TOYOTA

1KZ-TE ENGINE

REPAIR MANUAL

Aug., 1999

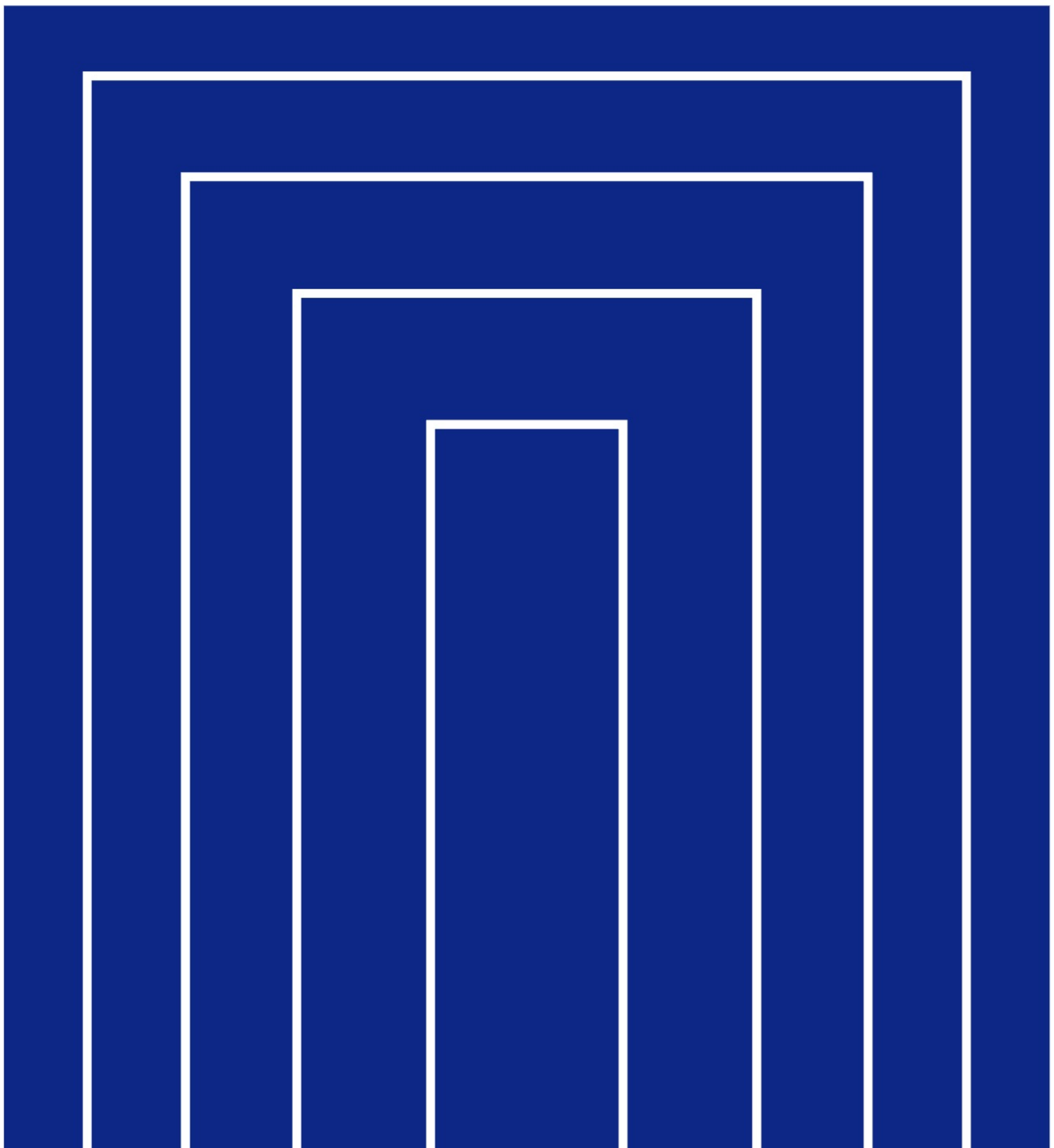

Pub. No. RM710E

FOREWORD

This repair manual has been prepared to provide information covering general service repairs for the 1KZ–TE engine equipped on the TOYOTA HILUX.

Applicable models: KZN165 series

Please note that the publications below have also been prepared as relevant service manuals for the components and system in this engine.

Manual Name	Pub. No.
• HILUX Electrical Wiring Diagram	EWD307F

All information in this manual is based on the latest product information at the time of publication. However, specifications and procedures are subject to change without notice.

TOYOTA MOTOR CORPORATION

©1999 **TOYOTA MOTOR CORPORATION**
All rights reserved. This book may not be reproduced or copied, in whole or in part, without the written permission of Toyota Motor Corporation.
First Printing; Jun. 11, 1999 01–990611–00–2

CAUTION

This manual does not include all the necessary items about repair and service. This manual is made for the purpose of the use for the persons who have special techniques and certifications. In the cases that non–specialized or uncertified technicians perform repair or service only using this manual or without proper equipment or tool, that may cause severe injury to you or other people around and also cause damage to your customer's vehicle.

In order to prevent dangerous operation and damages to your customer's vehicle, be sure to follow the instruction shown below.

- Must read this manual thoroughly. It is especially important to have good understanding all the contents written in the PRECAUTION of "IN" section.
- The service method written in this manual is very effective to perform repair and service. When performing the operations following the procedures using this manual, be sure to use tools specified and recommended. If using non–specified or recommended tools and service method, be sure to confirm safety of the technicians and any possibility of causing personal injury or damage to the customer's vehicle before starting the operation.
- If part replacement is necessary, must replace the part with the same part number or equivalent part. Do not replace it with inferior quality.
- It is important to note that this manual contains various "Cautions" and "Notices" that must be carefully observed in order to reduce the risk of personal injury during service or repair, or the possibility that improper service or repair may damage the vehicle or render it unsafe. It is also important to understand that these "Cautions" and "Notices" are not exhaustive, because it is important to warn of all the possible hazardous consequences that might result from failure to follow these instructions.

INTRODUCTION IN
PREPARATION PP
SERVICE SPECIFICATIONS SS
DIAGNOSTICS DI
ENGINE MECHANICAL EM
TURBOCHARGER TC
EMISSION CONTROL EC
ELECTRONIC CONTROL DIESEL ED
ENGINE FUEL FU
COOLING CO
LUBRICATION LU
STARTING ST
CHARGING CH
ALPHABETICAL INDEX ID

INTRODUCTION

HOW TO USE THIS MANUAL IN–1
GENERAL INFORMATION IN–1
IDENTIFICATION INFORMATION IN–3
ENGINE SERIAL NUMBER IN–3
REPAIR INSTRUCTIONS IN–4
GENERAL INFORMATION IN–4
FOR ALL OF VEHICLES IN–8
PRECAUTION IN–8
HOW TO TROUBLESHOOT
ECU CONTROLLED SYSTEMS IN–9
GENERAL INFORMATION IN–9
HOW TO PROCEED
WITH TROUBLESHOOTING IN–10
HOW TO USE THE DIAGNOSTIC CHART
AND INSPECTION PROCEDURE IN–20
TERMS IN–25
ABBREVIATIONS USED IN THIS MANUAL IN–25

HOW TO USE THIS MANUAL

GENERAL INFORMATION

IN04V–04

1. INDEX

An INDEX is provided on the first page of each section to guide you to the item to be repaired. To assist you in finding your way through the manual, the section title and major heading are given at the top of every page.

2. PRECAUTION

At the beginning of each section, a PRECAUTION is given that pertains to all repair operations contained in that section.
Read these precautions before starting any repair task.

3. TROUBLESHOOTING

TROUBLESHOOTING tables are included for each system to help you diagnose the problem and find the cause. The fundamentals of how to proceed with troubleshooting are described on page IN–9.
Be sure to read this before performing troubleshooting.

4. PREPARATION

Preparation lists the SST (Special Service Tools), recommended tools, equipment, lubricant and SSM (Special Service Materials) which should be prepared before beginning the operation and explains the purpose of each one.

5. REPAIR PROCEDURES

Most repair operations begin with an overview illustration. It identifies the components and shows how the parts fit together.
Example:

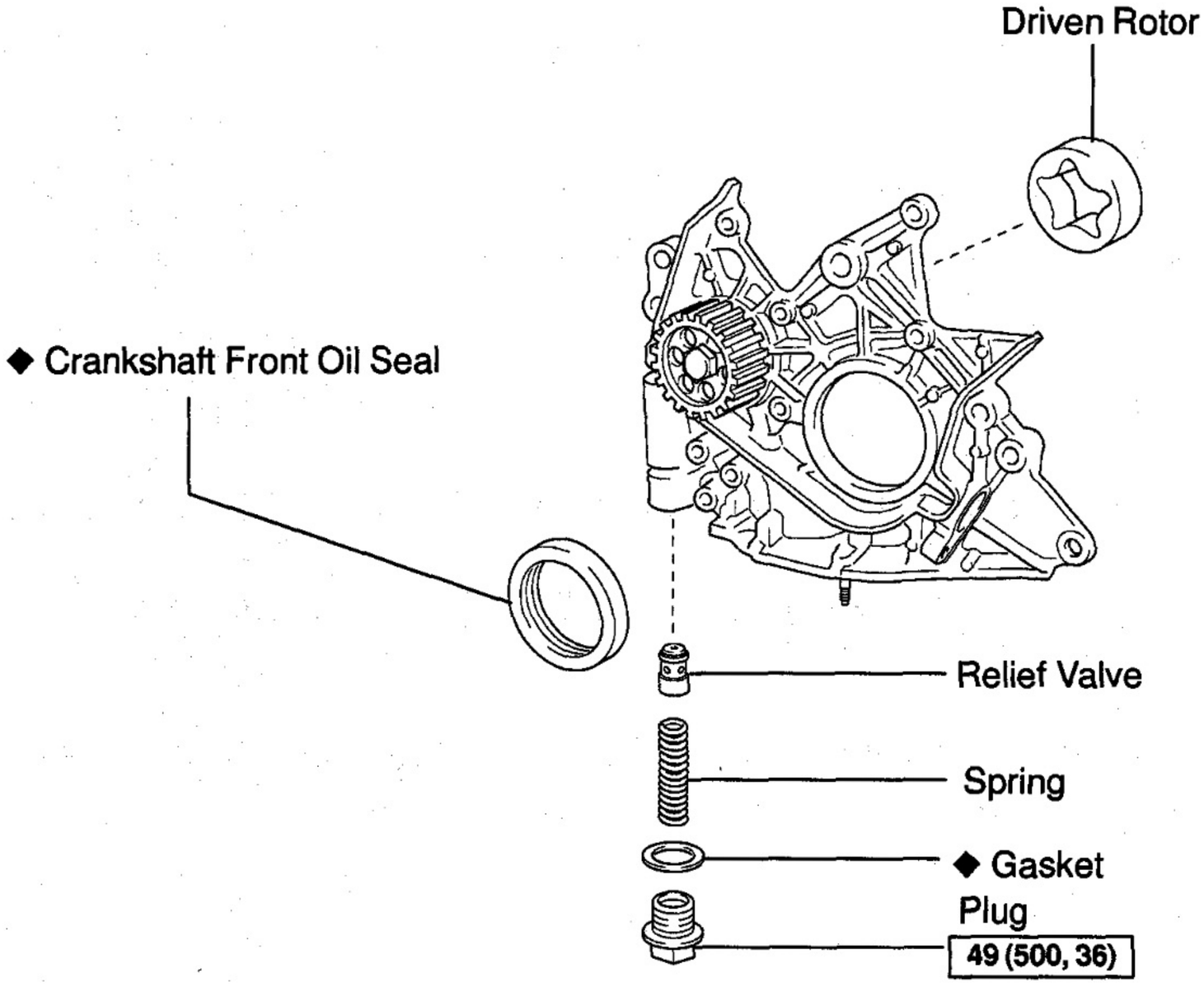

N·m (kgf·cm, ft·lbf) : Specified torque
◆ Non–reusable part

B07996
B08237

The procedures are presented in a step–by–step format:

- The illustration shows what to do and where to do it.
- The task heading tells what to do.
- The detailed text tells how to perform the task and gives other information such as specifications and warnings.

Example:

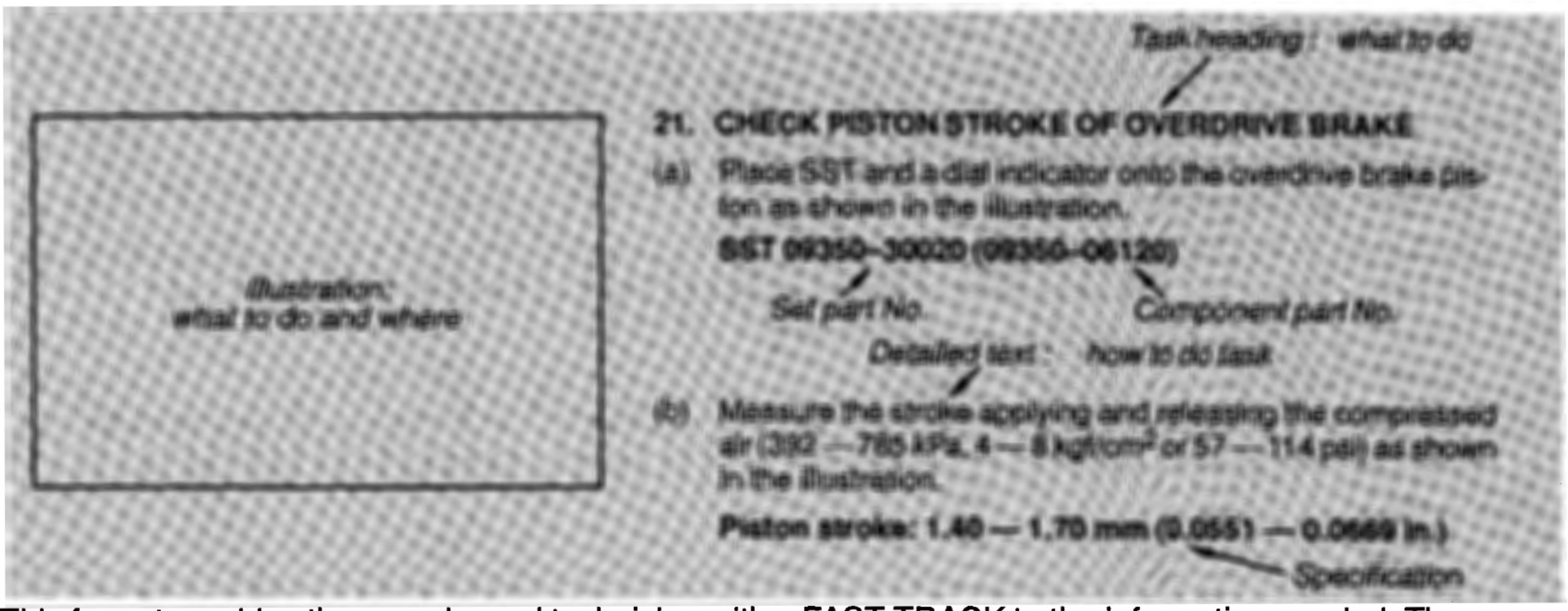

This format provides the experienced technician with a FAST TRACK to the information needed. The upper case task heading can be read at a glance when necessary, and the text below it provides detailed information. Important specifications and warnings always stand out in bold type.

6. REFERENCES

References have been kept to a minimum. However, when they are required you are given the page to refer to.

7. SPECIFICATIONS

Specifications are presented in bold type throughout the text where needed. You never have to leave the procedure to look up your specifications. They are also found in Service Specifications section for quick reference.

8. CAUTIONS, NOTICES, HINTS:

- CAUTIONS are presented in bold type, and indicate there is a possibility of injury to you or other people.
- NOTICES are also presented in bold type, and indicate the possibility of damage to the components being repaired.
- HINTS are separated from the text but do not appear in bold. They provide additional information to help you perform the repair efficiently.

9. SI UNIT

The UNITS given in this manual are primarily expressed according to the SI UNIT (International System of Unit), and alternately expressed in the metric system and in the English System.

Example:

Torque: 30 N·m (310 kgf·cm, 22 ft·lbf)

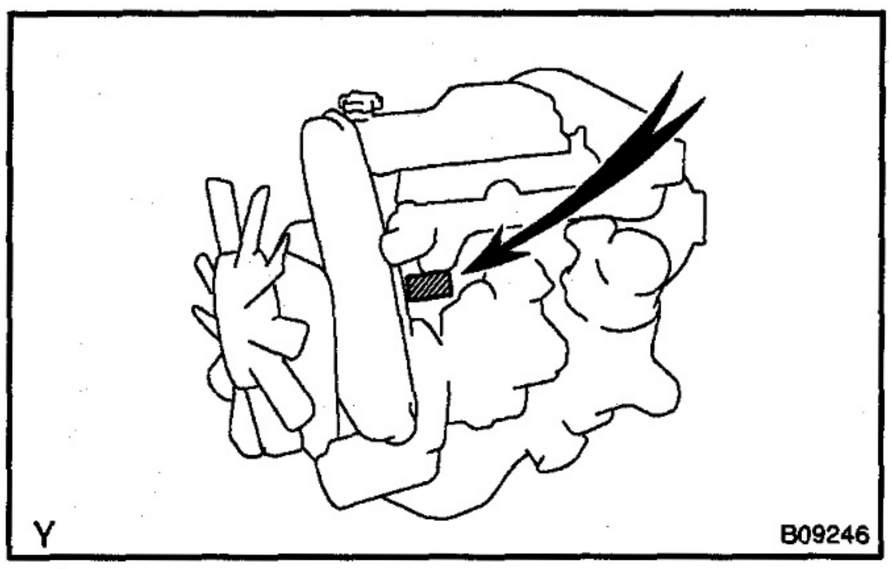

IDENTIFICATION INFORMATION

IN0E6–02

ENGINE SERIAL NUMBER

The engine serial number is stamped on the engine block, as shown in the illustration.

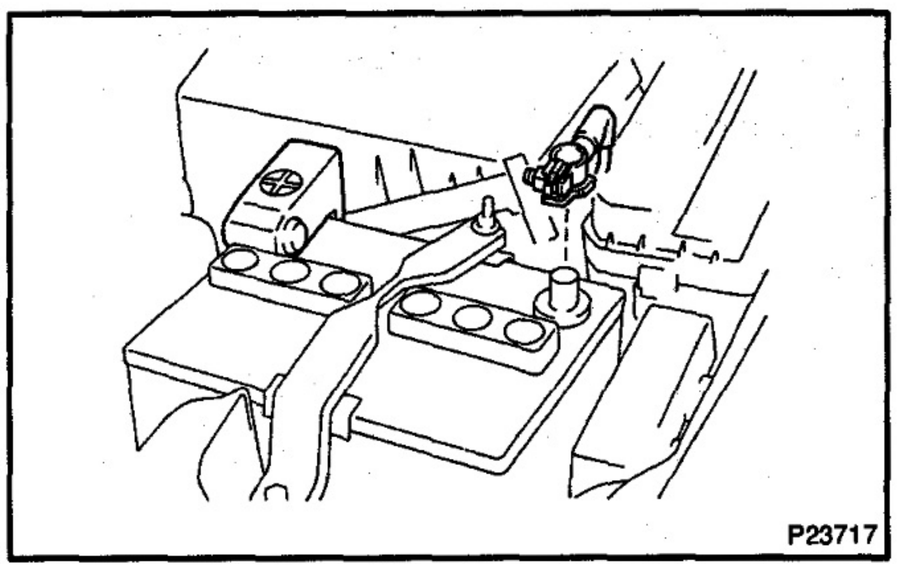
P23717

REPAIR INSTRUCTIONS

GENERAL INFORMATION

IN0E7–02

BASIC REPAIR HINT

(a) Use fender, seat and floor covers to keep the vehicle clean and prevent damage.

(b) During disassembly, keep parts in the appropriate order to facilitate reassembly.

(c) Observe the following operations:

(1) Before performing electrical work, disconnect the negative (–) terminal cable from the battery.

(2) If it is necessary to disconnect the battery for inspection or repair, always disconnect the negative (–) terminal cable which is grounded to the vehicle body.

(3) To prevent damage to the battery terminal, loosen the cable nut and raise the cable straight up without twisting or prying it.

(4) Clean the battery terminals and cable ends with a clean shop rag. Do not scrape them with a file or other abrasive objects.

(5) Install the cable ends to the battery terminals with the nut loose, and tighten the nut after installation. Do not use a hammer to tap the cable ends onto the terminals.

(6) Be sure the cover for the positive (+) terminal is properly in place.

(d) Check hose and wiring connectors to make sure that they are secure and correct.

(e) Non–reusable parts

(1) Always replace cotter pins, gaskets, O–rings and oil seals etc. with new ones.

(2) Non–reusable parts are indicated in the component illustrations by the "◆" symbol.

(f) Precoated parts

Precoated parts are bolts and nuts, etc. that are coated with a seal lock adhesive at the factory.

(1) If a precoated part is retightened, loosened or caused to move in any way, it must be recoated with the specified adhesive.

(2) When reusing precoated parts, clean off the old adhesive and dry with compressed air. Then apply the specified seal lock adhesive to the bolt, nut or threads.

(3) Precoated parts are indicated in the component illustrations by the "★" symbol.

(g) When necessary, use a sealer on gaskets to prevent leaks.

(h) Carefully observe all specifications for bolt tightening torques. Always use a torque wrench.

(i) Use of special service tools (SST) and special service materials (SSM) may be required, depending on the nature of the repair. Be sure to use SST and SSM where specified and follow the proper work procedure. A list of SST and SSM can be found in section PP (Preparation) in this manual.

Medium Current Fuse and High Current Fuse Equal Amperage Rating

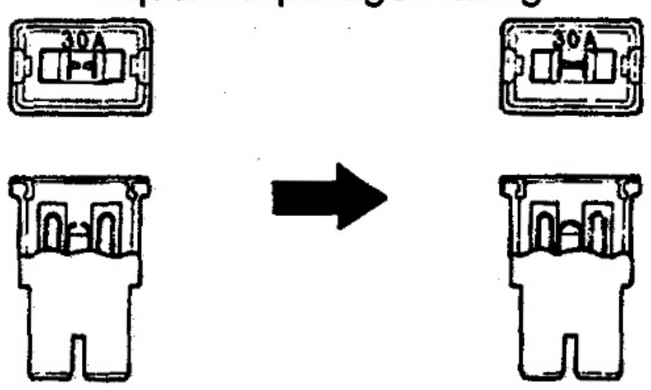

BE1367

(j) When replacing fuses, be sure the new fuse has the correct amperage rating. DO NOT exceed the rating or use one with a lower rating.

Illustration	Symbol	Part Name	Abbreviation
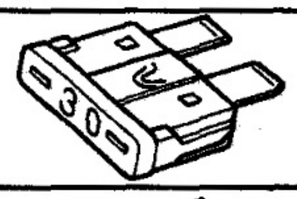 BE5594	 IN0365	FUSE	FUSE
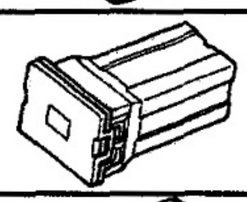 BE5595	 IN0366	MEDIUM CURRENT FUSE	M–FUSE
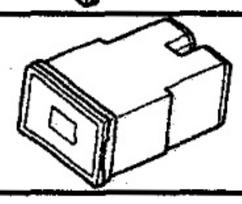 BE5596	 IN0367	HIGH CURRENT FUSE	H–FUSE
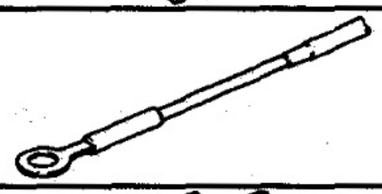 BE5597	 IN0367	FUSIBLE LINK	FL
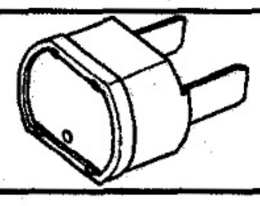 BE5598	 IN0368	CIRCUIT BREAKER	CB

V00076

(k) Care must be taken when jacking up and supporting the vehicle. Be sure to lift and support the vehicle at the proper locations.

- Cancel the parking brake on the level place and shift the transmission in Neutral (or N position).
- When jacking up the front wheels of the vehicle at first place stoppers behind the rear wheels.
- When jacking up the rear wheels of the vehicle at first place stoppers behind the rear wheels.

- When either the front or rear wheels only should be jacked up, set rigid racks and place stoppers in front and behind the other wheels on the ground.
- After the vehicle is jacked up, be sure to support it on rigid racks. It is extremely dangerous to do any work on a vehicle raised on a jack alone, even for a small job that can be finished quickly.

(l) Observe the following precautions to avoid damage to the following parts:

(1) Do not open the cover or case of the ECU unless absolutely necessary. (If the IC terminals are touched, the IC may be destroyed by static electricity.)

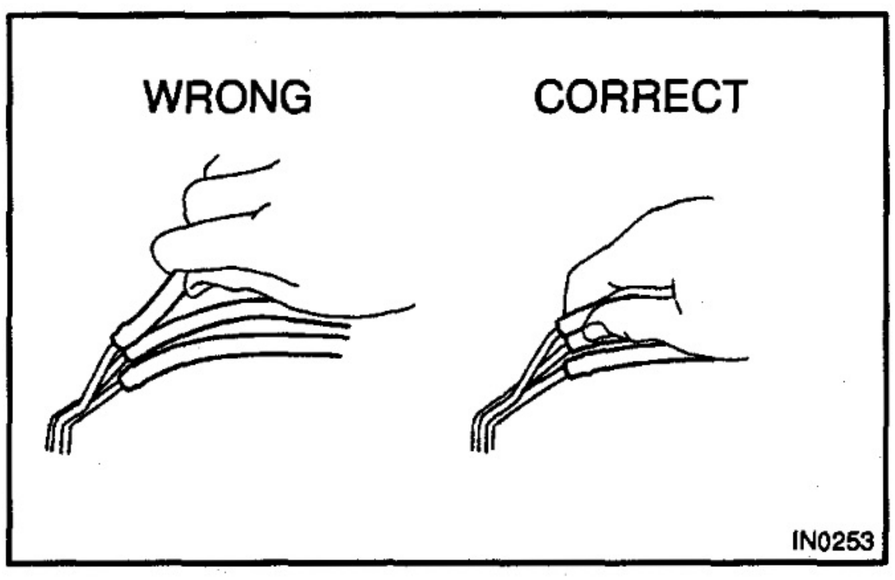

(2) To disconnect vacuum hoses, pull off the end, not the middle of the hose.

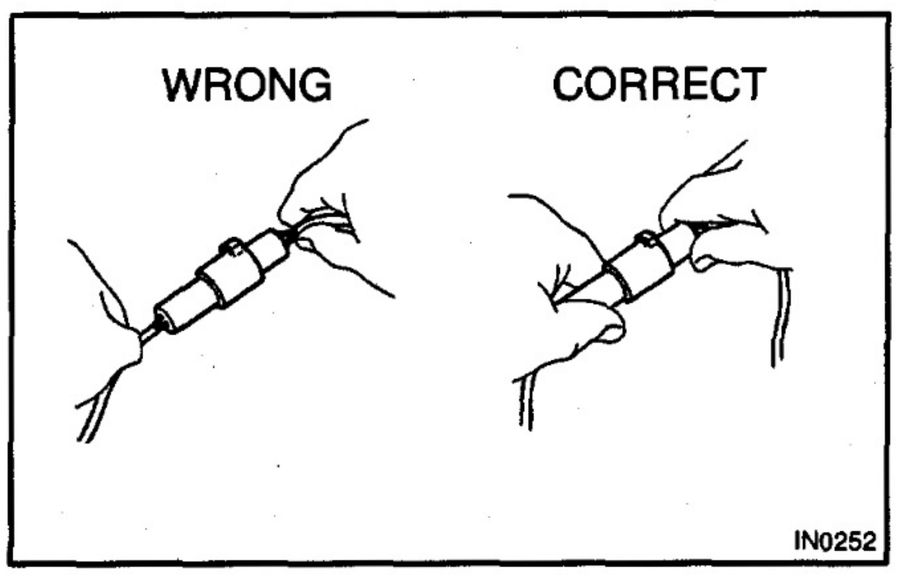

(3) To pull apart electrical connectors, pull on the connector itself, not the wires.

(4) Be careful not to drop electrical components, such as sensors or relays. If they are dropped on a hard floor, they should be replaced and not reused.

(5) When steam cleaning an engine, protect the electronic components, air filter and emission–related components from water.

(6) Never use an impact wrench to remove or install temperature switches or temperature sensors.

(7) When checking continuity at the wire connector, insert the tester probe carefully to prevent terminals from bending.

(8) When using a vacuum gauge, never force the hose onto a connector that is too large. Use a step–down adapter for adjustment. Once the hose has been stretched, it may leak.

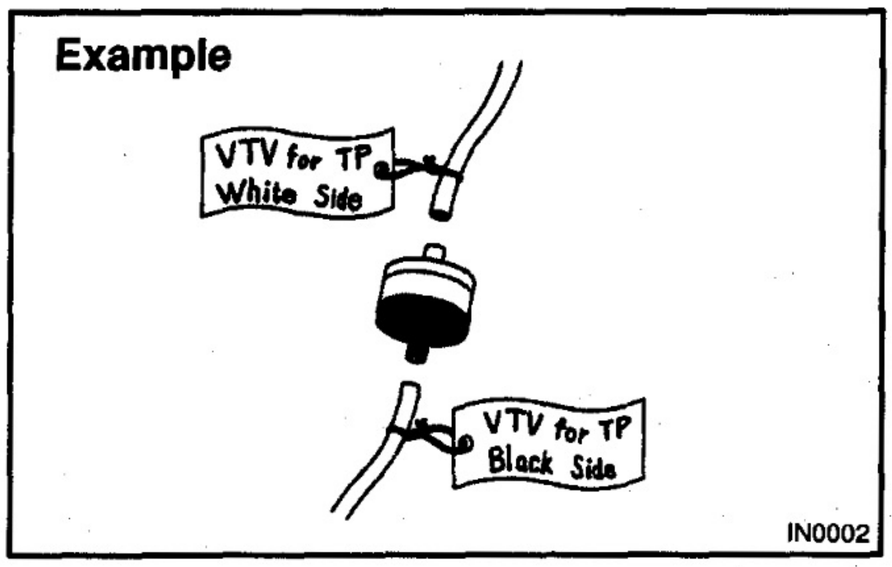

(m) Tag hoses before disconnecting them:
  (1) When disconnecting vacuum hoses, use tags to identify how they should be reconnected.
  (2) After completing a job, double check that the vacuum hoses are properly connected. A label under the hood shows the proper layout.

(n) Unless otherwise stated, all resistance is measured at an ambient temperature of 20°C (68°F). Because the resistance may be outside specifications if measured at high temperatures immediately after the vehicle has been running, measurement should be made when the engine has cooled down.

FOR ALL OF VEHICLES

PRECAUTION

IN0E8-02

1. IF VEHICLE IS EQUIPPED WITH MOBILE COMMUNICATION SYSTEM

For vehicles with mobile communication systems such as two–way radios and cellular telephones, observe the following precautions.

IN

(1) Install the antenna as far as possible away from the ECU and sensors of the vehicle's electronic system.
(2) Install the antenna feeder at least 20 cm (7.87 in.) away from the ECU and sensors of the vehicle's electronic systems. For details about ECU and sensors locations, refer to the section on the applicable component.
(3) Avoid winding the antenna feeder together with the other wiring as much as possible, and also avoid running the antenna feeder parallel with other wire harnesses.
(4) Check that the antenna and feeder are correctly adjusted.
(5) Do not install powerful mobile communications system.

2. FOR USING HAND–HELD TESTER

CAUTION:

Observe the following items for safety reasons:

- **Before using the hand–held tester, the hand–held tester's operator manual should be read throughly.**
- **Be sure to route all cables securely when driving with the hand–held tester connected to the vehicle. (i.e. Keep cables away from feet, pedals, steering wheel and shift lever.)**
- **Two persons are required when test driving with the hand–held tester, one person to drive the vehicle and one person to operate the hand–held tester.**

HOW TO TROUBLESHOOT ECU CONTROLLED SYSTEMS

GENERAL INFORMATION

IN050–05

A large number of ECU controlled systems are used in the HILUX. In general, the ECU controlled system is considered to be a very intricate system requiring a high level of technical knowledge and expert skill to troubleshoot. However, the fact is that if you proceed to inspect the circuits one by one, troubleshooting of these systems is not complex. If you have adequate understanding of the system and a basic knowledge of electricity, accurate diagnosis and necessary repair can be performed to locate and fix the problem. This manual is designed through emphasis of the above standpoint to help service technicians perform accurate and effective troubleshooting, and is compiled for the following major ECU controlled systems:

System	Page
Engine	DI–1

The troubleshooting procedure and how to make use of it are described on the above pages.

FOR USING HAND–HELD TESTER

- Before using the hand–held tester, the hand held–tester's operator manual should be read throughly.
- If the hand–held tester cannot communicate with ECU controlled systems when you have connected the cable of the hand–held tester to DLC3, turned the ignition switch ON and operated the scan tool, there is a problem on the vehicle side or tool side.
  (1) If communication is normal when the tool is connected to another vehicle, inspect the diagnosis data link line (Bus⊕line) or ECU power circuit of the vehicle.
  (2) If communication is still not possible when the tool is connected to another vehicle, the problem is probably in the tool itself, so perform the Self Test procedures outlined in the Tester Operator's Manual.

IN051–05

HOW TO PROCEED WITH TROUBLESHOOTING

Carry out troubleshooting in accordance with the procedure on the following page. Here, only the basic procedure is shown. Details are provided in each section, showing the most effective methods for each circuit. Confirm the troubleshooting procedures first for the relevant circuit before beginning troubleshooting of that circuit.

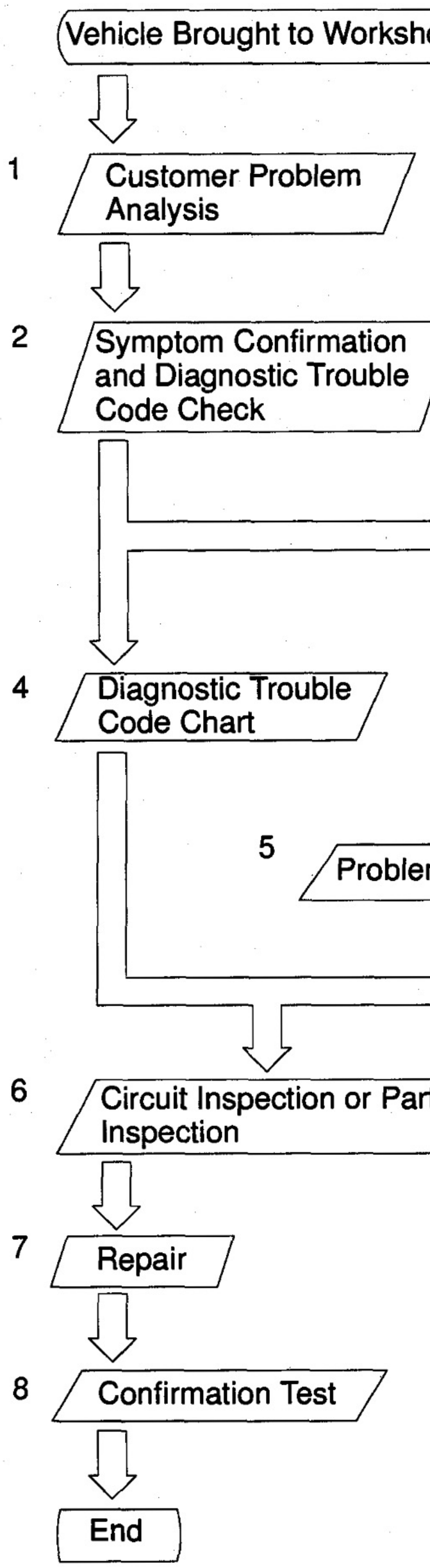

1
Ask the customer about the conditions and the environment when the problem occurred.

2, 3
Confirm the symptoms and the problem conditions, and check the diagnostic trouble codes.
(When the problem symptoms do not appear during confirmation, use the symptom simulation method described later on.)

4, 5, 6
Check the results obtained in Step 2, then confirm the inspection procedure for the system or the part which should be checked using the diagnostic trouble code chart or the problem symptoms table.

7
Check and repair the affected system or part in accordance with the instructions in Step 6.

8
After completing repairs, confirm that the problem has been eliminated.
(If the problem is not reproduced, perform the confirmation test under the same conditions and in the same environment as when it occurred for the first time.)

1. CUSTOMER PROBLEM ANALYSIS

In troubleshooting, the problem symptoms must be confirmed accurately and all preconceptions must be cleared away in order to give an accurate judgement. To ascertain just what the problem symptoms are, it is extremely important to ask the customer about the problem and the conditions at the time it occurred.

Important Point in the Problem Analysis:

The following 5 items are important points in the problem analysis. Past problems which are thought to be unrelated and the repair history, etc. may also help in some cases, so as much information as possible should be gathered and its relationship with the problem symptoms should be correctly ascertained for reference in troubleshooting. A customer problem analysis table is provided in the troubleshooting section for each system for your use.

Important Points in the Customer Problem Analysis

- What ——— Vehicle model, system name
- When ——— Date, time, occurrence frequency
- Where ——— Road conditions
- Under what conditions? ——— Running conditions, driving conditions, weather conditions
- How did it happen? ——— Problem symptoms

(Sample) Engine control system check sheet.

CUSTOMER PROBLEM ANALYSIS CHECK

ENGINE CONTROL SYSTEM Check Sheet

Inspector's Name _____

Customer's Name		Model and Model Year	
Driver's Name		Frame No.	
Data Vehicle Brought in		Engine Model	
License No.		Odometer Reading	km miles

Problem Symptoms		
	☐ Engine does not Start	☐ Engine does not crank ☐ No initial combustion ☐ No complete combustion
	☐ Difficult to Start	☐ Engine cranks slowly ☐ Other _____
	☐ Poor Idling	☐ Incorrect first idle ☐ Idling rpm is abnormal ☐ High (rpm) ☐ Low (rpm) ☐ Rough idling ☐ Other _____
	☐ Poor Drive ability	☐ Hesitation ☐ Back fire ☐ Muffler explosion (after–fire) ☐ Surging ☐ Knocking ☐ Other _____
	☐ Engine Stall	☐ Soon after starting ☐ After accelerator pedal depressed ☐ After accelerator pedal released ☐ During A/C operation ☐ Shifting from N to D ☐ Other _____
	☐ Others	

☐ Constant ☐ Sometimes (times per day/month)

2. SYMPTOM CONFIRMATION AND DIAGNOSTIC TROUBLE CODE CHECK

The diagnostic system in the HILUX fulfills various functions. The first function is the Diagnostic Trouble Code Check in which a malfunction in the signal circuits to the ECU is stored in code in the ECU memory at the time of occurrence, to be output by the technician during troubleshooting. Another function is the Input Signal Check which checks if the signals from various switches are sent to the ECU correctly.
By using these check functions, the problem areas can be narrowed down quickly and troubleshooting can be performed effectively. Diagnostic functions are incorporated in the following systems in the HILUX.

System	Diagnostic Trouble Code Check	Input Signal Check (Sensor Check)	Other Diagnosis Function
Engine	○ (with Test Mode)	○	Diagnostic Test Mode

In diagnostic trouble code check, it is very important to determine whether the problem indicated by the diagnostic trouble code is still occurring or occurred in the past but returned to normal at present. In addition, it must be checked in the problem symptom check whether the malfunction indicated by the diagnostic trouble code is directly related to the problem symptom or not. For this reason, the diagnostic trouble codes should be checked before and after the symptom confirmation to determine the current conditions, as shown in the table below. If this is not done, it may, depending on the case, result in unnecessary troubleshooting for normally operating systems, thus making it more difficult to locate the problem, or in repairs not pertinent to the problem. Therefore, always follow the procedure in correct order and perform the diagnostic trouble code check.

DIAGNOSTIC TROUBLE CODE CHECK PROCEDURE

Diagnostic Trouble Code Check (Make a note of and then clear)	Confirmation of Symptoms	Diagnostic Trouble Code Check	Problem Condition
Diagnostic Trouble Code Display	Problem symptoms exist	Same diagnostic trouble code is displayed	Problem is still occurring in the diagnostic circuit
		Normal code is displayed	The problem is still occurring in a place other than in the diagnostic circuit (The diagnostic trouble code displayed first is either for a past problem or it is a secondary problem)
	⇨ No problem symptoms exist		The problem occurred in the diagnostic circuit in the past
Normal Code Display	⇨ Problem symptoms exist	Normal code is displayed	The problem is still occurring in a place other than in the diagnostic circuit
	⇨ No problem symptoms exist	Normal code is displayed	The problem occurred in a place other than in the diagnostic circuit in the past

Taking into account the above points, a flow chart showing how to proceed with troubleshooting using the diagnostic trouble code check is shown below. This flow chart shows how to utilize the diagnostic trouble code check effectively, then by carefully checking the results, indicates how to proceed either to diagnostic trouble code troubleshooting or to troubleshooting of problem symptoms.

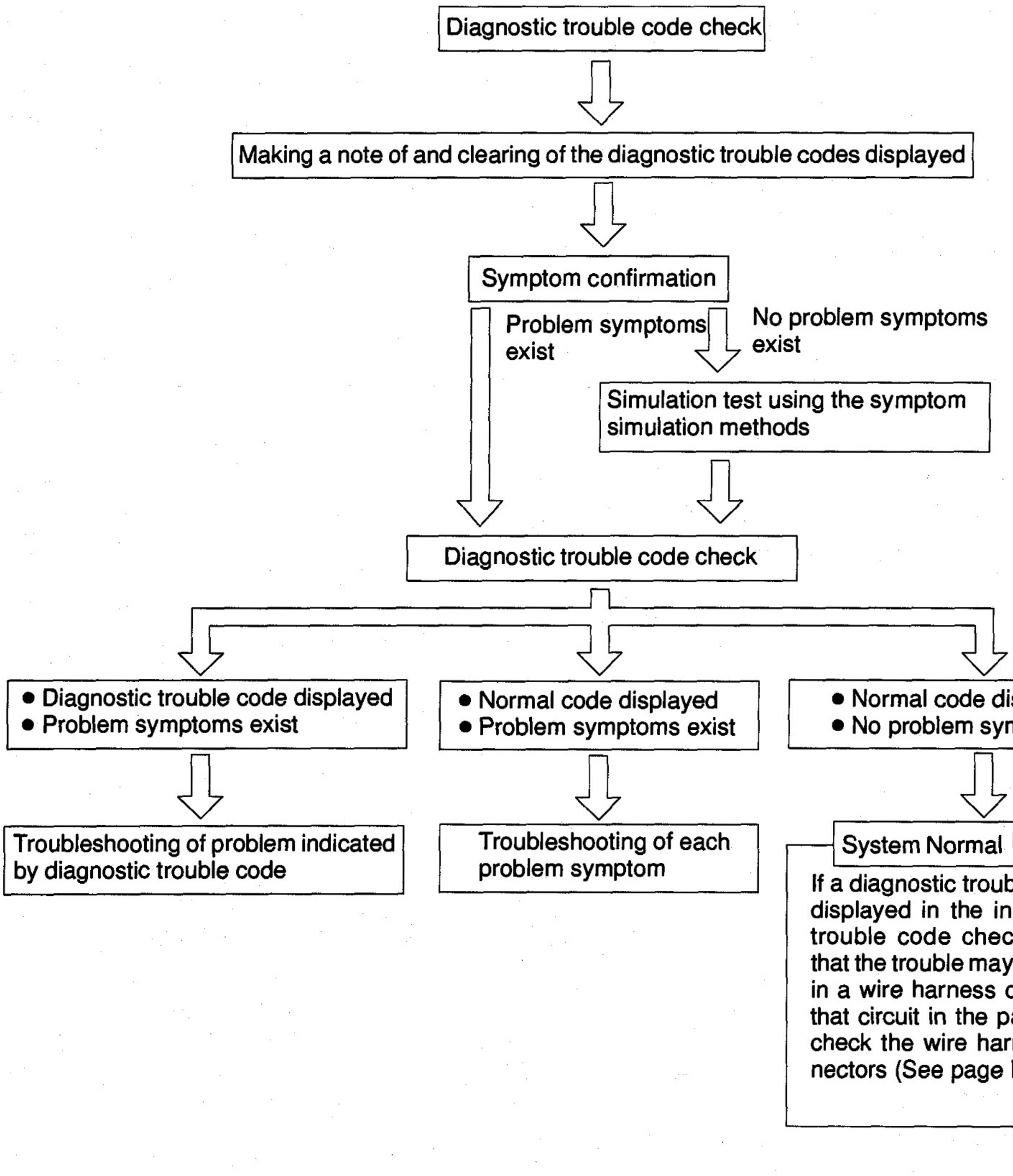

3. SYMPTOM SIMULATION

The most difficult case in troubleshooting is when there are no problem symptoms occurring. In such cases, a thorough customer problem analysis must be carried out, then simulate the same or similar conditions and environment in which the problem occurred in the customer's vehicle. No matter how much experience a technician has, or how skilled he may be, if he proceeds to troubleshoot without confirming the problem symptoms he will tend to overlook something important in the repair operation and make a wrong guess somewhere, which will only lead to a standstill. For example, for a problem which only occurs when the engine is cold, or for a problem which occurs due to vibration caused by the road during driving, etc., the problem can never be determined so long as the symptoms are confirmed with the engine hot condition or the vehicle at a standstill. Since vibration, heat or water penetration (moisture) is likely cause for problem which is difficult to reproduce, the symptom simulation tests introduced here are effective measures in that the external causes are applied to the vehicle in a stopped condition.

Important Points in the Symptom Simulation Test:

In the symptom simulation test, the problem symptoms should of course be confirmed, but the problem area or parts must also be found out. To do this, narrow down the possible problem circuits according to the symptoms before starting this test and connect a tester beforehand. After that, carry out the symptom simulation test, judging whether the circuit being tested is defective or normal and also confirming the problem symptoms at the same time. Refer to the problem symptoms table for each system to narrow down the possible causes of the symptom.

1	**VIBRATION METHOD: When vibration seems to be the major cause.**
CONNECTORS Slightly shake the connector vertically and horizontally. **WIRE HARNESS** Slightly shake the wire harness vertically and horizontally. The connector joint, fulcrum of the vibration, and body through portion are the major areas to be checked thoroughly.	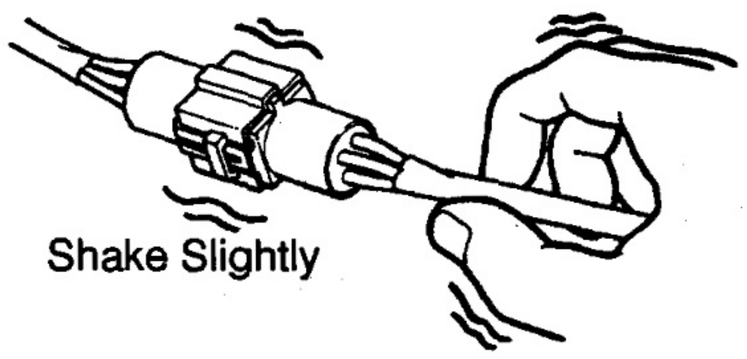 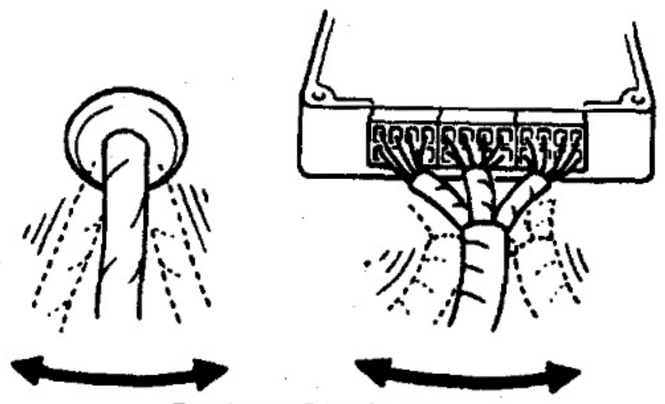 FI2331 FI2332
PARTS AND SENSOR Apply slight vibration with a finger to the part of the sensor considered to be the problem cause and check that the malfunction occurs. HINT: Applying strong vibration to relays may result in open relays.	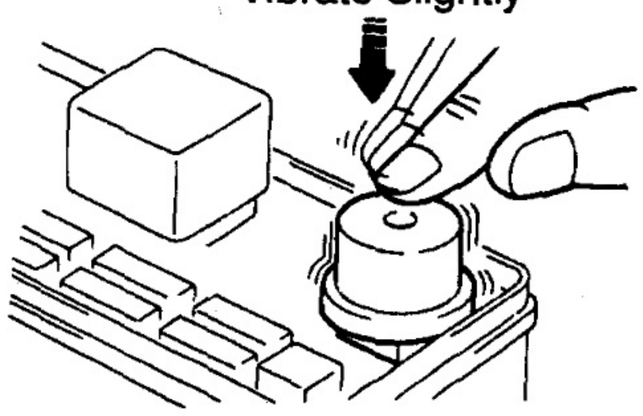 FI2330

V07268

2	**HEAT METHOD: When the problem seems to occur when the suspect area is heated.**

Heat the component that is the likely cause of the malfunction with a hair dryer or similar object. Check to see if the malfunction occurs.

NOTICE:

(1) Do not heat to more than 60°C (140°F). (Temperature is limited not to damage the components.)

(2) Do not apply heat directly to parts in the ECU.

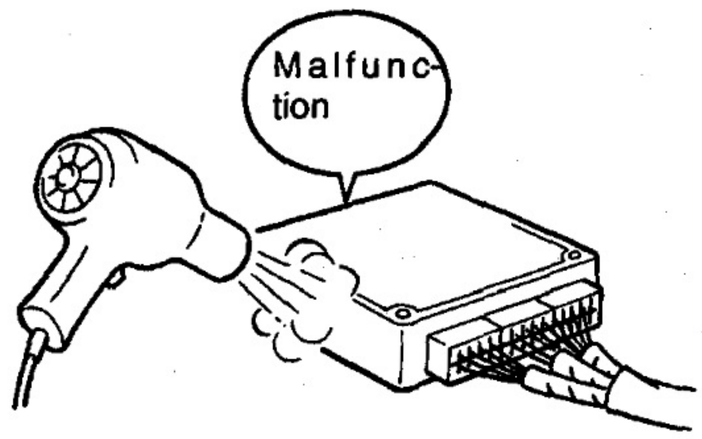

FI2334

3	**WATER SPRINKLING METHOD: When the malfunction seems to occur on a rainy day or in a high–humidity condition.**

Sprinkle water onto the vehicle and check to see if the malfunction occurs.

NOTICE:

(1) Never sprinkle water directly into the engine compartment, but indirectly change the temperature and humidity by applying water spray onto the radiator front surface.

(2) Never apply water directly onto the electronic components.

HINT:

If a vehicle is subject to water leakage, the leaked water may contaminate the ECU. When testing a vehicle with a water leakage problem, special caution must be taken.



FI6649

4	**OTHER: When a malfunction seems to occur when electrical load is excessive.**

Turn on all electrical loads including the heater blower, head lights, rear window defogger, etc. and check to see if the malfunction occurs.

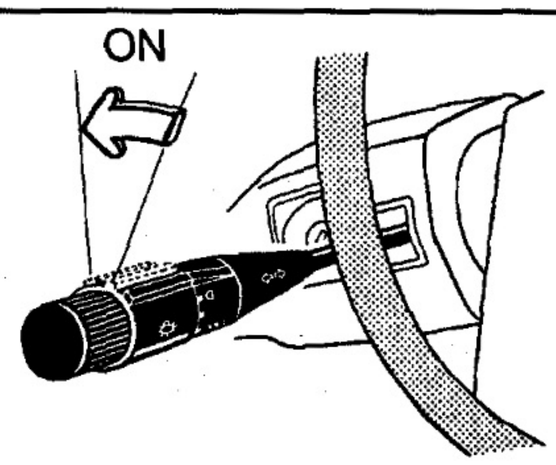

FI2336

V07469

4. DIAGNOSTIC TROUBLE CODE CHART

The inspection procedure is shown in the table below. This table permits efficient and accurate troubleshooting using the diagnostic trouble codes displayed in the diagnostic trouble code check. Proceed with troubleshooting in accordance with the inspection procedure given in the diagnostic chart corresponding to the diagnostic trouble codes displayed. The engine diagnostic trouble code chart is shown below as an example.

- DTC No.
  Indicates the diagnostic trouble code.
- Page or Instructions
  Indicates the page where the inspection procedure for each circuit is to be found, or gives instructions for checking and repairs.

- Trouble Area
  Indicates the suspect area of the problem.

- Detection Item
  Indicates the system of the problem or contents of the problem.

DIAGNOSTIC TROUBLE CODE CHART

HINT:
Parameters listed in the chart may not be exactly the same as your reading due to the type of instrument or other factors.
If a malfunction code is displayed during the DTC check in check (test) mode, check the circuit for that code listed in the table below. For details of each code, turn to the page referred to under the "See page" for the respective "DTC No." in the DTC chart.

DTC No. (See page)	Detection Item	Trouble Area	*1 Check Engine Warming Light Normal Mode/ Test Node	*2 Memory
12 (DI – 12)	Crankshaft Position Sensor Circuit Malfunction	• Open or short in crankshaft position sensor circuit • Crankshaft position sensor • Engine ECU	ON / N.A	○
13 (DI – 28)	Engine Speed Sensor Circuit Malfunction	• Open or short in engine speed sensor circuit • Engine speed sensor • Engine ECU	ON / N.A	○
15 (DI – 32)	Diesel Throttle Control Circuit Malfunction	• Open or short in E–VRV for main actuator circuit • E–VRV for main actuator • Diesel throttle position sensor circuit • Diesel throttle position sensor • Main actuator • Vacuum hose disconnected or blocked • Engine ECU	ON / N.A	○
	Interior IC Malfunction	• Engine ECU		

5. PROBLEM SYMPTOMS TABLE

The suspect circuits or parts for each problem symptom are shown in the table below. Use this table to troubleshoot the problem when a "Normal" code is displayed in the diagnostic trouble code check but the problem is still occurring. Numbers in the table indicate the inspection order in which the circuits or parts should be checked.

HINT:

When the problem is not detected by the diagnostic system even though the problem symptom is present, it is considered that the problem is occurring outside the detection range of the diagnostic system, or that the problem is occurring in a system other than the diagnostic system.

- Page
  Indicates the page where the flow chart for each circuit is located.
- Circuit Inspection, Inspection Order
  Indicates the circuit which needs to be checked for each problem symptom. Check in the order indicated by the numbers.
- Problem Symptom
- Circuit or Part Name
  Indicates the circuit or part which needs to be checked.

PROBLEM SYMPTOMS TABLE

Symptom	Suspect Area	See page
Engine does not crank (Does not start)	1. Starter 2. Starter relay	ST–3 ST–14
No initial combustion (Does not start)	1. ECU power source circuit 2. Pre–heating system 3. Compression 4. Engine ECU	DI–93 ST–1 EM–2 IN–20
Cold engine (Difficult to start)	1. Pre–heating system 2. Starter signal circuit 3. Water temperature sensor 4. Injector 5. Fuel filter 6. Diesel throttle body 7. Engine ECU	ST–1 DI–115 ED–10 FU–1 DI–26 IN–20
[illegible] engine	1. Starter signal circuit 2. Injector 3. Fuel filter 4. Diesel throttle body 5. Engine ECU	DI–115
	1. Fuel filter 2. Diesel throttle body 3 Engine ECU	

6. CIRCUIT INSPECTION

How to read and use each page is shown below.

● Diagnostic Trouble Code No. and Detection Item

● Circuit Description
The major role and operation, etc. of the circuit and its component parts are explained.

DTC	12	Crankshaft Position Sensor Circuit Malfunction

CIRCUIT DESCRIPTION

The crankshaft position sensor in the Engine Control System contains signal plate and a pickup coil for TDC signal. The TDC signal plate has 1 tooth on its outer circumference. The TDC signal sensor generates 1 signal for every engine revolution. The engine ECU detects the top dead center by the TDC signals. The NE signal plate has 52 teeth and is mounted in the supply pump. The NE signal sensor generates 52 signals of engine 2 revolutions. The engine ECU detects the engine speed and cam lift position of the supply pump. The engine ECU uses TDC signal and NE signals for injection control. And NE signal is used for injection volume control, also.

DTC No.	DTC Detecting Condition	Trouble Area
12	No TDC signal to engine ECU at 500 rpm or more	● Open or short in crankshaft position sensor circuit ● Crankshaft position sensor ● Engine ECU

● Indicates the diagnostic trouble code, diagnostic trouble code set parameter and suspect area of the problem.

WIRING DIAGRAM

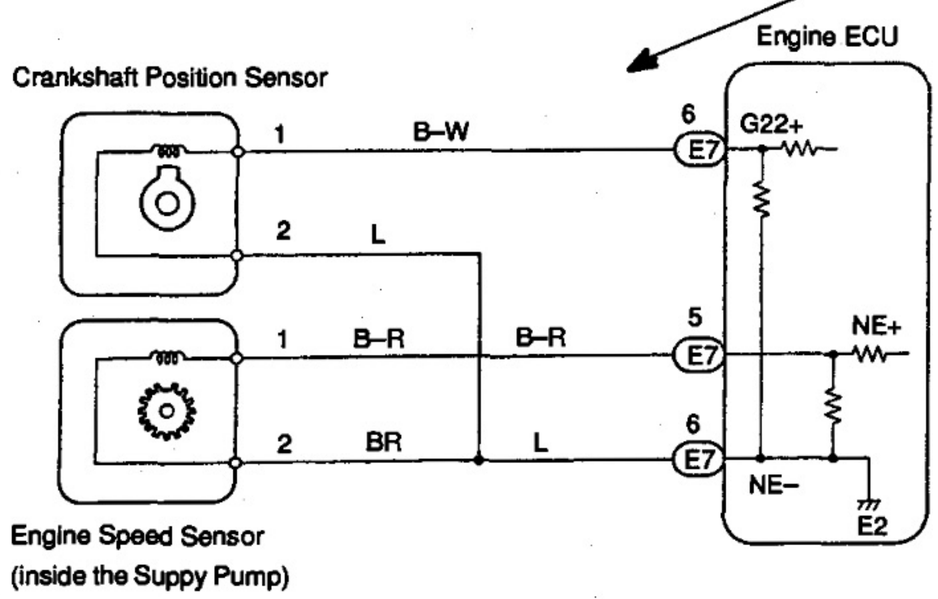

● Wiring Diagram
This shows a wiring diagram of the circuit.
Use this diagram together with ELECTRICAL WIRING DIAGRAM to thoroughly understand the circuit.
Wire colors are indicated by an alphabetical code.
B = Black, L = Blue, R = Red, BR = Brown,
LG = Light Green, V = Violet, G = Green,
O = Orange, W = White, GR = Gray, P = Pink,
Y = Yellow
The first letter indicates the basic wire color and the second letter indicates the color of the stripe.

B02134

● Indicates the position of the ignition switch during the check.

LOCK
Ignition Switch LOCK (OFF)

ON
Ignition Switch ON

START
Ignition Switch START

ACC
Ignition Switch ACC

● Inspection Procedure
Use the inspection procedure to determine if the circuit is normal or abnormal, and if it is abnormal, use it to determine whether the problem is located in the sensors, actuators, wire harness or ECU.

INSPECTION PROCEDURE

1	**Check continuity between terminal THW of ECU connector and body ground.**

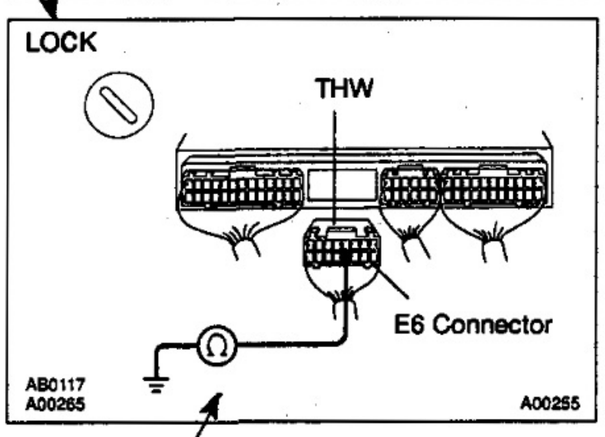

PREPARATION:
(a) Remove the glove compartment.
(b) Disconnect the E6 connector of ECU.

CHECK:
Measure resistance between terminal THW of ECU connector and body ground.

OK:
Resistance: 1 MΩ or higher

OK → **Go to step 3.**

NG

2	**Check water temp. sensor (See page ED–15).**

OK → **Replace water temp. sensor.**

● Indicates the place to check the voltage or resistance.
● Indicates the connector position to be checked, from the front or back side.

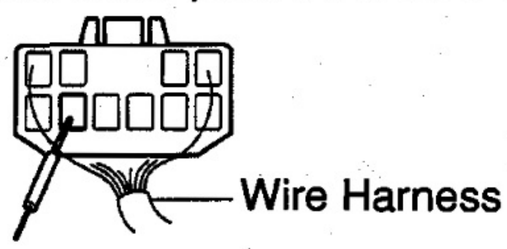

Check from the connector back side. (with harness)



Check from the connector front side. (without harness)
In this case, care must be taken not to bend the terminals.

● Indicates the condition of the connector of ECU during the check.

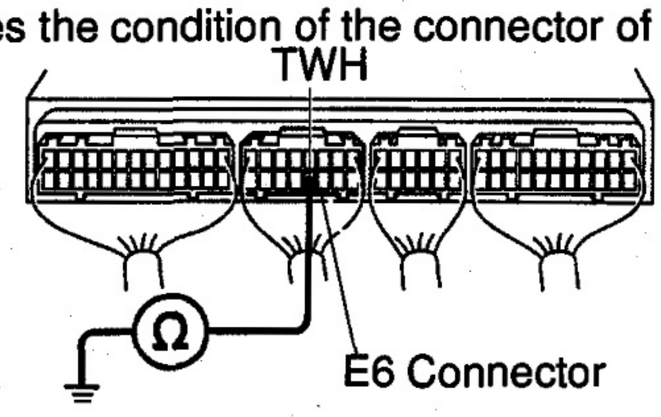

Connector being checked is connected.

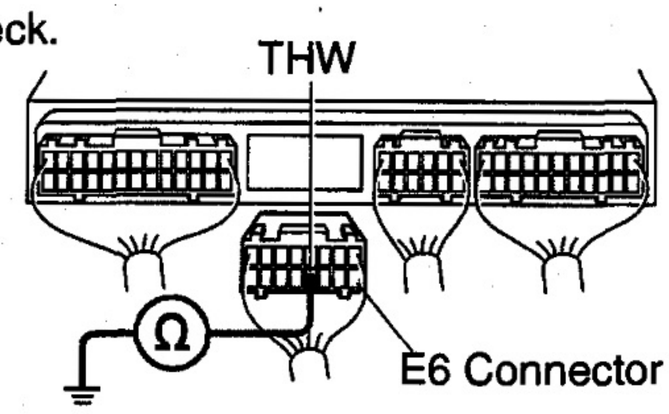

Connector being checked is disconnected.

V08425

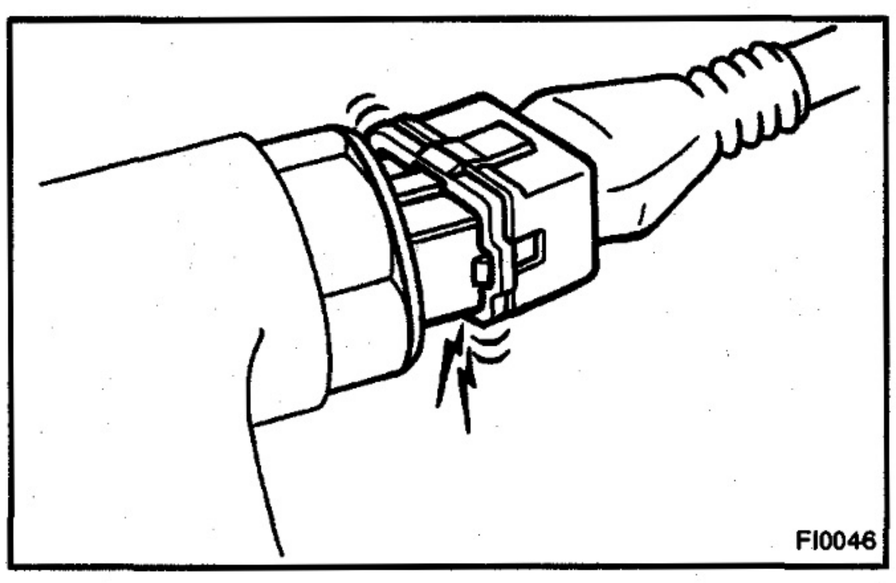
FI0046

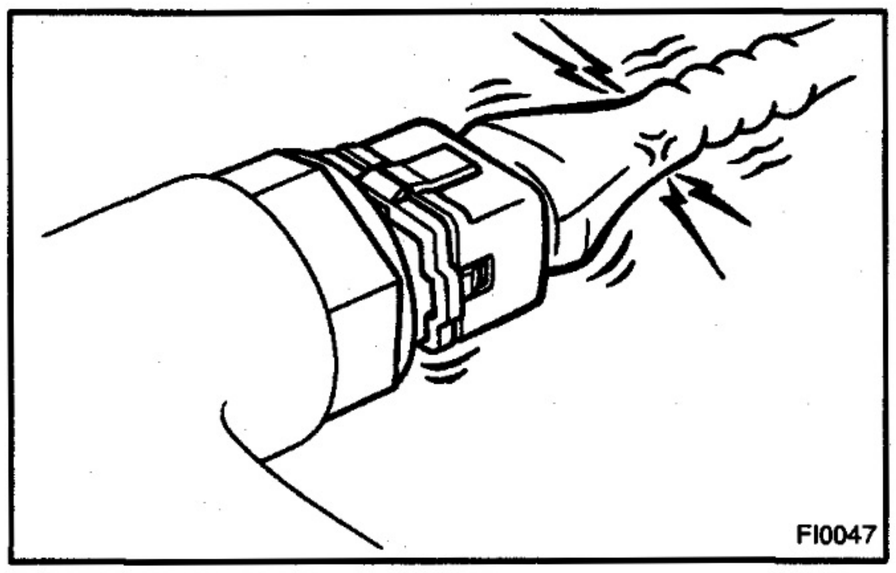
FI0047

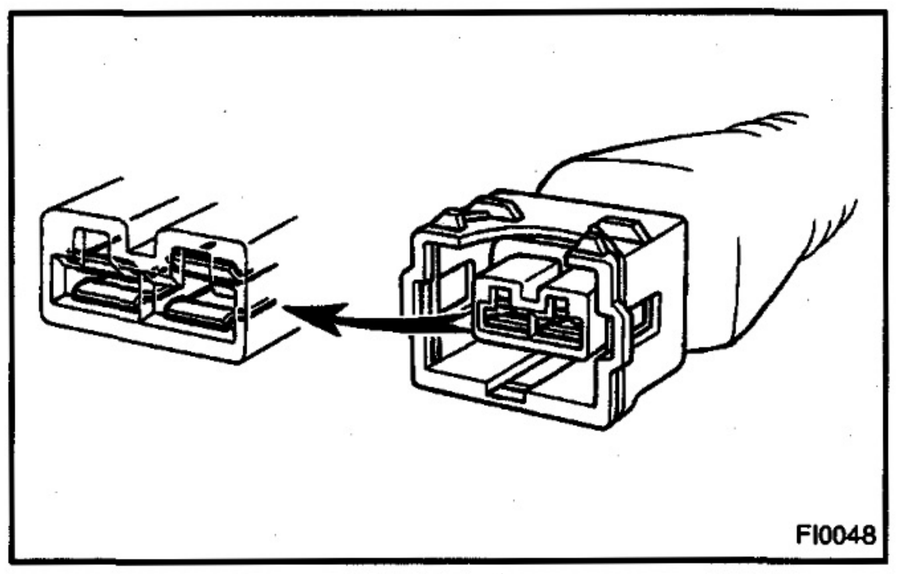
FI0048

IN052–05

HOW TO USE THE DIAGNOSTIC CHART AND INSPECTION PROCEDURE

1. CONNECTOR CONNECTION AND TERMINAL INSPECTION

- For troubleshooting, diagnostic trouble code charts or problem symptom charts are provided for each circuit with detailed inspection procedures on the following pages.
- When all the component parts, wire harnesses and connectors of each circuit except the ECU are found to be normal in troubleshooting, then it is determined that the problem is in the ECU. Accordingly, if diagnosis is performed without the problem symptoms occurring, refer to step 8 to replace the ECU, even if the problem is not in the ECU. So always confirm that the problem symptoms are occurring, or proceed with inspection while using the symptom simulation method.
- The instructions "Check wire harness and connector" and "Check and replace ECU" which appear in the inspection procedure, are common and applicable to all diagnostic trouble codes. Follow the procedure outlined below whenever these instructions appear.

OPEN CIRCUIT:

This could be due to a disconnected wire harness, faulty contact in the connector, and a connector terminal pulled out, etc.

HINT:

- It is rarely the case that a wire is broken in the middle of it. Most cases occur at the connector. In particular, carefully check the connectors of sensors and actuators.
- Faulty contact could be due to rusting of the connector terminals, to foreign materials entering terminals or a deformation of connector terminals. Simply disconnecting and reconnecting the connectors once changes the condition of the connection and may result in a return to normal operation. Therefore, in troubleshooting, if no abnormality is found in the wire harness and connector check, but the problem disappears after the check, then the cause is considered to be in the wire harness or connectors.

SHORT CIRCUIT:

This could be due to a contact between wire harness and the body ground or to a short circuit occurred inside the switch, etc.

HINT:

When there is a short circuit between the wire harness and body ground, check thoroughly whether the wire harness is caught in the body or is clamped properly.

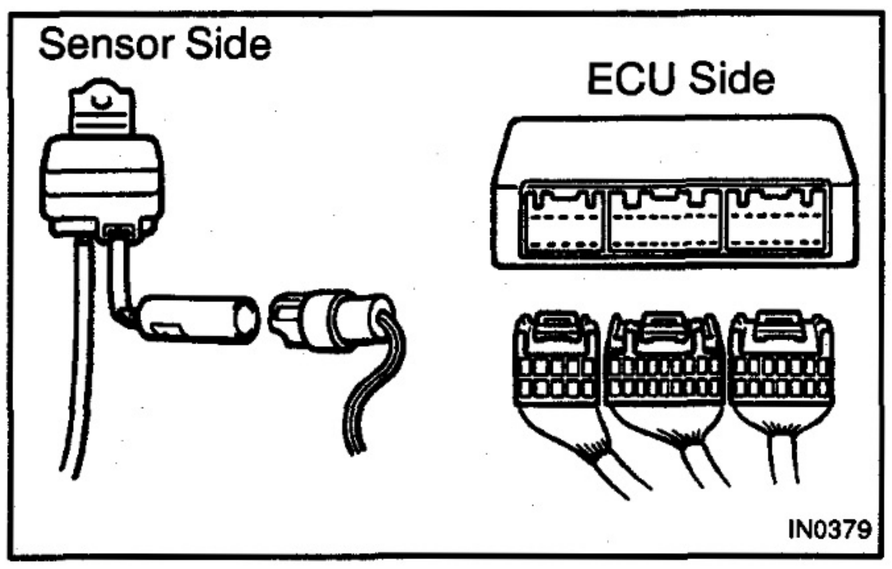

2. CONTINUITY CHECK (OPEN CIRCUIT CHECK)

(a) Disconnect the connectors at both ECU and sensor sides.

(b) Measure the resistance between the applicable terminals of the connectors.

Resistance: 1Ω or less

HINT:

- Measure the resistance while lightly shaking the wire harness vertically and horizontally.
- When tester probes are inserted into a connector, insert the probes from the back. For waterproof connectors in which the probes cannot be inserted from the back, be careful not to bend the terminals when inserting the tester probes.

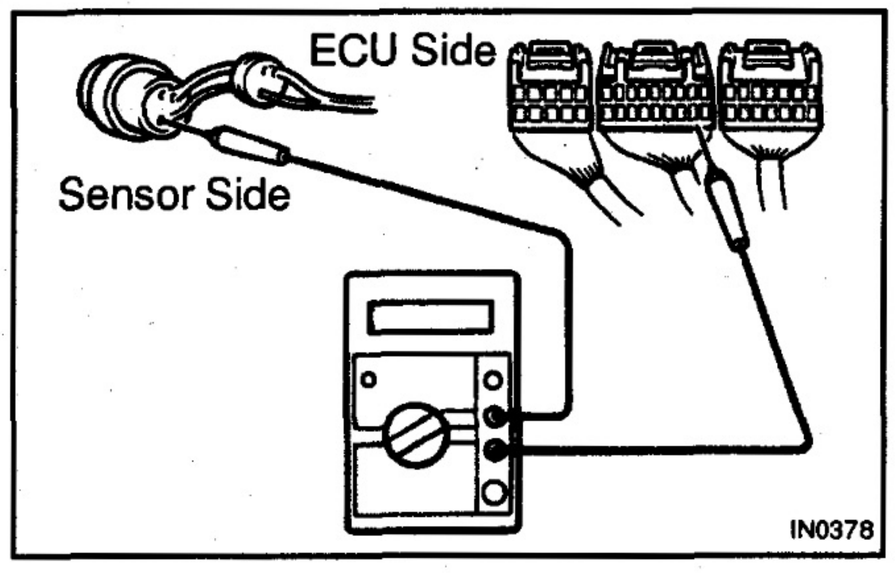

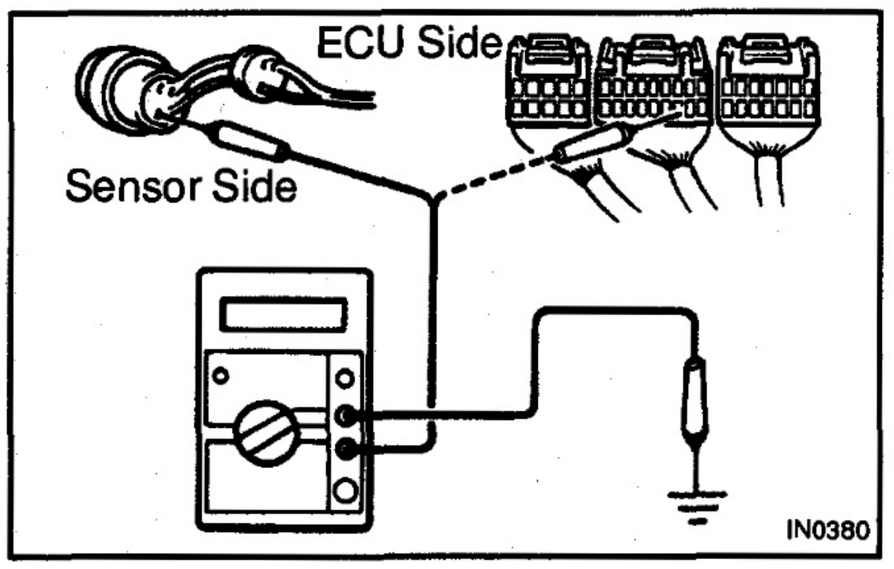

3. RESISTANCE CHECK (SHORT CIRCUIT CHECK)

(a) Disconnect the connectors on both ends.

(b) Measure the resistance between the applicable terminals of the connectors and body ground. Be sure to carry out this check on the connectors on both ends.

Resistance: 1 MΩ or higher

HINT:

Measure the resistance while lightly shaking the wire harness vertically and horizontally.

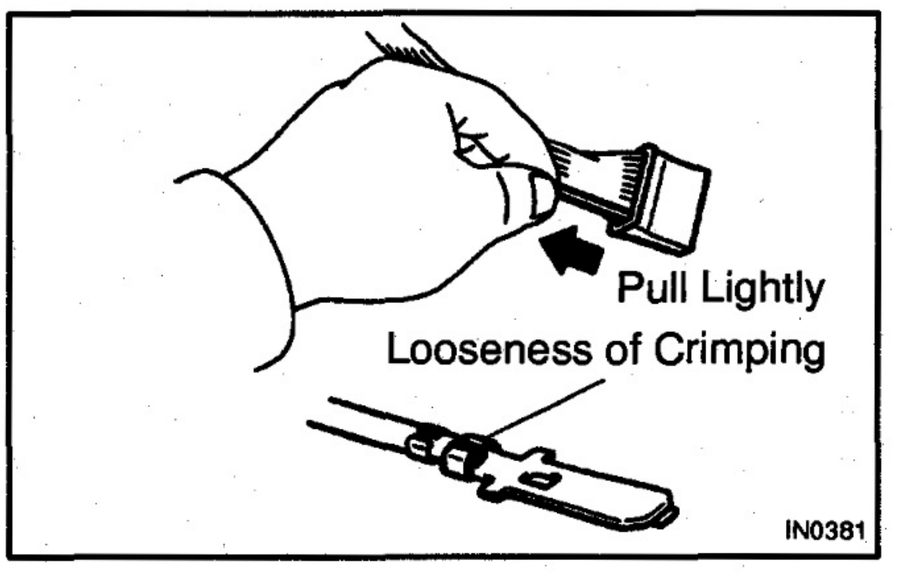

4. VISUAL CHECK AND CONTACT PRESSURE CHECK

(a) Disconnect the connectors at both ends.

(b) Check for rust or foreign material, etc. in the terminals of the connectors.

(c) Check crimped portions for looseness or damage and check that the terminals are secured in lock portion.

HINT:

The terminals should not come out when pulled lightly.

(d) Prepare a test male terminal and insert it in the female terminal, then pull it out.

NOTICE:

When testing a gold–plated female terminal, always use a gold–plated male terminal.

HINT:

When the test terminal is pulled out more easily than others, there may be poor contact in that section.

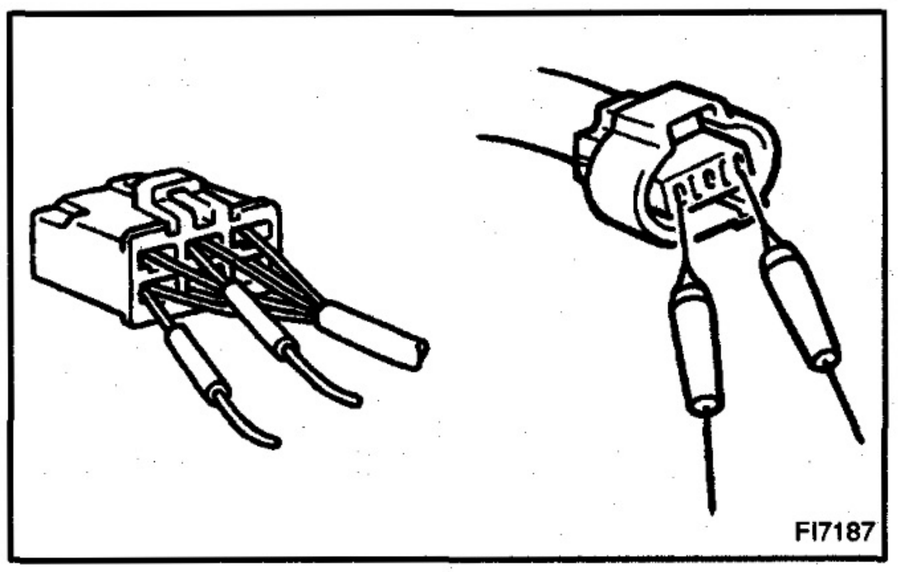

5. CONNECTOR HANDLING

When inserting tester probes into a connector, insert them from the rear of the connector. When necessary, use mini test leads. For water resistant connectors which cannot be accessed from behind, take good care not to deform the connector terminals.

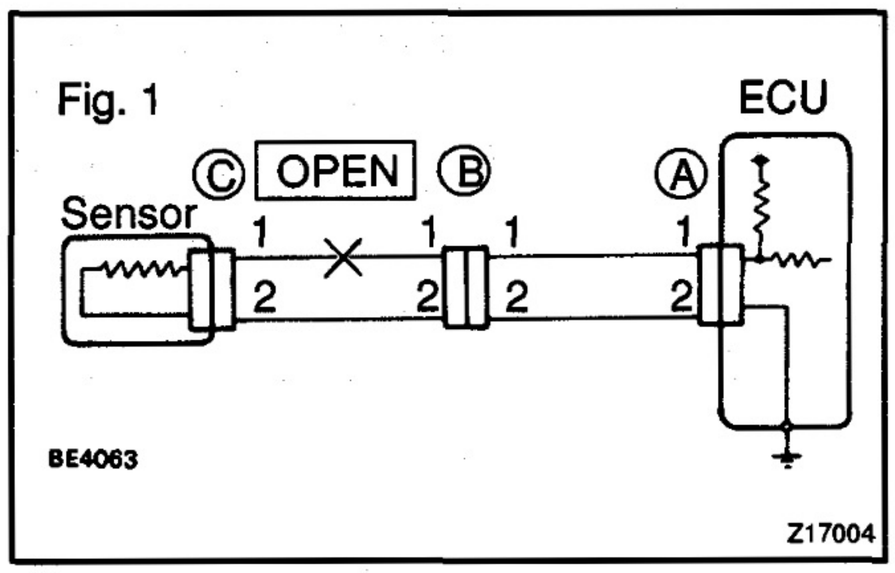

6. CHECK OPEN CIRCUIT

For the open circuit in the wire harness in Fig. 1, perform "(a) Continuity Check" or "(b) Voltage Check" to locate the section.

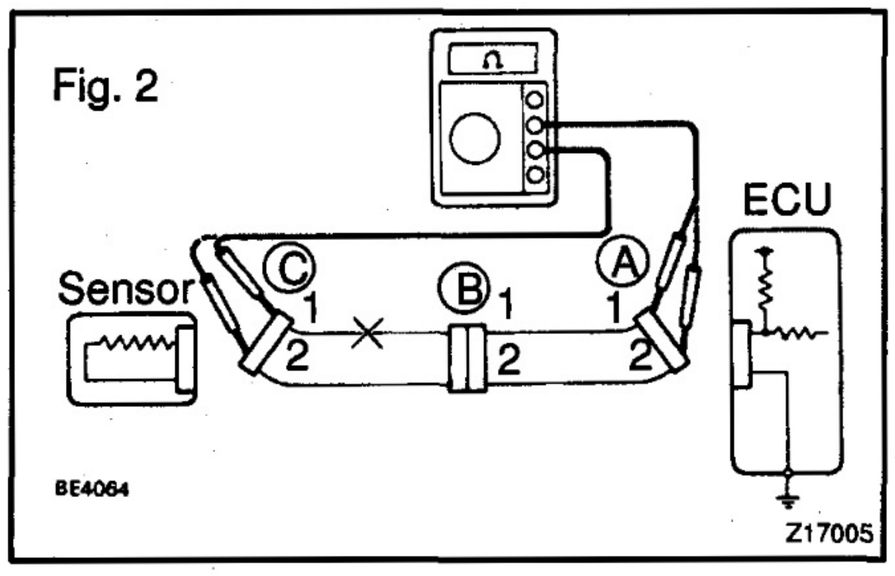

(a) Check the continuity.

(1) Disconnect connectors "A" and "C" and measure the resistance between them.

In the case of Fig. 2,

Between terminal 1 of connector "A" and terminal 1 of connector "C" → No continuity (open)

Between terminal 2 of connector "A" and terminal 2 of connector "C" → Continuity

Therefore, it is found out that there is an open circuit between terminal 1 of connector "A" and terminal 1 of connector "C".

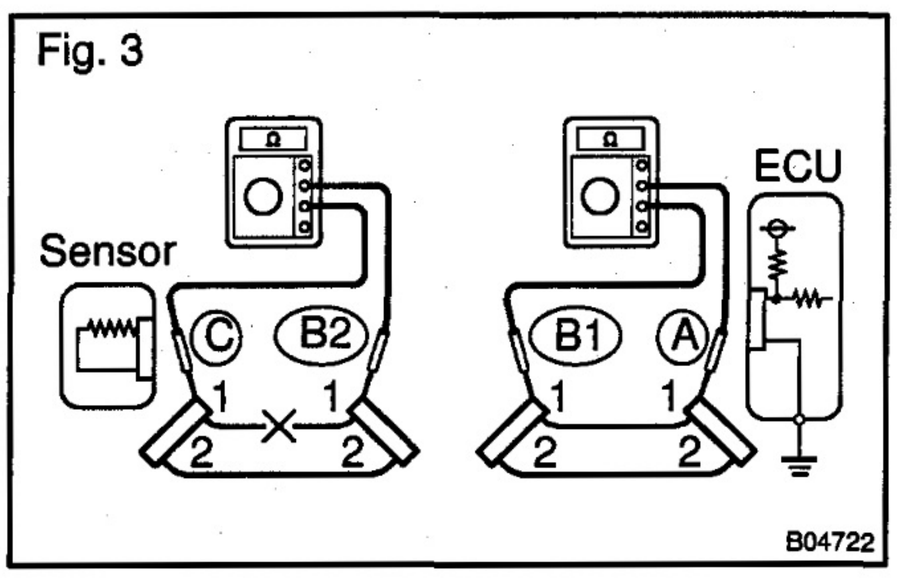

(2) Disconnect connector "B" and measure the resistance between the connectors.

In the case of Fig. 3,

Between terminal 1 of connector "A" and terminal 1 of connector "B1" → Continuity

Between terminal 1 of connector "B2" and terminal 1 of connector "C" → No continuity (open)

Therefore, it is found out that there is an open circuit between terminal 1 of connector "B2" and terminal 1 of connector "C".

Fig. 4

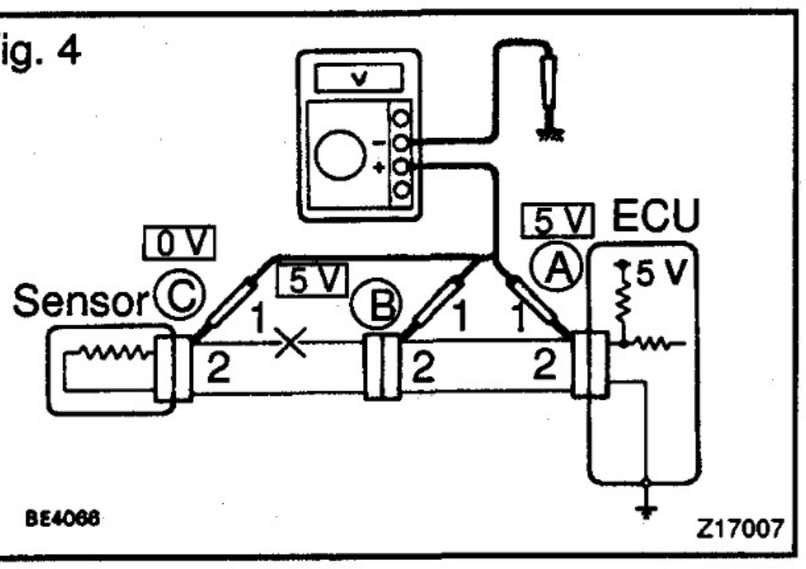

(b) Check the voltage.
In a circuit in which voltage is applied (to the ECU connector terminal), an open circuit can be checked for by conducting a voltage check.
As shown in Fig. 4, with each connector still connected, measure the voltage between body ground and terminal 1 of connector "A" at the ECU 5V output terminal, terminal 1 of connector "B", and terminal 1 of connector "C", in that order.

If the results are:
5V: Between Terminal 1 of connector "A" and Body Ground
5V: Between Terminal 1 of connector "B" and Body Ground
0V: Between Terminal 1 of connector "C" and Body Ground
Then it is found out that there is an open circuit in the wire harness between terminal 1 of "B" and terminal 1 of "C".

Fig. 5

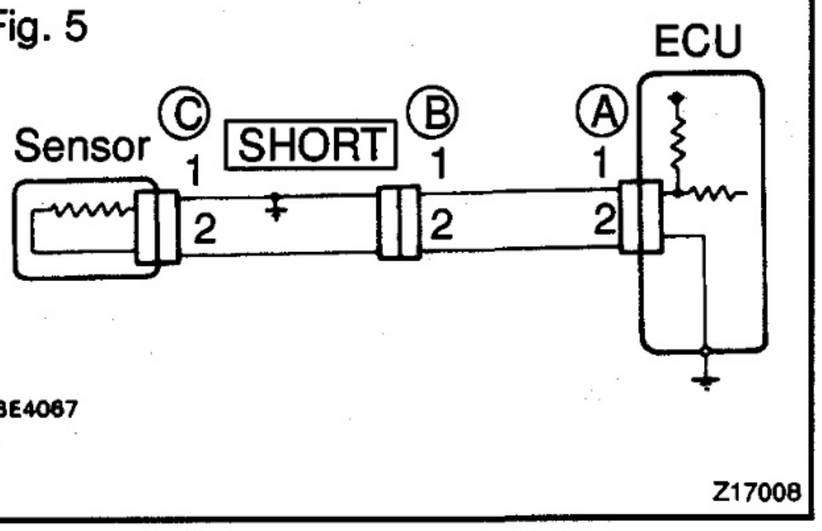

7. CHECK SHORT CIRCUIT

If the wire harness is ground shorted as in Fig. 5, locate the section by conducting a "continuity check with ground".

Fig. 6

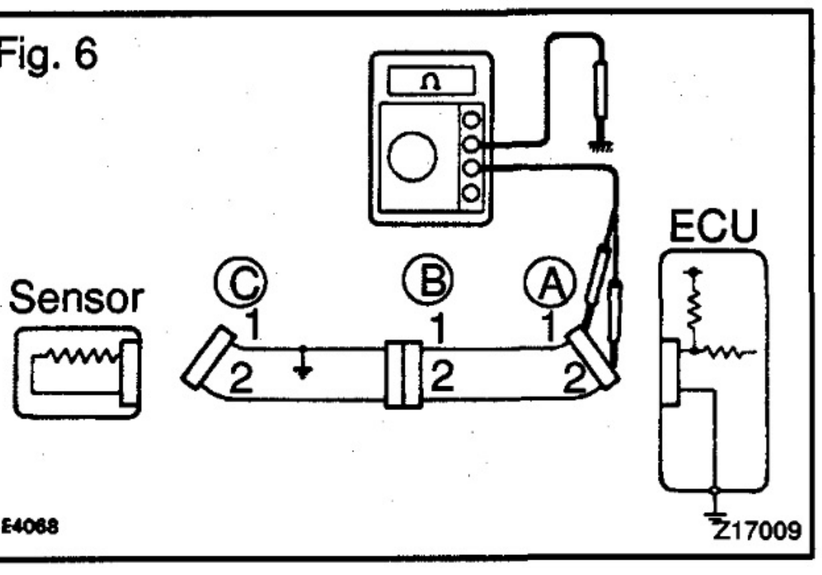

Check the continuity with ground.

(1) Disconnect connectors "A" and "C" and measure the resistance between terminal 1 and 2 of connector "A" and body ground.
In the case of Fig. 6
Between terminal 1 of connector "A" and body ground → Continuity (short)
Between terminal 2 of connector "A" and body ground → No continuity
Therefore, it is found out that there is a short circuit between terminal 1 of connector "A" and terminal 1 of connector "C".

Fig. 7

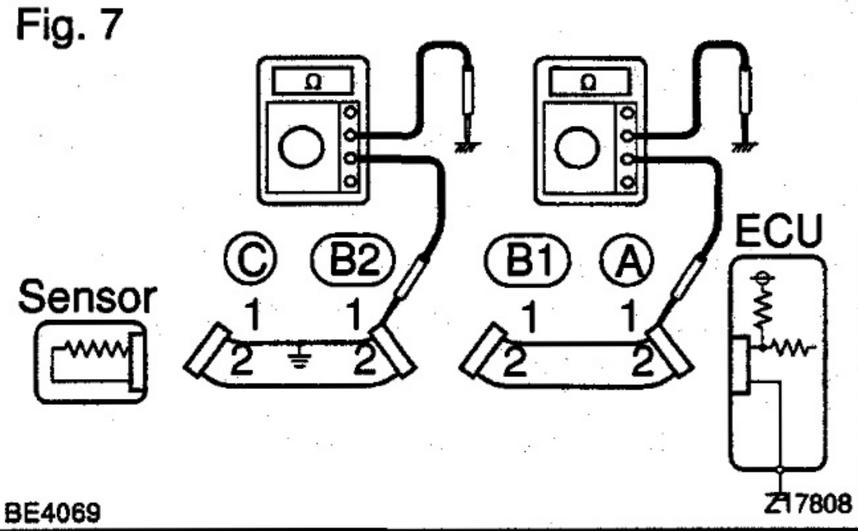

(2) Disconnect connector "B" and measure the resistance between terminal 1 of connector "A" and body ground, and terminal 1 of connector "B2" and body ground.
Between terminal 1 of connector "A" and body ground → No continuity
Between terminal 1 of connector "B2" and body ground → Continuity (short)
Therefore, it is found out that there is a short circuit between terminal 1 of connector "B2" and terminal 1 of connector "C".

8. CHECK AND REPLACE ECU

First check the ECU ground circuit. If it is faulty, repair it. If it is normal, the ECU could be faulty, so replace the ECU with a normal functioning one and check that the symptoms appear.

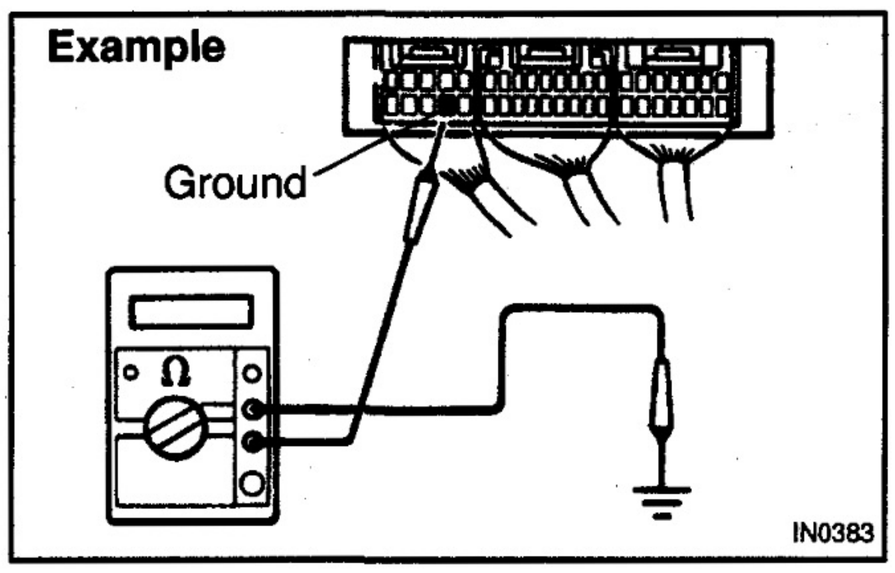

(1) Measure the resistance between the ECU ground terminal and the body ground.

Resistance: 1 Ω or less

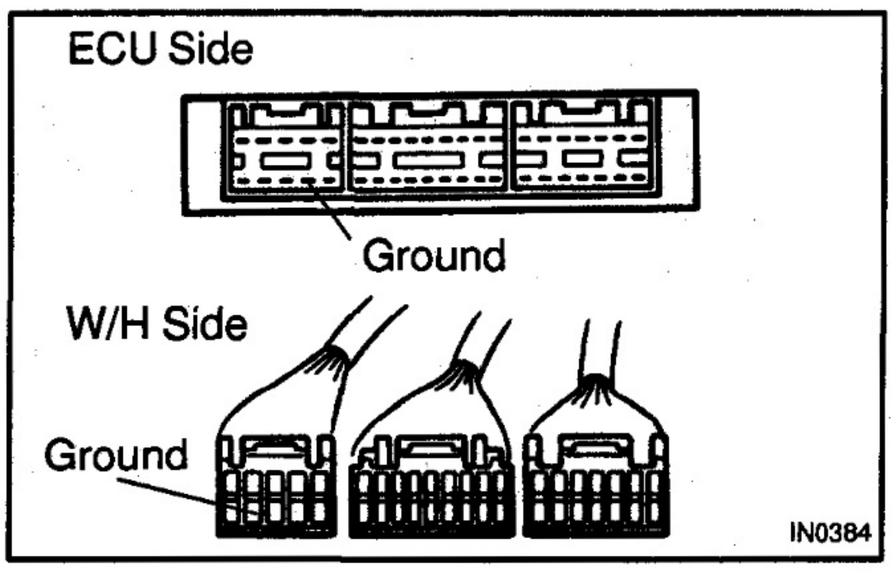

(2) Disconnect the ECU connector, check the ground terminals on the ECU side and the wire harness side for bend and check the contact pressure.

TERMS

ABBREVIATIONS USED IN THIS MANUAL

IN00S–13

Abbreviations	Meaning
A/C	Air Conditioning
AC	Alternating Current
ACC	Accessory
ACIS	Acoustic Control Induction System
ACSD	Automatic Cold Start Device
ALT	Alternator
AMP	Amplifier
APROX.	Approximately
A/T	Automatic Transmission (Transaxle)
BACS	Boost Altitude Compensation System
BAT	Battery
BTDC	Before Top Dead Center
BVSV	Bimetallic Vacuum Switching Valve
CB	Circuit Breaker
CCO	Catalytic Converter for Oxidation
DC	Direct Current
DLC	Data Link Connector
DTC	Diagnostic Trouble Code
ECD	Electronic Control Diesel
ECT	Electronic Control Transmission
ECU	Electronic Control Unit
EDU	Electronic Driving Unit
EFI	Electronic Fuel Injection
E/G	Engine
EGR	Exhaust Gas Recirculation
EVAP	Evaporative Emission Control
E–VRV	Electronic Vacuum Regulating Valve
EX	Exhaust
FIPG	Formed In Place Gasket
FL	Fusible Link
Fr	Front
GND	Ground
HAC	High Altitude Compensator
IG	Ignition
IIA	Integrated Ignition Assembly
IN	Intake
ISC	Idle Speed Control
J/B	Junction Block
J/C	Junction Connector
LCD	Liquid Crystal Display
LED	Light Emitting Diode
LH	Left–Hand

LHD	Left–Hand Drive
LO	Low
MAP	Manifold Absolute Pressure
MAX.	Maximum
MIL	Malfunction Indicator Lamp
MIN.	Minimum
MP	Multipurpose
M/T	Manual Transmission
N	Neutral
O2S	Oxygen Sensor
O/D	Overdrive
O/S	Oversize
PKB	Parking Brake
PS	Power Steering
RAM	Random Access Memory
R/B	Relay Block
RH	Right–Hand
RHD	Right–Hand Drive
ROM	Read Only Memory
Rr	Rear
SICS	Starting Injection Control System
SPEC	Specification
SSM	Special Service Materials
SST	Special Service Tools
STD	Standard
SW	Switch
TACH	Tachometer
TDC	Top Dead Center
TEMP.	Temperature
TM	Transmission
TMC	TOYOTA Motor Corporation
TWC	Three–Way Catalyst
U/D	Underdrive
VCV	Vacuum Control Valve
VIN	Vehicle Identification Number
VSV	Vacuum Switching Valve
w/	With
W/H	Wire Harness
w/o	Without
WU–TWC	Warm Up Three–Way Catalytic Converter
2WD	Two Wheel Drive Vehicle (4x2)
4WD	For Wheel Drive Vehicle (4x4)

PREPARATION

ENGINE MECHANICAL PP–1
TURBOCHARGING PP–8
ELECTRONIC CONTROL DIESEL PP–11
ENGINE FUEL PP–14
COOLING PP–18
LUBRICATION PP–22
STARTING PP–27
CHARGING PP–30

ENGINE MECHANICAL

SST (Special Service Tools)

PP2D0-01

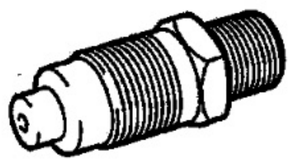	09992–00500	Compression Gauge Attachment	
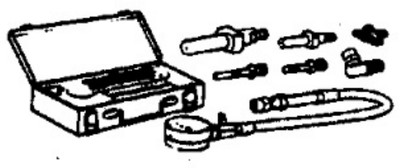	09992–00025	Cylinder Compression Check Gauge Set	
	(09992–00200)	L Joint	
	(09992–00211)	Gauge Assy	
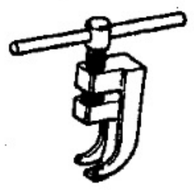	09248–64011	Valve Clearance Adjusting Tool	
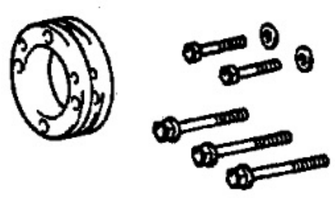	09213–58012	Crankshaft Pulley Holding Tool	
	09330–00021	Companion Flange Holding Tool	
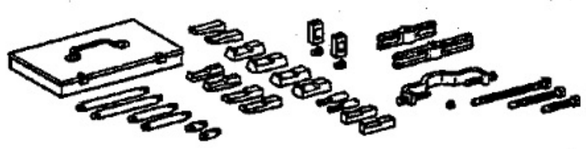	09950–40011	Puller B Set	
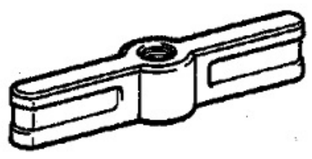	(09951–04010)	Hanger 150	Camshaft timing pulley Oil pump drive gear shaft Crank shaft timing gear Injection pump drive gear
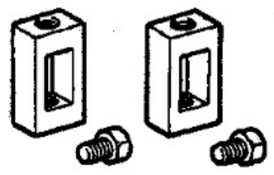	(09952–04010)	Slide Arm	Camshaft timing pulley Oil pump drive gear shaft Crank shaft timing gear Injection pump drive gear
	(09953–04010)	Center Bolt 100	Camshaft timing pulley Oil pump drive gear shaft
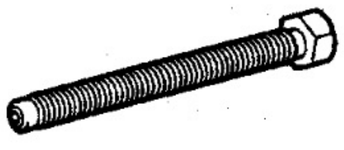	(09953–04020)	Center Bolt 150	Camshaft timing pulley Oil pump drive gear shaft Crank shaft timing gear Injection pump drive gear

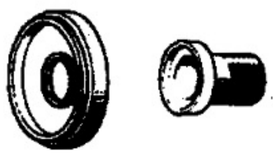	09223–78010	Crankshaft Oil Seal Replacer	Injection pump drive gear oil seal
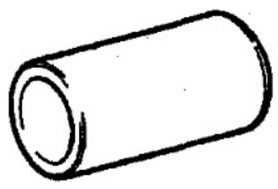	09223–00010	Cover & Seal Replacer	
	09214–60010	Crankshaft Pulley & Gear Replacer	Crankshaft pulley
	09268–64010	Injection Nozzle Wrench Set	
	(09268–64020)	Injection Nozzle Holder Retaining Nut Wrench	Injection Nozzle
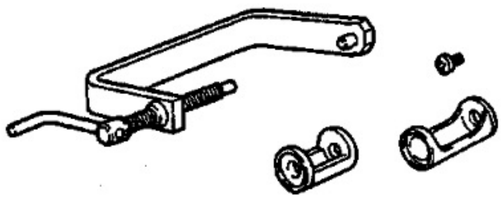	09202–70020	Valve Spring Compressor	Valve
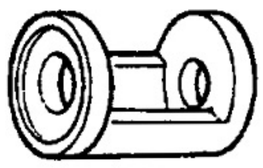	(09202–00010)	Attachment	
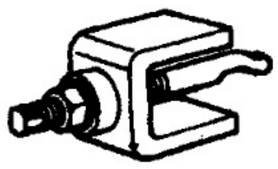	09208–48010	Combustion Chamber Remover	Combustion Chamber
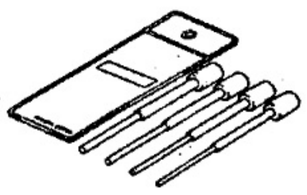	09201–10000	Valve Guide Bushing Remover & Replacer Set	Valve guide bushing
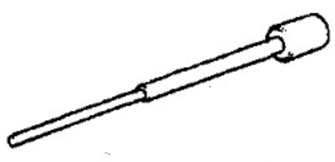	(09201–01080)	Valve Guide Bushing Remover & Replacer 8	
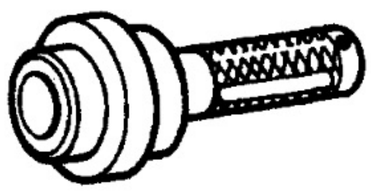	09223–46011	Crankshaft Front Oil Seal Replacer	Camshaft front oil seal
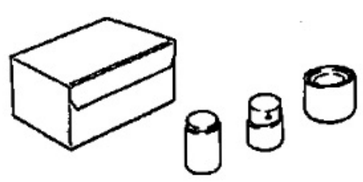	09222–67011	Connecting Rod Bushing Remover & Replacer	
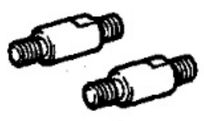	(09954–04010)	Arm 25	Camshaft timing pulley Oil pump drive gear shaft Crank shaft timing gear Injection pump drive gear

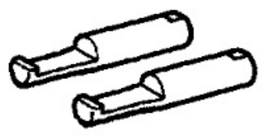	(09955–04041)	Claw No.4	
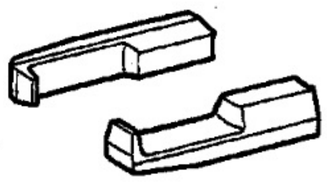	(09955–04061)	Claw No.6	Camshaft timing pulley Oil pump drive gear shaft Crank shaft timing gear Injection pump drive gear
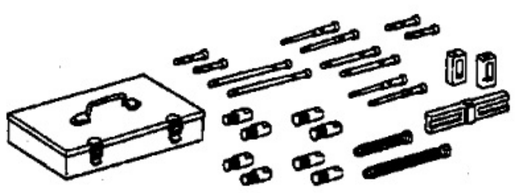	09950–50012	Puller C Set	
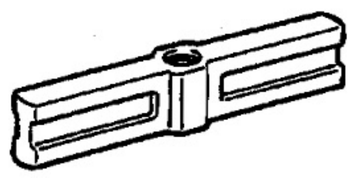	(09951–05010)	Hanger 150	Crank shaft pulley Injection pump drive gear
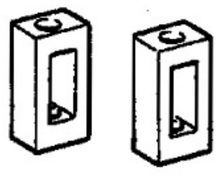	(09952–05010)	Slide Arm	Crank shaft pulley Injection pump drive gear
	(09953–05010)	Center Bolt 100	Crank shaft pulley Injection pump drive gear
	(09953–05020)	Center Bolt 150	Crank shaft pulley
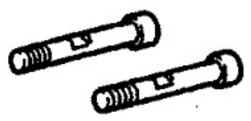	(09954–05020)	Claw No.2	Crank shaft pulley Injection pump drive gear
	09960–10010	Variable Pin Wrench Set	
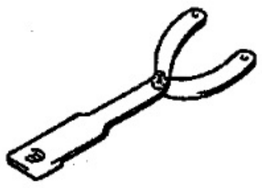	(09962–01000)	Variable Pin Wrench Arm Assy	Injection pump drive gear No.1 idrer sub–gear
	(09963–00600)	Pin 6	Injection pump drive gear No.1 idrer sub–gear
	09308–10010	Oil Seal Puller	
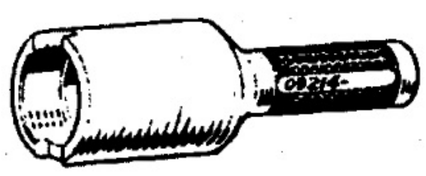	09214–76011	Crankshaft Pulley Replacer	Crankshaft from oil seal

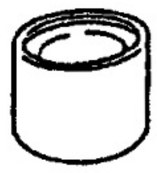	(09222–06031) Base	
	(09222–06020) Guide	
	09223–15030 Oil Seal & Bearing Replacer	
	(09252–10010) No. 1 Replacer Handle	
	(09222–06010) Remover & Replacer	Connecting rod bushing

PP2D1-01

RECOMMENDED TOOLS

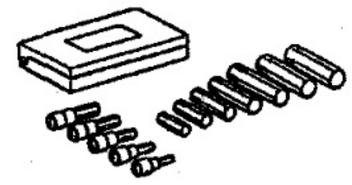	09040–00011	Hexagon Wrench Set .	
	09200–00010	Engine Adjust Kit .	
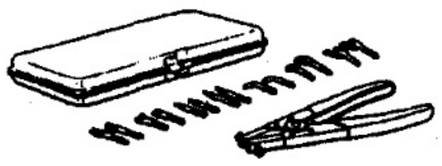	09904–00010	Expander Set .	
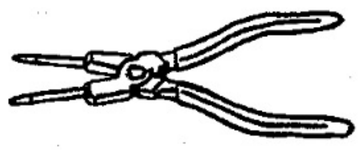	09905–00013	Snap Ring Pliers .	

PP1TO–02

EQUIPMENT

Carbide cutter	
Caliper gauge	
Connecting rod aligner	
Cylinder gauge	
Dial indicator	
Dye penetrant	
Engine tune–up tester	
Gasket scraper	
Heater	
Micrometer	
Magnetic finger	
Piston ring compressor	
Piston ring expander	
Plastigage	
Precision straight edge	
Soft brush	
Spring tester	Valve spring
Steel square	Valve spring
Tachometer	
Thermometer	
Torque wrench	
Valve seat cutter	
V–block	
Vernier calipers	

PP2D2–01

SSM (Special Service Materials)

08826–00080	Seal Packing Black or equivalent (FIPG)	Timing belt cover Timing gear cover Camshaft oil seal retainer Cylinder head semi–circular plug
08826–00080	Seal Packing Black or equivalent (FIPG)	Cylinder head cover Main bearing cover Rear oil seal retainer
08826–00100	Seal Packing 1282B, THREE BOND 1282B or equivalent (FIPG)	Water sender gauge

TURBOCHARGING

SST (Special Service Tools)

PP2D3–01

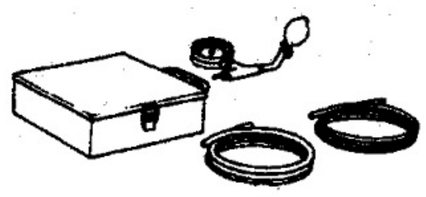	09992–00242	Turbocharger Pressure Gauge	
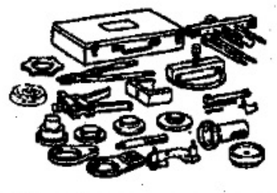	09350–32014	TOYOTA Automatic Transmission Tool Set	
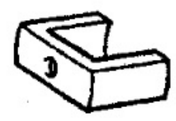	(09351–32070)	No.2 Piston Spring Compressor	Bearing housing

PP2D4–01

RECOMMENDED TOOLS

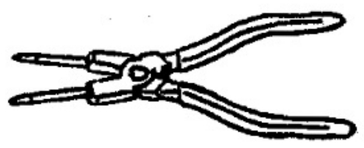	09905–00013 Snap Ring Pliers .	

PP1TR–03

EQUIPMENT

Dial indicator	Impeller wheel
Torque wrench	

ELECTRONIC CONTROL DIESEL

SST (Special Service Tools)

PP2CV–01

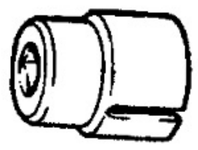	09817–16011	Back–up Light Switch Tool	First gear position sensor switch
	09843–18020	Diagnosis Check Wire	
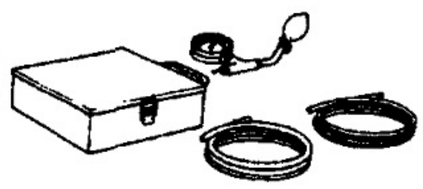	09992–00242	Turbocharger Pressure Gauge	

PP1T6–02

RECOMMENDED TOOLS

	09082–00040	TOYOTA Electrical Tester.	
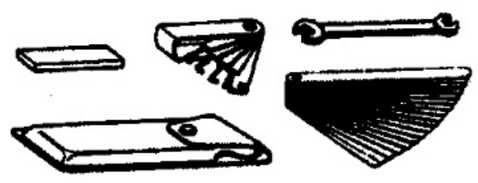	09200–00010	Engine Adjust Kit .	

PP15E–03

EQUIPMENT

19 mm deep socket wrench	
Thermometer	
Torque wrench	
Vacuum gauge	

ENGINE FUEL

SST (Special Service Tools)

PP2CW–01

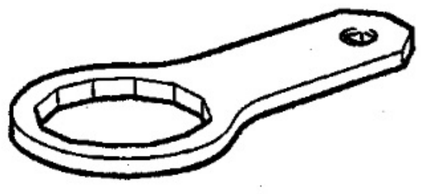	09228–64040 Fuel Filter Wrench	
	09241–76022 Injection Pump Stand Set	
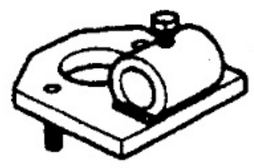	09245–54010 Injection Pump Stand Arm	
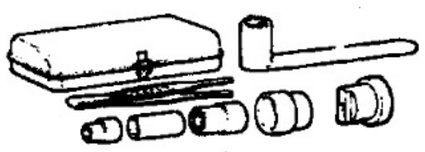	09260–54012 Injection Pump Tool Set	
	(09262–54010) Distributor Head Plug Wrench	
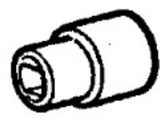	(09262–54020) Regulator Valve Wrench	
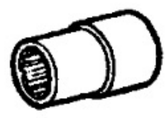	(09269–54020) Socket 14 mm	
	09268–64010 Injection Nozzle Wrench Set	
	(09268–64020) Injection Nozzle Holder Retaining Nut Wrench	
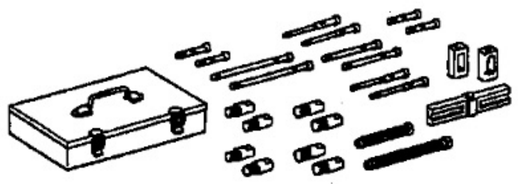	09950–50012 Puller C Set	
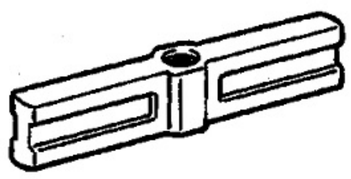	(09951–05010) Hanger 150	Injection pump
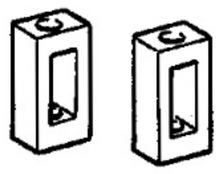	(09952–05010) Slide Arm	Injection pump

	(09953–05020) Center Bolt 150	Injection pump
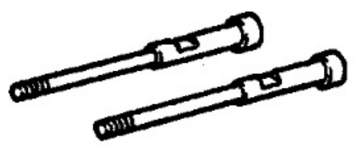	(09954–05010) Claw No.1	Injection pump

PP2CX–01

RECOMMENDED TOOLS

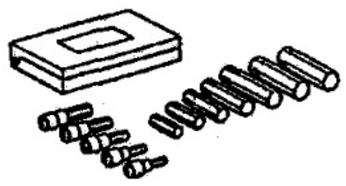	09040–00011	Hexagon Wrench Set .	
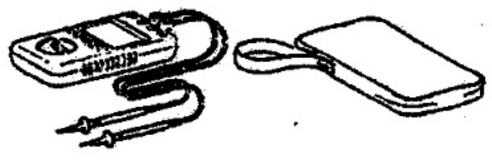	09082–00040	TOYOTA Electrical Tester.	

PP1LS–02

EQUIPMENT

19 mm deep socket wrench	Fuel temp. sensor
Brass brush	
Injection nozzle tester	
Injection pump tester	
Torque wrench	
Water pump pliers	
Wooden stick	

COOLING

SST (Special Service Tools)

PP2D5–01

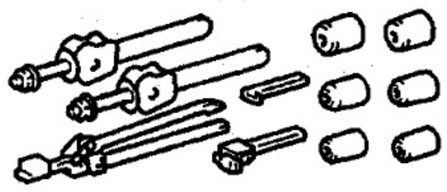	09230–01010	Radiator Service Tool Set	
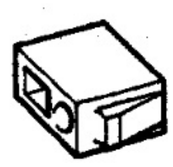	09231–14010	Punch	

PP1TJ-02

EQUIPMENT

Heater	Thermostat
Radiator cap tester	
Thermometer	Thermostat
Torque wrench	

PP2D6–01

COOLANT

Item	Capacity	Classification
Engine coolant	10.5 liters (11.1 US qts, 9.2 Imp. qts)	"Toyota Long Life Coolant" or equivalent

PP2D7-01

SSM (Special Service Materials)

08826–00100	Seal Packing 1282B, THREE BOND 1282B or equivalent (FIPG)	Engine drain plug on oil cooler cover

LUBRICATION

SST (Special Service Tools)

PP2D8–01

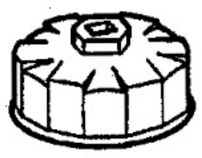	09228–10002 Oil Filter Wrench	
	09032–00100 Oil Pan Seal Cutter	

PP2D9–01

RECOMMENDED TOOLS

	09200–00010 Engine Adjust Kit .	

PP1T1–02

EQUIPMENT

Oil pressure gauge	
Precision straight edge	
Torque wrench	

PP2DA–01

LUBRICANT

Item	Capacity	Classification
Engine oil		API grade CF–4 or CF
Dry fill	7.5 liters (7.9 US qts, 6.2 Imp. qts)	(You may also use API CE or CD)
Drain and refill		
w/ Oil filter change	7.0 liters (7.4 US qts, 6.2 Imp. qts)	
w/o Oil filter change	6.4 liters (6.8 US qts, 5.6 Imp. qts)	

PP2DS–01

SSM (Special Service Materials)

08826–00080	Seal Packing Black or equivalent (FIPG)	Oil pump Oil pan
08833–00080	Adhesive 1344 THREE BOND 1344 LOCTITE 242 or equivalent	Oil pressure sender gauge Taper screw plug on timing gear case

STARTING

SST (Special Service Tools)

PP2CY–01

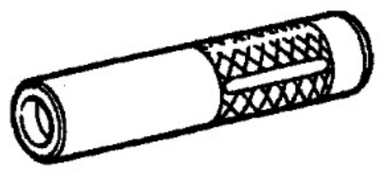	09201–41020	Valve Stem Oil Seal Replacer	Armature front bearing
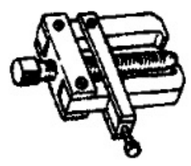	09286–46011	Injection Pump Spline Shaft Puller	Armature rear bearing
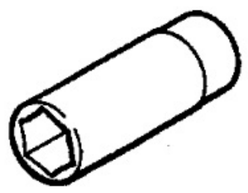	09810–38140	Starter Magnet Switch Nut Wrench 14	
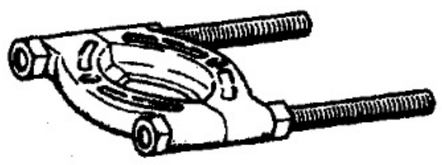	09950–00020	Bearing Remover	Armature front bearing

PP1M1–02

RECOMMENDED TOOLS

	09082–00040 TOYOTA Electrical Tester.	

PP1M2–02

EQUIPMENT

Dial indicator	Commutator
Magnetic finger	Steel ball
Plastic hammer	
Press	Magnetic switch terminal kit
Pull scale	Brush spring
Sandpaper	Commutator
Torque wrench	
V–block	Commutator
Vernier calipers	Commutator, Brush

CHARGING

SST (Special Service Tools)

PP2CZ–01

	09285–76010	Injection Pump Camshaft Bearing Cone Replacer	Rotor rear bearing cover
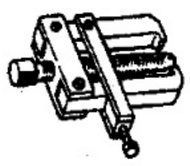	09286–46011	Injection Pump Spline Shaft Puller	Rectifier end frame
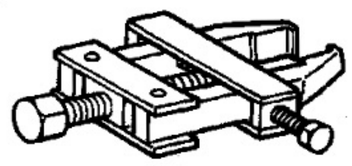	09820–00021	Alternator Rear Bearing Puller	
	09820–00030	Alternator Rear Bearing Replacer	Rotor rear bearing
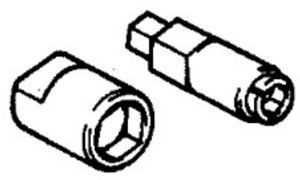	09820–63010	Alternator Pulley Set Nut Wrench Set	
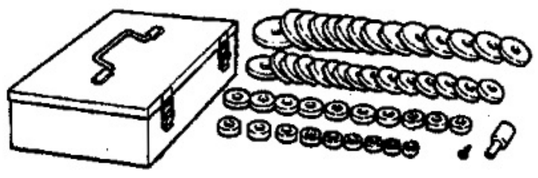	09950–60010	Replacer Set	
	(09951–00260)	Replacer 26	Rotor front bearing
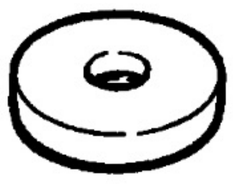	(09951–00510)	Replacer 51	
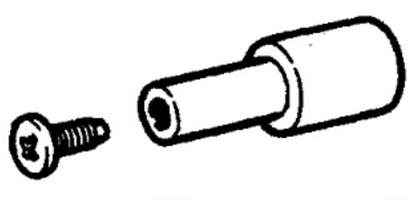	(09952–06010)	Adapter	Rotor front bearing

PP1M4–02

RECOMMENDED TOOLS

	09082–00040 TOYOTA Electrical Tester.	

PP1M5–02

EQUIPMENT

Ammeter (A)	
Battery specific gravity gauge	Except maintenance free battery
Belt tension gauge	
Torque wrench	
Vernier calipers	Rotor (Slip ring), Brush

SERVICE SPECIFICATIONS

STANDARD BOLT SS–1
ENGINE MECHANICAL SS–4
TURBOCHARGING SS–9
ELECTRONIC CONTROL DIESEL SS–11
ENGINE FUEL SS–13
COOLING SS–15
LUBRICATION SS–17
STARTING SS–19
CHARGING SS–21

STANDARD BOLT

HOW TO DETERMINE BOLT STRENGTH

SS0ZS–01

Bolt Type				Class
Hexagon Head Bolt		Stud Bolt	Weld Bolt	
Normal Recess Bolt	Deep Recess Bolt			
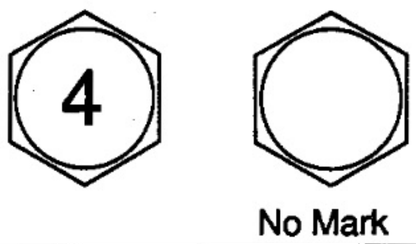 No Mark	 No Mark	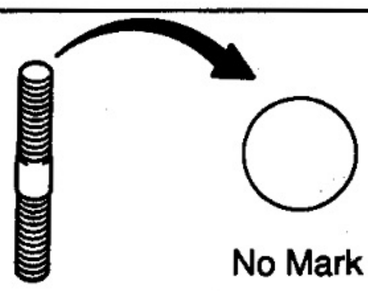 No Mark	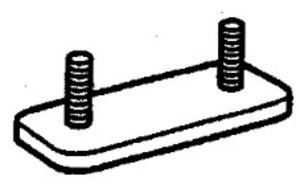	4T
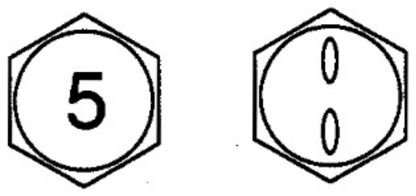				5T
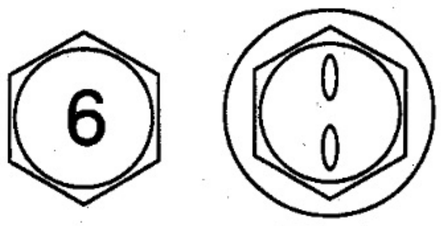 w/ Washer	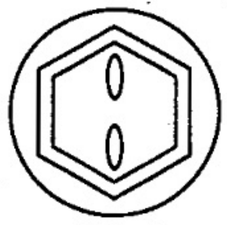 w/ Washer			6T
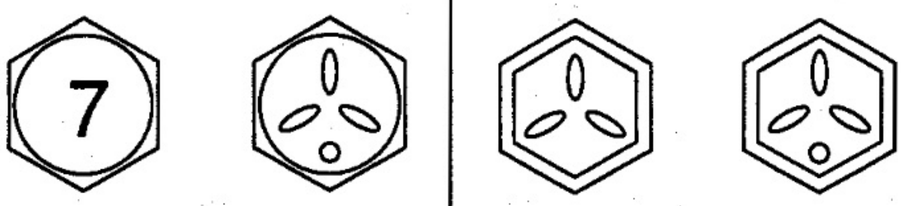				7T
				8T
				9T
	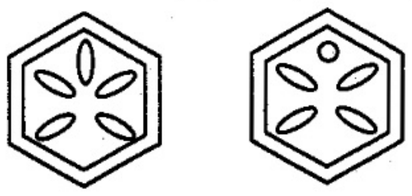			10T
	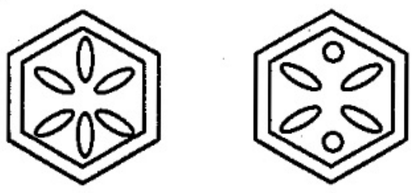			11T

B06431

SS0ZT–01

SPECIFIED TORQUE FOR STANDARD BOLTS

Class	Diameter mm	Pitch mm	Specified torque					
			Hexagon head bolt			Hexagon flange bolt		
			N·m	kgf·cm	ft·lbf	N·m	kgf·cm	ft·lbf
4T	6	1	5	55	48 in.·lbf	6	60	52 in.·lbf
	8	1.25	12.5	130	9	14	145	10
	10	1.25	26	260	19	29	290	21
	12	1.25	47	480	35	53	540	39
	14	1.5	74	760	55	84	850	61
	16	1.5	115	1,150	83	–	–	–
5T	6	1	6.5	65	56 in.·lbf	7.5	75	65 in.·lbf
	8	1.25	15.5	160	12	17.5	175	13
	10	1.25	32	330	24	36	360	26
	12	1.25	59	600	43	65	670	48
	14	1.5	91	930	67	100	1,050	76
	16	1.5	140	1,400	101	–	–	–
6T	6	1	8	80	69 in.·lbf	9	90	78 in.·lbf
	8	1.25	19	195	14	21	210	15
	10	1.25	39	400	29	44	440	32
	12	1.25	71	730	53	80	810	59
	14	1.5	110	1,100	80	125	1,250	90
	16	1.5	170	1,750	127	–	–	–
7T	6	1	10.5	110	8	12	120	9
	8	1.25	25	260	19	28	290	21
	10	1.25	52	530	38	58	590	43
	12	1.25	95	970	70	105	1,050	76
	14	1.5	145	1,500	108	165	1,700	123
	16	1.5	230	2,300	166	–	–	–
8T	8	1.25	29	300	22	33	330	24
	10	1.25	61	620	45	68	690	50
	12	1.25	110	1,100	80	120	1,250	90
9T	8	1.25	34	340	25	37	380	27
	10	1.25	70	710	51	78	790	57
	12	1.25	125	1,300	94	140	1,450	105
10T	8	1.25	38	390	28	42	430	31
	10	1.25	78	800	58	88	890	64
	12	1.25	140	1,450	105	155	1,600	116
11T	8	1.25	42	430	31	47	480	35
	10	1.25	87	890	64	97	990	72
	12	1.25	155	1,600	116	175	1,800	130

SS0ZU–01

HOW TO DETERMINE NUT STRENGTH

Nut Type			Class
Present Standard Hexagon Nut	Old Standard Hexagon Nut		
	Cold Forging Nut	Cutting Processed Nut	
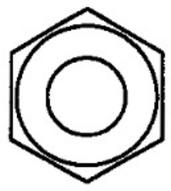 No Mark			4N
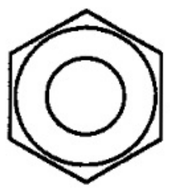 No Mark (w/ Washer)	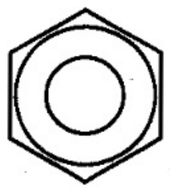 No Mark (w/ Washer)	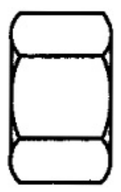 No Mark	5N (4T)
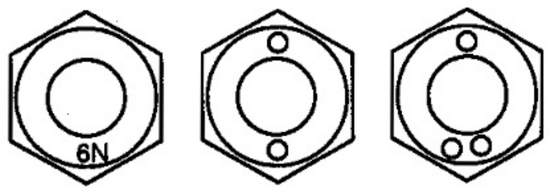			6N
	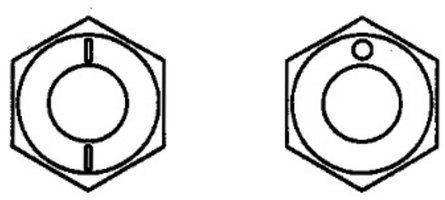	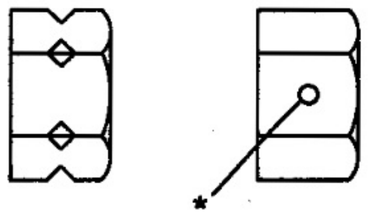 *	7N (5T)
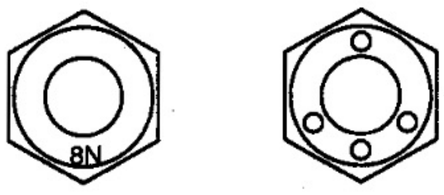			8N
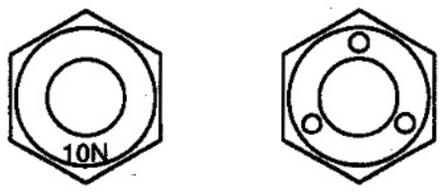	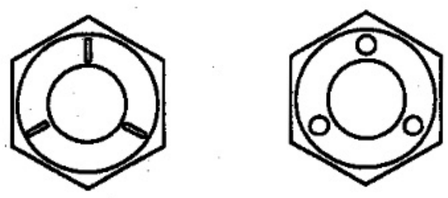	 No Mark	10N (7T)
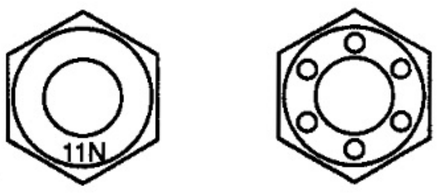			11N
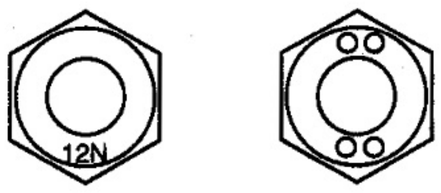			12N

*: Nut with 1 or more marks on one side surface of the nut.

B06432

HINT:

Use the nut with the same number of the nut strength classification or the greater than the bolt strength classification number when tightening parts with a bolt and nut.

Example: Bolt = 4T

Nut = 4N or more

ENGINE MECHANICAL

SERVICE DATA

SS16L–02

Compresion pressure		STD	3,040 kPa (31.0 kgf/cm^2, 441 psi) or more
		Minimium	1,961 kPa (20.0 kgf/cm^2, 284 psi)
	Difference between each cylinder		490 kPa (5.0 kgf/cm^2, 71 psi) or less
Valve clearance		at cold Intake	0.20 – 0.30 mm (0.008 – 0.012 in.)
		Exhaust	0.25 – 0.35 mm (0.010 – 0.014 in.)
		Adjust shim thickness	
		No. 01	2.50mm (0.0984 in)
		No. 42	2.55 mm (0.1004 in.)
		No. 06	2.60 mm (0.1024 in.)
		No. 43	2.65 mm (0.1043 in.)
		No. 11	2.70 mm (0.1063 in.)
		No. 44	2.75 mm (0.1083 in.)
		No. 16	2.80 mm (0.1102 in.)
		No. 45	2.85 mm (0.1122 in.)
		No. 21	2.90 mm (0.1142 in.)
		No. 46	2.95 mm (0.1161 in.)
		No. 26	3.00 mm (0.1181 in.)
		No. 47	3.05 mm (0.1201 in.)
		No. 31	3.10 mm (0.1220 in.)
		No. 48	3.15 mm (0.1240 in.)
		No. 36	3.20 mm (0.1260 in.)
		No.49	3.25 mm (0.1280 in.)
		No. 41	3.30 mm (0.1299 in.)
Idle speed			650 – 750 rpm
Maximum speed			4,500 – 4,700 rpm
Timing belt tensioner	Protrusion from husing end		8.1 – 8.9 mm (0.319 – 0.350 in.)
Timing gear	Idler gear thrust clearance	STD	0.06 – 0.11 mm (0.0024 – 0.0043 in.)
		Maximum	0.30 mm (0.0118 in.)
	Idler gear inside diameter		44.000 – 44.025 mm (1.7323 – 1.7333 in.)
	Idler gear shaft diameter		43.955 – 43.990 mm (1.7305 – 1.7319 in.)
	Idler gear oil clearance	STD	0.010 – 0.070 mm (0.0004 – 0.0028 in.)
		Maximum	0.20 mm (0.0079 in.)
	Gear backlash	STD	0.02 – 0.15 mm (0.0008 – 0.0060 in.)
		Maximum	0.20 mm (0.0079 in.)
Cylinder head	Warpage	Maximum	0.15 mm (0.0059 in.)
	Valve seat		
	Refacing angle	Intake	30° 45° 60°
		Exhaust	30° 45° 60°
	Contacting angle		45°
	Contacting width	Intake	1.5 – 1.9 mm (0.059 – 0.075 in.)
		Exhaust	1.8 – 2.2 mm (0.071 – 0.087 in.)
	Cylinder head bolt outer diameter	STD	11.8 – 12.0 mm (0.465 – 0.472 in.)
		Minimum	11.6 mm (0.457 in.)
	New cylinder head gasket thickness		
		Hole number "1"	0.80 – 0.90 mm (0.0315 – 0.0354 in.)
		Hole number "2"	0.90 – 1.00 mm (0.0354 – 0.0394 in.)
		Hole number "3"	1.00 – 1.10 mm (0.0394 – 0.0433 in.)
Valve guige bushing	Inside diameter	Intake	7.975 – 7.990 mm (0.3140 – 0.3146 in.)
		Exhaust	7.960 – 7.975 mm (0.3134 – 0.3140 in.)

Valve	Stem diameter	Intake	7.975 – 7.990 mm (0.3140 – 0.3146 in.)
		Exhaust	7.960 – 7.975 mm (0.3134 – 0.3140 in.)
	Stem oil clearance	STD Intake	0.020 – 0.055 mm (0.0008 – 0.0022 in.)
		Exhaust	0.035 – 0.070 mm (0.0014 – 0.0028 in.)
		Maximum Intake	0.08 mm (0.0031 in.)
		Exhaust	0.01 mm (0.0039 in.)
	Valve face angle		44.5°
	Margin thickness	STD Intake	1.6 mm (0.063 in.)
		Exhaust	1.7 mm (0.067 in.)
		Minimum Intake	1.1 mm (0.043 in.)
			1.2 mm (0.047 in.)
	Overall length	STD	103.29 – 103.69 mm (4.0665 – 4.08323 in.)
		Minimum	102.79 (4.0468 in.)
Valve spring	Deviation	Maximum	2.0 mm (0.079 in.)
	Free length		48.54 mm (1.9110 in.)
	Install tension	at 37.0 mm (1.457 in.)	301 – 322 N (30.7 – 33.9 kgf, 67.7 – 74.7 lbf)
Camshaft	Cam lobe height	STD Intake	54.810 – 54.910 mm (2.1579 – 2.1618 in.)
		Exhaust	56.140 – 56.240 mm (2.2102 – 2.2142 in.)
		Minimum Intake	54.39 mm (2.1413 in.)
		Exhaust	55.72 mm (2.1937 in.)
	Journal diameter		27.969 – 27.985 mm (1.1011 – 1.1018 in.)
	Oil clearance	STD	0.025 – 0.062 mm (0.0010 – 0.0024 in.)
		Maximum	0.10 mm (0.039 in.)
	Thrust clearance	STD	0.08 – 0.18 mm (0.0031 – 0.0071 in.)
		Maximum	0.25 mm (0.0098 in.)
Valve lifter	Lifter bore diameter		40.930 – 40.950 mm (1.6114 – 1.6122 in.)
	Lifter diameter		40.892 – 40.902 mm (1.6099 – 1.6103 in.)
	Oil clearance	STD	0.038 – 0.063 mm (0.0015 – 0.0025 in.)
		Maximum	0.08 mm (0.0031 in.)
Exhaust manifold	Warpage	Maximum	0.40 mm (0.0157 in.)
Combustion chamber	Protrusion		Minus 0.03 – Plus 0.02 mm (Minus 0.0012 – Plus 0.0008 in.)
	Shim thickness		0.05 mm (0.0020 in.) 0.10 mm (0.0039 in.)
Cylinder block	Cylinder head surface warpage Warpage	Maximum	0.10 mm (0.0039 in.)
	Cylinder bore diameter	STD Mark 1	96.000 – 96.010 mm (3.7795 – 3.7799 in.)
		Mark 2	96.010 – 96.020 mm (3.7799 – 3.7803 in.)
		Mark 3	96.020 – 96.030 mm (3.7803 – 3.7807 in.)
		Maximum	96.23 mm (3.7886 in.)
	Main journal bore diameter	STD Mark 1	75.000 – 75.006 mm (2.9528 – 2.9530 in.)
		Mark 2	75.006 – 75.012 mm (2.9530 – 2.9532 in.)
		Mark 3	75.012 – 75.018 mm (2.9532 – 2.9535 in.)

Piston and piston ring	Piston diameter	STD Mark 1	95.940 – 95.950 mm (3.7772 – 3.7776 in.)
		Mark 2	95.950 – 95.960 mm (3.7776 – 3.7779 in.)
		Mark 3	95.960 – 95.970 mm(3.7779 – 3.7783 in.)
		O/S 0.50	96.440 – 96.470 mm(3.7968 – 3.7980 in.)
		O/S 0.75	96.690 – 96.720 mm(3.8067 – 3.8079 in.)
		O/S 1.00	96.940 – 96.970 mm(3.8165 – 3.8177 in.)
	Piston oil clearance	STD	0.050 – 0.070 mm (0.0020 – 0.0028 in.)
		Maximum	0.14 mm (0.0055 in.)
	Piston ring grove clearance	No.1	0.060 – 0.110 mm (0.0024 – 0.0043 in.)
		No.2	0.060 – 0.100 mm (0.0024 – 0.0039 in.)
		Oil	0.020 – 0.060 mm (0.0009 – 0.0024 in.)
	Piston ring end gap	STD (No.1)	0.350 – 0.570 mm (0.0138 – 0.0224 in.)
		(No.2)	0.400 – 0.600 mm (0.0157 – 0.0236 in.)
		(Oil)	0.200 – 0.500 mm (0.0079 – 0.0197 in.)
		Limit (No.1)	1.03 mm (0.0406 in.)
		(No.2)	1.10 mm (0.0433 in.)
		(Oil)	0.87 mm (0.0343 in.)
Connecting rod	Thrust clearance	STD	0.10 – 0.30 mm (0.0039 – 0.0118 in.)
		Maximum	0.40 mm (0.0157 in.)
	Connecting rod bearing center wall thickness		
	(Referemce)	STD Mark 2	1.486 – 1.489 mm (0.0585 – 0.0586 in.)
		Mark 3	1.489 – 1.492 mm (0.0586 – 0.0587 in.)
		Mark 4	1.492 – 1.495 mm (0.0587 – 0.0589 in.)
		Mark 5	1.495 – 1.498 mm (0.0589 – 0.0590 in.)
		Mark 6	1.498 – 1.501 mm (0.0590 – 0.0591 in.)
	Connecting rod oil clearance	STD (STD)	0.036 – 0.054 mm (0.0014 – 0.0021 in.)
		U/S 0.25 and U/S 0.50	0.037 – 0.077 mm (0.0015 – 0.0030 in.)
		Maximum	0.10 mm (0.0039 in.)
	Rod bend	Limit per 100 mm (3.94 in.)	0.03 mm (0.0012 in.)
	Rod twist	Limit per 100 mm (3.94 in.)	0.15 mm (0.0059 in.)
	Connecting rod bolt outside diameter	STD	8.400 – 8.600 mm (0.3307 – 0.3385 in.)
		Maximum	8.20 mm (0.3228 in.)
	Busing inside diamater		34.012 – 34.024 mm (1.3391 – 1.3395 in.)
	Piston pin diameter		34.000 – 34.012 mm(1.3386 – 1.3391 in.)
	Piston pin oil clearance	STD	0.008 – 0.016 mm (0.0003 – 0.0006 in.)
		Maximum	0.03 mm (0.0012 in.)
	Big end inner diameter		
	(Reference)	STD Mark 1	62.014 – 62.020 mm (2.4415 – 2.4417 in.)
		Mark 2	62.020 – 62.026 mm (2.4417 – 2.4420 in.)
		Mark 3	62.026 – 62.032 mm (2.4420 – 2.4422 in.)

Crankshaft	Thrust clearance	STD	0.040 – 0.240 mm (0.0016 – 0.0094 in.)
		Maximum	0.30 mm (0.0118 in.)
	Thrust washer thickness		
		STD (STD)	2.430 – 2.480 mm (0.0957 – 0.0976 in.)
		(U/S 0.25)	2.555 – 2.605 mm (0.1006 – 0.1026 in.)
		(U/S 1.125)	2.493 – 2.543 mm (0.0981 – 0.1001 in.)
	Main journal oil clearance	STD (STD)	0.036–0.054 mm (0.0014 – 0.0021 in.)
		(U/S 0.25 and U/S 0.50)	0.037 – 0.077 mm (0.0015 – 0.0030 in.)
		Maximum	0.10 mm (0.0039 in.)
	Main journal diameter	STD Mark 1	69.994 – 70.000 mm (2.7557 – 2.7559 in.)
		Mark 2	69.988 – 69.994 mm (2.7554 – 2.7557 in.)
		Mark 3	69.982 – 69.988 mm (2.7552 – 2.7554 in.)
		U/S 0.25	69.745 – 69.755 mm (2.7459 – 2.7463 in.)
		U/S 0.50	69.495 – 69.505 mm (2.7360 – 2.7364 in.)
	Main bearing center wall thickness (Reference)		
		STD Mark 2	2.479 – 2.482 mm (0.0976 – 0.0977 in.)
		Mark 3	2.482 – 2.485 mm (0.0977 – 0.0978 in.)
		Mark 4	2.485 – 2.488 mm (0.0978 – 0.0980 in.)
		Mark 5	2.488 – 2.491 mm (0.0980 – 0.0981 in.)
		Mark 6	2.491 – 2.494 mm (0.0981 – 0.0982 in.)
	Crank pin dimeter	STD Mark 1	58.994 – 59.000 mm (2.3226 – 2.3228 in.)
		Mark 2	58.988 – 58.994 mm (2.3224 – 2.3226 in.)
		Mark 3	58.982 – 58.988 mm (2.3221 – 2.3224 in.)
		U/S 0.25	58.745 – 58.755 mm (2.3128 – 2.3132 in.)
		U/S 0.50	58.495 – 58.505 mm (2.3028 – 2.3132 in.)
	Circle runouit	Maximum	0.06 mm (0.0024 in.)
	Main journal taper and out–of–round	Maximum	0.002 mm (0.0008 in.)
	Crank pin taper and out–of–round	Maximum	0.002 mm (0.0008 in.)
	Main bearing cap bolt outer diameter	STD	13.500 – 14.000 mm (0.5315 – 0.5512 in.)
		Maximu	12.60 mm (0.4961 in.)
Balance shaft	Thrust clearance	STD	0.065 – 0.140 mm (0.0026 – 0.0055 in.)
		Maximum	0.25 mm (0.0098 in.)
	No.1 journal oil clearance	STD	0.040 – 0.079 mm (0.0957 – 0.0976 in.)
		Maximum	0.180 mm (0.0071 in.)
	No.2 journal oil clearance	STD	0.040 – 0.079 mm (0.0957 – 0.0976 in.)
		Maximum	0.190 mm (0.0075 in.)
	No.3 journal oil clearance	STD	0.050 – 0.089 mm (0.0020 – 0.0035 in.)
		Maximum	0.180 mm (0.0071 in.)
	No.1 Bearing inside diameter		42.000 – 42.020 mm (1.6535 – 1.6543 in.)
	No.2 Bearing inside diameter		41.000 – 41.020 mm (1.6142 – 1.6150 in.)
	No.3 Bearing inside diameter		32.000 – 31.020 mm (1.2598 – 1.2606 in.)
	No.1 journal diameter		41.941 – 41.960 mm (1.6512 – 1.6520 in.)
	No.2 journal diameter		40.931 – 40.950 mm (1.6115 – 1.6122 in.)
	No.3 journal diameter		31.941 – 31.960 mm (1.2575 – 1.2583 in.)

SS16K–01

TORQUE SPECIFICATION

Part tightened		N·m	kgf·cm	ft·lbf
Intake pipe x Intake manifold		12	120	9
Injection pump x Timing gear case		21	210	15
No.1 camshaft timing pulley x Camshaft		98	1,000	72
No.2 camshaft timing pulley x Injection pump drive gear		13	130	9
Idler pulley bolt x Timing gear case		35	350	25
Timing belt tensioner x Timing gear case		13	130	9
Injection pump drive gear x Injection pump		64	650	47
Idler gear x Timing gear case		19	195	14
Timing gear cover x Timing gear case		13	130	9
Crankshaft pulley x Crankshaft		363	3,700	268
Camshaft oil seal retainer x Cylinder head		9	90	78
Camshaft bearing cap x Cylinder head		18	185	13
Cylinder head x Cylinder block	1st 2nd 3rd	39 Turn 90° Turn 90°	400	29
Injection nozzle x Cylinder head		54	540	40
Nozzle leakage pipe x Injection nozzle		30	300	22
Water outlet x Cylinder head		16	165	12
Intake manifold x Cylinder head		20	200	14
Oil dipstick guide x Cylinder head		20	200	14
Injection pipe x Injection nozzle		15	150	11
Injection pipe x Injection pump		15	150	11
Oil nozzle x Cylinder block		25	260	19
Main bearing cap x Cylinder block	1st 2nd	49 Turn 90°	500	36
Connection rod cap x Connecting rod	1st 2nd	29 Turn 90°	300	22
Rear oil seal retainer x Cylinder block		13	130	9
Balance shaft x Cylinder block		32	320	23
Balance shaft x Cylinder block		8	85	74 in.·lbf
Rear end plate x Cylinder block		8	85	74 in.·lbf
Flywheel x Crankshaft		145	1,480	107
Accelerator cable bracket x Cylinder head		20	204	15
Front engine hanger x Cylinder head		47	460	34
LH engine mounting bracket x Cylinder block		68	693	50
RH engine mounting bracket x Cylinder block		68	693	50

TURBOCHARGING

SERVICE DATA

SS16E–01

Turbocharger	Turbocharging pressure		51 – 67 kPa (0.52 – 0.68 kgf/cm^2, 7.4 – 9.7 psi)
	Turbine shaft axial play	Maximum	0.150 mm (0.0063 in.)
	Turbine shaft radial play	Maximum	0.110 mm (0.0043 in.)
Actuator	Actuator stroke		1.20 – 1.70 mm (0.0472 – 0.0669 in.)

SS16F–01

TORQUE SPECIFICATION

Part tightened		N·m	kgf·cm	ft·lbf
Turbine inlet elbow x Turbocharger		19.1	195	14
Turbo water pipe x Turbocharger	Nut	12	120	9
	Bolt	8	80	69 in.·lbf
Turbocharger x Exhaust manifold		52	530	38
Oil pipe x Cylinder bolck		19	195	14
Exhaust manifold x Cylinder bolck		52	530	38
Oil pipe x Cylinder block	Union bolt	26	260	19
	Bolt	12	125	12
Turbocharger stay x Turbocharger		19	195	14
Turbocharger stay x Cylinder block		19	195	14
Turbine outlet elbow x Turbocharger		39	390	28
Exhaust manifold heat insulator x Exhaust manifold		8	80	69 in.·lbf
Turbocharger heat insulator x Turbocharger		8	80	69 in.·lbf
Intake pipe x Intake manifold		11	120	9
V–band x Bearing housing		4.8	49	42 in.·lbf
Actuator x Compressor housing		19.1	195	14
Bearing housing side plate x Bearing housing		12	122	9

SS

ELECTRONIC CONTROL DIESEL

SERVICE DATA

SS0L2–03

Throttle position sensor	Clearance between stop screw and lever		
	0 mm (0 in.)	VTA – E2	0.2 – 5.8 kΩ
	0 mm (0 in.)	IDL – E2	2.3 – or less
	1.60 mm (0.063 in.)	IDL – E2	Infinity
	Throttle valve fully open	VTA – E2	1.4 – 9.5 kΩ
		VC – E2	2.5 – 5.9 kΩ
Timing control valve	Resistance	at 20°C (68°F)	10 – 14 Ω
Spill control valve	Resistance	at 20°C (68°F)	1 – 2 Ω
VSV for intake constrictor control	Resistance	at 20°C (68°F)	38.5 – 44.5 kΩ
Water temperature sensor, Fuel temperature sensor, Intake air temperature sensor	Resistance	at –20°C (–4°F)	10 – 20 kΩ
		at 0°C (32°F)	4 – 7 kΩ
		at 20°C (68°F)	2 – 3 kΩ
		at 40°C (104°F)	0.9 – 1.3kΩ
		at 60°C (140°F)	0.4 – 0.7 kΩ
		at 80°C (176°F)	0.2 – 0.4 kΩ
Turbo pressure sensor	Power source voltage		4.5 – 5.5 V
Engine speed sensor	Resistance	at 20°C (68°F)	205 – 255 Ω
Crankshaft position sensor	Resistance	at Cold	19 – 32 Ω
		at Hot	24 – 37 Ω
Injection pump correction resistor	Resistance	at 20°C (68°F)	0.1 – 2.5 kΩ

SS0YQ–02

TORQUE SPECIFICATION

Part tightened	N·m	kgf·cm	ft·lbf
Throttle body x Intake manifold	20	204	15
Water temperature sensor x Cylinder block	25	255	18
Fuel temperature sensor x Fuel pump	21.6	220	16.5
Crankshaft position sensor x Cylinder block	5	51	44 in.·lbf
First gear position sensor switch x Transmission	30	306	22.1

ENGINE FUEL

SERVICE DATA

SS0UD–02

Injection nozzles	Nozzle opening pressure	New nozzle	14,808 – 15,593 kPa (151 – 159 kgf/cm^2, 2,148 – 2,261 psi)	
		Reused nozzle	14,320 – 15,100 kPa (146 – 154 kgf/cm^2, 2,076 – 2,190 psi)	
	Adjusting shim thickness		0.900 mm (0.0354 in.)	0.925 mm (0.0364 in.)
			0.950 mm (0.0374 in.)	0.975 mm (0.0384 in.)
			1.000 mm (0.0394 in.)	1.025 mm (0.0404 in.)
			1.050 mm (0.0413 in.)	1.075 mm (0.0423 in.)
			1.100 mm (0.0433 in.)	1.125 mm (0.0443 in.)
			1.150 mm (0.0453 in.)	1.175 mm (0.0463 in.)
			1.200 mm (0.0472 in.)	1.225 mm (0.0482 in.)
			1.250 mm (0.0492 in.)	1.275 mm (0.0502 in.)
			1.300 mm (0.0512 in.)	1.325 mm (0.0522 in.)
			1.350 mm (0.0531 in.)	1.375 mm (0.0541 in.)
			1.400 mm (0.0551 in.)	1.425 mm (0.0561 in.)
			1.450 mm (0.0571 in.)	1.475 mm (0.0581 in.)
			1.500 mm (0.0591 in.)	1.525 mm (0.0600 in.)
			1.550 mm (0.0610 in.)	1.575 mm (0.0620 in.)
			1.600 mm (0.0630 in.)	1.625 mm (0.0640 in.)
			1.650 mm (0.0650 in.)	1.675 mm (0.0659 in.)
			1.700 mm (0.0669 in.)	1.725 mm (0.0679 in.)
			1.750 mm (0.0689 in.)	1.775 mm (0.0699 in.)
			1.800 mm (0.0709 in.)	1.825 mm (0.0719 in.)
			1.850 mm (0.0728 in.)	1.875 mm (0.0738 in.)
			1.900 mm (0.0748 in.)	1.925 mm (0.0758 in.)
			1.950 mm (0.0768 in.)	
Injection pump	Engine speed sensor resistance	at 20°C (68°F)	205 – 255 Ω at 20°C (68°F)	
	Spill control valve resistance	at 20°C (68°F)	1 – 2 Ω at 20°C (68°F)	
	Correction resistors resistance	at 20°C (68°F)	0.1 – 2.5 kΩ at 20°C (68°F)	

SS0UE–02

TORQUE SPECIFICATION

Part tightened		N·m	kgf·cm	ft·lbf
Nozzle holder body x Nozzle holder retaining nut		37	375	27
Injection nozzle x Cylinder head		54	540	40
Nozzle leakage pipe x Injection nozzle		30	300	22
Injection pump clamp x Intake manifold		6	65	56 in.·lbf
Injection pipe x Injection nozzle		15	150	11
Injection pipe x Injection pump		15	150	11
Accelerator cable bracket x Intake pipe		20	200	15
Fuel inlet hollow screw x Injection pump body		36.8	375	27
Delivery valve holder x Distributive head		58.85	600	43
Distributive head plug x Distributive head		88	900	65
Fuel inlet pipe x injection pump	Cap nut	23	230	17
	Bolt	24.5	250	17
Fuel inlet pipe x Injection pump		23	230	17
Injection pump x Timing gear case		21	210	15
Fuel temp. sensor x Distributive head plug (No.2)		21.6	220	16.5
Pump stay x Injection pump		32	330	24
Pump stay x Cylinder block		21	210	15
Injection pump drive gear x Injection pump		64	650	47

COOLING

SERVICE DATA

SS16G–01

Thermostat	Valve opening temperature Valve life (at 95°C (203°F))	80 – 84°C (176 – 183 °F) 8 mm (0.31 in.) or more
Radiator cap	Relief valve opening pressure (STD) Relief valve opening pressure (Limit)	74 – 103 kPa (0.75 – 1.05 kgf/cm^2, 10.7 – 14.9 psi) 59 kPa (0.6 kgf/cm^2, 8.5 psi)

SS16H–01

TORQUE SPECIFICATION

Part tightened		N·m	kgf·cm	ft·lbf
Cylinder block x Drain plug		8	80	69 in.·lbf
Water pump x Cylinder block		13	130	9
Alternator bracket x Cylinder block		21	210	15
Alternator x Alternator bracket	Lock bolt	21	210	15
	Pivot bolt	62	620	45
Fan x Water pump pulley		18	185	13
Water inlet x cylinder block		13	130	9

LUBRICATION

SERVICE DATA

SS16I–01

Oil presuure	At idle speed (normal operating temperature) At 3,000 rpm (normal operating temperature)	29 kPa (0.3 kgf/cm^2, 43 psi) or more 250 – 600 kPa (2.5 – 6.1 kgf/cm^2, 18 – 42 psi)
Oil pump	Body clearance (STD) Body clearance (Maximum) Tip clearance (STD) Tip clearance (Maximum) Side clearance (STD) Side clearance (Maximum)	0.100 – 0.170 mm (0.0039 – 0.0067 in.) 0.20 mm (0.0079 in.) 0.060 – 0.160 mm (0.0024 – 0.0063 in.) 0.21 mm (0.0083 in.) 0.030 – 0.090 mm (0.0012 – 0.0035 in.) 0.15 mm (0.0059 in.)

SS16J–01

TORQUE SPECIFICATION

Part tightened		N·m	kgf·cm	ft·lbf
Oil pan x Drain plug		34	350	25
Relief valve x Oil pump		42	425	31
Oil pump x Cylinder block	Bolt	13	130	9
	Union bolt	16	160	12
Injection pump x Oil pump		21	210	15
Oil strainer x Cylinder block		8	80	69 in.·lbf
Oil pan x Cylinder block		16	165	12
Alternator adjusting bar x Oil pump		21	210	15
Oil cooler cover x Drain plug		8	80	69 in.·lbf
Oil cooler cover x Oil cooler		16	160	12
Oil cooler cover x Cylinder bolck		13	130	9
Dipstick guide x Intake manifold		29	300	22
Oil nozzle x Cylinder bolck		26	260	19

STARTING

SERVICE DATA

SS0UJ–02

Starter	Rated voltage and output power		12 V 2.2 kW
	No–load characteristics	Current	120 A or less at 11.5 V
		rpm	4,000 rpm or more
	Brush length	STD	16.5 mm (0.650 in.)
		Minimum	9.0 mm (0.354 in.)
	Spring installed load	STD	26.5 – 32.3 N (2.7 – 3.3 kgf, 5.9 – 7.3 lbf)
		Minimum	17.6 N (1.8 kgf, 4.0 lbf)
	Commutator		
	Diameter	STD	35.0 mm (1.38 in.)
		Minimum	34.0 mm (1.34 in.)
	Under cut depth	STD	0.7 mm (0.027 in.)
		Minimum	0.2 mm (0.008 in.)
	Circle runout	Maximum	0.05 mm (0.0020 in.)
	Magnetic switch		
	Contact plate for wear	Maximum	0.9 mm (0.035 in.)
Pre–heating system	Light lighting time	at 20°C (68°F)	Approx. 0.5 seconds
Glow plug	Resistance	at 20°C (68°F)	Approx. 0.72 Ω

SS0UK-02

TORQUE SPECIFICATION

Part tightened	N·m	kgf·cm	ft·lbf
Glow plug x Cylinder head	13	130	10
Starter housing x Clutch assembly	9.3	95	82 in.·lbf
Field frame x Starter housing	12.7	130	9
Lead wire x Terminal C	5.9	60	52 in.·lbf
Terminal nut x Terminal 30 of starter, Terminal C of starter	17	173	12
End cover x Magnetic switch housing	3.6	36	32 in.·lbf

CHARGING

SERVICE DATA

SS0UL–02

Battery	Specific gravity	at 20°C (68°F)	1.25 – 1.29
	Voltage	at 20°C (68°F)	12.5 – 12.9 V
Drive belt	Deflection	New belt	6 – 8 mm (0.24 – 0.31 in.)
		Used belt	8 – 12 mm (0.31 – 0.47 in.)
	Reference Tension	New belt	400 – 600 N (41 – 61 kgf)
		Used belt	300 – 500 N (31 – 51 kgf)
Alternator	Rated output		12 V 70 A
	Rotor coil resistance	at 20°C (68°F)	2.1 – 2.5 Ω
	Slip ring diameter	STD	14.2 mm – 14.4 mm (0.559 – 0.567 in.)
		Minimum	12.8 mm (0.504 in.)
	Brush exposed length	STD	9.5 – 11.5 mm (0.374 – 0.453 in.)
		Minimum	1.5 mm (0.059 in.)
IC regulator	Regulating voltage		13.2 – 14.8 V

SS0UM-02

TORQUE SPECIFICATION

Part tightened		N·m	kgf·cm	ft·lbf
Drive end frame x Rectifier end frame	Nut	4.5	46	40 in.·lbf
	Nut with cord clip	5.4	55	47 in.·lbf
Alternator pulley nut		110	1,125	81
Rectifier holder set screw		1.96	20	17.4 in.·lbf
Rear end cover x Rectifier end frame		4.5	46	40 in.·lbf
Terminal insulator mounting nut		4.1	42	36 in.·lbf
Alternator wire mounting nut		9.8	100	7.2
Bearing retainer x Drive end frame		2.6	26.5	23 in.·lbf
Rectifier holder x Drive end frame		3.9	40	34.7 in.·lbf
IC regulator x Rectifier holder		1.96	20	17.4 in.·lbf

DIAGNOSTICS

ENGINE DI–1
HOW TO PROCEED WITH TROUBLESHOOTING DI–1
CUSTOMER PROBLEM ANALYSIS CHECK ... DI–2
PRE–CHECK DI–3
DIAGNOSTIC TROUBLE CODE CHART DI–12
PARTS LOCATION DI–14
TERMINALS OF ECU DI–15
PROBLEM SYMPTOMS TABLE DI–17
CIRCUIT INSPECTION DI–19

ENGINE

HOW TO PROCEED WITH TROUBLESHOOTING

DI31H–05

Troubleshoot in accordance with the procedure on the following page.

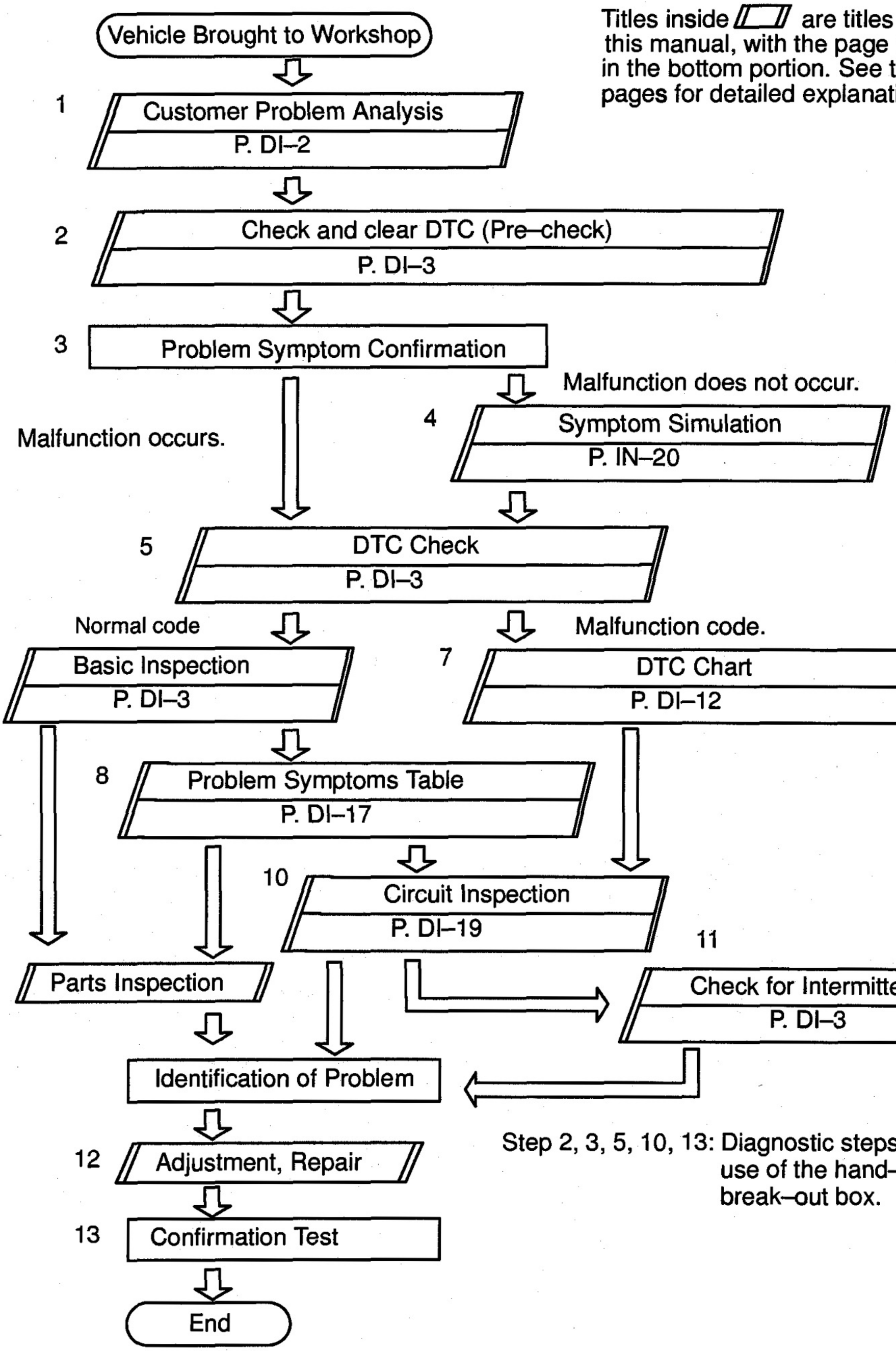

Titles inside ▱ are titles of pages in this manual, with the page number indicated in the bottom portion. See the indicated pages for detailed explanations.

Step 2, 3, 5, 10, 13: Diagnostic steps permitting the use of the hand–neld tester or break–out box.

DI

DI31I-03

CUSTOMER PROBLEM ANALYSIS CHECK

ENGINE CONTROL SYSTEM Check Sheet

Inspector's Name

Customer's Name		Model and Model Year	
Driver's Name		Frame No.	
Date Vehicle Brought in		Engine Model	
License No.		Odometer Reading	km miles

DI

Problem Symptoms

☐ Engine does not Start	☐ Engine does not crank ☐ No initial combustion ☐ No complete combustion
☐ Difficult to Start	☐ Engine cranks slowly ☐ Other _____
☐ Poor Idling	☐ Incorrect first idle ☐ Idling rpm is abnormal ☐ High (rpm) ☐ Low (rpm) ☐ Rough idling ☐ Other _____
☐ Poor Driveability	☐ Hesitation ☐ Back fire ☐ Muffler explosion (after–fire) ☐ Surging ☐ Knocking ☐ Other _____
☐ Engine Stall	☐ Soon after starting ☐ After accelerator pedal depressed ☐ After accelerator pedal released ☐ During A/C operation ☐ Shifting from N to D ☐ Other _____
☐ Others	

Dates Problem Occurred		
Problem Frequency		☐ Constant ☐ Sometimes (times per day/month) ☐ Once only ☐ Other _____
Condition When Problem Occurs	Weather	☐ Fine ☐ Cloudy ☐ Rainy ☐ Snowy ☐ Various/Other _____
	Outdoor Temperature	☐ Hot ☐ Warm ☐ Cool ☐ Cold (approx. ____ °F/____ °C)
	Place	☐ Highway ☐ Suburbs ☐ Inner city ☐ Uphill ☐ Downhill ☐ Rough road ☐ Other _____
	Engine Temp.	☐ Cold ☐ Warming up ☐ After warming up ☐ Any temp. ☐ Other _____
	Engine Operation	☐ Starting ☐ Just after starting (min.) ☐ Idling ☐ Racing ☐ Driving ☐ Constant speed ☐ Acceleration ☐ Deceleration ☐ A/C switch ON/OFF ☐ Other _____

Condition of Glow plug indicator Lamp		☐ Remains on	☐ Sometimes lights up ☐ Does not light up
Diagnostic Trouble Code Inspection	Normal Mode (Precheck)	☐ Normal	☐ Malfunction code(s) (code) ☐ Freezed frame data ( )
	Check Mode	☐ Normal	☐ Malfunction code(s) (code) ☐ Freezed frame data ( )

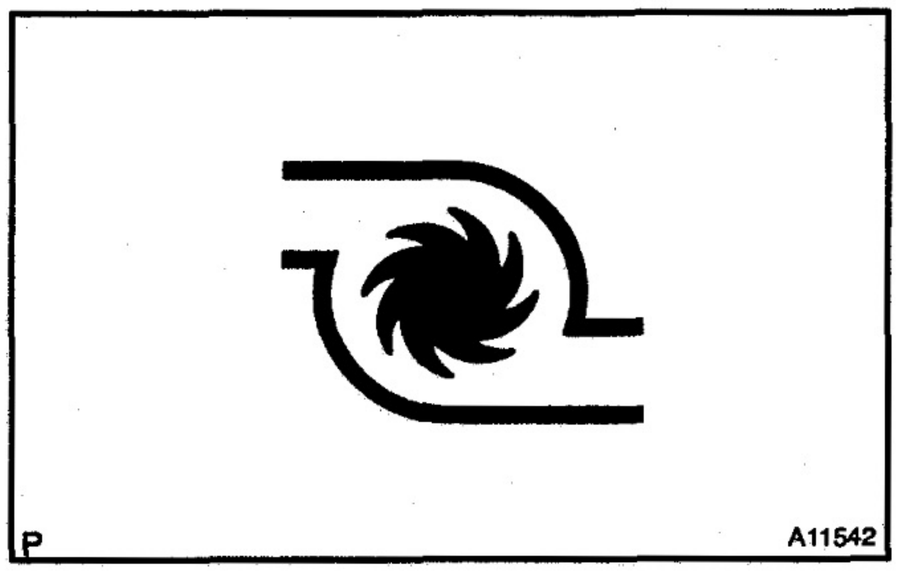

DI6JW–01

PRE–CHECK

1. DIAGNOSIS SYSTEM

(a) Description

- The engine ECU contains a built–in self–diagnosis system by which troubles with the engine signal network are detected and a check engine warning light in the combination meter lights up.
- By analyzing various signals as shown in the later table (See page DI–12) the engine ECU detects system malfunctions relating to the sensors or actuators.
- In the normal mode, the self–diagnosis system monitors 9 items, indicated by code No. as shown in DI–12. A check engine warning light informs the driver that a malfunction has been detected. The engine ECU stores the code(s) until it is cleared by removing the F–HTR fuse with the ignition switch off.
- The DTC (diagnostic trouble code) can be read by the number of blinks of the check engine warning light when TE1 and E1 terminals on the check connector are connected. When 2 or more codes are indicated, the lowest number (code) will appear first.
- In the test mode, 5 items, indicated by code No. as shown in DI–12 are monitored. If a malfunction is detected in any one of the systems indicated by code Nos. 22, 24, 35 and 41 the engine ECU lights the check engine warning light to warn the technician that malfunction has been detected. In this case, TE2 and E1 terminals on the check connector should be connected as shown later (See page DI–3).
- In the test mode, even if the malfunction is corrected, the malfunction code is stored in the engine ECU memory even when the ignition switch is off. This also applies to the normal mode. The diagnostic mode (normal or test) and the output of the check engine warning light can be selected by connecting the TE1, TE2, and E1 terminals on the check connector, as shown later.
- A test mode function has been added to the functions of the self–diagnosis system of the normal mode for the purpose of detecting malfunctions such as poor contact, which are difficult to detect in the normal mode. This function fills up the self–diagnosis system. The test mode can be implemented by the technician following the appropriate procedures of check terminal connection and operation described later (See page DI–3).

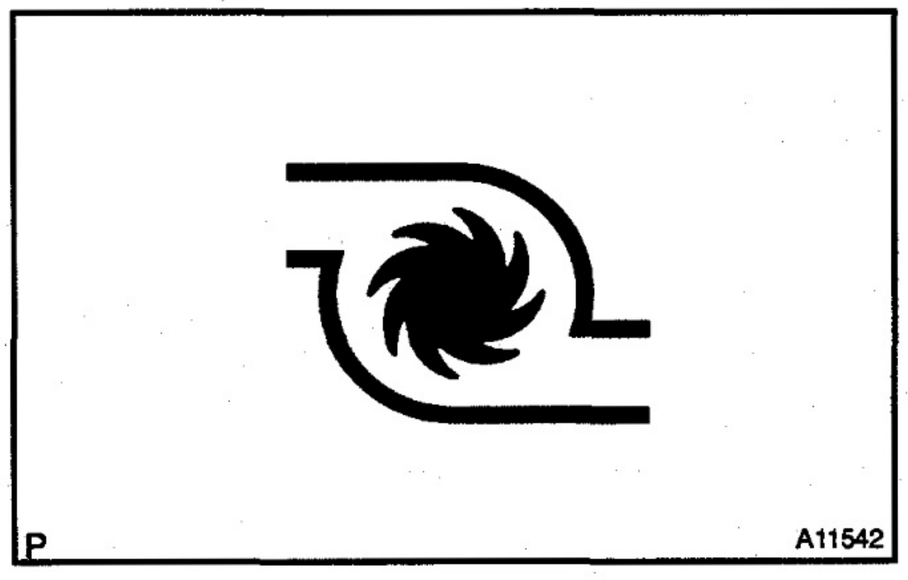

2. DIAGNOSIS INSPECTION (Normal Mode)

(a) Check the check engine warning light.

(1) The check engine warning light will light up when the ignition switch is turned ON and the engine is not running.

HINT:

If the check engine warning light does not light up, proceed to troubleshooting of the combination meter.

(2) When the engine is started, the check engine warning light should go off.

If the light remains on, the diagnosis system has detected a malfunction or abnormality in the system.

(b) Check the DTC.

(1) Turn the ignition switch ON.

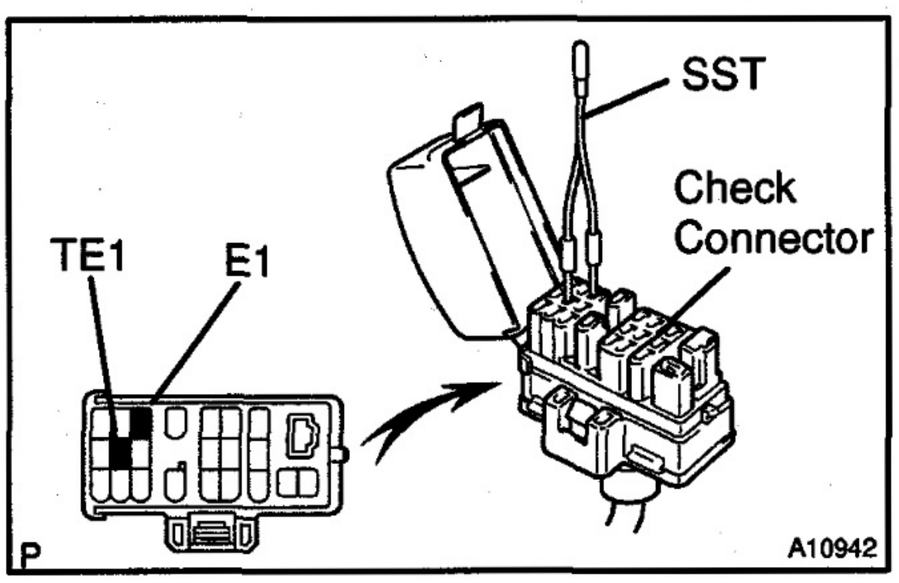

(2) Using SST, connect terminals between TE1 and E1 of the check connector.

SST 09843–18020

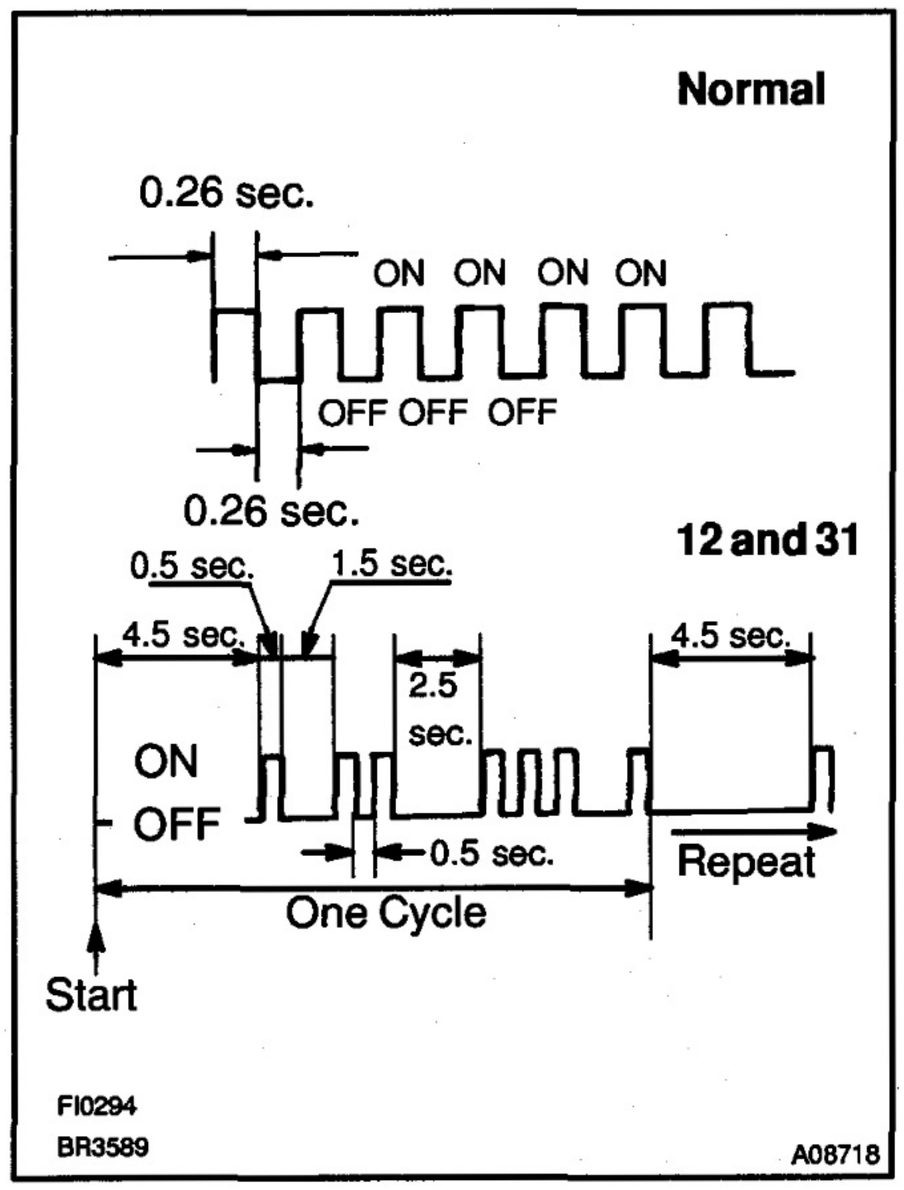

(3) Read the DTC from check engine warning light. As an example, the blinking patterns for codes; normal, 12 and 31 are as shown on the illustration.

HINT:

If a DTC is not output, check the TE1 terminal circuit (See Page DI–53).

(4) Check the details of the malfunction using the DTC chart on page DI–12.

(5) After completing the check, disconnect the SST from terminals TE1 and E1, and turn off the display.

HINT:

If the event of 2 or more malfunction codes, indication will begin from the smallest numbered code to the largest.

3. DIAGNOSIS INSPECTION (Test Mode)

HINT:

Compared to the normal mode, the test mode has an increased sensing ability to detect malfunctions.

The same diagnostic items which are detected in the normal mode can also be detected in the test mode.

(a) Check the DTC.
(1) Initial conditions.
- Battery positive voltage 11 V or more.
- Throttle valve fully closed.
- A/C switched OFF.

(2) Turn ignition switch OFF.

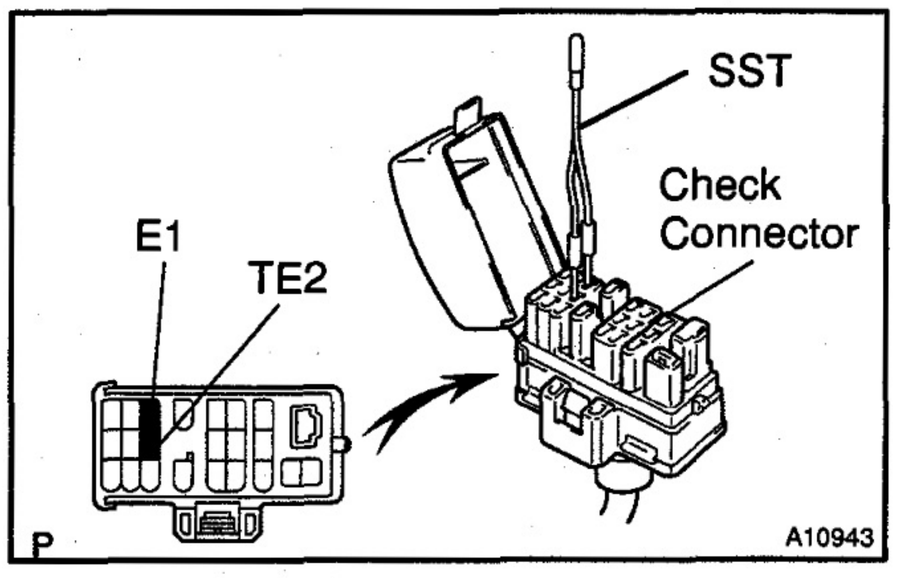

(3) Using SST, connect terminals TE2 and E1 of the check connector.

SST 09843–18020

(4) Turn the ignition switch ON.

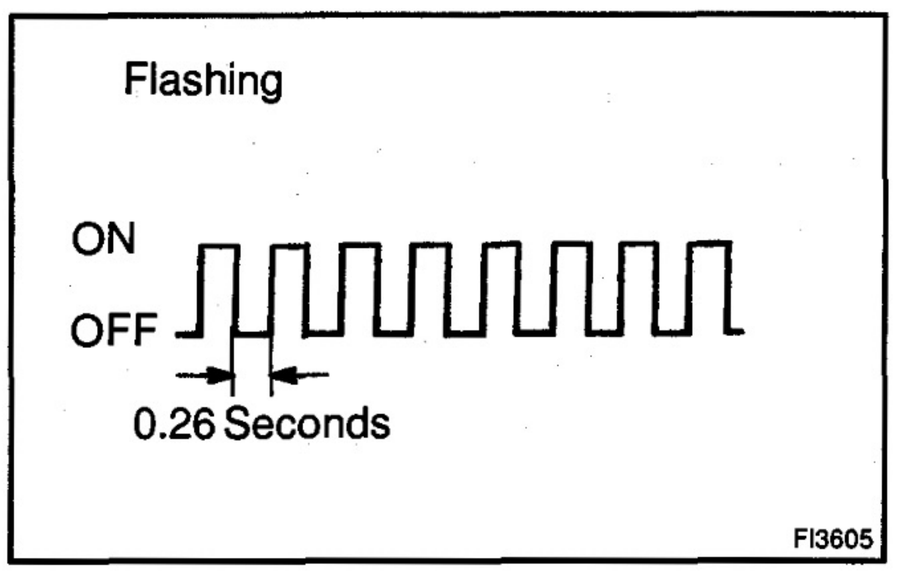

HINT:
- To confirm that the test mode is operating, check that the check engine warning light flashes when the ignition switch is turned ON.
- If the check engine warning light does not flash, refer to DTC chart for the TE2 terminal circuit on page DI–53.

(5) Start the engine.

(6) Simulate the conditions of the malfunction described by the customer.

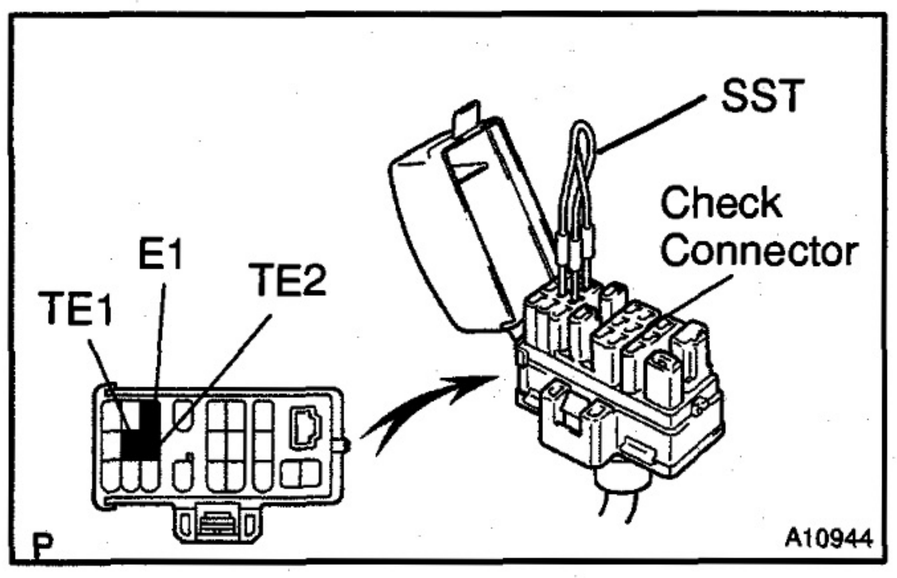

(7) After the road test, using SST, connect terminals TE1 and E1 of the check connector.

SST 09843–18020

(8) Read the DTC on check engine warning light in the combination meter (See page DI–3).

(9) After completing the check, disconnect the SST from terminals TE1, TE2 and E1, and turn off the display.

HINT:
- The test mode will not start if terminals TE2 and E1 are connected after the ignition switch is turned ON.
- When vehicle speed is 5 km/h (3 mph) or below, DTC 42 is output, but this is not abnormal.

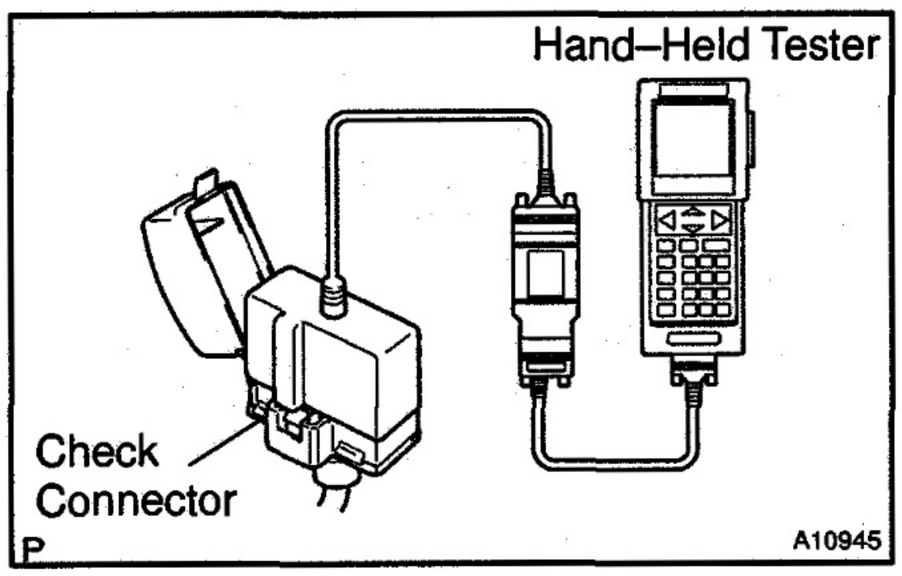

(b) Check the DTC using hand–held tester.
  (1) Hook up the hand–held tester to the check connector.
  (2) Read the DTCs by following the prompts on the tester screen.

HINT:
Please refer to the hand–held tester operator's manual for further details.

(c) Clear the DTC.
  (1) After repairing the trouble areas, the DTC retained in the engine ECU memory must be cleared out by removing the negative (–) terminal cable from the battery for 10 seconds or more with the ignition switch turned OFF.

HINT:
- In this case, other memory systems (clock, etc.) will also be cancelled out.
- If it is necessary to work on engine components requiring removal of the negative (–) terminal cable from the battery, a check must first be made to see if a DTC has been recorded.
  (2) After cancellation, road test the vehicle to check that a normal code is now read on the check engine warning light.
  If the same DTC appears, it indicates that the trouble area has not been repaired throughly.

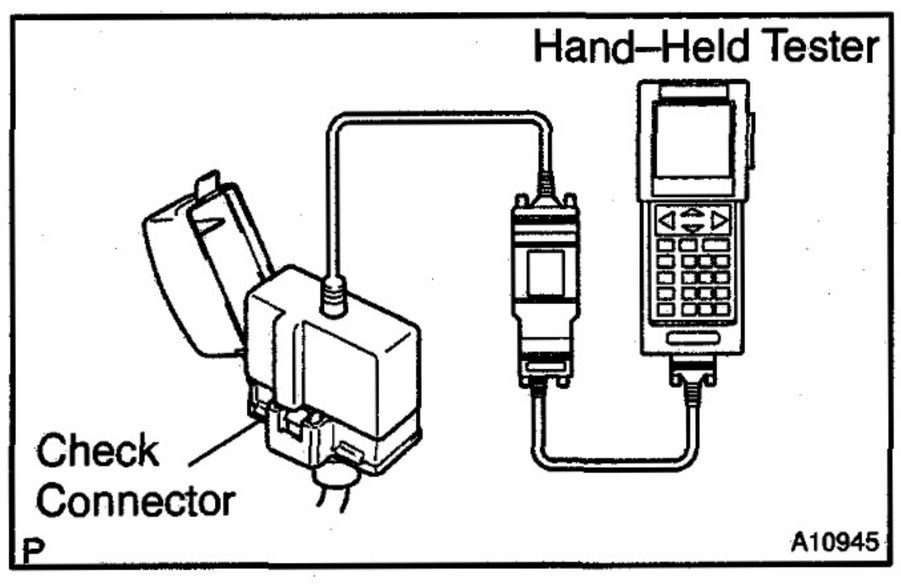

(d) Engine ECU data monitor using hand–held tester
  (1) Hook up the hand–held tester to the check connector.
  (2) Monitor the engine ECU data by following the prompts on the tester screen.

HINT:
- Hand–held tester has a "Snapshot" function which records the monitored data.
- Please refer to the hand–held tester operator's manual for further details.

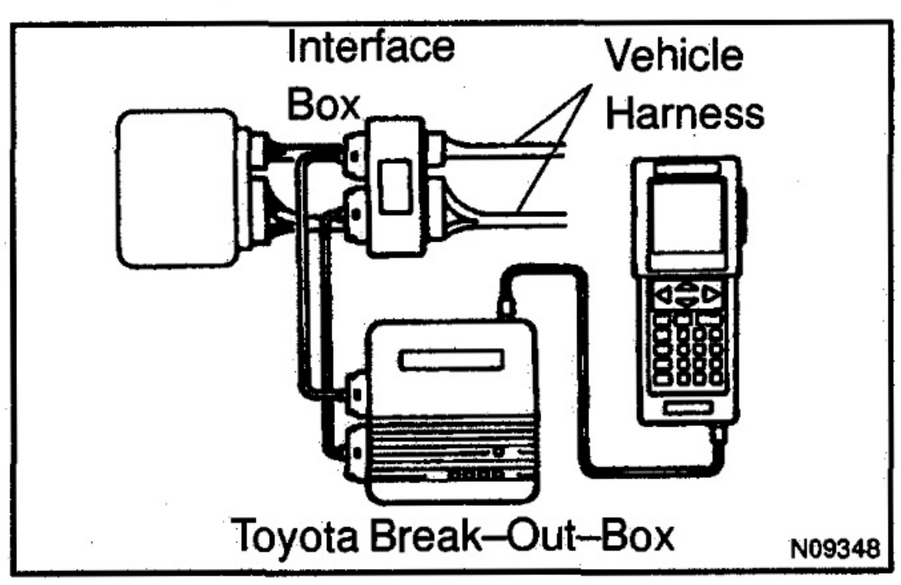

(e) Engine ECU terminal values measurement using break–out–box and hand–held tester
  (1) Hook up the break–out–box and hand–held tester to the vehicle.
  (2) Read the engine ECU input/output values by following the prompts on the tester screen.

HINT:
- Hand–held tester has a "Snapshot" function.
  This records the measured values and is effective in the diagnosis of intermittent problems.

- Please refer to the hand–held tester/break–out–box operator's manual for further details.

4. FAIL–SAFE CHART

If any of the following codes is recorded, the engine ECU enters fail–safe mode.

DTC No.	Fail–Safe Operation	Fail–Safe Deactivation Conditions
12	• TCV duty is 19.5 %	Returned to normal condition
13	• Engine speed 0 RPM • TCV duty is 6 % • Throttle valve position is fixed at 50% • Spill control valve is cut	Returned to normal condition
22	• Water temp. is fixed at 60°C (140°F)	Returned to normal condition
24	• Air temp. is fixed at 40°C (104°F)	Returned to normal condition
32	• Injection volume compensentation volume is fixed at settled value	Returned to normal condition
39	• Fuel temp is fixed at 40°C (104°F)	Returned to normal condition
41	• Accelerator pedal position is fixed at settled value	Following condition must be repeated at least 2 times consecutively When closed throttle position switch is ON: 0.1 V ≦ VA ≦ 4.0 V
42	• Do not operation A/C cut	Returned to normal condition
43	• Starter OFF	Returned to normal condition

DTC	Circuit
12	TDC signal circuit
13	NE signal circuit
22	Water temp. sensor circuit
24	Intake air temp. sensor circuit
32	Correction resistors circuit
35	Intake air pressure sensor circuit
39	Fuel temp. sensor circuit
41	Throttle position sensor circuit

5. CHECK FOR INTERMITTENT PROBLEMS

As previously described on page DI–3, abnormality detection ability in the test mode is increased compared to that in the normal mode, so that when intermittent problems occur in the engine ECU signal circuits (TDC, NE, THW, THA, VRP, VRT, PIM, THF, VA) shown in the table opposite, the appropriate DTC is output.

Accordingly, when the DTC shown in the table left (12, 13, 22, 24, 32, 35, 39, 41) are output during the DTC check, and inspection of the appropriate circuits reveals no abnormality, check for intermittent problems as described below.

By check for intermittent problems, the place where intermittent problems are occurring due to poor contacts can be isolated.

(1) Clear DTC (See page DI–3).

(2) Set the test mode.

- With the ignition switch turned OFF, using SST, connect terminals TE2 and E1 of the check connector.

SST 09843–18020

- Start the engine and check to see if the check engine warning light goes off.

DI

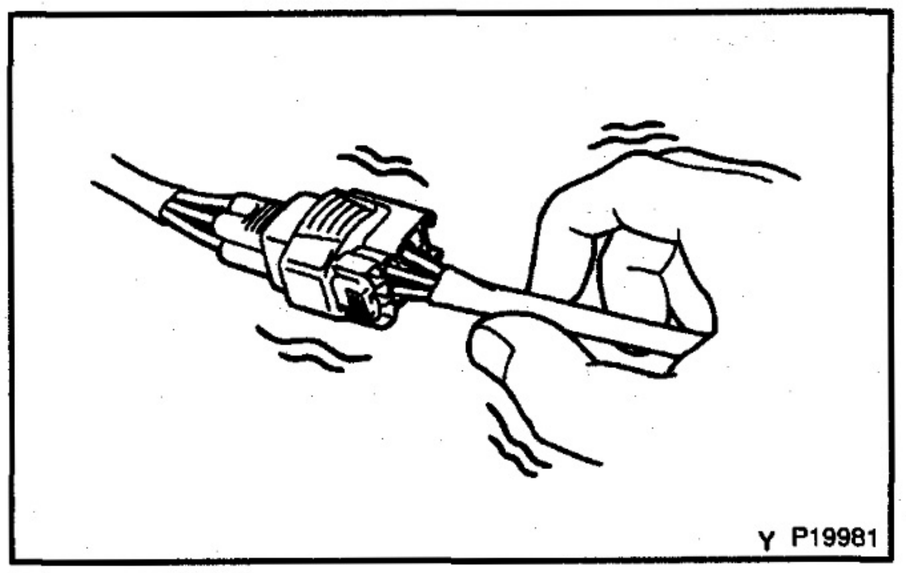

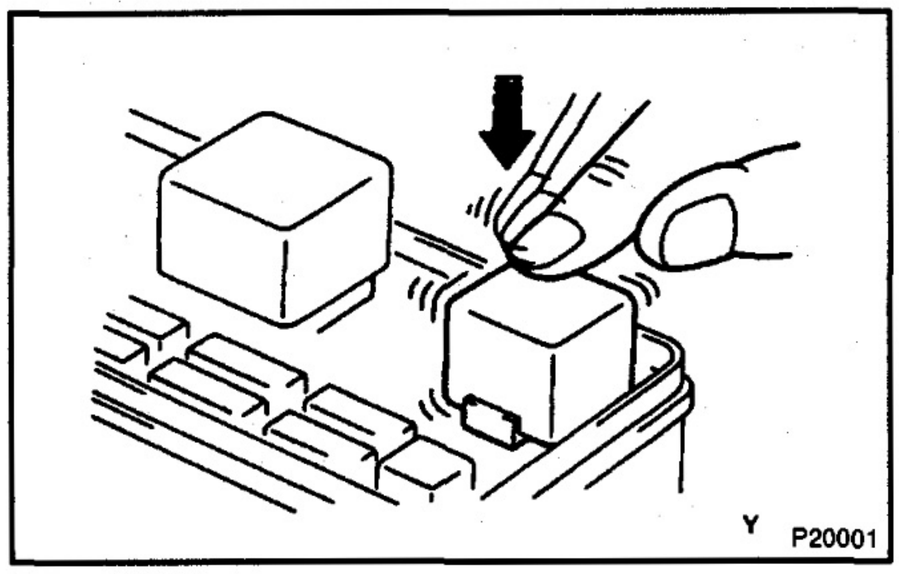

(3) Perform a Simulation Test
Using the symptom simulation (See page IN–10), apply vibration and pull lightly on the wire harness, connector or terminals in the circuit indicated by the malfunction code.
In this test, if the check engine warning light lights up, it indicates that the place where the wire harness, connector or terminals being pulled or vibrated has faulty contact. Check point for loose connections, dirt on the terminals, poor fit or other problems and repair as necessary.

HINT:
After cancelling out the DTC in memory and set the test mode, if the check engine warning light does not go off after the engine is started, check thoroughly for faulty contact, etc., then try the check again. If the check engine warning light still does not go off, check and replace engine ECU.

6. BASIC INSPECTION

When the malfunction code is not confirmed in the DTC check, troubleshooting should be carried out in the order for all possible circuits to be considered as the causes of the problems.
In many cases, by carrying out the basic engine check shown in the following flow chart, the location causing the problem can be found quickly and efficiently. Therefore, use of this check is essential in engine troubleshooting.

1	**Is battery positive voltage 11 V or more when engine is stopped?**

NO → **Charge or replace battery.**

YES

2	**Is engine cranked?**

NO → **Proceed to problem symptoms table on page DI–17.**

YES

3	Check air filter.

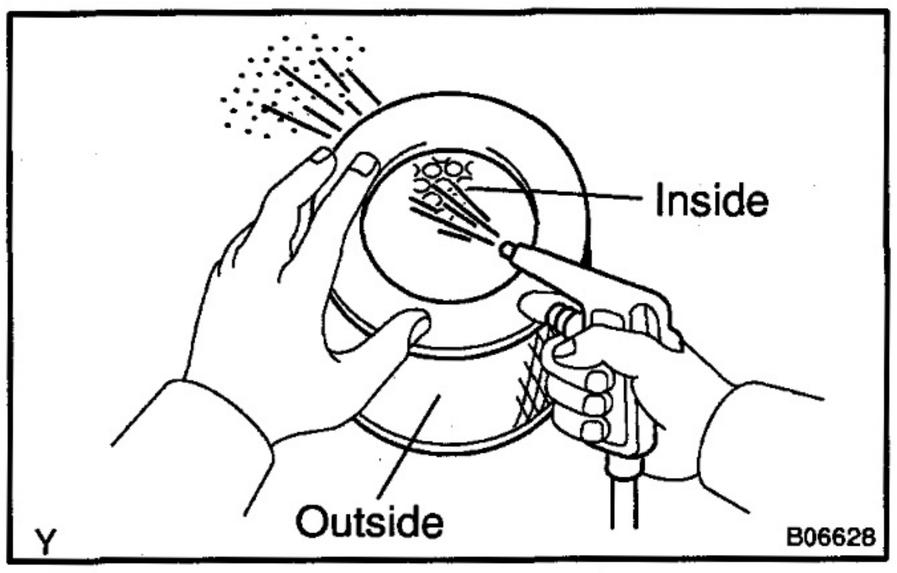

PREPARATION:
Remove air filter.
CHECK:
Visually check that the air filter is not excessively dirty or oily.
HINT:
If necessary, clean the air filter with compressed air. First blow from inside thoroughly, then blow from outside of the air filter.

NG → **Repair or replace.**

OK

4	Check fuel quality.

CHECK:
- Check that use only diesel fuel.
- Check that the fuel does not contain any impurity.

NG → **Replace fuel.**

OK

5	Check engine oil (See page LU–1).

NG → **Repair or replace.**

OK

6	Check coolant (See page CO–1).

NG → **Replace coolant.**

OK

7	Check injection timing (See page EM–8).

NG → Adjusting injection timing.

OK

DI

8	Check idle speed and maximum speed (See page EM–9).

NG → Repair or replace injection pump.

OK

Proceed to problem symptoms table on page DI–17.

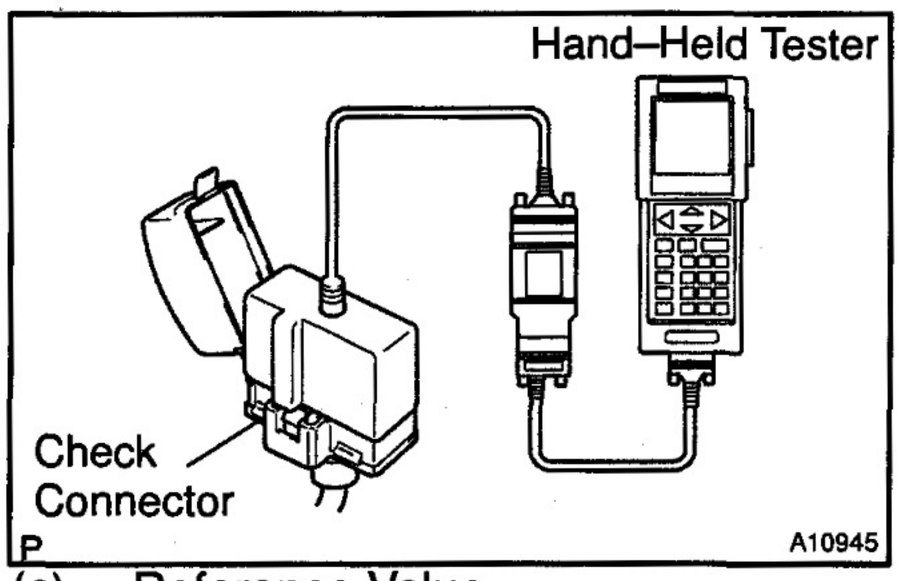

7. REFERENCE VALUE OF ENGINE ECU DATA

HINT:

Engine ECU data can be monitored by hand–held tester.

(a) Hook up the hand–held tester to the check connector.

(b) Monitor engine ECU data by following the prompts on the tester screen.

Please refer to the hand–held tester operator's manual for further detail.

(c) Reference Value

Item	Inspection Condition	Reference Value
INJECTOR	Engine at idling*1	46 ~ 51 °CA
	Engine racing at 2,000 rpm*1	40 ~ 45 °CA
	Engine racing at 3,000 rpm*1	33 ~ 38 °CA
INJ. TIMING	Engine at idling	9 ~ 14 °CA
	Engine racing at 2,000 rpm	13 ~ 18 °CA
	Engine racing at 3,000 rpm	18 ~ 23 °CA
ENGINE SPD	RPM kept stable (Comparison with tachometer)	No great changes
INTAKE MAN.	Engine at idling*1	1.3 ~ 1.5 V
	Engine racing at 2,000 rpm*1	1.3 ~ 1.5 V
	Engine racing at 3,000 rpm*1	1.3 ~ 1.5 V
COOLANT	Engine at normal operating temp.	75 – 95°C (185 – 203°F)*2
THROTTLE	Closed throttle position	Below 1.0 V
	Throttle fully opened	Above 2.5 V
	From closed throttle position to wide open throttle	Gradually increases

VEHICLE SPD	During driving (Comparison with speedometer)	No large differences
EGR	Engine idling at normal operating temp.	ON
	Engine at idling	ON
	At accelerator pedal fully opened	OFF
GROW PLUG	At IG SW LOCK→ON	ON
	During cranking	ON
STA SIGNAL	During cranking	ON
IDL SIGNAL	Closed throttle position	ON
A/C SIGNAL	A/C SW ON	ON

HINT:

*1: All accessories and A/C are switched OFF.

*2: If the water temperature sensor circuit is open or shorted, the engine ECU assumes an engine coolant temperature value of 80°C (176°F).

DI31K-05

DIAGNOSTIC TROUBLE CODE CHART

HINT:

Parameters listed in the chart may not be exactly the same as you reading due to the type of instrument or other factors.

If a malfunction code is displayed during the DTC check in check (test) mode, check the circuit for the codes listed in the table below. For details of each code, turn to the page referred to under the "See page" for the respective "DTC No." in the DTC chart.

DTC No. (See page)	Detection Item	Trouble Area	*1 Check Engine Warning Light (NormalMode/ Test Mode)	*2 Memory
12 (DI–19)	Engine Speed Sensor Circuit Malfunction (TDC or G1 Circuit)	• Open or short in crankshaft position sensor circuit • Crankshaft position sensor • Engine ECU	ON/ON	○
13 (DI–21)	Engine Speed Sensor Circuit Malfunction (NE Circuit)	• Open or short in engine speed sensor circuit • Engine speed sensor • Engine ECU	ON/ON	○
14 (DI–22)	Timing Control System Malfunction	• Open or short in timing control valve circuit • Fuel filter (Clogging) • Fuel (Freezing, Air in) • Injection pump (Internal pressure and timing control valve) • Engine ECU	ON/N.A.	○
22 (DI–25)	Water Temp. Sensor Circuit Malfunction	• Open or short in water temp. sensor circuit • Water temp. sensor • Engine ECU	ON/ON	○
24 (DI–28)	Intake Air Temp. Sensor Circuit Malfunction	• Open or short in intake air temp. sensor circuit • Intake air temp. sensor • Engine ECU	OFF/ON	○
32 (DI–31)	Injection Pump Correction System Malfunction	• Open or short in injection pump correction resistor cuicuit • Injection pump correction resistor • Engine ECU	OFF/ON	○
35 (DI–33)	Turbo Pressure Sensor Circuit Malfunction	• Open or short in turbo pressure sensor circuit • Turbo pressure sensor • Vacuum hose disconnected or blocked • Engine ECU	ON/ON	○
39 (DI–36)	Fuel Temp. Sensor Circuit Malfunction	• Open or short in fuel temp. sensor circuit • Fuel pressure sensor • Engine ECU	ON/ON	○
41 (DI–39)	Throttle Position Sensor Circuit Malfunction	• Open or short in throttle position sensor circuit • Throttle position sensor • Engine ECU	ON/ON	○
42 (DI–41)	Vehicle Speed Sensor Signal Circuit Malfunction	• Open or short in vehicle speed sensor circuit • Vehicle speed sensor • Combination meter • Engine ECU	OFF/OFF	○
43 (DI–43)	Starter Signal Circuit Malfunction	• Open or short in starter circuit • Open or short in ignition switch or starter relay circuit • Engine ECU	OFF/OFF	○
49 (DI–45)	First Gear Position Circuit Malfunction	• Open or short in 1st gear poosition switch circuit • 1st gear poosition switch • Engine ECU	OFF/OFF	×

*1: "ON" displayed in the diagnosis mode column indicates that the check engine warning light is lighted up when a malfunction is detected. "OFF" indicates that the check engine warning light does not light up during malfunction diagnosis, even if a malfunction is detected. "N.A." indicates that the item is not included in malfunction diagnosis.
*2: "○" in the memory column indicates that a DTC is recorded in the engine ECU memory when a malfunction occurs. Accordingly, output of diagnostic results in the normal or test mode is done with the ignition switch turned ON. "X" indicates that a DTC is not recorded in the ECU memory even if a malfunction occurs.

DI31L–04

PARTS LOCATION

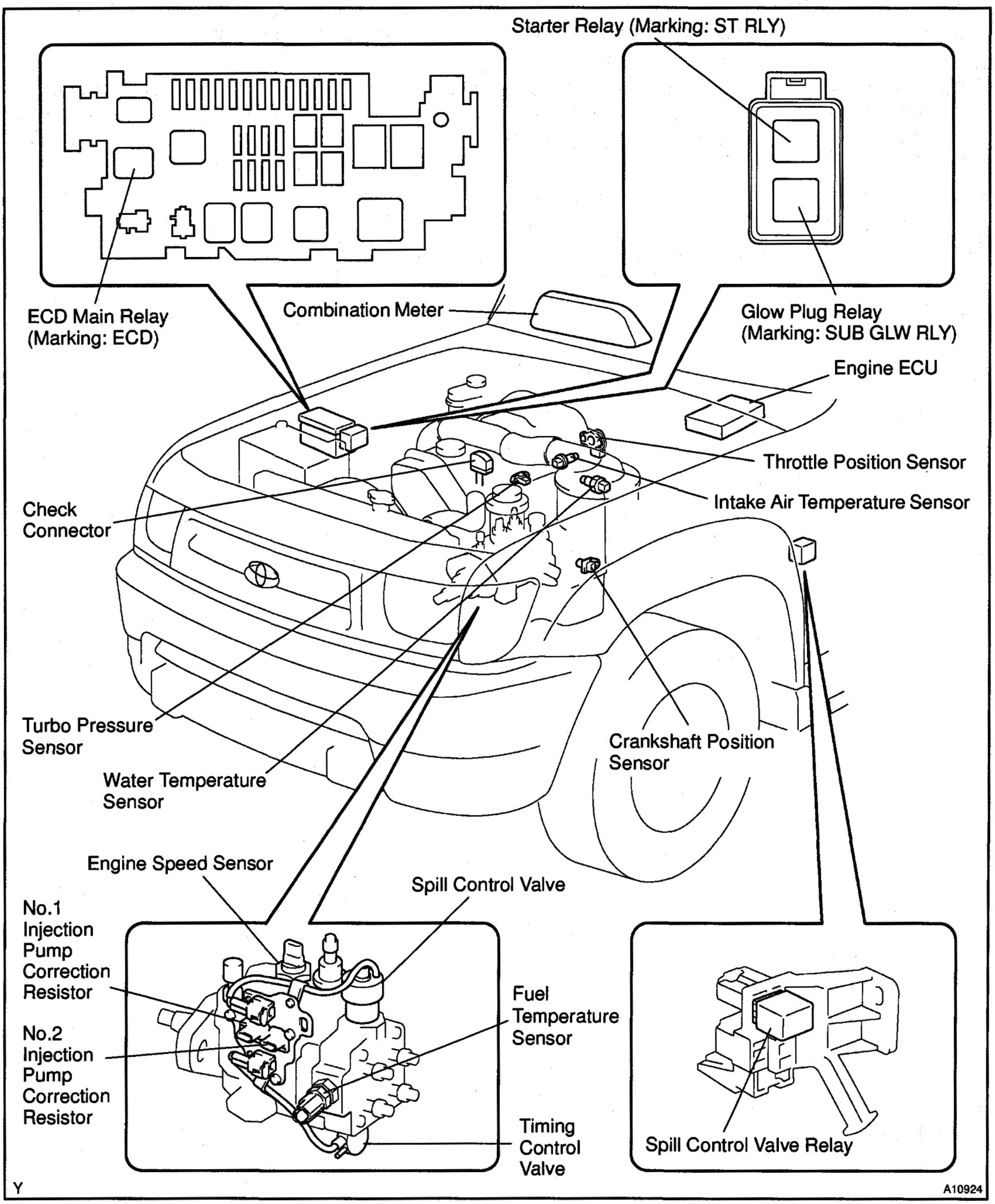

DI31M–04

TERMINALS OF ECU

Engine ECU Terminals

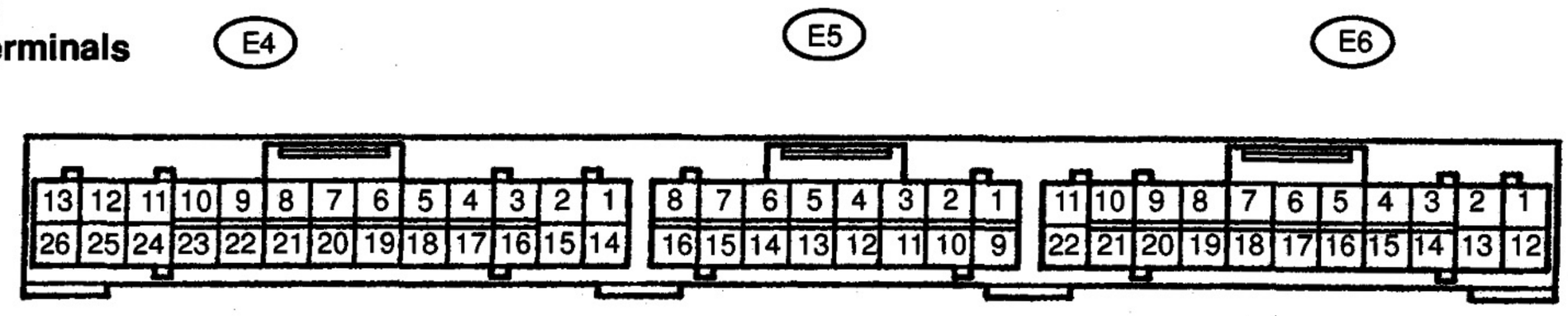

Symbols (Terminal No.)	Wiring Color	Condition	STD Voltage (V)
+BF (E6–1) – E1 (E4–14)	Y – BR	Always	9 – 14
+BG (E6–12) – E1 (E4–14)	R–L – BR	IG switch ON	9 – 14
VC (E5–1) – E2 (E5–9)	B – G–R	IG switch ON	4.5 – 5.5
VA (E5–11) – E2 (E5–9)	B–L – G–R	Accelerator pedal fully closed	0.3 – 0.8
		Accelerator pedal fully opened	2.9 – 4.9
IDL (E5–12) – E2 (E5–9)	B–R – G–R	Accelerator pedal fully closed	9 – 14
		Accelerator pedal fully opened	0 – 3
PIM (E5–2) – E2 (E5–9)	B–Y – G–R	Apply vacuum 40 kPa (300 mmHg, 11.8 in.Hg)	1.3 – 1.9
		Apply vacuum 69 kPa (1,000 mmHg, 39.4 in.Hg)	3.2 – 3.8
THA (E5–3) – E2 (E5–9)	P–L – G–R	Idling, Air intake temp. 0°C (32°F) to 60°C (140°F)	0.5 – 3.4
THW (E5–4) – E2 (E5–9)	P – G–R	Idling, Engine coolant temp. 60°C (140°F) to 120°C (248°F)	0.2 – 1.0
THF (E5–5) – E2 (E5–9)	LG–B – G–R	IG switch ON (at engine cold)	0.5 – 3.4
STA (E6–11) – E1 (E4–14)	V–Y – BR	Cranking	6.0 or more
TDC+ (E4–5) – TDC– (E4–18)	R – G	Idling	Pulse generation (See page DI–19)
NE+ (E4–4) – NE– (E4–17)	W – B	Idling	Pulse generation (See page DI–19)
SPD (E6–9) – E1 (E4–14)	G–O – BR	IG switch ON, Rotate driving wheel slowly	Pulse generation (See page DI–39)
TCV (E4–12) – E01 (E4–13)	G–B – BR	IG switch ON	9 – 14
		Idling	Pulse generation (See page DI–22)
S/TH1 (E4–10) – E01 (E4–13)	GR – BR	VSV OFF (idling)	9 – 14
		VSV ON (after IG switch OFF for 2 sec.)	0 – 3
S/TH2 (E4–9) – E01 (E4–13)	G–Y – BR	VSV OFF (idling)	9 – 14
		VSV ON (after IG switch OFF for 2 sec.)	0 – 3
MREL (E6–3) – E1 (E4–14)	L–O – BR	IG switch ON	9 – 14
		after IG switch OFF for 2 sec.or more	0 – 1.5
IGSW (E6–14) – E1 (E4–14)	B–W – BR	IG switch ON	9 – 14
TAC (E6–18) – E1 (E4–14)	B – BR	Idling	Pulse generation
W (E6–5) – E1 (E4–14)	P – BR	Check engine warning light lights up	0 – 3
		Except check engine warning light lights up	9 – 14
GIND (E6–7) – E01 (E4–13)	R–W – BR	Glow indicator light lights up	0 – 3
		Except glow indicator light lights up	9 – 14
SVR (E6–13) – E01 (E4–13)	L–B – BR	IG switch ON	0 – 1.5
TE1 (E5–15) – E1 (E4–14)	G–Y – BR	IG switch ON	9 – 14

SREL (E6–2) – E01 (E4–13)	B–R – BR	Cranking	9 – 14
SPV (E4–11) – E01 (E4–13)	R–B – BR	IG switch ON	9 – 14
		Idling	Pulse generation (See page DI–60)
FSW (E4–8) – E1 (E4–14)	L – BR	At shift position in 1st position	9 – 14
		At other shift position in 1st position	0 – 3
VRP (E5–6) – E2 (E5–9)	G–B – G–R	IG switch ON	0.2 – 4.5
VRT (E5–14) – E2 (E5–9)	L–B – G–R	IG switch ON	0.2 – 4.5

DI31N–05

PROBLEM SYMPTOMS TABLE

When the malfunction code is not confirmed the DTC check and the problem still can not be confirmed in the basic inspection, then proceed to this step and perform troubleshooting according to the numbered order given in the table below.

Symptom	Suspect Area	See page
Does not crank (Difficult to start)	1. Starter 2. Starter relay	ST–6 ST–20
Cold engine (Difficult to start)	1. STA signal circuit 2. Injection nozzle 3. Fuel filter 4. Engine ECU 5. Injection pump	DI–43 FU–8 FU–1 IN–20 FU–15
Hot engine (Difficult to start)	1. STA signal circuit 2. Injection nozzle 3. Fuel filter 4. Throttle Body 5. Engine ECU 6. Injection pump	DI–43 FU–8 FU–1 ED–3 IN–20 FU–15
Soon after starting (Engine stall)	1. Fuel filter 2. Engine ECU power source circuit 3. Engine ECU 4. Injection pump	FU–1 DI–49 IN–20 FU–15
Others (Engine stall)	1. Engine ECU power source circuit 2. Spill control valve relay circuit 3. Engine ECU 4. Injection pump	DI–49 DI–60 IN–20 FU–15
Incorrect first idle (Poor idling)	1. Fuel filter 2. Engine ECU 3. Injection pump	FU–1 IN–20 FU–15
High engine idle speed (Poor idling)	1. STA signal circuit 2. Throttle position sensor 3. Water temp. sensor 4. Vehicle speed sensor 5. Engine ECU 6. Injection pump	DI–43 ED–3 ED–15 DI–39 IN–20 FU–15
Lower engine idle speed (Poor idling)	1. Injection nozzle 2. Compression 3. Throttle body 4. Valve clearance 5. Fuel line (Air beed) 6. Engine ECU 7. Injection pump 8. Water temp. sensor	FU–8 EM–2 ED–3 EM–4 – IN–20 FU–15 ED–15
Rough idling (Poor idling)	1. Injection nozzle 2. Fuel line (Air beed) 3. Pre–heating control circuit 4. Compression 5. Throttle position sensor 6. Crankshaft position sensor 7. Valve clearance 8. Engine ECU 9. Injection pump	FU–8 – ST–2 EM–2 ED–3 ED–3 EM–4 IN–20 FU–15

Hunting at hot engine (Poor idling)	1. Injection nozzle	FU–8
	2. Engine ECU power source circuit	DI–49
	3. Compression	EM–2
	4. Fuel line (Air beed)	–
	5. Valve clearance	EM–4
	6. Engine ECU	IN–20
	7. Injection pump	FU–15
Hunting at cold engine (Poor idling)	1. Injection nozzle	FU–8
	2. Engine ECU power source circuit	DI–49
	3. Pre–heating control circuit	ST–2
	4. Compression	EM–2
	5. Fuel line (Air beed)	–
	6. Valve clearance	EM–4
	7. Engine ECU	IN–20
	8. Injection pump	FU–15
Hesitation/ Poor acceleration (Poor driveability)	1. Injection nozzle	FU–8
	2. Fuel filter	FU–1
	3. Compression	EM–2
	4. Engine ECU	IN–20
	5. Injection pump	FU–15
Knocking (Poor driveability)	1. Injection nozzle	FU–8
	2. Engine ECU	IN–20
	3. Crankshaft posistion sensor	ED–21
	4. Spill control valve circuit	DI–60
	5. Water temp. sensor	ED–15
Black smoke (Poor driveability)	1. Injection nozzle	FU–8
	2. Engine ECU	IN–20
	3. Injection pump	FU–15
	4. Spill control valve circuit	DI–60
	5. Throttle body	ED–3
	6. Throttle position sensor	ED–3
	7. Intake air temp. sensor	ED–17
White smoke (Poor driveability)	1. Pre–heating control circuit	ST–2
	2. Injection nozzle	FU–8
	3. Fuel filter	FU–1
	4. Engine ECU	IN–20
	5. Injection pump	FU–15
	6. Crankshaft position sensor	ED–21
	7. Throttle body	ED–3
	8. Water temp sensor	ED–15
Surging/ Hunting (Poor driveability)	1. Injection nozzle	FU–8
	2. Engine ECU	IN–20
	3. Injection pump	FU–15
	4. Throttle position sensor	ED–3

DI31C–04

CIRCUIT INSPECTION

DTC	12	Engine Speed Sensor Circuit Malfunction (TDC or G1 Circuit)

CIRCUIT DESCRIPTION

The crankshaft position sensor in the Engine Control System contains signal plate and a pickup coil for TDC signal. The TDC signal plate has 1 tooth on its outer circumference. The TDC signal sensor generates 1 signal for every engine revolution. The engine ECU detects the top dead center by the TDC signals.
The engine speed sensor in the Engine Control System contains signal plate and a pickup coil for NE signal. The NE signal plate has 52 teeth and is mounted in the injection pump. The NE signal sensor generates 52 signals of engine 2 revolutions. The engine ECU detects the engine speed and cam lift position of the injection pump.
The engine ECU uses TDC signal and NE signals for injection timing control. And NE signal is used for injection volume control, also.

DTC No.	DTC Code Detecting Condition	Trouble Area
12	No TDC signal to engine ECU during cranking	• Open or short in crankshaft position sensor circuit • Crankshaft position speed sensor • Engine ECU

WIRING DIAGRAM

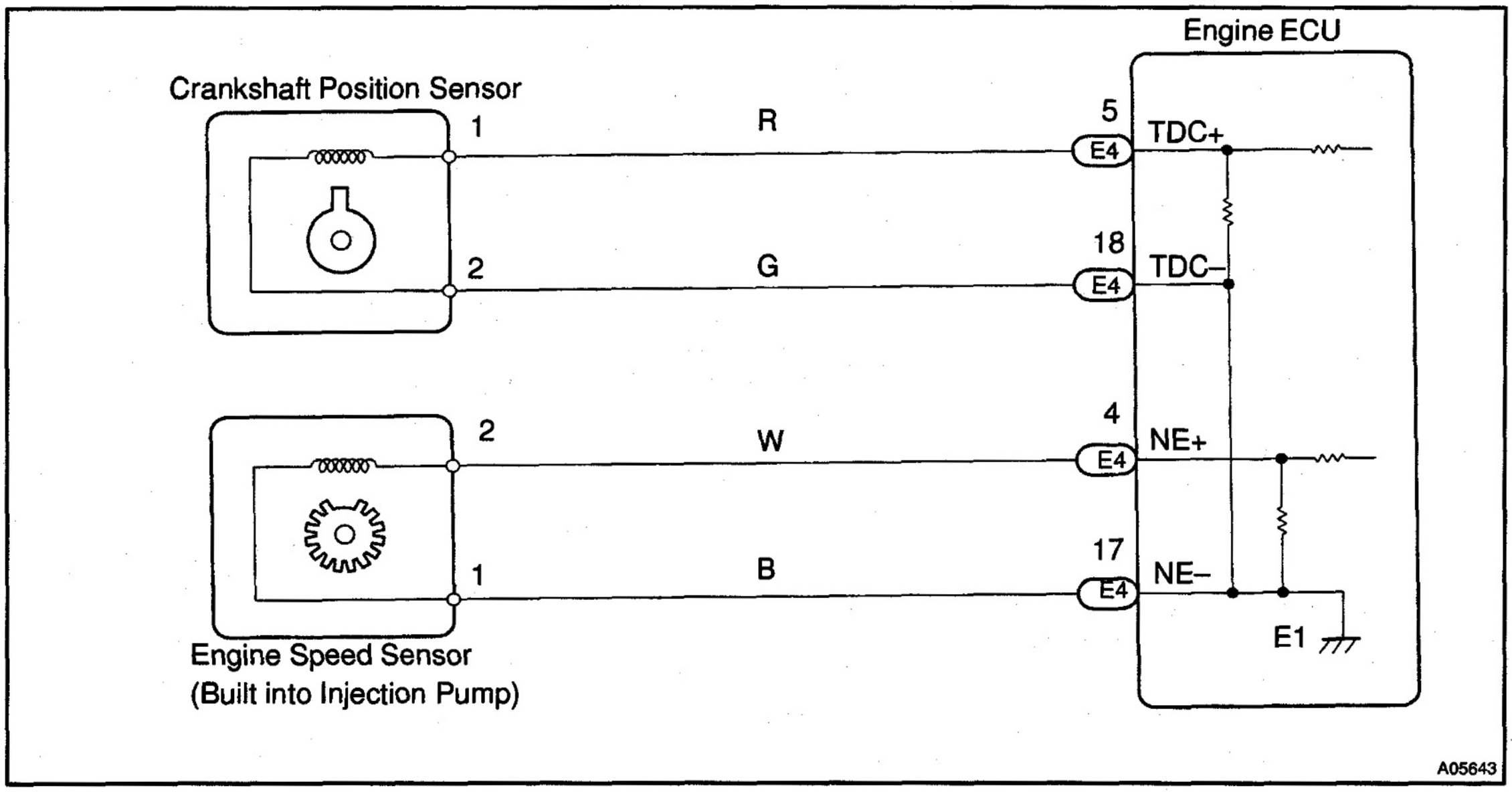

INSPECTION PROCEDURE

1	**Check resistance of crankshaft position sensor (See page ED–20).**

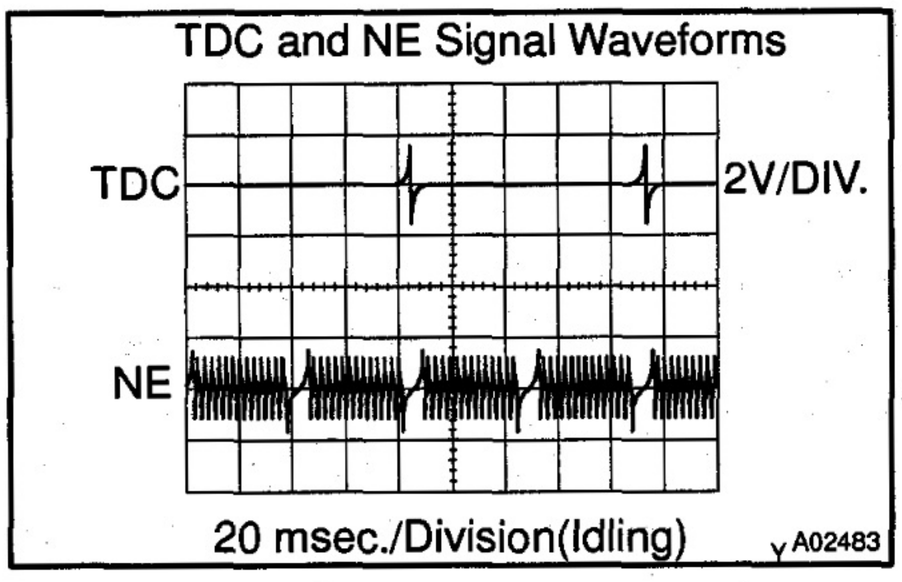

Reference: INSPECTION USING OSCILLOSCOPE
During cranking or idling, check the waveform between terminals TDC+ and TDC– of the engine ECU connector.
HINT:
The correct wavaforms are as shown.

NG → **Replace crankshaft position sensor.**

OK

2	**Check for open and short in harness and connector between engine ECU and crankshaft position sensor (See page IN–20).**

NG → **Repair or replace harness or connector.**

OK

3	**Inspect crankshaft position sensor installation.**

NG → **Tighten crankshaft position sensor.**

OK

Check and replace engine ECU (See page IN–20).

DTC	13	Engine Speed Sensor Circuit Malfunction (NE Circuit)

CIRCUIT DESCRIPTION

Refer to DTC 12 on page DI–19.

DTC No.	DTC Detecting Condition	Trouble Area
13	No NE signal to engine ECU for 0.5 sec. or more at 680 rpm or more	• Open or short in engine speed sensor circuit • Engine speed sensor • Engine ECU

WIRING DIAGRAM

Refer to DTC 12 on page DI–19.

INSPECTION PROCEDURE

1	**Check resistance of engine speed sensor (See page ED–20).**

NG → **Replace injection pump assembly.**

OK

2	**Check for open and short in harness and connector between engine ECU and engine speed sensor (See page IN–20).**

NG → **Repair or replace harness or connector.**

OK

3	**Inspect engine speed sensor installation.**

NG → **Tighten engine speed sensor.**

OK

Check and replace engine ECU (See page IN–20).

DI31Q–03

DTC	14	Timing Control System Malfunction

CIRCUIT DESCRIPTION

The engine ECU control the injection timing by actuating the timing control valve. The timing control valve is mounted on the injection pump and delay one by duty control of pump internal fuel pressure.
The engine ECU detects the injection advance angle by TDC and NE signals.

DTC No.	DTC Detecting Condition	Trouble Area
14	After engine warm up and during, actual injection timing is different from target value of engine ECU calculated for several sec.	• Open or short in timing control valve circuit • Fuel filter (Clogging) • Fuel (Freezing, Air in) • Injection pump (Internal pressure and timing control valve) • Engine ECU

WIRING DIAGRAM

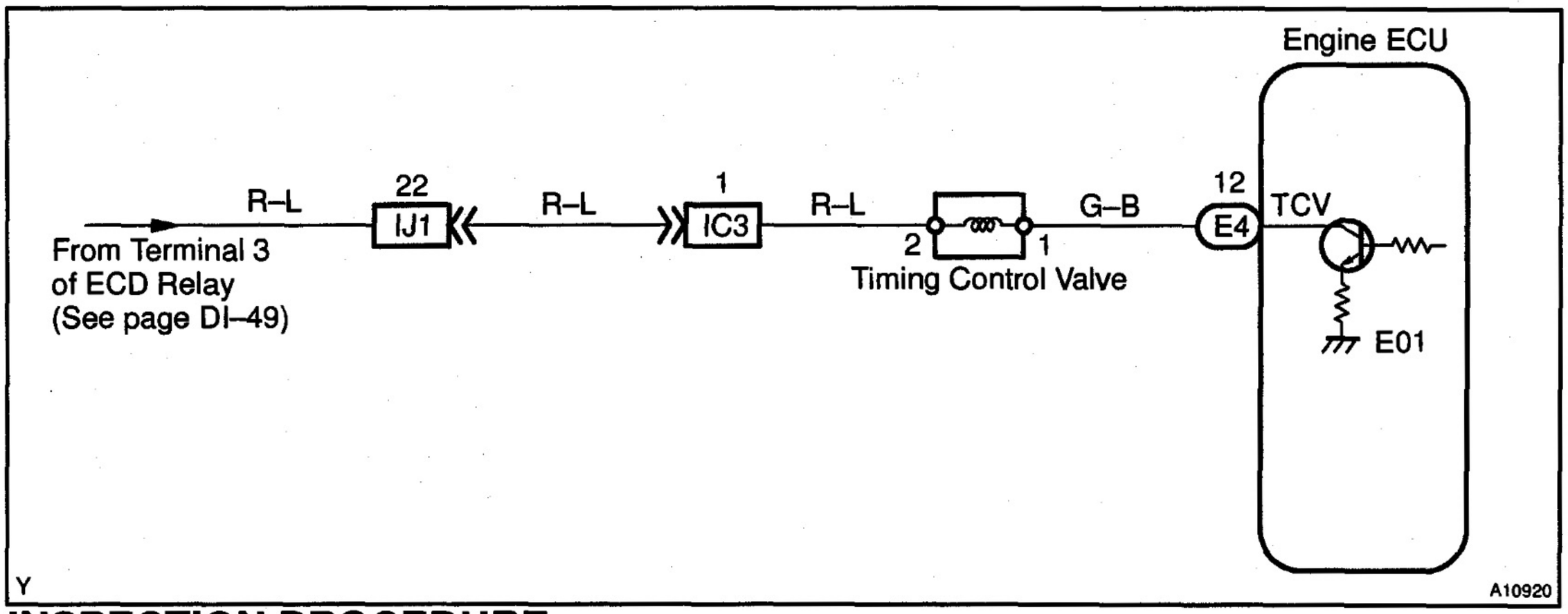

INSPECTION PROCEDURE

1	Check timing control valve (See page ED–8).

NG → Check and replace timing control valve (See page FU–18).

OK

2	Check voltage between terminal TCV of engine ECU connector and body ground.

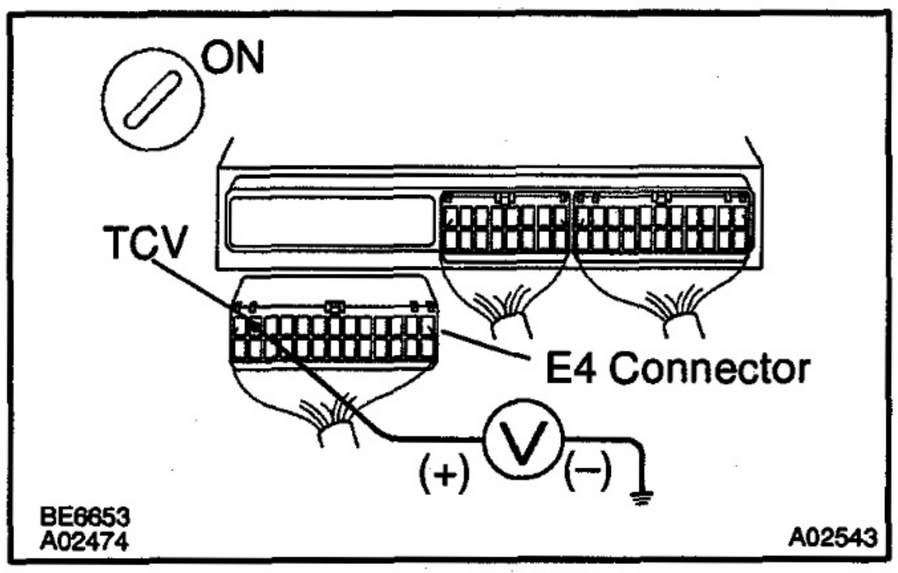

PREPARATION:
(a) Remove the glove compartment (See page ED–25).
(b) Disconnect the E4 connector from the engine ECU.
(c) Turn the ignition switch ON.

CHECK:
Measure the voltage between terminal TCV of the engine ECU connector and body ground.

OK:
Voltage: 9 – 14 V

OK	Go to step 3.

NG

Check for open or short in harness and connector between timing control valve and engine ECU, and timing control valve and ECD main relay (Marking: ECD) (See page IN–20).

3	Check voltage between terminal TCV of engine ECU connector and body ground.

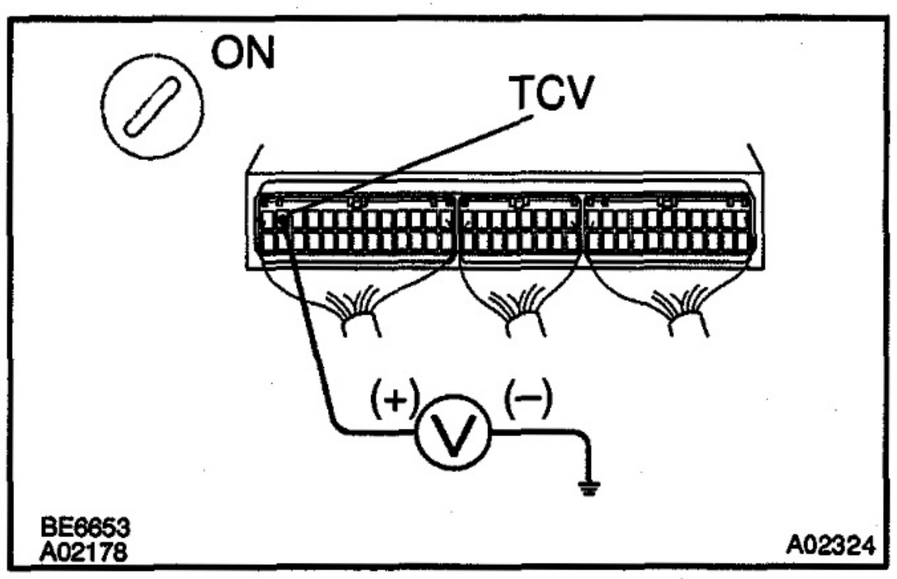

PREPARATION:
(a) Remove the glove compartment (See page ED–25).
(b) Turn the ignition switch ON.

CHECK:
Measure the voltage between terminal TCV of the engine ECU connector and body ground.

OK:
Voltage: 9 – 14 V

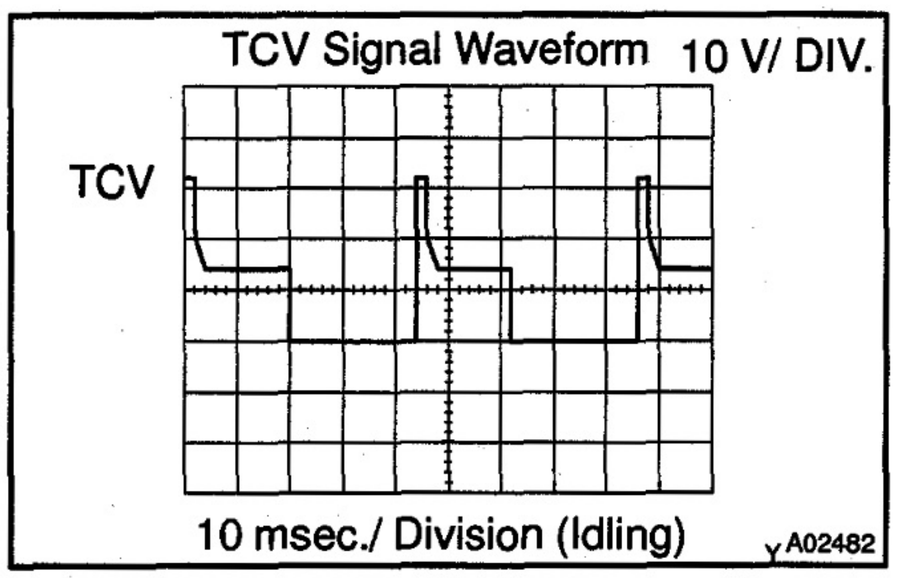

Reference: INSPECTION USING OSCILLOSCOPE
During idling, check the waveform between terminals TCV and E1 of the engine ECU connector.
HINT:
The correct waveform is as shown.

NG	Check and replace engine ECU (See page IN–20).

OK

4	Check fuel filter clogging, fuel freezing and fuel air in.

NG → Replace fuel filter.

OK

Check and replace injection pump (See page FU–15).

DI6JX–01

DTC	22	Water Temp. Sensor Circuit Malfunction

CIRCUIT DESCRIPTION

Fig. 1

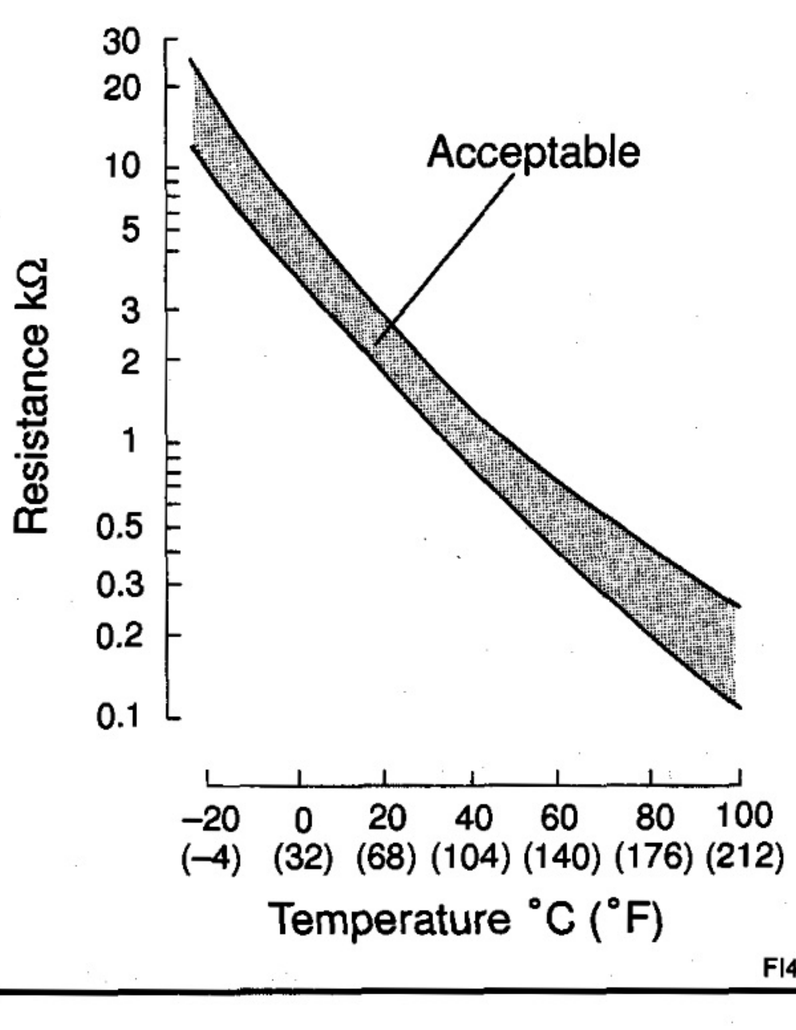

The water temperature sensor senses the coolant temperature. A thermistor built into the sensor changes the resistance value according to the coolant temperature. The lower the coolant temperature, the greater the thermistor resistance value, and the higher the coolant temperature, the lower the thermistor resistance value (See Fig. 1).

The water temperature sensor is connected to the engine ECU (See below). The 5 V power source voltage in the engine ECU is applied to the water temperature sensor from the terminal THW via a resistor R. That is, resistor R and the water temperature sensor are connected in series. When the resistance value of the water temperature sensor changes in accordance with changes in the coolant temperature, the potential at the terminal THW also changes. Based on this signal, the engine ECU increases the fuel injection volume to improve driveability during cold engine operation.

DTC No.	DTC Detecting Condition	Trouble Area
22	Resistance value of water temp. sensor circuit goes out of compensentation value for 0.5 sec. or more	• Open or short in water temp. sensor circuit • Water temp. sensor • Engine ECU

HINT:

After confirming DTC 22, use the hand–held tester to confirm the water temperature from the CURRENT DATA.

Temperature displayed	Malfunction
–40°C (–40°F)	Open circuit
140°C (284°F) or more	Short circuit

WIRING DIAGRAM

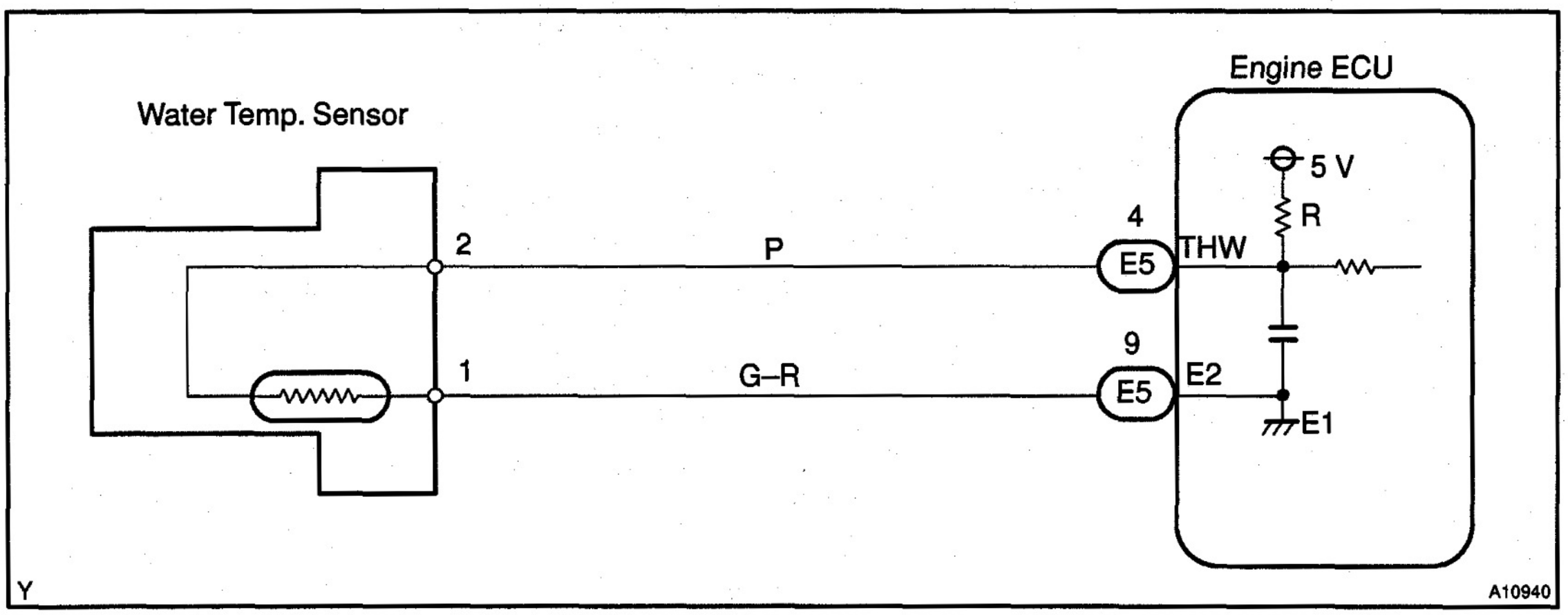

INSPECTION PROCEDURE

HINT:
If DTCs 22, 24 and 39 are output simultaneously, E2 (sensor ground) may be open.

1	**Check voltage between terminals THW and E2 of engine ECU connector.**

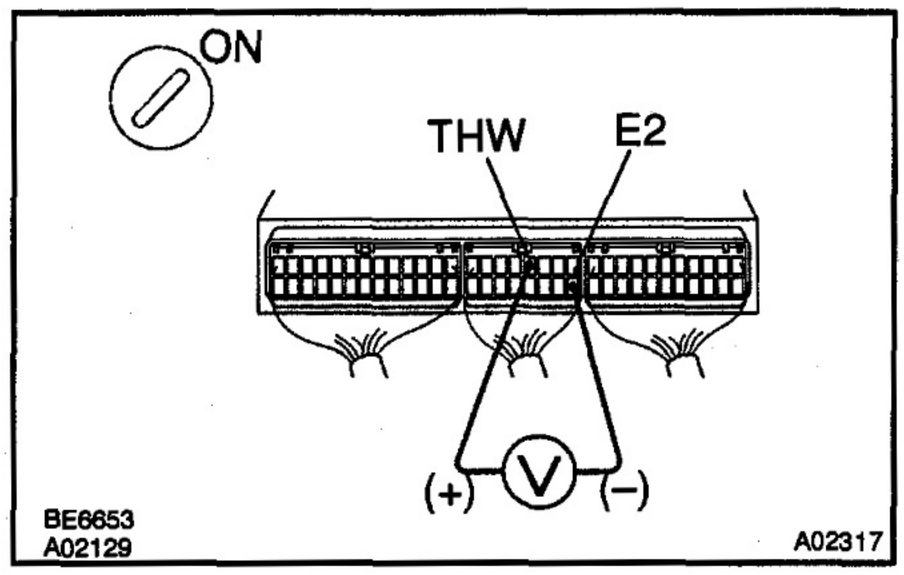

PREPARATION:

(a) Remove the glove compartment (See page ED–25).
(b) Turn the ignition switch ON.

CHECK:

Measure the voltage between terminals THW and E2 of the engine ECU connector.

OK:

Water Temp. °C (°F)	Voltage
20 (68) (Engine is cool)	2.7 – 2.9 V
80 (176) (Engine is hot)	1.6 V

OK → **Check for intermittent problems (See page DI–3).**

NG

2	**Check water temperature sensor (See page ED–15).**

NG → **Replace water temperature sensor.**

OK

3	**Check for open and short in harness and connector between engine ECU and water temperature sensor (See page IN–20).**

NG → **Repair or replace harness or connector.**

OK

Check and replace engine ECU (See page IN–20).

DI6JY–01

DTC	24	Intake Air Temp. Sensor Circuit Malfunction

CIRCUIT DESCRIPTION

Fig. 1

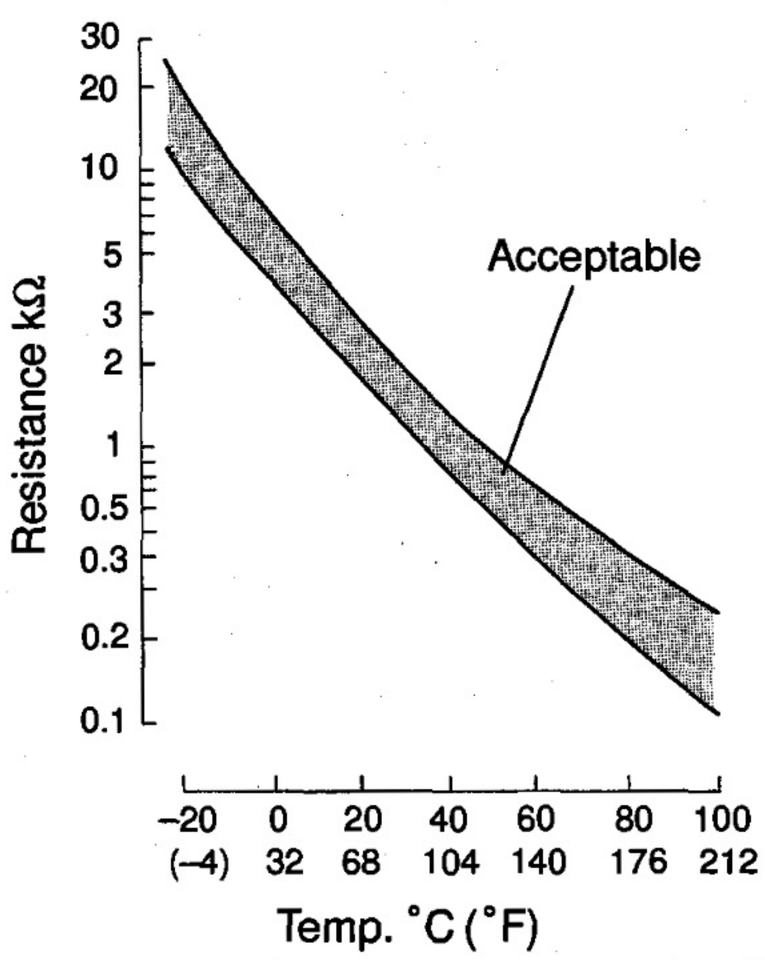

The intake air temperature sensor is built into the air cleaner cap and senses the intake air temperature. A thermistor built in the sensor changes the resistance value according to the intake air temperature. The lower the intake air temperature, the greater the thermistor, the lower the thermistor resistance value (See Fig. 1).

The intake air temperature sensor is connected to the engine ECU. The 5 V power source voltage in the engine ECU is applied to the intake air temperature sensor from terminal THA via a resistor R. That is, resistor R and the intake air temperature sensor are connected in series. When the resistance value of the intake air temperature sensor changes, based on this signal, the engine ECU increases the fuel injection volume to improve drivability during cold engine operation.

DTC No.	DTC Detecting Condition	Trouble Area
24 (1)	Resistance value of in intake air temp. sensor circuit value goes out of compensentation value for 0.5 sec. or more	• Open or short in intake air temp. sensor circuit • Intake air temp. sensor • Engine ECU

HINT:

After confirming DTC 24, use the hand–held tester to confirm the intake air temperature from the CURRENT DATA.

Temperature displayed	Malfunction
–40°C (–40°F)	Open circuit
140°C (284°F) or more	Short circuit

WIRING DIAGRAM

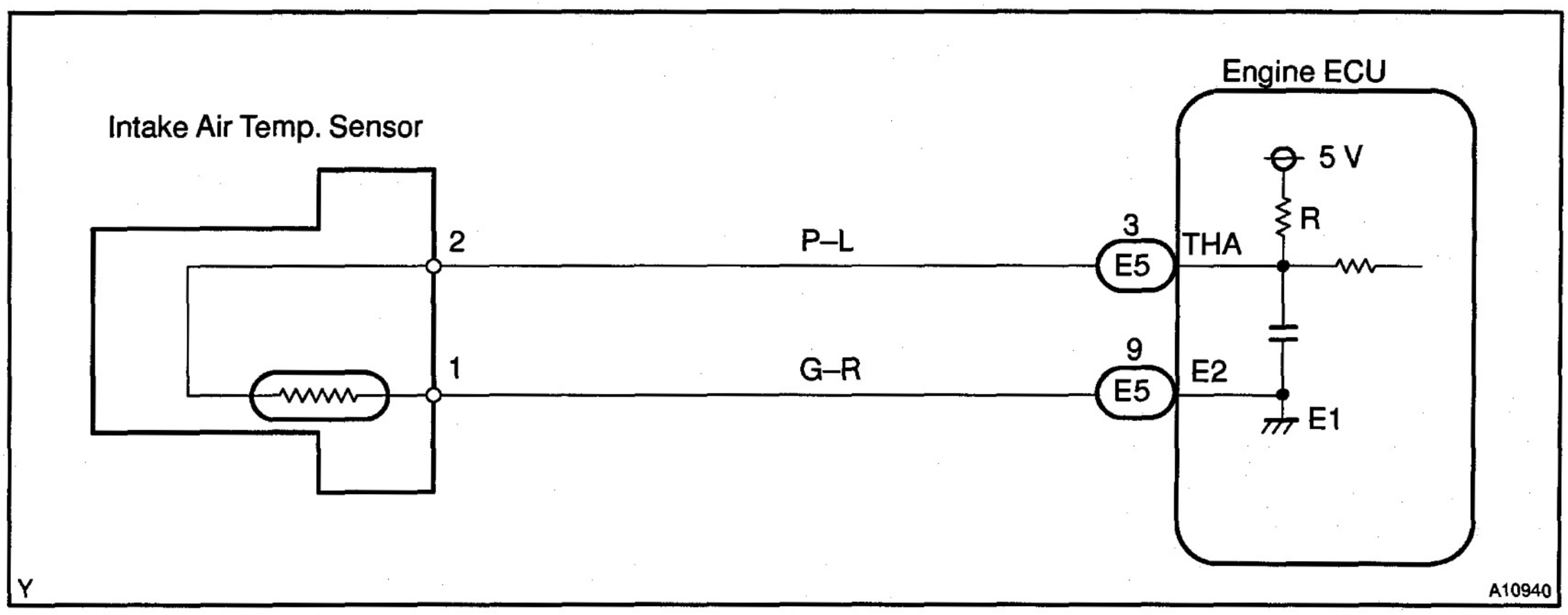

INSPECTION PROCEDURE

HINT:
If DTC 22, 24, 35 and 39, E2 (sensor ground) may be open.

1	**Check voltage between terminals THA and E2 of engine ECU connector.**

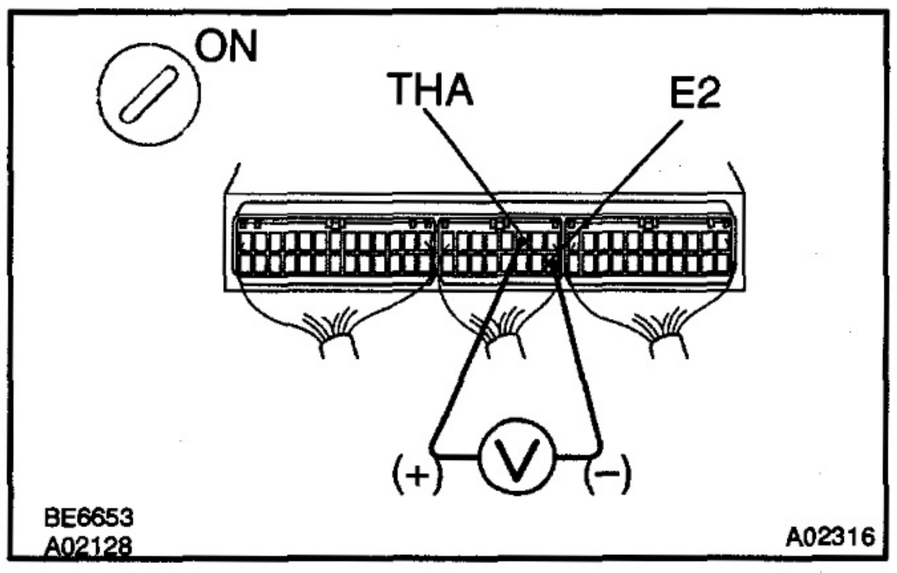

PREPARATION:

(a) Remove the glove compartment (See page ED–25).
(b) Turn the ignition switch ON.

CHECK:

Measure the voltage between terminals THA and E2 of the engine ECU connector.

OK:

Intake Air Temp. °C (°F)	Voltage
20 (68) (Engine is cool)	2.5 – 2.8 V
80 (176) (Engine is hot)	4.4 – 4.5 V

OK → **Check for intermittent problems (See page DI–3).**

NG

2	**Check intake air temperature sensor (See page ED–17).**

NG → **Replace intake air temperature sensor.**

OK

3	**Check for open and short in harness and connector between engine ECU and intake air temperature sensor (See page IN–20).**

NG → **Repair or replace harness or connector.**

OK

Check and replace engine ECU (See page IN–20).

DTC	32	Injection Pump Correction System Malfunction

CIRCUIT DESCRIPTION

There are two type correction resistors in this system.
One is correction resistor for injection timing (VRT). These resistors exist for correcting a few vary between each injection pumps.

DTC No.	DTC Detecting Condition	Trouble Area
32	Open or short in injection pump correction resistor circuit	• Injection pump correction resistor circuit • Injection pump correction resistor • Engine ECU

WIRING DIAGRAM

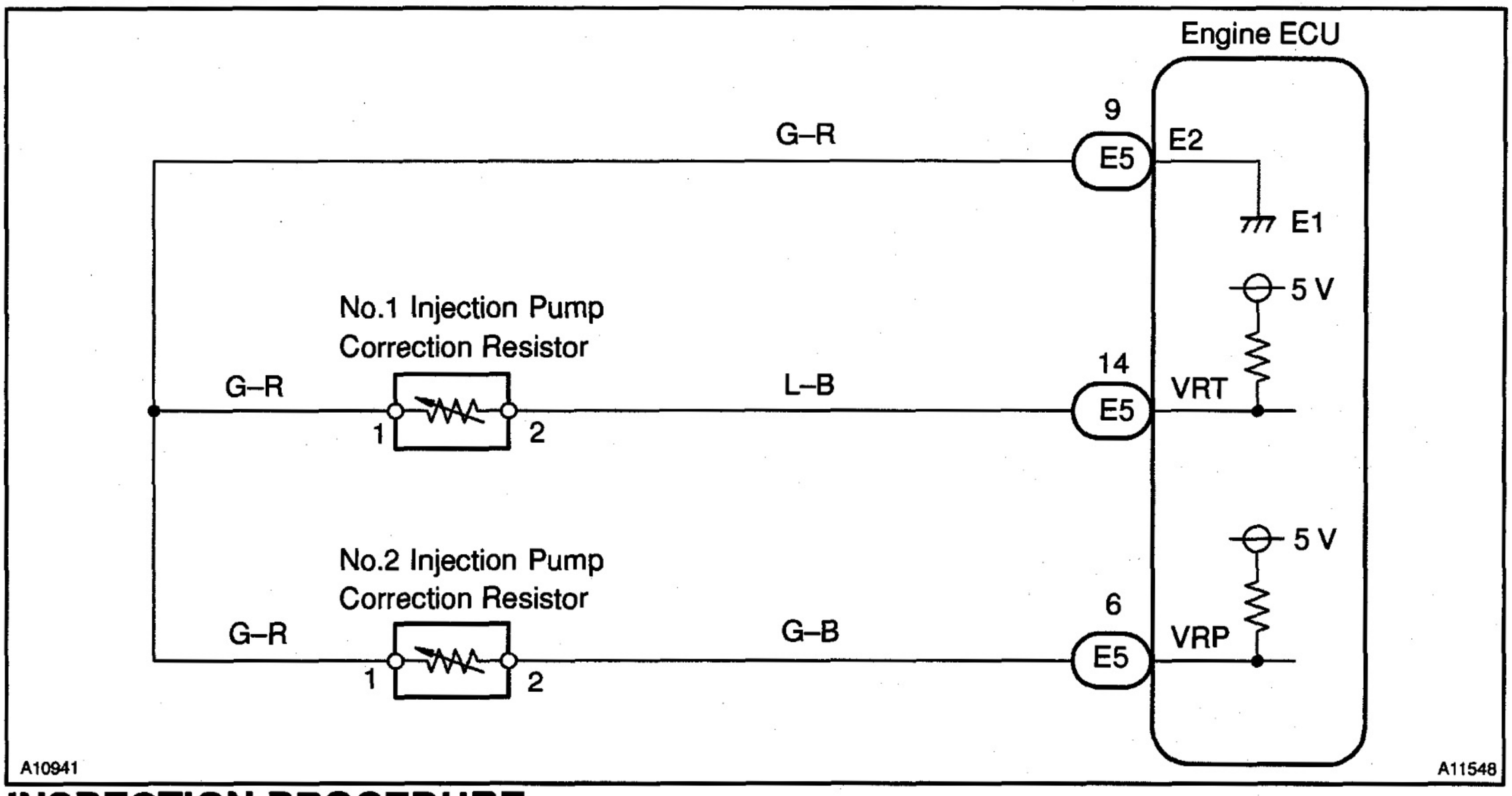

INSPECTION PROCEDURE

1	**Check injection pump correction resistors (See page ED–24).**

NG → **Replace injection pump assembly (See page FU–18).**

OK

2	**Check for open and short in harness and connector between the engine ECU and correction resistors (See page IN–20).**

NG → **Repair or replace harness or connector.**

OK

3	**Check voltage between terminals VRP and E2, and VRT and E2 of engine ECU connector.**

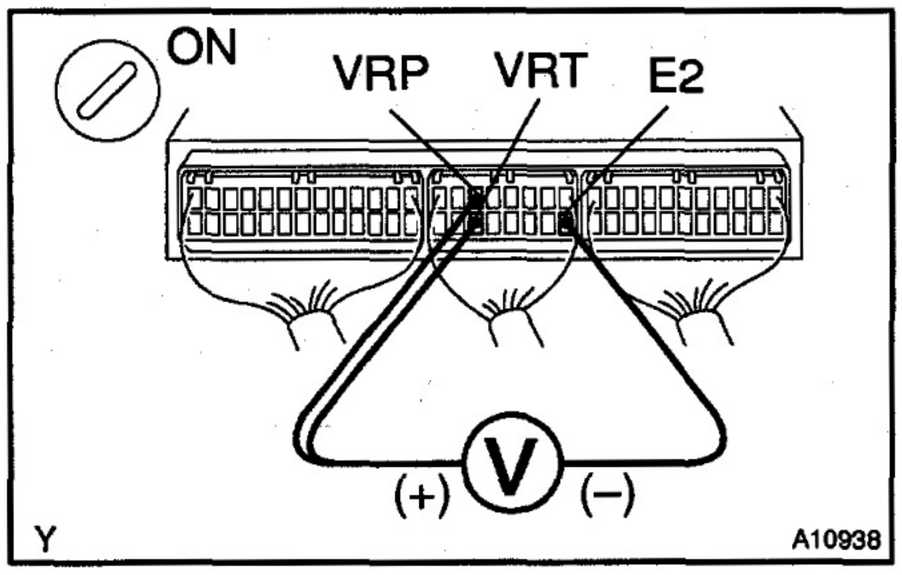

PREPARATION:

(a) Remove the glove compartment (See page ED–25).

(b) Turn the ignition switch ON.

CHECK:

Measure the voltage between terminals VRP and E2, and VRT and E2 of the engine ECU connector.

OK:

Voltage: 0.2 – 4.5 V

NG → **Repair or replace harness or connector.**

OK

Check and replace engine ECU (See page IN–20).

DI6K0–01

DTC 35 Turbo Pressure Sensor Circuit Malfunction

CIRCUIT DESCRIPTION

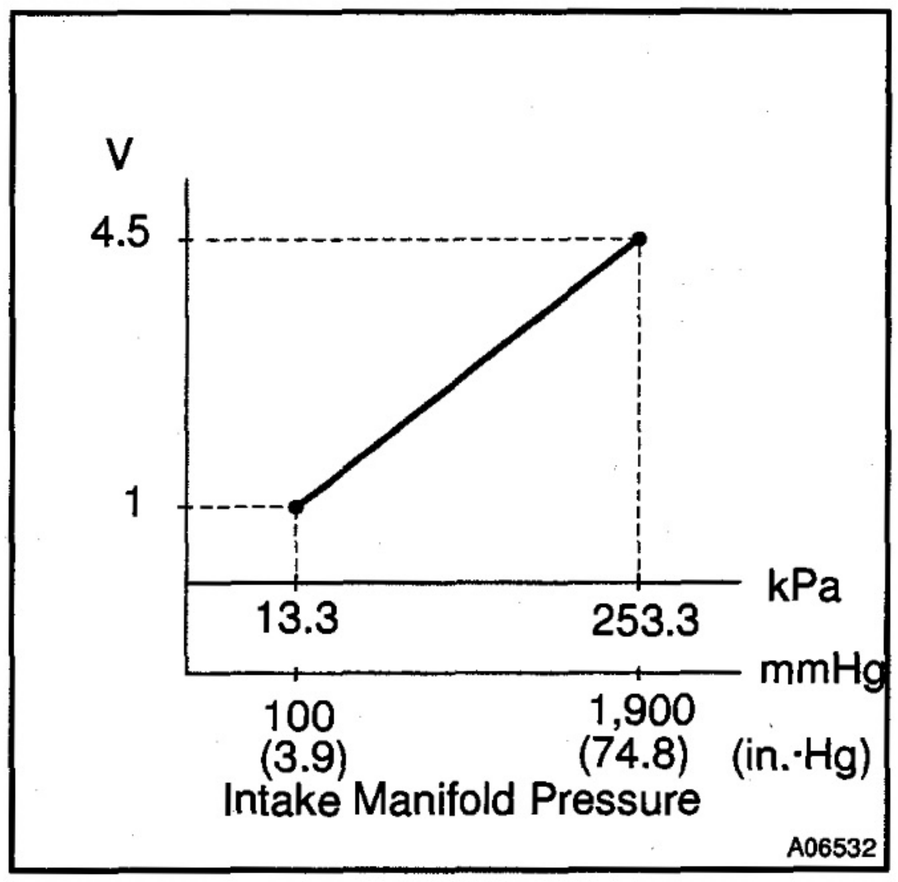

The turbo pressure sensor is connected to the intake manifold. The engine ECU detects the intake manifold pressure as a voltage by the sensor. The engine ECU uses the intake manifold pressure signal for correction of injection volume control and injection timing control.

The turbo pressure sensor monitors both the atmospheric pressure and intake manifold pressure and transmits the output voltage to the engine ECU, and the engine ECU uses this atmospheric pressure value for correcting the injection volume.

DTC No.	DTC Detecting Condition	Trouble Area
35	Open or short in turbo pressure sensor circuit for 2 sec. or more	• Open or short in turbo pressure sensor circuit • Turbo pressure sensor • Vacuum hose disconnected or blocked • Engine ECU

HINT:

After confirming DTC 35, use the hand–held tester to confirm the intake manifold pressure from the CURRENT DATA.

Intake Manifold Pressure (kPa)	Malfunction
Approx. 0	• PIM circuit short
130 or more	• VC circuit open or short • PIM circuit open • E2 circuit open

WIRING DIAGRAM

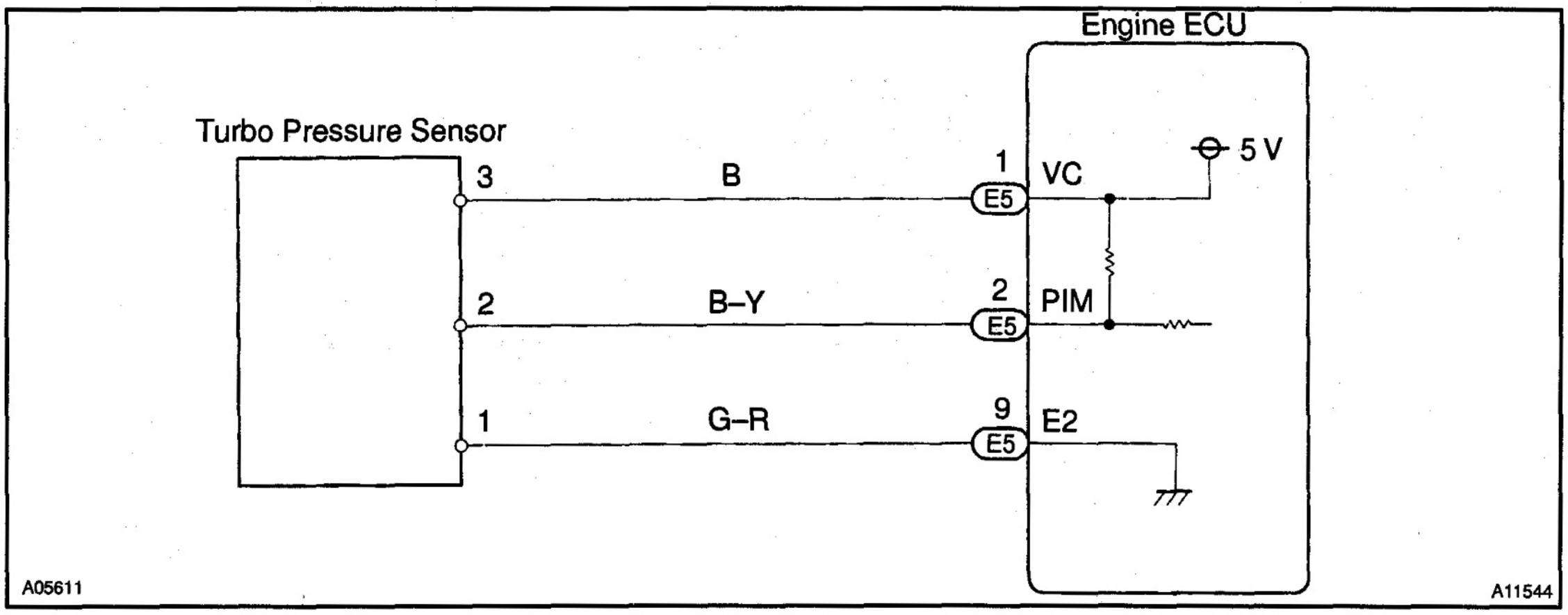

INSPECTION PROCEDURE

HINT:
If DTC 22, 24, 35 and 39 are output simultaneously, E2 (sensor ground) may be open.

1	**Check turbo pressure sensor (See page ED–18).**

NG → **Replace turbo pressure sensor.**

OK

2	**Check voltage between terminals VC and E2 of engine ECU connector.**

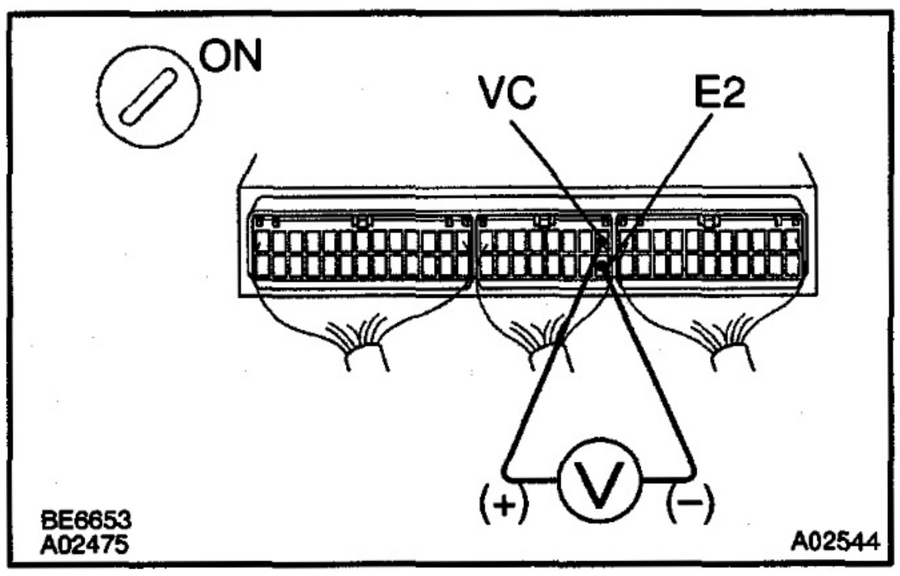

PREPARATION:
(a) Remove the glove compartment (See page ED–25).
(b) Turn the ignition switch ON.

CHECK:
Measure the voltage between terminals VC and E2 of the engine ECU connector.

OK:
Voltage: 4.5 – 5.5 V

NG → **Check and replace engine ECU (See page IN–20).**

OK

3	**Check voltage between terminals PIM and E2 of engine ECU connector.**

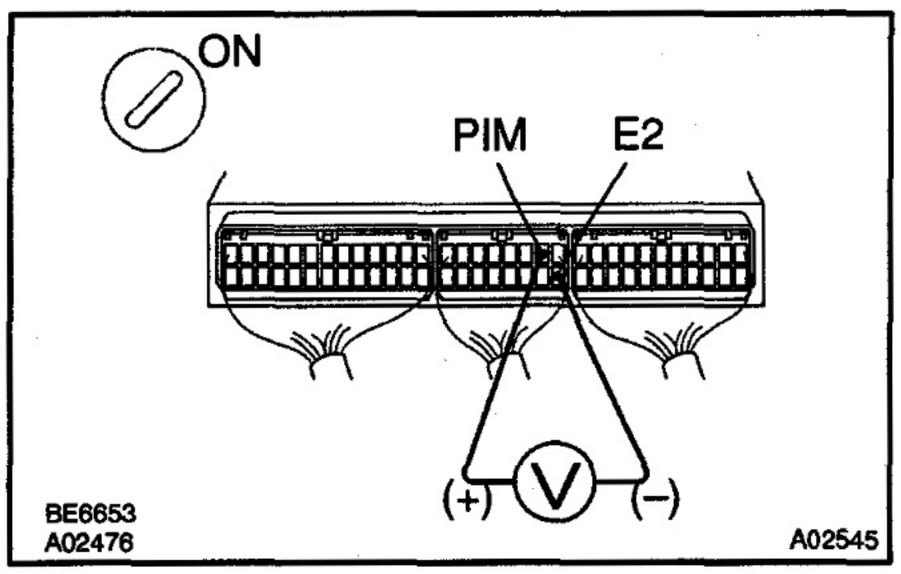

PREPARATION:
(a) Remove the glove compartment (See page ED–25).
(b) Turn the ignition switch ON.

CHECK:
Measure the voltage between terminals PIM and E2 of the engine ECU connector.

OK:
Voltage: 1.3 – 1.9 V

OK → **Check and replace engine ECU (See page IN–20).**

NG

Check for open and short in harness and connector between engine ECU and turbo pressure sensor (See page IN–20).

DI6K1–01

DTC	39	Fuel Temp. Sensor Circuit Malfunction

CIRCUIT DESCRIPTION

Fig. 1

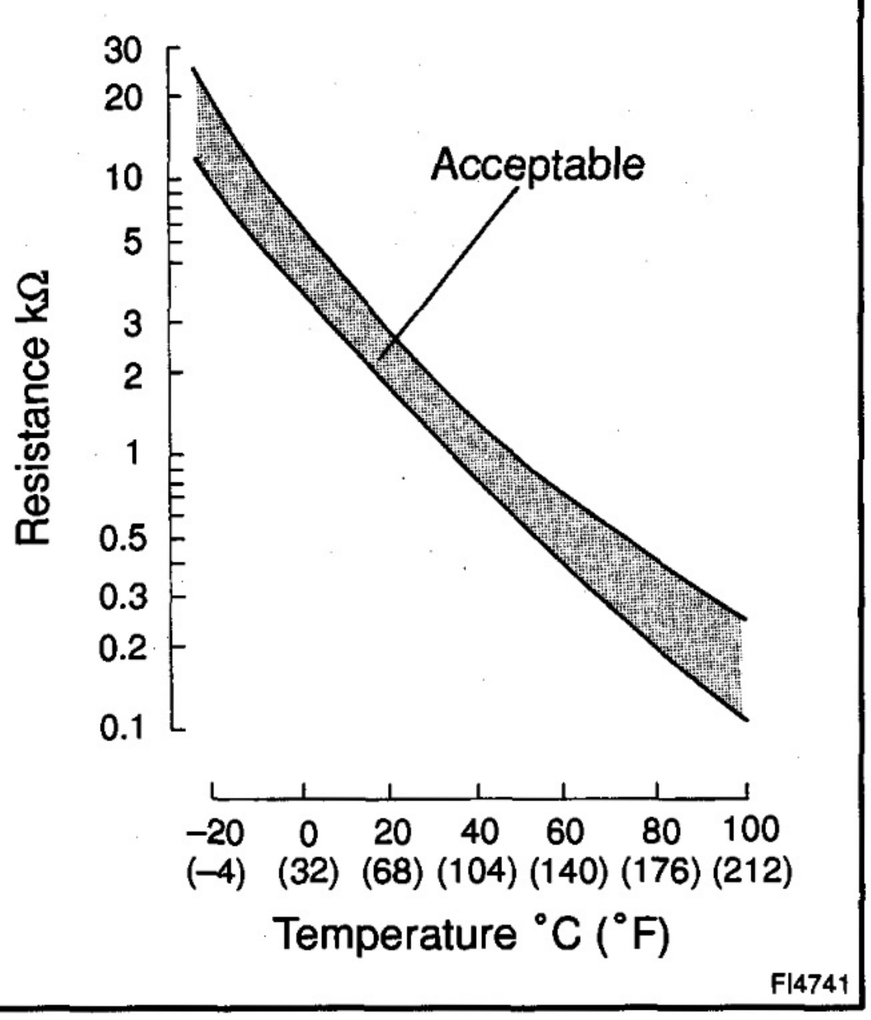

The fuel temperature sensor senses the fuel temperature. A thermistor built into the sensor changes the resistance value according to the fuel temperature. The lower the fuel temperature, the greater the thermistor resistance value, and the higher the fuel temperature, the lower the thermistor resistance value (See Fig. 1).

The fuel temperature sensor is connected to the engine ECU (See below). The 5 V power source voltage in the engine ECU is applied to the fuel temperature sensor from terminal THF via a resistor R. That is, resistor R and the fuel temperature sensor are connected in series. When the resistance value of the fuel temperature sensor changes in accordance with changes in the fuel temperature, the potential at terminal THF also changes. Based on this signal, the engine ECU. Based on this signal, the engine ECU performs the pressure control compensation of the supply pump and error detection compensation of the highly pressurized fuel system.

DTC No.	DTC Detecting Condition	Trouble Area
39	Open or short in fuel temp. sensor circuit for 0.5 sec. or more	• Open or short in fuel temp. sensor circuit • Fuel temp. sensor • Engine ECU

HINT:

After confirming DTC 39, use the hand–held tester to confirm the fuel temperature from the CURRENT DATA.

Temperature displayed	Malfunction
–40°C (–40°F)	Open circuit
140°C (284°F) or more	Short circuit

WIRING DIAGRAM

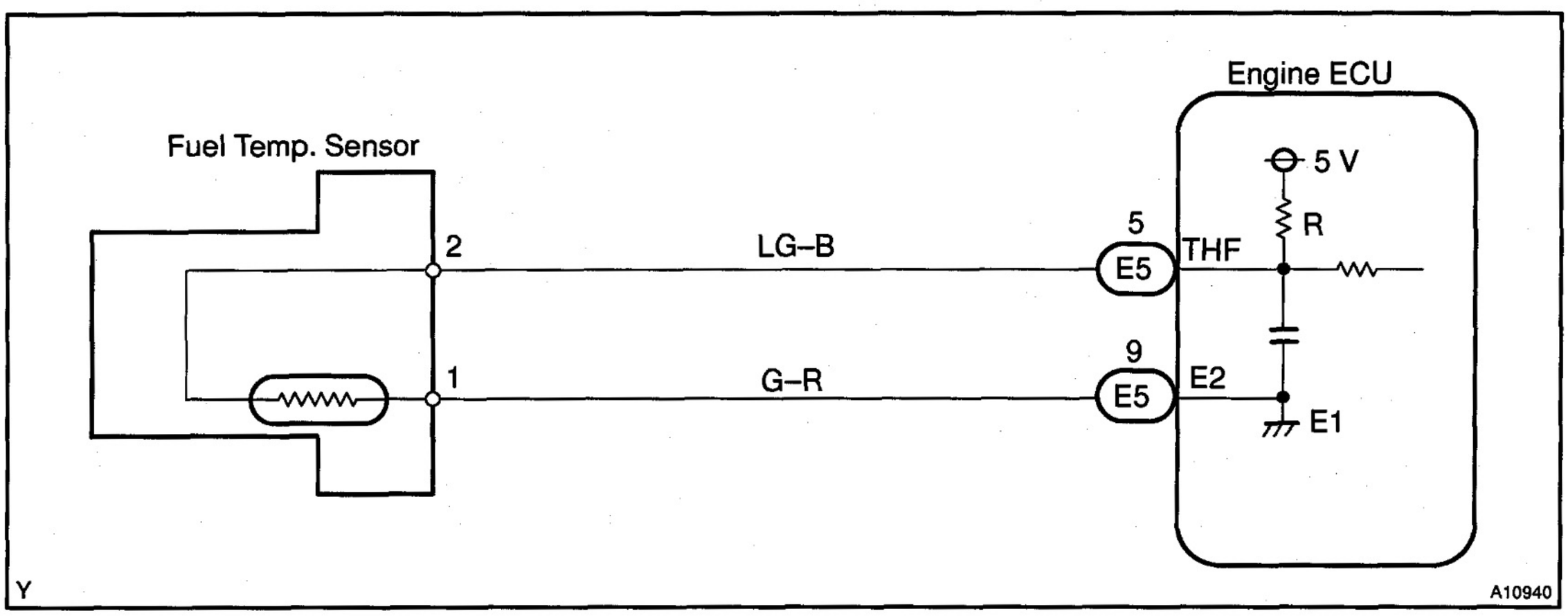

INSPECTION PROCEDURE

HINT:

If DTC 22, 24, 35 and 39 are output simultaneously, E2 (sensor ground) may be open.

1	**Check voltage between terminals THF and E2 of engine ECU connector.**

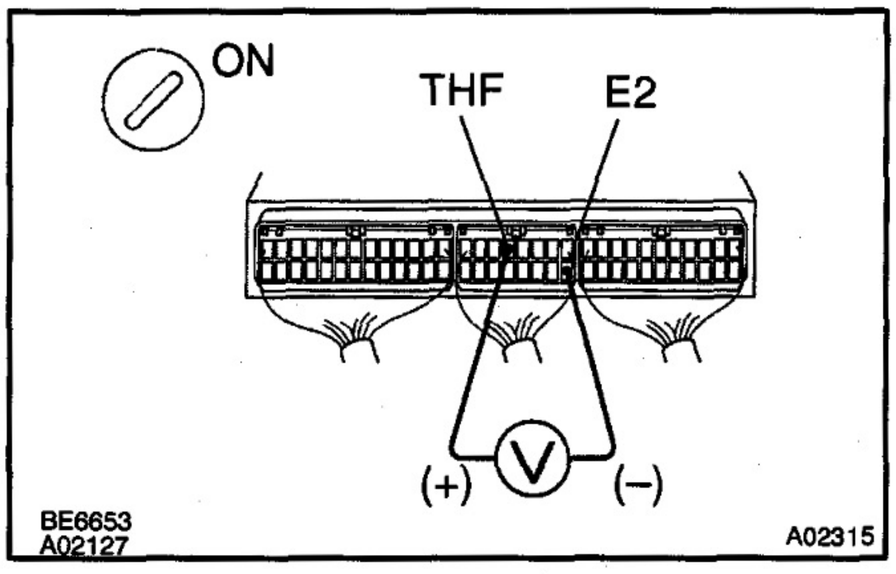

PREPARATION:

(a) Remove the glove compartment (See page ED–25).

(b) Turn the ignition switch ON.

CHECK:

Measure the voltage between terminals THF and E2 of the engine ECU connecter.

OK:

Fuel Temp. °C (°F)	Voltage
20 (68) (Engine is cool)	2.5 – 2.8 V
80 (176) (Engine is hot)	4.4 – 4.5 V

OK → **Check for intermittent problems (See page DI–3).**

NG

2	**Check fuel temperature sensor (See page ED–16).**

NG → **Replace fuel temperature sensor.**

OK

3	**Check for open and short in harness and connector between engine ECU and fuel temperature sensor (See page IN–20).**

NG → **Repair or replace harness or connector.**

OK

Check and replace engine ECU (See page IN–20).

DI6K2-01

DTC	41	Throttle Position Sensor Circuit Malfunction

CIRCUIT DESCRIPTION

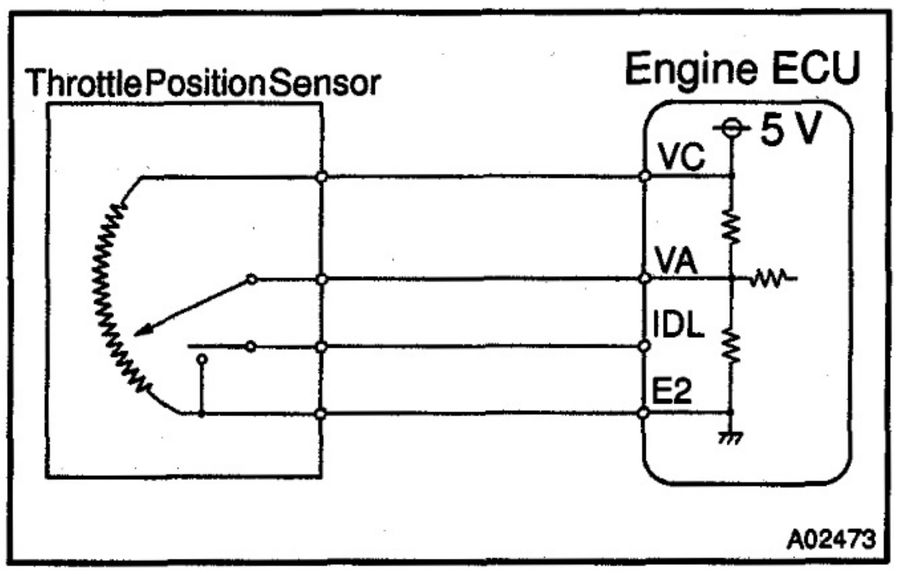

The throttle position sensor is mounted in the throttle body and detects the throttle valve opening angle. When the throttle valve is fully closed, the IDL contacts in the throttle position sensor are on, so the voltage at the terminal IDL of the engine ECU becomes 0 V. At this time, a voltage of approximately 0.3 – 0.8 V is applied to terminal VA of the engine ECU. When the throttle valve is opened, the IDL contacts go off and thus the power source voltage of approximately 12 V in the engine ECU is applied to the terminal IDL of the engine ECU. The voltage applied to the terminal VA of the engine ECU increases in proportion to the opening angle of the throttle valve and becomes approximately 3.2 – 4.9 V when the throttle valve is fully opened. The engine ECU judges the vehicle driving conditions from these signals input from terminals VA and IDL, and uses them as one of the conditions for deciding the basic fuel injection volume.

DTC No.	DTC Detecting Condition	Trouble Area
41	Open or short in throttle position sensor circuit for 0.05 sec. or more	• Open or short in throttle position sensor circuit • Throttle position sensor • Engine ECU

HINT:
When the connector for the throttle position sensor is disconnected, DTC 41 is not displayed. DTC 41 is displayed only when there is an open or short in the VA signal circuit of the throttle position sensor.

WIRING DIAGRAM

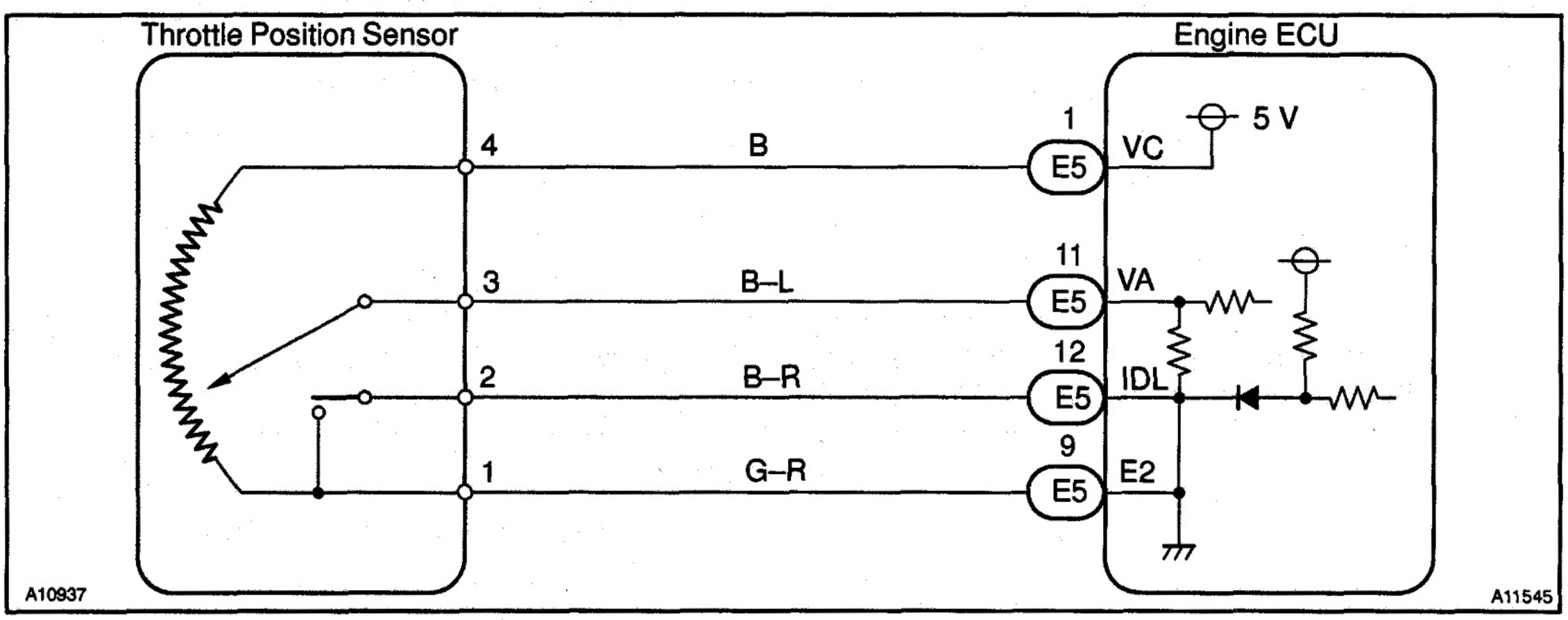

INSPECTION PROCEDURE

HINT:
If DTC 22, 35 and 41 are output simultaneously, E2 (sensor ground) may be open.

1	**Check voltage between terminals VA and E2, and IDL and E2 of engine ECU connector.**

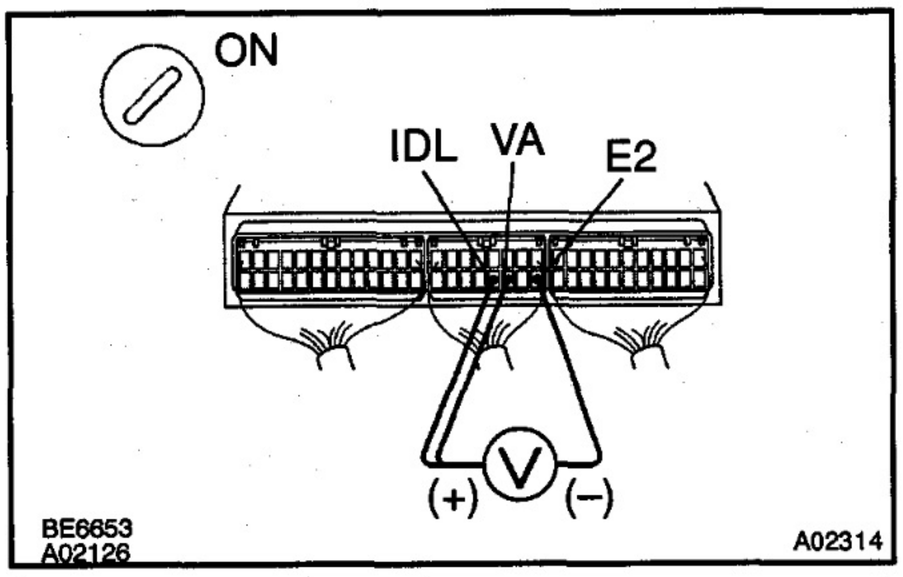

PREPARATION:

(a) Remove the glove compartment (See page ED–25).

(b) Turn the ignition switch ON.

CHECK:

Measure the voltage between terminals VA and E2, and IDL and E2 of the engine ECU connector when the throttle valve is opened gradually from the closed condition.

OK:

Throttle Valve	Voltage	
	VA – E2	IDL – E2
Fully closed	0.3 – 0.8 V	0 – 3 V
Fully open	2.9 – 4.9 V	9 – 14 V

HINT:

The voltage should increase steadily in proportion to the throttle valve opening angle.

OK → **Check for problem symptoms table (See page DI–17).**

NG

2	**Check throttle position sensor (See page ED–3).**

NG → **Replace throttle position sensor.**

OK

3	**Check for open and short in harness and connector between engine ECU and throttle position sensor (See page IN–20).**

NG → **Repair or replace harness or connector.**

OK

Check and replace engine ECU (See page IN–20).

DTC	42	Vehicle Speed Sensor Signal Circuit Malfunction

CIRCUIT DESCRIPTION

The vehicle speed sensor outputs a 4–pulse signal for every revolution of the rotor shaft, which is rotated by the transmission output shaft via the driven gear. After this signal is converted into a more precise rectangular waveform by the waveform shaping circuit inside the combination meter, it is then transmitted to the engine ECU. The engine ECU determines the vehicle speed based on the frequency of these pulse signals.

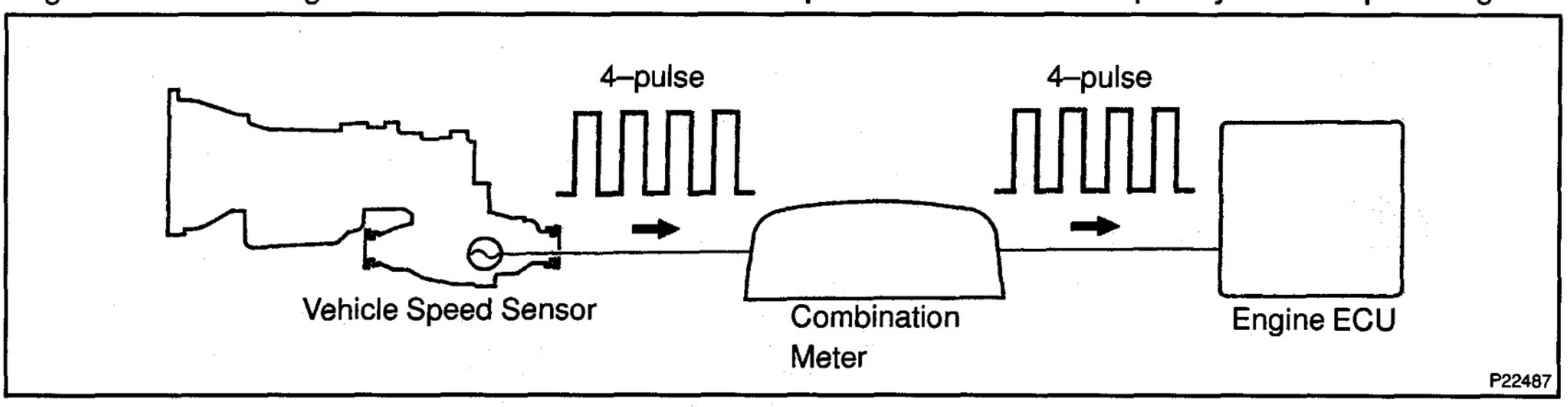

DTC No.	DTC Detecting Condition	Trouble Area
42	All conditions below are detected continuously for 8 sec. or more: (a) Vehicle speed signal: 0 km/h (0 mph) (b) Engine speed: 1,800 – 3,200 rpm (c) Engine coolant temp.: 60°C (176°F) or more (d) Accelerator pedal opening angle : 32 % or more	• Combination meter • Open or short in vehicle speed sensor circuit • Vehicle speed sensor • Engine ECU

WIRING DIAGRAM

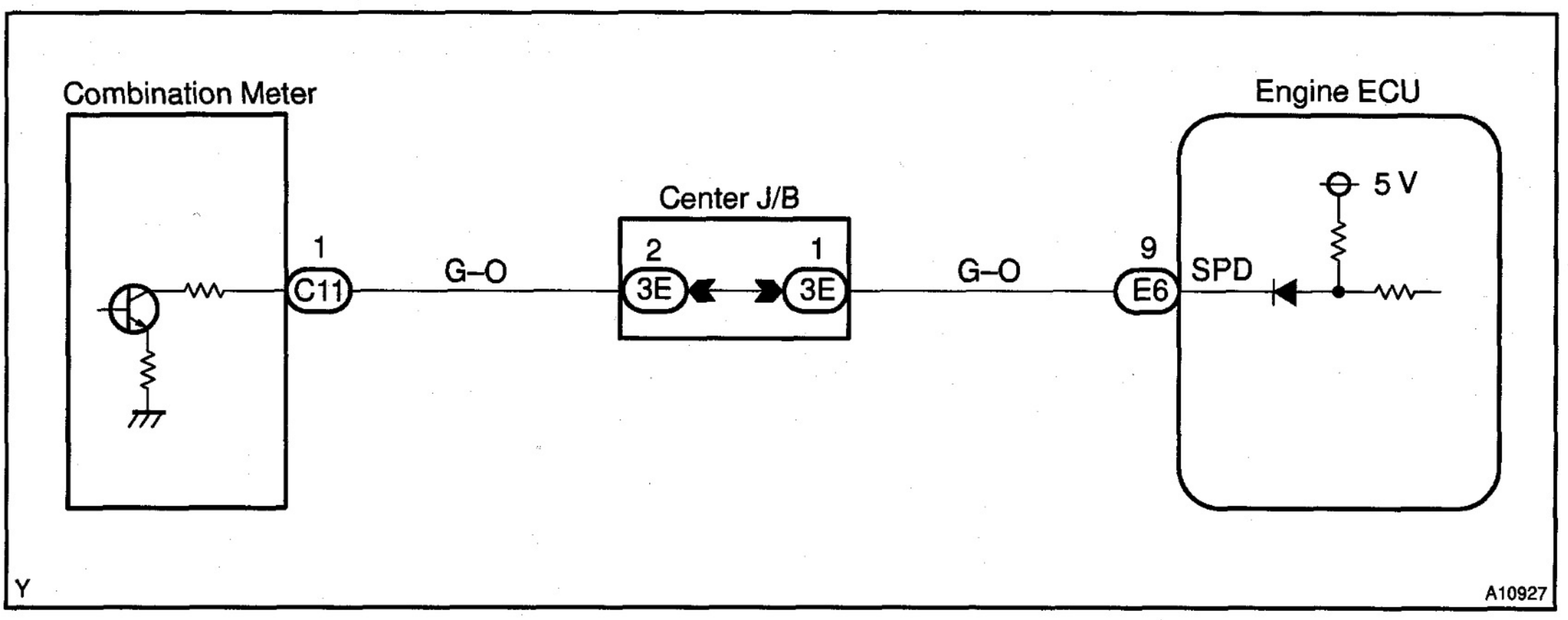

INSPECTION PROCEDURE

1	**Check operation of speedometer.**

CHECK:

Drive the vehicle and check if the operation of the speedometer in the combination meter is normal.

HINT:
The vehicle speed sensor is operating normally if the speedometer display is normal.

NG → **Check speedometer.**

OK

2	**Check voltage between terminal SPD of engine ECU connector and body ground.**

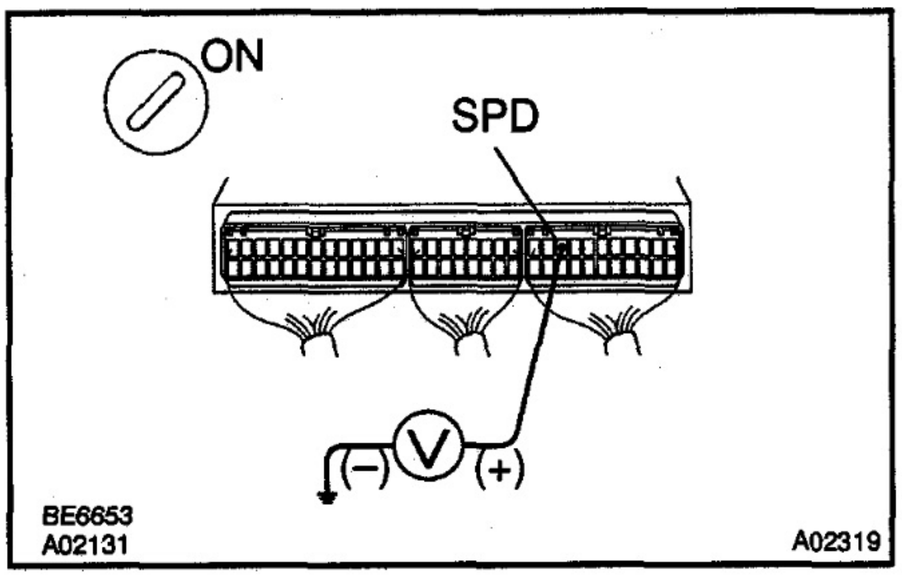

PREPARATION:
(a) Remove the glove compartment (See page ED–25).
(b) Shift the shift lever to the neutral.
(c) Jack up one of the front wheels.
(d) Turn the ignition switch ON.

CHECK:
Measure the voltage between terminal SPD of the engine ECU connector and body ground when the wheel is turned slowly.

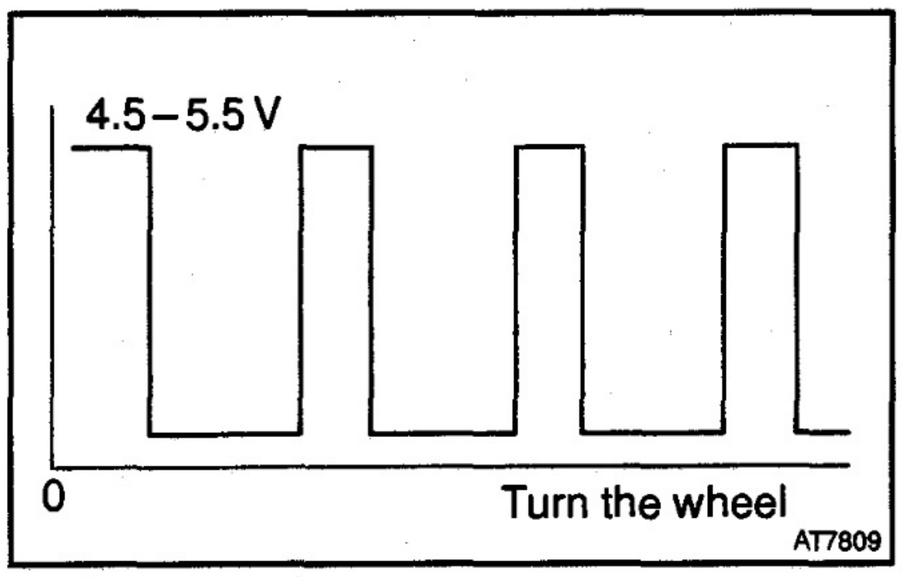

OK:
Voltage is generated intermittently.

NG → **Check and repair harness and connector between combination speedometer and engine ECU (See page IN–20).**

OK

Check and replace engine ECU (See page IN–20).

DI325-04

DTC	43	Starter Signal Circuit Malfunction

CIRCUIT DESCRIPTION

When the engine is being cranked, the intake air flow is slow, so fuel vaporization is poor. A rich mixture is therefore necessary in order to achieve good startability. While the engine is being cranked, the battery positive voltage is applied to terminal STA of the engine ECU. The starter signal is mainly used to increase the fuel injection volume for the starting injection control and after–start injection control.

DTC No.	Detection Condition	Trouble Area
43	No starter signal to engine ECU	• Open or short in starter circuit • Open or short in ignition switch or stater relay circuit • Engine ECU

WIRING DIAGRAM

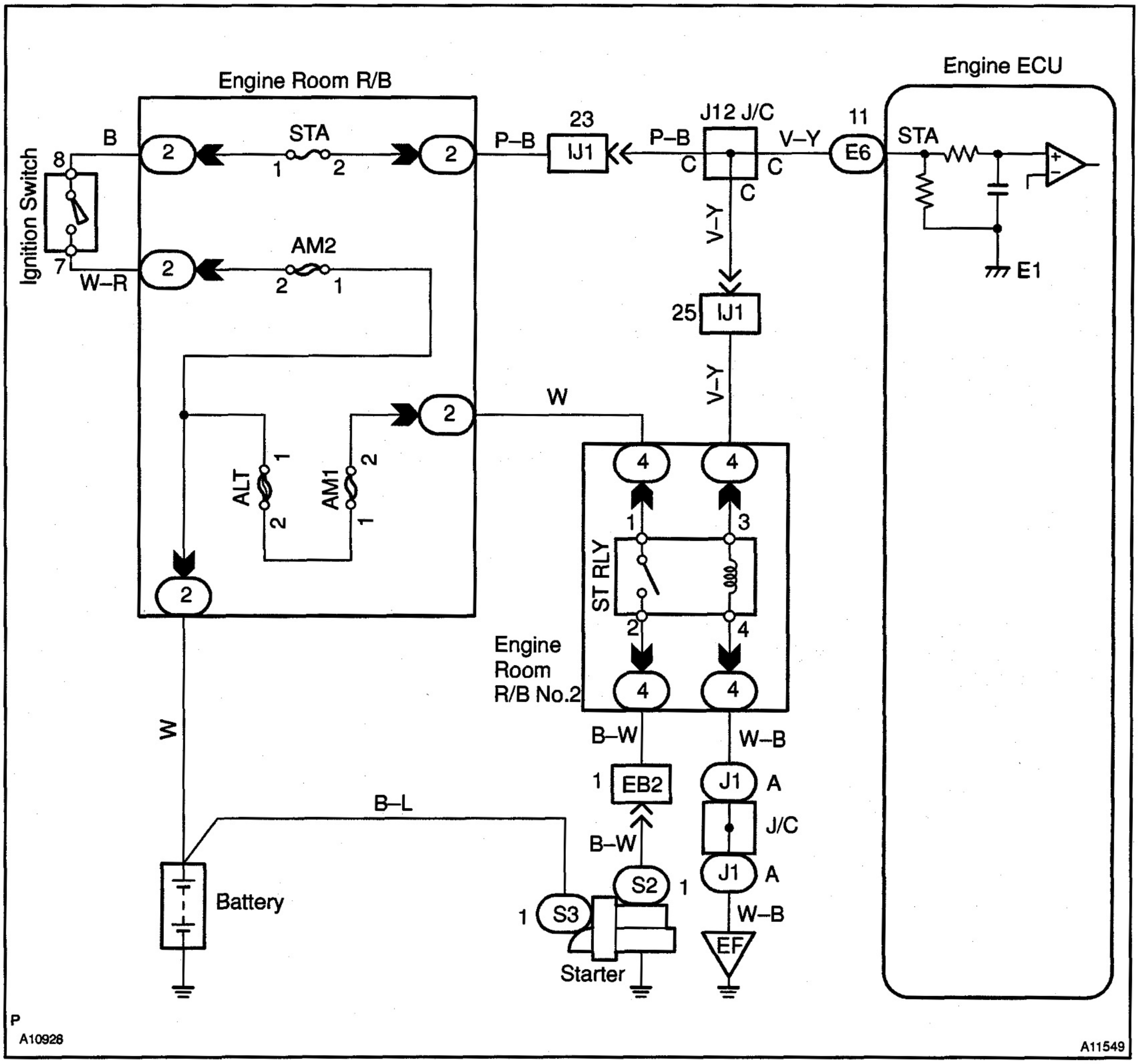

INSPECTION PROCEDURE

HINT:
This diagnostic chart is based on the premise that the engine is being cranked under normal conditions. If the engine does not crank, proceed to the problem symptoms table on page DI–17.

1	**Check voltage between terminal STA of engine ECU connector and body ground.**

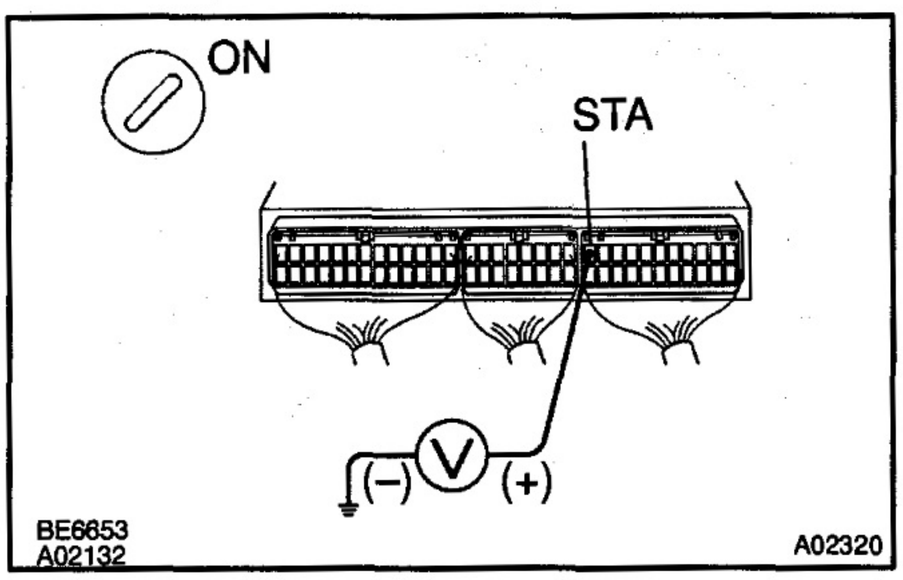

PREPARATION:
(a) Remove the glove compartment (See page ED–25).
(b) Turn the ignition switch ON.

CHECK:
Measure the voltage between terminal STA of the engine ECU connector and body ground during cranking.

OK:

Voltage: 6.0 V or more

Ignition Switch Position	ON	STA
STA Signal	OFF	ON

OK → **Proceed to next circuit inspection shown on problem symptoms table (See page DI–17).**

NG

2	**Check for open in harness and connector between engine ECU and starter relay (Marking: ST RLY) (See page IN–20).**

NG → **Repair or replace harness or connector.**

OK

Check and replace engine ECU (See page IN–20).

DTC	49	First Gear Position Switch Circuit Malfunction

CIRCUIT DESCRIPTION

The 1st gear position switch on the side of transmission detects the 1st gear and limits the engine output when the high load is applied during running in the 1st gear.

DTC No.	Detection Condition	Trouble Area
49	Open or short 1st gear position switch	• Open or short in 1st gear position switch circuit • Open or short in 1st gear position switch • Engine ECU

WIRING DIAGRAM

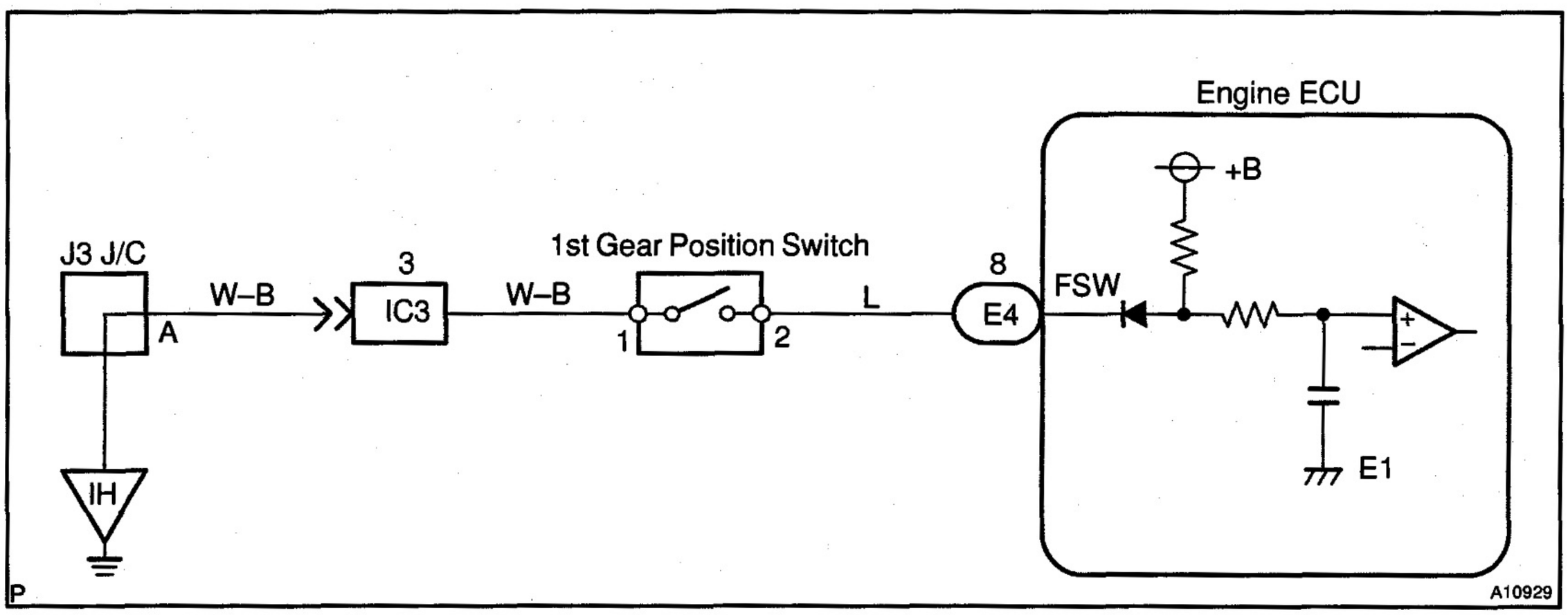

INSPECTION PROCEDURE

1	Check 1st gear position switch (See page ED–22).

NG → Replace 1st gear position switch.

OK

2	**Check voltage between terminal FSW of engine ECU connector and body ground.**

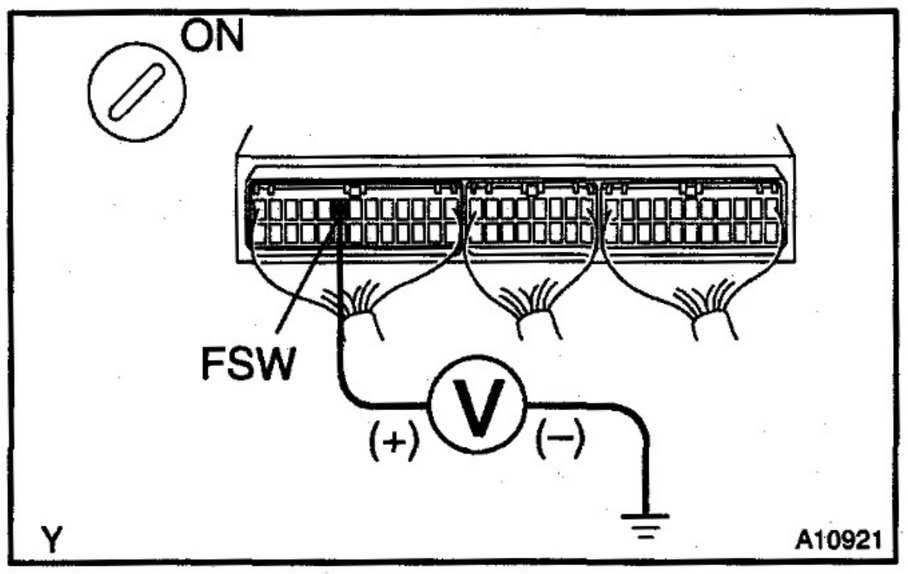

PREPARATION:

(a) Remove the glove compartment (See page ED–25).

(b) Turn the ignition switch ON.

CHECK:

Measure the voltage between terminal FSW of the engine ECU connector and body ground after the shift lever is moved to the following positions.

OK:

Shift Lever Position	1st Gear	Except 1st Gear
Voltage	9 – 14 V	0 – 3 V

OK → **Check and replace engine ECU (See page IN–20).**

NG

Check for open and short in harness and connector between 1st gear position switch and engine ECU (See page IN–20).

Back Up Power Source Circuit

CIRCUIT DESCRIPTION

Battery positive voltage is supplied to terminal +BF of the engine ECU even when the ignition switch is OFF for the use of the DTC memory, air–fuel ratio adaptive control value memory, etc.

WIRING DIAGRAM

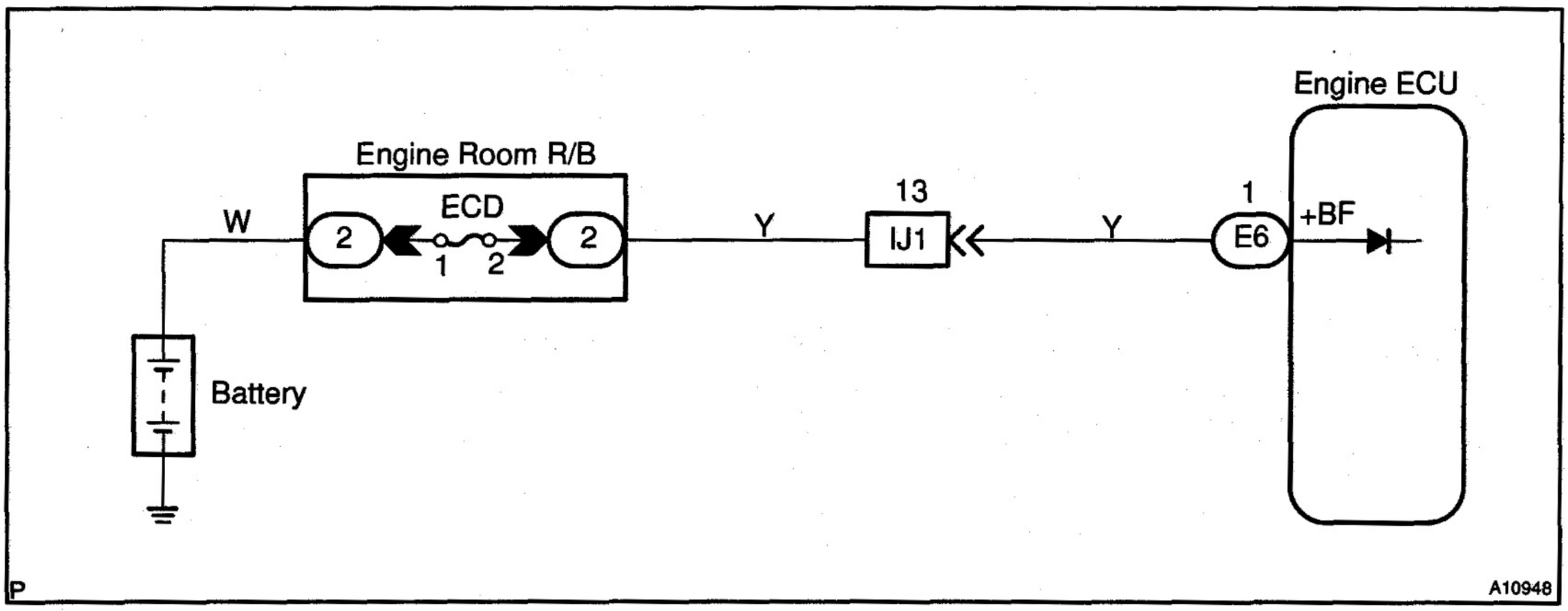

INSPECTION PROCEDURE

1	**Check voltage between terminal +BF of engine ECU connector and body ground.**

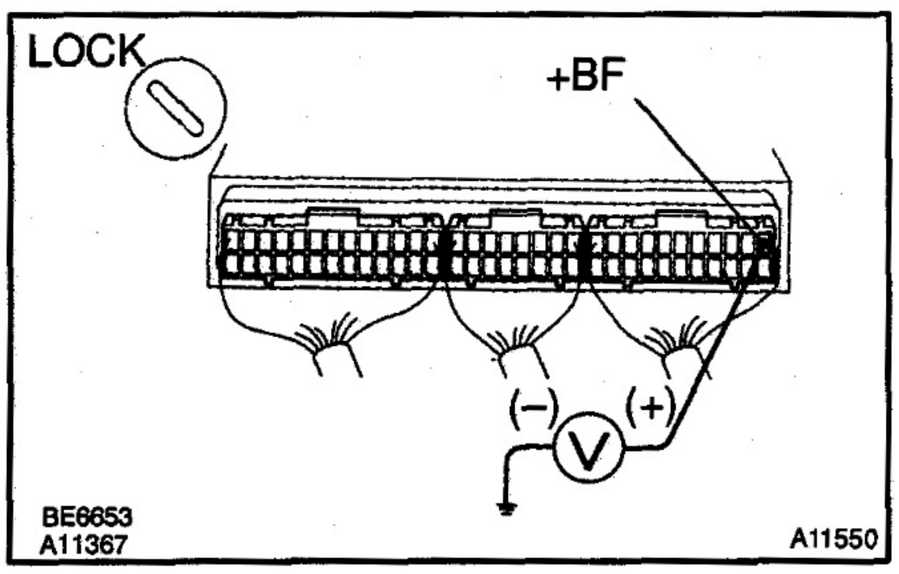

PREPARATION:

Remove the glove compartment (See page ED–25).

CHECK:

Measure the voltage between terminal +BF of the engine ECU connector and body ground.

OK:

Voltage: 9 – 14 V

OK	**Check and replace engine ECU (See page IN–20).**
NG	

2	**Check ECD fuse.**

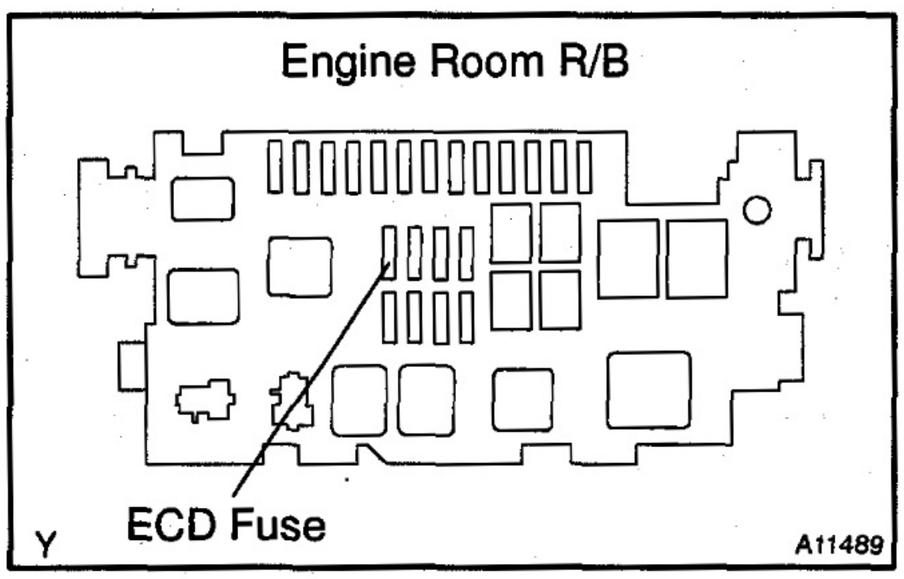

PREPARATION:

Remove the ECD fuse from the engine room R/B.

CHECK:

Check the continuity of the ECD fuse.

OK:

Continuity

NG → **Check for short in all harness and components connected to ECD fuse (See page IN–10).**

OK

Check and repair harness or connector between battery and ECD fuse, and ECD fuse and engine ECU (See page IN–20).

Engine ECU Power Source Circuit

CIRCUIT DESCRIPTION

When the ignition switch is turned ON, battery voltage is applied to the coil, closing the contacts of the ECD relay (Marking: ECD) and supplying power to the terminal +BG of the engine ECU.

WIRING DIAGRAM

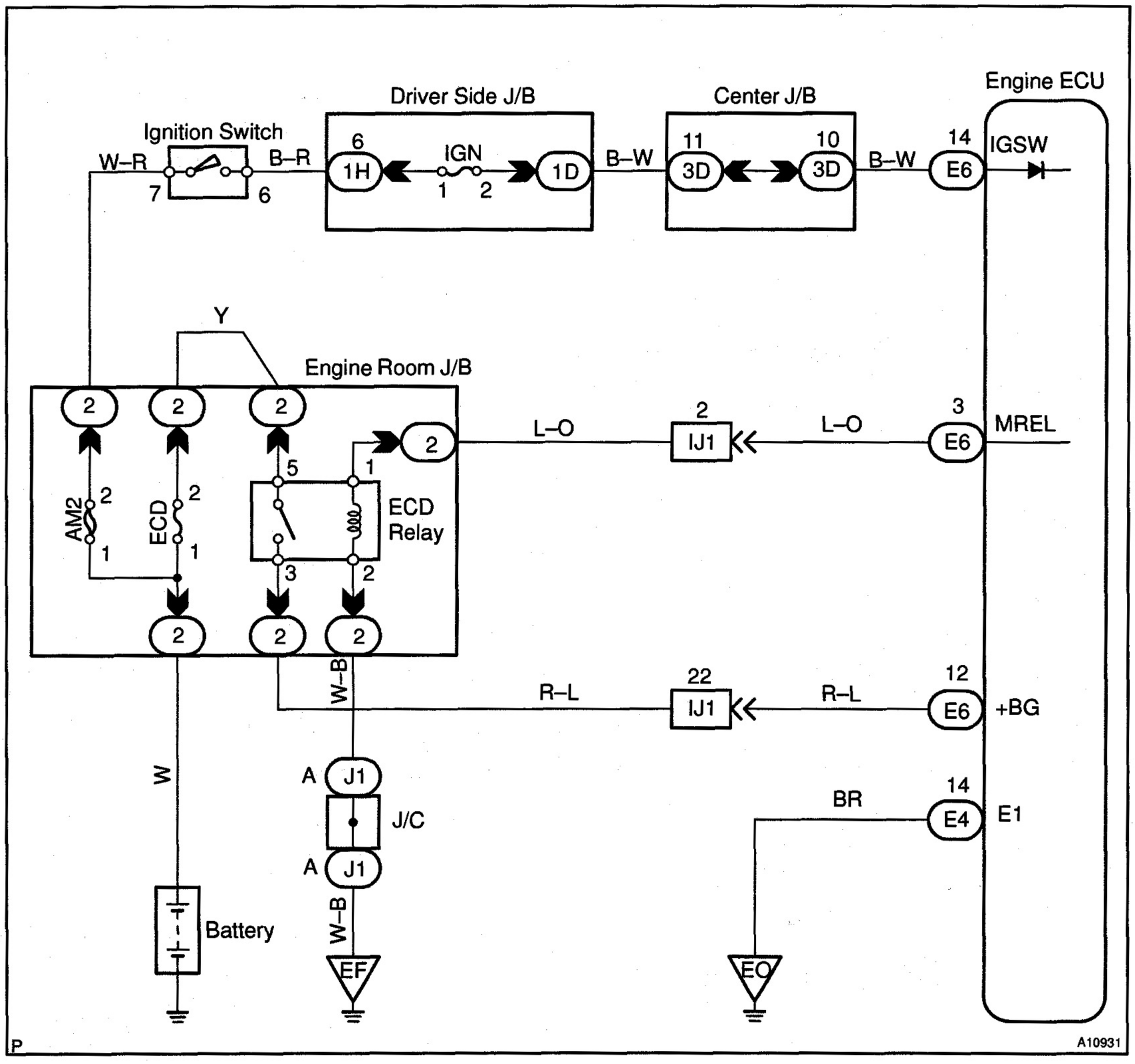

INSPECTION PROCEDURE

1	**Check voltage between terminals +BG and E1 of engine ECU connectors.**

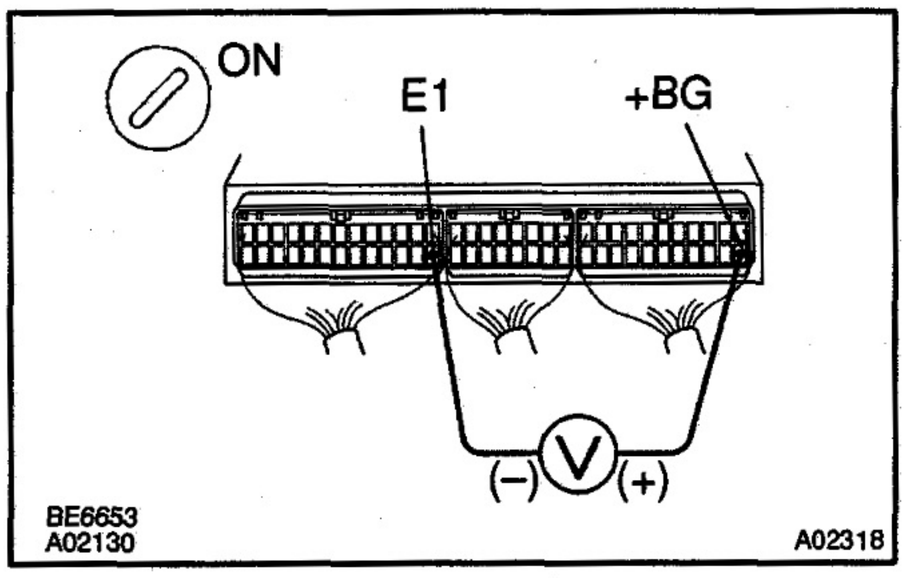

PREPARATION:

(a) Remove the glove compartment (See page ED–25).

(b) Turn the ignition switch ON.

CHECK:

Measure the voltage between terminals +BG and E1 of the engine ECU connectors.

OK:

Voltage: 9 – 14 V

OK → **Proceed to next circuit inspection shown on problem symptoms table (See page DI–17).**

NG

2	**Check for open in harness and connector between terminal E1 of engine ECU and body ground (See page IN–20).**

NG → **Repair or replace harness or connector.**

OK

3	**Check ECD main relay (Marking: ECD) (See page ED–10).**

NG → **Replace ECD main relay.**

OK

4	**Check ECD fuse (See page DI–47, step 2).**

NG → **Check for short in all harness and components connected to ECD fuse.**

OK

5	**Check for open in harness and connector between engine ECU and ECD main relay (Marking: ECD), and ECD main relay and battery (See page IN–20).**

NG → **Repair or replace harness or connector.**

OK

6	**Check voltage between terminals IGSW and E1 of engine ECU connectors.**

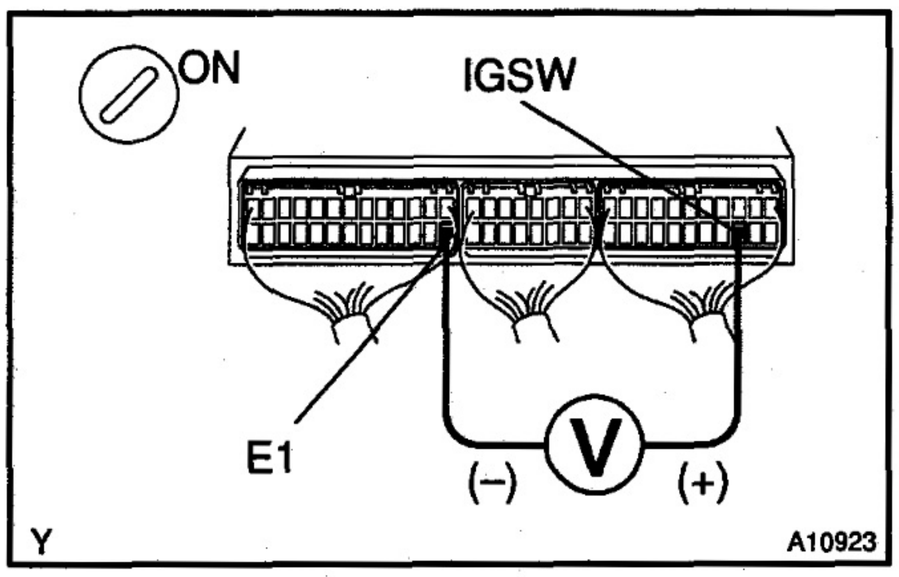

PREPARATION:

(a) Remove the glove compartment (See page ED–25).

(b) Turn the ignition switch ON.

CHECK:

Measure the voltage between terminals IGSW and E1 of the engine ECU connectors.

OK:

Voltage: 9 – 14 V

OK → **Go to step 10.**

NG

7	**Check IGN fuse.**

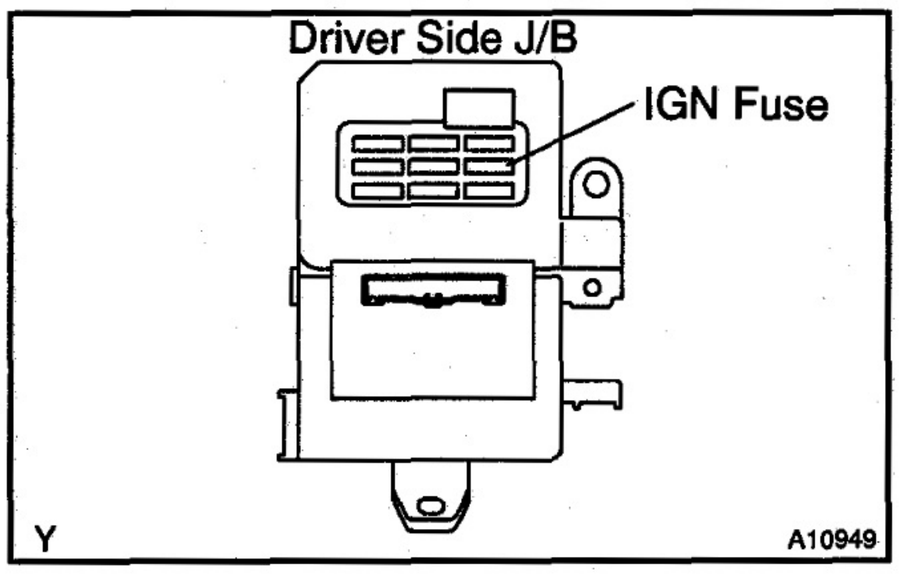

PREPARATION:

Remove the IGN fuse from the driver side J/B.

CHECK:

Check the continuity of the IGN fuse.

OK:

Continuity

NG → **Check for short in all harness and components connected to ECD fuse.**

OK

8	**Check ignition switch (See Pub. No. RM585E, pages BO–67 and BE–12).**

NG → **Replace ignition switch.**

OK

9	**Check for open in harness and connector between ignition switch and engine ECU (See page IN–20).**

NG → **Repair or replace harness or connector.**

OK

10	**Check voltage between terminal MREL of engine ECU connector and body ground.**

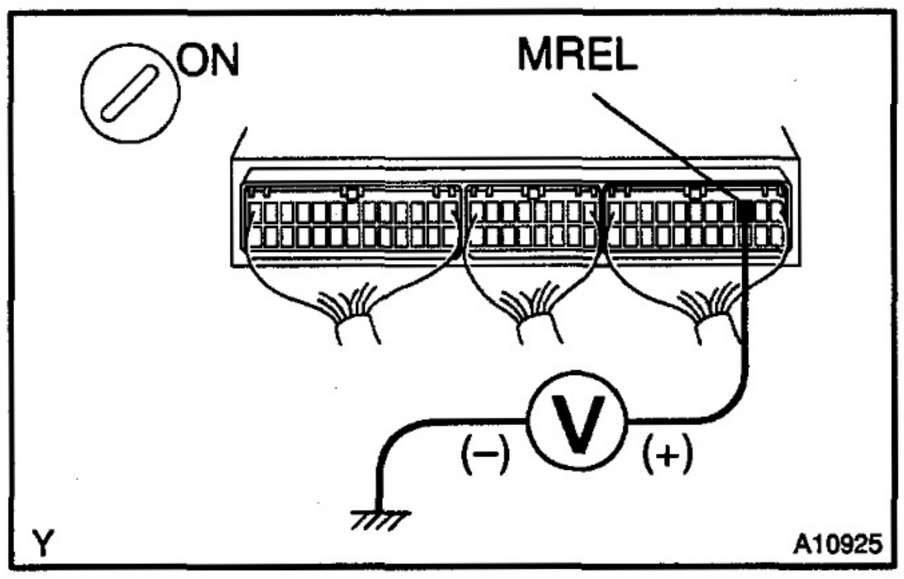

PREPARATION:

(a) Remove the glove compartment (See page ED–25).

(b) Turn the ignition switch ON.

CHECK:

Measure the voltage between terminal MREL of the engine ECU connector and body ground.

OK:

Voltage: 9 – 14 V

OK → **Check and replace engine ECU (See page IN–20).**

NG

Check for open in harness and connector between engine ECU and ECD main relay (Marking: ECD), and ECD main relay and body ground (See page IN–20).

TE1, TE2 Terminal Circuit

CIRCUIT DESCRIPTION

Terminals TE1 and TE2 are located in the check connector.
The check connector is located in the engine compartment. When these terminals are connected with the E1 terminal, DTCs in normal mode or test mode can be read from the check engine warning light in the combination meter.

WIRING DIAGRAM

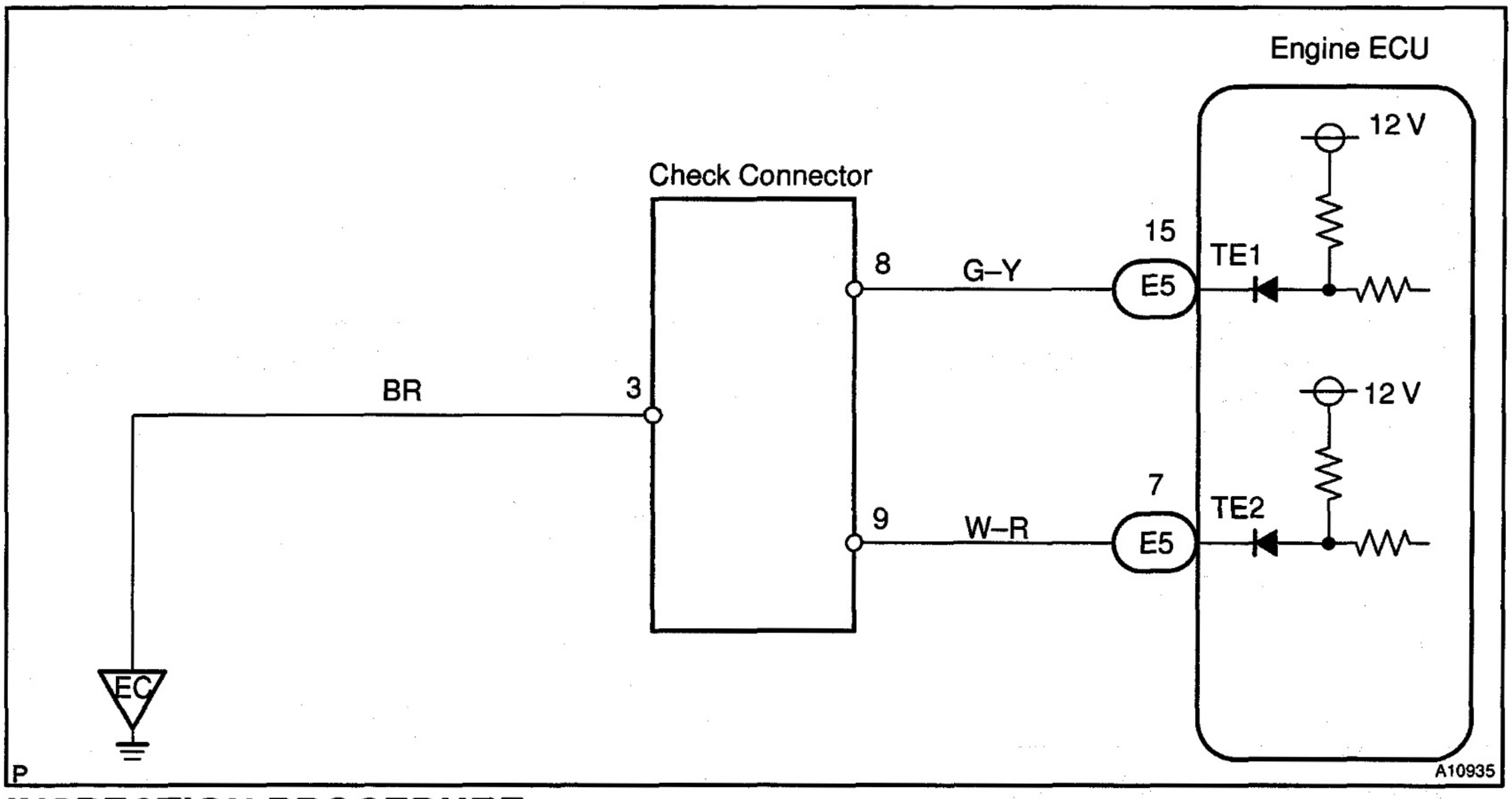

INSPECTION PROCEDURE

HINT:

- If terminals TE1 and TE2 are connected with terminal E1, DTC is not output or test mode is not activated.
- Even though terminal TE1 is not connected with terminal E1, the check engine warning light blinks.
- For the above phenomenon, the likely cause is open or short in the wire harness, or malfunction inside the engine ECU.

1	**Check voltage between terminals TE1 and E1, and TE2 and E1 of check connector.**

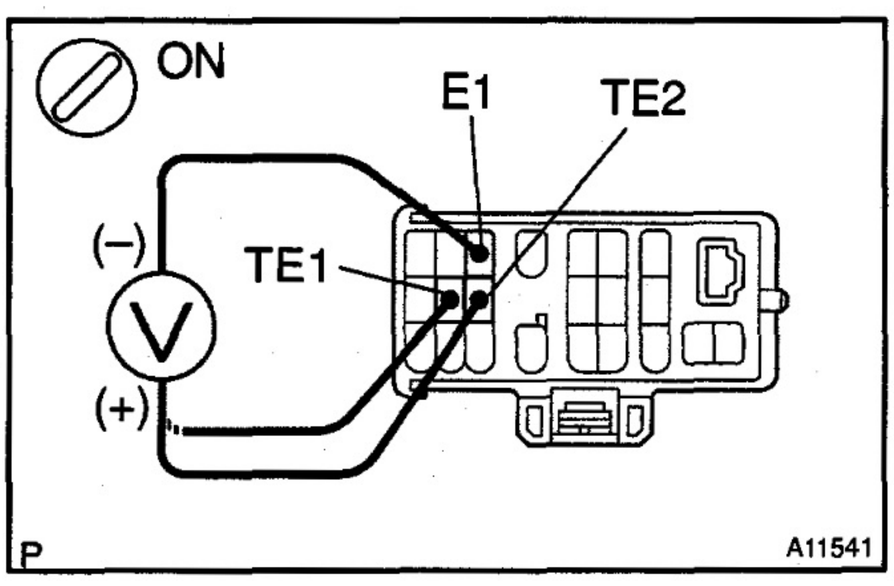

PREPARATION:
Turn the ignition switch ON.
CHECK:
Measure the voltage between terminal TE1 and E1, and TE2 and E1 of the check connector.
OK:

Voltage: 9 – 14 V

OK → Check and replace engine ECU (See page IN–20).

NG

2	Check continuity between terminal E1 of check connector and body ground.

NG → Repair or replace harness or connector.

OK

3	Check for open and short in harness and connector between terminal TE1, TE2 of engine ECU and check connector (See page IN–20).

NG → Repair or replace harness or connector.

OK

Check and replace engine ECU (See page IN–20).

DI6K4–01

Pre–Heating Control Circuit

CIRCUIT DESCRIPTION

When the ignition switch turns ON, the engine ECU calculates the glow indicator lighting time/heating corresponding to the coolant temperature at that time and turns ON the glow indicator light/glow plug relay.
As the ceramics is used for a glow plug material, the current control is not performed.

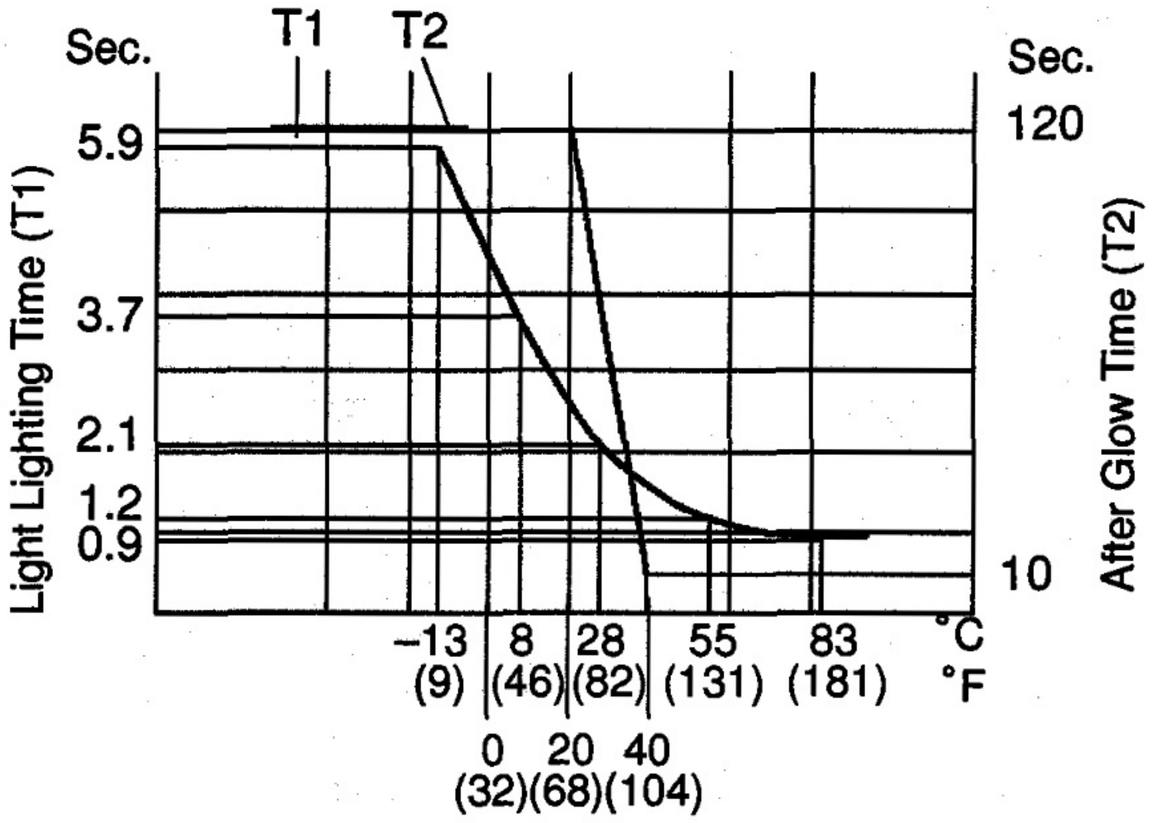

A05568

WIRING DIAGRAM

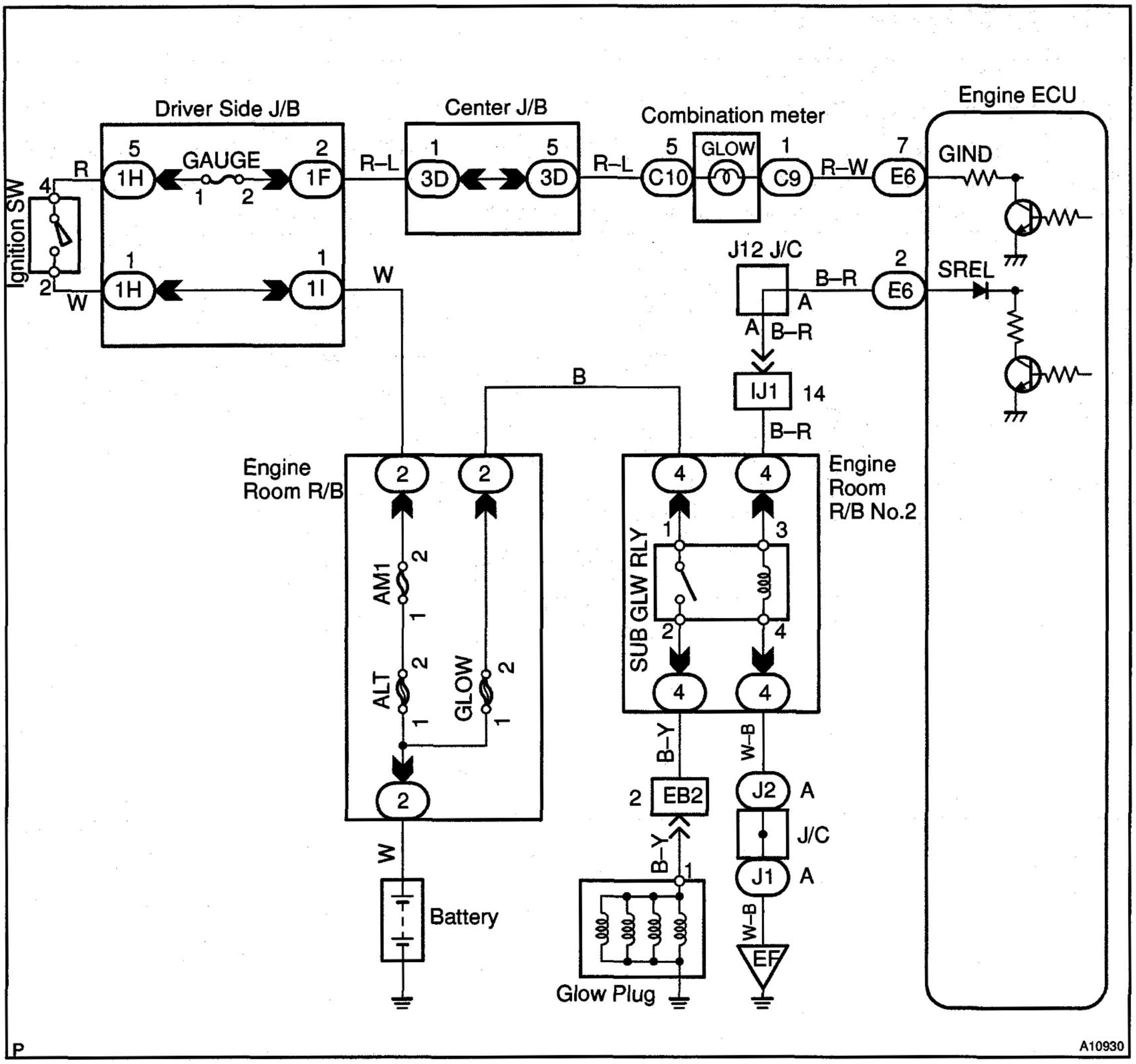

INSPECTION PROCEDURE

1	**Does glow indicator light up?**

PREPARATION:
Turn the ignition switch ON.
CHECK:
Does the glow indicator light up?
OK:
The glow indicator lights up for 0.5 sec. or more.

OK	**Go to step 5.**

NG

2	**Check voltage between terminal GIND of engine ECU connector and body ground.**

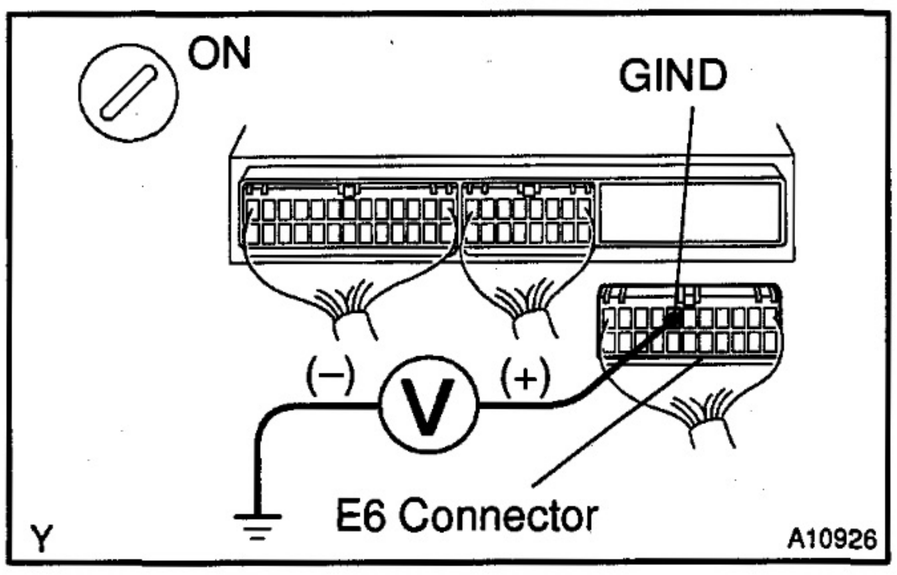

PREPARATION:

(a) Remove the glove compartment (See page ED–25).
(b) Disconnect the E6 connector from the engine ECU.
(c) Turn the ignition switch ON.

CHECK:

Measure the voltage between terminal GIND of the engine ECU connector and body ground.

OK:

Voltage: 9 – 14 V

OK	**Check and replace engine ECU (See page IN–20).**

NG

3	**Check GAUGE fuse.**

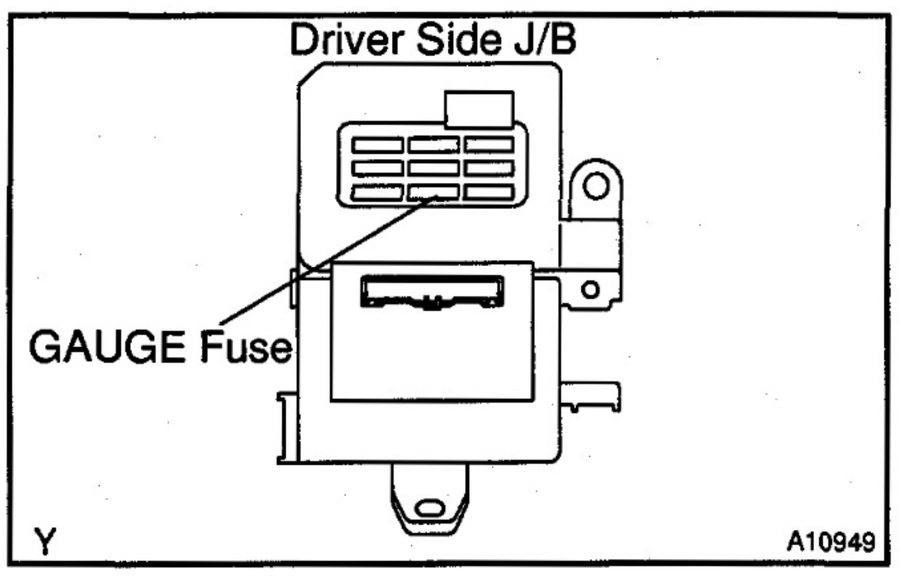

PREPARATION:

Remove the GAUGE fuse from the driver side J/B.

CHECK:

Check the continuity of the GAUGE fuse.

OK:

Continuity

NG	**Check for short in all harness and components connected to GAUGE fuse.**

OK

4	**Check glow indicator light bulb.**

NG	**Replace bulb.**

OK

Check for open in harness and connector between combination meter and engine ECU, and combination meter and GAUGE fuse (See page IN–20).

5	**Check glow indicator lighting time (See page ST–1).**

NG → **Check and replace engine ECU (See page IN–20).**

OK

6	**Are there any DTC being output?**

YES → **Go to relevant DTC chart (See page DI–12).**

NO

7	**Check glow plug relay (See page ST–2).**

NG → **Replace glow plug relay.**

OK

8	**Check voltage between terminal SREL of engine ECU connector and body ground at cranking.**

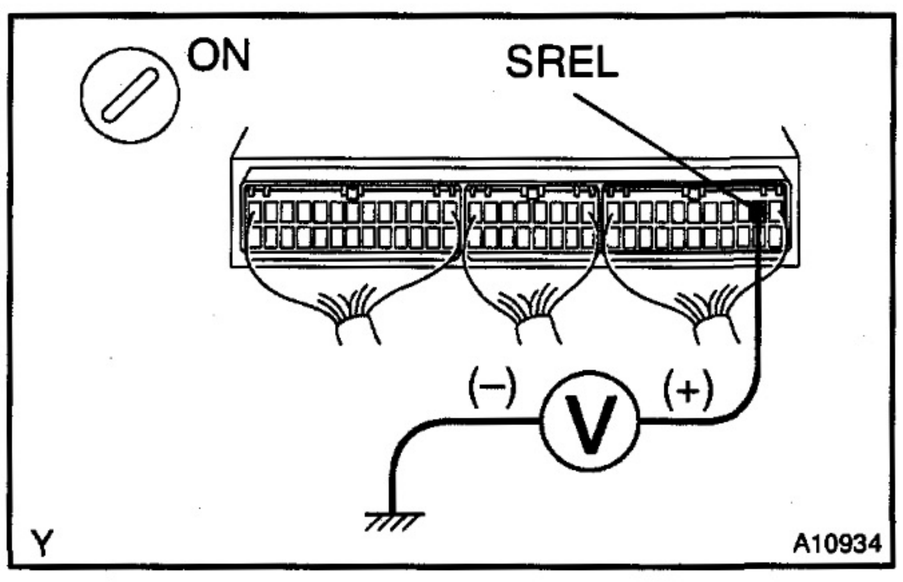

PREPARATION:

(a) Remove the glove compartment (See page ED–25).
(b) Disconnect the E6 connector from the engine ECU.
(c) Turn the ignition switch STA.

CHECK:

Measure the voltage between terminal SREL of the engine ECU connector and body ground at cranking.

OK:

Voltage: 9 – 14 V

NG → **Check and replace engine ECU (See page IN–20).**

OK

9	Check for open and short in harness and connector between glow plug relay and engine ECU, and glow plug relay and body ground (See page IN–20).

NG → Repair or replace harness or connector.

OK

10	Check resistance of glow plug (See page ST–2).

NG → Replace glow plug.

OK

11	Inspect glow plug installation.

NG → Tighten glow plug.

OK

12	Check for open in harness and connector between glow plug relay and glow plug (See page IN–20).

NG → Repair or replace harness or connector.

OK

Proceed to next circuit inspection shown on problem symptoms table (See page DI–17).

DI6K5–01

Spill Control Valve Relay Circuit

CIRCUIT DESCRIPTION

The engine ECU controls the fuel injection volume by operating the spill control valve. The spill control valve is mounted on the injection pump, and open or close the injection pressure releasing port by the solenoid valve in the spill control valve (During injection; valve is close (ON)). The engine ECU decides the basic fuel injection volume by the engine rpm and throttle valve opening angle, and calculates the final fuel injection angle to add the various corrections on the basic fuel injection volume. The engine ECU counts the NE pulse to detects the angle from injection starts and operates the spill control valve from ON to OFF (The injection pressure releasing port is open.) at the position which watches the final fuel injection angle.

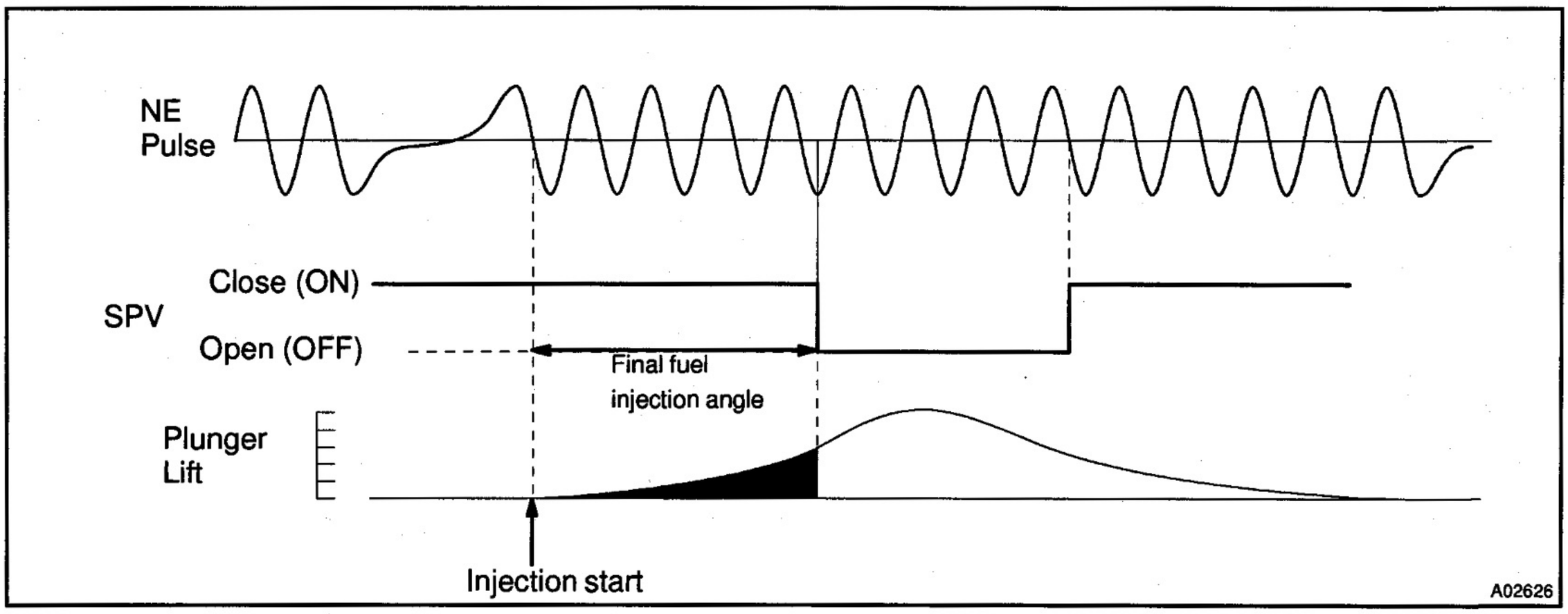

WIRING DIAGRAM

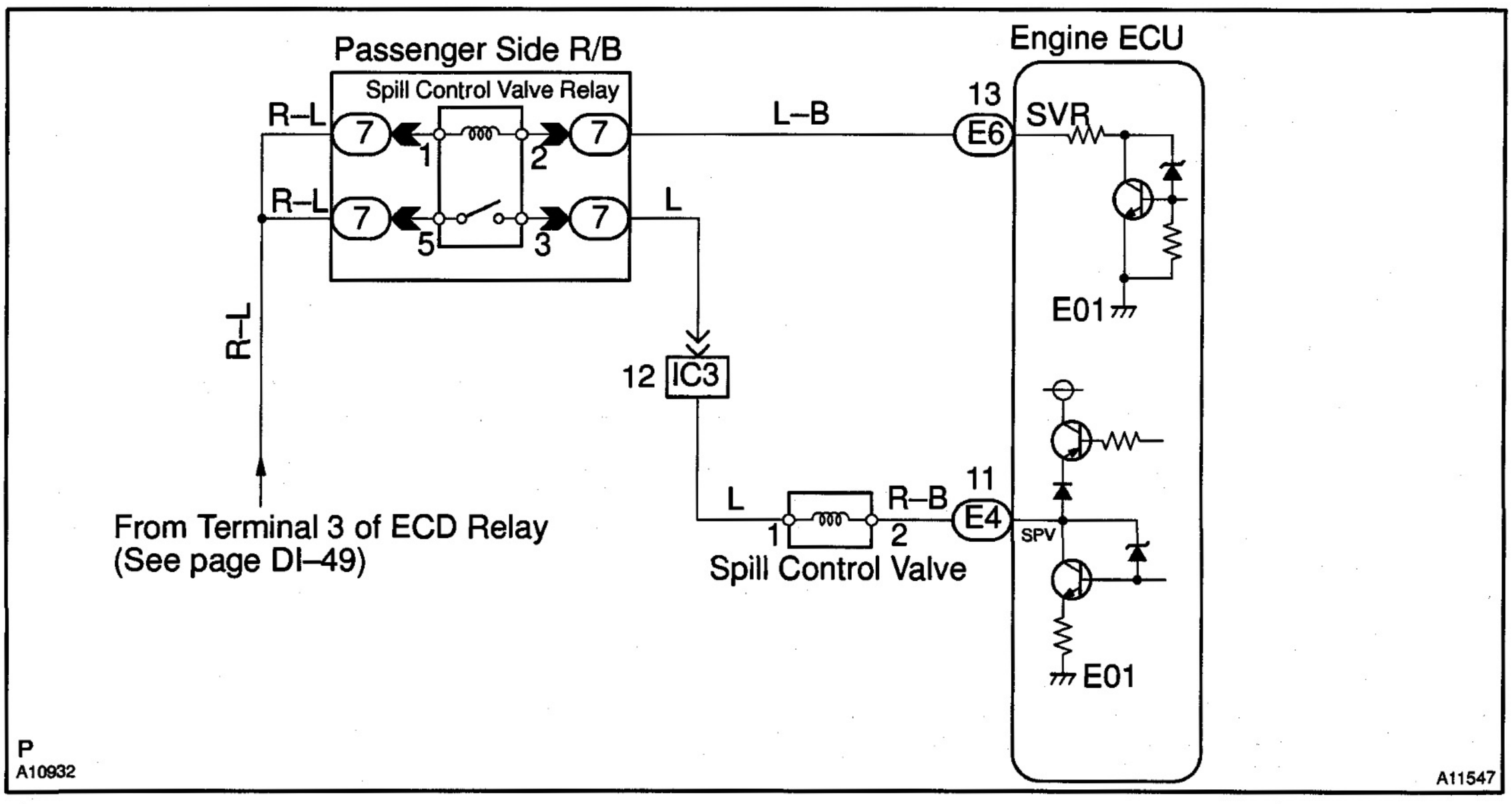

INSPECTION PROCEDURE

1	Check spill control valve relay (See page ED–12).

NG → Replace spill control valve relay.

OK

2	Check voltage between terminal SVR of engine ECU connector and body ground.

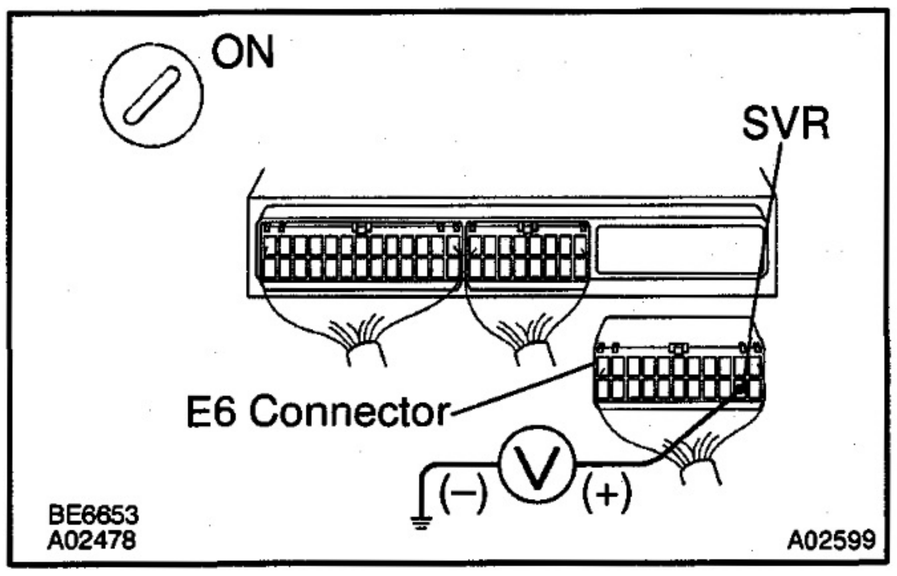

PREPARATION:
(a) Remove the glove compartment (See page ED–25).
(b) Disconnect the E6 connector from the engine ECU.
(c) Turn the ignition switch ON.

CHECK:
Measure the voltage between terminals SVR of the engine ECU connector and body ground.

OK:
Voltage: 9 – 14 V

OK → Go to step 3.

NG

Check for open or short in harness and connector between spill control valve relay and engine ECU, and spill control valve relay and ECD main relay (Marking: ECD).

3	Check voltage between terminal SVR of engine ECU connector and body ground.

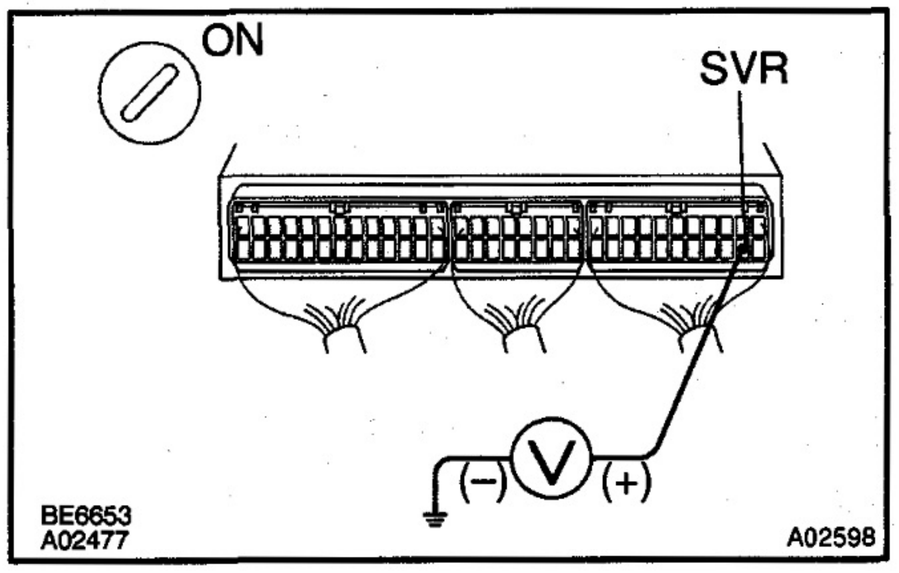

PREPARATION:
(a) Remove the glove compartment (See page ED–25).
(b) Turn the ignition switch ON.

CHECK:
Measure the voltage between terminals SVR of the engine ECU connector and body ground.

OK:
Voltage: Below 1.5 V

NG → Check and replace engine ECU (See page IN–20).

OK

4	Check spill control valve (See page ED–9).

NG → Replace spill control valve.

OK

5	Check voltage between terminal SPV of engine ECU connector and body ground.

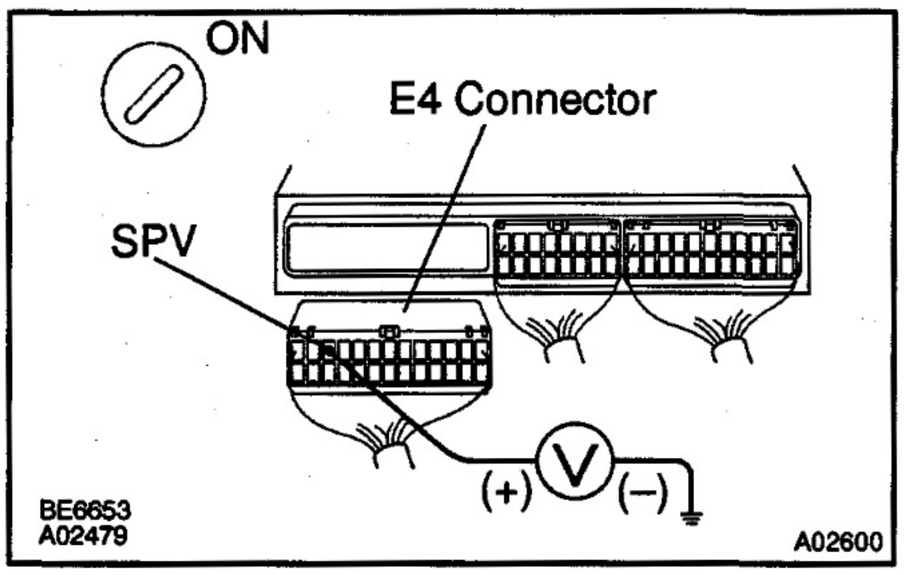

PREPARATION:

(a) Remove the glove compartment (See page ED–25).
(b) Disconnect the E4 connector from the engine ECU.
(c) Turn the ignition switch ON.

CHECK:

Measure the voltage between terminal SPV of the engine ECU connector and body ground.

OK:

Voltage: 9 – 14 V

OK → Go to step 6.

NG

Check for open or short in harness and connector between spill control valve and engine ECU, and spill control valve and spill control valve relay (See page IN–20).

6	Check voltage between terminal SPV of engine ECU and body ground.

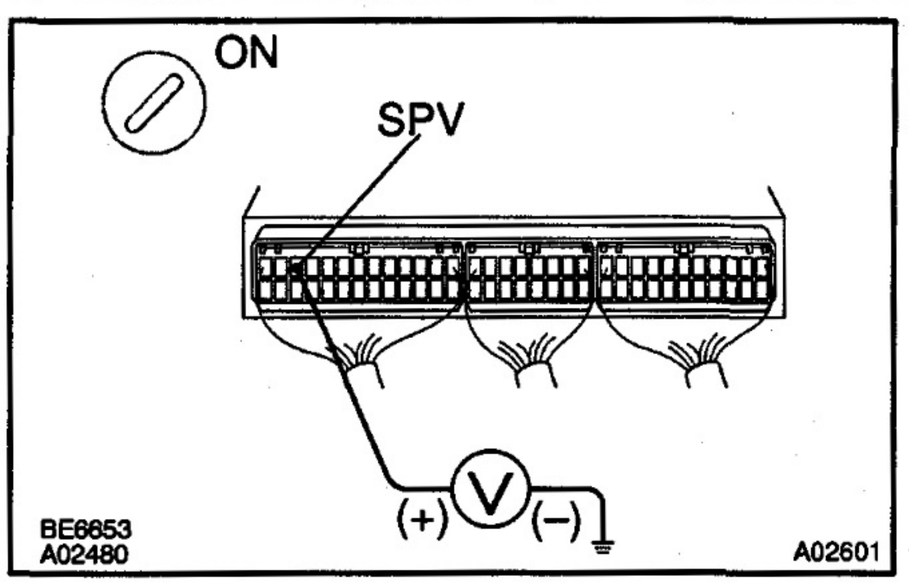

PREPARATION:

(a) Remove the glove compartment (See page ED–25).
(b) Turn the ignition switch ON.

CHECK:

Measure the voltage between terminals SPV of the engine ECU connector and body ground.

OK:

Voltage: 9 – 14 V

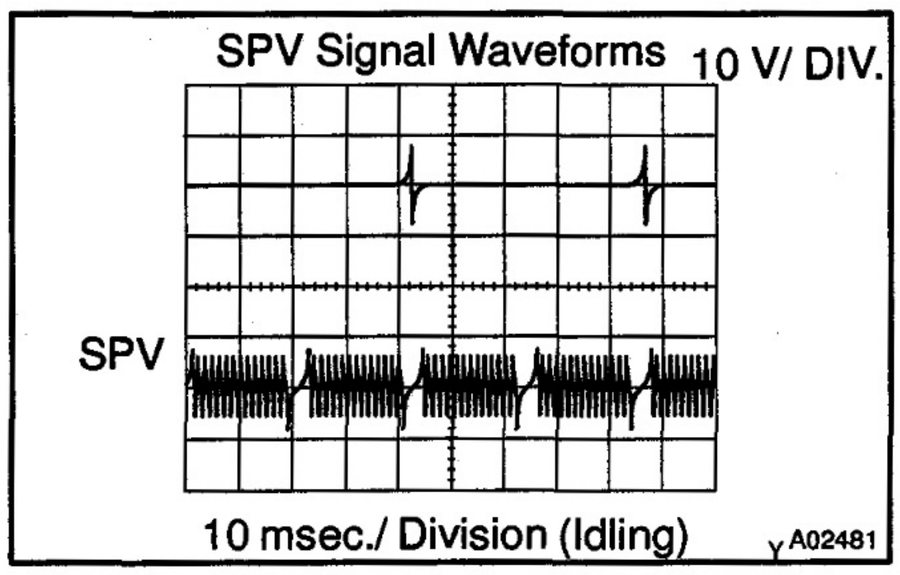

Reference: INSPECTION USING OSCILLOSCOPE

During idling, check the waveform between terminals SPV and E1 of the engine ECU connector.

HINT:

The correct waveform is as shown.

NG

Check and replace engine ECU (See page IN–20).

ENGINE MECHANICAL

AIR FILTER EM–1
COMPRESSION EM–2
VALVE CLEARANCE EM–4
INJECTION TIMING EM–8
IDLE SPEED AND MAXIMUM SPEED EM–9
INTAKE CONSTRICTOR CONTROL EM–10
TIMING BELT EM–12
TIMING GEAR EM–22
CYLINDER HEAD EM–41
CYLINDER BLOCK EM–72

AIR FILTER

INSPECTION

EM0QH-02

1. PAPER FILTER TYPE:

(a) Inspect the air filter.
Visually check that the filter element is not excessively dirty, damaged or oily.

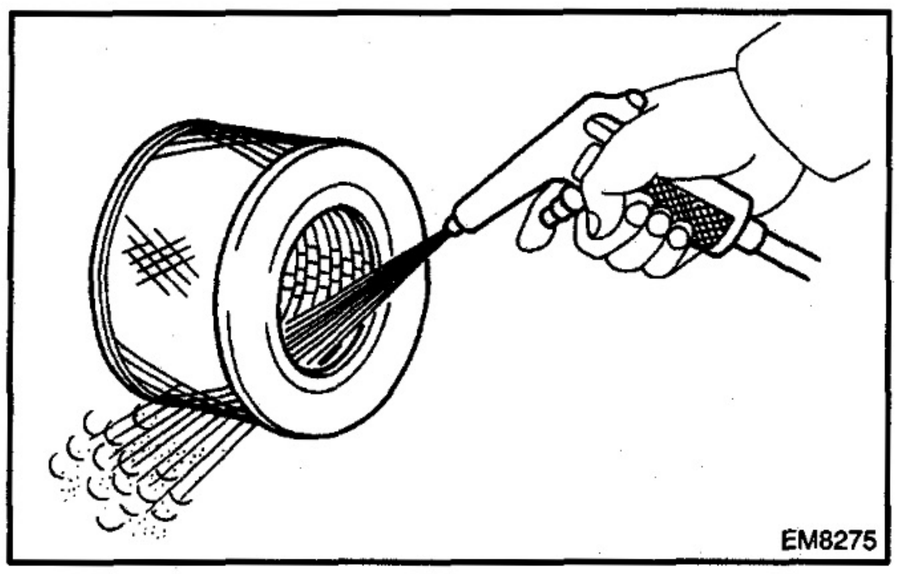

(b) Clean the air filter.
Clean the filter element with compressed air.
First blow from the inside thoroughly. Then blow the outside of the filter element.

2. WASHABLE TYPE:

(a) Inspect the air filter.
Visually check that the filter element is not excessively dirty, damaged or oily.

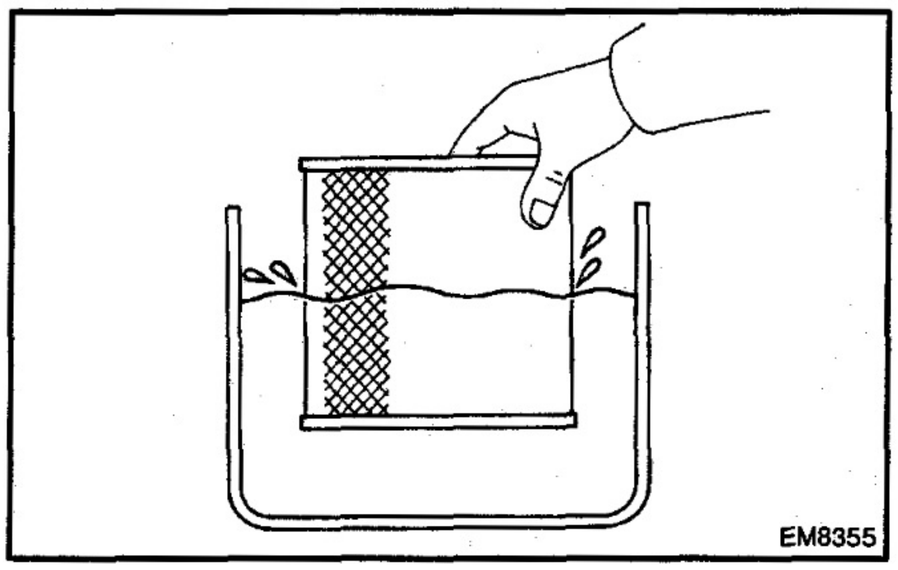

(b) Clean the air filter.
(1) Blow dirt off in the filter element with compressed air.
(2) Submerge the filter element in the water and agitate it up and down more than 10 times.
(3) Repeat rinsing in clean water until rinsing water is clear.

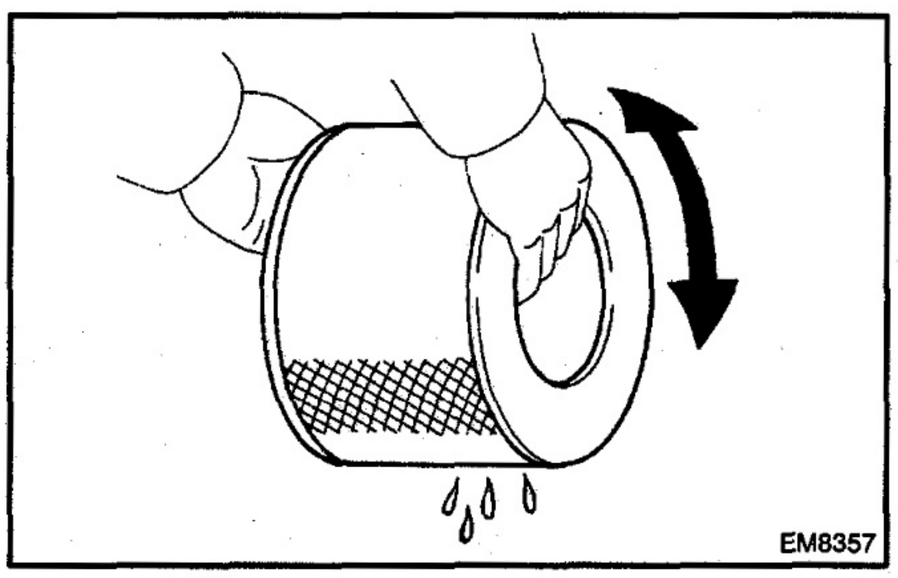

(4) Remove excess water by shaking the filter element or blowing with compressed air.

NOTICE:
Do not beat or drop filter element.

(5) Wipe off dust on the air cleaner case interior.

EM

EM

COMPRESSION

INSPECTION

EM0QI–02

HINT:

If there is lack of power, excessive oil consumption or poor fuel economy, measure the compression pressure.

1. WARM UP AND STOP ENGINE

Allow the engine to warm up to normal operating temperature.

2. DISCONNECT INJECTION PUMP (SPILL CONTROL VALVE) CONNECTOR

3. DISCONNECT GLOW PLUG WIRE FROM GLOW PLUG CONNECTOR

NOTICE:

In order not to short the glow plug wire, apply vinyl tape around the terminal.

4. REMOVE INTAKE PIPE (See page EM–44)

5. REMOVE INJECTION PIPES (See page FU–18)

6. REMOVE INJECTION NOZZLES (See page FU–5)

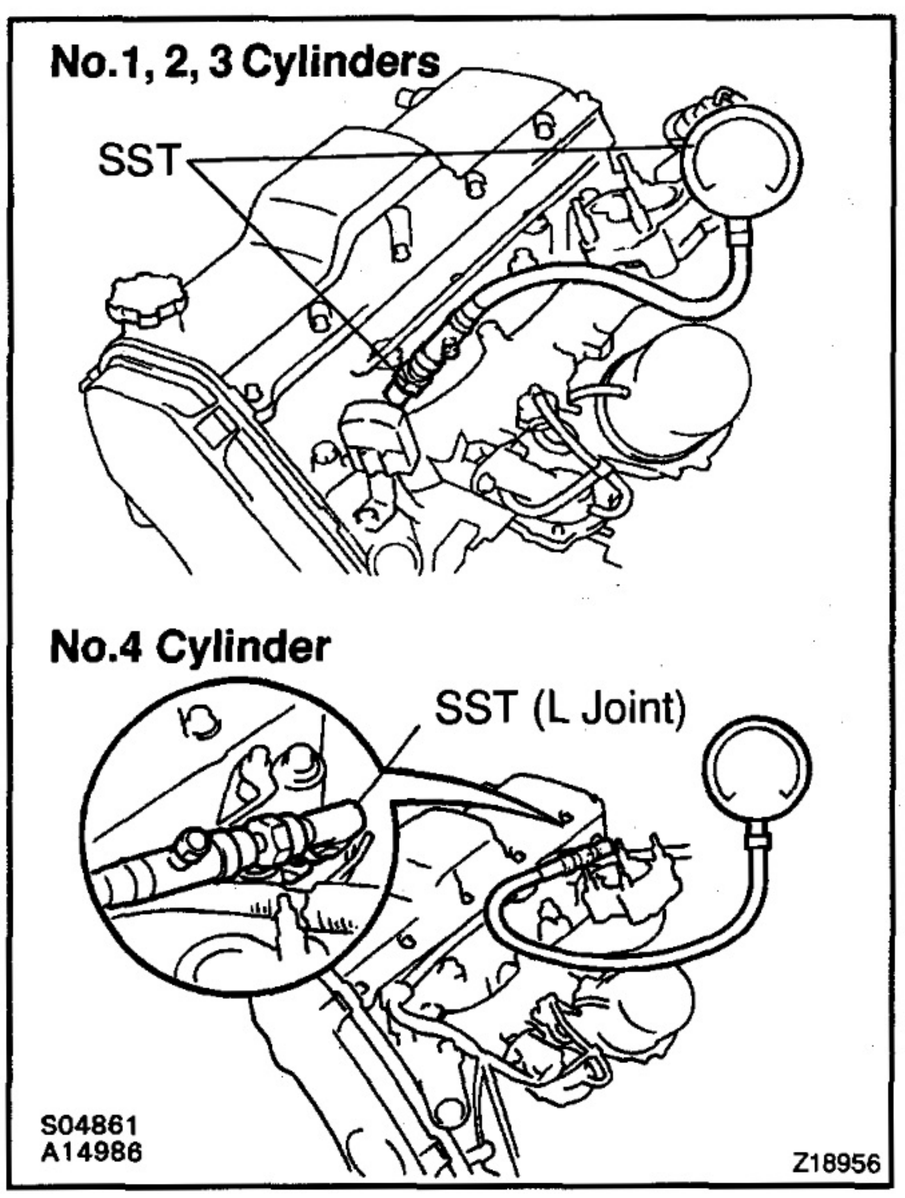

7. CHECK CYLINDER COMPRESSION PRESSURE

HINT:

Turn the starter before measuring the compression and discharge the foreign objects.

(a) Install SST (attachment) to the injection nozzle hole.
SST 09992–00500

(b) Connect SST (compression gauge) to the attachment.
SST 09992–00024 (09992–00200, 09992–00211)

(c) While cranking the engine, measure the compression pressure.

HINT:

Always use a fully charged battery to obtain engine revolution of 250 rpm or more.

(d) Repeat steps (a) through (c) for each cylinder.

NOTICE:

This measurement must be done in as short a time as possible.

Compression pressure:
3,040 kPa (31.0 kgf/cm^2, 441 psi) or more
Minimum pressure: 1,961 kPa (20.0 kgf/cm^2, 284 psi)
Difference between each cylinder:
490 kPa (5.0 kgf/cm^2, 71 psi) or less

(e) If the cylinder compression in one or more cylinders is low, pour a small amount of engine oil into the cylinder through the injection nozzle hole and repeat steps (a) through (c) for the cylinder with low compression.

- If adding oil helps the compression, chances are that the piston rings and / or cylinder bore are worn or damaged.

- If pressure stays low, a valve may be sticking or seating improperly, or there may be leakage past the gasket.

8. **REINSTALL INJECTION NOZZLES (See page FU–18)**
9. **REINSTALL INJECTION PIPES (See page FU–25)**
10. **REINSTALL INTAKE PIPE (See page EM–64)**
11. **RECONNECT GLOW PLUG WIRE TO GLOW PLUG CONNECTOR**
12. **RECONNECT INJECTION PUMP (SPILL CONTROL VALVE) CONNECTOR**
13. **START ENGINE AND CHECK FUEL LEAKAGE**

VALVE CLEARANCE

INSPECTION

EM155–01

HINT:

Inspect and adjust the valve clearance when the engine is cold.

1. **REMOVE INTAKE AIR PIPE**
2. **REMOVE INTAKE PIPE (See page EM–44)**
3. **REMOVE CYLINDER HEAD COVER (See page EM–44)**

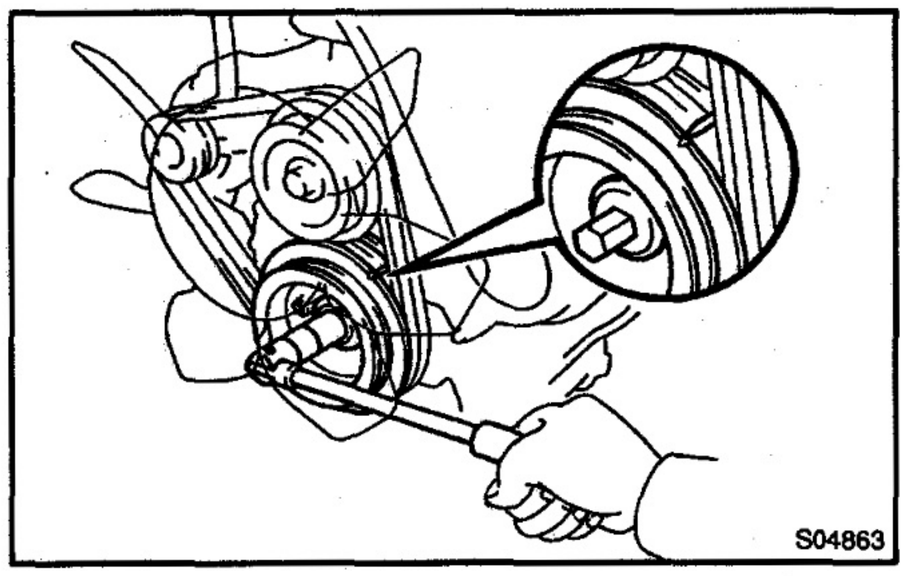

4. **SET NO.4 CYLINDER TO TDC / COMPRESSION**

(a) Turn the crankshaft pulley clockwise, and align its groove with the timing pointer.

(b) Check that the valve lifters on the No.4 cylinder are loose and valve lifters on the No.1 cylinder are tight.

If not, turn the crankshaft one revolution (360°) and align the mark as above.

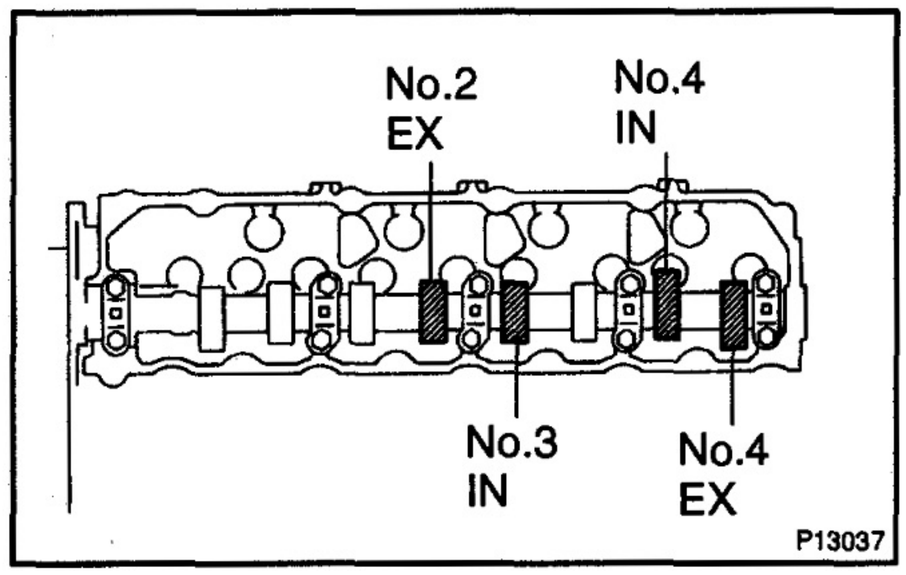

5. **CHECK VALVE CLEARANCE**

(a) Check only the valves indicated in the illustration.

(1) Using a feeler gauge, measure the clearance between the valve lifter and camshaft.

(2) Record the out–of–specification valve clearance measurements. They will be used later to determine the required replacement adjusting shim.

Valve clearance (Cold):

Intake	0.20 – 0.30 mm (0.008 – 0.012 in.)
Exhaust	0.25 – 0.35 mm (0.010 – 0.014 in.)

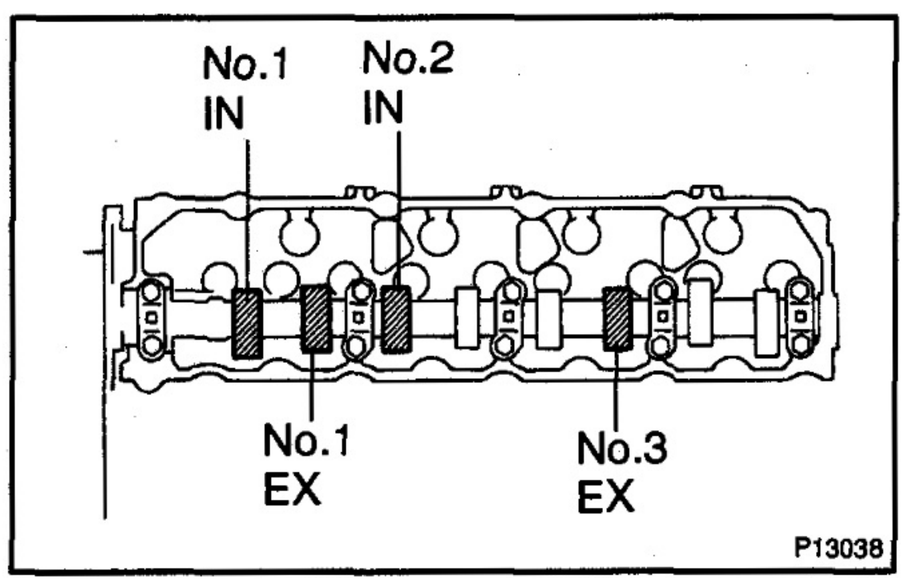

(b) Turn the crankshaft pulley one revolution (360°) and align the mark as above (See procedure step 4).

(c) Check only the valves indicated as shown. Measure the valve clearance. (See procedure in step (a))

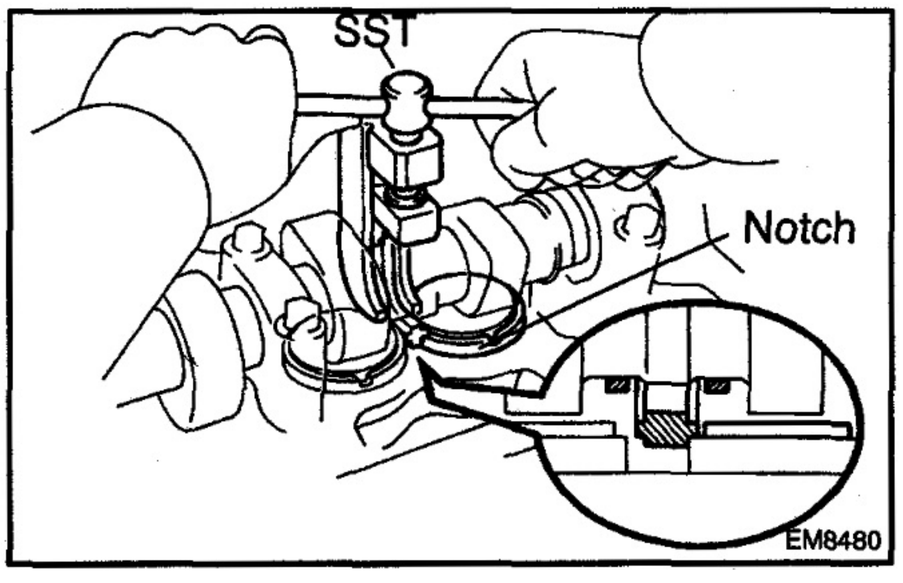

6. **ADJUST VALVE CLEARANCE**

(a) Remove the adjusting shim.

(1) Turn the crankshaft to position the cam lob of the camshaft on the adjusting valve upward.

(2) Using SST, press down the valve lifter.

SST 09248–64011

HINT:

Before pressing down the valve lifter, position the notch on the exhaust manifold side.

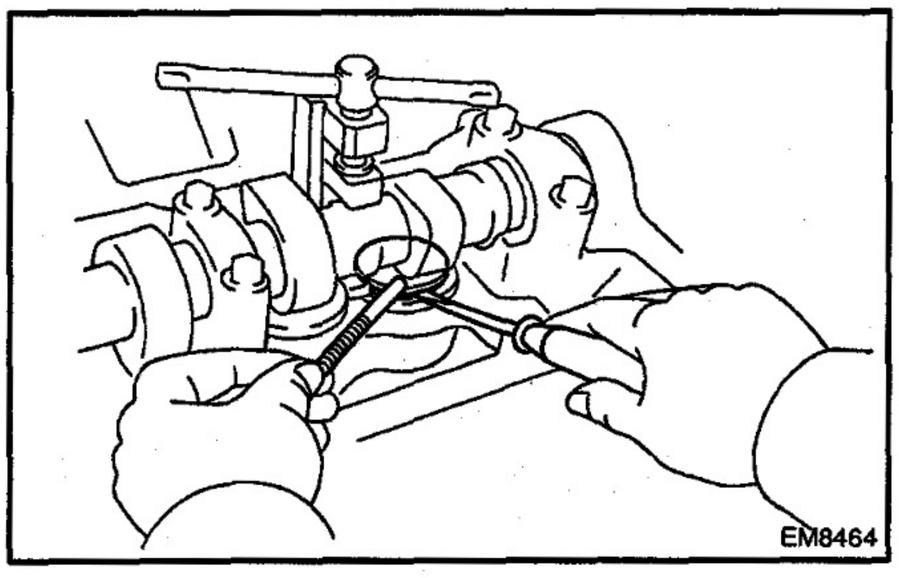

(3) Remove the adjusting shim with small screwdriver and magnetic finger.

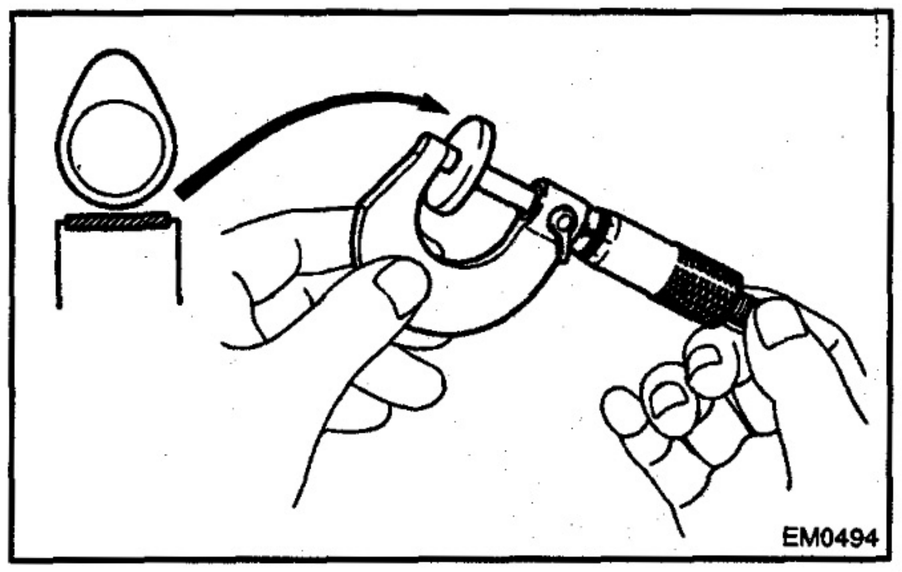

(b) Determine the replacement adjusting shim size by using following the formula or charts:

(1) Using a micrometer, measure the thickness of the shim which was removed.

(2) Calculate the thickness of the new shim so the valve clearance comes within specified value.

T .... Thickness of removed shim

A .... Measure valve clearance

N .... Thickness of new shim

Intake	N = T + (A – 0.25 mm (0.010 in.))
Exhaust	N = T + (A – 0.30 mm (0.012 in.))

(3) Select a new shim with a thickness as close as possible to the calculated values.

HINT:

Shims are available in 17 sized in increments of 0.050 mm (0.0020 in.), from 2.500 mm (0.0984 in.) to 3.300 mm (0.1299 in.).

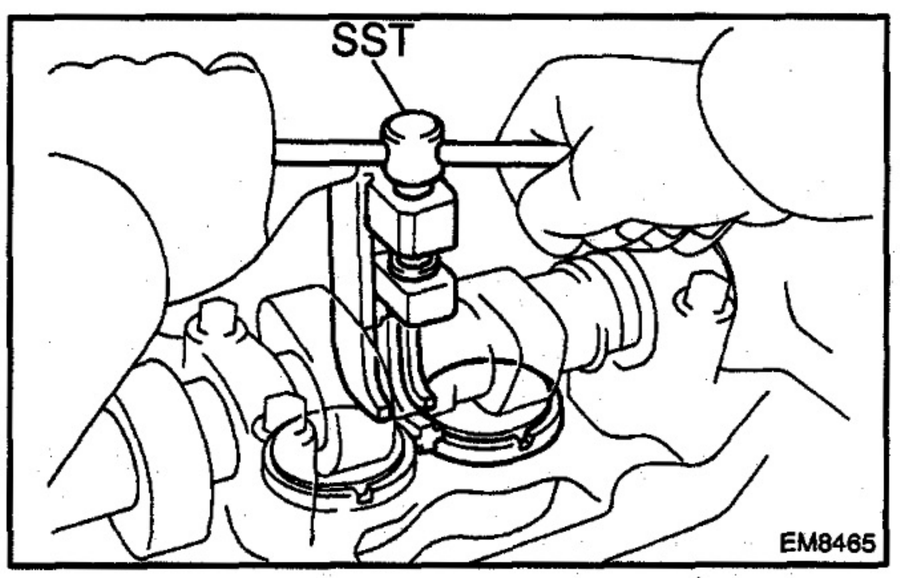

(c) Install a new adjusting shim.

(1) Place a new adjusting shim on the valve lifter.

(2) Remove the SST.

SST 09248–64011

(d) Recheck the valve clearance.

7. **REINSTALL CYLINDER HEAD COVER (See page EM–64)**
8. **REINSTALL INTAKE PIPE (See page EM–64)**
9. **REINSTALL INTAKE AIR PIPE**

Adjusting Shim Selection Using Chart

INTAKE

| Measured clearance mm (in.) | Installed shim thickness mm (in.) | | |

Adjusting Shim Selection Using Chart

EXHAUST

| Measured clearance mm (in.) | Installed shim thickness mm (in.) | | |

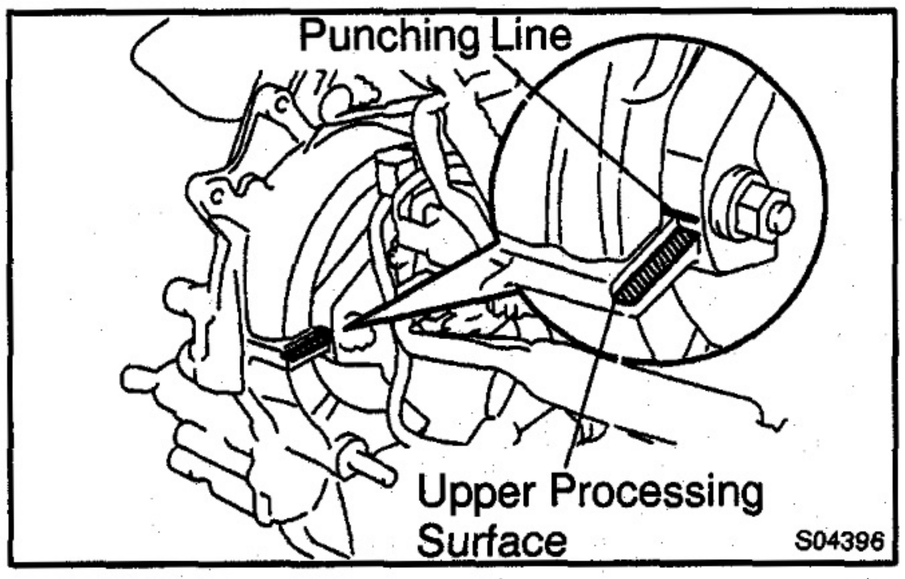

INJECTION TIMING

EM0QK–02

INSPECTION

1. INSPECT INJECTION TIMING

Using mirror, check that the punching line of the injection pump flange and the upper processing surface of the timing gear case aligned.

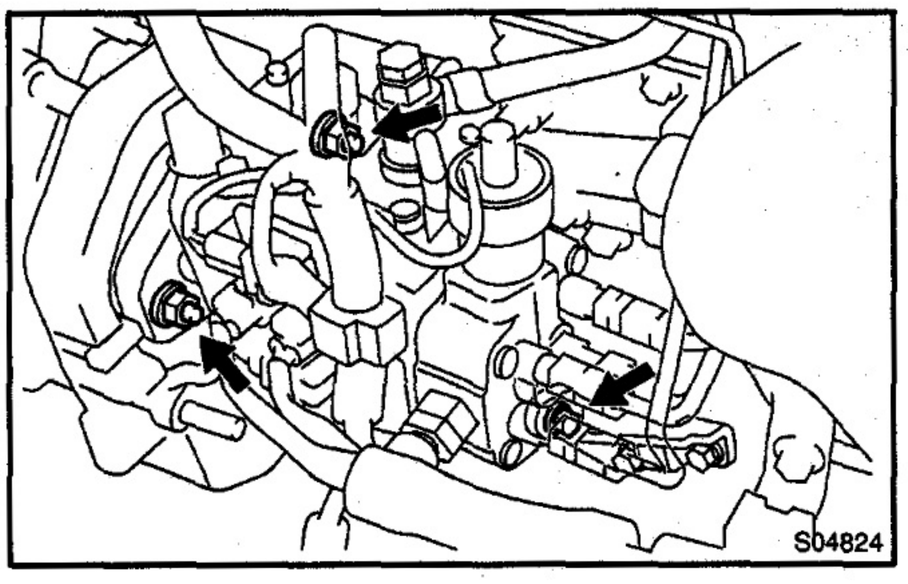

2. ADJUST INJECTION TIMING

(a) Remove the cylinder block insulator.

(b) Loosen the bolt holding the injection pump to the injection pump stay.

(c) Loosen the 2 nuts holding the injection pump to the timing gear case.

(d) Align the punching line and upper processing surface by slightly tilting the injection pump.

(e) Tighten the 2 nuts holding the injection pump to the timing gear case.

Torque: 21 N·m (210 kgf·cm, 15 ft·lbf)

(f) Tighten the bolt holding the injection pump to the injection pump stay.

Torque: 32 N·m (330 kgf·cm, 24 ft·lbf)

(g) Reinstall the cylinder brock insulator.

IDLE SPEED AND MAXIMUM SPEED

EM0QL-02

INSPECTION

1. INITIAL CONDITIONS

(a) Engine at normal operating temperature
(b) Air cleaner installed
(c) All pipes and hoses of air induction system connected
(d) All accessories switched OFF
(e) All vacuum lines properly connected
(f) ECD system wiring connectors fully plugged
(g) Valve clearance set correctly
(h) Injection timing set correctly

2. CONNECT TACHOMETER

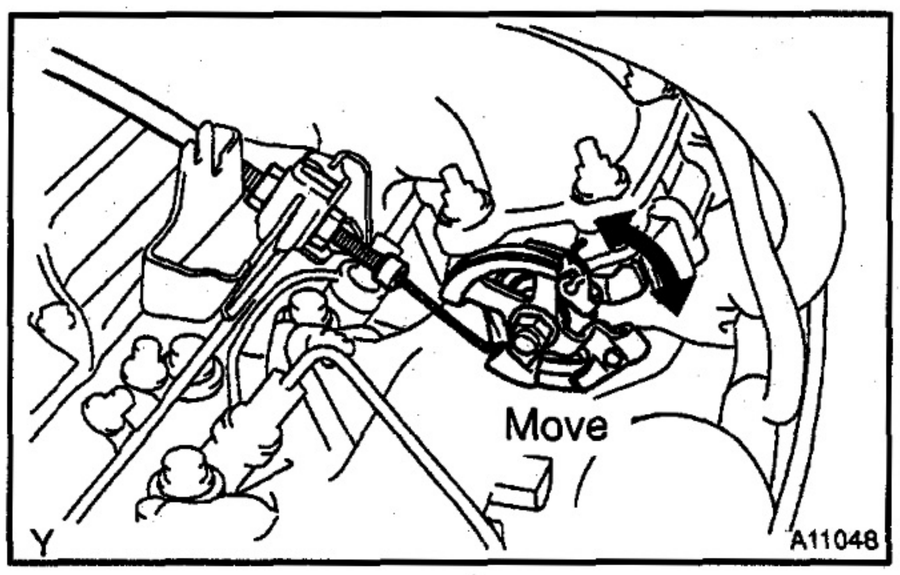

3. INSPECT IDLE SPEED

(a) Check that the throttle throttle lever move smoothly.

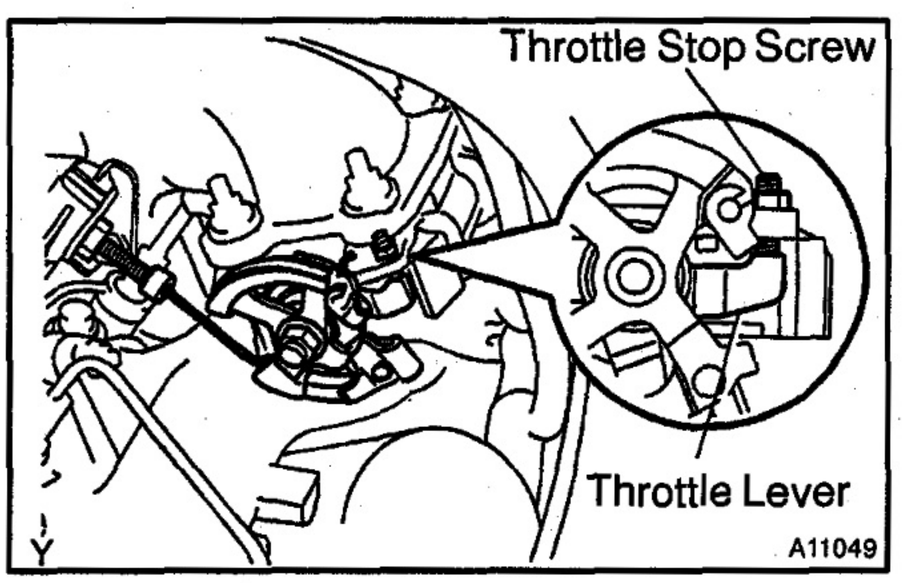

(b) Check that the throttle lever touches throttle stop screw when the accelerator pedal is released.
(c) Start the idle speed.

Idle speed: 650 – 750 rpm

If the idle speed is not as specified, check the troubleshooting (See page DI–3).

4. INSPECT MAXIMUM SPEED

(a) Depress the accelerator pedal all the way.
(b) Check the maximum speed.

Maximum speed: 4,500 – 4,700 rpm

If the maximum speed is not as specified, check and replace the injection pump (See page FU–15).

INTAKE CONSTRICTOR CONTROL

EM0QP–02

INSPECTION

1. INITIAL CONDITIONS

(a) Engine at normal operating temperature
(b) Air cleaner installed
(c) All pipes and hoses of air induction system connected
(d) All accessories switched OFF
(e) All vacuum lines properly connected
(f) ECD system wiring connectors fully plugged
(g) Valve clearance set correctly
(h) Injection timing set correctly

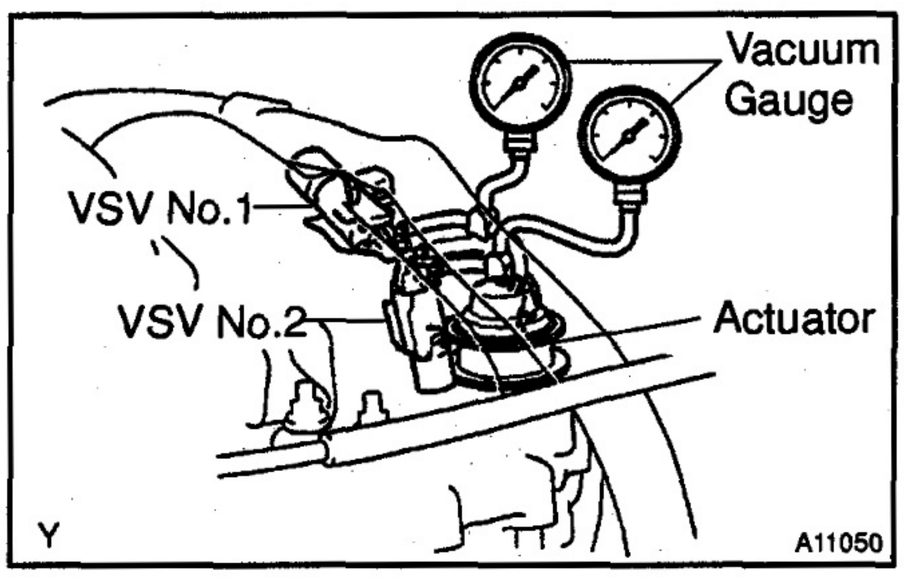

2. CONNECT VACUUM GAUGES

Using a 3–way connector, connect a vacuum gauge to the hose between the actuator and VSV.

NOTICE:

Always stop the engine when installing or removing the vacuum gauge, or removing the vacuum hoses.

3. INSPECT COLD ENGINE CONDITION

(a) Start the engine.
(b) Check that the vacuum gauge in the chambers A and B will not move.

HINT:

A no vacuum is loaded in the chamber, sub–throttle valve is fully open.

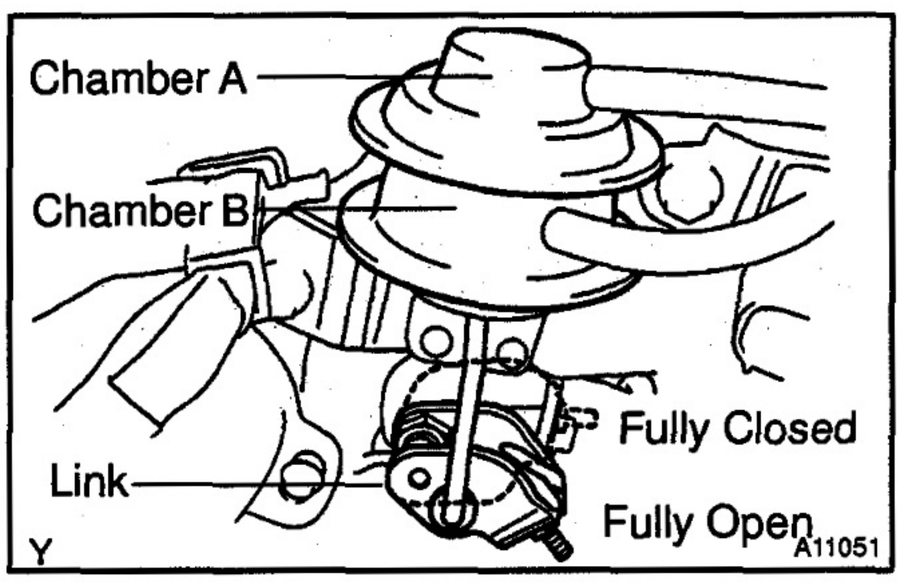

(c) Check the lever link position of the illustration.

Standard:

Link is levered lowest position.
(Same position as that before staring)

4. INSPECT HOT ENGINE CONDITION

(a) Check that the vacuum gauge in the chambers A and B will not move during idling.

HINT:

As no vacuum is loaded in the chamber, sub–throttle valve is fully open.

(b) When opening the throttle valve from idling condition, check that the vacuum gauges of chambers A and B will raise.

(c) Check the link position of the lower diaphragm.

Standard:

Link is lowered to lowest position.

(Same position as that before starting)

(d) When the engine stops (IG OFF) from idling condition, check that the vacuum gauges in chambers A and B will raise.

(e) Check the link position of the lower diaphragm.

Standard: Link is raised to highest position.

HINT:

Vacuum is loaded in the chambers A and B of the diaphragm and sub–throttle valve will fully closed.

(f) A few seconds after the engine stops (IG OFF), check that the vacuum gauges in the chambers A and B is at zero.

(g) Check the link position of the lower diaphragm.

Standard: Link is lowered to lowest position.

HINT:

As the vacuum does not act in the chamber, sub–throttle valve is fully open.

5. REMOVE VACUUM GAUGES

Remove the vacuum gauge, and reconnect the vacuum hoses to the proper locations.

TIMING BELT

COMPONENTS

EM0RR–02

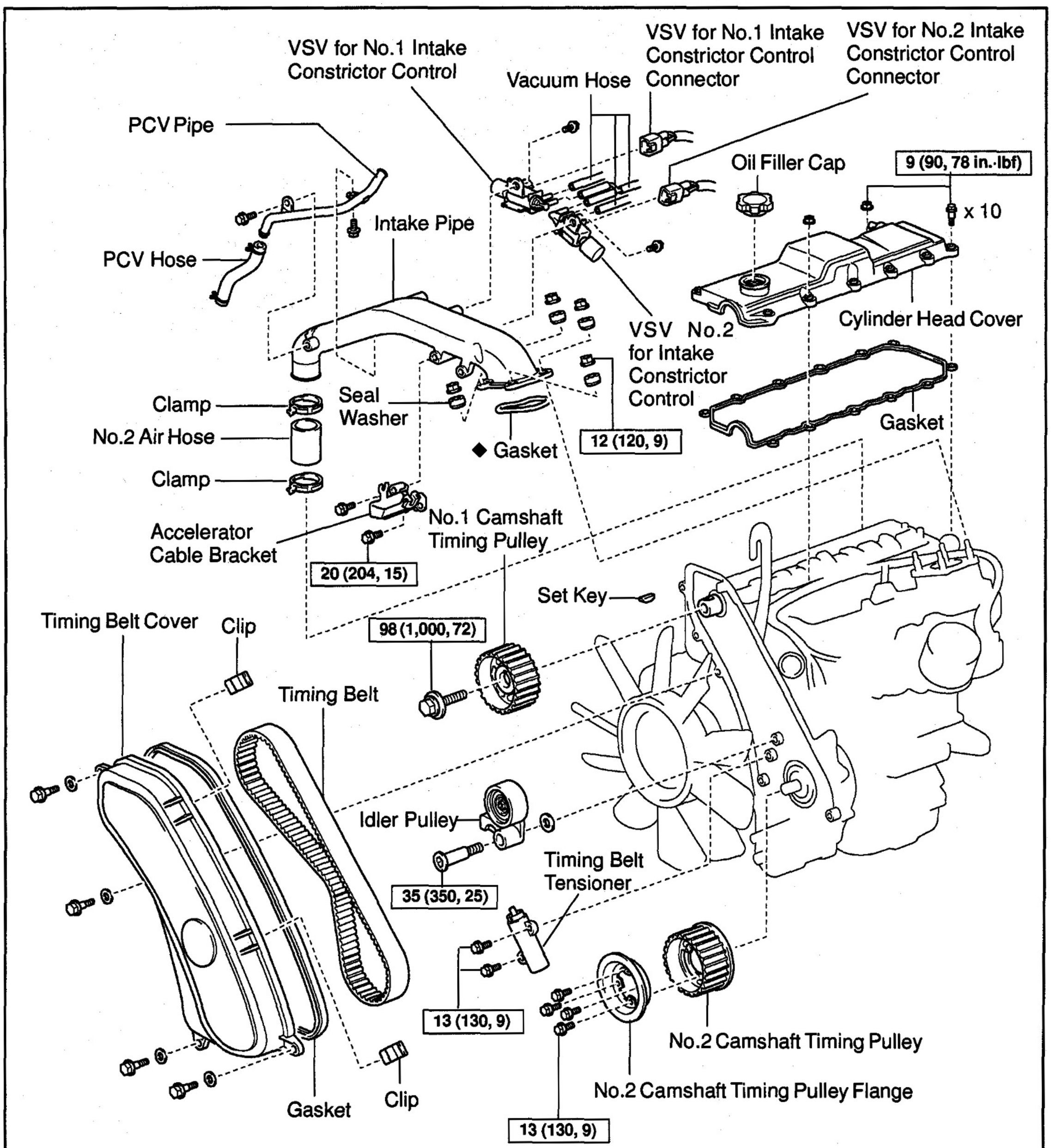

EM15A–01

REMOVAL

HINT:

If replacing the timing belt before the timing belt warning light comes on, (light comes on after 100,000 km of driving), be sure to reset the timing belt counter of the speedometer to zero.

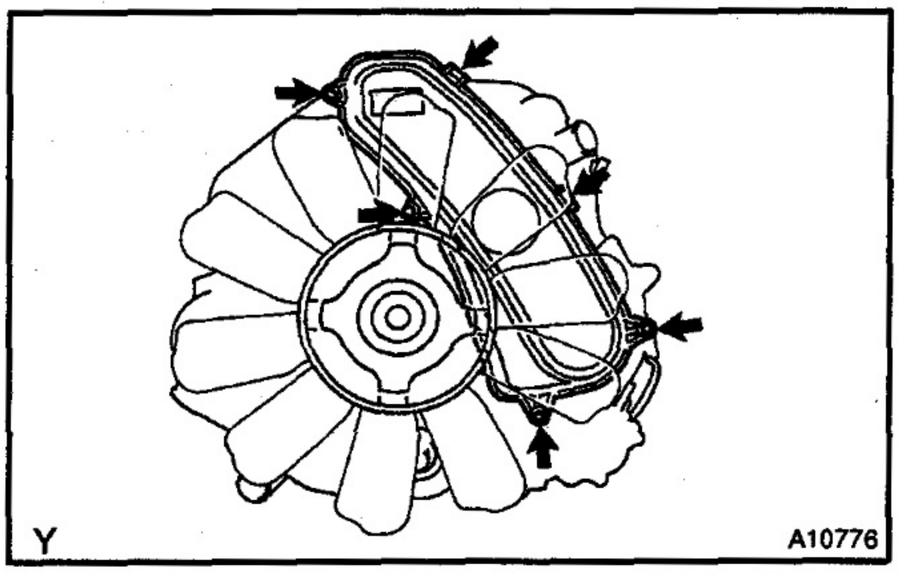

1. REMOVE TIMING BELT COVER

Remove the 4 bolts, seal washers, 2 clips, timing belt cover and gasket.

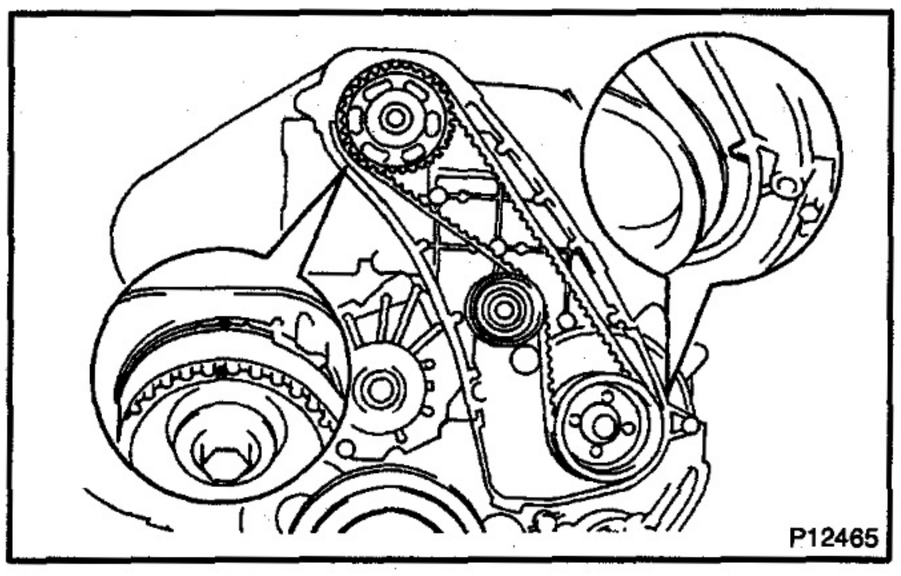

2. SET NO.4 CYLINDER TO TDC / COMPRESSION

Turn the crankshaft pulley clockwise, set both No.1 and No.2 camshaft pulley grooves at TDC marks.

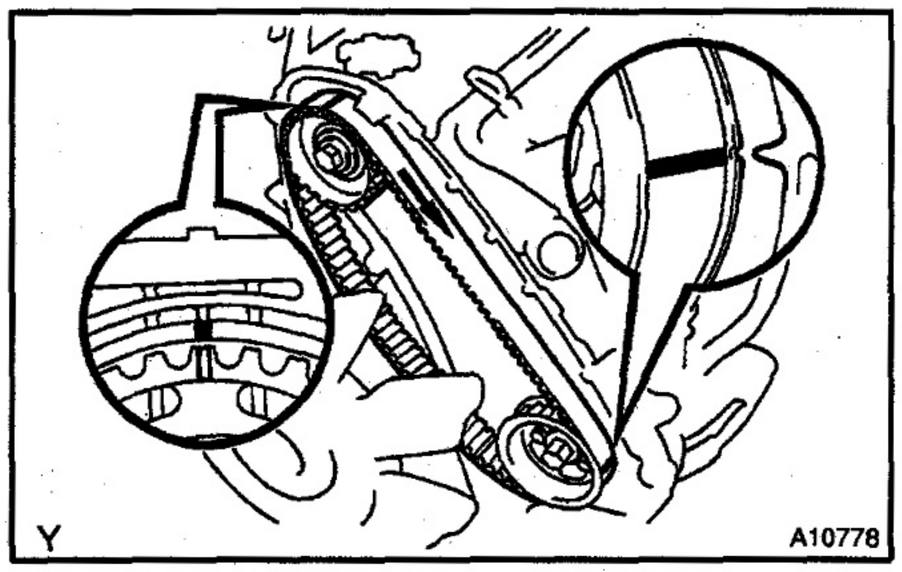

3. IF RE–USING TIMING BELT, MARK TIMING BELT

HINT:

If reusing the timing belt, draw a direction arrow on the bolt (in the direction of engine revolution), and place matchmarks on the pulleys and belt as shown in the illustration.

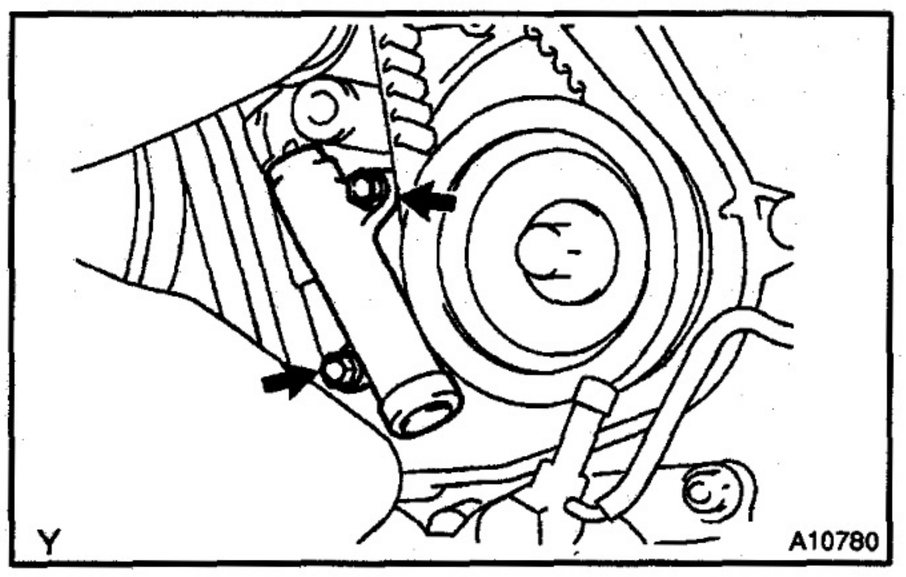

4. REMOVE TIMING BELT TENSIONER

Alternately loosen the 2 bolts, remove them and timing belt tensioner.

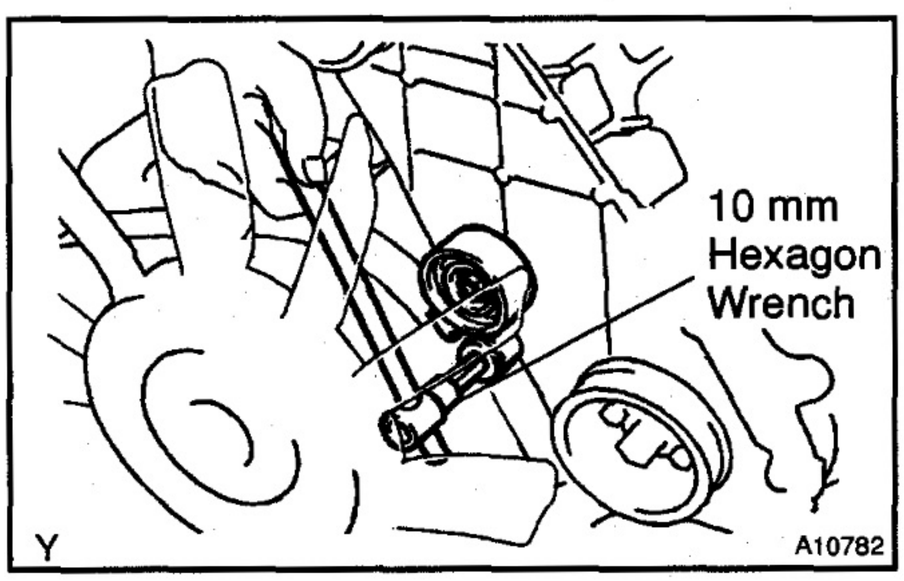

5. REMOVE TIMING BELT IDLER PULLEY

Using a 10 mm hexagon wrench, remove the bolt, timing belt idler pulley and washer.

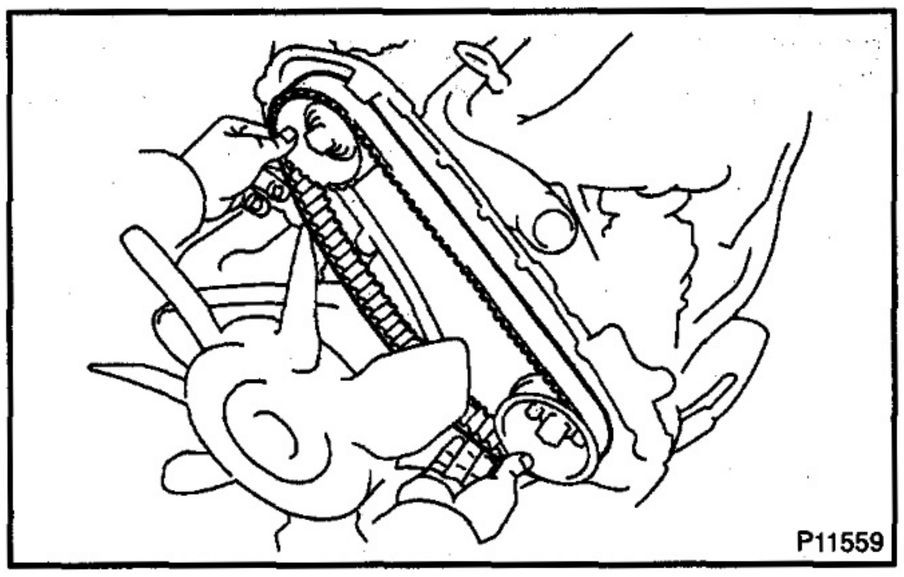

6. REMOVE TIMING BELT

Remove the timing belt from the camshaft timing pulley and crankshaft pully.

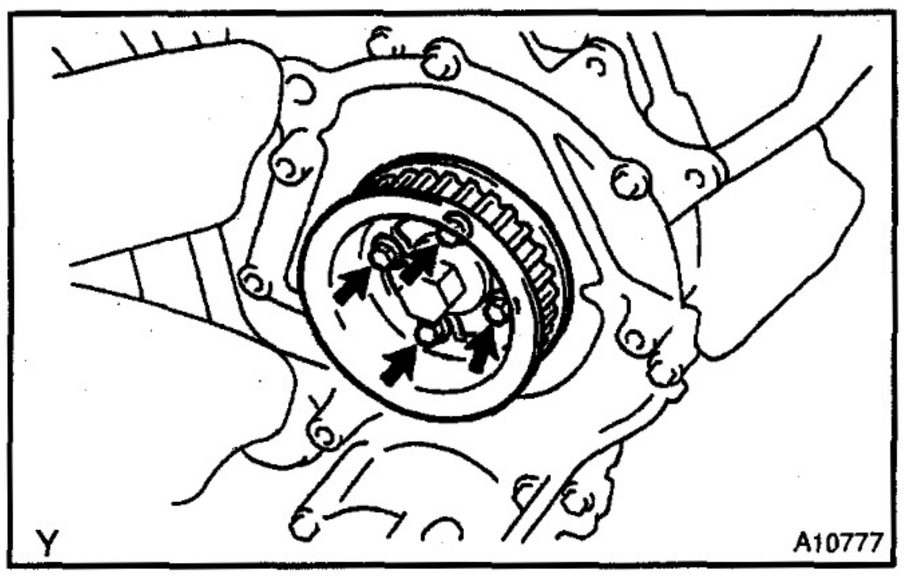

7. REMOVE NO.2 CAMSHAFT TIMING PULLEY

Remove the 4 bolts, No.2 camshaft timing pulley flange and No.2 camshaft timing pulley.

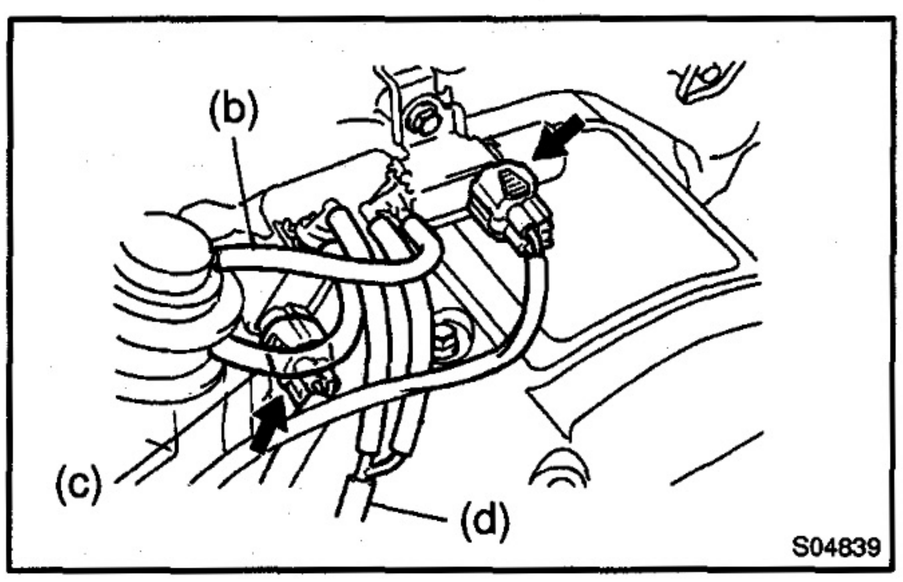

8. REMOVE INTAKE PIPE

(a) Disconnect the VSV for the No.1 and No.2 intake constrictor control connectors.

(b) Disconnect the vacuum hose from the actuator of the chamber A.

(c) Disconnect the vacuum hose from the actuator of the chamber B.

(d) Disconnect the vacuum hose from the 3–way (from vacuum pump).

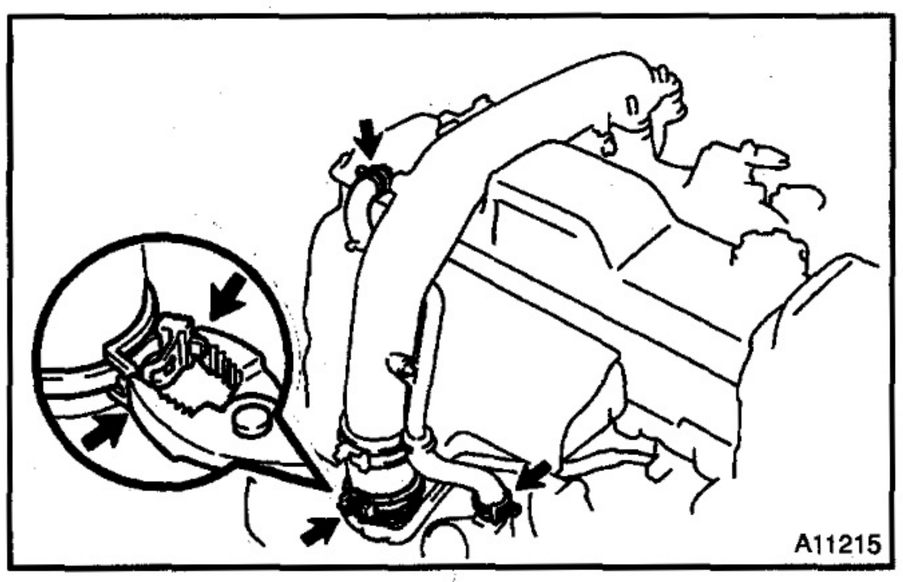

(e) Remove the 4 nuts and seal washers.

(f) Disconnect the 2 PCV hoses.

(g) Use pliers to pinch the ends of the clamp together until the lock plate engages the catch.
Make sure the lock plate and catch are engaged securely.

(h) Remove the intake pipe and gasket.

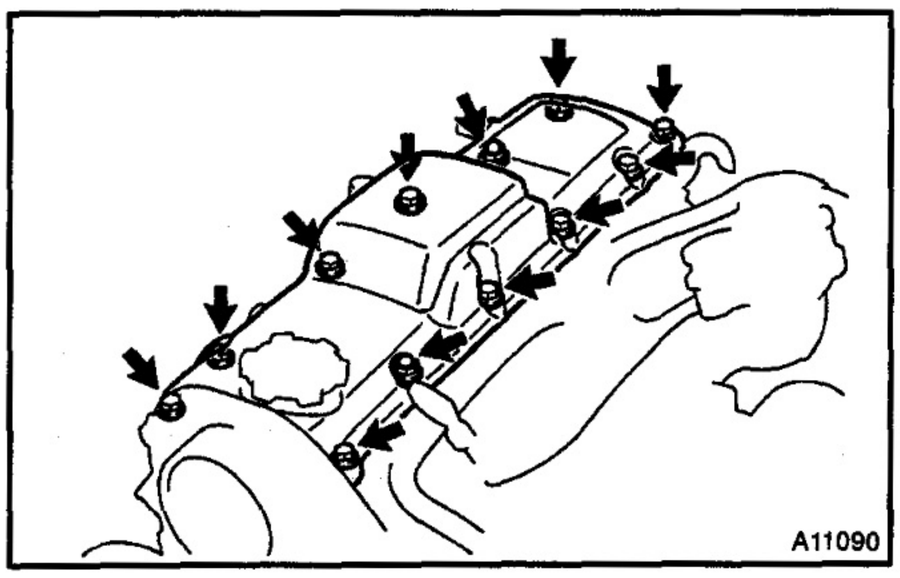

9. REMOVE CYLINDER HEAD COVER

Remove the 10 bolts, 2 nuts, cylinder head cover and gasket.

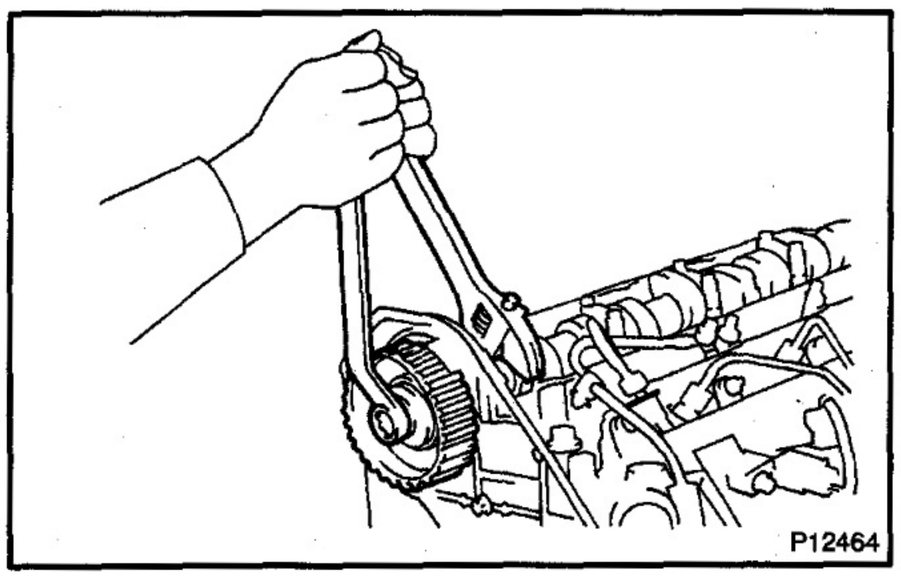

10. REMOVE NO.1 CAMSHAFT TIMING PULLEY

(a) Hold the hexagonal wrench head portion of the camshaft with a wrench, and remove the No.1 camshaft timing pulley bolt.

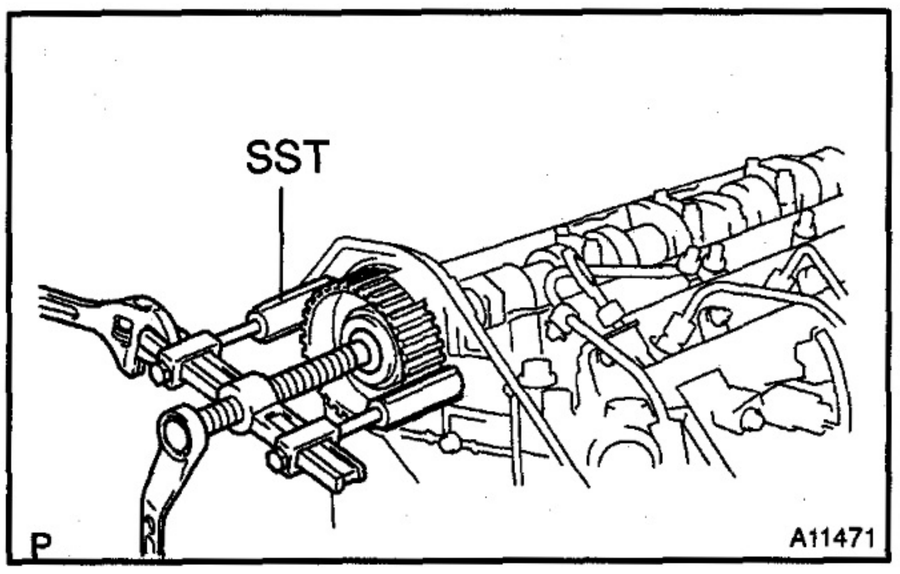

(b) Using SST, remove the No.1 camshaft timing pulley.
SST 09950–40011 (09951–04010, 09952–04010, 09953–04020, 09954–04010, 09955–04061)

(c) Remove the set key.

EM15B–01

INSPECTION

1. INSPECT TIMING BELT

NOTICE:

- **Do not bend, twist or turn the timing belt inside out.**
- **Do not allow the timing belt to come into contact with oil, water or steam.**
- **Do not utilize timing belt tension when installing or removing the mount bolt of the camshaft timing pulley.**

If there are any defects, check these points:

(a) Premature parting
- Check for proper installation.
- Check the timing cover gasket for damage and proper installation.

(b) If the belt teeth are cracked or damaged, check to see if the camshaft is locked.

(c) If there is noticeable wear or cracks on the bolt face, check to see if there are nicks on the side of the idler pulley lock.

(d) If there is wear or damage on only one side of the belt, check the belt guide and the alignment of each pulley.

(e) If there is noticeable wear on the belt teeth, check timing cover for damage and check gasket has been installed correctly and for foreign material on the pulley teeth.

If necessary, replace the timing belt.

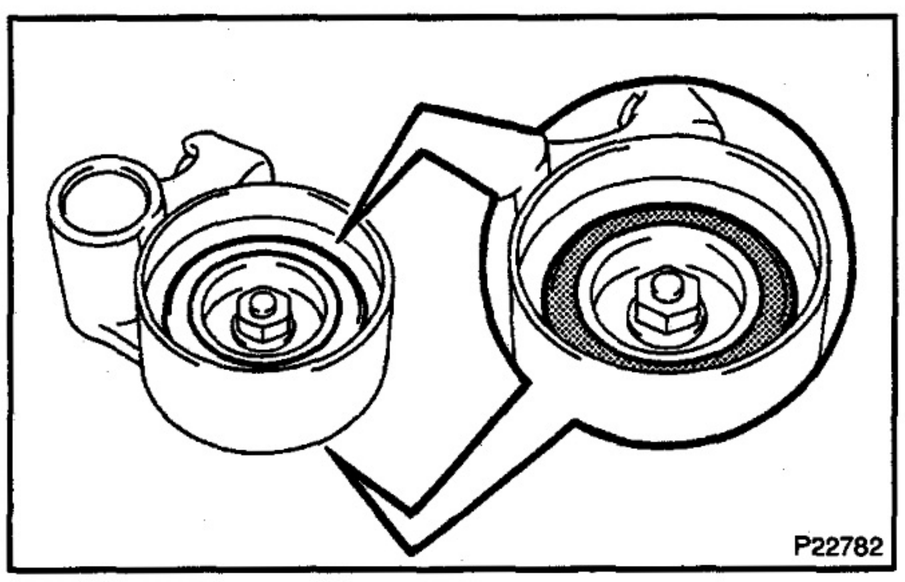

2. INSPECT IDLER PULLEY

(a) Visually check the seal portion of the idler pulley for oil leakage.

If leakage is found, replace the idler pulley.

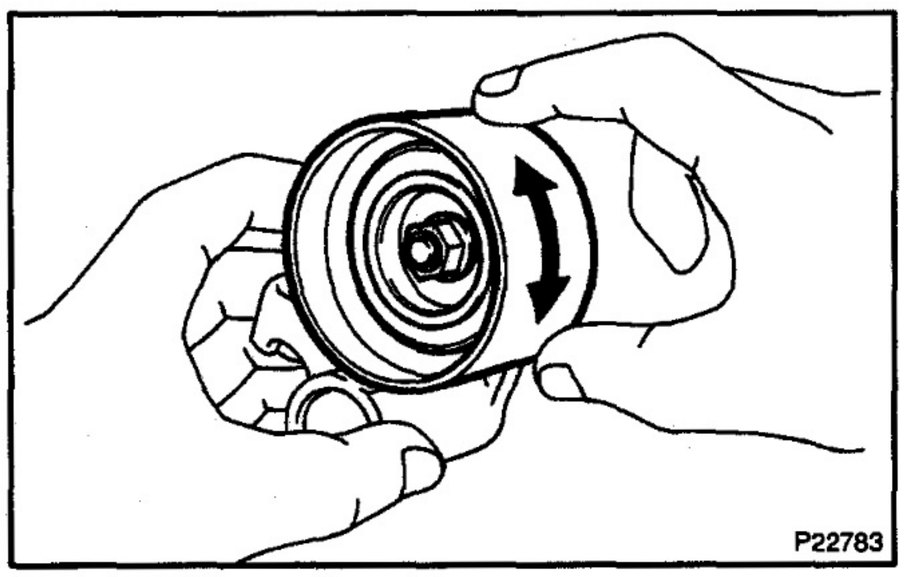

(b) Check that the idler pulley turns smoothly.

If necessary, replace the idler pulley.

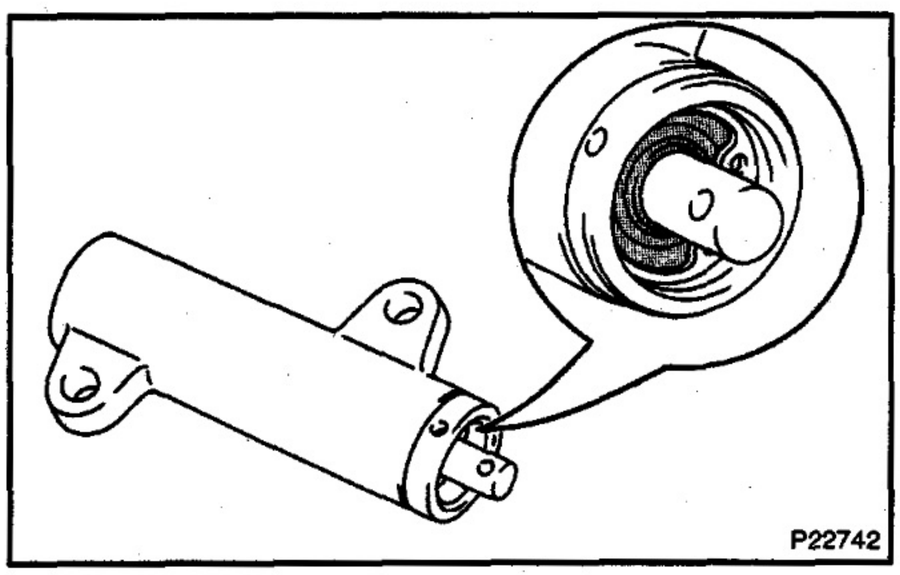

3. INSPECT TIMING BELT TENSIONER

(a) Visually check the seal portion of the tensioner for oil leakage.

HINT:

If there is only the faintest trace of oil on the seal on the push rod side, the tensioner is all right.

If leakage is found, replace the tensioner.

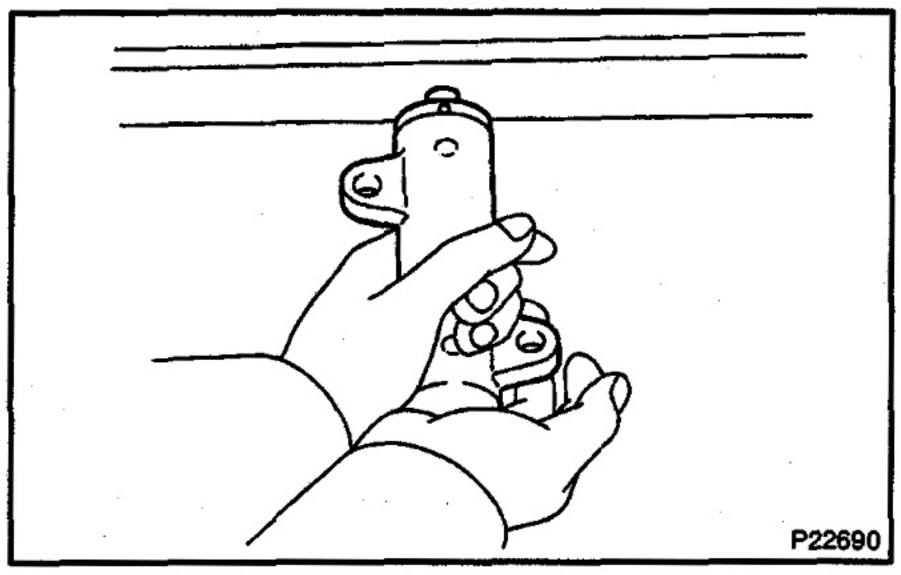

(b) Hold the tensioner with both hands and push the push rod strongly as shown to check that it doesn't move.

If the push rod moves, replace the tensioner.

NOTICE:

Never hold the tensioner push rod facing downward.

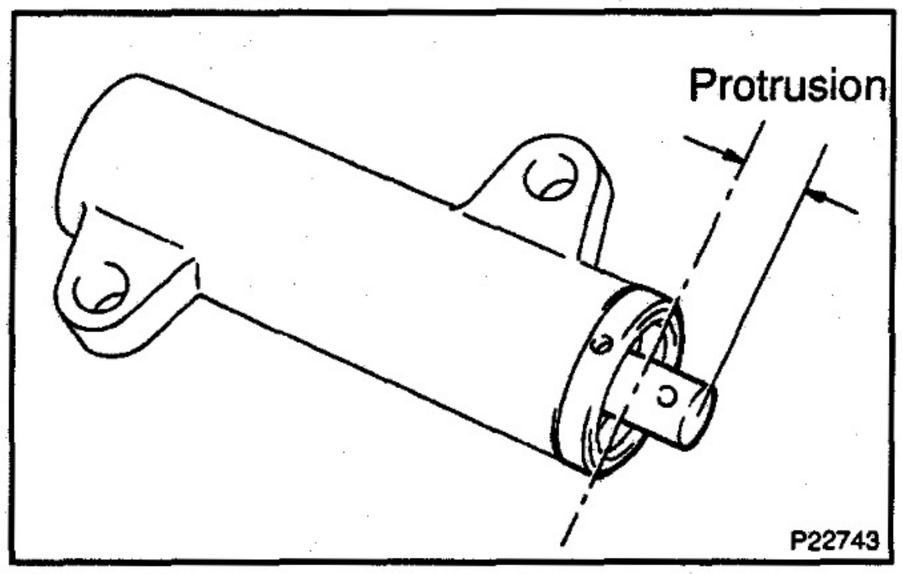

(c) Measure the protrusion of the push rod from the housing end.

Protrusion: 8.1 – 8.9 mm (0.319 – 0.350 in.)

If the protrusion is not as specified, replace the tensioner.

EM0RU–02

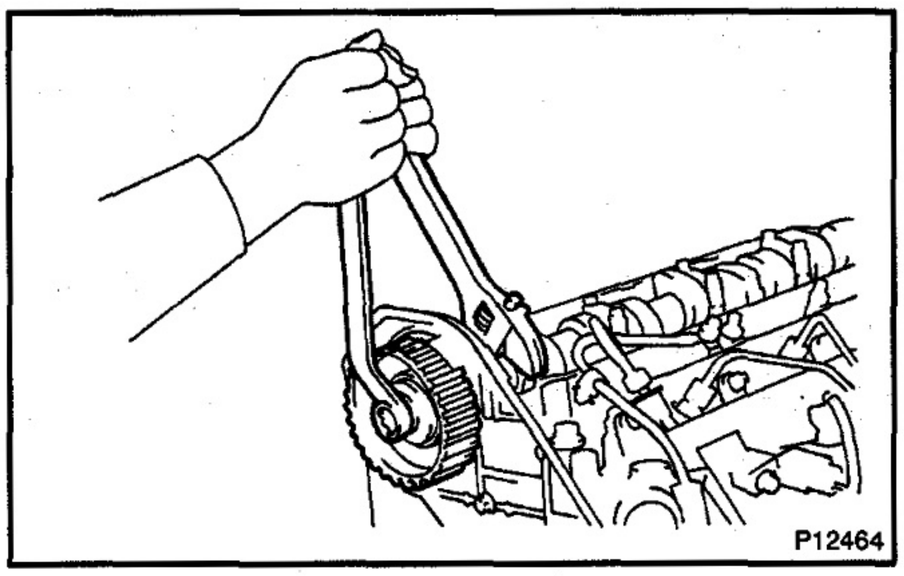

INSTALLATION

1. INSTALL NO.1 CAMSHAFT TIMING PULLEY

(a) Install the set key to the key groove of the camshaft.

(b) Align the pulley set key with the key groove of the No.1 camshaft timing pulley, slide the No.1 camshaft timing pulley.

(c) Temporarily install the No.1 timing pulley bolt.

(d) Hold the hexagon wrench head portion of the camshaft with a wrench, and tighten the No.1 camshaft timing pulley bolt.

Torque: 98 N·m (1,000 kgf·cm, 72 ft·lbf)

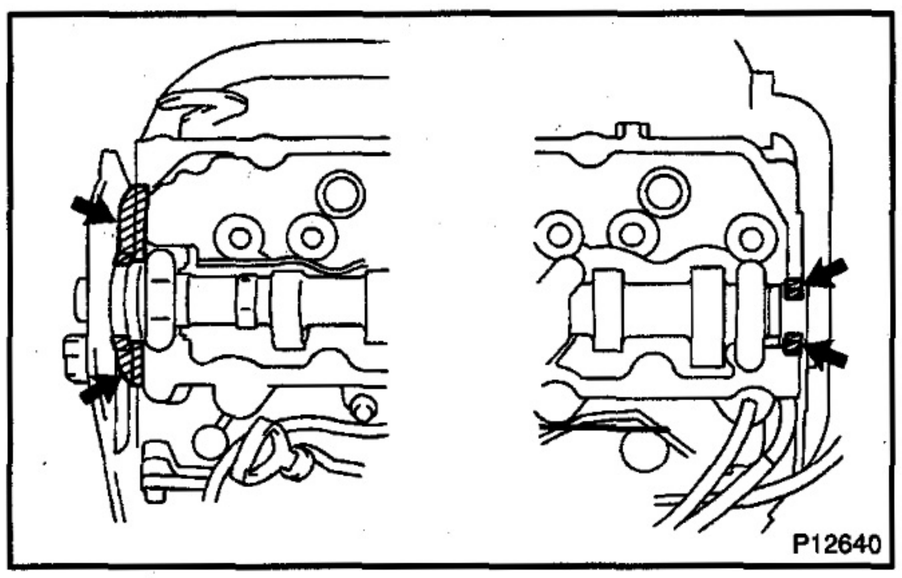

2. INSTALL CYLINDER HEAD COVER

(a) Remove any old packing (FIPG) material.

(b) Apply seal packing to the cylinder head s shown the illustration.

Seal packing: Part No. 08826–0080 or equivalent

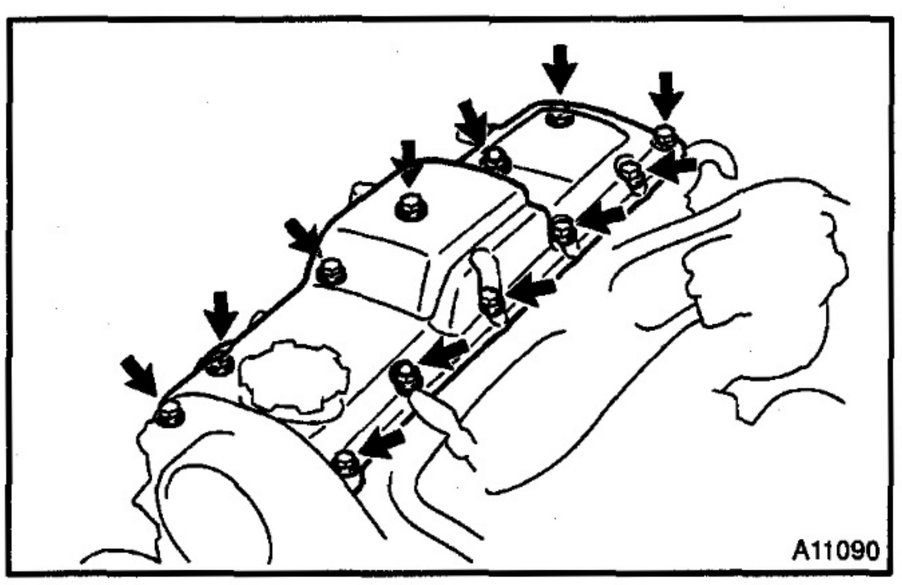

(c) Install a new gasket to the cylinder head cover.

(d) Install the cylinder head cover with the 10 bolts and 2 nuts.

Torque: 9 N·m (90 kgf·cm, 78 in.·lbf)

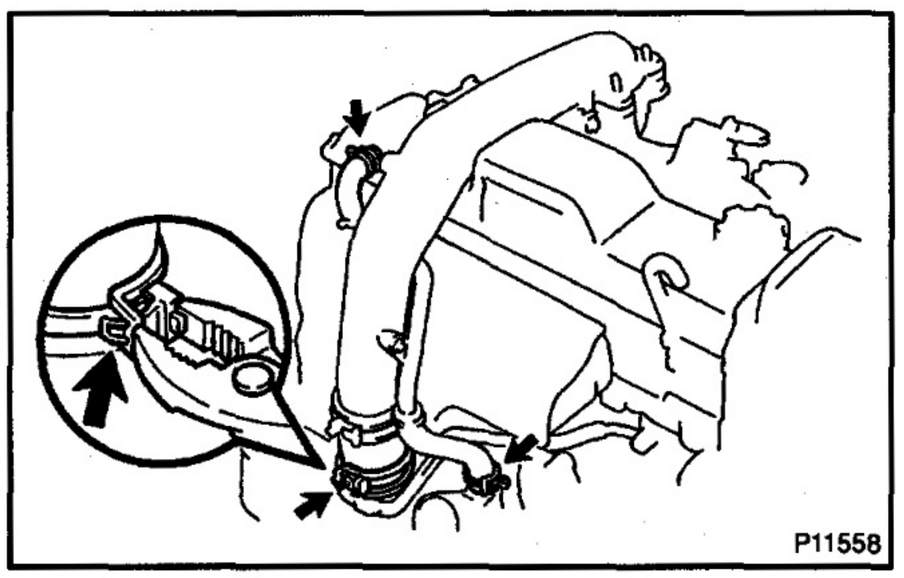

3. INSTALL INTAKE PIPE

(a) Place a new gasket on the intake manifold.

(b) Connect the air hose and install the intake pipe.

(c) Press the clamp lock together with the pliers and press down the tip of the lock plate. Carefully let the lock spread apart. Take care not to let the pliers slip.

(d) Connect the 2 PCV hoses.

(e) Install the 4 seal washers and nuts.

Torque: 12 N·m (120 kgf·cm, 9 ft·lbf)

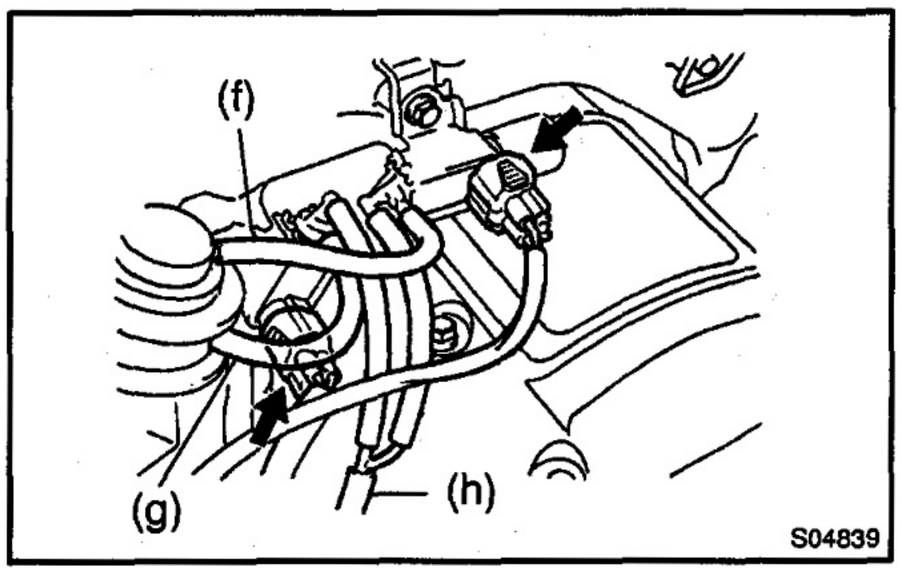

(f) Connect the vacuum hose to the acutuator of the chamber A.
(g) Connect the vacuum hose to the acutuator of the chamber B.
(h) Connect the vacuum hose to the 3–way (from vacuum pump).
(i) Connect the VSV for the No.1 and No.2 intake constrictor control connectors.

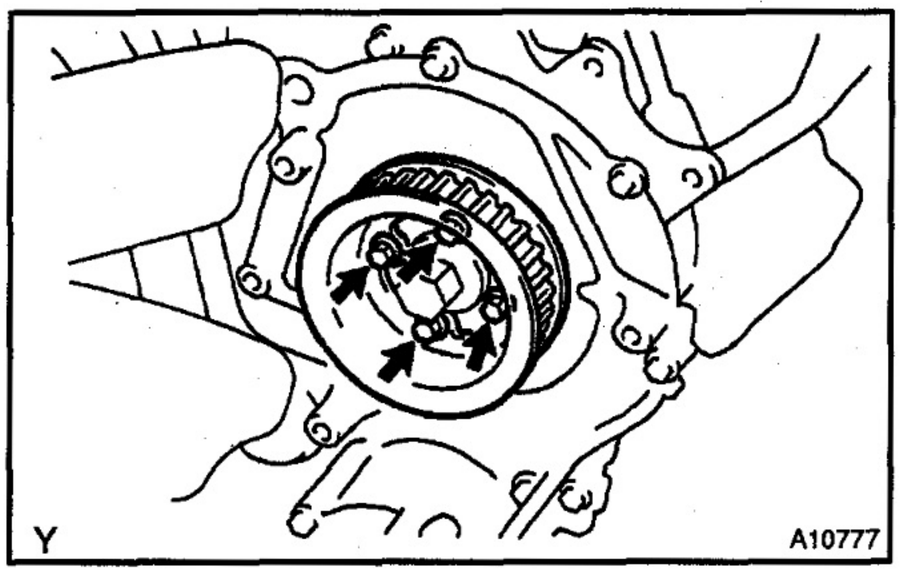

4. INSTALL NO.2 CAMSHAFT TIMING PULLEY

Align the knock pin of the injection pump drive gear with the knock pin hole of the No.2 camshaft timing pulley, install the pulley and No.2 camshaft timing pulley flanges with the 4 bolts.

Torque: 13 N·m (130 kgf·cm, 9 ft·lbf)

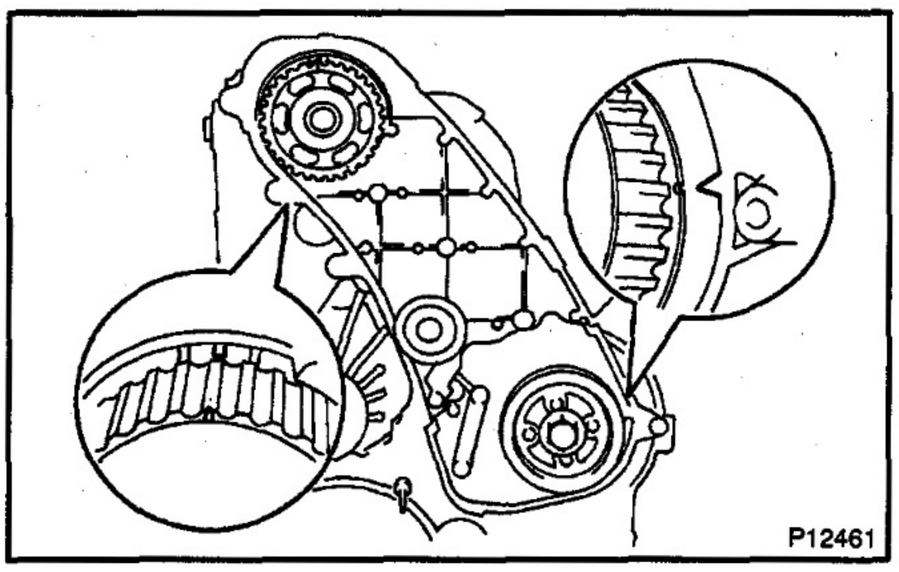

5. SET NO.4 CYLINDER TO TDC / COMPRESSION

Set the timing pulley at each position.

NOTICE:

When turning the crankshaft, the valve heads will hit against the position top. So do not turn it more than necessary.

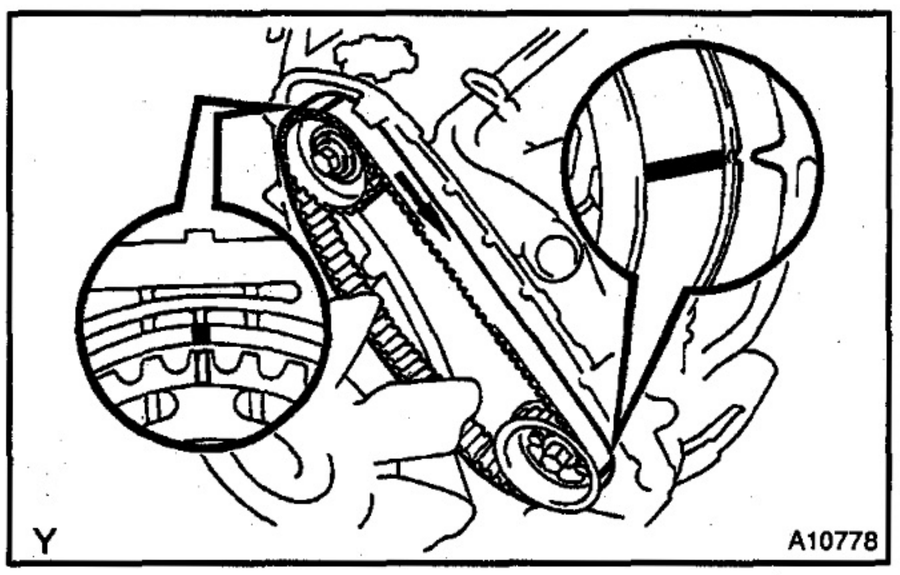

6. INSTALL TIMING BELT

NOTICE:

The engine should be cold.

HINT:

If re–using the timing belt, align the points marked during removal, and install the belt with the arrow pointing in the direction of engine revolution.

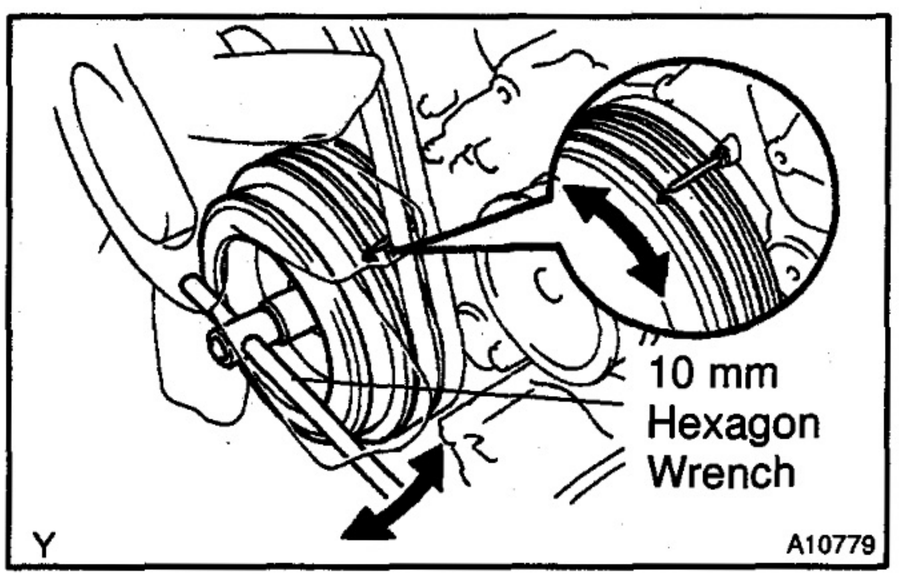

7. INSTALL TIMING BELT IDLER PULLEY

(a) Using a 10 mm hexagon wrench, install the washer and timing belt idler pulley with the bolt.

Torque: 35 N·m (350 kgf·cm, 25 ft·lbf)

(b) Check that the idler pulley moves smoothly.

If it doesn't move smoothly, check the idler pulley and washer.

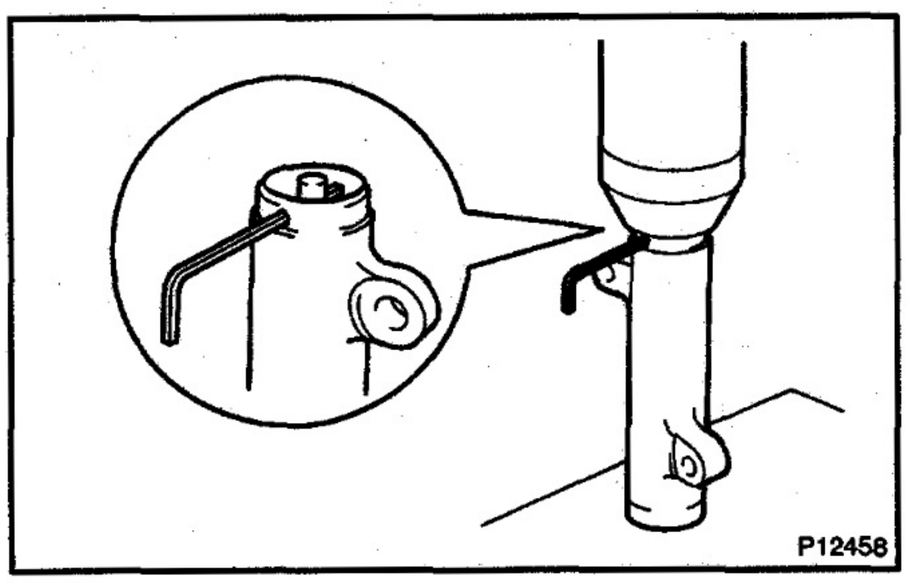

8. SET TIMING BELT TENSIONER

(a) Using a press, slowly press in the push rod using 981 – 9,807 N (100 – 1,000 kgf, 220 –2,205 lbf) of force.

(b) Align the hoses of the push rod and housing, pass a 1.5 mm hexagon wrench through the hoses to keep the setting position of the push rod.

(c) Release the press.

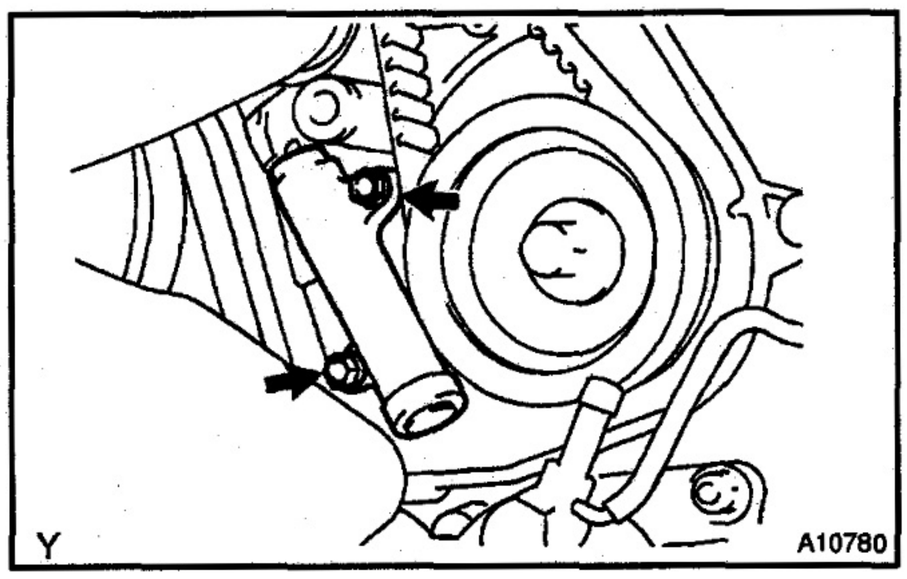

9. INSTALL TIMING BELT TENSIONER

(a) Temporarily install the timing belt tensioner with the 2 bolts while pushing the idler pulley toward the timing belt.

(b) Tighten the 2 bolts.
Torque: 13 N·m (130 kgf·cm, 9 ft·lbf)

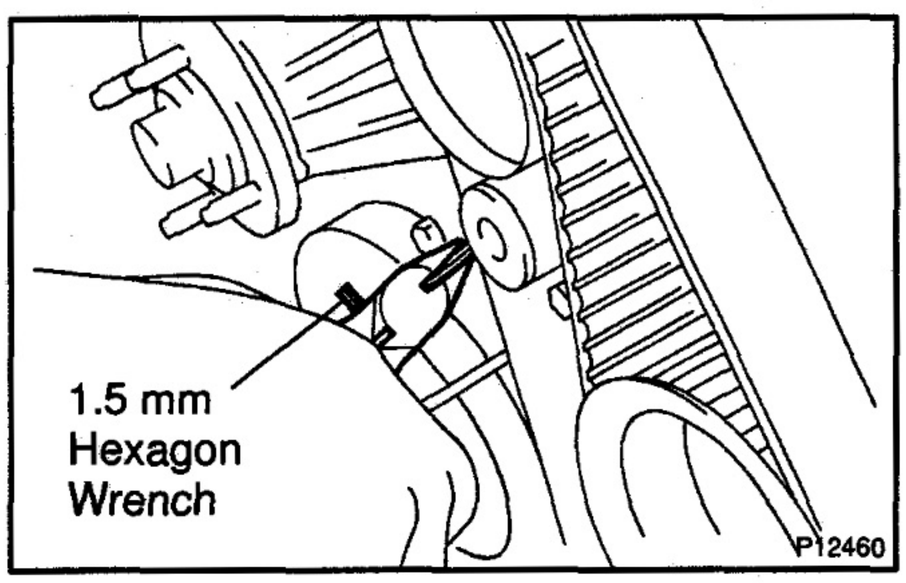

(c) Remove the 1.5 mm hexagon wrench from the tensioner.

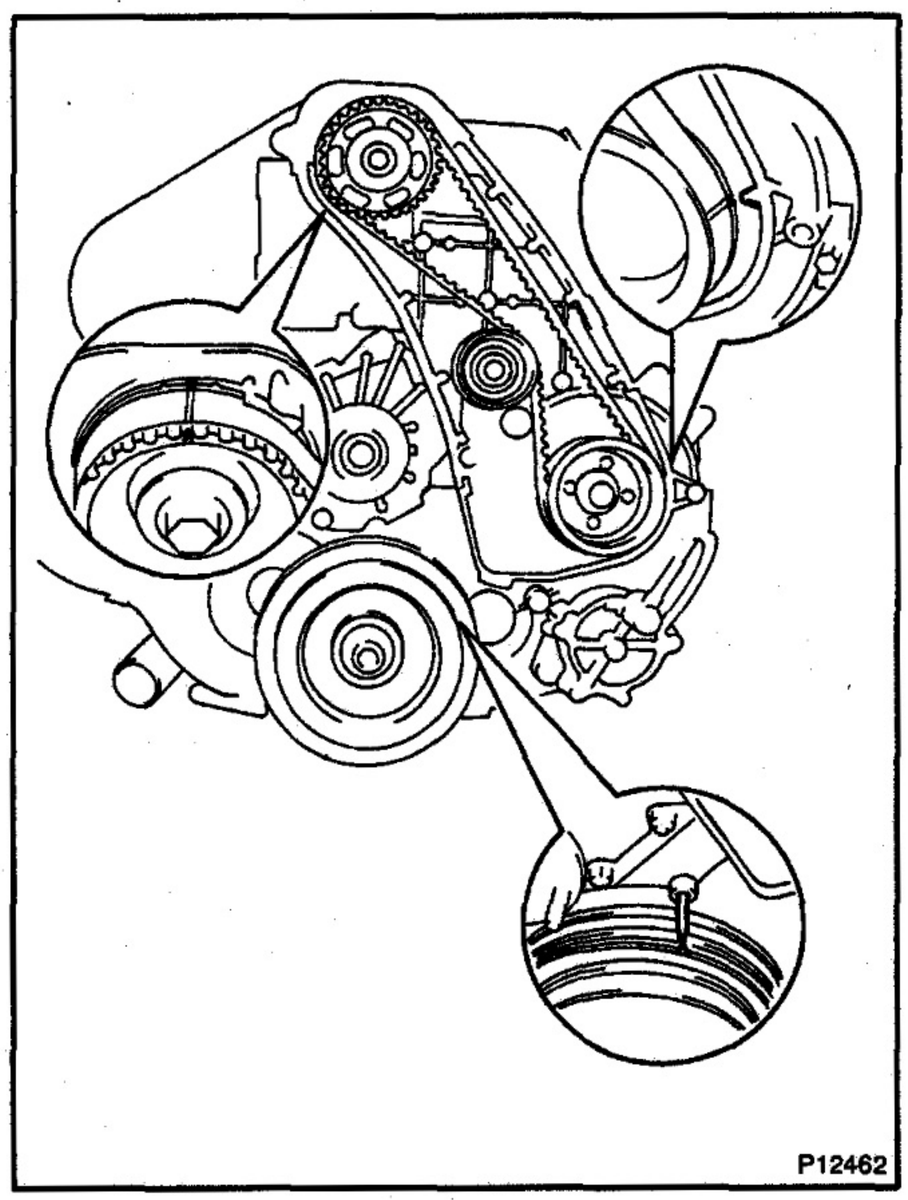

10. CHECK VALVE TIMING

Turn the crankshaft pulley clockwise and check that each pulley aligns with the timing marks (TDC mark) as shown in the illustration.

If the marks do not align, remove the timing belt and reinstall it.

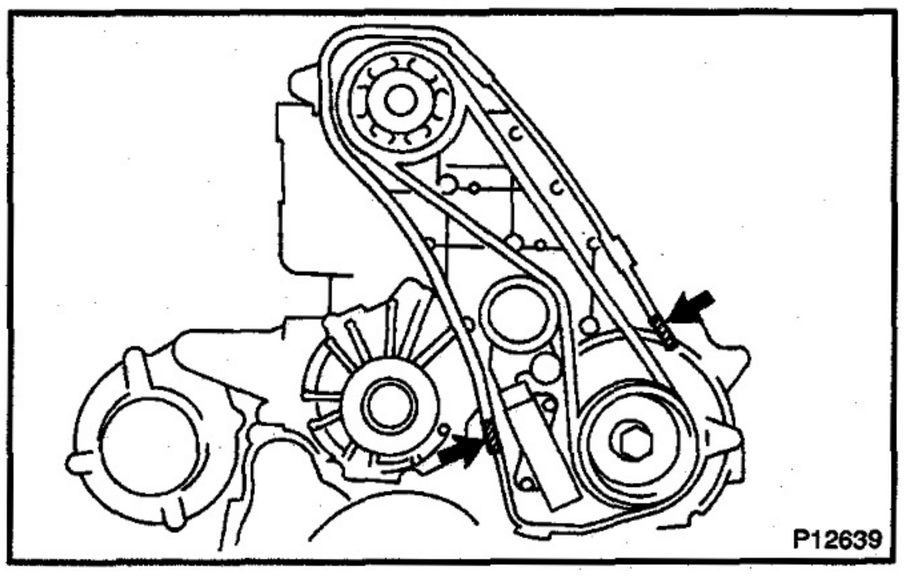

11. INSTALL TIMING BELT COVER

(a) Remove any old packing (FIPG) material.

(b) Apply seal packing to the camshaft oil seal retainer and timing gear cover as shown in the illustration.
Seal packing: Part No. 08826–00080 or equivalent

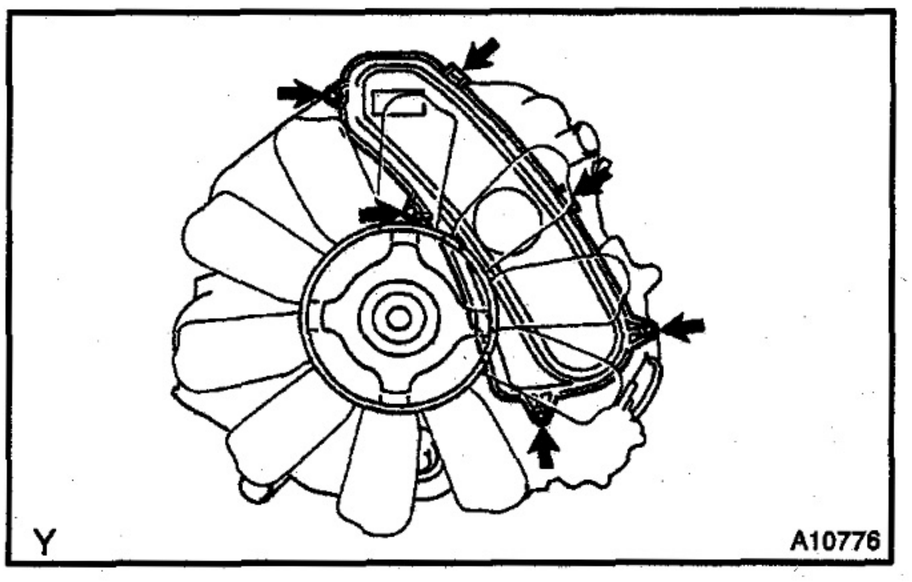

(c) Install the gasket to the timing belt cover.

(d) Install the timing belt cover with the 4 seal washers, 4 bolts and 2 clips.

TIMING GEAR

COMPONENTS

EM156–01

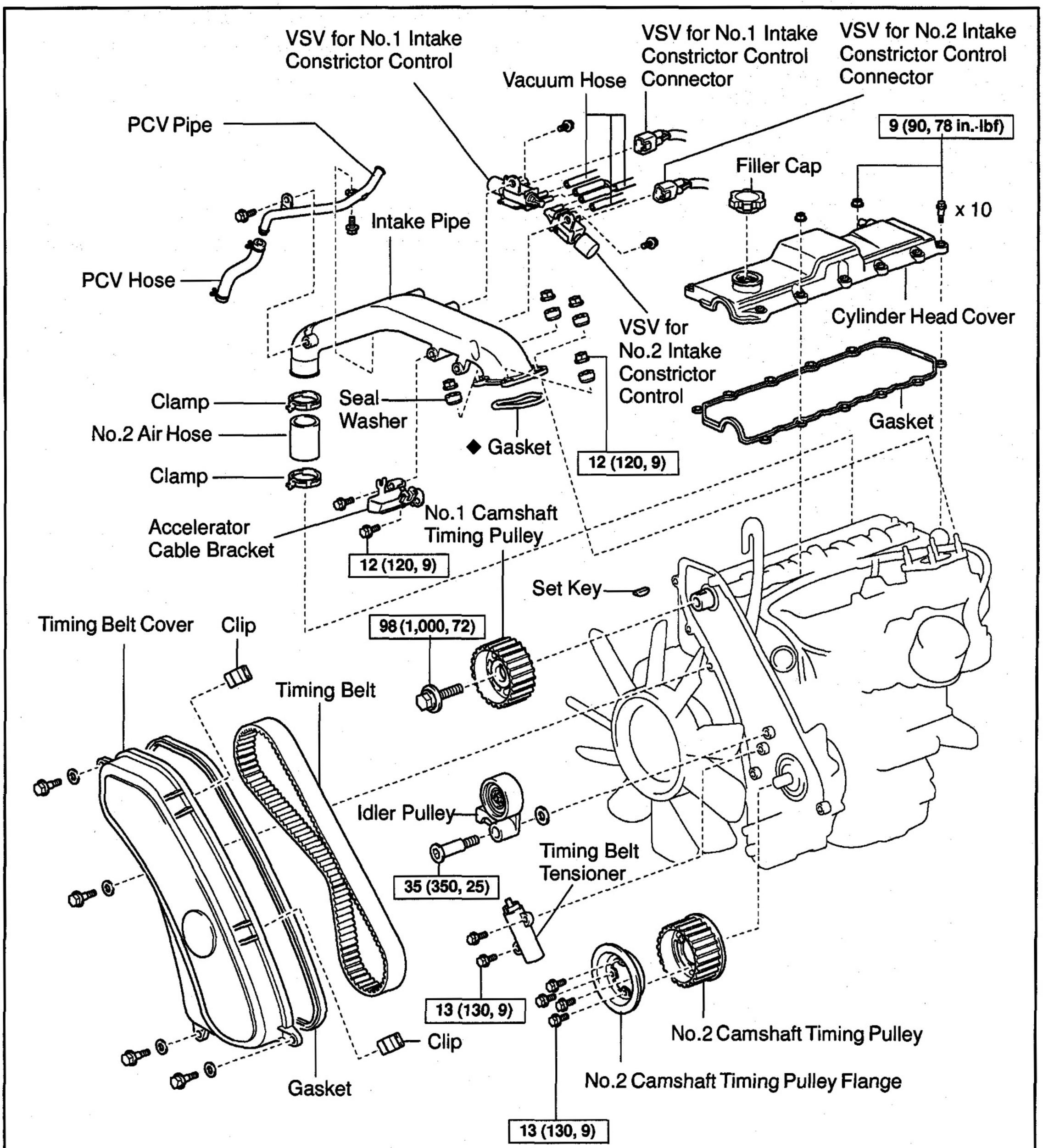

N·m (kgf·cm, ft·lbf) : Specified torque

◆ Non–reusable part

A10775

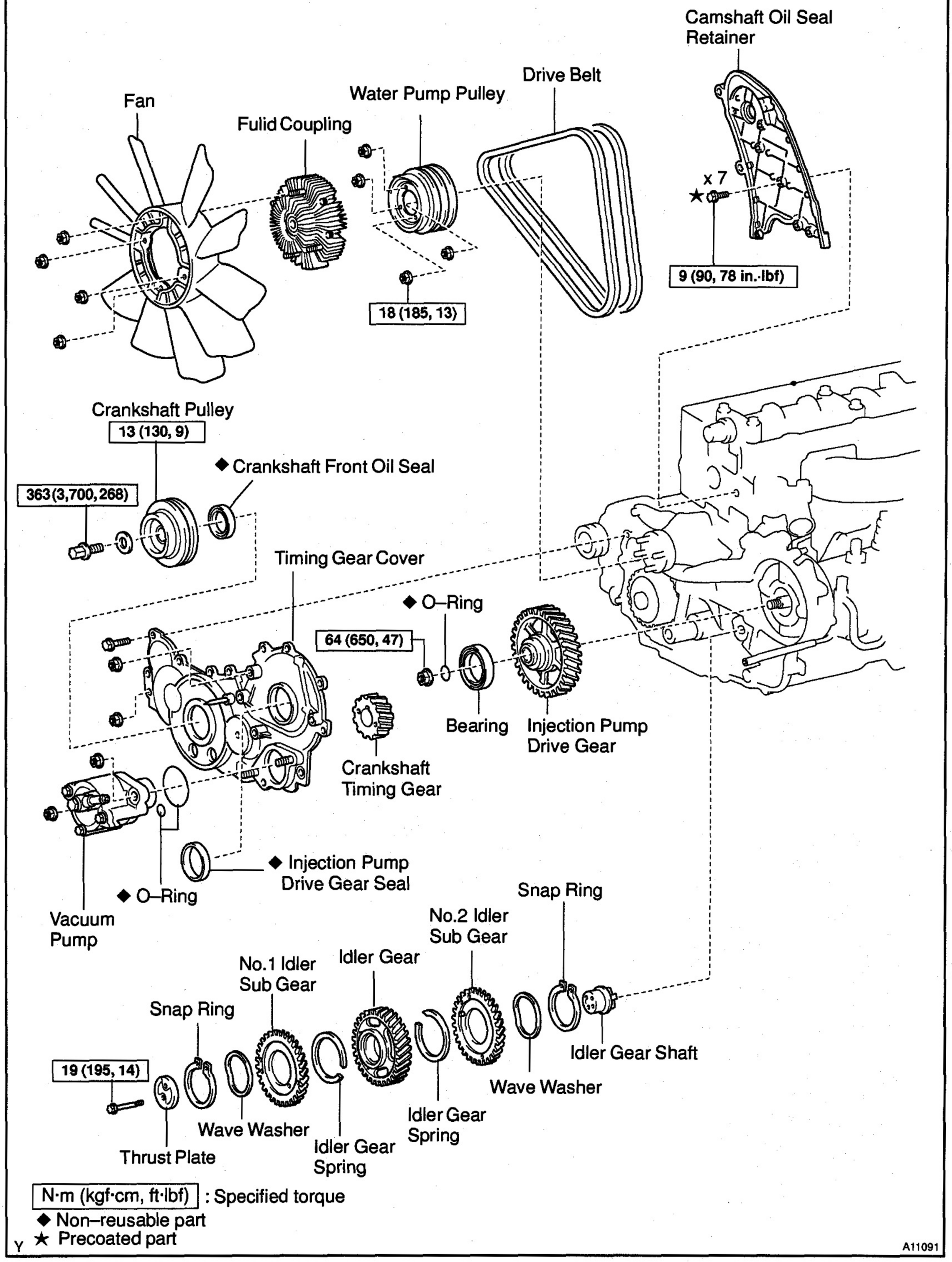
Camshaft Oil Seal Retainer
Drive Belt
Water Pump Pulley
Fan
Fulid Coupling
x 7
★
9 (90, 78 in.·lbf)
18 (185, 13)
Crankshaft Pulley
13 (130, 9)
◆ Crankshaft Front Oil Seal
363 (3,700, 268)
Timing Gear Cover
◆ O–Ring
64 (650, 47)
Bearing
Injection Pump Drive Gear
Crankshaft Timing Gear
◆ Injection Pump Drive Gear Seal
◆ O–Ring
Vacuum Pump
Snap Ring
No.2 Idler Sub Gear
No.1 Idler Sub Gear
Idler Gear
Idler Gear Shaft
Wave Washer
19 (195, 14)
Thrust Plate
Wave Washer
Idler Gear Spring
Idler Gear Spring
N·m (kgf·cm, ft·lbf) : Specified torque
◆ Non–reusable part
★ Precoated part
Y
A11091

EM0RW–02

REMOVAL

NOTICE:

When removing the crankshaft pulley and timing gear as the timing belt is off and the vaive interferes with the piston, never,turn the crankshaft to the right beyond the dead point above the No.4 cylinder.

1. **REMOVE TIMING BELT AND PULLEYS**
   (See page EM–13)
2. **REMOVE DRIVE BELT, FAN AND WATER PUMP PULLEY (See page CO–5)**

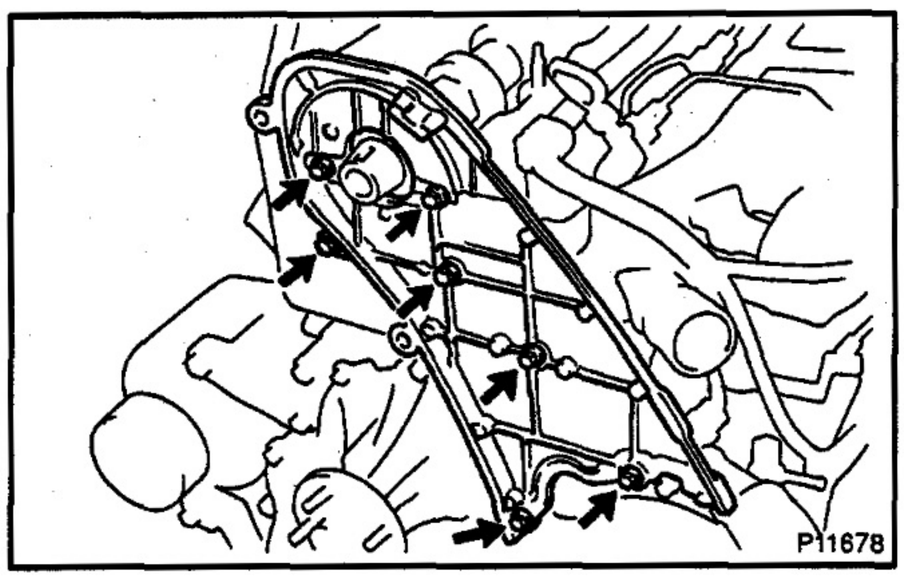

3. **REMOVE CAMSHAFT OIL SEAL RETAINER**

Remove the 7 bolts and camshaft oil seal retainer.

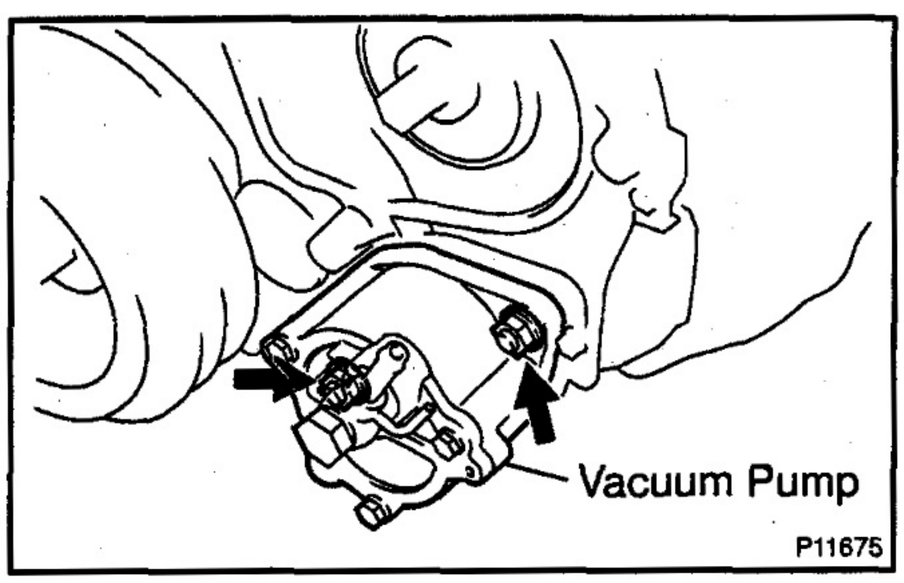

4. **REMOVE VACUUM PUMP**

(a) Remove the vacuum hose.
(b) Remove the 2 nuts and vacuum pump.
(c) Remove 2 the O–rings.

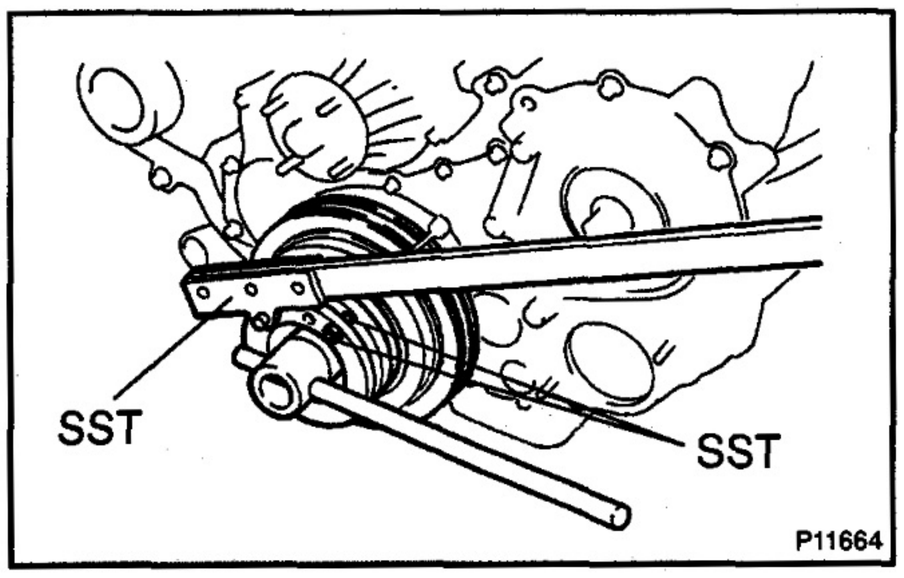

5. **REMOVE CRANKSHAFT PULLEY**

(a) Using SST, remove the pulley bolt and plate.
SST 09213–58012 x 2, 09330–00021

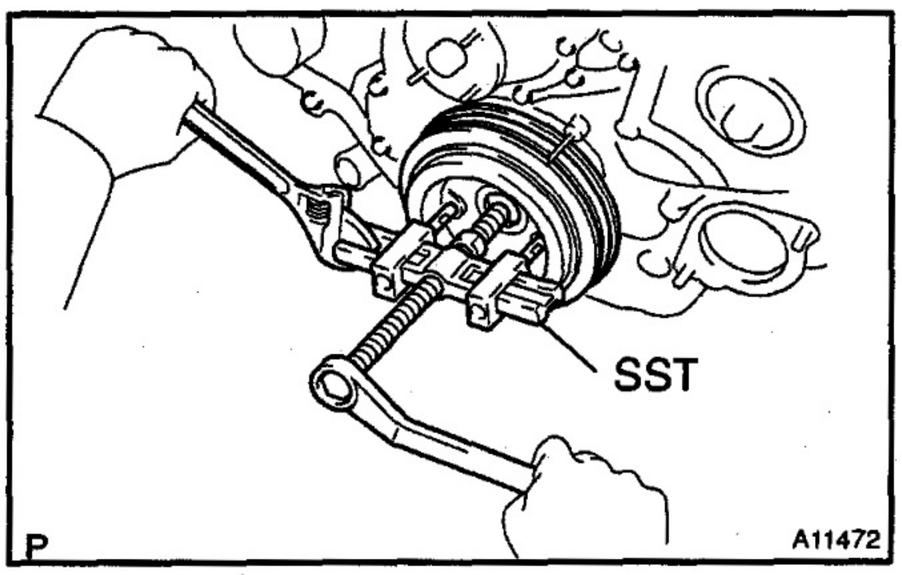

(b) Using SST, remove the crankshaft pulley.
SST 09950–50012, (09951–05010, 09952–05010, 09953–05010, 09953–05020, 09954–05020)

6. REMOVE TIMING GEAR COVER

(a) Remove the bolt, nut and washer and disconnect the vacuum pipe.

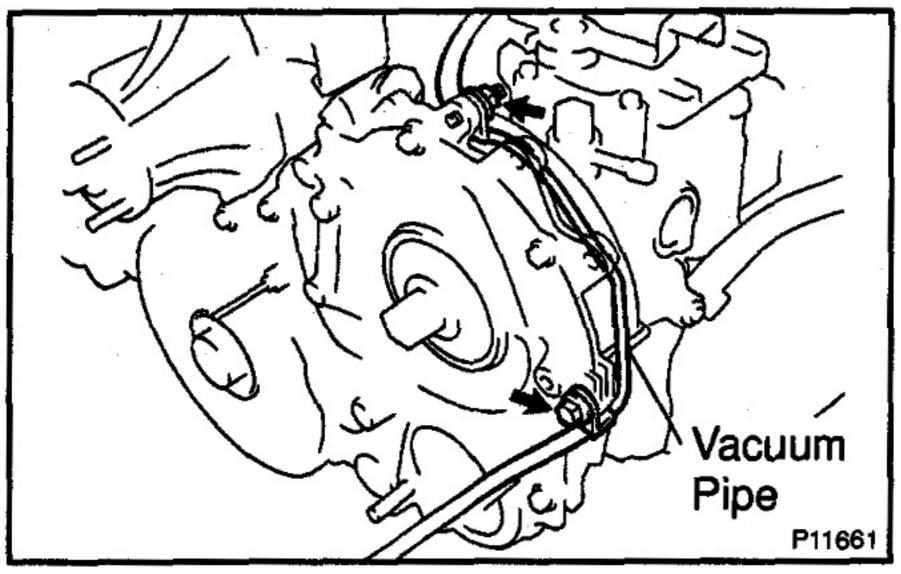

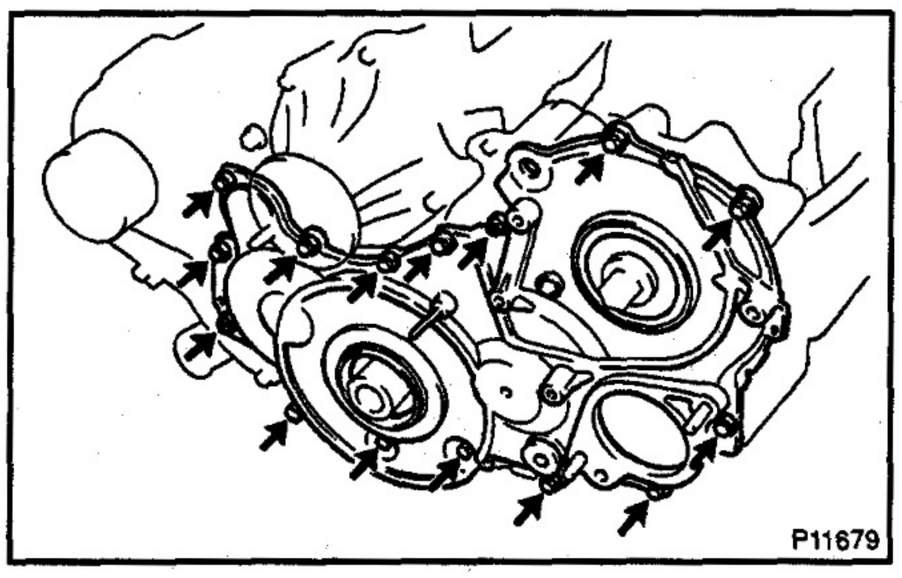

(b) Remove the 13 bolts and 2 nuts.

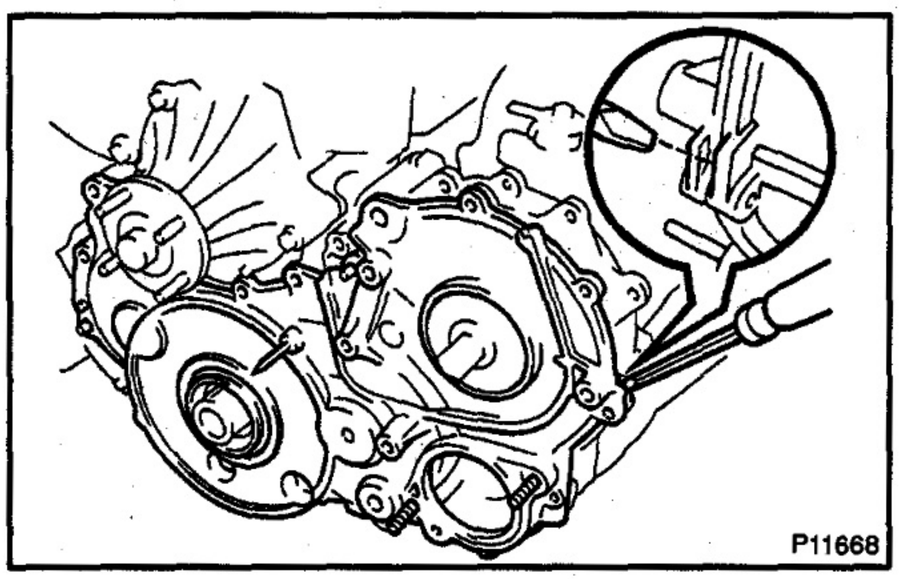

(c) Using a screwdriver, pry out the timing gear cover.

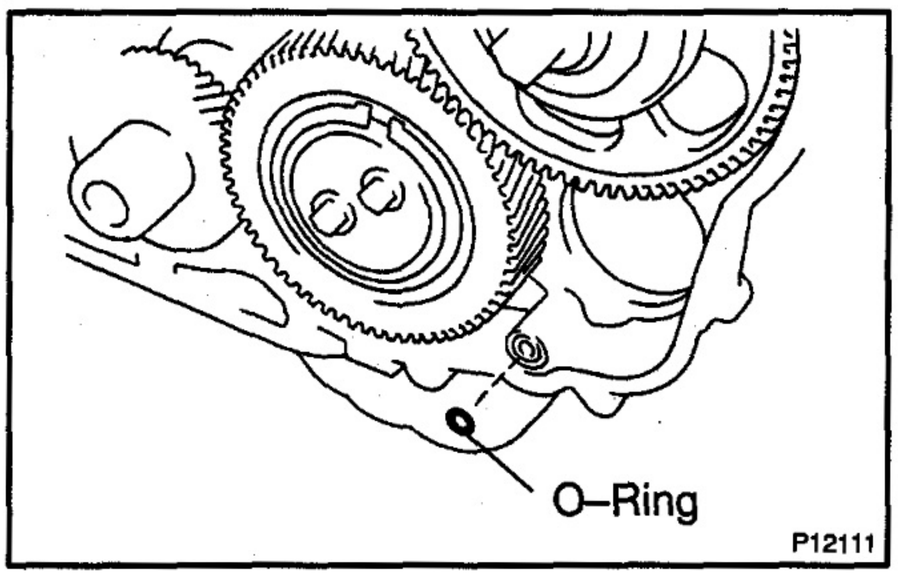

(d) Remove the O–ring.

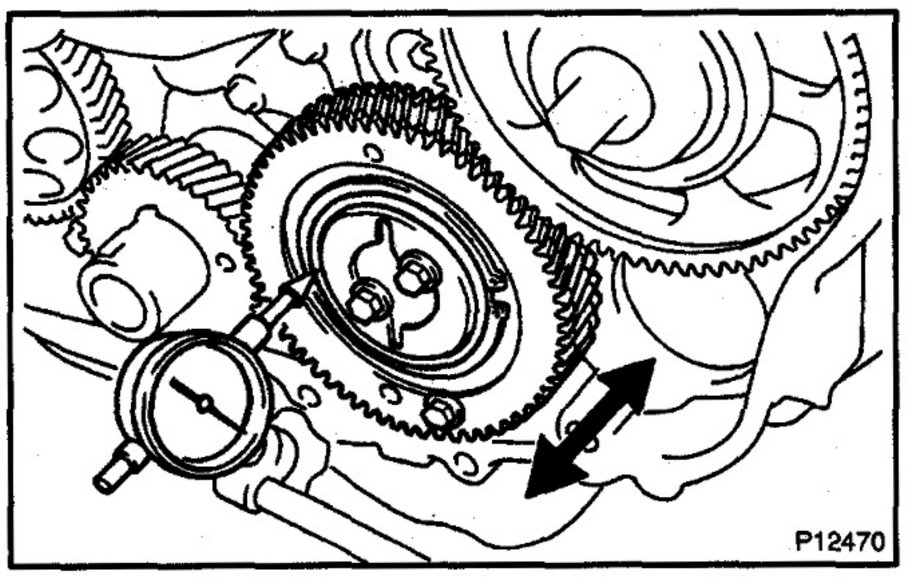

7. CHECK THRUST CLEARANCE OF IDLER GEAR

Using a dial indicator, measure the thrust clearance.

Standard thrust clearance:

0.06 – 0.11 mm (0.0024 – 0.0043 in.)

Maximum thrust clearance: 0.30 mm (0.0118 in.)

If the thrust clearance is greater than maximum, replace the thrust plate. If necessary, replace the idler gear and/or idler gear shaft.

8. REMOVE TIMING GEARS

NOTICE:

- **The matchmark on each gear faces the front of the engine.**
- **Take care not to damage the gear teeth when removing and installing the gears. Do not use parts that are scratched or damaged, they cause noise.**

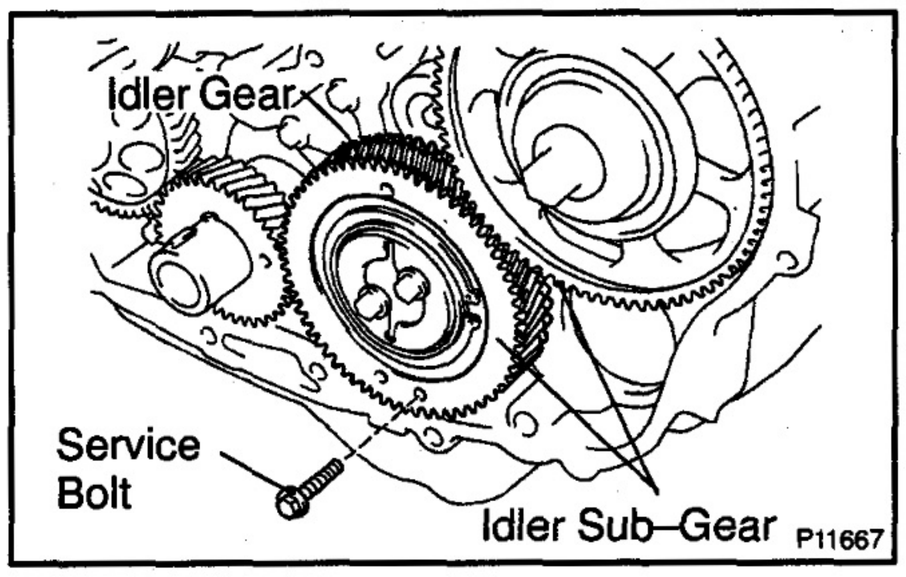

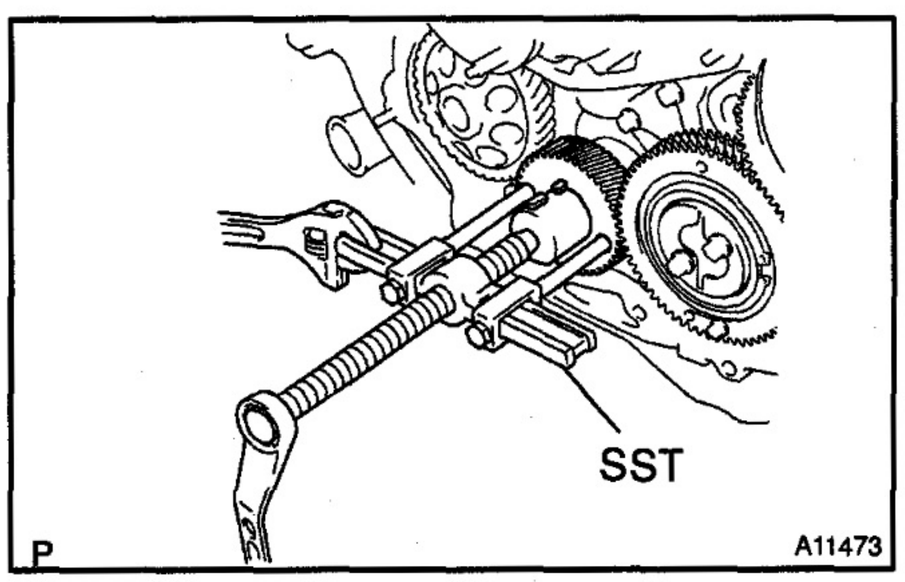

(a) Remove the crankshaft timing gear.

(1) Secure the idler sub–gears to the idler gear with a service bolt.

Recommended service bolt:

Thread diameter	6 mm
Thread pitch	1.0 mm
Bolt length	28.0 mm (1.10 in.)

HINT:

When removing the idler gear, make sure that the torsional spring force of the sub–gears has been eliminated by the above operation.

(2) Using SST, remove the crankshaft timing gear.

SST 09950–50012 (09951–05010, 09952–05010, 09953–05010, 09954–05020)

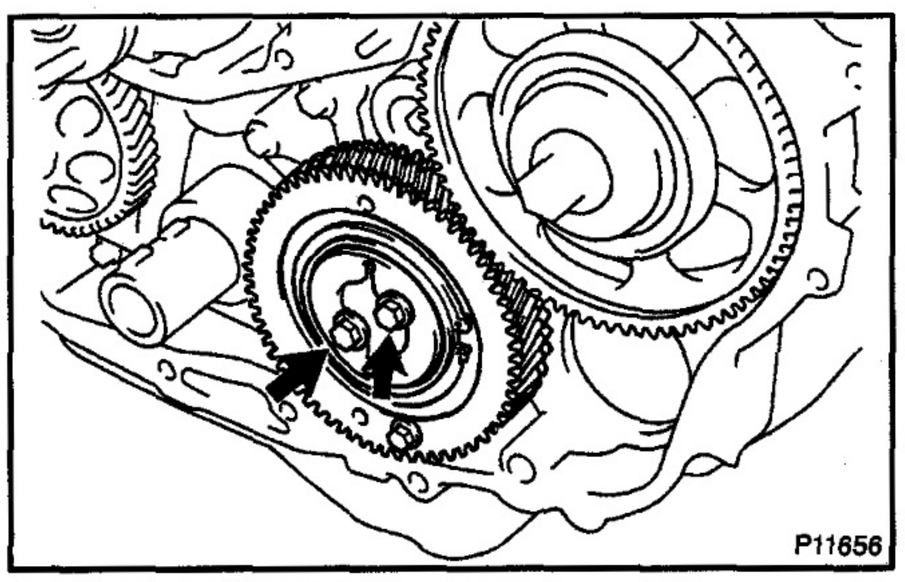

(b) Remove the 2 bolts, thrust plate, idler gear assembly and idler gear shaft.

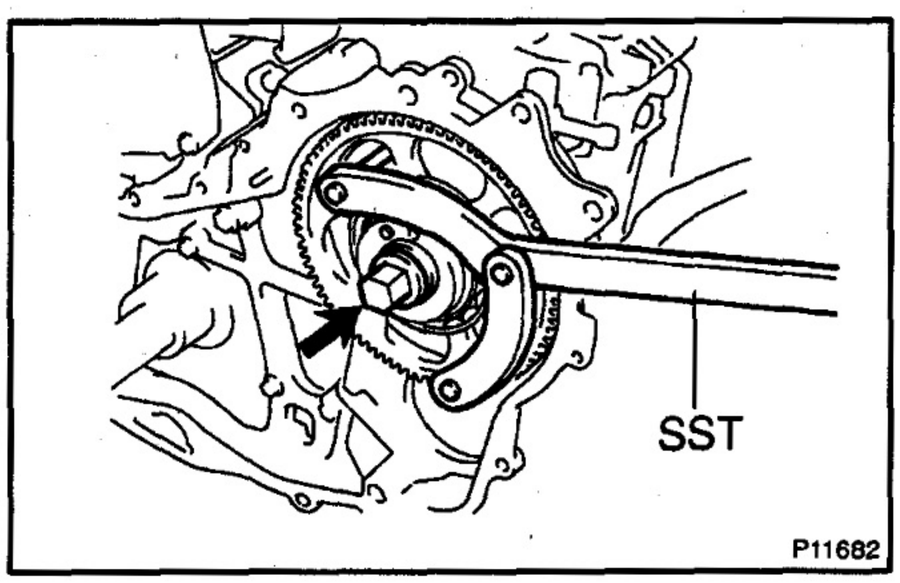

(c) Remove the injection pump drive gear.
(1) Using SST, remove the injection pump drive gear set nut.
SST 09960–10010 (09962–01000, 09963–00600)
(2) Remove the O–ring.

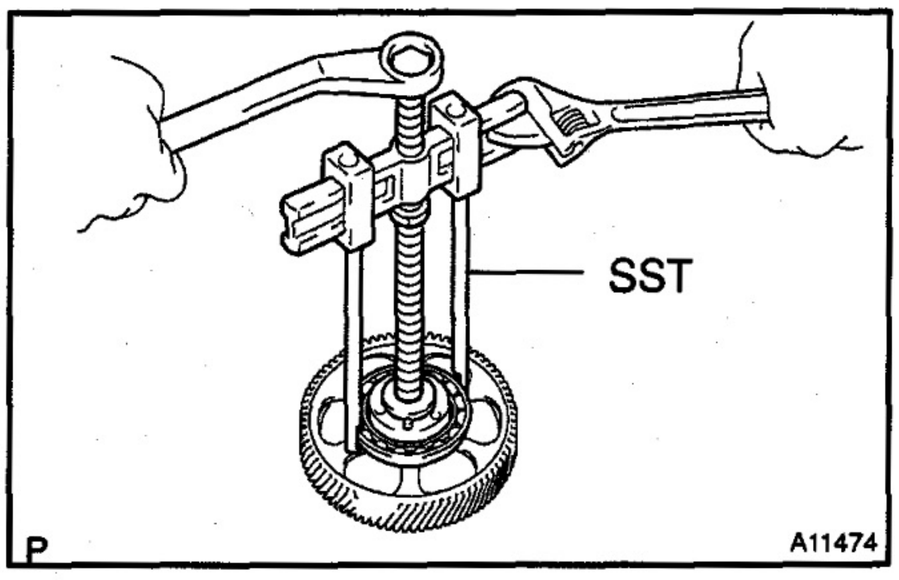

(3) Using SST, remove the injection pump drive gear.
SST 09950–50012 (09951–05010, 09952–05010, 09953–05010, 09954–05020)

NOTICE:
- **Tighten the 2 bolts of SST more than 8 mm (0.31 in.).**
- **Set the SST so that it is balanced.**

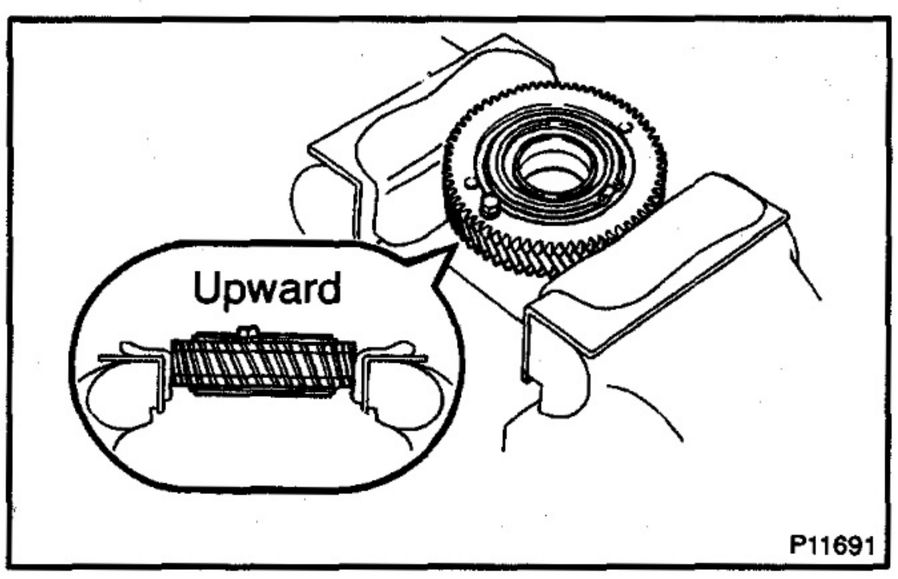

9. DISASSEMBLY IDLER GEAR

(a) Mount the idler gear and No.2 idler sub–gear in a vise.

NOTICE:
Be careful not to damage the gears.

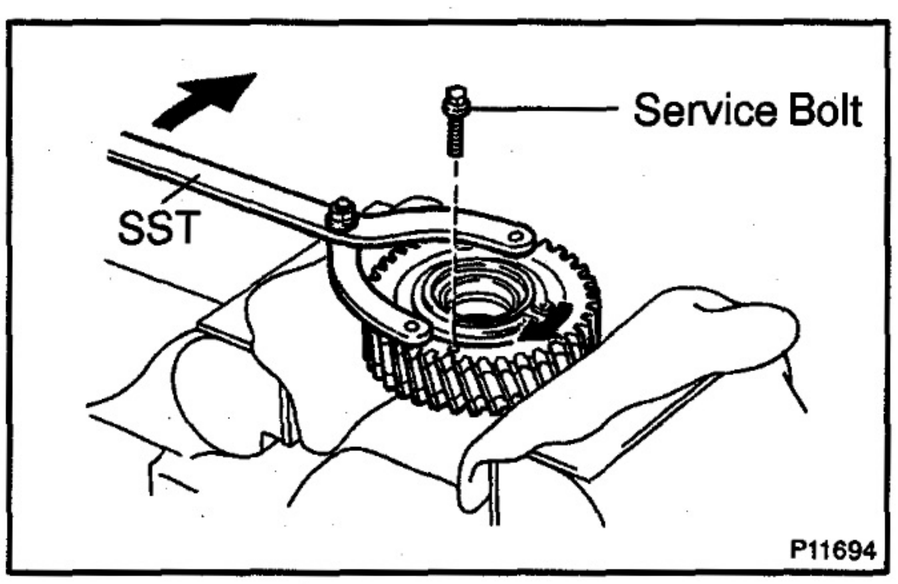

(b) Using SST, turn the No.1 idler sub–gear clockwise and remove the service bolt.
SST 09960–10010 (09962–01000, 09963–00600)

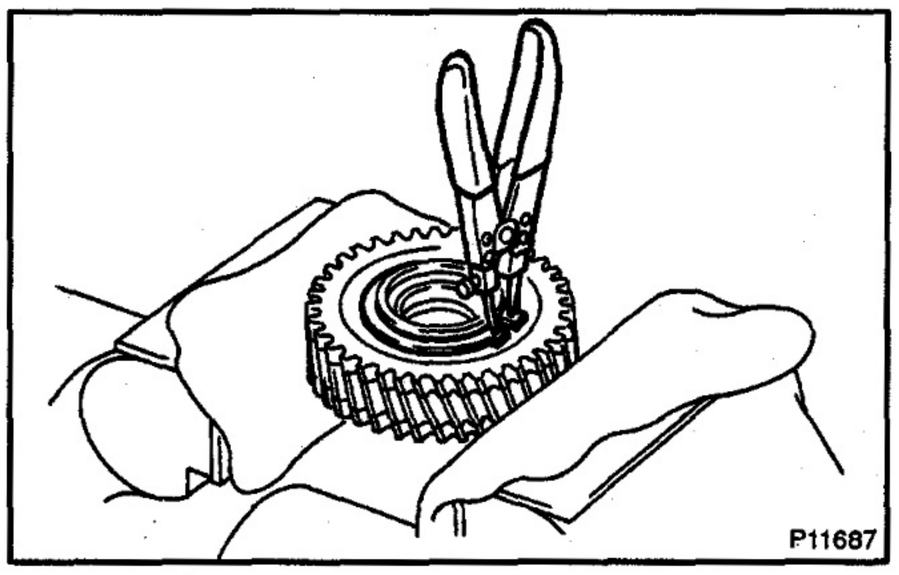

(c) Using snap ring pliers, remove the snap ring.

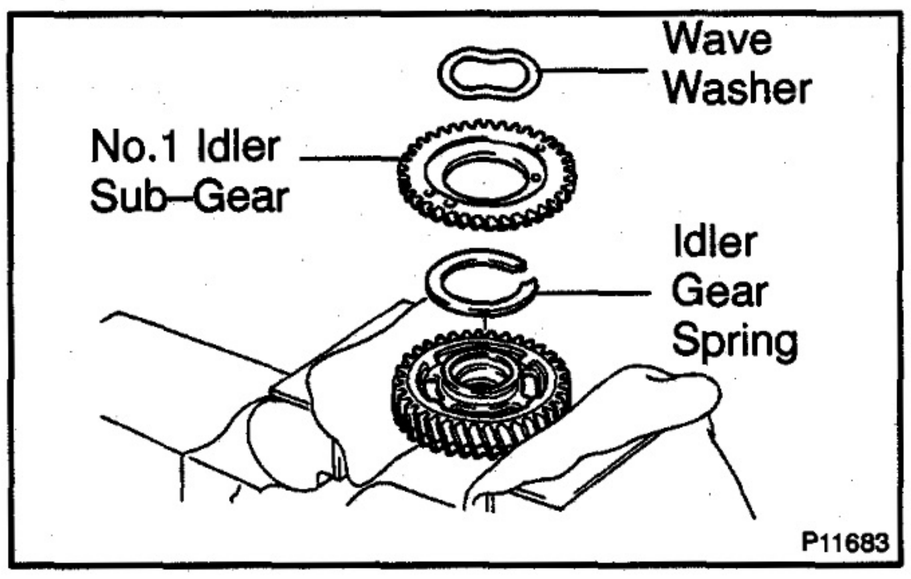

(d) Remove the wave washer.
(e) Remove the No.1 idler sub–gear.
(f) Remove the idler gear spring.
(g) Remove the idler gear assembly from the vice and turn it upside down.

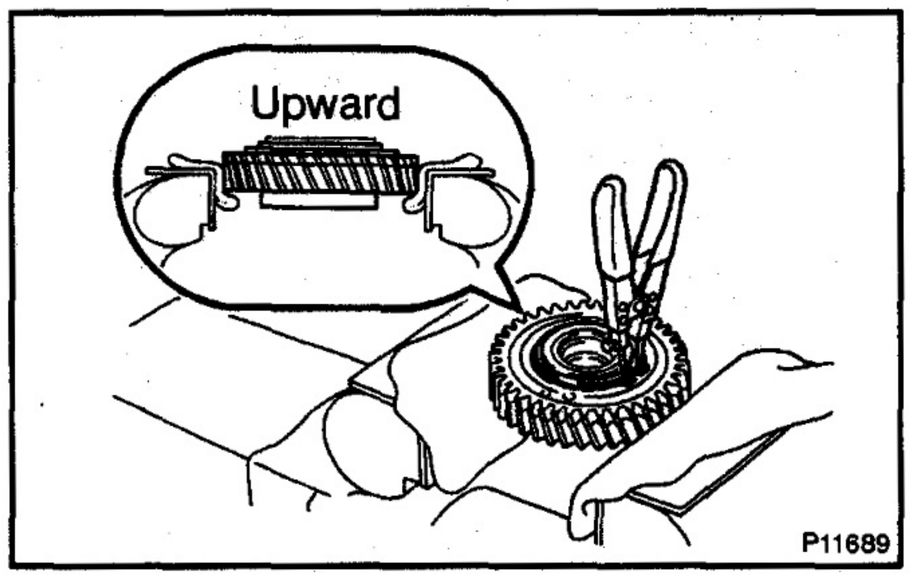

(h) Mount the idler gear in a vise.

NOTICE:

Be careful not to damage the gear.

(i) Using snap ring pliers, remove the snap ring.

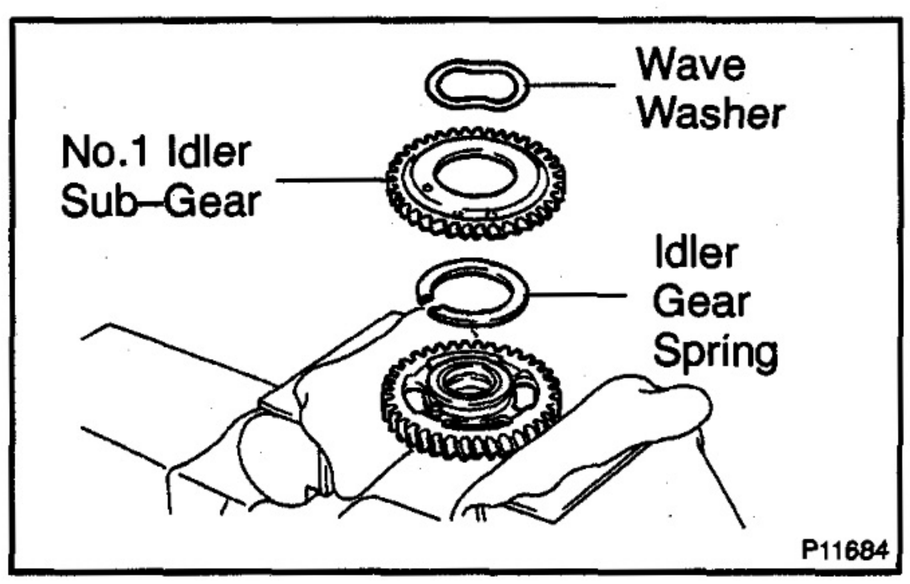

(j) Remove the wave washer.
(k) Remove the No.2 idler sub–gear.
(l) Remove the idler gear spring.

EM157–01

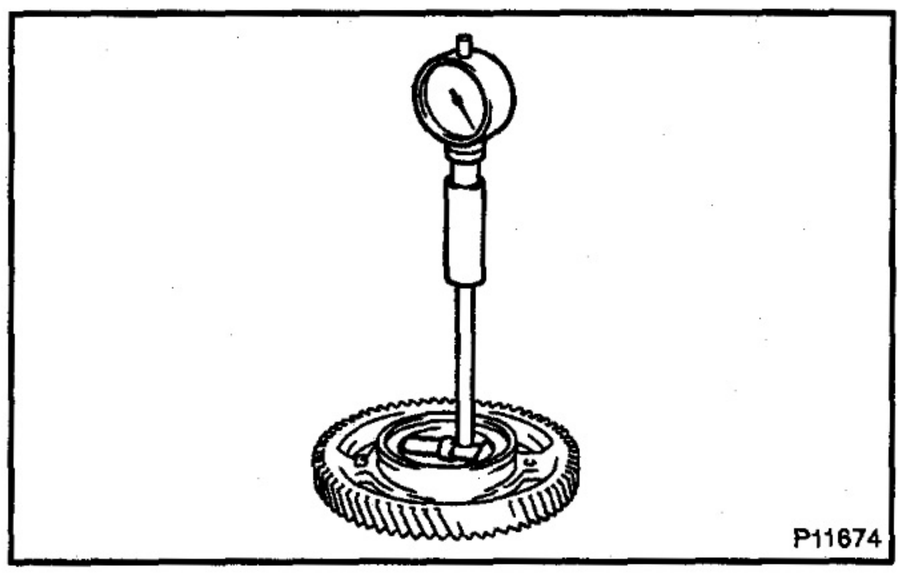

INSPECTION

1. INSPECT IDLER GEAR

(a) Using a cylinder gauge, measure the inside diameter of the idler gear.
Idler gear inside diameter:
44.000 – 44.025 mm (1.7323 – 1.7333 in.)

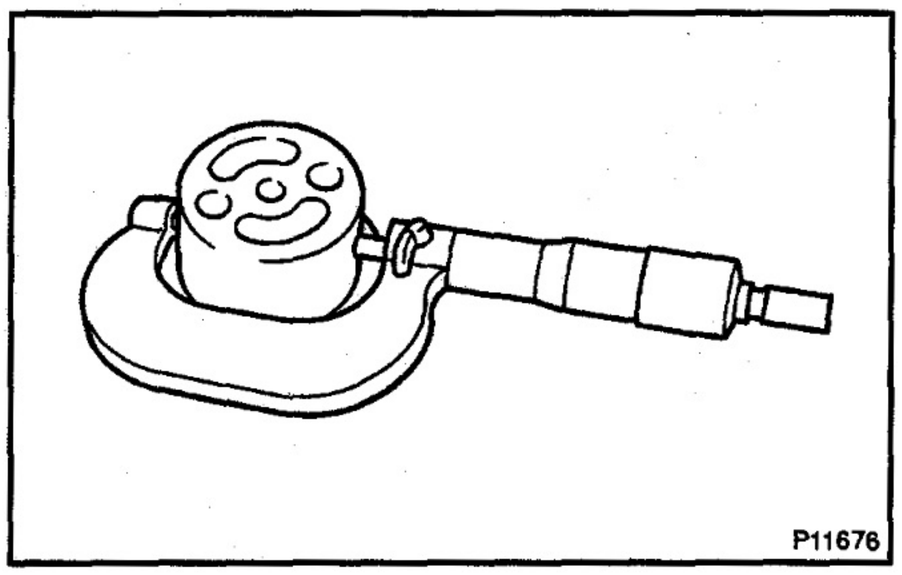

(b) Using a micrometer, measure the diameter of the idler gear shaft.
Idler gear shaft diameter:
43.955 – 43.990 mm (1.7305 – 1.7319 in.)

(c) Subtract the idler gear shaft diameter measurement from the idler gear inside diameter measurement.
Standard oil clearance:
0.010 – 0.070 mm (0.0004 – 0.0028 in.)
Maximum oil clearance: 0.20 mm (0.0079 in.)

If the clearance is greater than maximum, replace the gear and shaft.

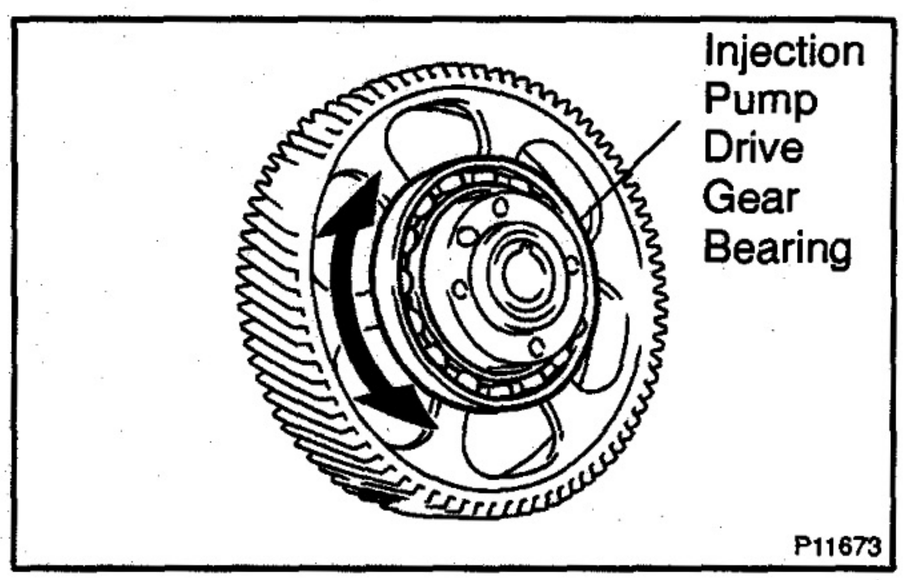

2. INSPECT INJECTION PUMP DRIVE GEAR BEARING

Check that bearing is not rough or worn.
If necessary, replace the bearing. (See page EM–31)

3. CHECK BACKLASH OF TIMING GEARS

Using a dial indicator, measure the backlash.

Standard gear backlash:
0.02 – 0.15 mm (0.0008 – 0.0060 in.)
Maximum gear backlash: 0.20 mm (0.0079 in.)

If the gear backlash is greater than maximum, replace the gears as a set.

Balance Shaft No.1 x Oil Pump

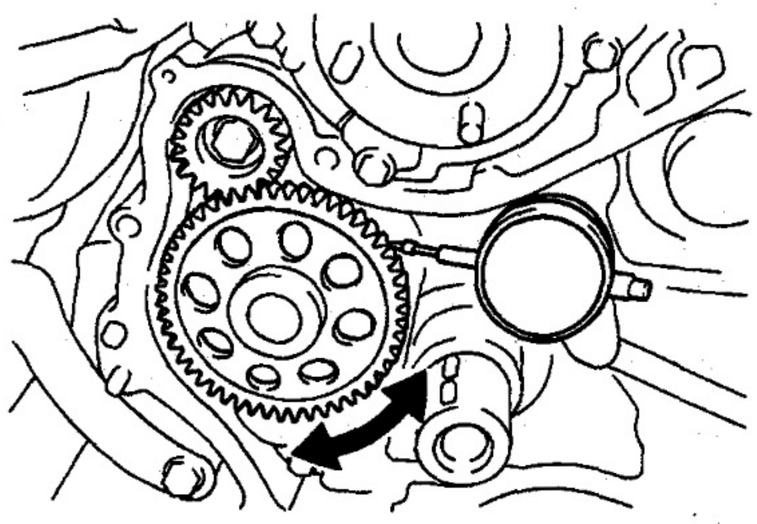

Balance Shaft No.2 x Injection Pump

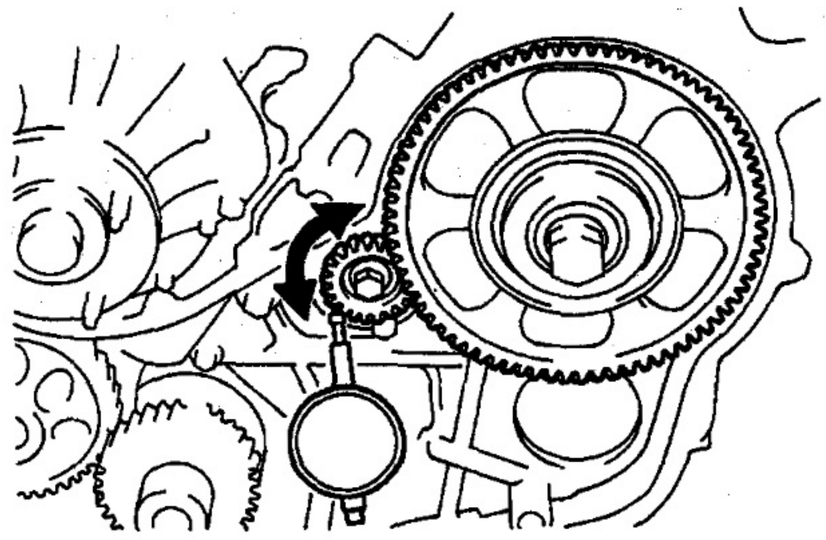

Crankshaft x Idler

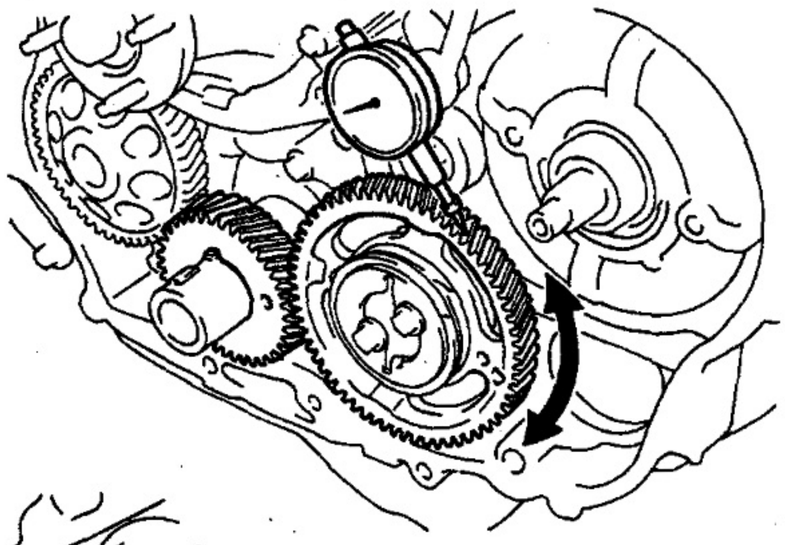

Oil Pump x Crankshaft

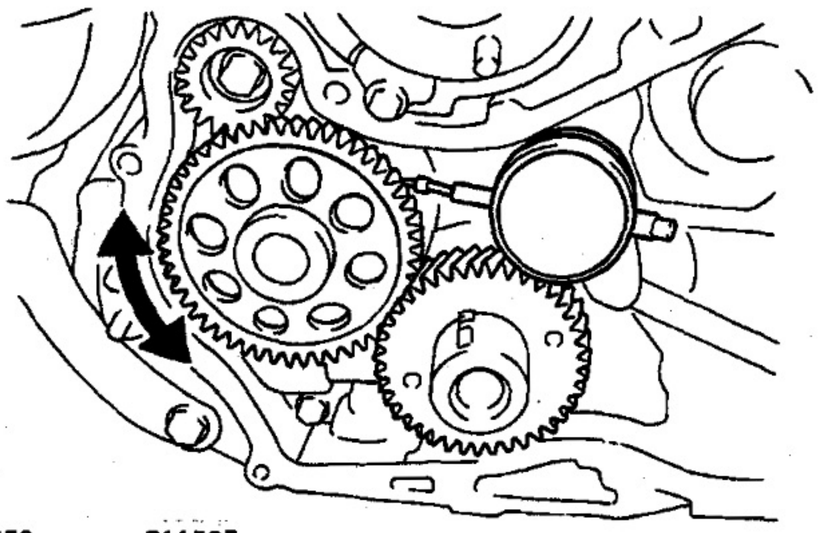

Injection Pump x Idler

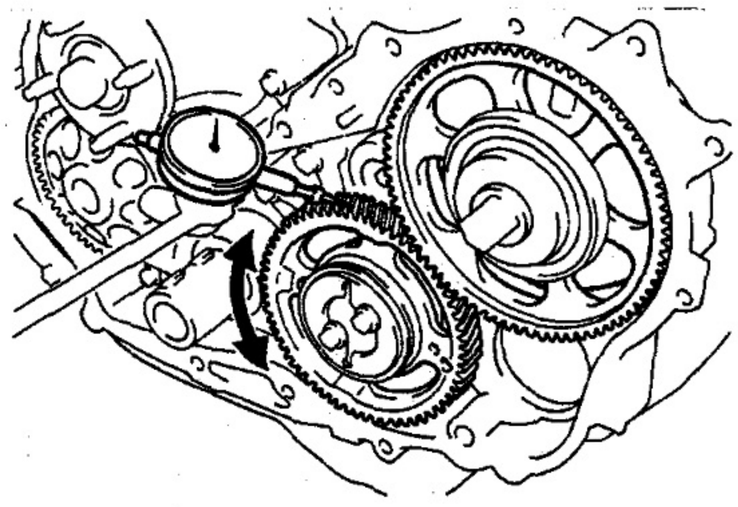

P11653 P11695
P11652 P11671 P11670

Z09204

EM156–01

REPLACEMENT

HINT:

There are 2 methods (a and b) to replace the oil seal as follows:

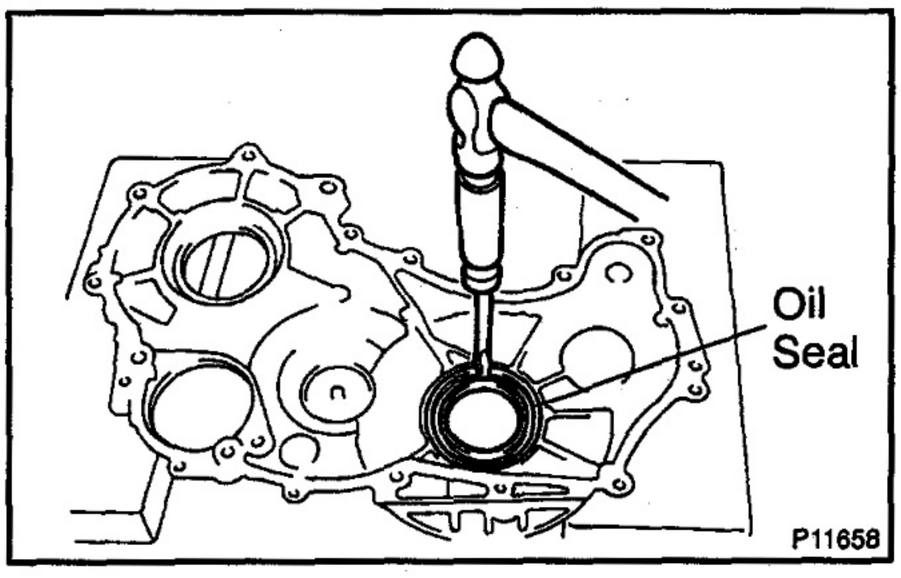

1. REPLACE CRANKSHAFT FRONT OIL SEAL

(a) If the timing gear cover is removed from the cylinder block:

(1) Using a screwdriver and hammer, tap out the oil seal.

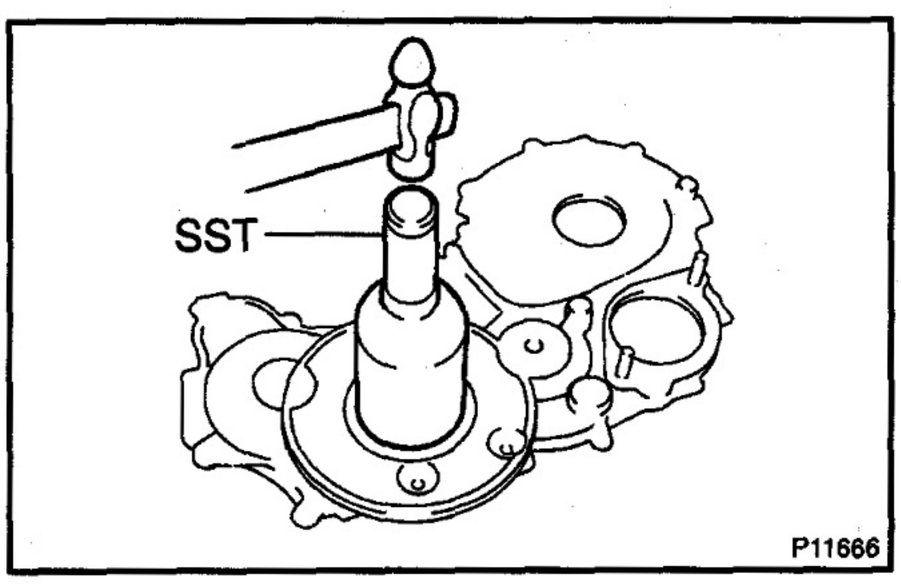

(2) Using SST and a hammer, tap in a new oil seal until its surface is flush with the timing gear cover edge.

SST 09214–76011

(3) Apply MP grease to the oil seal lip.

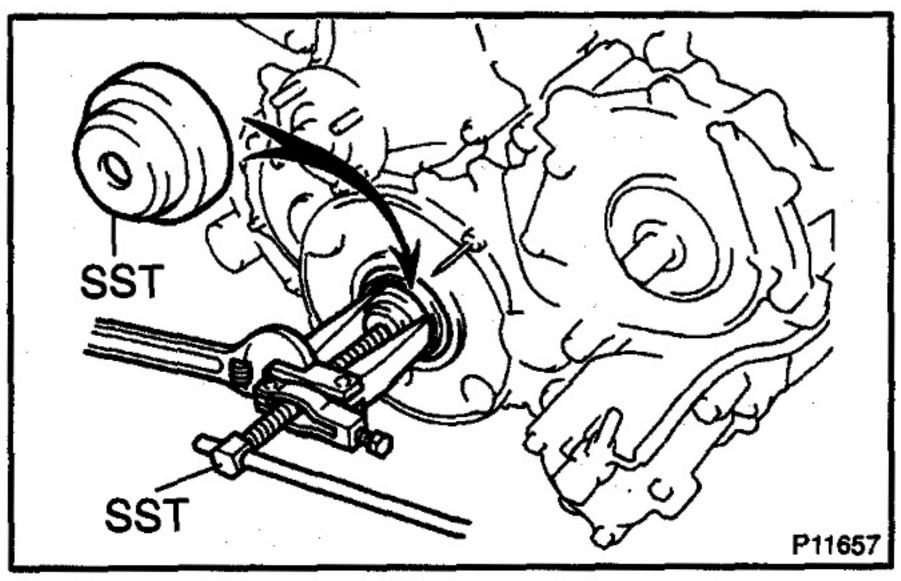

(b) If the timing gear cover is installed to the cylinder block:

(1) Using SST, remove the oil seal.

SST 09308–10010, 09950–20017

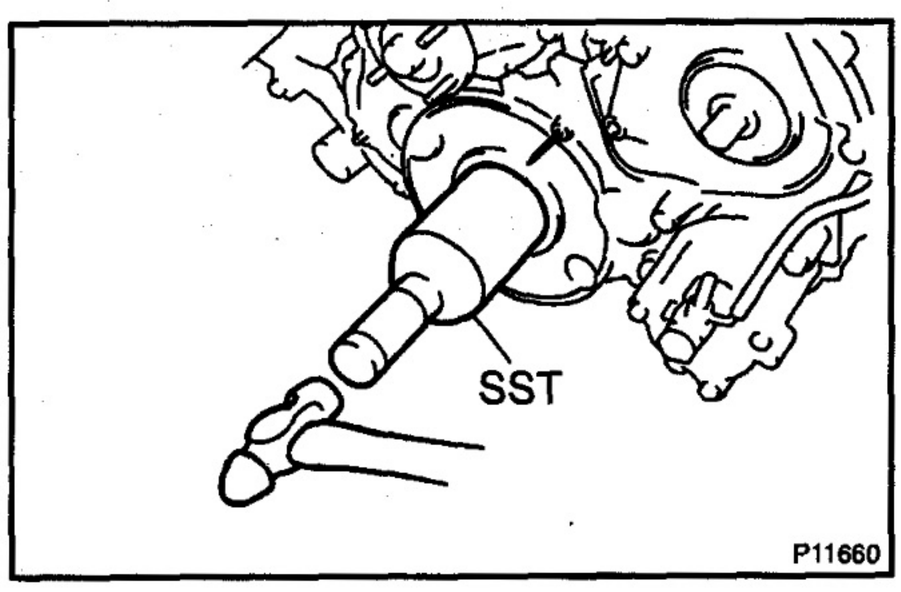

(2) Apply MP grease to a new oil seal lip.

(3) Using SST and a hammer, tap in the oil seal until its surface is flush with the timing gear cover edge.

SST 09214–76011

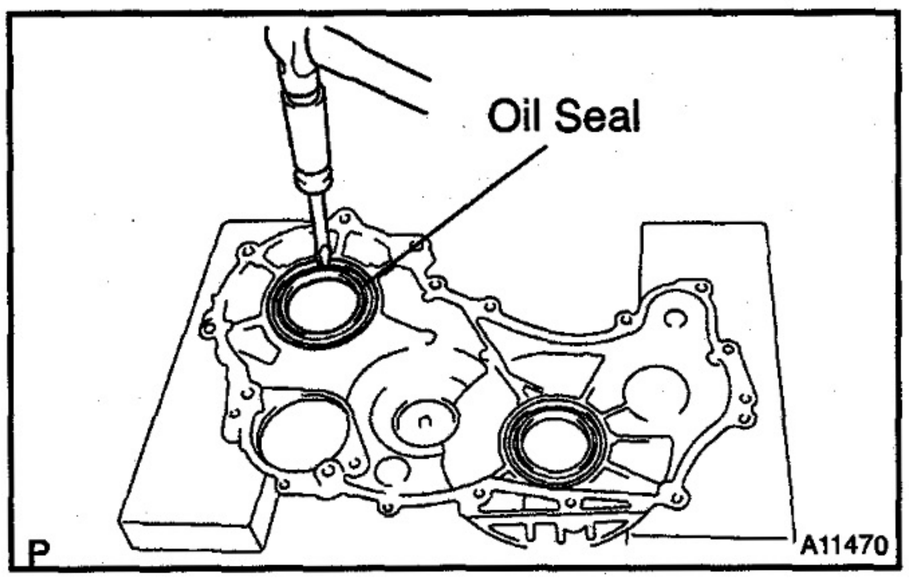

2. REPLACE INJECTION PUMP DRIVE GEAR OIL SEAL

(a) If the timing gear cover is removed from cylinder block:

(1) Using a screwdriver and hammer, tap out the oil seal.

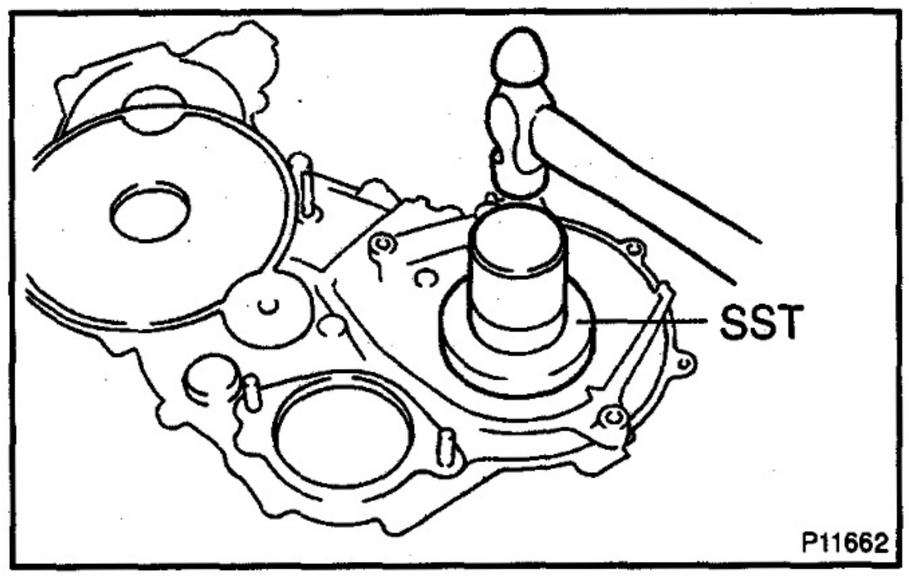

(2) Using SST and a hammer, tap in a new oil seal until its surface is flush with the timing gear cover edge.

SST 09223–78010

(3) Apply MP grease to the oil seal lip.

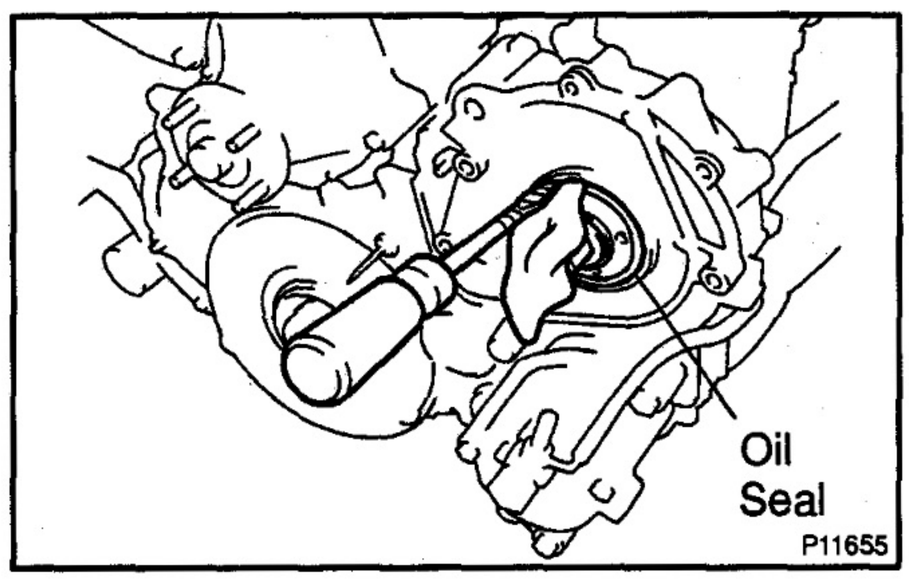

(b) If the timing gear cover is installed to the cylinder block:

(1) Using a screwdriver, pry out the oil seal.

NOTICE:

Be careful not to damage the injection pump drive gear. Tape the screwdriver tip.

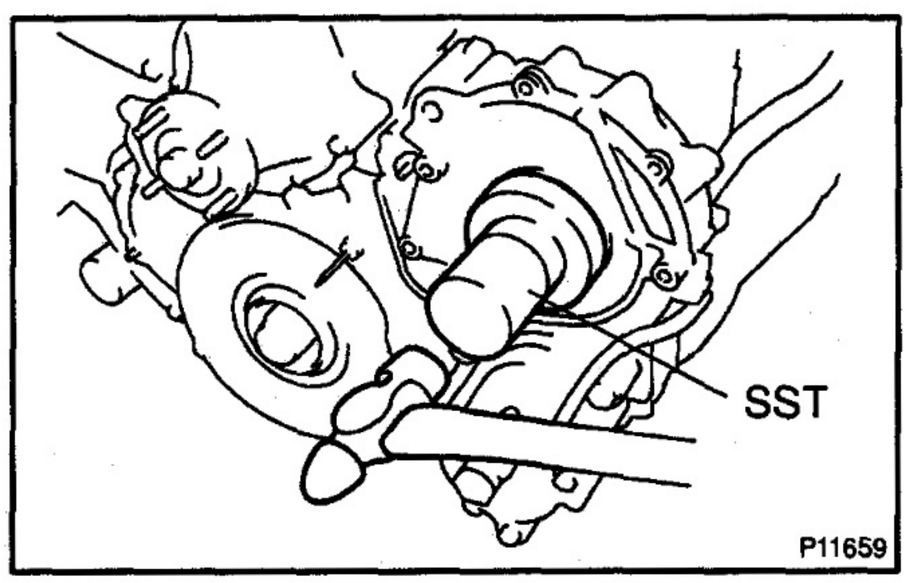

(2) Apply MP grease to the oil seal lip.

(3) Using SST and a hammer, tap in a new oil seal until its surface is flush with the timing gear cover edge.

SST 09223–78010

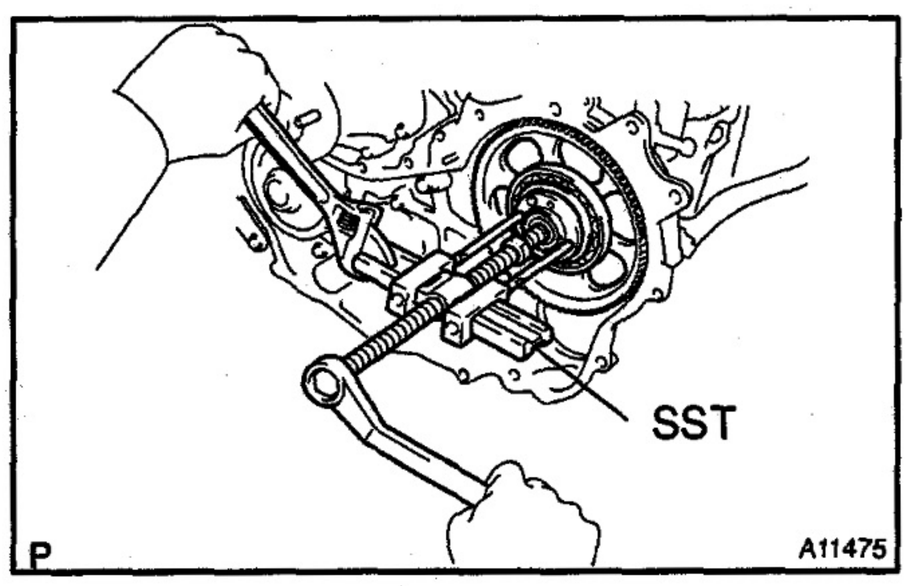

3. REPLACE INJECTION PUMP DRIVE GEAR BEARING

(a) Using SST, remove the bearing.

SST 09950–40010 (09951–04010, 09952–04010, 09953–04020, 09954–04010, 09955–04040)

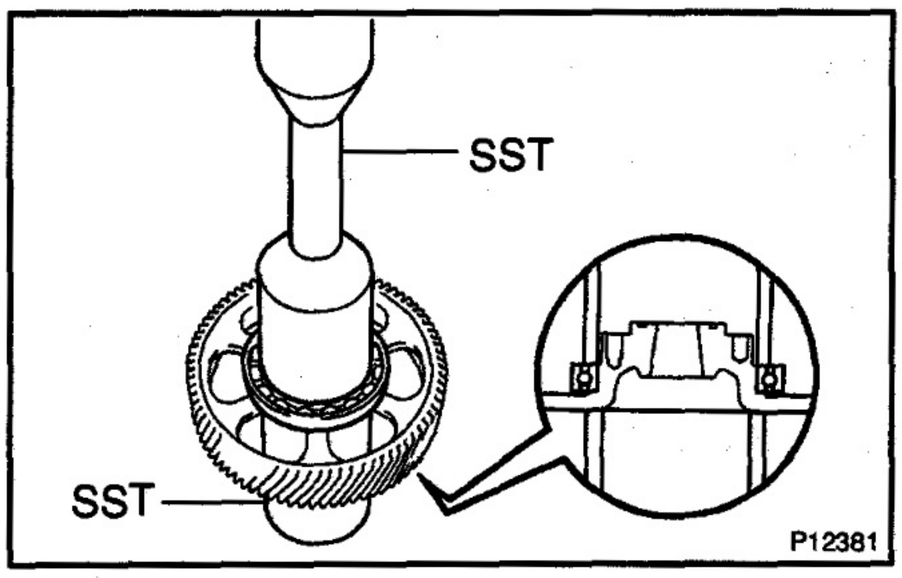

(b) Using SST and a press, press in a new bearing.
SST 09214–76011, 09223–00010

EM159–01

INSTALLATION

1. ASSEMBLE IDLER GEAR

(a) Mount the idler gear in a vise.

HINT:

Install the idler gear with the cut–off mark facing downward.

NOTICE:

Be careful not to damage the gear.

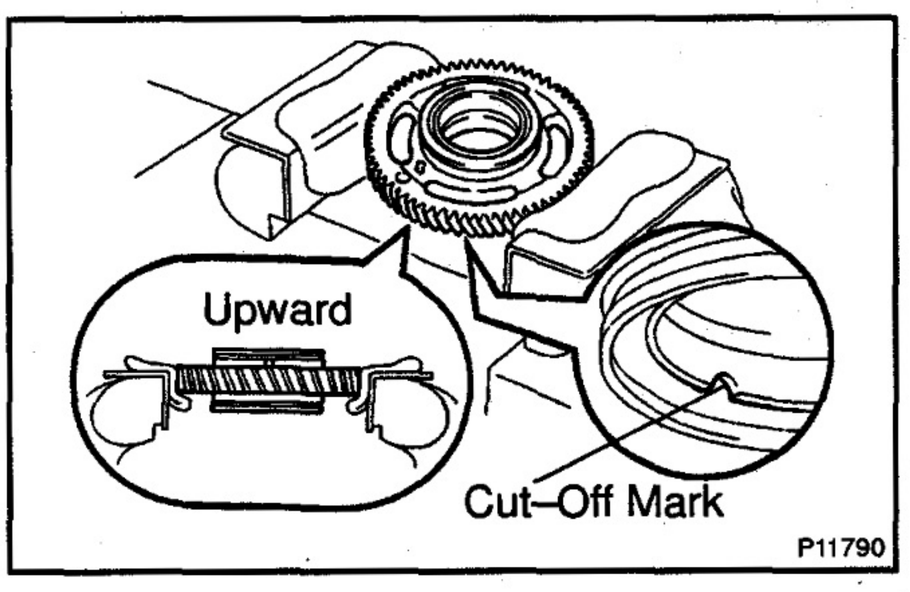

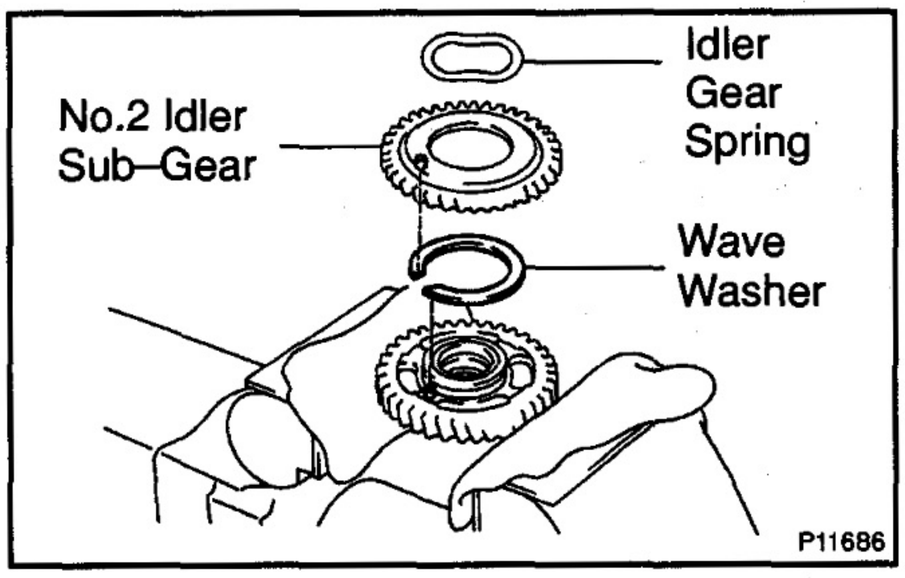

(b) Install the idler gear spring.

(c) Install the No.2 idler sub–gear.

(d) Install the wave washer.

HINT:

Align the pins on the gears with the spring ends.

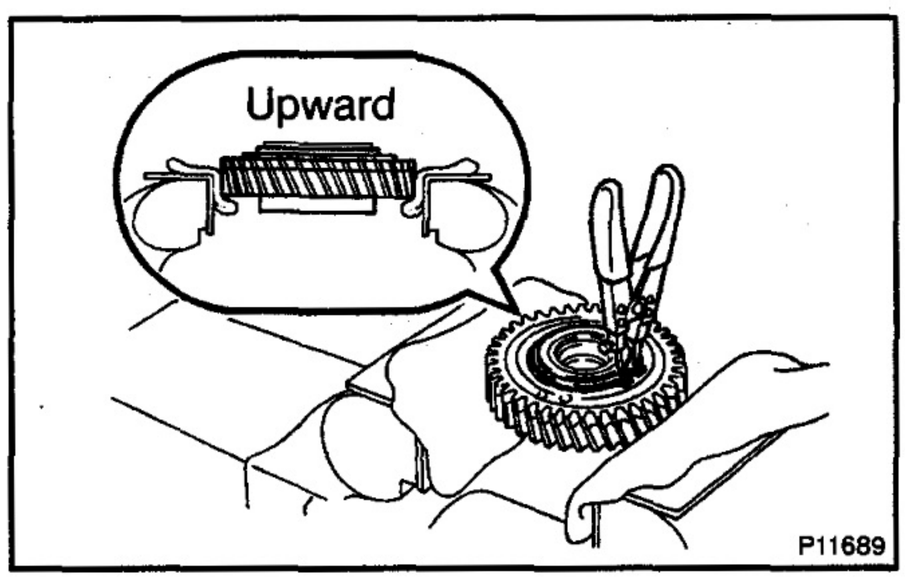

(e) Using snap ring pliers, install the snap ring.

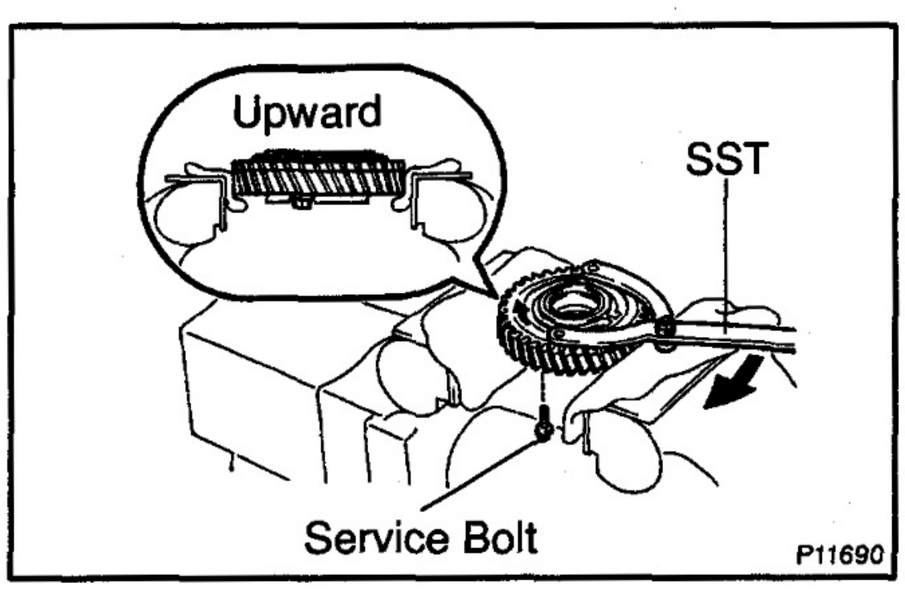

(f) Using SST, align the holes of the idler gear and No.2 idler sub–gear by turning the No.2 idler sub–gear clockwise, and install a service bolt.

SST 09960–10010 (09962–01000, 09963–00600)

(g) Remove the idler gear assembly from the vice and turn it upside down.

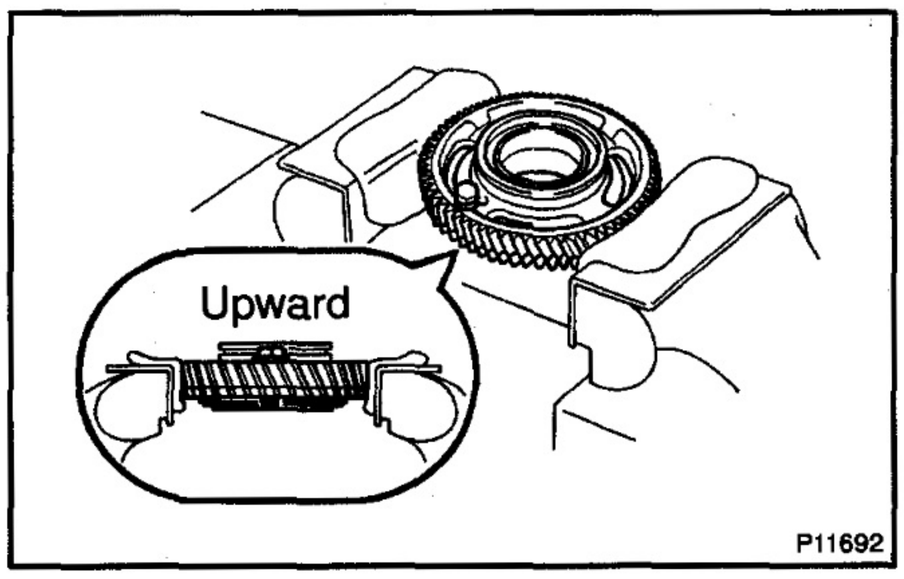

(h) Mount the idler gear and No.2 idler sub–gear in a vise.

NOTICE:

Be careful not to damage the gears.

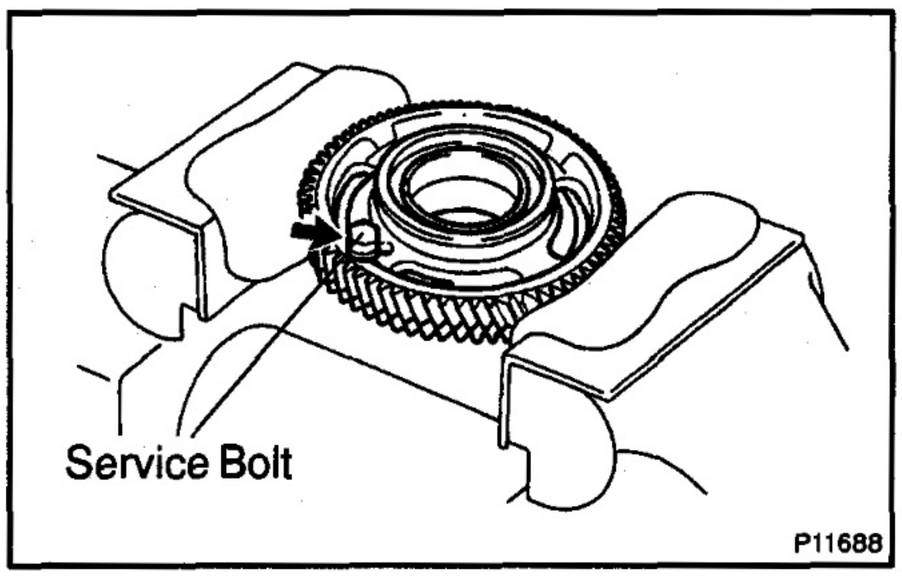

(i) Remove the service bolt.

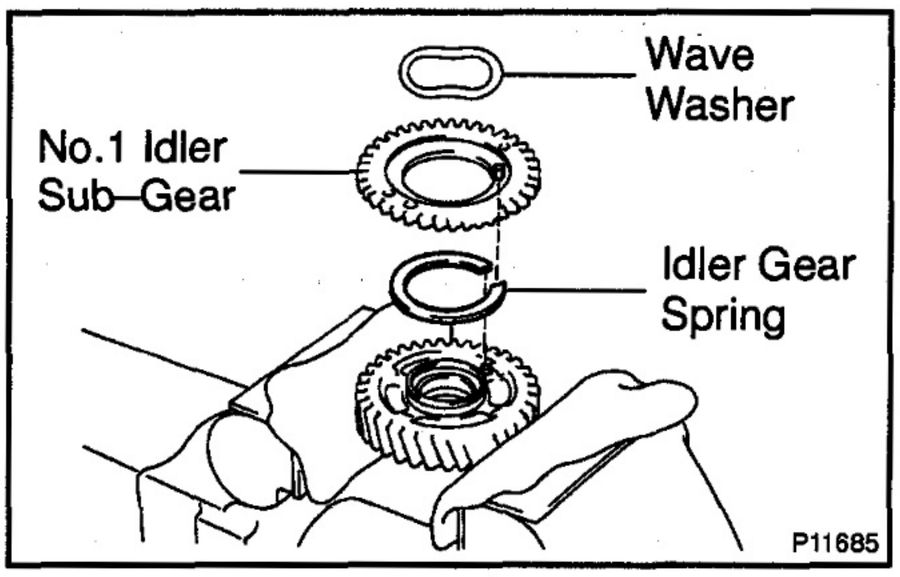

(j) Install the idler gear spring.
(k) Install the No.1 idler sub–gear.
(l) Install the wave washer.

HINT:
Align the pins on the gears with the spring ends.

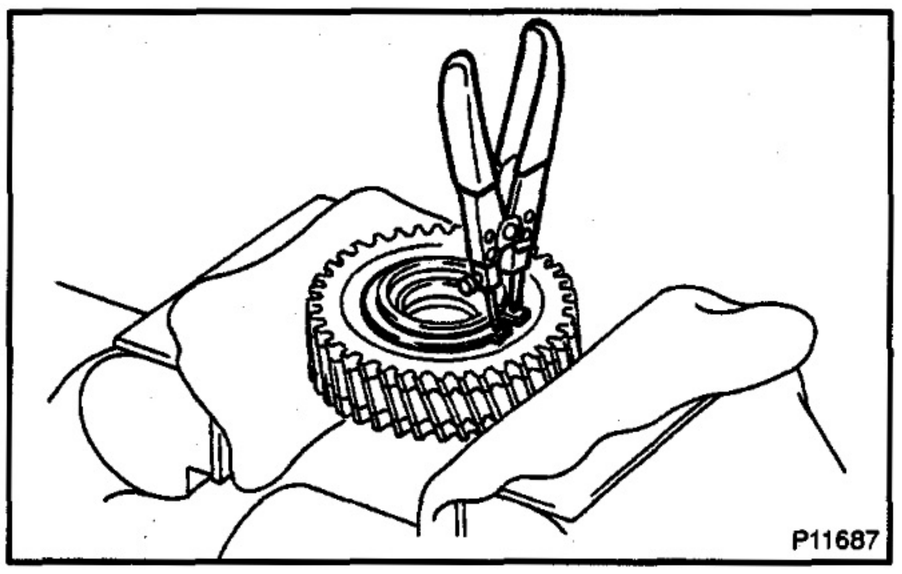

(m) Using snap ring pliers, install the snap ring.

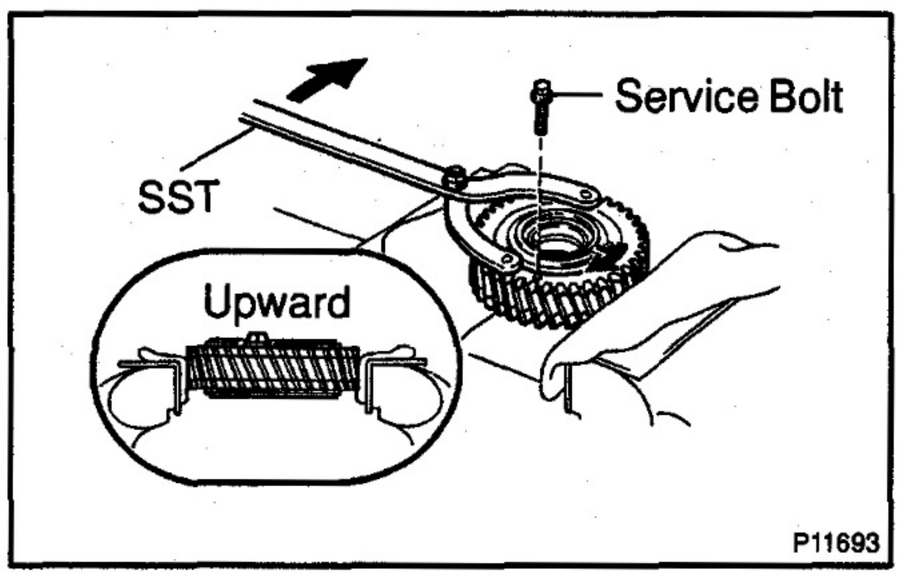

(n) Using SST, align the holes of the idler gear and No.1 idler sub–gear by turning the No.1 idler sub–gear clockwise, and install a service bolt.
SST 09960–10010 (09962–01000, 09963–00600)

2. INSTALL TIMING GEAR

NOTICE:

- **The matchmark on each gear faces the front of the engine.**
- **Take care not to damage the gear teeth when removing and installing the gears. Do not use parts that are scratched or damaged, they cause noise.**

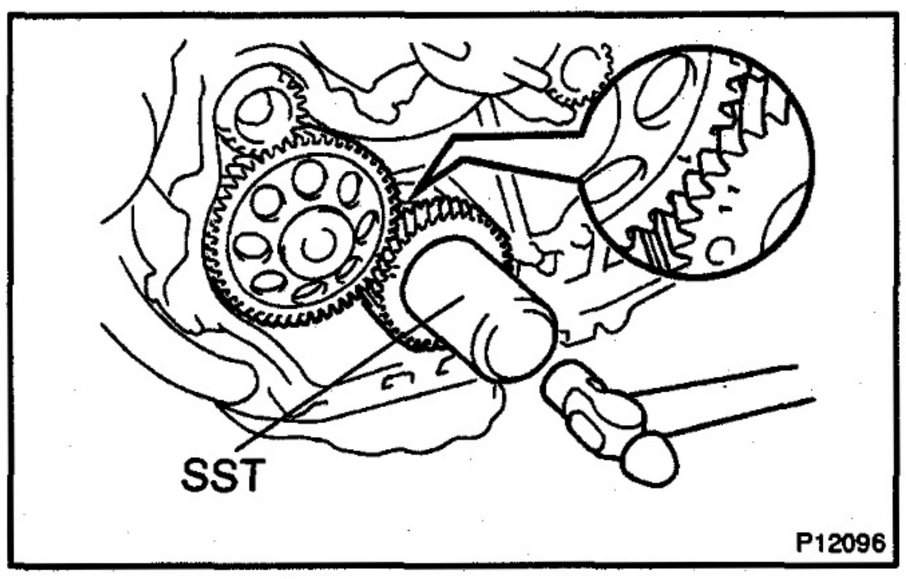

(a) Install the crankshaft timing gear.
(1) With the crankshaft key groove facing upward, install the crankshaft timing gear into the crankshaft.
(2) When doing this, the matchmarks of the oil pump drive shaft gear and crankshaft timing gear should be matched at "1".
(3) Using SST and a hammer, tap in the timing gear.
SST 09223–00010

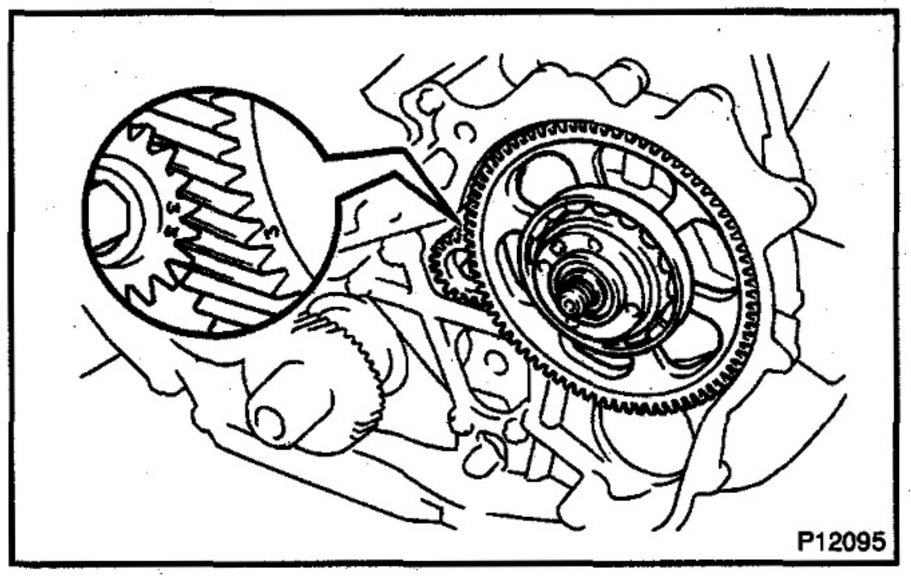

(b) Install the injection pump drive gear.
(1) Install the set key to the groove of the injection pump drive shaft.
(2) The matchmarks on the No.2 balance shaft driven gear should be aligned with "3" marks.

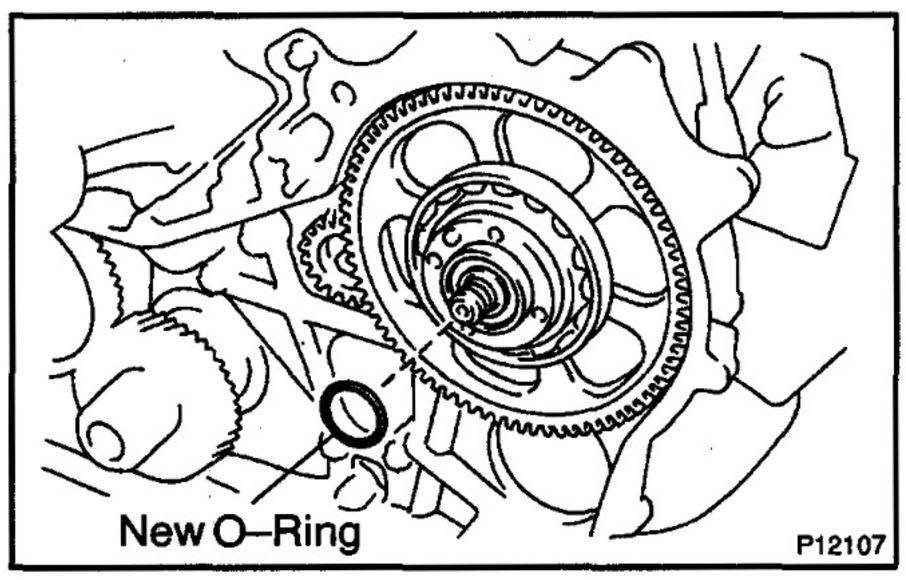

(3) Install a new O–ring to the injection pump drive gear.

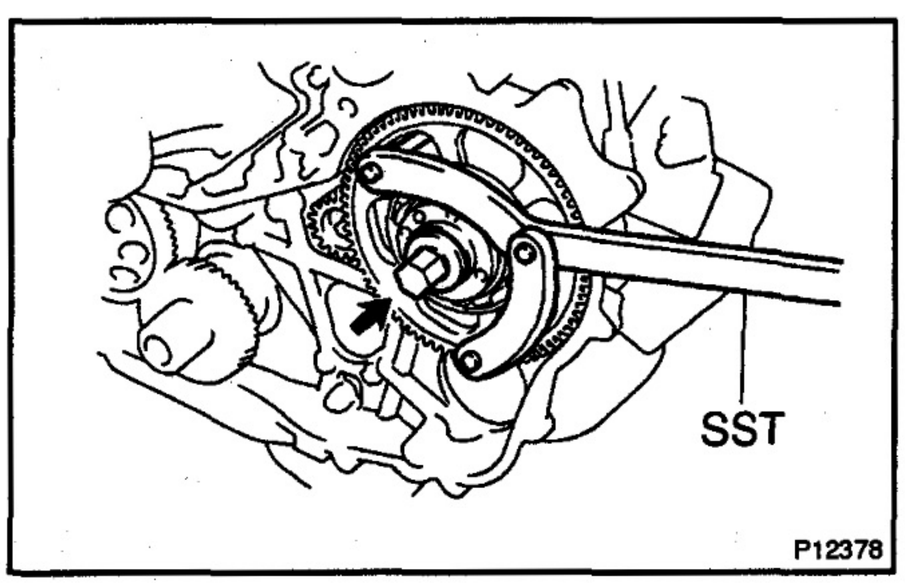

(4) Install the injection pump drive gear set nut.
(5) Using SST, torque the nut.
SST 09960–10010 (09962–01000, 09963–00600)
Torque: 64 N·m (650 kgf·cm, 47 ft·lbf)

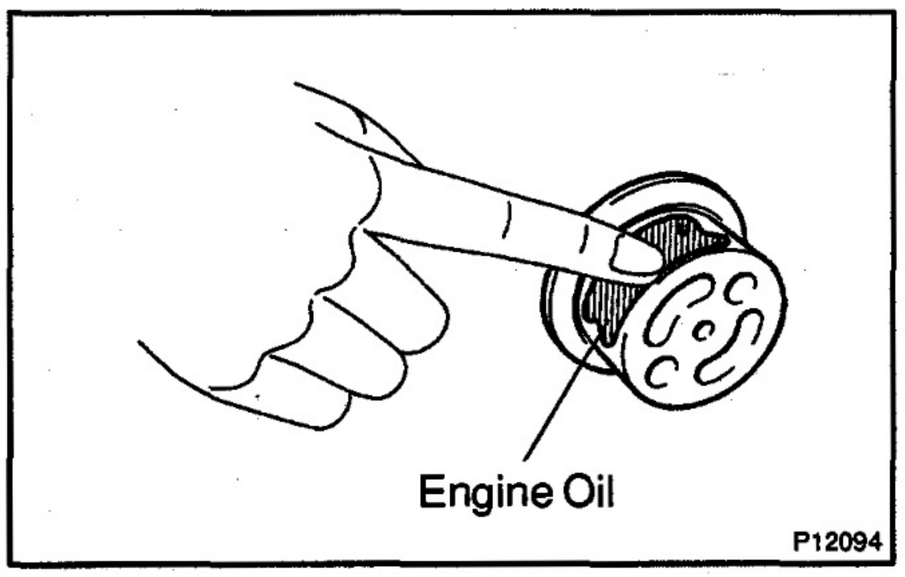

(c) Install the idler gear.
(1) Coat the idler gear shaft with engine oil as shown in the illustration.

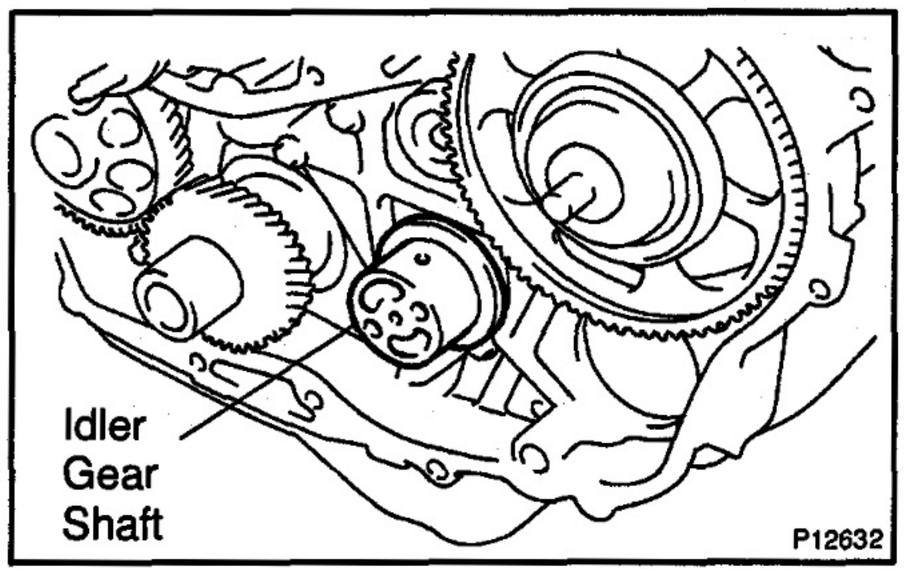

(2) Install the idler gear shaft to the cylinder block.

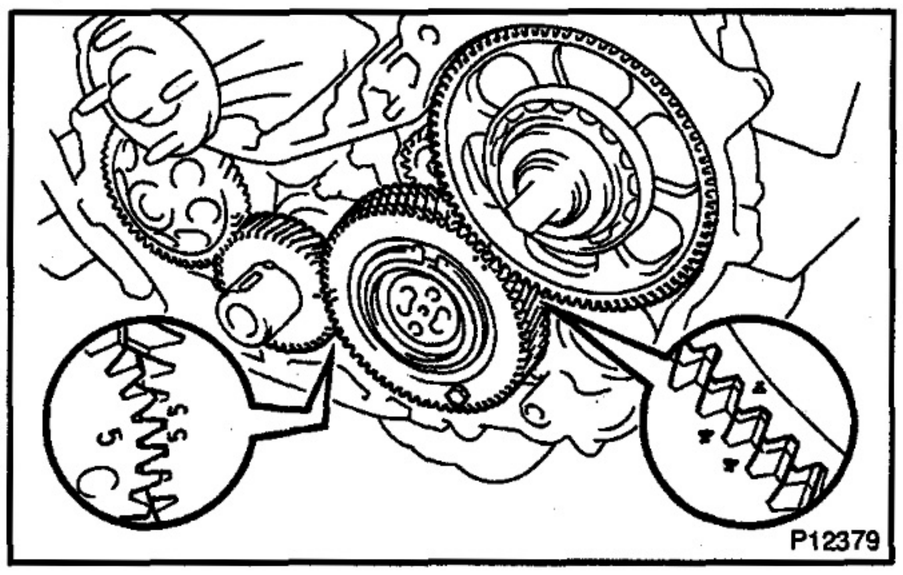

(3) Align the idler gear assembly timing marks "5" and "4" with the crankshaft timing gear mark "5" and injection pump drive gear timing mark "4" respectively, and mesh the gears.

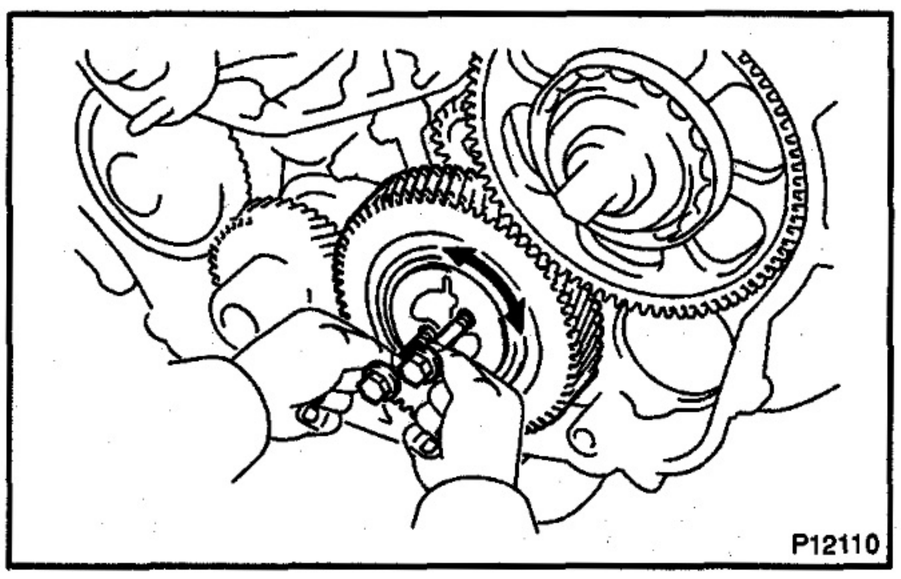

(4) Align the thrust plate set bolt holes.

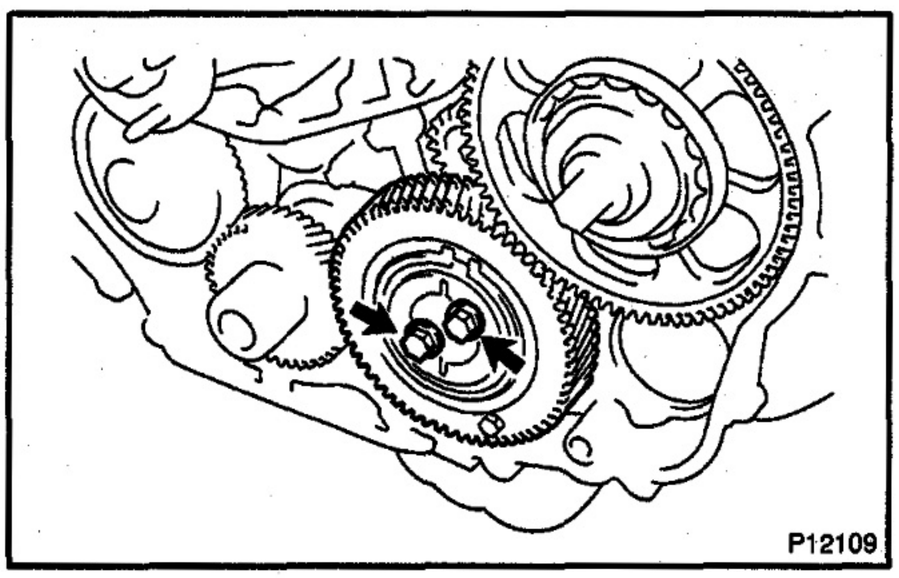

(5) Install the thrust plate with the 2 bolts. Torque the bolts.

Torque: 50 N·m (500 kgf·cm, 36 ft·lbf)

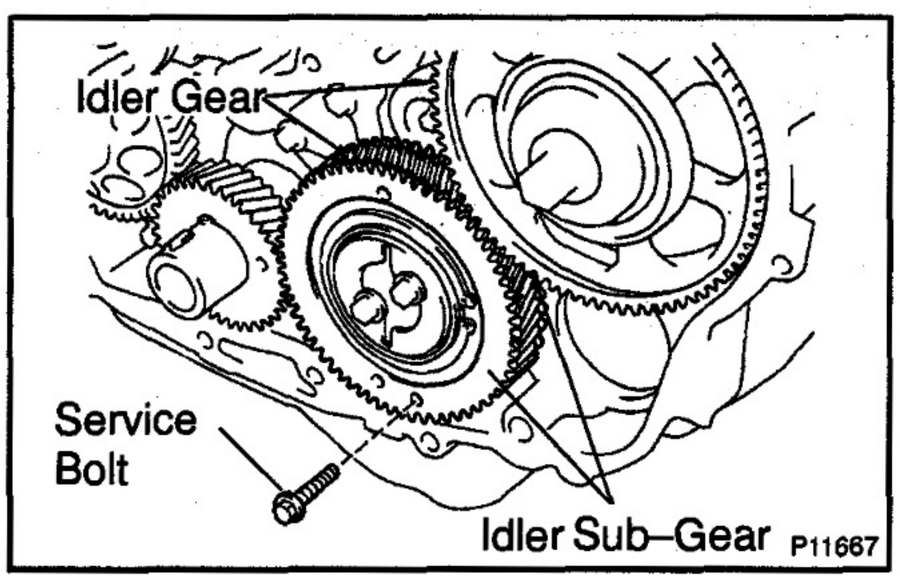

(6) Remove the service bolt.

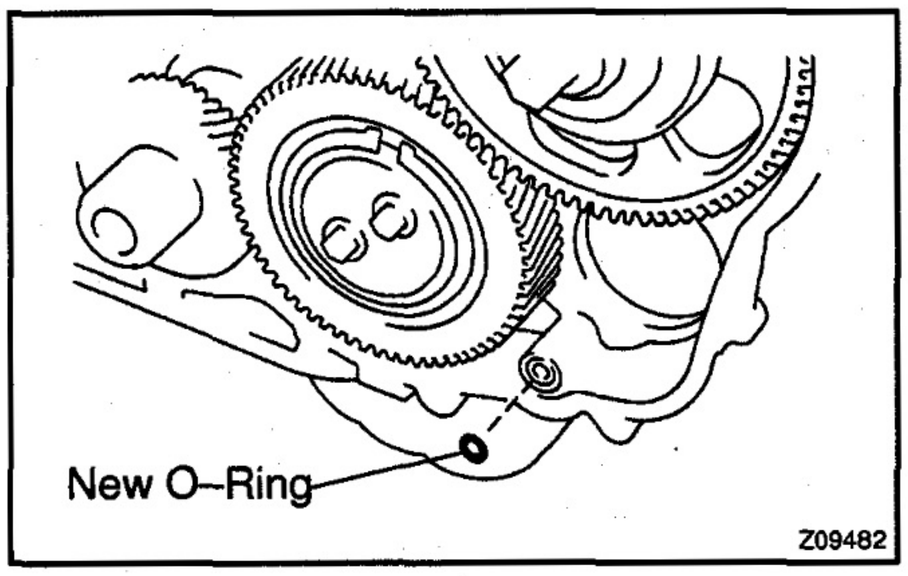

3. INSTALL TIMING GEAR COVER

(a) Install a new O–ring to the timing gear case.

(b) Remove any old packing (FIPG) material and be careful not to drop any oil on the contact surfaces of the timing gear cover and cylinder block.

- Using a razor blade and gasket scraper, remove all the old packing (FIPG) material from the gasket surfaces and sealing groove.
- Thoroughly clean all components to remove all the loose material.
- Using a non–residue solvent, clean both sealing surfaces.

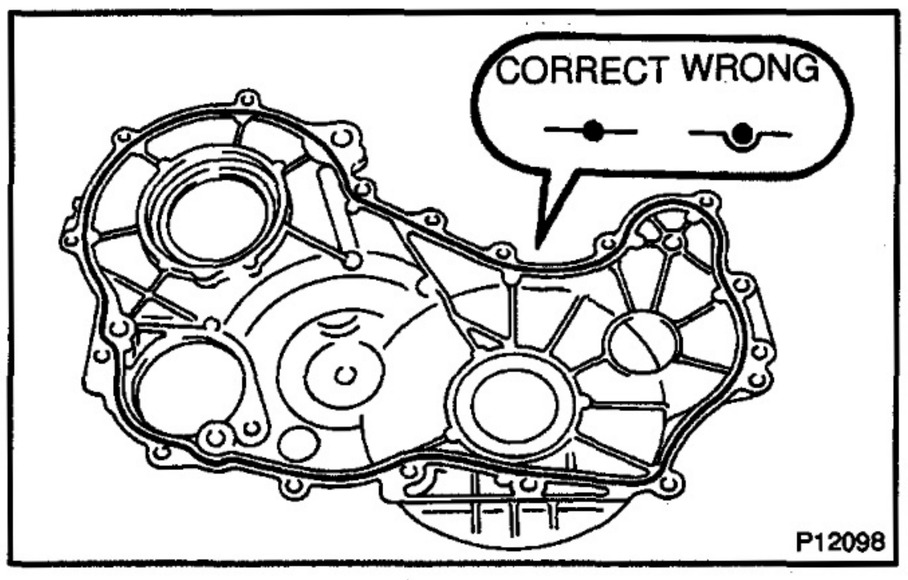

(c) Apply seal packing to the timing gear cover as shown in the illustration.

Seal packing: Part No. 08826–00080 or equivalent

- Install a nozzle that has been cut to a 2 – 3 mm (0.08 – 0.12 in.) opening.
- Parts must be assembled within 5 minutes of application. Otherwise the material must be removed and reapplied.
- Immediately remove nozzle from the tube and reinstall cap.

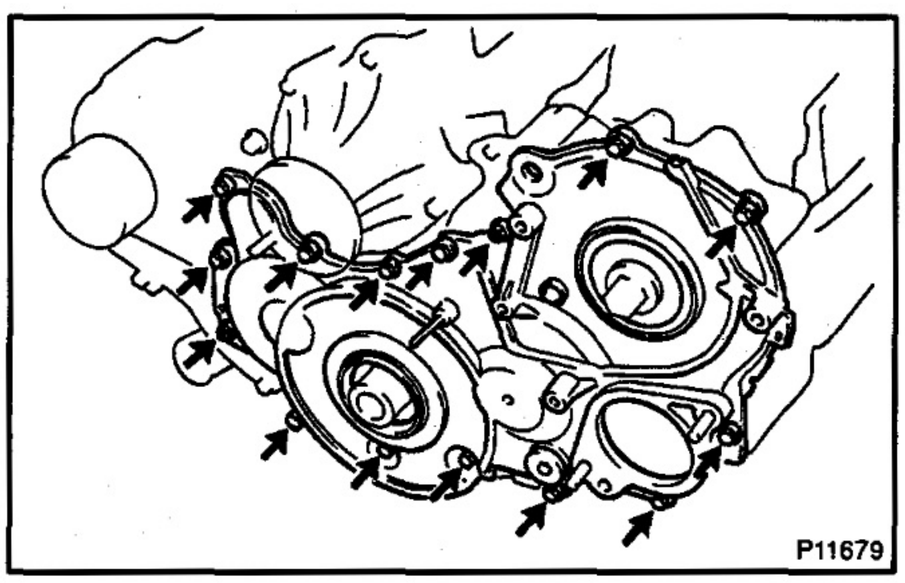

(d) Install the timing gear cover with the 13 bolts and 2 nuts.

Torque: 13 N·m (130 kgf·cm, 9 ft·lbf)

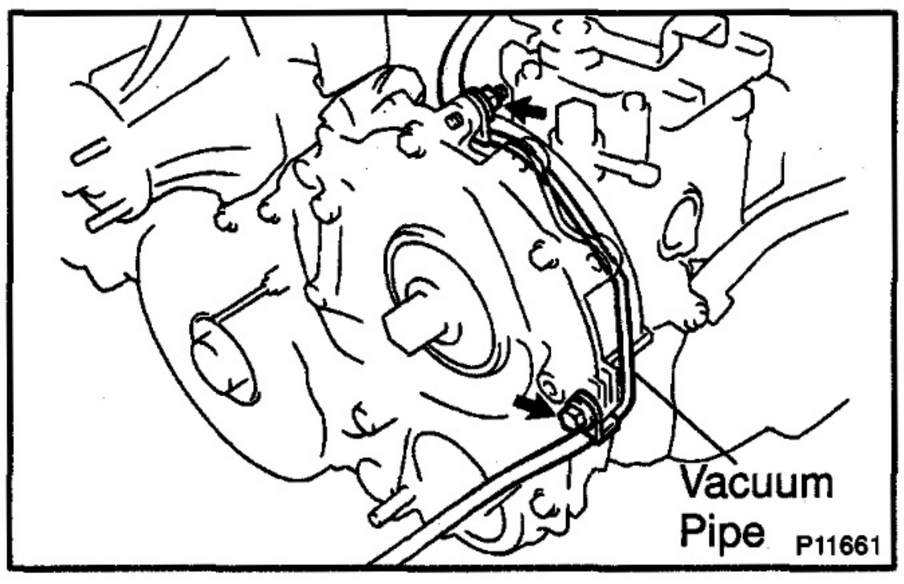

(e) Connect the vacuum pipe with the bolt, nut and washer.

Torque: 13 N·m (130 kgf·cm, 9 ft·lbf)

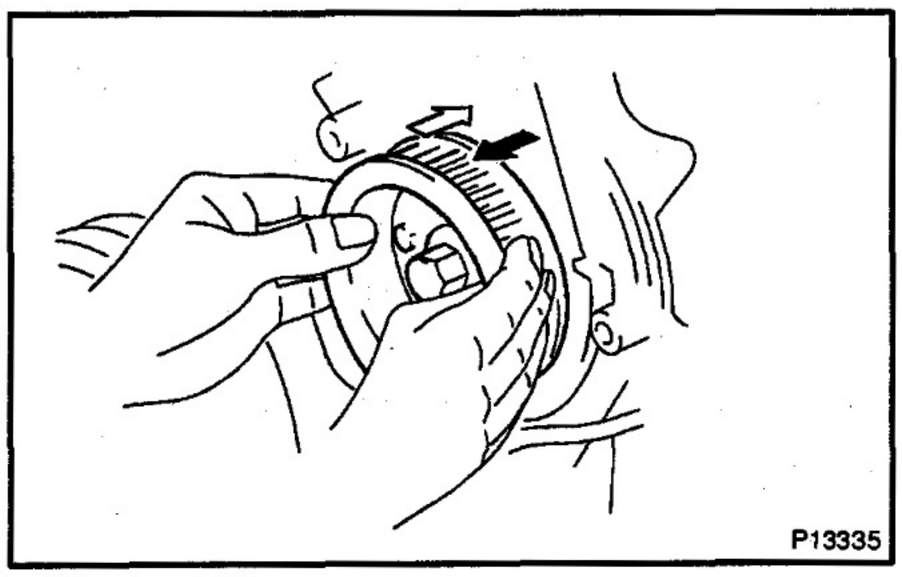

4. CHECK INJECTION PUMP DRIVE SHAFT THRUST CLEARANCE

(a) Temporarily install the No.2 camshaft timing pulley and flange with the 4 bolts.

(b) Move the No.2 camshaft timing pulley back and forth to check that the injection pump drive shaft has sufficient thrust clearance.

Reference: 0.15 – 0.55 mm (0.0059 – 0.0217 in.)

If the thrust clearance is not sufficient, loosen the 2 injection pump nuts and 3 pump stay bolts, then retighten them.

If the thrust clearance is still not sufficient, remove the timing gear cover and then reinstall it.

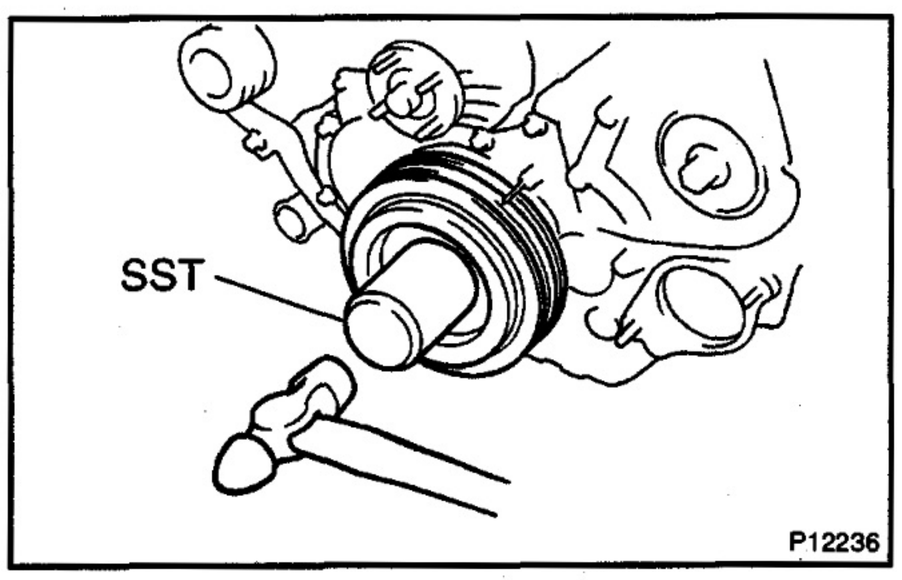

5. INSTALL CRANKSHAFT PULLEY

(a) Align the pulley set key with the key groove of the pulley.

(b) Using SST and a hammer, tap in the pulley.
SST 09214–60010

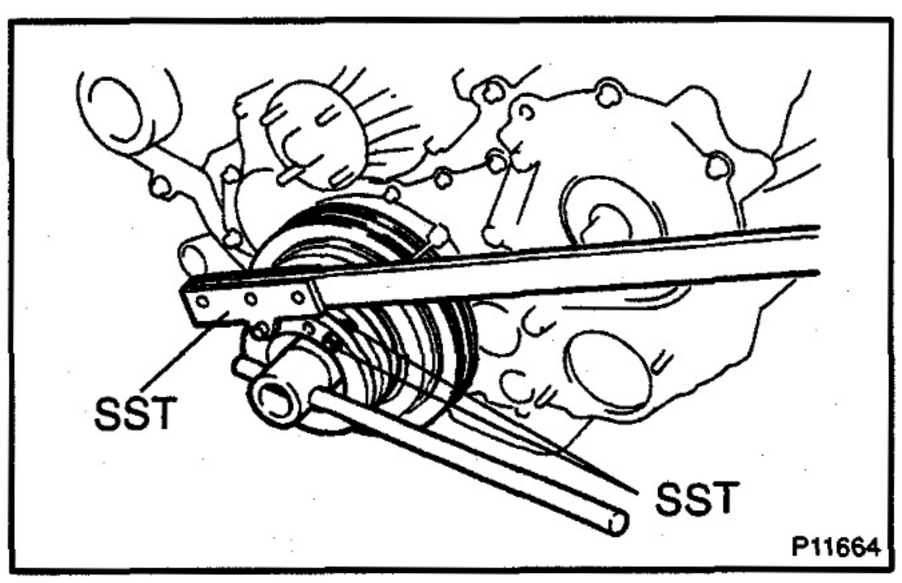

(c) Using SST, install and torque the plate bolt.
SST 09213–58012 x 2, 09330–00021

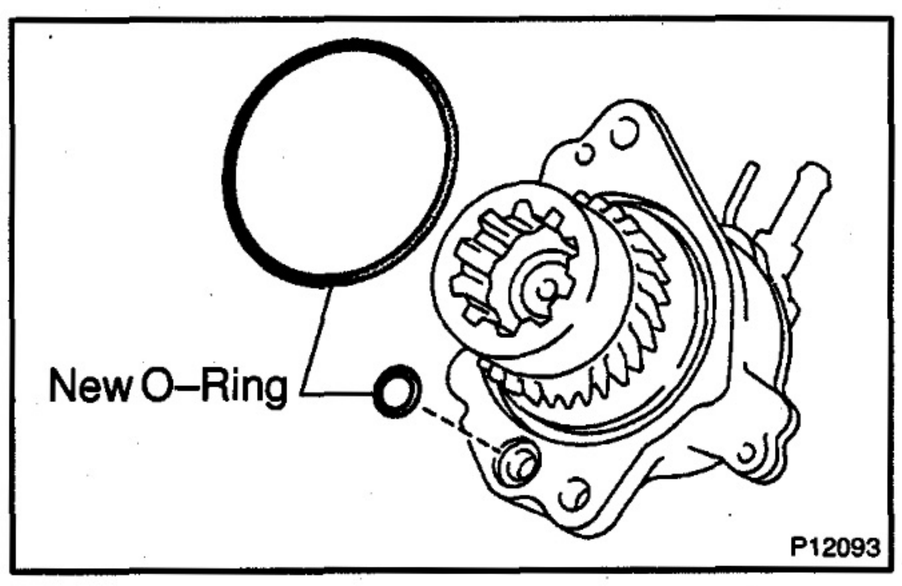

6. INSTALL VACUUM PUMP

(a) Install 2 new O–rings to the vacuum pump.

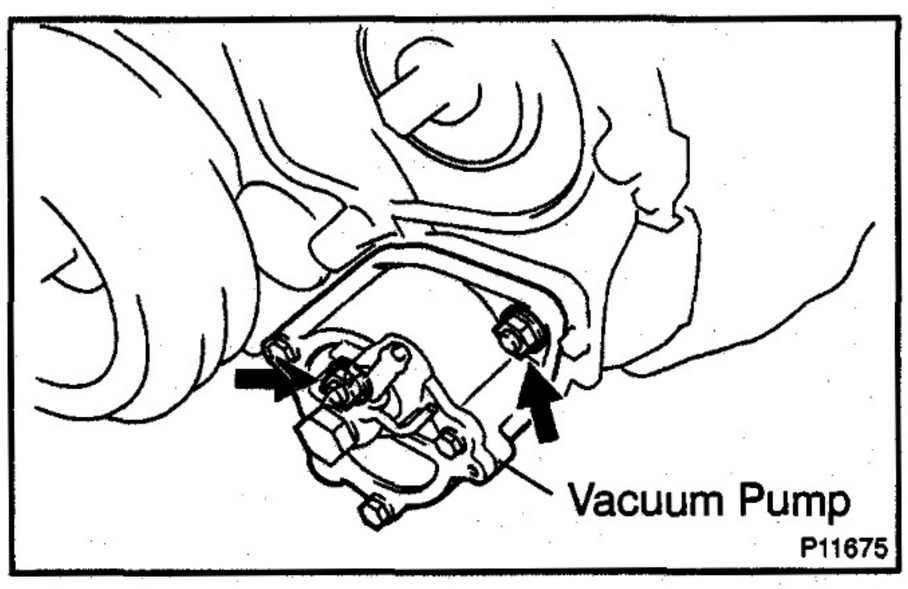

(b) Install the vacuum pump with the 2 nuts.
Torque: 21 N·m (210 kgf·cm, 15 ft·lbf)

7. **INSTALL CAMSHAFT OIL SEAL RETAINER (See page EM–64)**
8. **INSTALL TIMING BELT AND PULLEYS (See page EM–18)**
9. **INSTALL WATER PUMP PULLEY, FAN AND DRIVE BELT (See page CO–8)**

CYLINDER HEAD

COMPONENTS

EM15C–01

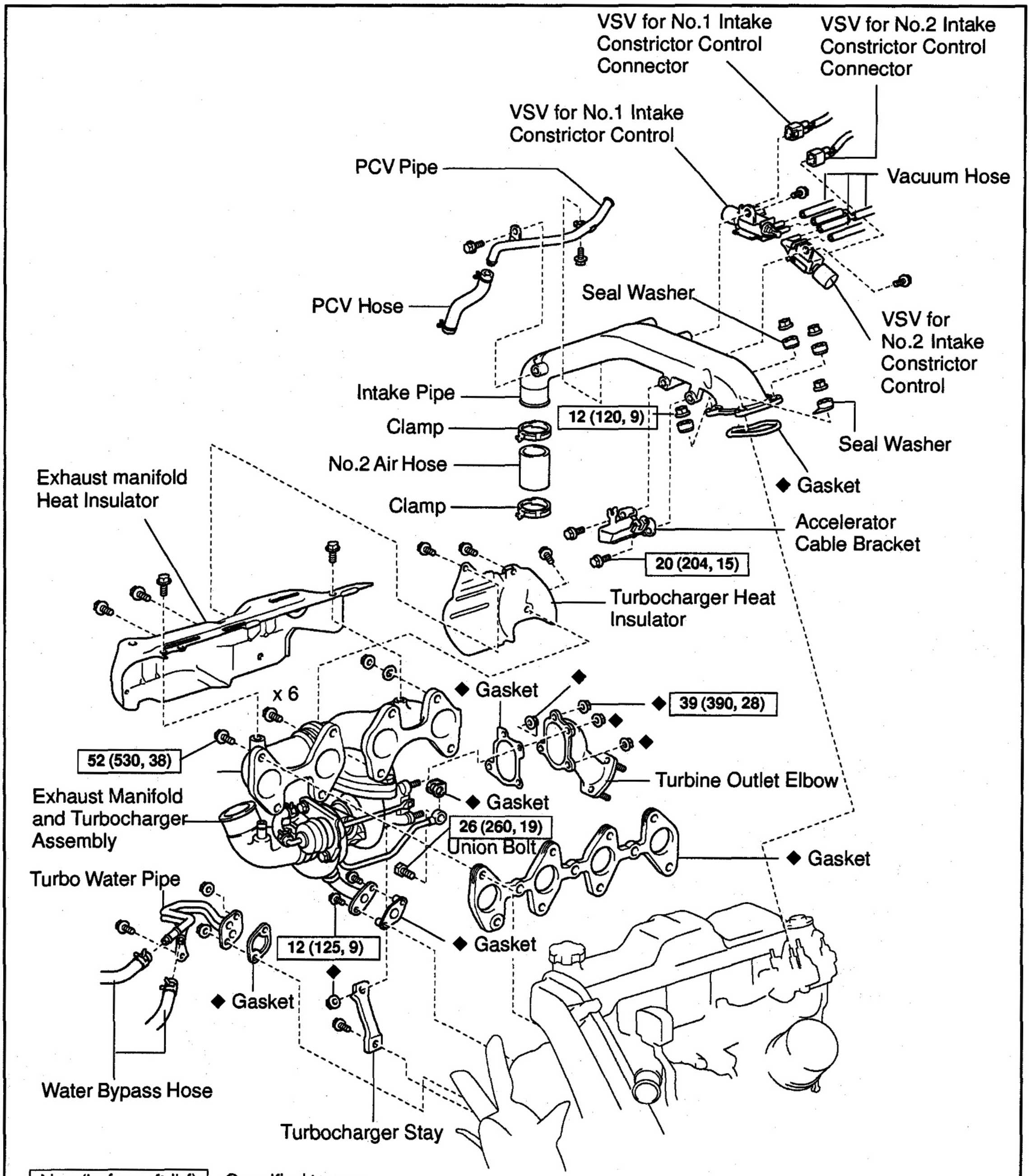

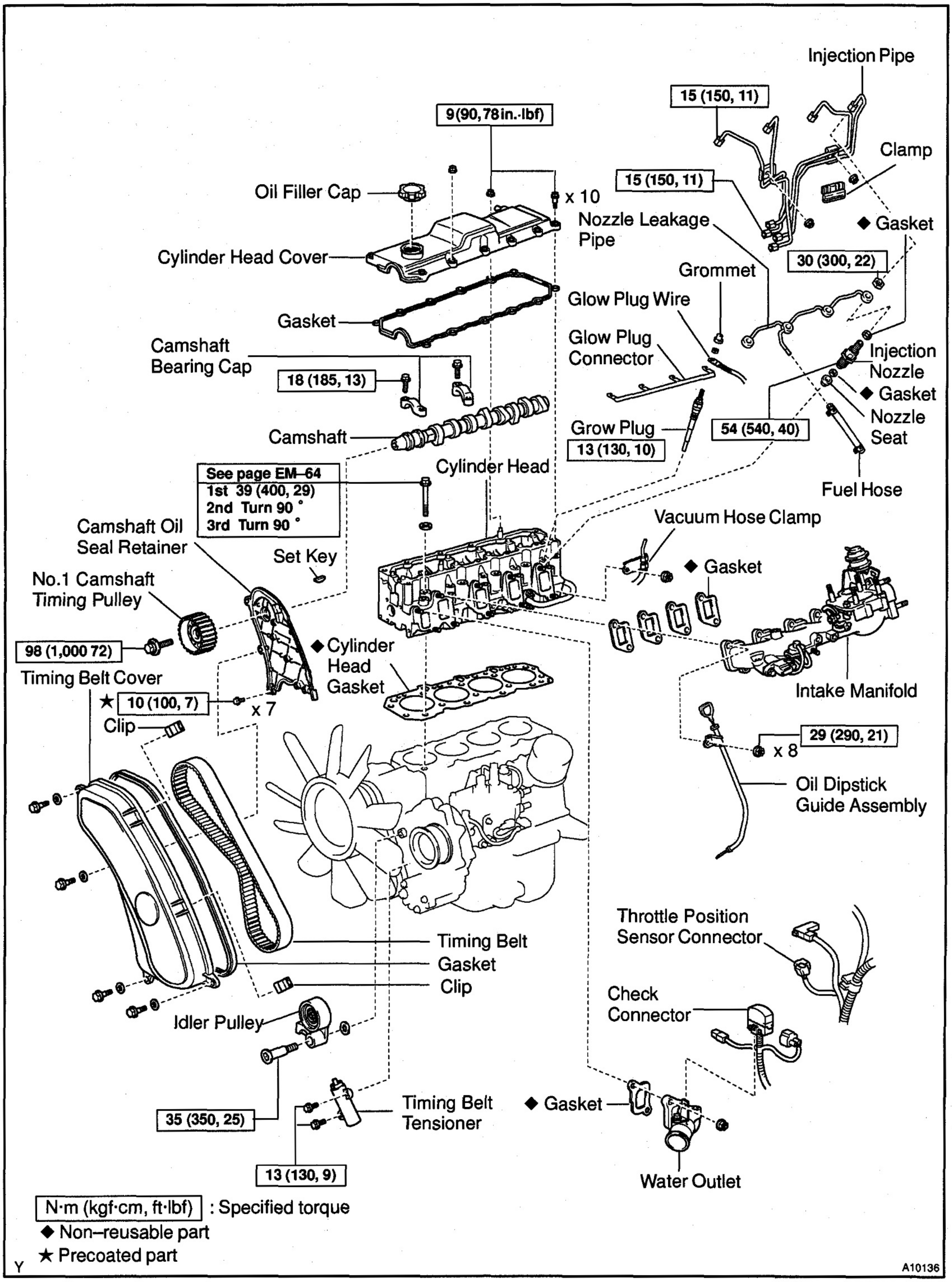
Injection Pipe
15 (150, 11)
9 (90, 78 in.·lbf)
Clamp
15 (150, 11)
Oil Filler Cap
x 10
Nozzle Leakage Pipe
◆ Gasket
Cylinder Head Cover
30 (300, 22)
Grommet
Glow Plug Wire
Gasket
Glow Plug Connector
Injection Nozzle
◆ Gasket
Camshaft Bearing Cap
18 (185, 13)
Nozzle Seat
Grow Plug
13 (130, 10)
54 (540, 40)
Camshaft
Fuel Hose
Cylinder Head
See page EM–64
1st 39 (400, 29)
2nd Turn 90 °
3rd Turn 90 °
Vacuum Hose Clamp
Camshaft Oil Seal Retainer
Set Key
◆ Gasket
No.1 Camshaft Timing Pulley
◆ Cylinder Head Gasket
98 (1,000 72)
Intake Manifold
Timing Belt Cover
★ 10 (100, 7)
x 7
29 (290, 21)
x 8
Clip
Oil Dipstick Guide Assembly
Throttle Position Sensor Connector
Check Connector
Timing Belt
Gasket
Clip
Idler Pulley
◆ Gasket
Timing Belt Tensioner
35 (350, 25)
13 (130, 9)
Water Outlet
N·m (kgf·cm, ft·lbf) : Specified torque
◆ Non–reusable part
★ Precoated part
Y
A10136

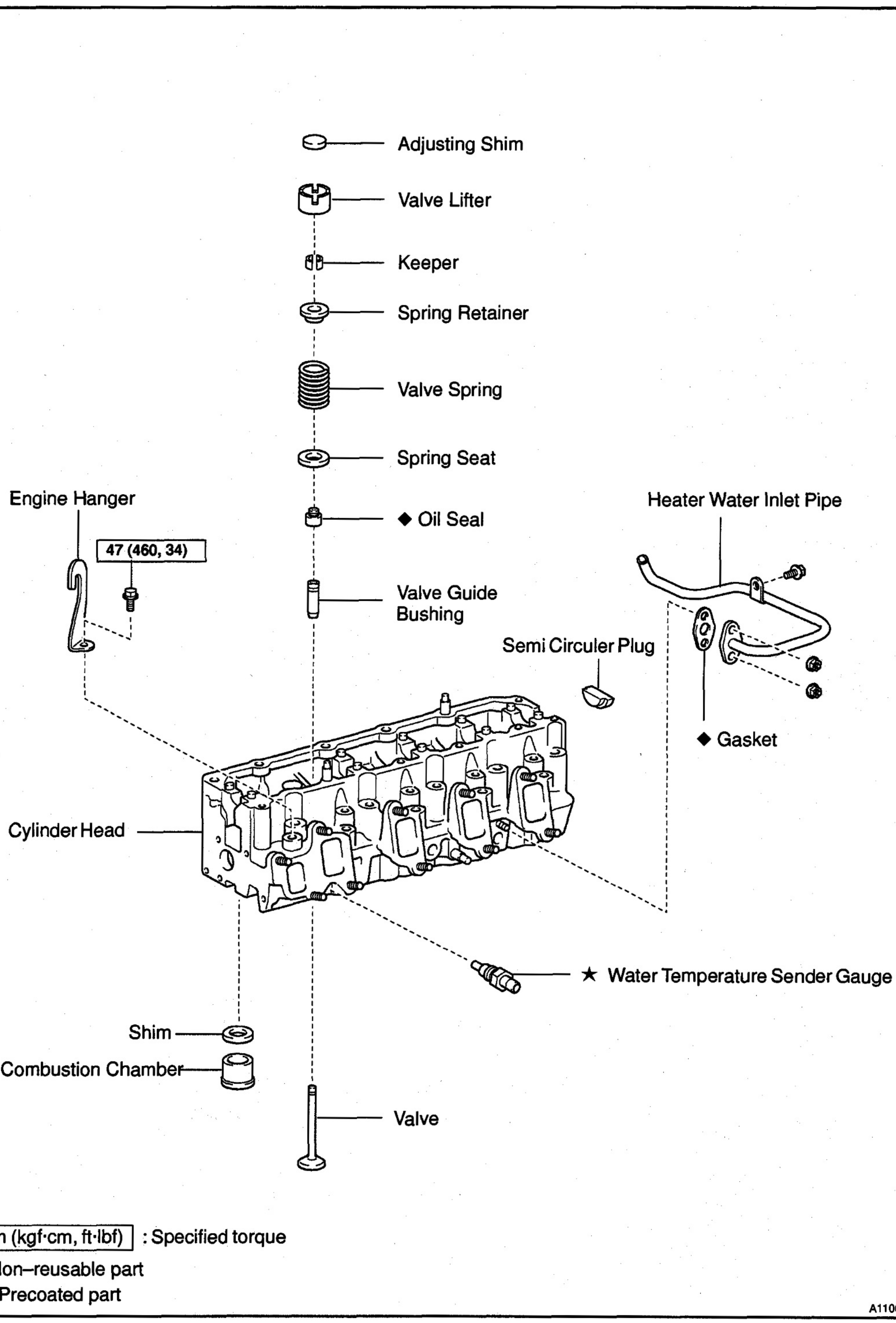
Adjusting Shim
Valve Lifter
Keeper
Spring Retainer
Valve Spring
Spring Seat
◆ Oil Seal
Valve Guide Bushing
Engine Hanger
47 (460, 34)
Heater Water Inlet Pipe
Semi Circuler Plug
◆ Gasket
Cylinder Head
★ Water Temperature Sender Gauge
Shim
Combustion Chamber
Valve
N·m (kgf·cm, ft·lbf) : Specified torque
◆ Non–reusable part
★ Precoated part
A11067

EM15D–01

REMOVAL

1. DRAIN ENGINE COOLANT

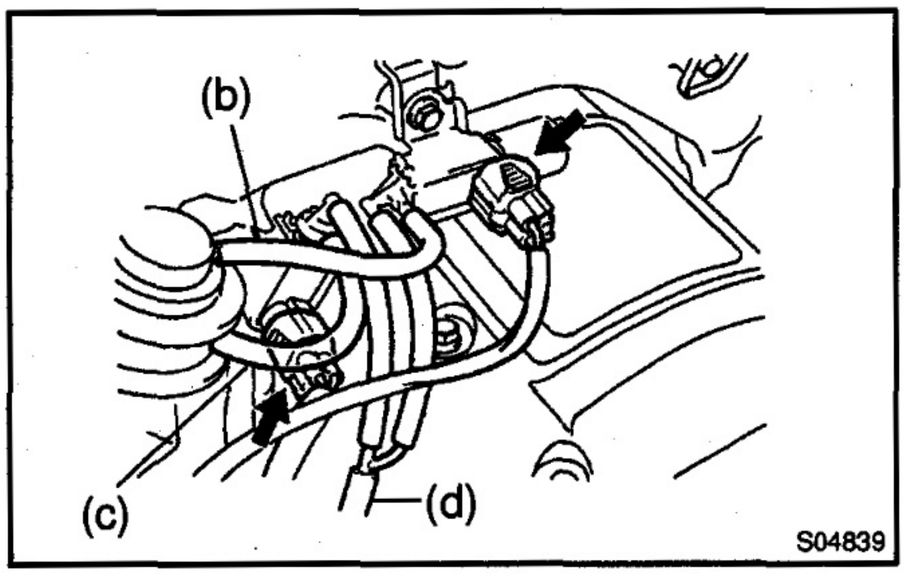

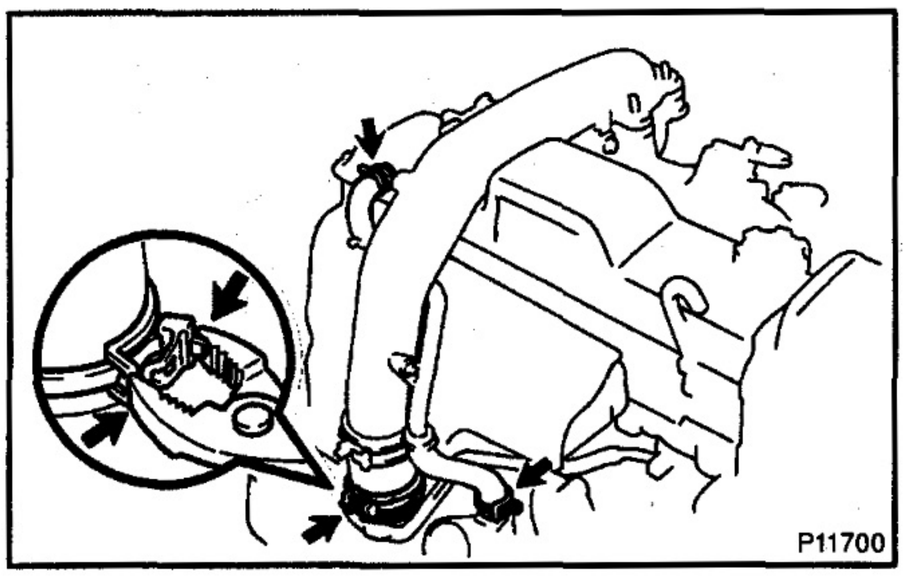

2. REMOVE INTAKE PIPE

(a) Disconnect the VSV for the No.1 and No.2 intake constrictor control connectors.

(b) Disconnect the vacuum hose from the actuator of the chamber A

(c) Disconnect the vacuum hose from the actuator of the chamber B

(d) Disconnect the vacuum hose from the 3–way (from vacuum pump)

(e) Remove the 4 nuts and 4 seal washers.

(f) Use pliers to pinch the ends of the clamp together until the lock plate engages the catch.
Make sure the lock plate and catch are engaged securely.

(g) Remove the intake pipe, PCV hose and gasket.

(h) Remove the accelerator cable bracket from the intake pipe.

(i) Remove the VSV for the No.1 and No.2 intake constrictor control. (See page ED–13)

(j) Remove the bolt and vacuum hose clamp from the cylinder head.

3. REMOVE TURBOCHARGER (See page TC–6)

4. REMOVE INJECTION PIPES (See page FU–5)

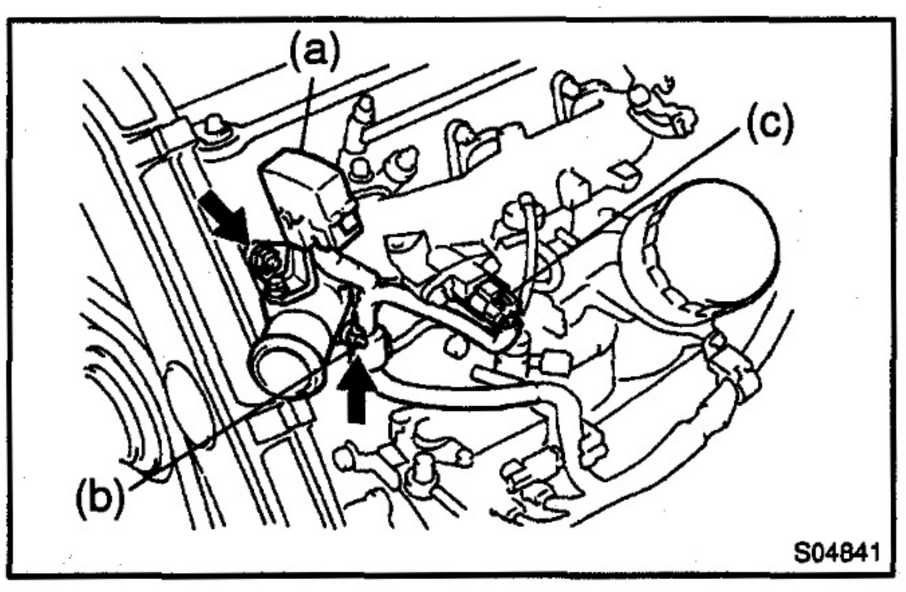

5. REMOVE WATER OUTLET

(a) Disconnect the check connector.

(b) Disconnect the engine wire clamp.

(c) Disconnect the turbo pressure sensor connector.

(d) Disconnect the water temperature sender gauge connector.

(e) Remove the 2 nuts, water outlet and gasket.

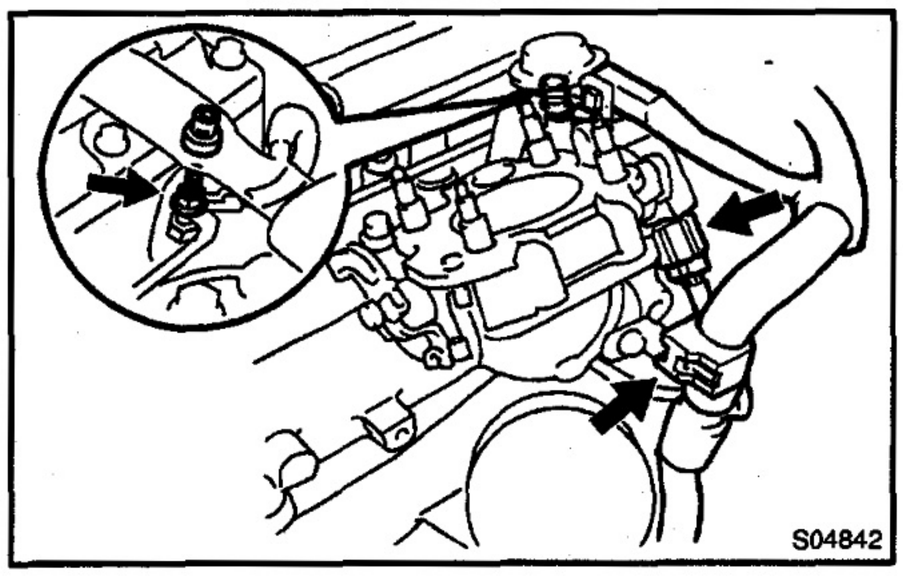

6. REMOVE INTAKE MANIFOLD

(a) Disconnect the throttle position sensor connector.
(b) Remove the grommet and nut, and disconnect the glow plug wire.
(c) Disconnect the engine wire clamp from the venturi.

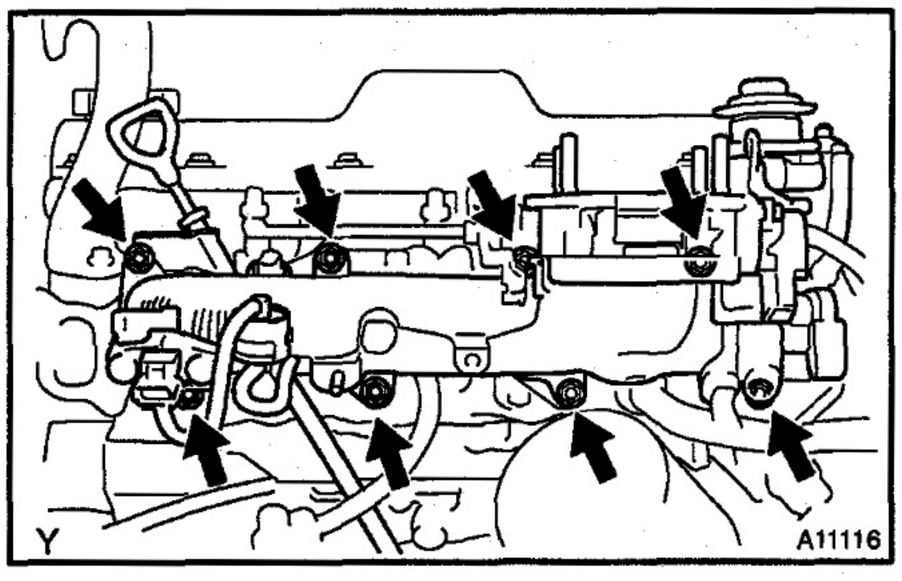

(d) Remove the 8 nuts, oil dipstick guide assembly, intake manifold and 4 gaskets.

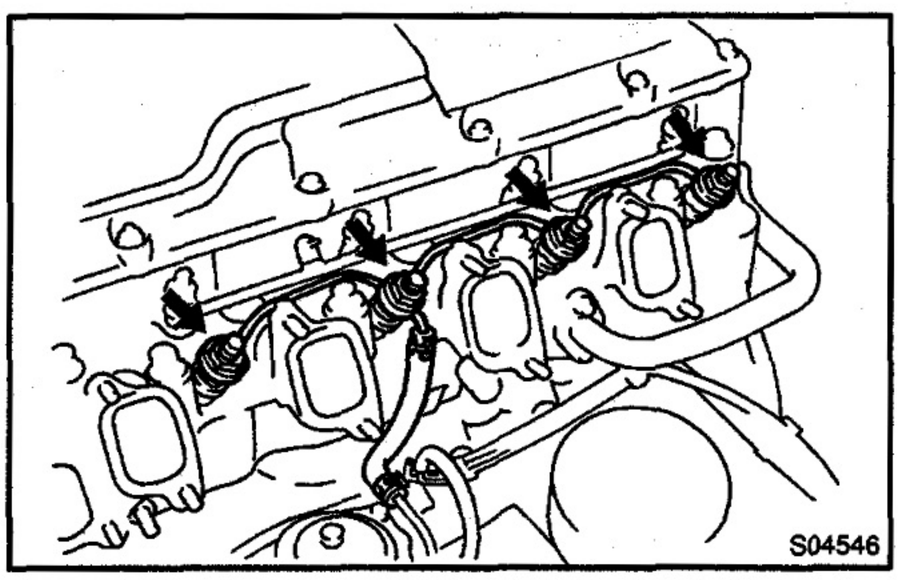

7. REMOVE NOZZLE LEAKAGE PIPE

(a) Disconnect the fuel hose from the return pipe.
(b) Remove the 4 nuts, nozzle leakage pipe and 4 gaskets.

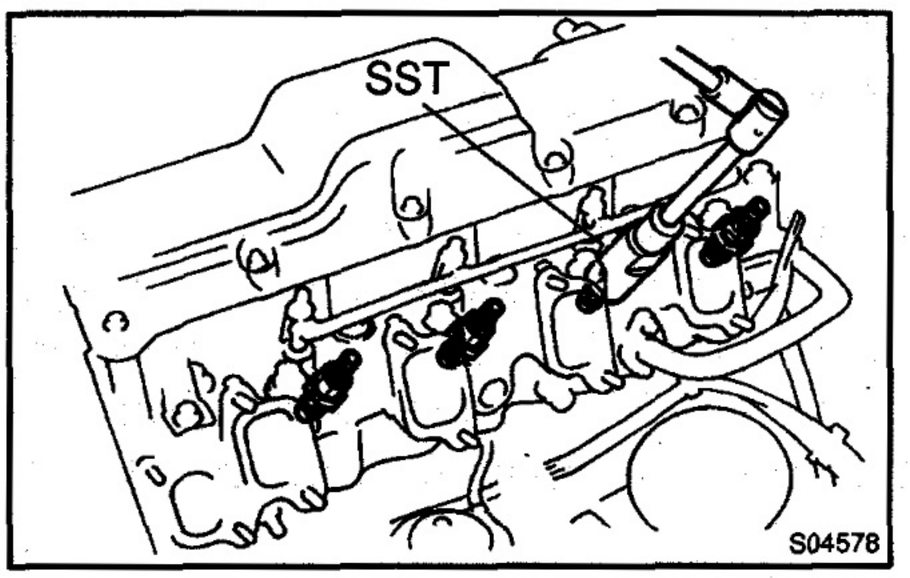

8. REMOVE INJECTION NOZZLES

Using SST, remove the 4 injection nozzles, gaskets and seats.

SST 09268–64010 (09268–64020)

HINT:

Arrange the injection nozzles in correct order.

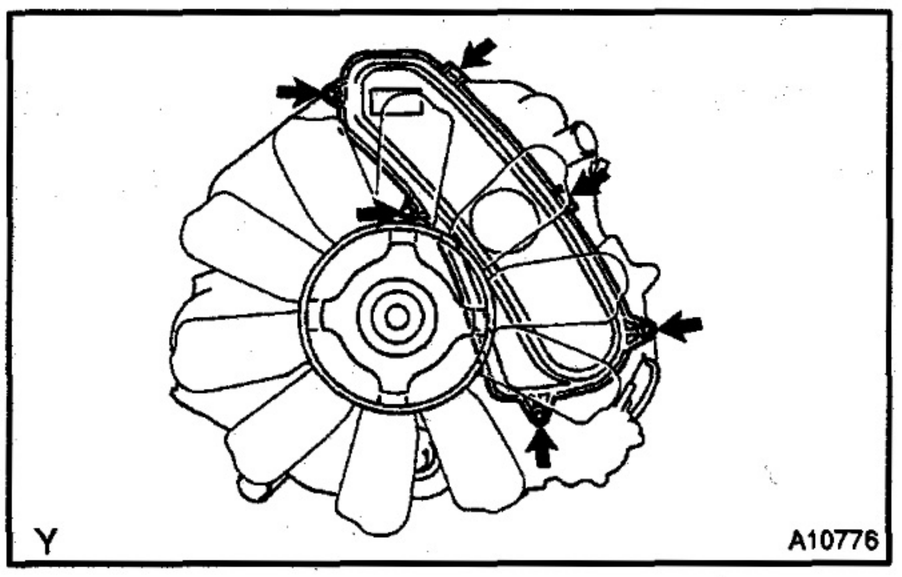

9. REMOVE TIMING BELT COVER

Remove the 4 bolts, 4 seal washers, 2 clips, timing belt cover and gasket.

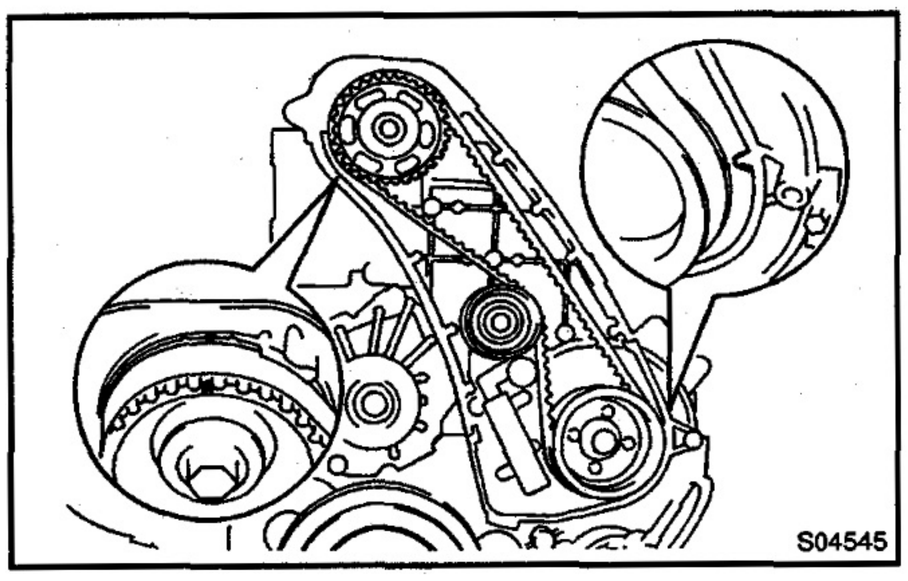

10. SET NO.4 CYLINDER TO TDC / COMPRESSION

Turn the crankshaft pulley clockwise, set both No.1 and No.2 camshaft pulley grooves at TDC marks.

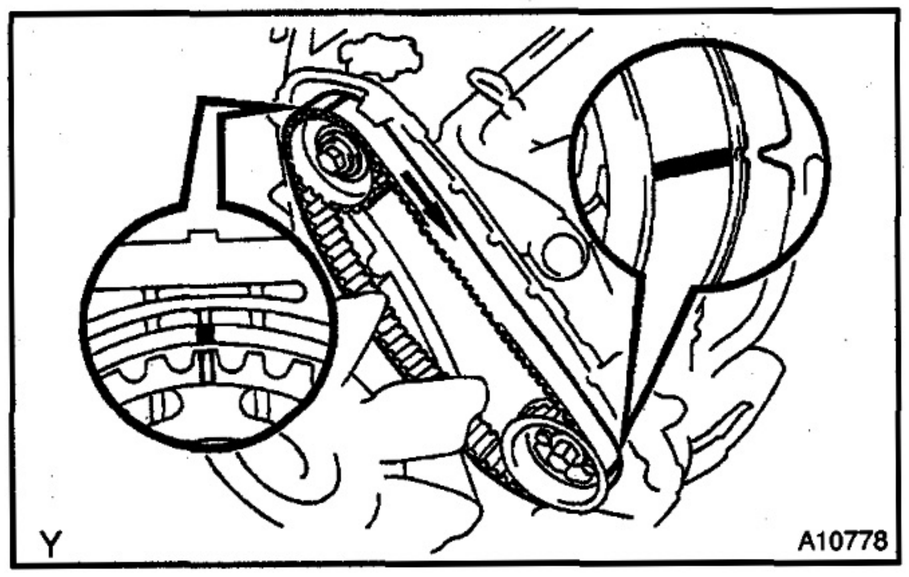

11. IF RE–USING TIMING BELT, MARK TIMING BELT

HINT:

If reusing the timing belt, draw a direction arrow on the belt (in the direction of engine revolution), and place matchmarks on the pulleys and belt as shown in the illustration.

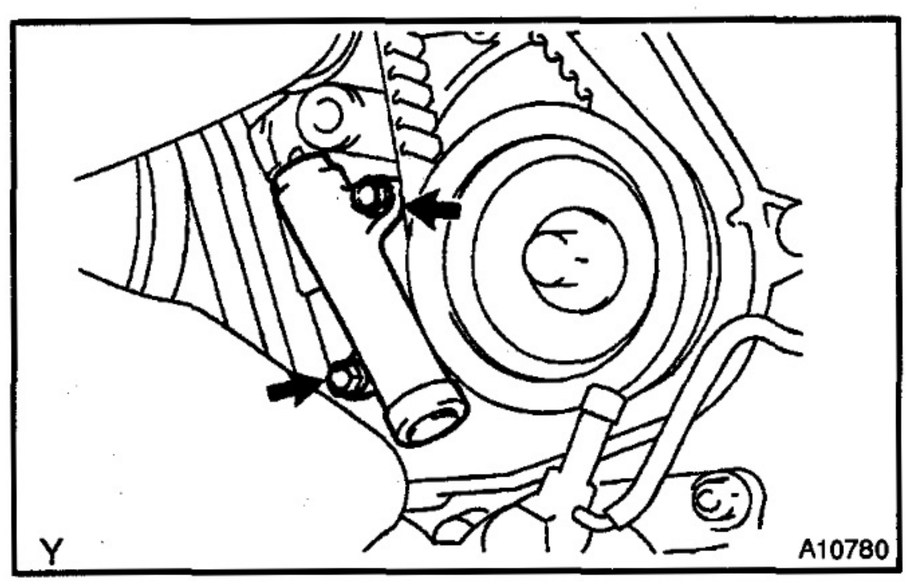

12. REMOVE TIMING BELT TENSIONER

Alternately loosen the 2 bolts, remove them and timing belt tensioner.

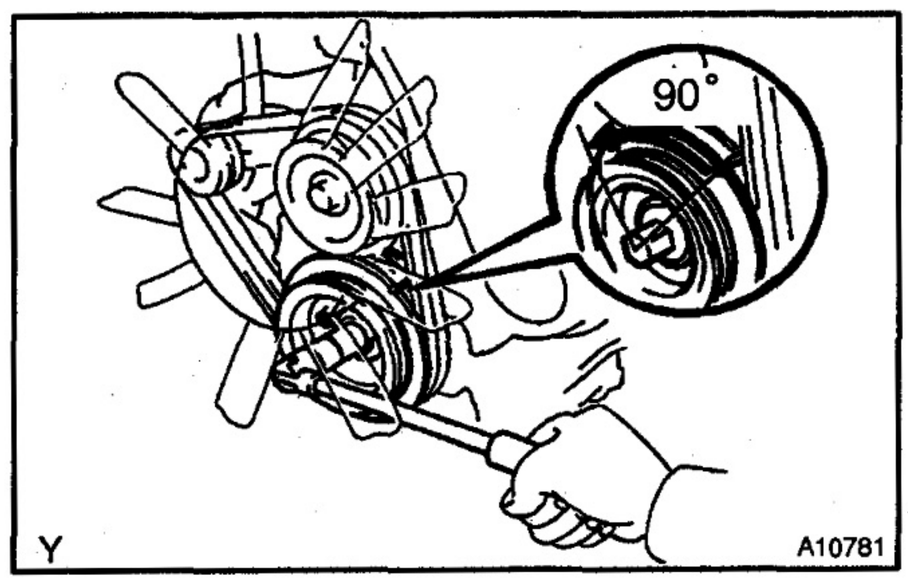

13. REMOVE TIMING BELT

(a) Turn the crankshaft 90° counterclockwise.

NOTICE:

If the timing belt is disengaged, having the crankshaft pulley at the wrong angle can cause the piston head and valve head to come into contact with each order when you remove the No.1 camshaft timing pulley (step 16), causing damage. So always set the crankshaft pulley at the correct angle.

(b) Remove the timing belt.

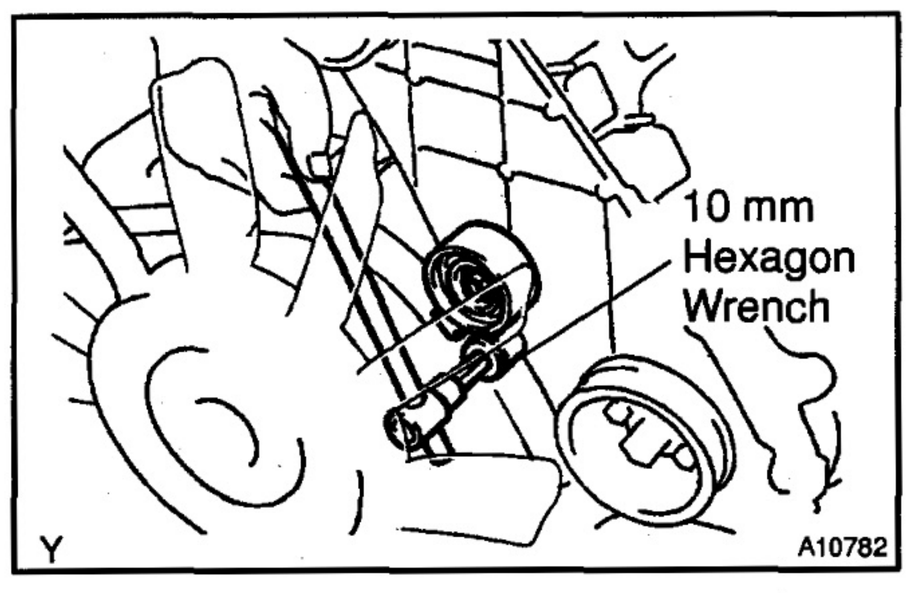

14. REMOVE TIMING BELT IDLER PULLEY

Using a 10 mm hexagon wrench, remove the bolt, timing belt idler pulley and washer.

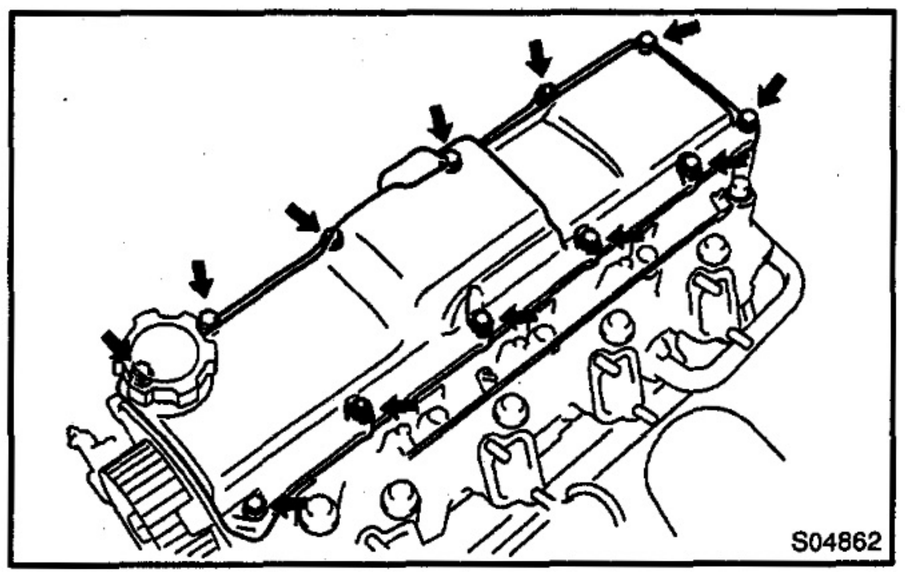

15. REMOVE CYLINDER HEAD COVER

Remove the 10 bolts, 2 nuts, cylinder head cover and gasket.

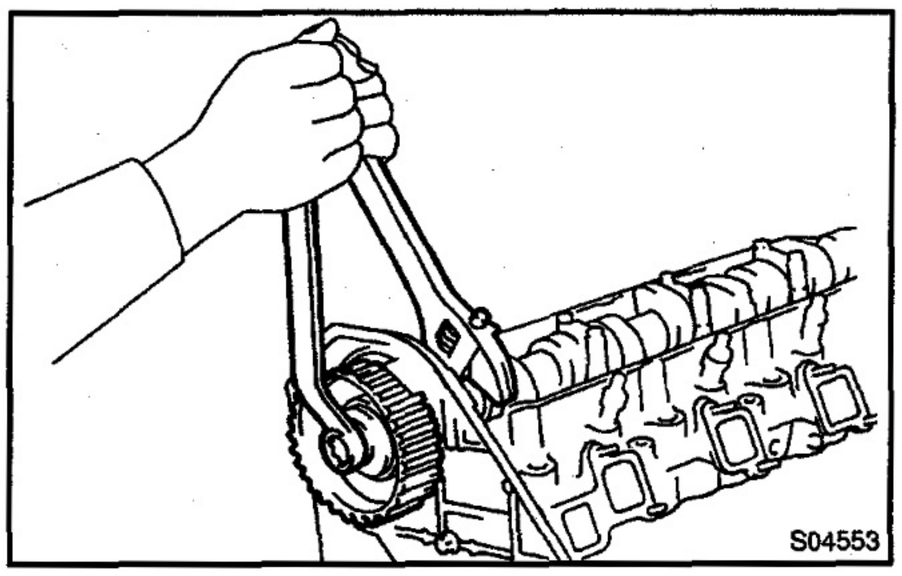

16. REMOVE NO.1 CAMSHAFT TIMING PULLEY

(a) Hold the hexagonal wrench head portion of the camshaft with a wrench, and remove the camshaft timing pulley bolt.

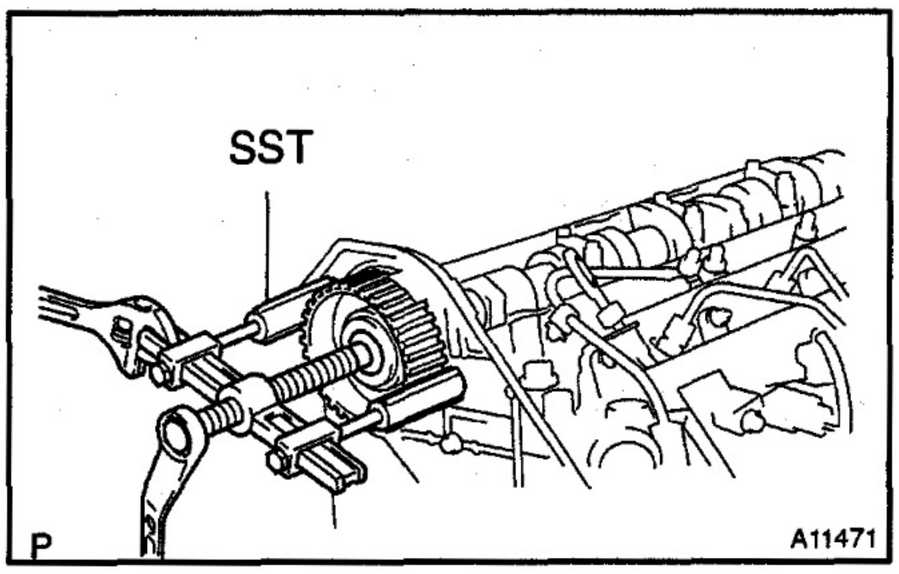

(b) Using SST, remove the timing pulley.
SST 09950–40011 (09951–04010, 09952–04010, 09953–04020, 09954–04010, 09955–04061)

(c) Remove the set key.

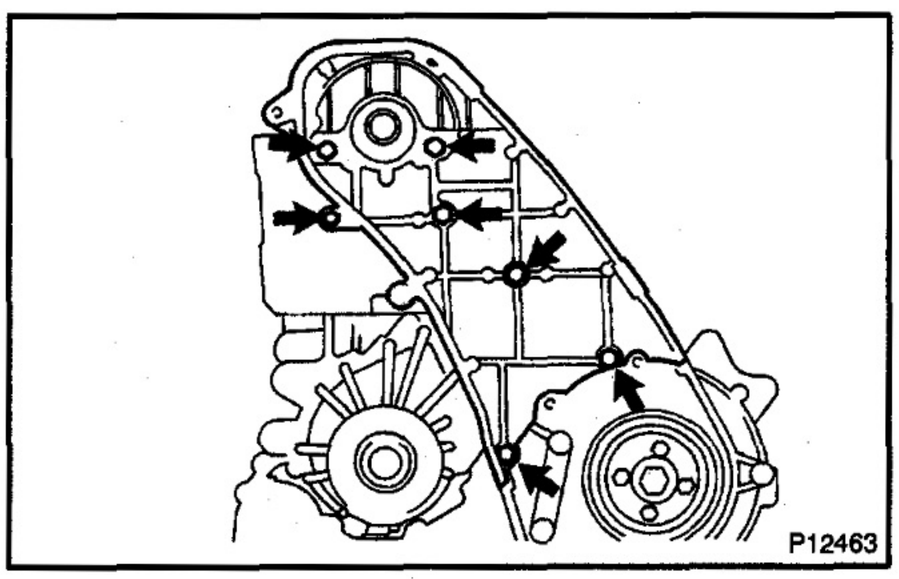

17. REMOVE CAMSHAFT OIL SEAL RETAINER

(a) Remove the 7 bolts holding the camshaft oil seal retainer to the cylinder head.

(b) Pry out the camshaft oil seal retainer.

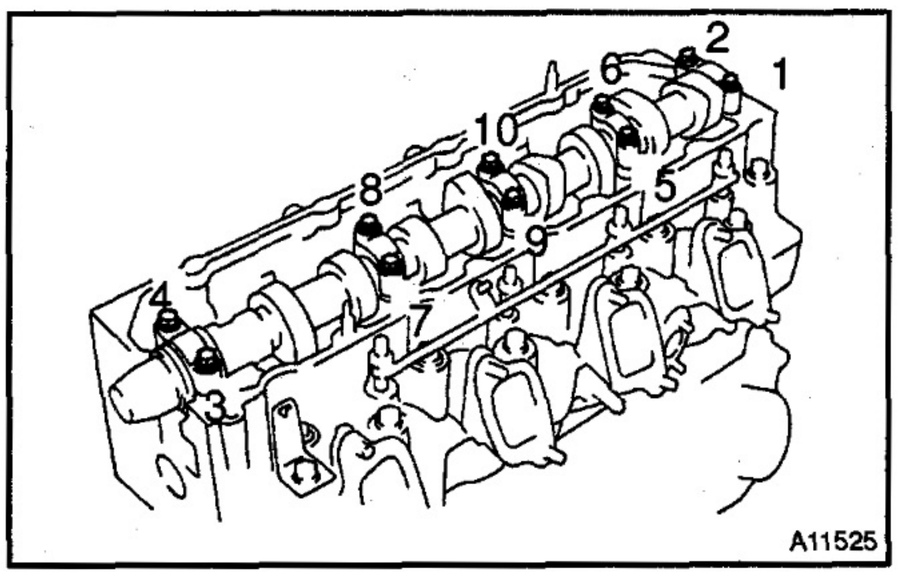

18. REMOVE CAMSHAFT

(a) Uniformly loosen and remove the 10 bearing cap bolts in several passes in the sequence shown.

(b) Remove the 5 bearing caps and camshaft.

HINT:

Arrange the bearing caps in correct order.

19. REMOVE GLOW PLUG CONNECTOR AND GLOW PLUGS (See page ST–4)

NOTICE:

This engine uses ceramic glow plugs. To prevent damage to the glow plugs, do not remove them unless necessary.

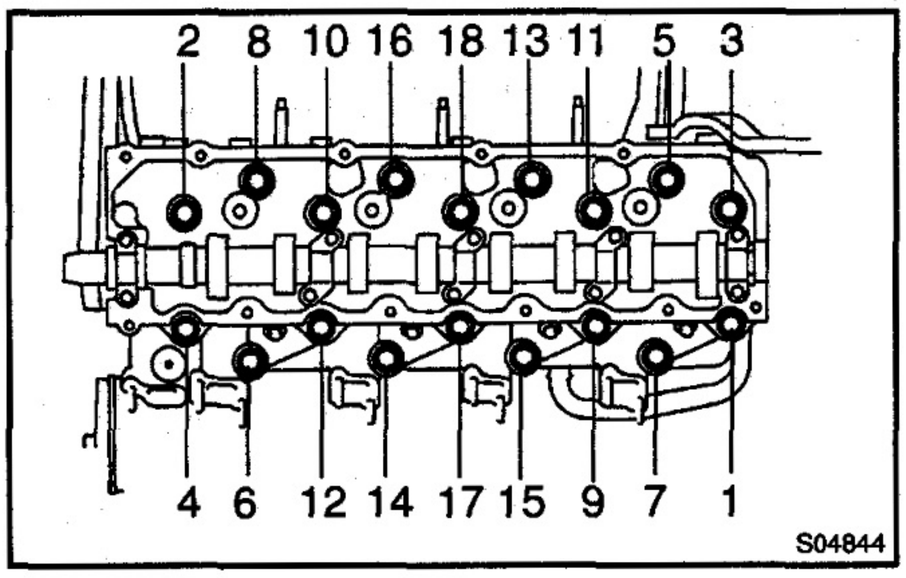

20. REMOVE CYLINDER HEAD

(a) Uniformly loosen and remove the 18 cylinder head bolts, in several passes, in the sequence shown.

NOTICE:

Head warpage or cracking could result from removing bolts in incorrect order.

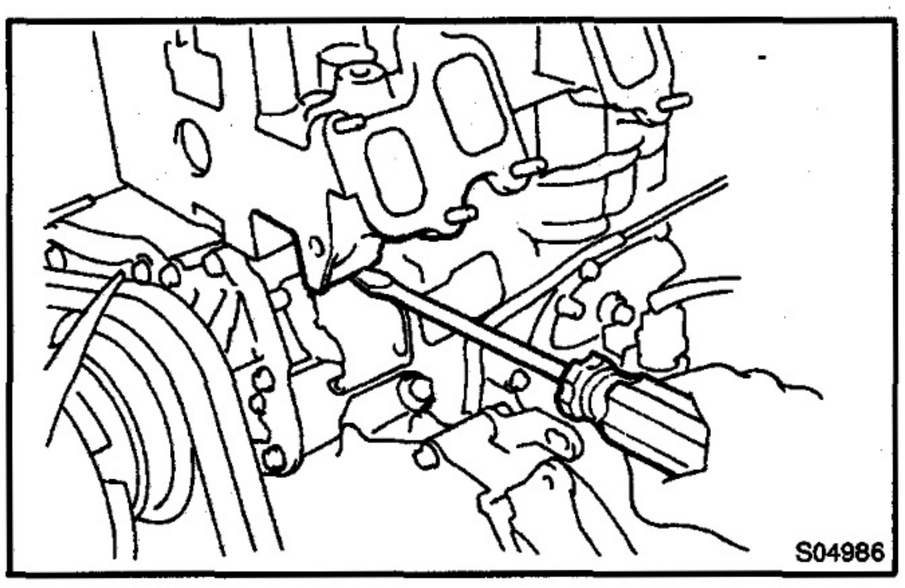

(b) Lift the cylinder head from the dowels on the cylinder block, and place the head on wooden blocks on a bench.

HINT:

If the cylinder head is difficult to lift off, pry with a screwdriver between the cylinder head and block.

NOTICE:

Be careful not to damage the contact surfaces of cylinder head and block.

EM15E–01

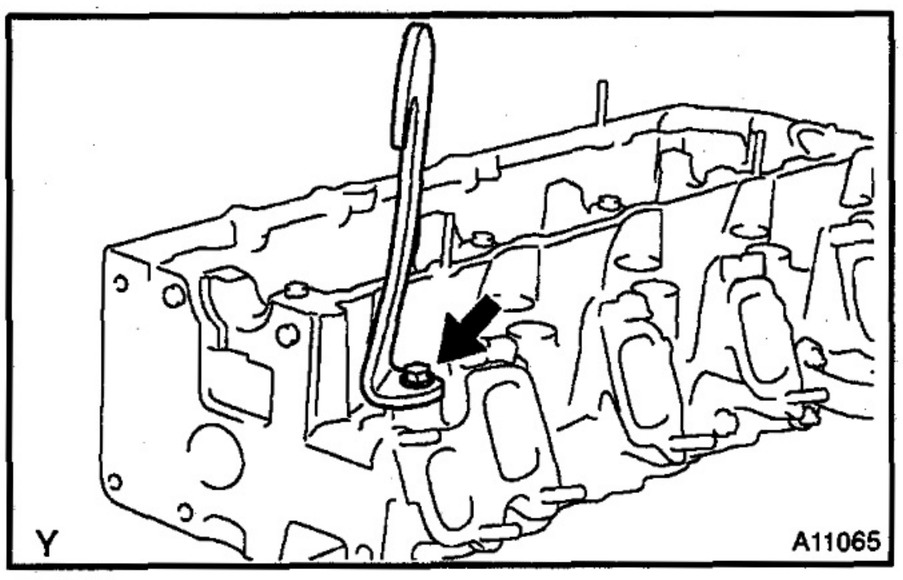

DISASSEMBLY

1. REMOVE ENGINE HANGER

Remove the engine hanger from the cylinder head.

2. REMOVE WIRE CLAMP BRACKET

3. REMOVE WATER TEMPERATURE SENDER GAUGE

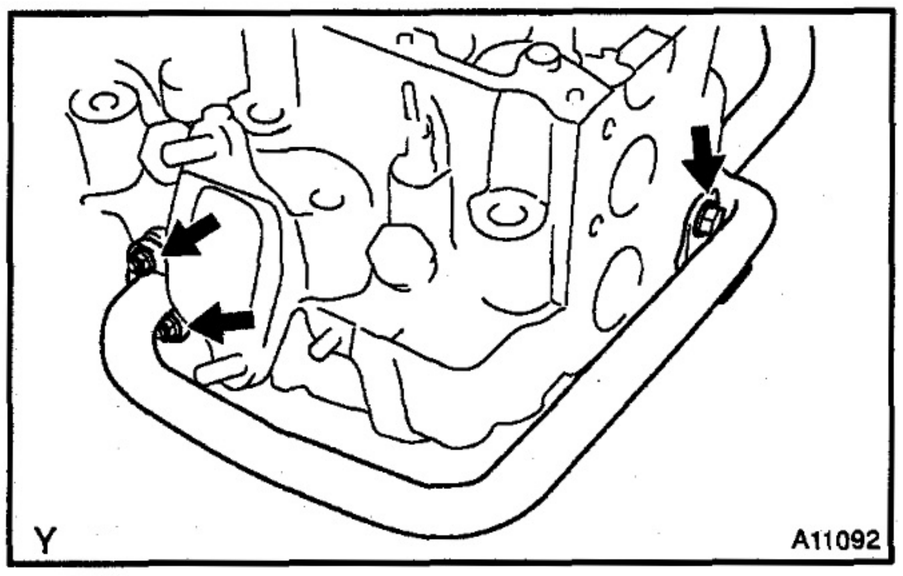

4. REMOVE HEATER WATER INLET PIPE

Remove the bolt, 2 nuts, heater water inlet pipe and gasket.

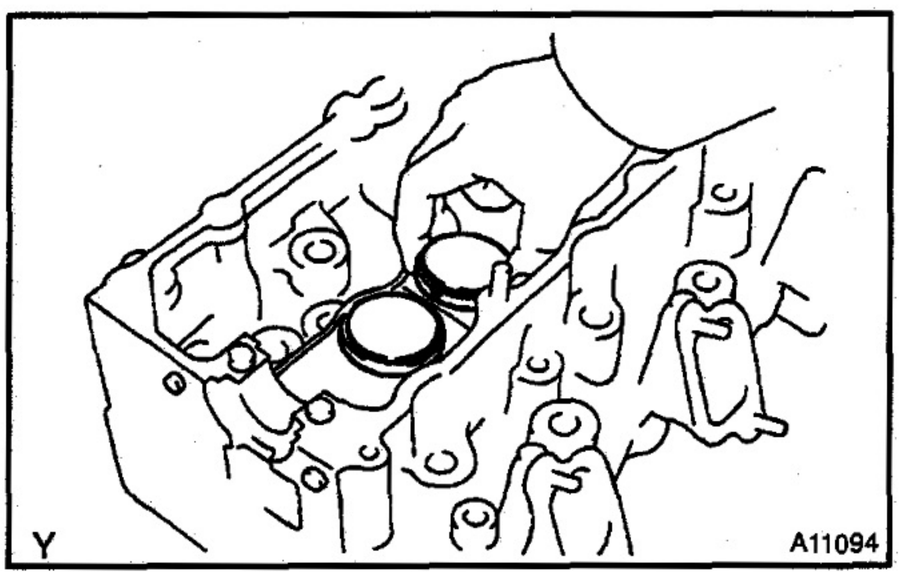

5. REMOVE VALVE LIFTERS AND SHIMS

HINT:

Arrange the valve lifters and shims in correct order.

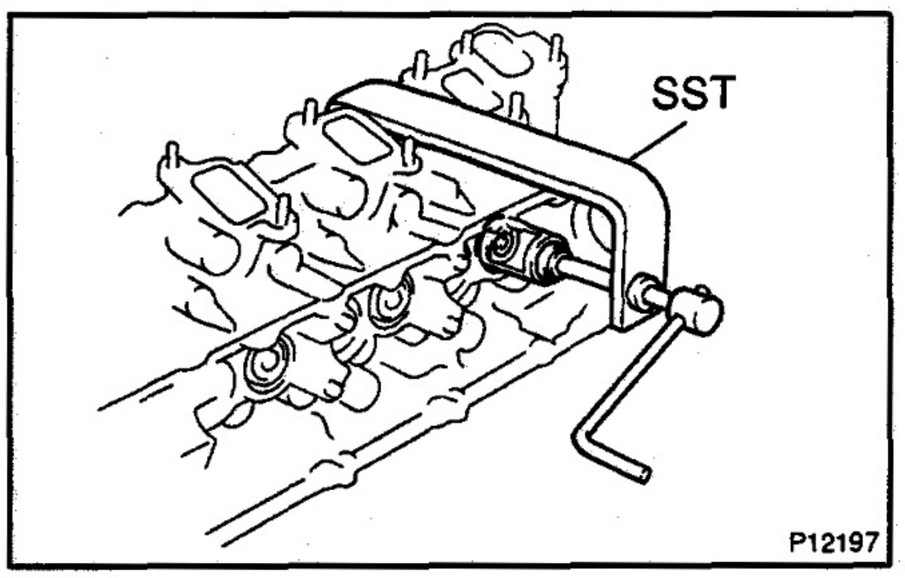

6. REMOVE VALVES

(a) Using SST, compress the valve spring and remove the 2 keepers.

SST 09202–70020 (09202–00010)

(b) Remove the spring retainer, valve spring, valve and spring seat.

HINT:

Arrange the valves, valve springs, spring seats and spring retainers in correct order.

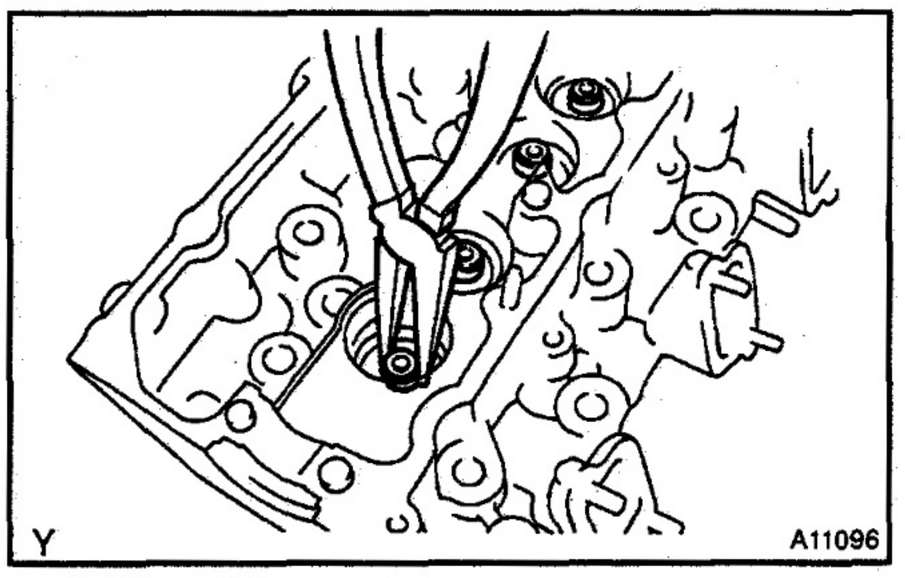

(c) Using needle–nose pliers, remove the oil seal.

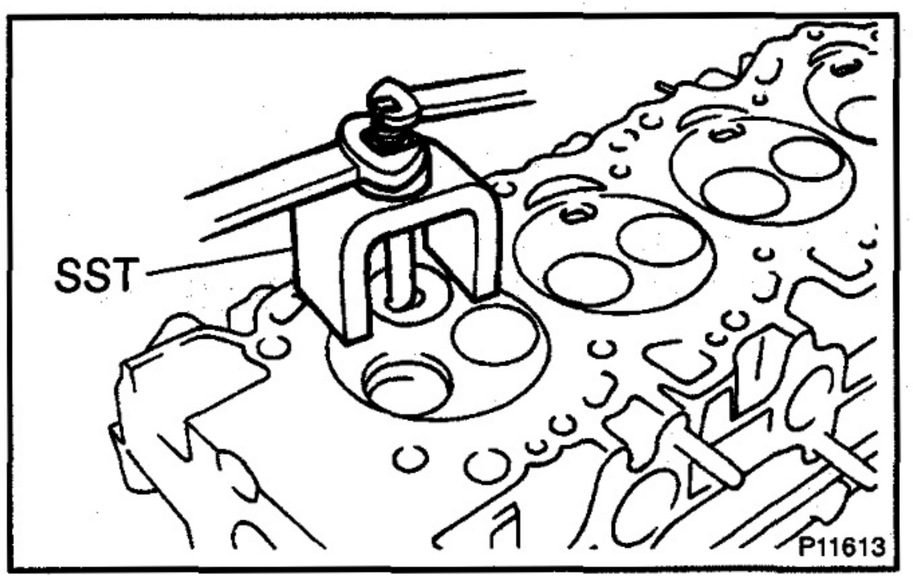

7. REMOVE COMBUSTION CHAMBERS

Using SST, remove the 4 combination chambers.

SST 09208–48010

HINT:

Arrange the combustion chambers in correct order.

8. REMOVE SEMI–CIRCULAR PLUG

Remove the semi–circular plug.

EM15F–01

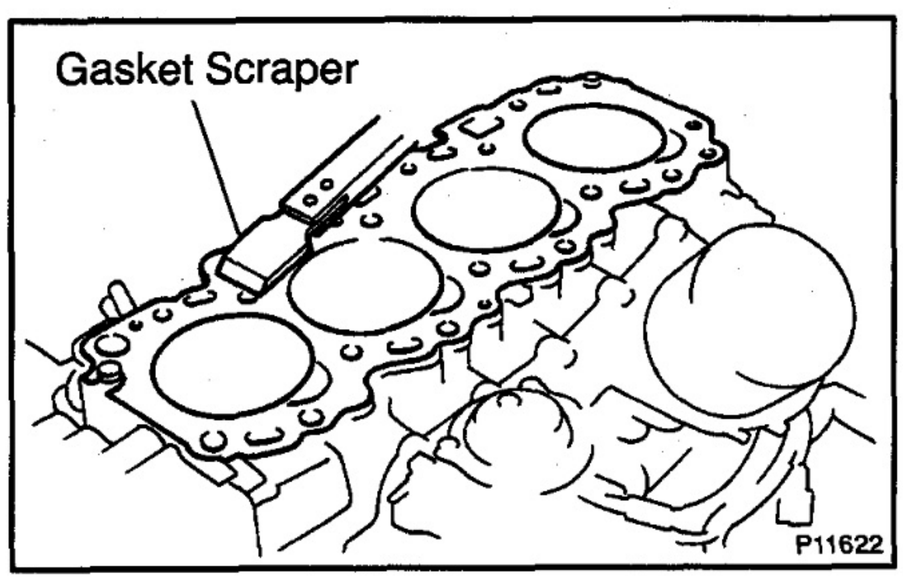

INSPECTION

1. CLEAN TOP SURFACES OF PISTONS AND CYLINDER BLOCK

(a) Turn the crankshaft, and bring each piston to the top dead center (TDC). Using a gasket scraper, remove all the carbon from the piston top surface.

(b) Remove all the gasket material from the top of the cylinder block.

NOTICE:

Be careful not to scratch the surfaces.

(c) Using compressed air, blow carbon and oil from the bolt holes.

CAUTION:

Protect your eyes when using high–compressed air.

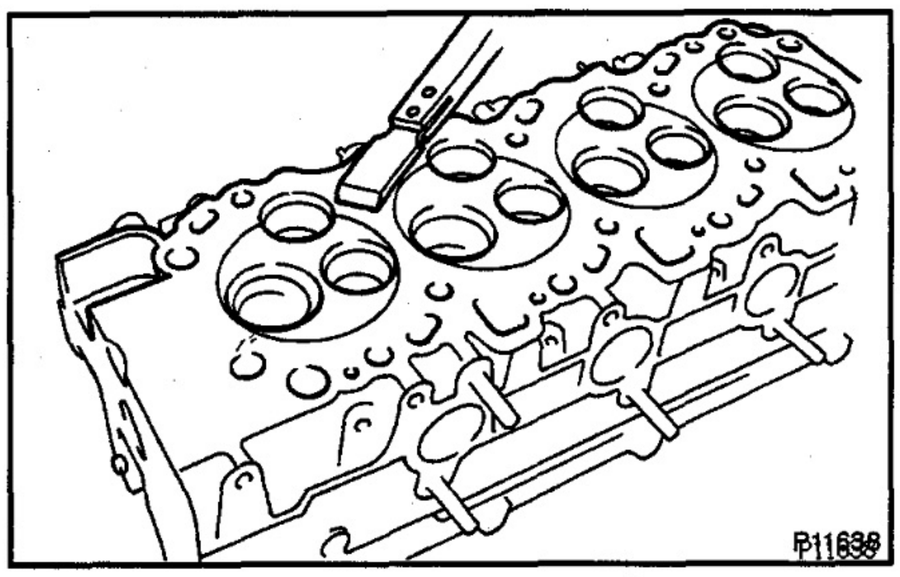

2. REMOVE GASKET MATERIAL

Using a gasket scraper, remove all the gasket material from the cylinder block contact surface.

NOTICE:

Be careful not to scratch the cylinder block contact surface.

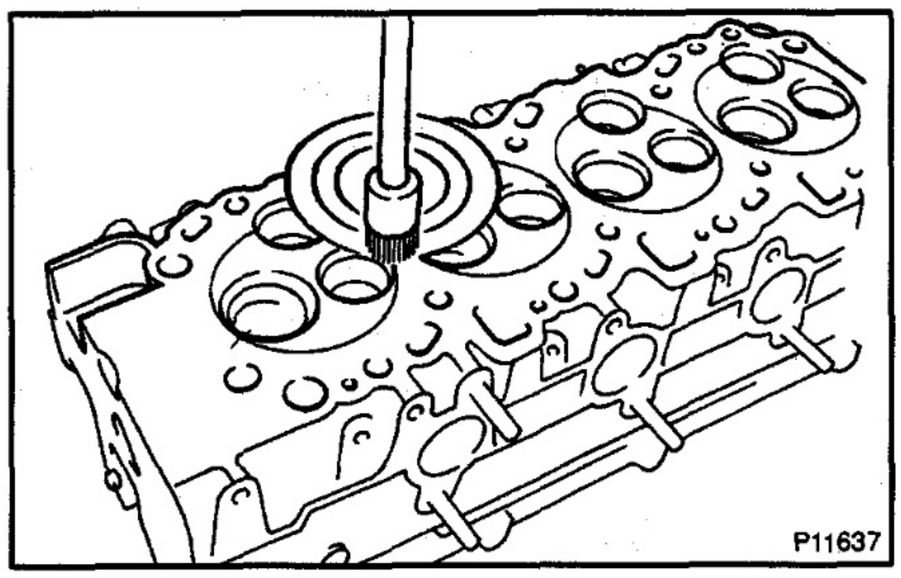

3. CLEAN COMBUSTION CHAMBERS

Using a wire brush, remove all the carbon from the combustion chambers.

NOTICE:

Be careful not to scratch the cylinder block contact surface.

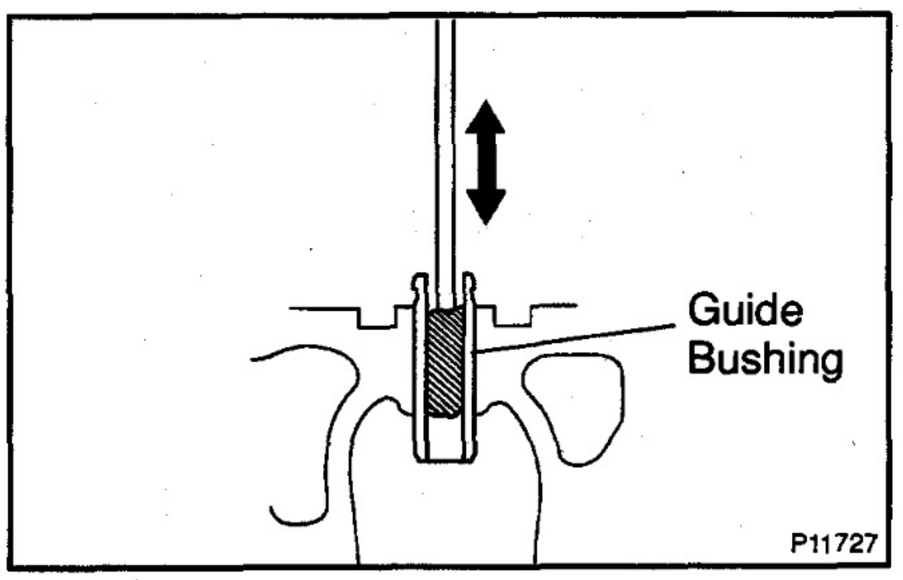

4. CLEAN VALVE GUIDE BUSHINGS

Using a valve guide bushing brush and solvent, clean all the guide bushings.

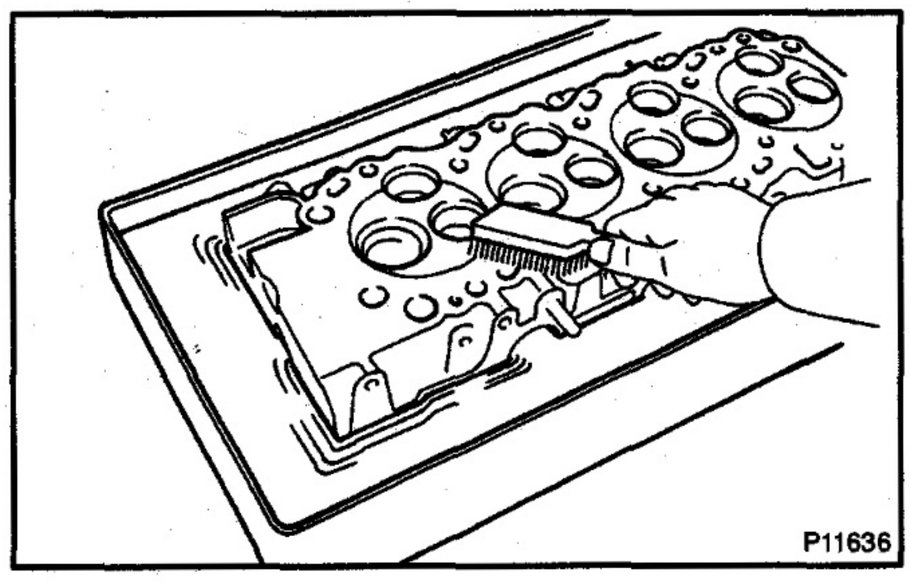

5. CLEAN CYLINDER HEAD

Using soft brush and solvent, thoroughly clean the cylinder head.

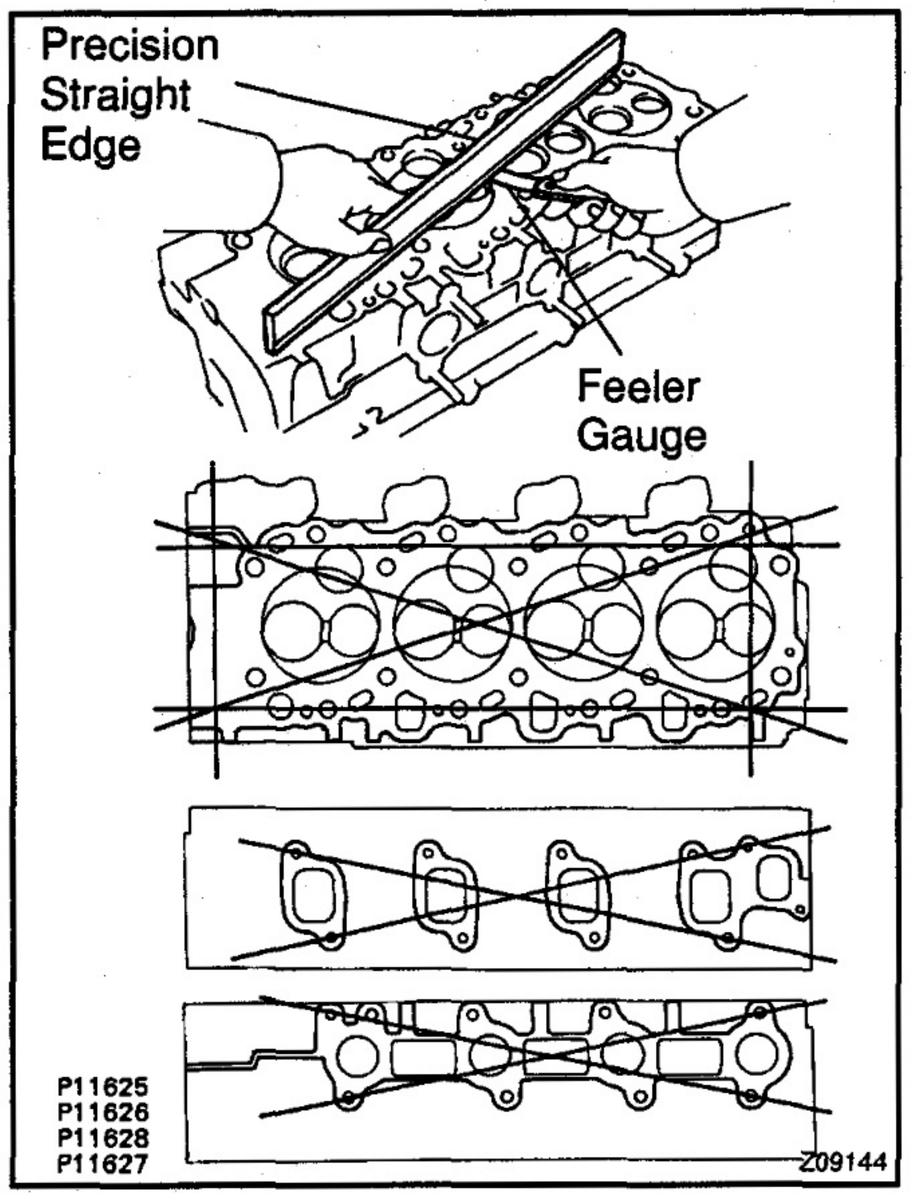

6. INSPECT FOR FLATNESS

Using a precision straight edge and feeler gauge, measure the surfaces contacting the cylinder block and manifolds for warpage.

Maximum warpage: 0.15 mm (0.0059 in.)

If warpage is greater than maximum, replace the cylinder head.

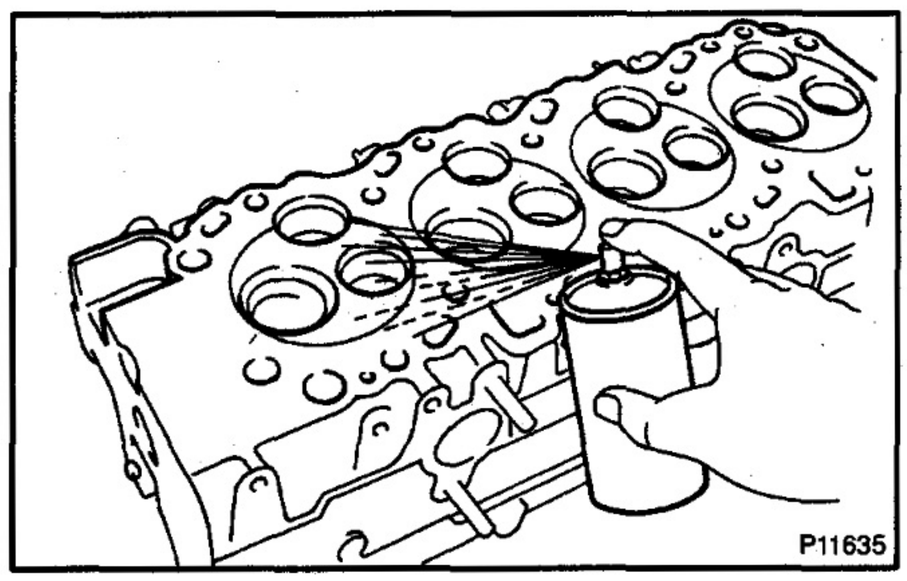

7. INSPECT FOR CRACKS

Using a dye penetrant, check the combustion chambers, intake ports, exhaust ports and surface contacting the cylinder block.
If cracked, replace the cylinder head.

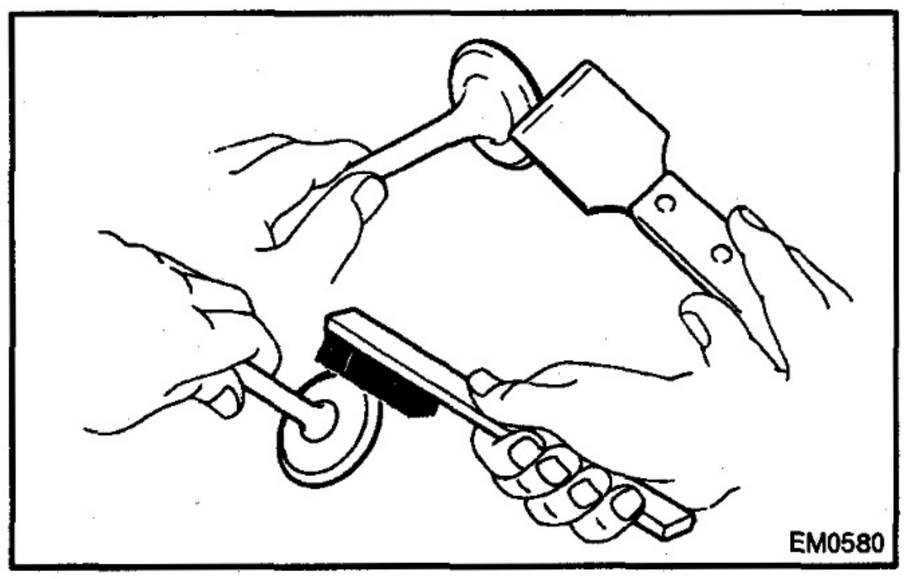

8. CLEAN VALVES

(a) Using a gasket scraper, chip off any carbon from the valve head.

(b) Using a wire brush, thoroughly clean the valve.

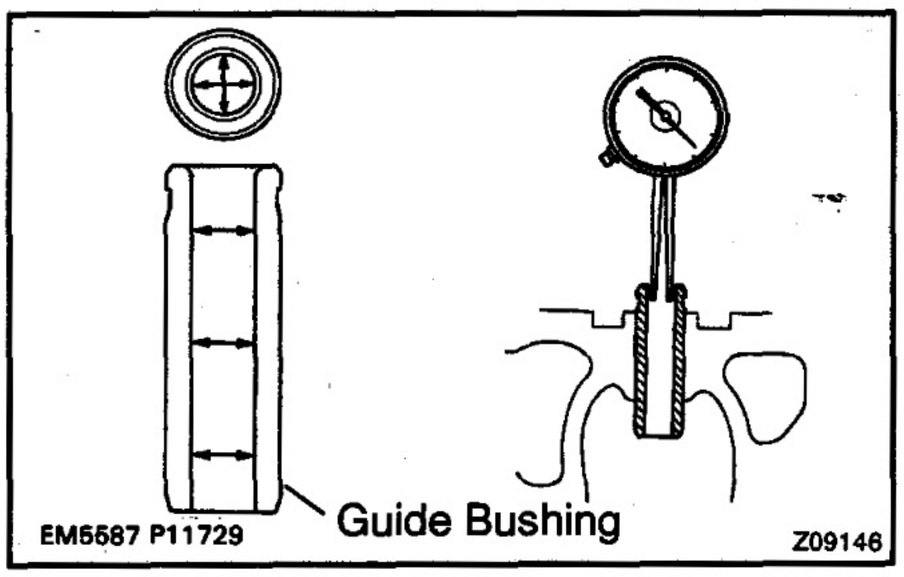

9. INSPECT VALVE STEMS AND GUIDE BUSHINGS

(a) Using a caliper gauge, measure the inside diameter of the guide bushing.

Bushing inside diameter:
8.010 – 8.030 mm (0.3154 – 0.3161 in.)

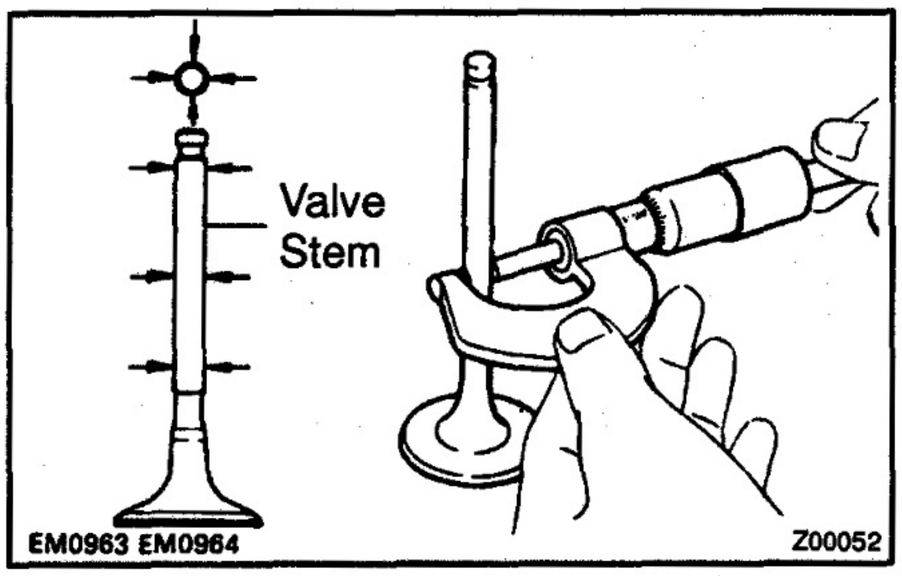

(b) Using a micrometer, measure the diameter of the valve stem.

Valve stem diameter:

Intake	7.975 – 7.990 mm (0.3140 – 0.3146 in.)
Exhaust	7.960 – 7.975 mm (0.3134 – 0.3140 in.)

(c) Subtract the valve stem diameter measurement from the guide bushing inside diameter measurement.

Standard oil clearance:

Intake	0.020 – 0.055 mm (0.0008 – 0.0022 in.)
Exhaust	0.035 – 0.070 mm (0.0014 – 0.0028 in.)

Maximum oil clearance:

Intake	0.08 mm (0.0031 in.)
Exhaust	0.10 mm (0.0039 in.)

If the clearance is greater than maximum, replace the valve and guide bushing. (See page EM–59)

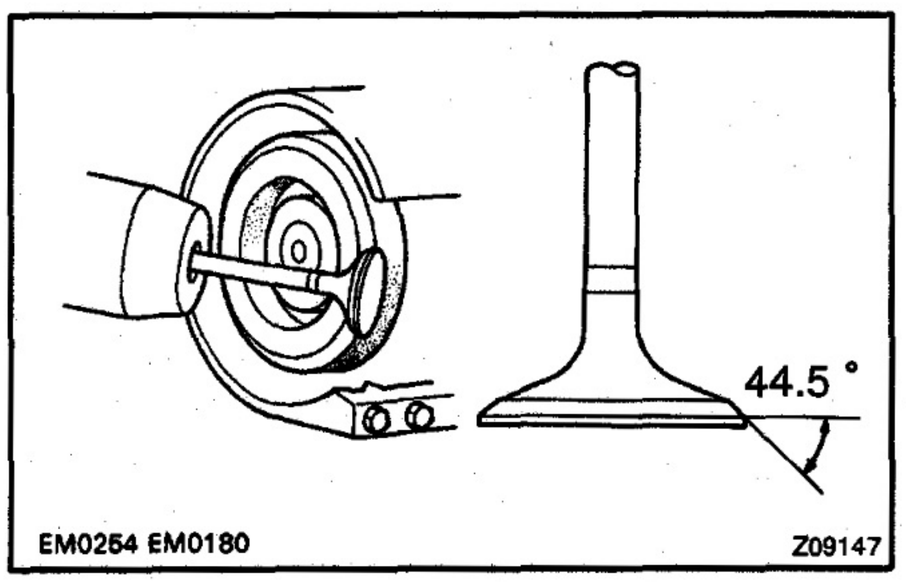

10. INSPECT AND GRIND VALVES

(a) Grind the valve enough to remove pits and carbon.

(b) Check that the valve is ground to the correct valve face angle.

Valve face angle: 44.5°

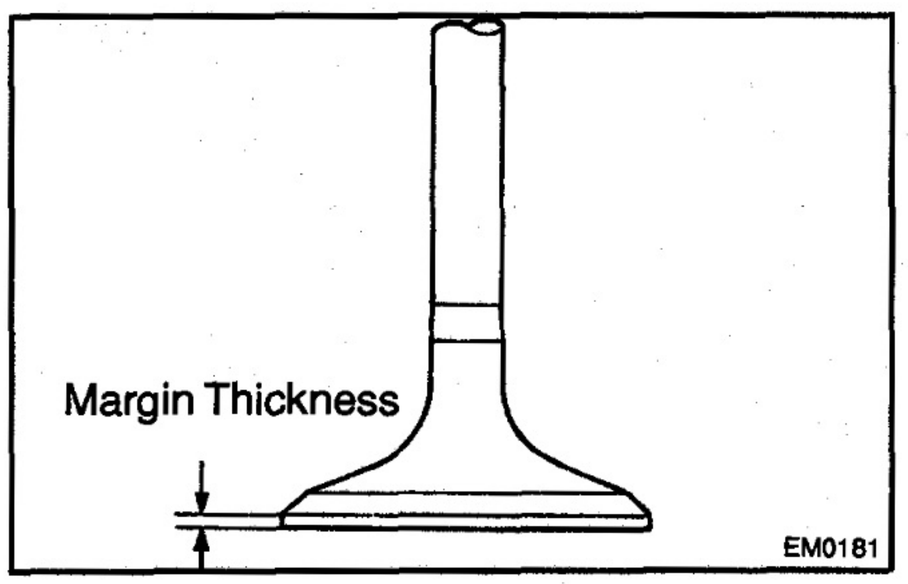

(c) Check the valve head margin thickness.

Standard margin thickness:

Intake	1.6 mm (0.063 in.)
Exhaust	1.7 mm (0.067 in.)

Minimum margin thickness:

Intake	1.1 mm (0.043 in.)
Exhaust	1.2 mm (0.047 in.)

If the margin thickness is less than minimum, replace the valve.

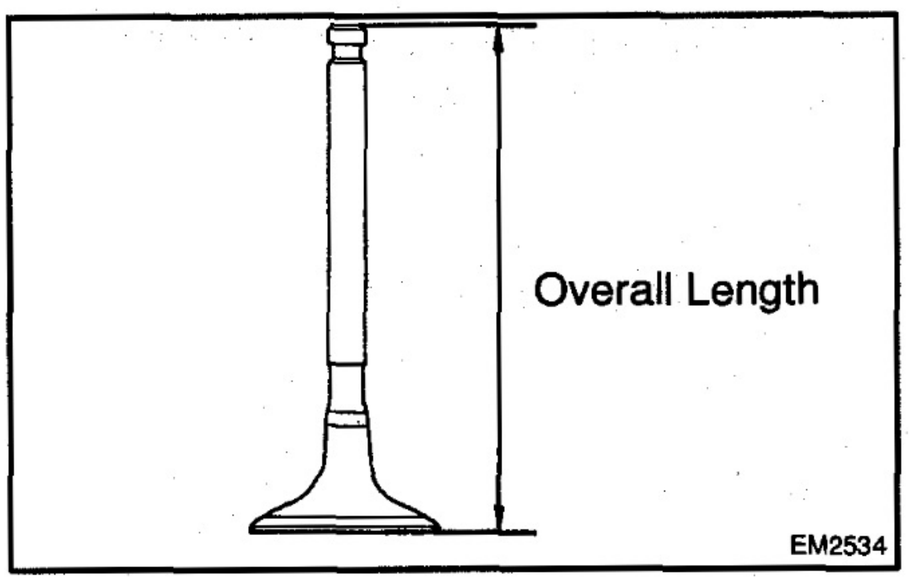

(d) Check the valve overall length.
Standard overall length:
103.29 – 103.69 mm (4.0665 – 4.0823 in.)
Minimum overall length: 102.79 mm (4.0468 in.)
If the overall length is less than minimum, replace the valve.

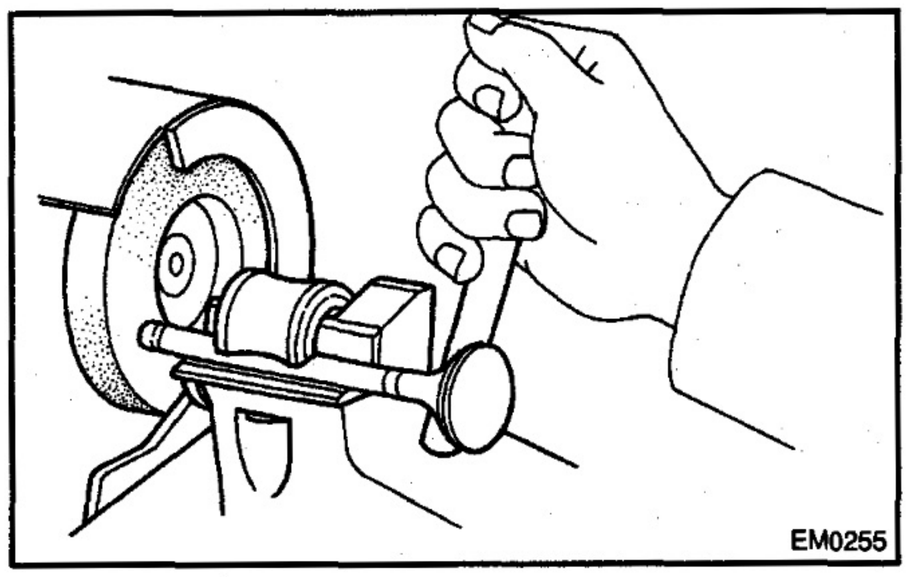

(e) Check the surface of the valve stem tip for wear.
If the valve stem tip is worn, resurface the tip with a grinder or replace the valve.
NOTICE:
Do not grind off more than minimum overall length.

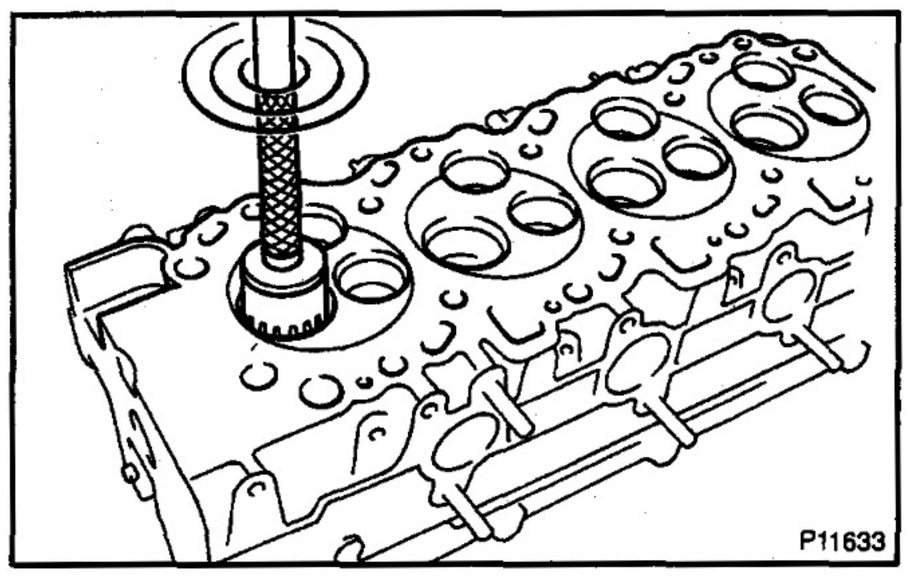

11. INSPECT AND CLEAN VALVE SEATS

(a) Using a 45° carbide cutter, resurface the valve seats. Remove only enough metal to clean the seats.

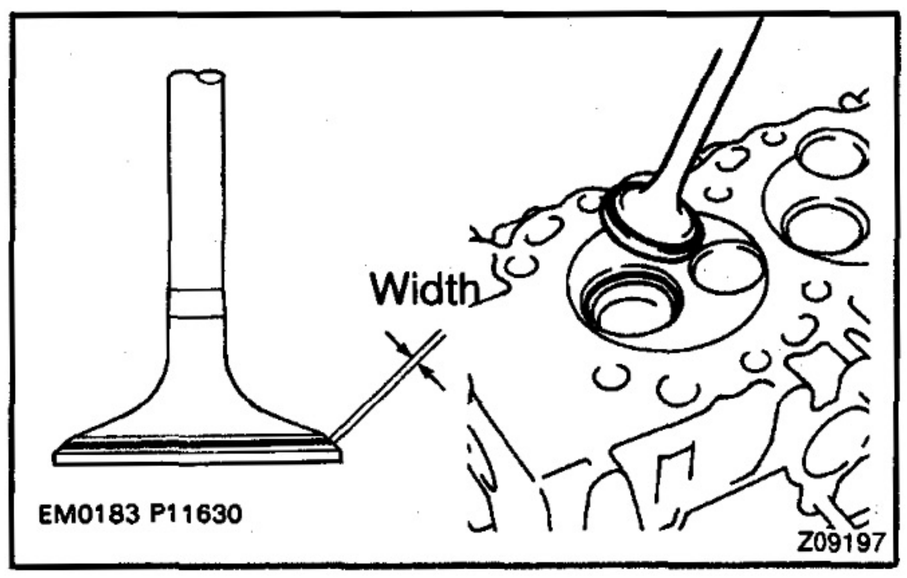

(b) Check the valve seating position.
Apply a light coat of prussian blue (or white lead) to the valve face. Lightly press the valve against the seat. Do not rotate valve.

(c) Check the valve face and seat for the following:
- If blue appears 360° around the valve face, the valve is concentric. If not, replace the valve.
- If blue appears 360° around the valve seat, the guide and face are concentric. If not, resurface the seat.
- Check that the seat contact is in the middle of the valve face with the following width:

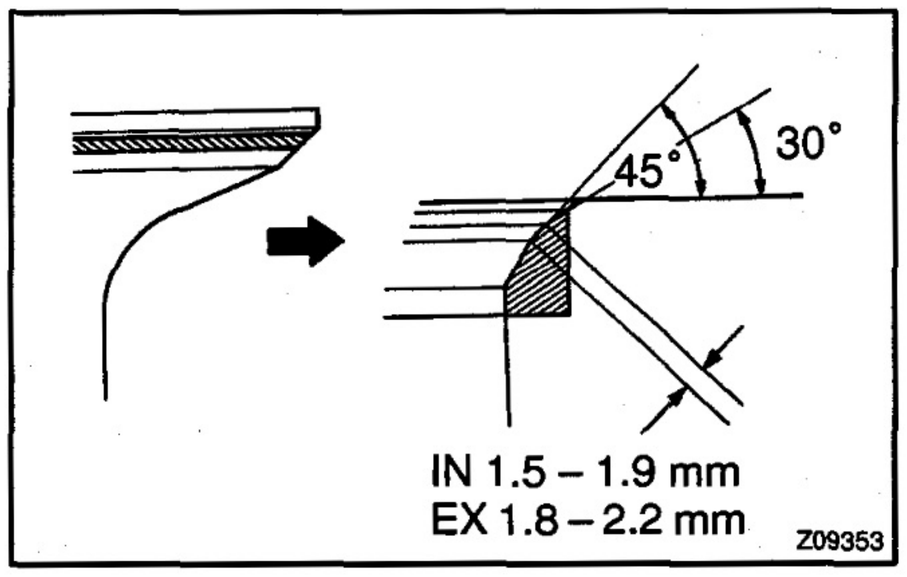

Intake	1.5 – 1.9 mm (0.059 – 0.075 in.)
Exhaust	1.8 – 2.2 mm (0.071 – 0.087 in.)

If not, correct the valve seats as follows:

(1) If the seating is too high on the valve face, use 30° and 45° cutters to correct the seat.

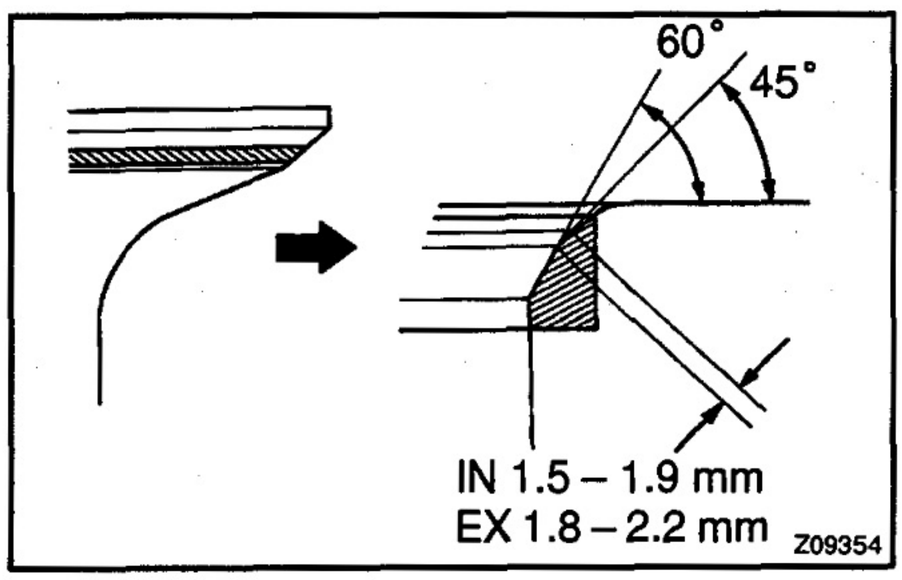

(2) If the seating is too low on the valve face, use 60° and 45° cutters to correct the seat.

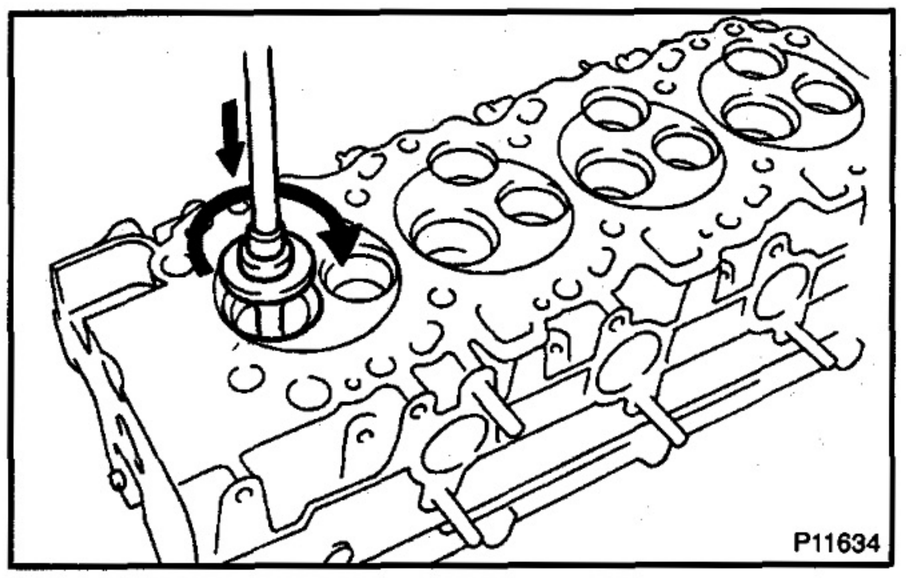

(d) Hand–lap the valve and valve seat with an abrasive compound.

(e) After hand–lapping, clean the valve and valve seat.

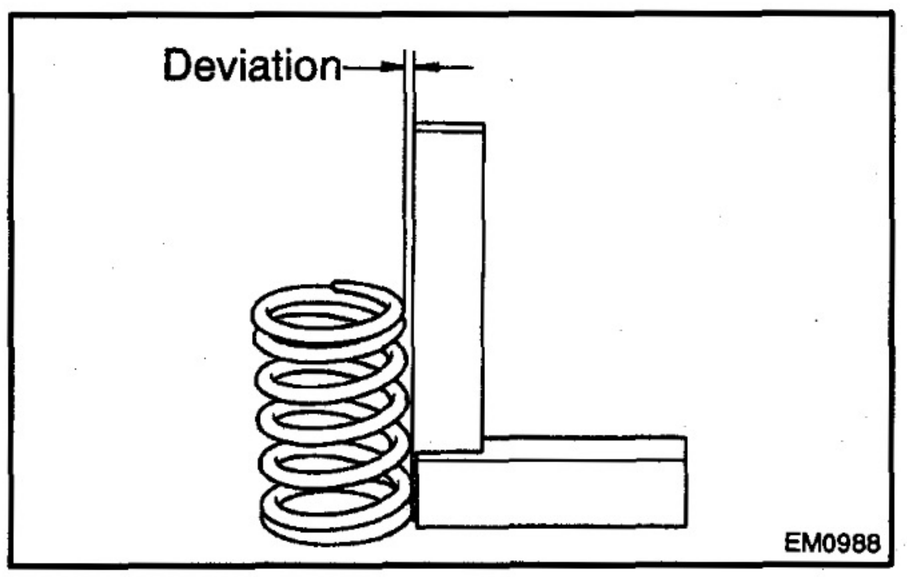

12. INSPECT VALVE SPRINGS

(a) Using a steel square, measure the deviation of the valve spring.

Maximum deviation: 2.0 mm (0.079 in.)

If the deviation is greater than maximum, replace the valve spring.

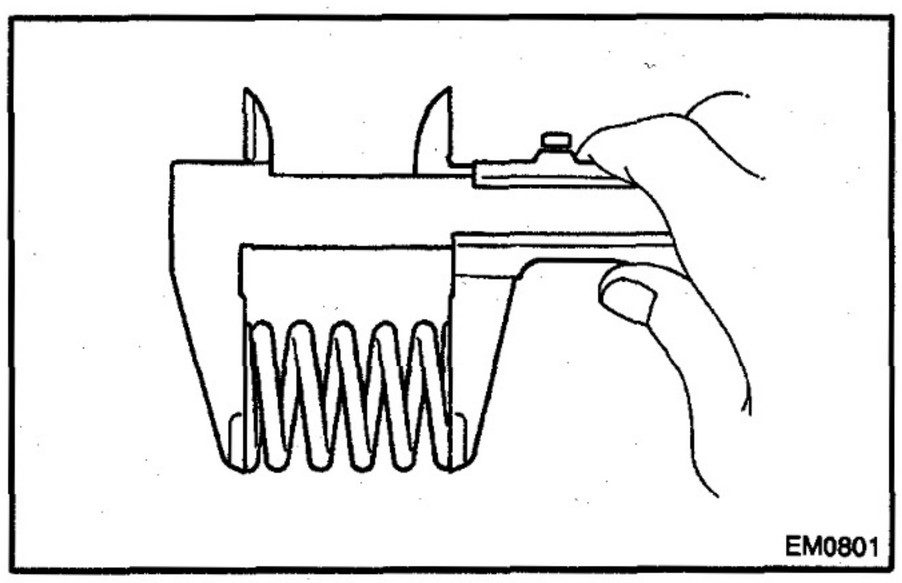

(b) Using a vernier caliper, measure the free length of the valve spring.

Free length: 48.54 mm (1.9110 in.)

If the free length is not as specified, replace the valve spring.

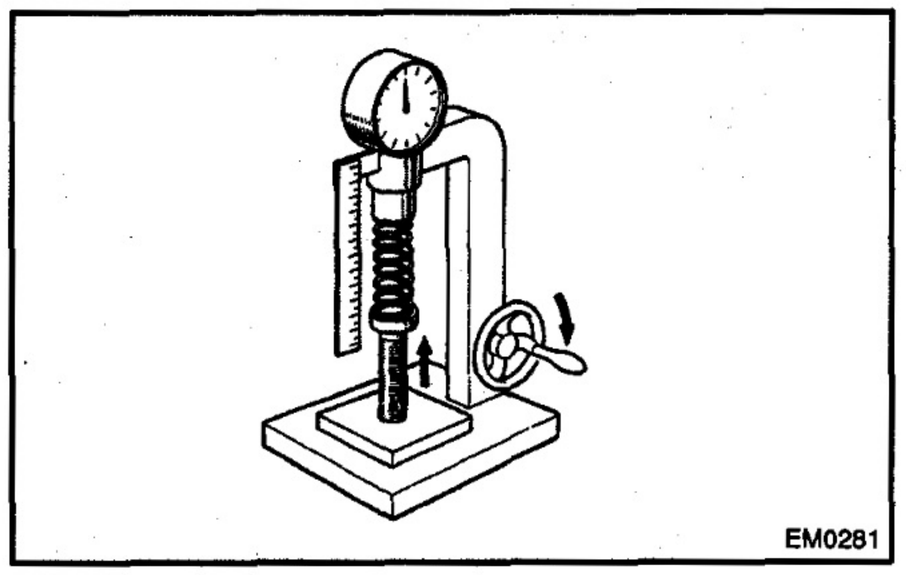

(c) Using a spring tester, measure the tension of the valve spring at the specified installed length.

Installed tension:
301 – 332 N (30.7 – 33.9 kgf, 67.7 – 74.7 lbf)
at 37.0 mm (1.457 in.)

If the installed tension is not as specified, replace the valve spring.

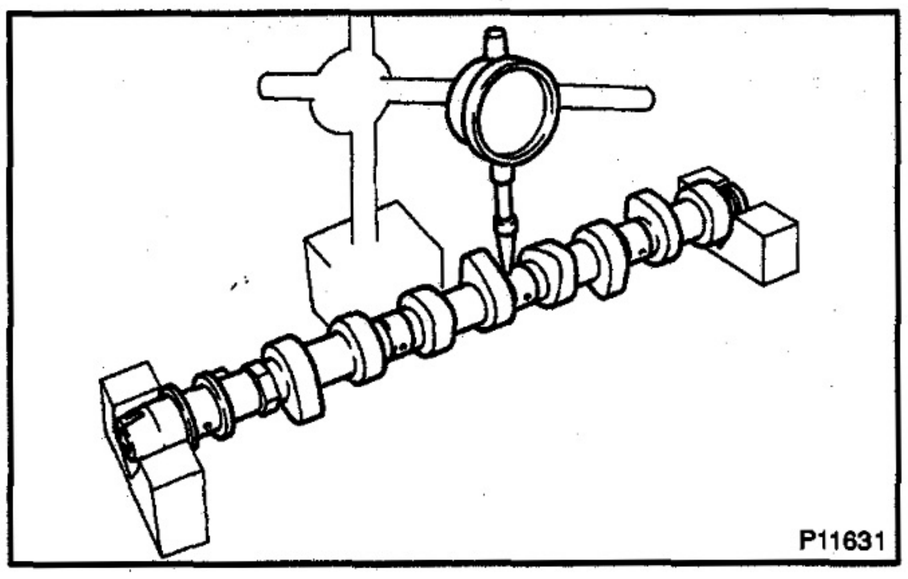

13. INSPECT CAMSHAFT FOR RUNOUT

(a) Place the camshaft on V–blocks.

(b) Using a dial indicator, measure the circle runout at the center journal.

Maximum circle runout: 0.06 mm (0.0024 in.)

If the circle runout is greater than maximum, replace the camshaft.

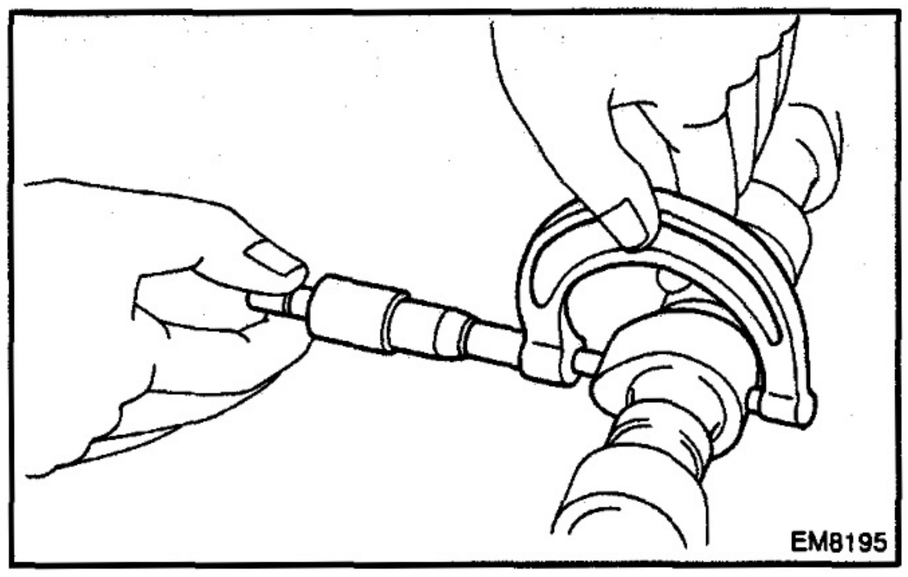

14. INSPECT CAM LOBES

Using a micrometer, measure the cam lobe height.

Standard cam lobe height:

Intake	54.810 – 54.910 mm (2.1579 – 2.1618 in.)
Exhaust	56.140 – 56.240 mm (2.2102 – 2.2142 in.)

Minimum cam lobe height:

Intake	54.39 mm (2.1413 in.)
Exhaust	55.72 mm (2.1937 in.)

If the cam lobe height is less than minimum, replace the camshaft.

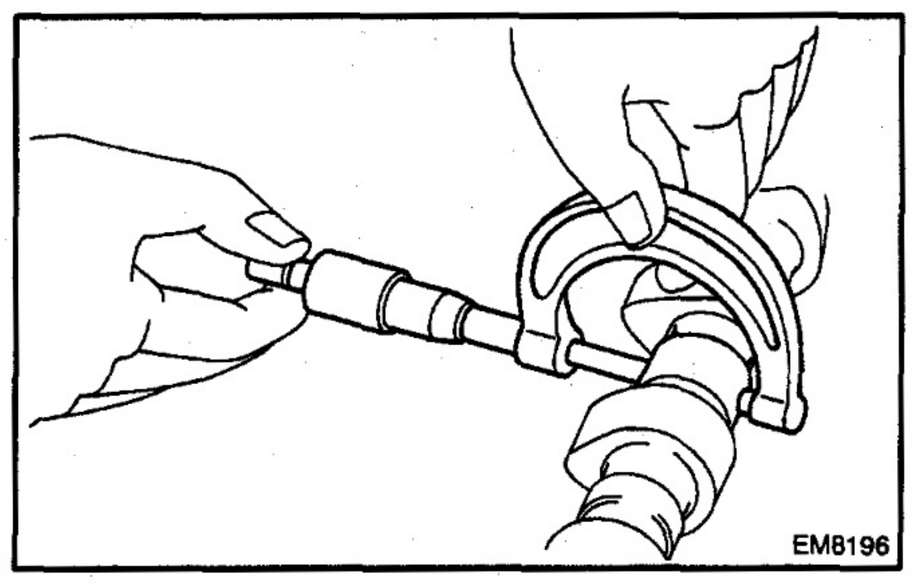

15. INSPECT CAMSHAFT JOURNALS

Using a micrometer, measure the journal diameter.

Journal diameter:

27.969 – 27.985 mm (1.1011 – 1.1018 in.)

If the journal diameter is not as specified, check the oil clearance.

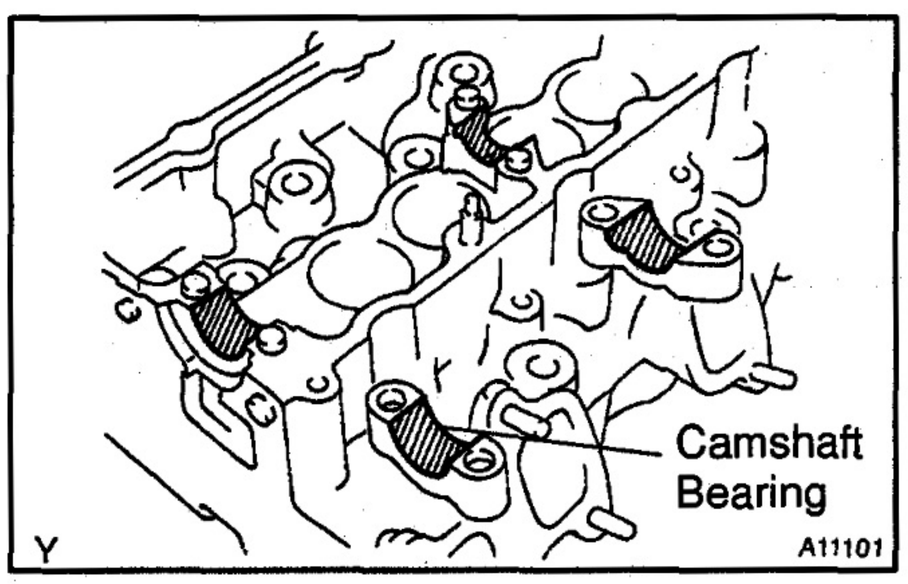

16. INSPECT CAMSHAFT BEARINGS

Check the bearings for flaking and scoring.

If the bearings are damaged, replace the bearing caps and cylinder head as a set.

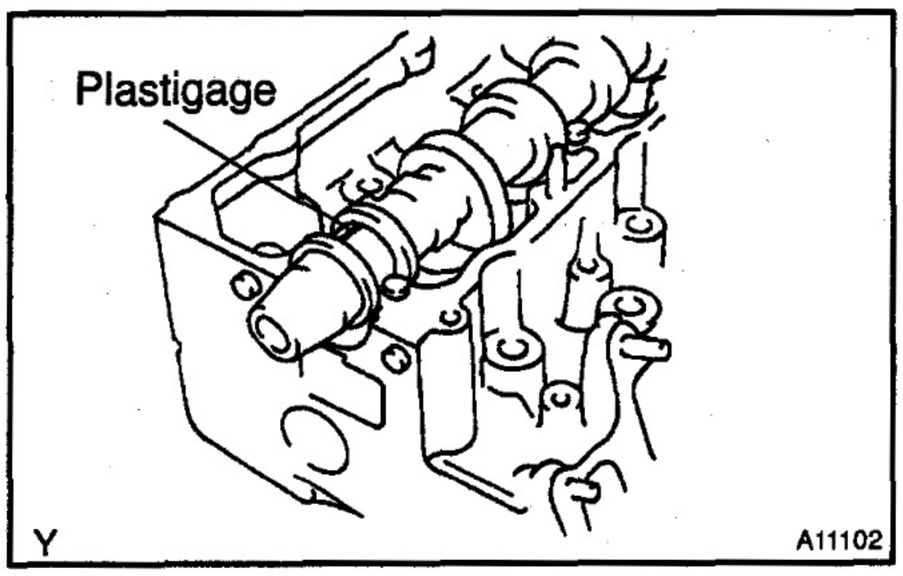

17. INSPECT CAMSHAFT JOURNAL OIL CLEARANCE

(a) Clean the bearing caps and camshaft journals.

(b) Place the camshaft on the cylinder head.

(c) Lay a strip of Plastigage across each of the camshaft journals.

(d) Install the bearing caps. (See page EM–64)
Torque: 18 N·m (185 kgf·cm, 13 ft·lbf)

NOTICE:
Do not turn the camshaft.

(e) Remove the bearing caps.

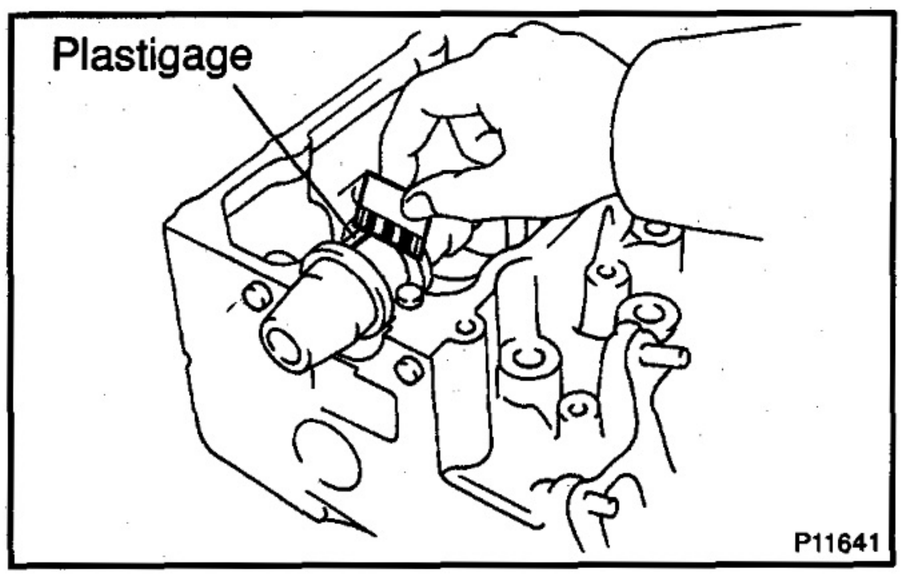

(f) Measure the Plastigage at its widest point.
Standard oil clearance:
0.025 – 0.062 mm (0.0010 – 0.0024 in.)
Maximum oil clearance: 0.10 mm (0.039 in.)

If the oil clearance is greater than maximum, replace the camshaft. If necessary, replace the bearing caps and cylinder head as a set.

(g) Completely remove the Plastigage.

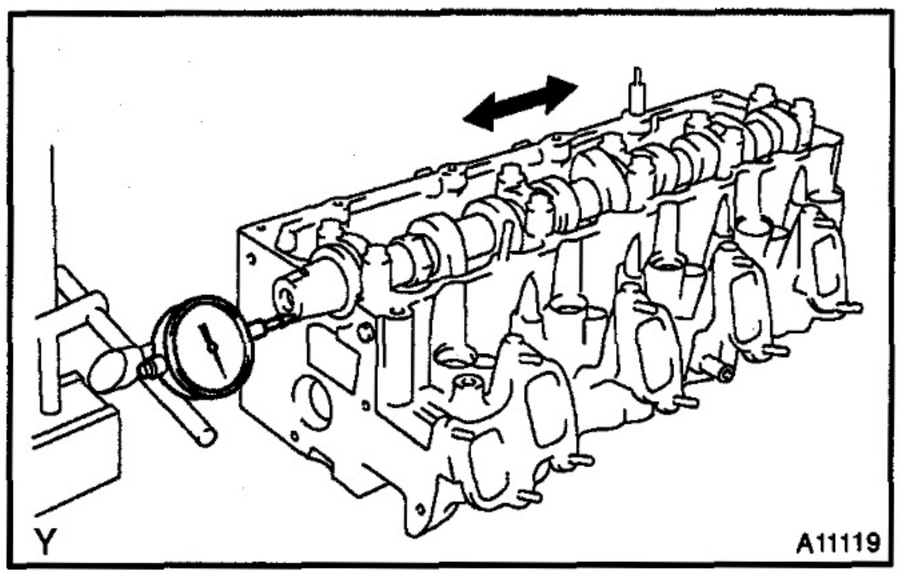

18. INSPECT CAMSHAFT THRUST CLEARANCE

(a) Install the camshaft. (See page EM–64)

(b) Using a dial indicator, measure the thrust clearance while moving the camshaft back and forth.
Standard thrust clearance:
0.08 – 0.18 mm (0.0031 – 0.0071 in.)
Maximum thrust clearance: 0.25 mm (0.0098 in.)

If the thrust clearance is greater than maximum, replace the camshaft. If necessary, replace the bearing caps and cylinder head as a set.

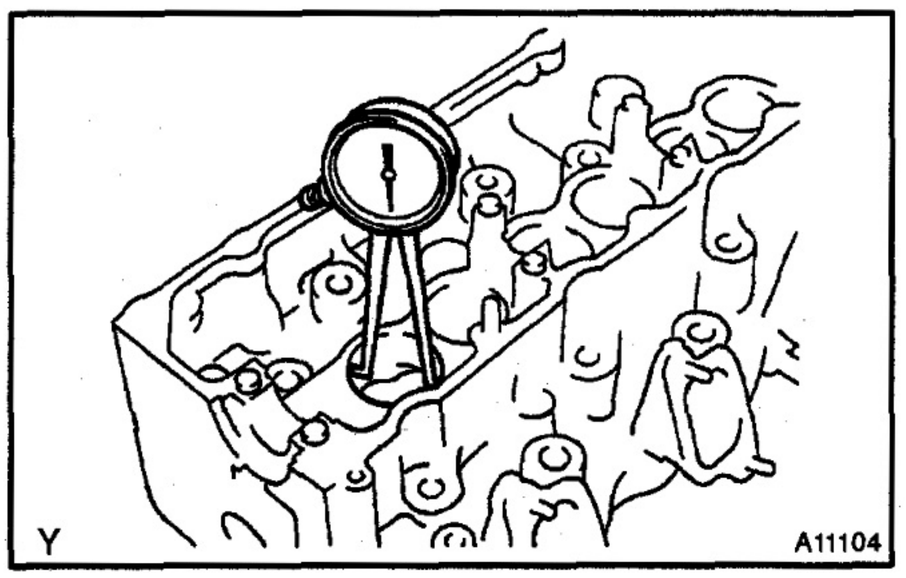

19. INSPECT VALVE LIFTERS AND LIFTER BORES

(a) Using a caliper gauge, measure the lifter bore diameter of the cylinder head.
Lifter bore diameter:
40.930 – 40.950 mm (1.6114 – 1.6122 in.)

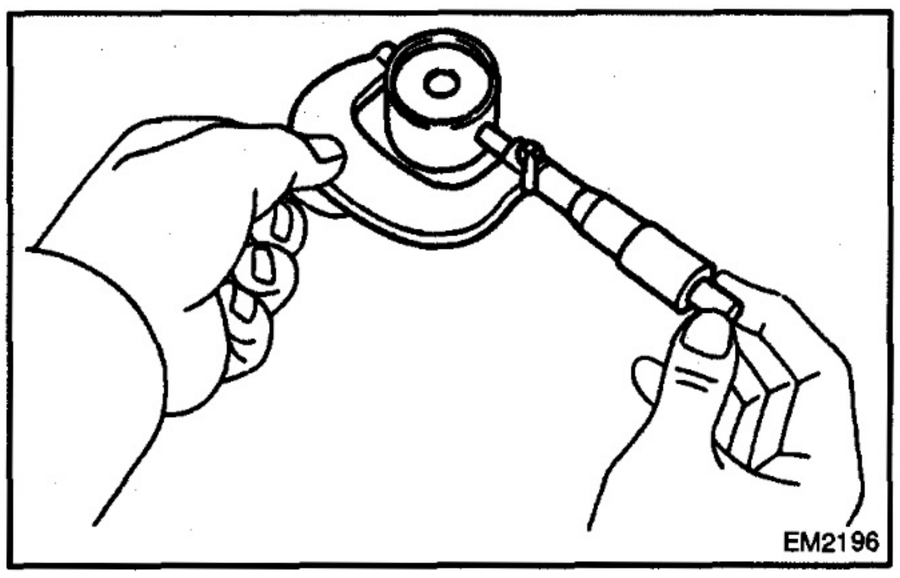

(b) Using a micrometer, measure the lifter diameter.
Lifter diameter:
40.892 – 40.902 mm (1.6099 – 1.6103 in.)

(c) Subtract the lifter diameter measurement from the lifter bore diameter measurement.
Standard oil clearance:
0.038 – 0.063 mm (0.0015 – 0.0025 in.)
Maximum oil clearance: 0.08 mm (0.0031 in.)

If the oil clearance is greater than maximum, replace the lifter. If necessary, replace the cylinder head.

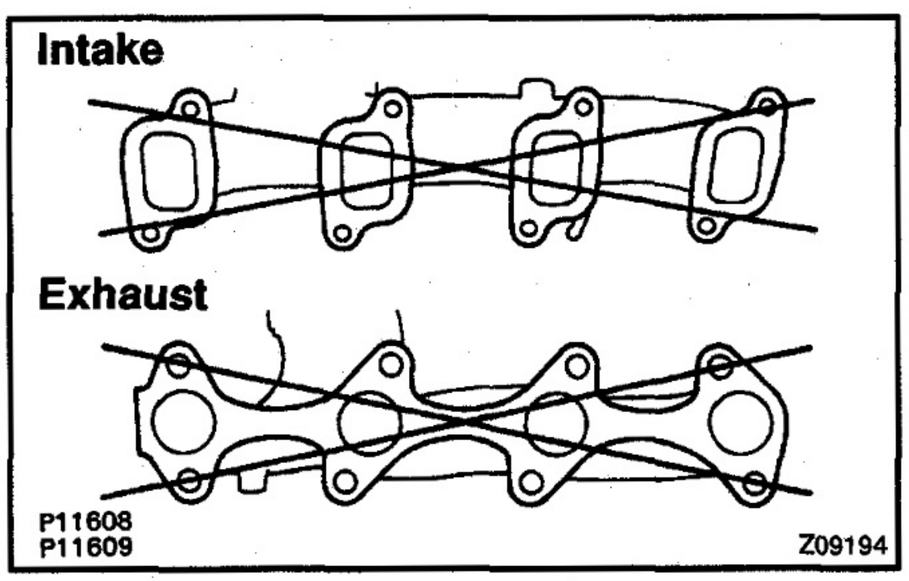

20. INSPECT INTAKE AND EXHAUST MANIFOLDS

Using a precision straight edge and feeler gauge, measure the surface contacting the cylinder head for warpage.

Maximum warpage: 0.40 mm (0.0157 in.)

If warpage is greater than maximum, replace the manifold.

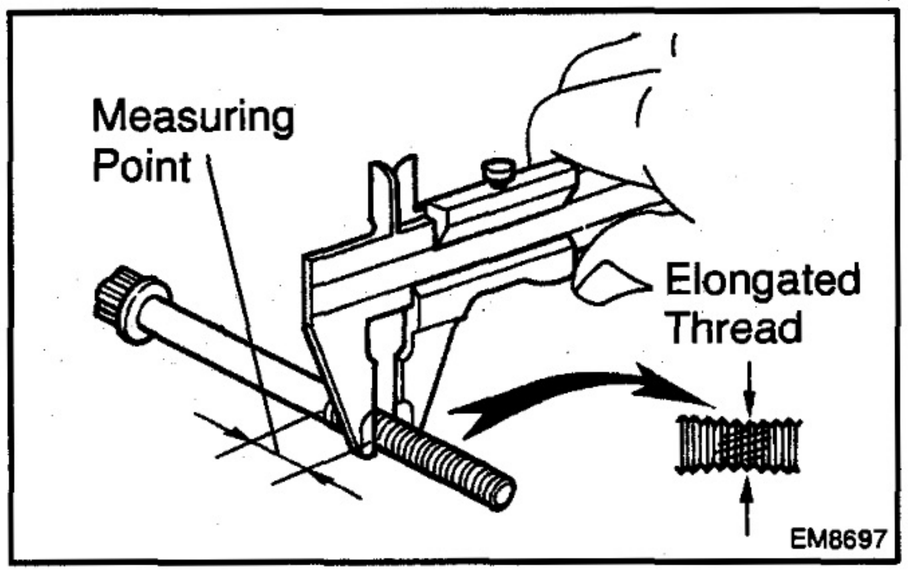

21. INSPECT CYLINDER HEAD BOLTS

Using vernier calipers, measure the minimum outer diameter of the compressed thread at the measuring point.

Standard outer diameter:
11.8 – 12.0 mm (0.465 – 0.472 in.)
Minimum outer diameter: 11.6 mm (0.457 in.)

If the outer diameter is less than minimum, replace the bolt.

EM15G–01

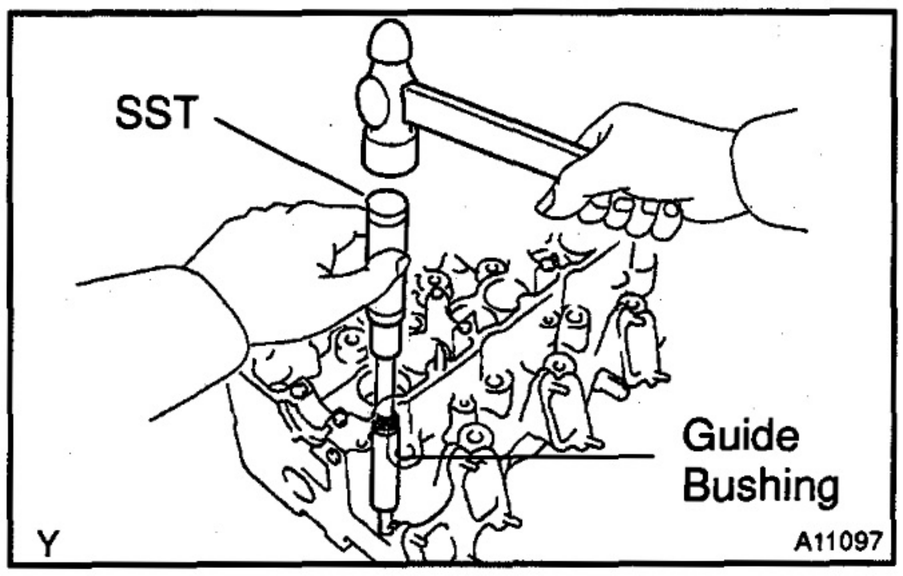

REPLACEMENT

1. REPLACE VALVE GUIDE BUSHINGS

(a) Using SST and a hammer, tap out the guide bushing.
SST 09201–60011

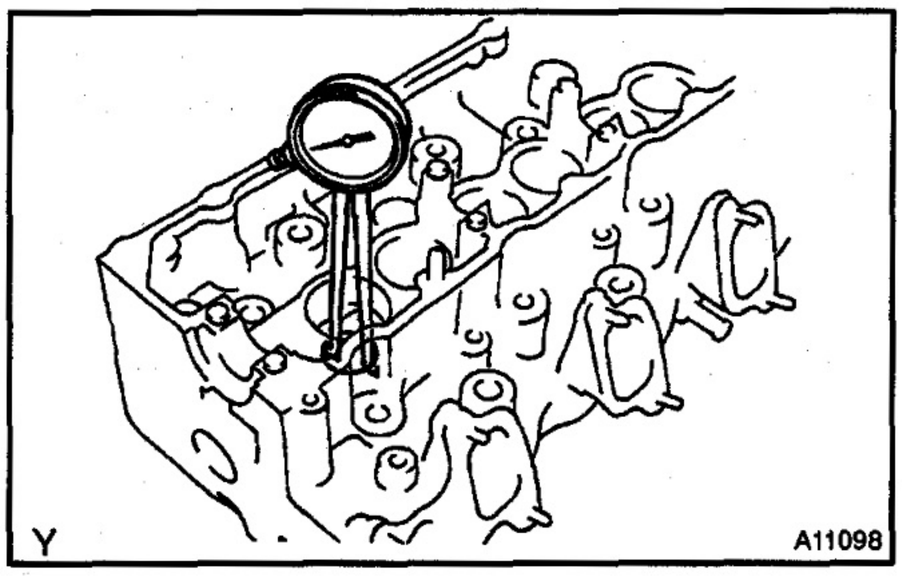

(b) Using a caliper gauge, measure the bushing bore diameter of cylinder head.

Both intake and exhaust

Bushing bore diameter mm (in.)	Bushing size
13.000 – 13.027 (0.5118 – 0.5129)	Use SST
13.050 – 13.077 (0.5134 – 0.5148)	Use O/S 0.05

V03700

(c) Select a new guide bushing (STD or O/S 0.05).
If the bushing bore diameter of the cylinder head is greater than 13.027 mm (0.5129 in.), machine the bushing bore to the following dimension:

Rebored cylinder head bushing bore dimension:
13.050 – 13.077 mm (0.5138 – 0.5148 in.)

If the bushing bore diameter of the cylinder head is greater than 13.077 mm (0.5148 in.), replace the cylinder head.

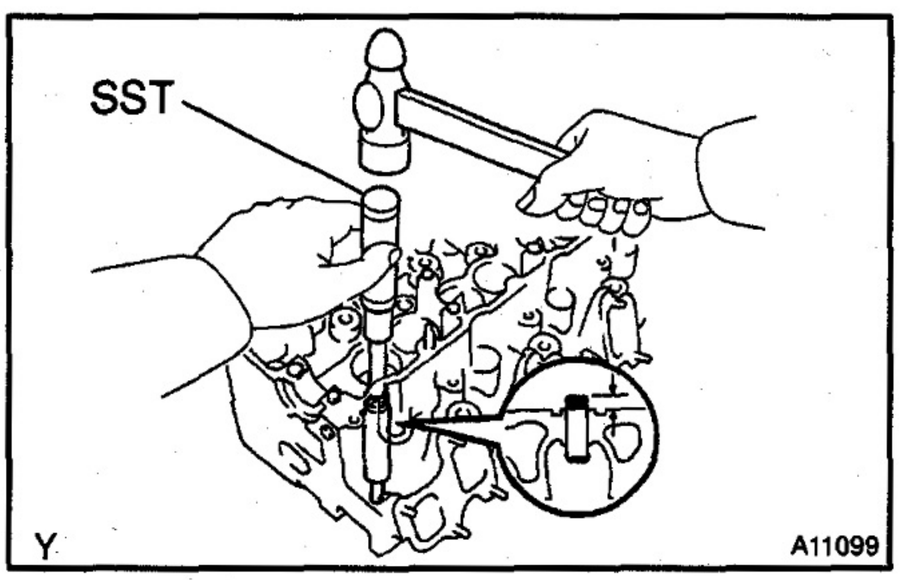

(d) Using SST and a hammer, tap in a new guide bushing until there is 12.8 – 13.2 mm (0.504 – 0.520 in.) protruding from the cylinder head.
SST 09201–60011

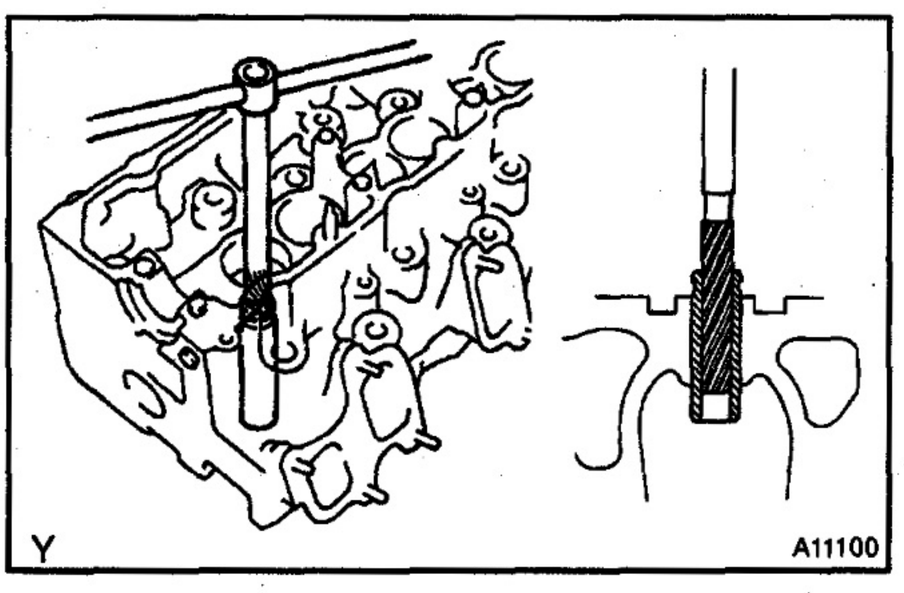

(e) Using a sharp 8 mm reamer, ream the guide bushing to obtain the standard specified clearance (See page EM–51) between the guide bushing and valve stem.

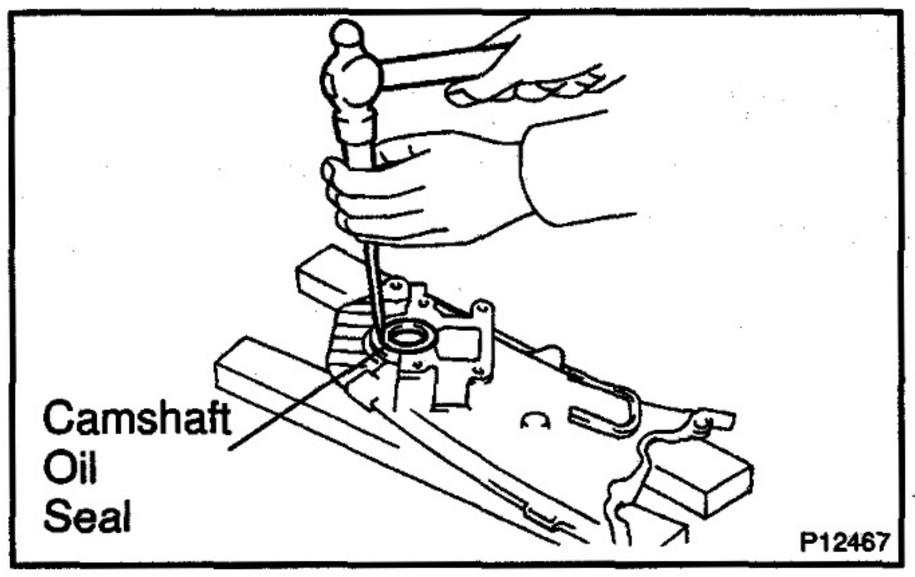

2. REPLACE CAMSHAFT OIL SEAL

HINT:

There are 2 methods (a and b) to replace the oil seal which are as follows:

(a) If the camshaft oil seal retainer is removed from the cylinder head:

(1) Using a screwdriver, tap out the oil seal.

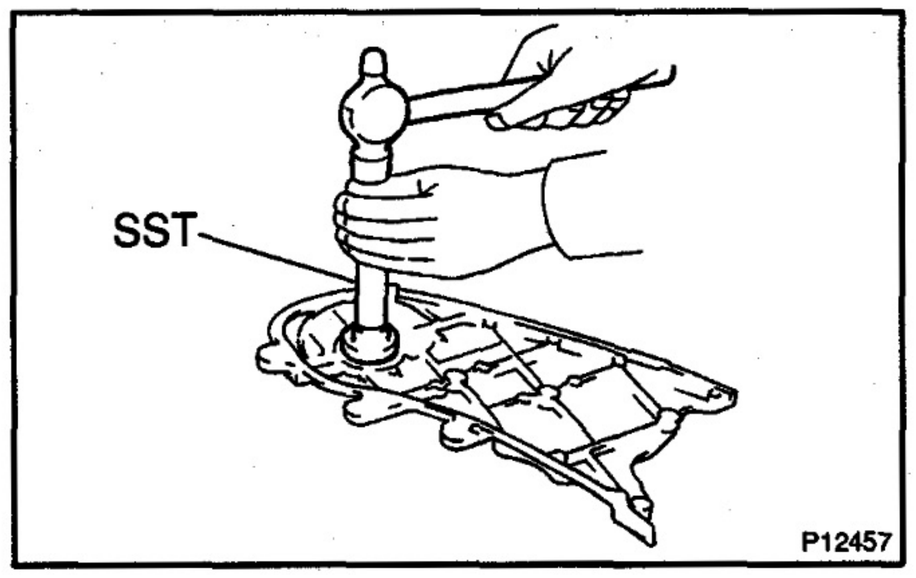

(2) Using SST and a hammer, tap in a new seal until its surface is flush with the oil seal retainer edge.

SST 09223–46011

(3) Apply MP grease to the oil seal lip.

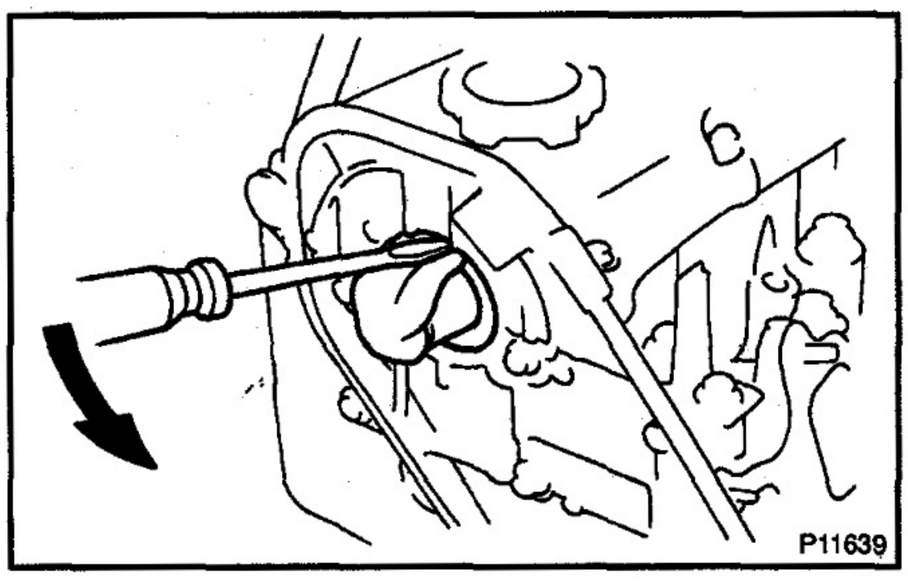

(b) If the camshaft oil seal retainer is installed to the cylinder head:

(1) Using a screwdriver, pry out the oil seal.

NOTICE:

Be careful not to damage the camshaft. Tape the screwdriver tip.

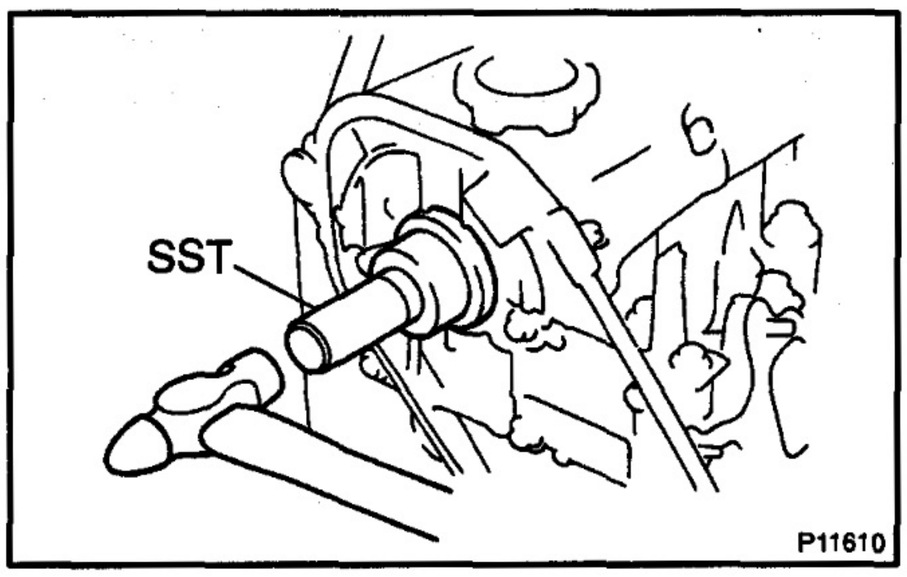

(2) Apply MP grease to a new oil seal lip.

(3) Using SST and a hammer, tap in the oil seal until its surface is flush with the oil seal retainer edge.

SST 09223–46011

EM15H–01

REASSEMBLY

HINT:

- Thoroughly clean all parts to be assembled.
- Before installing the parts, apply fresh engine oil to all sliding and rotating surfaces.
- Replace all gaskets and oil seals with new ones.

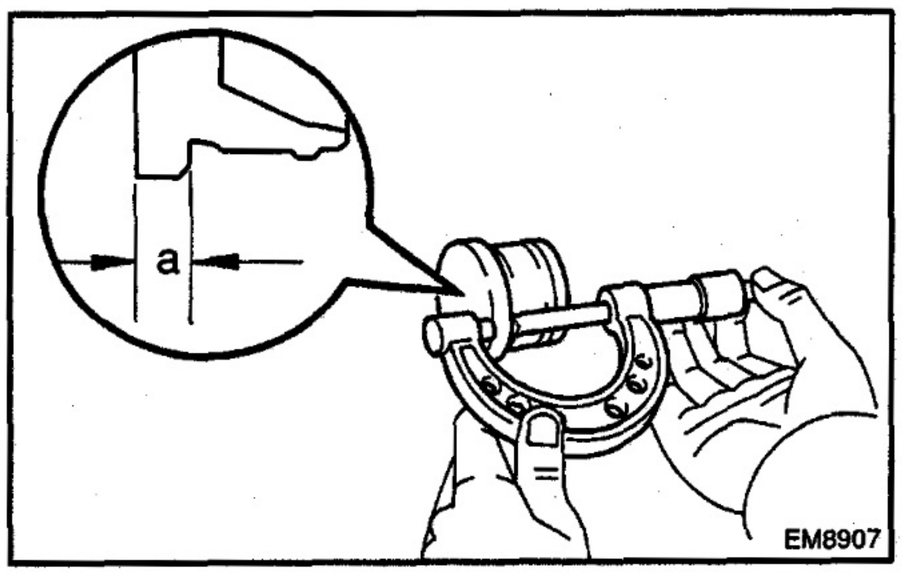

1. SELECT COMBINATION CHAMBER SHIM

(a) If using new combustion chamber:

(1) Using a micrometer, measure the thickness of each used combustion chamber at the position shown in the illustration.

(2) Measure the thickness of the new combustion chamber the same way as in (a).

(3) From the thickness of the new chamber subtract the thickness of the used chamber in order to select the appropriate shim thickness from the table below.

Difference in chamber thickness
= New chamber thickness – Used chamber thickness
mm (in.)

Difference in chamber thickness mm (in.)	Shim thickness required mm (in.)
Plus 0.02 – Minus 0.02 (Plus 0.0008 – Minus 0.0008)	No shim required
Minus 0.03 (Minus 0.0012)	0.05 (0.0020) or no shim required
Minus 0.04 – Minus 0.07 (Minus 0.0016 – Minus 0.0028)	0.05 (0.0020)
Minus 0.08 (Minus 0.0031)	0.05 (0.0020) or 0.10 (0.0039)
Minus 0.09 – Minus 0.12 (Minus 0.0035 – Minus 0.0047)	0.10 (0.0039)

NOTICE:

Do not use two 0.05 mm (0.0020 in.) shims instead of one 0.10 mm (0.0039 in.) shim.

(b) If reusing combustion chamber:
Install the combustion chamber back in its original position.

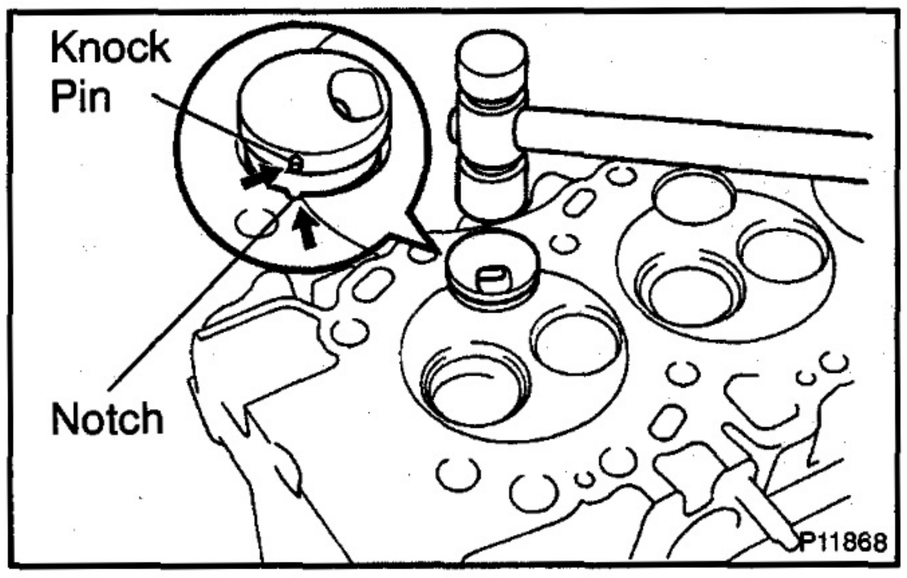

2. INSTALL COMBUSTION CHAMBERS

(a) Align the knock pin of the combustion chamber with the notch of the cylinder head.

(b) Using a plastic–faced hammer, tap in the combustion chamber.

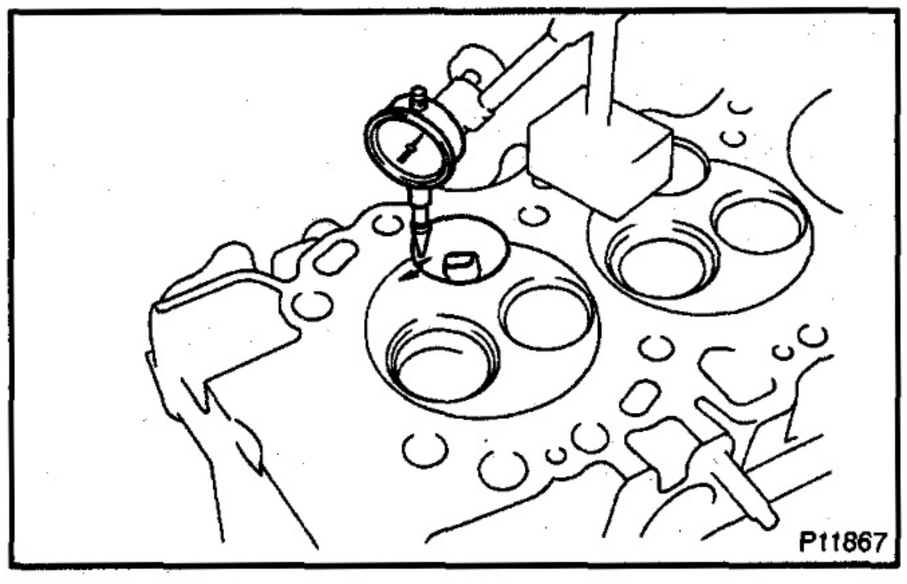

(c) Using a dial indicator, measure the protrusion of the combustion chamber from the cylinder head.

Protrusion:
Minus 0.03 – Plus 0.02 mm
(Minus 0.0012 – Plus 0.0008 in.)

If the protrusion is less than specified, adjust with shims.

Shim thickness:
0.05 mm (0.0020 in.)
0.10 mm (0.0039 in.)

If the protrusion is greater than specification, replace the chamber and recheck the protrusion.

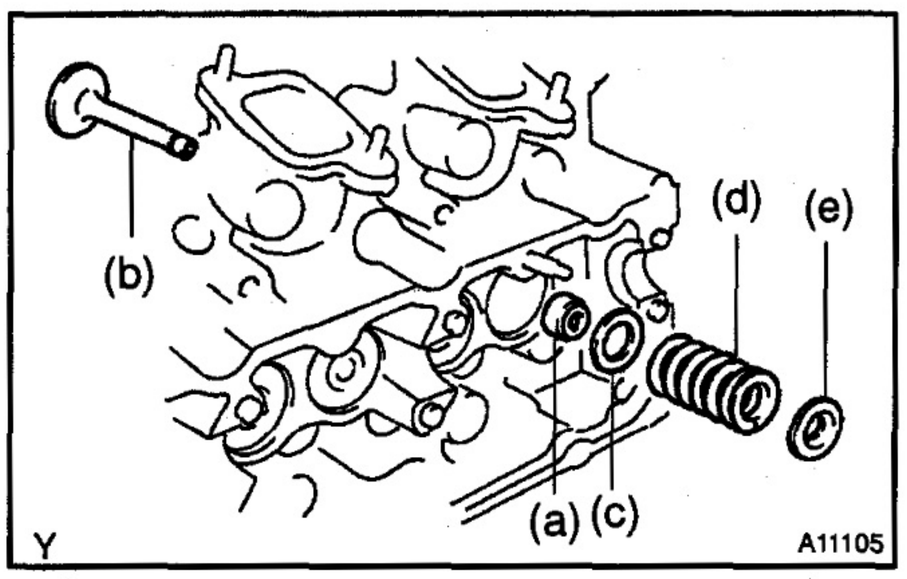

3. INSTALL VALVES

(a) Install the oil seal.

(b) Install the valve.

(c) Install the spring seat.

(d) Install the valve spring.

(e) Install the spring retainer.

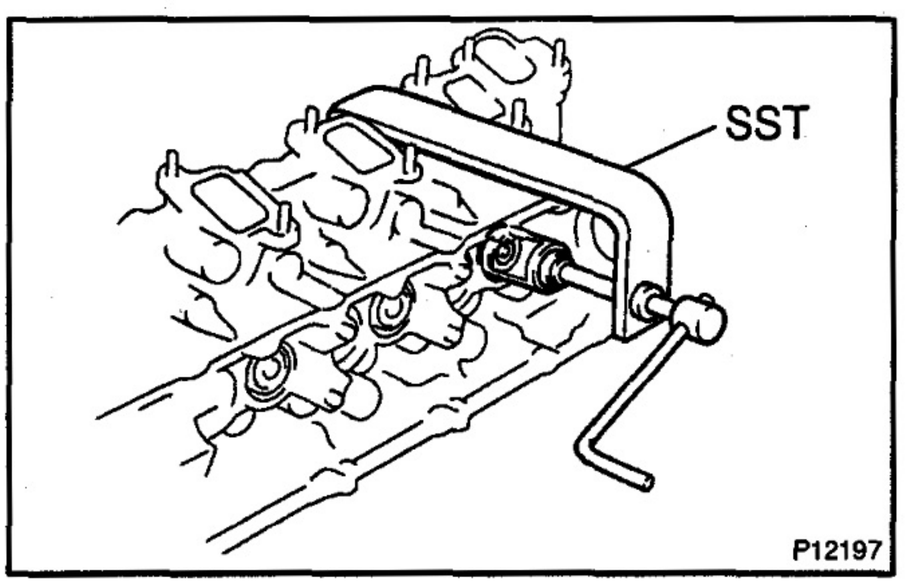

(f) Using SST, compress the valve spring and place the 2 keepers around the valve stem.

SST 09202–70020 (09202–00010)

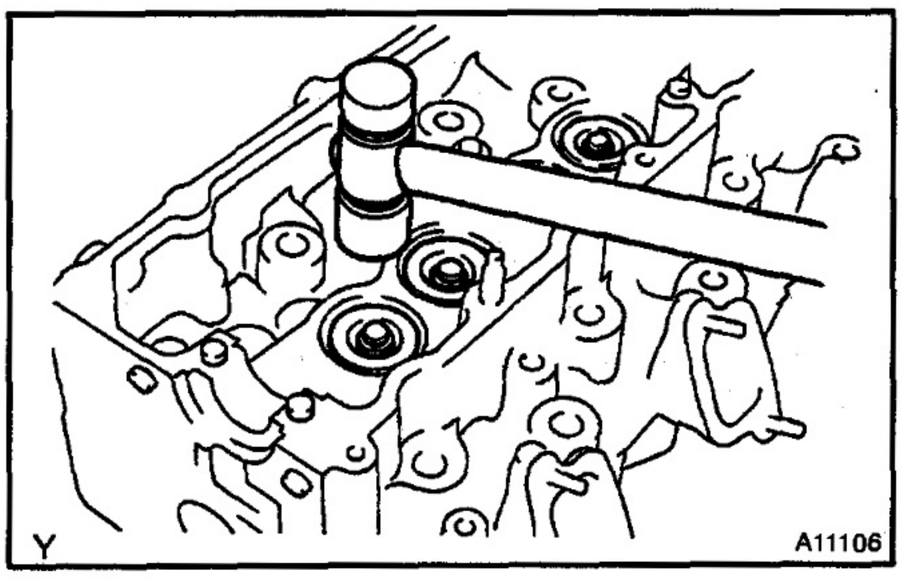

(g) Using a plastic–faced hammer, lightly tap the valve stem tip to assure a proper fit.

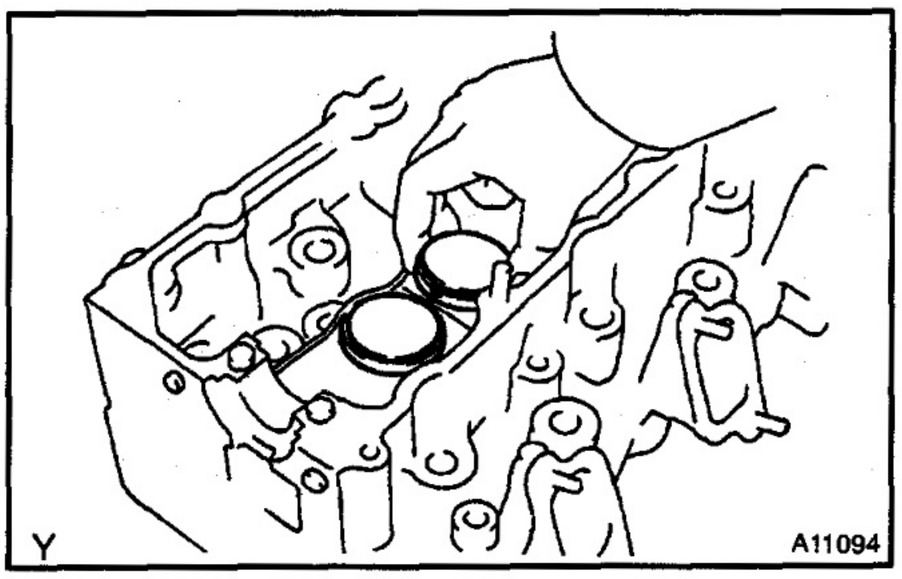

4. INSTALL VALVE LIFTERS AND SHIMS

(a) Install the valve lifter and shim.

(b) Check that the valve lifter rotates smoothly by hand.

5. INSTALL WATER TEMPERATURE SENDER GAUGE

6. INSTALL WIRE CLAMP BRACKET

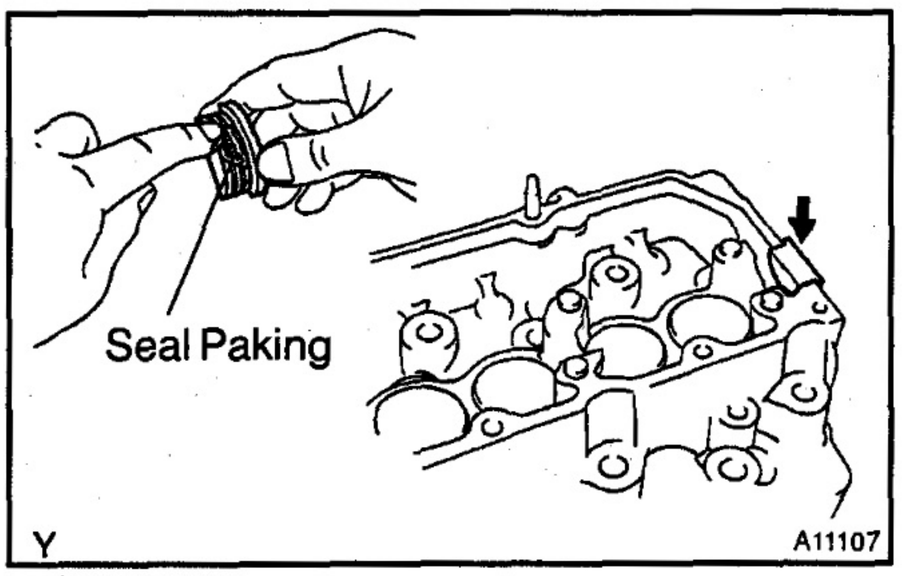

7. INSTALL SEMI CIRCULAR PLUG

(a) Remove any old packing (FIPG) material.

(b) Apply seal packing to the semi circular plug as shown.
Seal packing: Part No. 08826–00080 or equivalent

(c) Install the half circular plug to the cylinder head.

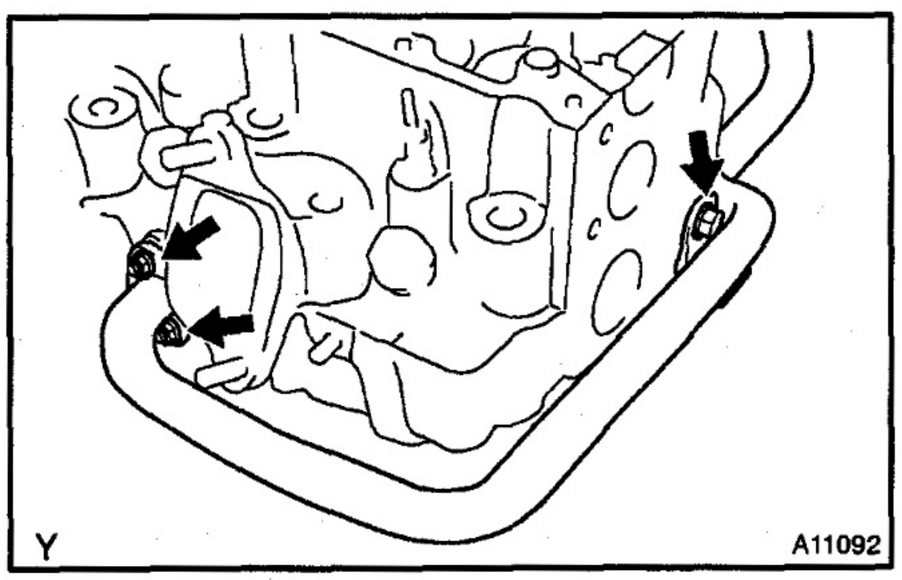

8. INSTALL HEATER WATER INLET PIPE

Install a new gasket, the heater water inlet pipe with the 2 nuts and bolt.

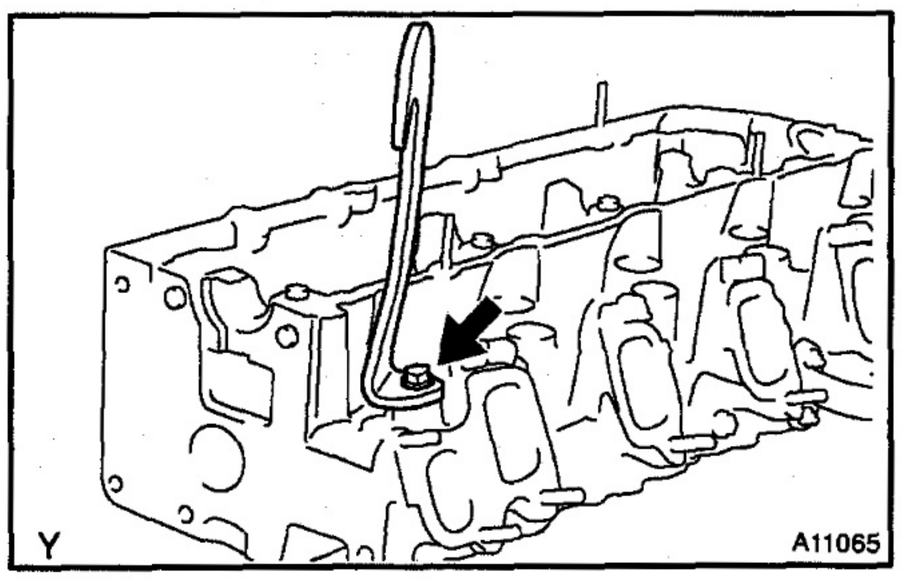

9. INSTALL FRONT ENGINE HANGER

Install the front engine hanger to the cylinder head.

Torque: 41 N·m (420 kgf·cm, 30 ft·lbf)

EM15I–01

INSTALLATION

1. CHECK PISTON PROTRUSION AND SELECT CYLINDER HEAD GASKET

(a) Check the piston protrusions for each cylinder.

(1) Clean the cylinder block with solvent.

(2) Sent the piston of the cylinder to be measured to slightly before TDC.

(3) Place a dial indicator on the cylinder block, and set the dial indicator at 0 mm (0 in.).

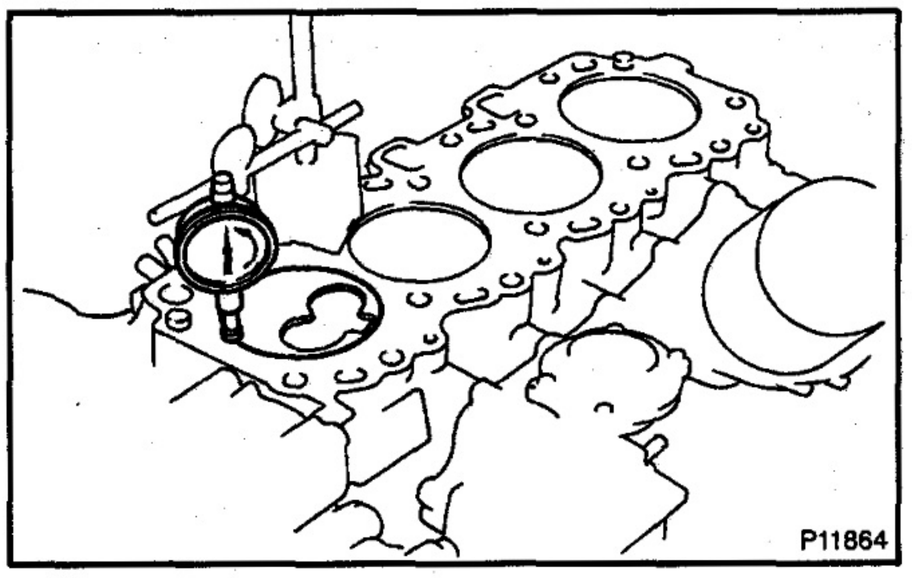

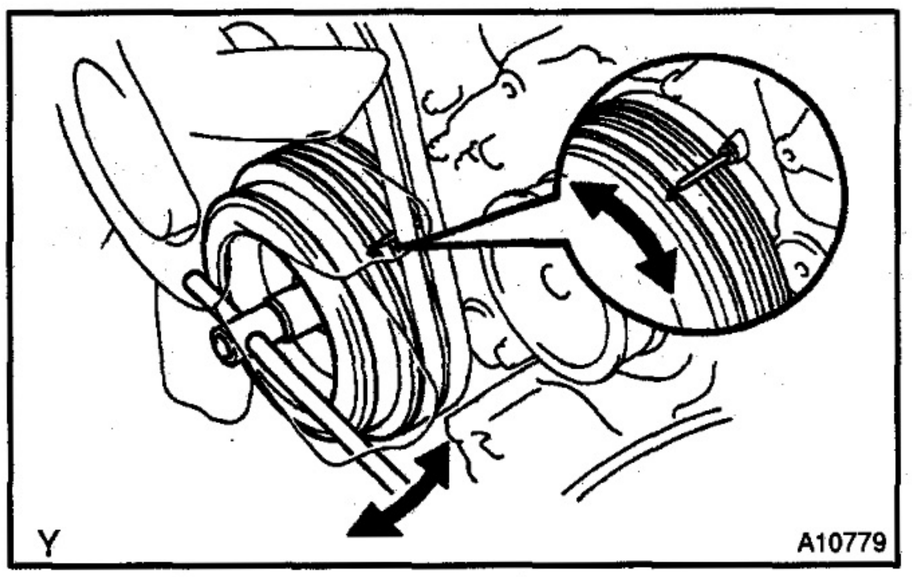

HINT:

- Use a dial indicator measuring tip a shown in the illustration.
- Make sure that the measuring tip is square to the cylinder block gasket surface and piston head when taking the measurements.

(4) Find where the piston head protrudes most by slowly turning the crankshaft clockwise and counterclockwise.

(5) Measure each cylinder at 2 places as shown in the illustration, making a total of 8 measurements.

(6) For the piston protrusion value of each cylinder, use the average of the 2 measurements of each cylinder.

Protrusion: 0.08 – 0.33 mm (0.0031 – 0.0130 in.)

(When removing piston and connecting rod assembly)

If the protrusion is not as specified, remove the piston and connecting rod assembly and reinstall it.

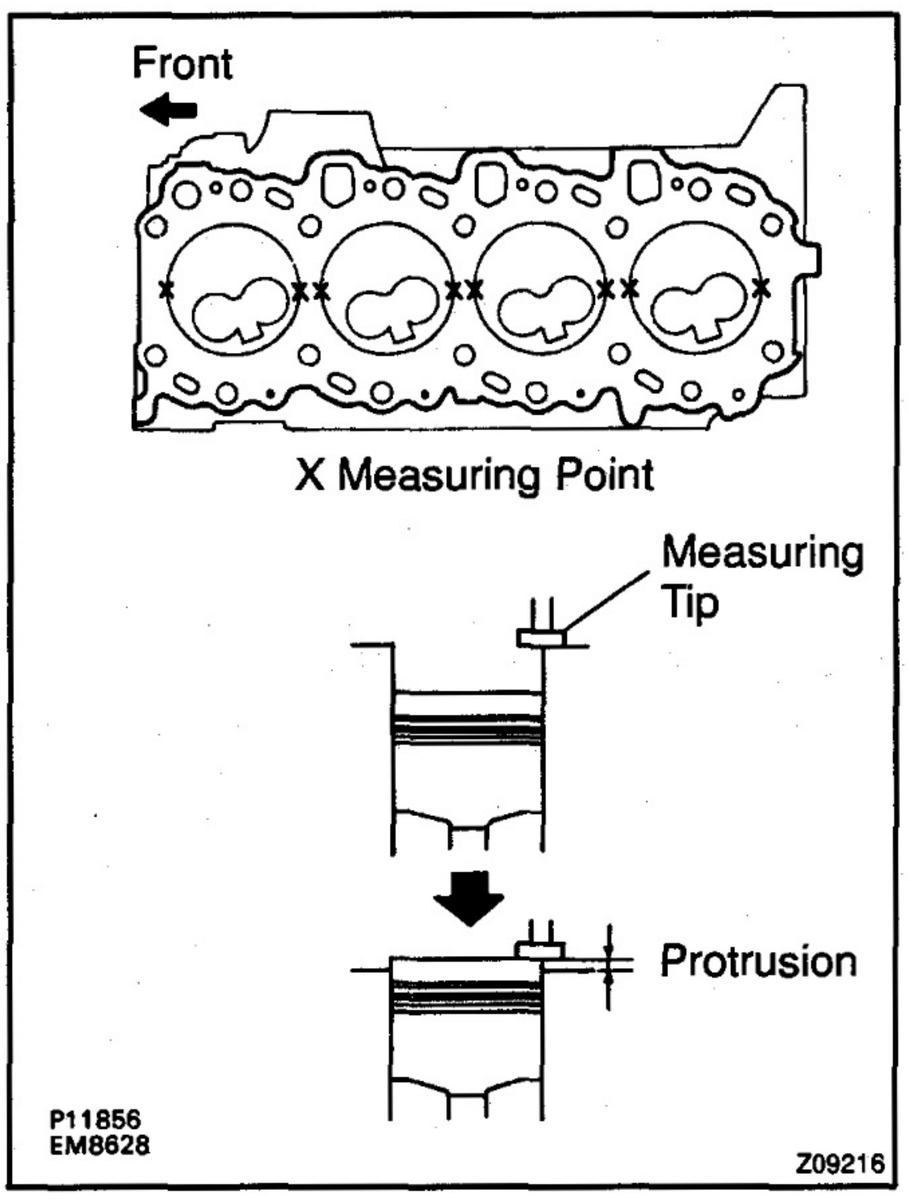

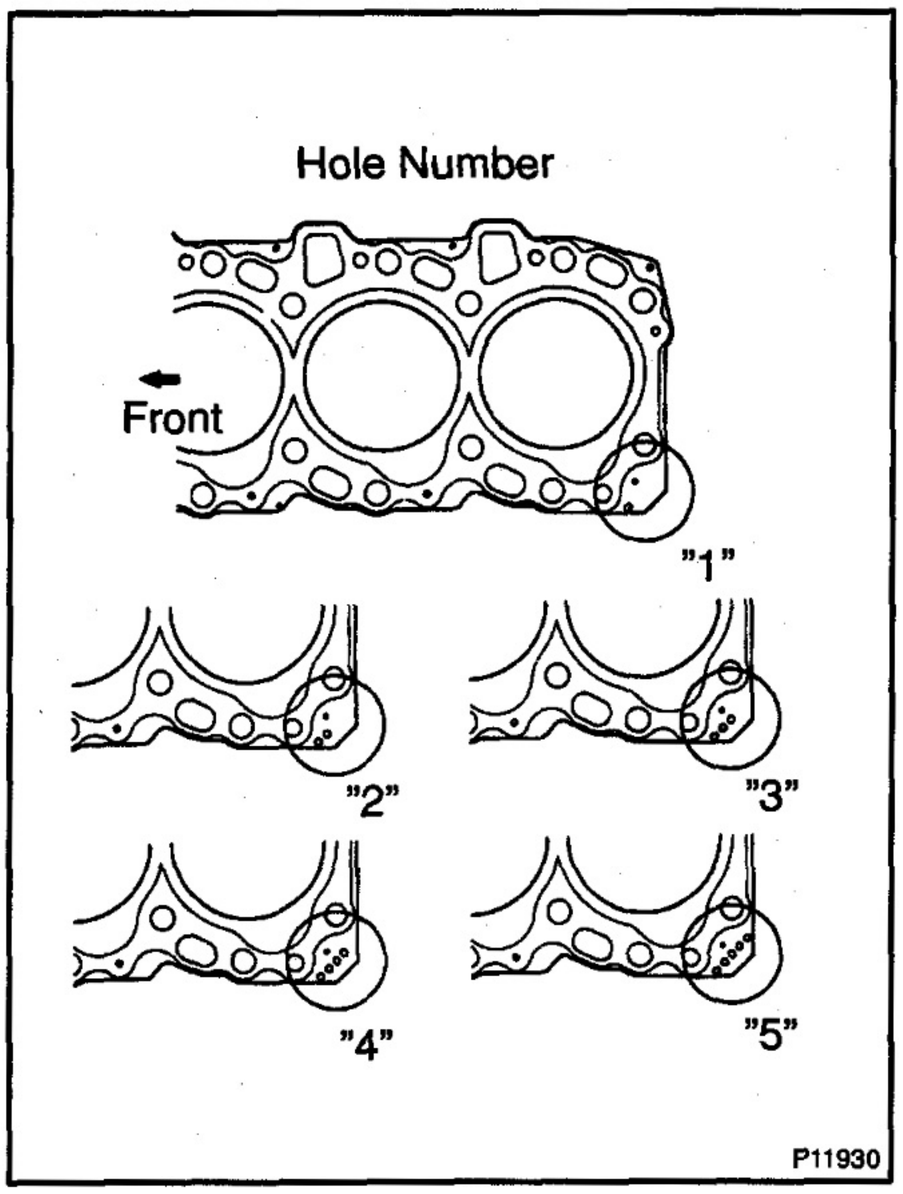

(b) Select a new cylinder head gasket.

HINT:

There are 5 types of cylinder head gasket (hole number 1 to 5) installed at factory, but only 3 types for supply parts (hole number "1", "3" and "5"), so when replacing the gasket select from one of 3 types above.

Installed cylinder head gasket thickness:

Hole number "1"	0.80 – 0.90 mm (0.0315 – 0.0354 in.)
Hole number "3"	0.90 – 1.00 mm (0.0354 – 0.0394 in.)
Hole number "5"	1.00 – 1.10 mm (0.0394 – 0.0433 in.)

Select the largest piston protrusion value from the measurements made, then select the appropriate cylinder head gasket according to the table below.

Piston protrusion mm (in.)	Gasket size
0.08 – 0.12 (0.0031 – 0.0047)	Use "1"
0.13 – 0.22 (0.0051 – 0.0087)	Use "3"
0.23 – 0.33 (0.0091 – 0.0130)	Use "5"

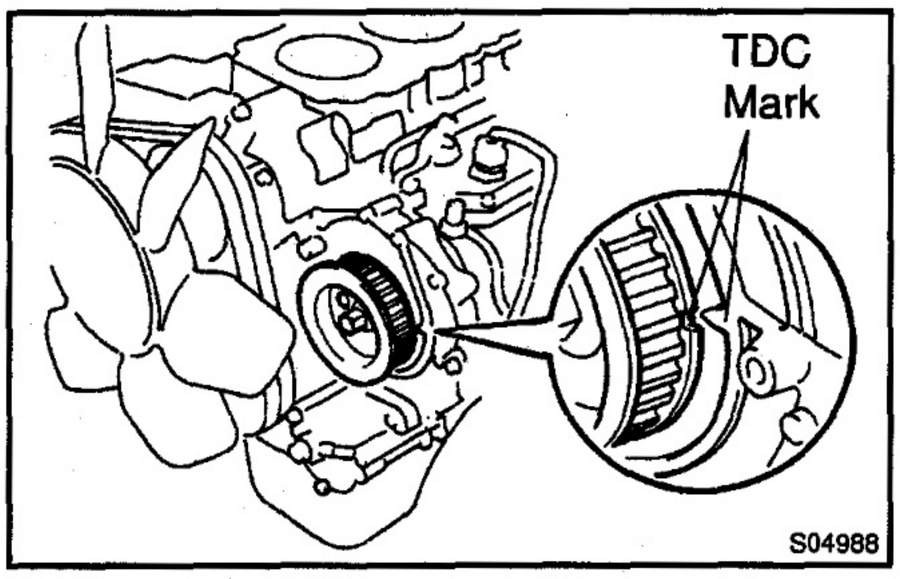

2. SET NO.4 CYLINDER TO TDC / COMPRESSION

Turn the crankshaft pulley, and align the TDC mark of the timing gear cover with the No.2 camshaft timing pulley.

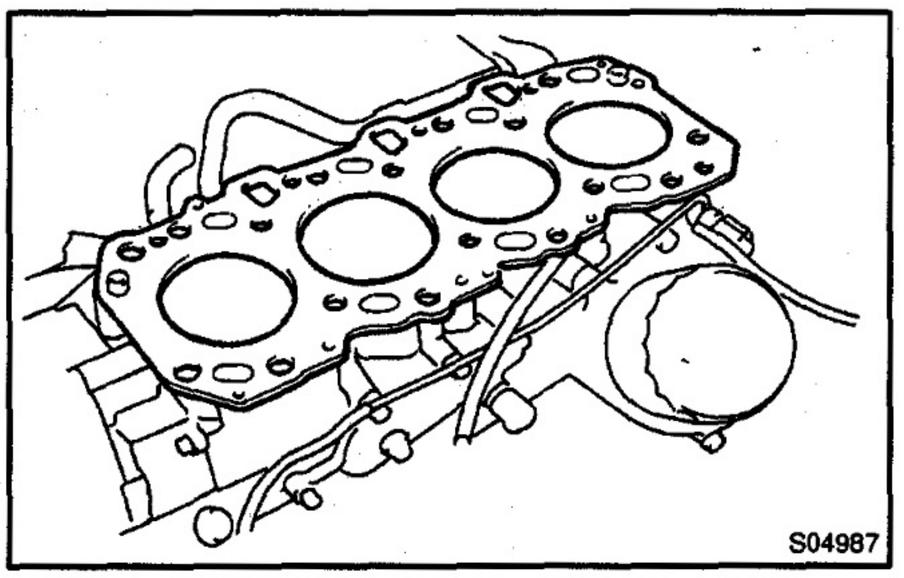

3. PLACE CYLINDER HEAD ON CYLINDER BLOCK

(a) Place a new cylinder head gasket in position on the cylinder block.

NOTICE:

Be careful of the installation direction.

(b) Place the cylinder head in position on the cylinder head gasket.

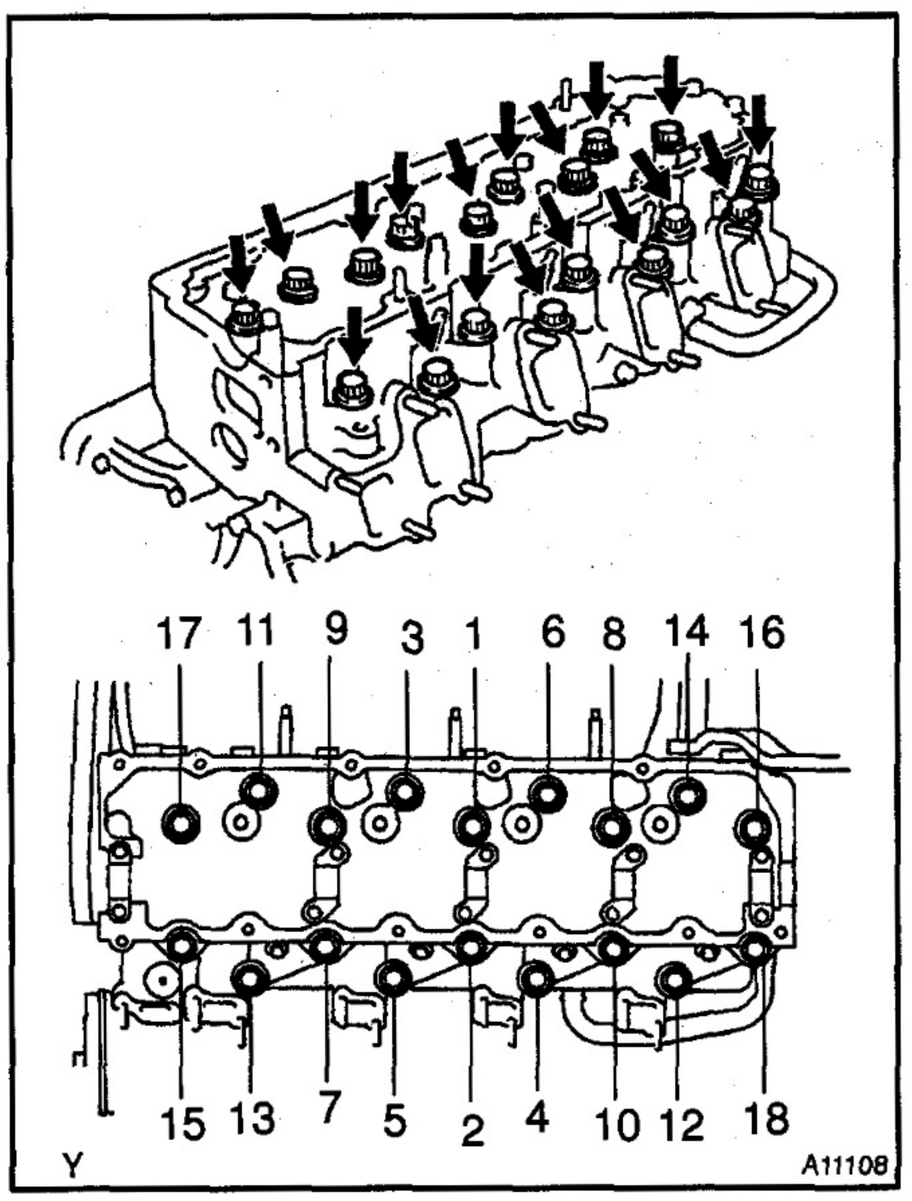

4. INSTALL CYLINDER HEAD BOLTS

HINT:

- The cylinder head bolts are tightened in 3 progressive steps (steps (b), (d) and (e)).
- If any bolts is broken or deformed, replace it.

(a) Apply a light coat of engine oil on the threads and under the heads of the cylinder head bolts.

(b) Install and uniformly tighten the 18 cylinder head bolts, in several passes, in the sequence shown.
Torque: 39 N·m (400 kgf·cm, 29 ft·lbf)

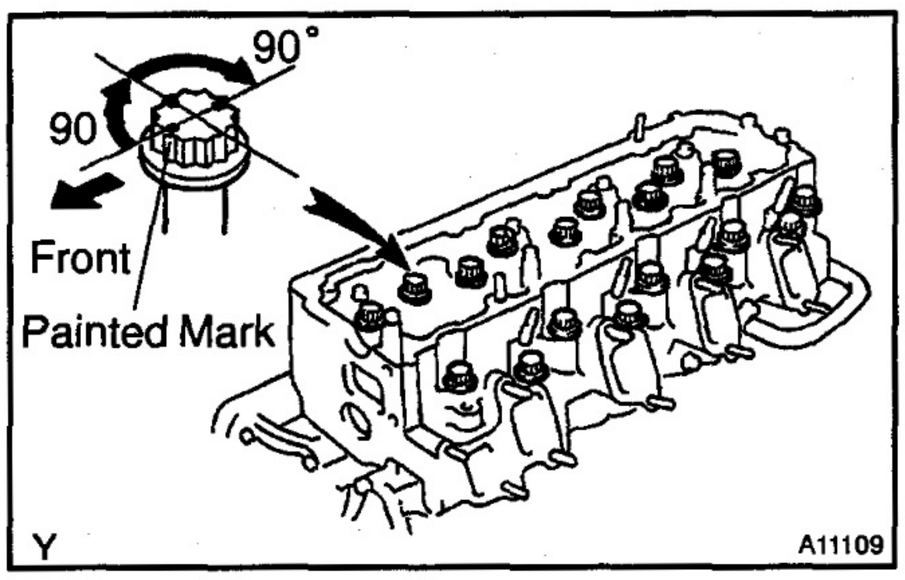

(c) Mark the front of the cylinder head bolt with paint.

(d) Retighten the cylinder head bolts 90° in the numerical order shown.

(e) Retighten cylinder head bolts by an additional 90°.

(f) Check that the painted mark is now facing rearward.

5. INSTALL GLOW PLUG AND GLOW PLUG CONNECETOR (See page ST–4)

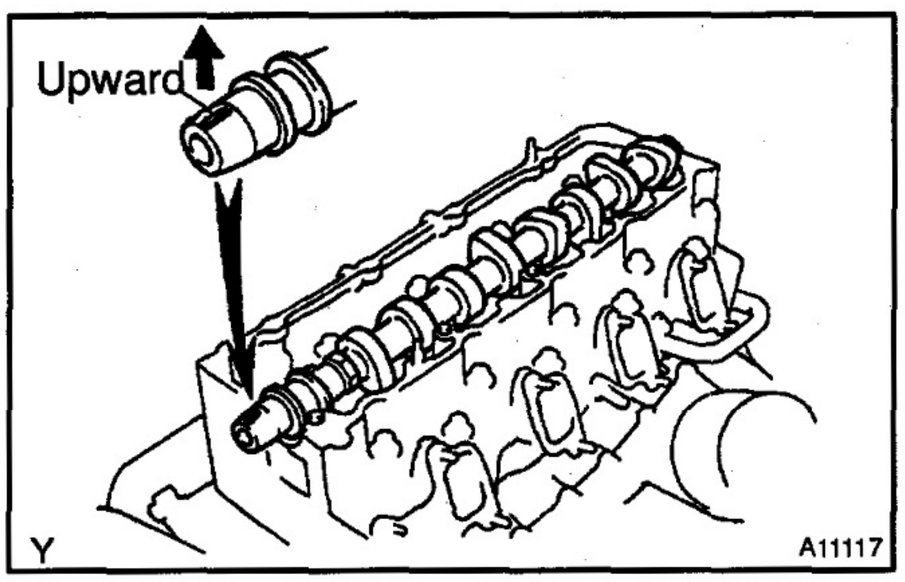

6. INSTALL CAMSHAFT

(a) Place the camshaft on the cylinder head, facing the key groove upward.

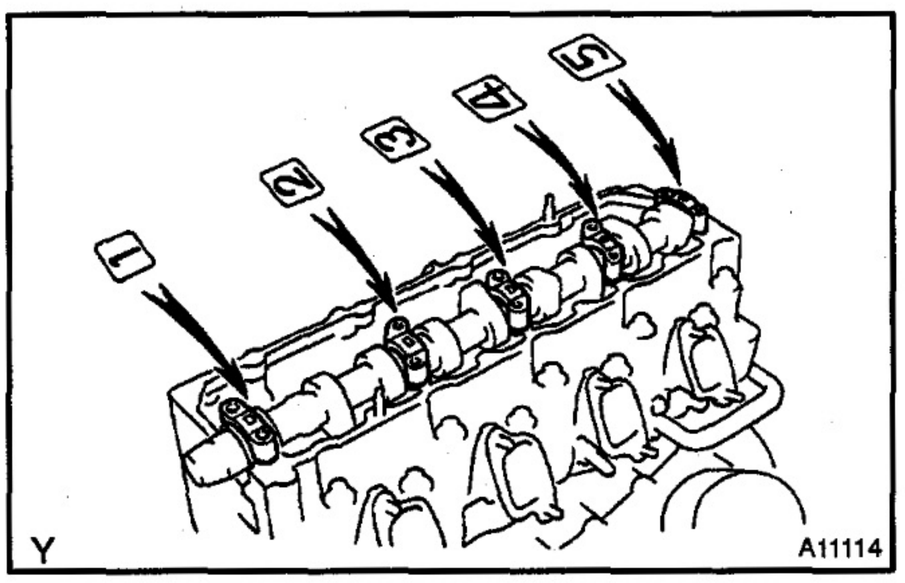

(b) Install the 5 bearing caps in their proper locations.

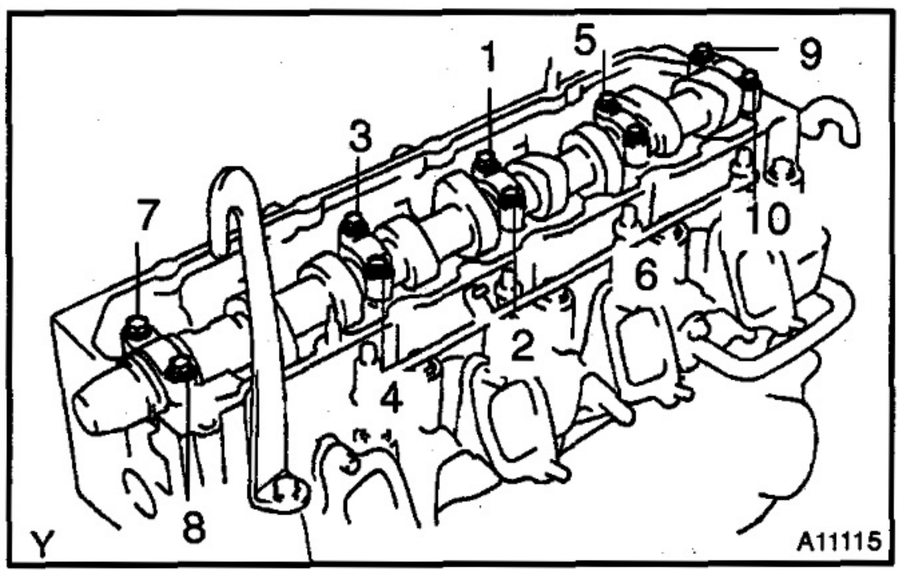

(c) Install and uniformly tighten the 10 bearing cap bolts in several passes in the sequence shown.
Torque: 18 N·m (185 kgf·cm, 13 ft·lbf)

7. INSTALL CAMSHAFT OIL SEAL RETAINER

(a) Remove any old packing (FIPG) material and be careful not to drop any oil on the contact surfaces of the camshaft oil seal retainer and cylinder head.

- Using a razor blade and gasket scraper, remove all the old packing (FIPG) material from the gasket surfaces and sealing groove.
- Thoroughly clean all components to remove all the loose material.
- Using a non–residue solvent, clean both sealing surfaces.

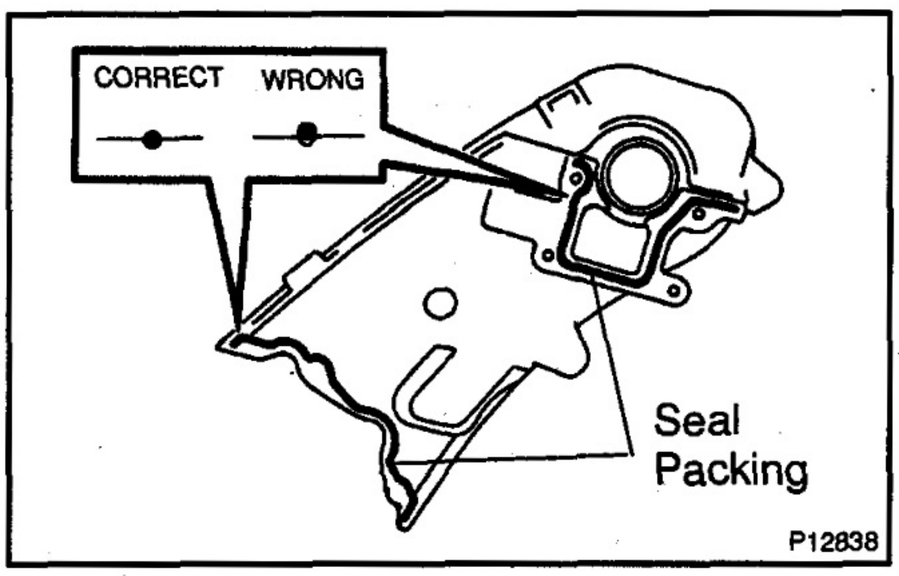

(b) Apply seal packing to the camshaft oil seal retainer as shown in the illustration.
Seal packing: Part No. 08826–00080 or equivalent

- Install a nozzle that has been cut to a 2 – 3 mm (0.08 – 0.12 in.) opening.

HINT:
Avoid applying an excessive amount to the surface.

- Parts must be assembled within 5 minutes of application. Otherwise the material must be removed and reapplied.
- Immediately remove nozzle from the tube and reinstall cap.

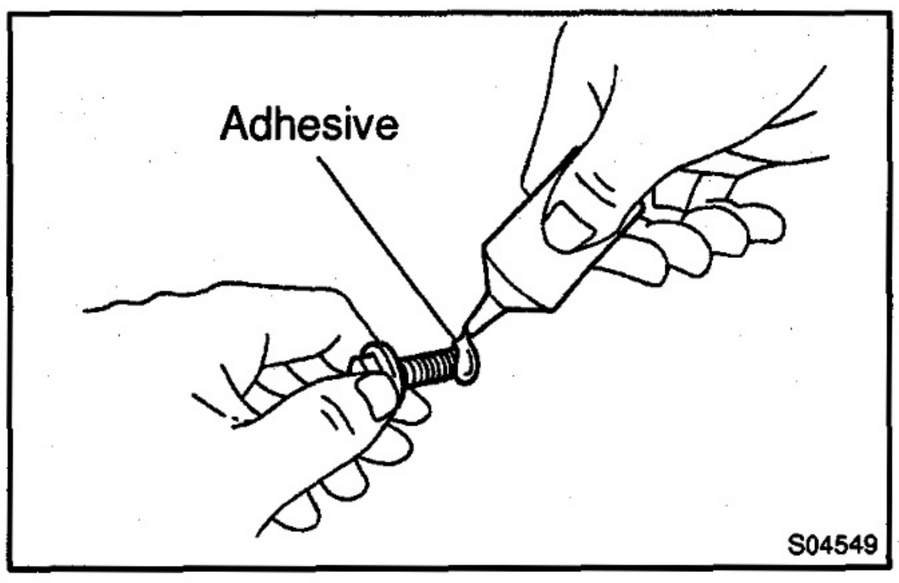

(c) Apply adhesive to 2 or 3 threads of the mounting bolt end.
Adhesive:
Part No. 08833–00070, THREE BOND 1324, or equivalent

(d) Install the retainer with the 7 bolts.
Torque: 10 N·m (100 kgf·cm, 7 ft·lbf)

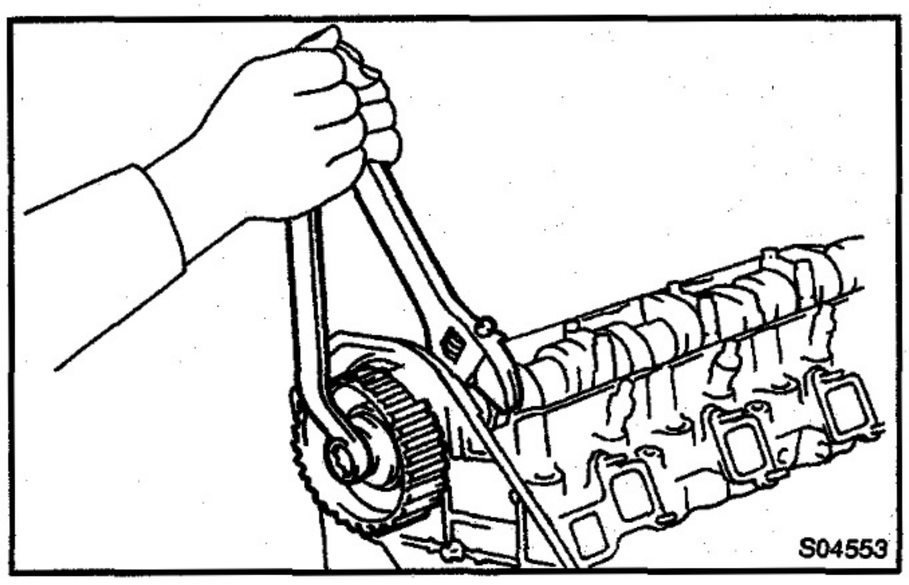

8. INSTALL NO.1 CAMSHAFT TIMING PULLEY

(a) Install the set key to the key groove of the camshaft.

(b) Align the pulley set key with the key groove of the camshaft timing pulley, slide the camshaft timing pulley.

(c) Temporarily install the timing pulley bolt.

(d) Hold the hexagon wrench head portion of the camshaft with a wrench, and tighten the camshaft timing pulley bolt.
Torque: 98 N·m (1,000 kgf·cm, 72 ft·lbf)

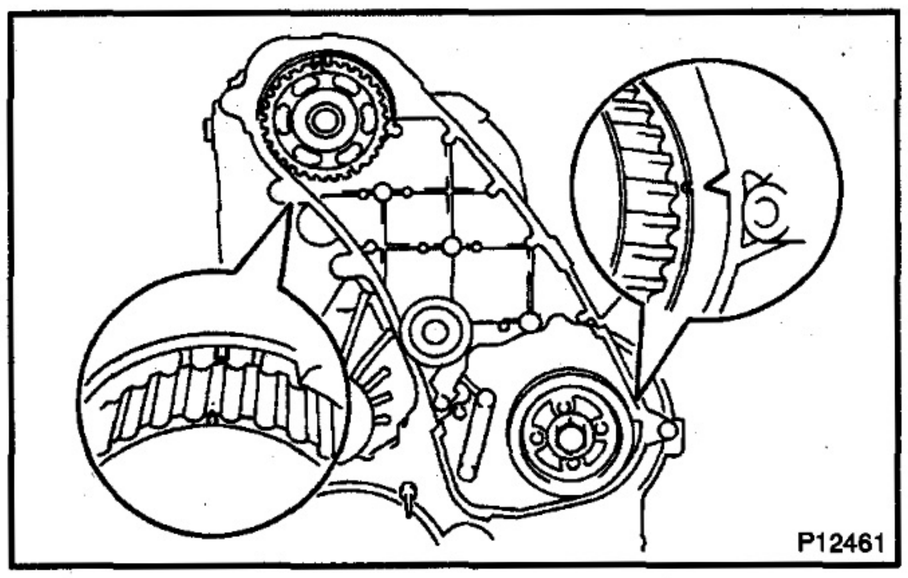

9. SET NO.4 CYLINDER TO TDC / COMPRESSION

Set the timing pulley at each position.

NOTICE:

When turning the crankshaft, the valve heads will hit against the piston top. So do not turn it more than necessary.

10. INSTALL TIMING BELT IDLER PULLEY

(a) Using a 10 mm hexagon wrench, install the washer and timing belt idler pulley with the bolt.
Torque: 35 N·m (350 kgf·cm, 25 ft·lbf)

(b) Check that the idler pulley moves smoothly.

If it doesn't move smoothly, check the idler pulley and washer.

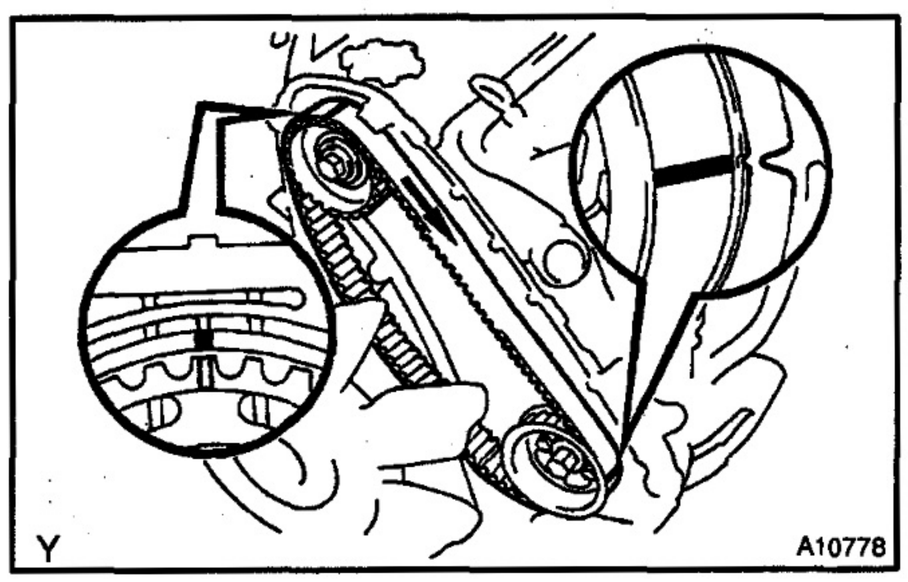

11. INSTALL TIMING BELT

NOTICE:

The engine should be cold.

HINT:

If re–using the timing belt, align the points marked during removal, and install the belt with the arrow pointing in the direction of engine revolution.

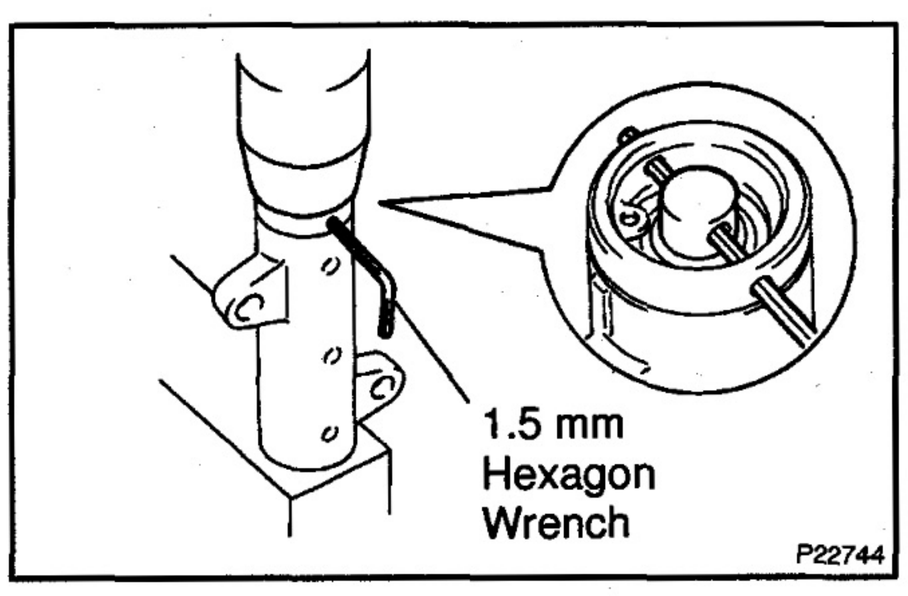

12. SET TIMING BELT TENSIONER

(a) Using a press, slowly press in the push rod using 981 – 9,807 N (100 – 1,000 kgf, 220 – 2,205 lbf) of force.

(b) Align the holes of the push rod and housing, pass a 1.5 mm hexagon wrench through the holes to keep the setting position of the push rod.

(c) Release the press.

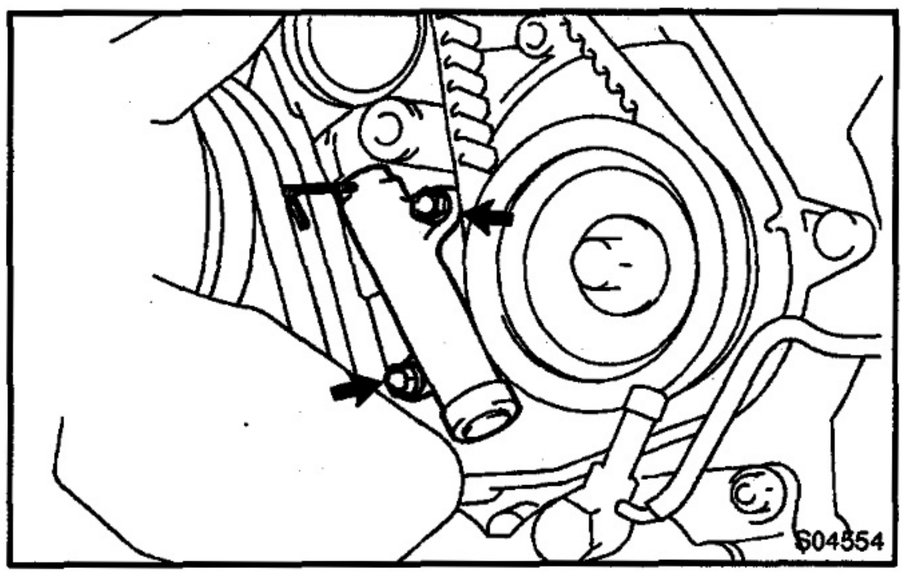

13. INSTALL TIMING BELT TENSIONER

(a) Temporarily install the timing belt tensioner with the 2 bolts while pushing the idler pulley toward the timing belt.

(b) Tighten the 2 bolts.
Torque: 13 N·m (130 kgf·cm, 9 ft·lbf)

(c) Remove the 1.5 mm hexagon wrench from the tensioner.

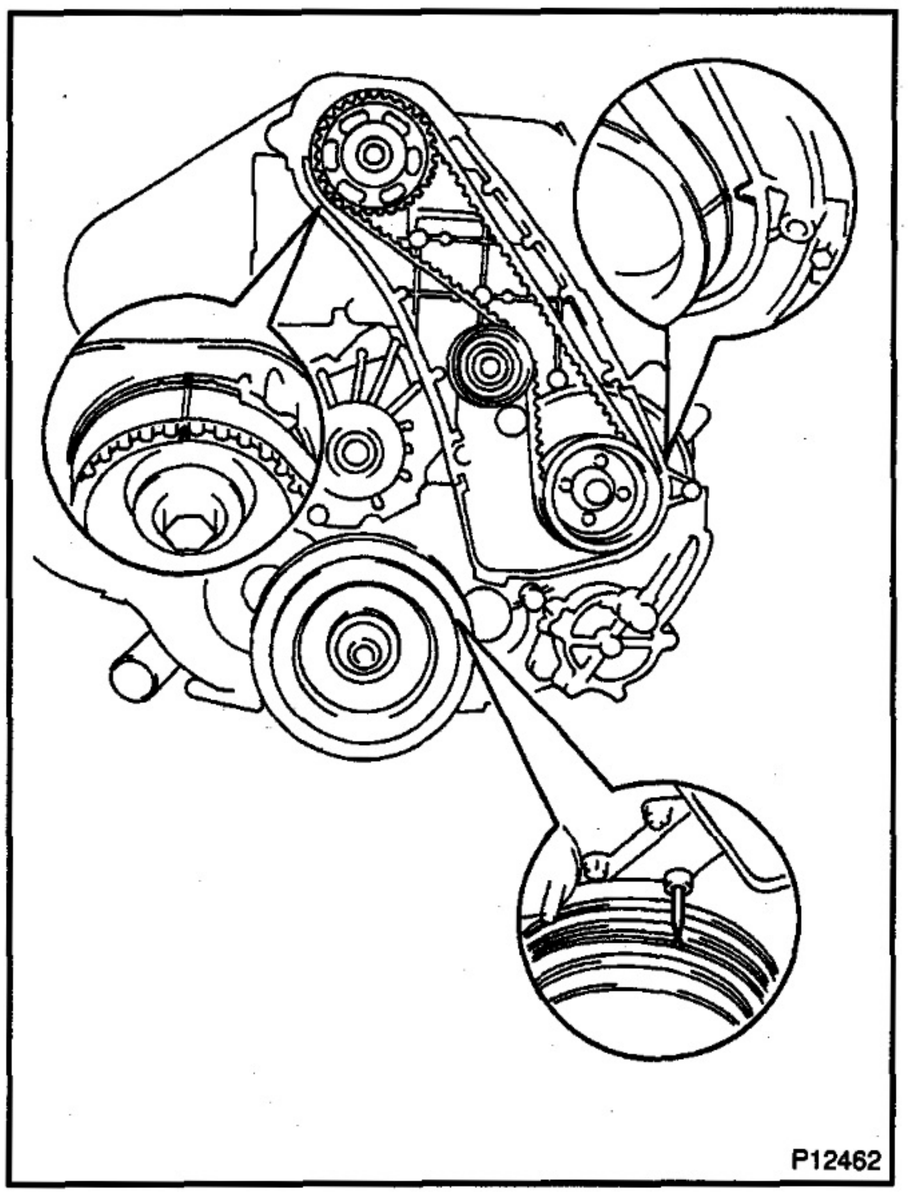

14. CHECK VALVE TIMING

Turn the crankshaft pulley clockwise and check that each pulley aligns with the timing marks (TDC mark) as shown in the illustration.

If the marks do not align, remove the timing belt and reinstall it.

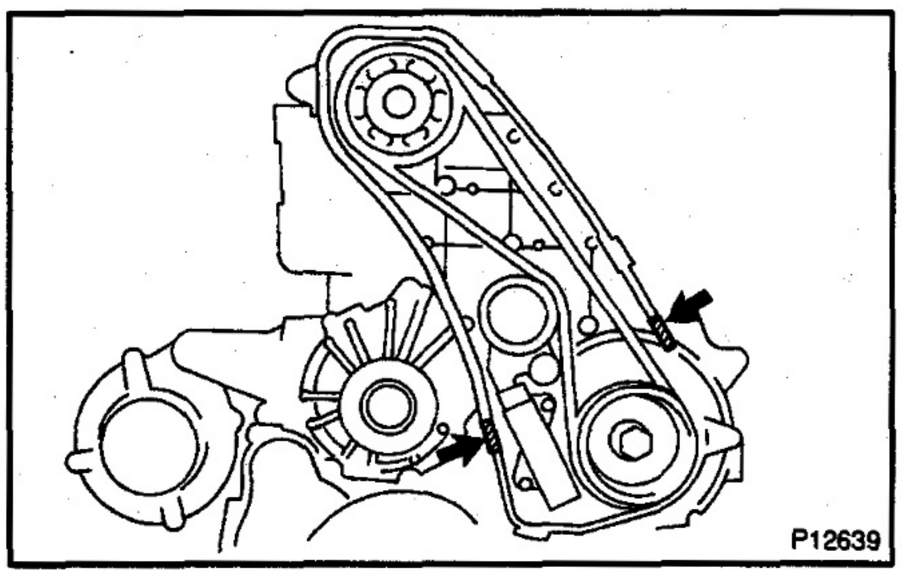

15. INSTALL TIMING BELT COVER

(a) Remove any old packing (FIPG) material.

(b) Apply seal packing to the camshaft oil seal retainer and timing gear cover a shown in the illustration.
Seal packing: Part No. 08826–00080 or equivalent

(c) Install the gasket to the timing belt cover.

(d) Install the timing belt cover with the 4 seal washers, bolts and 2 clips.

16. CHECK AND ADJUST VALVE CLEARANCE
(See page EM–4)

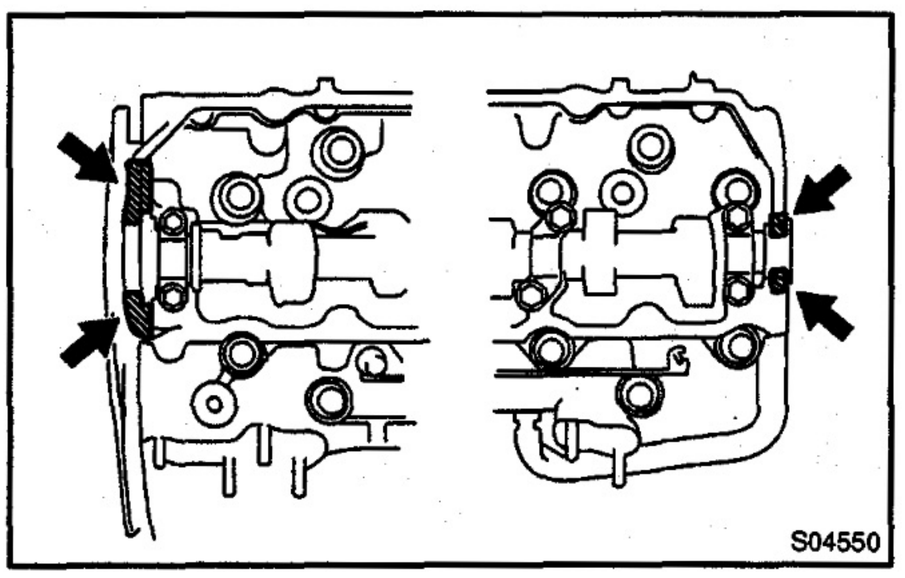

17. INSTALL CYLINDER HEAD COVER

(a) Remove any old packing (FIPG) material.

(b) Apply seal packing to the cylinder head as shown in the illustration.
Seal packing: Part No. 08826–00080 or equivalent

(c) Install the gasket to the cylinder head cover.

(d) Install the cylinder head cover with the 10 bolts and 2 nuts. Uniformly tighten the bolts and nuts in several passes.
Torque: 9 N·m (90 kgf·cm, 78 in.·lbf)

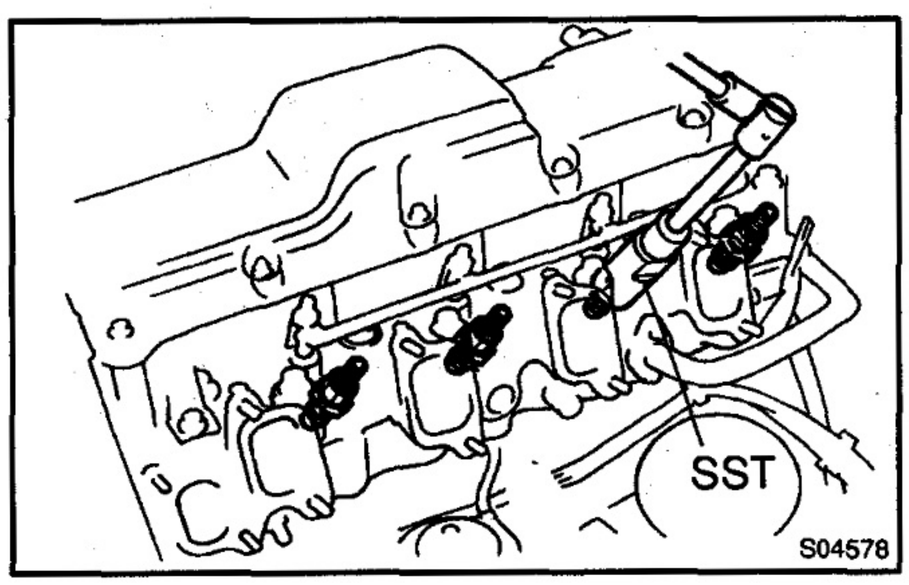

18. INSTALL INJECTION NOZZLES

(a) Place the nozzle seats and new gaskets into the injection nozzle holes of the cylinder head.

(b) Using SST, install the injection nozzles.
SST 09268–64010 (09268–64020)
Torque: 54 N·m (540 kgf·cm, 40 ft·lbf)

NOTICE:

Over torquing could cause nozzle deformation and needle adhesion or other defects.

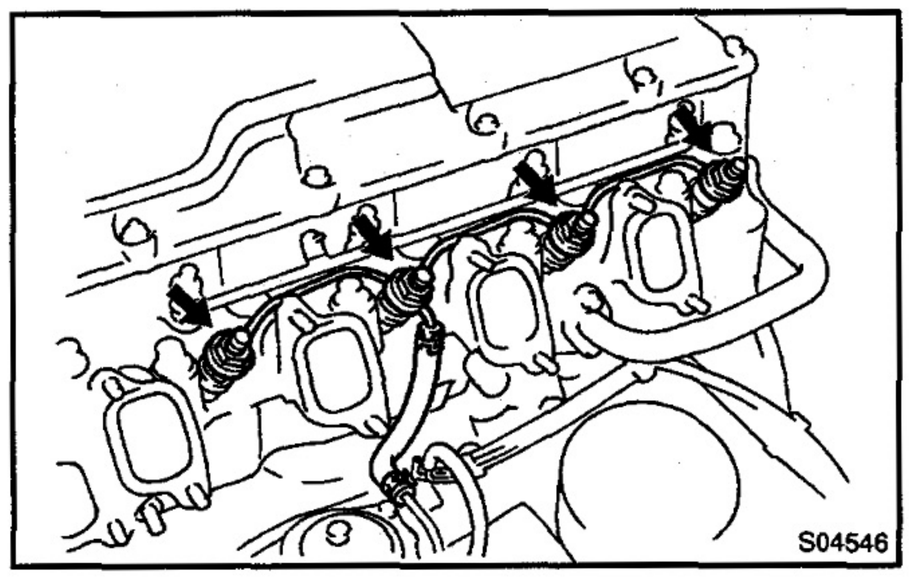

19. INSTALL NOZZLE LEAKAGE PIPE

(a) Install 4 new gaskets and the leakage pipe with the 4 nuts.
Torque: 30 N·m (300 kgf·cm, 22 ft·lbf)

(b) Connect the fuel hose to the return pipe.

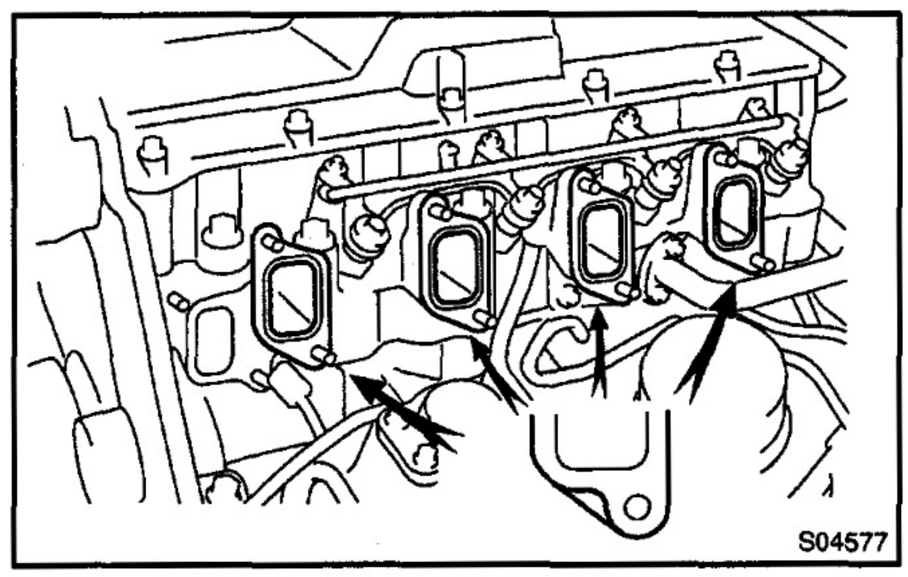

20. INSTALL INTAKE MANIFOLD

(a) Place 4 new gaskets in position on the cylinder head.

NOTICE:

Be careful of the installation direction.

(b) Connect the oil dipstick guide assembly.

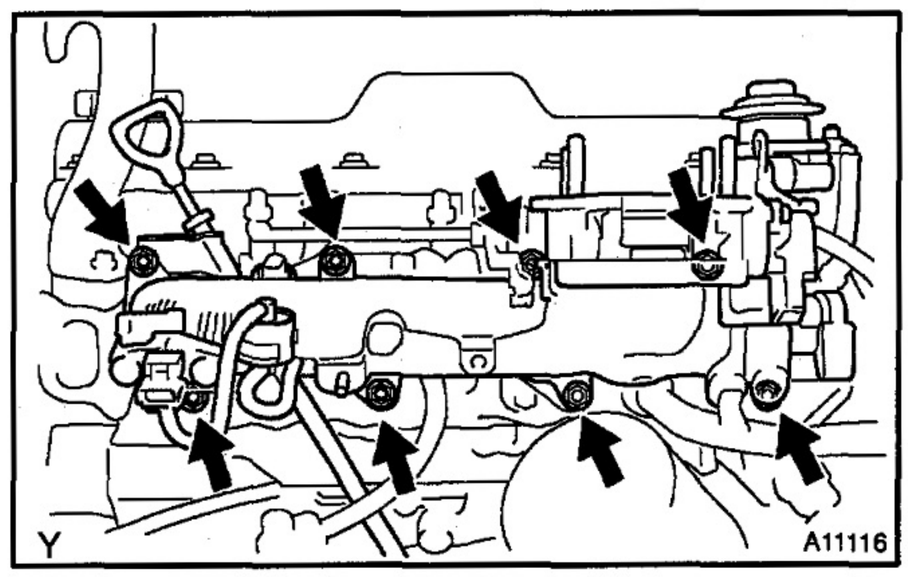

(c) Install the intake manifold with the 8 nuts and oil dipstick.
Uniformly tighten the nuts in several passes.
Torque: 29 N·m (290 kgf·cm, 21 ft·lbf)

(d) Connect the engine wire clamp to the venturi.

(e) Install the glow plug wire with the nut and grommet.

(f) Connect the throttle position sensor connector.

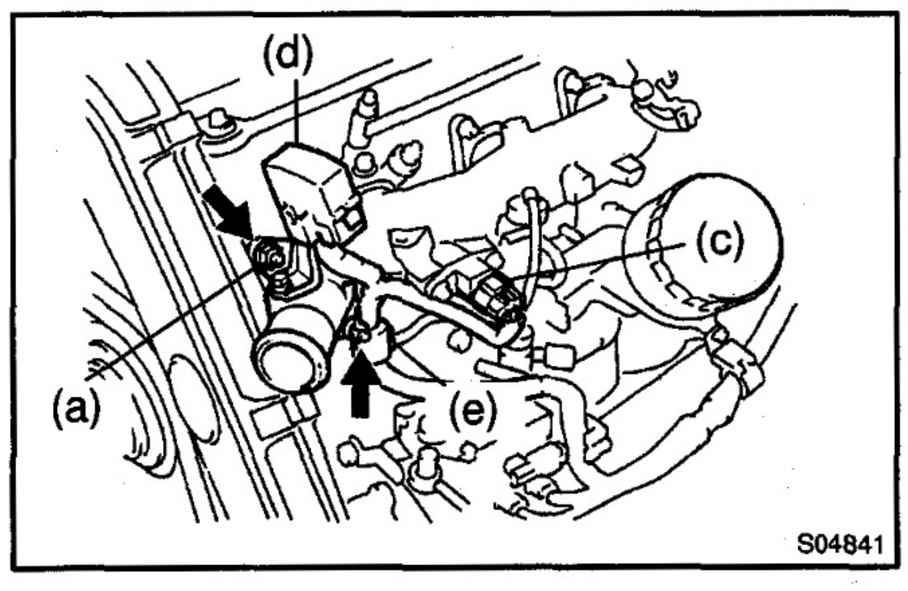

21. INSTALL WATER OUTLET

(a) Install a new gasket and the water outlet with the 2 nuts.
Torque: 13 N·m (130 kgf·cm, 9 ft·lbf)

(b) Connect the water temperature sender gauge connector.

(c) Connect the turbo pressure sensor connector.

(d) Connect the check connector.

(e) Connect the engine wire clamp.

22. INSTALL INJECTION PIPES (See page FU–13)

23. INSTALL TURBOCHARGER (See page TC–16)

24. INSTALL INTAKE PIPE

(a) Install the VSV for the No.1 and No.2. intake constrictor control. (See page ED–13)

(b) Install the accelrator cable bracket to the intake pipe.
Torque: 20 N·m (204 kgf·cm cm, 15 ft·lbf)

(c) Place a new gasket on the venturi.

(d) Connect the intake pipe and PCV hose.

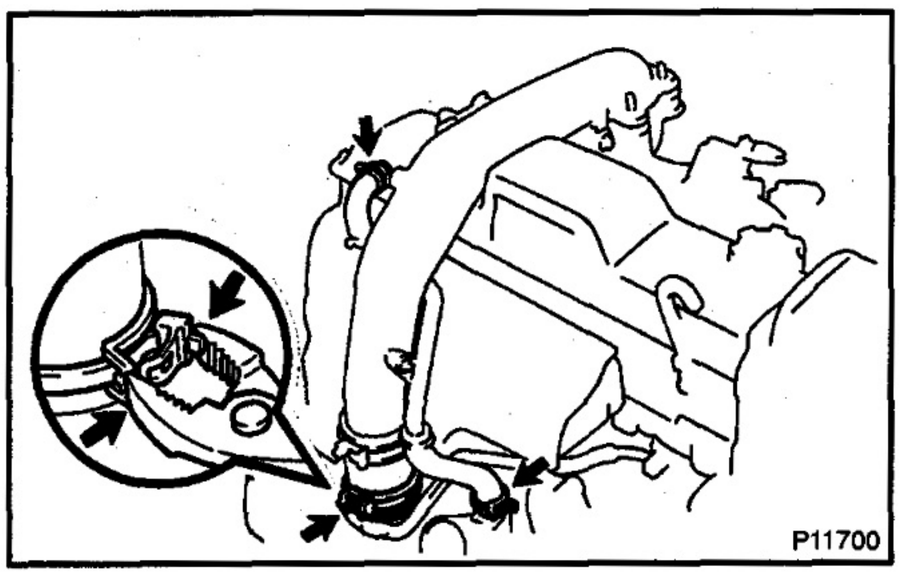

(e) Place the clamp lock together with the pliers and press down the tip of the lock plate. Carefully let the lock spread apart. Take care not to let the pliers slip.

(f) Install the 4 seal washers and nuts.
Torque: 12 N·m (120 kgf·cm, 9 ft·lbf)

(g) install the vacuum hose clamp with the bolt to the cylinder head.

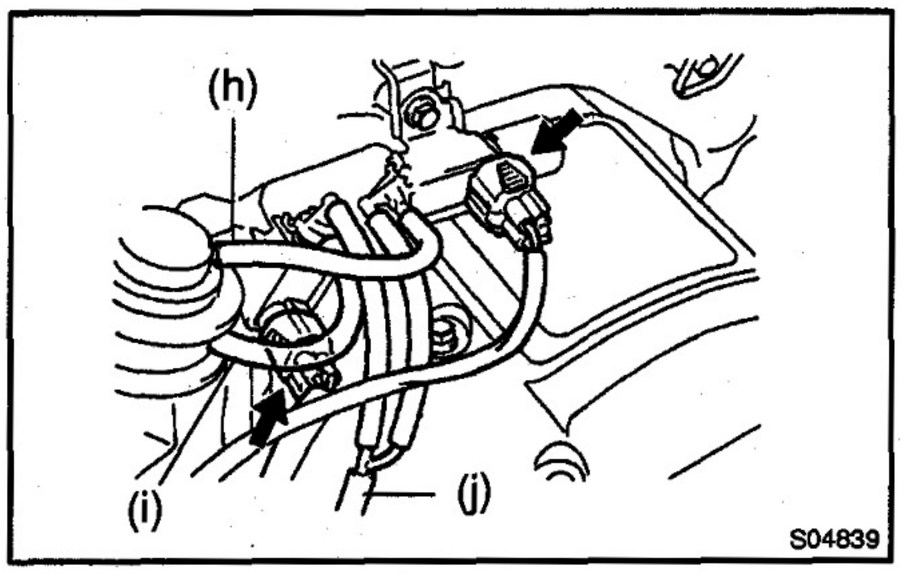

(h) Connect the vacuum hose to the actuator of the chamber A.

(i) Connect the vacuum hose to the actuator of the chamber B.

(j) Connect the vacuum hose to the 3–way (from the vacuum pump).

(k) Connect the VSV for the No.1 and No.2 intake constrictor control connectors.

25. FILL WITH ENGINE COOLANT

26. START ENGINE AND CHECK FOR LEAKS

27. RECHECK ENGINE COOLANT LEVEL AND OIL LEVEL

CYLINDER BLOCK

COMPONENTS

EM15J–01

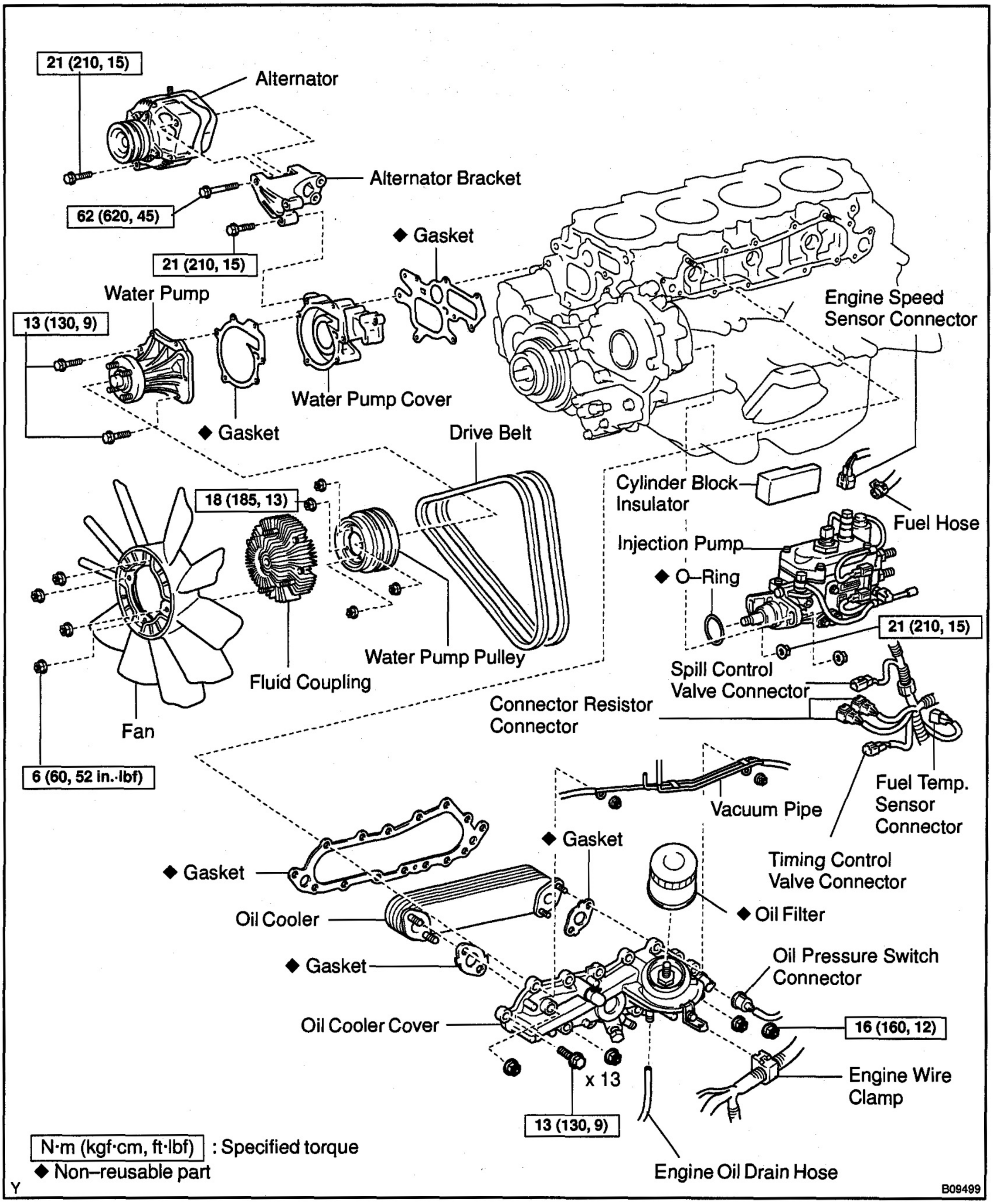

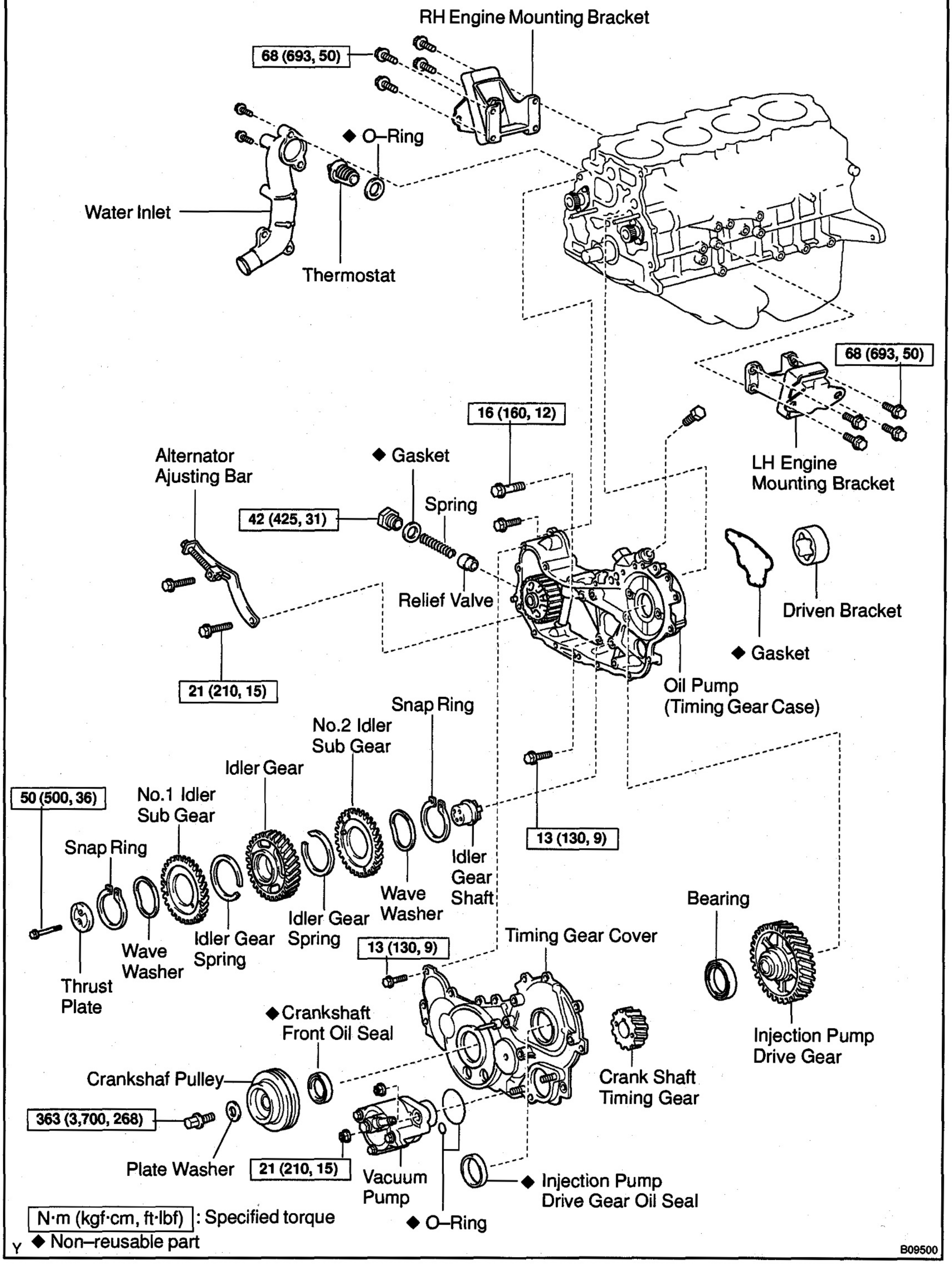
RH Engine Mounting Bracket
68 (693, 50)
◆ O–Ring
Water Inlet
Thermostat
68 (693, 50)
LH Engine
Mounting Bracket
16 (160, 12)
◆ Gasket
Alternator
Ajusting Bar
Spring
42 (425, 31)
Relief Valve
Driven Bracket
◆ Gasket
21 (210, 15)
Oil Pump
(Timing Gear Case)
Snap Ring
No.2 Idler
Sub Gear
Idler Gear
No.1 Idler
Sub Gear
50 (500, 36)
Snap Ring
Idler
Gear
Shaft
Wave
Washer
Idler Gear
Spring
Idler Gear
Spring
Wave
Washer
13 (130, 9)
13 (130, 9)
Timing Gear Cover
Bearing
Thrust
Plate
◆ Crankshaft
Front Oil Seal
Injection Pump
Drive Gear
Crankshaf Pulley
Crank Shaft
Timing Gear
363 (3,700, 268)
Plate Washer
21 (210, 15)
Vacuum
Pump
◆ Injection Pump
Drive Gear Oil Seal
◆ O–Ring
N·m (kgf·cm, ft·lbf) : Specified torque
◆ Non–reusable part
B09500

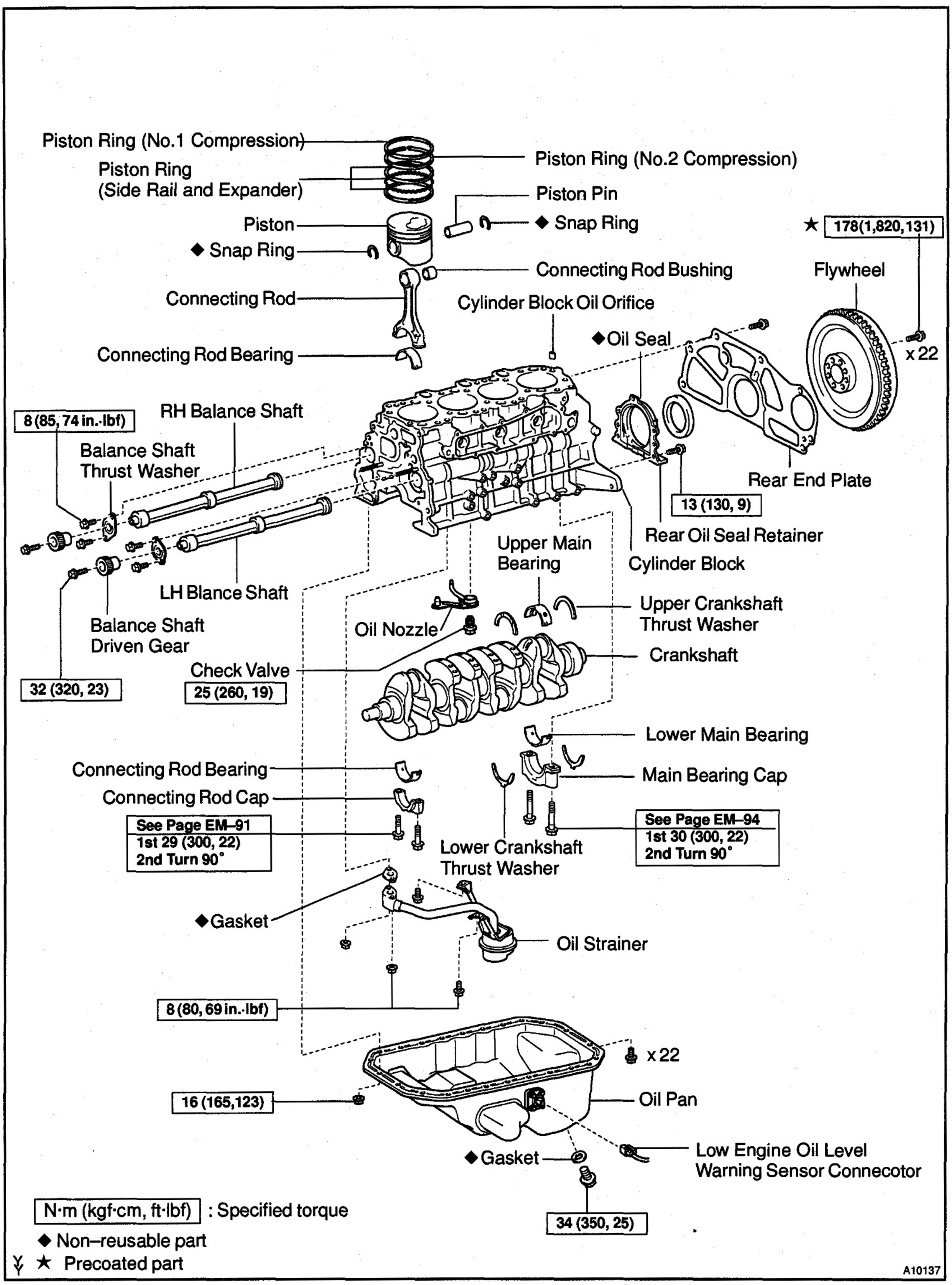
Piston Ring (No.1 Compression)
Piston Ring (No.2 Compression)
Piston Ring (Side Rail and Expander)
Piston Pin
Piston
◆ Snap Ring
★ 178(1,820,131)
◆ Snap Ring
Connecting Rod Bushing
Flywheel
Connecting Rod
Cylinder Block Oil Orifice
Connecting Rod Bearing
◆Oil Seal
x 22
8 (85, 74 in.-lbf)
RH Balance Shaft
Balance Shaft Thrust Washer
Rear End Plate
13 (130, 9)
Rear Oil Seal Retainer
Upper Main Bearing
Cylinder Block
LH Blance Shaft
Balance Shaft Driven Gear
Oil Nozzle
Upper Crankshaft Thrust Washer
Crankshaft
Check Valve
32 (320, 23)
25 (260, 19)
Lower Main Bearing
Connecting Rod Bearing
Main Bearing Cap
Connecting Rod Cap
See Page EM–91
1st 29 (300, 22)
2nd Turn 90°
See Page EM–94
1st 30 (300, 22)
2nd Turn 90°
Lower Crankshaft Thrust Washer
◆Gasket
Oil Strainer
8 (80, 69 in.-lbf)
x 22
16 (165,123)
Oil Pan
◆ Gasket
Low Engine Oil Level Warning Sensor Connecotor
34 (350, 25)
N·m (kgf·cm, ft·lbf) : Specified torque
◆ Non–reusable part
★ Precoated part
A10137

EM15K–01

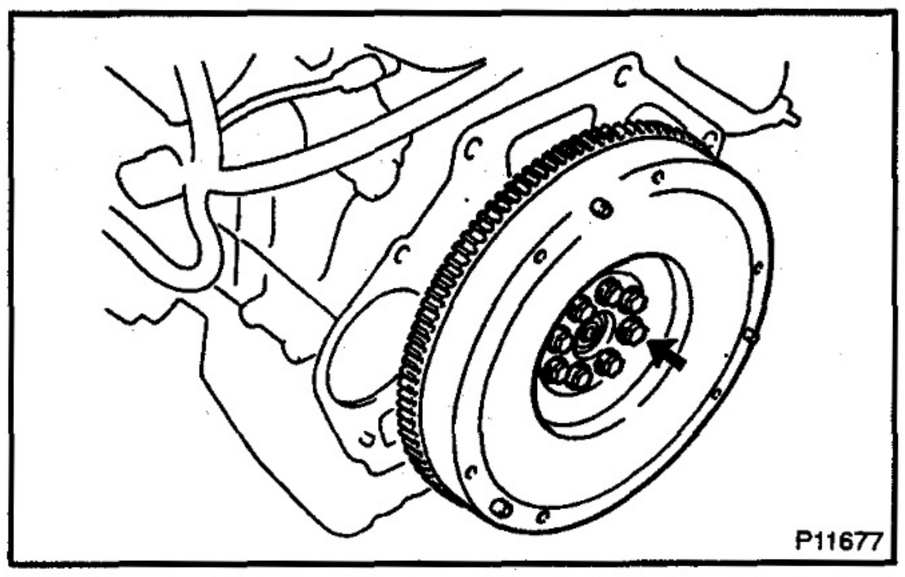

DISASSEMBLY

1. REMOVE CLUTCH COVER AND DISC

2. REMOVE FLYWHEEL

Remove the 8 bolts and flywheel.

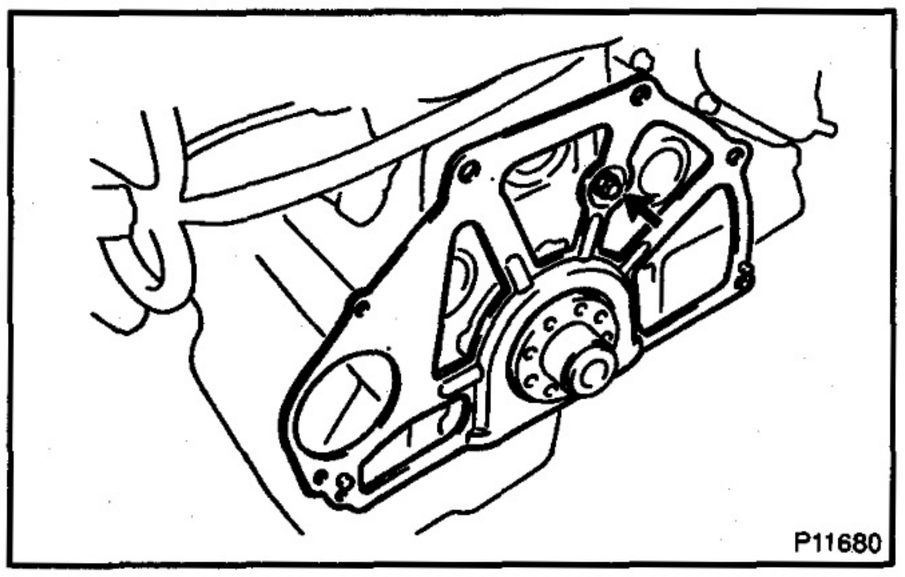

3. REMOVE REAR END PLATE

Remove the bolt and end plate.

4. INSTALL ENGINE TO ENGINE STAND FOR DISASSEMBLY

5. REMOVE TIMING BELT AND PULLEYS (See page EM–13)

6. REMOVE CYLINDER HEAD (See page EM–44)

7. REMOVE ALTERNATOR AND ALTERNATOR BRACKET (See page CO–5)

8. REMOVE WATER PUMP (See page CO–5)

9. REMOVE INJECTION PUMP (See page FU–18)

10. REMOVE OIL COOLER (See page LU–21)

11. REMOVE TIMING GEARS (See page EM–24)

12. TIMING GEAR CASE (See page LU–7)

13. REMOVE WATER INLET AND THERMOSTAT (See page CO–11)

14. REMOVE WATER TEMPERATURE SENSOR

15. REMOVE ENGINE MOUNTING

16. REMOVE OIL PAN

17. REMOVE PLUG HOLE

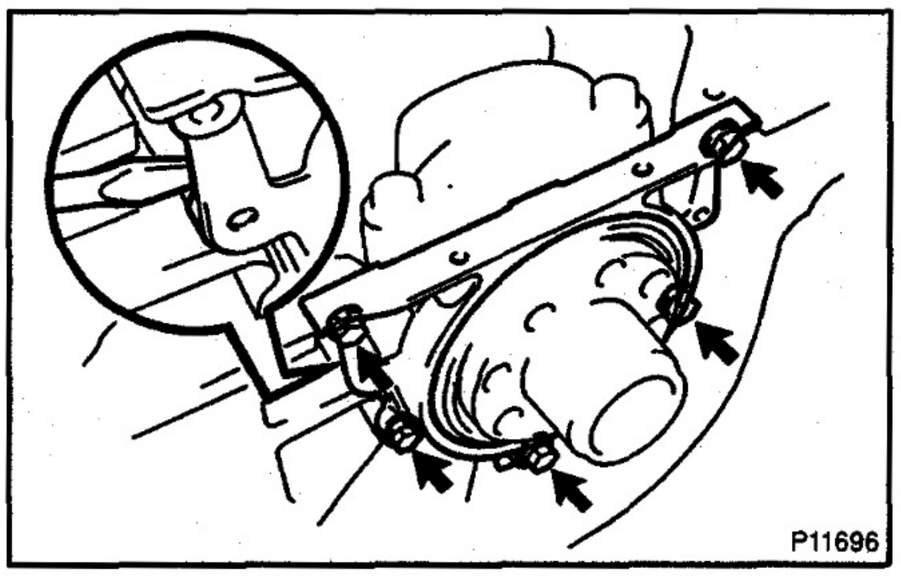

18. REMOVE REAR OIL SEAL RETAINER

Remove the 5 bolts and retainer.

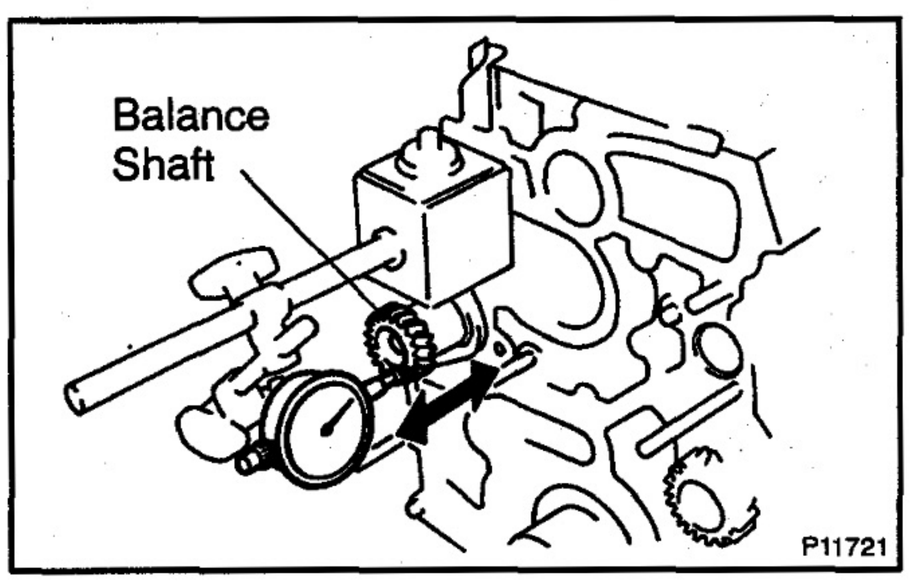

19. CHECK THRUST CLEARANCES OF RH AND LH BALANCE SHAFTS OF ENGINE BALANCER

Using a dial indicator, measure the thrust clearance while moving the balance shaft back and forth.

Standard thrust clearance:
0.065 – 0.140 mm (0.0026 – 0.0055 in.)
Maximum thrust clearance: 0.25 mm (0.0098 in.)

If the thrust clearance is greater than maximum, replace the balance shaft thrust washer.

If necessary, replace the balance shaft.

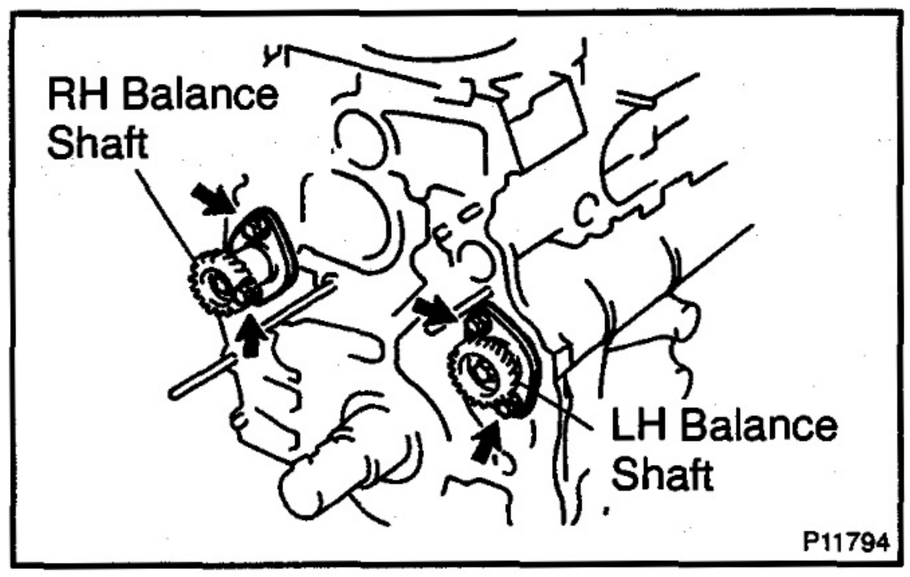

20. REMOVE RH AND LH BALANCE SHAFTS

(a) Remove the 2 bolts and RH balance shaft.

(b) Remove the 2 bolts and LH balance shaft.

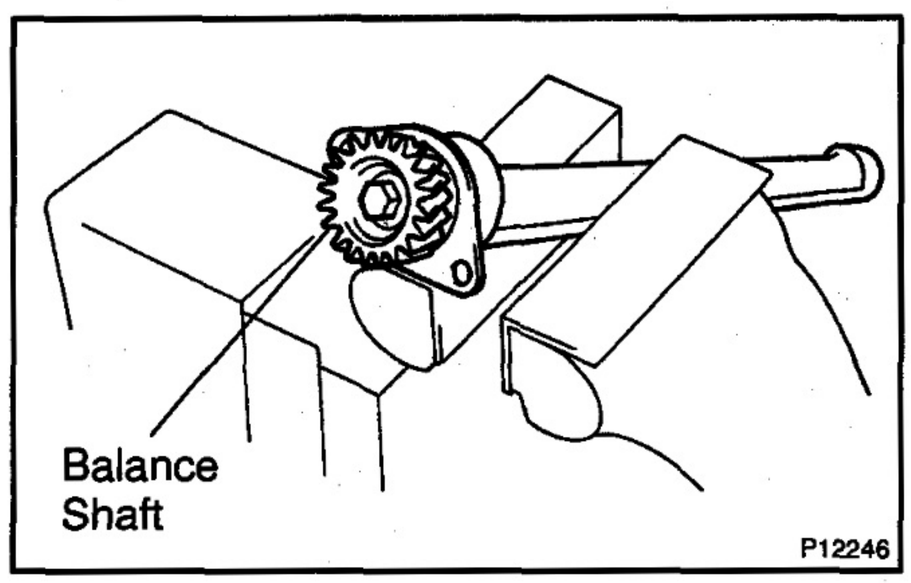

21. DISASSEMBLE RH AND LH BALANCE SHAFTS

(a) Mount the weight of the balance shaft in a vise.

NOTICE:

Be careful not to damage the balance shaft.

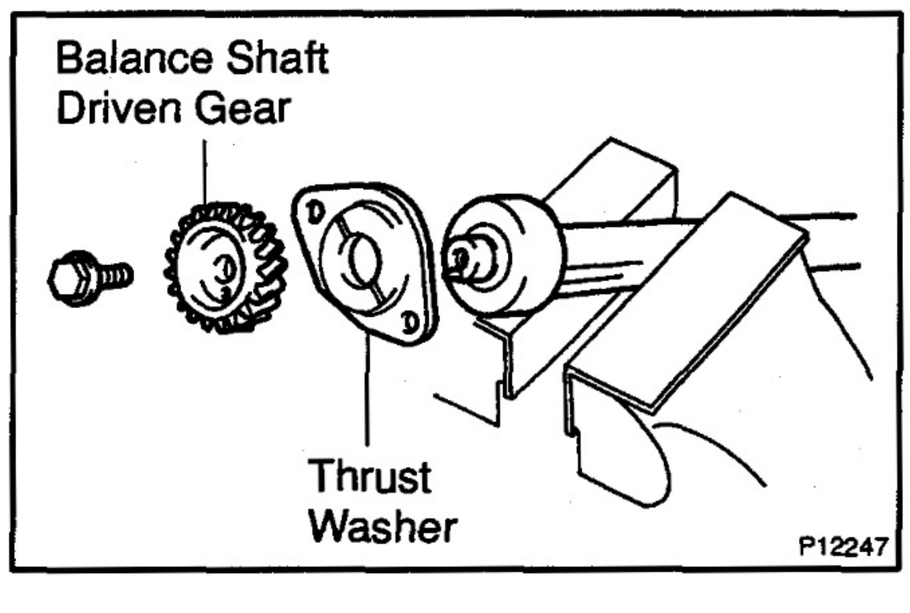

(b) Remove the bolt, balance shaft driven gear and thrust washer.

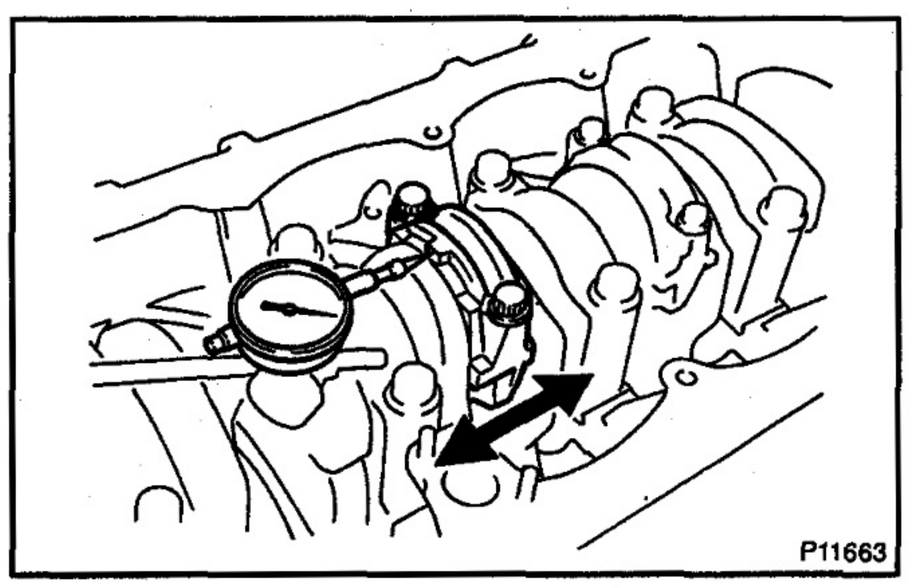

22. CHECK CONNECTING ROD THRUST CLEARANCE

Using a dial indicator, measure the thrust clearance while moving the connecting rod back and forth.

Standard thrust clearance:
0.10 – 0.30 mm (0.0039 – 0.0118 in.)
Maximum thrust clearance: 0.40 mm (0.0157 in.)

If the thrust clearance is greater than maximum, replace the connecting rod assembly. If necessary, replace the crankshaft.

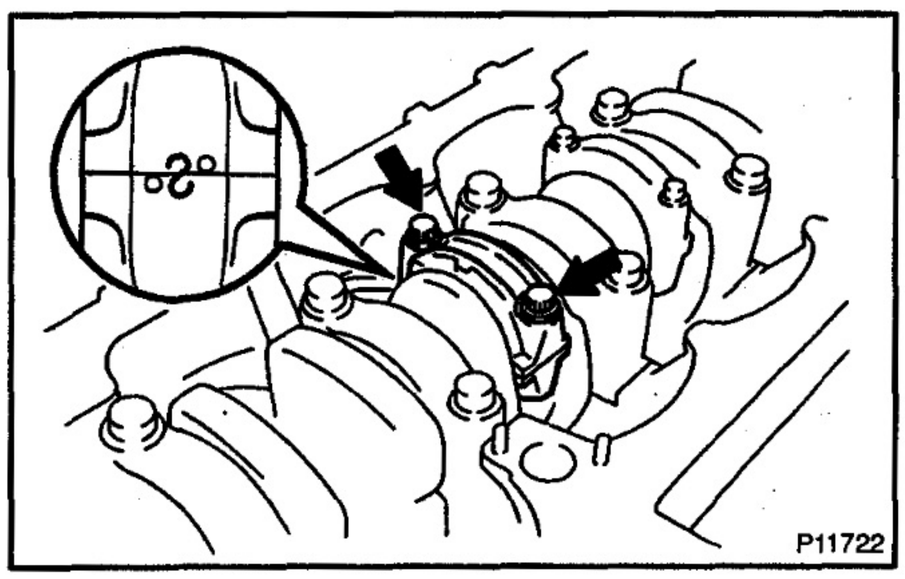

23. REMOVE CONNECTING ROD CAPS AND CHECK OIL CLEARANCE

(a) Using a punch or numbering stamp, place matchmarks on the connecting rod and cap to ensure correct reassembly.

(b) Remove the connecting rod cap bolts.

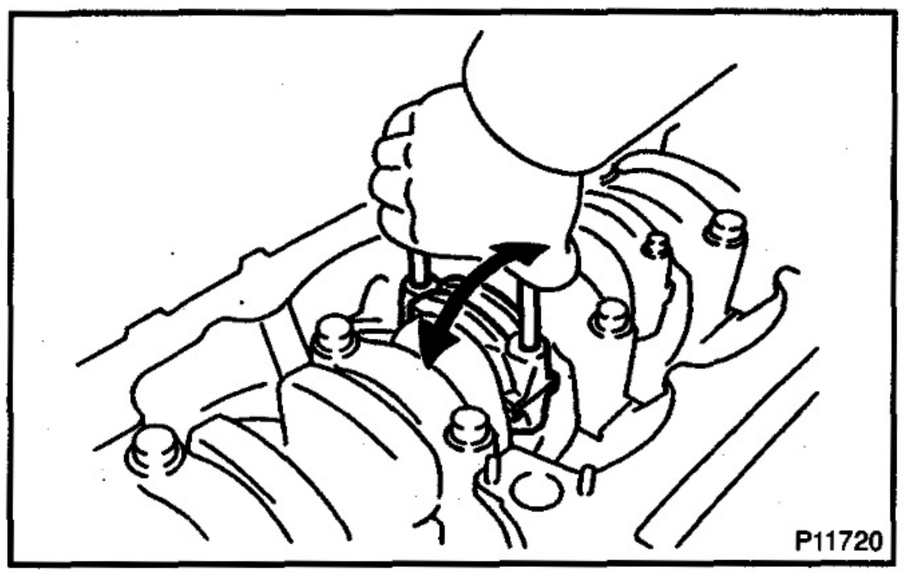

(c) Using the 2 removed connecting rod bolts, pry the connecting rod cap back and forth, and remove the connecting cap.

HINT:

Keep the lower bearing inserted with the connecting rod cap.

(d) Clean the crank pin and bearing.

(e) Check the crank pin and bearing for pitting and scratches.

If the crank pin or bearing is damaged, replace the bearings. If necessary, grind or replace the crankshaft.

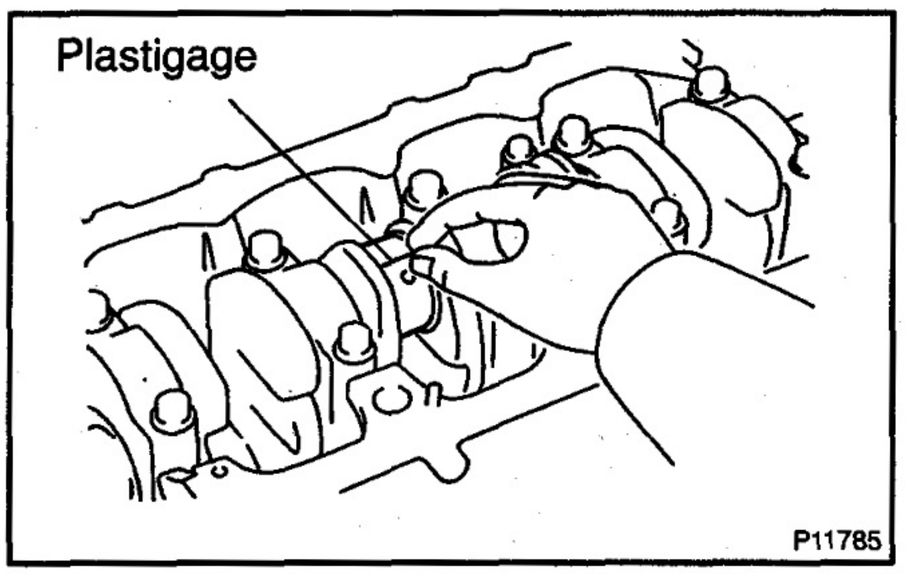

(f) Lay a strip of Plastigage across the crank pin.

(g) Install the connecting rod cap with the 2 bolts.
(See page EM–94)
1st
Torque: 29 N·m (300 kgf·cm, 22 ft·lbf)
2nd Turn 90 °

NOTICE:

Do not turn the crankshaft.

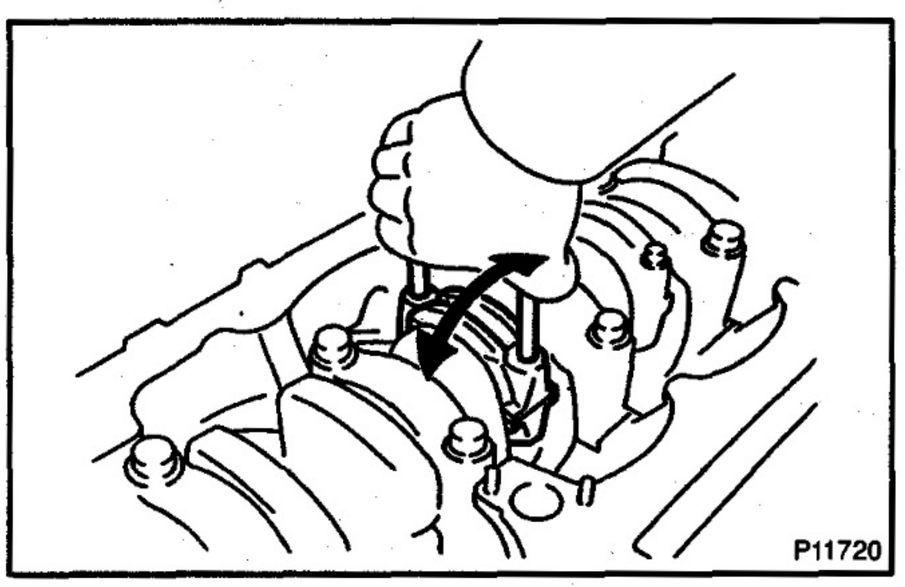

(h) Remove the 2 bolts, connecting rod cap and lower bearing. (See procedure (b) and (c) above)

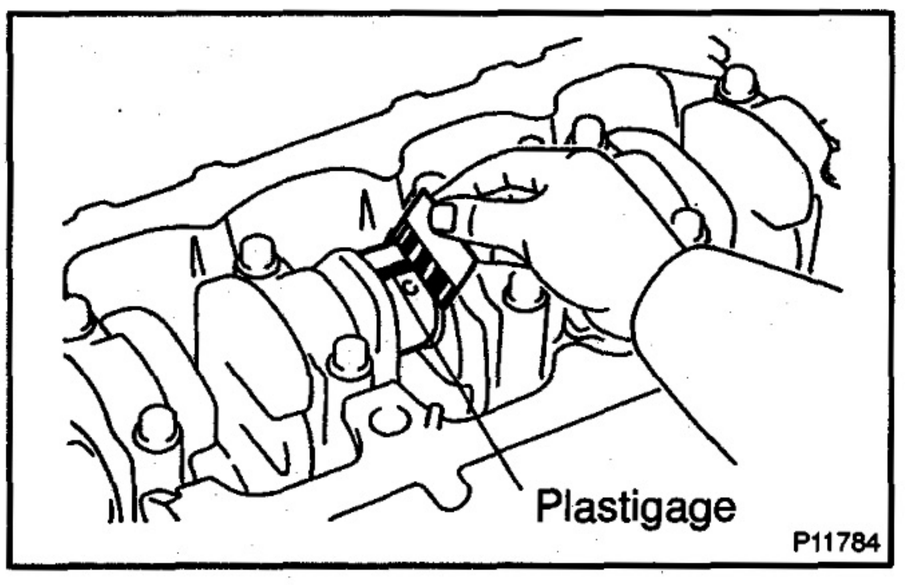

(i) Measure the Plastigage at its widest point.
Standard oil clearance:
STD: 0.036 – 0.054 mm (0.0014 – 0.0021 in.)
U/S 0.25 and U/S 0.50:
0.037 – 0.077 mm (0.0015 – 0.0030 in.)
Maximum oil clearance: 0.10 mm (0.0039 in.)

If the oil clearance is greater than maximum, replace the bearings. If necessary, grind or replace the crankshaft.

HINT:
If using a standard bearing, replace it with one having the same number. If the number of the bearing cannot be determined, select the correct bearing by adding together the numbers inprinted on the crankshaft and connecting rod, then selecting the bearing with the same number as the total. There are 5 sizes of standard bearings, marked "2", "3", "4", "5" and "6" accordingly.

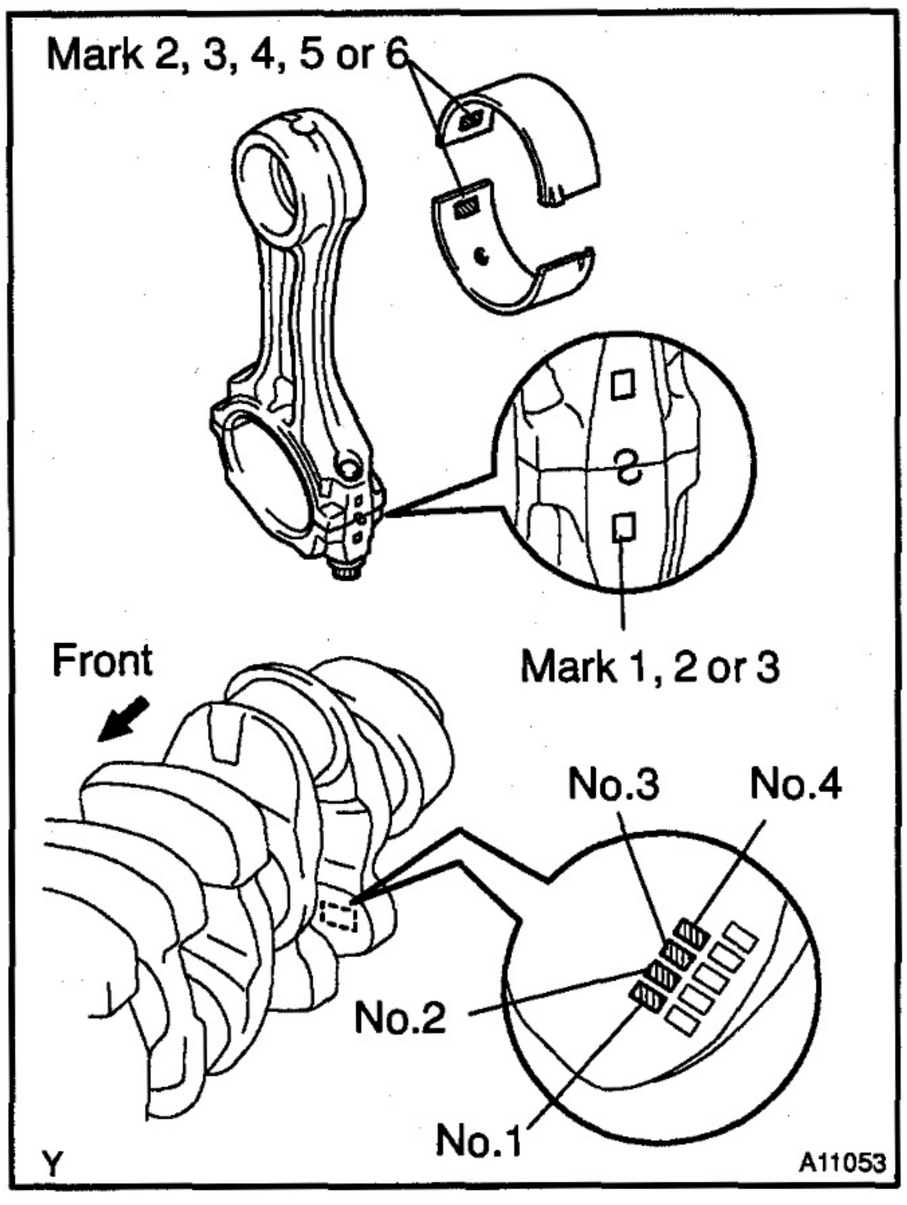

	Number Marked								
Cylinder block	1			2			3		
Crankshaft	1	2	3	1	2	3	1	2	3
Use bearing	2	3	4	3	4	5	4	5	6

EXAMPLE: Cylinder block "2" + crankshaft "1"
= Total number 3 (Use bearing "3")

Y A11054

Reference

Connecting rod big end inner diameter:

Mark "1"	62.014 – 62.020 mm (2.4415 – 2.4417 in.)
Mark "2"	62.020 – 62.026 mm (2.4417 – 2.4420 in.)
Mark "3"	62.026 – 62.032 mm (2.4420 – 2.4422 in.)

Crankshaft pin diameter:

Mark "1"	58.994 – 59.000 mm (2.3226 – 2.3228 in.)
Mark "2"	58.988 – 58.994 mm (2.3224 – 2.3226 in.)
Mark "3"	58.982 – 58.988 mm (2.3221 – 2.3224 in.)

Standard sized bearing center wall thickness:

Mark "2"	1.486 – 1.489 mm (0.0585 – 0.0586 in.)
Mark "3"	1.489 – 1.492 mm (0.0586 – 0.0587 in.)
Mark "4"	1.492 – 1.495 mm (0.0587 – 0.0589 in.)
Mark "5"	1.495 – 1.498 mm (0.0589 – 0.0590 in.)
Mark "6"	1.498 – 1.501 mm (0.0590 – 0.0591 in.)

(j) Completely remove the Plastigage.

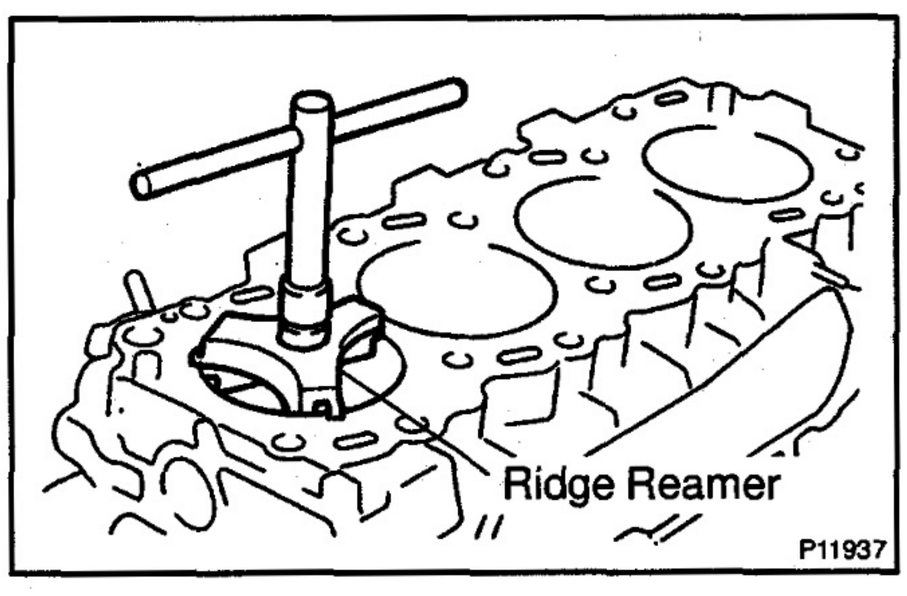

24. REMOVE PISTON AND CONNECTING ROD ASSEMBLIES

(a) Using a ridge reamer, remove all the carbon from the top of the cylinder.

(b) Push the piston, connecting rod assembly and upper bearing through the top of the cylinder block.

HINT:

- Keep the bearings, connecting rod and cap together.
- Arrange the piston and connecting rod assemblies in correct order.

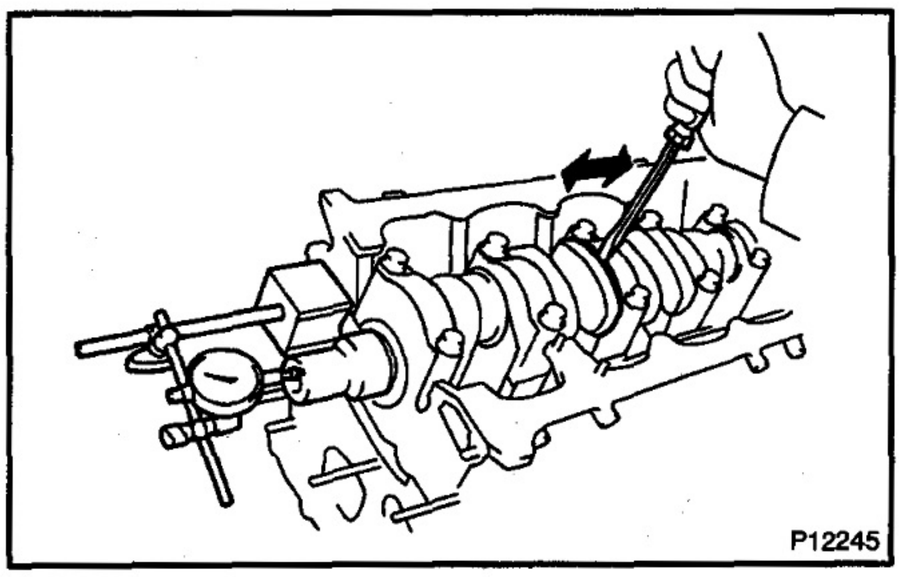

25. CHECK CRANKSHAFT THRUST CLEARANCE

Using a dial indicator, measure the thrust clearance while prying the crankshaft back and forth with a screwdriver.

Standard thrust clearance:
0.040 – 0.240 mm (0.0016 – 0.0094 in.)
Maximum thrust clearance: 0.30 mm (0.0118 in.)

If the thrust clearance is grater than maximum, replace the thrust washers as a set.

Thrust washer thickness:

STD	2.430 – 2.480 mm (0.0957 – 0.0976 in.)
U/S 0.250	2.555 – 2.605 mm (0.1006 – 0.1026 in.)
U/S 0.125	2.493 – 2.543 mm (0.0981 – 0.1001 in.)

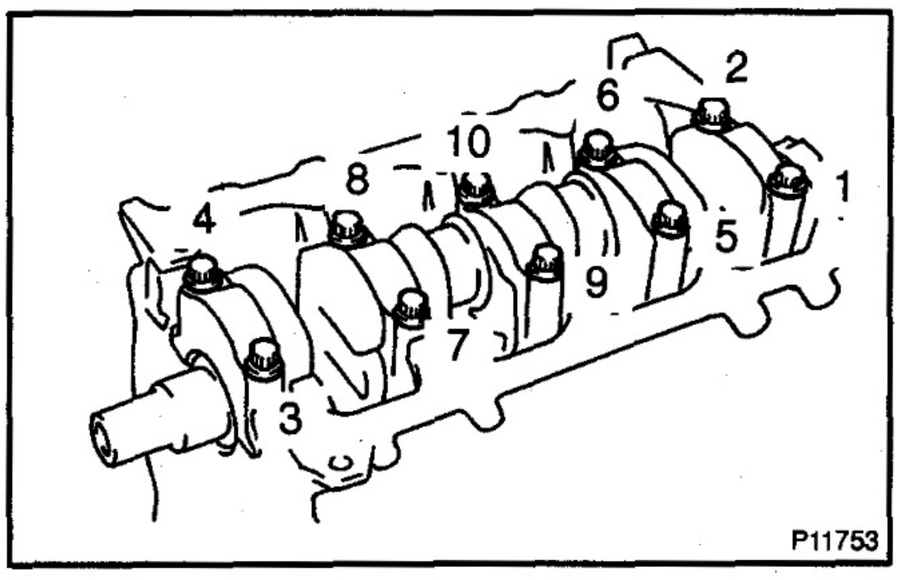

26. REMOVE MAIN BEARING CAPS AND CHECK OIL CLEARANCE

(a) Uniformly loosen and remove the main bearing cap bolts in several passes, in the sequence shown.

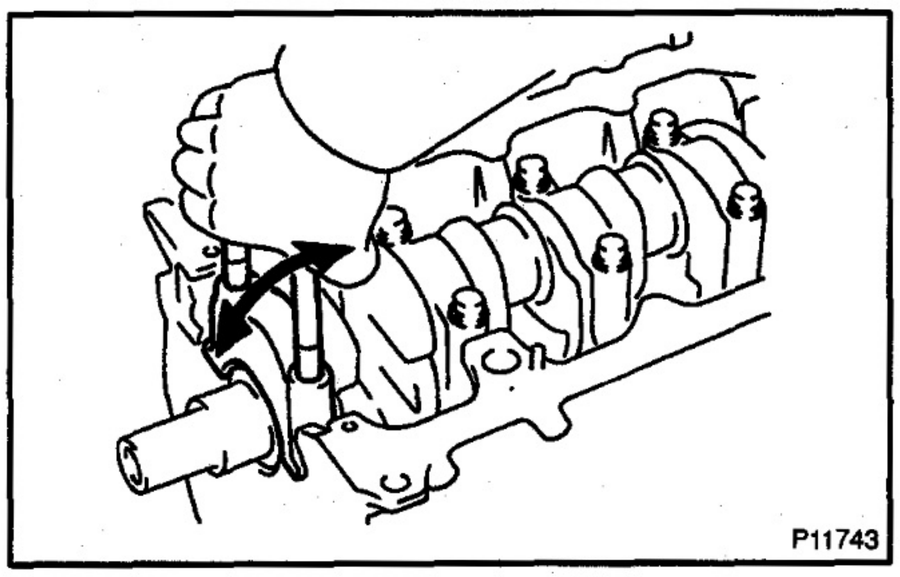

(b) Using the removed main bearing cap bolts, pry the main bearing cap back and forth, and remove the main bearing caps, lower bearings and lower thrust washers (No.5 main bearing cap only).

HINT:

- Keep the lower bearing and main bearing cap together.
- Arrange the main bearing caps and lower thrust washers in correct order.

(c) Lift out the crankshaft.

HINT:

Keep the upper bearings and upper thrust washers together with the cylinder block.

(d) Clean each main journal and bearing.

(e) Check each main journal and bearing for pitting and scratches.

If the journal or bearing is damaged, replace the bearings. If necessary, grind or replace the crankshaft.

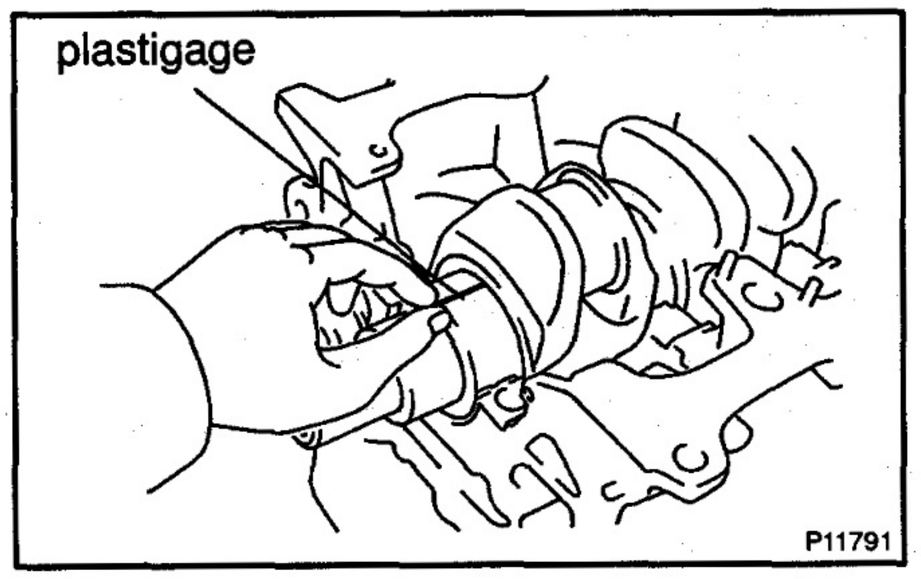

(f) Place the crankshaft on the cylinder block.
(g) Lay a strip of Plastigage across each journal.
(h) Install the main bearing caps. (See page EM–94)
1st
Torque: 49 N·m (500 kgf·cm, 36 ft·lbf)
2nd Turn 90 °

NOTICE:
Do not turn the crankshaft.

(i) Remove the main bearing caps. (See procedure (a) and (b) above)

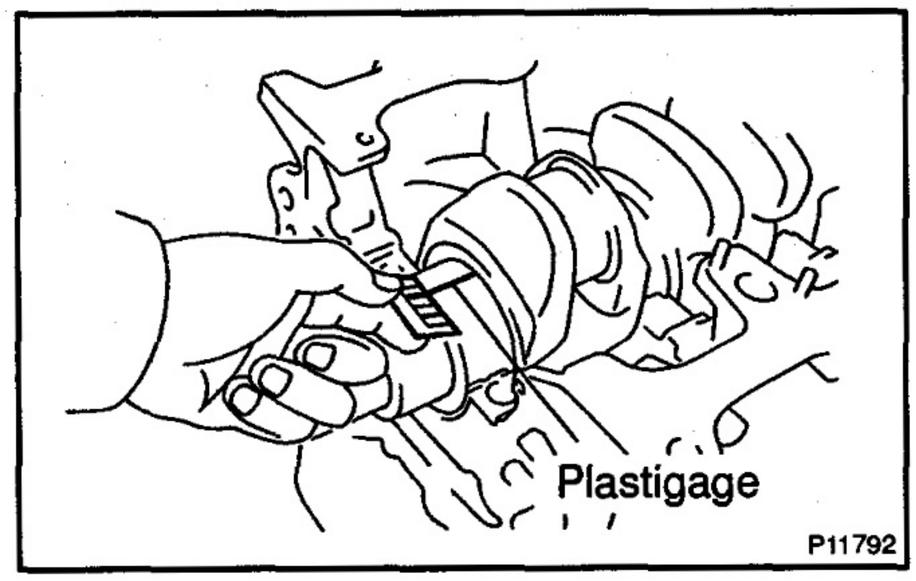

(j) Measure the Plastigage at its widest point.
Standard clearance:
STD: 0.036 – 0.054 mm (0.0014 – 0.0021 in.)
U/S 0.25 and U/S 0.50:
0.037– 0.077 mm (0.0015 – 0.0030 in.)
Maximum clearance: 0.10 mm (0.0039 in.)

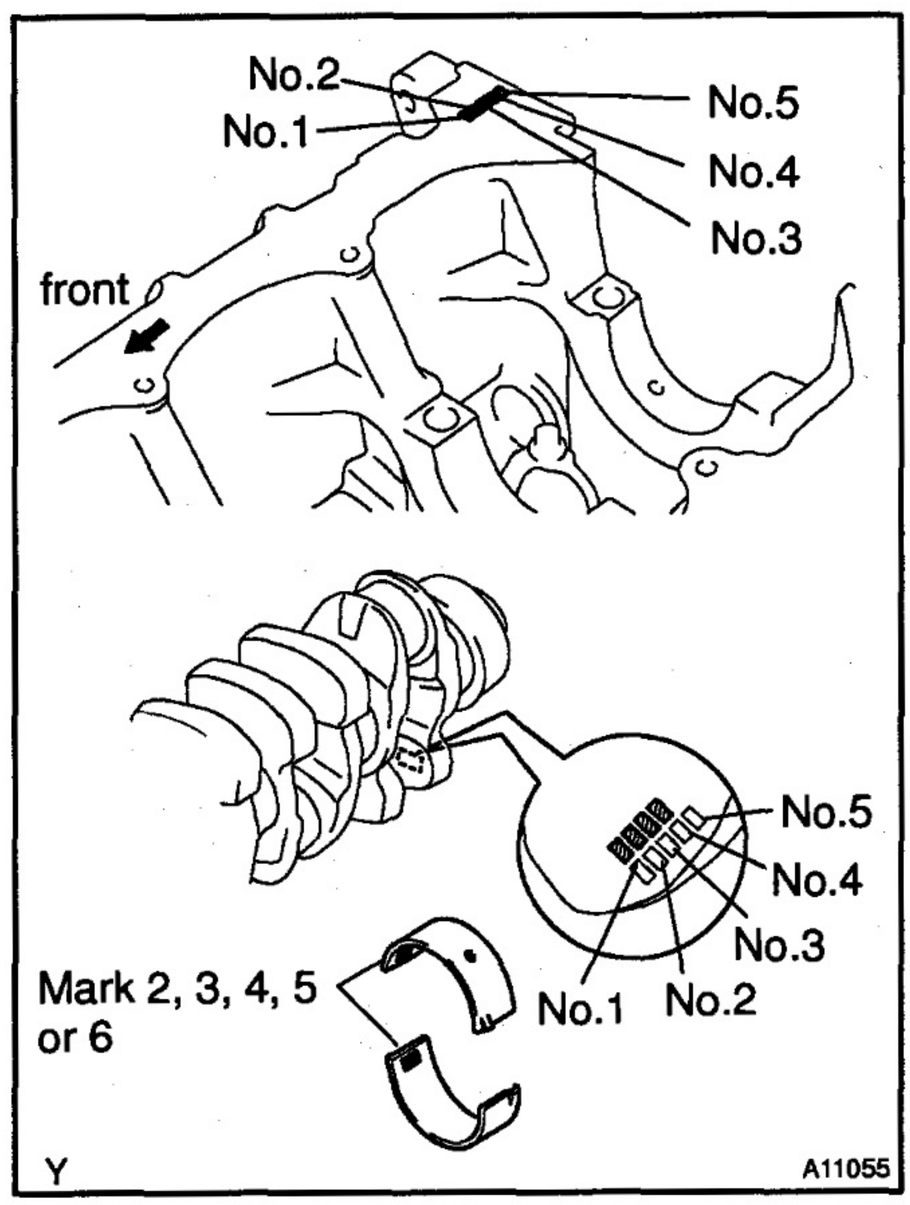

HINT:
If replacing the cylinder block subassembly, the bearing standard clearance will be:
0.036 – 0.054 mm (0.0014 – 0.0021 in.)
If the oil clearance is greater than maximum, replace the bearings. If necessary, grind or replace the crankshaft.
HINT:
If using a standard bearing, replace it with one having the same number. If the number of the bearing cannot be determined, select the correct bearing by adding together the numbers imprinted on the cylinder block and crankshaft, then selecting the bearing with the same number as the total. There are 5 sizes of standard bearings, marked "2", "3", "4", "5" and "6" accordingly.

	Number Marked								
Cylinder block	1			2			3		
Crankshaft	1	2	3	1	2	3	1	2	3
Use bearing	2	3	4	3	4	5	4	5	6

EXAMPLE: Cylinder block "2" + crankshaft "1"
= Total number 3 (Use bearing "3")

Y A11056

Reference
Cylinder block main journal bore diameter:

Mark "1"	75.000 – 75.006 mm (2.9528 – 2.9530 in.)
Mark "2"	75.006 – 75.012 mm (2.9530 – 2.9532 in.)
Mark "3"	75.012 – 75. 018 mm (2.9532 – 2.9535 in.)

Crankshaft journal diameter:

Mark "1"	69.994 – 70.000 mm (2.7557 – 2.7559 in.)
Mark "2"	69.988 – 69.994 mm (2.7554 – 2.7557 in.)
Mark "3"	69.982 – 69.988 mm (2.7552 – 2.7554 in.)

Standard sized bearing center wall thickness:

Mark "2"	2.479 – 2.482 mm (0.0976 – 0.977 in.)
Mark "3"	2.482 – 2.485 mm (0.0977 – 0.0978 in.)
Mark "4"	2.485 – 2.488 mm (0.0978 – 0.0980 in.)
Mark "5"	2.488 – 2.491 mm (0.0980 – 0.0981 in.)
Mark "6"	2.491 – 2.494 mm (0.0981 – 0.0982 in.)

(k) Completely remove the Plastigage.

27. REMOVE CRANKSHAFT

(a) Lift out the crankshaft.

(b) Remove the upper bearings and upper thrust washers from the cylinder block.

HINT:

Arrange the main bearing caps, bearings and thrust washers in correct order.

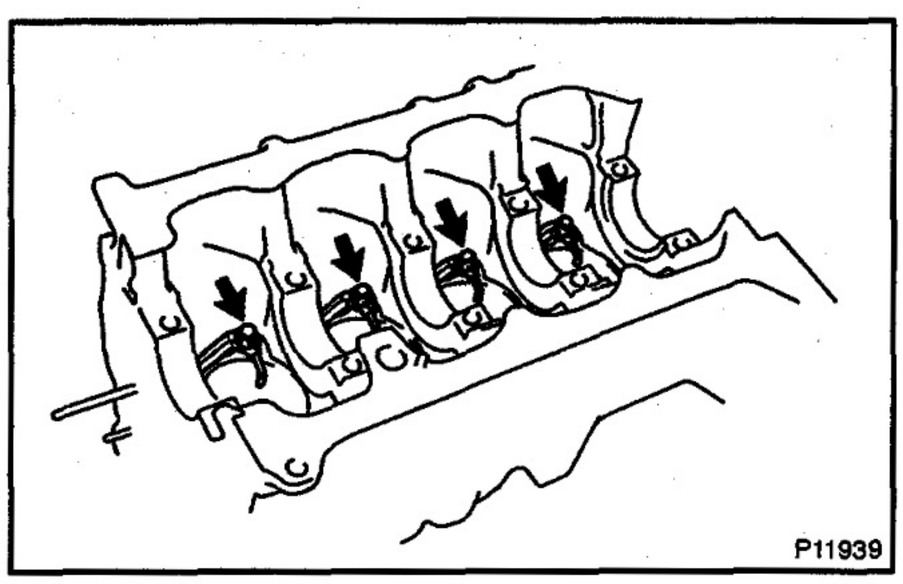

28. REMOVE CHECK VALVES AND OIL NOZZLES

Remove the 4 check valves and oil nozzles.

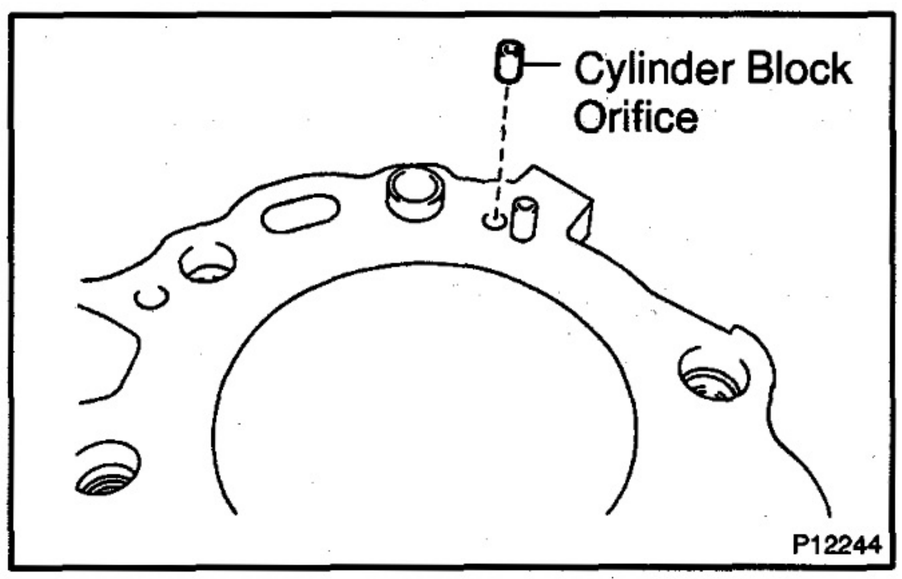

29. REMOVE CYLINDER BLOCK ORIFICE

Remove the cylinder block orifice from the cylinder block.

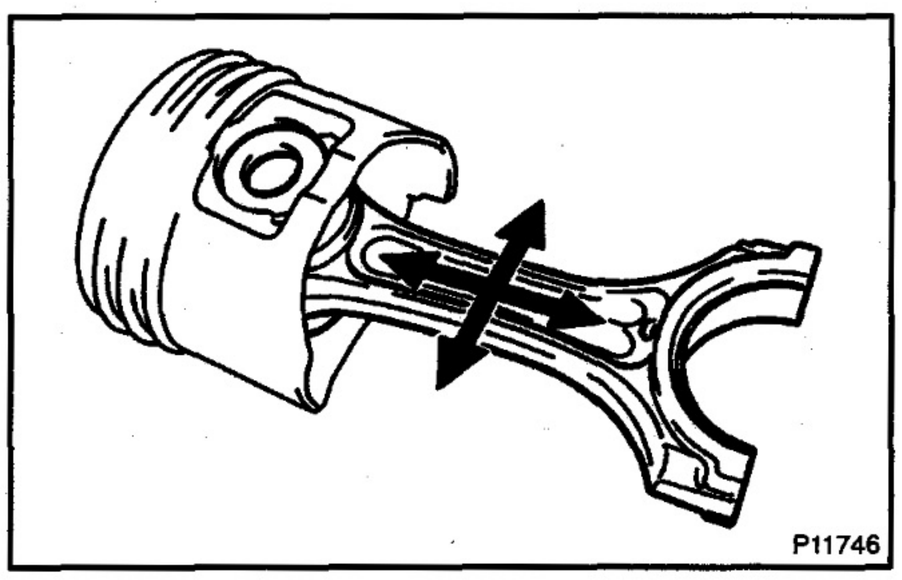

30. CHECK FIT BETWEEN PISTON AND PISTON PIN

Try to move the piston back and forth on the piston pin.

If any movement is felt, replace the piston and pin as a set.

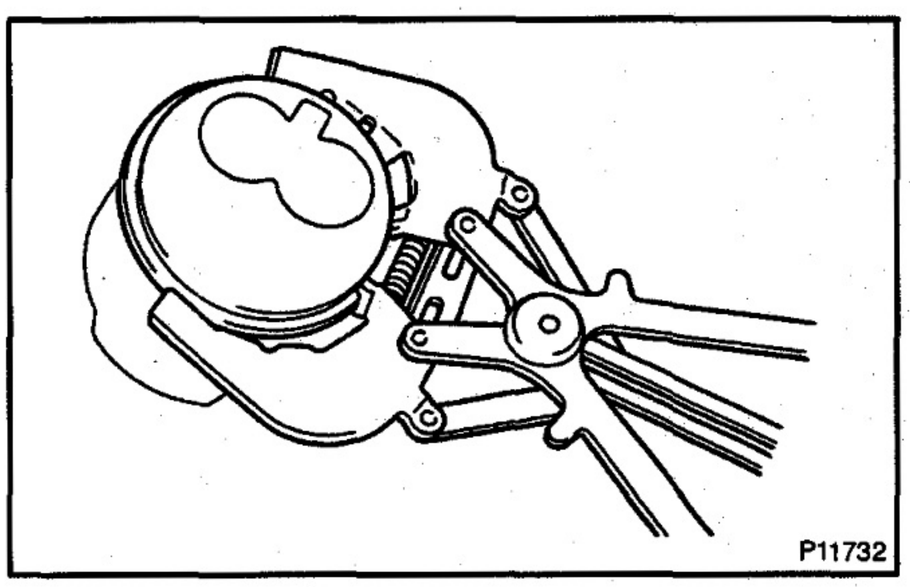

31. REMOVE PISTON RINGS

(a) Using a piston ring expander, remove the 2 compression rings and oil ring.

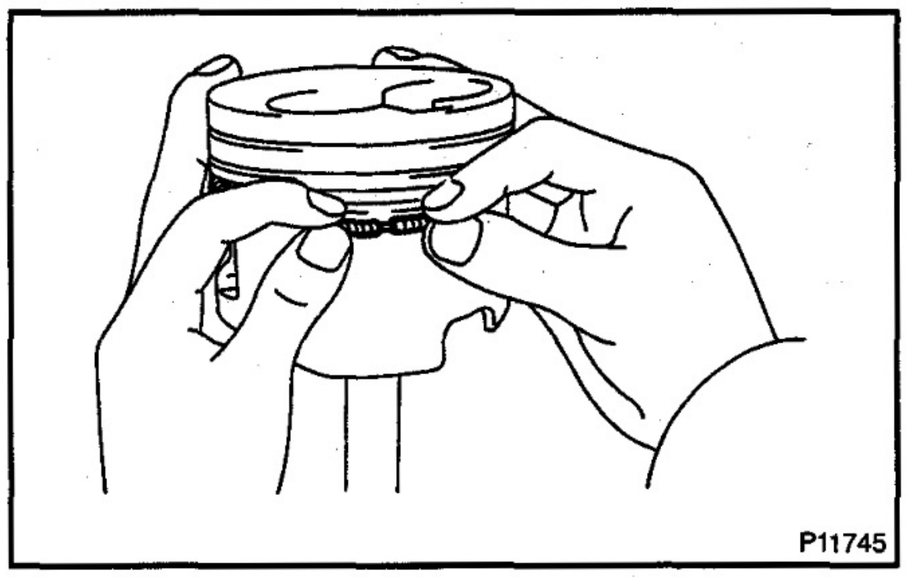

(b) Remove the coil by hand.

HINT:

Arrange the rings in correct order only.

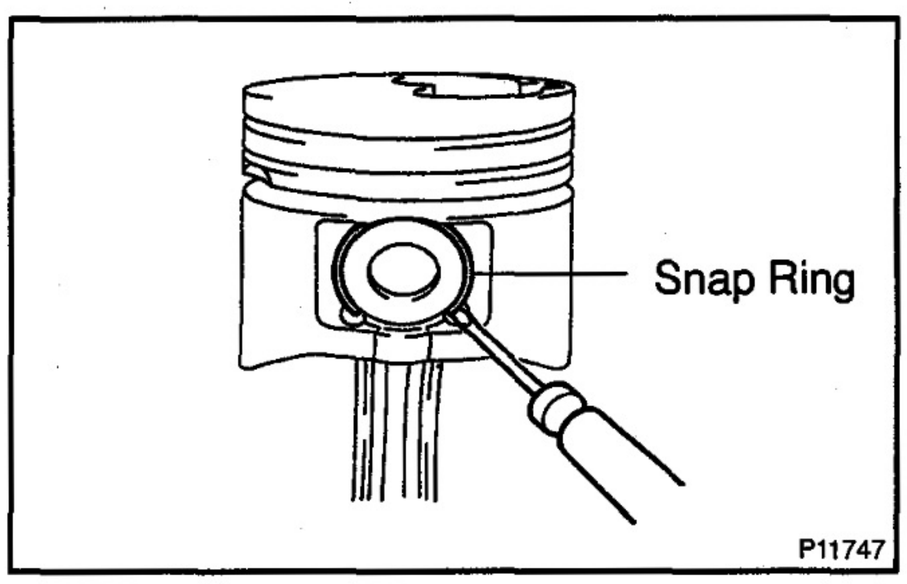

32. DISCONNECT CONNECTING ROD FROM PISTON

(a) Using a small screwdriver, pry off the snap ring form the piston.

(b) Gradually heat the piston to approx. 60°C (140°F).

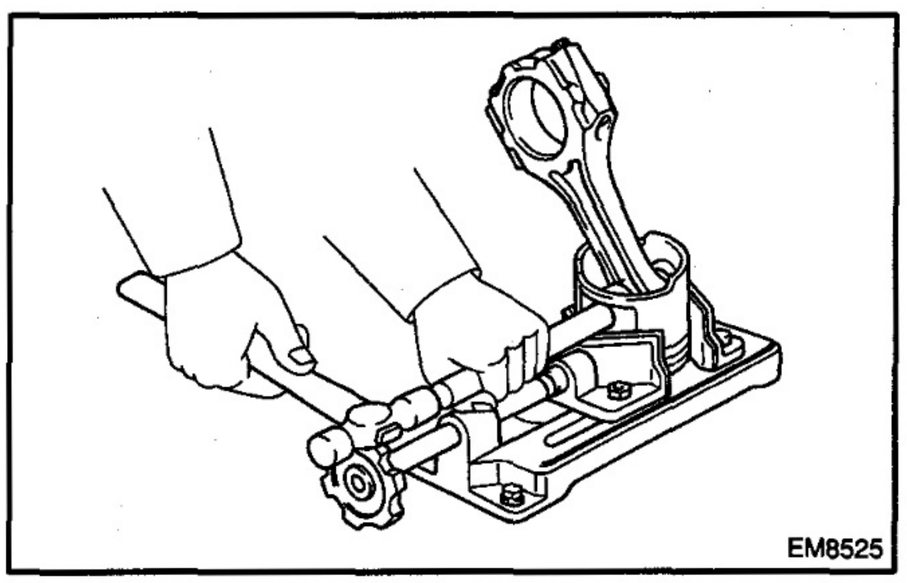

(c) Using a plastic–faced hammer and brass bar, lightly tap out the piston pin and remove the connecting rod.

HINT:

- The piston pin are matched set.
- Arrange the pistons, pins, rings, connecting rods and bearings in correct order.

EM15L–01

INSPECTION

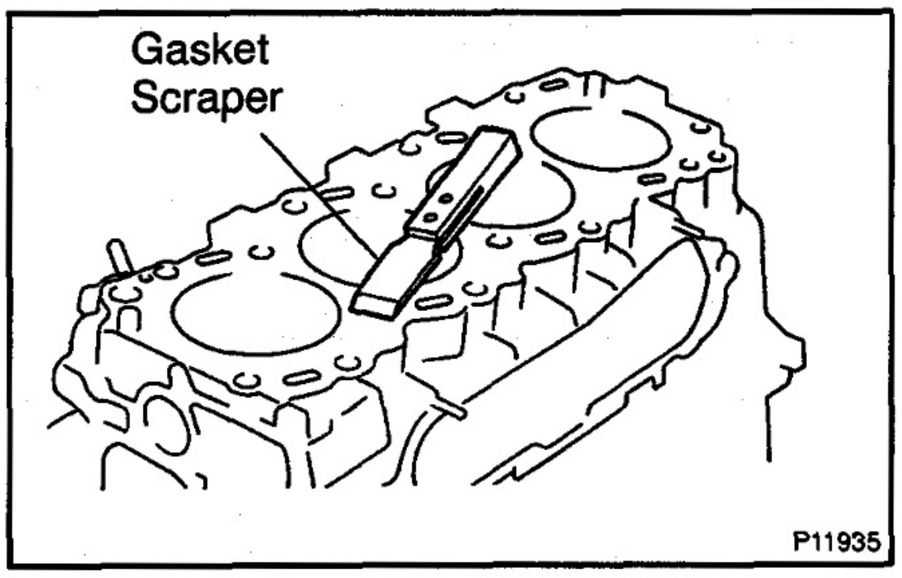

1. CLEAN CYLINDER BLOCK

(a) Remove the gasket material.
Using a gasket scraper, remove all the gasket material from the top surface of the cylinder block.

(b) Clean the cylinder block.
Using a soft brush and solvent, thoroughly clean the cylinder block.

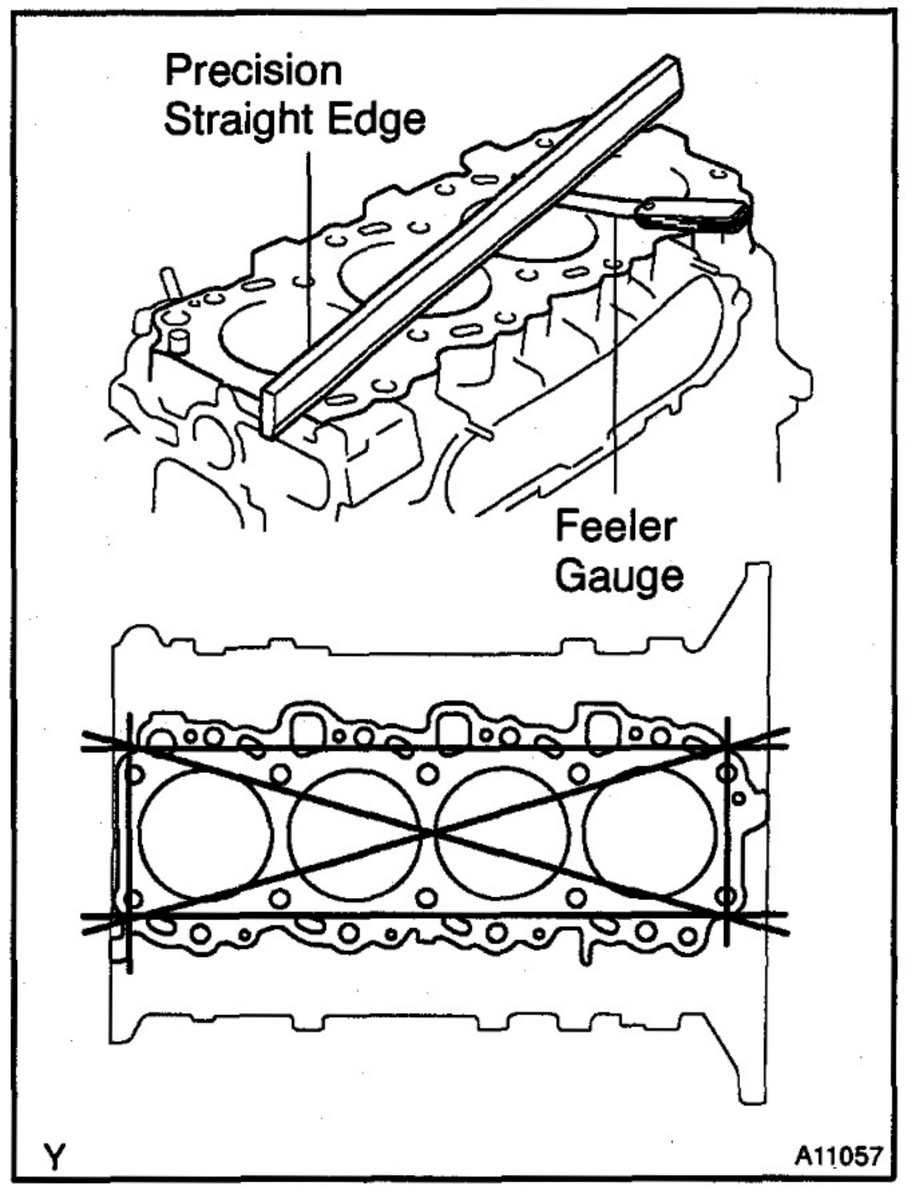

2. INSPECT TOP SURFACE OF CYLINDER BLOCK FOR FLATNESS

Using a precision straight edge and feeler gauge, measure the surfaces contacting the cylinder head gasket for warpage.

Maximum warpage: 0.10 mm (0.0039 in.)

If warpage is greater than maximum, replace the cylinder block.

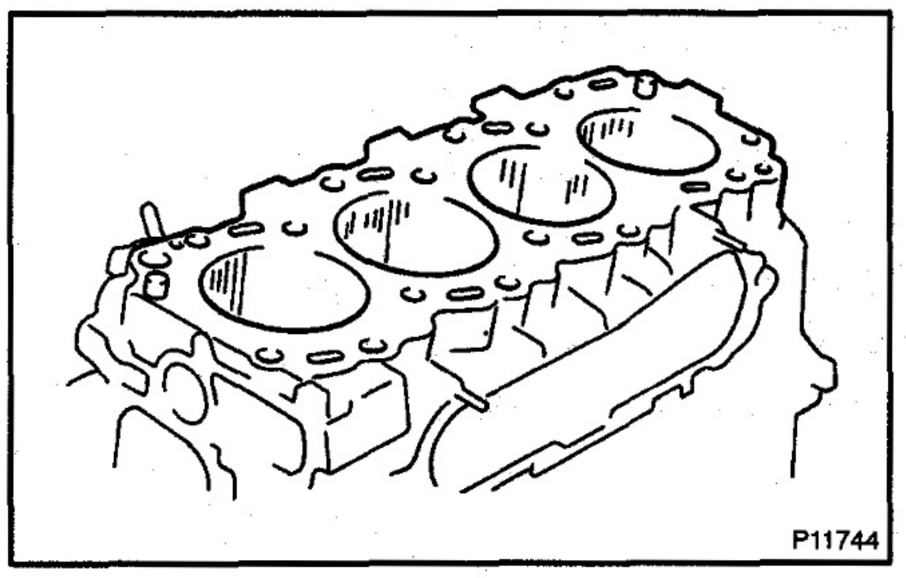

3. INSPECT CYLINDER FOR VERTICAL SCRATCHES

Visually check the cylinder for vertical scratches.
If deep scratches are present, rebore all the 4 cylinders. If necessary, replace the cylinder block.

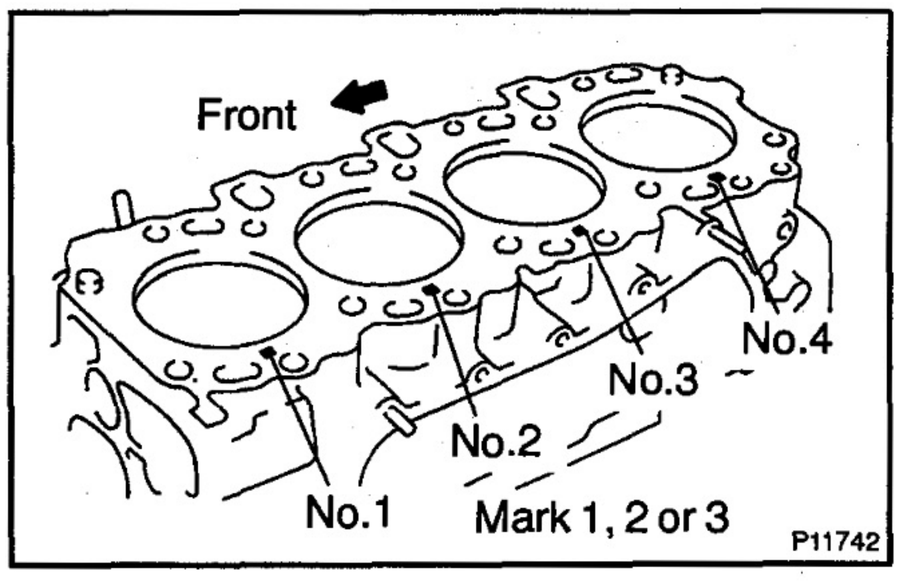

4. INSPECT CYLINDER BORE DIAMETER

HINT:
There are 3 sizes of the standard cylinder bore diameter, marked "1", "2" and "3" accordingly. The mark is stamped on the top of the cylinder block.

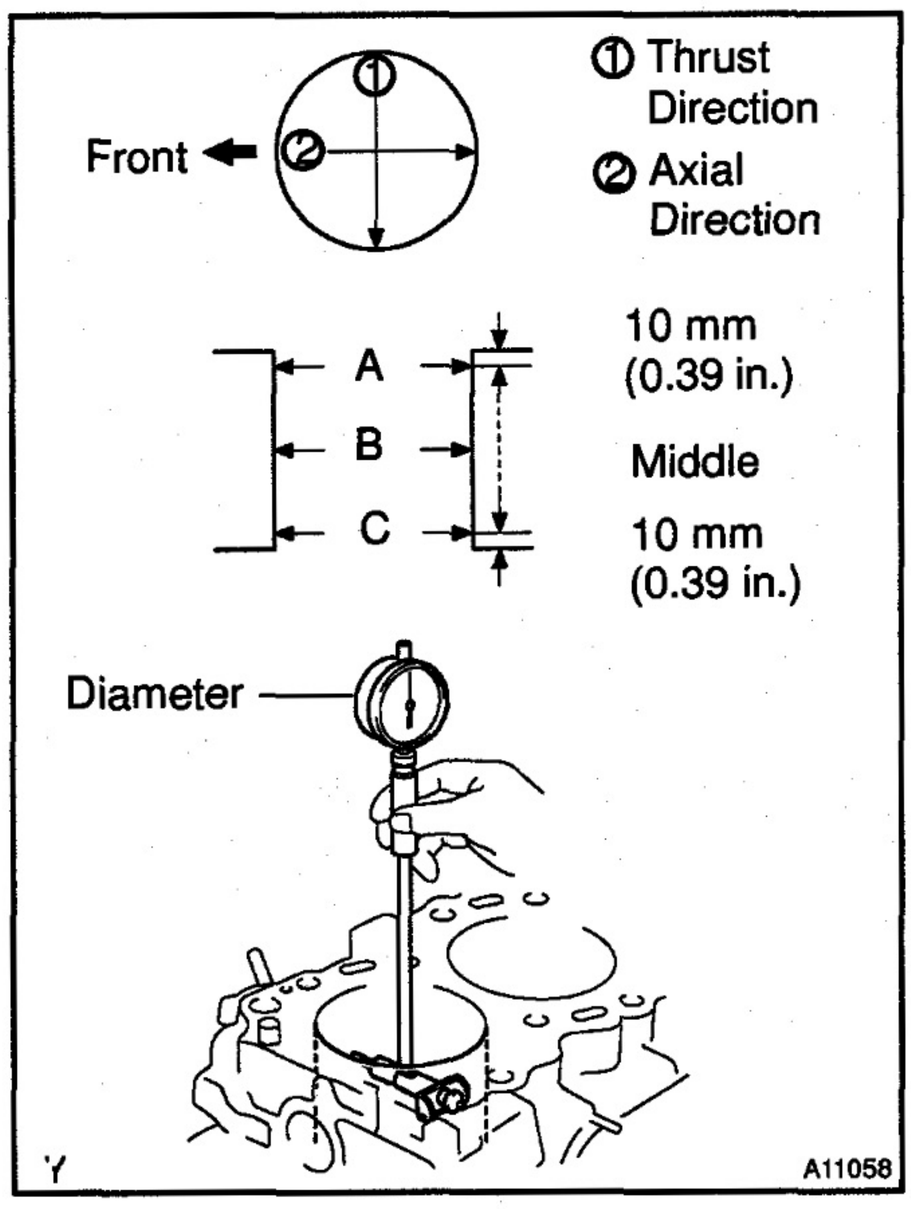

Using a cylinder gauge, measure the cylinder bore diameter at positions A, B and C in the thrust and axial directions.

Standard diameter:

STD Mark	96.000 – 96.010 mm (3.7795 – 3.7799 in.)
STD Mark	96.010 – 96.020 mm(3.7799 – 3.7803 in.)
STD Mark	96.020 – 96.030 mm (3.7803 – 3.7807 in.)

Maximum diameter:

STD	96.23 mm (3.7886 in.)
O/S 0.50	96.73 mm (3.8083 in.)
O/S 0.75	96.96 mm (3.8137 in.)
O/S 1.00	97.23 mm (3.8279 in.)

If the diameter is greater than maximum, rebore all the 4 cylinders. If necessary, replace the cylinder block.

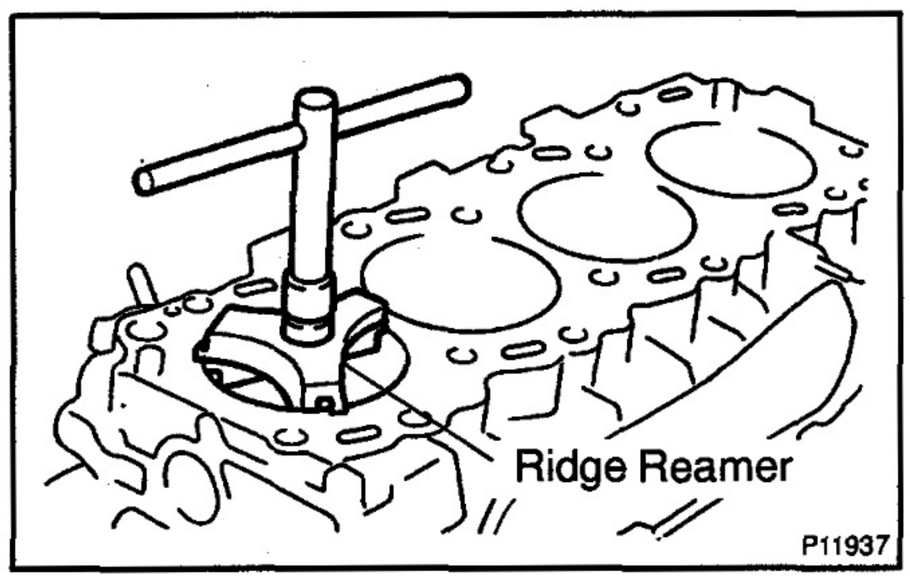

5. REMOVE CYLINDER RIDGE

If the wear is less than 0.2 mm (0.008 in.), using a ridge reamer, grind the top of the cylinder.

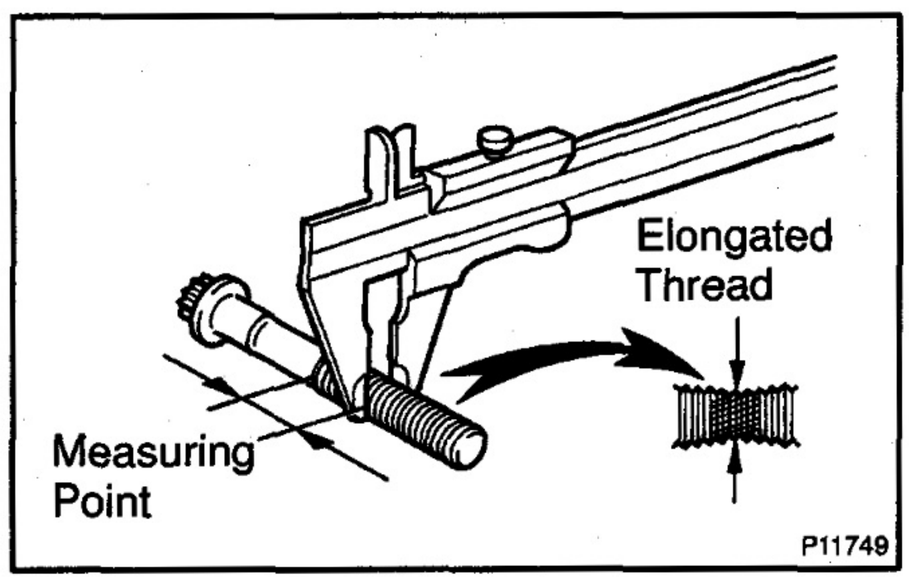

6. INSPECT MAIN BEARING CAP BOLTS

Using vernier calipers, measure the minimum diameter of the compressed thread at the measuring point.

Standard diameter:
13.500 – 14.000 mm (0.5315 – 0.5512 in.)
Minimum diameter: 12.60 mm (0.4961 in.)

If the diameter is less than minimum, replace the bolt.

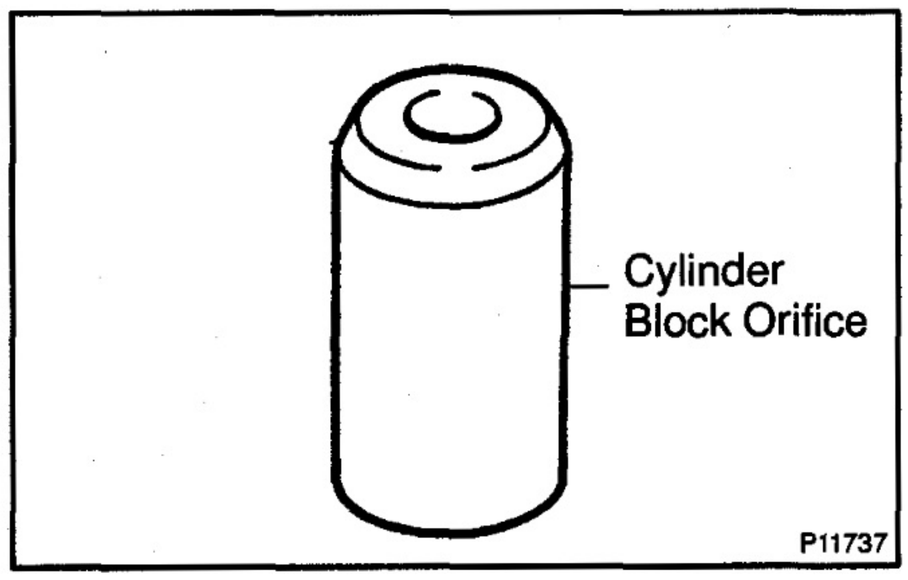

7. INSPECT CYLINDER BLOCK ORIFICE

Visually check that the orifice is not clogged.

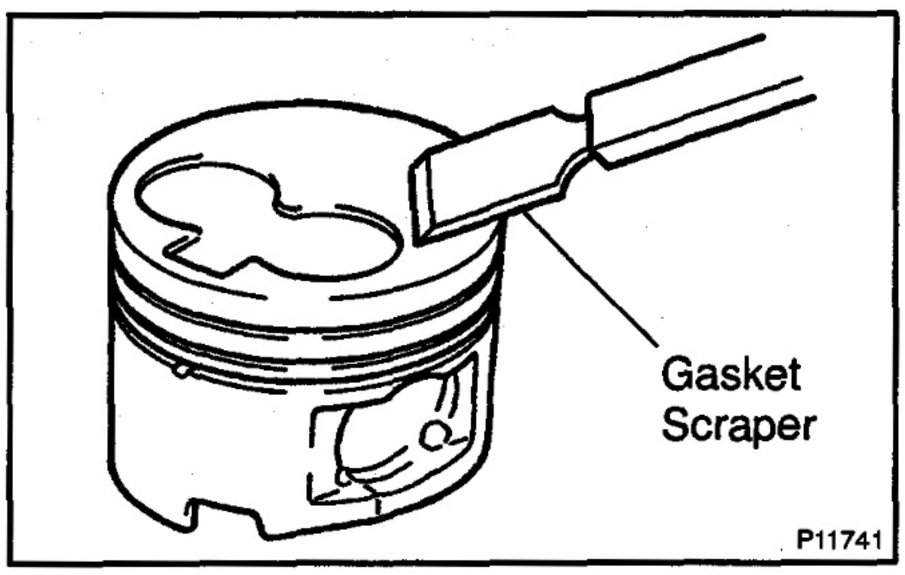

8. CLEAN PISTON

(a) Using a gasket scraper, remove the carbon from the piston top.

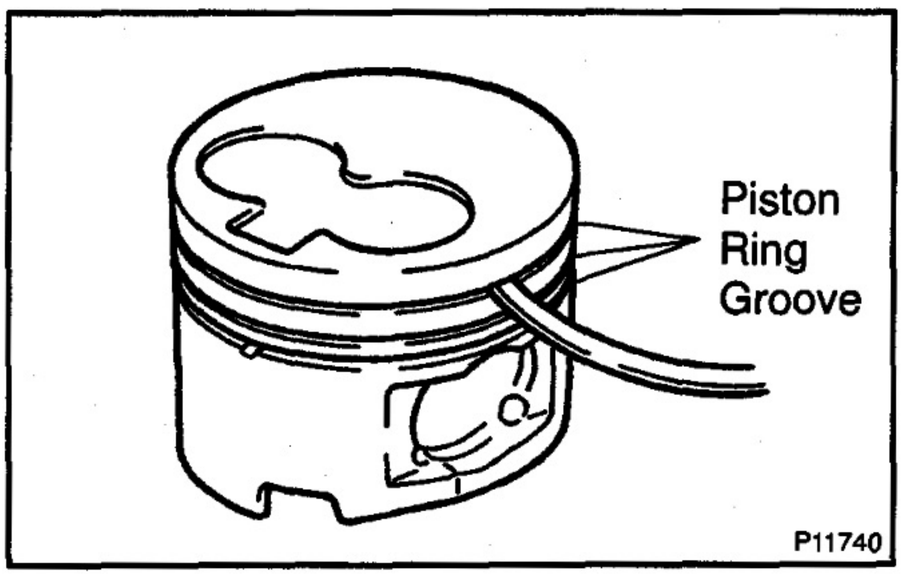

(b) Using a groove cleaning tool or broken ring, clean the piston ring grooves.

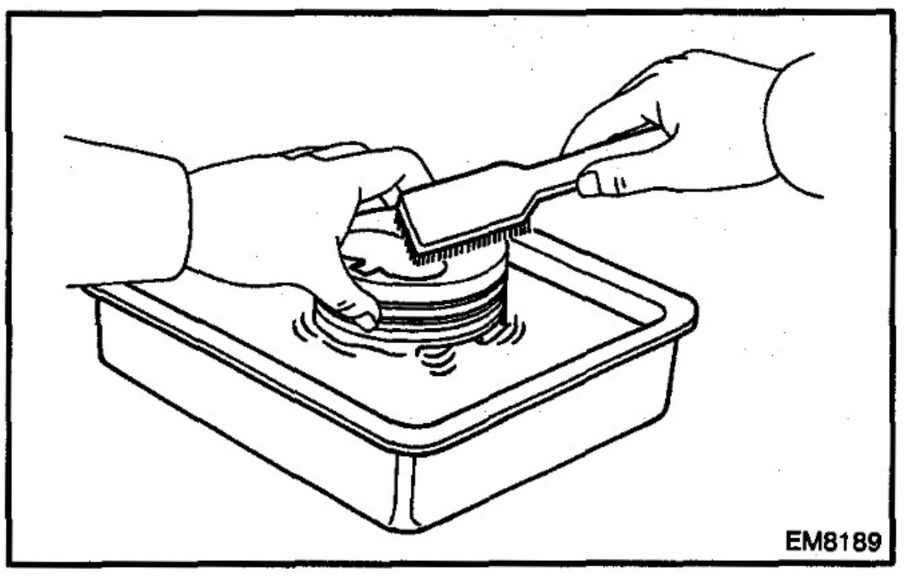

(c) Using solvent and a brush, thoroughly clean the piston.

NOTICE:

Do not use a wire brush.

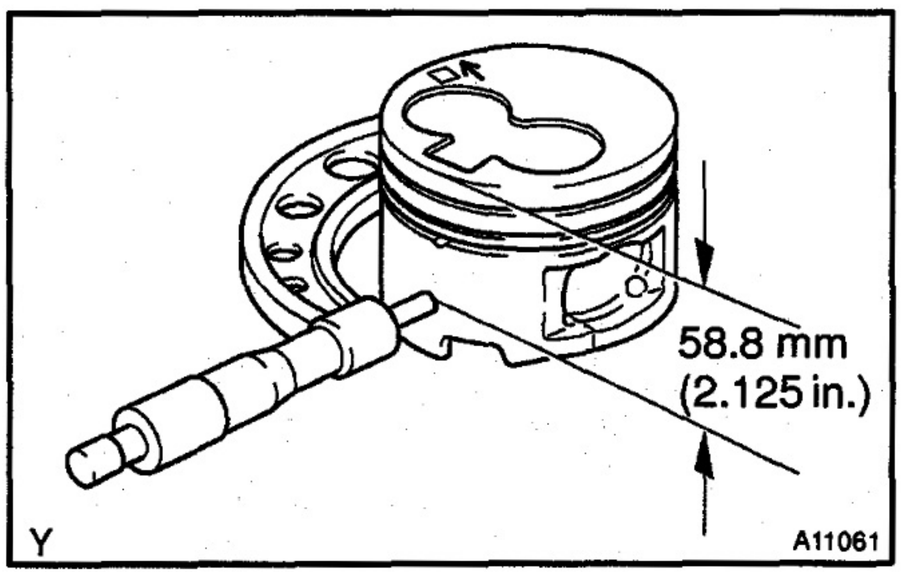

9. INSPECT PISTON AND PISTON RING

(a) Inspect the piston oil clearance.

HINT:

There are 3 sizes of the standard piston diameter, marked "1", "2" and "3" accordingly. The mark is stamped on the piston top.

(1) Using a micrometer, measure the piston diameter at right angles to the piston pin center line, 58.8 mm (2.315 in.) from the piston head.

Piston diameter:

STD Mark 1	95.940 – 95.950 mm (3.7772 – 3.7776 in.)
STD Mark 2	95.950 – 95.960 mm (3.7776 – 3.7779 in.)
STD Mark 3	95.960 – 95.970 mm (3.7779 – 3.7783 in.)
O/S 0.50	96.440 – 96.470 mm (3.7968 – 3.7980 in.)
O/S 0.75	96.690 – 96.720 mm (3.8067 – 3.8079 in.)
O/S 1.00	96.940 – 96.970 mm (3.8165 – 3.8177 in.)

(2) Measure the cylinder bore diameter in the thrust directions. (See page EM–94)

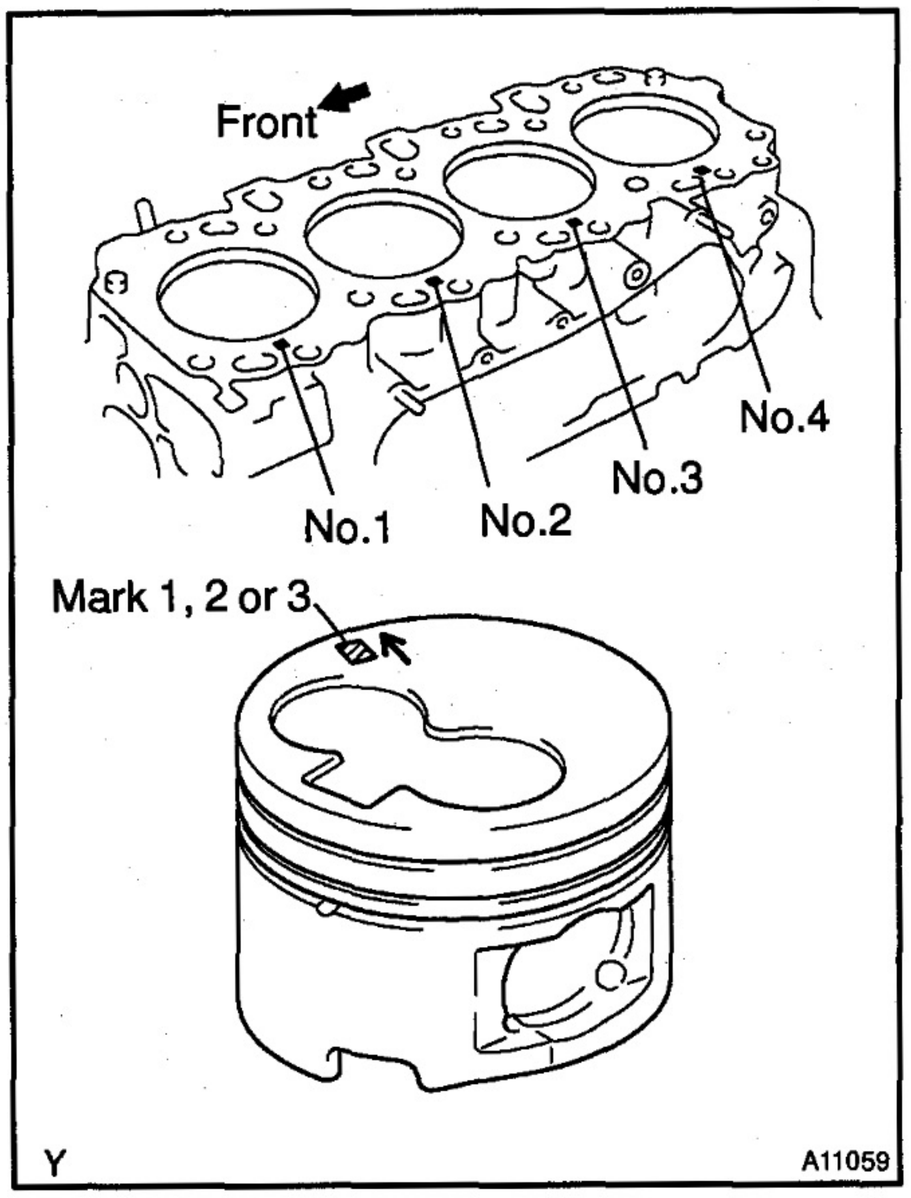

(3) Subtract the piston diameter measurement from the cylinder bore diameter measurement.

Standard oil clearance:
0.050 – 0.070 mm (0.0020 – 0.0028 in.)
Maximum oil clearance: 0.14 mm (0.0055 in.)

If the oil clearance is greater than maximum, replace all the 4 pistons and rebore all the 4 cylinders. If necessary, replace the cylinder block.

HINT:

(Use new cylinder block): Use a piston with the same number mark as the cylinder bore diameter marked on the cylinder block.

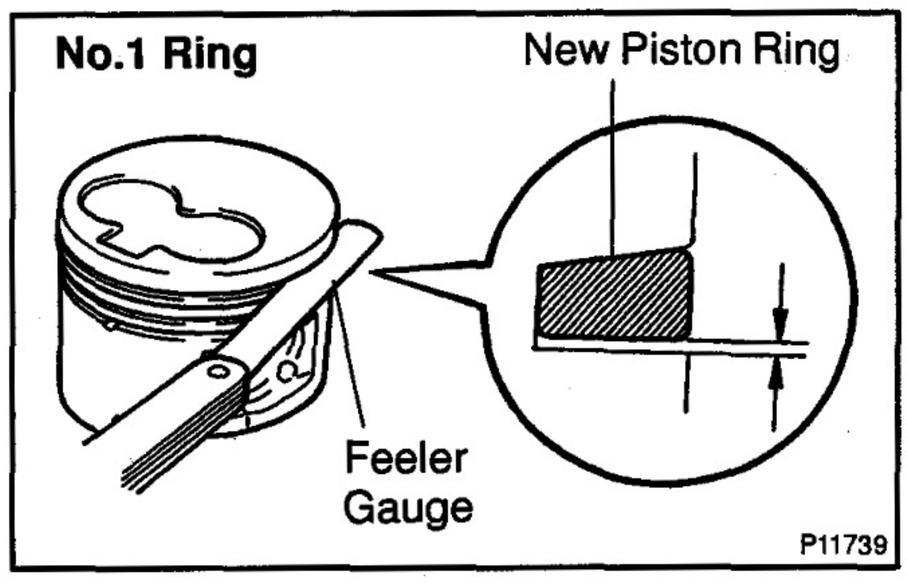

(b) Inspect the piston ring groove clearance.

(1) No.1 ring:

Install a new No.1 piston ring to the piston. Using a feeler gauge, measure the clearance between new piston ring and the wall of the ring groove.

Ring groove clearance (No.1):
0.060 – 0.110 mm (0.0024 – 0.0043 in.)

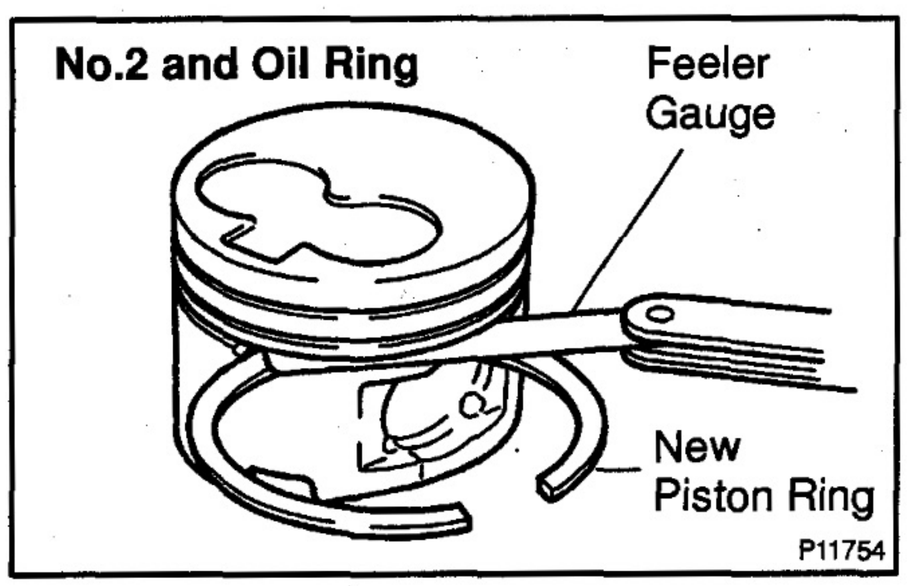

(2) No.2 and oil ring:

Using a feeler gauge, measure the clearance between the new piston ring and the wall of the ring groove.

Ring groove clearance (No.2 and oil ring):

No.2	0.060 – 0.100 mm (0.0024 – 0.0039 in.)
Oil	0.020 – 0.060 mm (0.0009 – 0.0024 in.)

If the clearance is greater than maximum, replace the piston.

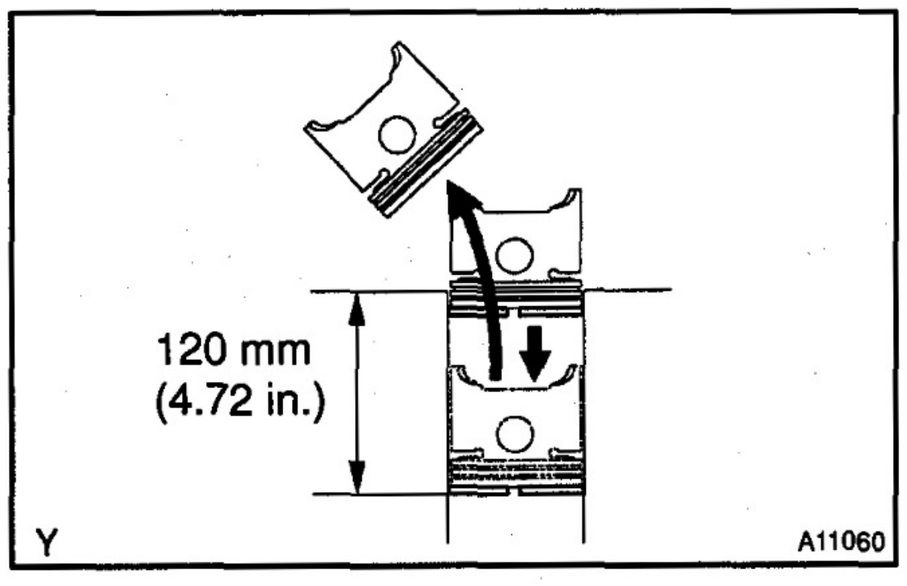

(c) Inspect the piston ring end gap.

(1) Insert the piston ring into the cylinder bore.

(2) Using a piston, push the piston ring a little beyond the bottom of the ring travel, 120 mm (4.72 in.) from the top of the cylinder block.

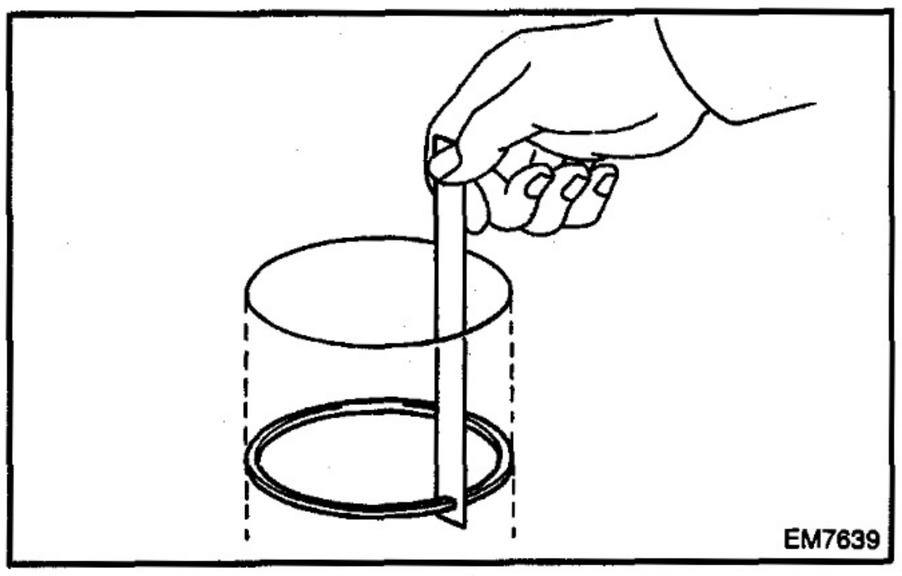
EM7639

(3) Using a feeler gauge, measure the end gap.

Standard end gap:

No.1	0.350 – 0.570 mm (0.0138 – 0.0224 in.)
No.2	0.400 – 0.600 mm (0.0157 – 0.0236 in.)
Oil	0.200 – 0.500 mm (0.0079 – 0.0197 in.)

Maximum end gap:

No.1	1.03 mm (0.0406 in.)
No.2	1.10 mm (0.0433 in.)
Oil	0.87 mm (0.0343 in.)

If the end gap is greater than maximum, replace the piston ring.
If the end gap is greater than maximum, even with a new piston ring, rebore all the 4 cylinders or replace the cylinder block.

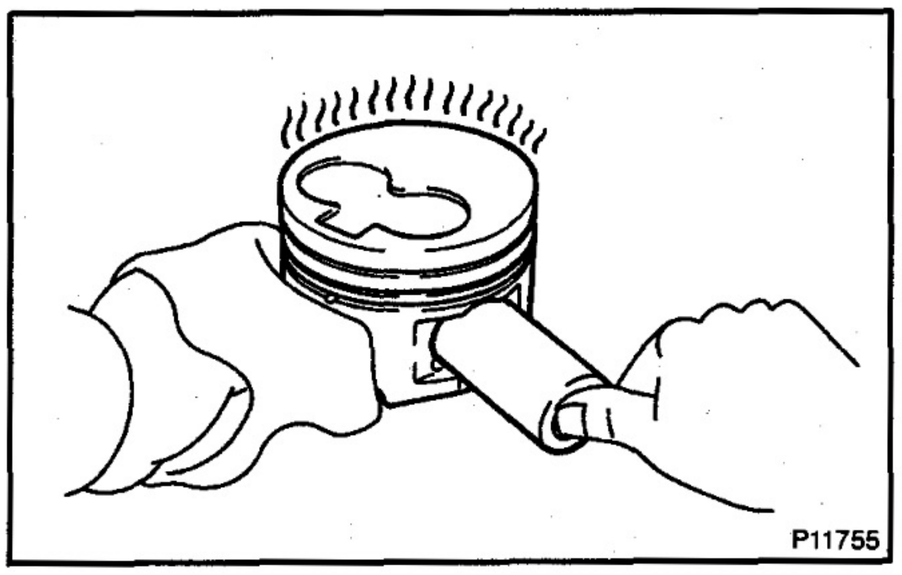
P11755

(d) Inspect the pistion pin fit.
At 80°C (176°F), you should be able to push the piston pin into the piston pin hole with your thumb.

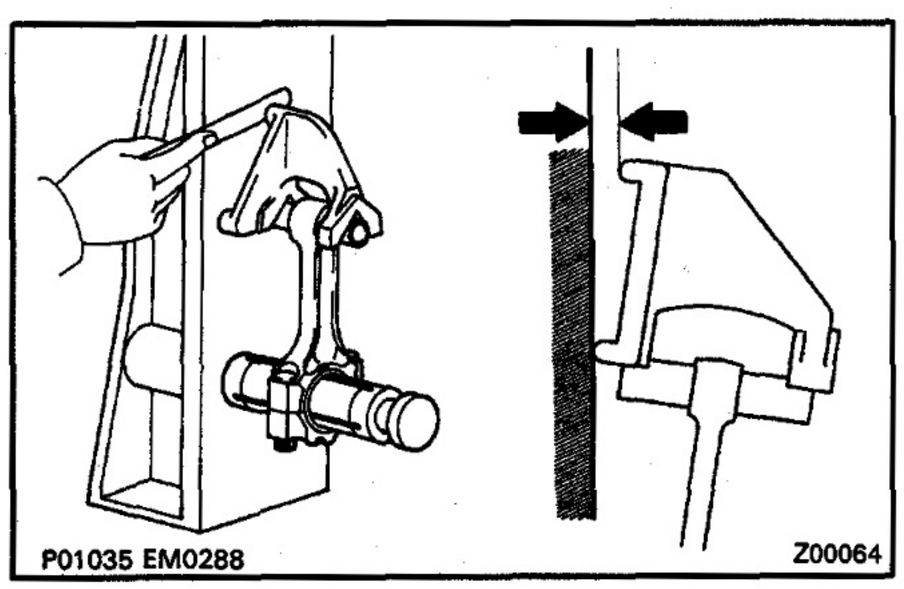
P01035 EM0288 Z00064

(e) Using a rod aligner and feeler gauge, check the connecting rod alignment.
(1) Check for bend.
Maximum bend:
0.03 mm (0.0012 in.) per 100 mm (3.94 in.)
If bend is greater than maximum, replace the connecting rod assembly.

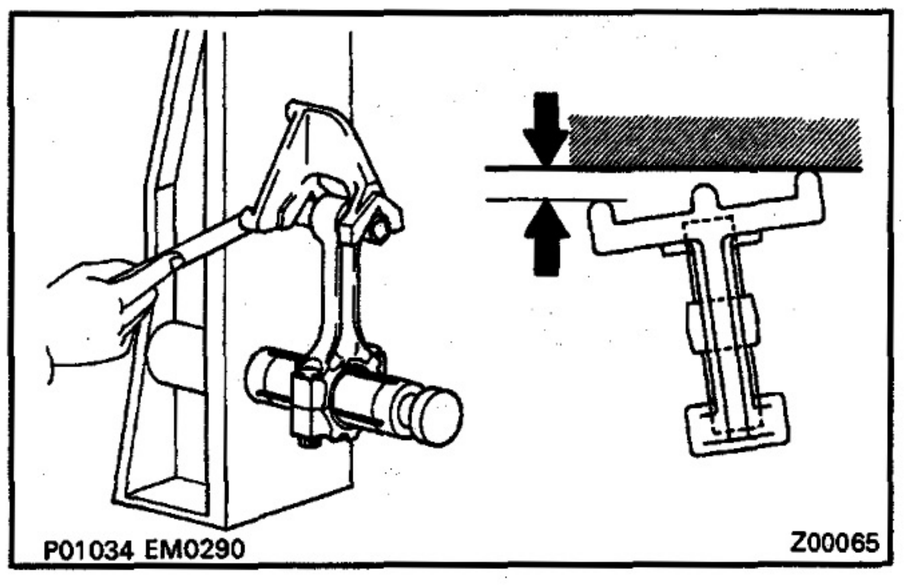
P01034 EM0290 Z00065

(2) Check for twist.
Maximum twist:
0.15 mm (0.0059 in.) per 100 mm (3.94 in.)
If twist is greater than maximum, replace the connecting rod assembly.

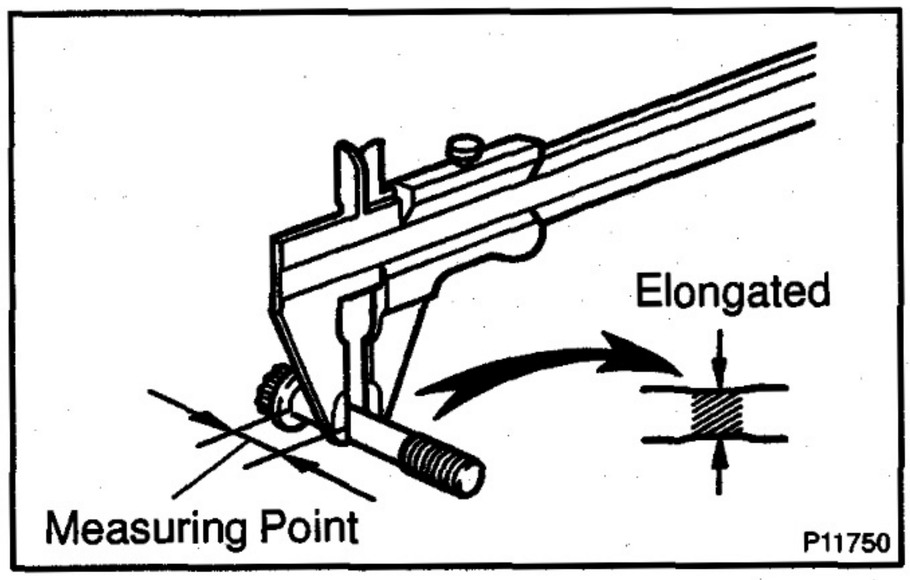

(f) Using vernier calipers, measure the minimum diameter of the compressed bolt at the measuring point.

Standard diameter:
8.400 – 8.600 mm (0.3307 – 0.3385 in.)
Minimum diameter: 8.20 mm (0.3228 in.)

If the diameter is less than minimum, replace the connecting rod bolt.

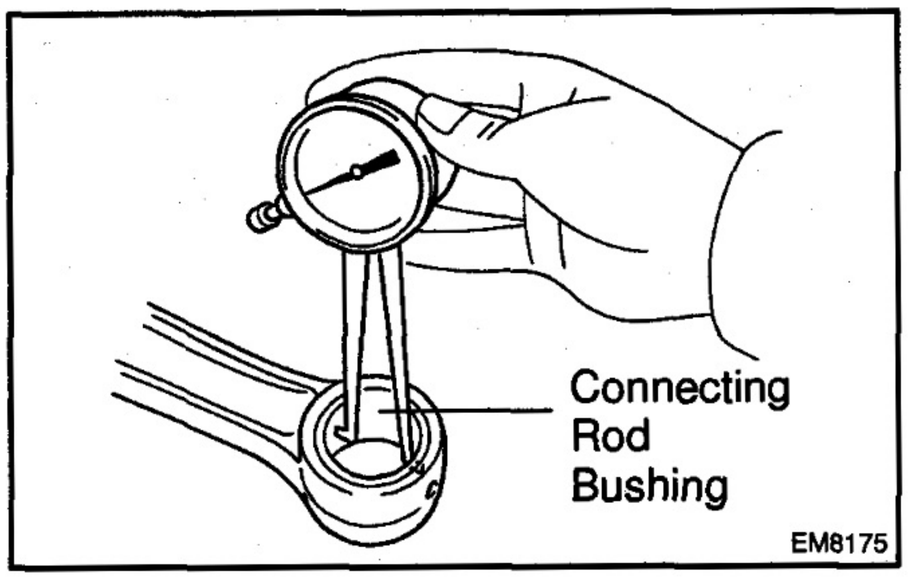

(g) Inspect the piston pin oil clearance.

(1) Using caliper gauge, measure the inside diameter of the connecting rod bushing.

Bushing inside diameter:
34.012 – 34.024 mm (1.3391 – 1.3395 in.)

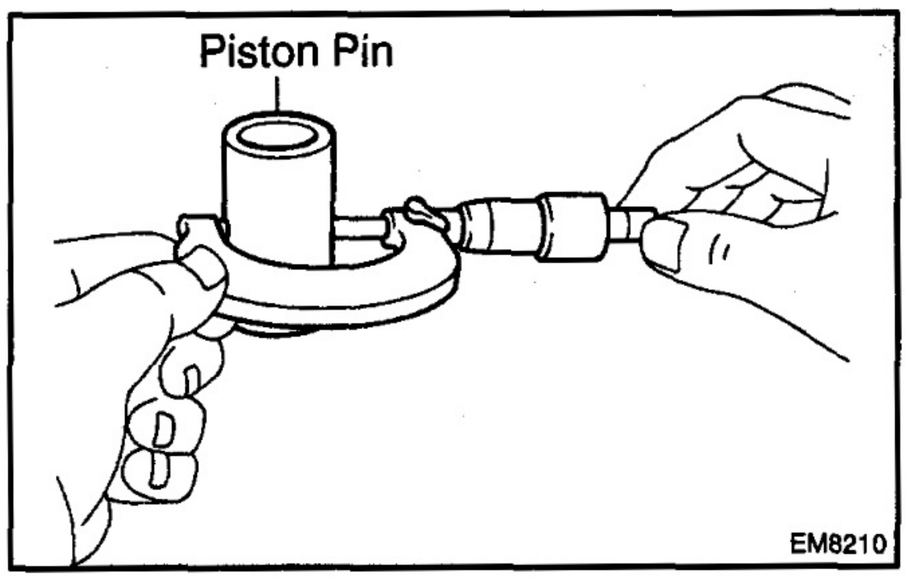

(2) Using a micrometer, measure the piston pin diameter.

Piston pin diameter:
34.000 – 34.012 mm (1.3386 – 1.3391 in.)

(3) Subtract the piston pin diameter measurement from the bushing inside diameter measurement.

Standard oil clearance:
0.008 – 0.0016 mm (0.0003 – 0.0006 in.)
Maximum oil clearance: 0.03 mm (0.0012 in.)

If the oil clearance is greater than maximum, replace the bushing. If necessary, replace the piston and piston pin as a set.

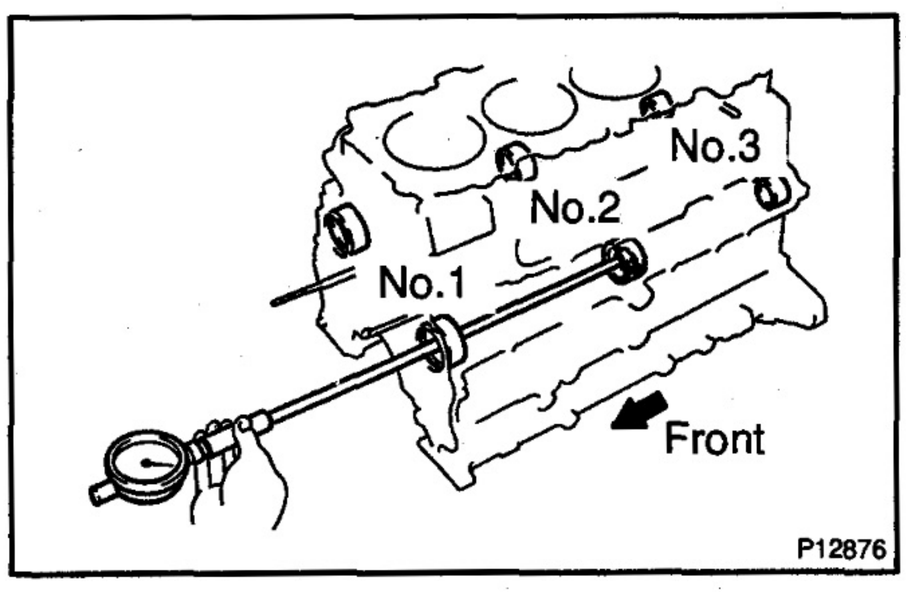

10. INSPECT RH AND LH BALANCE SHAFT

(a) Using cylinder gauge, measure the inside diameter of the balance shaft bearing.

Bearing inside diameter (from front side):

No.1	42.000 – 42.020 mm (1.6535 – 1.6543 in.)
No.2	41.000 – 41.020 mm (1.6142 – 1.6150 in.)
No.3	32.000 – 32.020 mm (1.2598 – 1.2606 in.)

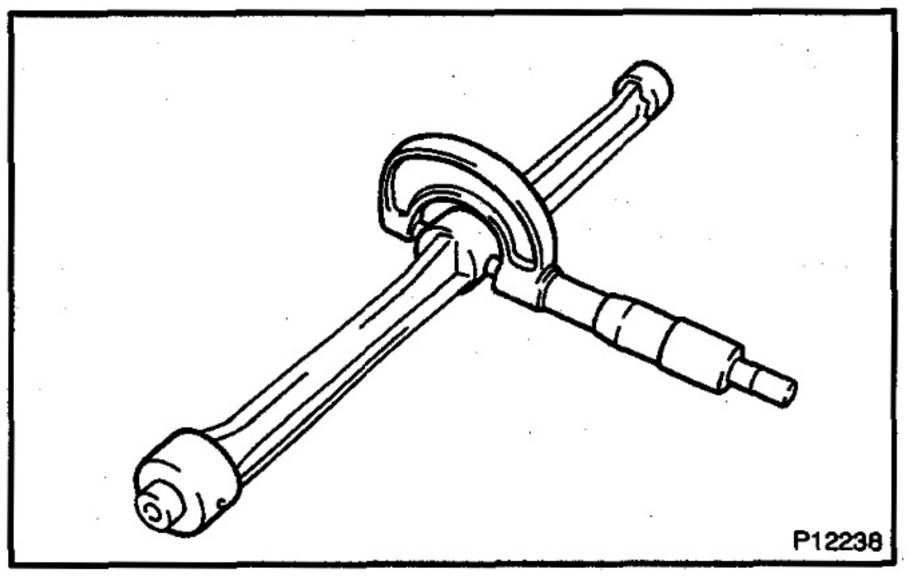

(b) Using a micrometer, measure the diameter of the balance shaft main journals.

Main journal diameter (from front side):

No.1	41.941 – 41.960 mm (1.6512 – 1.6520 in.)
No.2	40.931 – 40.950 mm (1.6115 – 1.6122 in.)
No.3	31.941 – 31.960 mm (1.2575 – 1.2583 in.)

(c) Subtract the balance shaft main journal diameter measurement from the balance shaft bearing inside diameter measurement.

Standard oil clearance:

No.1	0.040 – 0.079 mm (0.0016 – 0.0031 in.)
No.2	0.040 – 0.079 mm (0.0016 – 0.0031 in.)
No.3	0.050 – 0.089 mm (0.0020 – 0.0035 in.)

Maximum oil clearance:

No.1	0.18 mm (0.0071 in.)
No.2	0.19 mm (0.0075 in.)
No.3	0.18 mm (0.0071 in.)

If the clearance is greater than maximum, replace the cylinder block and balance shaft.

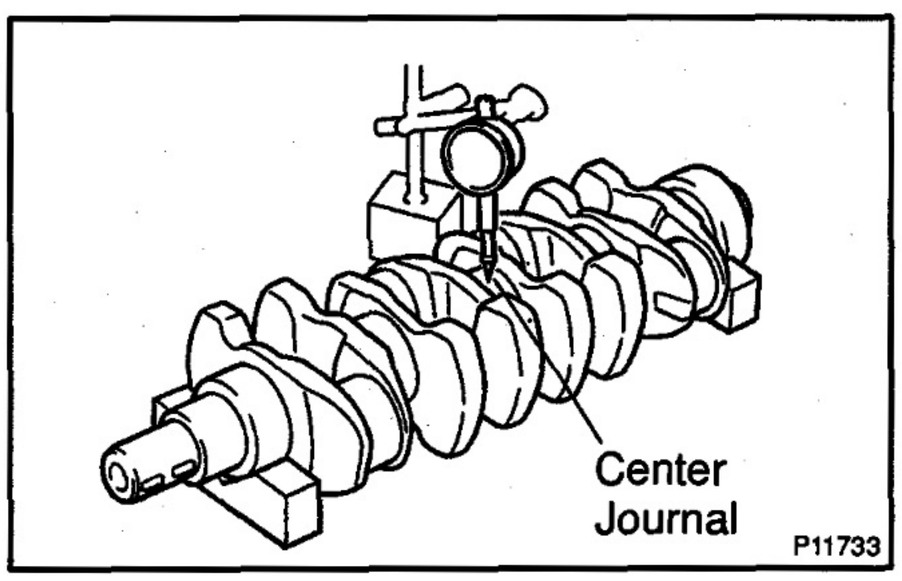

11. INSPECT CRANKSHAFT FOR RUNOUT

(a) Place the crankshaft on V–blocks.

(b) Using a dial indicator, measure the circle runout at the center journal.

Maximum circle runout: 0.06 mm (0.0024 in.)

If the circle runout is greater than maximum, replace the crankshaft.

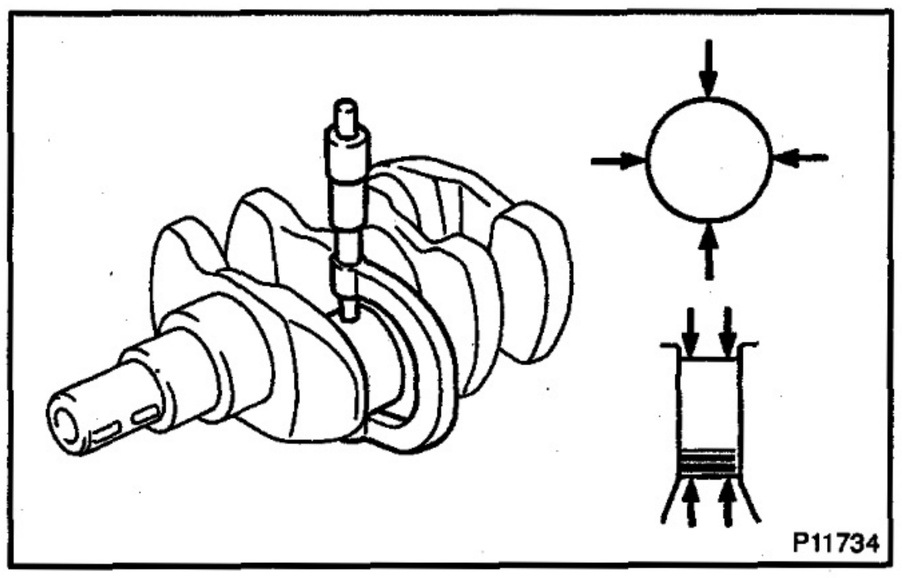

12. INSPECT MAIN JOURNALS AND CRANK PINS

(a) Using a micrometer, measure the diameter of each main journal and crank pin.

Main journal diameter:

STD	69.982 – 70.000 mm (2.7552 – 2.7559 in.)
U/S 0.25	69.745 – 69.755 mm (2.7459 – 2.7463 in.)
U/S 0.50	69.495 – 69. 505 mm (2.7360 – 2.7364 in.)

Crank pin diameter:

STD	58.982 – 59.000 mm (2.3221 – 2.3228 in.)
U/S 0.25	58.745 – 58.755 mm (2.3128 – 2.3132 in.)
U/S 0.50	58.495 – 58.505 mm (2.3028 – 2.3132 in.)

If the diameter is not as specified, check the oil clearance (See page EM–75). If necessary, grind or replace the crankshaft.

(b) Check each main journal and crank pin for taper and out–of–round as shown.

Maximum taper and out–of–round:
0.020 mm (0.0008 in.)

If the taper and out–of–round is greater than maximum, replace the crankshaft.

EM15M–01

REPLACEMENT

1. REPLACE OVERSIZED (O/S) PISTONS

HINT:

- Bore all the 4 cylinders to the O/S piston outside diameter.
- Replace all the piston rings with ones to match the O/S pistons.

(a) Keep the O/S pistons.

O/S piston diameter:

O/S 0.50	96.440 – 96.470 mm (3.7968 – 3.7980 in.)
O/S 0.75	96.690 – 96.720 mm (3.8067 – 3.8079 in.)
O/S 1.00	96.940 – 96.970 mm (3.8165 – 3.8177 in.)

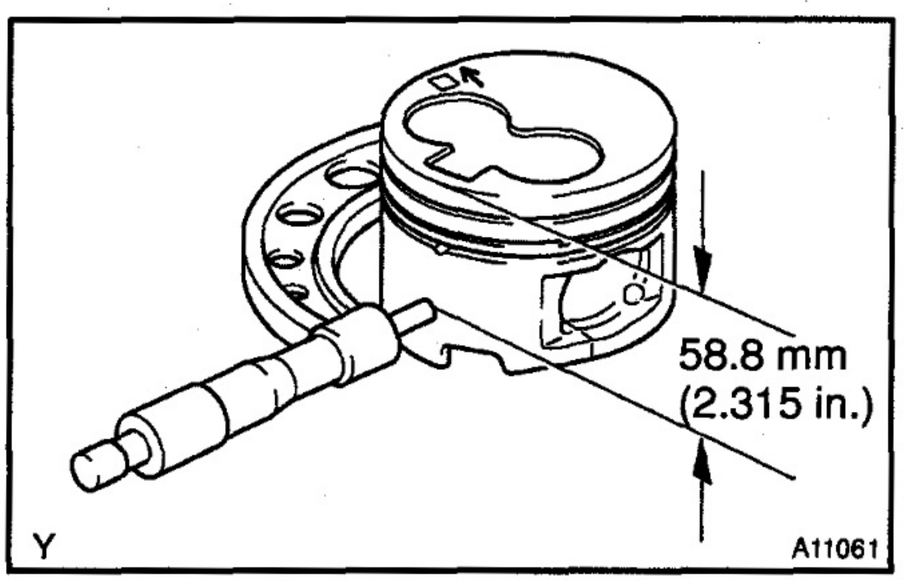

(b) Using a micrometer, measure the piston diameter at right angles to the piston pin center line, 58.8 mm (2.315 in.) from the piston head.

(c) Calculate the amount each cylinder is to be rebored as follows:

Size to be rebored = P + C – H

P = Piston diameter

C = Piston clearance

0.050 – 0.070 mm (0.0020 – 0.0028 in.)

H = Allowance for honing

0.02 mm (0.0008 in.) or less

(d) Bore and hone cylinder to calculated dimensions.

Maximum honing: 0.02 mm (0.0008 in.)

NOTICE:

Excess honing will destroy the finished roundness.

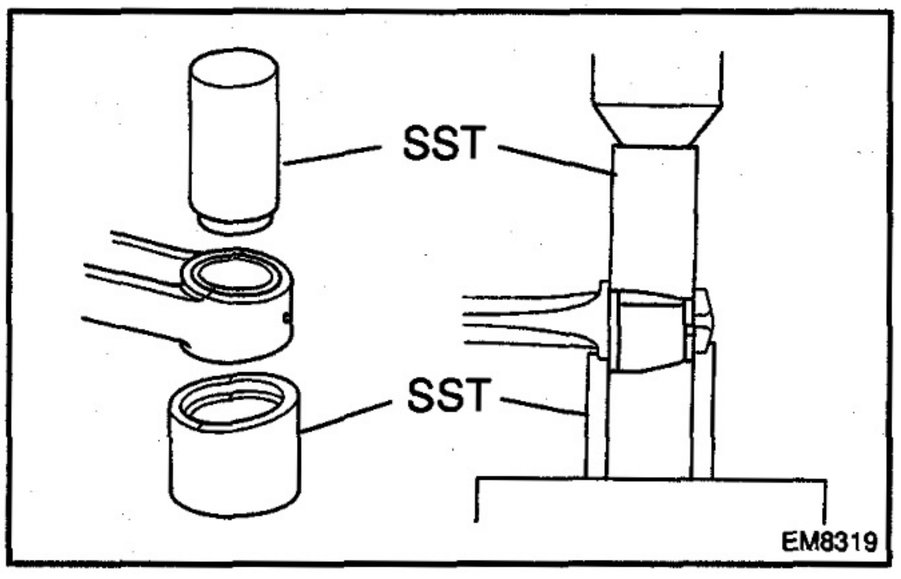

2. REPLACE CONNECTING ROD BUSHING

(a) Using SST and a press, press out the bushing.

SST 09222–67010 (09222–06010, 09222–06030)

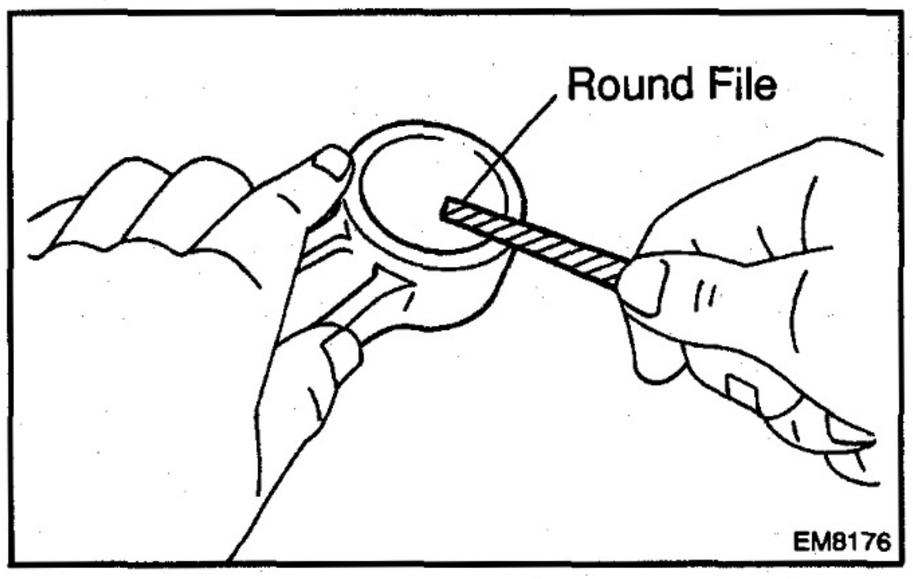

(b) Using a round file, lightly file off any roughness from the small end of the connecting rod.

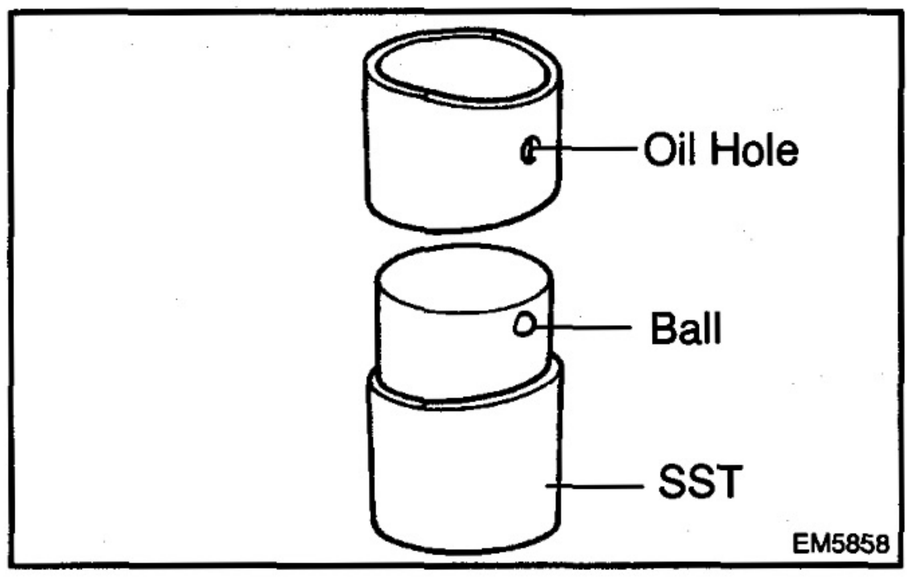

(c) Attach the bushing to SST with the ball of SST inside the oil hole of the bushing.
SST 09222–67010 (09222–06020)

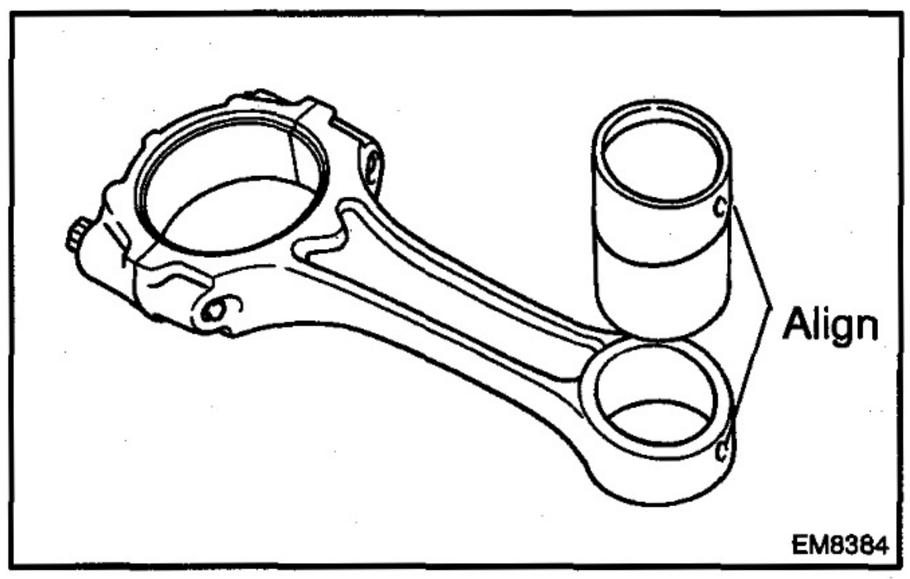

(d) Align the oil holes of a new bushing and the connecting rod.

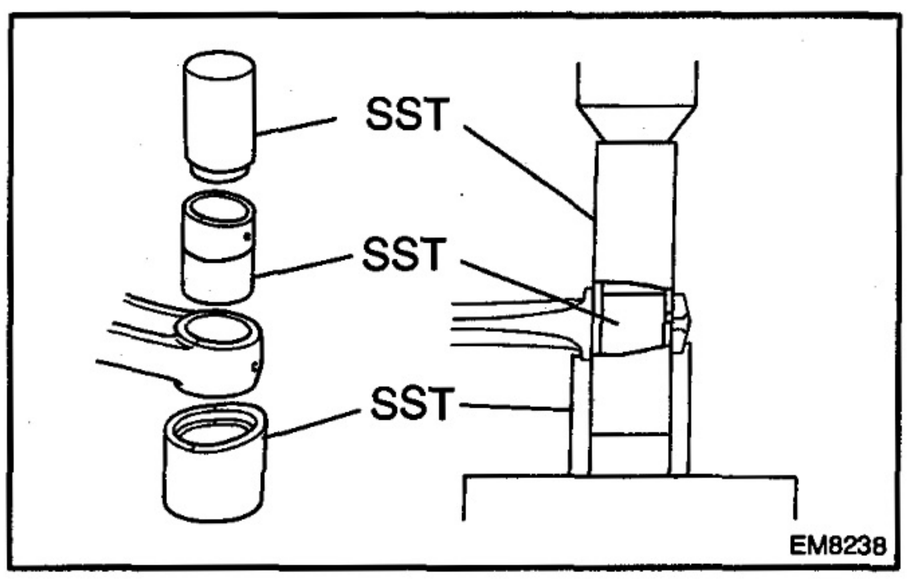

(e) Using SST and a press, press in the bushing.
SST 09222–67010 (09222–06010, 09222–06020, 09222–06030)

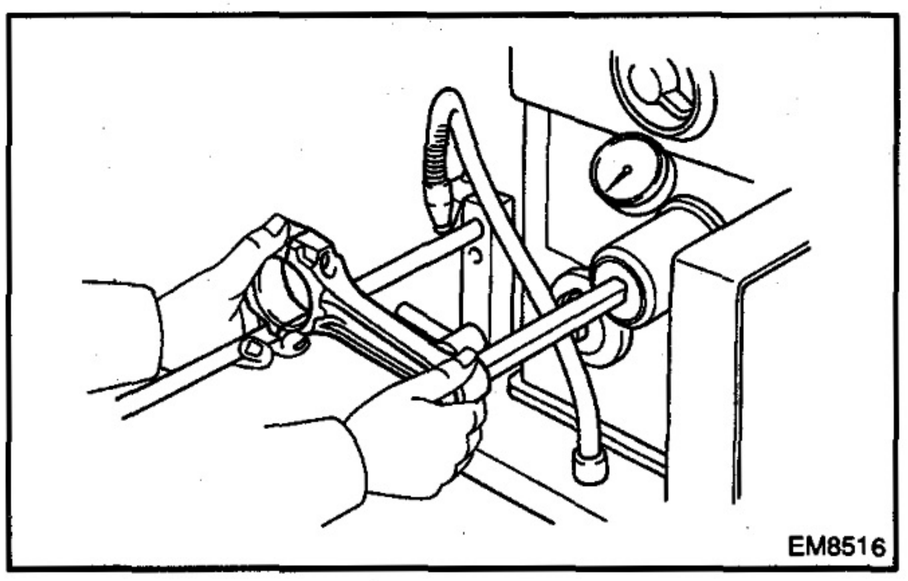

(f) Using a pin hole grinder, hone the bushing to obtain the standard specified clearance (See page EM–83) between the bushing and piston pin.

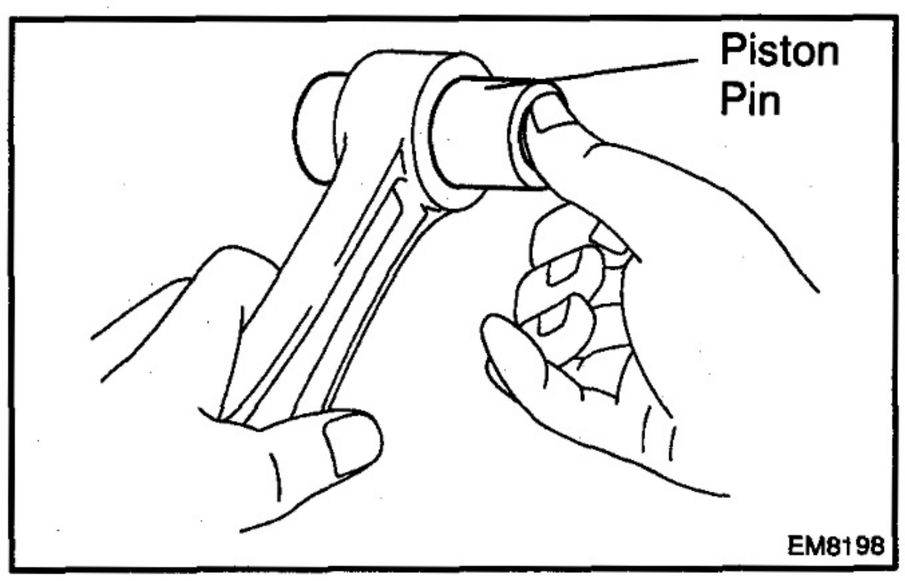

(g) Check the piston pin fit at normal room temperature. Coat the piston pin with engine oil, and push it into the connecting rod with your thumb.

3. GRIND AND HONE MAIN JOURNALS AND/OR CRANK PINS

Grind and hone the main journals and/or crank pins to the finished undersized diameter (See page EM–83).

Install new main journal and/or crankshaft pin undersized bearings.

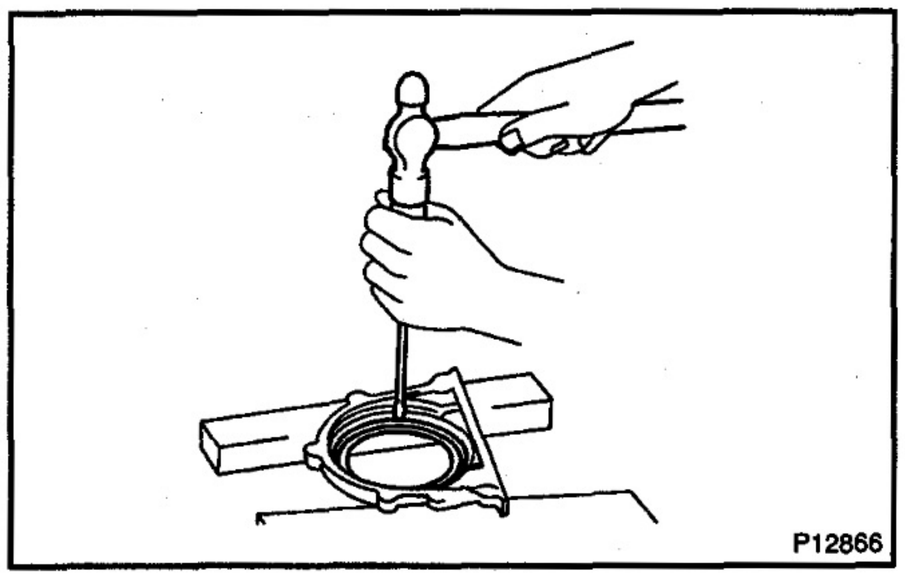

4. REPLACE CRANKSHAFT REAR OIL SEAL

HINT:

There are 2 methods (A and B) to replace the oil seal which are as follows.

(a) If the rear oil seal retainer is removed from the cylinder block:

(1) Using a screwdriver and hammer, tap out the oil seal.

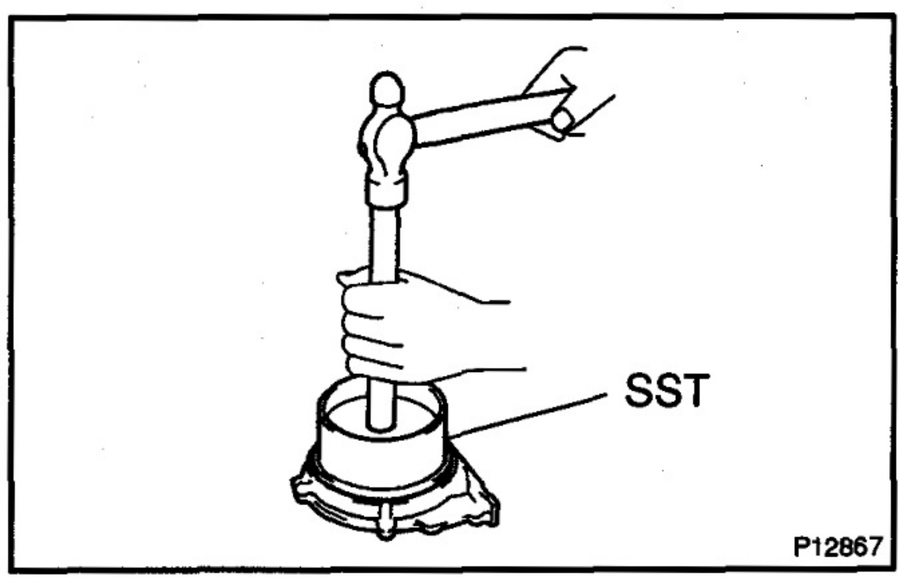

(2) Using SST and a hammer, tap in a new oil seal until its surface is flush with the rear oil seal retainer edge.

SST 09223–15030, 09252–10010

(3) Apply MP grease to a new oil seal lip.

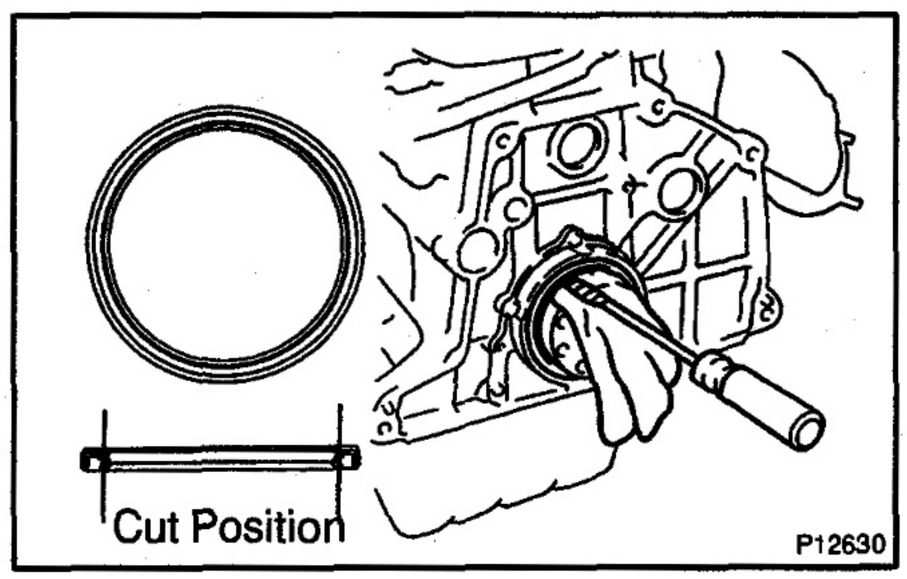

(b) If the rear oil seal retainer is installed to the cylinder block:

(1) Using a knife, cut off the oil seal lip.

(2) Using a screwdriver, pry out the oil seal.

NOTICE:

Be careful not to damage the crankshaft. Tape the screwdriver tip.

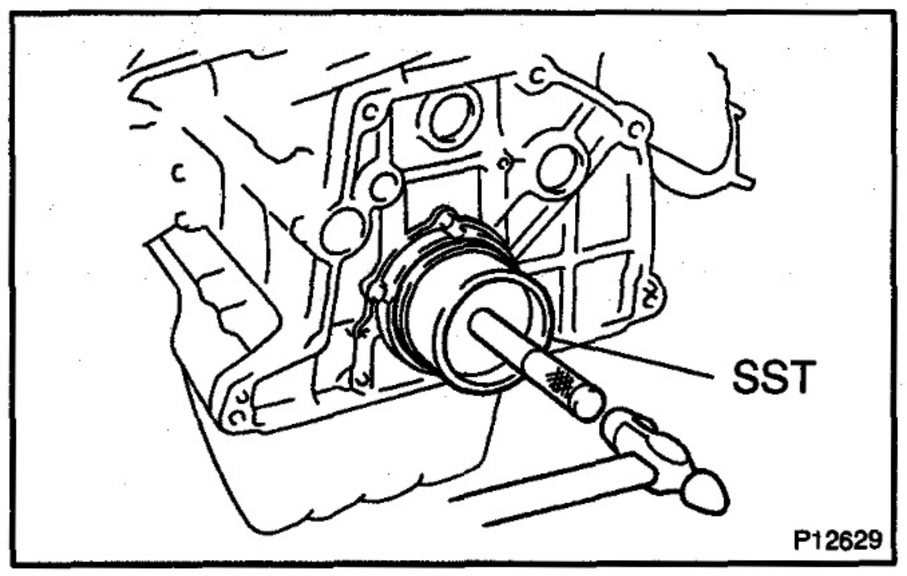

(3) Apply MP grease to a new oil seal lip.

(4) Using SST and a hammer, tap in the oil seal until its surface is flush with the rear oil seal retainer edge.

SST 09223–15030, 09252–10010

EM15N–01

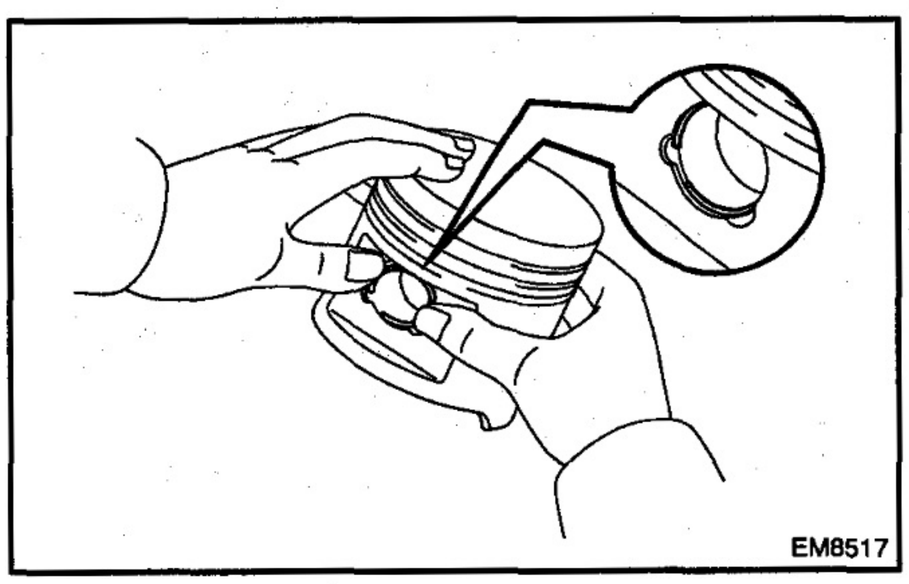

REASSEMBLY

HINT:

- Thoroughly clean all parts to be assembled.
- Before installing the parts, apply fresh engine oil to all sliding and rotating surfaces.
- Replace all gaskets, O–rings and oil seals with new parts.

1. ASSEMBLE PISTON AND CONNECTING ROD

(a) Install a new snap ring on one side of the piston pin hole.

(b) Gradually heat the piston to 80°C (176°F).

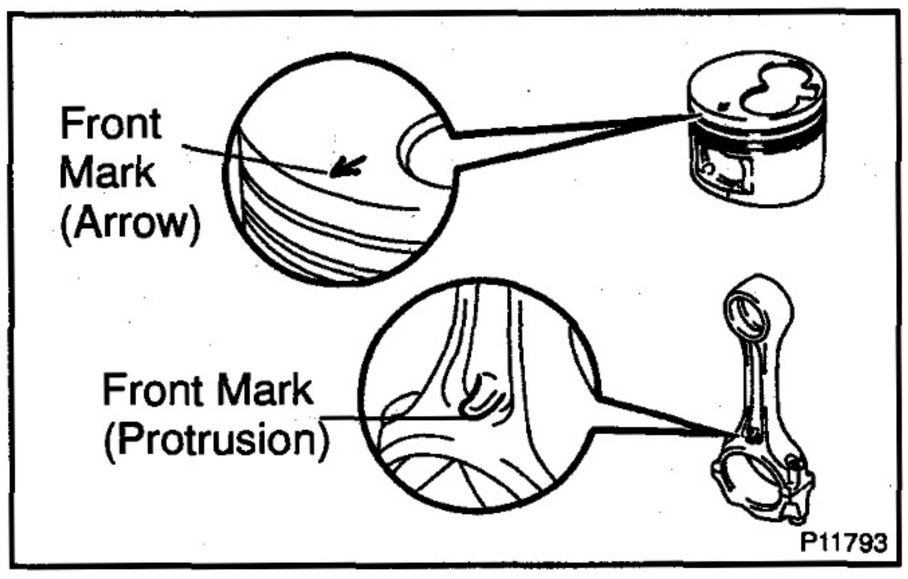

(c) Coat the piston pin with engine oil.

(d) Align the front marks of the piston and connecting rod, and push in the piston pin with your thumb.

(e) Install a new snap ring on the other side of the piston pin hole.

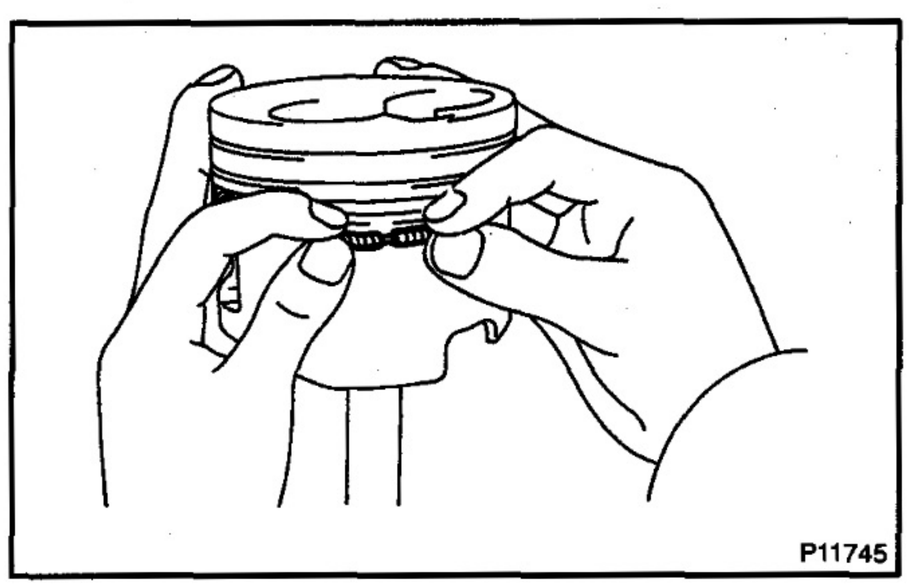

2. INSTALL PISTON RINGS

(a) Install the coil by hand.

(b) Install a piston ring expander, install the oil ring.

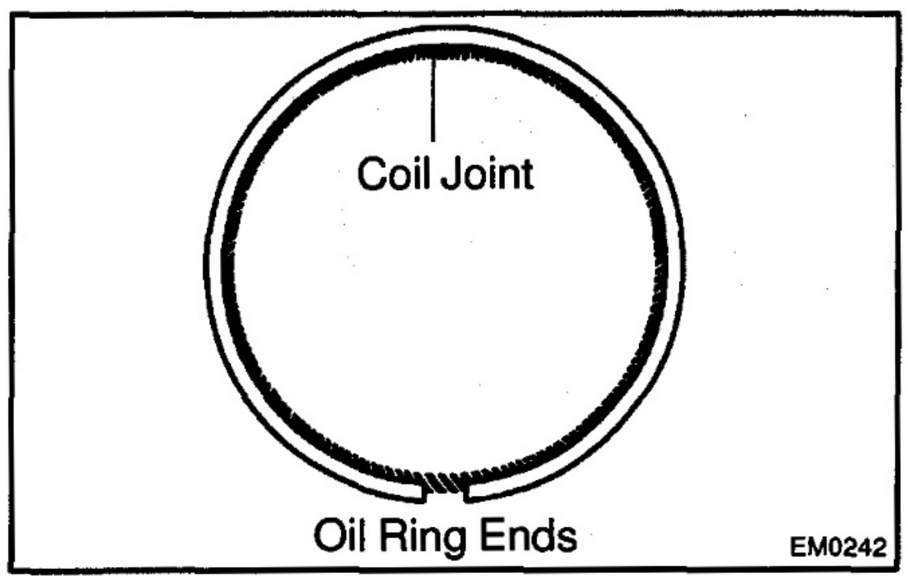

HINT:

Face the end gap of the oil ring in the opposite direction of coil joint.

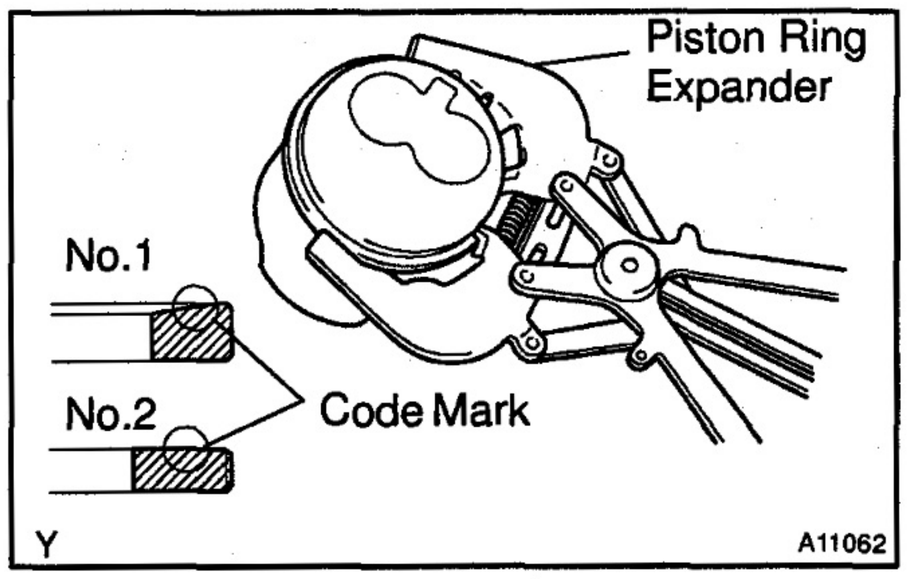

(c) Using a piston ring expander, install the 2 compression rings with the code mark facing upward.

Code mark:

No.1	1N
No.2	2N

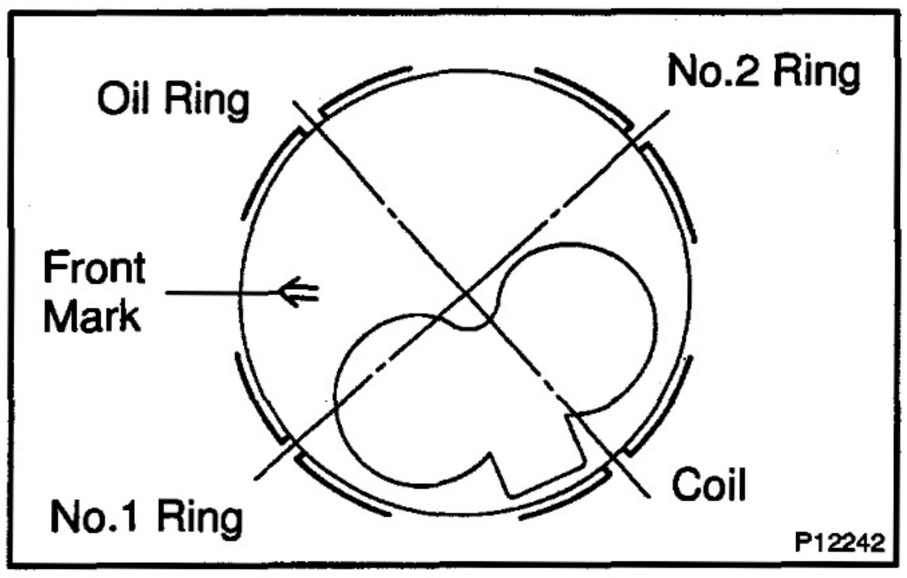

(d) Position the piston rings so that the ring ends are as shown.

NOTICE:

Do not align the ring ends.

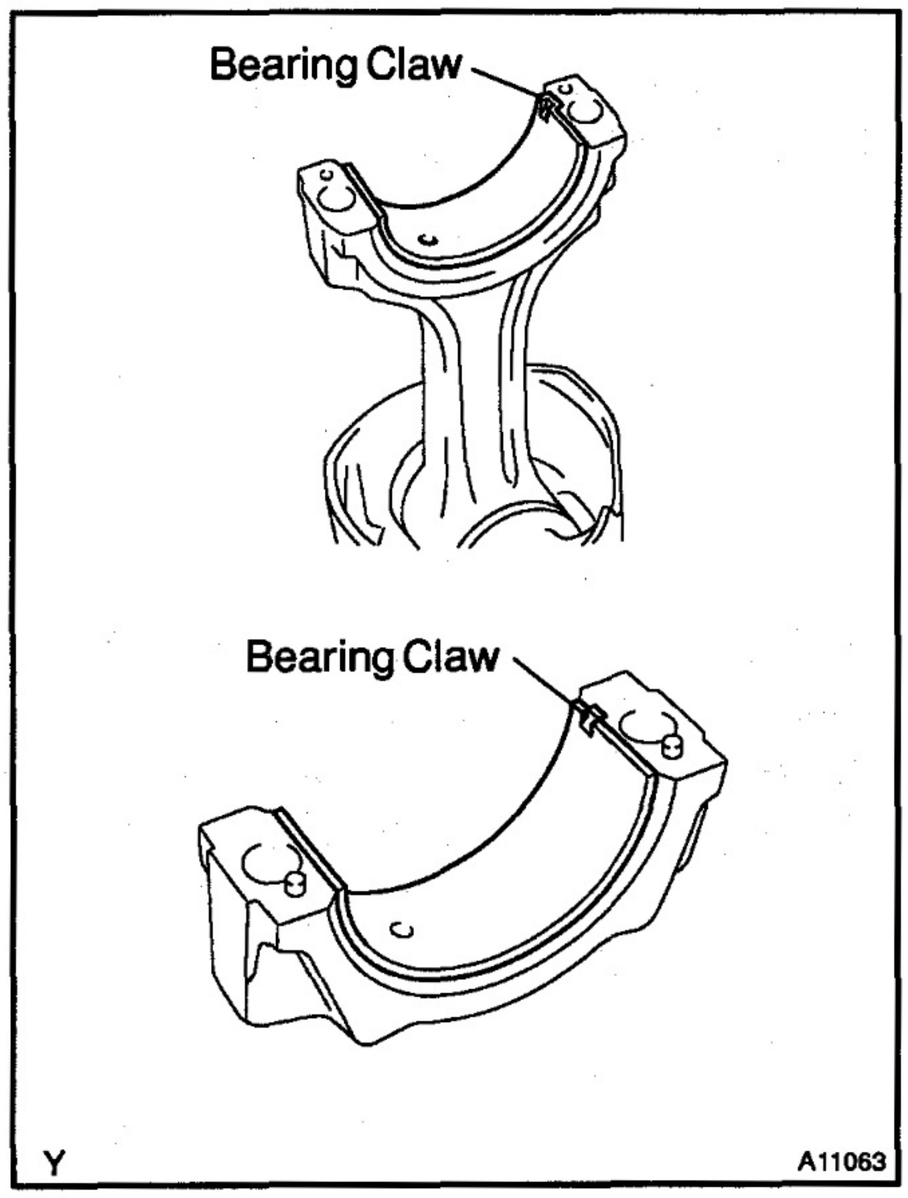

3. INSTALL BEARINGS

(a) Align the bearing claw with the groove of the connecting rod or connecting cap.

(b) Install the bearings in the connecting rod and connecting rod cap.

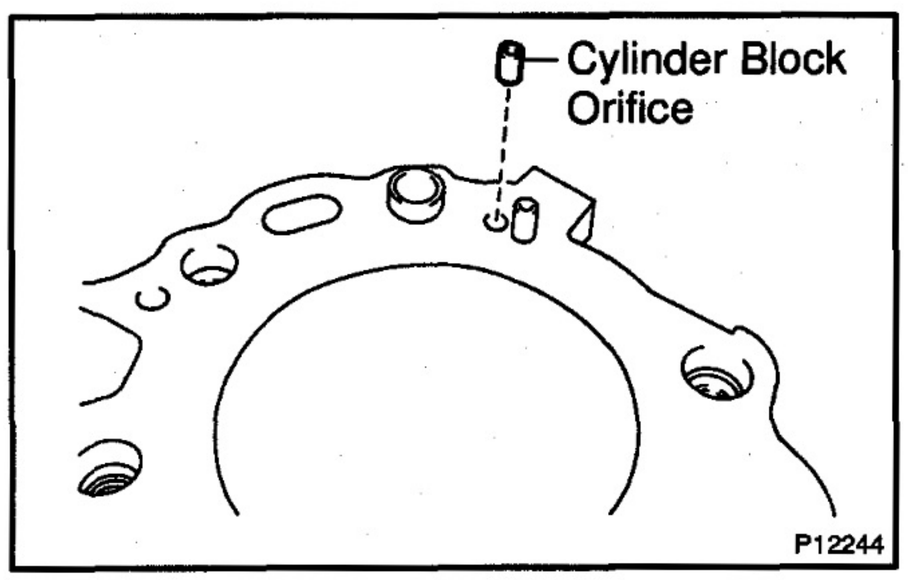

4. INSTALL CYLINDER BLOCK ORIFICE

Install the cylinder block orifice to the cylinder brock.

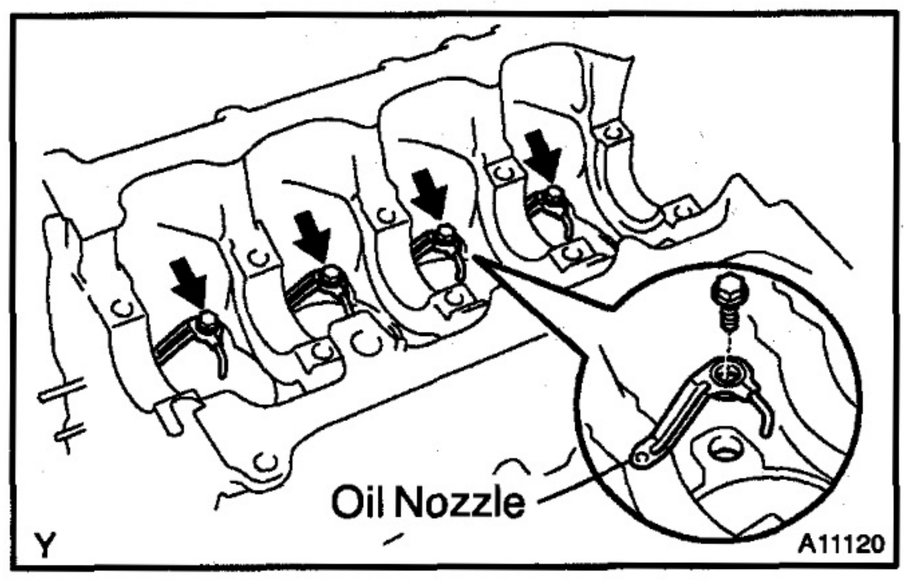

5. INSTALL OIL NOZZLES AND CHECK VALVES

(a) Align the pin of the oil nozzle with the pin hole of the cylinder block.

(b) Install the oil nozzle with the check valve. Install the 4 oil nozzles and check valves.

Torque: 25 N·m (260 kgf·cm, 19 ft·lbf)

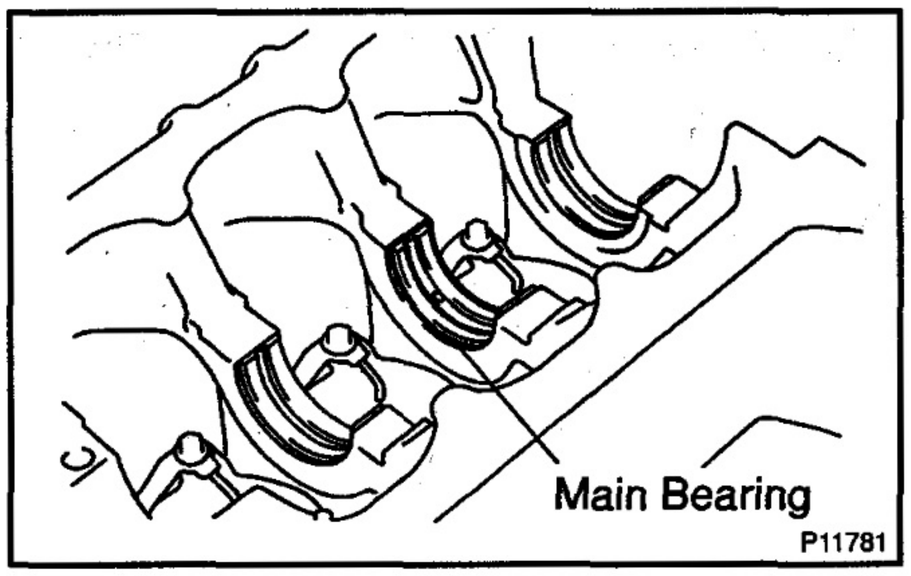

6. INSTALL MAIN BEARINGS

(a) Align the bearing claw with the claw groove of the cylinder block, and push in the 5 upper bearings.

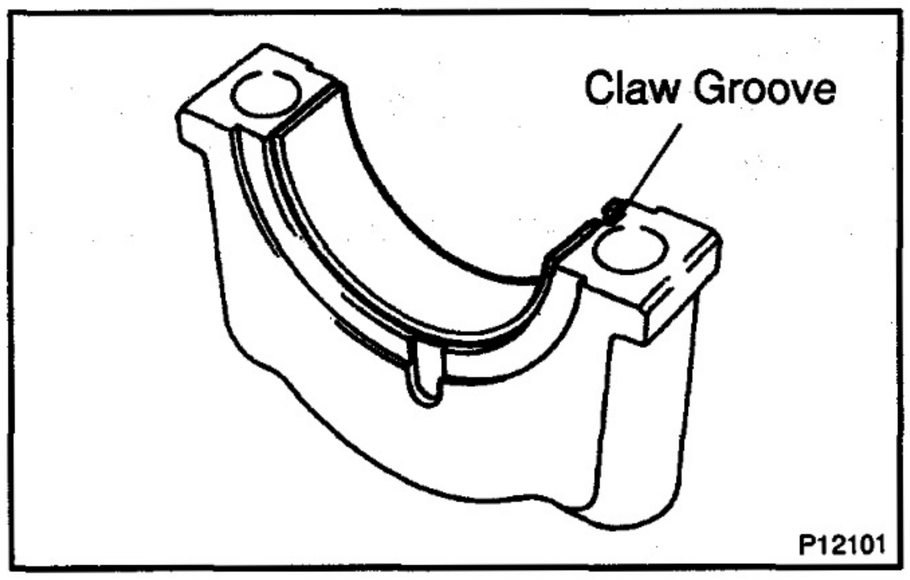

(b) Align the bearing claw with the claw groove of the main bearing cap, and push in the 5 lower bearings.

7. PLACE CRANKSHAFT ON CYLINDER BLOCK

Place the crankshaft on the cylinder brock.

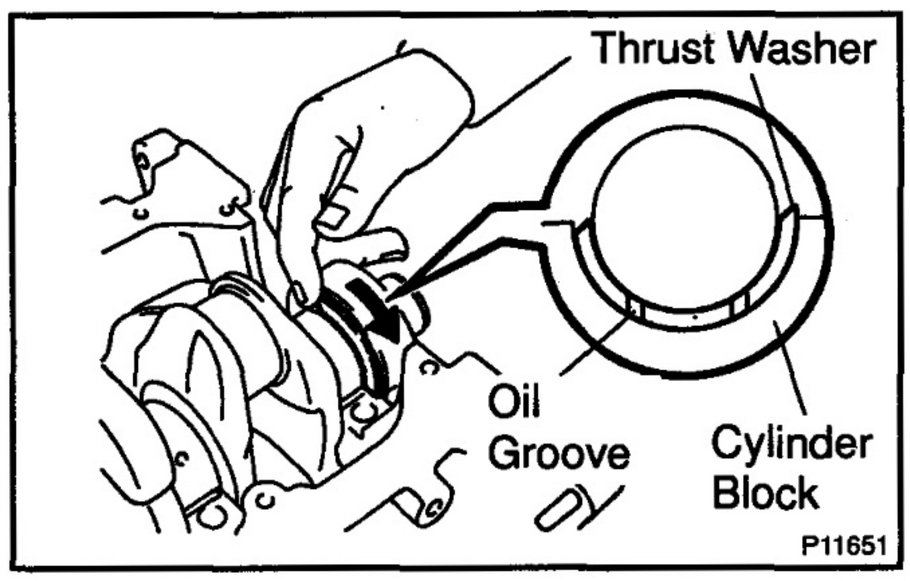

8. INSTALL UPPER THRUST WASHERS

(a) Push the crankshaft toward the front (rear) side.

(b) Install the 2 thrust washers to the No.5 journal position of the cylinder block with the oil grooves facing outward.

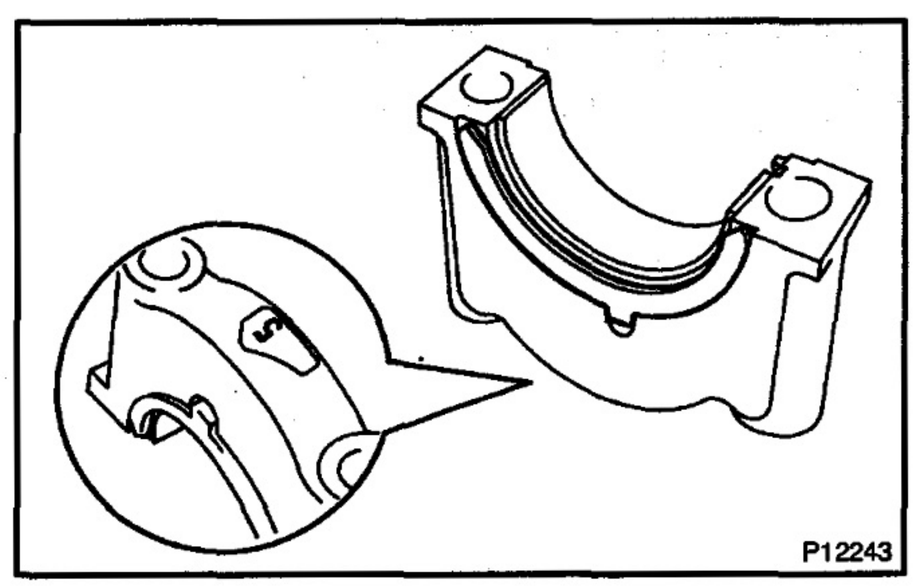

9. PLACE MAIN BEARING CAP AND LOWER THRUST WASHERS ON CYLINDER BLOCK

(a) Install the 2 thrust washers on the No.5 bearing cap with the grooves facing outward.

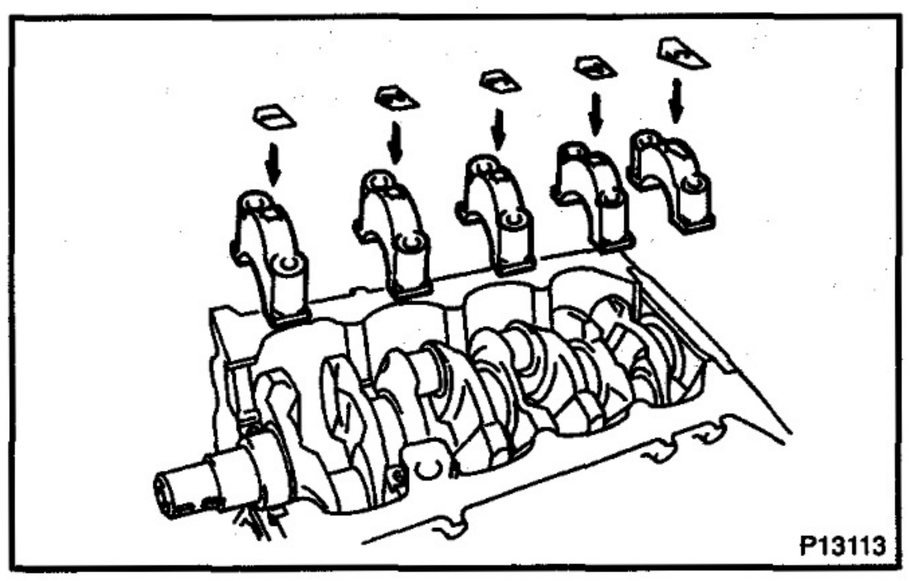

(b) Install the 5 main bearing caps in their proper locations.

HINT:

Each bearing cap has a number and front mark.

10. INSTALL MAIN BEARING CAP BOLTS

HINT:

- The main bearing cap bolts are tightened in 2 progressive steps (steps (b) and (d)).
- If any one of the main bearing cap bolt is broken or deformed, replace it.

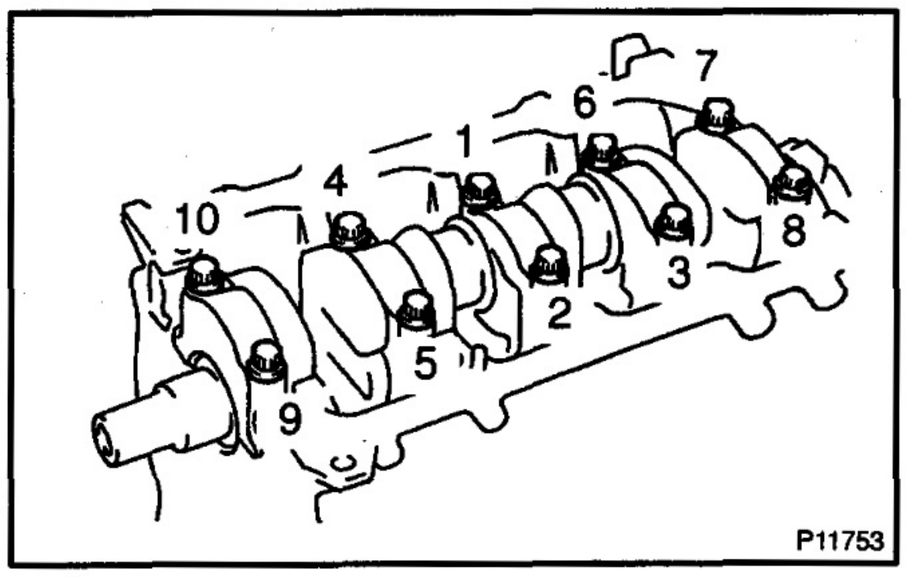

(a) Apply a light coat of engine oil on the threads and under the heads of the main bearing cap bolts.
(b) Install and uniformly tighten the 10 bolts of the main bearing caps in several passes, in the sequence shown.
Torque: 49 N·m (500 kgf·cm, 36 ft·lbf)

If any one of the main bearing cap bolts does not meet the torque specification, replace the main bearing cap bolt.

(c) Mark the front of the main bearing cap bolt with paint.

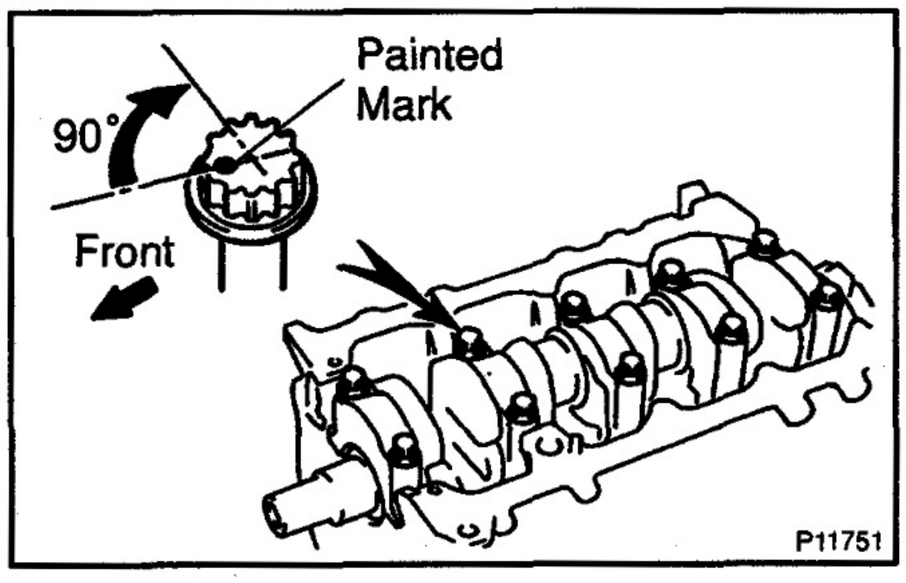

(1) Retighten the main bearing cap bolts 90 ° in the numerical order shown above.
(2) Check that the painted mark is now at a 90 ° angle to the front.
(3) Check that the crankshaft turns smoothly.
(4) Check the crankshaft thrust clearance(See page EM–91).

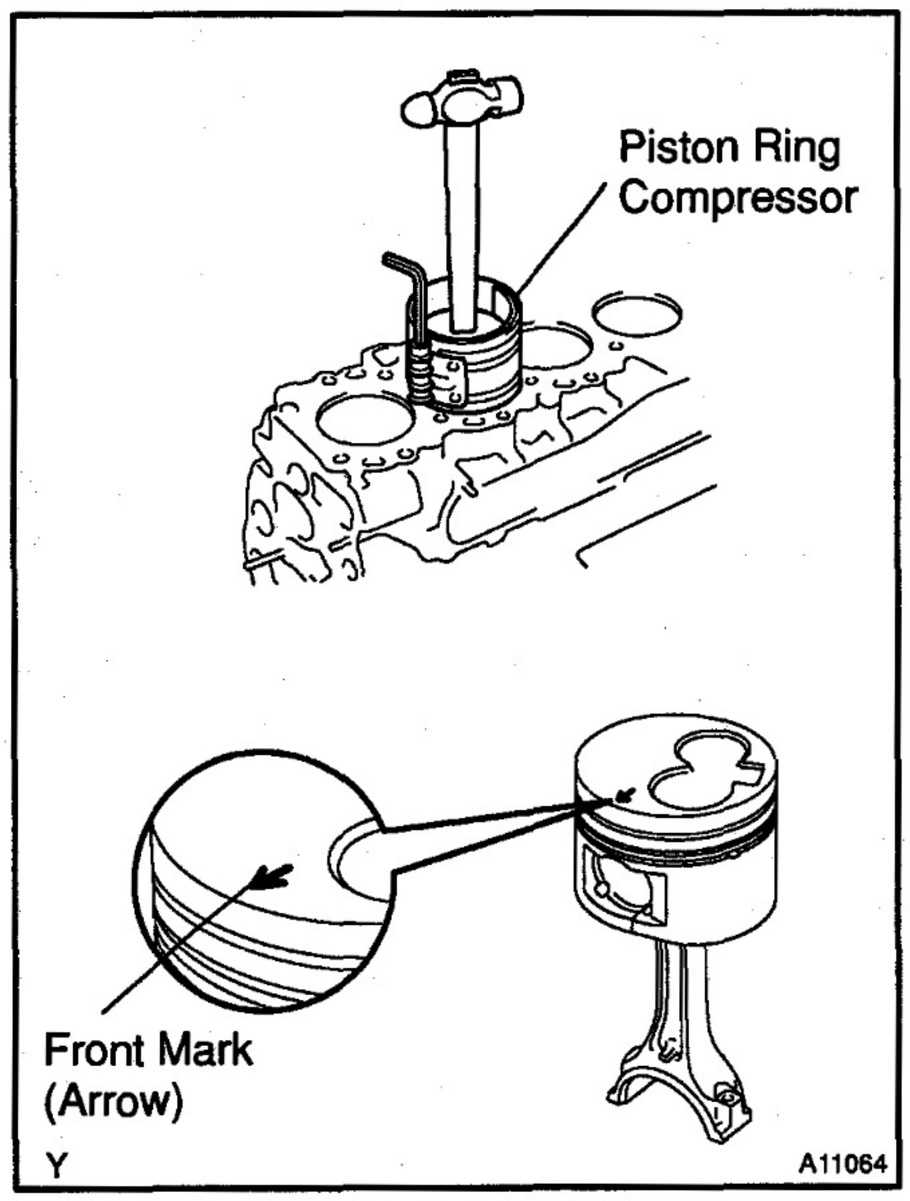

11. INSTALL PISTON AND CONNECTING ROD ASSEMBLIES

Using a piston ring compressor, push the correctly numbered piston and connecting rod assemblies into each cylinder with the front mark of the piston facing forward.

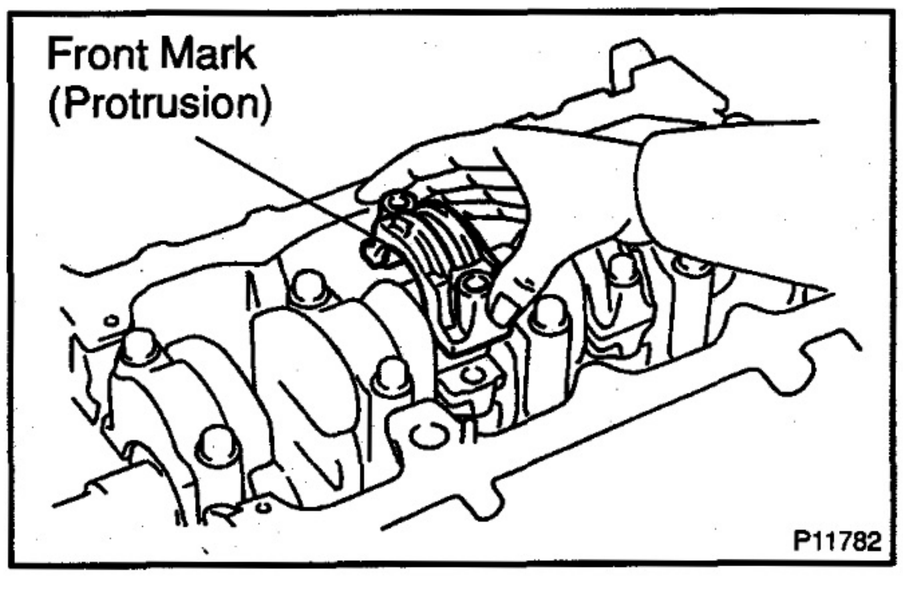

12. PLACE CONNECTING ROD CAP ON CONNECTING ROD

(a) Match the numbered connecting rod cap with the connecting rod.
(b) Install the connecting rod cap with the front mark facing forward.

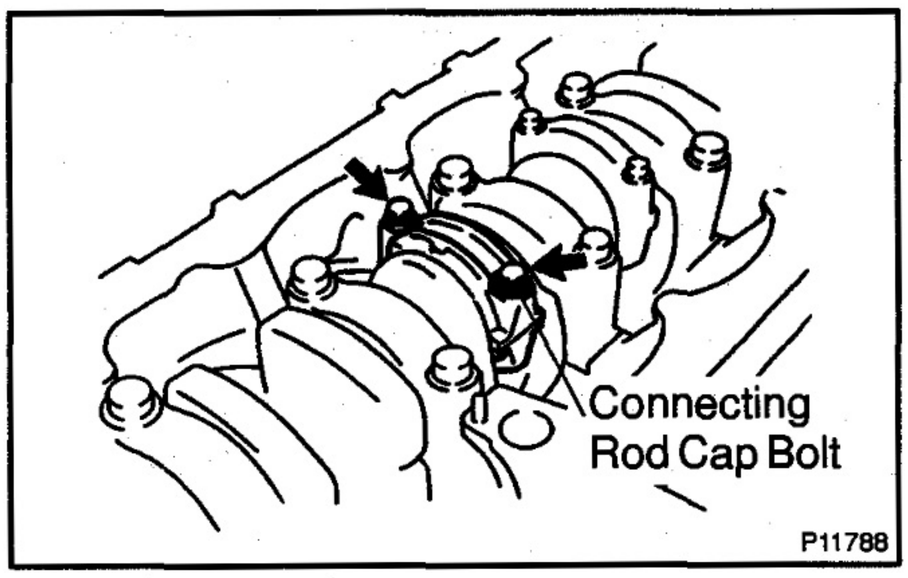

(c) Install the connecting rod cap bolts.

HINT:

- The connecting rod cap nuts are tightened in 2 progressive steps (steps (b) and (d)).
- If any connecting rod bolt is broken or deformed, replace it.

(d) Apply a light of engine oil on the threads and under the heads of the connecting rod cap bolts.

(e) Install and alternately tighten the bolts of the connecting rod cap in several passes.

Torque: 29 N·m (300 kgf·cm, 22 ft·lbf)

If any one of the connecting rod cap bolts does not meet the torque specification, replace the cap bolt.

(f) Mark the front of the connecting rod cap bolt with paint.

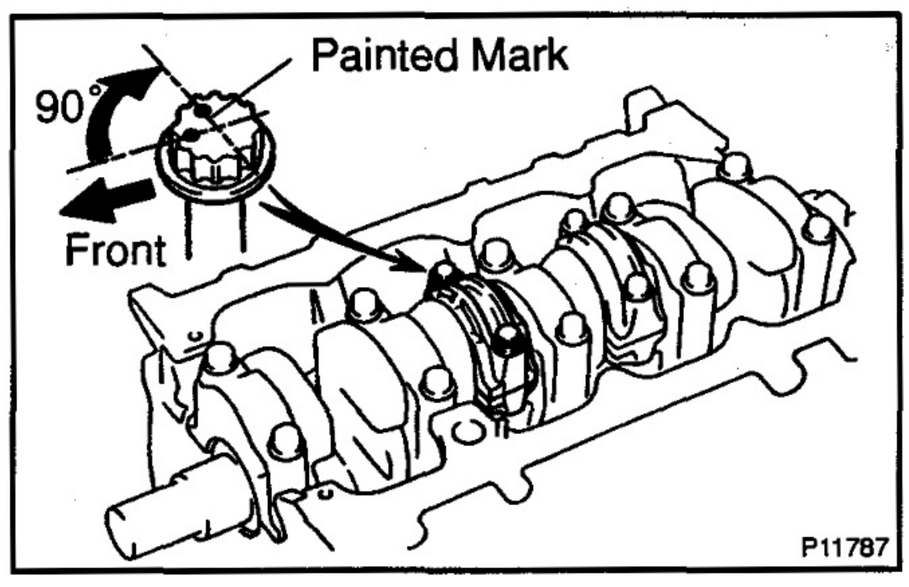

(g) Retighen the connecting rod cap bolts 90° as shown .

(h) Check that the painted mark is now at a 90° angle to the front.

(i) Check that the crankshaft turns smoothly.

13. CHECK CONNECTING ROD THRUST CLEARANCE (See step EM–75)

14. INSTALL REAR OIL SEAL RETAINER

(a) Remove any old packing (FIPG) material and be careful not to drop any oil on the contact surfaces of the retainer and cylinder block.

- Using a razor blade and gasket scraper, remove all the old packing (FIPG) material from the gasket surfaces and sealing groove.
- Thoroughly clean all components to remove all the loose material.
- Using a non–residue solvent, clean both sealing surfaces.

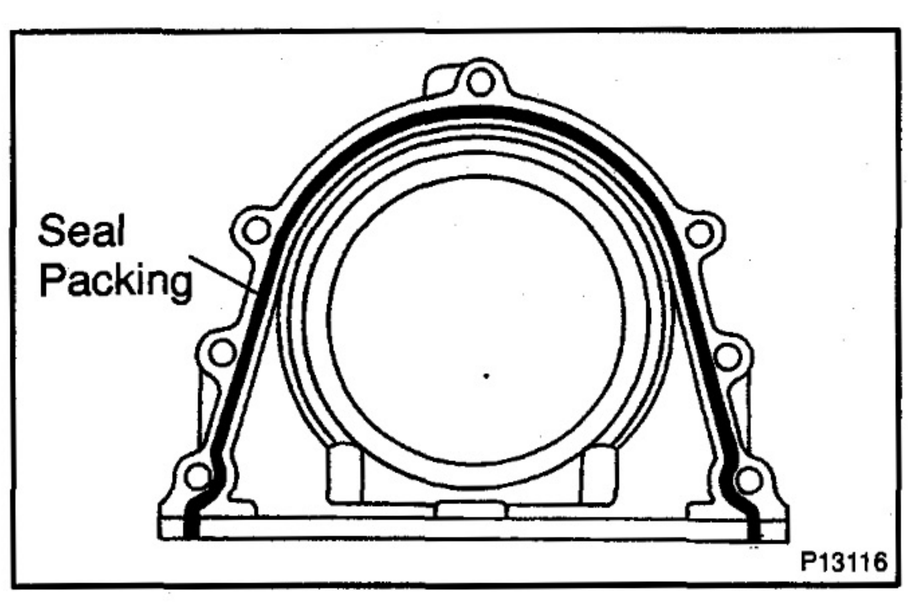

(b) Apply seal packing to the retainer as shown in the illustration.

Seal packing: Part No. 08826–00080 or equivalent

- Install a nozzle that has been cut to a 2 – 3 mm (0.08 – 0.12 in.) opening.

HINT:

Avoid applying an excessive amount to the surface.

- Parts must be assembled within 5 minutes of application. Otherwise the material must be removed and reapplied.

- Immediately remove nozzle from the tube and reinstall cap.

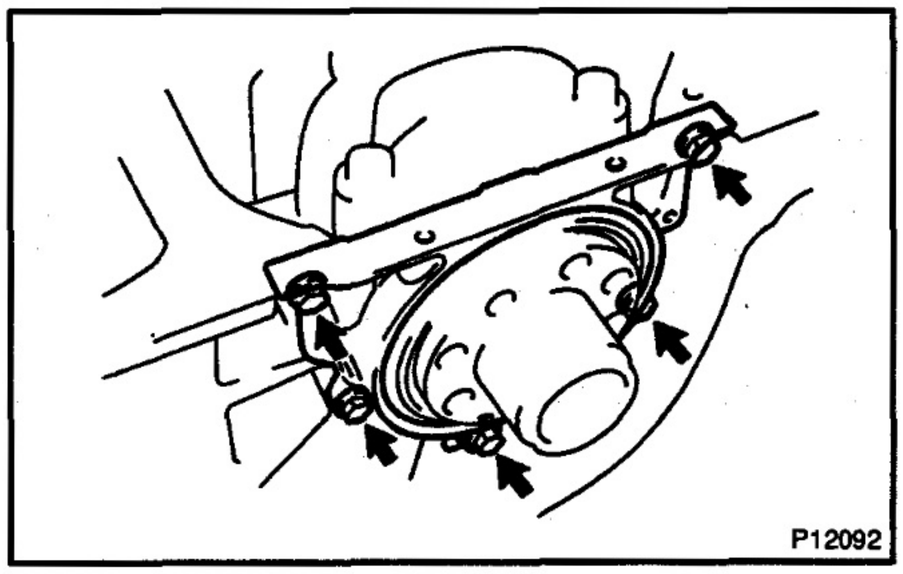

(c) Install the retainer with the 5 bolts.
Torque: 13 N·m (130 kgf·cm, 9 ft·lbf)

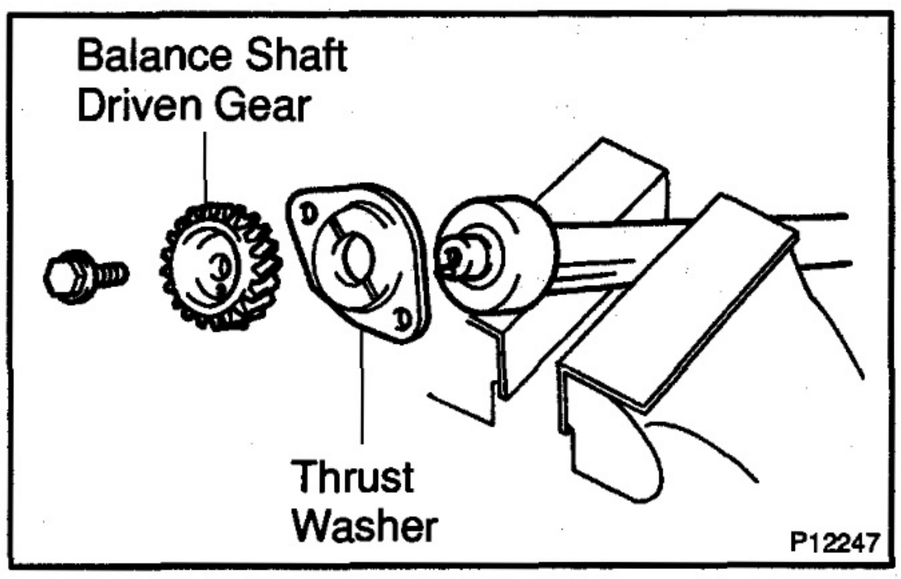

15. ASSEMBLY RH AND LH BALANCE SHAFTS

(a) Mount the weight of the balance shaft in a vise.

NOTICE:

Be careful not to damage the balance shafts.

(b) Align the balance shaft knock pin with the knock pin hole of the balance shaft driven gear, install the thrust washer and balance shaft driven gear.

(c) Install and torque the bolt.
Torque: 32 N·m (320 kgf·cm, 23 ft·lbf)

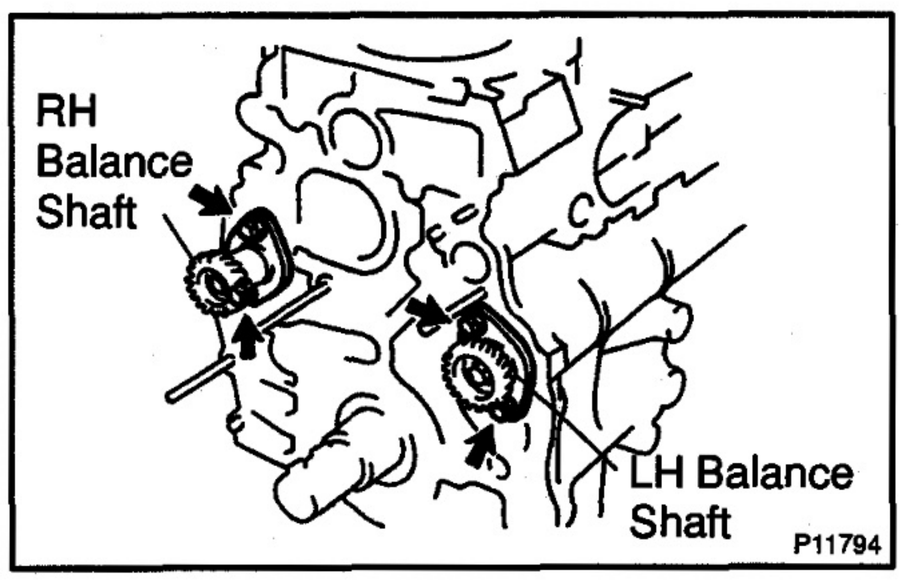

16. INSTALL RH AND LH BALANCE SHAFTS

(a) Install the RH balance shaft with the 2 bolts.

(b) Install the LH balance shaft with the 2 bolts.
Torque: 8 N·m (85 kgf·cm, 74 in.·lbf)

17. INSTALL PLUG HOLE

18. INSTALL ENGINE MOUNTING
Torque: 68 N·m (693 kgf·cm, 50 ft·lbf)

19. INSTALL WATER TEMPERATURE SENSOR

20. INSTALL WATER INLET AND THRMOSTAT (See page CO–13)

21. INSTALL OIL COOLER (See page LU–21)

22. INSTALL OIL PAN AND TIMING GEAR CASE (See page LU–12)

23. INSTALL INJECTION PUMP (See page FU–25)

24. INSTALL TIMING GEARS (See page EM–34)

25. INSTALL WATER PUMP (See page CO–8)

26. INSTALL ALTERNATOR AND ALTERNATOR BRACKET (See page CO–8)

27. INSTALL CYLINDER HEAD (See page EM–64)

28. INSTALL TIMING BELT AND PULLEYS
(See page EM–18)

29. DISCONNECT ENGINE FROM ENGINE STAND

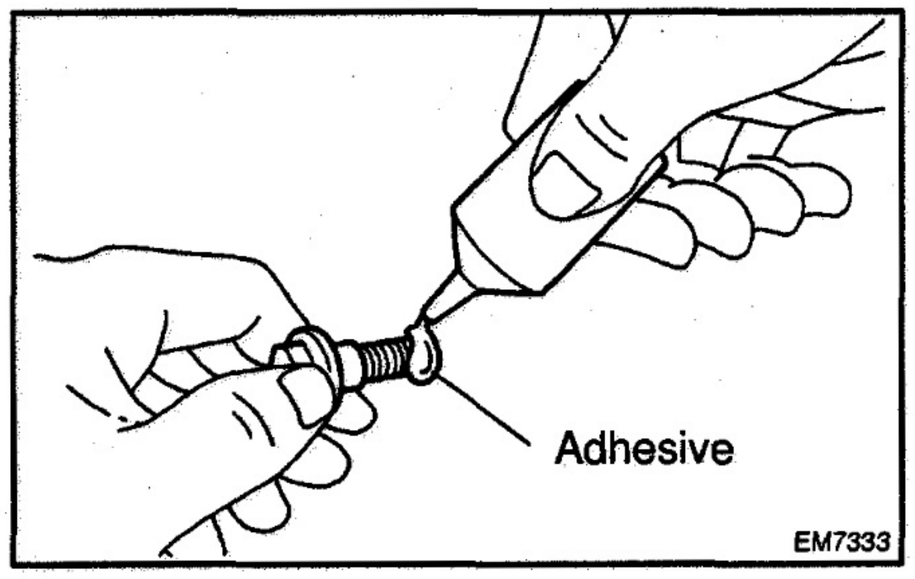

30. INSTALL REAR END PLATE

Install the rear end plate with the bolt.

Torque: 8 N·m (85 kgf·cm, 74 in.·lbf)

31. INSTALL FLYWHEEL

(a) Apply adhesive to 2 or 3 threads of the mounting bolt end.
Adhesive:
Part No. 08833–00070, THREE BOND 1324, or equivalent

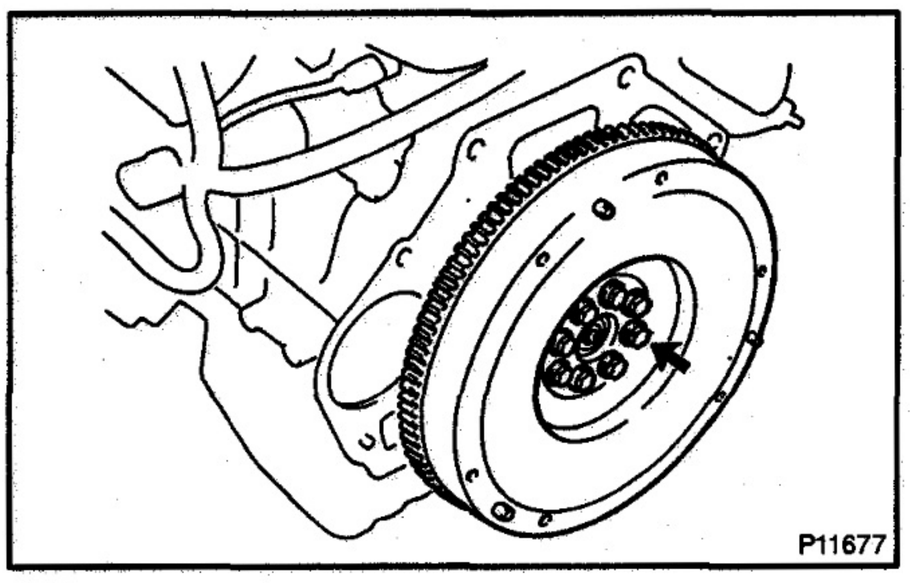

(b) Install the flywheel on the crankshaft.
(c) Install and uniformly tighten the mounting bolts in several passes, in the sequence shown.
Torque: 178 N·m (1,820 kgf·cm, 131 ft·lbf)

32. INSTALL CLUTCH COVER AND DISC

TURBOCHARGING

TROUBLESHOOTING TC–1
TURBOCHARGER TC–2

TROUBLESHOOTING

PROBLEM SYMPTOMS TABLE

TC01W–02

HINT:

Before troubleshooting the turbocharger, first check the engine itself. (valve clearance, engine compression, etc.)

INSUFFICIENT ACCELERATION, LACK OF POWER OR EXCESSIVE FUEL CONSUMPTION

Possible Cause	Check Procedure and Correction Method	See page
1. Turbocharging pressure too low	Check turbocharging pressure.	TC–3
2. Restricted intake system	Check intake air system, and repair or replace parts as necessary.	EM–1 EM–44
3. Leak in intake air system	Check intake air system, and repair or replace parts as necessary.	EM–1 EM–44
4. Restricted exhaust system	Check exhaust system, and repair or replace parts as necessary.	EM–44
5. Leak in exhaust system	Check exhaust system, and repair or replace parts as necessary.	EM–44
6. Erratic turbocharger operation	Check rotation of turbine shaft, and replace bearing housing if necessary. Check axial and radial plays of turbine shaft, and replace bearing housing if necessary.	TC–10

ABNORMAL NOISE

Possible Cause	Check Procedure and Correction Method	See page
1. Turbocharging heat insulator resonance	Check for loose, improperly installed or deformed insulator nuts and bolt, and repair or replace as necessary.	TC–6
2. Erratic turbocharger operation	Check rotation of turbine shaft, and replace bearing housing if necessary. Check axial and radial plays of turbine shaft, and replace bearing housing if necessary.	TC–10

EXCESSIVE OIL CONSUMPTION OR WHITE EXHAUST

NOTICE:

Some oil mist in blowby from PCV is normal. Do not mistake it for oil leak from turbocharger.

Possible Cause	Check Procedure and Correction Method	See page
Faulty turbocharger oil seal	Check for oil leakage in exhaust system. • Remove exhaust manifold converter from turbocharger, and check for excessive carbon deposits on turbine wheel. Excessive carbon deposits indicate a faulty turbocharger. Check for oil leakage in intake air system. • Check for axial and radial plays of turbine shaft, and replace bearing housing if necessary.	TC–10

TC

TURBOCHARGER

PRECAUTION

TC030–01

MAINTENANCE PRECAUTION

(a) Do not stop the engine immediately after pulling a trailer or after high speed or uphill driving. Idle the engine for 20 – 120 seconds, depending on how hard the vehicle has been driven.

(b) Avoid sudden acceleration or racing immediately after starting a cold engine.

(c) If the turbocharger is found to be defective and must be replaced, check for the cause, and repair or replace the following items as necessary:

- Engine oil level and quality
- Conditions under which the turbocharger was used
- Oil lines leading to the turbocharger

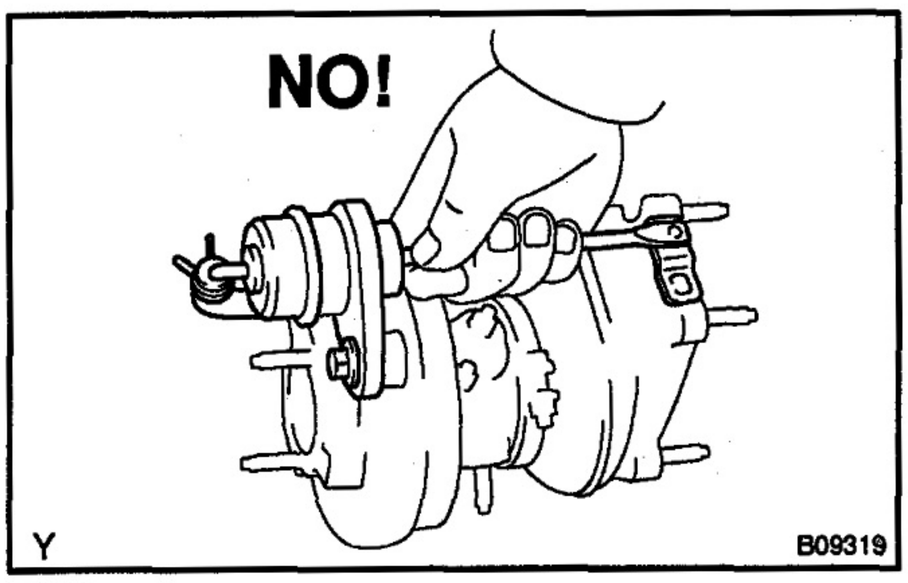

(d) Use caution when removing and reinstalling the turbocharger assembly. Do not drop it or bang it against anything or grasp it by easily–deformed parts, such as the actuator or rod, when moving it.

(e) Before removing the turbocharger, plug the intake and exhaust ports and oil inlet to prevent entry of dirt or other foreign material.

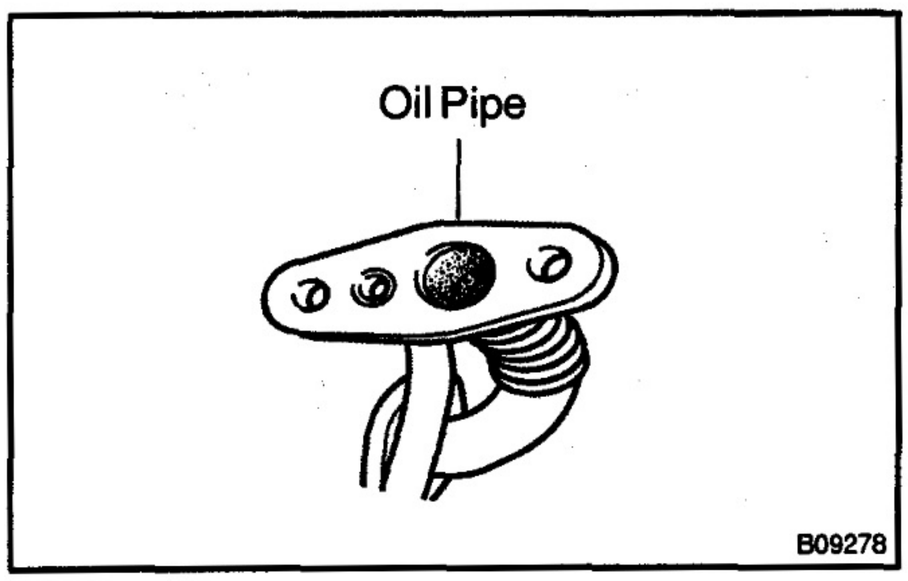

(f) If replacing the turbocharger, check for accumulation of sludge particles in the oil pipes, and if necessary, replace the oil pipes.

(g) Completely remove the gasket adhered to the lubrication oil pipe flange and turbocharger oil flange.

(h) When replacing bolt or nuts, use only anthorized replacement parts to prevent breakage or deformation.

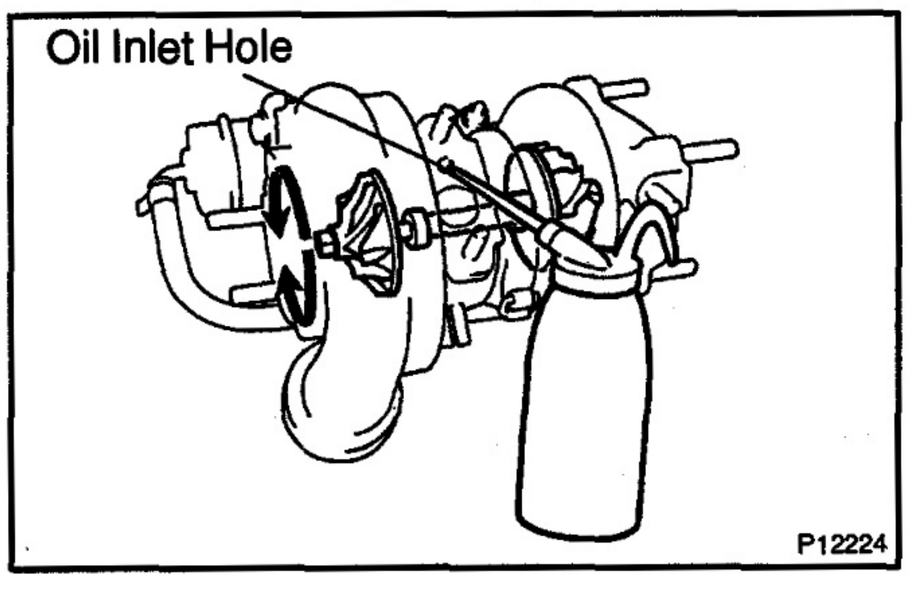

(i) If replacing the turbocharger, put 20 cm^3 (1.2 cu in.) of oil into the turbocharger oil inlet and turn the impeller wheel by hand to spread oil to the bearing.

(j) If overhauling or replacing the engine, cut the fuel supply after reassembly and crank the engine for 30 seconds to distribute oil throughout the engine. Then allow the engine to idle for 60 seconds.

(k) Do not run the engine with air cleaner removed, as this may cause foreign material to enter and damage the impeller wheel operating at high speed.

TC01P–02

ON–VEHICLE INSPECTION

1. INSPECT INTAKE AIR SYSTEM

Check for leakage or clogging between the air cleaner housing and turbocharger inlet and between the turbocharger outlet and cylinder head.

- Clogged air cleaner .... Clean or replace element
- Hoses collapsed or deformed .... Repair or replace
- Leakage from connections .... Check each connection and repair
- Cracks in components .... Check and replace

2. INSPECT EXHAUST SYSTEM

Check for leakage or clogging between the cylinder head and turbocharger inlet and between the turbocharger outlet and exhaust pipe.

- Deformed components .... Repair or replace
- Foreign material in passages .... Remove
- Leakage from components .... Repair or replace
- Cracks in components .... Check and replace

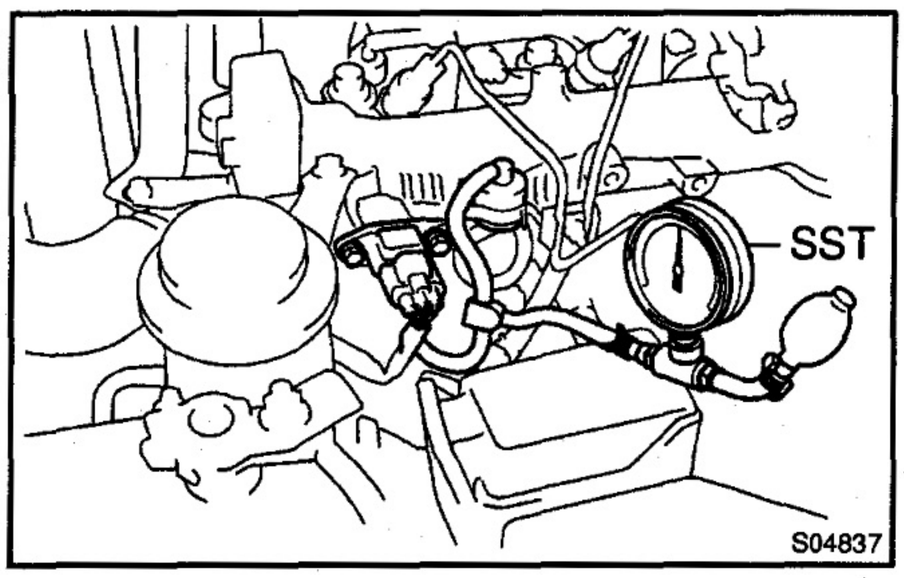

3. CHECK TURBOCHARGER PRESSURE

(a) Warm up engine.

(b) Using a 3–way connector, connect SST (turbocharger pressure gauge) to the hose leading to the intake manifold.

SST 09992–00241

(c) Press in the clutch pedal, then press the accelerator pedal down as far as it will go. Measure the turbocharging pressure at maximum speed (approx. 4,600 rpm) .

Standard pressure:

51 – 67 kPa (0.52 – 0.68 kgf/cm^2, 7.4 – 9.7 psi)

If the pressure is less than specified, check the intake air and exhaust systems for leakage.

If there is no leakage, replace the turbocharger.

If the pressure is above specification, check if the actuator hose is disconnected or cracked. If not, replace the turbocharger.

4. INSPECT IMPELLER WHEEL ROTATION

(See page TC–10)

5. INSPECT ACTUATOR OPERATION

(See page TC–10)

6. INSPECT TURBO PRESSURE SENOR

(See page ED–18)

TC031–01

COMPONENTS

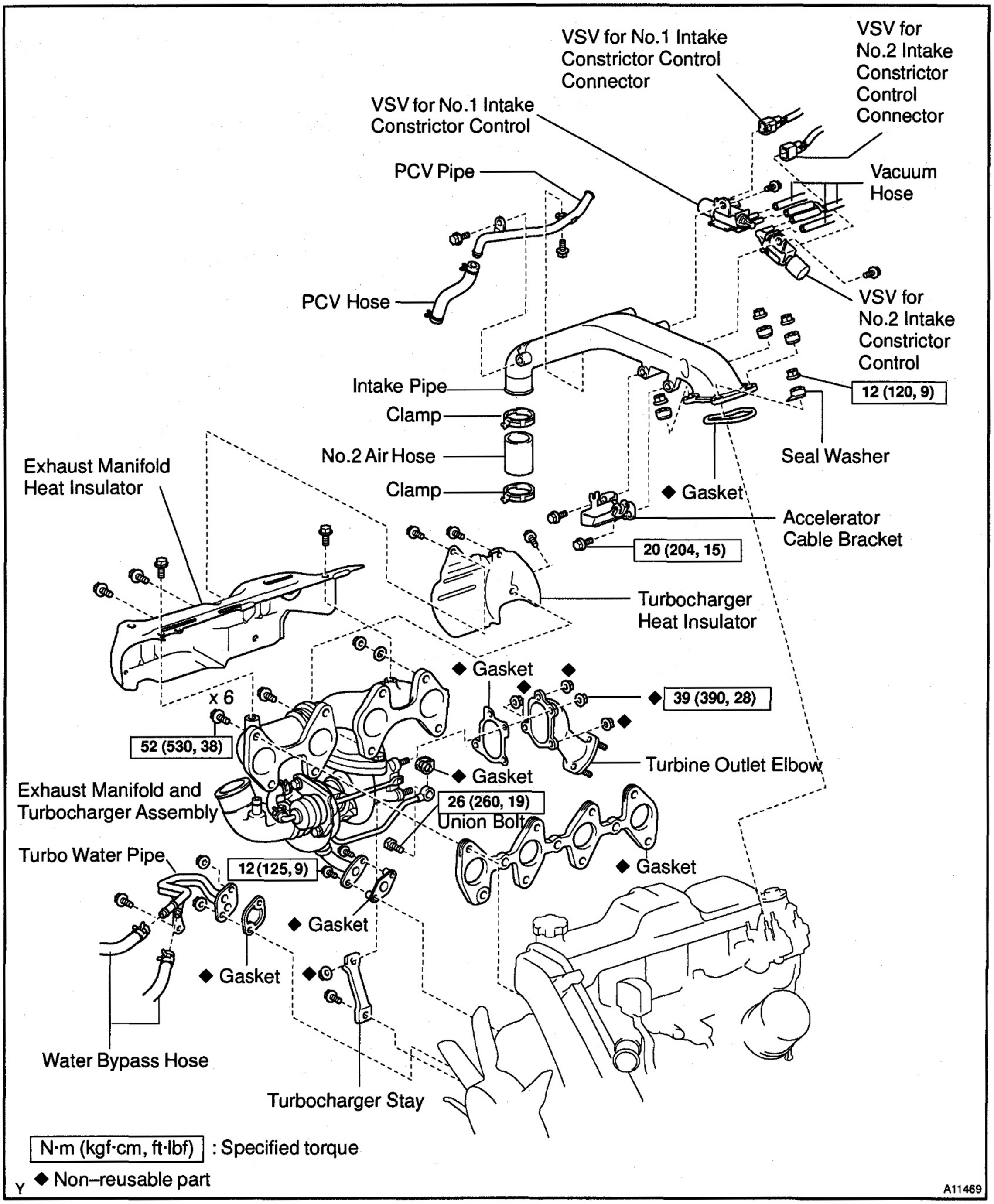

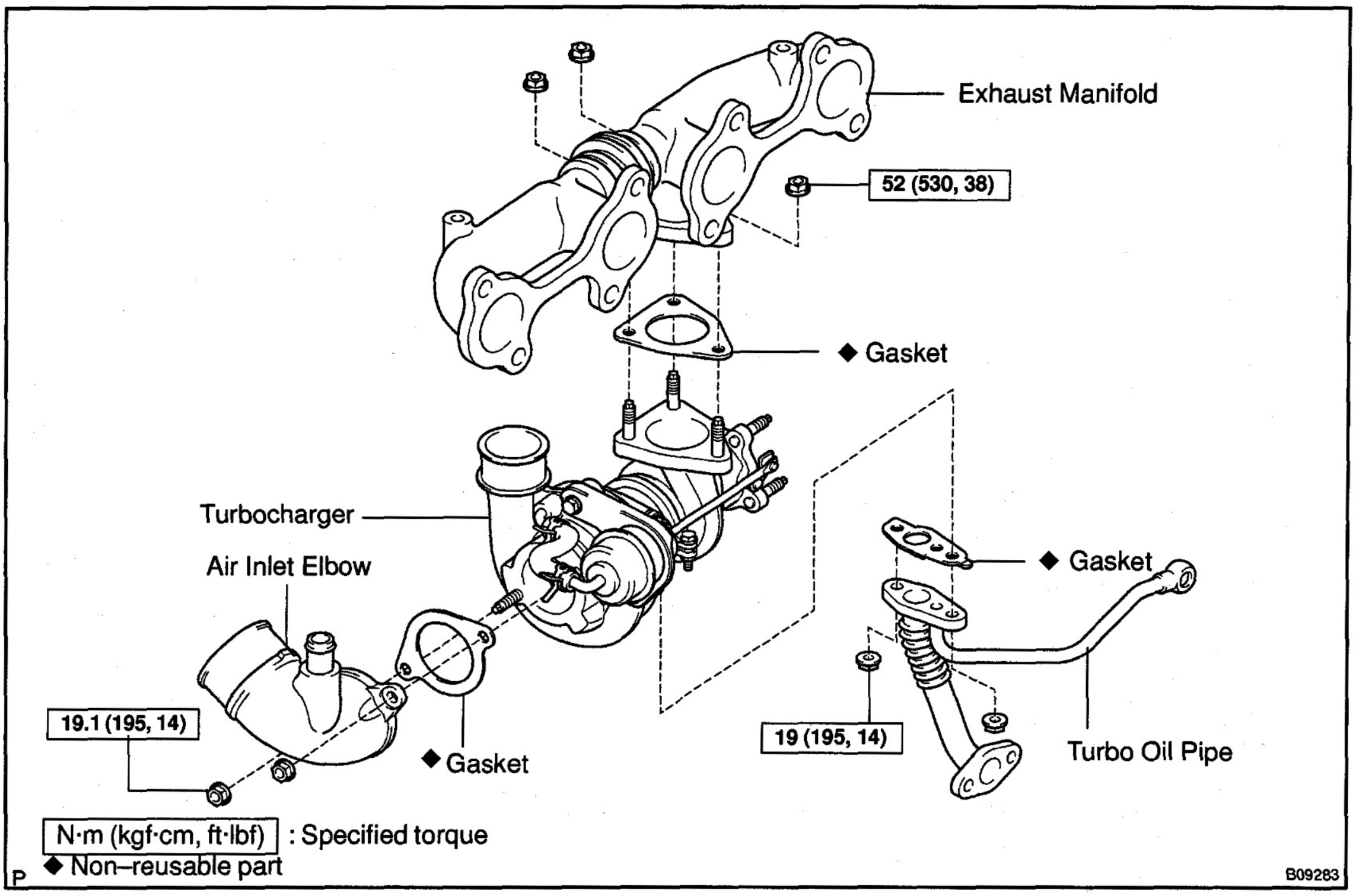
Exhaust Manifold
52 (530, 38)
◆ Gasket
Turbocharger
Air Inlet Elbow
◆ Gasket
19.1 (195, 14)
◆ Gasket
19 (195, 14)
Turbo Oil Pipe
N·m (kgf·cm, ft·lbf) : Specified torque
◆ Non–reusable part
B09283

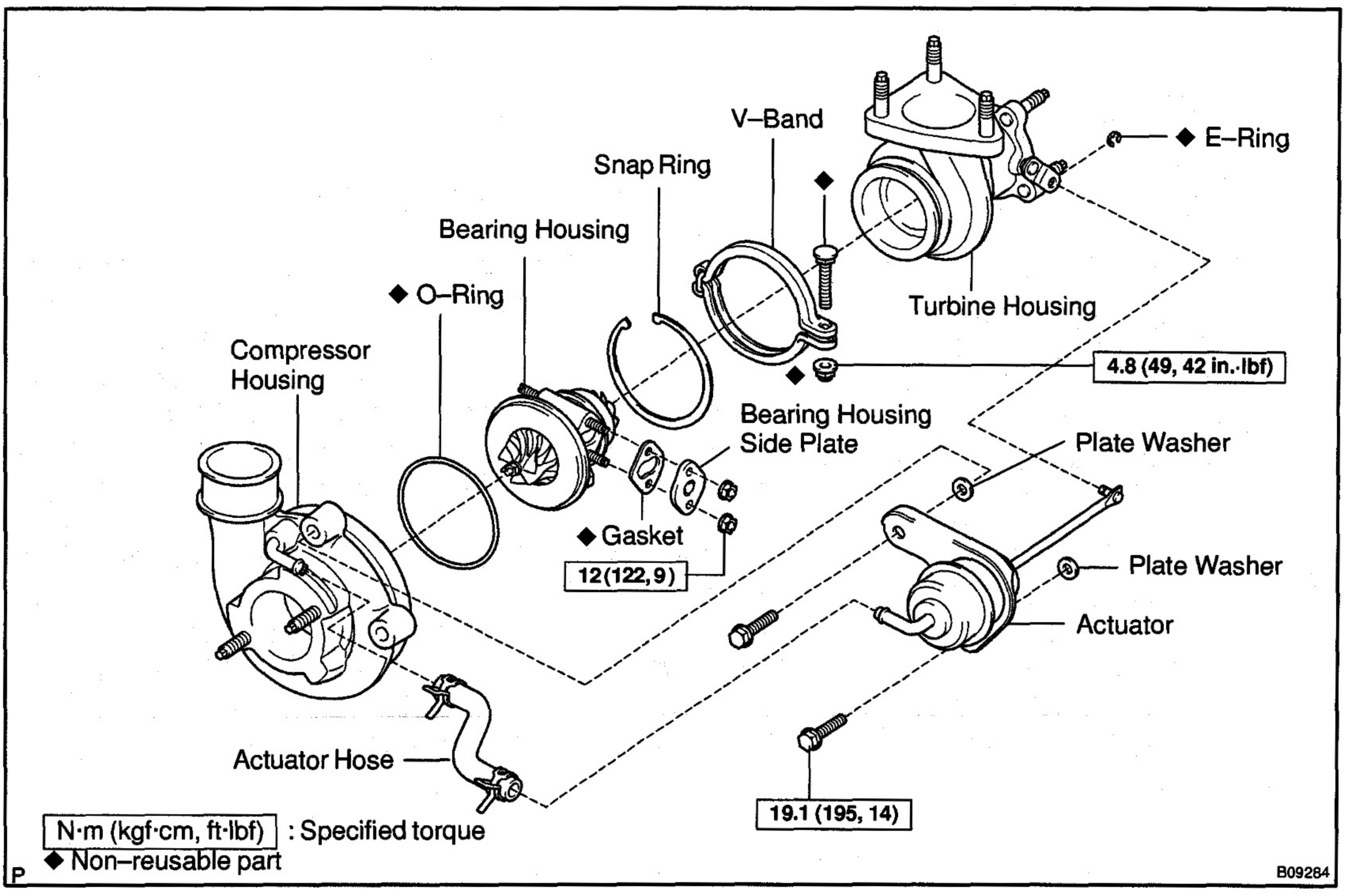
V–Band
Snap Ring
◆ E–Ring
Bearing Housing
◆ O–Ring
Turbine Housing
4.8 (49, 42 in.·lbf)
Compressor Housing
Bearing Housing Side Plate
Plate Washer
◆ Gasket
12(122,9)
Plate Washer
Actuator
Actuator Hose
19.1 (195, 14)
N·m (kgf·cm, ft·lbf) : Specified torque
◆ Non–reusable part
B09284

TC032–01

REMOVAL

1. DRAIN ENGINE COOLANT

2. REMOVE INTAKE PIPE (See page EM–44)

3. REMOVE TURBOCHARGER HEAT INSULATOR

Remove the 3 bolts and heat insulator.

4. REMOVE EXHAUST MANIFOLD HEAT INSULATOR

Remove the 4 bolts and heat insulator.

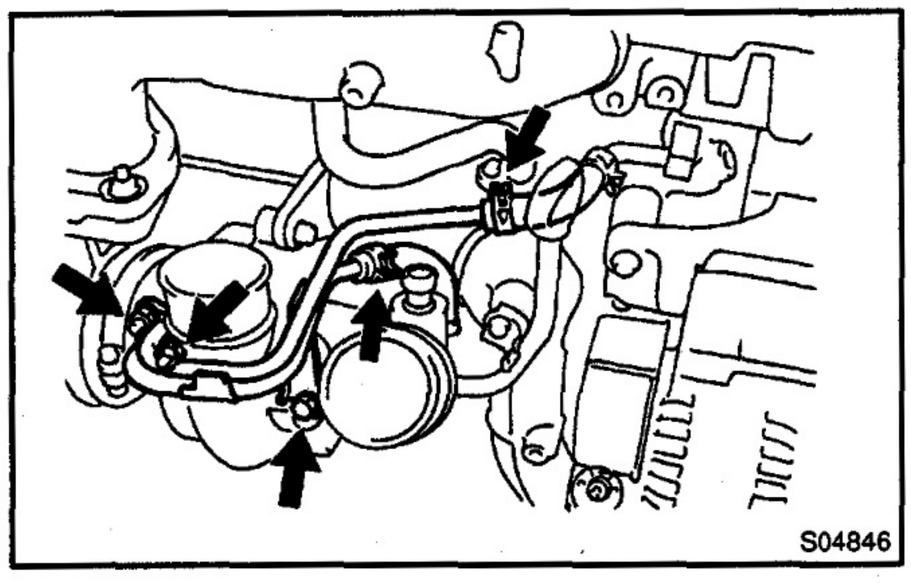

5. REMOVE TURBO WATER PIPE

(a) Disconnect the 2 water bypass hoses from the turbo water pipe.

(b) Remove the 2 nuts, bolt, water pipe and gasket.

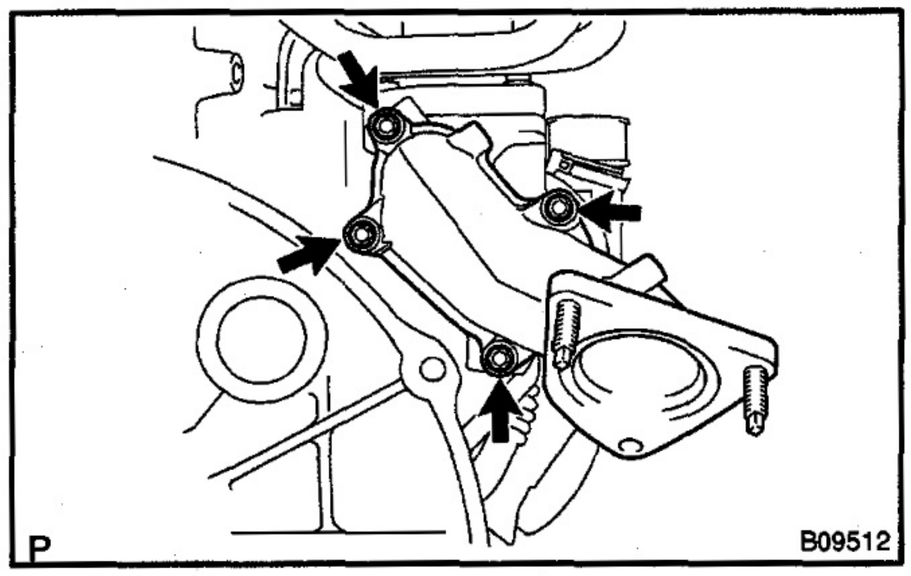

6. REMOVE TURBINE OUTLET ELBOW

Remove the 4 nuts, outlet elbow and gasket.

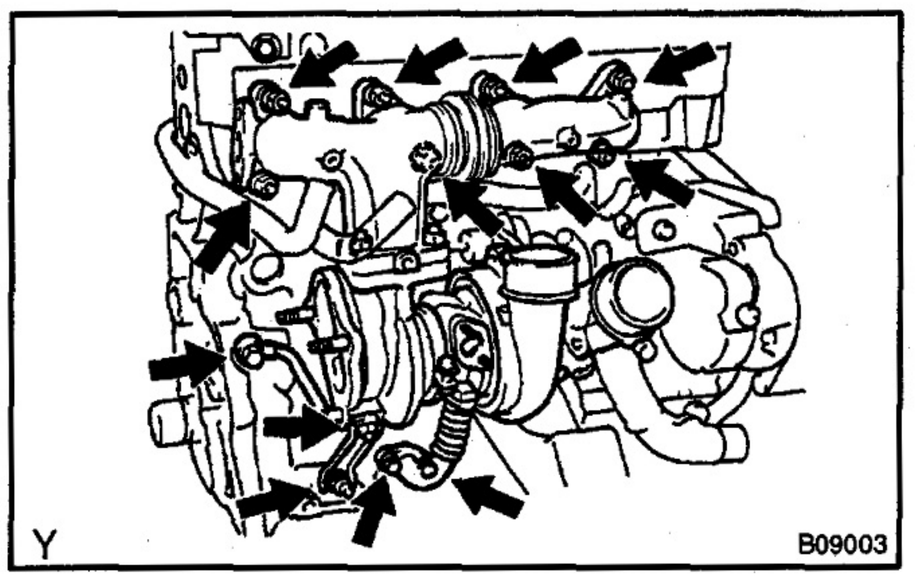

7. REMOVE TURBOCHARGER STAY

Remove the bolt, nut and turbocharger stay.

8. REMOVE TURBOCHARGER AND EXHAUST MANIFOLD ASSEMBLY

(a) Remove the 2 bolts and union bolt from the turbo oil pipe.

(b) Remove the 6 nuts, plate washers, 2 bolts, the turbocharger, exhaust manifold assembly and 3 gaskets.

9. REMOVE TURBO OIL PIPE FROM TURBOCHARGER

Remove the 2 nuts, oil pipe and gasket.

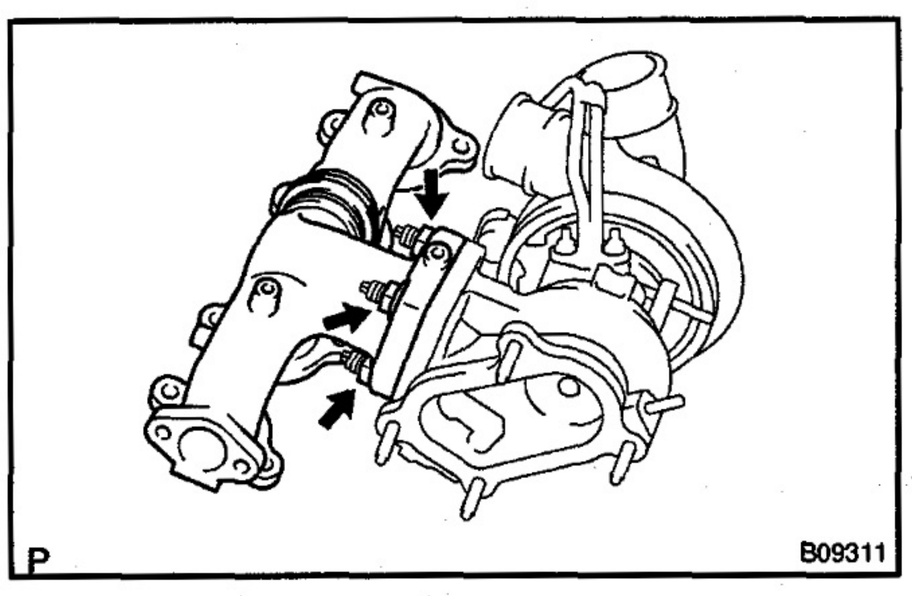

10. REMOVE EXHAUST MANIFOLD FROM TURBOCHARGER

Remove the 3 nuts, exhaust manifold and gasket.

11. REMOVE AIR INLET ELBOW FROM TURBOCHARGER

Remove the 2 nuts, inlet elbow and gasket.

TC033-01

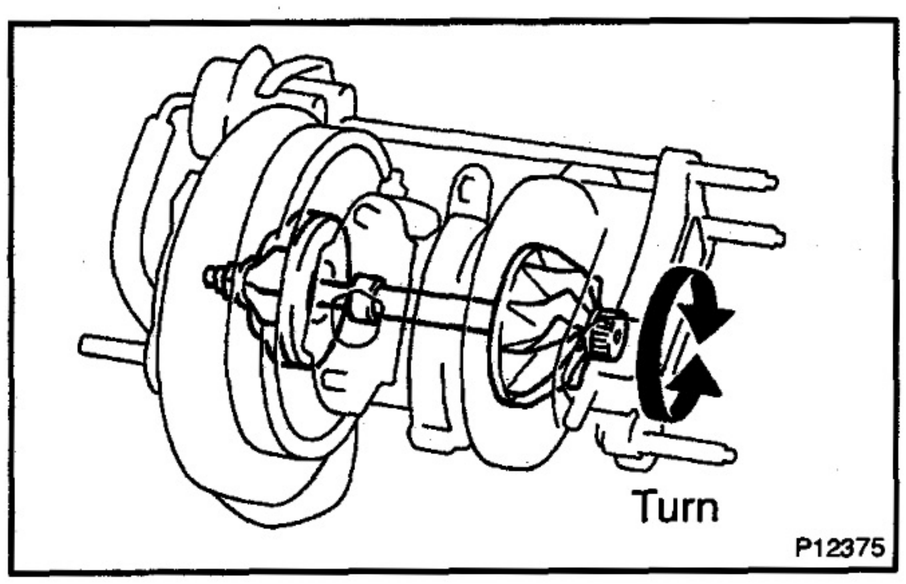

DISASSEMBLY

1. INSPECT TURBINE SHAFT ROTATION

Grasp the edge of the turbine shaft, and turn it. Check that the turbine shaft turns smoothly.

If the turbine shaft does not turn or if it turns with a heavy drag, replace the turbocharger.

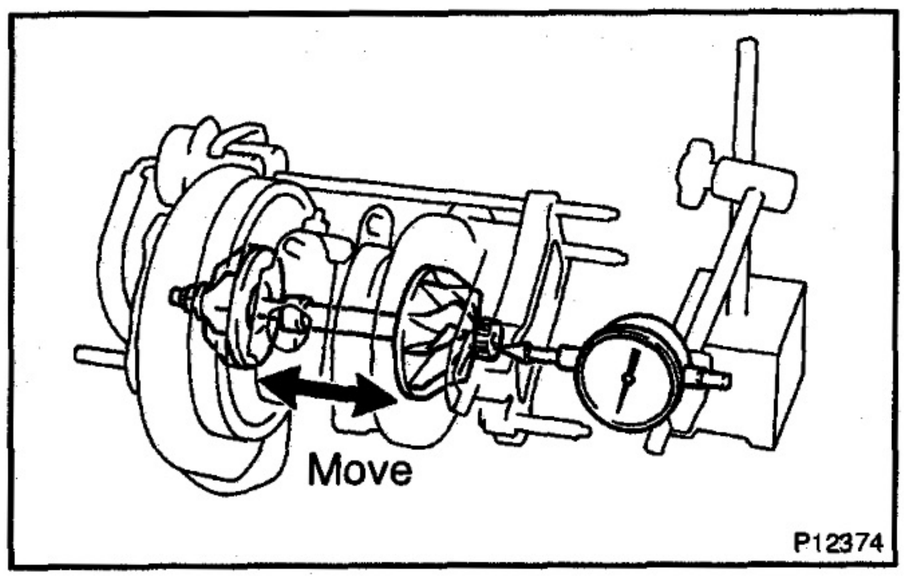

2. INSPECT AXIAL PLAY OF TURBINE SHAFT

(a) Using a dial indicator, insert the needle of the dial indicator into the exhaust side.

(b) Move the turbine shaft in an axial direction, measure the axial play of the turbine shaft.

Maximum axial play: 0.15 mm (0.0063 in.)

If the axial play is greater than maximum, replace the turbocharger.

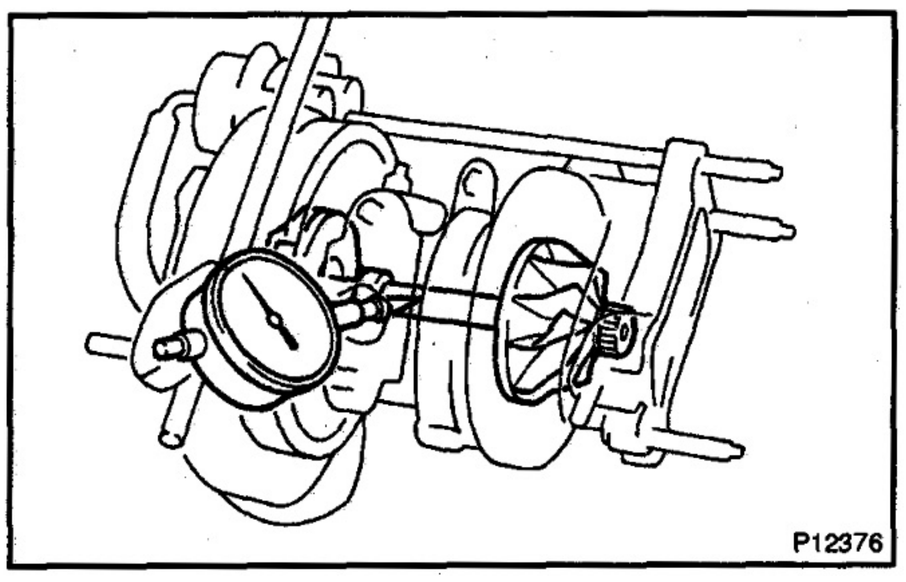

3. INSPECT RADIAL PLAY OF TURBINE SHAFT

(a) Using a dial indicator, insert the needle of the dial indicator into the oil outlet hole, and set it in the center of the turbine shaft.

(b) Move the turbine shaft in a radial direction, measure the radial play of the turbine shaft.

Maximum radial play: 0.11 mm (0.0043 in.)

If the radial play is greater than maximum, replace the turbocharger.

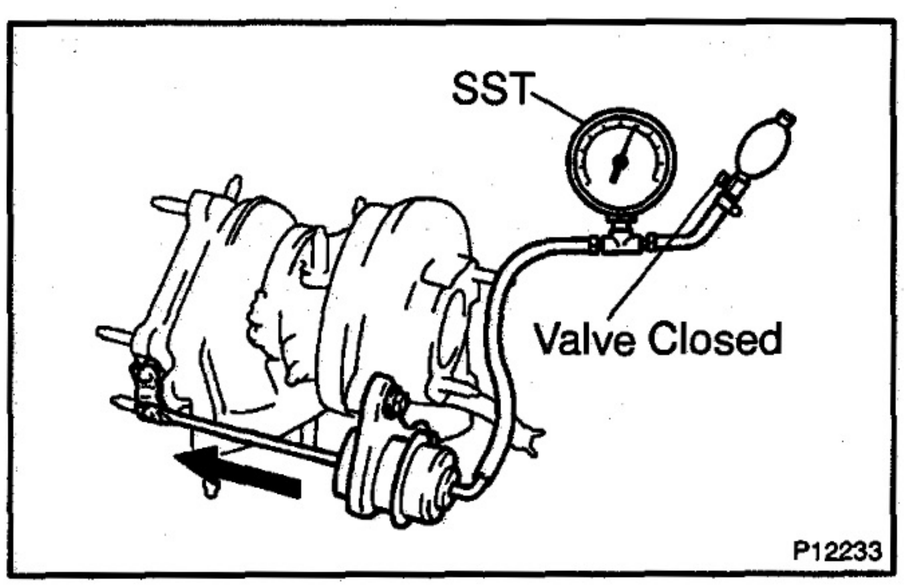

4. INSPECT ACTUATOR AND WASTE GATE VALVE OPERATION

(a) Disconnect the actuator hose from the compressor housing.

(b) Using SST, apply approx. 116 kPa (1.18 kgf/cm^2, 16.7 psi) of pressure to the actuator.

SST 09992–00242

(c) Move the actuator push rod, and check that the waste gate valve is open.

If the rod does not move, replace the actuator or turbocharger.

NOTICE:

Never apply more than 141 kPa (1.44 kgf/cm^2, 20.5 psi) of pressure to the actuator.

(d) Reconnect the actuator hose to the compressor housing.

5. REMOVE BEARING HOUSING SIDE PLATE FROM TURBOCHARGER

Remove the 2 bolts, side plate and gasket.

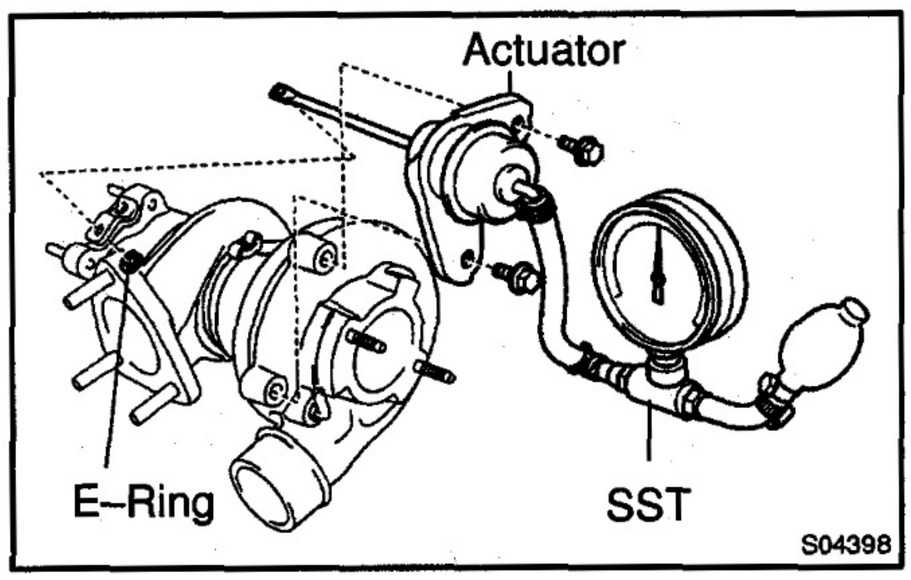

6. REMOVE ACTUATOR

(a) Disconnect the actuator hose form the compressor housing.

(b) Using SST, apply pressure to the actuator.
SST 09992–00242

NOTICE:

Never apply more than 141 kPa (1.44 kgf/cm^2, 20.5 psi) of pressure to the actuator.

(c) Remove the 2 bolts holding the actuator to the compressor housing.

(d) Remove the E–ring holding the actuator push rod to the waste gate valve link, and remove the actuator.

7. REMOVE COMPRESSOR HOUSING

(a) Place the matchmarks on the compressor housing and bearing housing.

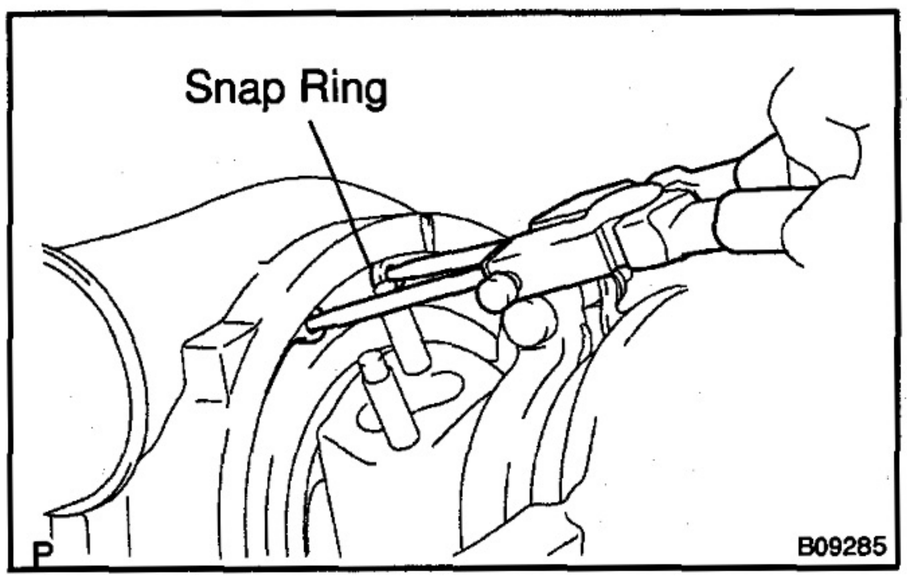

(b) Using snap ring pliers, remove the snap ring from the compressor housing.

HINT:

Do not remove the snap ring with force from the turbocharger.

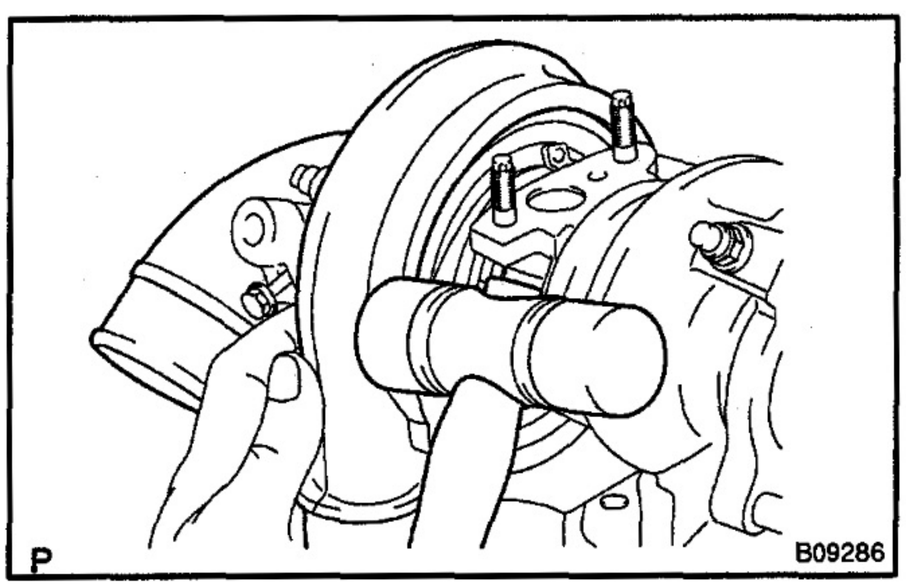

(c) Using a plastic–faced hammer, tap out the compressor housing.

NOTICE:

Remove the compressor housing as straight as possible and do not make the impeller wheel interfere with the compressor housing.

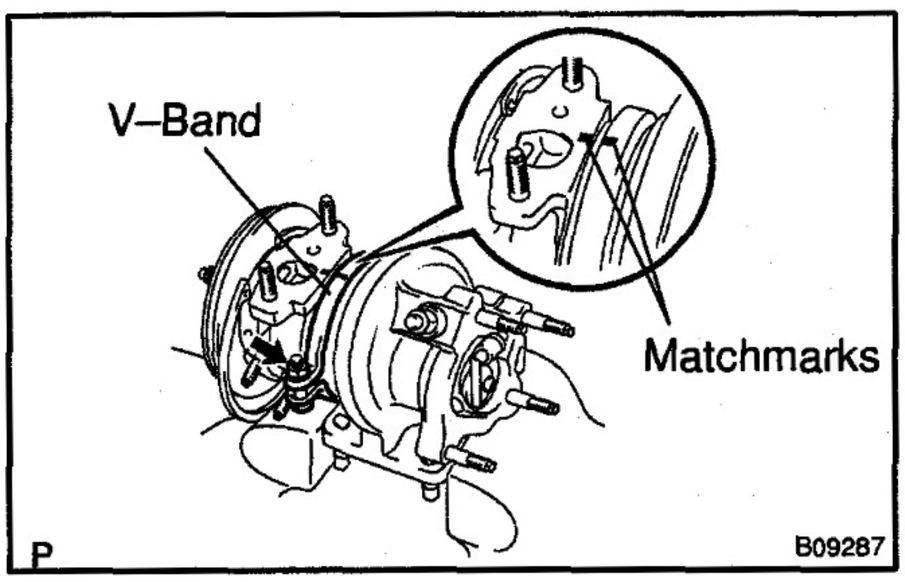

8. REMOVE BEARING HOUSING

(a) Place the matchmarks on the V–band, turbine housing and bearing housing.

(b) Remove the bolt, nut and V–band.

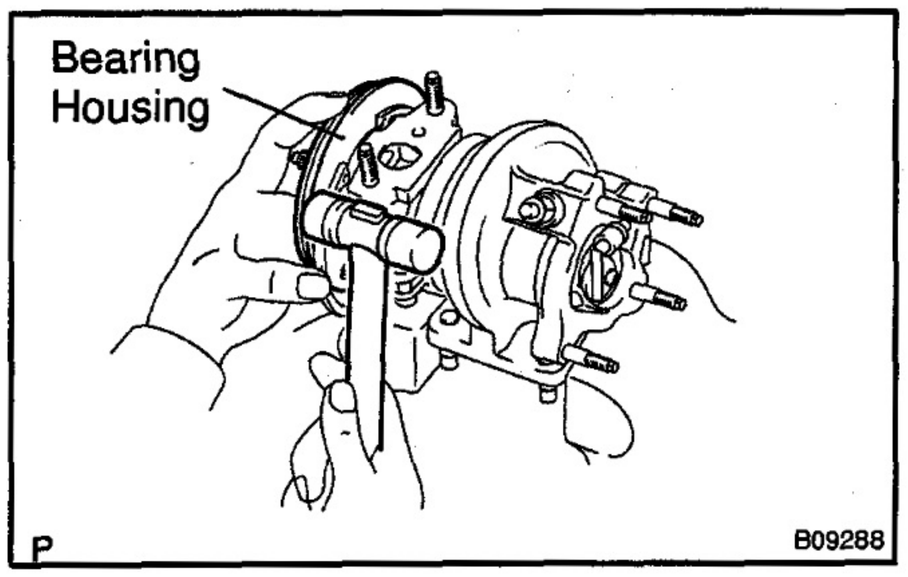

(c) Using a plastic–faced hammer, tap out the bearing housing.

NOTICE:

Remove the bearing housing as straight as possible and so not make the turbine wheel interfere with the turbine housing.

(d) Remove the snap ring from the turbocharger.

(e) Remove the O–ring from the bearing housing.

TC034–01

INSPECTION

1. CLEAN AND INSPECT TURBINE HOUSING

(a) Spray the engine conditioner to the section where the carbon dirt is adhered.

NOTICE:

Be careful not to erase the matchmark of the turbine housing.

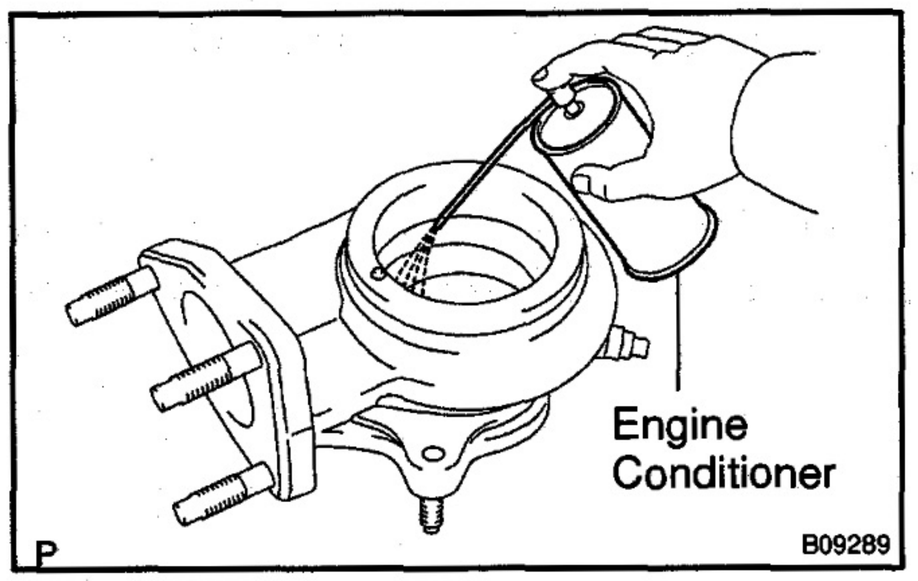

(b) Using a wire brush, remove all the carbon dirt inside the turbine housing.

NOTICE:

Clean the shroud section shown in the illustration sufficiently. And clean the waste gate valve seat sufficiently, too.

HINT:

When the carbon dirt is heavily adhered, remove it using the screwdriver and the like.

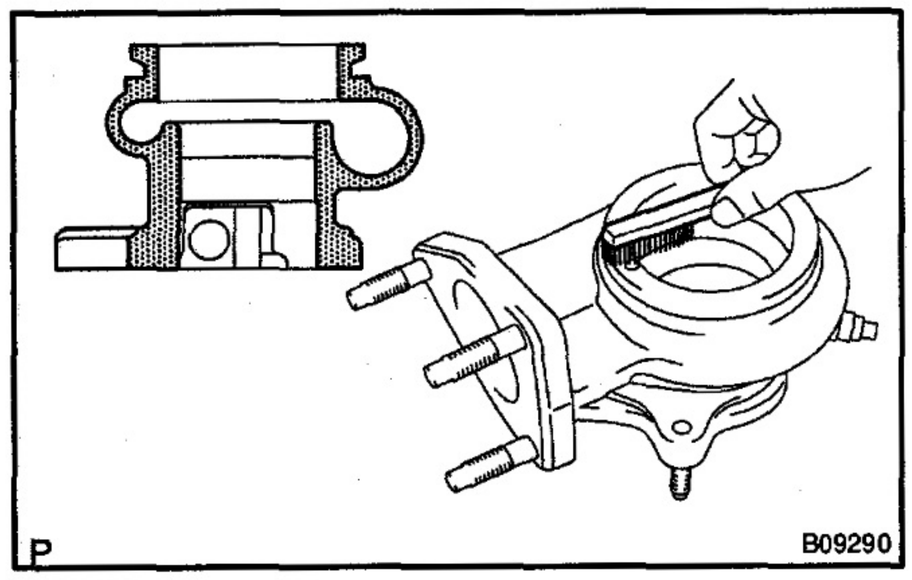

(c) Wash with compressed air or a steam cleaner.

NOTICE:

Wash sufficiently without leaving any irregular objects.

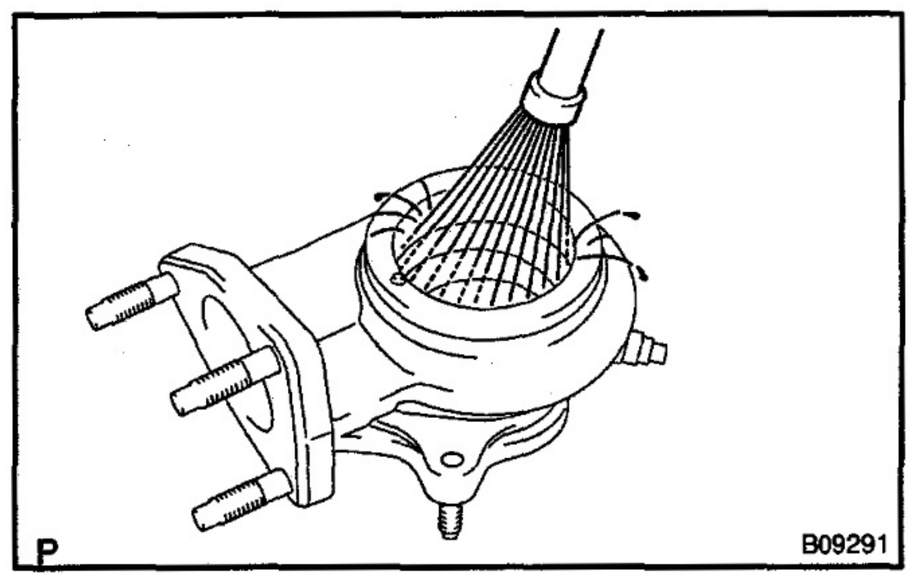

(d) Check that there is no bore made by the interference with the turbine wheel in the shroud section.

If the turbine housing is having remarkable damage or bore, replace the turbine housing and bearing housing.

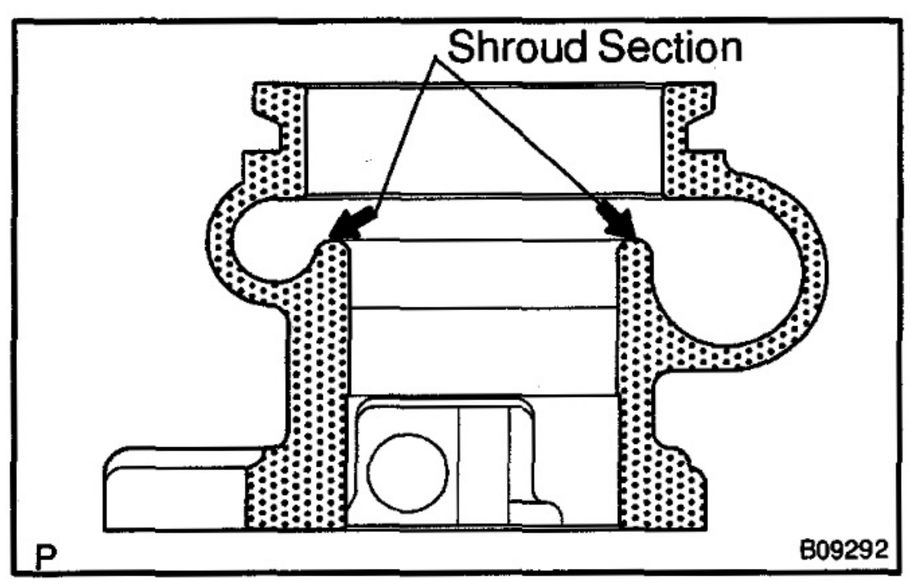

(e) Move the waste gate valve link and check that it runs smoothly without sticking.

If the link is bad running, clean again. If it is bad running, even after cleaning, replace the turbine housing.

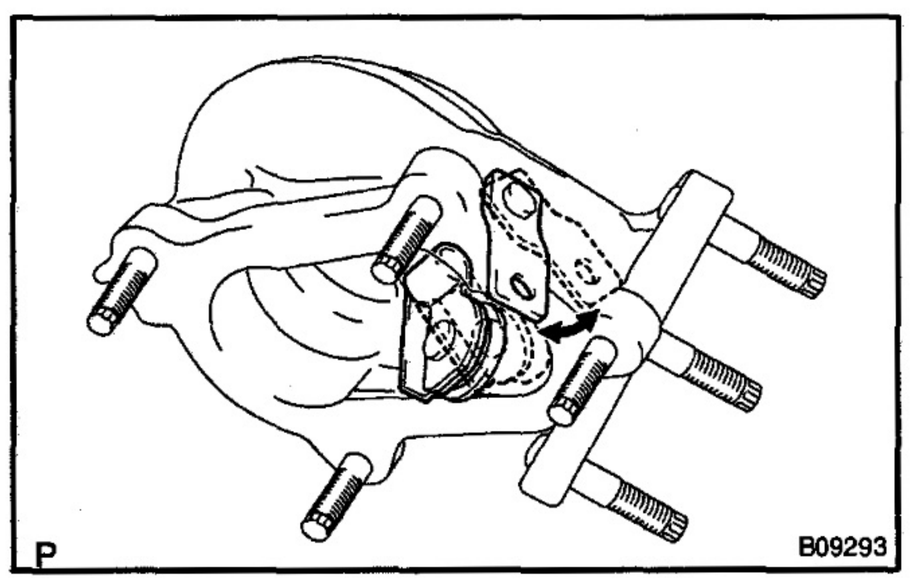

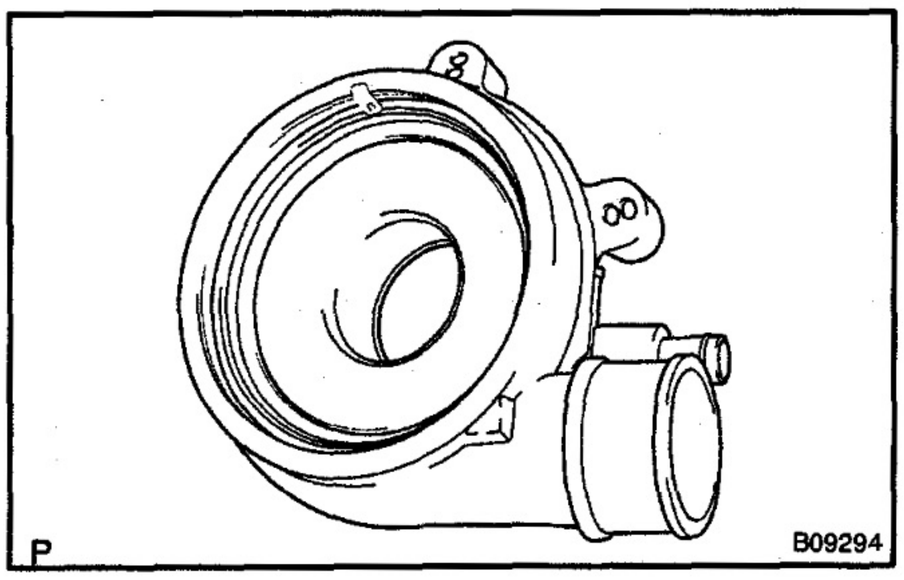

2. CLEAN COMPRESSOR HOUSING

(a) Be careful not to drop any oil on the contact surfaces of the compressor housing and bearing housing.

(b) Wipe off the dirt from the inside of the housing with a shop rag.

TC035–01

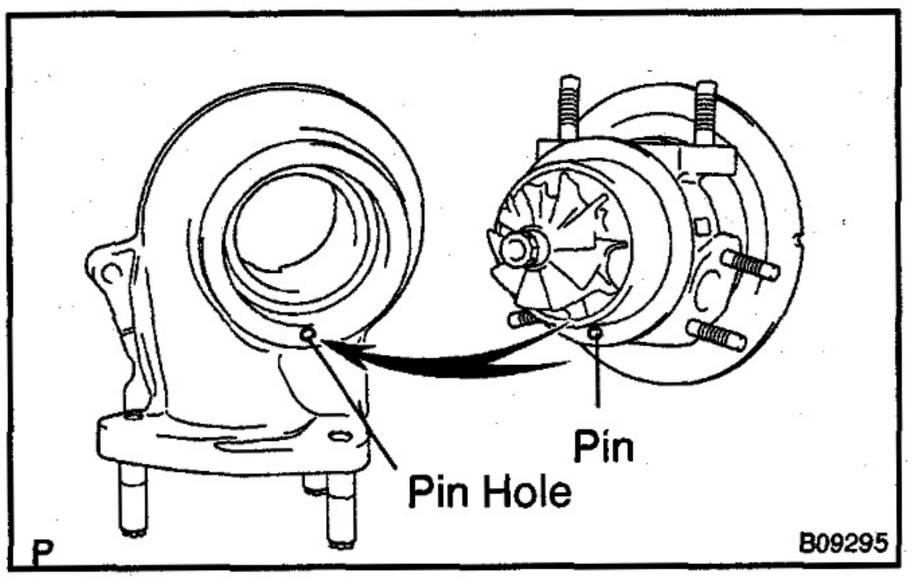

REASSEMBLY

1. INSTALL BEARING HOUSING

(a) Install the snap ring to the turbocharger.

HINT:

In advance, put the snap ring through the bearing housing.

(b) Install a new O–ring to the bearing housing.

(c) Align the pin of the turbine housing with the pin hole of the bearing housing.

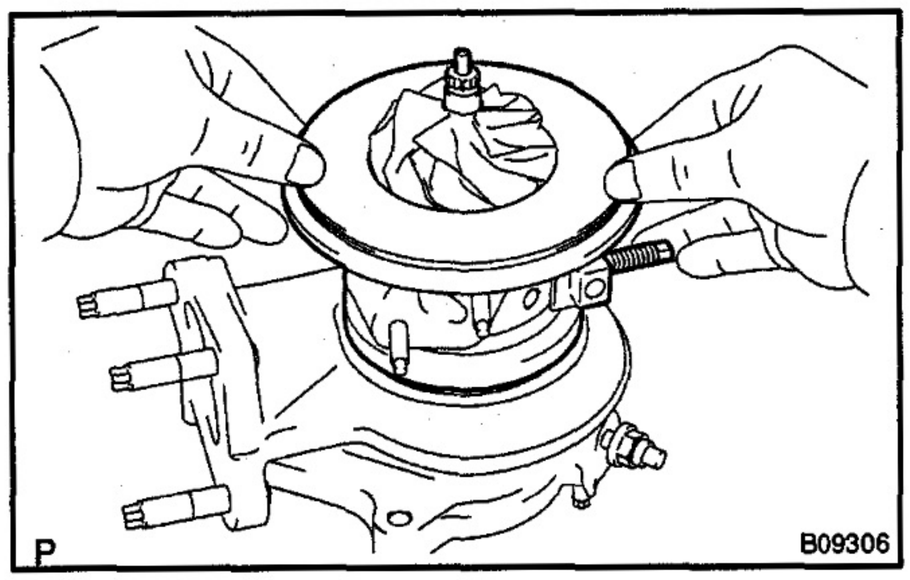

(d) Install the bearing housing to the turbine housing.

NOTICE:

- **Install the bearing housing straight, and be careful not to damage the turbine wheel.**
- **In case of having difficulty of pressing in the bearing housing to install with a hand due to hard engagement, apply the procedure (c).**

HINT:

Apply a little penetrate rust prevention lubricant onto the engagement section to make installation easier.

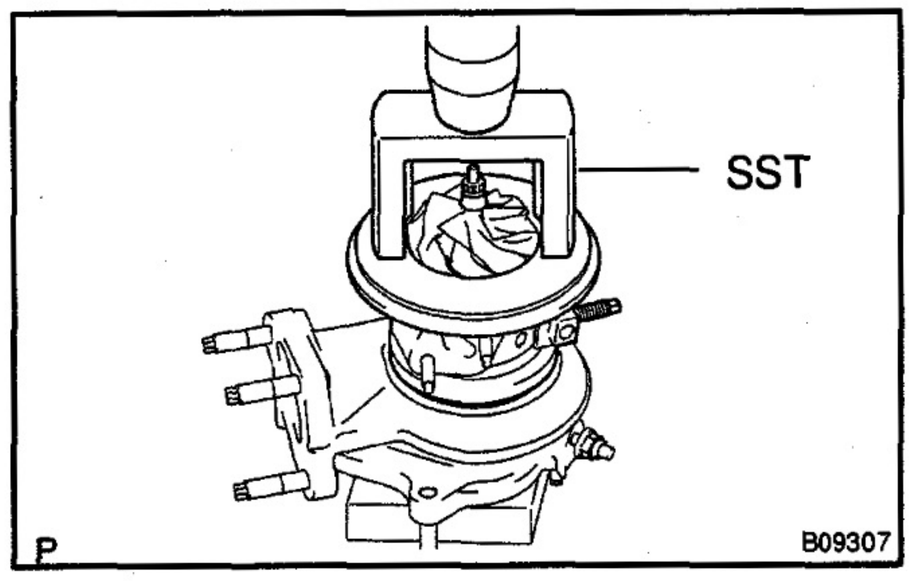

(e) In case that the engagement of the bearing housing is hard, using SST and a press, install the bearing housing while checking the smooth rotation of the impeller wheel.

SST 09350–32014 (09351–32070)

NOTICE:

- **Do not hold the turbine housing with the stud bolts.**
- **Be sure to install the bearing housing straight without tilting as the shaft may bent and cause the irregular noise.**
- **Press in the bearing housing slowly. When the rotation of the impeller wheel becomes heavy, return the press immediately and do the operation again.**
- **After installed, check that the turbine shaft turns smoothly.**

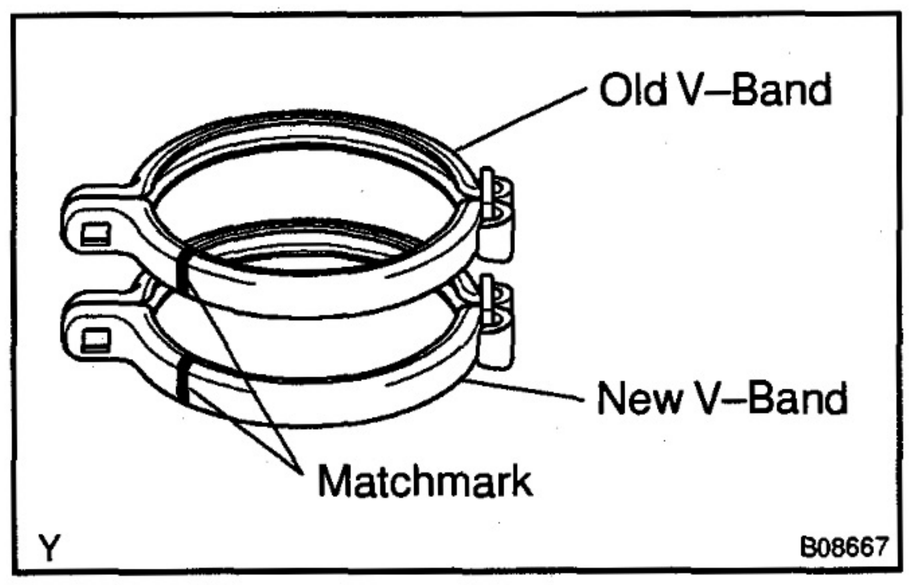

(f) Place a new and old (used) V–bands in line, then reprint the matchmark position on the old V–band to the new one.

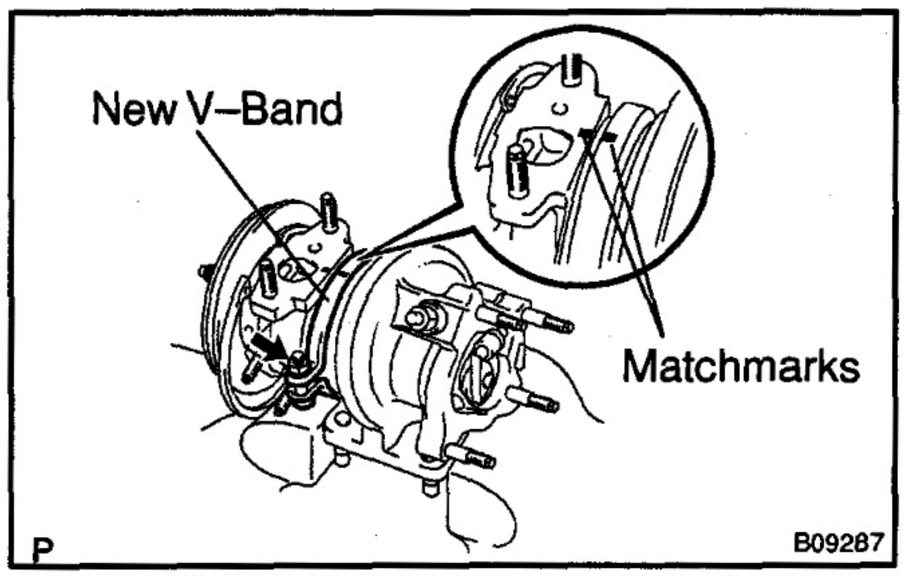

(g) Align the matchmarks on the V–band, turbine housing and bearing housing, and temporarily tighten with a new bolt and nut.
Torque: 4.8 N·m (49 kgf·cm, 42 in.·lbf)

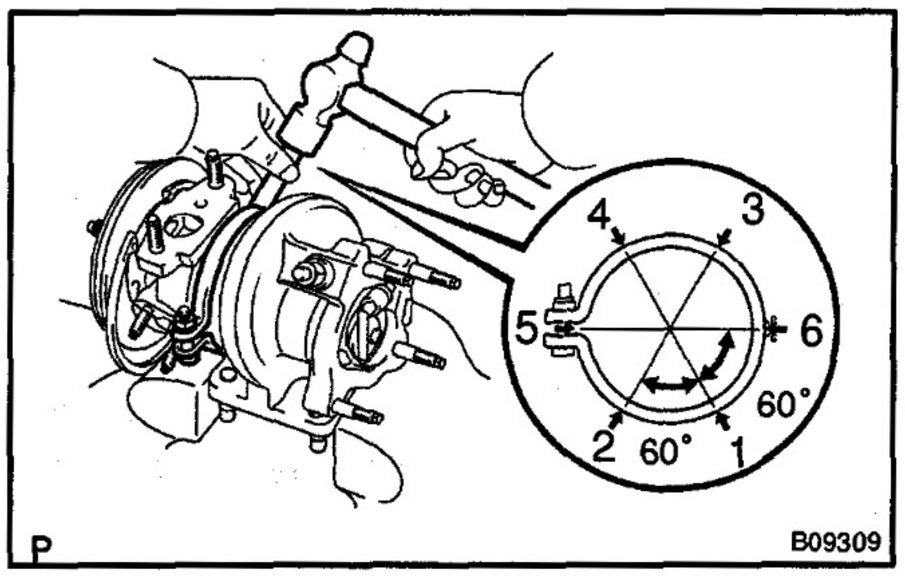

(h) Using a brass bar and hammer, hit 2 or 3 times lightly at each place in order of 1 through 5.
(i) Tighten the bolt and nut more.
Torque: 4.8 N·m (49 kgf·cm, 42 in.·lbf)
(j) Using a brass bar and hammer, hit 2 or 3 times lightly at each place of 1 and 4.
(k) Tighten the bolt and nut completely.

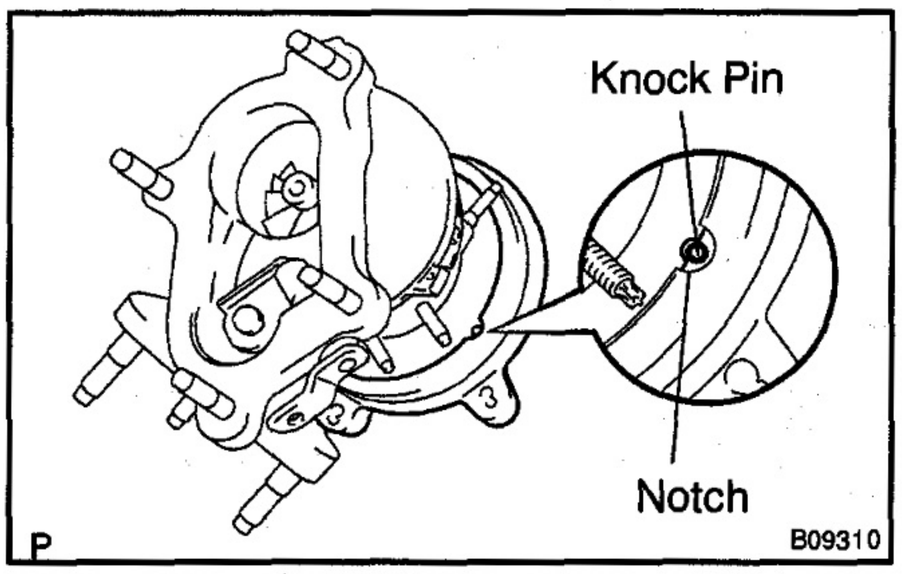

2. INSTALL COMPRESSOR HOUSING
(a) Align the knock pin of the bearing housing with the notch of the compressor housing, and install them.

NOTICE:
- **Do not make the impeller wheel interfere with the compressor housing.**
- **Check that the turbine shaft truns smoothly.**

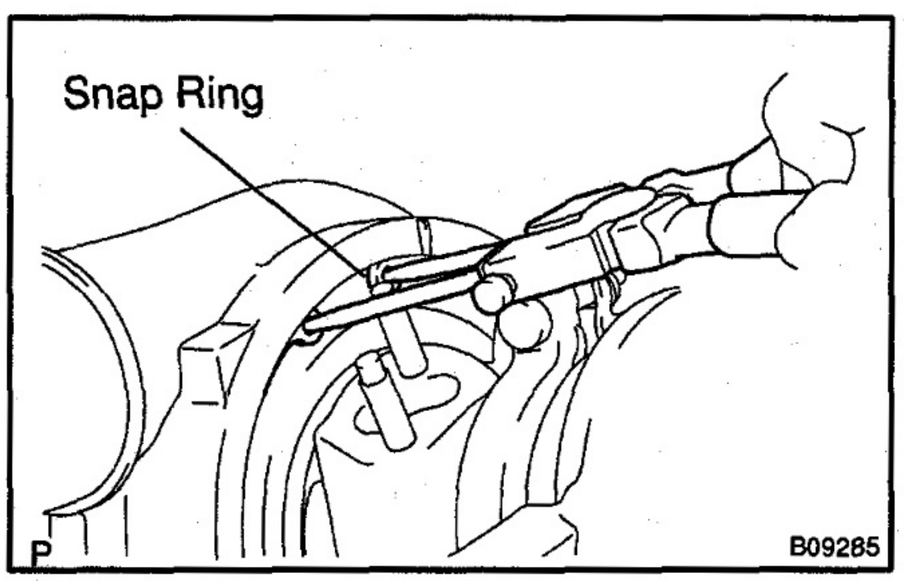

(b) Using snap ring pliers, install the snap ring to the compressor housing.

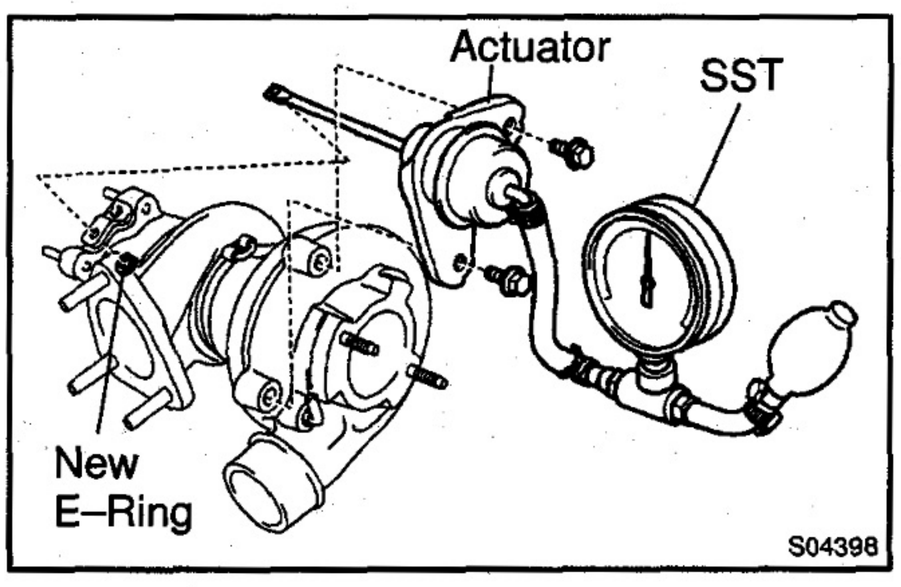

3. INSTALL ACTUATOR
(a) Using SST, apply pressure to the actuator.
SST 09992–00241

NOTICE:
Never apply more than 141 kPa (1.44 kgf/cm^2, 20.5 psi) of pressure to the actuator.

(b) Connect the actuator push rod to the waste gate valve link with a new E–ring.
(c) Install the actuator with the 2 bolts.
Torque: 19.1 N·m (195 kgf·cm, 14 ft·lbf)

(d) Remove the SST.

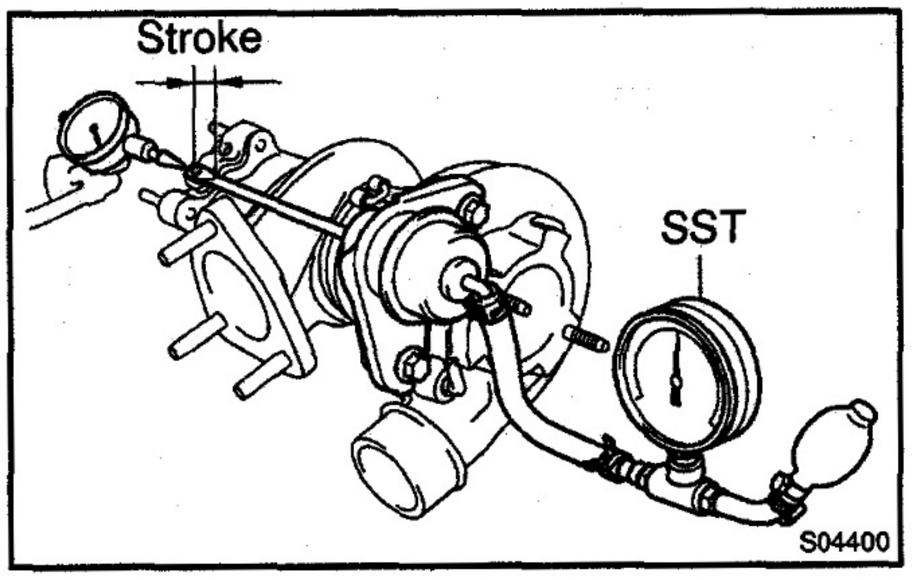

4. ADJUST ACTUATOR PUSH ROD STROKE

NOTICE:

Never apply more than 141 kPa (1.44 kgf/cm^2, 20.5 psi) of pressure to the actuator.

(a) Using a dial indicator, set the dial indicator in a straight line with the actuator push rod.

(b) Using SST, apply 119 kPa (1.21 kgf/cm^2, 17.2 psi) of pressure to the actuator, and measure the actuator push rod stroke.

SST 09992–00242

(c) From the table below select the plate washer thickness to match the stroke measured in (b) above.

Stroke measurement mm (in.)	Required plate washer thickness mm (in.)
1.20 – 1.70 (0.0472 – 0.0669)	None required
1.71 – 2.20 (0.0673 – 0.0866)	0.5 (0.020)
2.21 – 2.70 (0.0870 – 0.1063)	1.0 (0.039)
2.71 – 3.20 (0.1067 – 0.1260)	1.5 (0.059)
3.21 – 3.70 (0.1264 – 0.1457)	2.0 (0.079)
3.71 – 4.20 (0.1461 – 0.1654)	2.5 (0.098)
4.21 – 4.70 (0.1657 – 0.1850)	3.0 (0.118)
4.71 – 5.20 (0.1854 – 0.2047)	3.5 (0.138)
5.21 – 5.70 (0.2051 – 0.2244)	4.0 (0.157)
5.71 – 6.20 (0.2248 – 0.2441)	4.5 (0.177)
6.21 – 6.70 (0.2445 – 0.2638)	5.0 (0.197)
6.71 – 7.20 (0.2642 – 0.2827)	5.5 (0.217)
7.21 – 7.70 (0.2839 – 0.3031)	6.0 (0.236)
7.71 – 8.20 (0.3035 – 0.3228)	6.5 (0.256)

NOTICE:

- **Use a combination of plate washers of 0.5 mm (0.020 in.), 1.0 mm (0.039 in.), 2.0 mm (0.079 in.) and 3.0 mm (0.118 in.) thickness to achieve the required thickness.**
- **Use the same thickness of plate washer for the 2 locations between the actuator and compressor housing.**
- **If the plate washer thickness exceeds 3.5 mm (0.138 in.), replace the actuator installation bolts with the bolts from the kit part.**

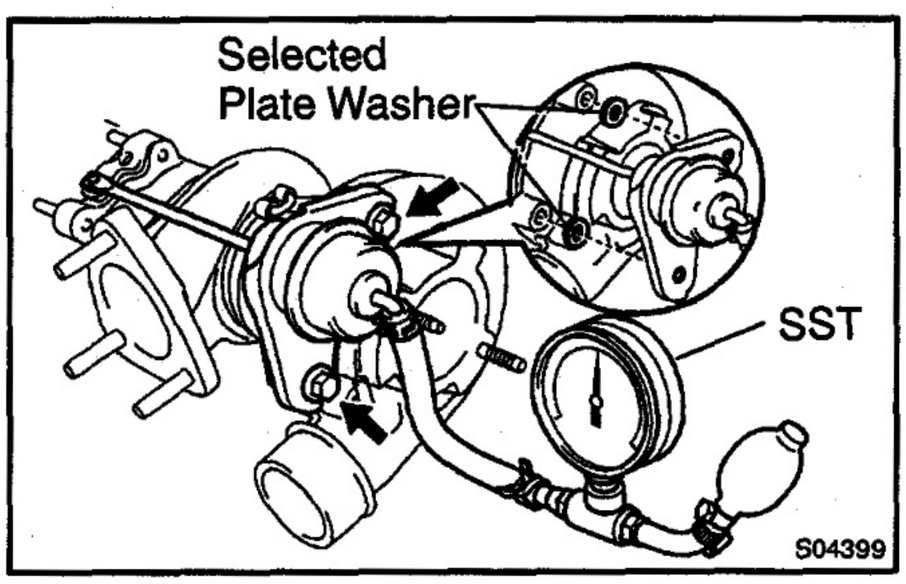

(d) Using SST, apply approx. 119 kPa (1.21 kgf/cm^2, 17.2 psi) of pressure to the actuator, and install the selected plate washers between the actuator and compressor housing with the 2 bolts.
Torque: 19.1 N·m (195 kgf·cm, 14 ft·lbf)

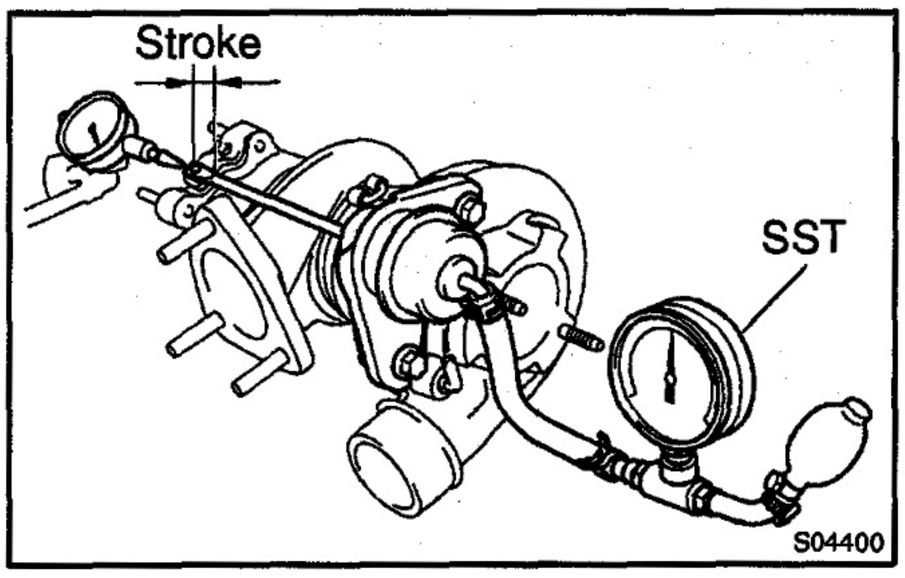

(e) Using SST, apply approx. 113 kPa (1.13 kgf/cm^2, 16.1 psi) of pressure to the actuator, and measure the actuator push rod stroke.
SST 09992–00242
Standard stroke: 1.20 – 1.70 mm (0.0472 – 0.0669 in.)

If the stroke is outside specifications, reselect the plate washers.

5. INSTALL ACTUATOR HOSE

6. APPLY YELLOW PAINT

Apply yellow paint from the actuator bolts to the actuator bracket to indicate that they have been correctly installed.

7. INSTALL BEARING HOUSING SIDE PLATE TO TURBOCHARGER

Install a new gasket and the side plate with the 2 bolts.
Torque: 12 N·m (122 kgf·cm, 9ft·lbf)

TC036-01

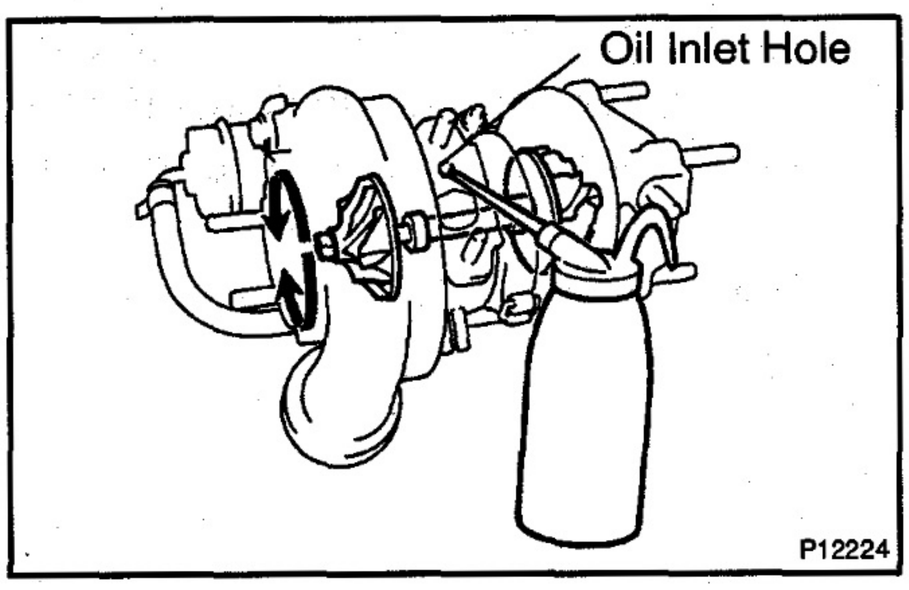

INSTALLATION

NOTICE:

After replacing the turbocharger assembly, pour approx. 20 cm^3 (1.2 cu in.) of fresh oil into the oil inlet hole and turn the turbine wheel by hand to splash oil on the bearing.

1. INSTALL AIR INLET ELBOW TO TURBOCHARGER

Install a new gasket and the inlet elbow with the 2 nuts.

Torque: 19.1 N·m (195 kgf·cm, 14 ft·lbf)

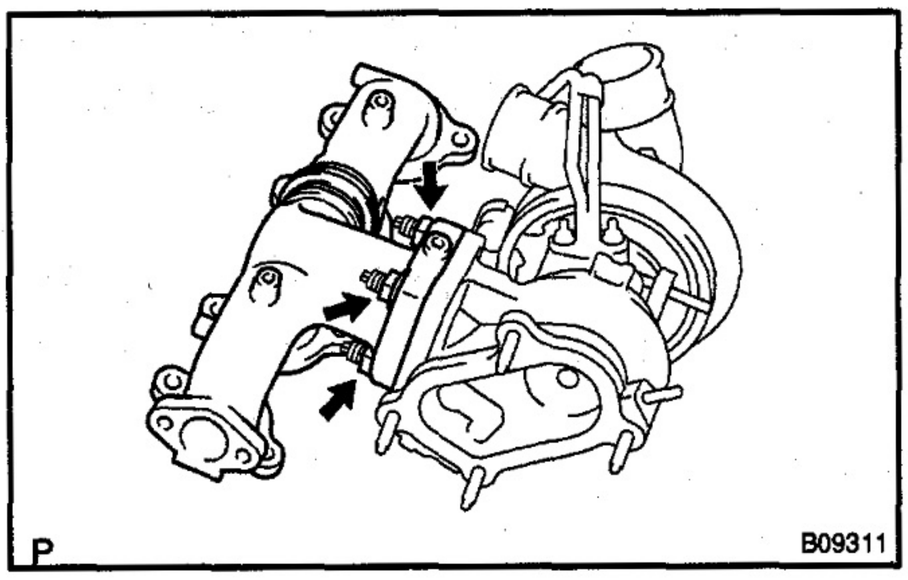

2. INSTALL EXHAUST MANIFOLD TO TURBOCHARGER

Install a new gasket and the exhaust manifold with the 3 nuts.

Torque: 52 N·m (530 kgf·cm, 38 ft·lbf)

3. INSTALL TURBO OIL PIPE TO TURBOCHARGER

Install a new gasket and the oil pipe with the 2 nuts.

Torque: 19 N·m (195 kgf·cm, 14 ft·lbf)

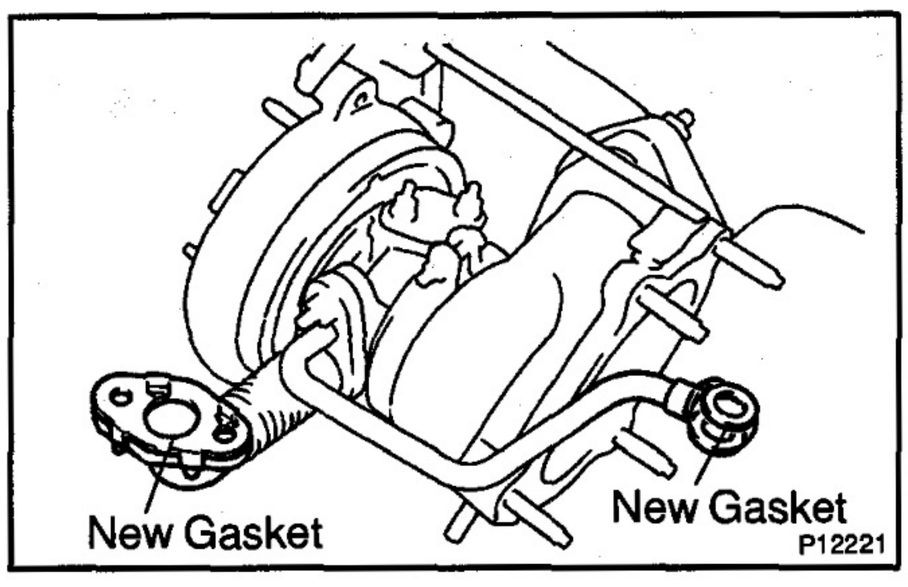

4. INSTALL TURBOCHARGER AND EXHAUST MANIFOLD ASSEMBLY

(a) Install 2 new gaskets to the turbo oil pipe.

(b) Install a new gasket, the turbocharger and exhaust manifold assembly with the 6 plate washers, 6 new nuts and the 2 bolts. Uniformly tightern the nuts and bolts in several passes.

Torque: 52 N·m (530 kgf·cm, 38 ft·lbf)

(c) Install the union bolt and 2 bolts holding the oil pipe to the cylinder block.

Torque:

Union bolt: 26 N·m (260 kgf·cm, 19 ft·lbf)

Bolt: 12 N·m (125 kgf·cm, 9 ft·lbf)

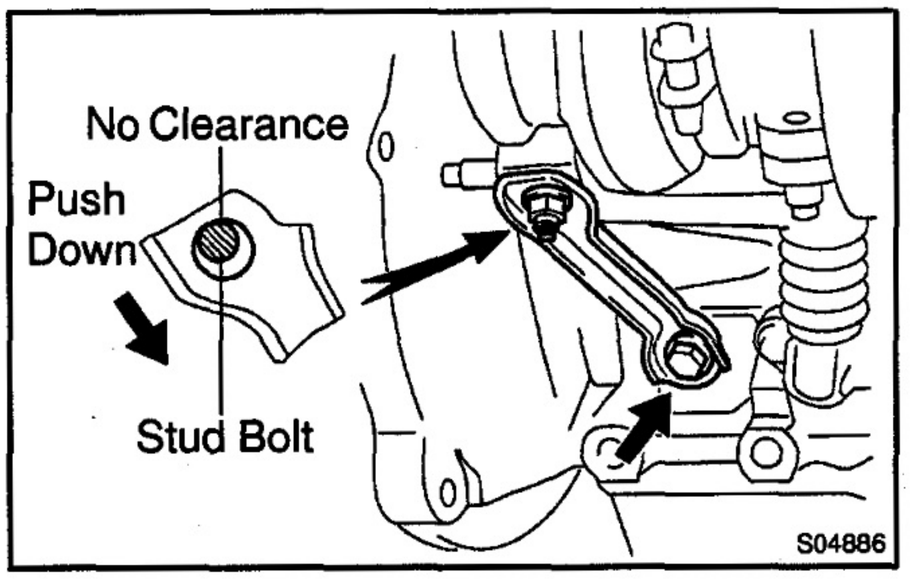

5. INSTALL TURBOCHARGER STAY

(a) Temporarily install the turbocharger stay with the bolt and a new nut.

(b) Push down the turbocharger stay and tighten the bolt and nut.

Torque: 19 N·m (195 kgf·cm, 14 ft·lbf)

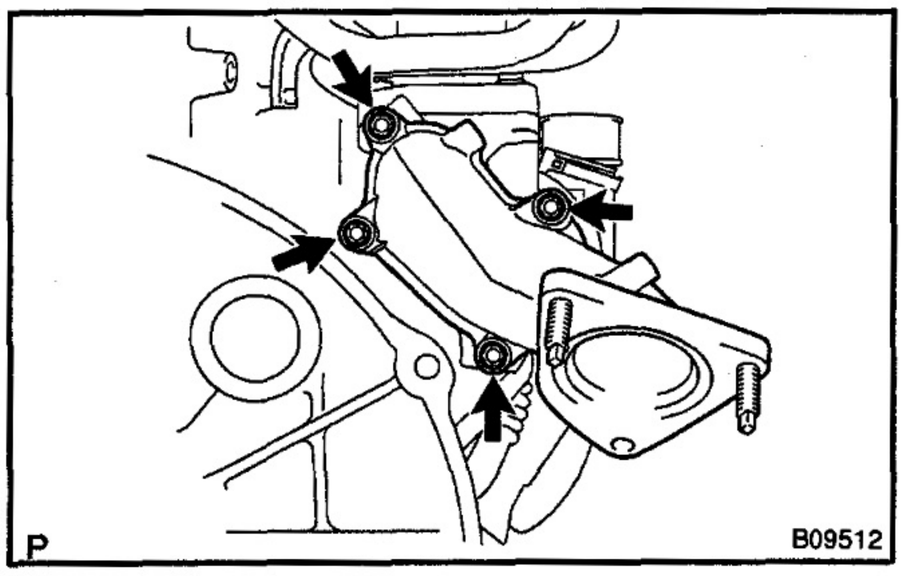

6. INSTALL TURBINE OUTLET ELBOW

Install a new gasket and the outlet elbow with 4 new nuts. Uniformly tighten the nuts in several passes.

Torque: 39 N·m (390 kgf·cm, 28 ft·lbf)

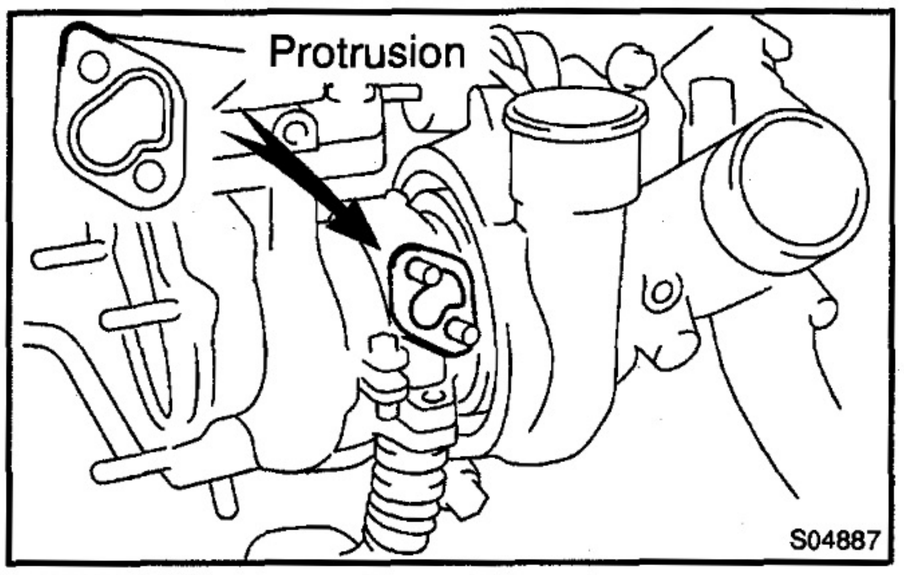

7. INSTALL TURBO WATER PIPE

(a) Place a new gasket on the turbocharger with the protrusion facing upward.

NOTICE:

Be careful of the gasket installation direction.

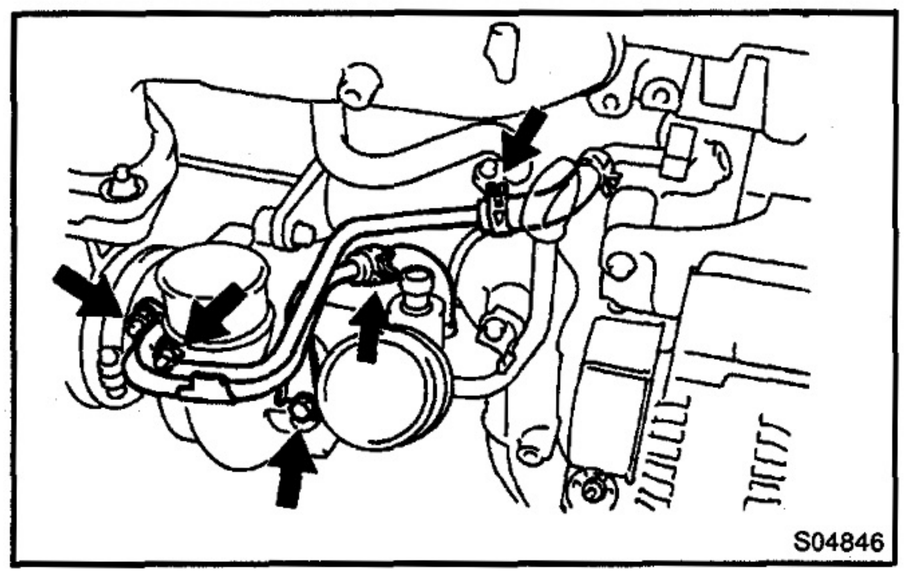

(b) Install the water pipe with the 2 nuts and bolt.

Torque:

Nut: 12 N·m (120 kgf·cm, 9 ft·lbf)

Bolt: 8 N·m (80 kgf·cm, 69 in.·lbf)

(c) Connect the 2 water bypass hoses to the turbo water pipe.

8. INSTALL EXHAUST MANIFOLD HEAT INSULATOR

Install the heat insulator with the 4 bolts.

9. INSTALL TURBOCHARGER HEAT INSULATOR

Install the heat insulator with the 4 bolts.

10. INSTALL INTAKE PIPE (See page EM–64)

11. FILL WITH ENGINE COOLANT

12. START ENGINE AND CHECK FOR LEAKS

13. CHECK ENGINE OIL LEVEL

EMISSION CONTROL

POSITIVE CRANKCASE
VENTILATION (PCV) SYSTEM EC–1

EC

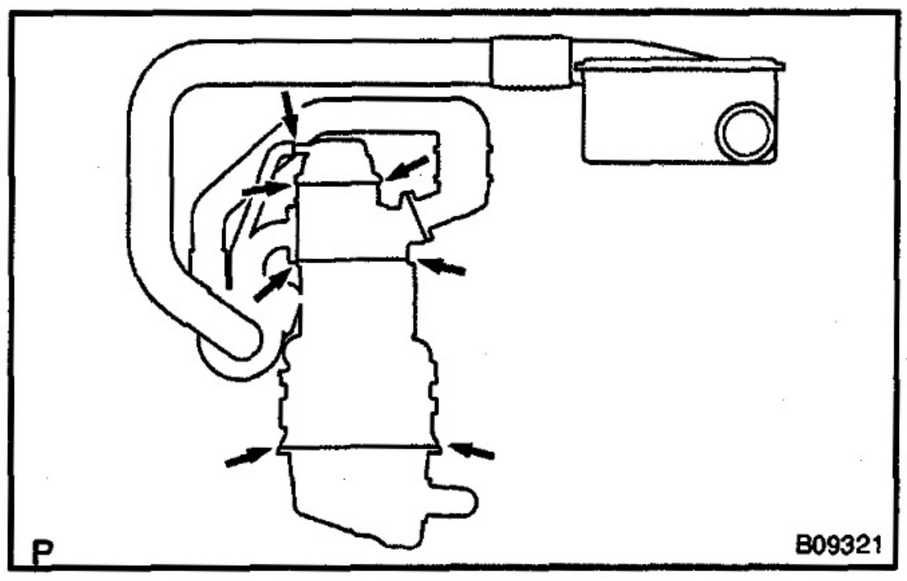

POSITIVE CRANKCASE VENTILATION (PCV) SYSTEM

EC0DP–01

INSPECTION

VISUALLY INSPECT HOSE AND CONNECTIONS

Check for cranks, leaks or damage.

ELECTRONIC CONTROL DIESEL

ECD SYSTEM ED–1
THROTTLE BODY ED–3
TIMING CONTROL VALVE ED–8
SPILL CONTROL VALVE ED–9
ECD MAIN RELAY ED–10
SPILL CONTROL VALVE RELAY ED–11
VSV FOR INTAKE
CONSTRICTOR CONTROL ED–13
WATER TEMPERATURE SENSOR ED–15
FUEL TEMPERATURE SENSOR ED–16
INTAKE AIR TEMPERATURE SENSOR ED–17
TURBO PRESSURE SENSOR ED–18
ENGINE SPEED SENSOR ED–20
CRANKSHAFT POSITION SENSOR ED–21
FIRST GEAR POSITION SWITCH ED–22
INJECTION PUMP
CORRECTION RESISTOR ED–24
ENGINE ECU ED–25

ECD SYSTEM

PRECAUTION

ED001-03

HINT:

- Any DTC code retained by the computer will be erased when the negative (–) terminal cable is removed from the battery.
- Therefore, if necessary, read the diagnosis before removing the negative (–) terminal cable from the battery.

1. BEFORE WORKING ON FUEL SYSTEM, DISCONNECT NEGATIVE (–) TERMINAL CABLE FROM BATTERY

2. DO NOT SMOKE OR WORK NEAR AN OPEN FLAME WHEN WORKING ON FUEL SYSTEM

3. KEEP DIESEL FUEL AWAY FROM RUBBER OR LEATHER PARTS

4. AIR INDUCTION SYSTEM

(a) Separation of the engine oil dipstick, oil filler cap, PCV hose, etc. may cause the engine to run out of tune.

(b) Disconnection, looseness or cracks in the parts of the air induction system between the throttle body and cylinder head will allow air suction and cause the engine to run out of tune.

5. ELECTRONIC CONTROL SYSTEM

(a) Before removing ECD wiring connectors, terminals, etc., first disconnect the power by either turning the ignition switch OFF or disconnecting the negative (–) terminal cable from the battery.

HINT:

Always check the DTC before disconnecting the negative (–) terminal cable from the battery.

(b) When installing the battery, be especially careful not to in correctly connect the positive (+) and negative (–) cables.

(c) Do not permit parts to receive a severe impact daring removal or installation. Handle all ECD parts carefully, especially the engine ECU.

(d) Do not be careless during troubleshooting as there are numerous transistor circuits and even slight terminal contact can further troubles.

(e) Do not open the engine ECU cover.

(f) When inspecting during rainy weather, take care to prevent entry of water. Also, when washing the engine compartment, prevent water from getting on the ECD parts and wiring connectors.

(g) Parts should be replaced as an assembly.

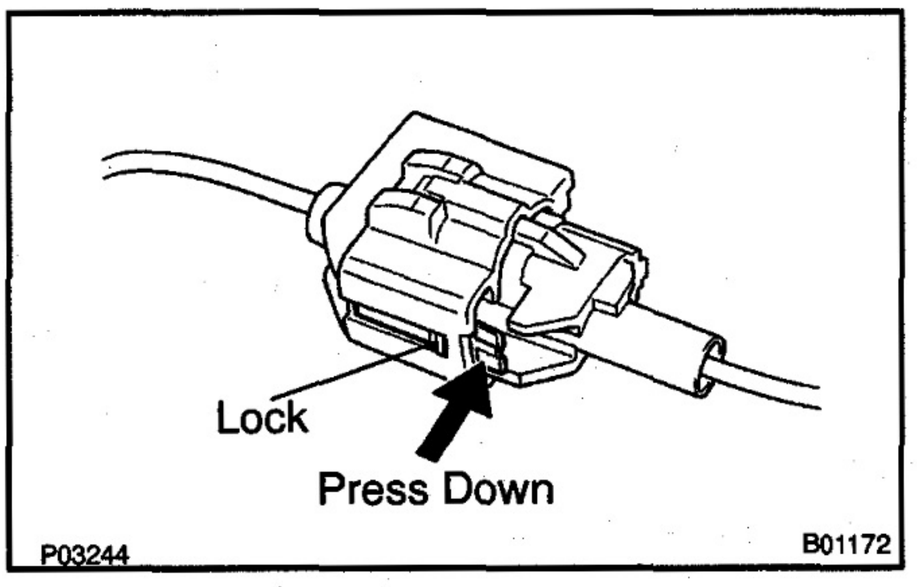

(h) Care is required when pulling out and inserting wiring connectors.
  (1) Release the lock and pull out the connector, pulling on the connectors.

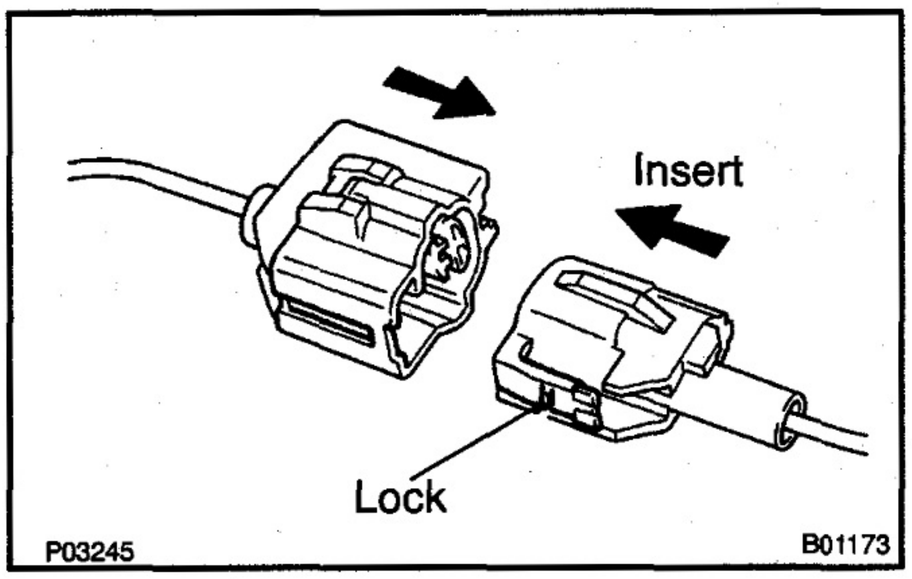

  (2) Fully insert the connector and check that it locked.

(i) When inspecting a connector with a volt/ohmmeter.
  (1) Carefully take out the water–proofing rubber if it is a water–proof type connector.
  (2) Insert the test probe in to the connector from the wiring side when checking the continuity, amperage or voltage.
  (3) Do not apply unnecessary force to the terminal.
  (4) After checking, install the water–proofing rubber on the connector securely.

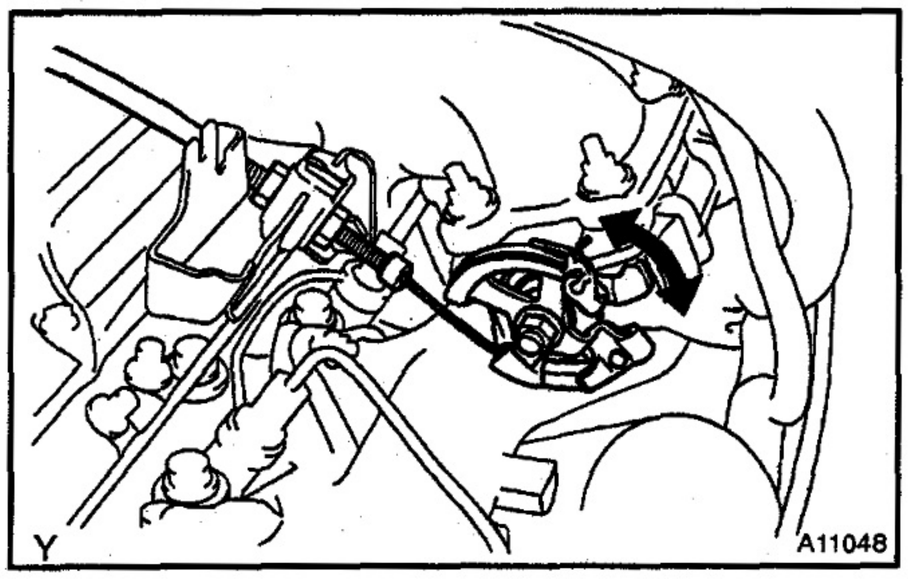

THROTTLE BODY

ON–VEHICLE INSPECTION

ED01K–02

INSPECT THROTTLE BODY OPERATION

(a) Check that the throttle linkage moves smoothly.
(b) Disconnect the 2 vacuum hoses from actuators A and B.

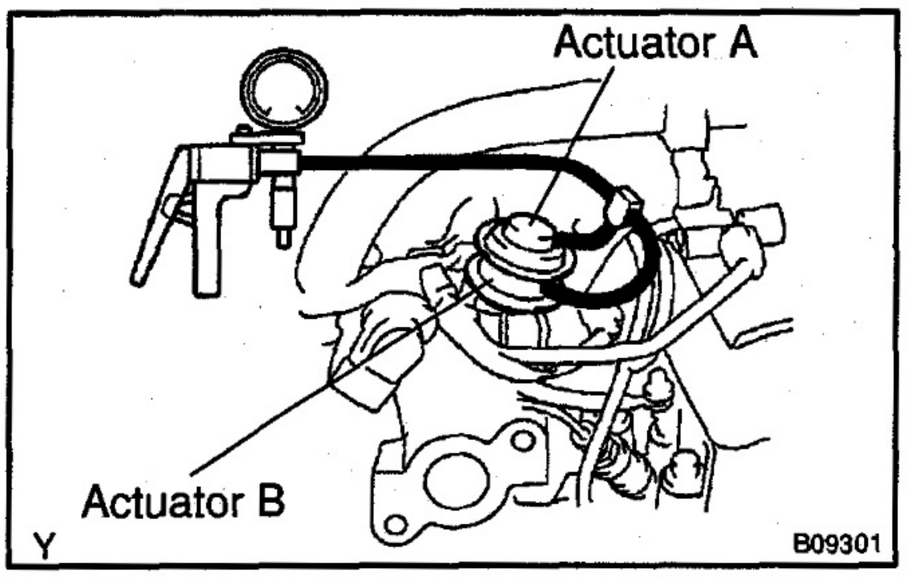

(c) Check that the diaphragm rod is pulled up when a vacuum of approx. 60 kPa (450 mmHg, 17.72 in.Hg) is applied to actuator B.
(d) Start the engine.
(e) Using a 3–way connector, apply approx. 60 kPa (450 mmHg, 17.72 in.Hg) of vacuum directly to actuator A and B with the engine idling.
(f) Check that the engine runs tough or dies.
(g) Reconnect the vacuum hoses to actuators A and B.

ED01L–02

COMPONENTS

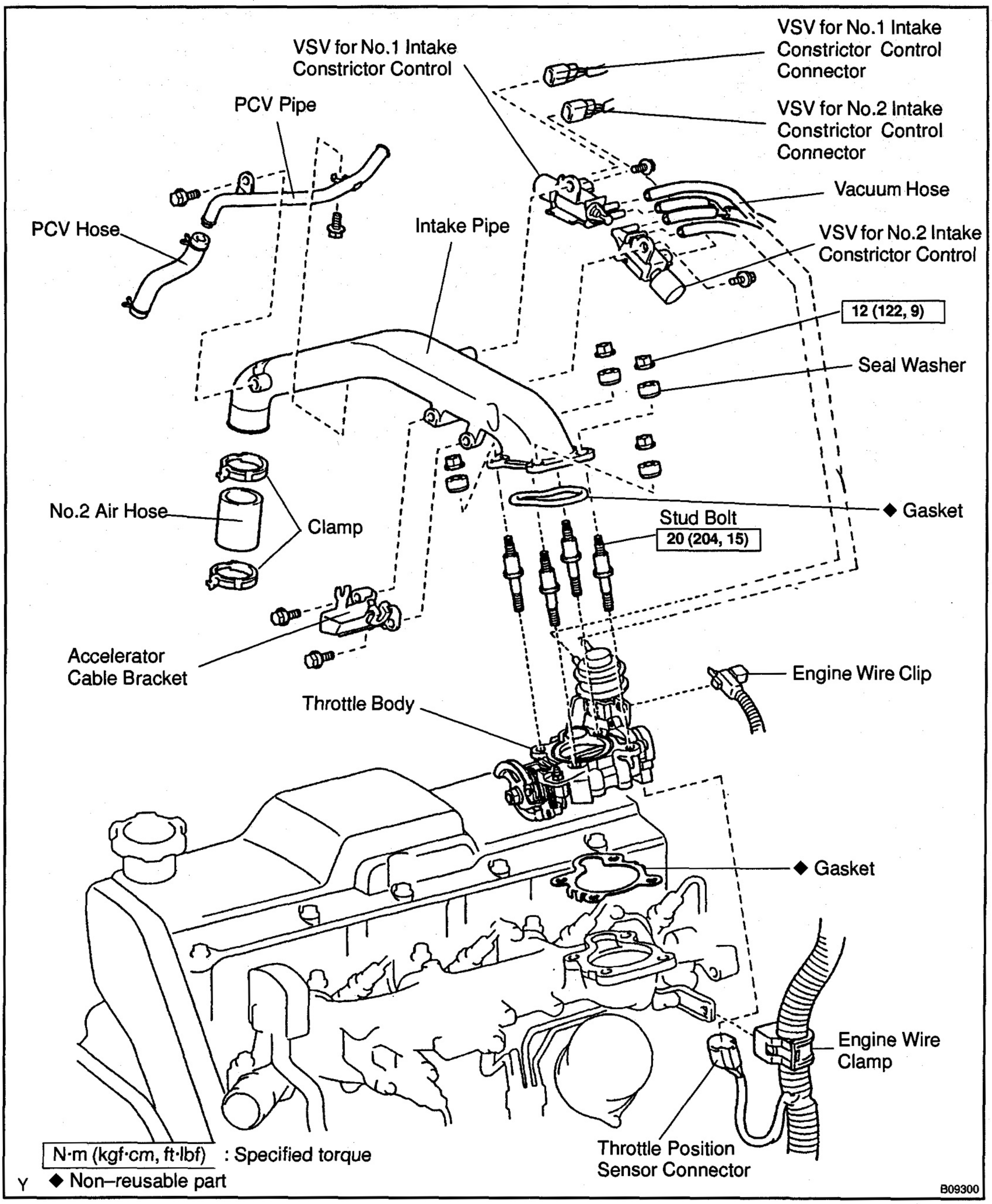

ED01M–02

REMOVAL

1. REMOVE INTAKE PIPE (See page EM–44)

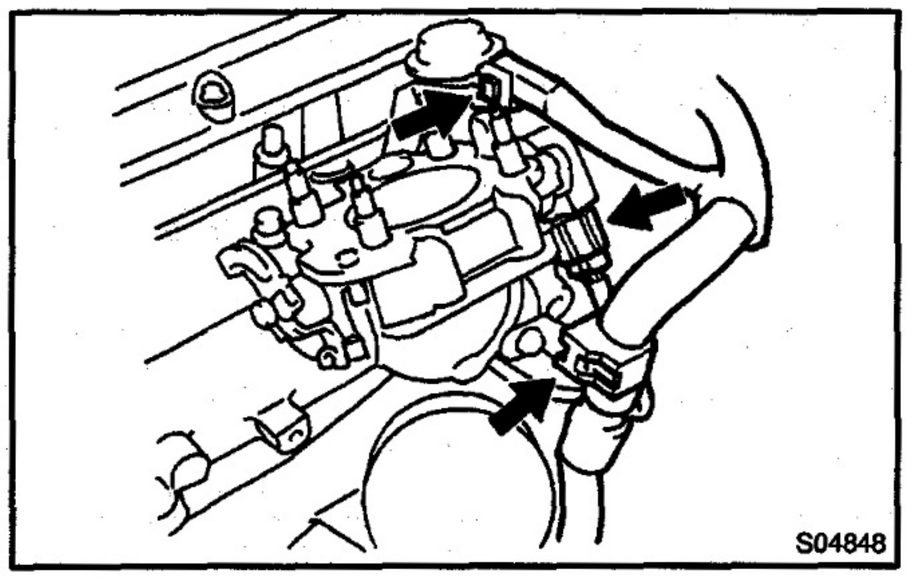

2. REMOVE THROTTLE BODY

(a) Disconnect the throttle position sensor connector.

(b) Disconnect the engine wire clamp and clip from the throttle body.

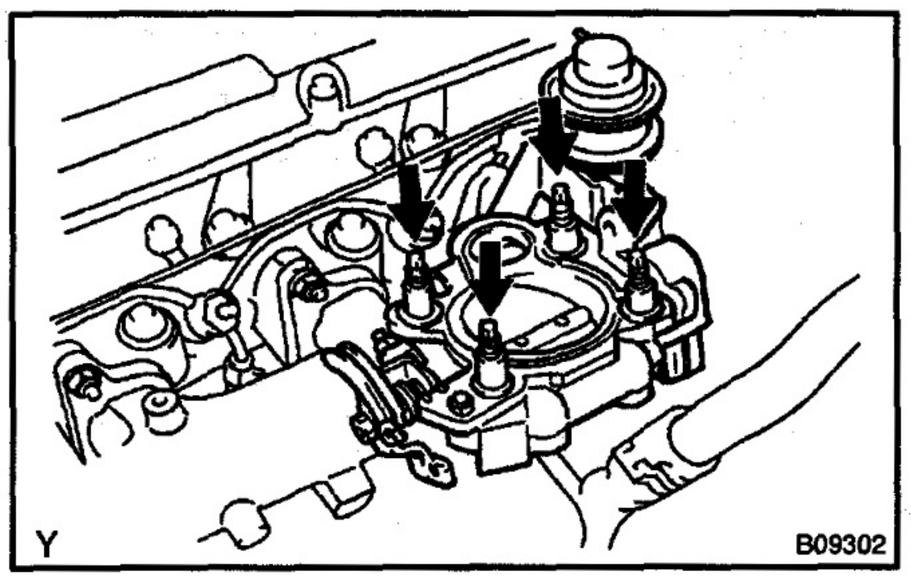

(c) Remove the 4 stud bolts, throttle body and gasket.

HINT:

At the time of installation, place refer to the following item. Place a new gasket on the intake manifold.

Torque: 20 N·m (204 kgf·cm, 15 ft·lbf)

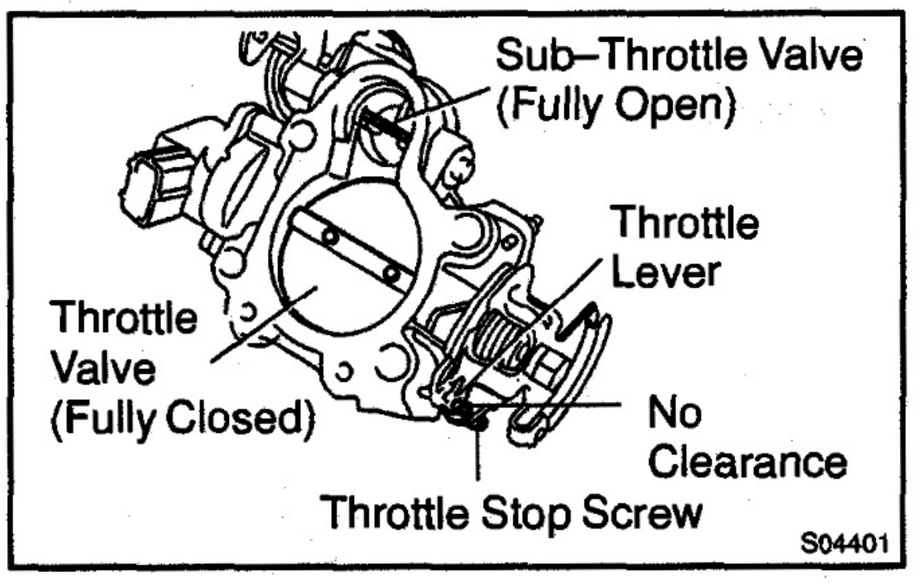

ED01N–01

INSPECTION

1. INSPECT THROTTLE VALVE

(a) Check that there is no clearance between the throttle stop screw and throttle lever when the throttle valve is fully closed.

(b) Check that the sub–throttle valve is fully open.

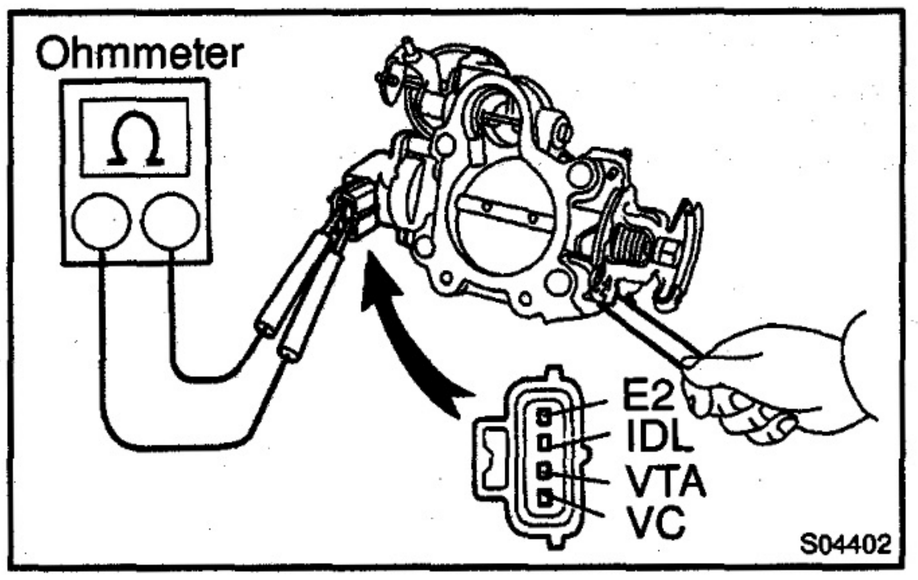

2. INSPECT THROTTLE POSITION SENSOR

(a) Insert a feeler gauge between the throttle stop screw and stop lever.

(b) Using an ohmmeter, measure the resistance between each terminal.

Clearance between lever and stop screw	Between terminals	Resistance
0 mm (0 in.)	VTA – E2	0.2 – 5.8 kΩ
0 mm (0 in.)	IDL – E2	2.3 kΩ or less
1.6 mm (0.063 in.)	IDL – E2	Infinity
Throttle valve fully open	VTA – E2	1.4 – 9.5 kΩ
	VC – E2	2.5 – 5.9 kΩ

INSTALLATION

Installation is in the reverse order of removal (See page ED–5).

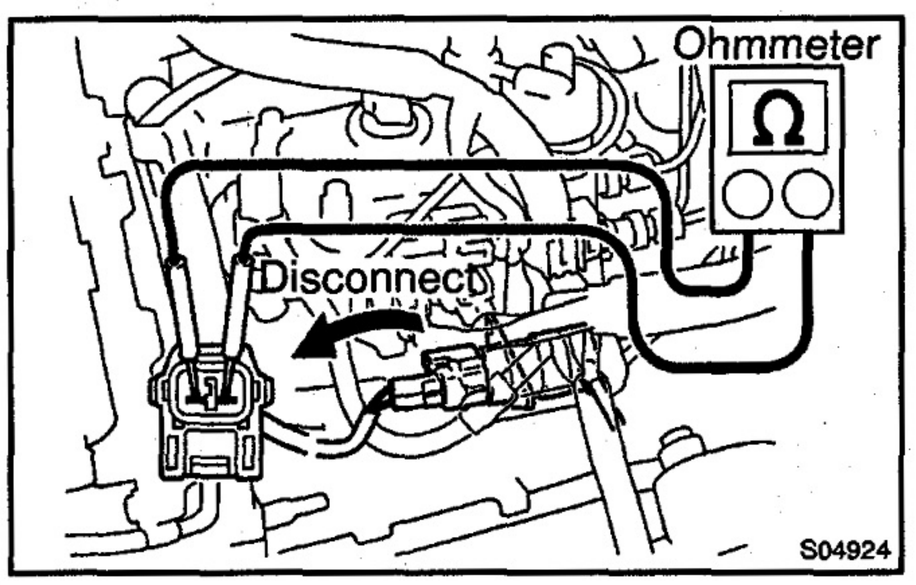

TIMING CONTROL VALVE

ED03S–01

INSPECTION

INSPECT TIMING CONTROL VALVE

(a) Disconnect the valve connector.

(b) Using an ohmmeter, measure the resistance between the terminals.

Resistance: 10 – 14 Ω at 20°C (68°F)

If the resistance is not as specified, replace the valve.

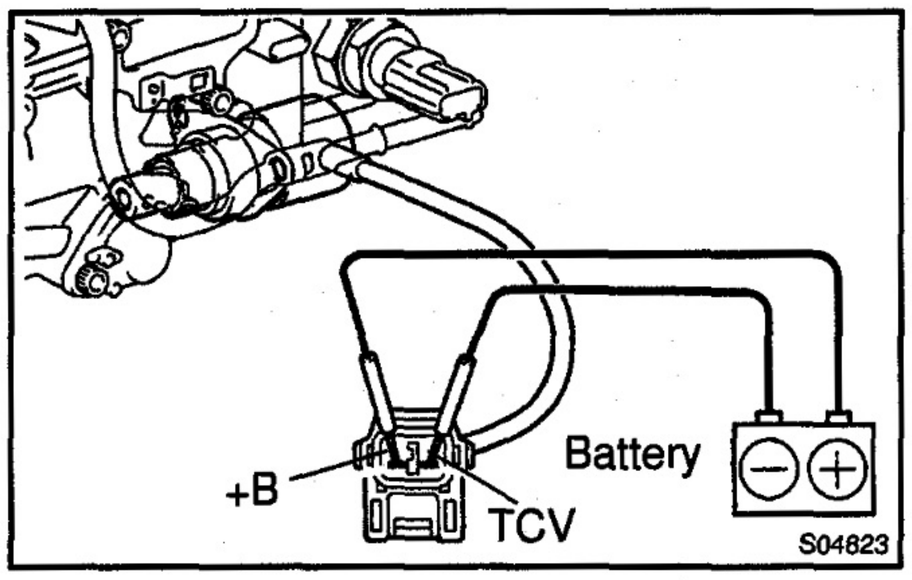

(c) Inspect the valve solenoid operation.

(1) Connect the battery positive the terminal to the valve terminal +B.

(2) Connect the battery negative terminal to the valve terminal TCV.

(3) Check that the solenoid makes a "clicks" sound.

If operation is not as specified, replace the valve.

NOTICE:

- **Do not apply voltage for more than 30 seconds to avoid burning out the solenoid.**
- **If repeating this step, wait until the solenoid coils down enough that it can be touched by hand.**

(d) Reconnect the valve connector.

ED

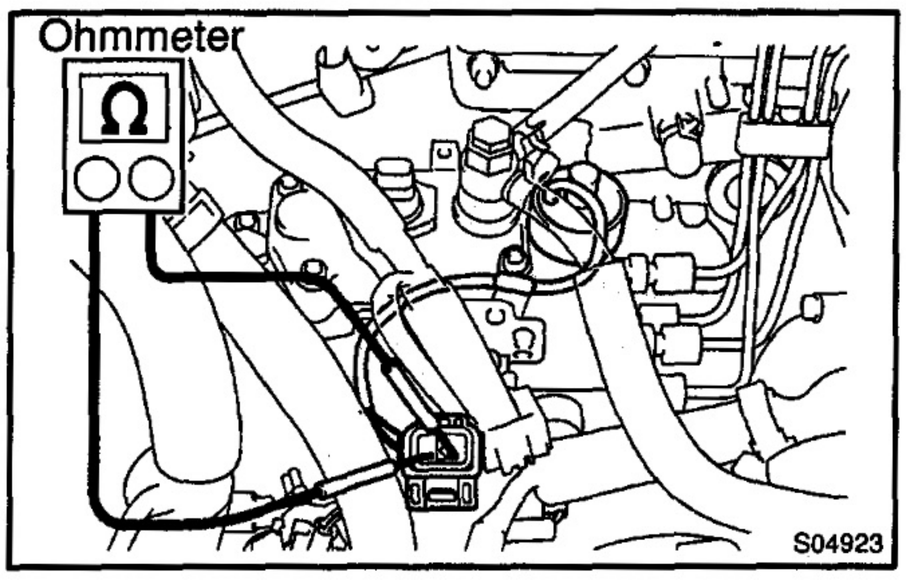

SPILL CONTROL VALVE

INSPECTION

ED03G–01

INSPECT SPILL CONTROL VALVE

(a) Disconnect the valve connector.

(b) Using an ohmmeter, measure the resistance between the terminals.

Resistance: 1 – 2 Ω at 20°C (68°F)

If the resistance is not specified, replace the injection pump assembly (See page FU–16).

(c) Reconnect the valve connector.

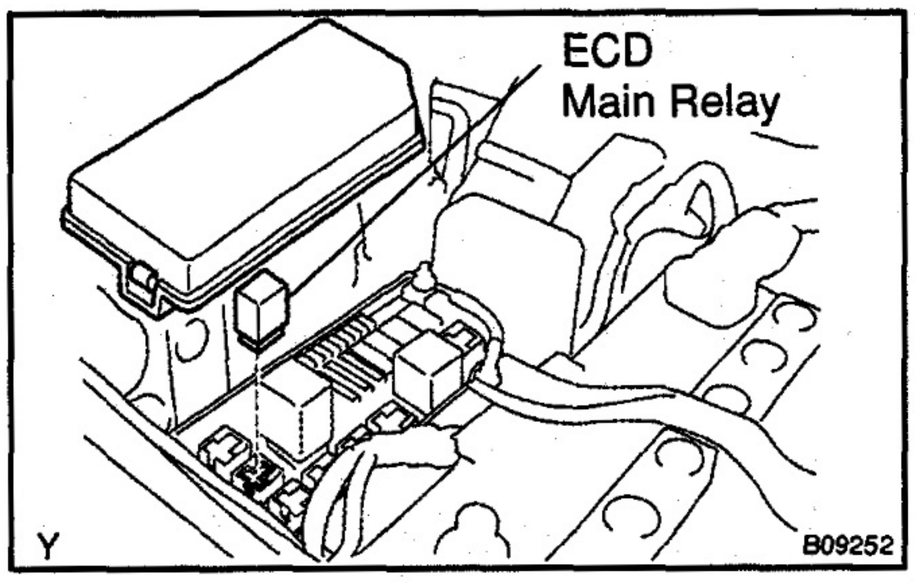

ECD MAIN RELAY

ED01Q–02

INSPECTION

1. **REMOVE ENGINE ROOM R/B COVER**
2. **REMOVE ECD MAIN RELAY (Marking: ECD)**

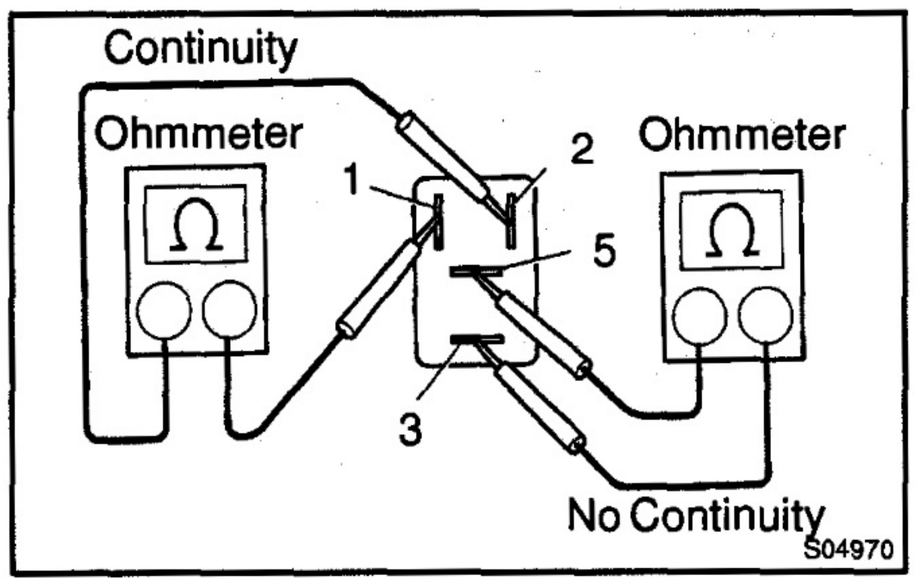

3. **INSPECT ECD MAIN RELAY**

(a) Inspect the relay continuity.

(1) Using an ohmmeter, check that there is continuity between terminals 1 and 2.

If there is no continuity, replace the relay.

(2) Check that there is no continuity between terminals 3 and 5.

If there is continuity, replace the relay.

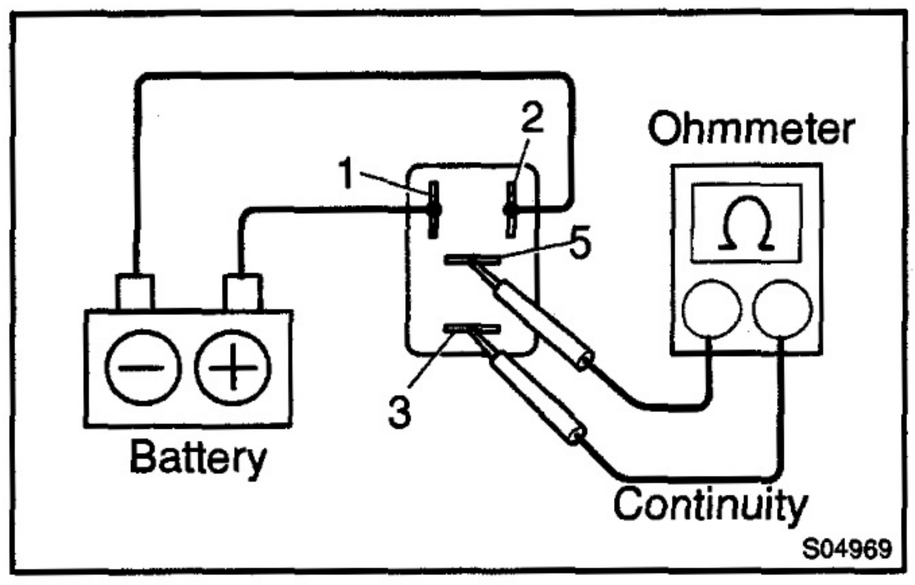

(b) Inspect the relay operation.

(1) Apply battery voltage across terminals 1 and 2.

(2) Using an ohmmeter, check that there is continuity between terminals 3 and 5.

If there is no continuity, replace the relay.

4. **REINSTALL ECD MAIN RELAY**
5. **REINSTALL ENGINE ROOM R/B COVER**

ED

SPILL CONTROL VALVE RELAY

COMPONENTS

ED03H–01

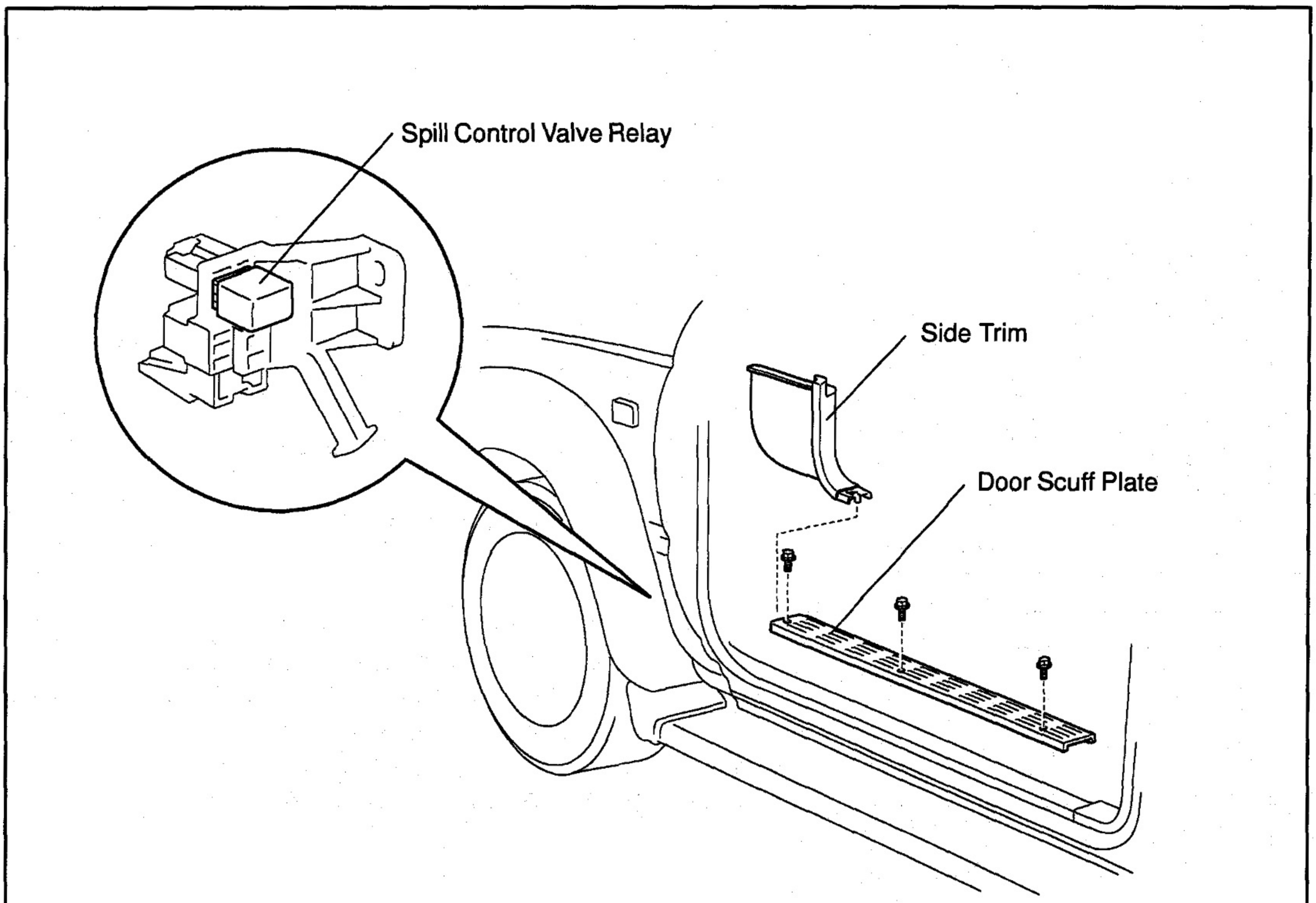

ED03I–01

INSPECTION

1. REMOVE SPILL CONTROL VALVE RELAY

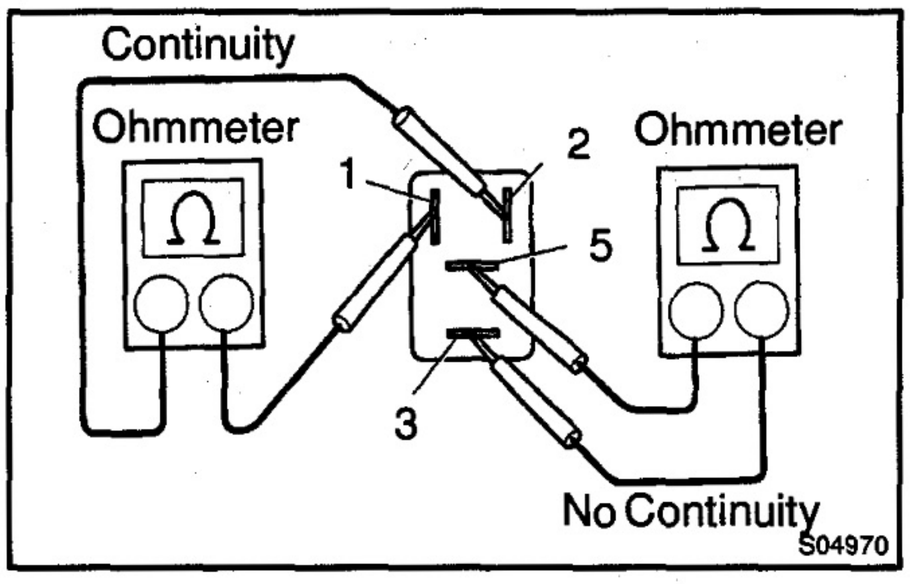

2. INSPECT SPILL CONTROL VALVE RELAY

(a) Inspect the relay continuity.

(1) Using an ohmmeter, check that there is continuity between terminals 1 and 2.

If there is no continuity, replace the relay.

(2) Check that there is no continuity between terminals 3 and 5.

If there is continuity, replace the relay.

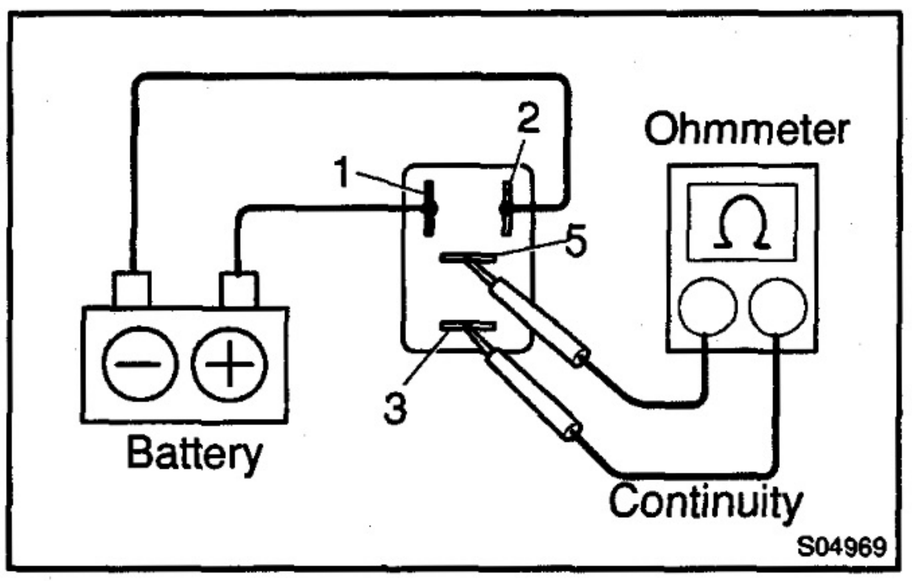

(b) Inspect the relay operation.

(1) Apply battery voltage across terminals 1 and 2.

(2) Using an ohmmeter, check that there is continuity between terminals 3 and 5.

If there is no continuity, replace the relay.

3. REINSTALL SPILL CONTROL VALVE RELAY

VSV FOR INTAKE CONSTRICTOR CONTROL

COMPONENTS

ED03J–01

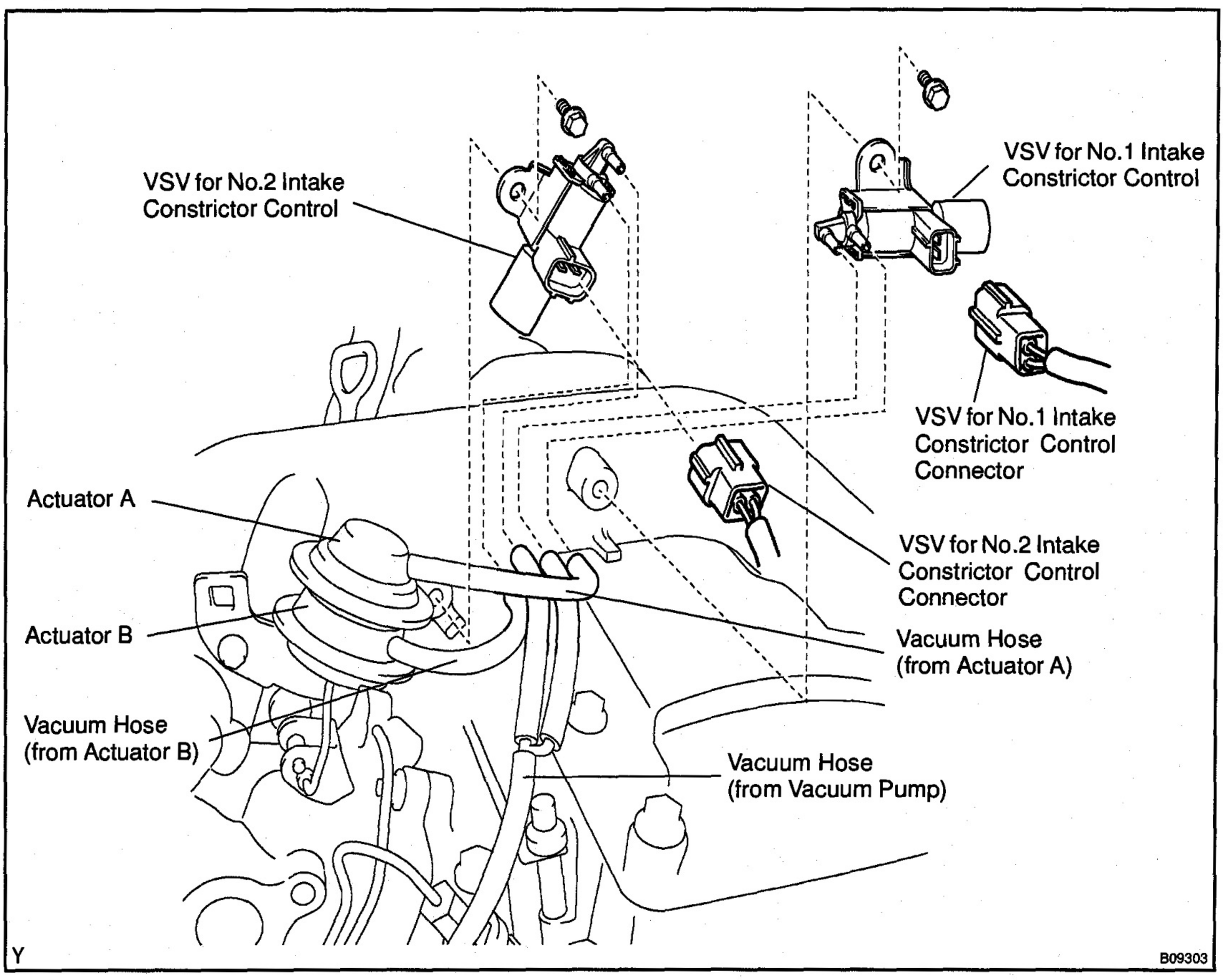

ED01S–02

INSPECTION

1. REMOVE VSV (NO.1, NO.2)

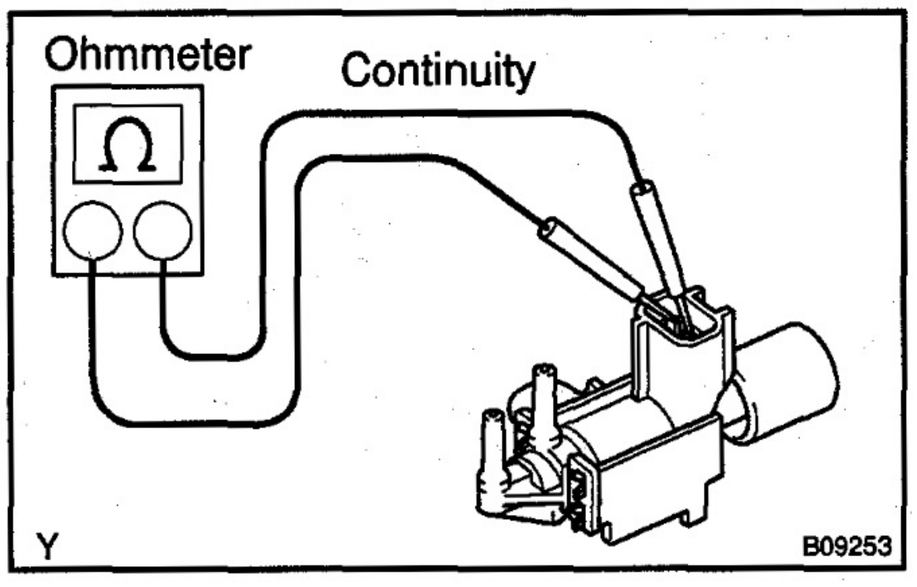

2. INSPECT VSV (NO.1, NO.2)

(a) Inspect the VSV for open circuit.

Using an ohmmeter, check that there is continuity between the terminals.

Resistance: 38.5 – 44.5 Ω at 20°C (68°F)

If there is no continuity, replace the VSV.

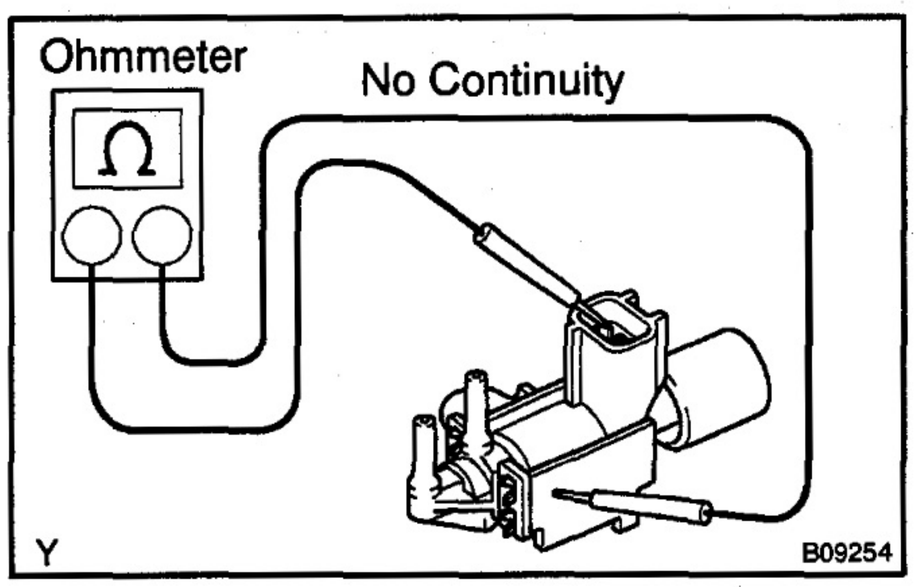

(b) Inspect the VSV for ground.

Using an ohmmeter, check that there is no continuity between each terminal and the body.

If there is continuity, replace the VSV.

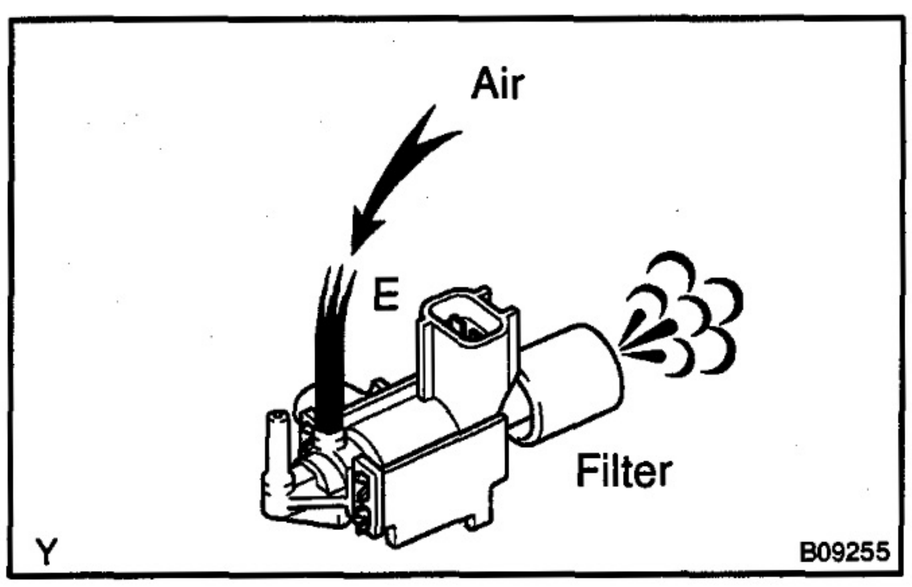

(c) Inspect the VSV operation.

(1) Check that air flows from port E to the filter.

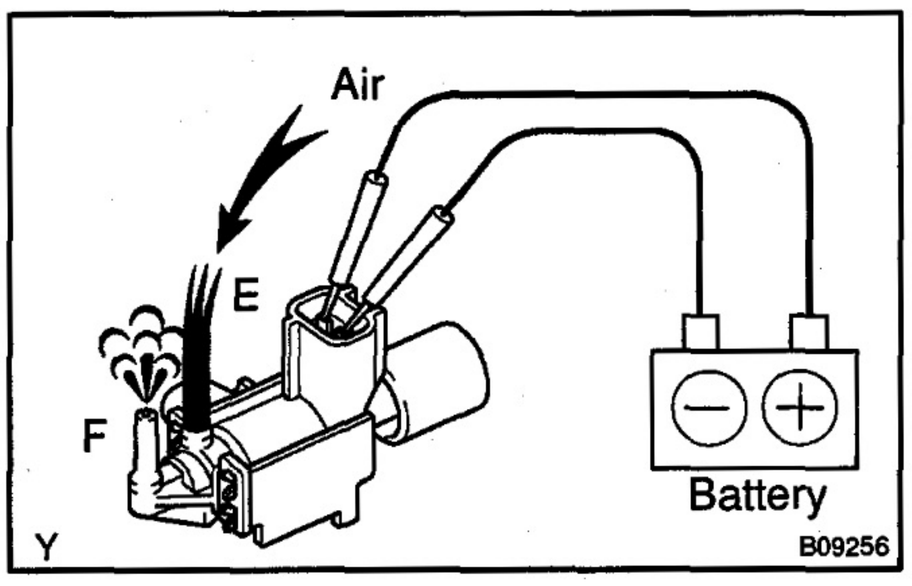

(2) Apply battery voltage across terminals.

(3) Check that air flows from ports E to F.

If operation is not as specified, replace the VSV.

3. REINSTALL VSV (NO.1, NO.2)

WATER TEMPERATURE SENSOR

ED01T–02

INSPECTION

1. DRAIN ENGINE COOLANT

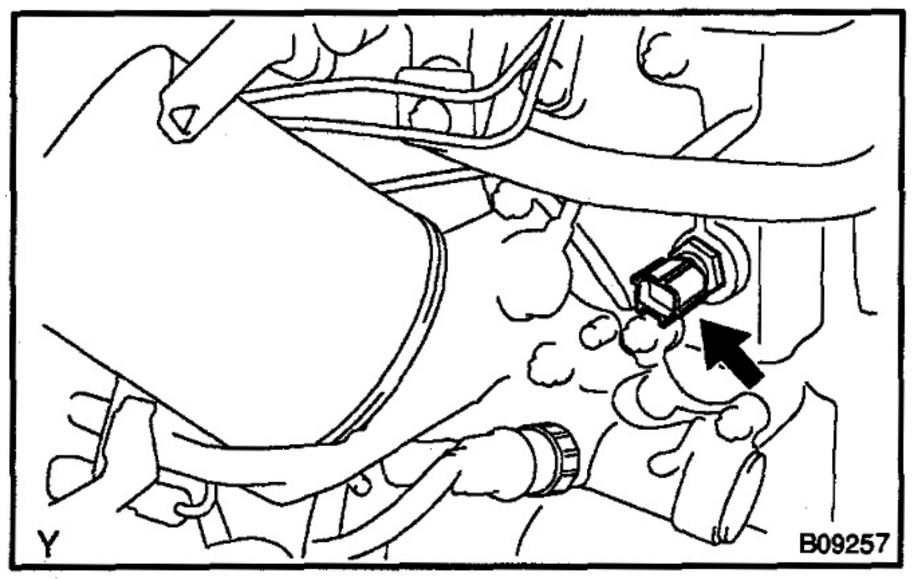

2. REMOVE WATER TEMPERATURE SENSOR

(a) Disconnect the sensor connector.

(b) Using a 19 mm deep socket wrench, remove the sensor and gasket.

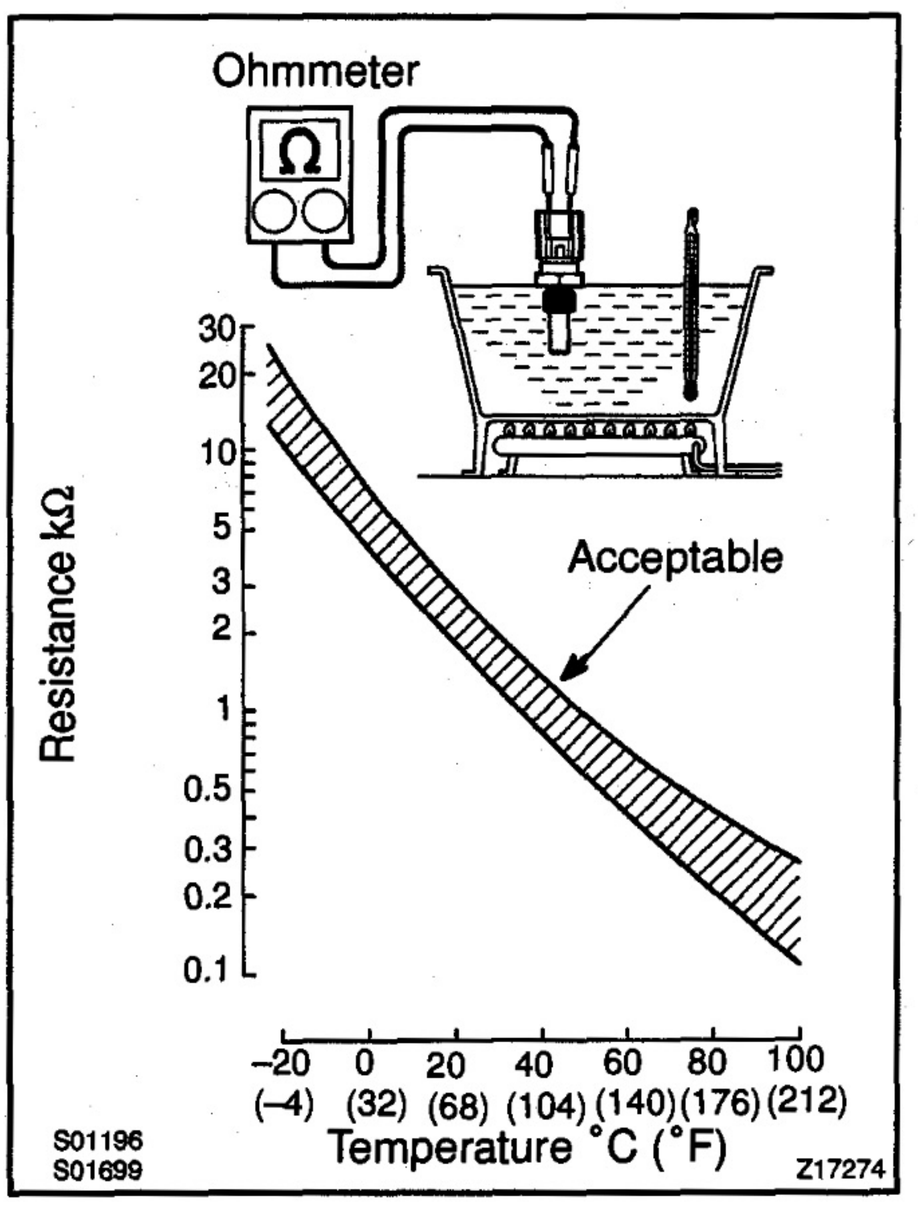

3. INSPECT WATER TEMPERATURE SENSOR

Using an ohmmeter, measure the resistance between terminals.

Resistance: Refer to the chart graph

If the resistance is not as specified, replace the sensor.

4. REINSTALL WATER TEMPERATURE SENSOR

(a) Using a 19 mm deep socket wrench, install a new gasket and the sensor.

Torque: 25 N·m (255 kgf·cm, 18 ft·lbf)

(b) Connect the sensor connector.

5. REFILL WITH ENGINE COOLANT

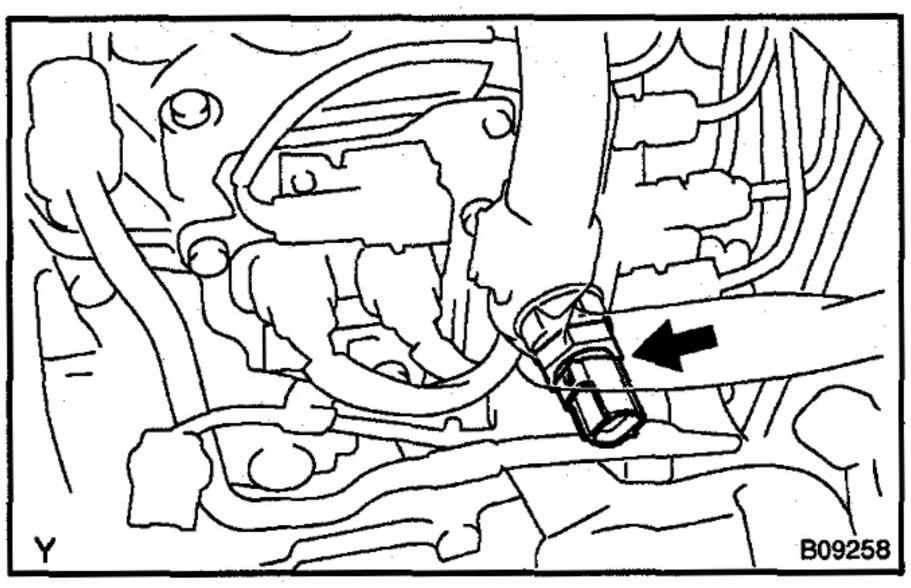

FUEL TEMPERATURE SENSOR

ED03K–01

INSPECTION

1. REMOVE FUEL TEMPERATURE SENSOR

(a) Disconnect the sensor connector.

(b) Using a 19 mm deep socket wrench, remove the sensor and O–ring.

NOTICE:

Pay attention not to catch any irregular objects in the sensor installation hole of the injection pump.

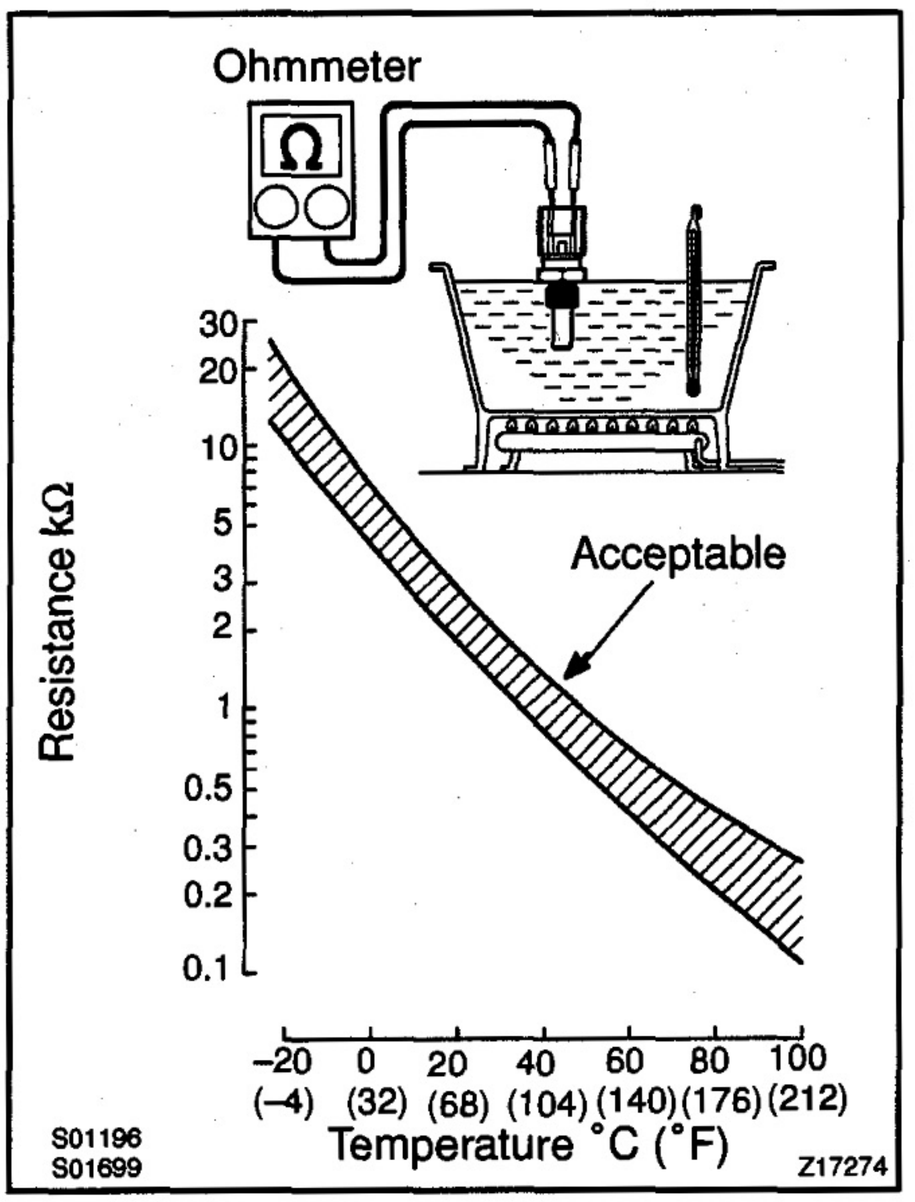

2. INSPECT FUEL TEMPERATURE SENSOR

Using an ohmmeter, measure the resistance between terminals.

Resistance: Refer to the chart graph

If the resistance is not as specified, replace the sensor.

3. REINSTALL FUEL TEMPERATURE SENSOR

(a) Install a new O–ring to the sensor.

(b) Using a 19 mm deep socket wrench, install the sensor.

Torque: 21.6 N·m (220 kgf·cm, 16 ft·lbf)

(c) Connect the sensor connector.

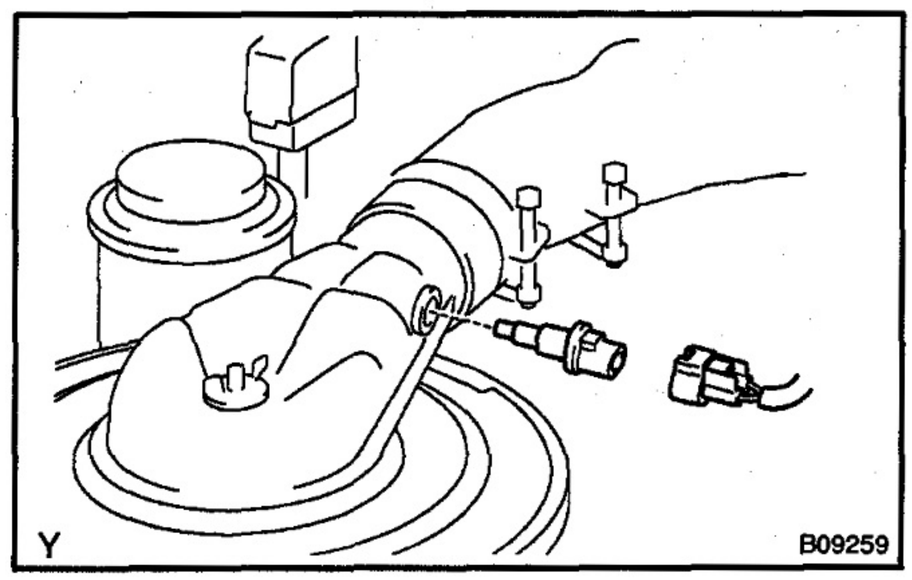

INTAKE AIR TEMPERATURE SENSOR

INSPECTION

ED01V–02

1. REMOVE INTAKE AIR TEMPERATURE SENSOR

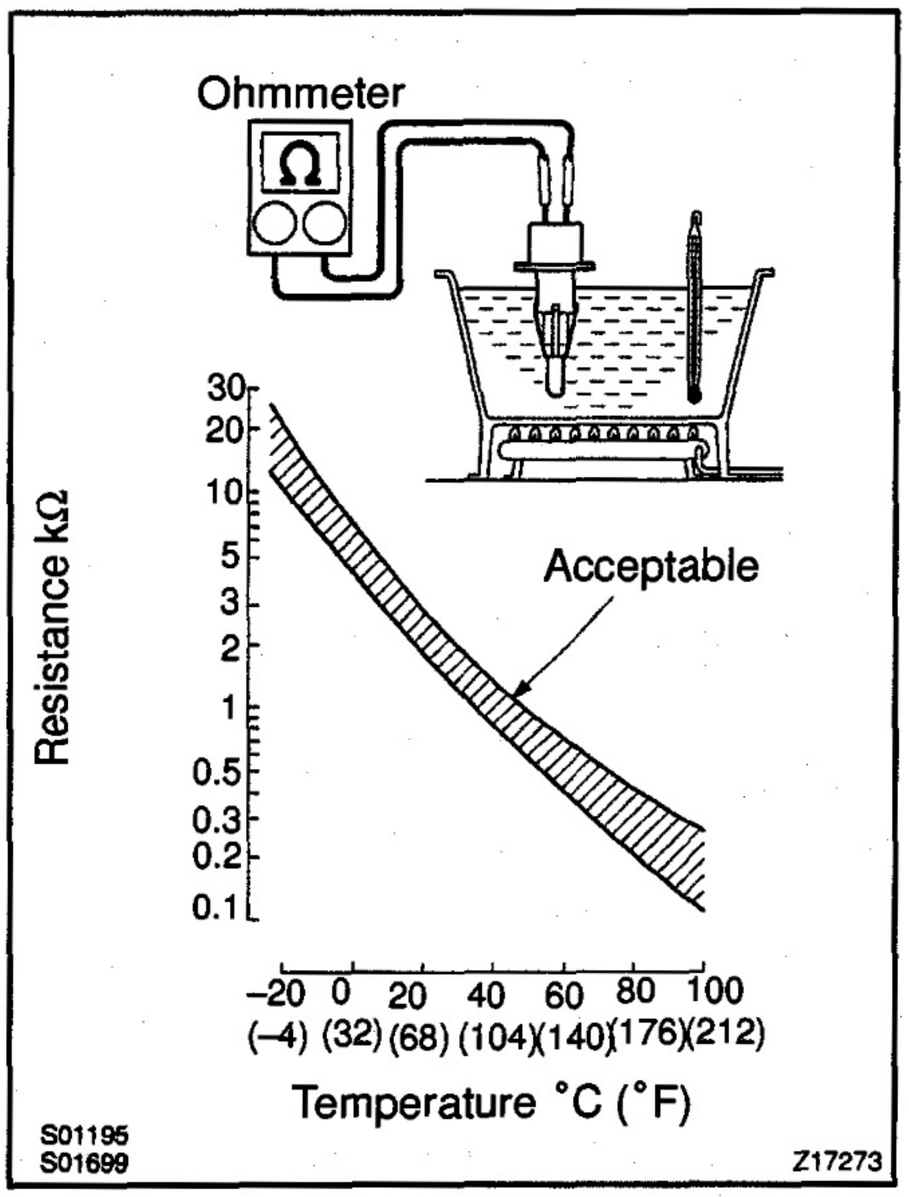

2. INSPECT INTAKE AIR TEMPERATURE SENSOR

Using an ohmmeter, measure the resistance between terminals.

Resistance: Refer to the chart graph

If the resistance is not as specified, replace the sensor.

3. REINSTALL INTAKE AIR TEMPERATURE SENSOR

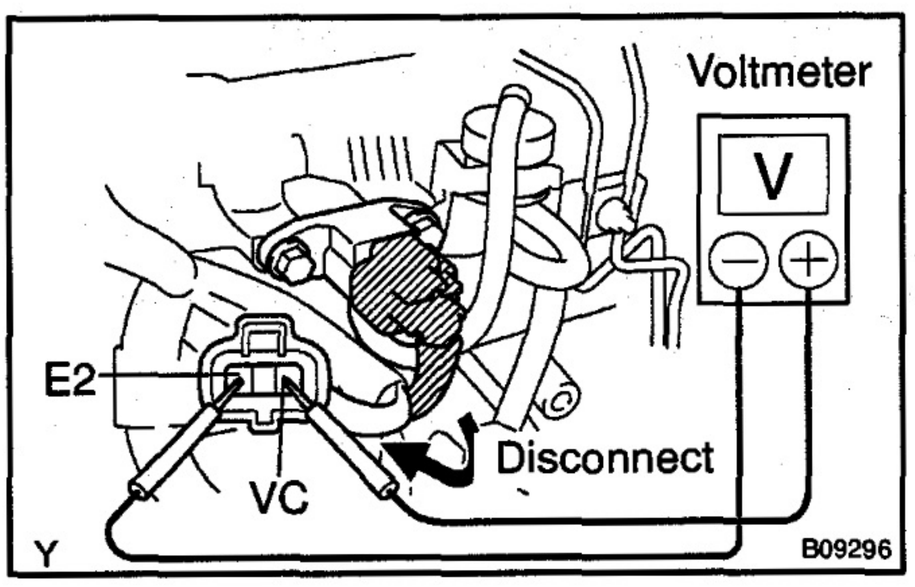

TURBO PRESSURE SENSOR

ED03L–01

INSPECTION

1. INSPECT POWER SOURCE VOLTAGE OF TURBO PRESSURE SENSOR

(a) Disconnect the turbo pressure sensor connector.
(b) Turn the ignition switch ON.
(c) Using a voltmeter, measure the voltage between connector terminals VC and E2 of the wiring harness side.
Voltage: 4.5 – 5.5 V
(d) Turn the ignition switch OFF.
(e) Reconnect the turbo pressure sensor connector.

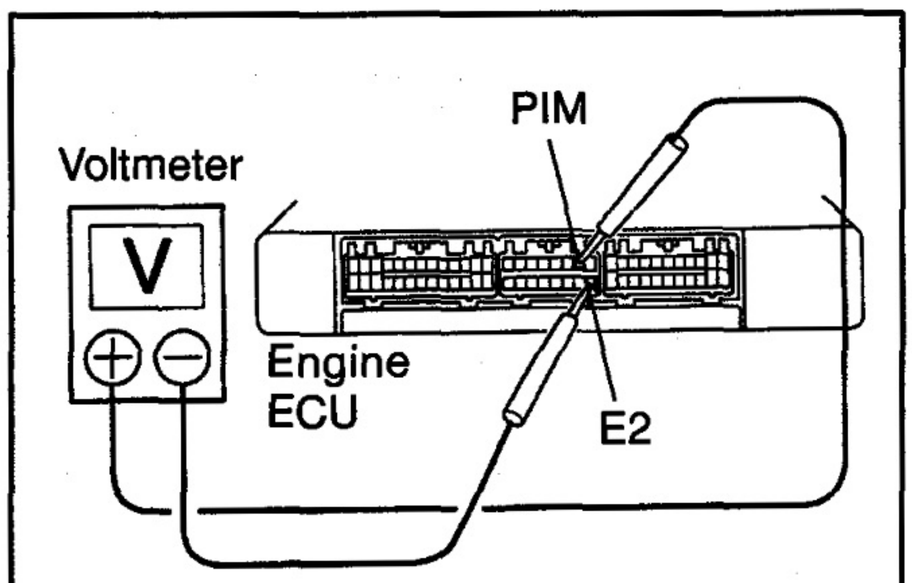

2. INSPECT SUPPLY POWER OF TURBO PRESSURE SENSOR

(a) Turn the ignition switch ON.
(b) Disconnect the vacuum hose form the turbo pressure sensor.
(c) Connect a voltmeter to terminals PIM and E2 of the engine ECU, and measure the output voltage under ambient atmospheric pressure.
(d) Apply vacuum to the turbo pressure sensor in 13.3 kPa (100 mmHg, 3.94 in.Hg) segments to 40.0 kPa (300 mmHg, 11.81 in.Hg).
(e) Measure the voltage drop from step (c) above for each segment.
Voltage drop:

Applied vacuum kPa (mmHg, in.Hg)	Voltage drop V
13.3 (100, 3.94)	0.3 – 0.5
26.7 (200, 7.87)	0.6 – 0.8
40.0 (300, 11.81)	0.95 – 1.15

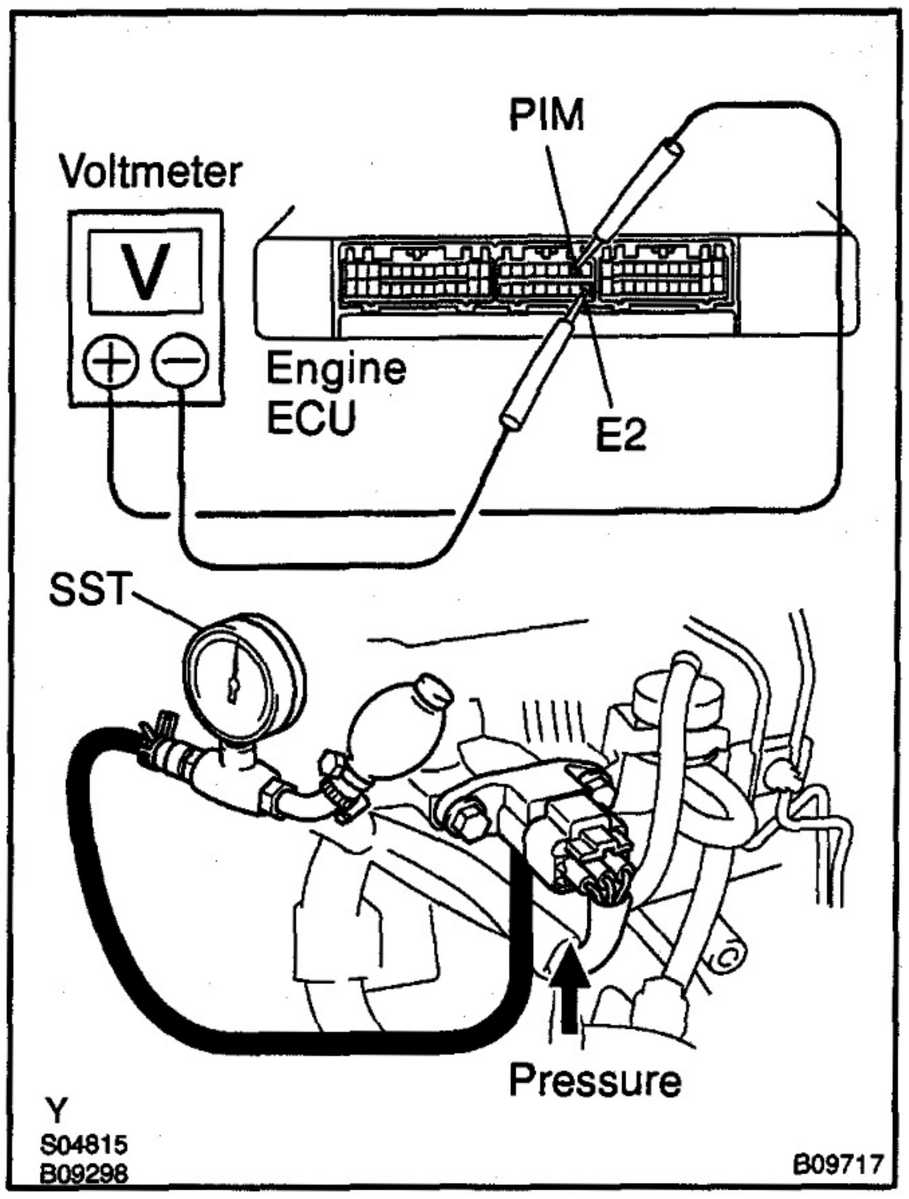

(f) Using SST (turbocharger pressure gauge), apply pressure to the turbo pressure sensor in 19.6 kPa (0.20 kgf/cm^2, 2.84 psi) segments to 98.0 kPa (1.00 kgf/cm^2, 14.2 psi).
SST 09992–00242

(g) Measure the voltage up from step (c) above for each segment.

Voltage up:

Applied pressure kPa (kgf/cm^2, psi)	Voltage up V
19.6 (0.20, 2.84)	0.1 – 0.4
39.2 (0.40, 5.69)	0.4 – 0.7
58.8 (0.60, 8.53)	0.7 – 1.0
78.5 (0.80, 11.4)	1.0 – 1.3
98.0 (1.00, 14.2)	1.3 – 1.6

(h) Reconnect the vacuum hose to the turbo pressure sensor.

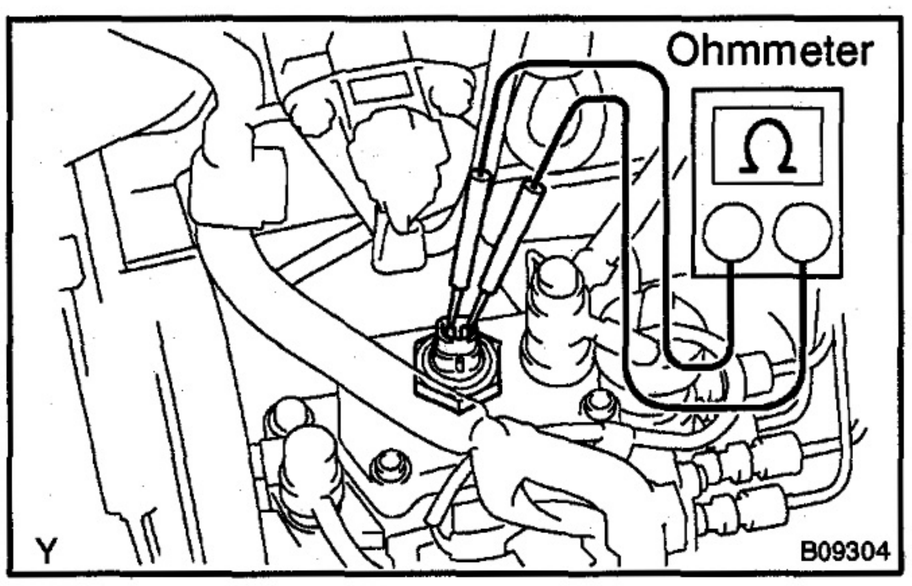

ENGINE SPEED SENSOR

ED03M–01

INSPECTION

INSPECT ENGINE SPEED SENSOR

(a) Disconnect the sensor connector.

(b) Using an ohmmeter, measure the resistance between terminals.

Resistance: 205 – 255 Ω at 20°C (68°F)

If the resistance is not specified, replace the injection pump assembly (see page FU–16).

(c) Reconnect the sensor connector.

CRANKSHAFT POSITION SENSOR

ED03N–01

INSPECTION

NOTICE:

"Cold" and "Hot" in these sentences express the temperature of the sensors themselves. "Cold" is from –10°C (14°F) to 50°C (122°F) and "Hot" is from 50°C (122°F) to 100°C (212°F).

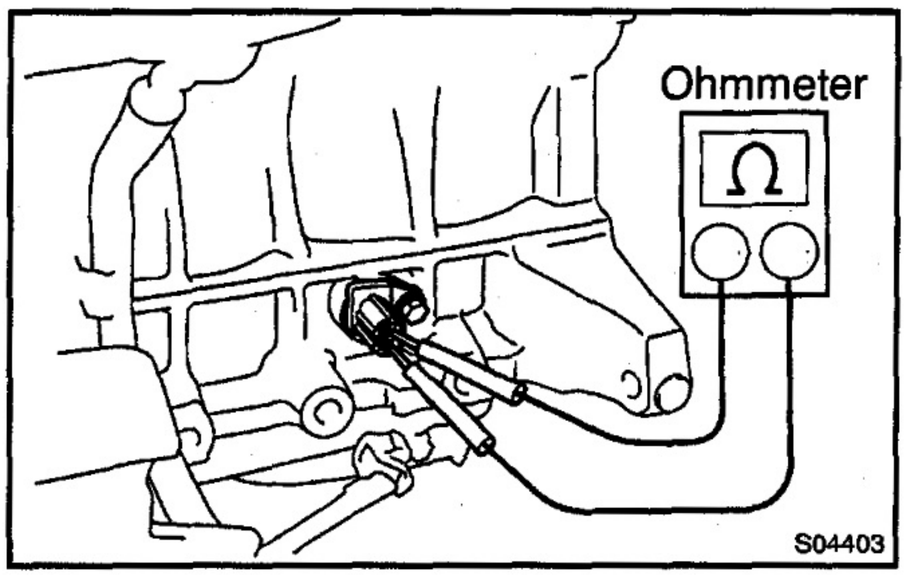

INSPECT CRANKSHAFT POSITION SENSOR

(a) Disconnect the sensor connector.

(b) Using an ohmmeter, measure the resistance between terminals.

Resistance:

Cold	19 – 32 Ω
Hot	24 – 37 Ω

If the resistance is not as specified, replace the sensor.

Torque: 5 N·m (51 kgf·cm, 44 in.·lbf)

HINT:

Apply engine oil to a new O–ring.

NOTICE:

Be careful not drop and shock the sensor.

(c) Reconnect the sensor connector.

FIRST GEAR POSITION SWITCH

INSPECTION

ED03O–01

INSPECT FIRST GEAR POSITION SWITCH

(a) Disconnect the switch connector.

(b) Using an ohmmeter, check the switch continuity.

Continuity:

Transmission Shift Position	Specified continuity
1	Continuity
Others	No continuity

If continuity is not as specified, replace the switch.

(c) Reconnect the switch connector.

ED03F–01

REPLACEMENT

1. REMOVE TRANSMISSION

2. REMOVE FIRST GEAR POSITION SWITCH

(a) Using SST, remove the switch and gasket.
SST 09817–16011

(b) Remove the gasket from the switch.

3. REINSTALL NEW FIRST GEAR POSITION SWITCH

(a) Install a new gasket to the switch.

(b) Using SST, install the switch.
Torque: 30 N·m (306 kgf·cm, 22.1 ft·lbf)
SST 09817–16011

4. REINSTALL TRANSMISSION



INJECTION PUMP CORRECTION RESISTOR

INSPECTION

ED03Q–01

INSPECT INJECTION PUMP CORRECTION RESISTORS

(a) Disconnect the resistor connectors.
(b) Using an ohmmeter, measure the resistance between terminals of resistor No.1 and No.2.
Resistance: 0.1 – 2.5 kΩ at 20°C (68°F)

If the resistance is not as specified, replace the injection pump assembly (See page FU–16).

(c) Reconnect the resistor connectors.

ENGINE ECU

COMPONENTS

ED020–02

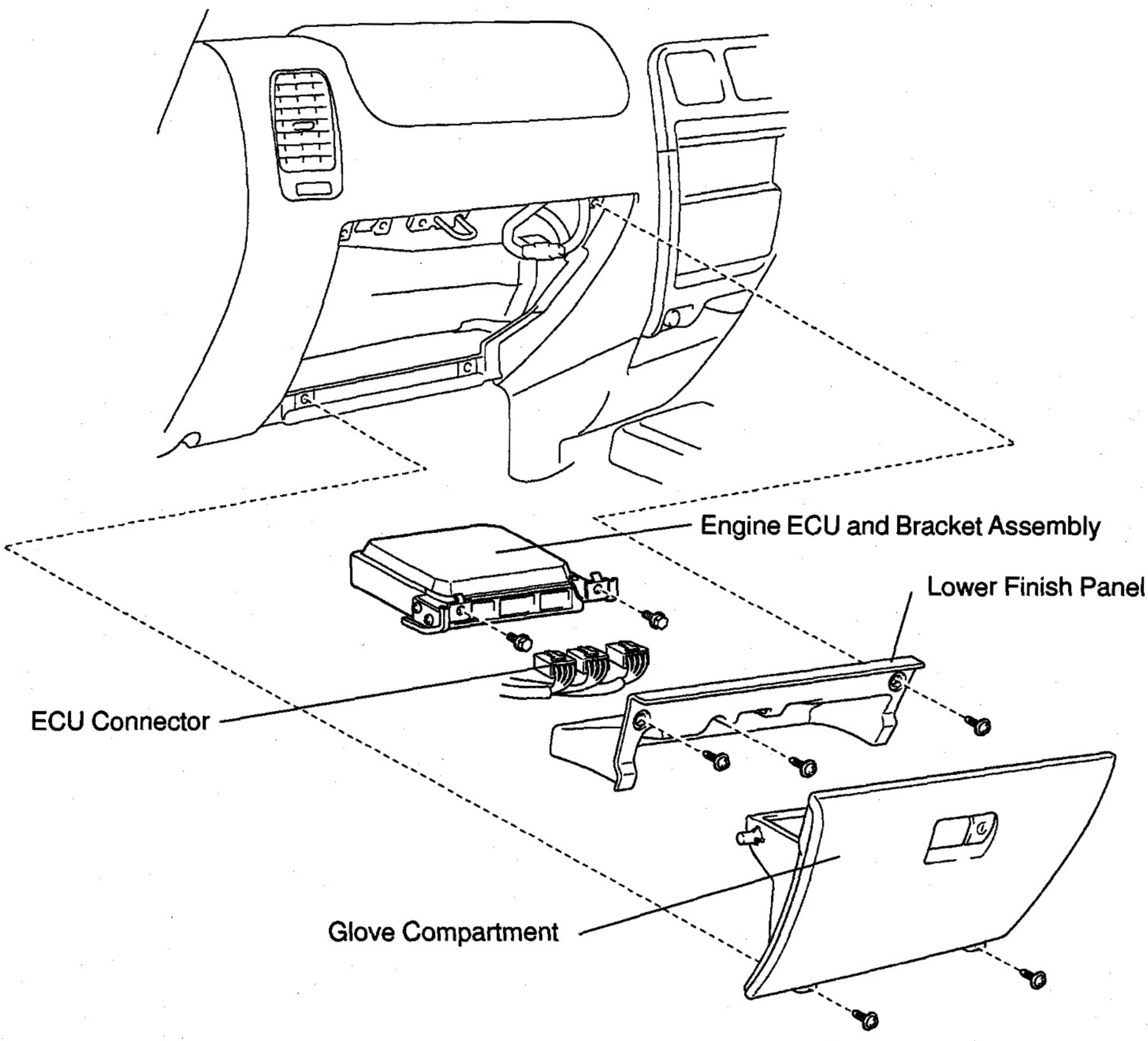

ED03R–01

INSPECTION

INSPECT VOLTAGE OF ENGINE ECU (See page DI–15)

ENGINE FUEL

FUEL FILTER FU–1
INJECTION NOZZLE FU–3
INJECTION PUMP FU–15

FUEL FILTER

FU064–02

REPLACEMENT

1. REMOVE FUEL FILTER ASSEMBLY FROM FUEL FILTER SUPPORT

2. DRAIN FUEL FROM FUEL FILTER

Loosen the drain plug, and drain the fuel from the fuel filter.

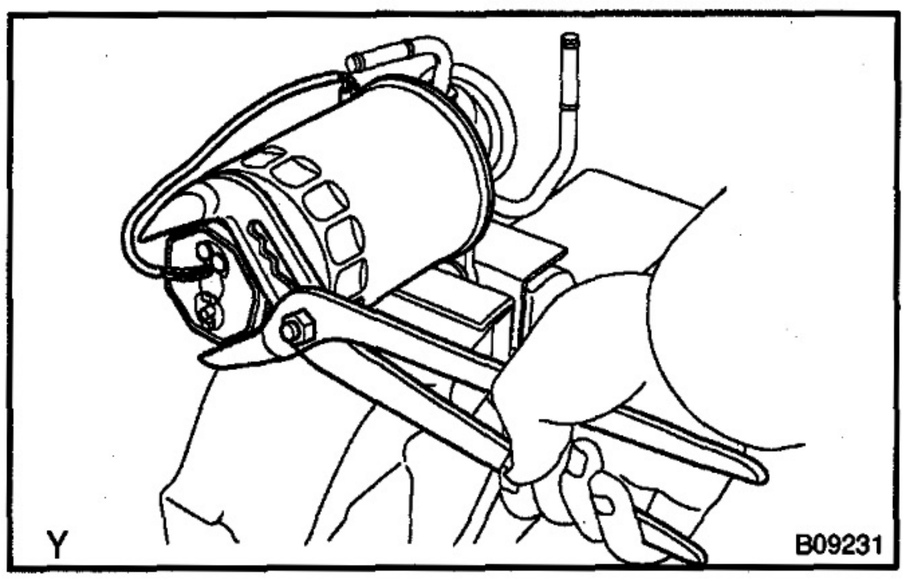

3. REMOVE FUEL FILTER WARNING SWITCH FROM FUEL FILTER

(a) Mount the fuel filter in a soft jaw vise.

(b) Using pliers, remove the warning switch and O–ring.

NOTICE:

Be careful not to damage the warning switch.

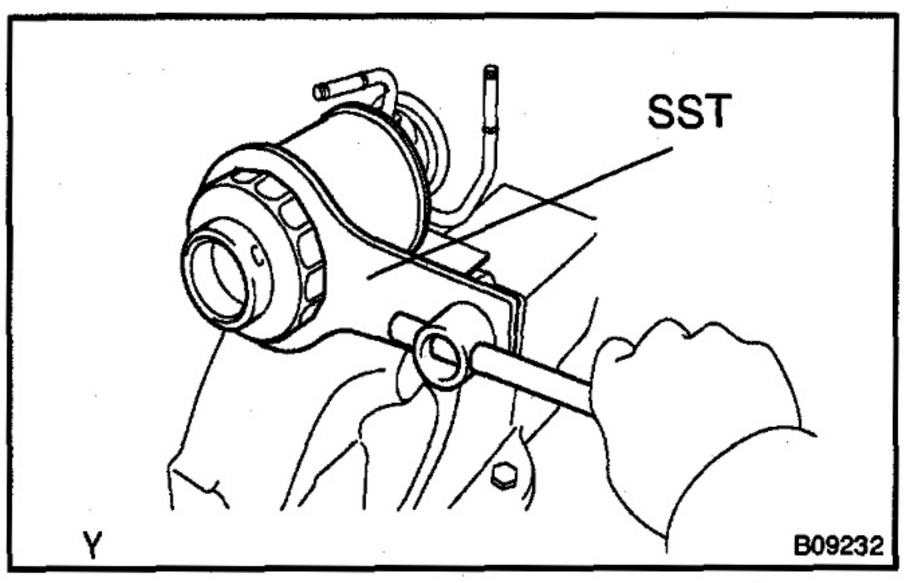

4. REMOVE FUEL FILTER

Using SST, remove the fuel filter.

SST 09228–64040

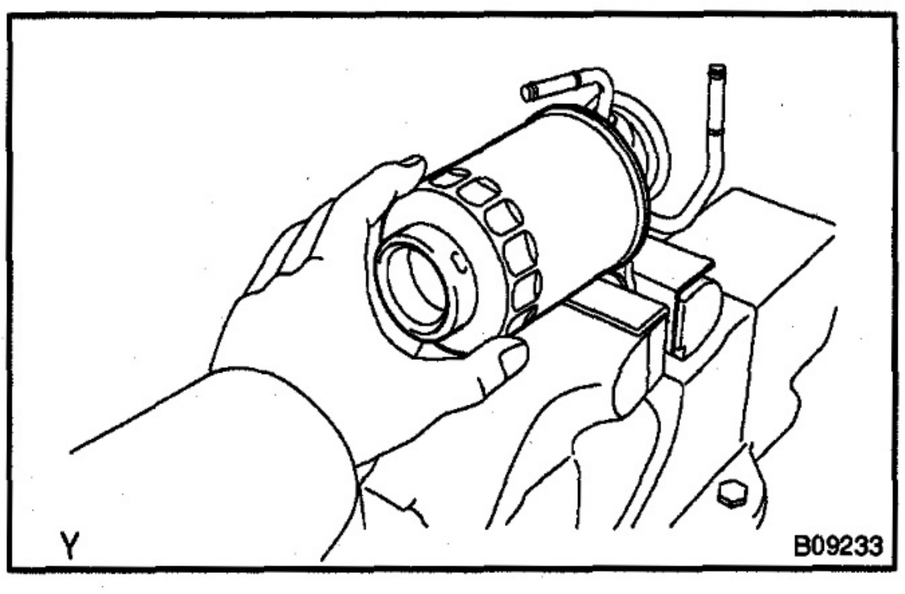

5. INSTALL NEW FUEL FILTER

(a) Check and clean the fuel filter installation surface.

(b) Apply fuel to the gasket of a new fuel filter.

(c) Lightly screw the fuel filter into place, and tighten it until the gasket comes into contact with the seat.

(d) Tighten it additional 3/4 turn by hand.

6. INSTALL FUEL FILTER WARNING SWITCH TO NEW FUEL FILTER

(a) Install a new O–ring to the warning switch.

(b) Apply fuel to the O–ring of the warning switch.

(c) Install the warning switch to a new fuel filter by hand.

7. REINSTALL FUEL FILTER ASSEMBLY TO FUEL FILTER SUPPORT

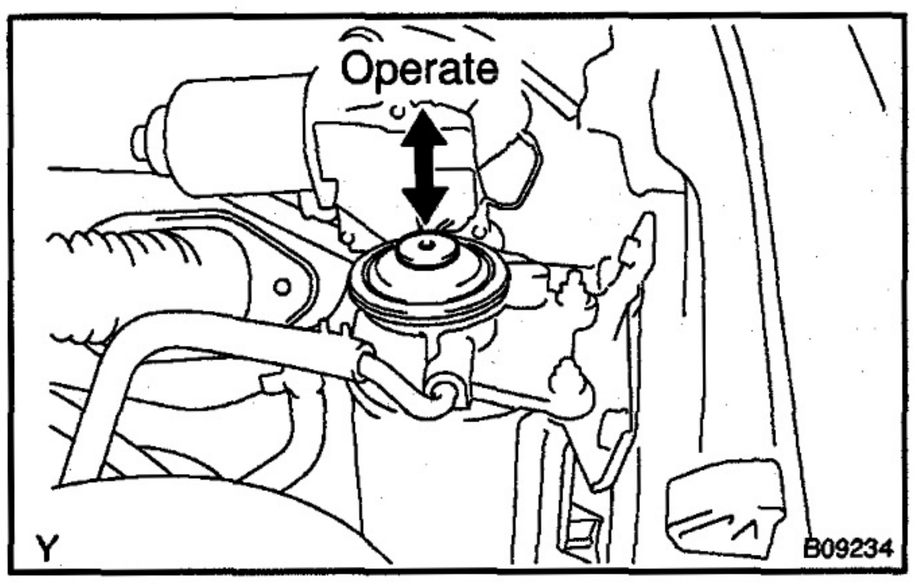

8. REFILL FUEL FILTER WITH FUEL

Operate the hand pump until you feel more resistance.

9. START ENGINE AND CHECK FOR FUEL LEAK

INJECTION NOZZLE

COMPONENTS

FU06R–01

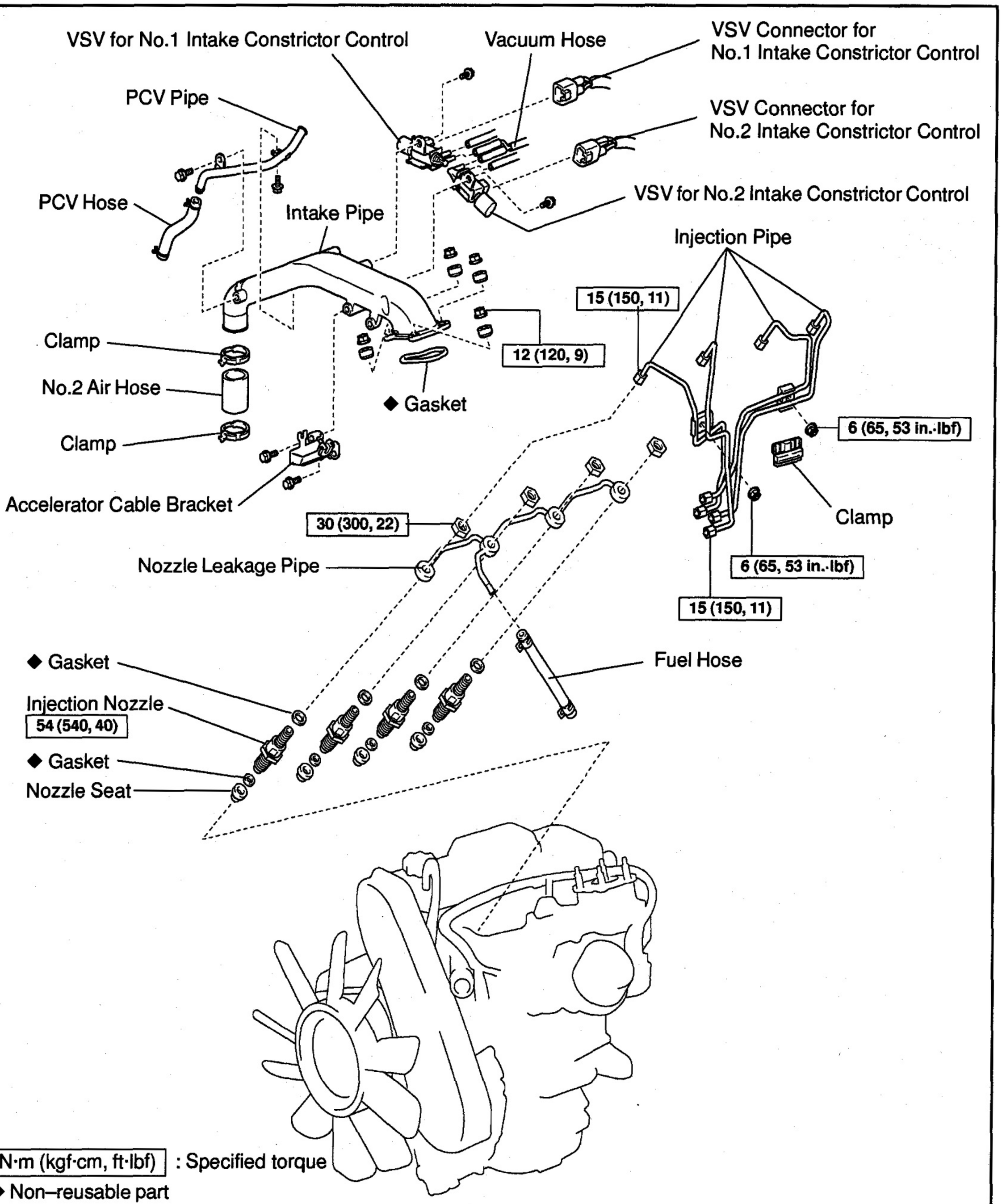

FU

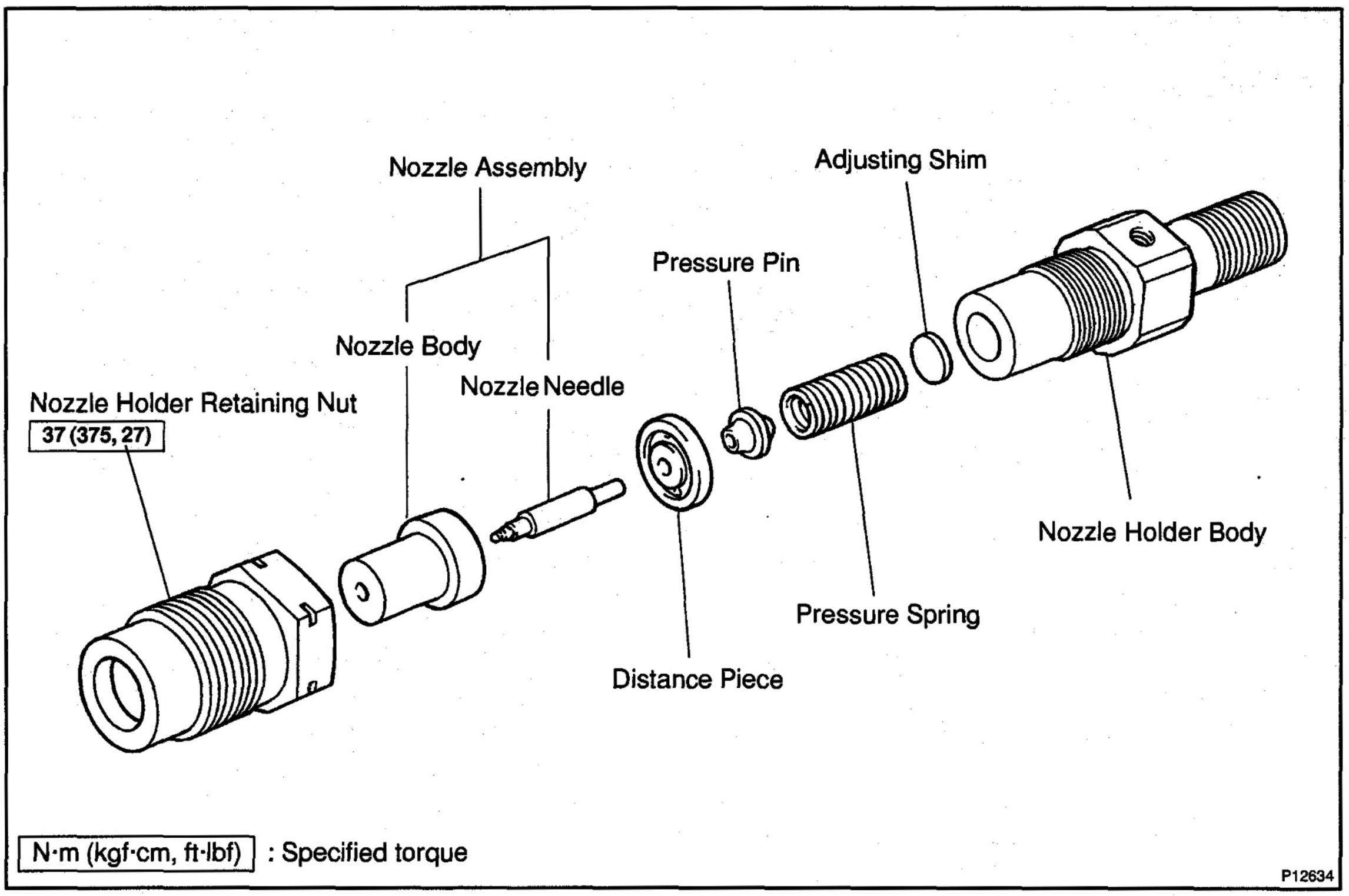

N·m (kgf·cm, ft·lbf) : Specified torque

P12634

FU06S-01

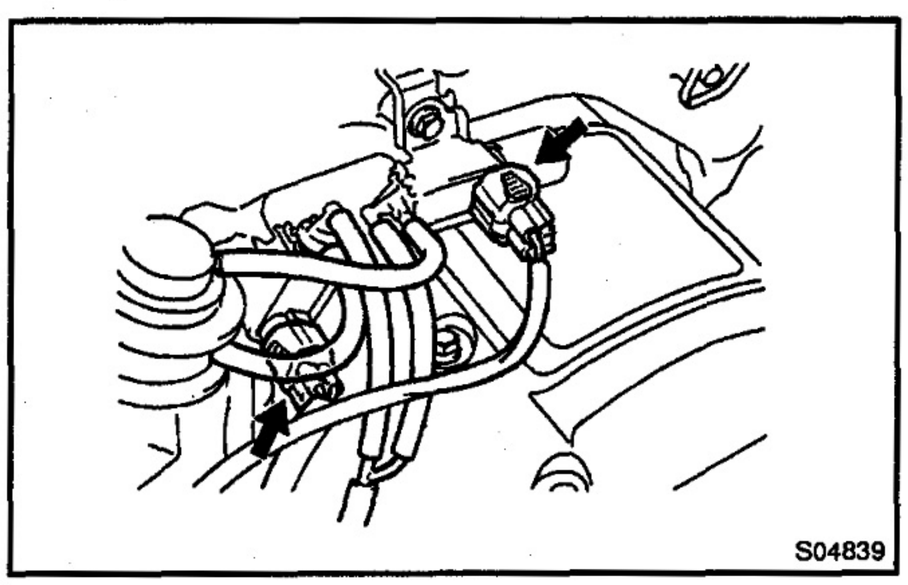

REMOVAL

1. REMOVE INTAKE PIPE

(a) Disconnect the 2 VSV connectors.
(b) Disconnect the 2 vacuum hoses from the actuator.
(c) Disconnect the vacuum hose from the 3–way (from vacuum pump).
(d) Remove the 4 nuts and seal washers.

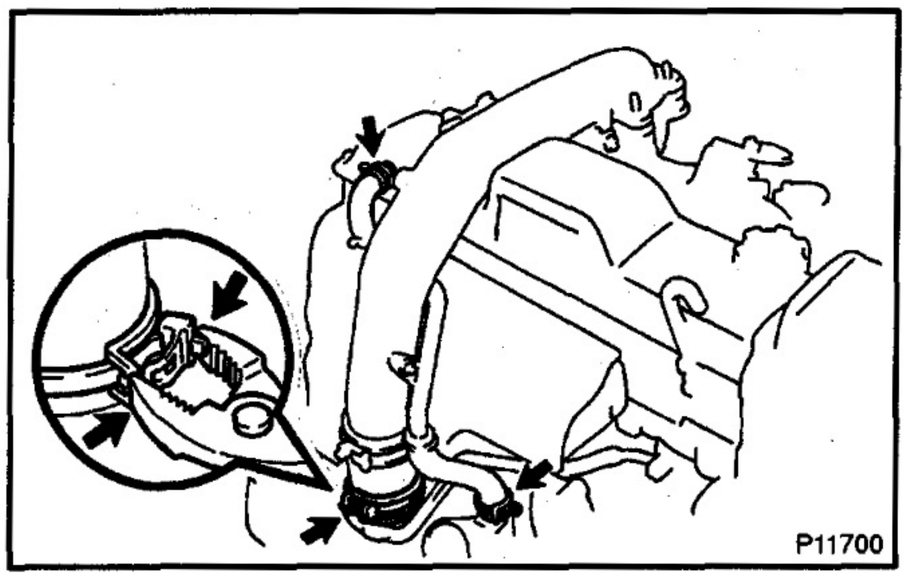

(e) Disconnect the 2 PCV hoses.
(f) Use pliers to pinch the ends of the clamp together until the lock plate engages the catch.
Make sure the lock plate and catch are engaged securely.
(g) Remove the intake pipe and gasket.
(h) Remove the 2 nuts and accelerator cable bracket from the intake pipe.
(i) Remove the 2 nuts and PCV pipe from the intake pipe.

FU

2. REMOVE INJECTION PIPES

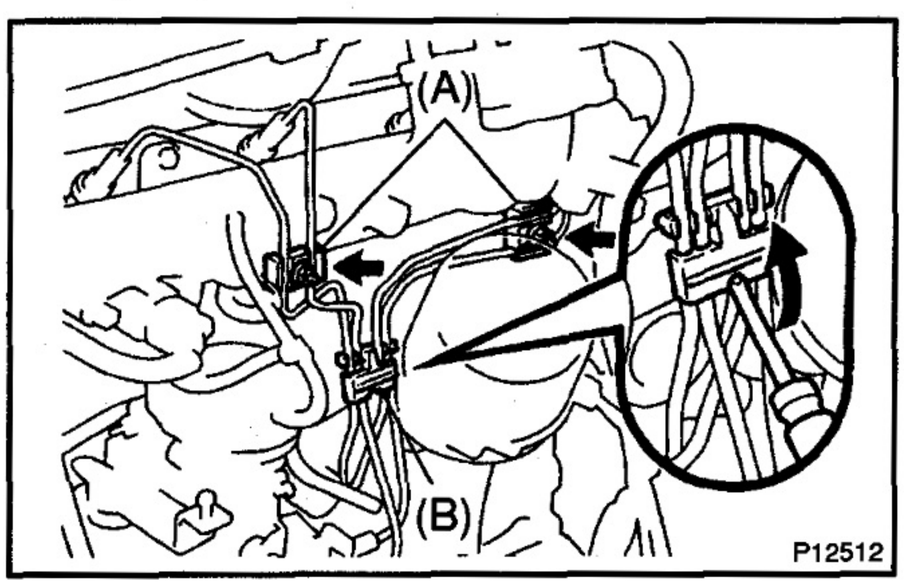

(a) Remove the 2 nuts holding the clamps (A) to the intake manifold.
(b) Using a screwdriver, pry out the clamp (B).

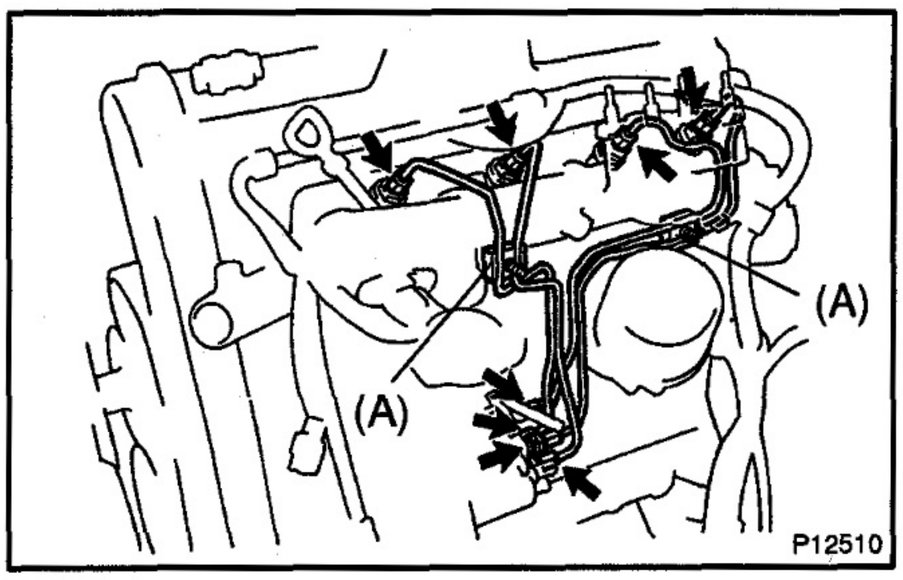

(c) Loosen the 8 union nuts of the injection pipes.
(d) Remove the 4 injection pipes and 2 clamps (A).

3. REMOVE NOZZLE LEAKAGE PIPE

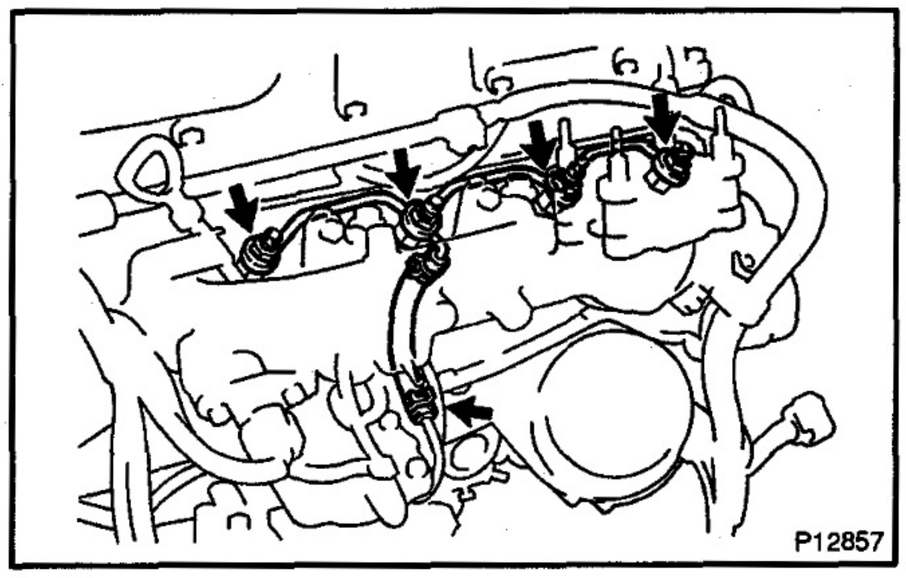

(a) Disconnect the fuel hose from the return pipe.
(b) Remove the 4 nuts, leakage pipe and 4 gaskets.

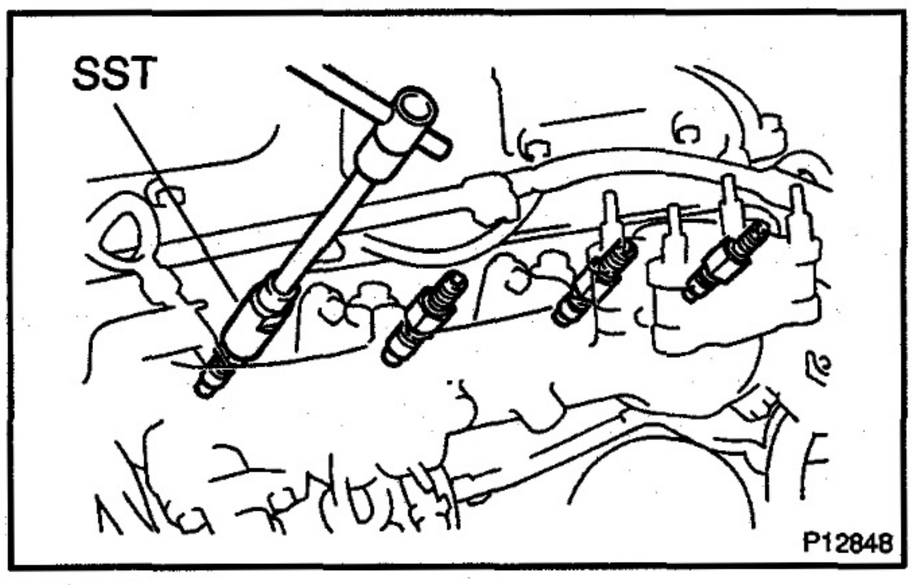

4. REMOVE INJECTION NOZZLES

Using SST, remove the 4 injection nozzles, gaskets and seats.

SST 09268–64010 (09268–64020)

HINT:

Arrange the injection nozzle in correct order.

FU06T–01

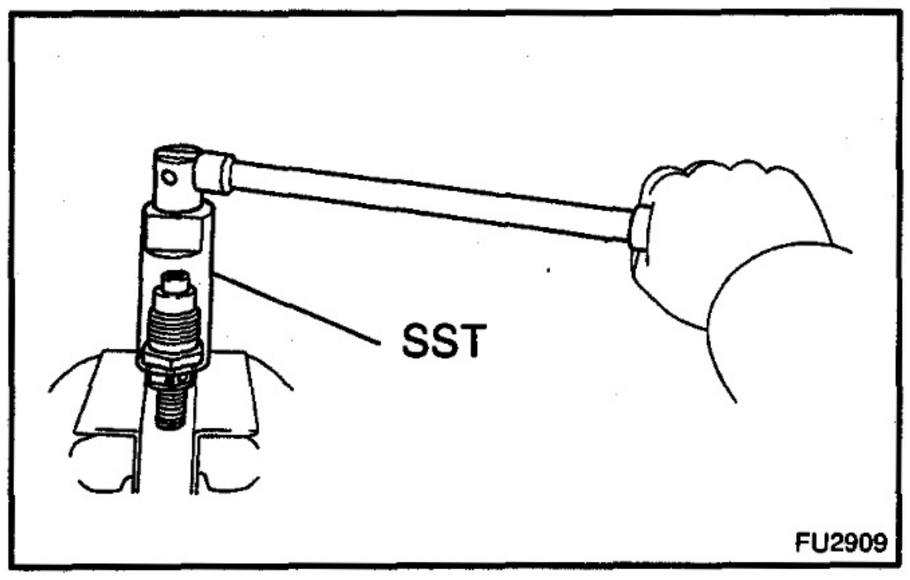

DISASSEMBLY

DISASSEMBLE INJECTION NOZZLES

(a) Using SST, remove the nozzle holder retaining nut.
SST 09268–64010 (09268–64020)

NOTICE:

When disassembling the nozzle, be careful not to drop the inner parts.

(b) Remove the pressure spring, shim, pressure pin, distance piece and the nozzle assembly.

FU06U–01

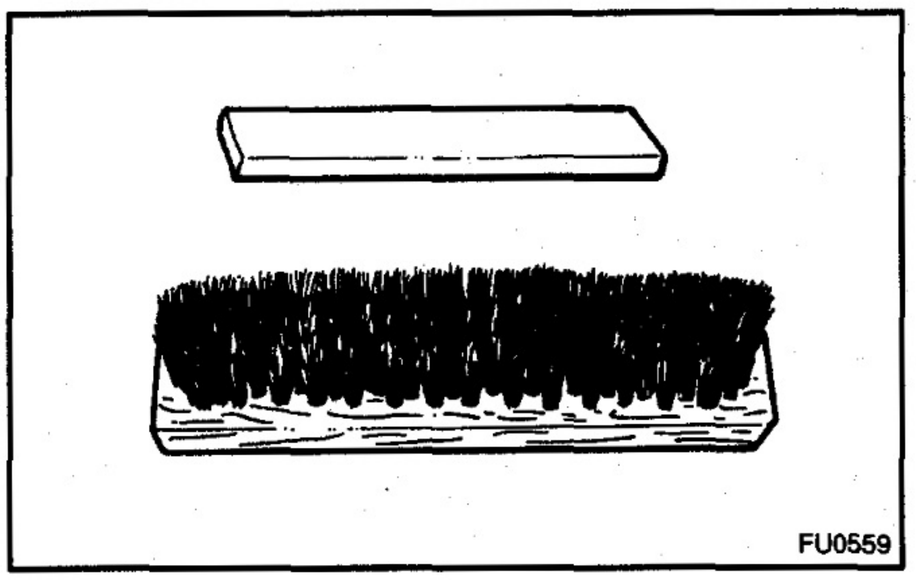
FU0559

INSPECTION

1. NOZZLE CLEANING

(a) To wash the nozzles, use a wooden stick and brass brush. Wash them in clean diesel fuel.

HINT:

Do not touch the nozzle mating surfaces with your fingers.

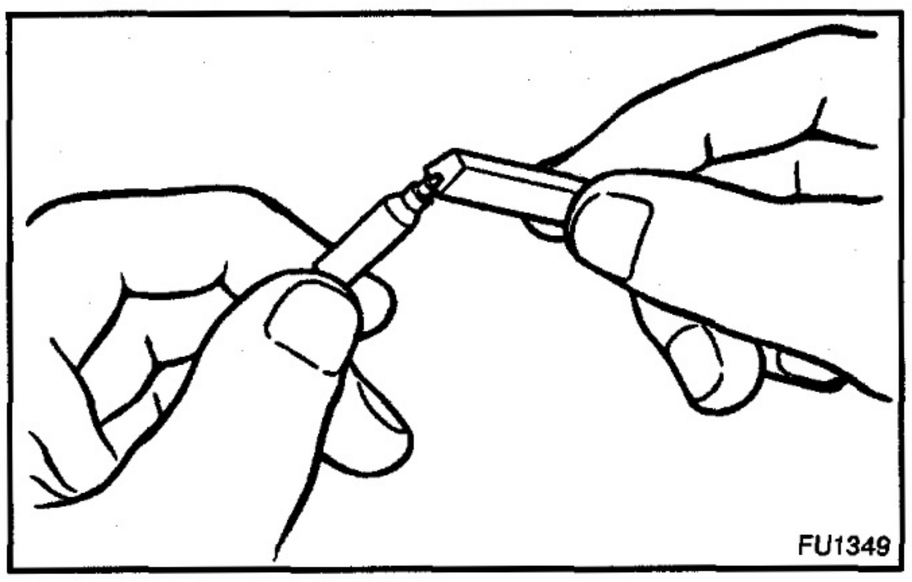
FU1349

(b) Using a wooden stick, remove the carbon adhering to the nozzle needle tip.

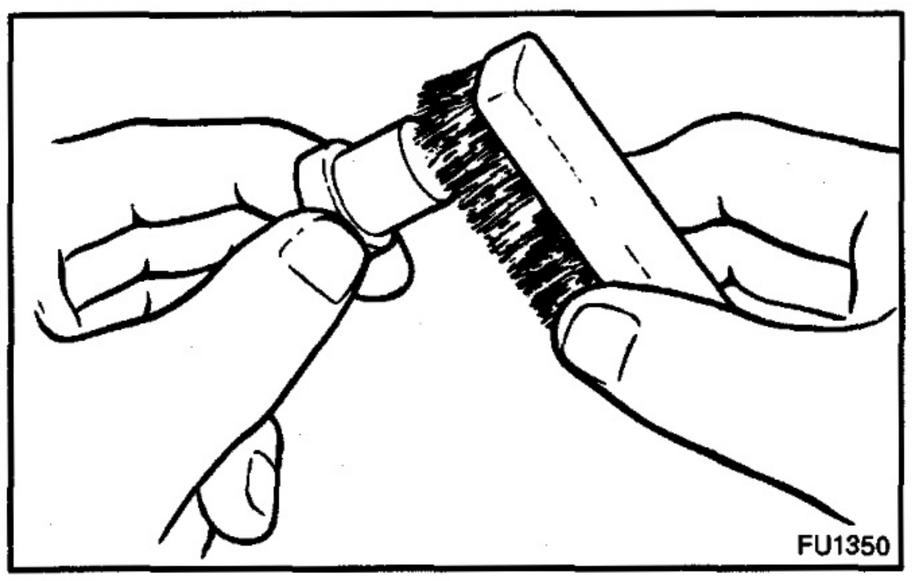
FU1350

(c) Using a brass brush, remove the carbon from the exterior of the nozzle body (except lapped surface).

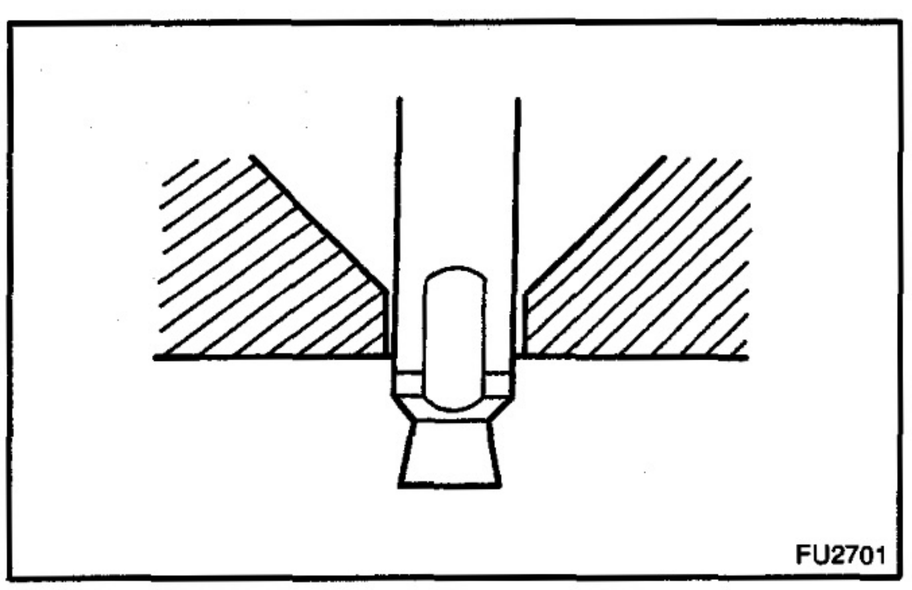
FU2701

(d) Check the seat of the nozzle body for burns or corrosion.

(e) Check the nozzle needle tip for damage or corrosion.

If any of these conditions are present, replace the nozzle assembly.

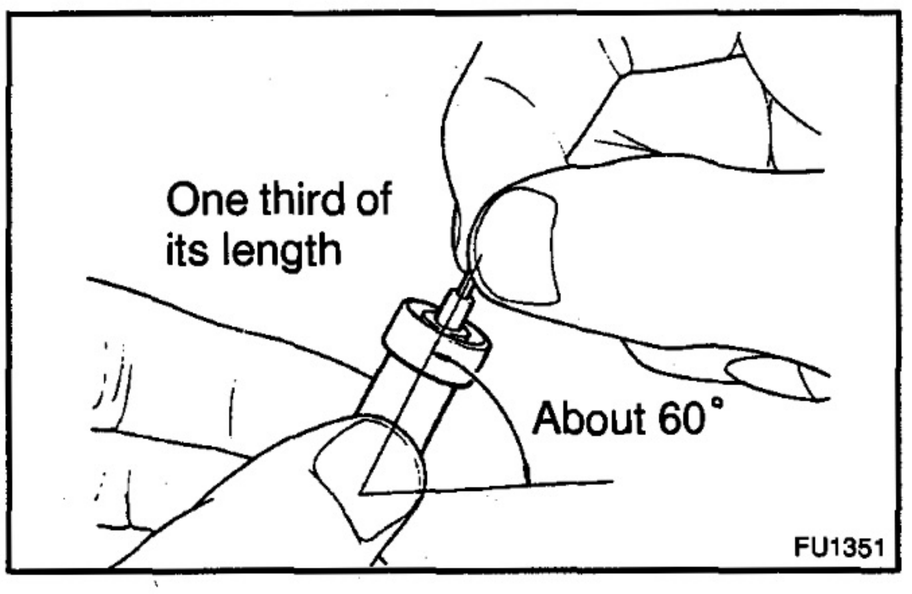

FU1351

2. INSPECT NOZZLE ASSEMBLY

(a) Wash the nozzle in clean diesel fuel.

HINT:

Do not touch the nozzle mating surfaces with your fingers.

(b) Tilt the nozzle body about 60° and pull the needle out about one third of its length.

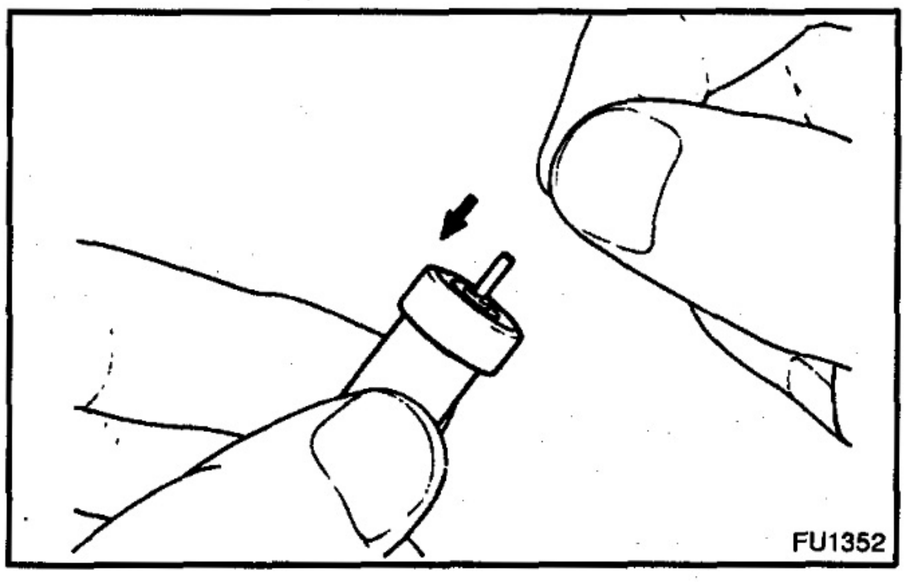

(c) When released, the needle should stick down into the body vent smoothly by its own weight.
(d) Repeat this test, rotating the needle slightly each time.

If the needle does not sink freely, replace the nozzle assembly.

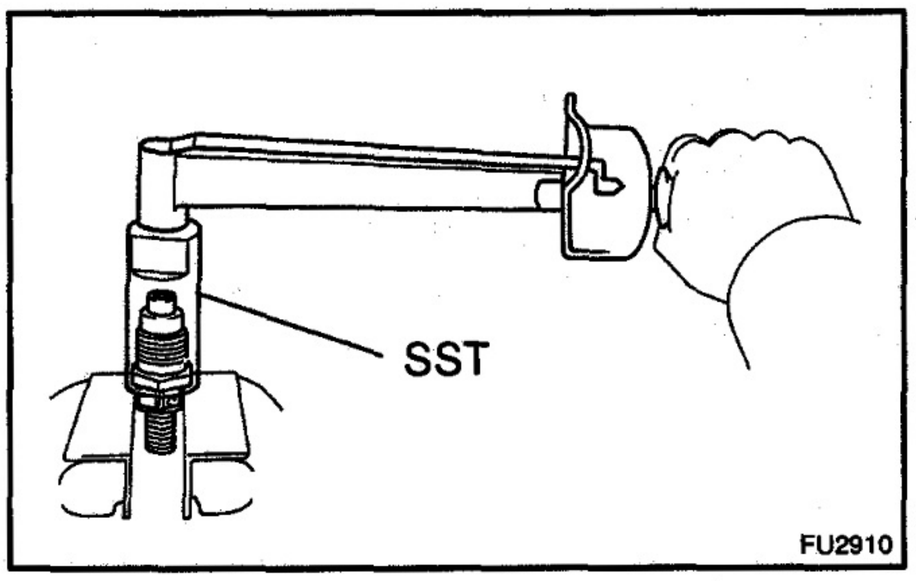

FU06V–01

REASSEMBLY

1. ASSEMBLE INJECTION NOZZLE HOLDERS

(a) Assemble the nozzle holder retaining nut, the nozzle assembly, distance piece, pressure pin, pressure spring, adjusting shim and nozzle holder body, and finger tighten the retaining nut.

(b) Using SST, tighten the retaining nut.
SST 09268–64010 (09268–64020)
Torque: 37 N·m (375 kgf·cm, 27 ft·lbf)

NOTICE:
Over torquing could cause nozzle deformation and needle adhesion or other defects.

2. PERFORM PRESSURE AND SPRAY PATTERN TEST
(See page FU–11)

FU06W-01

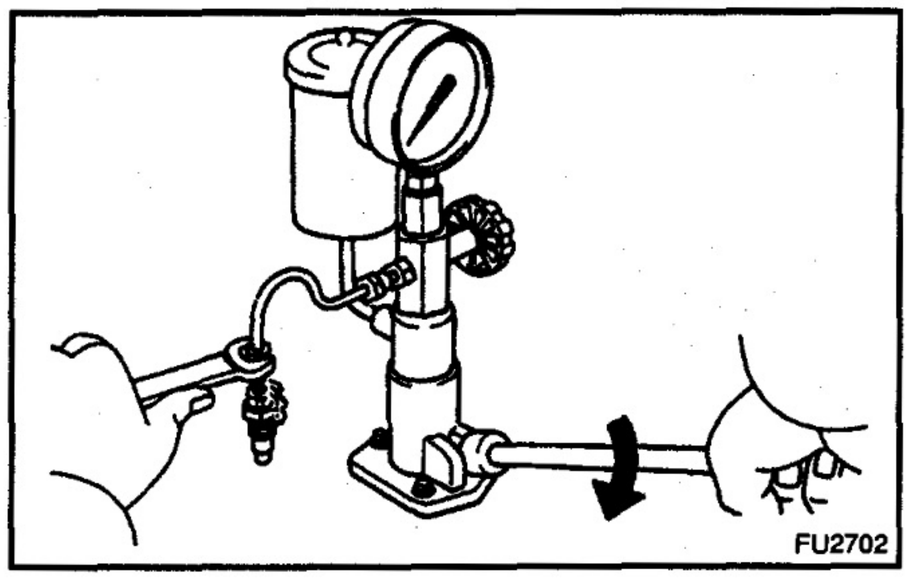
FU2702

TEST

1. INJECTION PRESSURE TEST

(a) Install the injection nozzle to the injection nozzle hand tester and bleed air from the union nut.

CAUTION:

Do not place your finger over the nozzle injection hole.

(b) Pump the tester handle a few times as fast as possible to discharge the carbon from the injection hole.

(c) Pump the tester handle slowly and observe the pressure gauge.

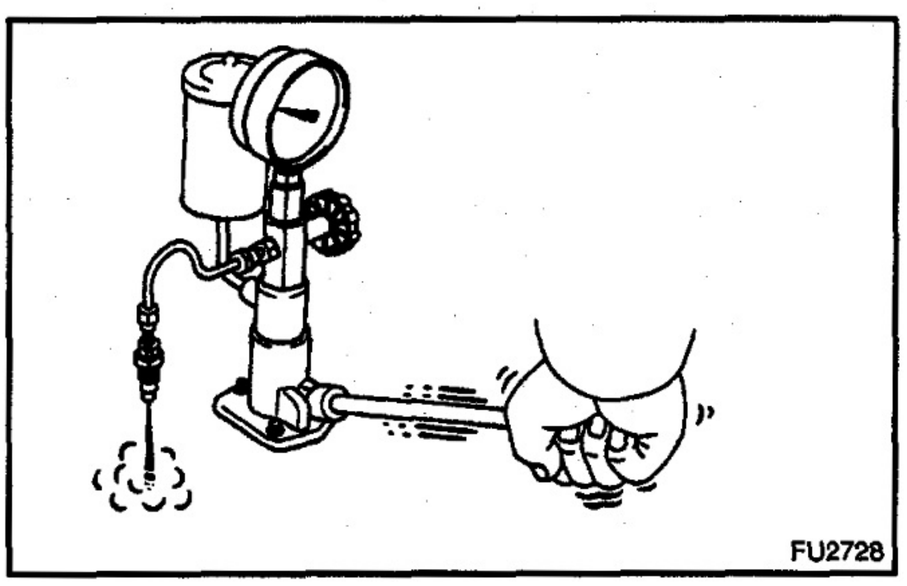
FU2728

(d) Read the pressure gauge just as the injection pressure begins to drop.

Opening pressure:

New nozzle	14,808 – 15,593 kPa (151 – 159 kgf/cm^2, 2,148 – 2,261 psi)
Reused nozzle	14,320 – 15,100 kPa (146 – 154 kgf/cm^2, 2,076 – 2,190 psi)

HINT:

Proper nozzle operation can be determined by a swishing sound.

If the opening pressure is not as specified, disassemble the nozzle holder and change the adjusting shim on the top of the pressure spring.

Adjusted opening pressure:

14,220 – 15,200 kPa

(145 – 155 kgf/cm^2, 2,062 – 2,205 psi)

Adjusting shim thickness:

mm (in.)	mm (in.)	mm (in.)
0.900 (0.0354)	1.275 (0.0502)	1.650 (0.0650)
0.925 (0.0364)	1.300 (0.0512)	1.675 (0.0659)
0.950 (0.0374)	1.325 (0.0522)	1.700 (0.0669)
0.975 (0.0384)	1.350 (0.0531)	1.725 (0.0679)
1.000 (0.0394)	1.375 (0.0541)	1.750 (0.0689)
1.025 (0.0404)	1.400 (0.0551)	1.775 (0.0699)
1.050 (0.0413)	1.425 (0.0561)	1.800 (0.0709)
1.075 (0.0423)	1.450 (0.0571)	1.825 (0.0719)
1.100 (0.0433)	1.475 (0.0581)	1.850 (0.0728)
1.125 (0.0443)	1.500 (0.0591)	1.875 (0.0738)
1.150 (0.0453)	1.525 (0.0600)	1.900 (0.0748)
1.175 (0.0463)	1.550 (0.0610)	1.925 (0.0758)
1.200 (0.0472)	1.575 (0.0620)	1.950 (0.0768)
1.225 (0.0482)	1.600 (0.0630)	–
1.250 (0.0492)	1.625 (0.0640)	–

HINT:

- Varying the adjusting shim thickness by 0.025 mm (0.0010 in.) changes the injection pressure by about 471 kPa (4.8 kgf/cm^2, 68 psi).
- Only one adjusting shim should be used.

(e) There should be no dripping after injection.

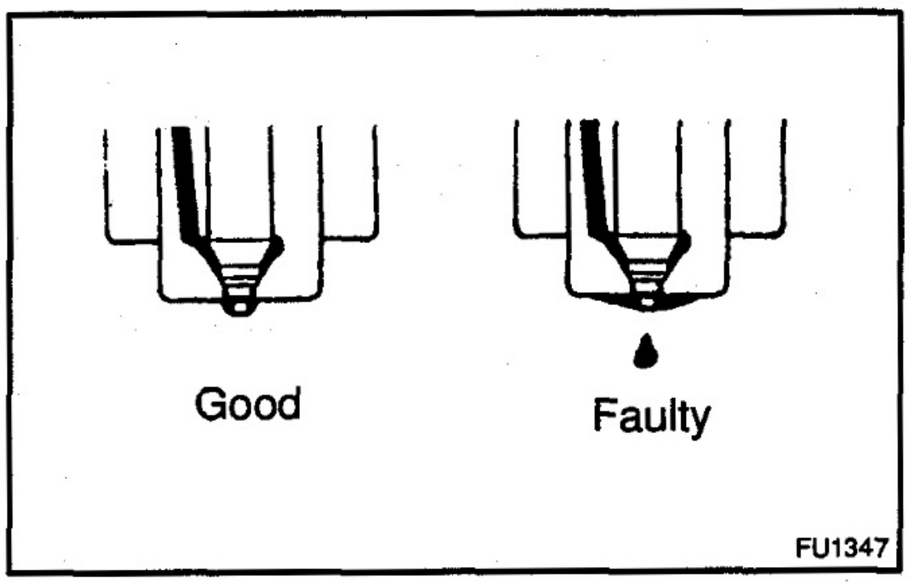

2. LEAKAGE TEST

While maintaining pressure at about 981 – 1,961 kPa (10 – 20 kgf/cm^2, 142 – 284 psi) below opening pressure (adjust by tester handle), check that there is no dripping for 10 seconds from the injection hole or around the retaining nut.
If the nozzle drips within 10 seconds, replace or clean and overhaul the nozzle assembly.

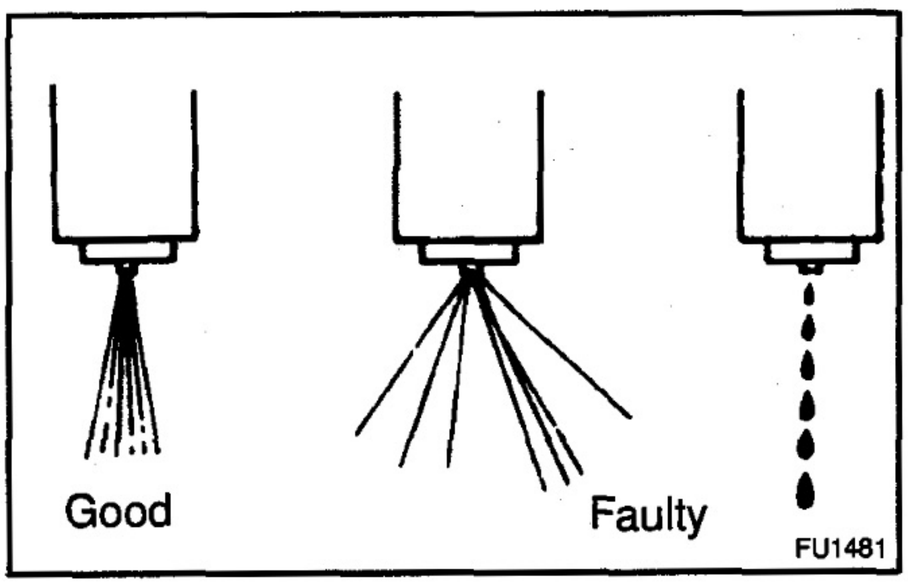

3. SPRAY PATTERN TEST

(a) The injection nozzle should shudder at a certain pumping speed between 15 – 60 times (old nozzle) or 30 – 60 times (new nozzle) per minute.

(b) Check the spray pattern during shuddering.

If the spray pattern is not correct during shuddering the nozzle must be replaced or cleaned.

FU06X–01

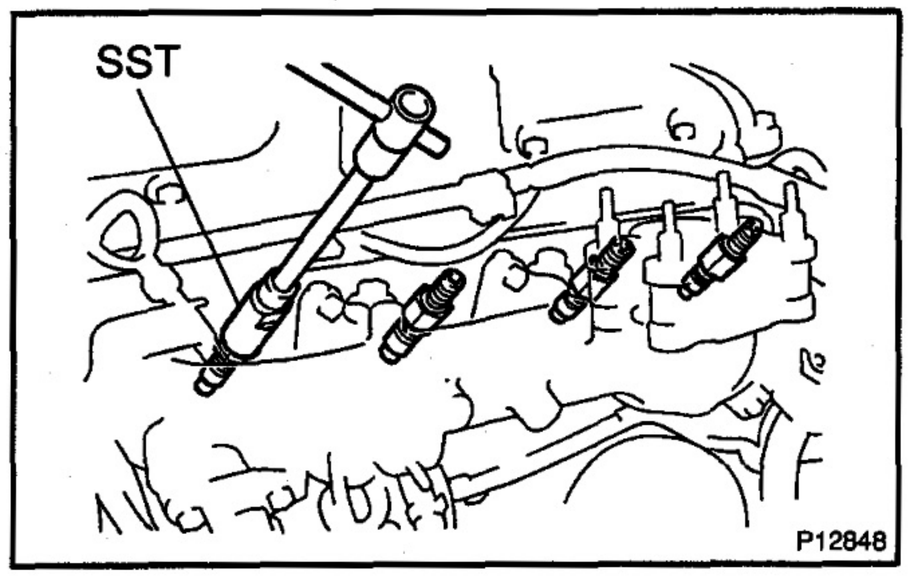

INSTALLATION

1. INSTALL INJECTION NOZZLES

(a) Place the 4 nozzle seats and new gaskets into the injection nozzle holes of the cylinder head.

(b) Using SST, install the 4 injection nozzles.
SST 09268–64010 (09268–64020)
Torque: 54 N·m (540 kgf·cm, 40 ft·lbf)

NOTICE:

- **Over torquing could cause nozzle deformation and needle adhesion or other defects.**
- **When installing the injection nozzle, never torque the nozzle holder body. Torque the retaining nut section.**

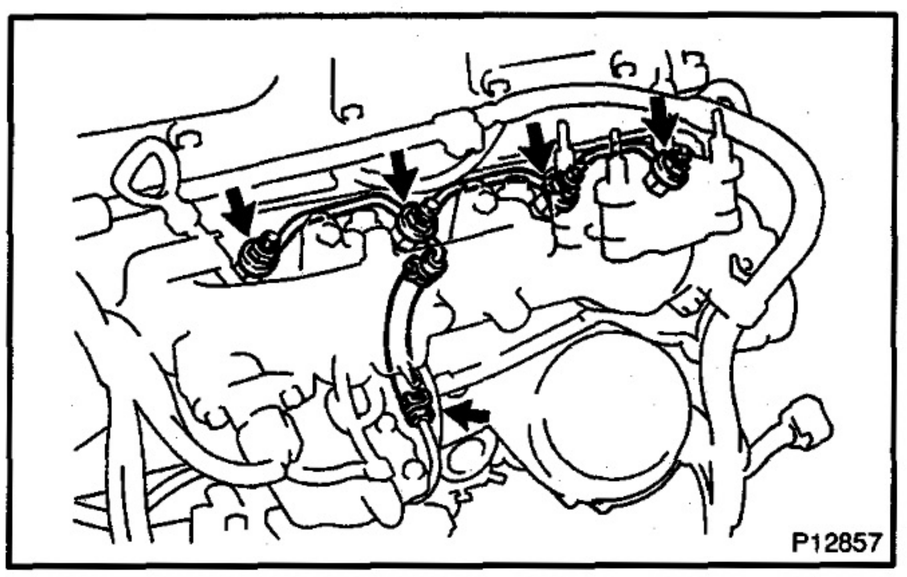

2. INSTALL NOZZLE LEAKAGE PIPE

(a) Install 4 new gaskets and the leakage pipe with the nuts.
Torque: 30 N·m (300 kgf·cm, 22 ft·lbf)

(b) Connect the fuel hose to the return pipe.

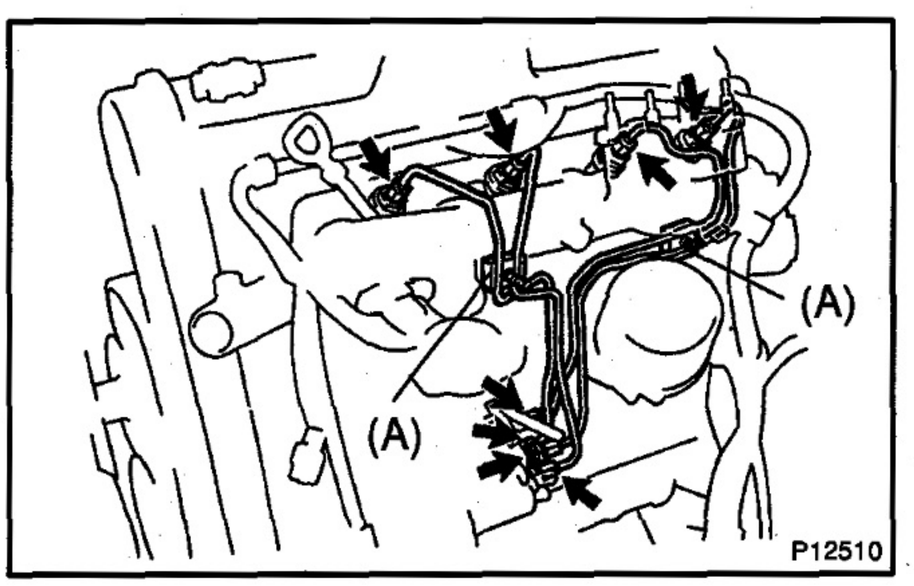

3. INSTALL INJECTION PIPES

(a) Temporarily install the 2 clamps (A) and 4 injection pipes.

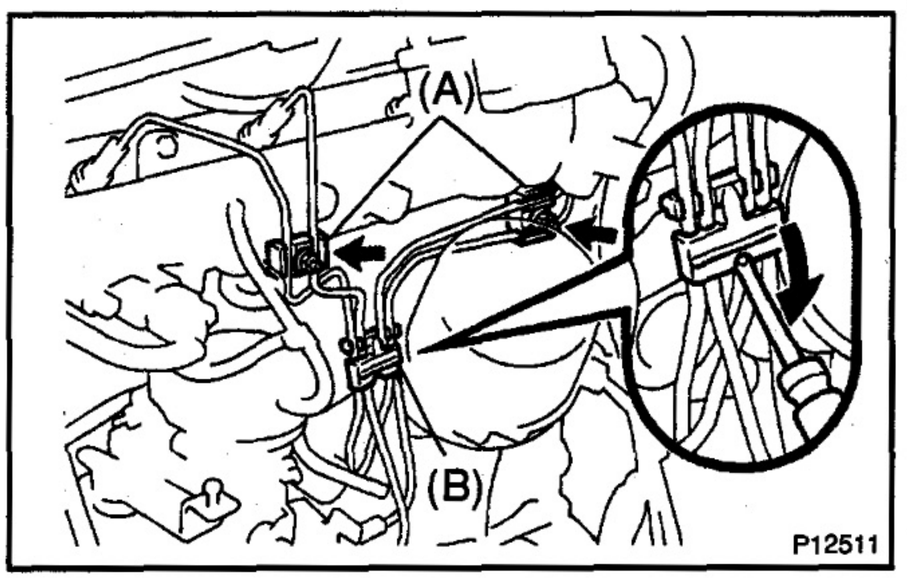

(b) Install the 2 nuts holding the clamps (A) to the intake manifold.
Torque: 6 N·m (65 kgf·cm, 53 in.·lbf)

(c) Using a screwdriver, attach the clamp (B).

(d) Tighten the 8 union nuts.
Torque: 15 N·m (150 kgf·cm, 11 ft·lbf)

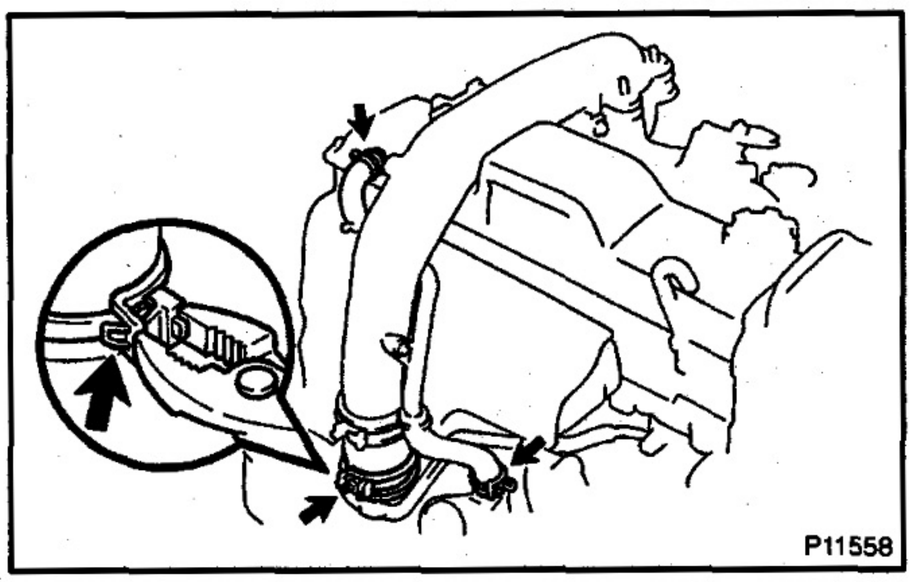

4. INSTALL INTAKE PIPE

(a) Install the PCV pipe with the 2 nuts to the intake pipe.

(b) Install the accelerator cable bracket with the 2 nuts to the intake pipe.

Torque: 20 N·m (200 kgf·cm, 15 ft·lbf)

(c) Place a new gasket on the intake manifold.

(d) Connect the air hose and install the intake pipe.

(e) Press the clamp lock together with the pliers and press down the tip of the lock plate. Carefully let the lock spread apart.

Take care not to let the pliers slip.

(f) Connect the 2 PCV hoses.

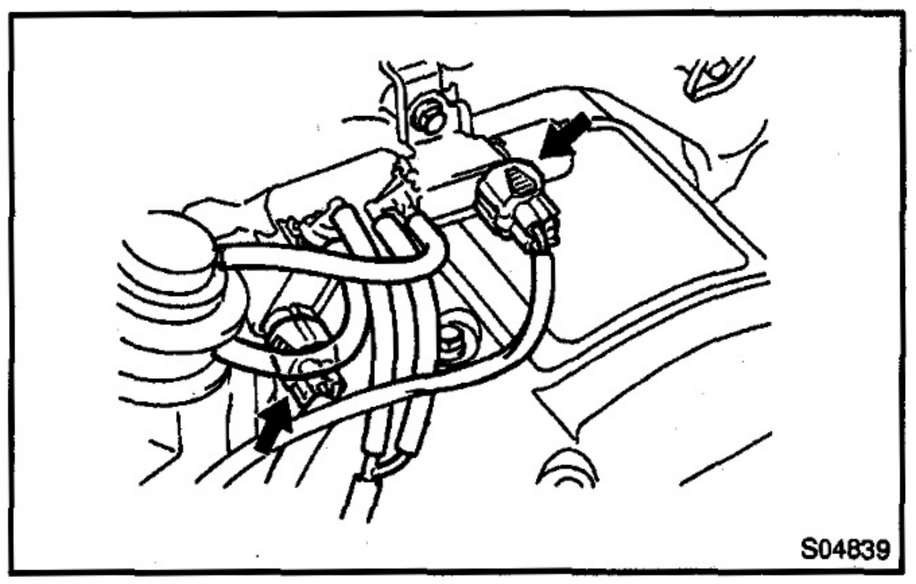

(g) Install the 4 seal washers and nuts.

Torque: 12 N·m (120 kgf·cm, 9 ft·lbf)

(h) Connect the vacuum hose to the 3–way (to vacuum pump).

(i) Connect the 2 vacuum hoses to the actuator.

(j) Connect the 2 VSV connectors.

5. START ENGINE AND CHECK FOR FUEL LEAKAGE

INJECTION PUMP

FU06Y–01

ON–VEHICLE INSPECTION

1. **INSPECT ENGINE SPEED SENSOR (See page ED–20)**
2. **INSPECT SPILL CONTROL VALVE (See page ED–9)**
3. **INSPECT INJECTION PUMP CORRECTION RESISTORS (See page ED–24)**
4. **INSPECT TIMING CONTROL VALVE (See page ED–8)**

FU03P–02

COMPONENTS

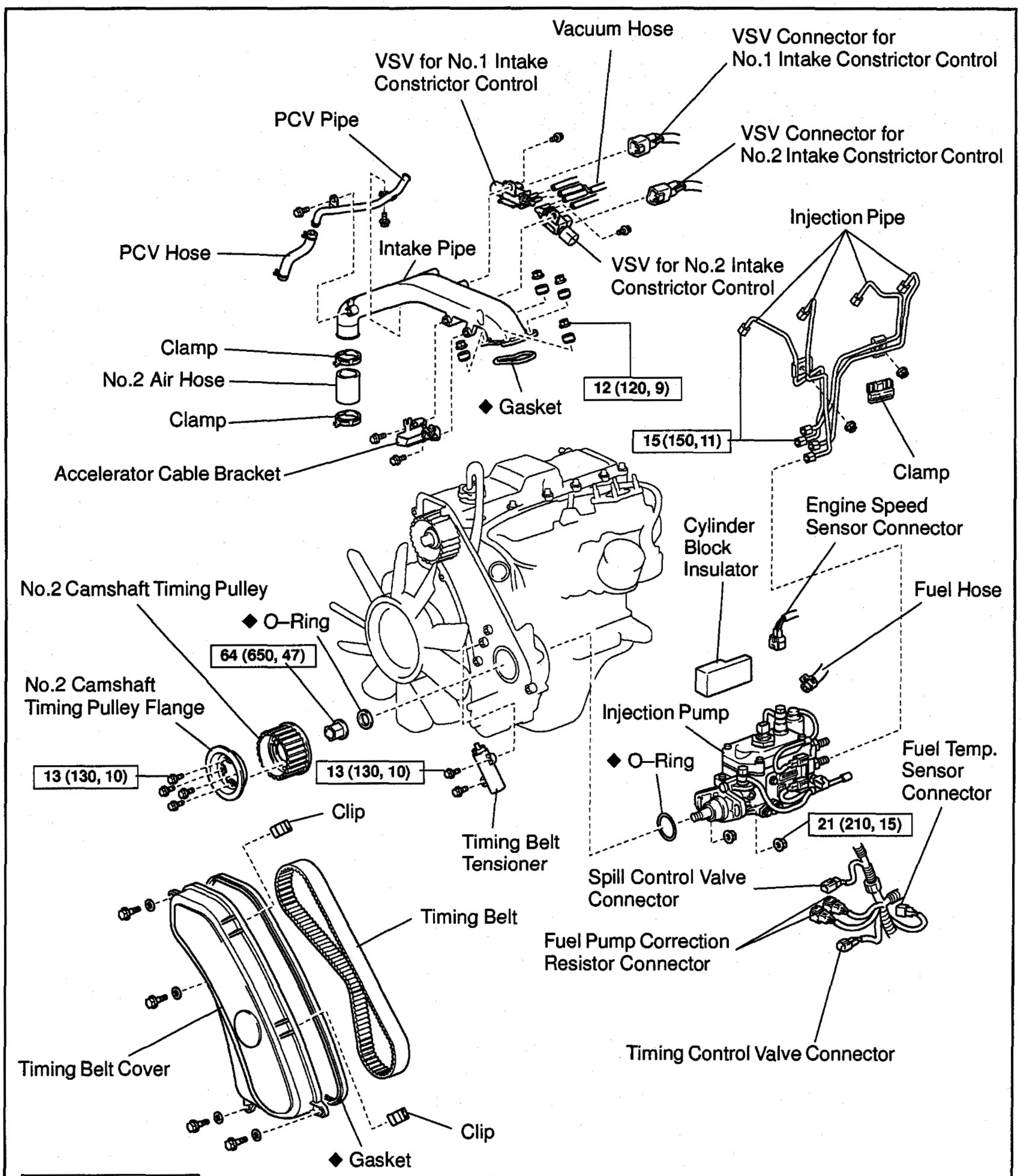

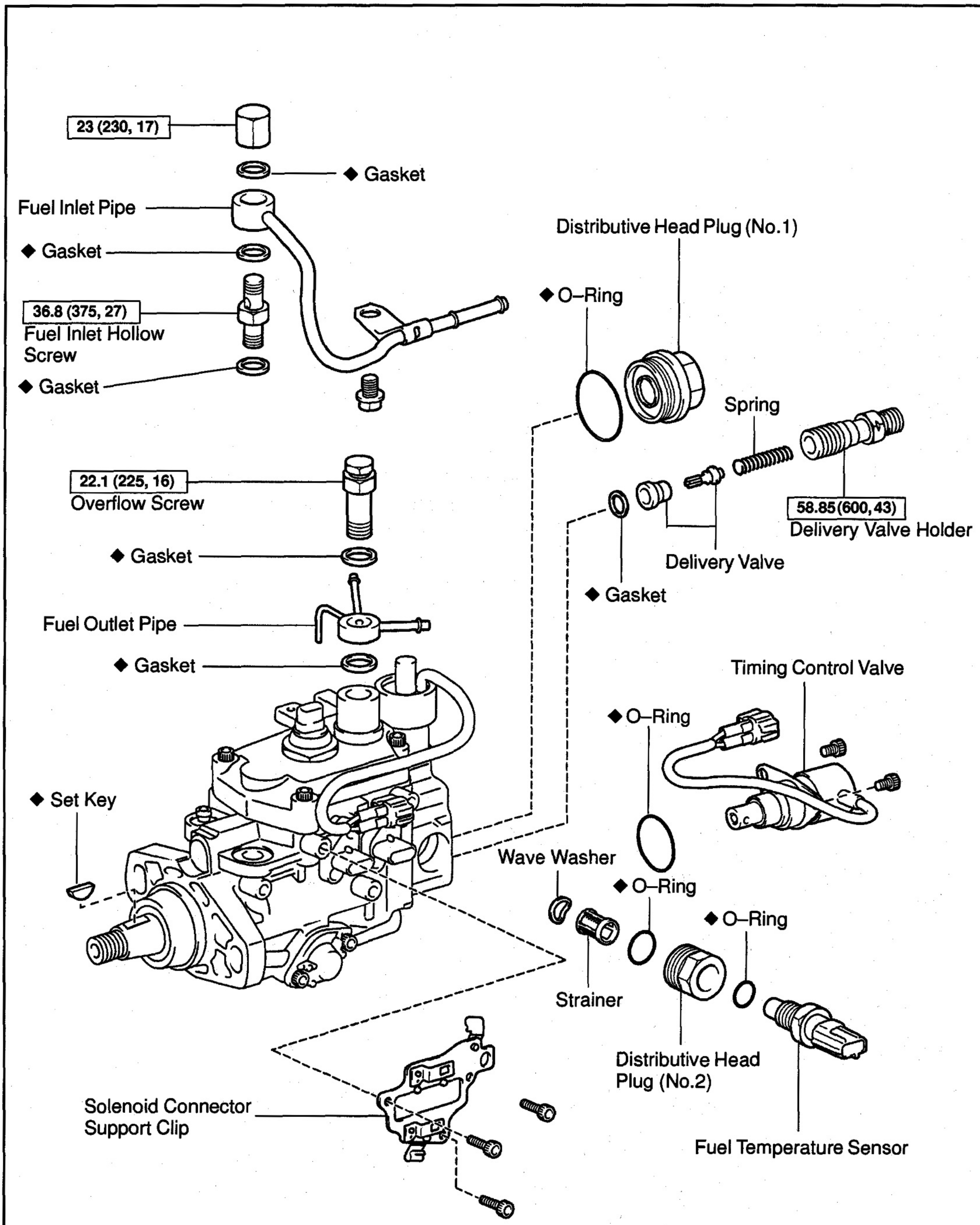

N·m (kgf·cm, ft·lbf) : Specified torque

◆ Non reusable part

S04926

FU06Z–01

REMOVAL

1. **REMOVE INTAKE PIPE (See page EM–44)**
2. **REMOVE INJECTION PIPES (See page FU–5)**
3. **REMOVE TIMING BELT (See page EM–13)**

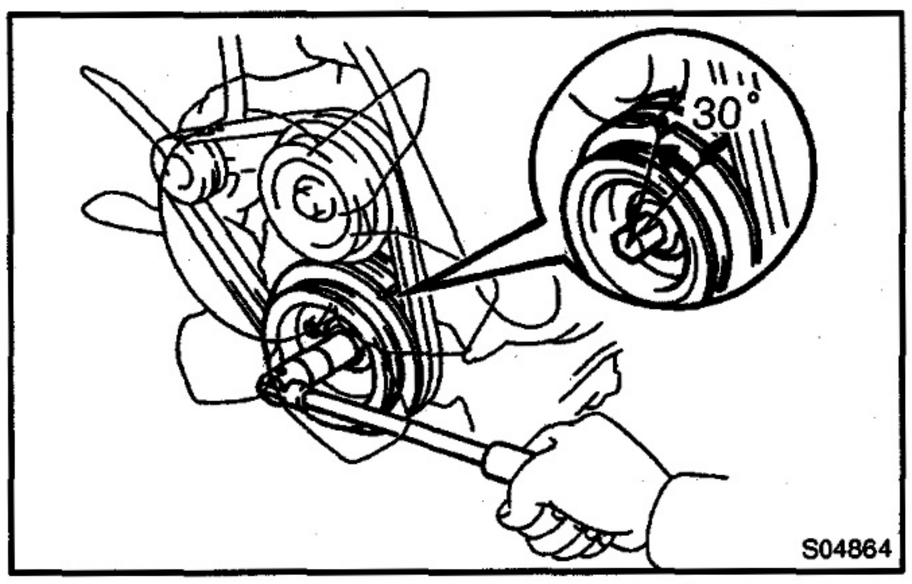

4. **CHECK INJECTION PUMP DRIVE SHAFT THRUST CLEARANCE**

(a) Turn the crankshaft pulley counterclockwise, so the pulley groove is about 30° from the timing pointer.

HINT:

To do this in order to adjust the teeth of the scissors portion of the idler gear.

(b) Move the No.2 camshaft timing pulley forward and backward and understand the sense of thrust clearance of the injection pump.

5. **REMOVE NO.2 CAMSHAFT TIMING PULLEY (See page EM–13)**

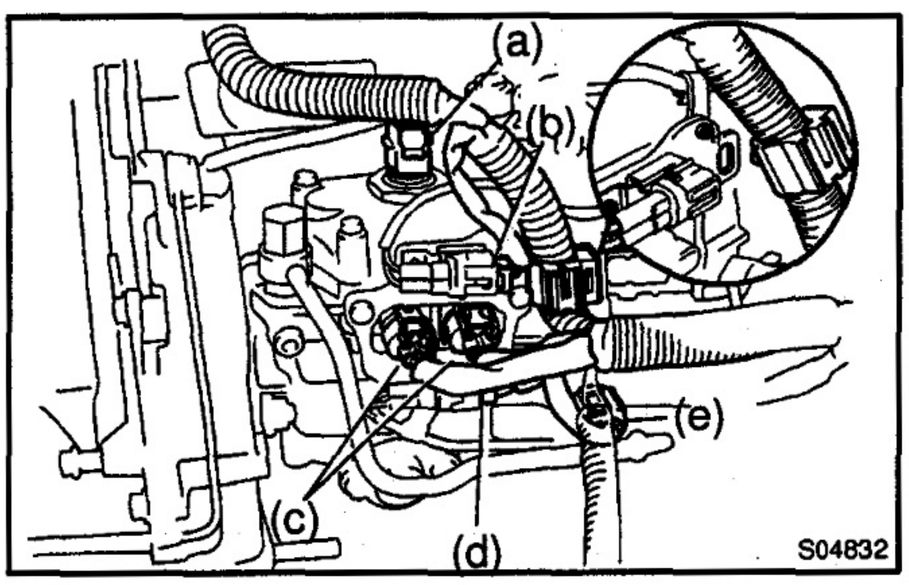

6. **REMOVE INJECTION PUMP**

(a) Disconnect the engine speed sensor connector.
(b) Disconnect the spill control valve connector.
(c) Disconnect the 2 correction resistor connectors.
(d) Disconnect the timing control valve connector.
(e) Disconnect the fuel temperature sensor connector.
(f) Disconnect the engine wire clamp and fuel hose.

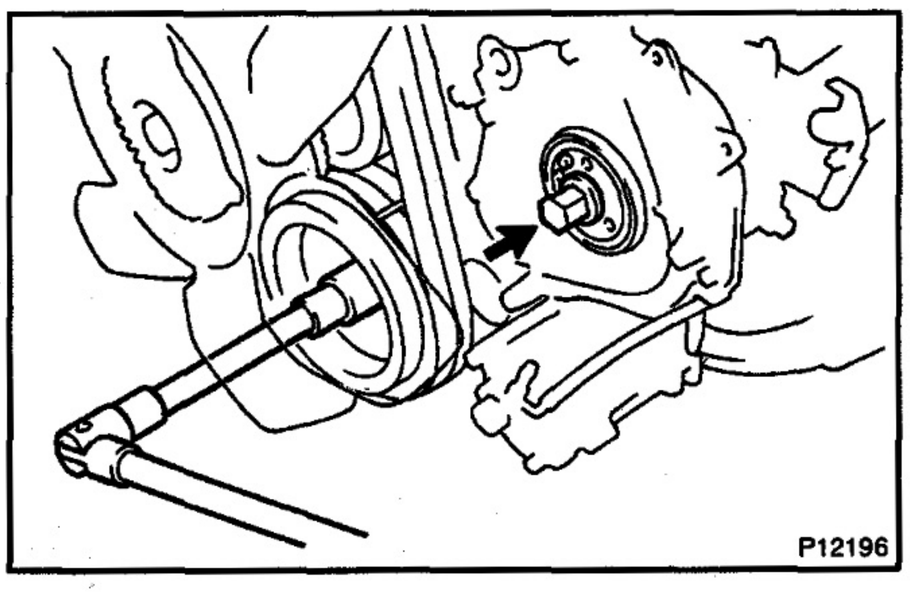

(g) Hold the crankshaft pulley, and remove the injection pump drive gear set nut.
(h) Remove the O–ring from the injection pump drive gear.

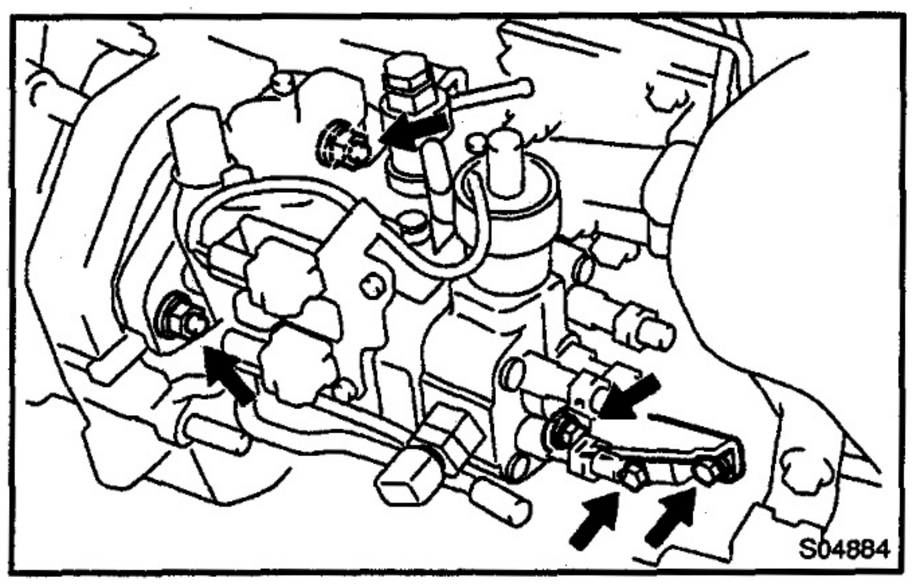

(i) Loosen the 2 nuts holding the injection pump to the timing gear case.

(j) Remove the 3 bolts and injection pump stay.

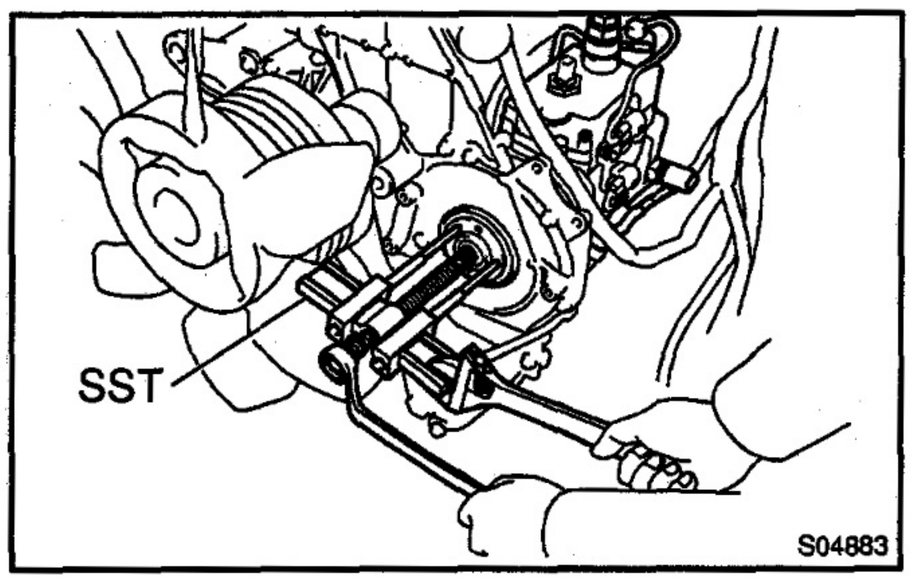

(k) Using SST, disconnect the injection pump from the timing gear case.

SST 09960–50010 (09951–05010, 09952–05010, 09953–05020, 09954–05010)

(l) Remove the 2 nuts, injection pump and cylinder block insulator.

(m) Remove the O–ring from the injection pump.

FU03R–02

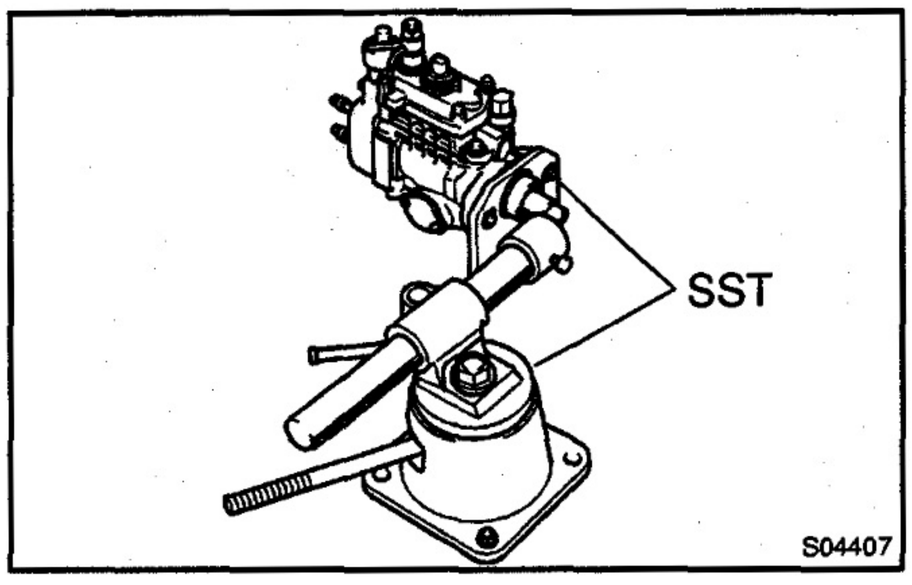

DISASSEMBLY

1. MOUNT PUMP ASSEMBLY TO SST (STAND)

SST 09241–76022, 09245–54010

2. REMOVE SET KEY OF DRIVE PULLEY FROM DRIVE SHAFT

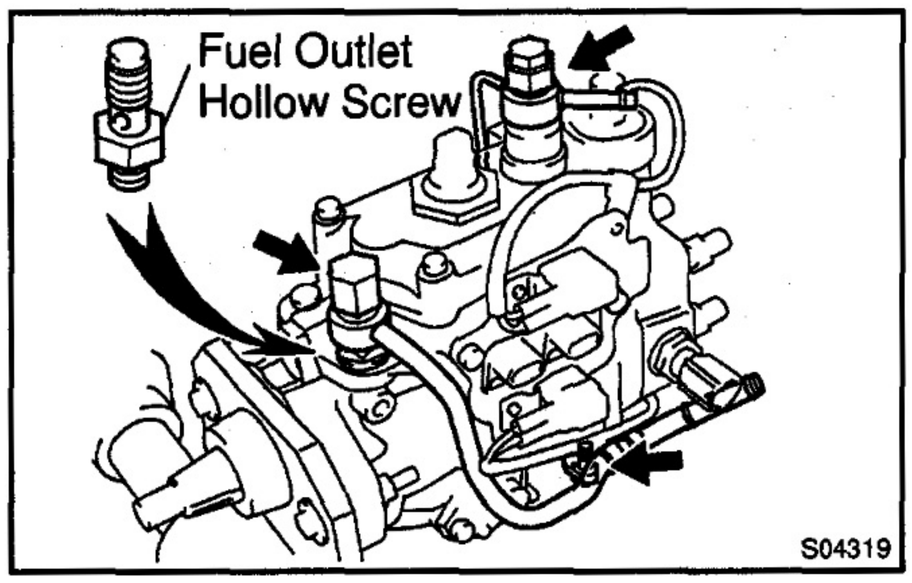

3. REMOVE FUEL PIPES AND INLET HOLLOW SCREW

(a) Remove the overflow screw, fuel outlet pipe and 2 gaskets.

(b) Remove the cap nut, bolt, fuel inlet pipe and 2 gaskets.

(c) Remove the fuel outlet hollow screw and gasket.

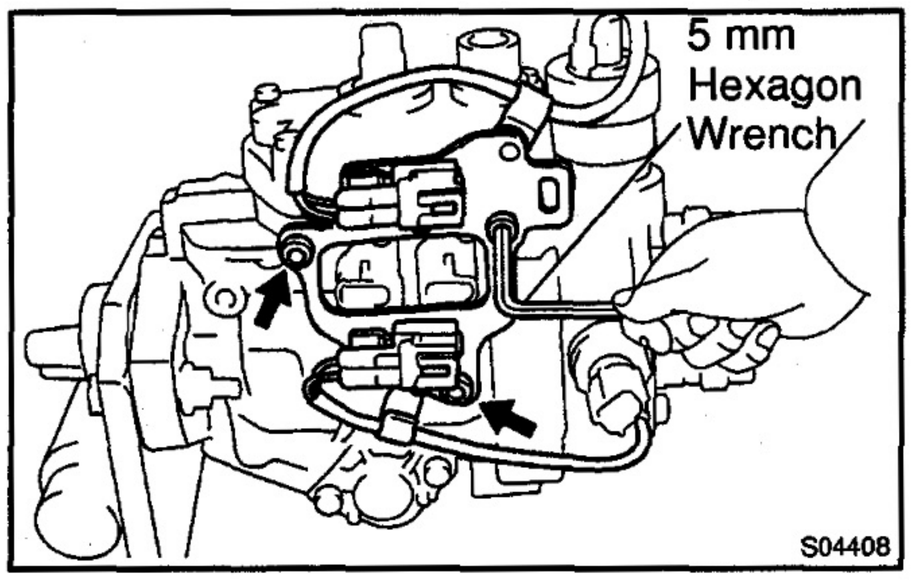

4. REMOVE SOLENOID CONNECTOR SUPPORT CLIP

(a) Using a 5 mm hexagon wrench, remove the 3 bolts and solenoid connector support clip.

(b) Disconnect the 2 lead wires and 2 connectors from the clamps.

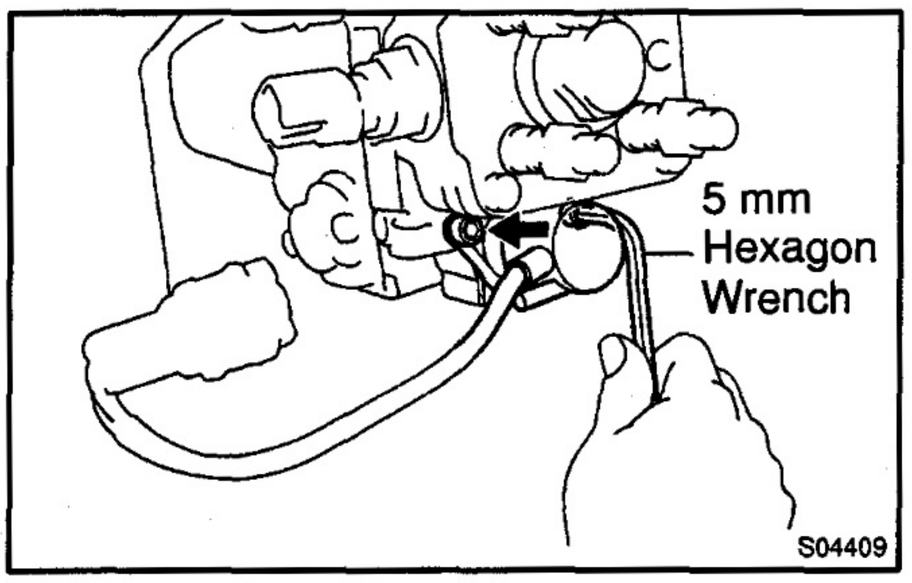

5. REMOVE TIMING CONTROL VALVE

Using a 5 mm hexagon wrench, remove the 2 bolts and timing control valve.

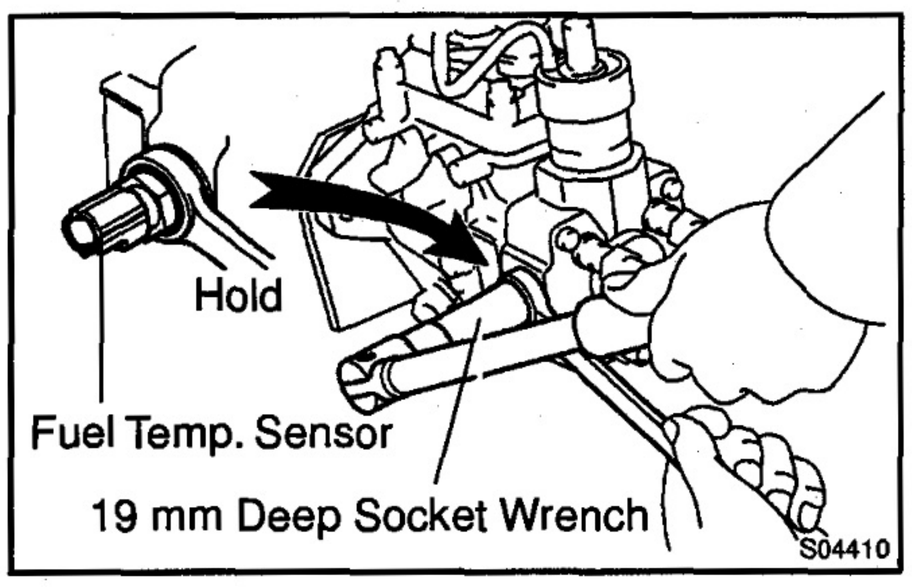

6. REMOVE FUEL TEMPERATURE SENSOR AND DISTRIBUTIVE HEAD PLUG (NO.2)

(a) Hold the distributive head plug, and using a 19 mm deep socket wrench, remove the fuel temperature sensor and O–ring.

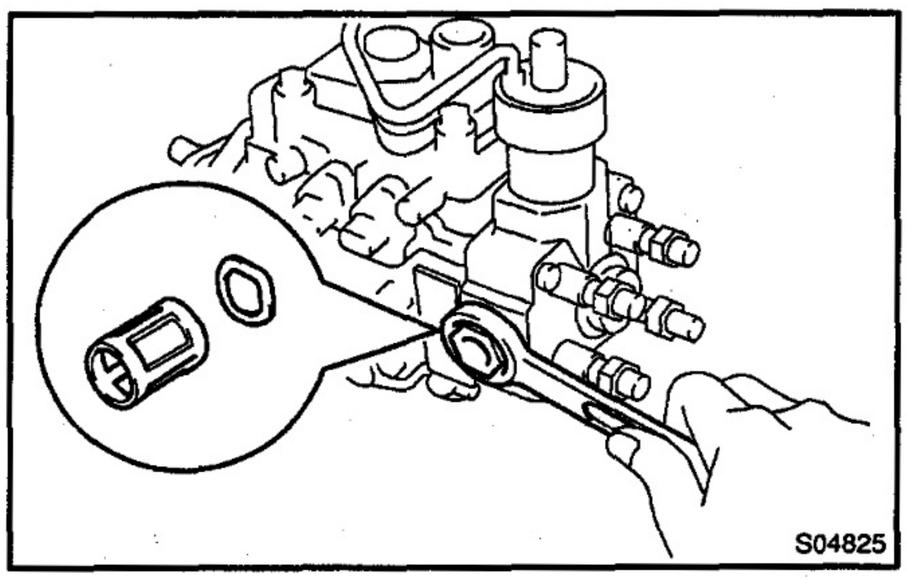

(b) Remove the distributive head plug and O–ring.
(c) Remove the strainer and wave washer.

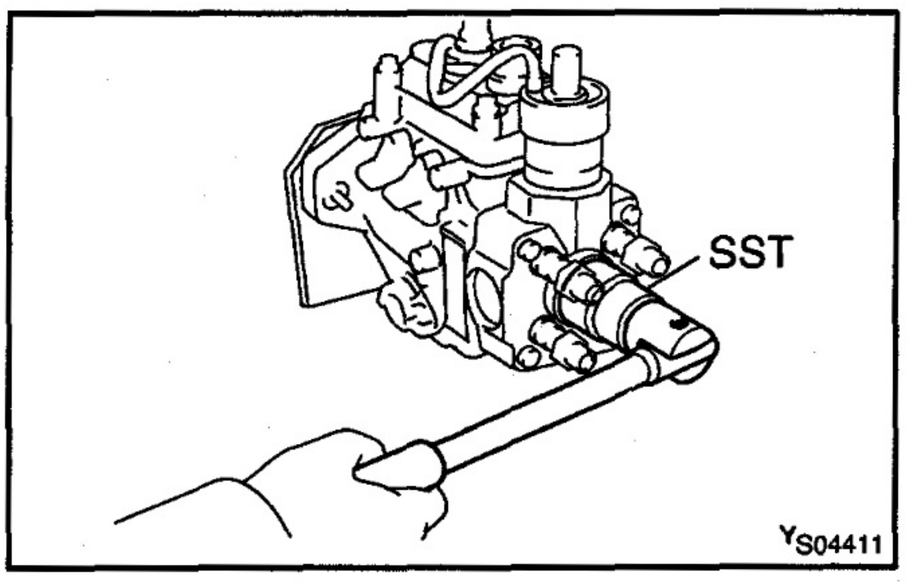

7. REMOVE DISTRIBUTIVE HEAD PLUG (NO.1)

Using SST, remove the distributive head plug.

SST 09260–54012 (09262–54010)

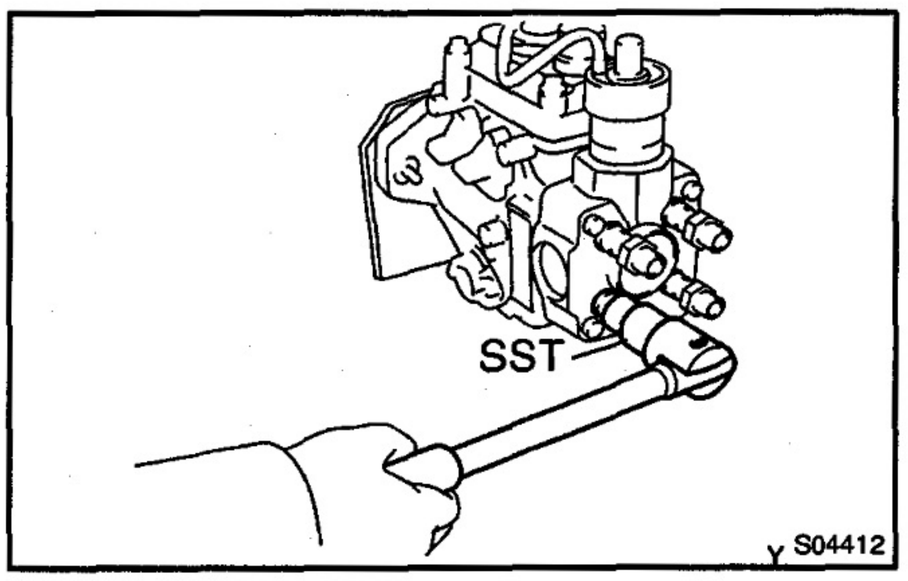

8. REMOVE DELIVERY VALVE HOLDERS

(a) Using SST, remove the 4 delivery valve holders and springs.

SST 09260–54012 (09269–54020)

(b) Remove the 4 delivery valves and gaskets.

NOTICE:

Do not touch the sliding surfaces of the delivery valve with your hand.

HINT:

Arrange the delivery valves, springs, and holders in order.

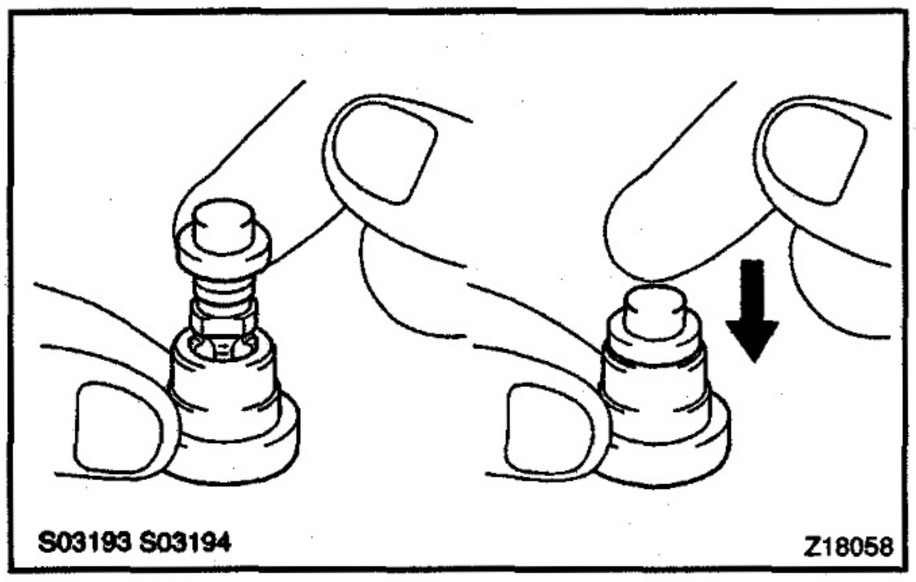

S03193 S03194 Z18058

FU03S–02

INSPECTION

NOTICE:

Do not touch the sliding surfaces of the delivery valves.

INSPECT DELIVERY VALVES

Pull up the valve, release it.

Check that it sinks smoothly to the valve seat.

If operation is not as specified, replace the valve as a set.

HINT:

Before using a new valve set, wash off the rust prevention compound with diesel fuel. Then re–wash with diesel fuel and perform the above tests.

FU03T–02

REASSEMBLY

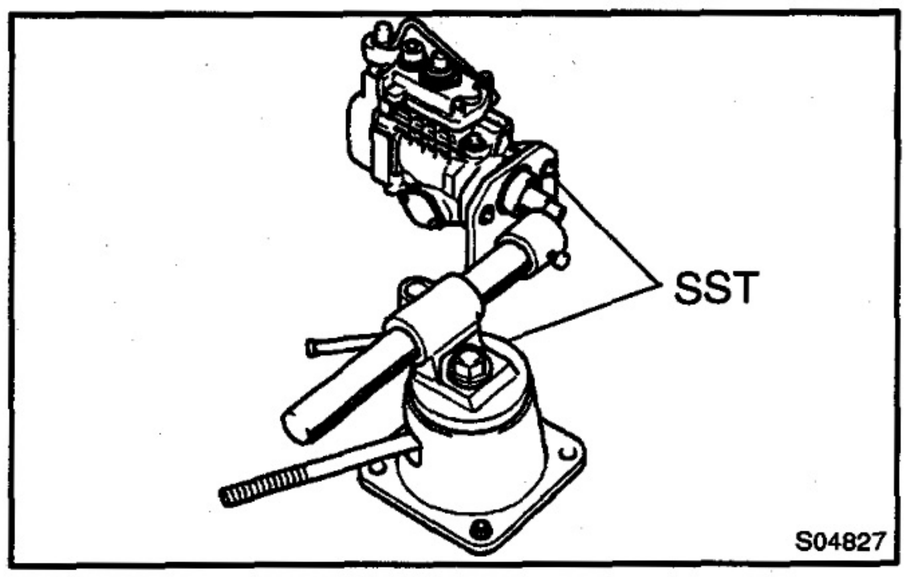

1. MOUNT PUMP BODY TO SST (STAND)

SST 09241–76022, 09245–54010

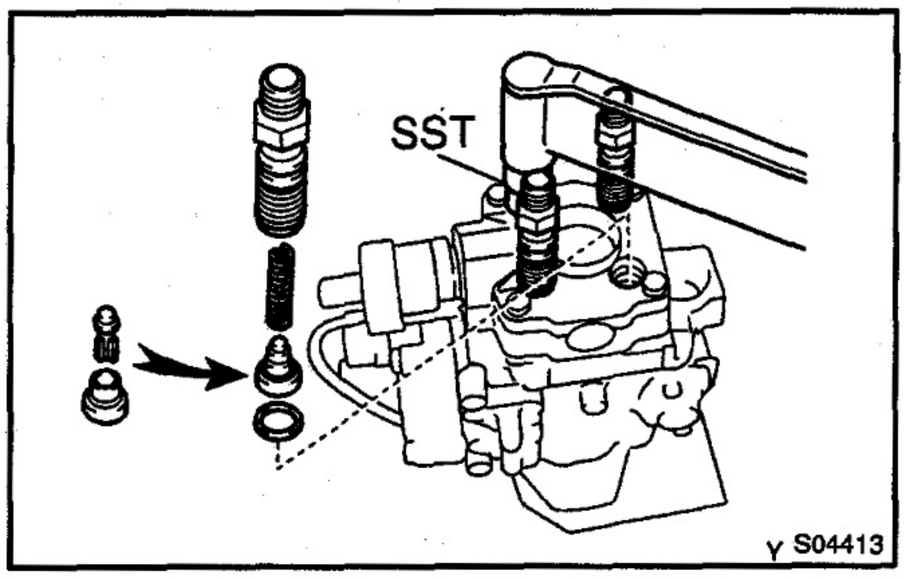

2. INSTALL DELIVERY VALVE HOLDERS

(a) Install new gaskets and the valves into the distributive head.

(b) Install the springs into the delivery valve holders.

(c) Using SST, install the delivery valve holders.
SST 09260–54012 (09269–54020)
Torque: 58.85 N·m (600 kgf·cm, 43 ft·lbf)

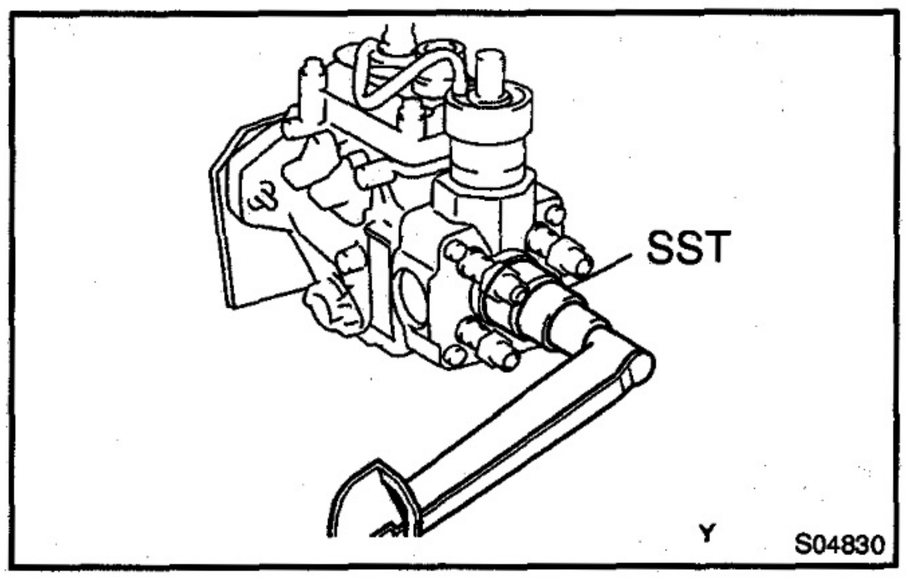

3. INSTALL DISTRIBUTIVE HEAD PLUG

(a) Install a new O–ring to the distributive head plug.

(b) Using SST, install the head plug.
SST 09260–54012 (09262–54010)
Torque: 88 N·m (900 kgf·cm, 65 ft·lbf)

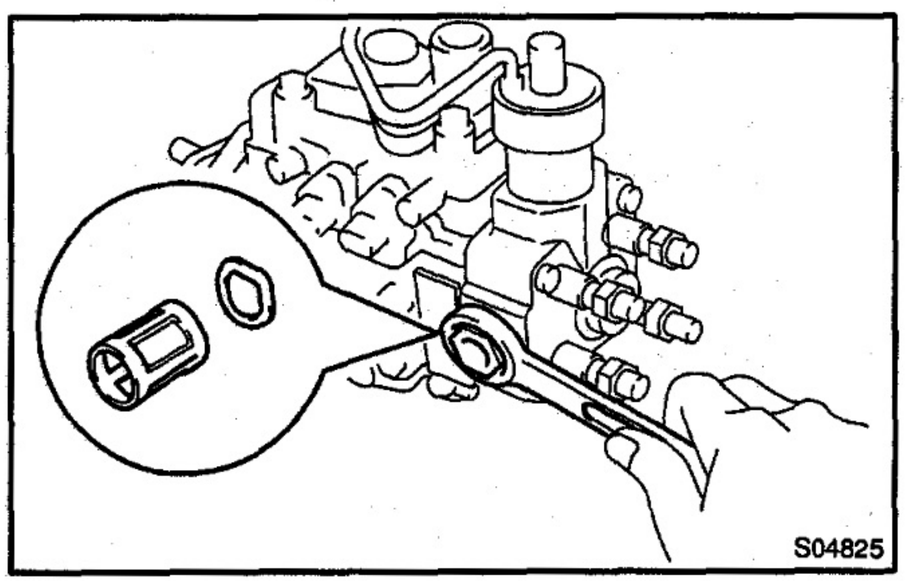

4. INSTALL DISTRIBUTIVE HEAD PLUG (NO.2) AND FUEL TEMPERATURE SENSOR

(a) Install a new O–ring to the distributive head plug.

(b) Install the wave washer, strainer and head plug.

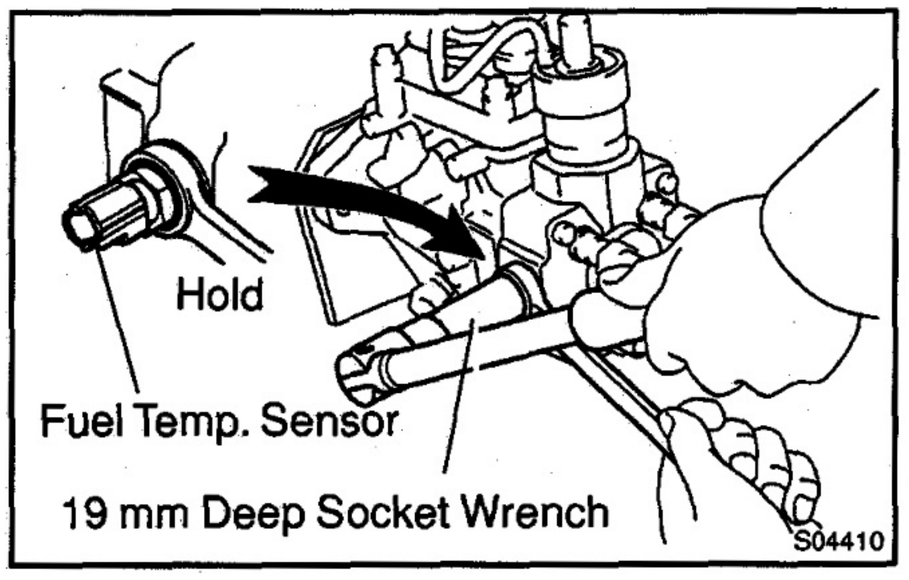

(c) Install a new O–ring to the fuel temperature sensor.

(d) Hold the distributive head plug, and using a 19 mm deep socket wrench, install the fuel temperature sensor.
Torque: 21.6 N·m (220 kgf·cm, 16 ft·lbf)

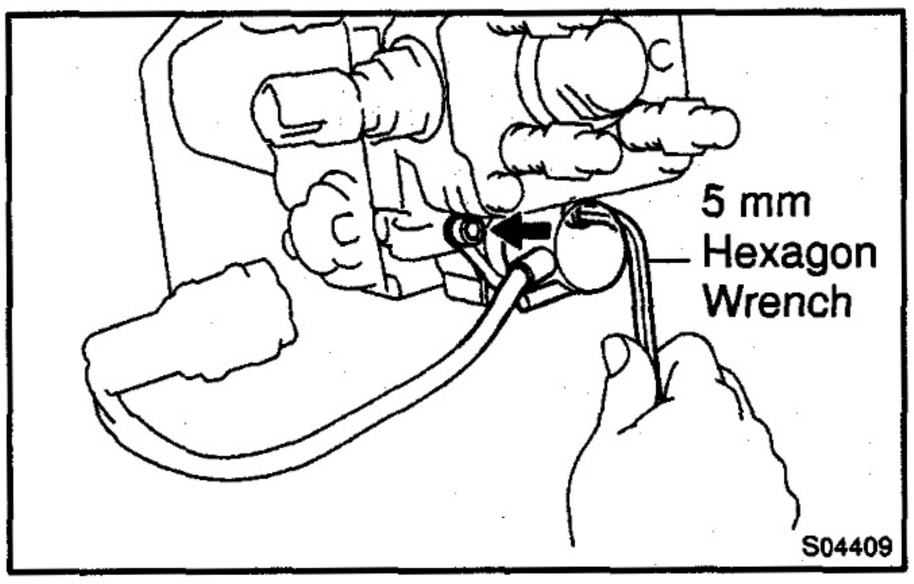

5. INSTALL TIMING CONTROL VALVE

Using a 5 mm hexagon wrench, install the timing control valve with the 2 bolts.

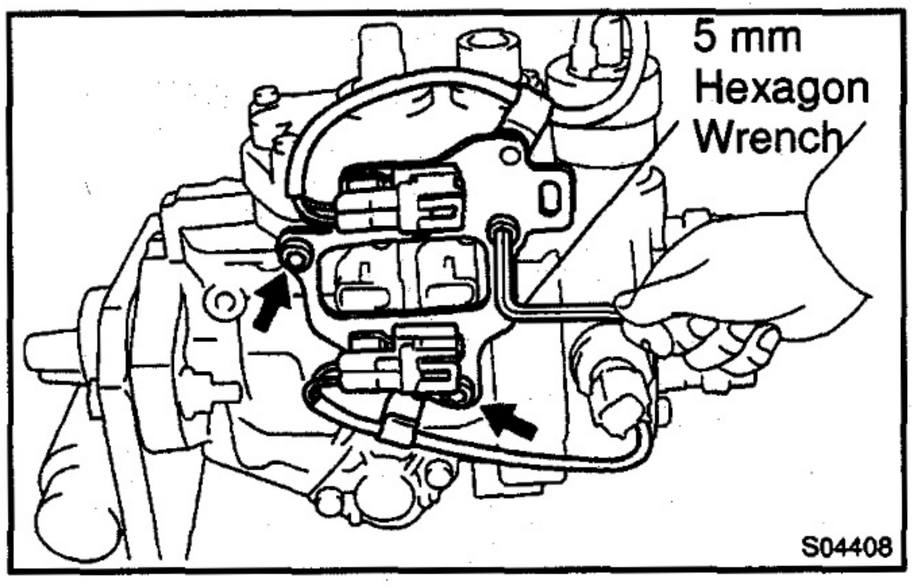

6. INSTALL SOLENOID CONNECTOR SUPPORT CLIP

(a) Using a 5 mm hexagon wrench, install the solenoid connector support clip with the 3 bolts.

(b) Connect the 2 lead wires and 2 connectors to clamps.

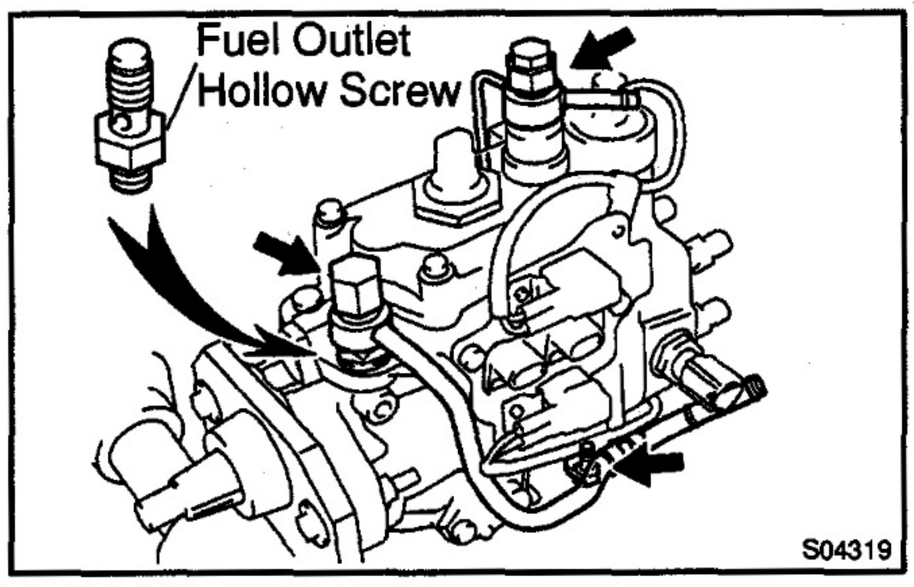

7. INSTALL FUEL INLET HOLLOW SCREWS FUEL PIPES

(a) Install a new gasket and the hollow screw.
Torque: 36.8 N·m (375 kgf·cm, 27 ft·lbf)

(b) Install fuel inlet pipe with 2 new gaskets, the cap nut and bolt.
Torque:
Cap nut: 23 N·m (230 kgf·cm, 17 ft·lbf)
Bolt: 24.5 N·m (250 kgf·cm, 18 ft·lbf)

(c) Install fuel outlet pipe with a new gasket and the overflow screw.
Torque: 22.1 N·m (225 kgf·cm, 16 ft·lbf)

8. REMOVE INJECTION PUMP FROM SST (STAND)

SST 09241–76022, 09245–54010

9. INSTALL SET KEY OF INJECTION PUMP DRIVE PULLEY ON DRIVE SHAFT

FU070–01

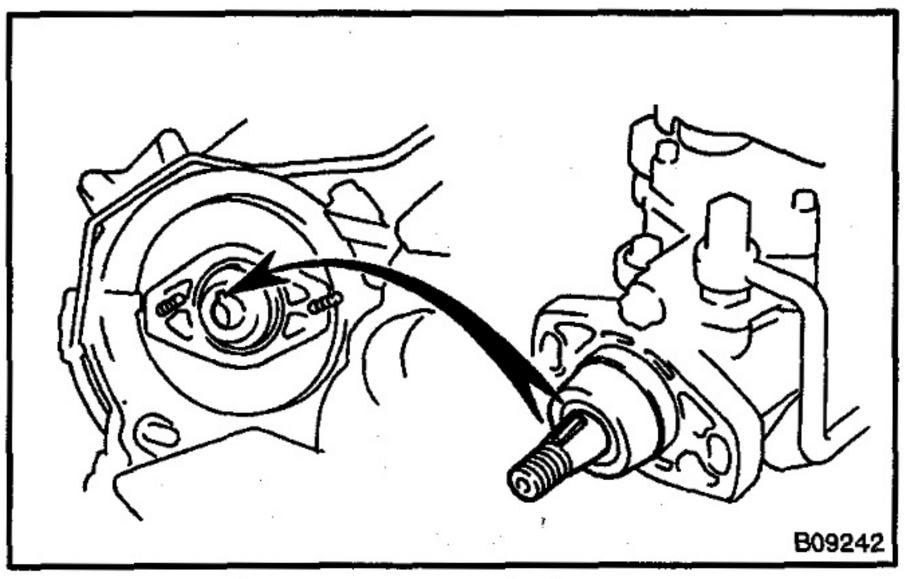

INSTALLATION

1. INSTALL INJECTION PUMP

(a) Install a new O–ring to the pump.
(b) Apply a light coat of engine oil on the O–ring.
(c) Align the set key on the drive shaft and groove of the injection pump drive gear.

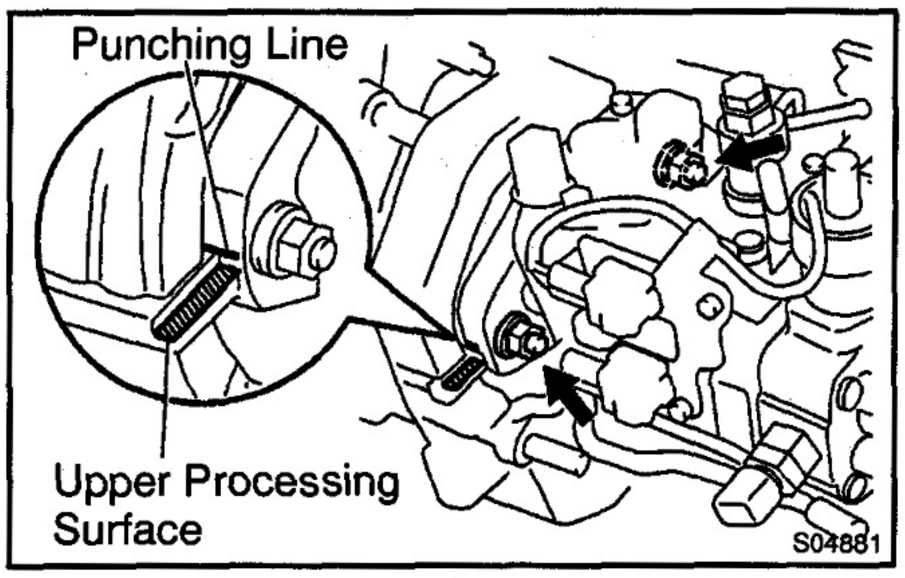

(d) Hold the injection pump with hands and press the injection pump drive gear to the backward and weld it with the injection pump drive shaft.
(e) Align the punching line of the injection pump flange and the upper processing surface of the timing gear case, and then temporarily install the 2 nuts.
(f) Tighten the 2 nuts holding the injection pump to the timing gear case.
Torque: 21 N·m (210 kgf·cm, 15 ft·lbf)

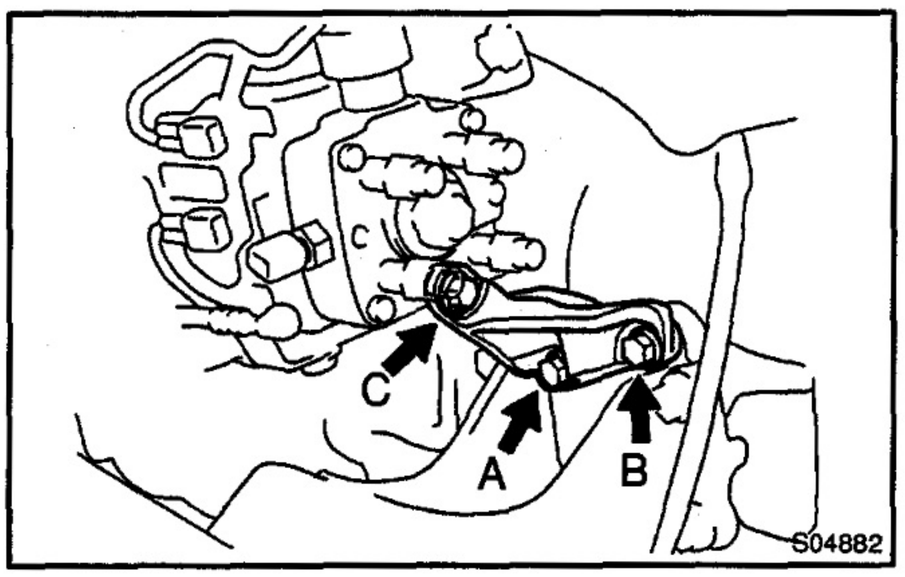

(g) Temporarily install the injection pump stay with the 2 bolts (A, B).
(h) Install the injection pump set C bolt.
Torque: 32 N·m (330 kgf·cm, 24 ft·lbf)
(i) Torque the A and B bolts.
Torque: 21 N·m (210 kgf·cm, 15 ft·lbf)

NOTICE:

Before tightening to the standard torque, check whether the pump stay is up against the injection pump.

(j) Install the cylinder block insulator.
(k) Install a new O–ring to the injection pump drive gear.
(l) Install the injection pump drive gear set nut.
(m) Hold the crankshaft pulley, and torque the set nut.
Torque: 64 N·m (650 kgf·cm, 47 ft·lbf)

NOTICE:

Do not turn the crankshaft pulley. The valve heads will hit against the piston top.

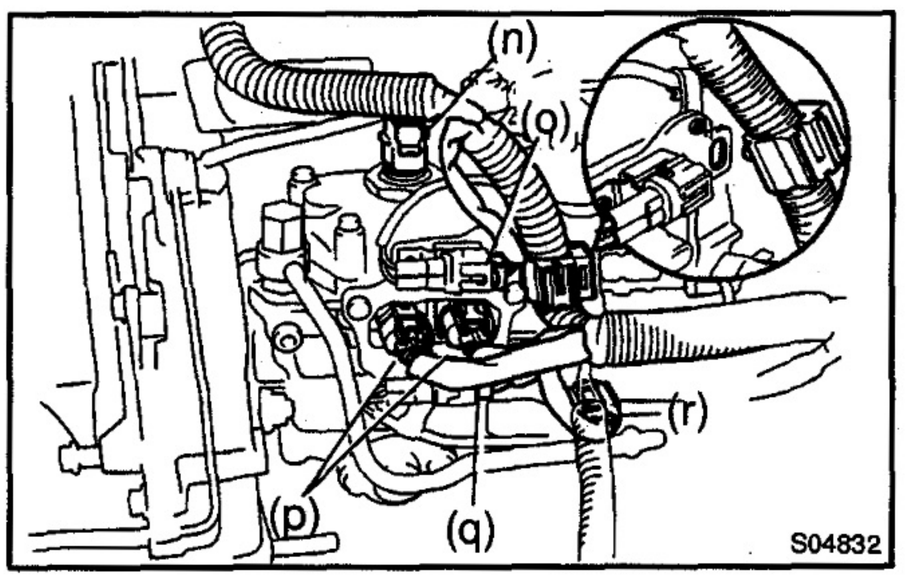

(n) Connect the engine speed sensor connector.
(o) Connect the spill control valve connector.
(p) Connect the 2 correction resistor connectors.
(q) Connect the timing control valve connector.
(r) Connect the fuel temperature sensor connector.
(s) Connect the engine wire clamp and fuel hose.

2. INSTALL NO.2 CAMSHAFT TIMING PULLEY (See page EM–18)

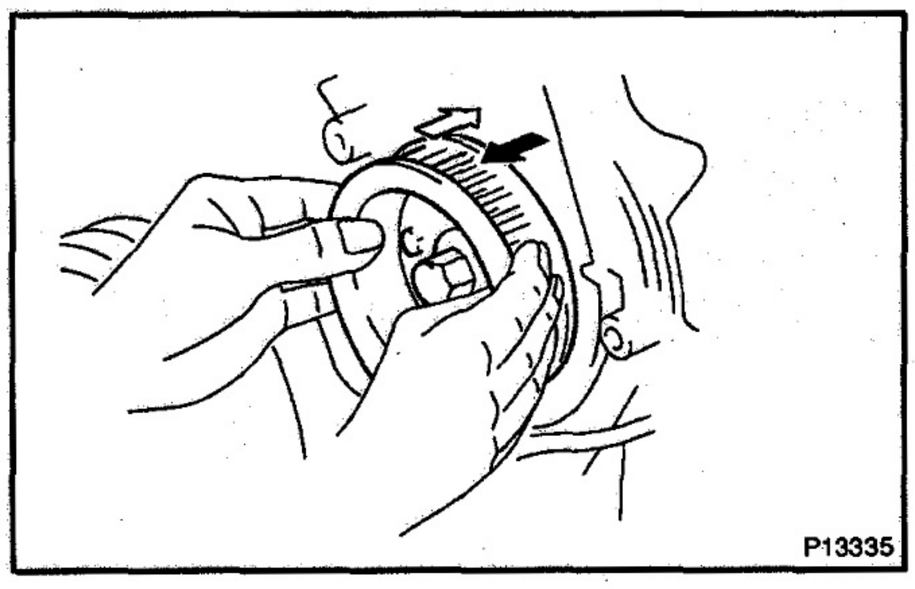

3. CHECK INJECTION PUMP DRIVE SHAFT THRUST CLEARANCE

Move the No.2 camshaft timing pulley back and forth to check that the injection pump drive shaft has sufficient thrust clearance.

Thrust clearance (Reference):
0.15 – 0.55 mm (0.0059 – 0.0217 in.)

If the thrust clearance is not sufficient, loosen the 2 injection pump nuts and the 3 pump stay bolts, than retighten them.
If the thrust clearance is still not sufficient, remove the timing gear cover and then reinstall it.

4. INSTALL TIMING BELT (See page EM–18)
5. INSTALL INJECTION PIPES (See page FU–13)
6. INSTALL INTAKE PIPE (See page EM–64)

COOLING

COOLANT CO–1
WATER PUMP CO–3
THERMOSTAT CO–10
RADIATOR CO–14

COOLANT

INSPECTION

CO0NG-02

HINT:

Check the coolant level when the engine is cold.

1. CHECK ENGINE COOLANT LEVEL AT RADIATOR RESERVOIR

The engine coolant level should be between the "L" and "F" lines.

If low, check for leaks and add "Toyota Long Life Coolant" or equivalent up to between the "L" and "F" lines.

2. CHECK ENGINE COOLANT QUALITY

(a) Remove the radiator cap.

CAUTION:

To avoid the danger of being burned, do not remove the radiator cap while the engine and radiator are still hot, as fluid and steam can be blown out under pressure.

(b) There should not be excessive deposits of rust or scale around the radiator cap or water filler hole, and the coolant should be free from oil.

If excessively dirty, clean the coolant passages and replace the coolant.

(c) Reinstall the radiator cap.

CO0NH–02

REPLACEMENT

CAUTION:

To avoid the danger of being burned, do not remove the radiator cap while the engine and radiator are still hot, as fluid and steam can be blown out under pressure.

1. DRAIN ENGINE COOLANT

(a) Remove the radiator cap.

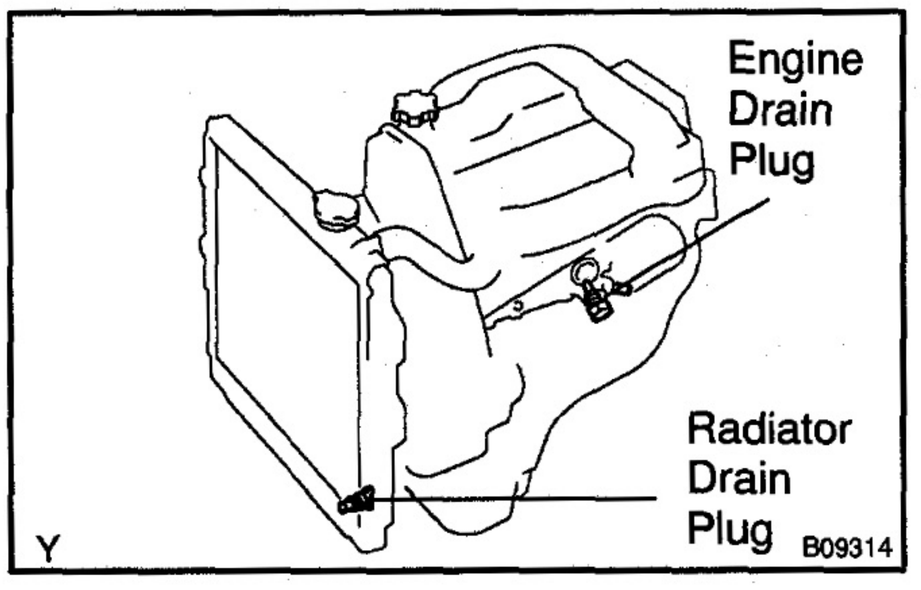

(b) Loosen the radiator drain plug (on the right side of the radiator lower tank) and engine drain plug (on the oil cooler cover), and drain the coolant.

(c) Close the drain plugs.

Torque: 8 N·m (80 kgf·cm, 69 in.·lbf) for Engine

2. FILL ENGINE COOLANT

(a) Slowly fill the system with coolant.

- Use of improper coolants may damage engine cooling system.
- Use "Toyota Long Life Coolant" or equivalent and mix it with plan water according to the manufacturer's directions.
- Using of coolant which includes more than 50 % [freezing protection down to –35°C (–31°F)] or 60 % [freezing protection down to –50°C (–58°F)] of ethylene–glycol is recommended but not more than 70 %.

NOTICE:

- **Do not use an alcohol type coolant or plain water alone.**
- **The coolant should be mixed with plain water (preferably demineralized water or distilled water).**

Capacity:

9.5 liters (10.0 US qts, 8.4 Imp. qts)

(b) Reinstall the radiator cap.

(c) Start the engine, and bleed the cooling system.

(d) Refill the radiator reservoir with coolant until it reaches the "F" line.

3. CHECK ENGINE COOLANT FOR LEAKS

4. CHECK ENGINE COOLANT SPECIFIC GRAVITY CORRECTLY

CO

WATER PUMP

COMPONENTS

CO0WL–02

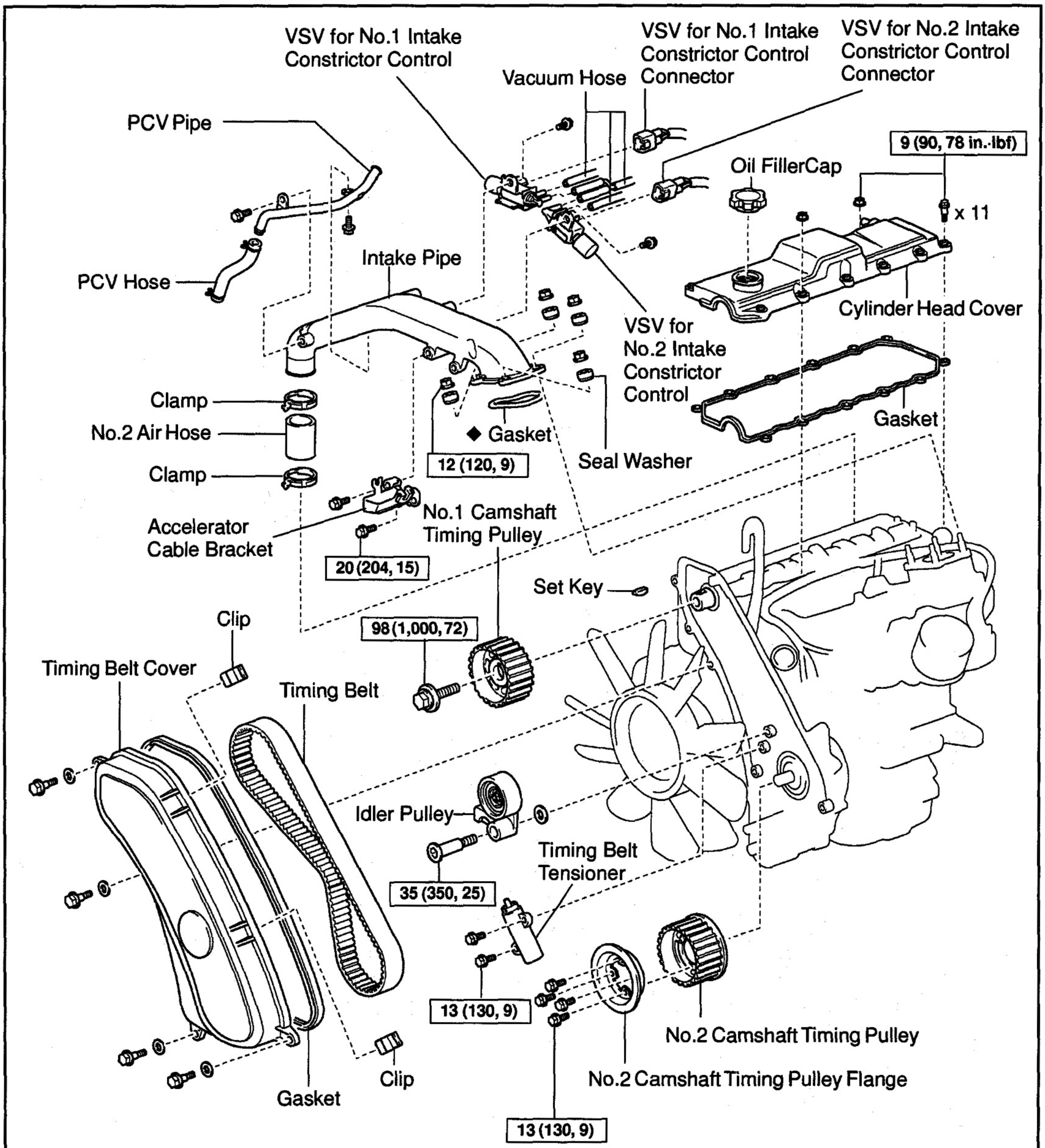

N·m (kgf·cm, ft·lbf) : Specified torque

◆ Non–reusable part

A10775

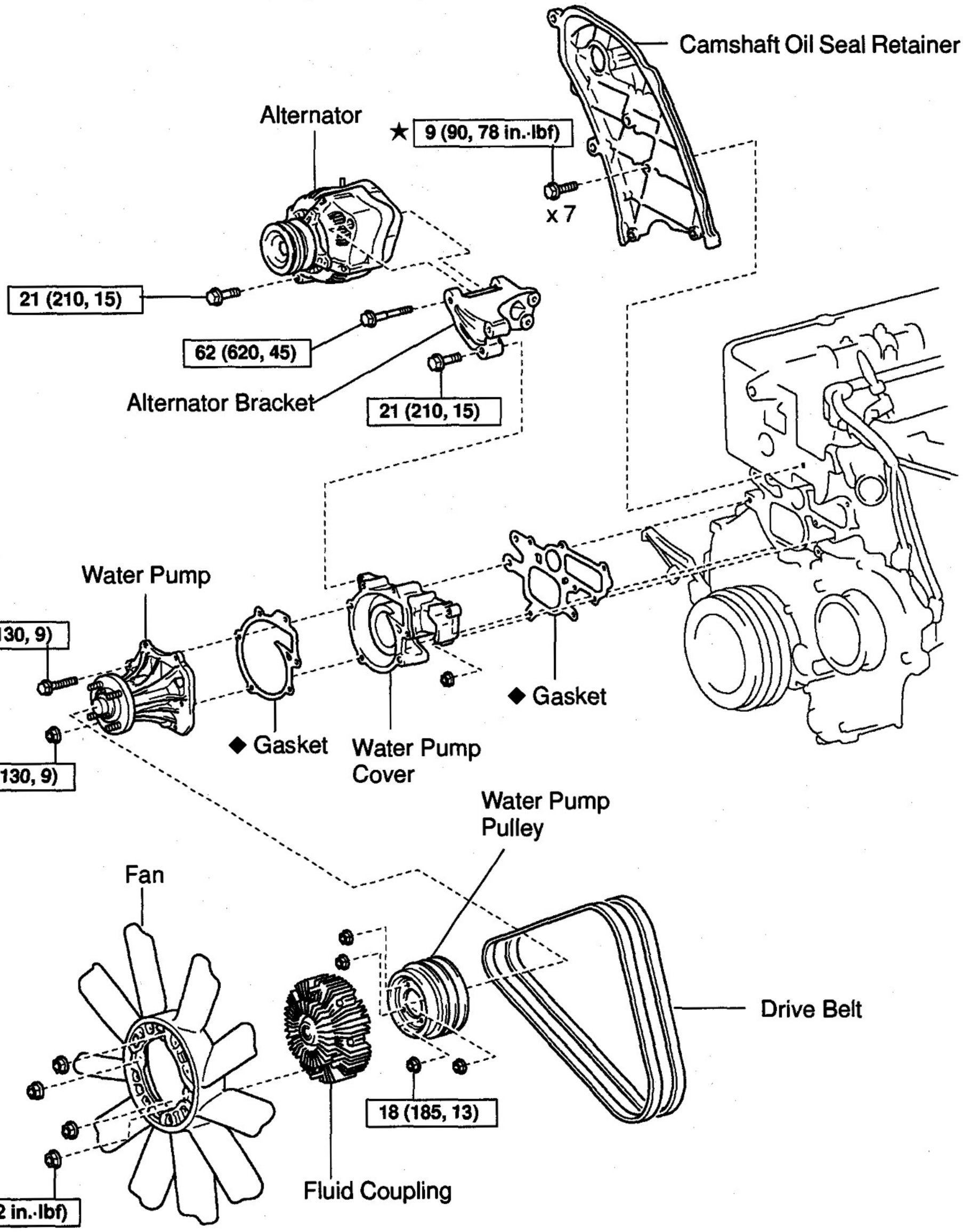

N·m (kgf·cm, ft·lbf) : Specified torque
◆ Non–reusable part
★ Precoated part

B09006

CO0WM-01

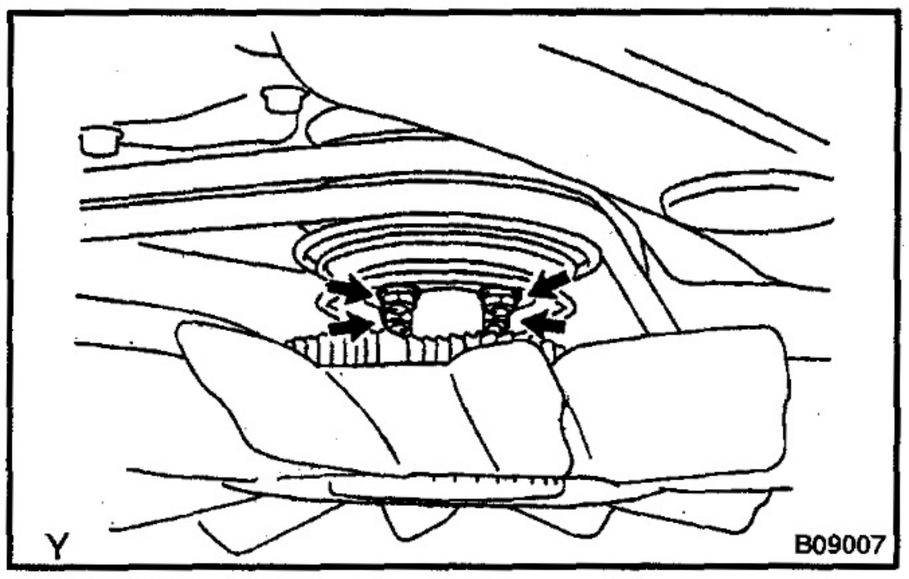

REMOVAL

1. **DRAIN ENGINE COOLANT**
2. **REMOVE DRIVE BELTAS, FAN AND WATER PUMP PULLEY**

(a) Stretch the belt tight and loosen the 4 pump pulley set nuts.
(b) Loosen the pivot bolt and adjusting lock bolt.
(c) Loosen the adjusting bolt, and remove the drive belt.
(d) Remove the 4 nuts, fan and fluid coupling assembly and pulley.

3. **REMOVE TIMING BELT AND IDLER PULLEY** **(See page EM–13)**
4. **REMOVE NO.1 CAMSHAFT TIMING PULLEY** **(See page EM–13)**
5. **REMOVE CAMSHAFT OIL SEAL RETAINER** **(See page EM–24)**

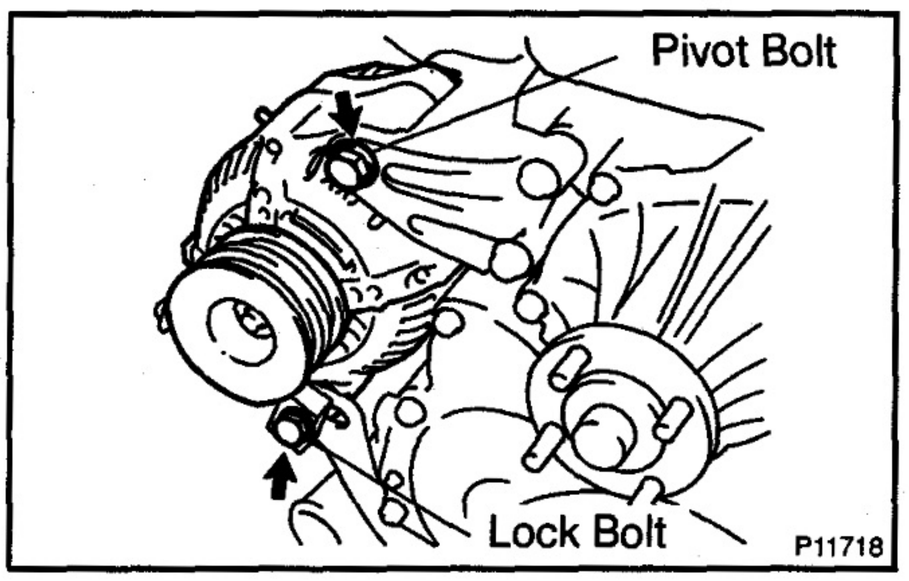

6. **REMOVE WATER PUMP**

(a) Remove the lock bolt, pivot bolt and alternator.

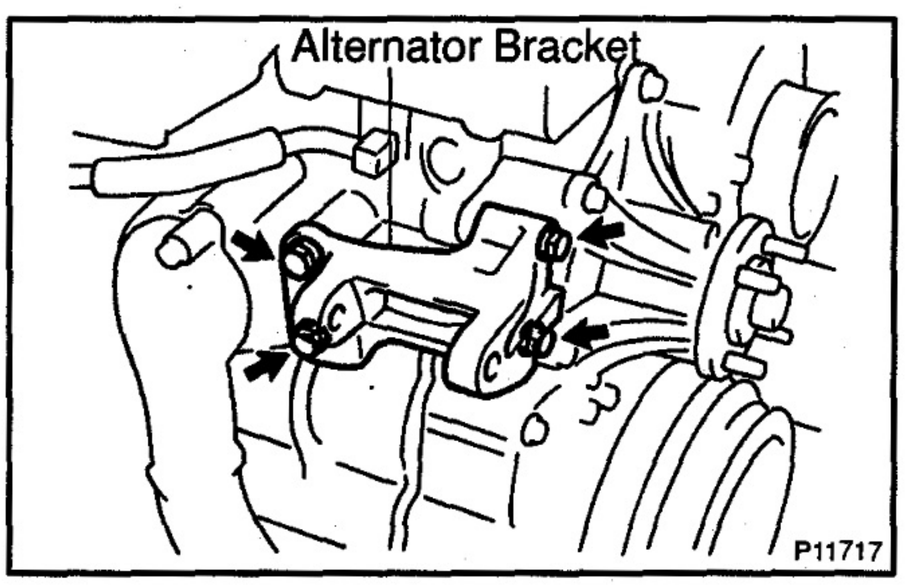

(b) Remove the 4 bolts and alternator bracket.

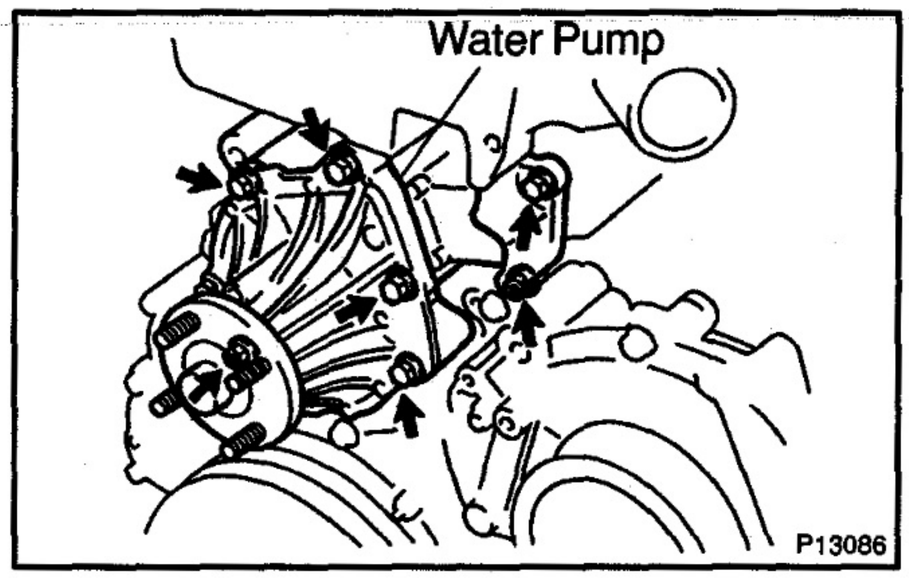

(c) Remove the 5 bolts, 2 nuts, water pump and gasket.

CO

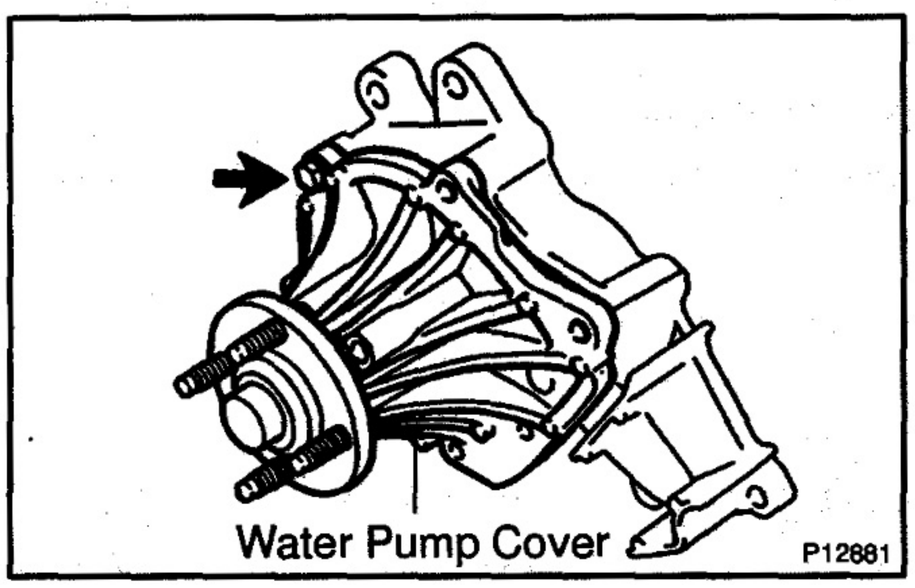

(d) Remove the bolt, water pump cover and gasket.

COOWN-01

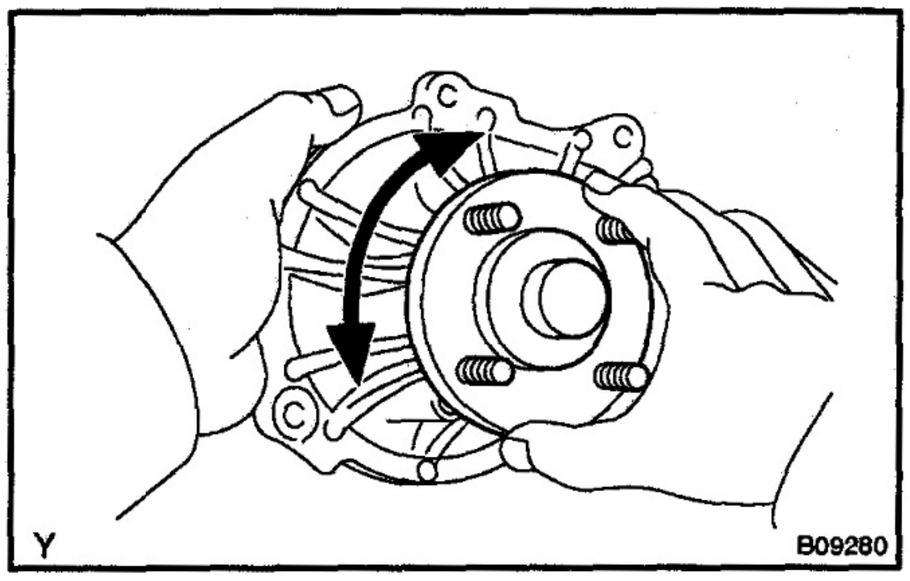

INSPECTION

1. INSPECT WATER PUMP

Turn the pulley and check that the water pump bearing moves smoothly and quietly.
If necessary, replace the water pump.

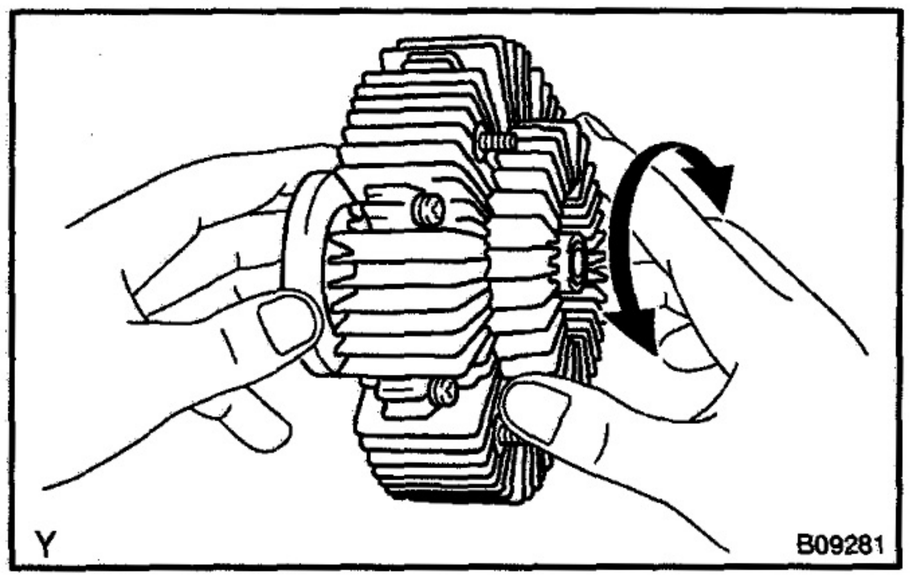

2. INSPECT FLUID COUPLING

Check the fluid coupling for damage and silicon oil leakage.
If necessary, replace the fluid coupling.

CO0WO-01

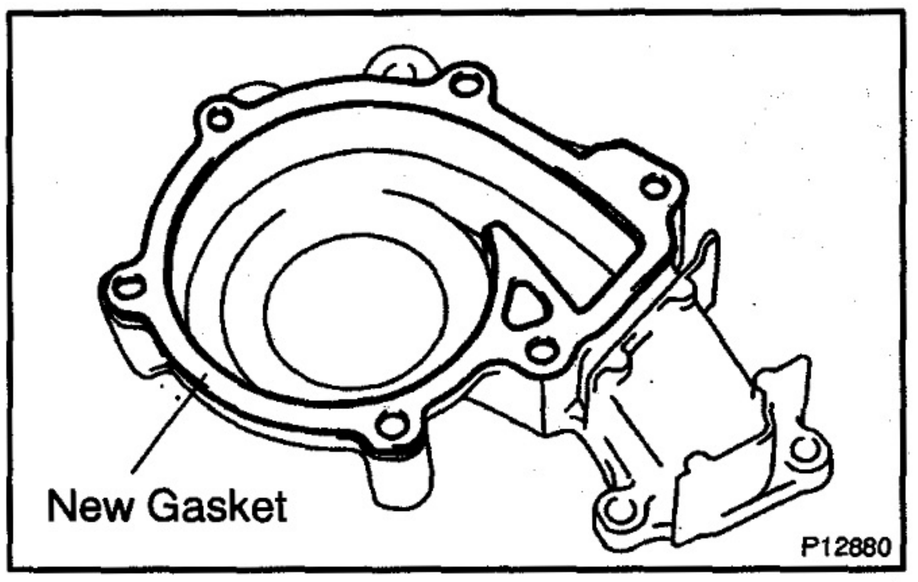

INSTALLATION

1. INSTALL WATER PUMP ASSEMBLY

(a) Install a new gasket to the water pump cover.

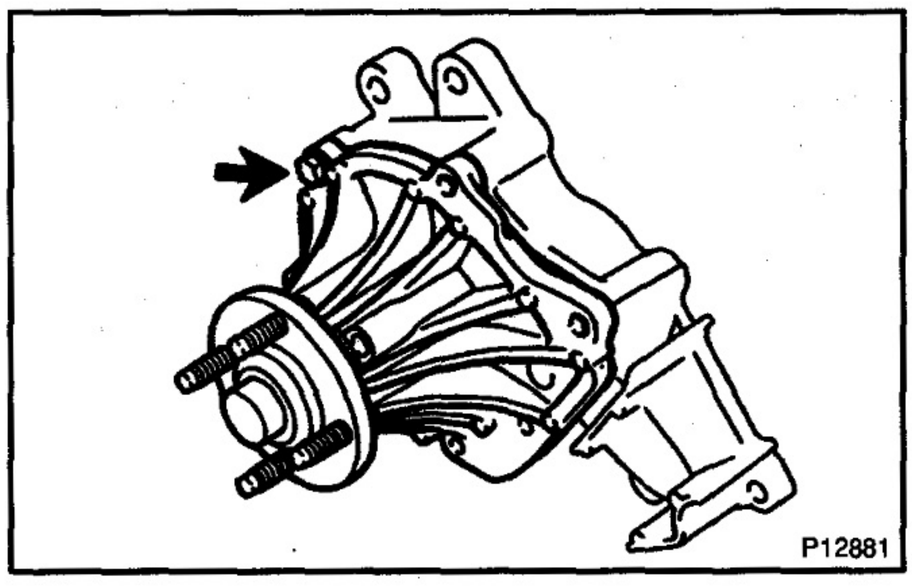

(b) Temporarily install the water pump and water pump cover with the bolt.

CO

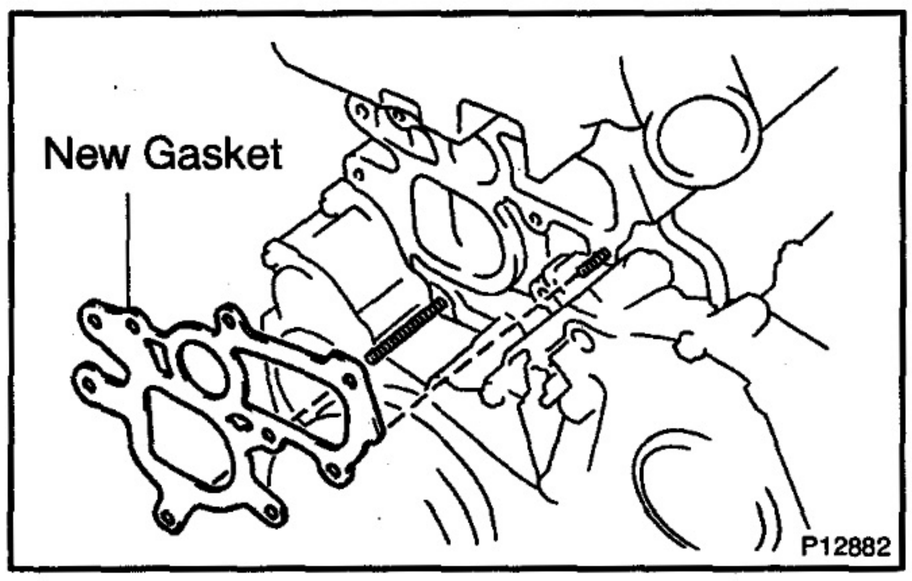

(c) Place a new gasket in position on the cylinder head.

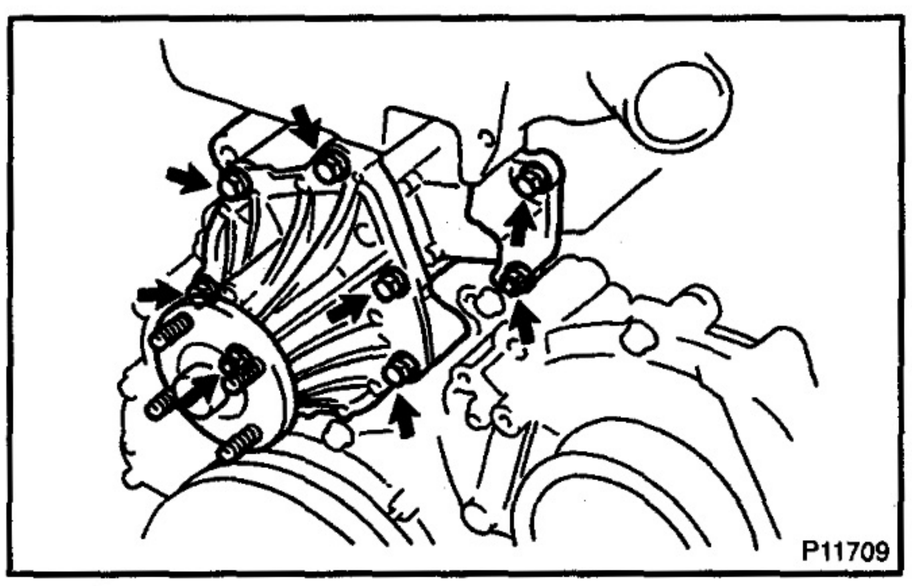

(d) Temporarily install the water pump with the 5 bolts and 2 nuts.

(e) Tighten the bolts and nuts.

Torque: 13 N·m (130 kgf·cm, 9 ft·lbf)

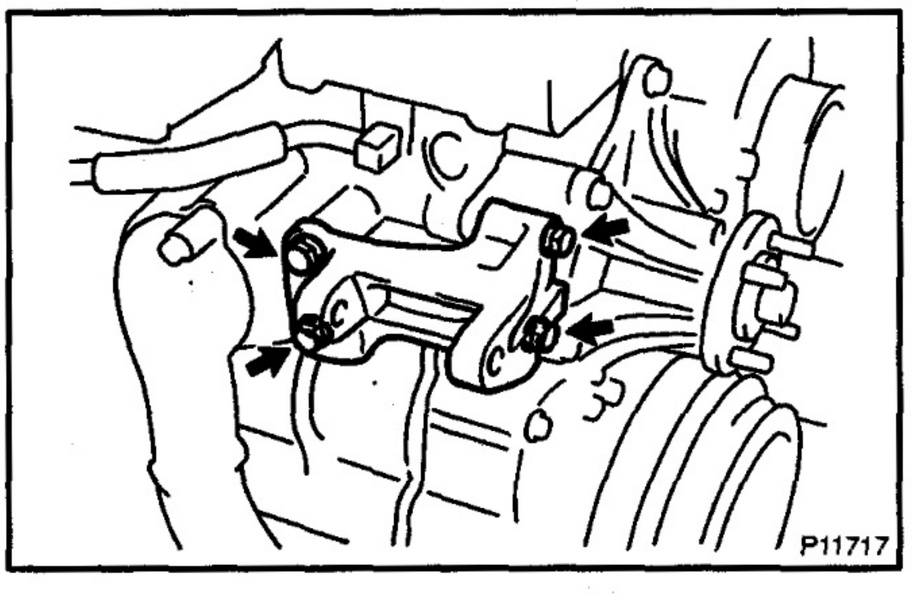

(f) Install the alternator bracket with the 4 bolts.

Torque: 21 N·m (210 kgf·cm, 15 ft·lbf)

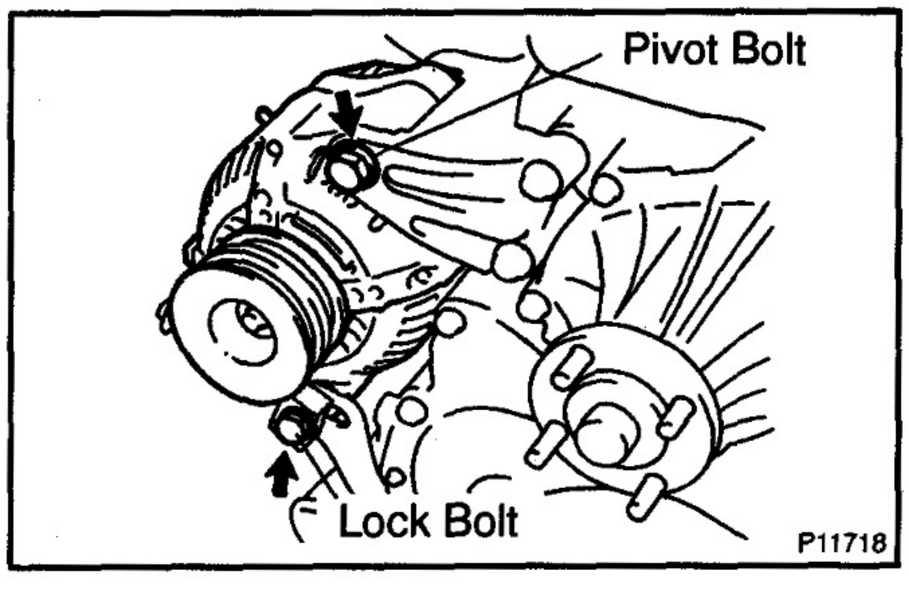

(g) Install the alternator with the pivot bolt and lock bolt.
Torque:
21 N·m (210 kgf·cm, 15 ft·lbf) for Lock bolt
62 N·m (620 kgf·cm, 45 ft·lbf) for Pivot bolt

2. INSTALL CAMSHAFT OIL SEAL RETAINER
(See page EM–34)

3. INSTALL NO.1 CAMSHAFT TIMING PULLEY
(See page EM–18)

4. INSTALL IDLER PULLEY AND TIMING BELT
(See page EM–18)

5. INSTALL WATER PUMP PULLEY, FAN AND DRIVE BELT

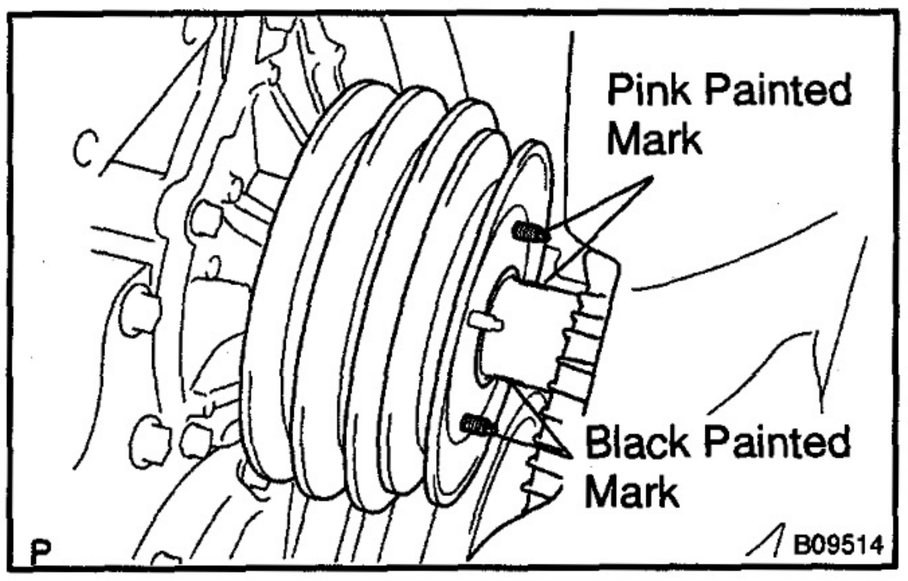

(a) Install the pump pulley, the fluid, fan and coupling assembly with the 4 nuts.

HINT:
When intalling the fluid coupling on the water pump, must intall it by making the marking color of the bolt of the water pump and the marking color of the fulid coupling meet.

(b) Place the drive belt on each pulley.

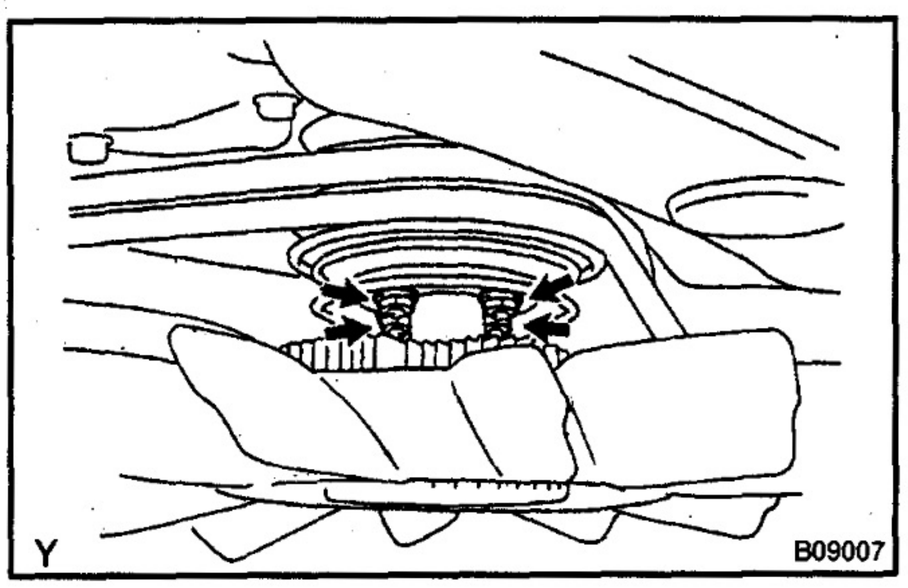

(c) Stretch the belt tight and torque the 4 nuts.
Torque: 18 N·m (185 kgf·cm, 13 ft·lbf)

(d) Adjust the drive belt deflection. (See page CH–2)

6. FILL WITH ENGINE COOLANT

7. START ENGINE AND CHECK FOR COOLANT LEAKS

THERMOSTAT

COMPONENTS

CO0NI–02

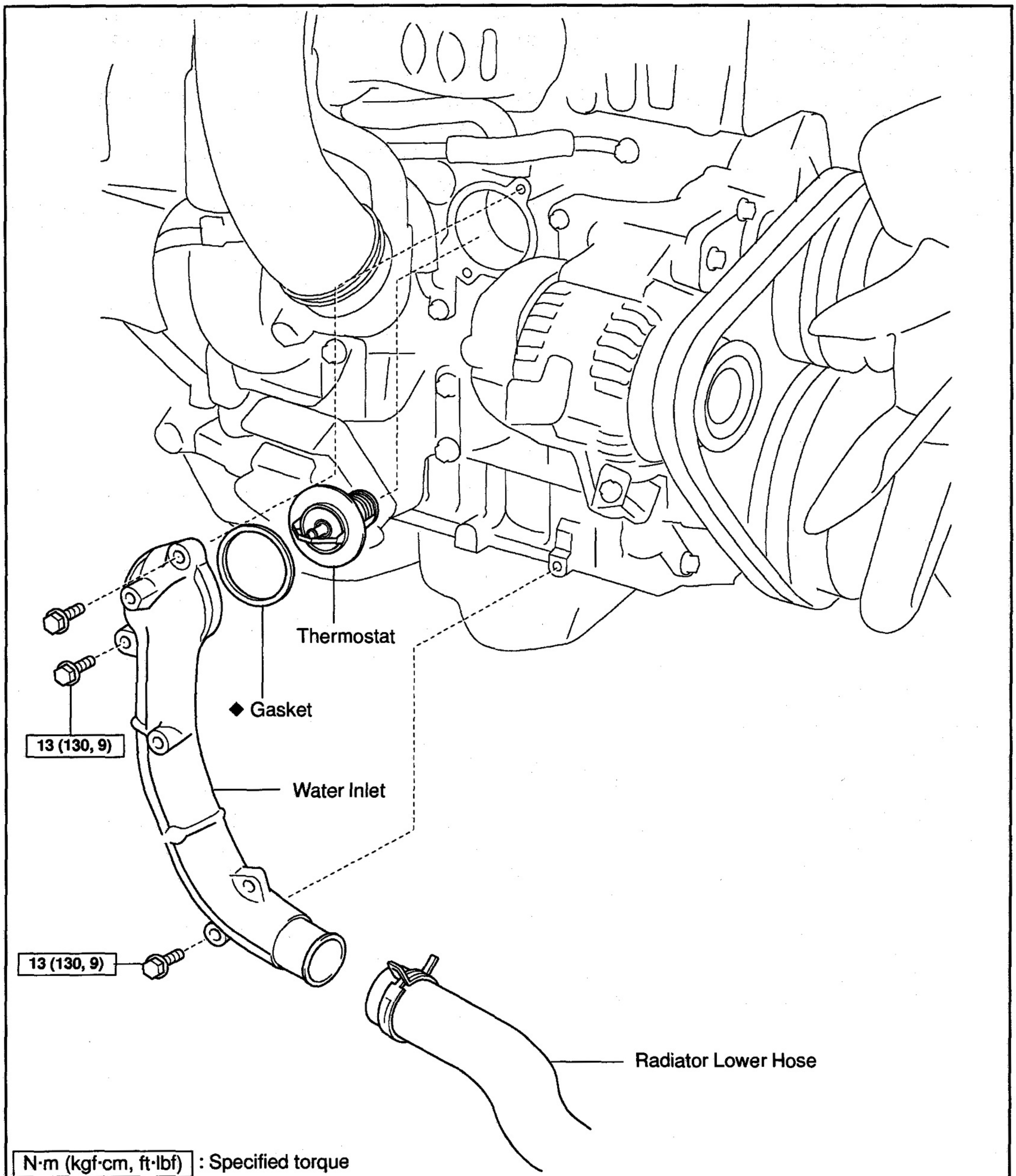

N·m (kgf·cm, ft·lbf) : Specified torque

◆ Non–reusable part

Y

B09315

CO0WP–01

REMOVAL

HINT:

Removal of the thermostat would have an adverse effect, causing a lowering of cooling efficiency. Do not remove the thermostat, even if the engine tends to overheat.

1. DRAIN ENGINE COOLANT

2. DISCONNECT RADIATOR LOWER HOSE

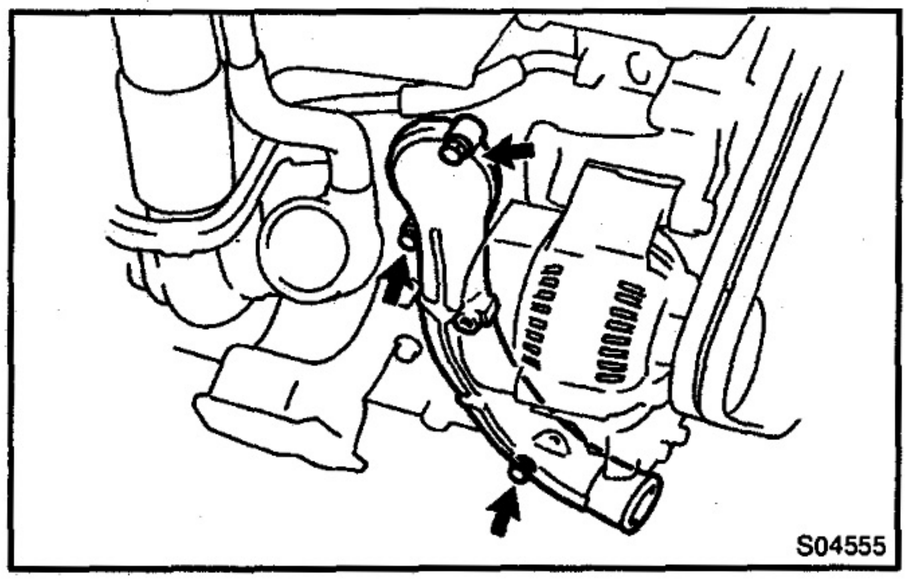

3. REMOVE WATER INLET AND THERMOSTAT

(a) Remove the 3 bolts and water inlet from the cylinder block.

(b) Remove the thermostat.

(c) Remove the gasket from the thermostat.

CO0NK–02

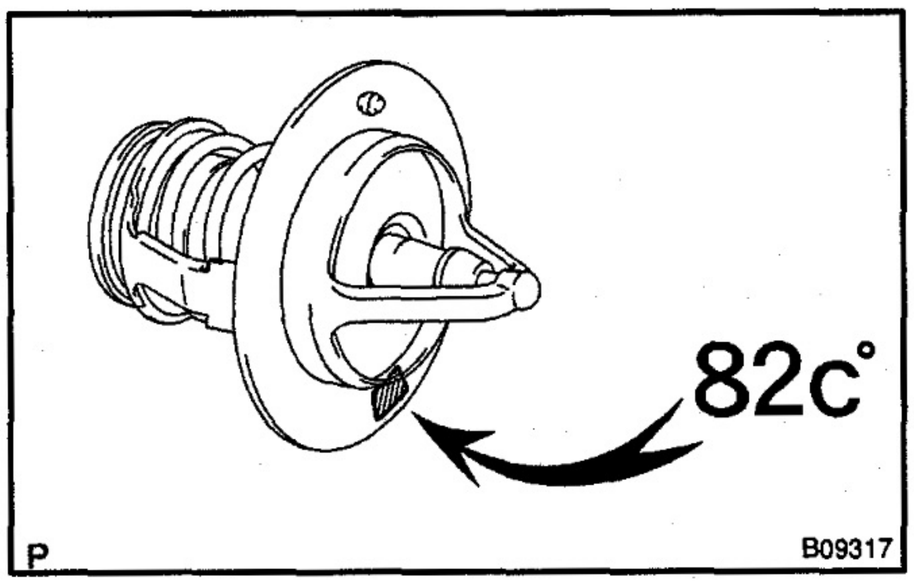

INSPECTION

INSPECT THERMOSTAT

HINT:

The thermostat is numbered with the valve opening temperature.

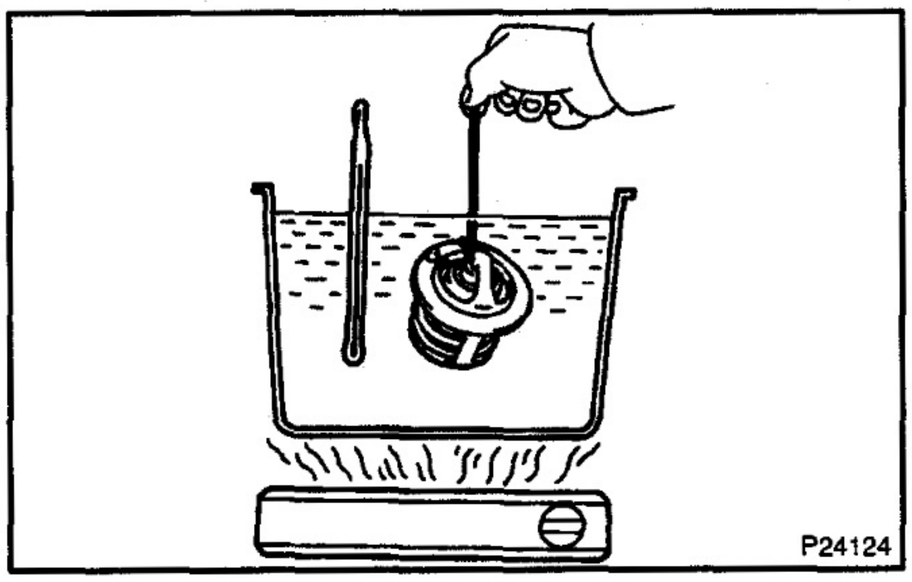

(a) Immerse the thermostat in water and gradually heat the water.

(b) Check the valve opening temperature.

Valve opening temperature: 80 – 84°C (176 – 183°F)

If the valve opening temperature is not as specified, replace the thermostat.

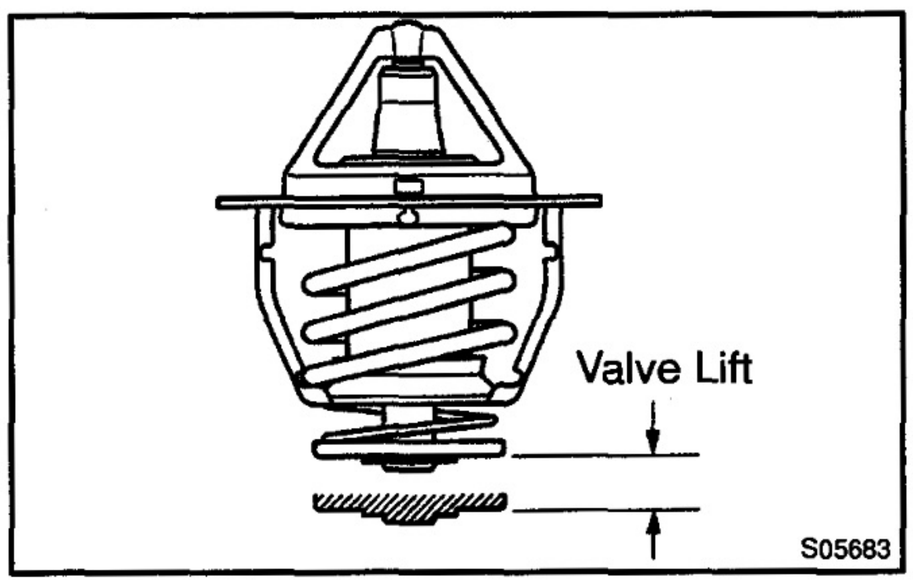

(c) Check the valve lift.

Valve lift: 10 mm (0.39 in.) or more at 95 °C (203°F)

If the valve lift is not as specified, replace the thermostat.

(d) Check that the valve is fully closed when the thermostat is at low temperatures (below 40°C (104°F)).

If not closed, replace the thermostat.

CO0NL–02

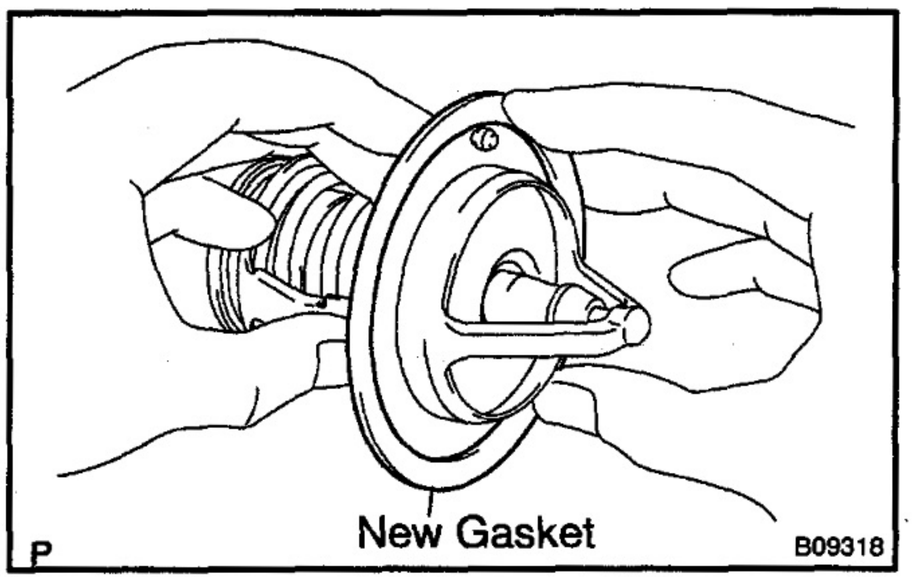

INSTALLATION

1. PLACE THERMOSTAT IN CYLINDER BLOCK

(a) Install a new gasket to the thermostat.

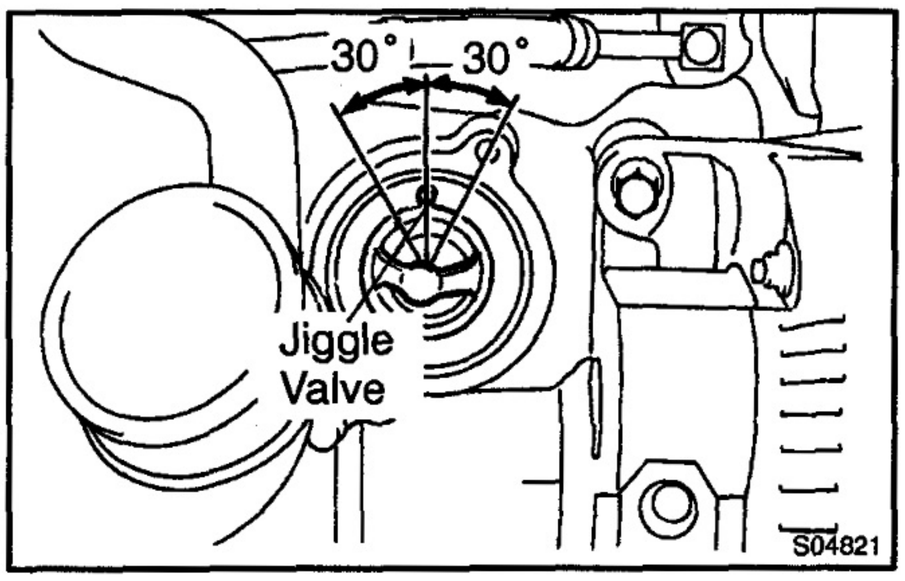

(b) Install the thermostat with the jiggle valve upward.

HINT:

The jiggle valve may be set within 30° of either side of the prescribed position.

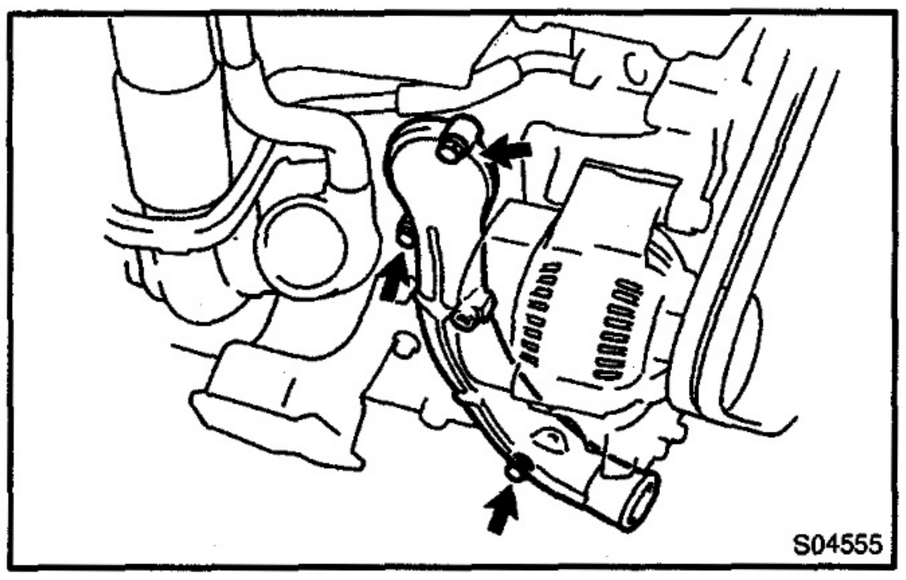

2. INSTALL WATER INLET TO CYLINDER BLOCK

Install the water inlet with the 3 bolts.

Torque: 13 N·m (130 kgf·cm, 9 ft·lbf)

NOTICE:

Torque the 2 upper bolts first.

3. FILL WITH ENGINE COOLANT

4. START ENGINE AND CHECK FOR COOLANT LEAKS

RADIATOR

ON–VEHICLE CLEANING

CO0WQ–01

Using water or a steam cleaner, remove any mud and dirt from the radiator core.

NOTICE:

If using a high pressure type cleaner, be careful not to deform the fins of the radiator core. (i.e. Maintain a distance between the cleaner nozzle and radiator core.)

CO0WR-01

ON–VEHICLE INSPECTION

1. REMOVE RADIATOR CAP

CAUTION:

To avoid the danger of being burned, do not remove the radiator cap while the engine and radiator are still hot, as fluid and steam can be blown out under pressure.

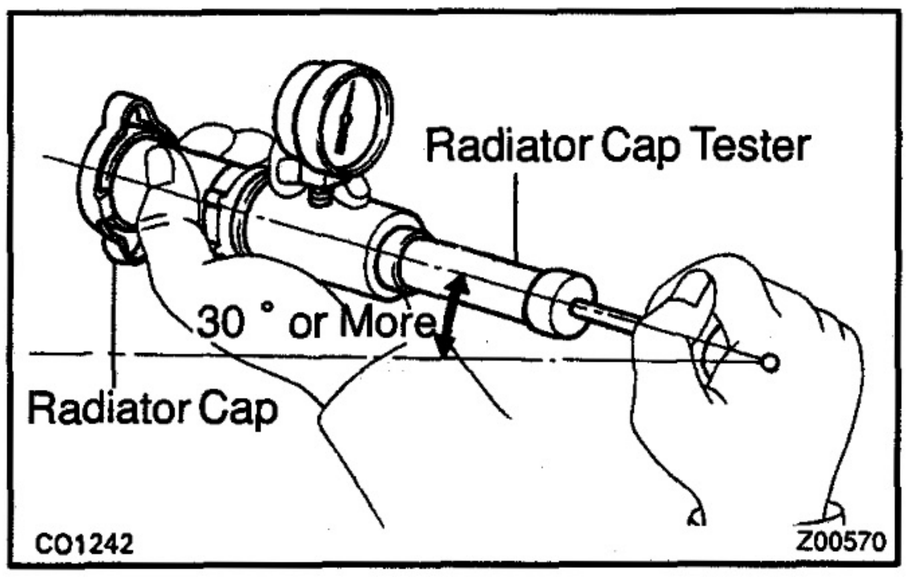

2. INSPECT RADIATOR CAP

NOTICE:

- **If the radiator cap has contaminations, always rinse it with water.**
- **Before using a radiator cap tester, wet the relief valve and pressure valve with engine coolant or water.**
- **When performing steps (a) and (b) below, keep the tester at an angle of over 30° above the horizontal.**

(a) Using a radiator cap tester, slowly pump the tester and check that air is coming form the vacuum valve.

Pump speed: 1 push / (3 seconds or more)

NOTICE:

Push the pump at a constant speed.

If air is not coming from the vacuum valve, replace the radiator cap.

(b) Pump the tester and measure the relief valve opening pressure.

Pump speed: 1 push within 1 second

NOTICE:

This pump speed is for the first pump only (in order to close the vacuum valve). After this, the pump speed can be reduced.

Standard opening pressure:
93 – 125 kPa (0.95 – 1.25 kgf/cm^2, 10.7 – 14. 9psi)
Minimum opening pressure:
59 kPa (0.6 kgf/cm^2, 8.5 psi)

HINT:

Use the tester's maximum reading as the opening pressure.

If the opening pressure is less than minimum, replace the radiator cap.

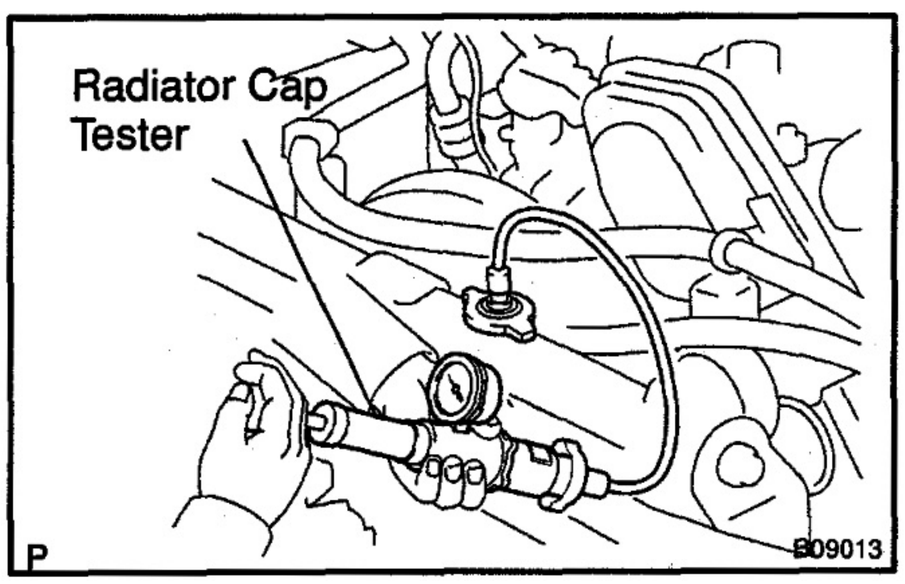

3. INSPECT COOLING SYSTEM FOR LEAKS

(a) Fill the radiator with coolant, and attach a radiator cap tester.

(b) Warm up the engine.

(c) Pump it to 118 kPa (1.2 kgf/cm^2, 17.1 psi), and check that the pressure does not drop.

If the pressure drops, check the hoses, radiator or water pump for leaks. If no external leaks is found, check the heater core, cylinder block and head.

4. REINSTALL RADIATOR CAP

CO0NM–02

COMPONENTS

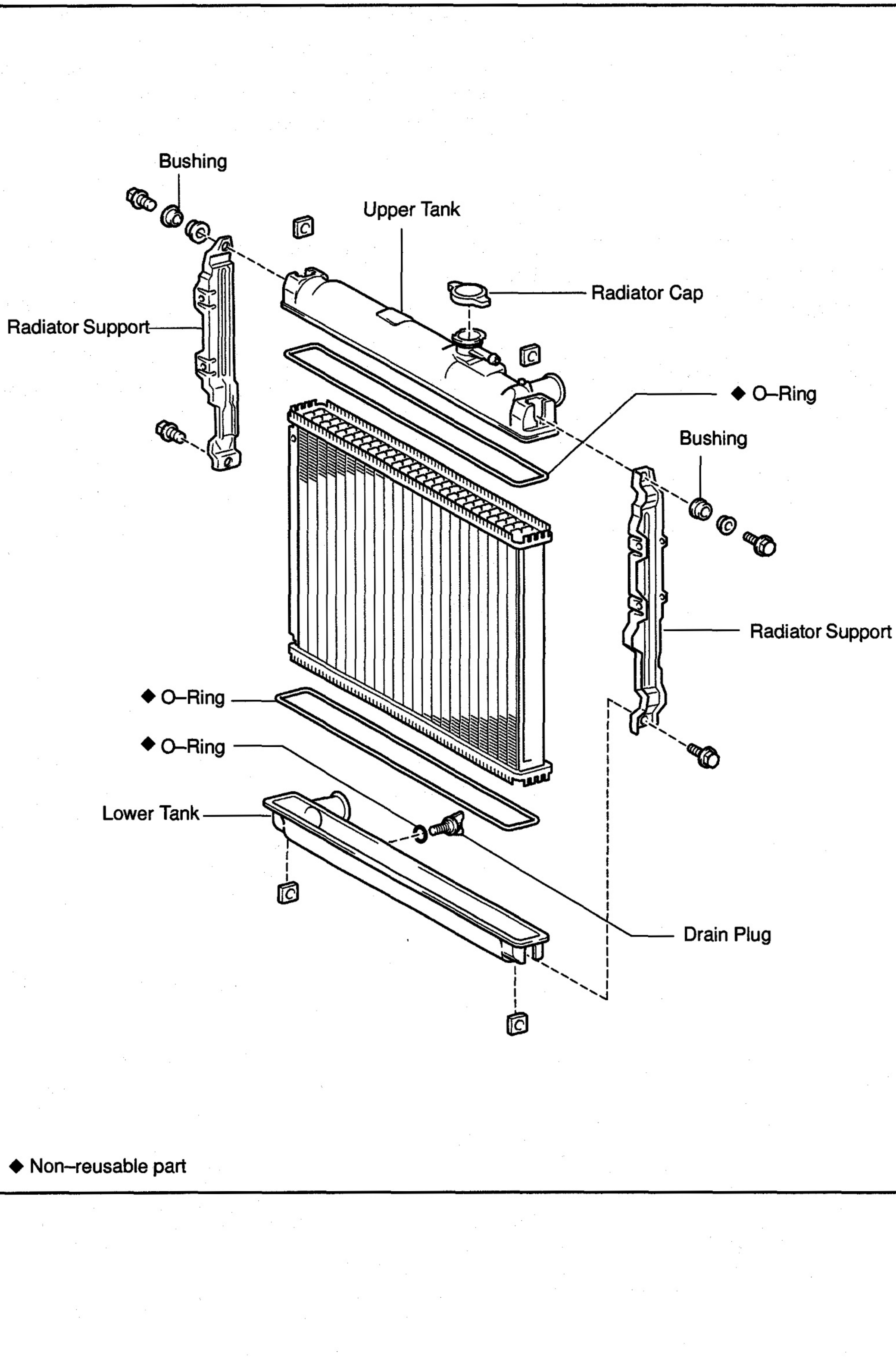

P

B09313

CO0NN–02

DISASSEMBLY

1. REMOVE RADIATOR SUPPORTS

Remove the 2 bolts, nuts, pipe, bushing and radiator support.
Remove the LH and RH supports.

2. REMOVE RADIATOR CAP

3. REMOVE DRAIN PLUG

(a) Remove the drain plug.
(b) Remove the O–ring.

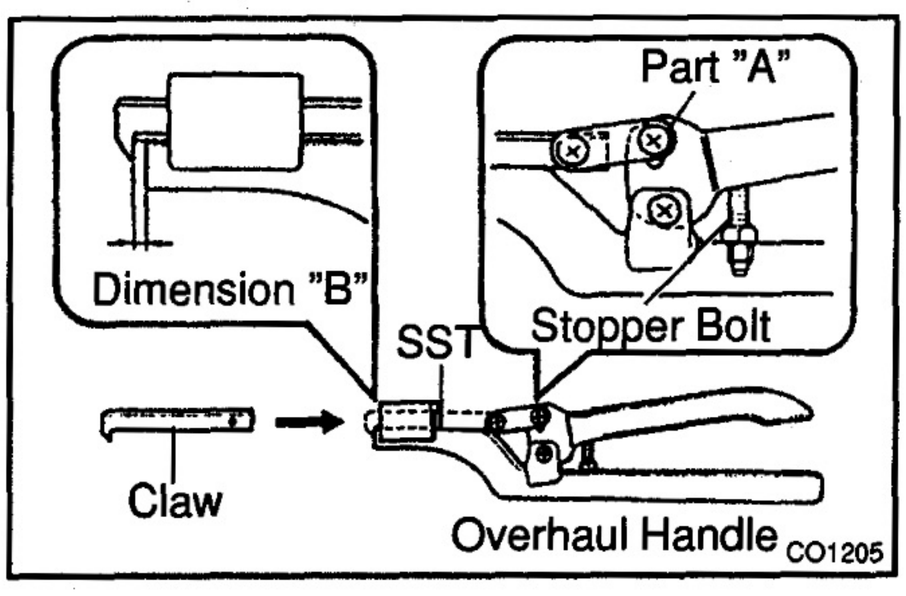

4. ASSEMBLE SST

SST 09230–01010

(a) Install the claw to the overhaul handle, inserting it in the hole in part "A" as shown in the diagram.
(b) While gripping the handle, adjust the stopper bolt so that dimension "B" is as shown in the illustration.
Dimension B: 0.2 – 0.3 mm (0.008 – 0.012 in.)

NOTICE:
If this adjustment is not done the claw may be damaged.

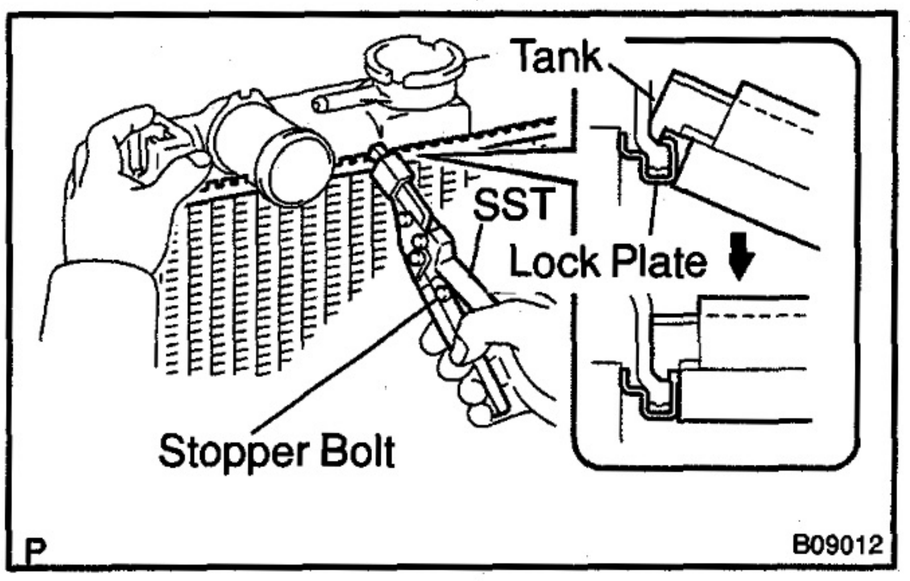

5. UNCAULK LOCK PLATES

Using SST to release the caulking, squeeze the handle until stopped by the stopper bolt.

SST 09230–01010

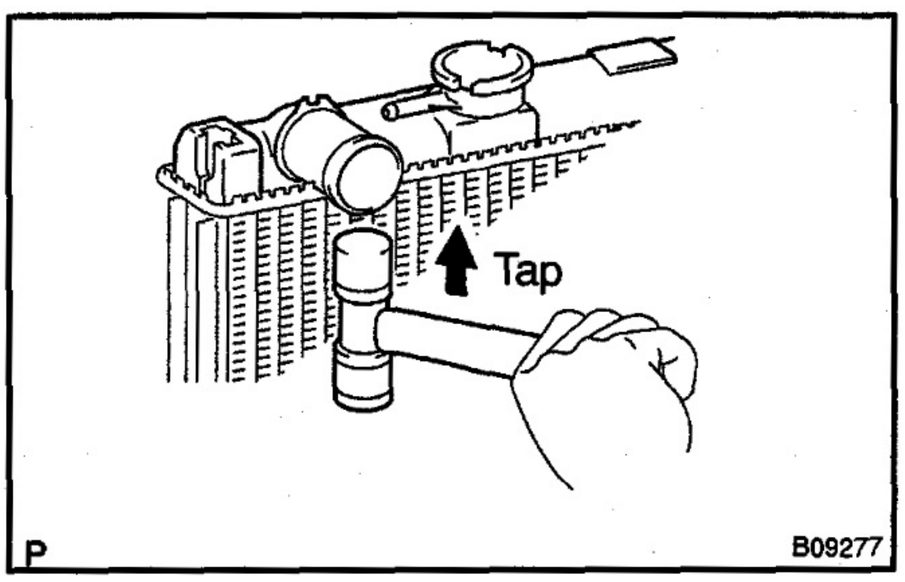

6. REMOVE TANKS AND O–RINGS

Lightly tap the radiator inlet or outlet (or bracket of the radiator) with a soft–faced hammer, and remove the tank and the O–ring.

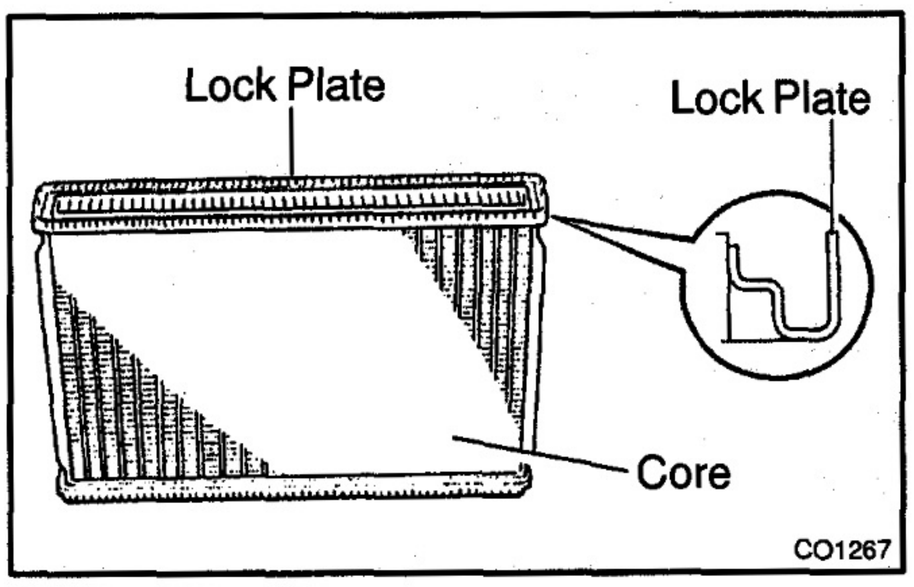

CO0NQ–02

REASSEMBLY

1. INSPECT LOCK PLATE FOR DAMAGE

HINT:

- If the sides of the lock plate groove are deformed, reassembly of the tank will be impossible.
- Therefore, first correct any deformation with pliers or similar object. Water leakage will result if the bottom of the lock plate groove is damaged or dented.

NOTICE:

The radiator can only be recaulked 2 times. After the 2nd time, the radiator core must be replaced.

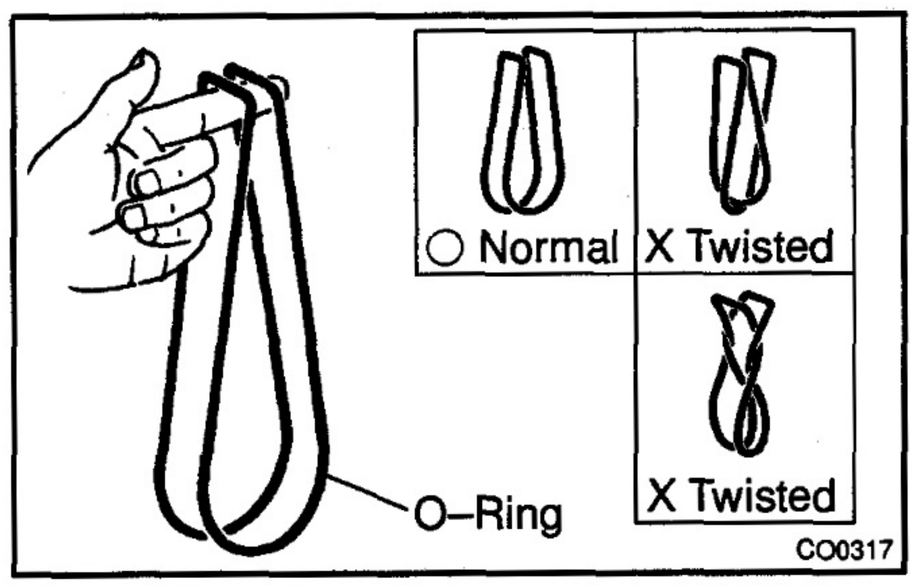

2. INSTALL NEW O–RINGS AND TANKS

(a) After checking that there are no foreign objects in the lock plate groove, install a new O–ring without twisting it.

HINT:

When cleaning the lock plate groove, lightly rub it with sand paper without scratching it.

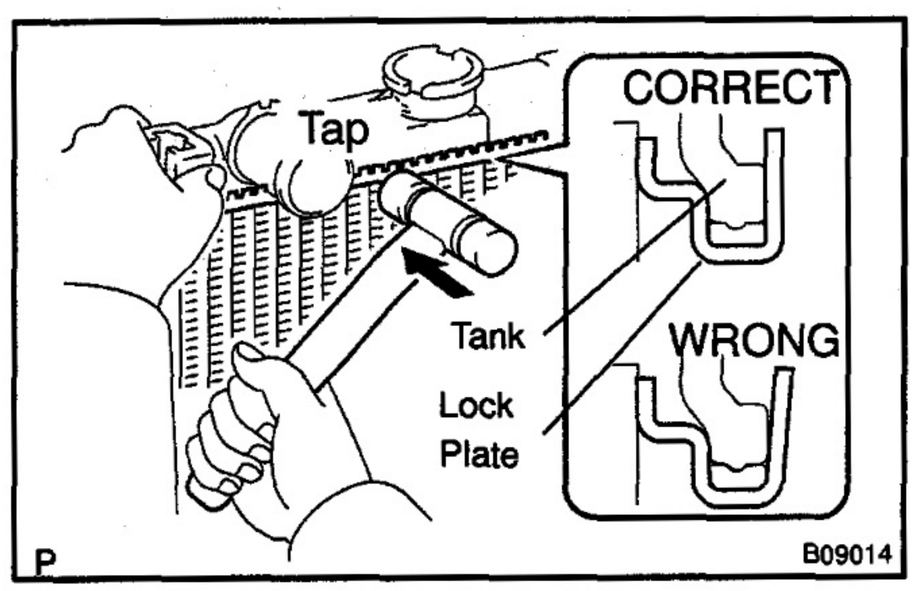

(b) Install the tank without damaging the O–ring.

(c) Tap the lock plate with a soft–faced hammer so that there is no gap between it and the tank.

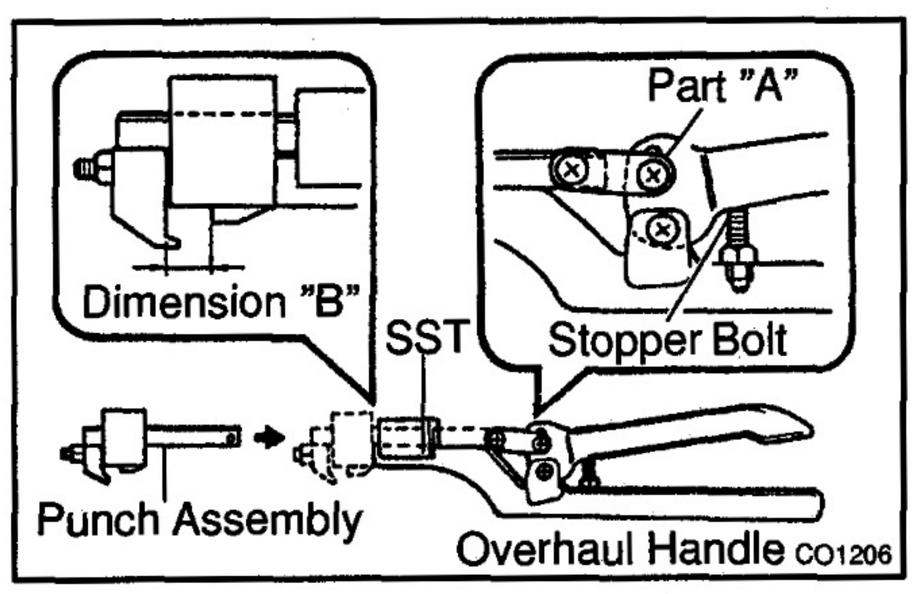

3. ASSEMBLE SST

SST 09230–01010, 09231–14010

(a) Install the punch assembly to the overhaul handle, inserting it in the hole in part "A" as shown in the illustration.

(b) While gripping the handle, adjust the stopper bolt so that dimension "B" is as shown in the illustration.

Dimension "B": 8.4 mm (0.331 in.)

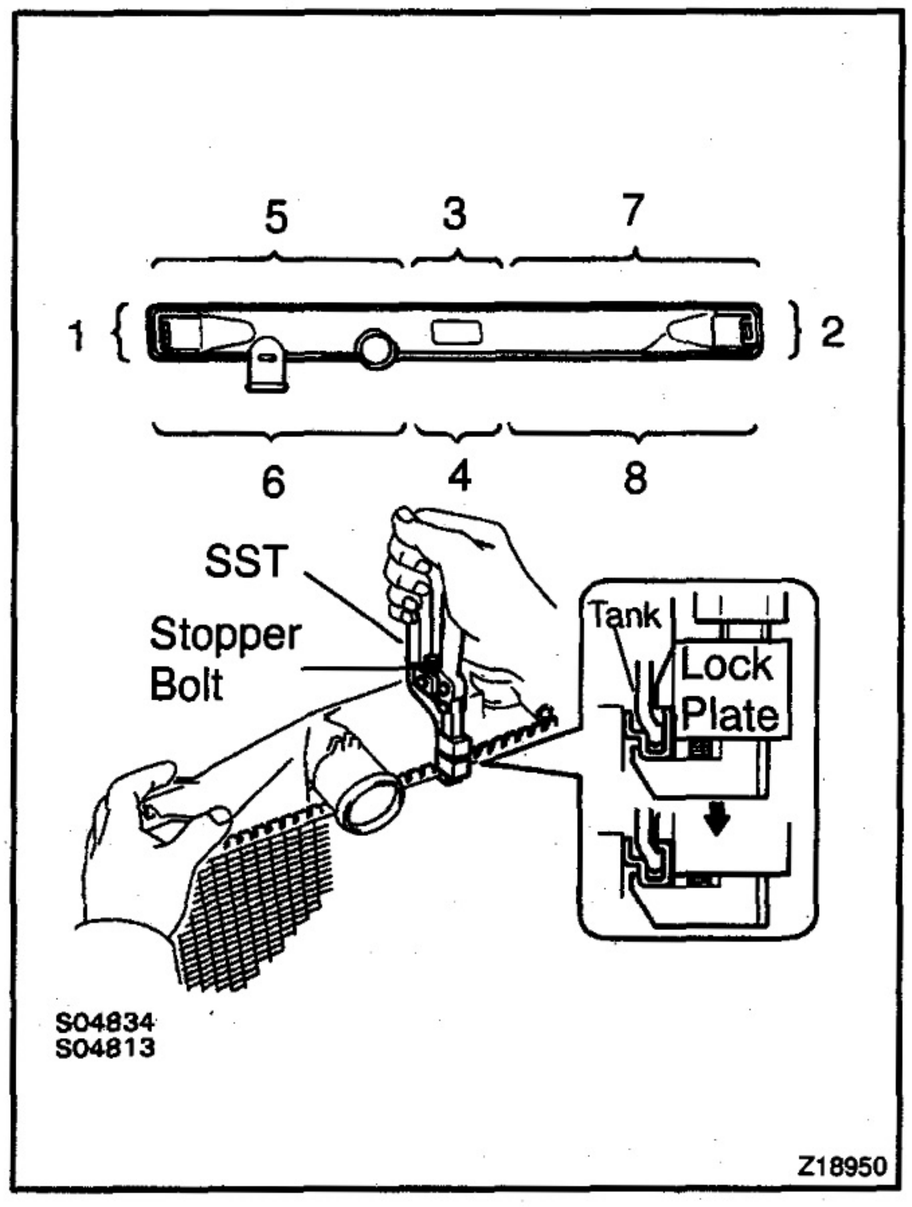

4. CAULK LOCK PLATE

(a) Lightly press SST against the lock plate in the order shown in the illustration. After repeating this a few times, fully caulk the lock plate by squeezing the handle until stopped by the stopper bolt.
SST 09230–01010

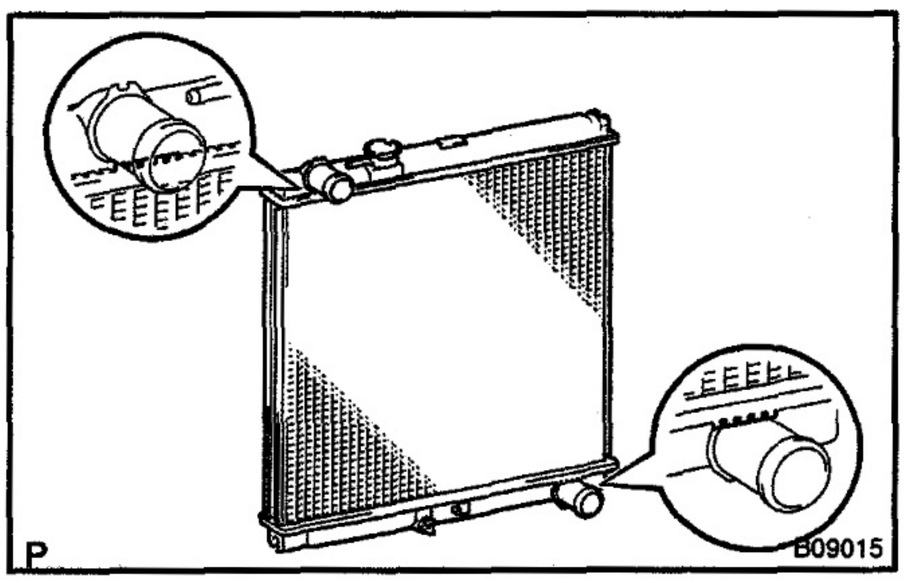

HINT:

- Do not stake the areas protruding around the ports.

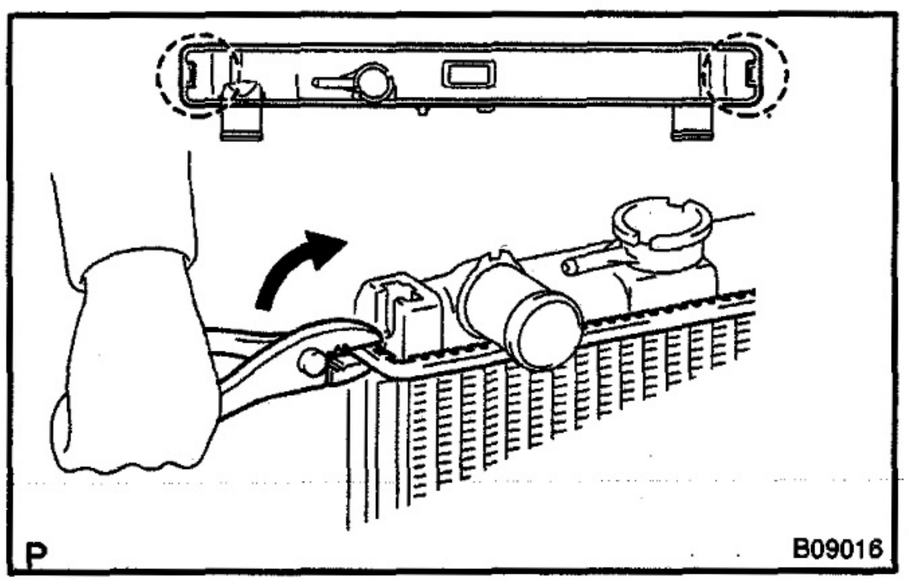

- The points shown in the rib sides near here cannot be staked with SST. Use pliers similar object and be careful not to damage the core plates.

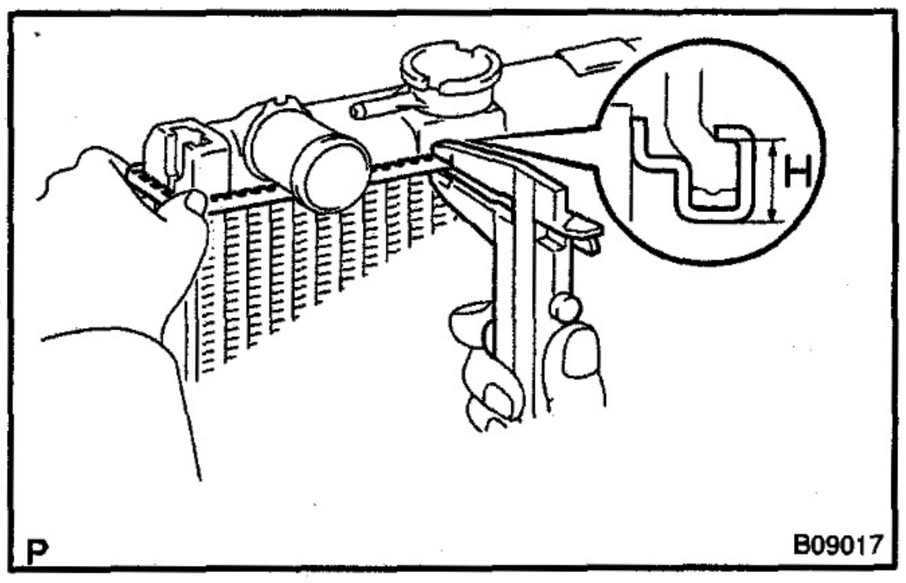

(b) Check the lock plate height (H) after completing the caluking.
Plate height (H):
7.40 – 7.80 mm (0.2913 – 0.3071 in.)

If not within the specified height, adjust the stopper bolt of the handle again and caulk again.

5. INSTALL RADIATOR CAP

6. INSTALL DRAIN PLUG

(a) Install a new O–ring to the drain plug.

(b) Install the drain plug.

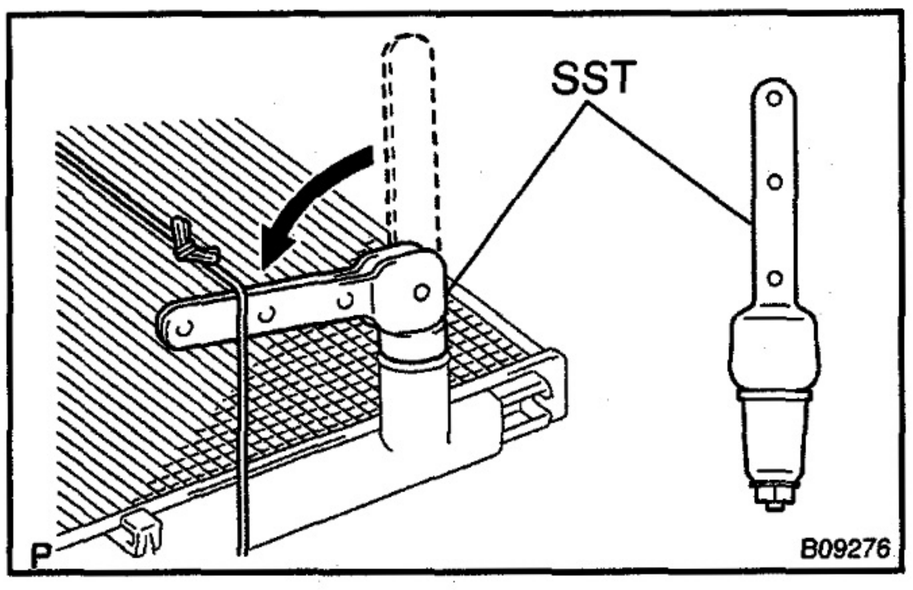

7. CHECK FOR WATER LEAKS

(a) Tighten the drain plug.

(b) Using SST, plug the inlet and outlet pipes of the radiator.
SST 09230–01010

(c) Using a radiator cap tester, apply pressure to the radiator.
Test pressure: 147 kPa (1.8 kgf/cm^2, 26 psi)

(d) Submerge the radiator in water.

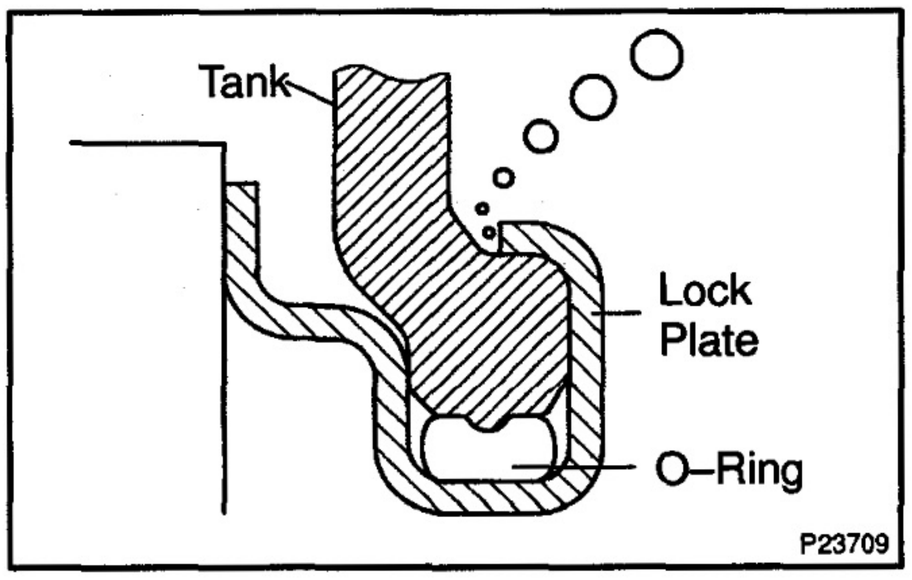

(e) Inspect for water leaks.

HINT:

On radiators with resin tanks, there is a clearance between the tank and lock plate where a minute amount of air will remain, giving the appearance of an air leak when the radiator is submerged in water. Therefore, before doing the water leak test, first swirl the radiator around in the water until all air bubbles disappear.

8. INSTALL RADIATOR SUPPORTS
Torque: 13 N·m (130 kgf·cm, 9 ft·lbf)

LUBRICATION

OIL AND FILTER LU–1
OIL PUMP LU–4
OIL COOLER LU–16
OIL NOZZLE LU–23

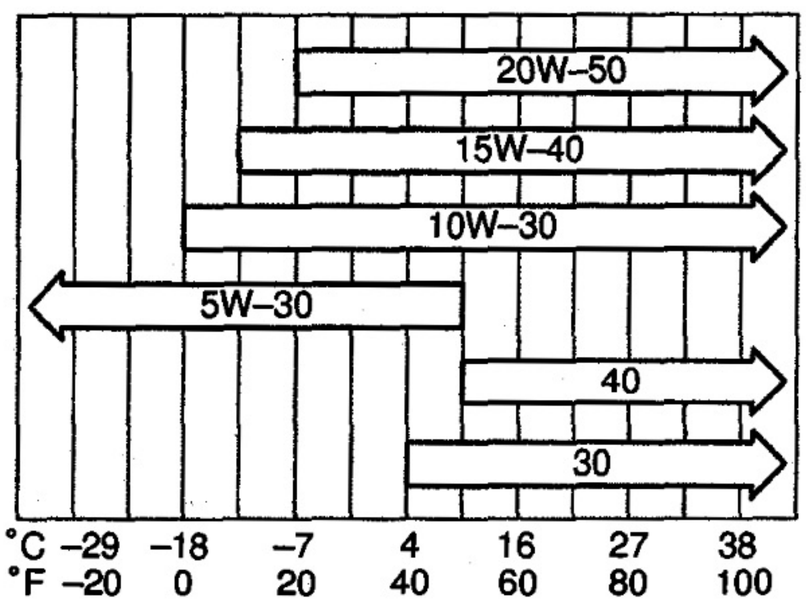

OIL AND FILTER

INSPECTION

LU0BW–02

1. CHECK ENGINE OIL QUALITY

Check the oil for deterioration, entry of water, discoloring or thinning.

If the quality is visibly poor, replace the oil.

Oil grade:

API CF–4 or CF (You may also use API CE or CD)

If you use SAE 10W–30 or higher viscosity oil in extremely low temperatures, the engine may become difficult to start, so SAE 5W–30 engine oil is recommended.

2. CHECK ENGINE OIL LEVEL

After warming up the engine and then 5 minutes after the engine stops, oil level should be between the "L" and "F" marks of the dipstick.

If low, check for leakage and add oil up to the "F" mark.

NOTICE:

Do not fill with engine oil above the "F" mark.

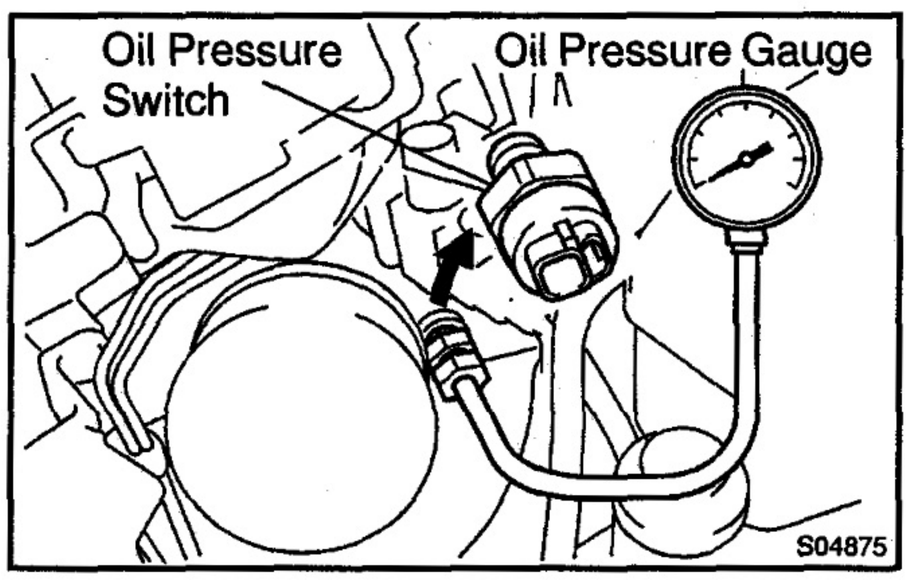

3. CHECK OIL PRESSURE

(a) Using a 24 mm deep socket wrench, remove the oil pressure switch.

(b) Install an oil pressure gauge.

(c) Allow the engine to warm pu to normal operating temperature.

(d) Check the oil pressure.

Oil pressure:

At idle	29 kPa (0.3 kgf/cm^2, 4.3 psi) or more
At 3,000 rpm	245 kPa (2.5 kgf/cm^2, 33 psi) or more

(e) Remove the oil pressure gauge.

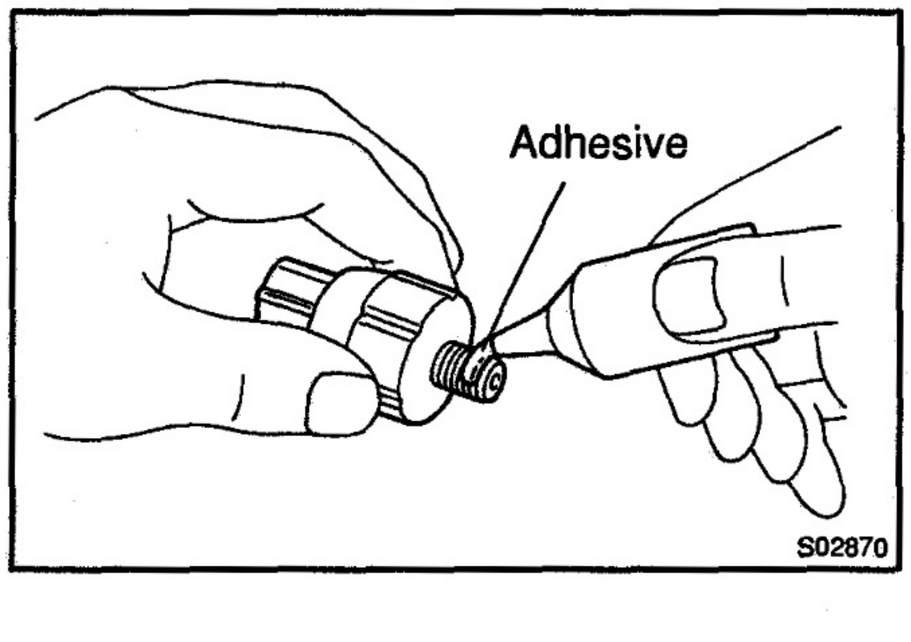

(f) Apply adhesive to 2 or 3 threads of the oil pressure switch.

Adhesive:

Part No. 08833–00080, THREE BOND 1344, LOCTITE 242 or equivalent

(g) Reinstall the oil pressure switch.

(h) Start the engine and check for oil leak.

LU

LU0HW–01

REPLACEMENT

CAUTION:

- **Prolonged and repeated contact with mineral oil will result in the removal of natural fats from the skin, leading to dryness, irritation and dermatitis. In addition, used engine oil contains potentially harmful contaminants which may cause skin cancer.**
- **Care should be taken, therefore, when changing engine oil to minimize the frequency and length of time your skin is exposed to used engine oil. Protective clothing and gloves that cannot be penetrated by oil should be worn. The skin should be thoroughly washed with soap and water, or use water–less hand cleaner, to remove any used engine oil. Do not use gasoline, thinners, or solvents.**
- **In order to preserve the environment, used oil and used oil filter must be disposed of only at designated disposal sites.**

1. DRAIN ENGINE OIL

(a) Remove the oil filter cap.

(b) Remove the oil drain plug, and drain the oil into a container.

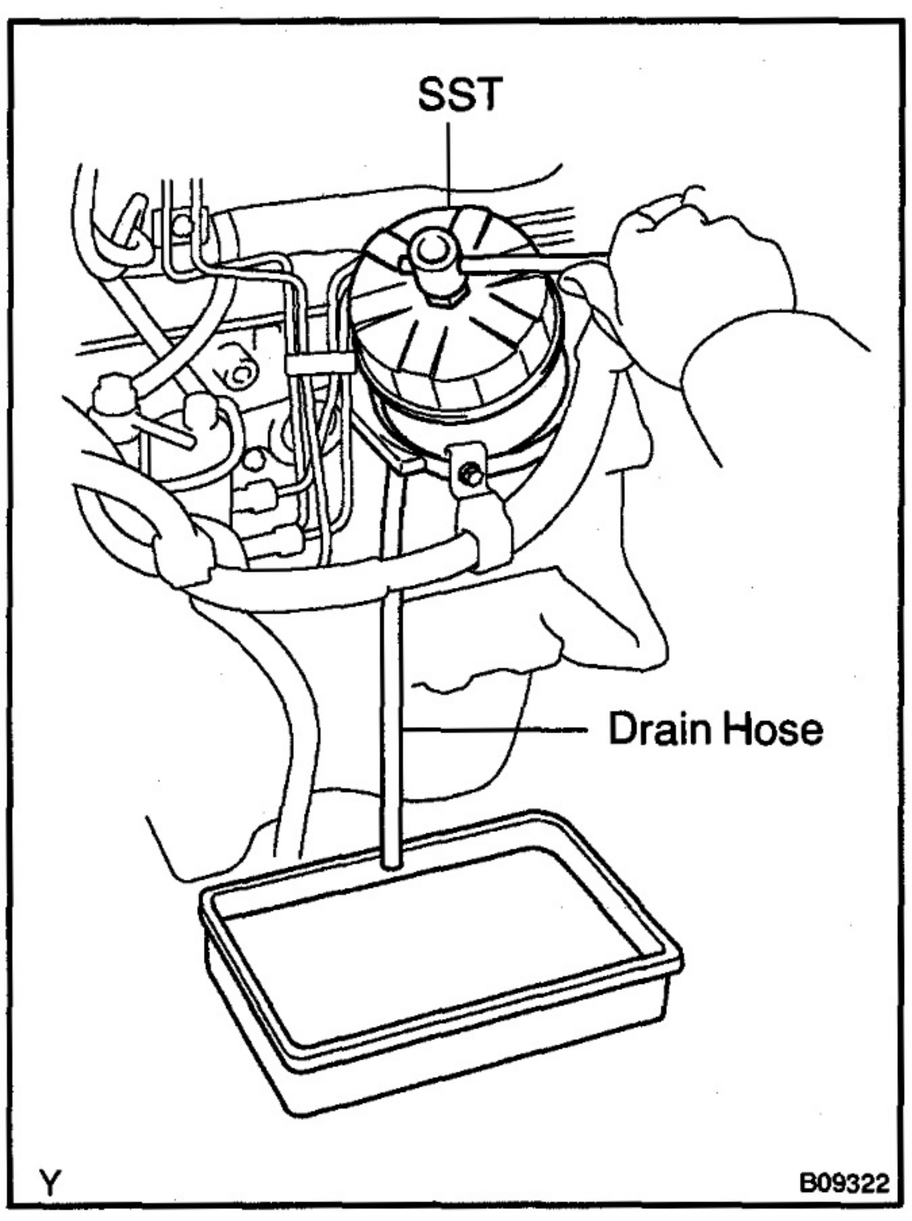

2. REPLACE OIL FILTER

(a) Using SST, remove the oil filter.
SST 09228–10002

HINT:

As the oil in the filter flows out through the drain hose, place the drain oil container under the drain hose.

(b) Clean the oil filter contact surface on the oil filter mounting.

(c) Lubricate the filter rubber gasket with clean engine oil.

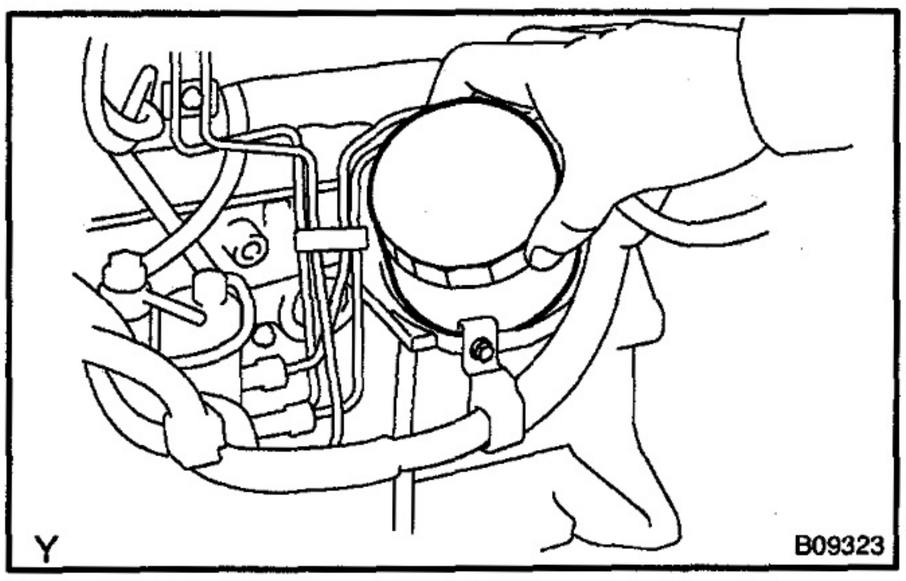

(d) Tighten the oil filter by hand until the rubber gasket contacts the seat of the filter mounting.

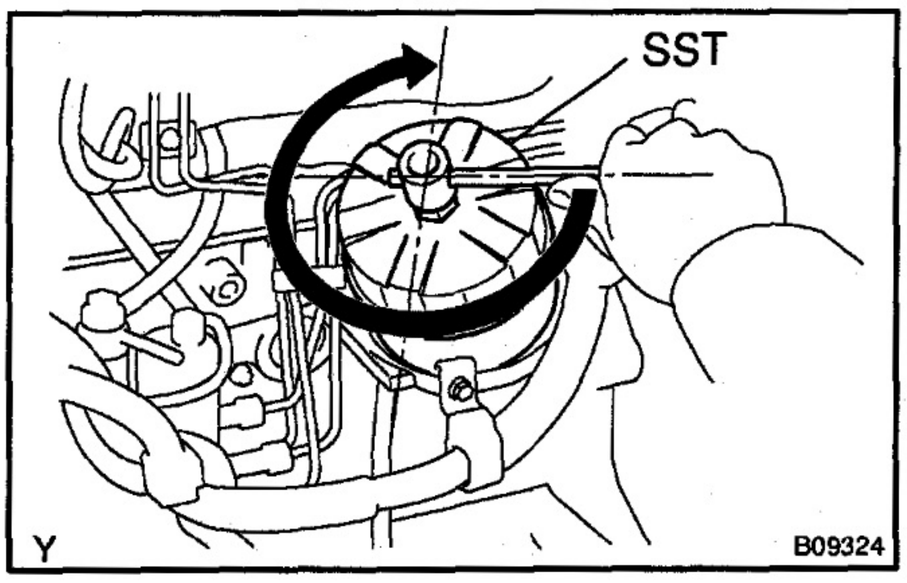

(e) Using SST, give it an additional 3/4 turn to seat the filter.
SST 09228–10002

3. FILL WITH ENGINE OIL

(a) Clean and install the oil drain plug with a new gasket.
Torque: 34 N·m (350 kgf·cm, 25 ft·lbf)

(b) Fill with fresh engine oil.
Capacity:

Drain and refill	w/ Oil filter change	7.0 liters (7.4 US qts, 6.2 Imp. qts)
	w/o Oil filter change	6.4 liters (6.8 US qts, 5.6 Imp. qts)
Dry fill		7.5 liters (7.9 US qts, 6.6 Imp. qts)

(c) Reinstall the oil filter cap.

4. START ENGINE AND CHECK FOR OIL LEAKS

5. RECHECK ENGINE OIL LEVEL

OIL PUMP

COMPONENTS

LU0HX–01

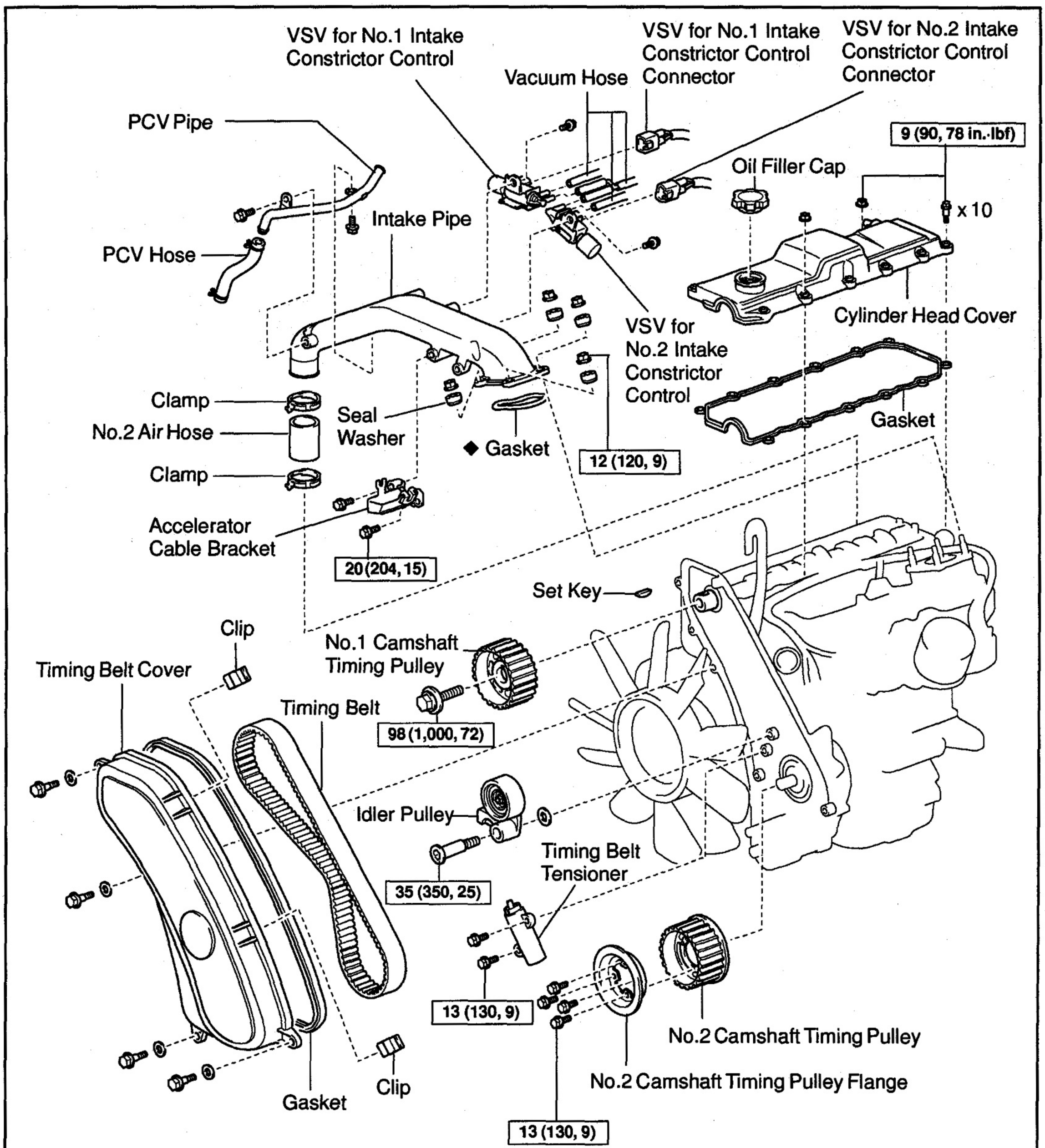

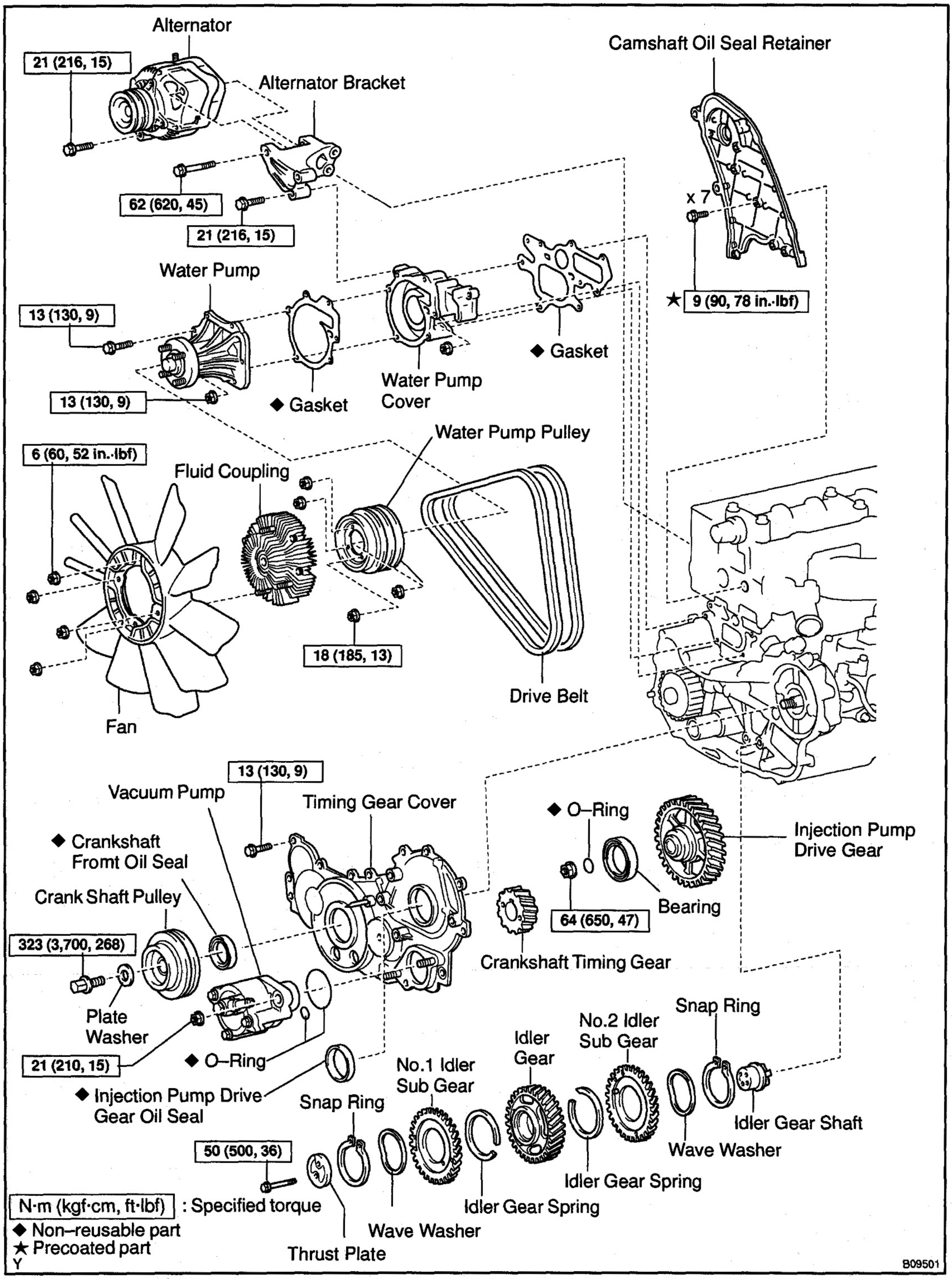
Alternator
21 (216, 15)
Alternator Bracket
62 (620, 45)
21 (216, 15)
Camshaft Oil Seal Retainer
x 7
★ 9 (90, 78 in.·lbf)
Water Pump
13 (130, 9)
13 (130, 9)
◆ Gasket
Water Pump Cover
◆ Gasket
Water Pump Pulley
6 (60, 52 in.·lbf)
Fluid Coupling
18 (185, 13)
Drive Belt
Fan
13 (130, 9)
Vacuum Pump
Timing Gear Cover
◆ O–Ring
Injection Pump Drive Gear
◆ Crankshaft Fromt Oil Seal
Crank Shaft Pulley
323 (3,700, 268)
Bearing
64 (650, 47)
Crankshaft Timing Gear
Plate Washer
21 (210, 15)
◆ O–Ring
◆ Injection Pump Drive Gear Oil Seal
Snap Ring
No.2 Idler Sub Gear
Idler Gear
No.1 Idler Sub Gear
Idler Gear Shaft
Wave Washer
Idler Gear Spring
50 (500, 36)
Idler Gear Spring
Wave Washer
Thrust Plate
N·m (kgf·cm, ft·lbf) : Specified torque
◆ Non–reusable part
★ Precoated part
Y
B09501

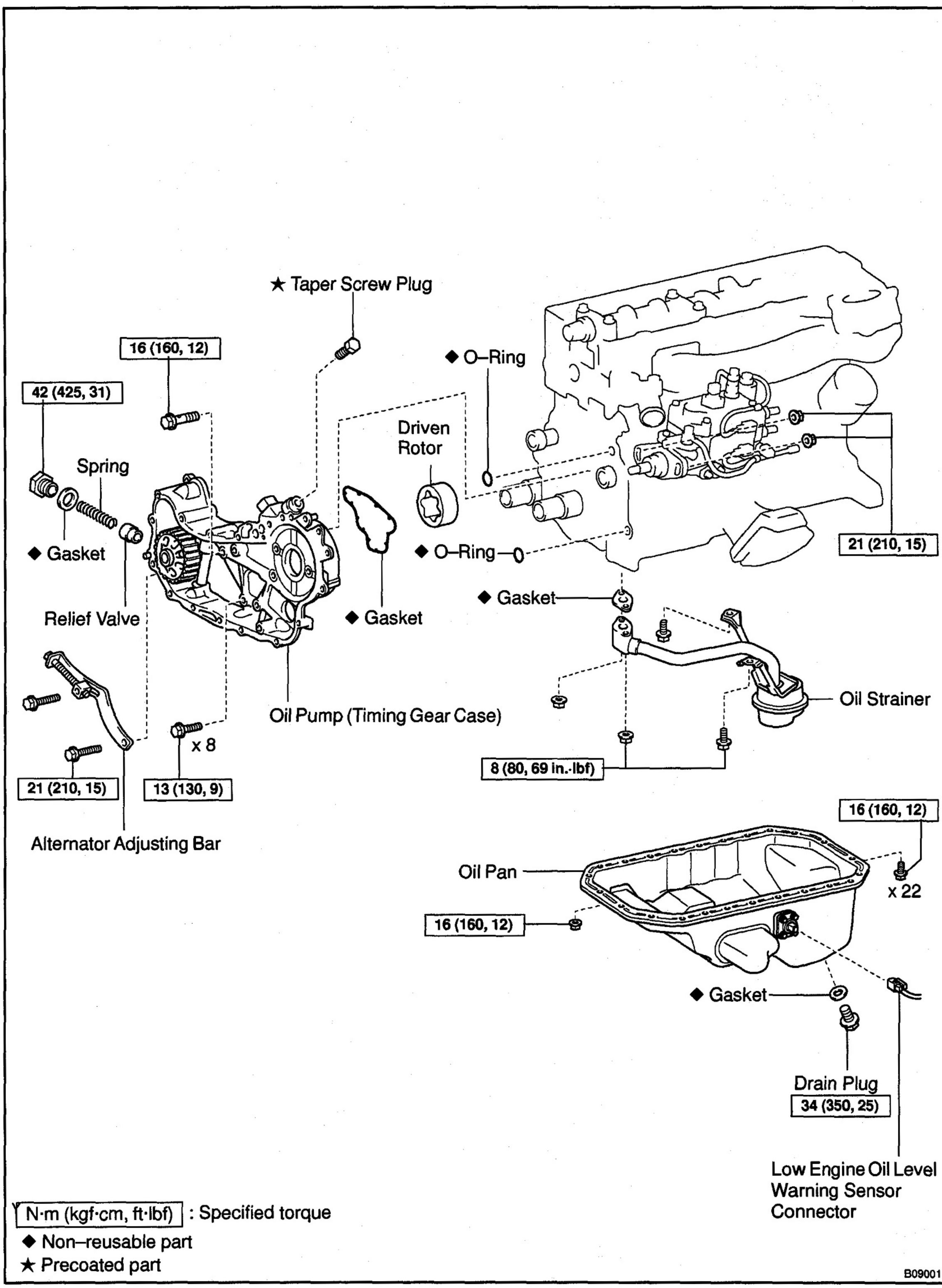
★ Taper Screw Plug
16 (160, 12)
42 (425, 31)
◆ O–Ring
Driven Rotor
Spring
◆ Gasket
Relief Valve
◆ Gasket
◆ O–Ring
21 (210, 15)
◆ Gasket
Oil Strainer
Oil Pump (Timing Gear Case)
x 8
21 (210, 15)
13 (130, 9)
8 (80, 69 in.·lbf)
Alternator Adjusting Bar
16 (160, 12)
Oil Pan
x 22
16 (160, 12)
◆ Gasket
Drain Plug
34 (350, 25)
Low Engine Oil Level Warning Sensor Connector
N·m (kgf·cm, ft·lbf) : Specified torque
◆ Non–reusable part
★ Precoated part
B09001

LU0HY-01

REMOVAL

HINT:
When repairing the oil pump, oil pan and strainer should be removed and cleaned.

1. **DRAIN ENGINE COOLANT**
2. **DRAIN ENGINE OIL**
3. **REMOVE DRIVE BELT, FAN AND WATER PUMP PULLEY (See page CO–5)**
4. **REMOVE TIMING BELT (See page EM–13)**
5. **REMOVE TIMING GEARS (See page EM–24)**

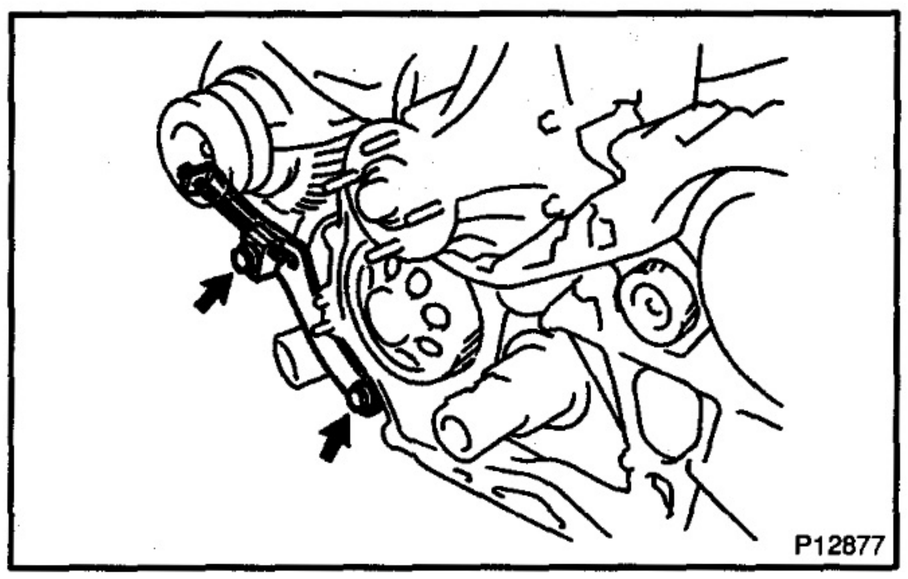
P12877

6. **REMOVE ALTERNATOR ADJUSTING BAR**
(a) Remove the lock bolt.
(b) Remove the bolt and adjusting bar.
7. **REMOVE ALTERNATOR AND ALTERNATOR BRACKET (See page CO–5)**
8. **REMOVE WATER PUMP (See page CO–5)**

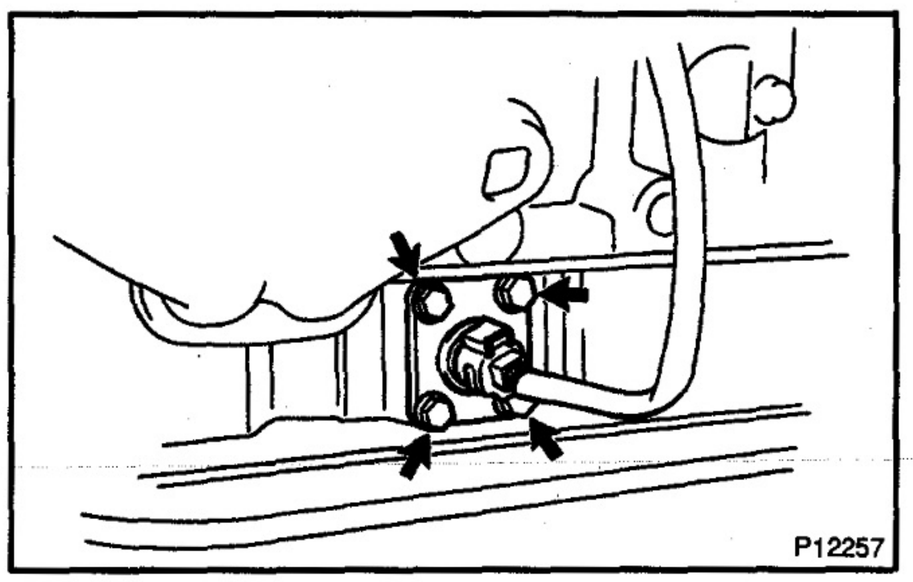
P12257

9. **REMOVE OIL LEVEL SENSOR**
(a) Disconnect the oil level sensor connector.
(b) Remove the 4 bolts and oil level sensor.

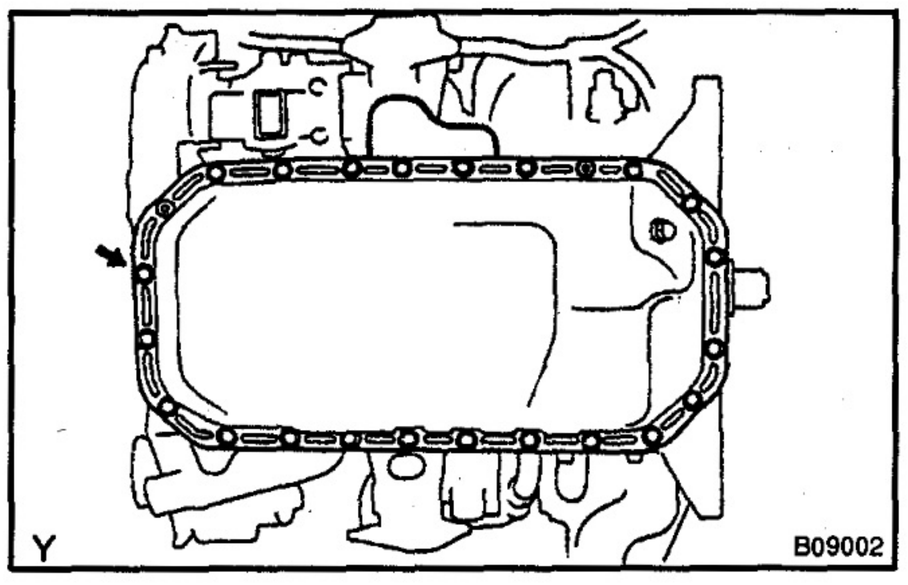

B09002

10. **REMOVE OIL PAN**
(a) Remove the 22 bolts and 2 nuts.

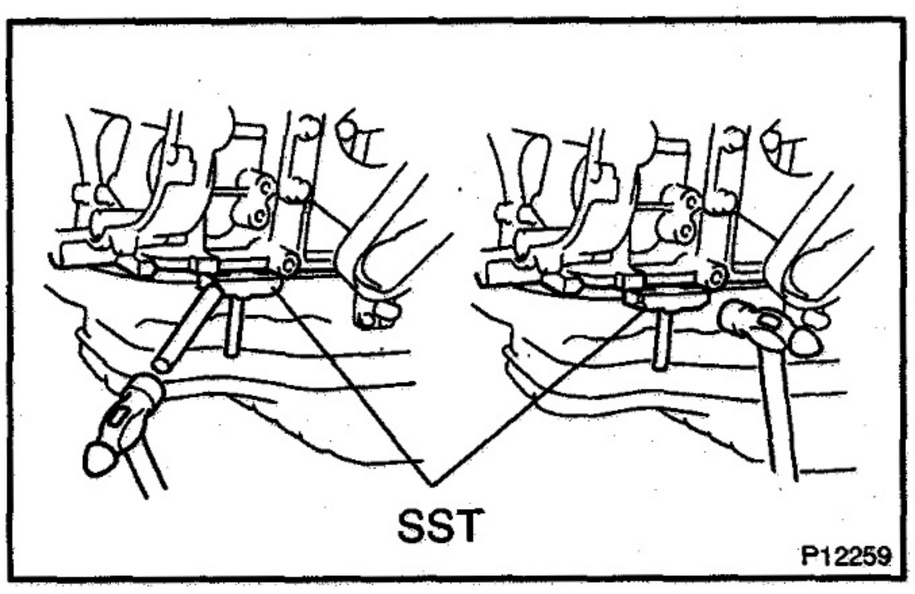

(b) Insert the blade of SST between the cylinder block and oil pan, and cut off applied sealer and remove the oil pan.
SST 09032–00100

NOTICE:

- **Do not use SST for the oil pump body side and rear oil seal retainer.**
- **Be careful not to damage the oil pan flange.**

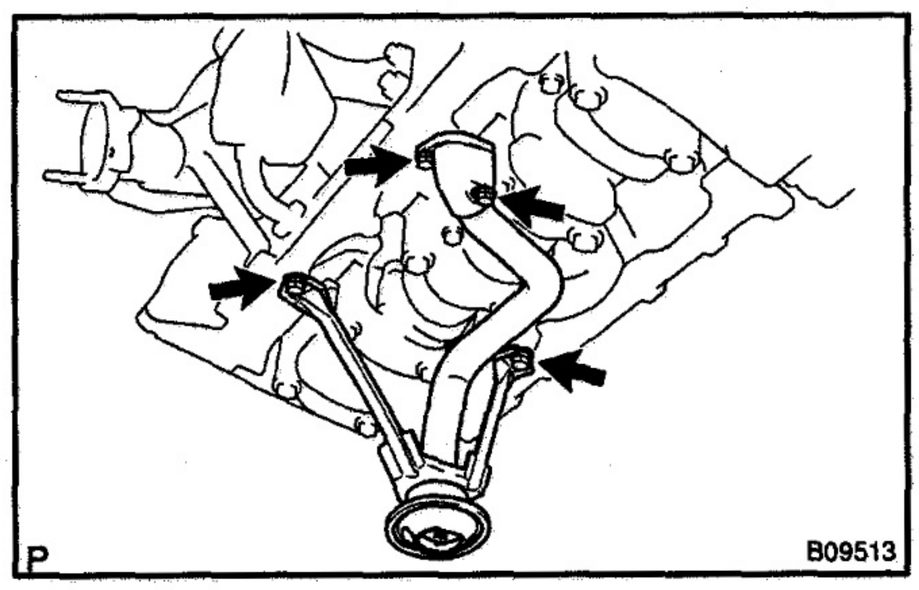

11. REMOVE OIL STRAINER

Remove the 2 bolts, 2 nuts, oil strainer and gasket.

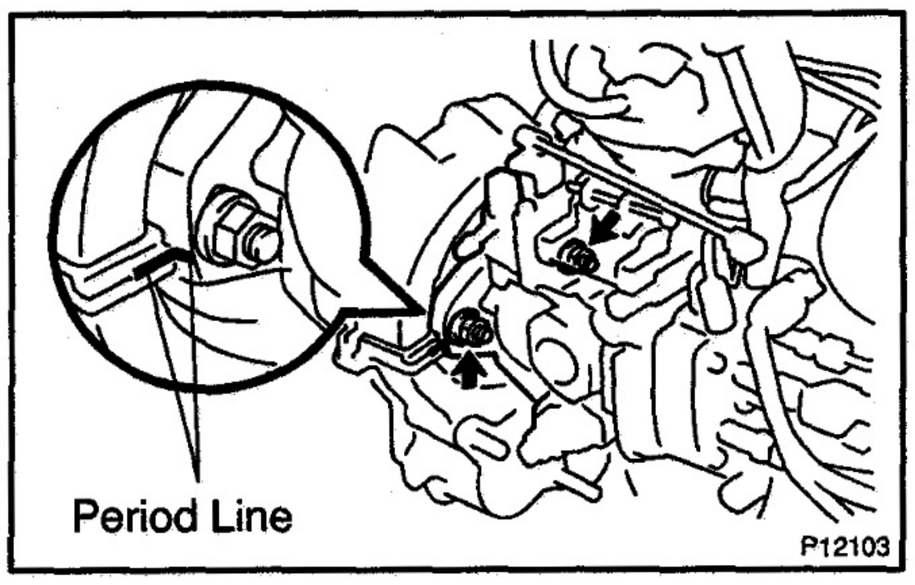

12. REMOVE OIL PUMP (TIMING GEAR CASE)

(a) Before removing the 2 nuts holding the timing gear case to the injection pump, check if the injection pump period lines are aligned.

If not, place new matchmarks for reinstallation.

(b) Remove the 2 nuts.

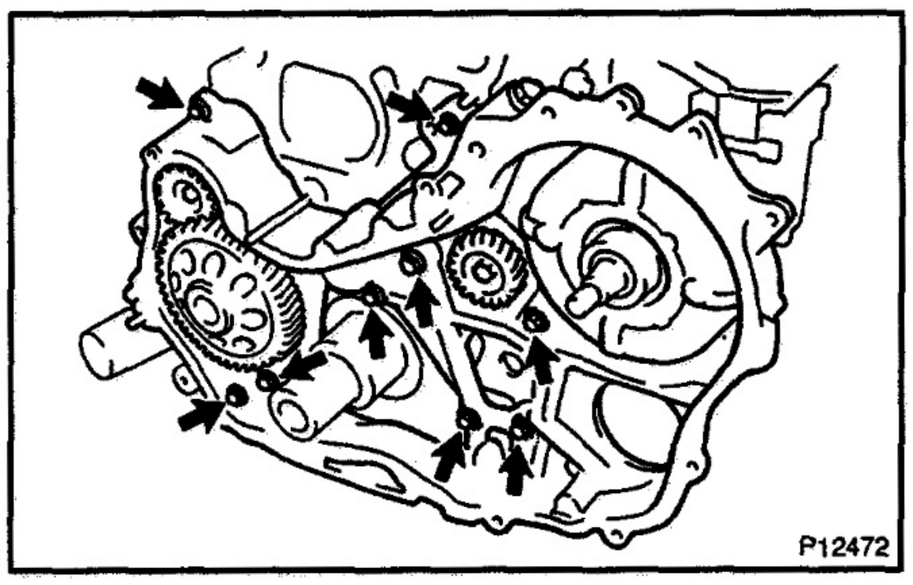

(c) Remove the 8 bolts and union bolt.

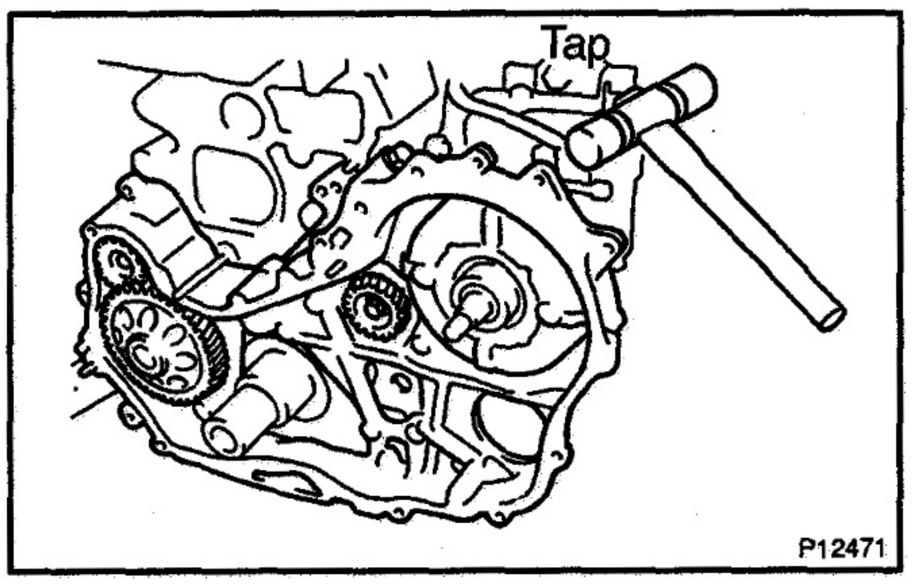

(d) Using a plastic–faced hammer, lightly tap out the timing gear case.

(e) Remove the 3 O–rings.

LU01A–01

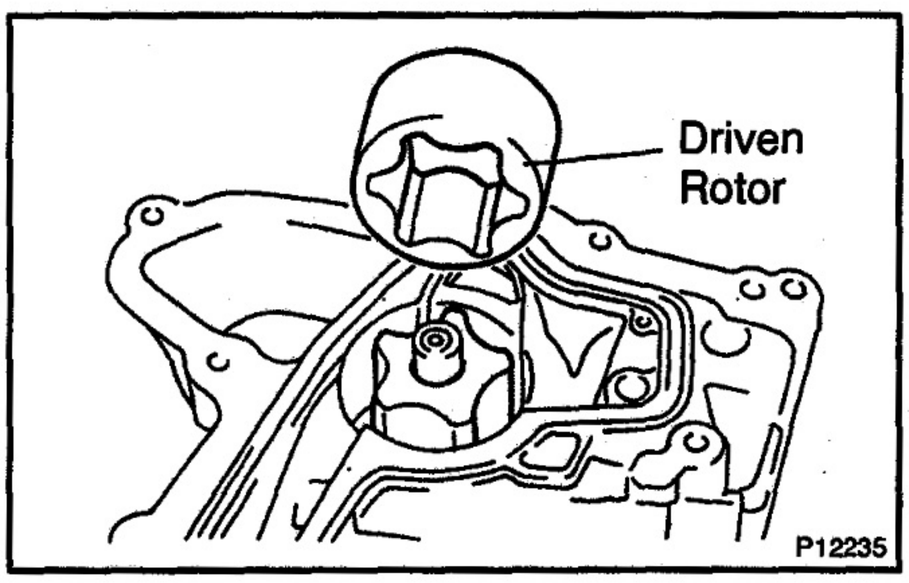

DISASSEMBLY

1. REMOVE DRIVE ROTOR

Pull out the driven rotor.

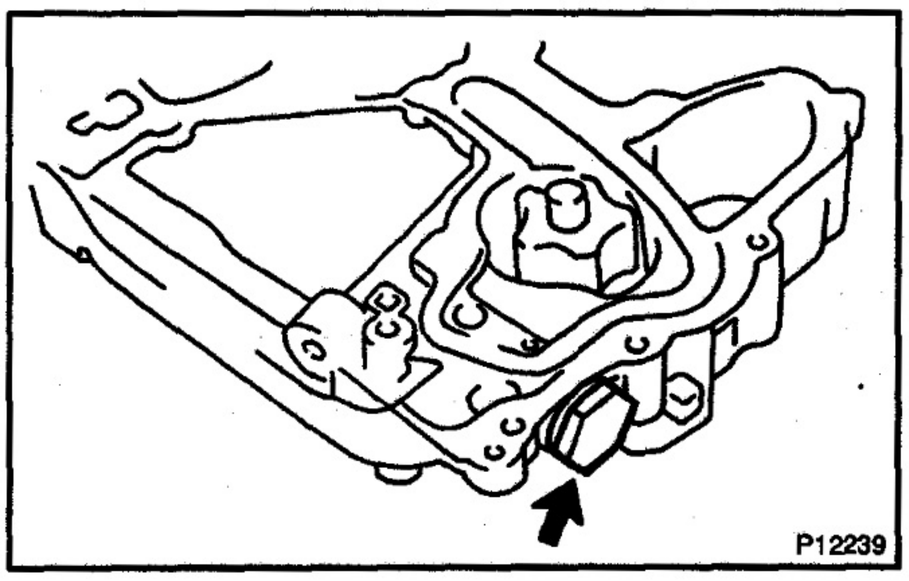

2. REMOVE RELIEF VALVE

Remove the plug, gasket, spring and relief valve.

LU010-01

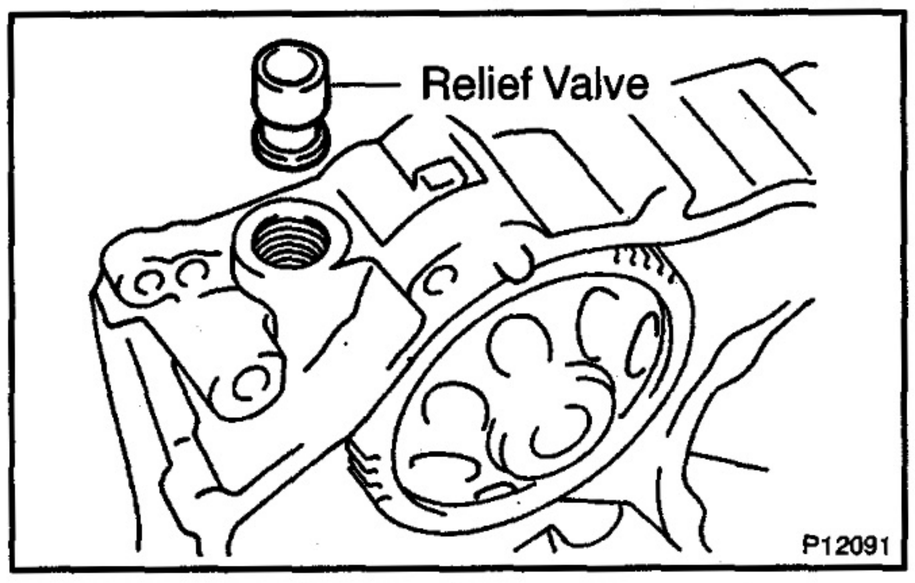

INSPECTION

1. INSPECT RELIEF VALVE

Coat the valve with engine oil and check that it falls smoothly into the valve hole by its own weight.

If it doesn't, replace the relief valve. If necessary, replace the oil pump assembly.

2. INSPECT DRIVE AND DRIVEN ROTORS

(a) Place the driven rotor into the oil pump body.

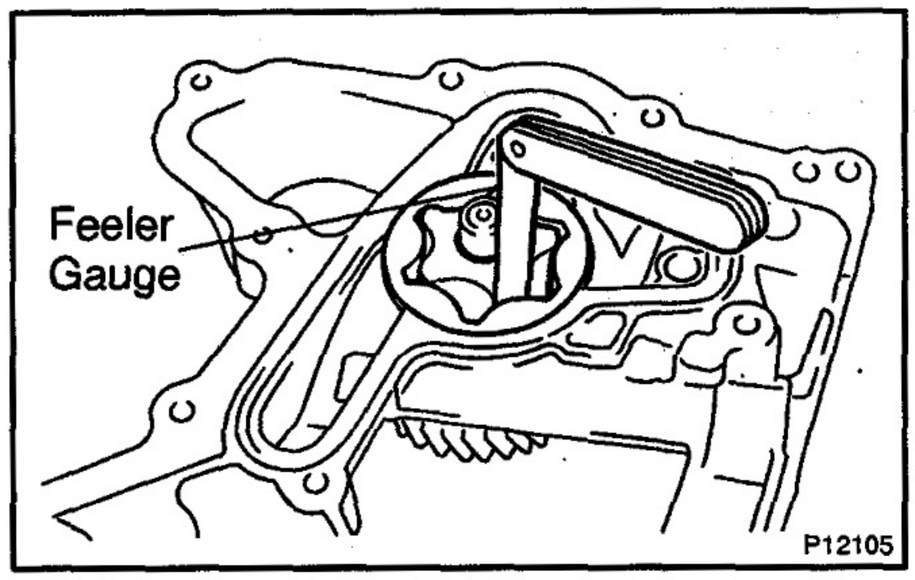

(b) Inspect the rotor tip clearance.

Using a feeler gauge, measure the clearance between the drive and driven rotor tips.

Standard tip clearance:

0.060 – 0.160 mm (0.0024 – 0.0063 in.)

Maximum tip clearance: 0.21 mm (0.0083 in.)

If the tip clearance is greater than maximum, replace the timing gear case.

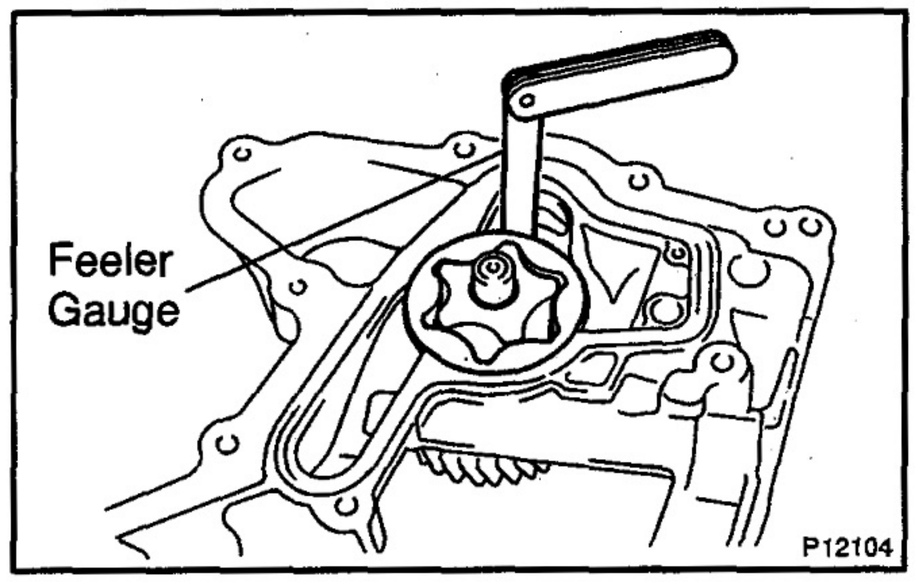

(c) Inspect the rotor body clearance.

Using a feeler gauge, measure the clearance between the driven rotor and body.

Standard body clearance:

0.100 – 0.170 mm (0.0039 – 0.0067 in.)

Maximum body clearance: 0.20 mm (0.0079 in.)

If the body clearance is greater than maximum, replace the timing gear case.

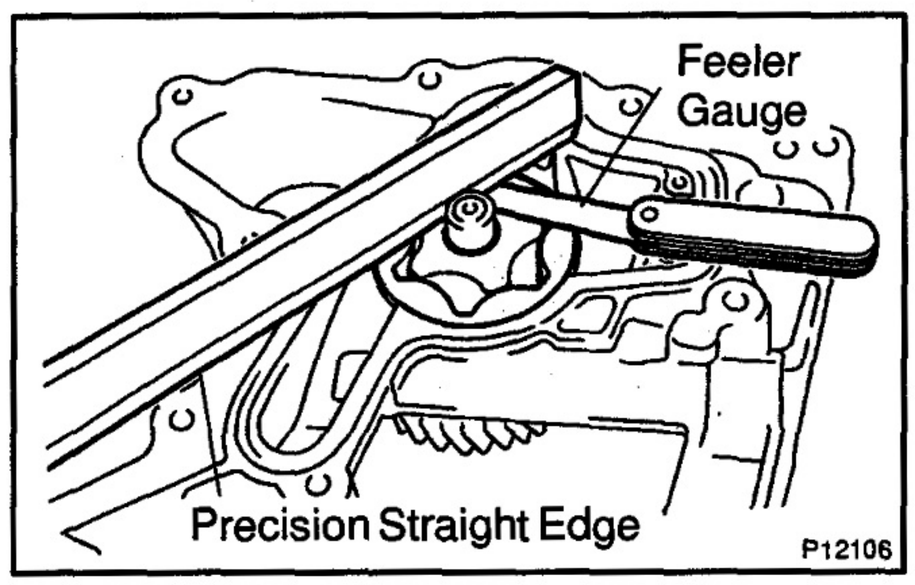

(d) Inspect the rotor side clearance.

Using a feeler gauge and precision straight edge, measure the clearance between the rotors and precision straight edge.

Standard side clearance:

0.030 – 0.090 mm (0.0012 – 0.0035 in.)

Maximum side clearance: 0.15 mm (0.0059 in.)

If the side clearance is greater than maximum, replace the timing gear case.

LU011-01

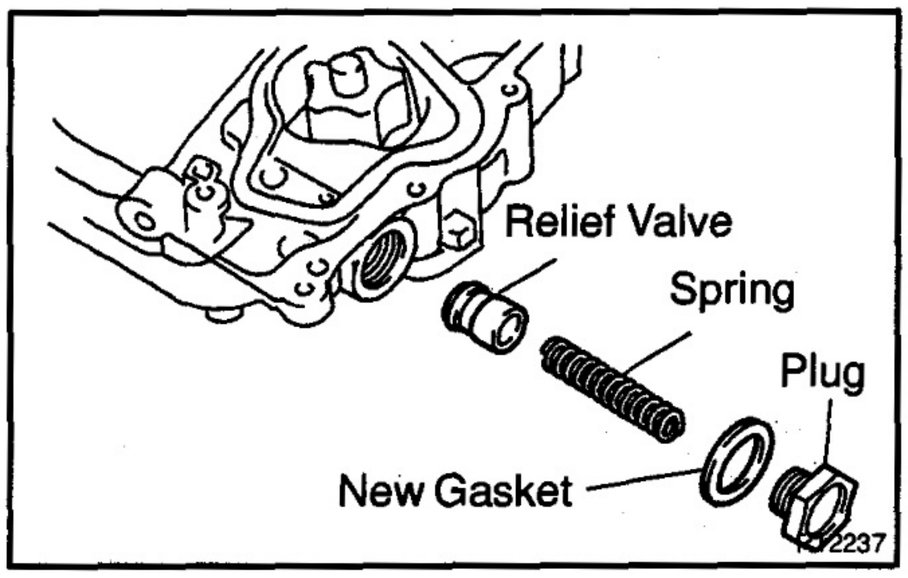

REASSEMBLY

1. INSTALL RELIEF VALVE

(a) Insert the relief valve and spring into the installation hole of the timing gear case.

(b) Install a new gasket and the plug.
Torque: 42 N·m (425 kgf·cm, 31 ft·lbf)

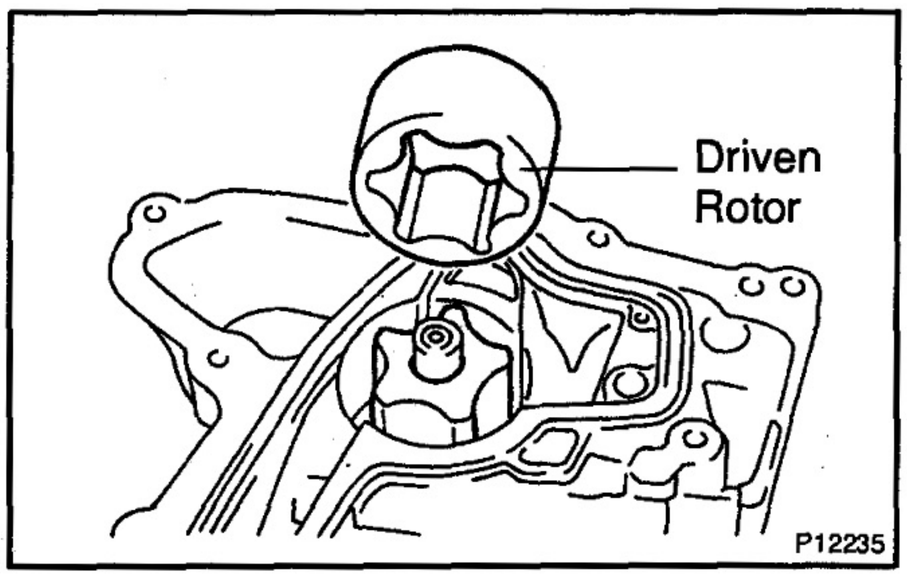

2. INSTALL DRIVE AND DRIVEN ROTORS

Install the driven rotor into the pump.

LU012–01

INSTALLATION

1. INSTALL OIL PUMP (TIMING GEAR CASE)

(a) Remove any old packing (FIPG) material and be careful not to drop any oil on the contact surfaces of the timing gear case and cylinder block.

- Using a razor blade and gasket scraper, remove all the old packing (FIPG) material from the gasket surfaces and sealing groove.
- Thoroughly clean all components to remove all the loose material.
- Using a non–residue solvent, clean both sealing surfaces.

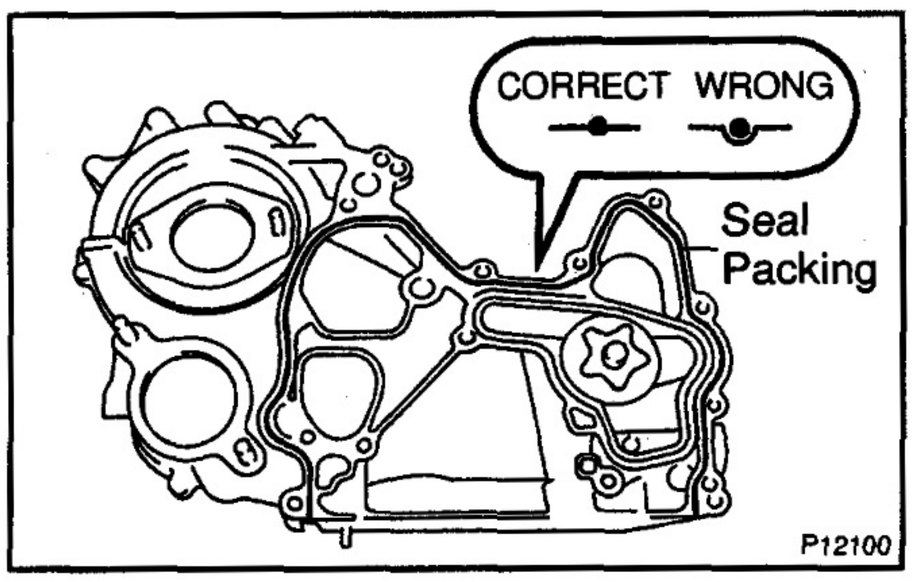

(b) Apply seal packing to the timing gear case as shown in the illustration.

Seal packing: Part No. 08826–00080 or equivalent

NOTICE:

Aroid applying an excessive amount to the surface.

- Install a nozzle that has been cut to a 3 – 5 mm (0.12 – 0.20 in.) opening.
- Parts must be assembled within 3 minutes of application. Otherwise the material must be removed and reapplied.
- Immediately remove nozzle from the tube and reinstall cap.

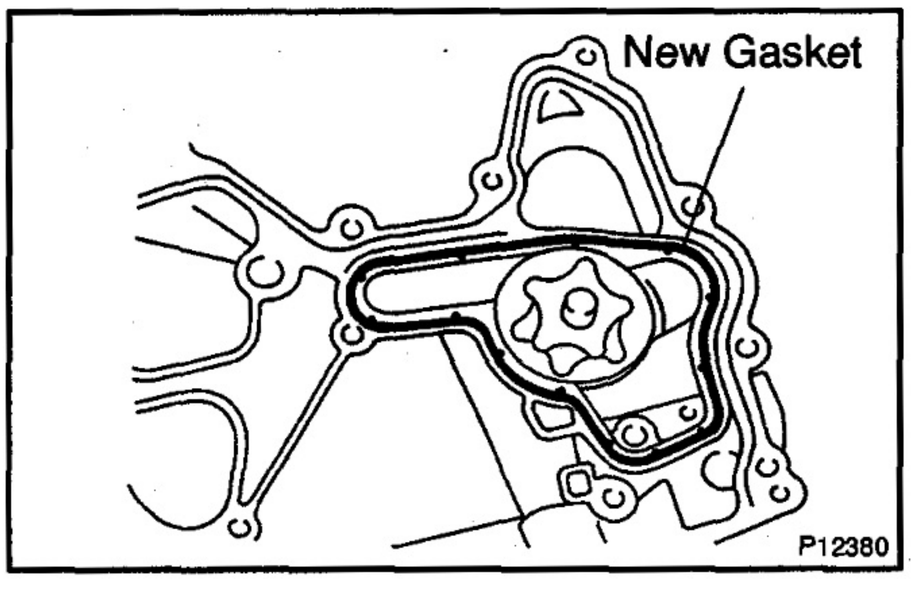

(c) Place a new gasket into the groove of the timing gear case as shown in the illustration.

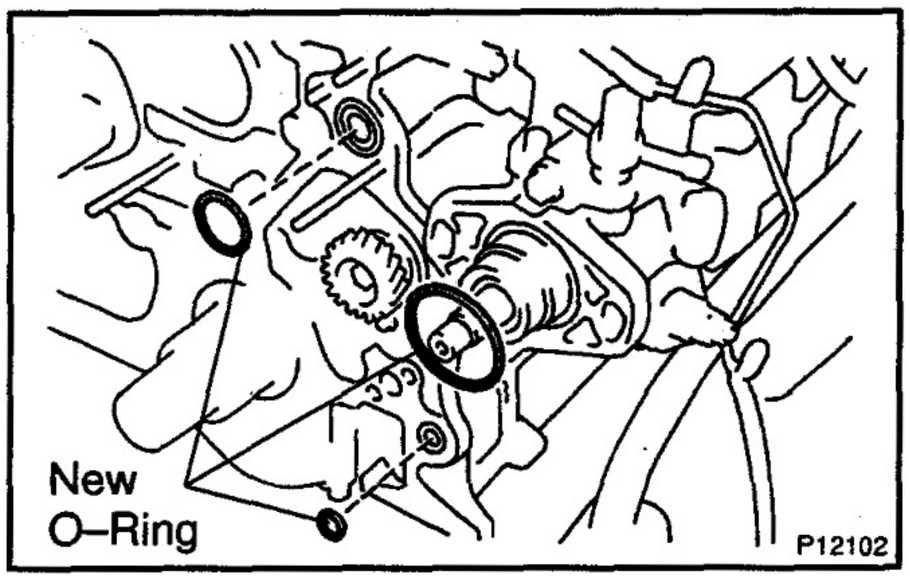

(d) Install 3 new O–rings to the cylinder block and injection pump.
(e) Install the timing gear case.

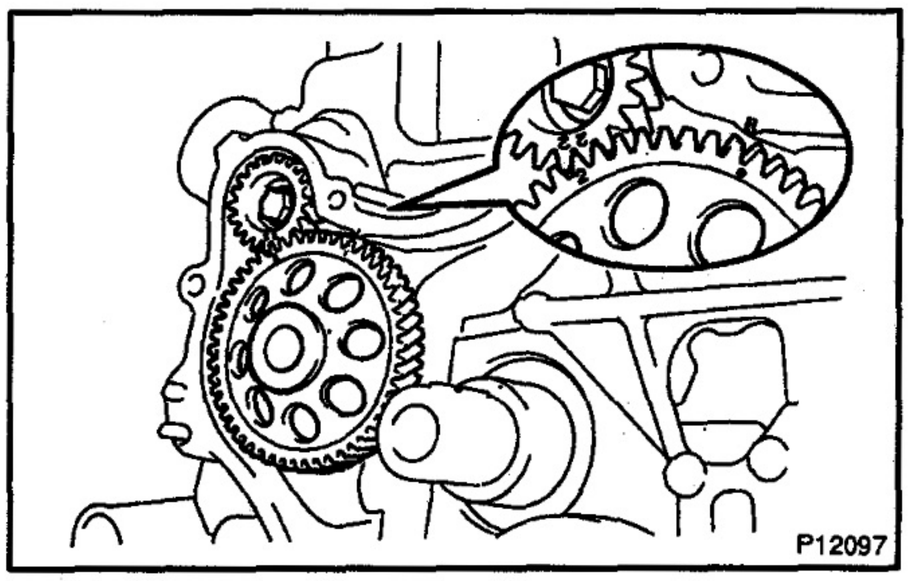

(f) The matchmark on the No.1 balance shaft driven gear should be aligned with the "2" mark.
(g) Align the mark on the oil pump drive gear with the mark on the timing gear case.

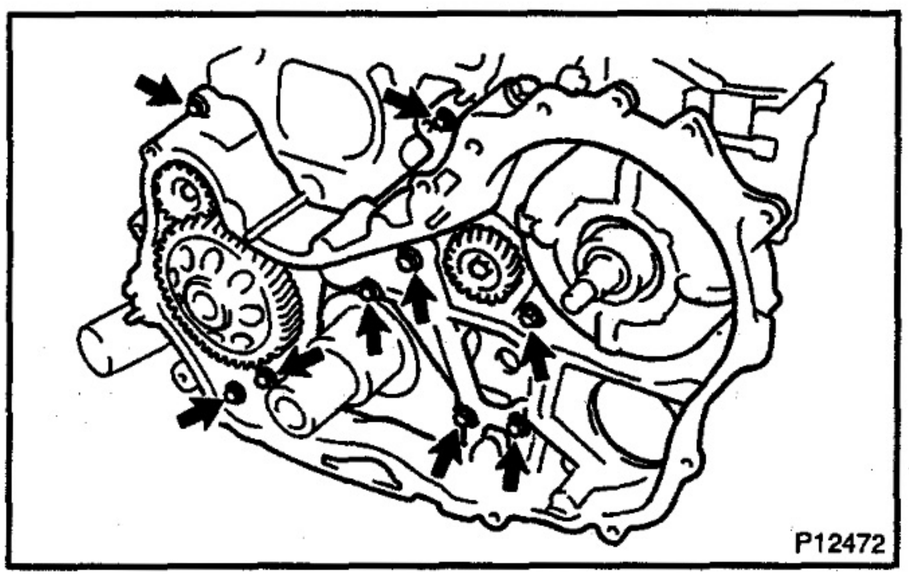

(h) Install the 8 bolts and union bolt.
Torque:
13 N·m (130 kgf·cm, 9 ft·lbf) for Bolt
16 N·m (160 kgf·cm, 12 ft·lbf) for Union bolt

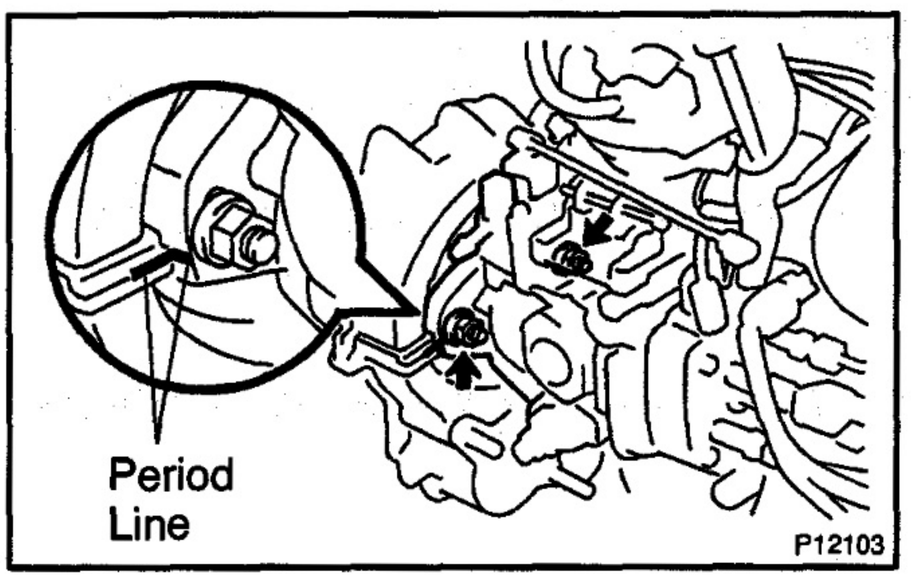

(i) Install the 2 nuts holding the injection pump to the timing gear case.
Torque: 21 N·m (210 kgf·cm, 15 ft·lbf) for bolt
(j) Check that the injection pump period lines (or match-marks) are aligned by tilting the injection pump.

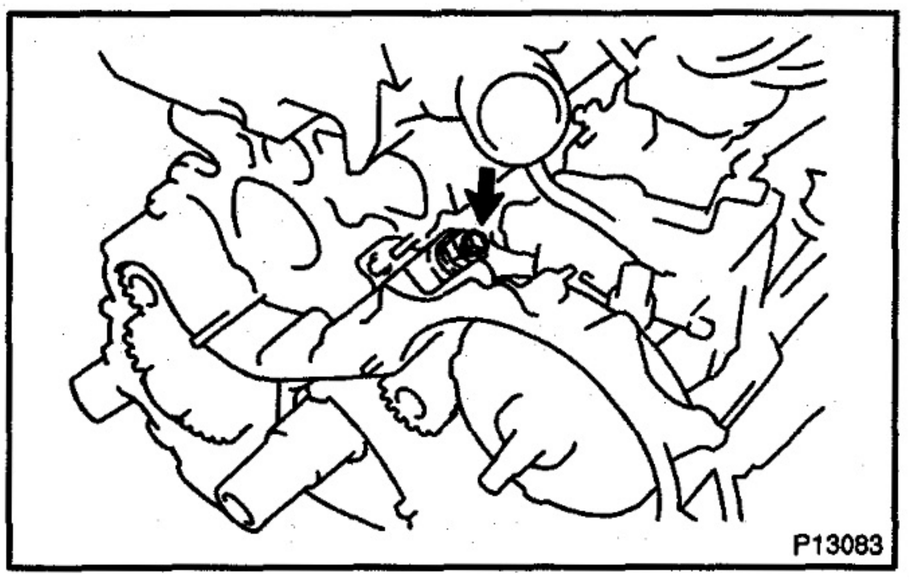

2. POUR ENGINE OIL INTO OIL PUMP
(a) Remove the taper screw plug.

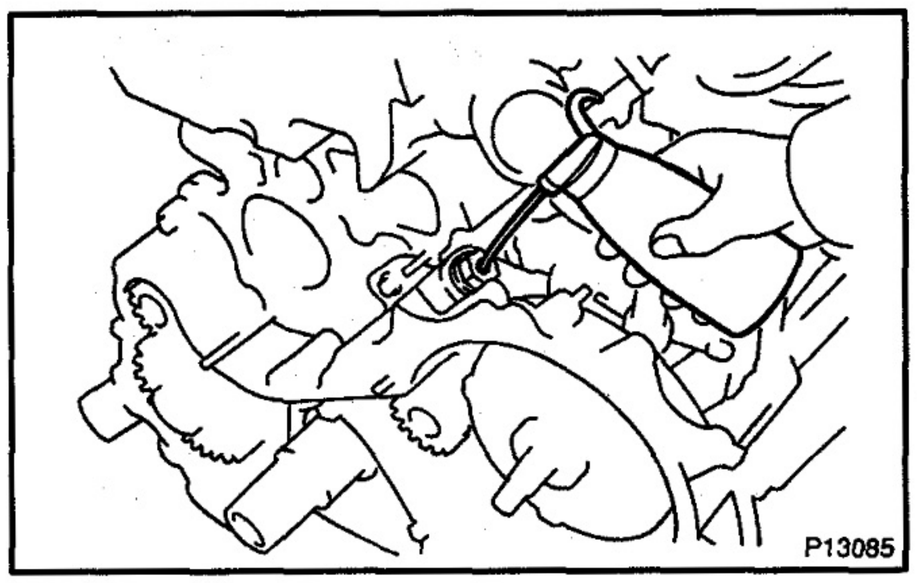

(b) Pour in approx. 20 cc (0.12 cu in.) of engine oil into the oil pump.

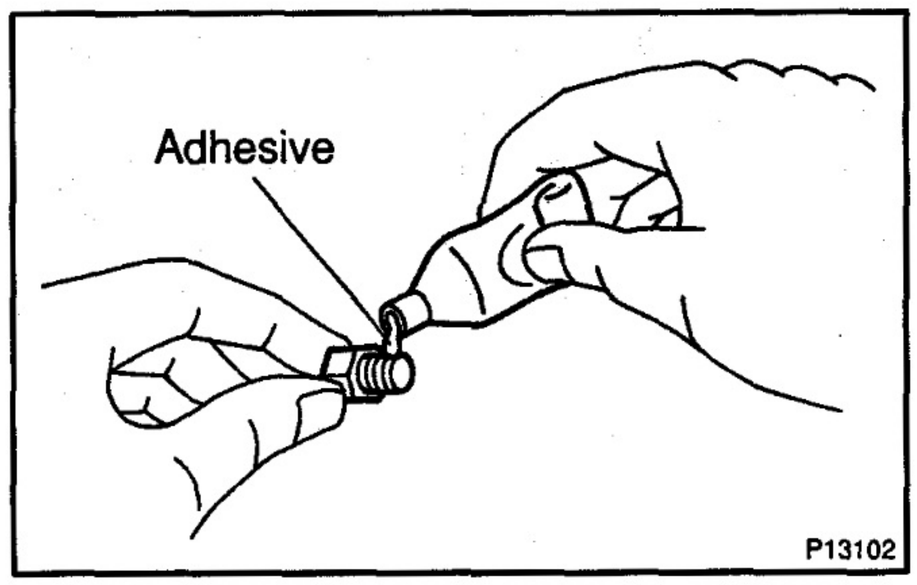

(c) Apply adhesive to 2 or 3 threads of the taper screw.
Adhesive:
Part No. 08833–00080, THREE BOND 1344, LOCTITE 242 or equivalent.

(d) Install the taper screw plug.

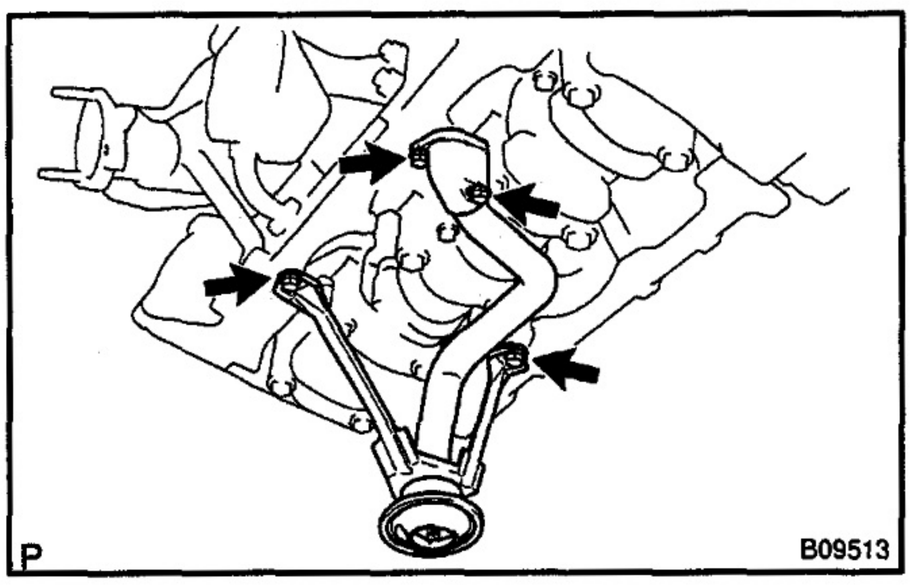

3. INSTALL OIL STRAINER

Install a new gasket and the oil strainer with the 2 bolts and 2 nuts.

Torque: 8 N·m (80 kgf·cm, 69 in.·lbf)

4. INSTALL OIL PAN

(a) Remove any old packing (FIPG) material and be careful not to drop any oil on the contact surfaces of the oil pan and cylinder block.

- Using a razor blade and gasket scraper, remove all the old packing (FIPG) material from the gasket surfaces and sealing groove.
- Thoroughly clean all components to remove all the loose material.
- Using a non–residue solvent, clean both sealing surfaces.

NOTICE:
Do not use a solvent which will affect the painted surfaces.

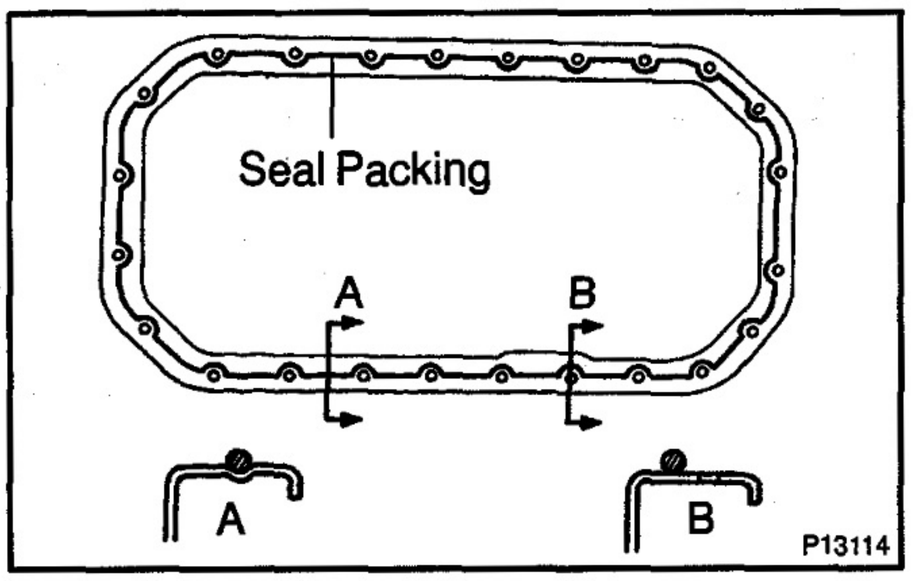

(b) Apply seal packing to the oil pan as shown in the illustration.
Seal packing: Part No. 08826 –00080 or equivalent

- Install a nozzle that has been cut to a 3 – 5 mm (0.12 – 0.20 in.) opening.
- Parts must be assembled within 5 minutes of application. Otherwise the material must be removed and reapplied.
- Immediately remove nozzle from the tube and reinstall cap.

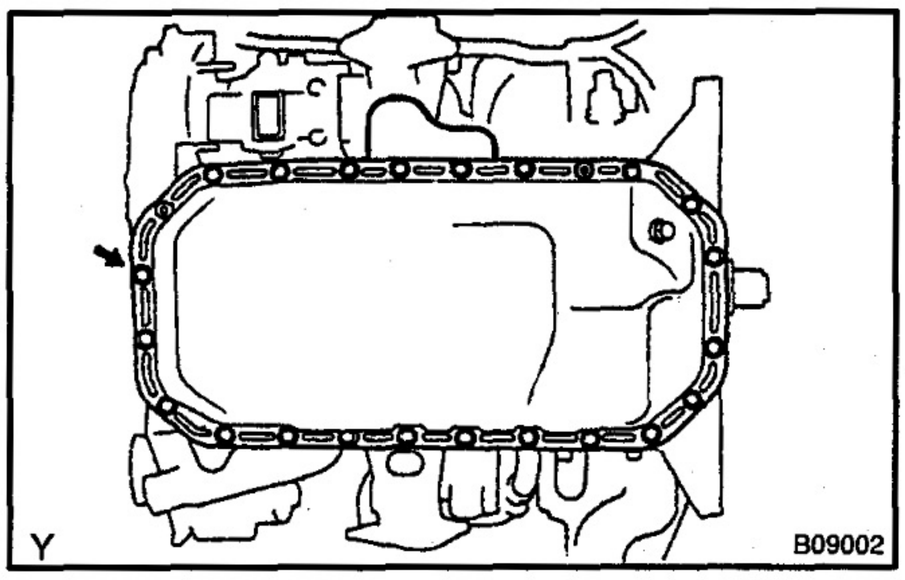

(c) Install the oil pan with the 22 bolts and 2 nuts.
Torque: 16 N·m (165 kgf·cm, 12 ft·lbf)

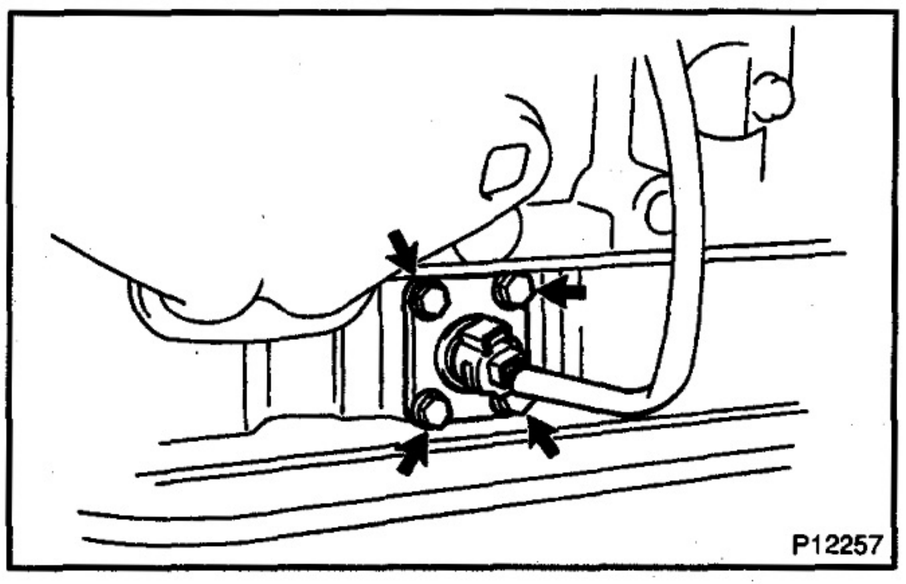

5. INSTALL OIL LEVEL SENSOR
(a) Install the oil level sensor with the 4 bolts.
(b) Connect the oil level sensor connector.
6. INSTALL WATER PUMP (See page CO–8)
7. INSTALL ALTERNATOR AND ALTERNATOR BRACKET (See page CO–8)

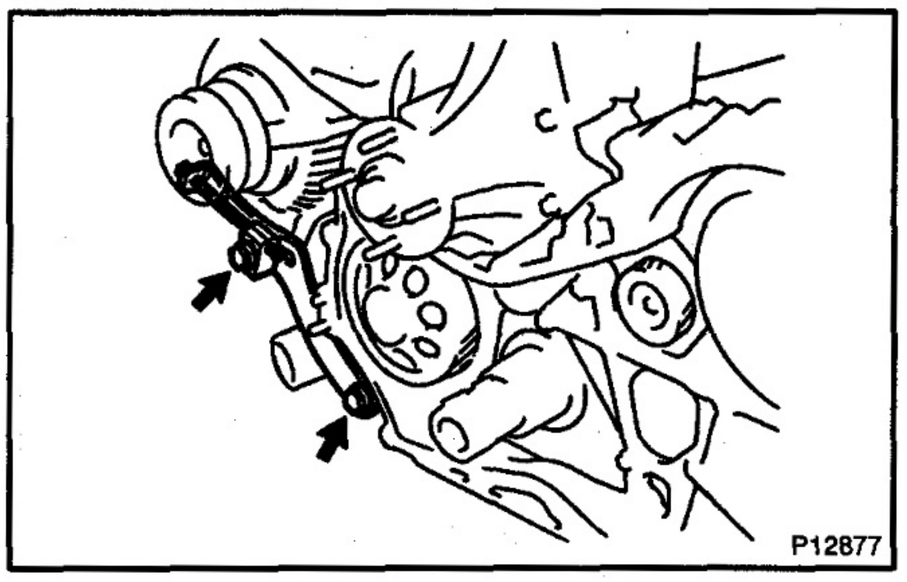

8. INSTALL ALTERNATOR ADJUSTING BAR
Install the adjusting bar with the bolt and lock bolt.
Torque: 21 N·m (210 kgf·cm, 15 ft·lbf)
9. INSTALL TIMING GEARS (See page EM–34)
10. INSTALL TIMING BELT (See page EM–18)
11. INSTALL WATER PUMP PULLEY, FAN AND DRIVE BELT (See page CO–8)
12. FILL WITH ENGINE OIL
13. FILL WITH ENGINE COOLANT
14. START ENGINE AND CHECK FOR OIL LEAKS
15. RECHECK ENGINE OIL LEVEL

OIL COOLER

COMPONENTS

LU013-01

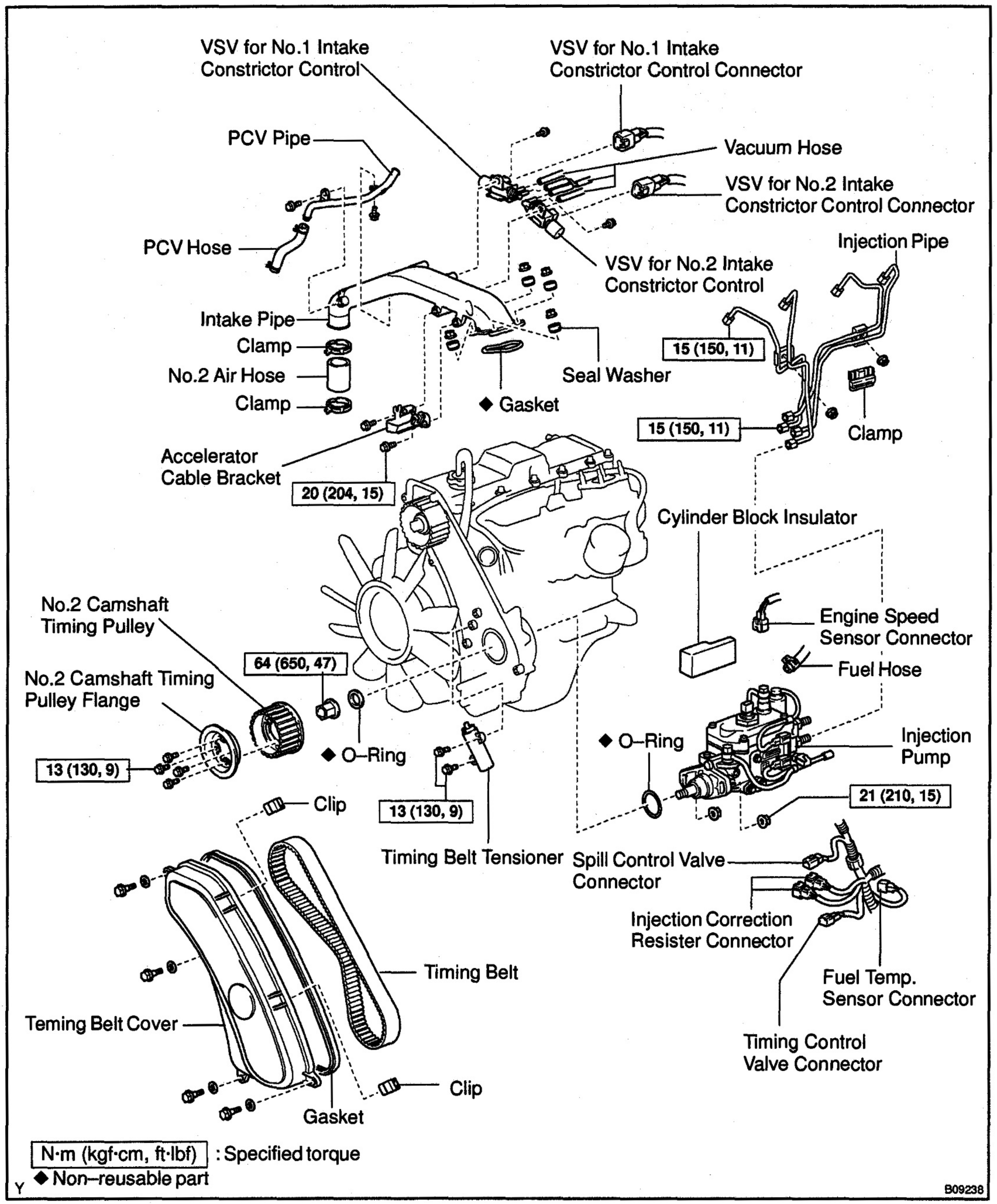

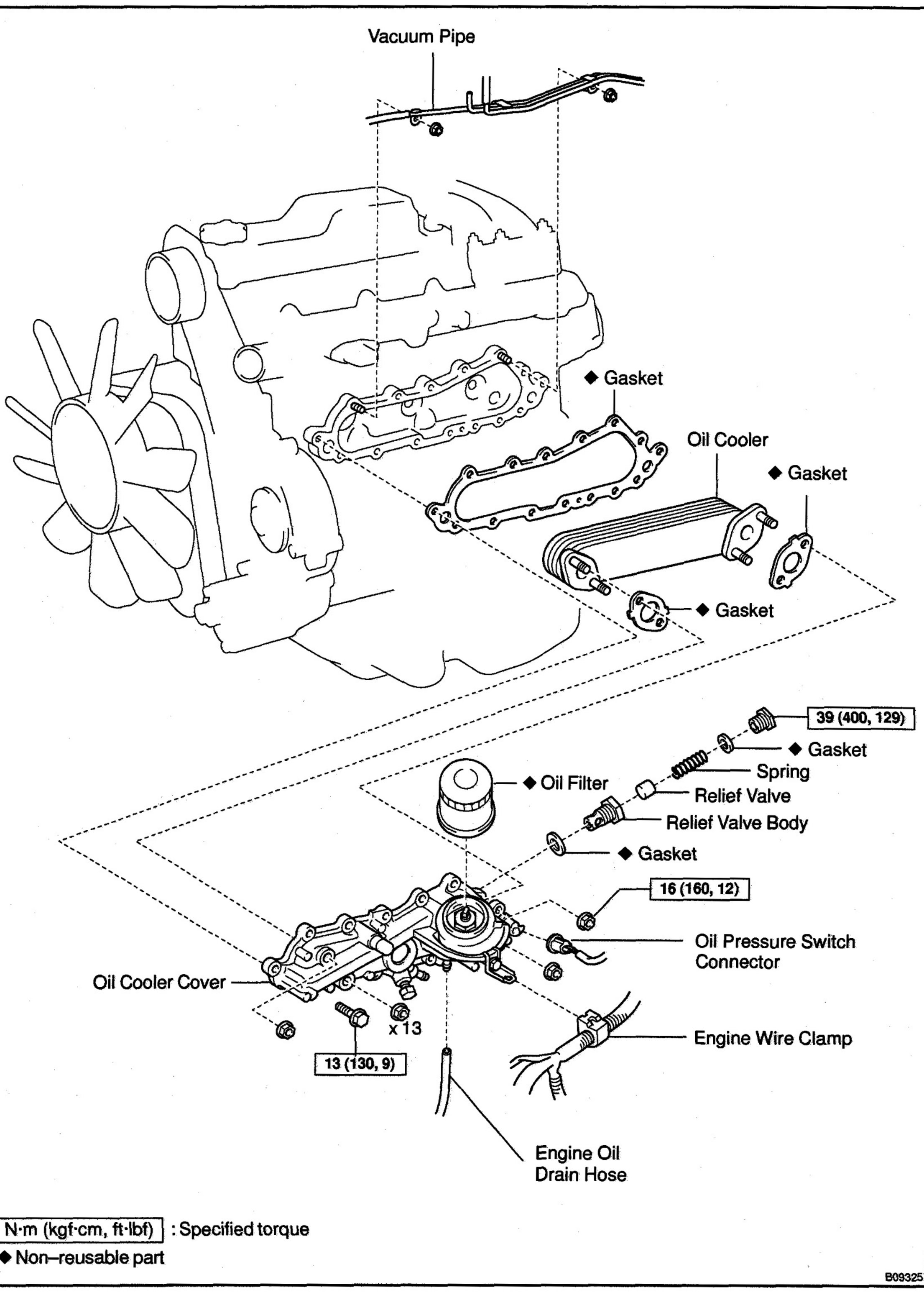

N·m (kgf·cm, ft·lbf) : Specified torque

◆ Non–reusable part

B09325

LU014–01

REMOVAL

1. **DRAIN ENGINE COOLANT**
2. **REMOVE TIMING BELT (See page EM–13)**
3. **REMOVE INJECTION PIPES (See page FU–5)**
4. **REMOVE INJECTION PUMP (See page FU–18)**

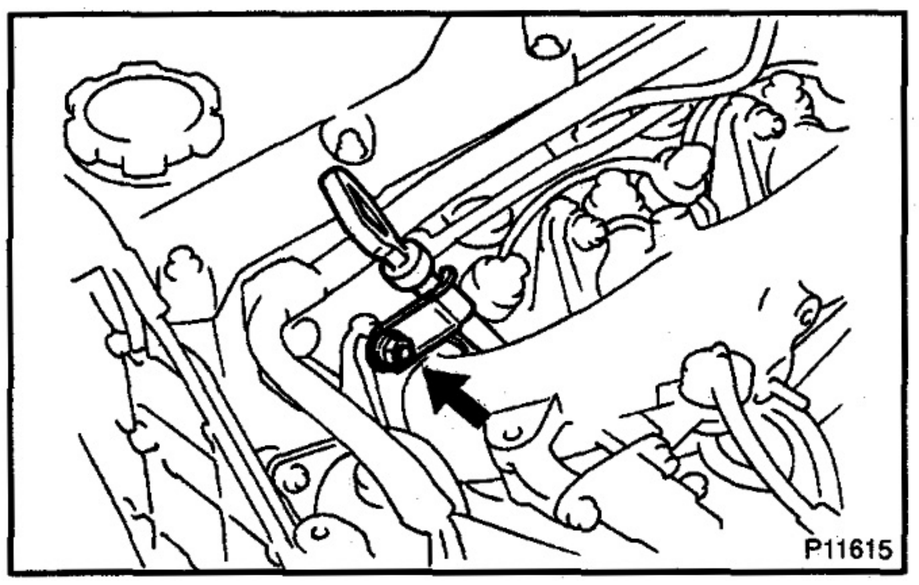

5. **REMOVE OIL DIPSTICK AND GUIDE**

(a) Remove the nut and oil dipstick guide assembly.

(b) remove the O–ring from the oil dipstick guide.

6. **REMOVE OIL FILTER (See page LU–2)**

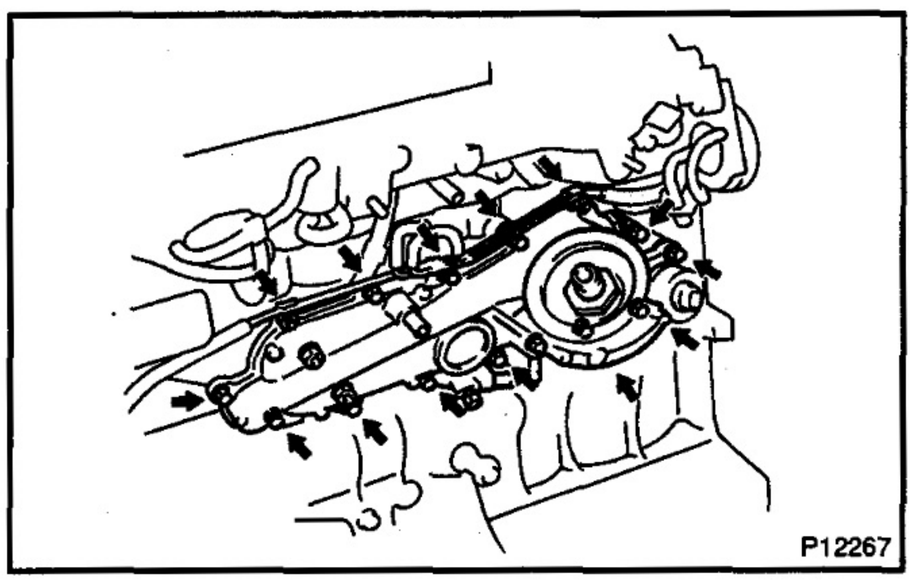

7. **REMOVE OIL COOLER AND OIL COOLER COVER ASSEMBLY**

(a) Remove the 2 nuts and disconnect the vacuum pipe.

(b) Remove the 13 bolts, oil cooler, oil cooler cover assembly and gasket.

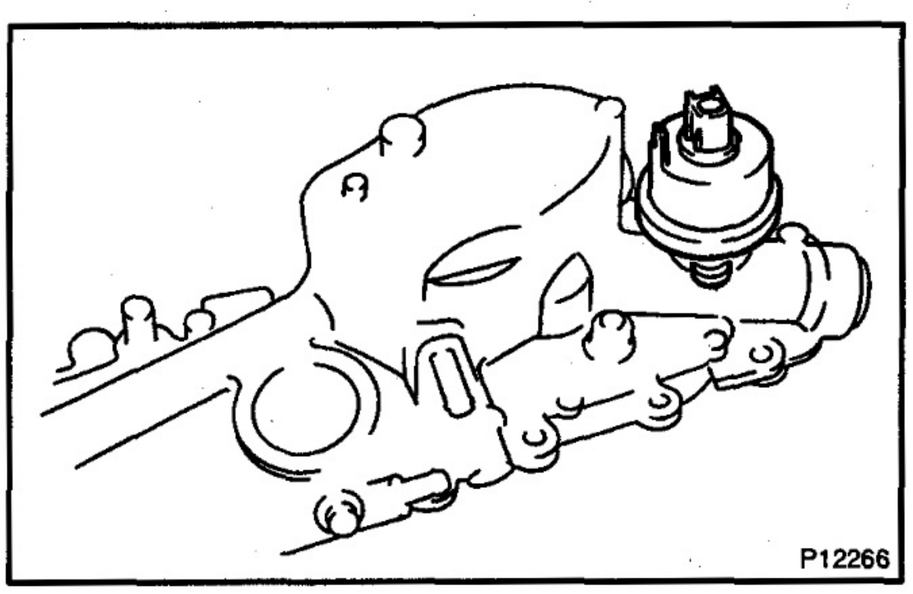

8. **REMOVE OIL PRESSURE SENDER GAUGE**

Remove the oil pressure sender gauge from the oil cooler cover.

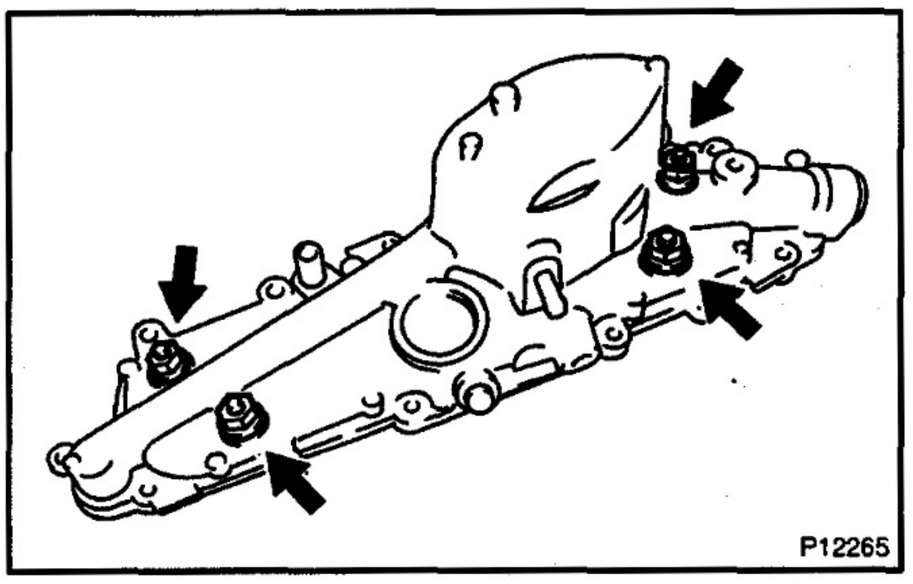

9. **SEPARATE OIL COOLER AND OIL COOLER COVER**

Remove the 4 nuts, oil cooler and 2 gaskets from the oil cooler cover.

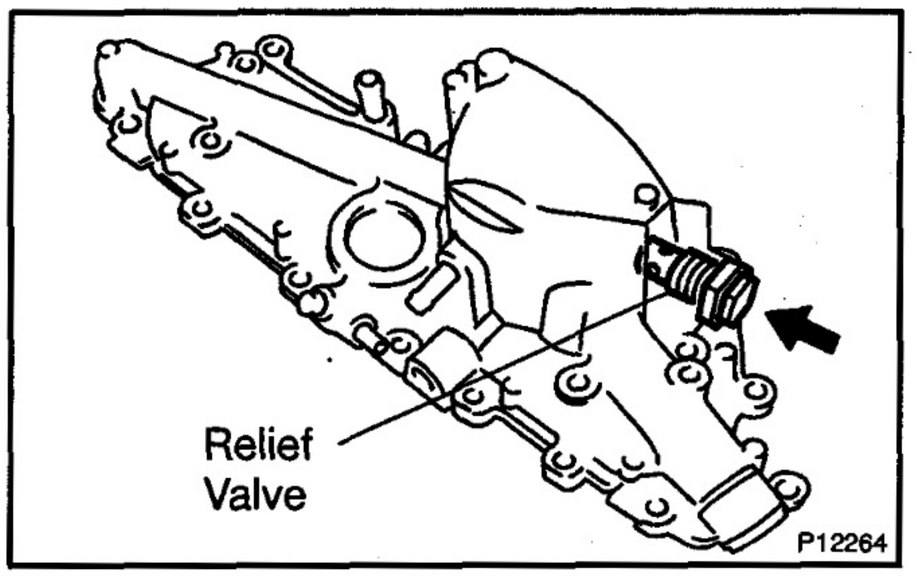

10. REMOVE RELIEF VALVE

Remove the relief valve from the oil cooler cover.

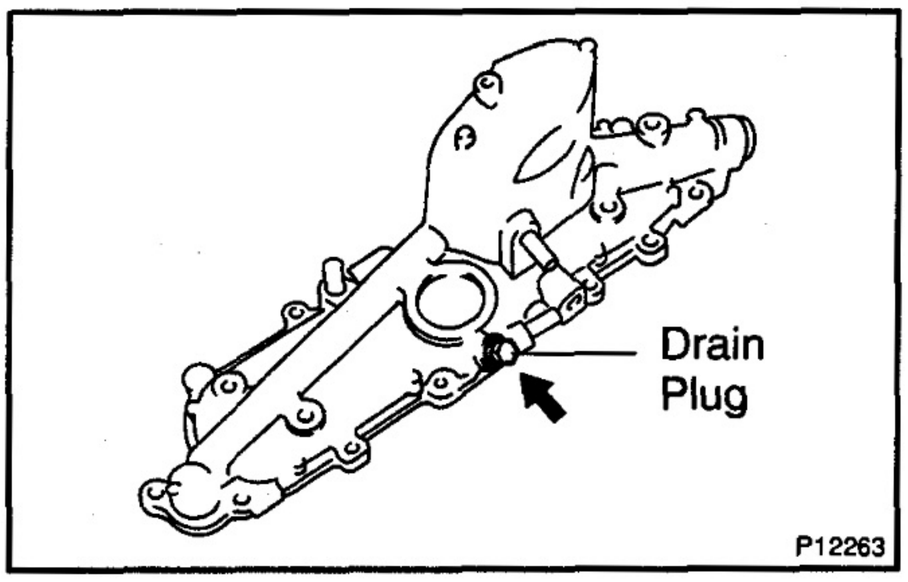

11. REMOVE DRAIN PLUG

Remove the drain plug from the oil cooler cover.

LU015-01

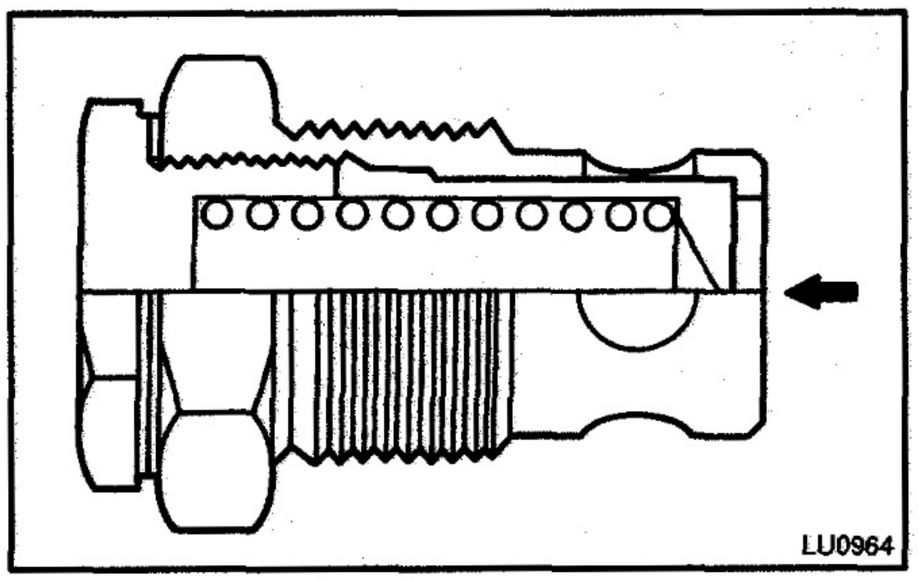

INSPECTION

1. INSPECT RELIEF VALVE

Push the valve with a wooden stick to check if it is stuck.
If stuck, replace the relief valve.

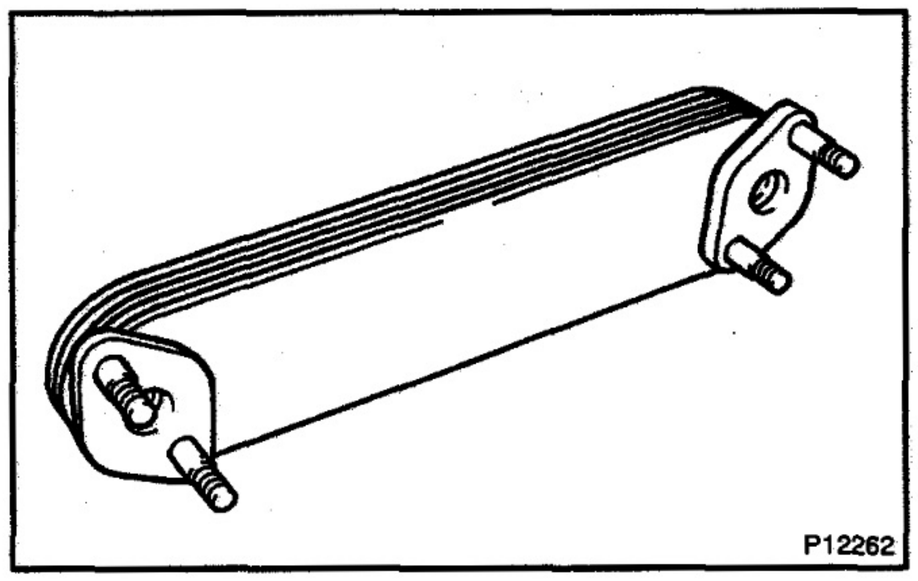

2. INSPECT OIL COOLER

Check the oil cooler for damage or clogging.
If necessary, replace the oil cooler.

LU016–01

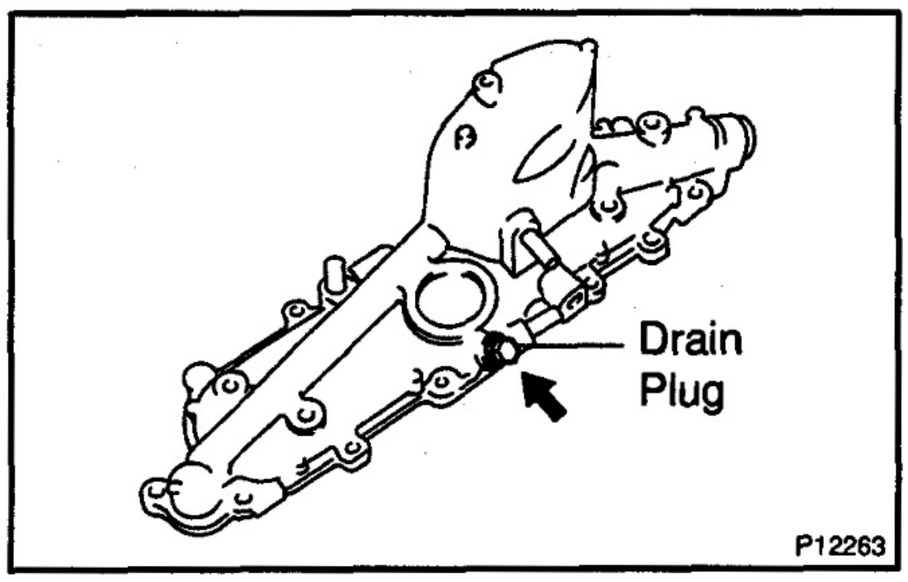

INSTALLATION

1. INSTALL ENGINE DRAIN PLUG

Install the engine drain plug to the oil cooler cover.

Torque: 8 N·m (80 kgf·cm, 69 in.·lbf)

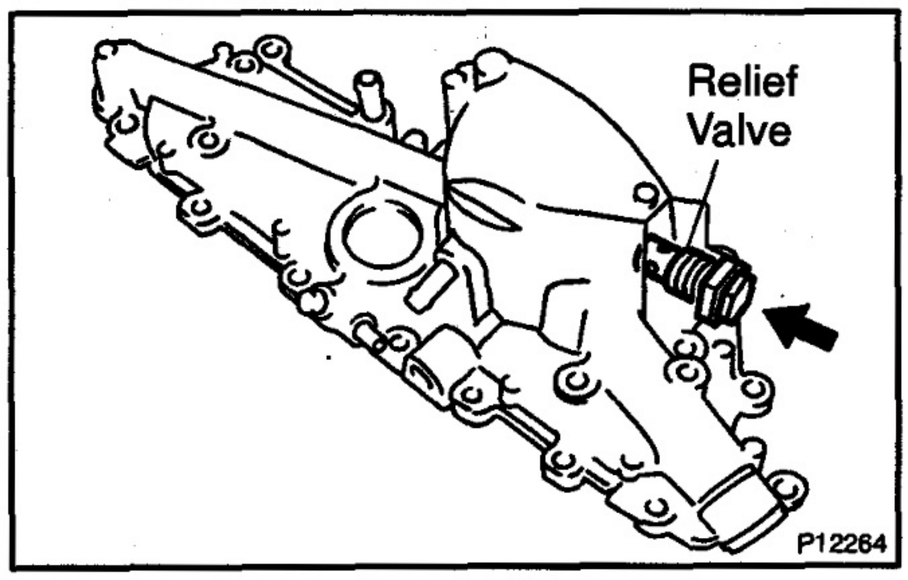

2. INSTALL RELIEF VALVE

Install a new gasket with the relief valve.

Torque: 39 N·m (400 kgf·cm, 29 ft·lbf)

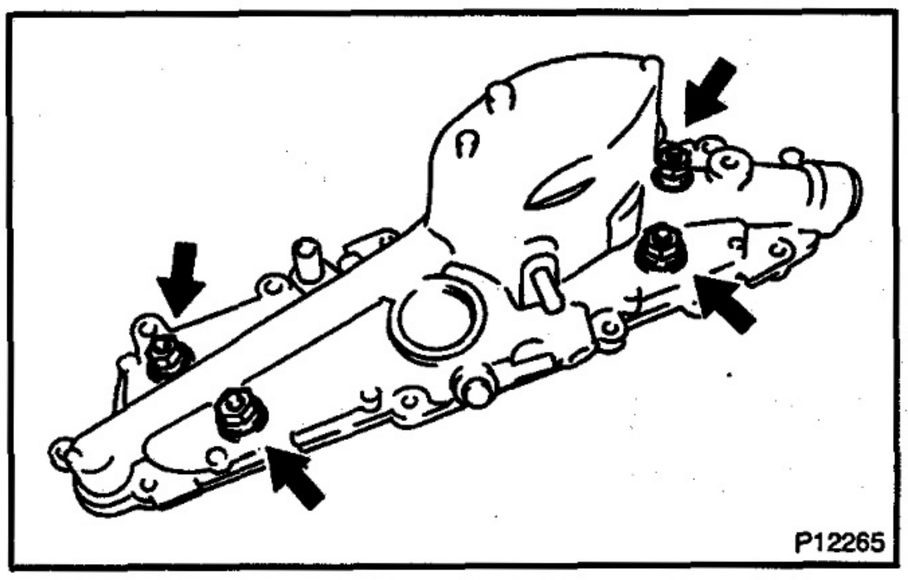

3. ASSEMBLY OIL COOLER AND OIL COOLER COVER

Install 2 new gaskets and the oil cooler to the oil cooler cover with the 4 nuts.

Torque: 16 N·m (160 kgf·cm, 12 ft·lbf)

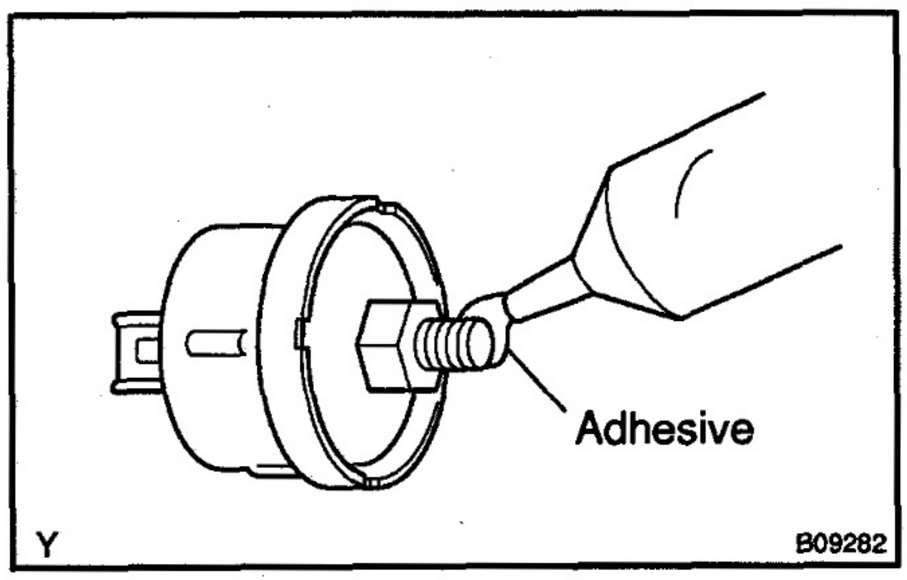

4. INSTALL OIL PRESSURE SENDER GAUGE

(a) Apply adhesive to 2 or 3 threads of the oil pressure sender gauge.

Adhesive:
Part No. 08833–00080, THREE BOND 1344,
LOCTITE 242 or equivalent

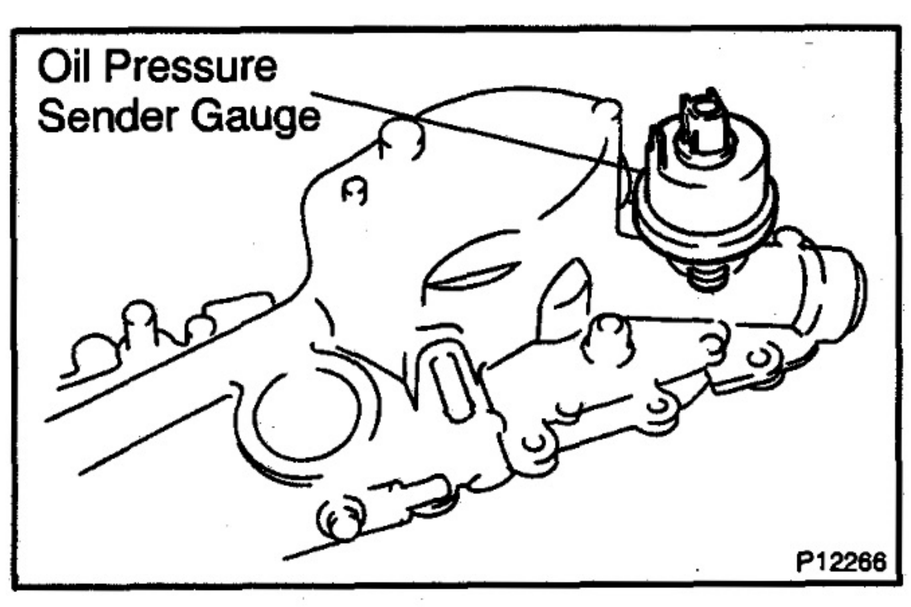

(b) Install the oil pressure sender gauge.

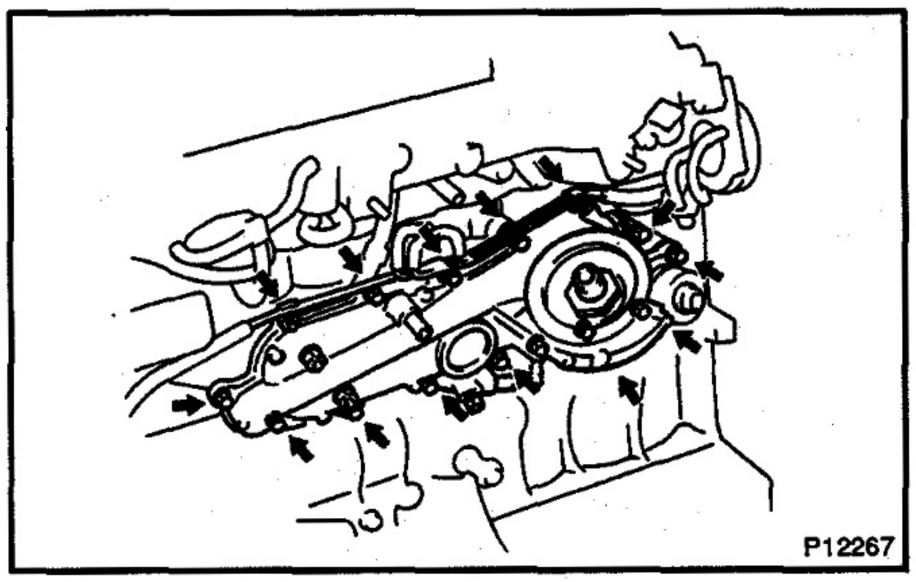

5. INSTALL OIL COOLER AND OIL COOLER COVER ASSEMBLY

Install a new gasket, the oil cooler and oil cooler cover assembly with the 13 bolts.

Torque: 13 N·m (130 kgf·cm, 9 ft·lbf)

6. INSTALL OIL FILTER (See page LU–2)

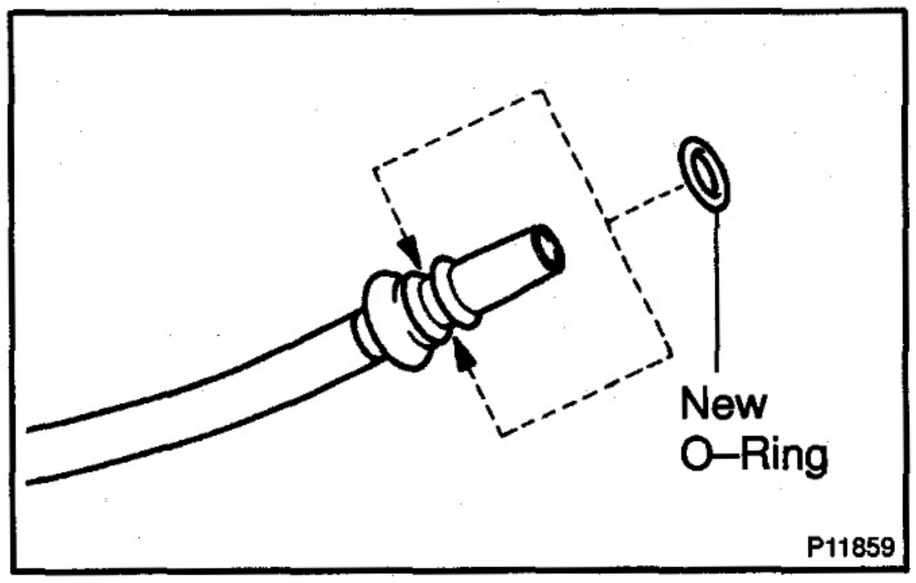

7. INSTALL OIL DIPSTICK GUIDE AND OIL DIPSTICK

(a) Install a new O–ring to the dipstick guide.

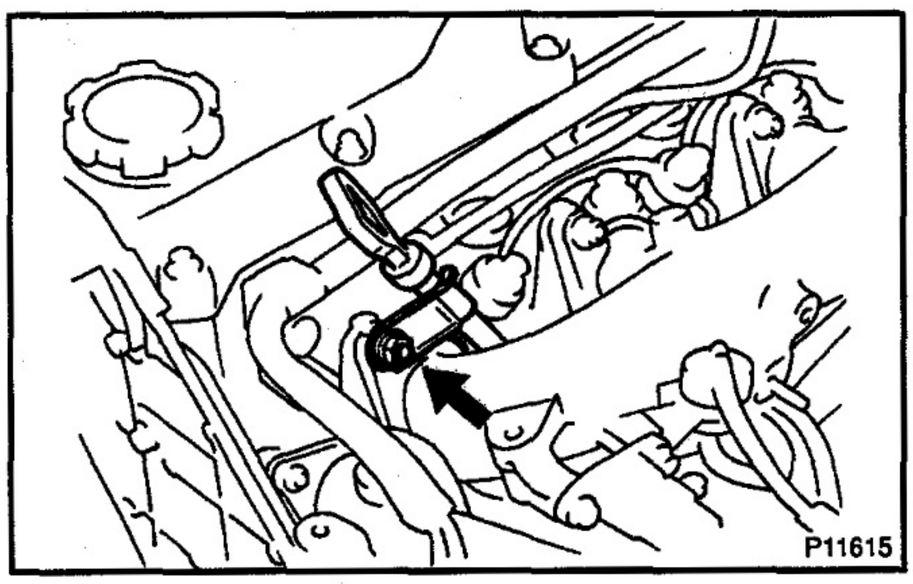

(b) Install the oil dipstick guide assembly with the nut.

Torque: 29 N·m (300 kgf·cm, 22 ft·lbf)

8. INSTALL INJECTION PUMP (See page FU–25)

9. INSTALL INJECTION PIPES (See page FU–13)

10. INSTALL TIMING BELT (See page EM–18)

11. FILL WITH ENGINE COOLANT

12. START ENGINE AND CHECK FOR LEAKS

13. CHECK ENGINE OIL LEVEL

OIL NOZZLE

COMPONENTS

LU0C0–02

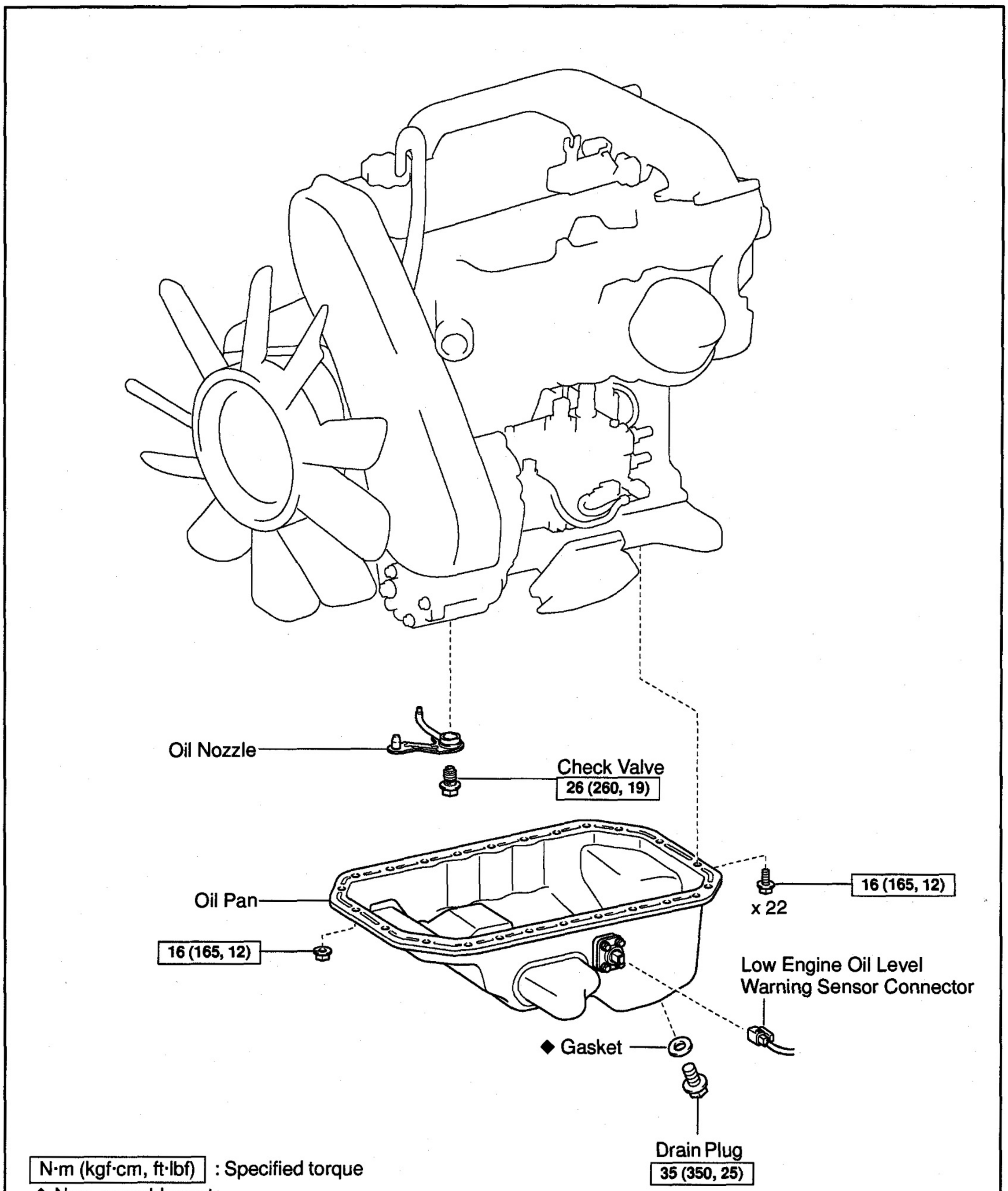

N·m (kgf·cm, ft·lbf) : Specified torque

◆ Non–reusable part

B09005

LU0I7–01

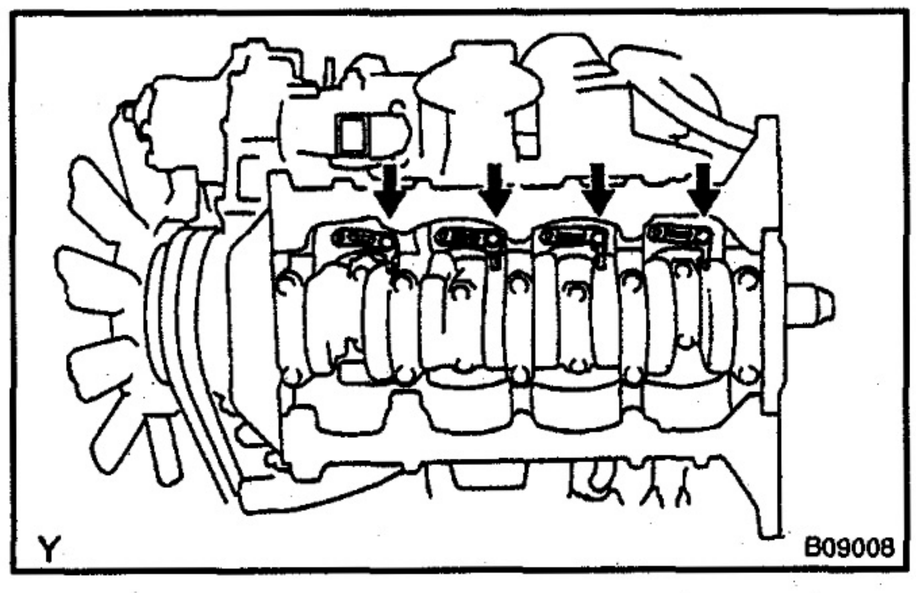

REMOVAL

1. **DRAIN ENGINE OIL**
2. **REMOVE OIL PAN (See page LU–7)**
3. **REMOVE CHECK VALVE AND OIL NOZZLES**

Remove the 4 check valves and oil nozzles.

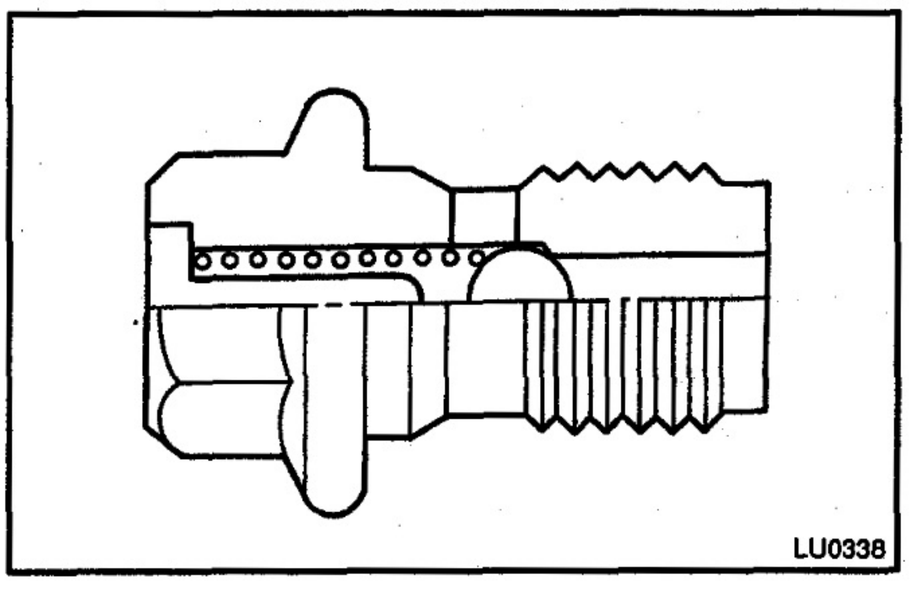
LU0338

LU016-01

INSPECTION

1. INSPECT CHECK VALVES

Push the valve with a wooden stick to check if it is stuck.
If stuck, replace the check valve.

2. INSPECT OIL NOZZLES

Check the oil nozzles for damage or clogging. If necessary, replace the oil nozzle.

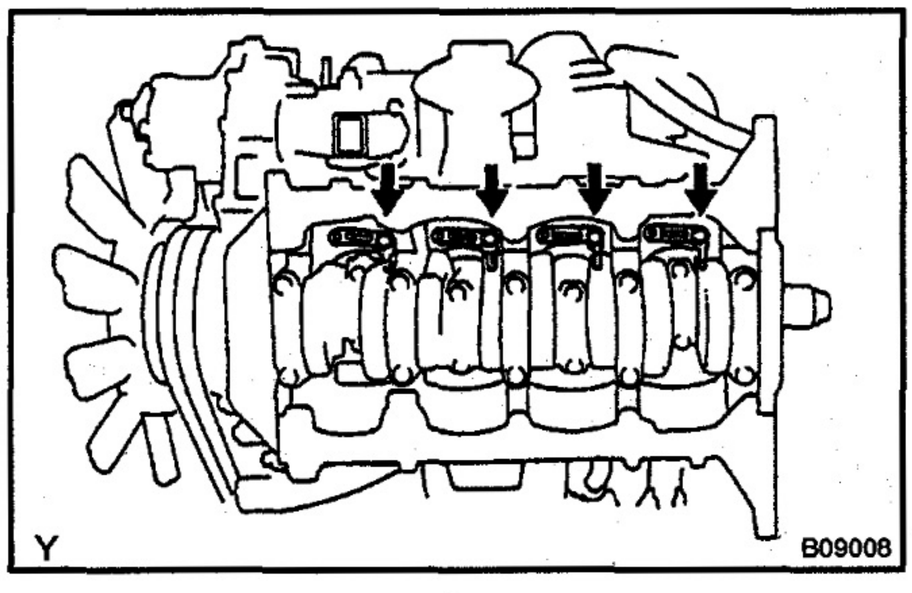

LU019–01

INSTALLATION

1. INSTALL OIL NOZZLES AND CHECK VALVES

(a) Align the pin of the oil nozzle with the pin hole of the cylinder block.

(b) Install the oil nozzle with the check valve. Install the 4 oil nozzles and check valves.

Torque: 26 N·m (260 kgf·cm, 19 ft·lbf)

2. INSTALL OIL PAN (See page LU–12)

3. FILL WITH ENGINE OIL

4. START ENGINE AND CHECK FOR LEAKS

STARTING

PRE–HEATING SYSTEM ST–1
STARTER ST–6
STARTER RELAY ST–20

PRE–HEATING SYSTEM

COMPONENTS

ST0HH–01

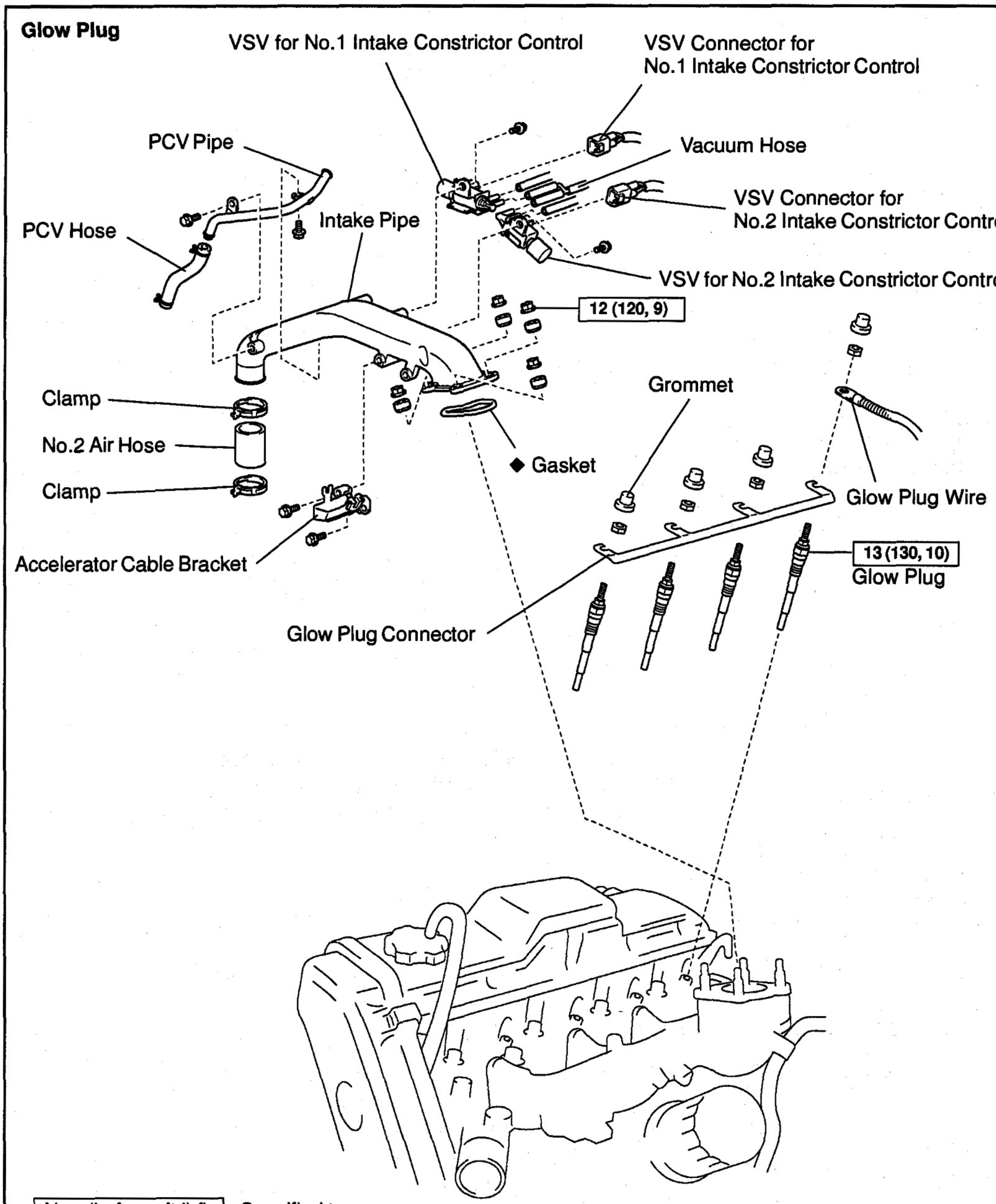

N·m (kgf·cm, ft·lbf) : Specified torque

◆ Non–reusable part

B09245

ST0HI–01

INSPECTION

1. INSPECT LIGHTING TIME OF GLOW INDICATOR LIGHT

Turn the ignition switch ON, measure the lighting time.

Light lighting time (T1): Refer to the chart graph

2. INSPECT AFTER GLOW TIME

Turn the ignition switch ON, measure the time battery voltage is applied to terminal SREL of the preheating timer.

After glow time (T2): Refer to the chart graph

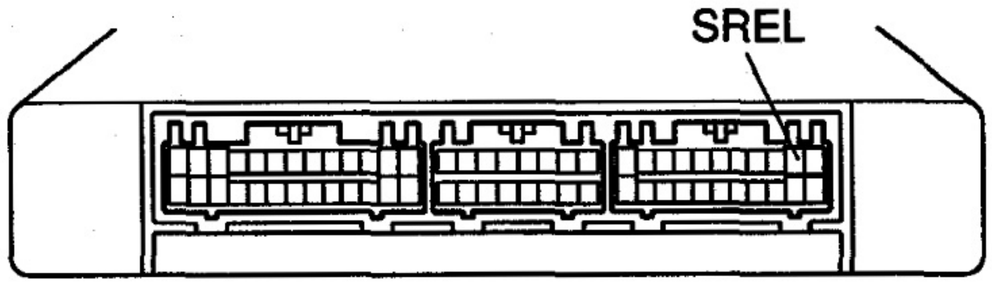

Engine ECU

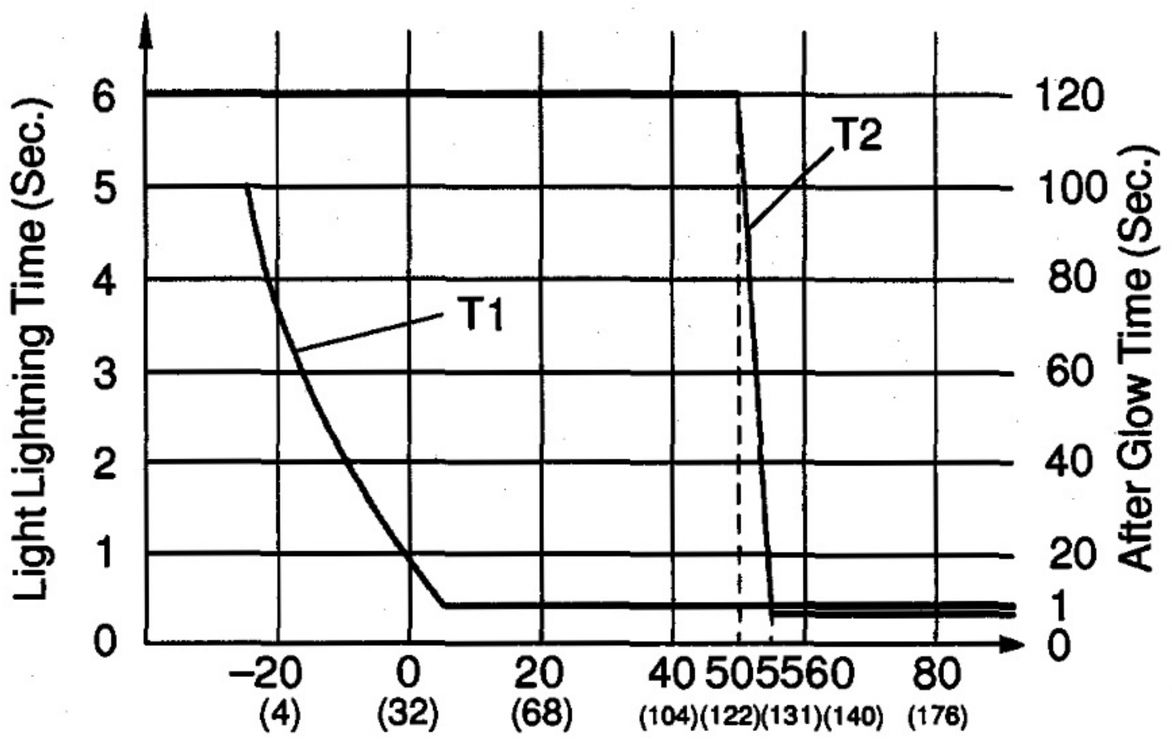

B09236

3. INSPECT ENGINE ECU (See page DI–15)

4. INSPECT GLOW PLUG RELAY

(a) Remove the glow plug relay. (Marking: SUB GLW RLY)

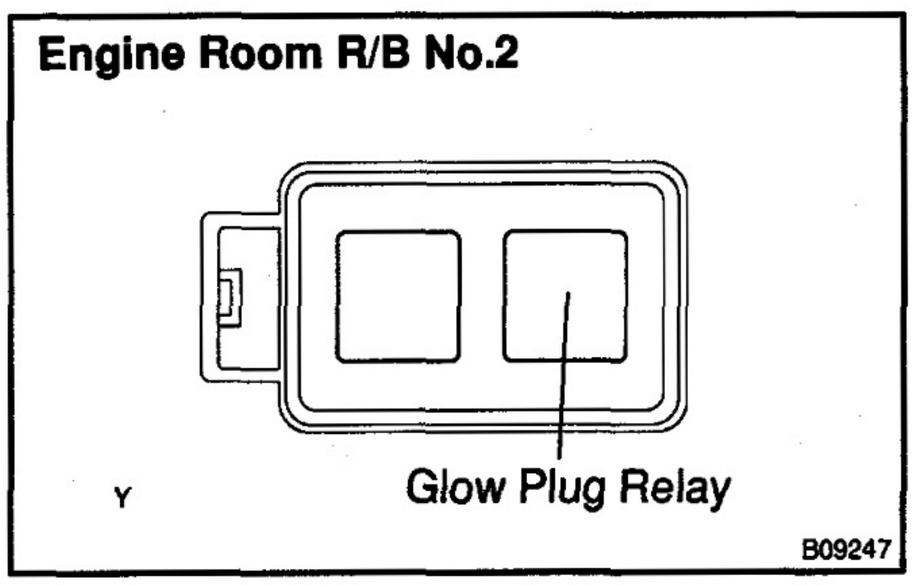

B09247

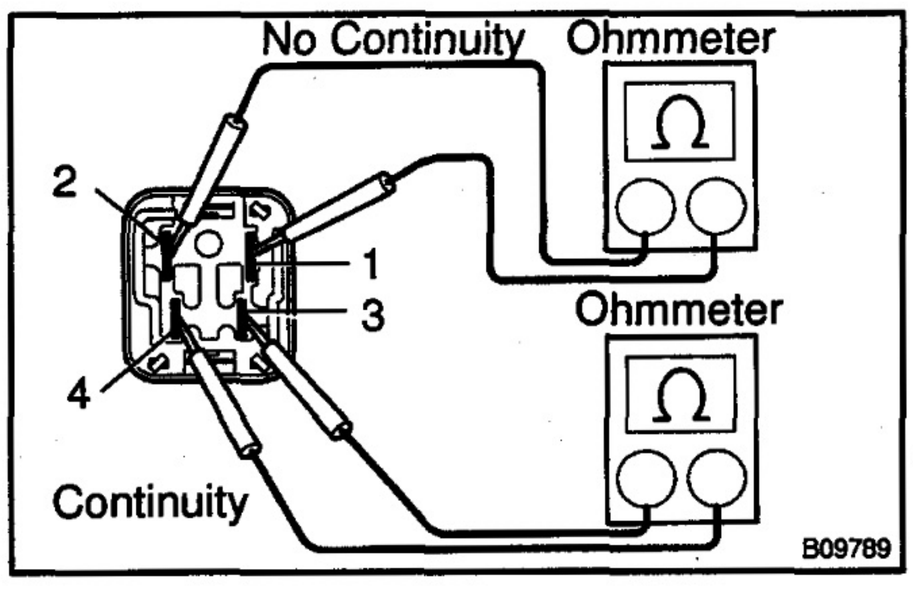

B09789

(b) Inspect the glow plug relay continuity.

(1) Using an ohmmeter, check that there is no continuity between terminals 1 and 2.

If there is continuity, replace the relay.

(2) Check that there is continuity between terminals 3 and 4.

If there is no continuity, replace the relay.

ST

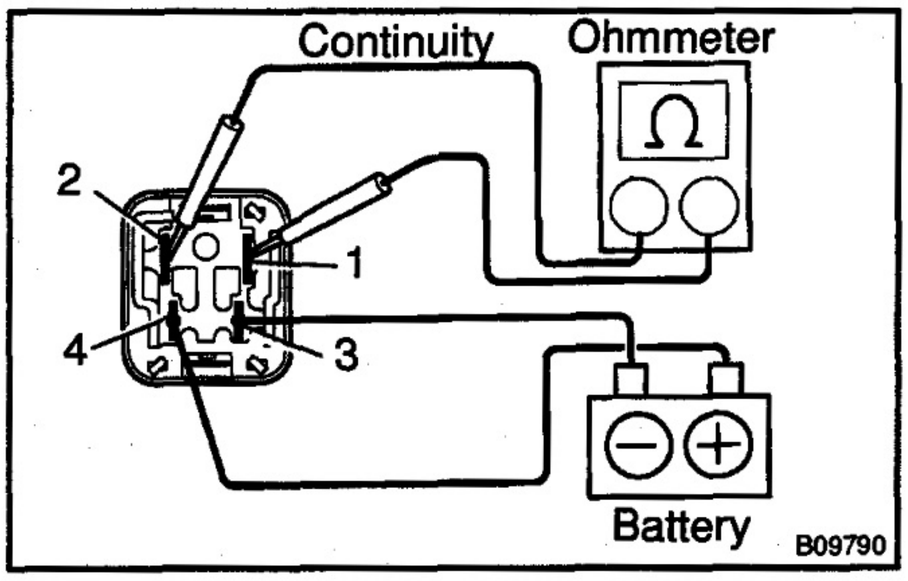

(c) Inspect the glow plug relay operation.
  (1) Apply battery voltage across terminals 3 and 4.
  (2) Using an ohmmeter, check that there is continuity between terminals 1 and 2.

If there is no continuity, replace the relay.

(d) Reinstall the glow plug relay.

5. INSPECT WATER TEMPERATURE SENSOR (See page ED–15)

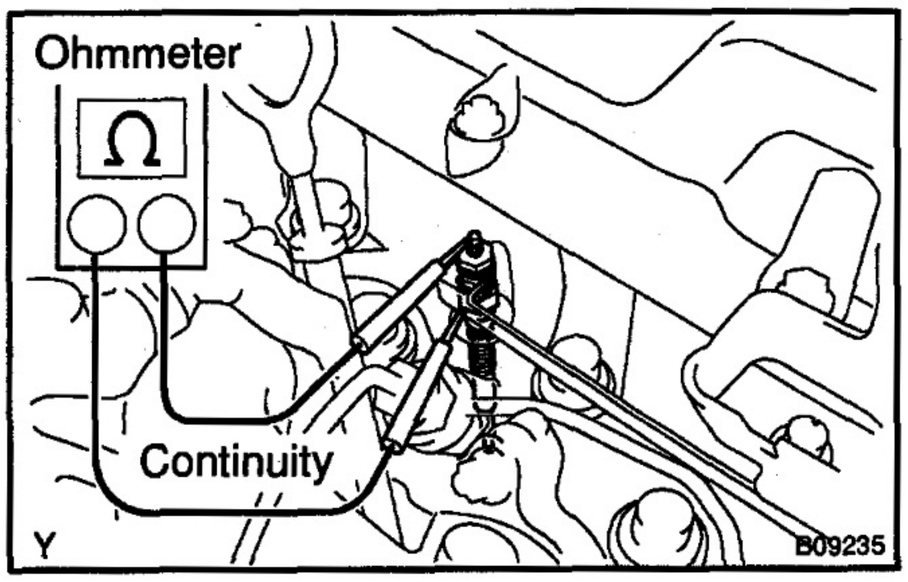

6. INSPECT GLOW PLUGS

NOTICE:

- **Be careful not to damage the glow plug pipes as it could cause an open circuit or shorten life of the glow plugs.**
- **Avoid getting oil and gasoline on the glow plug when cleaning.**
- **During inspection, be sure to wipe any oil of the terminal and bakelite washer with a dry cloth.**
- **Be careful no to apply more than 11 V to the glow plug as it could cause an open circuit.**

Using an ohmmeter, check that there is continuity between the glow plug terminal and ground.

Standard resistance: Approx. 0.72 Ω at 20°C (68°F)

If there is no continuity, replace the glow plug (See page ST–4).

Torque: 13 N·m (130 kgf·cm, 10 ft·lbf)

ST0HJ–01

REPLACEMENT

REPLACE GLOW PLUGS

NOTICE:

- **The cylinder head and glow plug hole can seize up with carbon deposits. And if the glow plug is forcefully twisted when you remove it, the torsion can crack the ceramic. So keep removal of the glow plugs to a minimum.**
- **The heater element is ceramic. So if you drop or knock a glow plug even once, replace the glow plug. Replace it regardless of it being new or used, having a normal resistance value and no sign of external damage.**

(a) Remove the intake pipe. (See page EM–44)

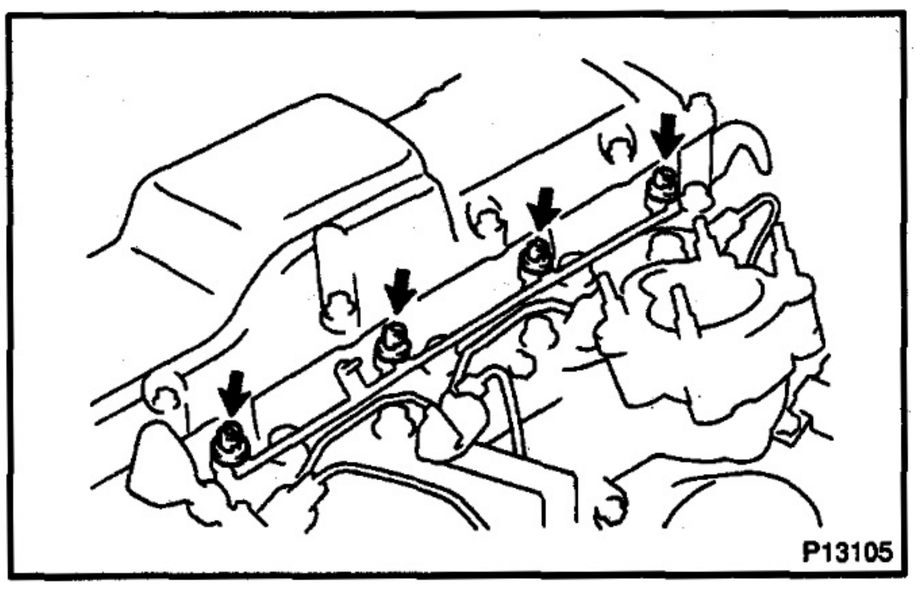

P13105

(b) Remove the glow plugs.
  (1) Remove the 4 screw grommets from the glow plugs.
  (2) Remove the ground wire from the glow plug.
  (3) Remove the 4 nuts and glow plug connector from the glow plugs.

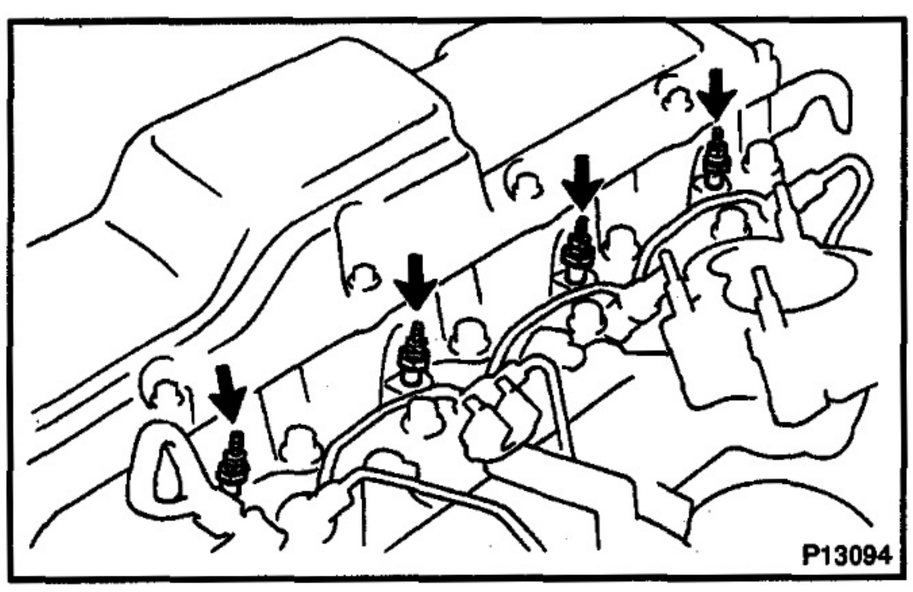

P13094

  (4) Using a 12 mm deep socket wrench, remove the 4 glow plugs from the cylinder head.

NOTICE:

Before reinstalling glow plugs, always first remove the carbon from the glow plug hole according to the following procedure.

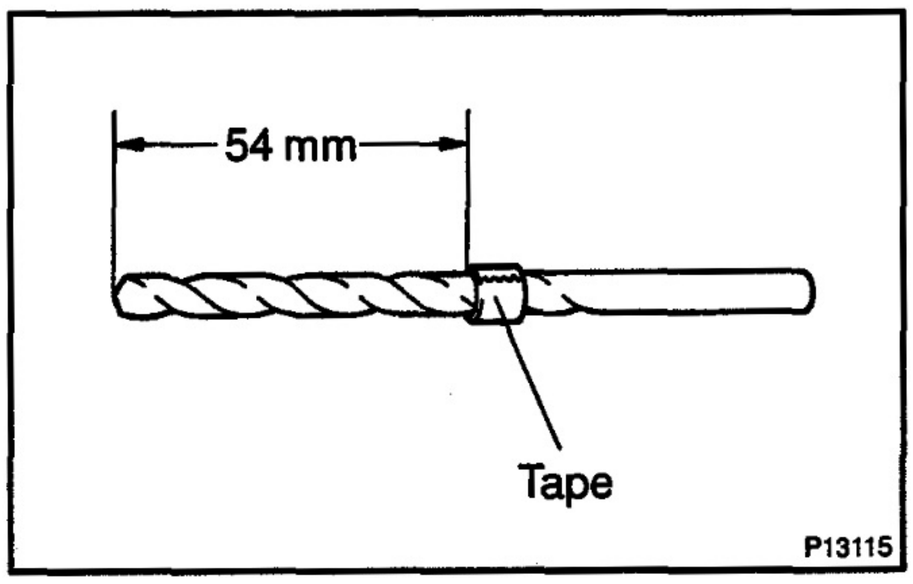

P13115

(c) Install the glow plugs.
  (1) Wind tape back for 54 mm (2.13 in.) from the tip of a 6 mm drill.

ST

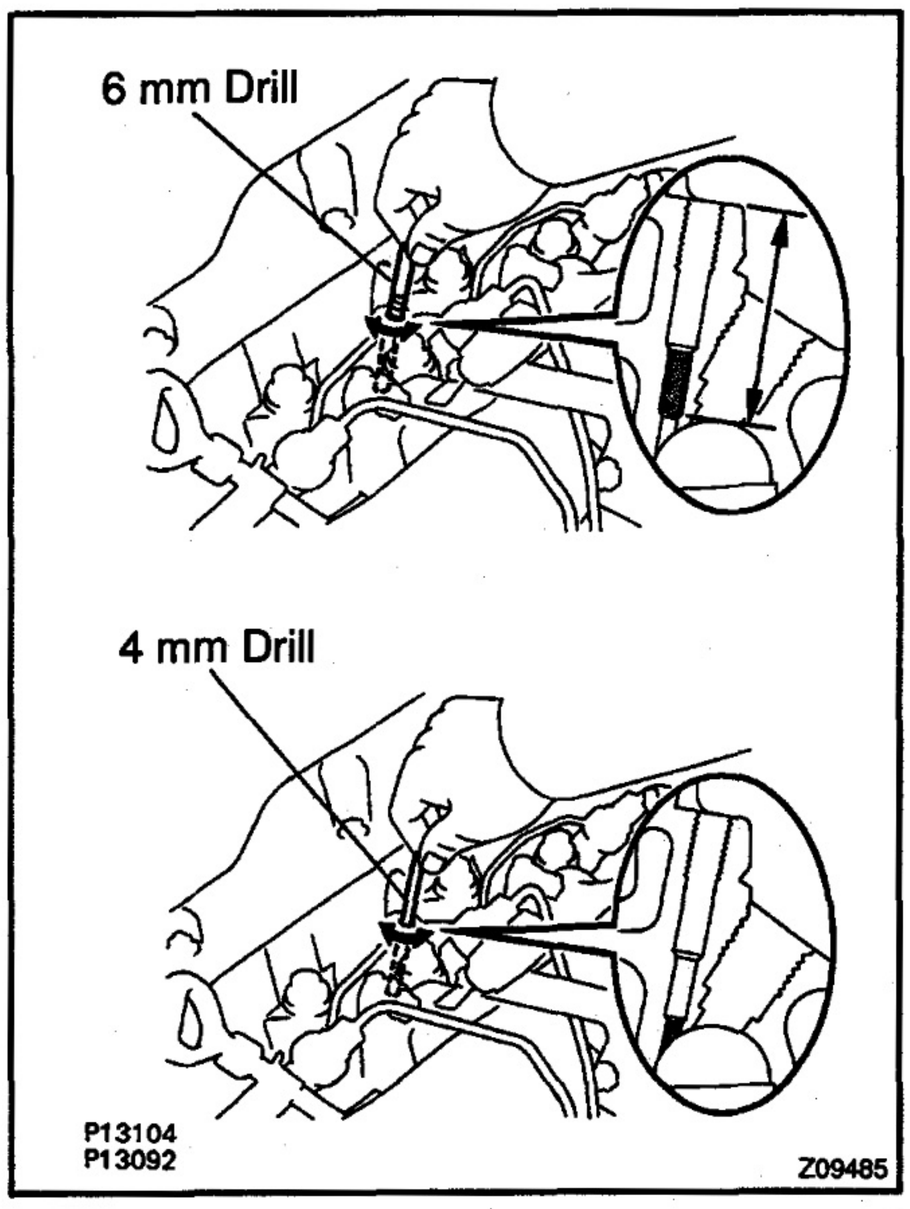

(2) Insert the taped 54 mm (2.13 in.) of the drill into the plug hole and turn the drill by hand to remove the carbon.

(3) Insert a 4 mm drill into the glow plug hole and turn the drill by hand to remove the carbon from the tip of the plug hole.

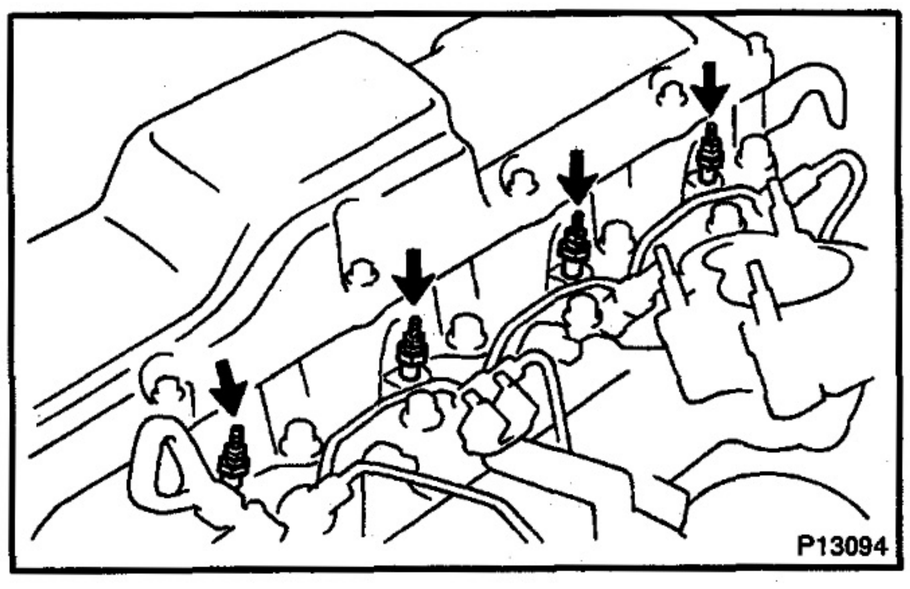

(4) Using a 12 mm deep socket wrench, install the 4 glow plugs to the cylinder head.

Torque: 13 N·m (130 kgf·cm, 10 ft·lbf)

(5) Install the glow plug wire to the glow plug.

(6) Install the glow plug connector to the glow plugs with the 4 nuts.

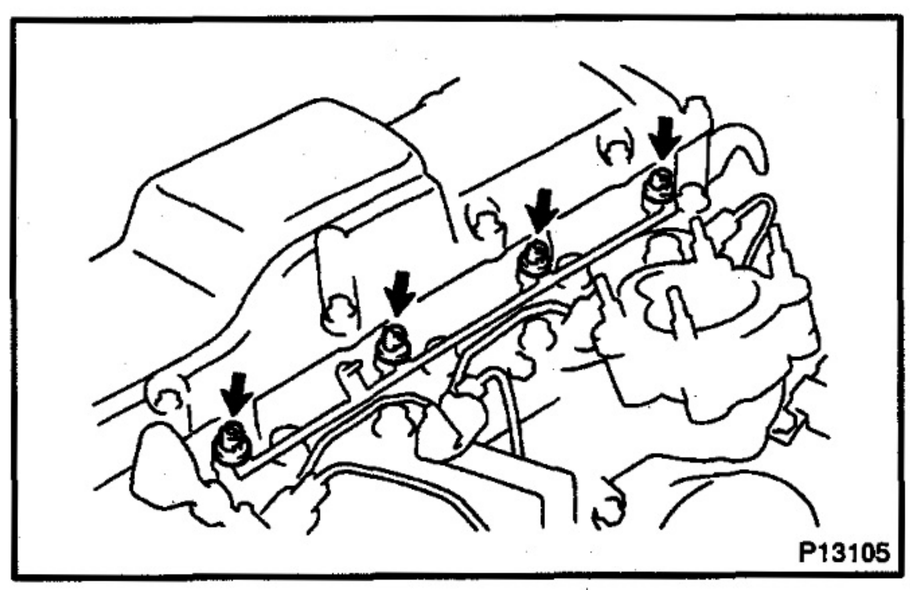

(7) Install the 4 screw grommets to the glow plugs.

(d) Install the intake pipe. (See page EM–64)

STARTER

COMPONENTS

ST0BK–02

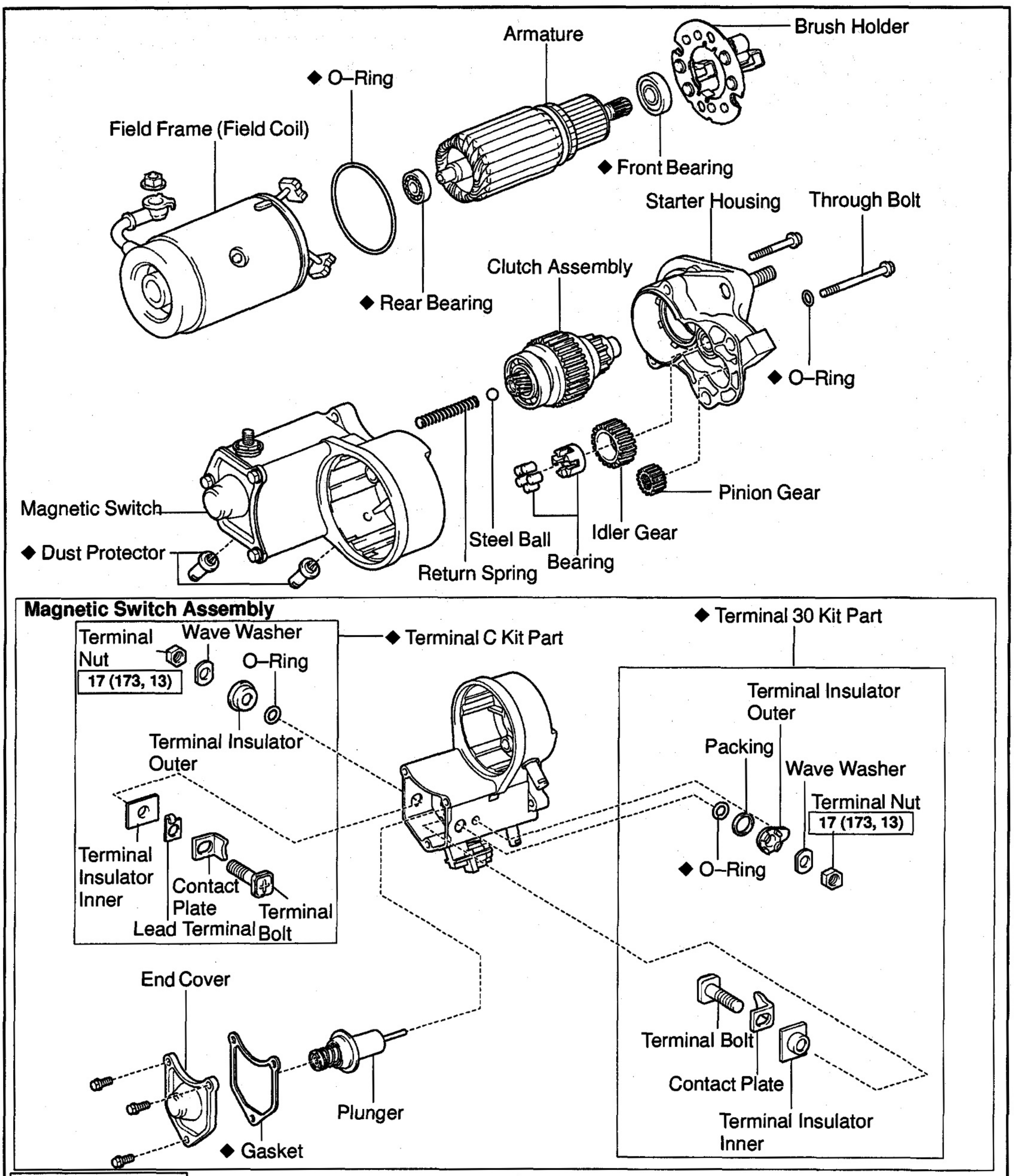

N·m (kgf·cm, ft·lbf) : Specified torque

◆ Non–reusable part

B09800

ST0BL–02

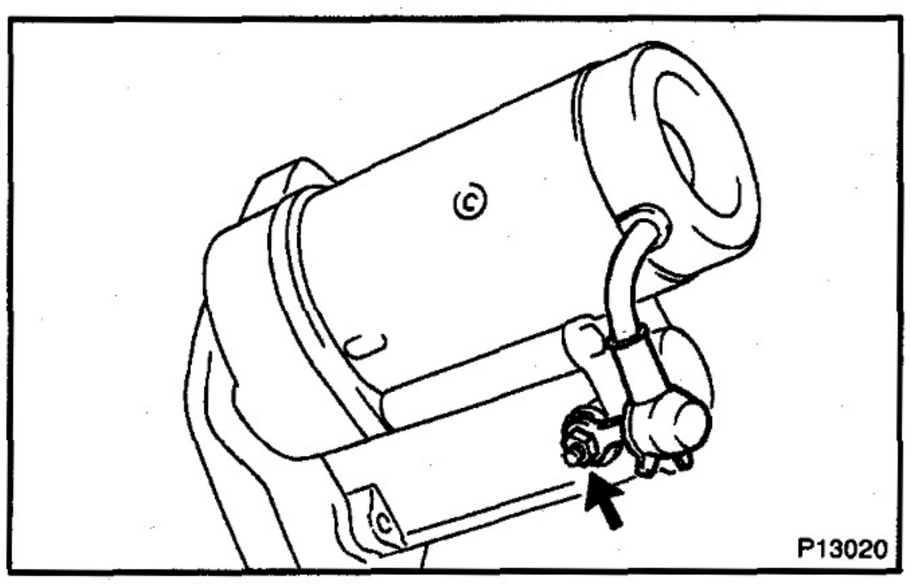

DISASSEMBLY

1. REMOVE FIELD FRAME AND ARMATURE

(a) Remove the nut, and disconnect the lead wire from the magnetic switch terminal.

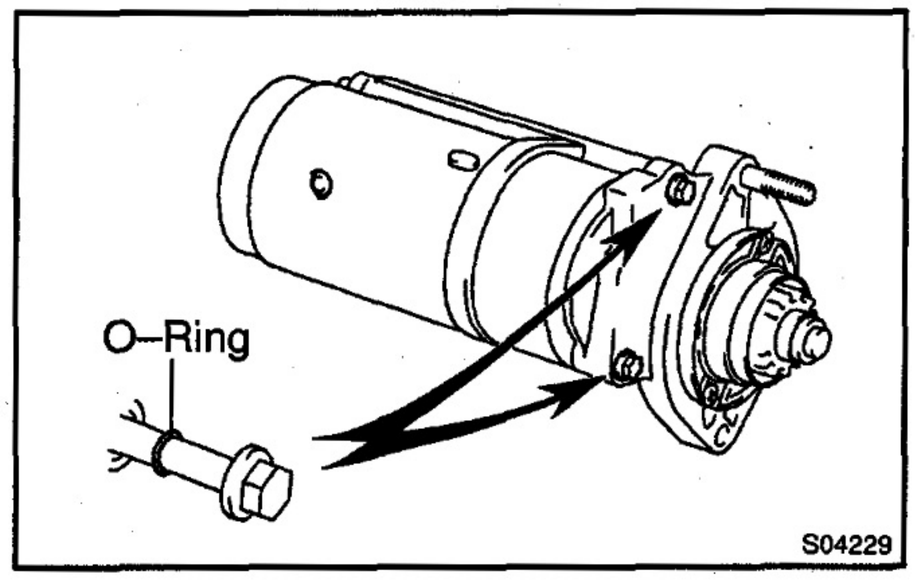

(b) Remove the 2 through bolts and O–rings.

(c) Pull out the field frame with the armature from the magnetic switch assembly.

(d) Remove the O–ring from the field frame.

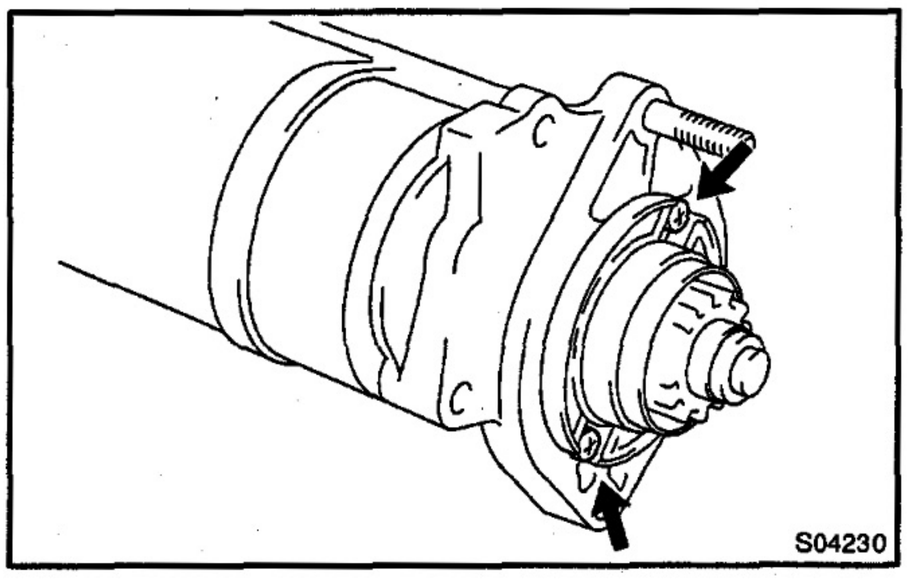

2. REMOVE STARTER HOUSING, CLUTCH ASSEMBLY AND GEARS

(a) Remove the 2 screws.

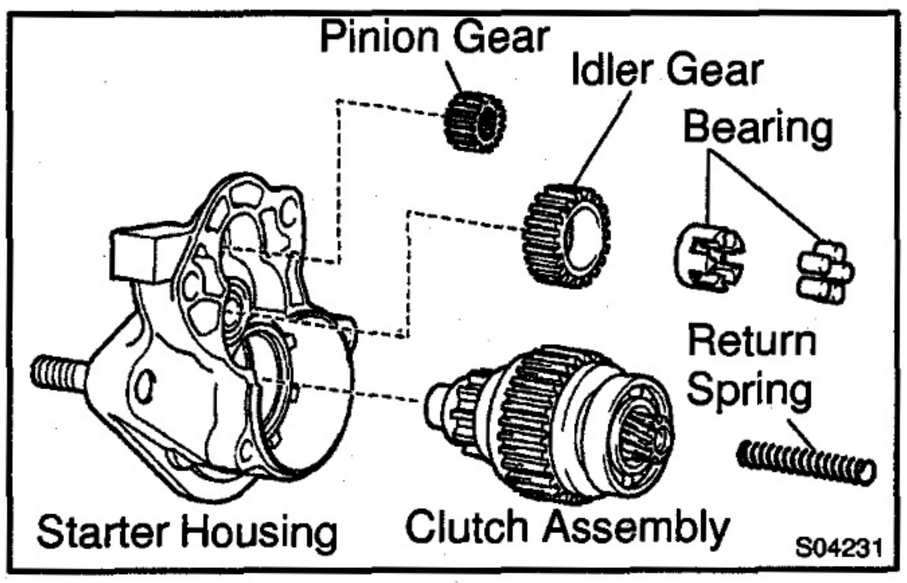

(b) Remove the starter housing, return spring, pinion gear, bearing, idler gear and clutch assembly from the magnetic switch assembly.

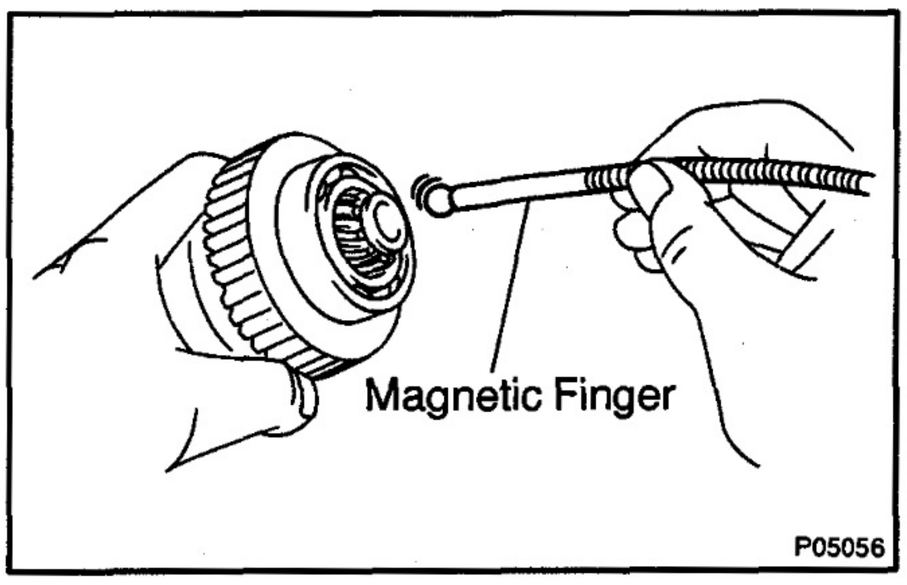

3. REMOVE STEEL BALL

Using a magnetic finger, remove the steel ball from the clutch shaft hole.

ST

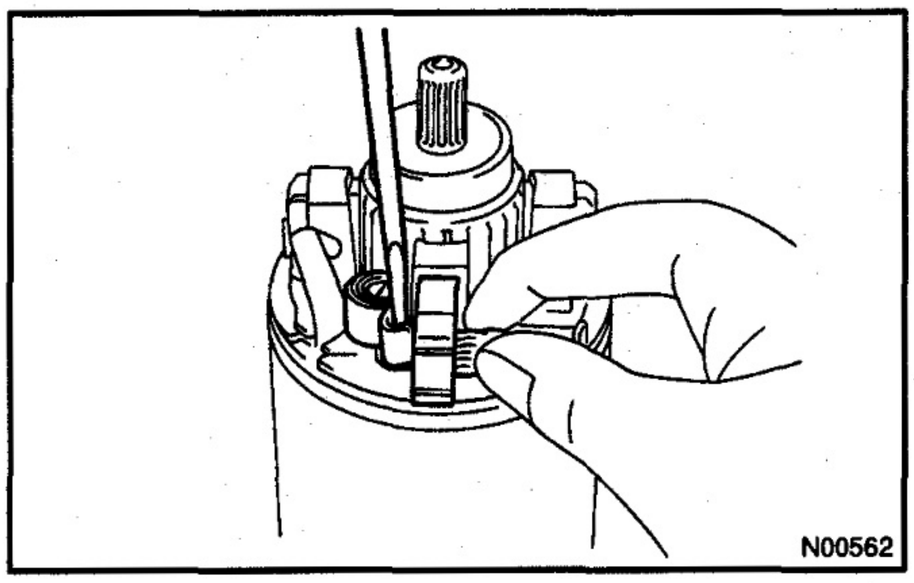

4. REMOVE BRUSH HOLDER

Using a screwdriver, hold the spring back and disconnect the brush from the brush holder. Disconnect the 4 brushes and remove the brush holder.

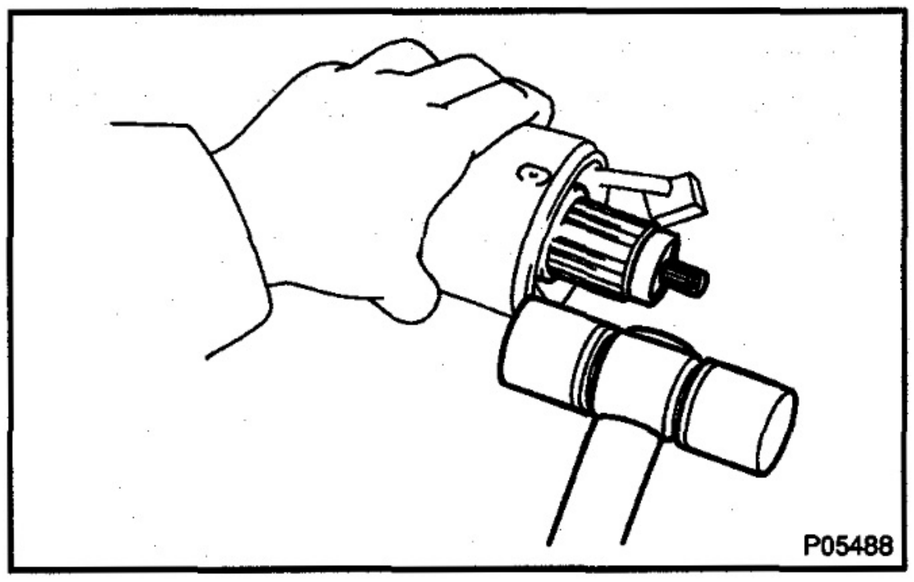

5. REMOVE ARMATURE FROM FIELD FRAME

Using a plastic hammer, tap the frame end to remove the armature from the field frame.

ST0HK–01

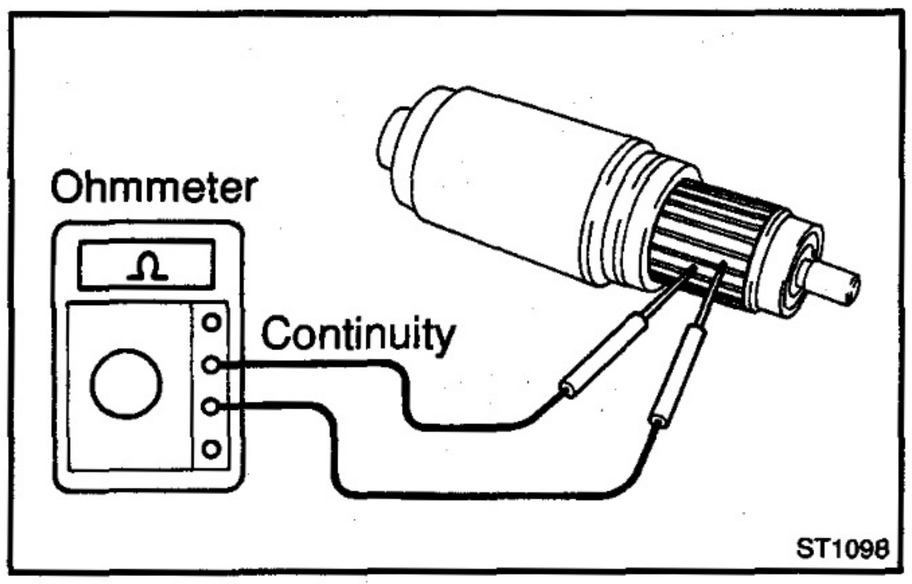

INSPECTION

1. INSPECT ARMATURE COIL

(a) Check the commutator for open circuit.
Using an ohmmeter, check that there is continuity between the segments of the commutator.

If there is no continuity between any segment, replace the armature.

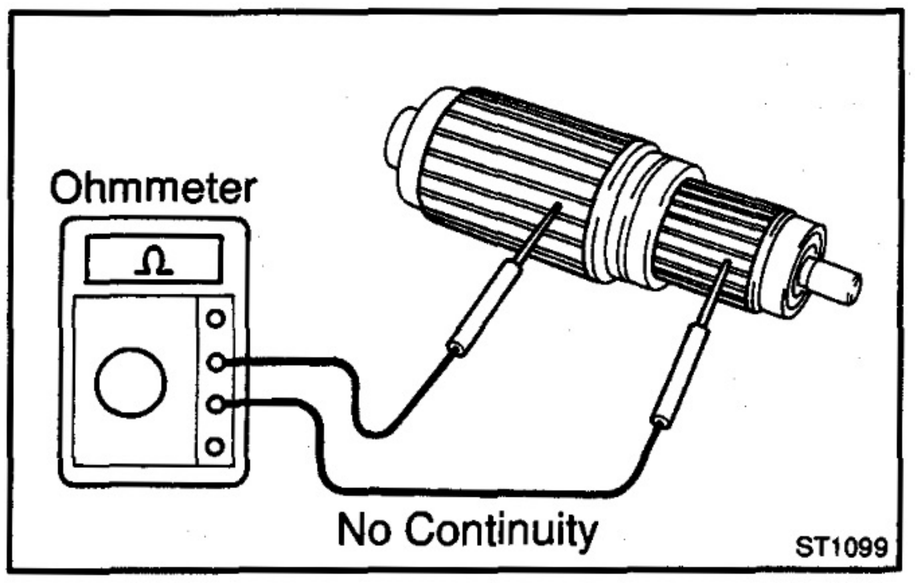

(b) Check the commutator for ground.
Using an ohmmeter, check that there is no continuity between the commutator and armature coil core.

If there is continuity, replace the armature.

2. INSPECT COMMUTATOR

(a) Check the commutator for the dirty and burnt surfaces.

If the surface is dirty or burnt, correct it with sandpaper (No. 400) or on a lathe.

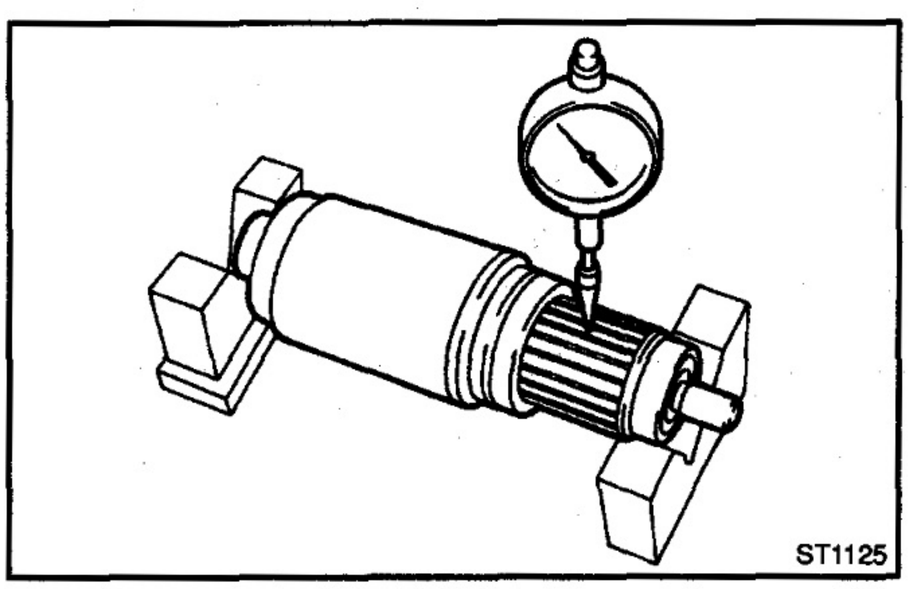

(b) Check the commutator circle runout.
(1) Place the commutator on V–blocks.
(2) Using a dial gauge, measure the circle runout.
Maximum circle runout: 0.05 mm (0.0020 in.)

If the circle runout is greater than maximum, correct it on a lathe.

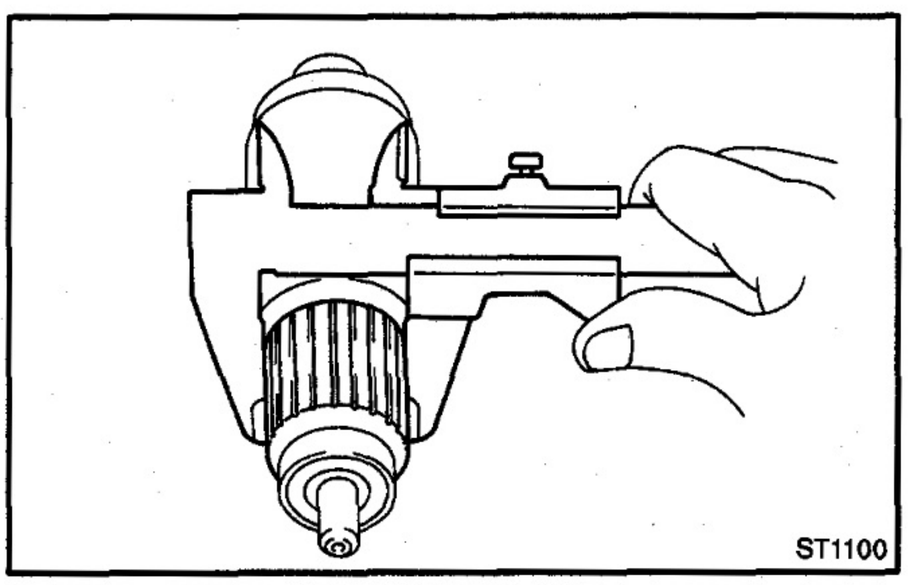

(c) Using vernier calipers, measure the commutator diameter.
Standard diameter: 35 mm (1.38 in.)
Minimum diameter: 34 mm (1.34 in.)

If the diameter is less than minimum, replace the armature.

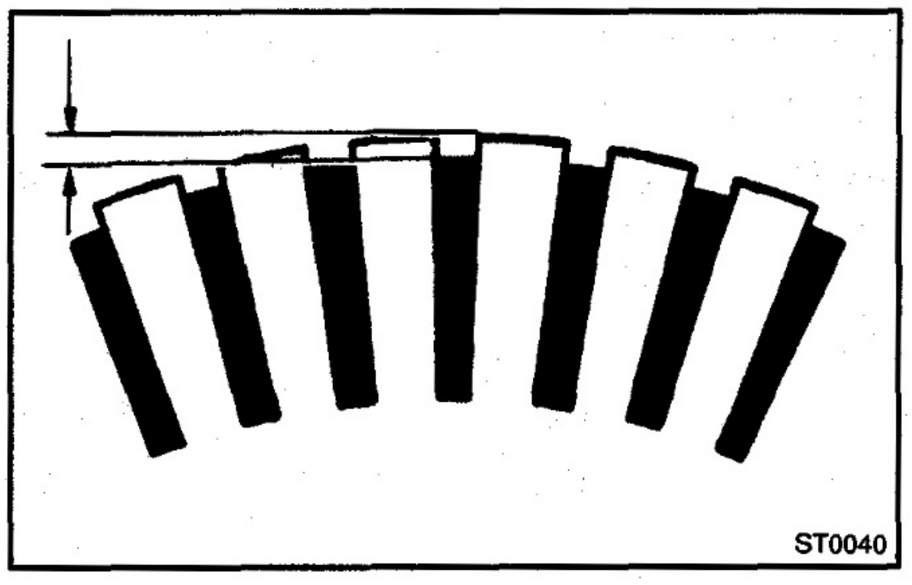

(d) Check that the undercut depth is clean and free of foreign materials. Smooth out the edge.
Standard undercut depth: 0.7 mm (0.027 in.)
Minimum undercut depth: 0.2 mm (0.008 in.)

If the undercut depth is less than minimum, correct it with a hacksaw blade.

ST

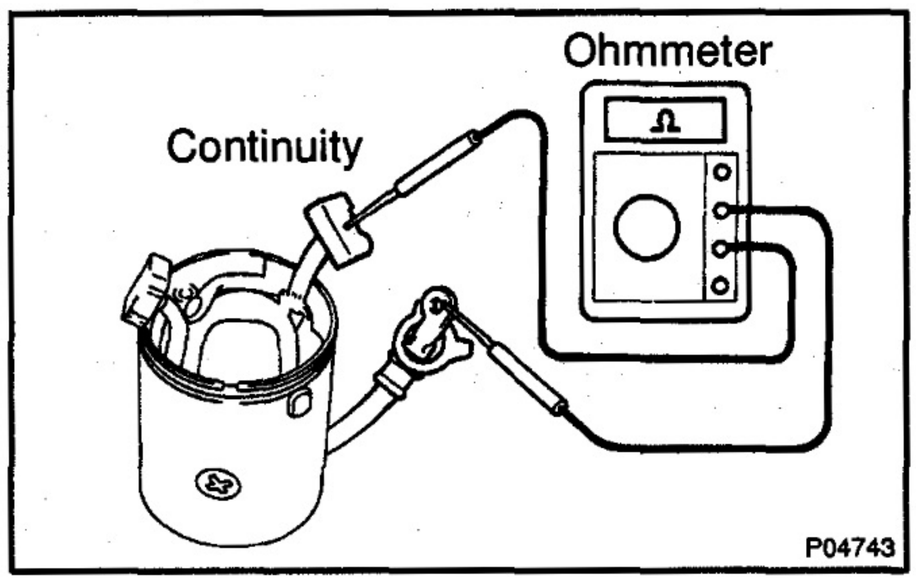

3. INSPECT FIELD FRAME

(a) Check the field coil for open circuit.

Using an ohmmeter, check that there is continuity between the lead wire and field coil brush lead.

If there is no continuity, replace the field frame.

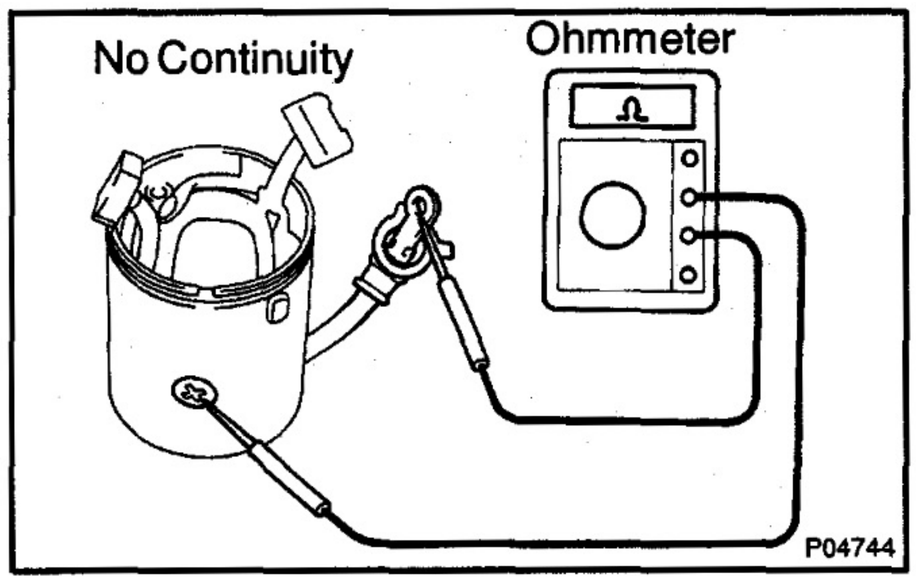

(b) Check the field coil for ground.

Using an ohmmeter, check that there is no continuity between the field coil end and field frame.

If there is continuity, repair or replace the field frame.

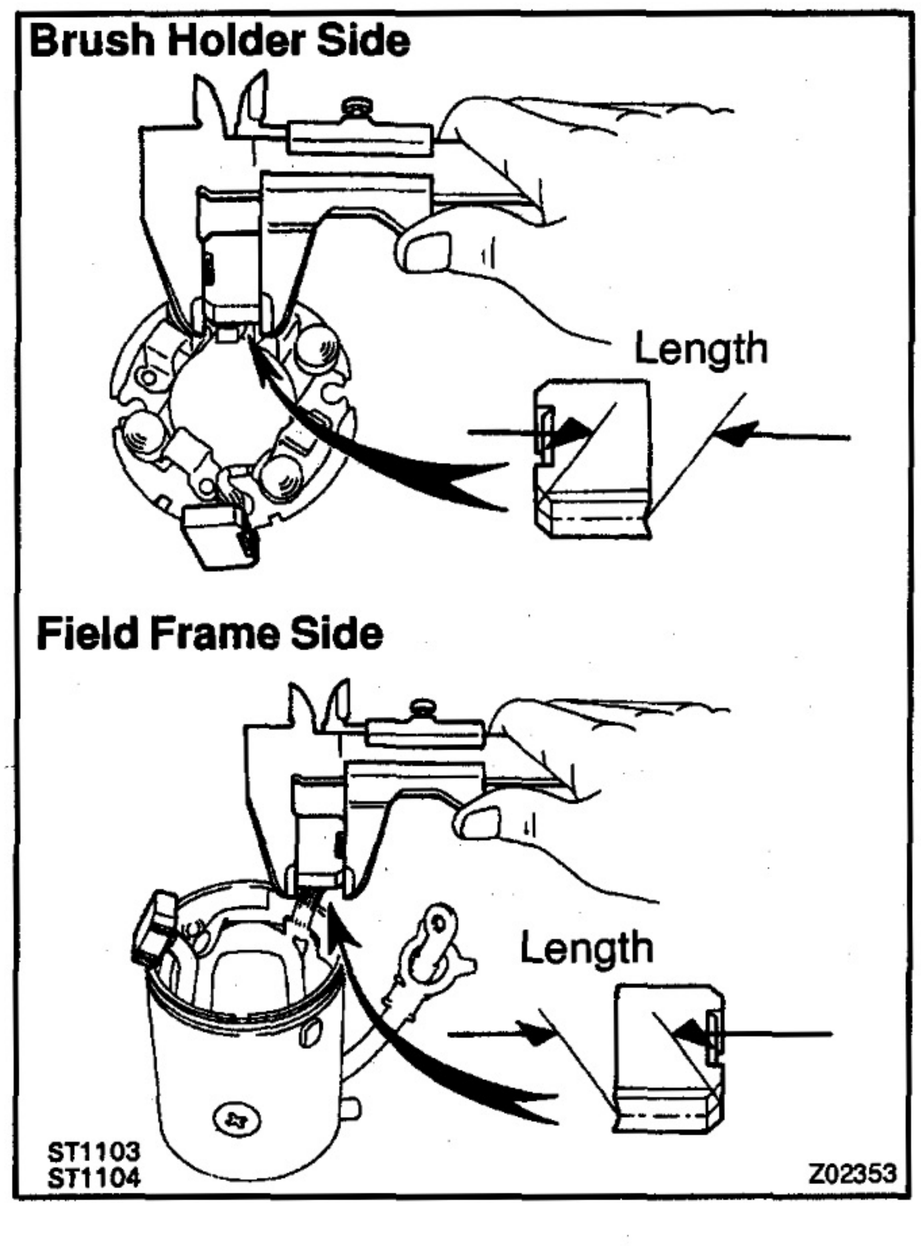

4. INSPECT BRUSHES

Check the brushes length.

Using vernier calipers, measure the brush length.

Standard length: 16.5 mm (0.650 in.)

Minimum length: 9.0 mm (0.354 in.)

If the length is less than minimum, replace the brush holder and field frame.

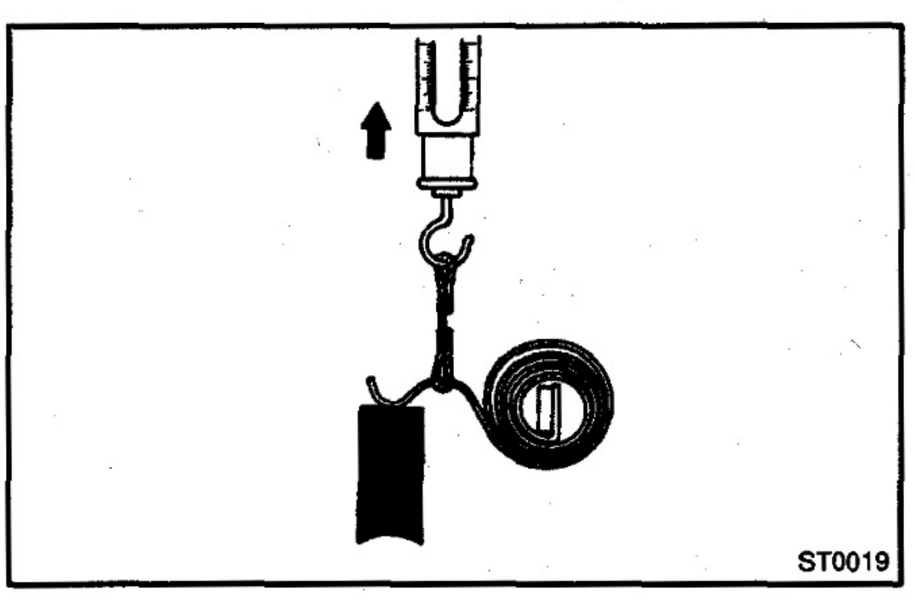

5. INSPECT BRUSH SPRINGS

Check the brush spring load.

Take the pull scale reading the instant the brush spring separates from the brush.

Standard spring installed load:

26.5 – 32.3 N (2.7 – 3.3 kgf, 5.9 – 7.3 lbf)

Minimum spring installed load: 17.6 N (1.8 kgf, 4.0 lbf)

If the installed load is less than minimum, replace the brush springs.

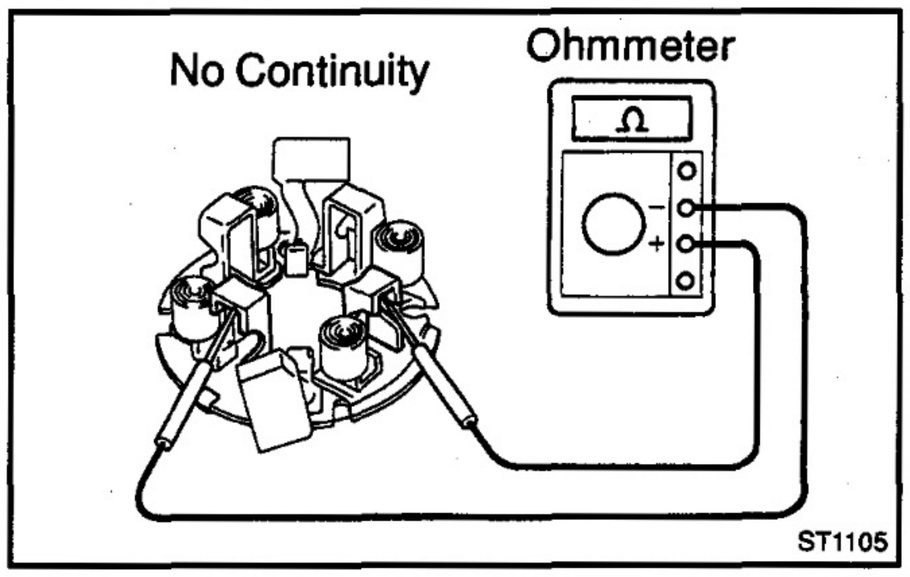

6. INSPECT BRUSH HOLDER

Check the brush holder insulation.

Using an ohmmeter, check that there is no continuity between the positive (+) and negative (–) brush holders.

If there is continuity, repair or replace the brush holder.

7. INSPECT CLUTCH AND GEARS

(a) Check the gear teeth on the pinion gear, idle gear and clutch assembly for wear or damage.

If damaged, replace the gear or clutch assembly.

If damaged, also check the drive plate ring gear for wear or damage.

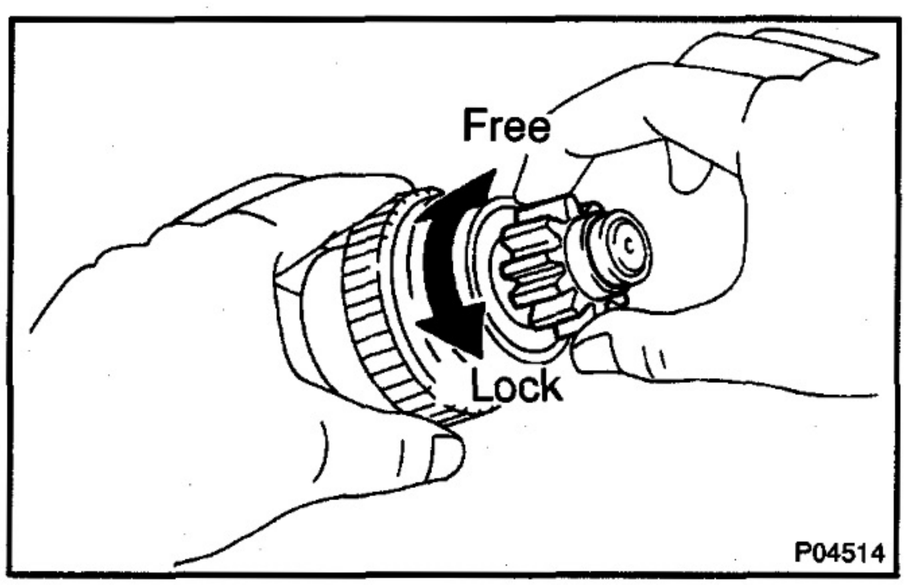

(b) Check the clutch pinion gear.

Hold the starter clutch and rotate the pinion gear clockwise, and check that it turns freely. Try to rotate the pinion gear counterclockwise and check that it locks.

If necessary, replace the clutch assembly.

8. INSPECT BEARINGS

Turn the bearing by hand while applying inward force.

If resistance is felt or the bearing sticks, replace the bearing.

(See page ST–12)

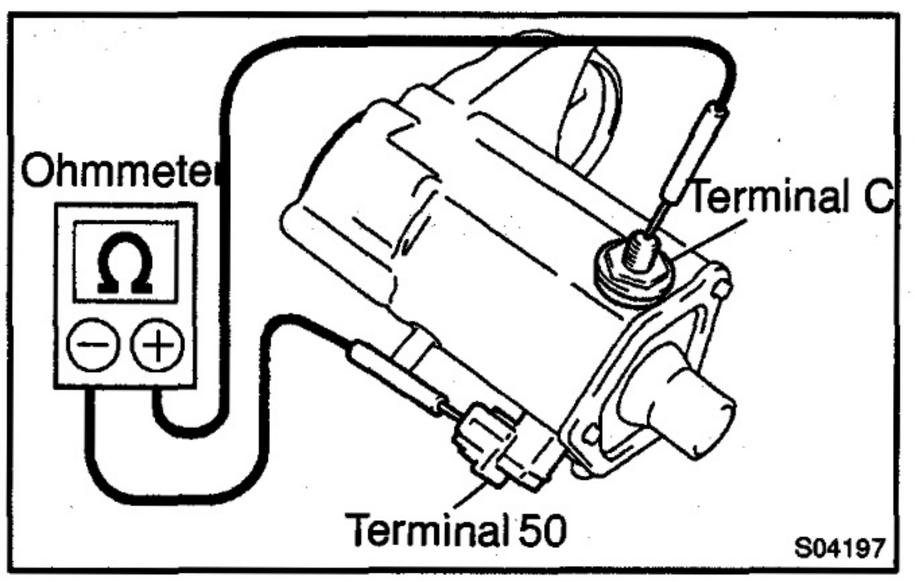

9. INSPECT MAGNETIC SWITCH

(a) Check the pull–in coil for open circuit.

Using an ohmmeter, check that there is continuity between terminals 50 and C.

If there is no continuity, replace the magnetic switch.

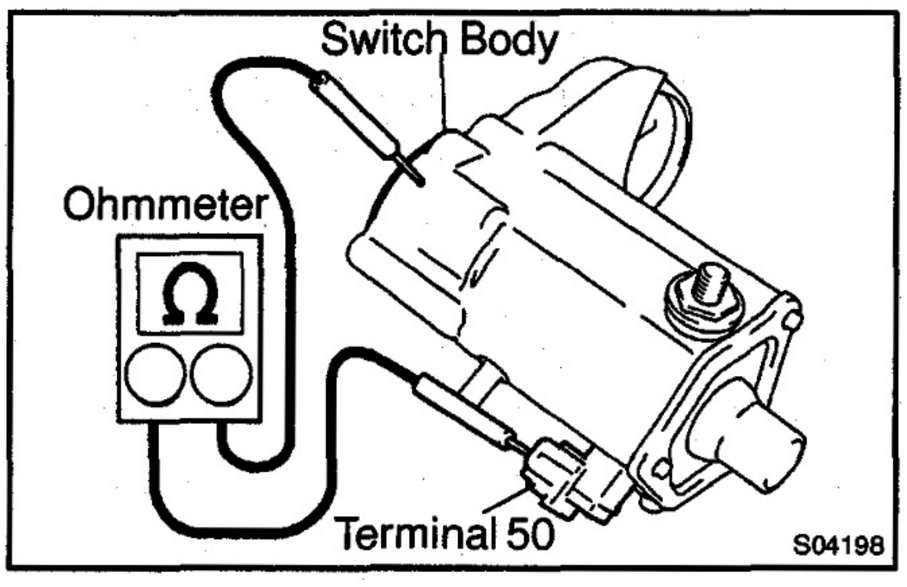

(b) Check the hold–in coil for open circuit.

Using an ohmmeter, check that there is continuity between terminal 50 and the switch body.

If there is no continuity, replace the magnetic switch.

ST0HL–01

REPLACEMENT

1. REPLACE FRONT BEARING

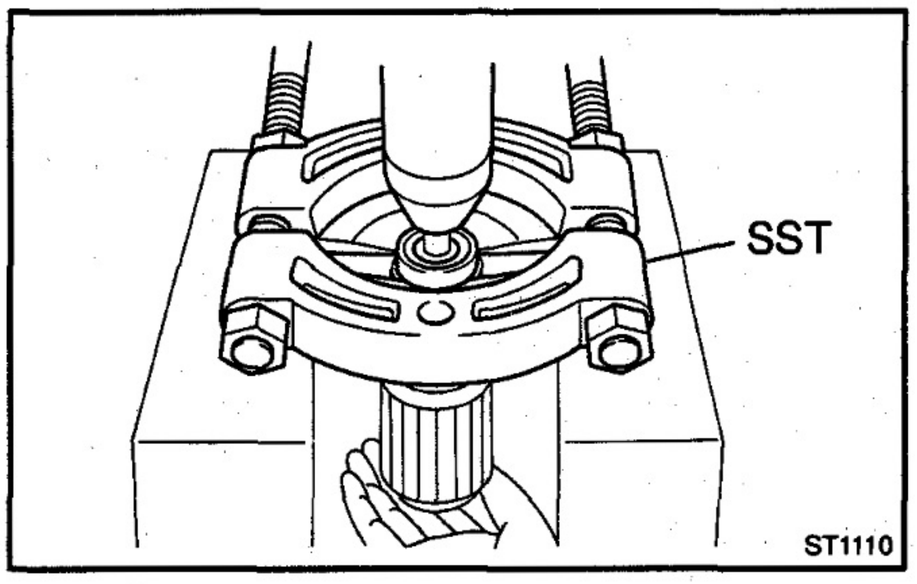

(a) Using SST and a press, press out the bearing.
SST 09950–00020

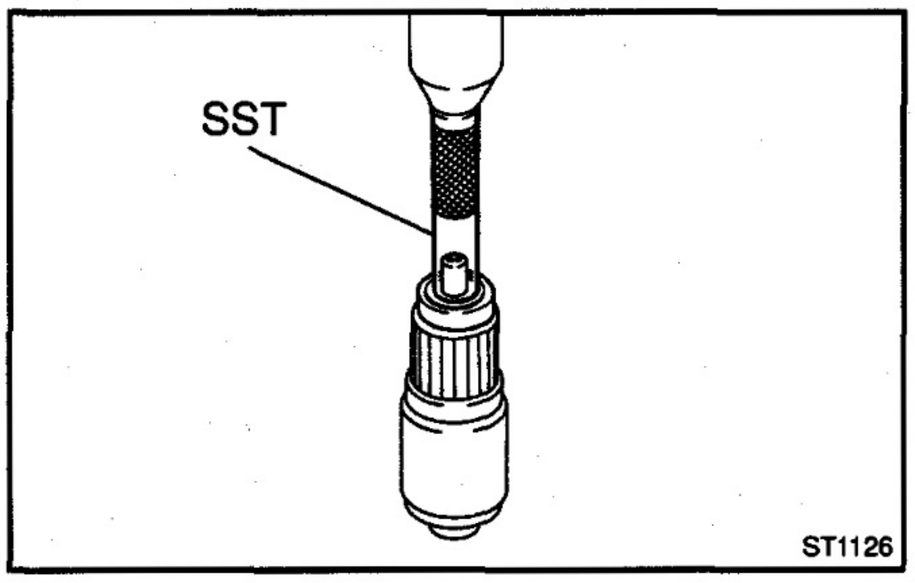

(b) Using SST and a press, press in a new bearing.
SST 09201–41020

2. REPLACE REAR BEARING

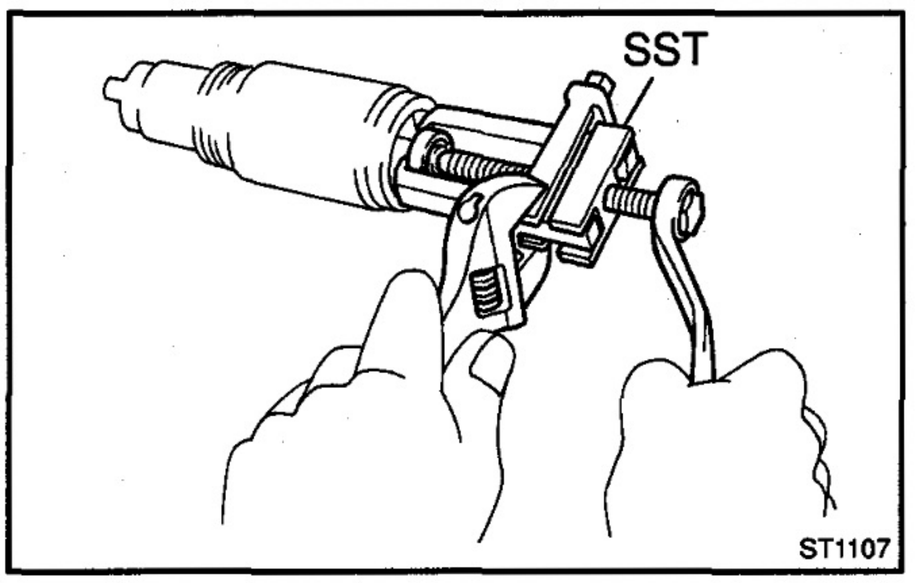

(a) Using SST, remove the bearing.
SST 09286–46011

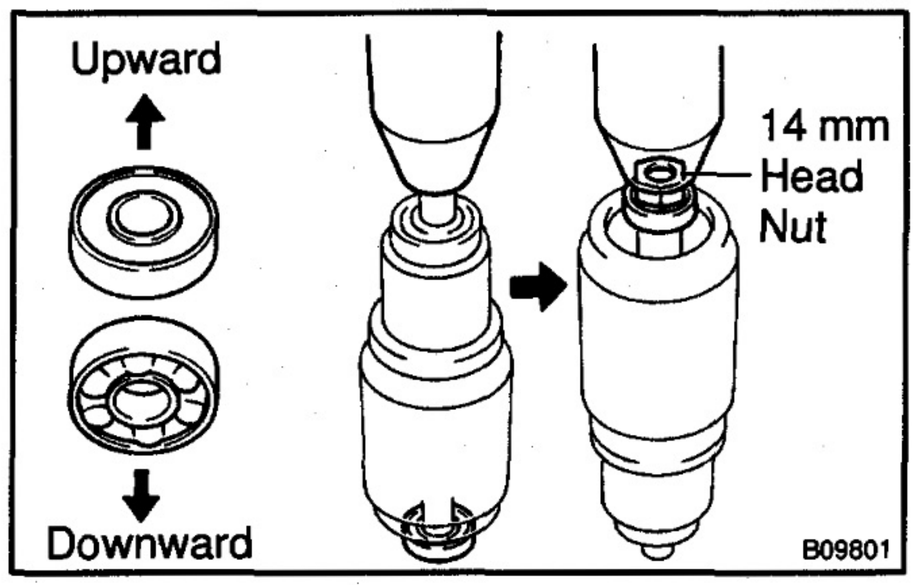

(b) Using a 14 mm head nut and press, press in a new bearing.

NOTICE:

Be careful of the bearing installation direction.

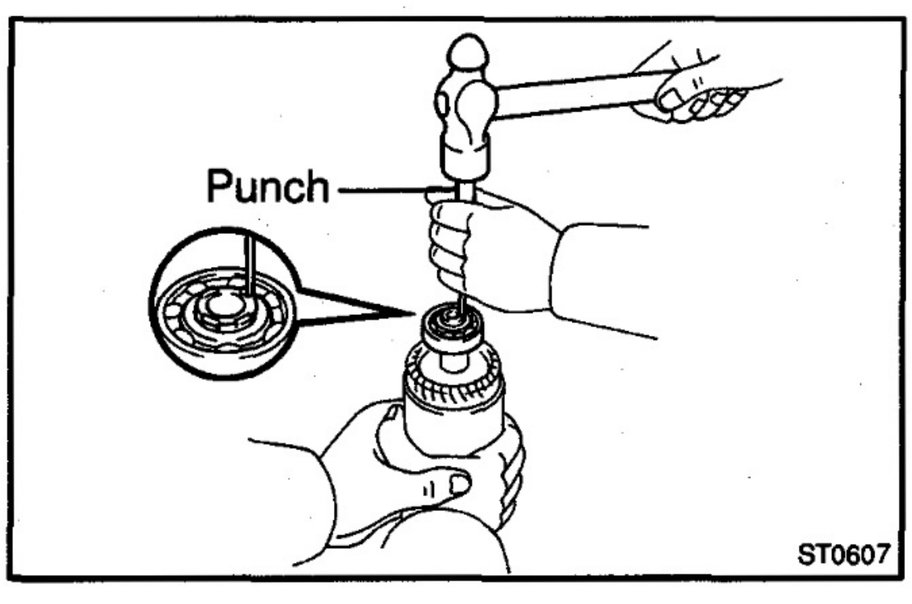

(c) Using a punch, stake the armature shaft.

3. REPLACE MAGNETIC SWITCH TERMINAL KIT PARTS

(a) Remove the 3 bolts, end cover, gasket and plunger.

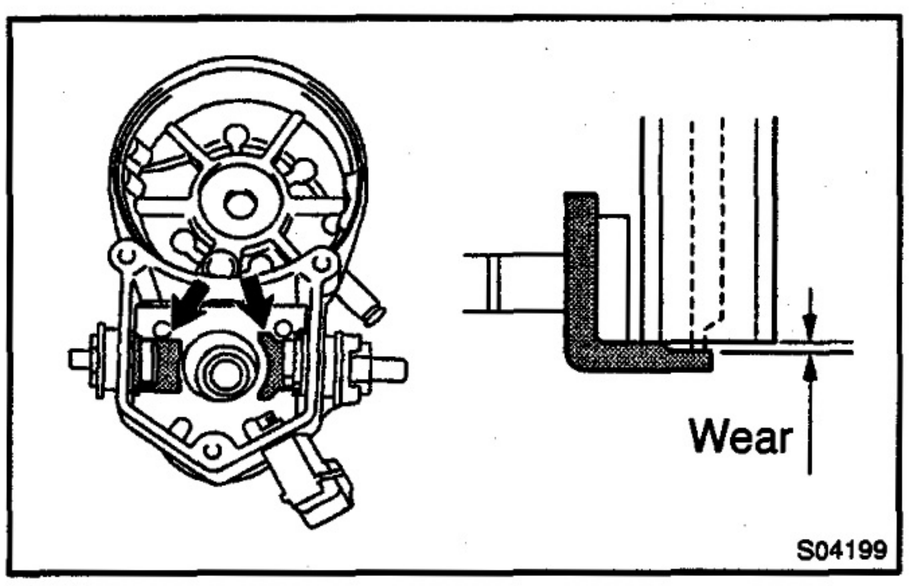

(b) Inspect the contact plate for wear.
Using vernier calipers, measure the contact plate for depth of wear.
Maximum wear: 0.9 mm (0.035 in.)

If the depth of wear is greater than the maximum, replace the contact plate.

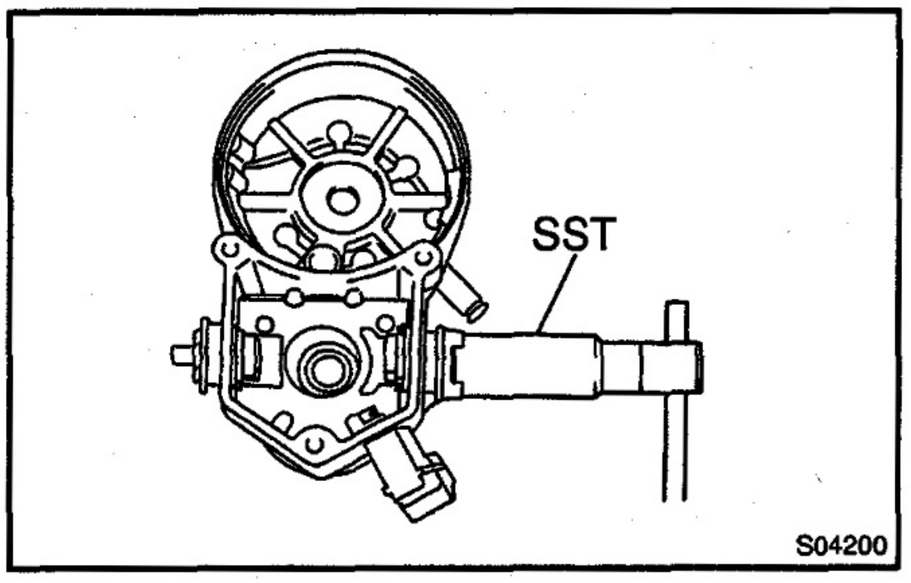

(c) Remove the terminal kit parts.
(1) Using SST, loosen the terminal nuts.
SST 09810–38140
(2) Terminal C:
Remove the terminal nut, wave washer, terminal insulator (outside), O–ring, terminal bolt, contact plate and terminal insulator (inside).
(3) Terminal 30:
Remove the terminal nut, wave washer, terminal insulator (outside), packing, O–ring, terminal bolt, contact plate, terminal insulator (inside).

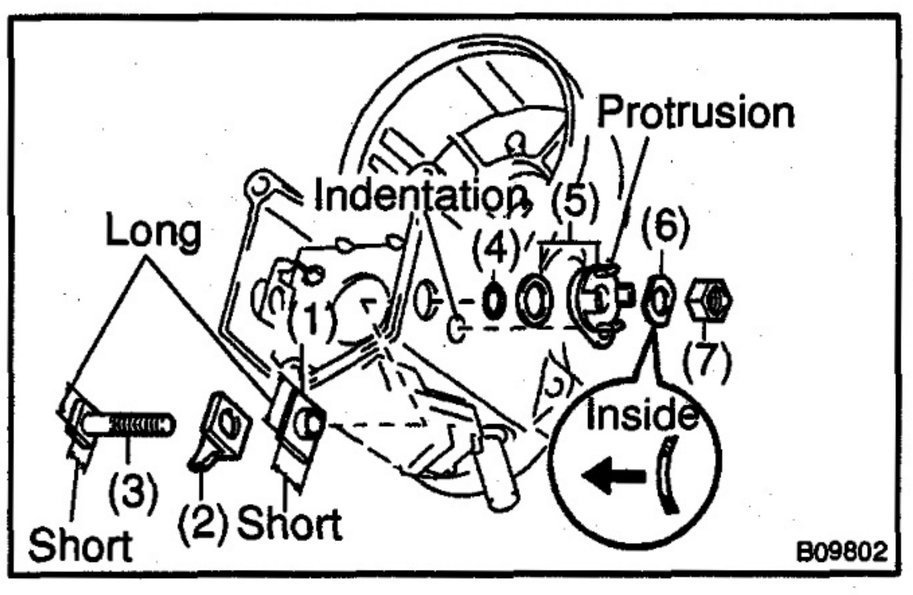

(d) Install new terminal 30 kit parts.
(1) Temporarily install a new terminal insulator (inside).
(2) Temporarily install a new contact plate.
(3) Temporarily install a new terminal bolt.
(4) Temporarily install a new O–ring.
(5) Temporarily install a new packing and new terminal insulator (outside).

HINT:
Match the protrusion of the insulator with the indentation of the housing.

(6) Temporarily install a new wave washer.
(7) Temporarily install a new terminal nut.

NOTICE:
Be careful to install the terminal insulators (inside) and wave washer and terminal bolt in the correct direction.

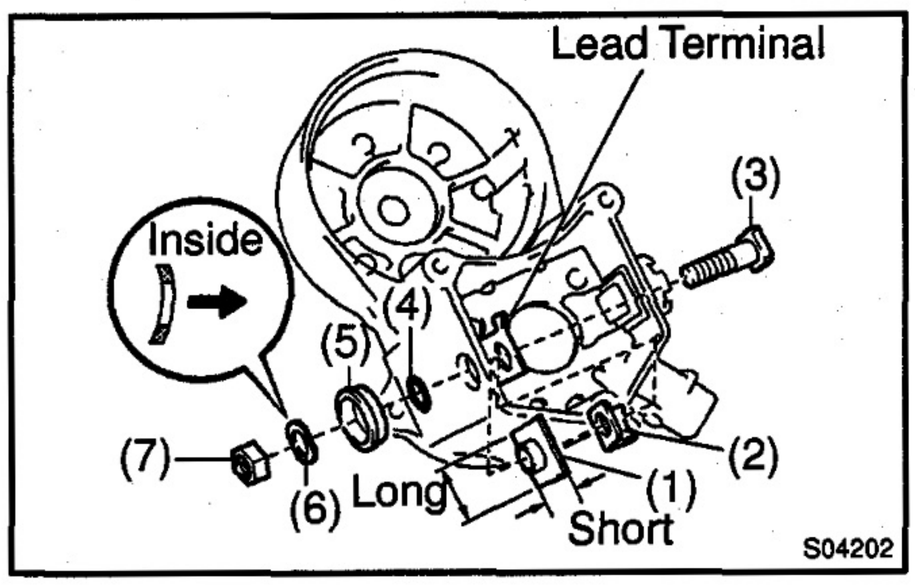

(e) Install new terminal C kit parts.
  (1) Temporarily install a new terminal insulator (inside).
  (2) Temporarily install a new contact plate.
  (3) Temporarily install a new terminal bolt.
  (4) Temporarily install a new O–ring.
  (5) Temporarily install a new terminal insulator (outside).
  (6) Temporarily install a new wave washer.
  (7) Temporarily install a new terminal nut.

NOTICE:

Be careful to install the terminal insulators (inside) and wave washer in the correct direction.

(f) Temporarily tighten the terminal nuts.

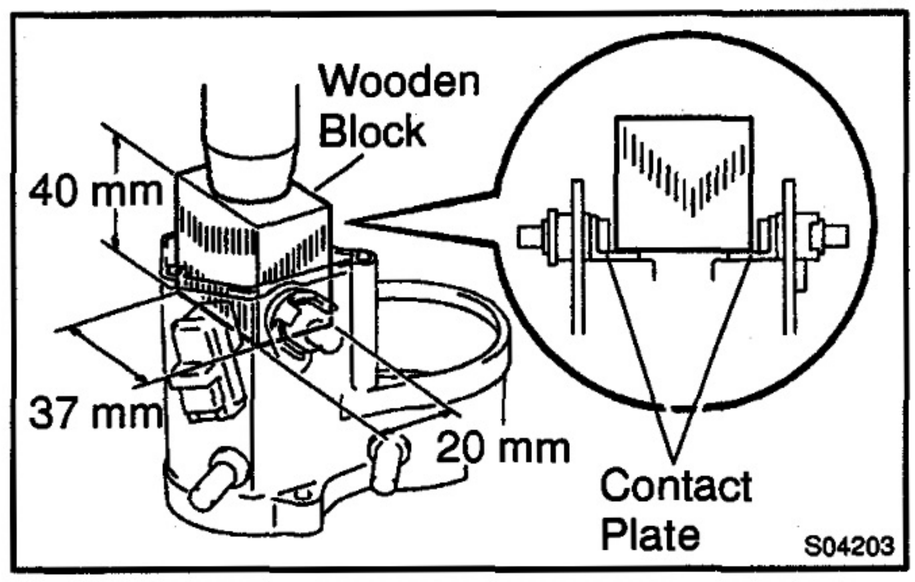

(g) Tighten the terminal nuts.
  (1) Put a wood block on the contact plate and press it down with a hand press.

Dimensions of wood block:

20 x 37 x 40 mm (0.97 x 1.46 x 1.57 in.)

Press force: 981 N (100 kgf, 221 lbf)

NOTICE:

- **Check the diameter of the hand press ram. Then calculate the gauge pressure of the press when 981 N (100 kgf, 221 lbf) of force is applied.**

Gauge pressure

$$(kgf/cm^2) = \frac{100\ kgf}{\left(\frac{\text{Ram diameter (cm)}}{2}\right)^2 \times 3.14\ (\pi)}$$

$$(psi) = \frac{221\ lbf}{\left(\frac{\text{Ram diameter (in.)}}{2}\right)^2 \times 3.14\ (\pi)}$$

(kPa) = (kgf/cm²) x 98.1

(kPa) = (psi) x 6.9

- **If the contact plate is not pressed down with the specified pressure, the contact plate may tilt due to coil deformation or the tightening of the nut.**

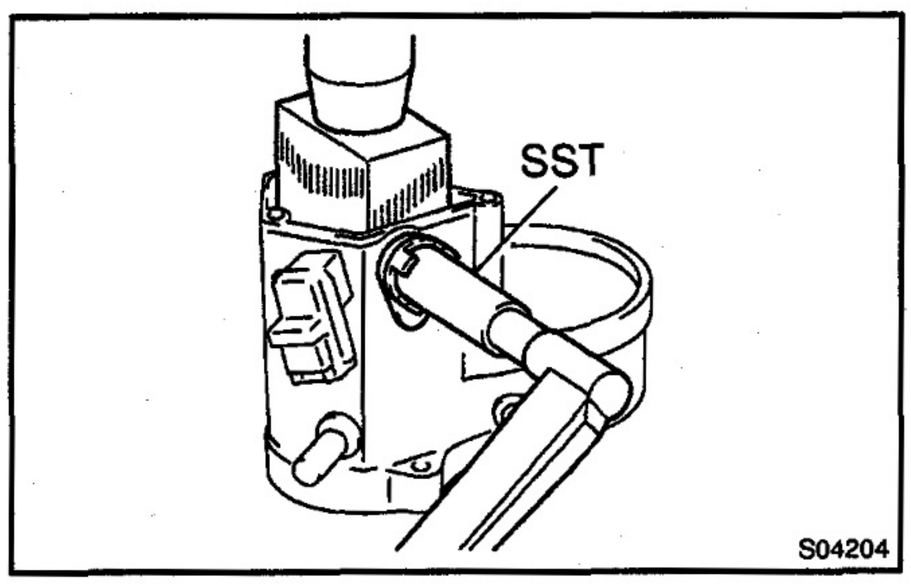

(2) Using SST, tighten the nuts to the specified torque.
SST 09810–38140
Torque: 17 N·m (173 kgf·cm, 13 ft·lbf)

NOTICE:
If the nut is over tightened, it may cause cracks on the inside of the insulator.

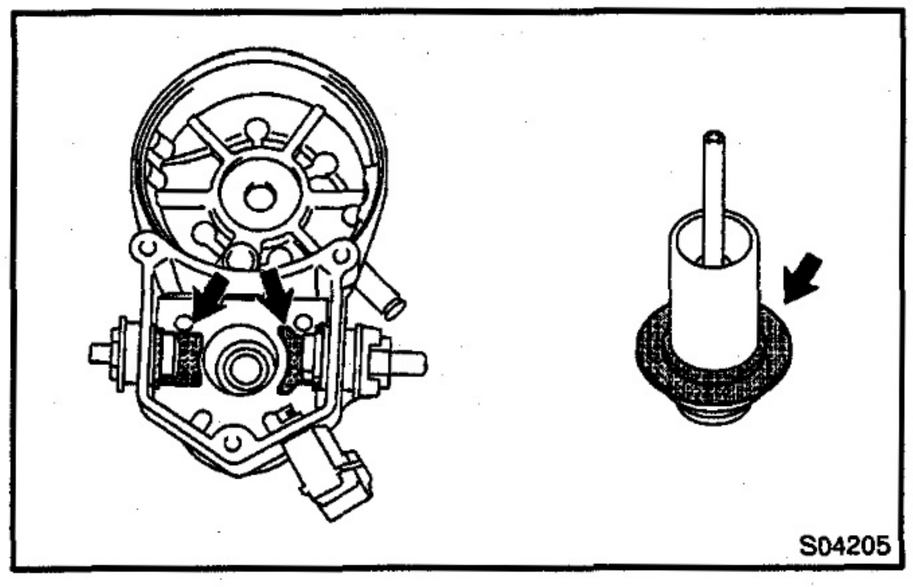

(h) Clean the contact surfaces of the remaining contact plate and plunger with a dry shop rag.

(i) Reinstall the plunger, a new gasket and end cover with the 3 bolts.
Torque: 3.6 N·m (36 kgf·cm, 32 in.·lbf)

ST0BO–02

REASSEMBLY

HINT:

Use high–temperature grease to lubricate the bearings and gears when assembling the starter.

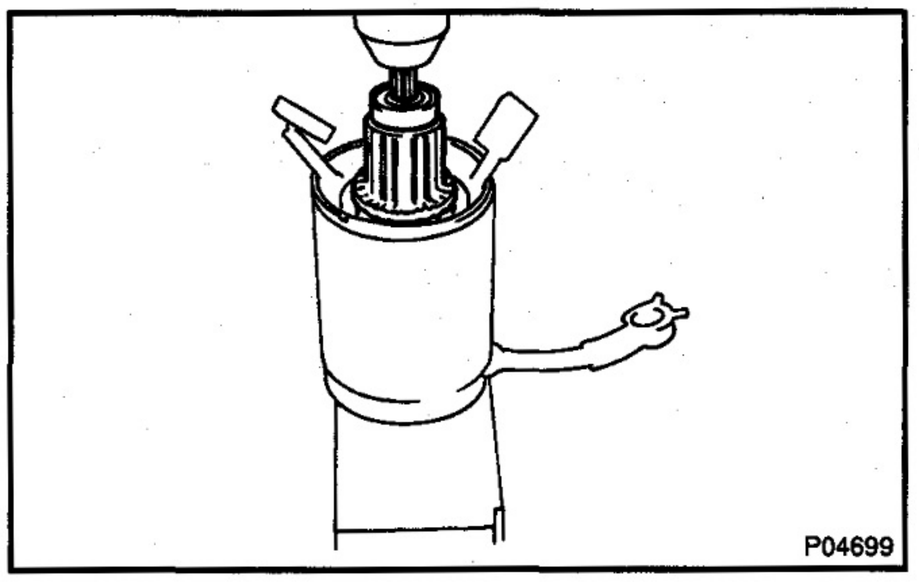

1. PLACE ARMATURE INTO FIELD FRAME

(a) Apply a grease to the armature bearings.

(b) Using a press, press the armature into the field frame.

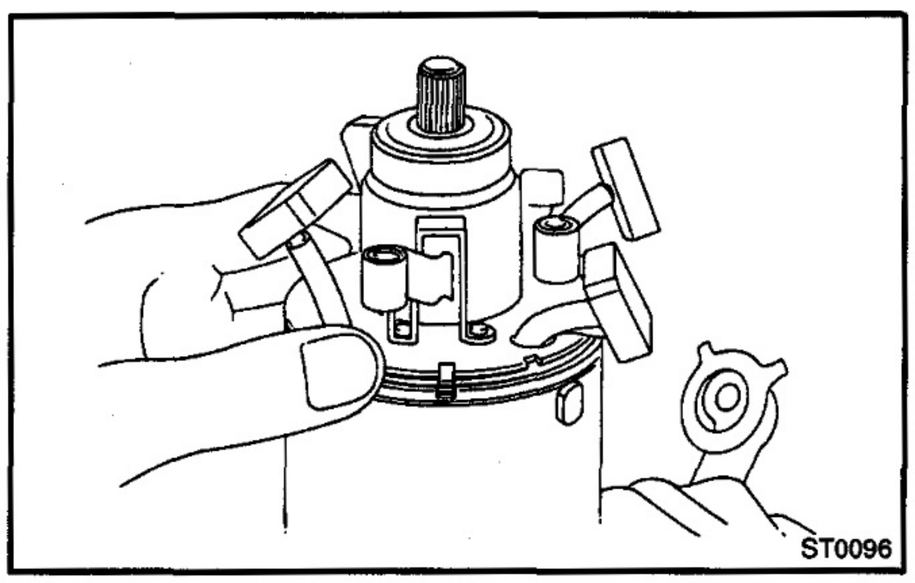

2. INSTALL BRUSH HOLDER

(a) Align the claw of the brush holder with the claw groove of the field frame.

(b) Place the brush holder on the field frame.

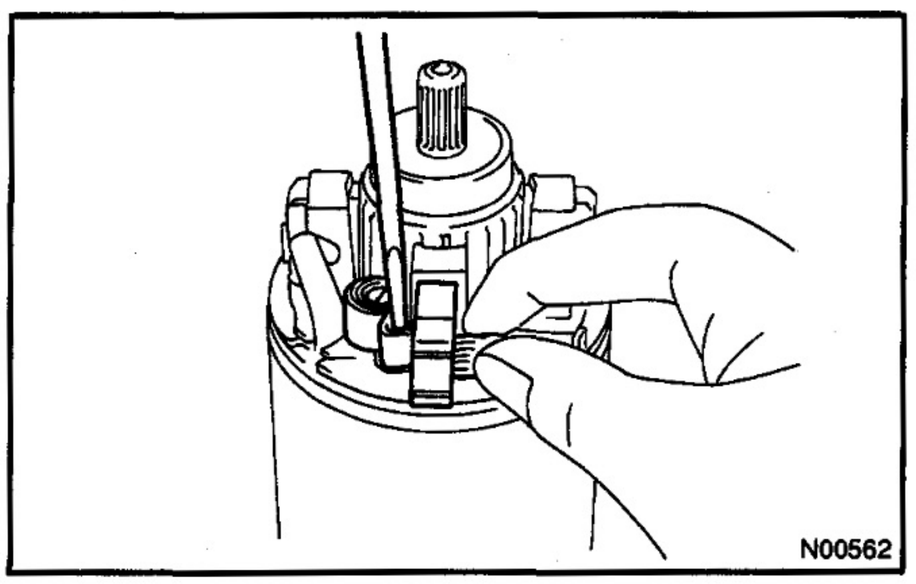

(c) Using a screwdriver, hold the brush spring back, and connect the brush into the brush holder. Contact the 4 brushes.

NOTICE:

Check that the positive (+) lead wires are not grounded.

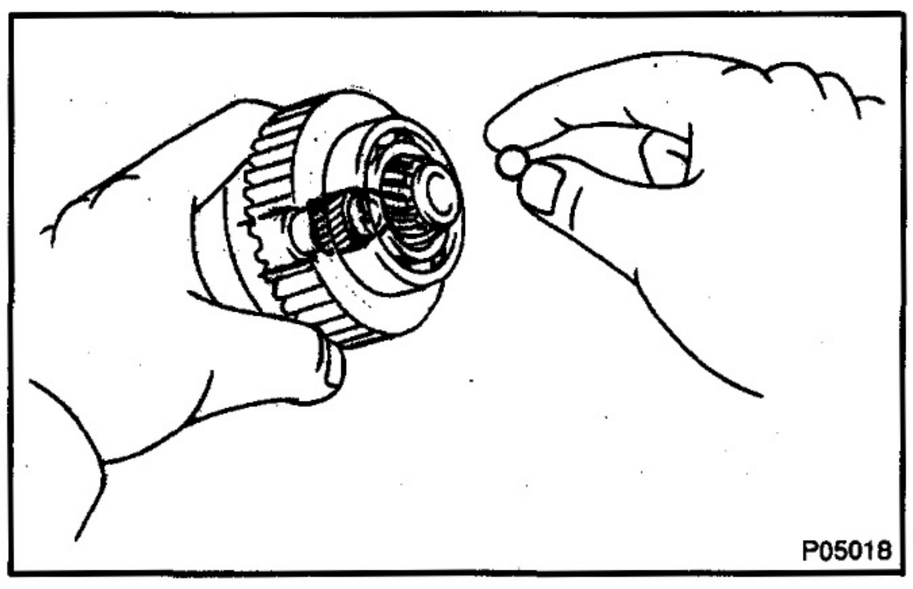

3. INSERT STEEL BALL INTO CLUTCH SHAFT HOLE

(a) Apply grease to the steel ball.

(b) Insert the steel ball into the clutch shaft hole.

4. INSTALL STARTER HOUSING, CLUTCH ASSEMBLY AND GEARS

(a) Apply grease to the return spring.

(b) Insert the return spring into the magnetic switch hole.

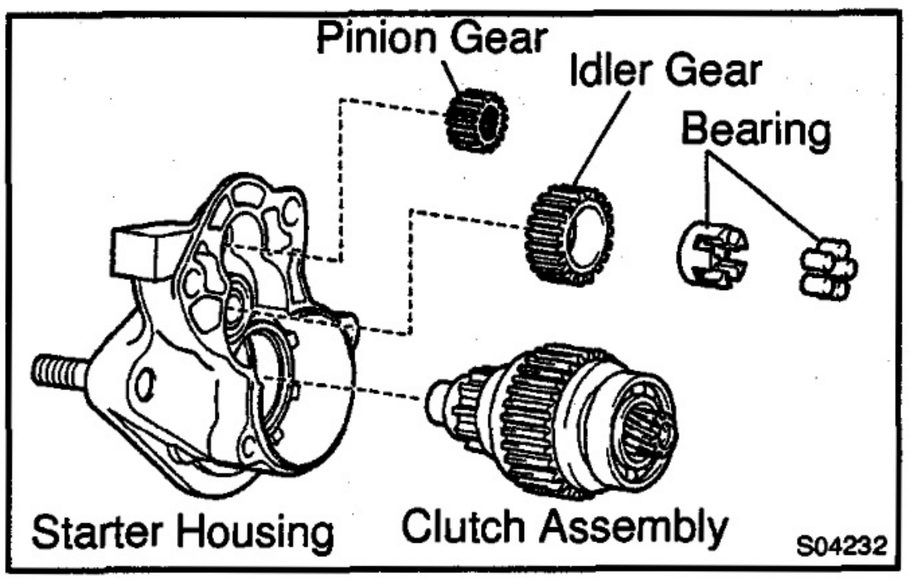

(c) Place the starter housing, pinion gear, bearing, idler gear and clutch assembly on the starter housing.

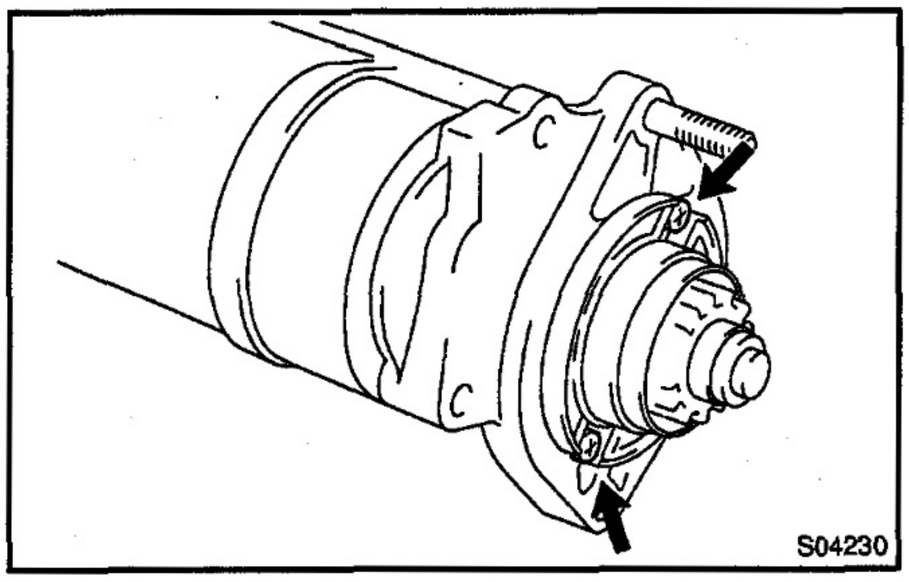

(d) Assemble the starter housing and magnetic switch assembly and install the 2 screws.
Torque: 9.3 N·m (95 kgf·cm, 82 in.·lbf)

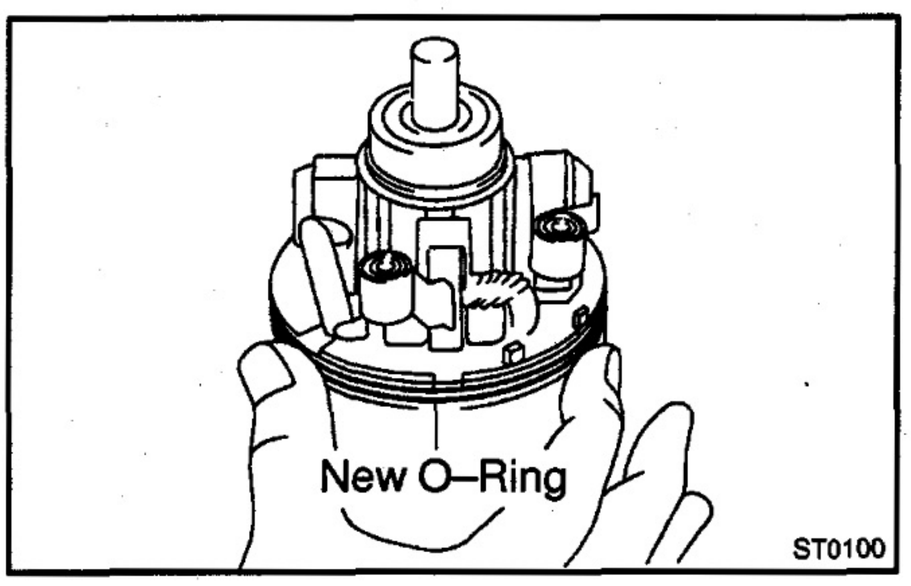

5. INSTALL FIELD FRAME AND ARMATURE ASSEMBLY

(a) Place a new O–ring in position on the field frame.

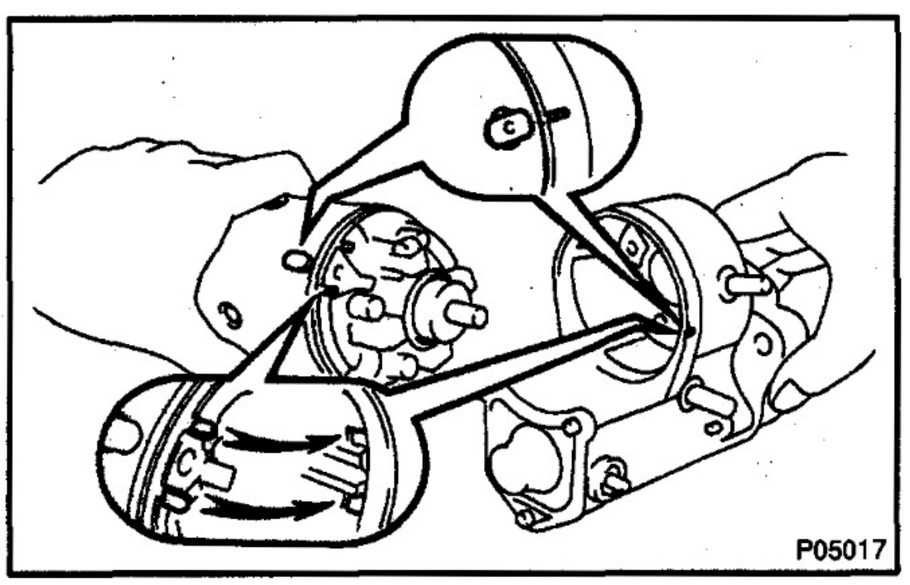

(b) Align the claws of the brush holder with the grooves of the magnetic switch, and install the field frame and armature shaft assembly.

(c) Align the punch mark of the field frame with the line of the magnet switch.

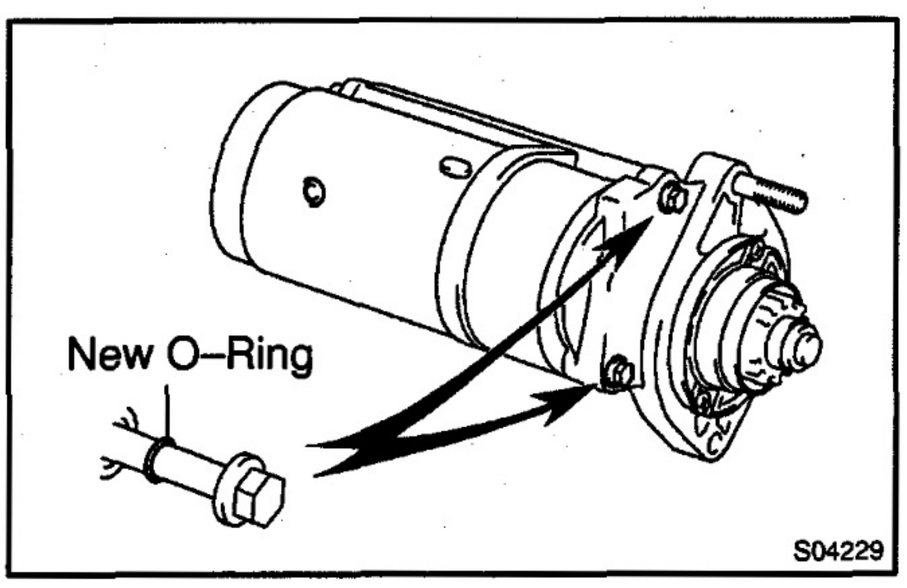

(d) Install a new O–rings to the through bolts.

(e) Install the field frame and armature assembly with the 2 through bolts.
Torque: 12.7 N·m (130 kgf·cm, 9 ft·lbf)

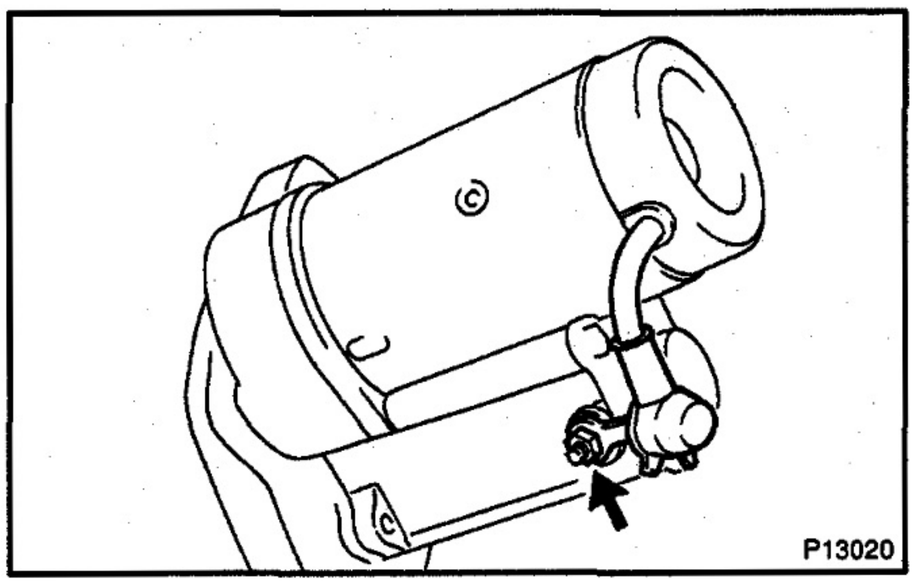

(f) Connect the lead wire to terminal C, and install the nut.
Torque: 5.9 N·m (60 kgf·cm, 52 in.·lbf)

ST0BP–02

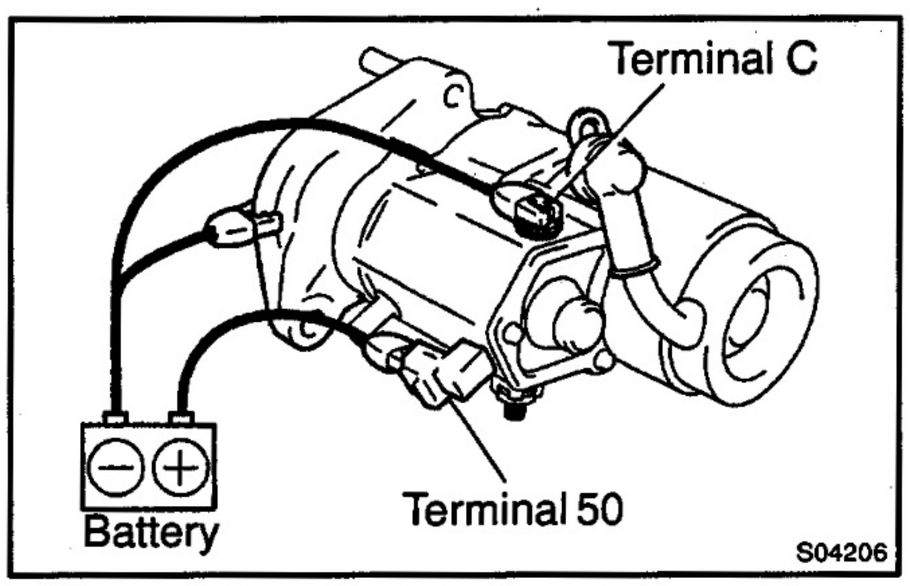

TEST

NOTICE:

These tests must be performed within 3 to 5 seconds to avoid burning out the coil.

1. PERFORM PULL–IN TEST

(a) Disconnect the field coil lead wire from terminal C.

(b) Connect the battery to the magnetic switch as shown. Check that the clutch pinion gear moves outward.

If the clutch pinion gear does not move, replace the magnetic switch assembly.

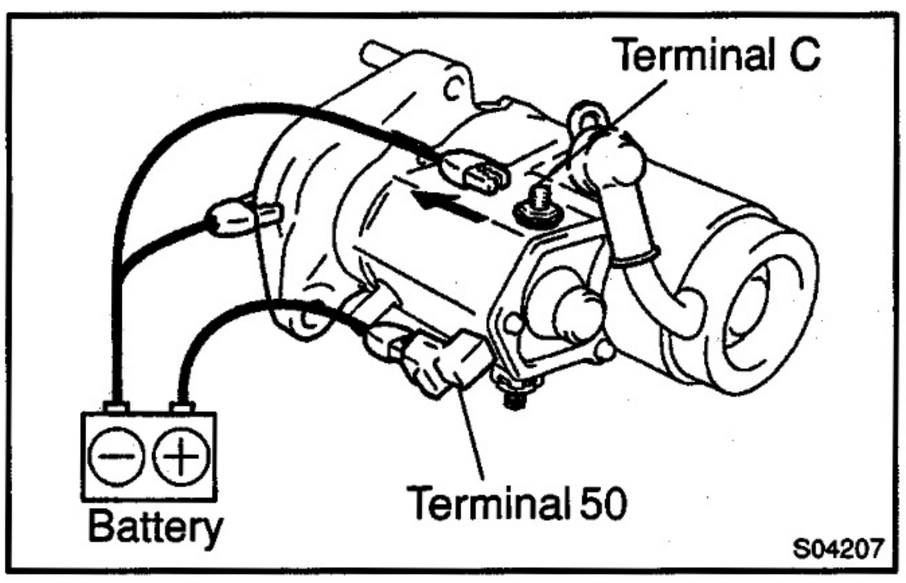

2. PERFORM HOLD–IN TEST

With battery connected as above with the clutch pinion gear out, disconnect the negative (–) lead from terminal C. Check that the pinion gear remains out.

If the clutch pinion gear returns inward, replace the magnetic switch assembly.

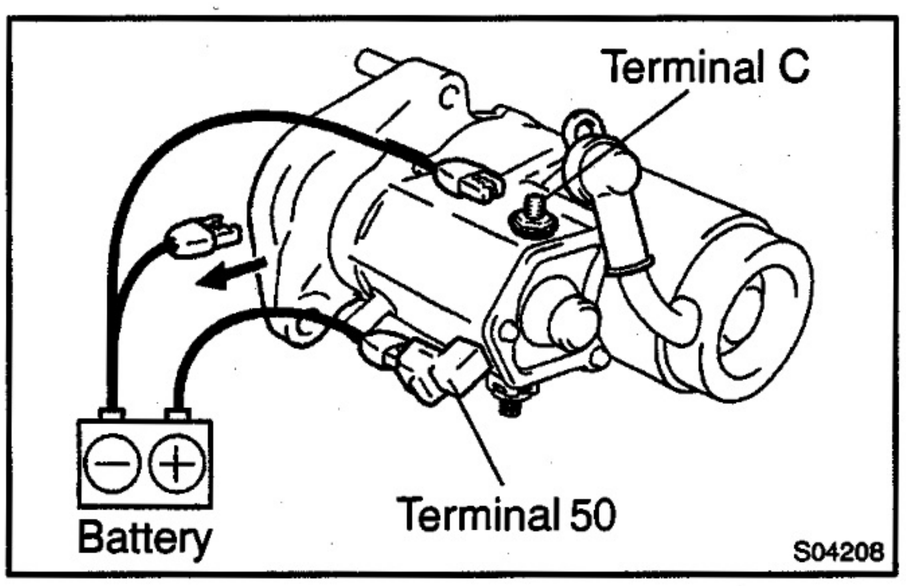

3. INSPECT CLUTCH PINION GEAR RETURN

Disconnect the negative (–) lead from the switch body.

Check that the clutch pinion gear returns inward.

If the clutch pinion gear does not return, replace the magnetic switch assembly.

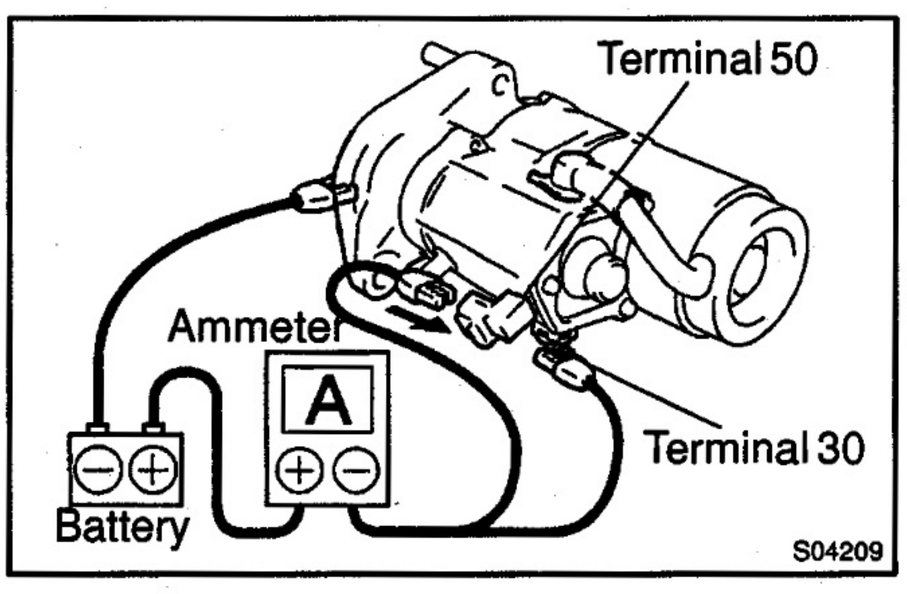

4. PERFORM NO–LOAD PERFORMANCE TEST

(a) Connect the battery and ammeter to the starter as shown.

(b) Check that the starter rotates smoothly and steadily with the pinion gear moving out. Check that the ammeter shows the specified current.

Specified current: 120 A or less at 11.5V

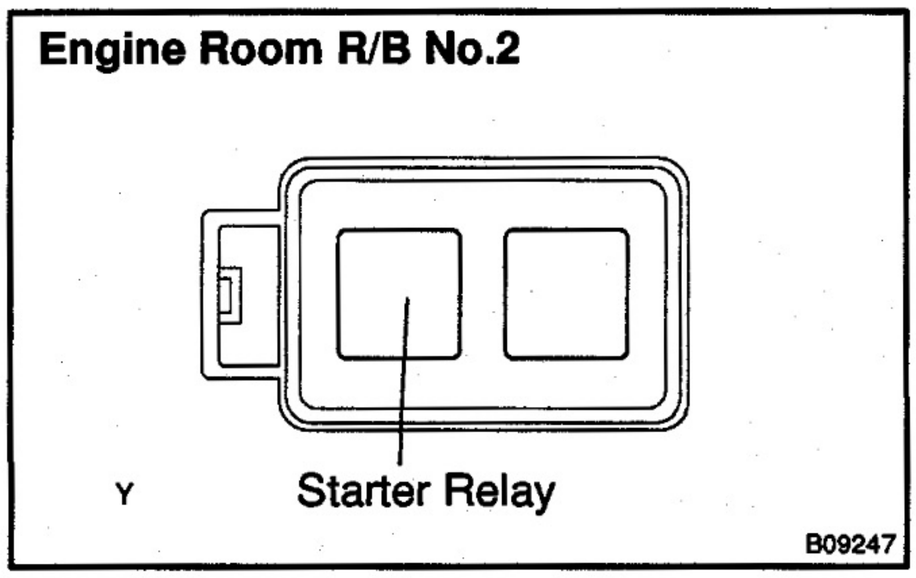

STARTER RELAY

ST0HM–01

INSPECTION

1. REMOVE STARTER RELAY

Remove the starter relay. (Marking: ST RLY)

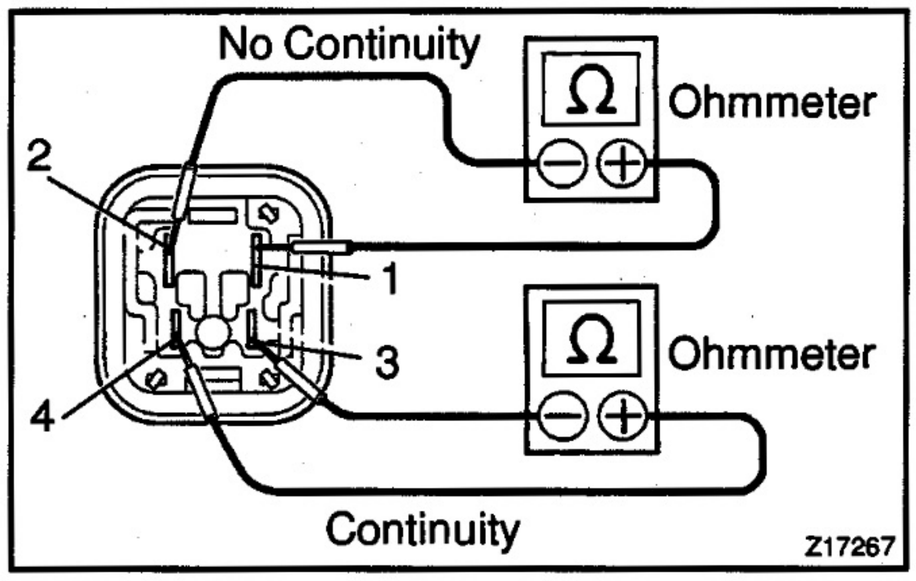

2. INSPECT STARTER RELAY

(a) Inspect the relay continuity.

(1) Using an ohmmeter, check that there is continuity between terminals 3 and 4.

If there is no continuity, replace the relay.

(2) Check that there is no continuity between terminal 1 and 2.

If there is continuity, replace the relay.

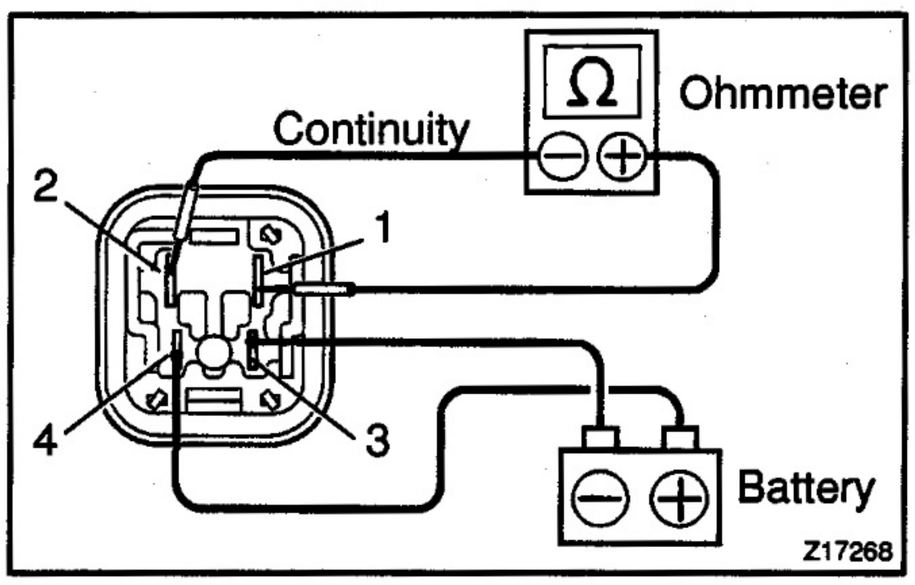

(b) Inspect the relay operation.

(1) Apply battery voltage across terminals 3 and 4.

(2) Using an ohmmeter, check that there is continuity between terminals 1 and 2.

If there is no continuity, replace the relay.

3. REINSTALL STARTER RELAY

CHARGING

CHARGING SYSTEM CH–1
ALTERNATOR CH–5

CHARGING SYSTEM

PRECAUTION

CH08P–02

- **Check that the battery cables are connected to the correct terminals.**
- **Disconnect the battery cables when the battery is given a quick charge.**
- **Do not perform tests with a high voltage insulation resistance tester.**
- **Never disconnect the battery while the engine is running.**

CH0C4–01

ON–VEHICLE INSPECTION

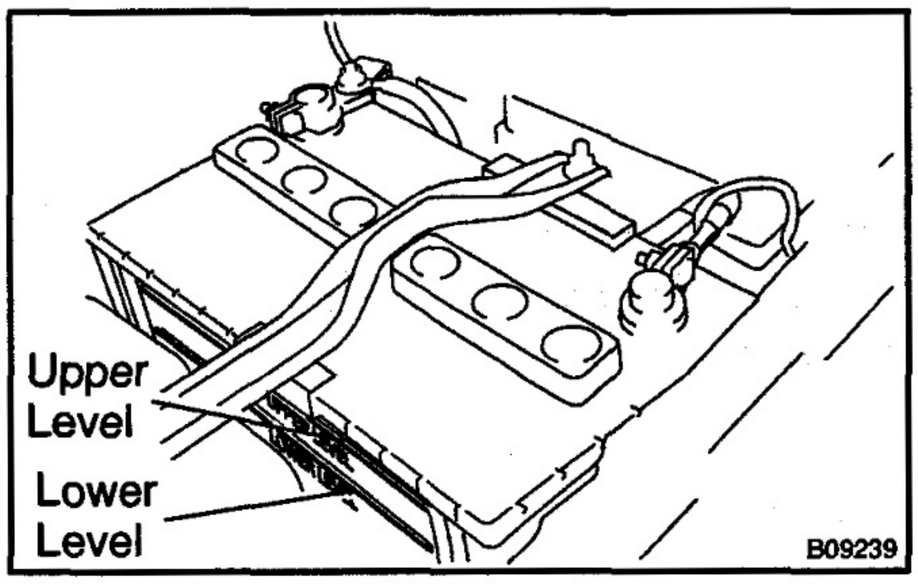

1. CHECK BATTERY ELECTROLYTE LEVEL

Check the electrolyte quantity of each cell.

Maintenance–Free Battery:

If under the lower level, replace the battery (or add distilled water if possible). Check the charging system.

Except maintenance–Free Battery:

If under the lower level, add distilled water.

Except Maintenance–Free Battery

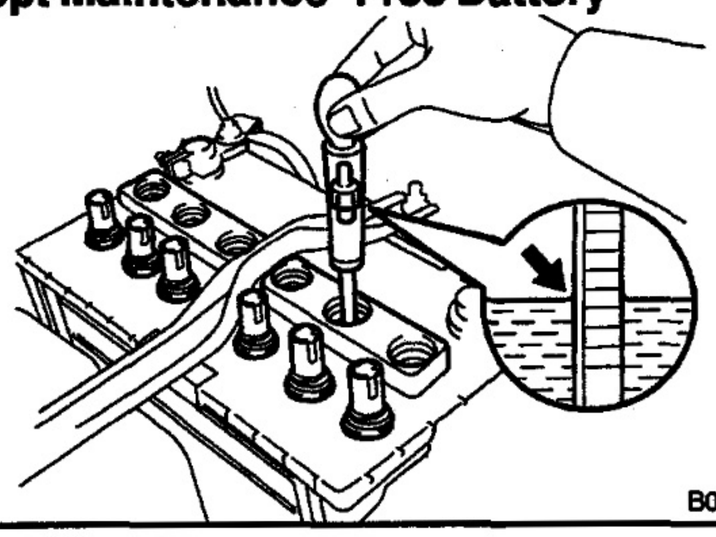

2. Except Maintenance–Free Battery: CHECK BATTERY SPECIFIC GRAVITY

Check the specific gravity of each cell.

Standard specific gravity: 1.25 – 1.29 at 20°C (68°F)

If the specific gravity is less than specification, charge the battery.

Maintenance–Free Battery

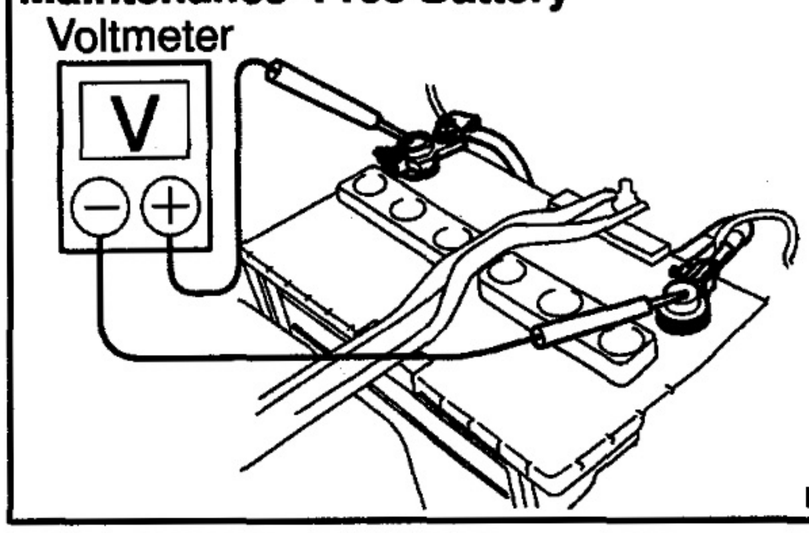

3. Maintenance–Free Battery: CHECK BATTERY VOLTAGE

(a) After having driven the vehicle and in the case that 20 minutes have not passed after having stopped the engine, turn the ignition switch ON and turn on the electrical system (headlight, blower motor, rear defogger etc.) for 60 seconds to remove the surface charge.

(b) Turn the ignition switch OFF and turn off the electrical systems.

(c) Measure the battery voltage between the negative (–) and positive (+) terminals of the battery.

Standard voltage: 12.5 – 12.9 V at 20°C (68°F)

If the voltage is less than specification, charge the battery.

CH

Maintenance–Free Battery

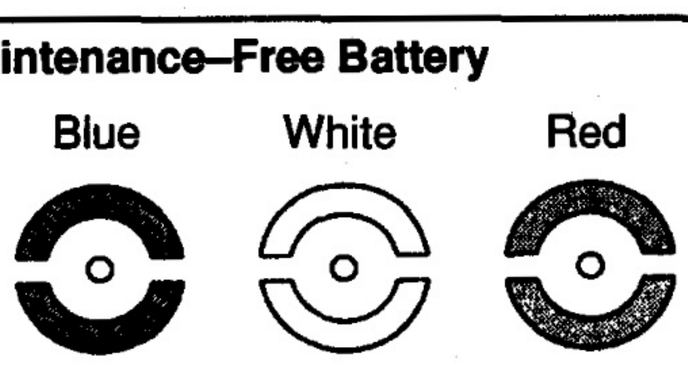

HINT:

Check the indicator as shown in the illustration.

4. CHECK BATTERY TERMINALS, FUSIBLE LINK AND FUSES

(a) Check that the battery terminals are not loose or corroded.

If the terminals are corroded, clean the terminals.

(b) Check the fusible link and fuses for continuity.

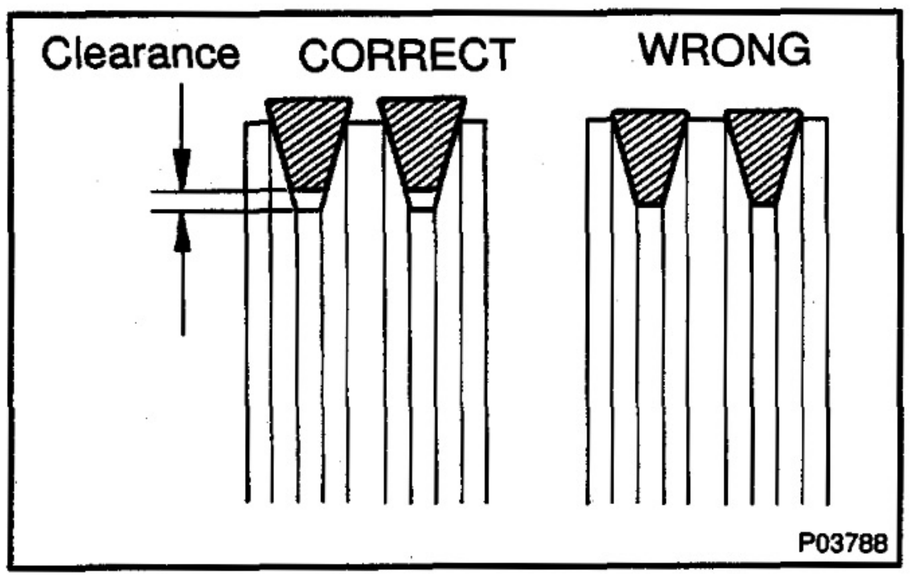

5. INSPECT DRIVE BELTS

(a) Visually check the drive belt for cracks, oiliness or wear. Check that the belt does not touch the bottom of the pulley groove.

If necessary, replace the drive belts as a set.

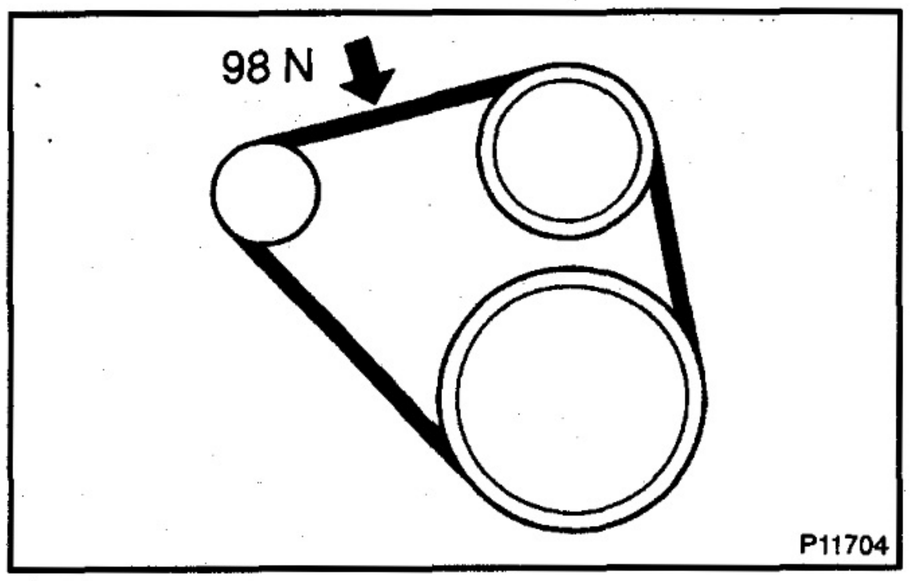

(b) Check the drive belt deflection by pressing on the belt at the points indicated in the illustration with 98 N (10 kgf, 22 lbf) of pressure.

Drive belt deflection:

New belt	6 – 8 mm (0.24 – 0.31 in.)
Used belt	8 – 12 mm (0.31 – 0.47 in.)

If necessary, adjust the drive belt deflection.

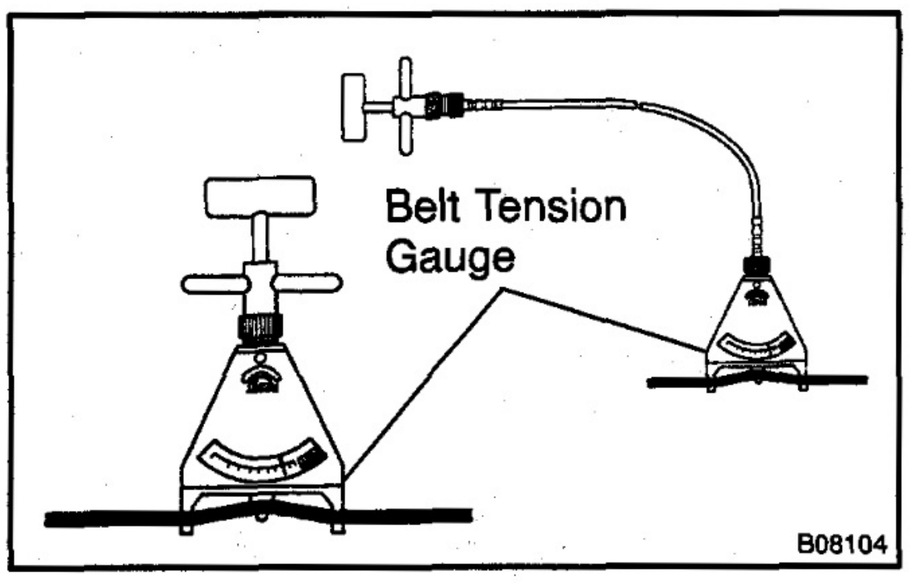

(c) Reference:
Using a belt tension gauge, measure the belt tension.

Belt tension gauge:
BTG–20 (95506–00020)

Drive belt tension:

New belt	400 – 600 N (41 – 61 kgf)
Used belt	300 – 500 N (31 – 51 kgf)

If the belt tension is not as specified, adjust it.

HINT:

- "New belt" refers to a belt which has been used less than 5 minutes on a running engine.
- "Used belt" refers to a belt which has been used on a running engine for 5 minutes or more.
- After installing a new belt, run the engine for about 5 minutes and recheck the deflection.

6. VISUALLY CHECK ALTERNATOR WIRING AND LISTEN FOR ABNORMAL NOISES

(a) Check that the wiring is in good condition.

(b) Check that there is no abnormal noise form the alternator while the engine is running.

7. INSPECT DISCHARGE WARNING LIGHT CIRCUIT

(a) Turn the ignition switch "ON". Check that the discharge warning light comes on.

(b) Start the engine. Check that the light goes off.

If the light does not operate as specified, troubleshoot the discharge warning light circuit.

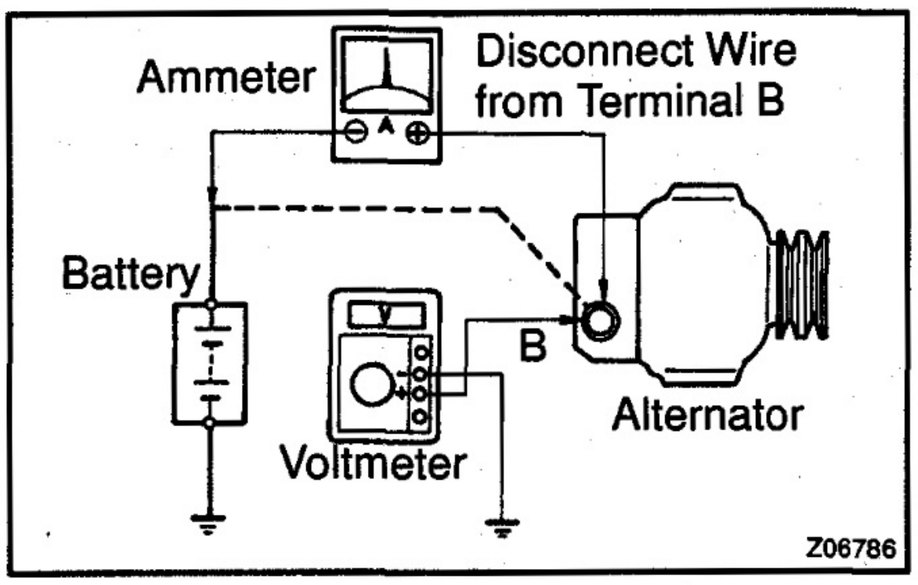

8. INSPECT CHARGING CIRCUIT WITHOUT LOAD

HINT:

If a battery / alternator tester is available, connect the tester to the charging circuit as per the manufacturer's instructions.

(a) If a tester is not available, connect a voltmeter and ammeter to the charging circuit as follows:
- Disconnect the wire from terminal B of the alternator and connect it to the negative (–) lead of the ammeter.
- Connect the positive (+) lead of the voltmeter to terminal B of the alternator.
- Ground the negative (–) lead of the voltmeter.

(b) Check the charging circuit as follows:
With the engine running from idle to 2,000 rpm, check the reading on the ammeter and voltmeter.
Standard amperage. 10 A or less
Standard voltage: 13.2 – 14.8 V

If the voltmeter reading is more than standard voltage, replace the IC regulator.

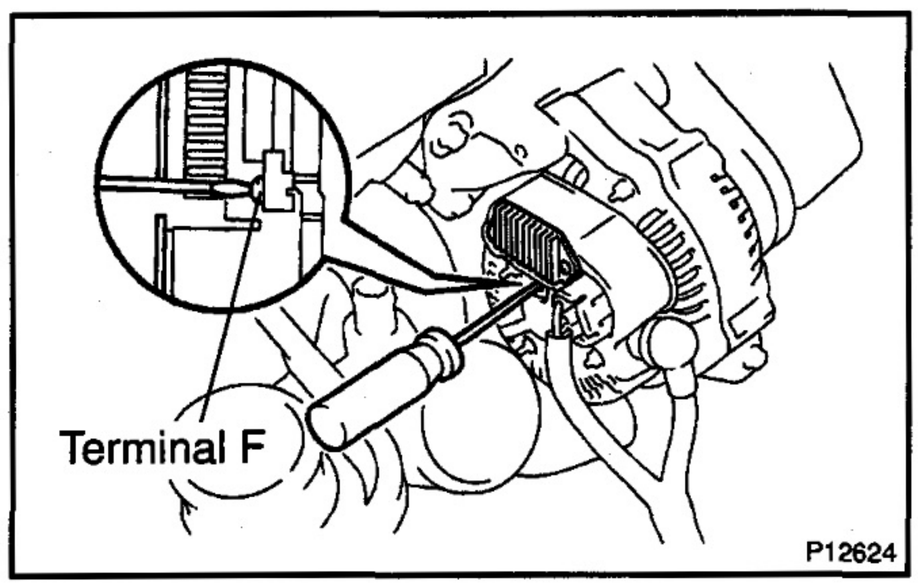

If the voltmeter reading is less than the standard voltage, check the IC regulator and alternator as follows:
- With terminal F grounded, start the engine and check the voltmeter reading of terminal B.
- If the voltmeter reading is more than standard voltage, replace the IC regulator,
- If the voltmeter reading is less than standard voltage, check the alternator.

9. INSPECT CHARGING CIRCUIT WITH LOAD

(a) With the engine running at 2,000 rpm, turn on the high beam headlights and place the heater blower switch at "HI".

(b) Check the reading on the ammeter.
Standard amperage: 30 A or more

If the ammeter reading is less than standard amperage, repair the alternator.

HINT:

If the battery is fully charged, the indication will sometimes be less than standard amperage.

ALTERNATOR

COMPONENTS

CH08R–02

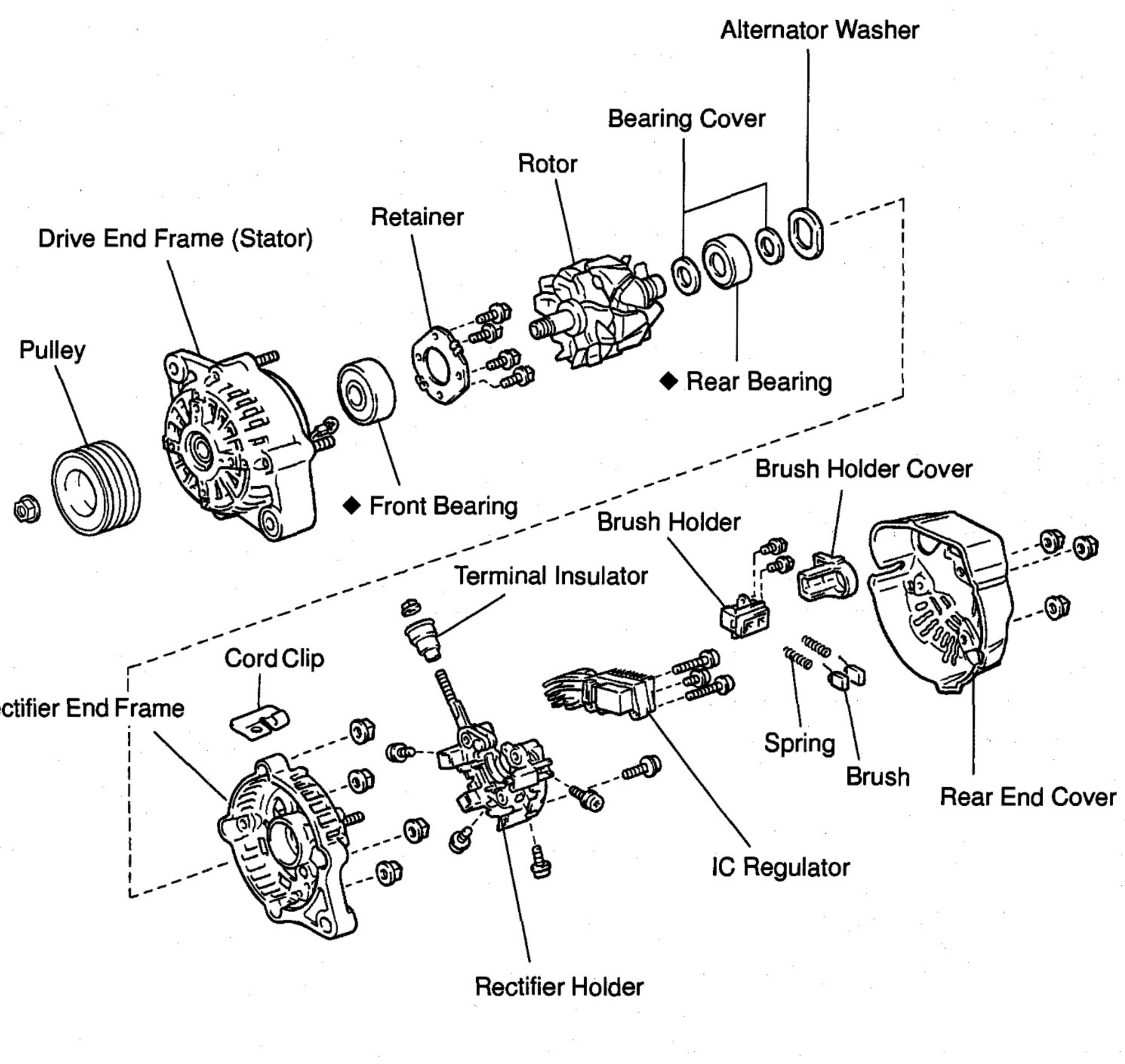

◆ Non–reusable part

B09803

CH08S–02

DISASSEMBLY

1. REMOVE REAR END COVER

(a) Remove the nut and terminal insulator.

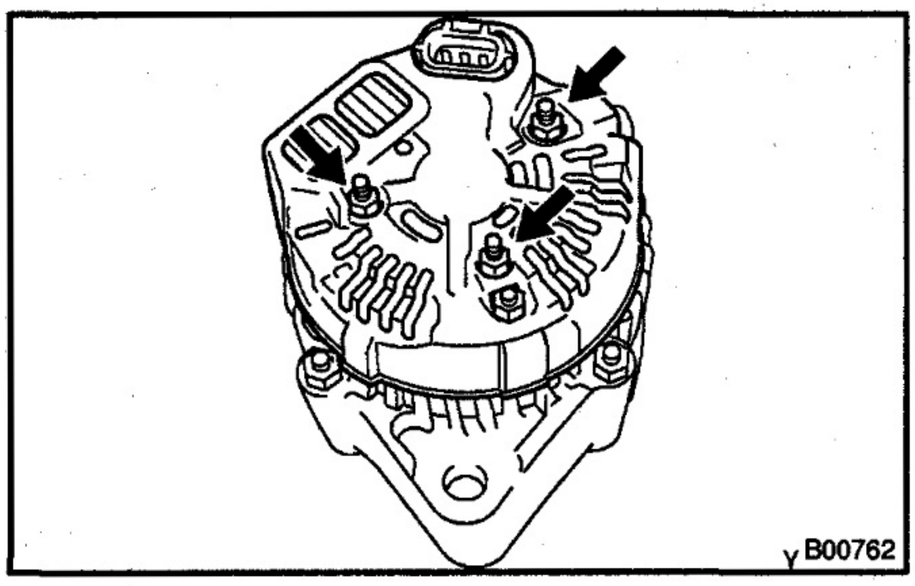

(b) Remove the 3 nuts and end cover.

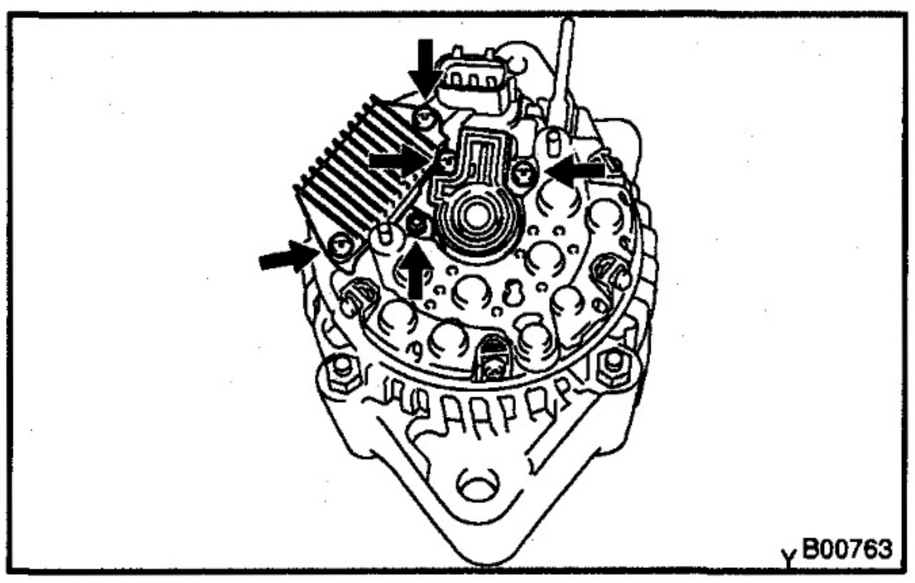

2. REMOVE BRUSH HOLDER AND IC REGULATOR

(a) Remove the 5 screws, bush holder and IC regulator.

(b) Remove the brush holder cover from the brush holder.

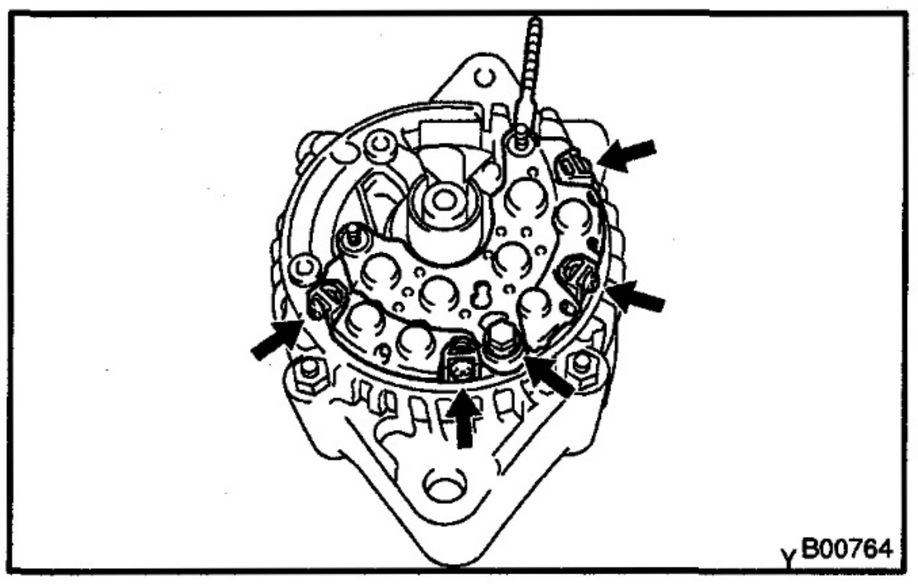

3. REMOVE RECTIFIER HOLDER

Remove the bolt, 4 screws and rectifier holder.

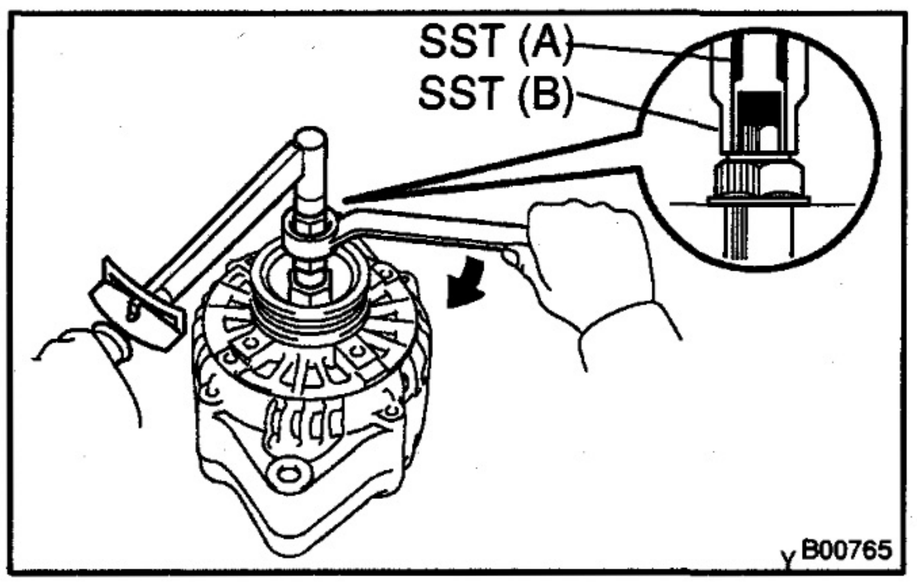

4. REMOVE PULLEY

(a) Hold SST (A) with a torque wrench, and tighten SST (B) clockwise to the specified torque.

SST 09820–63010

Torque: 39 N·m (400 kgf·cm, 29 ft·lbf)

(b) Check that SST (A) is secured to the rotor shaft.

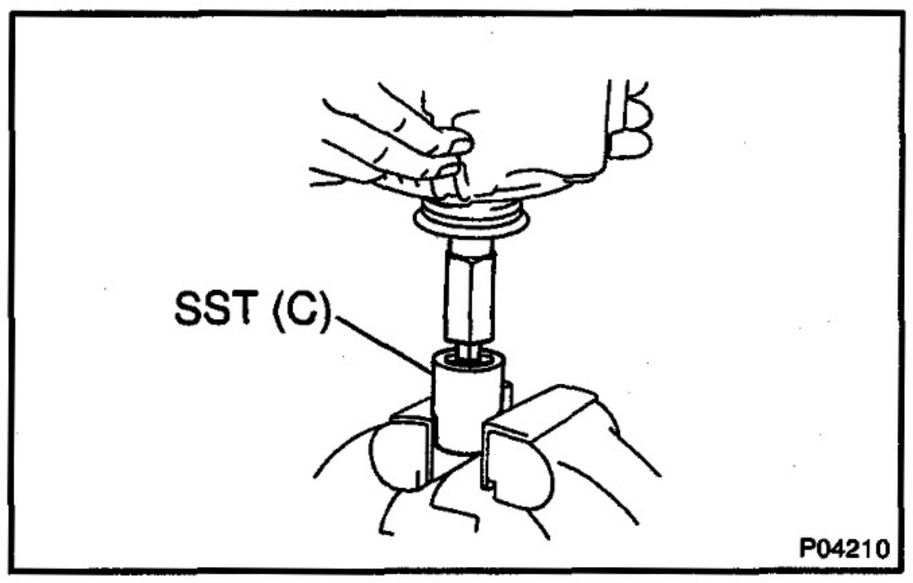

(c) Mount SST (C) in a vise.
(d) Install the pulley nut to SST (C).

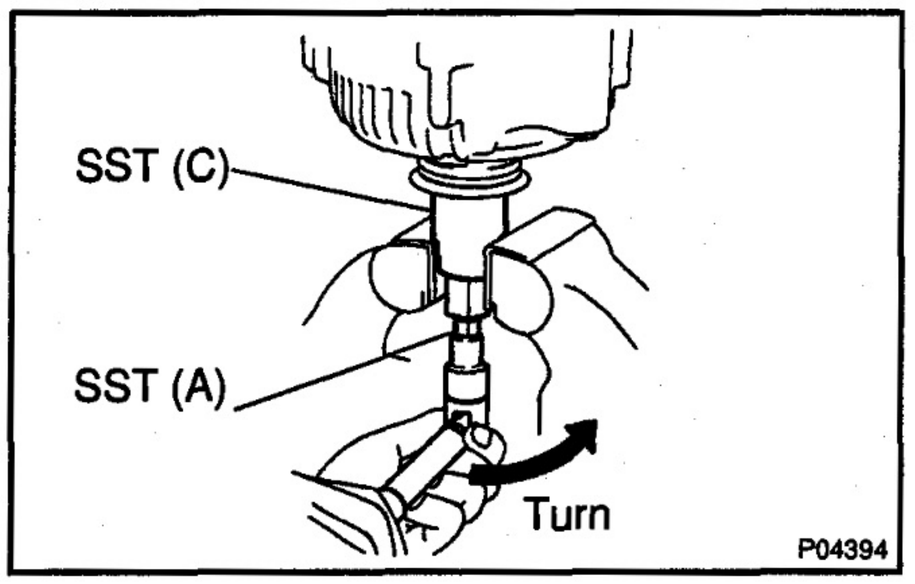

(e) To loosen the pulley nut, turn SST (A) in the direction shown in the illustration.

NOTICE:

To prevent damage to the rotor shaft, do not loosen the pulley nut more than one–half of a turn.

(f) Remove the alternator from SST (C).

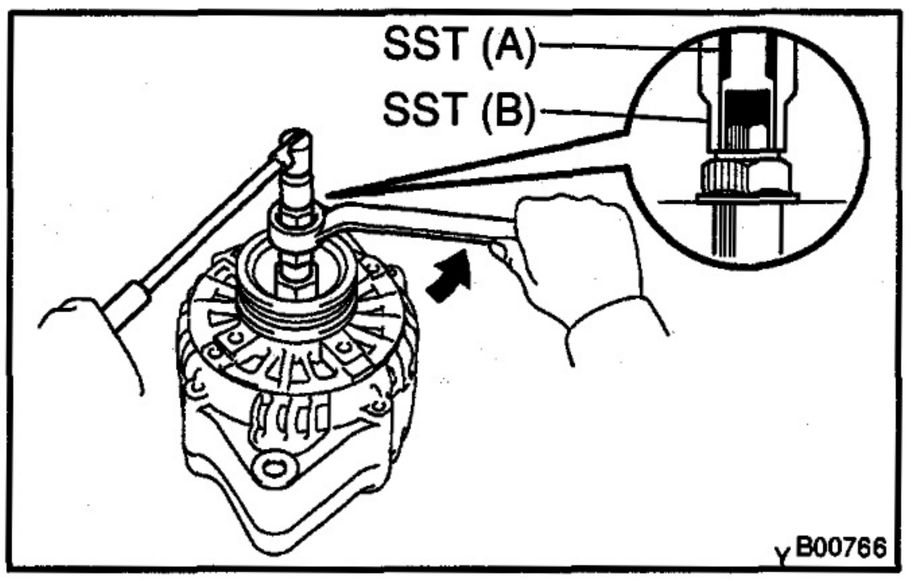

(g) Turn SST (B), and remove SST (A and B).
(h) Remove the pulley nut and pulley.

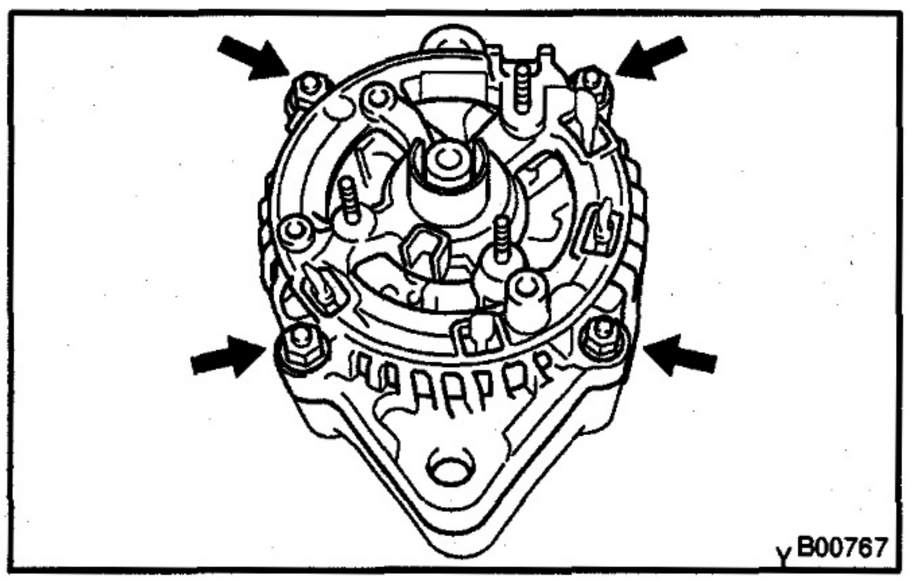

5. REMOVE RECTIFIER END FRAME

(a) Remove the 4 nuts and cord clip.

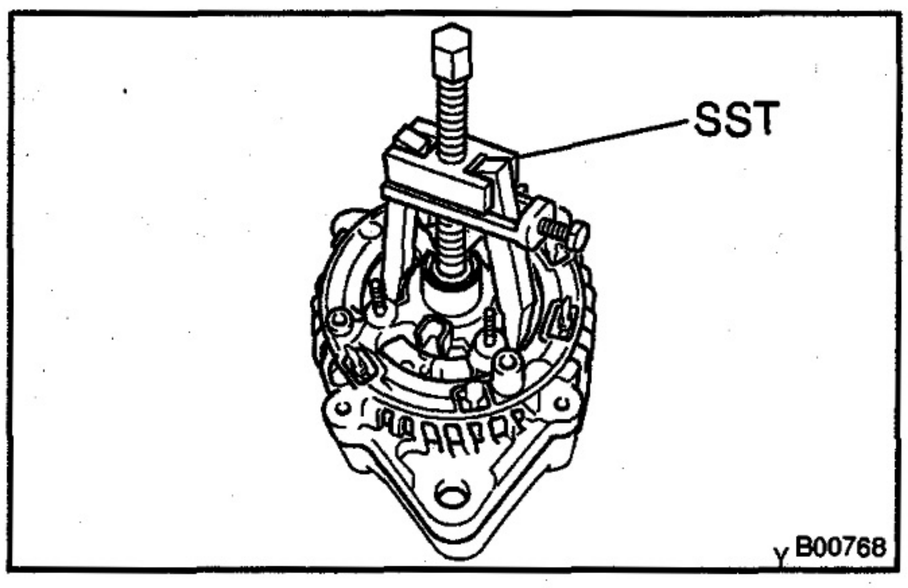

(b) Using SST, remove the rectifier end frame.
SST 09286–46011

6. REMOVE ROTOR FROM DRIVE END FRAME

CH0C5-01

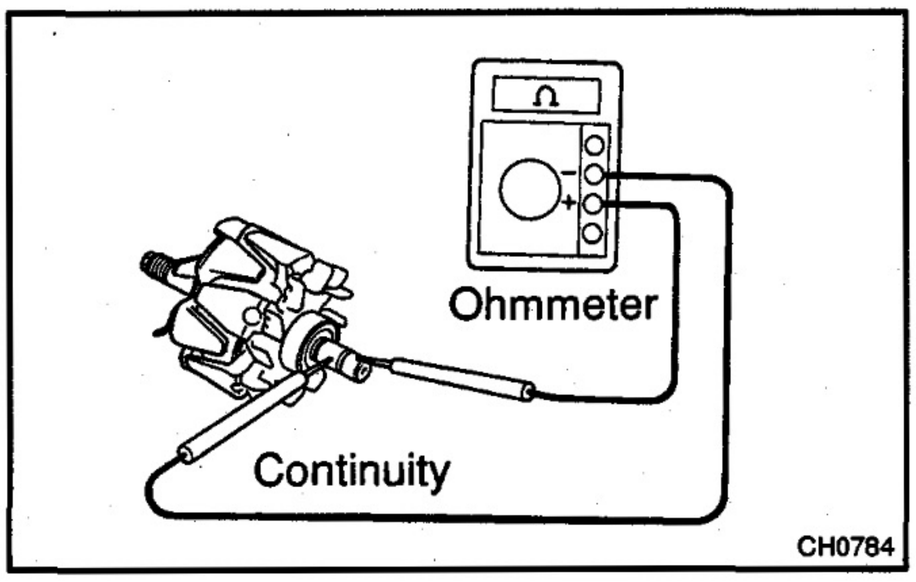

INSPECTION

1. INSPECT ROTOR

(a) Check the rotor for open circuit.
Using an ohmmeter, check that there is continuity between the slip rings.
Standard resistance: 2.1 – 2.5 Ω at 20°C (68°F)

If there is no continuity, replace the rotor.

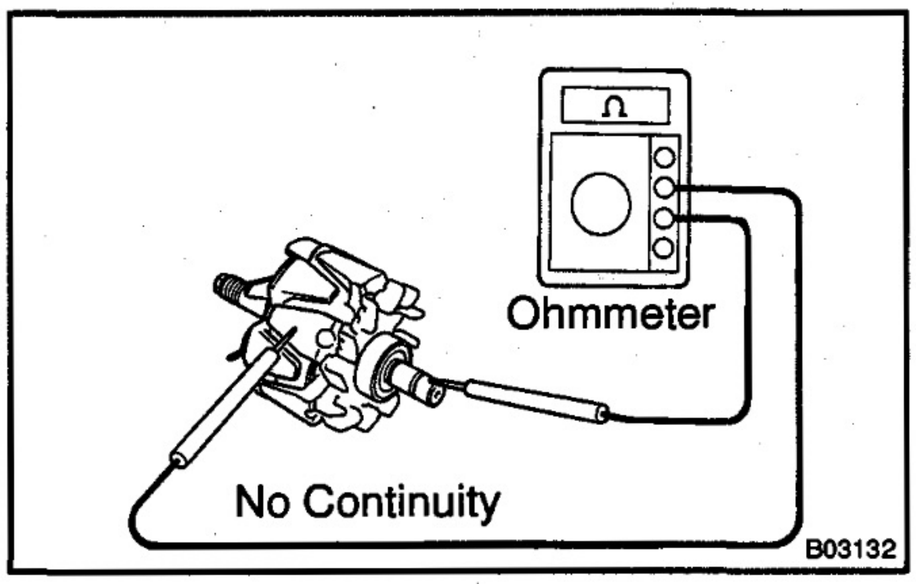

(b) Check the rotor for ground.
Using an ohmmeter, check that there is no continuity between the slip ring and rotor.

If there is continuity, replace the rotor.

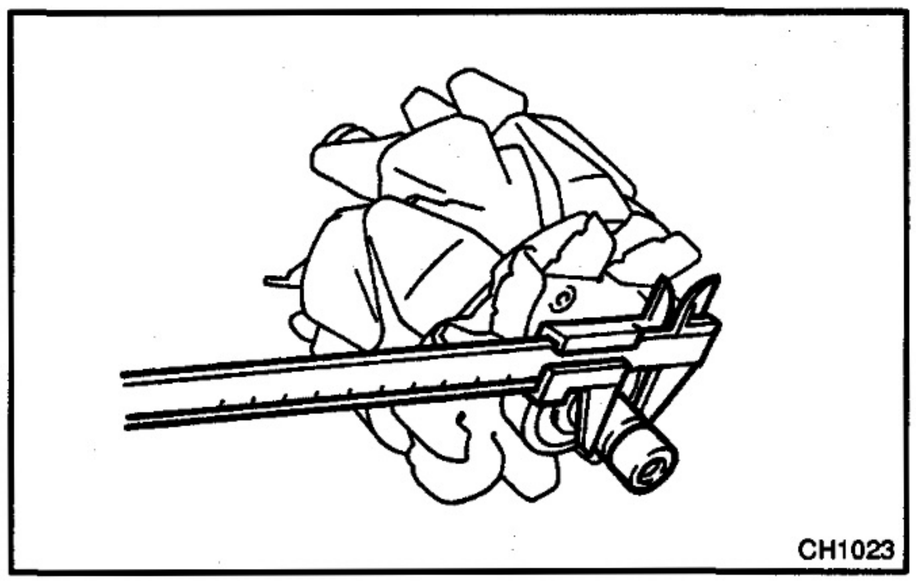

(c) Check that the slip rings are not rough or scored.

If rough or scored, replace the rotor.

(d) Using vernier calipers, measure the slip ring diameter.
Standard diameter: 14.2 – 14.4 mm (0.559 – 0.567 in.)
Minimum diameter: 12.8 mm (0.504 in.)

If the diameter is less than minimum, replace the rotor.

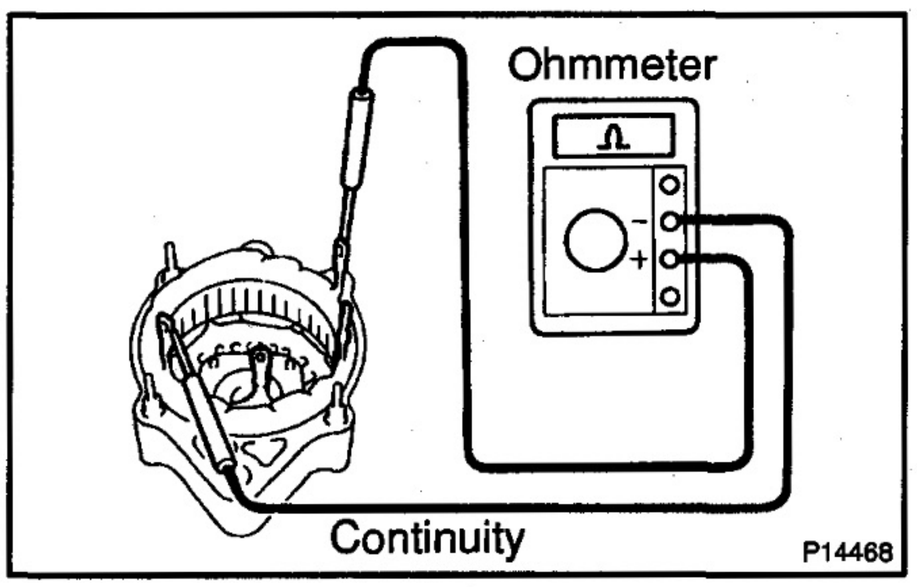

2. INSPECT STATOR (DRIVE END FRAME)

(a) Check the stator for open circuit.
Using an ohmmeter, check that there is continuity between the coil leads.

If there is no continuity, replace the drive end frame assembly.

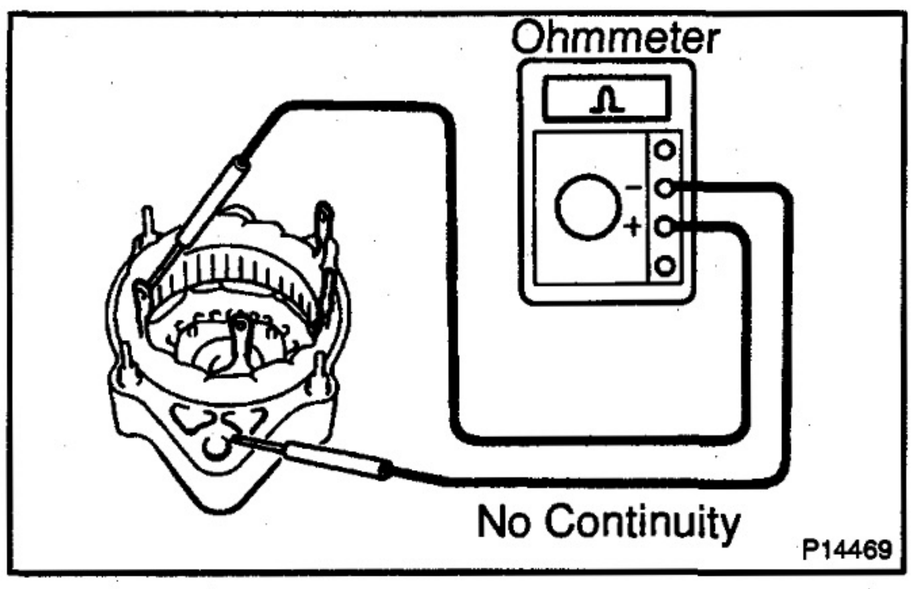

(b) Check the stator for ground.
Using an ohmmeter, check that there is no continuity between the coil lead and drive end frame.

If there is continuity, replace the drive end frame assembly.

CH

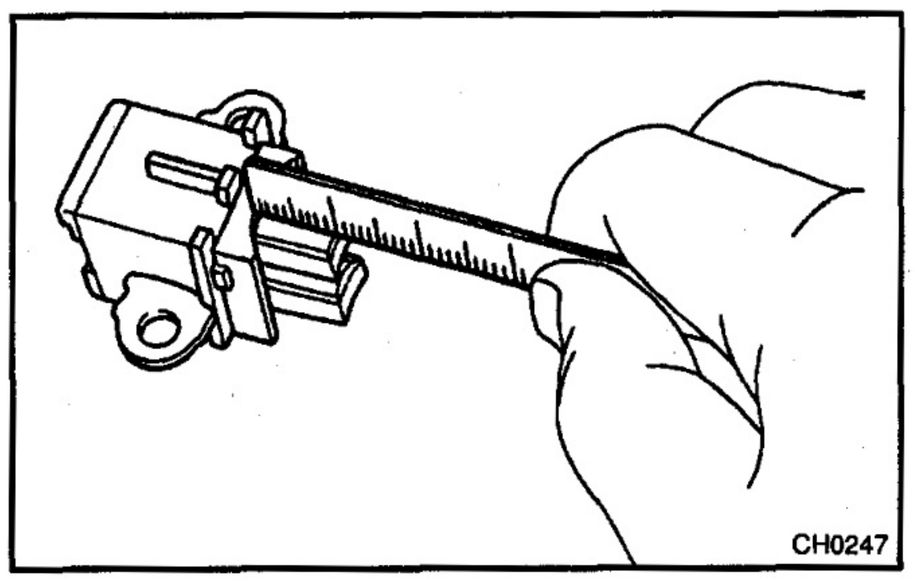

3. INSPECT BRUSHES

Using a scale, measure the exposed brush length.

Standard exposed length:
9.5 – 11.5 mm (0.374 – 0.453 in.)
Minimum exposed length:
1.5 mm (0.059 in.)

If the exposed length is less than minimum, replace the brushes. (See page CH–10)

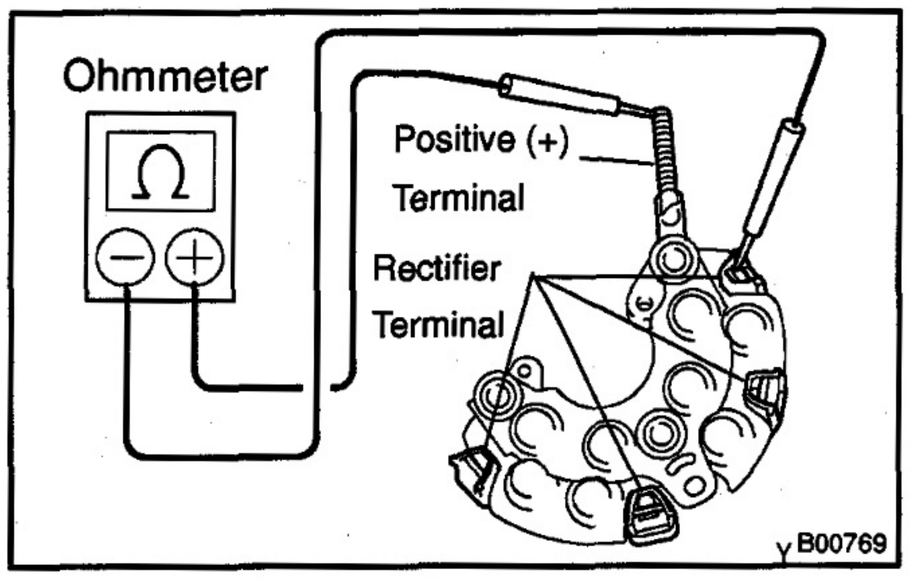

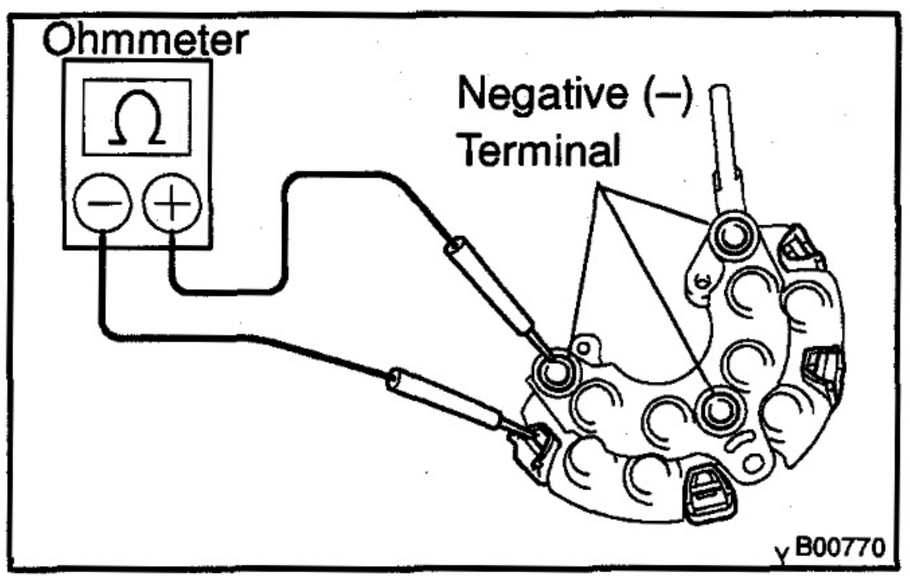

4. INSPECT RECTIFIER (RECTIFIER HOLDER)

(a) Check the positive (+) rectifier.
  (1) Using an ohmmeter, connect one tester probe to the positive (+) terminal and the other to each rectifier terminal.
  (2) Reverse the polarity of the tester probes and repeat step (a).
  (3) Check that one shows continuity and the other shows no continuity.

If continuity is not as specified, replace the rectifier holder.

(b) Check the negative (–) rectifier.
  (1) Using an ohmmeter, connect one tester probe to each negative (–) terminal and the other to each rectifier terminal.
  (2) Reverse the polarity of the tester probes and repeat step (a).
  (3) Check that one shows continuity and the other shows no continuity.

If continuity is not as specified, replace the rectifier holder.

5. INSPECT BEARINGS

Check the bearing is not rough or worn.

If necessary, replace the bearing. (See page CH–10)

CH0C8-01

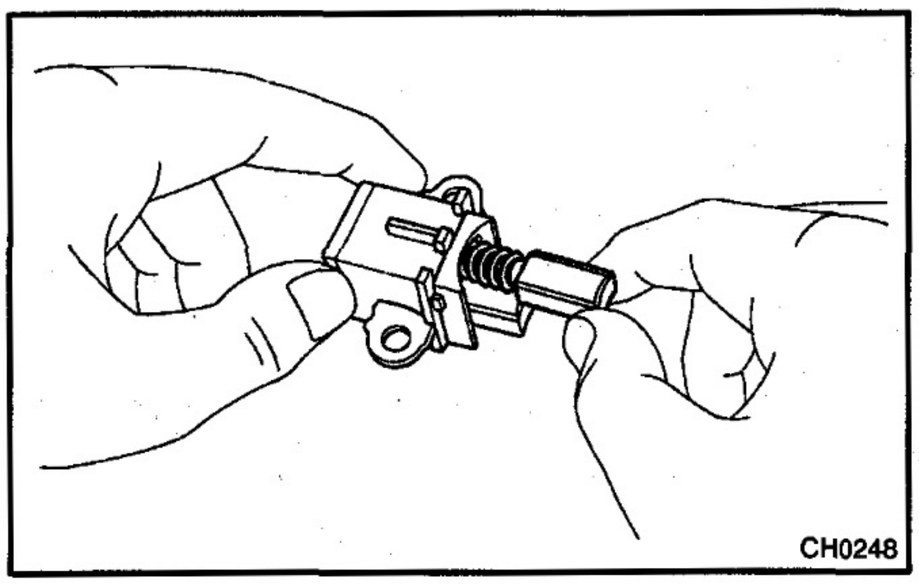

REPLACEMENT

1. REPLACE BRUSHES

(a) Unsolder and remove the brush and spring.

(b) Run the wire of a new brush through the spring and the hole in the brush holder, and insert the spring and brush into the brush holder.

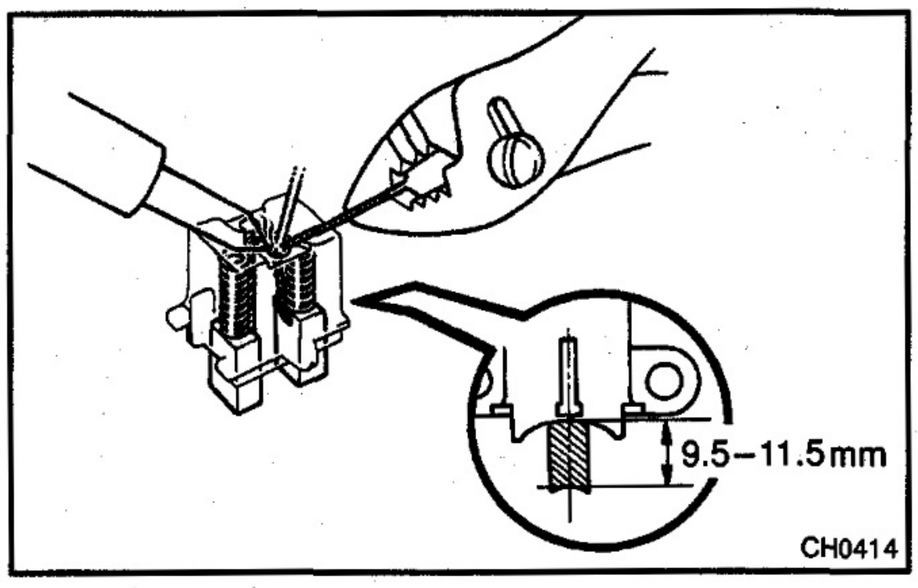

(c) Solder the brush wire to the brush holder at specified exposed length.

Exposed length: 9.5 – 11.5 mm (0.374 – 0.453 in.)

(d) Check that the brush moves smoothly in the brush holder.

(e) Cut off the excess wire.

(f) Apply insulation paint to the soldered area.

2. REPLACE FRONT BEARING

(a) Remove the 4 screws, bearing retainer and bearing.

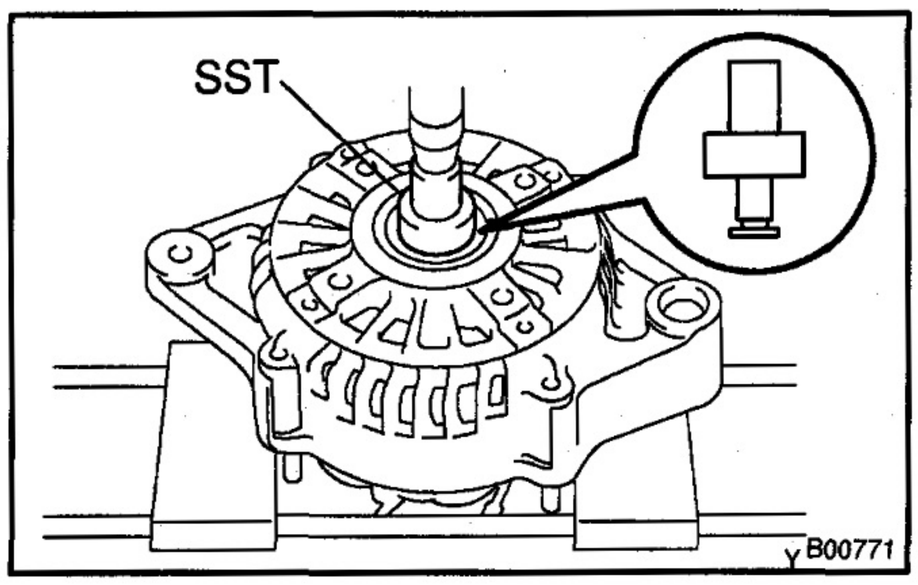

(b) Using SST and a press, press out the bearing.
SST 09950–60010 (09951–00260, 09952–06010)

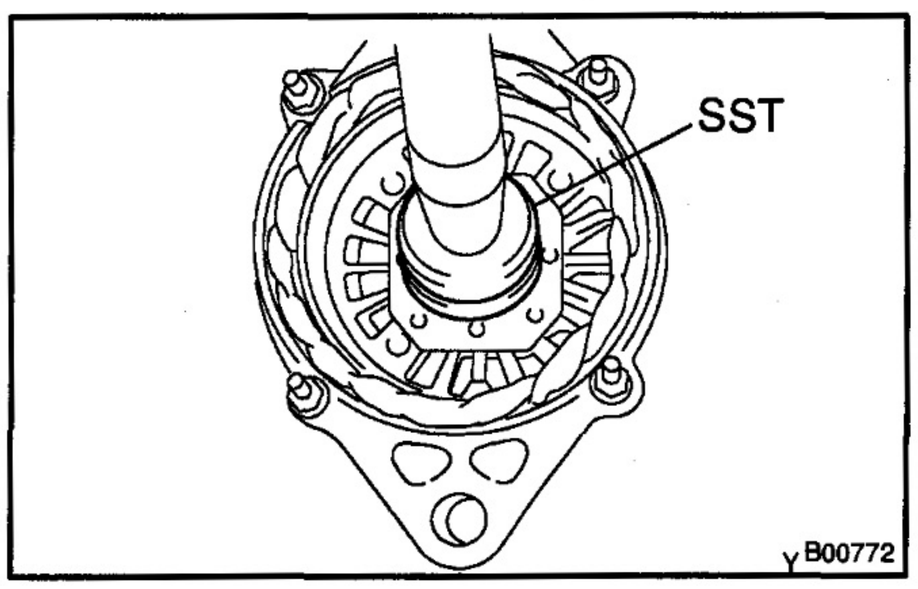

(c) Using SST and a press, press in a new bearing.
SST 09950–60010 (09951–00510)

(d) Install the bearing retainer with the 4 screws.
Torque: 2.6 N·m (26.5 kgf·cm, 23 in.·lbf)

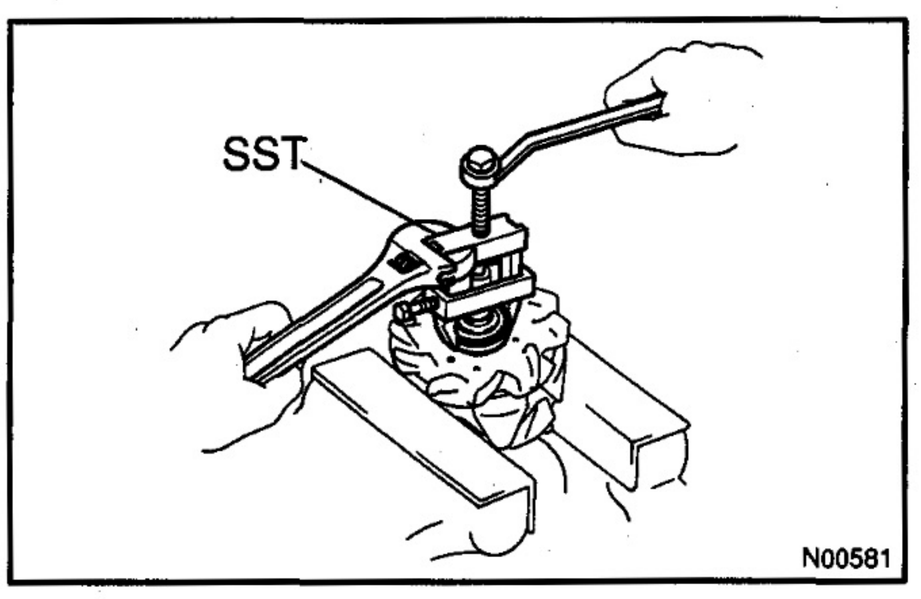

3. REPLACE REAR BEARING

(a) Using SST, remove the bearing cover and bearing.
SST 09820–00021

NOTICE:

Be careful not to damage the fan.

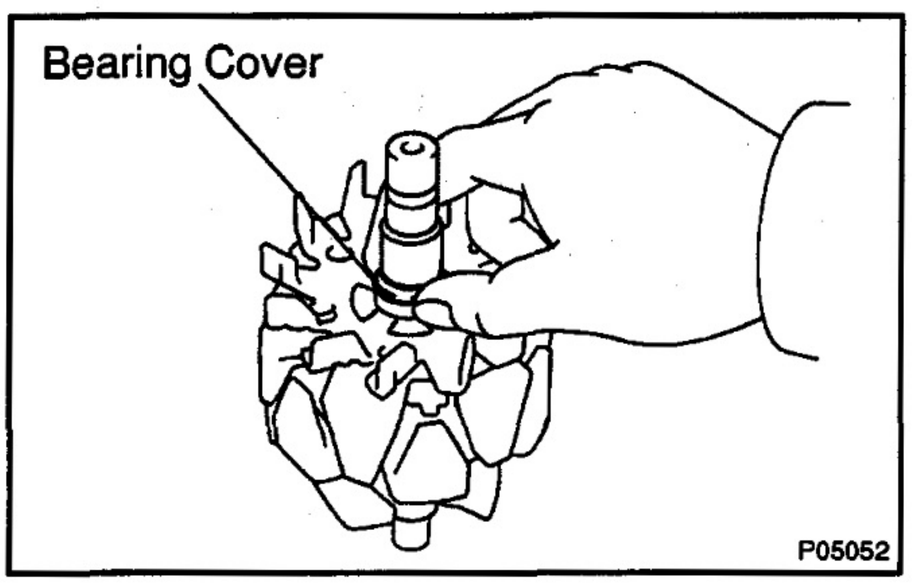

(b) Place the bearing cover on the rotor.

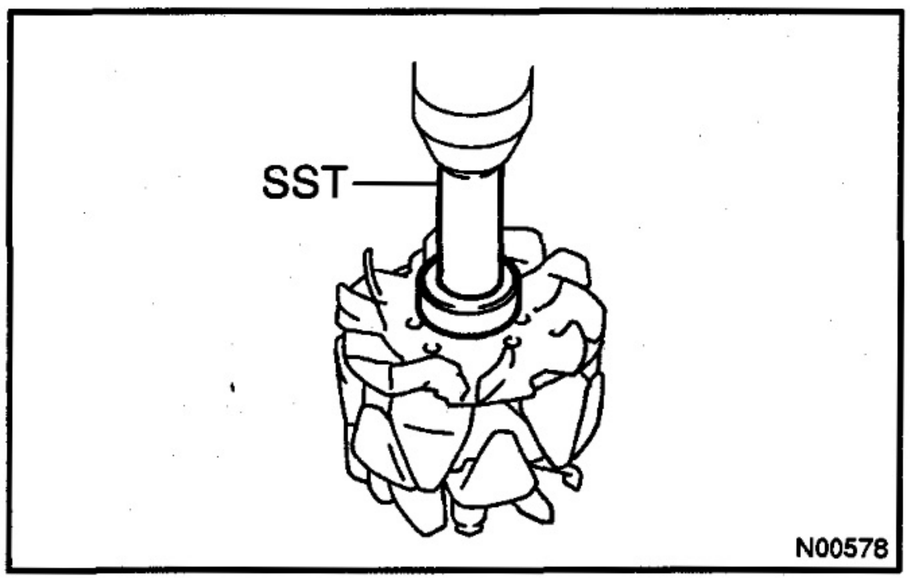

(c) Using SST and a press, press in a new bearing.
SST 09820–00030

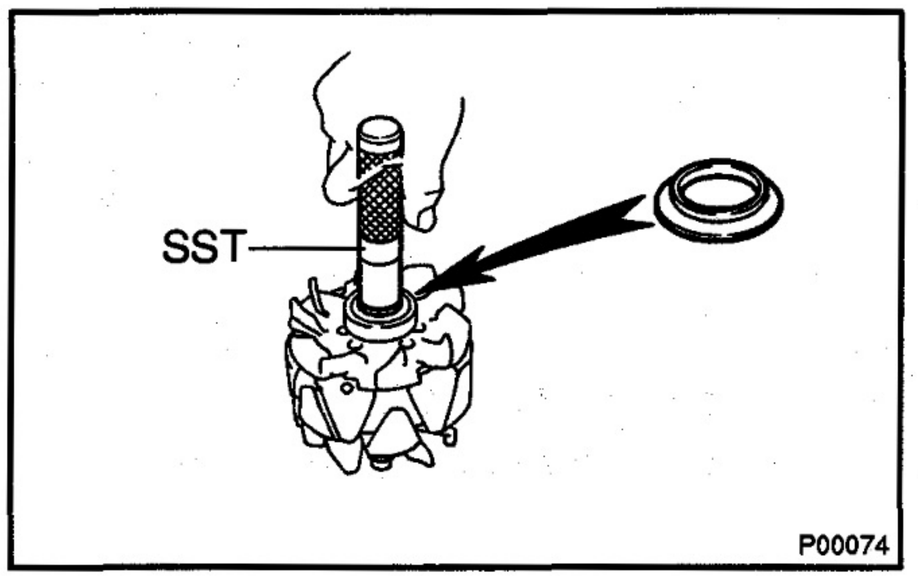

(d) Using SST, push in the bearing cover.
SST 09285–76010

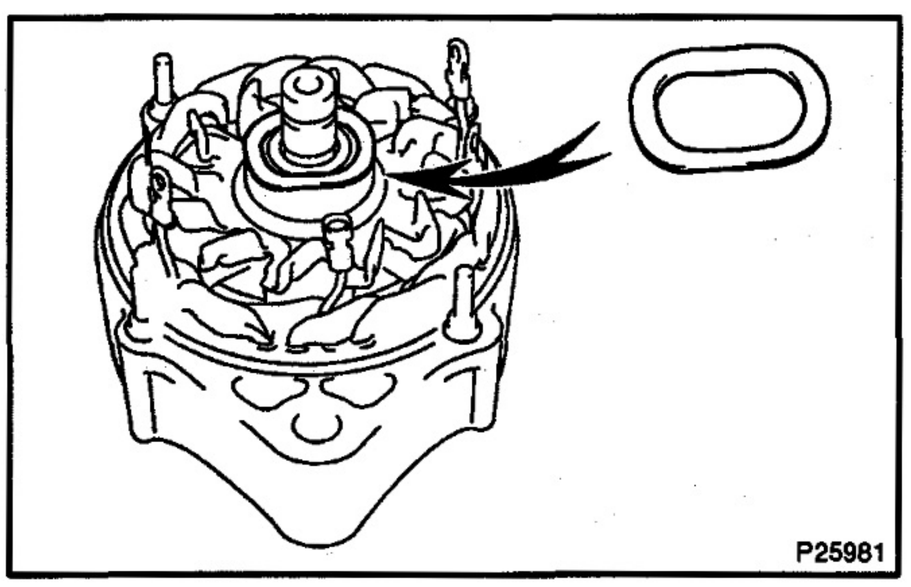

(e) Place the generator washer on the rotor.

CH0C7–01

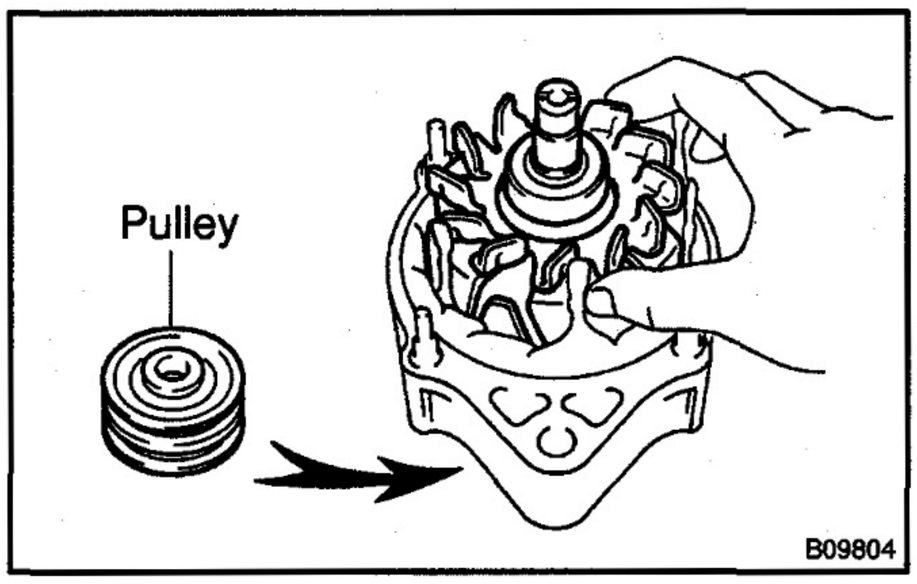

REASSEMBLY

1. INSTALL ROTOR TO DRIVE END FRAME

(a) Place the rectifier end frame on the pulley.

(b) Install the rotor to the rectifier end frame.

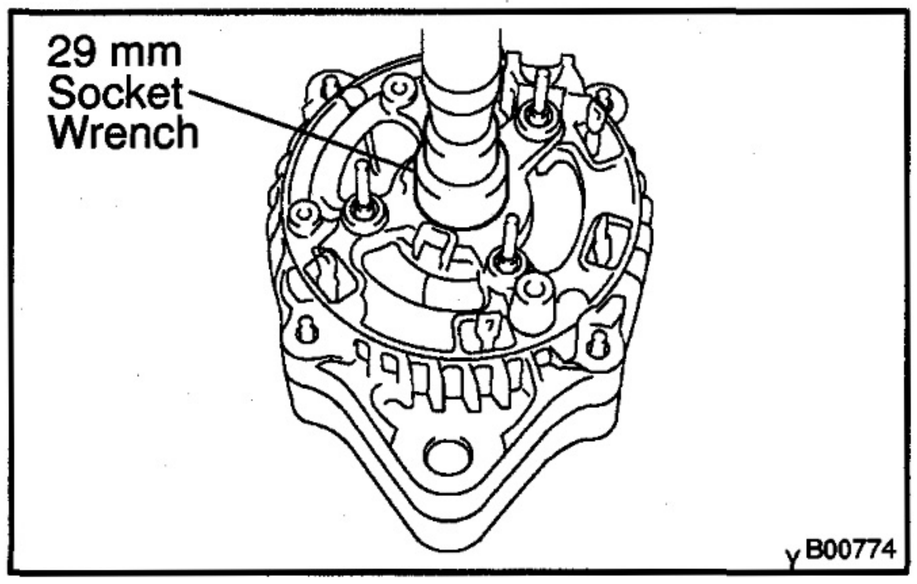

2. INSTALL RECTIFIER END FRAME

(a) Using a 29 mm socket wrench and press, slowly press in the rectifier end frame.

(b) Install the 4 nuts and cord clip.

Torque:
Nut: 4.5 N·m (46 kgf·cm, 40 in.·lbf)
Nut with cord clip: 5.4 N·m (55 kgf·cm, 48 in.·lbf)

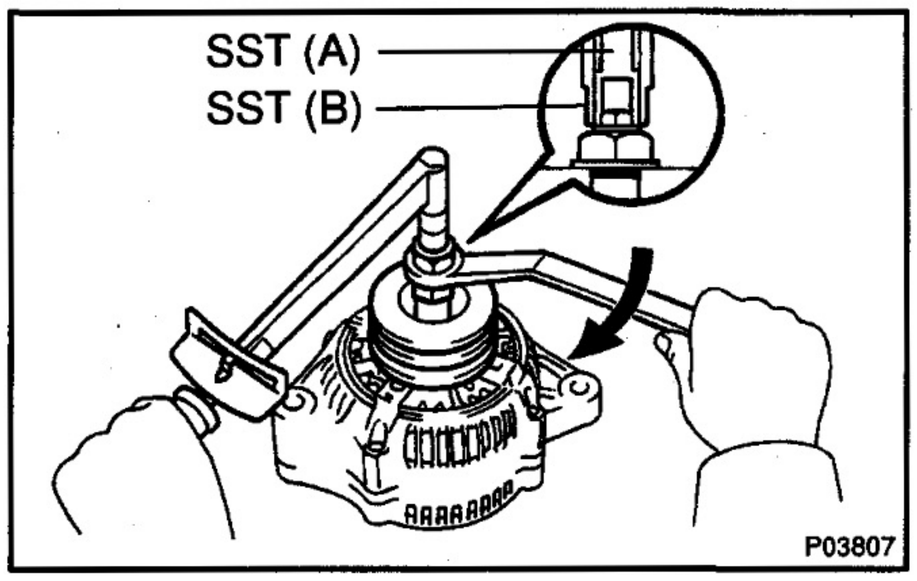

3. INSTALL PULLEY

(a) Install the pulley to the rotor shaft by tightening the pulley nut by hand.

(b) Hold SST (A) with a torque wrench, and tighten SST (B) clockwise to the specified torque.
SST 09820–63010 (09820–06010)
Torque: 39 N·m (400 kgf·cm, 29 ft·lbf)

(c) Check that SST (A) is secured to the pulley shaft.

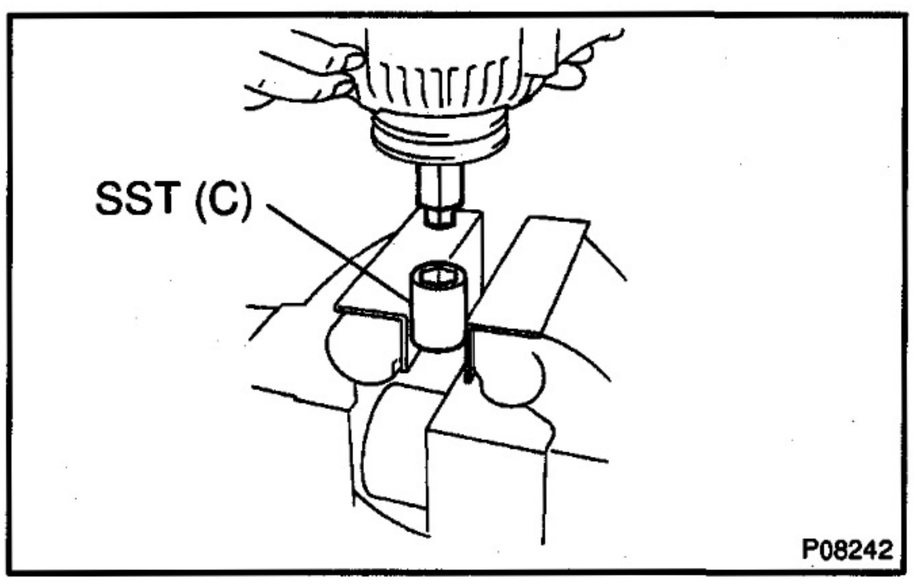

(d) Mount SST (C) in a vise.
SST 09820–06021

(e) Install the pulley nut to SST (C).

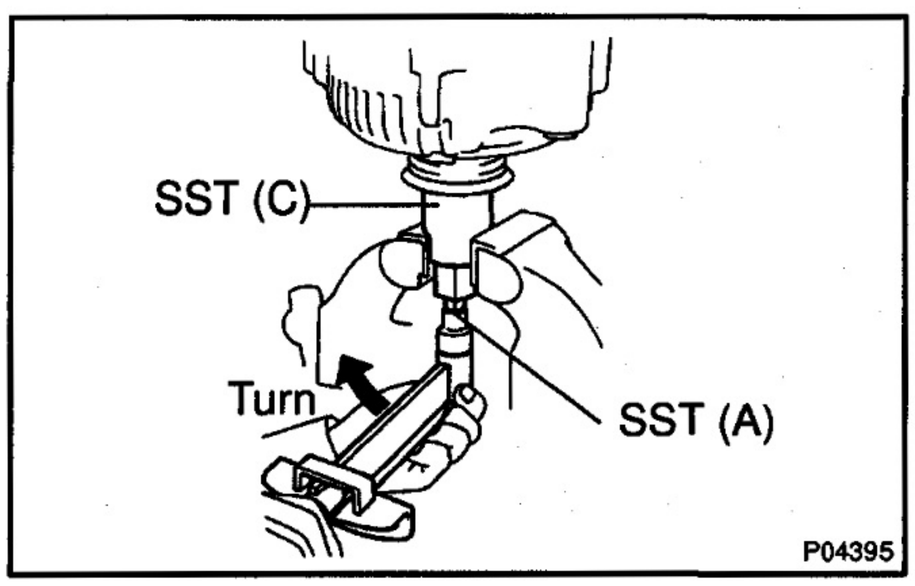

(f) To torque the pulley nut turn SST (A) in the direction shown in the illustration.
Torque: 110 N·m (1,125 kgf·cm, 81 ft·lbf)

(g) Remove the alternator from SST (C).

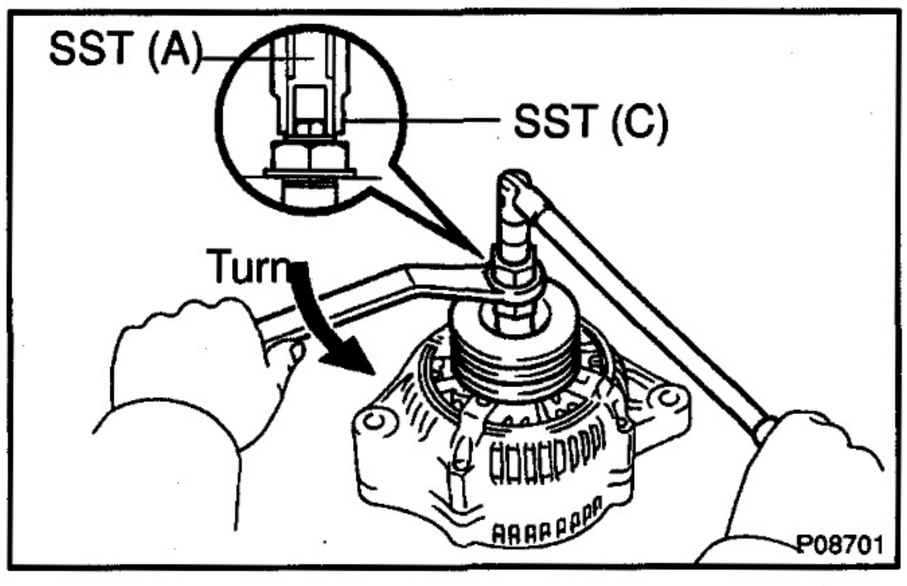

(h) Turn SST (B) and remove SST (A and B).

4. INSTALL RECTIFIER HOLDER

Install the rectifier holder with the bolt and 4 screws.

Torque: Screw: 1.96 N·m (20 kgf·cm, 17.4 in.·lbf)

Torque: Bolt: 3.9 N·m (40 kgf·cm, 34.7 in.·lbf)

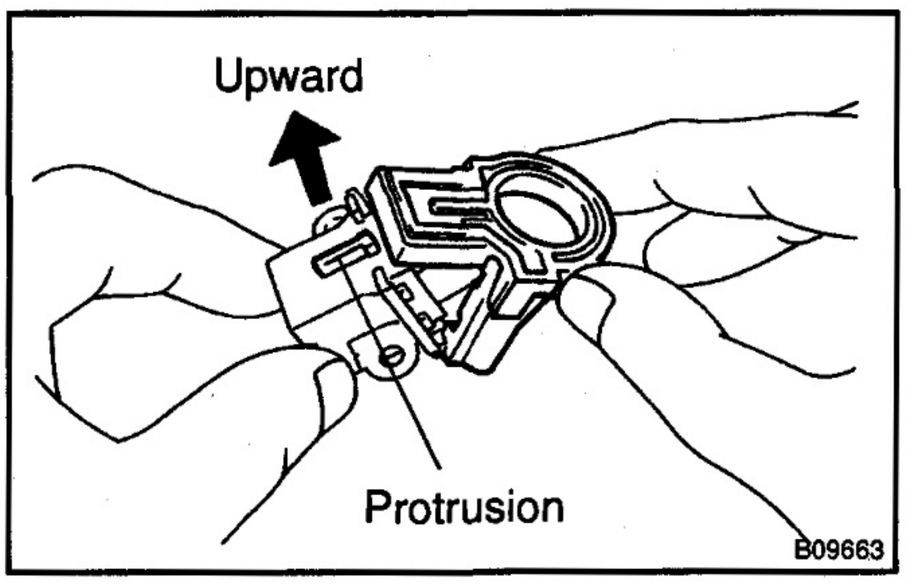

5. INSTALL IC REGULATOR AND BRUSH HOLDER

(a) Install the brush holder cover to the brush holder.

NOTICE:

Be careful of the holder installation direction.

(b) Place the IC regulator together with the brush holder horizontally on the rectifier end frame.

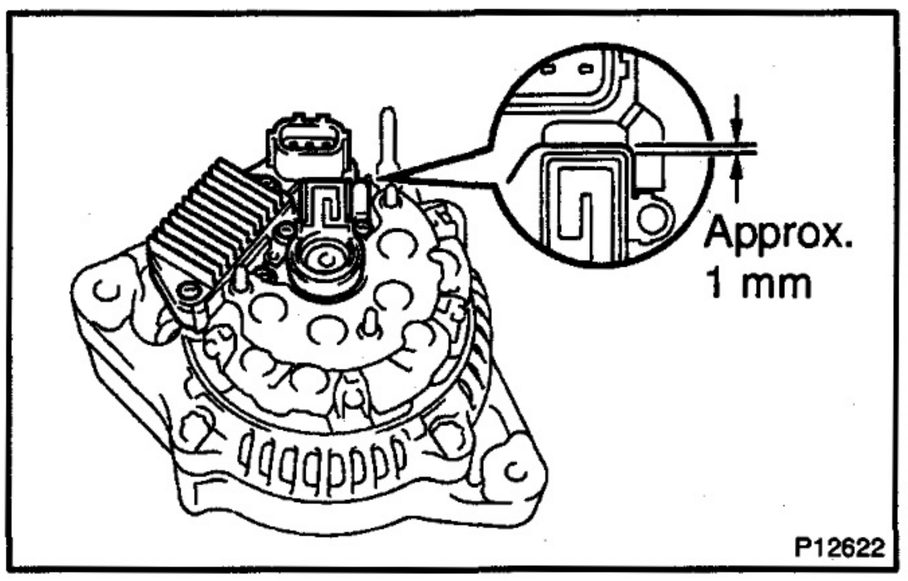

(c) Install the 5 screws until there is a clearance of approx. 1 mm (0.04 in.) between the brush holder and connector.

Torque: 1.96 N·m (20 kgf·cm, 17 in.·lbf)

(d) Fit the brush holder cover.

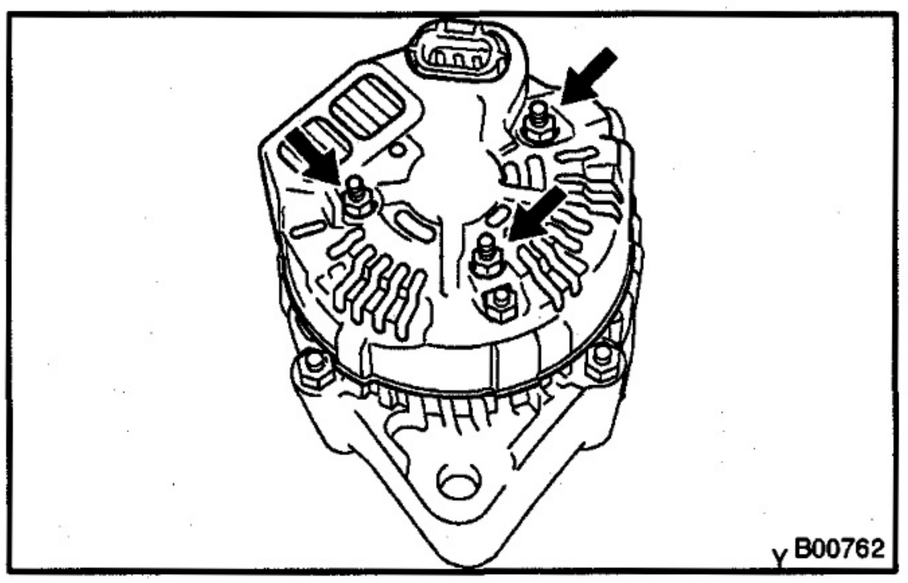

6. INSTALL REAR END COVER

(a) Install the end cover with the 3 nuts.

Torque: 4.5 N·m (46 kgf·cm, 40 in.·lbf)

(b) Install the terminal insulator with the nut.

Torque: 4.1 N·m (42 kgf·cm, 36 in.·lbf)

7. CHECK THAT ROTOR ROTATES SMOOTHLY

ALPHABETICAL INDEX

A

	Page
ABBREVIATIONS USED IN THIS MANUAL (TERMS)	IN–25
AIR FILTER	EM–1
ALTERNATOR	CH–5

C

	Page
CHARGING (PREPARATION)	PP–30
CHARGING (SERVICE SPECIFICATIONS)	SS–21
CHARGING SYSTEM	CH–1
CIRCUIT INSPECTION (ENGINE) (DIAGNOSTICS)	DI–19
COMPRESSION	EM–2
COOLANT	CO–1
COOLING (PREPARATION)	PP–18
COOLING (SERVICE SPECIFICATIONS)	SS–15
CRANKSHAFT POSITION SENSOR	ED–21
CUSTOMER PROBLEM ANALYSIS CHECK (ENGINE) (DIAGNOSTICS)	DI–2
CYLINDER BLOCK	EM–72
CYLINDER HEAD	EM–41

D

	Page
DIAGNOSTIC TROUBLE CODE CHART (ENGINE) (DIAGNOSTICS)	DI–12

E

	Page
ECD MAIN RELAY	ED–10
ECD SYSTEM	ED–1
ELECTRONIC CONTROL DIESEL (PREPARATION)	PP–11
ELECTRONIC CONTROL DIESEL (SERVICE SPECIFICATIONS)	SS–11
ENGINE (DIAGNOSTICS)	DI–1
ENGINE ECU	ED–25
ENGINE FUEL (PREPARATION)	PP–14
ENGINE FUEL (SERVICE SPECIFICATIONS)	SS–13
ENGINE MECHANICAL (PREPARATION)	PP–1
ENGINE MECHANICAL (SERVICE SPECIFICATIONS)	SS–4
ENGINE SERIAL NUMBER (IDENTIFICATION INFORMATION)	IN–3
ENGINE SPEED SENSOR	ED–20

F

	Page
FIRST GEAR POSITION SWITCH	ED–22
FOR ALL OF VEHICLES	IN–8
FUEL FILTER	FU–1
FUEL TEMPERATURE SENSOR	ED–16

G

	Page
GENERAL INFORMATION (HOW TO TROUBLESHOOT ECU CONTROLLED SYSTEMS)	IN–9
GENERAL INFORMATION (HOW TO USE THIS MANUAL)	IN–1
GENERAL INFORMATION (REPAIR INSTRUCTIONS)	IN–4

H

	Page
HOW TO PROCEED WITH TROUBLESHOOTING (ENGINE) (DIAGNOSTICS)	DI–1
HOW TO PROCEED WITH TROUBLESHOOTING (HOW TO TROUBLESHOOT ECU CONTROLLED SYSTEMS)	IN–10
HOW TO TROUBLESHOOT ECU CONTROLLED SYSTEMS	IN–9
HOW TO USE THE DIAGNOSTIC CHART AND INSPECTION PROCEDURE (HOW TO TROUBLESHOOT ECU CONTROLLED SYSTEMS)	IN–20
HOW TO USE THIS MANUAL	IN–1

I

	Page
IDENTIFICATION INFORMATION	IN–3
IDLE SPEED AND MAXIMUM SPEED	EM–9
INJECTION NOZZLE	FU–3
INJECTION PUMP	FU–15
INJECTION PUMP CORRECTION RESISTOR	ED–24
INJECTION TIMING	EM–8
INTAKE AIR TEMPERATURE SENSOR	ED–17
INTAKE CONSTRICTOR CONTROL	EM–10

L

	Page
LUBRICATION (PREPARATION)	PP–22
LUBRICATION (SERVICE SPECIFICATIONS)	SS–17

O

	Page
OIL AND FILTER	LU–1
OIL COOLER	LU–16
OIL NOZZLE	LU–23
OIL PUMP	LU–4

P

	Page
PARTS LOCATION (ENGINE) (DIAGNOSTICS)	DI–14
POSITIVE CRANKCASE VENTILATION (PCV) SYSTEM	EC–1
PRE–CHECK (ENGINE) (DIAGNOSTICS)	DI–3
PRE–HEATING SYSTEM	ST–1
PRECAUTION (FOR ALL OF VEHICLES)	IN–8
PROBLEM SYMPTOMS TABLE (ENGINE) (DIAGNOSTICS)	DI–17

R

	Page
RADIATOR	CO–14
REPAIR INSTRUCTIONS	IN–4

S

	Page
SPILL CONTROL VALVE	ED–9
SPILL CONTROL VALVE RELAY	ED–11
STANDARD BOLT (SERVICE SPECIFICATIONS)	SS–1
STARTER	ST–6
STARTER RELAY	ST–20
STARTING (PREPARATION)	PP–27
STARTING (SERVICE SPECIFICATIONS)	SS–19

T

	Page
TERMINALS OF ECU (ENGINE) (DIAGNOSTICS)	DI–15
TERMS	IN–25
THERMOSTAT	CO–10
THROTTLE BODY	ED–3
TIMING BELT	EM–12
TIMING CONTROL VALVE	ED–8
TIMING GEAR	EM–22
TROUBLESHOOTING	TC–1
TURBO PRESSURE SENSOR	ED–18
TURBOCHARGER	TC–2
TURBOCHARGING (PREPARATION)	PP–8
TURBOCHARGING (SERVICE SPECIFICATIONS)	SS–9

V

VALVE CLEARANCE	EM–4
VSV FOR INTAKE CONSTRICTOR CONTROL	ED–13

W

WATER PUMP	CO–3
WATER TEMPERATURE SENSOR	ED–15