TOYOTA

REPAIR MANUAL SUPPLEMENT

FOR CHASSIS & BODY

LAND CRUISER/ LAND CRUISER PRADO

RZJ9_, VZJ9_ series
KZJ9_, LJ9_ series

Jun., 1999

Pub. No. RM702E

FOREWORD

This supplement has been prepared to provide information covering general service repairs for the chassis and body of the TOYOTA LAND CRUISER/LAND CRUISER PRADO which underwent changes in June, 1999.

Applicable models: RZJ90, 95 series
VZJ90, 95 series
KZJ90, 95 series
LJ90, 95 series

For the service specifications and repair procedures of the above model other than those listed in this supplement, refer to the following manuals.

Manual Name	Pub. No.
• LAND CRUISER/LAND CRUISER PRADO Chassis and Body Repair Manual	RM517E
• LAND CRUISER/LAND CRUISER PRADO Chassis and Body Repair Manual Supplement	RM627E
• 3RZ–F, 3RZ–FE Engine Repair Manual	RM521E
• 3RZ–FE Engine Repair Manual Supplement	RM704E
• 5VZ–FE Engine Repair Manual	RM519E
• 5VZ–FE Engine Repair Manual Supplement	RM703E
• 1KZ–T Engine Repair Manual	RM353E
• 1KZ–T, 1KZ–TE Engine Repair Manual Supplement	RM522E
• 2L, 3L Engine Repair Manual	RM520E
• A343F Automatic Transmission Repair Manual	RM528E
• LAND CRUISER/LAND CRUISER PRADO Electrical Wiring Diagram	EWD269F
• LAND CRUISER/LAND CRUISER PRADO Electrical Wiring Diagram Supplement (Jan., 1998)	EWD340F
• LAND CRUISER/LAND CRUISER PRADO Electrical Wiring Diagram Supplement (Jun., 1999)	EWD376F

All information in this manual is based on the latest product information at the time of publication. However, specifications and procedures are subject to change without notice.

TOYOTA MOTOR CORPORATION

©1999 **TOYOTA MOTOR CORPORATION**
All rights reserved. This book may not be reproduced or copied, in whole or in part, without the written permission of Toyota Motor Corporation.
First Printing: May 14, 1999 01–990514–00

CAUTION

This manual does not include all the necessary items about repair and service. This manual is made for the purpose of the use for the persons who have special techniques and certifications. In the cases that non–specialized or uncertified technicians perform repair or service only using this manual or without proper equipment or tool, that may cause severe injury to you or other people around and also cause damage to your customer's vehicle.

In order to prevent dangerous operation and damages to your customer's vehicle, be sure to follow the instruction shown below.

- Must read this manual thoroughly. It is especially important to have good understanding all the contents written in the PRECAUTION of "IN" section.
- The service method written in this manual is very effective to perform repair and service. When performing the operations following the procedures using this manual, be sure to use tools specified and recommended. If using non–specified or recommended tools and service method, be sure to confirm safety of the technicians and any possibility of causing personal injury or damage to the customer's vehicle before starting the operation.
- If part replacement is necessary, must replace the part with the same part number or equivalent part. Do not replace it with inferior quality.
- It is important to note that this manual contains various "Cautions" and "Notices" that must be carefully observed in order to reduce the risk of personal injury during service or repair, or the possibility that improper service or repair may damage the vehicle or render it unsafe. It is also important to understand that these "Cautions" and "Notices" are not exhaustive, because it is important to warn of all the possible hazardous consequences that might result from failure to follow these instructions.

INTRODUCTION IN
PREPARATION PP
SERVICE SPECIFICATIONS SS
DIAGNOSTICS DI
AUTOMATIC TRANSMISSION AT
VF3BM TRANSFER TR
BRAKE BR
BODY ELECTRICAL BE
BODY BO
AIR CONDITIONING AC
ALPHABETICAL INDEX ID

INTRODUCTION

HOW TO USE THIS MANUAL IN–1
GENERAL INFORMATION IN–1
IDENTIFICATION INFORMATION IN–3
VEHICLE IDENTIFICATION AND ENGINE SERIAL NUMBER IN–3
REPAIR INSTRUCTIONS IN–4
GENERAL INFORMATION IN–4
VEHICLE LIFT AND SUPPORT LOCATIONS IN–8
FOR ALL OF VEHICLES IN–9
PRECAUTION IN–9
HOW TO TROUBLESHOOT ECU CONTROLLED SYSTEMS IN–22
GENERAL INFORMATION IN–22
HOW TO PROCEED WITH TROUBLESHOOTING IN–23
HOW TO USE THE DIAGNOSTIC CHART AND INSPECTION PROCEDURE IN–33
TERMS IN–38
ABBREVIATIONS USED IN THIS MANUAL IN–38

HOW TO USE THIS MANUAL

GENERAL INFORMATION

IN00U–41

1. INDEX

An INDEX is provided on the first page of each section to guide you to the item to be repaired. To assist you in finding your way through the manual, the section title and major heading are given at the top of every page.

2. PRECAUTION

At the beginning of each section, a PRECAUTION is given that pertains to all repair operations contained in that section.
Read these precautions before starting any repair task.

3. TROUBLESHOOTING

TROUBLESHOOTING tables are included for each system to help you diagnose the problem and find the cause. The fundamentals of how to proceed with troubleshooting are described on page IN–23.
Be sure to read this before performing troubleshooting.

4. PREPARATION

Preparation lists the SST (Special Service Tools), recommended tools, equipment, lubricant and SSM (Special Service Materials) which should be prepared before beginning the operation and explains the purpose of each one.

5. REPAIR PROCEDURES

Most repair operations begin with an overview illustration. It identifies the components and shows how the parts fit together.
Example:

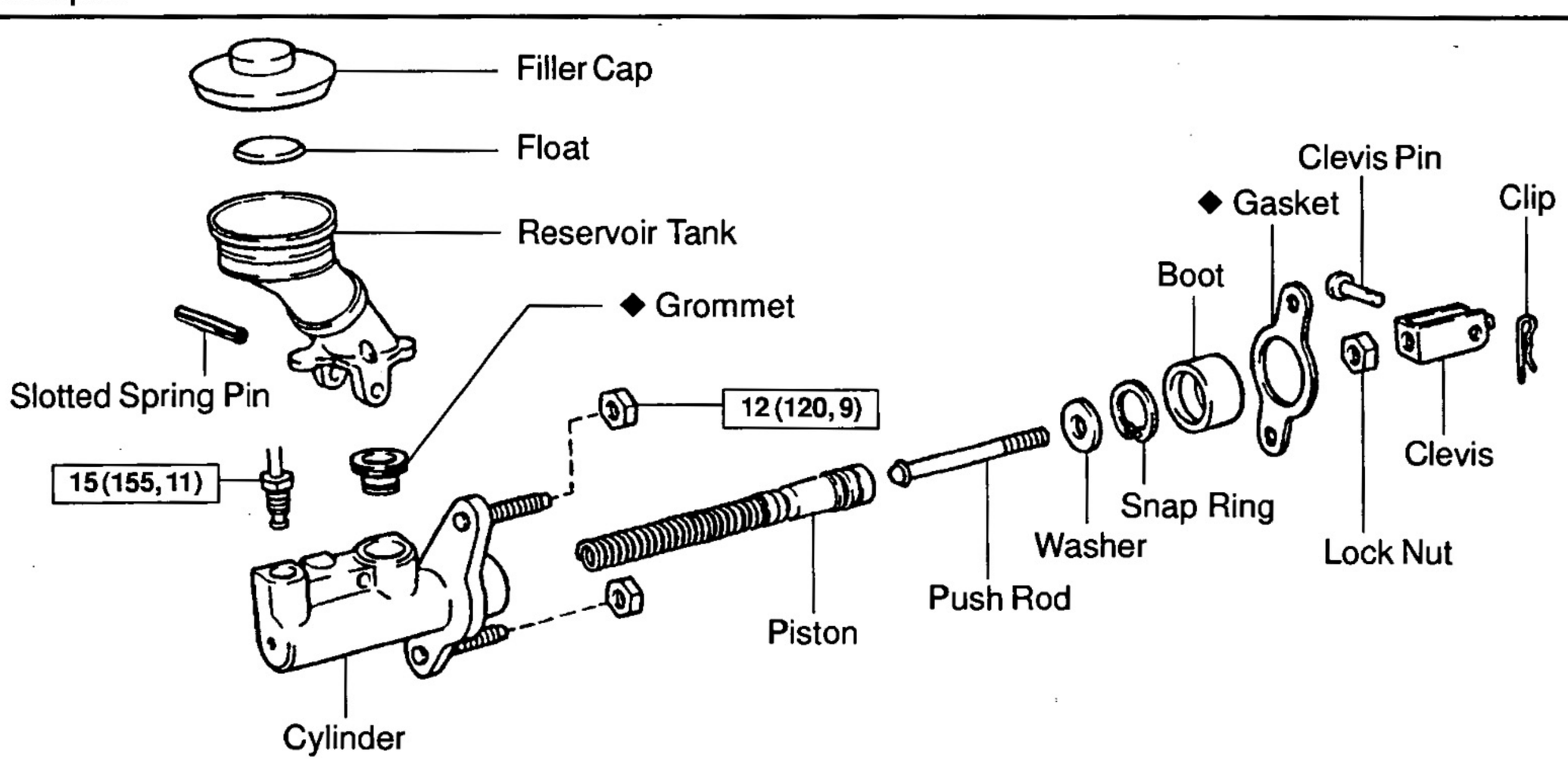

The procedures are presented in a step–by–step format:

- The illustration shows what to do and where to do it.
- The task heading tells what to do.
- The detailed text tells how to perform the task and gives other information such as specifications and warnings.

Example:

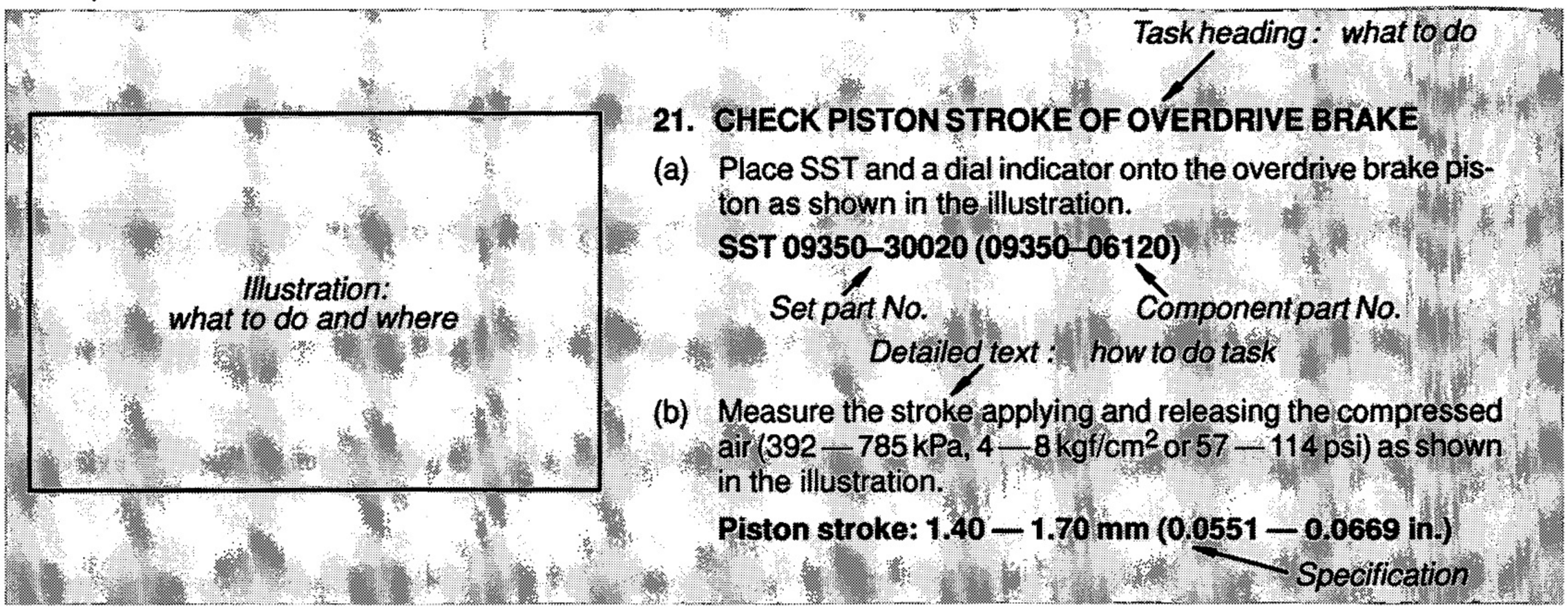

This format provides the experienced technician with a FAST TRACK to the information needed. The upper case task heading can be read at a glance when necessary, and the text below it provides detailed information. Important specifications and warnings always stand out in bold type.

6. REFERENCES

References have been kept to a minimum. However, when they are required you are given the page to refer to.

7. SPECIFICATIONS

Specifications are presented in bold type throughout the text where needed. You never have to leave the procedure to look up your specifications. They are also found in Service Specifications section for quick reference.

8. CAUTIONS, NOTICES, HINTS:

- CAUTIONS are presented in bold type, and indicate there is a possibility of injury to you or other people.
- NOTICES are also presented in bold type, and indicate the possibility of damage to the components being repaired.
- HINTS are separated from the text but do not appear in bold. They provide additional information to help you perform the repair efficiently.

9. SI UNIT

The UNITS given in this manual are primarily expressed according to the SI UNIT (International System of Unit), and alternately expressed in the metric system and in the English System.

Example:

Torque: 30 N·m (310 kgf·cm, 22 ft·lbf)

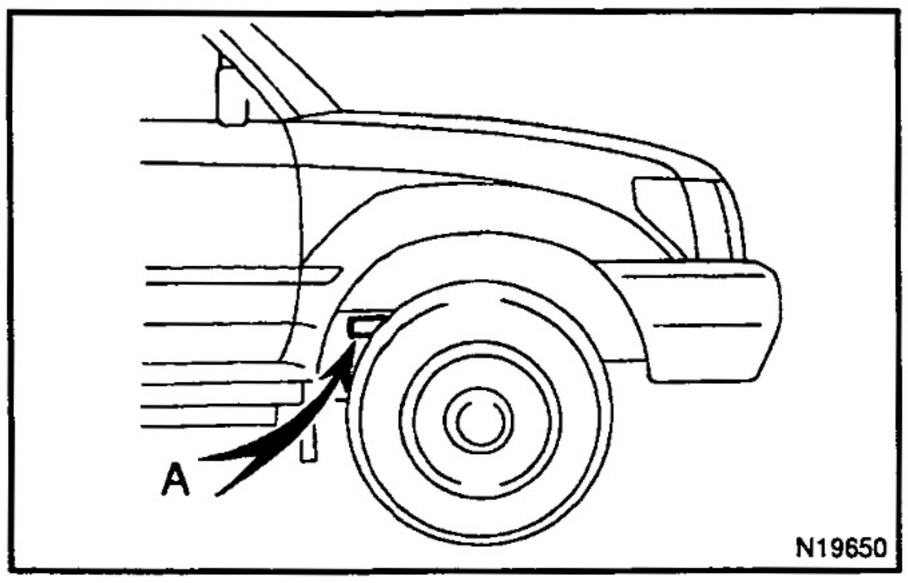

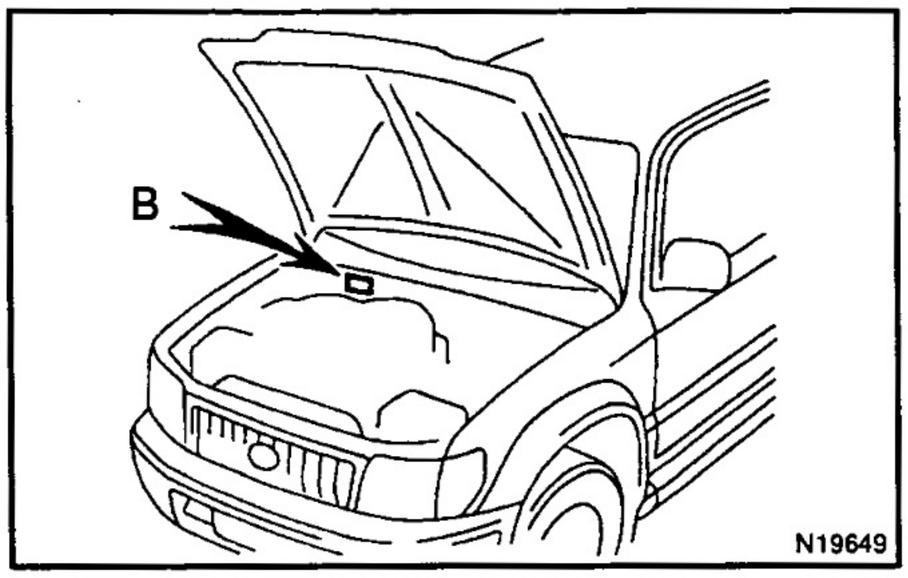

IDENTIFICATION INFORMATION

IN09T–02

VEHICLE IDENTIFICATION AND ENGINE SERIAL NUMBER

1. VEHICLE IDENTIFICATION NUMBER

The vehicle identification number is stamped on the outer surface of the front right side frame. This number is also stamped on the manufacture's plate.

A: Vehicle Identification Number

B: Manufacturer's Plate

2. ENGINE SERIAL NUMBER

The engine serial number is stamped on the engine block, as shown in the illustration.

3L Engine

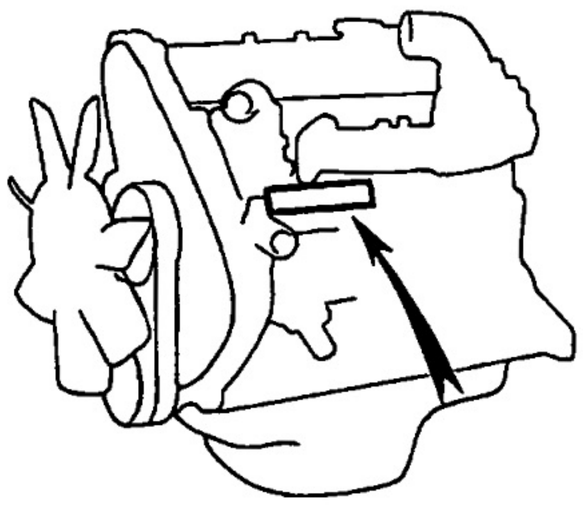

1KZ–T, 1KZ–TE Engine

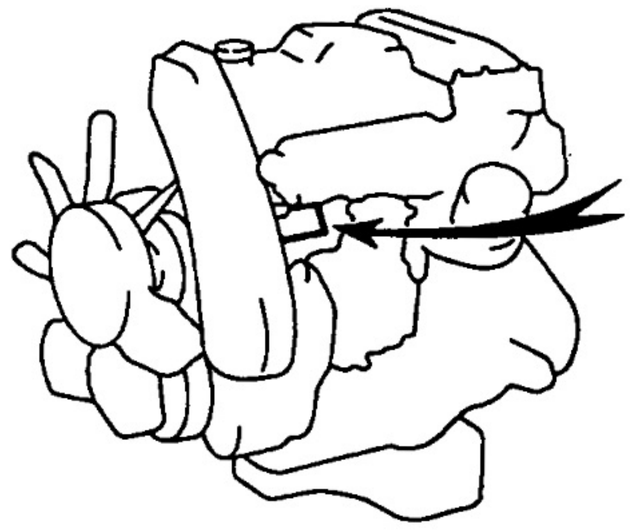

3RZ–FE Engine

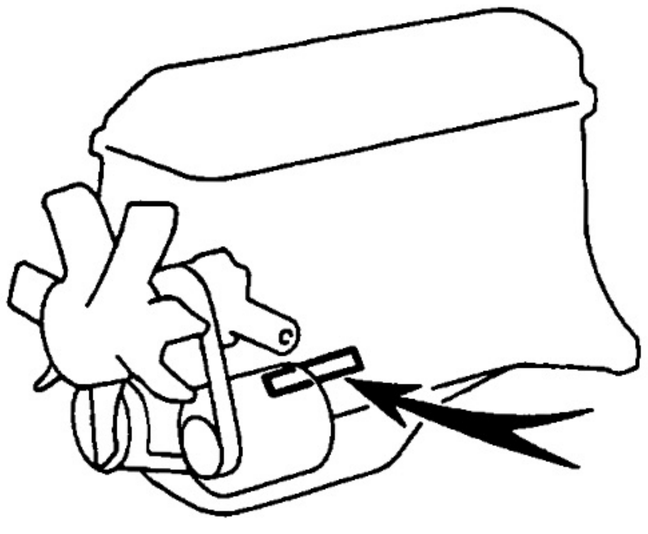

5VZ–FE Engine

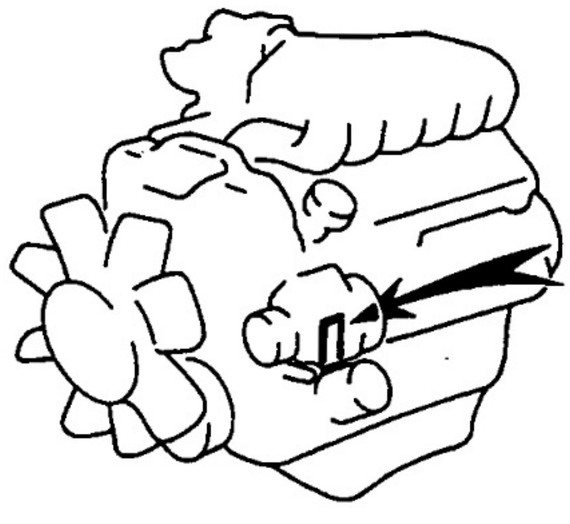

N19545 N09034
N17730 N17731

Z18427

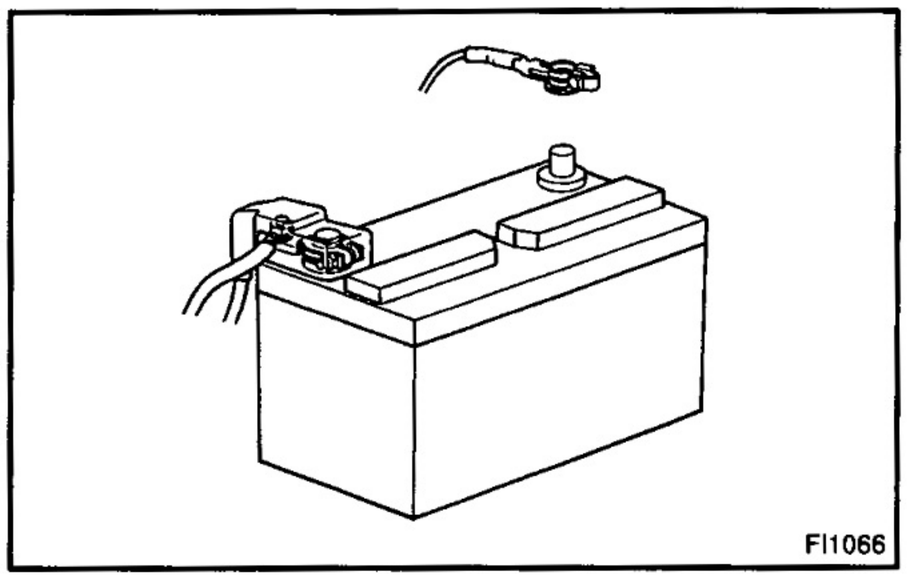
FI1066

REPAIR INSTRUCTIONS

GENERAL INFORMATION

IN0CO–09

BASIC REPAIR HINT

(a) Use fender, seat and floor covers to keep the vehicle clean and prevent damage.

(b) During disassembly, keep parts in the appropriate order to facilitate reassembly.

(c) Installation and removal of battery terminal:

(1) Before performing electrical work, disconnect the negative (–) terminal cable from the battery.

(2) If it is necessary to disconnect the battery for inspection or repair, first disconnect the negative (–) terminal cable.

(3) When disconnecting the terminal cable, to prevent damage to battery terminal, loosen the cable nut and raise the cable straight up without twisting or prying it.

(4) Clean the battery terminals and cable ends with a clean shop rag. Do not scrape them with a file or other abrasive objects.

(5) Install the cable ends to the battery terminals after loosening the nut, and tighten the nut after installation. Do not use a hammer to tap the cable ends onto the terminals.

(6) Be sure the cover for the positive (+) terminal is properly in place.

(d) Check hose and wiring connectors to make sure that they are connected securely and correctly.

(e) Non–reusable parts

(1) Always replace cotter pins, gaskets, O–rings, oil seals, etc. with new ones.

(2) Non–reusable parts are indicated in the component illustrations by the "◆" symbol.

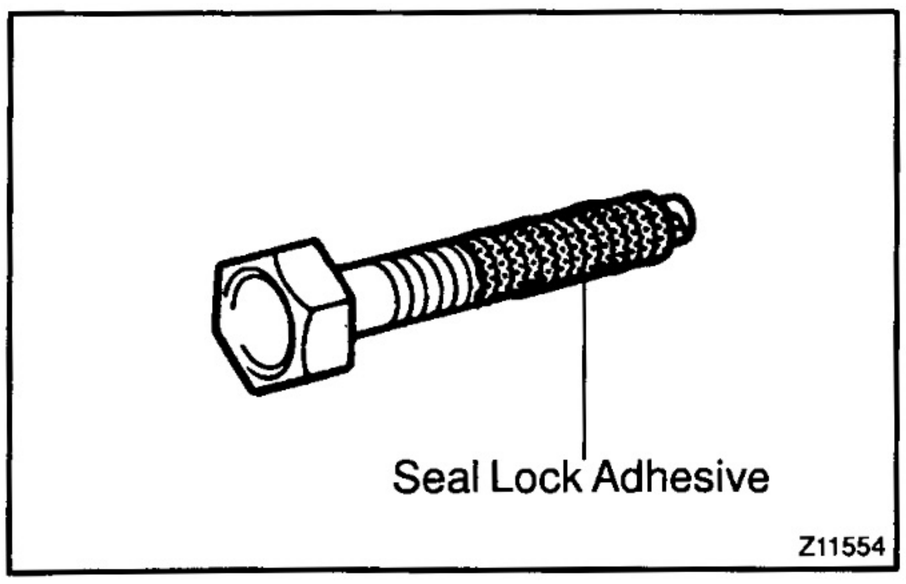

Z11554

(f) Precoated parts

Precoated parts are bolts, nuts, etc. that are coated with a seal lock adhesive at the factory.

(1) If a precoated part is retightened, loosened or caused to move in any way, it must be recoated with the specified adhesive.

(2) When reusing precoated parts, clean off the old adhesive and dry with compressed air. Then apply the specified seal lock adhesive to the bolt, nut or threads.

(3) Precoated parts are indicated in the component illustrations by the "★" symbol.

(g) When necessary, use a sealer on gaskets to prevent leaks.

(h) Carefully observe all specifications for bolt tightening torques. Always use a torque wrench.

(i) Use of special service tools (SST) and special service materials (SSM) may be required, depending on the nature of the repair. Be sure to use SST and SSM where specified and follow the proper work procedure. A list of SST and SSM can be found in Preparation section in this manual.

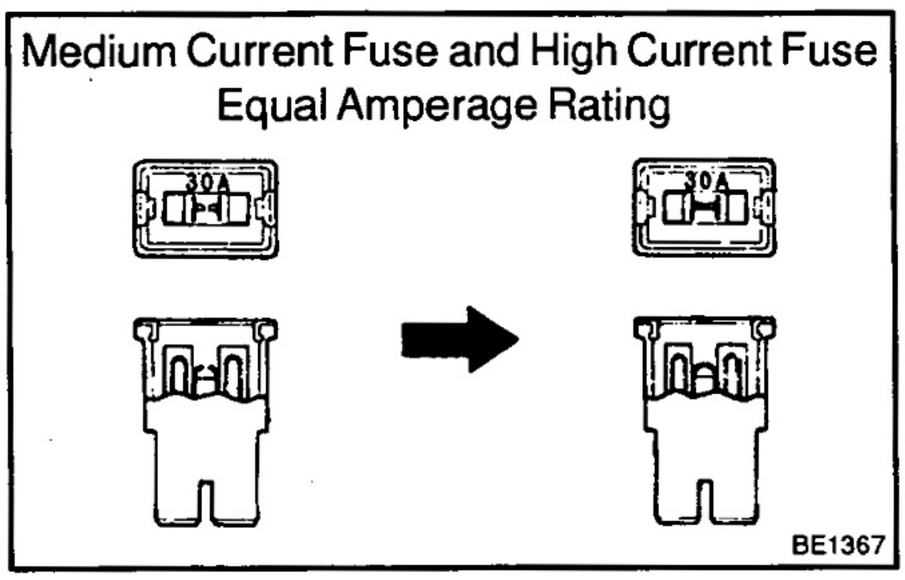

(j) When replacing fuses, be sure the new fuse has the correct amperage rating. DO NOT exceed the rating or use one with a lower rating.

Illustration	Symbol	Part Name	Abbreviation
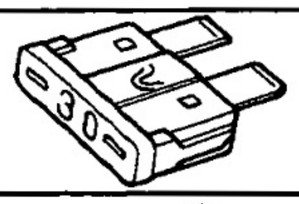 BE5594	 IN0365	FUSE	FUSE
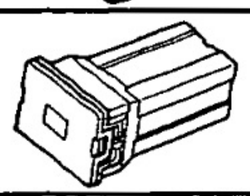 BE5595	 IN0366	MEDIUM CURRENT FUSE	M–FUSE
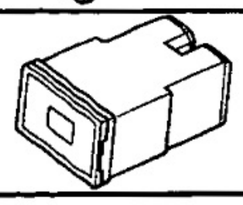 BE5596	 IN0367	HIGH CURRENT FUSE	H–FUSE
 BE5597	 IN0367	FUSIBLE LINK	FL
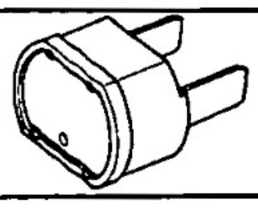 BE5598	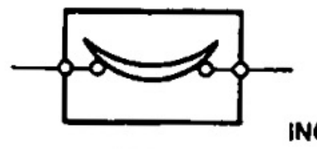 IN0368	CIRCUIT BREAKER	CB

(k) Care must be taken when jacking up and supporting the vehicle. Be sure to lift and support the vehicle at the proper locations (See page IN–8).
- Cancel the parking brake on the level place and shift the transmission in Neutral (or N position).
- When jacking up the front wheels of the vehicle at first place stoppers behind the rear wheels.
- When jacking up the rear wheels of the vehicle at first place stoppers before the front wheels.
- When either the front or rear wheels only should be jacked up, set rigid racks and place stoppers in front and behind the other wheels on the ground.
- After the vehicle is jacked up, be sure to support it on rigid racks . It is extremely dangerous to do any work on a vehicle raised on a jack alone, even for a small job that can be finished quickly.

(l) Observe the following precautions to avoid damage to the following parts:
(1) Do not open the cover or case of the ECU unless absolutely necessary. (If the IC terminals are touched, the IC may be destroyed by static electricity.)

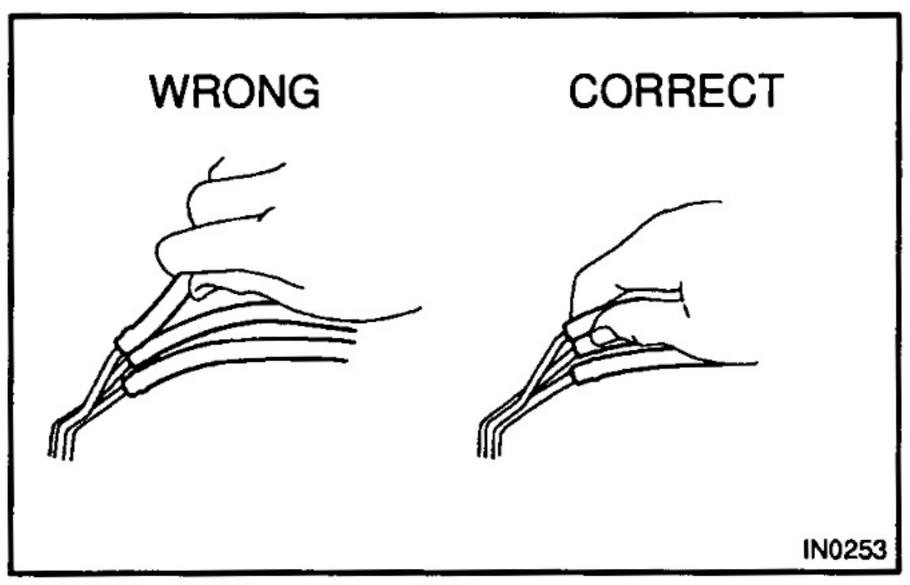

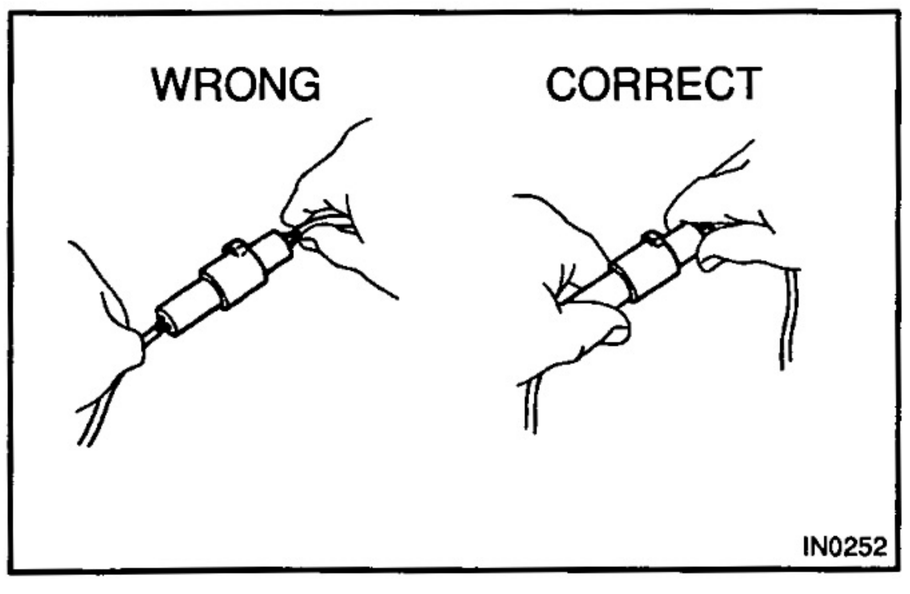

(2) To disconnect vacuum hoses, pull off the end, not the middle of the hose.
(3) To pull apart electrical connectors, pull on the connector itself, not the wires.
(4) Be careful not to drop electrical components, such as sensors or relays. If they are dropped on a hard floor, they should be replaced and not reused.
(5) When steam cleaning an engine, protect the electronic components, air filter and emission–related components from water.
(6) Never use an impact wrench to remove or install temperature switches or temperature sensors.
(7) When checking continuity at the wire connector, insert the tester probe carefully to prevent terminals from bending.
(8) When using a vacuum gauge, never force the hose onto a connector that is too large. Use a step–down adapter for adjustment. Once the hose has been stretched, it may leak air.

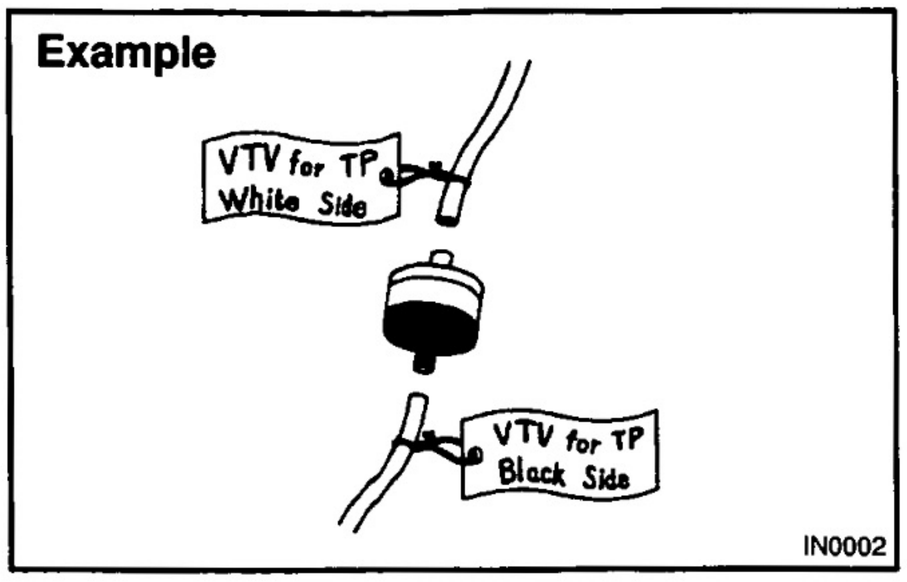

(m) Installation and removal of vacuum hose:
  (1) When disconnecting vacuum hoses, use tags to identify how they should be reconnected to.
  (2) After completing a job, double check that the vacuum hoses are properly connected. A label under the hood shows the proper layout.

(n) Bleeding of hydraulic brake booster:
When repairing the hydraulic brake booster or ABS, TRC and VSC system, bleeding the air out of the hydraulic brake booster (See page BR–1).

(o) Unless otherwise stated, all resistance is measured at an ambient temperature of 20°C (68°F). Because the resistance may be outside specifications if measured at high temperatures immediately after the vehicle has been running, measurement should be made when the engine has cooled down.

IN09V–02

VEHICLE LIFT AND SUPPORT LOCATIONS

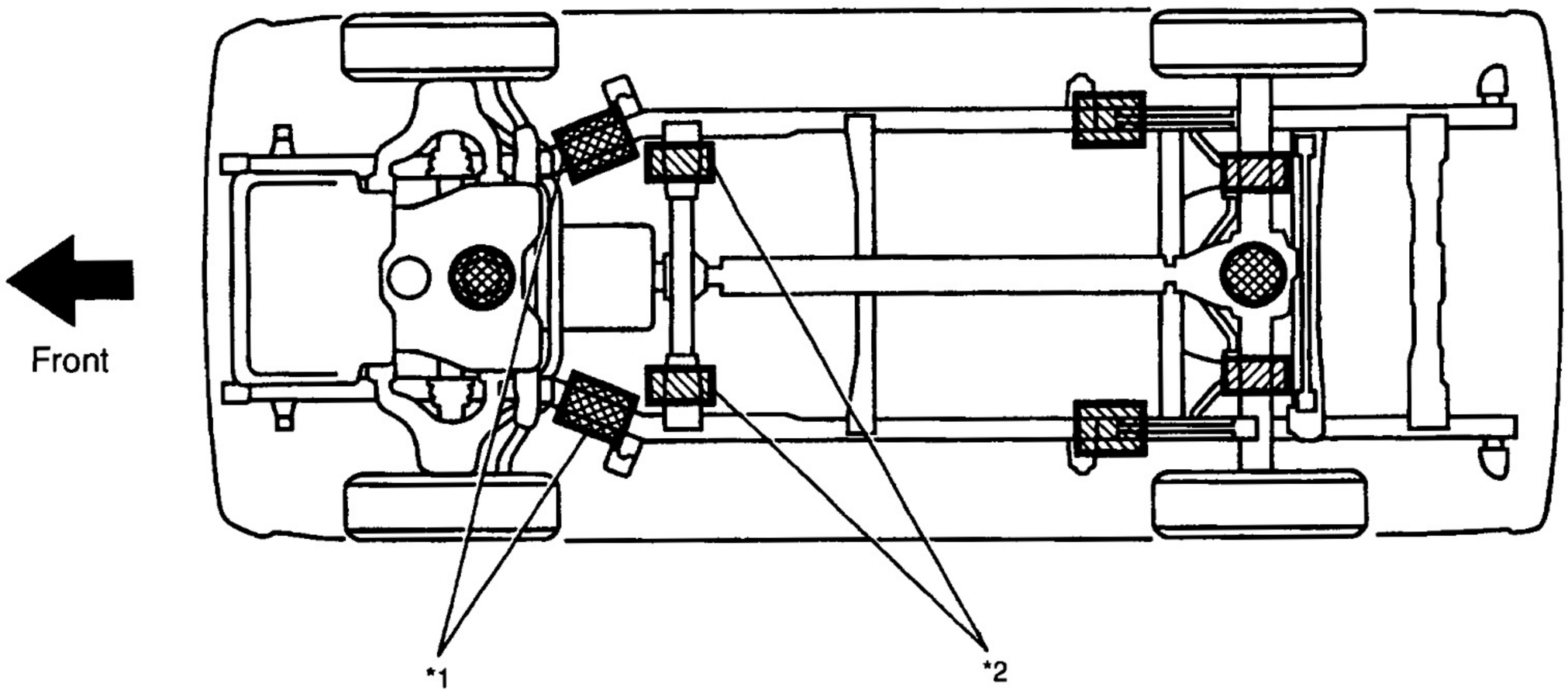

JACK POSITION . . . . . ●

Front	Center of crossmember
Rear	Center of rear axle housing

SUPPORT POSITION

Safety stand . . . . . ▨

Swing arm type lift . . . . . ▨

*1 : Support position when equipping without side step.

*2 : Support position when equipping with side step.

CAUTION : For 3 door models, do not use the swing arm type lift as this type lift may not support the short wheel based models securely.

B01542

FOR ALL OF VEHICLES

PRECAUTION

IN0ER–01

1. FOR VEHICLES EQUIPPED WITH SRS AIRBAG AND SEAT BELT PRETENSIONER

(a) The LAND CRUISER/LAND CRUISER PRADO is equipped with an SRS (Supplemental Restraint System), such as the driver airbag, front passenger airbag assembly and seat belt pretensioner.
Failure to carry out service operations in the correct sequence could cause the supplemental restraint system to unexpectedly deploy during servicing, possibly leading to a serious accident.
Further, if a mistake is made in servicing the supplemental restraint system, it is possible the SRS may fail to operate when required. Before servicing (including removal or installation of parts, inspection or replacement), be sure to read the following items carefully, then follow the correct procedure described in this manual.

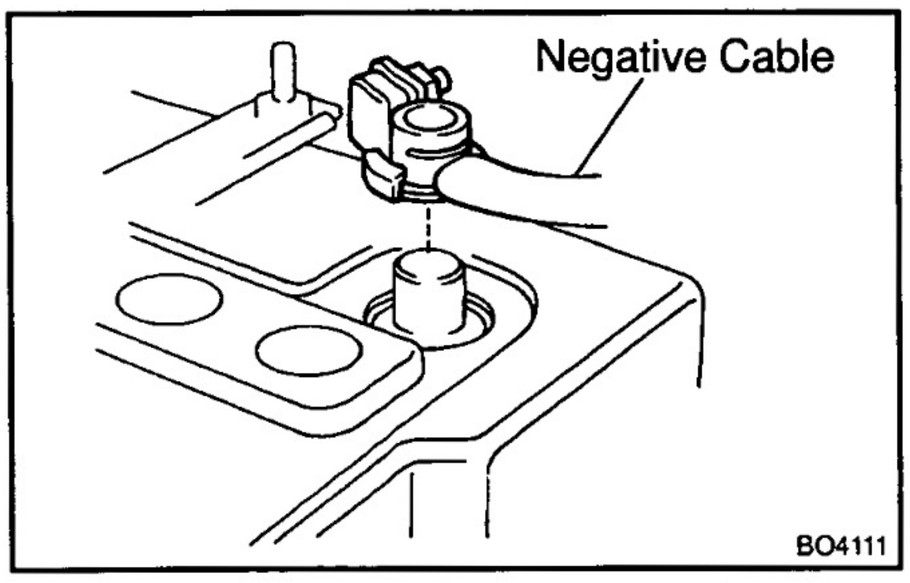

(b) GENERAL NOTICE

(1) Malfunction symptoms of the supplemental restraint system are difficult to confirm, so the diagnostic trouble codes become the most important source of information when troubleshooting. When troubleshooting the supplemental restraint system, always inspect the diagnostic trouble codes before disconnecting the battery (See Pub. No. RM627E on page DI–3).

(2) Work must be started after 90 seconds from the time the ignition switch is turned to the "LOCK" position and the negative (–) terminal cable is disconnected from the battery.
(The supplemental restraint system is equipped with a back–up power source so that if work is started within 90 seconds of disconnecting the negative (–) terminal cable from the battery, the SRS may deploy.)
When the negative (–) terminal cable is disconnected from the battery, memory of the clock and audio systems will be cancelled. So before starting work, make a record of the contents memorized by the each memory system. Then when work is finished, reset the clock and audio systems as before. So when the work is finished, therefore it will be necessary to explain this fact to the customer, and ask the customer to adjust the features and reset the memory.To avoid erasing the memory of each memory system, never use a back–up power supply from another battery.

(3) Even in cases of a minor collision where the SRS does not deploy, the steering wheel pad, front passenger airbag assembly and seat belt pretensioner should be inspected (See Pub. No. RM627E on page RS–13, RS–27, BO–24 or RM517E on page BO–73).

(4) Never use SRS parts from another vehicle. When replacing parts, replace them with new parts.

(5) Before repairs, remove the airbag sensor if shocks are likely to be applied to the sensor during repairs.

(6) Never disassemble and repair the airbag sensor assembly, steering wheel pad, front passenger airbag assembly or seat belt pretensioner in order to reuse them.

(7) If the airbag sensor assembly, steering wheel pad, front passenger airbag assembly or seat belt pretensioner have been dropped, or if there are cracks, dents or other defects in the case, bracket or connector, replace them with new ones.

(8) Do not directly expose the airbag sensor assembly, steering wheel pad, front passenger airbag assembly or seat belt pretensioner to hot air or flames.

(9) Use a volt/ohmmeter with high impedance (10 kΩ/V minimum) for troubleshooting of the electrical circuit.

(10) Information labels are attached to the periphery of the SRS components. Follow the instructions on the notices.

(11) After work on the supplemental restraint system is completed, check the SRS warning light (See Pub. No. RM627E on page DI–3).

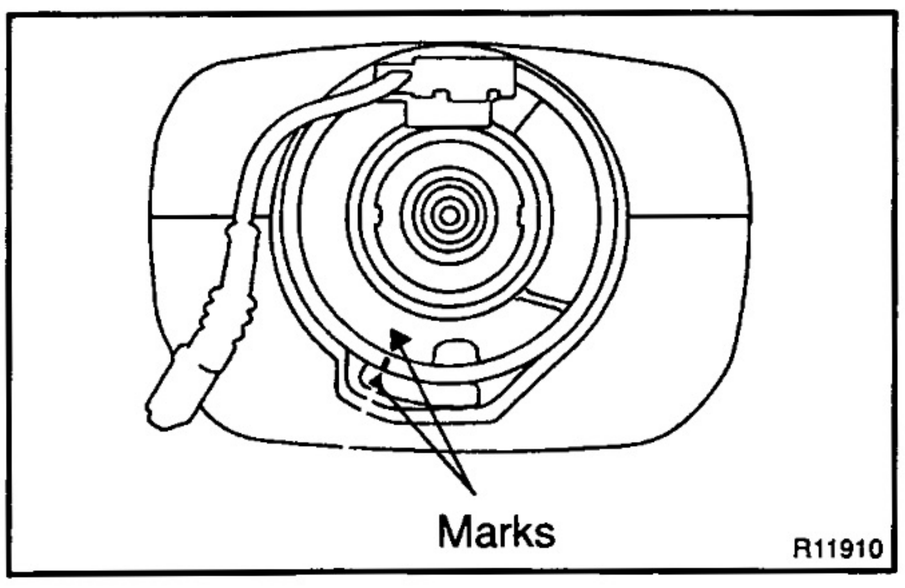

(c) SPIRAL CABLE (in Combination Switch)
The steering wheel must be fitted correctly to the steering column with the spiral cable at the neutral position, otherwise cable disconnection and other troubles may result. Refer to Pub. No. RM627E on page SR–4 of this manual concerning correct steering wheel installation.

(d) STEERING WHEEL PAD (with Airbag)

(1) When removing the steering wheel pad or handling a new steering wheel pad, it should be placed with the pad top surface facing up.
Storing the pad with its metallic surface facing upward may lead to a serious accident if the airbag inflates for some reason. In addition do not store a steering wheel pad on top of another one.

(2) Never measure the resistance of the airbag squib. (This may cause the airbag to deploy, which is very dangerous.)

(3) Grease should not be applied to the steering wheel pad and the pad should not be cleaned with detergents of any kind.

(4) Store the steering wheel pad where the ambient temperature remains below 93°C (200°F), without high humidity and away from electrical noise.

(5) When using electric welding, first disconnect the airbag connector (yellow color and 2 pins) under the steering column near the combination switch connector before starting work.

(6) When disposing of a vehicle or the steering wheel pad alone, the airbag should be deployed using an SST before disposal (See Pub. No. RM627E on page RS–15).
Carry out the operation in a safe place away from electrical noise.

Example:

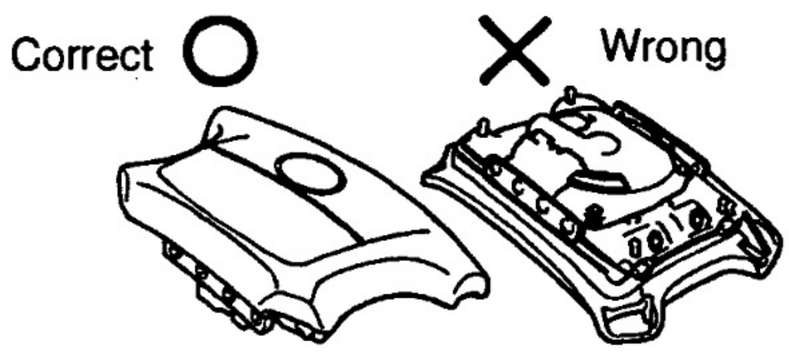

Z13953 B05084

Example:

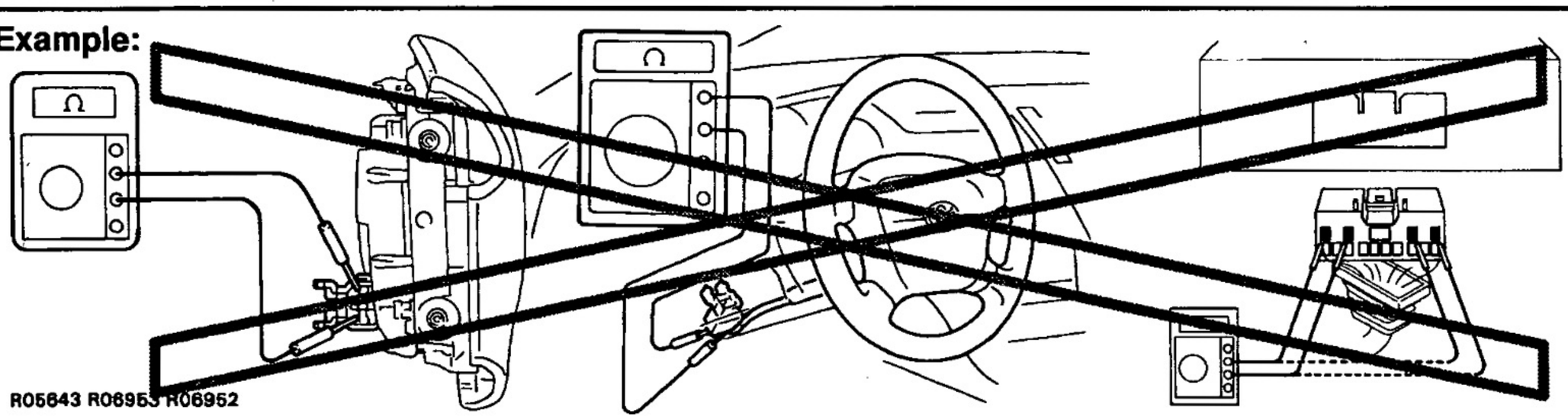

R05643 R06953 R06952 Z13950

(e) FRONT PASSENGER AIRBAG ASSEMBLY

(1) Always store a removed or new front passenger airbag assembly with the airbag deployment direction facing up.
Storing the airbag assembly with the airbag deployment direction facing down could cause a serious accident if the airbag inflates.

(2) Never measure the resistance of the airbag squib. (This may cause the airbag to deploy, which is very dangerous.)

(3) Grease should not be applied to the front passenger airbag assembly and the airbag door should not be cleaned with detergents of any kind.

(4) Store the airbag assembly where the ambient temperature remains below 93°C (200°F), without high humidity and away from electrical noise.

(5) When using electric welding, first disconnect the airbag connector (yellow color and 2 pins) installed on the assembly before starting work.

(6) When disposing of a vehicle or the airbag assembly alone, the airbag should be deployed using an SST before disposal (See Pub. No. RM627E on page RS–29).
Perform the operation in a safe place away from electrical noise.

Example:

○ Correct

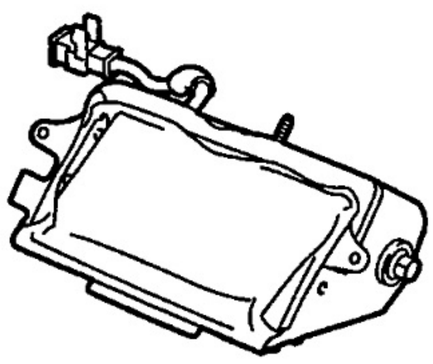

× Wrong

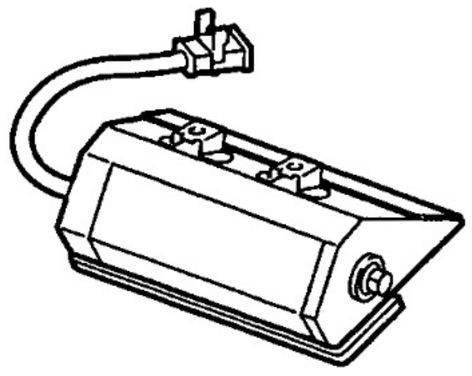

B01927

Example:

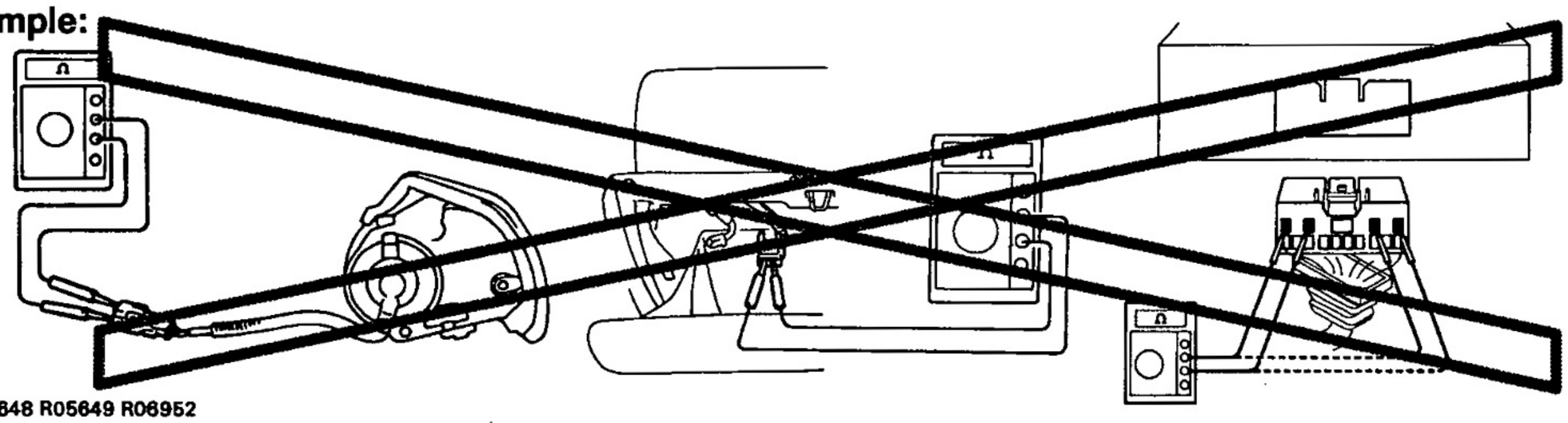

R05648 R05649 R06952

Z13951

(f) ELECTRICAL TYPE SEAT BELT PRETENSIONER

(1) Never measure the resistance of the seat belt pretensioner. (This may cause the seat belt pretensioner activation which is very dangerous.)

(2) Never disassemble the seat belt pretensioner.

(3) Never install the seat belt pretensioner in another vehicle.

(4) Store the seat belt pretensioner where the ambient temperature remains below 80°C (176°F) and away from electrical noise without high humidity.

(5) When using electric welding, first disconnect the connector (yellow color and 2 pins) before starting work.

(6) When disposing of a vehicle or the seat belt pretensioner alone, the seat belt pretensioner should be activated before disposal (See Pub. No. RM627E on page BO–25). Perform the operation in a safe place away from electrical noise.

(7) The seat belt pretensioner is hot after activation, so let it cool down sufficiently before the disposal. However never apply water to the seat belt pretensioner.

Example:

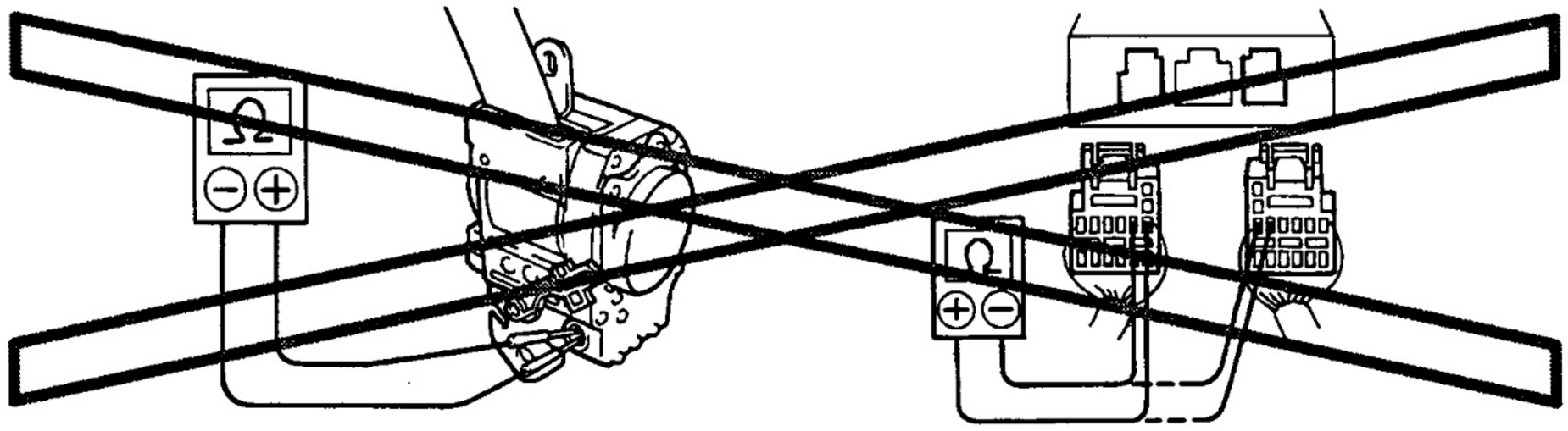

B04210

(g) MECHANICAL TYPE SEAT BELT PRETENSIONER

(1) Before doing any operation which will apply a strong shock to the vehicle, or before removing the seat belt pretensioner, be sure to lock the sensor (See Pub. No. RM517E on page BO–73).

(2) Never disassemble the seat belt pretensioner.

(3) Do not subject the seat belt pretensioner to shocks or bring magnets close to it.

(4) Do not drop the seat belt pretensioner. Never use a seat belt pretensioner which has been dropped.

(5) Never install the seat belt pretensioner in another vehicle.

(6) Store the seat belt pretensioner on a flat, stable surface where the ambient temperature remains below 80°C (176°F) without high humidity.

(7) After frontal collision, always check whether the seat belt pretensioners have been activated.

(8) When disposing of a vehicle or the seat belt pretensioner alone, the seat belt pretensioner should be activated before disposal (See Pub. No. RM517E on page BO–74).

(9) The seat belt pretensioner is hot after activation, so let it cool down sufficiently before the disposal. However never apply water to the seat belt pretensioner.

(h) AIRBAG SENSOR ASSEMBLY

(1) Never reuse the airbag sensor assembly involved in a collision when the SRS has deployed.

(2) The connectors to the airbag sensor assembly should be connected or disconnected with the sensor mounted on the floor. If the connectors are connected or disconnected while the airbag sensor assembly is not mounted to the floor, it could cause undesired ignition of the supplemental restraint system.

(3) Work must be started after 90 seconds from the time the ignition switch is turned to the "LOCK" position and the negative (–) terminal cable is disconnected from the battery, even if only loosing the set bolts of the airbag sensor assembly.

(i) WIRE HARNESS AND CONNECTOR

The SRS wire harness is integrated with the cowl wire harness assembly. All the connectors in the system are a standard yellow color. If the SRS wire harness becomes disconnected or the connector becomes broken due to an accident, etc., repair or replace it.

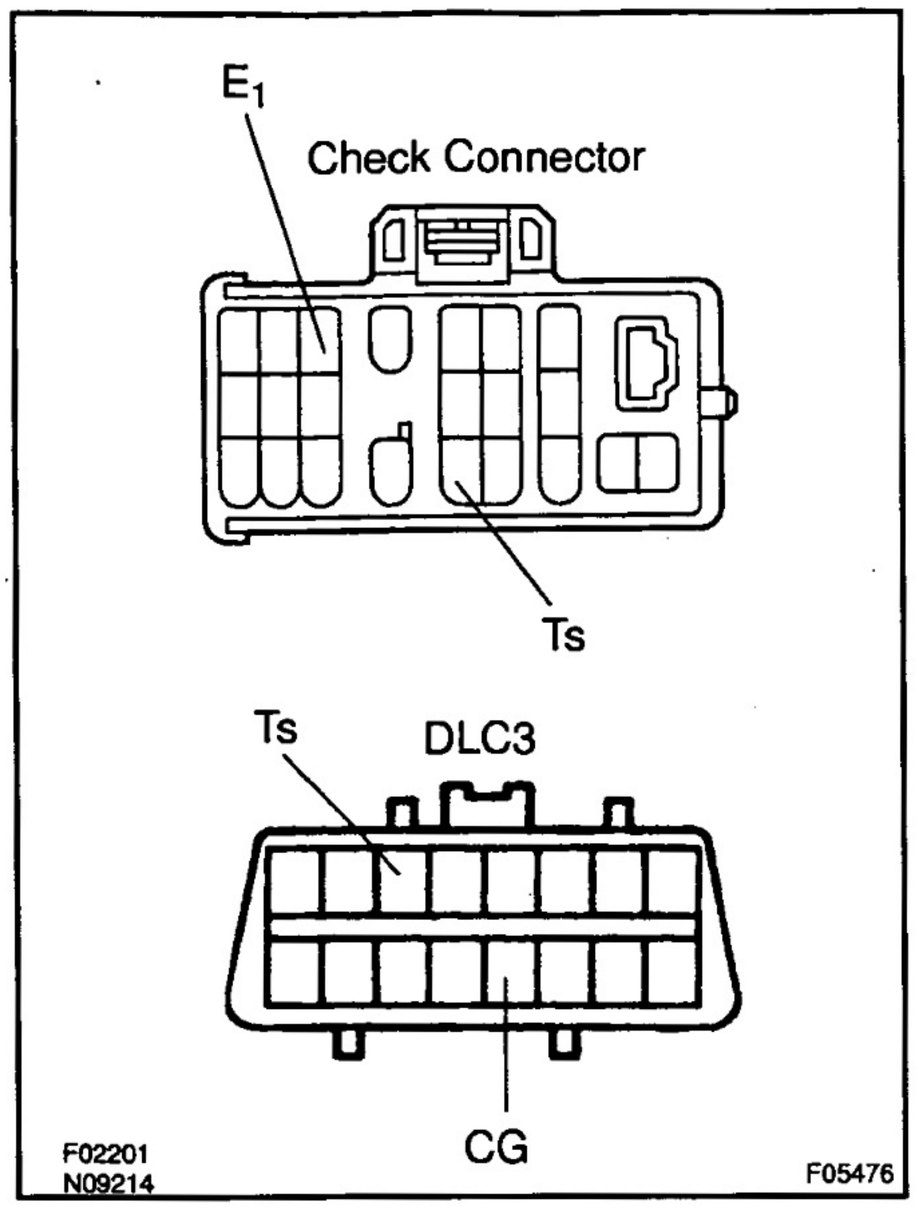

2. FOR VEHICLE EQUIPPED WITH VEHICLE Stability CONTROL (VSC) SYSTEM OR ACTIVE TRC SYSTEM

(a) Precaution when using drum tester:
When using a drum tester, make sure that the ignition switch is OFF, start the engine with the diagnosis connector short–circuited between Ts and E_1 (CG) and take a measurement.

NOTICE:

- **Check that VSC/TRC or TRC warning light is blinking.**
- **Ensure that the vehicle does not move using wires.**
- **After the measurement, disconnect the short circuit and check that the VSC/TRC or TRC warning light is turned off when restarting the engine.**

(b) Precaution during VSC operation:
(1) Since VSC may be affected by the removal/installation of the VSC–related parts, do not remove/install those parts unless absolutely necessary.
(2) When operating on VSC, follow the instructions in BR section in this manual to surely make preparations or check after operations.

3. WHEN SERVICING FULL–TIME 4WD VEHICLES

The Full–time 4WD LAND CRUISER/LAND CRUISER PRADO is equipped with the mechanical lock type center differential system.
During tests using a brake tester or chassis dynamometer, such as braking force tests or speedometer tests, if only the front or rear wheels are to be rotated, it is necessary to set the position of the center differential to FREE or LOCK depending on the type of the test being performed.
HINT:
w/o Vehicle Stability control (VSC) system:
When the transfer select lever is put in "L_L" position, the center differential is put in LOCK condition regardless of the position of the center differential lock switch.

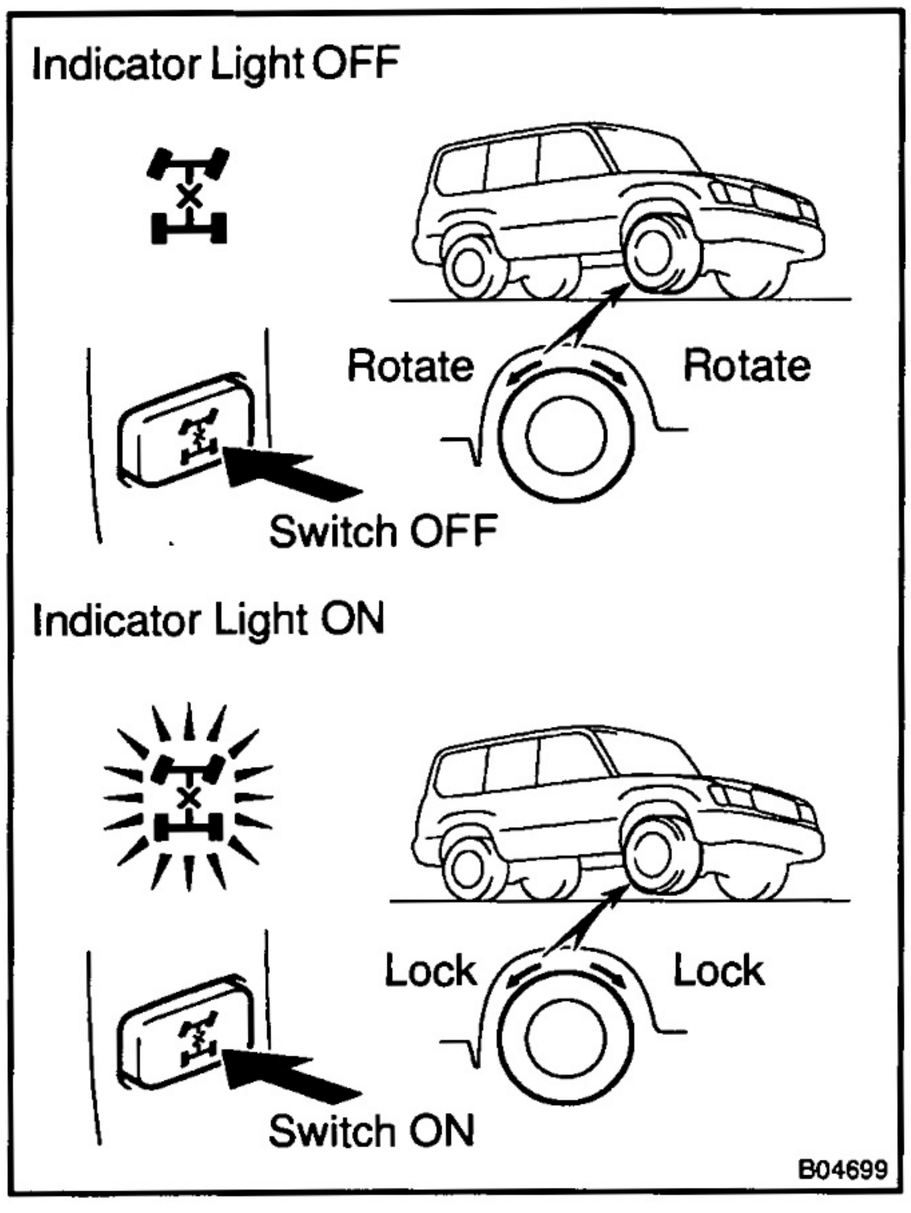

Center differential FREE condition:

	Condition	Wheel
Center differential switch	OFF	A lifted wheel can be rotated even if only one wheel is lifted up, as long as transmission is in N range.
Indicator light	OFF	
Transfer select lever (H/L)	Either will do	

Center differential LOCK conditions:

	Condition	Wheel
Center differential switch	ON	A lifted wheel cannot be rotated even if only one wheel is lifted up, as long as transmission is in N range.
Indicator light	ON	
Transfer select lever (H/L)	Either will do	

CAUTION:

Center differential "LOCK" ↔ "FREE" selecting procedure:

- **Operate the switch only when all of 4 wheels are stopped or driven in a straight line.**
- **Never operate the switch when any wheel is slipping.**
- **Never operate the switch when any wheel is spinning freely.**
- **Never operate the switch when swerving or cornering.**

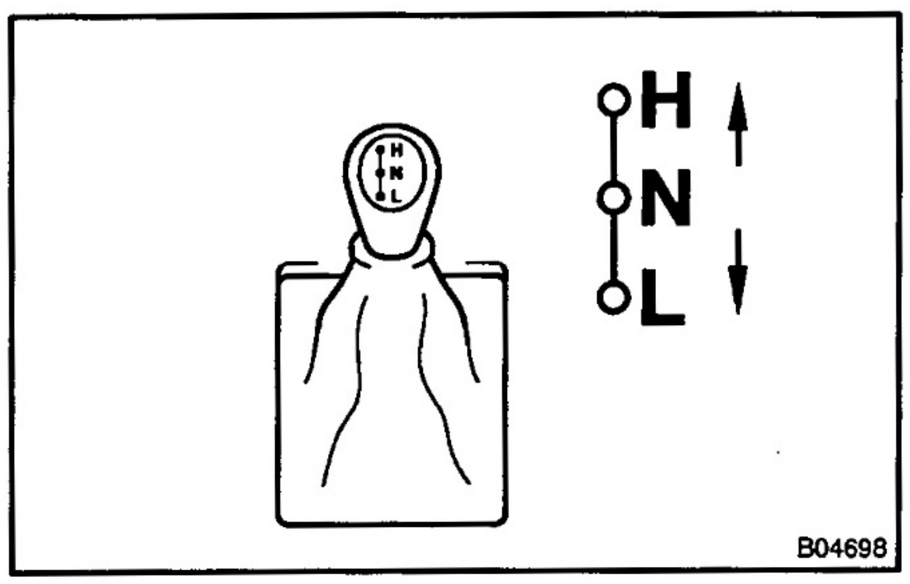

Transfer gear "H" ↔ "L" gear shifting procedure:

- **When shifting, always put the shift lever of the transmission in N position. In other positions, the gears of the transfer clash, and switching cannot be performed.**

HINT:

Center differential "LOCK" ↔ "FREE" selecting procedure:

Move the vehicle forward or backward slightly if the indicator light does not operate correctly when the center differential lock switch is turned ON or OFF.

4. WHEN TESTING BRAKES, SPEEDOMETER, ETC.

When carrying out any kind of servicing or testing on a Full–time 4WD with Active Traction Control System or Vehicle Stability Control (VSC) & Traction Control (TRC) System in which the front or rear wheels are to be rotated (braking test, speedometer test), be sure to observe the precautions given below.
Incorrect preparations or test procedures may cause danger as well as unsuccessful test results.
Before starting any such servicing or test, be sure to check the following items:

- Center differential mode position (FREE or LOCK)

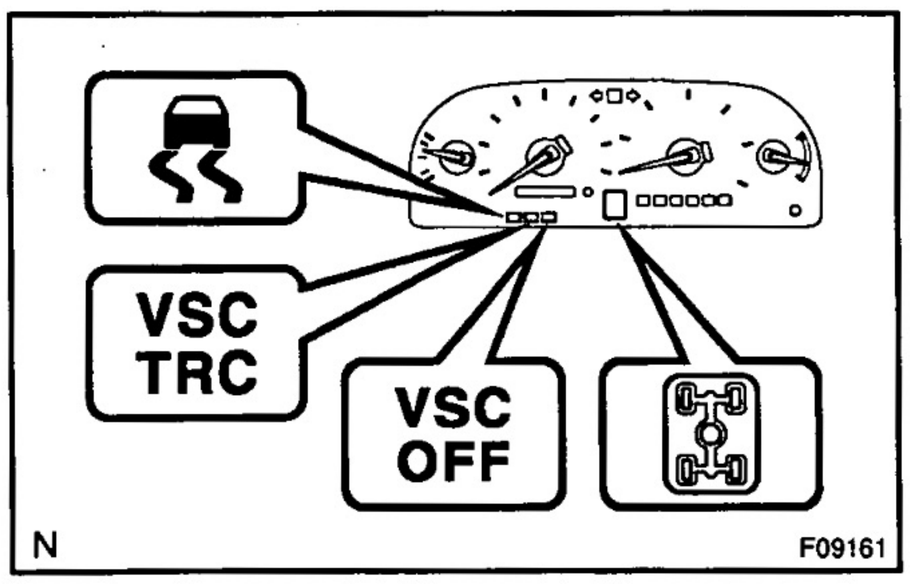

- w/ Vehicle Stability Control (VSC) System:
  Center differential switch and VSC OFF indicator light?
- Whether wheels should be touching ground or jacked up
- Transmission gear position (N range)
- Transfer gear position (H or L position)
- Maximum testing vehicle speed
- Maximum testing time

HINT:
w/o Vehicle Stability Control (VSC) System:
When the transfer select lever is put in "L_L" position, the center differential is put in LOCK condition.

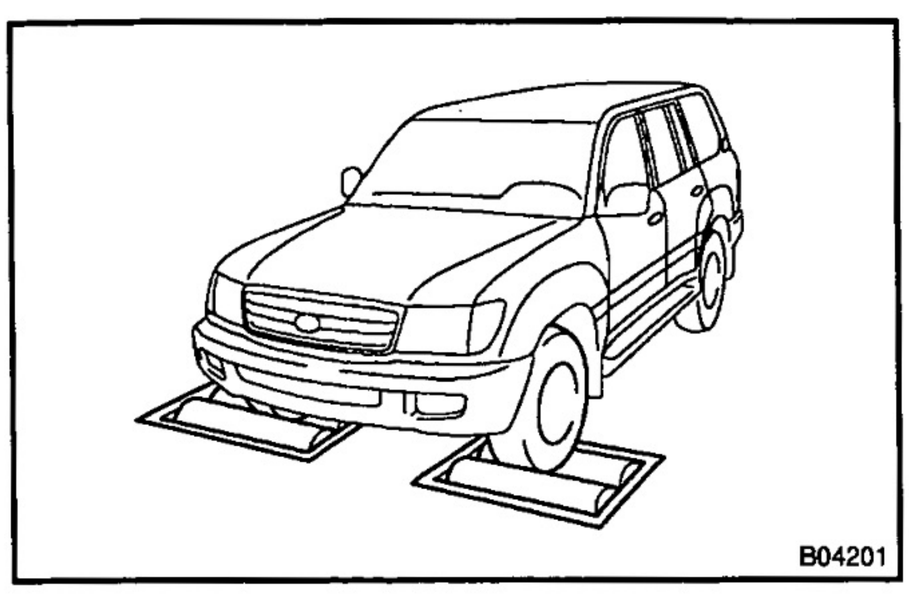

(a) Using Braking Tester:
Measure by low–speed type (Vehicle Speed: Below 0.5 km/h or 0.3 mph) brake tester and observe the following instructions before performing the test.

(1) Position the wheels to be tested (front or rear) on the tester.
(2) Put the center differential in FREE position.
(3) Prohibit the Active Traction Control System or Vehicle Stability Control (VSC) & Active Traction Control (TRC) System from the activation (See step 2.).

(4) Shift the transmission shift lever to "N" range.

HINT:

After completing the test with speedometer tester, do not forget to change the Active Traction Control System or Vehicle Stability Control (VSC) & Active Traction Control (TRC) System to operational condition. Check that TRC warning light or VSC/TRC warning light the VSC warning light goes off when restarting the engine.

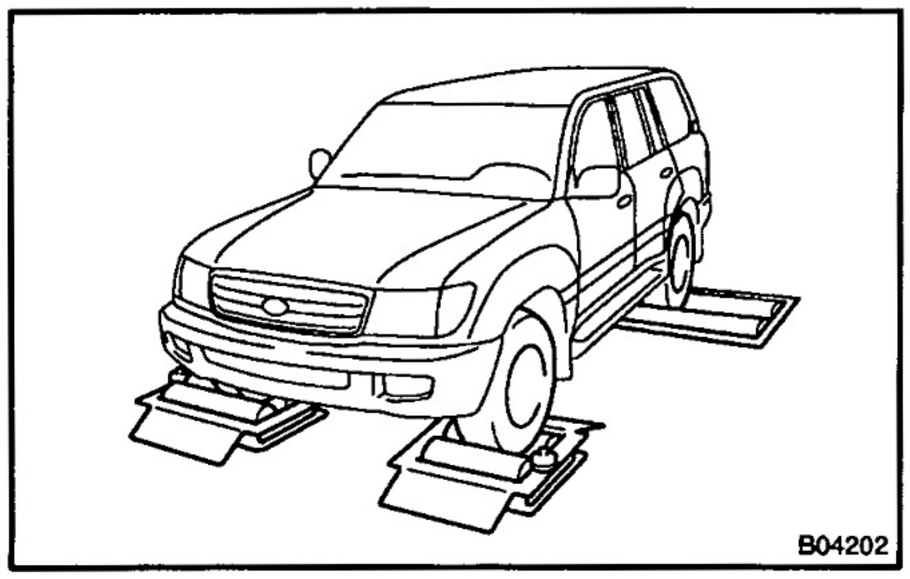

(b) Using Speedometer Tester:

Observe the following instructions and then measure with the rear wheels.

(1) Position the rear wheels on the tester roller.
(2) Position the front wheels on the free roller or jack them up.
(3) Put the center differential in FREE position.
(4) Prohibit the Active Traction Control System or Vehicle Stability Control (VSC) & Traction Control (TRC) System from the activation (See step 2.).
(5) Ensure that the vehicle does not move using wires.

CAUTION:

The maximum speed should be less than 60 km/h (37 mph) and maximum driving time should be 1 minute.

HINT:

- Sudden shifting, braking, acceleration or deceleration is not allowed.
- After completing the test with oh–vehicle wheel balancing do not forget to change the Active TRCtion Control System or Vehicle Stability Control (VSC) & Active TRCtion Control (TRC) System to operational condition. Check that the TRC warning light or VSC/TRC warning light warning indicator light goes off when restarting the engine.

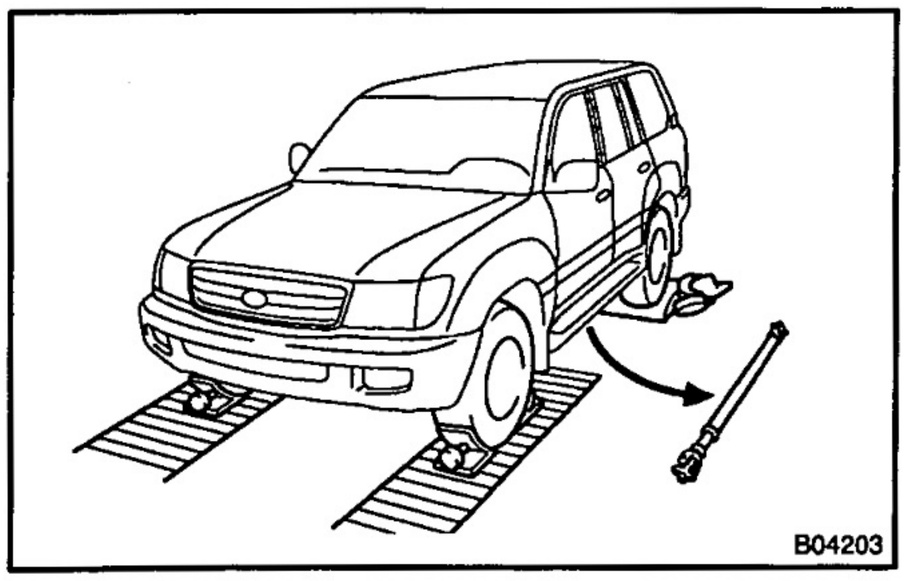

(c) Using Chassis Dynamometer:

Observe the following instructions and then measure with the rear wheels.

(1) Remove the front propeller shaft.
(2) Put the center differential in LOCK position.
(3) Prohibit the Active TRCtion Control System or Vehicle Stability Control (VSC) & TRCtion Control (TRC) System from the activation (See step 2.).
(4) Ensure that the vehicle is securely fixed.

HINT:

- Sudden shifting, braking, acceleration or deceleration is not allowed.
- Do not forget to change the Active TRCtion Control System or Vehicle Stability Control (VSC) & TRCtion Control (TRC) System to operational condition. Check that the VSC warning indicator light goes off when restarting the engine.

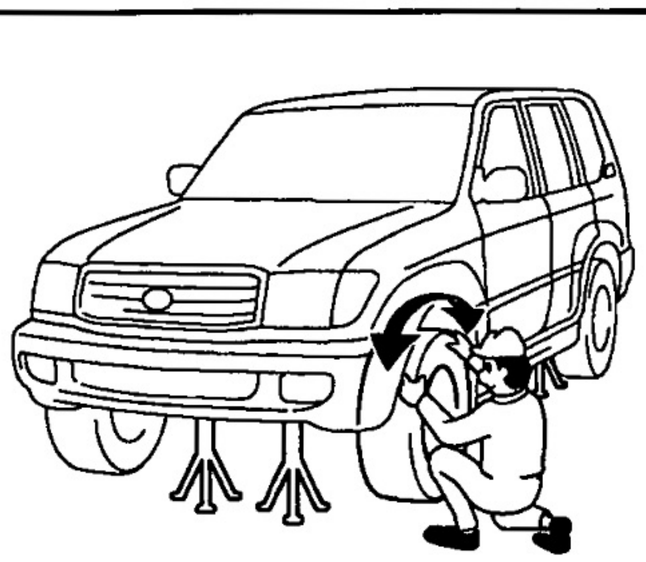

B04204

(d) On–Vehicle Wheel Balancing:

When doing on–vehicle wheel balancing on a full–time 4WD vehicle, to prevent each wheel from being rotated at different speed in different directions (which could damage the center differential), always be sure to observe the following precautions.

(1) All of 4 wheels should be jacked up, being apart from the ground completely.
(2) Put the center differential in LOCK position.
(3) Prohibit the Vehicle Stability Control (VSC) & TRCtion Control (TRC) System from the activation (See step 2.).
(4) The parking brake lever should be fully released.
(5) None of the brakes should be applied.
(6) The wheels should be driven on the wheel balancer with the engine running.
(7) Carry out the wheel balancing with the transmission range in D.

HINT:

- When doing this balancing, pay attention to the other wheels rotating at the same time.
- Sudden acceleration, deceleration or braking is not allowed.
- Do not forget to change the Active TRCtion Control System or Vehicle Stability Control (VSC) & TRCtion Control (TRC) System to operational condition. Check that the VSC warning indicator light goes off when restarting the engine.

5. WHEN TOWING FULL–TIME 4WD VEHICLES

- Use one of the methods shown below to tow the vehicle.
- If the vehicle has trouble in the chassis and drive train, use method 1 (flat bed truck).

Towing Method \ Condition	Parking Brake	Transmission Shift Lever Position (M/T)	Transmission Shift Lever Position (A/T)	Transfer Shift Lever Position
① Flat Bed Truck 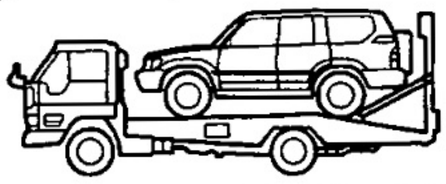 N19527	Applied	–	"P" Range	"H" Range
② Wheel Lift Type Truck With Dollies – From Front 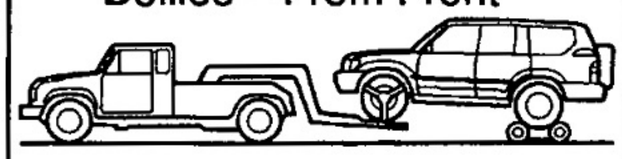 N20098				
③ Wheel Lift Type Truck With Dollies – From Rear 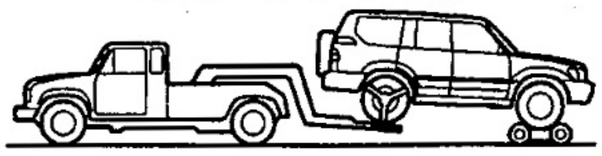 N20099				
④ Towing with Rope 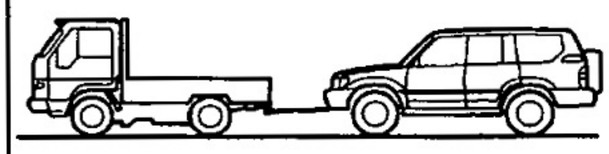 N19530	Released	Neutral	"N" Range	"HF" Position
	HINT : Do not tow the vehicle at a speed faster than 45 km/h (30mph) or distance greater then 80 km (50 miles).			

V08065

NOTICE:

Do not use any towing method other than those shown above.

For example, the towing methods shown below are dangerous or damage the vehicle, so do not use them.

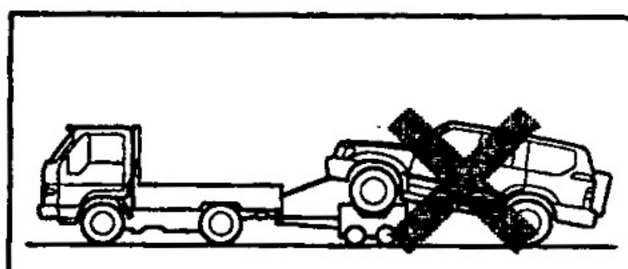 N19531	During towing with this towing method, there is a danger of the drive train heating up and causing breakdown, or of the front wheels flying off the dolly.

V08066

6. FOR VEHICLES EQUIPPED WITH A CATALYTIC CONVERTER

CAUTION:

If large amount of unburned gasoline flows into the converter, it may overheat and create a fire hazard. To prevent this, observe the following precautions and explain them to your customer.

(a) Use only unleaded gasoline.

(b) Avoid prolonged idling.
Avoid running the engine at idle speed for more than 20 minutes.

(c) Avoid spark jump test.
(1) Perform spark jump test only when absolutely necessary. Perform this test as rapidly as possible.
(2) While testing, never race the engine.

(d) Avoid prolonged engine compression measurement.
Engine compression tests must be done as rapidly as possible.

(e) Do not run engine when fuel tank is nearly empty.
This may cause the engine to misfire and create an extra load on the converter.

(f) Avoid coasting with ignition turned off and prolonged braking.

(g) Do not dispose of used catalyst along with parts contaminated with gasoline or oil.

7. IF VEHICLE IS EQUIPPED WITH MOBILE COMMUNICATION SYSTEM

For vehicles with mobile communication systems such as two–way radios and cellular telephones, observe the following precautions.

(a) Install the antenna as far as possible away from the ECU and sensors of the vehicle's electronic system.

(b) Install the antenna feeder at least 20 cm (7.87 in.) away from the ECU and sensors of the vehicle's electronic systems. For details about ECU and sensors locations, refer to the section on the applicable component.

(c) Do not wind the antenna feeder together with the other wiring as much as possible, also avoid running the antenna feeder parallel with other wire harnesses.

(d) Check that the antenna and feeder are correctly adjusted.

(e) Do not install powerful mobile communications system.

8. FOR USING HAND–HELD TESTER

CAUTION:

Observe the following items for safety reasons:

- **Before using the hand–held tester, the hand–held tester's operator manual should be read thoroughly.**
- **Be sure to route all cables securely when driving with the hand–held tester connected to the vehicle. (i.e. Keep cables away from feet, pedals, steering wheel and shift lever.)**
- **Two persons are required when test driving with the hand–held tester, one person to drive the vehicle and the other person to operate the hand–held tester.**

HOW TO TROUBLESHOOT ECU CONTROLLED SYSTEMS

GENERAL INFORMATION

IN04S–12

A large number of ECU controlled systems are used in the LAND CRUISER/LAND CRUISER PRADO. In general, the ECU controlled system is considered to be a very intricate system requiring a high level of technical knowledge and expert skill to troubleshoot. However, the fact is that if you proceed to inspect the circuits one by one, troubleshooting of these systems is not complex. If you have adequate understanding of the system and a basic knowledge of electricity, accurate diagnosis and necessary repair can be performed to locate and fix the problem. This manual is designed through emphasis of the above standpoint to help service technicians perform accurate and effective troubleshooting, and is compiled for the following major ECU controlled systems:

The troubleshooting procedure and how to make use of it are described on the following pages.

System	Page
1. Automatic Transmission	DI–1
2. Anti–Lock Brake System	DI–84
3. Vehicle Stability Control (VSC) & Brake Assist (BA) System	DI–182
4. Active Traction Control & Brake Assist (BA) system	DI–235
5. Engine Immobiliser System	DI–258
6. Air Conditioning System	DI–278

FOR USING HAND–HELD TESTER

- Before using the tester, the tester's operator manual should be read thoroughly.
- If the tester cannot communicate with ECU controlled systems when you have connected the cable of the tester to DLC3, turned the ignition switch ON and operated the tester, there is a problem on the vehicle side or tester side.

(1) If communication is normal when the tester is connected to another vehicle, inspect the diagnosis data link line (Bus⊕line) or ECU power circuit of the vehicle.

(2) If communication is still not possible when the tester is connected to another vehicle, the problem is probably in the tester itself, so perform the Self Test procedures outline in the Tester Operator's Manual.

IN0E0–02

HOW TO PROCEED WITH TROUBLESHOOTING

Carry out troubleshooting in accordance with the procedure on the following page. Here, only the basic procedure is shown. Details are provided in Diagnostics section, showing the most effective methods for each circuit. Confirm the troubleshooting procedures first for the relevant circuit before beginning troubleshooting of that circuit.

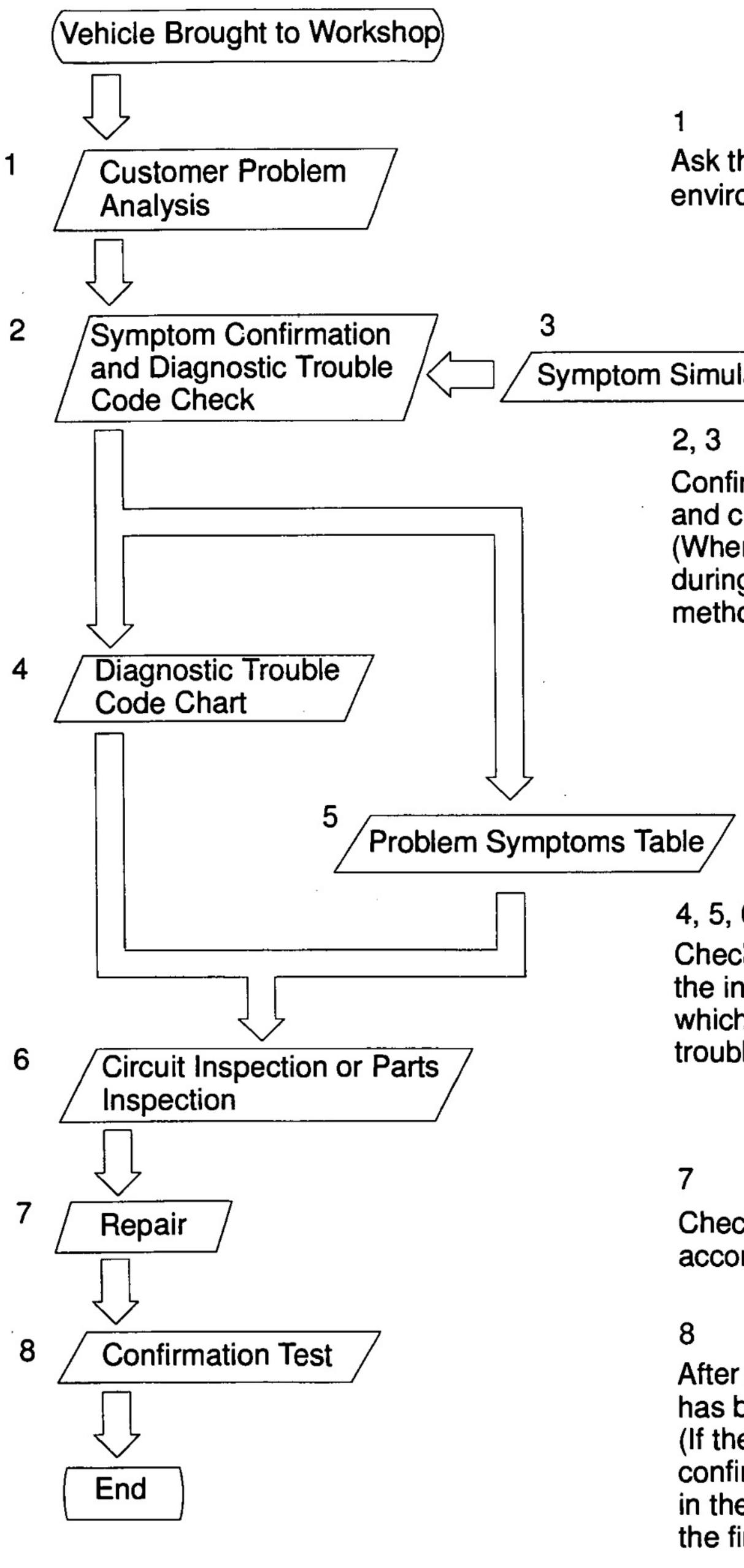

1

Ask the customer about the conditions and the environment when the problem occurred.

2, 3

Confirm the symptoms and the problem conditions, and check the diagnostic trouble codes.
(When the problem symptoms do not appear during confirmation, use the symptom simulation method described later on.)

4, 5, 6

Check the results obtained in Step 2, then confirm the inspection procedure for the system or the part which should be checked using the diagnostic trouble code chart or the problem symptoms table.

7

Check and repair the affected system or part in accordance with the instructions in Step 6.

8

After completing repairs, confirm that the problem has been eliminated.
(If the problem is not reproduced, perform the confirmation test under the same conditions and in the same environment as when it occurred for the first time.)

1. CUSTOMER PROBLEM ANALYSIS

In troubleshooting, the problem symptoms must be confirmed accurately and all preconceptions must be cleared away in order to give an accurate judgment. To ascertain just what the problem symptoms are, it is extremely important to ask the customer about the problem and the conditions at the time it occurred.

Important Point in the Problem Analysis:

The following 5 items are important points in the problem analysis. Past problems which are thought to be unrelated and the repair history, etc. may also help in some cases, so as much information as possible should be gathered and its relationship with the problem symptoms should be correctly ascertained for reference in troubleshooting. A customer problem analysis table is provided in Diagnostics section for each system for your use.

Important Points in the Customer Problem Analysis

- What ——— Vehicle model, system name
- When ——— Date, time, occurrence frequency
- Where ——— Road conditions
- Under what conditions? ——— Running conditions, driving conditions, weather conditions
- How did it happen? ——— Problem symptoms

(Sample) Supplemental restraint system check sheet.

CUSTOMER PROBLEM ANALYSIS CHECK

Supplemental Restraint System Check Sheet

Inspector's Name

Customer's Name		Registration No.	
		Registration Year	/ /
		Frame No.	
Date Vehicle Brought In	/ /	Odometer Reading	km miles

Date Problem First Occurred	/ /
Weather	☐ Fine ☐ Cloudy ☐ Rainy ☐ Snowy ☐ Other
Temperature	Approx.

Vehicle Operation	☐ Starting ☐ Idling ☐ Driving [☐ Constant speed ☐ Acceleration ☐ Deceleration ☐ Other]

2. SYMPTOM CONFIRMATION AND DIAGNOSTIC TROUBLE CODE CHECK

The diagnostic system in the LAND CRUISER/LAND CRUISER PRADO fulfills various functions. The first function is the Diagnostic Trouble Code Check in which a malfunction in the signal circuits to the ECU is stored in code in the ECU memory at the time of occurrence, to be output by the technician during troubleshooting. Another function is the Input Signal Check which checks if the signals from various switches are sent to the ECU correctly.

By using these check functions, the problem areas can be narrowed down quickly and troubleshooting can be performed effectively. Diagnostic functions are incorporated in the following systems in the LAND CRUISER/LAND CRUISER PRADO.

System	Diagnostic Trouble Code Check	Input Signal Check (Sensor Check)	Diagnostic Test Mode (Active Test)
Automatic Transmission	○ (with check Mode)	○	
Anti–Lock Brake System	○	○	
Vehicle Stability Control (VSC) & Brake assist (BA) System	○	○	
Active Traction Control & Brake Assist (BA) System	○	○	
Engine Immobiliser System	○		
Air Conditioning System	○		

In diagnostic trouble code check, it is very important to determine whether the problem indicated by the diagnostic trouble code is still occurring or occurred in the past but returned to normal at present. In addition, it must be checked in the problem symptom check whether the malfunction indicated by the diagnostic trouble code is directly related to the problem symptom or not. For this reason, the diagnostic trouble codes should be checked before and after the symptom confirmation to determine the current conditions, as shown in the table below. If this is not done, it may, depending on the case, result in unnecessary troubleshooting for normally operating systems, thus making it more difficult to locate the problem, or in repairs not pertinent to the problem. Therefore, always follow the procedure in correct order and perform the diagnostic trouble code check.

DIAGNOSTIC TROUBLE CODE CHECK PROCEDURE

Diagnostic Trouble Code Check (Make a note of and then clear)	**Confirmation of Symptoms**	**Diagnostic Trouble Code Check**	**Problem Condition**
Diagnostic Trouble Code Display	Problem symptoms exist	Same diagnostic trouble code is displayed	Problem is still occurring in the diagnostic circuit
		Normal code is displayed	The problem is still occurring in a place other than in the diagnostic circuit (The diagnostic trouble code displayed first is either for a past problem or it is a secondary problem)
	No problem symptoms exist		The problem occurred in the diagnostic circuit in the past
Normal Code Display	Problem symptoms exist	Normal code is displayed	The problem is still occurring in a place other than in the diagnostic circuit
	No problem symptoms exist	Normal code is displayed	The problem occurred in a place other than in the diagnostic circuit in the past

Taking into account the points on the previous page, a flow chart showing how to proceed with troubleshooting using the diagnostic trouble code check is shown below. This flow chart shows how to utilize the diagnostic trouble code check effectively, then by carefully checking the results, indicates how to proceed either to diagnostic trouble code troubleshooting or to troubleshooting of problem symptoms table.

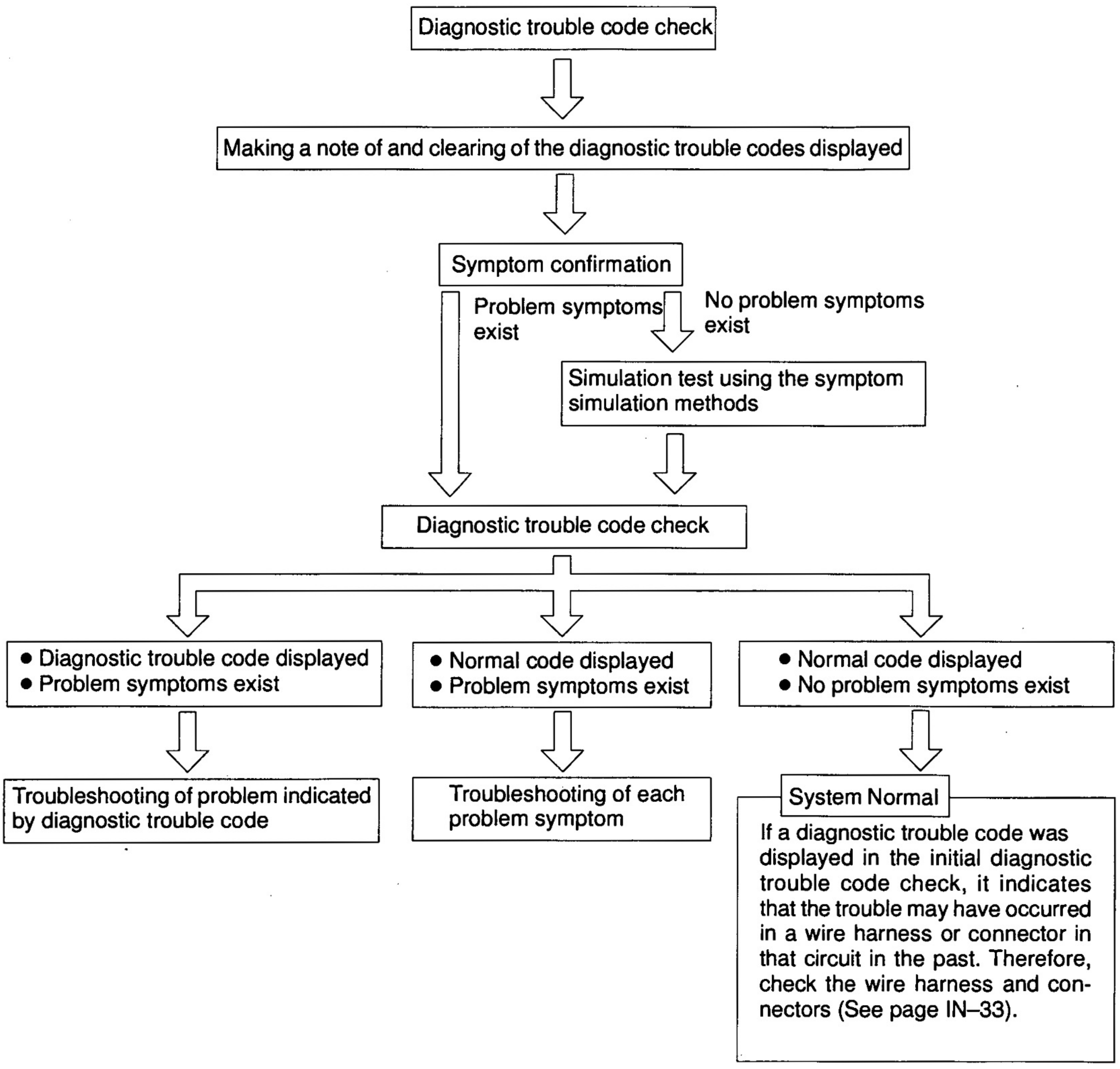

3. SYMPTOM SIMULATION

The most difficult case in troubleshooting is when there are no problem symptoms occurring. In such cases, a thorough customer problem analysis must be carried out, then simulate the same or similar conditions and environment in which the problem occurred in the customer's vehicle. No matter how much experience a technician has, or how skilled he may be, if he proceeds to troubleshoot without confirming the problem symptoms he will tend to overlook something important in the repair operation and make a wrong guess somewhere, which will only lead to a standstill. For example, for a problem which only occurs when the engine is cold, or for a problem which occurs due to vibration caused by the road during driving, etc., the problem can never be determined so long as the symptoms are confirmed with the engine hot condition or the vehicle at a standstill. Since vibration, heat or water penetration (moisture) is likely cause for problem which is difficult to reproduce, the symptom simulation tests introduced here are effective measures in that the external causes are applied to the vehicle in a stopped condition.

Important Points in the Symptom Simulation Test:

In the symptom simulation test, the problem symptoms should of course be confirmed, but the problem area or parts must also be found out. To do this, narrow down the possible problem circuits according to the symptoms before starting this test and connect a tester beforehand. After that, carry out the symptom simulation test, judging whether the circuit being tested is defective or normal and also confirming the problem symptoms at the same time. Refer to the problem symptoms table for each system to narrow down the possible causes of the symptom.

1	**VIBRATION METHOD: When vibration seems to be the major cause.**
CONNECTORS Slightly shake the connector vertically and horizontally. **WIRE HARNESS** Slightly shake the wire harness vertically and horizontally. The connector joint, fulcrum of the vibration, and body through portion are the major areas to be checked thoroughly.	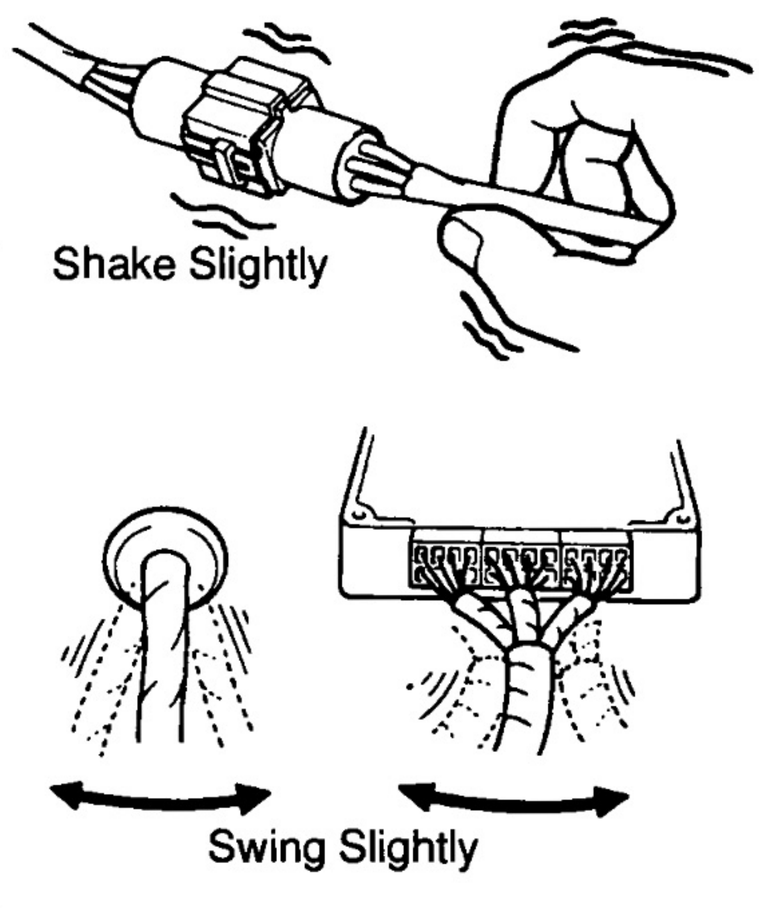 FI2331 FI2332
PARTS AND SENSOR Apply slight vibration with a finger to the part of the sensor considered to be the problem cause and check that the malfunction occurs. HINT: Applying strong vibration to relays may result in open relays.	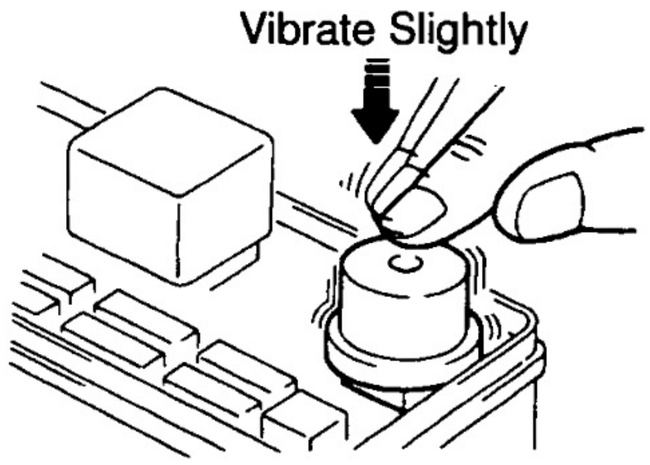 FI2330

V07268

2	**HEAT METHOD: When the problem seems to occur when the suspect area is heated.**

Heat the component that is the likely cause of the malfunction with a hair dryer or similar object. Check to see if the malfunction occurs.

NOTICE:

(1) Do not heat to more than 60 °C (140 °F). (Temperature is limited not to damage the components.)

(2) Do not apply heat directly to parts in the ECU.

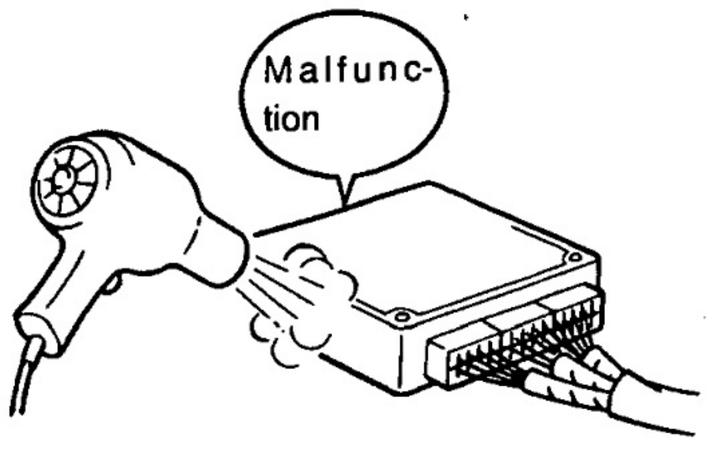

FI2334

3	**WATER SPRINKLING METHOD: When the malfunction seems to occur on a rainy day or in a high–humidity condition.**

Sprinkle water onto the vehicle and check to see if the malfunction occurs.

NOTICE:

(1) Never sprinkle water directly into the engine compartment, but indirectly change the temperature and humidity by applying water spray onto the radiator front surface.

(2) Never apply water directly onto the electronic components.

HINT:

If a vehicle is subject to water leakage, the leaked water may contaminate the ECU. When testing a vehicle with a water leakage problem, special caution must be taken.



FI6649

4	**OTHER: When a malfunction seems to occur when electrical load is excessive.**

Turn on all electrical loads including the heater blower, head lights, rear window defogger, etc. and check to see if the malfunction occurs.

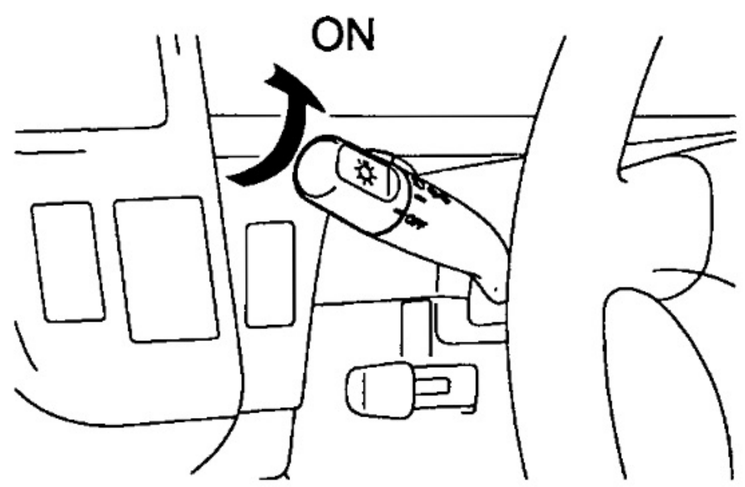

B02389

B02390

4. DIAGNOSTIC TROUBLE CODE CHART

The inspection procedure is shown in the table below. This table permits efficient and accurate troubleshooting using the diagnostic trouble codes displayed in the diagnostic trouble code check. Proceed with troubleshooting in accordance with the inspection procedure given in the diagnostic chart corresponding to the diagnostic trouble codes displayed. The engine diagnostic trouble code chart is shown below as an example.

- DTC No.
  Indicates the diagnostic trouble code.
- Page or Instructions
  Indicates the page where the inspection procedure for each circuit is to be found, or gives instructions for checking and repairs.

- Trouble Area
  Indicates the suspect area of the problem.

- Detection Item
  Indicates the system of the problem or contents of the problem.

DIAGNOSTIC TROUBLE CODE CHART

If a malfunction code is displayed during the DTC check, check the circuit for that code listed in the table below. (Proceed to the page given for that circuit).

DTC No. (See page)	Detection Item	Trouble Area	SRS Warming Light
11 (DI–14)	• Short in D squib circuit (to ground)	• Steering wheel pad (squib) • Spiral cable • Airbag sensor assembly • Wire harness	ON
12 (DI–19)	• Short in D squib circuit (to B+)	• Steering wheel pad (squib) • Spiral cable • Airbag sensor assembly • Wire harness	ON
13 (DI–23)	• Short in D squib circuit	• Steering wheel pad (squib) • Spiral cable • Airbag sensor assembly • Wire harness	ON
14 (DI–27)	• Open in D squib circuit	• Steering wheel pad (squib) • Spiral cable • Airbag sensor assembly • Wire harness	ON
15 (DI–27)	• Front airbag sensor assembly (RH) malfunction	• Front airbag sensor assembly (RH) • Wire harness	ON
	• Front airbag sensor assembly malfunction	• Front airbag sensor assembly (LH) • Wire harness	
	ssembly malfunction	• Airbag sensor assembly	

5. PROBLEM SYMPTOMS TABLE

The suspected circuits or parts for each problem symptom are shown in the table below. Use this table to troubleshoot the problem when a "Normal" code is displayed in the diagnostic trouble code check but the problem is still occurring. Numbers in the table indicate the inspection order in which the circuits or parts should be checked.

HINT:

When the problem is not detected by the diagnostic system even though the problem symptom is present, it is considered that the problem is occurring outside the detection range of the diagnostic system, or that the problem is occurring in a system other than the diagnostic system.

- Page
  Indicates the page where the flow chart for each circuit is located.
- Circuit Inspection, Inspection Order
  Indicates the circuit which needs to be checked for each problem symptom. Check in the order indicated by the numbers.
- Problem Symptom
- Circuit or Part Name
  Indicates the circuit or part which needs to be checked.

PROBLEM SYMPTOMS TABLE

Proceed with troubleshooting of each circuit in the table below.

Symptom	Suspect Area	See page
• With the ignition switch in the ACC or ON position, the SRS warning light sometimes lights up after approx. 6 seconds have elapsed. • SRS warning light is always lit up even when ignition switch is in the LOCK position	• SRS warning light circuit (Always lights up when ignition switch is in LOCK position.)	DI–91
• With the ignition switch in the ACC or ON position, the SRS warning light does not light up.	• SRS warning light circuit (Dose not light up when ignition switch is turned to ACC or ON.)	DI–93
• DTC is not displayed. • SRS warning light is always lit up at the time of DTC check procedure. • DTC is displayed without Tc and E1 terminal connection.	• Tc terminal circuit	DI–97

6. CIRCUIT INSPECTION

How to read and use each page is shown below.

- Diagnostic Trouble Code No. and Detection Item

- Circuit Description
  The major role and operation, etc. of the circuit and its component parts are explained.

DTC	13	Short in D Squib Circuit

CIRCUIT DESCRIPTION

The D squib circuit consists of the airbag sensor assembly, spiral cable and steering wheel pad.

It causes the airbag to deploy when the airbag deployment conditions are satisfied.

For details of the function of each components,see OPERATION on page RS–2.

DTC 13 is recorded when a short is detected in the D squib circuit.

DTC No.	DTC Detecting Condition	Trouble Area
13	•Short circuit between D + wire harness and D – wire harness of squib •D squib malfunction •Spiral cable malfunction •Airbag sensor assembly malfunction	•Steering wheel pad (D squib) •Spiral cable •Airbag sensor assembly •Wire harness

- Indicates the diagnostic trouble code, diagnostic trouble code set parameter and suspect area of the problem.

WIRING DIAGRAM

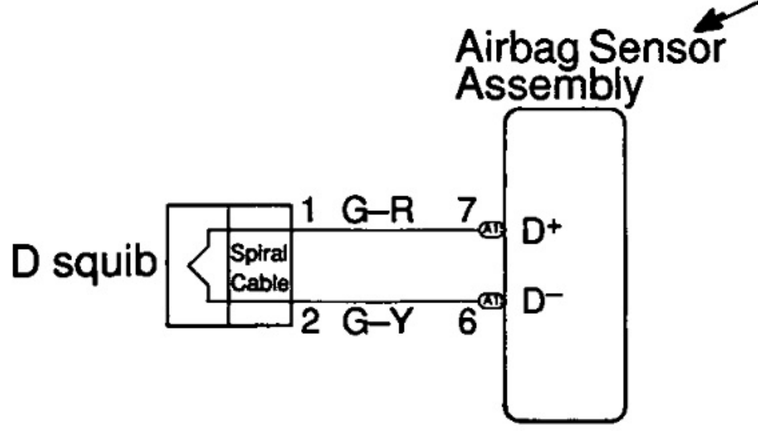

R16015

- Wiring Diagram
  This shows a wiring diagram of the circuit.
  Use this diagram together with ELECTRICAL WIRING DIAGRAM to thoroughly understand the circuit.
  Wire colors are indicated by an alphabetical code.
  B = Black, L = Blue, R = Red, BR = Brown,
  LG = Light Green, V = Violet, G = Green,
  O = Orange, W = White, GR = Gray, P = Pink,
  Y = Yellow, SB = Sky Blue
  The first letter indicates the basic wire color and the second letter indicates the color of the stripe.

B00803

- Indicates the position of the ignition switch during the check.

LOCK
Ignition Switch LOCK (OFF)

ON
Ignition Switch ON

START
Ignition Switch START

ACC
Ignition Switch ACC

- Inspection Procedure
Use the inspection procedure to determine if the circuit is normal or abnormal, and if it is abnormal, use it to determine whether the problem is located in the sensors, actuators, wire harness or ECU.

INSPECTION PROCEDURE

2	Check voltage at IG2 and ACC of airbag sensor assembly.

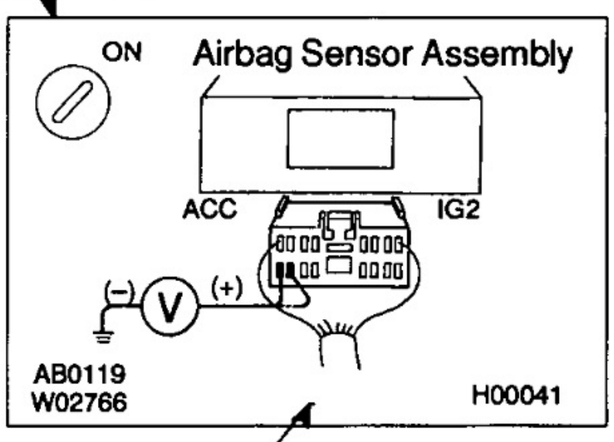

PREPARATION:
Turn ignition switch ON.

CHECK:
Measure voltage between terminals IG2 and ACC of airbag sensor assembly and body ground.

OK:
Voltage: Below 16 V

NG → **Check battery and charging system. (See charging system section)**

OK

- Indicates the place to check the voltage or resistance.
- Indicates the connector position to be checked, from the front or back side.

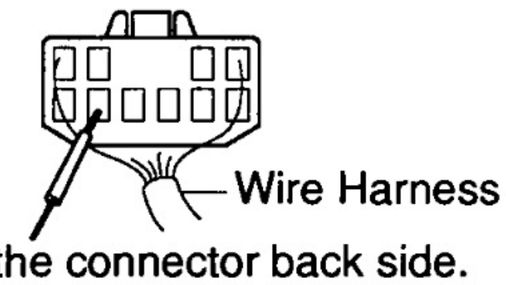

Check from the connector back side. (with harness)



Check from the connector front side. (without harness)
In this case, care must be taken not to bend the terminals.

- Indicates the condition of the connector of ECU during the check.

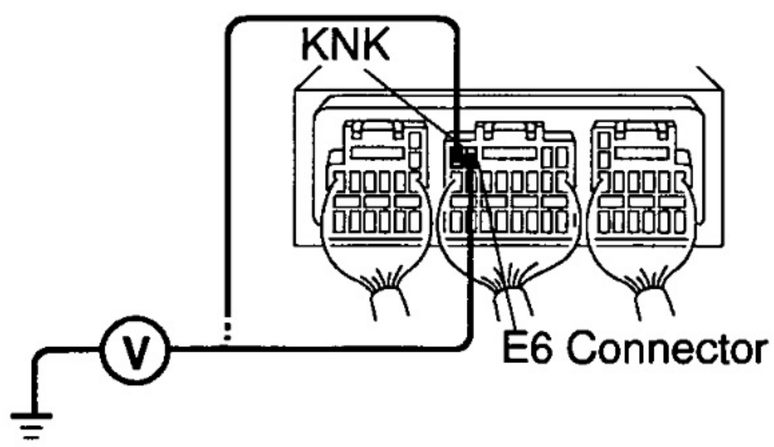

Connector being checked is connected.

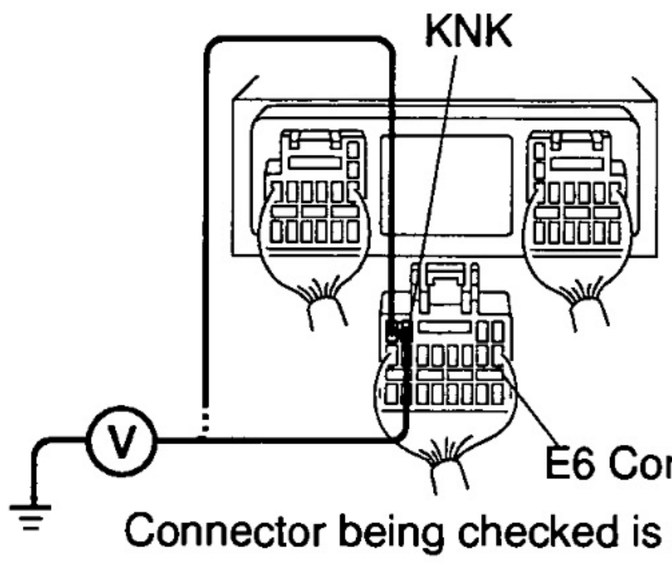

Connector being checked is disconnected.

B00691

B00972

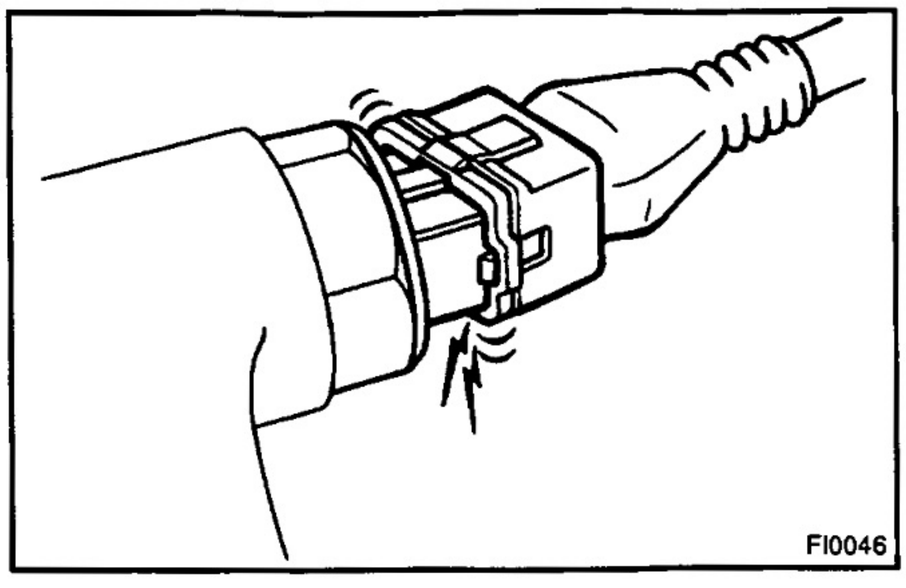
FI0046

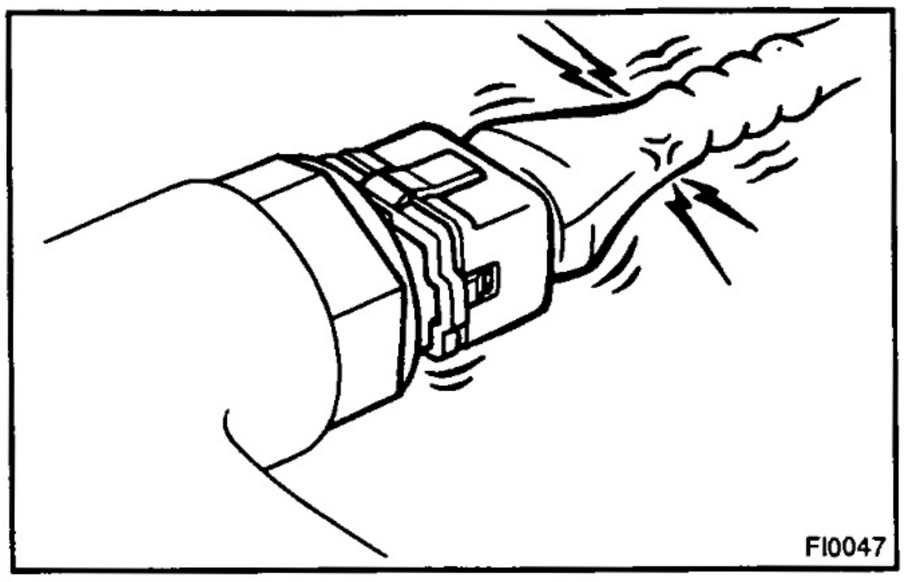
FI0047

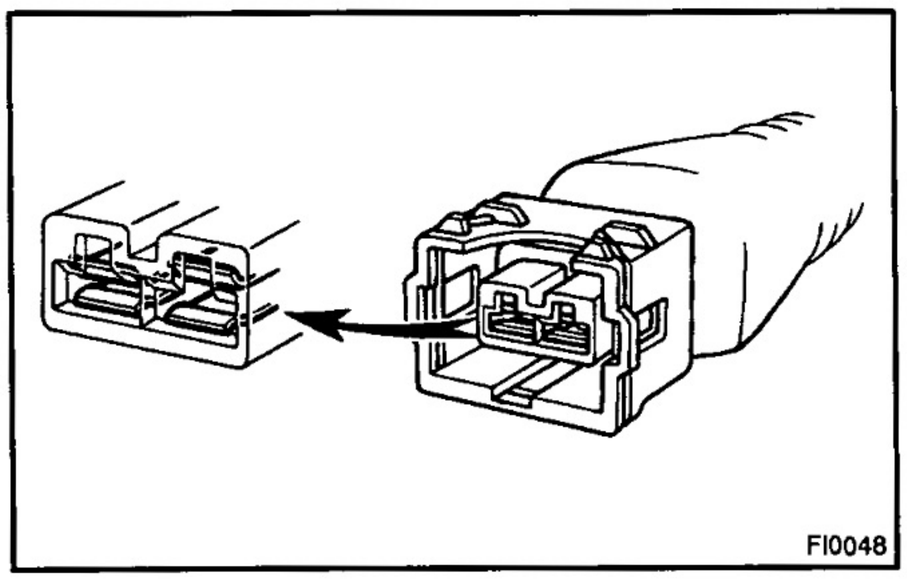
FI0048

IN011–24

HOW TO USE THE DIAGNOSTIC CHART AND INSPECTION PROCEDURE

1. CONNECTOR CONNECTION AND TERMINAL INSPECTION

- For troubleshooting, diagnostic trouble code charts or problem symptom table are provided for each circuit with detailed inspection procedures on the following pages.
- When all the component parts, wire harnesses and connectors of each circuit except the ECU are found to be normal in troubleshooting, then it is determined that the problem is in the ECU. Accordingly, if diagnosis is performed without the problem symptoms occurring, refer to step 8 to replace the ECU. So always confirm that the problem symptoms are occurring, or proceed with inspection while using the symptom simulation method.
- The instructions "Check wire harness and connector" and "Check and replace ECU" which appear in the inspection procedure, are common and applicable to all diagnostic trouble codes. Follow the procedure outlined below whenever these instructions appear.

OPEN CIRCUIT:

This could be due to a disconnected wire harness, faulty contact in the connector, and a connector terminal pulled out, etc.

HINT:

- It is rarely the case that a wire is broken in the middle of it. Most cases occur at the connector. In particular, carefully check the connectors of sensors and actuators
- Faulty contact could be due to rusting of the connector terminals, to foreign materials entering terminals or a deformation of connector terminals. Simply disconnecting and reconnecting the connectors once changes the condition of the connection and may result in a return to normal operation. Therefore, in troubleshooting, if no abnormality is found in the wire harness and connector check, but the problem disappears after the check, then the cause is considered to be in the wire harness or connectors.

SHORT CIRCUIT:

This could be due to a contact between wire harness and the body ground or to a short circuit occurred inside the switch, etc.

HINT:

When there is a short circuit between the wire harness and body ground, check thoroughly whether the wire harness is caught in the body or is clamped properly.

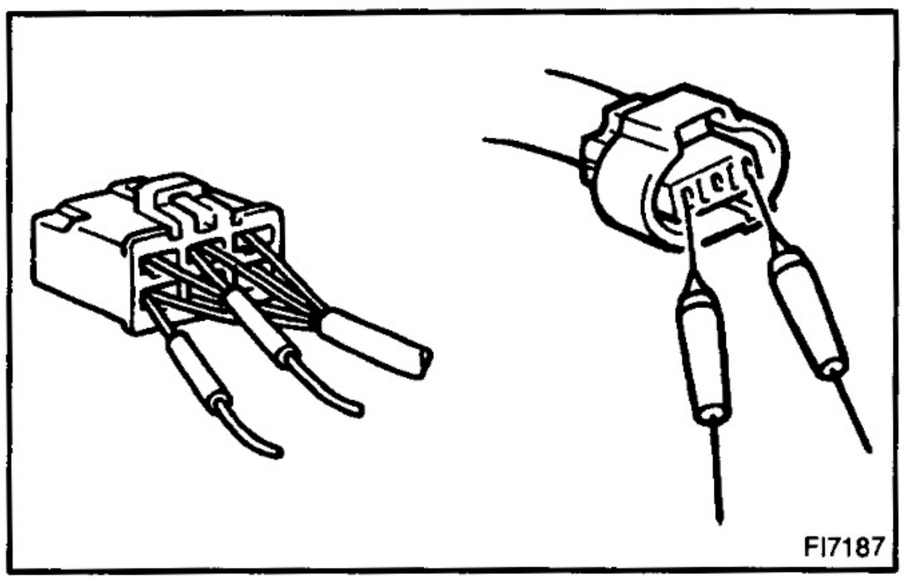

2. CONNECTOR HANDLING

When inserting tester probes into a connector, insert them from the rear of the connector. When necessary, use mini test leads. For water resistant connectors which cannot be accessed from behind, take good care not to deform the connector terminals.

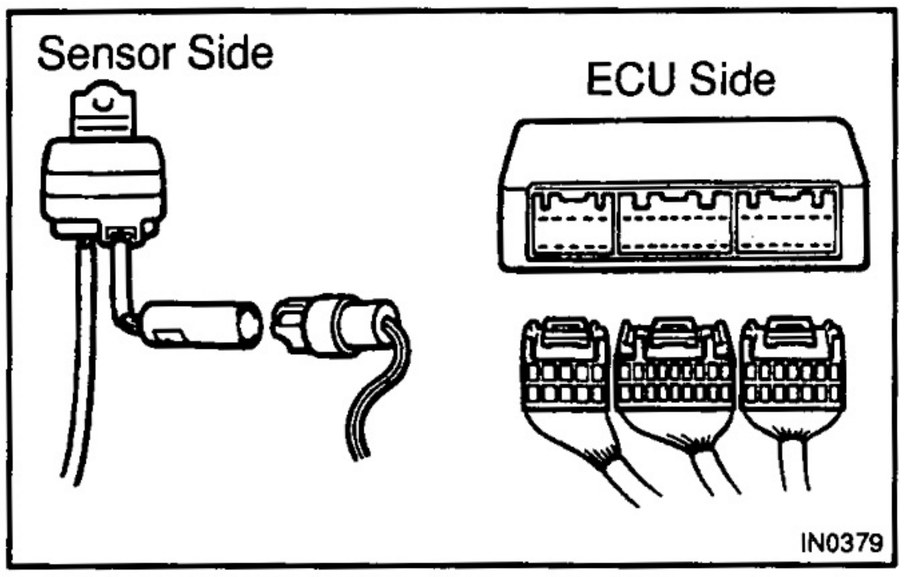

3. CONTINUITY CHECK (OPEN CIRCUIT CHECK)

(a) Disconnect the connectors at both ECU and sensor sides.

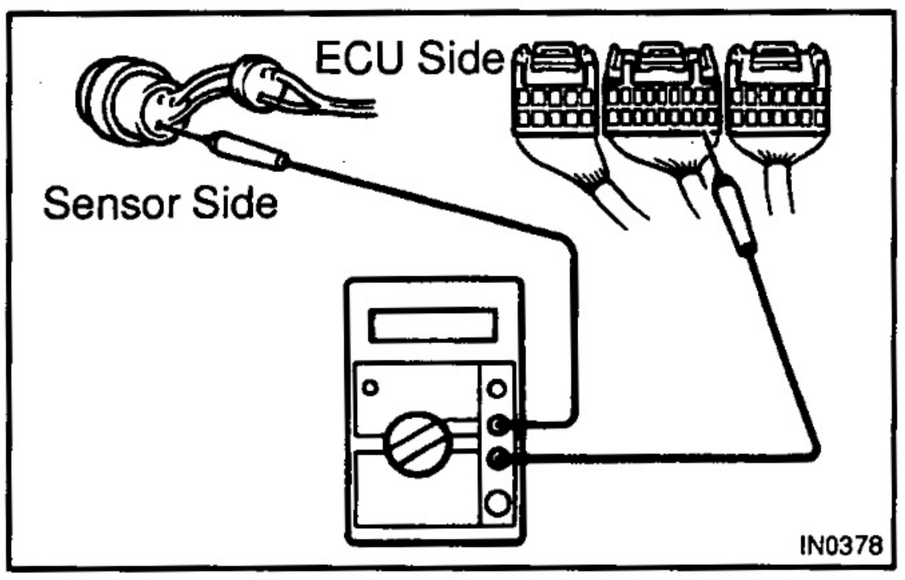

(b) Measure the resistance between the applicable terminals of the connectors.
Resistance: 1 Ω or less

HINT:
Measure the resistance while lightly shaking the wire harness vertically and horizontally.

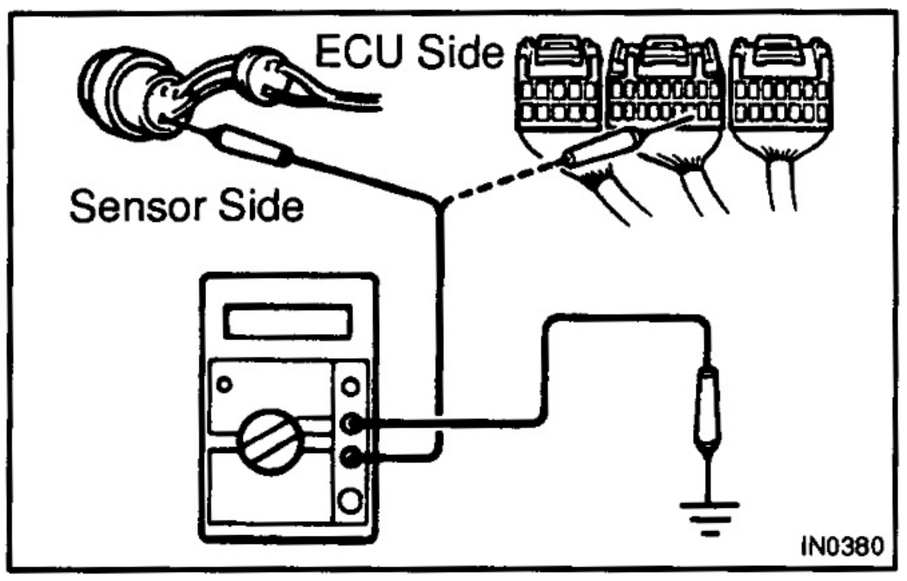

4. RESISTANCE CHECK (SHORT CIRCUIT CHECK)

(a) Disconnect the connectors on both ends.
(b) Measure the resistance between the applicable terminals of the connectors and body ground. Be sure to carry out this check on the connectors on both ends.
Resistance: 1 MΩ or higher

HINT:
Measure the resistance while lightly shaking the wire harness vertically and horizontally.

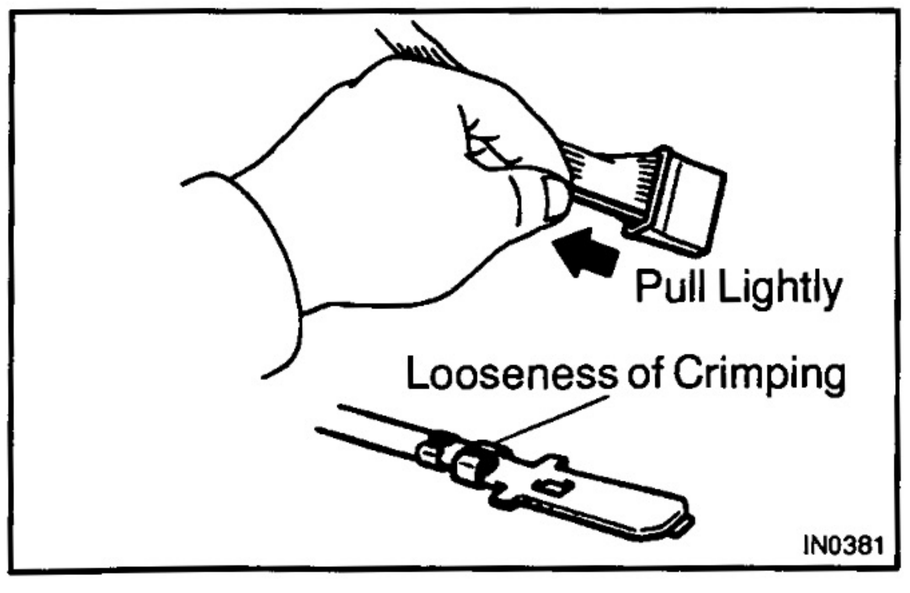

5. VISUAL CHECK AND CONTACT PRESSURE CHECK

(a) Disconnect the connectors at both ends.
(b) Check for rust or foreign material, etc. in the terminals of the connectors.
(c) Check crimped portions for looseness or damage and check that the terminals are secured in lock portion.

HINT:
The terminals should not come out when pulled lightly from the back.

(d) Prepare a test male terminal and insert it in the female terminal, then pull it out.

NOTICE:

When testing a gold–plated female terminal, always use a gold–plated male terminal.

HINT:

When the test terminal is pulled out more easily than others, there may be poor contact in that section.

Fig. 1

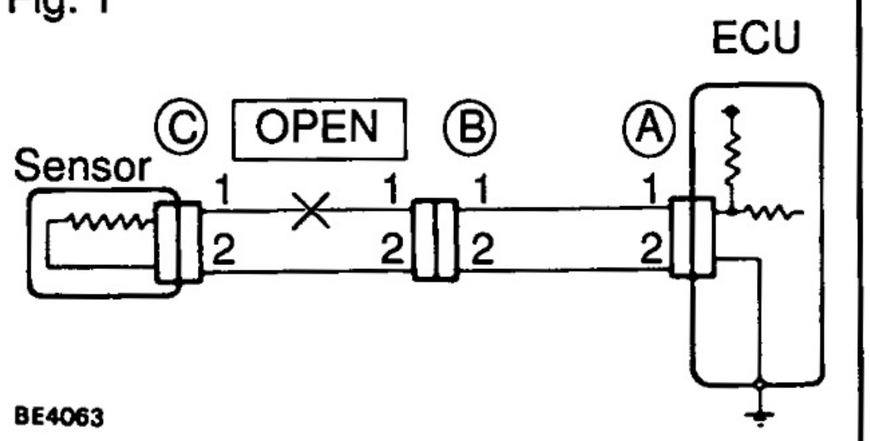

6. CHECK OPEN CIRCUIT

For the open circuit in the wire harness in Fig. 1, perform "(a) Continuity Check" or "(b) Voltage Check" to locate the section.

Fig. 2

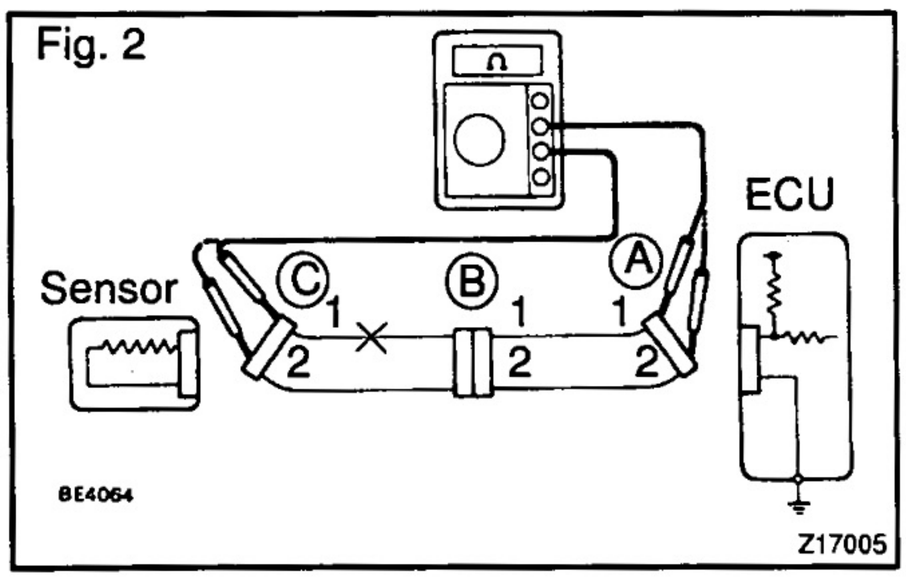

(a) Check the continuity.

(1) Disconnect connectors "A" and "C" and measure the resistance between them.

In the case of Fig. 2,

Between terminal 1 of connector "A" and terminal 1 of connector "C" → No continuity (open)

Between terminal 2 of connector "A" and terminal 2 of connector "C" → Continuity

Therefore, it is found out that there is an open circuit between terminal 1 of connector "A" and terminal 1 of connector "C".

Fig. 3

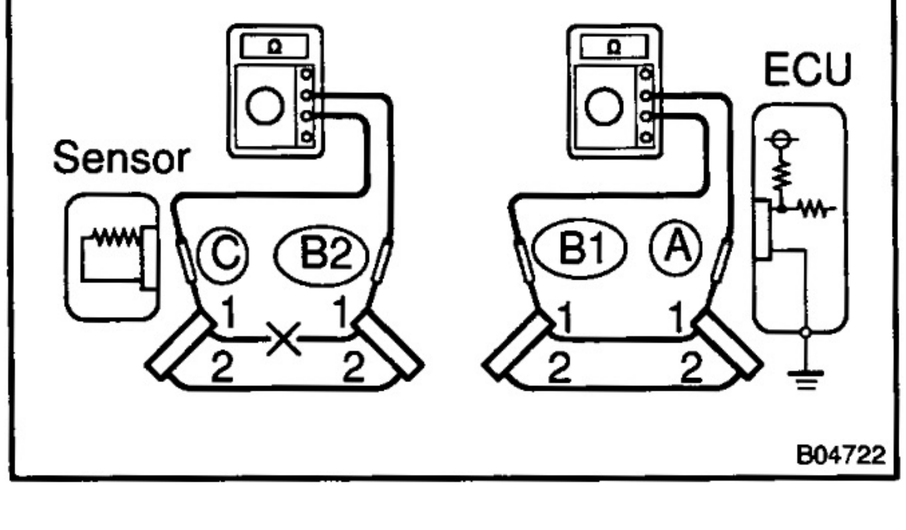

(2) Disconnect connector "B" and measure the resistance between the connectors.

In the case of Fig. 3,

Between terminal 1 of connector "A" and terminal 1 of connector "B1" → Continuity

Between terminal 1 of connector "B2" and terminal 1 of connector "C" → No continuity (open)

Therefore, it is found out that there is an open circuit between terminal 1 of connector "B2" and terminal 1 of connector "C".

Fig. 4

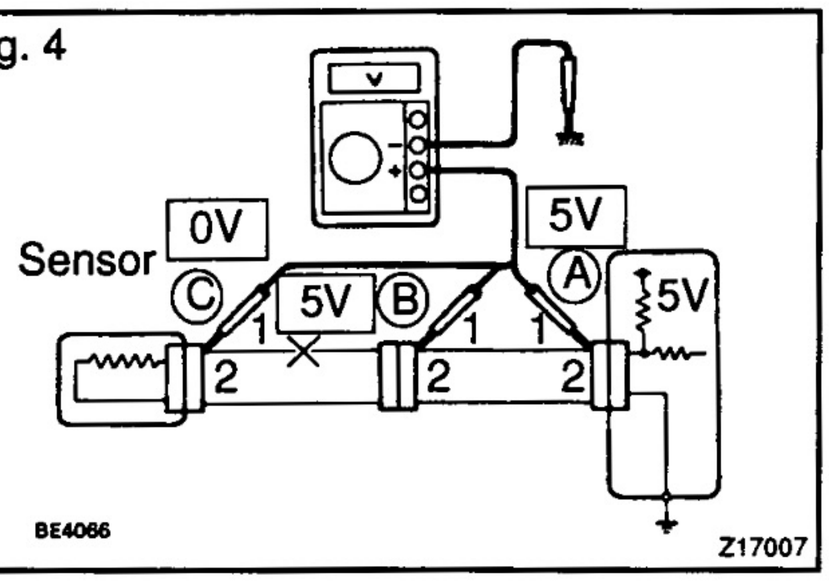

(b) Check the voltage.
In a circuit in which voltage is applied (to the ECU connector terminal), an open circuit can be checked for by conducting a voltage check.

As shown in Fig. 4, with each connector still connected, measure the voltage between body ground and terminal 1 of connector "A" at the ECU 5V output terminal, terminal 1 of connector "B", and terminal 1 of connector "C", in that order.

If the results are:
5V: Between Terminal 1 of connector "A" and Body Ground
5V: Between Terminal 1 of connector "B" and Body Ground
0V: Between Terminal 1 of connector "C" and Body Ground
Then it is found out that there is an open circuit in the wire harness between terminal 1 of "B" and terminal 1 of "C".

Fig. 5

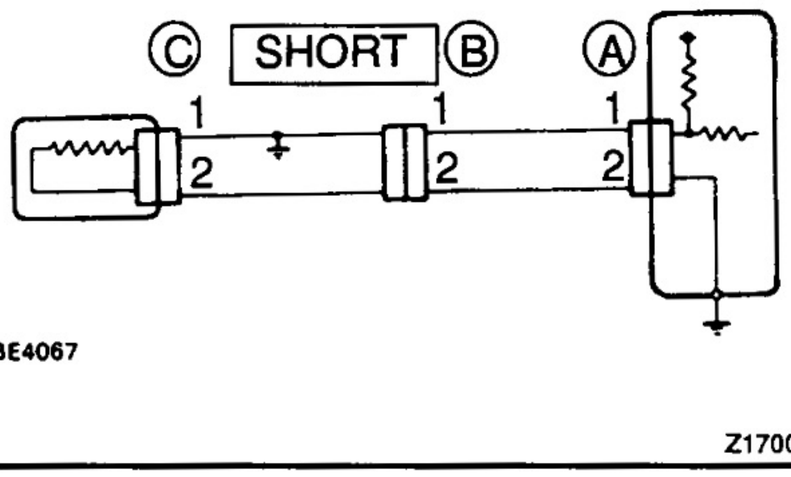

7. CHECK SHORT CIRCUIT

If the wire harness is ground shorted as in Fig. 5, locate the section by conducting a "continuity check with ground".

Fig. 6

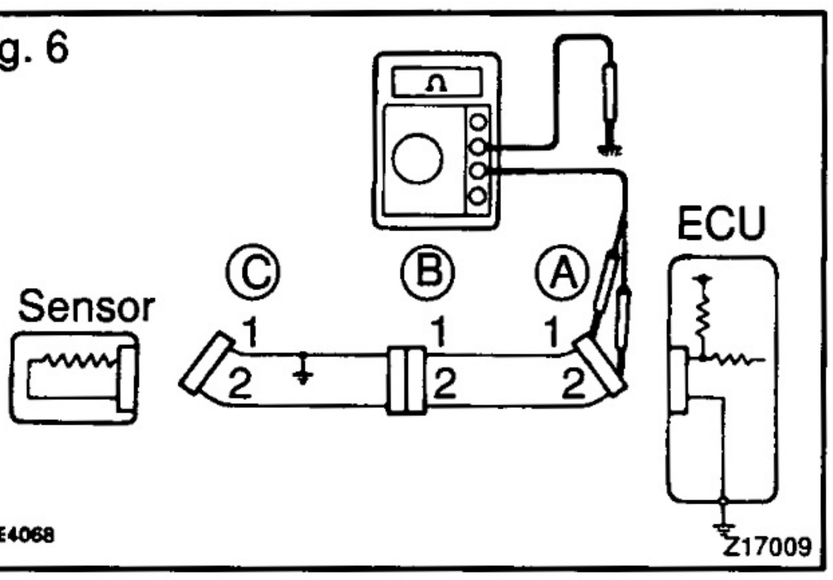

Check the continuity with ground.

(1) Disconnect connectors "A" and "C" and measure the resistance between terminal 1 and 2 of connector "A" and body ground.
In the case of Fig. 6
Between terminal 1 of connector "A" and body ground → Continuity (short)
Between terminal 2 of connector "A" and body ground → No continuity
Therefore, it is found out that there is a short circuit between terminal 1 of connector "A" and terminal 1 of connector "C".

Fig. 7

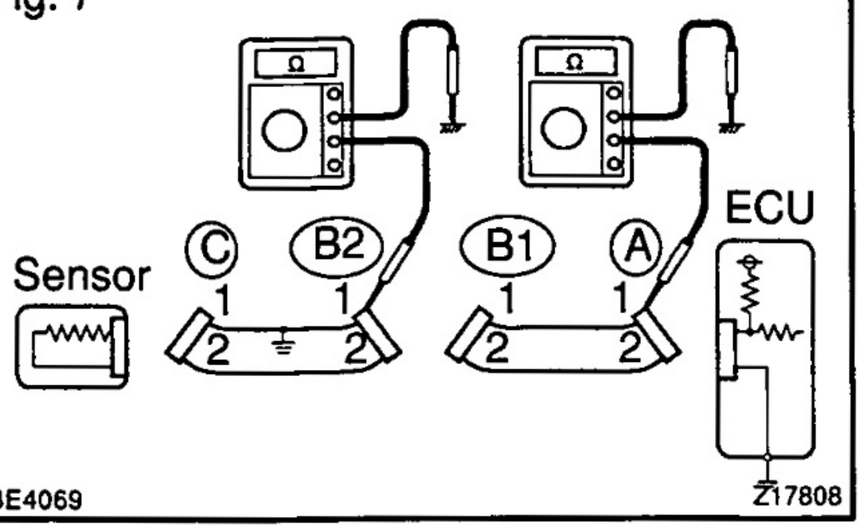

(2) Disconnect connector "B" and measure the resistance between terminal 1 of connector "A" and body ground, and terminal 1 of connector "B2" and body ground.
Between terminal 1 of connector "A" and body ground → No continuity
Between terminal 1 of connector "B2" and body ground → Continuity (short)
Therefore, it is found out that there is a short circuit between terminal 1 of connector "B2" and terminal 1 of connector "C".

8. CHECK AND REPLACE ECU

First check the ECU ground circuit. If it is faulty, repair it. If it is normal, the ECU could be faulty, so replace the ECU with a normal functioning one and check that the symptoms appear.

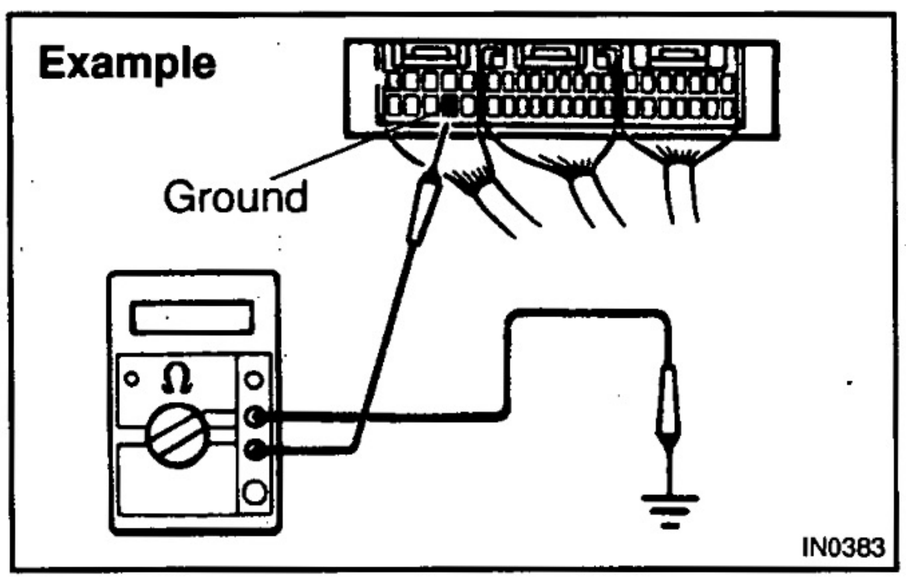

(1) Measure the resistance between the ECU ground terminal and the body ground.

Resistance: 1 Ω or less

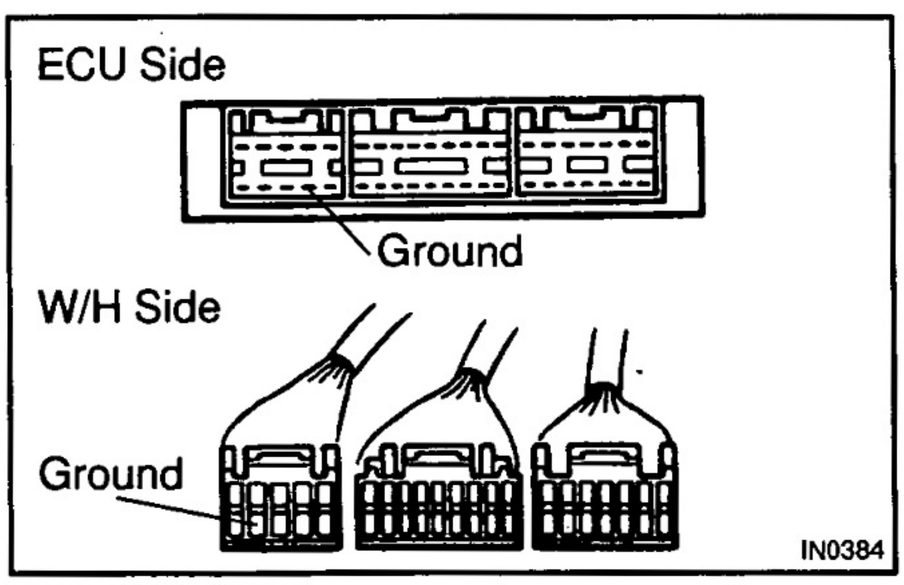

(2) Disconnect the ECU connector, check the ground terminals on the ECU side and the wire harness side for bend and check the contact pressure.

TERMS

ABBREVIATIONS USED IN THIS MANUAL

IN012-15

Abbreviations	Meaning
ABS	Anti–Lock Brake System
A/C	Air Conditioner
AC	Alternating Current
ACC	Accessory
ACIS	Acoustic Control Induction System
ACSD	Automatic Cold Start Device
A.D.D.	Automatic Disconnecting Differential
AHC	Active Height Control Suspension
ALR	Automatic Locking Retractor
ALT	Alternator
AMP	Amplifier
ANT	Antenna
APPROX.	Approximately
A/T	Automatic Transmission (Transaxle)
ATF	Automatic Transmission Fluid
AUTO	Automatic
BA	Brake Assist
BACS	Boost Altitude Compensation System
BAT	Battery
B/L	Bi–Level
BVSV	Bimetallic Vacuum Switching Valve
CB	Circuit Breaker
CD	Compact Disc
CH	Channel
CKD	Complete Knock Down
COMB.	Combination
CPE	Coupe
CRS	Child Restraint System
CTR	Center
DC	Direct Current
DIFF.	Differential
DIFF. LOCK	Differential Lock
DLC	Data Link Connector
DSP	Digital Signal Processor
DTC	Diagnostic Trouble Code
ECT	Electronic Control Transmission
ECU	Electronic Control Unit
EDU	Electronic Driving Unit
EFI	Electronic Fuel Injection
E/G	Engine
ELR	Emergency Locking Retractor
FF	Front–Engine Front–Wheel–Drive

FIPG	Formed In Place Gasket
FL	Fusible Link
Fr	Front
FR	Front–Engine Rear–Wheel–Drive
FWD	Front–Wheel–Drive
GND	Ground
H/B	Hatchback
HI	High
HID	High Intensity Discharge (Head Lamp)
HT	Hard Top
HWS	Heated Windshield System
IAC	Idle Air Control
IFS	Independent Front Suspension
IG	Ignition
INT	Intermittent
I/P	Instrument Panel
IRS	Independent Rear Suspension
J/B	Junction Block
J/C	Junction Connector
LAN	Local Area Network
LB	Liftback
LCD	Liquid Crystal Display
LED	Light Emitting Diode
LH	Left–Hand
LHD	Left–Hand Drive
LO	Low
LSD	Limited Slip Differential
LSP & PV	Load Sensing Proportioning And Bypass Valve
LSPV	Load Sensing Proportioning Valve
MAP	Manifold Absolute Pressure
MAX.	Maximum
MIC	Microphone
MIL	Malfunction Indicator Lamp
MIN.	Minimum
MP	Multipurpose
MPI	Multipoint Electronic Fuel Injection
MPX	Multiplex Communication System
MS	Manual Steering
M/T	Manual Transmission (Transaxle)
N	Neutral
No.	Number
O2S	Oxygen Sensor
O/D	Overdrive
OPT	Option
P & BV	Proportioning And Bypass Valve
PCS	Power Control System

PKB	Parking Brake
PPS	Progressive Power Steering
PS	Power Steering
PTO	Power Take–Off
RAM	Random Access Memory
R/B	Relay Block
RBS	Recirculating Ball Type Steering
R/F	Reinforcement
RFS	Rigid Front Suspension
RH	Right–Hand
RHD	Right–Hand Drive
RLY	Relay
ROM	Read Only Memory
Rr	Rear
RR	Rear–Engine Rear–Wheel Drive
RRS	Rigid Rear Suspension
RWD	Rear–Wheel Drive
SDN	Sedan
SEN	Sensor
SICS	Starting Injection Control System
SPEC	Specification
SRS	Supplemental Restraint System
SSM	Special Service Materials
SST	Special Service Tools
STD	Standard
SW	Switch
SYS	System
T/A	Transaxle
TACH	Tachometer
TDC	Top Dead Center
TEMP.	Temperature
TEMS	TOYOTA Electronic Modulated Suspension
TFT	Toyota Free–Tronic
T/M	Transmission
TMC	TOYOTA Motor Corporation
TRC	Traction Control System
U/D	Underdrive
VENT	Ventilator
VIN	Vehicle Identification Number
VSC	Vehicle Skid Control Vehicle Stability Control
w/	With
WGN	Wagon
W/H	Wire Harness
w/o	Without
1st	First
2nd	Second

2WD	Two Wheel Drive Vehicle (4x2)
4WD	Four Wheel Drive Vehicle (4x4)

PREPARATION

AUTOMATIC TRANSMISSION PP–1
TRANSFER (VF3BM) PP–6
BRAKE PP–13
BODY ELECTRICAL PP–18
BODY PP–20
AIR CONDITIONING PP–24

PP

REFER TO FOLLOWING REPAIR MANUALS:

Manual Name	Pub. No.
LAND CRUISER/LAND CRUISER PRADO Chassis and Body Repair Manual	RM517E
LAND CRUISER/LAND CRUISER PRADO Chassis and Body Repair Manual Supplement	RM627E

NOTE: The above pages contain only the points which differ from the above listed manuals.

AUTOMATIC TRANSMISSION

SST (Special Service Tools)

PP2AB-01

	09032–00100	Oil Pan Seal Cutter	
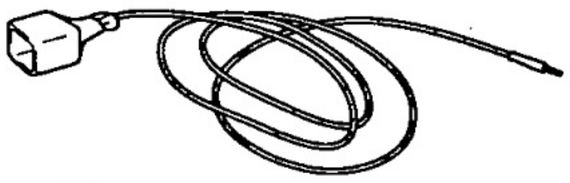	09843–18030	Tacho–pulse Pickup Wire No.2	
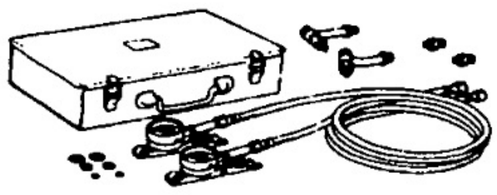	09992–00095	Automatic Transmission Oil Pressure Gauge Set	
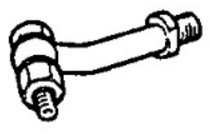	(09992–00231)	Adaptor C	
	(09992–00271)	Gauge Assy	

PP

PP2AC–01

RECOMMENDED TOOLS

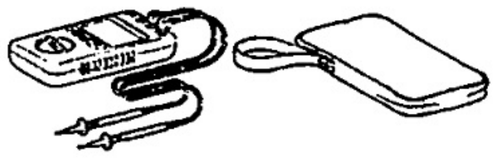	09082–00040 TOYOTA Electrical Tester.	

PP2AD–01

EQUIPMENT

Torque wrench	

PP2AE–01

LUBRICANT

Item	Capacity	Classification
Automatic transmission fluid		
Dry fill	10.1 liters (10.7 US qts, 8.9 Imp. qts)	ATF D–II or DEXRON®III (DEXRON®II)
Drain and refill	2.0 liters (2.1 US qts, 1.8 Imp. qts)	

PP2AF-01

SSM (Special Service Materials)

08826–00090	Seal Packing 1281, THREE BOND 1281 or equivalent (FIPG)	

TRANSFER (VF3BM)

SST (Special Service Tools)

PP2AM–01

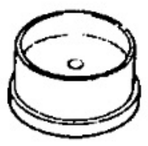	09223–15020	Oil Seal & Bearing Replacer	Planetary gear
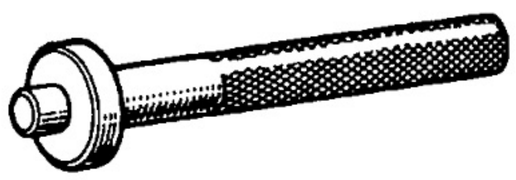	09304–12012	Input Shaft Front Bearing Replacer	Oil pump
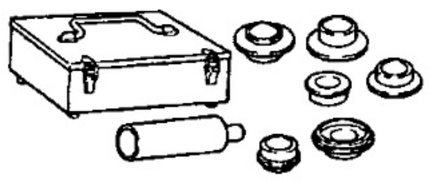	09316–60011	Transmission & Transfer Bearing Replacer	
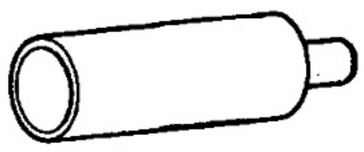	(09316–00011)	Replacer Pipe	Rear output shaft, Oil seal
	(09316–00071)	Replacer "F"	Rear output shaft
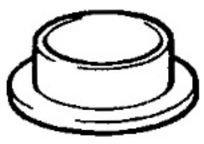	09316–20011	Transfer Bearing Replacer	Rear output shaft
	09330–00021	Companion Flange Holding Tool	Front companion flange, Rear companion flange
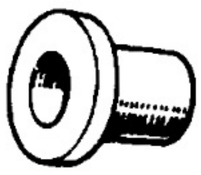	09515–30010	Rear Wheel Bearing Replacer	Planetary gear
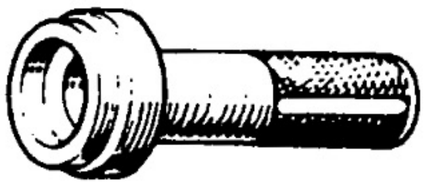	09554–22010	Differential Oil Seal Replacer	Oil seal
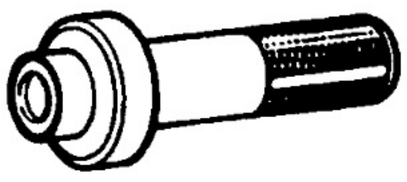	09554–30011	Differential Oil Seal Replacer	Planetary gear
	09555–55010	Differential Drive Pinion Bearing Replacer	Driven sprocket, Rear output shaft, Planetary gear
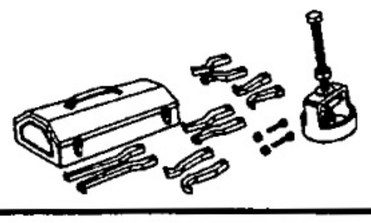	09612–65014	Steering Worm Bearing Puller	

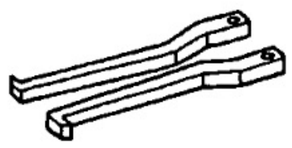	(09612–01030)	Claw "C"	Planetary gear
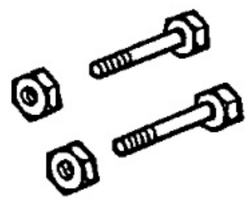	(09612–01050)	Hanger Pin with Nut	Planetary gear
	09950–40011	Puller B Set	
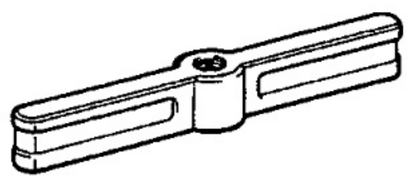	(09951–04020)	Hanger 200	Front companion flange, Rear companion flange
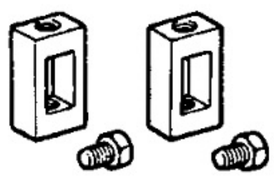	(09952–04010)	Slide Arm	Front companion flange, Rear companion flange
	(09953–04030)	Center Bolt 200	Front companion flange, Rear companion flange
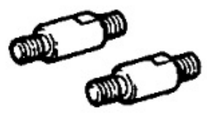	(09954–04010)	Arm 25	Front companion flange, Rear companion flange
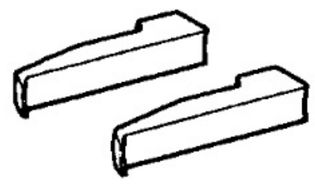	(09955–04011)	Claw No.1	Front companion flange, Rear companion flange
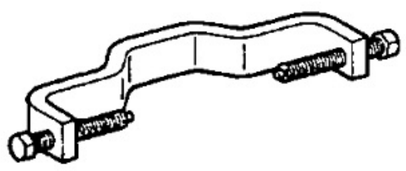	(09958–04011)	Holder	Front companion flange, Rear companion flange
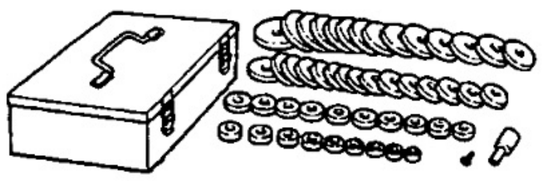	09950–60010	Replacer Set	
	(09951–00220)	Replacer 22	Oil seal
	(09951–00350)	Replacer 35	Oil seal
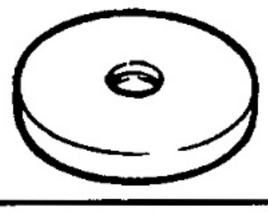	(09951–00570)	Replacer 57	Planetary gear

PP

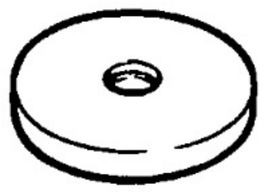	(09951–00590)	Replacer 59	Oil seal
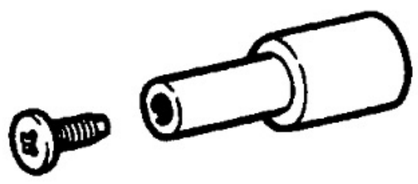	(09952–06010)	Adapter	Oil seal
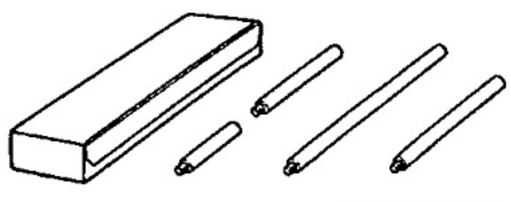	09950–70010	Handle Set	
	(09951–07100)	Handle 100	Planetary gear, Oil seal

PP2AN–01

RECOMMENDED TOOLS

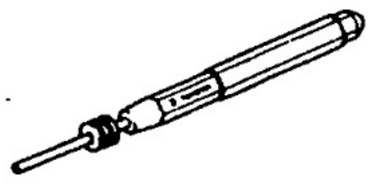	09031–00030	Pin Punch .	
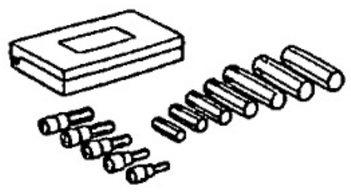	09040–00011	Hexagon Wrench Set .	
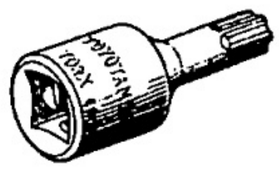	09042–00010	Torx Socket T30 .	
	09082–00040	TOYOTA Electrical Tester.	
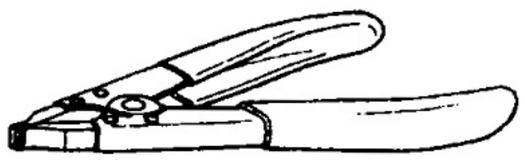	09905–00012	Snap Ring No.1 Expander .	

PP

PP2AO–01

EQUIPMENT

Dial indicator	
Steel square	
Torque wrench	
Feeler gauge	
Magnetic finger	
Micrometer	
Steel bar	

PP2AP–01

LUBRICANT

Item	Capacity	Classification
Transfer oil	1.2 liters (1.3 US qts, 1.1 Imp. qts)	API GL–4 or GL–5 SAE 75W–90

PP2AQ–01

SSM (Special Service Materials)

08826–00090	Seal Packing 1281, THREE BOND 1281 or equivalent (FIPG)	
08833–00080	Adhesive 1344 THREE BOND 1344 LOCTITE 242 or equivalent	

BRAKE

SST (Special Service Tools)

PP2A2–01

	09023–00100 Union Nut Wrench 10 mm	
	09318–12010 Transfer Bearing Adjusting Nut Wrench	
	09630–00014 Power Steering Gear Housing Overhaul Tool Set	
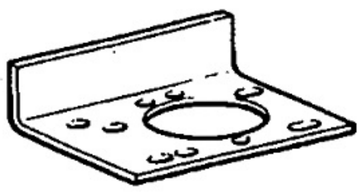	(09631–00142) Overhaul Stand	
	09709–29018 LSPV Gauge Set	
	09843–18020 Diagnosis Check Wire	
	09843–18040 Diagnosis Check Wire No.2	
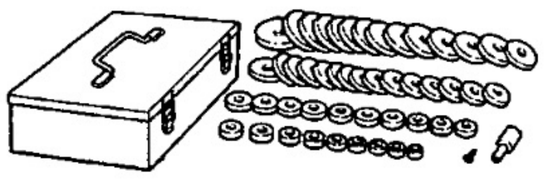	09950–60010 Replacer Set	
	(09951–00180) Replacer 18	
	(09951–00190) Replacer 19	
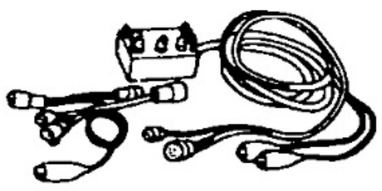	09990–00150 ABS Actuator Checker and Sub–harness	
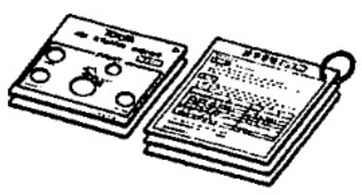	09990–00240 ABS Actuator Checker Sheet "G"	

	09990–00480	ABS Actuator Checker Sub–harness "S"	

PP2A3-01

RECOMMENDED TOOLS

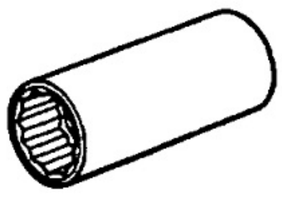	09017–12301	Deep Socket Wrench 30 mm .	
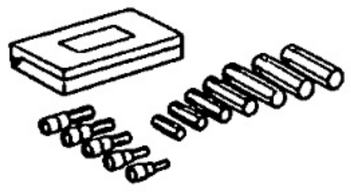	09040–00011	Hexagon Wrench Set .	
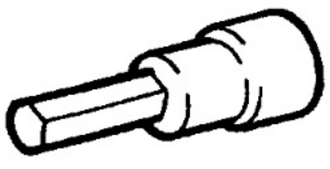	(09043–20050)	Socket Hexagon Wrench 5.	
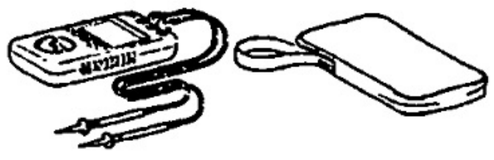	09082–00040	TOYOTA Electrical Tester.	

PP2A4-01

EQUIPMENT

Torque wrench	
Effort gauge	

PP2A5–01

LUBRICANT

Item	Capacity	Classification
Brake fluid	–	SAE J1703 or FMVSS No. 116 DOT3

BODY ELECTRICAL

RECOMMENDED TOOLS

PP0XL–02

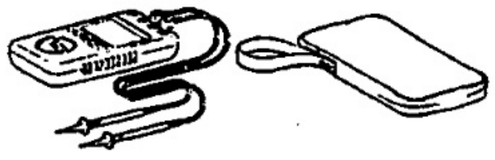	09082–00040 TOYOTA Electrical Tester.	

PP0XM–01

EQUIPMENT

Voltmeter	
Ammeter	
Ohmmeter	
Test lead	

BODY

SST (Special Service Tools)

PP2A7–01

	09812–00010 Door Hinge Set Bolt Wrench	

PP1SJ–02

EQUIPMENT

Clip remover	
Hog ring pliers	
Tape	To avoid surface damage
Scraper	

PP1SK–01

LUBRICANT

Item	Capacity	Classification
MP grease	–	–

PP2A8–01

SSM (Special Service Materials)

08833–00070	Adhesive 1324, THREE BOND 1324 or equivalent	Front Door Rear Door

AIR CONDITIONING

SST (Special Service Tools)

PP2A9–01

	07110–58060 Air Conditioner Service Tool Set	
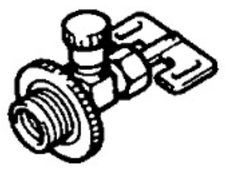	(07117–58060) Refrigerant Drain Service Valve	
	(07117–58070) T–Joint	
	(07117–58080) Quick Disconnect Adapter	
	(07117–58090) Quick Disconnect Adapter	
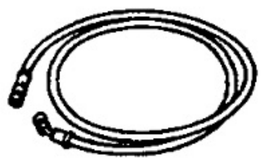	(07117–88060) Refrigerant Charging Hose	
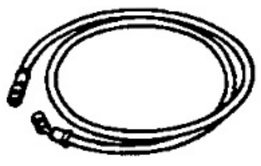	(07117–88070) Refrigerant Charging Hose	
	(07117–88080) Refrigerant Charging Hose	

PP0E3–05

RECOMMENDED TOOLS

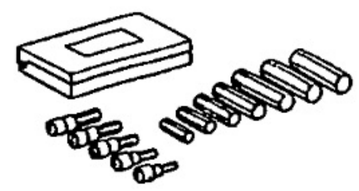	09040–00011	Hexagon Wrench Set .	Expansion valve
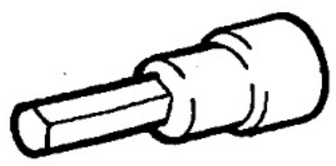	(09043–20050)	Socket Hexagon Wrench 5.	5.0 mm (0.20 in.)
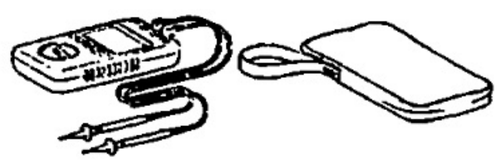	09082–00040	TOYOTA Electrical Tester.	

PP0E4-05

EQUIPMENT

Voltmeter	
Ammeter	
Ohmmeter	
Test lead	
Thermometer	Evaporator temperature sensor, Water temperature sensor
Hexagon wrench	Expansion valve

PP0E5-05

LUBRICANT

Item	Capacity	Classification
When replacing evaporator	40 cc (1.4 fl. oz.)	

SERVICE SPECIFICATIONS

STANDARD BOLT SS–1
AUTOMATIC TRANSMISSION SS–4
TRANSFER (VF3BM) SS–8
BRAKE SS–11
BODY SS–13
AIR CONDITIONING SS–15

REFER TO FOLLOWING REPAIR MANUALS:

Manual Name	Pub. No.
LAND CRUISER/LAND CRUISER PRADO Chassis and Body Repair Manual	RM517E
LAND CRUISER/LAND CRUISER PRADO Chassis and Body Repair Manual Supplement	RM627E

NOTE: The above pages contain only the points which differ from the above listed manuals.

STANDARD BOLT

HOW TO DETERMINE BOLT STRENGTH

SS0ZS–01

Bolt Type				Class
Hexagon Head Bolt		Stud Bolt	Weld Bolt	
Normal Recess Bolt	Deep Recess Bolt			
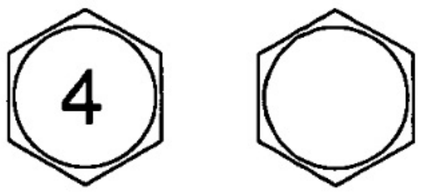 No Mark	 No Mark	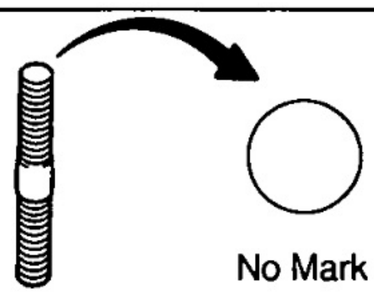 No Mark	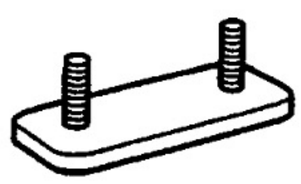	4T
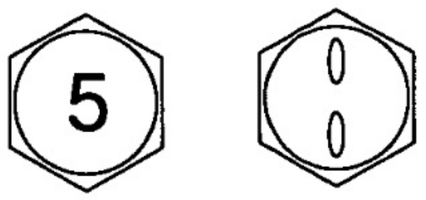				5T
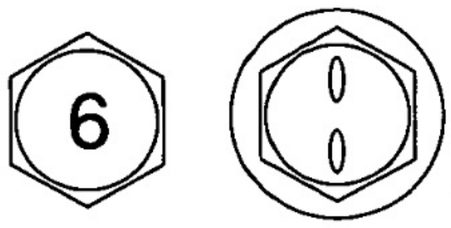 w/ Washer	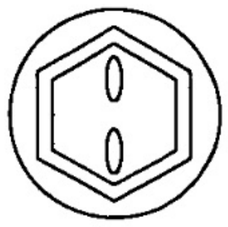 w/ Washer			6T
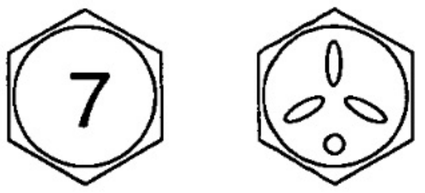	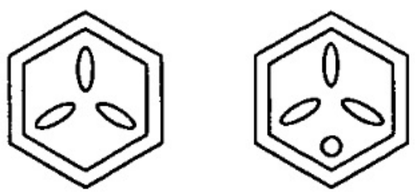			7T
		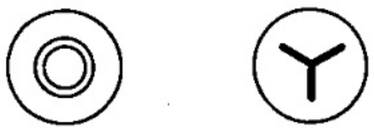		8T
				9T
	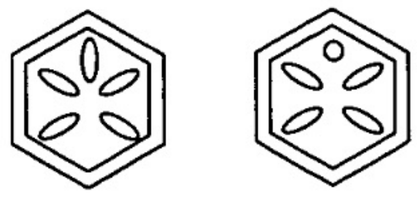			10T
	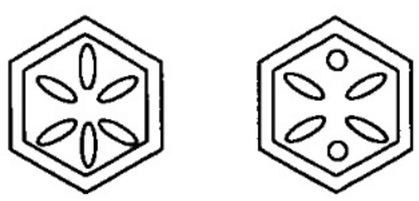			11T

B06431

SS

SS0ZT–01

SPECIFIED TORQUE FOR STANDARD BOLTS

Class	Diameter mm	Pitch mm	Specified torque					
			Hexagon head bolt			Hexagon flange bolt		
			N·m	kgf·cm	ft·lbf	N·m	kgf·cm	ft·lbf
4T	6	1	5	55	48 in.·lbf	6	60	52 in.·lbf
	8	1.25	12.5	130	9	14	145	10
	10	1.25	26	260	19	29	290	21
	12	1.25	47	480	35	53	540	39
	14	1.5	74	760	55	84	850	61
	16	1.5	115	1,150	83	–	–	–
5T	6	1	6.5	65	56 in.·lbf	7.5	75	65 in.·lbf
	8	1.25	15.5	160	12	17.5	175	13
	10	1.25	32	330	24	36	360	26
	12	1.25	59	600	43	65	670	48
	14	1.5	91	930	67	100	1,050	76
	16	1.5	140	1,400	101	–	–	–
6T	6	1	8	80	69 in.·lbf	9	90	78 in.·lbf
	8	1.25	19	195	14	21	210	15
	10	1.25	39	400	29	44	440	32
	12	1.25	71	730	53	80	810	59
	14	1.5	110	1,100	80	125	1,250	90
	16	1.5	170	1,750	127	–	–	–
7T	6	1	10.5	110	8	12	120	9
	8	1.25	25	260	19	28	290	21
	10	1.25	52	530	38	58	590	43
	12	1.25	95	970	70	105	1,050	76
	14	1.5	145	1,500	108	165	1,700	123
	16	1.5	230	2,300	166	–	–	–
8T	8	1.25	29	300	22	33	330	24
	10	1.25	61	620	45	68	690	50
	12	1.25	110	1,100	80	120	1,250	90
9T	8	1.25	34	340	25	37	380	27
	10	1.25	70	710	51	78	790	57
	12	1.25	125	1,300	94	140	1,450	105
10T	8	1.25	38	390	28	42	430	31
	10	1.25	78	800	58	88	890	64
	12	1.25	140	1,450	105	155	1,600	116
11T	8	1.25	42	430	31	47	480	35
	10	1.25	87	890	64	97	990	72
	12	1.25	155	1,600	116	175	1,800	130

SS0ZU–01

HOW TO DETERMINE NUT STRENGTH

Nut Type			Class
Present Standard Hexagon Nut	Old Standard Hexagon Nut		
	Cold Forging Nut	Cutting Processed Nut	
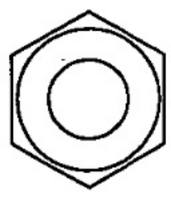 No Mark			4N
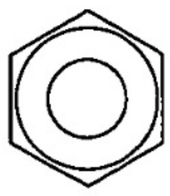 No Mark (w/ Washer)	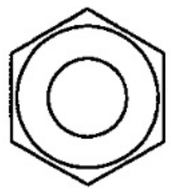 No Mark (w/ Washer)	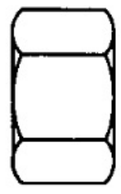 No Mark	5N (4T)
			6N
	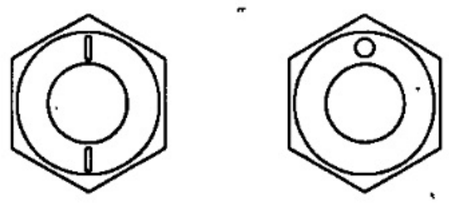	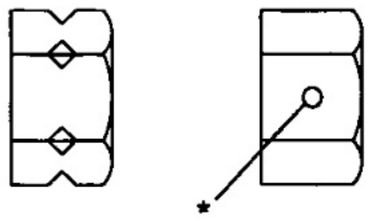	7N (5T)
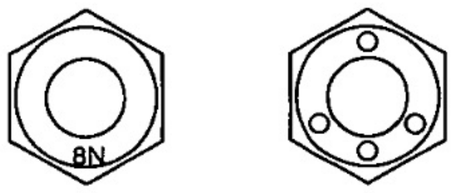			8N
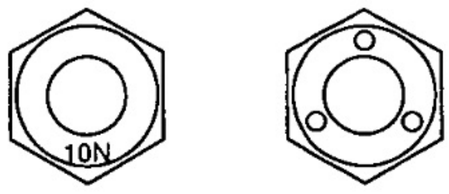	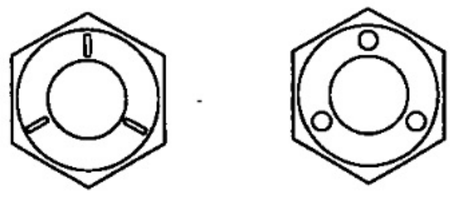	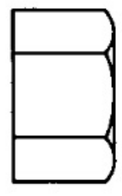 No Mark	10N (7T)
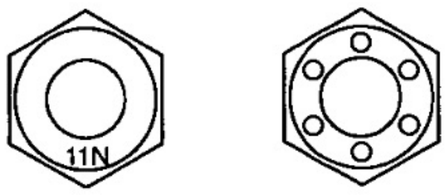			11N
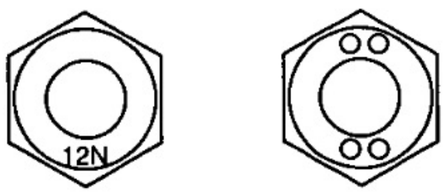			12N

*: Nut with 1 or more marks on one side surface of the nut.

B06432

HINT:

Use the nut with the same number of the nut strength classification or the greater than the bolt strength classification number when tightening parts with a bolt and nut.

Example: Bolt = 4T

Nut = 4N or more

AUTOMATIC TRANSMISSION

SERVICE DATA

SS159–01

Line pressure (Wheel locked)	3RZ–FE:	
	Engine idling	
	D range	363 – 422 kPa (3.7 – 4.3 kgf/cm^2, 53 – 61 psi)
	R range	607 – 706 kPa (6.2 – 7.2 kgf/cm^2, 88 – 103 psi)
	AT stall (Throttle valve fully opened)	
	D range	932 – 1,177 kPa (9.5 – 12.0 kgf/cm^2, 135 – 171 psi)
	R range	1,568 – 1,911 kPa (16.0 – 19.5 kgf/cm^2, 227 – 277 psi)
	5VZ–FE:	
	Engine idling	
	D range	382 – 441 kPa (3.9 – 4.5 kgf/cm^2, 56 – 64 psi)
	R range	588 – 686 kPa (6.0 – 7.0 kgf/cm^2, 85 – 100 psi)
	AT stall (Throttle valve fully opened)	
	D range	1,088 – 1,225 kPa (11.1 – 12.5 kgf/cm^2, 158 – 178 psi)
	R range	1,460 – 1,793 kPa (14.9 – 18.3 kgf/cm^2, 212 – 260 psi)
	1KZ–TE:	
	Engine idling	
	D range	323 – 382 kPa (3.3 – 3.9 kgf/cm^2, 47 – 55 psi)
	R range	500 – 598 kPa (5.1 – 6.1 kgf/cm^2, 73 – 87 psi)
	AT stall (Throttle valve fully opened)	
	D range	1,137 – 1,274 kPa (11.6 – 13.0 kgf/cm^2, 165 – 185 psi)
	R range	1,499 – 1,833 kPa (15.3 – 18.7 kgf/cm^2, 217 – 266 psi)
Engine stall revolution	3RZ–FE	2,000 ± 150 rpm
	5VZ–FE	2,250 ± 150 rpm
	1KZ–TE	
	Australia:	2,550 ±150 rpm
Time lag	N → D range	Less than 1.2 seconds
	N → R range	Less than 1.5 seconds
Engine idle speed (In N range and A/C OFF)	3RZ–FE, 5VZ–FE, 1KZ–TE	700 ± 50 rpm
Trottle cable adjustment (Trottle valve fully closed)		Between boot and face and inner cable stopper 0 – 1 mm (0 – 0.04 in.)
Drive plate runout	Max.	0.20 mm (0.0079 in.)
Torque converter runout	Max.	0.30 mm (0.0118 in.)
Torque converter correct distance	3RZ–FE	More than 31.75 mm (1.2500 in.)
	5VZ–FE	More than 17.95 mm (0.7067 in.)
	1KZ–TE	More than 44.67 mm (1.7587 in.)

1KZ–TE:		
Shift point		
D range		
(Throttle valve fully opened)		
	1 → 2	44 – 48 km/h (27 – 30 mph)
	2 → 3	83 – 88 km/h (52 – 55 mph)
	3 → O/D	122 – 130 km/h (76 – 81 mph)
	O/D → 3	115 – 123 km/h (71 – 76 mph)
	3 → 2	73 – 84 km/h (45 – 52 mph)
	2 → 1	32 – 37 km/h (20 – 23 mph)
(Throttle valve fully closed)		
	3 → O/D	NORM: 46 – 47 km/h (16 – 29 mph)
		PWR: 47 – 52 km/h (29 – 32 mph)
	O/D → 3	31 – 35 km/h (19 – 22 mph)
2 range		
(Throttle valve fully opened)		
	1 → 2	44 – 48 km/h (27 – 30 mph)
	3 → 2	*90 – 94 km/h (56 – 58 mph)
	2 → 1	32 – 37 km/h (20 – 23 mph)
L range		
(Throttle valve fully opened)		
	2 → 1	*52 – 57 km/h (32 – 35 mph)
1KZ–TE:		
Lock–up point		
D range		
(Throttle valve opening 5 %)		
(NORM pattern)	Lock–up ON	77 – 81 km/h (48 – 50 mph)
	Lock–up OFF	70 – 75 km/h (43 – 47 mph)
(PWR pattern)	Lock–up ON	90 – 94 km/h (56 – 58 mph)
	Lock–up OFF	83 – 88 km/h (52 – 55 mph)
3RZ–FE:		
Shift point		
D range		
(Throttle valve fully opened)		
	1 → 2	55 – 59 km/h (34 – 37 mph)
	2 → 3	101 – 108 km/h (63 – 67 mph)
	3 → O/D	133 – 141 km/h (83 – 88 mph)
	O/D → 3	127 – 135 km/h (79 – 84 mph)
	3 → 2	93 – 100 km/h (58 – 62 mph)
	2 → 1	42 – 46 km/h (26 – 29 mph)
(Throttle valve fully closed)		
	3 → O/D	32 – 36 km/h (20 – 22 mph)
	O/D → 3	24 – 28 km/h (15 – 17 mph)
2 range		
(Throttle valve fully opened)		
	1 → 2	55 – 59 km/h (34 – 37 mph)
	3 → 2	*105 – 113 km/h (65 – 70 mph)
	2 → 1	42 – 46 km/h (26 – 29 mph)
L range		
(Throttle valve fully opened)		
	2 → 1	*51 – 55 km/h (32 – 34 mph)
3RZ–FE:		
Lock–up point		
D range		
(Throttle valve fully opening 5 %)		
	Lock–up ON	77 – 82 km/h (48 – 51 mph)
	Lock–up OFF	71 – 75 km/h (44 – 47 mph)

5VZ–FE:		
Shift point		
D range		
(Throttle valve fully opened)		
	1 → 2	58 – 63 km/h (36 – 39 mph)
	2 → 3	106 – 114 km/h (66 – 71 mph)
	3 → O/D	141 – 149 km/h (88 – 93 mph)
	O/D → 3	134 – 142 km/h (83 – 88 mph)
	3 → 2	98 – 106 km/h (61 – 66 mph)
	2 → 1	41 – 45 km/h (25 – 28 mph)
(Throttle valve fully closed)		
	3 → O/D	41 – 45 km/h (25 – 28 mph)
	O/D → 3	21 – 26 km/h (13 – 16 mph)
2 range		
(Throttle valve fully opened)		
	1 → 2	58 – 63 km/h (36 – 39 mph)
	3 → 2	*111 – 119 km/h (69 – 74 mph)
	2 → 1	41 – 45 km/h (25 – 28 mph)
L range		
(Throttle valve fully opened)		
	2 → 1	*54 – 58 km/h (34 – 36 mph)
3RZ–FE:		
Lock–up point		
D range		
(Throttle valve fully opening 5 %)		
	Lock–up ON	57 – 61 km/h (35 – 38 mph)
	Lock–up OFF	50 – 55 km/h (31 – 34 mph)

* Constant regardless of the throttle opening angle.

SS

SS15A–01

TORQUE SPECIFICATION

Part tightened	N·m	kgf·cm	ft·lbf
Detent spring x Valve body	10	100	7
Solenoid valve x Valve body	10	100	7
Throttle pressure accumlator assembly x Valve body (Australia 1KZ–TE)	10	100	7
Valve body x Transmission case	11	110	8
Oil pan x Transmission case	7.4	75	65 in.·lbf
Drain plug x Oil pan	20	205	15
Parking lock pawl bracket x Transmission case	7.4	75	65 in.·lbf

TRANSFER (VF3BM)

SERVICE DATA

SS15F–01

Input gear snap ring thickness		
	Mark A	2.10 – 2.15 mm (0.0827 – 0.0846 in.)
	Mark B	2.15 – 2.20 mm (0.0846 – 0.0866 in.)
	Mark C	2.20 – 2.25 mm (0.0866 – 0.0886 in.)
	Mark D	2.25 – 2.30 mm (0.0886 – 0.0906 in.)
	Mark E	2.30 – 2.35 mm (0.0906 – 0.0925 in.)
	Mark F	2.35 – 2.40 mm (0.0925 – 0.0945 in.)
	Mark G	2.40 – 2.45 mm (0.0945 – 0.0965 in.)
	Mark H	2.45 – 2.50 mm (0.0965 – 0.0984 in.)
	Mark J	2.50 – 2.55 mm (0.0984 – 0.1004 in.)
	Mark K	2.55 – 2.60 mm (0.1004 – 0.1024 in.)
	Mark L	2.60 – 2.65 mm (0.1024 – 0.1043 in.)
	Mark M	2.65 – 2.70 mm (0.1043 – 0.1063 in.)
	Mark N	2.70 – 2.75 mm (0.1063 – 0.1083 in.)
	Mark P	2.75 – 2.80 mm (0.1083 – 0.1102 in.)
	Mark Q	2.80 – 2.85 mm (0.1102 – 0.1122 in.)
	Mark R	2.85 – 2.90 mm (0.1122 – 0.1142 in.)
	Mark S	2.90 – 2.95 mm (0.1142 – 0.1161 in.)
	Mark T	2.95 – 3.00 mm (0.1161 – 0.1181 in.)
	Mark U	3.00 – 3.05 mm (0.1181 – 0.1201 in.)
Oil pump driven rotor body clearance	STD	0.09 – 0.16 mm (0.0035 – 0.0063 in.)
	Max.	0.16 mm (0.0063 in.)
Oil pump rotor tip clearance	STD	0.05 – 0.15 mm (0.0020 – 0.0059 in.)
	Max.	0.15 mm (0.0059 in.)
Oil pump rotor side clearance	STD	0.03 – 0.10 mm (0.0012 – 0.0039 in.)
	Max.	0.10 mm (0.0039 in.)
Drive sprocket thrust clearance	STD	0.10 – 0.25 mm (0.0039 – 0.0098 in.)
	Max.	0.25 mm (0.0098 in.)
Rear output shaft journal surface outer diameter	Min.	
	A	27.98 mm (1.1016 in.)
	B	36.98 mm (1.4561 in.)
Drive sprocket radial clearance	STD	0.010 – 0.055 mm (0.0004 – 0.0022 in.)
	Max.	0.055 mm (0.0022 in.)
High and low shift fork and clutch sleeve clearance	Max.	1.0 mm (0.039 in.)
Front drive shift fork and diff. lock sleeve clearance	Max.	1.0 mm (0.039 in.)
Rear output shaft snap ring thickness		
	Mark A	2.10 – 2.15 mm (0.0827 – 0.0846 in.)
	Mark B	2.15 – 2.20 mm (0.0846 – 0.0866 in.)
	Mark C	2.20 – 2.25 mm (0.0866 – 0.0886 in.)
	Mark D	2.25 – 2.30 mm (0.0886 – 0.0906 in.)
	Mark E	2.30 – 2.35 mm (0.0906 – 0.0925 in.)
	Mark F	2.35 – 2.40 mm (0.0925 – 0.0945 in.)
	Mark G	2.40 – 2.45 mm (0.0945 – 0.0965 in.)
	Mark H	2.45 – 2.50 mm (0.0965 – 0.0984 in.)
	Mark J	2.50 – 2.55 mm (0.0984 – 0.1004 in.)
	Mark K	2.00 – 2.05 mm (0.0787 – 0.0807 in.)
	Mark L	2.05 – 2.10 mm (0.0807 – 0.0827 in.)
Input shaft outer diameter	Min.	47.59 mm (1.8736 in.)
Input shaft inside diameter	Max.	39.14 mm (1.5409 in.)
Planetary gear assembly thrust clearance	STD	0.15 – 0.70 mm (0.0059 – 0.0276 in.)
	Max.	0.70 mm (0.0276 in.)

Planetary gear assembly radial clearance	STD	0.009 – 0.038 mm (0.0004 – 0.0015 in.)
	Max.	0.038 mm (0.0015 in.)
Planetary gear assembly back lash	STD	0.15 – 0.70 mm (0.0059 – 0.0276 in.)
	Max.	0.70 mm (0.0276 in.)
Planetary pinion gear thrust clearance	STD	0.11 – 0.84 mm (0.0043 – 0.0331 in.)
	Max.	0.84 mm (0.0331 in.)
Planetary pinion gear radial clearance	STD	0.009 – 0.038 mm (0.0004 – 0.0015 in.)
	Max.	0.038 mm (0.0015 in.)
Planetary gear outer bearing snap ring thickness		
	Mark 1	1.45 – 1.50 mm (0.0571 – 0.0591 in.)
	Mark 2	1.50 – 1.55 mm (0.0591 – 0.0610 in.)
	Mark 3	1.55 – 1.60 mm (0.0610 – 0.0630 in.)
	Mark 4	1.60 – 1.65 mm (0.0630 – 0.0650 in.)
	Mark 5	1.65 – 1.70 mm (0.0650 – 0.0669 in.)
Planetary gear outer bearing press in depth		7.7 – 8.3 mm (0.303 – 0.327 in.)
Shift fork shaft oil seal depth		–0.5 – 0.5 mm (–0.020 – 0.020 in.)

SS15G–01

TORQUE SPECIFICATION

Part tightened	N·m	kgf·cm	ft·lbf
Speed sensor x Extension housing	12	120	9
Plug x Front case	37	380	27
Dynamic damper x Rear case (5VZ–FE A/T)	38	380	28
Protector	18	180	13
Front bearing retainer x Front case	12	120	9
Upper cover x Front case (1KZ–TE A/T)	18	185	13
Control retainer x Front case (5VZ–FE A/T)	18	185	13
Front companion flange lock nut	118	1,200	87
Rear companion flange lock nut	118	1,200	87
Extension housing x Rear case	12	120	9
Front case x Rear case	28	285	21
Straight screw plug x Rear case	19	190	14
Center diff. lock fork x Actuator assembly	24	240	17
Actuator assembly x Rear case	20	200	14
Separator with oil strainer x Front case	7.5	80	69 in.·lbf
Oil pump body assembly x Front case	7.5	80	69 in.·lbf
Head screw plug x Front case	19	190	14
Oil pump plate x Oil pump body	7.4	75	65 in.·lbf
Relief valve x Oil pump body	29	300	22

BRAKE

SERVICE DATA

SS156-01

Brake pedal height (from asphalt sheet)		183.7 – 193.7 mm (7.232 – 7.626 in.)
Brake pedal freeplay	w/o TRC or VSC	3.0 – 6.0 mm (0.118 – 0.236 in.)
	w/ TRC or VSC	3.0 – 4.0 mm (0.118 – 0.157 in.)
Stop light switch clearance:		1.0 mm (0.039 in.)
Brake pedal reserve distance at 490 N (50 kgf, 110.2 lbf)		More than 95 mm (3.74 in.)

SS157-01

TORQUE SPECIFICATION

Part tightened	N·m	kgf·cm	ft·lbf
Brake line union nut	15	155	11
Hydraulic brake booster clevis lock nut	25	260	19
Hydraulic brake booster x Pedal bracket	13	130	9
Bleeder plug	11	110	8
Reservoir set screw	1.7	17.5	15.2 in.·lbf
Oil pressure sensor x Hydraulic brake booster	81	830	60
Accumulator x Booster pump motor	54	550	36
No. 1 hanger set bolt	7.8	80	69 in.·lbf
No. 2 hanger set bolt	7.8	80	69 in.·lbf
Fluid level warning switch connector clamp set bolt	7.8	80	69 in.·lbf

BODY

TORQUE SPECIFICATION

SS158–01

Part tightened	N·m	kgf·cm	ft·lbf
FRONT BUMPER	–	–	–
Upper retainer x Body	4.9	50	43 in.·lbf
Bumper cover x Over fender	4.9	50	43 in.·lbf
Bumper cover x Fender liner	4.9	50	43 in.·lbf
Bumper cover x Body	7.5	76	66 in.·lbf
Licence plate bracket x Bumper cover	4.9	50	43 in.·lbf
Lower support x Body	18	184	13
Winch x Body	99	1010	73
FRONT DOOR	–	–	–
Door hinge x Body	23	235	17
Door hinge x Door panel	26	265	19
Door lock striker x Body	11	115	8.3
Door glass x Window regulator	4.9	50	43 in.·lbf
Lower frame x Door panel	4.9	50	43 in.·lbf
Window regulator x Door panel	4.9	50	43 in.·lbf
Door lock x Door panel	4.9	50	43 in.·lbf
Outside handle x Door panel	4.9	50	43 in.·lbf
REAR DOOR	–	–	–
Door hinge x Body	23	235	17
Door hinge x Door panel	26	265	19
Door lock striker x Body	11	115	8.3
Window regulator x Door panel	4.9	50	43 in.·lbf
Door lock x Door panel	4.9	50	43 in.·lbf
Outside handle x Door panel	4.9	50	43 in.·lbf
REAR NO. 1 SEAT (Split Type: Single Side)	–	–	–
Inner rear seatback adjuster x Rear seatback frame	37	380	27
Outer rear No. 1 seat adjuster x Rear seatback frame	37	380	27
Inner rear seatback adjuster x Rear seat cushion frame	37	380	27
Outer rear No. 1 seat adjuster x Rear seat cushion frame	37	380	27
Rear seat hinge x Rear seat cushion frame	37	380	27
No. 1 seat leg x Rear seat cushion frame	37	380	27
Rear seat hinge x Body	37	380	27
No. 1 seat leg x Body	37	380	27
REAR NO. 1 SEAT (Split Type: Double Side)	–	–	–
Rear No. 1 seat cushion lock x Rear Seat cushion frame	37	380	27
Outer rear seat belt x Rear seat cushion frame	43	440	32
Outer seat belt x Rear seat cushion frame	43	440	32
Inner rear seat belt x Rear seat cushion frame	43	440	32
Outer rear No. 1 seatback adjuster x Rear seatback frame	37	380	27
Outer rear No. 1 seatback adjuster x Rear seat cushion frame	37	380	27
Inner rear seatback adjuster x Seatback frame	37	380	27
Inner rear seatback adjuster x Rear seat cushion frame	37	380	27

Inner No. 1 seat leg x Rear seat cushion frame	37	380	27
REAR NO. 1 SEAT (Split Type)	–	–	–
Outer rear No. 1 seat adjuster x Rear seatback frame	37	380	27
Inner rear seatback adjuster x Rear seatback frame	37	380	27
Inner rear seatback adjuster x Seat cushion frame	37	380	27
Inner seat belt x Seat cushion frame	43	440	32
Inner rear seat belt x Seat cushion frame	43	440	32
Outer seat belt x Seat cushion frame	43	440	32
Rear seat leg x Seat cushion frame	38	380	27
Rear seat leg x Body	38	380	27

SS0YK–02

TORQUE SPECIFICATION

Part tightened	N·m	kgf·cm	ft·lbf
FRONT COOLING UNIT			
Expansion valve x Evaporator	5.4	55	48 in.·lbf
REAR COOLING UNIT			
Expansion valve x Evaporator	5.4	55	48 in.·lbf
A/C tube x A/C tube (Liquid line)	14	140	10
A/C tube x A/C tube (Suction line)	32	330	24

DIAGNOSTICS

AUTOMATIC TRANSMISSION DI–1
HOW TO PROCEED WITH TROUBLESHOOTING DI–1
CUSTOMER PROBLEM ANALYSIS CHECK ... DI–3
PRE–CHECK DI–4
DIAGNOSTIC TROUBLE CODE CHART DI–17
PARTS LOCATION DI–18
TERMINALS OF ECU DI–20
PROBLEM SYMPTOMS TABLE DI–24
CIRCUIT INSPECTION DI–28
ANTI–LOCK BRAKE SYSTEM DI–84
HOW TO PROCEED WITH TROUBLESHOOTING DI–84
CUSTOMER PROBLEM ANALYSIS CHECK ... DI–85
PRE–CHECK DI–86
DIAGNOSTIC TROUBLE CODE CHART DI–92
PARTS LOCATION DI–95
TERMINALS OF ECU DI–96
PROBLEM SYMPTOMS TABLE DI–100
CIRCUIT INSPECTION DI–101
VEHICLE STABILITY CONTROL (VSC) & BRAKE ASSIST (BA) SYSTEM DI–182
HOW TO PROCEED WITH TROUBLESHOOTING DI–182
CUSTOMER PROBLEM ANALYSIS CHECK ... DI–183
PRE–CHECK DI–184
DIAGNOSTIC TROUBLE CODE CHART DI–190
PARTS LOCATION DI–191
TERMINALS OF ECU DI–192
PROBLEM SYMPTOMS TABLE DI–193
CIRCUIT INSPECTION DI–194
ACTIVE TRACTION CONTROL & BRAKE ASSIST (BA) SYSTEM DI–235
HOW TO PROCEED WITH TROUBLESHOOTING DI–235
CUSTOMER PROBLEM ANALYSIS CHECK ... DI–236
PRE–CHECK DI–237
DIAGNOSTIC TROUBLE CODE CHART DI–240
PARTS LOCATION DI–241
TERMINALS OF ECU DI–242
PROBLEM SYMPTOMS TABLE DI–243
CIRCUIT INSPECTION DI–244
ENGINE IMMOBILISER SYSTEM (5VZ–FE) DI–258
HOW TO PROCEED WITH TROUBLESHOOTING DI–258
CUSTOMER PROBLEM ANALYSIS CHECK ... DI–259
PRE–CHECK DI–260
DIAGNOSTIC TROUBLE CODE CHART DI–263
PARTS LOCATION DI–264
TERMINALS OF ECU DI–265
PROBLEM SYMPTOMS TABLE DI–266
CIRCUIT INSPECTION DI–267
AIR CONDITIONING SYSTEM DI–278
HOW TO PROCEED WITH TROUBLESHOOTING DI–278
CUSTOMER PROBLEM ANALYSIS CHECK ... DI–279
PRE–CHECK DI–280
DIAGNOSTIC TROUBLE CODE CHART DI–284
TERMINALS OF ECU DI–285
PROBLEM SYMPTOMS TABLE DI–288
CIRCUIT INSPECTION DI–290

REFER TO FOLLOWING REPAIR MANUALS:

Manual Name	Pub. No.
LAND CRUISER/LAND CRUISER PRADO Chassis and Body Repair Manual	RM517E
LAND CRUISER/LAND CRUISER PRADO Chassis and Body Repair Manual Supplement	RM627E

NOTE: The above pages contain only the points which differ from the above listed manuals.

AUTOMATIC TRANSMISSION

HOW TO PROCEED WITH TROUBLESHOOTING

DI5F1–01

When using hand–held tester, troubleshoot in accordance with the procedure on the following pages.

Items inside ▱ are titles of pages in this manual, with the page number indicated in the bottom portion. See the indicated pages for detailed explanations.

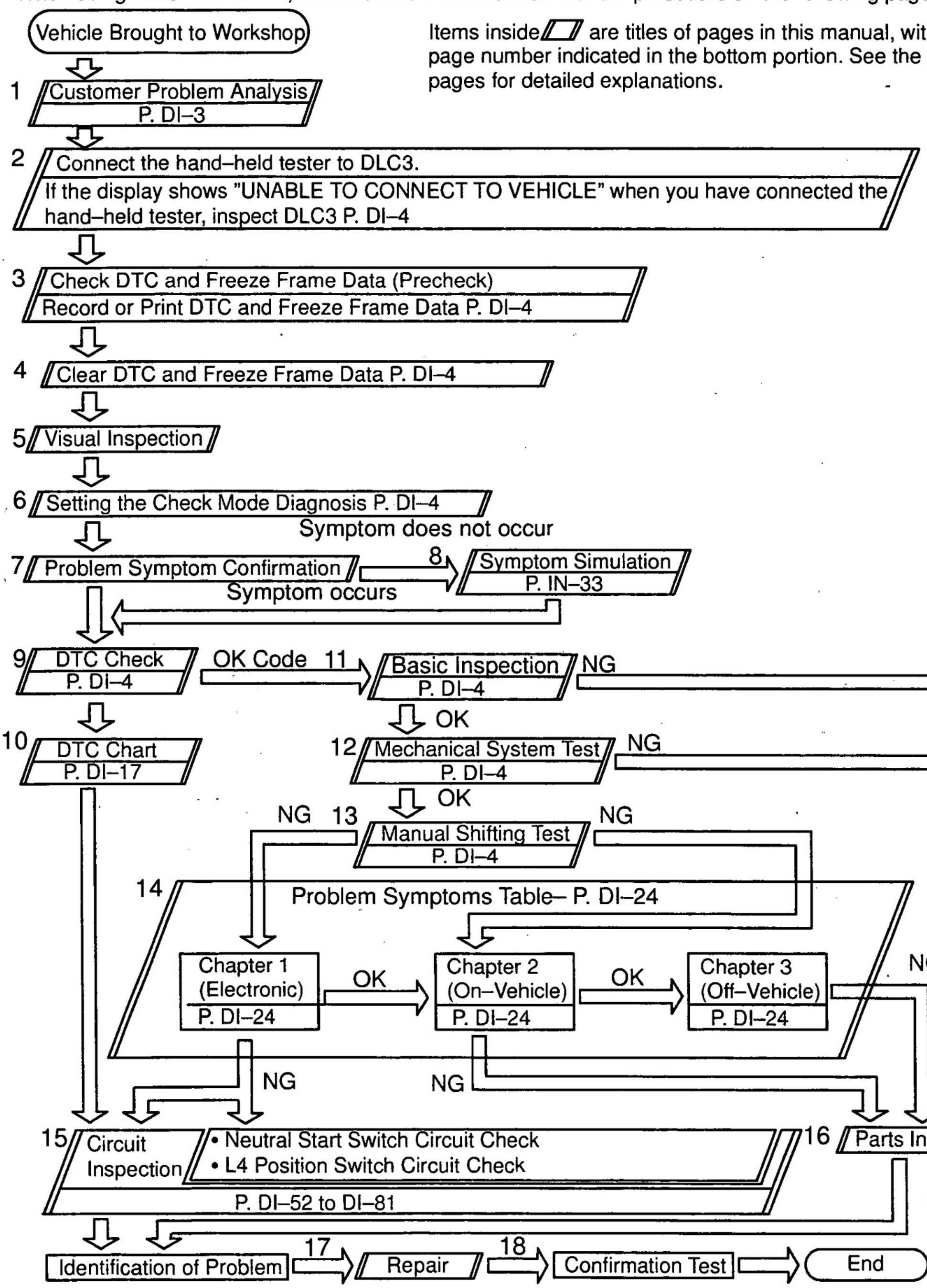

When not using hand–held tester, troubleshoot in accordance with the procedure on the following pages.

Items inside ▱ are titles of pages in this manual, with the page number indicated in the bottom portion. See the indicated pages for detailed explanations.

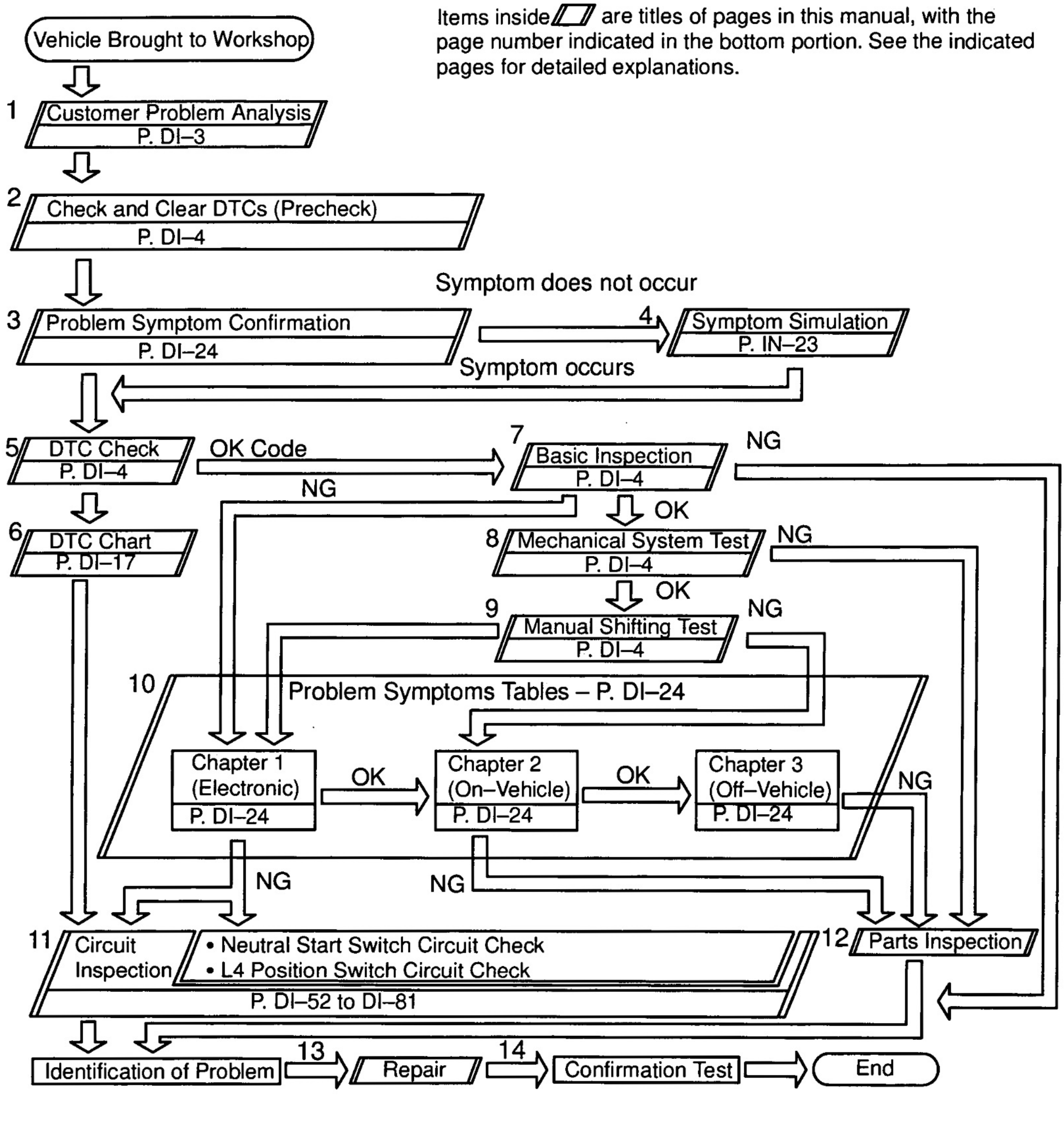

D16F2-01

CUSTOMER PROBLEM ANALYSIS CHECK

Transmission Control System Check Sheet

Inspector's Name :

Customer's Name		Registration No.	
		Registration Year	/ /
		Frame No.	
Date Vehicle Brought In	/ /	Odometer Reading	km mile

Date Problem Occurred	/ /
How Often Does Problem Occur?	☐ Continuous ☐ Intermittent (times a day)

Symptoms	☐ Vehicle does not move (☐ Any range ☐ Particular range)
	☐ No up–shift (☐ 1st → 2nd ☐ 2nd → 3rd ☐ 3rd → O/D)
	☐ No down–shift (☐ O/D → 3rd ☐ 3rd → 2nd ☐ 2nd → 1st)
	☐ Lock–up malfunction
	☐ Shift point too high or too low
	☐ Harsh engagement (☐ N → D ☐ Lock–up ☐ Any drive range)
	☐ Slip or shudder
	☐ No kick–down
	☐ Others ( )

Check Item	Malfunction Indicator Lamp	☐ Normal ☐ Remains ON

DTC Check	1st Time	☐ Normal code ☐ Malfunction code (Code)
	2nd Time	☐ Normal code ☐ Malfunction code (Code)

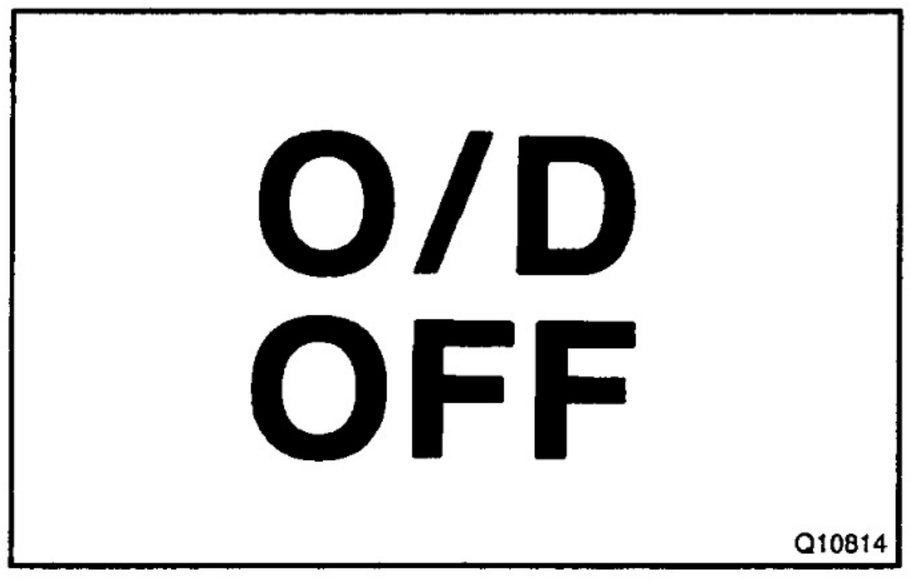

DI6F3–01

PRE–CHECK

1. DIAGNOSIS SYSTEM

Description

- When troubleshooting Multiplex (M–OBD) vehicles, the only difference from the usual troubleshooting procedure is that you connect the hand–held tester to the vehicle, and read off various data output from the vehicle's Engine and ECT ECU.
  The vehicle's on–board computer lights up the O/D OFF Indicator Light on the instrument panel when the computer detects a malfunction in the computer itself or in drive system components. In addition to the O/D OFF indicator light lighting up when a malfunction is detected, the applicable DTCs are recorded in the Engine and ECT ECU memory.
  If the malfunction only occurs in 3–trip, the O/D OFF indicator light goes off but the DTCs remain recorded in the Engine and ECT ECU memory.

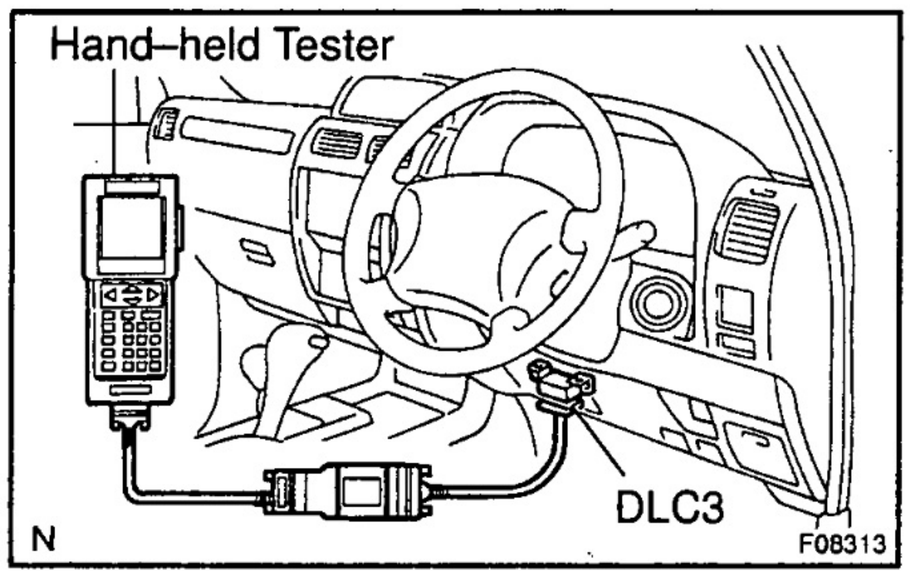

- To check the DTCs, connect a hand–held tester to DLC3 on the vehicle or read the number of blinks of the O/D OFF indicator light when TC and CG terminals on the DLC3 are connected. The hand–held tester also enables you to erase the DTCs and activate the several actuators and check freeze frame data and various forms of engine data (For instruction book).
- The diagnosis system operates in normal mode during normal vehicle use, and also has a check (test) mode for technicians to simulate malfunction symptoms and perform troubleshooting. Most DTCs use 2–trip detection logic (*) to prevent erroneous detection and ensure thorough malfunction detection. By switching the Engine and ECT ECU to check (test) mode using hand–held tester when troubleshooting, the technician can cause the O/D OFF indicator light to light up for a malfunction that is only detected once or momentarily.
- *2–trip detection logic:
  When a logic malfunction is first detected, the malfunction is temporarily stored in the Engine and ECT ECU memory.
  If the same malfunction is detected again during the 2nd test drive, this 2nd detection causes the O/D OFF indicator light to light up.

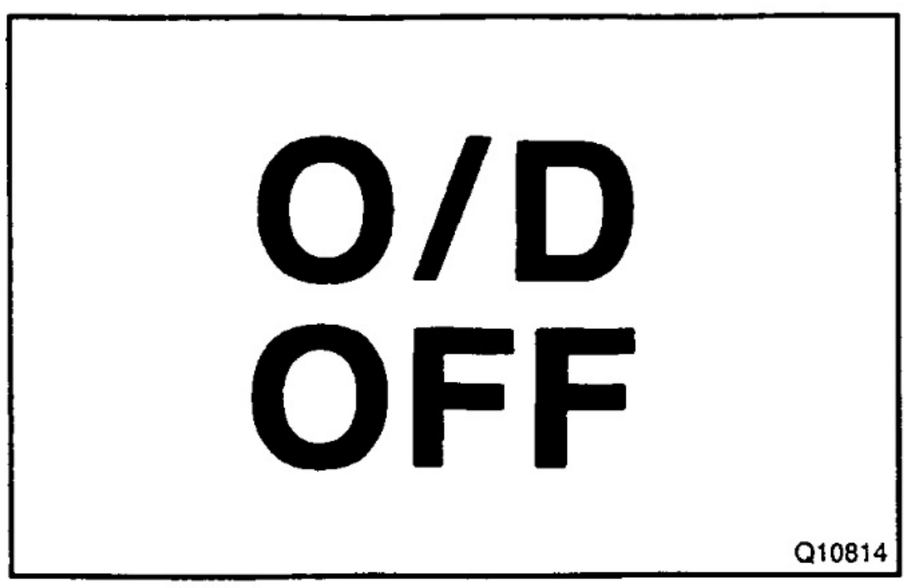

2. INSPECT DIAGNOSIS (NORMAL MODE)

(a) Check the O/D OFF indicator light.
  (1) Turn the ignition switch to ON.
  (2) Check that the O/D OFF indicator light light up when the O/D main switch is pushed out to OFF and goes off when the O/D main switch is pushed in to ON.

HINT:

- If the O/D OFF indicator light does not light up or stays on all the time, carry out the check for "O/D OFF Indicator Light Circuit" on page DI–65.
- If the O/D OFF indicator light blinks, a malfunction code is stored in the ECU memory.

(b) Check the DTC (Using hand–held tester).

NOTICE:

When the diagnostic system is switched from normal mode to check (test) mode, it erases all DTCs and freeze frame data recorded in normal mode. So before switching modes, always check the DTCs and freeze frame data, and note them down.

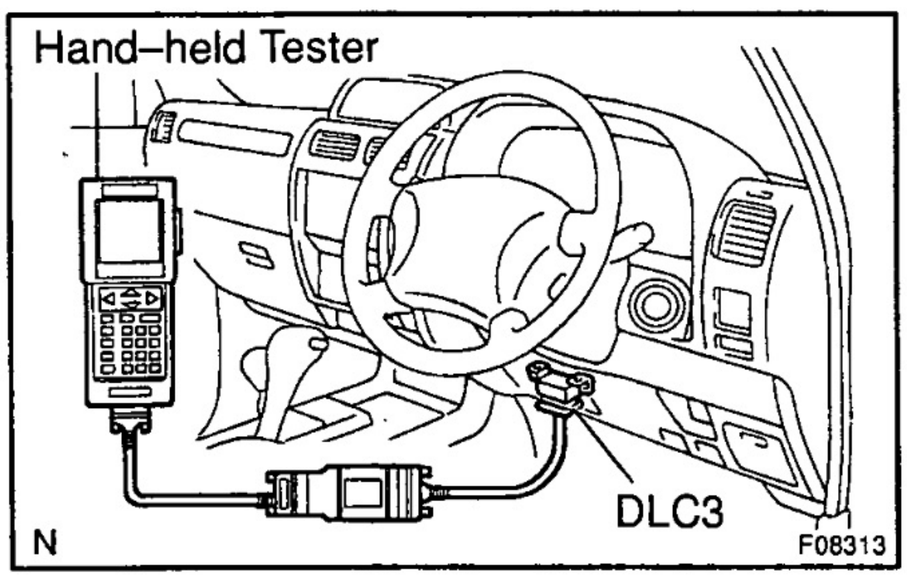

  (1) Prepare the hand–held tester.
  (2) Connect the hand–held tester to DLC3 at the lower of the instrument panel.
  (3) Turn the ignition switch ON and turn the hand–held tester switch ON.
  (4) Use the hand–held tester to check the DTCs and instructions, see the hand–held tester instruction book.
  (5) See page DI–4 to confirm the details of the DTCs.

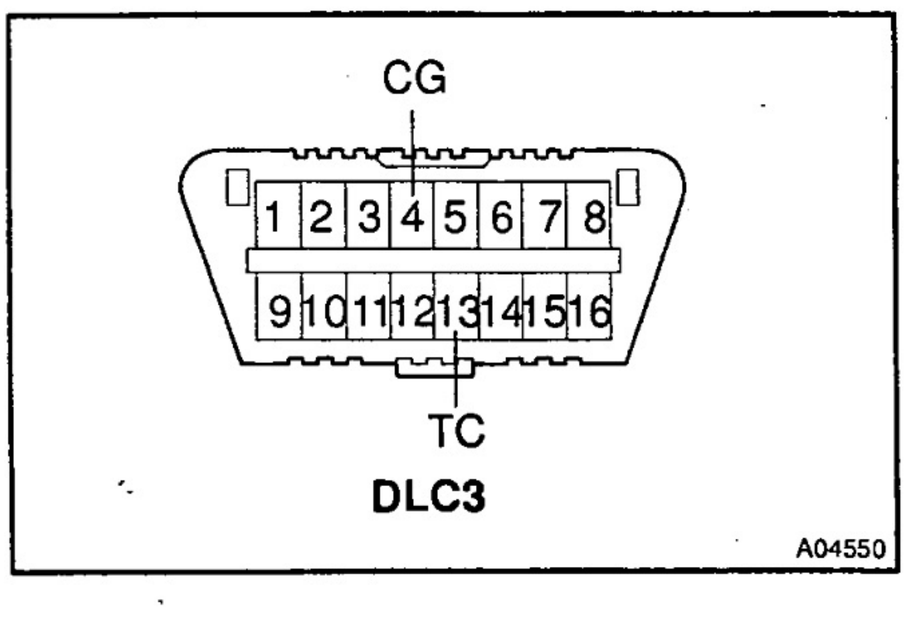

(c) Check the DTC (Not using hand–held tester).
  (1) Turn the ignition switch ON, but do not start the engine.
  (2) Push in the O/D main switch to ON.

HINT:

Warning and DTCs can be read only when the O/D main switch is ON. If it is OFF, the O/D OFF indicator light will light up continuously and will not blink.

  (3) Using SST, connect terminals 13 (TC) and 4 (CG) of DLC3.

SST 09843–18040

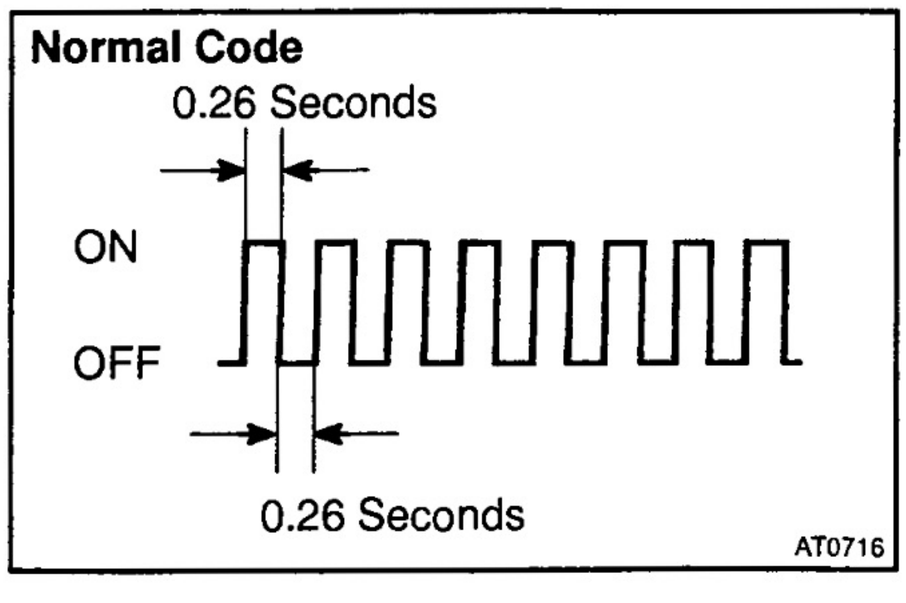

(4) Read the DTC indicated by the number of times the O/D OFF indicator light blinks.

HINT:
If the system is operating normally, the light will blink 2 times per second.

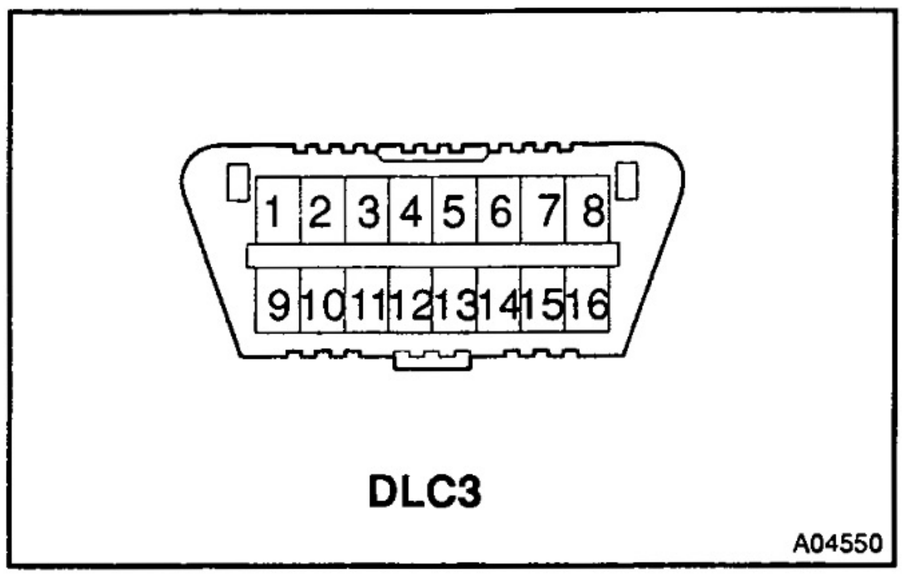

(d) Inspect the DLC3.

(1) The vehicle's Engine and ECT ECU uses ISO 14230 for communication. The terminal arrangement of DLC3 complies with SAE J1962 and matches the ISO 14230 format.

Terminal No.	Connection	Voltage or Resistance	Condition
7	Bus ⊕ Line	Pulse generation	During transaxle
4	Chassis Ground	↔ Body Ground / 1 Ω or less	Always
16	Battery Positive	↔ Body Ground / 9 – 14 V	Always

HINT:
If your display shows "UNABLE TO CONNECT TO VEHICLE" when you have connected the cable of hand–held tester to DLC3, turned the ignition switch ON and operated the hand–held tester, there is a problem on the vehicle side or tool side.

- If communication is normal when the tool is connected to another vehicle, inspect DLC3 on the original vehicle.
- If communication is still not possible when the tool is connected to another vehicle, the problem is probably in the tool itself, so consult the Service Department listed in the tool's instruction manual.

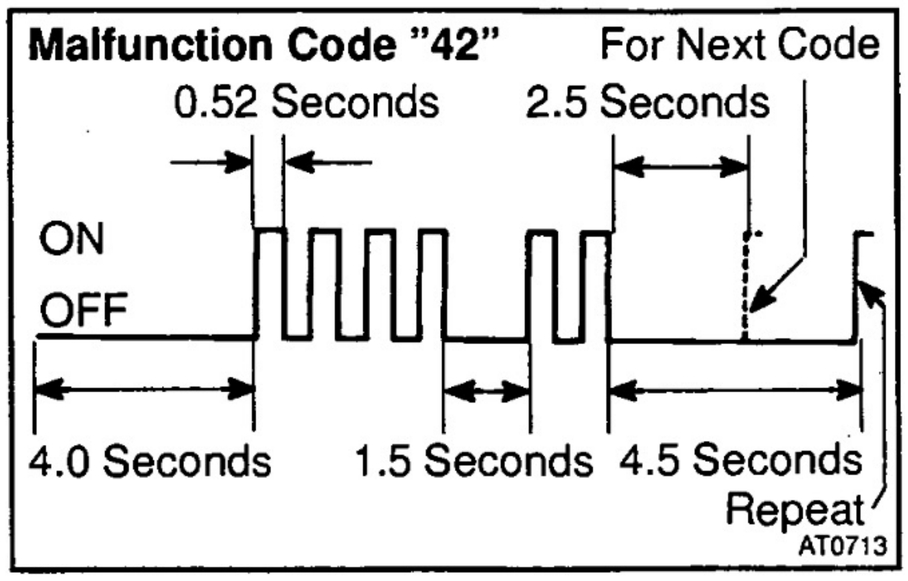

(2) The malfunction code is indicated, as shown in the chart on the left (DTC "42" is shown as an example).

HINT:
When 2 or more malfunction codes are stored in memory, the lower–numbered code is displayed first.

3. INSPECT DIAGNOSIS (CHECK MODE)

DI

HINT:
Hand–held tester only: Compared to the normal mode, the check mode has high sensing ability to detect malfunctions. Furthermore, the same diagnostic items which are detected in Normal mode can also be detected in Check mode.

(a) Check the DTC.
  (1) Check the initial conditions.
    - Battery positive voltage 11 V or more
    - Throttle valve fully closed
    - Shift lever in P range
    - Air conditioning switched OFF
  (2) Turn the ignition switch OFF.
  (3) Prepare a hand–held tester.

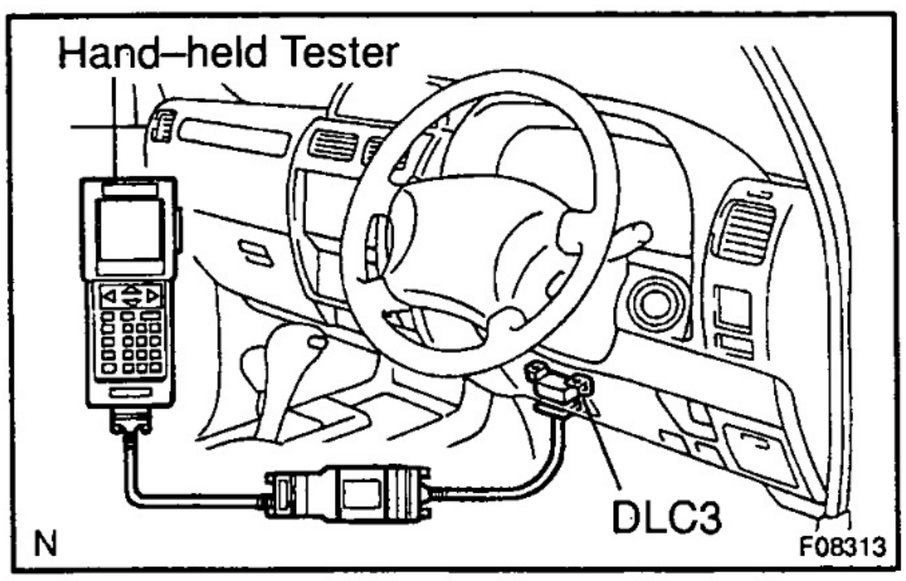

  (4) Connect the hand–held tester to DLC3 at the lower part of the instrument panel.
  (5) Turn the ignition switch ON and switch the hand–held tester ON.

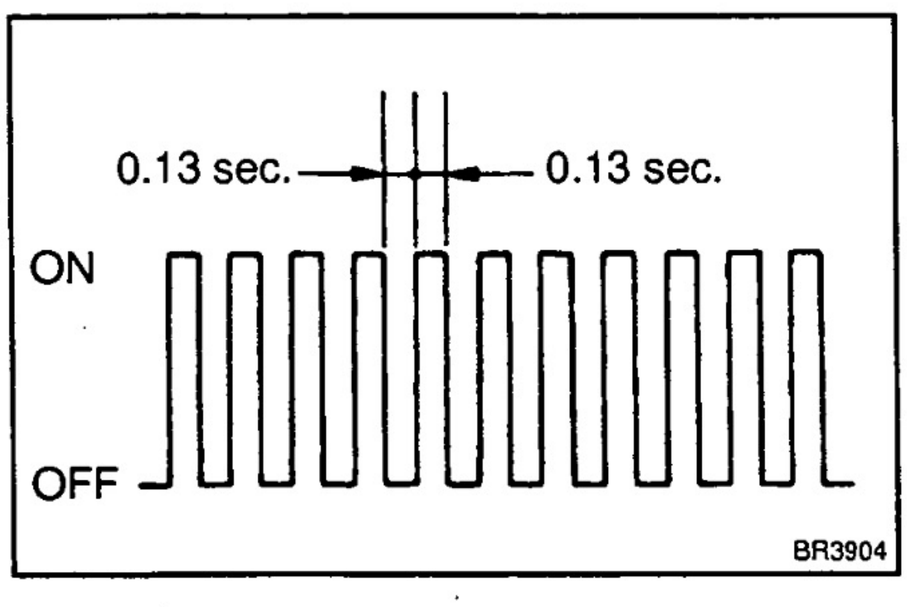

  (6) Switch the hand–held tester from Normal mode to Check mode (Check that the O/D OFF indicator light flashes).
  (7) Start the engine (O/D OFF indicator light goes out after the engine starts).
  (8) Simulate the conditions of the malfunction described by the customer.

NOTICE:
Leave the ignition switch ON until you have checked the DTCs, etc.

(9) After simulating the malfunction conditions, use the hand–held tester diagnosis selector to check the DTCs and freeze frame data, etc.

HINT:

Take care not to turn the ignition switch OFF, as turning it off switches the diagnosis system from Check mode to Normal mode, all DTCs etc. are erased.

(10) After checking the DTC, inspect the applicable circuit.

(b) When using hand–held tester:

Clear the DTC.

The following operation will erase the DTC and freeze frame data. Operate a hand–held tester to erase the codes.

(c) When not using hand–held tester:

Clear the DTC.

Remove the EFI fuse from engine room R/B No. 1 for 10 seconds or more.

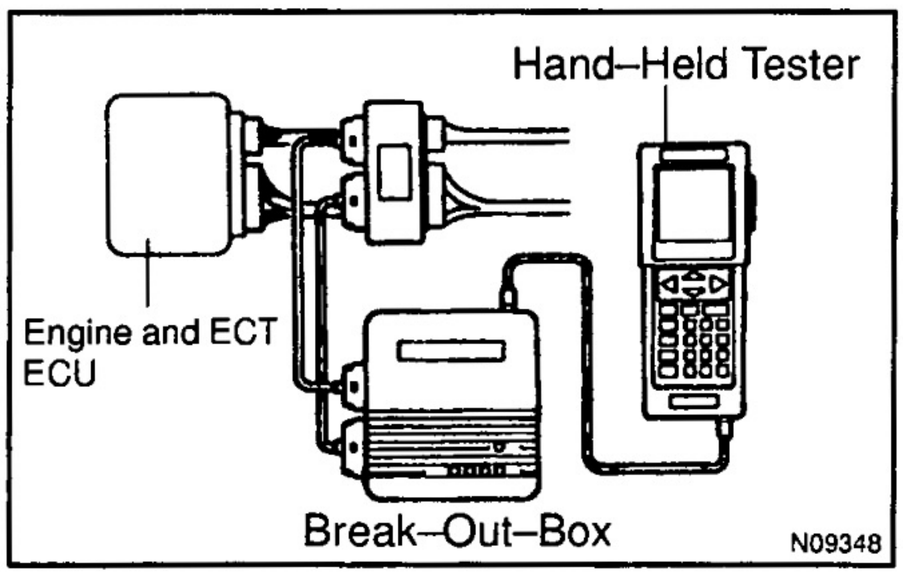

4. ENGINE and ECT ECU STANDARD VALUES MEASUREMENT USING BREAK–OUT–BOX AND HAND–HELD TESTER

(a) Hook up the break–out–box and hand–held tester to the vehicle.

(b) Read the Engine and ECT ECU input/output values by following the prompts on the tester screen.

HINT:

Hand–held tester has "Snapshot" function. This records the measured values and is effective in the diagnosis of intermittent problems. Please refer to the hand–held tester/break–out–box operator's manual for further details.

5. PROBLEM SYMPTOM CONFIRMATION

Taking into consideration the results of the customer problem analysis, try to reproduce the symptoms of the trouble. If the problem is that the transaxle does not shift up, shift down, or the shift point is too high or too low conduct the following road test referring to the automatic shift schedule and simulate the problem symptoms.

6. ROAD TEST

NOTICE:

Conduct the test at normal operating ATF temperature 50 – 80 °C (122 – 176 °F).

(a) D range test

Shift into the D range and fully depress the accelerator pedal and check the following points:

(1) Check up–shift operation.

Check to see that 1 → 2, 2 → 3 and 3 → O/D up–shift takes place, and that the shift points conform to the automatic shift schedule (See page SS–4).

HINT:

- O/D Gear Up–shift Prohibition Control (1. Water temp. is 60 °C (140 °F) or less. 2. If there is a 10 km/h (6 mph) difference between the set cruise control speed and vehicle speed.)
- O/D Gear Lock–up Prohibition Control (1. Brake pedal is depressed. 2. Water temp. is 60 °C (140 °F) or lower)
- When the 2nd start switch is ON, there is no 1 → 2 up–shift and 2 → 1 down–shift.

(2) Check for shift shock and slip.

Check for shock and slip at the 1 → 2, 2 → 3 and 3 → O/D up–shift.

(3) Check for abnormal noises and vibration.

Run in D range lock–up or O/D gear and check for abnormal noises and vibration.

HINT:

The check for the cause of abnormal noises and vibration must be done very thoroughly as it could also be sure to loss of balance in the differential, torque converter, etc.

(4) Check kick–down operation.

While running in the D range, 2nd, 3rd and O/D gears, check to see that the possible kick–down vehicle speed limits for 2 → 1, 3 → 2 and O/D → 3 kick–downs conform to those indicated in the automatic shift schedule (See page SS–4).

(5) Check for abnormal shock and slip at kick–down.

(6) Check the lock–up mechanism.

- Drive in D range O/D gear, at a steady speed (lock–up ON) of about 60 km/h (37 mph).
- Lightly depress the accelerator pedal and check that the engine speed does not change abruptly.

If there is a big jump in engine speed, there is no lock–up.

(b) 2 range test

Shift into the 2 range and fully depress the accelerator pedal and check the following points:

(1) Check up–shift operation.

Check to see that the 1 → 2 up–shift takes place and that the shift point conforms to the automatic shift schedule (See page SS–4).

(2) Check engine braking.

While running in the 2 range and 2nd gear, release the accelerator pedal and check the engine braking effect.

(3) Check for abnormal noises during acceleration and deceleration, and for shock at up–shift and down–shift.

(c) L range test
Shift into the L range and fully depress the accelerator pedal and check the following points:
(1) Check no up–shift.
While running in the L range, check that there is no up–shift to 2nd gear.

HINT:
- There is no O/D up–shift and lock–up in the 2 range.
- When the 2nd start switch in ON, there is 1 → 2 up–shift and 2 → 1 down–shift.

(2) Check engine braking.
While running in the L range, release the accelerator pedal and check the engine braking effect.
(3) Check for abnormal noises during acceleration and deceleration.

DI

(d) R range test
Shift into the R range and fully depress the accelerator pedal and check for slipping.

CAUTION:
Before conducting this test ensure that the test area is free from people and obstruction.

(e) P range test
Stop the vehicle on a grade (more than 5°) and after shifting into the P range, release the parking brake. Then, check to see that the parking lock pawl holds the vehicle in place.

7. BASIC INSPECTION

(a) Check the fluid level.

HINT:
Drive the vehicle so that the engine and transaxle are at normal operating temperature.
Fluid temperature: 70 – 80 °C (158 – 176 °F)

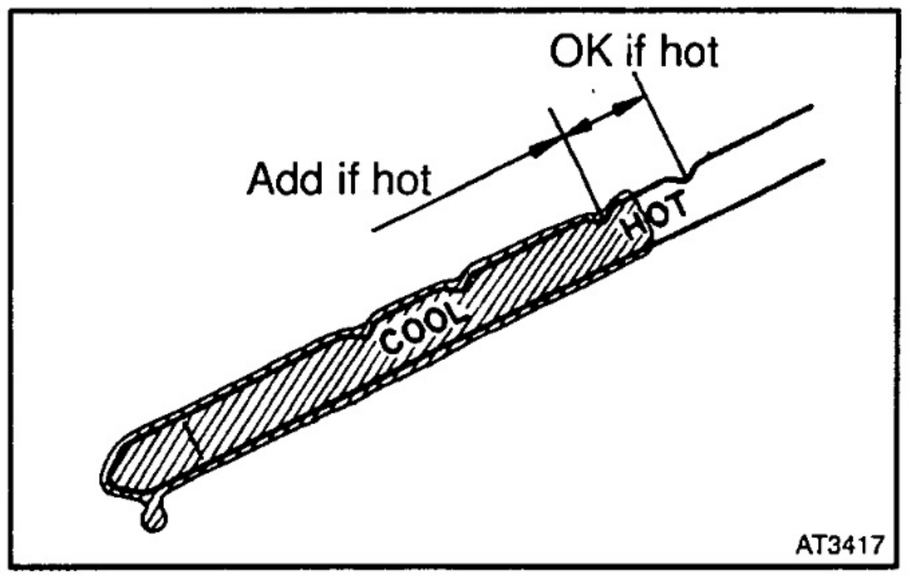

(1) Park the vehicle on a level surface and set the parking brake.
(2) With the engine idling and the brake pedal depressed, shift the shift lever into all ranges from P to L range and return to P range.
(3) Pull out the dipstick and wipe it clean.
(4) Push it back fully into the pipe.
(5) Pull it out and check that the fluid level is in the HOT range.

If the level is not within the range, add new fluid.
Fluid type: ATF D–II or DEXRON® III (DEXRON® II)

NOTICE:
Do not overfill.

(b) Check the fluid condition.
If the fluid smells burnt or is black, replace it.

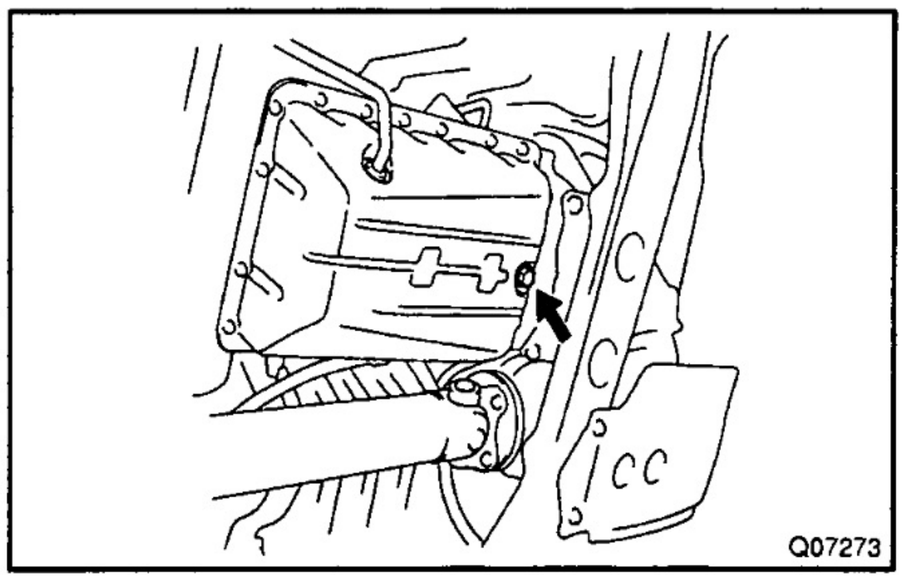

(c) Replace the ATF.
(1) Remove the drain plug and drain the fluid.
(2) Reinstall the drain plug securely.

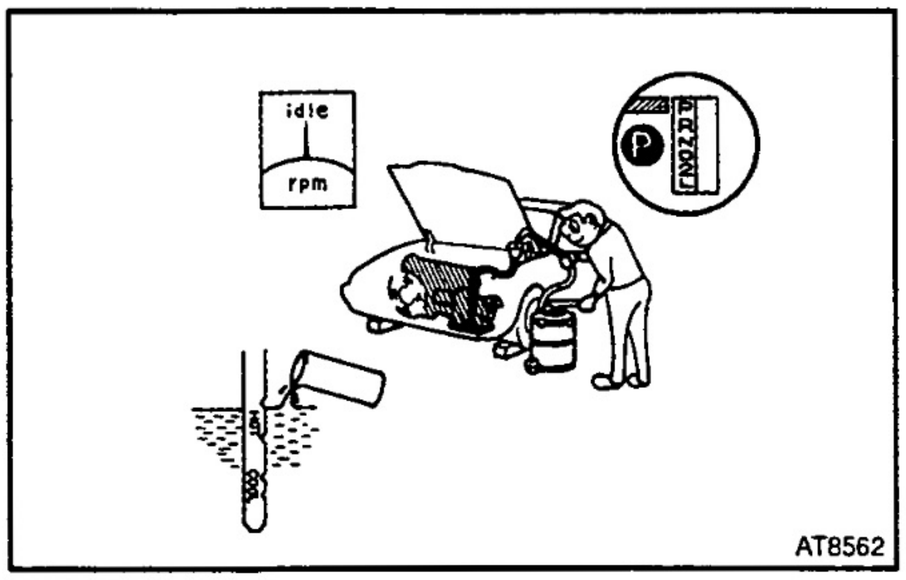

(3) With the engine OFF add new fluid through the oil filler pipe.

Fluid type: ATF D–II or DEXRON® III (DEXRON® II)

Capacity: 2.0 liters (2.1 US qts, 1.8 Imp.qts)

(4) Start the engine and shift the shift lever into all ranges from P to L range and then shift into P range.

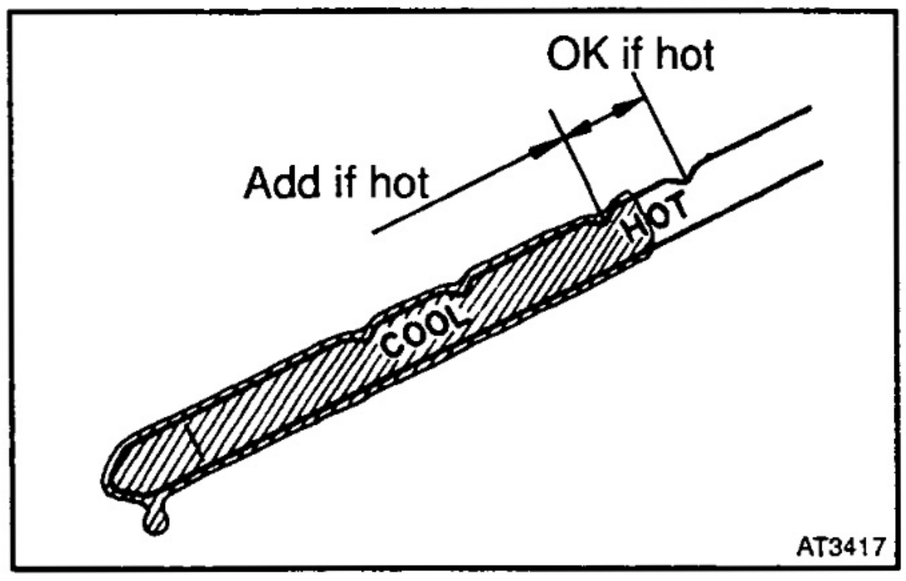

(5) With the engine idling, check the fluid level. Add fluid up to the COOL level on the dipstick.

(6) Check the fluid level at the normal operating temperature, 70 – 80 °C (158 – 176 °F), and add as necessary.

NOTICE:

Do not overfill.

(d) Check the fluid leaks.

Check for leaks in the transaxle.

If there are leaks, it is necessary to repair or replace O–rings, FIPGs, oil seals, plugs or other parts.

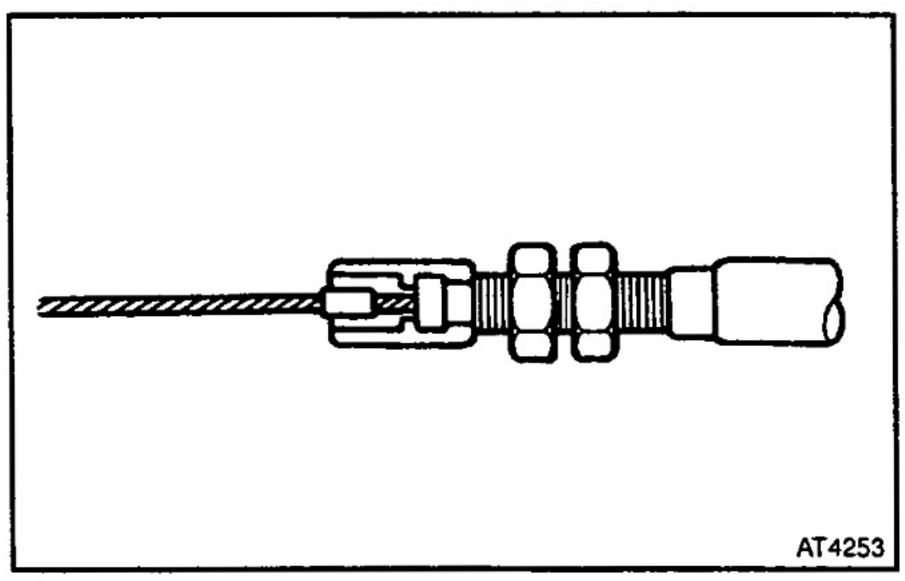

(e) Inspect and adjust the throttle cable.

(1) Check that the accelerator pedal is fully released.

(2) Check that the inner cable is not slack.

(3) Measure the distance between the outer cable end and stopper on the cable.

Standard distance: 0 – 1 mm (0 – 0.04 in.)

If the distance is not standard, adjust the cable by the adjusting nuts.

(f) Inspect and adjust the shift lever position.

- When shifting the shift lever from the N range to other ranges, check that the lever can be shifted smoothly and accurately to each range and that the position indicator is not aligned with the correct position.

If the indicator is not aligned with the correct position, carry out the following adjustment procedures.

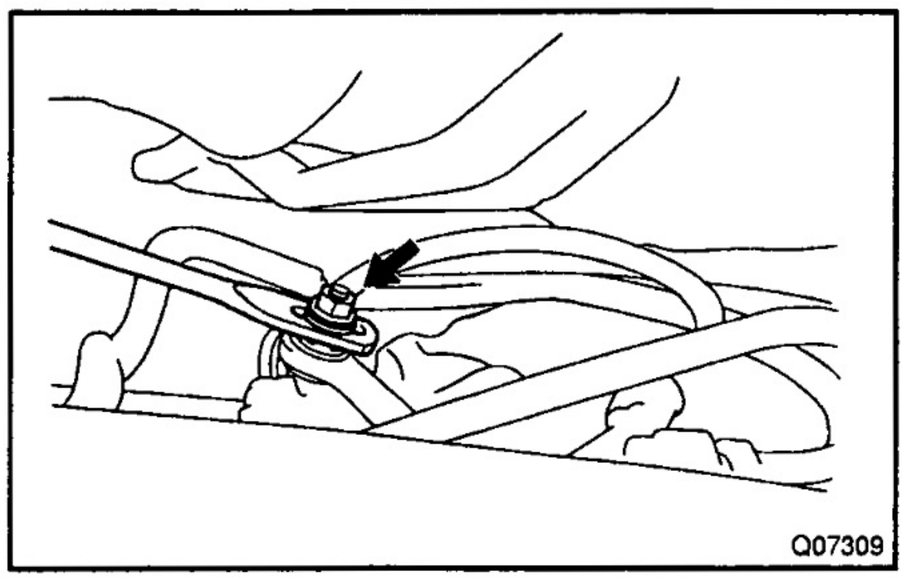

- Loosen the nut on the shift lever.
- Push the control shaft fully rearward.

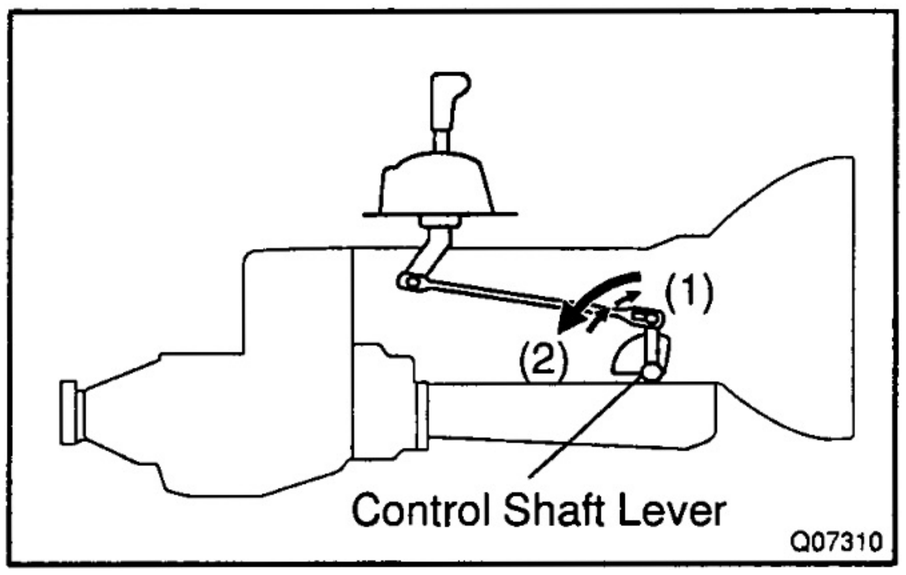

- Return the control shaft lever 2 notches to N range.
- Set the shift lever to N range.
- While holding the shift lever lightly toward the R range side, tighten the shift lever nut.

Torque: 13 N·m (130 kgf·cm, 9 ft·lbf)

- Start the engine and make sure that the vehicle moves forward when shifting the lever from the N to D range and reverses when shifting it to the R range.

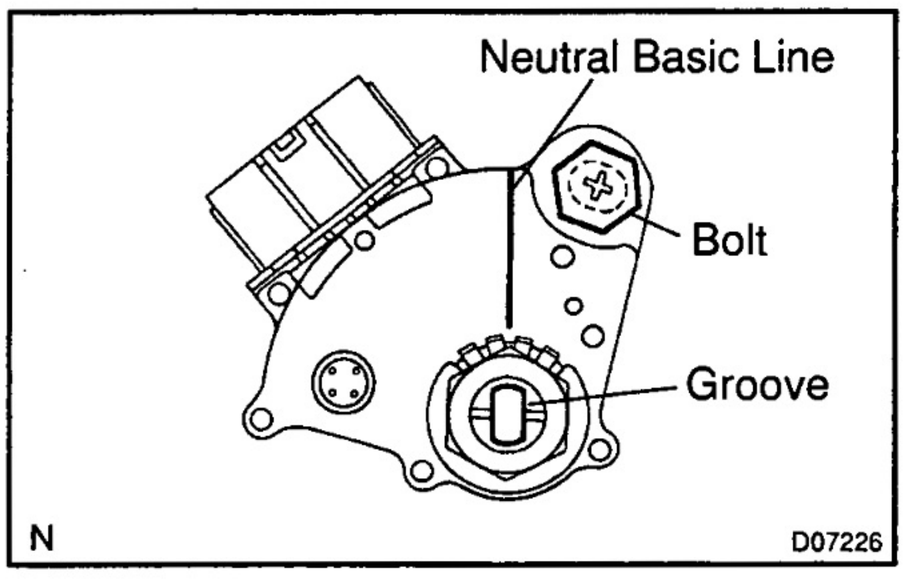

(g) Inspect and adjust the neutral start switch.
Check that the engine can be started with the shift lever only in the N or P range, but not in other ranges.

If it is not as stated above, carry out the following adjustment procedures.

- Loosen the neutral start switch bolt and set the shift lever to the N range.
- Align the groove and neutral basic line.
- Hold the switch in position and tighten the bolt.

Torque: 13 N·m (130 kgf·cm, 9 ft·lbf)

- For continuity inspection of the neutral start switch, see page DI–52.

8. MECHANICAL SYSTEM TESTS

(a) Measure the stall speed.

The object of this test is to check the overall performance of the transaxle and engine by measuring the stall speeds in the D and R ranges.

NOTICE:

- **Do the test at normal operating ATF temperature 50 – 80 °C (122 – 176 °F).**
- **Do not continuously run this test for longer than 5 seconds.**
- **To ensure safety, do this test in a wide, clear level area which provides good traction.**
- **The stall test should always be carried out in pairs. One technician should observe the conditions of wheels or wheel stoppers outside the vehicle while the other is doing the test.**

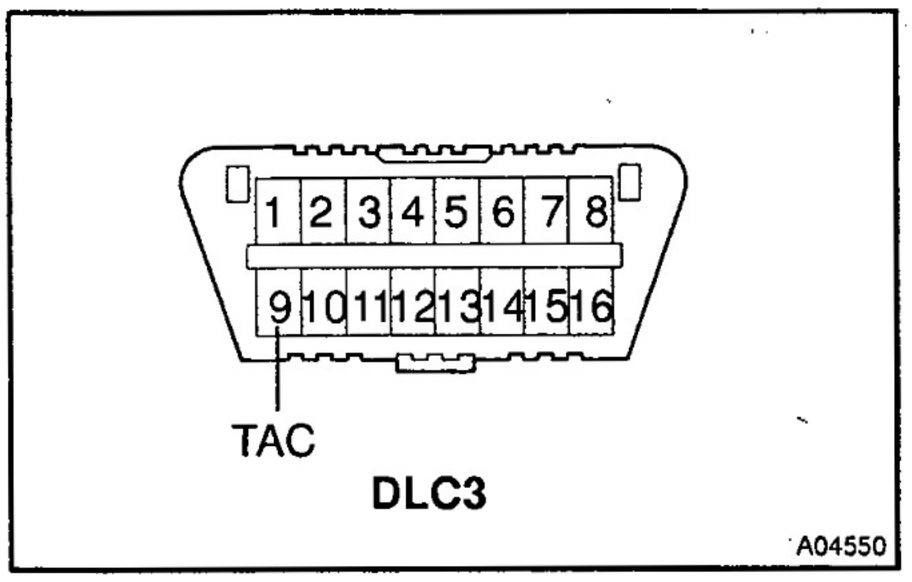

DLC3

- Chock the 2 wheels.
- Connect a hand–held tester to DLC3 or tachometer to terminal TAC of DLC3 with SST.

SST 09843–18030

- Fully apply the parking brake.
- Keep your left foot pressing firmly on the brake pedal.
- Start the engine.
- Shift into the D range. Press all the way down on the accelerator pedal with your right foot.
- Quickly read the stall speed at this time.

Stall speed:
5VZ–FE: 2,250 ± 150 rpm
1KZ–TE:
Australia: 2,550 ± 150 rpm
Except Australia: 2,350 ± 150 rpm
3RZ–FE: 2,000 ± 150 rpm

- Do the same test in the R range.

Stall speed:
5VZ–FE: 2,250 ± 150 rpm
1KZ–TE:
Australia: 2,550 ± 150 rpm
Except Australia: 2,350 ± 150 rpm
3RZ–FE: 2,000 ± 150 rpm

Evaluation:

Problem	Possible cause
(a) Stall speed low in D and R ranges	• Engine output may be insufficient • Stator one–way clutch not operating properly HINT: If more than 600 rpm below the specified value, the torque converter could be faulty.
(b) Stall speed high in D range	• Line pressure too low • Forward clutch slipping • One–way clutch No.2 not operating properly
(c) Stall speed high in R range	• Line pressure too low • Reverse clutch slipping • 1st & reverse brake slipping
(d) Stall speed high in D and R ranges	• Line pressure too low • Improper fluid level

(b) Measure the time lag.
When the shift lever is shifted while the engine is idling, there will be a certain time lapse or lag before the shock can be felt. This is used for checking the condition of the O/D direct clutch, forward clutch, and 1st & reverse brake.

NOTICE:

- **Do the test at normal operating ATF temperature 50 – 80 °C (122 – 176 °F).**
- **Be sure to allow 1 minute interval between tests.**
- **Take 3 measurements and take the average value.**

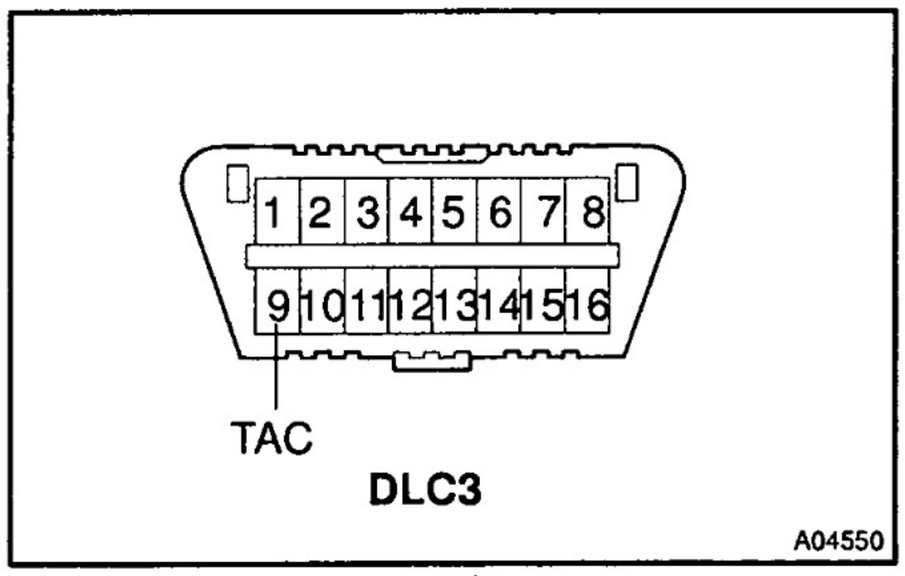

DLC3

- Chock the 4 wheels.
- Connect a hand–held tester to DLC3 or tachometer to terminal TAC of DLC3 with SST.

SST 09843–18030

- Start engine and check idle speed.

Idle speed: 700 ± 50 rpm (In N range and A/C OFF)

- Shift the lever from N to D range. Using a stop watch, measure the time from when the lever is shifted until the shock is felt.

Time lag: N → D less than 1.2 seconds

- In the same way, measure the time lag for N → R.

Time lag: N → R less than 1.5 seconds

Evaluation (If N → D or N → R time lag is longer than the specified):

Problem	Possible cause
N → D time lag is longer	• Line pressure too low • Forward clutch worn • One–way clutch No. 2 not operating properly
N → R time lag is longer	• Line pressure too low • Reverse clutch worn • 1st & reverse brake worn

9. HYDRAULIC TEST

Measure the line pressure.

NOTICE:

- **Do the test at normal operation ATF temperature 50 – 80 °C (122 – 176 °F).**
- **The line pressure test should always be carried out in pairs. One technician should observe the conditions of wheels or wheel stopper outside the vehicle while the other is doing the test.**
- **Be careful to prevent SST's hose from interfering with the exhaust pipe.**

(1) Warm up the ATF.

(2) Remove the test plug on the rear side of the transmission case and connect SST.
(See Pub. No. RM517E on page AT–9 for the location to connect SST)

SST 09992–00095 (09992– 00231, 09992–00271)

(3) Fully apply the parking brake and chock the 4 wheels.

(4) Connect a hand–held tester to DLC3.

(5) Start the engine and check idling speed.

(6) Keep your left foot pressing firmly on the brake pedal and shift into D range.

(7) Measure the line pressure when the engine is idling.

(8) Depress the accelerator pedal all the way down. Quickly read the highest line pressure when engine speed reaches stall speed.

(9) In the same way, do the test in R range.

Specified line pressure:

5VZ–FE:

Condition	D range kPa (kgf / cm², psi)	R range kPa (kgf / cm², psi)
Idling	382 – 441 (3.9 – 4.5, 56 – 64)	588 – 686 (6.0 – 7.0, 85 – 100)
Stall	1,088 – 1,225 (11.1 – 12.5, 158 – 178)	1,460 – 1,793 (14.9 – 18.3, 212 – 260)

1KZ–TE:

Condition	D range kPa (kgf / cm², psi)	R range kPa (kgf / cm², psi)
Idling	323 – 382 (3.3 – 3.9, 47 – 55)	500 – 598 (5.1 – 6.1, 73 – 87)
Stall	1,137 – 1,274 (11.6 – 13.0, 165 – 185)	1,499 – 1,833 (15.3 – 18.7, 217 – 266)

3RZ–FE:

Condition	D range kPa (kgf / cm², psi)	R range kPa (kgf / cm², psi)
Idling	363 – 422 (3.7 – 4.3, 53 – 61)	607 – 706 (6.2 – 7.2, 88 – 103)
Stall	932 – 1,177 (9.5 – 12.0, 135 – 171)	1,568 – 1,911 (16.0 – 19.5, 227 – 277)

If the measured pressure is not up to the specified value, recheck the throttle cable adjustment and retest.

Evaluation:

Problem	Possible cause
If the measured values at all ranges are higher	• SLT solenoid valve defective • Regulator valve detective
If the measured values at all ranges are lower	• SLT solenoid valve defective • Regulator valve defective • Oil pump defective
If pressure is low in the D range only	• D range circuit fluid leakage • Forward clutch defective
If pressure is low in the R range only	• R range circuit fluid leakage • Reverse clutch defective • 1st & reverse brake defective

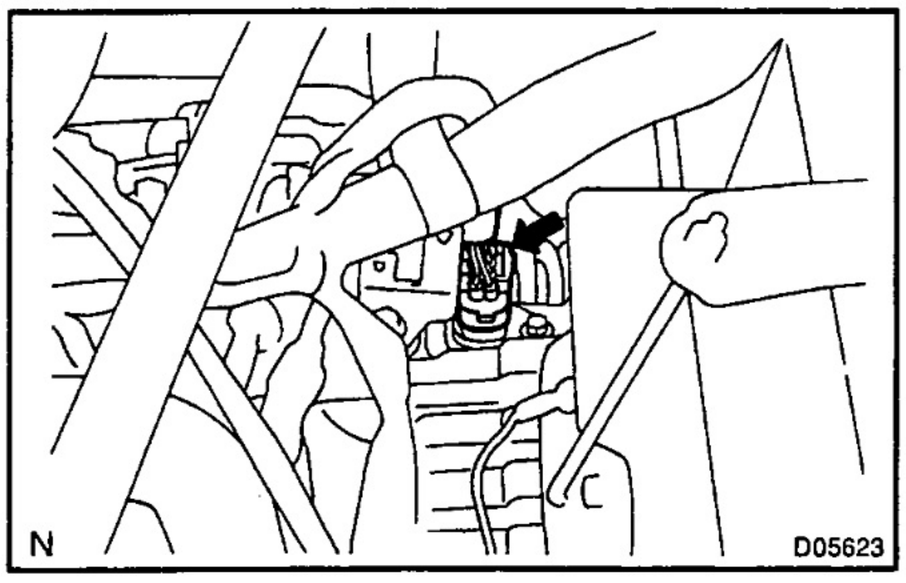

10. MANUAL SHIFTING TEST

HINT:

By this test, it can be determined whether the trouble is within the electrical circuit or is a mechanical problem in the transaxle.

(a) Disconnect the solenoid wire.

(b) Inspect the manual driving operation.
Check that the shift and gear positions correspond to the table below.
While driving, shift through the L, 2 and D ranges.
Check that the gear change corresponds to the shift range.

Shift range	Gear position
D	4th
2	3rd
L	1st
R	Reverse
P	Pawl Lock

HINT:

If the L, 2 and D range gear positions are difficult to distinguish, do the above read test.

If any abnormality is found in the above test, the problem is in the transaxle itself.

(c) Connect the solenoid wire.

(d) Cancel out the DTC.

DI6F4-01

DIAGNOSTIC TROUBLE CODE CHART

If a DTC is displayed during the DTC check, check the circuit listed in the table below and proceed to the page given.

DTC No. (See Page)	Detection Item	Trouble Area	*1O/D OFF Indicator Light Blink	*2Memory
P0500/42 (DI–28)	Vehicle Speed Sensor Malfunction (No.1 Speed Sensor)	• Open or short in No.1 speed sensor circuit • No.1 speed sensor • Combination meter • Engine and ECT ECU • Automatic Transmission Assembly	○	○
P0710/38 (DI–32)	Transmission Fluid Temperature Sensor Circuit Malfunction (ATF Temperature Sensor)	• Open or short in ATF temperature sensor circuit • ATF temperature sensor circuit • Engine and ECT ECU	○	○
P0753/62 (DI–34)	Shift Solenoid "A" Electrical Malfunction (No.1 Solenoid Valve)	• Open or short No.1 solenoid valve circuit • No.1 solenoid valve • Engine and ECT ECU	○	○
P0758/63 (DI–34)	Shift Solenoid "B" Electrical Malfunction (No.2 Solenoid Valve)	• Open or short No.2 solenoid valve circuit • No.2 solenoid valve • Engine and ECT ECU	○	○
P0773/64 (DI–39)	Shift Solenoid "E" Electrical Malfunction (SL Solenoid Valve)	• Open or short SL solenoid valve circuit • SL solenoid valve • Engine and ECT ECU	○	○
P1700/61 (DI–43)	Speed Sensor No.2 Circuit Malfunction (No.2 Speed Sensor)	• Open or short in No.2 speed sensor circuit • No.2 speed sensor • Engine and ECT ECU	X	○
P1760/77 (DI–49)	Linear Solenoid for Line Pressure Control Circuit Malfunction (SLT Solenoid Valve)	• Open or short in SLT solenoid valve circuit • SLT solenoid valve • Engine and ECT ECU	X	○

*1: "○" mark means O/D OFF indicator light blinks once every 2 seconds.
"X" mark means O/D OFF indicator light never blinks.
*2: "○" mark means Engine and ECT ECU memorizes the malfunction code if the Engine and ECT ECU detects the DTC detection condition.
HINT:
This DTC may be output when the clutch, brake and gear components etc. inside the automatic transmission are damaged.

D16FS-01

PARTS LOCATION

LHD:

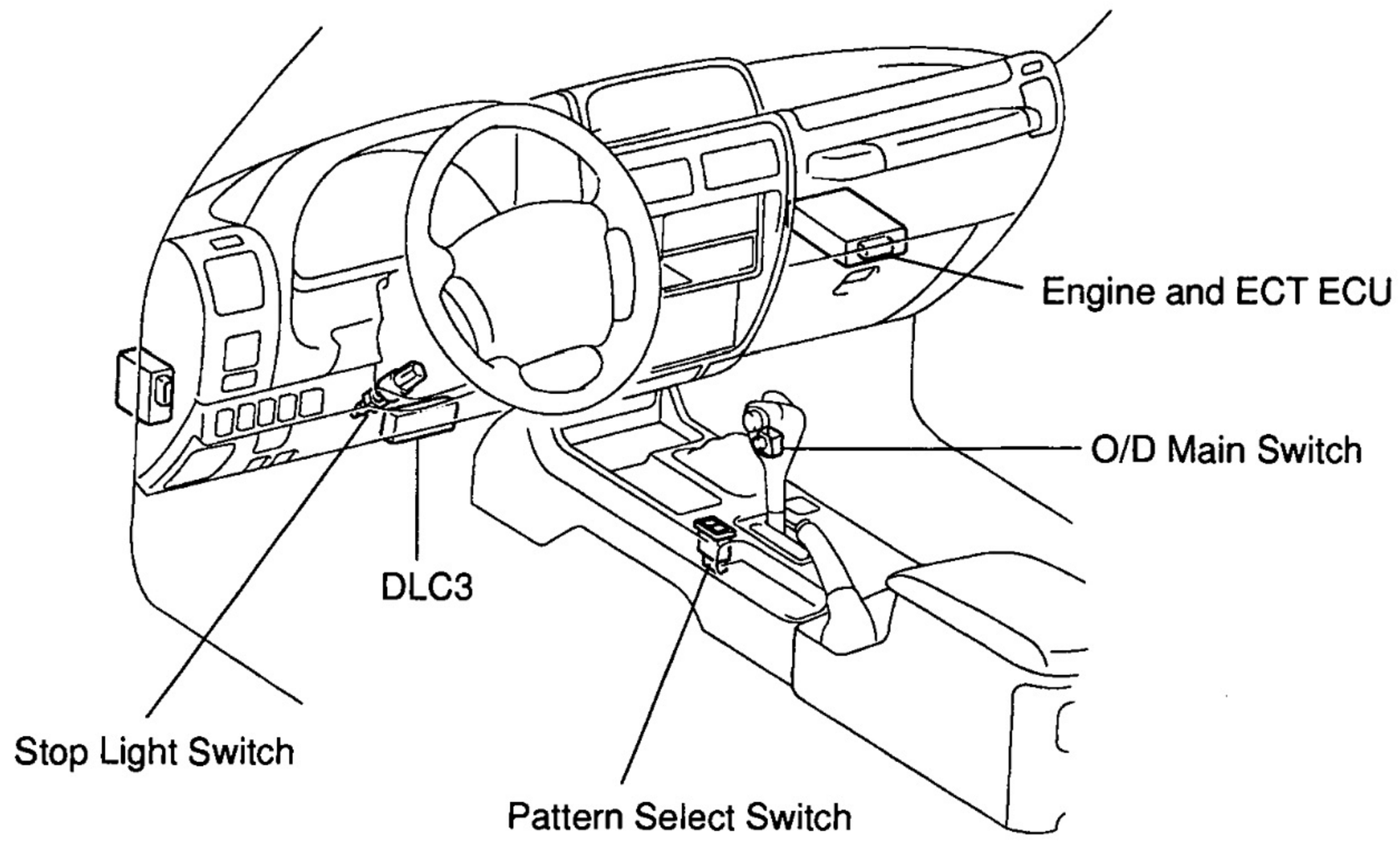

RHD:

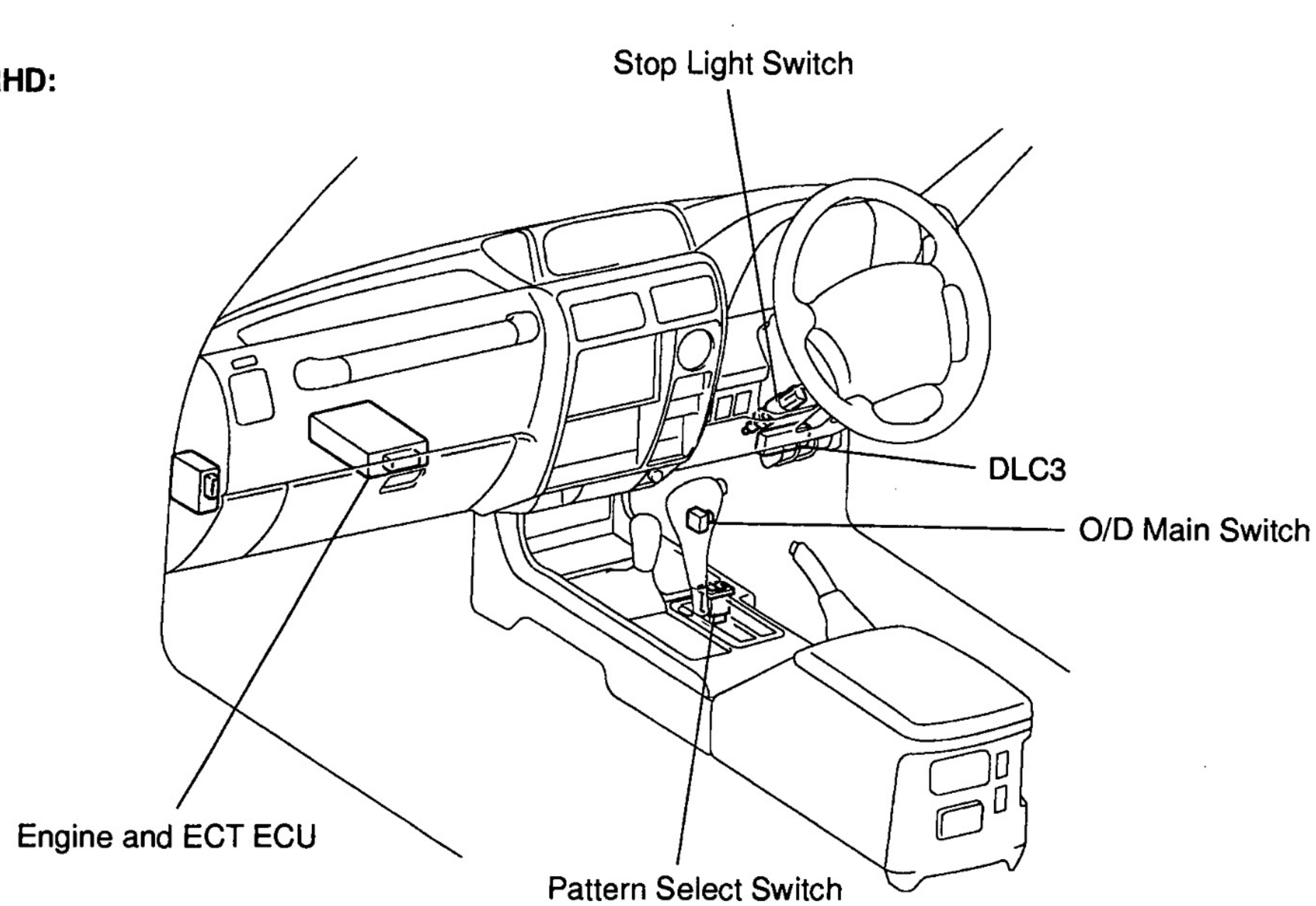

Y

D07689

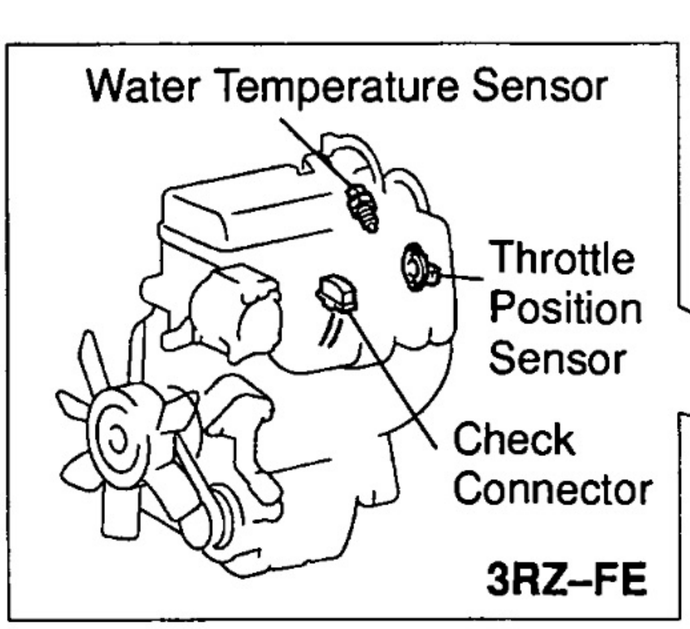
Water Temperature Sensor
Throttle Position Sensor
Check Connector
3RZ–FE

Check Connector
Throttle Position Sensor
No. 2 Speed Sensor
No. 1 Speed Sensor
Water Temperature Sensor
Neutral Start Switch
Lock–up Solenoid Valve
No. 2 Solenoid Valve
No. 1 Solenoid Valve
5VZ–FE

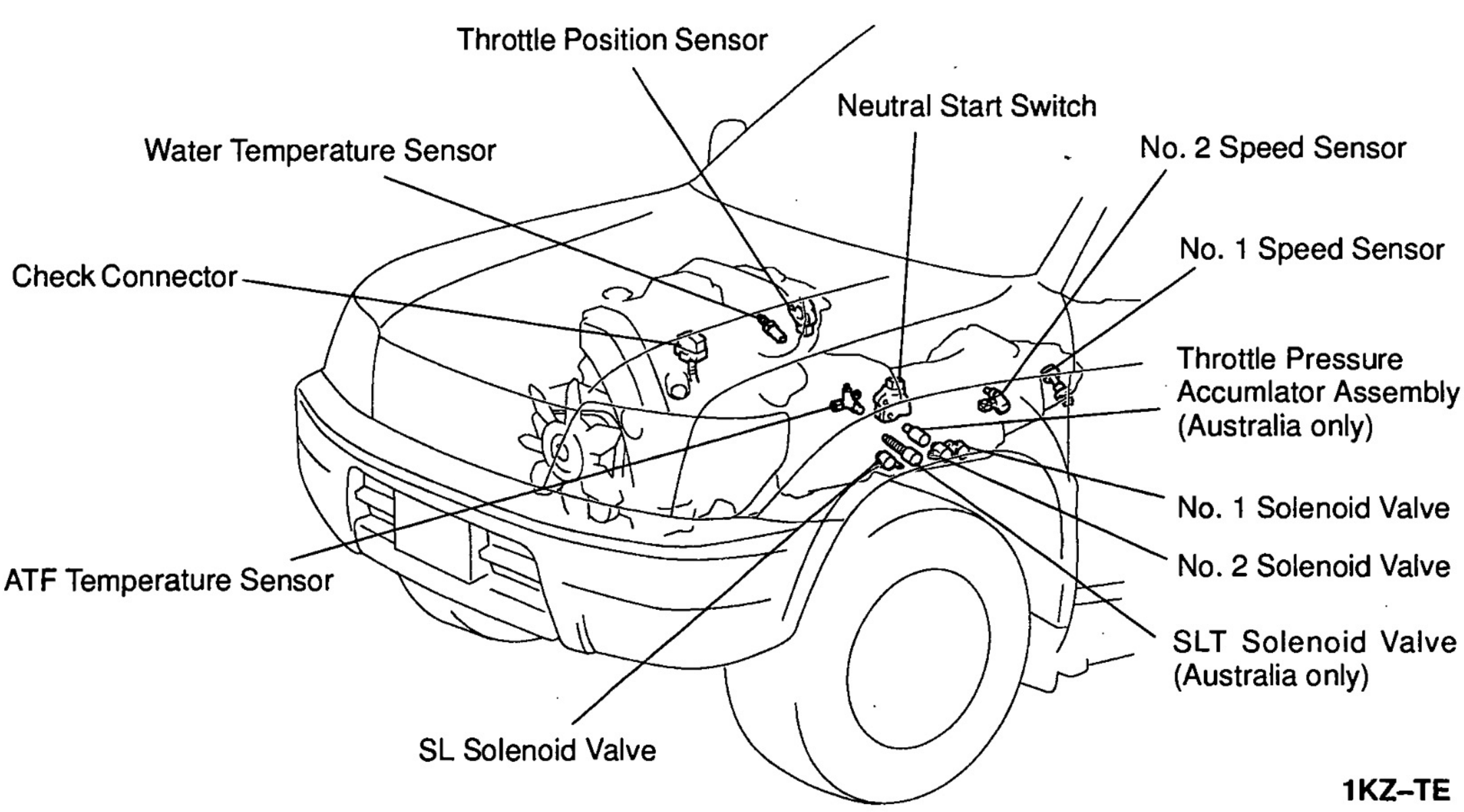
Throttle Position Sensor
Neutral Start Switch
Water Temperature Sensor
No. 2 Speed Sensor
Check Connector
No. 1 Speed Sensor
Throttle Pressure Accumlator Assembly (Australia only)
No. 1 Solenoid Valve
ATF Temperature Sensor
No. 2 Solenoid Valve
SLT Solenoid Valve (Australia only)
SL Solenoid Valve
1KZ–TE

DI6F6–01

TERMINALS OF ECU

5VZ–FE:

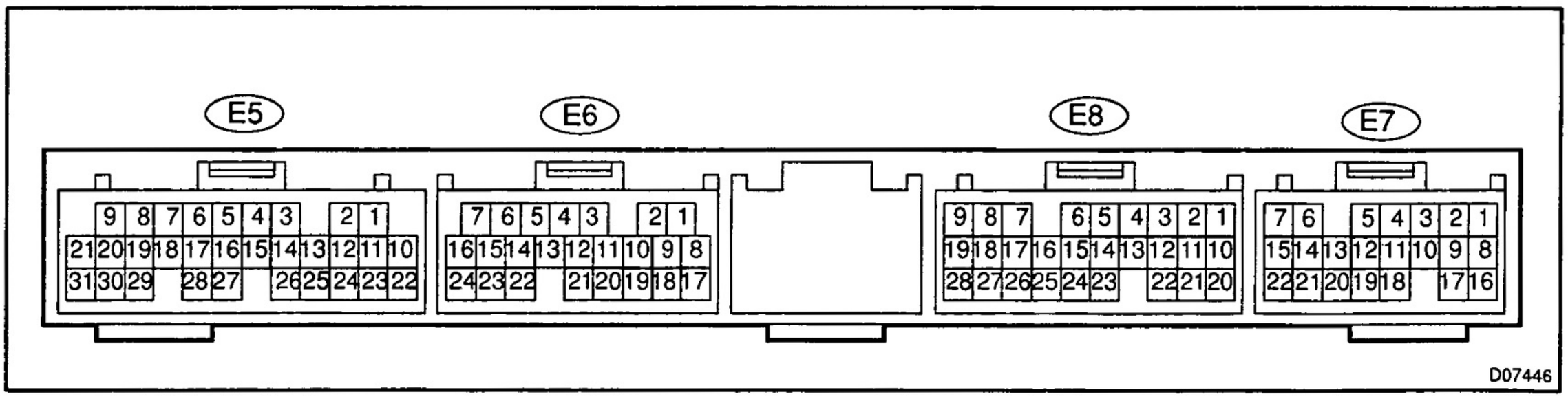

Symbols (Terminals No.)	Wiring Color	Condition	STD Voltage (V)
S1 (E5–3) ↔ E1 (E6–17)	P–B ↔ BR	IG ON	Below 1.5
		3rd or O/D gear	Below 1.5
		1st or 2nd gear	9.0 – 14
S2 (E5–2) ↔ E1 (E6–17)	P–L ↔ BR	IG ON	Below 1.5
		1st or O/D gear	Below 1.5
		2nd or 3rd gear	9.0 – 14
SL (E5–1) ↔ E1 (E6–17)	L ↔ BR	IG ON	Below 1.5
		Vehicle driving under lock–up position	9.0 – 14
$SP2^{+}$ (E6–23) ↔ $SP2^{-}$ (E6–22)	LG ↔ L	Engine is idling	Pulse signal is output Below 1.5 ↔ 4 – 6
THOC (E5–19) ↔ E2 (E5–11)	Y–B ↔ BR	IG ON and ATF temperature 110 °C (176 °F)	Below 1.5
NSW (E8–3) ↔ E1 (E6–17)	B–W ↔ BR	IG ON and shift lever range: P or N	9.0 – 14
		IG ON and shift lever range: except P or N	Below 1.5
R (E8–6) ↔ E1 (E6–17)	R–B ↔ BR	IG ON and shift lever range: R	9.0 – 14
		IG ON and shift lever range: except R	Below 1.5
2 (E8–5) ↔ E1 (E6–17)	G–W ↔ BR	IG ON and shift lever range: 2	9.0 – 14
		IG ON and shift lever range: except 2	Below 1.5
L (E8–4) ↔ E1 (E6–17)	G–B ↔ BR	IG ON and shift lever range: L	9.0 – 14
		IG ON and shift lever range: except L	Below 1.5
STP (E7–20) ↔ E1 (E6–17)	G–W ↔ BR	IG ON and brake pedal depressed	9.0 – 14
		IG ON and brake pedal released	Below 1.5
TFN (E8–11) ↔ E1 (E6–17)	L ↔ BR	IG ON and Transfer shift lever N position	Below 1.5
		IG ON and Transfer shift lever other than N position	9.0 – 14
SNWI (E8–14) ↔ E1 (E6–17)	Y ↔ BR	IG ON and 2nd start switch ON	Below 1.5
		IG ON and 2nd start switch OFF	9.0 – 14
SNWO (E8–23) ↔ E1 (E6–17)	Y–G ↔ BR	IG ON and 2nd start mode	Below 1.5
		IG ON and Except 2nd start mode	9.0 – 14
PWR (E8–1) ↔ E1 (E6–17)	G–Y ↔ BR	IG ON and Pattern select switch "NORM"	9.0 – 14
		IG ON and Pattern select switch "PWR"	Below 1.5
OD2 (E8–20) ↔ E1 (E6–17)	V–G ↔ BR	IG ON and O/D main switch ON (O/D OFF)	Below 1.5
		IG ON and O/D main switch OFF (O/D ON)	9.0 – 14
L4 (E8–2) ↔ E1 (E6–17)	LG ↔ BR	IG ON and Transfer shift lever L4 position	9.0 – 14
		IG ON and Transfer shift lever other than L4 position	Below 1.5

1KZ–TE:

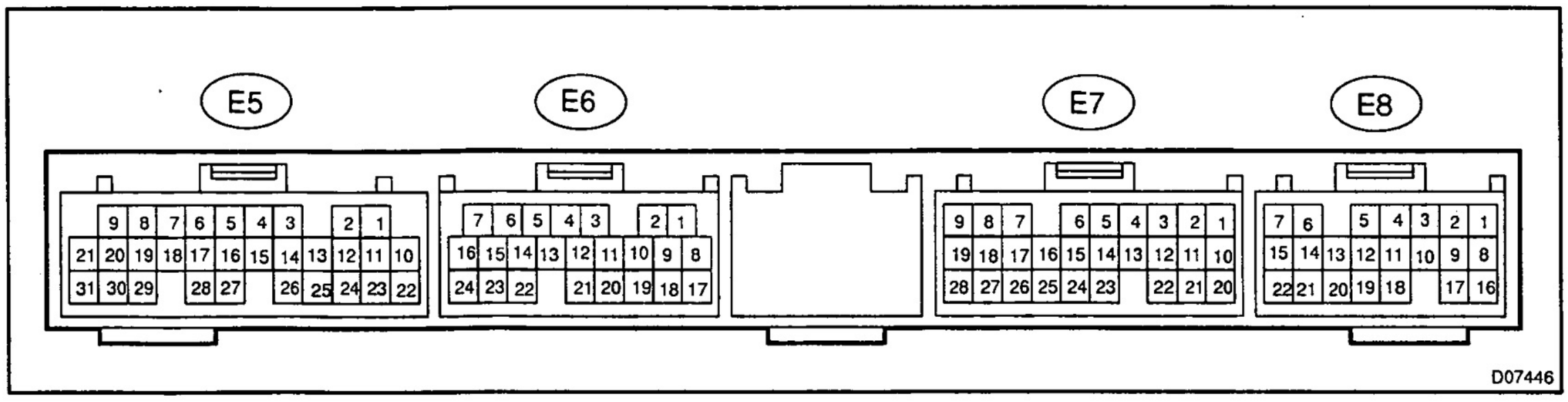

Symbols (Terminals No.)	Wiring Color	Condition	STD Voltage (V)
S1 (E6–6) ↔ E1 (E5–22)	P–B ↔ BR	IG ON	Below 1.5
		3rd or O/D gear	Below 1.5
		1st or 2nd gear	9.0 – 14
S2 (E6–5) ↔ E1 (E5–22)	P–L ↔ BR	IG ON	Below 1.5
		1st or O/D gear	Below 1.5
		2nd or 3rd gear	9.0 – 14
SL (E6–4) ↔ E1 (E5–22)	P ↔ BR	IG ON	Below 1.5
		Vehicle driving under lock–up position	9.0 – 14
SLT^+ (E6–8) ↔ SLT^- (E6–17)	LG ↔ V	IG ON	Below 3.0
		Engine is idling	Pulse signal is output Below 1.5 ↔ 9.0 – 14
$SP2^+$ (E5–14) ↔ $SP2^-$ (E5–26)	LG ↔ L	Engine is idling	Pulse signal is output Below 1.5 ↔ 4 – 6
THO (E6–15) ↔ E2 (E6–20)	Y ↔ BR	IG ON and ATF temperature 110 °C (176 °F)	Below 1.5
NSW (E7–15) ↔ E1 (E5–22)	B–W ↔ BR	IG ON and shift lever range: P or N	9.0 – 14
		IG ON and shift lever range: except P or N	Below 1.5
R (E6–19) ↔ E1 (E5–22)	R–B ↔ BR	IG ON and shift lever range: R	9.0 – 14
		IG ON and shift lever range: except R	Below 1.5
D (E6–18) ↔ E1 (E5–22)	G–O ↔ BR	IG ON and shift lever range: D	9.0 – 14
		IG ON and shift lever range: except D	Below 1.5
2 (E6–9) ↔ E1 (E5–22)	G–W ↔ BR	IG ON and shift lever range: 2	9.0 – 14
		IG ON and shift lever range: except 2	Below 1.5
L (E6–10) ↔ E1 (E5–22)	G–B ↔ BR	IG ON and shift lever range: L	9.0 – 14
		IG ON and shift lever range: except L	Below 1.5
STP (E7–14) ↔ E1 (E5–22)	G–W ↔ BR	IG ON and brake pedal depressed	9.0 – 14
		IG ON and brake pedal released	Below 1.5
TFN (E5–23) ↔ E1 (E5–22)	L ↔ BR	IG ON and Transfer shift lever N position	Below 1.5
		IG ON and Transfer shift lever other than N position	9.0 – 14
SNW (E7–12) ↔ E1 (E5–22)	Y ↔ BR	IG ON and 2nd start switch ON	Below 1.5
		IG ON and 2nd start switch OFF	9.0 – 14
SNWL (E7–16) ↔ E1 (E5–22)	Y–G ↔ BR	IG ON and 2nd start mode	Below 1.5
		IG ON and Except 2nd start mode	9.0 – 14
PWR (E7–20) ↔ E1 (E5–22)	G–Y ↔ BR	IG ON and Pattern select switch "NORM"	9.0 – 14
		IG ON and Pattern select switch "PWR"	Below 1.5

OD2 (E8–11) ↔ E1 (E5–22)	V–G ↔ BR	IG ON and O/D main switch ON (O/D OFF)	Below 1.5
		IG ON and O/D main switch OFF (O/D ON)	9.0 – 14
L4 (E5–11) ↔ E1 (E5–22)	LG ↔ BR	IG ON and Transfer shift lever L4 position	9.0 – 14
		IG ON and Transfer shift lever other than L4 position	Below 1.5
SP1 (E7–22) ↔ E1 (E5–22)	V–W ↔ BR	IG ON and Vehicle stationary	Below 1.5
		IG ON and Turn one rear wheel slowly	Pulse signal is output Below 1.5 ↔ 4–6

3RZ–FE:

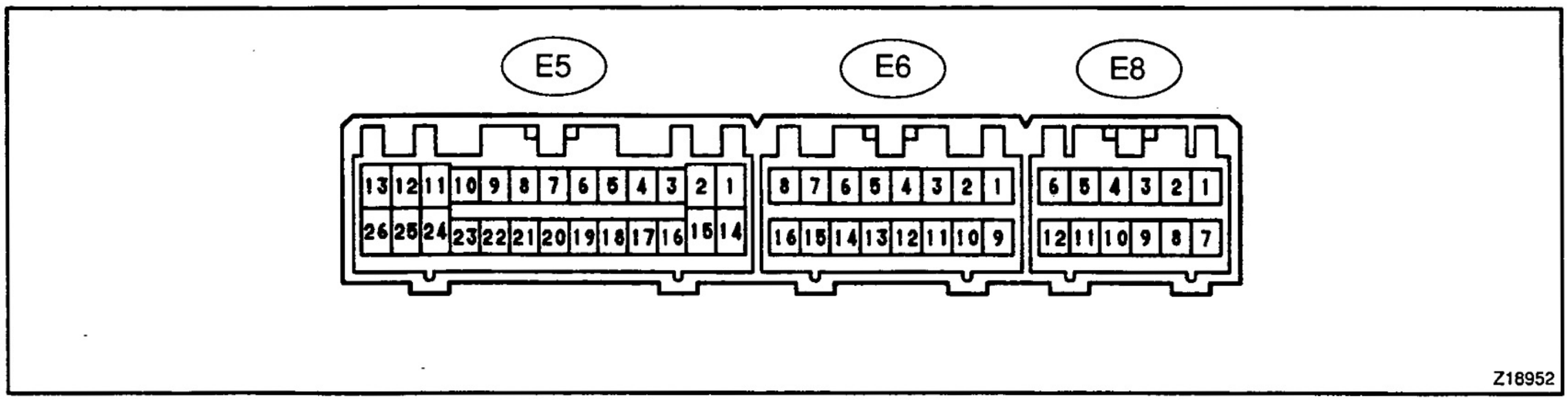

Symbols (Terminals No.)	Wiring Color	Condition	STD Voltage (V)
S1 (E5–26) ↔ E1 (E5–24)	P–B ↔ BR	IG ON	Below 1.5
		3rd or O/D gear	Below 1.5
		1st or 2nd gear	9.0 – 14
S2 (E5–25) ↔ E1 (E5–24)	P–L ↔ BR	IG ON	Below 1.5
		1st or O/D gear	Below 1.5
		2nd or 3rd gear	9.0 – 14
SL (E5–11) ↔ E1 (E5–24)	L ↔ BR	IG ON	Below 1.5
		Vehicle driving under lock–up position	9.0 – 14
NSW (E5–15) ↔ E1 (E5–24)	B ↔ BR	IG ON and shift lever range: P or N	9.0 – 14
		IG ON and shift lever range: except P or N	Below 1.5
R (E5–19) ↔ E1 (E5–24)	R–B ↔ BR	IG ON and shift lever range: R	9.0 – 14
		IG ON and shift lever range: except R	Below 1.5
2 (E5–20) ↔ E1 (E5–24)	G–W ↔ BR	IG ON and shift lever range: 2	9.0 – 14
		IG ON and shift lever range: except 2	Below 1.5
L (E5–6) ↔ E1 (E5–24)	G–B ↔ BR	IG ON and shift lever range: L	9.0 – 14
		IG ON and shift lever range: except L	Below 1.5
STP (E6–1) ↔ E1 (E5–24)	G–W ↔ BR	IG ON and brake pedal depressed	9.0 – 14
		IG ON and brake pedal released	Below 1.5
TFN (E6–9) ↔ E1 (E5–24)	L ↔ BR	IG ON and Transfer shift lever N position	Below 1.5
		IG ON and Transfer shift lever other than N position	9.0 – 14
SNWI (E8–3) ↔ E1 (E5–24)	Y ↔ BR	IG ON and 2nd start switch ON	Below 1.5
		IG ON and 2nd start switch OFF	9.0 – 14
SNWO (E5–18) ↔ E1 (E5–24)	Y–G ↔ BR	IG ON and 2nd start mode	Below 1.5
		IG ON and Except 2nd start mode	9.0 – 14
OD2 (E5–1) ↔ E1 (E5–24)	L–W ↔ BR	O/D main switch ON (O/D ON)	9.0 – 14
		O/D main switch OFF (O/D OFF)	Below 3
SPD (E8–11) ↔ E1 (E5–24)	V–W ↔ BR	IG ON and turn one front wheel slowly	Pulse signal is output Below 1.5 ↔ 4 – 6
SP2+ (E5–3) ↔ SP2– (E5–16)	LG ↔ L	Engine is idling	Pulse signal is output Below 1.5 ↔ 4 – 6
L4 (E6–13) ↔ E1 (E5–24)	LG ↔ BR	IG ON and Transfer shift lever L4 position	9.0 – 14
		IG ON and Transfer shift lever other than L4 position	Below 1.5

DI6F7–01

PROBLEM SYMPTOMS TABLE

HINT:

If a normal code is displayed during the DTC check but the trouble still occurs, check the circuits for each symptom in the order given in the charts on the following pages and proceed to the page given for trouble-shooting.

The Matrix Chart is divided into 3 chapters.

- If the instruction "Proceed to next circuit inspection shown on matrix chart" is given in the flow chart for each circuit, proceed to the circuit with the next highest number in the table to continue the check.
- If the trouble still occurs even though there are no abnormalities in any of the other circuits, then check and replace the Engine and ECT ECU.

CHAPTER 1: ELECTRONIC CIRCUIT MATRIX CHART

Symptom	Suspect Area	See page
No up–shift (A particular gear, from 1st to 3rd gear, is not –up shifted)	Engine and ECT ECU	IN–33
No up–shift (3rd → O/D)	1. O/D main switch & O/D OFF indicator circuit 2. Engine and ECT ECU	DI–65 IN–33
No down–shift (O/D → 3rd)	1. O/D main switch & O/D OFF indicator circuit 2. Engine and ECT ECU	DI–65 IN–33
No down–shift (A particular gear, from 1st to 3rd gear, is not –down shifted)	Engine and ECT ECU	IN–33
No lock–up	1. Stop light switch signal circuit 2. Engine and ECT ECU	DI–59 IN–33
No lock–up off	Engine and ECT ECU	IN–33
Shift point too high or too low	1. Pattern select switch circuit 2. L4 position switch circuit 3. Engine and ECT ECU	DI–70 DI–81 IN–33
Up–shift to O/D from 3rd while O/D main switch is OFF	1. O/D main switch & O/D OFF indicator circuit 2. Engine and ECT ECU	DI–65 IN–33
Up–shift to O/D from 3rd while engine is cold	Engine and ECT ECU	IN–33
No kick–down	Engine and ECT ECU	IN–33
Engine stalls when starting off or stopping	Engine and ECT ECU	IN–33
No pattern select	1. Pattern select switch circuit 2. Engine and ECT ECU	DI–70 IN–33
No 2nd start	1. Pattern select switch circuit 2. Engine and ECT ECU	DI–70 IN–33
A/T.P. indicator light does not light up	1. A/T. P. indicator light circuit 2. Engine and ECT ECU	DI–78 IN–33

CHAPTER 2: ON–VEHICLE REPAIR
(★: A343F AUTOMATIC TRANSMISSION Repair Manual Pub. No. RM528E)

Symptom	Suspect Area	See page
Vehicle does not move in any forward range and reverse range	1. Transmission control rod 2. Manual valve 3. Parking lock pawl 4. Off–vehicle repair matrix chart	DI–4 ★ AT–5 –
Vehicle does not move in R range	Off–vehicle repair matrix chart	–
Vehicle does not move in particular range or ranges (except R range)	Off–vehicle repair matrix chart	–
No up–shift (1st → 2nd)	1. 1–2 shift valve 2. Off–vehicle repair matrix chart	★ –
No up–shift (2nd → 3rd)	1. 2–3 shift valve 2. Off–vehicle repair matrix chart	★ –
No up–shift (3rd → O/D)	1. 3–4 shift valve 2. Off–vehicle repair matrix chart	★ –
No down–shift (O/D → 3rd)	1. 3–4 shift valve 2. Off–vehicle repair matrix chart	★
No down–shift (3rd → 2nd)	1. 2–3 shift valve 2. Off–vehicle repair matrix chart	★ –
No down–shift (2nd → 1st)	1. 1–2 shift valve 2. Off–vehicle repair matrix chart	★
No lock–up or No lock–up off	1. Lock–up control valve 2. Lock–up relay valve 3. Off–vehicle repair matrix chart	★ ★ –
Harsh engagement (N → D)	1. Accumulator control valve 2. Solenoid modulator valve 3. C_1 accumulator 4. Orifice control valve 5. Off–vehicle repair matrix chart	★ ★ ★ ★ –
Harsh engagement (Lock–up)	1. Lock–up control valve 2. Lock–up relay valve 3. Solenoid relay valve 4. Off–vehicle repair matrix chart	★ ★ ★ –
Harsh engagement (N → R)	1. Accumulator control valve 2. C_2 accumulator 3. Solenoid modulator valve 4. Off–vehicle repair matrix chart	★ ★ ★ –
Harsh engagement (N → L)	Low coast modulator valve	★
Harsh engagement (1st → 2nd → 3rd → O/D)	1. Accumulator control valve 2. Solenoid modulator valve	★ ★
Harsh engagement (2nd → 3rd)	1. Accumulator control valve 2. Solenoid modulator valve 3. C_2 accumulator 4. Off–vehicle repair matrix chart	★ ★ ★ –
Harsh engagement (3rd → O/D)	1. Accumulator control valve 2. Solenoid modulator valve 3. B_0 accumulator 4. Off–vehicle repair matrix chart	★ ★ ★ –

Symptom	Suspect Area	See page
Harsh engagement (O/D → 3rd)	1. Accumulator control valve 2. Solenoid modulator valve 3. C_0 accumulator 4. Off–vehicle repair matrix chart	★ ★ ★ –
Slip or shudder (Forward and reverse)	1. Transmission control rod 2. Oil strainer 3. Pressure relief valve 4. Off–vehicle repair matrix chart	DI–4 ★ ★ –
Slip or shudder (Particular range)	1. Transmission control rod 2. Off–vehicle repair matrix chart	DI–4 –
No engine braking (1st: L range)	1. Low coast modulator valve 2. Off–vehicle repair matrix chart	★ –
No engine braking (2nd: 2 range)	1. 2nd coast modulator valve 2. Off–vehicle repair matrix chart	★ –
No kick–down	1. 1–2 shift valve 2. 2–3 shift valve	★ ★

CHAPTER 3: OFF–VEHICLE REPAIR
(★: A343F AUTOMATIC TRANSMISSION Repair Manual Pub. No. RM528E)

Symptom	Suspect Area	See page
Vehicle does not move in any forward range and reverse range	1. O/D one–way clutch (F_0) 2. O/D direct clutch (C_0) 3. O/D planetary gear unit 4. Torque converter	★ ★ ★ *1
Vehicle does not move in R range	1. Front and rear planetary gear unit 2. Direct clutch (C_2) 3. 1st & reverse brake (B_3) 4. O/D direct clutch (C_0)	★ ★ ★ ★
No up–shift (1st → 2nd)	1. 2nd brake (B_2) 2. No. 1 one–way clutch (F_1)	★ ★
No up–shift (2nd → 3rd)	Direct clutch (C_2)	★
No up–shift (3rd → O/D)	O/D brake (B_0)	★
No lock–up or No lock–up off	Torque converter	*1
Harsh engagement (N → D)	1. Forward clutch (C_1) 2. O/D one–way clutch (F_0) 3. No. 2 one–way clutch (F_2)	★ ★ ★
Harsh engagement (N → R)	1. Direct clutch (C_2) 2. 1st & reverse brake (B_3) 3. O/D one–way clutch (F_0)	★ ★ ★
Harsh engagement (N → 2)	1. Forward clutch (C_1) 2. O/D one–way clutch (F_0) 3. No. 2 one–way clutch (F_2)	★ ★ ★
Harsh engagement (N → L)	1. Forward clutch (C_1) 2. 1st & reverse brake (B_3) 3. O/D one–way clutch (F_0) 4. No. 2 one–way clutch (F_2)	★ ★ ★ ★
Harsh engagement (Lock–up)	Torque converter	*1
Slip or shudder (Forward and reverse: After warm–up)	1. Torque converter 2. O/D one–way clutch (F_0) 3. O/D direct clutch (C_0)	*1 ★ ★
Slip or shudder (Particular range: Just after engine starts)	Torque converter	*1
Slip or shudder (R range)	1. Direct clutch (C_2) 2. 1st & reverse brake (B_3)	★ ★
Slip or shudder (1st)	1. Forward clutch (C_1) 2. No. 2 one–way clutch (F_2)	★ ★
Slip or shudder (2nd)	1. 2nd brake (B_2) 2. 2nd coast brake (B_1) 3. No. 1 one–way clutch (F_1)	★ ★ ★
Slip or shudder (3rd)	Direct clutch (C_2)	★
Slip or shudder (O/D)	O/D brake (B_0)	★
No engine braking (1st ± 3rd: D range)	2nd brake (B_2)	★
No engine braking (1st: L range)	1st & reverse brake (B_3)	★
No engine braking (2nd: 2 range)	2nd coast brake (B_1)	★
Poor acceleration (All range)	Torque converter	*1
Poor acceleration (O/D)	1. O/D direct clutch (C_0) 2. O/D planetary gear unit	★ ★
Engine stalls when starting off or stopping	Torque converter	*1

*1: See Pub. No. RM517E on page AT–17

DI6F8–01

CIRCUIT INSPECTION

DTC	P0500/42	Vehicle Speed Sensor Malfunction (No. 1 Speed Sensor)

CIRCUIT DESCRIPTION

The No.1 speed sensor detects the rotation speed of the transmission output shaft and sends signals to the Engine and ECT ECU. The Engine and ECT ECU determines the vehicle speed based on these signals. An AC voltage is generated in the vehicle speed sensor coil as the rotor mounted on the output shaft rotates, and this voltage is sent to the Engine and ECT ECU.

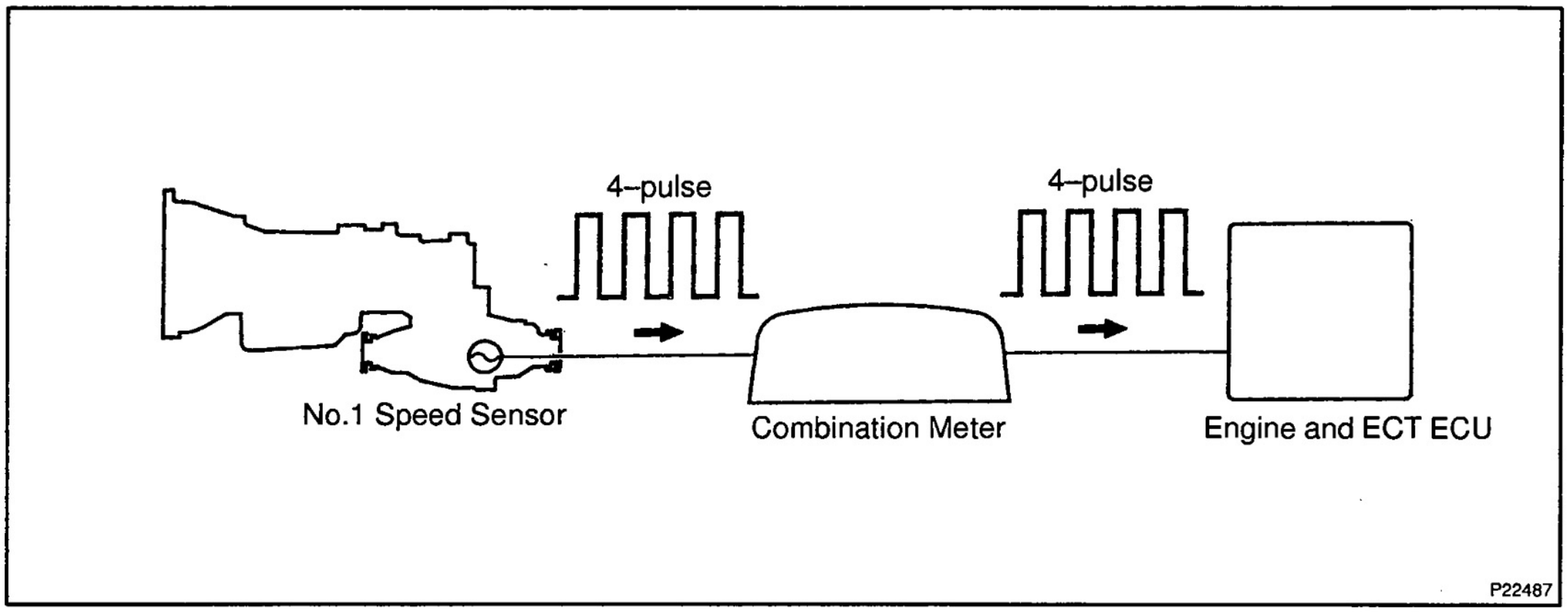

DTC No.	DTC Detecting Condition	Trouble Area
P0500/42	No vehicle speed sensor signal to Engine and ECT ECU under conditions (a) and (b): (a) Neutral start switch is OFF (b) Vehicle is being driven	• Open or short in No.1 speed sensor circuit • No.1 speed sensor • Engine and ECT ECU • Automatic transmission assembly
	Clutch or brake slips or gear broken	

WIRING DIAGRAM

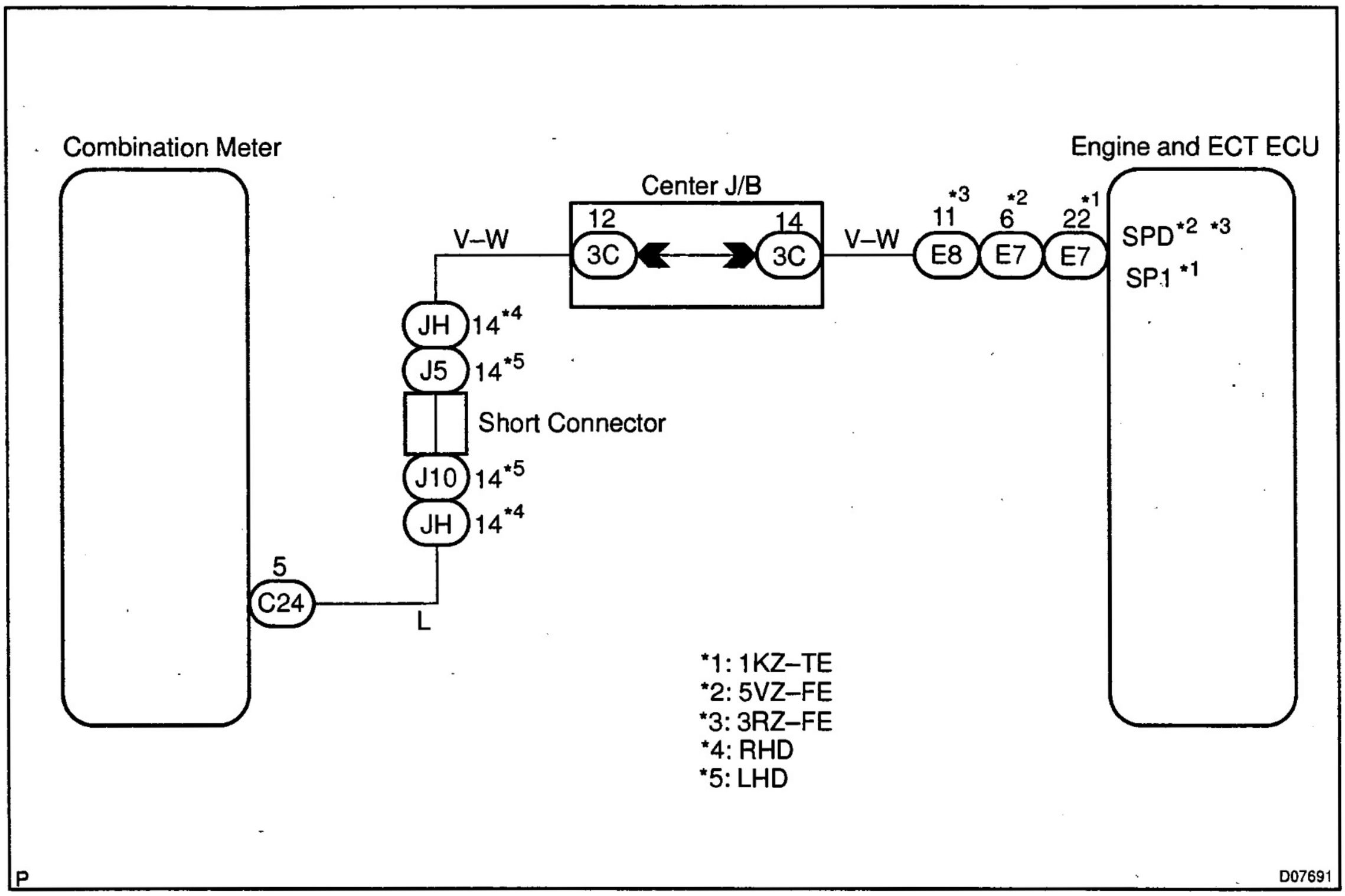

INSPECTION PROCEDURE

HINT:

Read freeze frame data using hand–held tester. Because freeze frame records the engine conditions when the malfunction is detected, when troubleshooting it is useful for determining whether the vehicle was running or stopped, the engine warmed up or not, the air–fuel ratio lean or rich, etc. at the time of the malfunction.

1	**Connect hand–held tester and read value of vehicle speed value.**

PREPARATION:

(a) Connect the hand–held tester to the DLC3.

(b) Start the engine and the hand–held tester main switch ON.

CHECK:

Drive the vehicle and read vehicle speed value.

OK:

Vehicle speed matches tester speed value

NG → **Check and replace Engine and ECT ECU (See page IN–33).**

OK

2	**Check speedometer circuit.**

NG → **Repair or replace speedometer circuit.**

OK

3	**Check resistance between terminals SPD of Engine and ECT ECU connector and body ground.**

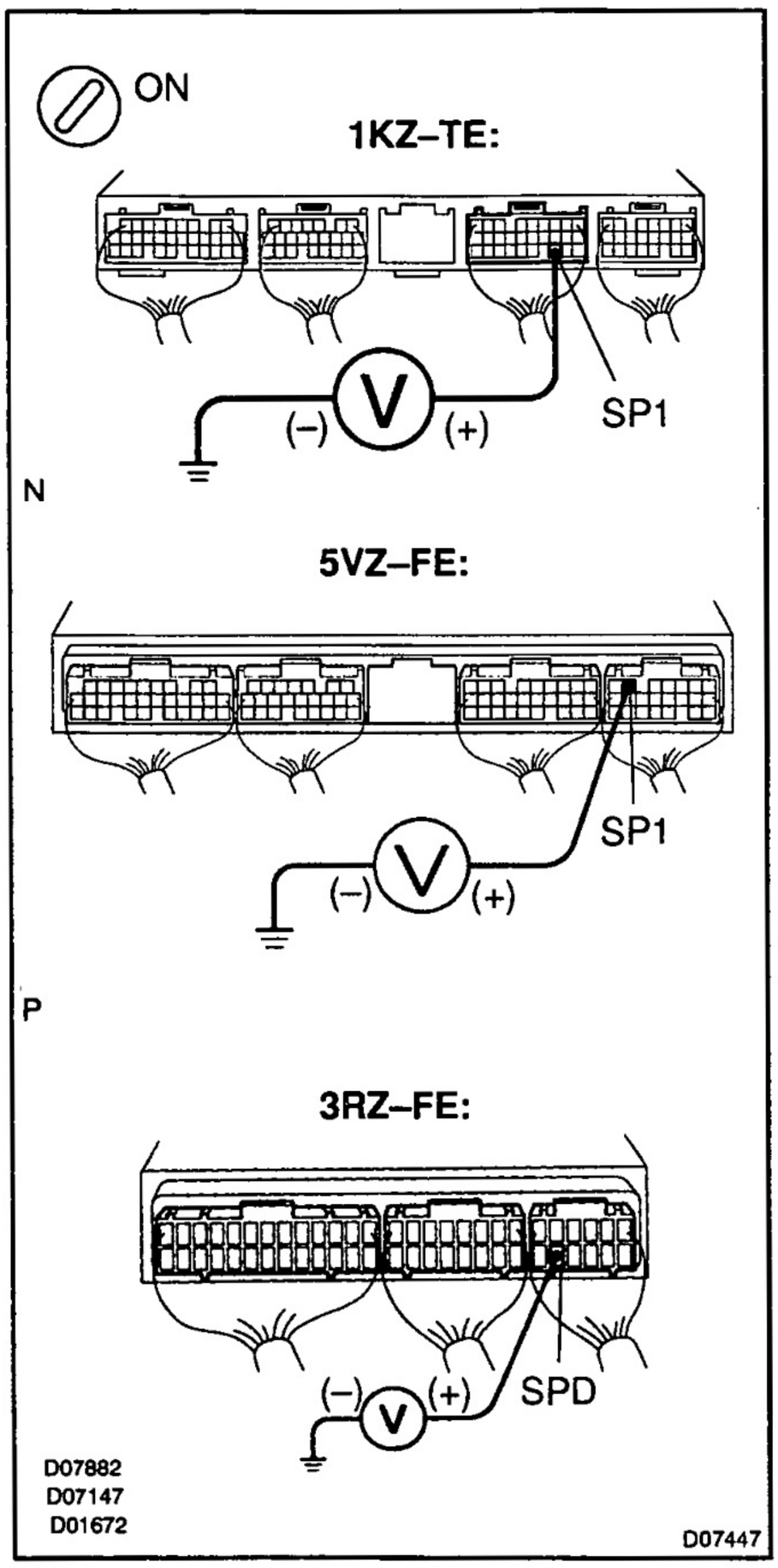

PREPARATION:

(a) Remove the glove compartment door.
(b) Disconnect the cruise control ECU connector.
(c) Disconnect the connector of the Engine and ECT ECU.
(d) Shift the shift lever to neutral.
(e) Jack up the rear wheel on one side
(f) Turn ignition switch ON.

CHECK:

Check voltage between terminals SPD of the Engine and ECT ECU connector and body ground when the wheel is turned slowly.

OK:

Voltage is generated intermittently

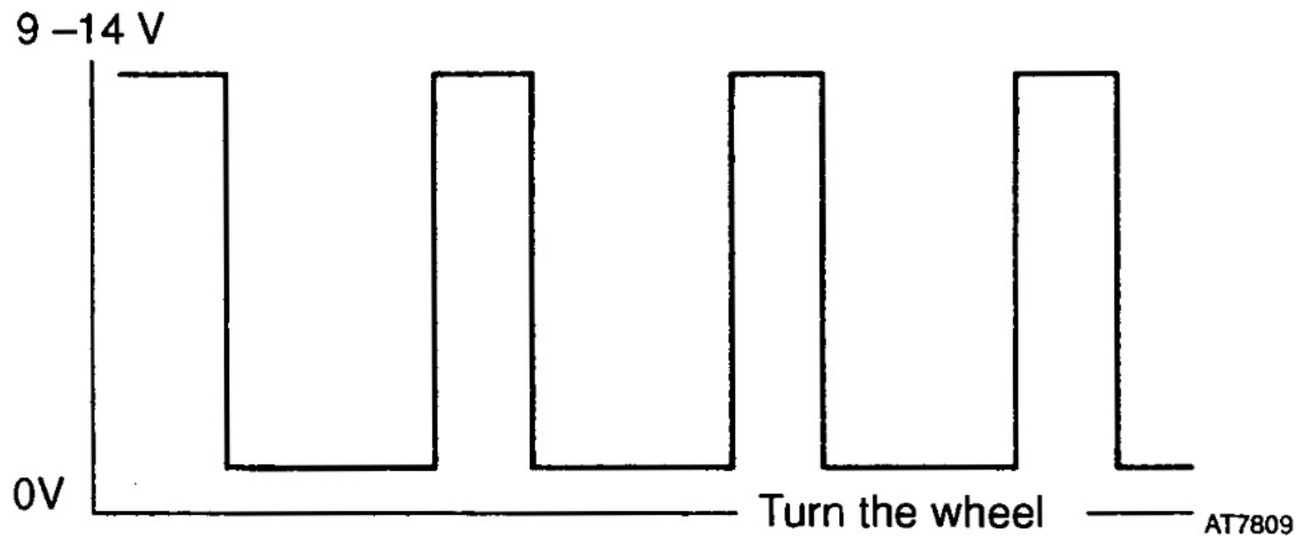

NG → **Check and repair harness and connector between combination meter and Engine and ECT ECU.**

OK

Check and replace Engine and ECT ECU (See page IN–33).

DI6F9–01

DTC	P0710/38	Transmission Fluid Temperature Sensor Malfunction (ATF Temperature Sensor)

CIRCUIT DESCRIPTION

The ATF temperature sensor converts fluid temperature into a resistance value which is input into the Engine and ECT ECU.

DTC No.	DTC Detecting Condition	Trouble Area
P0710/38	Either (a) or (b) is detected for 0.5 sec. or more. (2–trip detection logic) (a) Temperature sensor resistance is less than 79 Ω (b) After the engine has been operating for 15 minutes or more, the resistance at the temp. sensor is more than 156 kΩ	• Open or short in ATF temperature sensor • ATF temperature sensor • Engine and ECT ECU

WIRING DIAGRAM

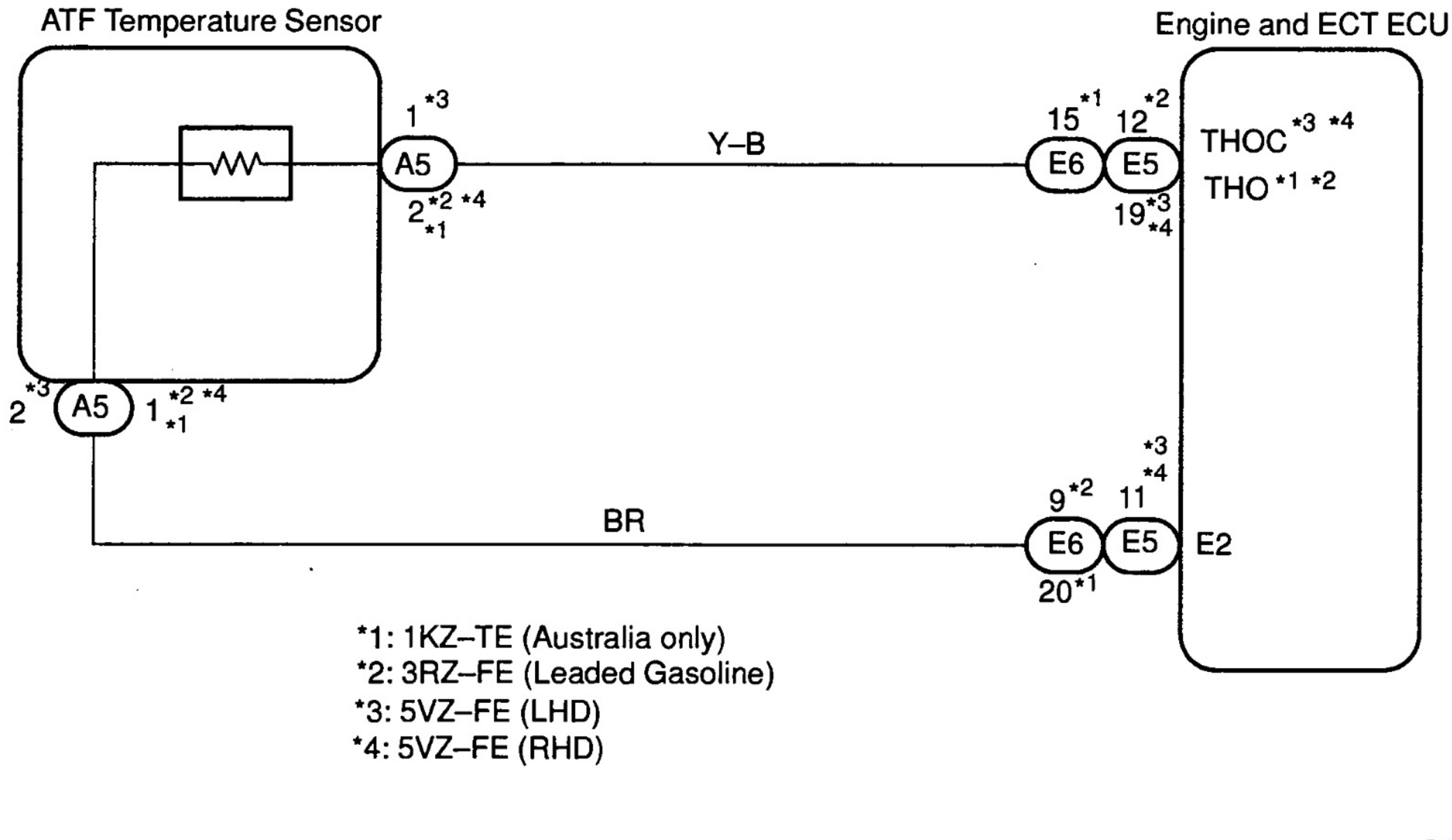

P

D07692

INSPECTION PROCEDURE

1	**Check ATF temperature sensor.**

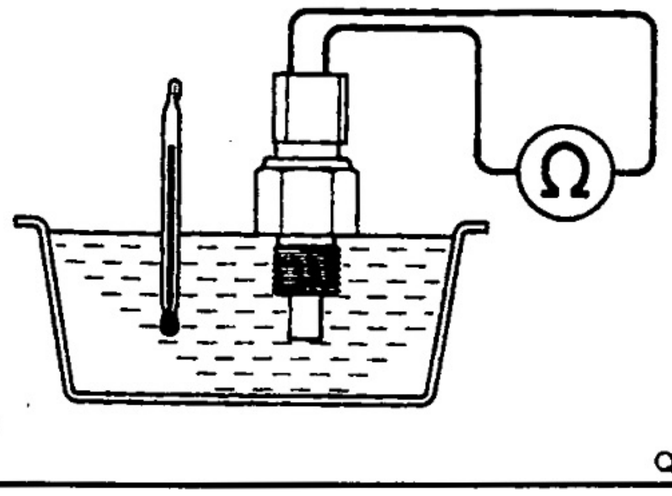

PREPARATION:

(a) Remove the ATF temperature sensor connector.

(b) Remove the ATF temperature sensor.

CHECK:

Measure resistance between terminals of ATF temperature sensor at 20 °C (68 °F) and 120 °C (248 °F).

OK:

Resistance (Approx.):
20 °C (68 °F): 12.1 kΩ
120 °C (248 °F): 616 Ω

NG → **Replace the ATF temperature sensor.**

OK

2	**Check harness and connector between ATF temperature sensor and Engine and ECT ECU (See page IN–33).**

NG → **Repair or replace the harness or connector.**

OK

Check and replace the Engine and ECT ECU (See page IN–33).

DTC	P0753/62,P0758/63	Shift Solenoid A/B Electrical Malfunction (No. 1/No. 2 Solenoid Valve)

CIRCUIT DESCRIPTION

Shifting from 1st to O/D is performed in combination with ON and OFF of the No.1 and No.2 solenoid valves controlled by Engine and ECT ECU. If an open or short circuit occurs in either of the solenoid valves, the Engine and ECT ECU controls the remaining normal solenoid valve to allow the vehicle to be operated smoothly (Fail safe function).

HINT:

Check the No.1 solenoid valve when DTC P0753/62 is output, check the No.2 solenoid valve when DTC P0758/63 is output.

DTC No.	DTC Detecting Condition	Trouble Area
P0753/62 P0758/63	The Engine and ECT ECU checks for an open or short circuit in the No.1 or No.2 solenoid valve circuit when it changes. The Engine and ECT ECU records DTC P0753/62 or P0758/63 if condition (a) or (b) is detected once, but it does not light up O/D OFF indicator light. After Engine and ECT ECU detects condition (a) or (b) continuously 8 times or more in 1 trip, it causes the O/D OFF indicator light lights up until condition (a) or (b) disappears. After that, if the Engine and ECT ECU detects condition (a) or (b) once, it starts lighting up O/D OFF indicator light again. (a) Solenoid resistance is 8 Ω or less (short circuit) when the solenoid is energized. (b) Solenoid resistance is 100 kΩ or more (open circuit) when the solenoid is not energized.	• Open or short in No.1/No.2 solenoid valve circuit • No.1/No.2 solenoid valve • Engine and ECT ECU

Fail Safe Function:

If either of the shift solenoid valve circuits develops an open or short, the Engine and ECT ECU turns the other solenoid valve ON and OFF to shift to the gear positions shown in the table below. The Engine and ECT ECU also turns the SL solenoid valve OFF at the same time. If both solenoids are malfunctioning, hydraulic control cannot be performed electronically and must be done manually.

Manual shifting as shown in the following table must be done (In the case of a short circuit, the Engine and ECT ECU stops sending current to the short circuited solenoid).

Range	NORMAL			NO.1 SOLENOID MALFUNCTIONING			NO.2 SOLENOID MALFUNCTIONING			BOTH SOLENOIDS MALFUNCTIONING
	Solenoid valve		Gear	Solenoid valve		Gear	Solenoid valve		Gear	Gear when shift selector is manually operated
	No.1	No.2		No.1	No.2		No.1	No.2		
D	ON	OFF	1st	X	ON	3rd	ON	X	1st	O/D
	ON	ON	2nd	X	ON	3rd	OFF	X	O/D	O/D
	OFF	ON	3rd	X	ON	3rd	OFF	X	O/D	O/D
	OFF	OFF	O/D	X	OFF	O/D	OFF	X	O/D	O/D
2	ON	OFF	1st	X	ON	3rd	ON	X	1st	3rd
	ON	ON	2nd	X	ON	3rd	OFF	X	3rd	3rd
	OFF	ON	3rd	X	ON	3rd	OFF	X	3rd	3rd
L	ON	OFF	1st	X	OFF	1st	ON	X	1st	1st
	ON	ON	2nd	X	ON	2nd	ON	X	1st	1st

X: Malfunctions

WIRING DIAGRAM

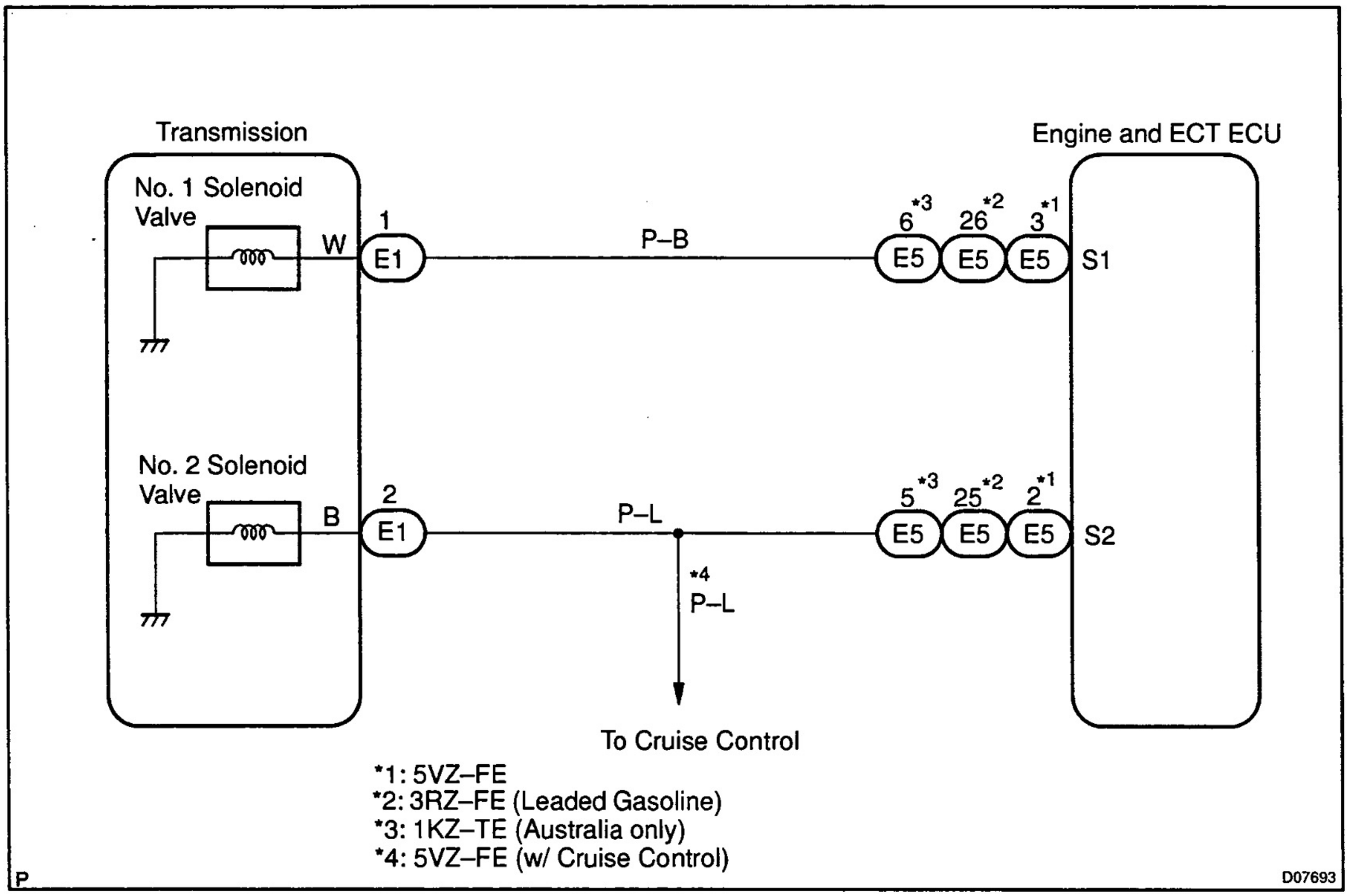

INSPECTION PROCEDURE

1	**Measure resistance between terminal S1 or S2 of Engine and ECT ECU and body ground.**

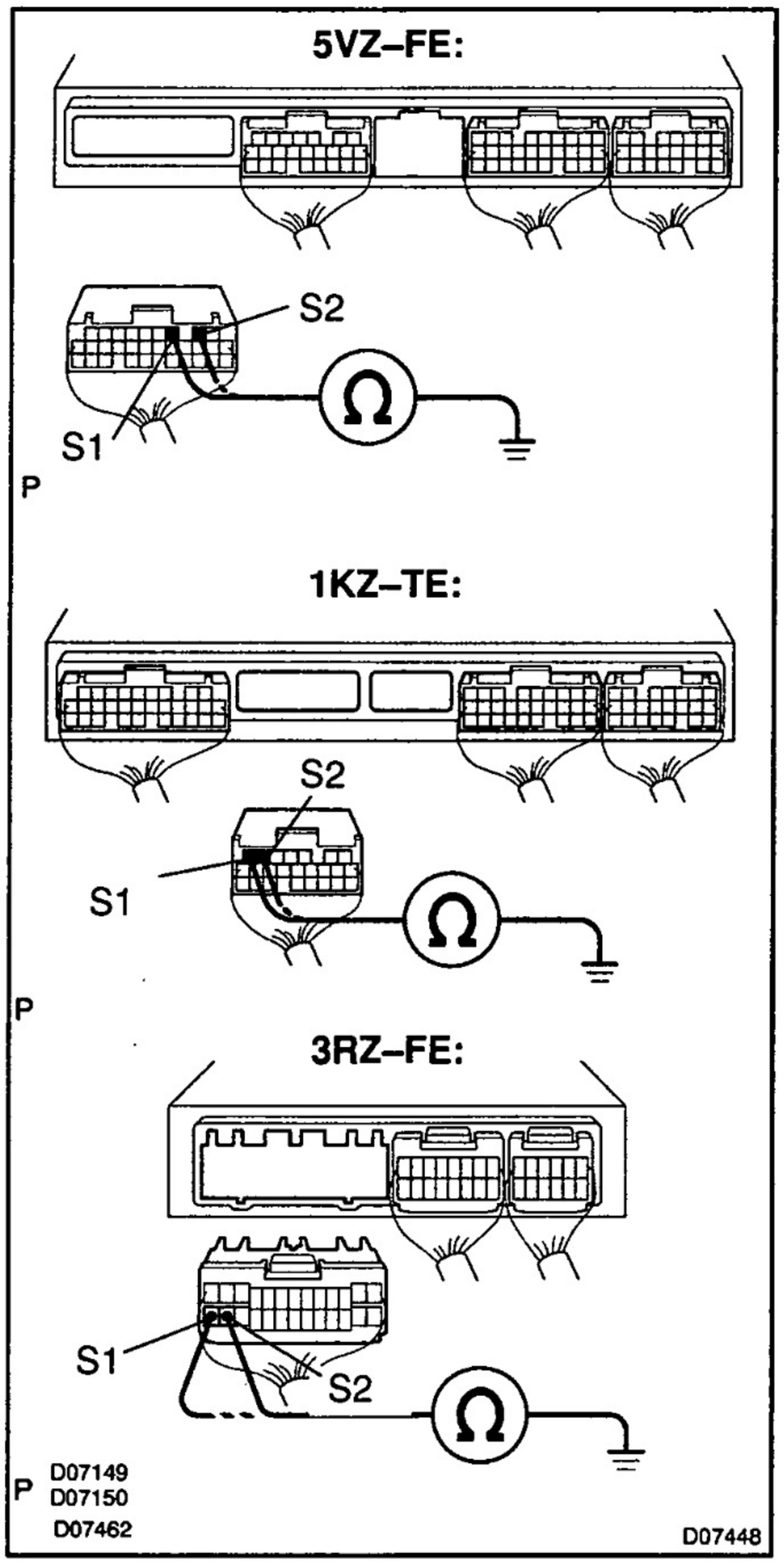

PREPARATION:

(a) Remove the glove compartment door.

(b) Disconnect the connector from Engine and ECT ECU.

CHECK:

Measure resistance between terminal S1 or S2 of Engine and ECT ECU and body ground.

OK:

Resistance: 11 – 15 Ω at 20 °C (68 °F)

OK → **Check and replace the Engine and ECT ECU (See page IN–33).**

NG

2	**Check harness and connector between Engine and ECT ECU and automatic transmission solenoid connector.**

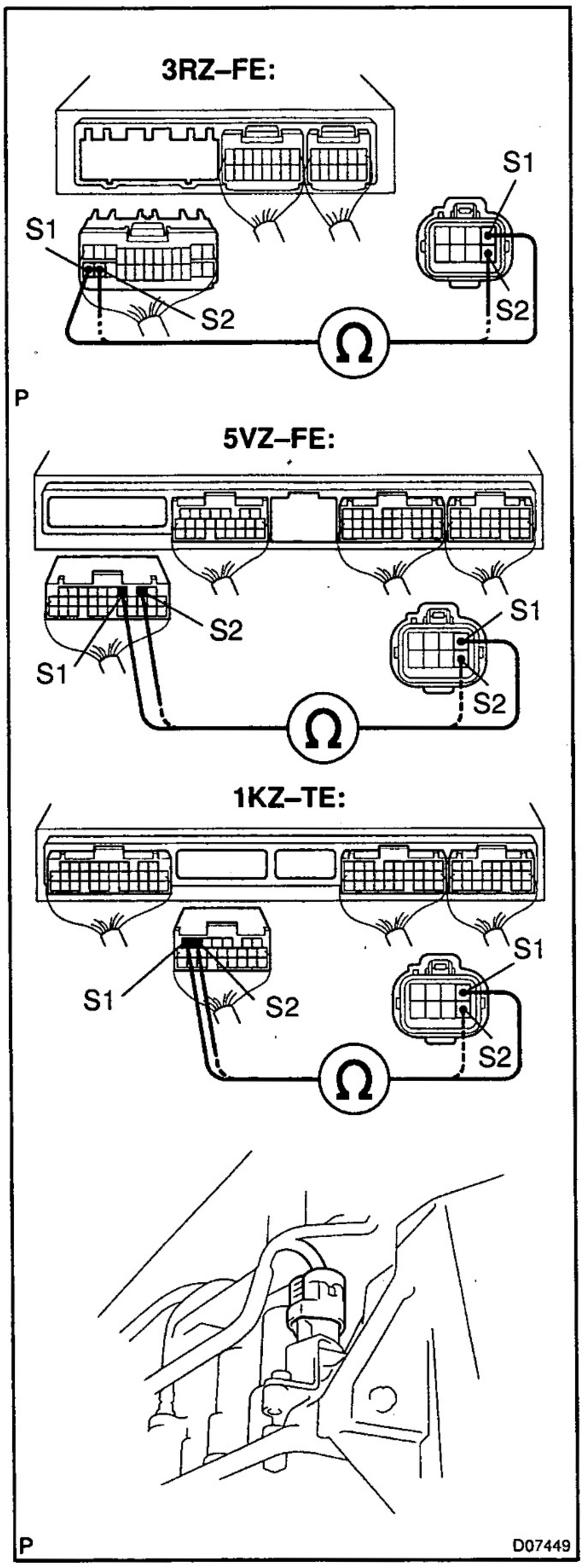

PREPARATION:

Disconnect the solenoid connector from the automatic transmission.

CHECK:

Check the harness and connector between terminal S1 or, S2 of Engine and ECT ECU and terminal S1 or S2 of solenoid connector.

OK:

There is no open and no short circuit.

NG → **Repair or replace the harness or connector.**

OK

3	Check No.1 or No.2 solenoid valve.

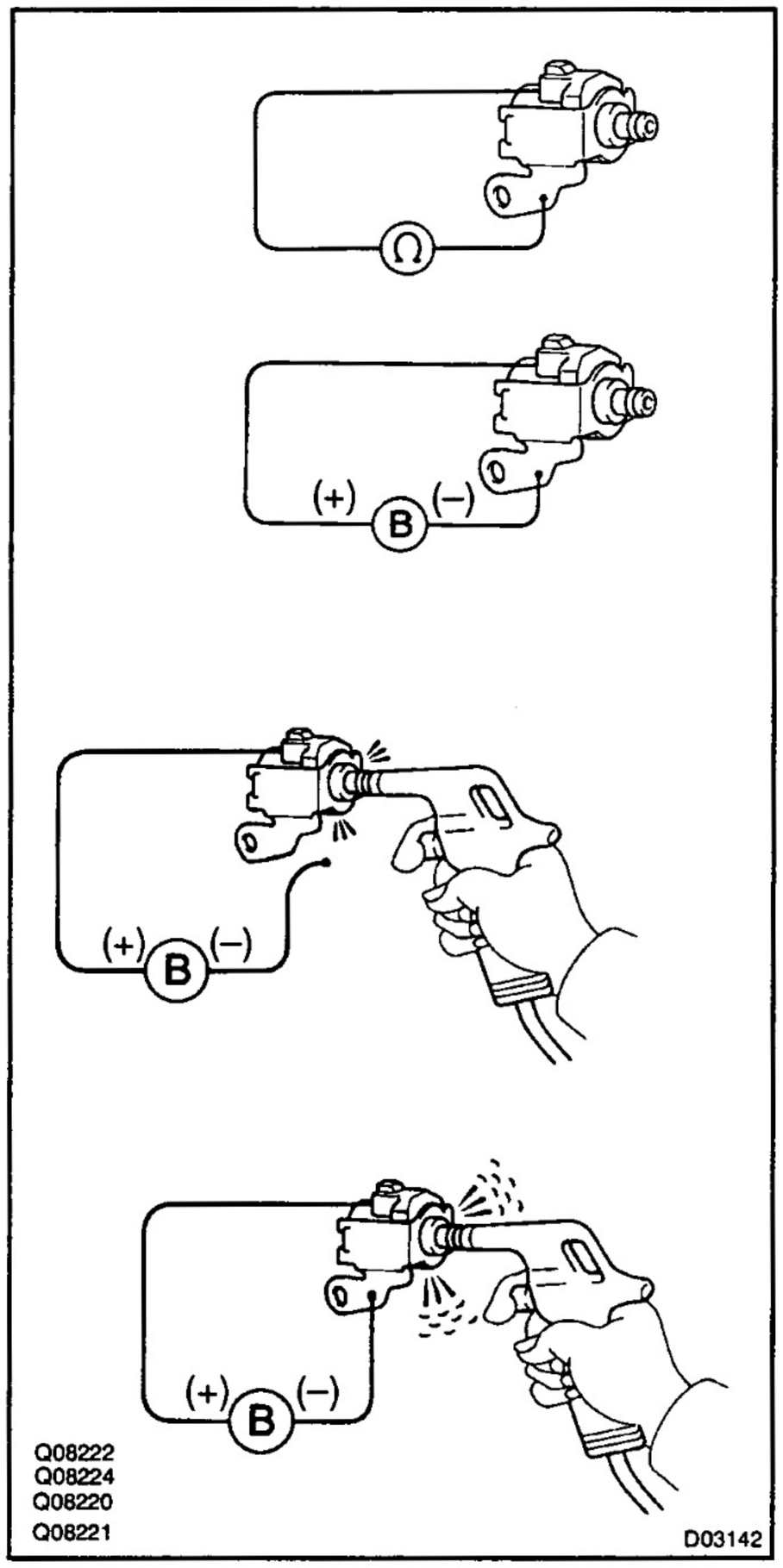

Electrical Check:

PREPARATION:

(a) Jack up the vehicle.
(b) Remove the oil pan.
(c) Disconnect the solenoid connector.
(d) Remove the No.1 or No.2 solenoid valve.

CHECK:

(a) Measure resistance between solenoid connector and body ground.
(b) Connect positive ⊕ lead to terminal of solenoid connector, negative ⊖ lead to solenoid body.

OK:

(a) Resistance: 11 – 15 Ω at 20 °C (68 °F)
(b) The solenoid makes an operating noise.

Mechanical Check:

PREPARATION:

(a) Jack up the vehicle.
(b) Remove the oil pan.
(c) Disconnect the solenoid connector.
(d) Remove the No.1 or No.2 solenoid valve.

CHECK:

(a) Applying 490 kPa (5 kgf/cm^2, 71 psi) of compressed air, check that the solenoid valves do not leak air.
(b) When battery positive voltage is supplied to the shift solenoid valves, check that the solenoid valves open.

OK:

(a) Solenoid valve does not leak air.
(b) Solenoid valve opens.

NG → **Replace the solenoid valve.**

OK

Repair or replace the solenoid wire.

DI6FB–01

DTC	P0773/64	Shift Solenoid E Electrical Malfunction (SL Solenoid Valve)

CIRCUIT DESCRIPTION

The SL solenoid valve is turned ON and OFF by signals from the Engine and ECT ECU to control the hydraulic pressure acting on the lock–up relay valve, which then controls operation of the lock–up clutch.

DTC No.	DTC Detecting Condition	Trouble Area
P0773/64	Either (a) or (b) is detected for 1 time. (a) Solenoid resistance is 8 Ω or less (short circuit) when the solenoid is energized. (b) Solenoid resistance is 100 kΩ or more (open circuit) when the solenoid is not energized.	• Open or short in SL solenoid valve circuit • SL solenoid valve • Engine and ECT ECU

Fail safe function

If the Engine and ECT ECU detects a malfunction, it turns the SL solenoid valve OFF.

WIRING DIAGRAM

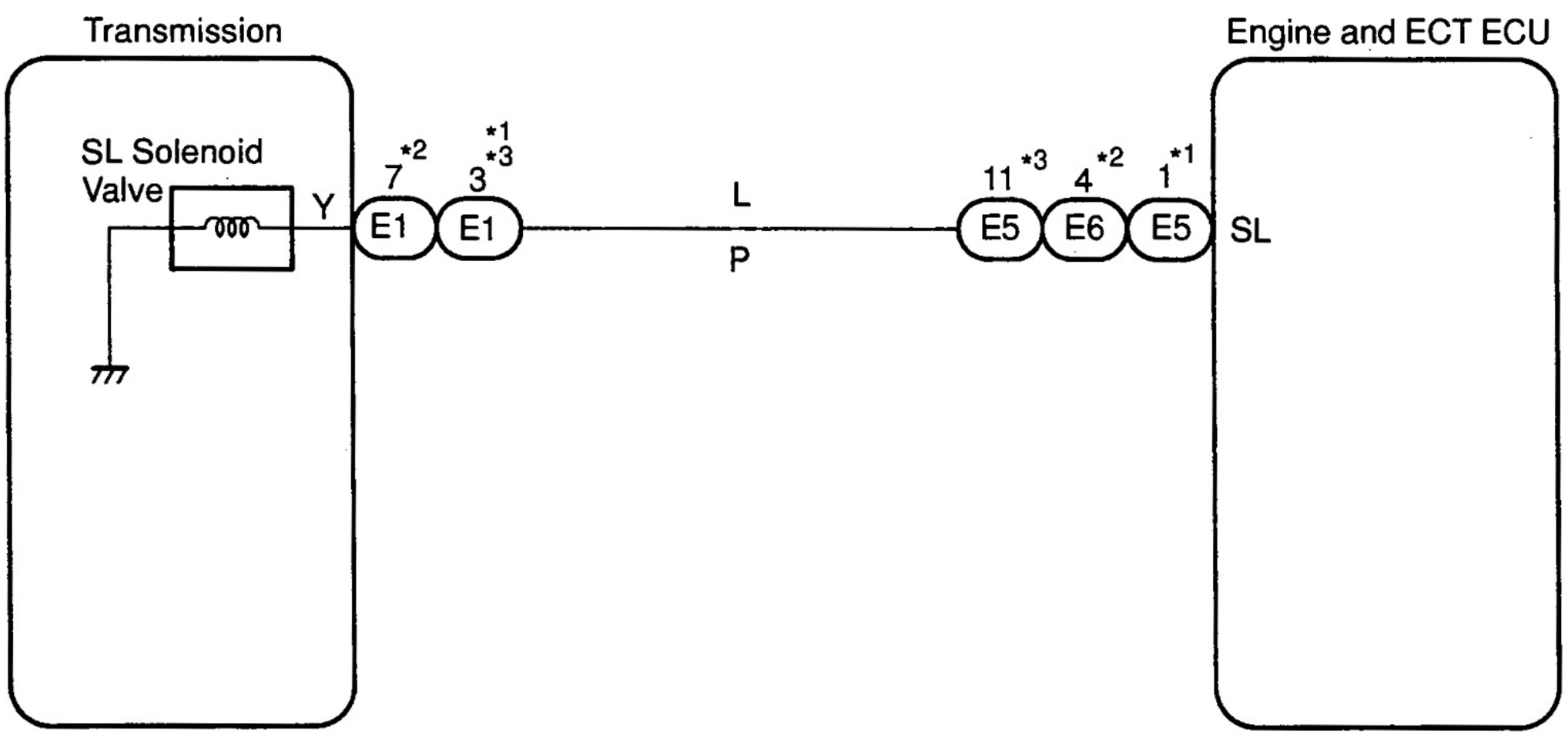

*1: 5VZ–FE
*2: 1KZ–TE (Australia only)
*3: 3RZ–FE (Leaded Gasoline)

P

D07694

INSPECTION PROCEDURE

1	**Measure resistance between terminal SL of Engine and ECT ECU and body ground.**

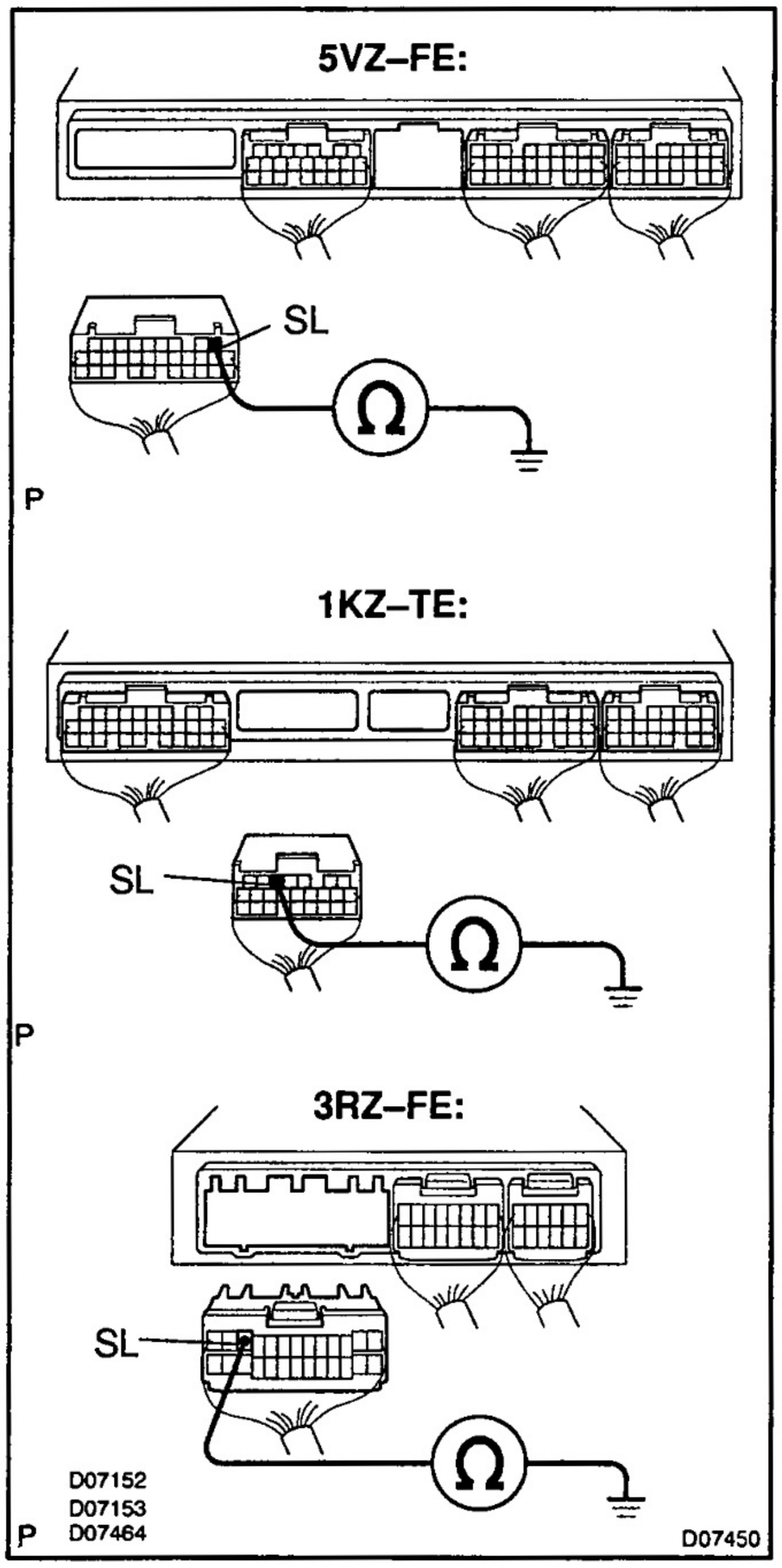

PREPARATION:

(a) Remove the glove compartment door (See page BO–17).

(b) Disconnect the connector from Engine and ECT ECU.

CHECK:

Measure resistance between terminal SL of Engine and ECT ECU and body ground.

OK:

Resistance: 11 – 15 Ω at 20 °C (68 °F)

OK → **Check and replace the Engine and ECT ECU (See page IN–33).**

NG

2	**Check harness and connector between Engine and ECT ECU and automatic transmission solenoid connector.**

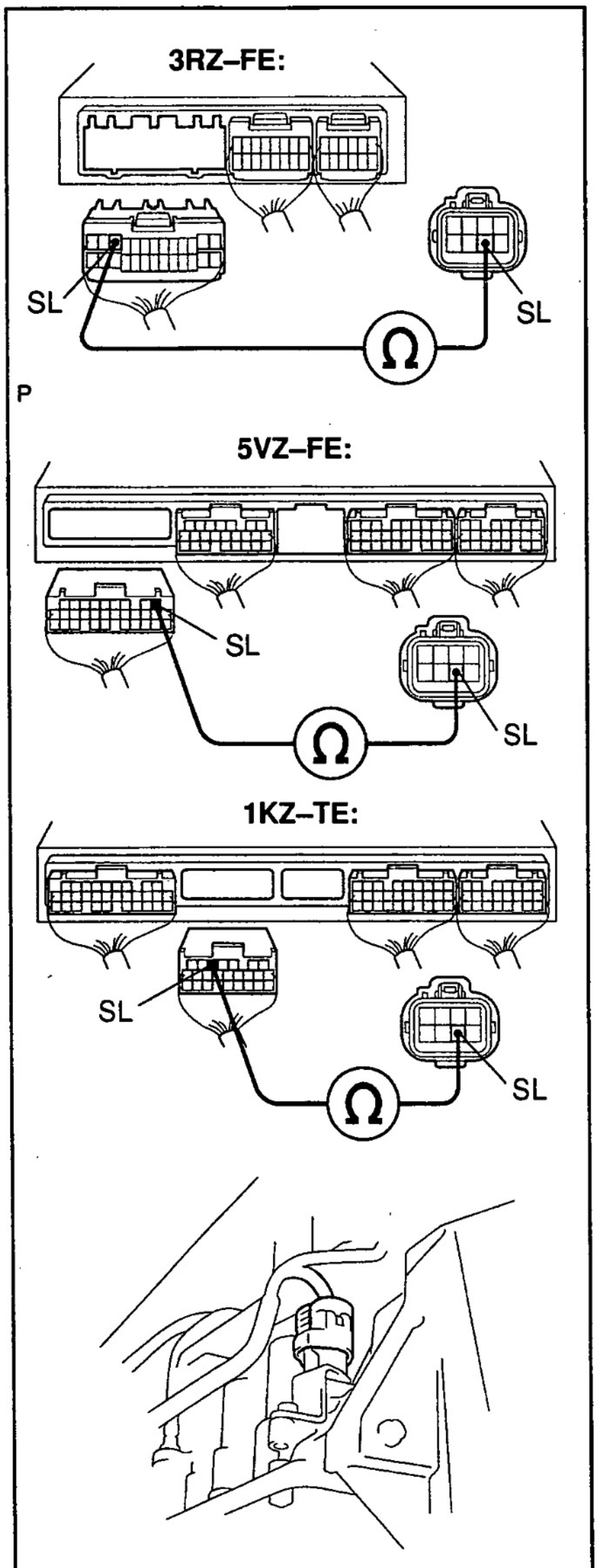

PREPARATION:

Disconnect the solenoid connector from the transmission.

CHECK:

Check the harness between terminal SL of Engine and ECT ECU and terminal SL of transmission solenoid connector.

OK:

There is no open or short circuit.

NG → **Repair or replace the harness or connector.**

OK

3	Check SL solenoid valve.

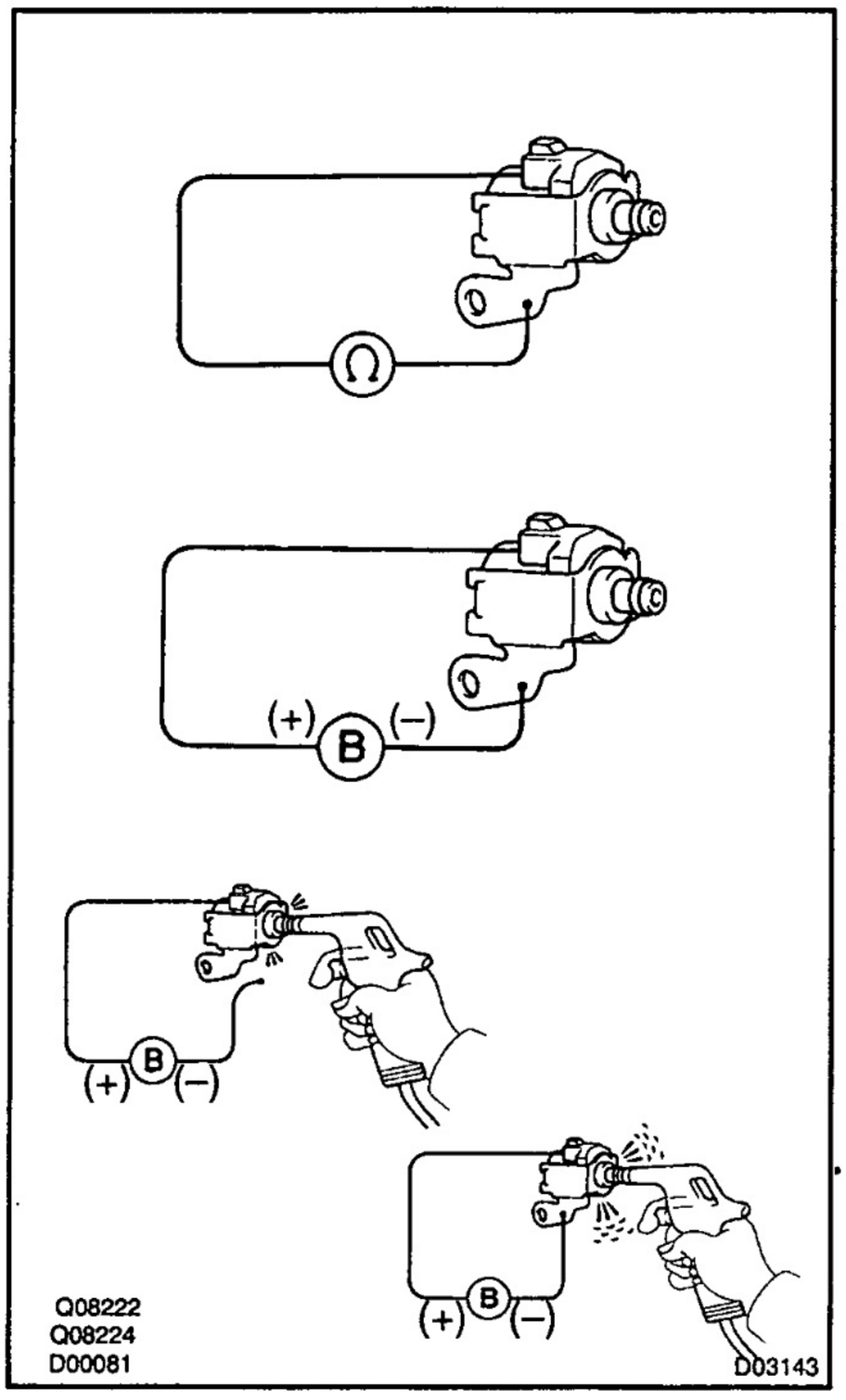

Electrical Check:

PREPARATION:

(a) Jack up the vehicle.
(b) Remove the oil pan.
(c) Disconnect the solenoid connector.
(d) Remove the SL solenoid valve.

CHECK:

(a) Measure resistance between terminal SL of solenoid valve and solenoid body.
(b) Connect positive ⊕ lead of the battery to terminal of solenoid connector, negative ⊖ lead of the battery to solenoid body.

OK:

(1) Resistance: 11 – 15 Ω at 20 °C (68 °F)
(2) The SL solenoid valve makes operating noise.

Mechanical Check:

PREPARATION:

(a) Jack up the vehicle.
(b) Remove the oil pan.
(c) Disconnect the solenoid connector.
(d) Remove the SL solenoid valve.

CHECK:

(a) Applying 490 kPa (5 kgf/cm^2, 71 psi) of compressed air, check that the solenoid valve does not leak air.
(b) When battery positive voltage is supplied to the solenoid valve, check that the solenoid valve opens.

OK:

(a) Solenoid valve does not leak air
(b) Solenoid valve opens

NG → **Replace the SL solenoid valve.**

OK

Repair or replace the solenoid wire.

DI6FC-01

DTC	P1700/61	Speed Sensor No. 2 Circuit Malfunction (No. 2 Speed Sensor)

CIRCUIT DESCRIPTION

The No.2 speed sensor detects the rotation speed of the transmission output shaft and sends signals to the Engine and ECT ECU. The Engine and ECT ECU determines the vehicle speed based on these signals. An AC voltage is generated in the No.2 speed sensor coil as the rotor mounted on the output shaft rotates, and this voltage is sent to the Engine and ECT ECU.
The gear shift point and lock–up timing are controlled by the Engine and ECT ECU based on the signals from this speed sensor and the throttle position sensor signal.
If the No.2 speed sensor malfunctions, the Engine and ECT ECU uses input signals from the No.1 speed sensor as a back–up signal.

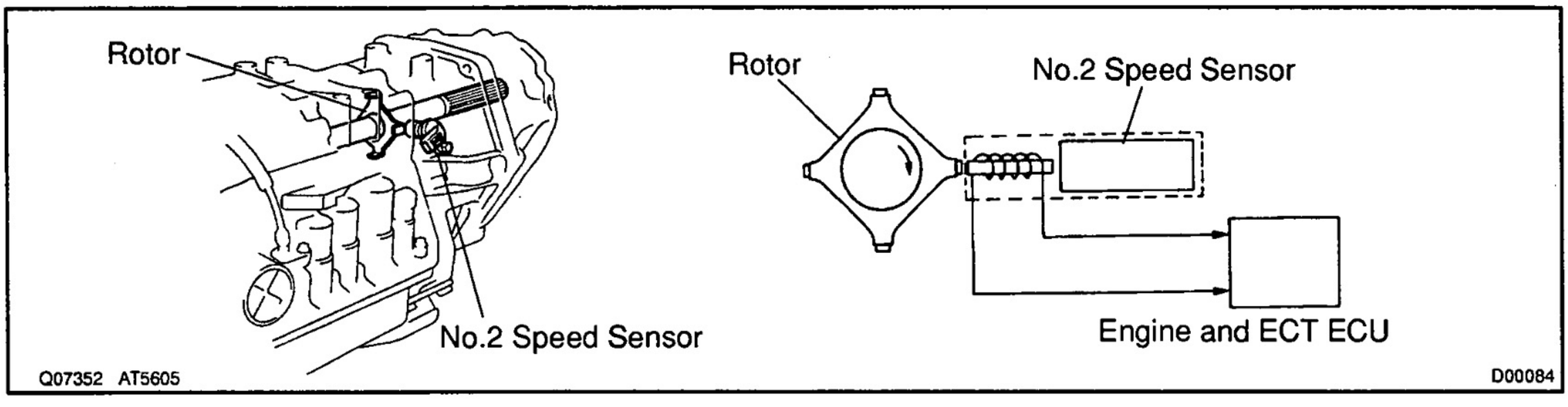

DTC No.	DTC Detecting Condition	Trouble Area
P1700/61	All conditions below are detected 500 times or more continuously. (2 trip detection logic) (a) No signal from No.2 speed sensor is input to Engine and ECT while 4 pulses of No.1 speed sensor signal are sent. (b) Vehicle speed: 9 km/h (5.6 mph) or more for at least 4 seconds (c) Neutral start switch: OFF (Other than P or N)	• Open or short in No.2 speed sensor circuit • No.2 speed sensor • Engine and ECT ECU

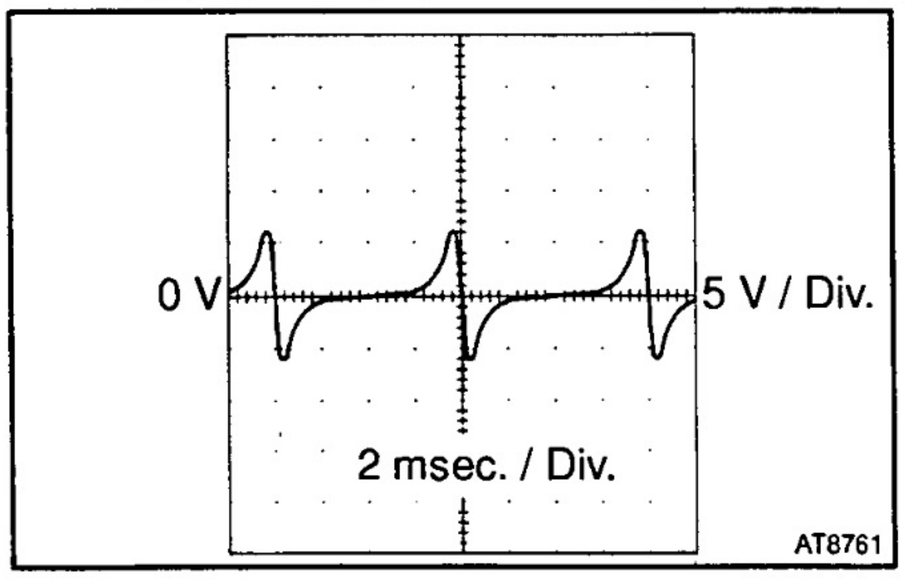

HINT:
Refer to the chart for the wave from between terminals $SP2^+$ and $SP2^-$ when vehicle speed is approx. 60 km/h (37 mph).

WIRING DIAGRAM

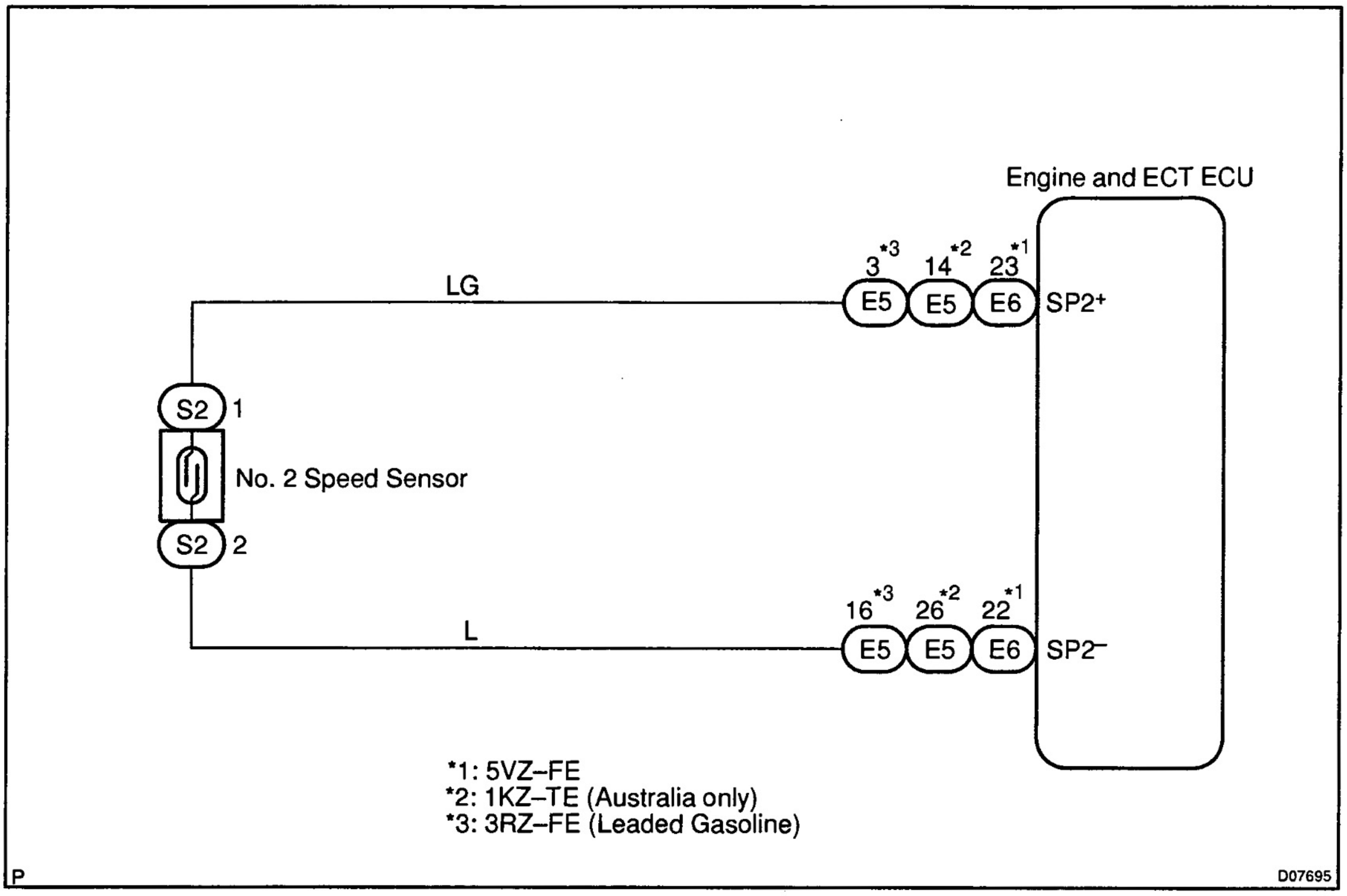

INSPECTION PROCEDURE

1	**Check vehicle speed value or resistance between terminals SP2+ and SP2– of Engine and ECT ECU.**

When using hand–held tester:

PREPARATION:

(a) Remove the DLC3 cover.
(b) Connect a hand–held tester to the DLC3.
(c) Start the engine and turn the hand–held tester main switch ON.

CHECK:

Drive the vehicle and read vehicle speed value.

OK:

Vehicle speed matches tester speed value.

When not using hand–held tester:

PREPARATION:

Disconnect the connector from Engine and ECT ECU.

CHECK:

Check resistance between terminals SP2+ and SP2– of Engine and ECT ECU.

OK:

Resistance: 560 – 680 Ω at 20 °C (68 °F)

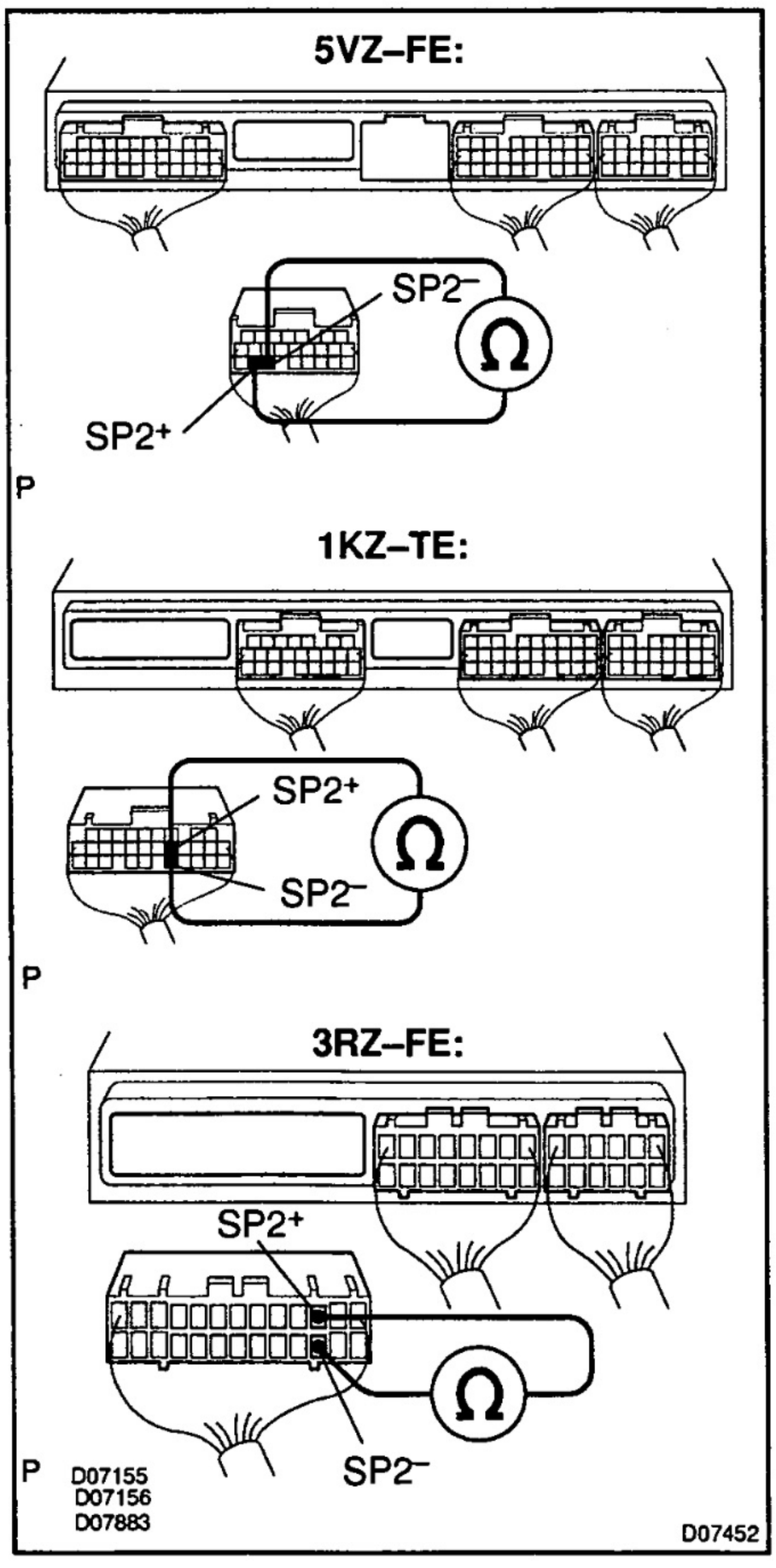

NG

OK → **Check and replace the Engine and ECT ECU (See page IN–33).**

2	Check No.2 speed sensor.

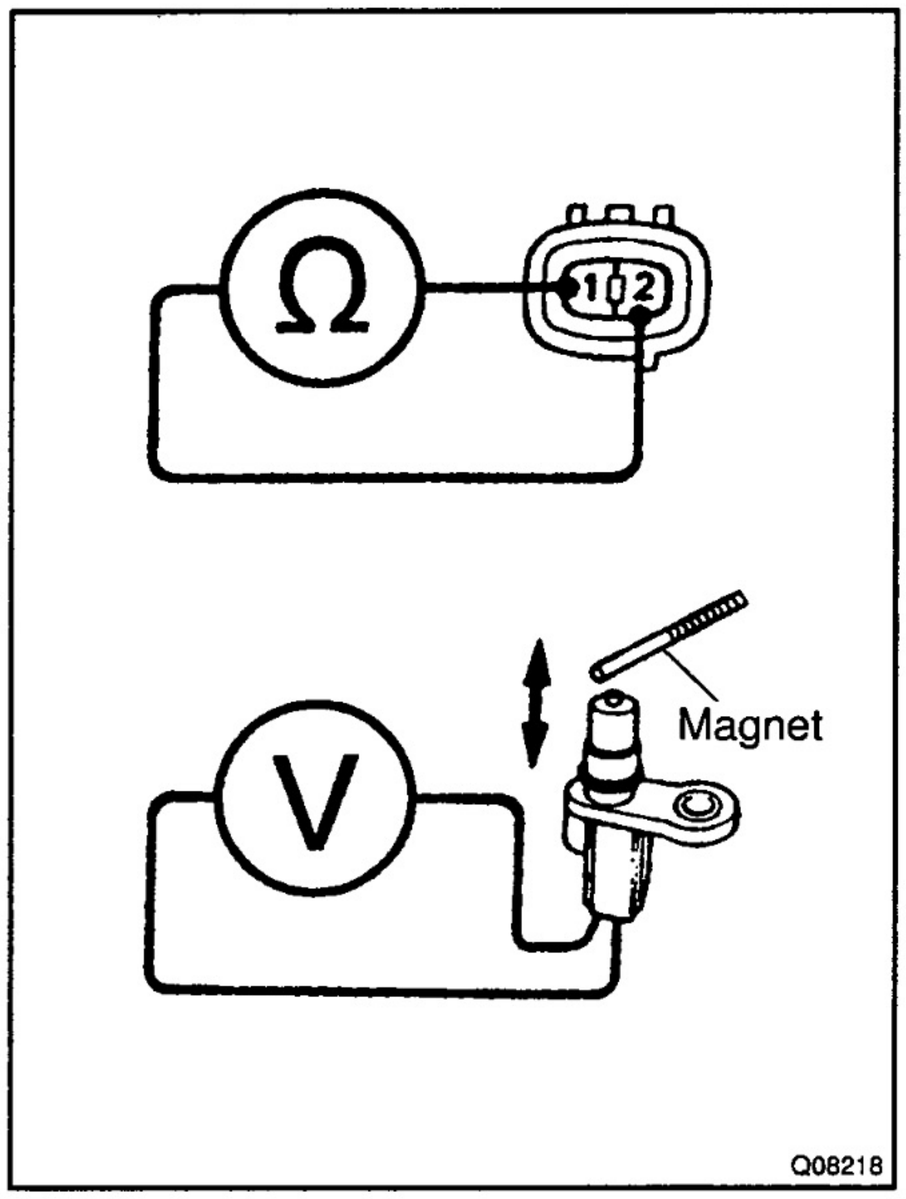

PREPARATION:

Remove the No.2 speed sensor from the transmission.

CHECK:

(a) Measure resistance between terminals 1 and 2 of No.2 speed sensor.

(b) Check voltage between terminals 1 and 2 of No.2 speed sensor when a magnet is put close to the front end of the No.2 speed sensor then taken away quickly.

OK:

(a) Resistance: 560 – 680 Ω at 20 °C (68 °F)

(b) Voltage is generated intermittently.

HINT:

The voltage generated is extremely low.

NG → **Replace the No.2 speed sensor.**

OK →

Check and repair the harness and connector between Engine and ECT ECU and No.2 speed sensor (See page IN–33).

DTC	P1755/68	Liner Solenoid for Lock–up Control Circuit Malfunction (Shift Solenoid Valve SLU)

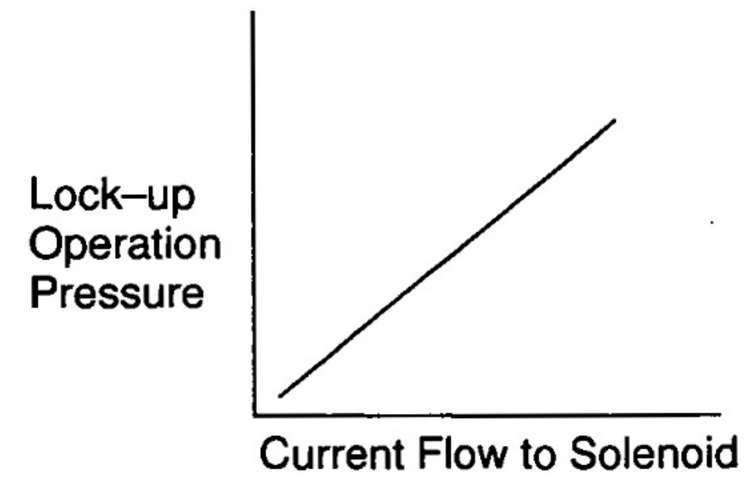

CIRCUIT DESCRIPTION

The amount of current flow to the solenoid is controlled by the (*) duty ratio of the Engine and ECT ECU output signal. The higher the duty ratio becomes, the higher the lock–up hydraulic pressure becomes during the lock–up operation.

(*) Duty Ratio

The duty ratio is the ratio of the period of continuity in one cycle. For example, if A is the period of continuity in one cycle, and B is the period of non–continuity, then.

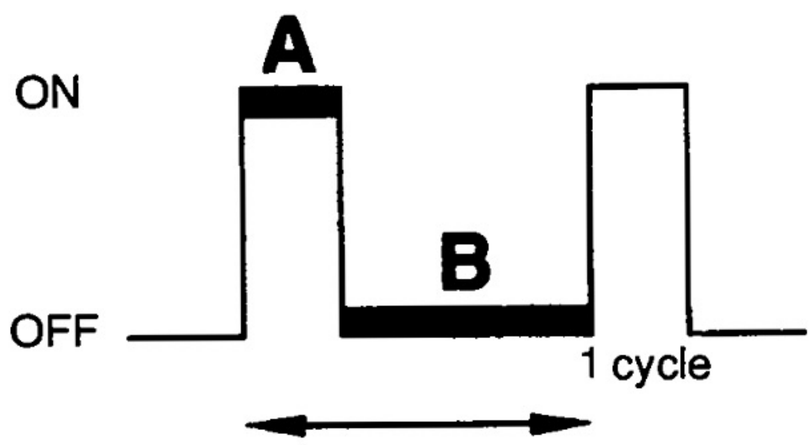

BE4056

(*)

$$\text{Duty Ratio} = \frac{A}{A+B} \times 100\ (\%)$$

D00160

DTC No.	DTC Detecting Condition	Trouble Area
P1755	The following condition is detected. (2 trip detection logic) SLU output signal's duty ON of 3.3 msec. or more with duty ratio of least 95% lasts for 1 second.	• Open or short in shift solenoid valve SLU circuit • Shift solenoid valve SLU • Engine and ECT ECU

WIRING DIAGRAM

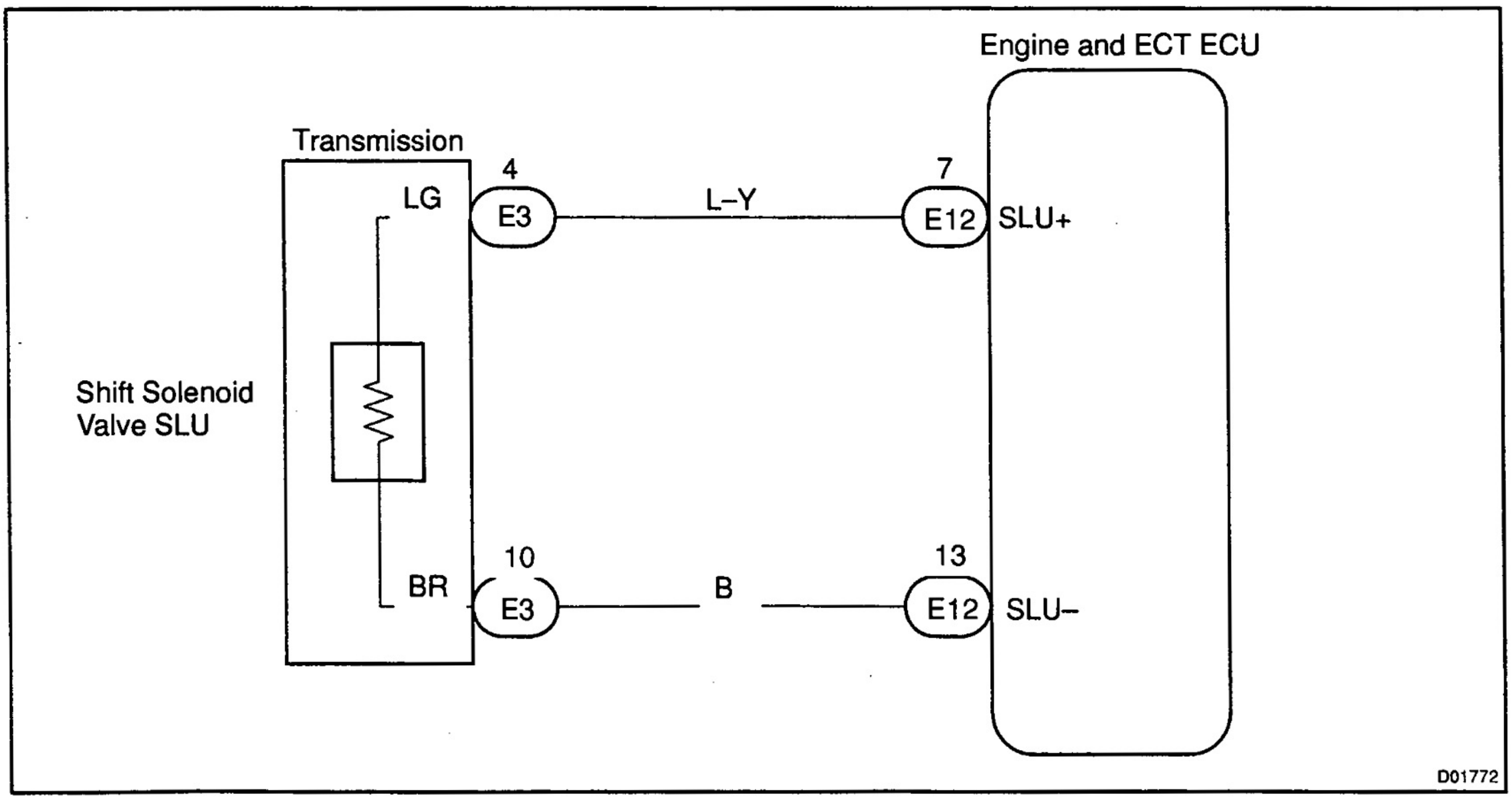

INSPECTION PROCEDURE

1	**Check that the resistance between terminals 4 and 10 of transmission wire connector (See page IN–33).**

NG → **Go to step 3.**

OK

2	**Check shift solenoid SLU.**

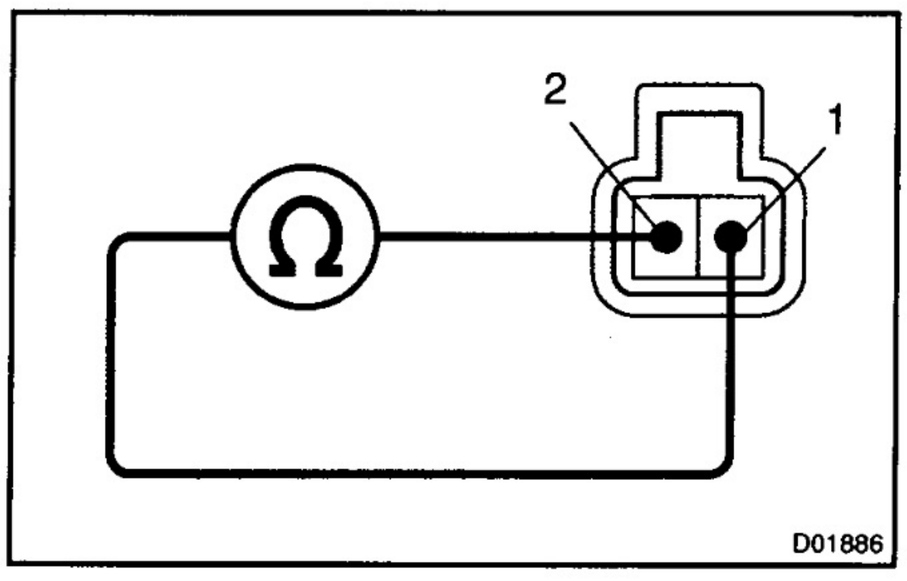

PREPARATION:

(a) Jack up the vehicle.
(b) Remove the oil pan.
(c) Disconnect the solenoid connector.

CHECK:

Measure the resistance between terminals 1 and 2.

OK:

5.0 – 5.6 Ω

NG → **Replace shift solenoid valve SLU.**

OK

3	**Check harness and connector between shift solenoid valve SLU and Engine and ECT ECU (See page IN–33).**

NG → **Repair or replace the harness or connector.**

OK

Check and replace the Engine and ECT ECU.

DTC	P1760/77	Linear Solenoid for Line Pressure Control Circuit Malfunction (SLT Solenoid Valve)

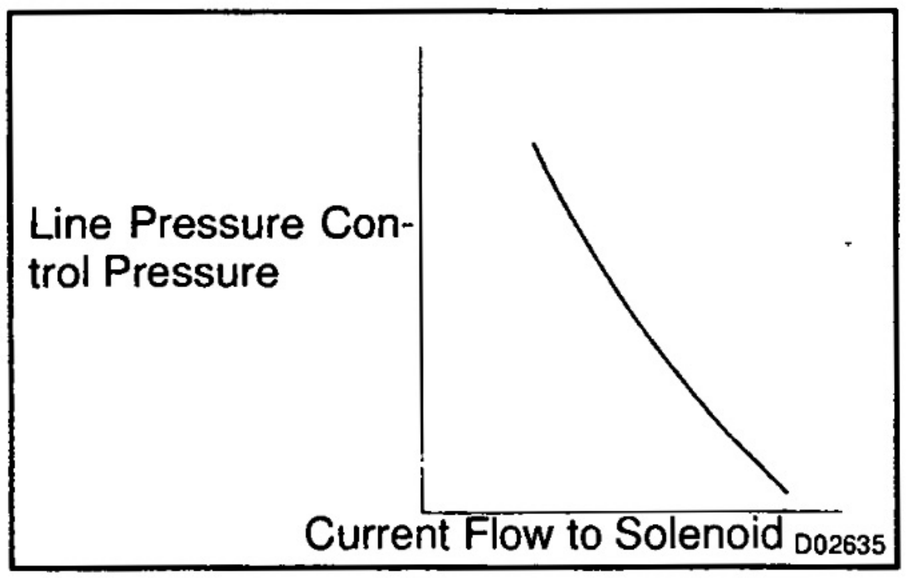

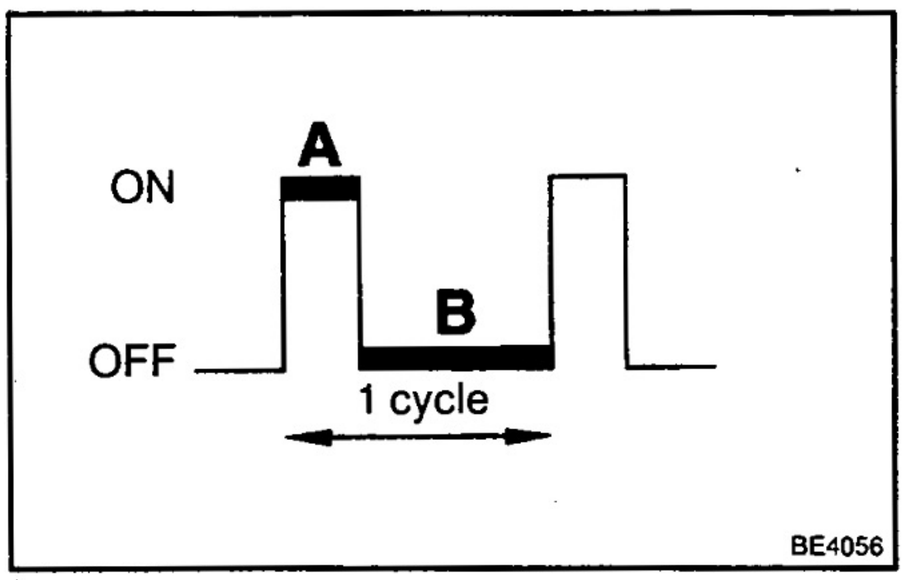

CIRCUIT DESCRIPTION

The throttle pressure that is applied to the primary regulator valve (which modulates line pressure) causes the SLT solenoid valve, under electronic control, to precisely and minutely modulates and generates line pressure according to the accelerator pedal effort, or engine power output detected.
This reduces the function of line pressure and provides smooth shifting characteristics.
Upon receiving the throttle valve opening angle signal, Engine and ECT ECU controls the line pressure by sending a predetermined (*) duty ratio to the solenoid valve, modulating the line pressure, generating throttle pressure.
(*) Duty Ratio
The duty ratio is the ratio of the period of continuity in one cycle.
For example, if A is the period of continuity in one cycle, and B is the period of non–continuity, then

$$\text{Duty Ratio} = \frac{A}{A + B} \times 100\ (\%)$$

DTC No.	DTC Detecting Condition	Trouble Area
P1760/77	(a) or (b) condition below is detected for 1 second or more. (a) SLT⁻ terminal: 0V (b) SLT⁻ terminal: 12V	• Open or short in SLT solenoid valve circuit • SLT solenoid valve • Engine and ECT ECU

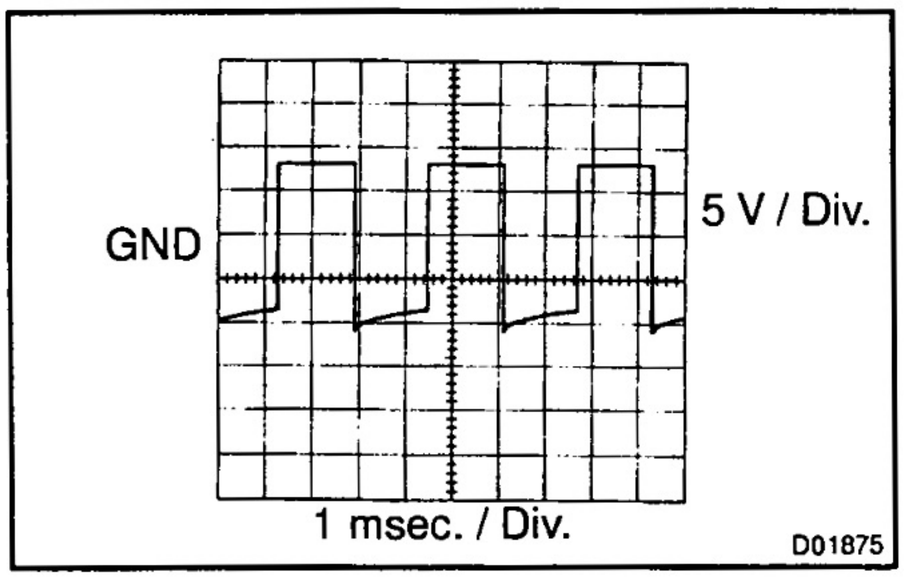

Reference
Refer to the chart for the wave form between terminals SLT⁺ and SLT⁻during engine idling.

WIRING DIAGRAM

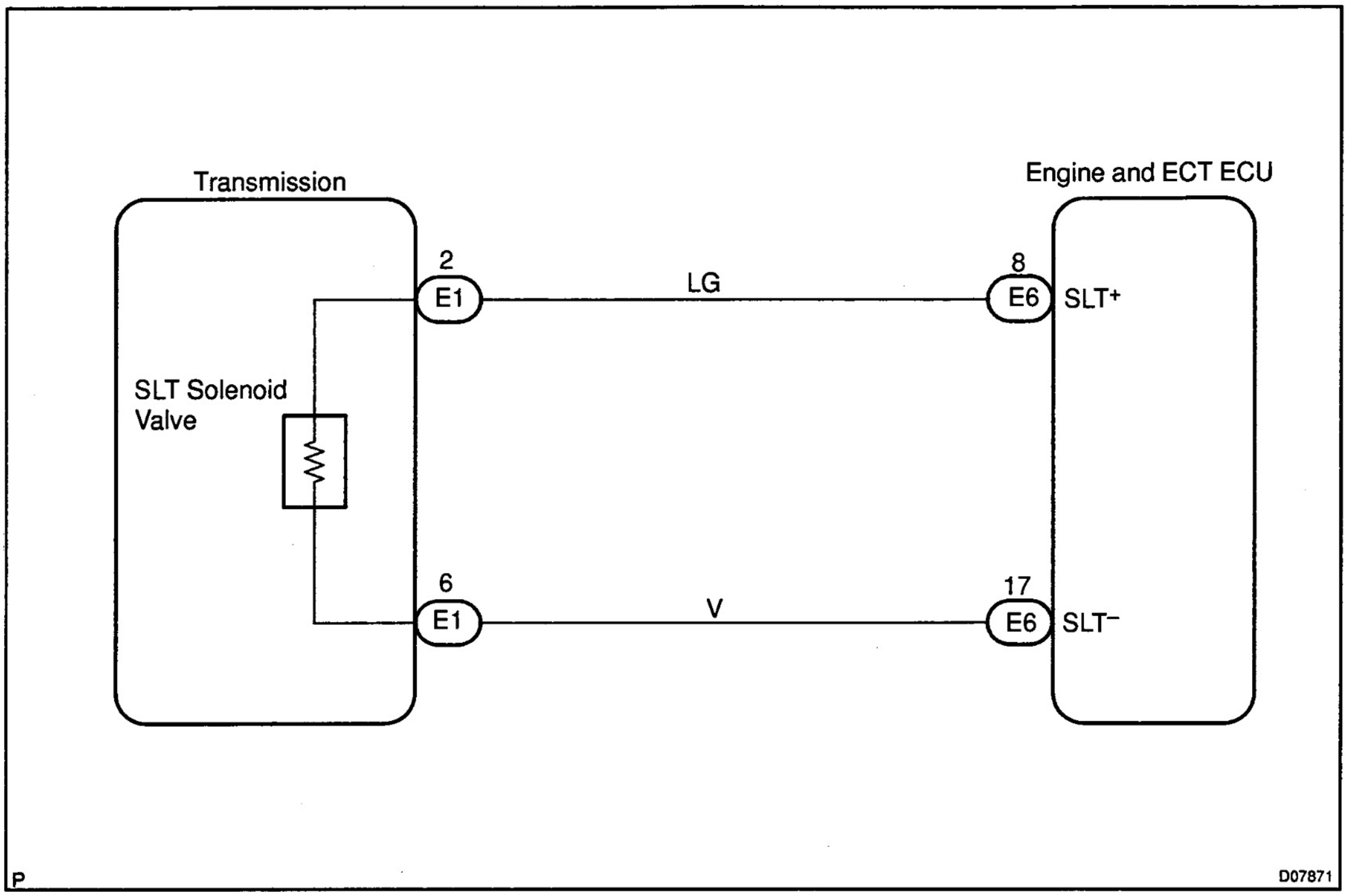

INSPECTION PROCEDURE

1	**Check SLT solenoid valve.**

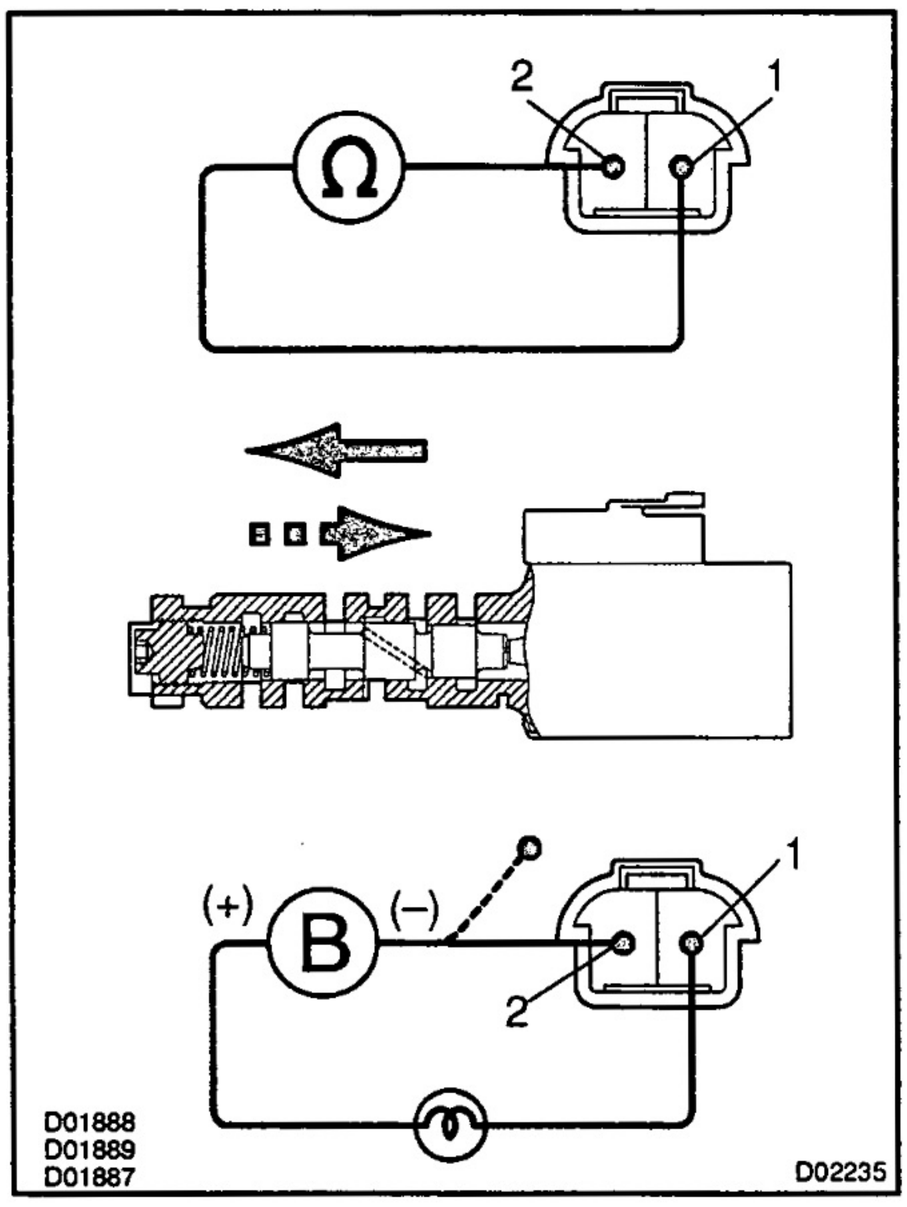

PREPARATION:

(a) Jack up the vehicle.
(b) Remove the oil pan.
(c) Disconnect the solenoid connector.

Check solenoid resistance:

CHECK:

Measure resistance between terminals 1 and 2 of solenoid connector.

OK:

Resistance: 5.0 – 5.6 Ω at 20 °C (68°F)

Check solenoid operation:

CHECK:

Connect positive (+) lead with an 8 ± 10 W bulb to terminal 1 of solenoid connector and negative (–) lead to terminal 2, then check the movement of the valve.

OK:

When battery positive voltage is applied.	Valve moves in ◄ direction in the illustration on the left.
When battery positive voltage is cut off.	Valve moves in ■ ■ ► direction in in the illustration on the left.

NG → **Replace SLT solenoid valve.**

OK

2	**Check harness and connector between SLT solenoid valve and Engine and ECT ECU (See page IN–33).**

NG → **Repair or replace harness or connector.**

OK

Check and replace Engine and ECT ECU (See page IN–33).

DI6FF-01

Neutral Start Switch Circuit

CIRCUIT DESCRIPTION

The neutral start switch detects the shift lever range and sends signals to the Engine and ECT ECU.
The Engine and ECT ECU receives signals (NSW, R, 2 and L) from the neutral start switch. When the signal is not sent to the Engine and ECT ECU from the neutral start switch, the Engine and ECT ECU judges that the shift lever is in D range.

WIRING DIAGRAM

1KZ–TE (Australia only):

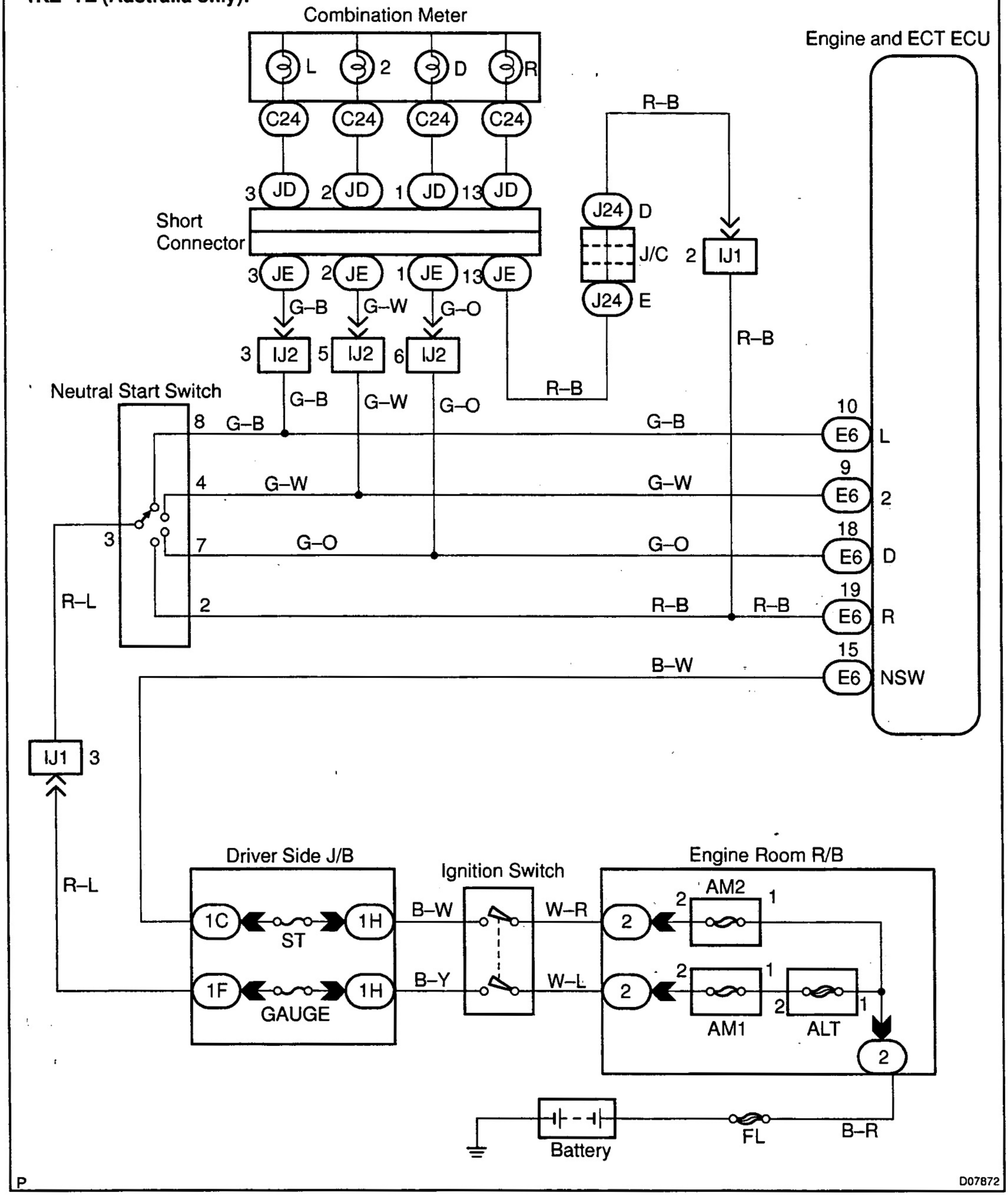

3RZ–FE (Leaded Gasoline):

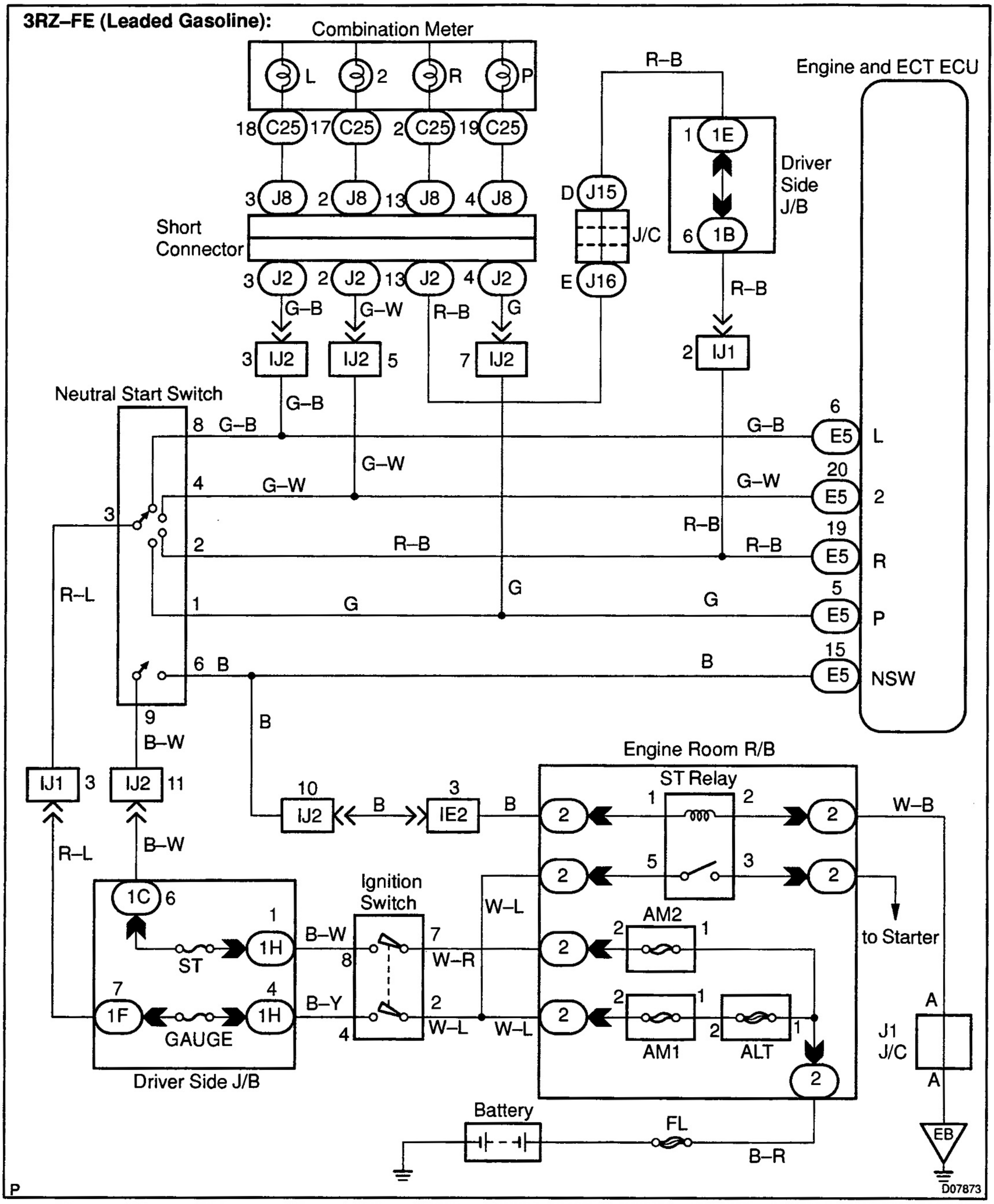

5VZ–FE:

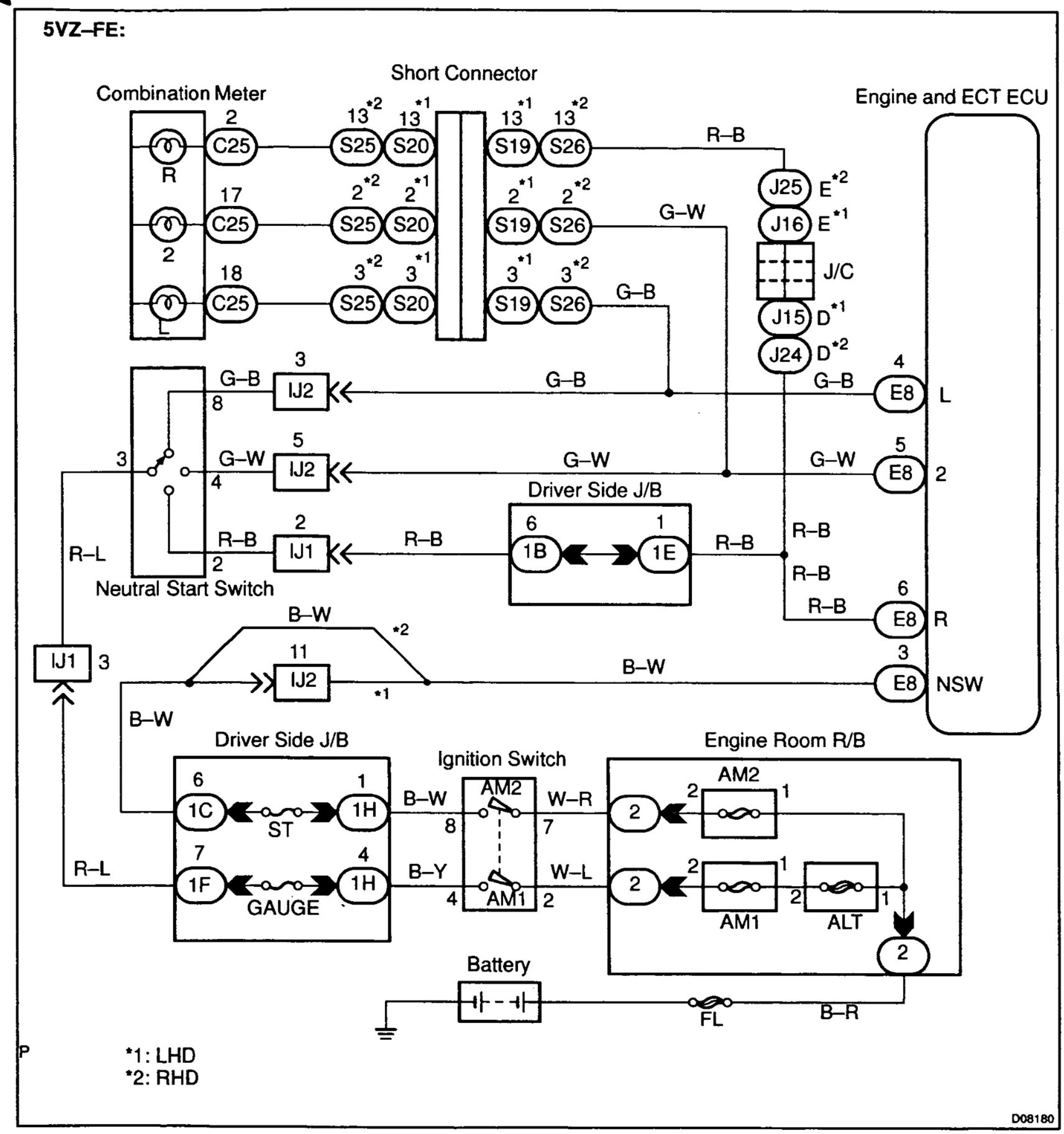
Short Connector
Combination Meter
Engine and ECT ECU
R–B
G–W
G–B
B–W
R–L
B–Y
W–R
W–L
B–R
Neutral Start Switch
Driver Side J/B
Ignition Switch
Engine Room R/B
Battery
ST
GAUGE
AM1
AM2
ALT
FL
J/C
NSW
L
R
*1: LHD
*2: RHD
D08180

INSPECTION PROCEDURE

HINT:

In case of using the hand–held tester, start the inspection from step 1 and in case of not using the hand–held tester, start from step 2.

1	**Read PNP, REVERSE, DRIVE, 2ND and LOW signals.**

PREPARATION:

(a) Remove the DLC3 cover.

(b) Connect a hand–held tester to the DLC3.

(c) Turn the ignition switch ON and hand–held tester main switch ON.

CHECK:

Shift lever into the P, R, N, 4, 3, 2 and L ranges, and read the PNP, REVERSE, DRIVE, 2ND and LOW signals on the hand–held tester.

OK:

Shift range	Signal
P, N	PNP : OFF → ON
R	REVERSE : OFF → ON
D	DRIVE : OFF → ON
2	2ND : OFF → ON
L	LOW : OFF → ON

OK → **Check and replace the Engine and ECT ECU (See page IN–33).**

NG

Go to step 3.

2	**Measure voltage between each terminals of NSW, R, D, 2, and L of Engine and ECT ECU and body ground.**

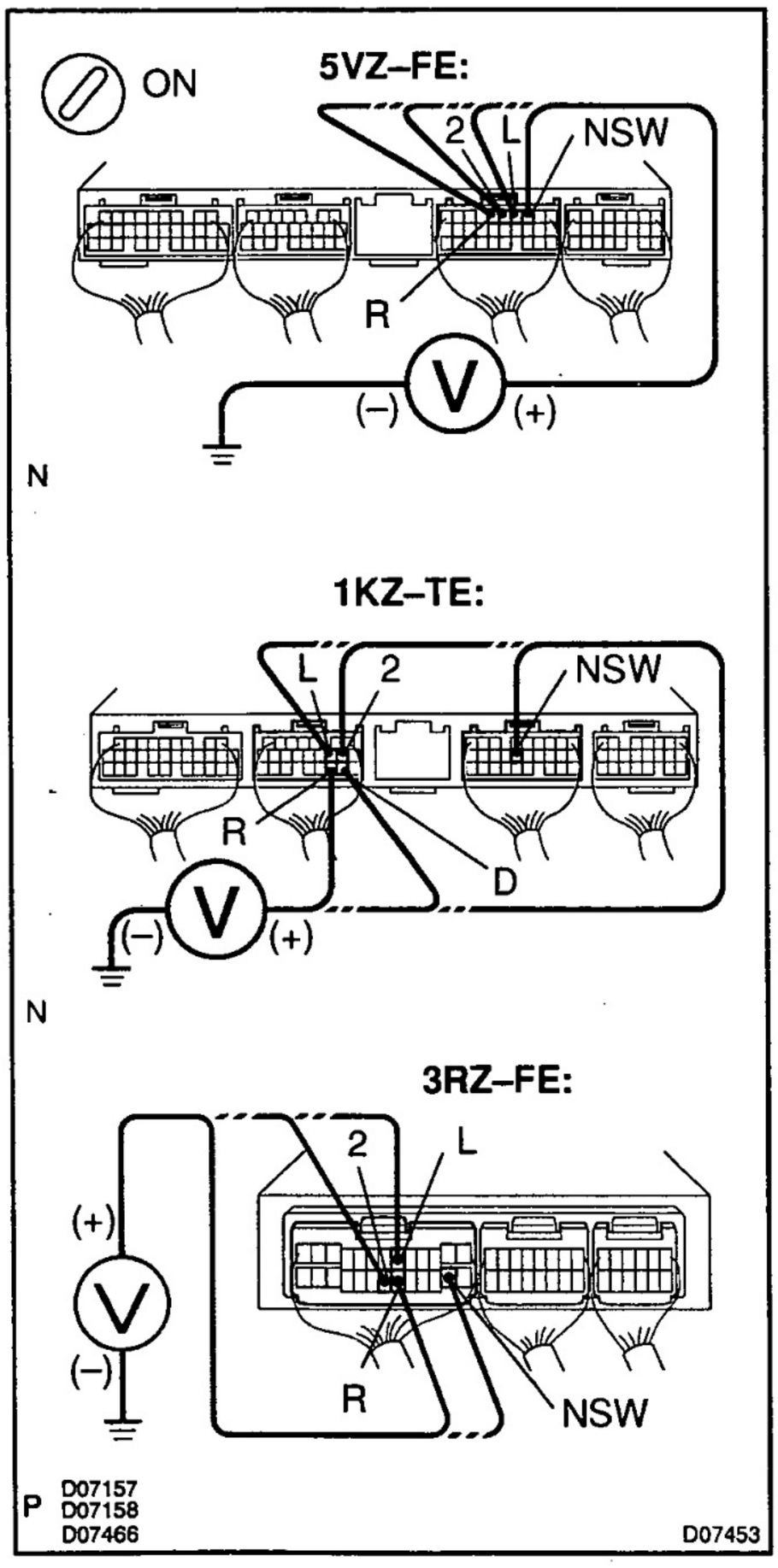

PREPARATION:

Turn the ignition switch ON.

CHECK:

Measure voltage between each terminals NSW, R, N, 2 and L of Engine and ECT ECU and body ground when the shift lever is shifted to the following positions.

OK:

Tester connection	Condition	specified condition
NSW– Body ground	Shift lever range : P, N	No battery positive voltage
R – Body ground	Shift lever range : R	Battery positive voltage*
D – Body ground	Shift lever range : D	Battery positive voltage
2 – Body ground	Shift lever range : 2	Battery positive voltage
L – Body ground	Shift lever range : L	Battery positive voltage

HINT:

*: The voltage will drop slightly due to lighting up of the back up light.

OK → **Check and replace the Engine and ECT ECU (See page IN–33).**

NG

3	**Check neutral start switch.**

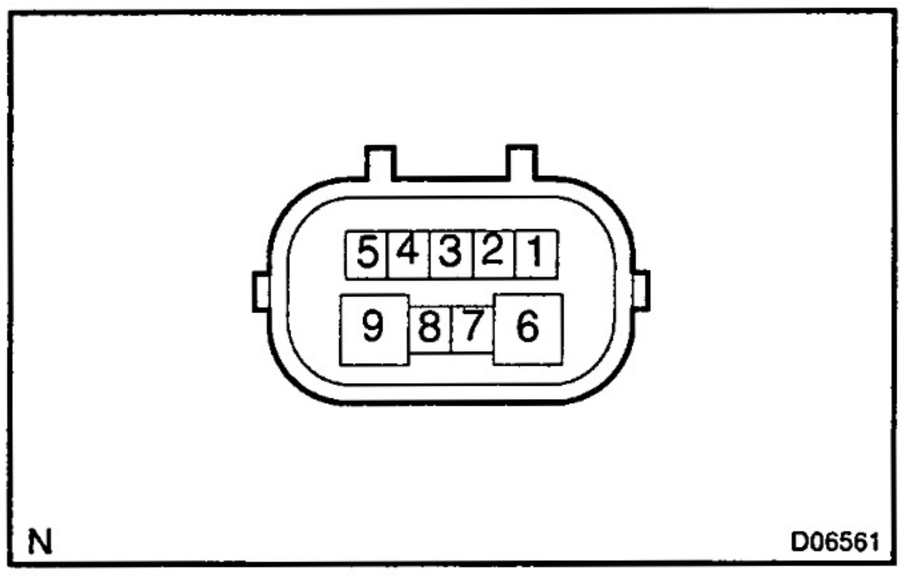

PREPARATION:

(a) Jack up the vehicle.

(b) Remove the neutral start switch connector.

CHECK:

Check continuity between each terminal shown below when the shift lever is moved to each range.

OK:

Shift Range	Terminal No. to continuity	Terminal No. to continuity
P	6 – 9	1 – 3
R	2 – 3	–
N	6 – 9	3 – 5
D	3 – 7	–
2	3 – 4	–
L	3 – 8	–

NG → **Replace the neutral start switch.**

OK

Repair or replace harness and connector between battery and neutral start switch, neutral start switch and Engine and ECT ECU (See page IN–33).

DI6FG-01

Stop Light Switch Signal Circuit

CIRCUIT DESCRIPTION

The purpose of this circuit is to prevent the engine from stalling, while driving in lock–up condition, when brakes are suddenly applied.

When the brake pedal is depressed, this switch sends a signal to Engine and ECT ECU. Then the Engine and ECT ECU cancels operation of the lock–up clutch while braking is in progress.

WIRING DIAGRAM

5VZ–FE (RHD), 1KZ–TE (RHD):

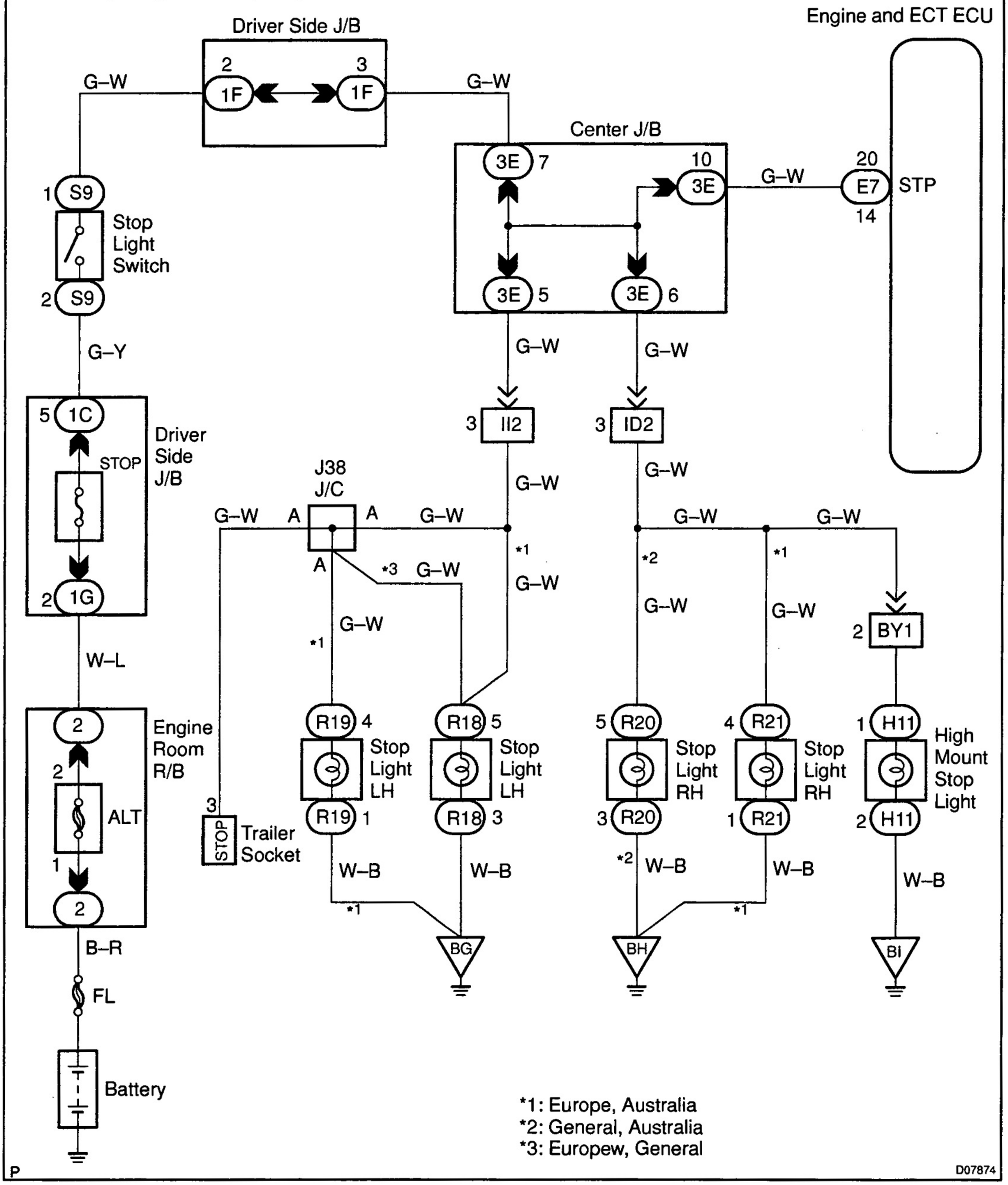

5VZ–FE (LHD), 3RZ–FE:

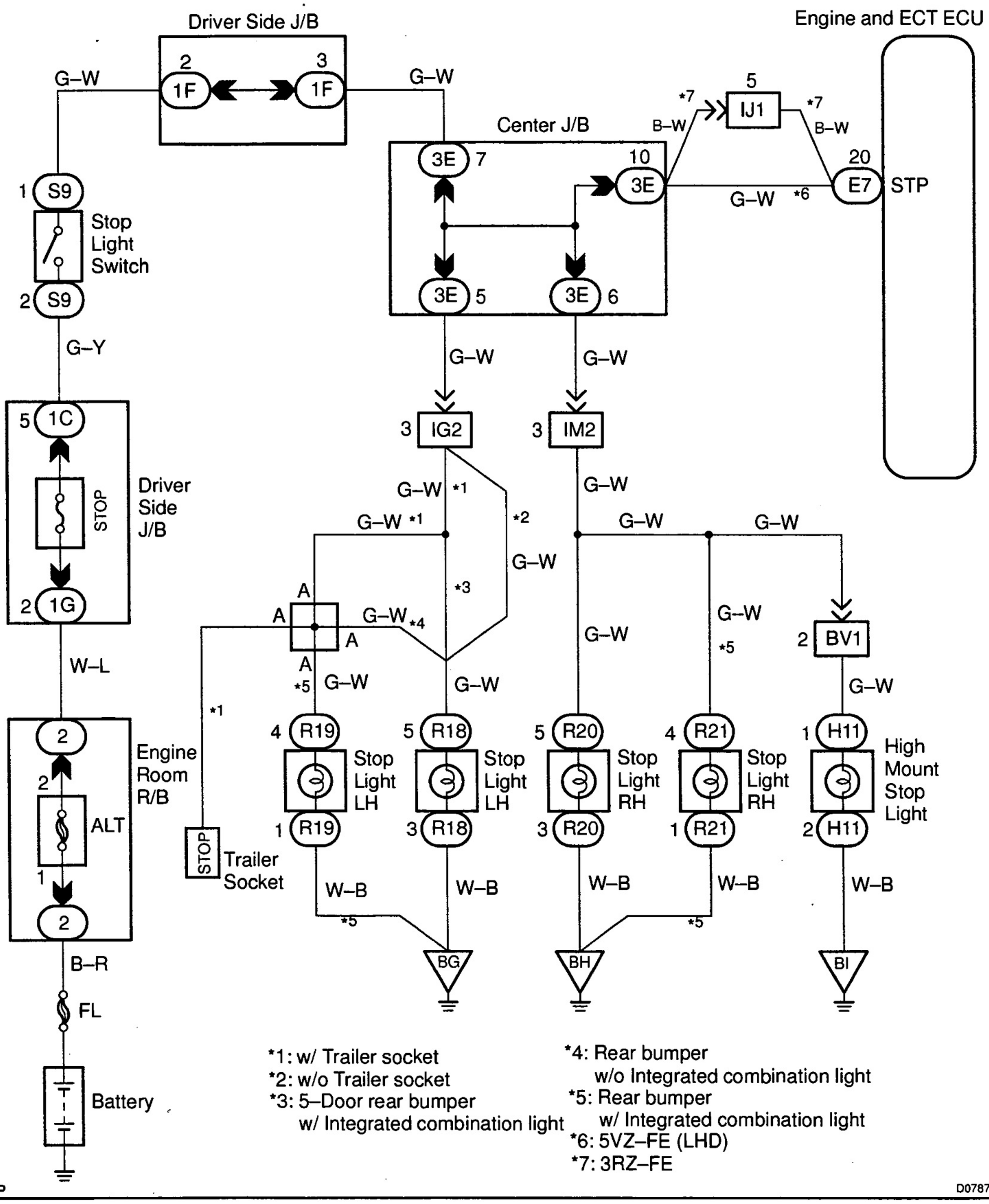

INSPECTION PROCEDURE

HINT:

Read freeze frame data using hand–held tester. Because freeze frame records the engine conditions when the malfunction is detected, when troubleshooting it is useful for determining whether the vehicle was running or stopped, the engine warmed up or not, the air–fuel ratio lean or rich, etc. at the time of the malfunction.

1	**Check operation of stop light.**

CHECK:

Check if the stop lights go on and off normally when the brake pedal is depressed and released.

NG → **Check and repair stop light circuit.**

OK

2	Check STP signal.

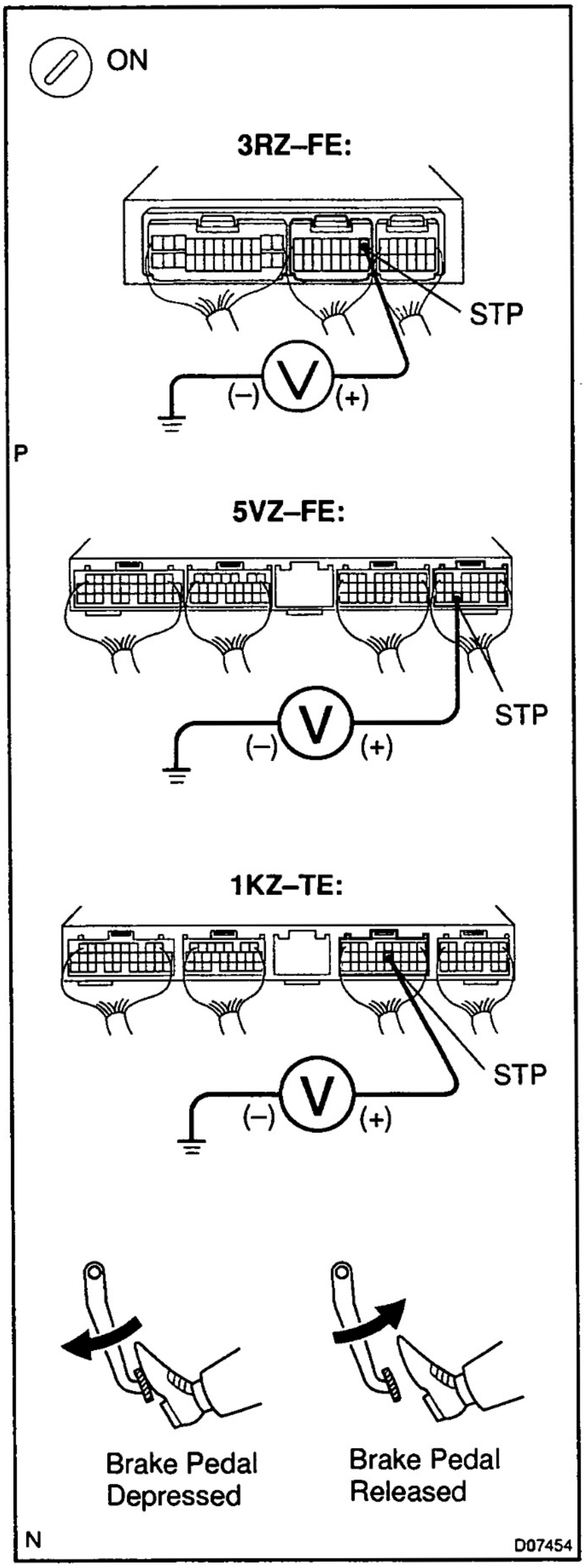

When using hand–held tester:

PREPARATION:

(a) Connect the hand–held tester to the DLC3.

(b) Turn the ignition switch ON and hand–held tester main switch ON.

CHECK:

Read the STP signal on the hand–held tester.

OK:

Brake pedal is depressed: STP...ON

Brake pedal is released: STP...OFF

When not using hand–held tester:

PREPARATION:

(a) Remove the glove compartment door.

(b) Turn the ignition switch ON.

CHECK:

Check voltage between terminal STP of the Engine and ECT ECU and body ground.

OK:

Brake pedal	Voltage
Depressed	9.0 – 14 V
Released	Below 1.5 V

OK → **Check for intermittent problems.**

NG

3	**Check harness and connector between Engine and ECT ECU and stop light switch (See page IN–33).**

NG → **Repair or replace harness or connector.**

OK

Check and replace Engine and ECT ECU (See page IN–33).

D16FH-01

O/D Main Switch & O/D OFF Indicator Light Circuit

CIRCUIT DESCRIPTION

The O/D main switch contacts go open when the switch is pushed in and go closed when it is pushed out. In O/D main switch at OFF position, the O/D OFF indicator light lights up, and the Engine and ECT ECU prohibits shifting overdrive.

WIRING DIAGRAM

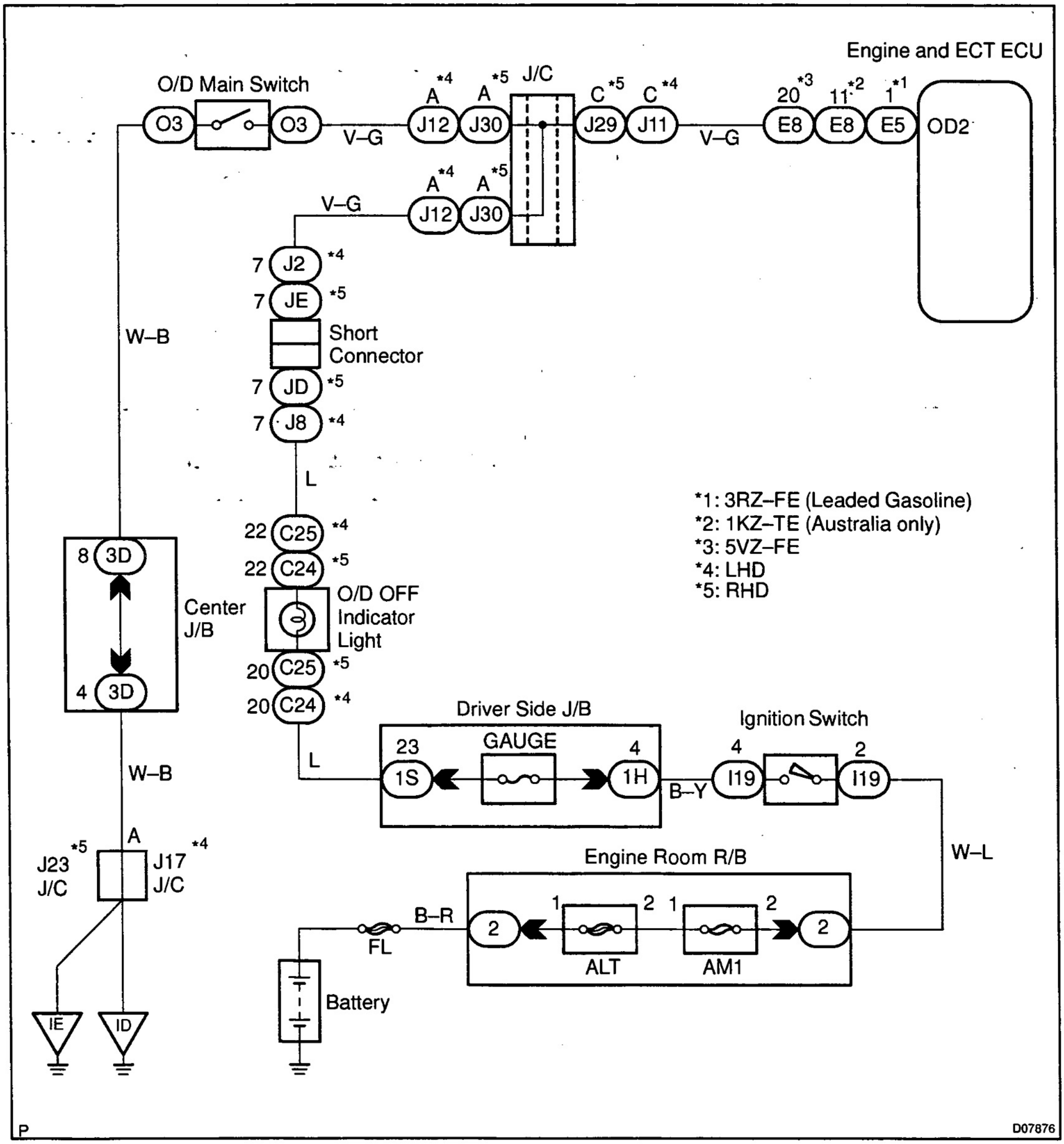

INSPECTION PROCEDURE

O/D OFF indicator light does not light up

1	**Check O/D main switch.**

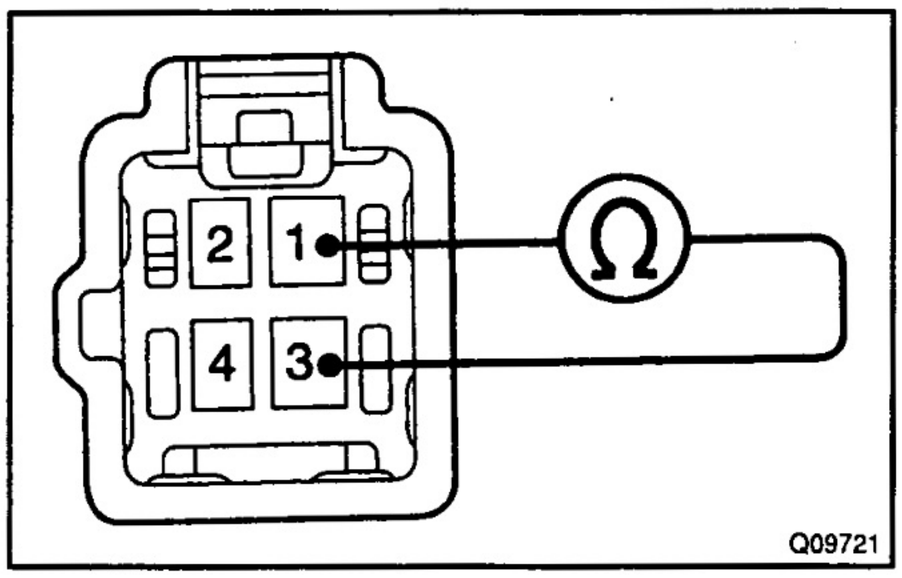

PREPARATION:
Disconnect the O/D main switch connector.

CHECK:
Check continuity between terminals 2 and 4 of O/D main switch connector.

OK:

O/D main switch	Specified condition
ON	No continuity
OFF	Continuity

NG → **Replace the O/D main switch.**

OK ↓

2	**Check and replace combination meter.**

NG → **Replace the combination meter.**

OK ↓

3	Check OVRDRIVE CUT SW2 signal.

When using hand–held tester

PREPARATION:

(a) Remove the fuse box cover.
(b) Connect a hand–held tester to the DLC3.
(c) Turn the ignition switch ON and hand–held tester main switch ON.

CHECK:

Read the OVRDRIVE CUT SW2 signal on the hand–held tester.

OK:

O/D main switch condition	OVRDRIVE CUT SW2 signal
O/D ON (Pushed in)	OFF
O/D OFF (Pushed once again)	ON

When not using hand–held tester

PREPARATION:

Turn the ignition switch ON.

CHECK:

Check voltage between terminal OD2 of Engine and ECT ECU and body ground.

OK:

O/D main switch condition	Voltage
O/D ON (Pushed in)	9.0 – 14 V
O/D (Pushed once again)	Below 1.5 V

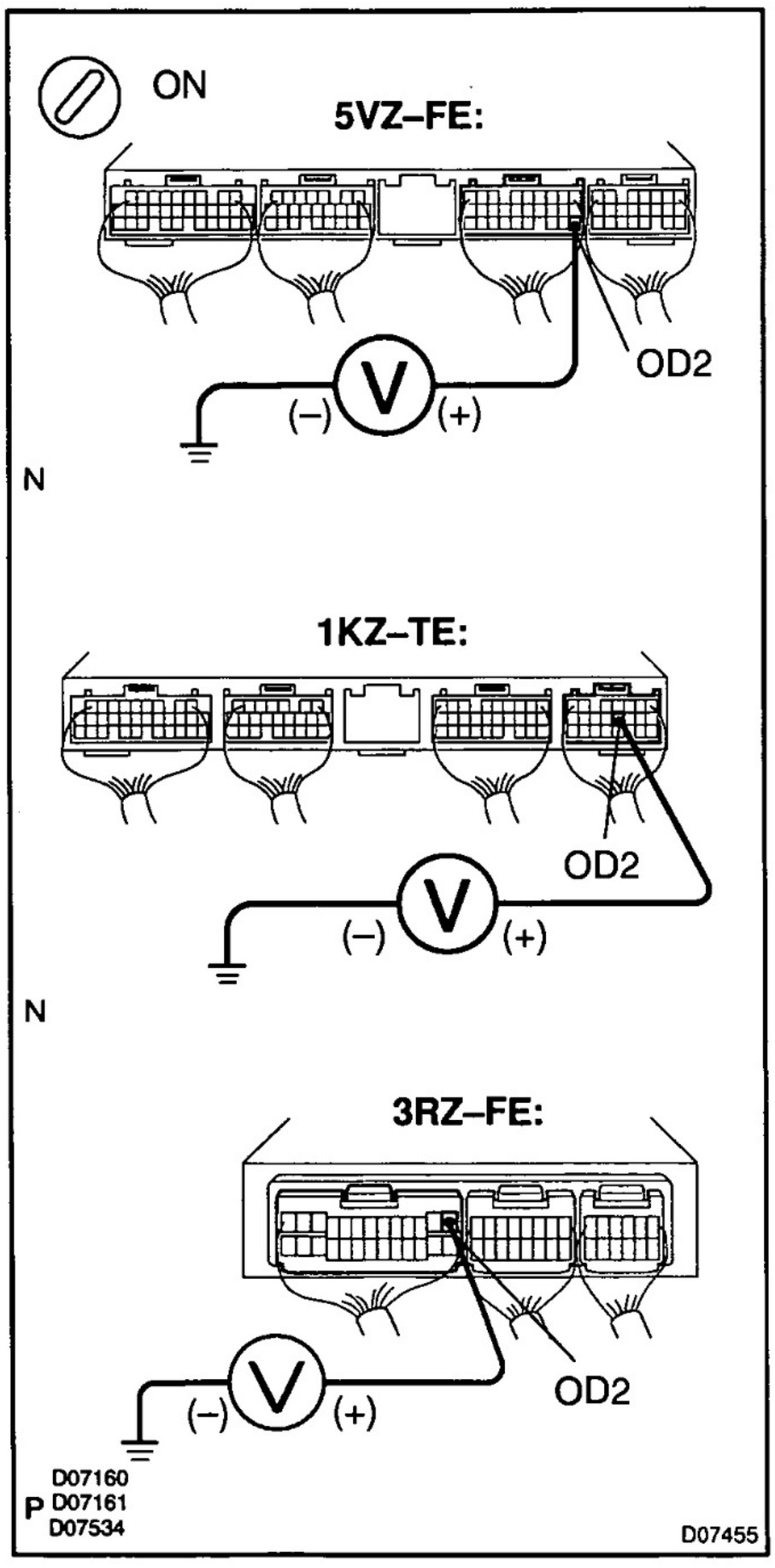

NG

OK → **Proceed to next circuit inspection shown in symptom problems table (See page DI–24).**

4	**Check harness and connector between O/D OFF indicator light and Engine and ECT ECU (See page IN–33).**

NG → **Repair or replace the harness or connector.**

OK

Check and replace the Engine and ECT ECU (See page IN–33).

O/D OFF indicator light remains ON

1	**Check O/D main switch.**

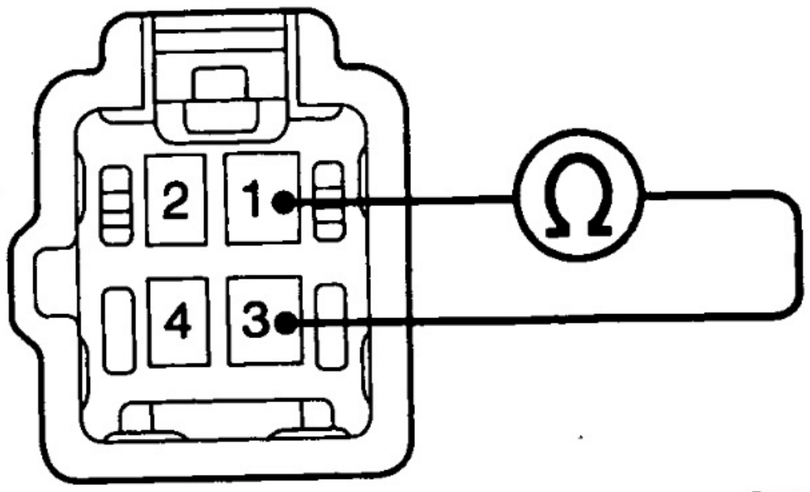

PREPARATION:

Disconnect the O/D main switch connector.

CHECK:

Check continuity between terminals 2 and 4 of O/D main switch connector.

OK:

O/D main switch	Specified condition
ON	No continuity
OFF	Continuity

NG → **Replace the O/D main switch.**

OK

2	**Check harness and connector between O/D OFF indicator light and O/D main switch, O/D OFF indicator light and Engine and ECT ECU (See page IN–33).**

NG → **Repair or replace the harness or connector.**

OK

Check and replace the Engine and ECT ECU (See page IN–33).

DI6FI–01

Pattern Select Switch Circuit (PWR Mode Switch)

CIRCUIT DESCRIPTION

The Engine and ECT ECU memory contains the shift programs for the NORMAL and POWER patterns, 2 range, L range and the lock–up patterns. Following the programs corresponding to the signals from the pattern select switch, the neutral Start and other various sensors, the Engine and ECT ECU switches the solenoid valves ON and OFF, and controls the transmission gear change and the lock–up clutch operation.

WIRING DIAGRAM

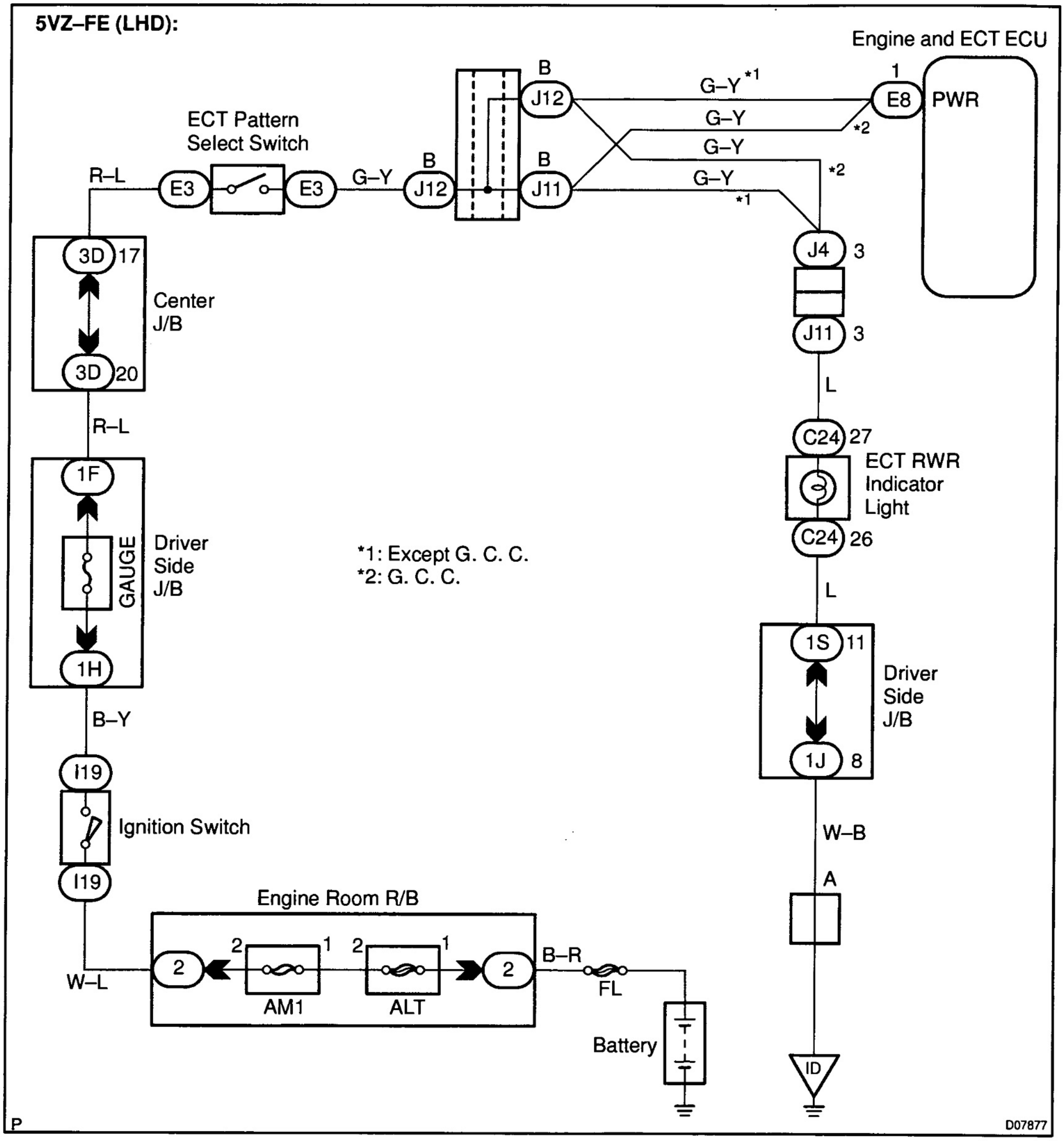

5VZ–FE (RHD), 1KZ–TE (Australia)

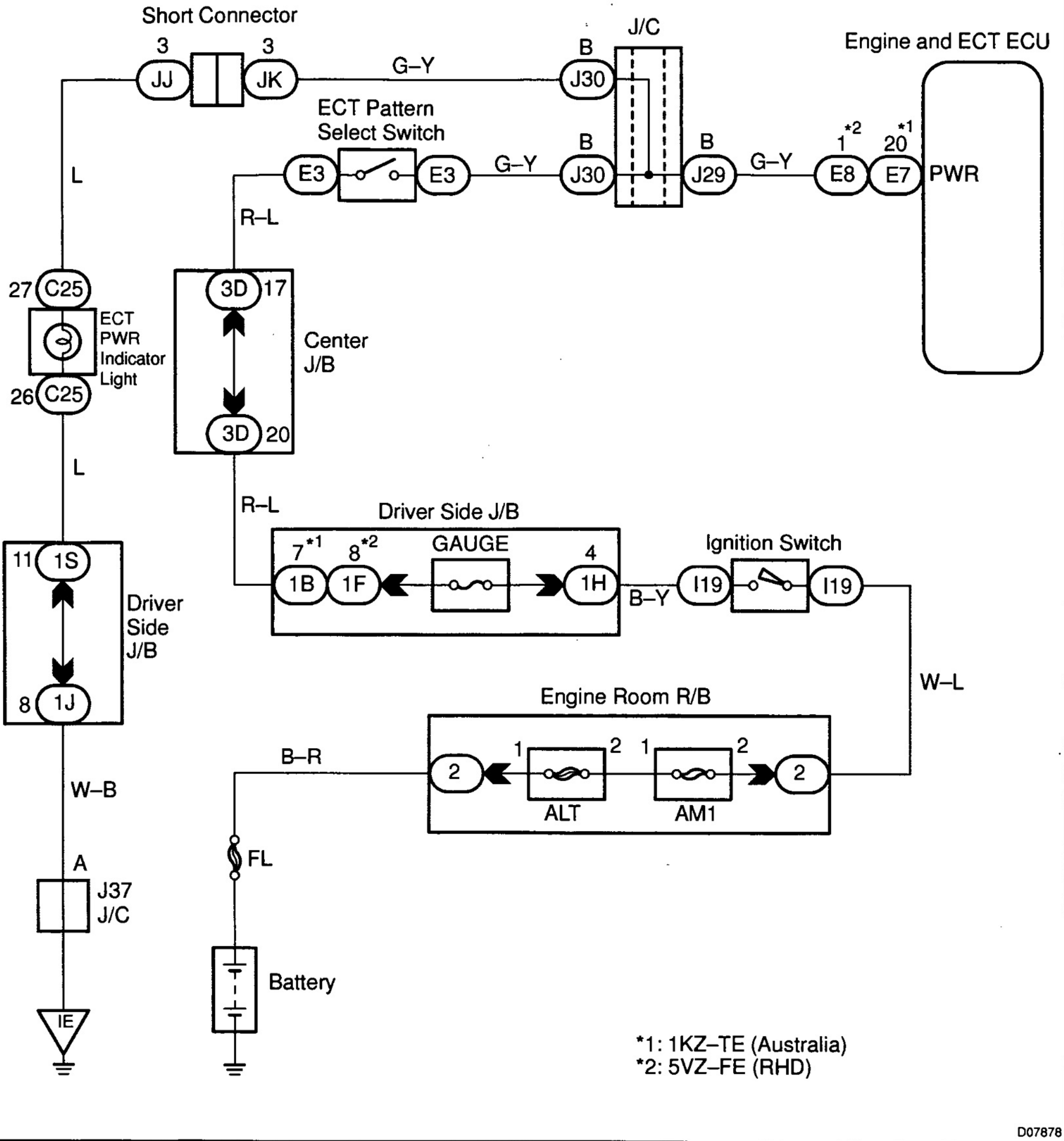

P

D07878

INSPECTION PROCEDURE

1	**Check PATTERN SEL SW signal.**

When using hand–held tester

PREPARATION:

(a) Remove the fuse box cover.
(b) Connect a hand–held tester to the DLC3.
(c) Turn the ignition switch ON and hand–held tester main switch ON.

CHECK:

Read the PATTERN SEL SW signal on the hand–held tester.

OK:

Pattern select switch	PATTERN SEL SW signal
PWR	ON
NORM	OFF

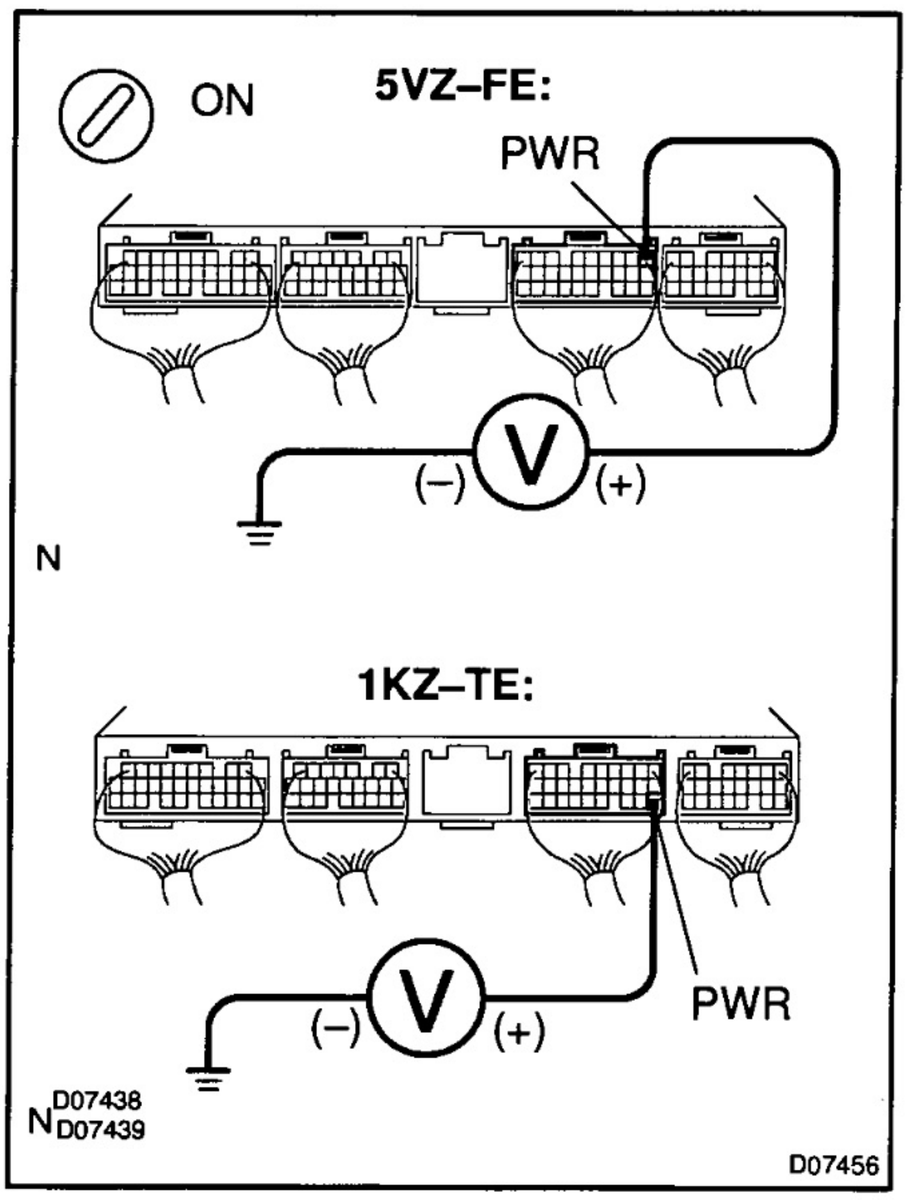

When not using hand–held tester

PREPARATION:

Turn the ignition switch ON.

CHECK:

Measure voltage between terminal PWR of Engine and ECT ECU and body ground when the pattern select switch set to the PWR (POWER) position and NORM (NORMAL) position.

OK:

Pattern select switch	Voltage
PWR	Below 1.0 V
NORM	9.0 – 14 V

HINT:

The Engine and ECT ECU uses the normal pattern signal if the PWR signal is not input.

OK → **Proceed to next circuit inspection shown in problem symptoms table (See page DI–24).**

NG

2	Check pattern select switch.

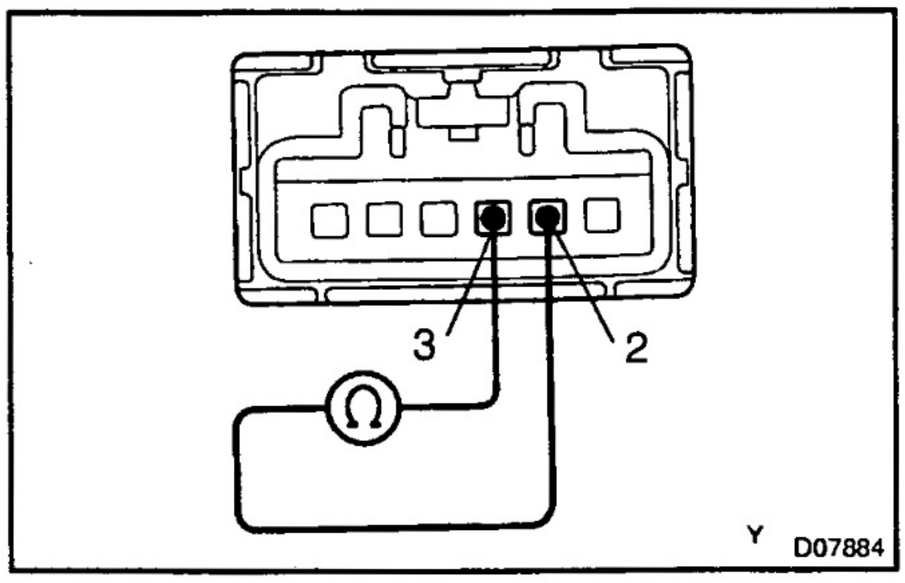

PREPARATION:

Disconnect the pattern select switch connector.

CHECK:

Check continuity between terminals 2 and 3 of pattern select switch connector when the select switch is set to PWR and NORM positions.

OK:

Pattern select switch	Specified condition
PWR	Continuity
NORM	No continuity

NG → **Replace the pattern select switch.**

OK

3	Check harness and connector between battery and pattern select switch, pattern select switch and Engine and ECT ECU (See page IN–33).

NG → **Repair or replace the harness or connector.**

OK

Check and replace the Engine and ECT ECU (See page IN–33).

D16FJ–01

Pattern Select Switch Circuit (2nd Start Switch) & 2nd Start Switch Indicator Light Circuit

CIRCUIT DESCRIPTION

When 2nd start mode is selected with the pattern select switch, the Engine and ECT ECU controls the solenoid valves and the transmission starts from 2nd gear.
In D range, the transmission automatically shifts up through 3rd to O/D as usual.
In 2nd position, the transmission is held in 2nd gear.

WIRING DIAGRAM

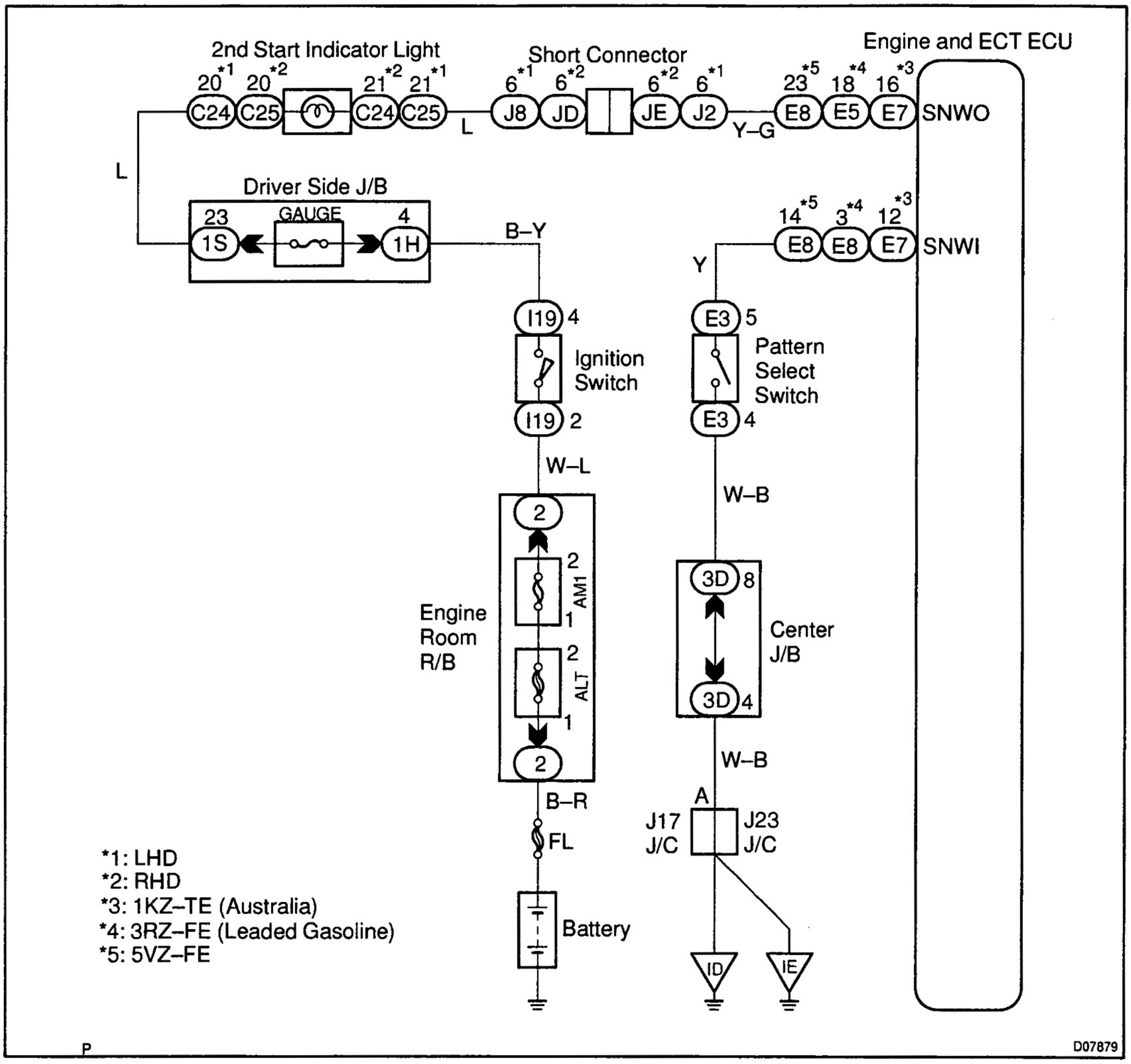

INSPECTION PROCEDURE

1	**Check operation of 2nd start switch.**

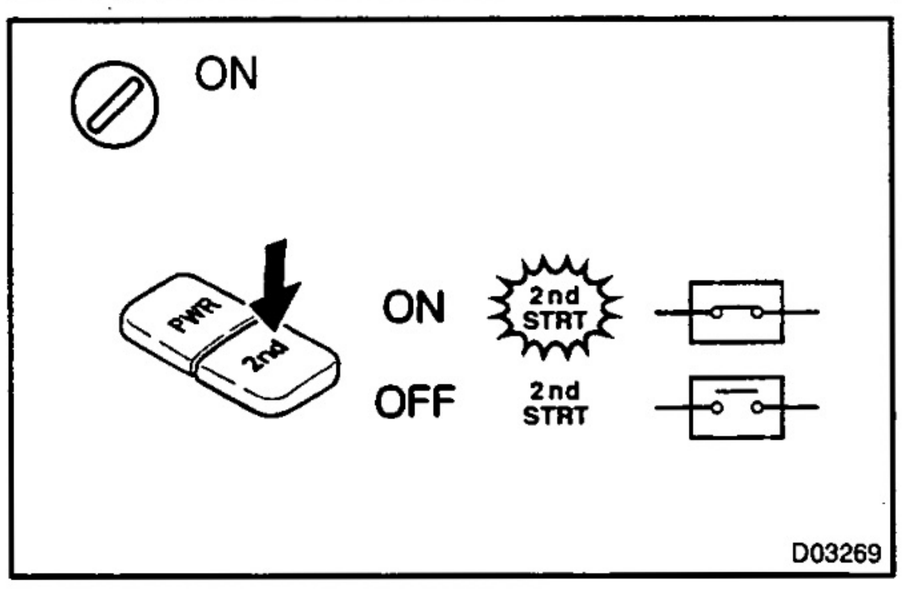

PREPARATION:

Turn the ignition switch ON.

CHECK:

(a) Check "2nd STRT" indicator light when 2nd start switch is pushed in to ON.

(b) Check "2nd STRT" indicator light when 2nd start switch is pushed again, or PWR mode switch is pushed into ON.

OK:

(a)"2nd STRT" indicator light lights up.

(b)"2nd STRT" indicator light goes off. When PWR mode switch is pushed in to ON, "2nd STRT" indicator light goes off, and "PWR" indicator light lights up.

OK → **Proceed to next circuit inspection shown in problem symptoms table (See page DI–24).**

NG

2	**Check 2nd start indicator bulb.**

NG → **Replace the 2nd start indicator bulb.**

OK

3	Check 2nd start switch.

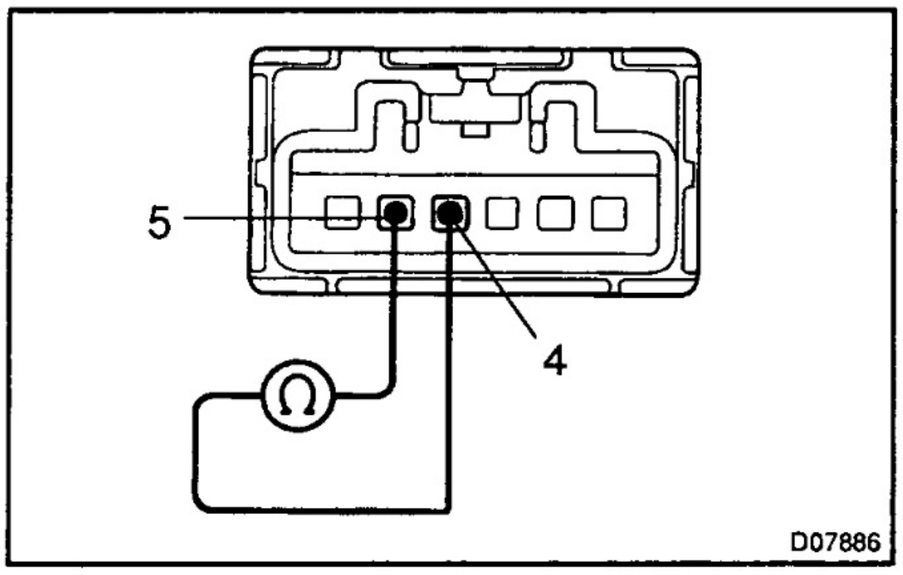

PREPARATION:

Disconnect the pattern select switch connector.

CHECK:

Check continuity between terminals 4 and 5 of pattern select switch connector when pattern select switch is set to 2nd start switch ON and OFF.

OK:

2nd start switch	Specified condition
Press continuously "2nd" switch	Continuity
Release "2nd" switch	No continuity

NG → **Replace the 2nd start indicator bulb.**

OK

4	**Check voltage between terminal SNWL and SNWI of Engine and ECT ECU and body ground.**

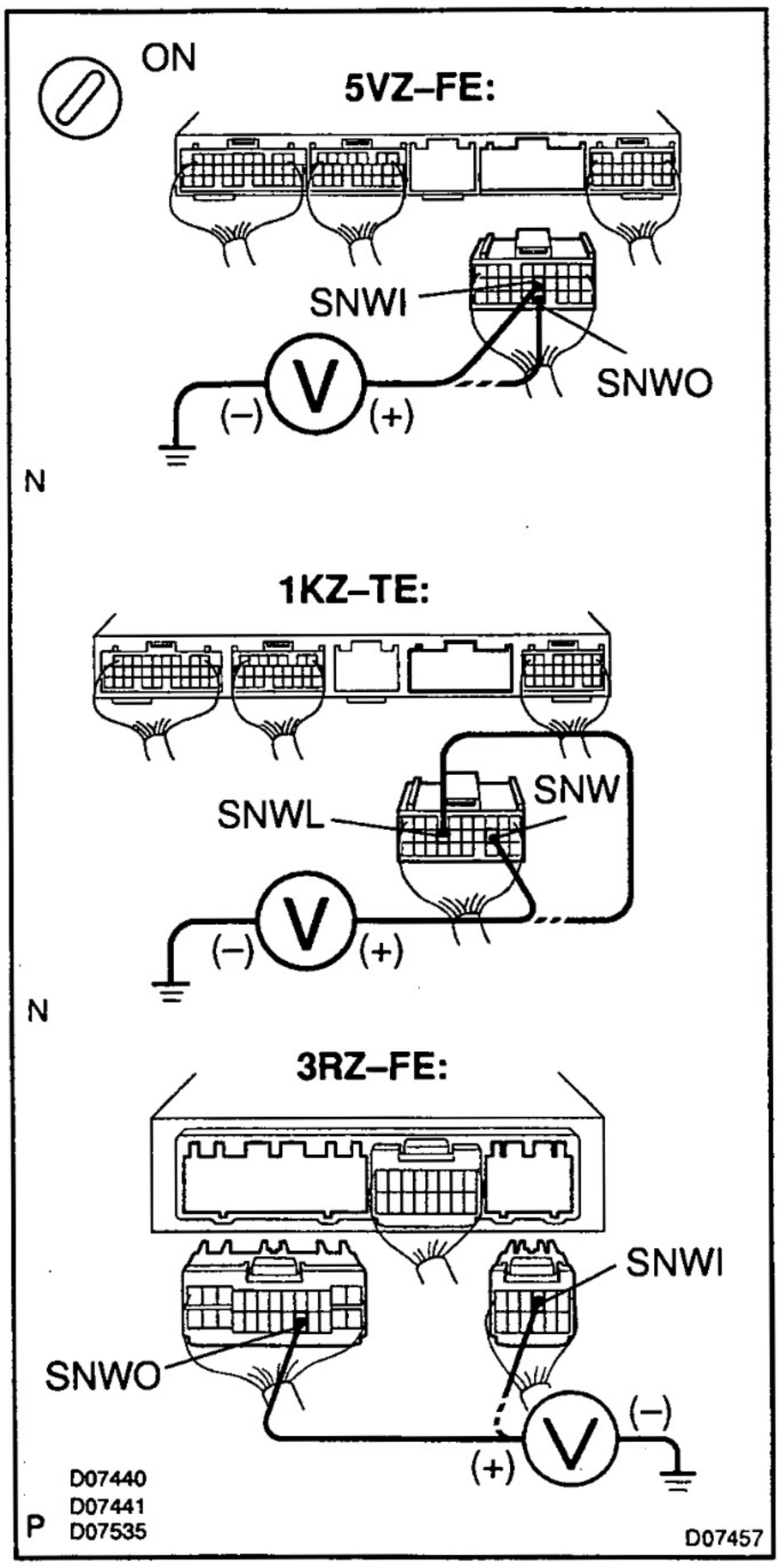

PREPARATION:

(a) Turn the ignition switch ON.

(b) Disconnect the connector of Engine and ECT ECU.

CHECK:

Check voltage between terminal SNWI of Engine and ECT ECU and body ground when the select switch is set to 2nd start switch ON and OFF.

OK:

2nd start switch	Voltage
ON	Below 1.5 V
OFF	9.0 – 14 V

CHECK:

Check voltage between terminal SNWL of Engine and ECT ECU and body ground.

OK:

Voltage:

2nd start mode: Below 1.5 V

Other mode: 9.0 – 14 V

OK → **Check and replace the Engine and ECT ECU (See page IN–33).**

NG

Check and replace harness and connector between battery and patten select switch, pattern select switch and Engine and ECT ECU, battery and 2nd start indicator light, 2nd start indicator light and Engine and ECT ECU (See page IN–33).

D16FK-01

A/T. P. (Automatic Transmission Parking) Indicator Circuit

CIRCUIT DESCRIPTION

The propeller shaft and wheels are free even when the transmission shift lever is set in P as long as the transfer shift lever is in neutral position. The A/T.P. indicator light come on to warn the drive shaft that the propeller shaft and wheels are not locked.
If the A/T.P. indicator light stays on, the transfer shift lever should be shifted out of N range.

WIRING DIAGRAM

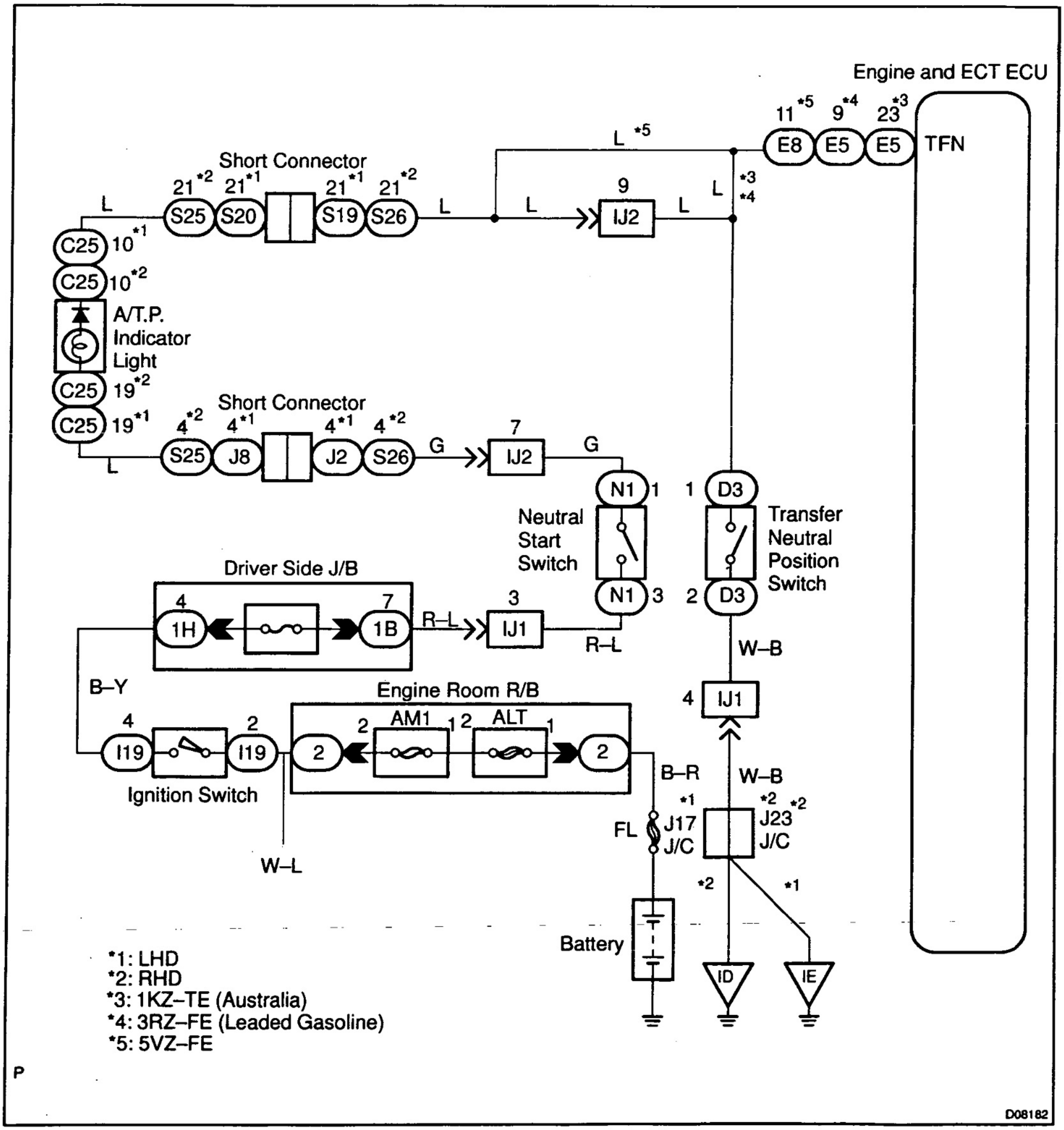

INSPECTION PROCEDURE

1	**Check voltage between terminal TFN of Engine and ECT ECU and body ground.**

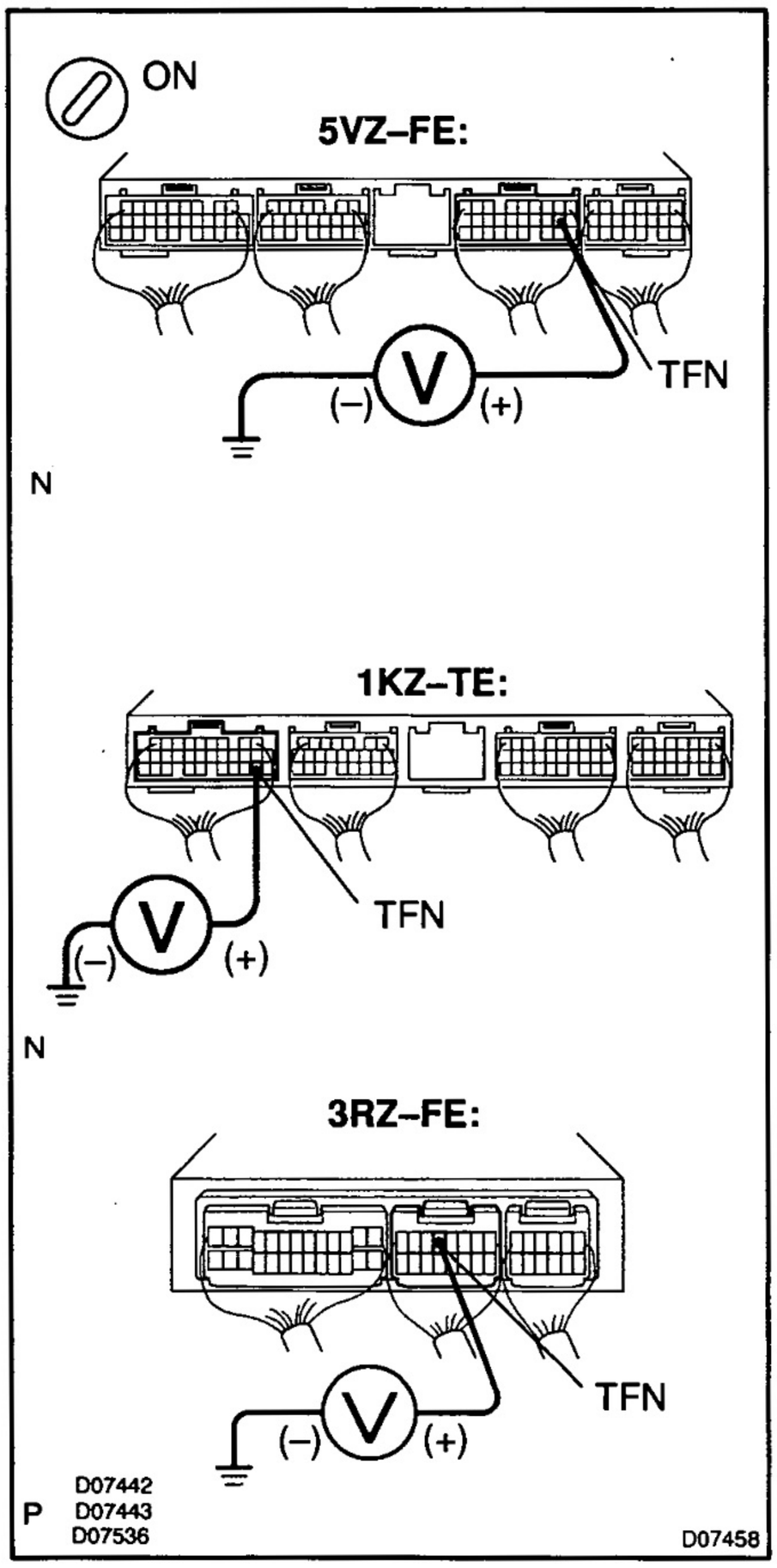

PREPARATION:

(a) Remove the glove compartment door (See page BO–17).

(b) Turn the ignition switch ON.

CHECK:

Check voltage between terminal TFN of Engine and ECT ECU and body ground.

OK:

9.0 – 14 V

OK → **Proceed to next circuit inspection shown in symptom problems table (See page DI–24).**

NG

2	Check neutral start switch (See page DI–52).

NG → Replace the neutral start switch.

OK

3	Check transfer neutral position switch (See page TR–3).

OK → Replace the neutral position switch.

NG

4	Check combination meter (See Pub. No. RM517E on page BE–46).

NG → Repair or replace the combination meter.

OK

5	Check harness and connector between battery and neutral start switch, neutral start switch and combination meter, combination meter and ECU, ECU and transfer neutral position switch (See page IN–33).

NG → Repair or replace harness or connector.

OK

Check and replace Engine and ECT ECU (See page IN–33).

DI6FL–01

L4 Position Switch Circuit

CIRCUIT DESCRIPTION

The L4 position switch detects the gear position of the transfer. Shifting the transfer shift lever into L4 turns L4 position switch ON. After turning on the L4 position switch, Engine and ECT ECU changes the transmission shift schedule.

WIRING DIAGRAM

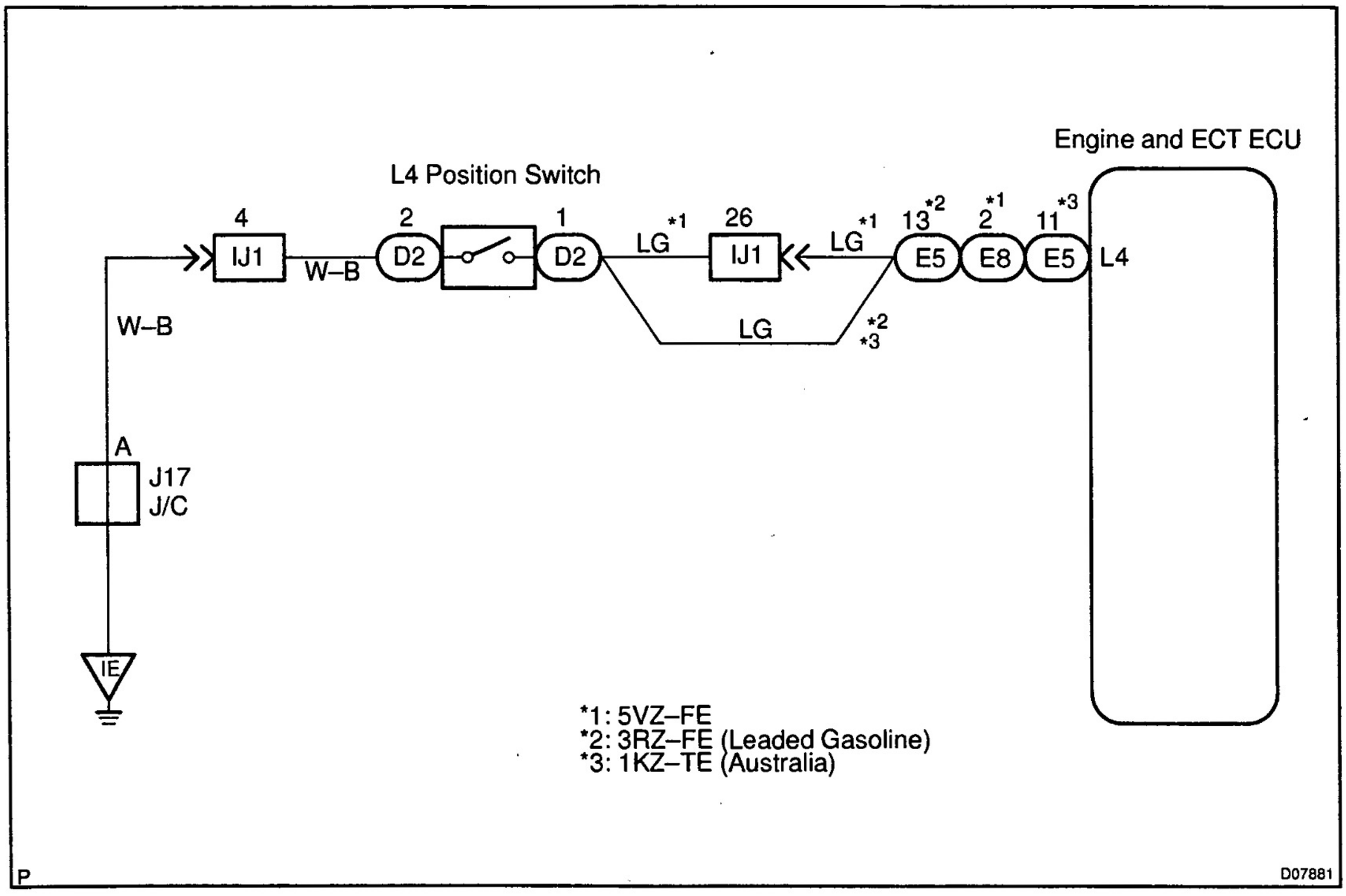

INSPECTION PROCEDURE

1	**Check voltage between terminal L4 of Engine and ECT ECU and body ground.**

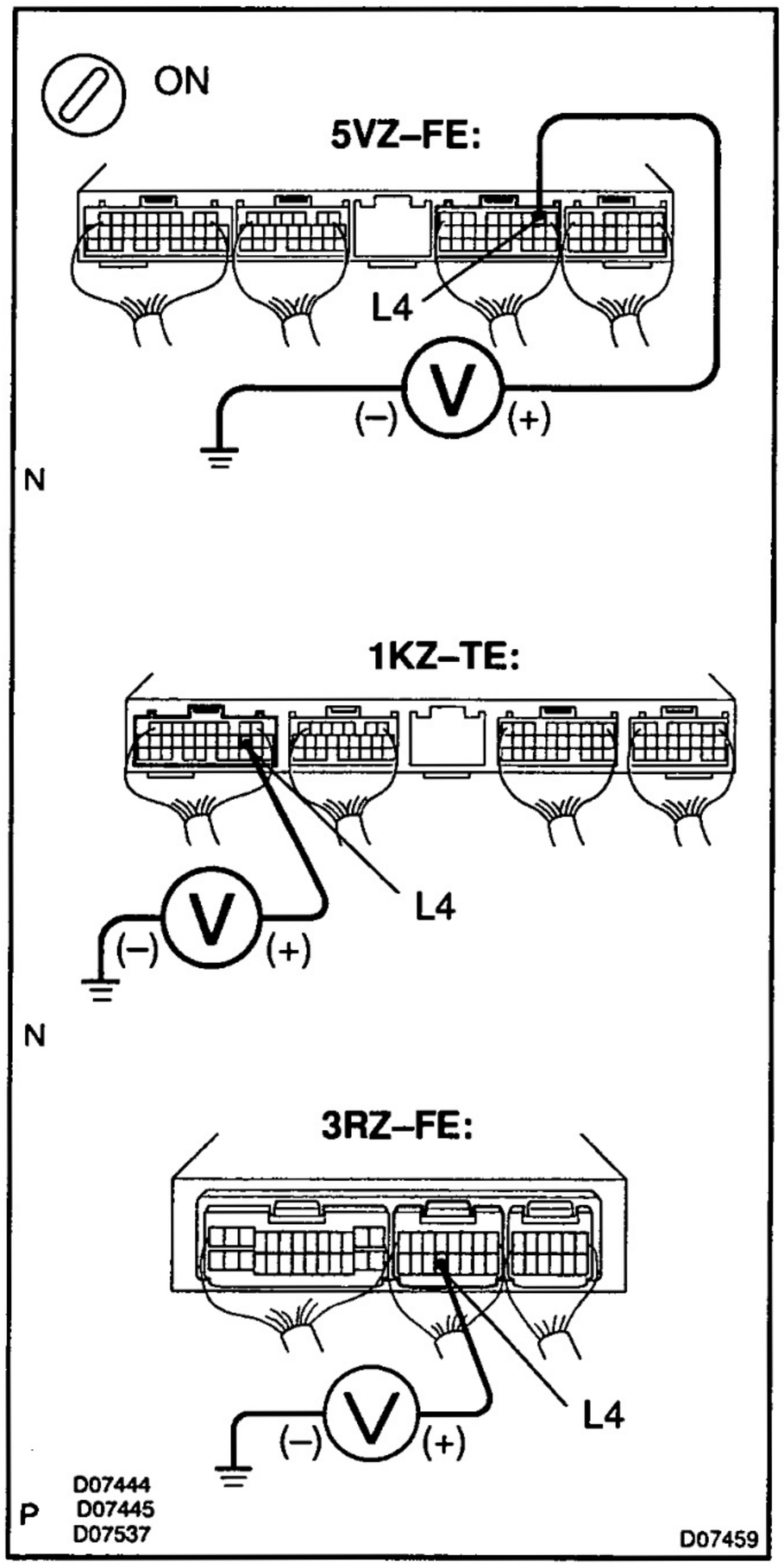

PREPARATION:

(a) Remove the glove compartment door (See page BO–17).

(b) Turn the ignition switch ON.

CHECK:

Check voltage between terminal L4 of the Engine and ECT ECU and body ground.

OK:

9.0 – 14 V

OK

Proceed to next circuit inspection shown in symptom problem table (See page DI–24).

NG

2	Check L4 position switch (See page TR–3).

NG → Replace the L4 position switch.

OK ↓

3	Check harness and connector between battery and L4 position switch, L4 position switch and Engine and ECT ECU (See page IN–33).

NG → Repair or replace the harness or connector.

OK ↓

Check and replace Engine and ECT ECU (See page IN–33)

ANTI–LOCK BRAKE SYSTEM

HOW TO PROCEED WITH TROUBLESHOOTING

DI6BA–01

Troubleshooting in accordance with the procedure on the following pages.

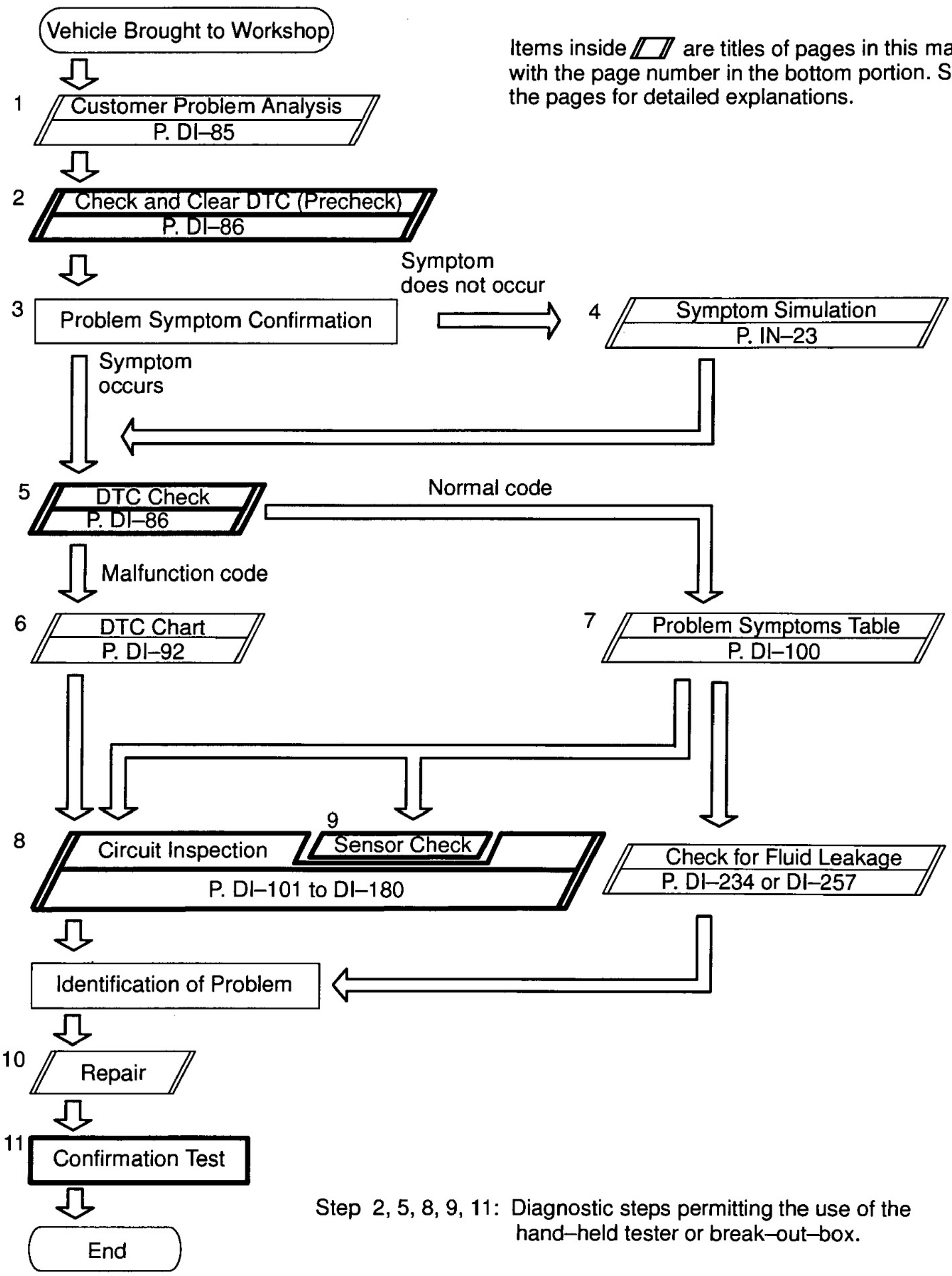

Items inside ▱ are titles of pages in this manual, with the page number in the bottom portion. See the pages for detailed explanations.

Step 2, 5, 8, 9, 11: Diagnostic steps permitting the use of the hand–held tester or break–out–box.

DI6BB–01

CUSTOMER PROBLEM ANALYSIS CHECK

ABS Check Sheet

Inspector's Name :

Customer's Name		**Registration No.**	
		Registration Year	/ /
		Frame No.	
Date Vehicle Brought In	/ /	**Odometer Reading**	km miles

Date Problem First Occurred	/ /
Frequency Problem Occurs	☐ Continuous ☐ Intermittent (times a day)

Symptoms	☐ ABS does not operate.	
	☐ ABS does not operate efficiently.	
	☐ BA does not operate.	
	ABS Warning Light Abnormal	☐ Remains ON ☐ Does not Light Up
	Brake Warning Light Abnormal (PKB released)	☐ Remains ON ☐ Does not Light Up
	Brake Warning Buzzer Abnormal	☐ Sounds ☐ Does not sounds

DTC Check	**1st Time**	☐ Normal Code ☐ Malfunction Code (Code)
	2nd Time	☐ Normal Code ☐ Malfunction Code (Code)

DI6BC–01

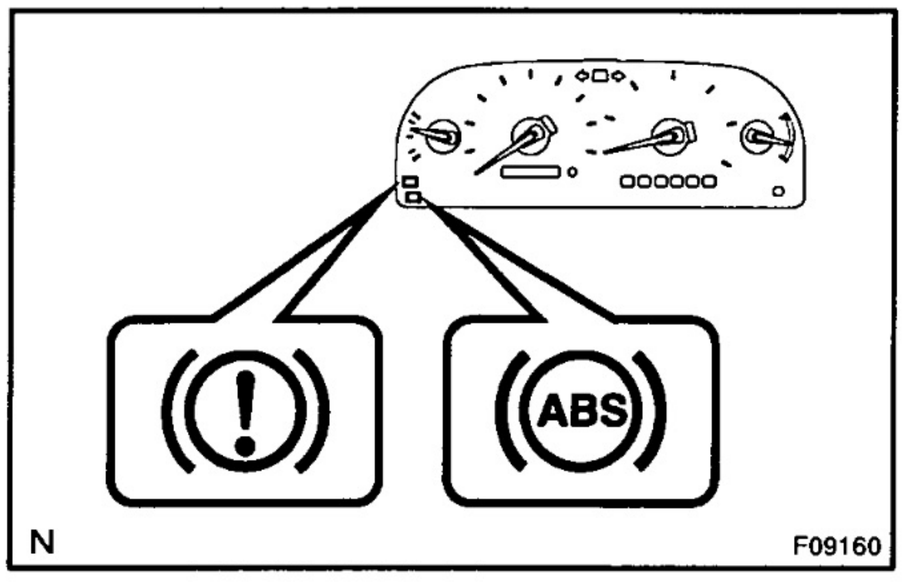

PRE–CHECK

1. DIAGNOSIS SYSTEM

(a) Check the warning lights and buzzer.

(1) Release parking brake lever.

(2) When the ignition switch is turned ON, check that the ABS and brake warning lights goes on for 3 sec.

(3) When depressing the brake pedal repeatedly it may turn on the warning lights and buzzer.

HINT:

If the indicator check result is not normal, proceed to trouble-shooting for the ABS warning light circuit or brake warning right circuit (See page DI–170 or DI–174).

(b) In case of not using hand–held tester:
Check the DTC.

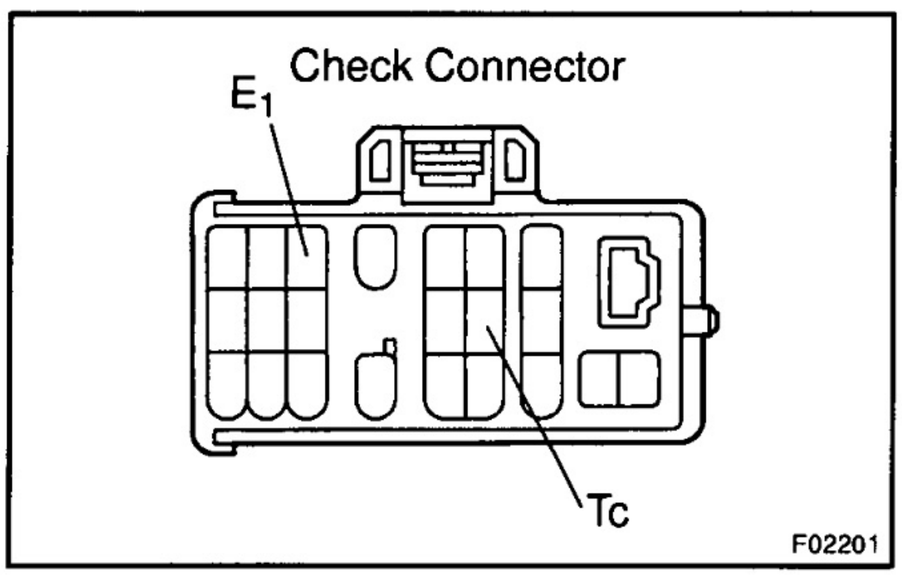

(1) Using SST, connect terminals Tc and E_1 of check connector.

SST 09843–18020

(2) Turn the ignition switch ON.

(3) Read the DTC from the ABS warning light on the combination meter.

HINT:

- If no code appears, inspect the diagnostic circuit or ABS warning light circuit (See page DI–178 or DI–170).

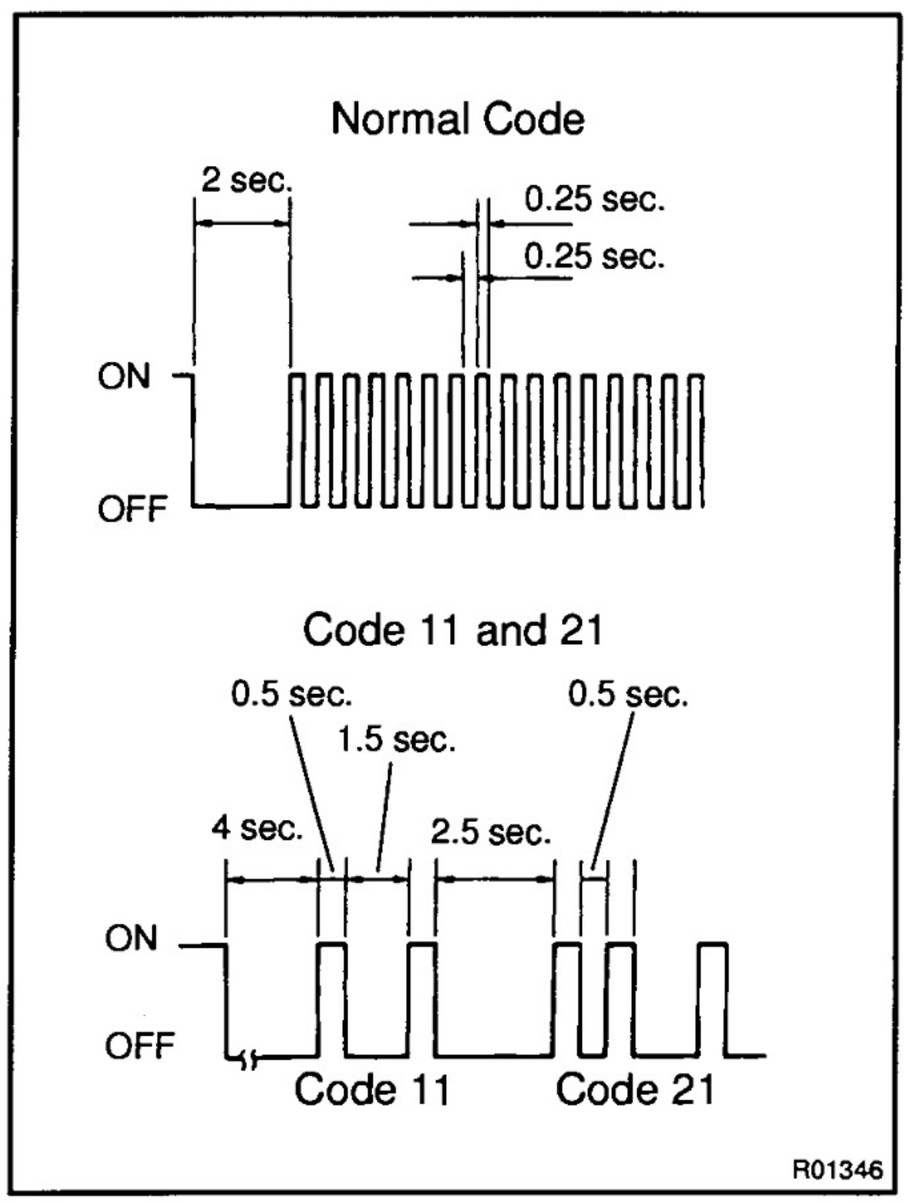

- As an example, the blinking patterns for normal code and codes 11 and 21 are shown on the left.

(4) Codes are explained in the code table on page DI–92.

(5) After completing the check, disconnect terminals Tc and E_1 of check connector, and turn off the display.

If 2 or more malfunctions are indicated at the same time the lowest numbered DTC will be displayed 1st.

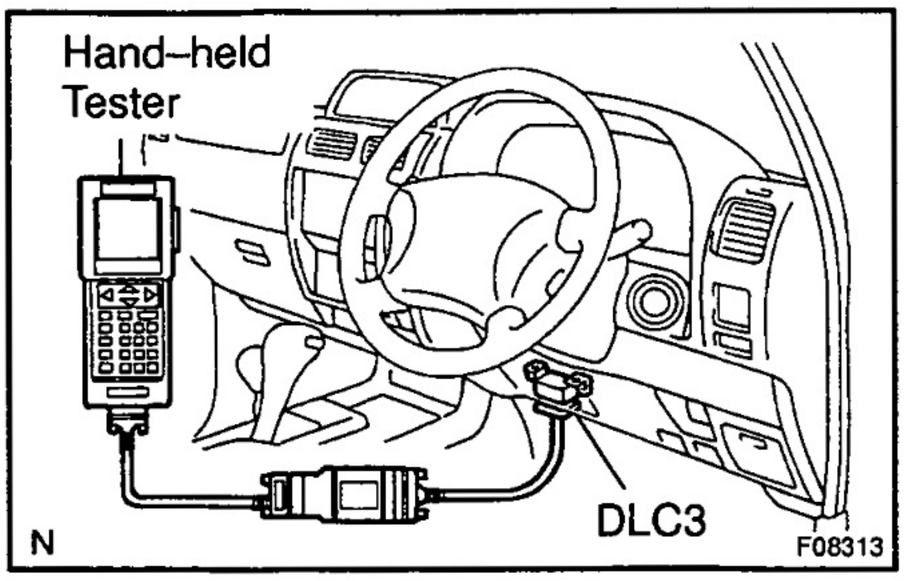

(c) In case of using hand–held tester:
Check the DTC.
(1) Hook up the hand–held tester to the DLC3.
(2) Turn the ignition switch ON.
(3) Read the DTC by following the prompts on the tester screen.

HINT:
Please refer to the hand–held tester operator's manual for further details.

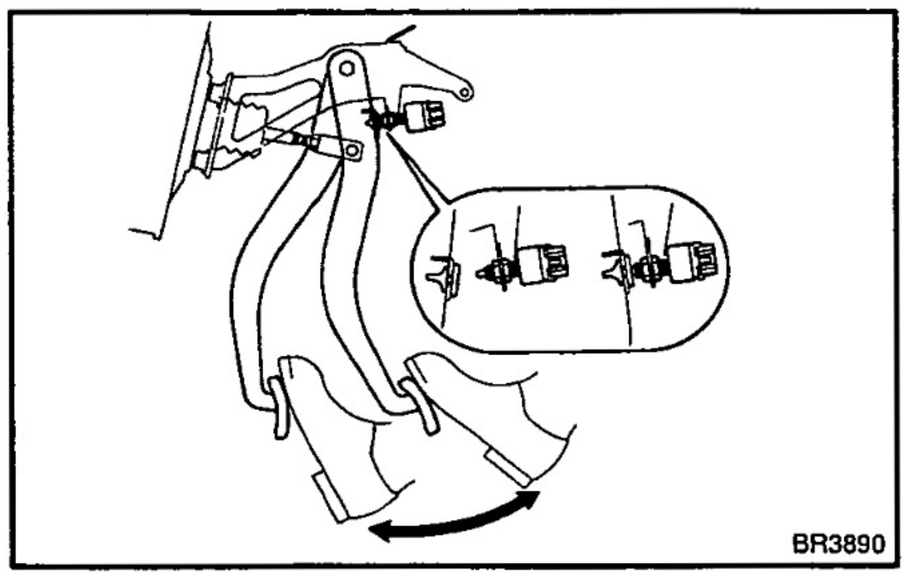

(d) In case of not using hand–held tester:
Clear the DTC.
(1) Using SST, connect terminals Tc and E_1 of check connector.
SST 09843–18020
(2) Turn the ignition switch ON.
(3) Clear the DTC stored in ECU by depressing the brake pedal 8 times more within 5 sec.
(4) Check that the warning light shows the normal code.
(5) Remove the SST from the terminals of check connector.
SST 09843–18020

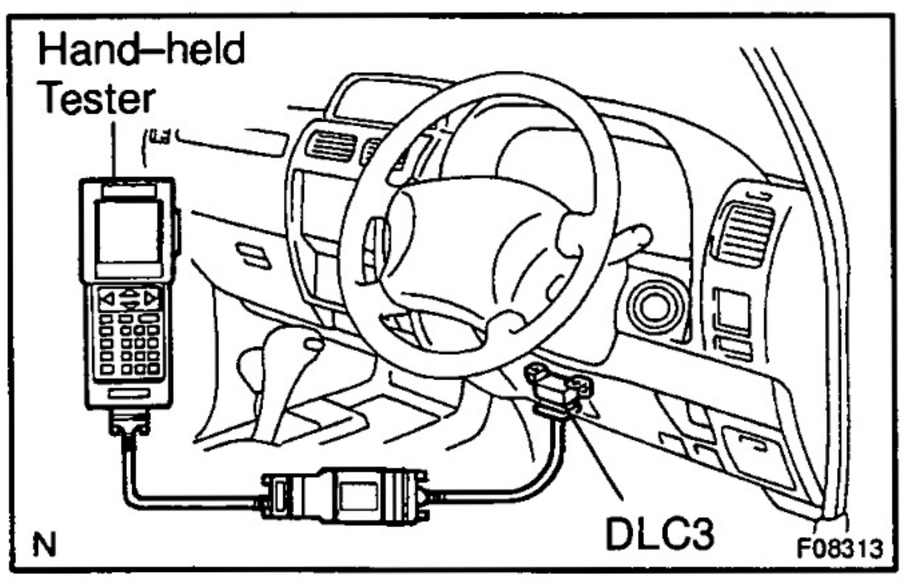

(e) In case of using hand–held tester:
Clear the DTC.
(1) Hook up the hand–held tester to the DLC3.
(2) Turn the ignition switch ON.
(3) Operate the hand–held tester to erase the codes.
(See hand–held tester operator's manual.)

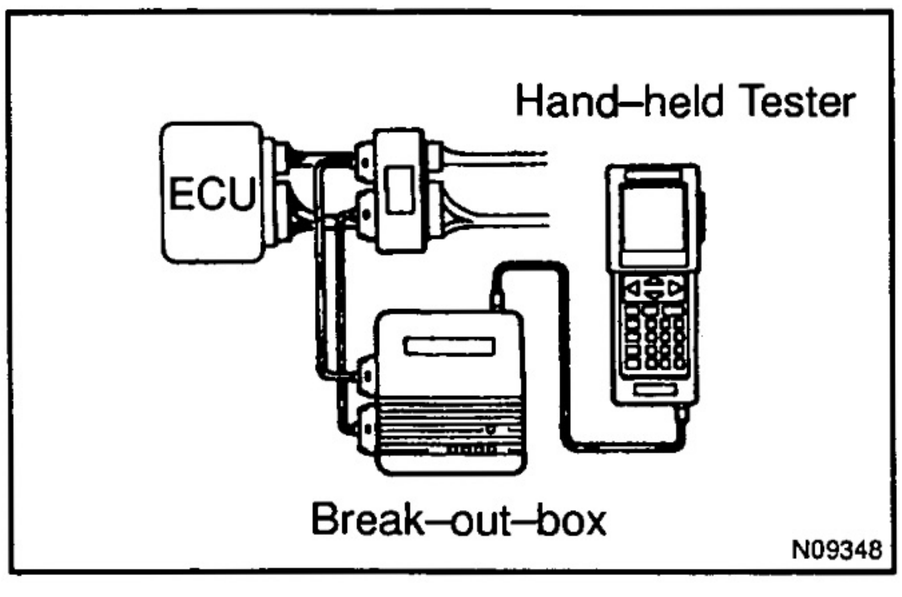

(f) Reference:
Using break–out–box and hand–held tester, measure the ECU terminal values.
(1) Turn the ignition switch OFF.
(2) Hook up the break–out–box and hand–held tester to the vehicle.
(3) Turn the ignition switch ON.
(4) Read the ECU input/output values by following the prompts on the tester screen.

HINT:

- Hand–held tester has a "Snapshot" function. This records the measured values and is effective in the diagnosis of intermittent problems.
- Please refer to the hand–held tester/break–out–box operator's manual for further details.

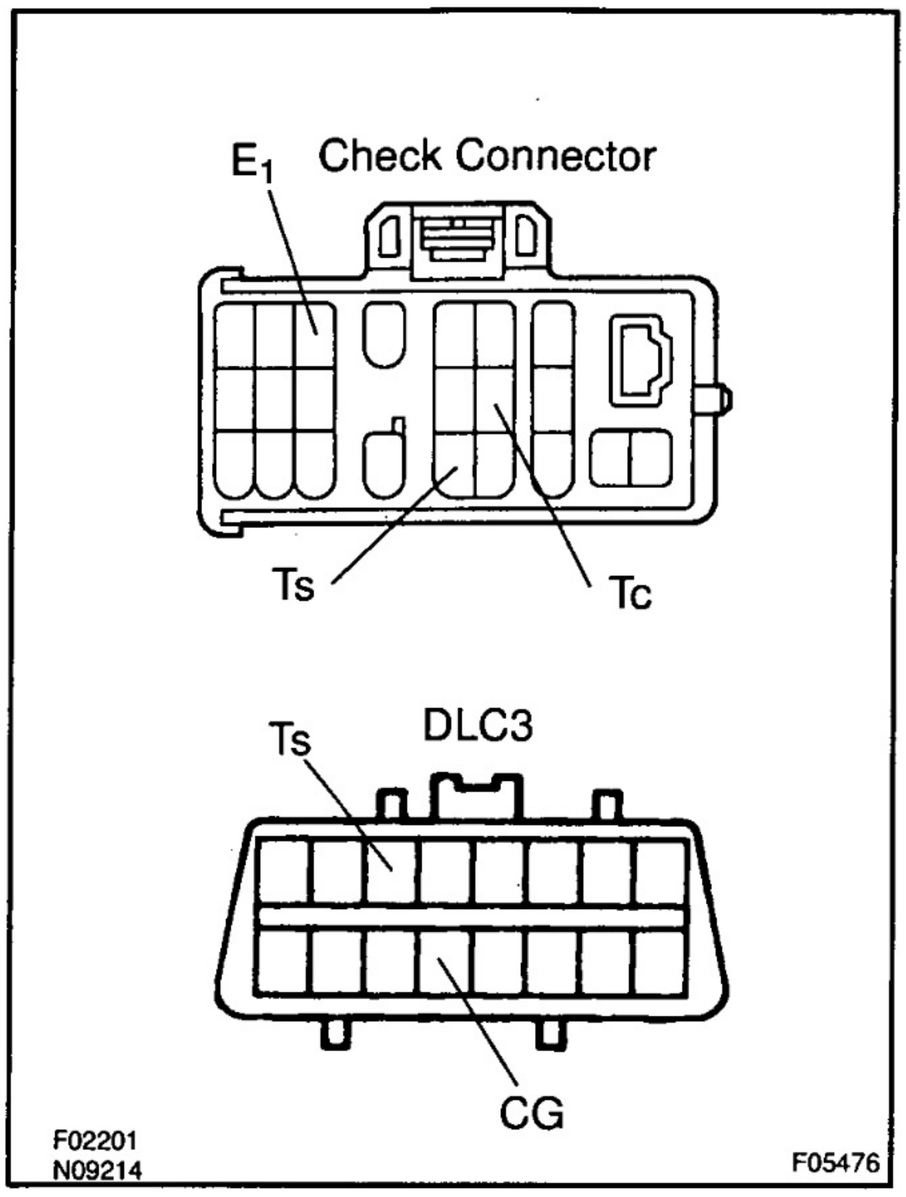

2. SPEED SENSOR SIGNAL CHECK (TEST MODE)

HINT:

If the ignition switch is turned from ON to ACC or LOCK during test mode, DTC will be erased.

(a) In case of not using hand–held tester:
Check the speed sensor signal.
(1) Turn the ignition switch OFF.
(2) Using SST, connect terminals Ts and E_1 of check connector or Ts and CG of DLC3.
SST 09843–18020 or 09843–18040
(3) Start the engine.

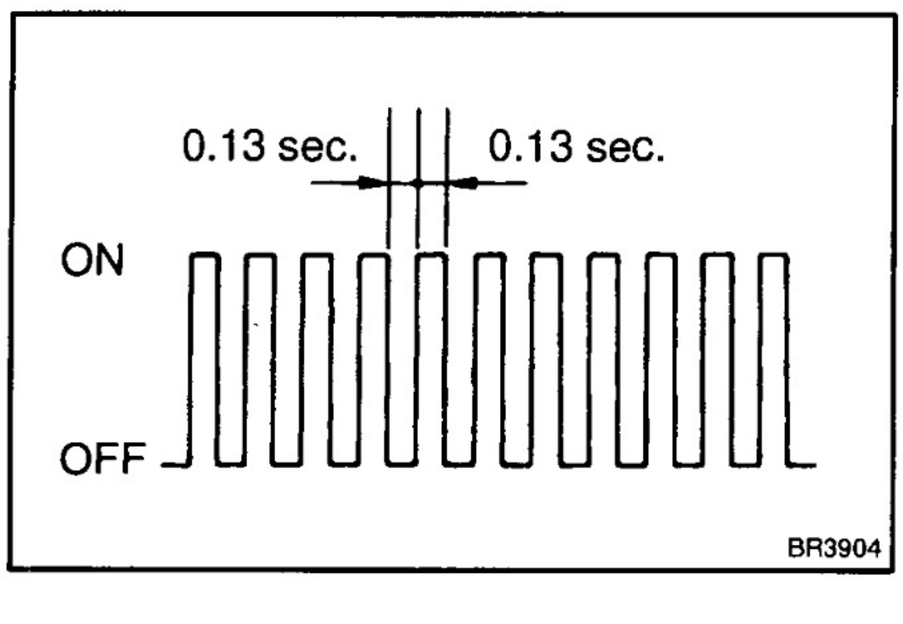

(4) Check that the ABS warning light blinks.

HINT:

If the ABS warning light does not blink, inspect the ABS warning light circuit and Ts circuit (See page DI–170 and DI–180).

(5) Keep the vehicle in the stationary condition on the flat place for 6 sec. or more.
(6) Shift the transfer lever in L4 position and turn the center diff. lock switch ON.
(7) Leaving the vehicle in the stationary condition and the brake pedal in free condition for 1 sec. or more, continue to depress the brake pedal with 98 N (10 kgf, 22 lbf) of force or more for 1 sec. or more.
(8) Leaving the vehicle in the stationary condition, depress the brake pedal with 980 N (100 kgf, 221 lbf) of force or more quickly.

HINT:

At this time, the ABS warning light comes on for 3 sec.

(9) Drive vehicle straight forward.
When driving the vehicle with the speed faster than 45 km/h (28 mph) for several seconds, check that the ABS warning light comes off.

HINT:
There is a case that the sensor check is not completed if the vehicle has its rear wheels spun or its steering wheel steered during this check.

(10) Stop the vehicle.
(11) Using SST, connect terminals Tc and E_1 of check connector.
SST 09843–18020
(12) Read the number of blinks of the ABS warning light.

HINT:
- See the list of DTC on the next page.
- If every sensor is normal, a normal code is output (A cycle of 0.25 sec. ON and 0.25 sec. OFF is repeated).
- If 2 or more malfunctions are indicated at the same time, the lowest numbered code will be displayed 1st.

(13) After doing the check, disconnect the SST from terminals Ts and E_1, Tc and E_1 of check connector and/or Ts and CG of DLC3 and turn ignition switch OFF.
SST 09843–18020 or 09843–18040

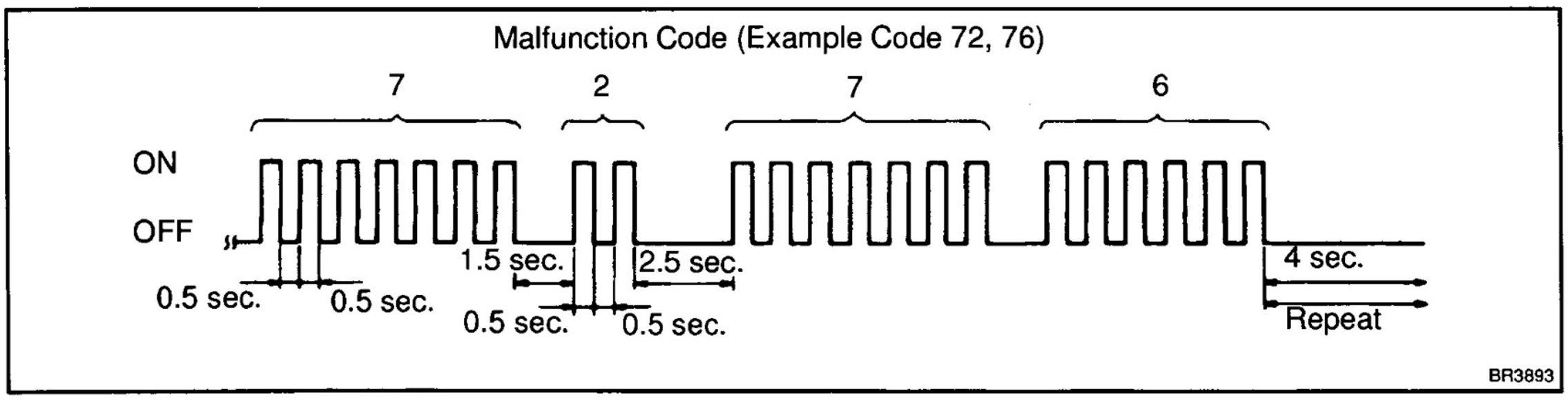

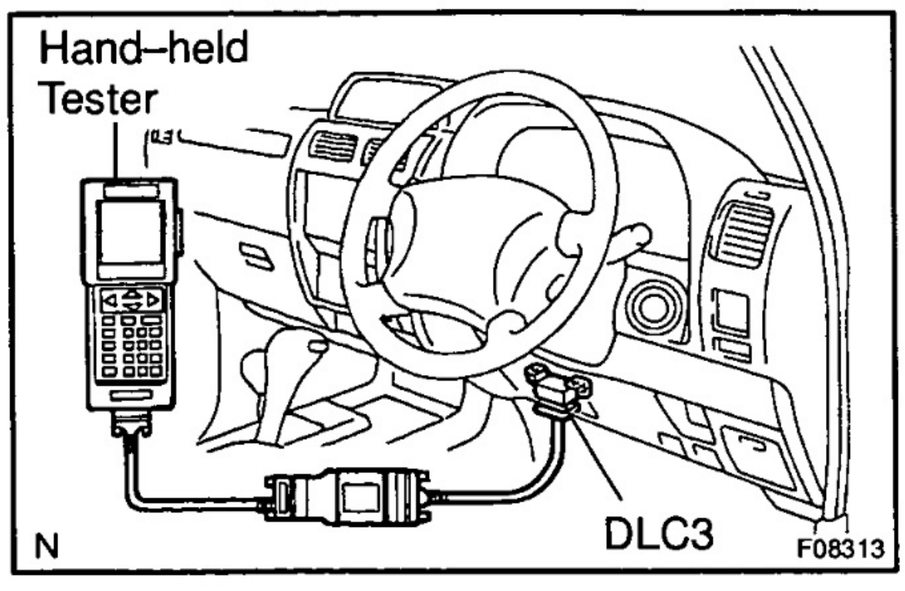

(b) In case of using hand–held tester:
Check the sensor signal.
(1) Hook up the hand–held tester to the DLC3.
(2) Do step (3) to (10) on the previous page.
(3) Read the DTC by following the prompts on the tester screen.

HINT:
Please refer to the hand–held tester operator's manual for further details.

DTC of speed sensor check function:

Code No.	Diagnosis	Trouble Area
C1271 / 71	Low output voltage of right front speed sensor	• Right front speed sensor • Sensor installation • Sensor rotor
C1272 / 72	Low output voltage of left front speed sensor	• Left front speed sensor • Sensor installation • Sensor rotor
C1273 / 73	Low output voltage of right rear speed sensor	• Right rear speed sensor • Sensor installation • Sensor rotor
C1274 / 74	Low output voltage of left rear speed sensor	• Left rear speed sensor • Sensor installation • Sensor rotor
C1275 / 75	Abnormal change in output voltage of right front speed sensor	Right front speed sensor rotor
C1276 / 76	Abnormal change in output voltage of left front speed sensor	Left front speed sensor rotor
C1277 / 77	Abnormal change in output voltage of right rear speed sensor	Right rear speed sensor rotor
C1278 / 78	Abnormal change in output voltage of left rear speed sensor	Left rear speed sensor rotor
C1279 / 79	Deceleration sensor is faulty	• Deceleration sensor • Sensor installation
C1281 / 81	Master cylinder pressure sensor output signal is faulty	Master cylinder pressure sensor
C1282 / 82	Transfer indicator (center diff. lock) switch malfunction	Transfer indicator (center diff. lock) switch
C1283 / 83	Transfer L4 position switch malfunction	Transfer L4 position switch

3. DECELERATION SENSOR OPERATION DIAGNOSIS SYSTEM

CAUTION:

While checking the deceleration sensor operating diagnosis system, ABS does not work and brake system works as a conventional brake system.

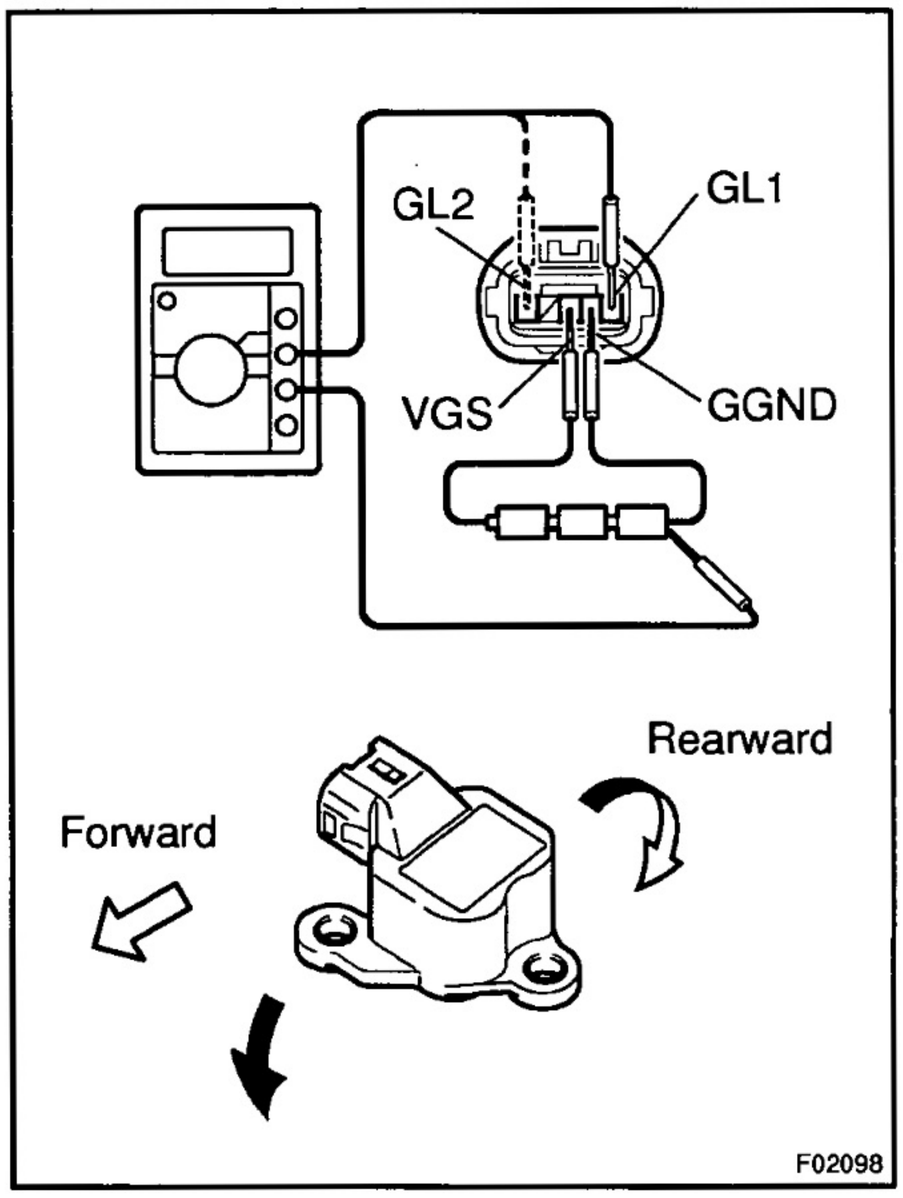

4. DECELERATION SENSOR CHECK

(a) Connect 3 dry batteries of 1.5 V in series.

(b) Connect VGS terminal to the batteries' positive (+) terminal, and GGND terminal to the batteries' negative (–) terminal, apply about 4.5 V between VGS and GGND terminals.

NOTICE:

Do not apply voltage of 6 V or more to terminals VGS and GGND.

(c) Check the output voltage of GL1 and GL2 terminal.

Symbols	Condition	Standard Value
GL1	Horizontal	About 2.3 V
GL1	Lean forward	0.4V – about 2.3 V
GL1	Lean rearward	About 2.3 V – 4.1 V
GL2	Horizontal	About 2.3 V
GL2	Lean forward	About 2.3 V – 4.1 V
GL2	Lean rearward	0.4V – about 2.3 V

HINT:

- If the sensor is tilted too much it may show the wrong value.
- If dropped, the sensor should be replaced with a new one.
- When a deceleration sensor is replaced, the ECU should be formatted.
  First, shift the shift lever to P range and turn the ignition switch ON. Repeat connecting and disconnecting between terminals Ts and E_1 of DLC1 or Ts and CG of DLC3 4 times or more for 8 sec. Leaving the vehicle in stationary condition after this results in the ECU format.
- The sensor removed from the vehicle should not be placed upside down.

DI6BD–01

DIAGNOSTIC TROUBLE CODE CHART

NOTICE:

When removing the part, turn the ignition switch OFF.

HINT:

- Using SST 09843–18020, connect the terminals Tc and E_1 of check connector.
- If any abnormality is not found when inspecting parts, inspect the ECU.
- If a malfunction code is displayed during the DTC check, check the circuit listed that code. For details of each code, turn to the page referred to under the "See page" for respective "DTC No." in the DTC chart.
- EBD shall be checked according to the ABS trouble code chart.

Chart of ABS:

DTC No. (See Page)	Detection Item	Trouble Area
C0278 / 11 (DI–110)	Open or short circuit in ABS solenoid relay circuit	• ABS solenoid relay • ABS solenoid relay circuit
C0279 / 12 (DI–110)	B+ short circuit in ABS solenoid relay circuit	
C0226 / 21 (DI–107)	Open or short circuit in hydraulic brake booster solenoid circuit (SFR circuit)	• Hydraulic brake booster • SFRR or SFRH circuit
C0236 / 22 (DI–107)	Open or short circuit in hydraulic brake booster solenoid circuit (SFL circuit)	• Hydraulic brake booster • SFLR or SFLH circuit
C0246 / 23 (DI–107)	Open or short circuit in hydraulic brake booster solenoid circuit (SRR circuit)	• Hydraulic brake booster • SRRR or SRRH circuit
C0256 / 24 (DI–107)	Open or short circuit in hydraulic brake booster solenoid circuit (SRL circuit)	• Hydraulic brake booster • SRLR or SRLH circuit
C1225 / 25 (DI–116)	Open or short circuit in hydraulic brake booster solenoid circuit (SA1 circuit)	• Hydraulic brake booster • SA1 circuit
C1226 / 26 (DI–116)	Open or short circuit in hydraulic brake booster solenoid circuit (SA2 circuit)	• Hydraulic brake booster • SA2 circuit
C1227 / 27 (DI–116)	Open or short circuit in hydraulic brake booster solenoid circuit (SA3 circuit)	• Hydraulic brake booster • SA3 circuit
C1228 / 28 (DI–116)	Open or short circuit in hydraulic brake booster solenoid circuit (STR circuit)	• Hydraulic brake booster • STR circuit
C0200 / 31*1 (DI–101)	Right front wheel speed sensor signal malfunction	• Right front, left front, right rear and left rear speed sensor • Each speed sensor circuit • Sensor rotor
C0205 / 32*1 (DI–101)	Left front wheel speed sensor signal malfunction	
C0210 / 33*1 (DI–101)	Right rear wheel speed sensor signal malfunction	
C0215 / 34*1 (DI–101)	Left rear wheel speed sensor signal malfunction	
C1237 / 37 (DI–118)	Some tire is different size from the other tires	Tire size
C1241 / 41 (DI–119)	Low battery voltage or abnormally high battery voltage	• Battery • IC regulator • Power source circuit
C1242 / 42*2 (DI–122)	Open circuit in IG2 circuit	• Battery • IC regulator • Power source circuit

C1243 / 43 (DI–125)	Malfunction in deceleration sensor (constant output)	• Deceleration sensor • Wire harness for deceleration sensor system
C1244 / 44 (DI–127)	Open or short circuit in deceleration sensor circuit	• Deceleration sensor • Deceleration sensor circuit
C1245 / 45 (DI–125)	Malfunction in deceleration sensor	• Deceleration sensor • Wire harness for deceleration sensor system
C1246 / 46 (DI–129)	Malfunction in master cylinder pressure sensor	• Master cylinder pressure sensor • Master cylinder pressure sensor circuit
C1249 / 49 (DI–132)	Open circuit in stop light switch circuit	Stop light switch circuit
C1251 / 51*2 (DI–135)	Pump motor is locked Open circuit in pump motor ground	Hydraulic brake booster pump motor
C1252 / 52*2 (DI–138)	Hydraulic brake booster pump motor malfunction	• Hydraulic brake booster pump motor • Hydraulic brake booster pump motor circuit • Pressure switch (PH or PL)
C1253 / 53*2 (DI–144)	Hydraulic brake booster pump motor relay malfunction	• ABS or TRC motor relay • ABS or TRC motor relay circuit • Hydraulic brake booster pump motor circuit
C1254 / 54*2 (DI–149)	Pressure switch malfunction	• Pressure switch (PH or PL) • Pressure switch circuit
C1256 / 56*2 (DI–152)	Accumulator low pressure malfunction	• Accumulator • Pressure switch (PH or PL) • Hydraulic brake booster pump motor
C1257 / 57*2 (DI–158)	Power supply drive circuit malfunction	• Battery • Power source circuit • ABS & BA & TRC ECU or ABS & BA & TRC & VSC ECU
C1268 / 68 (DI–161)	Transfer L4 position signal transmission failure	• Transfer L4 position switch • Transfer L4 position switch circuit
C1269 / 69 (DI–164)	Malfunction in neutral start switch circuit (R range)	• Neutral start switch • Neutral start switch circuit (R range)
Always ON (DI–167)	Malfunction in ABS & BA & TRC ECU or ABS & BA & TRC & VSC ECU	• Battery • IC regulator • Power source circuit • ABS & BA & TRC ECU or ABS & BA & TRC & VSC ECU

*1: As the DTC cannot be erased by replacing parts alone do either of the following operations.

(1) Clear DTC (See page DI–86).

(2) At the vehicle speed of 20 km/h (12 mph), drive the vehicle for 30 sec. or more.

*2: Using the following table, troubled parts can be specified.

DTC		42		51		52		53		54		56		57	
Brake warning light and buzzer		Light	Buzzer	Light	Buzzer	Light	Buzzer	Light	Buzzer	Light	Buzzer	Light	Buzzer	Light	Buzzer
Pressure switch	PH					○	○			○		○	○		
	PL					○	○			○		○	○		
Pump motor circuit	Pump motor			○	○	○	○					○	○		
	MTT wire harness					○	○	○							
	MT+ wire harness			○											
	MT– wire harness			○											
Accumulator malfunction												○	○		
Motor relay circuit	MR1 open circuit							○							
	MR2 open circuit							○							
	MR1 welded contact					○	○	○							
	MR2 welded contact					○	○	○							
Hydraulic brake booster	Pressure leaks					○	○					○	○		
Power source*	IG2 open circuit	○													
ECU	Power supply circuit													○	

*: When IG1 circuit is open, ABS warning light and brake warning light come on.

DI6BE–01

PARTS LOCATION

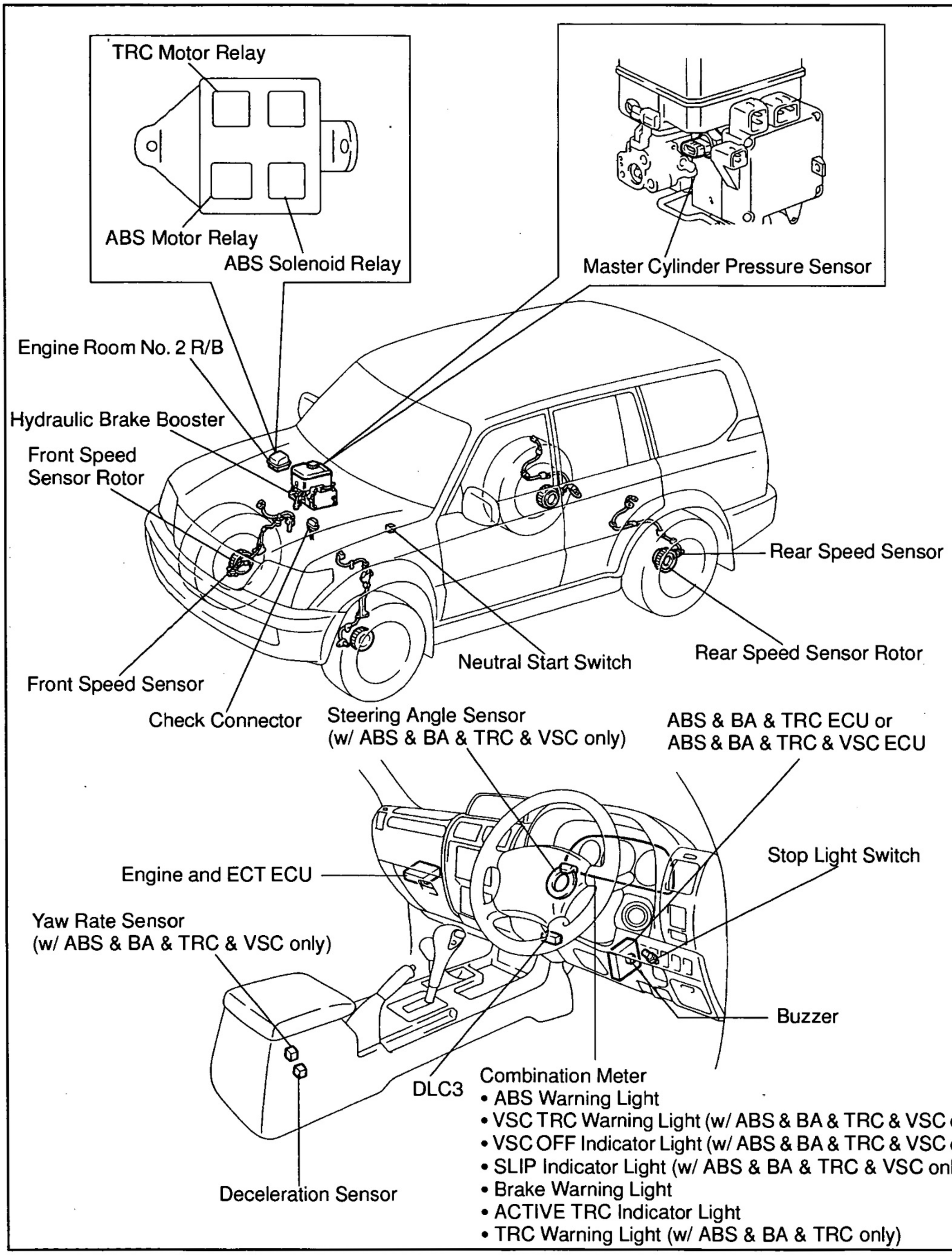

F09159

DI6BF–01

TERMINALS OF ECU

w/ VSC:

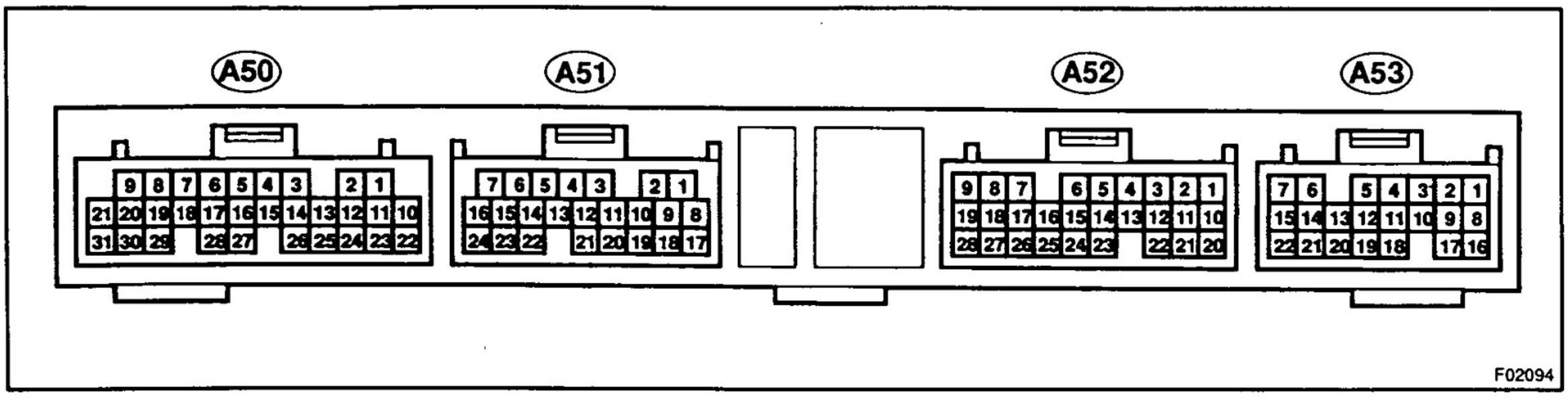

Symbols (Terminals No.)	Wiring Color	Condition	STD Voltage (V)
SA1 (A50 – 2) – GND (A50 – 6, 31, A51 – 8, 17)	G–W ↔ W–B	IG switch ON, ABS warning light OFF	10 – 14
SA2 (A50 – 3) – GND (A50 – 6, 31, A51 –8, 17)	G–Y ↔ W–B	IG switch ON, ABS warning light OFF	10 – 14
SA3 (A50 – 4) – GND (A50 – 6, 31, A51 – 8, 17)	G–R ↔ W–B	IG switch ON, ABS warning light OFF	10 – 14
STR (A50 – 5) – GND (A50 – 6, 31, A51 – 8, 17)	L–W ↔ W–B	IG switch ON, ABS warning light OFF	10 – 14
SFLR (A50 – 7) – GND (A50 – 6, 31, A51 – 8, 17)	W–G ↔ W–B	IG switch ON, ABS warning light OFF	10 – 14
SRRH (A50 – 8) – GND (A50 – 6, 31, A51 – 8, 17)	L–Y ↔ W–B	IG switch ON, ABS warning light OFF	10 – 14
SRRR (A50 – 9) – GND (A50 – 6, 31, A51 – 8, 17)	L–R ↔ W–B	IG switch ON, ABS warning light OFF	10 – 14
VCM (A50 – 10) – GND (A50 – 6, 31, A51 – 8, 17)	W ↔ W–B	IG switch ON	4.5 – 5.5
PH (A50 – 11) – GND (A50 – 6, 31, A51 – 8, 17)	B–R ↔ W–B	IG switch ON, pressure switch (PH) ON	Below 0.9
		IG switch ON, pressure switch (PH) OFF	5 – 8
FR+ (A50 – 14) – FR– (A50 – 13)	L ↔ BR	IG switch ON, slowly turn right front wheel	AC generation
FL+ (A50 – 16) – FL– (A50 – 15)	G ↔ L	IG switch ON, slowly turn left front wheel	AC generation
SR (A50 – 19) – R1+ (A50 – 1)	R–B ↔ BR	IG switch ON, ABS warning light OFF	10 – 14
SFLH (A50 – 21) – GND (A50 – 6, 31, A51 – 8, 17)	W–R ↔ W–B	IG switch ON, ABS warning light OFF	10 – 14
PMC (A50 – 22) – E2 (A50 – 23)	B ↔ R	IG switch ON, stop light switch released	0.3 – 0.7
E2 (A50 – 23) – GND (A50 – 6, 31, A51 – 8)	R ↔ W–B	IG switch OFF	Below 1.5
FSS (A50 – 25) – GND (A50 – 6, 31, A51 – 8, 17)	BR–W ↔ W–B	IG switch OFF	Below 1.5
MTT (A50 – 27) – GND (A50 – 6, 31, A51 – 8, 17)	L–R ↔ W–B	IG switch ON (Motor relay is OFF)	Below 1.5
MT+ (A50 – 28) – MT– (A50 – 18)	L–W ↔ L–Y	IG switch ON	Pulse generation

MR1 (A50 – 29) – R1+ (A50 – 1)	R–Y ↔ BR	IG switch ON, hydraulic brake booster pump motor stops	Below 1.0
WA (A51 – 1) – GND (A50 – 6, 31, A51 – 8, 17)	W ↔ W–B	IG switch ON, ABS warning light OFF	10 – 14
BZ (A51 – 2) – GND (A50 – 6, 31, A51 – 8, 17)	R–Y ↔ W–B	IG switch ON, VSC and brake buzzer is not sounded	10 – 14
D/G (A51 – 3) – GND (A50 – 6, 31, A51 – 8, 17)	V–W ↔ W–B	IG switch ON	10 – 14
R (A51 – 4) – GND (A50 – 6, 31, A51 – 8, 17)	R–B ↔ W–B	IG switch ON, shift lever is in R range	10 – 14
P (A51 – 5) – GND (A50 – 6, 31, A51 – 8, 17)	G ↔ W–B	IG switch ON, shift lever is in P range	10 – 14
IG1 (A51 – 6) – GND (A50 – 6, 31, A51 – 8, 17)	W ↔ W–B	IG switch ON	10 – 14
NEO (A51 – 7) – GND (A50 – 6, 31, A51 – 8, 17)	Y–G ↔ W–B	Engine idling	Pulse generation
RSS (A51 – 9) – GND (A50 – 6, 31, A51 – 8, 17)	BR ↔ W–B	IG switch OFF	Below 1.5
STP (A51 – 10) – GND (A50 – 6, 31, A51 – 8)	G–W ↔ W–B	Stop light switch pushed in	Below 1.5
		Stop light switch released	2 – 5
Tc (A51 – 11) – GND (A50 – 6, 31, A51 – 8, 17)	P–L ↔ W–B	IG switch ON and terminals Tc–E_1 of check connector connected	Below 1.0
		IG switch ON and terminals Tc–E_1 of check connector not connected	10 – 14
Ts (A51 – 12) – GND (A50 – 6, 31, A51 – 8, 17)	L–B ↔ W–B	IG switch ON and terminals Ts–E_1 of check connector or Tc–CG of DLC3 connected	Below 1.0
		IG switch ON and terminals Ts–E_1 of check connector or Tc–CG of DLC3 not connected	10 – 14
PKB (A51 – 13) – GND (A50 – 6, 31, A51 – 8, 17)	R–W ↔ W–B	IG switch ON, parking brake switch ON	Below 1.5
		IG switch ON, parking brake switch OFF	10 – 14
ENG+ (A51 – 14) – ENG– (A51 – 22)	P ↔ V	IG switch ON	Pulse generation
TFN (A51 – 15) – GND (A50 – 6, 31, A51 – 8, 17)	L ↔ W–B	IG switch ON, transfer shift lever N position	Below 1.5
		IG switch ON, transfer shift lever other than N position	10 – 14
RL+ (A51 – 18) – RL– (A51 – 19)	R ↔ G	IG switch ON, slowly turn left rear wheel	AC generation
RR+ (A51 – 20) – RR– (A51 – 21)	B ↔ W	IG switch ON, slowly turn right rear wheel	AC generation
TRC+ (A51 – 24) – TRC– (A51 – 16)	L ↔ Y	IG switch ON	Pulse generation
VGS (A52 – 1) – GGND (A51 – 10)	B ↔ W	IG switch ON	4.5 – 5.5
EXI (A52 – 3) – GND (A50 – 6, 31, A51 – 8, 17)	B ↔ W–B	IG switch ON, transfer indicator (center diff. lock) switch ON	Below 2.0
		IG switch ON, transfer indicator (center diff. lock) switch OFF	10 – 14
VSCW (A52 – 4) – GND (A50 – 6, 31, A51 – 8, 17)	L–R ↔ W–B	IG switch ON, VSC TRC warning light ON	Below 2.0
		IG switch ON, VSC TRC warning light OFF	10 – 14
BRL (A52 – 5) – GND (A50 – 6, 31, A51 – 8, 17)	R–W ↔ W–B	IG switch ON, brake warning light ON	Below 2.0
		IG switch ON, brake warning light OFF	10 – 14

IND (A52 – 6) – GND (A50 – 6, 31, A51 – 8, 17)	G–Y ↔ W–B	IG switch ON, SLIP indicator light ON	Below 2.0
		IG switch ON, SLIP indicator light OFF	10 – 14
WT (A52 – 7) – GND (A50 – 6, 31, A51 – 8, 17)	R–W ↔ W–B	IG switch ON, VSC OFF indicator light ON	Below 2.0
		IG switch ON, VSC OFF indicator light OFF	10 – 14
EXI4 (A52 – 8) – GND (A50 – 6, 31, A51 – 8, 17)	LG ↔ W–B	IG switch ON, transfer in L4 position	10 – 14
		IG switch ON, transfer in any poaition except L4 position	Below 1.5
VYS (A52 – 9) – GYAW (A52 – 28)	B ↔ W	IG switch ON	4.5 – 5.5
GL2 (A52 – 10) – GGND (A52 – 21)	G ↔ W	IG switch ON, vehicle is placed on the horizontal surface	2.0 – 3.0
INRR (A52 – 12) – GND (A50 – 6, 31, A51 – 8, 17)	G ↔ W–B	Right rear ACTIVE TRC indicator light ON	6.5 – 10.5
INFL (A52 – 13) – GND (A50 – 6, 31, A51 – 8, 17)	L ↔ W–B	Left front ACTIVE TRC indicator light ON	6.5 – 10.5
SS1+ (A52 – 14) – SS1– (A52 – 23)	B ↔ W	Engine idling, slowly turn steering wheel	Pulse generation
INFR (A52 – 15) – GND (A50 – 6, 31, A51 – 8, 17)	R ↔ W–B	Right front ACTIVE TRC indicator light ON	6.5 – 10.5
SP1 (A52 – 16) – GND (A50 – 6, 31, A51 – 8, 17)	L–R ↔ W–B	IG switch ON	Pulse generation
YD (A52 – 19) – GND (A50 – 6, 31, A51 – 8, 17)	L–Y ↔ W–B	Approx. 1 sec. after IG switch ON	4.5 – 5.3
INRL (A52 – 20) – GND (A50 – 6, 31, A51 – 8, 17)	Y ↔ W–B	Right rear ACTIVE TRC indicator light ON	6.5 – 10.5
GGND (A52 – 21) – GND (A50 – 6, 31, A51 – 8)	W ↔ W–B	IG switch OFF	Below 0.3
GL1 (A52 – 22) – GGND (A52 – 21)	R ↔ W	IG switch ON, vehicle is placed on the horizontal surface	2.0 – 3.0
GYAW (A52 – 27) – GND (A50 – 6, 31, A51 – 8, 17)	W ↔ W–B	IG switch OFF	Continuity
YAW (A52 – 28) – GYAW (A52 – 27)	R ↔ W	IG switch ON, vehicle is in stationary condition	2 – 3
SRLR (A53 – 1) – GND (A50 – 6, 31, A51 – 8, 17)	LG ↔ W–B	IG switch ON, ABS warning light OFF	10 – 14
MR2 (A53 – 2) – R2+ (A53 – 3)	R–W ↔ R–L	IG switch ON, hydrauric brake booster pump motor stops	Below 1.0
AST (A53 – 6) – GND (A50 – 6, 31, A51 – 8, 17)	P–L ↔ W–B	IG switch ON, ABS warning light OFF	10 – 14
SRLH (A53 – 7) – GND (A50 – 6, 31, A51 – 8, 17)	L–B ↔ W–B	IG switch ON, ABS warning light OFF	10 – 14
SFRR (A53 – 8) – GND (A50 – 6, 31, A51 – 8, 17)	W–L ↔ W–B	IG switch ON, ABS warning light OFF	10 – 14
PL (A53 – 9) – GND (A50 – 6, 31, A51 – 8, 17)	B–Y ↔ W–B	IG switch ON, pressure switch ON	3 – 5
		IG switch ON, pressure switch OFF	7 – 11
SFRH (A53 – 16) – GND (A50 – 6, 31, A51 – 8, 17)	L ↔ W–B	IG switch ON, ABS warning light OFF	10 – 14
IG2 (A53 – 22) – GND (A50 – 6, 31, A51 – 8, 17)	B–O ↔ W–B	IG switch ON	10 – 14

w/ ABS & TRC:

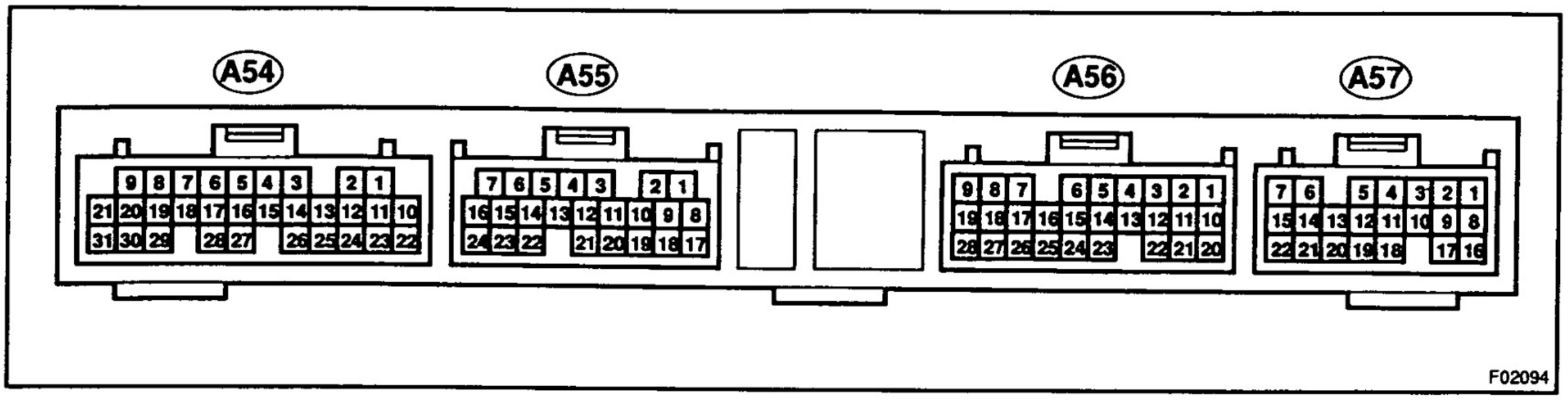

Symbols (Terminals No.)	Wiring Color	Condition	STD Voltage (V)
SA1 (A54 – 2) – GND (A54 – 6, 31, A55 – 8, 17)	G–W ↔ W–B	IG switch ON, ABS warning light OFF	10 – 14
SA2 (A54 – 3) – GND (A54 – 6, 31, A55 –8, 17)	G–Y ↔ W–B	IG switch ON, ABS warning light OFF	10 – 14
SA3 (A54 – 4) – GND (A54 – 6, 31, A55 – 8, 17)	G–R ↔ W–B	IG switch ON, ABS warning light OFF	10 – 14
STR (A54 – 5) – GND (A54 – 6, 31, A55 – 8, 17)	L–W ↔ W–B	IG switch ON, ABS warning light OFF	10 – 14
SFLR (A54 – 7) – GND (A54 – 6, 31, A55 – 8, 17)	W–G ↔ W–B	IG switch ON, ABS warning light OFF	10 – 14
SRRH (A54 – 8) – GND (A54 – 6, 31, A55 – 8, 17)	L–Y ↔ W–B	IG switch ON, ABS warning light OFF	10 – 14
SRRR (A54 – 9) – GND (A54 – 6, 31, A55 – 8, 17)	L–R ↔ W–B	IG switch ON, ABS warning light OFF	10 – 14
VCM (A54 – 10) – GND (A54 – 6, 31, A55 – 8, 17)	W ↔ W–B	IG switch ON	4.5 – 5.5
PH (A54 – 11) – GND (A54 – 6, 31, A55 – 8, 17)	B–R ↔ W–B	IG switch ON, pressure switch (PH) ON	Below 0.9
		IG switch ON, pressure switch (PH) OFF	5 – 8
FR+ (A54 – 14) – FR– (A54 – 13)	L ↔ BR	IG switch ON, slowly turn right front wheel	AC generation
FL+ (A54 – 16) – FL– (A54 – 15)	G ↔ L	IG switch ON, slowly turn left front wheel	AC generation
SR (A54 – 19) – R1+ (A54 – 1)	R–B ↔ BR	IG switch ON, ABS warning light OFF	10 – 14
SFLH (A54 – 21) – GND (A54 – 6, 31, A55 – 8, 17)	W–R ↔ W–B	IG switch ON, ABS warning light OFF	10 – 14
PMC (A54 – 22) – E2 (A54 – 23)	B ↔ R	IG switch ON, stop light switch released	0.3 – 0.7
E2 (A54 – 23) – GND (A54 – 6, 31, A55 – 8)	R ↔ W–B	IG switch OFF	Below 1.5
FSS (A54 – 25) – GND (A54 – 6, 31, A55 – 8, 17)	BR–W ↔ W–B	IG switch OFF	Below 1.5
MTT (A54 – 27) – GND (A54 – 6, 31, A55 – 8, 17)	L–R ↔ W–B	IG switch ON (Motor relay is OFF)	Below 1.5
MT+ (A54 – 28) – MT– (A54 – 18)	L–W ↔ L–Y	IG switch ON	Pulse generation
MR1 (A54 – 29) – R1+ (A54 – 1)	R–Y ↔ BR	IG switch ON, hydraulic brake booster pump motor stops	Below 1.0

WA (A55 – 1) – GND (A54 – 6, 31, A55 – 8, 17)	W ↔ W–B	IG switch ON, ABS warning light OFF	10 – 14
BZ (A55 – 2) – GND (A54 – 6, 31, A55 – 8, 17)	R–Y ↔ W–B	IG switch ON, Brake buzzer is not sounded	10 – 14
D/G (A55 – 3) – GND (A54 – 6, 31, A55 – 8, 17)	V–W ↔ W–B	IG switch ON	10 – 14
R (A55 – 4) – GND (A54 – 6, 31, A55 – 8, 17)	R–B ↔ W–B	IG switch ON, shift lever is in R range	10 – 14
IG1 (A55 – 6) – GND (A54 – 6, 31, A55 – 8, 17)	W ↔ W–B	IG switch ON	10 – 14
NEO (A55 – 7) – GND (A54 – 6, 31, A55 – 8, 17)	Y–G ↔ W–B	Engine idling	Pulse generation
RSS (A55 – 9) – GND (A54 – 6, 31, A55 – 8, 17)	BR ↔ W–B	IG switch OFF	Below 1.5
STP (A55 – 10) – GND (A54 – 6, 31, A55 – 8)	G–W ↔ W–B	Stop light switch pushed in	Below 1.5
		Stop light switch released	2 – 5
Tc (A55 – 11) – GND (A54 – 6, 31, A55 – 8, 17)	P–L ↔ W–B	IG switch ON and terminals Tc–E_1 of check connector connected	Below 1.0
		IG switch ON and terminals Tc–E_1 of check connector not connected	10 – 14
Ts (A55 – 12) – GND (A54 – 6, 31, A55 – 8, 17)	L–B ↔ W–B	IG switch ON and terminals Ts–E_1 of check connector or Tc–CG of DLC3 connected	Below 1.0
		IG switch ON and terminals Ts–E_1 of check connector or Tc–CG of DLC3 not connected	10 – 14
PKB (A55 – 13) – GND (A54 – 6, 31, A55 – 8, 17)	R–W ↔ W–B	IG switch ON, parking brake switch ON	Below 1.5
		IG switch ON, parking brake switch OFF	10 – 14
ENG+ (A55 – 14) – ENG – (A55 – 22)	P ↔ V	IG switch ON	Pulse generation
TFN (A55 – 15) – GND (A54 – 6, 31, A55 – 8, 17)	L ↔ W–B	IG switch ON, transfer shift lever N position	Below 1.5
		IG switch ON, transfer shift lever other than N position	10 – 14
RL+ (A55 – 18) – RL– (A55 – 19)	R ↔ G	IG switch ON, slowly turn left rear wheel	AC generation
RR+ (A55 – 20) – RR– (A55 – 21)	B ↔ W	IG switch ON, slowly turn right rear wheel	AC generation
VGS (A56 – 1) – GGND (A55 – 10)	B ↔ W	IG switch ON	4.5 – 5.5
EXI (A56 – 3) – GND (A54 – 6, 31, A55 – 8, 17)	B ↔ W–B	IG switch ON, transfer indicator (center diff. lock) switch ON	Below 2.0
		IG switch ON, transfer indicator (center diff. lock) switch OFF	10 – 14
VSCW (A56 – 4) – GND (A54 – 6, 31, A55 – 8, 17)	L–R ↔ W–B	IG switch ON, TRC warning light ON	Below 2.0
		IG switch ON, TRC warning light OFF	10 – 14
BRL (A56 – 5) – GND (A54 – 6, 31, A55 – 8, 17)	R–W ↔ W–B	IG switch ON, brake warning light ON	Below 2.0
		IG switch ON, brake warning light OFF	10 – 14
WT (A56 – 7) – GND (A54 – 6, 31, A55 – 8, 17)	R–W ↔ W–B	IG switch ON, VSC OFF indicator light ON	Below 2.0
		IG switch ON, VSC OFF indicator light OFF	10 – 14
EXI4 (A56 – 8) – GND (A54 – 6, 31, A55 – 8, 17)	LG ↔ W–B	IG switch ON, transfer in L4 position	10 – 14
		IG switch ON, transfer in any poaition except L4 position	Below 1.5
GL2 (A56 – 10) – GGND (A56 – 21)	G ↔ W	IG switch ON, vehicle is placed on the horizontal surface	2.0 – 3.0

INRR (A56 – 12) – GND (A54 – 6, 31, A55 – 8, 17)	G ↔ W–B	Right rear ACTIVE TRC indicator light ON	6.5 – 10.5
INFL (A56 – 13) – GND (A54 – 6, 31, A55 – 8, 17)	L ↔ W–B	Left front ACTIVE TRC indicator light ON	6.5 – 10.5
INFR (A56 – 15) – GND (A54 – 6, 31, A55 – 8, 17)	R ↔ W–B	Right front ACTIVE TRC indicator light ON	6.5 – 10.5
SP1 (A56 – 16) – GND (A54 – 6, 31, A55 – 8, 17)	L–R ↔ W–B	IG switch ON	Pulse generation
INRL (A56 – 20) – GND (A54 – 6, 31, A55 – 8, 17)	Y ↔ W–B	Right rear ACTIVE TRC indicator light ON	6.5 – 10.5
GGND (A56 – 21) – GND (A54 – 6, 31, A55 – 8)	W ↔ W–B	IG switch OFF	Below 0.3
GL1 (A56 – 22) – GGND (A56 – 21)	R ↔ W	IG switch ON, vehicle is placed on the horizontal surface	2.0 – 3.0
SRLR (A57 – 1) – GND (A54 – 6, 31, A55 – 8, 17)	LG ↔ W–B	IG switch ON, ABS warning light OFF	10 – 14
MR2 (A57 – 2) – R2+ (A57 – 3)	R–W ↔ R–L	IG switch ON, hydrauric brake booster pump motor stops	Below 1.0
AST (A57 – 6) – GND (A54 – 6, 31, A55 – 8, 17)	P–L ↔ W–B	IG switch ON, ABS warning light OFF	10 – 14
SRLH (A57 – 7) – GND (A54 – 6, 31, A55 – 8, 17)	L–B ↔ W–B	IG switch ON, ABS warning light OFF	10 – 14
SFRR (A57 – 8) – GND (A54 – 6, 31, A55 – 8, 17)	W–L ↔ W–B	IG switch ON, ABS warning light OFF	10 – 14
PL (A57 – 9) – GND (A54 – 6, 31, A55 – 8, 17)	B–Y ↔ W–B	IG switch ON, pressure switch ON	3 – 5
		IG switch ON, pressure switch OFF	7 – 11
SFRH (A57 – 16) – GND (A54 – 6, 31, A55 – 8, 17)	L ↔ W–B	IG switch ON, ABS warning light OFF	10 – 14
IG2 (A57 – 22) – GND (A54 – 6, 31, A55 – 8, 17)	B–O ↔ W–B	IG switch ON	10 – 14

DI6BG–01

PROBLEM SYMPTOMS TABLE

If a normal code is displayed during the DTC check but the problem still occurs, check the circuits for each problem symptom in the order given in the table below and proceed to the relevant troubleshooting page.

NOTICE:

When replacing ABS & BA & TRC ECU or ABS & BA & TRC & VSC ECU, sensor or etc., turn the ignition switch OFF.

Symptom	Suspect Area	See page
ABS does not operate. BA does not operate.	Only when 1. to 4. are all normal and the problem is still occurring, replace the ABS & BA & TRC ECU or ABS & BA & TRC & VSC ECU. 1. Reconfirm the DTC and check that the normal code is output. 2. IG power source circuit 3. Speed sensor circuit 4. Check the hydraulic brake booster with a checker or hand–held tester. If abnormal, check the hydraulic circuit for leakage (See page DI–234 or DI–257).	 DI–86 DI–119 DI–101 BR–8
ABS does not operate efficiently. BA does not operate.	Only when 1. to 4. are all normal and the problem is still occurring, replace the ABS & BA & TRC ECU or ABS & BA & TRC & VSC ECU. 1. Reconfirm the DTC and check that the normal code is output. 2. Speed sensor circuit 3. Stop light switch circuit 4. Check the hydraulic brake booster with a checker or hand–held tester. If abnormal, check the hydraulic circuit for leakage (See page DI–234 or DI–257).	 DI–86 DI–101 DI–132 BR–8
ABS warning light abnormal.	1. ABS warning light circuit 2. ABS & BA & TRC ECU or ABS & BA & TRC & VSC ECU	DI–170 IN–33
DTC check cannot be done.	Only when 1. to 4. are all normal and the problem is still occurring, replace the ABS & BA & TRC ECU or ABS & BA & TRC & VSC ECU. 1. ABS warning light circuit 2. Tc terminal circuit	 DI–170 DI–178
Speed sensor signal check cannot be done.	1. Ts terminal circuit 2. ABS & BA & TRC ECU or ABS & BA & TRC & VSC ECU	DI–180 IN–33

DI6BH–01

CIRCUIT INSPECTION

DTC	C0200 / 31 to C0215 / 34	Speed Sensor Circuit

CIRCUIT DESCRIPTION

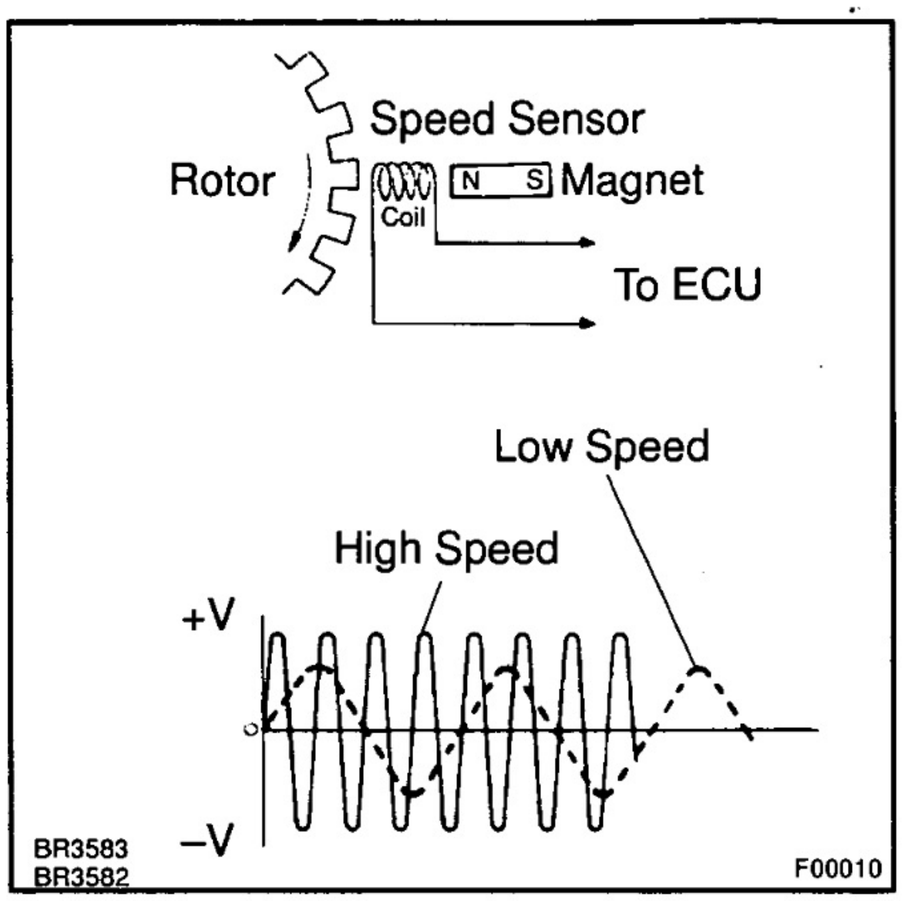

The speed sensor detects wheel speed and sends the appropriate signals to the ECU. These signals are used for control of both the ABS & BA & TRC or ABS & BA & TRC & VSC control system. The front and rear rotors each have 48 serrations.
When the rotors rotate, the magnetic field emitted by the permanent magnet in the speed sensor generates an AC voltage. Since the frequency of this AC voltage changes in direct proportion to the speed of the rotor, the frequency is used by the ECU to detect the speed of each wheel.

DTC No.	DTC Detecting Condition	Trouble Area
C0200 / 31 C0205 / 32 C0210 / 33 C0215 / 34	Detection of any of conditions 1. through 4.: 1. At vehicle speed of 10 km/h (6 mph) or more, pulses are not input for 15 sec. 2. Momentary interruption of the speed sensor signal occurs at least 7 times in the time between switching the ignition switch ON and switching it OFF. 3. Continuous noise occurs into the speed sensor signals with the vehicle speed at 20 km/h (12 mph) or more. 4. The condition that the speed sensor signal circuit is open continues for 0.12 sec. or more.	• Right front, left front, right rear and left rear speed sensor • Each speed sensor circuit • Sensor rotor

HINT:
DTC No. C0200 / 31 is for the right front speed sensor.
DTC No. C0205 / 32 is for the left front speed sensor.
DTC No. C0210 / 33 is for the right rear speed sensor.
DTC No. C0215 / 34 is for the left rear speed sensor.
Fail safe function:
If trouble occurs in the speed sensor circuit, the ECU cuts off current to the ABS solenoid relay and prohibits ABS & BA & TRC or ABS & BA & TRC & VSC controls and the brake system becomes normal.

WIRING DIAGRAM

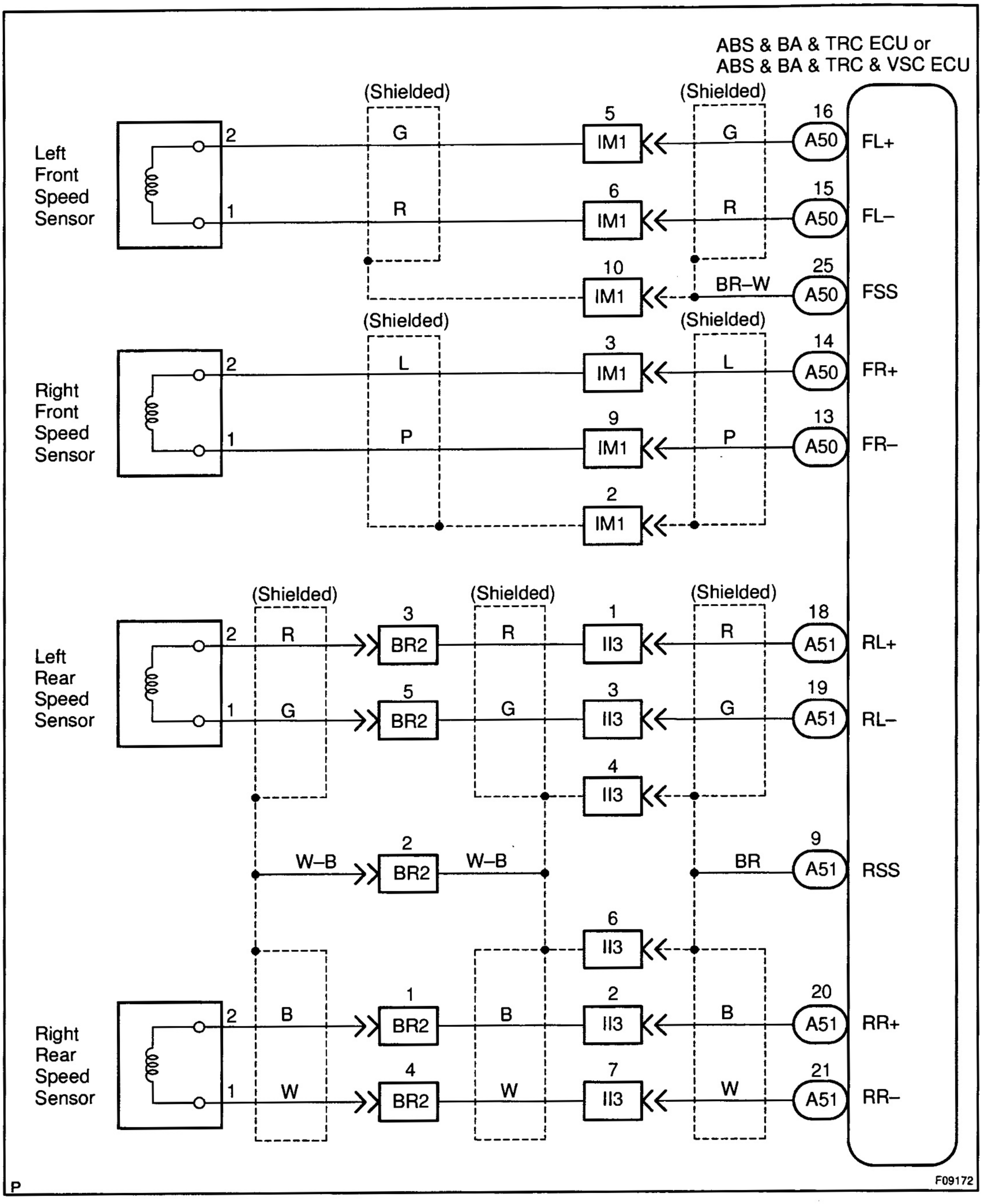

INSPECTION PROCEDURE

Start the inspection from step 1 in case of using the hand–held tester and start from step 2 in case of not using the hand–held tester.

1	**Check output value of speed sensor.**

PREPARATION:

(a) Connect the hand–held tester to the DLC3.
(b) Turn the ignition switch ON and push the hand–held tester main switch ON.
(c) Select the DATALIST mode on the hand–held tester.

CHECK:

Check that there is no difference between the speed value output from the speed sensor displayed on the hand–held tester and the speed value displayed on the speedometer when driving the vehicle.

OK:

There is almost no difference from the displayed speed value.

HINT:

There is tolerance of ± 10 % in the speedometer indication.

OK → **Check and replace ABS & BA & TRC ECU or ABS & BA & TRC & VSC ECU.**

NG

2	**Check speed sensor.**

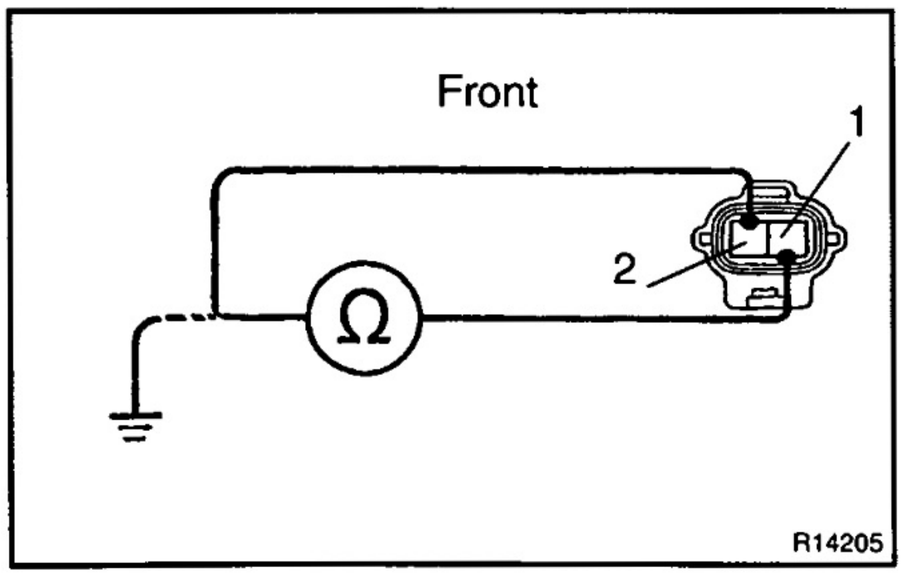

Front:

PREPARATION:

(a) Make sure that there is no looseness at the connector lock part and connecting part of the connector.
(b) Disconnect speed sensor connector.

CHECK:

Measure resistance between terminals 1 and 2 of speed sensor connector.

OK:

Resistance: 1.4 – 1.8 kΩ

CHECK:

Measure resistance between terminals 1 and 2 of speed sensor connector and body ground.

OK:

Resistance: 1 MΩ or higher

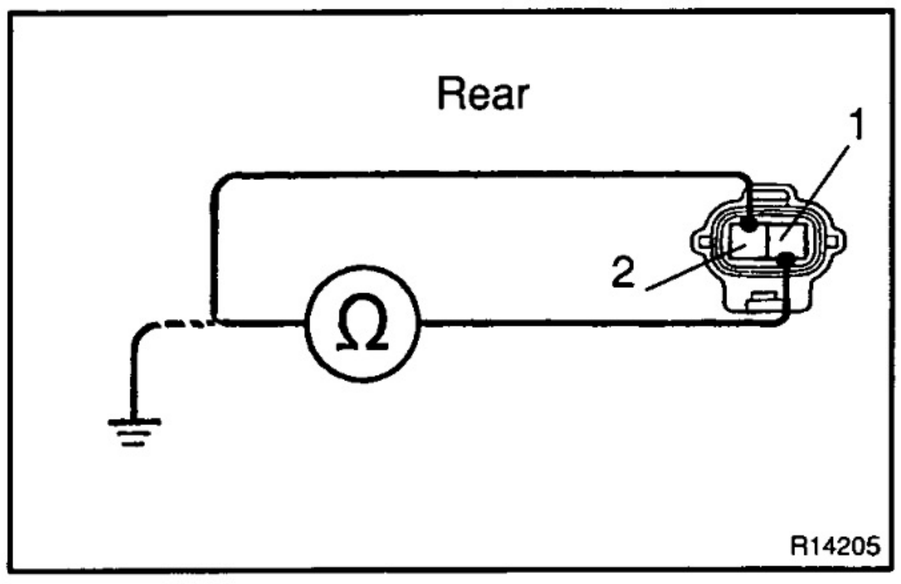

Rear:

PREPARATION:

(a) Make sure that there is no looseness at the connector lock part and connecting part of the connector.

(b) Disconnect speed sensor connector.

CHECK:

Measure resistance between terminals 1 and 2 of speed sensor connector.

OK:

Resistance: 1.0 – 1.4 kΩ

CHECK:

Measure resistance between terminal 1 or 2 of speed sensor connector and body ground.

OK:

Resistance: 1 MΩ or higher

NG	**Replace speed sensor.**

NOTICE:

Check the speed sensor signal last (See page DI–86).

OK

3	**Check for open and short circuit in harness and connector between each speed sensor and ABS & BA & TRC ECU or ABS & BA & TRC & VSC ECU (See page IN–33).**

NG	**Repair or replace harness or connector.**

OK

4	Check sensor installation.

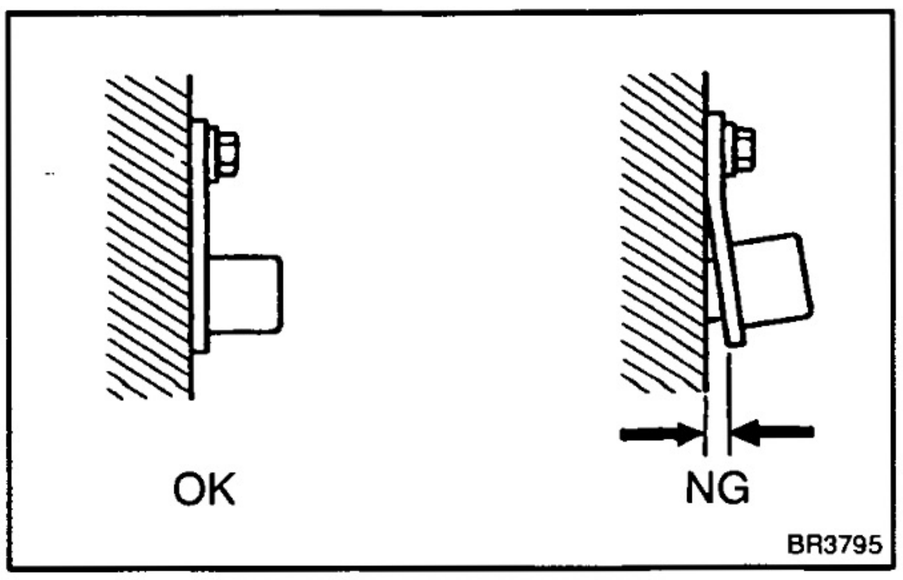

CHECK:
Check the speed sensor installation.
OK:

The installation bolt is tightened properly and there is no clearance between the sensor and front steering knuckle or rear axle carrier.

NG → **Replace speed sensor.**

NOTICE:
Check the speed sensor signal last (See page DI–86).

OK

5	Check speed sensor and sensor rotor serrations.

(REFERENCE) INSPECTION USING OSCILLOSCOPE

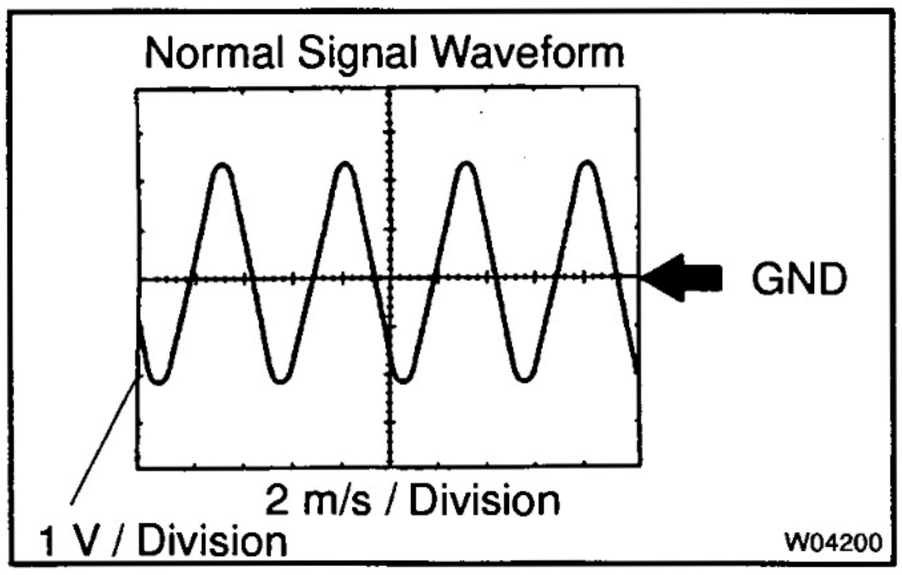

PREPARATION:
(a) Remove the ABS & BA & TRC ECU or ABS & BA & TRC & VSC ECU.
(b) Connect the oscilloscope to the each of terminals FR+, FL+, RR+ or RL+ and GND of the ABS & BA & TRC ECU or ABS & BA & TRC & VSC ECU.

CHECK:
Drive the vehicle at about 20 km/h (12 mph), and check the signal waveform.

OK → **Check and replace ABS & BA & TRC ECU or ABS & BA & TRC & VSC ECU.**

NG

6	Check sensor rotor and sensor tip.

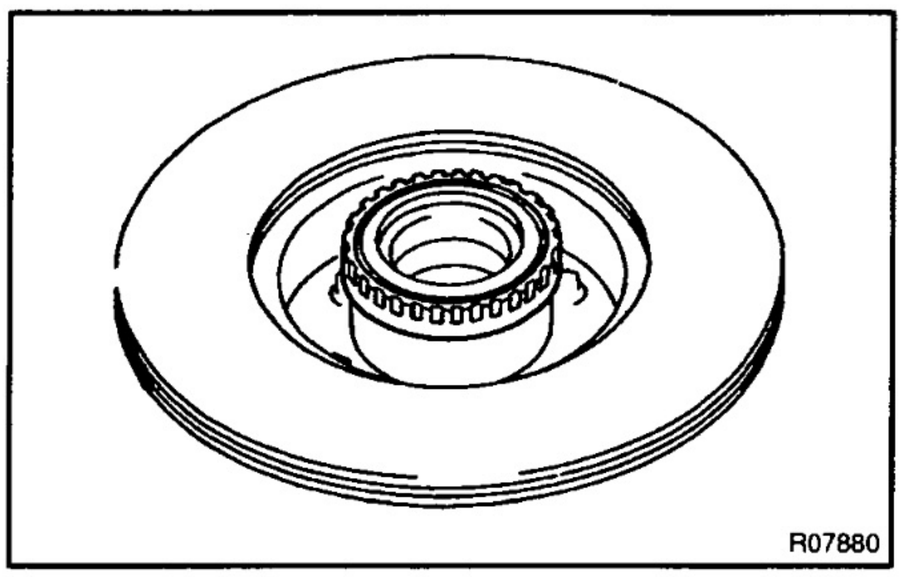

Front:

PREPARATION:

Remove front axle hub (See Pub. No. RM517E on page SA–12).

CHECK:

Check the sensor rotor serrations.

OK:

No scratches, missing teeth or foreign objects.

PREPARATION:

Remove front speed sensor (See Pub. No. RM517E on page BR–52).

CHECK:

Check the sensor tip.

OK:

No scratches or foreign objects on the sensor tip.

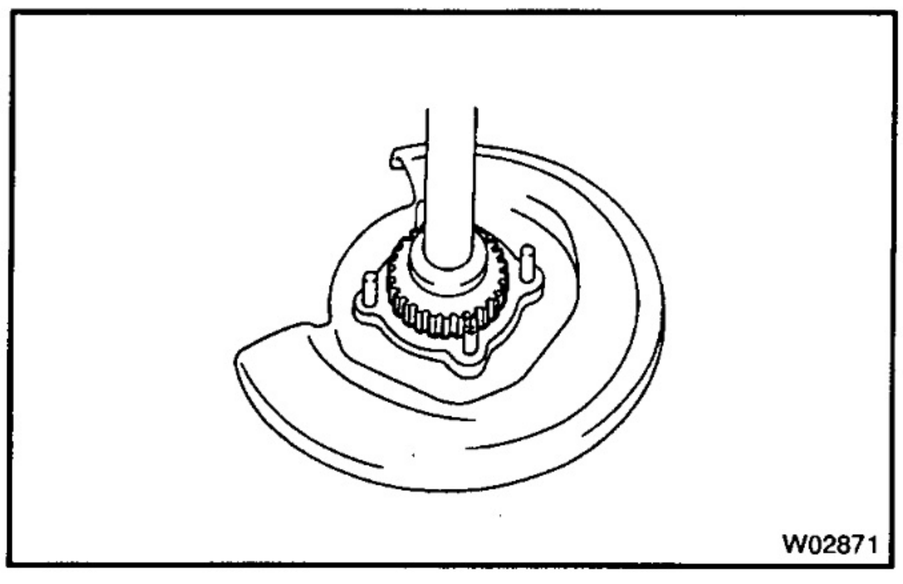

Rear:

PREPARATION:

Remove the rear axle shaft (See Pub. No. RM517E on page SA–65).

CHECK:

Check the sensor rotor serrations.

OK:

No scratches, missing teeth or foreign objects.

PREPARATION:

Remove rear speed sensor (See Pub. No. RM517E on page BR–53).

CHECK:

Check the sensor tip.

OK:

No scratches or foreign objects on the sensor tip.

NG → **Replace speed sensor or rotor.**

NOTICE:

Check the speed sensor signal last (See page DI–86).

OK

Check and replace ABS & BA & TRC ECU or ABS & BA & TRC & VSC ECU.

DI6BI–01

DTC	C0226 / 21 to C0256 / 24	ABS Solenoid Circuit

CIRCUIT DESCRIPTION

This solenoid goes on when signals are received from the ECU and controls the pressure acting on the wheel cylinders thus controlling the braking force.

DTC No.	DTC Detecting Condition	Trouble Area
C0226 / 21	Open or short circuit in SFRH or SFRR circuit continues for 0.015 sec. or more.	• Hydraulic brake booster • SFRH or SFRR circuit
C0236 / 22	Open or short circuit in SFLH or SFLR circuit continues for 0.015 sec. or more.	• Hydraulic brake booster • SFLH or SFLR circuit
C0246 / 23	Open or short circuit in SRRH or SRRR circuit continues for 0.015 sec. or more.	• Hydraulic brake booster • SRRH or SRRR circuit
C0256 / 24	Open or short circuit in SRLH or SRLR circuit continues for 0.015 sec. or more.	• Hydraulic brake booster • SRLH or SRLR circuit

Fail safe function:

If trouble occurs in the actuator solenoid circuit, the ECU cuts off current to the ABS solenoid relay and prohibits ABS & BA & TRC or ABS & BA & TRC & VSC controls and the brake system becomes normal.

WIRING DIAGRAM

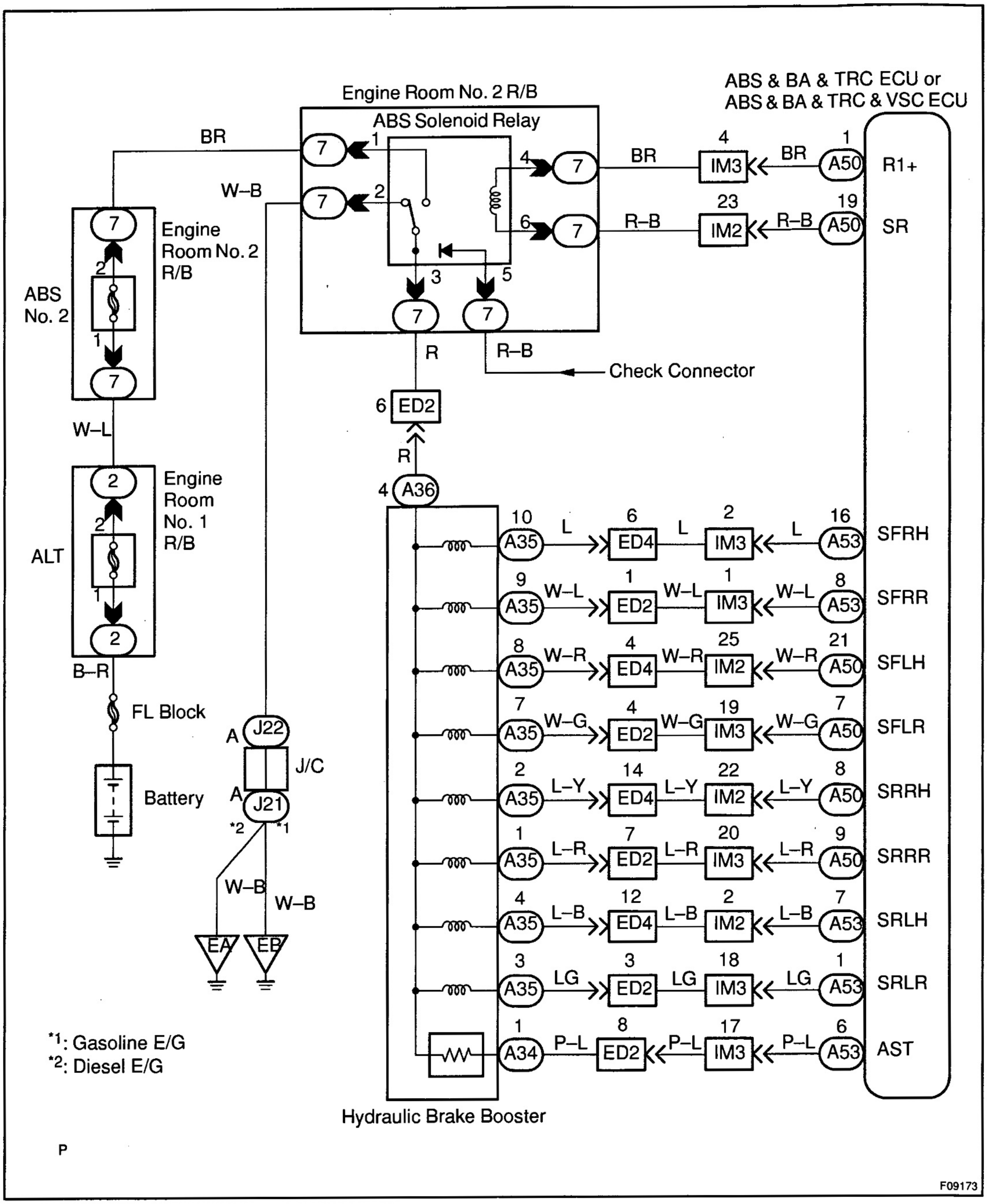

INSPECTION PROCEDURE

1	**Check hydraulic brake booster solenoid.**

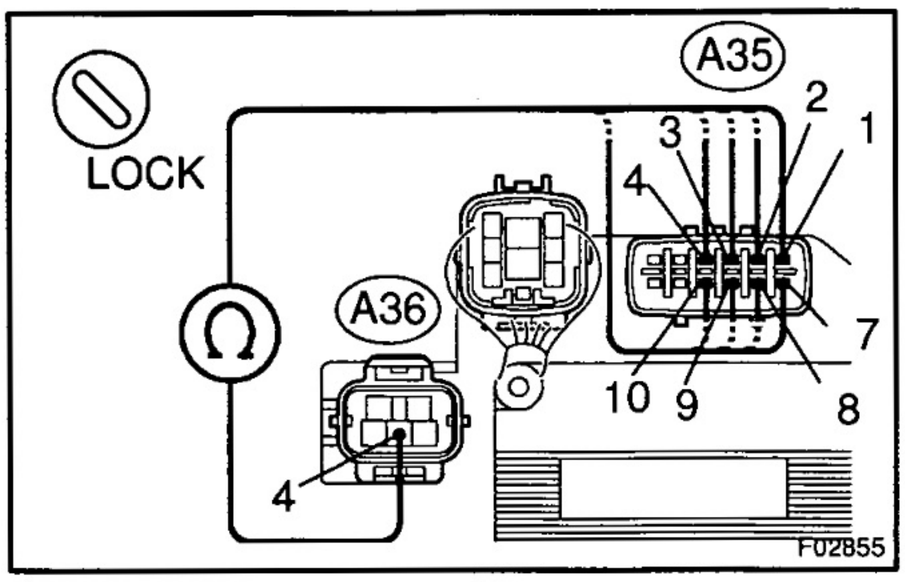

PREPARATION:

Disconnect the 2 connectors from hydraulic brake booster.

CHECK:

Check continuity between each of terminals A36 – 4 and A5 – 1, 2, 3, 4, 7, 8, 9 and 10 of hydraulic brake booster connector.

OK:

Continuity

HINT:

Resistance of each solenoid at 20 °C (68 °F)

SFRH, SFLH, SRRH, SRLH: 4.75 – 5.25 Ω

SFRR, SFLR, SRRR, SRLR: 2.00 – 2.40 Ω

NG → **Replace hydraulic brake booster.**

OK

2	**Check for open and short circuit in harness and connector between ABS & BA & TRC ECU or ABS & BA & TRC & VSC ECU and actuator (See page DI–86).**

NG → **Repair or replace harness or connector.**

OK

If the same code is still output after the DTC is deleted, check the contact condition of each connection. If the connections are normal, the ECU may be defective.

DI6BJ–01

DTC	C0278 / 11, C0279 / 12	ABS Solenoid Relay Circuit

CIRCUIT DESCRIPTION

This relay supplies power to each ABS solenoid. After the ignition switch is turned ON, if the initial check is OK, the relay goes on.

DTC No.	DTC Detecting Condition	Trouble Area
C0278 / 11	Conditions 1. and 2. continue for 0.2 sec. or more: 1. ECU terminal IG1 voltage is 9.5 V to 17.0 V and the solenoid relay is ON, however, the contact point of the solenoid relay is OFF. 2. With solenoid relay ON, ECU terminal IG1 voltage becomes 9.5 V or less and the contact point of the solenoid relay does not become ON.	• ABS solenoid relay • ABS solenoid relay circuit
C0279 / 12	Immediately after ECU terminal IG1 becomes ON, and solenoid relay is OFF, however, when the condition that the solenoid relay due to the contact point is ON continues for 0.2 sec. or more.	

Fail safe function:

If trouble occurs in the ABS solenoid relay circuit, the ECU cuts off current to the ABS solenoid relay and prohibits ABS & BA & TRC or ABS & BA & TRC & VSC controls and the brake system becomes normal.

WIRING DIAGRAM

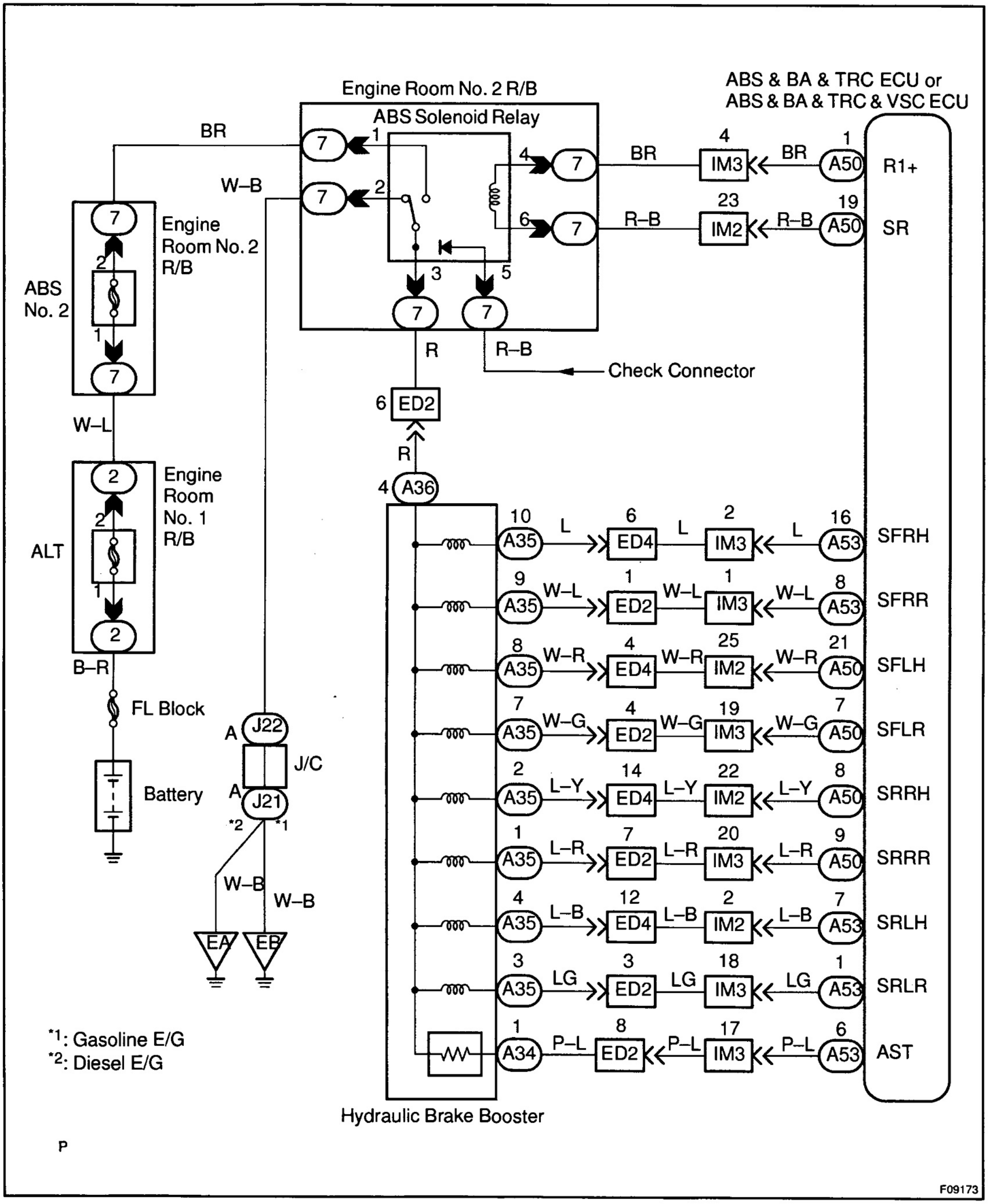

INSPECTION PROCEDURE

Start the inspection from step 1 in case of using the hand–held tester and start from step 2 in case of not using the hand–held tester.

1	**Check ABS solenoid relay operation.**

PREPARATION:

(a) Connect the hand–held tester to the DLC3.
(b) Turn the ignition switch ON and push the hand–held tester main switch ON.
(c) Select the ACTIVE TEST mode on the hand–held tester.

CHECK:

Check the operation sound of the ABS solenoid relay when operating it with the hand–held tester.

OK:

The operation sound of the ABS solenoid relay should be heard.

OK → **Go to step 6.**

NG

2	**Check voltage between terminals 1 and 2 of engine room No. 2 R/B (for ABS solenoid relay).**

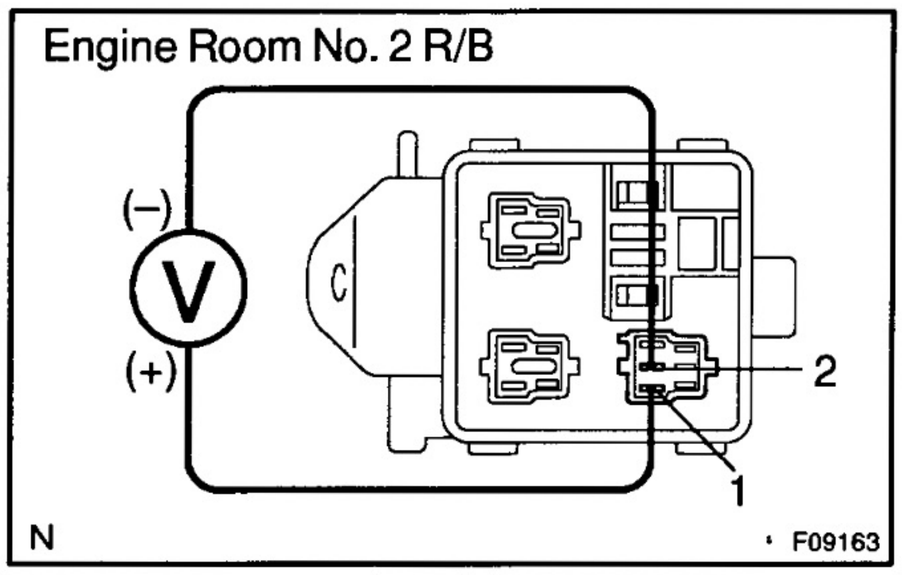

PREPARATION:

Remove ABS solenoid relay from engine room No. 2 R/B.

CHECK:

Measure the voltage between terminals 1 and 2 of engine room R/B (for ABS solenoid relay).

OK:

Voltage: 10 – 14 V

NG → **Check and repair harness or connector.**

OK

3	**Check ABS solenoid relay.**

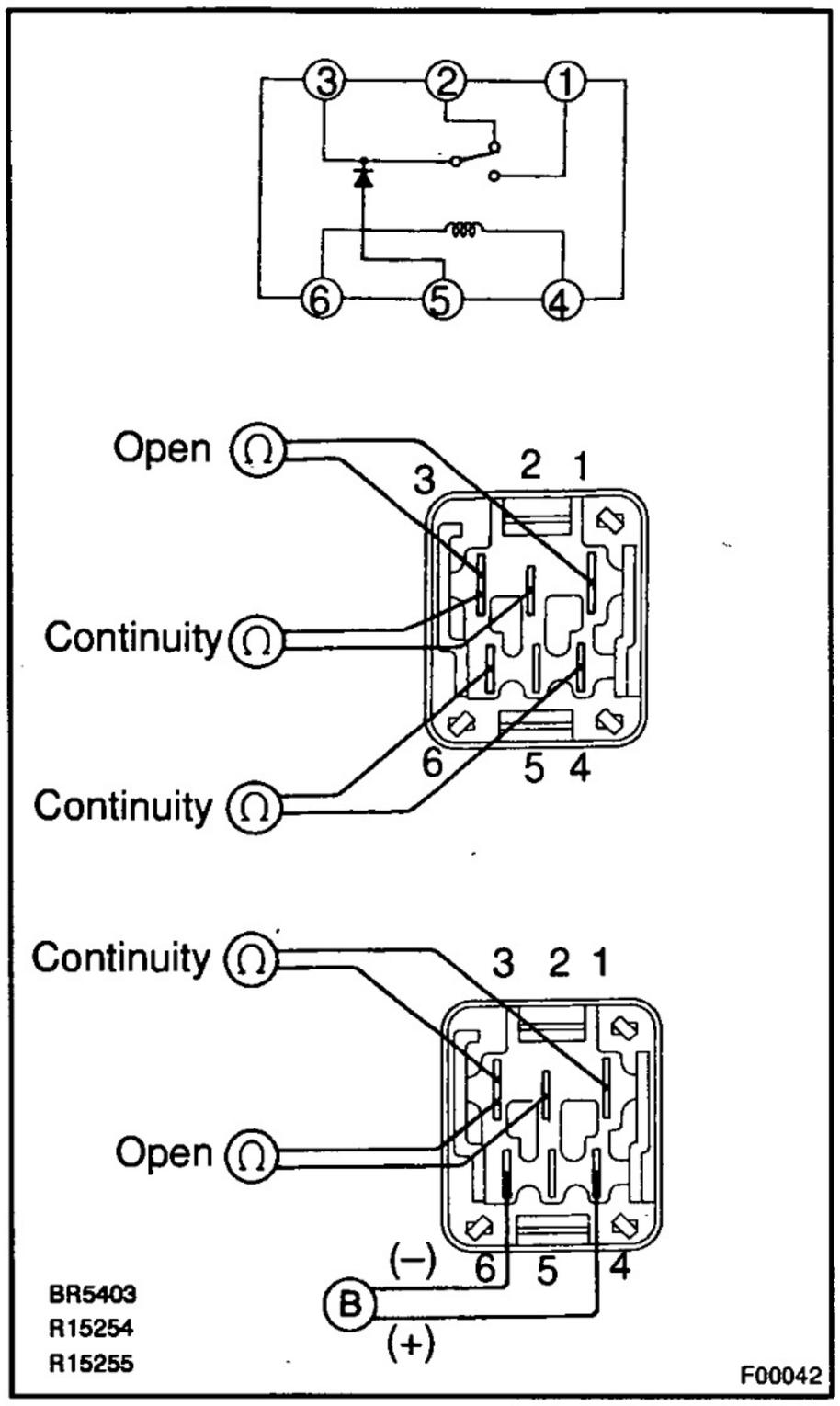

PREPARATION:

Remove ABS solenoid relay from engine room No. 2 R/B.

CHECK:

Check continuity between each terminal of ABS solenoid relay.

OK:

Terminals 4 and 6	Continuity (Reference value 80 Ω)
Terminals 2 and 3	Continuity
Terminals 1 and 3	Open

CHECK:

(a) Apply battery voltage between terminals 4 and 6.

(b) Check continuity between each terminal of ABS solenoid relay.

OK:

Terminals 2 and 3	Open
Terminals 1 and 3	Continuity

NG → **Replace ABS solenoid relay.**

OK

4	Check continuity between terminals 3 of ABS solenoid relay and terminal AST of ABS & BA & TRC ECU or ABS & BA & TRC & VSC ECU.

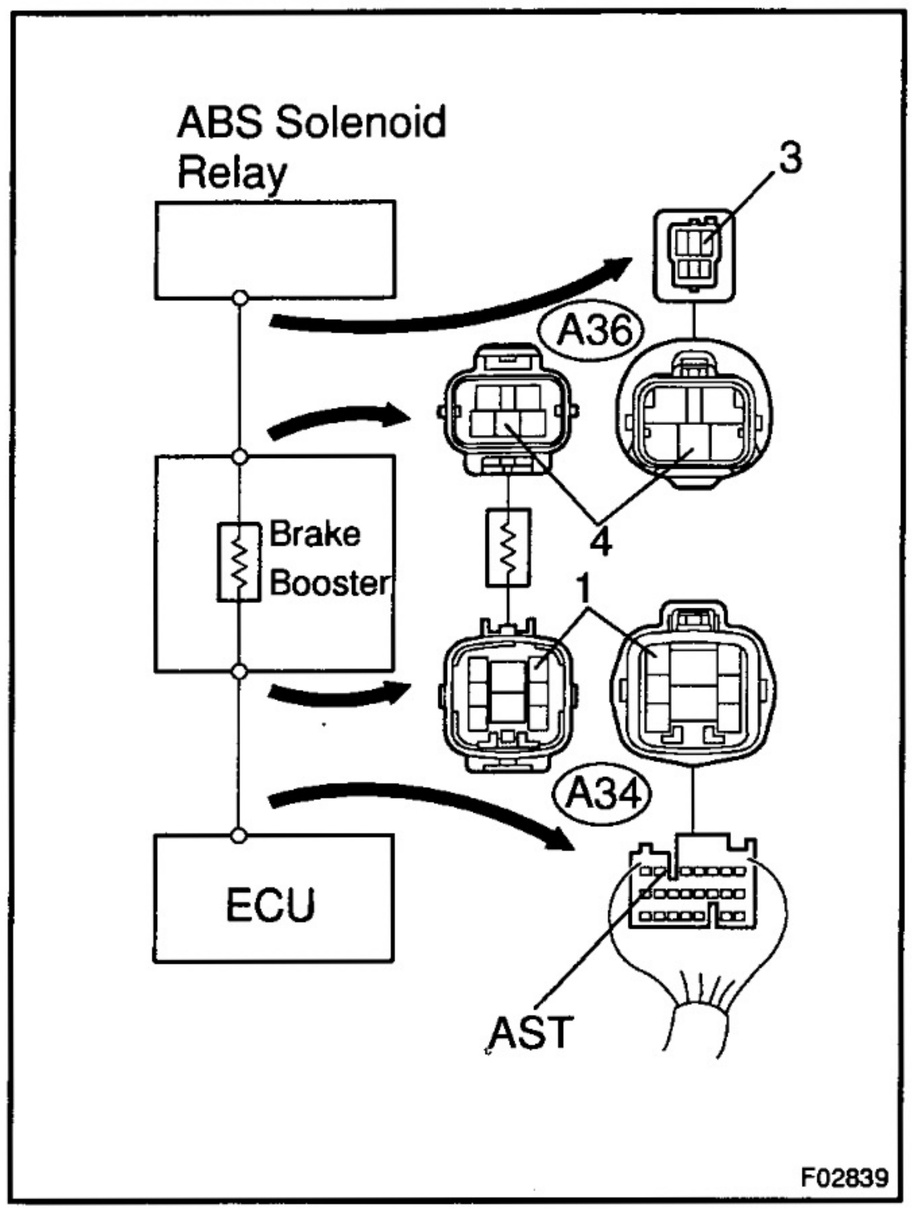

CHECK:

Check continuity between terminal 3 of ABS solenoid relay and terminal AST of ABS & BA & TRC ECU or ABS & BA & TRC & VSC ECU.

OK:

Continuity

HINT:

There is a resistance of 33 ± 3 Ω between terminal 4 of connector A36 and terminal 1 of connector A34.

NG → **Repair or replace harness or hydraulic brake booster.**

OK

5	Check for open and short circuit in harness and connector between ABS solenoid relay and ABS & BA & TRC ECU or ABS & BA & TRC & VSC ECU (See page IN–33).

NG → **Repair or replace harness or connector.**

OK

If the same code is still output after the DTC is deleted, check the contact condition of each connection. If the connections are normal, the ECU may be defective.

6	Check for open circuit in harness and connector between AST of hydraulic brake booster and AST of ABS & BA & TRC ECU or ABS & BA & TRC & VSC ECU (See page IN–33).

NG → Repair or replace harness and connector.

OK →

Replace hydraulic brake booster, ABS & BA & TRC ECU or ABS & BA & TRC & VSC ECU.

DI6BK–01

DTC	C1225 / 25 to C1228 / 28	TRC or TRC & VSC Solenoid Circuit

CIRCUIT DESCRIPTION

The TRC or TRC & VSC solenoid operates in accordance with signals from the ECU and raises the fluid pressure in and releases it from the brake cylinders.

DTC No.	DTC Detecting Condition	Trouble Area
C1225 / 25	Open or short circuit for SA1 circuit continues for 0.015 sec. or more.	• Hydraulic brake booster • SA1 circuit
C1226 / 26	Open or short circuit for SA2 circuit continues for 0.015 sec. or more.	• Hydraulic brake booster • SA2 circuit
C1227 / 27	Open or short circuit for SA3 circuit continues for 0.015 sec. or more.	• Hydraulic brake booster • SA3 circuit
C1228 / 28	Open or short circuit for STR circuit continues for 0.015 sec. or more.	• Hydraulic brake booster • STR circuit

Fail safe function:

If trouble occurs in the actuator solenoid circuit, the ECU cuts off current to the ABS solenoid relay and prohibits ABS & BA & TRC or ABS & BA & TRC & VSC controls and the brake system becomes normal.

WIRING DIAGRAM

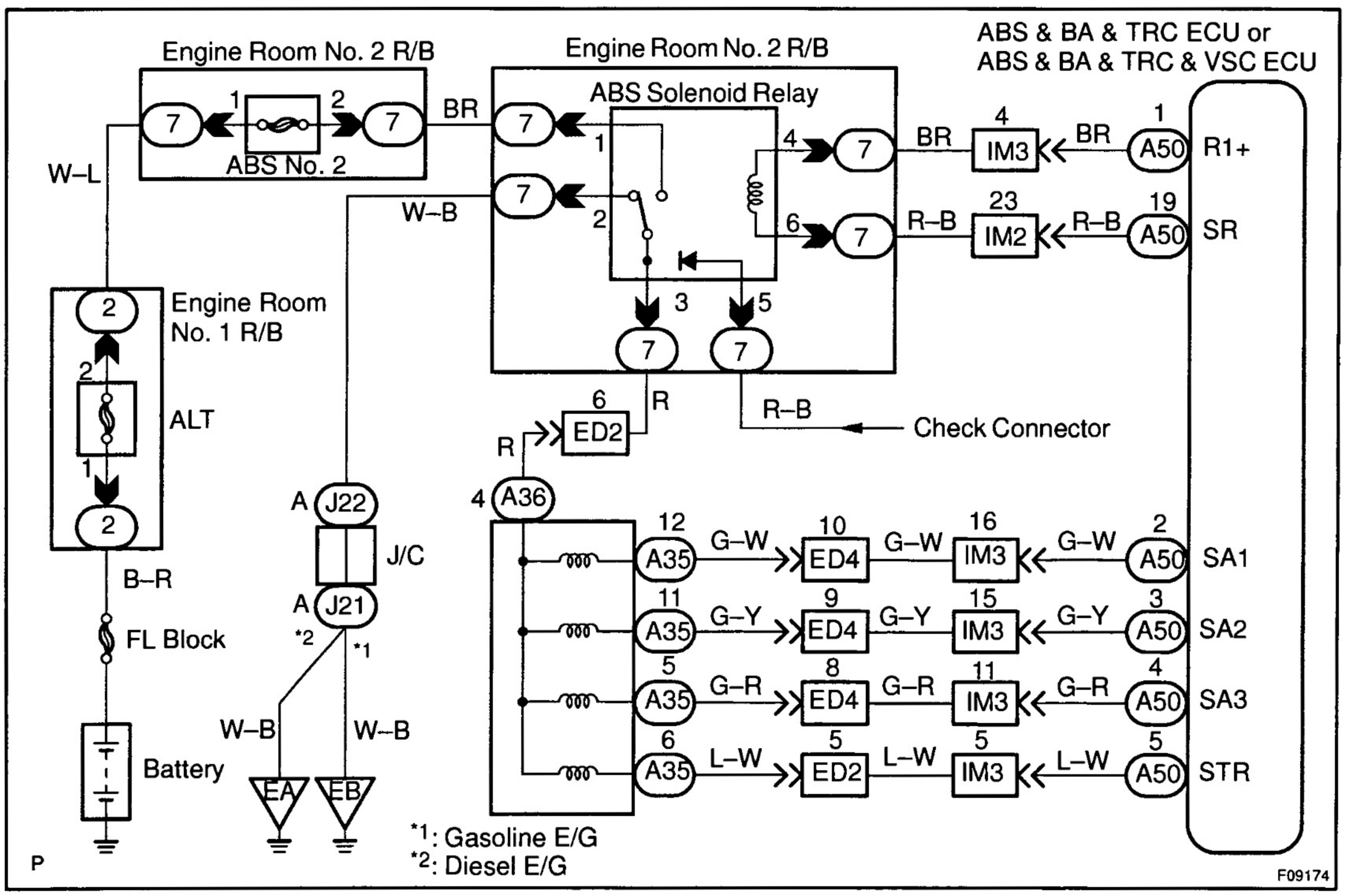

INSPECTION PROCEDURE

1	**Check TRC or TRC & VSC solenoid.**

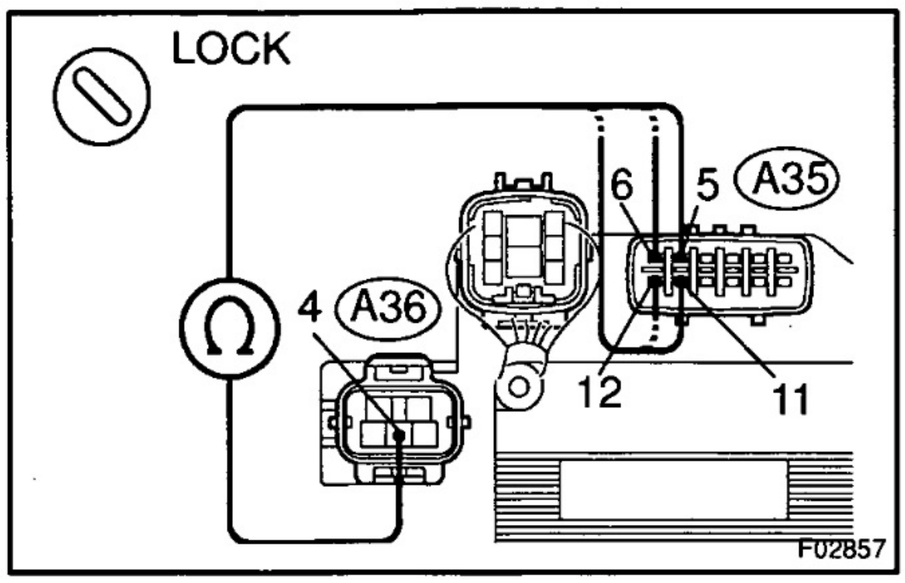

PREPARATION:
Disconnect the 2 connectors from hydraulic brake booster.

CHECK:
Check continuity between terminals A36 – 4 and A35 – 5, 6, 11 and 12 of hydraulic brake booster.

OK:

Continuity

HINT:
Resistance of each solenoid at 20 °C (68 °F)
SA1, SA2, STR: 3.5 – 3.9 Ω
SA3: 4.75 – 5.25 Ω

NG → **Replace hydraulic brake booster.**

OK

2	**Check for open and short circuit in harness and connector between ABS & BA & TRC ECU or ABS & BA & TRC & VSC ECU and hydraulic brake booster (See page IN–33).**

NG → **Repair or replace harness or connector.**

OK

If the same code is still output after the DTC is deleted, check the contact condition of each connection. If the connections are normal, the ECU may be defective.

DI6BL–01

DTC	C1237 / 37	Tires of Different Size

CIRCUIT DESCRIPTION

DTC No.	DTC Detecting Condition	Trouble Area
C1237 / 37	Driving at more than 30 km/h (19 mph) for more than 20 seconds with 1 or 2 tires of different size for 3 times continuously.	• Tire size • ABS & BA & TRC ECU or ABS & BA & TRC & VSC ECU

INSPECTION PROCEDURE

1	Check tire size.

NG → Replace tires so that all 4 tires are of the same size.

OK →

Check and replace ABS & BA & TRC ECU or ABS & BA & TRC & VSC ECU.

DI6BM–01

DTC	C1241 / 41	IG Power Source Circuit

CIRCUIT DESCRIPTION

DTC No.	DTC Detecting Condition	Trouble Area
C1241 / 41	Detection of any of conditions 1. through 4.: 1. Vehicle speed is 3 km/h (1.9 mph) or more and voltage of ECU terminal IG remains at below 9.5 V for more than 10 sec. 2. While the condition that the solenoid relay is ON continues, ECU terminal IG1 voltage becomes 9.5 V or less, and the condition that the contact point of the solenoid relay is OFF continues for 0.2 sec. or more. 3. The condition that ECU terminal IG1 voltage is more than 17.0 V continues for 1.2 sec. or more. 4. While the solenoid relay outputs ON signal, ECU terminal IG1 voltage becomes more than 17.0 V, and the condition that the contact point of the solenoid relay is OFF continues for 0.2 sec. or more.	• Battery • IC regulator • Power source circuit

Fail safe function:
If trouble occurs in the power source circuit, the ECU cuts off current to the ABS solenoid relay and prohibits ABS & BA & TRC ECU or ABS & BA & TRC & VSC controls and the brake system becomes normal.

WIRING DIAGRAM

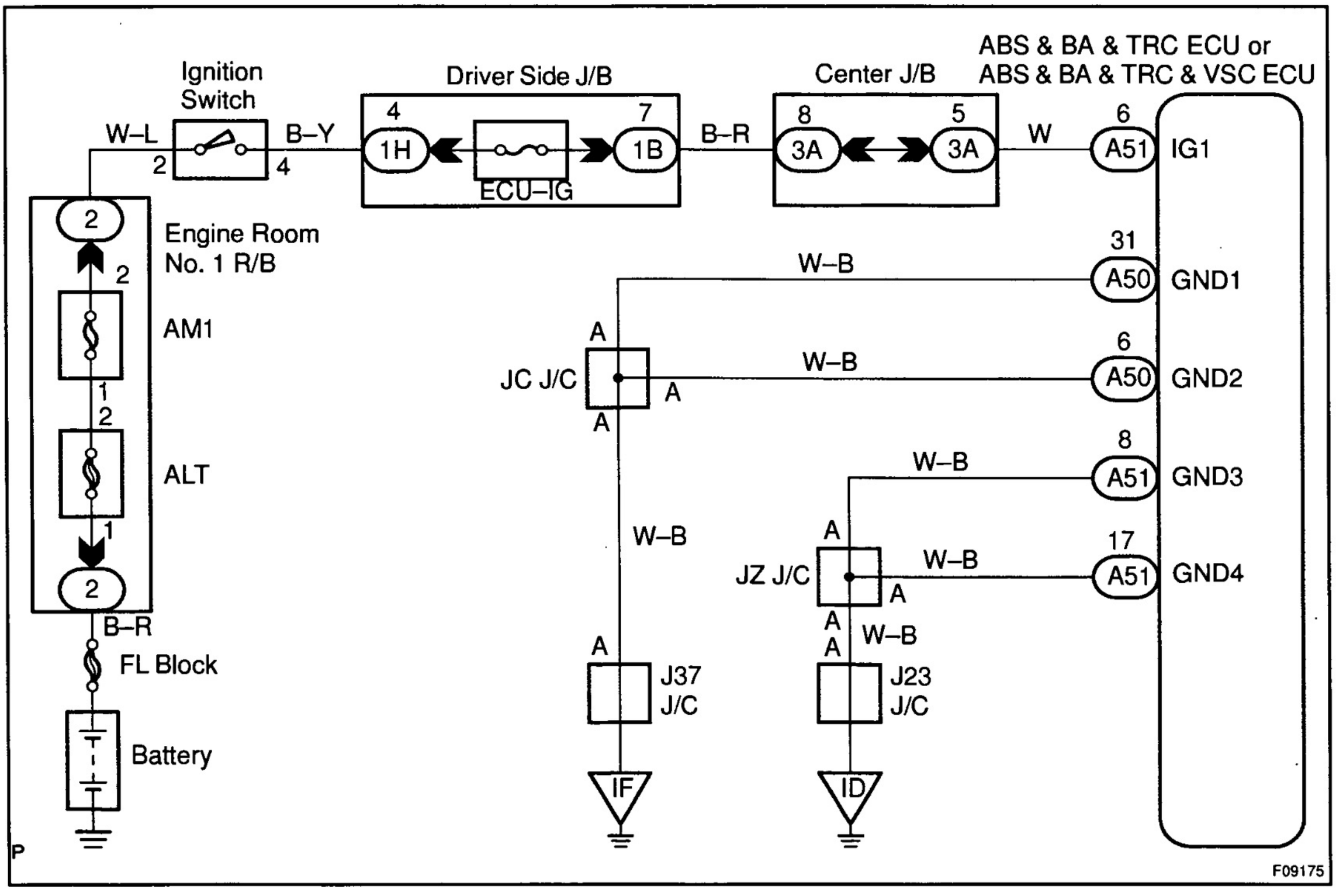

INSPECTION PROCEDURE

1	**Check battery voltage.**

OK:

Voltage: 10 – 14 V

NG → **Check and repair the charging system.**

OK

2	**Check voltage of the ECU IG power source.**

In case of using the hand–held tester:

PREPARATION:

(a) Connect the hand–held tester to the DLC3.

(b) Turn the ignition switch ON and push the hand–held tester main switch ON.

(c) Select the DATALIST mode on the hand–held tester.

CHECK:

Check the voltage condition output from the ECU displayed on the hand–held tester.

OK:

"Normal" is displayed.

In case of not using the hand–held tester:

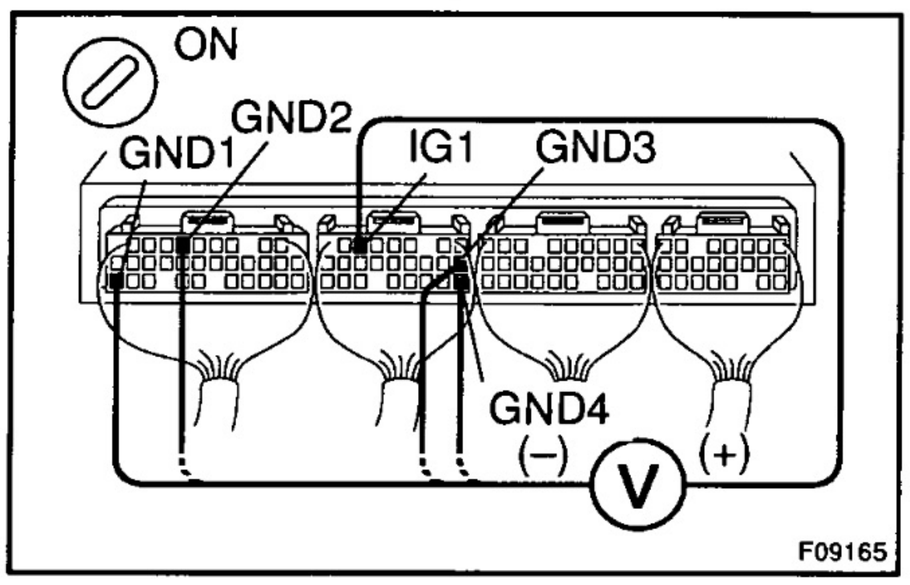

PREPARATION:

Remove ABS & BA & TRC ECU or ABS & BA & TRC & VSC ECU with connectors still connected.

CHECK:

(a) Turn the ignition switch ON.

(b) Measure voltage between terminals IG1 and GND of ABS & BA & TRC ECU or ABS & BA & TRC & VSC ECU connector.

OK:

Voltage: 10 – 14 V

OK → **Turn ignition switch OFF, check and replace ABS & BA & TRC ECU or ABS & BA & TRC & VSC ECU.**

NG

3	**Check continuity between terminal GND of ABS & BA & TRC ECU or ABS & BA & TRC & VSC ECU connector and body ground.**

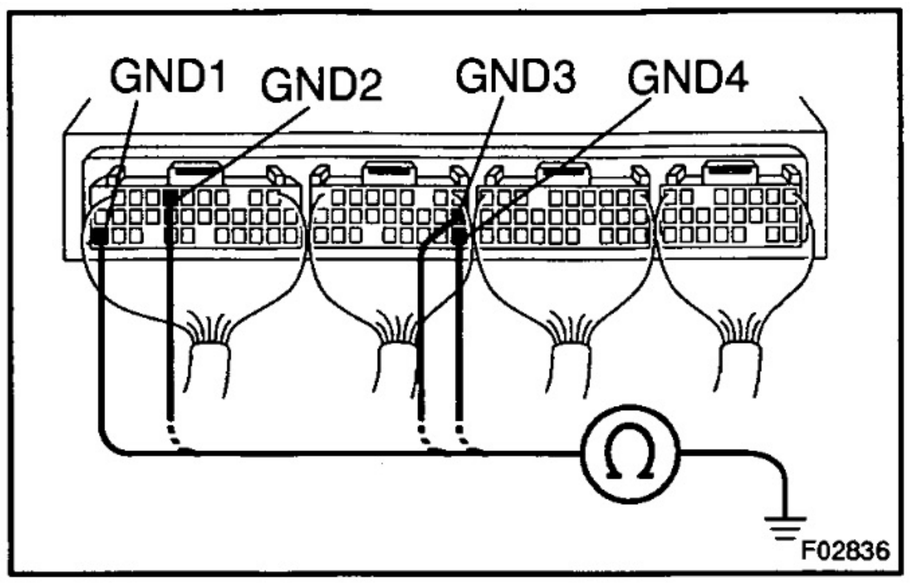

CHECK:
Measure resistance between terminal GND of ABS & BA & TRC ECU or ABS & BA & TRC & VSC ECU connector and body ground.
OK:
Resistance: 1 Ω or less

NG → **Repair or replace harness or connector.**

OK

4	**Check ECU–IG fuse.**

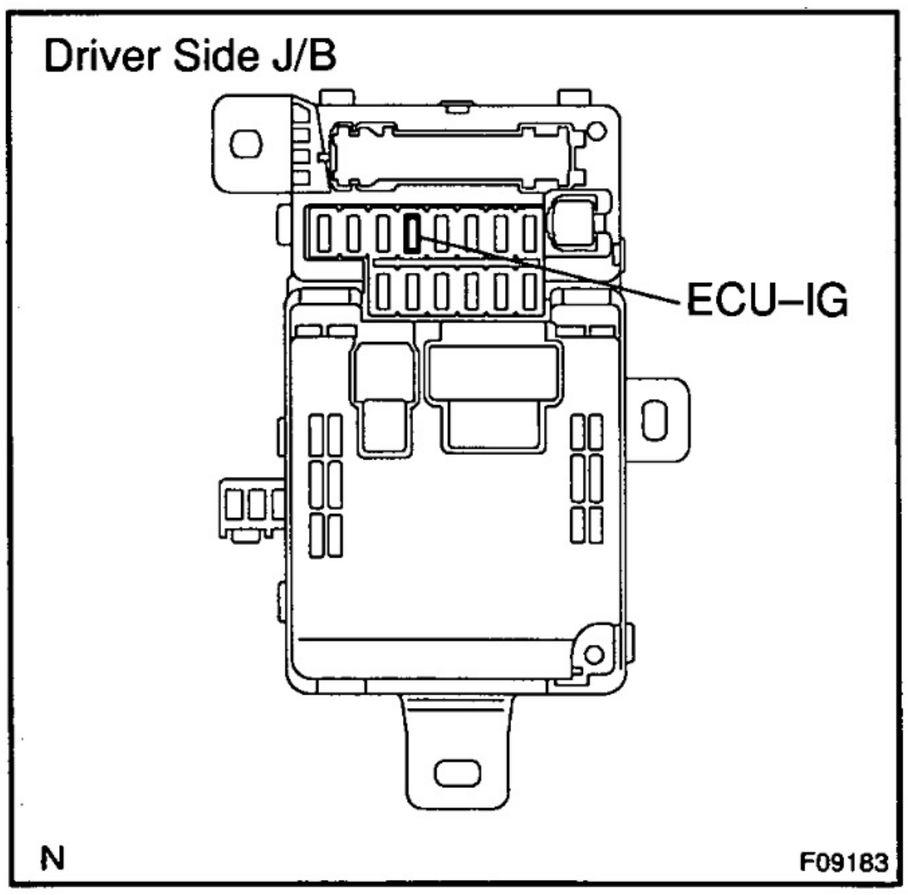

PREPARATION:
Remove ECU–IG fuse from driver side J/B.
CHECK:
Check continuity of ECU–IG fuse.
OK:
Continuity

NG → **Check for short circuit in all the harness and components connected to ECU–IG fuse (See attached wiring diagram).**

OK

Check for open circuit in harness and connector between ABS & BA & TRC ECU or ABS & BA & TRC & VSC ECU and battery (See page IN–33).

DI6BN–01

DTC	C1242 / 42	IG2 Power Source Circuit

CIRCUIT DESCRIPTION

DTC No.	DTC Detecting Condition	Trouble Area
C1242 / 42	With the vehicle running, open circuit in IG2 is detected for more than 7 sec.	• Battery • IC regulator • Power source circuit

Fail safe function:

If trouble occurs in the power source circuit, the ECU cuts off current to the ABS solenoid relay and prohibits ABS & BA & TRC or ABS & BA & TRC & VSC controls and the brake system becomes normal.

WIRING DIAGRAM

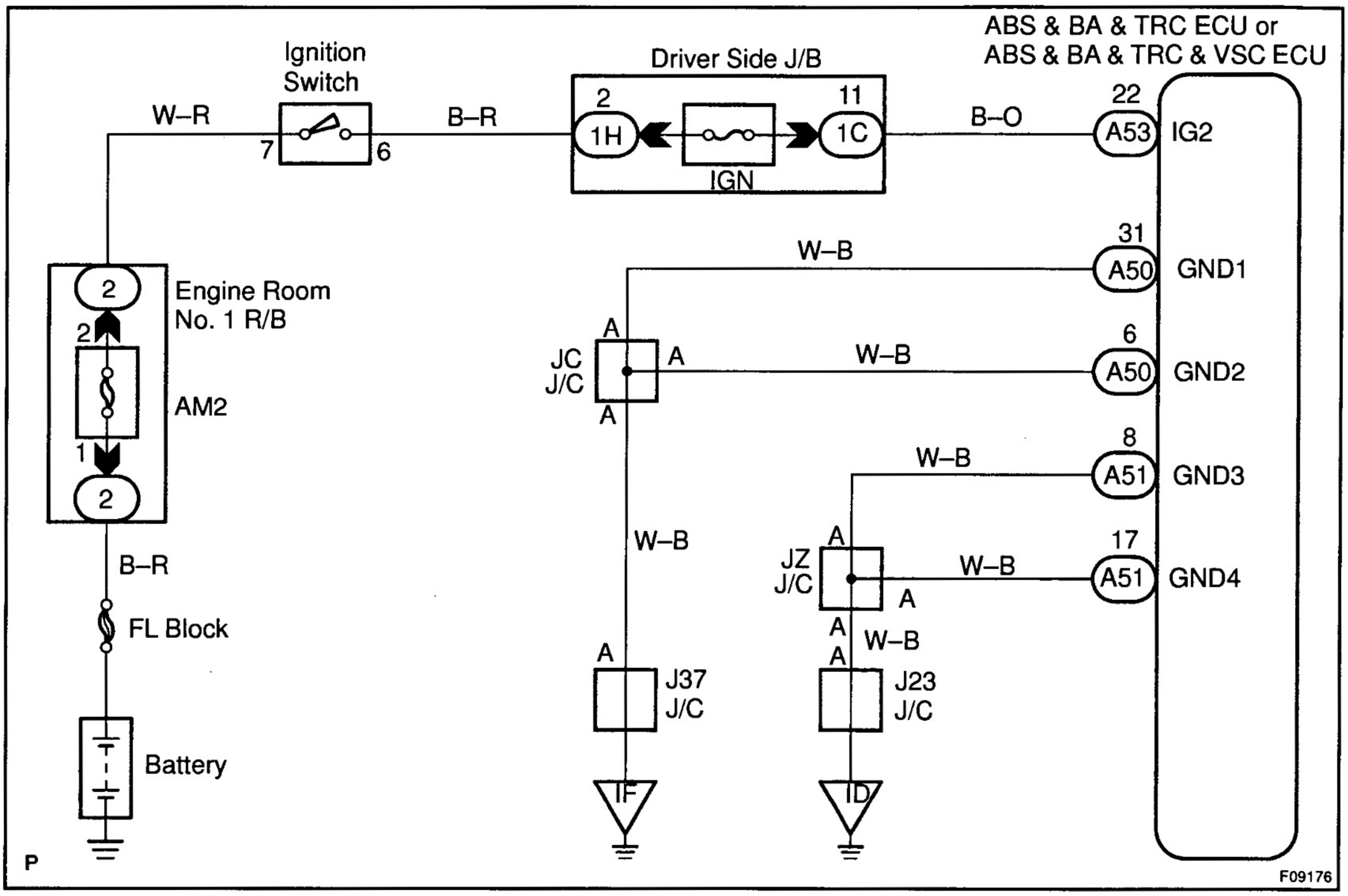

INSPECTION PROCEDURE

1	**Check battery voltage.**

OK:

Voltage: 10 – 14 V

NG → **Check and repair the charging system.**

OK

2	**Check voltage of the ECU IG power source.**

In case of using the hand–held tester:

PREPARATION:

(a) Connect the hand–held tester to the DLC3.

(b) Turn the ignition switch ON and push the hand–held tester main switch ON.

(c) Select the DATALIST mode on the hand–held tester.

CHECK:

Check the voltage condition output from the ECU displayed on the hand–held tester.

OK:

"Normal" is displayed.

In case of not using the hand–held tester:

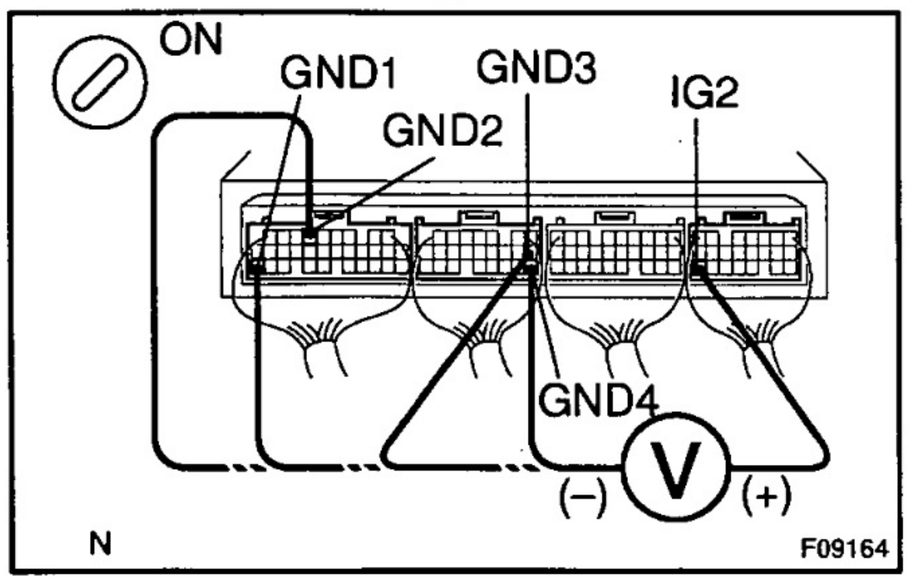

PREPARATION:

Remove ABS & BA & TRC ECU or ABS & BA & TRC & VSC ECU with connectors still connected.

CHECK:

(a) Turn the ignition switch ON.

(b) Measure voltage between terminals IG2 and GND of ABS & BA & TRC ECU or ABS & BA & TRC & VSC ECU connector.

OK:

Voltage: 10 – 14 V

OK → **Turn ignition switch OFF, check and replace ABS & BA & TRC ECU or ABS & BA & TRC & VSC ECU.**

NG

3	**Check continuity between terminal GND of ABS & BA & TRC ECU or ABS & BA & TRC & VSC ECU connector and body ground.**

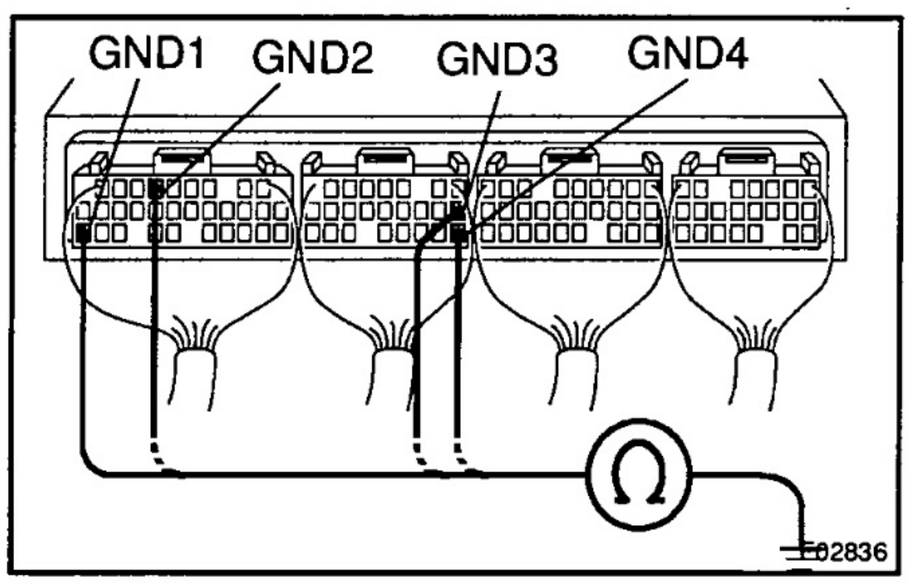

CHECK:

Measure resistance between terminal GND of ABS & BA & TRC ECU or ABS & BA & TRC & VSC ECU connector and body ground.

OK:

Resistance: 1 Ω or less

NG → **Repair or replace harness or connector.**

OK

Check for open circuit in harness and connector between ABS & BA & TRC ECU or ABS & BA & TRC & VSC ECU and battery (See page IN–33).

DI5BO-01

DTC	C1243 / 43, C1245 / 45	Malfunction in Deceleration Sensor

CIRCUIT DESCRIPTION

DTC No.	DTC Detecting Condition	Trouble Area
C1243 / 43	While vehicle speed becomes 0 km/h (0 mph) from 30 km/h (18 mph), and the condition that GL1 and GL2 signals of ECU terminals did not change 40 mV or less continued in a sequence 16 times.	• Deceleration sensor • Wire harness for deceleration sensor system
C1245 / 45	At the vehicle speed of 30 km/h (18 mph) or more, and the condition that the difference between acceleration and deceleration values of computation from deceleration sensor and vehicle speed becomes more than 0.35 G continues for 60 sec. or more.	

Fail safe function:
If trouble occurs in the deceleration sensor circuit, the ECU cuts off current to the ABS solenoid relay and prohibits ABS & BA & TRC or ABS & BA & TRC & VSC controls and the brake system becomes normal.

INSPECTION PROCEDURE

Start the inspection from step1 in case of using the hand–held tester and start from step 2 in case of not using the hand–held tester.

1	Check output value of the deceleration sensor.

PREPARATION:
(a) Connect the hand–held tester to the DLC3.
(b) Turn the ignition switch ON and push the hand–held tester main switch ON.
(c) Select the DATALIST mode on the hand–held tester.

CHECK:
Check that the deceleration value of the deceleration sensor displayed on the hand–held tester is changing when tilting the vehicle.

OK:
Deceleration value must be changing.

OK → **Check and replace ABS & BA & TRC ECU or ABS & BA & TRC & VSC ECU.**

NG

2	Check deceleration sensor (See page DI–86).

NG → **Replace deceleration sensor.**

OK

3	Check for open or short circuit in harness and connector between deceleration sensor and ABS & BA & TRC ECU or ABS & BA & TRC & VSC ECU (See page IN–33).

NG → Repair or replace harness or connector.

OK ↓

Check and replace ABS & BA & TRC ECU or ABS & BA & TRC & VSC ECU.

DI6BP–01

DTC	C1244 / 44	Deceleration Sensor Circuit

CIRCUIT DESCRIPTION

This sensor detects deceleration on the vehicle. The sensor signal is used in ABS & BA & TRC or ABS & BA & TRC & VSC control. If the sensor functions abnormally, the ABS warning light comes on.

DTC No.	DTC Detecting Condition	Trouble Area
C1244 / 44	Either of the following 1., 2., 3. or 4. is detected: 1. The condition that ECU terminals GL1 and GL2 values are –1.5 G or less or 1.5 G or more continues for 1.2 sec. or more. 2. The condition that the deceleration sensor terminal VGS voltage is 4.4 V or less or 5.6 V or more continues for 1.2 sec. or more. 3. At the vehicle speed of 0 km/h (0 mph), after the difference of output value between deceleration sensor terminals GL1 and GL2 becomes 0.6 G or more, and the condition that does not become 0.4 G or less continues for 60 sec. or more. 4. Deceleration sensor signal momentary open occurs for 7 times or more.	• Deceleration sensor • Deceleration sensor circuit

Fail safe function:

If trouble occurs in the deceleration sensor circuit, the ECU cuts off current to the ABS solenoid relay and prohibits ABS & BA & TRC or ABS & BA & TRC & VSC controls and the brake system becomes normal.

WIRING DIAGRAM

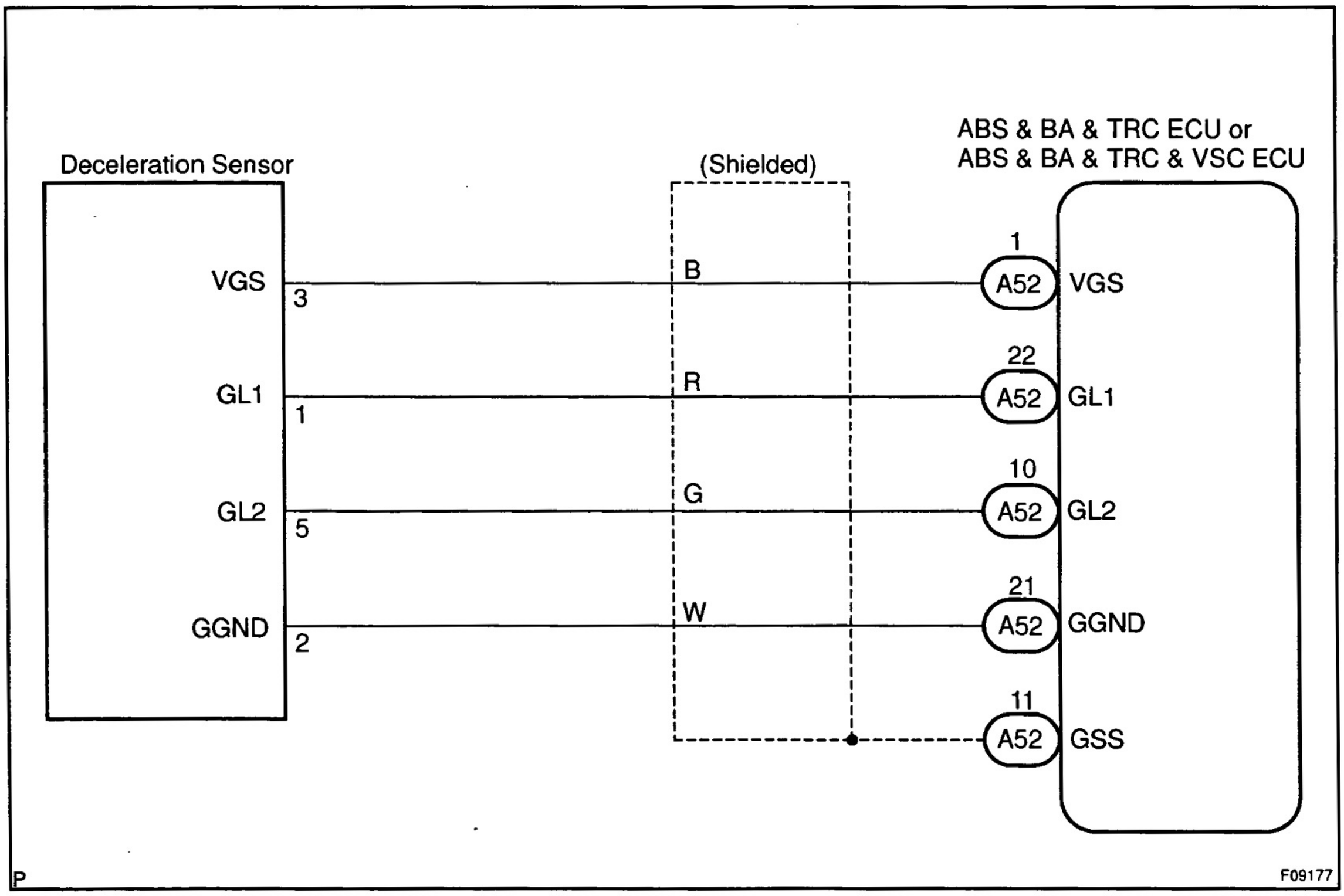

INSPECTION PROCEDURE

1	Check for open and short circuit in harness and connector between deceleration sensor and ABS & BA & TRC ECU or ABS & BA & TRC & VSC ECU (See page IN–33).

NG → Repair or replace harness or connector.

OK ↓

2	Check deceleration sensor (See page DI–86).

NG → Replace deceleration sensor.

OK ↓

Check and replace ABS & BA & TRC ECU or ABS & BA & TRC & VSC ECU.

DI6BQ–01

DTC	C1246 / 46	Master Cylinder Pressure Sensor Circuit

CIRCUIT DESCRIPTION

DTC No.	DTC Detecting Condition	Trouble Area
C1246 / 46	Either of the following 1., 2., 3., 4. or 5. is detected: 1. At the vehicle speed of 7 km/h (4 mph) or more, ECU terminal PMC voltage becomes more than 0.86 V and the condition that 0.01 V or less does not change continues for 30 sec. 2. Interference occurs to ECU terminal PMC 7 times or more for 5 sec. 3. ECU terminal STP is OFF, and the condition that terminal PMC voltage becomes more than 0.86 V or less than 0.3 V continues for 5 sec. or more. 4. The condition that ECU terminal IG1 voltage is 9.5 V to 17.0 V, and terminal VCM voltage other than the range from 4.4 V to 5.6 V continues for 1.2 sec. or more. 5. The condition that ECU terminal VCM voltage is 4.4 V to 5.6 V, and terminal PMC voltage other than the range from 0.14 V to 4.85 V continues for 1.2 sec. or more.	• Master cylinder pressure sensor • Master cylinder pressure sensor circuit

Fail safe function:

If trouble occurs in the master cylinder pressure sensor circuit, the ECU cuts off current to the ABS solenoid relay and prohibits ABS & BA & TRC or ABS & BA & TRC & VSC controls and the brake system becomes normal.

WIRING DIAGRAM

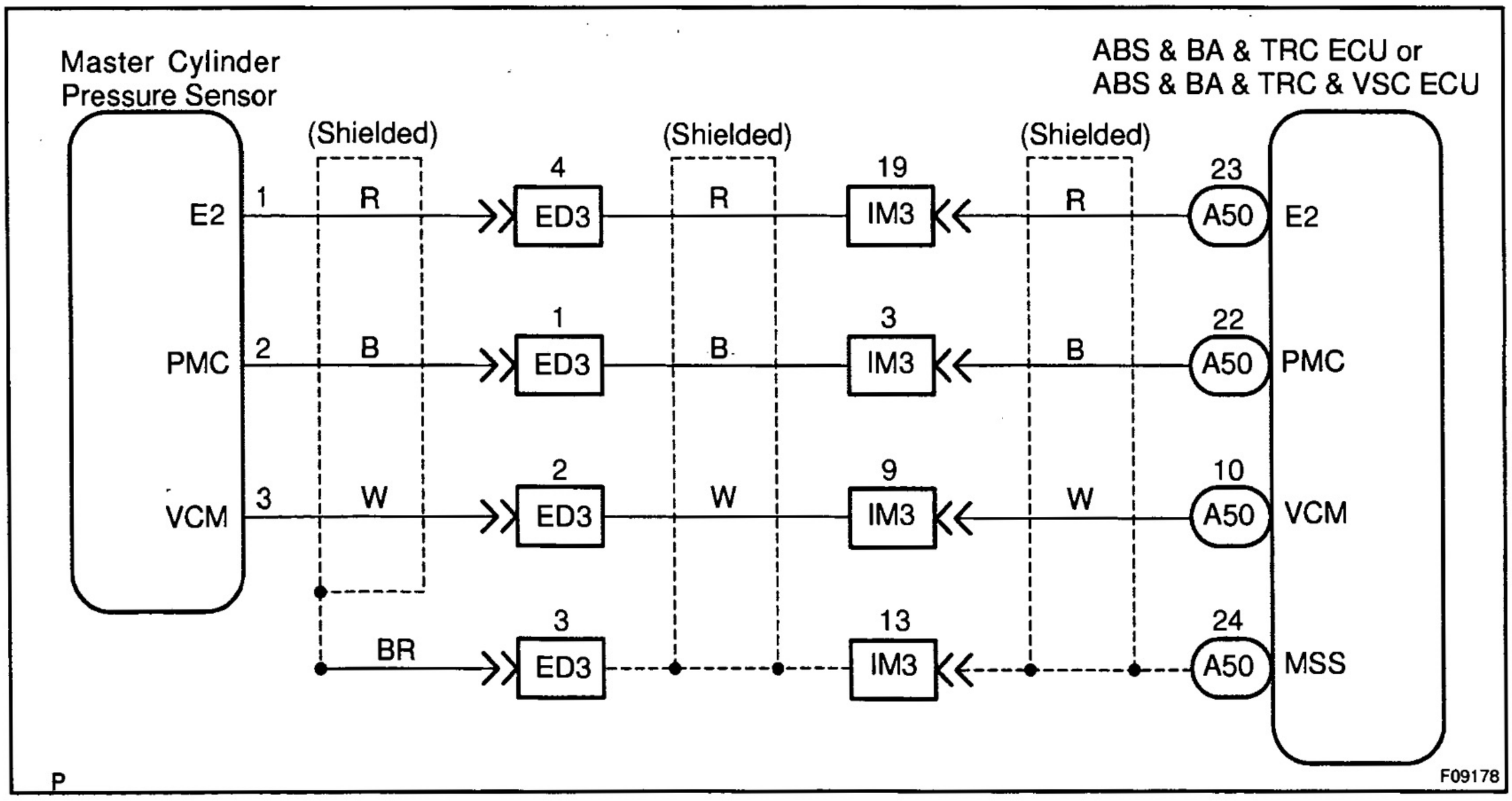

INSPECTION PROCEDURE

Start the inspection from step 1 in case of using the hand–held tester and start from step 2 in case of not using the hand–held tester.

1	**Check output value of the master cylinder pressure sensor.**

PREPARATION:

(a) Connect the hand–held tester to the DLC3.
(b) Turn the ignition switch ON and push the hand–held tester main switch ON.
(c) Select the DATALIST mode on the hand–held tester.

CHECK:

Check that the brake fluid pressure value of the master cylinder pressure sensor displayed on the hand–held tester is changing when depressing the brake pedal.

OK:

Brake fluid pressure value must be changing.

OK → **Go to step 4.**

NG

2	**Check master cylinder pressure sensor.**

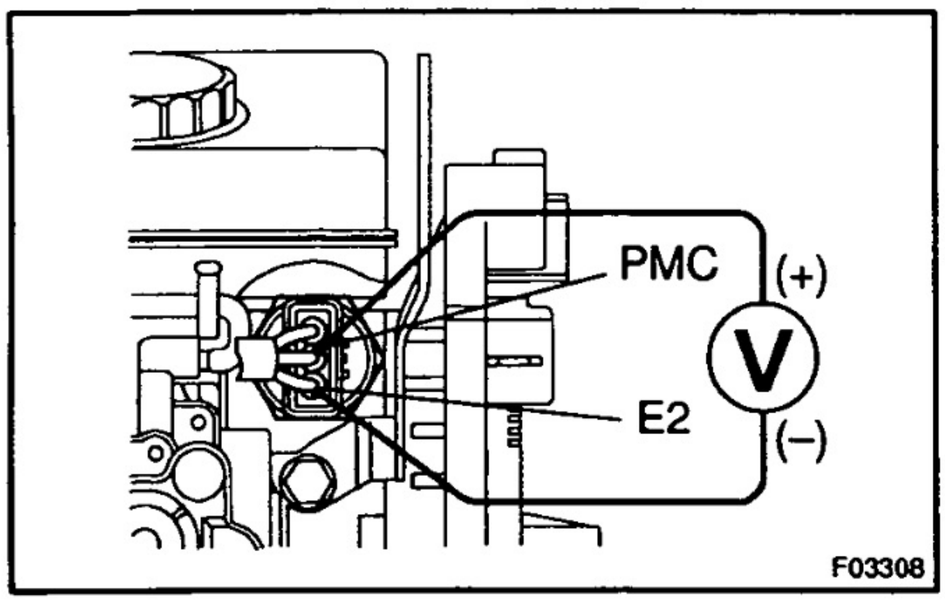

PREPARATION:

(a) Install LSPV gauge to the front caliper bleeder plug portion, and bleed LSPV gauge.
SST 09709–29018
(b) Remove air cleaner inlet and battery clamp cover.

CHECK:

Start the engine and depress the brake pedal, then check the relation between the fluid pressure and voltage of PMC and E2 terminals of the master cylinder pressure sensor with connector still connected.

OK:

Front brake caliper fluid pressure	Voltage
0 kPa (0 Kgf/cm^2, 0 psi)	0.37 – 0.63 V
5,883 kPa (60 kgf/cm^2, 853 psi)	1.57 – 1.83 V
11,768 kPa (120 kgf/cm^2, 1,706 psi)	2.77 – 3.03 V

HINT:

Voltage of between terminals VCM and E2: 4.7 – 5.3 V

NG → **Replace master cylinder pressure sensor.**

OK

3	**Check for open and short circuit in harness and connector between master cylinder pressure sensor and ABS & BA & TRC ECU or ABS & BA & TRC & VSC ECU (See page IN–33).**

NG → **Repair or replace harness or connector.**

OK

4	**Check whether or not the ECU terminal STP input voltage is changed when the stop light switch is turned on and off.**

NO → **Check the stop light switch circuit (See page BE–11).**

YES

Check and replace ABS & BA & TRC ECU or ABS & BA & TRC & VSC ECU.

DI6BR–01

DTC	C1249 / 49	Stop Light Switch Circuit

CIRCUIT DESCRIPTION

DTC No.	DTC Detecting Condition	Trouble Area
C1249 / 49	ECU terminal IG1 voltage is 9.5 to 17.2 V and ABS is in non–operation, the open circuit in stop light switch circuit continues for 0.3 sec. or more.	Stop light switch circuit

WIRING DIAGRAM

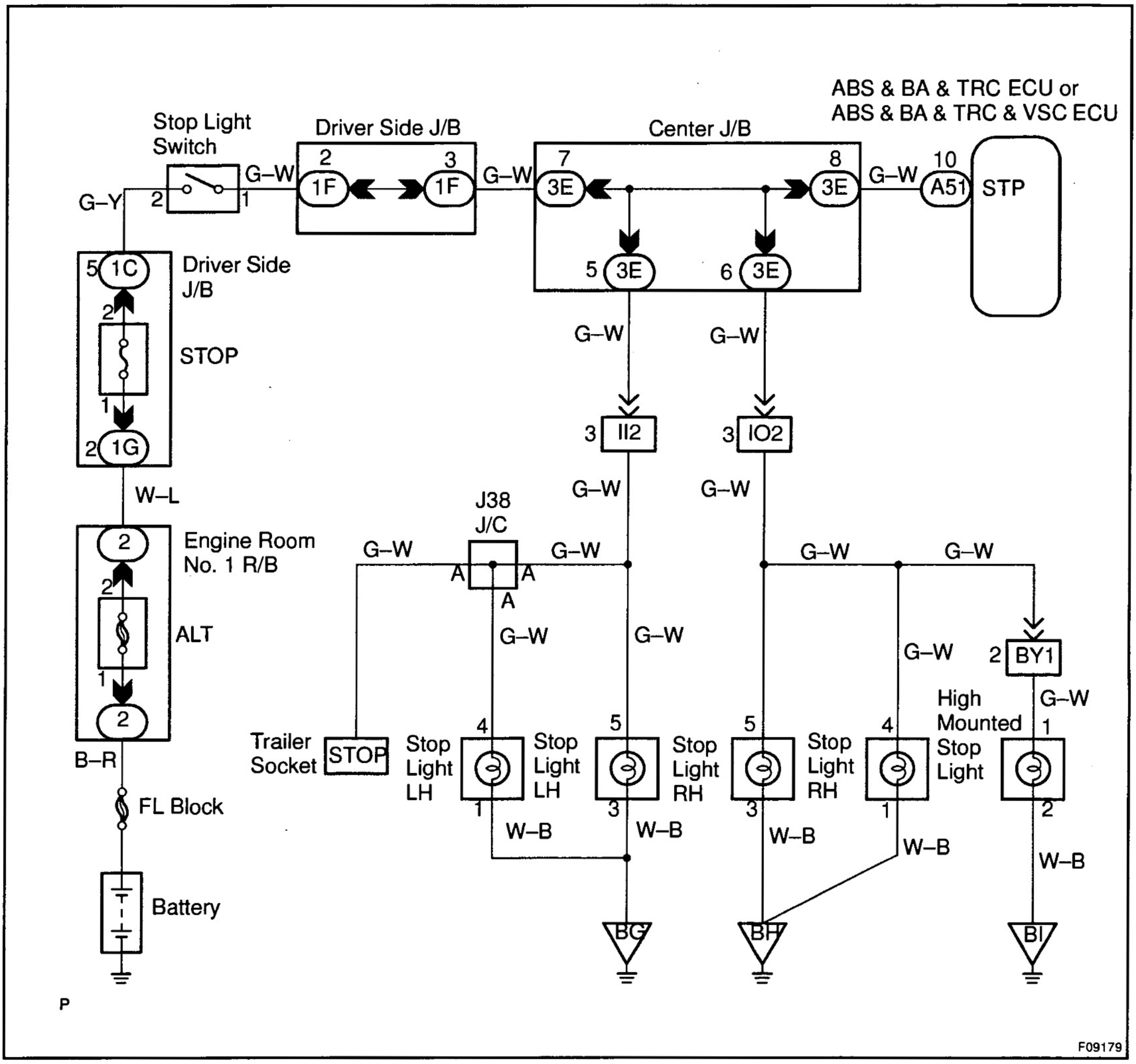

F09179

INSPECTION PROCEDURE

1	**Check operation of the stop light switch.**

CHECK:

Check that the stop light lights up when brake pedal is depressed and turns OFF when the brake pedal is released.

OK → **Go to step 3.**

NG

2	**Check stop light circuit (See page BE–11).**

NG → **Repair or replace stop light circuit.**

OK

3	**Check voltage between terminal STP of ABS & BA & TRC ECU or ABS & BA & TRC & VSC ECU and body ground.**

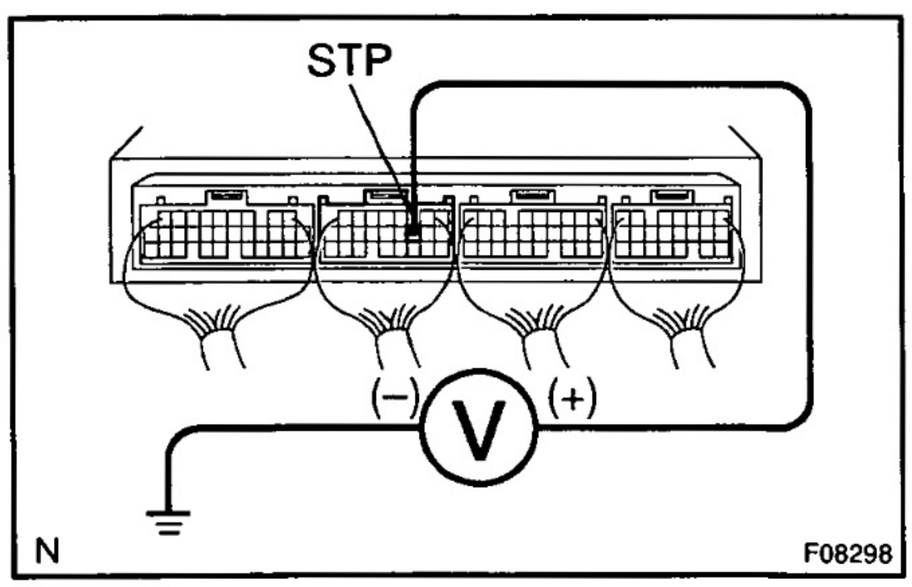

PREPARATION:

Remove ABS & BA & TRC ECU or ABS & BA & TRC & VSC ECU with connectors still connected.

CHECK:

Measure voltage between terminal STP of ABS & BA & TRC ECU or ABS & BA & TRC & VSC ECU and body ground when brake pedal is depressed.

OK:

Voltage: 10 – 14 V

OK → **Proceed to next circuit inspection shown in problem symptoms chart (See page DI–100).**

NG

4	**Check for open circuit in harness and connector between ABS & BA & TRC ECU or ABS & BA & TRC & VSC ECU and stop light switch (See page IN–33).**

NG → **Repair or replace harness or connector.**

OK

Check and replace ABS & BA & TRC ECU or ABS & BA & TRC & VSC ECU.

DI6BS–01

DTC	C1251 / 51	Hydraulic Brake Booster Pump Motor Malfunction

CIRCUIT DESCRIPTION

DTC No.	DTC Detecting Condition	Trouble Area
C1251 / 51	Either of the following 1. or 2. is detected: 1. After turning the ignition switch ON, the current of more than 28A flows to the motor for more than 1 sec. 2. After turning the ignition switch ON, less than 7A change in current is detected more than 3 times in a low when the motor is ON.	Hydraulic brake booster pump motor

Fail safe function:
If trouble occurs in the pump motor, the ECU cuts off current to the ABS solenoid relay and prohibits ABS & BA & TRC ECU or ABS & BA & TRC & VSC controls.

WIRING DIAGRAM

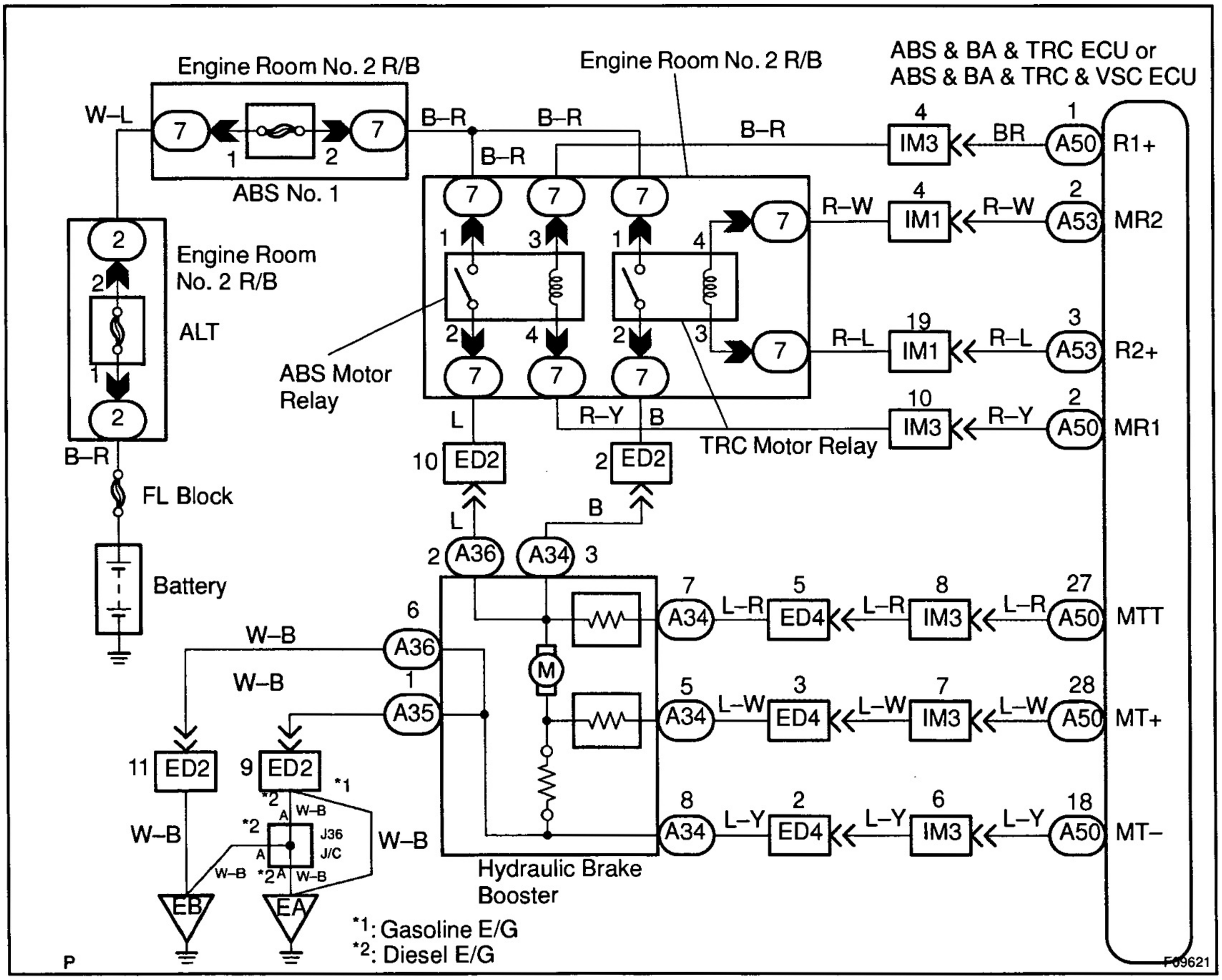

INSPECTION PROCEDURE

1	**Check operation of hydraulic brake booster pump motor.**

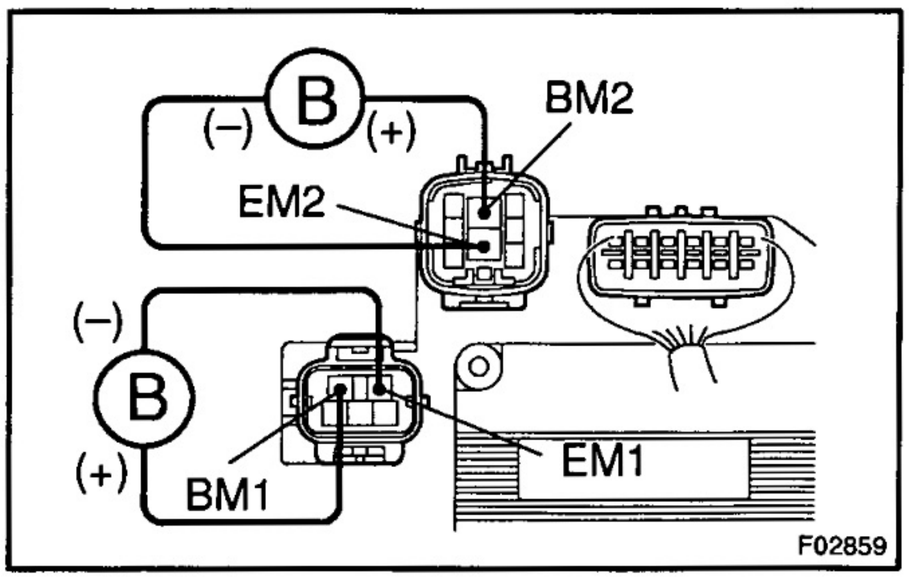

PREPARATION:
Disconnect the 2 connectors from the hydraulic brake booster.
CHECK:
Connect battery positive ⊕ lead to BM1 or BM2 terminal and battery negative ⊖ lead to EM1 or EM2 terminal of the hydraulic brake booster (pump motor) connector.
OK:

The operation sound of the pump motor should be heard.

NG → **Go to step 4.**

OK

2	**Check hydraulic brake booster resistance.**

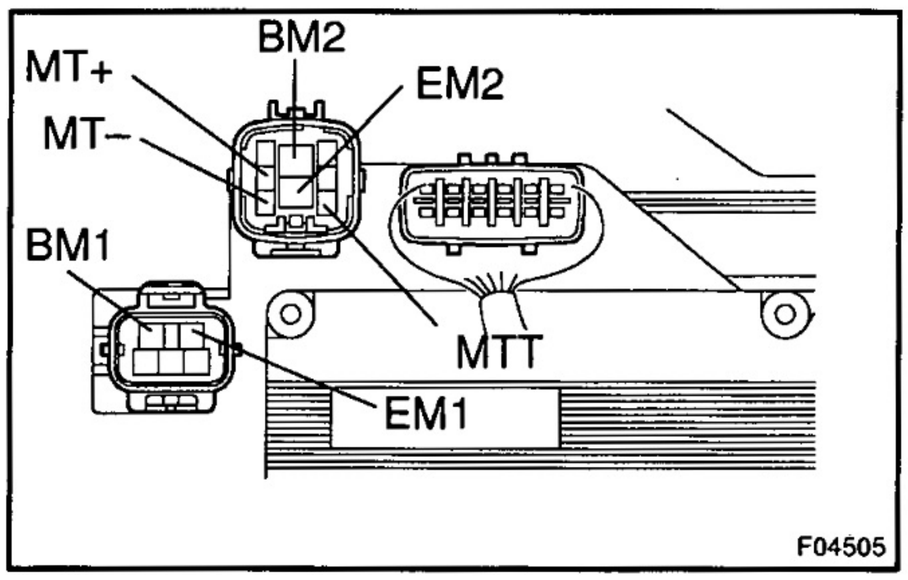

PREPARATION:
Disconnect the 2 connectors from the hydraulic brake booster.
CHECK:
Check resistance between terminals MT+ and MT–, BM1 and MTT, BM2 and MTT, EM1 and MT+, EM2 and MT+ of the hydraulic brake booster connector.
OK:

30 – 36 Ω

NG → **Replace the hydraulic brake booster assembly.**

OK

3	**Check for open circuit in harness and connector between hydraulic brake booster (MT+, MT–) and ABS & BA & TRC ECU or ABS & BA & TRC & VSC ECU (See page IN–33).**

NG → **Repair or replace harness or connector.**

OK

Check and replace ABS & BA & TRC ECU or ABS & BA & TRC & VSC ECU.

4	**Check for open or short circuit in harness and connector between hydraulic brake booster pump motor and hydraulic brake booster (See page IN–33).**

NG → **Replace wire harness.**

OK

5	**Check hydraulic brake booster pump motor (See page BR–25).**

NG → **Replace hydraulic brake booster pump motor.**

OK

Replace hydraulic brake booster.

DI6BT–01

DTC	C1252 / 52	Hydraulic Brake Booster Pump Motor ON Time Abnormally Long

CIRCUIT DESCRIPTION

DTC No.	DTC Detecting Condition	Trouble Area
C1252 / 52	After the ignition switch has been turned ON, when the power is supplied to the pump motor for more than 5 minutes.	• Hydraulic brake booster pump motor • Hydraulic brake booster pump motor circuit • Pressure switch (PH or PL)

Fail safe function:
If trouble occurs in the pump motor, the ECU cuts off current to the ABS solenoid relay and prohibits ABS & BA & TRC ECU or ABS & BA & TRC & VSC controls.

WIRING DIAGRAM

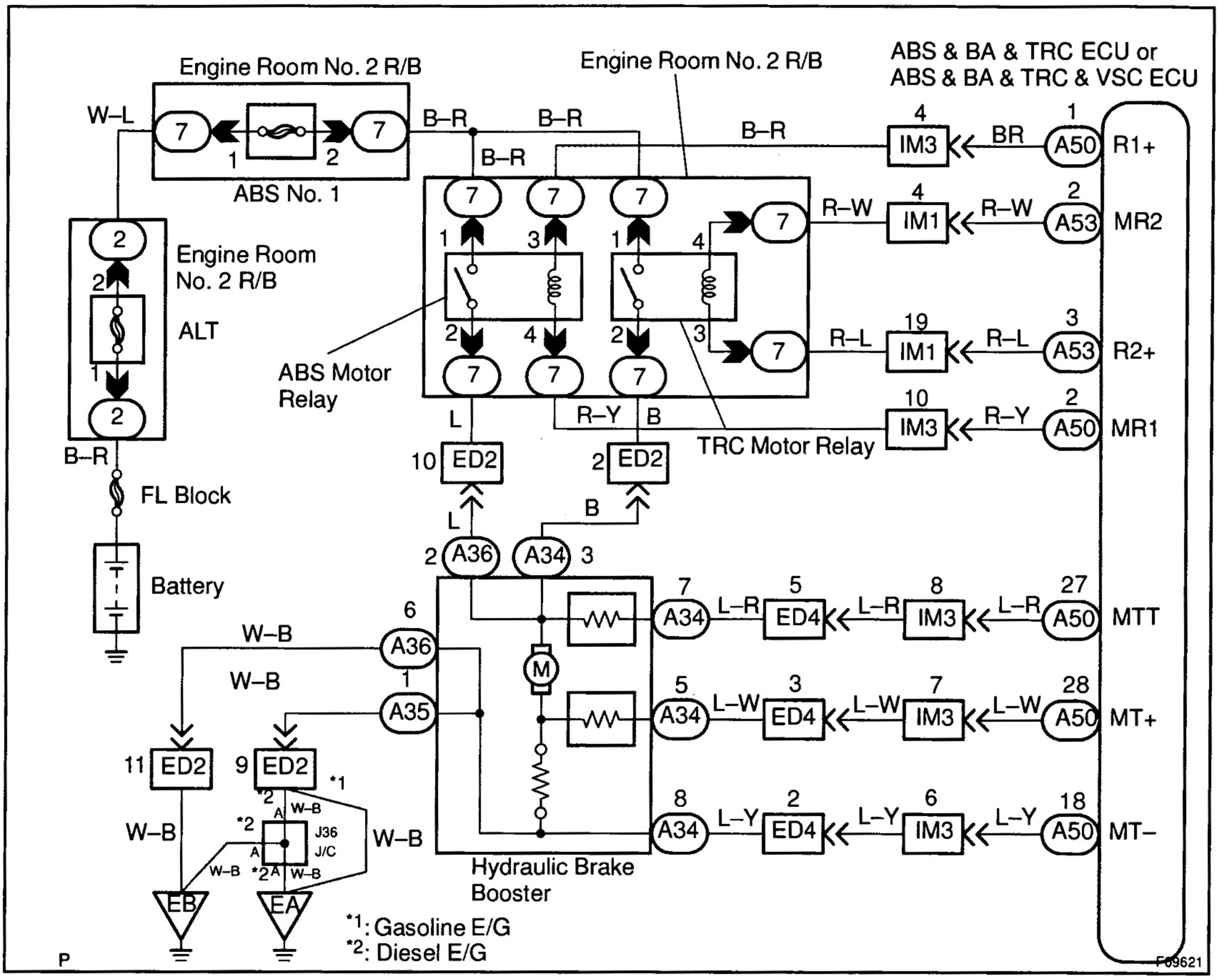

INSPECTION PROCEDURE

1	**Check operation of hydraulic brake booster pump motor.**

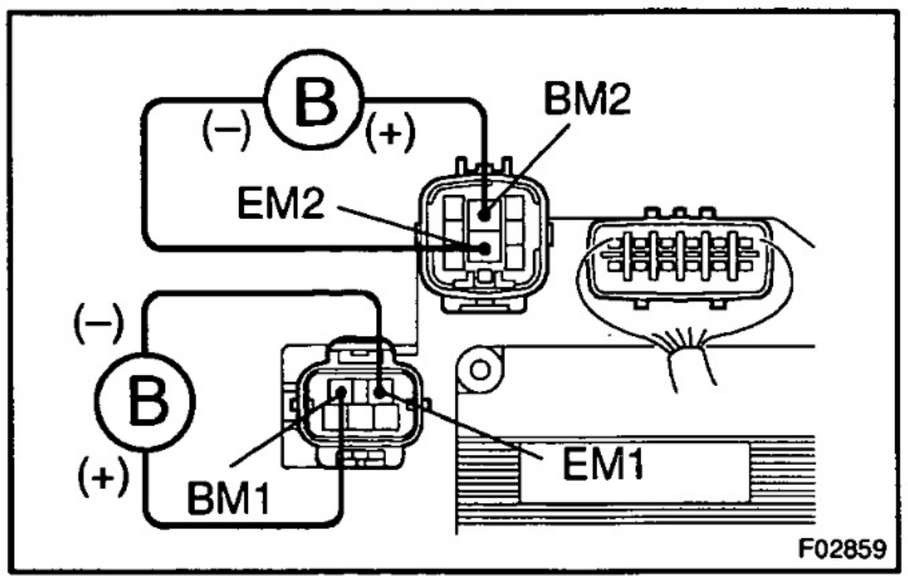

PREPARATION:

Disconnect the 2 connectors from the hydraulic brake booster.

CHECK:

Connect battery positive ⊕ lead to BM1 or BM2 terminal and battery negative ⊖ lead to EM1 or EM2 terminal of the hydraulic brake booster (pump motor) connector.

OK:

The operation sound of the pump motor should be heard.

NG → **Go to step 9.**

OK

2	**Check for short circuit (to B+) in harness and connector between BM1 or BM2 of hydraulic brake booster and ABS or TRC motor relay (See page IN–33).**

NG → **Repair or replace harness or connector.**

OK

3	**Check for short circuit (to B+) in harness and connector between MTT of hydraulic brake booster and ABS & BA & TRC ECU or ABS & BA & TRC & VSC ECU (See page IN–33).**

NG → **Repair or replace harness or connector.**

OK

4	**Check pressure switch (PH).**

In case of using the hand–held tester.

PREPARATION:

(a) Connect the hand–held tester to the DLC3.

(b) Turn the ignition switch ON and push the hand–held tester main switch ON.

(c) Select the DATALIST mode on the hand–held tester.

CHECK:

Depress the brake pedal more than 40 times with the ignition switch OFF then turn the ignition switch ON and check the pressure switch (PH) condition.

HINT:

When a pressure in power supply system is released, reaction force becomes heavy and stroke becomes shorter.

OK:

"OFF" turns to "ON".

HINT:

OFF: Low pressure

ON: High pressure

In case of not using the hand–held tester.

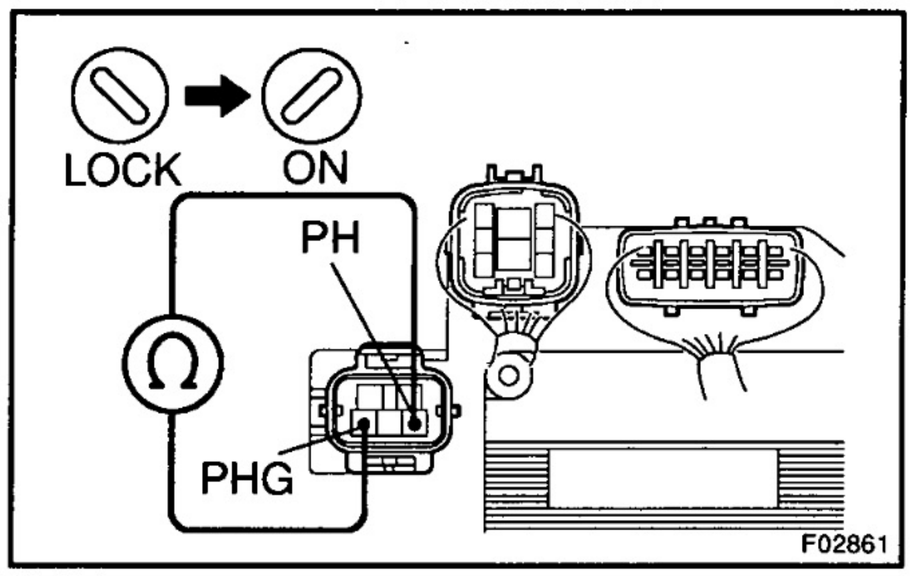

PREPARATION:

(a) Disconnect the connector (5P) from the hydraulic brake booster.

(b) With the ignition switch OFF, depress the brake pedal more than 40 times to decrease the accumulator pressure.

HINT:

When a pressure in power supply system is released, reaction force becomes heavy and stroke becomes shorter.

CHECK:

Measure resistance between terminals PH and PHG of hydraulic brake booster connector.

OK:

Resistance: 1.0 kΩ

PREPARATION:

(a) Connect the connector (5P) to the hydraulic brake booster.

(b) Disconnect the connector (5P) after ignition switch has been ON and the pump motor has stopped.

CHECK:

Measure resistance between terminals PH and PHG of hydraulic brake booster connector.

OK:

Resistance: 0 Ω

HINT:

After inspection, connect the connector and clear the DTC (See page DI–86).

NG	**Replace hydraulic brake booster assembly.**

OK

5	**Check pressure switch (PL).**

In case of using hand–held tester:

PREPARATION:

(a) Connect the hand–held tester to the DLC3.

(b) Turn the ignition switch ON and push the hand–held tester main switch ON.

(c) Select the DATALIST mode on the hand–held tester.

CHECK:

Depress the brake pedal more than 40 times with the ignition switch OFF then turn the ignition switch ON and check the pressure switch (PL) condition.

HINT:

When a pressure in power supply system is released, reaction force becomes heavy and stroke becomes shorter.

OK:

"OFF" turns to "ON".

HINT:

OFF: Low pressure

ON: High pressure

In case of not using hand–held tester:

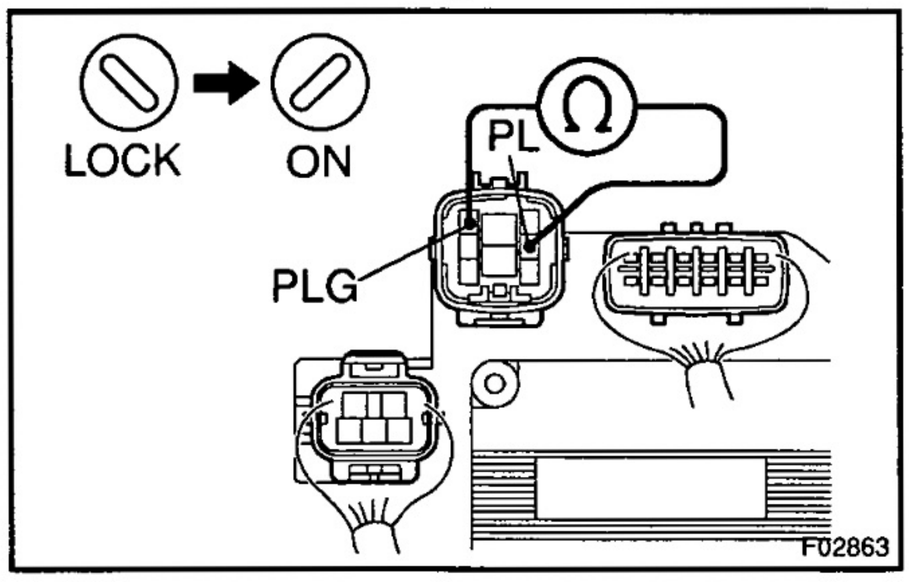

PREPARATION:

(a) Disconnect the connector (8P) from the hydraulic brake booster.

(b) With the ignition switch OFF, depress the brake pedal more than 40 times to decrease the accumulator pressure.

HINT:

When a pressure in power supply system is released, reaction force becomes heavy and stroke becomes shorter.

CHECK:

Measure resistance between terminals PL and PLG of hydraulic brake booster connector.

OK:

Resistance: 5.7 kΩ

PREPARATION:

(a) Connect the connector (8P) to the hydraulic brake booster.

(b) Disconnect the connector (8P) after ignition switch has been ON and the pump motor has stopped.

CHECK:

Measure resistance between terminals PL and PLG of hydraulic brake booster connector.

OK:

Resistance: 1.0 kΩ

HINT:
After inspection, connect the connector and clear the DTC (See page DI–86).

NG → **Replace hydraulic brake booster assembly.**

OK

6	**Check for short circuit (to B+) in harness and connector between pressure switch and ABS & BA & TRC ECU or ABS & BA & TRC & VSC ECU (See page IN–33).**

NG → **Repair or replace harness or connector.**

OK

7	**Check ABS and TRC motor relay.**

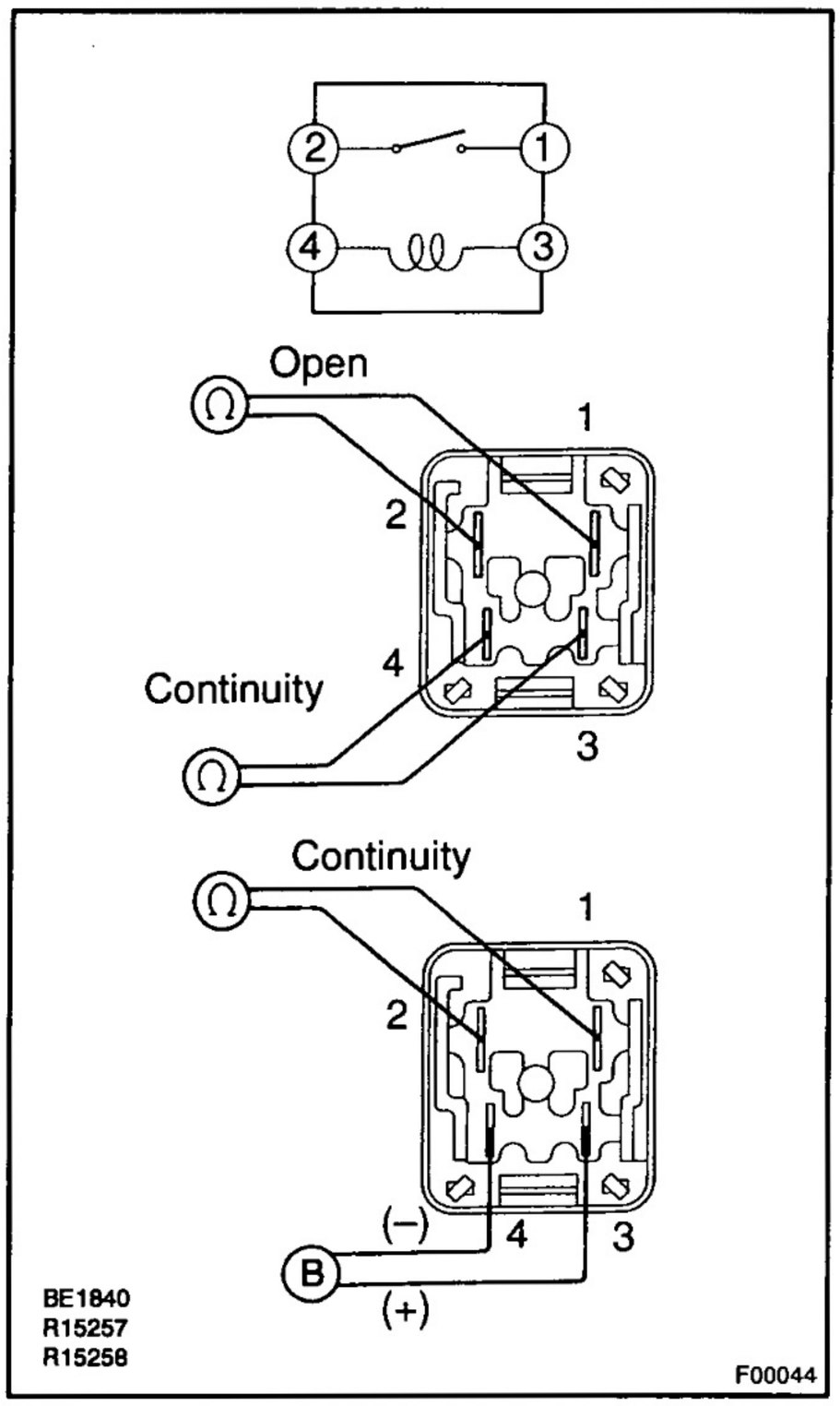

PREPARATION:
Remove ABS and TRC motor relay from engine room No. 2 R/B.

CHECK:
Check continuity between each pair of terminal of motor relay.

OK:

Terminals 3 and 4	Continuity (Reference value *1)
Terminals 1 and 2	Open

*1: ABS motor relay 62 Ω
TRC motor relay 54 Ω

CHECK:
(a) Apply battery voltage between terminals 3 and 4.
(b) Check continuity between terminals.

OK:

Terminals 1 and 2	Continuity

NG → Replace ABS or TRC motor relay.

OK

8	Check for short circuit in harness and connector between ABS or TRC motor relay and ABS & BA & TRC ECU or ABS & BA & TRC & VSC ECU (See page IN–33).

NG → Repair or replace harness or connector.

OK

Check and replace ABS & BA & TRC ECU or ABS & BA & TRC & VSC ECU.

9	Check for open or short circuit in harness and connector between hydraulic brake booster pump motor and hydraulic brake booster (See page IN–33).

NG → Replace wire harness.

OK

10	Check hydraulic brake booster pump motor (See page BR–25).

NG → Replace hydraulic brake booster pump motor.

OK

Replace hydraulic brake booster.

DI6BU–01

DTC	C1253 / 53	Motor Relay Circuit

CIRCUIT DESCRIPTION

The ABS and TRC motor relay supplies power to the hydraulic brake booster pump motor. While the ABS & BA & TRC ECU or ABS & BA & TRC & VSC are activated, the ECU switches the motor relay ON and operates the hydraulic brake booster pump motor.

DTC No.	DTC Detecting Condition	Trouble Area
C1253 / 53	When any of the following 1. through 4. is detected: 1. After turning the ignition switch ON, open in the relay coil is detected for more than 1 sec. 2. When the pressure switch does not control motor driving, the status that the motor relay is always ON continues for more than 1 sec. due to short circuit. 3. When the pressure switch (PH) detects the low pressure or while the pump motor operates to increase the pressure, the status that the motor relay does not turn ON continues for more than 0.2 sec. 4. When pressure switch does not control motor driving, the status that the motor relay is always ON due to the welded contact continues for more than 2 sec.	• ABS or TRC motor relay • ABS or TRC motor relay circuit • Hydraulic brake booster pump motor circuit

Fail safe function:

If trouble occurs in the ABS and TRC motor relay circuit, the ECU cuts off current to the ABS solenoid relay and prohibits ABS & BA & TRC ECU or ABS & BA & TRC & VSC controls.

WIRING DIAGRAM

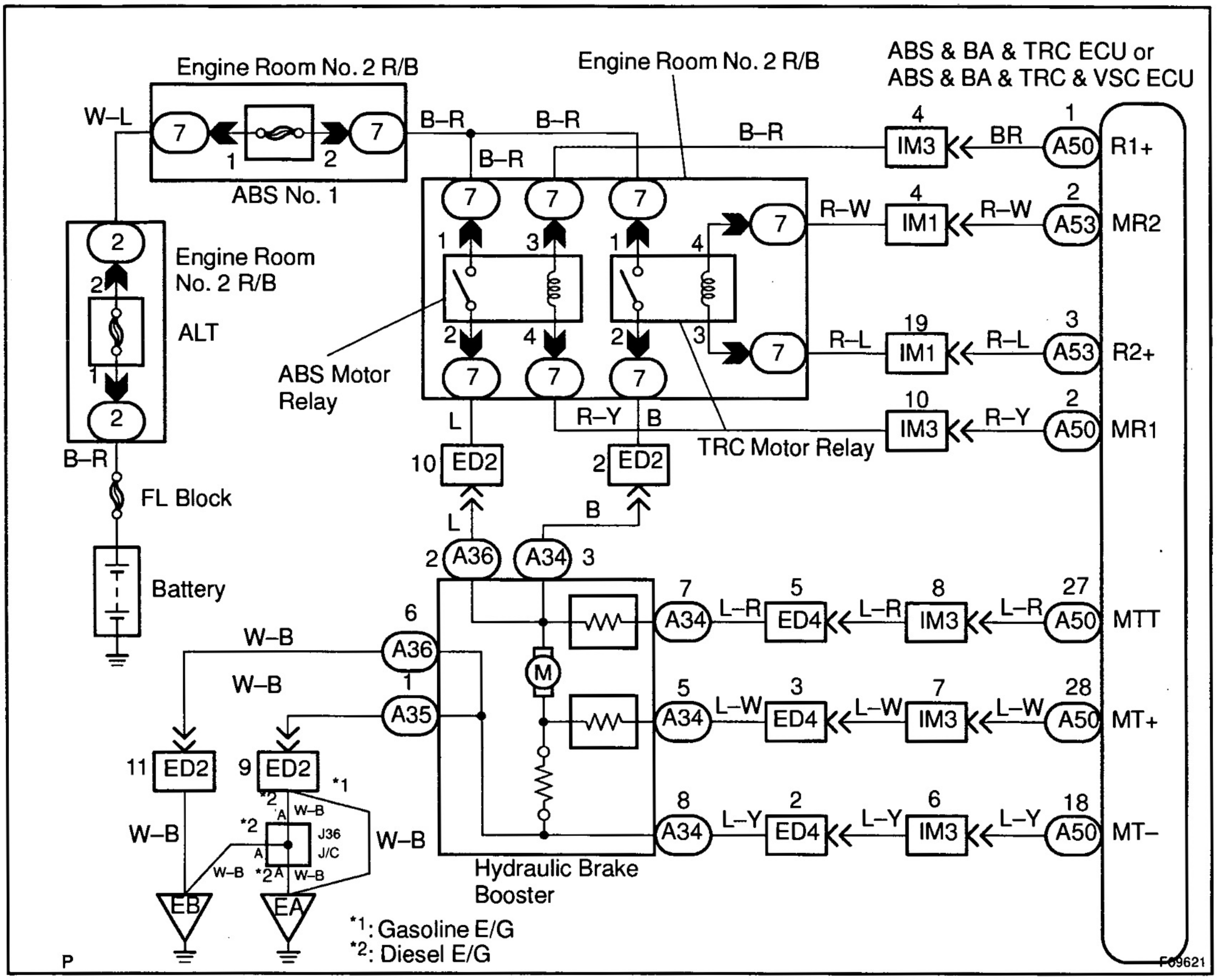

INSPECTION PROCEDURE

Start the inspection from step 1, in case of using the hand–held tester and start from step 3, in case of not using hand–held tester.

1	**Check ABS and TRC motor relay operation.**

PREPARATION:

(a) Connect the hand–held tester to the DLC3.
(b) Turn the ignition switch ON and push the hand–held tester main switch ON.
(c) Select the ACTIVE TEST mode on the hand–held tester.

CHECK:

Check the operation sound of the ABS and TRC motor relays individually when operating it with the hand–held tester.

OK:

The operation sound of the ABS and TRC motor relay should be heard.

NG → **Go to step 3.**

OK

2	**Check for short circuit (to B+) in harness and connector between MTT of hydraulic brake booster and ABS & BA & TRC ECU or ABS & BA & TRC & VSC ECU (See page IN–33).**

NG → **Repair or replace harness or connector.**

OK

Check and replace ABS & BA & TRC ECU or ABS & BA & TRC & VSC ECU.

3	**Check voltage between terminal 1 of engine room No. 2 R/B (for ABS and TRC motor relay) and body ground.**

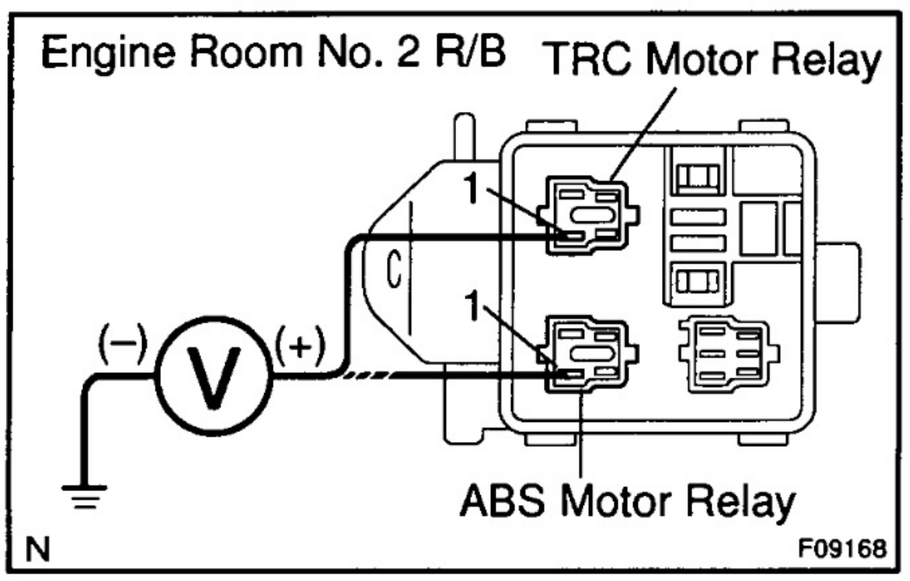

PREPARATION:

Remove ABS and TRC motor relay from engine room No. 2 R/B.

CHECK:

Measure voltage between terminal 1 of engine room No. 2 R/B (for ABS and TRC motor relay) and body ground.

OK:

Voltage: 10 – 14 V

NG → **Check and repair harness or connector.**

OK

4	Check ABS and TRC motor relay.

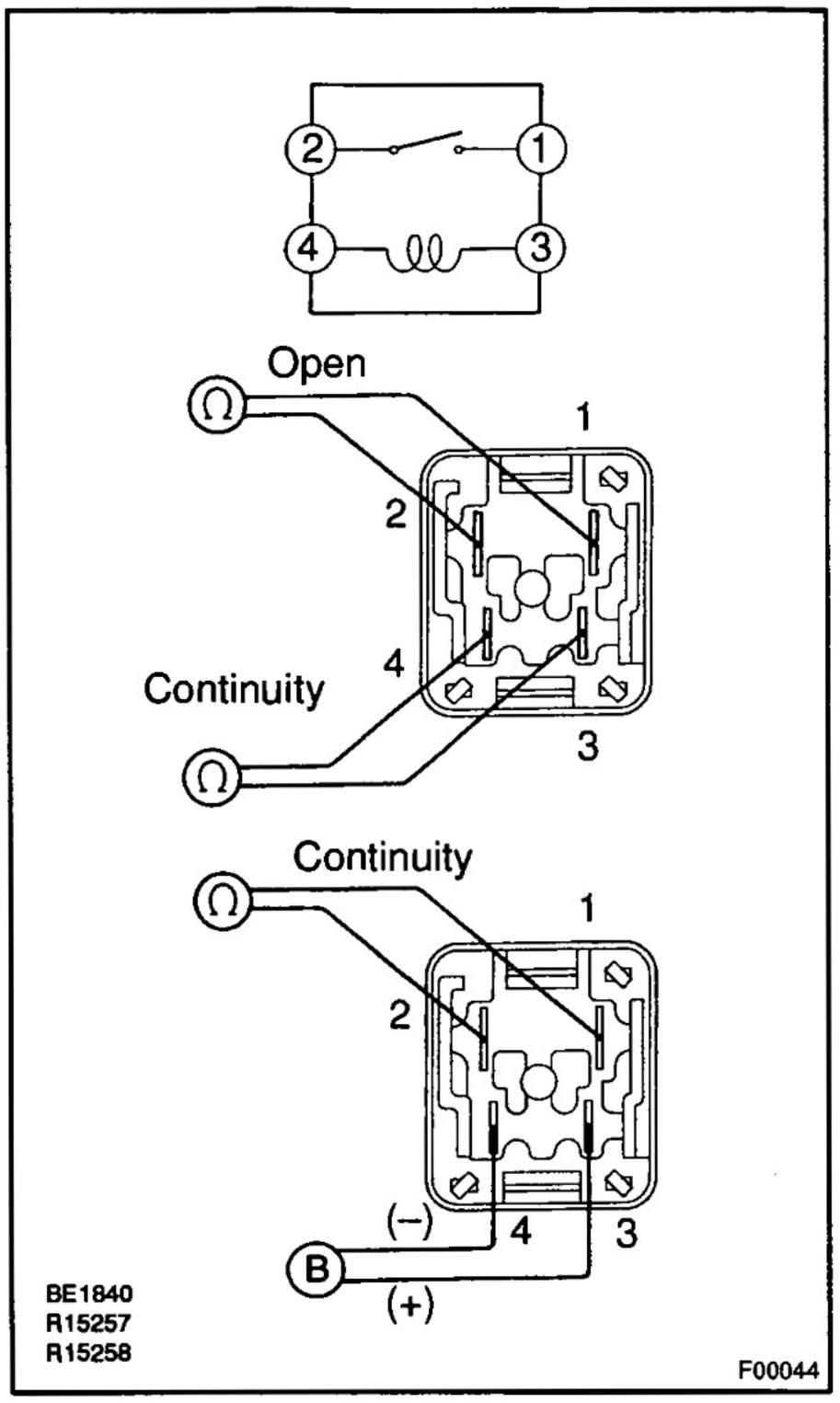

PREPARATION:

Remove ABS and TRC motor relay from engine room No. 2 R/B.

CHECK:

Check continuity between each pair of terminal of motor relay.

OK:

Terminals 3 and 4	Continuity (Reference value *1)
Terminals 1 and 2	Open

*1: ABS motor relay 62 Ω
TRC motor relay 54 Ω

CHECK:

(a) Apply battery voltage between terminals 3 and 4.
(b) Check continuity between terminals.

OK:

Terminals 1 and 2	Continuity

NG → **Replace ABS or TRC motor relay.**

OK

5	Check continuity between each terminal BM1 and BM2 and terminal MTT of ABS & BA & TRC ECU or ABS & BA & TRC & VSC ECU.

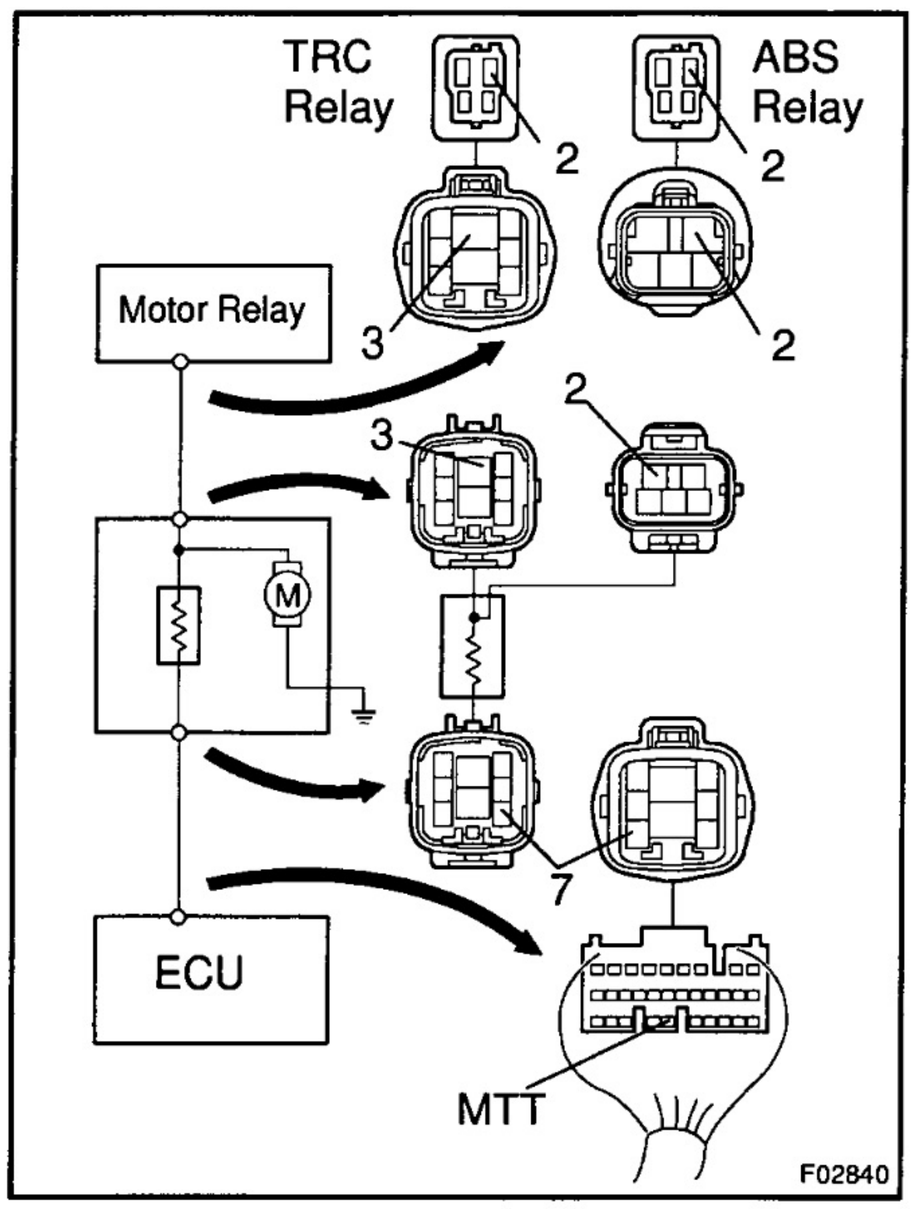

PREPARATION:

Disconnect the 2 connectors from the hydraulic brake booster.

CHECK:

(a) Check continuity between terminal BM1 of ABS motor relay and terminal MTT of ABS & BA & TRC ECU or ABS & BA & TRC & VSC ECU.

(b) Check continuity between terminal BM2 of TRC motor relay and terminal MTT of ABS & BA & TRC ECU or ABS & BA & TRC & VSC ECU.

OK:

Continuity

HINT:

There is resistance of 33 ± 3 Ω between terminal BM1or BM2 and MTT of the hydraulic brake booster.

NG → **Repair or replace harness, connector or hydraulic brake booster.**

OK

6	Check for open and short circuit in harness and connector between ABS and TRC motor relay and ABS & BA & TRC ECU or ABS & BA & TRC & VSC ECU (See page IN–33).

NG → **Repair or replace harness or connector.**

OK

Check and replace ABS & BA & TRC ECU or ABS & BA & TRC & VSC ECU.

DI6BV–01

DTC	C1254 / 54	Pressure Switch Circuit

CIRCUIT DESCRIPTION

DTC No.	DTC Detecting Condition	Trouble Area
C1254 / 54	Either of the following 1. or 2. is detected: 1. After turning the ignition switch ON, short or open circuit in pressure switch (PL) continued for more than 1 sec. 2. After turning the ignition switch ON open in pressure switch (PH) continued for more than 1 sec.	• Pressure switch (PH or PL) • Pressure switch circuit

WIRING DIAGRAM

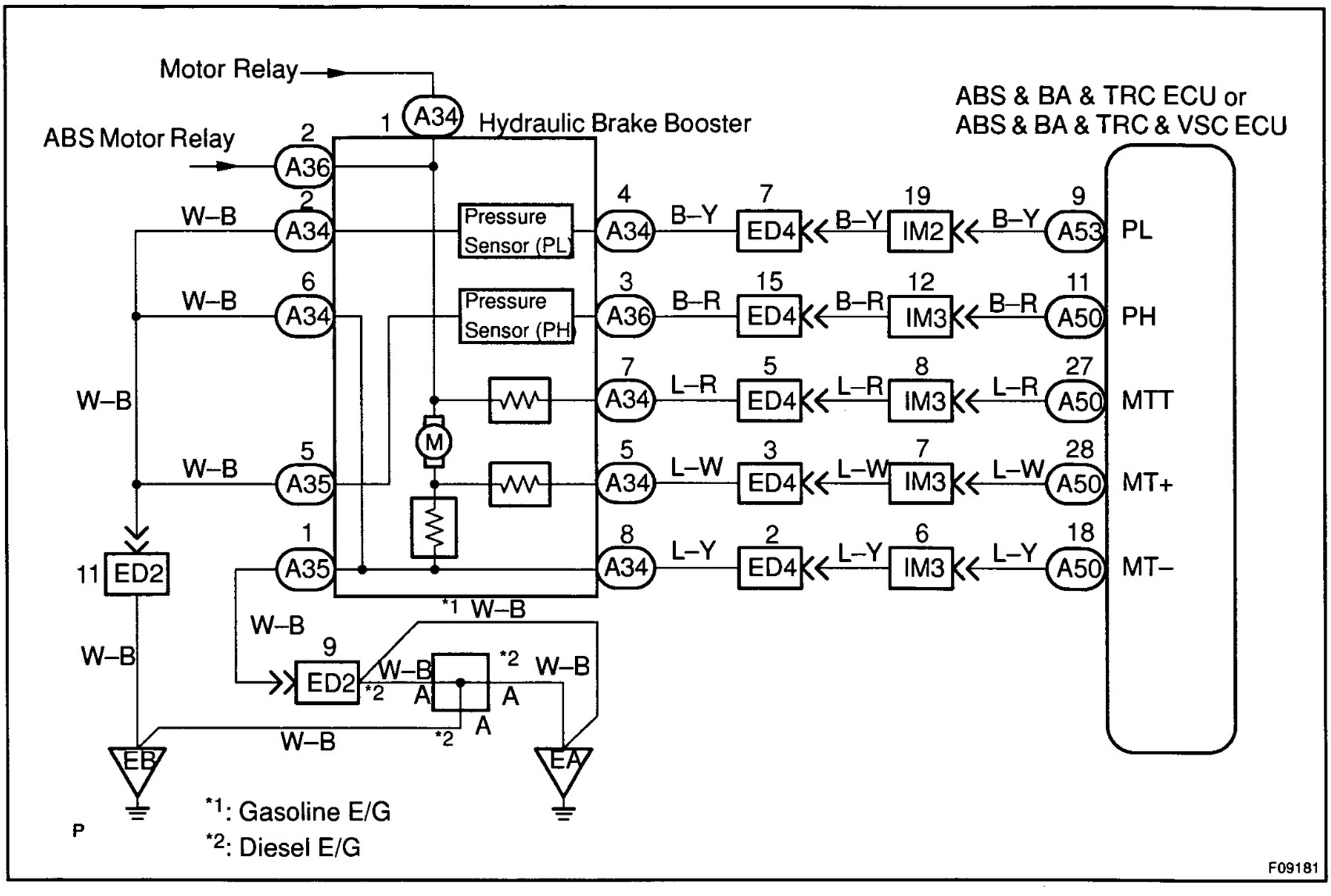

INSPECTION PROCEDURE

1	**Check pressure switch (PL) resistance.**

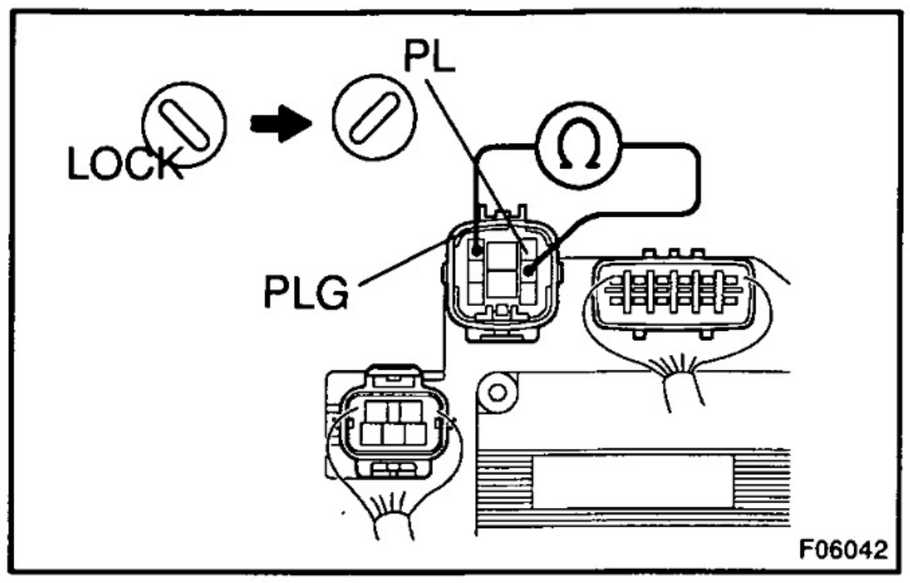

PREPARATION:

(a) Disconnect the connector (8P) from the hydraulic brake booster.

(b) With ignition switch OFF, depress the brake pedal more than 40 times to decrease the accumulator pressure.

HINT:

When a pressure in power supply system is released, reaction force becomes heavy and stroke becomes shorter.

CHECK:

Measure resistance between terminals PL and PLG of hydraulic brake booster connector.

OK:

Resistance: 5.1 – 6.3 kΩ

HINT:

After inspection, connect the connector and clear the DTC (See page DI–86).

NG	**Replace hydraulic brake booster assembly.**

OK

2	**Check pressure switch (PH) resistance.**

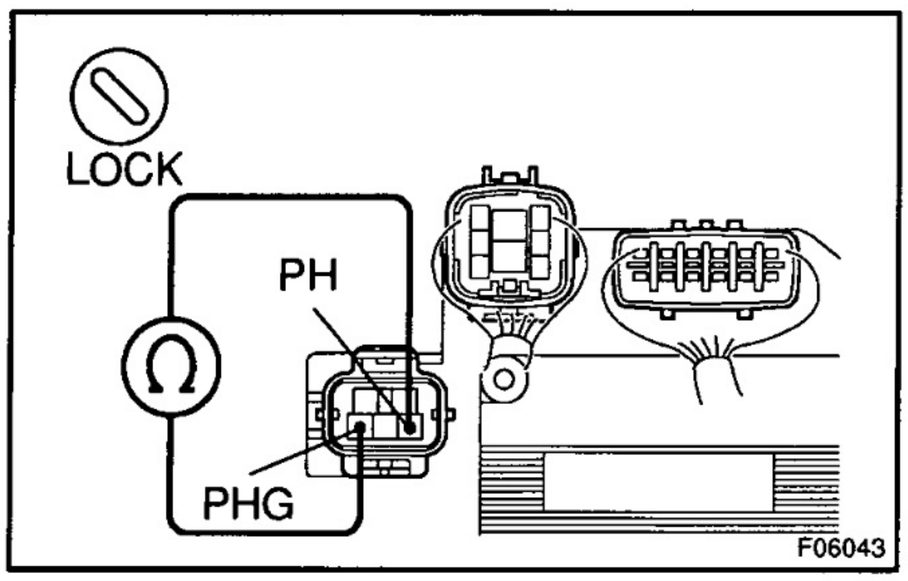

PREPARATION:

(a) Disconnect the connector (5P) from the hydraulic brake booster.

(b) With ignition switch OFF, depress the brake pedal more than 40 times to decrease the accumulator pressure.

HINT:

When a pressure in power supply system is released, reaction force becomes heavy and stroke becomes shorter.

CHECK:

Measure resistance between terminals PH and PHG of hydraulic brake booster connector.

OK:

Resistance: 0.9 – 1.1 kΩ

HINT:

After inspection, connect the connector and clear the DTC (See page DI–86).

NG → Replace hydraulic brake booster assembly.

OK

3	Check for open and short circuit in harness and connector between pressure switch and ABS & BA & TRC ECU or ABS & BA & TRC & VSC ECU (See page IN–33).

NG → Repair or replace harness or connector.

OK

Check and replace ABS & BA & TRC ECU or ABS & BA & TRC & VSC ECU.

DI6BW–01

DTC	C1256 / 56	Accumulator Low Pressure Malfunction

CIRCUIT DESCRIPTION

DTC No.	DTC Detecting Condition	Trouble Area
C1256 / 56	Either of the following 1. through 7. is detected: 1. With the vehicle running, when the pressure switch (PL) detects high pressure, although ABS, TRC or VSC does not control, the pressure switch (PL) detects low pressure for more than 1.4 sec. 2. With the vehicle running, when the pressure switch (PL) detects high pressure, although ABS, TRC or VSC controls, the pressure switch (PL) detects low pressure for more than 0.2 sec. 3. After the ignition switch is turned ON, the pressure switch (PL) detects low pressure for more than 60 sec. 4. With the vehicle running, after ignition switch has been ON, the pressure switch (PL) detects low pressure for more than 0.2 sec. although ABS, TRC, or VSC does not control and when the pressure switch is ON and stuck under high pressure. 5. With the vehicle running, after ignition switch is ON, the pressure switch (PL) detects low pressure for more than 0.2 sec. when ABS, TRC or VSC controls, the pressure switch is ON and stuck under high pressure. 6. With the vehicle running, after ignition switch is ON, the pressure switch (PL) is stuck to under low pressure although ABS, TRC or VSC does not control for more than 1.4 sec. 7. With the vehicle running, after ignition switch is ON, the pressure switch (PL) is stuck under low pressure when ABS, TRC or VSC controls for more than 0.2 sec.	• Accumulator • Pressure switch (PH or PL) • Hydraulic brake booster pump motor

WIRING DIAGRAM

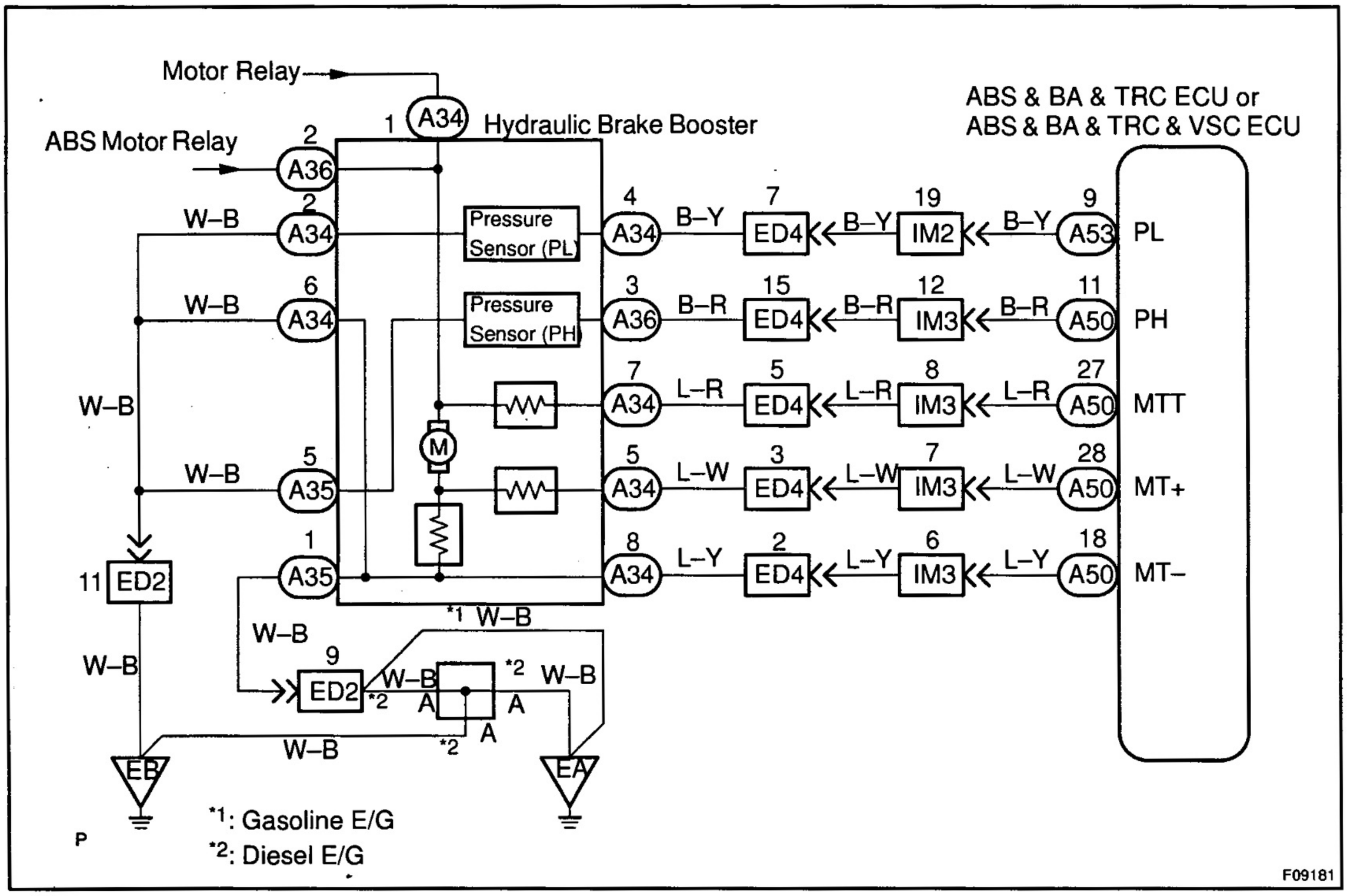

INSPECTION PROCEDURE

1	**Check accumulator operation.**

PREPARATION:

(a) Turn the ignition switch OFF, and depress the brake pedal 40 times or more.

HINT:

When a pressure in power supply system is released, reaction force becomes heavy and stroke becomes shorter.

(b) Install the LSPV gauge (SST) to rear brake caliper and bleed air.

SST 09709–29018

CHECK:

Depress the brake pedal with force of more than 490 N (50 kgf, 110 lbf) and turn the ignition switch ON, then check the rear brake caliper pressure when an increase of pressure changes from acutely to mildly.

OK:

5,099 – 8,924 kPa (52 – 91 kgf/cm^2, 740 – 1,294 psi) at 20°C (68°F)

HINT:

If the value is not within the standard, cool the engine room and check it again.

NG → **Replace accumulator.**

OK

2	**Check operation of hydraulic brake booster pump motor.**

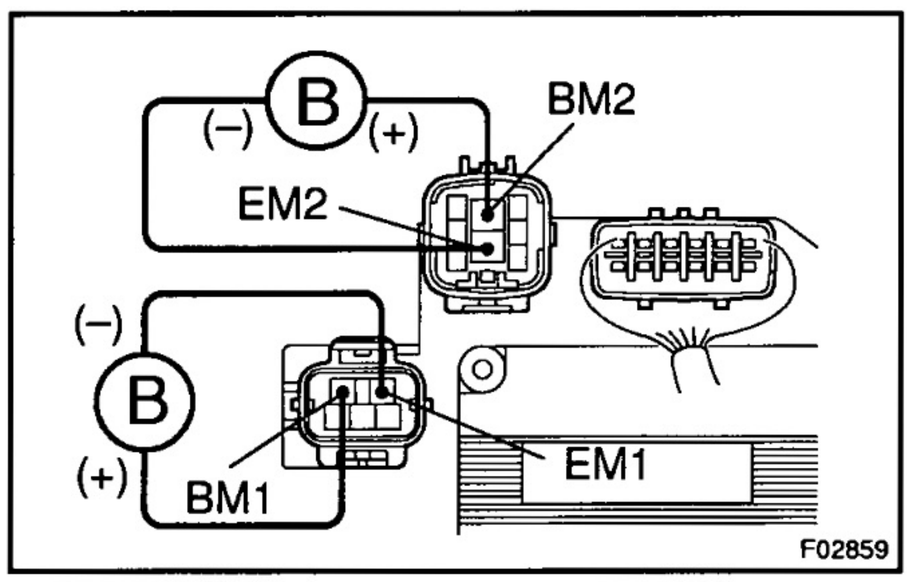

PREPARATION:

Disconnect the 2 connectors from the hydraulic brake booster.

CHECK:

Connect battery positive ⊕ lead to BM1 or BM2 terminal and battery negative ⊖ lead to EM1 or EM2 terminal of the hydraulic brake booster (pump motor) connector.

OK:

The operation sound of the pump motor should be heard.

NG → **Go to step 7.**

OK

3	Check pressure switch (PH) operation.

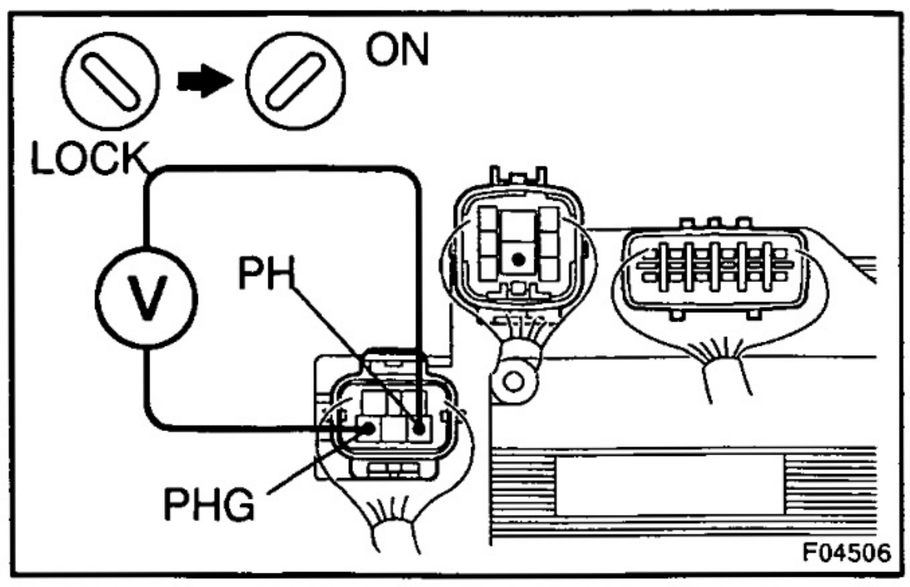

PREPARATION:

(a) Turn the ignition switch OFF, and depress the brake pedal 40 times or more.

HINT:

When a pressure in power supply system is released, reaction force becomes heavy and stroke becomes shorter.

(b) Install the LSPV gauge (SST) to the rear brake caliper and bleed air.

SST 09709–29018

CHECK:

While checking the voltage between terminals PH and PHG of hydraulic brake booster, depress the brake pedal with force of more than 490 N (50 kgf, 110 lbf) and turn the ignition switch ON, then check the rear wheel cylinder pressure when voltage changes from 6 V to 0 V.

OK:

12,553 – 20,104 kpa (128 – 205 kgf·cm^2, 1,820 – 2,916 psi)

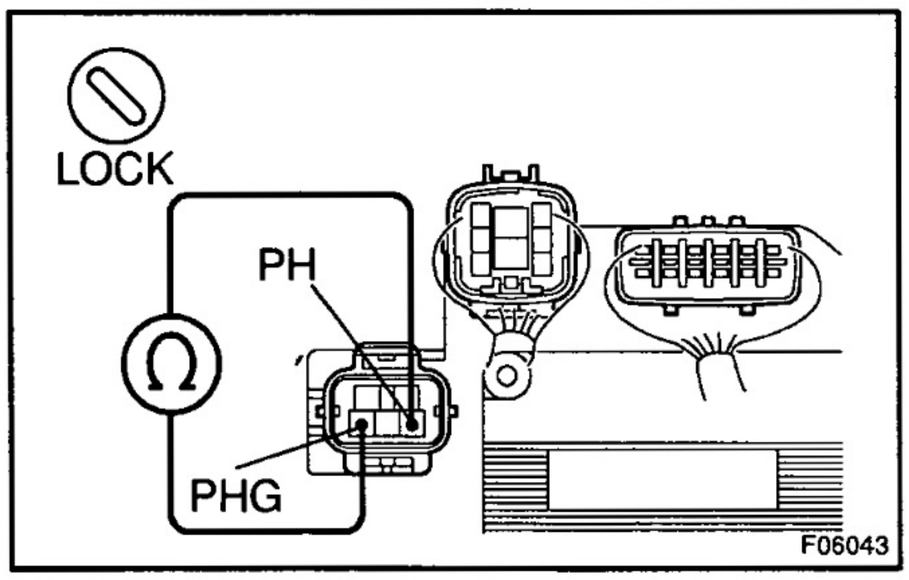

PREPARATION:

Turn the ignition switch OFF and disconnect the connector (5P) from the hydraulic brake booster.

CHECK:

While checking the resistance between terminals PH and PHG, depress the brake pedal changing the force in the range of 197 N (20 kgf, 44 lbf) to 490 N (50 kgf, 110 lbf) and check the rear wheel cylinder pressure when resistance changes from 0 kΩ to 1 kΩ between PH and PHG.

OK:

11,964 – 18,240 kpa (122 – 186 kgf·cm^2, 1,735 – 2,645 psi)

HINT:

After inspection, connect the connector, fill brake reservoir with brake fluid and clear the DTC (See page DI–86).

OK	Go to step 5.

NG

4	Check for open circuit in harness and connector between pressure switch (PH) and ABS & BA & TRC ECU or ABS & BA & TRC & VSC ECU (See page IN–33).

NG	Repair or replace harness or connector.

OK

Replace hydraulic brake booster assembly.

5	**Check pressure switch (PL) operation.**

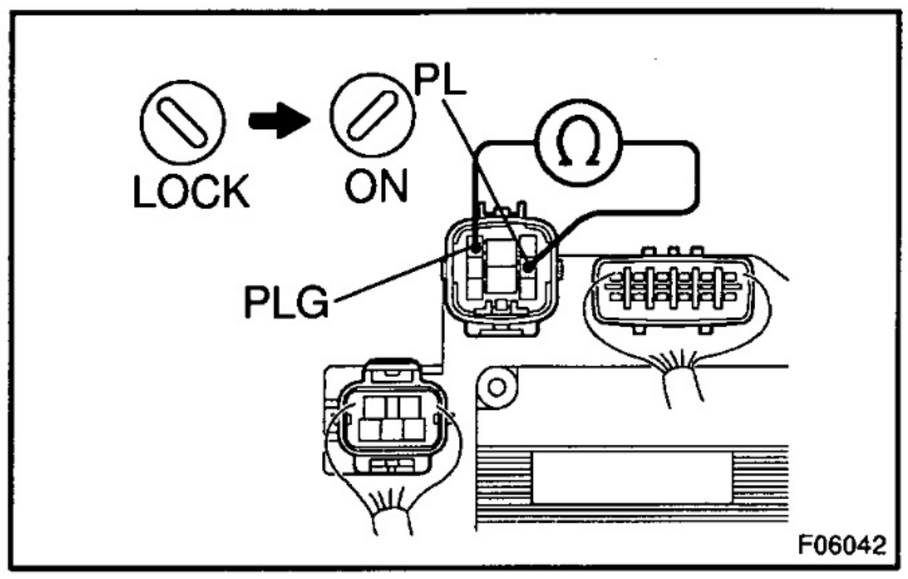

PREPARATION:

(a) Turn the motor switch OFF, and depress the brake pedal 40 times or more.

HINT:

When a pressure in power supply system is released, reaction force becomes heavy and stroke becomes shorter.

(b) Install the LSPV gauge (SST) to the rear brake caliper and bleed air.
SST 09709 –29018

(c) Disconnect the connector (8P) from the hydraulic brake booster.

CHECK:

While checking the resistance between terminals PL and PLG of hydraulic brake booster, depress the brake pedal with force of more than 490 N (50 kgf, 110 lbf) and turn the ignition switch ON, then check the rear wheel cylinder pressure when the resistance changes from 5.7 kΩ to 1.0 kΩ.

OK:

9,022 – 15,102 kpa (92 – 154 kgf·cm^2, 1,308 – 2,190 psi)

PREPARATION:

Turn the ignition switch OFF and disconnect the connector (8P) from the hydraulic brake booster.

CHECK:

While checking the resistance between terminals PL and PLG of hydraulic brake booster, depress the brake pedal changing the force in the range of 197 N (20 kgf, 44 lbf) to 490 N (50 kgf, 110 lbf) and check the rear wheel cylinder pressure when resistance changes from 1.0 kΩ to 5.7 kΩ.

OK:

8,532 – 13,337 kpa (87 – 136 kgf·cm^2, 1,237 – 1,934 psi)

HINT:

After inspection, connect the connector, fill brake reservoir with brake fluid and clear the DTC (See page DI–86).

NG → **Replace hydraulic brake booster assembly.**

OK

6	**Check pressure switch (PH) and pressure switch (PL)**

CHECK:

Compare the pressure value of the rear wheel cylinder measured in check pressure switch (PL) operation with the one measured in check pressure switch (PH) operation.

OK:

- **Pressure when the voltage between PH and PHG becomes 6 to 0 V > pressure when the resistance between PL and PLG becomes 5.7 kΩ to 1.0 kΩ.**
- **Pressure when the resistance between PH and PHG becomes 0 kΩ to 1 kΩ > pressure when the resistance between PL and PLG becomes 1.0 kΩ to 5.7 kΩ.**

NG → **Replace hydraulic brake booster assembly.**

OK

Check and replace ABS & BA & TRC ECU or ABS & BA & TRC & VSC ECU.

7	**Check for open or short circuit in harness and connector between hydraulic brake booster pump motor and hydraulic brake booster (See page IN–33).**

NG → **Replace wire harness.**

OK

8	**Check hydraulic brake booster pump motor (See page BR–25).**

NG → **Replace hydraulic brake booster pump motor.**

OK

Replace hydraulic brake booster.

DI6BX–01

DTC	C1257 / 57	Power Supply Drive Circuit

CIRCUIT DESCRIPTION

DTC No.	DTC Detecting Condition	Trouble Area
C1257 / 57	When malfunction inside ECU is detected.	• Battery • Power source circuit • ABS & BA & TRC ECU or ABS & BA & TRC & VSC ECU

WIRING DIAGRAM

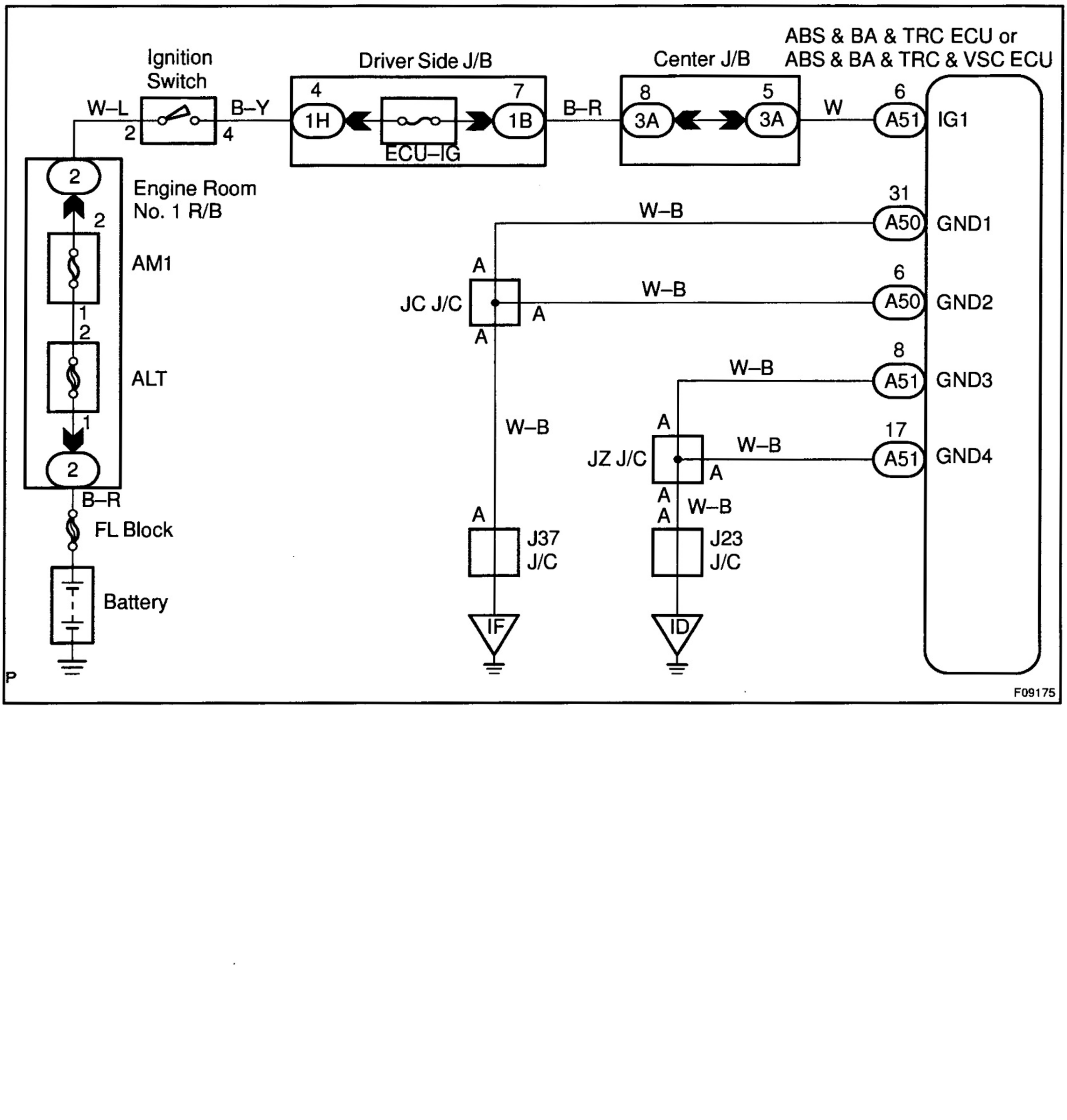

INSPECTION PROCEDURE

1	**Check battery voltage.**

OK:

Voltage: 10 – 14 V

NG → **Check and repair the charging system.**

OK

2	**Check voltage of the ECU IG power source.**

In case of using the hand–held tester:

PREPARATION:

(a) Connect the hand–held tester to the DLC3.
(b) Turn the ignition switch ON and push the hand–held tester main switch ON.
(c) Select the DATALIST mode on the hand–held tester.

CHECK:

Check the voltage condition output from the ECU displayed on the hand–held tester.

OK:

"Normal" is displayed.

In case of not using the hand–held tester:

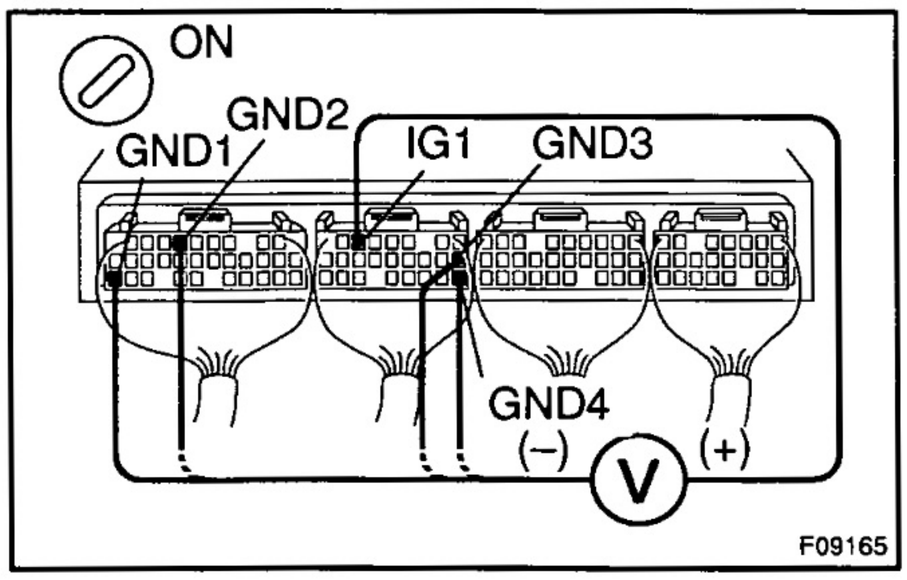

PREPARATION:

Remove ABS & BA & TRC ECU or ABS & BA & TRC & VSC ECU with connectors still connected.

CHECK:

(a) Turn the ignition switch ON.
(b) Measure voltage between terminals IG1 and GND of ABS & BA & TRC ECU or ABS & BA & TRC & VSC ECU connector.

OK:

Voltage: 10 – 14 V

OK → **Turn ignition switch OFF, check and replace ABS & BA & TRC ECU or ABS & BA & TRC & VSC ECU.**

NG

3	**Check continuity between terminal GND of ABS & BA & TRC ECU or ABS & BA & TRC & VSC ECU connector and body ground.**

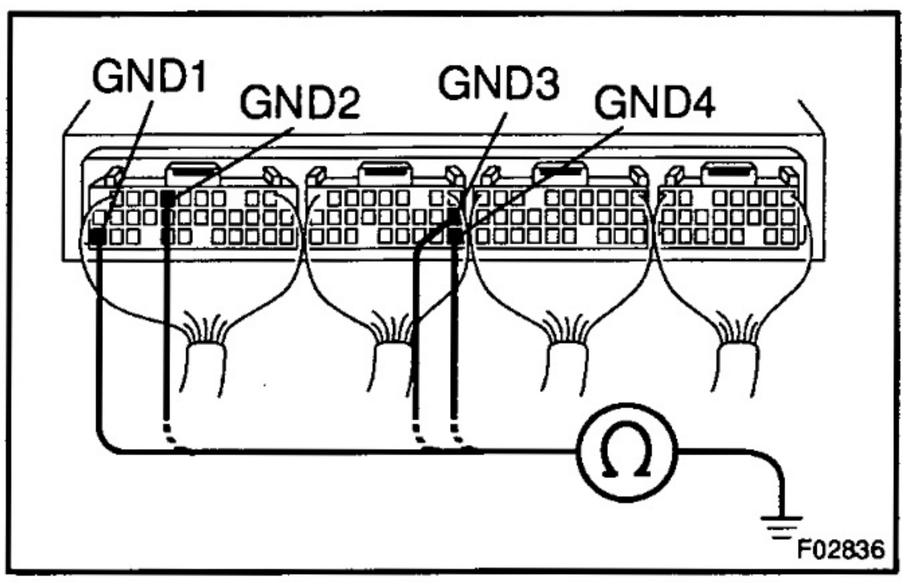

CHECK:

Measure resistance between terminal GND of ABS & BA & TRC ECU or ABS & BA & TRC & VSC ECU connector and body ground.

OK:

Resistance: 1 Ω or less

NG → **Repair or replace harness or connector.**

OK

4	**Check ECU–IG fuse.**

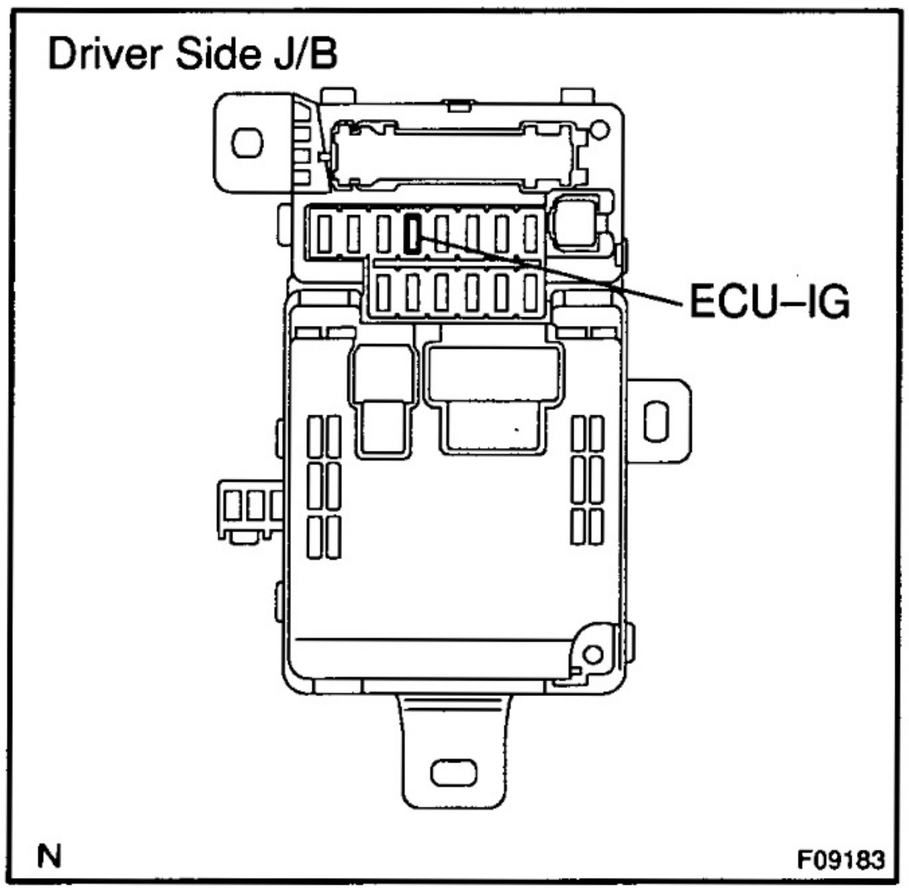

PREPARATION:

Remove ECU–IG fuse from the driver side J/B.

CHECK:

Check continuity of ECU–IG fuse.

OK:

Continuity

NG → **Check for short circuit in all the harness and components connected to ECU–IG fuse (See attached wiring diagram).**

OK

Check for open circuit in harness and connector between ABS & BA & TRC ECU or ABS & BA & TRC & VSC ECU and battery (See page IN–33).

DI8BY–01

DTC	C1268 / 68	Transfer L4 Position Switch Circuit

CIRCUIT DESCRIPTION

DTC No.	DTC Detecting Condition	Trouble Area
C1268 / 68	Open or short circuit in transfer L4 position switch circuit.	• Transfer L4 position switch • Transfer L4 indicator switch circuit

WIRING DIAGRAM

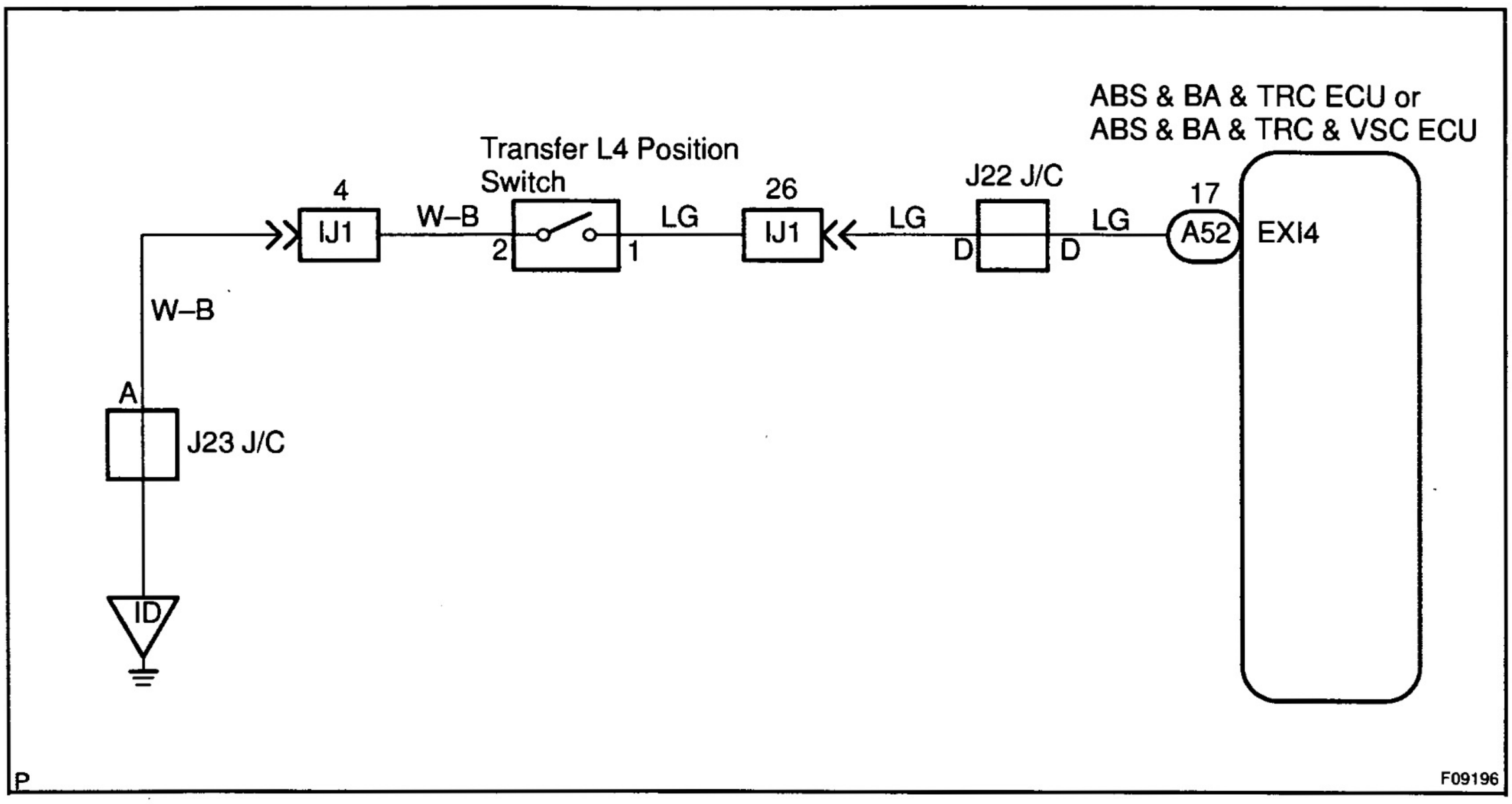

INSPECTION PROCEDURE

1	**Check voltage between terminal EXI4 of ABS & BA & TRC ECU or ABS & BA & TRC & VSC ECU and body ground.**

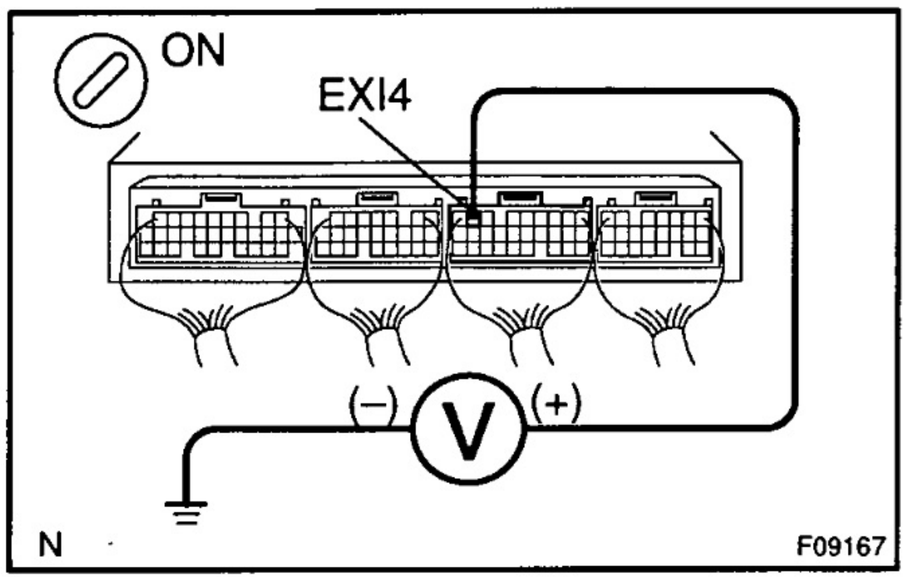

PREPARATION:

Remove ABS & BA & TRC ECU or ABS & BA & TRC & VSC ECU with connectors still connected.

CHECK:

(a) Turn the ignition switch ON.

(b) Measure voltage between terminal EXI4 of ABS & BA & TRC ECU or ABS & BA & TRC & VSC ECU and body ground when transfer in L4 position.

OK:

Voltage: 10 – 14 V

OK → **Proceed to next circuit inspection shown in problem symptoms chart (See page DI–100).**

NG

2	**Check transfer L4 position switch (See page TR–3).**

NG → **Replace transfer L4 position switch.**

OK

3	**Check for open or short circuit in harness and connector between transfer L4 position switch and ABS & BA & TRC ECU or ABS & BA &TRC & VSC ECU (See page IN–33).**

NG → **Repair or replace harness or connector.**

OK

4	**Check for open or short circuit in harness and connector between ABS & BA & TRC ECU or ABS & BA & TRC & VSC ECU and engine and ECT ECU (See page IN–33).**

NG → **Repair or replace harness or connector.**

OK

Check and replace ABS & BA & TRC ECU or ABS & BA & TRC & VSC ECU.

DI6BZ–01

DTC	C1269 / 69	Neutral Start Switch Circuit (R range)

CIRCUIT DESCRIPTION

DTC No.	DTC Detecting Condition	Trouble Area
C1269 / 69	With the vehicle speed less than 15 km/h (9 mph) when an open circuit signal of R signal is detected for more than 2 sec.	• Neutral start switch • Neutral start switch circuit (R range)

WIRING DIAGRAM

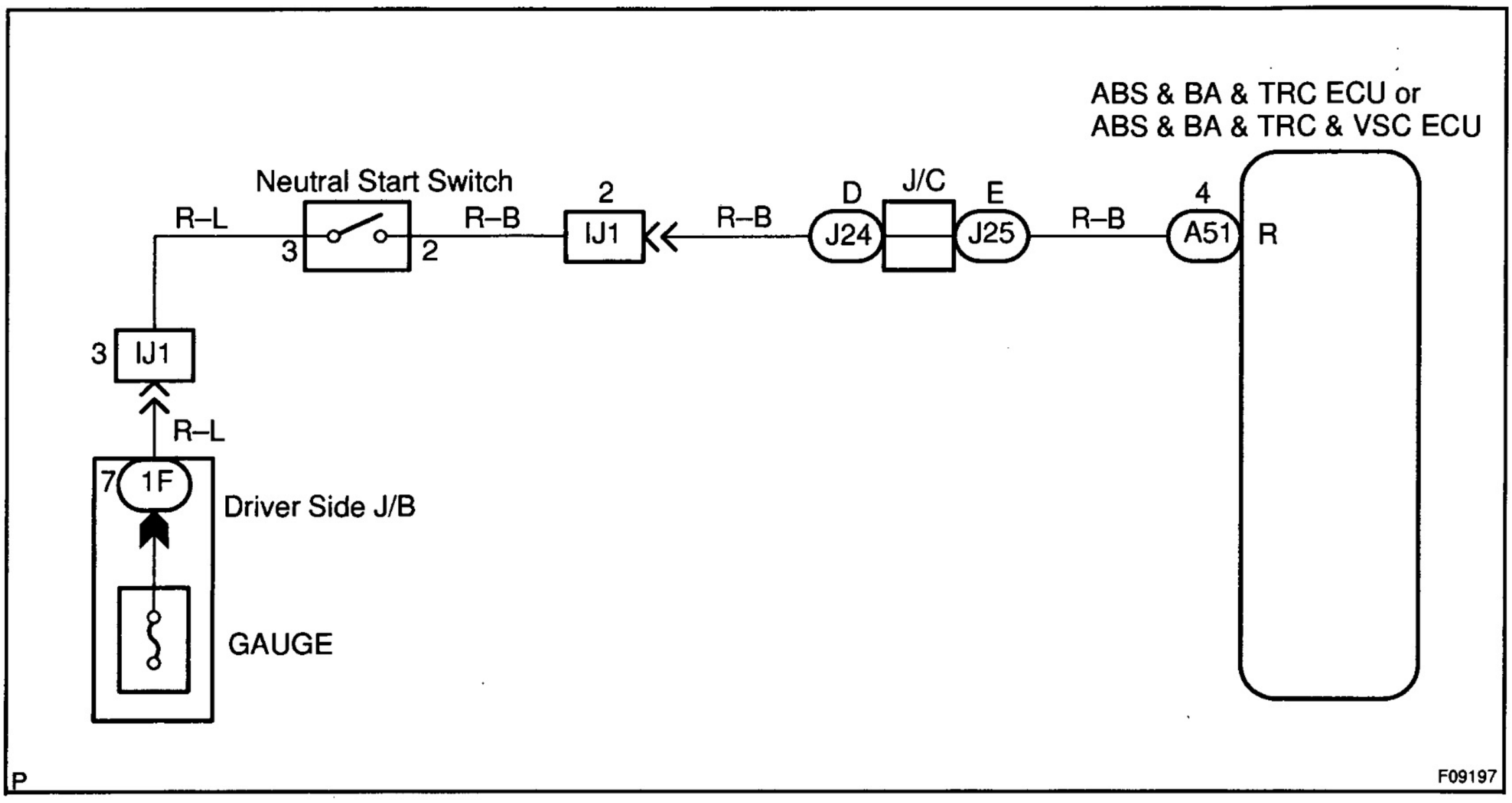

INSPECTION PROCEDURE

Start the inspection from step 1 in case of using the hand–held tester and start from step 2 in case of not using the hand–held tester.

1	**Check operation of the neutral start switch (R range) circuit.**

PREPARATION:

(a) Connect the hand–held tester to the DLC3.
(b) Turn the ignition switch ON and push the hand–held tester main switch ON.
(c) Select the ACTIVE TEST mode on the hand–held tester.

CHECK:

Shift lever into the R range, and read the R signal on the hand–held tester.

OK:

"ON" is displayed.

OK → **Check and replace ABS & BA & TRC ECU or ABS & BA & TRC & VSC ECU.**

NG

2	**Check neutral start switch (R range) (See page DI–4).**

NG → **Repair or replace neutral start switch.**

OK

3	Check voltage between terminal R of ABS & BA & TRC ECU or ABS & BA & TRC & VSC ECU and body ground.

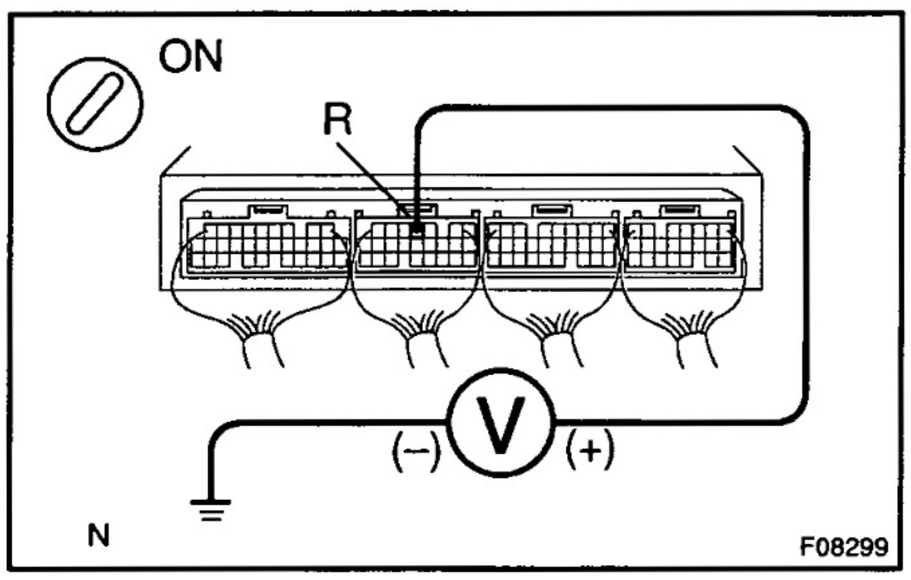

PREPARATION:

Remove ABS & BA & TRC ECU or ABS & BA & TRC & VSC ECU with connectors still connected.

CHECK:

(a) Turn the ignition switch ON.

(b) Measure voltage between terminal R of ABS & BA & TRC ECU or ABS & BA & TRC & VSC ECU and body ground when brake pedal is depressed.

OK:

Voltage: 10 – 14 V

NG → **Go to step 4.**

OK

If the same code is still output after the DTC is deleted, check the contact condition of each connection. If the connections are normal, the ECU may be defective.

4	Check for open circuit in harness and connector between neutral start switch (R range) and ABS & BA & TRC ECU or ABS & BA & TRC & VSC ECU (See page IN–33).

NG → **Repair or replace harness or connector.**

OK

Check and replace ABS & BA & TRC ECU or ABS & BA & TRC & VSC ECU.

DI6C0–01

DTC	Always ON	Malfunction in ECU

CIRCUIT DESCRIPTION

DTC No.	DTC Detecting Condition	Trouble Area
Always ON	Either of the following 1. or 2. is detected: 1. The ECU connectors are OFF from the ECU. 2. There is a malfunction in the ECU internal circuit.	• Battery • IC regulator • Power source circuit • ABS & BA & TRC ECU or ABS & BA & TRC & VSC ECU

HINT:
There is a case that hand–held tester cannot be used when ECU is abnormal.
Fail safe function:
If trouble occurs in the ECU, the ECU cuts off current to the ABS solenoid relay and prohibits ABS & BA & TRC or ABS & BA & TRC & VSC controls. When fail safe function in ABS system is activated, "TRC" or "VSC" warning light and "VSC OFF" indicator light light up.

WIRING DIAGRAM

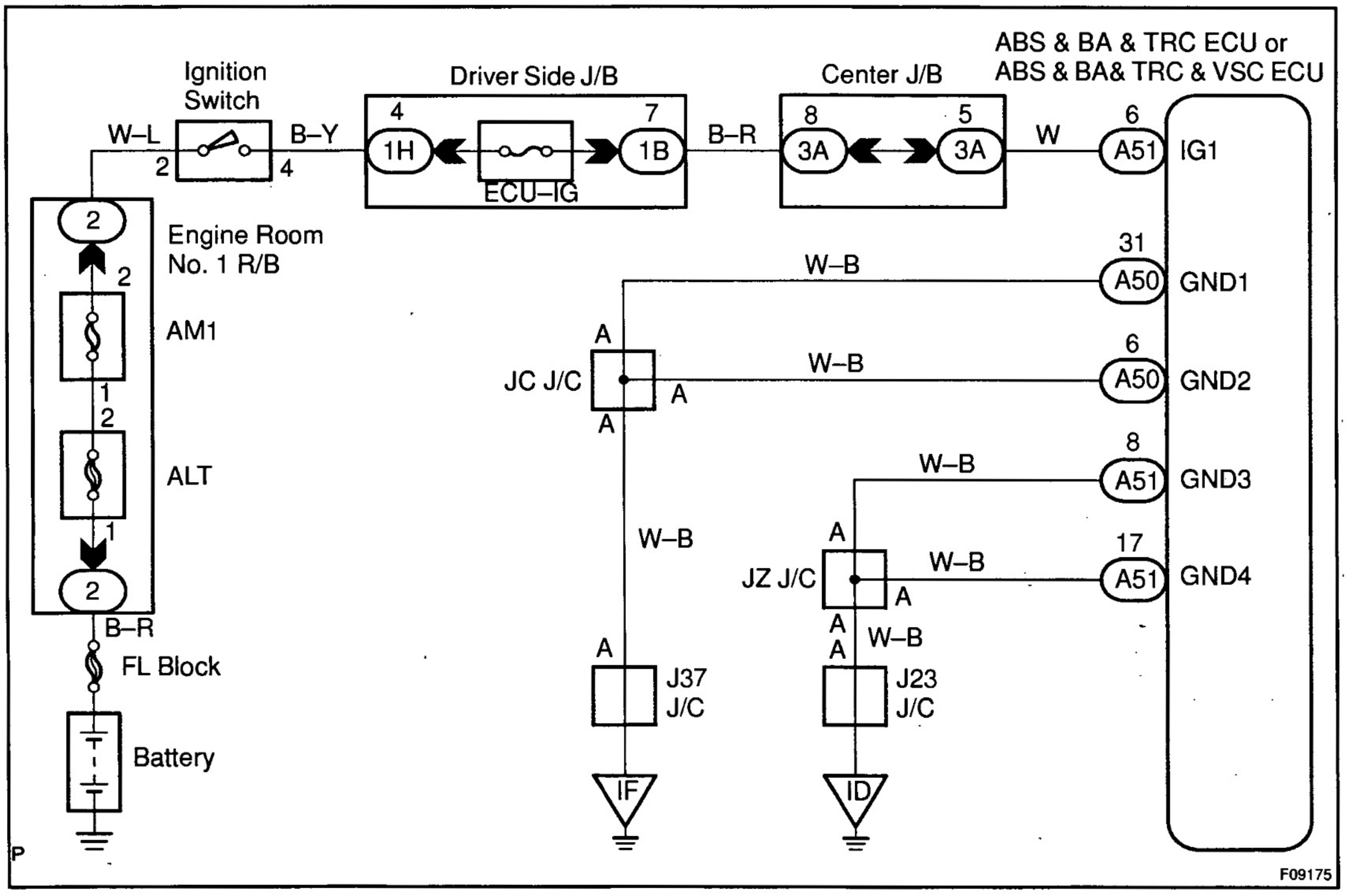

INSPECTION PROCEDURE

1	**Check that the ECU connectors are securely connected to the ECU.**

NO → **Connect the connector to the ECU.**

YES

2	**Is DTC output?**

Check DTC on page DI–86.

YES → **Repair circuit indicated by the output code.**

NO

3	**Does ABS warning light go off?**

YES → **Check for open or short circuit in harness and connector between ECU–IG fuse and ECU (See page IN–33).**

NO

4	**Check battery voltage.**

PREPARATION:
Start the engine.
CHECK:
Check the battery voltage.
OK:
Voltage: 10 – 14 V

NG → **Check and repair the charging system.**

OK

5	Check operation of the ABS warning light.

In case of using the hand–held tester:

PREPARATION:

(a) Connect the hand–held tester to the DLC3.
(b) Turn the ignition switch ON and push the hand–held tester main switch ON.
(c) Select the ACTIVE TEST mode on the hand–held tester.

CHECK:

Check that "ON" and "OFF" of the ABS warning light can be shown on the combination meter by the hand–held tester.

In case of not using the hand–held tester:

PREPARATION:

(a) Turn the ignition switch OFF.
(b) Disconnect the connector from the ABS & BA & TRC ECU or ABS & BA & TRC & VSC ECU.
(c) Turn the ignition switch ON.

CHECK:

Check the ABS warning light goes off.

OK → **Check and replace combination meter (See page BE–11).**

NG

6	Check for short circuit in harness and connector between combination meter and ABS & BA & TRC ECU or ABS & BA & TRC & VSC ECU (See page IN–33).

NG → **Repair and replace harness and connector.**

OK

Check and replace ABS & BA & TRC ECU or ABS & BA & TRC & VSC ECU.

DI6C1–01

ABS Warning Light Circuit

CIRCUIT DESCRIPTION

If the ECU detects trouble, it lights the ABS warning light while at the same time prohibiting ABS control. At this time, the ECU records a DTC in memory.
Connect terminals Tc and E_1 of the check connector to make the ABS warning light blink and output the DTC.

WIRING DIAGRAM

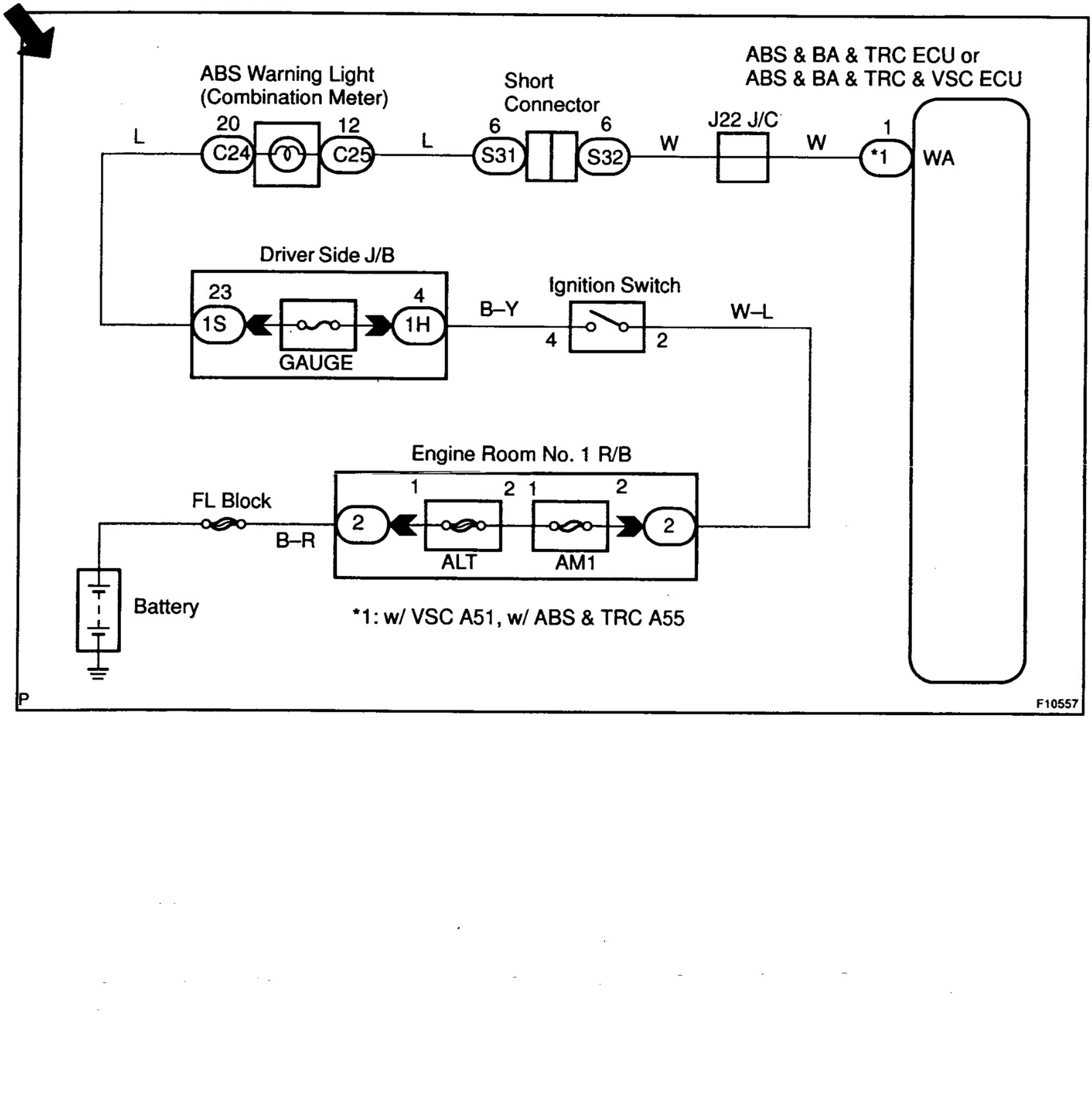

INSPECTION PROCEDURE

HINT:

Troubleshoot in accordance with the chart below for each trouble symptom.

ABS warning light does not light up	*1
ABS warning light remains on	*2

*1: Start the inspection from step 1 in case of using the hand–held tester and start from step 2 in case of not using hand–held tester.

*2: After inspection with step 4, start the inspection from step 5 in case of using the hand–held tester and start from step 6 in case of not using hand–held tester.

1	**Check operation of the ABS warning light.**

PREPARATION:

(a) Connect the hand–held tester to the DLC3.

(b) Turn the ignition switch ON and push the hand–held tester main switch ON.

(c) Select the ACTIVE TEST mode on the hand–held tester.

CHECK:

Check that "ON" and "OFF" of the ABS warning light can be shown on the combination meter on the hand–held tester.

OK → **Check and replace ABS & BA & TRC ECU or ABS & BA & TRC & VSC ECU.**

NG

2	**Check ABS warning light.**

See combination meter troubleshooting on page BE–11.

NG → **Repair bulb or combination meter assembly.**

OK

3	Check ABS solenoid relay.

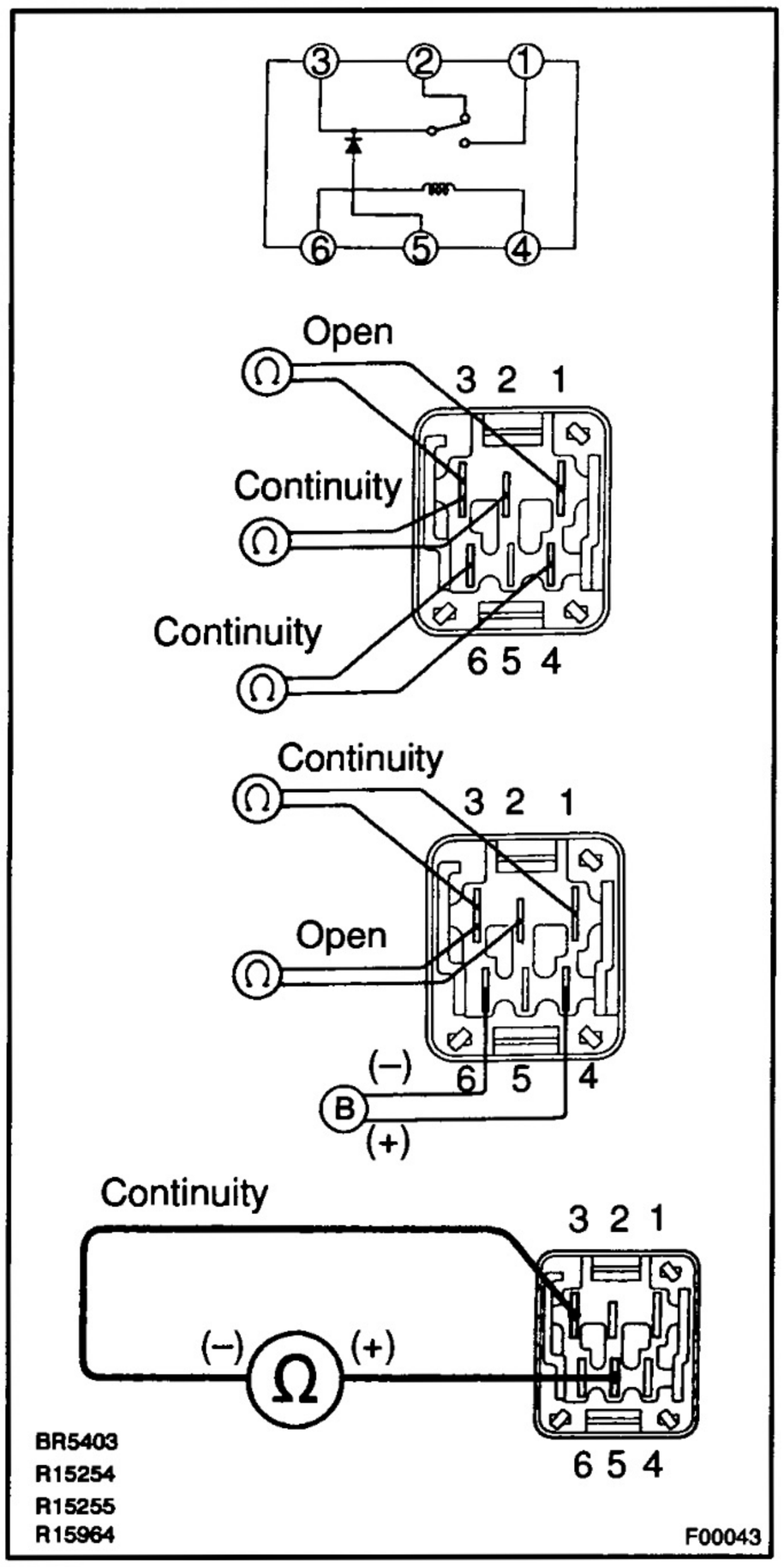

PREPARATION:

Remove ABS solenoid relay from engine room R/B.

CHECK:

Check continuity between each terminal of ABS solenoid relay.

OK:

Terminals 4 and 6	Continuity (Reference value 80 Ω)
Terminals 2 and 3	Continuity
Terminals 1 and 3	Open

CHECK:

(a) Apply battery voltage between terminals 4 and 6.

(b) Check continuity between each terminal of ABS solenoid relay.

OK:

Terminals 2 and 3	Open
Terminals 1 and 3	Continuity

CHECK:

Connect the ⊕ test lead to terminal 5 and the ⊖ lead to terminal 3. Check continuity between the terminals.

OK:

Continuity

If there is no continuity, connect the ⊖ test lead to terminal 5 and the ⊕ lead to terminal 3. Recheck continuity between terminals.

NG → **Replace ABS solenoid relay.**

OK →

Repair or replace and check for open circuit in harness and connector between check connector and ABS solenoid relay and body ground (See page BE–11).

4	Check that the ECU connectors are securely connected to the ECU.

NO → Connect the connector to the ECU.

YES

5	Check operation of the ABS warning light (See step 1).

OK → Check and replace ABS & BA & TRC ECU or ABS & BA & TRC & VSC ECU.

NG

6	Is DTC output?

Check DTC on page DI–86.

YES → Repair circuit indicated by the output code.

NO

7	Check ABS solenoid relay (See step 3).

NG → Replace ABS solenoid relay.

OK

Check for short circuit in harness and connector between check connector and ABS solenoid relay (See page IN–33).

DI6C2–01

Brake Warning Light Circuit

CIRCUIT DESCRIPTION

The brake warning light lights up while the brake fluid is insufficient and EBD is abnormally.

WIRING DIAGRAM

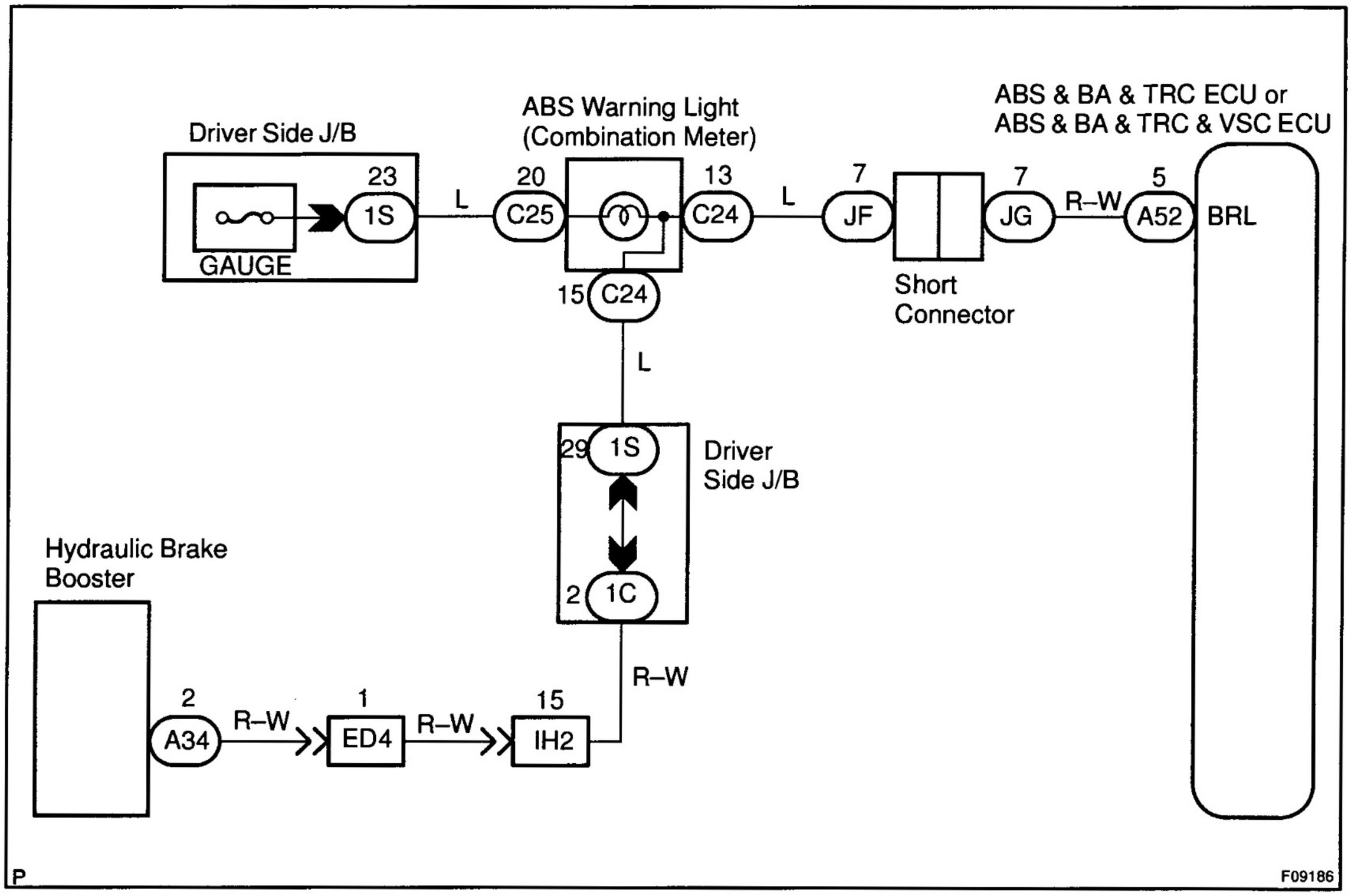

INSPECTION PROCEDURE

1	**Check parking brake switch circuit (See page BE–17).**

NG → **Repair or replace parking brake switch circuit.**

OK

2	**Check brake fluid level warning switch circuit (See page BE–17).**

NG → **Repair or replace brake fluid level warning switch circuit.**

OK

3	**Is DTC output for ABS ?**

Yes → **Repair circuit indicated by the output code.**

No

4	**Check brake warning light.**

See combination meter troubleshooting on page BE–11.

NG → **Repair or replace combination meter.**

OK

Check and replace ABS & BA & TRC ECU or ABS & BA & TRC & VSC ECU.

D6C3–01

Brake Warning Buzzer Circuit

CIRCUIT DESCRIPTION

The brake warning sounds while the accumulator pressure is abnormally low or an abnormality casing low fluid pressure occurs.

WIRING DIAGRAM

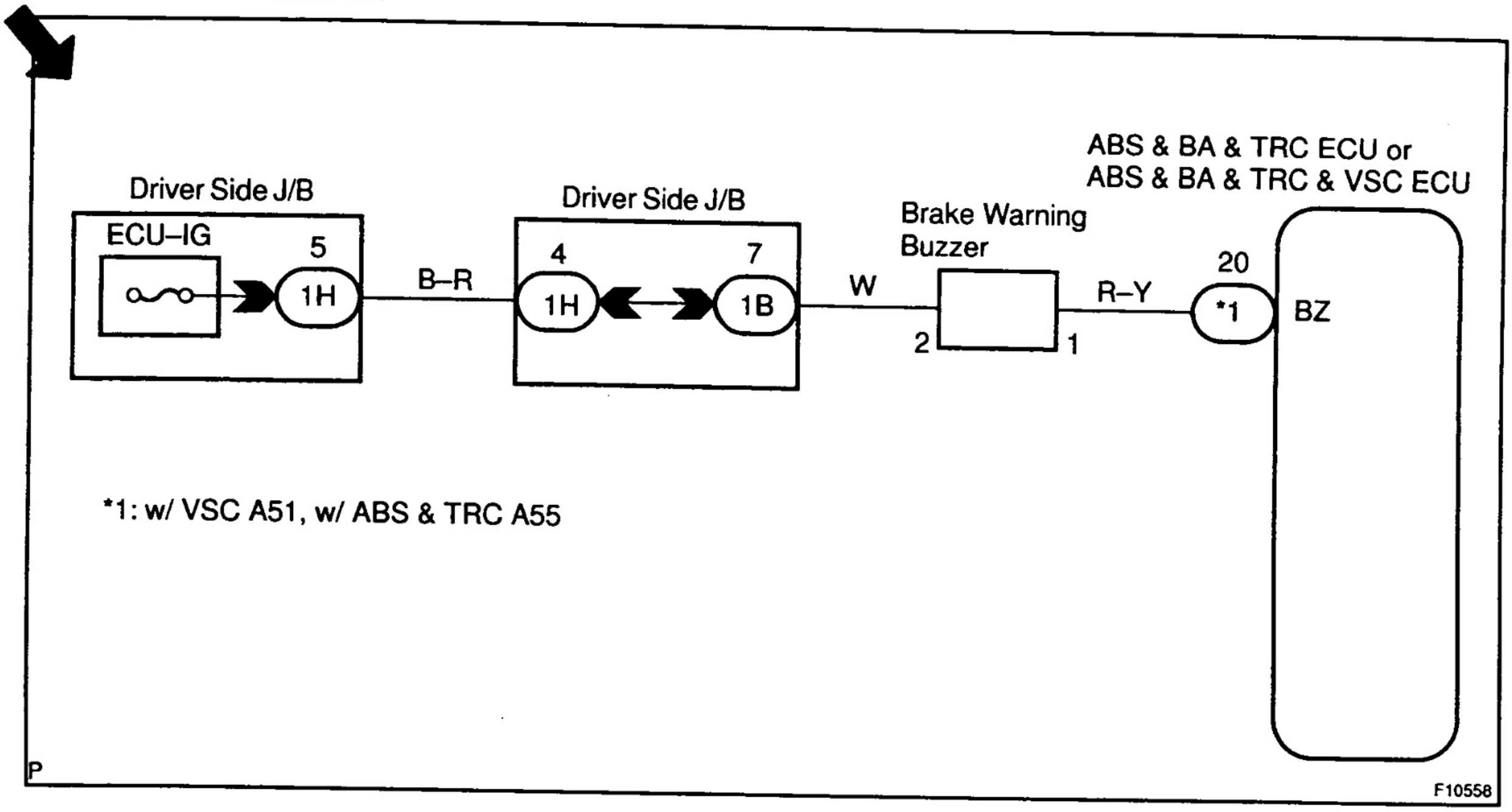

INSPECTION PROCEDURE

Start the inspection from step 1 in case of using the hand–held tester and start from step 2 in case of not using the hand–held tester.

1	**Check operation of the brake warning buzzer.**

PREPARATION:

(a) Connect the hand–held tester to the DLC3.
(b) Turn the ignition switch ON and push the hand–held tester main switch ON.
(c) Select the ACTIVE TEST mode on the hand–held tester.

CHECK:

Check that brake warning buzzer sounds "ON" and "OFF" with the hand–held tester.

OK → **Check and replace ABS & BA & TRC ECU or ABS & BA & TRC & VSC ECU.**

NG

2	**Check brake warning buzzer.**

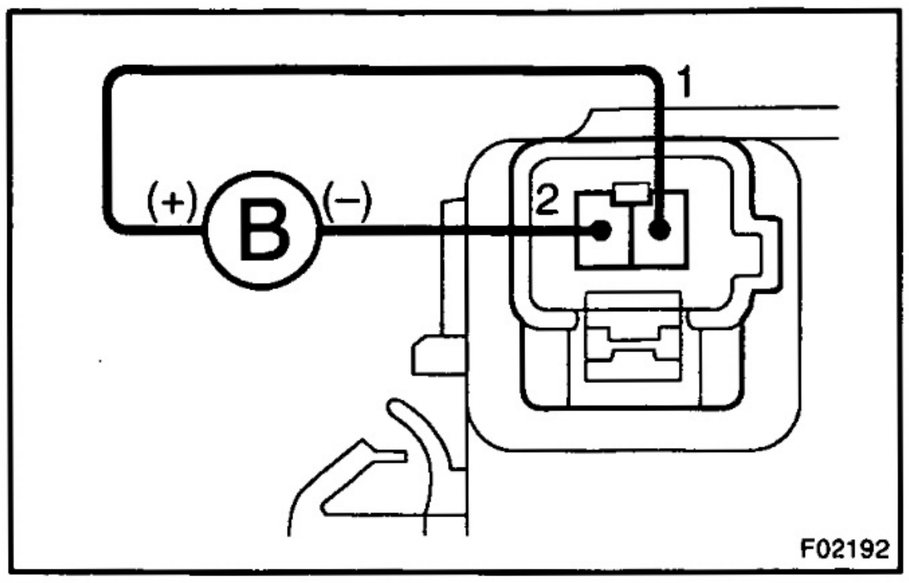

PREPARATION:

Disconnect the brake warning buzzer connector.

CHECK:

Apply battery positive voltage to the terminals 1 and 2 of brake warning buzzer connector, check that the brake warning buzzer sounds.

NG → **Replace brake warning buzzer.**

OK

3	**Check for open and short circuit in harness and connector between ABS & BA & TRC ECU or ABS & BA & TRC & VSC ECU and brake warning buzzer (See page IN–33).**

NG → **Repair or replace harness or connector.**

OK

Check and replace ABS & BA & TRC ECU or ABS & BA & TRC & VSC ECU.

DI6C4–01

Tc Terminal Circuit

CIRCUIT DESCRIPTION

Connecting terminals Tc and E_1 of the check connector causes the ECU to display the DTC by flashing the ABS warning light and TRC warning light or VSC TRC warning light.

WIRING DIAGRAM

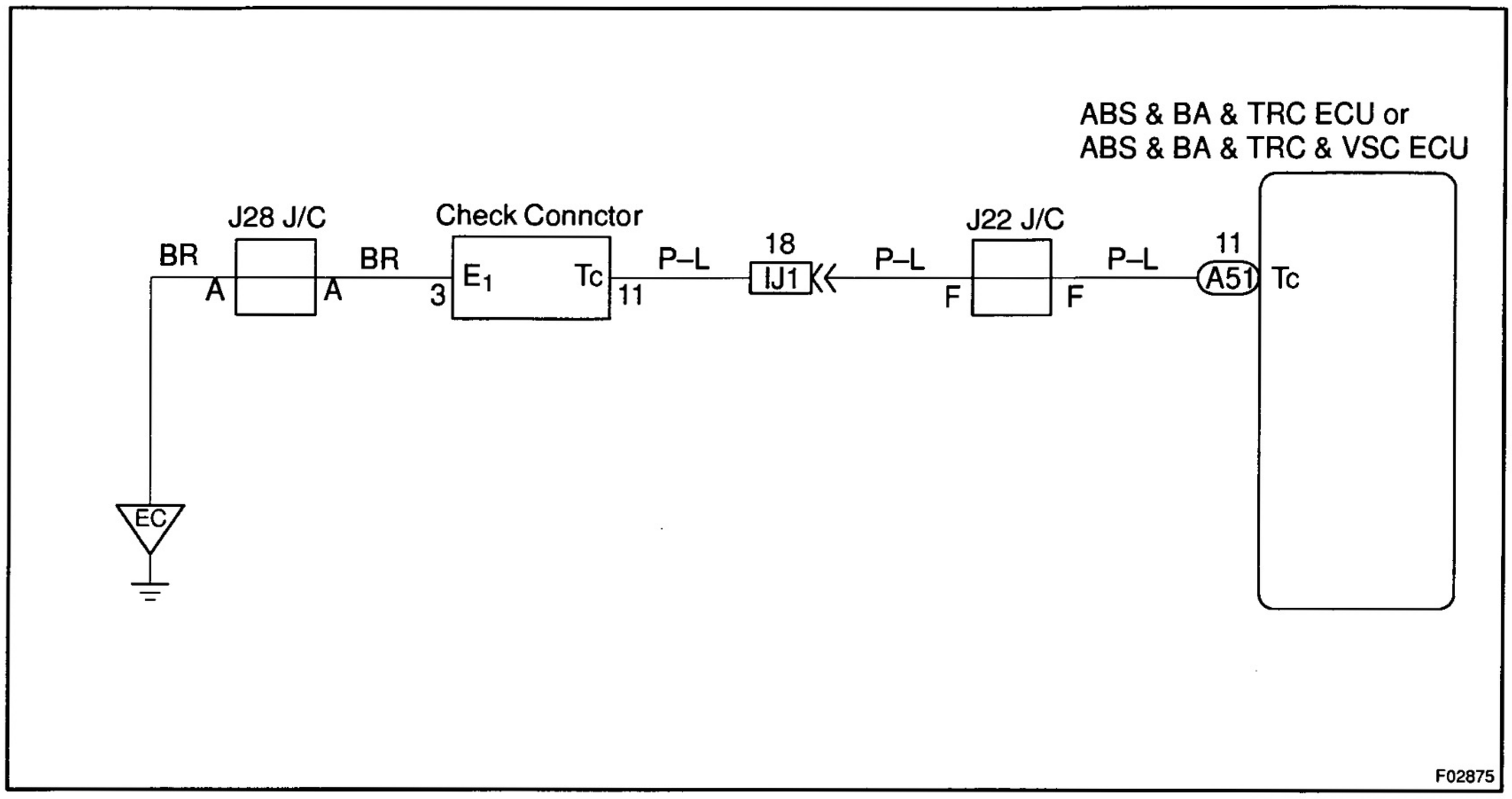

INSPECTION PROCEDURE

1	**Check voltage between terminals Tc and E_1 of check connector.**

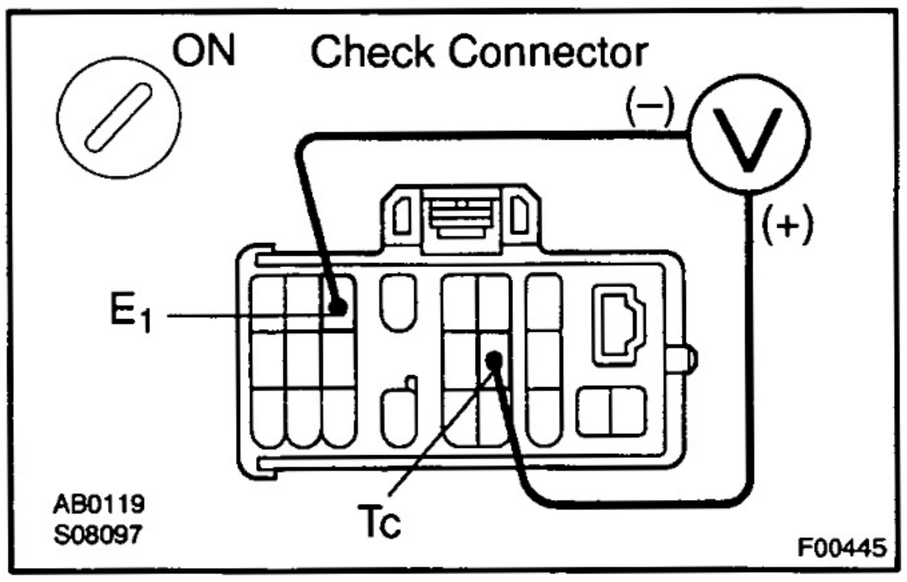

CHECK:

(a) Turn ignition switch ON.

(b) Measure voltage between terminals Tc and E_1 of check connector.

OK:

Voltage: 10 – 14 V

OK → **If ABS warning light does not blink even after Tc and E_1 have been connected, the ECU may be defective.**

NG

2	**IG switch OFF, and check for open and short circuit in harness and connector between ABS & BA & TRC ECU or ABS & BA & TRC & VSC ECU and check connector, check connector and body ground (See page IN–33).**

NG → **Repair or replace harness or connector.**

OK

Check and replace ABS & BA & TRC ECU or ABS & BA & TRC & VSC ECU.

DI6C5–01

Ts Terminal Circuit

CIRCUIT DESCRIPTION

The sensor check circuit detects abnormalities in the speed sensor signal which cannot be detected by the DTC check.
Connecting terminals Ts and E_1 of the check connector or Tc and CG of the DLC3 starts the check.

WIRING DIAGRAM

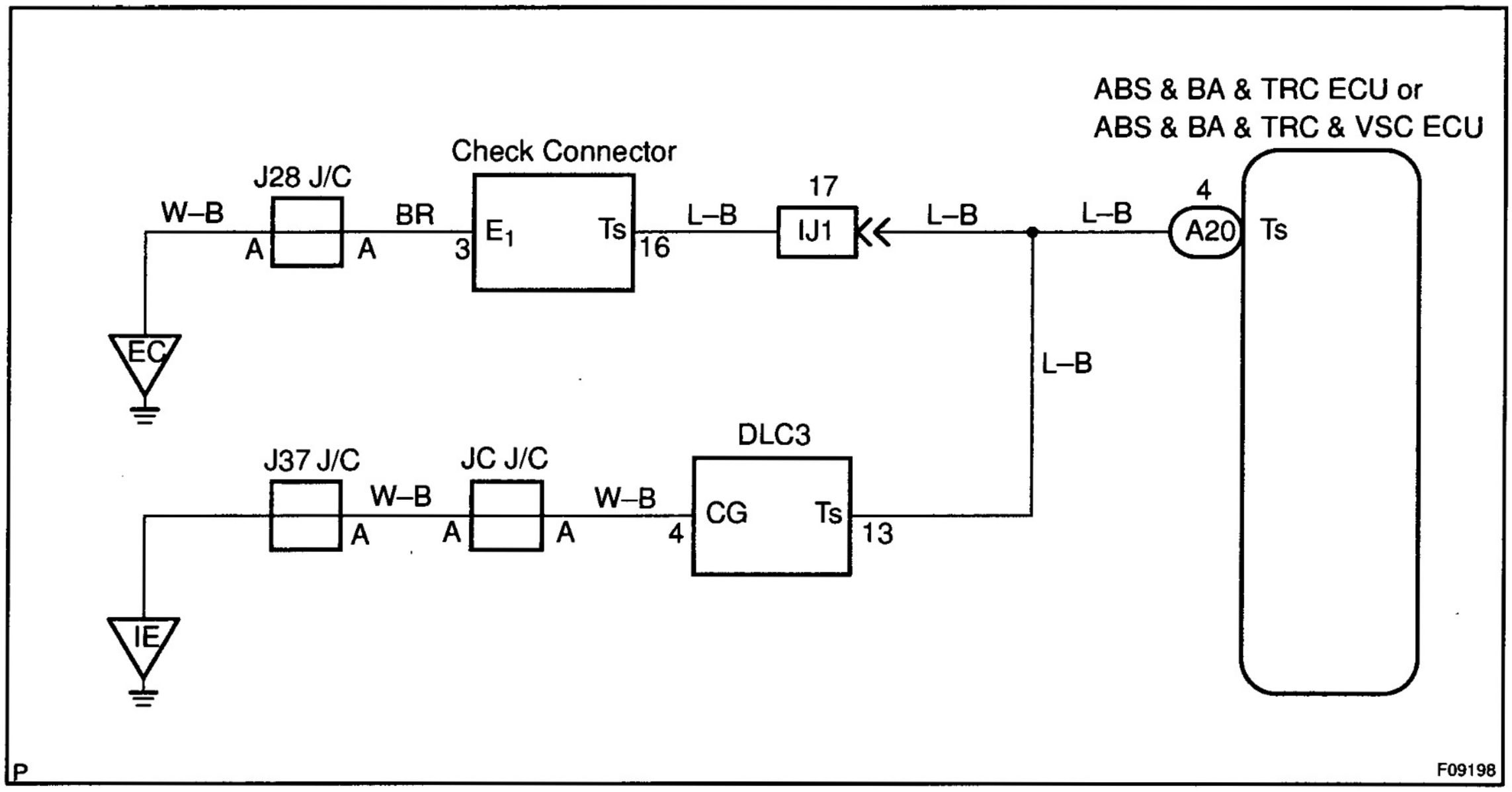

INSPECTION PROCEDURE

1	**Check voltage between terminals Ts and E_1 of check connector or Ts and CG of DLC3.**

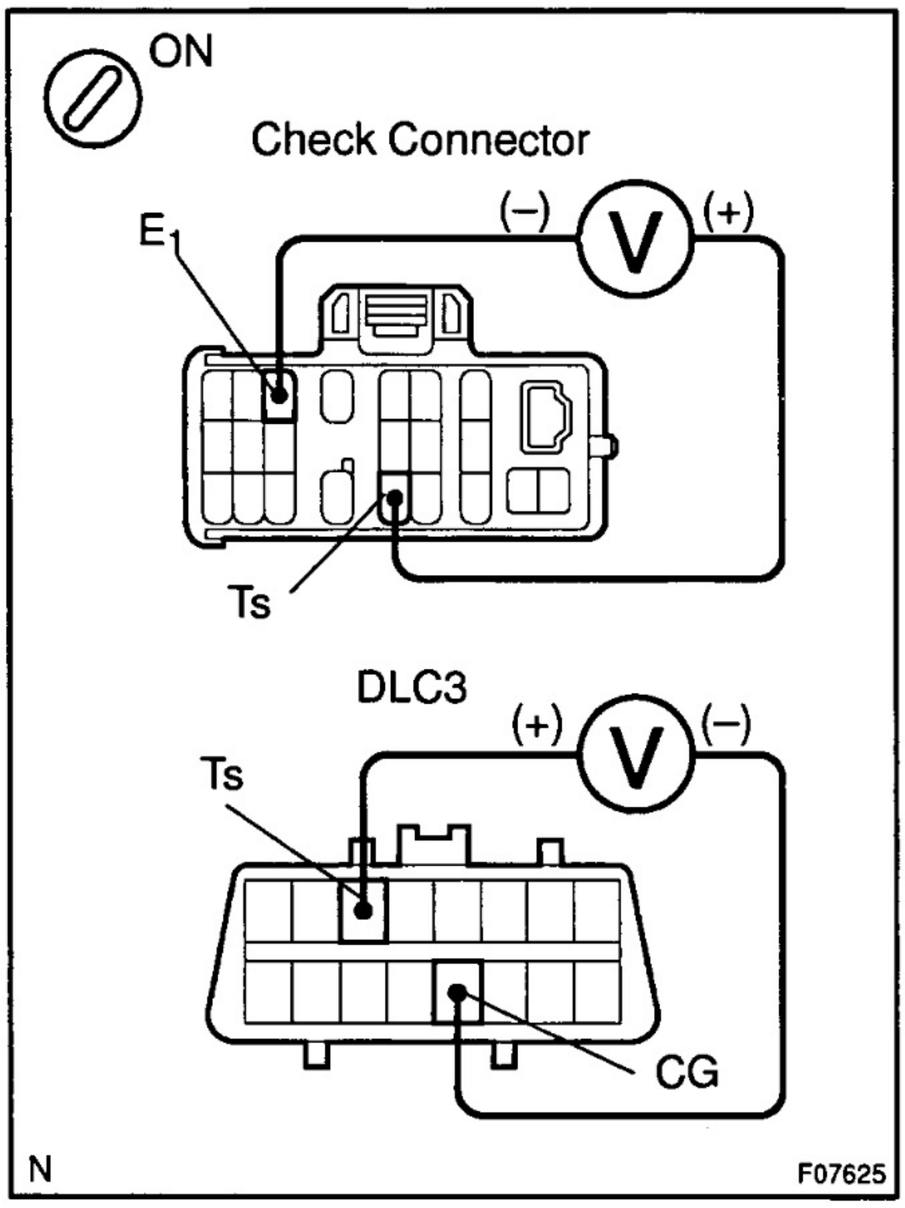

CHECK:

(a) Turn the ignition switch ON.

(b) Measure voltage between terminals Ts and E_1 of check connector or Ts and CG of DLC3.

OK:

Voltage: 10 – 14 V

OK → **If ABS warning light does not blink even after Ts and E_1 or Ts and CG have been connected, the ECU may be defective.**

NG

2	**IG switch OFF, and check for open and short circuit in harness and connector between ABS & BA & TRC ECU or ABS & BA & TRC & VSC ECU and check connector or DLC3, check connector or DLC3 and body ground (See page IN–33).**

NG → **Repair or replace harness or connector.**

OK

Check and replace ABS & BA & TRC ECU or ABS & BA & TRC & VSC ECU.

VEHICLE STABILITY CONTROL (VSC) & BRAKE ASSIST (BA) SYSTEM

DI5C6–01

HOW TO PROCEED WITH TROUBLESHOOTING

Troubleshooting in accordance with the procedure on the following pages.

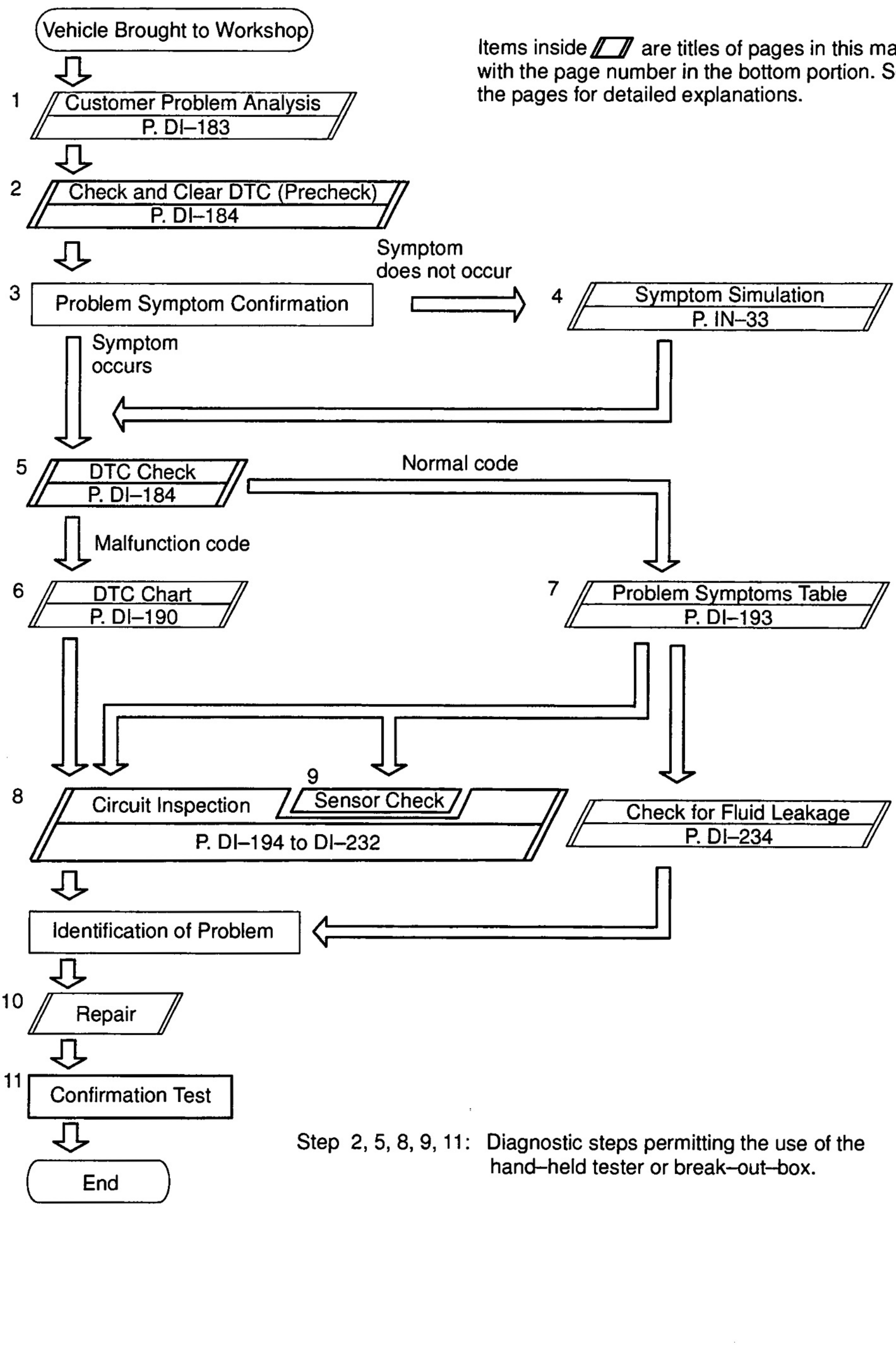

Items inside ▱ are titles of pages in this manual, with the page number in the bottom portion. See the pages for detailed explanations.

Step 2, 5, 8, 9, 11: Diagnostic steps permitting the use of the hand–held tester or break–out–box.

DI6C7-01

CUSTOMER PROBLEM ANALYSIS CHECK

TRC & VSC & BA Check Sheet

Inspector's Name :

Customer's Name		**Registration No.**	
		Registration Year	/ /
		Frame No.	
Date Vehicle Brought In	/ /	**Odometer Reading**	km miles

Date Problem First Occurred	/ /
Frequency Problem Occurs	☐ Continuous ☐ Intermittent (times a day)

Symptoms	☐ TRC does not operate. (Wheels spin when starting rapidly.)	
	☐ VSC does not operate. (Wheels sideslip at the time of sharp turning.)	
	☐ BA does not operate.	
	VSC OFF Indicator Light Abnormal	☐ Remains ON ☐ Does not Light Up
	VSC TRC Warning Light Abnormal	☐ Remains ON ☐ Does not Light Up
	SLIP Indicator Light Abnormal	☐ Remains ON ☐ Does not Light Up
	ACTIVE TRC Indicator Light Abnormal	☐ Remains ON ☐ Does not Light Up

Check Item	**ABS Warning Light**	☐ Normal ☐ Malfunction Code (Code)
	Malfunction Indicator Lamp	☐ Normal ☐ Malfunction Code (Code)
	Brake Warning Light Abnormal	☐ Remains ON ☐ Does not LIght Up
	VSC Warning Buzzer Abnormal	☐ Sounds ☐ Does not Sounds

DTC Check	**1st Time**	☐ Normal Code ☐ Malfunction Code (Code)
	2nd Time	☐ Normal Code ☐ Malfunction Code (Code)

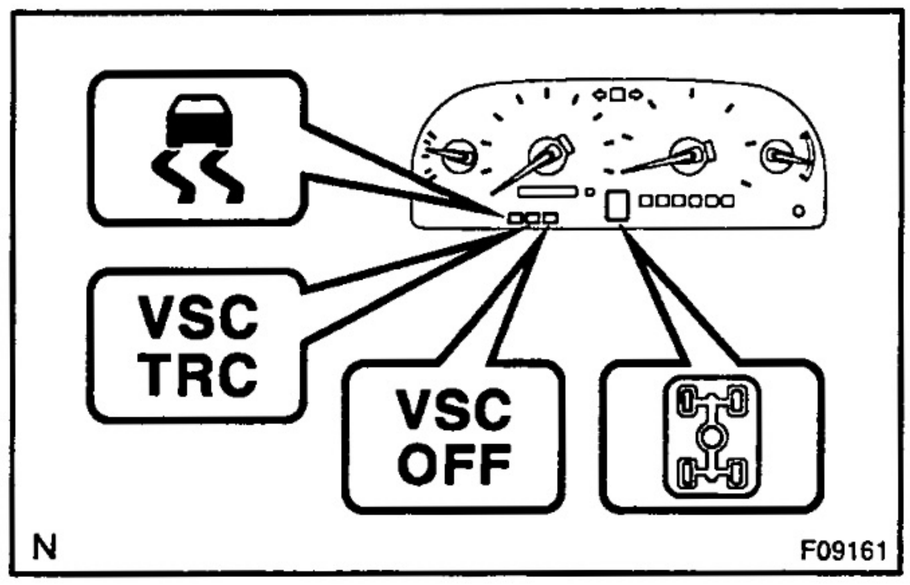

DI6C8–01

PRE–CHECK

1. DIAGNOSIS SYSTEM

(a) Check the warning lights and buzzer.

(1) Release parking brake lever.

(2) When the ignition switch is turned ON, check that the VSC TRC warning light, VSC OFF, SLIP and ACTIVE TRC indicator lights goes on for 3 sec.

(3) When depressing the brake pedal repeatedly it may turn on the warning lights and buzzer.

HINT:

- If the ECU stores DTC, VSC TRC warning light and VSC OFF indicator light is ON.
- If the indicator check result is not normal, proceed to troubleshooting for the VSC TRC warning light circuit, VSC OFF indicator light circuit, SLIP indicator light circuit and ACTIVE TRC indicator light circuit (See page DI–223, DI–227, DI–225 and DI–230).

(b) In case of not using hand–held tester:
Check the DTC.

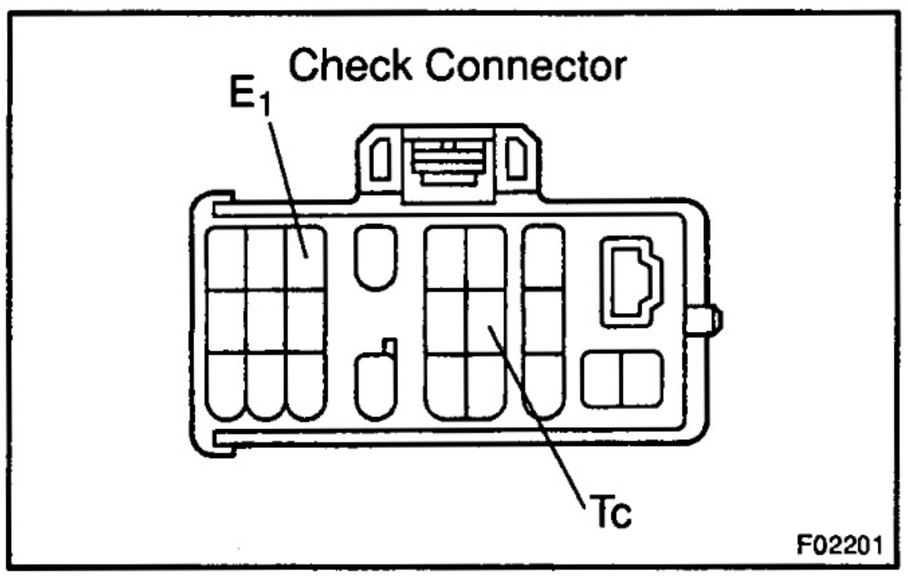

(1) Using SST, connect terminals Tc and E_1 of check connector.

SST 09843–18020

(2) Turn the ignition switch ON.

(3) Read the DTC from the VSC TRC warning light on the combination meter.

HINT:

- If no code appears, inspect the diagnostic circuit or VSC TRC warning light circuit (See page DI–178 or DI–223).
- As an example, the blinking patterns for normal code and codes 31 and 32 are shown on the left.

(4) Codes are explained in the code table on page DI–190.

(5) After completing the check, disconnect terminals Tc and E_1 of check connector, and turn off the display.

If 2 or more malfunctions are indicated at the same time the lowest numbered DTC will be displayed 1st.

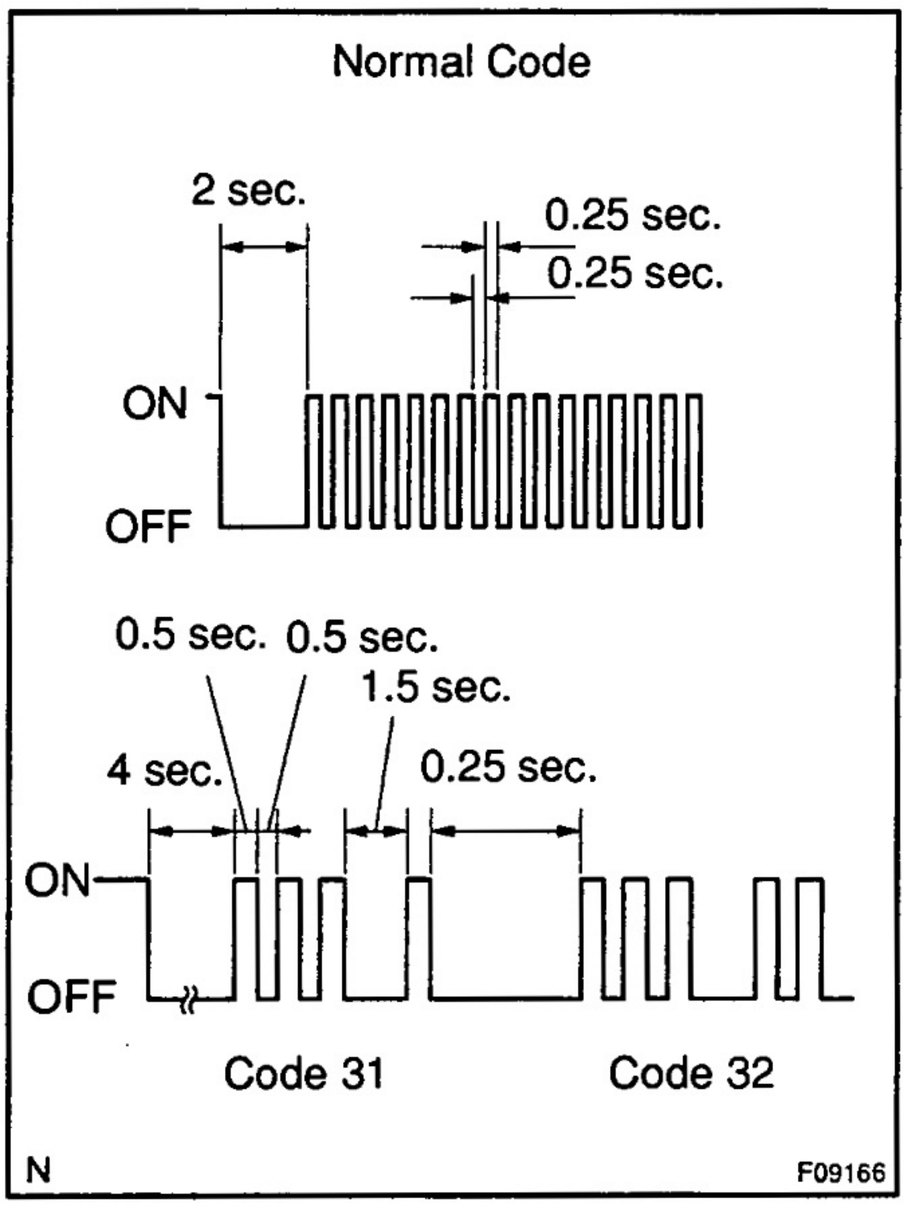

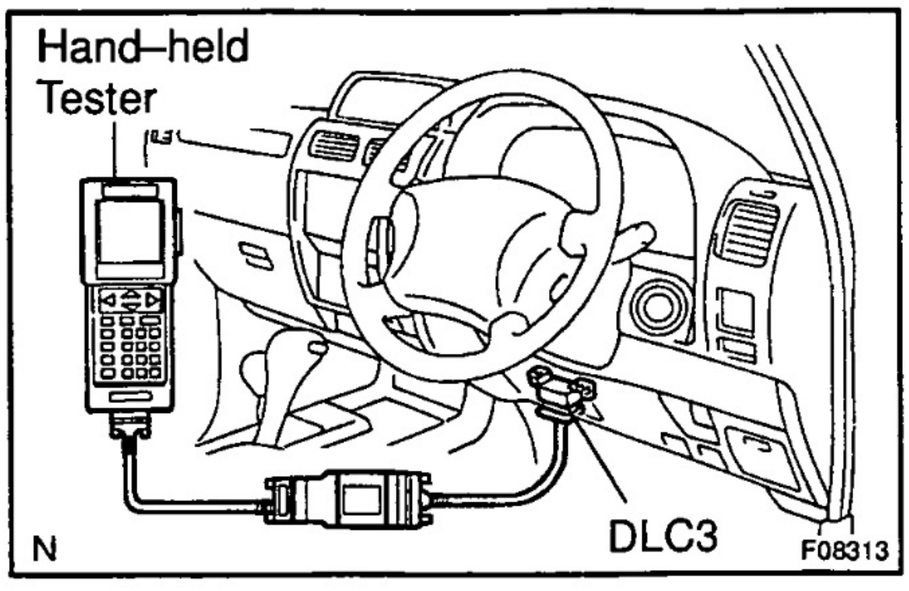

(c) In case of using hand–held tester:
Check the DTC.
(1) Hook up the hand–held tester to the DLC3.
(2) Turn the ignition switch ON.
(3) Read the DTC by following the prompts on the tester screen.

HINT:
Please refer to the hand–held tester operator's manual for further details.

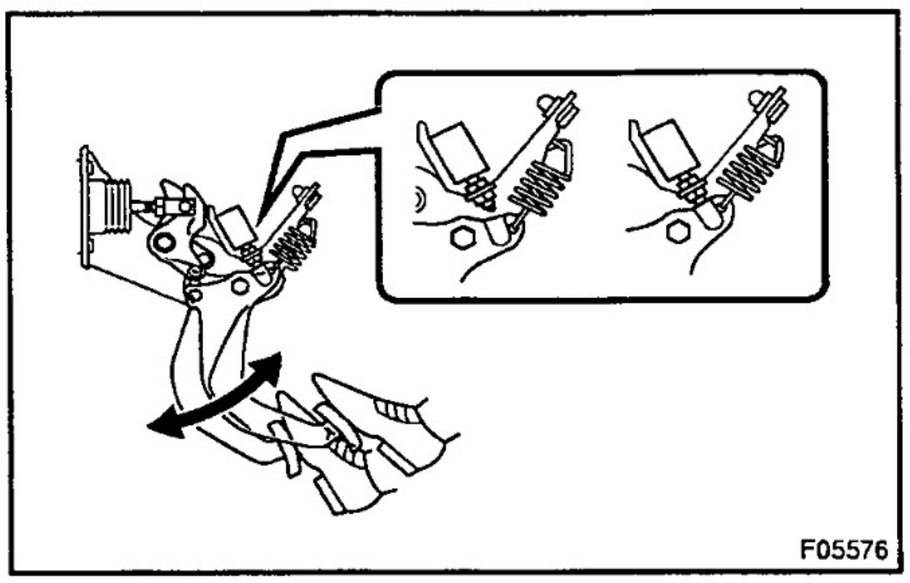

(d) In case of not using hand–held tester:
Clear the DTC.
(1) Using SST, connect terminals Tc and E_1 of check connector.
SST 09843–18020
(2) Turn the ignition switch ON.
(3) Clear the DTC stored in ECU by depressing the brake pedal 8 or more times within 5 sec.
(4) Check that the warning light shows the normal code.
(5) Remove the SST from the terminals of check connector.
SST 09843–18020

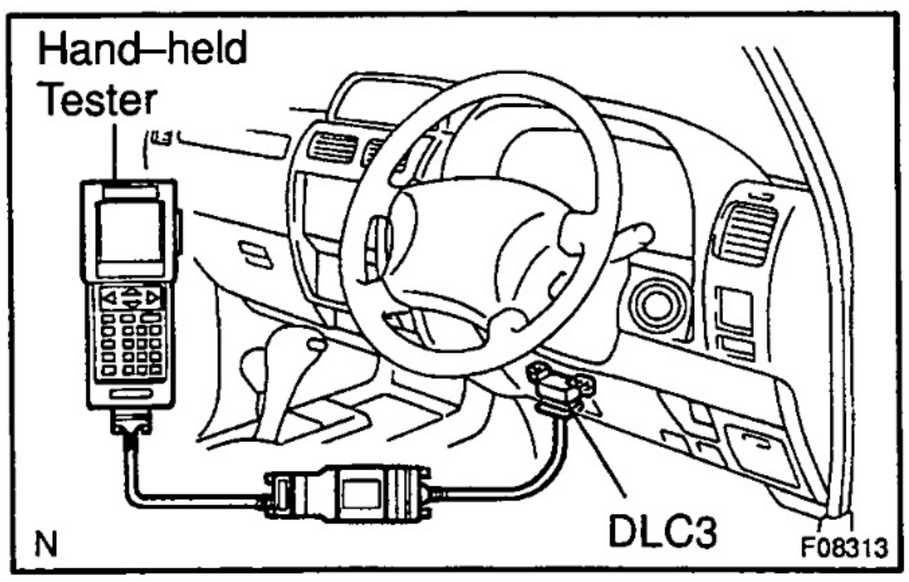

(e) In case of using hand–held tester:
Clear the DTC.
(1) Hook up the hand–held tester to the DLC3.
(2) Turn the ignition switch ON.
(3) Operate the hand–held tester to erase the codes.
(See hand–held tester operator's manual.)

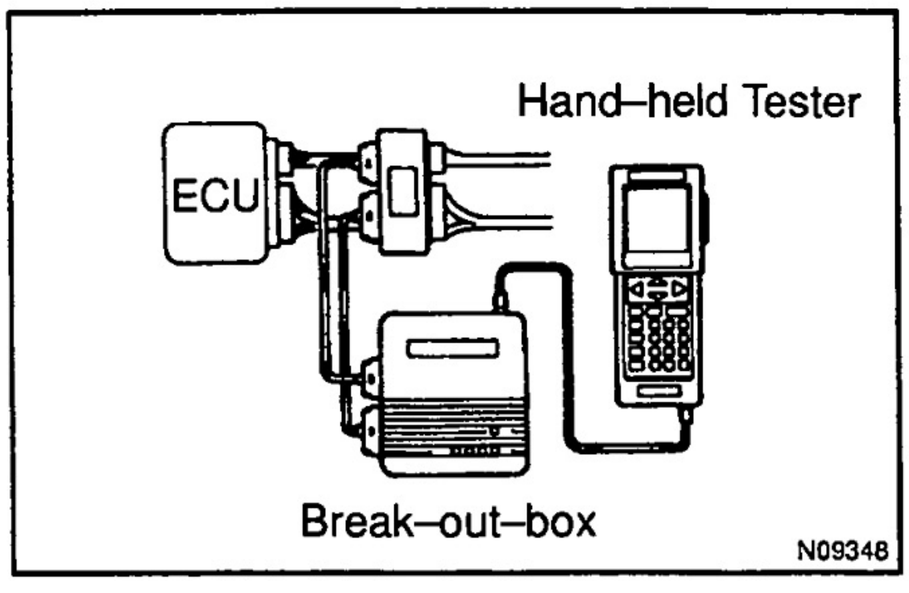

(f) Reference:
Using break–out–box and hand–held tester, measure the ECU terminal values.
(1) Turn the ignition switch OFF.
(2) Hook up the break–out–box and hand–held tester to the vehicle.
(3) Turn the ignition switch ON.
(4) Read the ECU input/output values by following the prompts on the tester screen.

HINT:

- Hand–held tester has a "Snapshot" function. This records the measured values and is effective in the diagnosis of intermittent problems.
- Please refer to the hand–held tester/break–out–box operator's manual for further details.

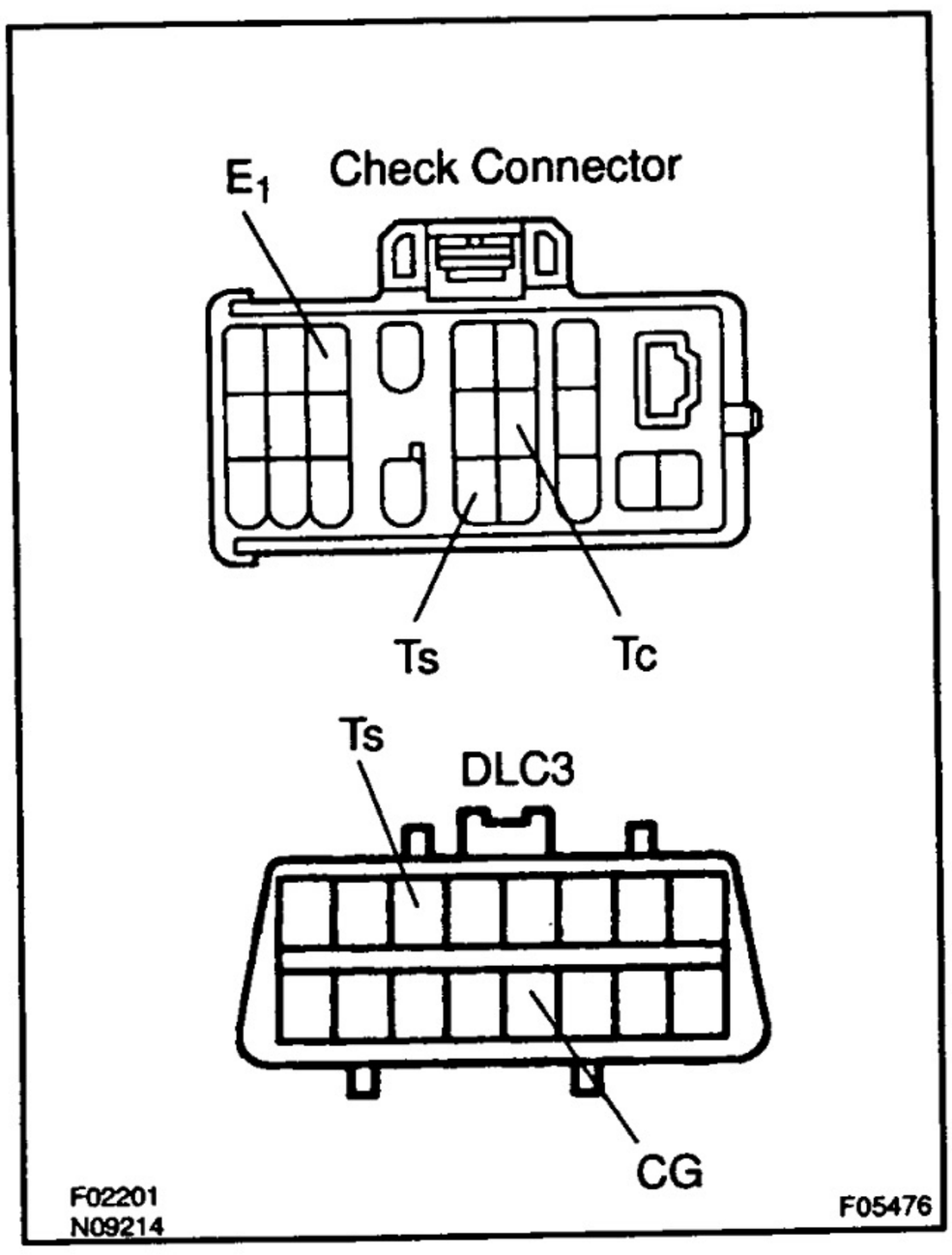

2. In case of not using hand–held tester: VSC SENSOR CHECK (TEST MODE)

HINT:

If the ignition switch is turned from ON to ACC or LOCK during test mode, DTC will be erased.

(a) Procedures for test mode:

(1) Turn the ignition switch OFF.

(2) Check that the shift lever position is at P range, turn the steering wheel to the neutral position.

(3) Using SST, connect terminals Ts and E_1 of check connector or Ts and CG of DLC3.

SST 09843–18020 or 09843–18040

(4) Start the engine.

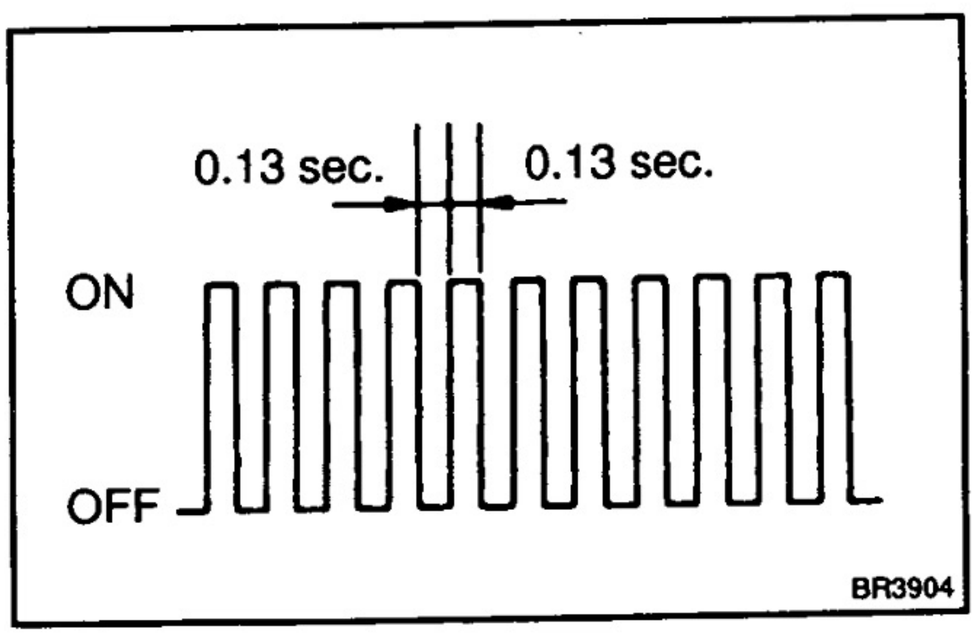

(5) Check that the VSC TRC warning light blinks.

HINT:

If the VSC TRC warning light does not blink, inspect the VSC TRC warning light circuit and Ts terminal circuit (See page DI–223 and DI–180).

(b) When replacing yaw rate sensor and/or ECU, the first time only:

➡ Perform the yaw rate sensor zero point calibration.

HINT:

Before the yaw rate sensor zero point calibration, shift the shift lever to P range, turn the ignition switch ON, and repeat connecting and disconnecting between terminals Ts and E_1 of check connector or Ts and CG of DLC3 4 times or more for 8 sec. After this, leave the vehicle in stationary condition for 15 sec. and carry out the yaw rate sensor zero point calibration.

Place the vehicle on the horizontal surface and carry out the zero point calibration of the yaw rate sensor by turning the ignition switch ON.

HINT:

After turning the ignition switch ON, keep the vehicle stationary condition until the VSC TRC warning changes from lighting to light–out.

(c) When replacing deceleration sensor and/or ECU, the first time only:

Perform the deceleration sensor zero point calibration.

HINT:

Before the deceleration sensor zero point calibration, shift the shift lever to P range, turn the ignition switch ON, and repeat connecting and disconnecting between terminals Ts and E_1 of check connector or Ts and CG of DLC3 4 times or more for 8 sec. After this, leave the vehicle in stationary condition for 15 sec. and carry out the deceleration sensor zero point calibration.

Place the vehicle on the horizontal surface and carry out the zero point calibration of the deceleration sensor by turning the ignition switch ON.

HINT:

After turning the ignition switch ON, keep the vehicle stationary condition until the VSC TRC warning changes from lighting to blinking in about 2 seconds.

NOTICE:

Do not turn OFF the ignition switch within 2 seconds after VSC TRC warning starts blinking.

(d) Check the steering angle sensor.

Turn the steering wheel either to left or right for 450° or more from the vehicle stationary condition, and turn back the steering wheel to the straight ahead position.

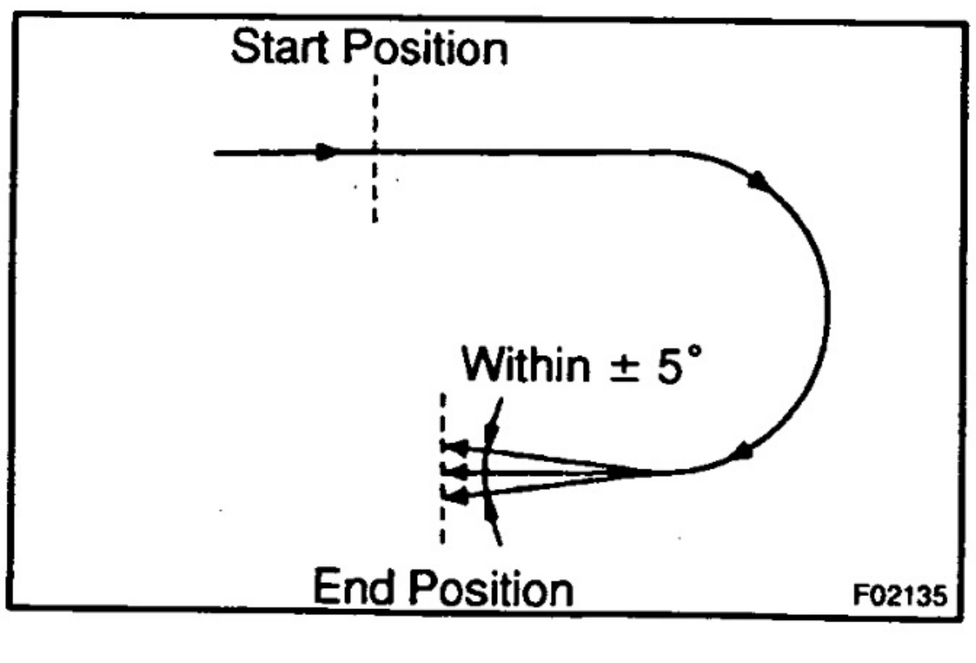

(e) Check the yaw rate sensor.

Shift the shift lever to the D range and drive the vehicle at the vehicle speed of approx. 5 km/h (3 mph), turn the steering wheel either to left or right for 90° or more, and maintain 180° circular drive for the vehicle.

Stop the vehicle and shift the shift lever to the P range, check that the VSC buzzer sounds for 3 sec.

- If the VSC buzzer sounded, the sensor check is in normal completion.
- If the VSC buzzer does not sound, do the sensor check again.
- If the VSC buzzer still won't sound, there is malfunction in the VSC sensor, so check the DTC.

HINT:

- Drive the vehicle circularly by 180°. At the end of the turn, the direction of the vehicle should be within 180° ± 5° of its start position.
- Do not spin the rear wheels.

(f) Read the DTC.

(1) Using SST, connect terminals Tc and E_1 of check connector.

SST 09843–18020

(2) Read the number of blinks of the VSC TRC warning light.

HINT:

- See the list of DTC shown on the this page.
- If every sensor is normal, a normal code is output. (A cycle of 0.25 sec. ON and 0.25 sec. OFF is repeated.)
- If 2 or more malfunctions are indicated at the same time, the lowest numbered code will be displayed 1st.

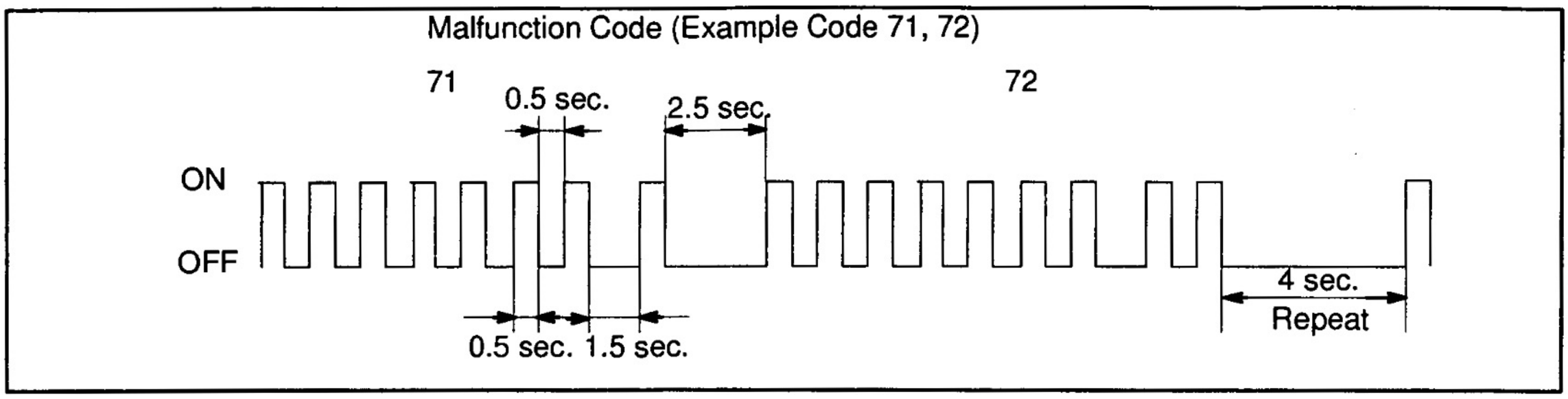

(3) After doing the check, disconnect the SST from terminals Ts and E_1, Tc and E_1 of check connector and/or Ts and CG of DLC3, and turn ignition switch OFF.

SST 09843–18020 or 09843–18040

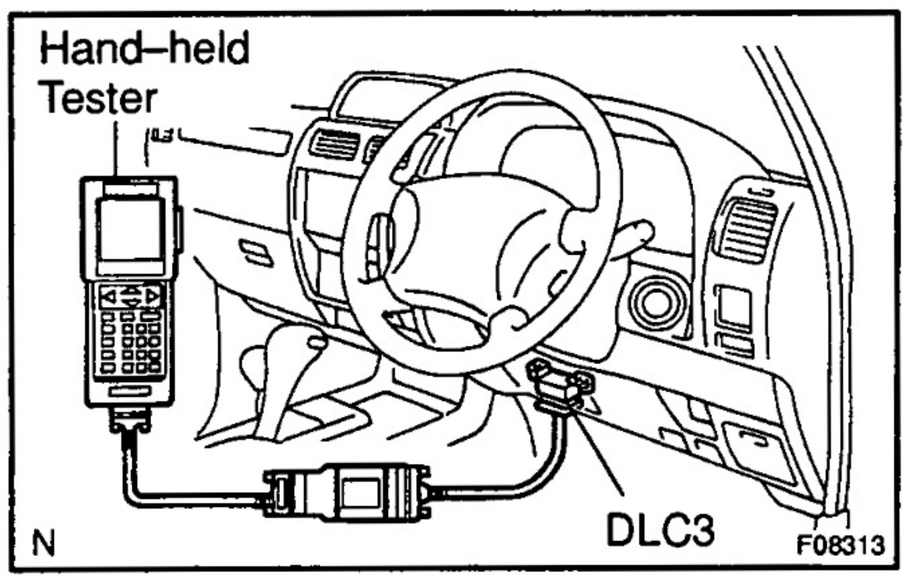

3. In case of using hand–held tester:
CHECK VSC SENSOR SIGNAL

(a) Hook up the hand–held tester to the DLC3.

(b) Do steps (2) and (4) to (8) on the previous page.

(c) Read the DTC by following the prompts on the tester screen.

HINT:

Please refer to the hand–held tester operator's manual for further details.

DTC of the VSC sensor check function:

Code No.	Diagnosis	Trouble Area
C0371 / 71	Yaw rate sensor output signal malfunction	• Yaw rate sensor • Yaw rate sensor circuit
C1208 / 72	Steering position sensor output signal malfunction	• Steering position sensor • Steering position sensor circuit

4. YAW RATE SENSOR ZERO POINT CALIBRATION

HINT:
When replacing the yaw rate sensor or ECU, make sure to perform yaw rate sensor zero point calibration.

(a) When replacing the ECU:
After replacing ECU, shift the shift lever in P range and turn the ignition switch ON. Do not move the vehicle for 15 seconds or more.

HINT:
At this time, the VSC TRC warning light and VSC OFF indicator light goes on for 15 sec. and goes off.
If the VSC TRC warning light and VSC OFF indicator light remains on, carry out yaw rate sensor and deceleration sensor zero point calibration in the Test mode.

(b) When replacing the yaw rate sensor:
Shift the shift lever in P range and turn the ignition switch ON, repeat connecting and releasing Ts and E_1 terminals of check connector or Ts and CG terminals of DLC3 4 times or more for 8 sec. After that do not move the vehicle for 15 sec. or more.

HINT:
When the operation (b) is performed, DTC is deleted.

5. DECELERATION SENSOR ZERO POINT CALIBRATION

HINT:
When replacing the deceleration sensor or ECU, make sure to perform deceleration sensor zero point calibration.
Shift the shift lever in P range and turn the ignition switch ON, repeat connecting and releasing Ts and E_1 terminals of check connector or Ts and CG terminals of DLC3 4 times or more for 8 sec. After that do not move the vehicle for 15 sec. or more.
HINT:
When the above operation is performed, DTC is deleted.

DI6C9-01

DIAGNOSTIC TROUBLE CODE CHART

NOTICE:

When removing the part, turn the ignition switch OFF.

HINT:

- Using SST 09843–18020, connect the terminals Tc and E_1 of check connector.
- If any abnormality is not found when inspecting parts, inspect the ECU.
- If a malfunction code is displayed during the DTC check, check the circuit listed that code. For details of each code, turn to the page referred to under the "See page" for respective "DTC No." in the DTC chart.

DTC chart of VSC:

DTC No. (See Page)	Detection Item	Trouble Area
C1231 / 31 (DI–204)	Malfunction in steering angle sensor	• Steering angle sensor • Steering angle sensor circuit
C1232 / 32 (DI–208)	Malfunction in deceleration sensor	• Deceleration sensor • Deceleration sensor circuit
C1233 / 33 (DI–210)	Open or short circuit in yaw rate sensor circuit	• Yaw rate sensor • Yaw rate sensor circuit
C1234 / 34 (DI–210)	Malfunction in yaw rate sensor	• Yaw rate sensor • Yaw rate sensor circuit
C1210 / 36 (DI–199)	Zero point calibration of yaw rate sensor undone	• Yaw rate sensor • Yaw rate sensor circuit • Neutral start switch circuit (P range)
C1207 / 37 (DI–197)	Malfunction in neutral start switch (P/R range)	• Neutral start switch • Neutral start switch circuit (P/R range)
C1336 / 39 (DI–214)	Zero point calibration of deceleration sensor	• Deceleration sensor • Deceleration sensor circuit • Neutral start switch (P range) circuit
C1223 / 43 (DI–201)	Malfunction in ABS control system	ABS control system
C1224 / 44 (DI–202)	Open or short circuit in NE signal circuit	• NEO circuit • Engine and ECT ECU • ABS & BA & TRC & VSC ECU
C1340 / 47 (DI–217)	Open circuit in center differential lock signal	• Center differential lock system • Center differential lock circuit
C1201 / 51 (DI–194)	Engine and ECT ECU system malfunction	Engine control system
C1203 / 53 (DI–195)	Engine and ECT ECU communication circuit malfunction	• TRC+ or TRC– circuit • ENG+ or ENG– circuit • Engine and ECT ECU
Always ON (DI–219)	Malfunction in ABS & BA & TRC & VSC ECU Open circuit in VSC TRC warning indicator circuit	• Power source circuit • VSC TRC warning light circuit

HINT:

There is a case that hand–held tester cannot be used when VSC TRC warning light is always on.

DI6CA-01

PARTS LOCATION

See page DI–95.

DI6CB-01

TERMINALS OF ECU

See page DI–96.

D16CC-01

PROBLEM SYMPTOMS TABLE

If a normal code is displayed during the DTC check but the problem still occurs, check the circuits for each problem symptom in the order given in the table below and proceed to the relevant troubleshooting page.

NOTICE:

When replacing ABS & BA & TRC & VSC ECU, sensor or etc., turn the ignition switch OFF.

Symptom	Suspect Area	See page
TRC does not operate.	Only when inspection circuits for each problem symptom are all normal and the problem is still occurring, replace the ABS & BA & TRC & VSC ECU. 1. Check the DTC, reconfirming that the normal code is output. 2. IG power source circuit 3. Check the hydraulic circuit for leakage. 4. Speed sensor circuit	 DI–184 DI–119 DI–234 DI–101
VSC does not operate.	Only when inspection circuits for each problem symptom are all normal and the problem is still occurring, replace the ABS & BA & TRC & VSC ECU. 1. Check the DTC, reconfirming that the normal code is output. 2. IG power source circuit 3. Check the hydraulic circuit for leakage. 4. Speed sensor circuit 5. Deceleration sensor circuit 6. Yaw rate sensor circuit 7. Steering angle sensor circuit	 DI–184 DI–119 DI–234 DI–101 DI–208 DI–210 DI–204
VSC TRC warning light abnormal.	Only when inspection circuits for each problem symptom are all normal and the problem is still occurring, replace the ABS & BA & TRC & VSC ECU. 1. VSC TRC warning light circuit 2. ABS & BA & TRC & VSC ECU	 DI–223 IN–33
SLIP indicator light abnormal.	SLIP indicator light circuit	DI–225
VSC OFF indicator abnormal.	Only when inspection circuits for each problem symptom are all normal and the problem is still occurring, replace the ABS & BA & TRC & VSC ECU. 1. VSC OFF indicator light circuit 2. Center diff. lock indicator switch circuit	 DI–227 DI–217
ACTIVE TRC indicator light abnormal.	ACTIVE TRC indicator light circuit	DI–230
DTC check cannot be done.	Only when inspection circuits for each problem symptom are all normal and the problem is still occurring, replace the ABS & BA & TRC & VSC ECU. 1. VSC TRC warning light circuit 2. Tc terminal circuit	 DI–223 DI–178

DI5CD–01

CIRCUIT INSPECTION

DTC	C1201 / 51	Engine Control System Malfunction

CIRCUIT DESCRIPTION

If trouble occurs in the engine control system, the ECU prohibits TRC and VSC control.

DTC No.	DTC Detecting Condition	Trouble Area
C1201 / 51	Conditions 1. and 2. continue for 5 sec.: 1. Engine speed: 500 rpm or more. 2. A trouble signal in the engine control system is input.	Engine control system

INSPECTION PROCEDURE

1	**Check the DTC for the engine.**

*1 → **Repair engine control system according to the output code.**

*2

Check for engine and ECT ECU connected to malfunction indicator light.

*1: Output NG code

*2: Malfunction indicator light remains ON

DI6CE-01

DTC	C1203 / 53	Engine and ECT ECU Communication Circuit Malfunction

CIRCUIT DESCRIPTION

The circuit is used to send TRC & VSC control information from the ABS & BA & TRC & VSC ECU to the engine and ECT ECU (TRC+, TRC–), and engine control information from the engine and ECT ECU to the ABS & BA & TRC & VSC ECU (ENG+, ENG–).

DTC No.	DTC Detecting Condition	Trouble Area
C1203 / 53	Either of the following 1. or 2. continues for 5 sec.: 1. ECU IG1 terminal voltage is 9.5 V to 17.0 V and data transmission to the engine and ECT ECU is impossible. 2. ECU IG1 terminal voltage is 9.5 V to 17.0 V, engine speed is 500 rpm or more or vehicle speed is 60 km/h (36 mph) or more and data receiving from the engine and ECT ECU impossible.	• TRC+ or TRC– circuit • ENG+ or ENG– circuit • Engine and ECT ECU

Fail safe function:

If trouble occurs in the engine and ECT ECU communication circuit, the ECU prohibits TRC & VSC controls.

WIRING DIAGRAM

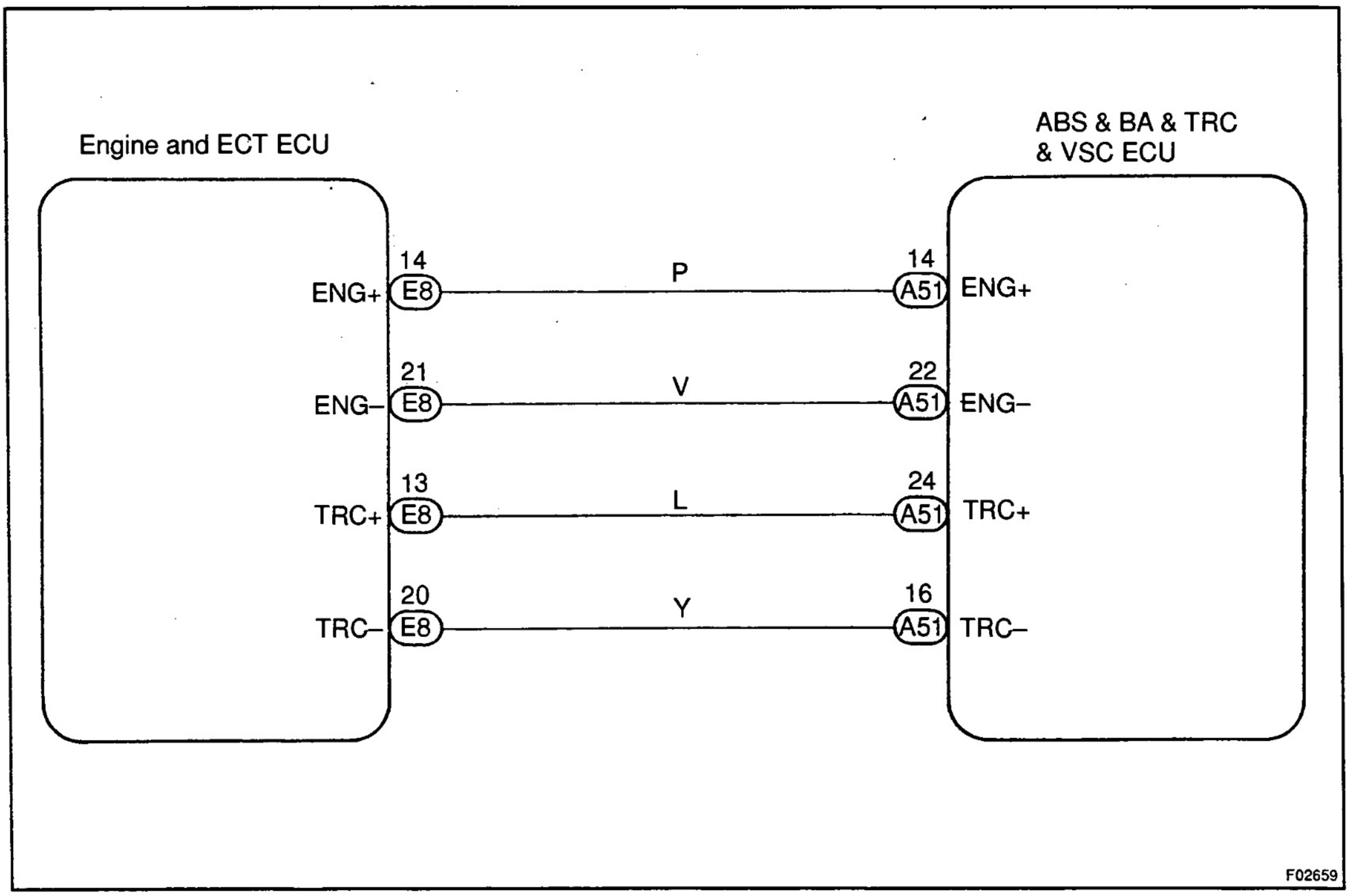

INSPECTION PROCEDURE

1	**Check ABS & BA & TRC & VSC ECU communication.**

(REFERENCE) INSPECTION USING OSCILLOSCOPE

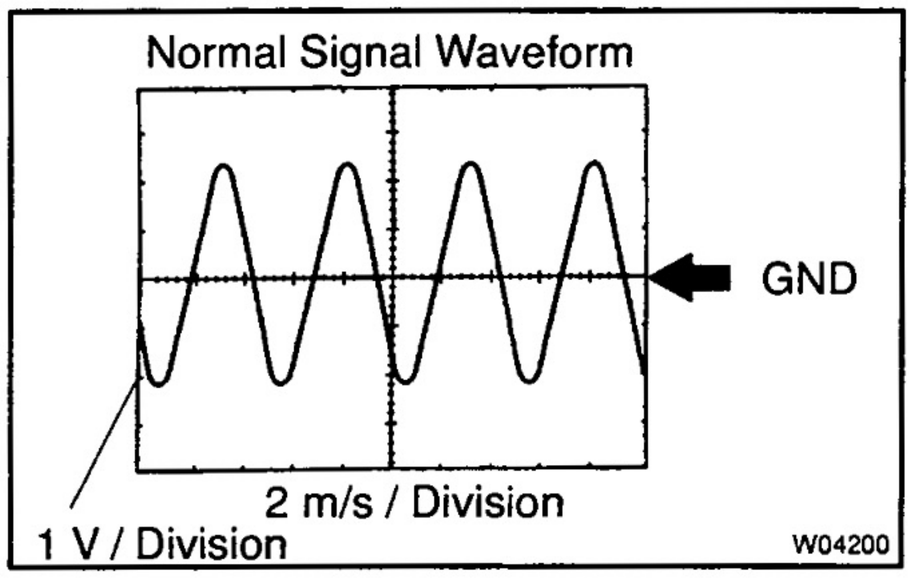

PREPARATION:

(a) Remove the ABS & BA & TRC & VSC ECU.

(b) Connect the oscilloscope to the each of terminals ENG+ or TRC+ and GND of the ABS & BA & TRC & VSC ECU.

CHECK:

Start the engine and check the signal waveform.

NG → **Check and replace ABS & BA & TRC & VSC ECU.**

OK

2	**Check for open and short circuit in harness and connector between each of terminals ENG+, ENG–, TRC+, TRC– of ABS & BA & TRC & VSC ECU and engine and ECT ECU (See page IN–33).**

NG → **Repair or replace harness or connector.**

OK

Check and replace engine and ECT ECU.

DI6CF–01

DTC	C1207 / 37	Neutral Start Switch Circuit (P/R Range)

CIRCUIT DESCRIPTION

DTC No.	DTC Detection Condition	Trouble Area
C1207 / 37	When any of the following 1. through 3. is detected: 1. At vehicle speed of 15 km/h (9 mph) or less and the conditions that open circuit signal of P signal circuit of park/neutral position switch is ON and the voltage of IG1 terminal is 9.5 V to 17 V continue for 5 sec. or more. 2. At vehicle speed of 15 km/h (9 mph) or more, and when the condition that P signal from neutral switch is ON, and the the shift lever position information from the engine and ECT ECU is other than in P or N position continues for 60 sec. or more. 3. At vehicle speed of 15 km/h (9 mph) or less and the conditions that open circuit signal of P signal circuit of neutral switch is ON and the voltage of IG1 terminal is 9.5 V to17 V continue for 5 sec. or more.	• Neutral start switch • Neutral start switch circuit (P/R range)

WIRING DIAGRAM

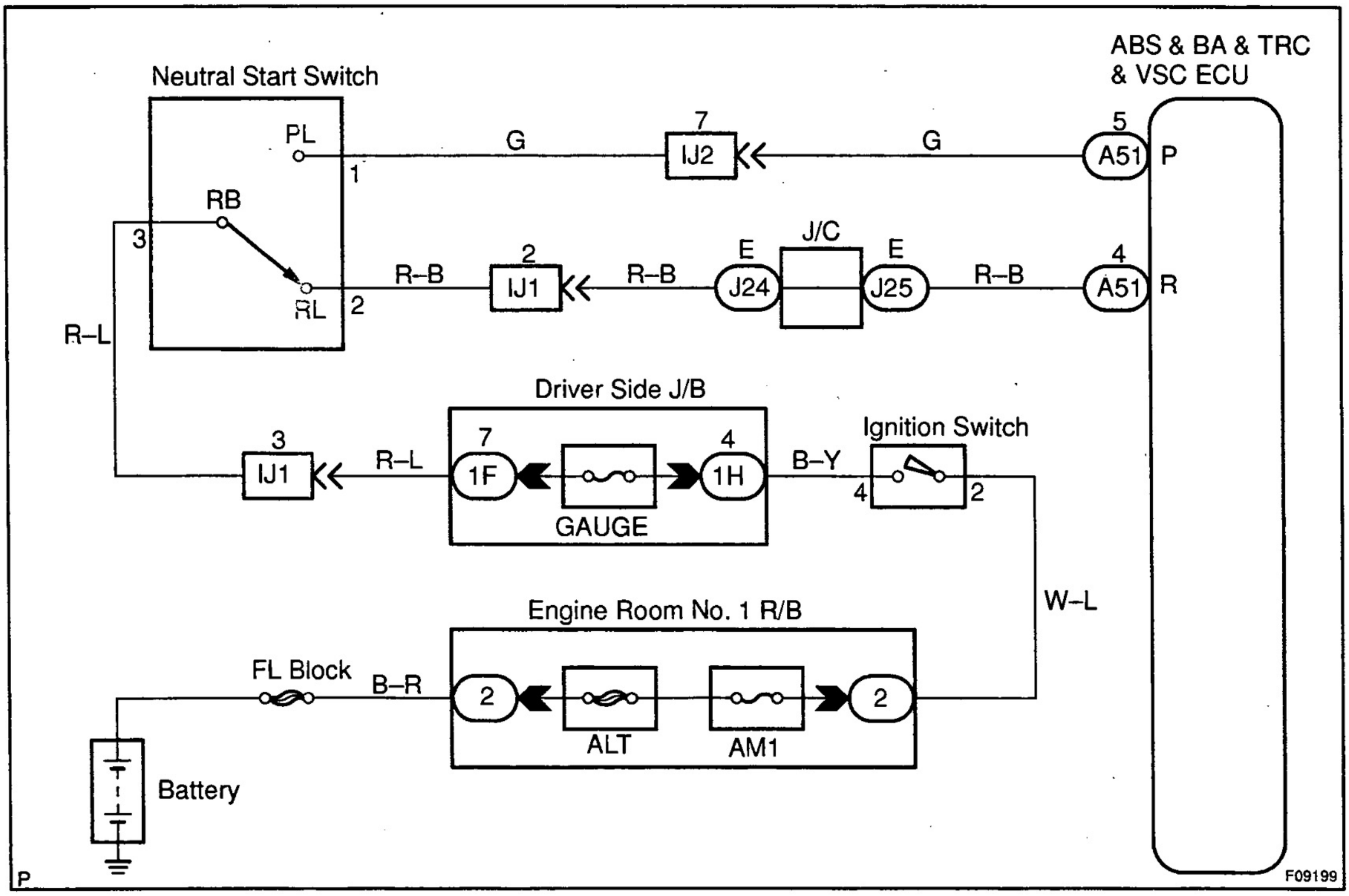

INSPECTION PROCEDURE

1	**Check neutral start switch (P/R range).**

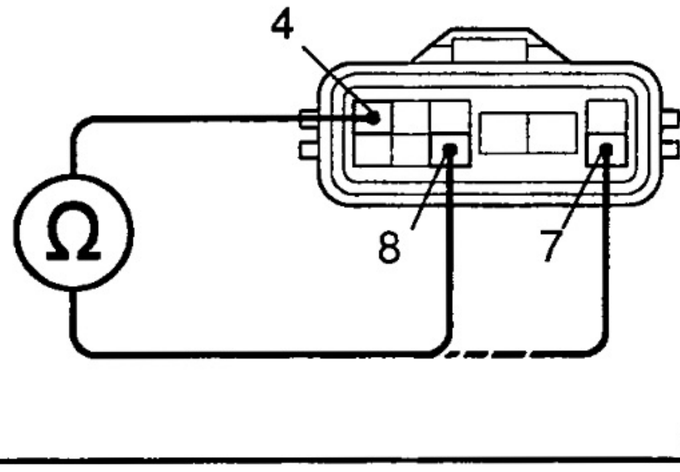

PREPARATION:

(a) Jack up the vehicle.

(b) Disconnect the neutral start switch connector.

CHECK:

Check continuity between each terminal shown below when the shift lever is moved to each range:

OK:

P range	Terminals 4 – 7	Continuity
R range	Terminals 4 – 8	Continuity

NG → **Replace neutral start switch.**

OK

2	**Check for open and short circuit in harness and connector between terminals P and R of ABS & BA & TRC & VSC ECU and battery (See page IN–33).**

NG → **Repair or replace harness or connector.**

OK

Check and replace ABS & BA & TRC & VSC ECU or engine and ECT ECU.

DI6CG–01

DTC	C1210 / 36	Zero Point Calibration of Yaw Rate Sensor Undone

CIRCUIT DESCRIPTION

DTC No.	DTC Detecting Condition	Trouble Area
C1210 / 36	When any of following 1. through 2. is detected: 1. After battery terminal was connected, when the shift lever was moved other than to P position within 15 sec. soon after ECU terminal IG1 become ON for the first time. 2. When the yaw rate sensor zero point recorded in ECU is deleted.	• Yaw rate sensor • Yaw rate sensor circuit • Neutral start switch circuit (P range)

WIRING DIAGRAM

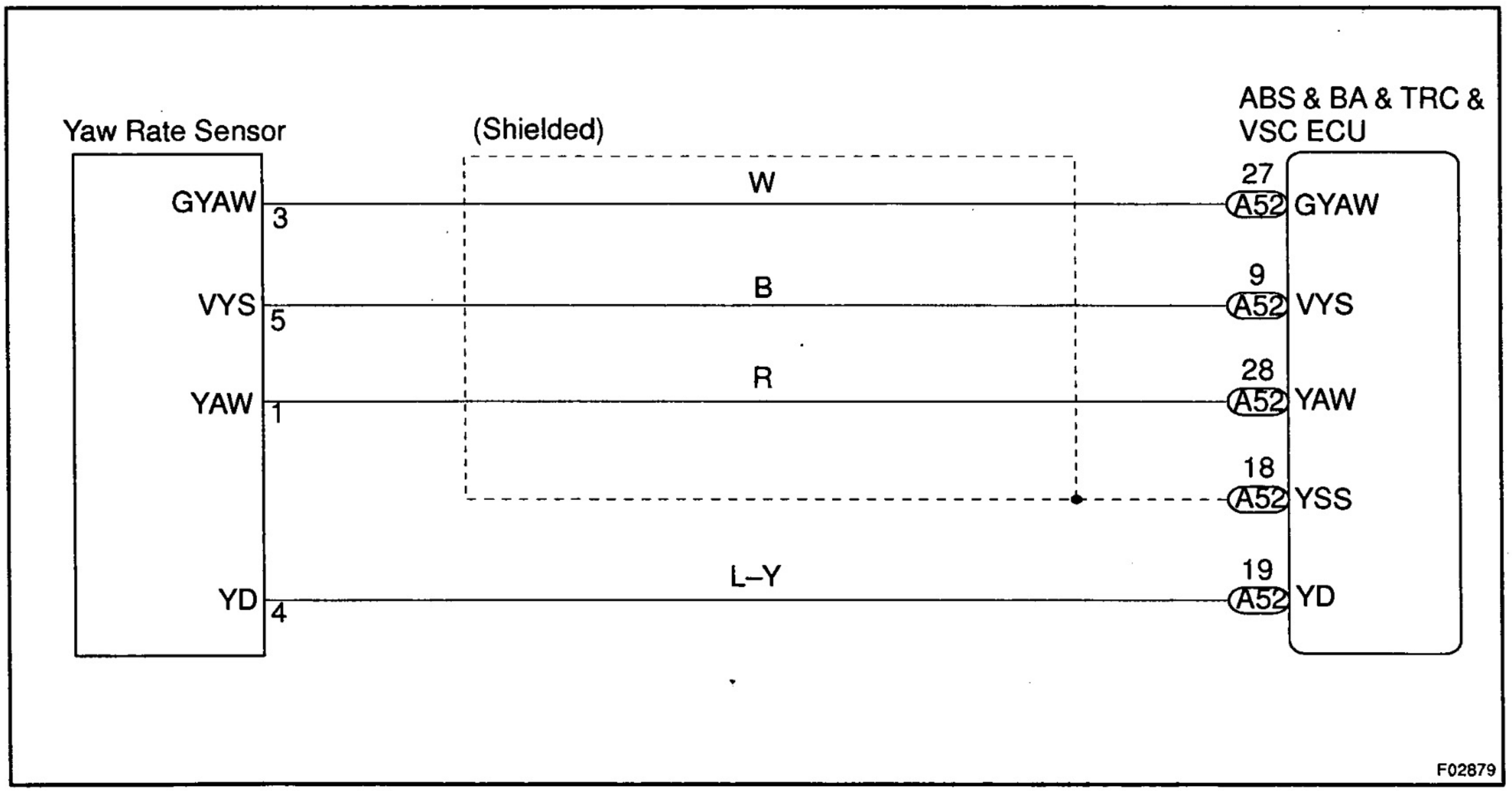

INSPECTION PROCEDURE

1	**Check whether zero point calibration of yaw rate sensor has been done or not.**

PREPARATION:

Shift the shift lever in P range and turn the ignition switch ON, repeat connecting and releasing Ts and E_1 terminals of check connector or Ts and CG of DLC3 4 times or more for 8 secs. After that do not move the vehicle for 15 sec. or more.

CHECK:

Check that the"VSC TRC" warning light and "VSC OFF" indicator light up for 15 sec.

YES → No problem.

NO

2	Check for open and short circuit in harness and connector between neutral start switch (P range) and ABS & BA & TRC & VSC ECU and engine and ECT ECU (See page IN–33).

NG → Repair or replace harness or connector.

OK

3	Check for open and short circuit in harness and connector between yaw rate sensor and ABS & BA & TRC & VSC ECU (See page IN–33).

NG → Repair or replace harness or connector.

OK

4	Check yaw rate sensor (See page DI–184).

NG → Replace yaw rate sensor.

OK

Check and replace ABS & BA & TRC & VSC ECU.

D16CH-01

DTC	C1223 / 43	ABS Control System Malfunction

CIRCUIT DESCRIPTION

DTC No.	DTC Detecting Condition	Trouble Area
C1223 / 43	ABS control system is abnormal.	ABS control system

INSPECTION PROCEDURE

1	Check the DTC for the ABS (See page DI–86).

*1 → Repair ABS control system according to the code output.

*2 → Check for ECU connected to malfunction indicator light.

*1: Output NG code
*2: Malfunction indicator light remains ON

DI6CI–01

DTC	C1224 / 44	NE Signal Circuit

CIRCUIT DESCRIPTION

The ABS & BA & TRC & VSC ECU receives engine revolution speed signals (NE signals) from the engine and ECT ECU.

DTC No.	DTC Detecting Condition	Trouble Area
C1224 / 44	When any of the following 1. through 2. is detected: 1. At vehicle speed of 30 km/h (19 mph) or more, and when data received from the engine and ECT ECU is in normal condition, and open or short circuit for engine revolution signal circuit continues for 10 sec. or more. 2. While TRC is operating, the conditions that open or short circuit in engine revolution signal circuit is detected, main throttle opening degree is 0 and IDL switch is OFF continue for 0.24 sec. or more.	• NEO circuit • Engine and ECT ECU • ABS & BA & TRC & VSC ECU

Fail safe function:

If trouble occurs in the NE signal circuit, the ECU prohibits ABS & BA & TRC & VSC controls.

WIRING DIAGRAM

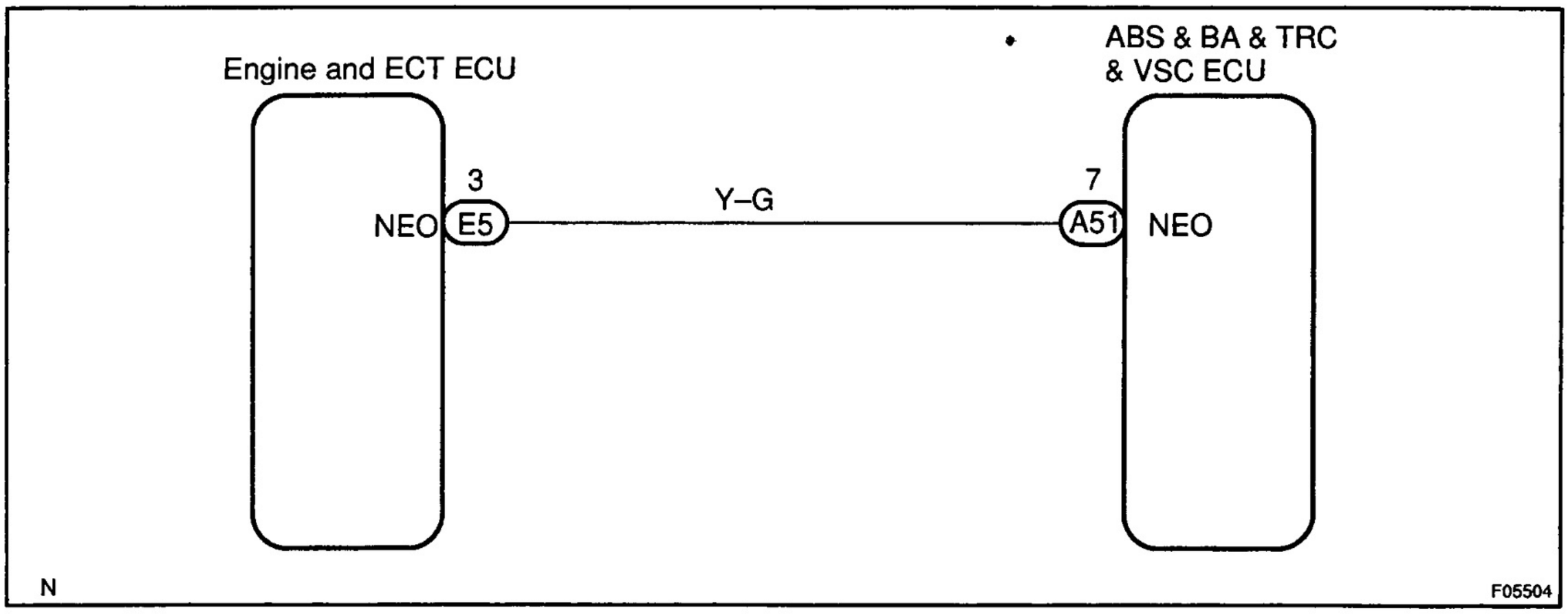

INSPECTION PROCEDURE

1	**Check for open and short circuit in harness and connector between terminal NEO of ABS & BA & TRC & VSC ECU and terminal NEO of engine and ECT ECU (See page IN–33).**

NG → **Repair or replace harness and connector.**

OK

2	**Check voltage between terminal NEO of ABS & BA & TRC & VSC ECU and body ground.**

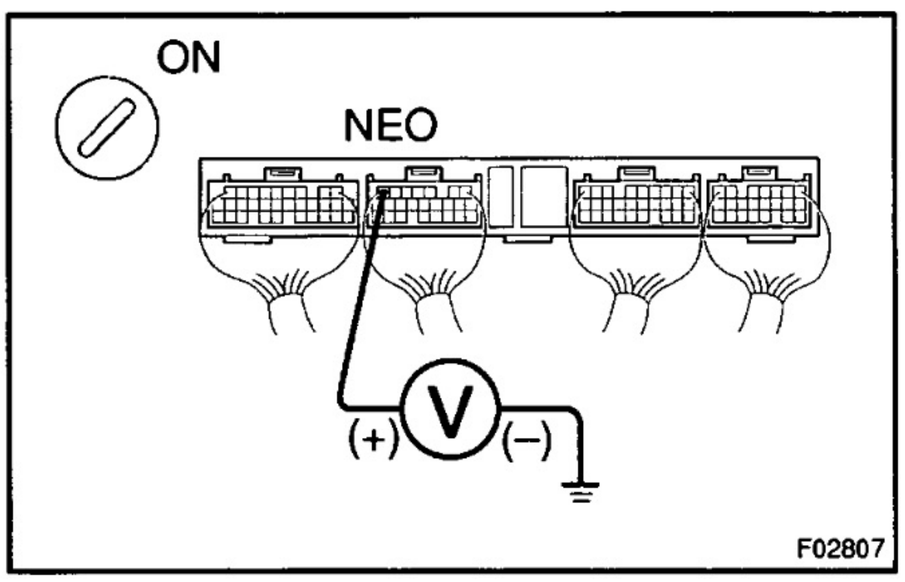

PREPARATION:

Remove ABS & BA & TRC & VSC ECU with connectors still connected.

CHECK:

(a) Turn ignition switch ON.

(b) Measure voltage between terminal NEO of ABS & BA & TRC & VSC ECU and body ground for the engine conditions below.

OK:

Engine condition	Voltage
OFF (IG ON)	3 – 6 V or below 1 V
ON (Idling)	3 – 6 V ↔ below 1 V (Pulse)

(Reference)

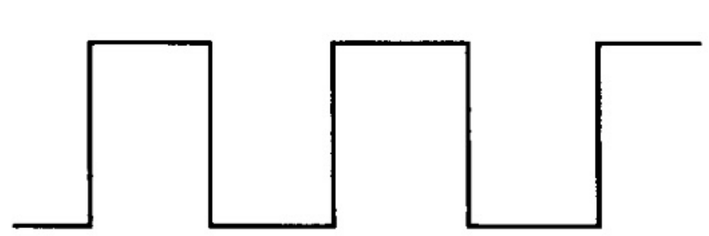

NG → **Check and replace ABS & BA & TRC & VSC ECU or engine and ECT ECU.**

OK

If the same codes is still output after the DTC is deleted, check the contact condition of each connection.

DI6CJ–01

DTC	C1231 / 31	Steering Angle Sensor Circuit

CIRCUIT DESCRIPTION

DTC No.	DTC Detecting Condition	Trouble Area
C1231 / 31	Detection of any of conditions 1. through 3.: 1. When the condition that ECU terminal IG1 voltage is 9.5 V or more, and does not receive a data from steering angle sensor continues for 1 sec. or more. 2. When the steering angle sensor value changes by 360° or more with SSC signal from steering angle sensor remaining ON or OFF. 3. When the condition that difference between the steering angle value at edge occurring in SSC signal and the value at edge occurring in SSC signal after turning the steering wheel one–turn is out of the renge from 355.5° – 364.5° occurs 10 times or more.	• Steering angle sensor • Steering angle sensor circuit

Fail safe function:
If trouble occurs in the steering angle sensor circuit, the ECU prohibits TRC & VSC controls.

WIRING DIAGRAM

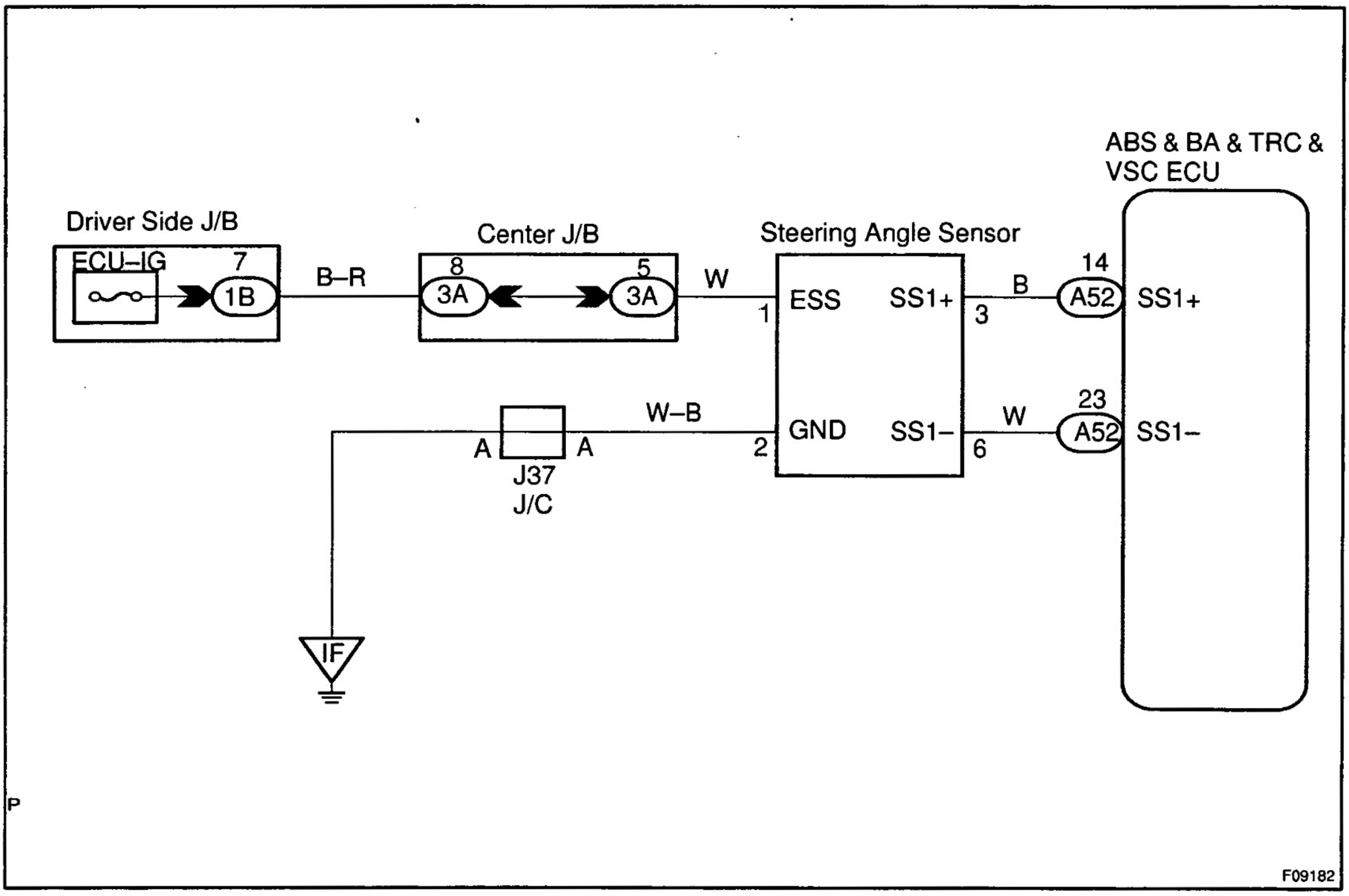

INSPECTION PROCEDURE

HINT:

Start the inspection from step 1 in case of using the hand–held tester and start from step 3 in case of not using the hand–held tester.

1	**Check output value of the steering angle sensor.**

PREPARATION:

(a) Connect the hand–held tester to the DLC3.

(b) Turn the ignition switch ON and push the hand–held tester main switch ON.

(c) Select the DATALIST mode on the hand–held tester.

CHECK:

Check that the steering wheel turning angle value of the steering angle position sensor displayed on the hand–held tester is changing when turning the steering wheel.

OK:

Steering wheel turning angle value must be changing.

OK → **Go to step 3.**

NG

2	**Replace the ECU and check whether or not the trouble occurs again.**

OK → **Replace steering angle sensor.**

NG

END

3	Check steering angle sensor.

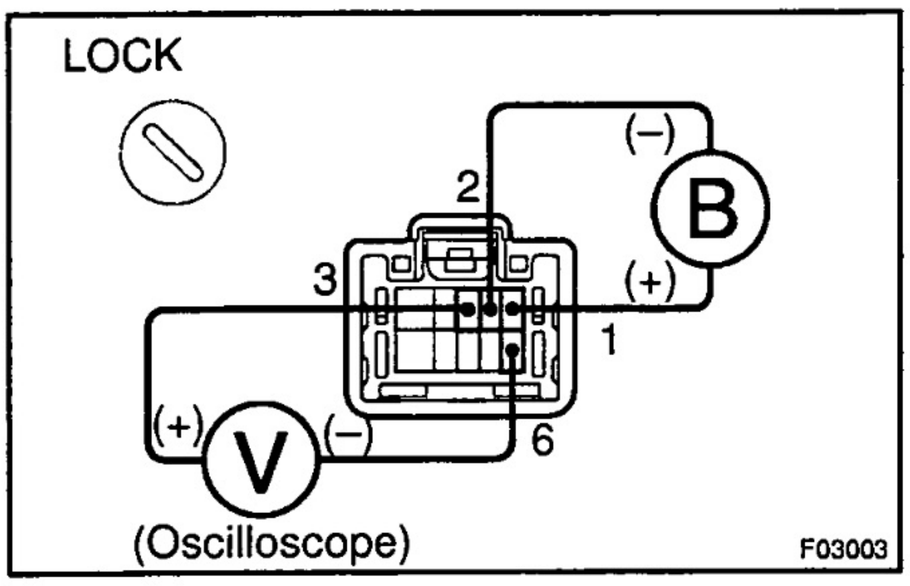

PREPARATION:

(a) Remove the steering wheel lower covers, steering wheel pad, steering wheel column upper and lower covers (See Pub. No. RM517E on page SR–27).

(b) Disconnect the combination switch connector (for steering angle sensor).

(c) Connect the oscilloscope to the terminals 3 and 6 of the combination switch connector (for steering angle sensor).

(d) Apply battery voltage between terminals 1 and 2.

CHECK:

Turns the steering wheel slowly and check the signal waveform.

OK:

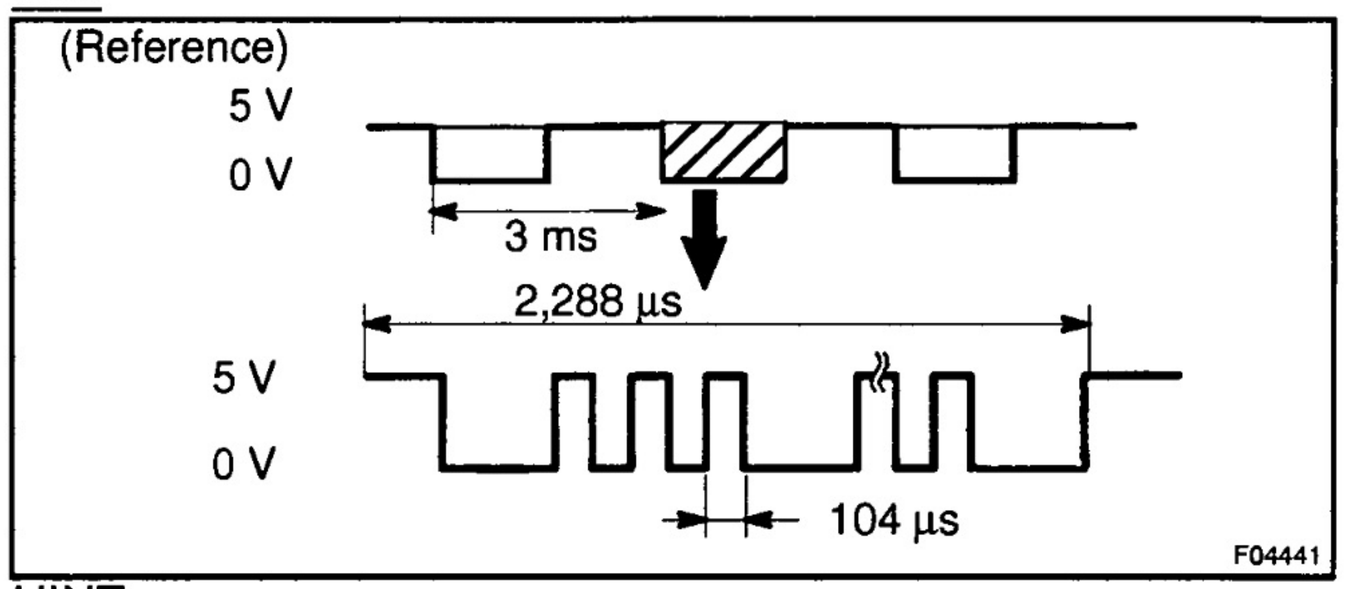

HINT:

The above signal waveform does not repeat ON and OFF regularly and this combination canges case by case according to the data.

NG → **Replace steering angle sensor.**

OK ↓

4	Check that slits of the steering sensor disc are clogged up.

NG → **Repair or replace steering sensor disc.**

OK ↓

5	**Check for open and short circuit in harness and connector between steering position sensor and ABS & BA & TRC & VSC ECU (See page IN–33).**

NG → **Repair or replace harness or connector.**

OK

Check and replace ABS & BA & TRC & VSC ECU.

DI6CK–01

DTC	C1232 / 32	Deceleration Sensor Circuit

CIRCUIT DESCRIPTION

DTC No.	DTC Detecting Condition	Trouble Area
C1232 / 32	Detection of either of conditions 1. and 2.: 1. At the vehicle speed of 10 km/h (6 mph) or more, when the condition that ECU terminal GL1 signal change range is less than 20 mV, and ECU terminal GL2 signal change range swings by 468 mV or more occurs for 30 sec. or more. 2. At the vehicle speed of 10 km/h (6 mph) or more, when the condition that ECU terminal GL2 signal change range is less than 20 mV, and ECU terminal GL1 signal change range swings by 468 mV or more occurs for 30 sec. or more.	• Deceleration sensor • Deceleration sensor circuit

Fail safe function:
If trouble occurs in the deceleration sensor circuit, the ECU prohibits TRC & VSC controls.

INSPECTION PROCEDURE

HINT:
Start the inspection from step 1 in case of using the hand–held tester and start from step 3 in case of not using the hand–held tester.

1	**Check output value of the deceleration sensor.**

PREPARATION:
(a) Connect the hand–held tester to the DLC3.
(b) Turn the ignition switch ON and push the hand–held tester main switch ON.
(c) Select the DATALIST mode on the hand–held tester.

CHECK:
Check that the deceleration value of the deceleration sensor displayed on the hand–held tester is changing when tilting the vehicle.

OK:
Deceleration value must be changing.

OK → **Check and replace ABS & BA & TRC & VSC ECU.**

NG

2	Check deceleration sensor (See page DI–86).

NG → Replace deceleration sensor.

OK

3	Check for open or short circuit in harness and connector between deceleration sensor and ABS & BA & TRC & VSC ECU (See page IN–33).

NG → Repair or replace harness and connector.

OK

Check and replace ABS & BA & TRC & VSC ECU.

DI6CL–01

CIRCUIT INSPECTION

DTC	C1233 / 33, C1234 / 34	Yaw Rate Sensor Circuit

CIRCUIT DESCRIPTION

DTC No.	DTC Detecting Condition	Trouble Area
C1233 / 33	When any of the following 1. through 4. is detected: 1. ECU terminal IG1 voltage is 9.5 V to 17.0 V, and the condition that yaw rate sensor voltage is out of the range from 0.25 V to 4.75 V continued for 1 sec. or more. 2. The conditions that yaw rate sensor open detect circuit signal is ON and the voltage of ECU terminal IG1 is 9.5 V to 17 V continued for 1 sec. or more. 3. The conditions that yaw rate sensor power source voltage is out of the range from 4.4 V to 5.6 V and the voltage of ECU terminal IG1 is 9.5 V to 17 V continued for 1 sec. or more. 4. When the condition that yaw rate sensor signal is momentarily open occurs 10 times or more and the voltage of ECU terminal IG1 is 9.5 V to 17 V.	• Yaw rate sensor • Yaw rate sensor circuit
C1234 / 34	Condition 1. or 2. is detected: 1. When the condition that yaw rate sensor VYS terminal voltage is 4.75 V to 5.25 V and YD malfunction signal of yaw rate sensor is ON continued for 5 sec. or more. 2. Shift lever position is in P range and output voltage of yaw rate sensor is out of the range from 2.4 V to 2.6 V or after the difference from zero point calibration voltage of yaw rate sensor has become 0.08 V or more and when the condition that the vehicle speed exceeds more than 15 km/h (9 mph) while output condition of yaw rate sensor has been repeated more than 3 times.	

Fail safe function:

If trouble occurs in the yaw rate sensor circuit, the ECU prohibits TRC & VSC controls.

WIRING DIAGRAM

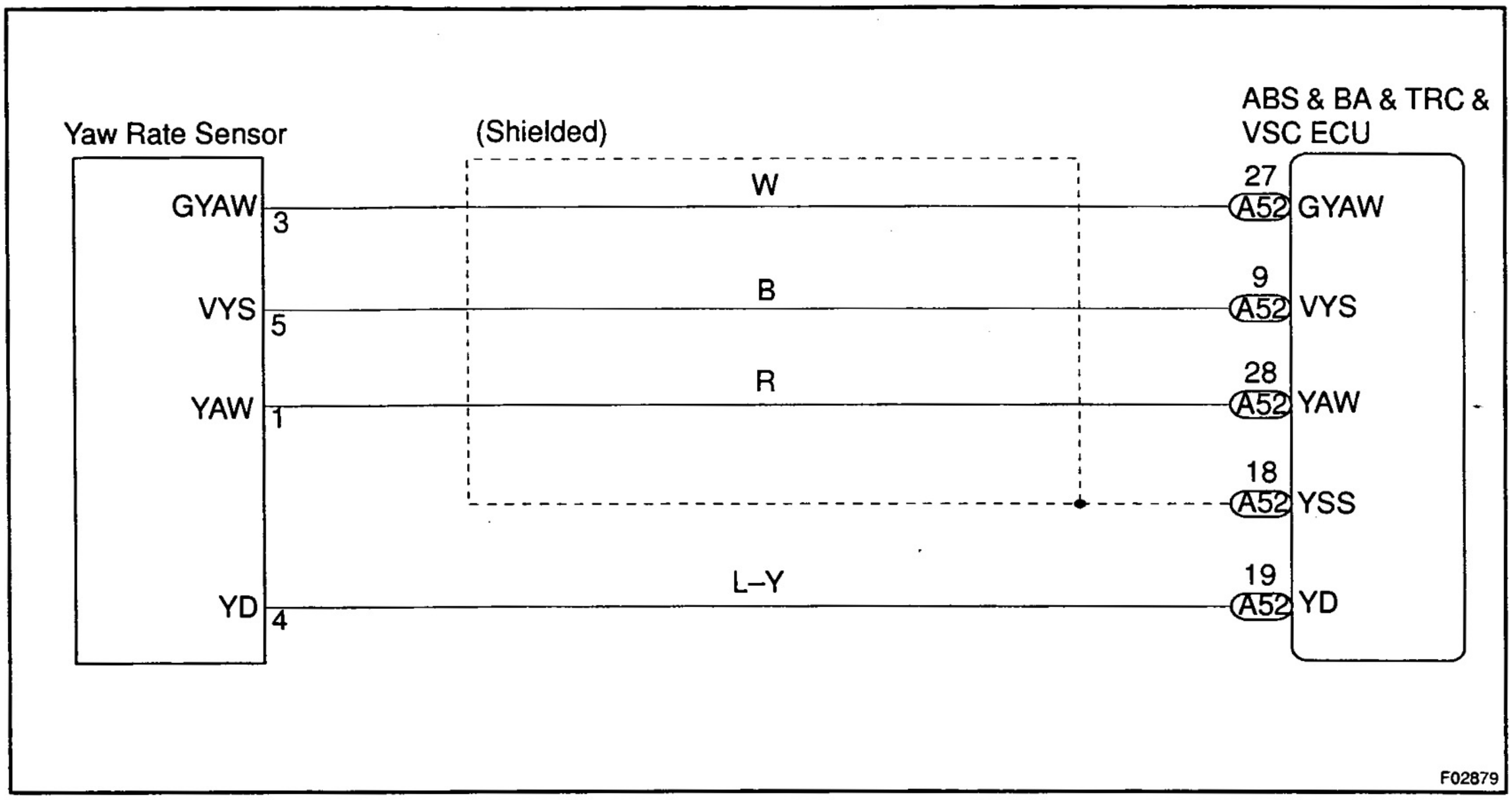

INSPECTION PROCEDURE

HINT:

Start the inspection from step 1 in case of using the hand–held tester and start from step 3 in case of not using the hand–held tester.

1	**Check output value of the yaw rate sensor.**

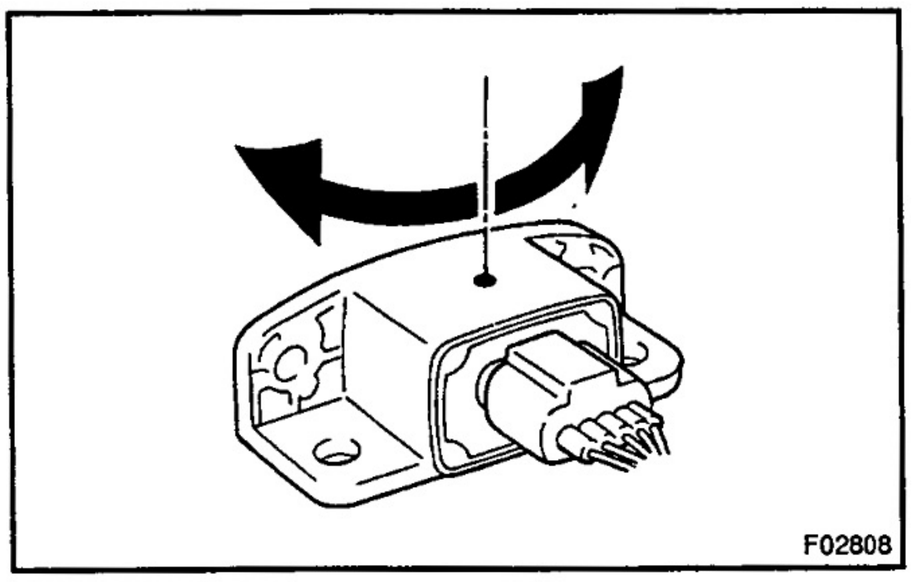

PREPARATION:

(a) Remove the 2 bolts and yaw rate sensor with connector still connected.
(b) Connect the hand–held tester to the DLC3.
(c) Turn the ignition switch ON and push the hand–held tester main switch ON.
(d) Select the DATALIST mode on the hand–held tester.

CHECK:

Check that the yaw rate value of the yaw rate sensor displayed on the hand–held tester is changing: Place the yaw rate sensor vertically to the ground and turn the sensor pivoted on its center.

OK:

Yaw rate value must be changing.

OK	**Go to step 4.**

NG

2	**Check whether continuity exists between terminal YD of yaw rate sensor and terminal YD of ABS & BA & TRC & VSC ECU.**

NG → **Repair or replace harness or connector.**

OK

3	**Check voltage between terminals YD and GND of ABS & BA & TRC & VSC ECU.**

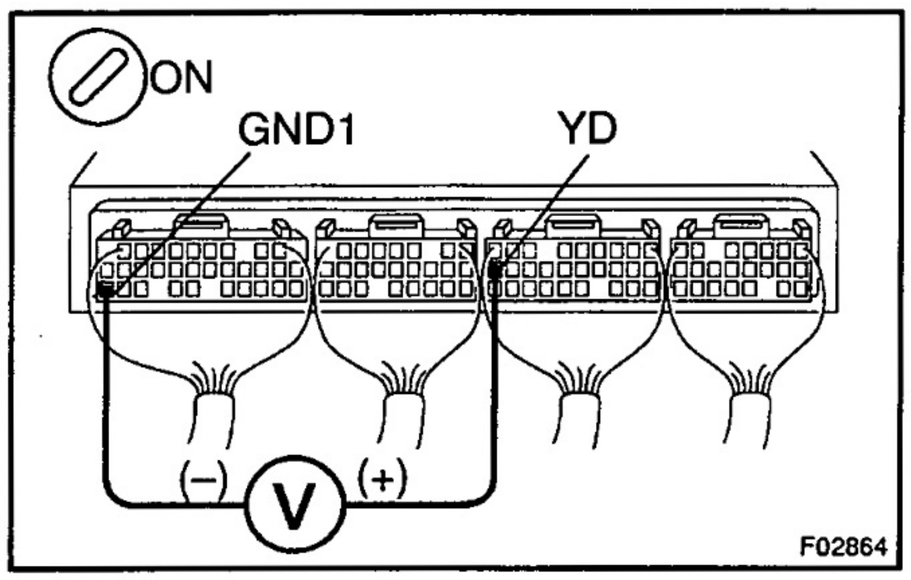

PREPARATION:

Remove ABS & BA & TRC & VSC ECU with connector still connected.

CHECK:

(a) Turn the ignition switch ON.

(b) Measure voltage between terminals YD and GND of ABS & BA & TRC & VSC ECU.

OK:

Voltage: 4.5 – 5.3 V

NG → **Replace yaw rate sensor.**

OK

Check and replace ABS & BA & TRC & VSC ECU.

4	Check yaw rate sensor.

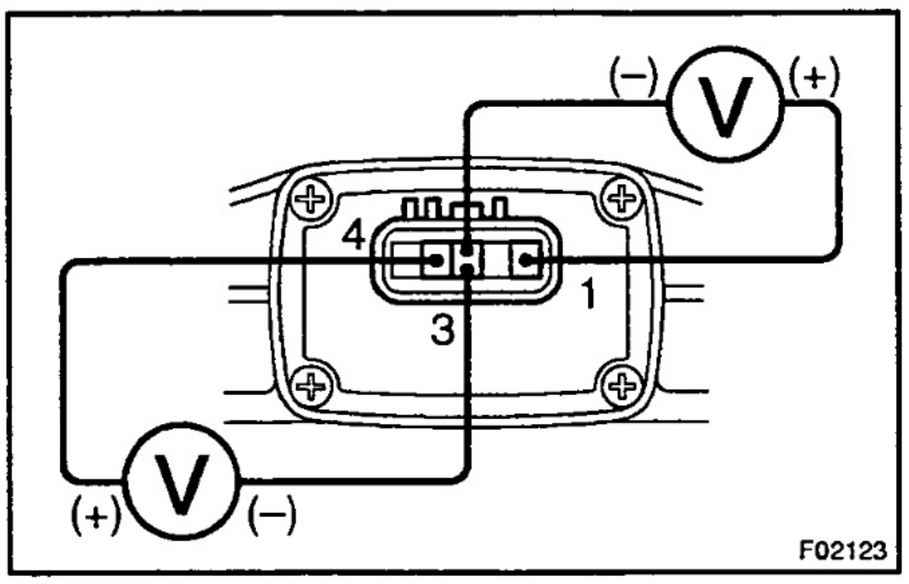

CHECK:

(a) Turn the ignition switch ON.

(b) Measure voltage between terminals 1 and 3, 3 and 4 of the yaw rate sensor with connector still connected.

OK:

Terminals 1 and 3 (YAW – GYAW)	Approx. 2.5 V
Terminals 3 and 4 (GYAW – YD)	Approx. 4.5 V – 5.3 V

NG → Replace yaw rate sensor.

OK

5	Check for open and short circuit in harness and connector between yaw rate sensor and ABS & BA & TRC & VSC ECU (See page IN–33).

NG → Repair or replace harness or connector.

OK

Check and replace ABS & BA & TRC & VSC ECU.

DI6CM–01

DTC	C1336 / 39	Zero Point Calibration of Deceleration Sensor Undone

CIRCUIT DESCRIPTION

DTC No.	DTC Detecting Condition	Trouble Area
C1336 / 39	When any of following 1. through 2. is detected: 1. In TEST mode, the shift lever is shifted to other than P range with 2 sec. after ECU terminal IG1 is turned ON for the first time. 2. When the deceleration sensor zero point recorded in ECU is deleted.	• Deceleration sensor • Deceleration sensor circuit • Neutral start switch circuit (P range)

WIRING DIAGRAM

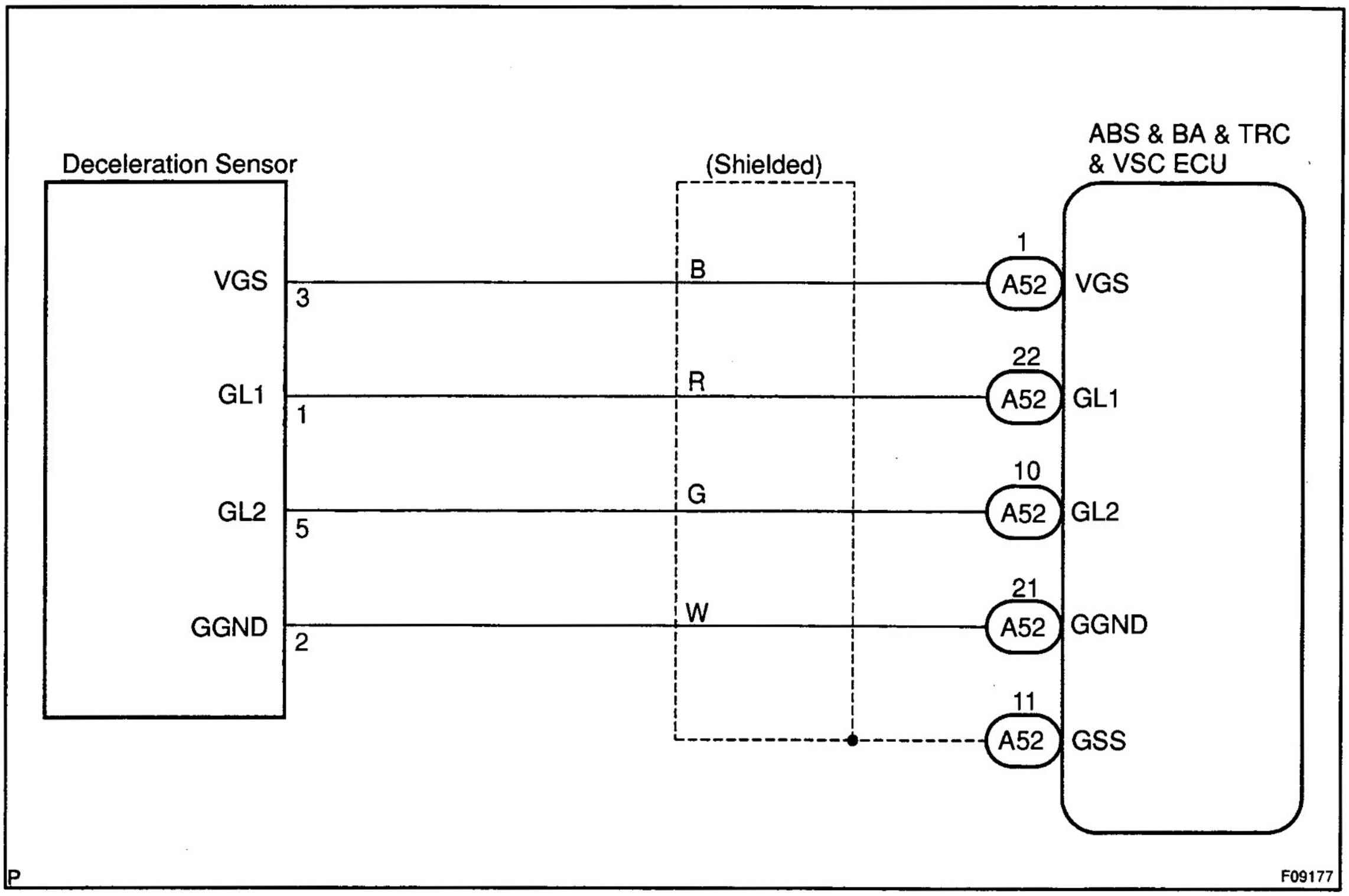

INSPECTION PROCEDURE

1	**Check whether zero point calibration of deceleration sensor has been done or not.**

PREPARATION:

Shift the shift lever in P range and turn the ignition switch ON, repeat connecting and releasing Ts and E_1 terminals of check connector or Ts and CG of DLC3 4 times or more for 8 sec. After that do not move the vehicle for 15 sec. or more.

CHECK:

VSC TRC warning light remains on.

YES → **No problem.**

NO

2	**Carry out deceleration sensor zero point calibration and confirm it by VSC TRC warning light.**

OK:

VSC TRC warning light blinks

OK → **No problem.**

NG

3	**Check DTC for the VSC (See page DI–184).**

*1: Other than DTC C1336 / 39 is output.

*2: DTC C1336 / 39 only is output.

*1 → **Repair ABS control system according to the code output.**

*2

4	Check for open and short circuit in harness and connector between neutral start switch (P range) and ABS & BA & TRC & VSC ECU and engine and ECT ECU (See page IN–33).

NG → Repair or replace harness or connector.

OK ↓

5	Check for open and short circuit in harness and connector between deceleration sensor and ABS & BA & TRC & VSC ECU (See page IN–33).

NG → Repair or replace harness or connector.

OK ↓

6	Check deceleration sensor (See page DI–86).

NG → Replace deceleration sensor.

OK ↓

Check and replace ABS & BA & TRC & VSC ECU.

DTC	C1340 / 47	Center Differential Lock Circuit

DI6CN–01

CIRCUIT DESCRIPTION

DTC No.	DTC Detecting Condition	Trouble Area
C1240 / 47	Open or short circuit in center differential lock circuit.	• Center differential lock system • Center differential lock circuit

WIRING DIAGRAM

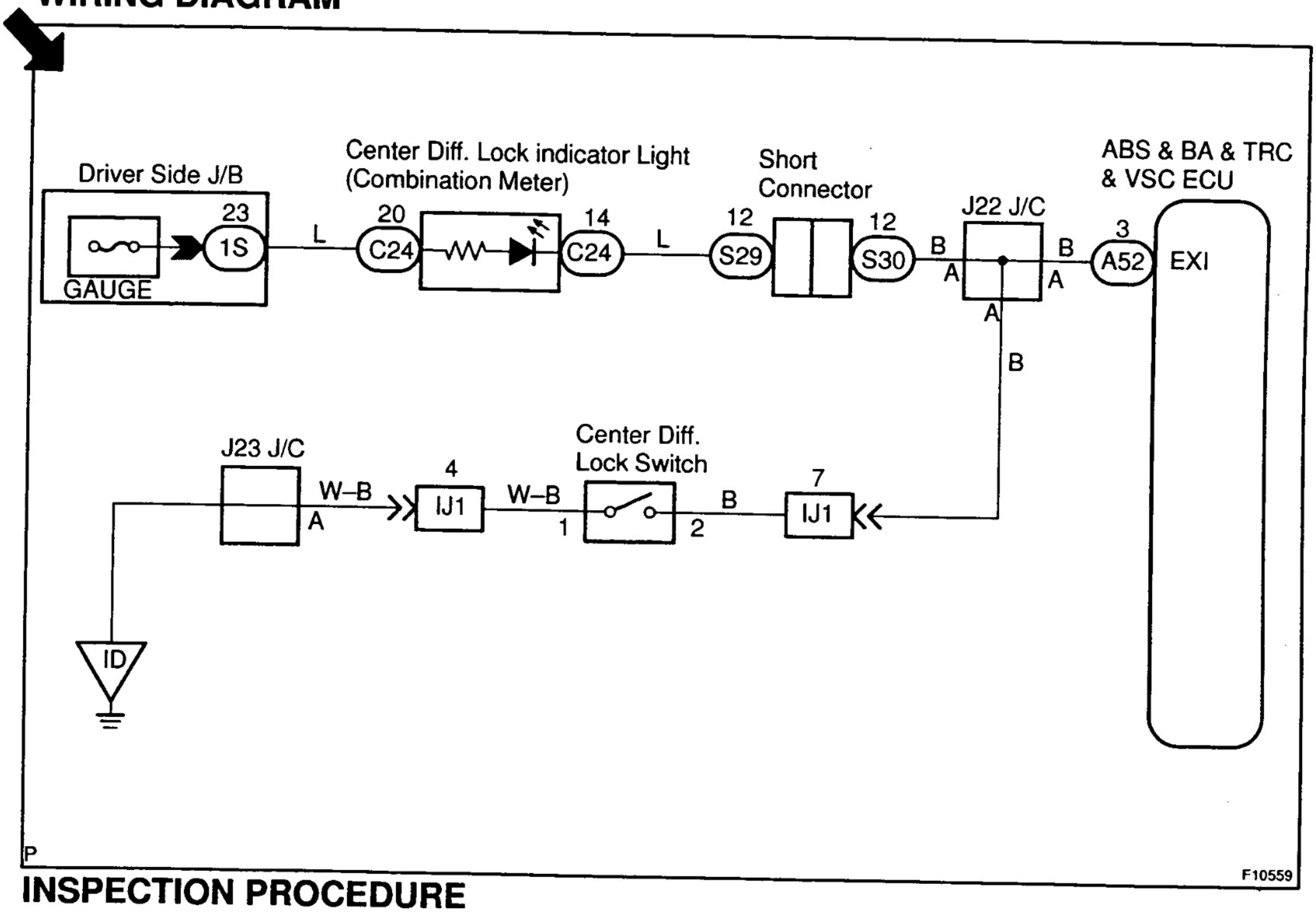

INSPECTION PROCEDURE

1	Check the center differential is free and center diff. lock switch is OFF.

NG → Repair the center differential lock system.

OK

2	**Is DTC output?**

Check DTC on page DI–184.

NO → **Normal.**

YES

3	**Check that bulb for center diff. lock indicator light is not burnt out.**

YES → **Replace indicator light.**

NO

4	**Check for open circuit in harness and connector between battery and center diff. lock indicator light, center diff. lock indicator light and ABS & BA & TRC & VSC ECU (See page IN–33).**

NG → **Repair or replace harness or connector.**

OK

Check and replace ABS & BA & TRC & VSC ECU.

DI6CO–01

DTC	Always ON	Malfunction in ECU VSC TRC Warning Light Circuit

CIRCUIT DESCRIPTION

DTC No.	DTC Detecting Condition	Trouble Area
Always ON	There is a malfunction in the ECU internal circuit.	• Power source circuit • ABS & BA & TRC & VSC ECU • VSC TRC warning light circuit

Fail safe function:
If trouble occurs in the ECU, the ECU prohibits ABS & BA & TRC & VSC controls and the brake system becomes normal.
HINT:
If fail safe function is activated in VSC system, "VSC OFF" indicator light lights up.

WIRING DIAGRAM

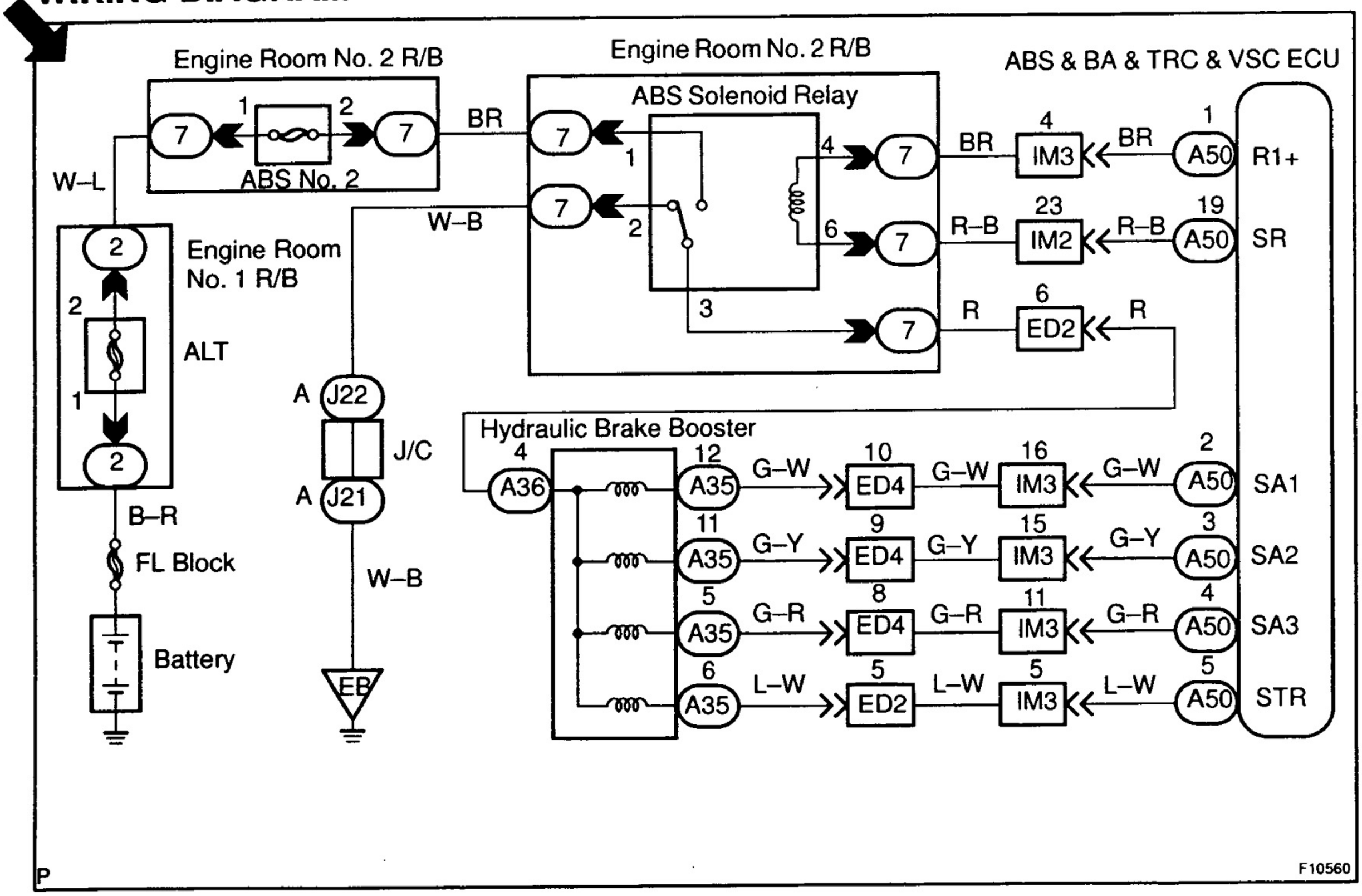

F10560

P

Correction for R/M Pub. No.702E

INSPECTION PROCEDURE

1	**Check that the ECU connectors are securely connected to the ECU.**

NO → **Connect the connector to the ECU.**

YES

2	**Is DTC output for VSC?**

Check DTC on page DI–184.

YES → **Repair circuit indicated by the output code.**

NO

3	**Does VSC TRC warning light go off?**

YES → **Check for open or short circuit in harness and connector between ECU–IG fuse and ECU (See page IN–33).**

NO

4	**Check battery voltage.**

PREPARATION:
Start the engine.
CHECK:
Check the battery voltage.
OK:
Voltage: 10 – 16 V

NG → **Check and repair the charging system.**

OK

5	**Check operation of the VSC TRC warning light.**

In case of using the hand–held tester:
PREPARATION:
(a) Connect the hand–held tester to the DLC3.
(b) Turn the ignition switch ON and push the hand–held tester main switch ON.
(c) Select the ACTIVE TEST mode on the hand–held tester.
CHECK:
Check that "ON" and "OFF" of the VSC TRC warning light can be shown on the combination meter on the hand–held tester.

In case of not using the hand–held tester:
PREPARATION:
(a) Turn the ignition switch OFF.
(b) Disconnect the connector from the ABS & BA & TRC & VSC ECU.
(c) Turn the ignition switch ON.
CHECK:
Check the VSC TRC warning light goes off.

NG → **Check and replace combination meter (See page BE–11).**

OK

6	**Check for short circuit in harness and connector between combination meter and ABS & BA & TRC & VSC ECU, combination meter and check connector (See page IN–33).**

NG → **Repair and replace harness and connector.**

OK

Check and replace ABS & BA & TRC & VSC ECU

DI6CP–01

VSC TRC Warning Light Circuit

CIRCUIT DESCRIPTION

If the ECU stores DTC, the VSC TRC warning light lights on the combination meter.

WIRING DIAGRAM

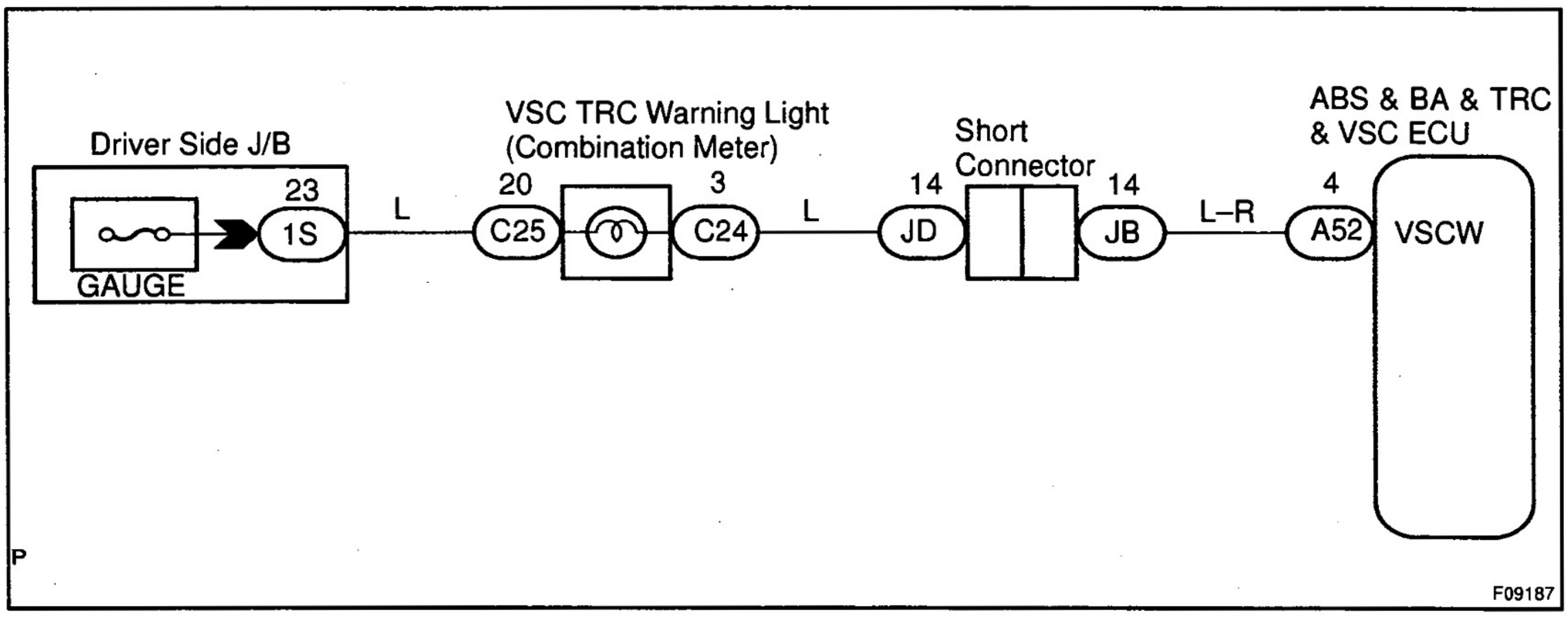

INSPECTION PROCEDURE

Start the inspection from step 1 in case of using the hand–held tester and start from step 2 in case of not using the hand–held tester.

1	**Check operation of the VSC TRC warning indicator.**

PREPARATION:

(a) Connect the hand–held tester to the DLC3.
(b) Turn the ignition switch ON and push the hand–held tester main switch ON.
(c) Select the ACTIVE TEST mode on the hand–held tester.

CHECK:

Check that "ON" and "OFF" of the VSC TRC warning light can be shown on the combination meter with the hand–held tester.

OK → **Check and replace ABS & BA & TRC & VSC ECU.**

NG

2	**Is DTC output for VSC?**

YES → **Repair circuit indicated by the output code.**

NO

3	**Check for open and short circuit in harness and connector between ABS & BA & TRC & VSC ECU and VSC TRC warning light (See page IN–33).**

NG → **Repair or replace harness or connector.**

OK

4	**Check VSC TRC warning light.**

NG → **Repair or replace combination meter.**

OK

Check and replace ABS & BA & TRC & VSC ECU.

DI5CQ-01

SLIP Indicator Light Circuit

CIRCUIT DESCRIPTION

The SLIP indicator blinks during VSC operation.

WIRING DIAGRAM

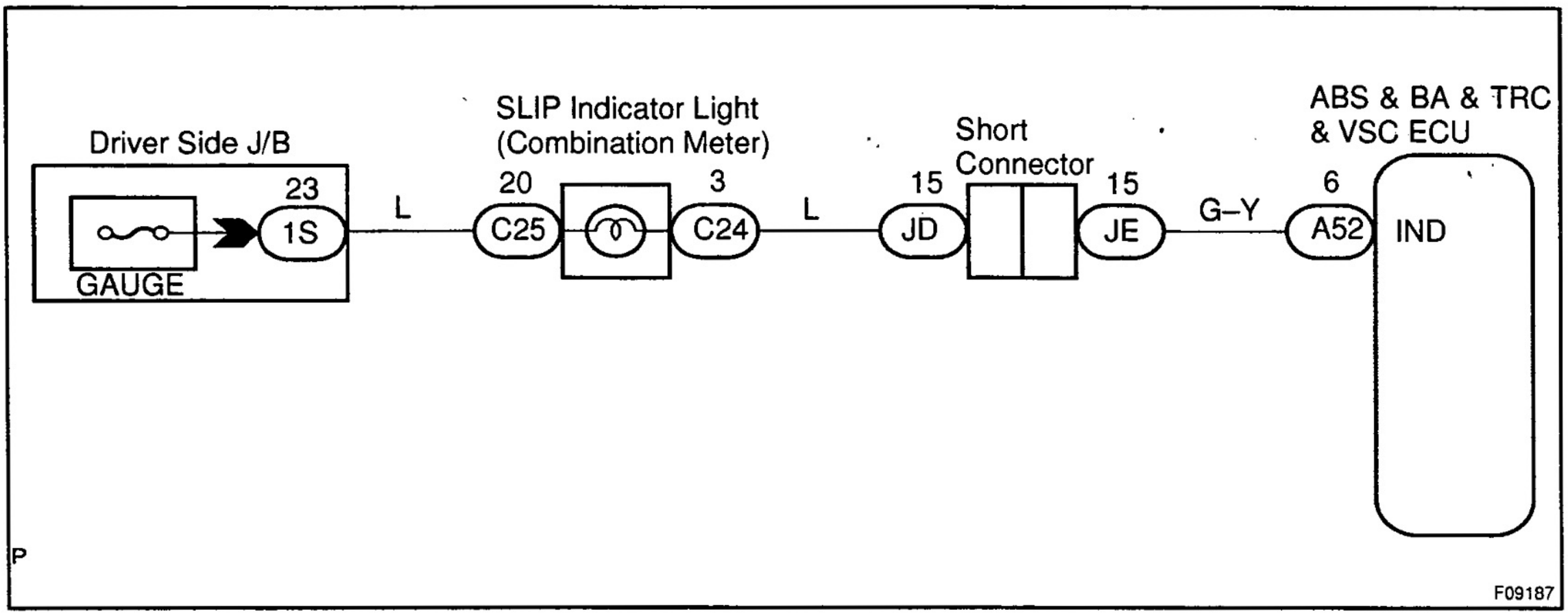

INSPECTION PROCEDURE

1	**Check that the SLIP indicator light is ON for 3 sec. soon after ignition switch is turned ON.**

OK → **Check and replace ABS & BA & TRC & VSC ECU.**

NG

2	**Check SLIP indicator light.**

NG → **Repair or replace combination meter check and replace ABS & BA & TRC & VSC ECU.**

OK

3	**Check for open and short circuit in harness and connector between ABS & BA & TRC & VSC ECU and SLIP indicator light (See page IN–33).**

NG → **Repair or replace harness or connector.**

OK

Check and replace ABS & BA & TRC & VSC ECU.

D16CR-01

VSC OFF Indicator Light, Center Diff. Lock Switch Circuit

CIRCUIT DESCRIPTION

This is the VSC control main switch. When the center differential is locked, VSC control goes off and the VSC OFF indicator lights up. Also, light the VSC OFF indicator light is "ON" when the VSC system is at the fail safe control.

WIRING DIAGRAM

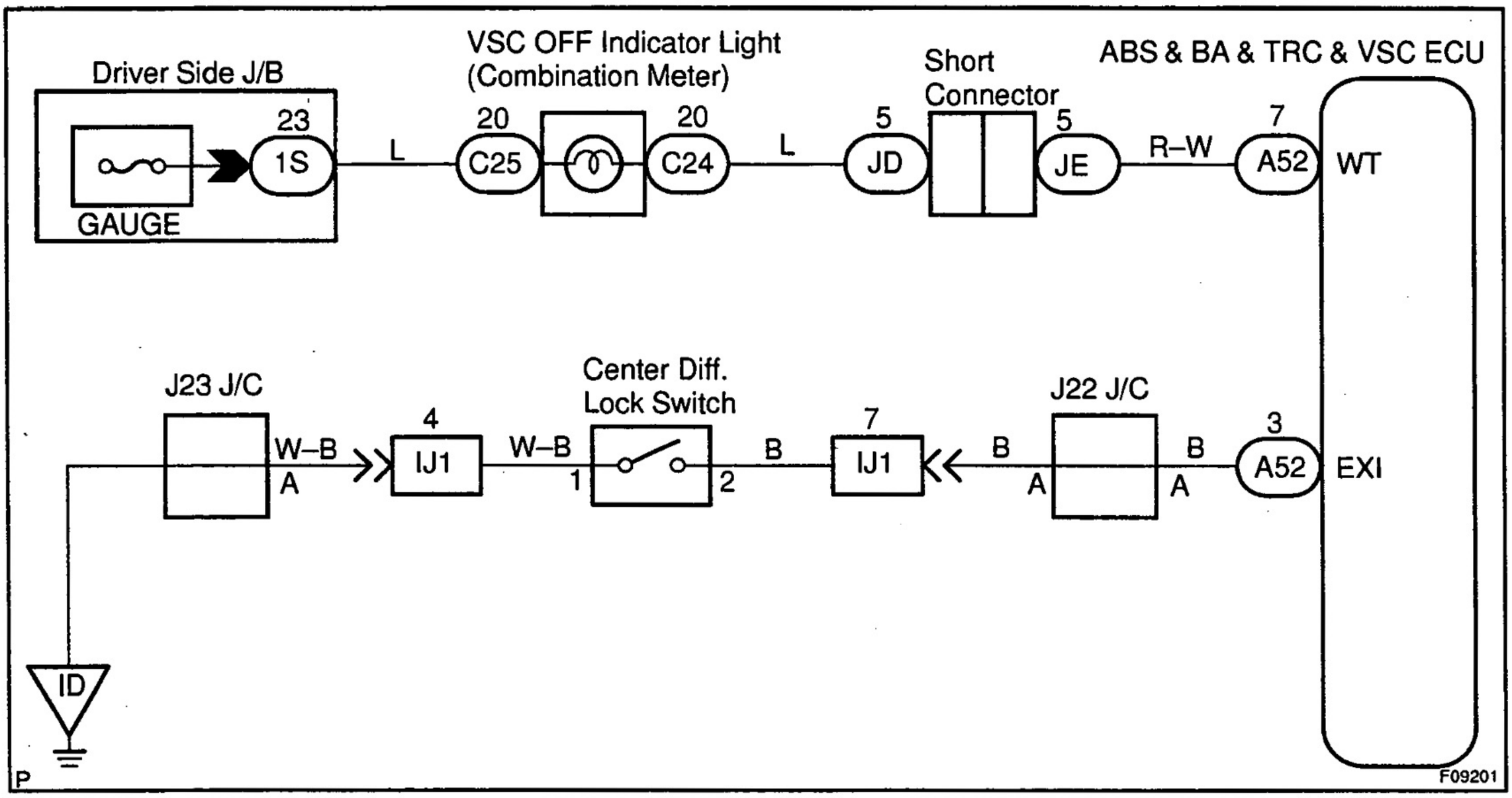

INSPECTION PROCEDURE

HINT:

Start the inspection from step 1 in case of using the hand–held tester and start from step 2 in case of not using the hand–held tester.

1	**Check operation of the VSC OFF indicator light.**

PREPARATION:

(a) Connect the hand–held tester to the DLC3.

(b) Turn the ignition switch ON and push the hand–held tester main switch ON.

(c) Select the ACTIVE TEST mode on the hand–held tester.

CHECK:

Check that "ON" and "OFF" of the VSC OFF indicator light can be shown on the combination meter with the hand–held tester.

NG → **Go to step 4.**

OK

2	**Check center diff. lock switch (See page TR–3).**

NG → **Replace center diff. lock switch.**

OK

3	**Check for open and short circuit in harness and connector between terminal EXI of ABS & BA & TRC & VSC ECU and center diff. lock switch and body ground (See page IN–33).**

NG → **Repair or replace harness or connector.**

OK

4	Check VSC OFF indicator light.

NG → Repair or replace combination meter.

OK →

5	Check for open and short circuit in harness and connector between terminal WT of ABS & BA & TRC & VSC ECU and VSC OFF indicator light (See page IN–33).

NG → Repair or replace harness or connector.

OK →

Check and replace ABS & BA & TRC & VSC ECU.

DI6CS–01

ACTIVE TRC Indicator Light Circuit

CIRCUIT DESCRIPTION

The ACTIVE TRC indicator blinks during TRC operation.

WIRING DIAGRAM

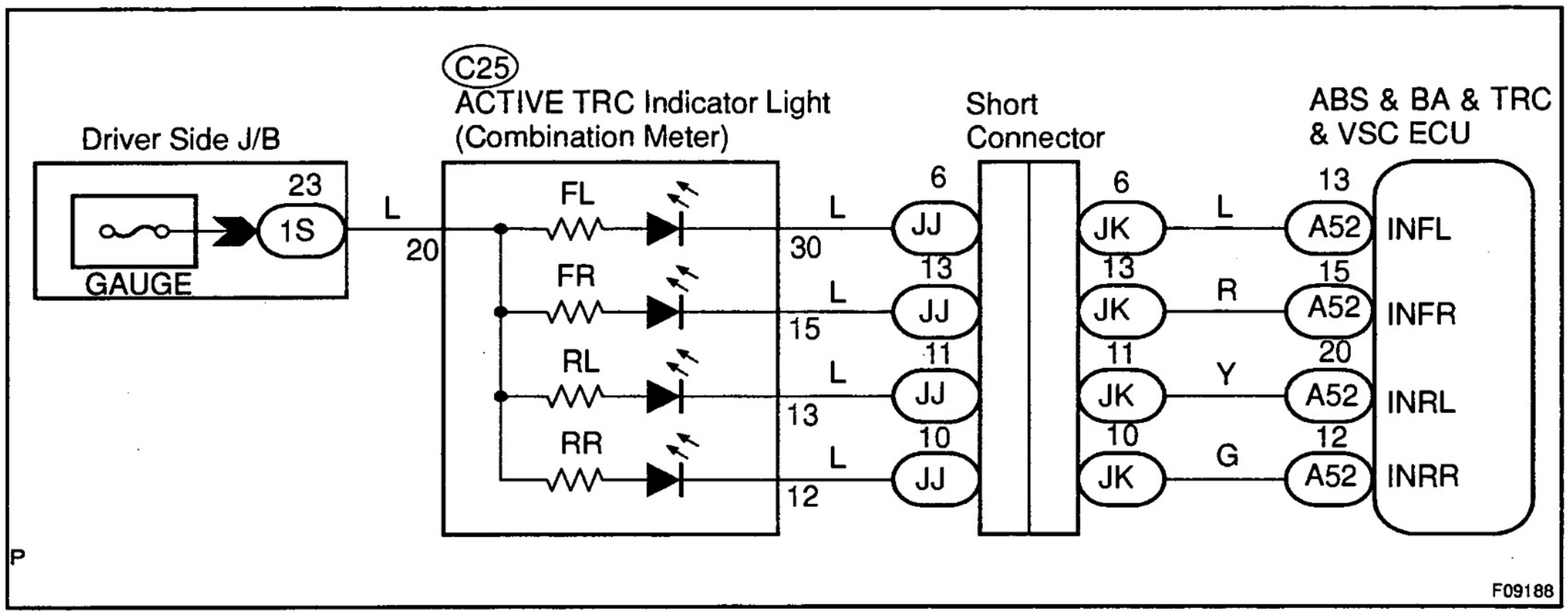

INSPECTION PROCEDURE

1	Check that the ACTIVE TRC indicator light is ON for 3 sec. soon after ignition switch is turned ON.

OK → Check and replace ABS & BA & TRC & VSC ECU.

NG

2	Check ACTIVE TRC indicator light.

NG → Repair or replace combination meter check and replace ABS & BA & TRC & VSC ECU.

OK

3	Check for open and short circuit in harness and connector between each terminals of ABS & BA & TRC & VSC ECU and ACTIVE TRC indicator light (See page IN–33).

NG → Repair or replace harness or connector.

OK

Check and replace ABS & BA & TRC & VSC ECU.

DI6CT–01

VSC Warning Buzzer Circuit

CIRCUIT DESCRIPTION

The brake warning, VSC buzzer sounds while the accumulator pressure is abnormally low or an abnormality causing low fluid pressure occurs or VSC is activated.

WIRING DIAGRAM

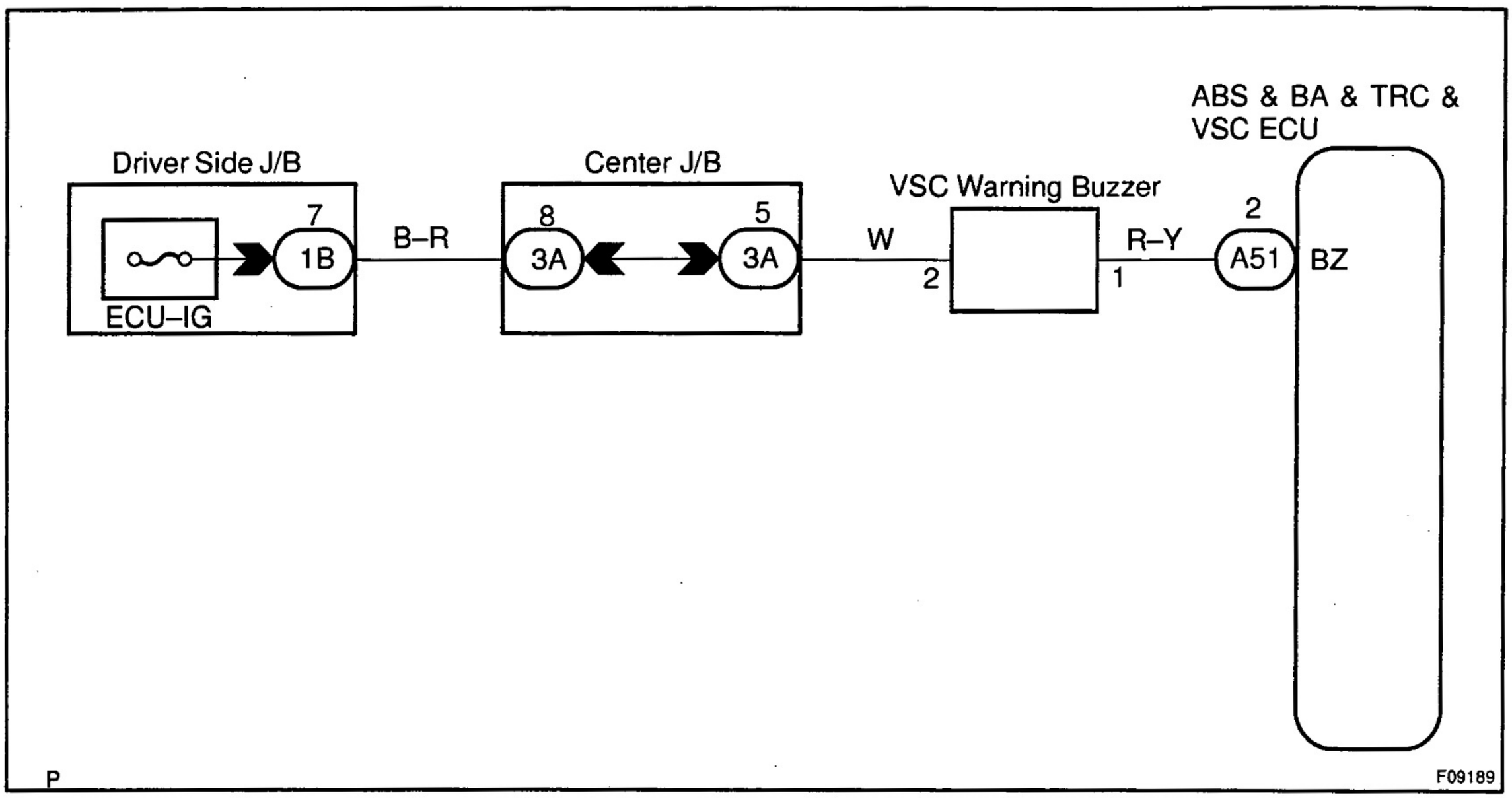

INSPECTION PROCEDURE

Start the inspection from step 1 in case of using the hand–held tester and start from step 2 in case of not using the hand–held tester.

1	**Check operation of the VSC warning buzzer.**

PREPARATION:

(a) Connect the hand–held tester to the DLC3.

(b) Turn the ignition switch ON and push the hand–held tester main switch ON.

(c) Select the ACTIVE TEST mode on the hand–held tester.

CHECK:

Check that brake warning, VSC buzzer sounds "ON" and "OFF" with the hand–held tester.

OK → **Check and replace ABS & BA & TRC & VSC ECU.**

NG

2	Check VSC warning buzzer.

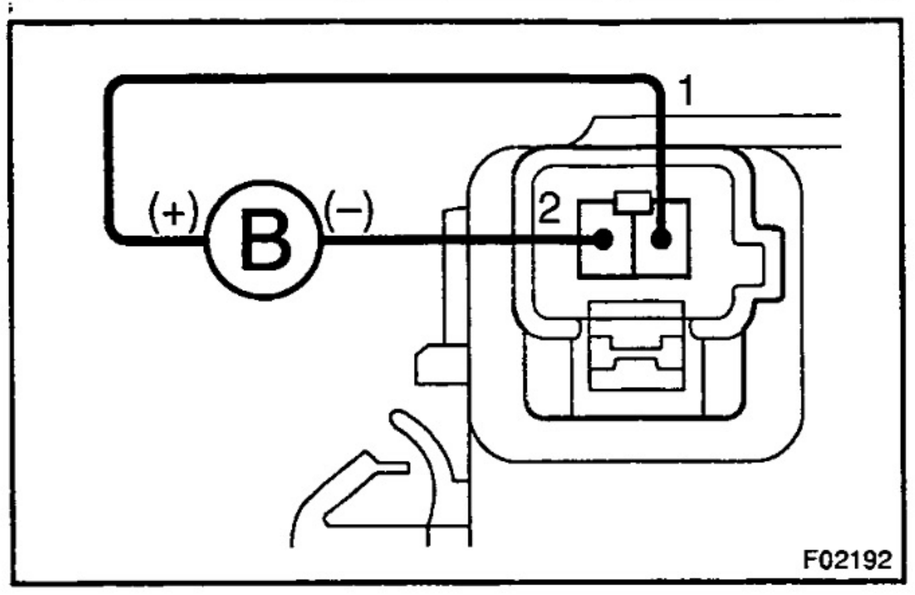

PREPARATION:

Disconnect the VSC warning buzzer connector.

CHECK:

Apply battery voltage to the terminals 1 and 2 of brake warning, VSC buzzer connector, check that the VSC warning buzzer sounds.

NG → Replace VSC warning buzzer.

OK ↓

3	Check for open and short circuit in harness and connector between ABS & BA & TRC & VSC ECU and VSC warning buzzer (See page IN–33).

NG → Repair or replace harness or connector.

OK ↓

Check and replace ABS & BA & TRC & VSC ECU.

DI6CU–01

Check for Fluid Leakage

Check for fluid leakage from actuator or hydraulic lines.

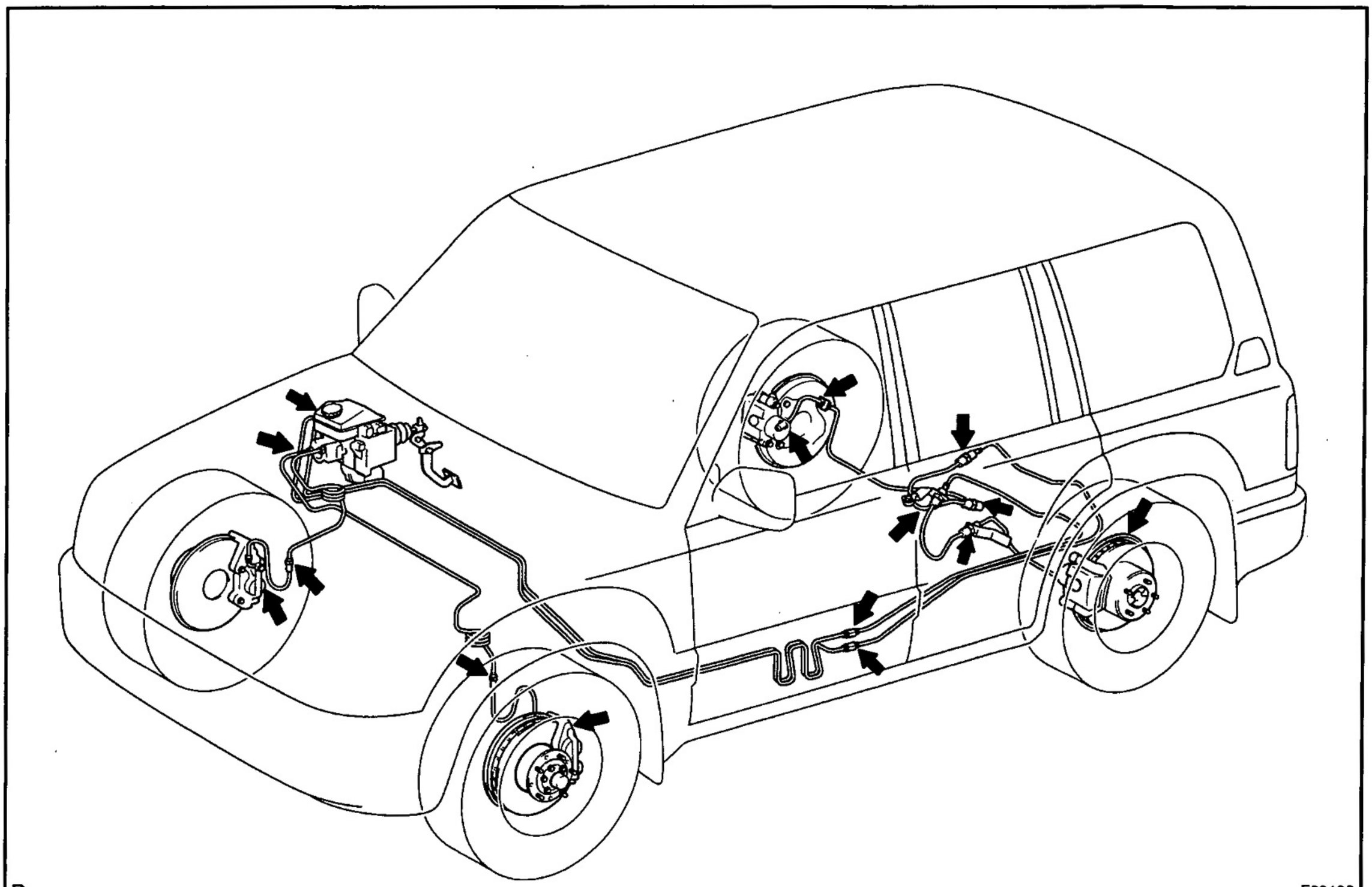

P F09190

ACTIVE TRACTION CONTROL & BRAKE ASSIST (BA) SYSTEM

DI6CV–01

HOW TO PROCEED WITH TROUBLESHOOTING

Troubleshooting in accordance with the procedure on the following pages.

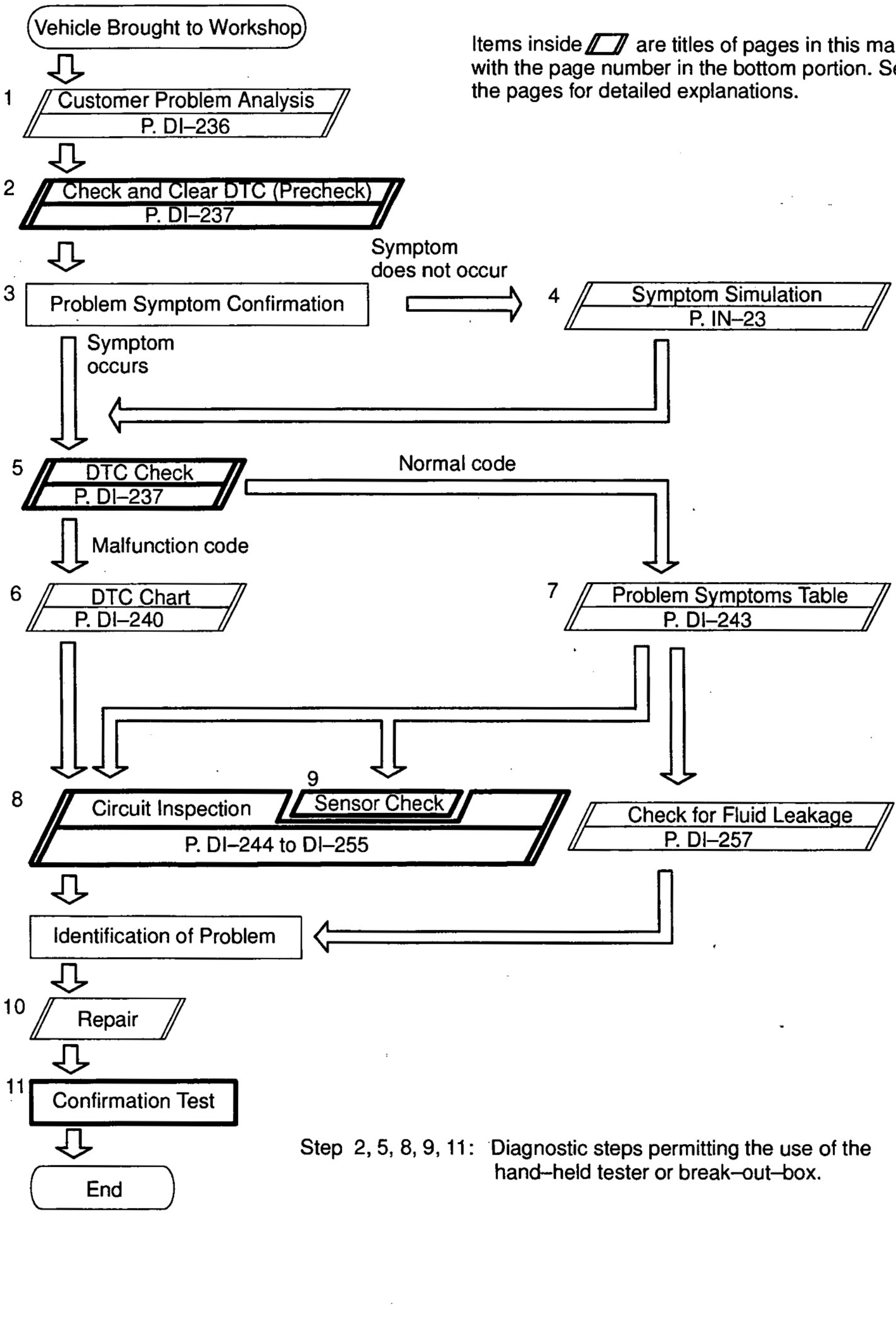

Items inside ▱ are titles of pages in this manual, with the page number in the bottom portion. See the pages for detailed explanations.

Step 2, 5, 8, 9, 11: Diagnostic steps permitting the use of the hand–held tester or break–out–box.

DI6CW–01

CUSTOMER PROBLEM ANALYSIS CHECK

Active TRC & BA Check Sheet

Inspector's Name :

Customer's Name		**Registration No.**	
		Registration Year	/ /
		Frame No.	
Date Vehicle Brought In	/ /	**Odometer Reading**	km miles

Date Problem First Occurred	/ /
Frequency Problem Occurs	☐ Continuous ☐ Intermittent (times a day)

Symptoms	☐ ABS does not operate.	
	☐ ABS does not operate efficiently.	
	☐ TRC does not operate. (Wheels spin when starting rapidly.)	
	☐ BA does not operate.	
	ABS Warning Light Abnormal	☐ Remains ON ☐ Does not Light Up
	TRC Warning Indicator Light Abnormal	☐ Remains ON ☐ Does not Light Up
	ACTIVE TRC Indicator Light Abnormal	☐ Remains ON ☐ Does not Light Up

Check Item	**Malfunction Indicator Light**	☐ Normal ☐ Malfunction Code (Code)

DTC Check	**1st Time**	☐ Normal Code ☐ Malfunction Code (Code)
	2nd Time	☐ Normal Code ☐ Malfunction Code (Code)

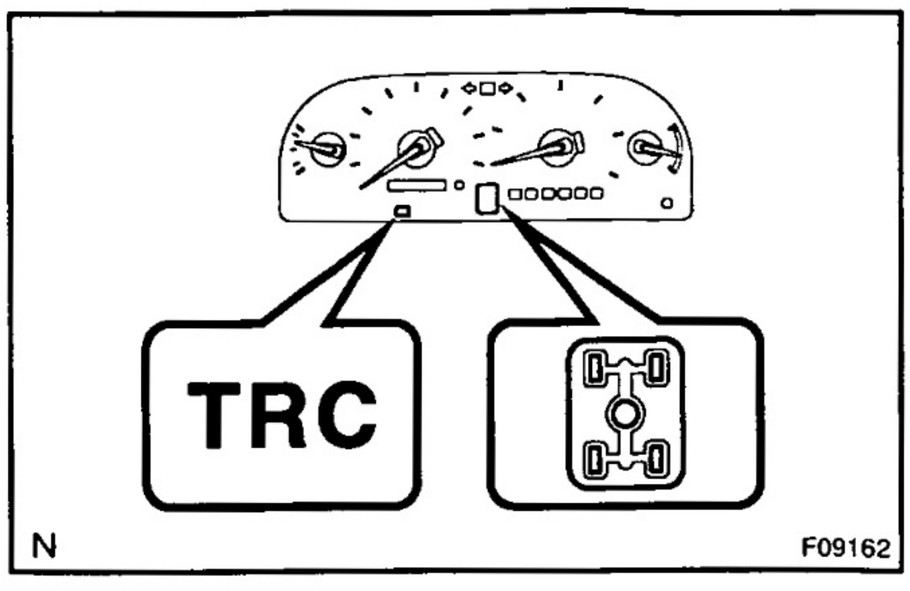

DI6CX-01

PRE–CHECK

1. DIAGNOSIS SYSTEM

(a) Check the warning lights.

(1) When the ignition switch is turned ON, check that the TRC warning light, and ACTIVE TRC indicator lights goes on for 3 sec.

(2) When depressing the brake pedal repeatedly it may turn on the warning lights.

HINT:

- If the ECU stores DTC, TRC warning light is ON.
- If the indicator check result is not normal, proceed to troubleshooting for the TRC warning light circuit and ACTIVE TRC indicator light circuit (See page DI–253 and DI–255).

(b) In case of not using hand–held tester:
Check the DTC.

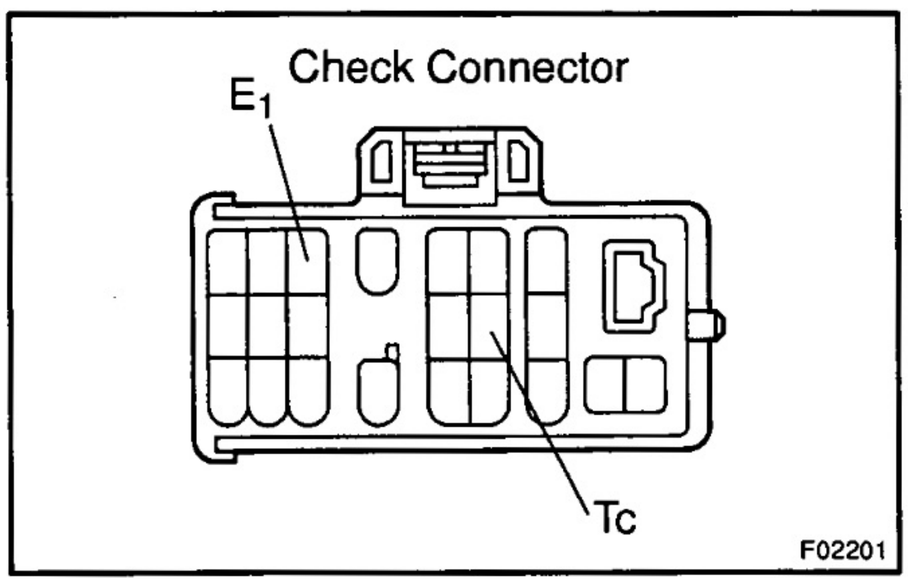

(1) Using SST, connect terminals Tc and E_1 of check connector.

SST 09843–18020

(2) Turn the ignition switch ON.

(3) Read the DTC from the TRC warning light on the combination meter.

HINT:

- If no code appears, inspect the diagnostic circuit or TRC warning light circuit (See page DI–178 or DI–253).

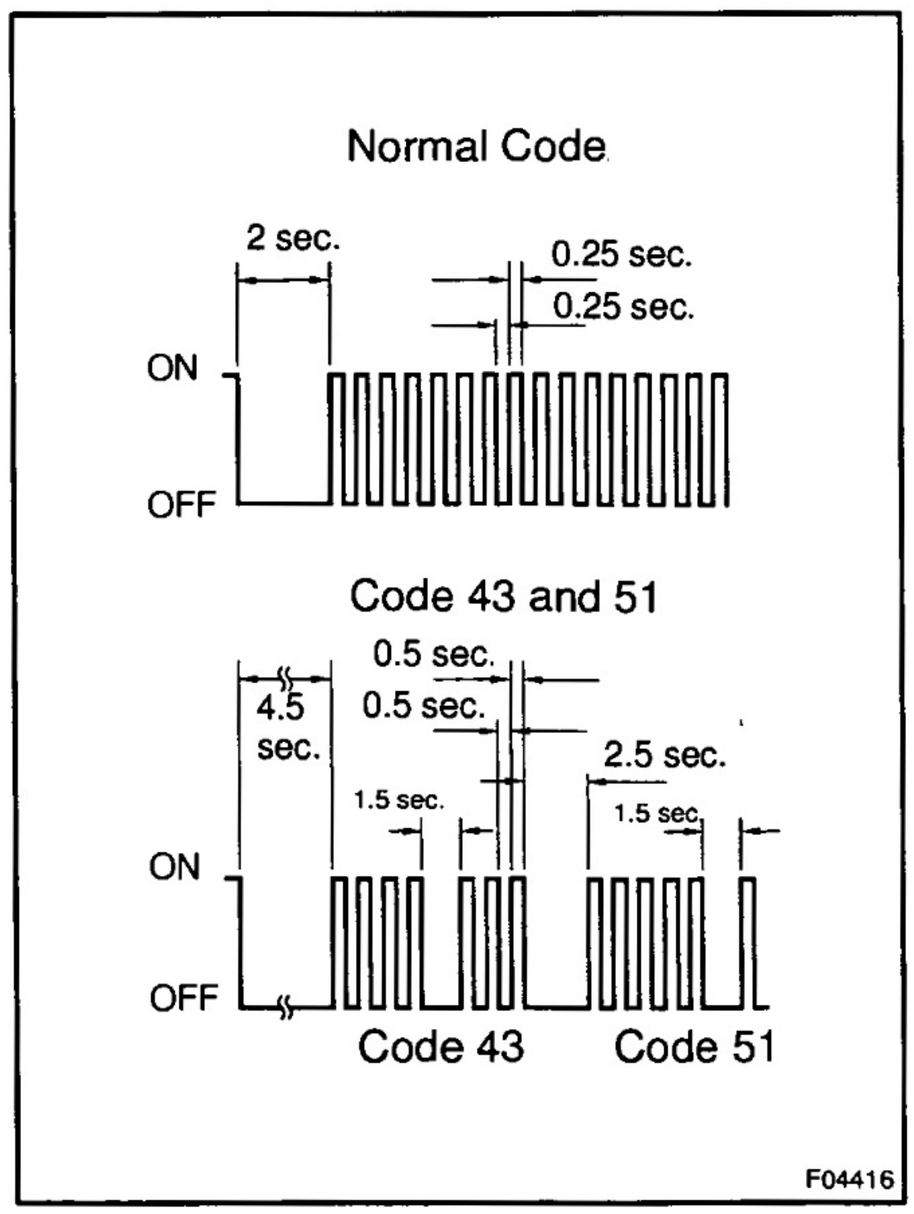

- As an example, the blinking patterns for normal code and codes 43 and 51 are shown on the left.

(4) Codes are explained in the code table on page DI–240.

(5) After completing the check, disconnect terminals Tc and E_1 of check connector, and turn off the display.

If 2 or more malfunctions are indicated at the same time the lowest numbered DTC will be displayed 1st.

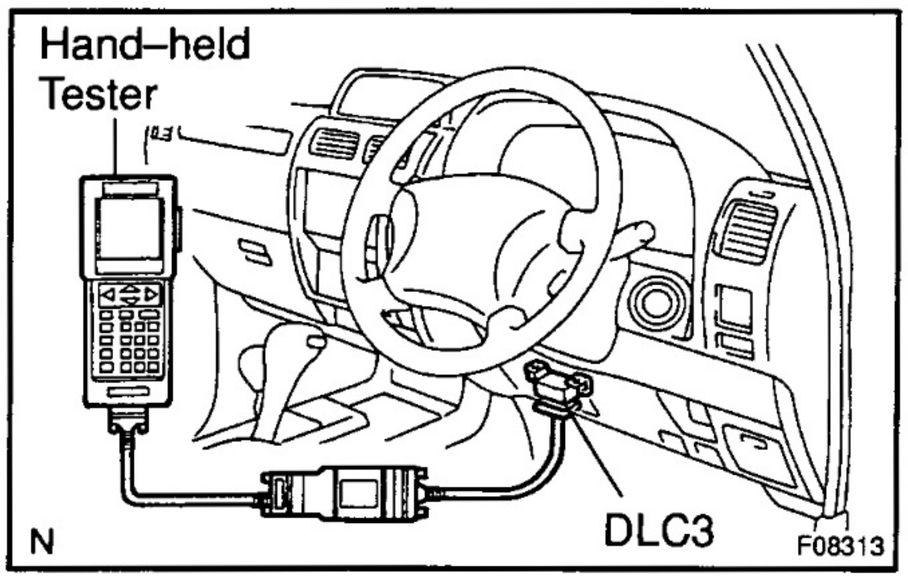

(c) In case of using hand–held tester:
Check the DTC.
(1) Hook up the hand–held tester to the DLC3.
(2) Turn the ignition switch ON.
(3) Read the DTC by following the prompts on the tester screen.

HINT:
Please refer to the hand–held tester operator's manual for further details.

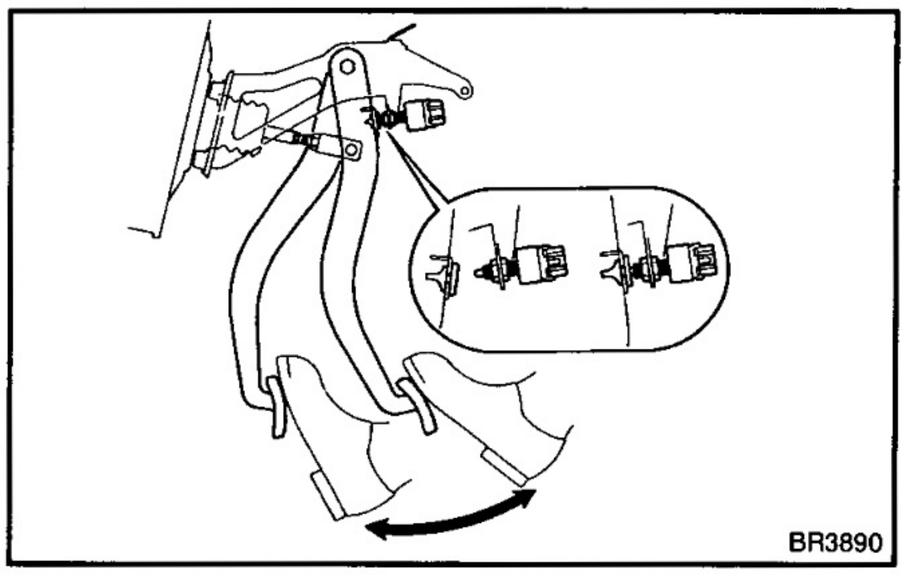

(d) In case of not using hand–held tester:
Clear the DTC.
(1) Using SST, connect terminals Tc and E_1 of check connector.
SST 09843–18020
(2) Turn the ignition switch ON.
(3) Clear the DTC stored in ECU by depressing the brake pedal 8 or more times within 5 sec.
(4) Check that the warning light shows the normal code.
(5) Remove the SST from the terminals of check connector.
SST 09843–18020

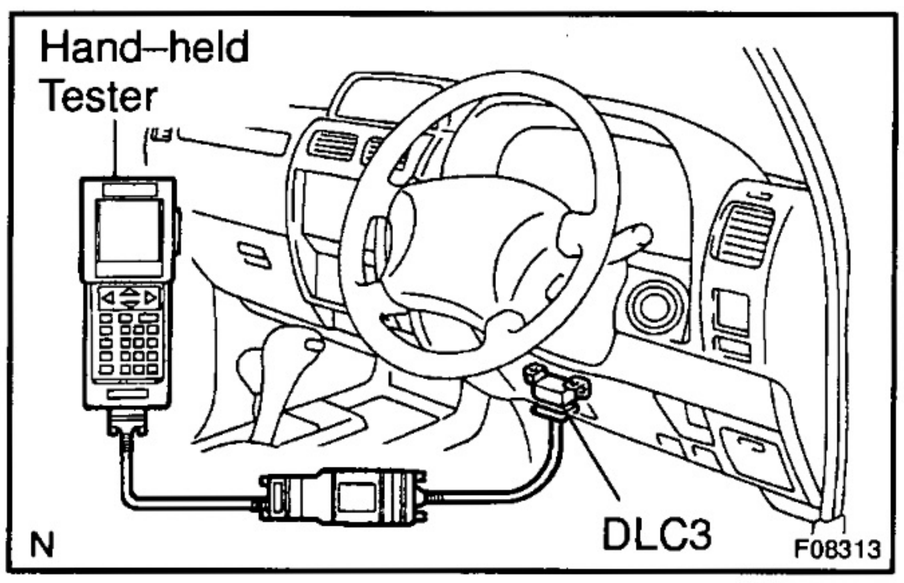

(e) In case of using hand–held tester:
Clear the DTC.
(1) Hook up the hand–held tester to the DLC3.
(2) Turn the ignition switch ON.
(3) Operate the hand–held tester to erase the codes.
(See hand–held tester operator's manual.)

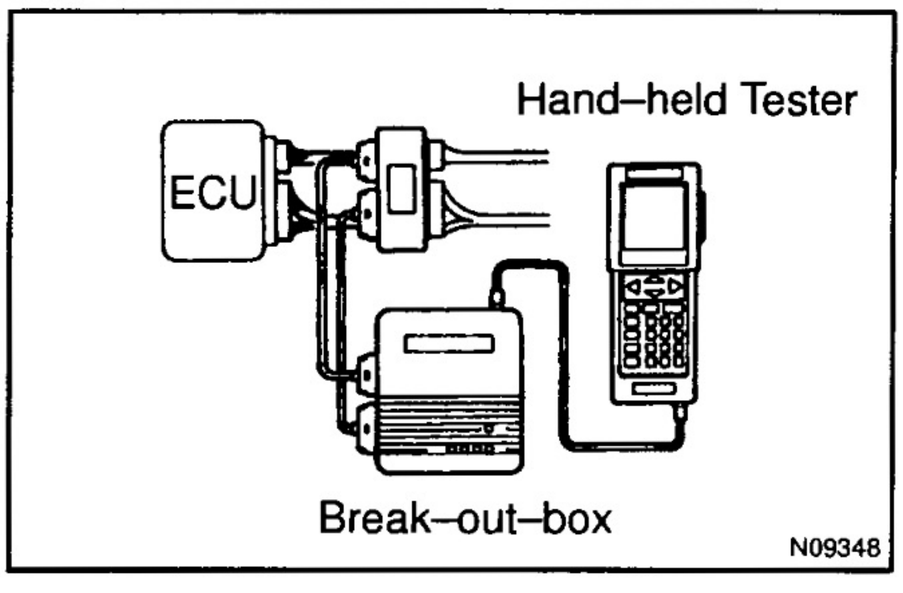

(f) Reference:
Using break–out–box and hand–held tester, measure the ECU terminal values.
(1) Turn the ignition switch OFF.
(2) Hook up the break–out–box and hand–held tester to the vehicle.
(3) Turn the ignition switch ON.
(4) Read the ECU input/output values by following the prompts on the tester screen.

HINT:

- Hand–held tester has a "Snapshot" function. This records the measured values and is effective in the diagnosis of intermittent problems.
- Please refer to the hand–held tester/break–out–box operator's manual for further details.

DI6CY–01

DIAGNOSTIC TROUBLE CODE CHART

NOTICE:

When removing the part, turn the ignition switch OFF.

HINT:

- Using SST 09843–18020, connect the terminals Tc and E_1 of check connector.
- If any abnormality is not found when inspecting parts, inspect the ECU.
- If a malfunction code is displayed during the DTC check, check the circuit listed that code. For details of each code, turn to the page referred to under the "See page" for respective "DTC No." in the DTC chart.

DTC chart of traction control system:

DTC No. (See Page)	Detection Item	Trouble Area
C1223 / 43 (DI–247)	Malfunction in ABS control system	ABS control system
C1224 / 44 (DI–248)	Open or short circuit in NE signal circuit	• NEO circuit • Engine and ECT ECU • ABS & BA & TRC ECU
C1201 / 51 (DI–244)	Engine and ECT ECU system malfunction	Engine control system
C1203 / 53 (DI–245)	Engine and ECT ECU communication circuit malfunction	• ENG+ or ENG– circuit • Engine and ECT ECU
Always ON (DI–250)	Malfunction in ABS & BA & TRC ECU Open circuit in TRC warning indicator circuit	• Power source circuit • TRC warning light circuit

HINT:

There is a case that hand–held tester cannot be used when TRC warning light is always on.

DI5CZ–01

PARTS LOCATION

See page DI–95.

DI6D0-01

TERMINALS OF ECU

See page DI–96.

DI6D1–01

PROBLEM SYMPTOMS TABLE

If a normal code is displayed during the DTC check but the problem still occurs, check the circuits for each problem symptom in the order given in the table below and proceed to the relevant troubleshooting page.

NOTICE:

When replacing ABS & BA & TRC ECU, sensor or etc., turn the ignition switch OFF.

Symptom	Suspect Area	See page
TRC does not operate.	Only when inspection circuits for each problem symptom are all normal and the problem is still occurring, replace the ABS & BA & TRC ECU. 1. Check the DTC, reconfirming that the normal code is output. 2. IG power source circuit 3. Check the hydraulic circuit for leakage. 4. Speed sensor circuit	 DI–237 DI–119 DI–257 DI–101
TRC warning light abnormal.	Only when inspection circuits for each problem symptom are all normal and the problem is still occurring, replace the ABS & BA & TRC ECU. 1. TRC warning light circuit 2. ABS & BA & TRC ECU	 DI–253 IN–33
ACTIVE TRC indicator light abnormal.	ACTIVE TRC indicator light circuit	DI–255
DTC check cannot be done.	Only when inspection circuits for each problem symptom are all normal and the problem is still occurring, replace the ABS & BA & TRC ECU. 1. TRC warning light circuit 2. Tc terminal circuit	 DI–253 DI–178

DI6D2-01

CIRCUIT INSPECTION

DTC	C1201 / 51	Engine Control System Malfunction

CIRCUIT DESCRIPTION

If trouble occurs in the engine control system, the ECU prohibits TRC control.

DTC No.	DTC Detecting Condition	Trouble Area
C1201 / 51	Conditions 1. and 2. continue for 5 sec.: 1. Engine speed: 500 rpm or more. 2. A trouble signal in the engine control system is input.	Engine control system

INSPECTION PROCEDURE

1	**Check the DTC for the engine.**

*1 → **Repair engine control system according to the output code.**

*2 → **Check for engine and ECT ECU connected to malufunction indicator light.**

*1: Output NG code

*2: Malfunction indicator light remains ON

DI6D3-01

DTC	C1203 / 53	Engine and ECT ECU Communication Circuit Malfunction

CIRCUIT DESCRIPTION

The circuit is used to send TRC control information from the engine and ECT ECU to the ABS & BA & TRC ECU (ENG+, ENG–).

DTC No.	DTC Detecting Condition	Trouble Area
C1203 / 53	Either of the following 1. or 2. continues for 5 sec.: 1. ECU IG1 terminal voltage is 9.5 V to 17.0 V and data transmission to the engine and ECT ECU is impossible. 2. ECU IG1 terminal voltage is 9.5 V to 17.0 V, engine speed is 500 rpm or more or vehicle speed is 60 km/h (36 mph) or more and data receiving from the engine and ECT ECU impossible.	• ENG+ or ENG– circuit • Engine and ECT ECU

Fail safe function:
If trouble occurs in the engine and ECT ECU communication circuit, the ECU prohibits TRC control.

WIRING DIAGRAM

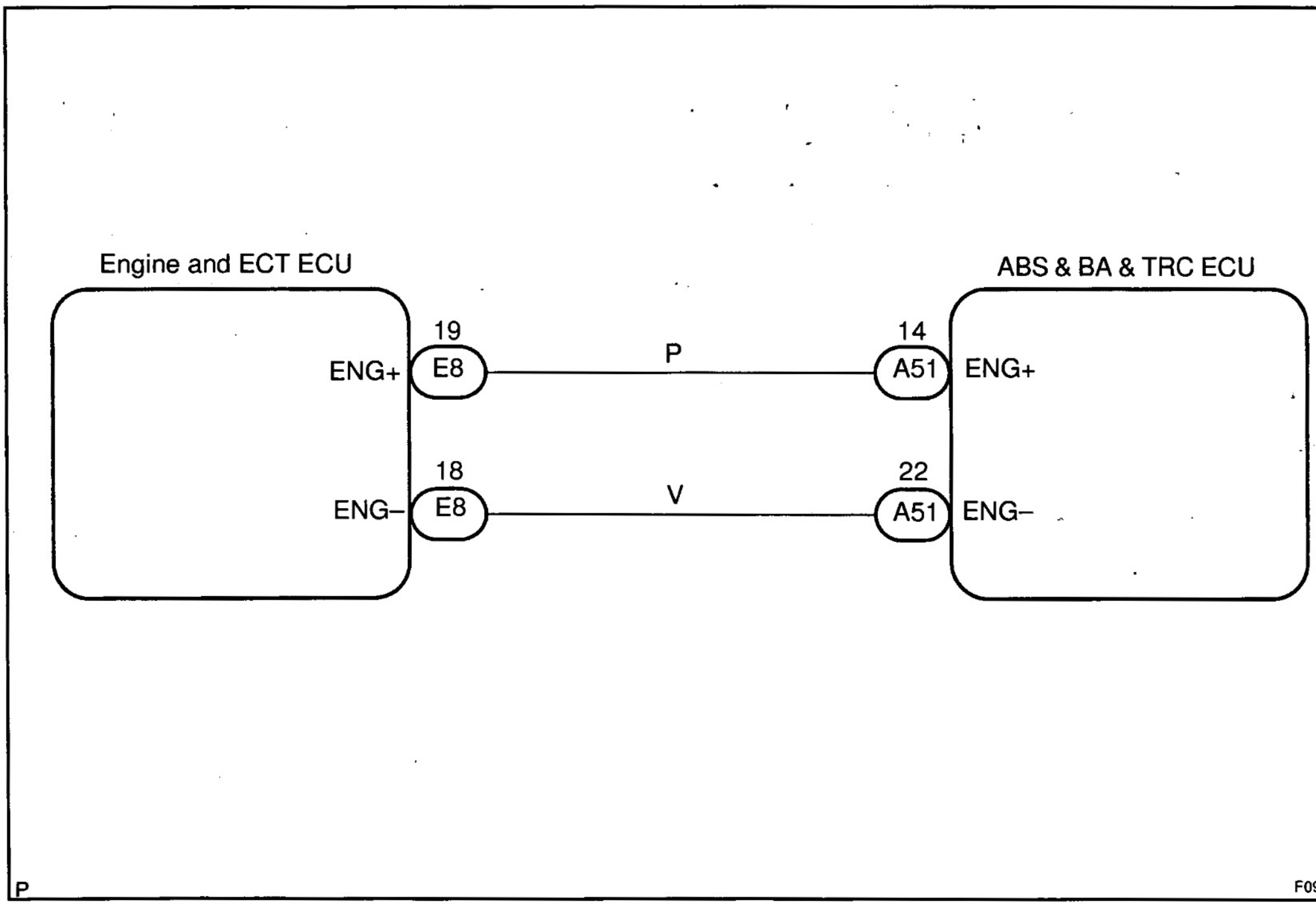

INSPECTION PROCEDURE

1	**Check ABS & BA & TRC ECU communication.**

(REFERENCE) INSPECTION USING OSCILLOSCOPE

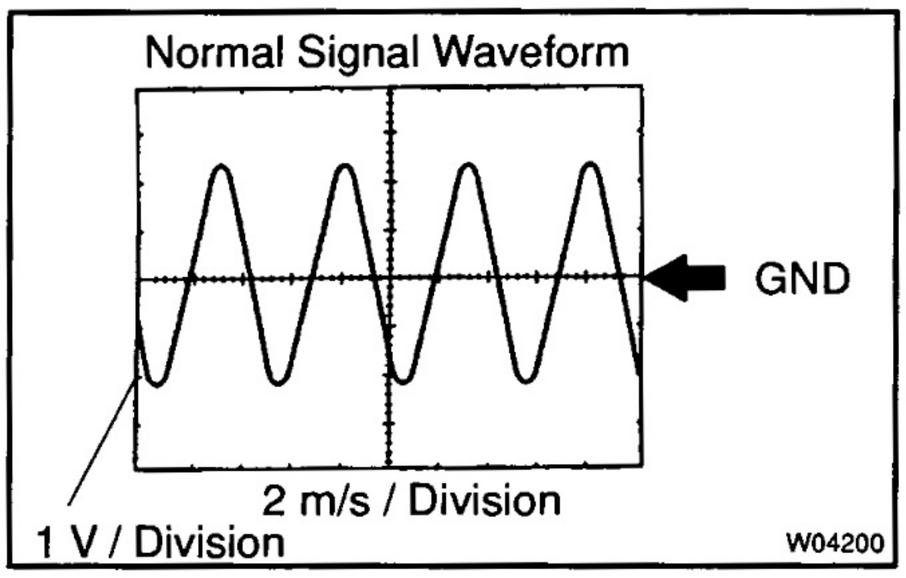

PREPARATION:

(a) Remove the ABS & BA & TRC ECU.

(b) Connect the oscilloscope to the each of terminals ENG+ and GND of the ABS & BA & TRC ECU.

CHECK:

Start the engine and check the signal waveform.

NG → **Check and replace ABS & BA & TRC ECU.**

OK

2	**Check for open and short circuit in harness and connector between each of terminals ENG+, ENG– of ABS & BA & TRC ECU and engine and ECT ECU (See page IN–33).**

NG → **Repair or replace harness or connector.**

OK

Check and replace engine and ECT ECU.

DI6D4–01

DTC	C1223 / 43	ABS Control System Malfunction

CIRCUIT DESCRIPTION

DTC No.	DTC Detecting Condition	Trouble Area
C1223 / 43	ABS control system is abnormal.	ABS control system

INSPECTION PROCEDURE

1	Check the DTC for the ABS (See page DI–86).

*1 → Repair ABS control system according to the code output.

*2

Check for ECU connected to malufunction indicator light.

*1: Output NG code
*2: Malfunction indicator light remains ON

DI6D5-01

DTC	C1224 / 44	NE Signal Circuit

CIRCUIT DESCRIPTION

The ABS & BA & TRC ECU receives engine revolution speed signals (NE signals) from the engine and ECT ECU.

DTC No.	DTC Detecting Condition	Trouble Area
C1224 / 44	When any of the following 1. through 2. is detected: 1. At vehicle speed of 30 km/h (19 mph) or more, and when data received from the engine and ECT ECU is in normal condition, and open or short circuit for engine revolution signal circuit continues for 10 sec. or more. 2. While TRC is operating, the conditions that open or short circuit in engine revolution signal circuit is detected, main throttle opening degree is 0 and IDL switch is OFF continue for 0.24 sec. or more.	• NEO circuit • Engine and ECT ECU • ABS & BA & TRC ECU

Fail safe function:

If trouble occurs in the NE signal circuit, the ECU prohibits TRC control.

WIRING DIAGRAM

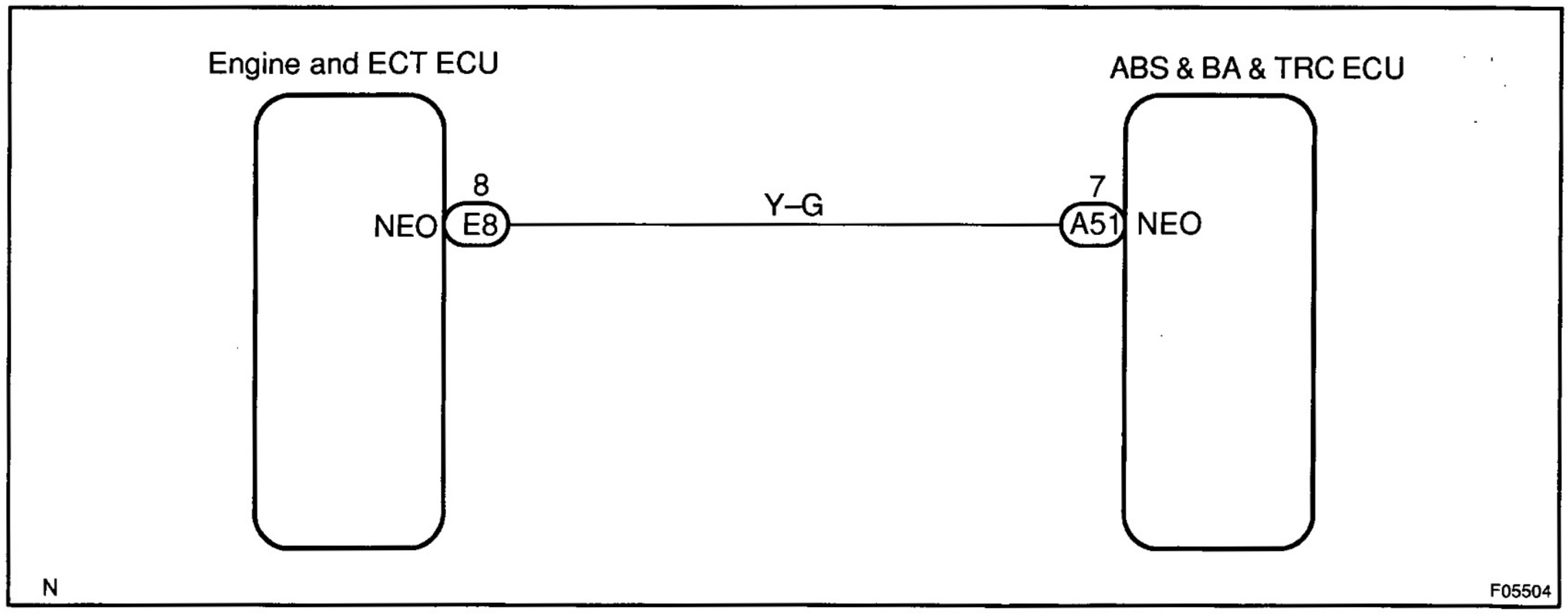

INSPECTION PROCEDURE

1	**Check for open and short circuit in harness and connector between terminal NEO of ABS & BA & TRC ECU and terminal NEO of engine and ECT ECU (See page IN–33).**

NG → **Repair or replace harness and connector.**

OK

2	**Check voltage between terminal NEO of ABS & BA & TRC ECU and body ground.**

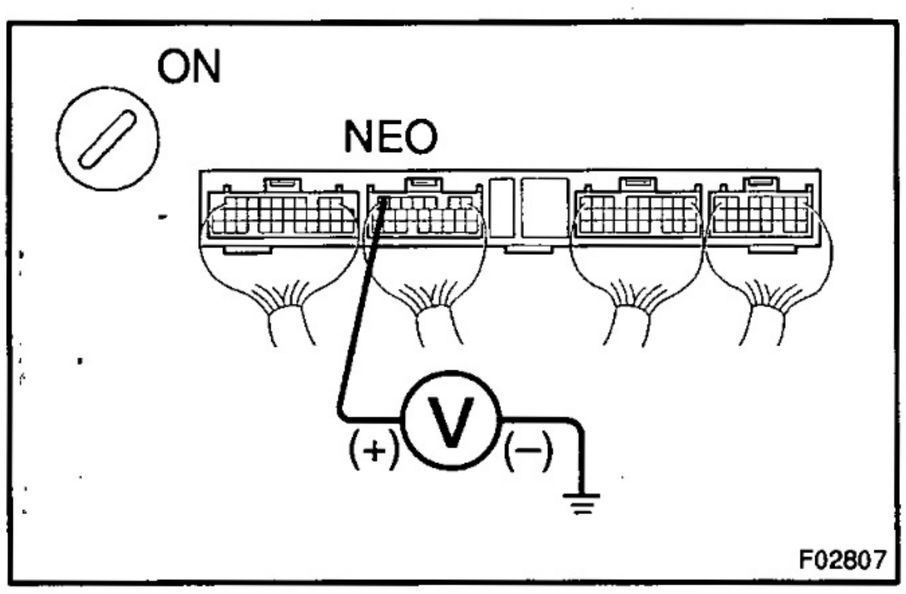

PREPARATION:

Remove ABS & BA & TRC ECU with connectors still connected.

CHECK:

(a) Turn ignition switch ON.

(b) Measure voltage between terminal NEO of ABS & BA & TRC ECU and body ground for the engine conditions below.

OK:

Engine condition	Voltage
OFF (IG ON)	3 – 6 V or below 1 V
ON (Idling)	3 – 6 V ↔ below 1 V (Pulse)

(Reference)

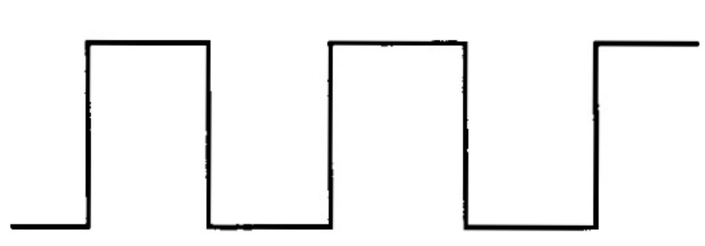

NG → **Check and replace ABS & BA & TRC ECU or engine and ECT ECU.**

OK

If the same codes is still output after the DTC is deleted, check the contact condition of each connection.

DI6D5–02

DTC	Always ON	Malfunction in ECU TRC Warning Light Circuit

CIRCUIT DESCRIPTION

DTC No.	DTC Detecting Condition	Trouble Area
Always ON	There is a malfunction in the ECU internal circuit.	• Power source circuit • ABS & BA & TRC ECU • TRC warning light circuit

Fail safe function:

If trouble occurs in the ECU, the ECU prohibits ABS & BA & TRC controls and the brake system becomes normal.

HINT:

If fail safe function is activated in TRC system, TRC warning light lights up.

WIRING DIAGRAM

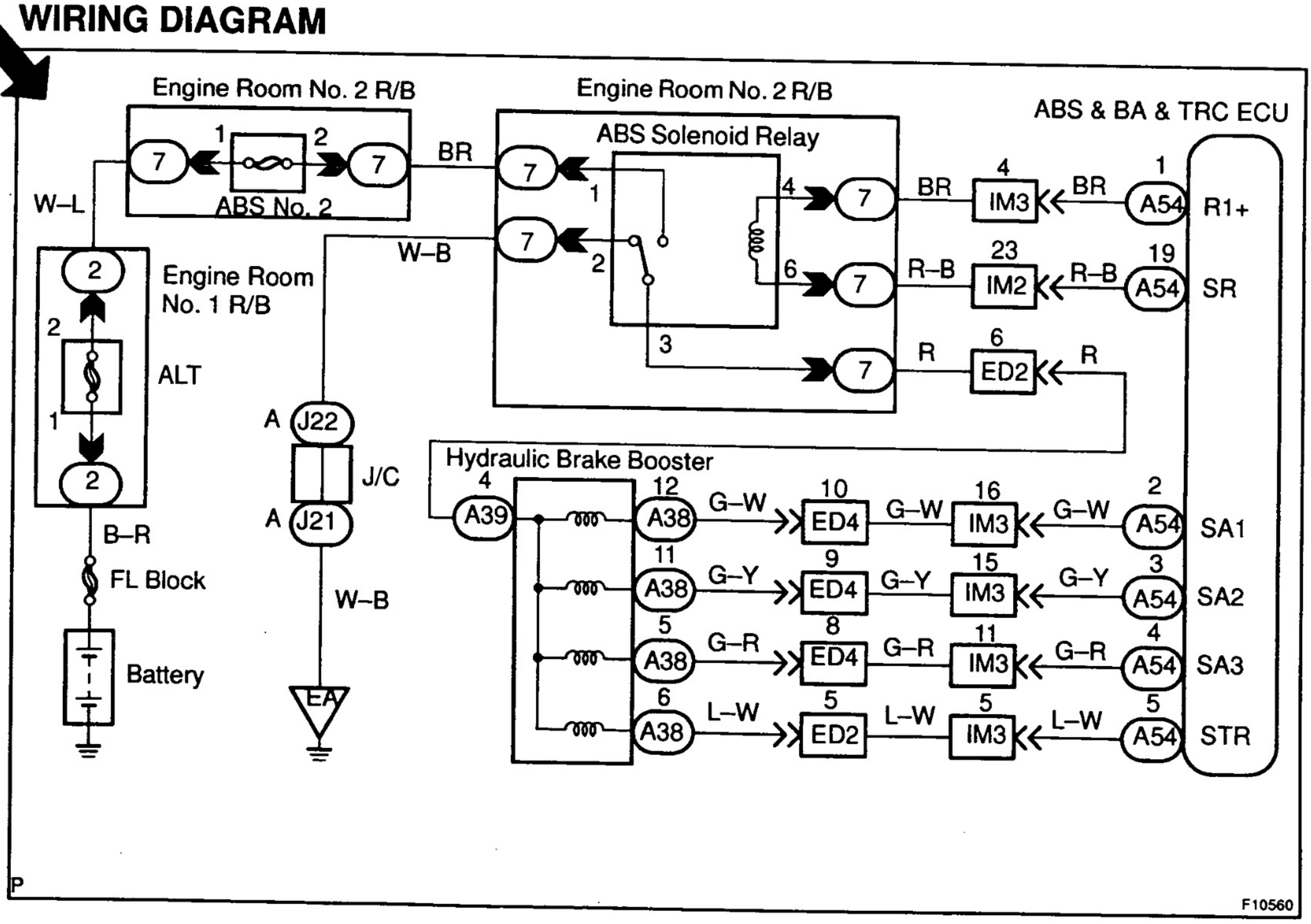

INSPECTION PROCEDURE

1	**Check that the ECU connectors are securely connected to the ECU.**

NO → **Connect the connector to the ECU.**

YES

2	**Is DTC output for TRC?**

Check DTC on page DI–237.

YES → **Repair circuit indicated by the output code.**

NO

3	**Does TRC warning light go off?**

YES → **Check for open or short circuit in harness and connector between ECU–IG fuse and ECU (See page IN–33).**

NO

4	**Check battery voltage.**

PREPARATION:

Start the engine.

CHECK:

Check the battery voltage.

OK:

Voltage: 10 – 16 V

NG → **Check and repair the charging system.**

OK

5	**Check operation of the TRC warning light.**

In case of using the hand–held tester:

PREPARATION:

(a) Connect the hand–held tester to the DLC3.
(b) Turn the ignition switch ON and push the hand–held tester main switch ON.
(c) Select the ACTIVE TEST mode on the hand–held tester.

CHECK:

Check that "ON" and "OFF" of the TRC warning light can be shown on the combination meter on the hand–held tester.

In case of not using the hand–held tester:

PREPARATION:

(a) Turn the ignition switch OFF.
(b) Disconnect the connector from the ABS & BA & TRC ECU.
(c) Turn the ignition switch ON.

CHECK:

Check the TRC warning light goes off.

NG → **Check and replace combination meter (See page BE–11).**

OK

6	**Check for short circuit in harness and connector between combination meter and ABS & BA & TRC ECU, combination meter and check connector (See page IN–33).**

NG → **Repair and replace harness and connector.**

OK

Check and replace ABS & BA & TRC & VSC ECU.

DI6D7–01

TRC Warning Light Circuit

CIRCUIT DESCRIPTION

If the ECU stores DTC, the TRC warning light lights on the combination meter.

WIRING DIAGRAM

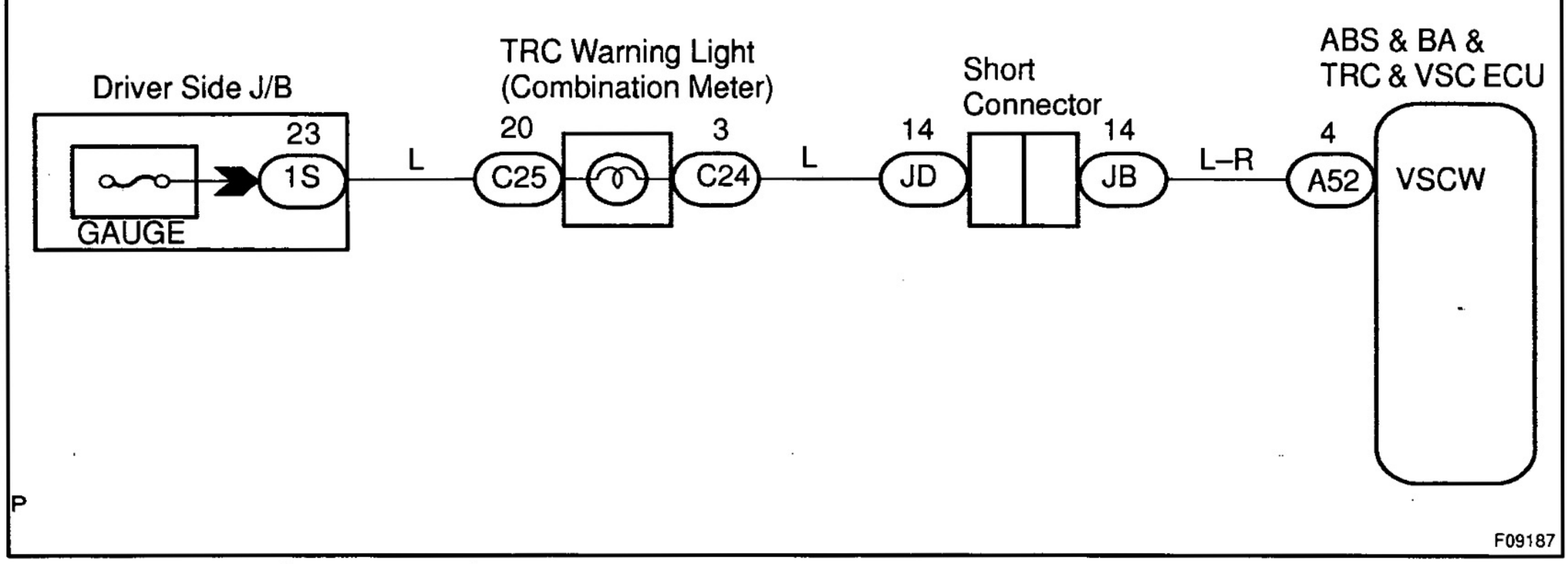

INSPECTION PROCEDURE

Start the inspection from step 1 in case of using the hand–held tester and start from step 2 in case of not using the hand–held tester.

1	**Check operation of the TRC warning indicator.**

PREPARATION:

(a) Connect the hand–held tester to the DLC3.
(b) Turn the ignition switch ON and push the hand–held tester main switch ON.
(c) Select the ACTIVE TEST mode on the hand–held tester.

CHECK:

Check that "ON" and "OFF" of the TRC warning light can be shown on the combination meter with the hand–held tester.

OK → **Check and replace ABS & BA & TRC ECU.**

NG

2	**Is DTC output for TRC?**

YES → **Repair circuit indicated by the output code.**

NO

3	**Check for open and short circuit in harness and connector between ABS & BA & TRC ECU and TRC warning light (See page IN–33).**

NG → **Repair or replace harness or connector.**

OK

4	**Check TRC warning light.**

See combination meter troubleshooting on page BE–11.

NG → **Repair or replace combination meter.**

OK

Check and replace ABS & BA & TRC ECU.

DI5D8-01

ACTIVE TRC Indicator Light Circuit

CIRCUIT DESCRIPTION

The ACTIVE TRC indicator blinks during TRC operation.

WIRING DIAGRAM

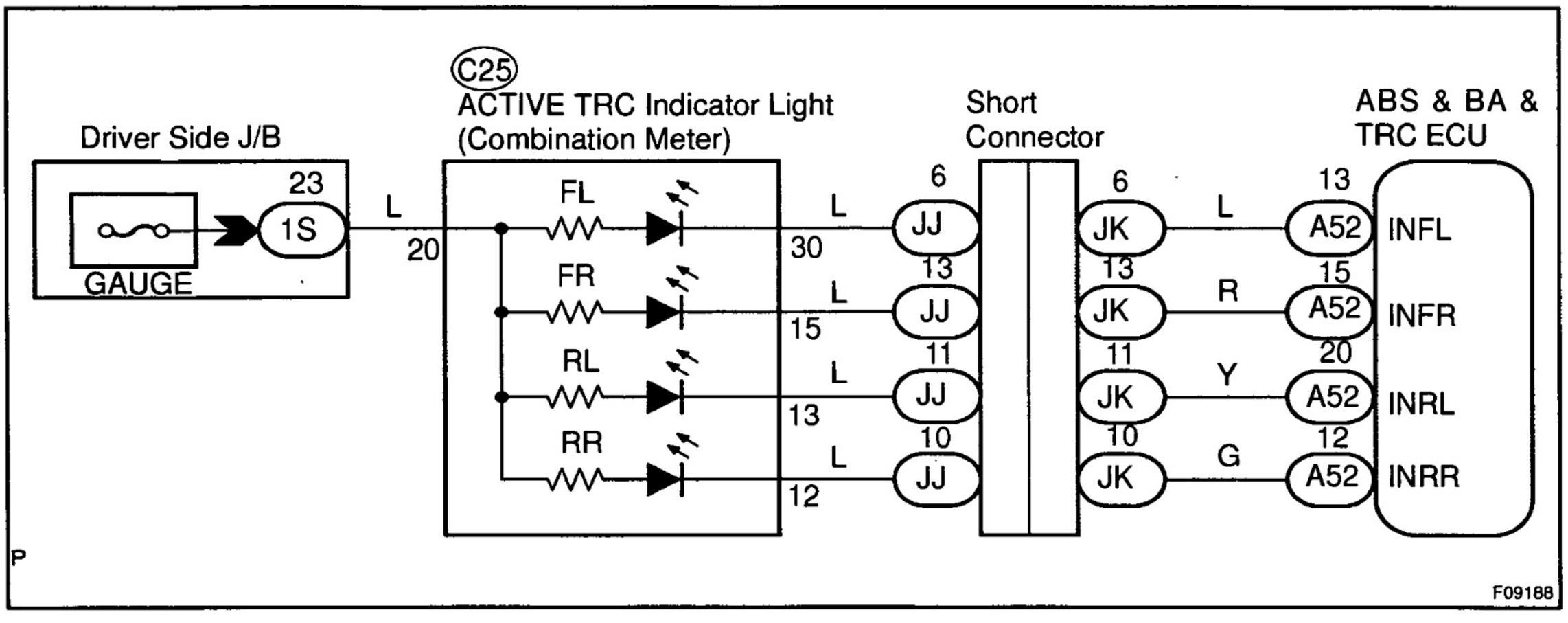

INSPECTION PROCEDURE

1	Check that the ACTIVE TRC indicator light is ON for 3 sec. soon after ignition switch is turned ON.

OK → Check and replace ABS & BA & TRC ECU.

NG

2	Check ACTIVE TRC indicator light.

See combination meter troubleshooting on page BE–11.

NG → Repair or replace combination meter check and replace ABS & BA & TRC ECU.

OK

3	**Check for open and short circuit in harness and connector between each terminals of ABS & BA & TRC ECU and ACTIVE TRC indicator light (See page IN–33).**

NG → **Repair or replace harness or connector.**

OK

Check and replace ABS & BA & TRC ECU.

D16D9–01

Check for Fluid Leakage

Check for fluid leakage from actuator or hydraulic lines.

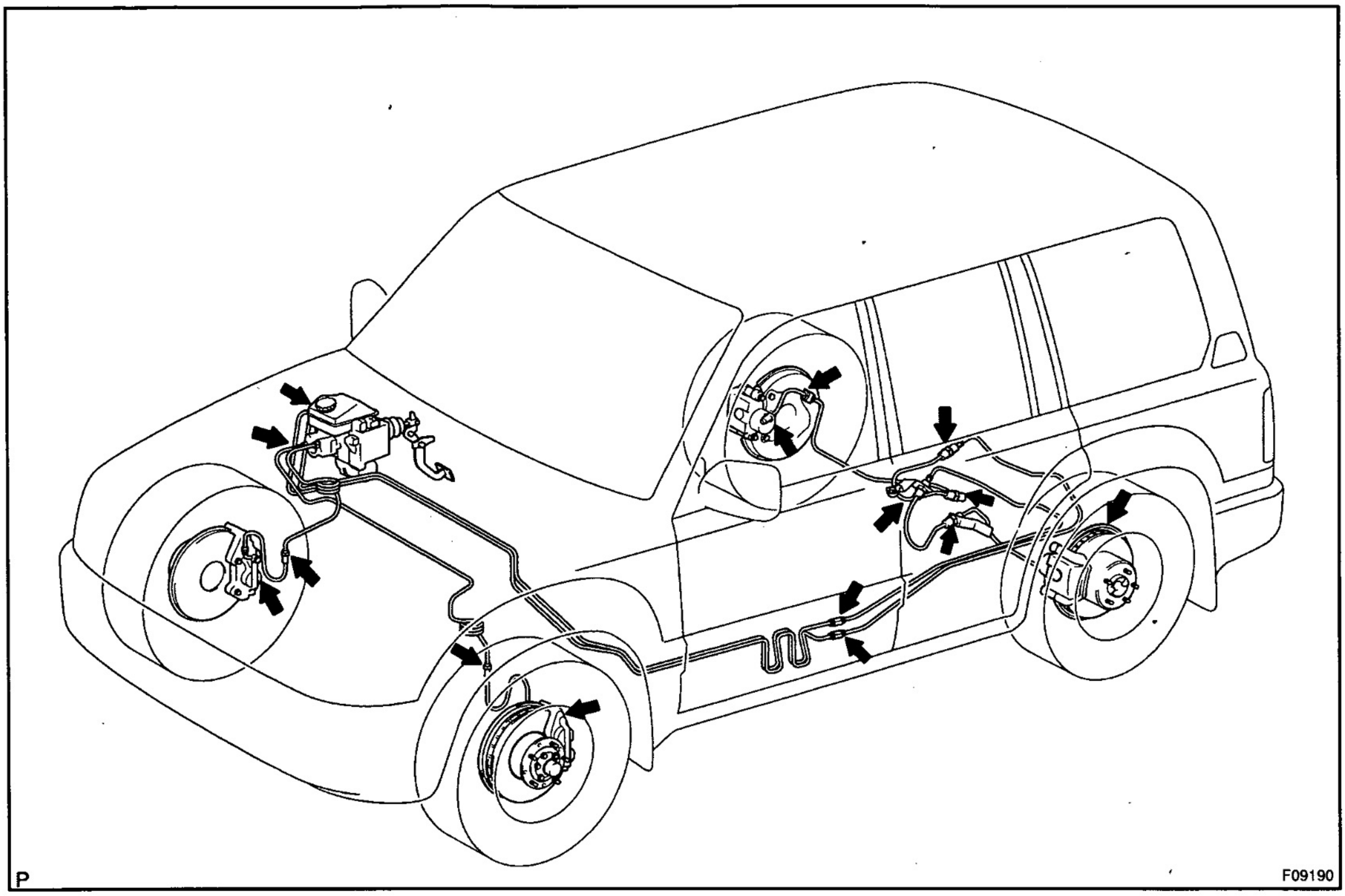

P F09190

ENGINE IMMOBILISER SYSTEM (5VZ–FE)

DI1AJ–16

HOW TO PROCEED WITH TROUBLESHOOTING

Troubleshoot in accordance with the procedure on the following pages.

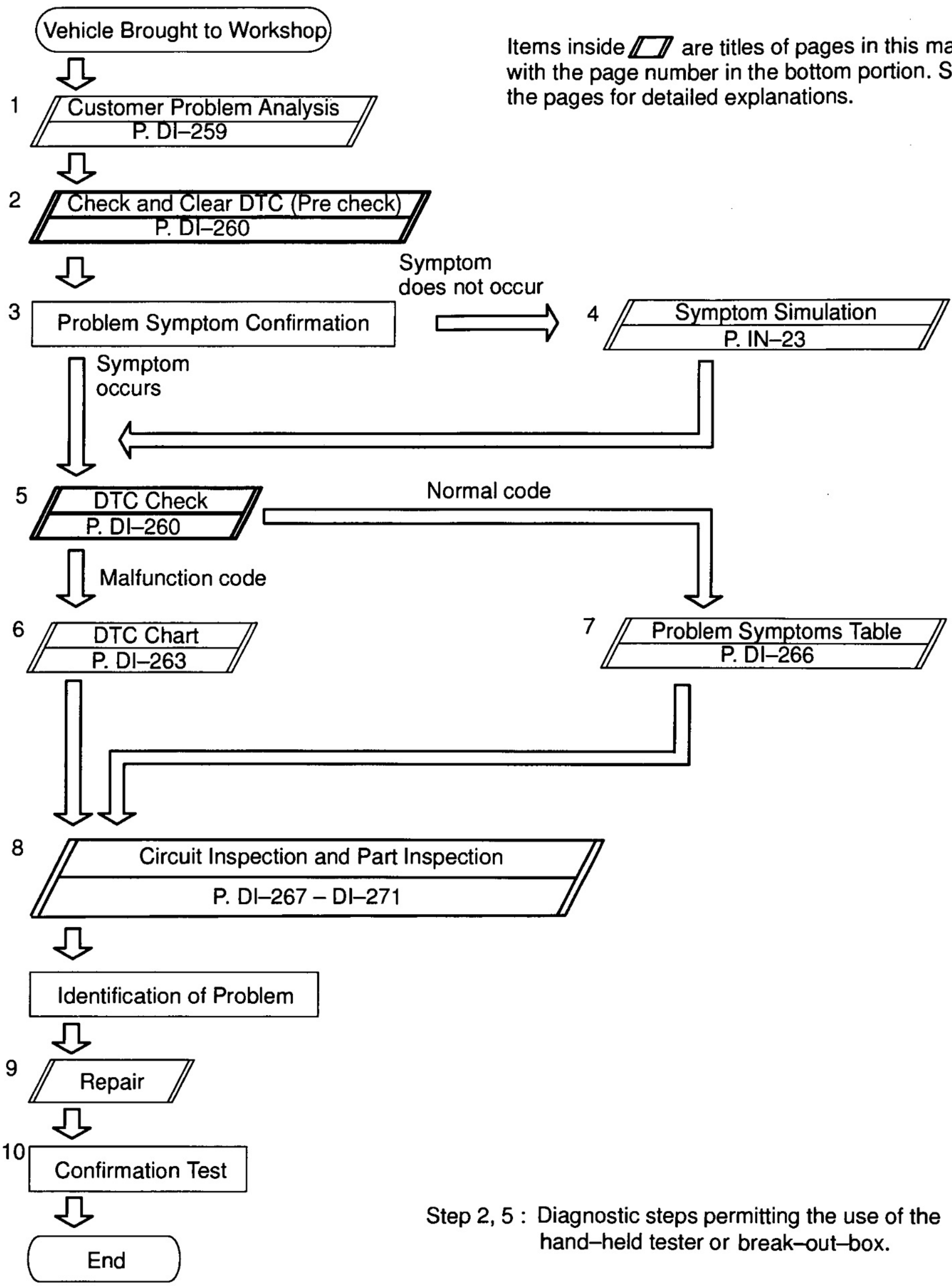

Items inside ▱ are titles of pages in this manual, with the page number in the bottom portion. See the pages for detailed explanations.

Step 2, 5 : Diagnostic steps permitting the use of the hand–held tester or break–out–box.

DI1AK–11

CUSTOMER PROBLEM ANALYSIS CHECK

ENGINE IMMOBLISER Check Sheet

Inspector's Name :

Customer's Name		**Registration No.**	
		Registration Year	/ /
		Frame No.	
Date Vehicle Brought In	/ /	**Odometer Reading**	km miles

Date Problem First Occurred	/ /
Frequency Problem Occurs	☐ Continuous ☐ Intermittent (times a day)

Symptoms	☐ Immobiliser is not set. (Engine starts with key codes other than the registered key code.)
	☐ Engine does not start.

Check Item	**Malfunction Indicator Lamp**	☐ Normal ☐ Remains ON ☐ Does not Light Up

DTC Check	**1st Time**	☐ Normal Code ☐ Malfunction Code (Code)
	2nd Time	☐ Normal Code ☐ Malfunction Code (Code)

DI1AL–17

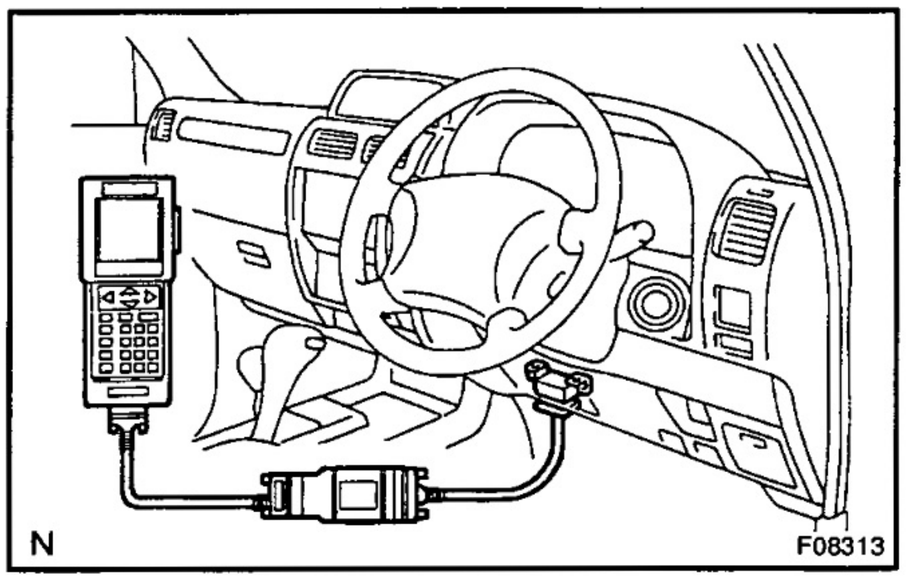

PRE–CHECK

1. DIAGNOSIS SYSTEM

(a) Description

Engine and ECT ECU controls the function of immobiliser on this vehicle.

Data of the immobiliser or DTC can be read form DLC3 of the vehicle. When a trouble occurs on immobiliser, check engine warning light does not light up but DTC inspection is performed.

Therefore when there seems to be a trouble on immobiliser, use hand–held tester or SST to check and trouble-shoot it.

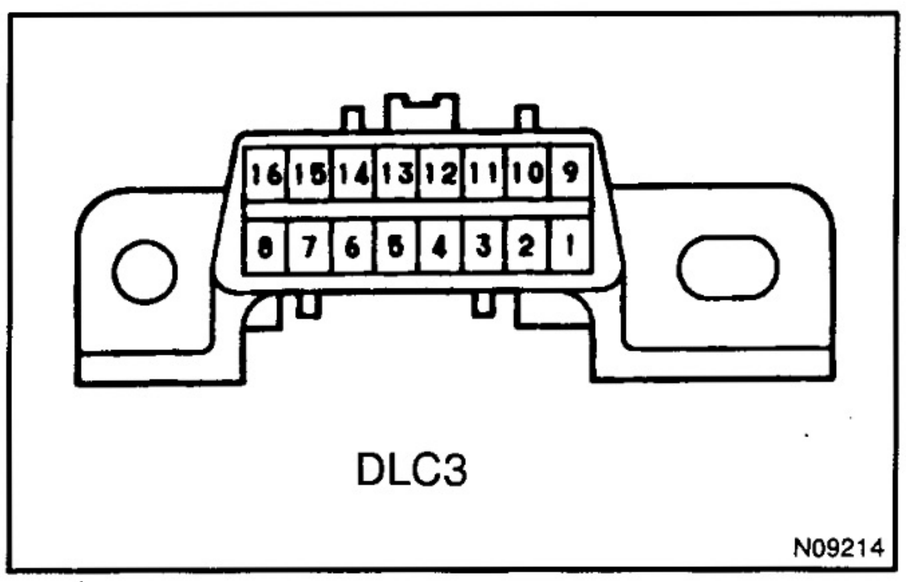

(b) Check the DLC3.

The vehicle's engine & ECT ECU uses ISO 14230 for communication. The terminal arrangement of DLC3 complies with SAE J1962 and matches the ISO 14230 format.

Terminal No.	Connection / Voltage or Resistance	Condition
7	Bus ⊕ Line / Pulse generation	During transmission
4	Chassis Ground ↔ Body Ground / 1 Ω or less	Always
16	Battery Positive ↔ Body Ground / 9 ~ 14 V	Always

HINT:

If your display shows "UNABLE TO CONNECT TO VEHICLE" when you have connected the cable of the hand–held tester to DLC3, turned the ignition switch ON and operated the hand–held tester, there is a problem on the vehicle side or tool side.

- If communication is normal when the tool is connected to another vehicle, inspect DLC3 on the original vehicle.
- If communication is still not possible when the tool is connected to another vehicle, the problem is probably in the tool itself, so consult the Service Department listed in the tool's instruction manual.

2. INSPECT DIAGNOSIS (Normal Mode)

(a) Check the DTC using hand–held tester.

NOTICE:

Hand–held tester only: When the diagnosis system is switched from normal mode to check mode, it erases all DTCs and freezed frame data recorded in normal mode. So before switching modes, always check the DTCs and freezed frame data, and note them down.

(1) Prepare the hand–held tester.
(2) Connect the hand–held tester to DLC3.
(3) Turn the ignition switch ON and push the hand–held tester main switch ON.
(4) Use the hand–held tester to check the DTCs and freezed frame data, note them down. (For operating instructions, see the hand–held tester instruction book.)
(5) See page DI–263 to confirm the details of the DTCs.

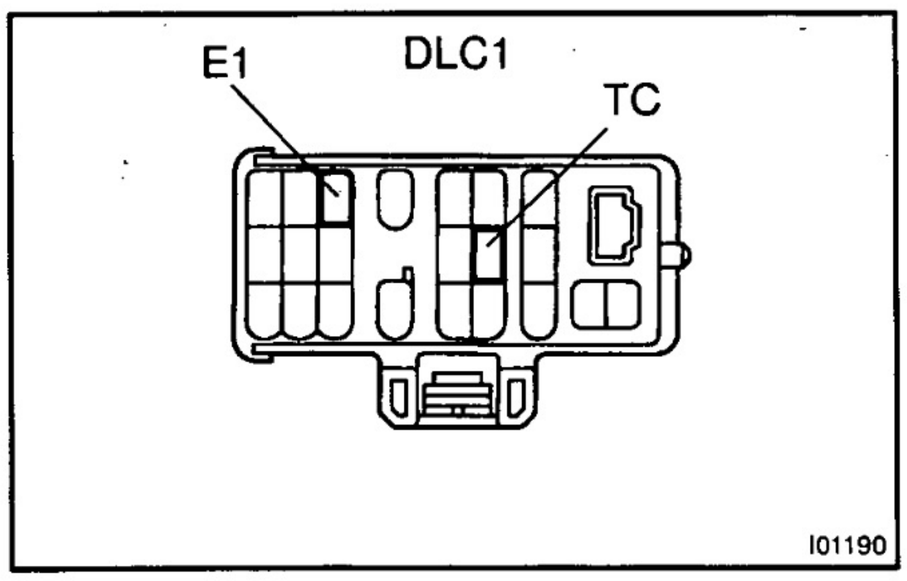

(b) Check the DTC (Using diagnosis check wire)
(1) Turn ignition switch ON.
(2) Using SST, connect between terminals 11 (TC) and 3 (E1) of DLC1.
SST 09843–18040
(3) Read the diagnostic trouble code from malfunction indicator lamp.

HINT:

- If a diagnostic trouble code is not output, check the TC terminal circuit.
- Engine & ECT ECU controls the immobiliser function on this vehicle, DTC is out put with engine data.

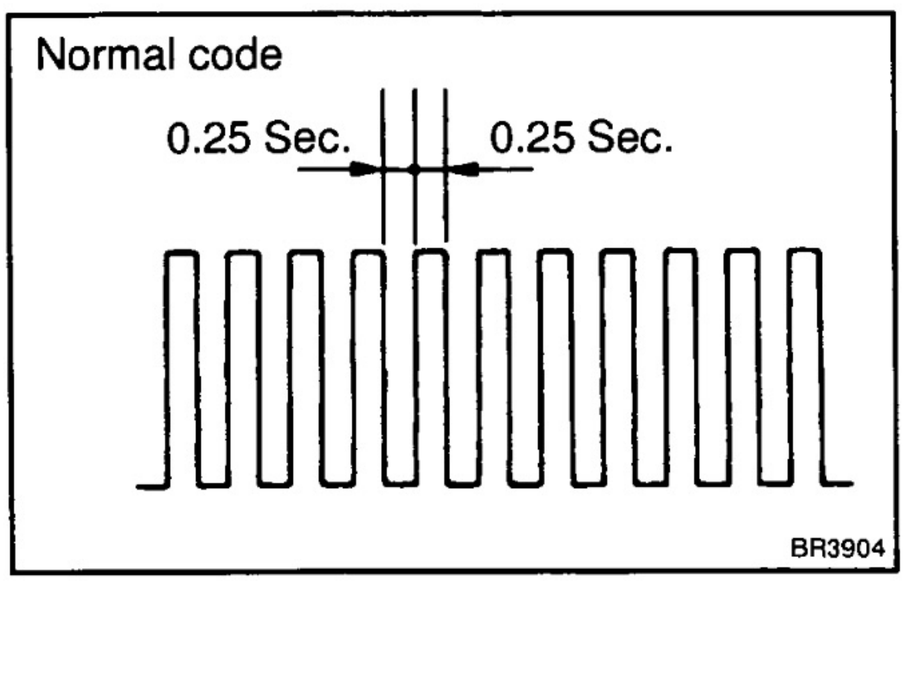

As an example, the blinking patterns for codes; normal, 12 and 99 are shown in the charts.

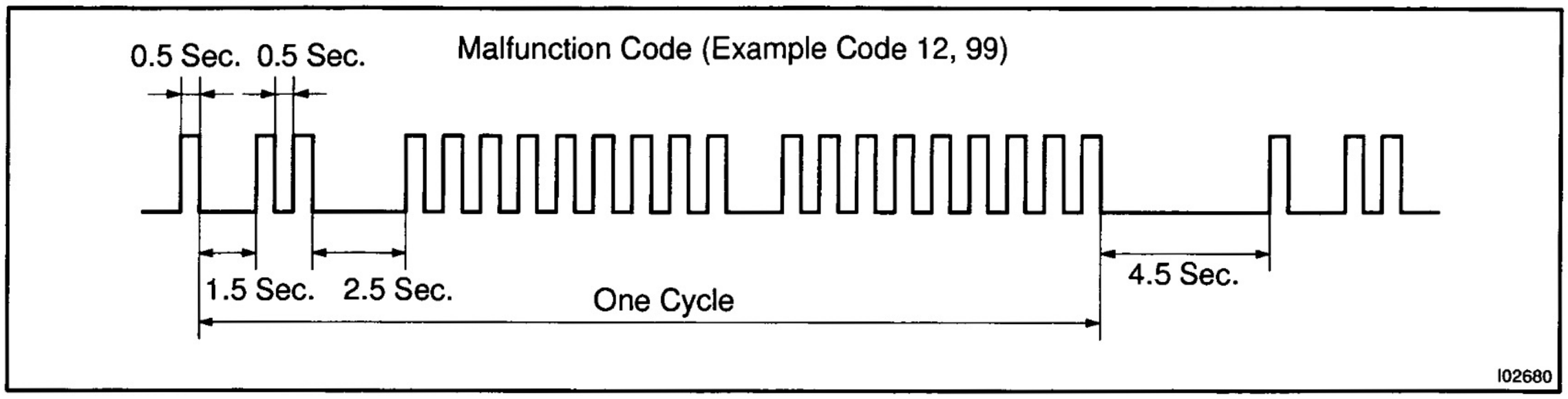

(4) When DTC "99" is output, there is a trouble of immobiliser. Start troubleshooting referring to PROBLEM SYMPTOMS TABLE.

(5) After completing the check, disconnect terminals 13 (TC) and 4 (CG) and turn off the display.

HINT:

In the event of 2 or more malfunction codes, indication will begin from the smaller numbered code and continue in order to the larger.

(c) Clear the DTC.

The following operations will erase the DTCs and freeze frame data.

(1) Operating the hand–held tester to erase the codes.

(2) Disconnecting the battery terminals or EFI fuse.

DI625–02

DIAGNOSTIC TROUBLE CODE CHART

DTC No. (See Page)	Detection Item	Trouble Area
B2795 (DI–267)	Unmatched key code	• Key • Unregistered key inserted before
B2796 (DI–268)	No communication in immobiliser system	• Key • Transponder key coil • Amplifier • Wirehaness • Engine & ECT ECU
B2797 (DI–271)	Communication malfunction No.1	• Communication contents • Unregistered key inserted before

HINT:
To reduce the unnecessary exchange of Engine & ECT ECU, check that a trouble occurs with the original Engine & ECT ECU at the time of excanging Engine & ECT ECU and the trouble will disappear with a new Engine & ECT ECU.

DI5A1–01

PARTS LOCATION

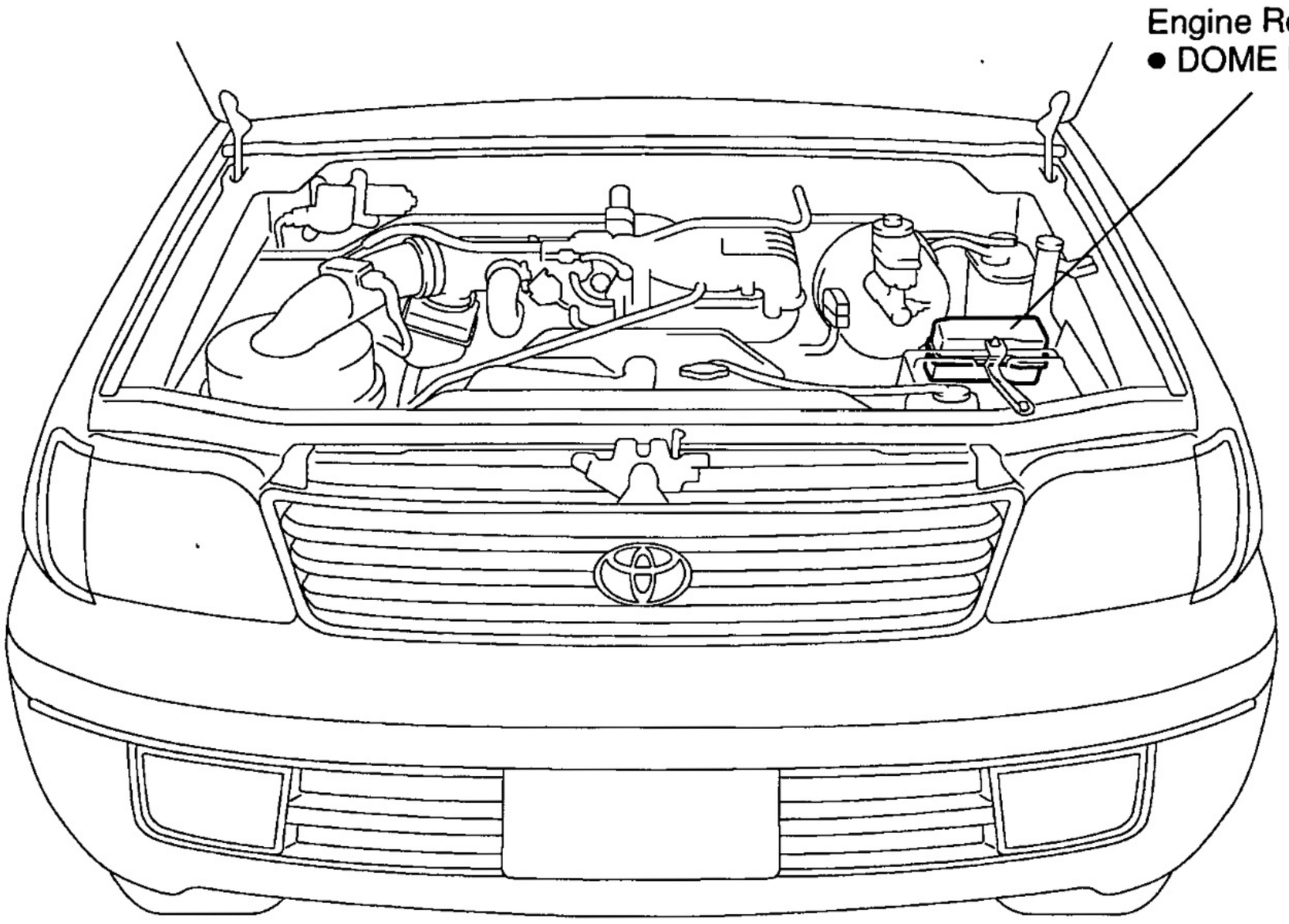

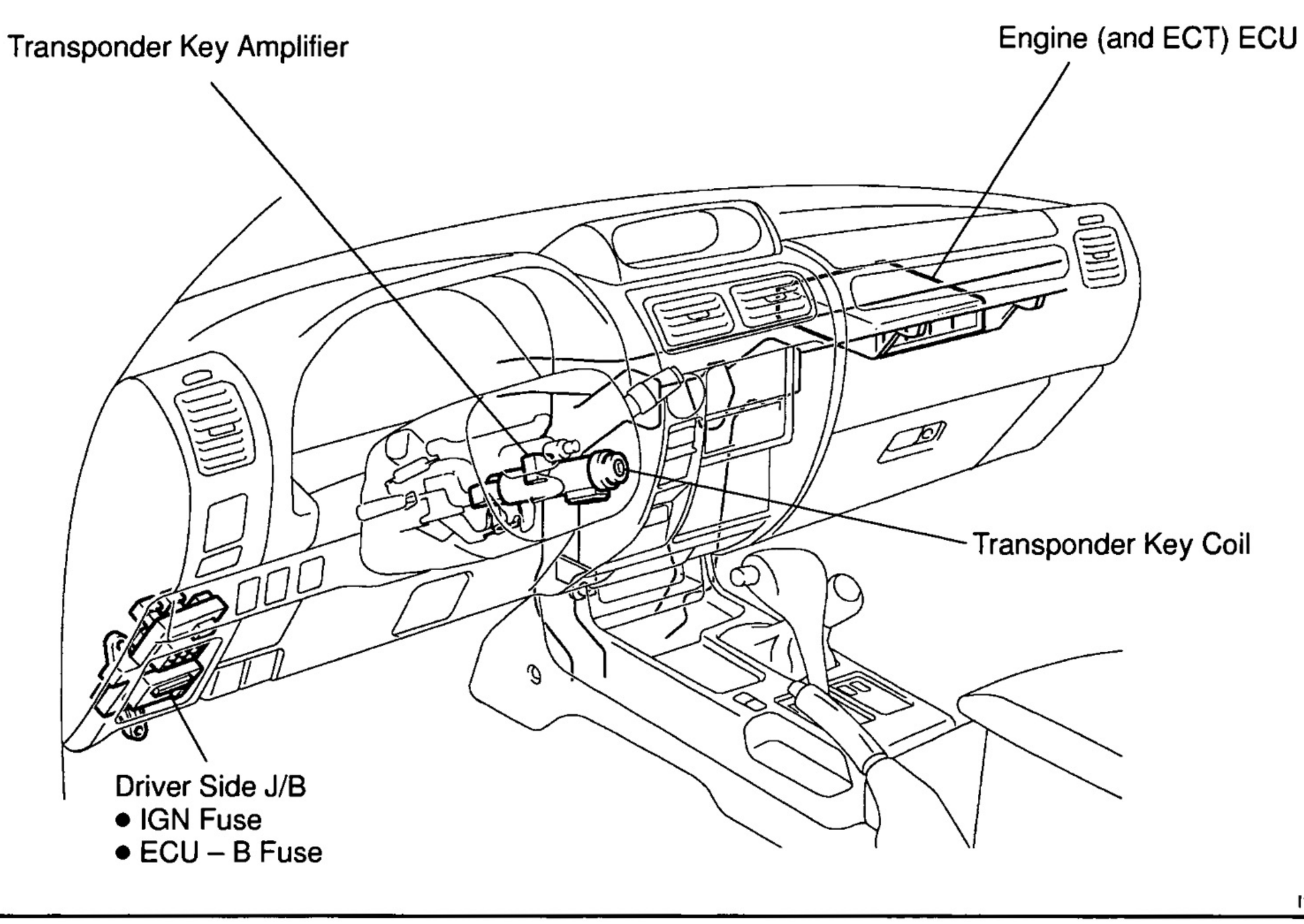

Y

I12688

DI3ML–04

TERMINALS OF ECU

ECM Terminals

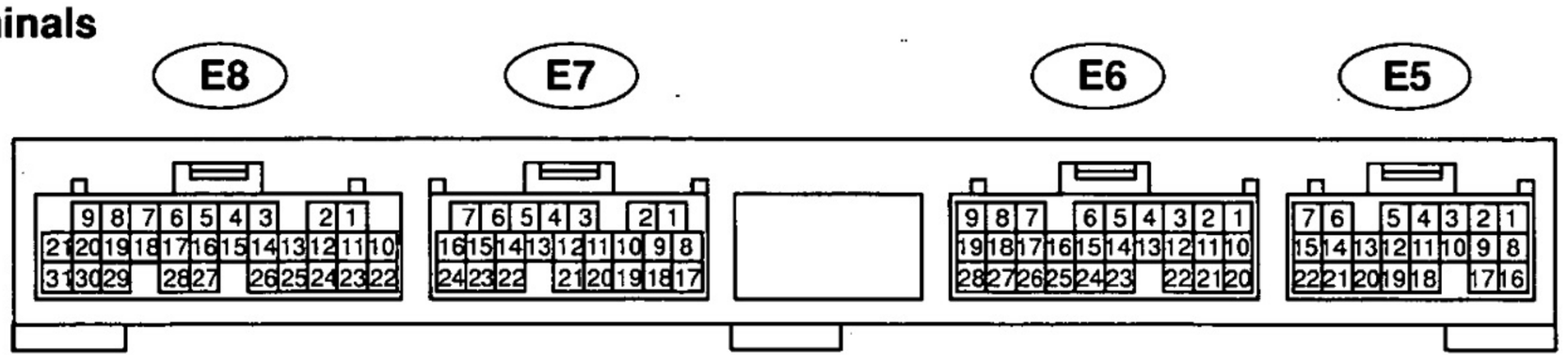

Symbols (Terminals No.)	Wiring Color	Condition	STD Voltage (V)
TXCT – E1 (E7 – 19 ↔ E6 – 17)	R–Y ↔ BR	Ignition Switch ON	10 – 14
CODE – E1 (E7 – 5 ↔ E6 – 17)	L–B ↔ BR	Ignition Switch ON	10 – 14
RXCK – E1 (E7 – 18 ↔ E6 – 17)	V–G ↔ BR	Ignition Switch ON	10 – 14

DI1AP–15

PROBLEM SYMPTOMS TABLE

Symptom	Suspect Area	See page
Immobiliser is not set. (Engine starts with key codes other than the registered key code.)	1. Engine and ECT ECU	IN–33
Engine does not start.	1. Key 2. Wire harness 3. Transponder key coil 4. Amplifier 5. Engine and ECT ECU	*1 IN–33 BE–55 IN–33
Security indicator is always ON.	1. Security indicator 2. Wire harness 3. Engine and ECT ECU	*2 IN–33 IN–33
Security indicator is always ON. (Although code has been registered in the automatic registration mode, indicator is not OFF.)	1. Wire harness 2 Transponder key coil 3. Amplifier 4. Engine and ECT ECU	IN–33 BE–55 IN–33
Security indicator is OFF. (When DTC of immobiliser is output)	1. Wire harness 2 Transponder key coil 3. Amplifier 4. Engine and ECT ECU	IN–33 BE–55 IN–33
Security indicator is OFF. (When DTC of immobiliser is not output)	1. Wire harness 2. Engine and ECT ECU	IN–33 IN–33
Security indicator is abnormally blinking.	1. Wire harness 2. Engine and ECT ECU	IN–33 IN–33

*1 : Check that the key which did not start the engine has been registered and that it is possible to start with other already registered key.

*2 : Finish the automatic registration mode because the mode might still remain.

DI1AS–15

CIRCUIT INSPECTION

DTC	B2795/99	Unmatched Key Code

This DTC is output when an unregistered key is inserted. When this DTC is output, delete DTC and insert the key that a customer keeps to check that B2795 is output.
When a key that outputs B2795 is found, register this key. when B2795 is not output, there is a possibility that the unregistered key has been inserted before. (Engine and ECT ECU is normal.)
Inquire a customer the condition of using the system to find the cause of the trouble.
(Example: Another key has been inserted, etc..)

DTC No.	DTC Detecting Condition	Trouble Area
B2795/99	No communication	• Key

INSPECTION PROCEDURE

1	**Delete DTC and insert all the presently available keys to check whether the engine starts or not.**

HINT:
When inserting the key that does not start the engine, DTC (B 2795) is stored in memory.

RESULT:

OK	All keys starts the engine.
NG	A specific key does not start the engine.

OK → **No problem.**

HINT:
If the result is "OK", please confirm whether or not customers have ever inserted the unregistered key or the immobiliser key (with transponder chip) of other vehicle in the ignition key cylinder, and find out the cause of detecting DTC.

NG

Register the key that does not start the engine.

DI6A2–01

DTC	B2796/99	No Communication in Immobiliser system

CIRCUIT DESCRIPTION

This code is stored in memory when inserting the key that does not have a transponder chip or if communication between the key and Engine and ECT ECU is impossible.

DTC No.	DTC Detecting Condition	Trouble Area
B2796/99	No communication	• Key • Transponder Key Coil • Transponder Key Amplifier • Wire harness • Engine and ECT ECU

WIRING DIAGRAM

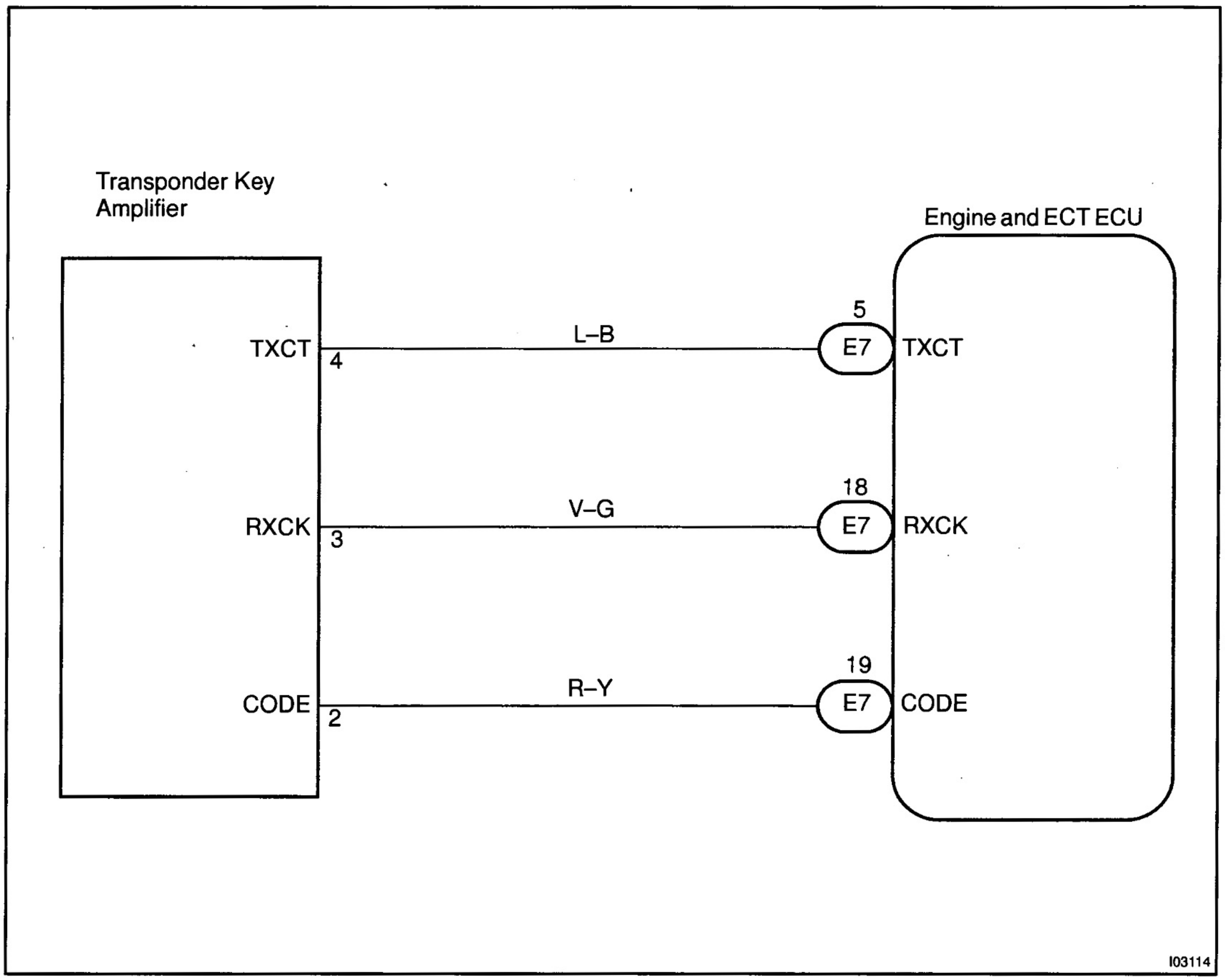

INSPECTION PROCEDURE

1	**Delete DTC and insert all the presently available keys to check whether the engine starts or not.**

RESULT:

A	All keys start the engine.
B	A specific key does not start the engine. In this case, DTC (B 2796) is stored in memory.
C	All keys do not start the engine. In this case, DTC (B 2796) is stored in memory.

A → **No problem at this time.**

HINT:
If the result is "A", please confirm whether or not customers have ever inserted the key (without transponder chip) of other vehicle in the ignition key cylinder, and find out the cause of detecting DTC.

B → **The transponder chip of a specific key is defective. Replace the key.**

C

2	**Check transponder key coil (See page BE–55).**

NG → **Replace transponder key coil.**

OK

3	**Check harness and connector between transponder key amplifier and Engine and ECT ECU.**

NG → **Repair or replace harness and connector.**

OK

4	Does it operate normally after replacement of transponder key amplifier?

Yes → Replace transponder key amplifier.

No →

Replace Engine and ECT ECU.

DI6A3–01

DTC	B2797/99	Communication Malfunction No.1

CIRCUIT DESCRIPTION

This code is detected when although the communication has been performed normally, an error occurs. (Exarnple. Some noise is included in communication line.)

DTC No.	DTC Detecting Condition	Trouble Area
B2797/99	Communication error	• Wire Harness • Transponder Key Amplifier • Engine and ECT ECU

WIRING DIAGRAM

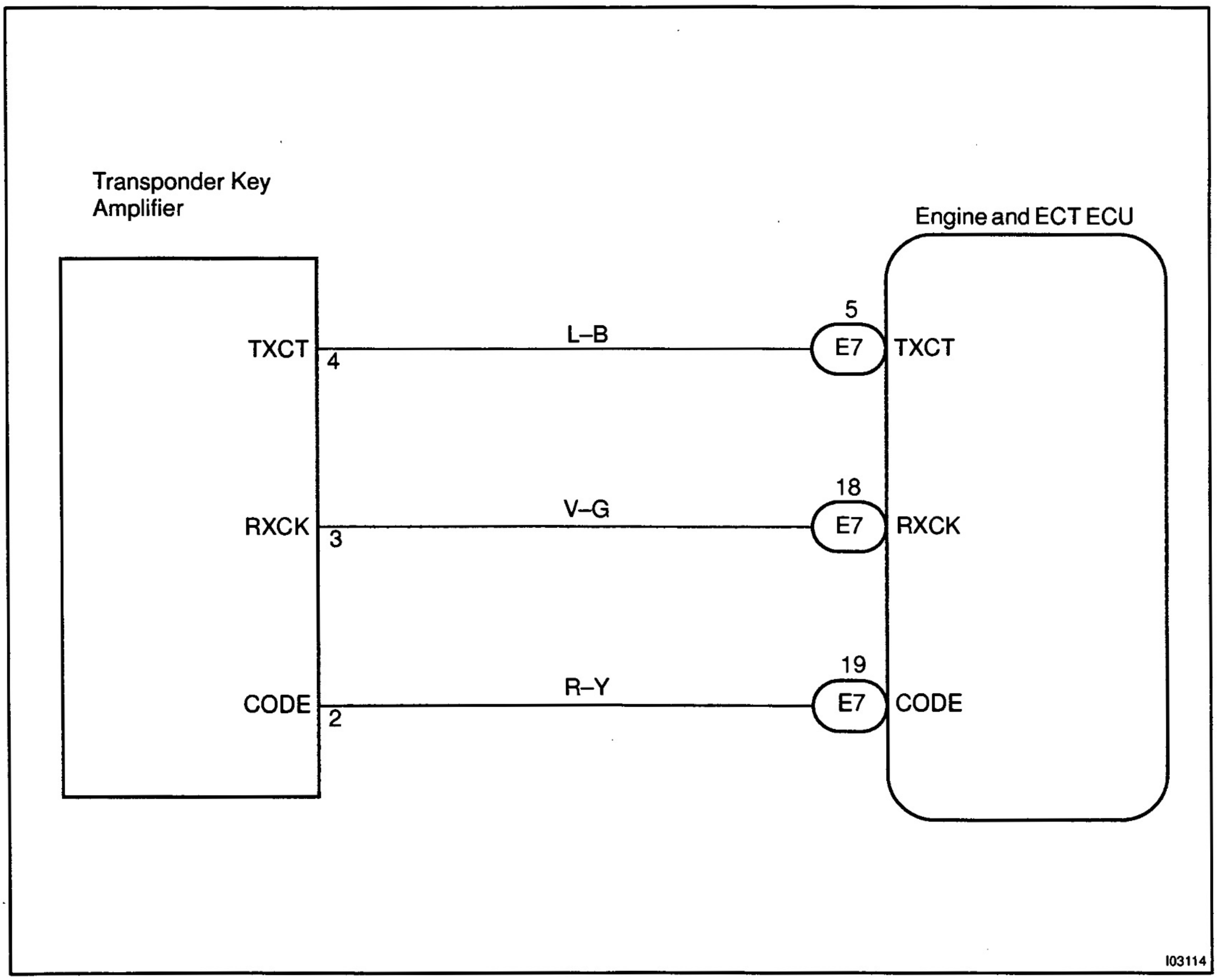

INSPECTION PROCEDURE

1	**Noise check**

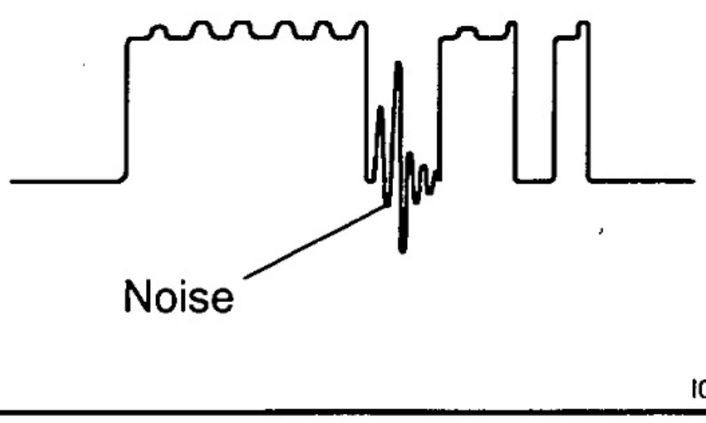

PREPARATION:
Insert the already registered master key in the key cylinder.
CHECK:
Using an oscilloscope or TOYOTA hand–held tester, check that noise is included in the signals sent to the CODE terminal of Engine and ECT ECU.
OK:
No noise is detected.

NG → **Try to find the cause of the noise and remove it.**

OK

2	**Does the system operate normally after replacement of transponder key amplifier?**

Yes → **Replace transponder key amplifier.**

No

Replace Engine and ECT ECU.

DI62A–02

Power source circuit

CIRCUIT DESCRIPTION

This circuit provides power to operate the Transponder Key ECU

WIRING DIAGRAM

LHD Models

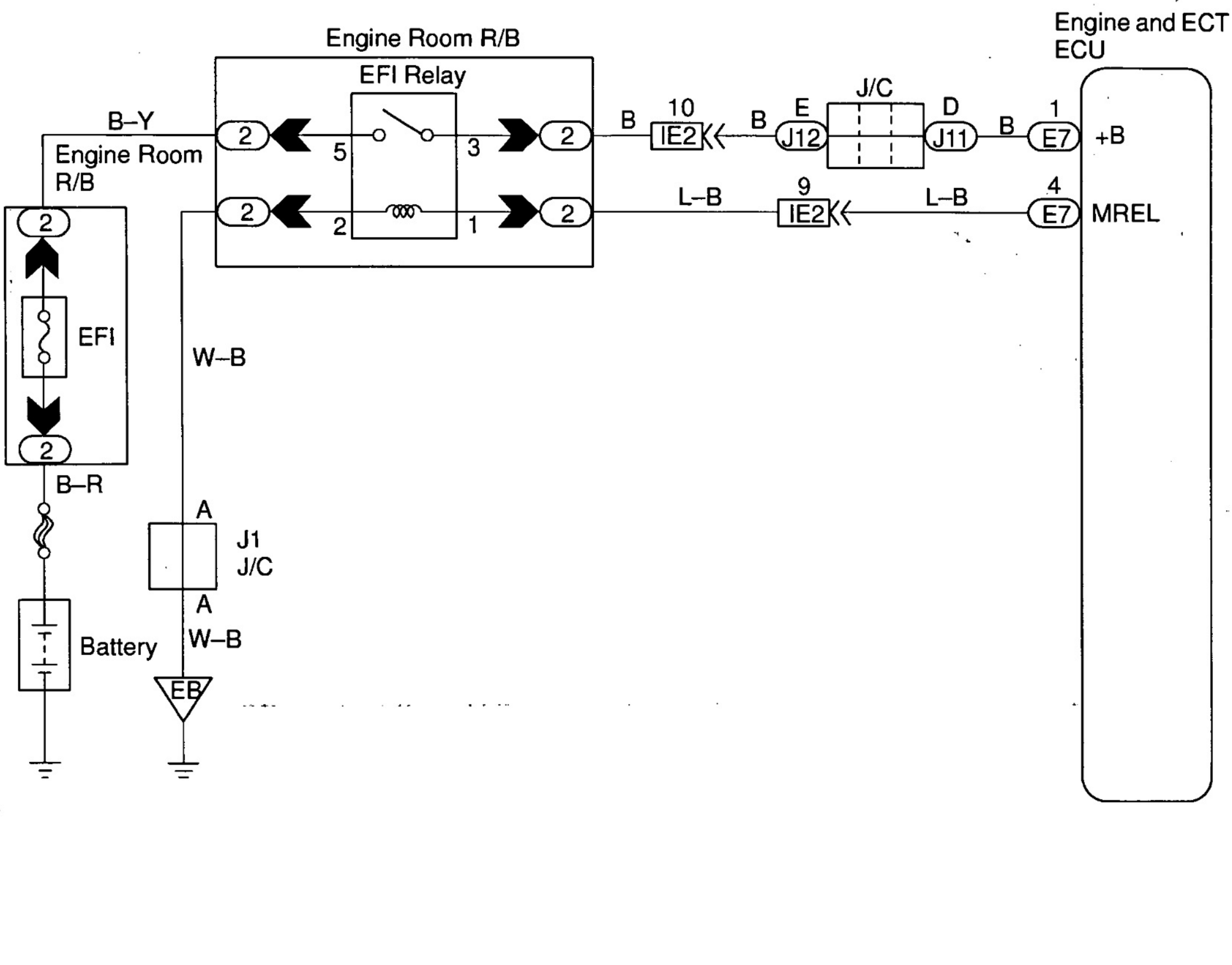

I13346

RHD Models

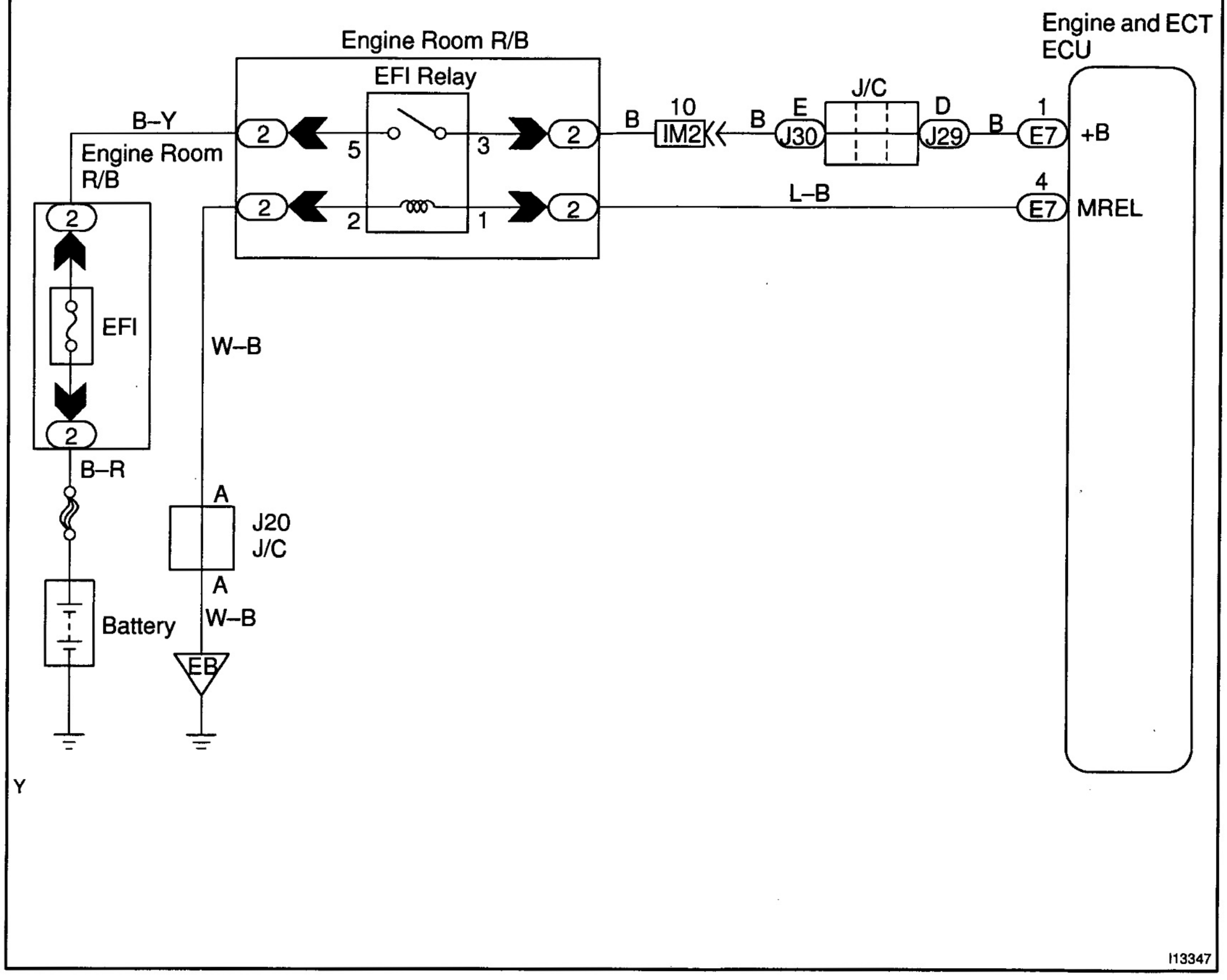
Engine Room R/B
EFI Relay
Engine and ECT ECU
B–Y
Engine Room R/B
2
5
3
2
B
10
IM2
B
E
J30
J/C
D
J29
B
1
E7
+B
2
2
1
2
L–B
4
E7
MREL
2
EFI
2
W–B
B–R
A
J20
J/C
A
Battery
W–B
EB
Y
I13347

INSPECTION PROCEDURE

1	**Check EFI fuse.**

CHECK:
Check continuity of EFI fuse.
OK:
Continuity

NG → **Replace the failure fuse.**

OK

2	**Check voltage between terminals EFI and GND of Transponder Key ECU connector.**

PREPARATION:
(a) Turn ignition switch OFF.
(b) Disconnect the Transponder Key ECU connector.
CHECK:
Measure voltage between terminals +B and GND.
OK:
Voltage: 10 – 14 V

OK → **Proceed to next circuit inspection shown in problem symptoms table (See page DI–266).**

NG

3	**Check wireharness and connector between Transponder Key ECU and body ground.**

NG → **Repair or replace wireharness or connector.**

OK

Check and repair wirehareness and connector between Transponder Key ECU and Battery.

DI6A4–01

Transponder key coil circuit

CIRCUIT DESCRIPTION

DTC No. (See Page)	Detection Item	Trouble Area
B2798/99	Communication error	• Key • Transponder Key Coil • Transponder Key Amplifier • Wire harness • Engine & ECT ECU

WIRING DIAGRAM

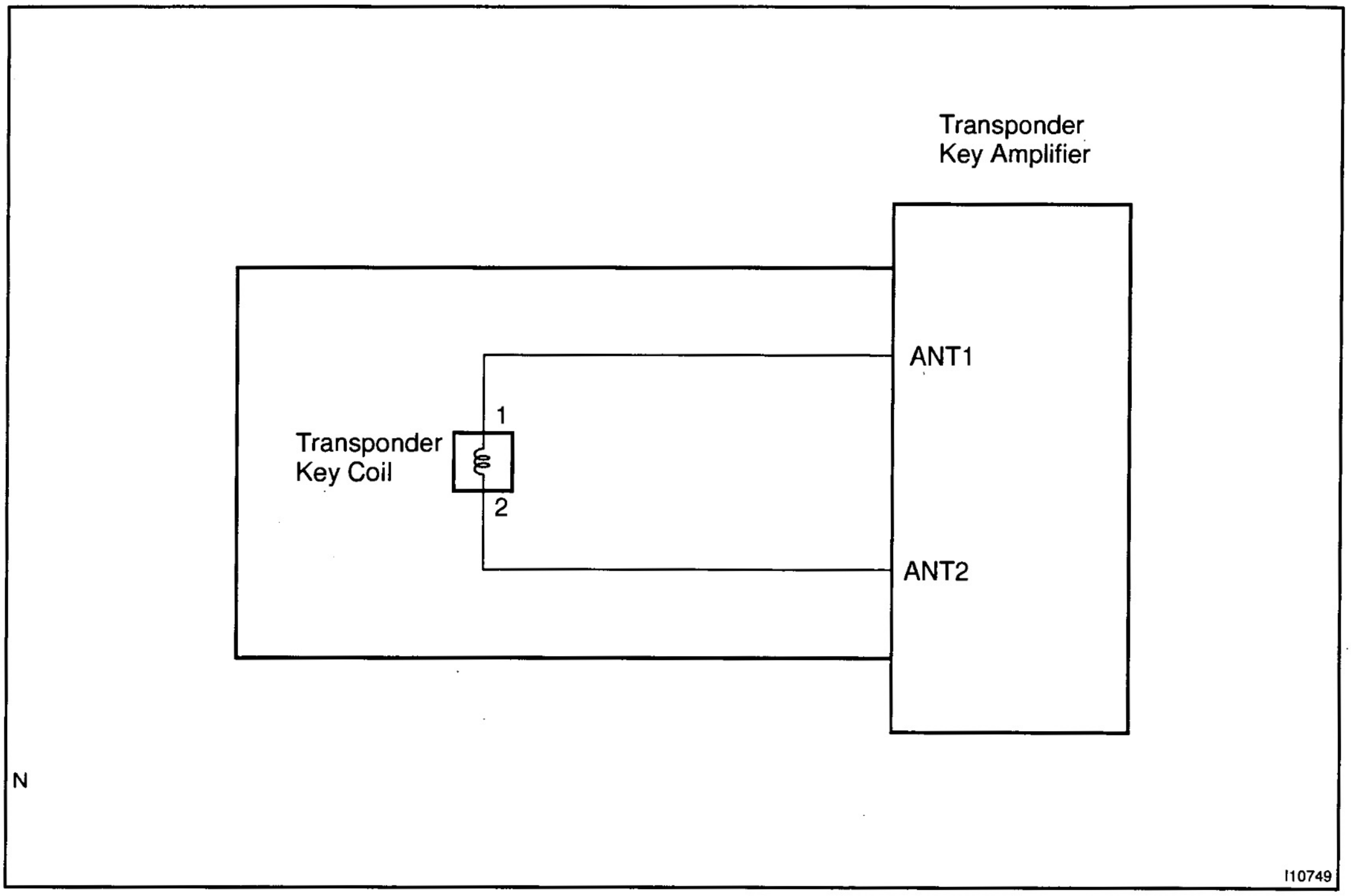

INSPECTION PROCEDURE

1	Check transponder key coil (See page BE–55).

NG → Replace transponder key coil.

OK ↓

2	Check harness and connector between transponder key amplifier and Engine & ECT ECU.

NG → Repair of replace harness and connector.

OK ↓

3	Does the system operate normally after replacement of transponder key amplifier?

Yes → Replace transponder key amplifier.

No ↓

Replace Engine & ECT ECU.

AIR CONDITIONING SYSTEM

HOW TO PROCEED WITH TROUBLESHOOTING

DI261–03

Perform troubleshooting in accordance with the procedure on the following page.

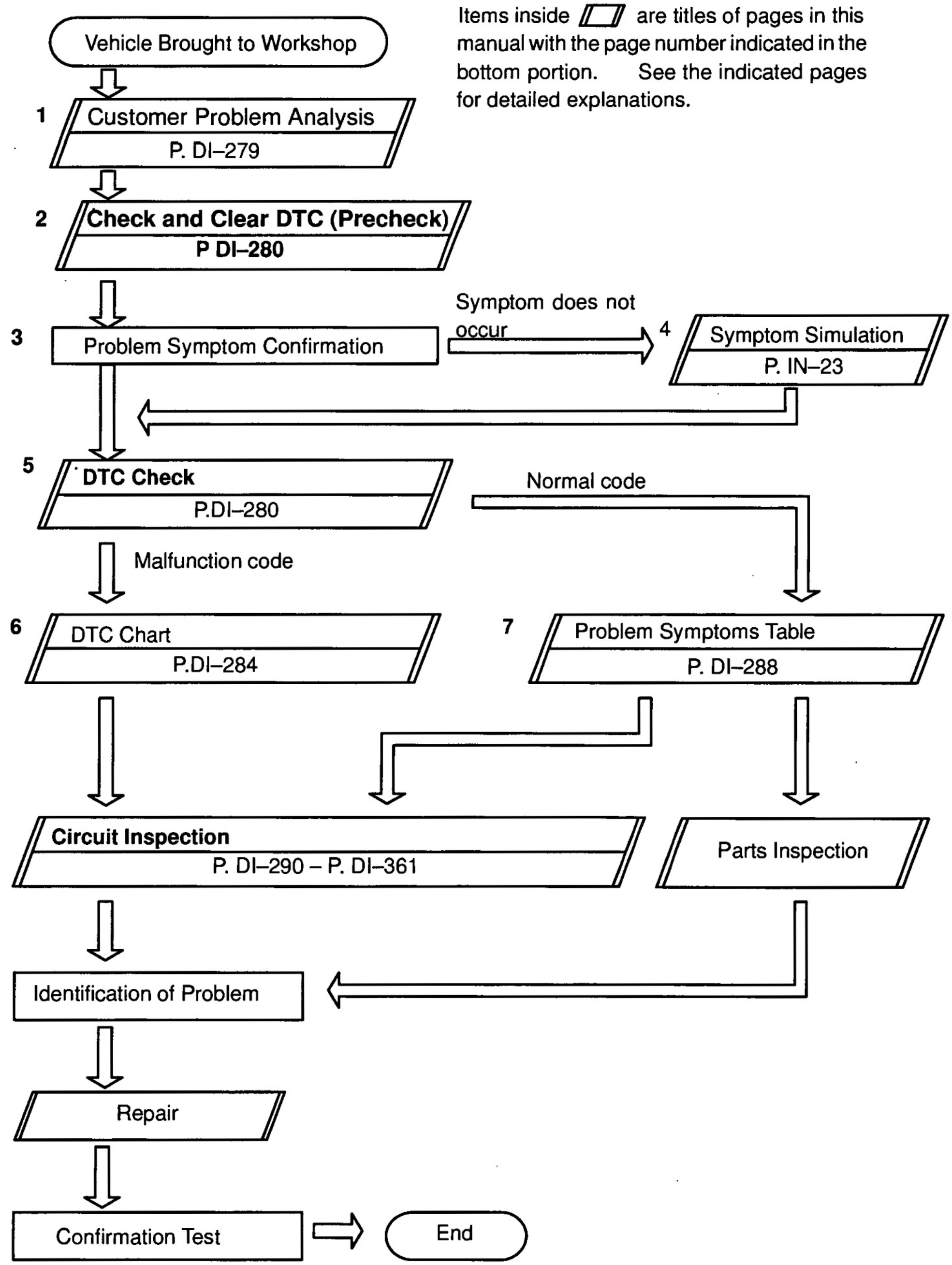

Items inside ▱ are titles of pages in this manual with the page number indicated in the bottom portion. See the indicated pages for detailed explanations.

DI262-02

CUSTOMER PROBLEM ANALYSIS CHECK

AIR CONDITIONING SYSTEM Check Sheet

Inspector's name: _____

Customer's Name		**Registration No.**	
		Registration Year	
		Frame No.	
Date vehicle Brought In	/ /	**Odometer Reading**	**km Miles**

Date of Problem Occurrence	/ /
How Often does Problem Occur?	☐ Continuous ☐ Intermittent (times a day)
Weather	☐ Fine ☐ Cloudy ☐ Snowy ☐ Various / Other
Outdoor Temperature	☐ Hot ☐ Warm ☐ Cool ☐ Cold (Approx. °F °C)

Symptoms	**Air Flow Control is Faulty**	☐ Blower motor does not operation ☐ Blower motor speed does not change (Always Hi, Always Med, Always Lo)
	Temperature Control is Faulty	☐ Cabin temperature does not go down ☐ Cabin temperature does not rise ☐ Response is slow
	Air Inlet Control is Faulty	☐ Cannot change between FRS and REC (Always Fresh or always Recirculating)
	Vent Control is Faulty	☐ Mode will not chage ☐ Will not enter the desired mode

DTC Check	**1st Time**	☐ Normal Code ☐ Malfunction Code (Code)
	2nd Time	☐ Normal Code ☐ Malfunction Code (Code)

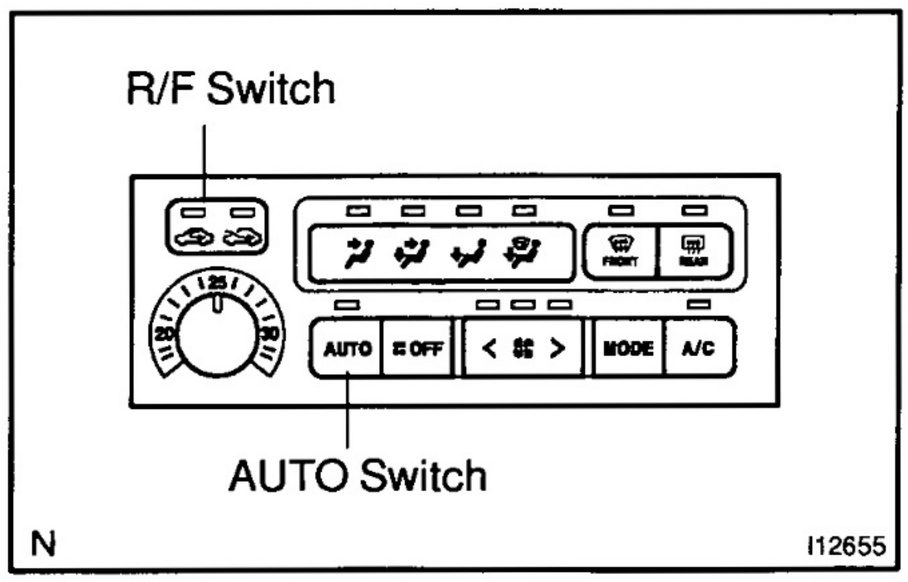

DI6EC–01

PRE–CHECK

1. INDICATOR CHECK

(a) Turn the ignition switch on while pressing the AUTO switch and R/F switch simultaneously.

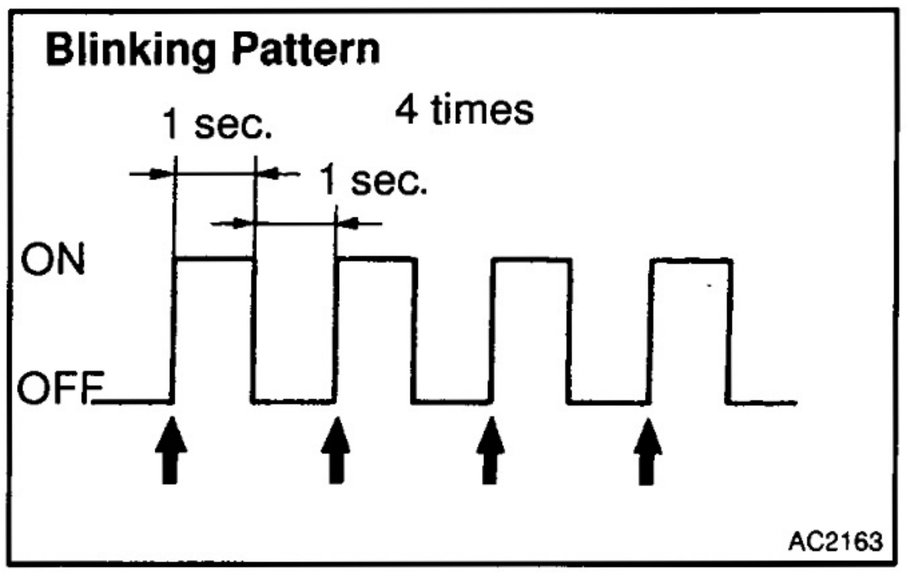

(b) Check that all the indicators light up and go off at 1 second intervals 4 times in succession.

HINT:

- After the indicator check is ended, the diagnostic sensor check begins automatically.
- Press the OFF switch when cancelling the check mode.

2. PANEL DIAGNOSIS SYSTEM

If a trouble occurs in A/C system, the specified lamp on the control panel starts blinking during the diagnostic sensor check.

During system diagnosis, a trouble is indicated on the panel by the blinking of a specified light instead of a code display (See TROUBLE CODE CHART).

For example, when a trouble occurs in solar sensor circuit, the DEF mode indicator will be blinking during the diagnostic sensor check.

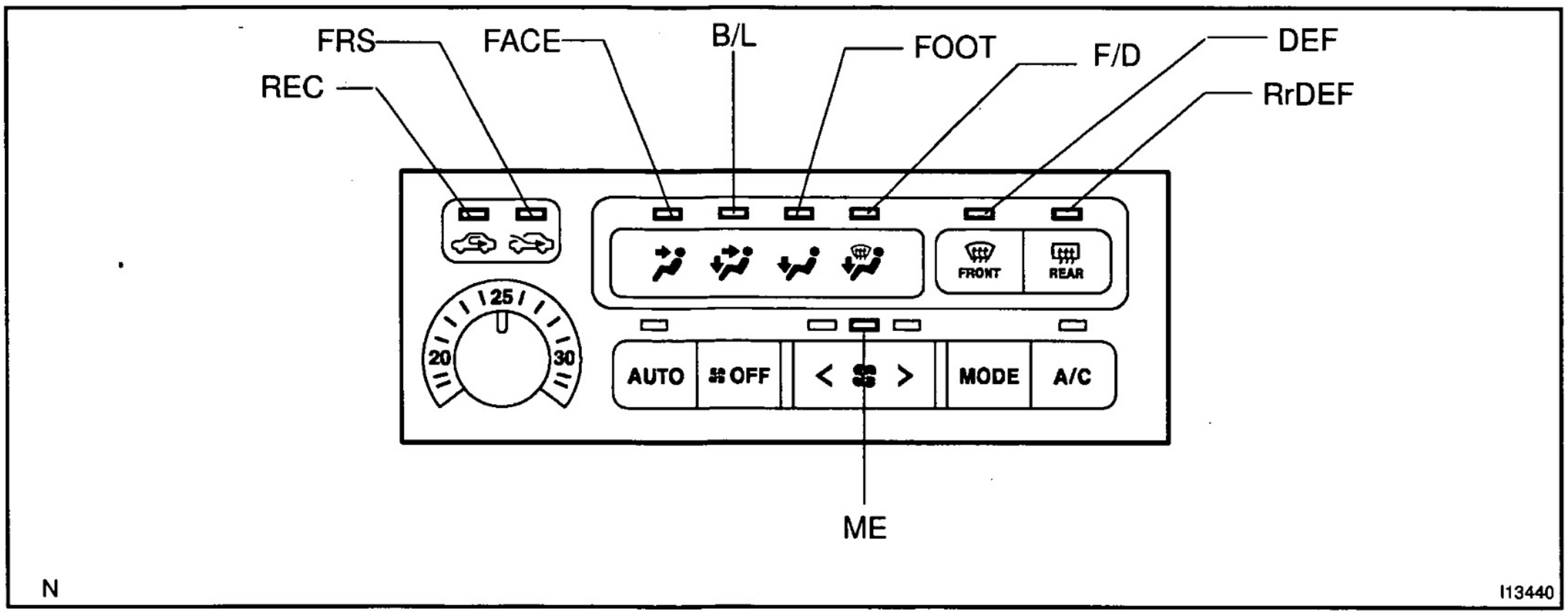

No.	Indicator name	Symbol
1	Rear window defogger switch indicator light	RrDEF
2	Air flow selector: FACE	FACE
3	Air flow selector: BI–LEVEL	B/L
4	Air flow selector: FOOT	FOOT
5	Air flow selector: FOOT and DEFROSTER	F/D
6	Air flow selector: DEFROSTER	DEF
7	Air inlet selector: FRESH	FRS
8	Air inlet selector: RECIRCULATE	REC
9	Fan Speed Selector: ME	ME

3. LIST OF OPERATION METHODS

By operating each of the A/C control switches as shown in the diagram below, it is possible to enter the diagnosis check mode.

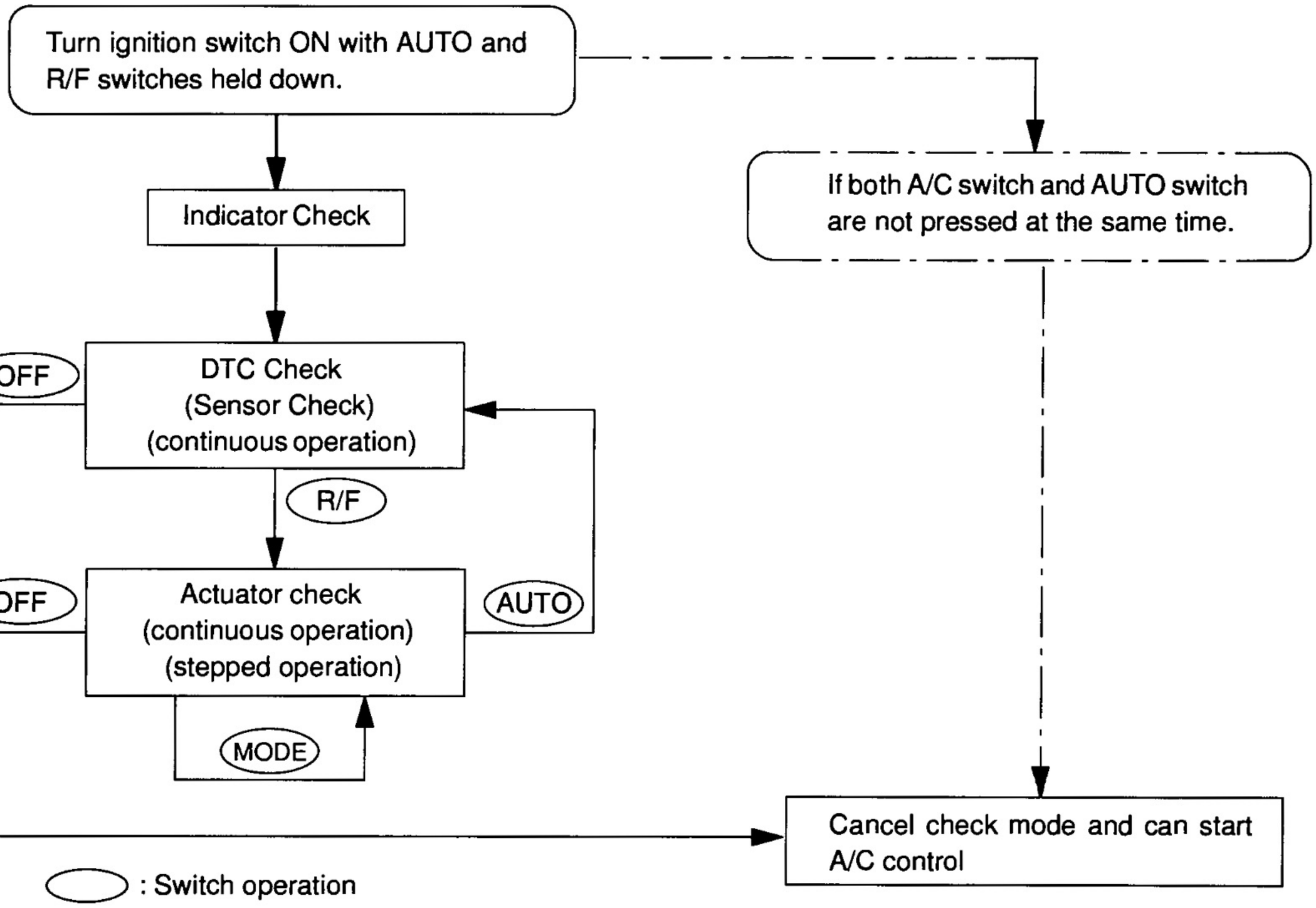

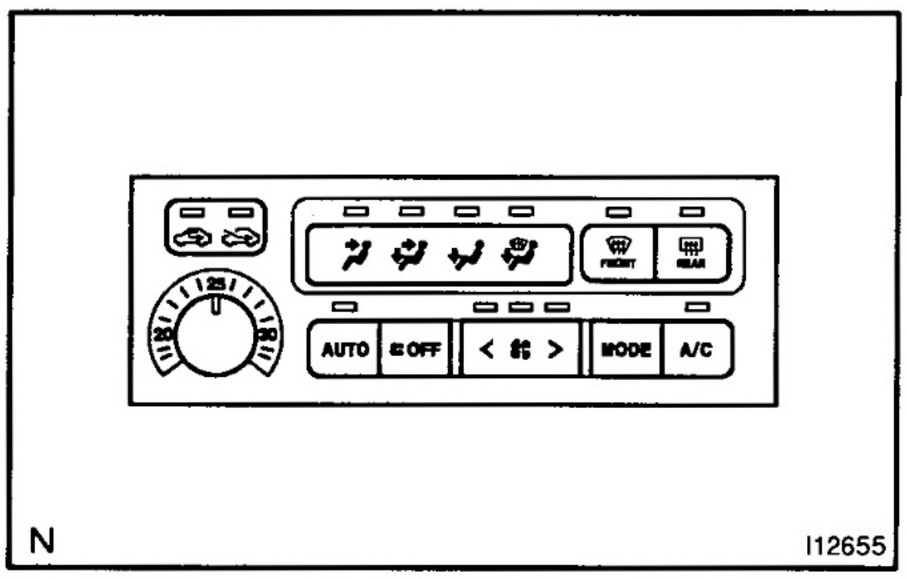

4. DIAGNOSTIC SENSOR CHECK

(a) Perform an indicator check. After the indicator check is completed, the system enters the diagnostic sensor check mode automatically.

(b) Check the LED blinking on the panel. Refer to the list of codes on page DI–284 when translating the trouble code from the LED blinking.

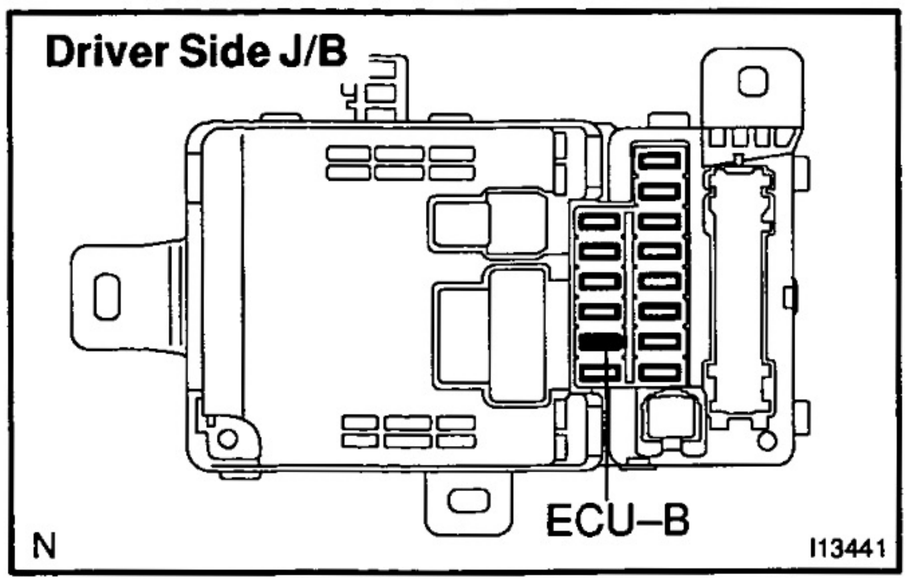

5. CLEARING DTC

(a) Method 1:

(1) Pull out the ECU–B fuse in driver side J/B for 10 sec. or longer to clear the trouble code's memory.

(2) After reinserting the fuse, check that the normal code is output.

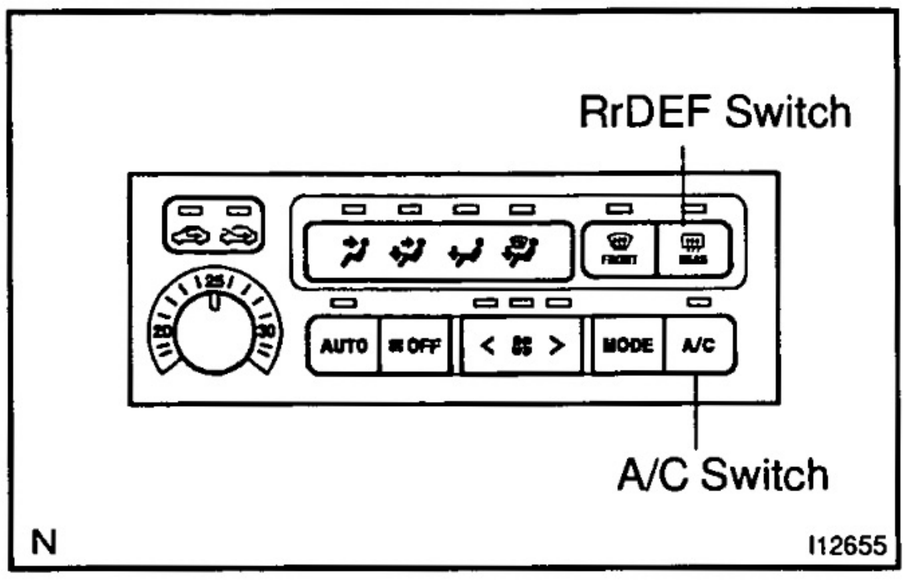

(b) Method 2:

Press the RrDEF switch while pushing the A/C switch during the sensor check mode.

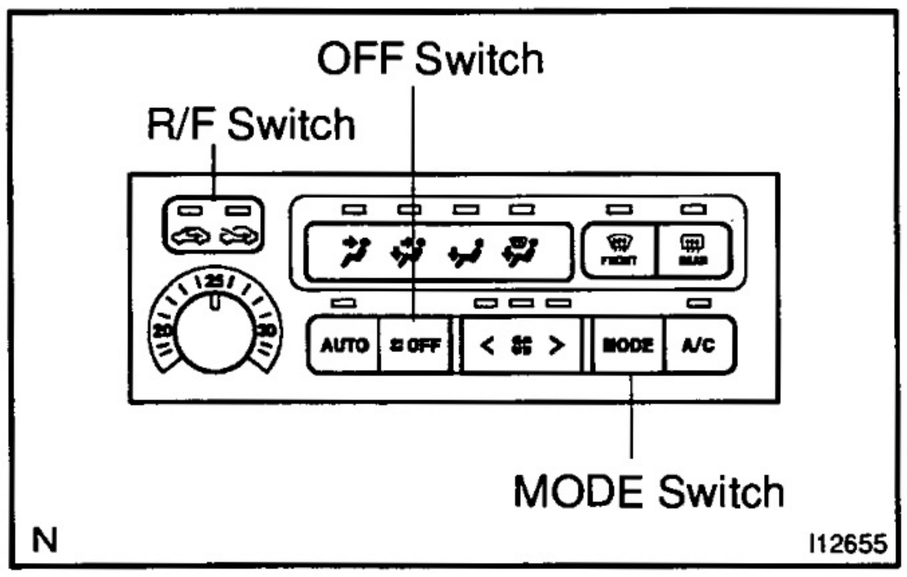

6. ACTUATOR CHECK

(a) After entering the sensor check mode, press the R/F switch.

(b) Push mode switch and change it to step operation. Each time the mode switch is pressed, the actuator operation changes by 1 step.

HINT:

- Check the change of actuator operation visually and by hand.
- To cancel the check mode, press the OFF switch.

Step No.	Condition						
	Blower Vent	Air flow Vent	Air inlet damper	Magnetic clutch	Air mix damper	Rr. A/C blower vent	Rr. A/C
1	0	FACE	REC	OFF	Cool side (–14.0 %)	0	OFF
2	↑	B/L	↑	↑	Cool/ Hot (50.0 %)	↑	↑
3	13	FOOT	FRS	Fr. A/C ON	Hot side (113.5 %)	6	Rr. A/C ON
4	↑	F/D	↑	↑	↑	↑	↑
5	31	DEF	↑	↑	↑	15	↑

DI264-06

DIAGNOSTIC TROUBLE CODE CHART

If malfunction code is displayed during the DTC check, check the circuit listed for that code in the table below (Proceed to the page given for that circuit.)

Blinking light	Detection Item	Trouble Area	Memory
AUTO	Normal	–	–
FACE *1 (DI–290)	Room temperature sensor circuit	• Room temp. sensor • Harness or connector between room temp. sensor and A/C amplifier • A/C amplifier	○ (8.5 min. or more)
B/L *2 (DI–293)	Ambient temperature sensor circuit	• Ambient temp. sensor • Harness or connector between ambient temp. sensor and A/C amplifier • A/C amplifier	○ (8.5 min. or more)
FOOT (DI–296)	Front evaporator temperature sensor circuit	• Front evaporator temp. sensor • Harness or connector between front evaporator temp. sensor and A/C amplifier • A/C amplifier	○ (8.5 min. or more)
RrDEF (DI–299)	Rear evaporator temperature sensor circuit	• Rear evaporator temp. sensor • Harness or connector between rear evaporator temp. sensor and A/C amplifier • A/C amplifier	○ (8.5 min. or more)
F/D (DI–302)	Water temperature sensor circuit	• Water temp. sensor • Harness or connector between water temp. sensor and A/C amplifier • A/C amplifier	–
DEF *3 (DI–305)	Solar sensor circuit (Open)	• Solar sensor • Harness or connector between solar sensor and A/C amplifier • A/C amplifier	–
	Solar sensor circuit (Short)		○ (8.5 min. or more)
FRS (DI–308)	Open in pressure sensor circuit Abnormal refrigerant pressure [below 196 kPa (2.0 kgf/cm^2, 28 psi) over 3,140 kPa (32.0 kgf/cm^2, 455 psi)]	• Pressure switch • Harness or connector between pressure switch and A/C amplifier • Refrigerant pipe line • A/C amplifier	–
REC (DI–311)	Air mix damper control servomotor circuit	• Air mix damper position sensor • A/C amplifier • Harness or connector between air mix damper position sensor and A/C amplifier	○ (1 min. or more)
ME (DI–314 DI–290)	Air mix damper control servomotor circuit	• Air mix damper control servomotor • Air mix damper position sensor • Harness and connector between A/C amplifier and air mix position sensor • Harness and connector between A/C amplifier and air mix damper control servomotor • A/C amplifier	○ (15secs. or more)

HINT:

- *1 If the room temp. is approx. –20°C (–4°F) or lower, RrDEF and FACE indicator may be light up even though the system is normal.
- *2 If the ambient temperature is approx. –50°C (–58°F) or lower, a DTC may be output even though the system is normal.
- *3 If the check is being performed in a dark place, RrDEF and DEF (solar sensor circuit abnormal) could be light up. In this case, perform DTC check again while shining a light, such as an inspection light, on the solar sensor. If RrDEF and DEF is still light up, there could be trouble in the solar sensor circuit.

DI6ED–01

TERMINALS OF ECU

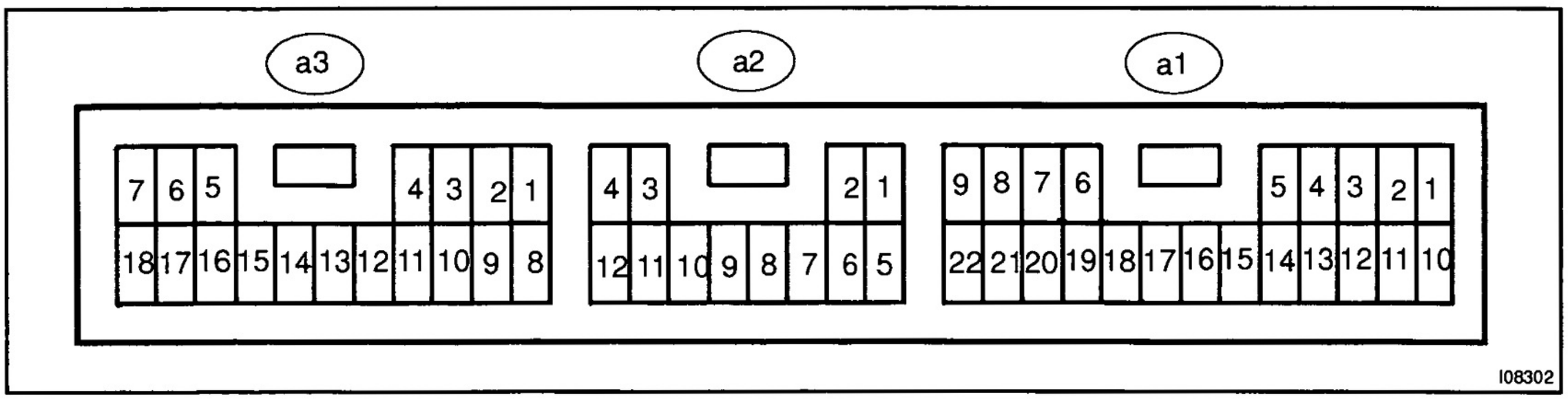

Symbols (Terminals No.)	Wiring Color	Condition	STD Voltage (V)
FrHR ↔ GND (a1 –1 ↔ a3 –18)	LY ↔ W–B	IG ON. Front blower motor: Operate	Below 1.0 V
		IG ON. Front blower motor : OFF	10 – 14 V
FrVM ↔ GND (a1 –2 ↔ a3 –18)	L–B ↔ W–B	IG ON. Front blower switch: LO	9.7 V
		IG ON. Front blower switch: ME	6.3 V
		IG ON. Front blower switch: HI	Below 1.0 V
RCHR ↔ GND (a1 –3 ↔ a3 –18)	W–R ↔ W–B	IG ON. Rear blower motor: Operate	Below 1.0 V
		IG ON. Rear blower motor: OFF	10 – 14 V
RCVM ↔ GND (a1 –4 ↔ a3 –18)	Y–B ↔ W–B	IG ON. Rear A/C blower switch: LO	9.5 V
		IG ON. Rear A/C blower switch: ME	6.4 V
		IG ON. Rear A/C blower switch: HI	Below 1.0 V
MGC ↔ GND (a1 –5 ↔ a3 –18)	L ↔ W–B	Start engine and push AUTO switch. A/C switch: ON	Below 1.0 V
		A/C switch: OFF	10 – 14 V
AIF ↔ GND (a1 –8 ↔ a3 –18)	G–W ↔ W–B	IG ON. Air inlet selector: FRESH	Below 1.0 V
		IG ON. Air inlet selector: RECIRCULATE	10 – 14 V
AIR ↔ GND (a1 –9 ↔ a3 –18)	LG–B ↔ W–B	IG ON. Air inlet selector: RECIRCULATE	Below 1.0 V
		IG ON. Air inlet selector: FRESH	10 – 14 V
FR ↔ GND (a1 –10 ↔ a3 –18)	G–W ↔ W–B	IG ON. Front blower switch: HI	Below 1.0 V
		IG ON. Front blower switch: Except HI	10 – 14 V
BLW ↔ GND (a1 –11 ↔ a3 –18)	Y ↔ W–B	IG ON. Front blower motor: OFF	10 – 14 V
		IG ON. Front blower motor: Operate	Below 1.0 V
RBLR ↔ GND (a1 –13 ↔ a3 –18)	R ↔ W–B	IG ON. Rear A/C blower motor: Operate	Below 1.0 V
		IG ON. Rear A/C blower motor: OFF	10 – 14 V
RMGV ↔ GND (a1 –14 ↔ a3 –18)	LG–R ↔ W–B	Start engine. Rear A/C switch: ON	Below 1.0 V
		Start engine. Rear A/C switch: OFF	10 – 14 V
FACE ↔ GND (a1 –15 ↔ a3 –18)	GR ↔ W–B	IG ON. Mode selector: FACE	Below 1.0 V
		IG ON. Mode selector: Except FACE	10 – 14 V
B/L ↔ GND (a1 –16 ↔ a3 –18)	BR–W ↔ W–B	IG ON. Mode selector: B/L	Below 1.0 V
		IG ON. Mode selector: Except B/L	10 – 14 V
FOOT ↔ GND (a1 –17 ↔ a3 –18)	BR–Y ↔ W–B	IG ON. Mode selector: FOOT	Below 1.0 V
		IG ON. Mode selector: Except FOOT	10 – 14 V
F/D ↔ GND (a1 –18 ↔ a3 –18)	R–Y ↔ W–B	IG ON. Mode selector: F/D	Below 1.0 V
		IG ON. Mode selector: Except F/D	10 – 14 V
DEF ↔ GND (a1 –19 ↔ a3 –18)	B–W ↔ W–B	IG ON. Mode selector: DEF	Below 1.0 V
		IG ON. Mode selector: Except DEF	10 – 14 V

MC ↔ GND (a1 –21 ↔ a3 –18)	B–W ↔ W–B	IG ON. Temp. control dial: MAX. COOL	Below 1.0 V
		IG ON. Temp. control dial: MAX. HOT	10 – 14 V
MH ↔ GND (a1 –22 ↔ a3 –18)	P–G ↔ W–B	IG ON. Temp. control dial: MAX. HOT	Below 1.0 V
		IG ON. Temp. control dial: MAX. COOL	10 – 14 V
RDEF ↔ GND (a2 –1 ↔ a3 –18)	L–O ↔ W–B	IG ON. Rear defogger switch: ON	Below 1.0 V
		IG ON. Rear defogger switch: OFF	10 – 14 V
A.C ↔ GND (a2 –2 ↔ a3 –18)	W–G ↔ W–B	Start engine and push AUTO switch. Magnetic clutch: ON	Below 1.0 V
		Magnetic clutch: OFF	10 – 14 V
RRAC ↔ GND (a2 –3 ↔ a3 –18)	B–W ↔ W–B	IG ON. Rear A/C main switch: ON	Below 1.0 V
		IG ON. Rear A/C main switch: OFF	10 – 14 V
RRHI ↔ GND (a2 –4 ↔ a3 –18)	Y–B ↔ W–B	IG ON. Rear A/C blower switch: HI	Below 1.0 V
		IG ON. Rear A/C blower switch: Except HI	10 – 14 V
PSW ↔ GND (a2 –5 ↔ a3 –18)	W ↔ W–B	IG ON.	Below 1.0 V
		IG ON. Disconnect pressure switch connector	10 – 14 V
ACT ↔ GND (a2 –6 ↔ a3 –18)	L–B ↔ W–B	Start engine (idling). Operate compressor	10 – 14 V
		Start engine (idling). Does not operate compressor	Below 1.5 V
RRAT ↔ GND (a2 –11 ↔ a3 –18)	Y–B ↔ W–B	IG ON. Rear A/C blower switch: AUTO	Below 1.0 V
		IG ON. Rear A/C blower switch: Except AUTO	10 – 14 V
RMI ↔ GND (a2 –12 ↔ a3 –18)	Y ↔ W–B	IG ON. Rear A/C blower switch: ME	Below 1.0 V
		IG ON. Rear A/C blower switch: Except ME	10 – 14 V
IG+ ↔ GND (a3 –1 ↔ a3 –18)	R–L ↔ W–B	IG ON.	10 – 14 V
		IG OFF.	No voltage
B ↔ GND (a3 –2 ↔ a3 –18)	W–R ↔ W–B	Constant	10 – 14 V
S5 ↔ GND (a3 –3 ↔ a3 –18)	LG ↔ W–B	Constant	4.5 – 5.5 V
ILL ↔ GND (a3 –4 ↔ a3 –18)	W–B ↔ W–B	Constant	Continuity
TP ↔ SG (a3 –5 ↔ a3 –7)	P ↔ Y–G	IG ON. Temp. control dial: MAX. COOL	4.0 V
		IG ON. Temp. control dial: MAX. HOT	1.0 V
RTB ↔ SG (a3 –6 ↔ a3 –7)	L–O ↔ Y–G	IG ON. Rear A/C temp. control dial: MAX. COOL	0.8 V
		IG ON. Rear A/C temp. control dial: MAX. HOT	2.2 V
SG ↔ GND (a3 –7 ↔ a3 –18)	Y–G ↔ W–B	Constant	Continuity
ILL+ ↔ GND (a3 –9 ↔ a3 –18)	G ↔ W–B	Taillight control switch: TAIL	10 – 14 V
RTE ↔ SG (a3 –12 ↔ a3 –7)	Y–G ↔ Y–G	IG ON. Rear A/C evaporator temp.: 0 °C (32 °F)	2.0 – 2.4 V
		IG ON. Rear A/C evaporator temp.: 15 °C (59 °F)	1.4 – 1.8 V
TE ↔ SG (a3 –13 ↔ a3 –7)	Y ↔ Y–G	IG ON. Front evaporator temp.: 0 °C (32 °F)	2.0 – 2.4 V
		IG ON. Front evaporator temp.: 15 °C (59 °F)	1.4 – 1.8 V
TW ↔ SG (a3 –14 ↔ a3 –7)	Y–B ↔ Y–G	IG ON. Water temp.: 40 °C (104 °F)	1.8 – 2.2 V
		IG ON. Water temp.: 70 °C (158 °F)	0.9 – 1.3 V
TAM ↔ SG (a3 –15 ↔ a3 –7)	W ↔ Y–G	IG ON. Ambient temp.: 25 °C (77 °F)	1.3 – 1.8 V
		IG ON. Ambient temp.: 40 °C (104 °F)	0.7 – 1.3 V
TR ↔ SG (a3 –16 ↔ a3 –7)	B ↔ Y–G	IG ON. Cabin temp.: 25 °C (77 °F)	1.8 – 2.2 V
		IG ON. Cabin temp.: 40 °C (104 °F)	1.2 – 1.6 V

TS ↔ S5 (a3 –17 ↔ a3 –7)	G–R ↔ Y–G	IG ON. Solar sensor subject to electric light	1.0 V or more
		IG ON. Solar sensor covered by a cloth	Below 1.0 V
GND ↔ Body ground (a3 –18 ↔ Body ground)	W–B ↔ Body ground	Constant	Continuity

DI29M–06

PROBLEM SYMPTOMS TABLE

FRONT A/C

Symptom	Suspect Area	See page
Whole functions of the A/C system does not operate	1. A/C amplifier 2. Back–up power source circuit	IN–33 DI–325
Air Flow Control: No blower operation	1. Back–up power source circuit 2. Heater main relay 3. Blower motor circuit 4. A/C amplifier	DI–325 DI–330 DI–333 IN–33
Air Flow Control: No blower control	1. Heater main relay 2. Extra–Hi relay circuit 3. Blower motor circuit 4. A/C amplifier 5. Solar sensor circuit	DI–330 DI–337 DI–333 IN–33 DI–305
Air Flow Control: Insufficient air flow	1. Blower motor circuit	DI–333
Temperature Control: No cool air comes out	1. Refrigerant volume 2. Drive belt tension 3. Refrigeration system inspection with manifold gauge set 4. Compressor circuit 5. Pressure switch circuit 6. Air mix damper position sensor circuit 7. Air mix damper control servomotor circuit 8. Room temp. sensor circuit 9. Ambient temp. sensor circuit 10.A/C amplifier	AC–21(*) AC–22(*) AC–16(*) DI–347 DI–308 DI–311 DI–314 DI–290 DI–293 IN–33
Temperature Control: No warm air comes out	1. Air mix damper position sensor circuit 2. Air mix damper control servomotor circuit 3. Room temp. sensor circuit 4. Ambient temp. sensor circuit 5. Front evaporator temp. sensor circuit 6. A/C amplifier	DI–311 DI–314 DI–290 DI–293 DI–296 IN–33
Temperature Control: Output air is warmer or cooler that the set temperature or response is slow	1. Refrigerant volume 2. Drive belt tension 3. Refrigeration system inspection with manifold gauge set 4. Cooling fan system 5. Solar sensor circuit 6. Room temp. sensor circuit 7. Ambient temp. sensor circuit 8. Front evaporator temp. sensor circuit 9. Air mix damper position sensor circuit 10.Air mix damper control servomotor circuit 11.Air inlet damper control servomotor circuit 12.Condenser 13.Evaporator 14.Heater radiator 15.Expansion valve 16.A/C amplifier	AC–21(*) AC–22(*) AC–16(*) AC–72(*) DI–305 DI–290 DI–293 DI–296 DI–311 DI–314 DI–318 AC–59(*) AC–62(*) AC–61(*) AC–62(*) IN–33

Symptom	Suspect Area	See page
Temperature Control: No temperature control (only Max. cool or Max. warm)	1. Room temp. sensor circuit 2. Ambient temp. sensor circuit 3. Air mix damper position sensor circuit 4. Air mix damper control servomotor circuit 5. A/C amplifier	DI–290 DI–293 DI–311 DI–314 IN–33
No air inlet control	1. Air inlet damper control servomotor circuit 2. A/C amplifier	DI–318 IN–33
No air flow mode	1. Air outlet damper control servomotor 2. A/C amplifier	DI–322 IN–33
Engine idle up does not occur, or is continuous	1. Compressor circuit 2. A/C amplifier	DI–347 IN–33

REAR A/C

Symptom	Suspect Area	See page
Whole functions of the rear A/C system does not operate	1. A/C amplifier	IN–33
Air Flow Control: No blower operation	1. Rear A/C relay circuit 2. Rear blower motor circuit 3. Rear power transistor 4. A/C amplifier	DI–340 DI–343 DI–343 IN–33
Air Flow Control: No blower control	1. Rear blower motor circuit 2. A/C amplifier	DI–343 IN–33
Air Flow Control: Insufficient air flow	1. Rear blower motor circuit	DI–343
Temperature Control: No cool air comes out	1. Refrigerant volume 2. Drive belt tension 3. Refrigeration system inspection with manifold gauge set 4. Compressor circuit 5. Pressure switch circuit 6. Rear A/C magnetic valve circuit 7. A/C amplifier	AC–21(*) AC–22(*) AC–16(*) DI–347 DI–308 DI–352 IN–33
Temperature Control: No temperature control (only Max. cool or Max. warm)	1. Rear A/C temperature set lever circuit 2. Rear A/C amplifier	DI–361 IN–33

(*): See Pub. No. RM 517E

DI6EE–01

CIRCUIT INSPECTION

DTC	FACE	Room Temperature Sensor Circuit

CIRCUIT DESCRIPTION

This sensor detects the temperature inside the cabin and sends the appropriate signals to the A/C amplifier.

Blinking light	Detection Item	Trouble Area
FACE	Open or short in room temperature sensor circuit.	• Room temperature sensor • Harness or connector between room temperature sensor and A/C amplifier • A/C amplifier

WIRING DIAGRAM

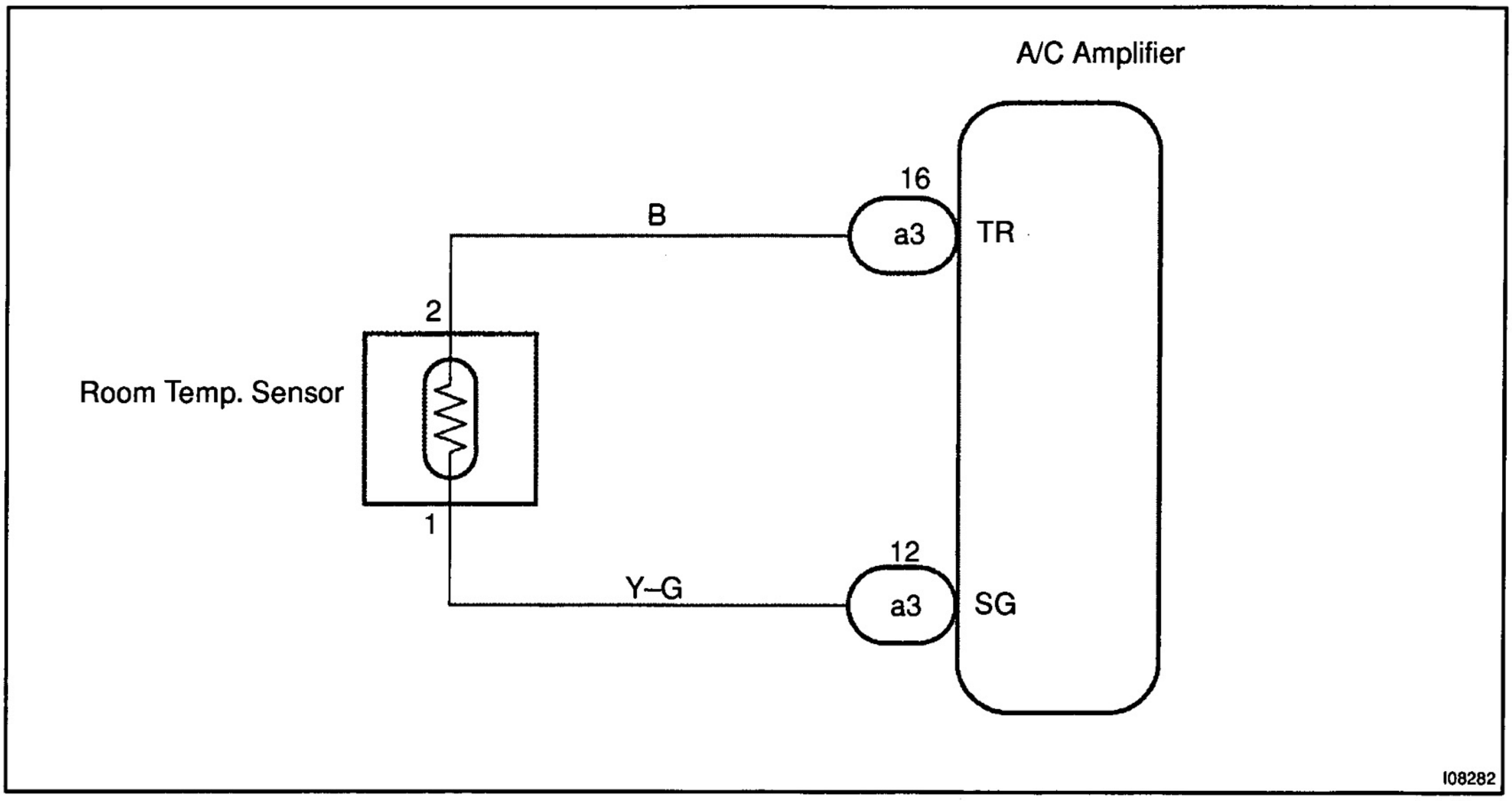

INSPECTION PROCEDURE

1	**Check voltage between terminals TR and SG of A/C amplifier connector.**

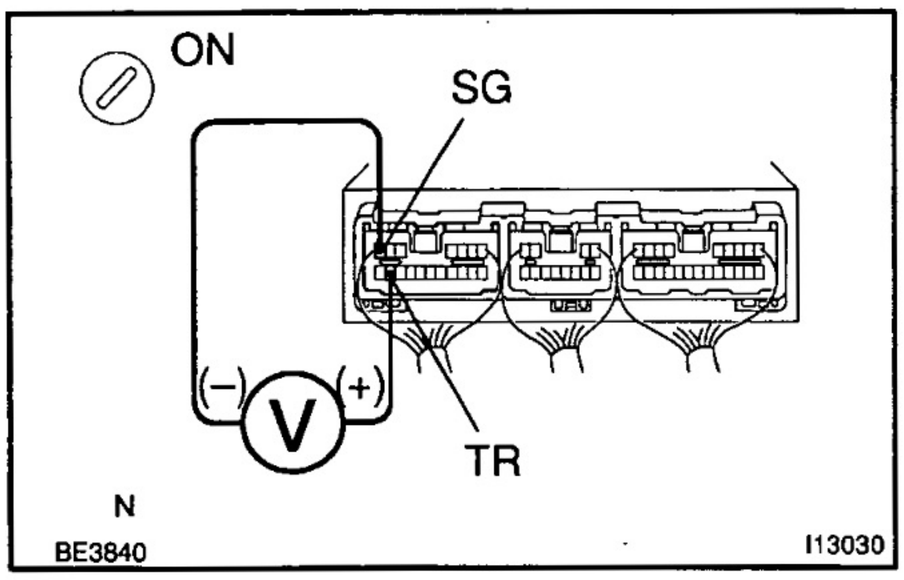

PREPARATION:

Remove A/C control assembly with connectors still connected.

CHECK:

(a) Turn ignition switch to ON.

(b) Measure voltage between terminals TR and SG of A/C amplifier connector at each temperature.

OK:

Voltage :
at 25°C (77°F) : 1.8 – 2.2 V
at 40°C (104°F) : 1.2 – 1.6 V

HINT:

As the temperature increases, the voltage decreases.

NG → **Go to step 2.**

OK

Proceed to next circuit inspection shown on problem symptoms table (See page DI–288). However, if FACE indicator light up, check and replace A/C amplifier.

2	Check room temperature sensor.

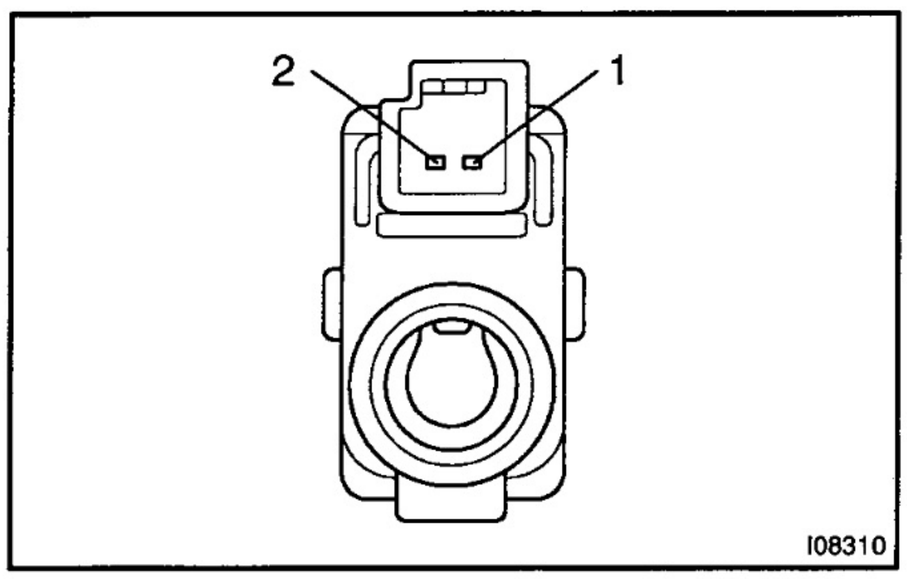

PREPARATION:
Remove room temperature sensor.
CHECK:
Measure resistance between terminals 1 and 2 of room temperature sensor connector at each temperature.
OK:

Resistance :
at 25°C (77°F) : 1.65 – 1.75 kΩ
at 50°C (122°F) : 0.55 – 0.65 kΩ

HINT:
As the temperature increases, the resistance decreases.

NG → **Replace room temperature sensor.**

OK

3	Check harness and connector between A/C amplifier and room temperature sensor (See page IN–33).

NG → **Repair or replace harness or connector.**

OK

Check and replace A/C amplifier.

DI6EF–01

DTC	B/L	Ambient Temperature Sensor Circuit

CIRCUIT DESCRIPTION

This sensor detects the ambient temperature and sends the appropriate signals to the A/C amplifier.

Blinking light	Detection Item	Trouble Area
B/L	Open or short in ambient temperature sensor circuit.	• Ambient temperature sensor • Harness or connector between ambient temperature sensor and A/C amplifier • A/C amplifier

WIRING DIAGRAM

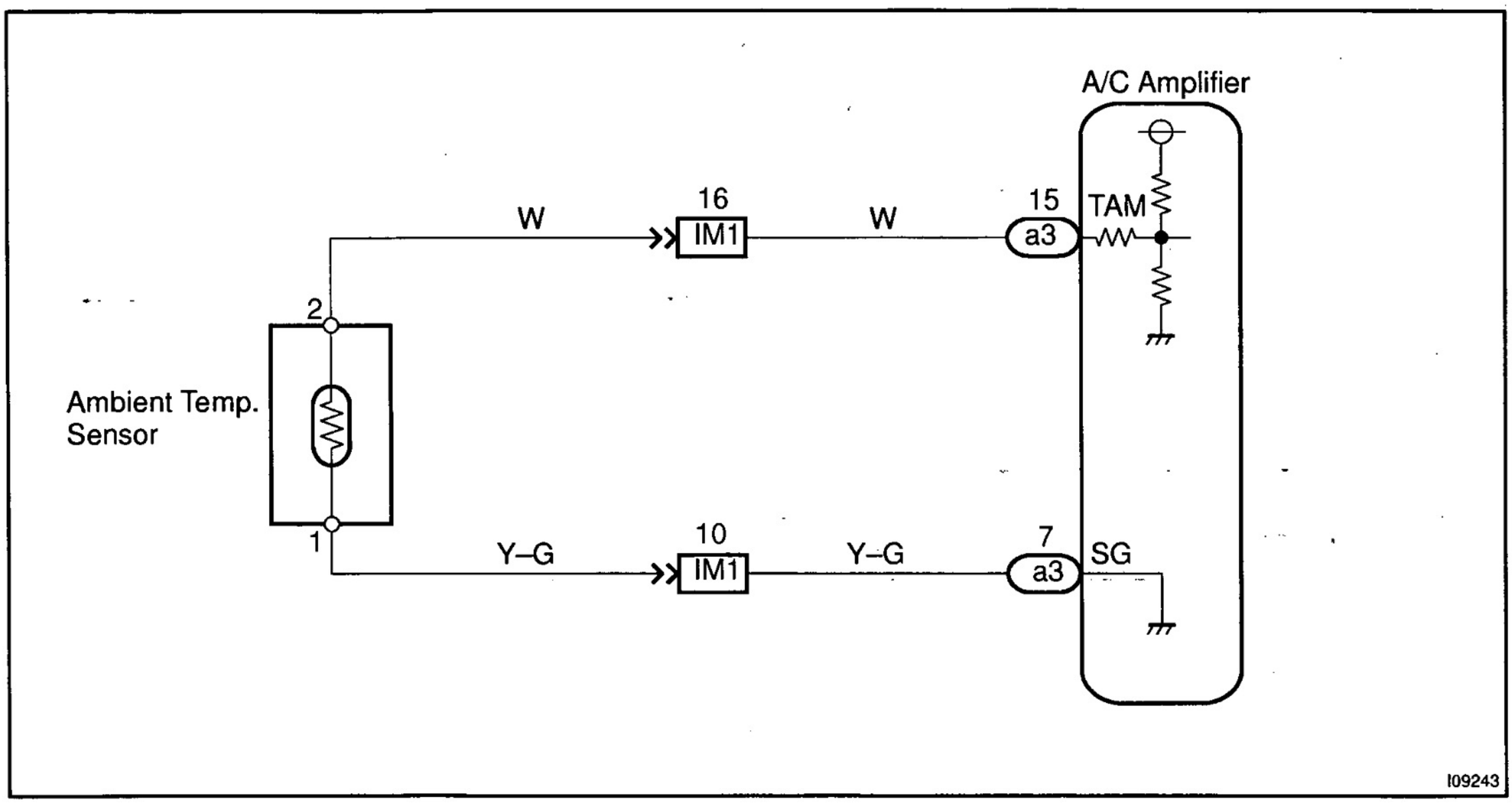

INSPECTION PROCEDURE

1	**Check voltage between terminals TAM and SG of A/C amplifier.**

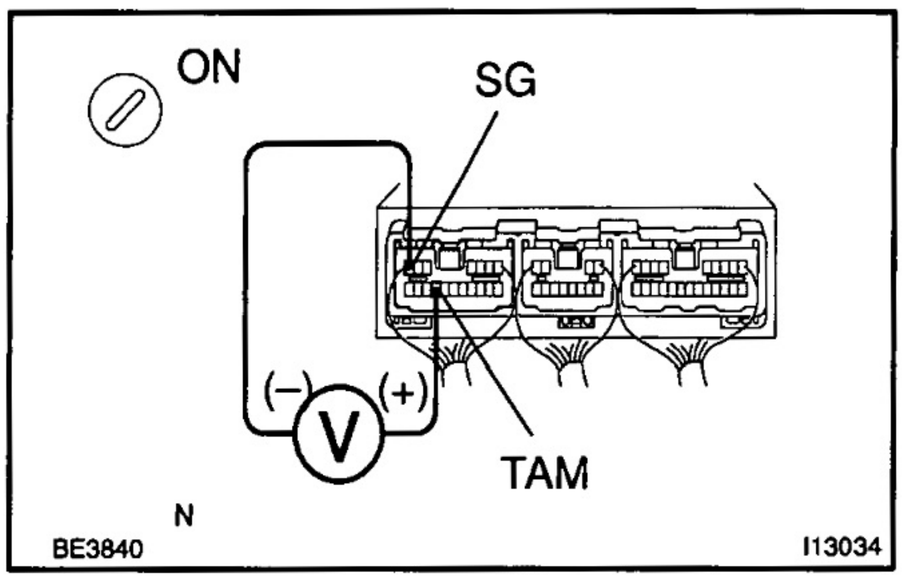

PREPARATION:

Remove A/C control assembly with connectors still connected.

CHECK:

(a) Turn ignition switch to ON.

(b) Measure voltage between terminals TAM and SG of A/C amplifier connector at each temperature.

OK:

Voltage :
at 25°C (77°F) : 1.35 – 1.75 V
at 40°C (104°F) : 0.85 – 1.25 V

HINT:

As the temperature increases, the voltage decreases.

NG → **Go to step 2.**

OK →

Proceed to next circuit inspection shown on problem symptoms table (See page DI–288). However, if B/L indicator light up, check and replace A/C amplifier.

2	**Check ambient temperature sensor.**

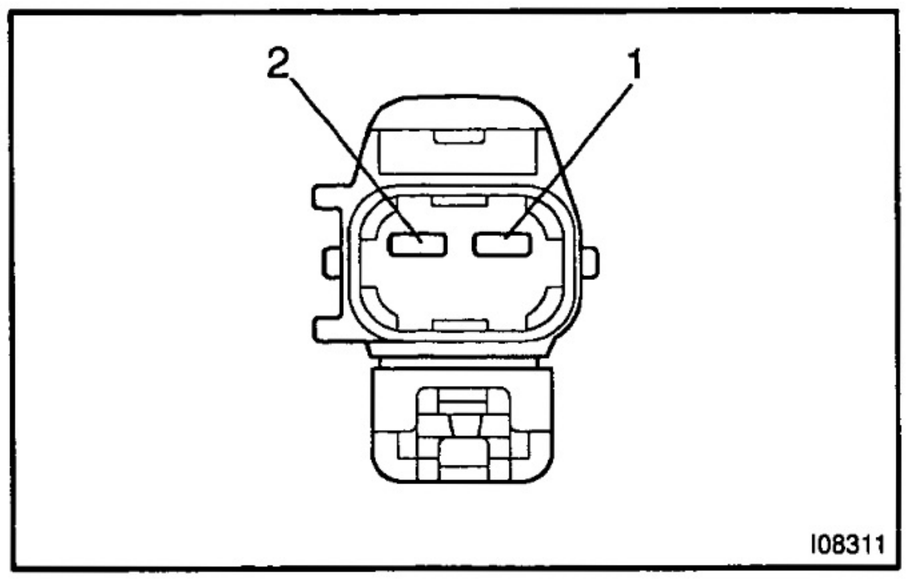

PREPARATION:
Remove ambient temperature sensor.
CHECK:
Measure resistance between terminals 1 and 2 of ambient temperature sensor connector at each temperature.
OK:

Resistance :
at 25°C (77°F) : 1.6 – 1.8 kΩ
at 50°C (122°F) : 0.5 – 0.7 kΩ

HINT:
As the temperature increases, the resistance decreases.
NOTICE:
When installing the ambient temperature sensor, be sure to connect the sensor connector before connecting the battery.

NG → **Replace ambient temperature sensor.**

OK

3	**Check harness and connector between ambient temperature sensor and A/C amplifier (See page IN–33).**

NG → **Repair or replace harness or connector.**

OK

Check and replace and A/C amplifier.

DI6EG–01

DTC	FOOT	Front Evaporator Temperature Sensor Circuit

CIRCUIT DESCRIPTION

This sensor detects the temperature inside the front cooling unit and sends the appropriate signals to the A/C amplifier.

Blinking light	Detection Item	Trouble Area
FOOT	Open or short in front evaporator temperature sensor circuit.	• Front evaporator temperature sensor • Harness or connector between front evaporator temperature sensor and A/C amplifier • A/C amplifier

WIRING DIAGRAM

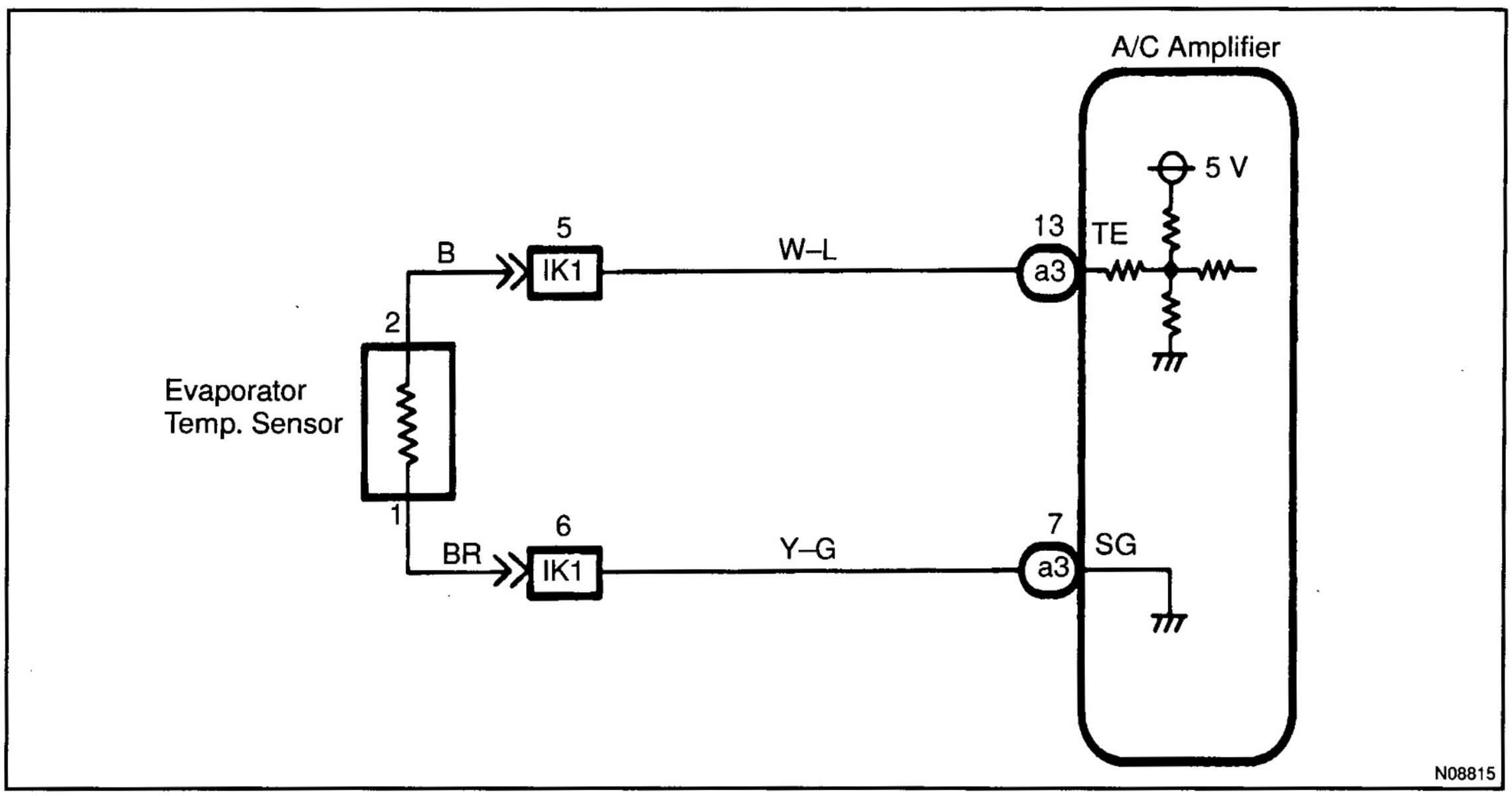

INSPECTION PROCEDURE

1	**Check voltage between terminals TE and SG of A/C amplifier connector.**

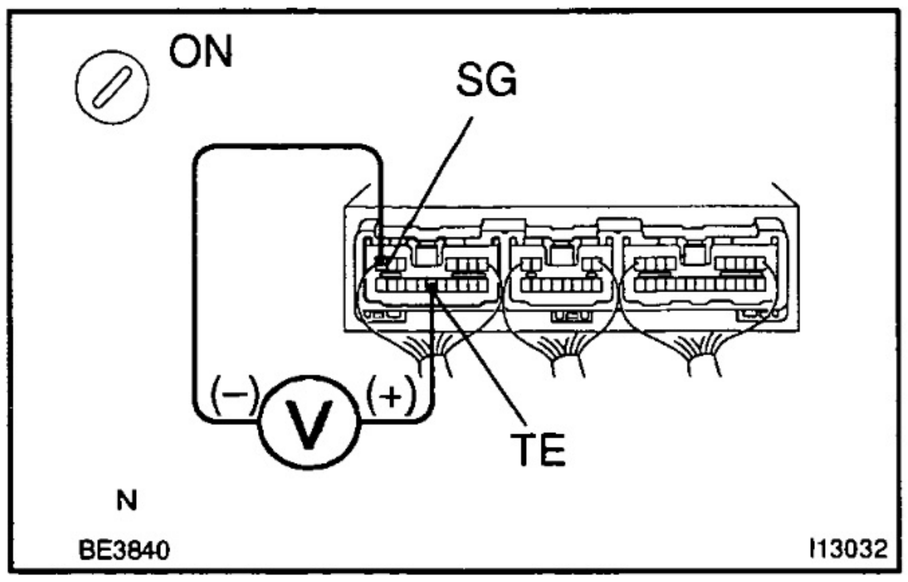

PREPARATION:

Remove A/C amplifier with connectors still connected.

CHECK:

(a) Turn ignition switch to ON.

(b) Measure voltage between terminals TE and SG of A/C amplifier connector at each temperature.

OK:

Voltage :
at 0°C (32°F) : 2.0 – 2.4 V
at 15°C (59°F) : 1.4 – 1.8 V

HINT:

As the temperature increases, the voltage decreases.

NG → **Go to step 2.**

OK

Proceed to next circuit inspection shown on problem symptoms table (See page DI–288). However, if FOOT indicator light up, check and replace A/C amplifier.

2	Check front evaporator temperature sensor.

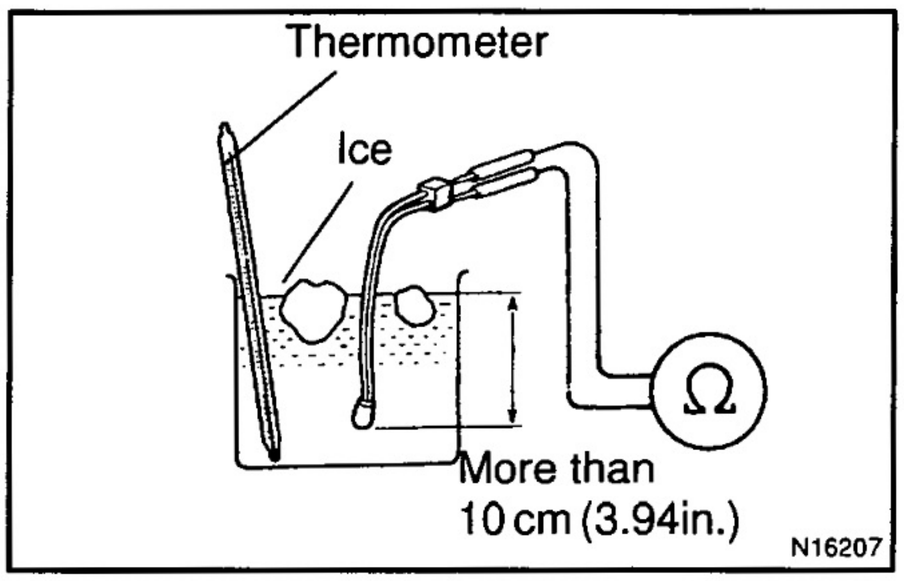

PREPARATION:

Remove front evaporator temperature sensor
(See page AC–4).

CHECK:

Measure resistance between terminals 1 and 2 of front evaporator temperature sensor connector at each temperature.

OK:

Resistance :
at 0°C (32°F) : 4.5 – 5.2 kΩ
at 15°C (59°F) : 2.0 – 2.7 kΩ

HINT:
As the temperature increases, the resistance decreases.

NG → **Replace front evaporator temperature sensor.**

OK ↓

3	Check harness and connector between A/C amplifier and front evaporator temperature sensor (See page IN–33).

NG → **Repair or replace harness or connector.**

OK ↓

Check and replace A/C amplifier.

DI6EH–01

DTC	RrDEF	Rear Evaporator Temperature Sensor circuit

CIRCUIT DESCRIPTION

This sensor detects the temperature inside the rear cooling unit and sends the appropriate signals to the A/C amplifier.

Blinking light	Detection Item	Trouble Area
RrDEF	Open or short in rear evaporator temperature sensor circuit.	• Rear evaporator temperature sensor. • Harness or connector between front evaporator temperature sensor and A/C amplifier. • A/C amplifier.

WIRING DIAGRAM

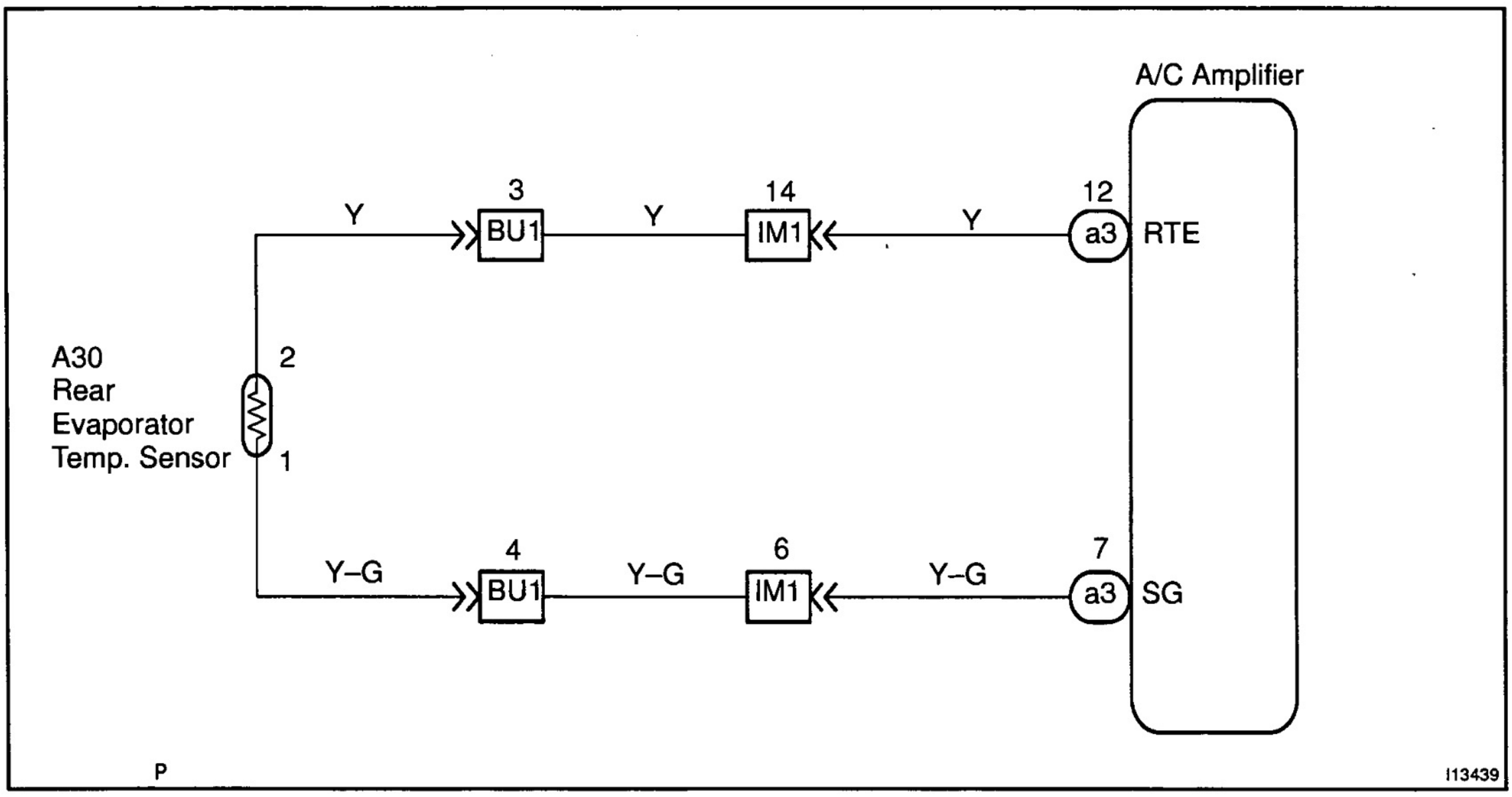

INSPECTION PROCEDURE

1	**Check voltage between terminals RTE and SG of A/C amplifier connector.**

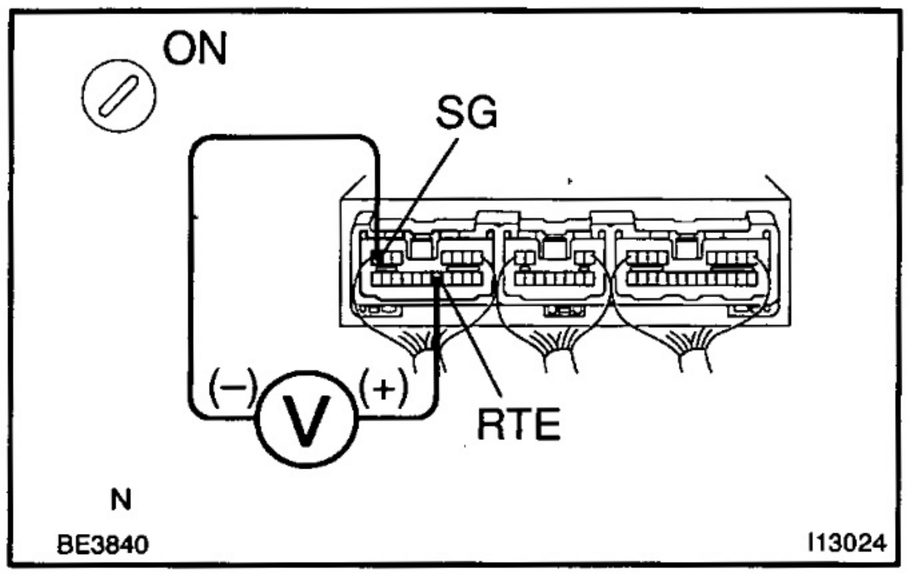

PREPARATION:

Remove A/C amplifier with connectors still connected.

CHECK:

(a) Turn ignition switch ON.

(b) Measure voltage between terminals RTE and SG of A/C amplifier connector at each temperature.

OK:

Voltage :
at 0°C (32°F) : 2.0 – 2.4 V
at 15°C (59°F) : 1.4 – 1.8 V

HINT:

As the temperature increases, the voltage decreases.

NG → **Go to step 2.**

OK

Proceed to next circuit inspection shown on problem symptoms table (See page DI–288). However, if RrDEF is light up, check and replace A/C amplifier.

2	Check rear evaporator temperature sensor.

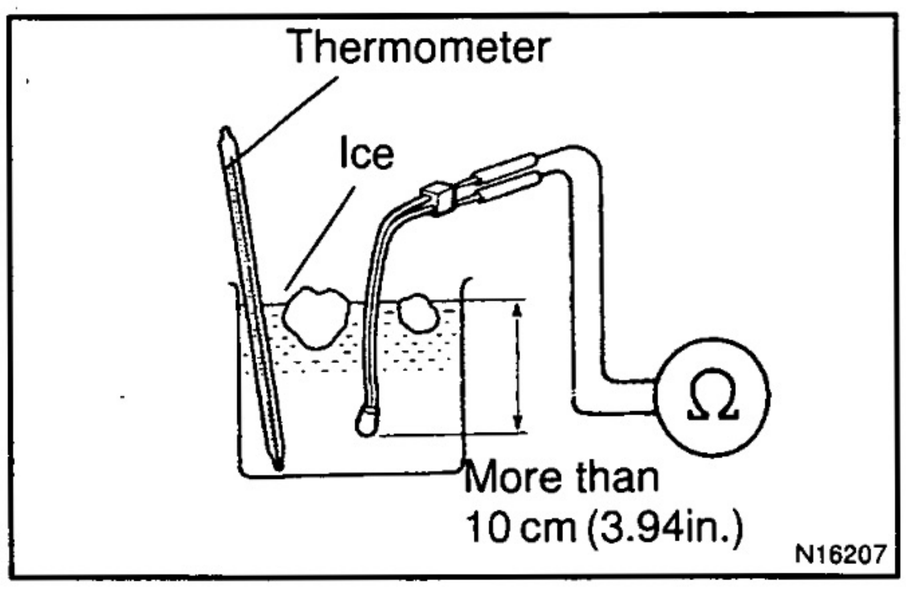

PREPARATION:

Remove rear evaporator temperature sensor (See page AC–8).

CHECK:

Measure resistance between terminals 1 and 2 of front evaporator temperature sensor connector at each temperature.

OK:

Resistance :
at 0°C (32°F) : 4.5 – 5.2 kΩ
at 15°C (59°F) : 2.0 – 2.7 kΩ

HINT:

As the temperature increases, the resistance decreases.

NG → **Replace rear evaporator temperature sensor.**

OK

3	Check harness and connector between A/C amplifier and rear evaporator temperature sensor (See page IN–33).

NG → **Repair or replace harness or connector.**

OK

Check and replace A/C amplifier.

DI6EI–01

DTC	F/D	Water Temperature Sensor Circuit

CIRCUIT DESCRIPTION

This sensor detects the water temperature and sends the appropriate signals to the A/C amplifier.

Blinking light	Detection Item	Trouble Area
F/D	Open or short in engine coolant temperature sensor circuit.	• Water temperature sensor • Harness or connector between engine coolant temperature sensor and A/C amplifier • A/C amplifier

WIRING DIAGRAM

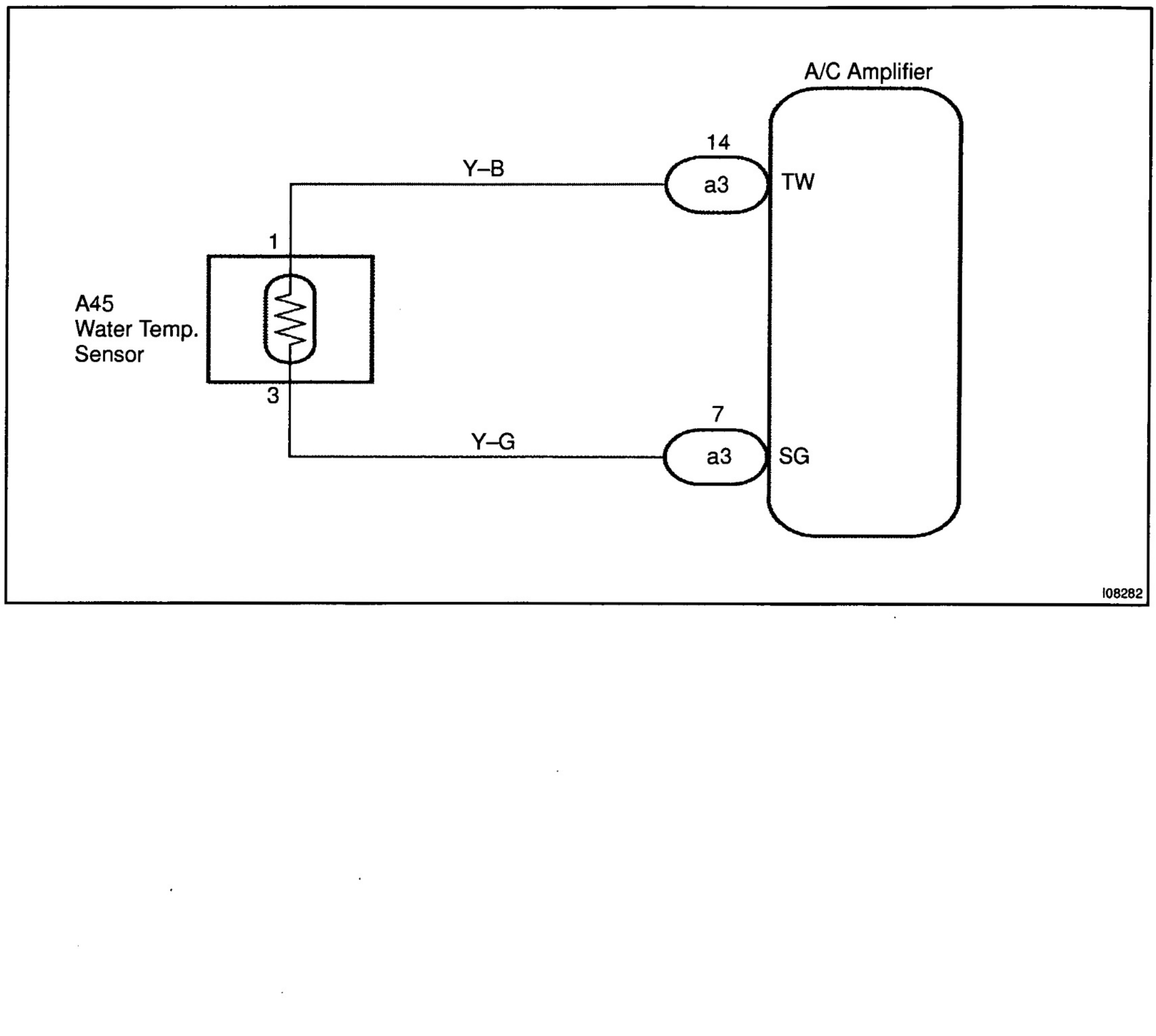

INSPECTION PROCEDURE

1	**Check voltage between terminals TW and SG of A/C control assembly connector.**

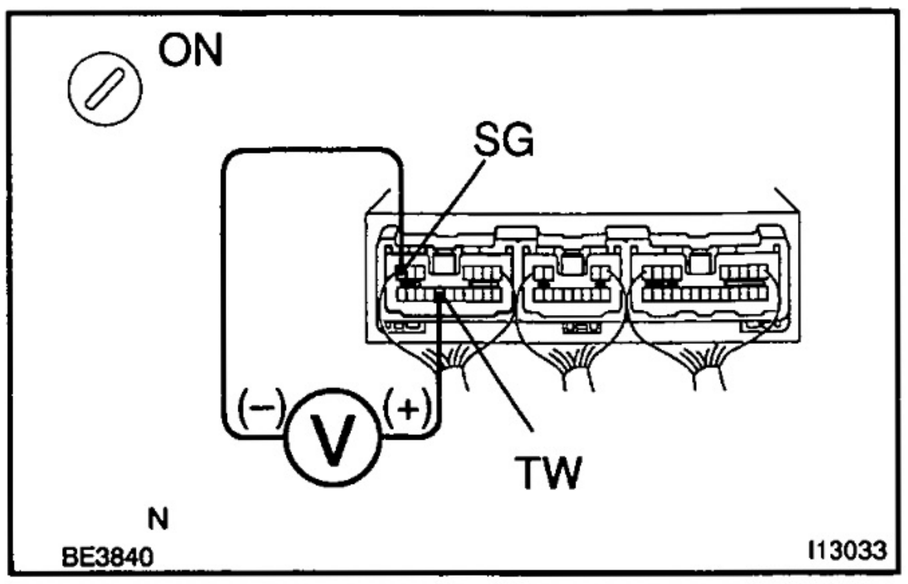

PREPARATION:

(a) Remove A/C control assembly with connectors still connected.

(b) Turn ignition switch to ON.

CHECK:

Measure voltage between terminals TW and SG of A/C control assembly connector at each engine coolant temperature.

OK:

Voltage :
at 0°C (32°F) : 2.8 – 3.2 V
at 40°C (104°F) : 1.8 – 2.2 V
at 70°C (158°F) : 0.9 – 1.3 V

HINT:

As the temperature increases, the voltage decreases.

NG	**Go to step 2.**

OK

Proceed to next circuit inspection shown on problem symptoms table (See page DI–288). However, if DTC 14 is displayed, check and replace A/C control assembly.

2	Check engine coolant temperature sensor.

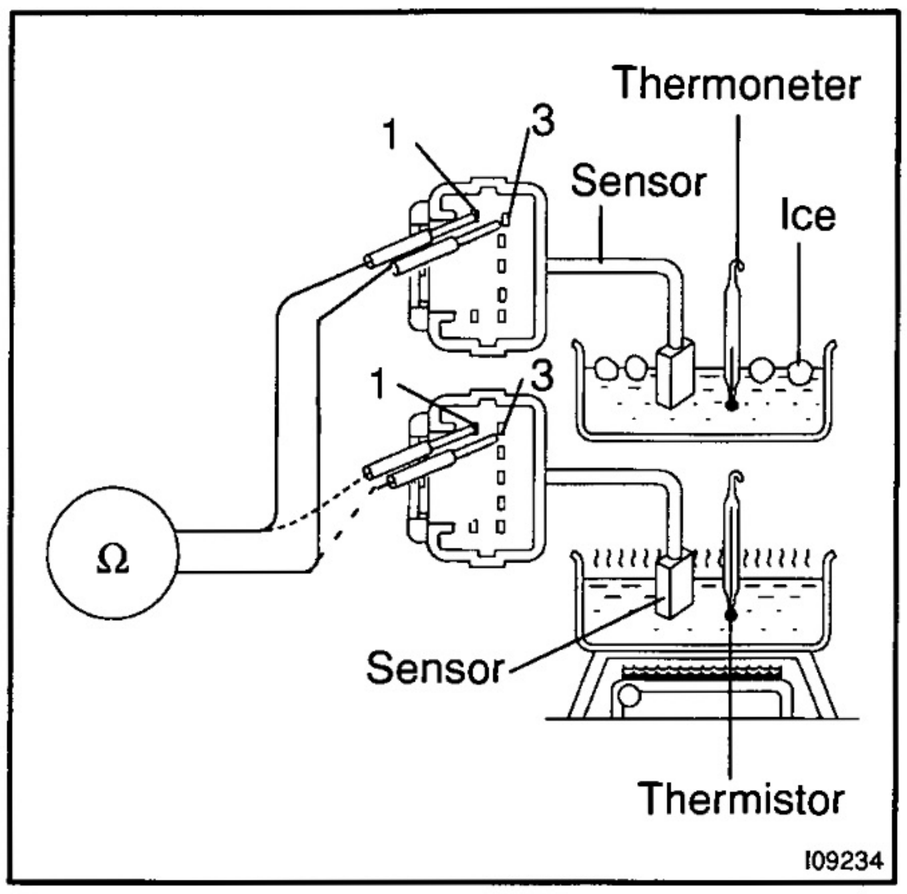

PREPARATION:

Remove engine coolant temperature sensor (See page AC–13.).

CHECK:

Measure resistance between terminals 1 and 3 of engine coolant temperature sensor connector at each temperature.

OK:

Resistance :
at 0°C (32°F) : Below 50 kΩ
at 40°C (104°F) : 2.5 – 2.7 kΩ
at 100°C (212°F) : Over 0.3 kΩ

HINT:

As the temperature increases, the resistance decreases gradually.

NG → **Replace engine coolant temperature sensor.**

OK

3	Check harness and connector between A/C control assembly and engine coolant temperature sensor (See page IN–33).

NG → **Repair or replace harness or connector.**

OK

Check and replace A/C control assembly.

DI6EY-01

DTC	DEF	Solar Sensor Circuit

CIRCUIT DESCRIPTION

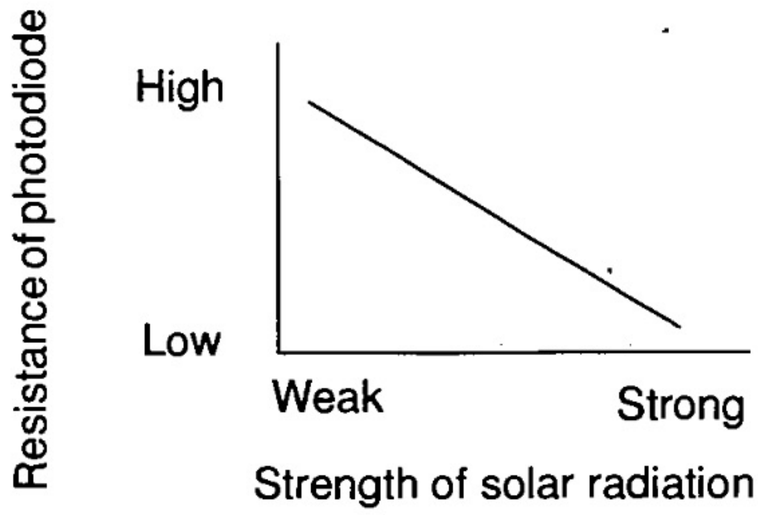

A photo diode in the solar sensor detects solar radiation and sends signals to the A/C control assembly.

Blinking light	Detection Item	Trouble Area
DEF	Open or short in solar sensor circuit. Please note that display of diagnostic trouble code DEF is not abnormal when the sensor is not receiving solar radiation.	• Solar sensor • Harness or connector between solar sensor and A/C amplifier • A/C amplifier

WIRING DIAGRAM

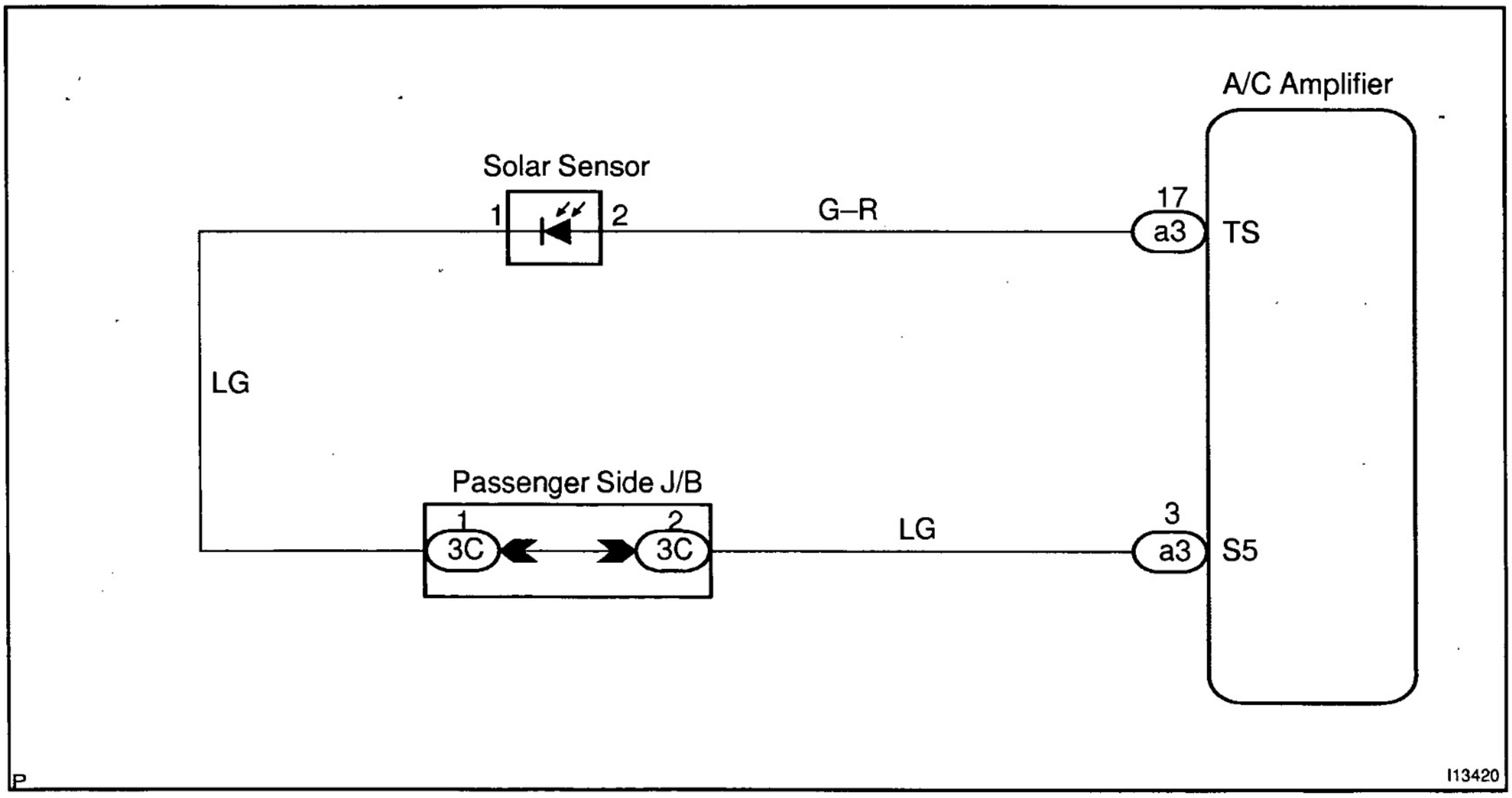

INSPECTION PROCEDURE

1	**Check voltage between terminals TS and S5 of A/C amplifier connector.**

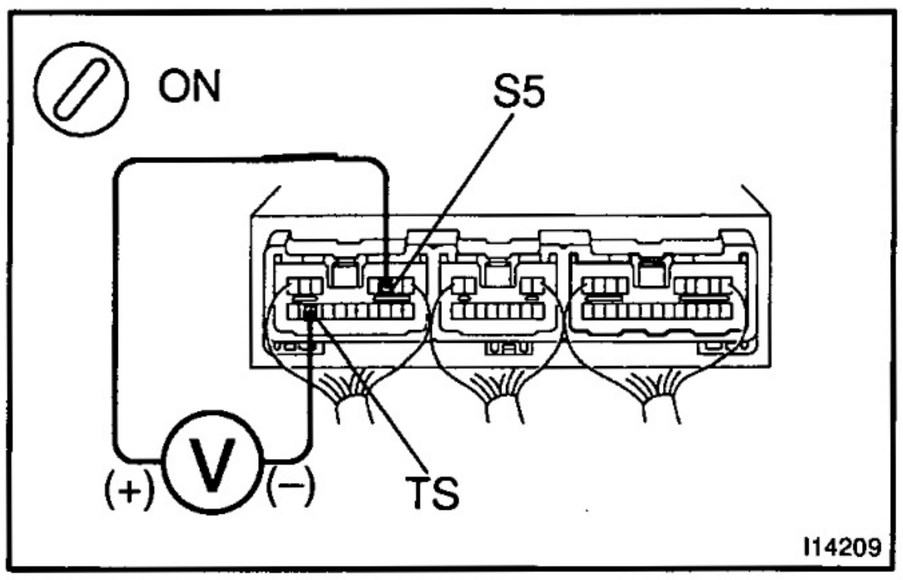

PREPARATION:

Remove A/C control assembly with connectors still connected.

CHECK:

(a) Turn ignition switch to ON.

(b) Measure voltage between terminals S5 and TS of A/C amplifier connector when the solar sensor is subjected to an electric light, and when the sensor is covered by al cloth.

OK:

Condition	Voltage
Sensor subjected to electric light	0.8 – 4.3 V
Sensor covered by a cloth	Below 0.8 V

HINT:

As the inspection light is moved away from the sensor, the voltage increases.

NG → **Go to step 2.**

OK

Proceed to next circuit inspection shown on problem symptoms table (See page DI–288). However, if DEF indicators light up, check and replace A/C amplifier.

2	Check solar sensor.

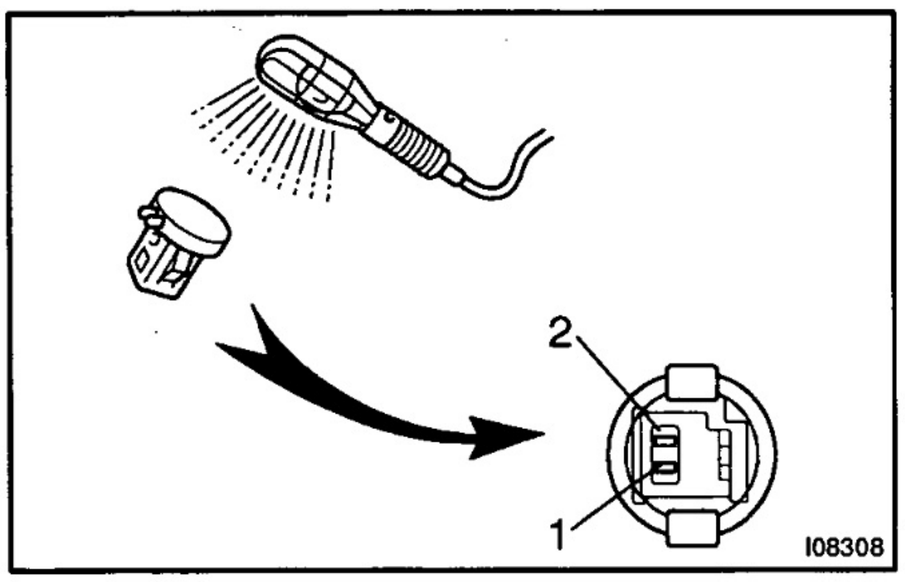

PREPARATION:

Remove solar sensor (See page AC–23).

CHECK:

(a) Cover the sensor with a cloth.

(b) Measure resistance between terminals 1 and 2 of solar sensor connector.

HINT:

Connect positive (+) lead of ohmmeter to terminal 2 and negative (–) lead to terminal 1 of the solar sensor.

OK:

Resistance : ∞ Ω (no continuity)

PREPARATION:

(a) Remove the cloth from the solar sensor and subject the sensor to electric light.

(b) Measure resistance.

OK:

Resistance : Approx. 4 kΩ (continuity)

HINT:

As the electric light is moved away from the sensor, the resistance increases.

NG → **Replace solar sensor.**

OK

3	Check harness and connector between A/C amplifier and solar sensor (See page IN–33).

NG → **Repair or replace harness or connector.**

OK

Check and replace A/C control assembly.

DI6EJ–01

DTC	FRS	Pressure Switch Circuit

CIRCUIT DESCRIPTION

The pressure switch sends the appropriate signals to the A/C amplifier when the A/C refrigerant pressure drops too low or rises too high. When the A/C amplifier receives these signals, it outputs signals via the A/C amplifier to switch OFF the compressor relay and turns the magnetic clutch OFF.

Blinking light	Detection Item	Trouble Area
FRS	• Open in pressure sensor circuit. • Abnormal refrigerant pressure. below 196 kPa (2.0 kg/cm^2, 28 psi) over 3,140 kPa (32.0 kgf/cm^2, 455 psi)	• Pressure switch • Harness or connector between pressure switch and A/C amplifier • Refrigerant pipe line • A/C amplifier

WIRING DIAGRAM

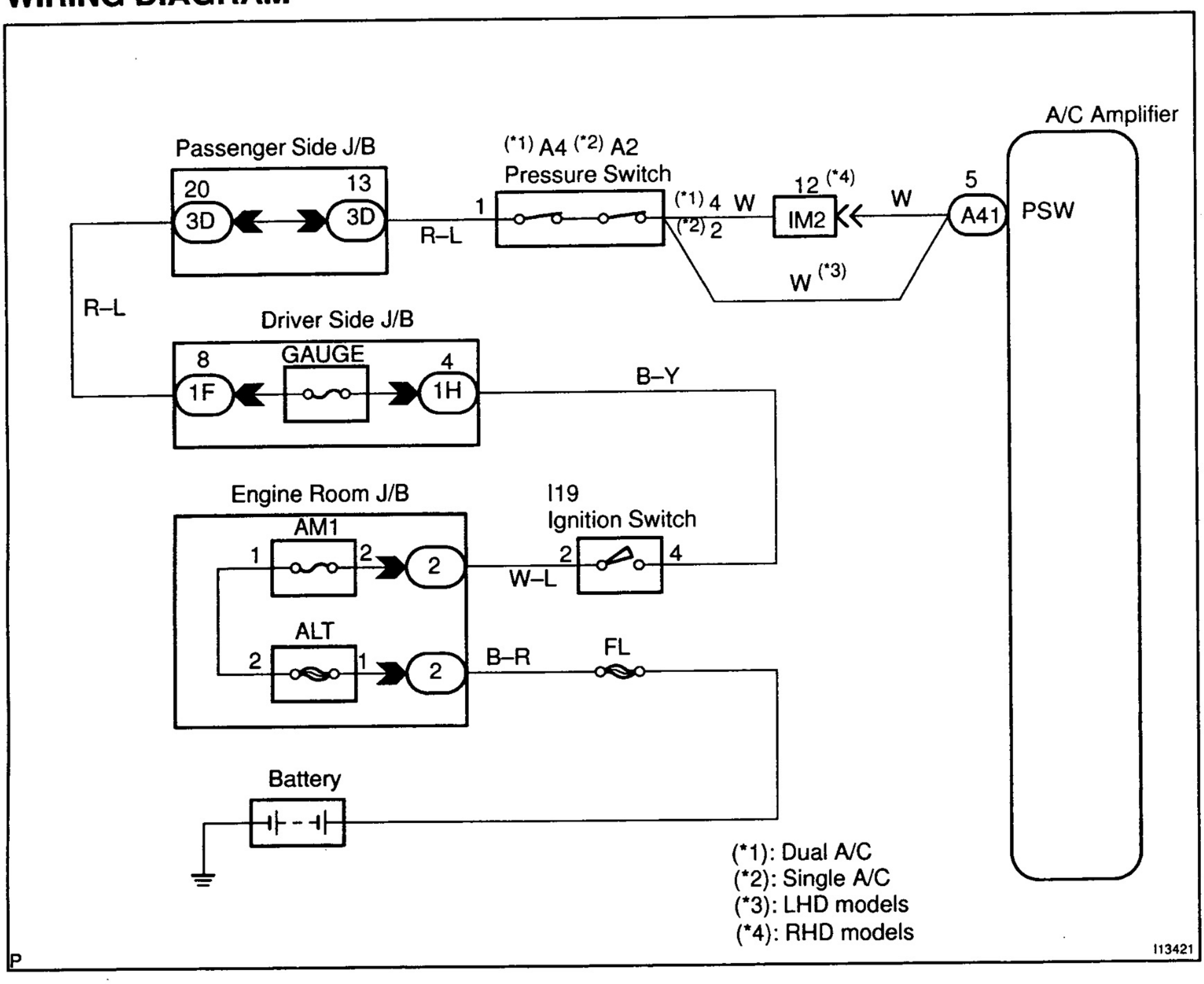

INSPECTION PROCEDURE

1	Check voltage between terminals PSW and GND of A/C amplifier.

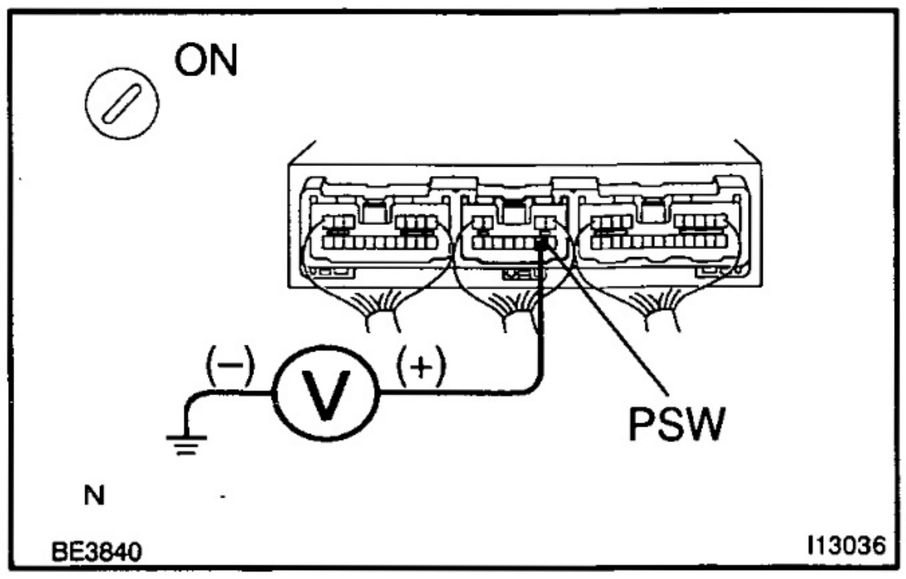

PREPARATION:

(a) Install the manifold gauge set.
(b) Remove A/C control assembly with connectors still connected.

CHECK:

(a) Turn ignition switch to ON.
(b) Check voltage between terminal PSW of A/C amplifier connector and body ground when refrigerant pressure is changed.

OK:

The voltage changes with refrigerant pressure, as shown in the diagram below.

Low Pressure Cut Side	Reference : High Pressure Cut Side
ON (12V) → 225 kPa → 196 kPa → OFF (0V)	ON (12V) → 2,550 kPa → 3,140 kPa → OFF (0V)

NG → **Go to step 2.**

OK

Proceed to next circuit inspection shown on problem symptoms table (See page DI–288). However, if FRS indicator light is light up, check and replace A/C amplifier.

2	Check pressure switch.

Single A/C:

LHD models:

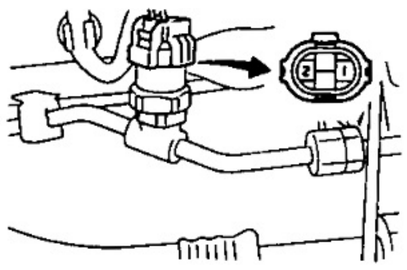

RHD models:

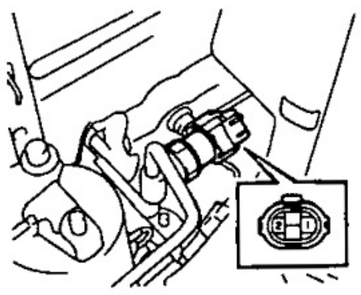

Dual A/C:

LHD models:

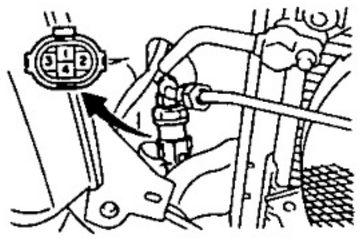

RHD models:

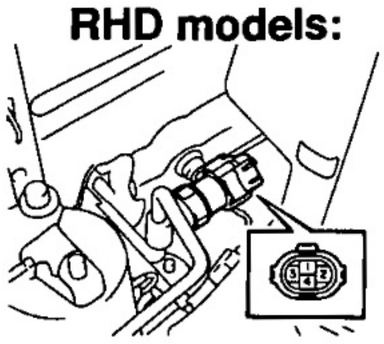

I14202

PREPARATION:

Disconnect pressure switch connector.

CHECK:

(a) Turn ignition switch to ON.

(b) Check continuity between terminals 1 and 2 of pressure switch when refrigerant pressure is changed.

OK:

The continuity changes with refrigerant pressure as shown below.

Low Pressure Cut Side	Reference : High Pressure Cut Side
ON (continuity) 211 kPa 196 kPa OFF (No continuity)	ON (continuity) 2,550kPa 3,140kPa OFF (No continuity)

NG → **Replace pressure switch.**

OK ↓

3	Check harness and connector between A/C amplifier and pressure switch (See page IN–33).

NG → **Repair or replace harness or connector.**

OK ↓

Check and replace A/C amplifier.

DI6EK–01

DTC	REC, ME	Air Mix Damper Position Sensor Circuit

CIRCUIT DESCRIPTION

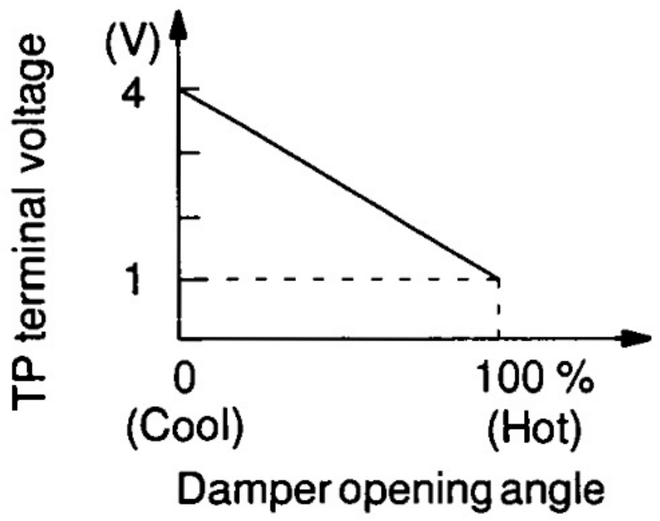

This sensor detects the position of the air mix damper and sends the appropriate signals to the A/C amplifier.
The position sensor is built into the air mix damper control servomotor assembly.

Blinking light	Detection Item	Trouble Area
REC	Short to ground or power source circuit in air mix damper position sensor circuit.	• Air mix damper position sensor • Harness or connector between air mix damper control servomotor assembly and A/C amplifier • A/C amplifier
ME	Air mix damper position sensor value does not change even if A/C amplifier operates Air mix damper control servomotor.	

WIRING DIAGRAM

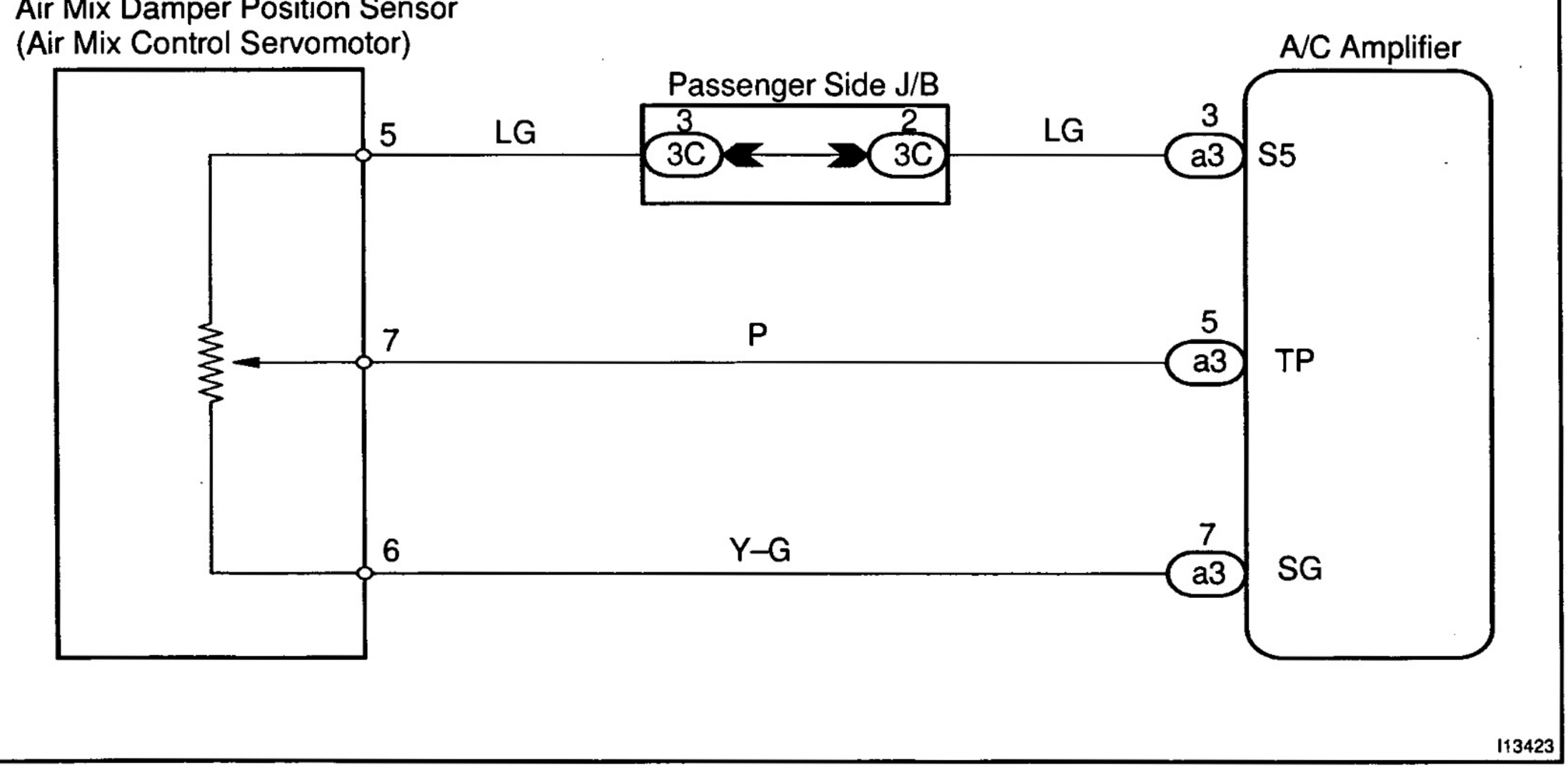

INSPECTION PROCEDURE

1	Check voltage between terminals TP and SG of A/C amplifier connector.

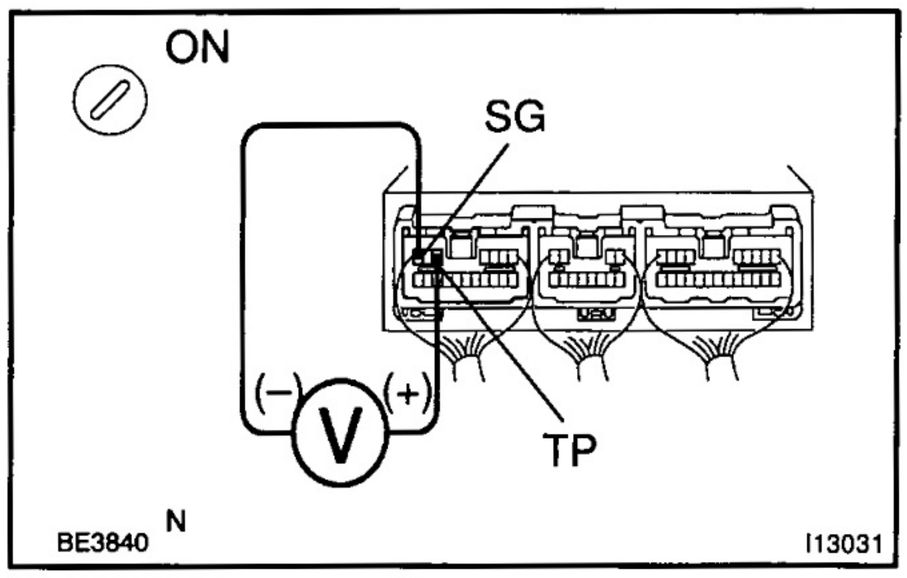

PREPARATION:

Remove A/C control assembly with connectors still connected.

CHECK:

(a) Turn ignition switch to ON.

(b) Change the set temperature to activate the air mix damper control servomotor and measure the voltage between terminals TP and SG of A/C amplifier connector each time when the set temperature is changed.

OK:

Set Temperature	Voltage
Max. cool	3.5 – 4.5 V
Max. hot	0.5 – 1.5 V

HINT:

As the set temperature increases, the voltage decreases.

NG → **Go to step 2.**

Ok

Proceed to next circuit inspection shown on problem symptoms table (See page DI–288). However, if REC or M1 indicators light up, check and replace A/C amplifier.

2	**Check air mix damper position sensor.**

LHD models:

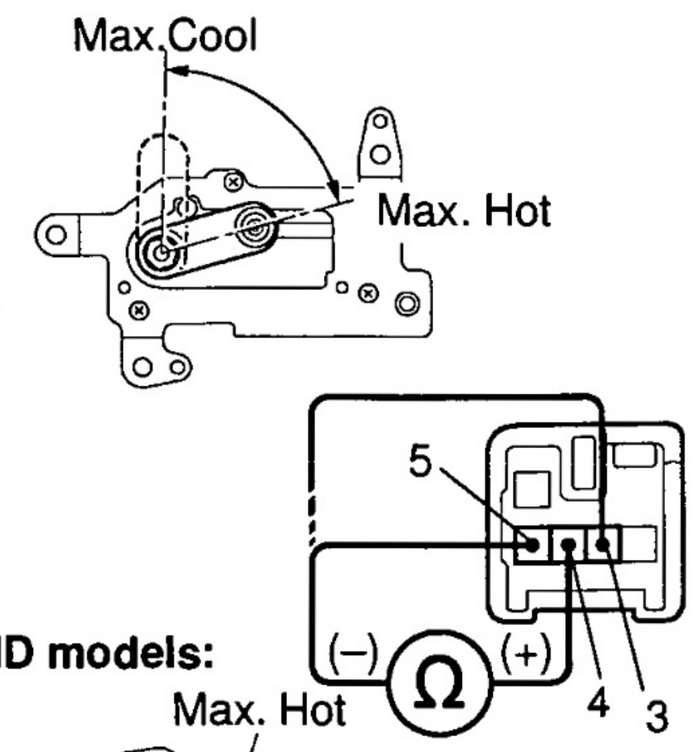

RHD models:

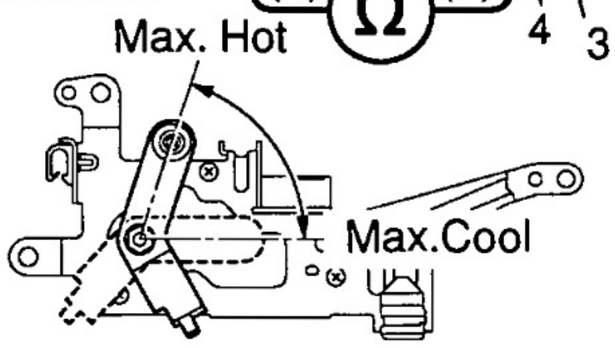

N

I12657

PREPARATION:

Remove air mix servomotor (See page AC–13).

CHECK:

Measure resistance between terminals 4 and 5 of air mix damper control servomotor assembly connector.

OK:

Resistance : 4.2 – 7.8 kΩ

CHECK:

While operating air mix damper control servomotor, following the procedure, measure resistance between terminals 3 and 4 of air mix damper control servomotor assembly connector.

OK:

Position	Resistance
Max. cool	3.6 – 6.8 kΩ
Max. hot	0.5 – 1.1 kΩ

HINT:

As the air mix damper control servomotor moves from cool side to hot side, the resistance decreases.

NG → **Replace air mix damper control servomotor assembly.**

OK

3	**Check harness and connector between A/C amplifier and air mix damper control servomotor assembly (See page IN–33).**

NG → **Repair or replace harness or connector.**

OK

Check and replace A/C amplifier.

DI6EL–01

DTC	ME	Air Mix Damper Control Servomotor Circuit

CIRCUIT DESCRIPTION

The air mix damper control servomotor is controlled by the A/C control assembly and moves the air mix damper to the desired position.

Blinking light	Detection Item	Trouble Area
ME	Air mix damper position sensor value does not change even if A/C control assembly operates air mix damper control servomotor.	• Air mix damper control servomotor • Air mix damper position sensor • Harness or connector between air mix control servomotor and A/C amplifier • A/C amplifier

WIRING DIAGRAM

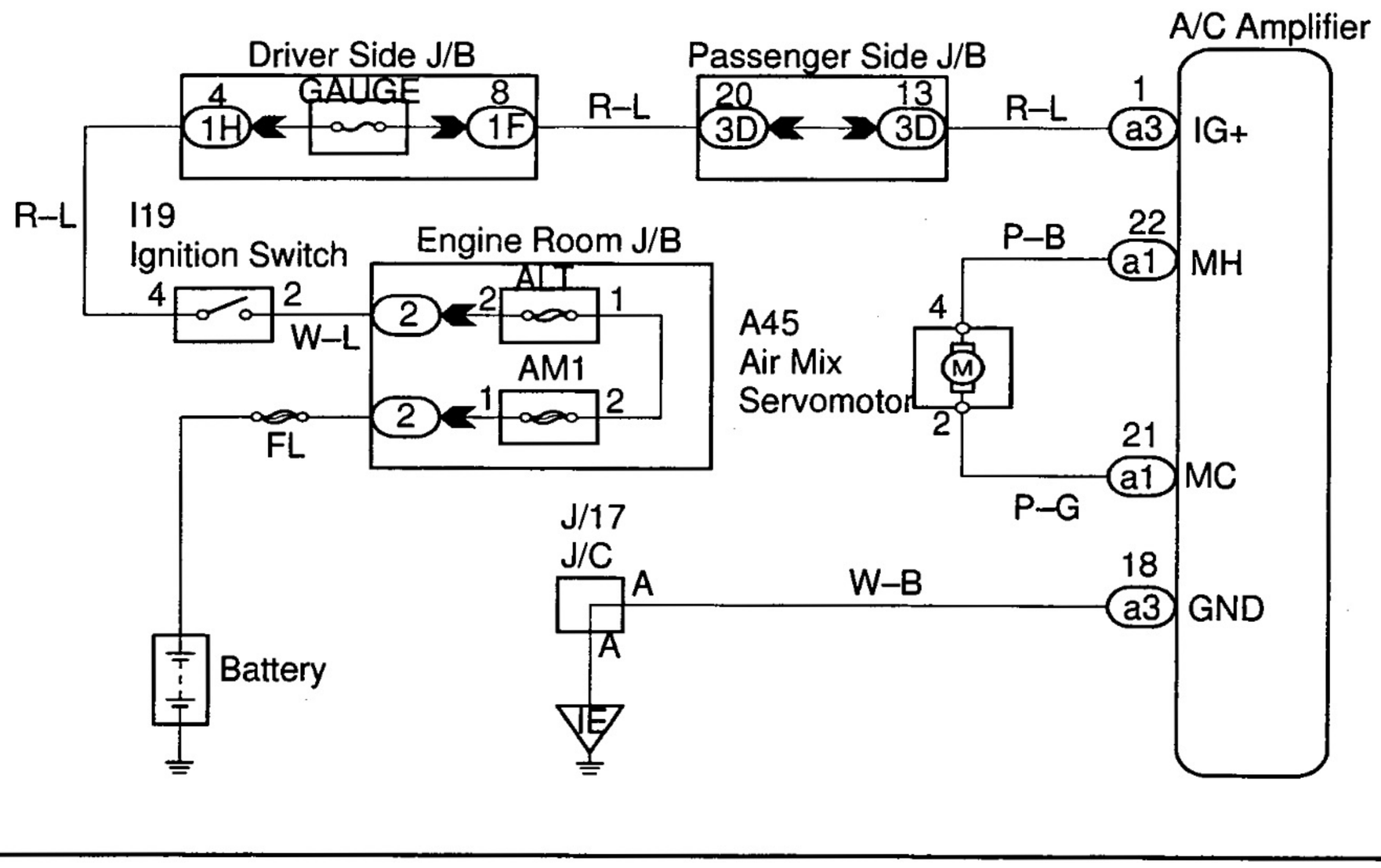

INSPECTION PROCEDURE

1	**Actuator check.**

PREPARATION:

(a) Warm up the engine.
(b) Set to the actuator check mode (See page DI–280).
(c) Press the MODE switch and change it to step operation.

CHECK:

Press the DEF switch and check the operation of the air mix damper and the condition of the blower by hand.

OK:

Step No.	Air Mix Damper	Condition
1	0 % (Fully closed)	Cool air comes out
2	(50 %)	
3 – 5	100 % (Fully opened)	Warm air comes out

OK → **Proceed to next circuit inspection shown on problem symptoms table (See page DI–288).**

NG

2	**Check air mix damper control servomotor.**

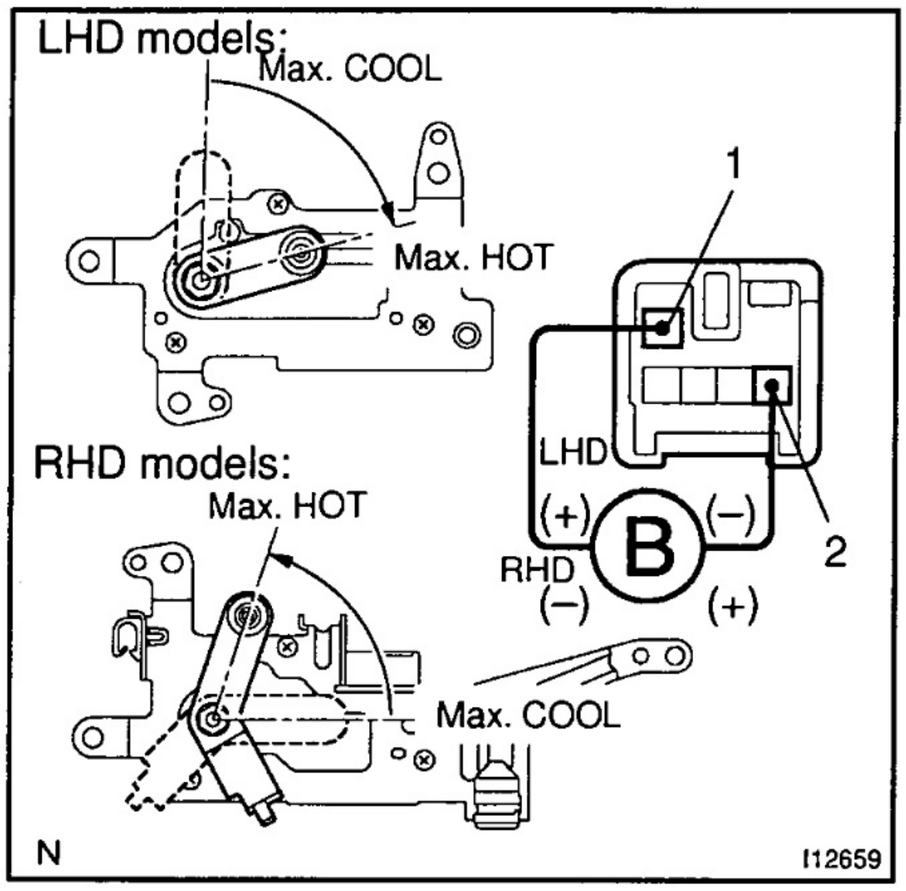

PREPARATION:

Remove air mix servomotor (See page AC–13).

CHECK:

(terminal No.): RHD models

Connect positive (+) lead to terminal 1 (2) and negative (–) lead to terminal 2 (1).

OK:

The lever turns smoothly to Hot side.

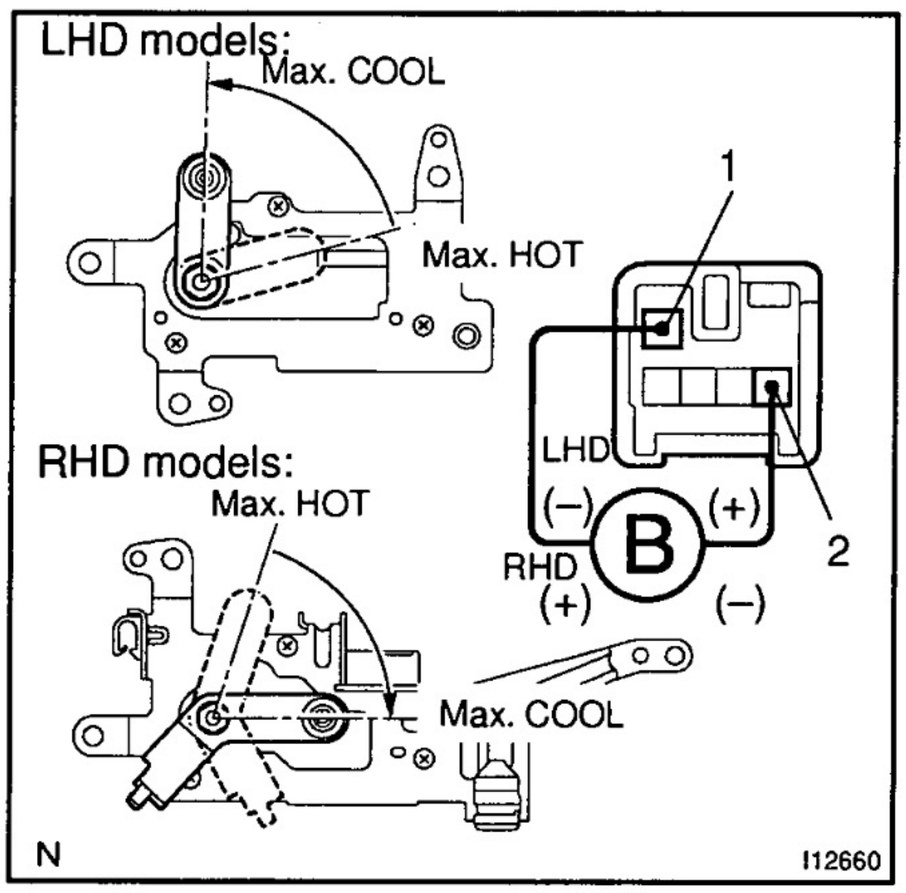

CHECK:

(terminal No.): RHD models

Connect positive (+) lead to terminal 2 (1) and negative (–) lead to terminal 1 (2).

OK:

The lever turns smoothly to Cool side.

NG → **Replace air mix damper control servomotor assembly.**

OK

3	**Check harness and connector between A/C amplifier and air mix damper control servomotor assembly (See page IN–33).**

NG → **Repair or replace harness or connector.**

OK

Check and replace A/C amplifier.

DI6EX–01

Air Inlet Damper Control Servomotor Circuit

CIRCUIT DESCRIPTION

The air inlet damper control servomotor is controlled by the A/C amplifier and moves the air inlet damper to the desired position.

WIRING DIAGRAM

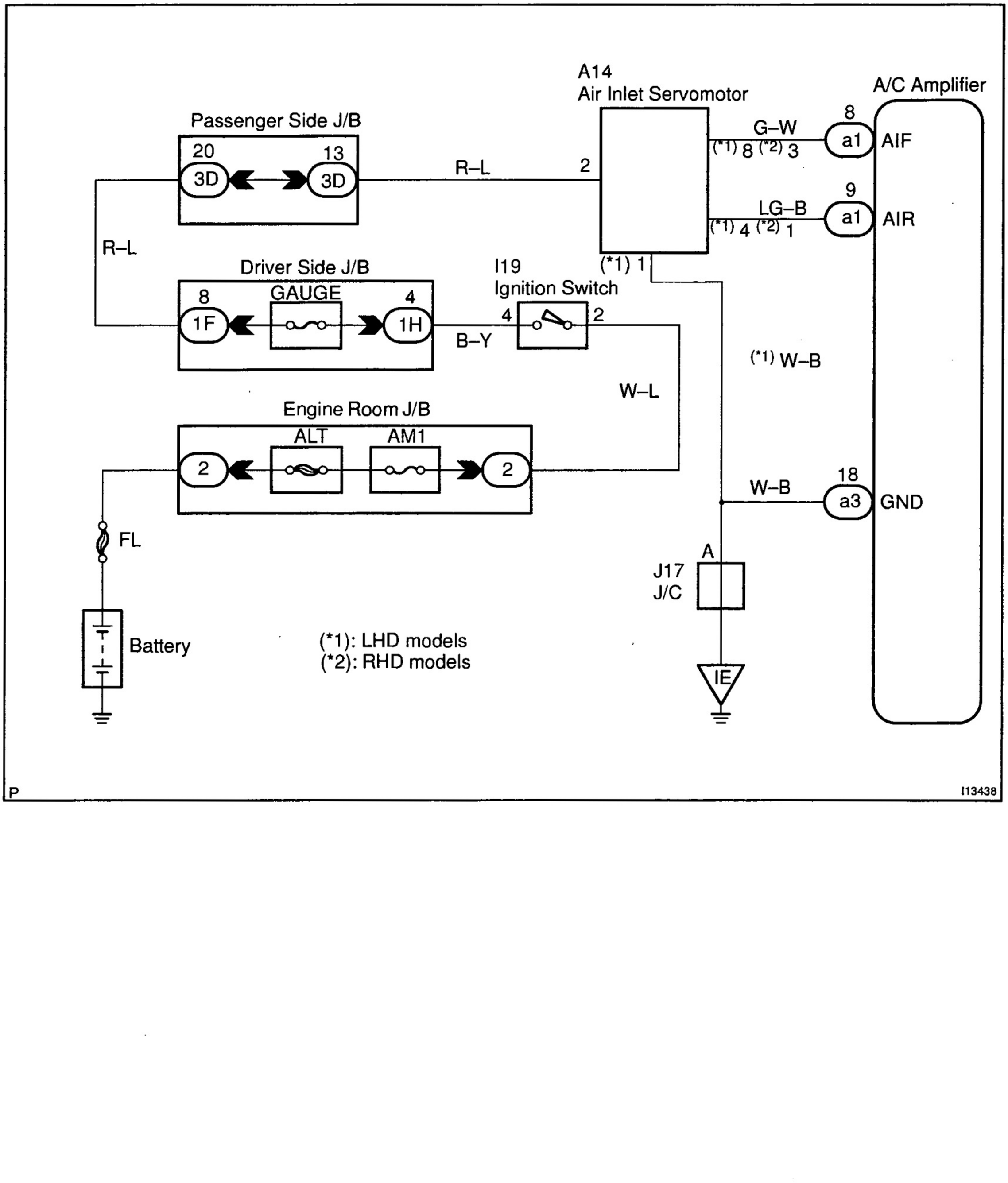

INSPECTION PROCEDURE

1	**Actuator check.**

PREPARATION:

(a) Remove glove compartment to see and check the air inlet damper operation.
(b) Set to the actuator check mode (See page DI–280).
(c) Press the MODE switch and change it to step operation.

CHECK:

Press the MODE switch and check the air inlet damper operation visually.

OK:

Step No.	Air Inlet Damper
1 – 2	REC
3 – 5	FRS

OK → **Proceed to next circuit inspection shoen on problem symptoms table (See page DI–288).**

NG

2	Check air inlet control servomotor.

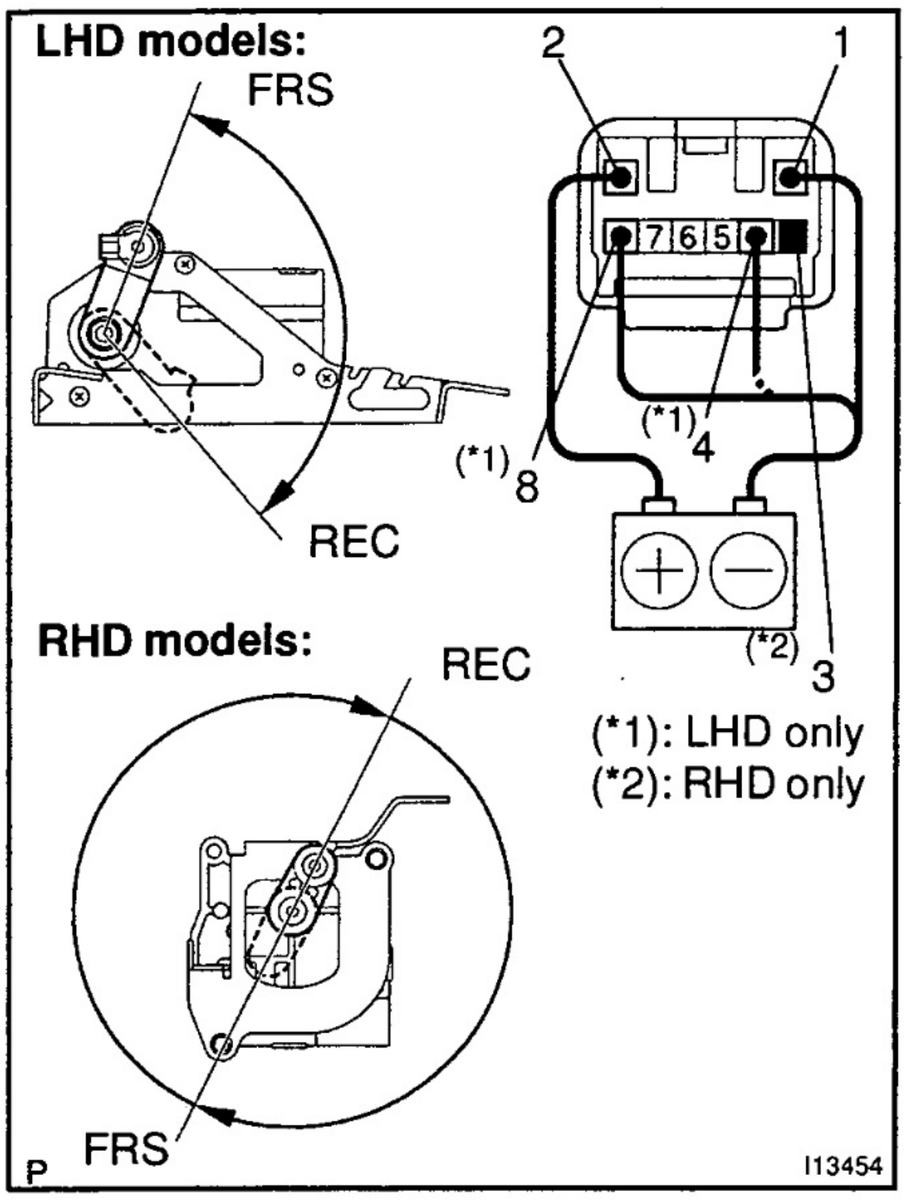

PREPARATION:

Remove air inlet control servomotor (See page AC–17).

CHECK:

(a) LHD models:
Connect positive (+) lead to terminal 2 and negative (–) lead to terminal 1 and 8.

(b) RHD models:
Connect positive (+) lead to terminal 2 and negative (–) lead to terminal 1.

OK:

LHD models:
The lever turns to FRS position.
RHD models:
The lever rotates clockwise and stop to REC position.

CHECK:

(a) LHD models:
Connect positive (+) lead to terminal 2 and negative (–) lead to terminal 1 and 4.

(b) RHD models:
Connect positive (+) lead to terminal 2 and negative (–) lead to terminal 3.

OK:

LHD models:
The lever turns to REC position.
RHD models:
The lever rotates clockwise and stop to FRS position.

NG → **Replace air inlet control servomotor.**

OK

3	**Check harness and connector between A/C amplifier and air inlet damper control servomotor (See page IN–33).**

NG → **Repair or replace harness or connector.**

OK

Check and replace A/C amplifier.

DI6EM–01

Air Outlet Control Servomotor Circuit

CIRCUIT DESCRIPTION

This circuit turns the servomotor and changes each mode damper position by signals from the A/C control assembly. When the AUTO switch is ON, the A/C control assembly changes the mode automatically between FACE, BI–LEVEL and FOOT according to the temperature setting.

WIRING DIAGRAM

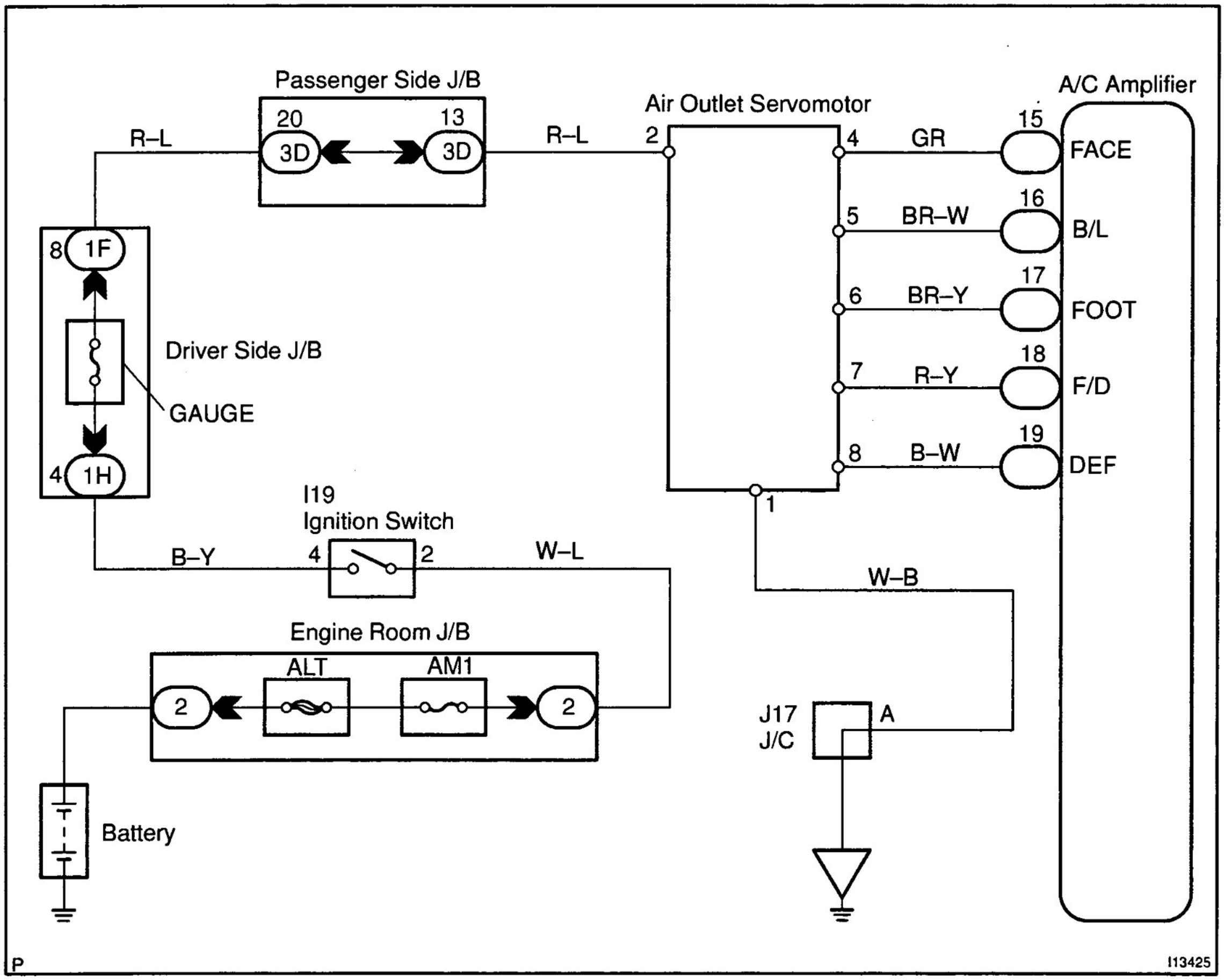

INSPECTION PROCEDURE

1	**Actuator check.**

Step No.	Air Flow Mode
1	FACE
2	B/L
3	FOOT
4	F/D
5	DEF

PREPARATION:

(a) Set to the actuator check mode (See page DI–280).

(b) Press the MODE switch and change to step operation.

CHECK:

Press the MODE switch in order and check the condition of air flow mode.

OK:

The mode changes with the change in the temperature display as shown in the table.

OK → **Proceed to next circuit inspection shown on problem symptoms table (See page DI–288).**

NG

2	**Check air outlet control servomotor.**

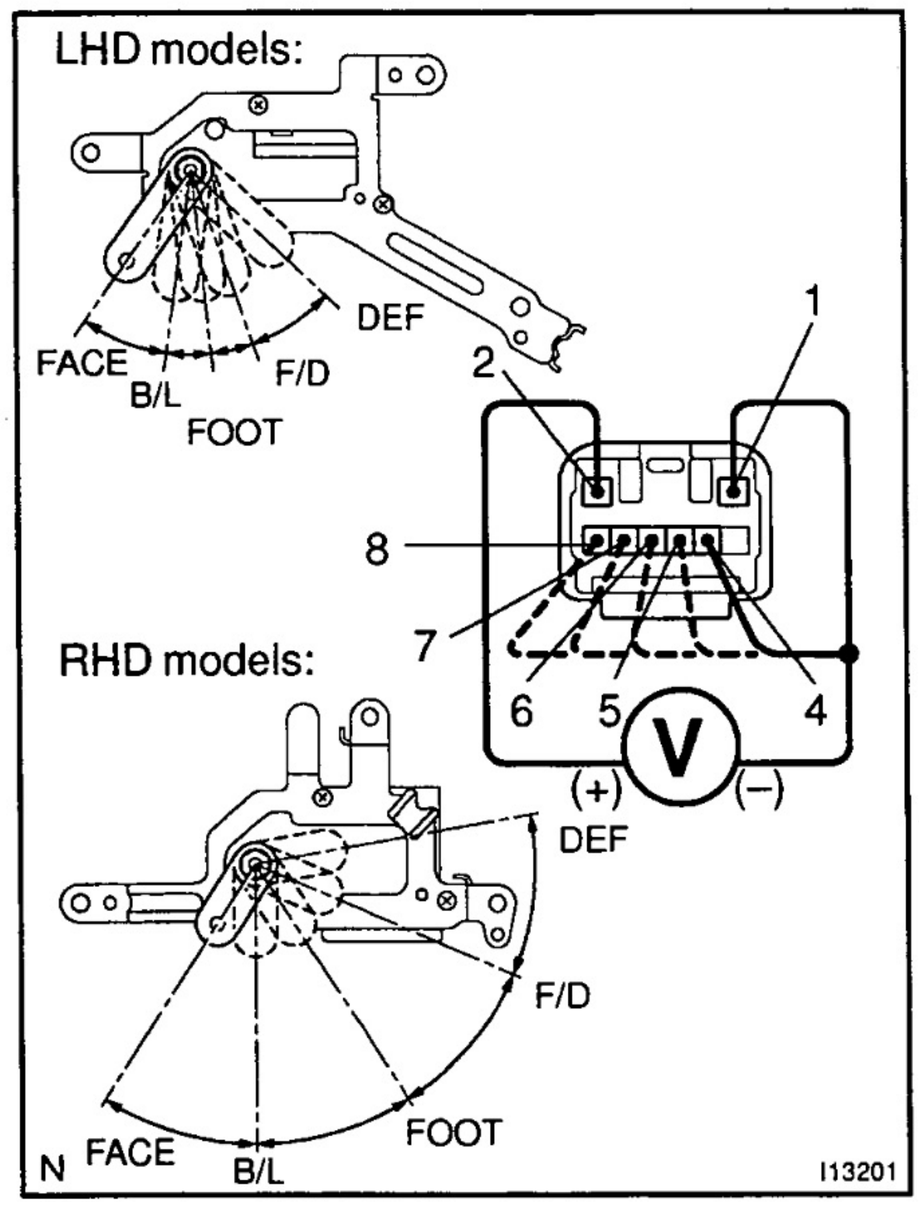

PREPARATION:

Remove air outlet control servomotor (See page AC–22).

CHECK:

(a) Connect positive (+) lead to terminal 2 and negative (–) lead to terminal 1.

(b) Check the lever operation when the negative (–) lead is connected to the terminals shown below.

OK:

The lever moves smoothly to the position for each mode.

Ground Terminals	Mode
4	FACE
5	B/L
6	FOOT
7	F/D
8	DEF.

NG → **Replace air outlet control servomotor.**

OK

3	**Check harness and connector between A/C control amplifier and air outlet control servomotor, air outlet control servomotor and battery, air outlet control servomotor and body ground (See page IN–33).**

NG → **Repair or replace harness or connector.**

OK ↓

Repair or replace A/C amplifier.

DI6EN–01

Back Up Power Source Circuit

CIRCUIT DESCRIPTION

This is the back up power source for the A/C control assembly. Power is supplied even when the ignition switch is off and is used for diagnostic trouble code memory, etc.

WIRING DIAGRAM

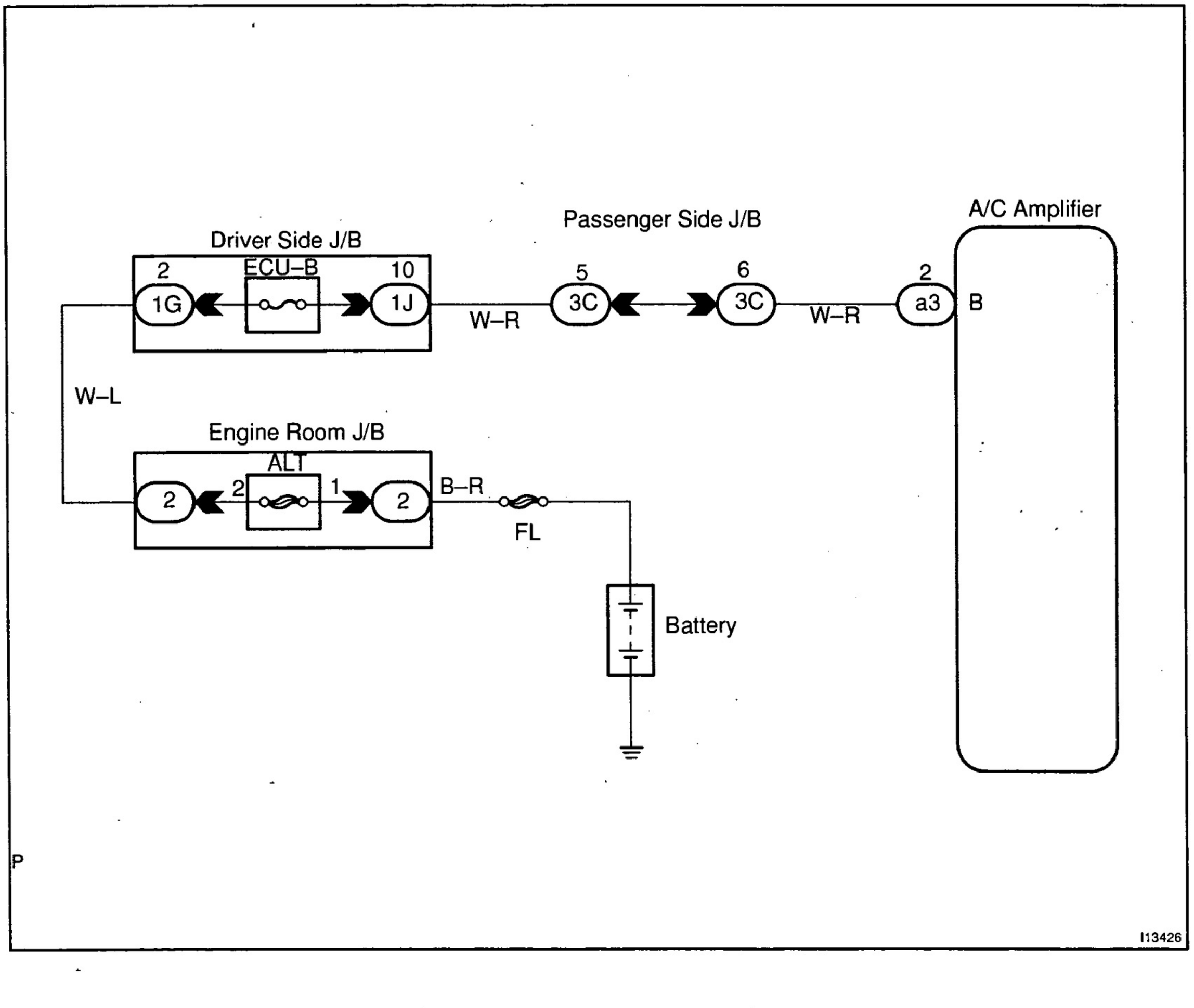

INSPECTION PROCEDURE

1	**Check voltage between terminal +B of A/C amplifier assembly connector and body ground.**

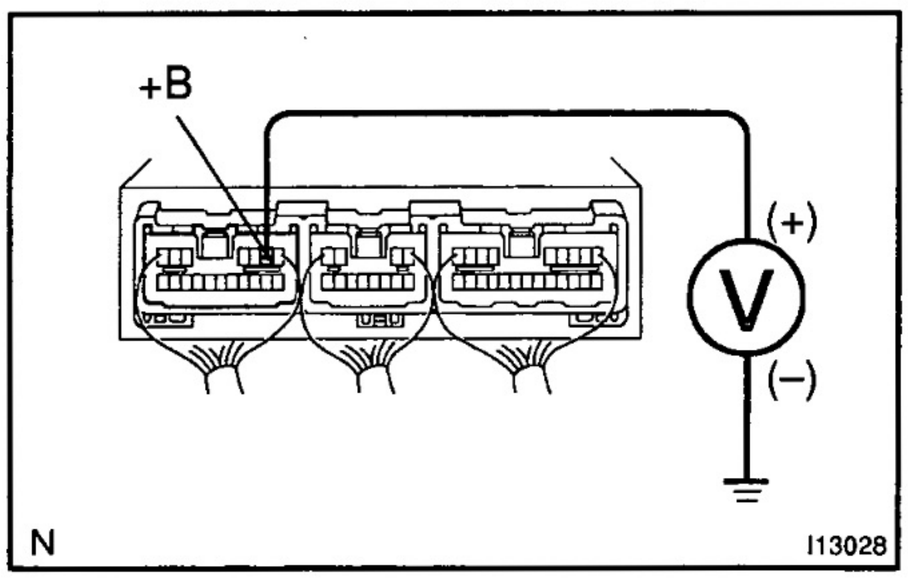

PREPARATION:
Remove the A/C amplifier with connector still connected.
CHECK:
Measure voltage between terminal +B of A/C amplifier connector and body ground.
OK:
Voltage : Battery voltage

OK → **Proceed to next circuit inspection shown on problem symptoms table (See page DI–288).**

NG

2	**Check ECU–IG fuse.**

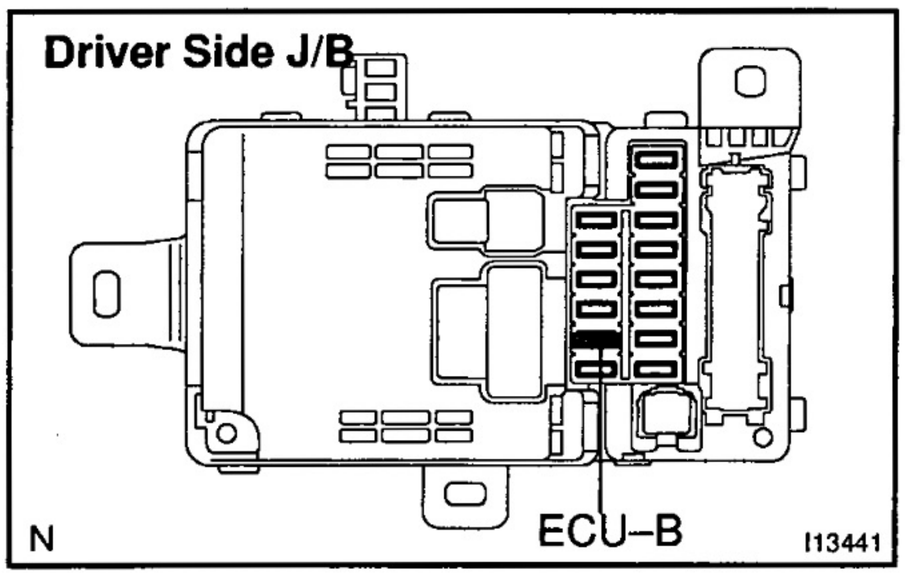

PREPARATION:
Remove ECU–B fuse from driver side J/B.
CHECK:
Check continuity of ECU–B fuse.
OK:
Continuity

NG → **Check for short in all the harness and components connected to the ECU–IG fuse (See attached wiring diagram).**

OK

Check and repair harness and connector between A/C amplifier.

DI6EV–01

IG Power Source Circuit

CIRCUIT DESCRIPTION

This is the power source for the A/C control assembly (contains the ECU) and servomotors, etc.

WIRING DIAGRAM

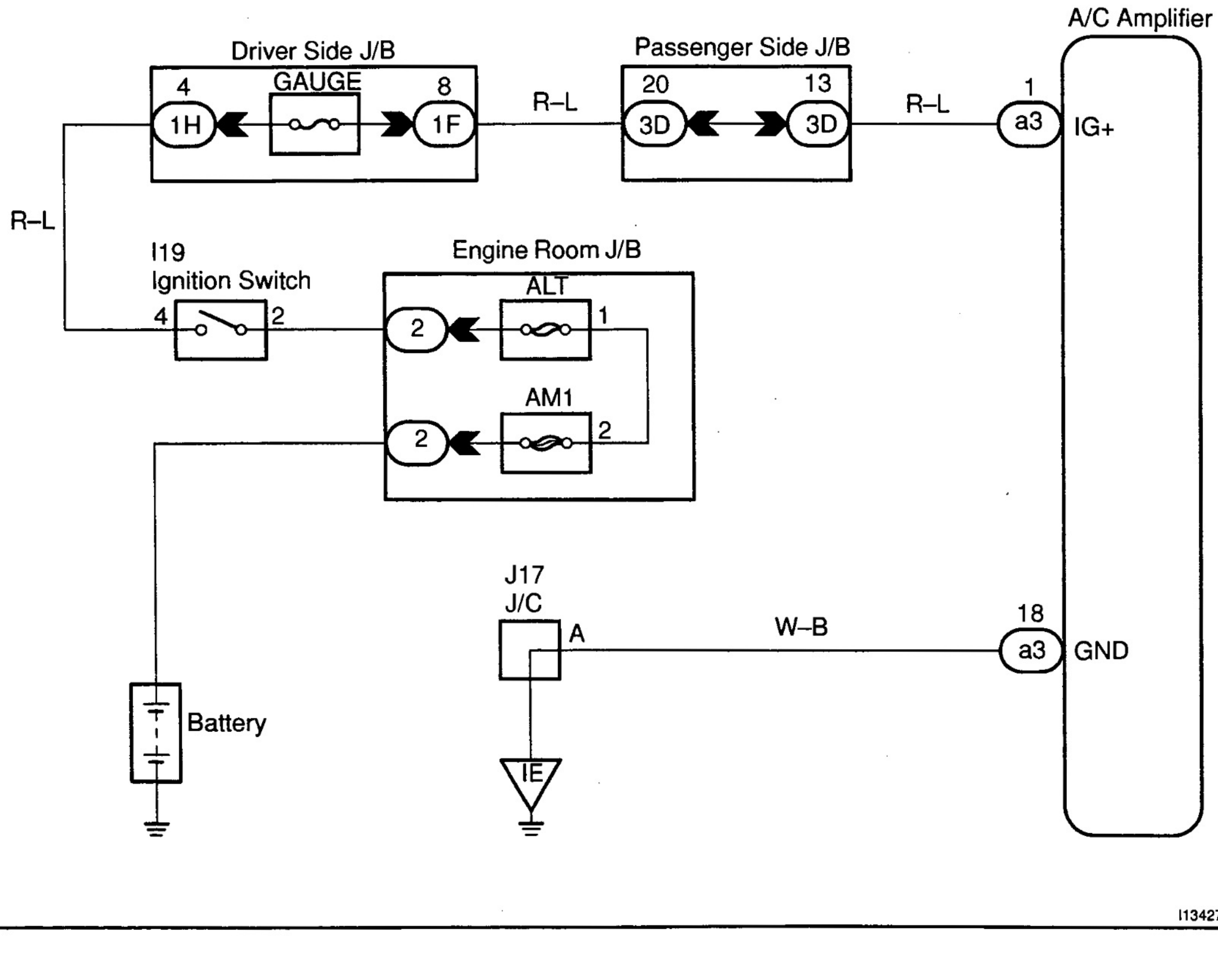

INSPECTION PROCEDURE

1	**Check voltage between terminals IG and GND of A/C control assembly connector.**

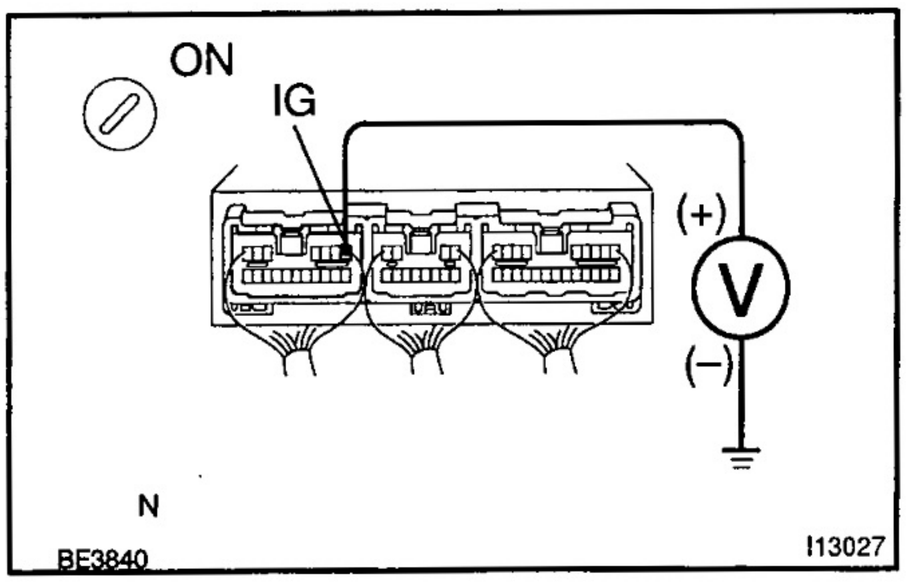

PREPARATION:

(a) Remove A/C control assembly with connectors still connected.

(b) Turn ignition switch to ON.

CHECK:

Measure voltage between terminals IG and GND of A/C control assembly.

OK:

Voltage : 10 – 14 V

OK	**Proceed to next circuit inspection shown on problem symptoms table (See page DI–288).**

NG

2	**Check continuity between terminal GND of A/C control assembly and body ground.**

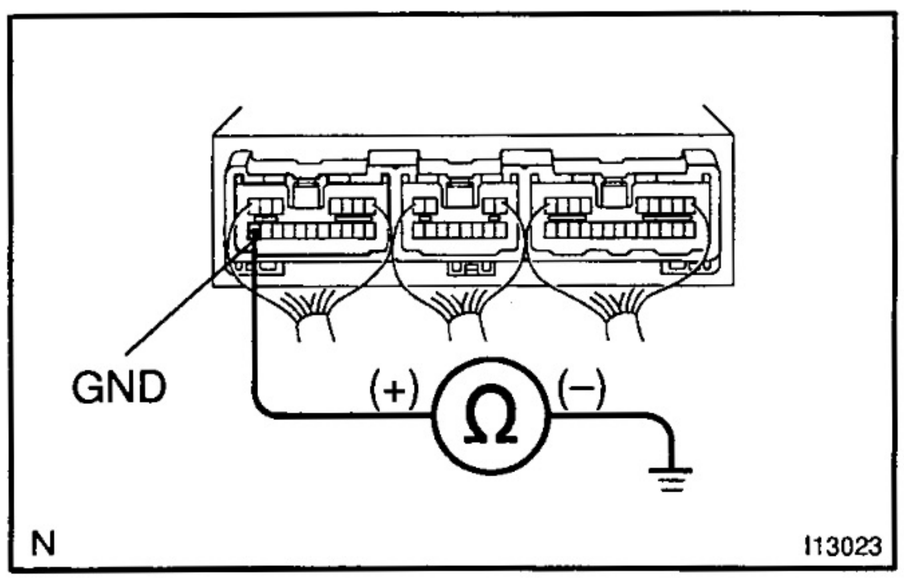

PREPARATION:

Turn ignition switch to LOCK or ACC.

CHECK:

Measure resistance between terminal GND of A/C control assembly and body ground.

OK:

Resistance : Below 1 Ω

NG	**Repair or replace harness or connector.**

OK

3	Check GAUGE fuse.

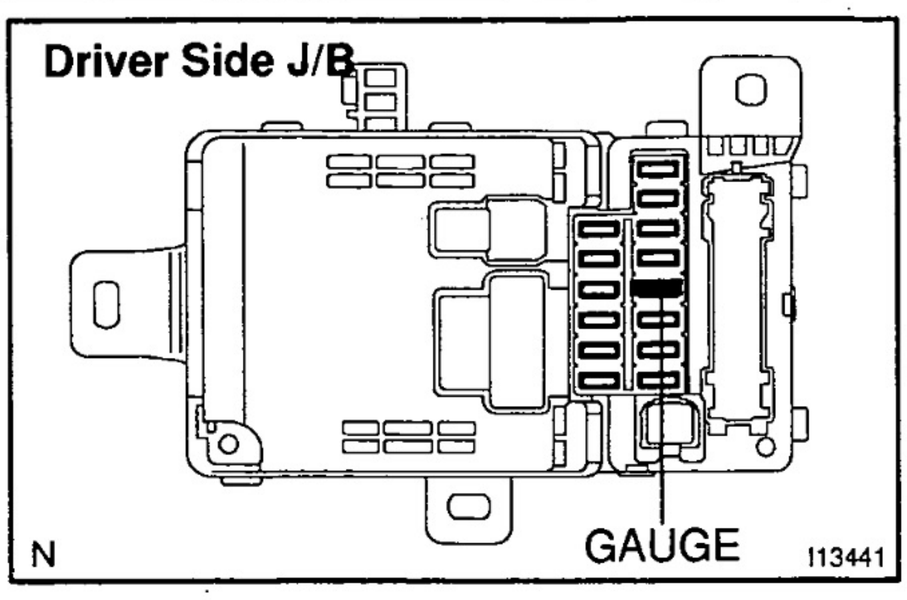

PREPARATION:

Remove GAUGE fuse from driver side J/B.

CHECK:

Check continuity of GAUGE fuse.

OK:

Continuity exists.

NG → **Check for shot in all the harness and components connected to the GAUGE fuse (See page IN–33).**

OK →

Check and repair harness and connector between A/C control assembly and battery.

DI6EO–01

Heater Main Relay Circuit

CIRCUIT DESCRIPTION

The heater main relay is switched on by signals from the A/C control assembly. It supplies power to the blower motor.

WIRING DIAGRAM

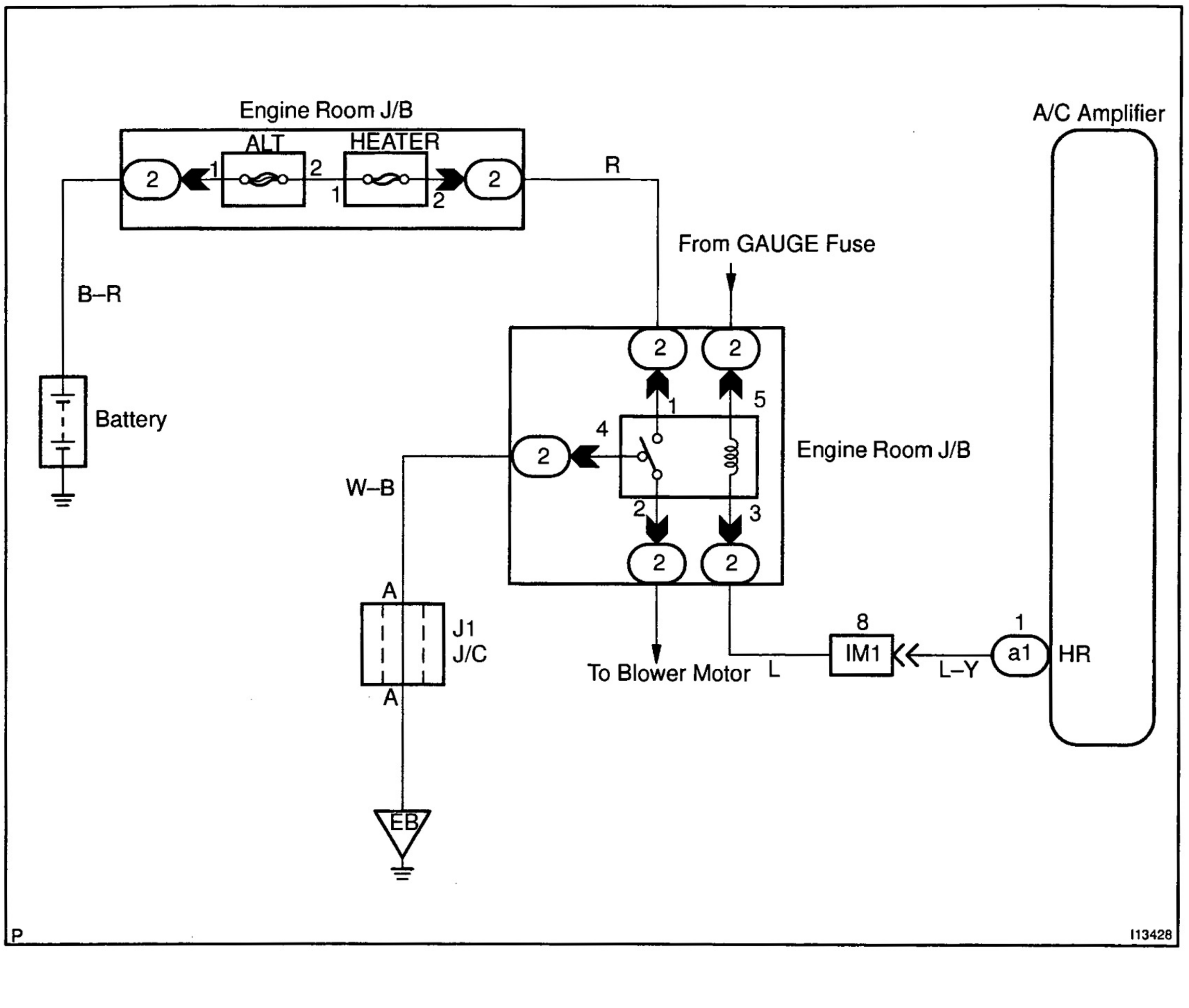

INSPECTION PROCEDURE

1	**Check voltage between terminal HR of A/C control assembly connector and body ground.**

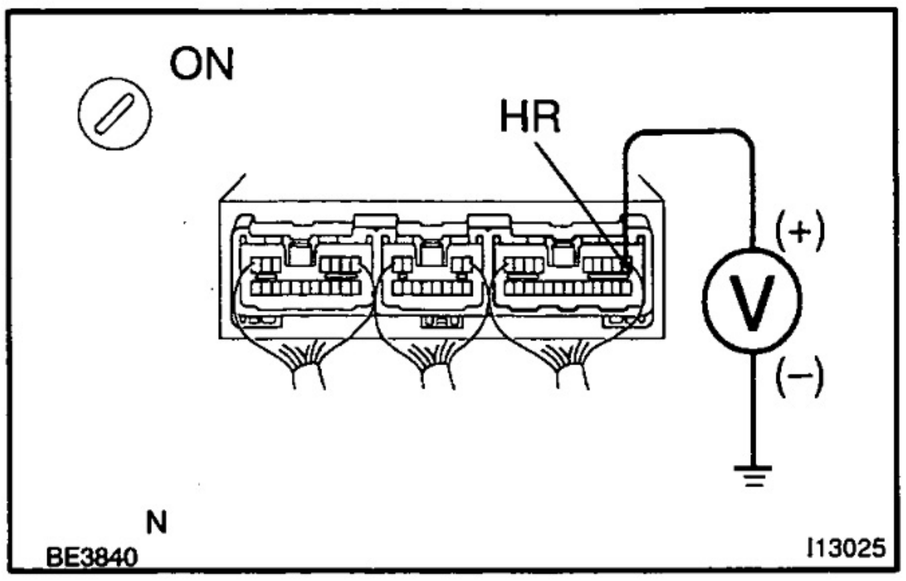

PREPARATION:

Remove A/C control assembly with connectors still connected.

CHECK:

Measure voltage between terminal HR of A/C control assembly and body ground when ignition switch is ON and OFF.

OK:

Ignition Switch	Voltage	
OFF	0 V	
ON	Blower ON	0 V
	Blower OFF	10 – 14 V

OK → **Proceed to next circuit inspection shown on problem symptoms table (See page DI–288).**

NG

2	Check heater main relay.

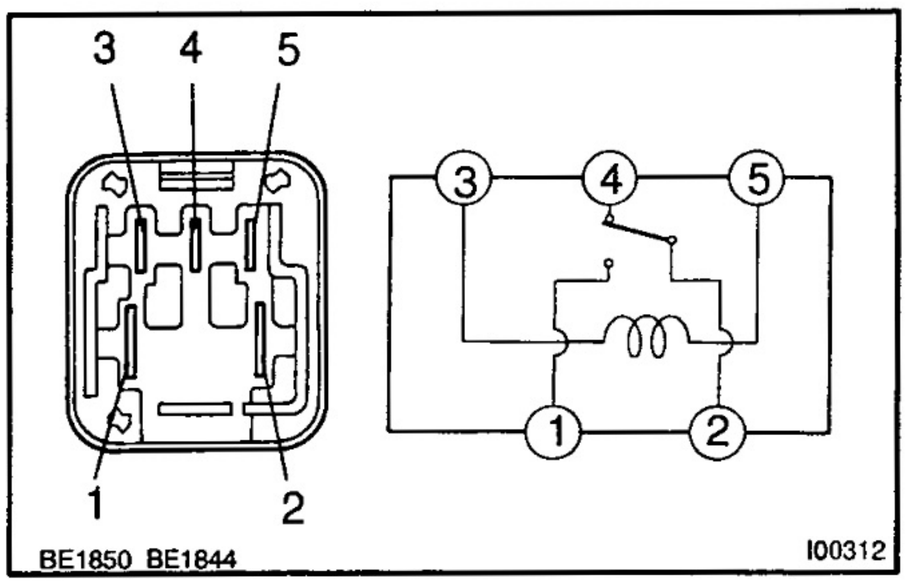

PREPARATION:
Remove heater main relay engine room R/B.
CHECK:
Check continuity between each pair of terminals of heater main relay shown below.
OK:

Tester connection	Specified condition
1 – 4	No continuity
2 – 4	Continuity
3 – 5	62.5 – 90.9 Ω

PREPARATION:
Apply battery voltage between terminals 3 and 5.
CHECK:
Check continuity between each pair of terminal shown below.
OK:

Tester connection	Specified condition
1 – 2	Continuity
2 – 4	No continuity

NG → **Replace hater main relay.**

OK

3	Check HEATER fuse.

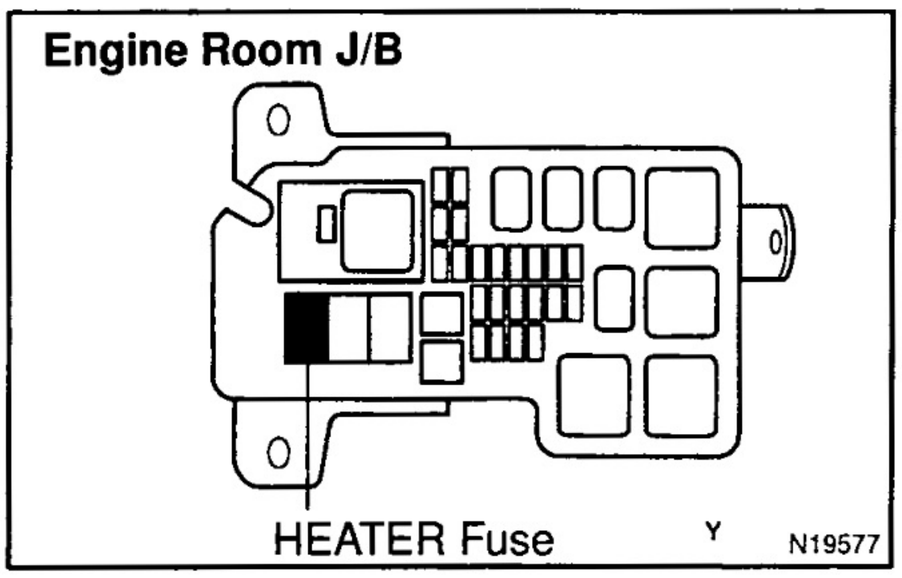

PREPARATION:
Remove HEATER fuse engine room R/B.
CHECK:
Check continuity of HEATER fuse.
OK:

Continuity exists.

NG → **Check for short in all the harness and components connected to the HEATER fuse (See attached wiring diagram).**

OK

Check and repair harness and connector between A/C control assembly and battery.

DI6EZ-01

Front A/C Blower Motor Circuit

CIRCUIT DESCRIPTION

This is the power source for the blower motor.

WIRING DIAGRAM

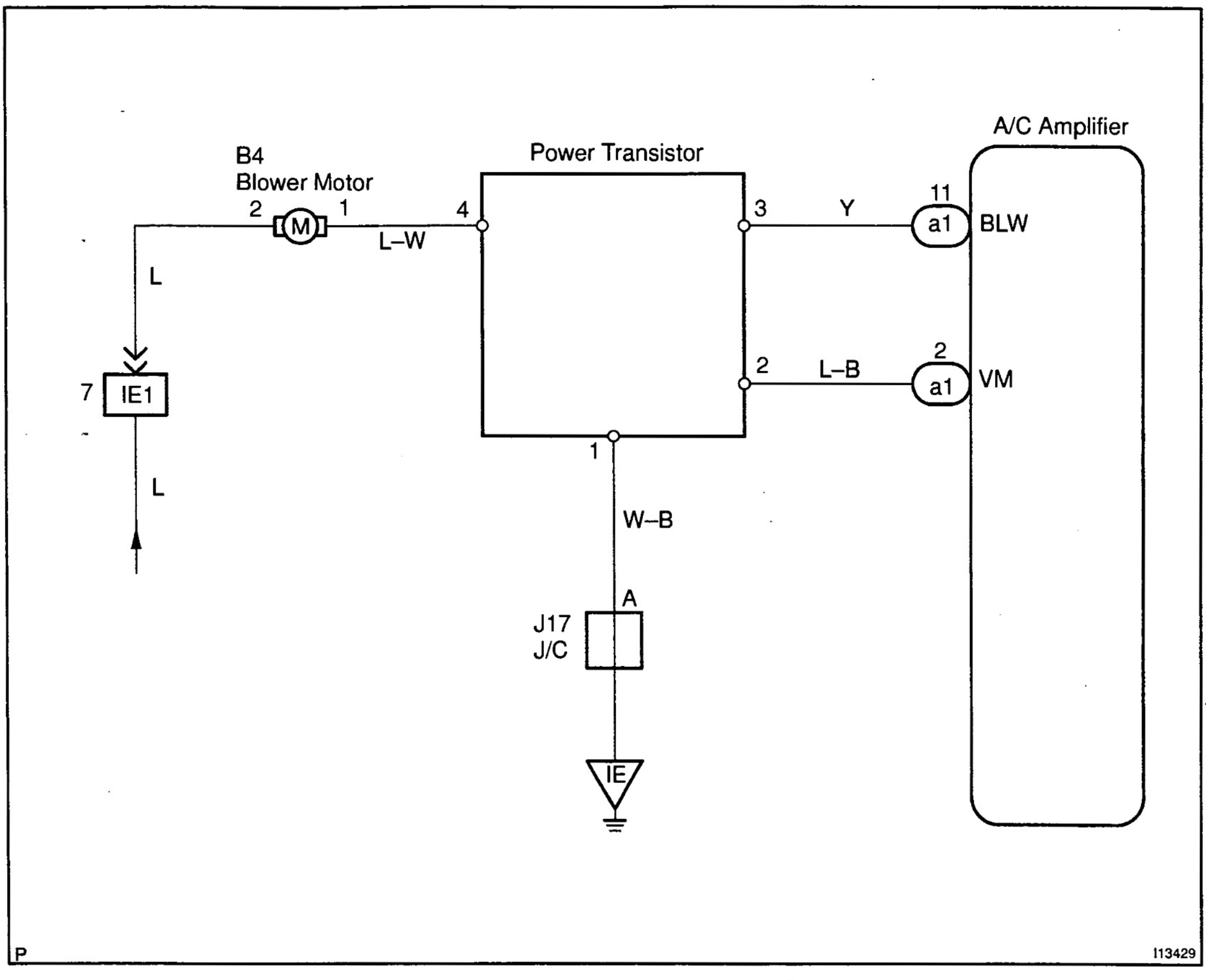

INSPECTION PROCEDURE

1	**Check voltage between terminal BLW of A/C amplifier connector and body ground.**

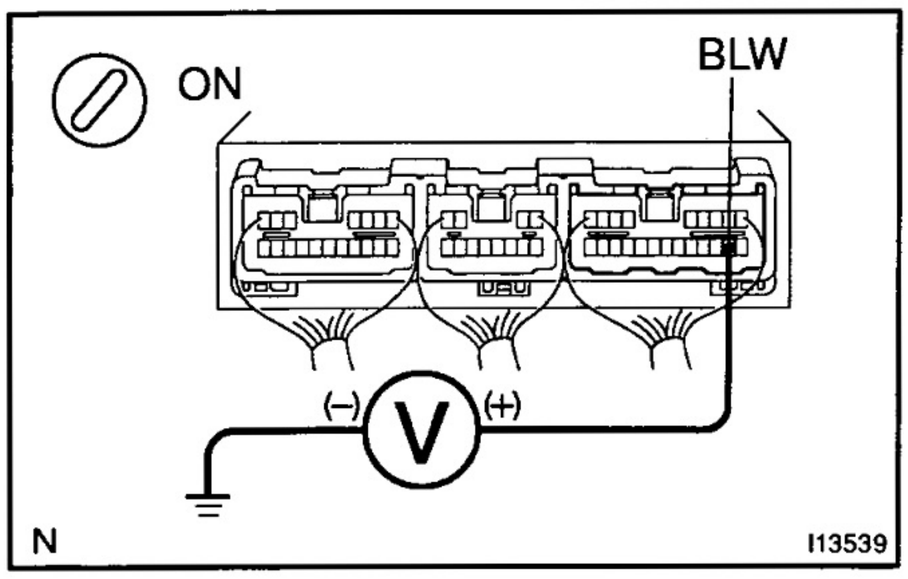

PREPARATION:
Remove the A/C amplifier with connector still connected.
CHECK:
(a) Turn ignition switch to ON.
(b) Operate blower motor.
(c) Measure voltage between terminal BLW of A/C amplifier and body ground.
OK:
Voltage : 1 – 3 V

OK	**Go to Step 6.**

NG

2	**Check blower motor.**

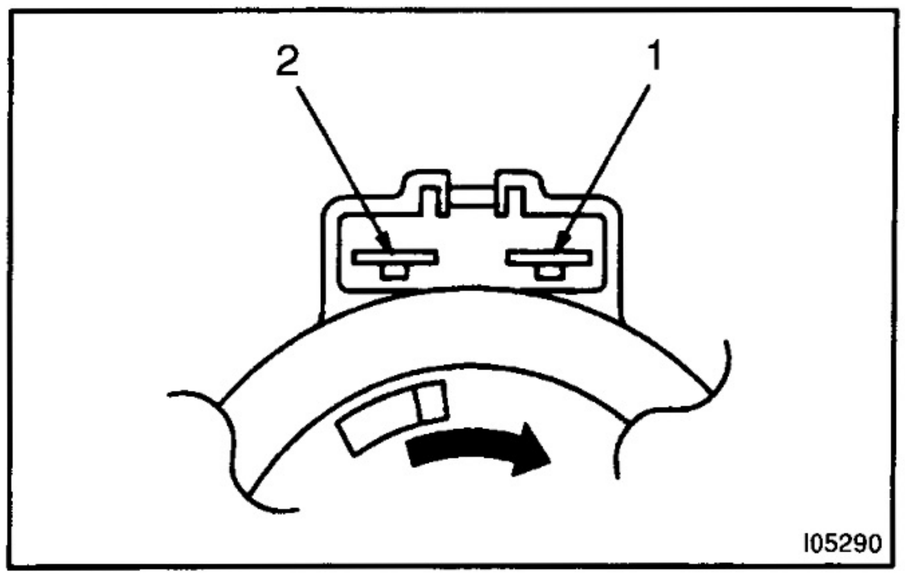

PREPARATION:
Remove blower motor.
CHECK:
Connect the positive (+) lead from the battery to terminal 2 of blower motor connector and the negative (–) lead to terminal 1.
OK:
Blower motor operates smoothly.

NG	**Replace blower motor.**

OK

3	**Check harness and connector between A/C amplifier, blower motor and body ground (See page IN–33).**

NG	**Repair or replace harness or connector.**

OK

Check and replace A/C control assembly (See page IN–33).

4	Check voltage between terminal VM of A/C amplifier and body ground.

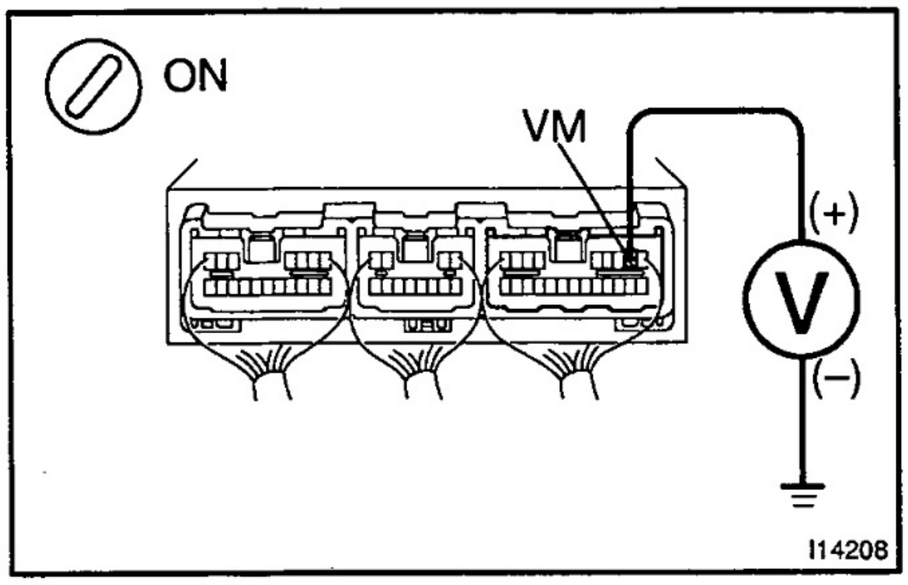

PREPARATION:
Remove the A/C amplifier with connector still connected.
CHECK:
(a) Turn ignition switch to ON.
(b) Operate blower motor.
(c) Measure voltage between terminal VM of A/C amplifier and body ground, when blower switch is operated to following positions.

OK:

Blower speed	Voltage
LO	9.5 V
ME	6.3 V
HI	Below 1.0 V

OK → **Proceed to next circuit inspection shown on problem symptoms table 'See page DI–288).**

NG

5	Check power transistor.

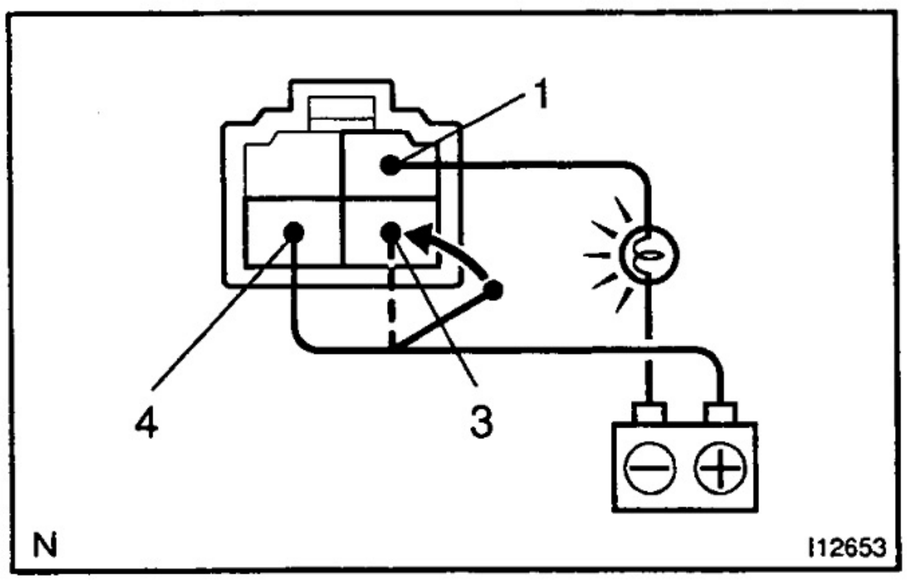

PREPARATION:
Remove power transistor (See page AC–20).
CHECK:
(a) Connect the positive (+) lead from the battery to terminal 4 and negative (–) lead to terminal 1 through a 12 V – 3.4 W test bulb.
(b) Check the test bulb lights up when positive (+) lead is connected to terminal 3.

OK:

Test bulb lights up.

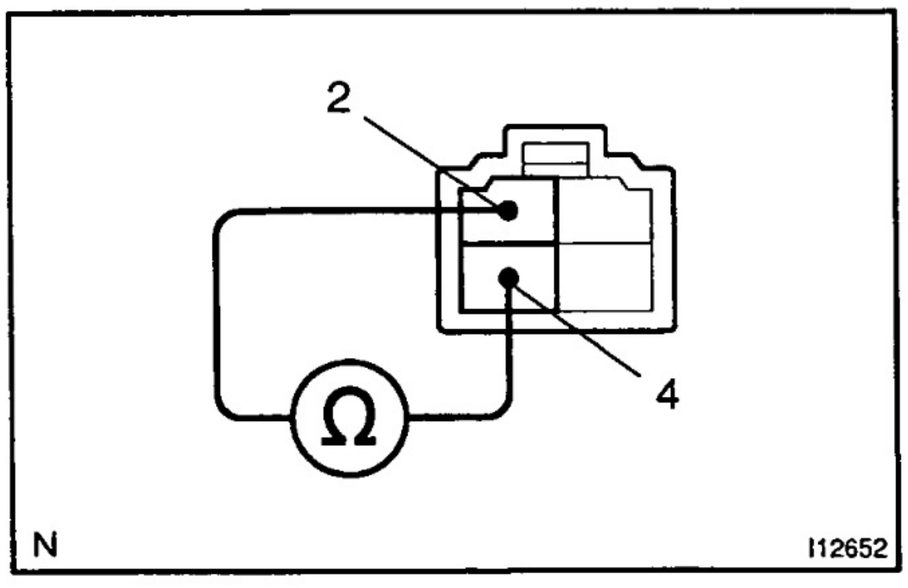

CHECK:
Measure resistance between terminals 2 and 4.
OK:

2.0 – 2.4 kΩ

NG → **Replace power transistor**

OK

6	Check harness and connector between A/C amplifier and power transistor, power transistor and body ground (See page IN–33).

NG → Repair or replace harness or connector.

OK ↓

Check and replace A/C control assembly (See page IN–33).

DI6EP–01

Extra–Hi Relay Circuit (Front A/C)

CIRCUIT DESCRIPTION

The extra–hi relay is switched on by signals from the A/C control assembly.

WIRING DIAGRAM

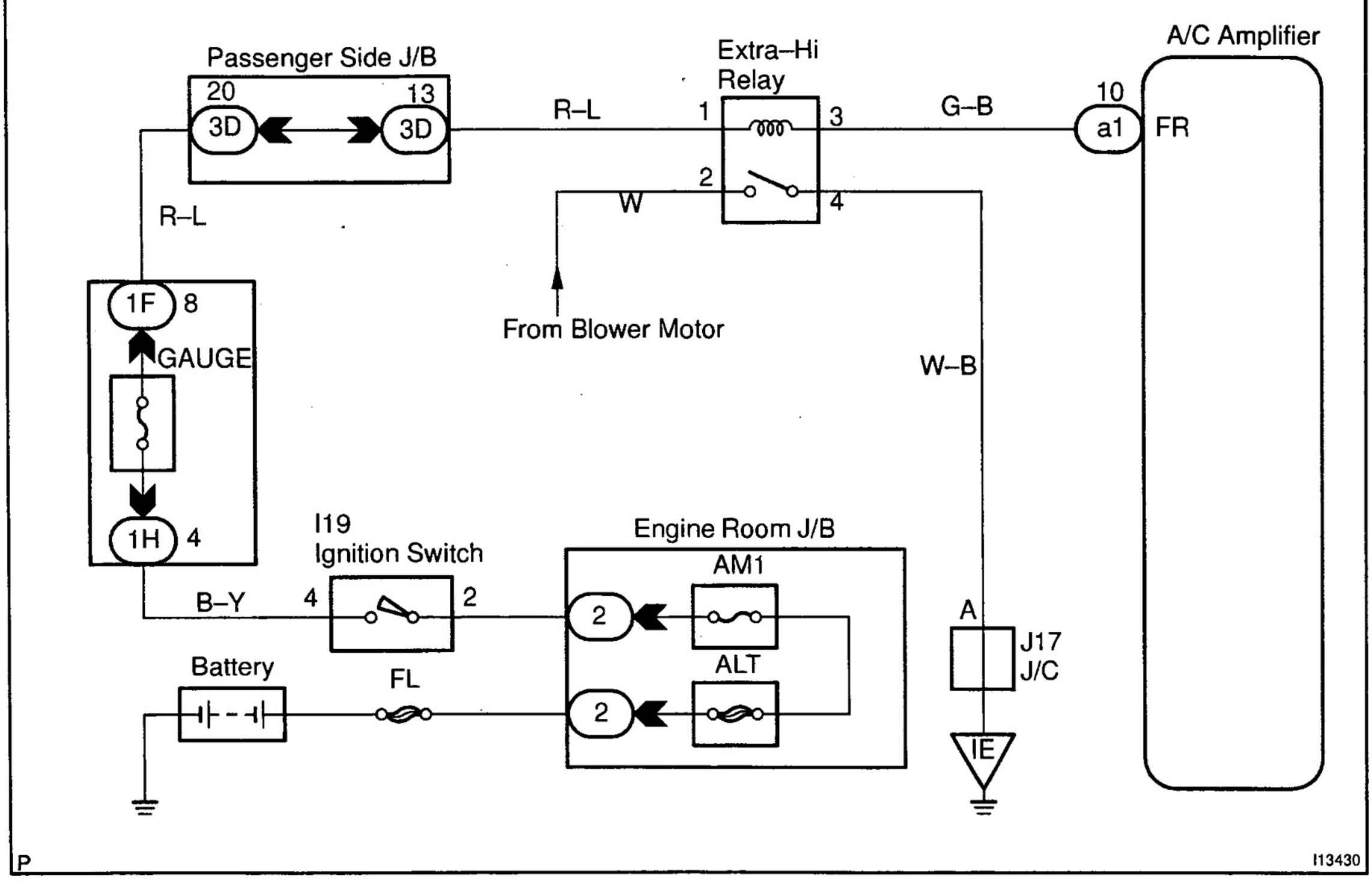

INSPECTION PROCEDURE

1	**Check voltage between terminal FR of A/C amplifier connector and body ground.**

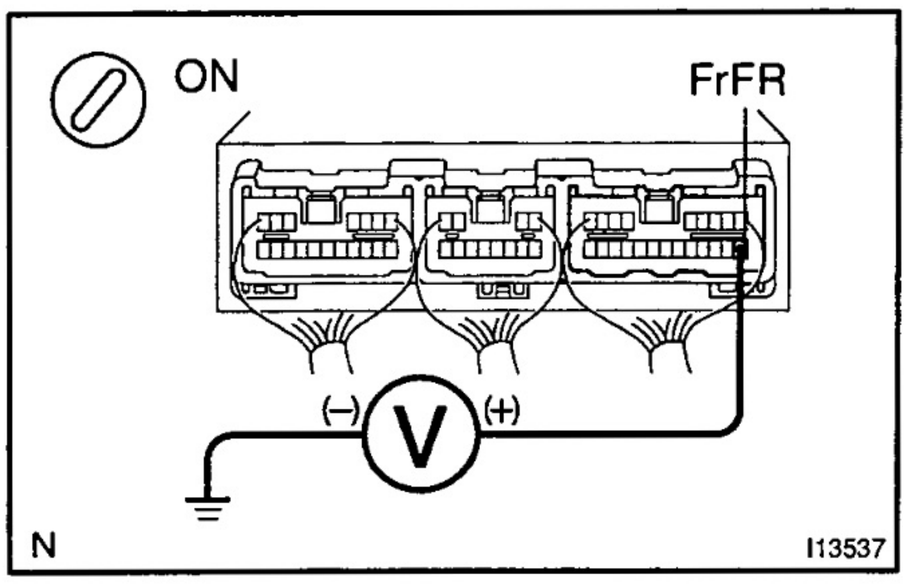

PREPARATION:

Remove the A/C control assembly with connectors still connected.

CHECK:

(a) Turn ignition switch ON.

(b) Measure voltage between terminal FR of A/C amplifier connector and body ground when blower speed condition as shown in the chart.

OK:

Blower speed	Standard voltage (V)
HI	Below 1.0 V
Except HI	10 – 14 V

OK → **Proceed to next circuit inspection shown on problem symptoms table (See page DI–288).**

NG

2	Check extra–hi relay.

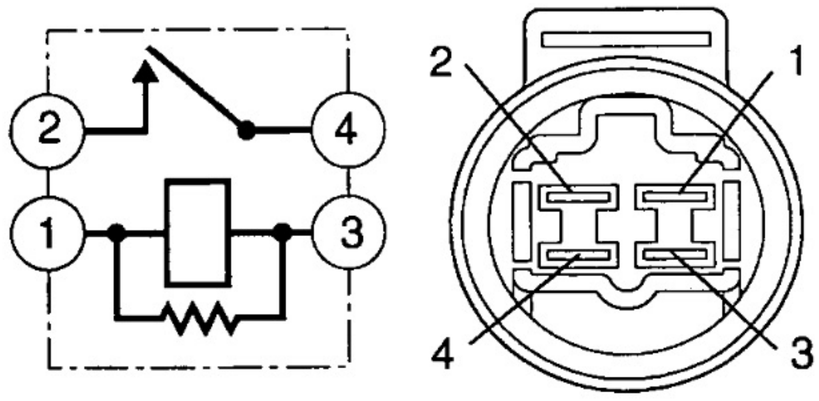

PREPARATION:
Remove extra–hi relay (See page AC–27).
CHECK:
Check continuity between each pair of terminals of heater main relay shown below.
OK:

Tester connection	Specified condition
2 – 4	No continuity
1 – 3	Continuity
1 – 3	62.5 – 90.9 Ω

PREPARATION:
Apply battery voltage between terminals 1 and 2.
CHECK:
Check continuity between each pair of terminal shown below.
OK:

Tester connection	Specified condition
2 – 4	Continuity

NG → **Replace extra–hi relay.**

OK

3	Check A/C fuse.

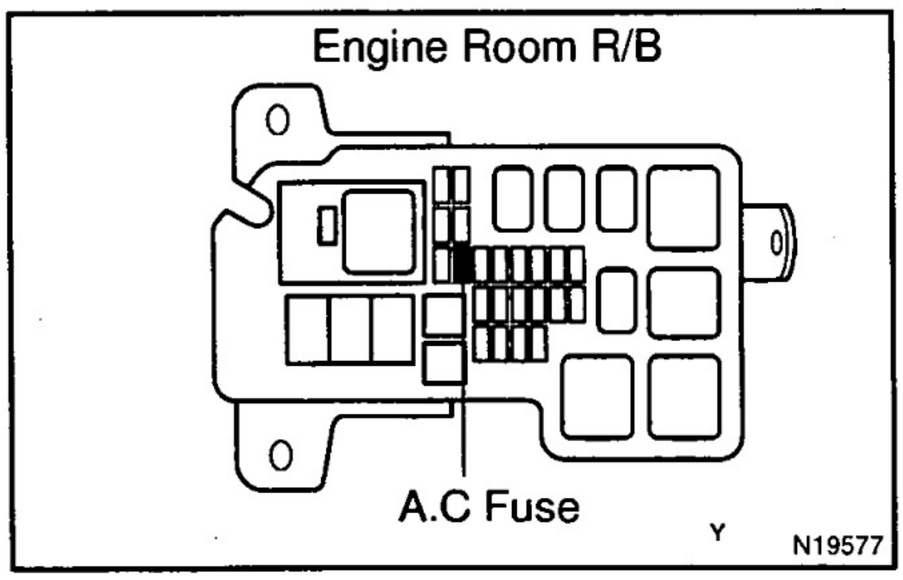

PREPARATION:
Remove A/C fuse engine room R/B.
CHECK:
Check continuity of A/C fuse.
OK:

Continuity exists.

NG → **Check for short in all the harness and components connected to the A/C fuse (See attached wiring diagram).**

OK

Check and repair harness and connector between A/C control assembly and A.C Fuse.

DI6EQ–01

Rear A/C Relay Circuit

CIRCUIT DESCRIPTION

The rear A/C relay is switched on by signals from the A/C amplifier. It supplies power to the rear A/C blower motor.

WIRING DIAGRAM

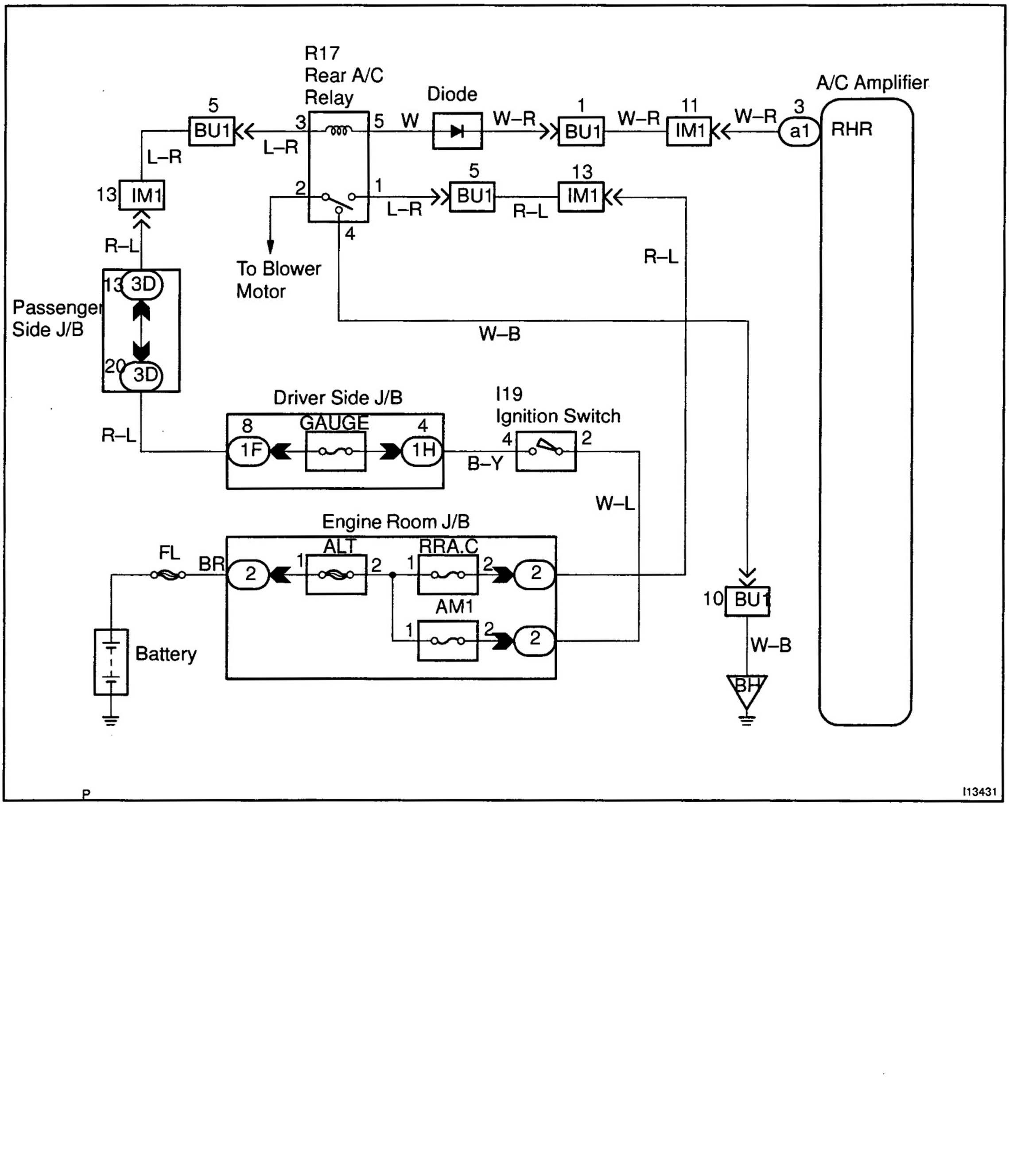

INSPECTION PROCEDURE

1	**Check voltage between terminal RCHR of A/C control assembly connector and body ground.**

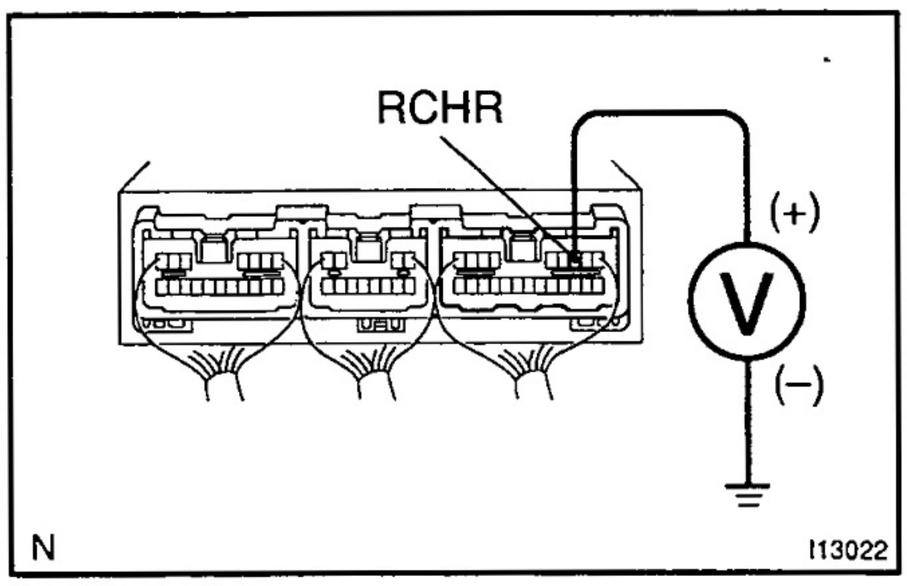

PREPARATION:

Remove A/C control assembly with connectors still connected.

CHECK:

Measure voltage between terminal RCHR of A/C control assembly and body ground when ignition switch is ON and OFF.

OK:

Ignition Switch	Voltage	
OFF	0 V	
ON	Blower ON	0 V
	Blower OFF	10 – 14 V

OK → **Proceed to next circuit inspection shown on problem symptoms table (See page DI–288).**

NG

2	Check rear A/C relay.

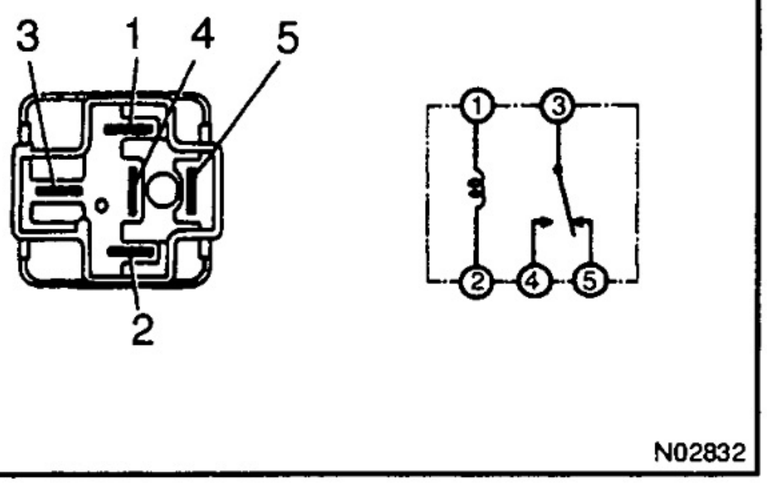

PREPARATION:
Remove rear A/C relay.
CHECK:
Check continuity between each pair of terminals of heater main relay shown below.
OK:

Tester connection	Specified condition
1 – 4	No continuity
2 – 4	Continuity
3 – 5	62.5 – 90.9 Ω

PREPARATION:
Apply battery voltage between terminals 3 and 5.
CHECK:
Check continuity between each pair of terminal shown below.
OK:

Tester connection	Specified condition
1 – 2	Continuity
2 – 4	No continuity

NG → **Replace hater main relay.**

OK

3	Check RR A/C fuse.

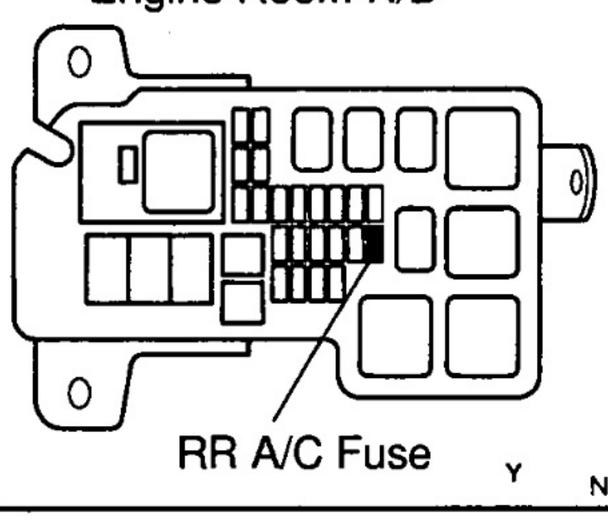

PREPARATION:
Remove RR A/C fuse engine room R/B.
CHECK:
Check continuity of RR A/C fuse.
OK:

Continuity exists.

NG → **Check for short in all the harness and components connected to the RR A/C fuse (See attached wiring diagram).**

OK

Check and repair harness and connector between A/C control assembly and battery.

DI6F0–01

Rear A/C Blower Motor Circuit

CIRCUIT DESCRIPTION

This is the power source for blower motor.

WIRING DIAGRAM

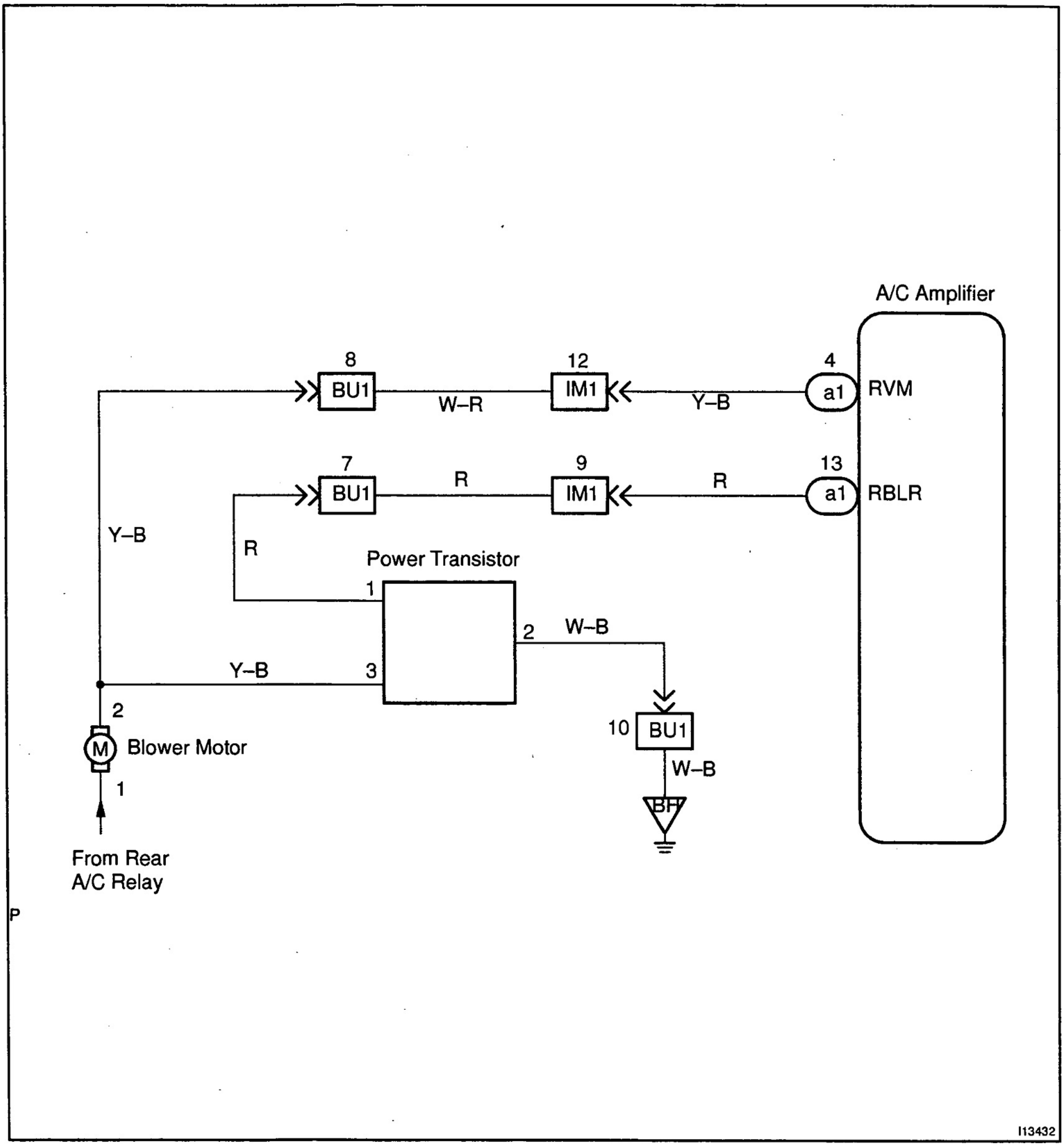

INSPECTION PROCEDURE

1	**Check voltage between terminal RBLR of A/C amplifier connector and body ground.**

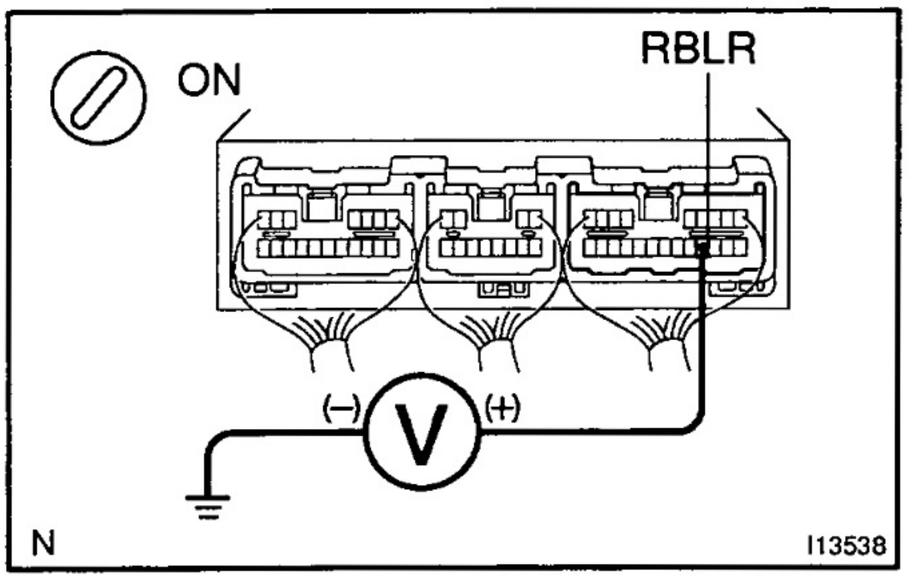

PREPARATION:
Remove the A/C amplifier with connector still connected.
CHECK:
(a) Turn ignition switch to ON.
(b) Operate blower motor.
(c) Measure voltage between terminal RCBLW of A/C amplifier and body ground.
OK:
Voltage: 1 ± 3 V

OK → **Proceed to next circuit inspection shown of problem symptoms table (See page DI–288).**

NG

2	**Check blower motor.**

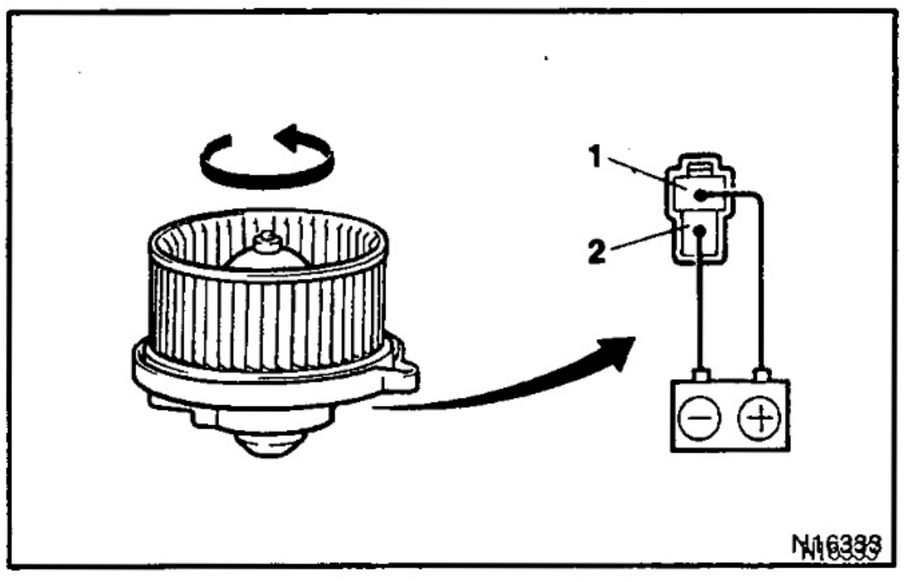

PREPARATION:
Remove blower motor.
CHECK:
Connect the positive (+) lead from the battery to terminal 2 of blower motor connector and the negative (–) lead to terminal 1.
OK:
Blower motor operates smoothly.

NG → **Replace blower motor.**

OK

3	Check voltage between terminal RVM of A/C amplifier and body ground.

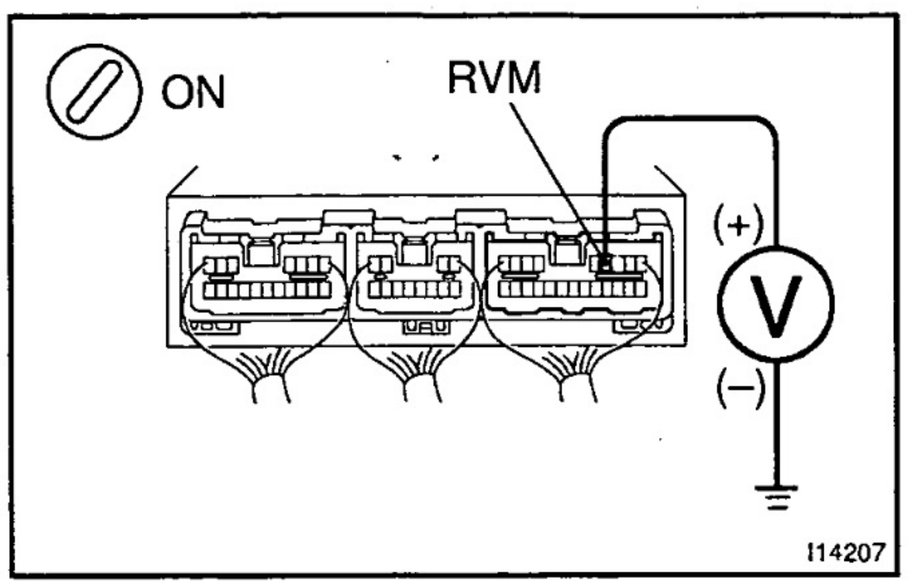

PREPARATION:

Remove the A/C amplifier with connector still connected.

CHECK:

(a) Turn ignition switch to ON.

(b) Operate rear A/C blower motor.

(c) Measure voltage between terminal RVM of A/C amplifier and body ground, when blower switch is operated to following positions.

OK:

Blower speed	Voltage
LO	9.5 V
ME	6.4 V
HI	Below 1.0 V

OK → **Proceed to next circuit inspection shown on problem symptoms table See page DI–288).**

NG

4	Check power transistor.

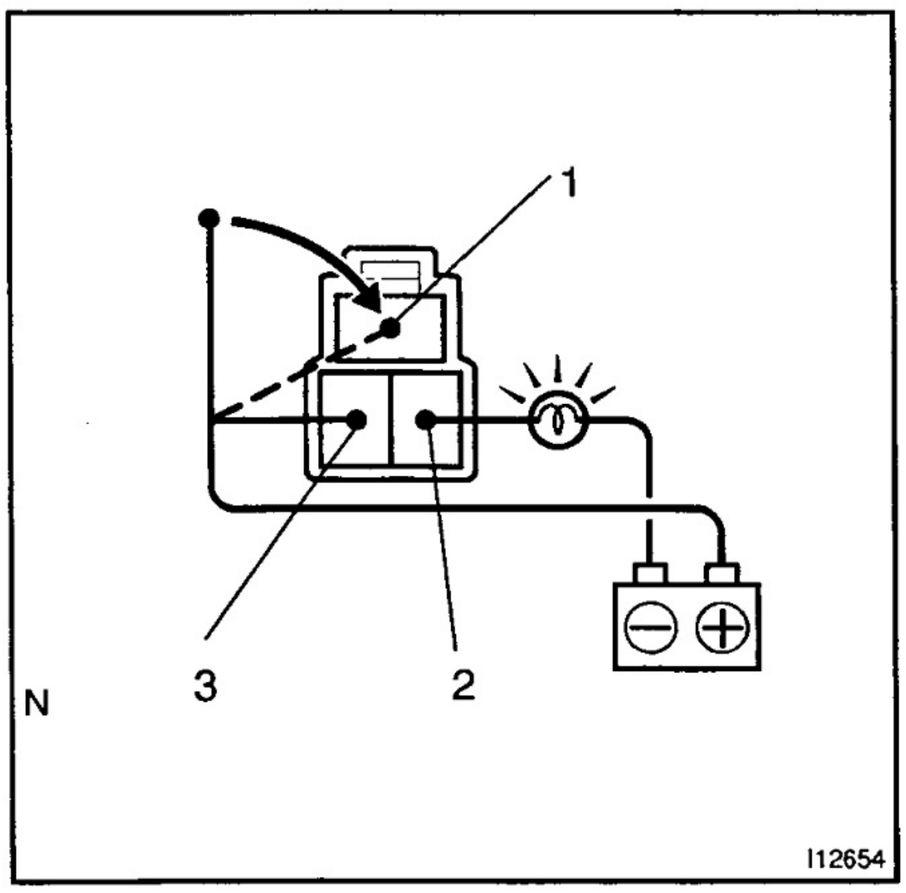

PREPARATION:

Remove power transistor (See page AC–8).

CHECK:

(a) Connect the positive (+) lead from the battery to terminal 3 and negative (–) lead to terminal 2 through a 12 V – 3.4 W test bulb.

(b) Check the test bulb lights up when positive (+) lead is connected to terminal 1.

OK:

Test bulb lights up.

NG → **Replace power transistor.**

OK

5	**Check harness and connector between A/C amplifier, motor power transistor and body ground (see page IN–33).**

NG → **Repair or replace harness or connector.**

OK

Check and replace A/C control assembly (See page IN–33).

DISEW–01

Compressor Circuit

CIRCUIT DESCRIPTION

The A/C control assembly outputs the magnetic clutch ON signal from terminal AC to the engine (and ECT) ECU. When the engine (and ECT) ECU receives this signal, it sends a signal from terminal ACT and switches the A/C magnetic clutch relay ON, thus turning on the A/C magnetic clutch.

WIRING DIAGRAM

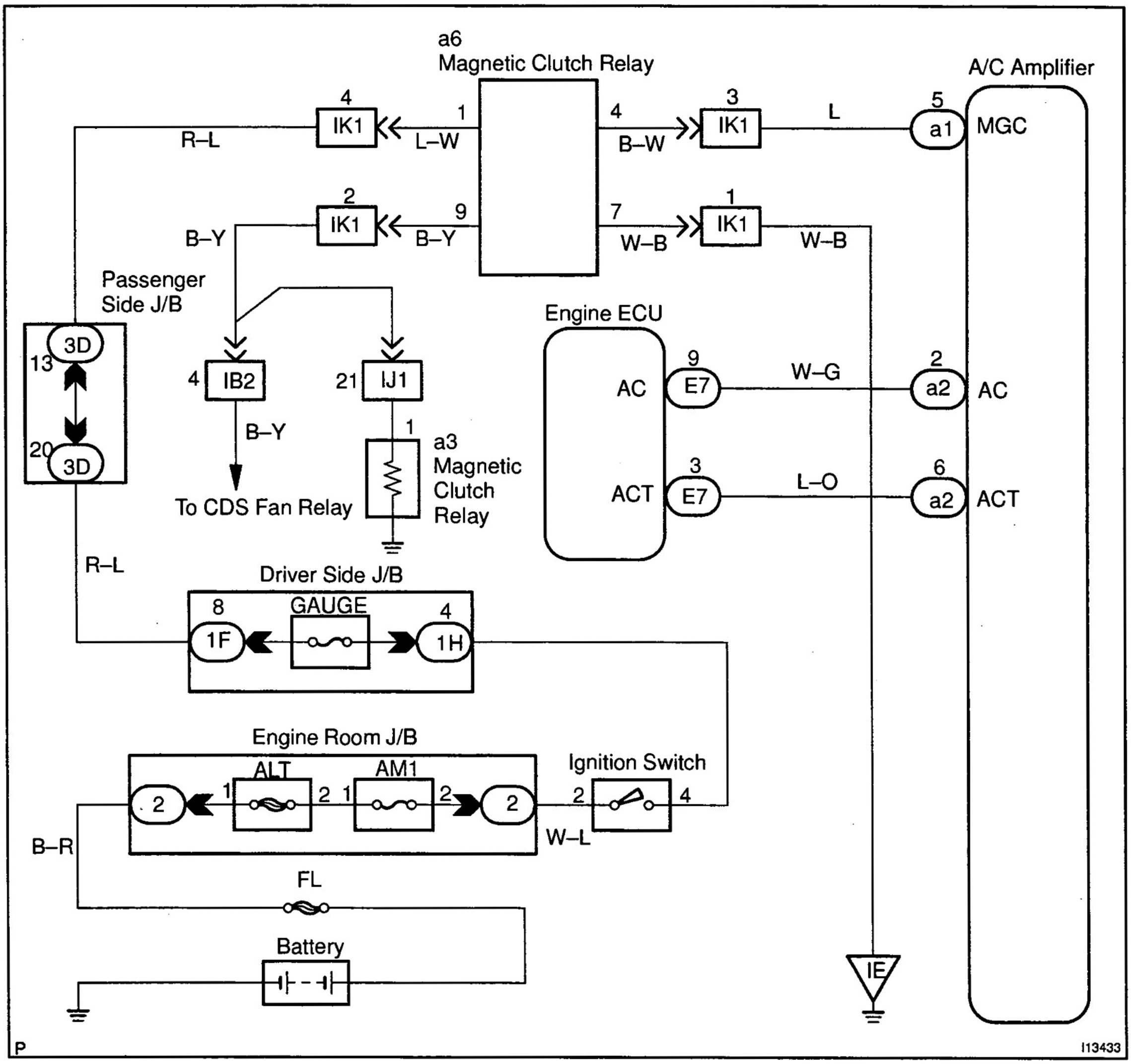

INSPECTION PROCEDURE

1	**Check voltage between terminal MGC of A/C control assembly connector and body ground.**

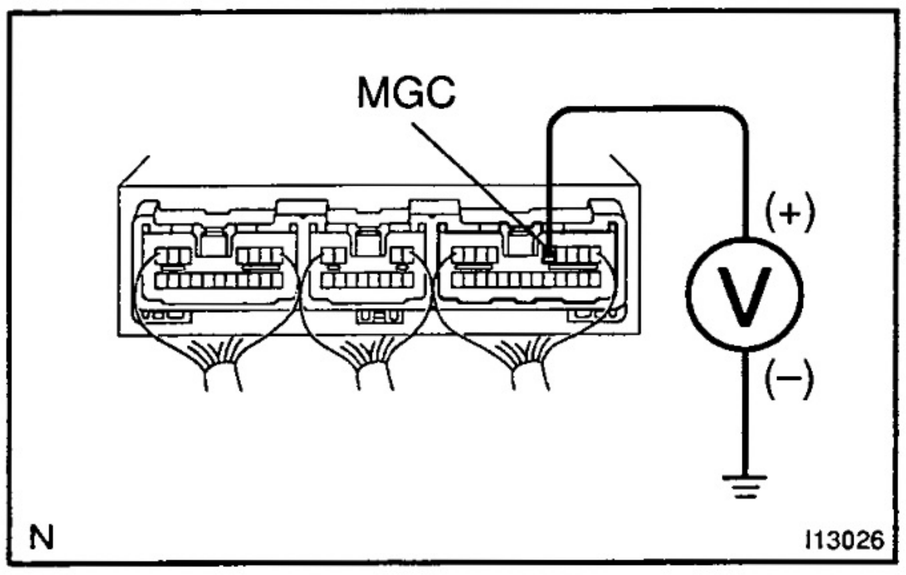

PREPARATION:

(a) Remove A/C control assembly with connectors still connected.

(b) Start the engine and push AUTO switch.

CHECK:

Check voltage between terminal MGC of A/C control assembly connector and body ground when magnetic clutch is ON and OFF by A/C switch.

OK:

A/C switch	Voltage
ON	Below 1 V
OFF	10 – 14 V

NG → **Go to step 5.**

OK

2	**Check magnetic clutch relay.**

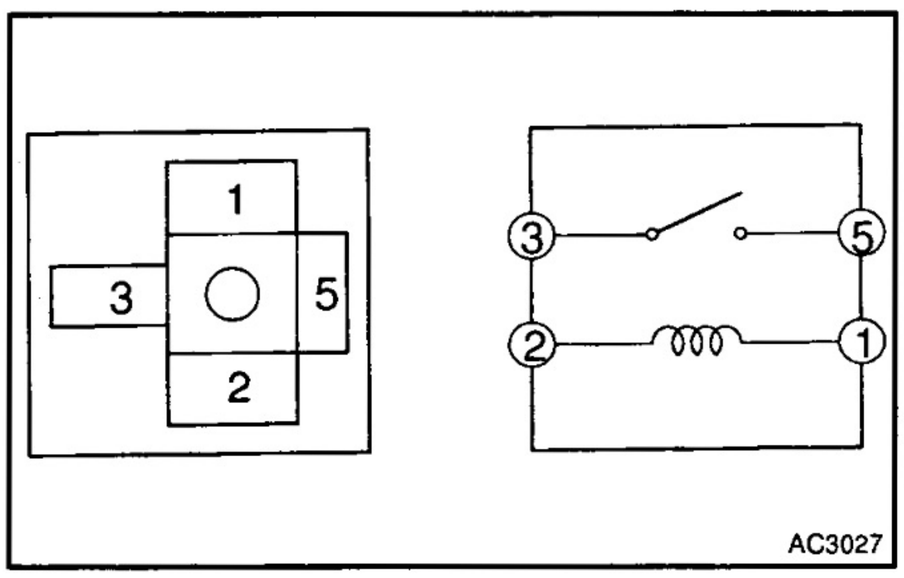

PREPARATION:

Remove magnetic clutch relay from R/B No.5.

CHECK:

Check continuity between each pair of terminals shown below of magnetic clutch relay.

OK:

Tester connection	Specified condition
1 – 2	62.5 – 90.9 Ω
3 – 5	No continuity

PREPARATION:

Apply battery positive (+) voltage between terminals 1 and 2.

CHECK:

Check continuity between terminals 3 and 5.

OK:

Continuity exists.

NG → **Replace magnetic clutch relay.**

OK

3	Check A/C magnetic clutch.

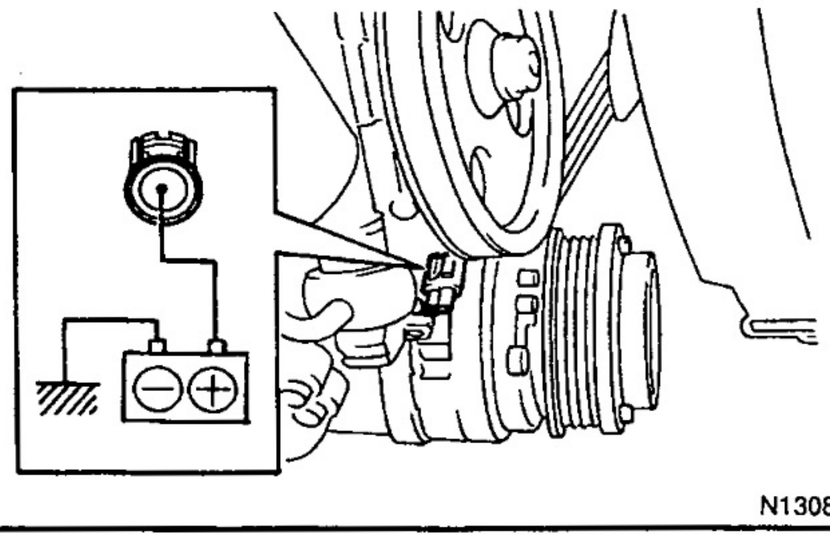

PREPARATION:
Disconnect magnetic clutch connector.
CHECK:
Connect positive (+) lead connected to battery to magnetic clutch connector terminal 1 and negative lead to the body ground.
OK:
Magnetic clutch is energized.

NG → **Repair A/C magnetic clutch.**

OK

4	Check harness and connector between magnetic clutch relay and A/C compressor, A/C compressor and body ground (See page IN–33).

NG → **Repair or replace harness or connector.**

OK

Proceed to next circuit inspection shown on problem symptoms table (See page DI–288).

5	Check voltage between terminal AC of A/C amplifier connector side and body ground.

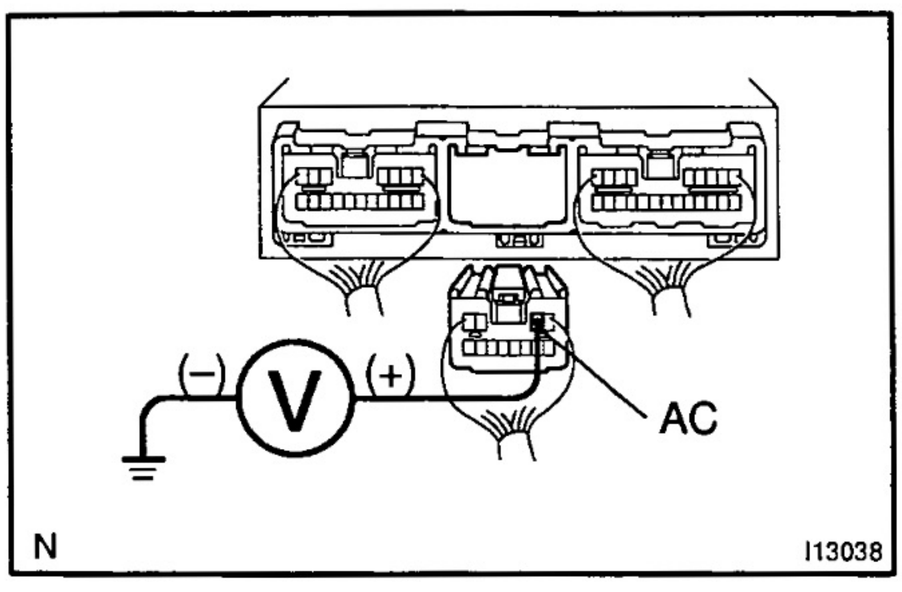

PREPARATION:
(a) Disconnect A/C control connector.
(b) Turn ignition switch to ON.
CHECK:
Check voltage between terminal AC of A/C amplifier harness side connector.
OK:
Voltage : 10 – 14 V

NG → **Check and replace engine (and ECT) ECU.**

OK

6	Check voltage between terminal AC of A/C control amplifier connector and body ground.

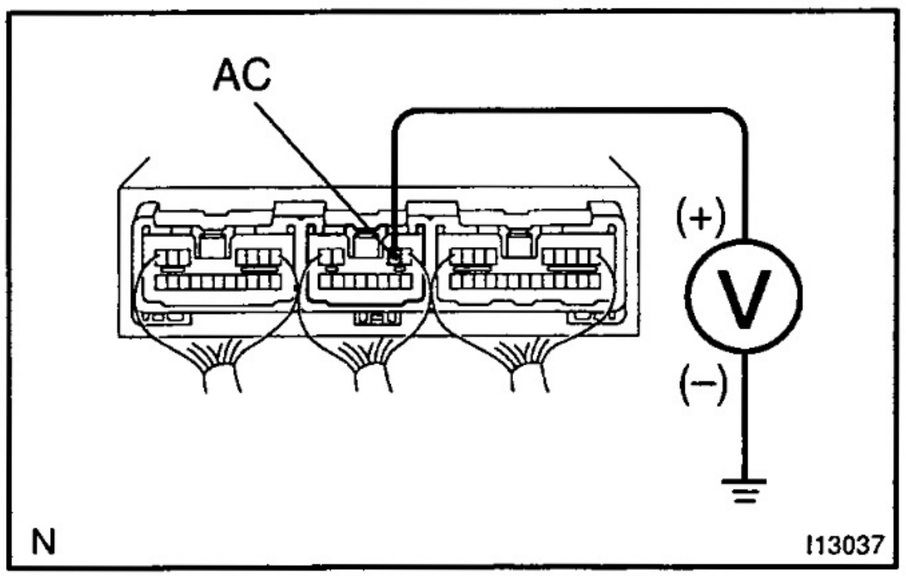

PREPARATION:

(a) Remove A/C control assembly with connector still connected.

(b) Start the engine and push AUTO switch.

CHECK:

Check the voltage between terminal AC of A/C amplifier connector and body ground when magnetic clutch is ON and OFF by A/C switch.

OK:

Magnetic clutch	Voltage
ON	Below 1 V
OFF	10 – 14 V

NG → **Check and replace A/C amplifier.**

OK

7	Check voltage between terminal ACT of A/C amplifier and body ground.

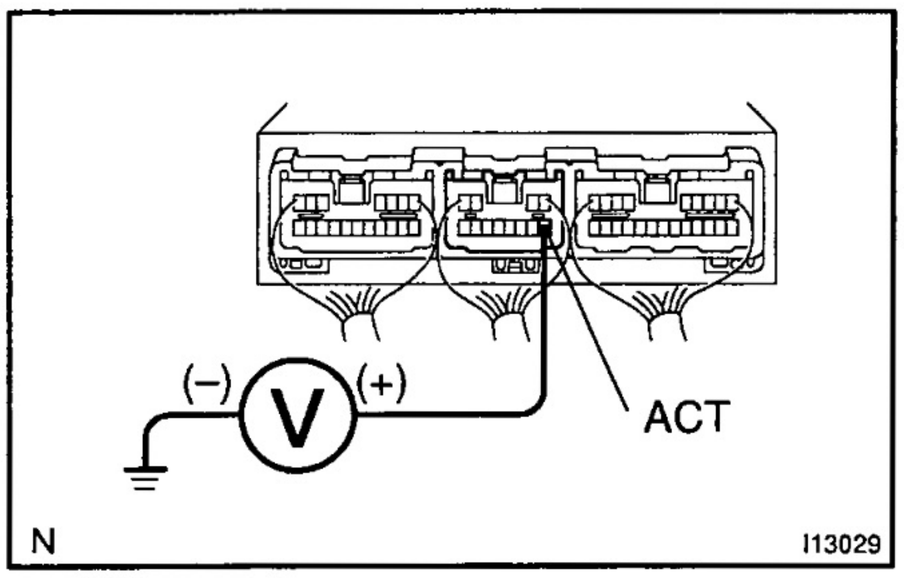

PREPARATION:

(a) Remove A/C control assembly with connectors still connected.

(b) Start the engine and push AUTO switch.

CHECK:

Check the voltage between terminal ACT of A/C amplifier and body ground.

OK:

A/C switch	Voltage
ON	10 – 14 V
OFF	Below 1.5 V

NG → **Check and replace engine (and ECT) ECU.**

OK

8	Check voltage between terminal ACT of engine (and ECT) ECU connector and body ground (See page IN–33).

NG → Check and replace engine (and ECT) ECU.

OK ↓

9	Check harness and connector between A/C control assembly and engine (and ECT) ECU (See page IN–33).

NG → Repair or replace harness or connector.

OK ↓

Proceed to next circuit inspection shown on problem symptoms table (See page DI–288).

DI6ER–01

Rear Magnetic Valve Circuit

CIRCUIT DESCRIPTION

The rear magnetic valve is controlled by A/C amplifier and rear A/C switch operation.

WIRING DIAGRAM

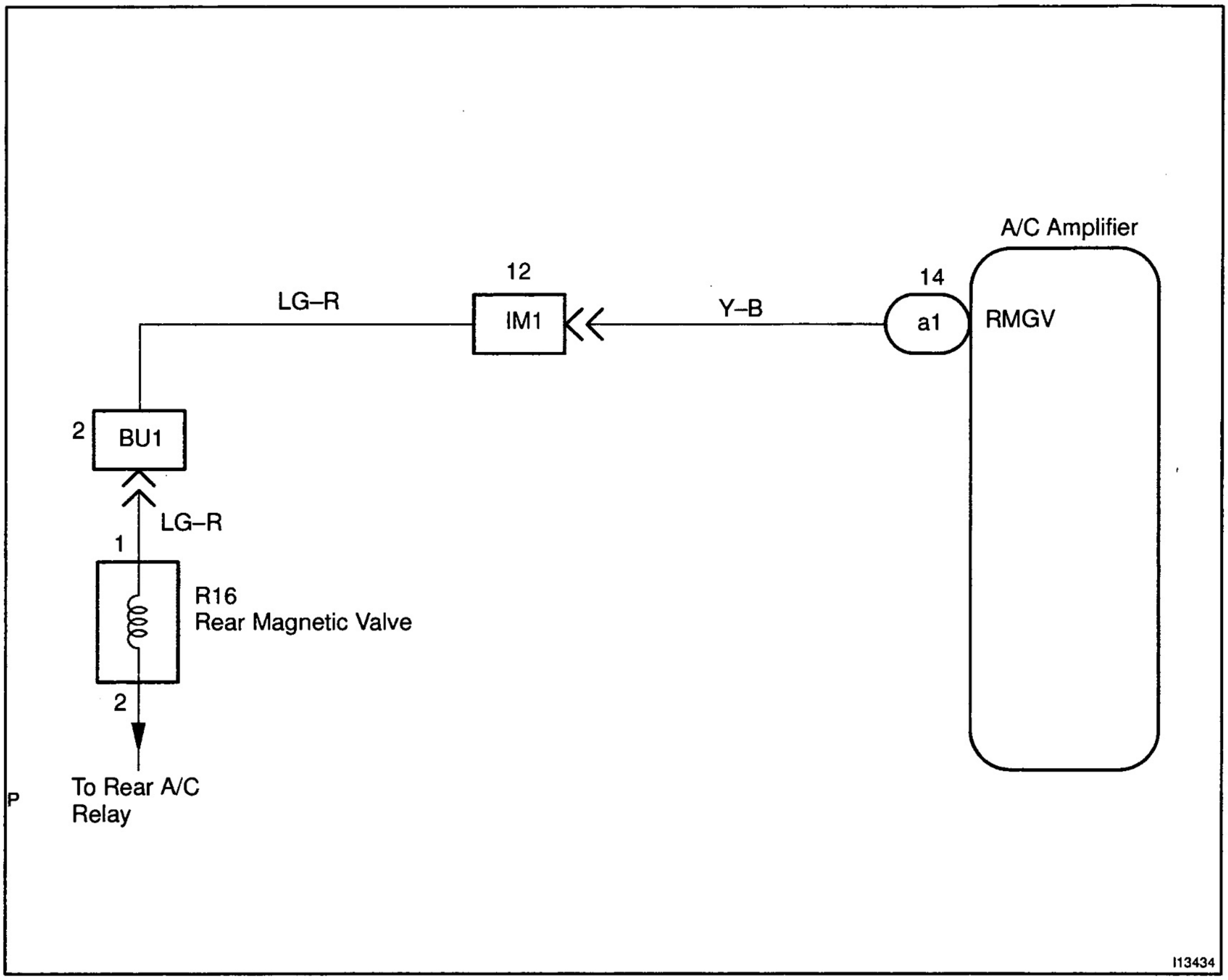

INSPECTION PROCEDURE

1	**Check voltage between terminals RMGV of A/C amplifier and body ground.**

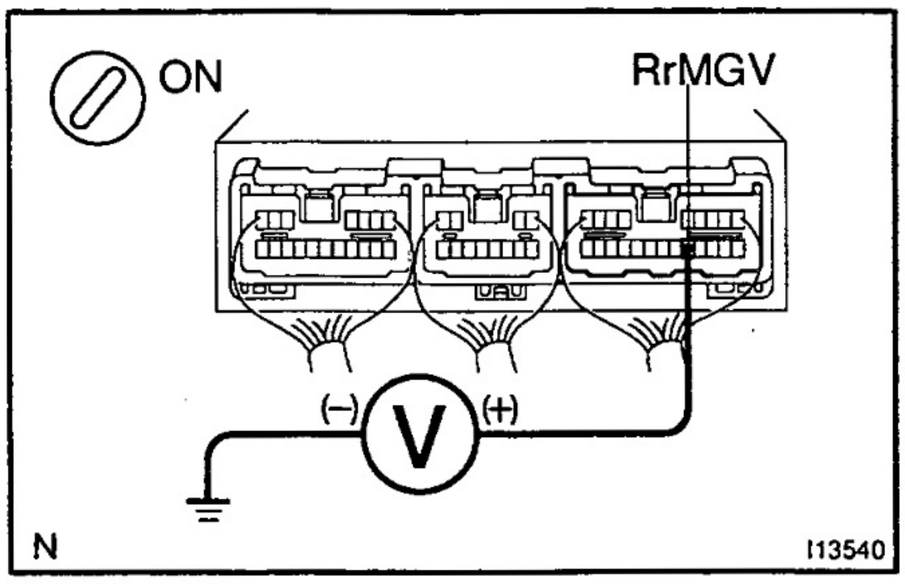

PREPARATION:

Remove the rear A/C amplifier with still connected.

CHECK:

(a) Turn ignition switch to ON.
(b) Push in rear A/C switch.
(c) Set rear temperature control to "MAX. COOL".
(d) Measure voltage between terminals RMGV of A/C amplifier and body ground.

OK:

Voltage: Below 1.0 V

OK	**Proceed to next circuit inspection shown on problem symptoms table (See page DI–288).**

NG

2	**Check magnetic valve.**

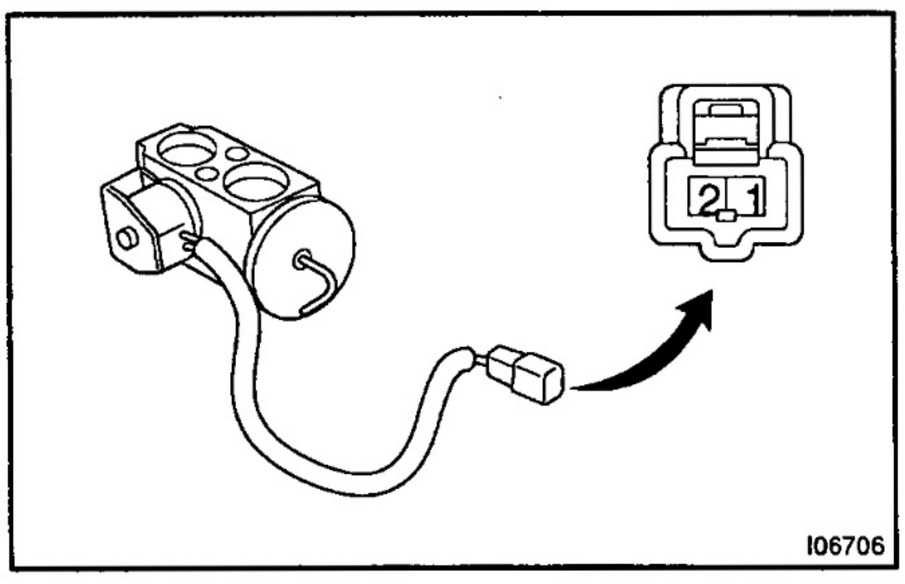

PREPARATION:

Remove the magnetic valve (See page AC–8).

CHECK:

Check the air passage through the valve with and without the battery positive voltage applied between terminals as shown in the chart.

OK:

Condition	Air passage
Apply B+ between terminals	Free passage
Not apply B+ between terminals	No passage

NG	**Replace rear magnetic valve.**

OK

3	**Check harness and connector between rear magnetic valve and A/C amplifier (See page IN–33).**

NG → **Repair or replace harness or connector.**

OK

Repair or replace A/C control assembly.

Rear A/C Main Switch Circuit

WIRING DIAGRAM

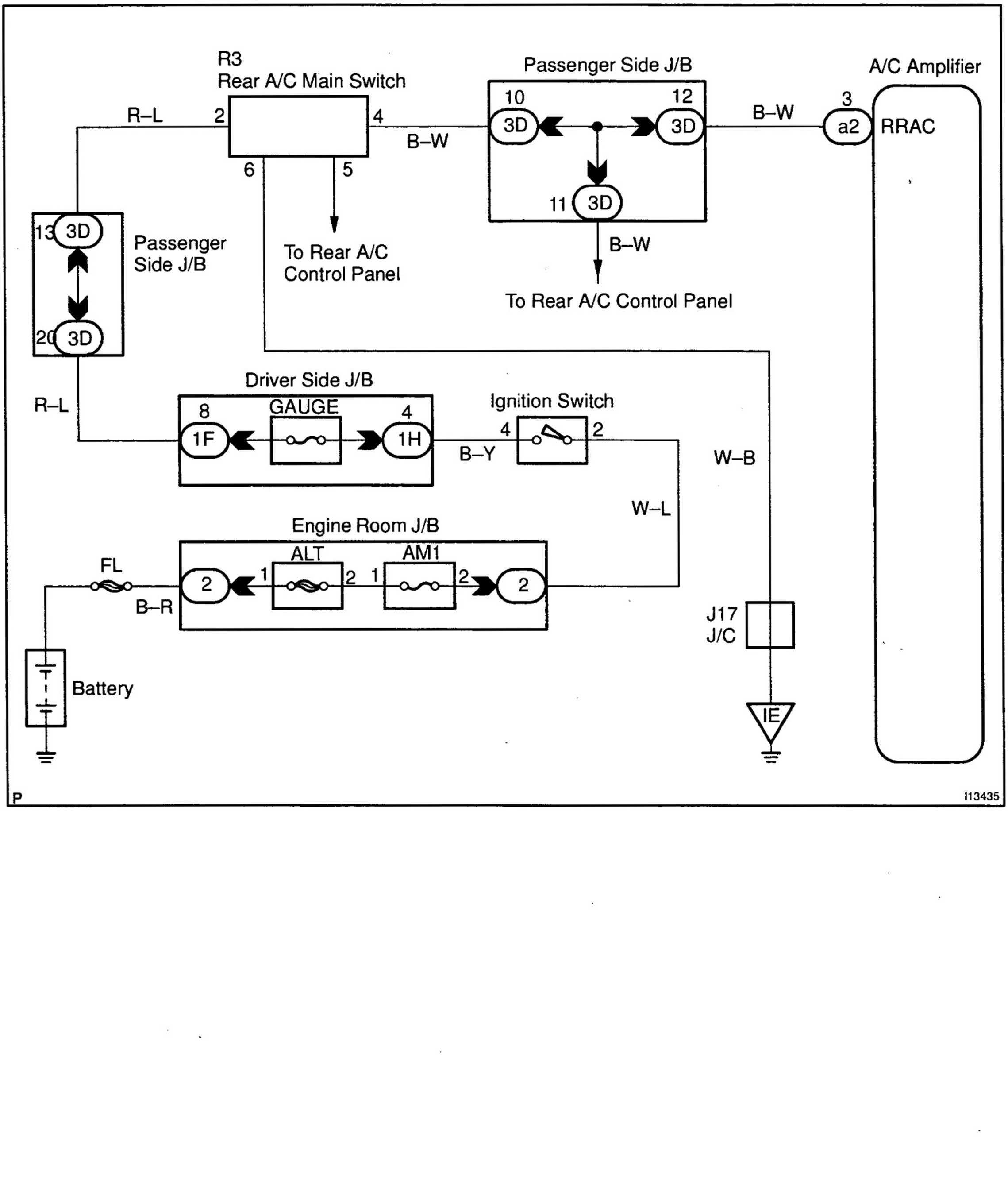

INSPECTION PROCEDURE

1	Check voltage between terminals RCMAIN of A/C amplifier and body ground.

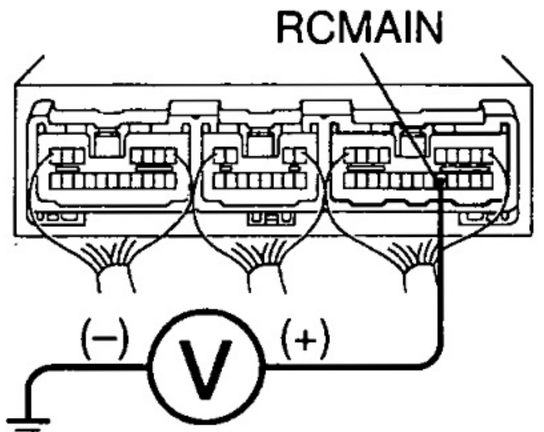

PREPARATION:

Remove A/C control assembly with connectors still connected.

CHECK:

(a) Turn ignition switch to ON.

(b) Measure voltage between terminal RCMAIN of A/C amplifier and body ground.

OK:

Rear A/C main switch	Voltage
ON	Below 1.0 V
OFF	10 – 14 V

OK → **Proceed to next circuit inspection shown on problem symptoms table (See page DI–288).**

NG

2	Check rear A/C main switch.

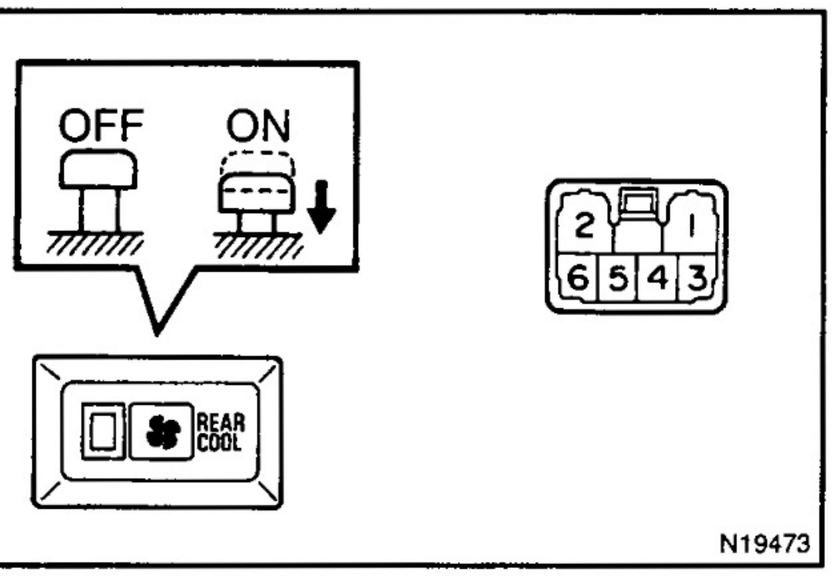

PREPARATION:

Remove rear A/C main switch.

CHECK:

Check continuity between terminals of rear A/C main switch when switch operation as shown in the chart.

OK:

Switch position	Tester connection	Specified condition
OFF	10 – 11	Continuity
ON	8 – 11	Continuity

NG → **Replace rear A/C main switch.**

OK

3	**Check harness and connector between A/C amplifier and rear A/C main switch (See page IN–33).**

NG → **Repair or replace harness or connector.**

OK

**Check and replace A/C amplifier.
(See page IN–33)**

DI6ET–01

Rear A/C Control Panel Circuit

WIRING DIAGRAM

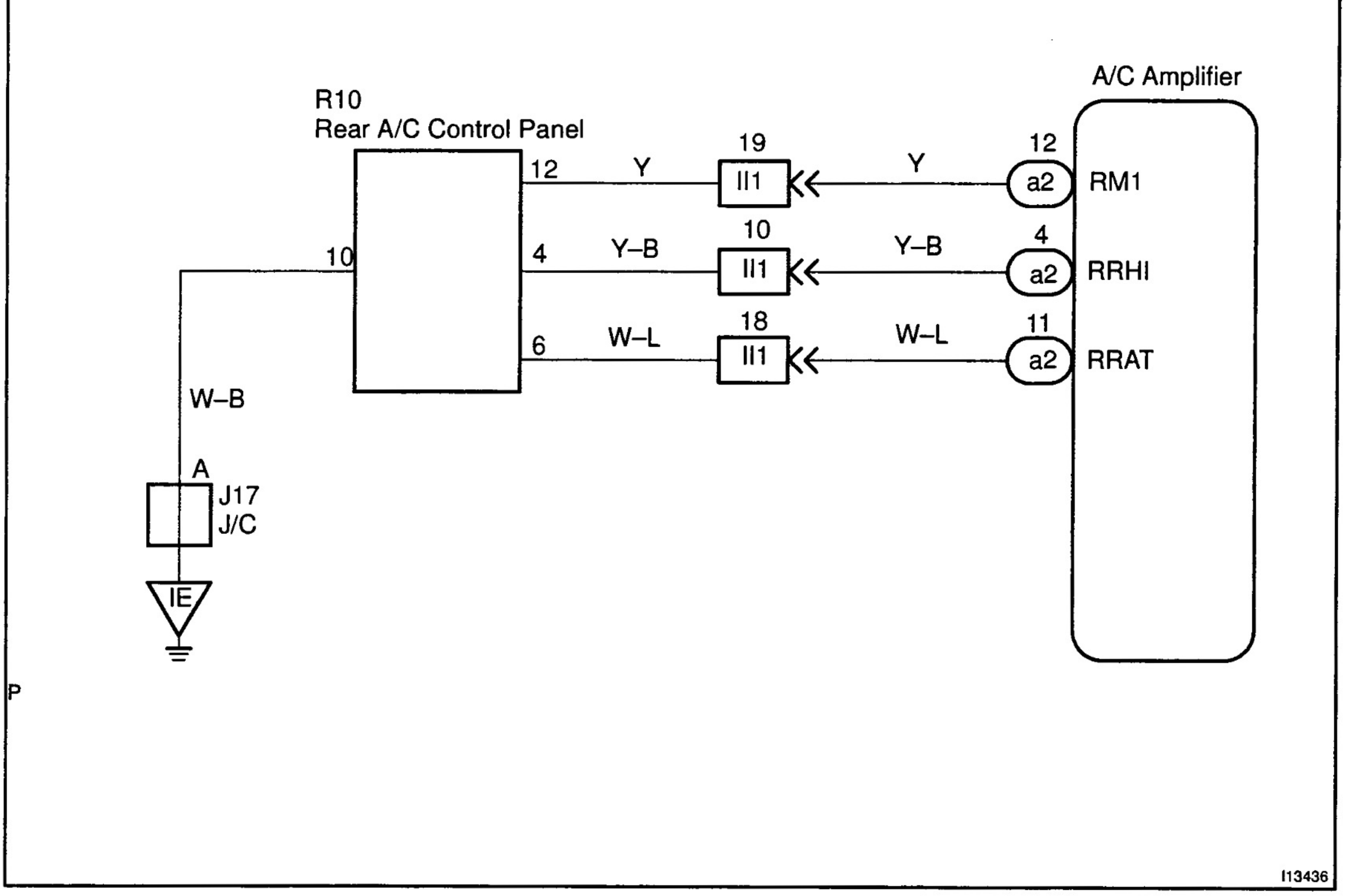

INSPECTION PROCEDURE

1	**Check voltage between terminals RRHI, RM1, RRAT of A/C amplifier and body ground.**

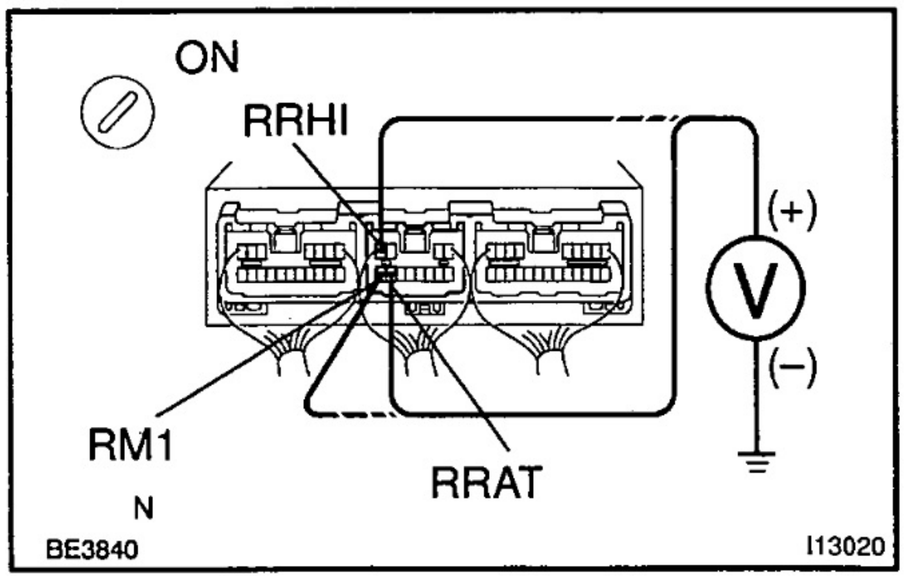

PREPARATION:

Remove A/C control assembly with connectors with still connected.

CHECK:

(a) Turn ignition switch to ON.

(b) Push in rear A/C main switch.

(c) Measure voltage between terminals RRHI, RM1 and RRAT of A/C amplifier and body ground when the rear A/C blower switch is operated to following positions.

OK:

Position	RRAT–Body ground	RM1–Body ground	RRHI–Body ground
Auto	Below 1.0 V	10 – 14V	10 – 14 V
ME	10 – 14 V	Below 1.0 V	10 – 14 V
HI	10 – 14V	10 – 14 V	Below 1.0 V

OK → **Proceed to next circuit inspection shown on problem symptoms table (See page DI–288).**

NG

2	Check rear A/C control panel.

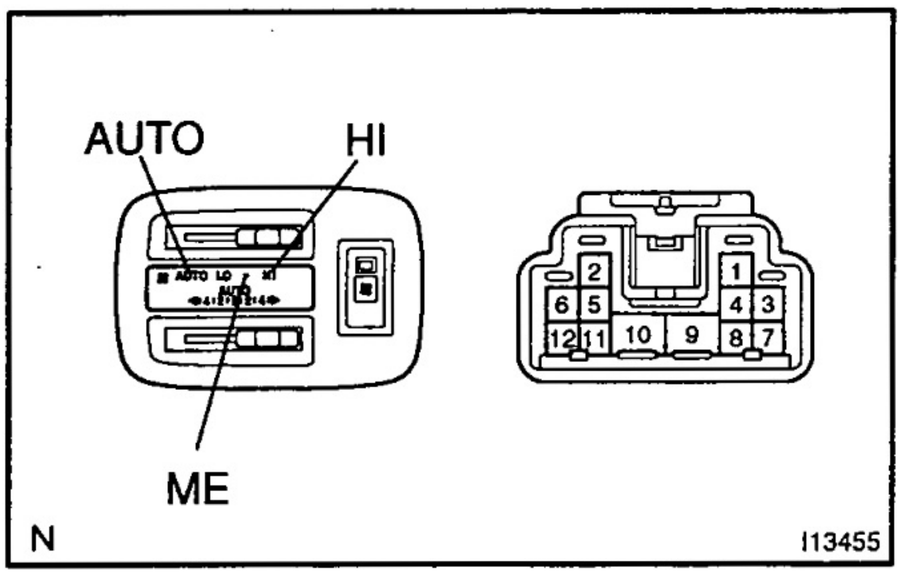

PREPARATION:

Remove rear A/C control panel.

CHECK:

Check continuity between terminals of rear A/C control panel when switch is operated as shown in the chart.

OK:

Switch position	Tester connection	Specified condition
AUTO	6 – 10	Continuity
ME	10 – 12	Continuity
HI	9 – 10	Continuity

NG → **Replace rear A/C control panel.**

OK

3	Check harness and connector between A/C amplifier and rear A/C control panel (See page IN–33).

NG → **Repair or replace harness or connector.**

OK

Check and replace A/C amplifier (See page IN–33).

DI6EU-01

Rear A/C Temperature Set Lever Circuit

WIRING DIAGRAM

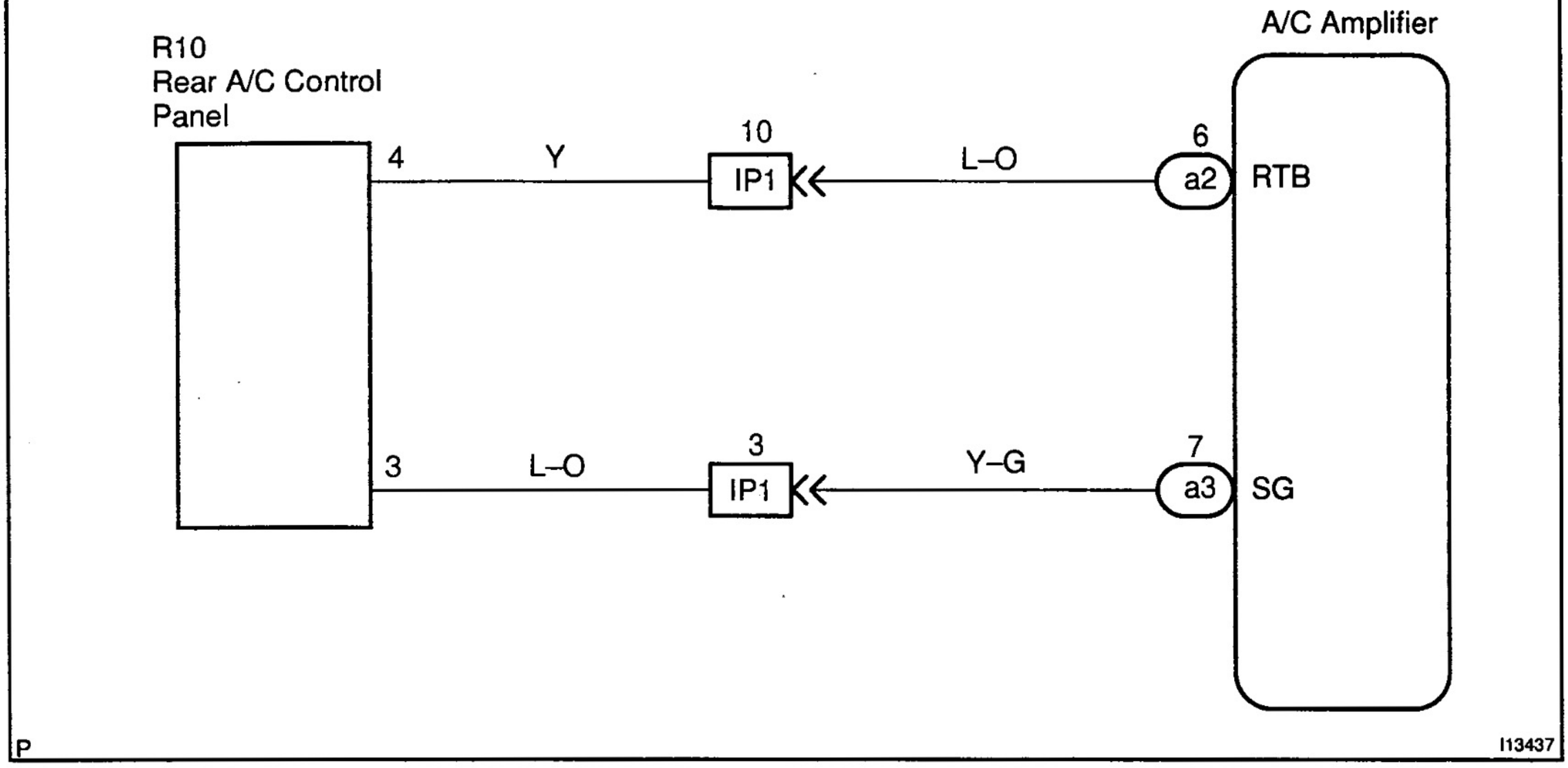

INSPECTION PROCEDURE

1	**Check voltage between terminals TB and SG of A/C amplifier.**

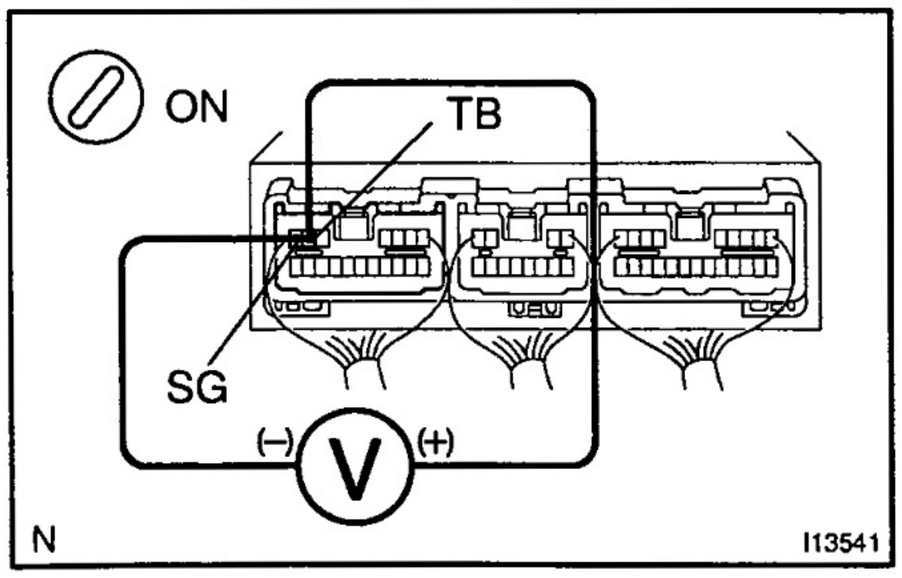

PREPARATION:

Remove A/C control assembly with connectors with still connected.

CHECK:

(a) Turn ignition switch to ON.

(b) Measure voltage between terminals TB and SG of A/C amplifier when operate rear A/C temperature set lever as shown in the chart.

OK:

Lever Position	Voltage
MAX. COOL	Approx. 0.8 V
MAX. HOT	Approx. 2.2 V

OK → **Proceed to next circuit inspection shown on problem symptoms table (See page IN–33).**

NG

2	Check rear A/C temperature set lever.

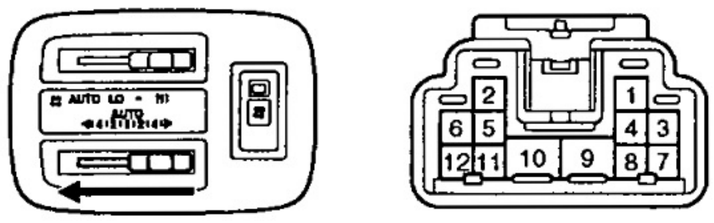

PREPARATION:

Remove rear A/C control panel.

CHECK:

Measure resistance between terminals 3 and 4 when operate the lever, as shown in the chart.

OK:

MAX. COOL: 0 Ω

MAX. HOT: 2.4 – 3.6 kΩ

NG → **Replace rear A/C control panel.**

OK

3	Check harness and connector between A/C amplifier and rear A/C control panel (See page IN–33).

NG → **Repair or replace harness or connector.**

OK

Check and replace A/C amplifier (See page IN–33).

AUTOMATIC TRANSMISSION

VALVE BODY ASSEMBLY (1KZ–TE) AT–1
PARKING LOCK PAWL AT–5

REFER TO LAND CRUISER/LAND CRUISER PRADO REPAIR MANUAL FOR CHASSIS AND BODY (Pub. No. RM517E)

NOTE: The above pages contain only the points which differ from the above listed manual.

VALVE BODY ASSEMBLY (1KZ–TE)

AT0R6–01

ON–VEHICLE REPAIR

AUSTRALIA ONLY

CAUTION:

- **When working with FIPG material, you must observe the followings.**
- **Using a razor blade and a gasket scraper, remove all old FIPG material from the gasket surfaces.**
- **Thoroughtly clean all components to remove all loose material. Clean both sealing surfaces with a non–residue solvent.**
- **Apply FIPG in an approx. 1 mm (0.04 in.) wide bead along the sealing surface. Parts must be assembled within 10 minutes of application. Otherwise, the FIPG material must be removed and reapplied.**

1. REMOVE ENGINE UNDER COVER

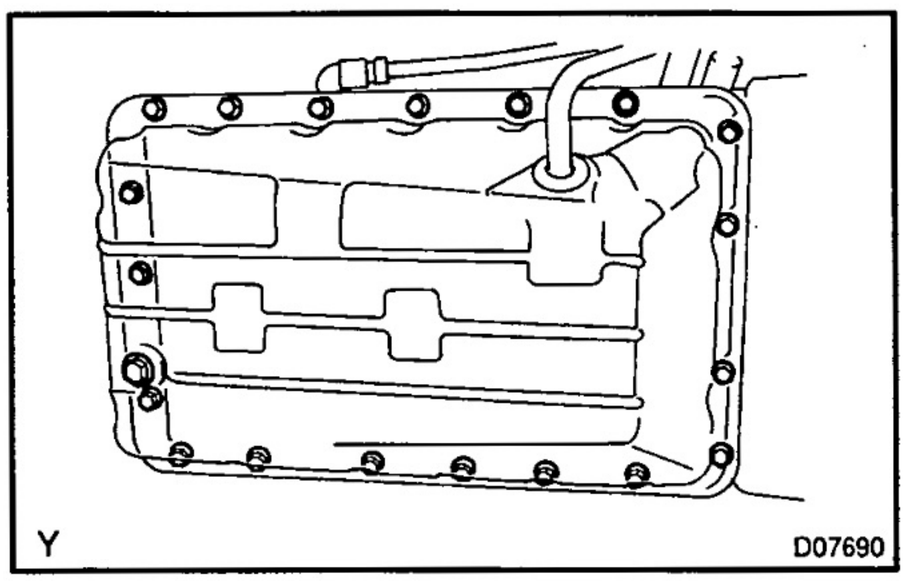

2. DRAIN ATF

3. REMOVE OIL PAN

NOTICE:

Some fluid will remain in the oil pan.

(a) Remove the 19 bolts.

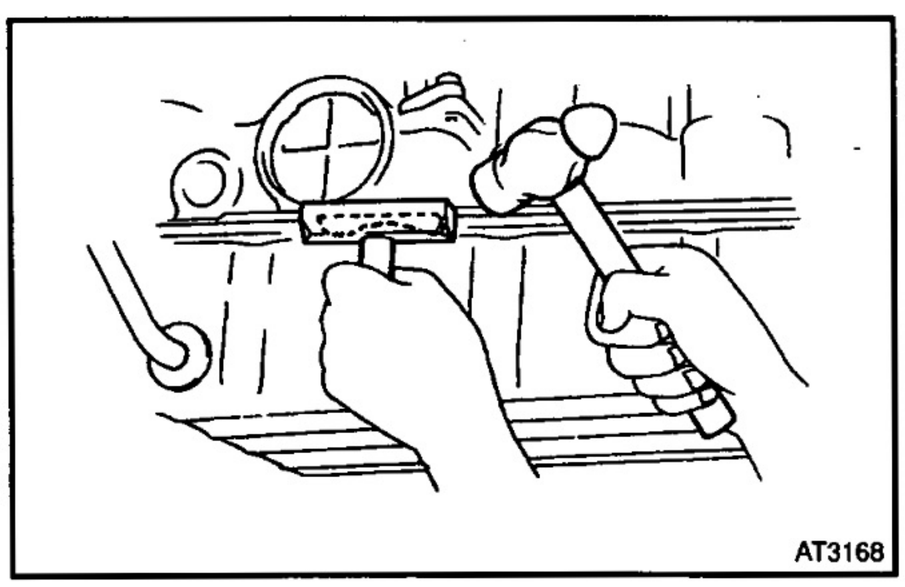

(b) Install the blade of SST between the transmission case and oil pan, cut off applied sealer and then remove the oil pan.

SST 09032–00100

NOTICE:

When removing the oil pan, be careful not to damage the oil pan flange.

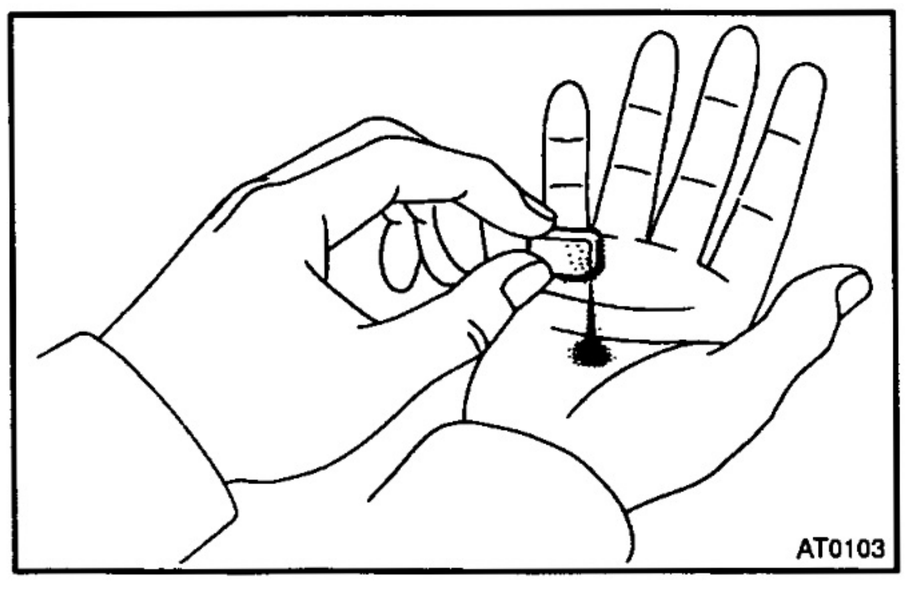

4. EXAMINE PARTICLES IN PAN

Remove the magnets and use them to collect steel particles. Carefully look at the foreign matter and particles in the pan and on the magnets to anticipate the type of wear you will find in the transmission.

Steel (magnetic) ... bearing, gear and clutch plate wear

Brass (non–magnetic) ... bushing wear

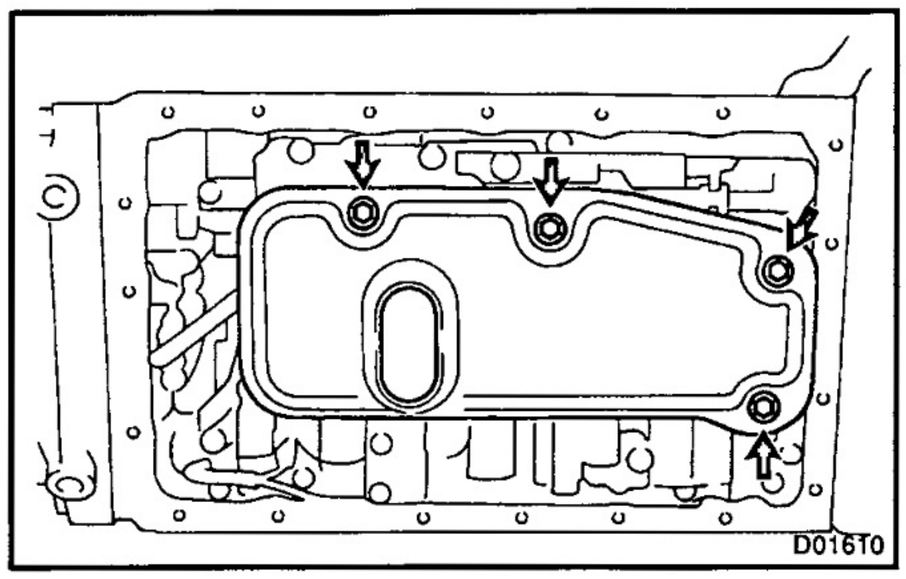

5. REMOVE OIL STRAINER

Remove the 4 bolts, and oil strainer and 3 gaskets.

NOTICE:

Be careful as same fluid will come out with the oil strainer.

6. DISCONNECT CONNECTOR FROM SOLENOID VALVE

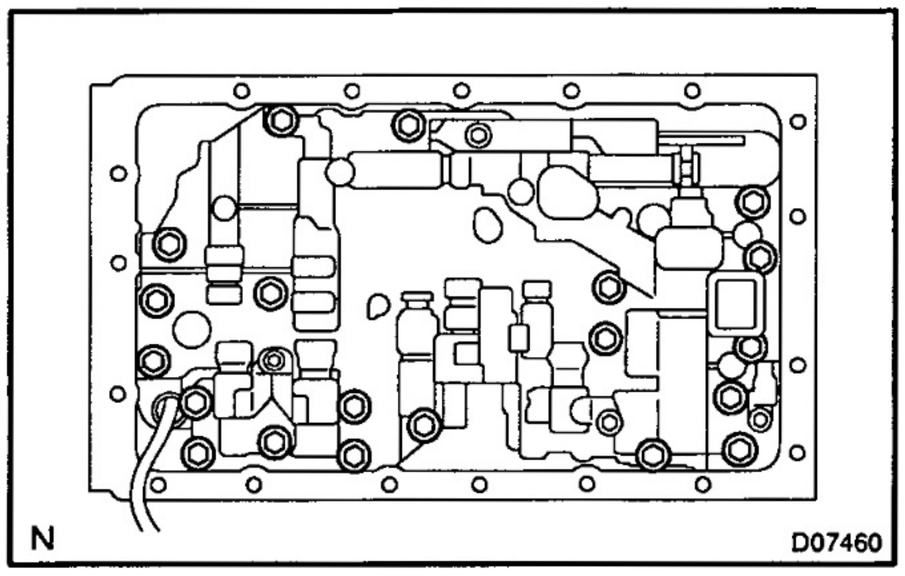

7. REMOVE VALVE BODY

Remove the 20 bolts and valve body.

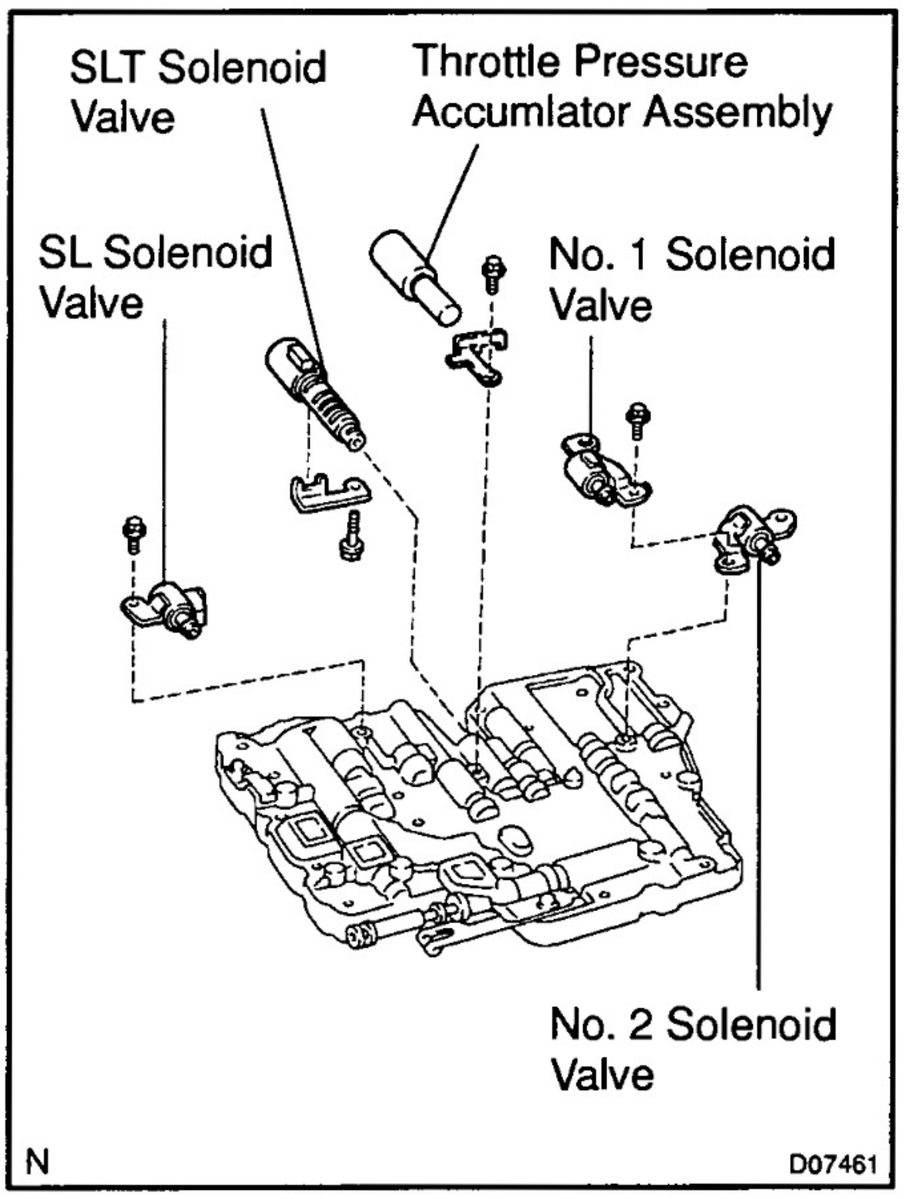

8. REMOVE SOLENOID VALVE

(a) Remove the 2 bolts and 3 solenoid valves.

(b) Turn the valve body, remove the bolt, lock plate and solenoid valve.

(c) Remove the 3 O–rings from the 3 solenoid valves.

9. REMOVE THROTTLE PRESSURE ACCUMLATOR ASSEMBLY

10. REMOVE DETENT SPRING

11. REMOVE MANUAL VALVE

12. INSTALL MANUAL VALVE

13. INSTALL DETENT SPRING

Torque: 10 N·m (100 kgf·cm, 7 ft·lbf)

14. INSTALL SOLENOID VALVE

(a) Install 3 new O–rings with the 3 solenoid valves.

(b) Install the solenoid valve, lock plate with the bolt.

Torque: 10 N·m (100 kgf·cm, 7 ft·lbf)

(c) Install the 3 solenoid valves with the 3 bolts.

Torque: 10 N·m (100 kgf·cm, 7 ft·lbf)

15. INSTALL THROTTLE PRESSURE ACCUMLATOR ASSEMBLY

Install the throttle pressure accumlator assembly, lock plate with the bolt.

Torque: 10 N·m (100 kgf·cm, 7 ft·lbf)

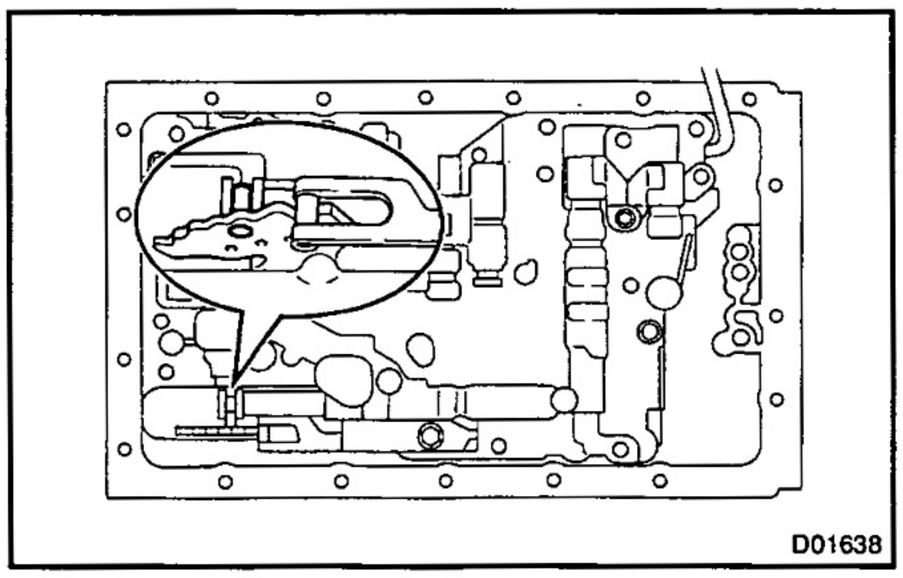

16. INSTALL VALVE BODY

HINT:

Align the groove of the manual valve with the pin of the lever.

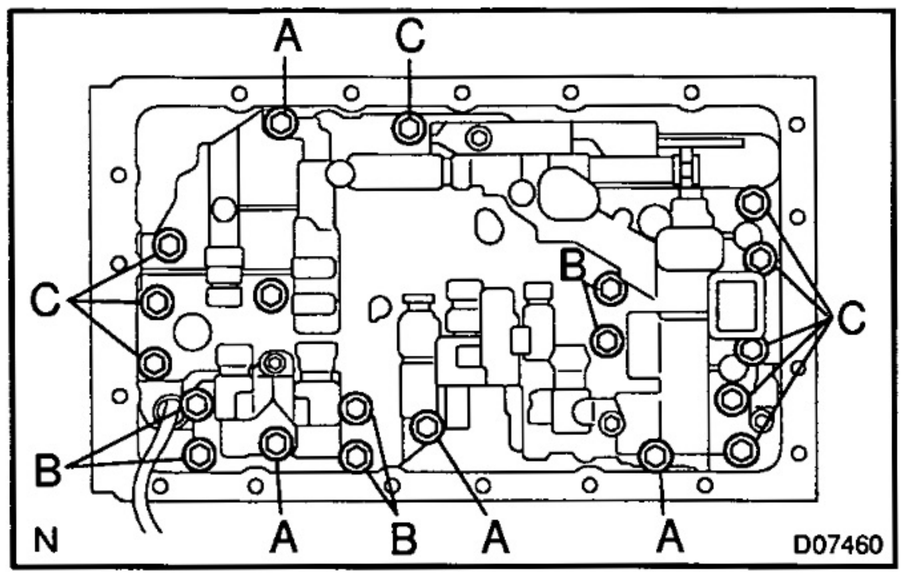

Install the 20 bolts and valve body.

Torque: 11 N·m (110 kgf·cm, 8 ft·lbf)
Bolt length:
Both A: 23 mm (0.91 in.)
Both B: 28 mm (1.10 in.)
Both C: 36 mm (1.42 in.)

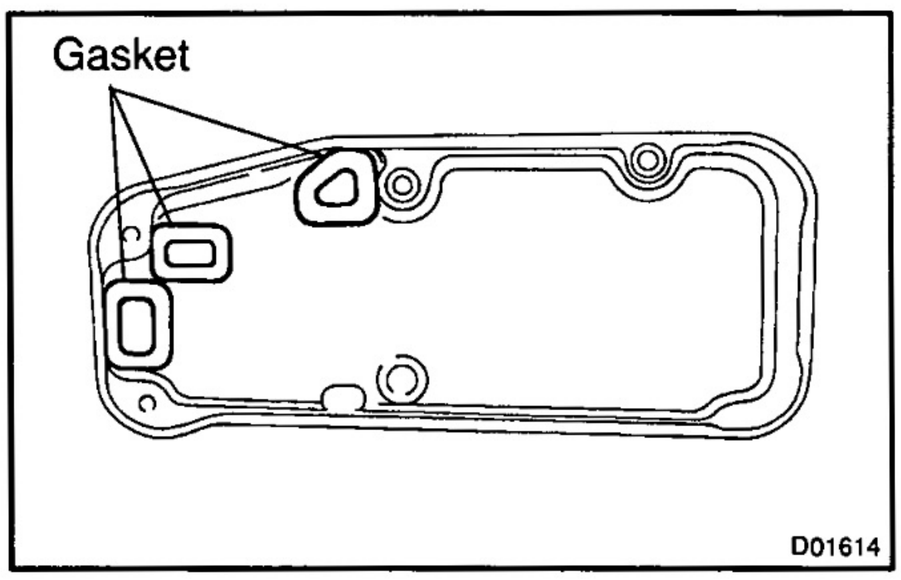

17. INSTALL OIL STRAINER

(a) Install 3 new gaskets.

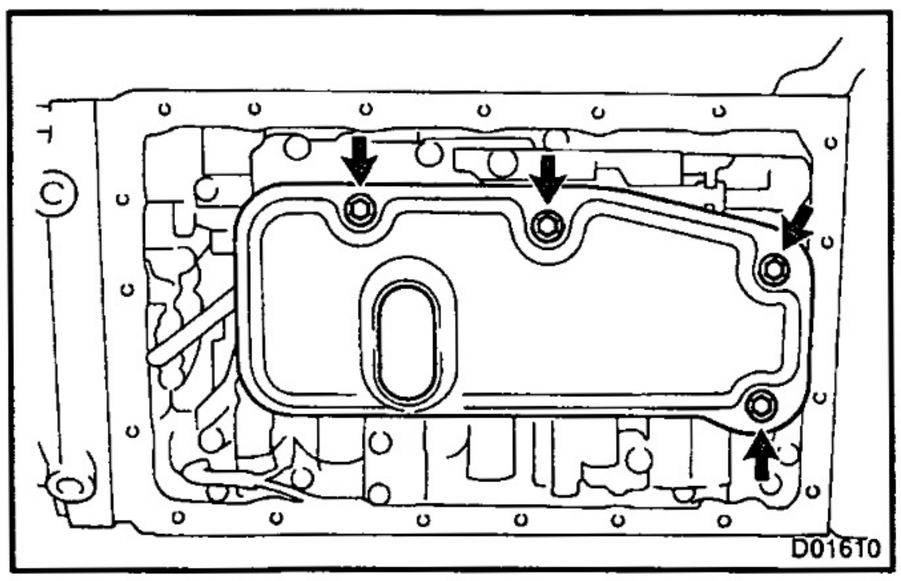

(b) Install the oil strainer with the 4 boths.
Bolt length:
Both A: 14 mm (0.55 in.)
Both B: 20 mm (0.79 in.)
Both C: 23 mm (0.91 in.)

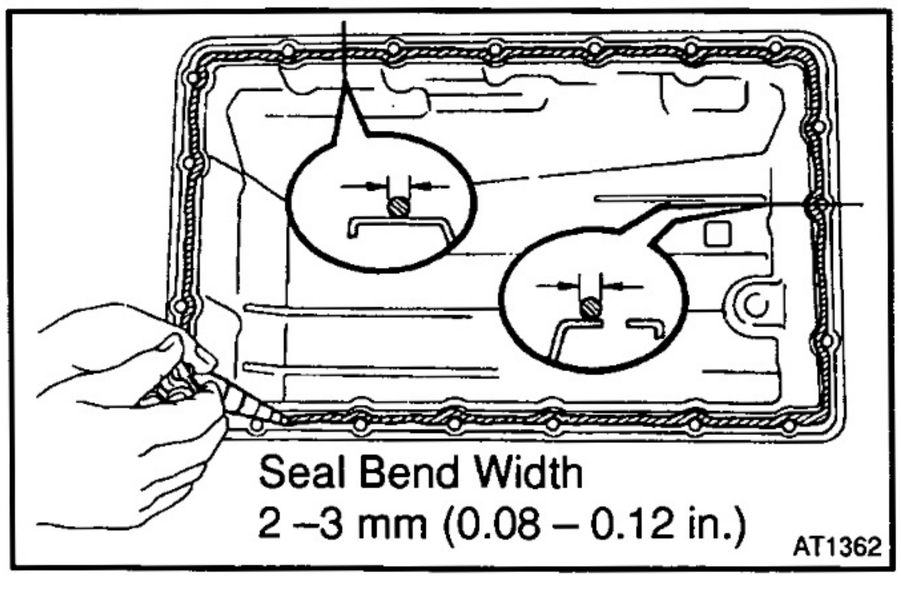

18. INSTALL OIL PAN

HINT:

Remove any packing material and be careful not to drop oil on the contacting surfaces of the transmission case and oil pan.

(a) Apply FIPG to the oil pan, as shown in the illustration.
FIPG: Part No. 08826–00090, THREE BOND 1281 or equivalent

(b) Install the 19 bolts and oil pan.
Torque: 7.4 N·m (75 kgf·cm, 65 in.·lbf)

19. FILL ATF AND CHECK ATF

(a) Install a new gasket and drain plug.
Torque: 20 N·m (205 kgf·cm, 15 ft·lbf)

(b) Fill new fluid through the filler pipe (See page DI–4).

20. INSTALL ENGINE UNDER COVER

PARKING LOCK PAWL

AT0R7-01

ON–VEHICLE REPAIR

1. **REMOVE VALVE BODY (See page AT–1)**

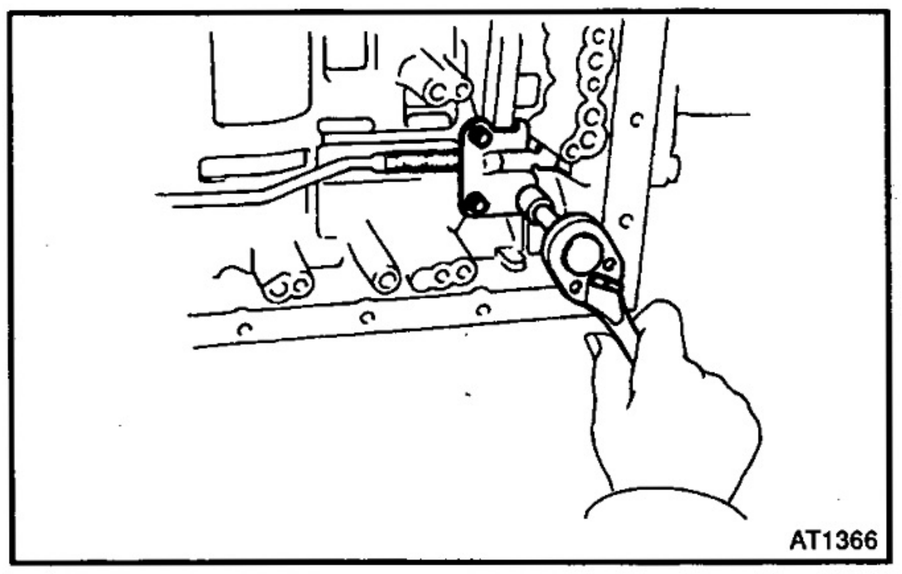

2. **REMOVE PARKING LOCK PAWL BRACKET**

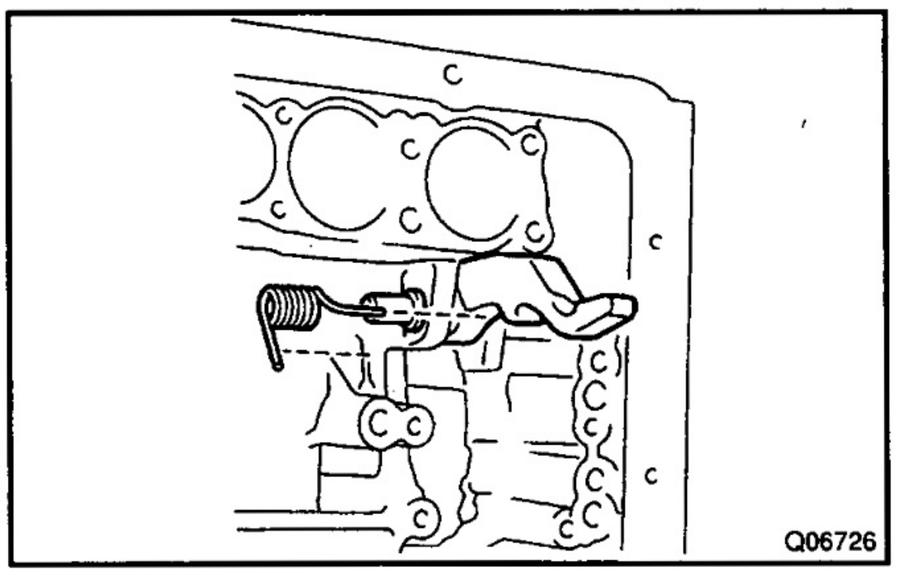

3. **REMOVE SPRING FROM PARKING LOCK PAWL SHAFT**
4. **REMOVE PARKING LOCK PAWL AND SHAFT**
5. **INSTALL PARKING LOCK PAWL AND SHAFT**
6. **INSTALL SPRING TO PARKING LOCK PAWL SHAFT**

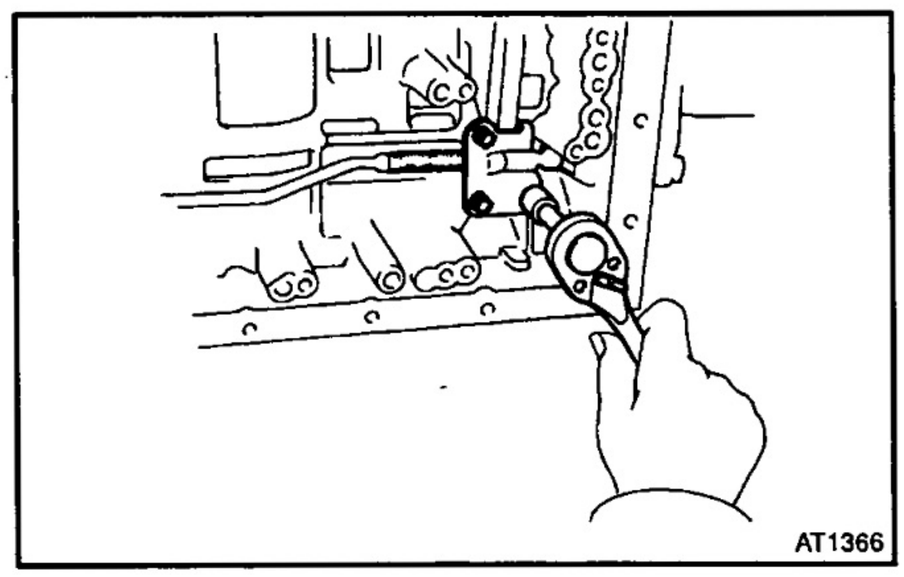

7. **INSTALL PARKING LOCK PAWL BRACKET**

HINT:

- Push the lock rod fully forward.
- Check that the parking lock pawl operates smoothly.

Torque: 7.4 N·m (75 kgf·cm, 65 in.·lbf)

8. **INSTALL VALVE BODY (See page AT–1)**

TRANSFER (VF3BM)

TRANSFER ASSEMBLY TR–1
OIL PUMP BODY TR–13
DRIVEN SPROCKET TR–17
REAR OUTPUT SHAFT TR–19
INPUT SHAFT TR–24
CENTER DIFFERENTIAL TR–26
PLANETARY GEAR TR–30
OIL SEAL TR–33
MOTOR SHIFT CONTROL SYSTEM TR–35

TRANSFER ASSEMBLY

COMPONENTS

TR09V–01

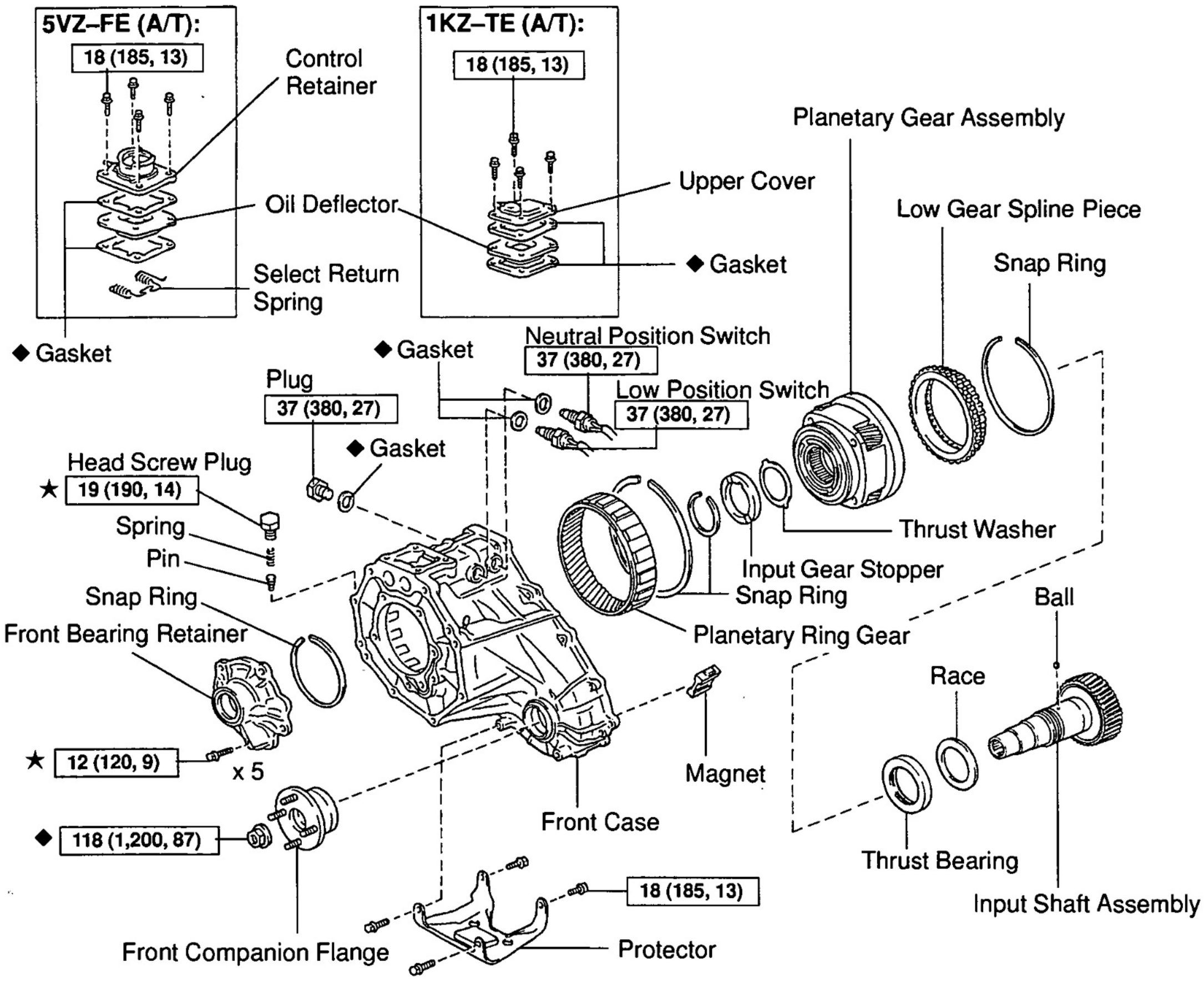

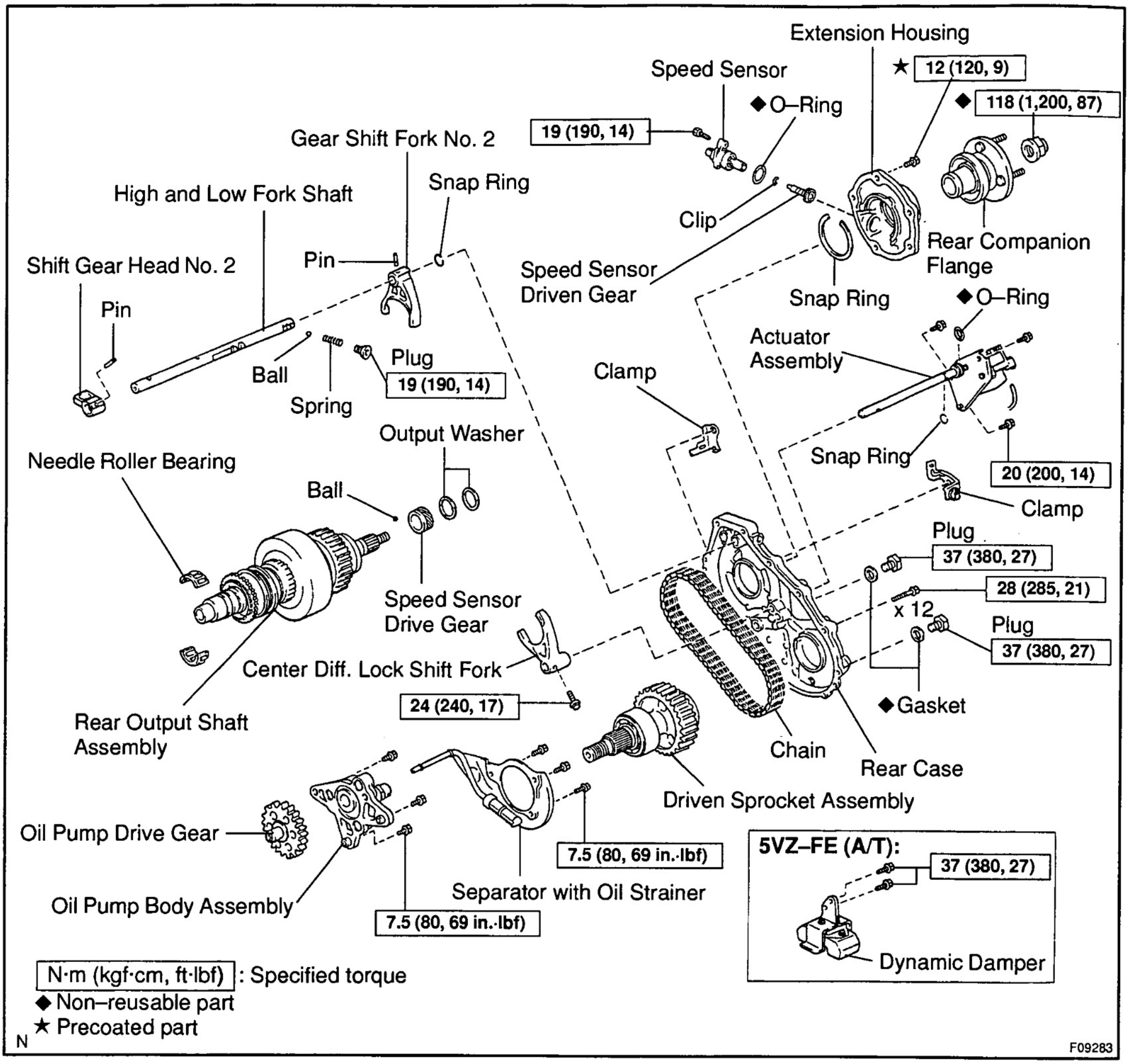
Extension Housing
Speed Sensor
★ 12 (120, 9)
◆ O–Ring
◆ 118 (1,200, 87)
19 (190, 14)
Gear Shift Fork No. 2
Snap Ring
High and Low Fork Shaft
Clip
Speed Sensor Driven Gear
Rear Companion Flange
Snap Ring
◆ O–Ring
Shift Gear Head No. 2
Pin
Pin
Ball
Spring
Plug
19 (190, 14)
Actuator Assembly
Clamp
Snap Ring
20 (200, 14)
Clamp
Output Washer
Needle Roller Bearing
Ball
Plug
37 (380, 27)
28 (285, 21)
x 12
Plug
37 (380, 27)
Speed Sensor Drive Gear
Center Diff. Lock Shift Fork
24 (240, 17)
◆ Gasket
Rear Output Shaft Assembly
Chain
Rear Case
Driven Sprocket Assembly
Oil Pump Drive Gear
7.5 (80, 69 in.·lbf)
Separator with Oil Strainer
Oil Pump Body Assembly
7.5 (80, 69 in.·lbf)
5VZ–FE (A/T):
37 (380, 27)
Dynamic Damper
N·m (kgf·cm, ft·lbf) : Specified torque
◆ Non–reusable part
★ Precoated part
N
F09283

TR09W–01

DISASSEMBLY

1. REMOVE SPEED SENSOR AND SPEED SENSOR DRIVEN GEAR

(a) Remove the bolt and speed sensor with the driven gear.
Torque: 12 N·m (120 kgf·cm, 9 ft·lbf)

(b) Remove the clip, driven gear and O–ring.

HINT:

At the time of reassembly, install a new O–ring.

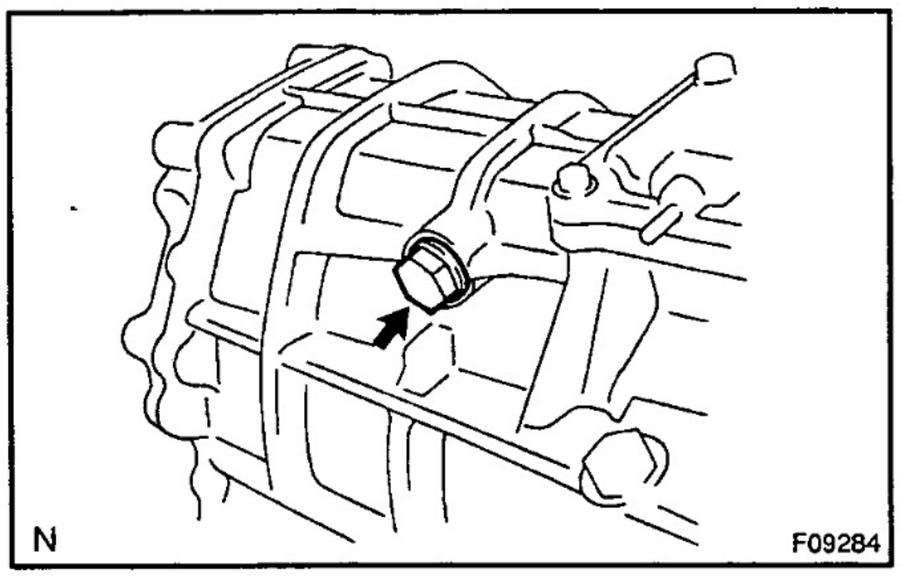

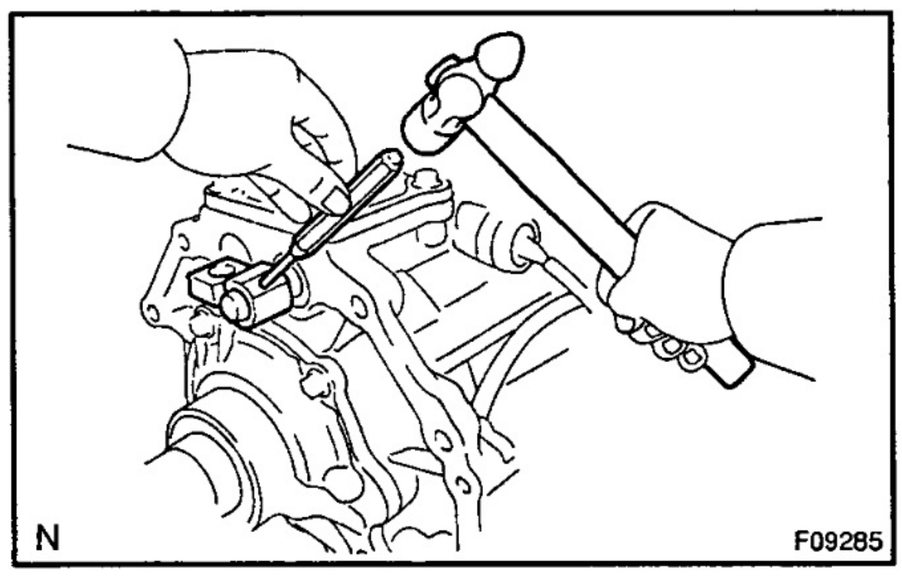

2. REMOVE PLUG FOR FRONT CASE

Remove the plug and gasket.

HINT:

At the time of reassembly, install a new gasket.
Torque: 37 N·m (380 kgf·cm, 27 ft·lbf)

3. REMOVE LOW POSITION SWITCH, NEUTRAL POSITION SWITCH AND 2 GASKETS

HINT:

At the time of reassembly, install 2 new gaskets.
Torque: 37 N·m (380 kgf·cm, 27 ft·lbf)

4. REMOVE SHIFT GEAR HEAD NO. 2

(a) Using a pin punch and hammer, drive out the slotted spring pin.

(b) Remove the shift gear head No. 2.

5. 5VZ–FE (A/T):
REMOVE DYNAMIC DAMPER

Remove the 2 bolts and dynamic damper from the transfer.
Torque: 38 N·m (380 kgf·cm, 28 ft·lbf)

6. REMOVE PROTECTOR

Remove the 4 bolts and protector.
Torque: 18 N·m (180 kgf·cm, 13 ft·lbf)

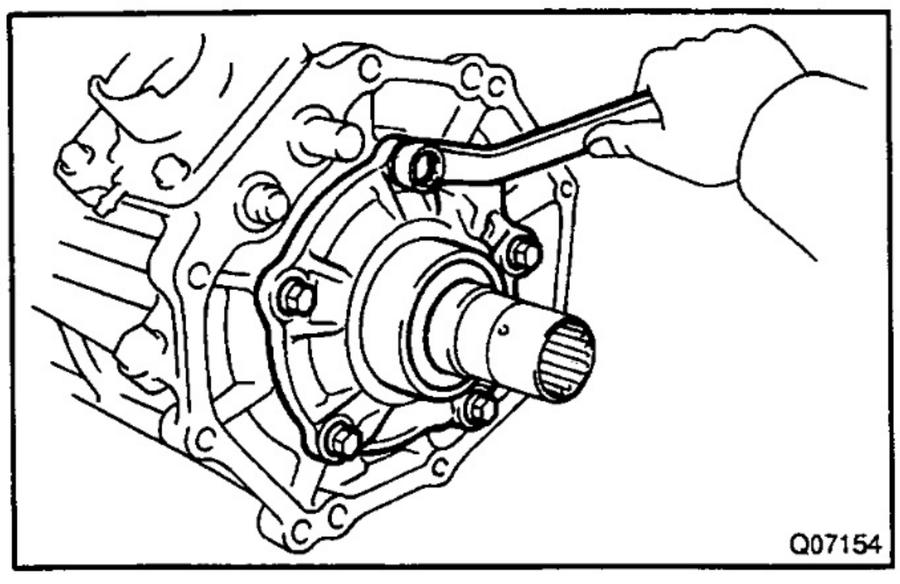

7. REMOVE FRONT BEARING RETAINER

(a) Remove the 5 bolts.

HINT:

At the time of reassembly, apply liquid sealer to the bolt threads.
Sealant: Part No. 08833–00080, THREE BOND 1344, LOCTITE 242 or equivalent
Torque: 12 N·m (120 kgf·cm, 9 ft·lbf)

(b) Using a plastic hammer, tap the front bearing retainer and remove it.

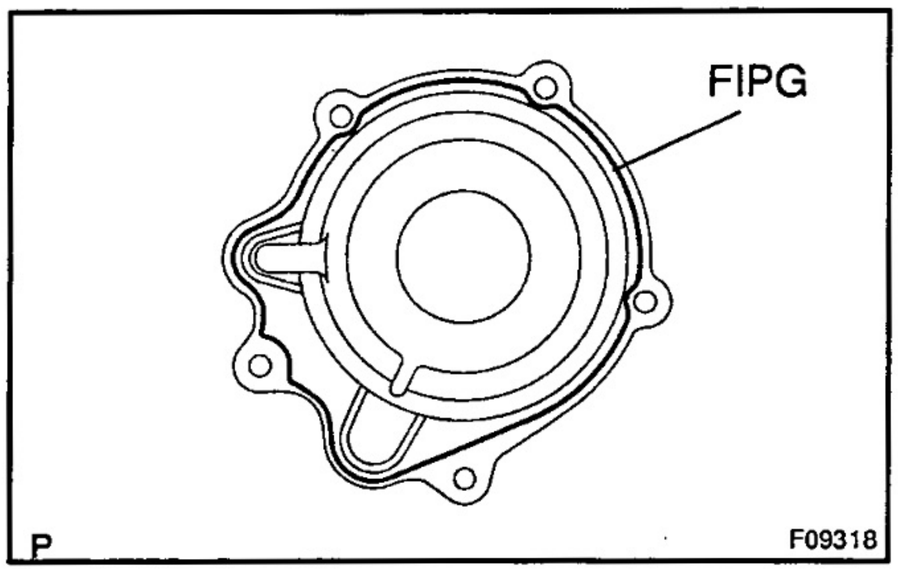

HINT:
At the time of reassembly, apply FIPG to the front bearing retainer.

FIPG: Part No. 08826–00090, THREE BOND 1281 or equivalent

8. 1KZ–TE (A/T):
REMOVE UPPER COVER AND OIL DEFLECTOR

Remove the 4 bolts, upper cover, 2 gaskets and oil deflector.

HINT:
At the time of reassembly, install 2 new gaskets and oil deflector.

Torque: 18 N·m (185 kgf·cm, 13 ft·lbf)

9. 5VZ–FE (A/T):
REMOVE CONTROL RETAINER AND OIL DEFLECTOR

(a) Remove the 4 bolts, control retainer, 2 gaskets and oil deflector.

HINT:
At the time of reassembly, install 2 new gaskets and control retainer.

Torque: 18 N·m (185 kgf·cm, 13 ft·lbf)

(b) Remove the select return spring from the control retainer.

10. REMOVE FRONT COMPANION FLANGE

(a) Using a chisel and hammer, loosen the staked part of the nut.

HINT:
At the time of reassembly, stake a new lock nut.

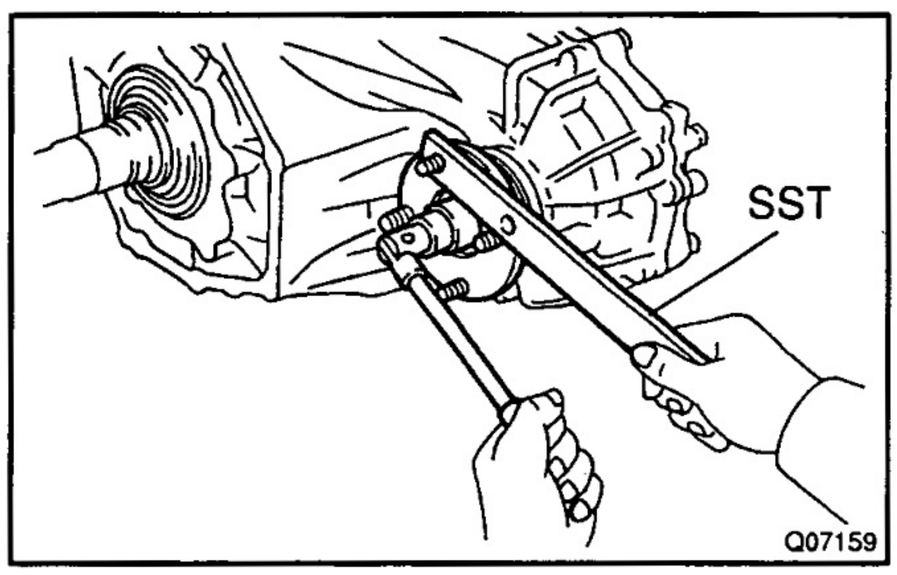

(b) Using SST to hold the flange, remove the companion flange lock nut.
SST 09330–00021
Torque: 118 N·m (1,200 kgf·cm, 87 ft·lbf)

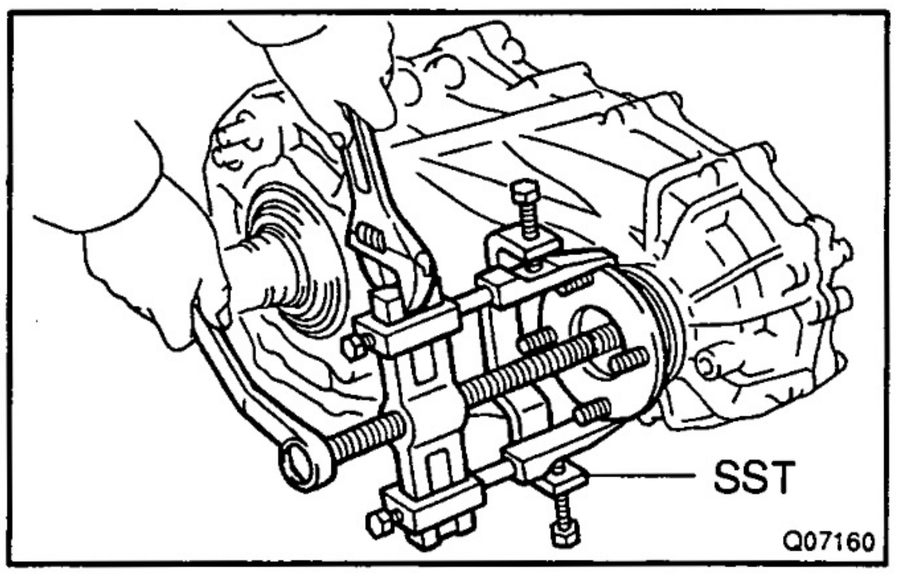

(c) Using SST, remove the companion flange.
SST 09950–40011 (09951–04020, 09952–04010, 09953–04030, 09954–04010, 09955–04011, 09958–04011)

11. REMOVE REAR COMPANION FLANGE

Remove the rear companion flange in the same way as the front companion flange.

12. REMOVE EXTENSION HOUSING

(a) Remove the 5 bolts.

HINT:

At the time of reassembly, apply liquid sealer to the bolt threads.

Sealant: Part No. 08833–00080, THREE BOND 1344, LOCTITE 242 or equivalent

Torque: 12 N·m (120 kgf·cm, 9 ft·lbf)

(b) Using a plastic hammer, tap the extension housing and remove it.

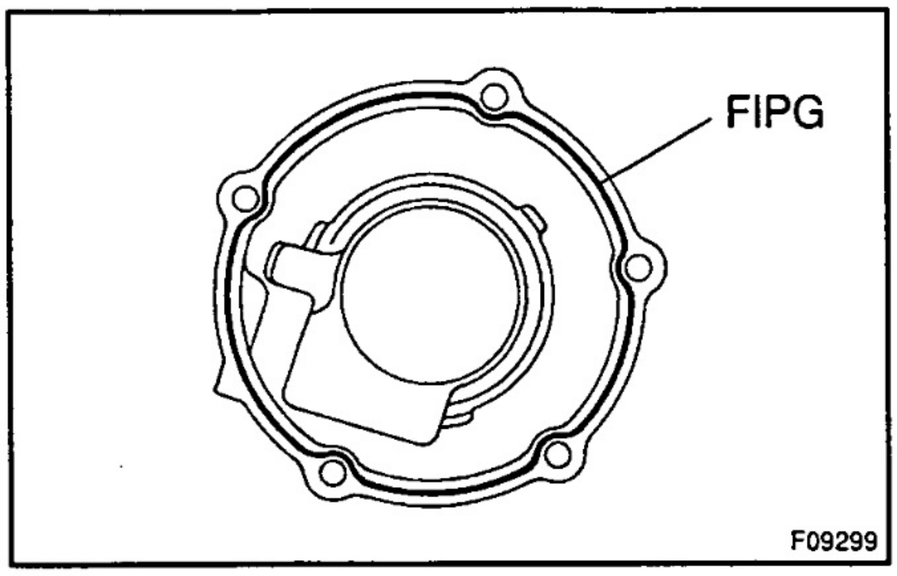

HINT:

At the time of reassembly, apply FIPG to the extension housing.

FIPG: Part No. 08826–00090, THREE BOND 1281 or equivalent

13. REMOVE SPEED SENSOR DRIVE GEAR

(a) Remove the 2 output washers and speed sensor drive gear.

(b) Using a magnetic finger, remove the ball from the rear output shaft.

14. SEPARATE FRONT CASE FROM REAR CASE

(a) Remove the 12 bolts.

Torque: 28 N·m (285 kgf·cm, 21 ft·lbf)

(b) Using a screwdriver, separate the front case from rear case.

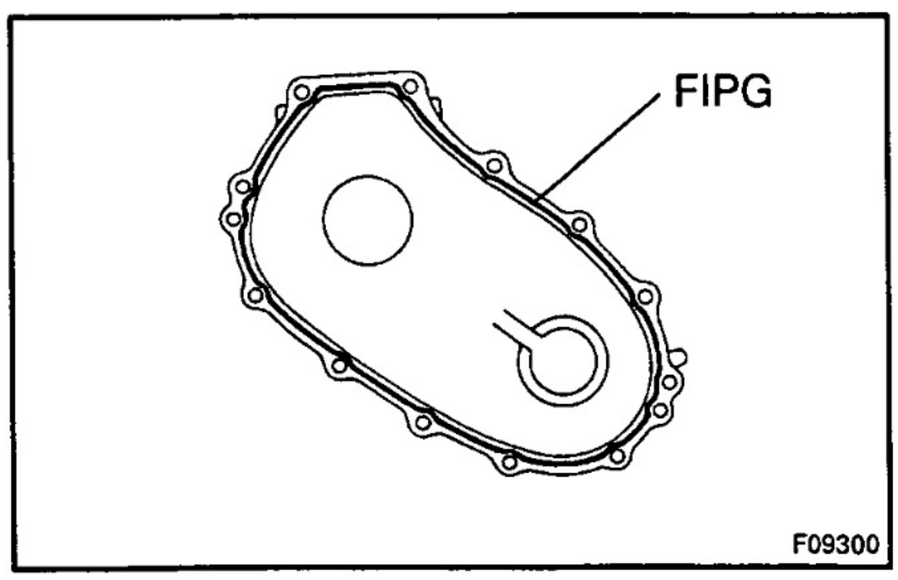

HINT:

At the time of reassembly, apply FIPG to the rear case.

FIPG: Part No. 08826–00090, THREE BOND 1281 or equivalent

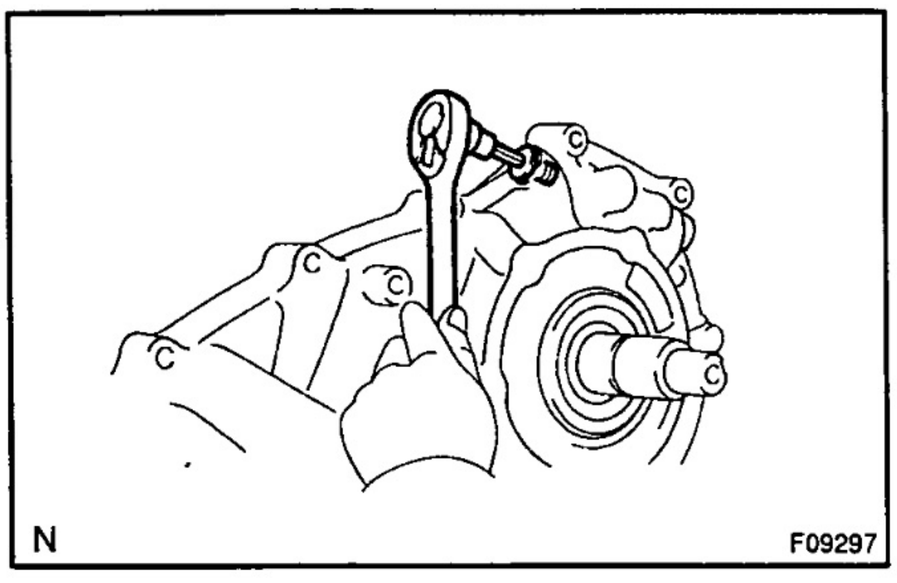

15. REMOVE STRAIGHT SCREW PLUG, SPRING AND LOCKING BALL

(a) Using a hexagon wrench, remove the screw plug.

Torque: 19 N·m (190 kgf·cm, 14 ft·lbf)

HINT:

At the time of reassembly, apply liquid sealer to the plug thread.

Sealant: Part No. 08833–00080, THREE BOND 1344, LOCTITE 242 or equivalent

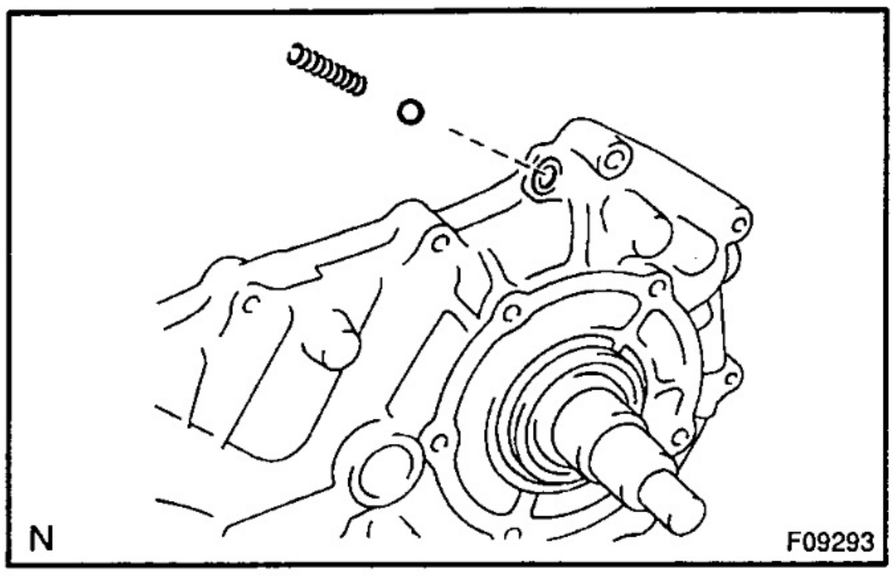

(b) Using a magnetic finger, remove the spring and ball.

16. REMOVE HIGH AND LOW FORK SHAFT AND SHIFT FORK

(a) Using 2 screwdrivers and a hammer, remove the snap ring.

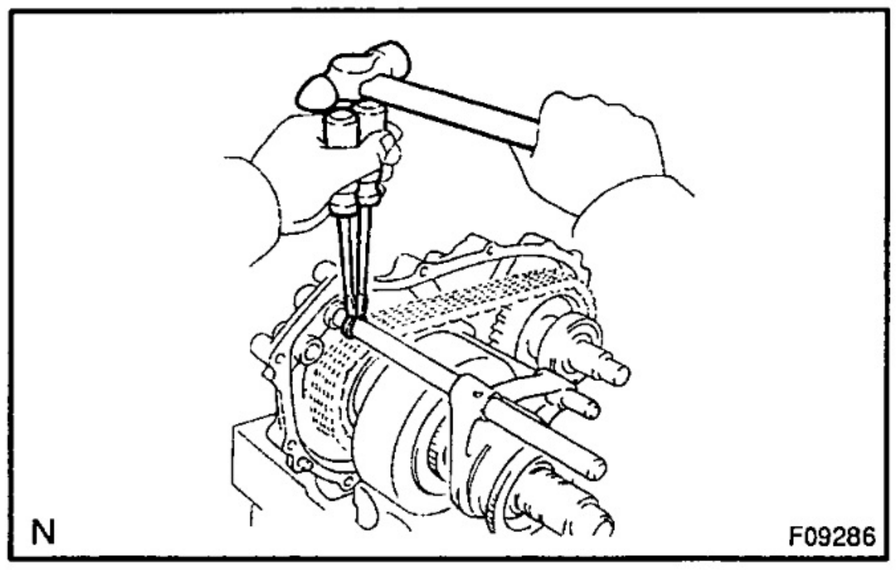

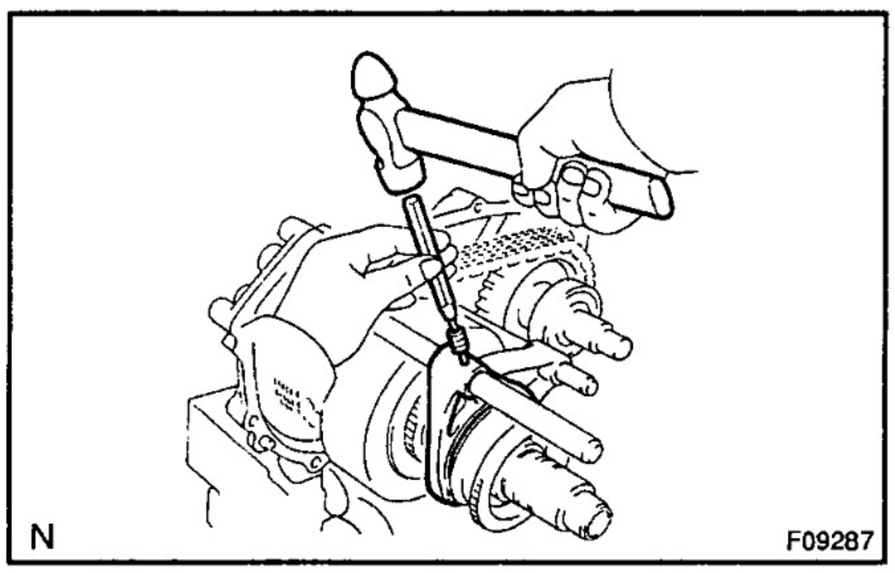

(b) Using a pin punch and hammer, drive out the slotted spring pin.

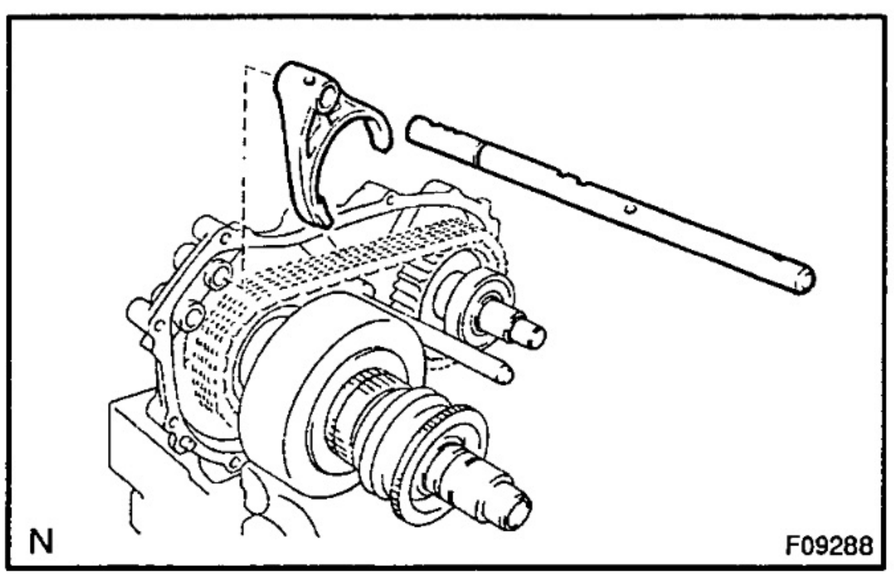

(c) Remove the high and low fork shaft and shift fork.

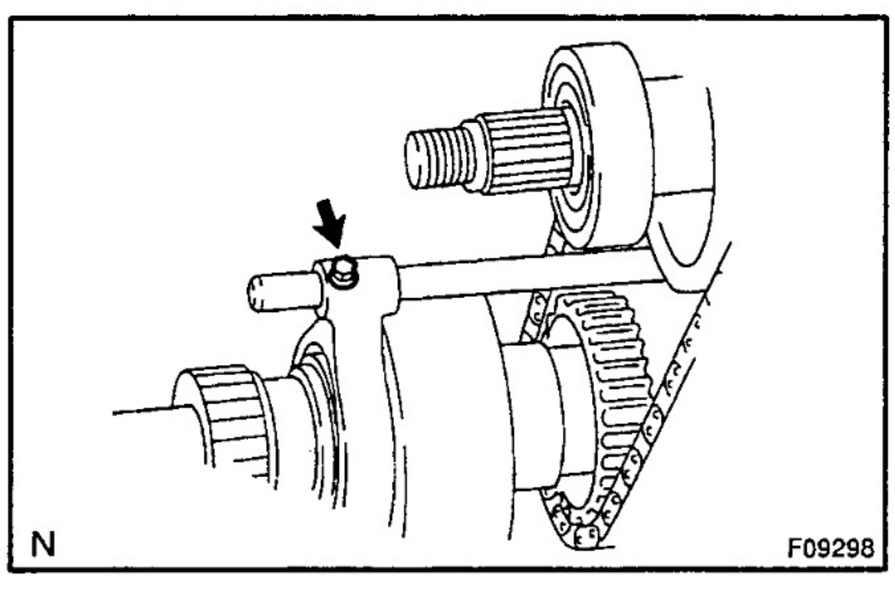

(d) Remove the center diff. lock fork set bolt.
Torque: 24 N·m (240 kgf·cm, 17 ft·lbf)

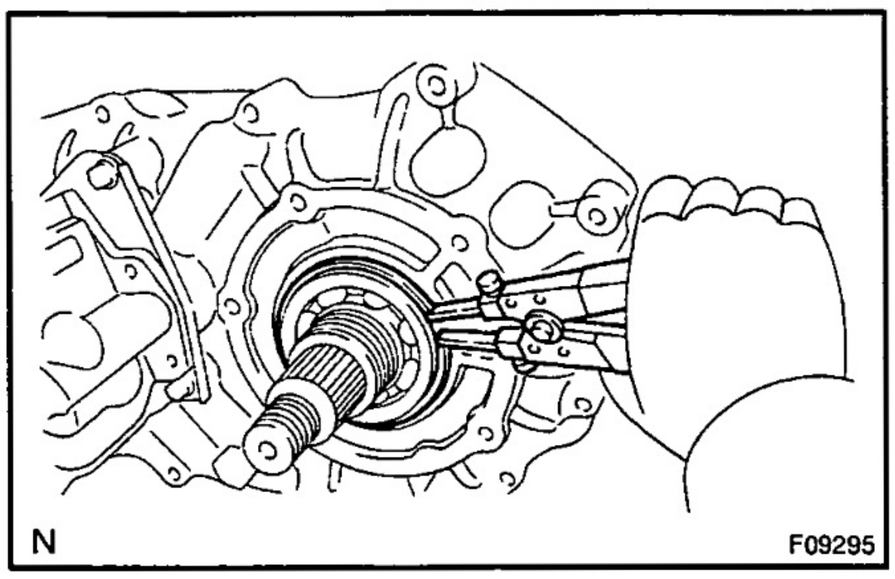

17. REMOVE REAR OUTPUT SHAFT, DRIVEN SPROCKET AND CHAIN

(a) Using a snap ring expander, remove the snap ring.

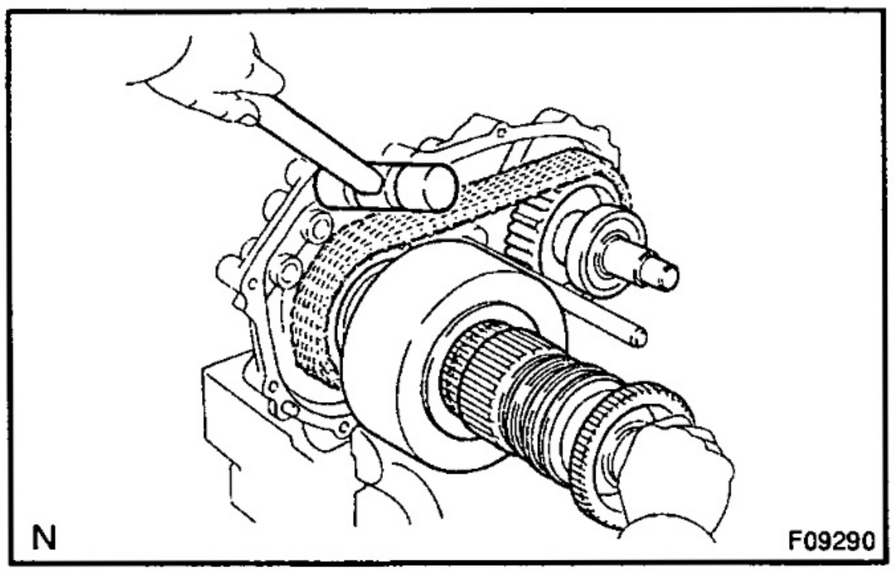

(b) Remove the rear output shaft, driven sprocket, chain and diff. lock shift fork.

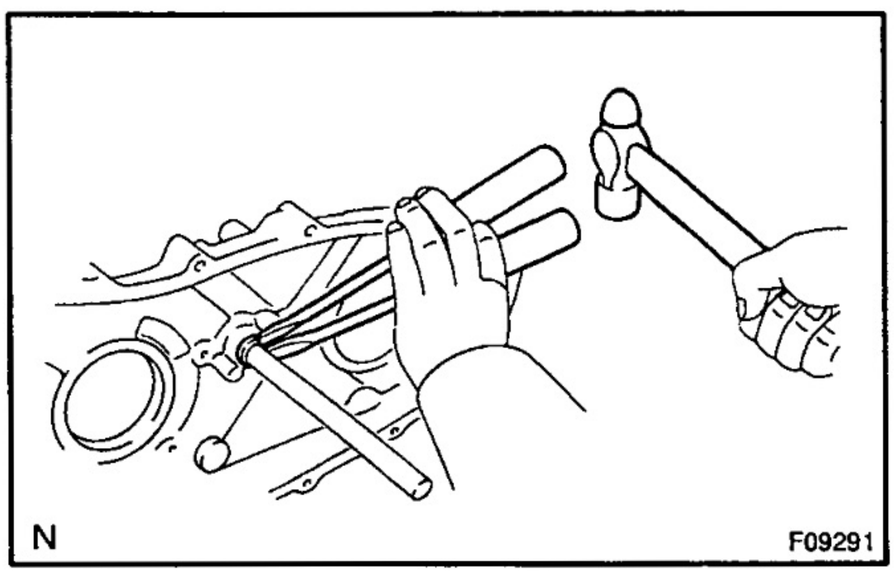

18. REMOVE ACTUATOR ASSEMBLY

(a) Using 2 screwdrivers and a hammer, remove the snap ring.

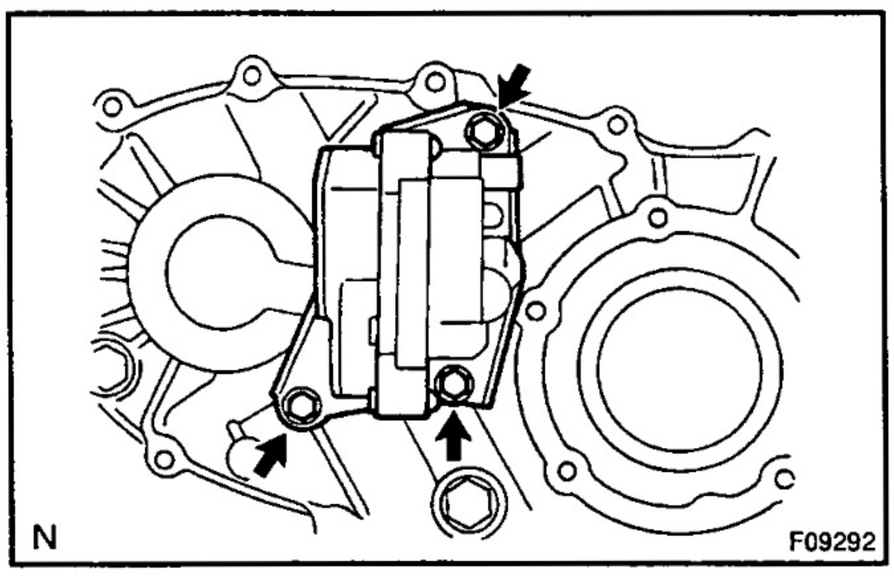

(b) Remove the 3 bolts and actuator assembly.
Torque: 20 N·m (200 kgf·cm, 14 ft·lbf)

(c) Remove the O–ring from the actuator assembly.

HINT:

At the time of reassembly, install a new O–ring.

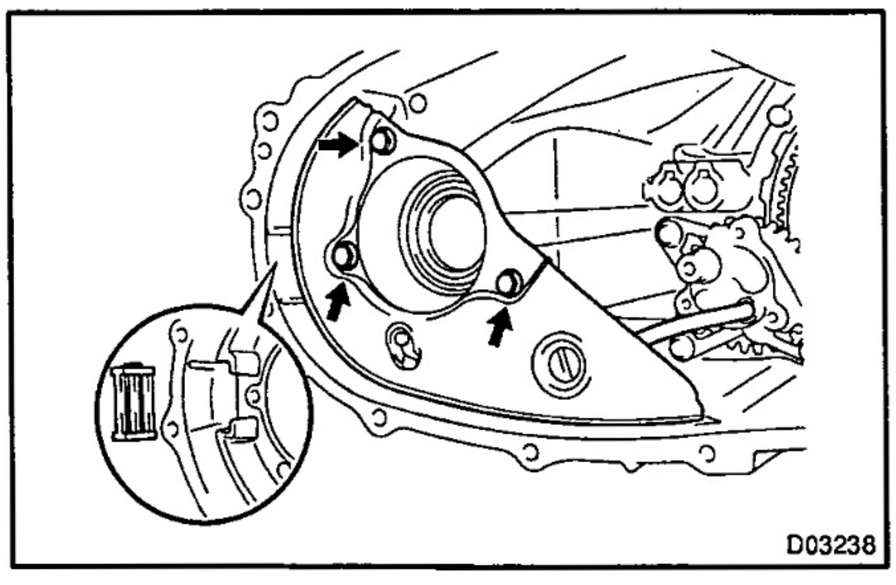

19. REMOVE SEPARATOR WITH OIL STRAINER AND MAGNET

Remove the 3 bolts, separator with the oil strainer and magnet.
Torque: 7.5 N·m (80 kgf·cm, 69 in.·lbf)

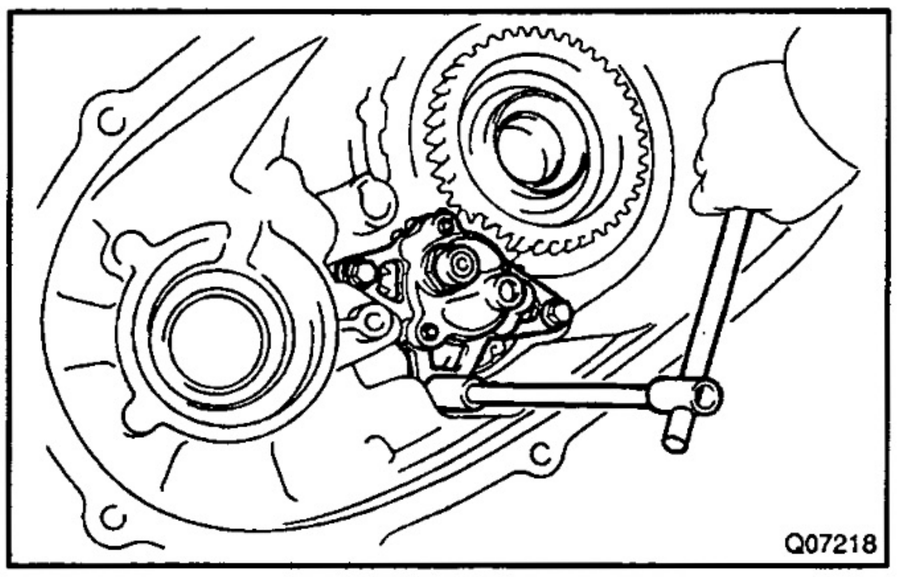

20. REMOVE OIL PUMP BODY ASSEMBLY

Remove the 3 bolts and oil pump body assembly.

Torque: 7.5 N·m (80 kgf·cm, 69 in.·lbf)

21. REMOVE OIL PUMP DRIVE GEAR

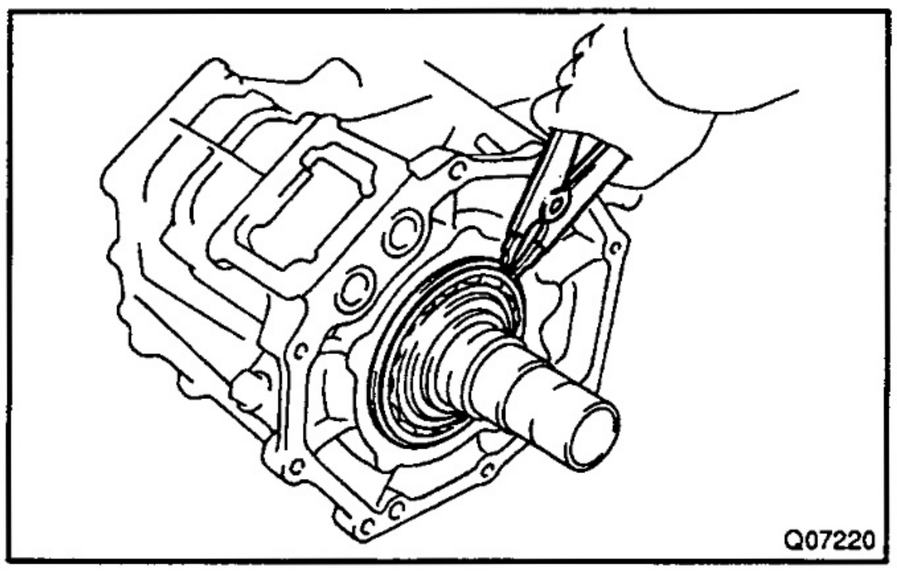

22. REMOVE PLANETARY GEAR ASSEMBLY WITH INPUT SHAFT ASSEMBLY

(a) Using a snap ring expander, remove the snap ring.

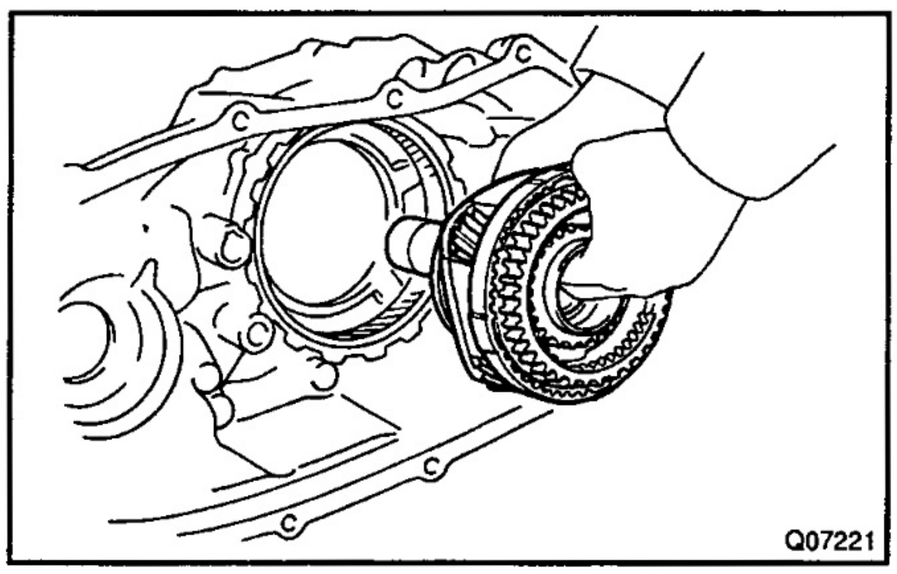

(b) Pull out the planetary gear assembly with the input shaft assembly.

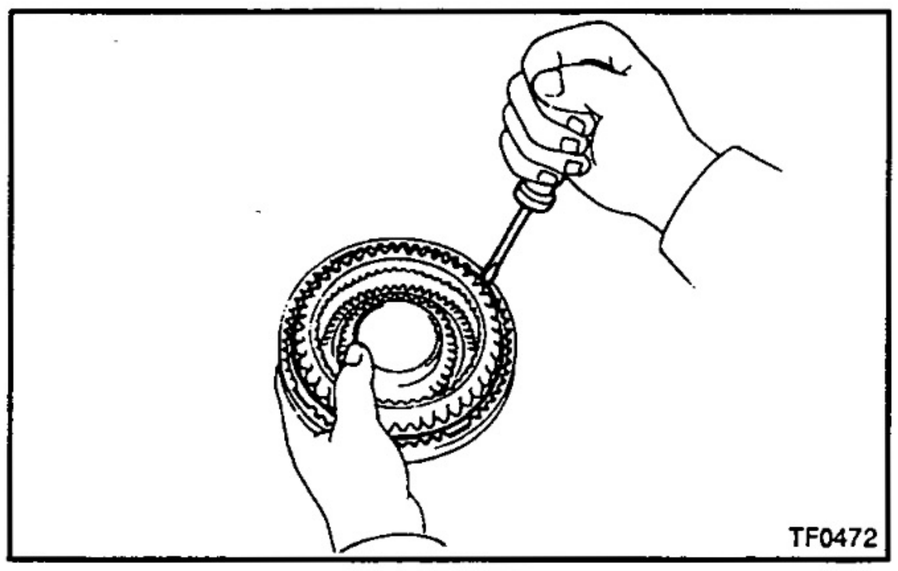

23. REMOVE LOW GEAR SPLINE PIECE

(a) Using a screwdriver, remove the snap ring.

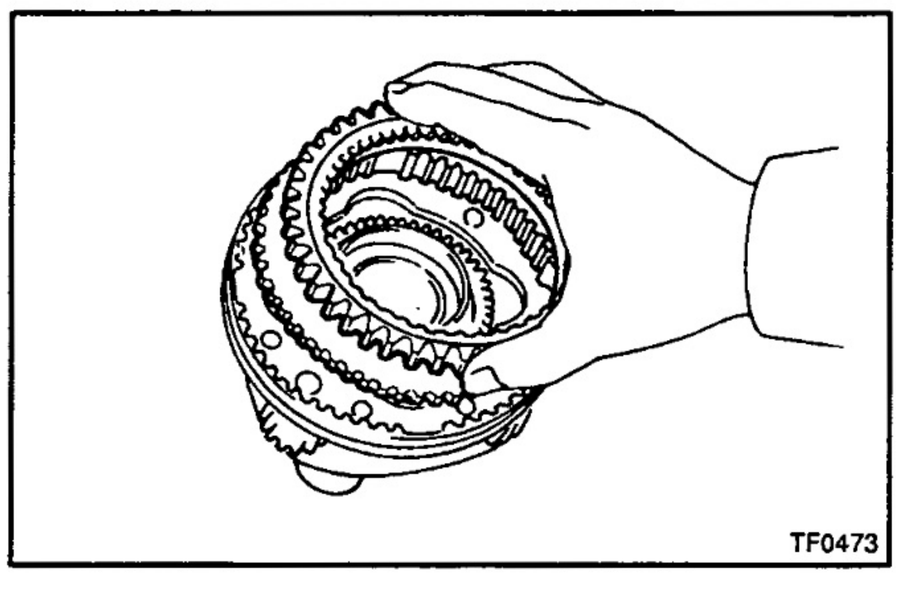

(b) Remove the low gear spline piece.

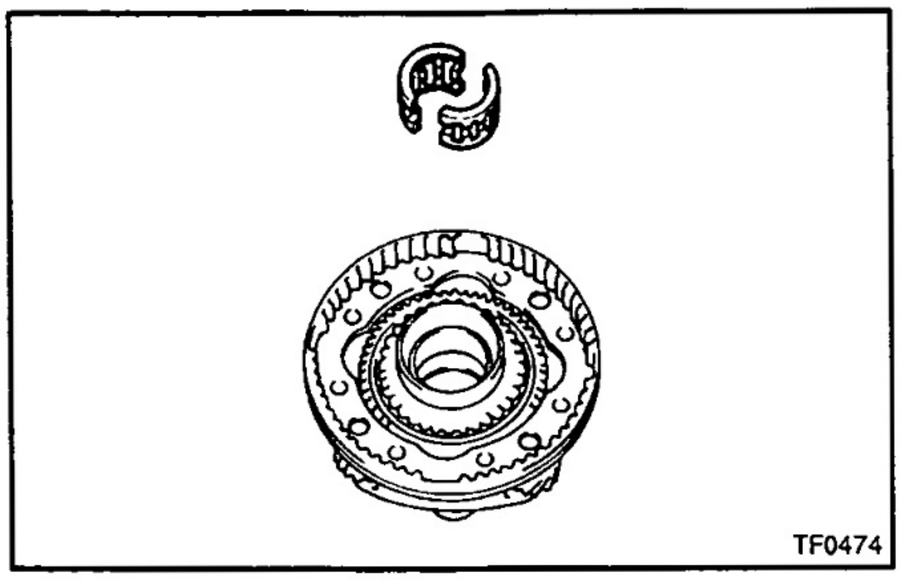
TF0474

24. REMOVE NEEDLE ROLLER BEARING FROM INPUT SHAFT ASSEMBLY

HINT:
At the time of reassembly, apply gear oil to the needle roller bearing.

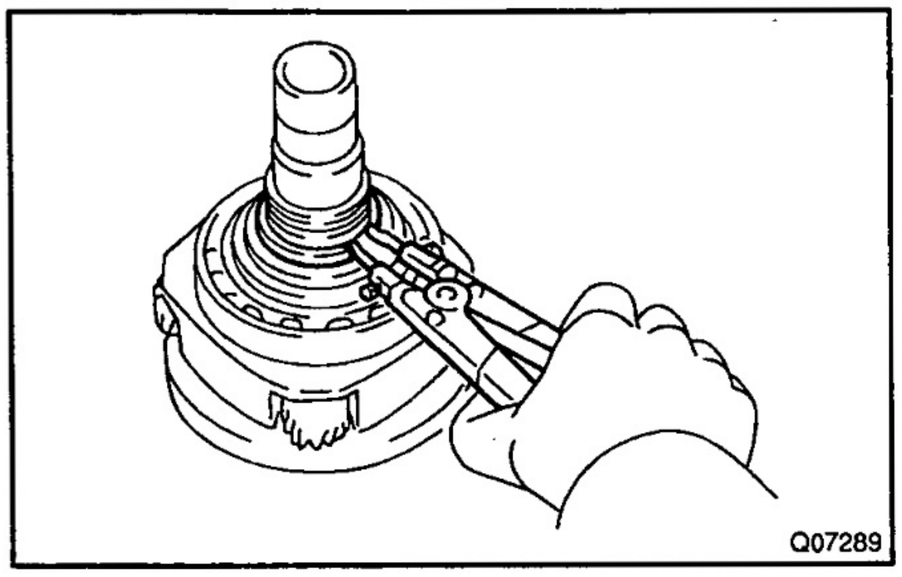
Q07289

25. REMOVE INPUT GEAR STOPPER AND THRUST WASHER

(a) Using a snap ring expander, remove the snap ring.

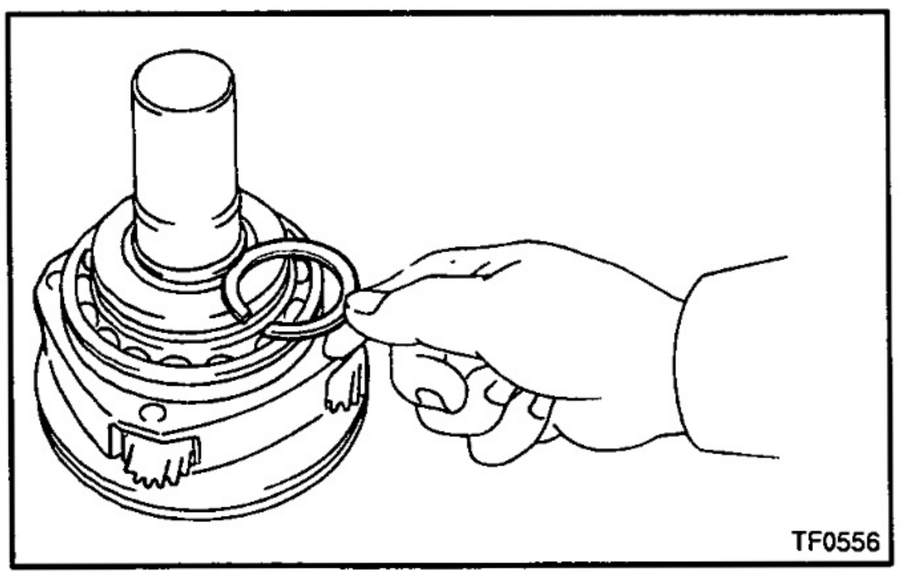
TF0556

HINT:
At the time of reassembly, select a snap ring that allows 0.05 – 0.15 mm (0.0020 – 0.0059 in.) axial play.

Mark	Thickness mm (in.)
A	2.10 – 2.15 (0.0827 – 0.0846)
B	2.15 – 2.20 (0.0846 – 0.0866)
C	2.20 – 2.25 (0.0866 – 0.0886)
D	2.25 – 2.30 (0.0886 – 0.0906)
E	2.30 – 2.35 (0.0906 – 0.0925)
F	2.35 – 2.40 (0.0925 – 0.0945)
G	2.40 – 2.45 (0.0945 – 0.0965)
H	2.45 – 2.50 (0.0965 – 0.0984)
J	2.50 – 2.55 (0.0984 – 0.1004)
K	2.55 – 2.60 (0.1004 – 0.1024)
L	2.60 – 2.65 (0.1024 – 0.1043)
M	2.65 – 2.70 (0.1043 – 0.1063)
N	2.70 – 2.75 (0.1063 – 0.1083)
P	2.75 – 2.80 (0.1083 – 0.1102)
Q	2.80 – 2.85 (0.1102 – 0.1122)
R	2.85 – 2.90 (0.1122 – 0.1142)
S	2.90 – 2.95 (0.1142 – 0.1161)
T	2.95 – 3.00 (0.1161 – 0.1181)
U	3.00 – 3.05 (0.1181 – 0.1201)

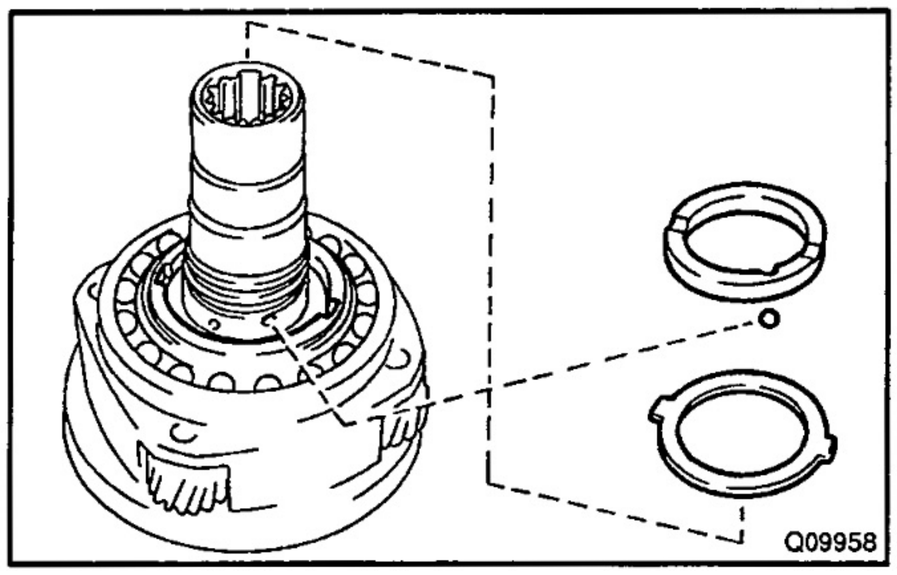

(b) Remove the input gear stopper, thrust washer and ball.
HINT:
At the time of reassembly, apply gear oil to the input gear stopper and thrust washer.

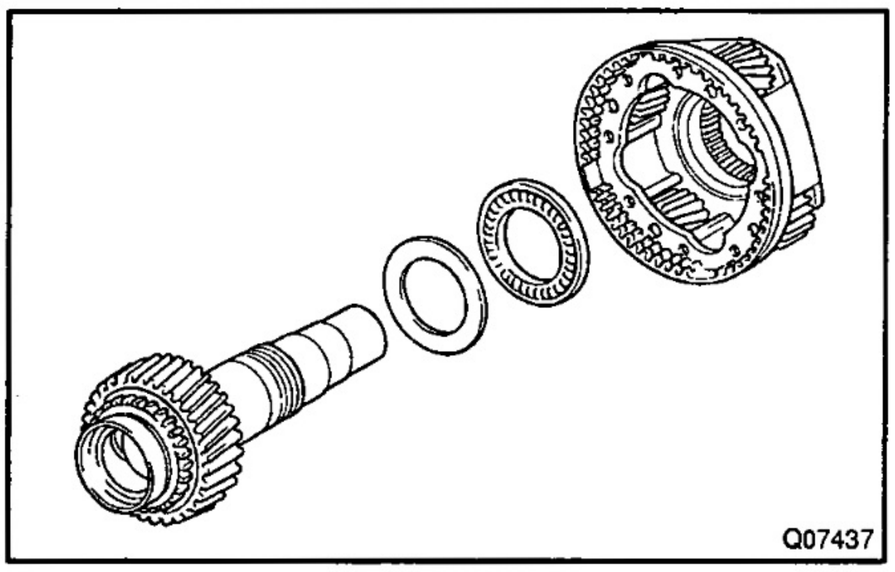

26. REMOVE INPUT SHAFT ASSEMBLY, THRUST BEARING AND RACE

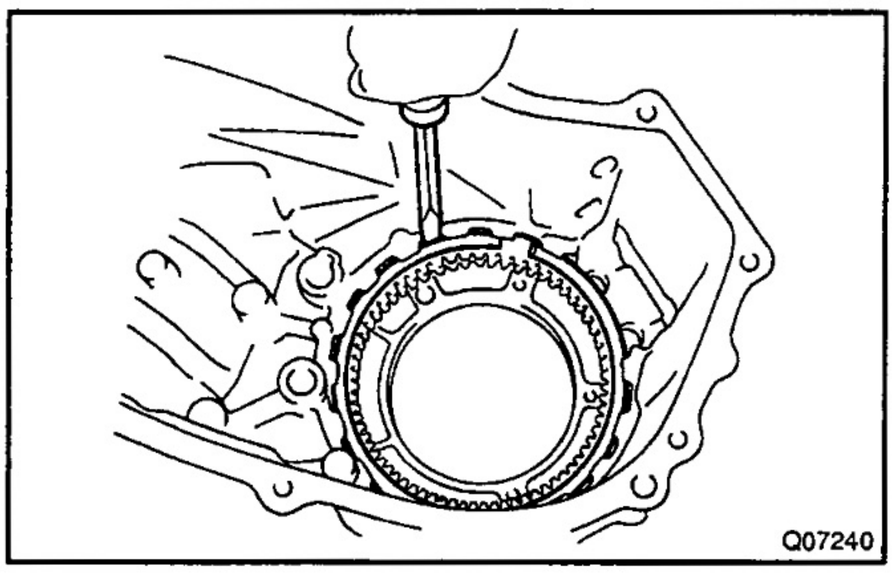

27. REMOVE PLANETARY RING GEAR

(a) Using a screwdriver, remove the snap ring.

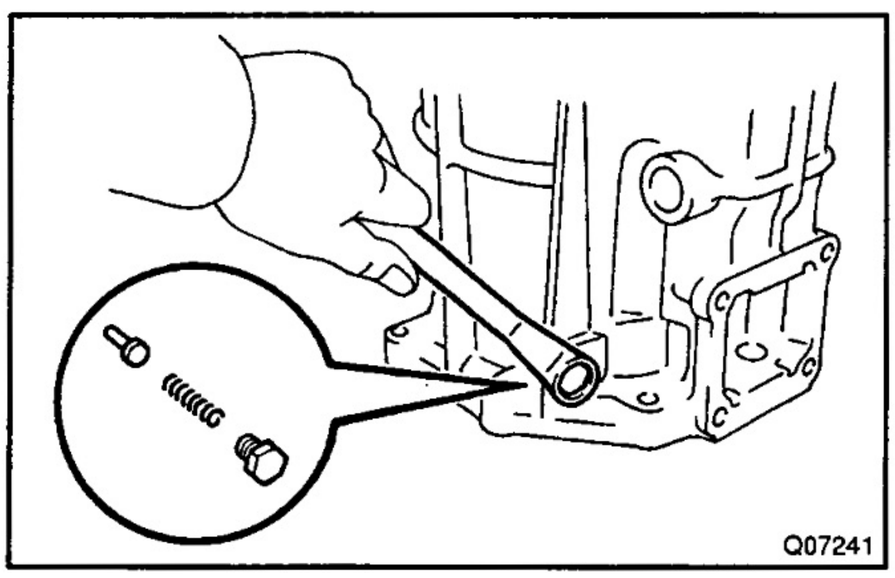

(b) Remove the head screw plug, spring and pin.
Torque: 19 N·m (190 kgf·cm, 14 ft·lbf)
HINT:
At the time of reassembly, apply liquid sealer to the plug thread.
Sealant: Part No. 08833–00080, THREE BOND 1344, LOCTITE 242 or equivalent

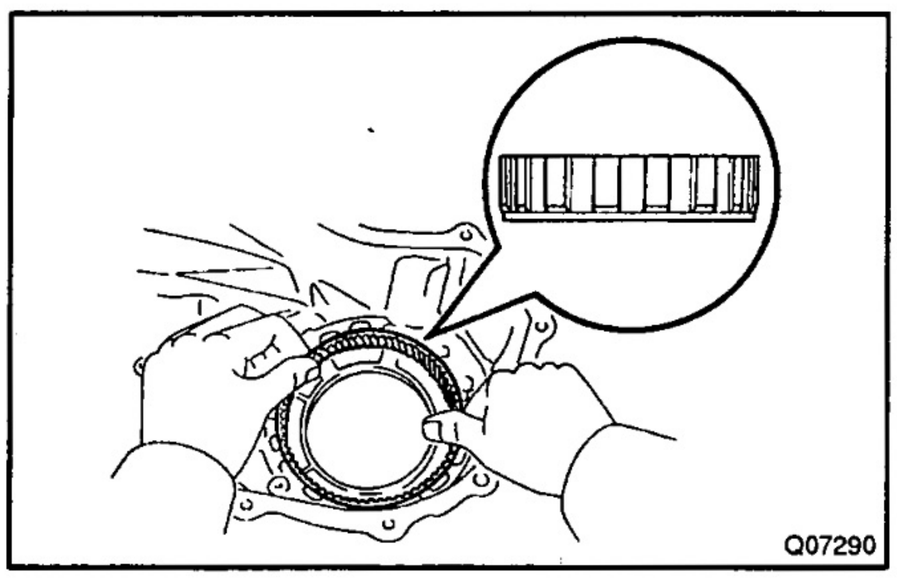

(c) Remove the planetary ring gear.
HINT:
At the time of reassembly, make sure to install the ring gear in the correct direction.

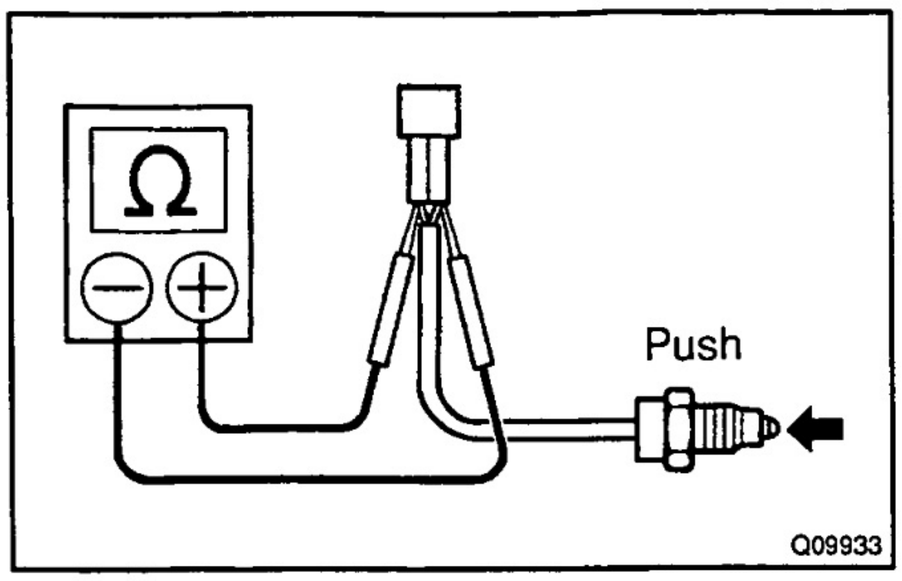

28. INSPECT NEUTRAL POSITION SWITCH AND LOW POSITION SWITCH

Check that continuity exists between terminals as shown.

Switch Position	Specified Condition
Push	Continuity
Free	No continuity

If operation is not as specified, replace the switch.

TR09X–01

REASSEMBLY

Reassembly is in the reverse order of disassembly (See page TR–3).

HINT:

Coat all of the sliding and rotating surfaces with gear oil before assembly.

OIL PUMP BODY

COMPONENTS

TR09Y–01

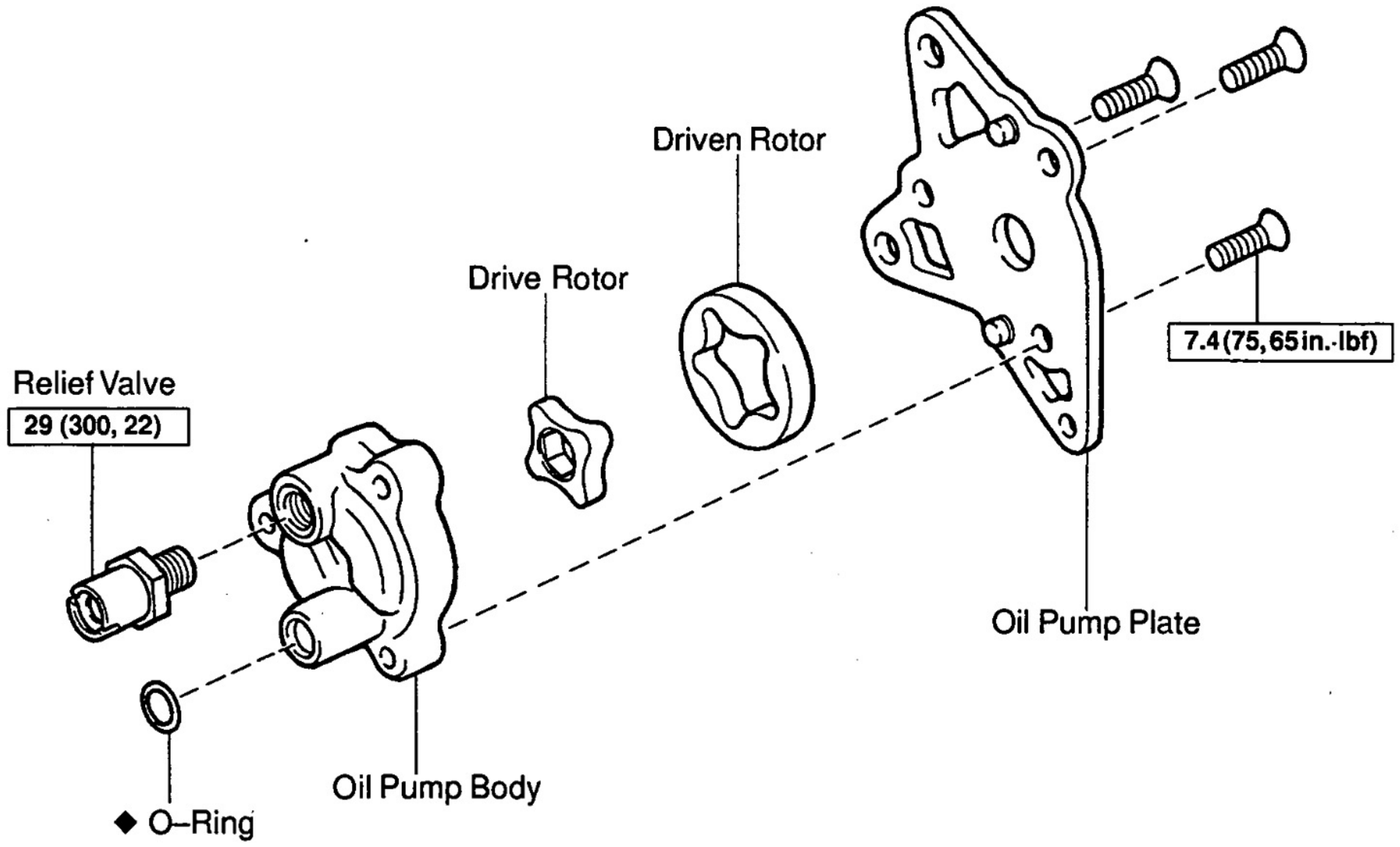

N·m (kgf·cm, ft·lbf) : Specified torque

◆ Non–reusable part

Q07245

TR09Z–01

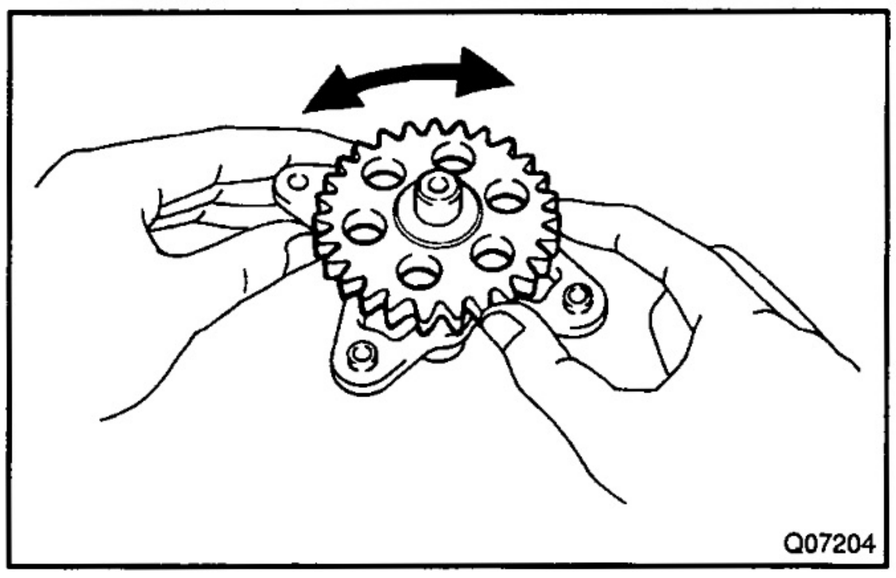

DISASSEMBLY

1. CHECK OIL PUMP OPERATION

Install the oil pump drive gear to the drive rotor and check that the drive rotor turns smoothly.

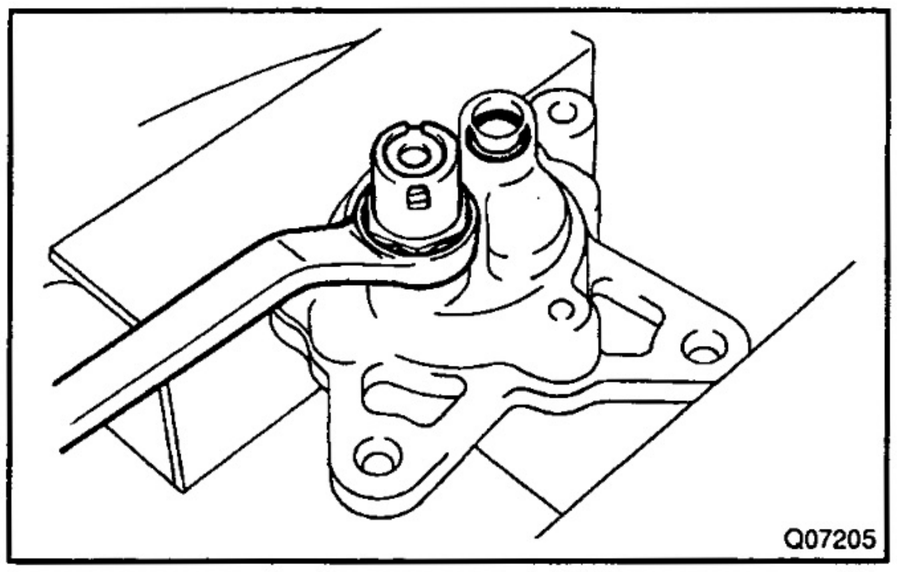

2. REMOVE O–RING AND RELIEF VALVE

(a) Mount the oil pump plate in a vise.

(b) Remove the relief valve and O–ring from the oil pump body.

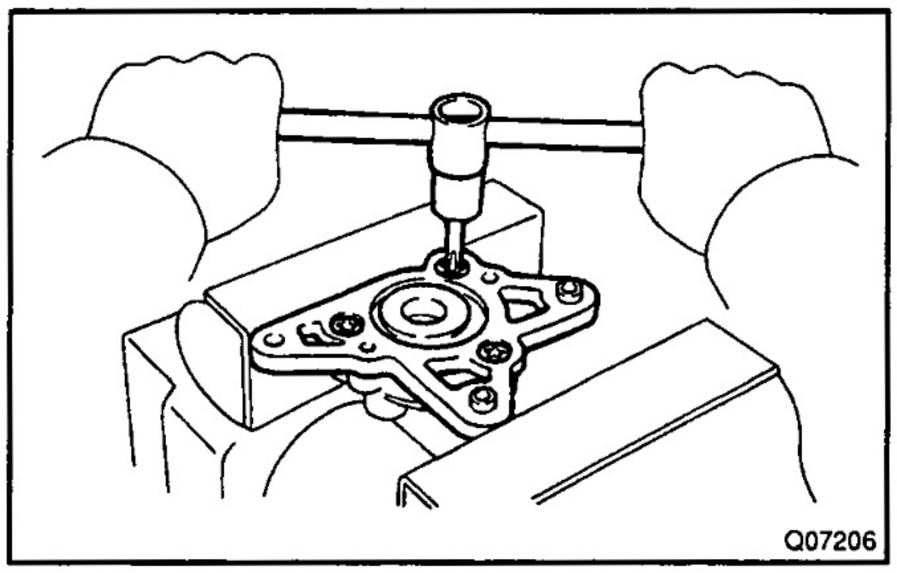

3. REMOVE OIL PUMP PLATE

(a) Using a torx socket wrench (T30 09042–00010), remove the 3 torx screws.

(b) Remove the oil pump plate.

4. REMOVE DRIVE ROTOR AND DRIVEN ROTOR

TR0A0–01

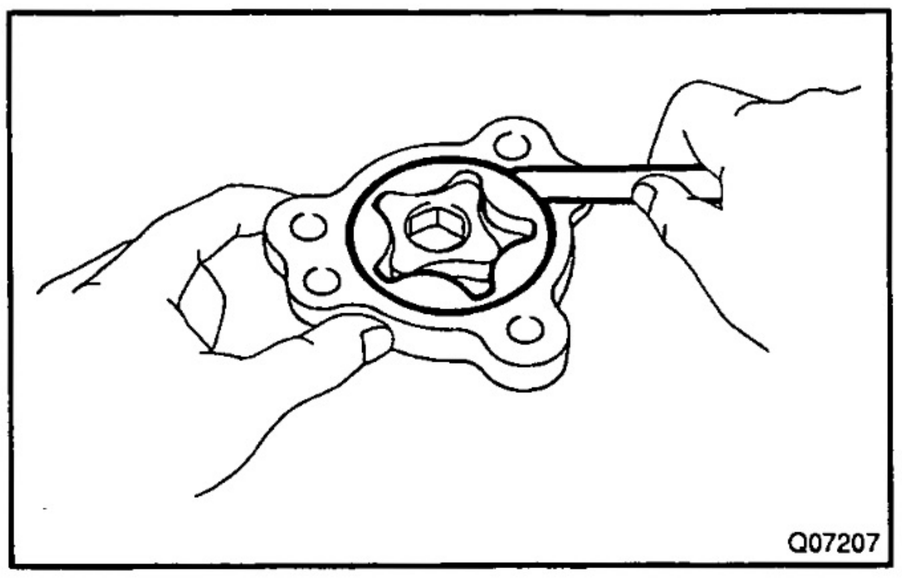
Q07207

INSPECTION

1. MEASURE DRIVEN ROTOR BODY CLEARANCE

(a) Push the driven rotor to one side of the body.

(b) Using a feeler gauge, measure the clearance.

Standard clearance:
0.09 – 0.16 mm (0.0035 – 0.0063 in.)
Maximum clearance:
0.16 mm (0.0063 in.)

If the clearance exceeds the maximum, replace the drive rotor, driven rotor or oil pump body.

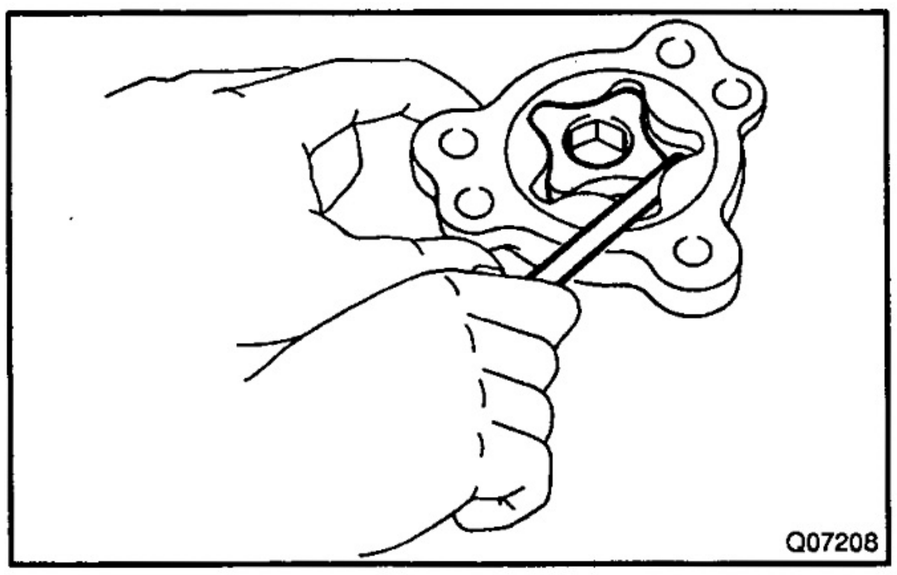
Q07208

2. MEASURE ROTOR TIP CLEARANCE

Using a feeler gauge, measure the clearance between both rotor tips.

Standard clearance:
0.05 – 0.15 mm (0.0020 – 0.0059 in.)
Maximum clearance:
0.15 mm (0.0059 in.)

If the clearance exceeds the maximum, replace the drive rotor, driven rotor or oil pump body.

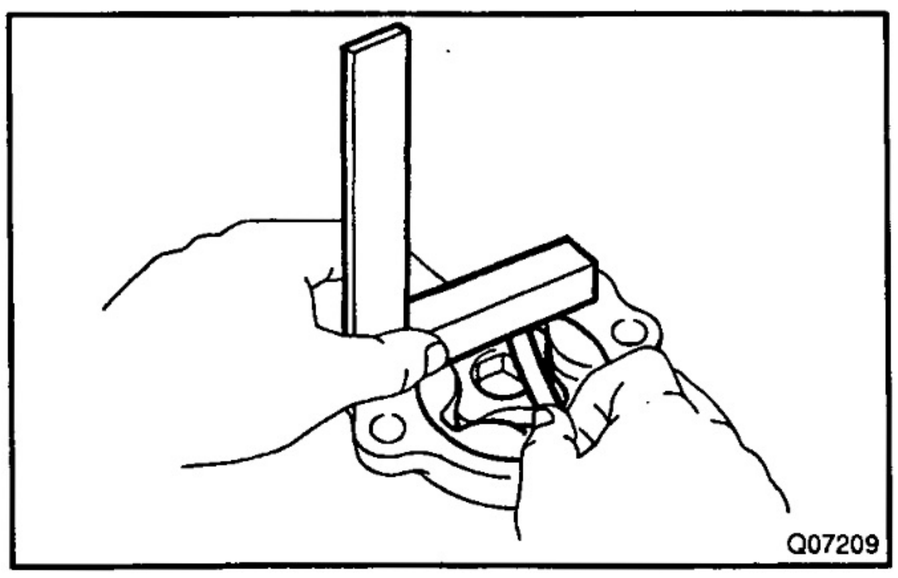
Q07209

3. MEASURE ROTOR SIDE CLEARANCE

Using a steel square and feeler gauge, measure the clearance between the rotors and straight edge.

Standard clearance:
0.03 – 0.10 mm (0.0012 – 0.0039 in.)
Maximum clearance:
0.10 mm (0.0039 in.)

If the clearance exceeds the maximum, replace the drive rotor, driven rotor or oil pump body.

TR0A1–01

REASSEMBLY

1. INSTALL DRIVE ROTOR AND DRIVEN ROTOR

(a) Apply gear oil to the both rotors.

(b) Install the drive rotor and driven rotor.

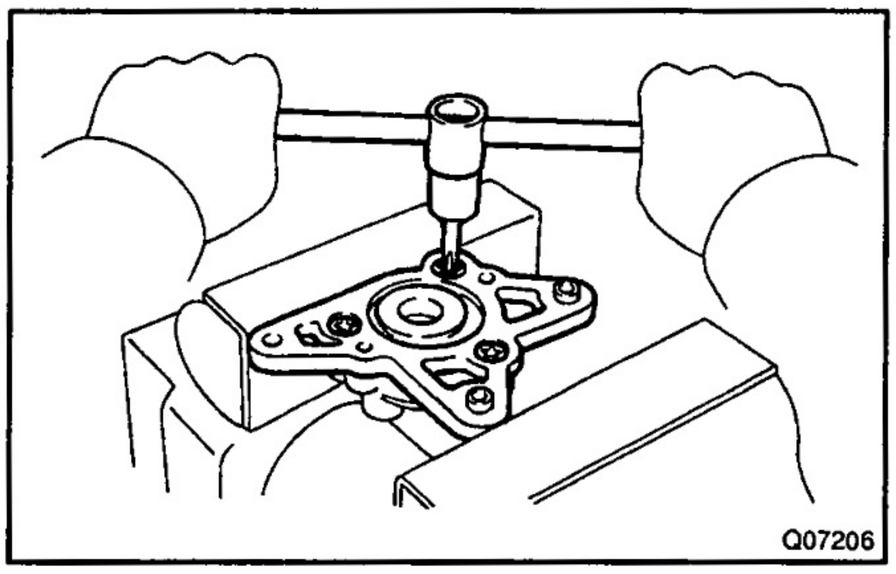

2. INSTALL OIL PUMP PLATE

Using a torx socket wrench (T30 09042–00010), install the oil pump plate and 3 torx screws.

Torque: 7.4 N·m (75 kgf·cm, 65 in.·lbf)

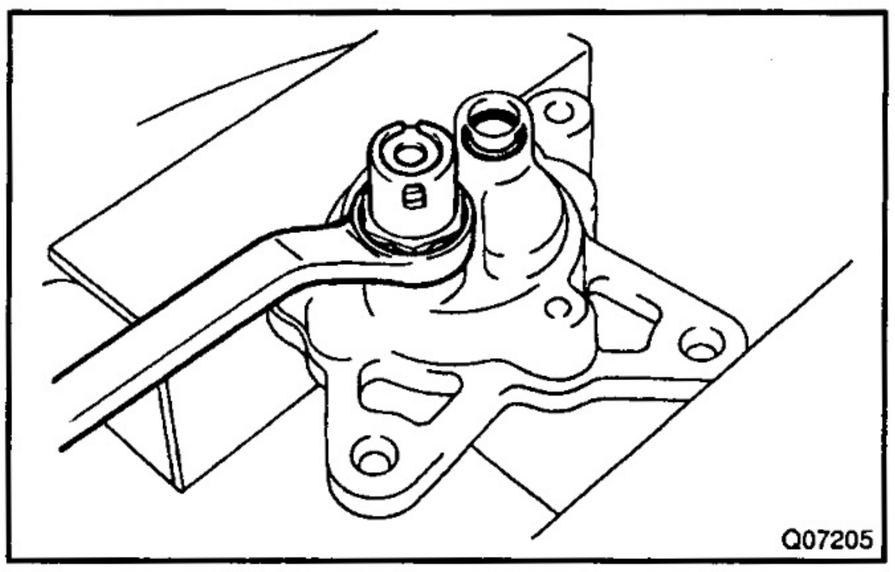

3. INSTALL RELIEF VALVE AND NEW O–RING

(a) Install the relief valve to the oil pump body.

Torque: 29 N·m (300 kgf·cm, 22 ft·lbf)

(b) Coat a new O–ring with gear oil and install it to the oil pump body.

DRIVEN SPROCKET

COMPONENTS

TR0A2-01

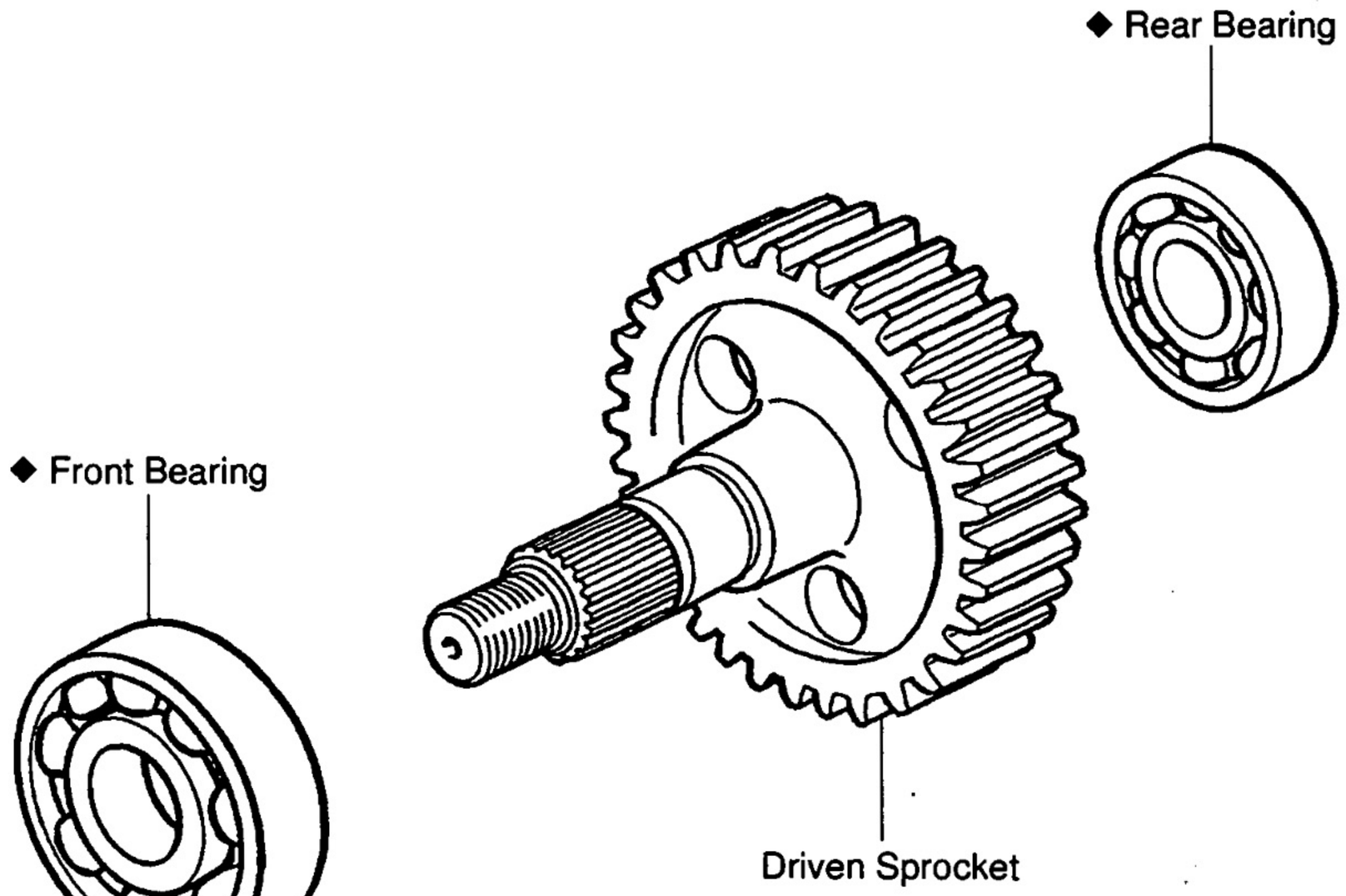

◆ Non–reusable part

Q07499

TR0A3–01

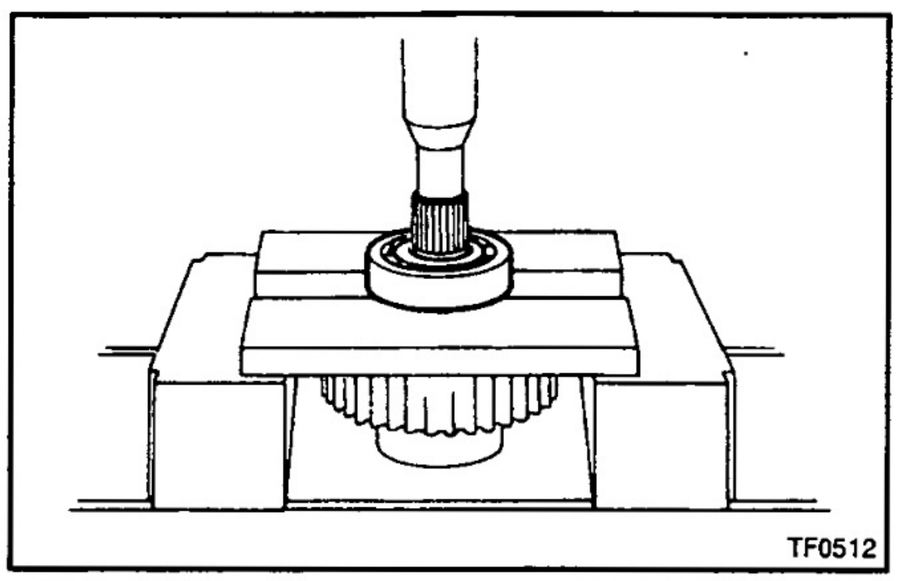
TF0512

REPLACEMENT

1. REPLACE FRONT BEARING

(a) Using a press, remove the front bearing.

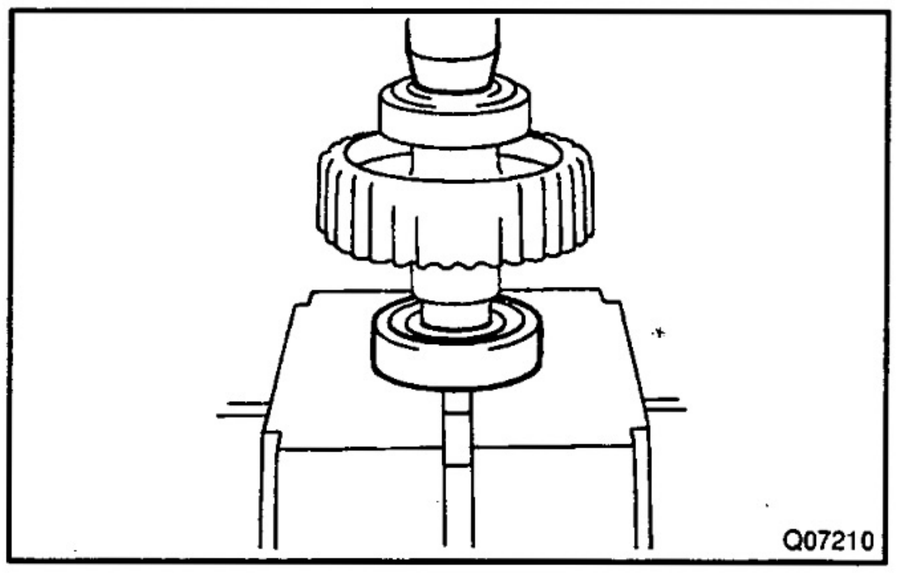
Q07210

(b) Using a press, install a new front bearing.

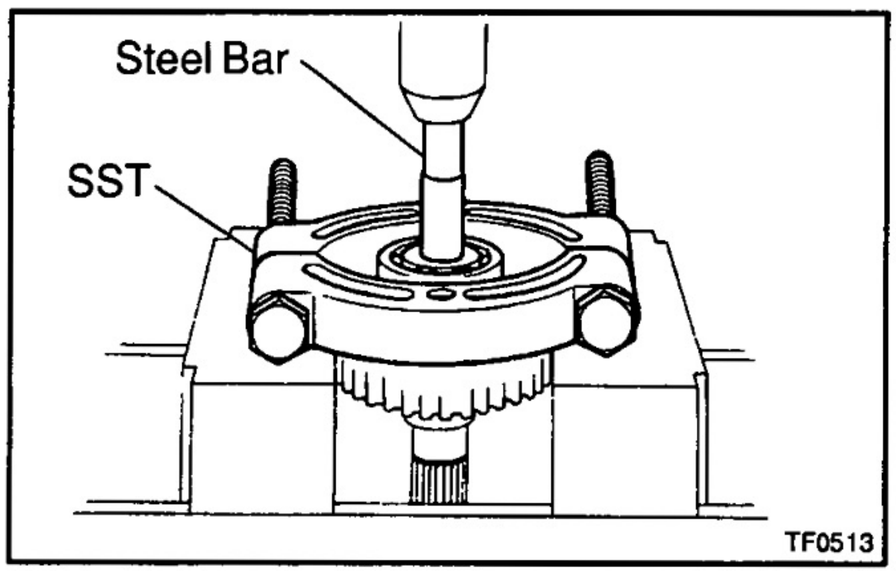

TF0513

2. REPLACE REAR BEARING

(a) Using SST, a press and steel bar, remove the rear bearing.

SST 09555–55010

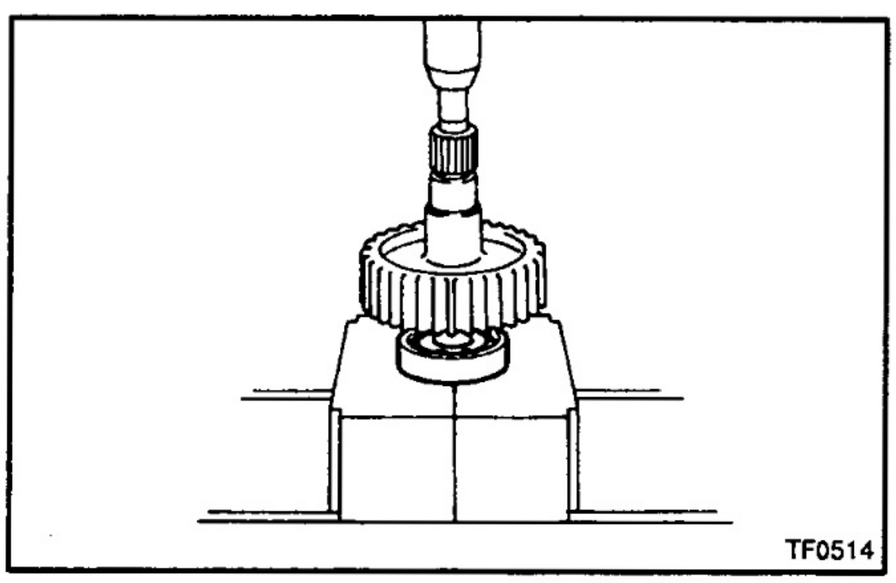
TF0514

(b) Using a press, install a new rear bearing.

REAR OUTPUT SHAFT

COMPONENTS

TR0A4–01

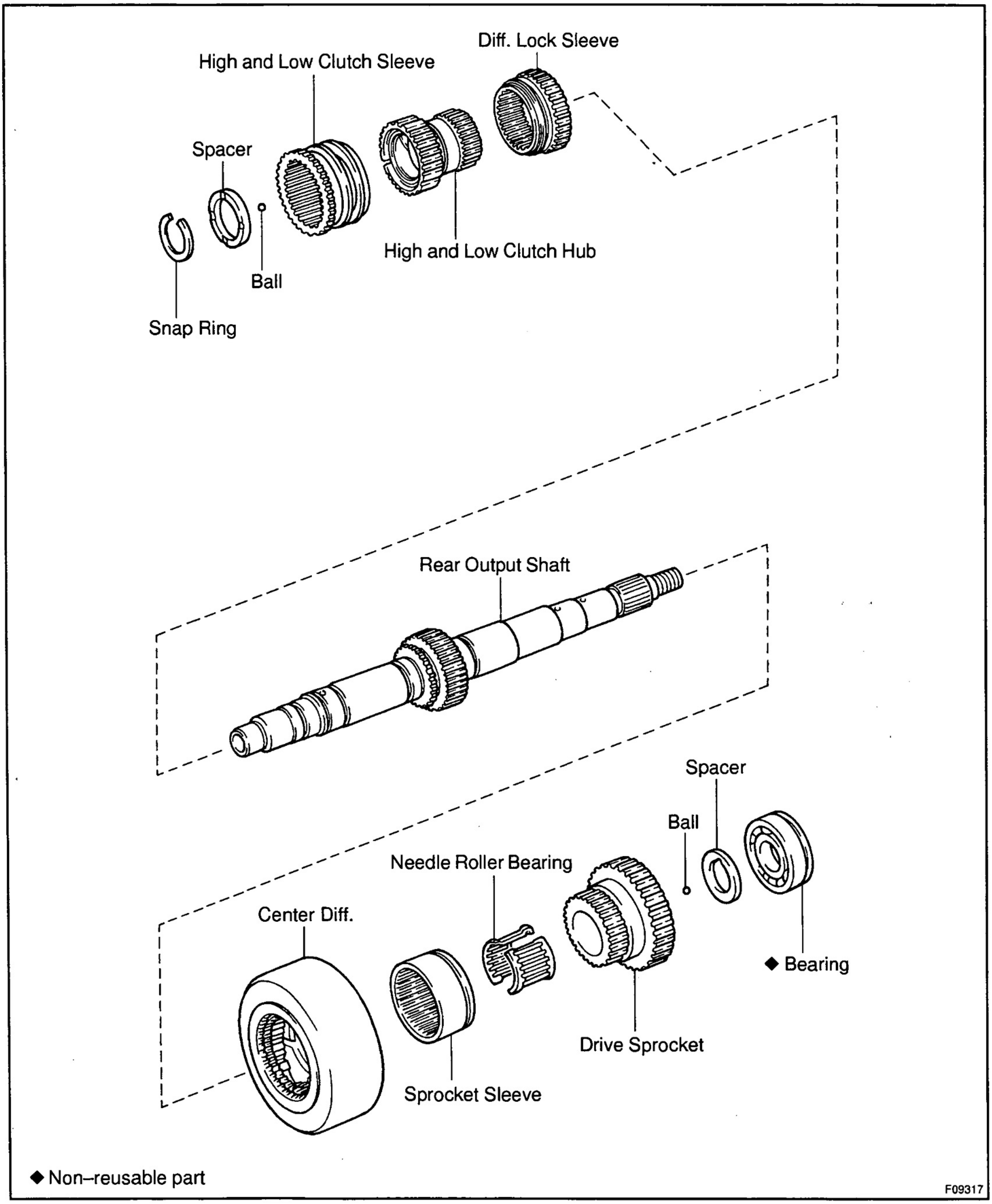

TR0A5–01

DISASSEMBLY

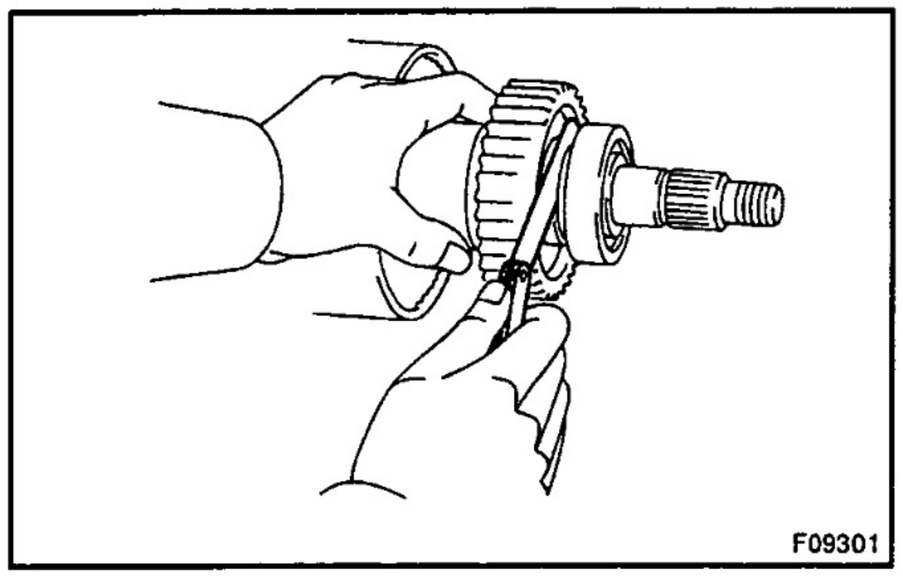
F09301

1. MEASURE DRIVE SPROCKET THRUST CLEARANCE

Using a feeler gauge, measure the drive sprocket thrust clearance.

Standard clearance:
0.10 – 0.25 mm (0.0039 – 0.0098 in.)
Maximum clearance: 0.25 mm (0.0098 in.)

If the clearance exceeds the maximum, replace the drive sprocket.

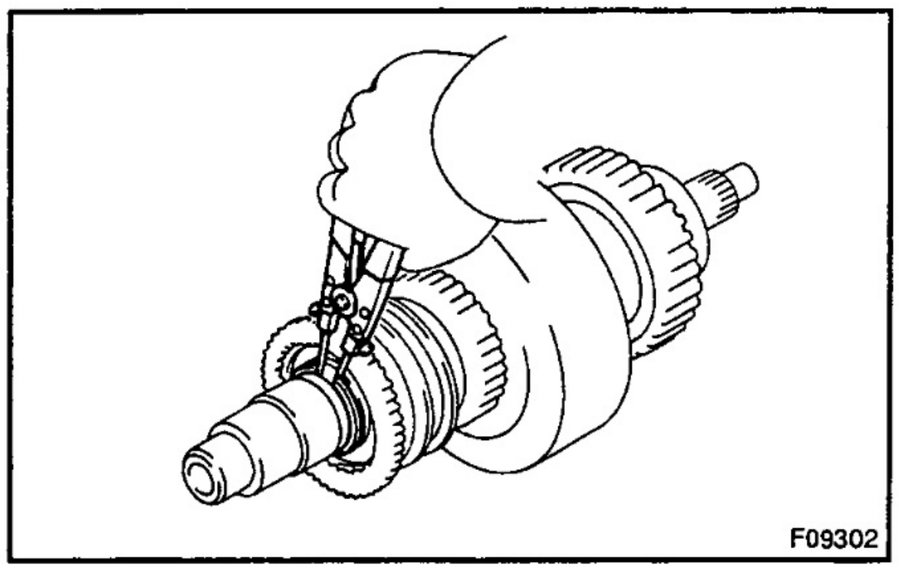
F09302

2. REMOVE HIGH AND LOW CLUTCH SLEEVE, SPACER, BALL, CLUTCH HUB AND DIFF. LOCK SLEEVE

(a) Using a snap ring expander, remove the snap ring.
(b) Remove the clutch sleeve.

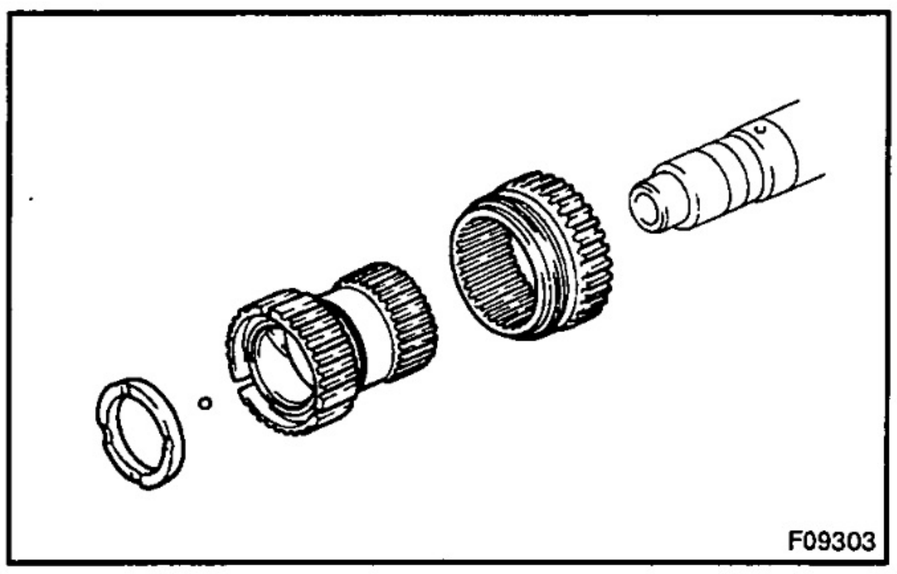
F09303

(c) Remove the spacer, ball, clutch hub and diff. lock sleeve.

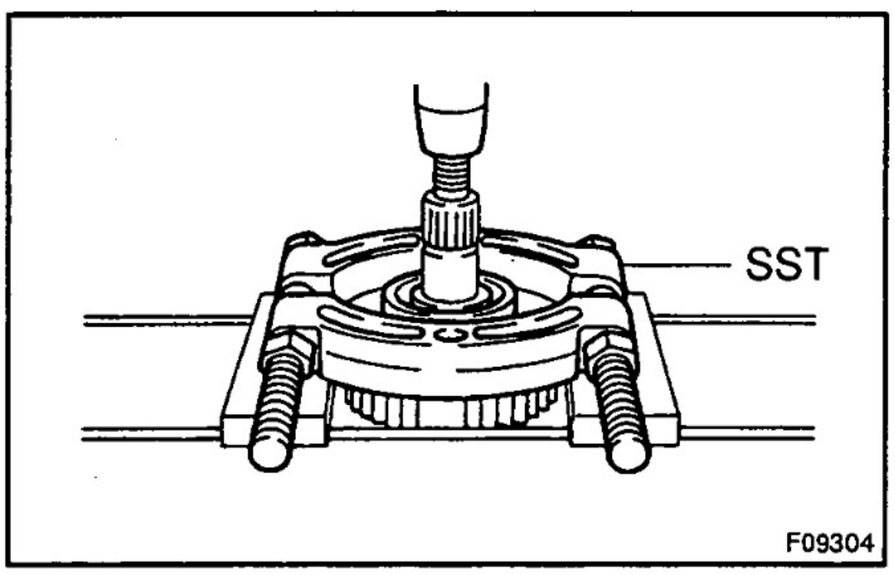

F09304

3. REMOVE BEARING, SPACER, BALL, DRIVE SPROCKET, NEEDLE ROLLER BEARING, SPROCKET SLEEVE AND CENTER DIFF.

(a) Using SST and a press, remove the bearing.
SST 09555–55010

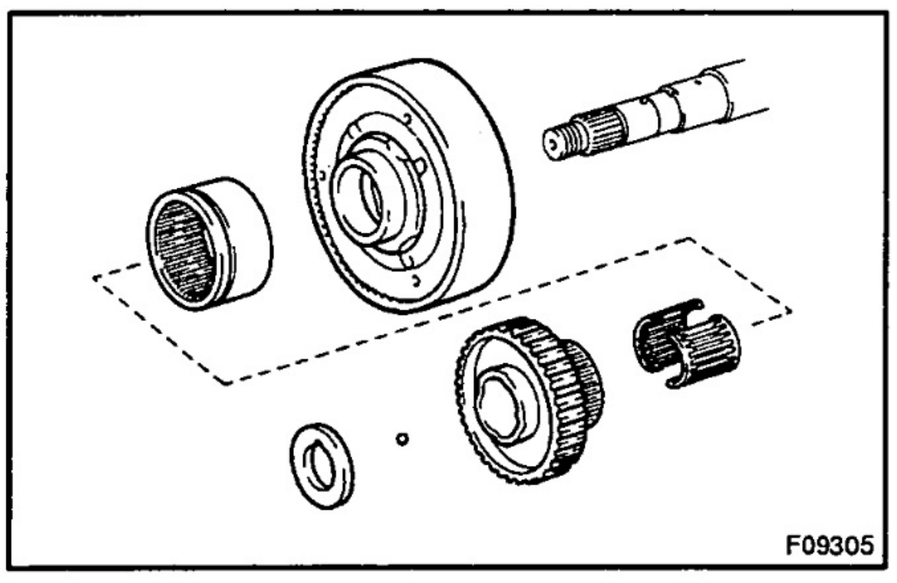
F09305

(b) Remove the spacer and ball.
(c) Remove the drive sprocket and needle roller bearing.
(d) Remove the sprocket sleeve and center diff.

TR0A5–01

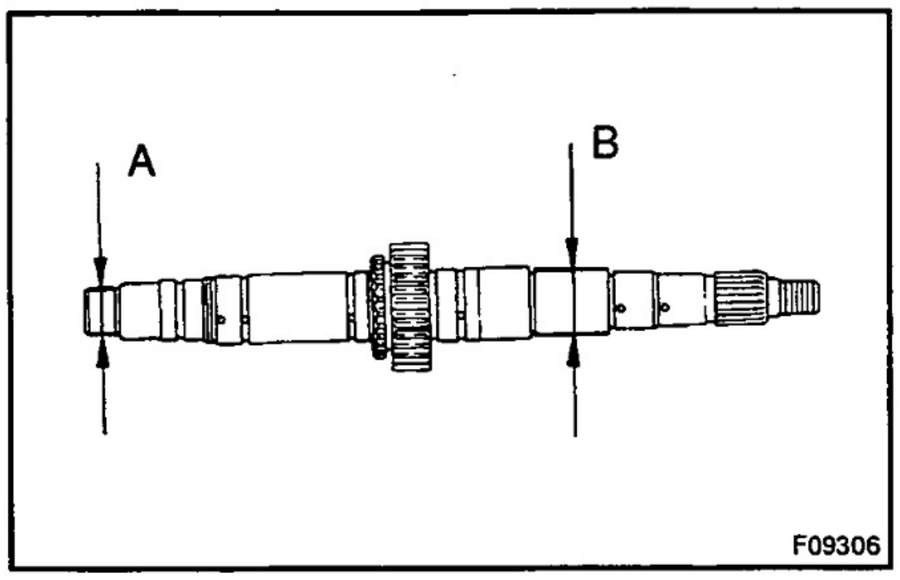

INSPECTION

1. MEASURE REAR OUTPUT SHAFT

Using a micrometer, measure the rear output shaft journal surface outer diameter.

Minimum diameter:
Part A: 27.98 mm (1.1016 in.)
Part B: 36.98 mm (1.4561 in.)

If the outer diameter is less than the minimum, replace the rear output shaft.

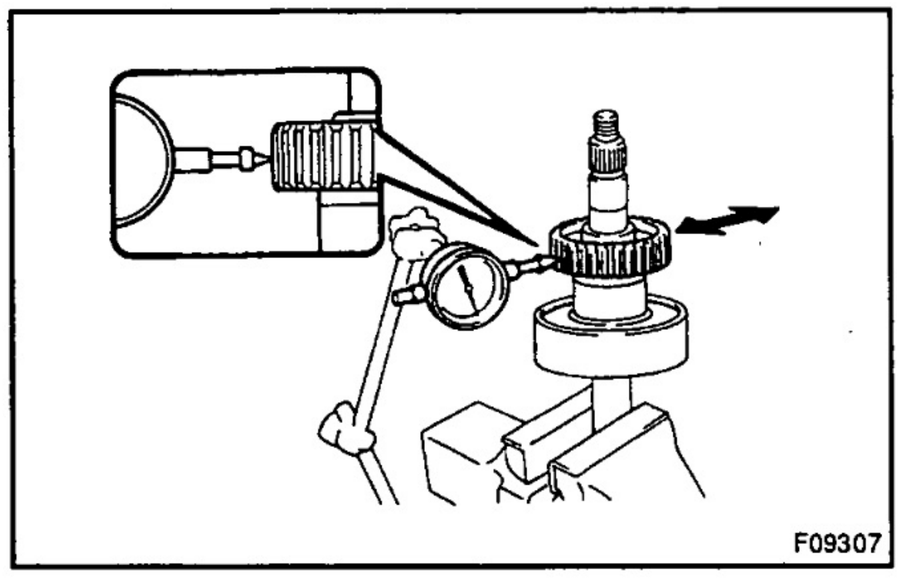

2. MEASURE DRIVE SPROCKET RADIAL CLEARANCE

Using a dial indicator, measure the radial clearance between the center diff., sprocket sleeve, drive sprocket and shaft with the needle roller bearing installed.

Standard clearance:
0.010 – 0.055 mm (0.0004 – 0.0022 in.)
Maximum clearance: 0.055 mm (0.0022 in.)

If the clearance exceeds the maximum, replace the drive sprocket, rear output shaft or needle roller bearing.

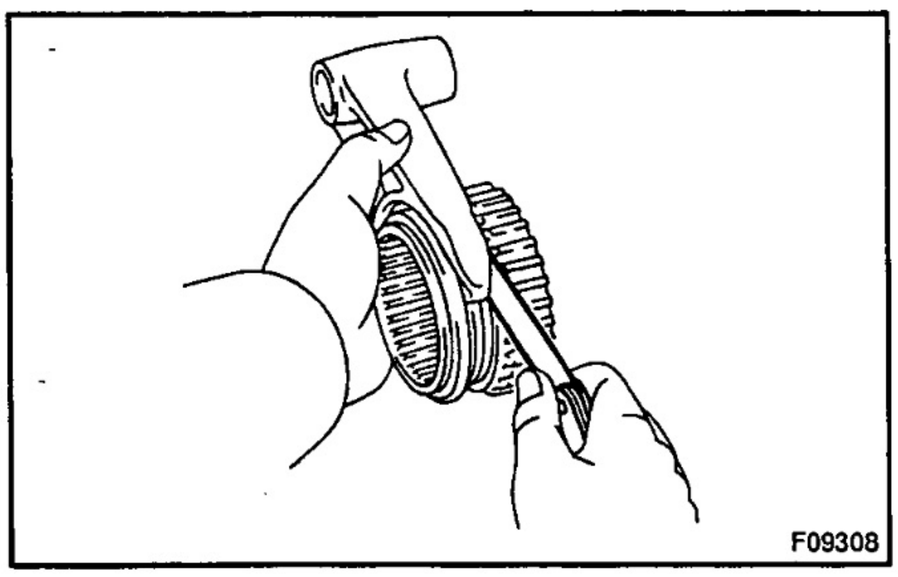

3. MEASURE FRONT DRIVE SHIFT FORK AND DIFF. LOCK SLEEVE CLEARANCE

Using a feeler gauge, measure the clearance between the front drive shift fork and diff. lock sleeve.

Maximum clearance: 1.0 mm (0.039 in.)

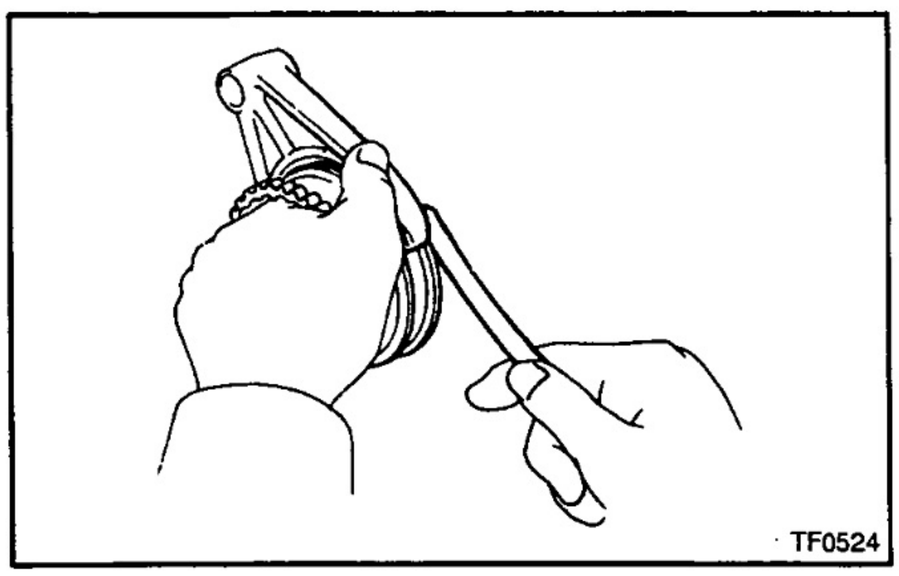

4. MEASURE HIGH AND LOW SHIFT FORK AND CLUTCH SLEEVE CLEARANCE

Using a feeler gauge, measure the clearance between the high and low shift fork and clutch sleeve.

Maximum clearance: 1.0 mm (0.039 in.)

If the clearance exceeds the maximum, replace the shift fork or clutch sleeve.

TR0A7–01

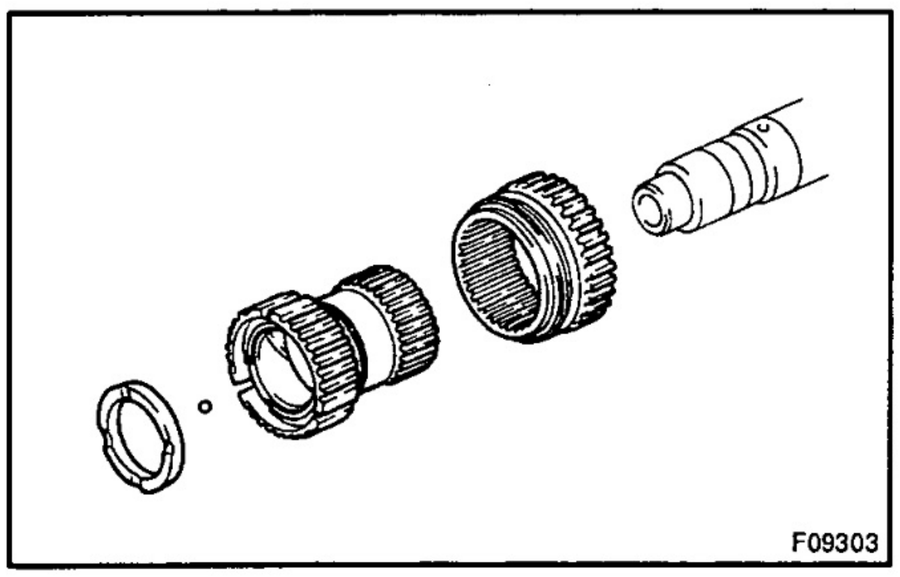

REASSEMBLY

1. INSTALL DIFF. LOCK SLEEVE, HIGH AND LOW CLUTCH HUB, SPACER AND BALL

(a) Install the diff. lock sleeve and clutch hub.

(b) Install the spacer and ball.

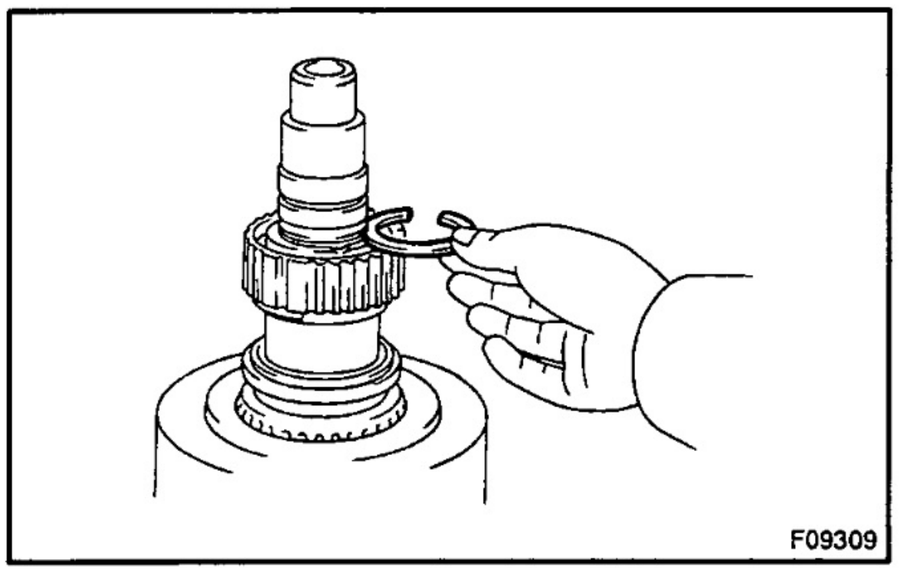

2. INSTALL SNAP RING

Select a snap ring that will allow minimum axial play and install it to the shaft.

Mark	Thickness mm (in.)
A	2.10 – 2.15 (0.0827 – 0.0846)
B	2.15 – 2.20 (0.0846 – 0.0866)
C	2.20 – 2.25 (0.0866 – 0.0886)
D	2.25 – 2.30 (0.0886 – 0.0906)
E	2.30 – 2.35 (0.0906 – 0.0925)
F	2.35 – 2.40 (0.0925 – 0.0945)
G	2.40 – 2.45 (0.0945 – 0.0965)
H	2.45 – 2.50 (0.0964 – 0.0984)
J	2.50 – 2.55 (0.0984 – 0.1004)
K	2.00 – 2.05 (0.0787 – 0.0807)
L	2.05 – 2.10 (0.0807 – 0.0827)

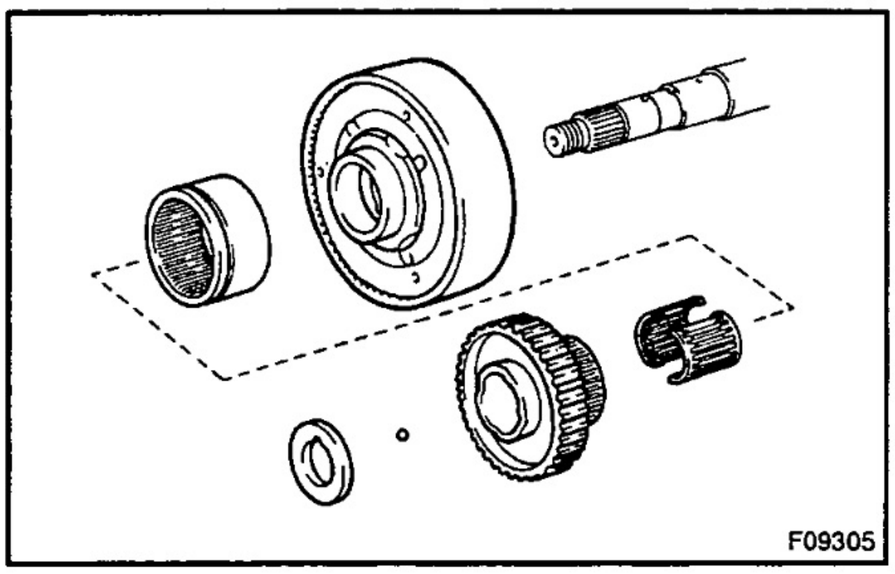

3. INSTALL CENTER DIFF., SPROCKET SLEEVE, NEEDLE ROLLER BEARING DRIVE SPROCKET, BALL, SPACER AND NEW BEARING

(a) Apply gear oil to the shaft and needle roller bearing.

(b) Install the center diff. and sprocket sleeve.

(c) Install the needle roller bearing in the drive sprocket.

(d) Install the drive sprocket, ball and spacer.

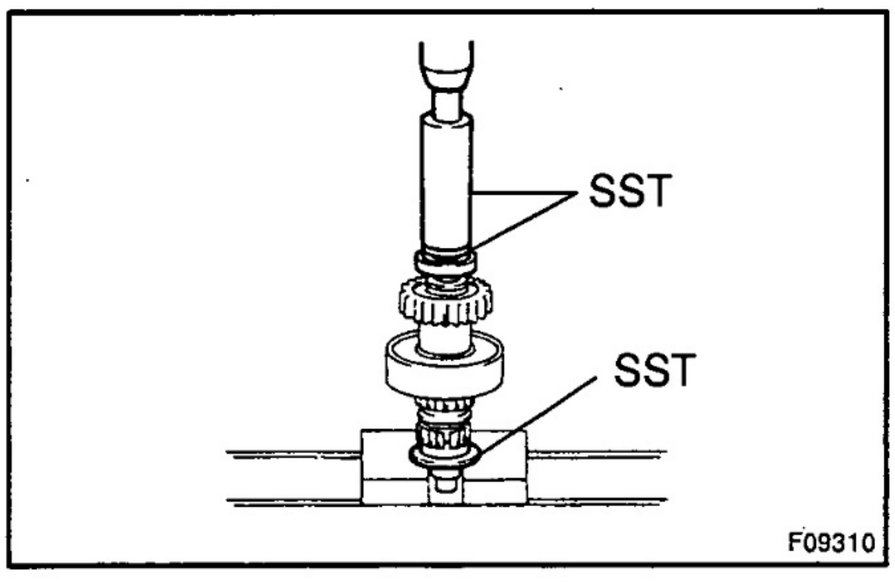

(e) Using SST and a press, install a new bearing with the outer race snap ring groove toward the rear.

SST 09316–60011 (09316–00011, 09316–00071, 09316–20011)

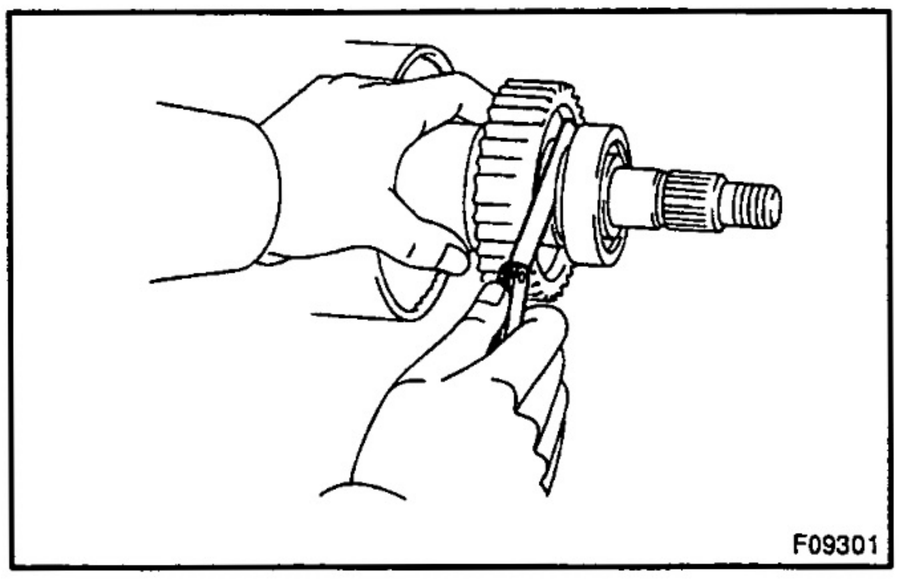
F09301

4. MEASURE DRIVE SPROCKET THRUST CLEARANCE

Using a feeler gauge, measure the drive sprocket thrust clearance.

Standard clearance:
0.10 – 0.25 mm (0.0039 – 0.0098 in.)

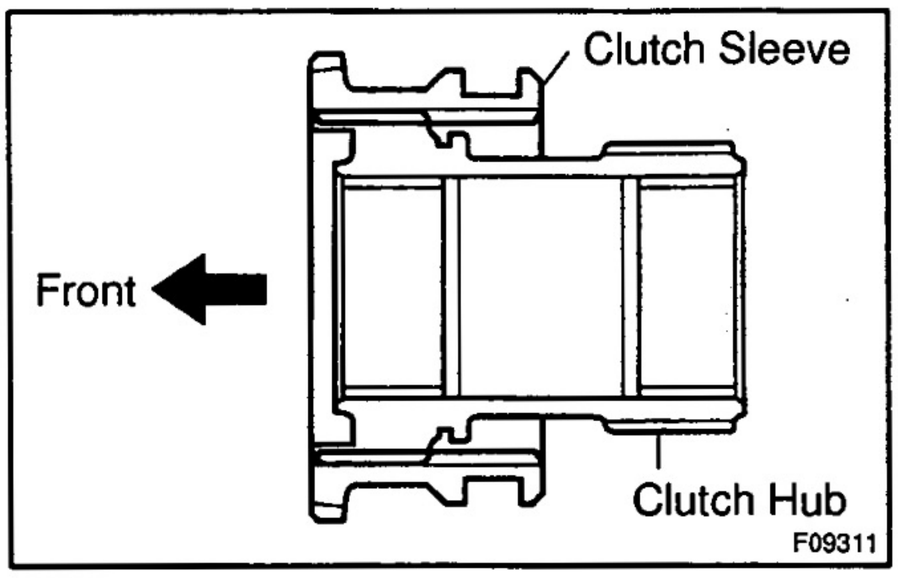

5. INSTALL HIGH AND LOW CLUTCH SLEEVE ONTO HIGH AND LOW CLUTCH HUB

Install the clutch sleeve onto the clutch hub.

HINT:

Make sure to install the clutch sleeve in the correct direction.

INPUT SHAFT

COMPONENTS

TR0A6–01

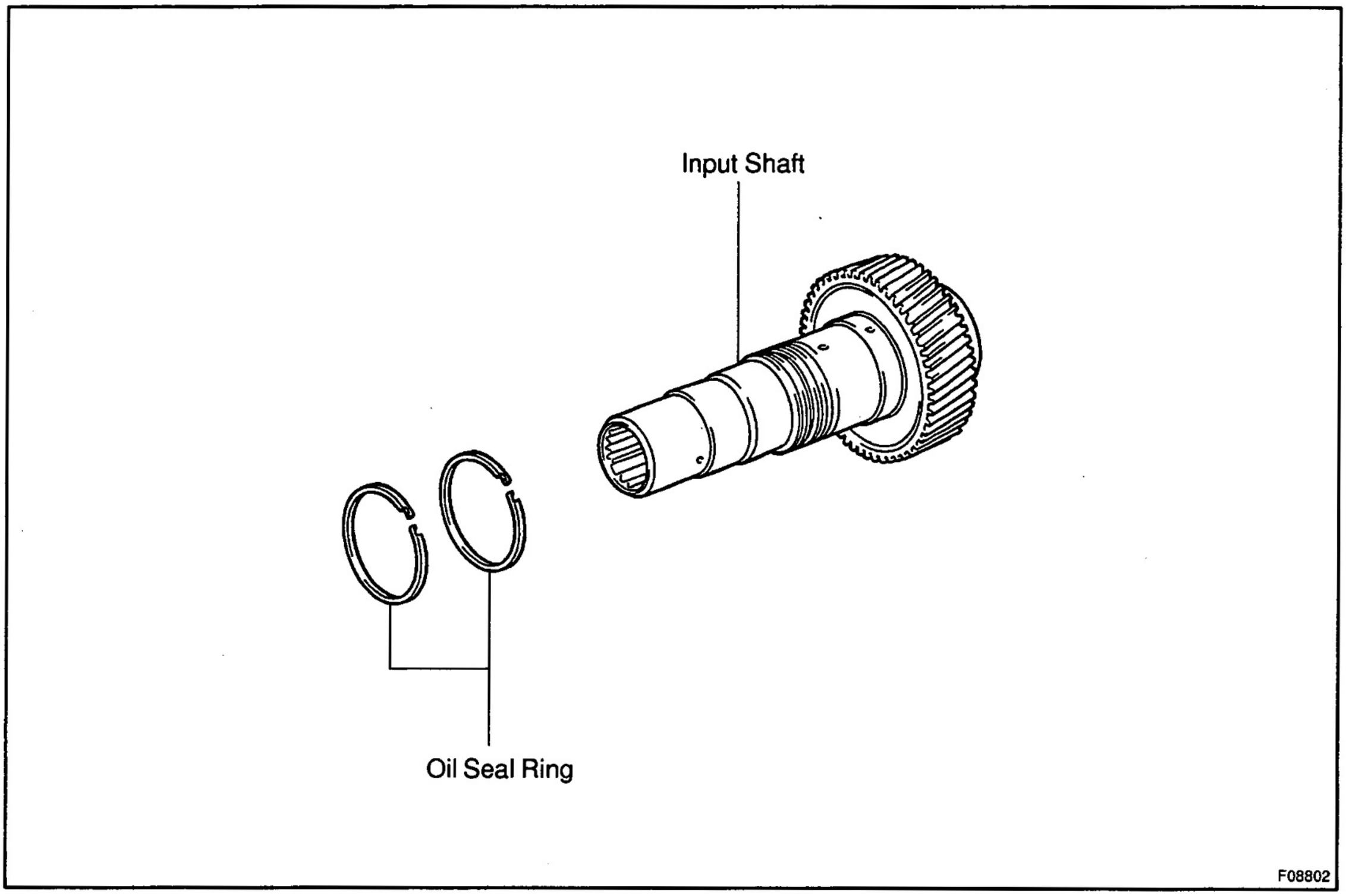

TR0A9–01

INSPECTION

1. REMOVE OIL SEAL RING

Remove the 2 oil seal rings.

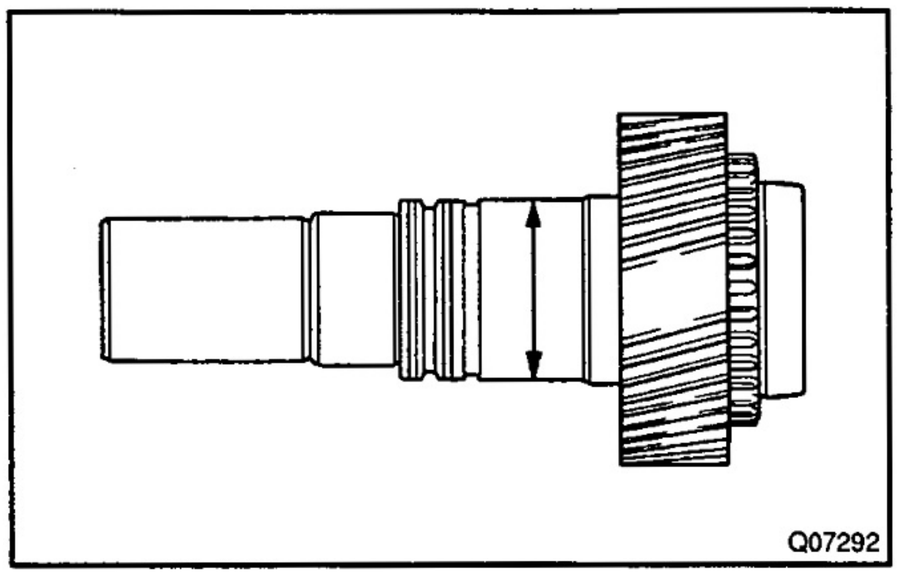

2. INSPECT INPUT SHAFT

(a) Using a micrometer, measure the outer diameter of the input shaft journal surface.

Minimum diameter: 47.59 mm (1.8736 in.)

If the outer diameter is less than the minimum, replace the input shaft.

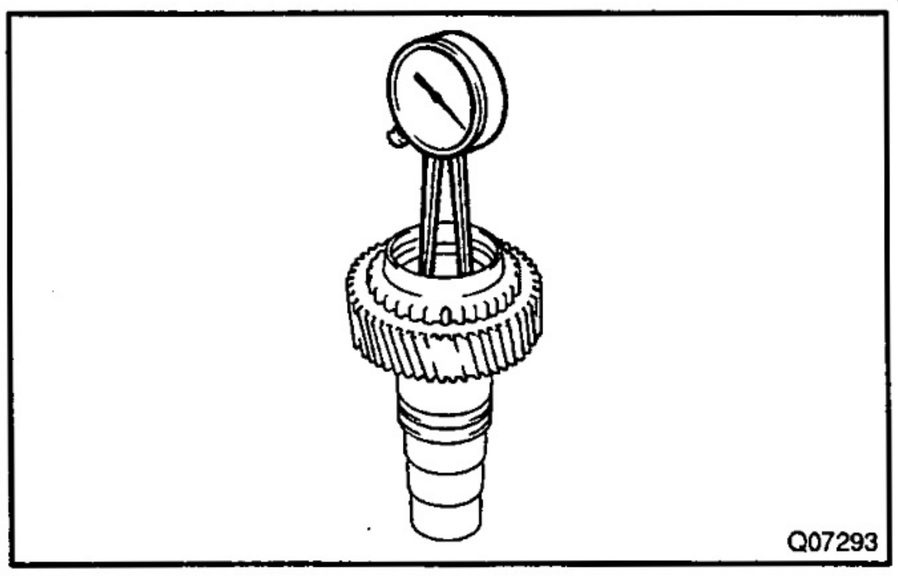

(b) Using a dial indicator, measure the inside diameter of the input shaft bushing.

Maximum inside diameter: 39.14 mm (1.5409 in.)

If the inside diameter exceeds the maximum, replace the input shaft.

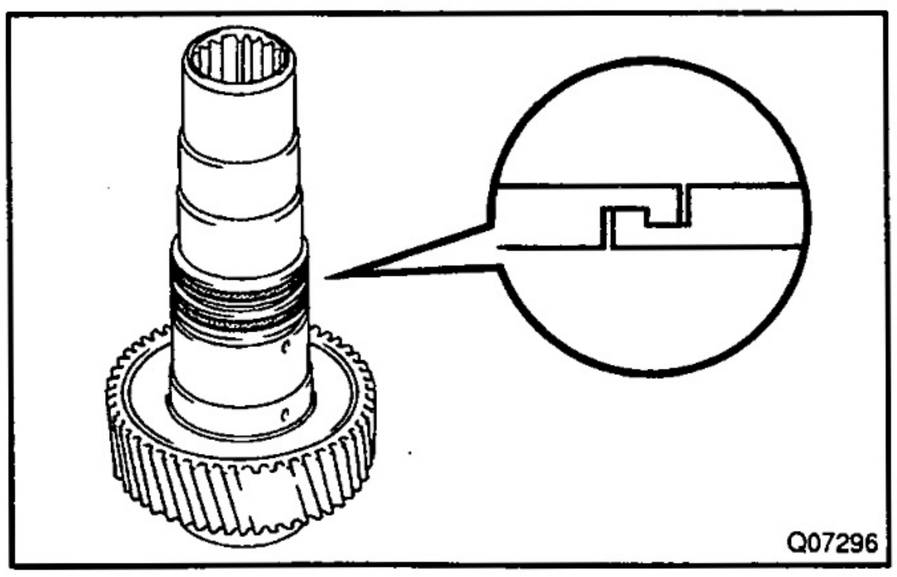

3. INSTALL OIL SEAL RING

Install the 2 oil seal rings.

HINT:

- Apply gear oil to the oil seal rings.
- Arrange the from of the oil seal rings to eliminate clearance.

CENTER DIFFERENTIAL

COMPONENTS

TR0AA–01

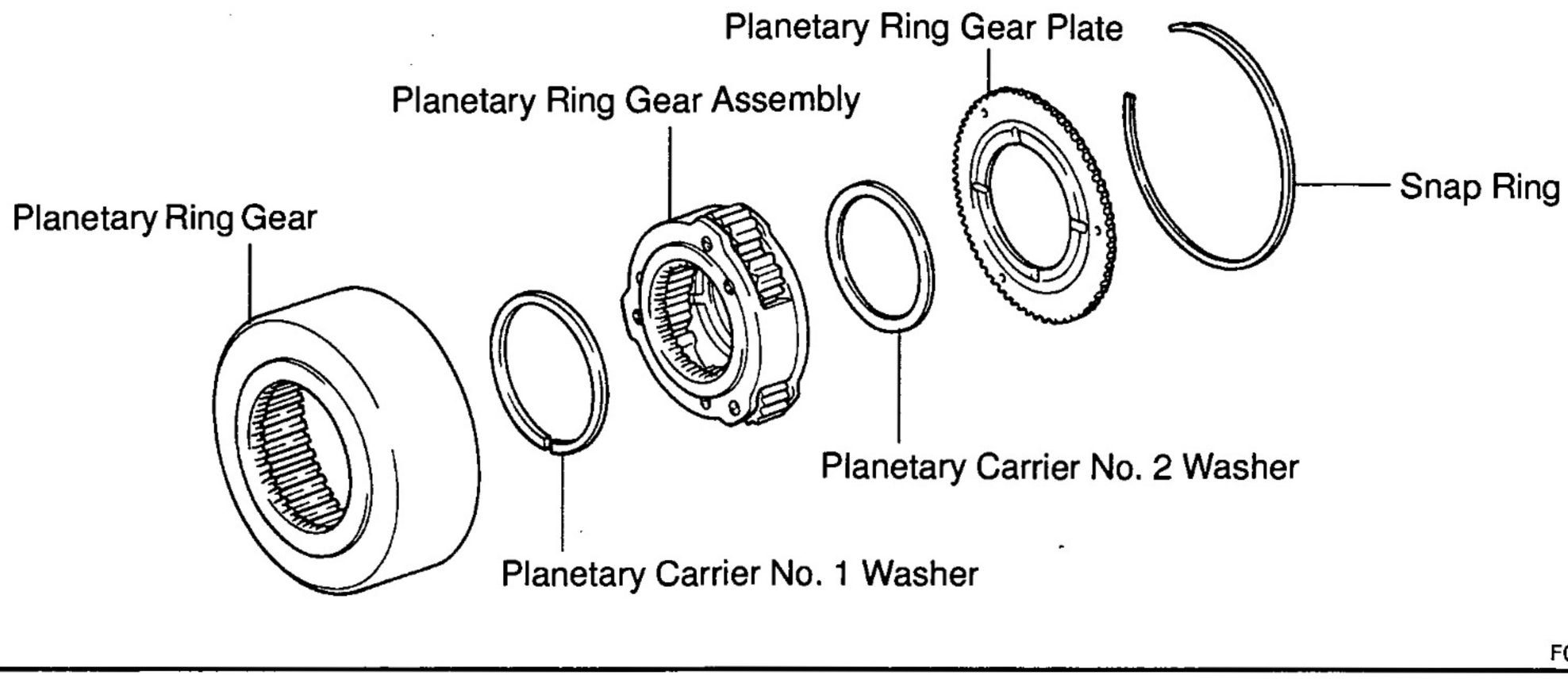

F09312

TR0AB–01

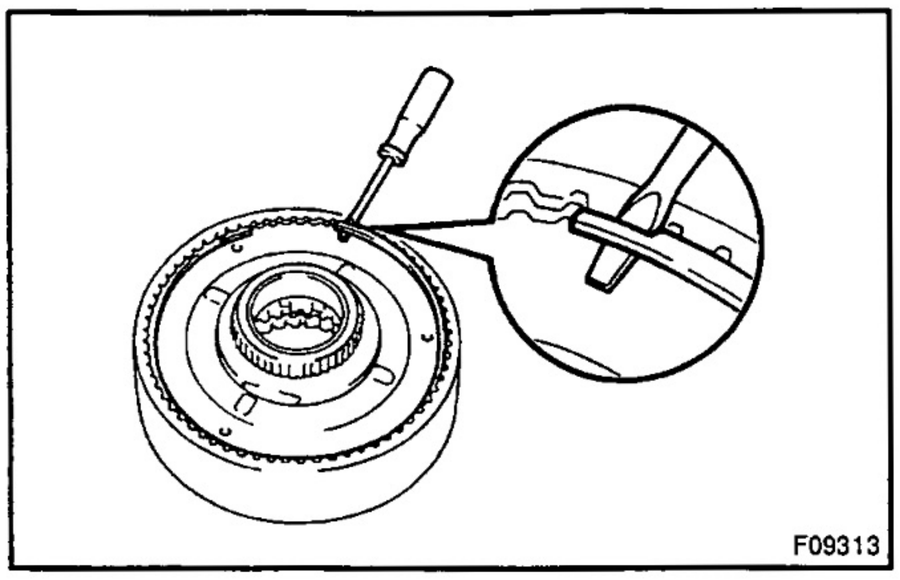

DISASSEMBLY

1. REMOVE PLANETARY RING GEAR PLATE

Using a screwdriver, remove the snap ring and ring gear plate.

2. SEPARATE PLANETARY RING GEAR ASSEMBLY, PLANETARY RING GEAR, PLANETARY CARRIER NO. 1 AND NO. 2 WASHERS

TR0AC–01

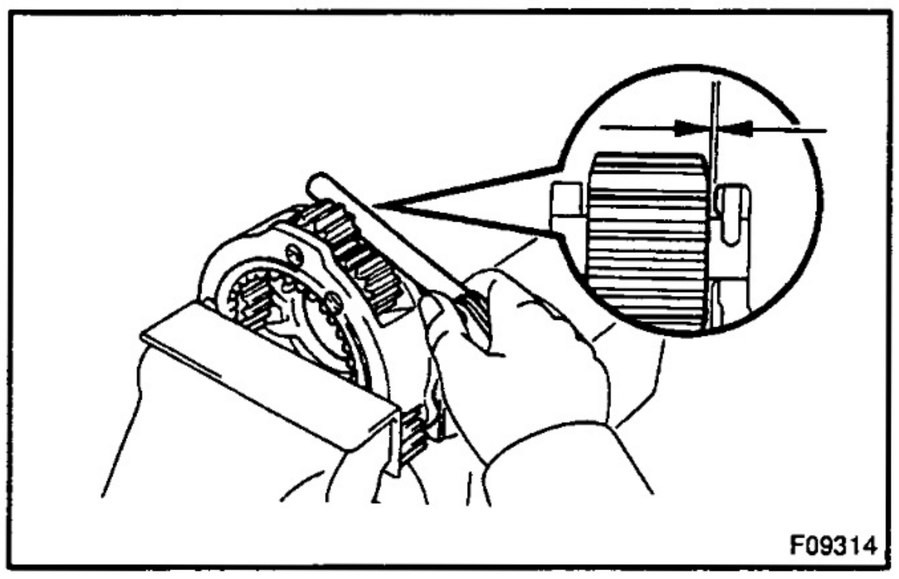
F09314

INSPECTION

1. MEASURE PLANETARY GEAR ASSEMBLY THRUST CLEARANCE

Using a feeler gauge, measure the planetary gear thrust clearance.

Standard clearance:
0.15 – 0.70 mm (0.0059 – 0.0276 in.)
Maximum clearance:
0.70 mm (0.0276 in.)

If the clearance exceeds the maximum, replace the planetary gear assembly.

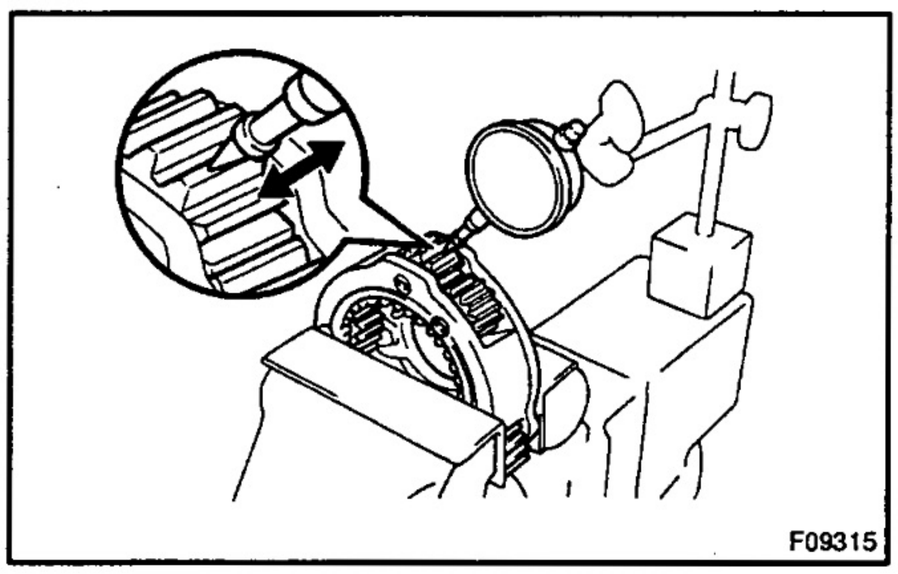
F09315

2. MEASURE PLANETARY GEAR ASSEMBLY RADIAL CLEARANCE

Using a dial indicator, measure the planetary gear radial clearance.

Standard clearance:
0.009 – 0.038 mm (0.0004 – 0.0015 in.)
Maximum clearance:
0.038mm (0.0015 in.)

If the clearance exceeds the maximum, replace the planetary gear.

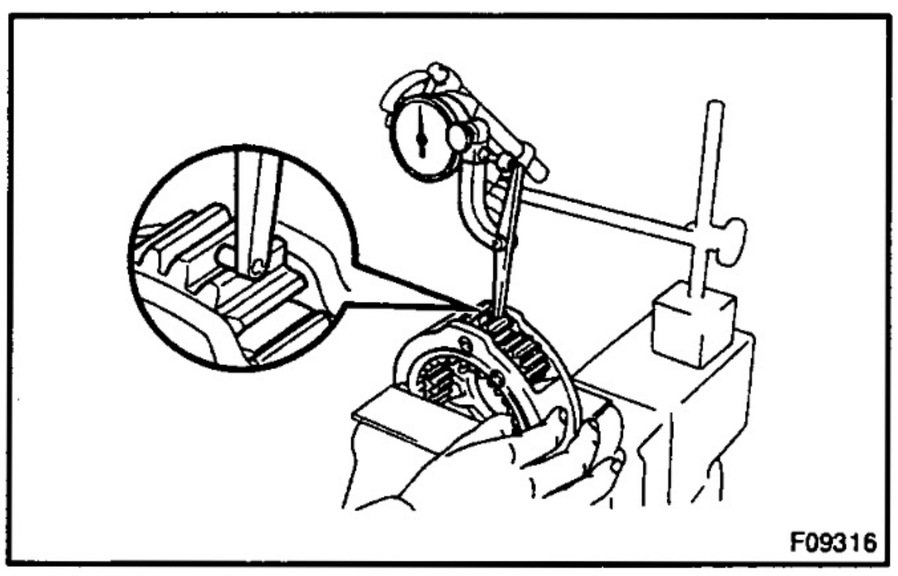
F09316

3. MEASURE PLANETARY GEAR ASSEMBLY BACK LASH

Using a dial indicator, measure the planetary gear backlash.
HINT:
Push the pinion gear in the direction of the rotation.

Standard clearance:
0.15 – 0.70 mm (0.0059 – 0.0276 in.)
Maximum clearance:
0.70 mm (0.0276 in.)

If the backlash exceeds the maximum, replace the planetary gear.

TR0AD–01

REASSEMBLY

1. ASSEMBLE PLANETARY RING GEAR ASSEMBLY, PLANETARY RING GEAR, PLANETARY CARRIER NO. 1 AND NO. 2 WASHERS
2. INSTALL PLANETARY RING GEAR PLATE AND SNAP RING

PLANETARY GEAR

COMPONENTS

TR0AE–01

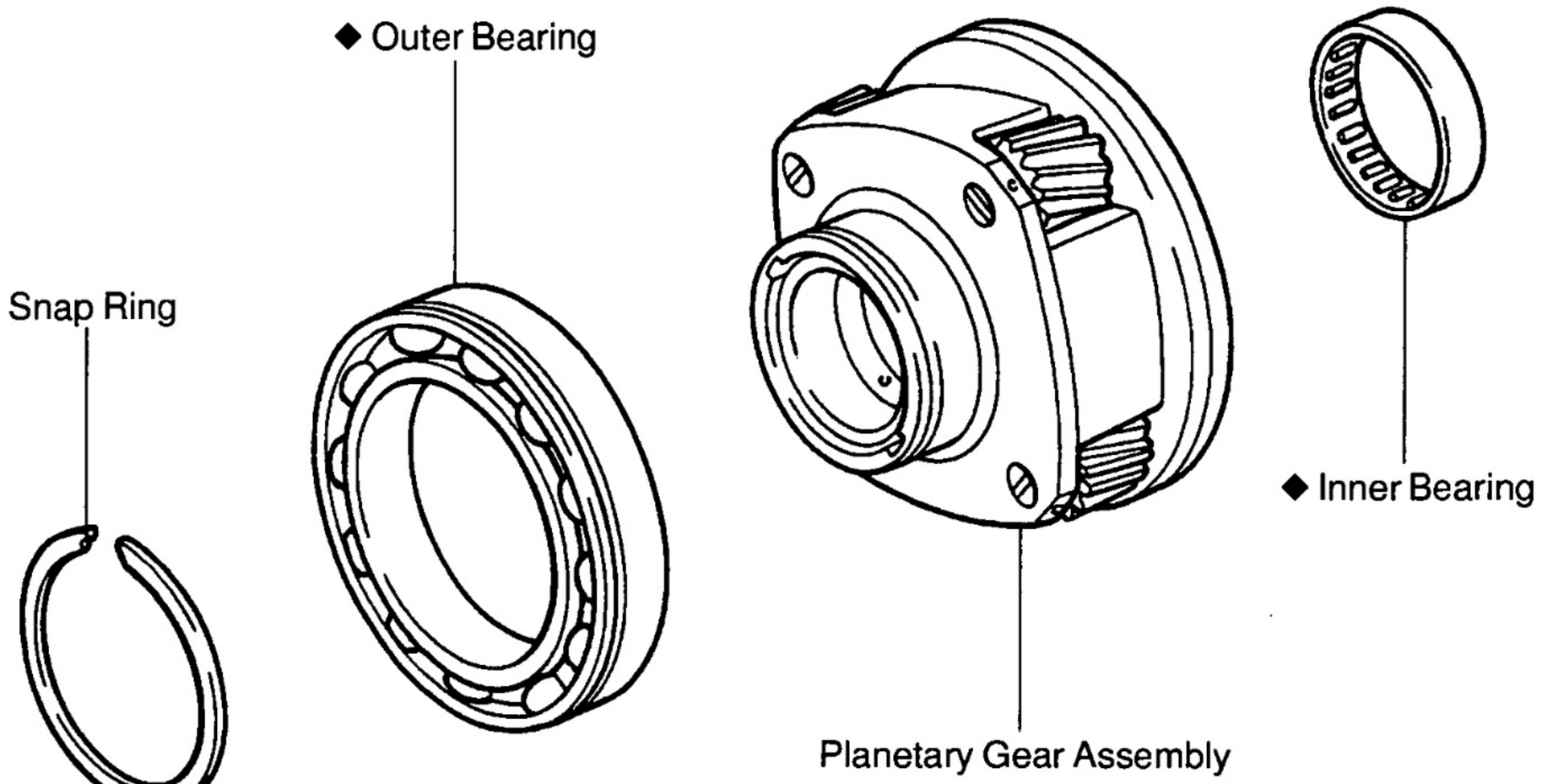

◆ Non–reusable part

Q07455

TR0AF–01

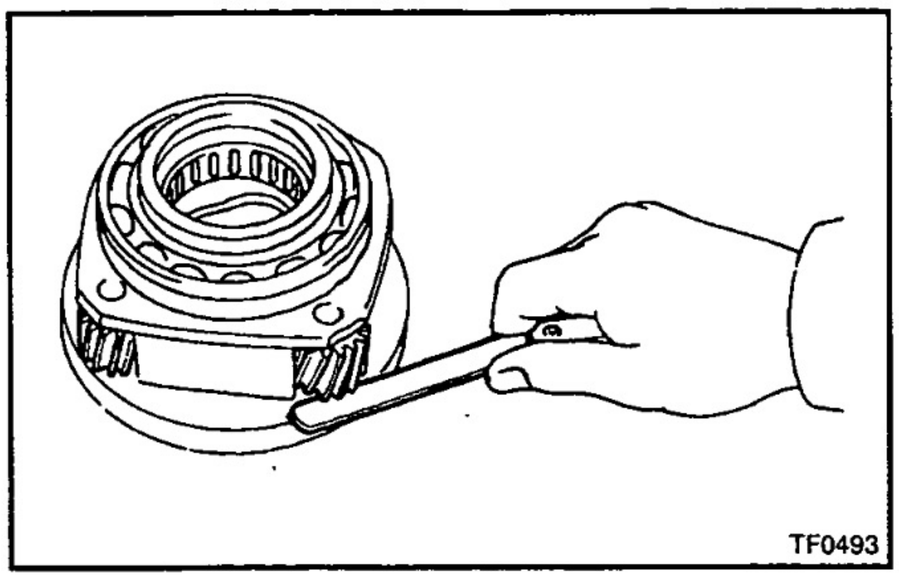
TF0493

INSPECTION

1. MEASURE PLANETARY PINION GEAR THRUST CLEARANCE

Using a feeler gauge, measure the planetary pinion gear thrust clearance.

Standard clearance:
0.11 – 0.84 mm (0.0043 – 0.0331 in.)
Maximum clearance:
0.84 mm (0.0331 in.)

If the clearance exceeds the maximum, replace the planetary gear assembly.

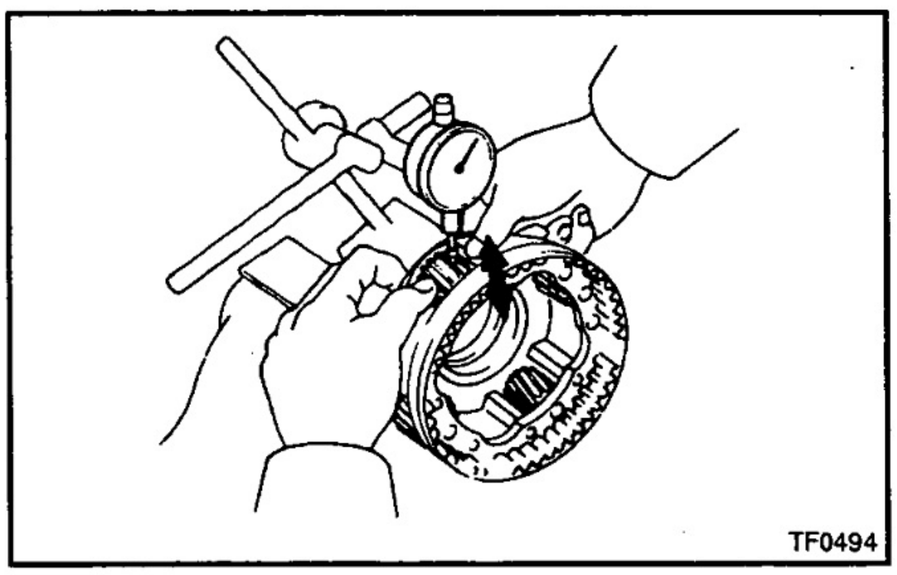
TF0494

2. MEASURE PLANETARY PINION GEAR RADIAL CLEARANCE

Using a dial indicator, measure the planetary pinion gear radial clearance.

Standard clearance:
0.009 – 0.038 mm (0.0004 – 0.0015 in.)
Maximum clearance:
0.038 mm (0.0015 in.)

If the clearance exceeds the maximum, replace the planetary gear assembly.

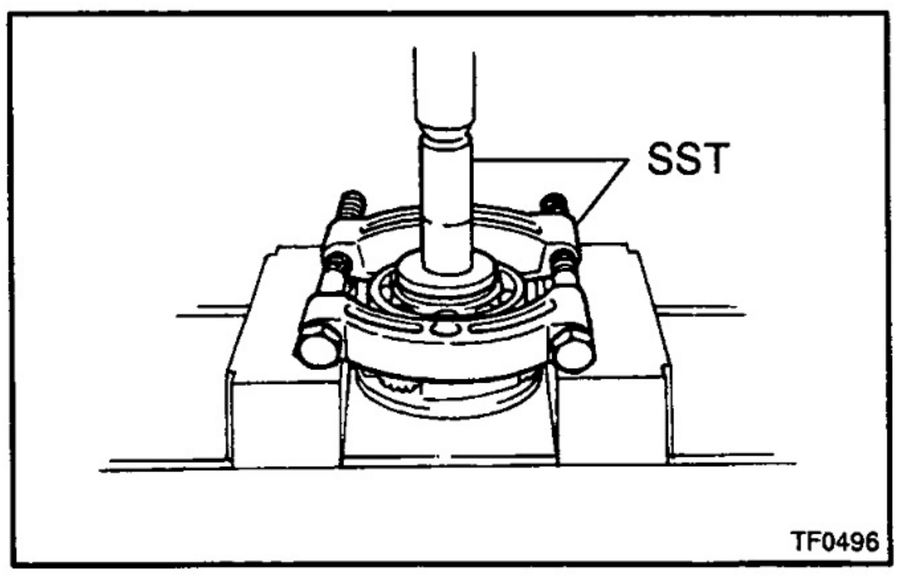

TF0496

3. IF NECESSARY, REPLACE PLANETARY GEAR OUTER BEARING

(a) Using a snap ring expander, remove the snap ring.
(b) Using SST and a press, remove the bearing.
SST 09554–30011, 09555–55010

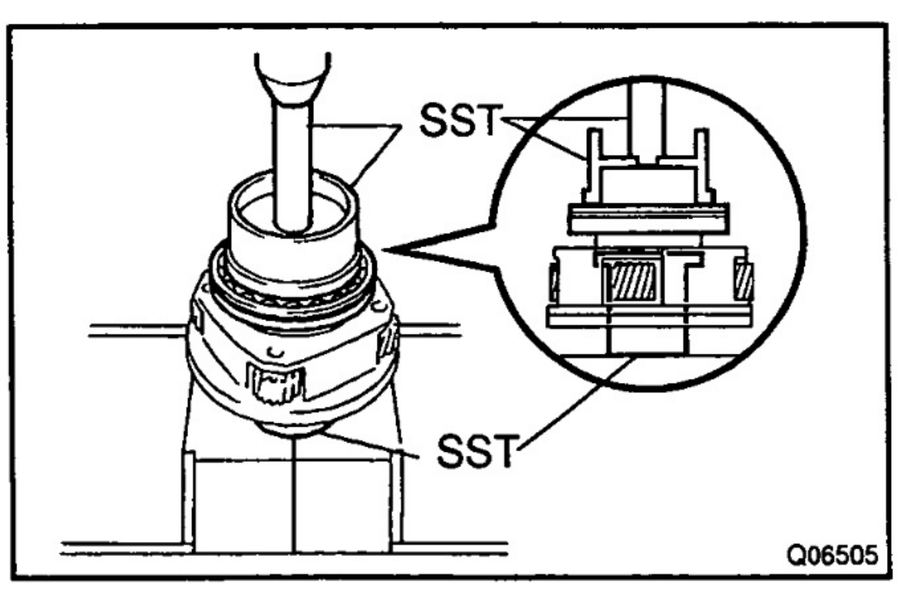

Q06505

(c) Using SST and a press, install a new bearing with the groove facing forward.
SST 09223–15020, 09515–30010, 09950–70010 (09951–07100)

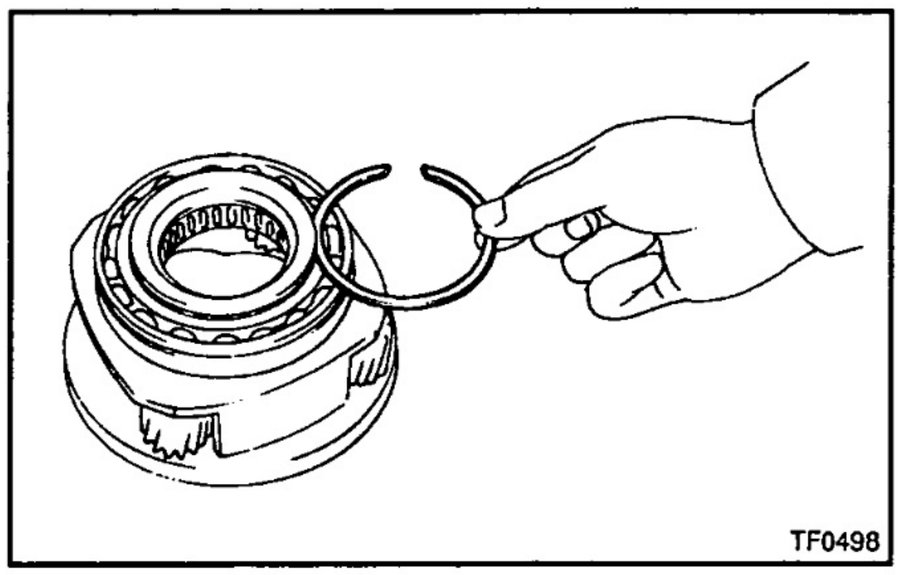

(d) Select a snap ring that allows the minimum axial play.

Mark	Thickness mm (in.)
1	1.45 – 1.50 (0.0571 – 0.0591)
2	1.50 – 1.55 (0.0591 – 0.0610)
3	1.55 – 1.60 (0.0610 – 0.0630)
4	1.60 – 1.65 (0.0630 – 0.0650)
5	1.65 – 1.70 (0.0650 – 0.0669)

(e) Using a snap ring expander, install a snap ring.

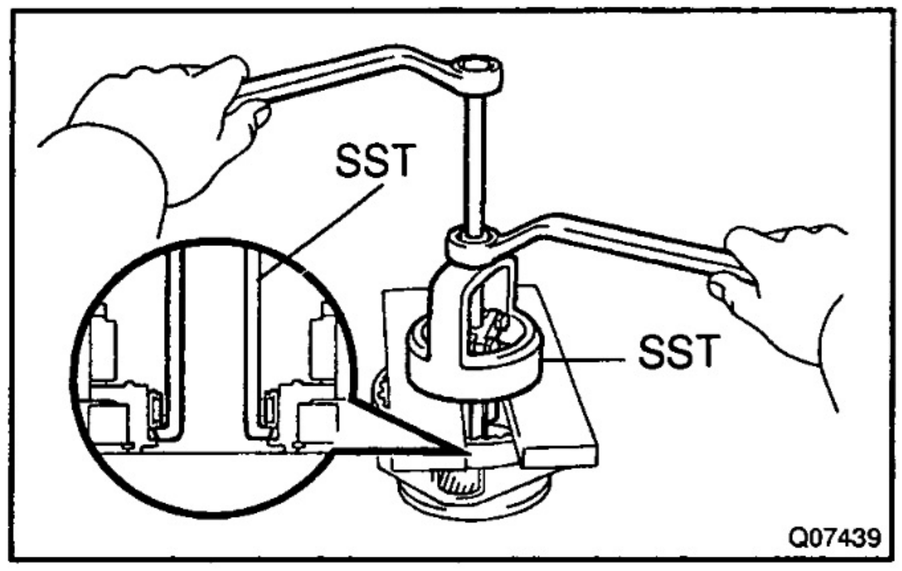

4. IF NECESSARY, REPLACE PLANETARY GEAR INNER BEARING

(a) Using SST, remove the bearing.
SST 09612–65014 (09612–01030, 09612–01050)

NOTICE:
Hang SST securely to the clearance between the inner bearing and planetary gear.

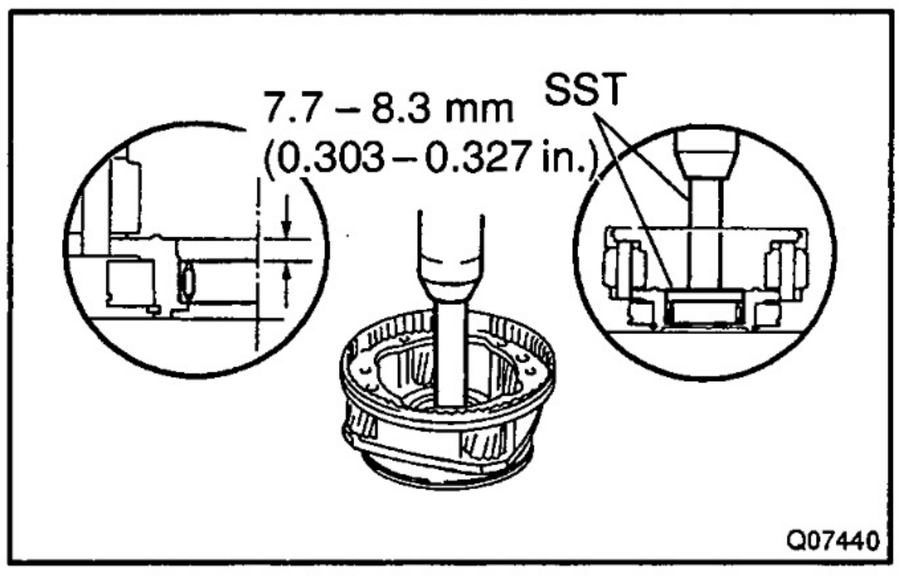

(b) Using SST and a press, install a new bearing.
SST 09950–60010 (09951–00570), 09950–70010 (09951–07100)

Bearing press in depth: 7.7 – 8.3 mm (0.303 – 0.327 in.)

OIL SEAL

COMPONENTS

TR0AG–01

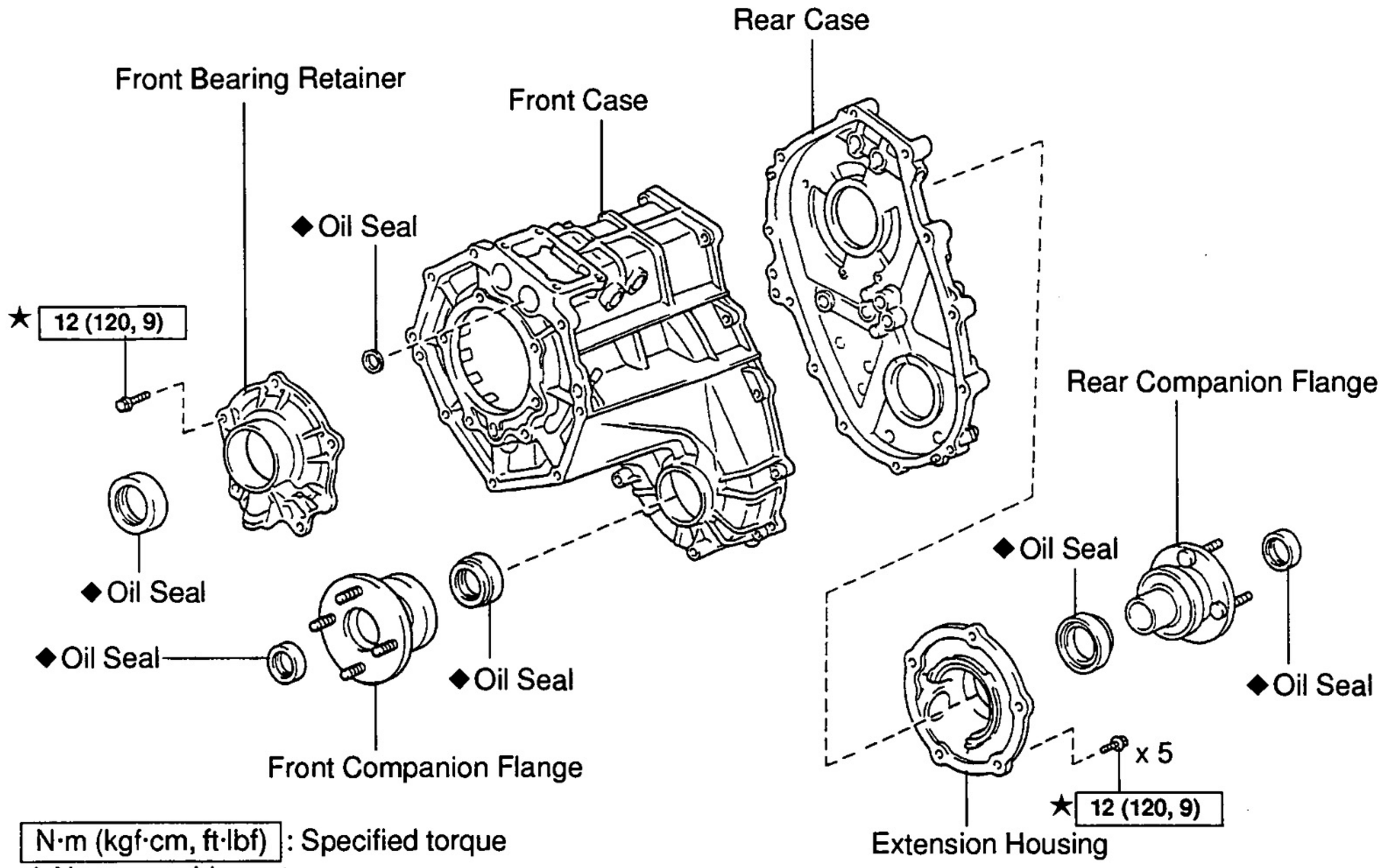

N·m (kgf·cm, ft·lbf) : Specified torque
◆ Non–reusable part
★ Precoated part

N

F09294

TR0AH–01

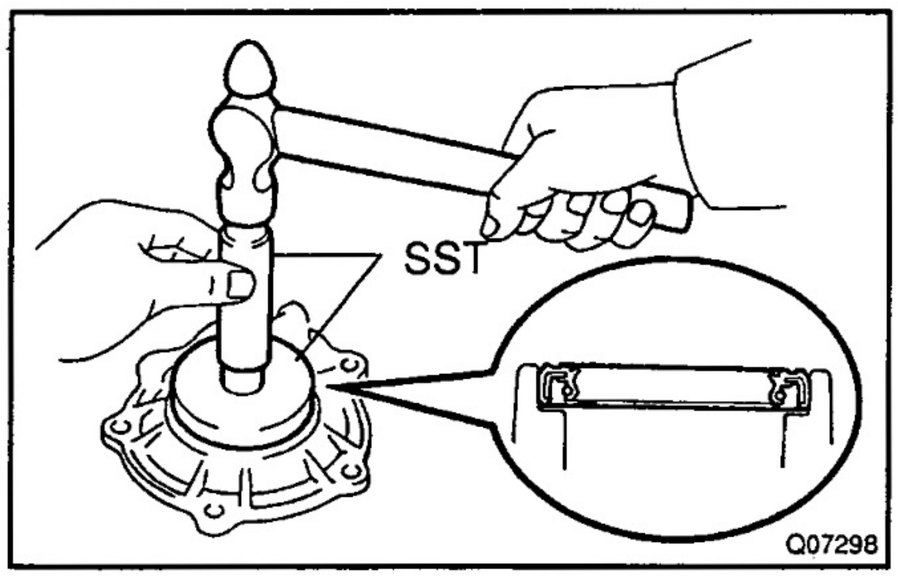

REPLACEMENT

1. IF NECESSARY, REPLACE FRONT BEARING RETAINER OIL SEAL

(a) Using a screwdriver and hammer, drive out the oil seal.

(b) Using SST and a hammer, drive in a new oil seal until its surface is flush with the retainer upper surface.
SST 09950–60010 (09951–00590), 09950–70010 (09951–07100)

(c) Coat the lip of the oil seal with MP grease.

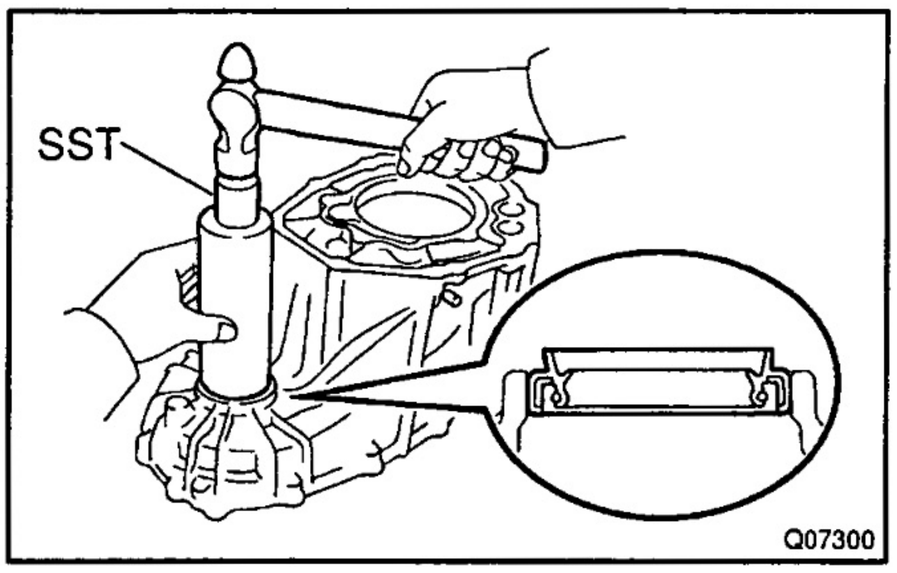

2. IF NECESSARY, REPLACE FRONT CASE OIL SEAL

(a) Using a screwdriver and hammer, drive out the oil seal.

(b) Using SST and a hammer, drive in a new oil seal until its surface is flush with the case upper surface.
SST 09316–60011 (09316–00011)

(c) Coat the lip of the oil seal with MP grease.

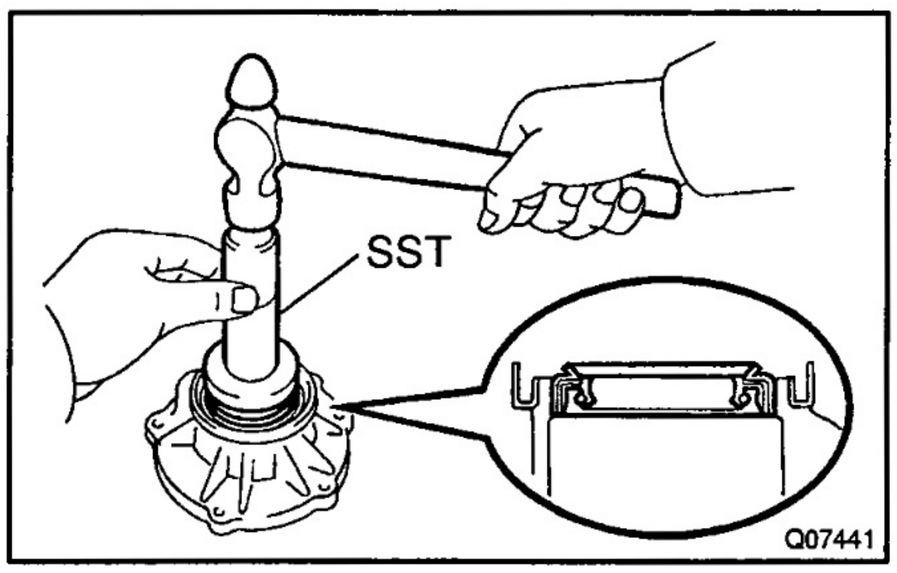

3. IF NECESSARY, REPLACE EXTENSION HOUSING OIL SEAL

(a) Using a screwdriver and hammer, drive out the oil seal.

(b) Using SST and a hammer, drive in a new oil seal until its surface is flush with the housing upper surface.
SST 09554–22010

(c) Coat the lip of the oil seal with MP grease.

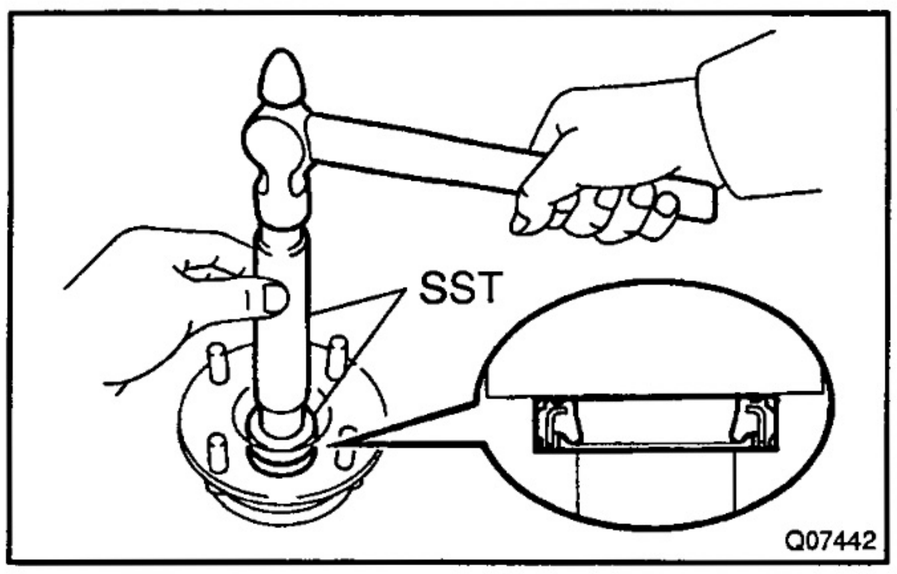

4. IF NECESSARY, REPLACE FRONT AND REAR COMPANION FLANGE OIL SEALS

(a) Using a screwdriver and hammer, drive out the 2 oil seals from the 2 flanges.

(b) Using SST and a hammer, drive in 2 new oil seals.
SST 09950–60010 (09951–00220, 09951–00350, 09952–06010), 09950–70010 (09951–07100)

(c) Coat the lip of the oil seal with MP grease.

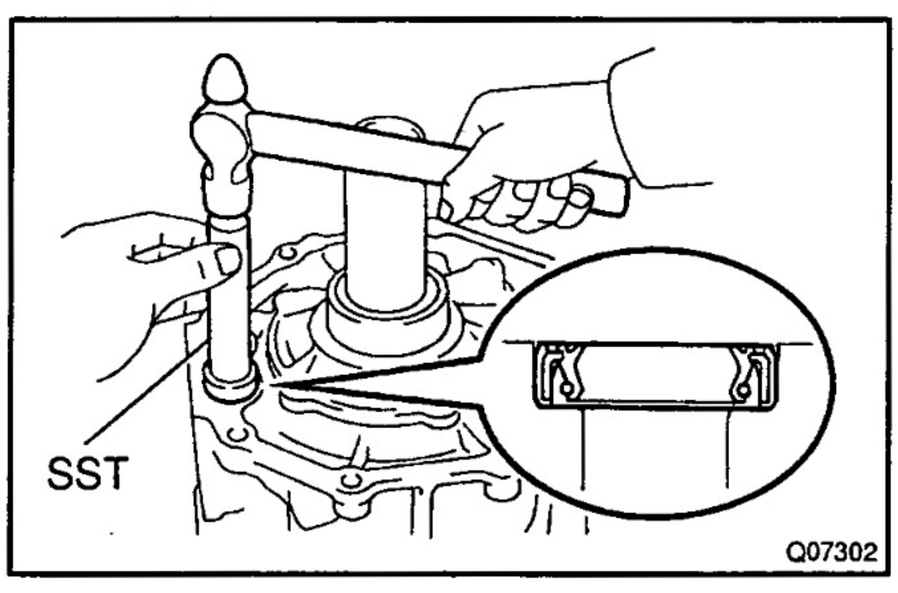

5. REPLACE SHIFT FORK SHFAT OIL SEALS

(a) Using a screwdriver, pry out the oil seal.

(b) Using SST and a hammer, drive in a new oil seal.
SST 09304–12012
Oil seal depth: –0.5 – 0.5 mm (–0.020 – 0.020 in.)

MOTOR SHIFT CONTROL SYSTEM

LOCATION

TR0AU–01

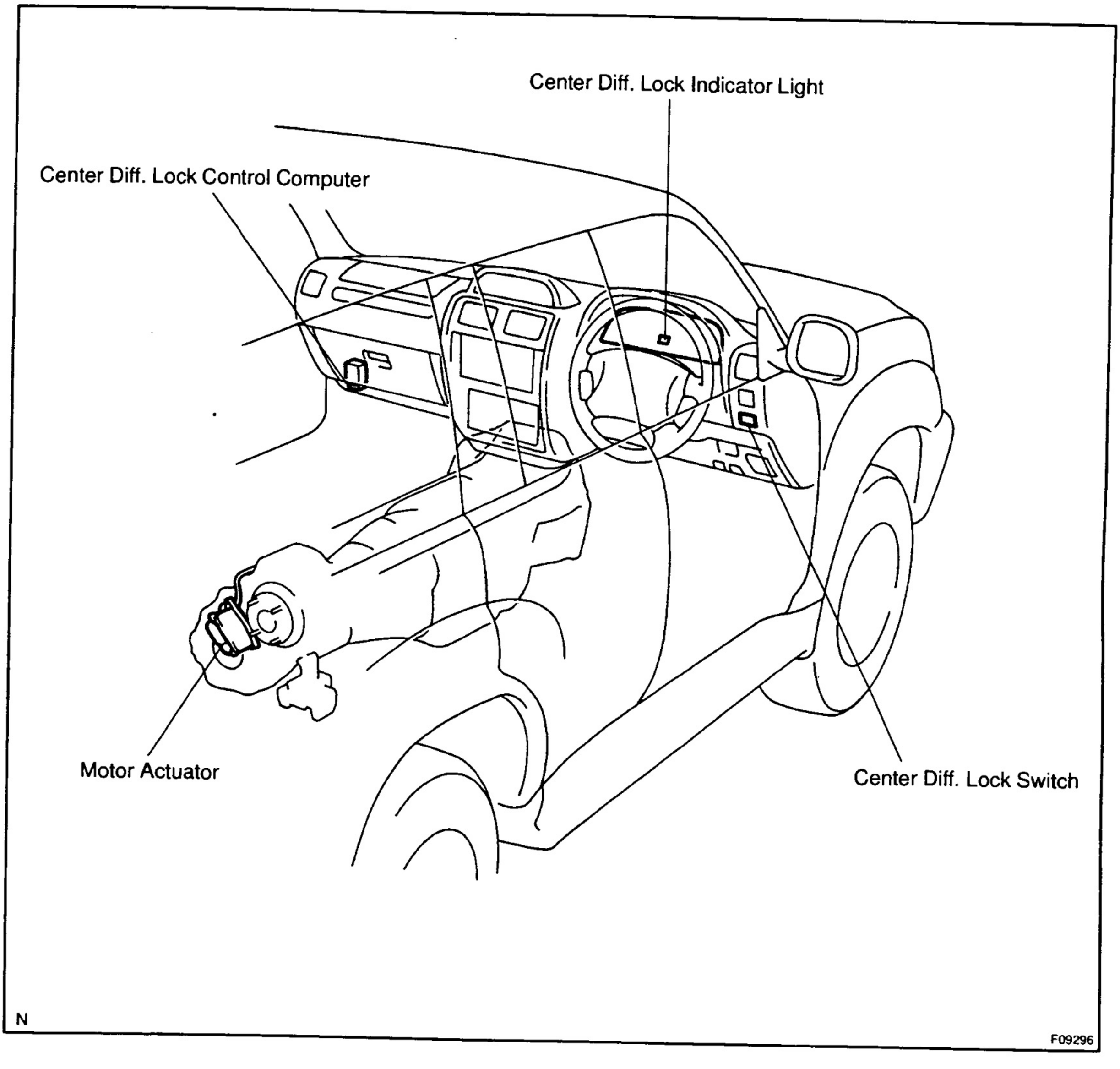

TR0AV–01

INSPECTION

1. INSPECT SWITCH POSITION

(a) Turn ON the ignition switch.

(b) Check that the center diff. indicator light goes on when the switch is in the "ON" position.
Check that the light goes off when the switch is in the "OFF" position.

ECU side:

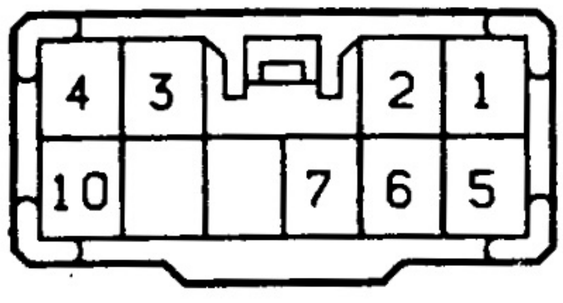

F08164

2. INSPECT CENTER DIFF. LOCK CONTROL ECU

Connect the connector to the center diff. lock control ECU and inspect the wire harness side of the connector.

STANDARD VALUE OF ECU TERMINAL

Terminals (Symbols)	Condition	Specified value
1 (DL) – 5 (GND)	• Ignition switch ON • Center diff. lock switch OFF → ON	10 – 14 V → About 0 V
2 (DF) – 5 (GND)	• Ignition switch ON • Center diff. lock switch ON → OFF	10 – 14 V → About 0 V
6 (C/D) – 5 (GND)	• Ignition switch ON • Center diff. lock switch ON	About 0 V
	• Ignition switch ON • Center diff. lock switch OFF	10 – 14 V
7 (IND) – 5 (GND)	• Ignition switch ON • Center diff. lock switch ON	0 – 1 V
	• Ignition switch ON • Center diff. lock switch OFF	10 – 14 V
8 (IG) – 5 (GND)	Ignition switch ON	10 – 14 V
5 (GND) – Body ground	–	Continuity

3. INSPECT MOTOR ACTUATOR OPERATION

HINT:

When switching from FREE to LOCK cannot be smoothly done, manually rotate the front propeller shaft a little and then drive the motor again.

NOTICE:

Current should not be applied to the motor for more than 1 min. (After a lay–up time of 1 min., apply current again.)

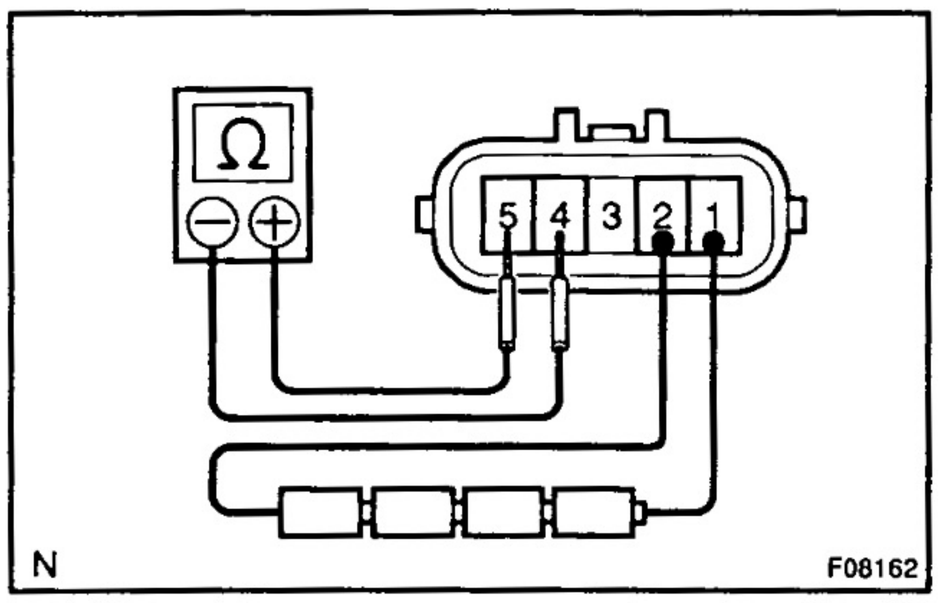

(a) Raise up the front wheels, place stoppers behind the rear wheels to block them, and pull up the parking brake.
(b) Disconnect the connector of the motor actuator.
(c) Connect four 1.5 V dry cells in series.
(d) Connect the positive (+) lead from the dry cells to terminal 1 and the negative (–) lead to terminal 2.
(e) Check that there is continuity between terminals 4 and 5.
(f) Check that the front propeller shaft can be rotated by hand.

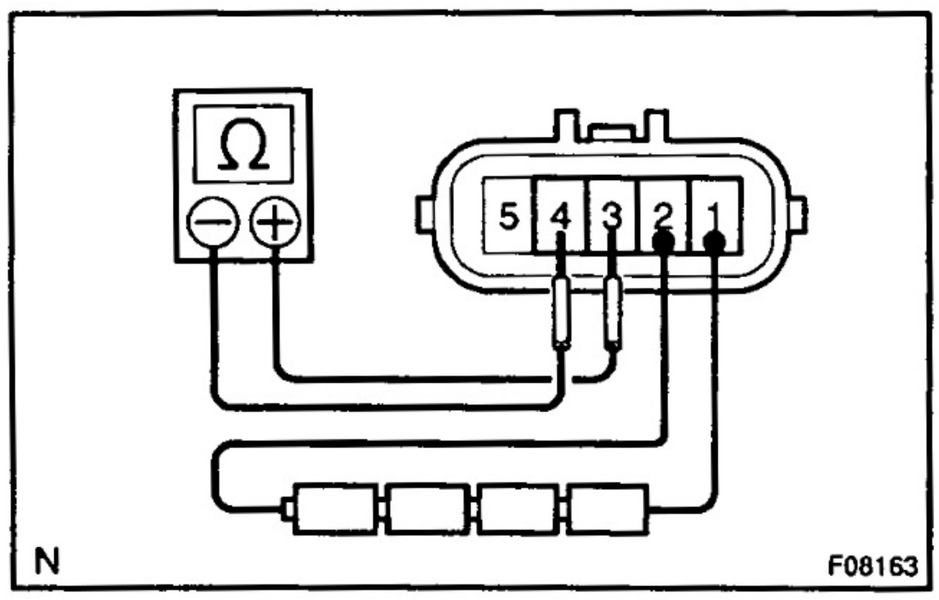

(g) Connect the positive (+) lead from the dry cells to terminal 2 and the negative (–) lead to terminal 1.
(h) Check that there is continuity between terminals 3 and 4.
(i) Check that the front propeller shaft cannot be rotated by hand.

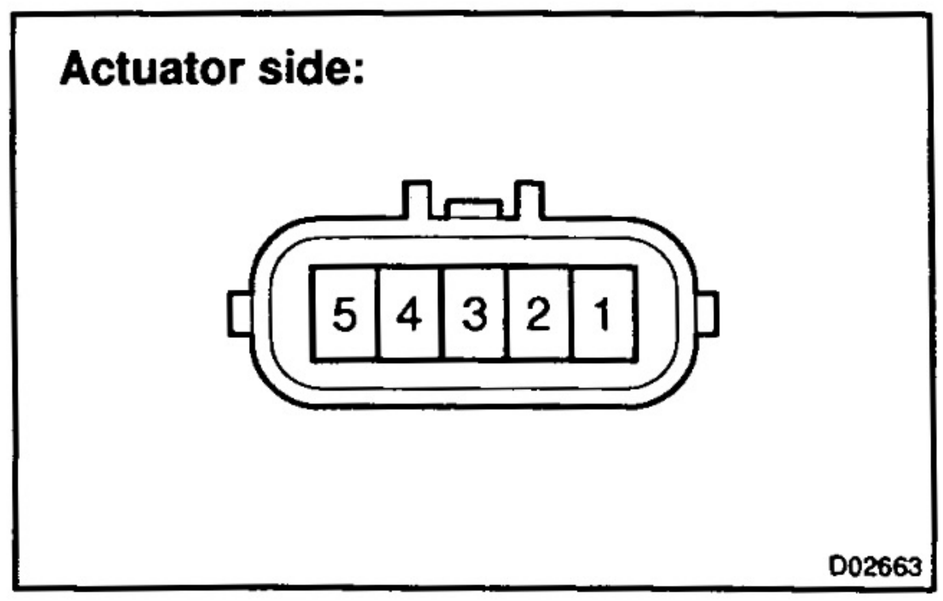

4. INSPECT MOTOR ACTUATOR (MOTOR)

(a) Remove the actuator assembly
(See page TR–3).
(b) Measure the resistance between terminals 1 and 2.
Standard resistance: 2.3 – 100 Ω (at 20 °C)
(c) Measure the resistance between terminals 1 or 2 and the body ground.
Standard resistance: More than 0.5 MΩ

If the resistance value is not as specified, replace the actuator assembly.

NOTICE:

After removing the actuator from the transfer, make sure that the rod does not move to the full strake.

BRAKE

BRAKE FLUID BR–1
BRAKE PEDAL BR–6
HYDRAULIC BRAKE BOOSTER BR–8

REFER TO LAND CRUISER/LAND CRUISER PRADO REPAIR MANUAL FOR CHASSIS AND BODY (Pub. No. RM517E)

NOTE: The above pages contain only the points which differ from the above listed manual.

BRAKE FLUID

BLEEDING

BR121-01

HINT:

- If any work is done on the brake system or if air in the brake lines is suspected, bleed the air from the system.
- When bleeding, keep the amount of the fluid within the line of reservoir between Min. and Max.

NOTICE:

- **Do not let brake fluid remain on painted surfaces. Wash it off immediately.**
- **With the reservoir cap removed, when depressing the brake pedal, the fluid will spray.**

1. **FILL RESERVOIR WITH BRAKE FLUID**
   Fluid: SAE J1703 or FMVSS NO. 116 DOT3
2. **In case of using hand–held tester:**
   BLEED HYDRAULIC BRAKE BOOSTER

HINT:

If the hydraulic brake booster has been disassembled, disconnect the brake line from the hydraulic brake booster or if the reservoir becomes empty, bleed the hydraulic brake booster.

(a) Turn the ignition switch OFF, depress the brake pedal more than 40 times.

HINT:

When a pressure in power supply system is released, reaction force becomes heavy and stroke becomes shorter.

(b) Turn the ignition switch ON, check that the pump stops after approx. 30 to 40 sec.

NOTICE:

When the pump does not stop, repeat step (a) and (b) again.

(c) With the ignition switch remained ON, depress the brake pedal more than 20 times.

(d) Observe the procedure in step 4 and bleed the right and left front brake caliper.

(e) Holding the brake pedal depressed, bleed the right and left rear brake caliper.

HINT:

It is not necessary to depress the pedal continuously, as brake fluid flows out by first depressing.

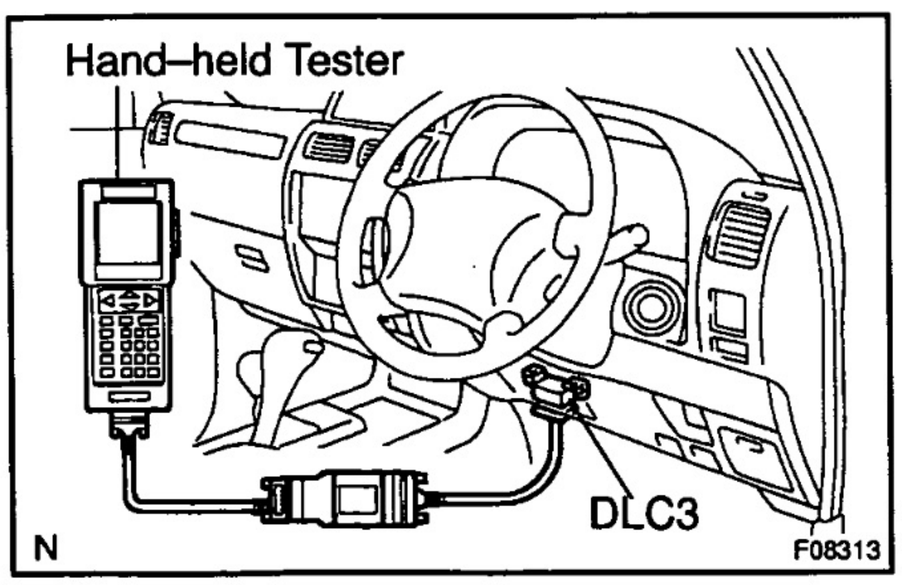

(f) Connect hand–held tester.

(1) Turn the ignition switch OFF, connect the hand–held tester to DLC3.

(2) Turn the ignition switch ON and select "AIR BLEEDING" on the hand–held tester.

HINT:

Please refer to the hand–held tester operator's manual for further details.

(g) Bleed right front brake line.
  (1) Select "FR LINE" on the hand–held tester.
  (2) With "FR LINE" turned ON with the hand–held tester, depress the brake pedal and hold it to bleed the right front brake caliper.
  (3) Repeat step (2) until there are no more air bubbles in the fluid.

(h) Bleed left front brake line.
  (1) Select "FL LINE" on the hand–held tester.
  (2) With "FL LINE" turned ON with the hand–held tester, depress the brake pedal and hold it to bleed the left front brake caliper.
  (3) Repeat step (2) until there are no more air bubbles in the fluid.

(i) Bleed rear brake line.
  (1) Select "RR LINE" on the hand–held tester.
  (2) With "RR LINE" turned ON with the hand–held tester, bleed the left and right rear brake caliper.

(j) Disconnect the hand–held tester from DLC3.

(k) Clear the DTC (See page DI–86).

3. In case of using ABS actuator checker (SST):
BLEED HYDRAULIC BRAKE BOOSTER

HINT:

If the hydraulic brake booster has been disassembled, disconnect the brake line from the hydraulic brake booster or if the ervoir becomes empty, bleed the hydraulic brake booster.

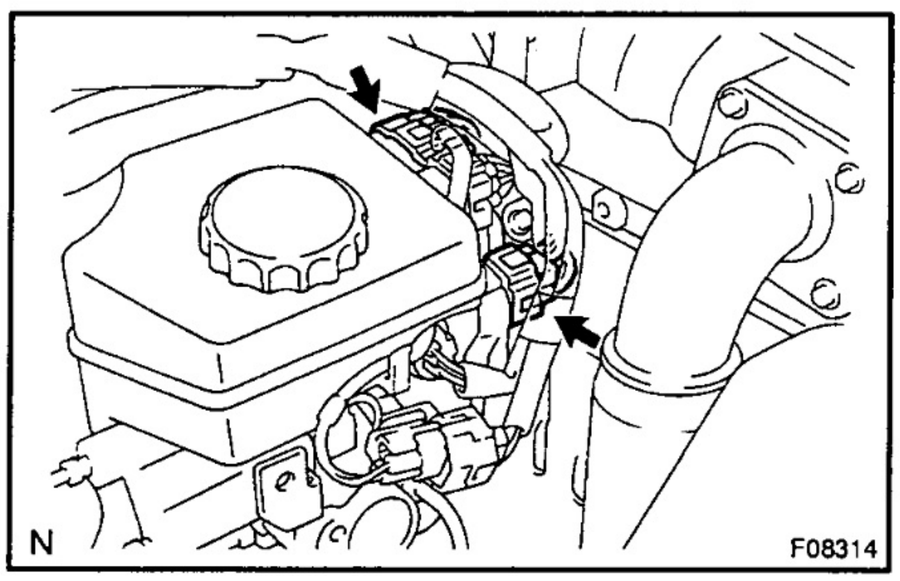

(a) Disconnect the 2 connectors from the hydraulic brake booster.

(b) Connect the actuator checker (SST) to the hydraulic brake booster side wire harness via the sub–wire harness (SST), as shown in the chart below.
SST 09990–00150, 09990–00480

HINT:
Connect the connector with the label of "AIR BLEED" attached to the connector of actuator checker.

(c) Connect the red cable of the checker to the battery positive (+) terminal and the black cable to the negative (–) terminal.

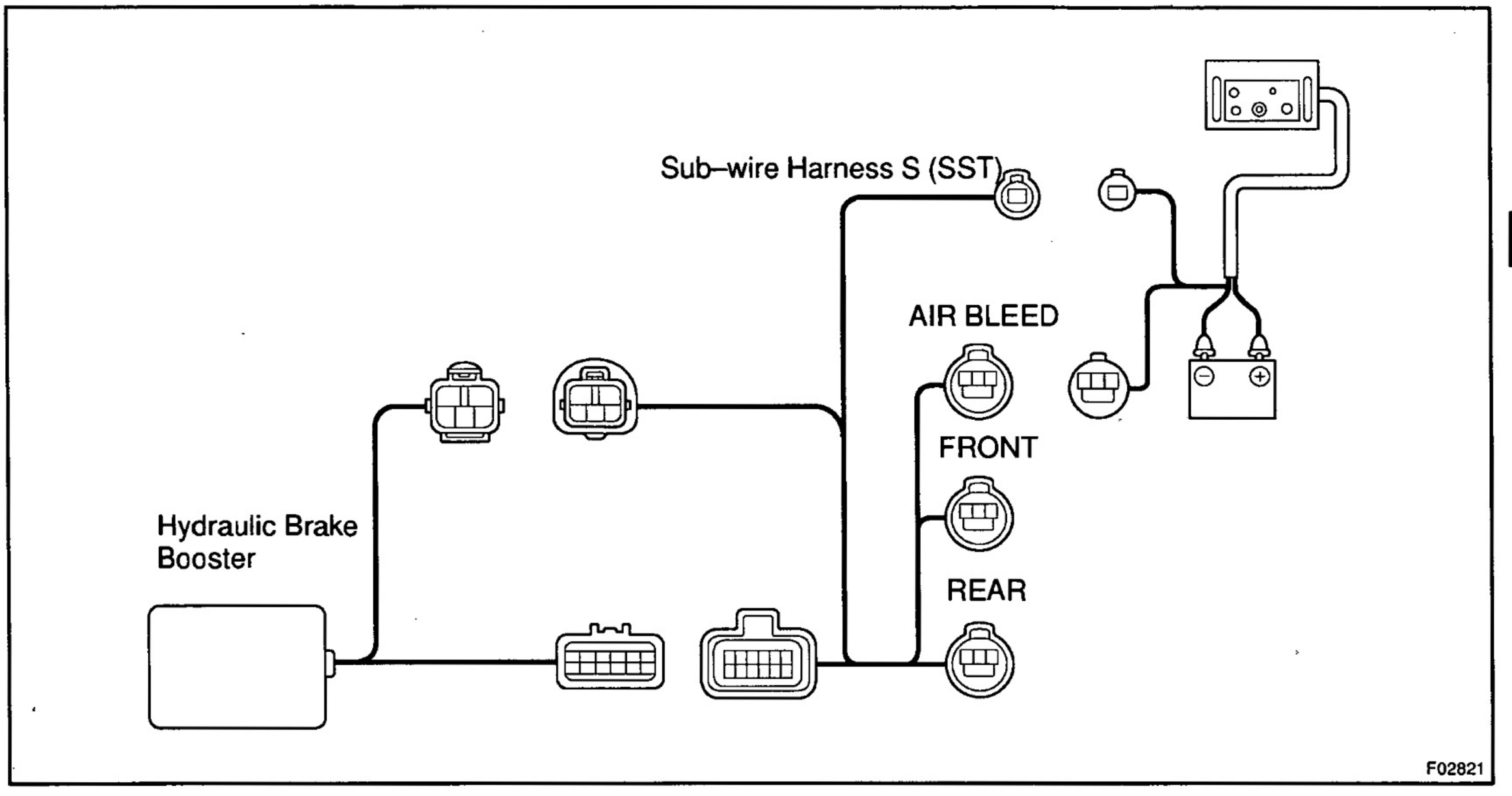

(d) Turn the ignition switch OFF, depress the brake pedal more than 40 times.

HINT:
When a pressure in power supply system is released, reaction force becomes heavy and stroke becomes shorter.

(e) Turn the ignition switch ON, check that the pump stops after 30 to 40 sec.

NOTICE:
When the pump does not stop, repeat step (d) and (e) again.

(f) With the ignition switch remained ON, depress the brake pedal more than 20 times.

(g) Observe the procedure in step 4 and bleed the right and left front wheel caliper.

(h) Holding the brake pedal depressed, bleed the right and left rear brake caliper.

HINT:
It is not necessary to depress the pedal continuously, as brake fluid flows out by first depressing.

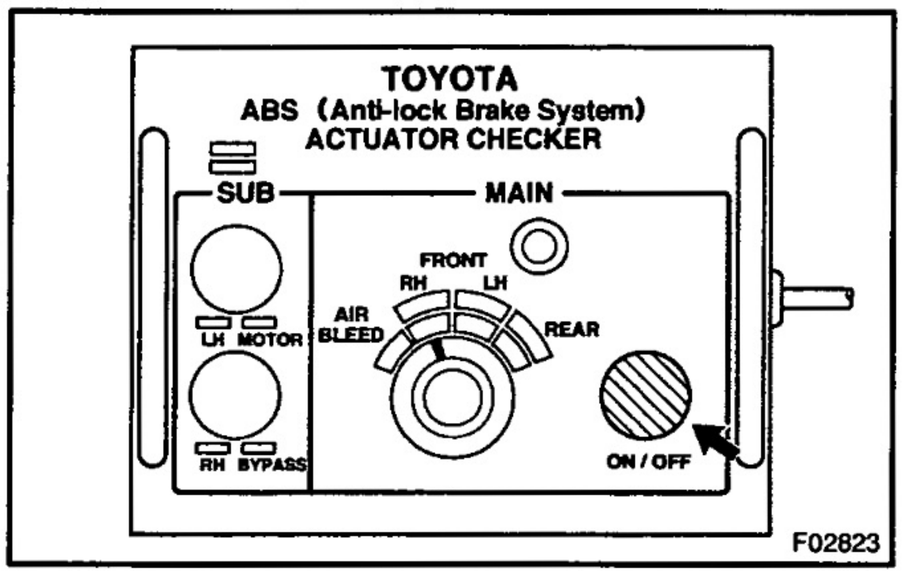

(i) Bleed right front brake line.

(1) Turn the selector switch of the actuator checker to the "FRONT RH" position.

(2) Push and hold in MAIN push switch, depress the brake pedal and hold it to bleed the right front brake caliper.

NOTICE:

Do not keep the MAIN switch pushed in for more than 10 sec. When operating it continuously, set the interval of more than 20 sec.

(3) Repeat step (2) until there are no more air bubbles in the fluid.

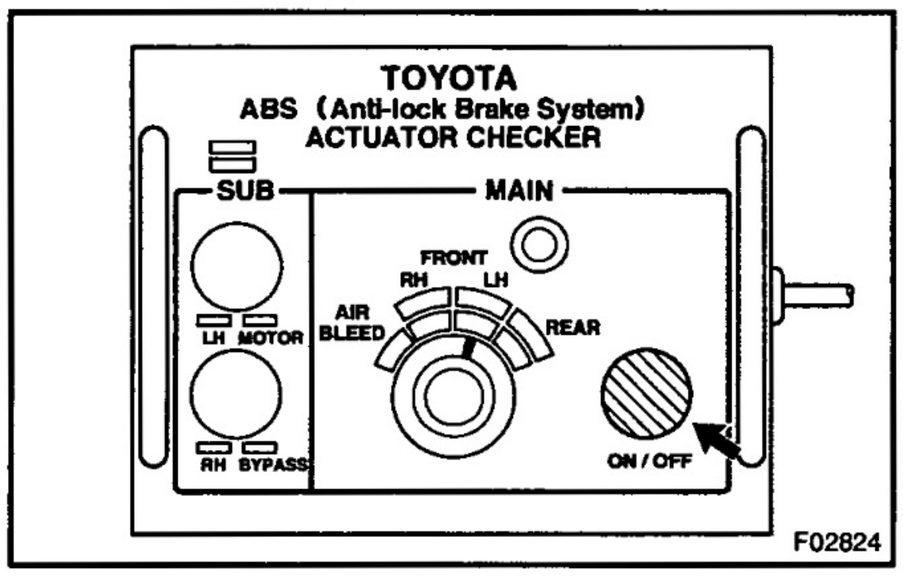

(j) Bleed left front brake line.

(1) Turn the selector switch of the actuator checker to the "FRONT LH" position.

(2) Push and hold in the MAIN push switch, depress the brake pedal and hold it to bleed the left front brake caliper.

NOTICE:

Do not keep the MAIN switch pushed in for more than 10 sec. When operating it continuously, set the interval of more than 20 sec.

(3) Repeat step (2) until there are no more air bubbles in the fluid.

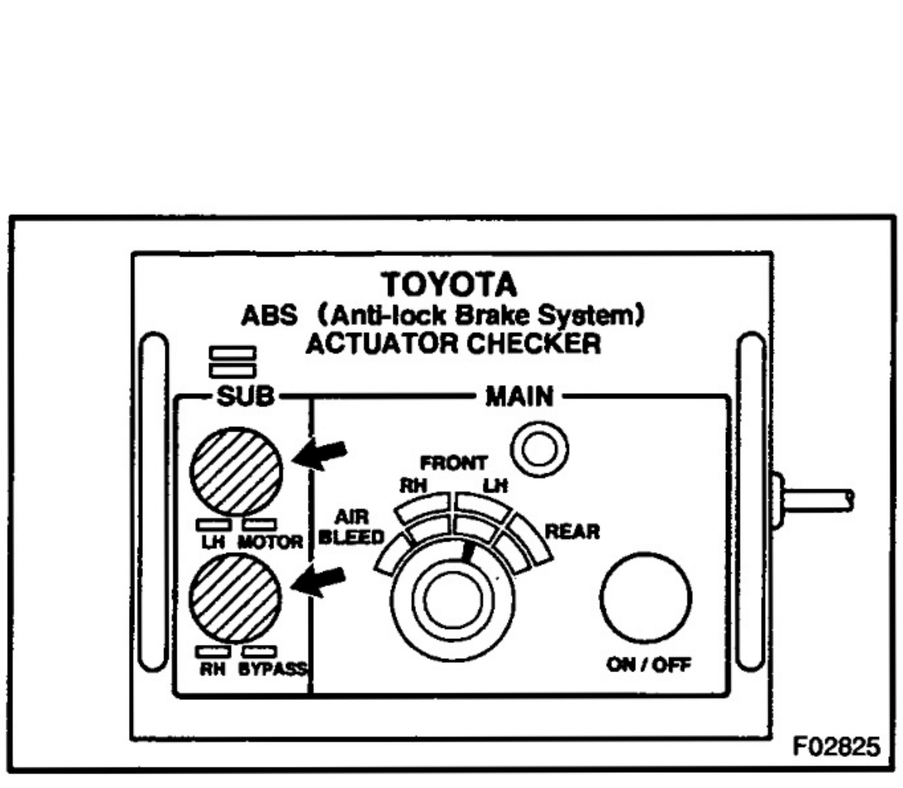

(k) Bleed right rear brake line.

(1) Push and hold in the "SUB LH" and "SUB RH" switches, bleed the right rear brake caliper.

NOTICE:

Do not keep the MAIN switch pushed in for more than 10 sec. When operating it continuously, set the interval of more than 20 sec.

(2) Repeat step (1) until there are no more air bubbles in the fluid.

(l) Observe the procedure in step (k) and bleed left rear brake line.
(m) Disconnect the actuator checker (SST) and sub–wire harness (SST) from the actuator.
SST 09990–00150, 09990–00480
(n) Connect the 2 connectors to the hydraulic brake booster.
(o) Clear the DTC (See page DI–86).

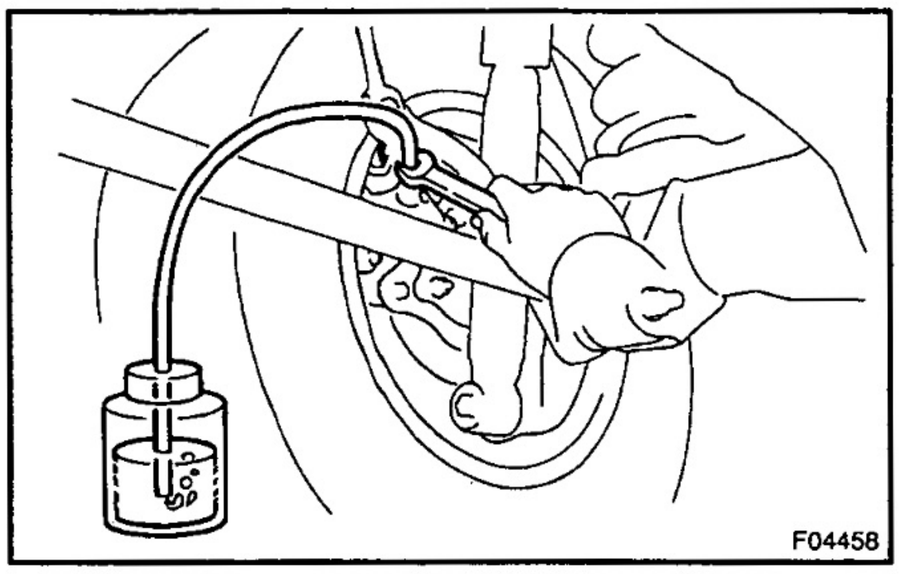
F04458

4. BLEED BRAKE LINE

(a) Connect the vinyl tube to the brake caliper.
(b) Depress the brake pedal several times, then loosen the bleeder plug with the pedal held down.
(c) At the point when fluid stops coming out, tighten the bleeder plug, then release the brake pedal.
(d) Repeat (b) and (c) until all the air in the fluid has been bled out.
(e) Repeat the above procedure to bleed the brake line for each wheel.
Torque: 11 N·m (110 kgf·cm, 8 ft·lbf)

5. CHECK FLUID LEVEL IN RESERVOIR

(a) With the ignition switch OFF, depress the brake pedal more than 40 times.

HINT:
When a pressure in power supply system is released, reaction force becomes heavy and stroke becomes shorter.

(b) Remove the reservoir cap. Add brake fluid up to the "MAX" line.
Fluid: SAE J1703 or FMVSS NO. 116 DOT3

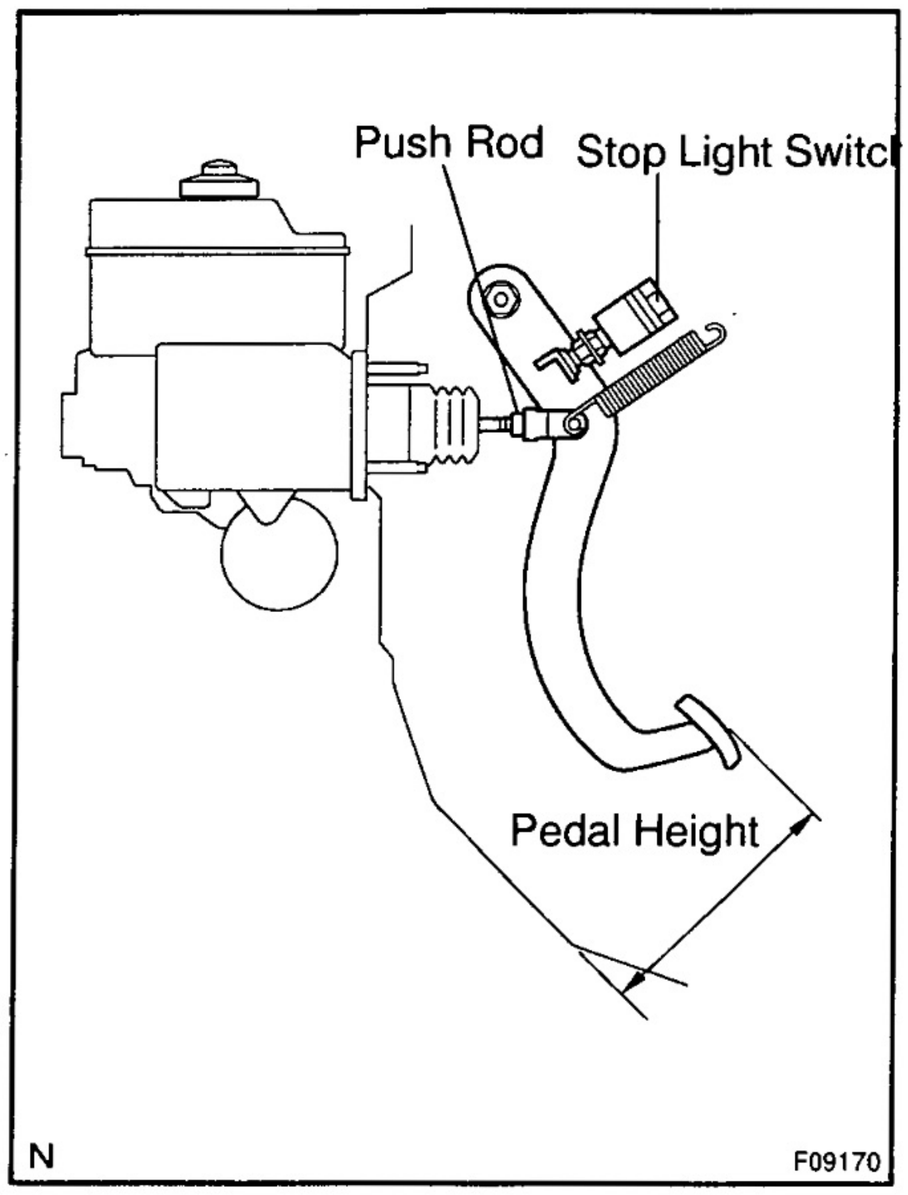

BRAKE PEDAL

BR122-01

ON–VEHICLE INSPECTION

1. CHECK PEDAL HEIGHT

Pedal height from asphalt sheet:
183.7 – 193.7 mm (7.232 – 7.626 in.)

If the pedal height is incorrect, adjust it.

2. IF NECESSARY, ADJUST PEDAL HEIGHT

(a) Remove the lower finish panel, hood lock release lever, fuel lid release lever and No. 1 heater to register duct (See page BO–17).

(b) Disconnect the connector from the stop light switch.

(c) Loosen the stop light switch lock nut and remove the stop light switch.

(d) Loosen the push rod lock nut.

(e) Adjust the pedal height by turning the pedal push rod.

(f) Tighten the push rod lock nut.

Torque: 25 N·m (260 kgf·cm, 19 ft·lbf)

(g) Install the stop light switch.

(h) Connect the connector to the stop light switch.

(i) Push in the brake pedal 5 – 15 mm (0.20 – 0.59 in.), turn the stop light switch to lock the nut in the position where the stop light goes off.

(j) After installation, push in the brake pedal 5 – 15 mm (0.20 – 0.59 in.), check that stop light lights up.

(k) After adjusting the pedal height, check the pedal freeplay.

(l) Install the No. 1 heater to register duct, hood lock release lever, fuel lid release lever and lower finish panel (See page BO–21).

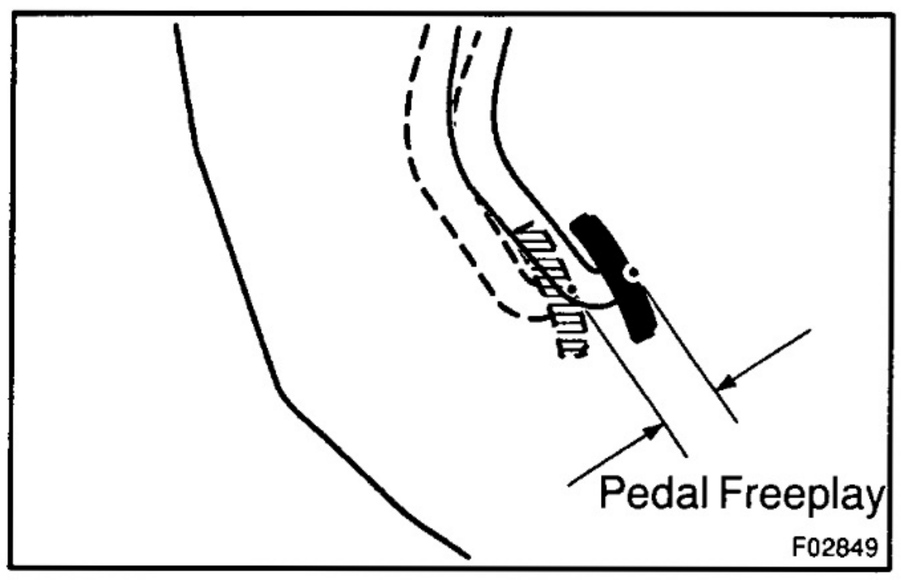

3. CHECK PEDAL FREEPLAY

(a) Stop the engine and depress the brake pedal more than 40 times until there is no more pressure left in the booster.

(b) Push in the pedal by hand until the second point of resistance begins to be felt, then measure the distance, as shown.

Pedal freeplay:
w/o TRC or VSC: 3.0 – 6.0 mm (0.118 – 0.236 in.)
w/ TRC or VSC: 3.0 – 4.0 mm (0.118 – 0.157 in.)

If incorrect, check the stop light switch clearance. If the clearance is OK, then troubleshoot the brake system.

Stop light switch clearance: 1.0 mm (0.039 in.)

HINT:

The freeplay to the 1st point of resistance is due to the play between the clevis, pedal link and pin. It is 1.0 – 6.0 mm (0.039 – 0.236 in.) on the pedal.

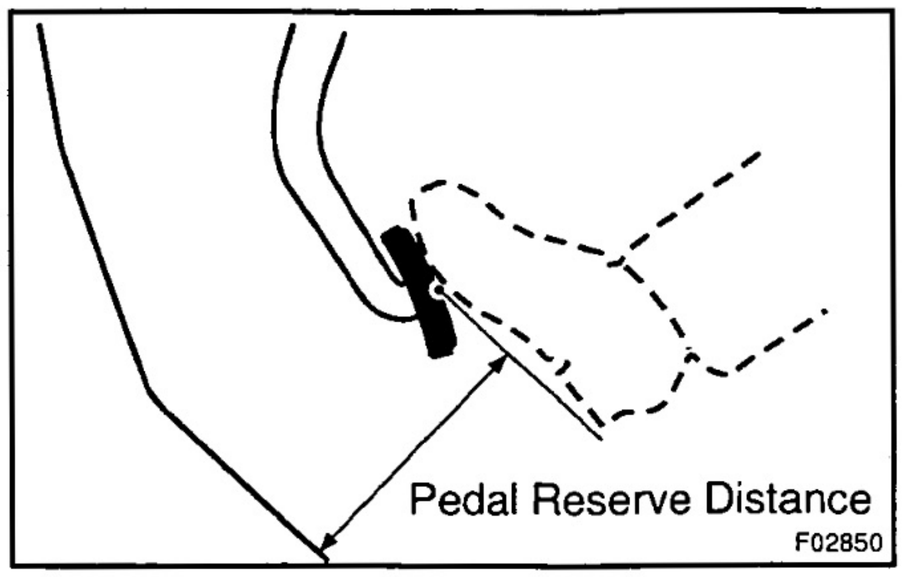

4. CHECK PEDAL RESERVE DISTANCE

(a) Remove the floor carpet.

(b) Release the parking brake.

With the engine running, depress the pedal and measure the pedal reserve distance, as shown.

Pedal reserve distance at 490 N (50 kgf, 110.2 lbf): More than 95 mm (3.74 in.)

If the reserve distance is incorrect, troubleshoot the brake system.

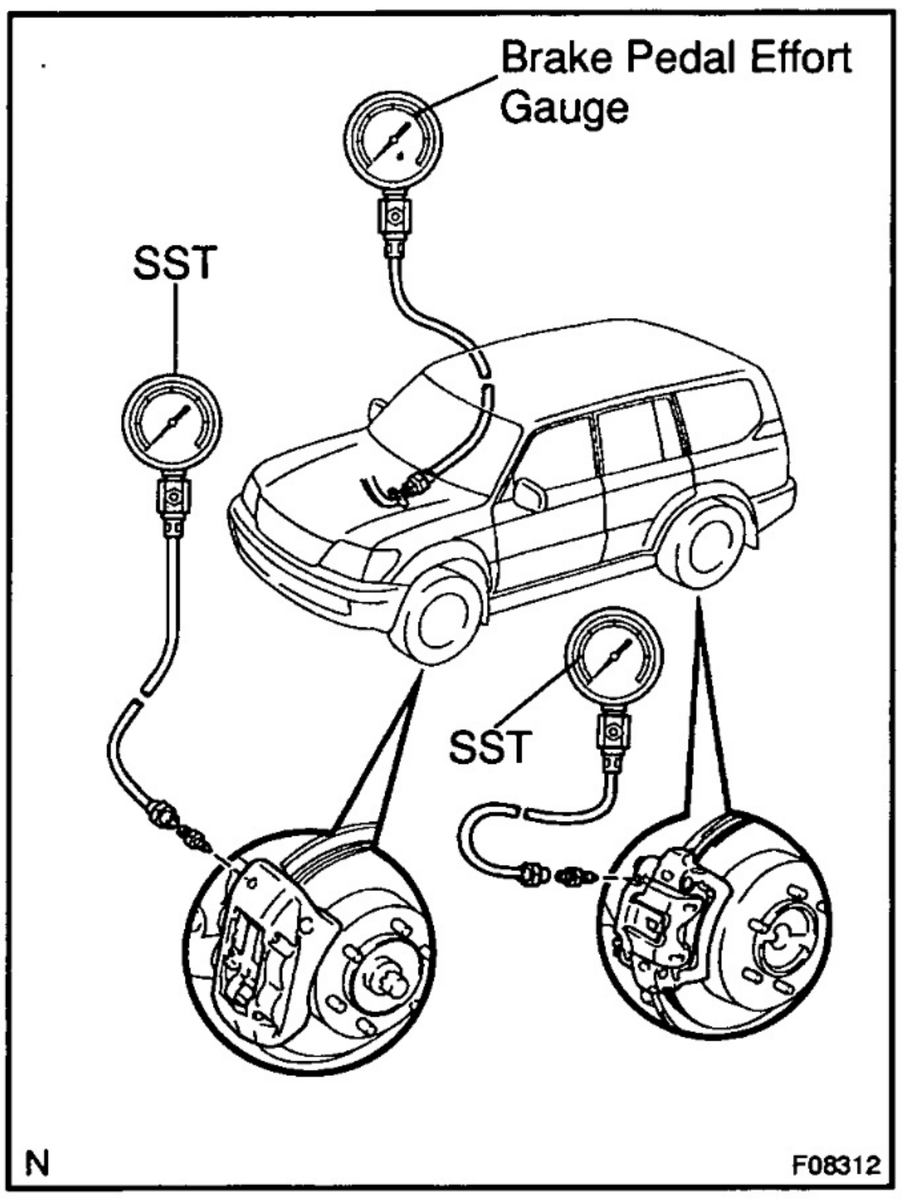

HYDRAULIC BRAKE BOOSTER

BR123-01

ON–VEHICLE INSPECTION

1. CHECK HYDRAULIC BRAKE BOOSTER FLUID PRESSURE CHANGE

(a) Inspect the battery voltage.
Battery voltage: 10 – 14 V

(b) Turn the ignition switch OFF, depress the brake pedal more than 40 times.

HINT:
When a pressure in power supply system is released, reaction force becomes heavy and stroke becomes shorter.

(c) Install LSPV gauge (SST) and brake pedal effort gauge, bleed air.
SST 09709–29018

(d) When booster does not operate:
Depress the brake pedal and check fluid pressure.
At 245 N (25 kgf, 55 lbf):

Front brake pressure	Rear brake pressure
1,471 kPa (15 kgf/cm^2, 213 psi) or more	0 kPa (0 kgf/cm^2, 0 psi)

At 343 N (35 kgf, 77 lbf):

Front brake pressure	Rear brake pressure
2,059 kPa (21 kgf/cm^2, 299 psi) or more	0 kPa (0 kgf/cm^2, 0 psi)

(e) When booster operate:
(1) Turn the ignition switch ON and wait until the pump motor has stopped.
(2) Depress the brake pedal and check fluid pressure.
At 49 N (5 kgf, 11 lbf):

Front brake pressure	Rear brake pressure
1,324 – 2,501 kPa (13.5 – 25.5 kgf/cm^2, 192 – 363 psi)	1,569 – 2,746 kPa (16 – 28 kgf/cm^2, 228 – 398 psi)

At 98 N (10 kgf, 22 lbf):

Front brake pressure	Rear brake pressure
3,285 – 4,462 kPa (33.5 – 45.5 kgf/cm^2, 476 – 647 psi)	3,579 – 4,756 kPa (36.5 – 48.5 kgf/cm^2, 519 – 690 psi)

At 147 N (15 kgf, 33 lbf):

Front brake pressure	Rear brake pressure
5,296 – 6,472 kPa (54 – 66 kgf/cm^2, 768 – 939 psi)	5,541 – 6,718 kPa (56.5 – 68.5 kgf/cm^2, 804 – 974 psi)

At 196 N (20 kgf, 44 lbf):

Front brake pressure	Rear brake pressure
7,257 – 8,434 kPa (74 – 86 kgf/cm^2, 1,053 – 1,223 psi)	7,551 – 8,728 kPa (77 – 89 kgf/cm^2, 1,095 – 1,266 psi)

2. In case of using hand–held tester:
INSPECT HYDRAULIC BRAKE BOOSTER OPERATION

(a) Inspect the battery voltage.
Battery voltage: 10 – 14 V

(b) Turn the ignition switch OFF, depress the brake pedal more than 40 times.

HINT:
When a pressure in power supply system is released, reaction force becomes heavy and stroke becomes shorter.

(c) Check that the brake pedal becomes heavy to depress.
If the pedal does not become to be heavy to depress, check and replace the brake line and hydraulic brake booster.

(d) Turn the ignition switch ON, check the pump motor operation noise.
If the pump motor does not operate, check and replace the wire harness and pump motor (See page BR–25).

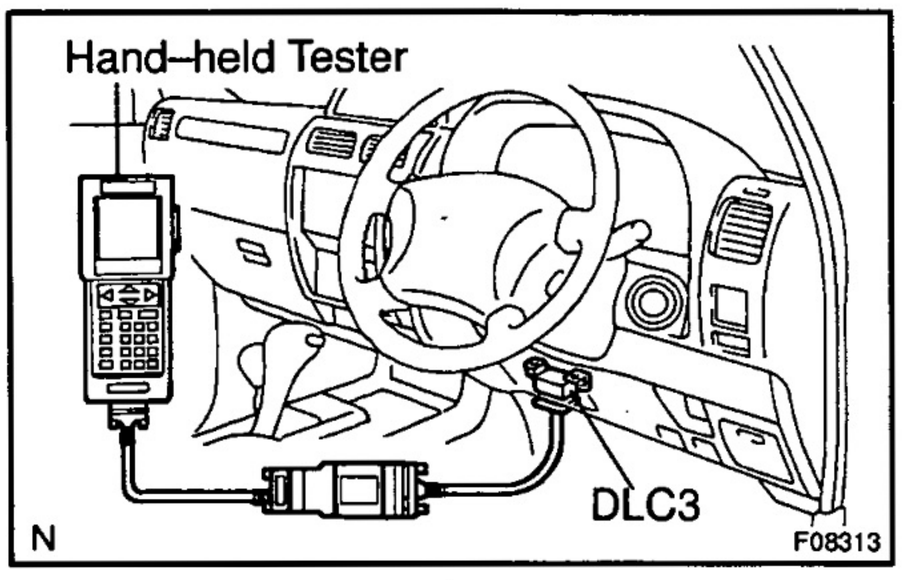

(e) Connect the hand–held tester.
(1) Connect the hand–held tester to the DLC3.
(2) Turn the ignition switch ON.
(3) Select the "ACTIVE TEST" mode on the hand–held tester.

HINT:
- Please refer to the hand–held tester operator's manual for further details.
- To protect the solenoids, hand–held tester turns OFF automatically 2 sec. after every solenoid has been turned ON.

(f) Inspect the front TRC or front TRC & VSC solenoid operation.
(1) Select "SA1" and "SA2" on the hand–held tester.
(2) With "SA1" and "SA2" turned ON simultaneously with the hand–held tester, depress the brake pedal with stable force and check that the pedal cannot be depressed.

HINT:
To protect the solenoids, hand–held tester turns OFF automatically 2 sec. after every solenoid has been turned ON.
If the pedal can be depressed, replace the hydraulic brake booster.

NOTICE:
When operating it continuously, set the interval of more than 20 sec.

(3) Once, release the brake pedal.

(4) When the solenoids are OFF, after depressing the brake pedal again and check that the brake pedal can be depressed.

If the pedal cannot be depressed, replace the hydraulic brake booster.

(g) Inspect the front ABS solenoid operation.

(1) Select "SFRH" and "SFLH" on the hand–held tester.

(2) With "SFRH" and "SFLH" turned ON simultaneously with the hand–held tester, depress the brake pedal with stable force and check that the brake pedal cannot be depressed.

HINT:

To protect the solenoids, hand–held tester turns OFF automatically 2 sec. after every solenoid has been turned ON.

If the pedal can be depressed, replace the hydraulic brake booster.

(3) Once, release the brake pedal when the solenoids are OFF, check that the brake pedal can be depressed.

If the pedal cannot be depressed, replace the hydraulic brake booster.

(4) Once, release the brake pedal. After depressing and holding the brake pedal with stable force, turn the SFRH and SFRR solenoids ON simultaneously.

HINT:

To protect the solenoids, hand–held tester turns OFF automatically 2 sec. after every solenoid has been turned ON.

(5) When the solenoids are OFF, check that the brake pedal can be depressed.

If the pedal cannot be depressed, replace the hydraulic brake booster.

(6) Once, release the brake pedal. After depressing and holding the brake pedal with stable force, turn the SFLH and SFLR solenoids ON simultaneously.

HINT:

To protect the solenoids, hand–held tester turns OFF automatically 2 sec. after every solenoid has been turned ON.

(7) When the solenoids are OFF, check that the brake pedal can be depressed.

If the pedal cannot be depressed, replace the hydraulic brake booster.

(h) Jack up and support the vehicle.

(i) Release the parking brake lever.

(j) Shift the transfer shift lever to "N" position and check that the rear wheels by rotating them by hand.

(k) Inspect the rear TRC or rear TRC & VSC solenoid operation.

(1) Select the "SA3" and "STR" on the hand–held tester.

(2) Turn the "SA3" and "STR" ON simultaneously with the hand–held tester, and check that the rear wheels does not rotate by hand.

HINT:

When rotating the wheel fast, the fail–safe function is activated and judgement cannot be made properly. So rotate the wheel as slowly as possible.

If the rear wheels rotate, replace the hydraulic brake booster.

(3) Turn the "SA3" and "STR" OFF simultaneously, and check that the rear wheels by rotating them by hand.

HINT:

- To protect the solenoids, hand–held tester turns OFF automatically 2 sec. after every solenoid has been turned ON.
- When rotating the wheel fast, the fail–safe function is activated and judgement cannot be made properly. So rotate the wheel as slowly as possible.

NOTICE:

When operating it continuously, set the interval of more than 20 sec.

If the rear wheels stop, replace the hydraulic brake booster.

(l) Inspect the right rear ABS solenoid.

(1) Select the "SA3", "STR" and "SRRH", on the hand–held tester.

(2) Turn the "SA3", "STR" and "SRRH" ON simultaneously with the hand–held tester, and check that the right rear wheel by rotating it by hand.

HINT:

- To protect the solenoids, hand–held tester turns OFF automatically 2 sec. after every solenoid has been turned ON.
- When rotating the wheel fast, the fail–safe function is activated and judgement cannot be made properly. So rotate the wheel as slowly as possible.
- When solenoid is OFF, the wheel might stop temporarily. However if the wheel rotates again, the function works normally.

If the rear wheels stop, replace the hydraulic brake booster.

(3) Turn the "SA3", "STR" and "SRRH" OFF, and check that the right rear wheel by rotating it by hand.

HINT:

- To protect the solenoids, hand–held tester turns OFF automatically 2 sec. after every solenoid has been turned ON.
- When rotating the wheel fast, the fail–safe function is activated and judgement cannot be made properly. So rotate the wheel as slowly as possible.

If the right rear wheel stop, replace the hydraulic brake booster.

(4) Depress the pedal with stable force, then turn the "SRRH" and "SRRR" ON simultaneously.

(5) When the solenoids are ON, check that the right rear wheel by rotating it by hand.

(m) Inspect the left rear ABS solenoid operation.

(1) Select the "SA3", "STR" and "SRLH" on the hand–held tester.

(2) Turn the "SA3", "STR" and "SRLH" ON with hand–held tester, and check that the left rear wheel by rotating it by hand.

HINT:

When rotating the wheel fast, the fail–safe function is activated and judgement cannot be made properly. So rotate the wheel as slowly as possible.

If the rear wheels stop, replace the hydraulic brake booster.

(3) Turn the "SA3", "STR" and "SRLH" OFF and check that the left rear wheel by rotating it by hand.

HINT:

- To protect the solenoids, hand–held tester turns OFF automatically 2 sec. after every solenoid has been turned ON.
- When rotating the wheel fast, the fail–safe function is activated and judgement cannot be made properly. So rotate the wheel as slowly as possible.
- When solenoid is OFF, the wheel might stop temporarily. However if the wheel rotates again, the function works normally.

If the left rear wheel stop, replace the hydraulic brake booster.

(4) Depress the pedal with stable force, then turn the "SRLH" and "SRLR" ON simultaneously.

HINT:

To protect the solenoids, hand–held tester turns OFF automatically 2 sec. after every solenoid has been turned ON.

(5) When the solenoids are ON, check that the left rear wheel by rotating it by hand.

HINT:

When rotating the wheel fast, the fail–safe function is activated and judgement cannot be made properly. So rotate the wheel as slowly as possible.

(n) Lower the vehicle.

(o) Disconnect the hand–held tester.

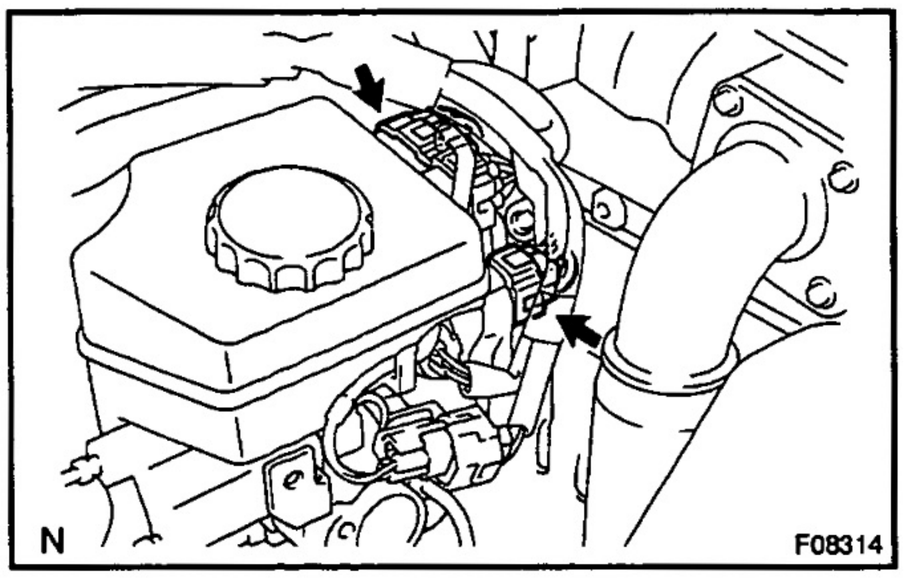

3. In case of using ABS actuator checker (SST): INSPECT HYDRAULIC BRAKE BOOSTER OPERATION

(a) Inspect the battery voltage.
Battery voltage: 10 – 14 V

(b) Disconnect the 2 connectors from hydraulic brake booster.

(c) Connect the actuator checker (SST) to the hydraulic brake booster side wire harness via the sub–wire harness S (SST), as shown in the following chart.
SST 09990–00150, 09990–00480

HINT:
Connect the connector with the label of "FRONT" attached to the connector of actuator checker.

(d) Connect the red cable of the checker to the battery positive (+) terminal and the black cable to the negative (–) terminal.

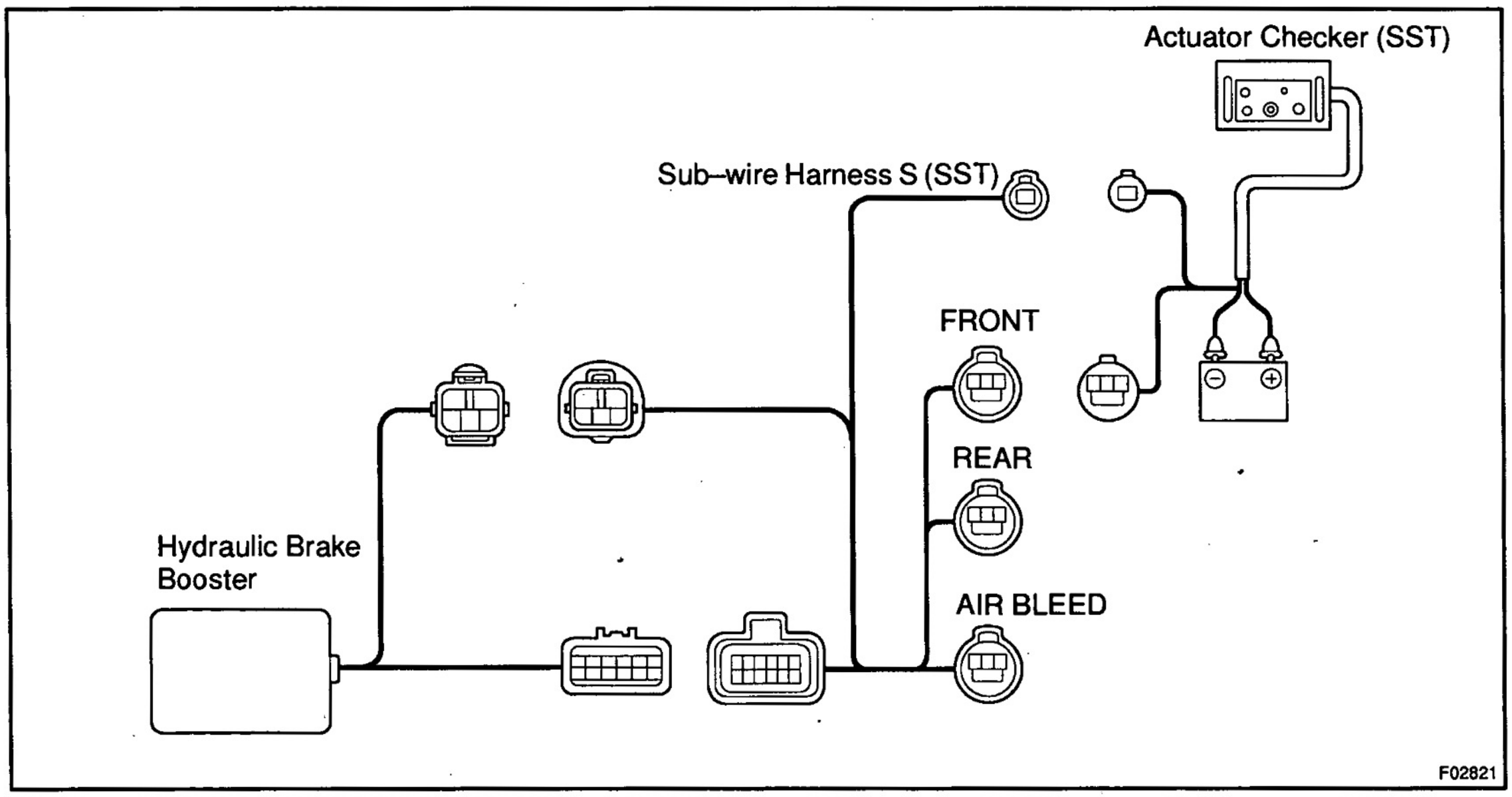

(e) Place "SHEET G" (SST) of "FRONT" on actuator checker.
SST 09990–00240

(f) Turn the ignition switch OFF, depress the brake pedal more than 40 times.

HINT:
When a pressure in power supply system is released, reaction force becomes heavy and stroke becomes shorter.

(g) Check that the brake pedal becomes heavy to depress.

If the pedal does not become to be heavy to depress, check and replace the brake line and hydraulic brake booster.

(h) Turn the ignition switch ON, check the pump motor operation noise.

If the pump motor does not operate, check and replace the wire harness and pump motor (See page BR–25).

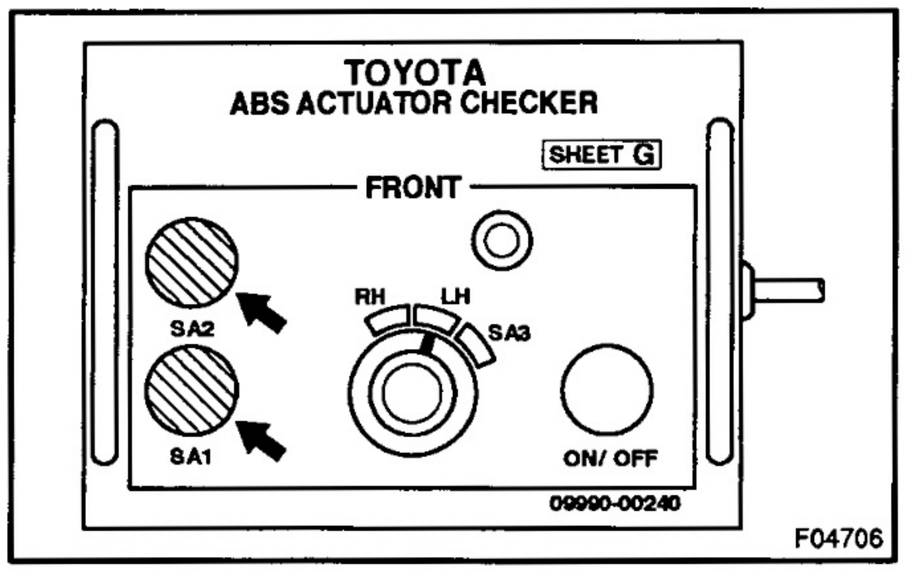

(i) Inspect the front TRC or front TRC & VSC solenoid operation.

(1) Push in and hold the "SA1" and "SA2" switches simultaneously, depress strongly and hold the brake pedal with stable force.

NOTICE:

Do not keep the "SA1" and "SA2" pushed down for more than 10 sec. When operating it continuously, set the interval of more than 20 sec.

(2) Check that the brake pedal cannot be depressed.

If the pedal can be depressed, replace the hydraulic brake booster.

(3) Release the "SA1" switch and check that the brake pedal can be depressed.

If the pedal cannot be depressed, replace the hydraulic brake booster.

(4) Release the "SA2" switch and check that the brake pedal can be depressed.

If the pedal cannot be depressed, replace the hydraulic brake booster.

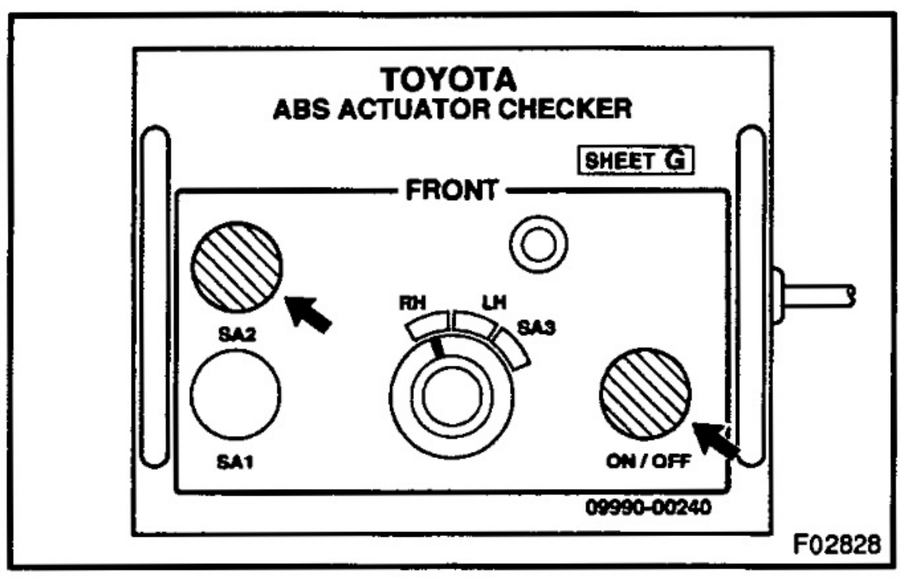

(j) Inspect the right front ABS solenoid operation.

(1) Turn the selector switch to "RH" position.

(2) Push and hold in the MAIN push switch and "SA2" switch simultaneously, depress and hold the brake pedal with stable force.

NOTICE:

Do not keep the MAIN push switch and "SA2" switch pushed down for more than 10 sec. When operating it continuously, set the interval of more than 20 sec.

(3) Check that the brake pedal cannot be depressed.

If the pedal can be depressed, replace the hydraulic brake booster.

(4) Release the MAIN push switch and "SA2" switch simultaneously and check that the brake pedal can be depressed.

If the pedal cannot be depressed, replace the hydraulic brake booster.

(5) Release the brake pedal.

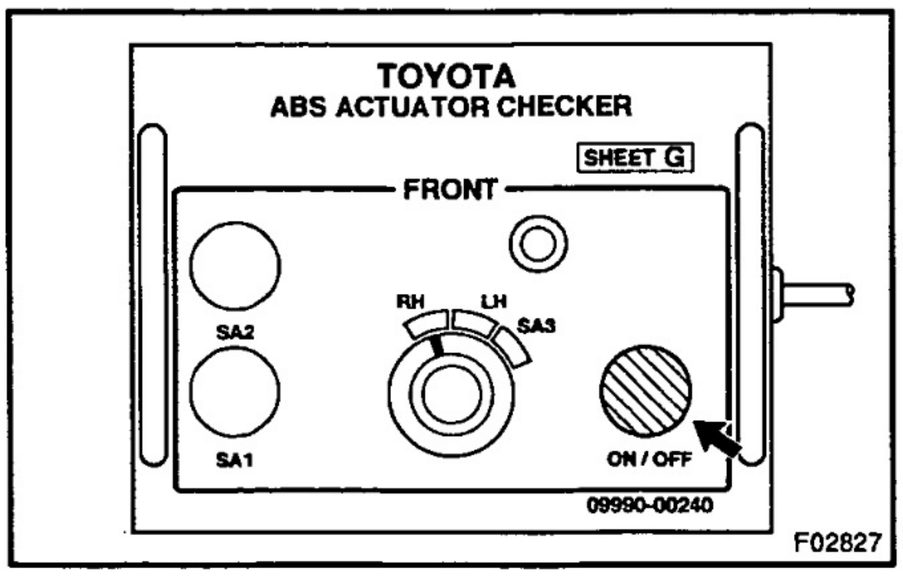

(6) Depress and hold the brake pedal with stable force, push and hold in MAIN push switch.

NOTICE:

Do not keep the MAIN push switch pushed down for more than 10 sec. When operating it continuously, set the interval of more than 20 sec.

(7) Check that the brake pedal cannot be depressed.

If the pedal can be depressed, replace the hydraulic brake booster.

(8) Release the MAIN push switch, and check that the brake pedal can be depressed.

If the pedal cannot be depressed, replace the hydraulic brake booster.

(9) Release the brake pedal.

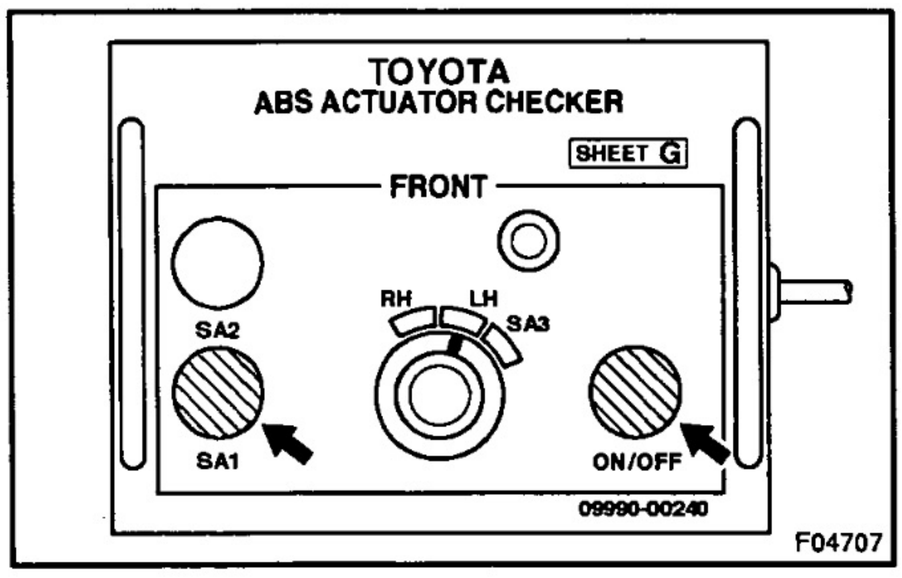

(k) Inspect the left front ABS solenoid operation.

(1) Turn the selector switch to "LH" position.

(2) Push and hold in the MAIN push switch and "SA1" switch simultaneously, depress and hold the brake pedal with stable force.

NOTICE:

Do not keep the MAIN push switch and "SA1" switch pushed down for more than 10 sec. When operating it continuously, set the interval of more than 20 sec.

(3) Check that the brake pedal cannot be depressed.

If the pedal can be depressed, replace the hydraulic brake booster.

(4) Release the MAIN push switch and "SA1" switch simultaneously, and check that the brake pedal can be depressed.

If the pedal cannot be depressed, replace the hydraulic brake booster.

(5) Release the brake pedal.

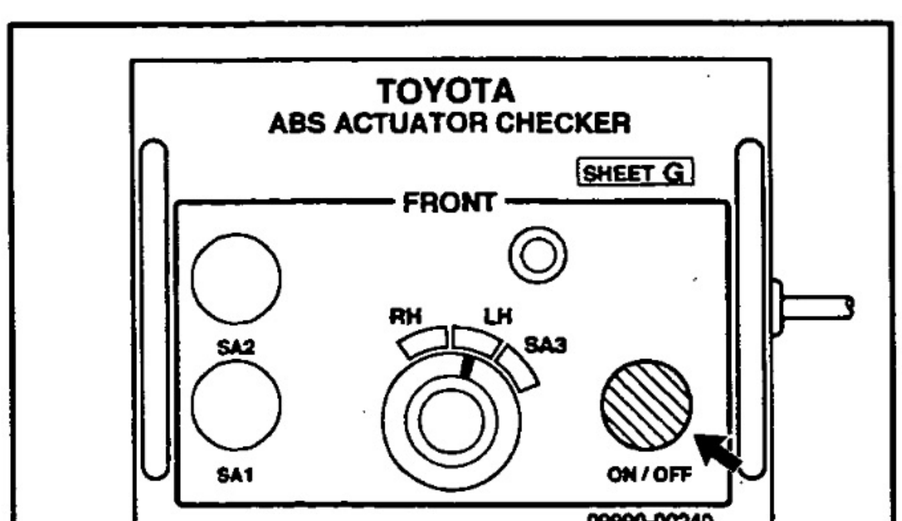

(6) Depress and hold the brake pedal with stable force, push and hold in MAIN push switch.

NOTICE:

Do not keep the MAIN push switch pushed down for more than 10 sec. When operating it continuously, set the interval of more than 20 sec.

(7) Check that the brake pedal cannot be depressed.

If the pedal can be depressed, replace the hydraulic brake booster.

(8) Release the MAIN push switch, and check that the brake pedal can be depressed.

If the pedal cannot be depressed, replace the hydraulic brake booster.

(9) Release the brake pedal.

(l) Turn the ignition switch OFF, then reconnect the connector of sub–wire harness from the one with label of "FRONT" to "REAR".

(m) Place "SHEET G" of "REAR" on the actuator checker.

(n) Jack up and support the vehicle.

(o) Start the engine and run it at idle.

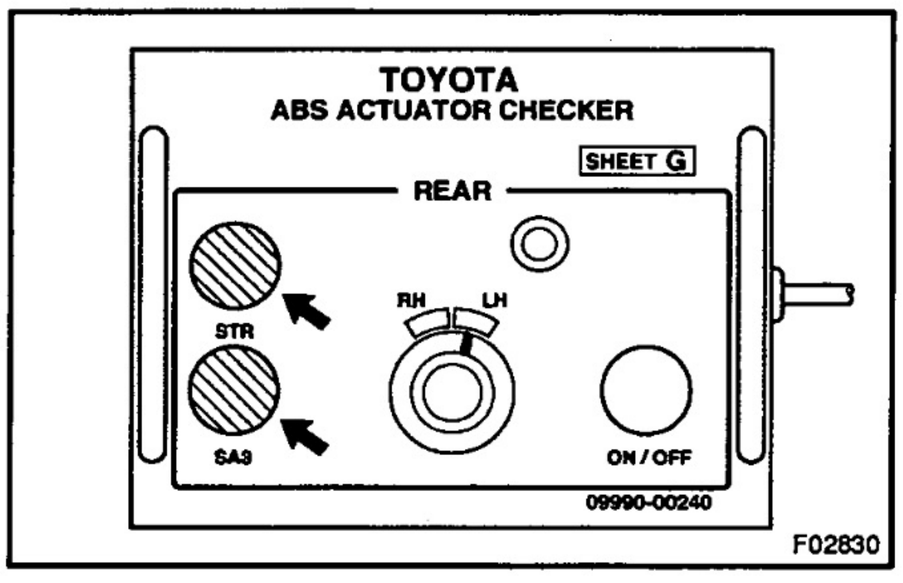

(p) Inspect the rear TRC or rear TRC & VSC solenoid.

(1) Release the parking brake lever and shift the shift lever to "L" position.

(2) Push and hold the "SA3" switch and "STR" switch simultaneously.

NOTICE:

- **Do not keep the "STR" switch pushed down for more than 10 sec.**
- **Do not keep the "SA3" switch pushed down for more than 5 sec.**
- **When operating it continuously, set the interval of more than 20 sec.**

(3) Check that the rear wheels stop.

If the rear wheels rotate, replace the hydraulic brake booster.

(4) Release the "SA3" switch and "STR" switch simultaneously.

(5) Check that the rear wheels rotate.

If the rear wheels stop, replace the hydraulic brake booster.

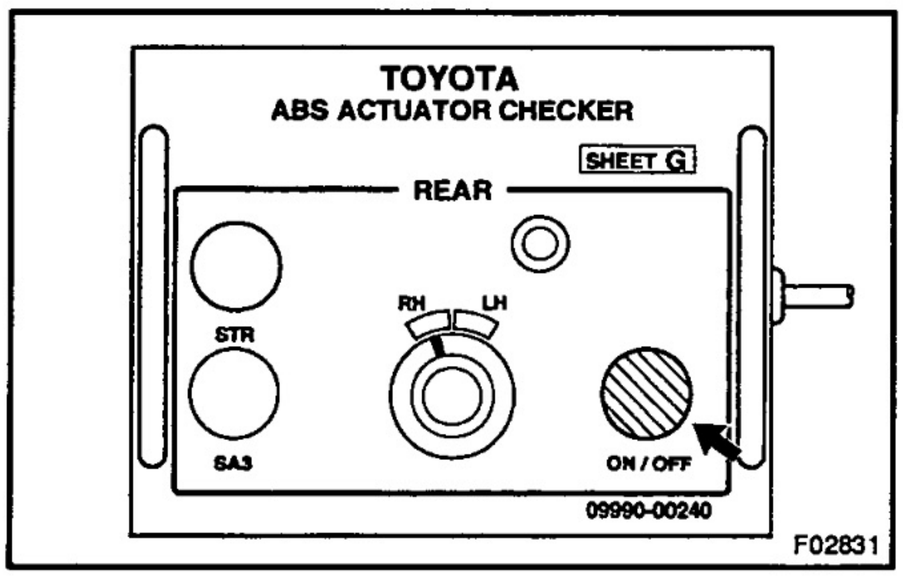

(q) Inspect the right rear ABS solenoid.

(1) Turn the selector switch to "RH" position.

(2) Depress the brake pedal several times and release the brake pedal when the pump begins rotating. Wait until the pump stops.

(3) Turn the ignition switch OFF.

(4) Depress the brake pedal with a force of 490 N (50 kgf, 110 lbf), record the fluid surface in the reservoir tank of the hydraulic brake booster.

(5) Press the MAIN push switch for 10 sec., and check that the fluid surface in the reservoir tank of the hydraulic brake booster does not rise up at this time.

If the fluid surface level rises up, replace the hydraulic brake booster.

NOTICE:

Do not press MAIN push switch for more than 10 sec. When operating the switch continuously, do it an interval of more than 20 sec.

(6) Start the engine and run it at idle.
(7) Depress the brake pedal.
(8) Release the parking brake lever and shift the shift lever to "L" position.
(9) Once, release the brake pedal. After depressing the brake pedal with stable force, then push and hold MAIN push switch.
(10) Check that the right rear wheel rotates.

If the right rear wheel stops, replace the hydraulic brake booster.

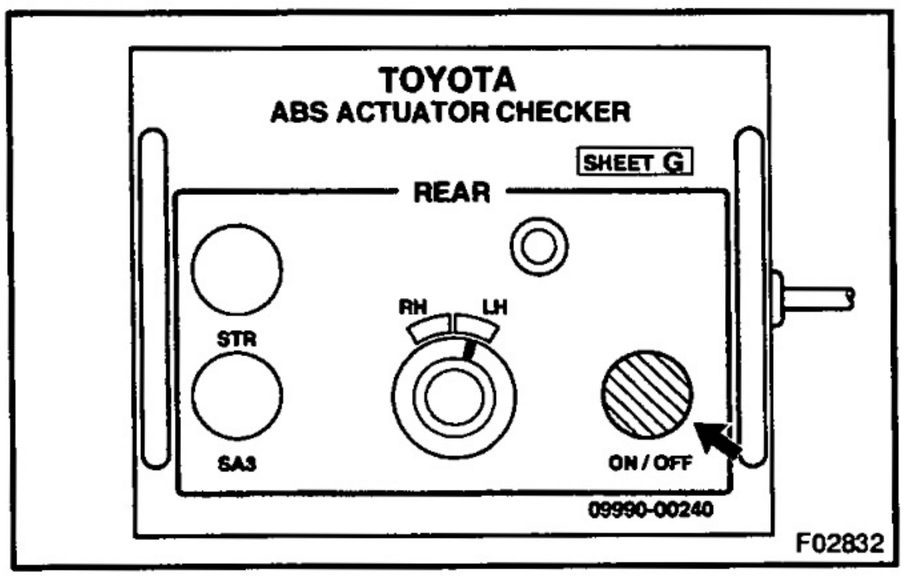

(r) Inspect the left rear ABS solenoid.

(1) Turn the selector switch to "LH" position.
(2) Depress the brake pedal several times and release the brake pedal when the pump begins rotating. Wait until the pump stops.
(3) Turn the ignition switch OFF.
(4) Depress the brake pedal with a force of 490 N (50 kgf, 110 lbf), record the fluid surface in the reservoir tank of the hydraulic brake booster.
(5) Press the MAIN push switch for 10 sec., and check that the fluid surface in the reservoir tank of the hydraulic brake booster does not rise up at this time.

If the fluid surface level rises up, replace the hydraulic brake booster.

NOTICE:

Do not press MAIN push switch for more than 10 sec. When operating the switch continuously, do it an interval of more than 20 sec.

(6) Start the engine and run it at idle.
(7) Depress the brake pedal.
(8) Release the parking brake lever and shift the shift lever to "L" position.
(9) Once, release the brake pedal. After depressing the brake pedal with stable force, then push and hold MAIN push switch.
(10) Check that the left rear wheel rotates.

If the left rear wheel stops, replace the hydraulic brake booster.

(s) Stop the engine and lower the vehicle.

(t) Remove the "SHEET G" (SST) and disconnect the actuator checker (SST) and sub–wire harness S (SST) from the hydraulic brake booster.
(u) Connect the 2 connectors to the actuator.
(v) Clear the DTC (See page DI–86).

BR124–01

COMPONENTS

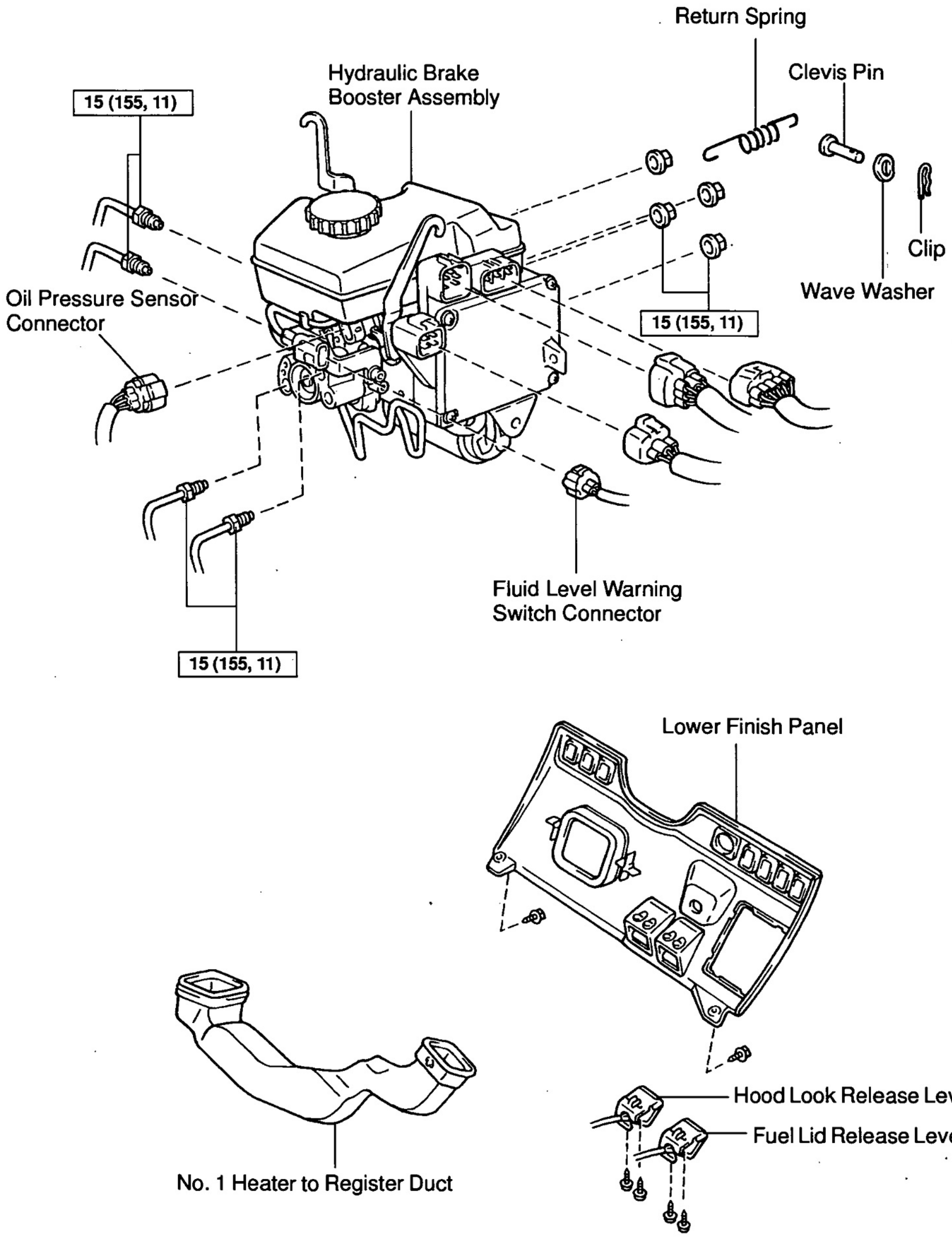

N·m (kgf·cm, ft·lbf) : Specified torque

◆ Non–reusable part

N

F08318

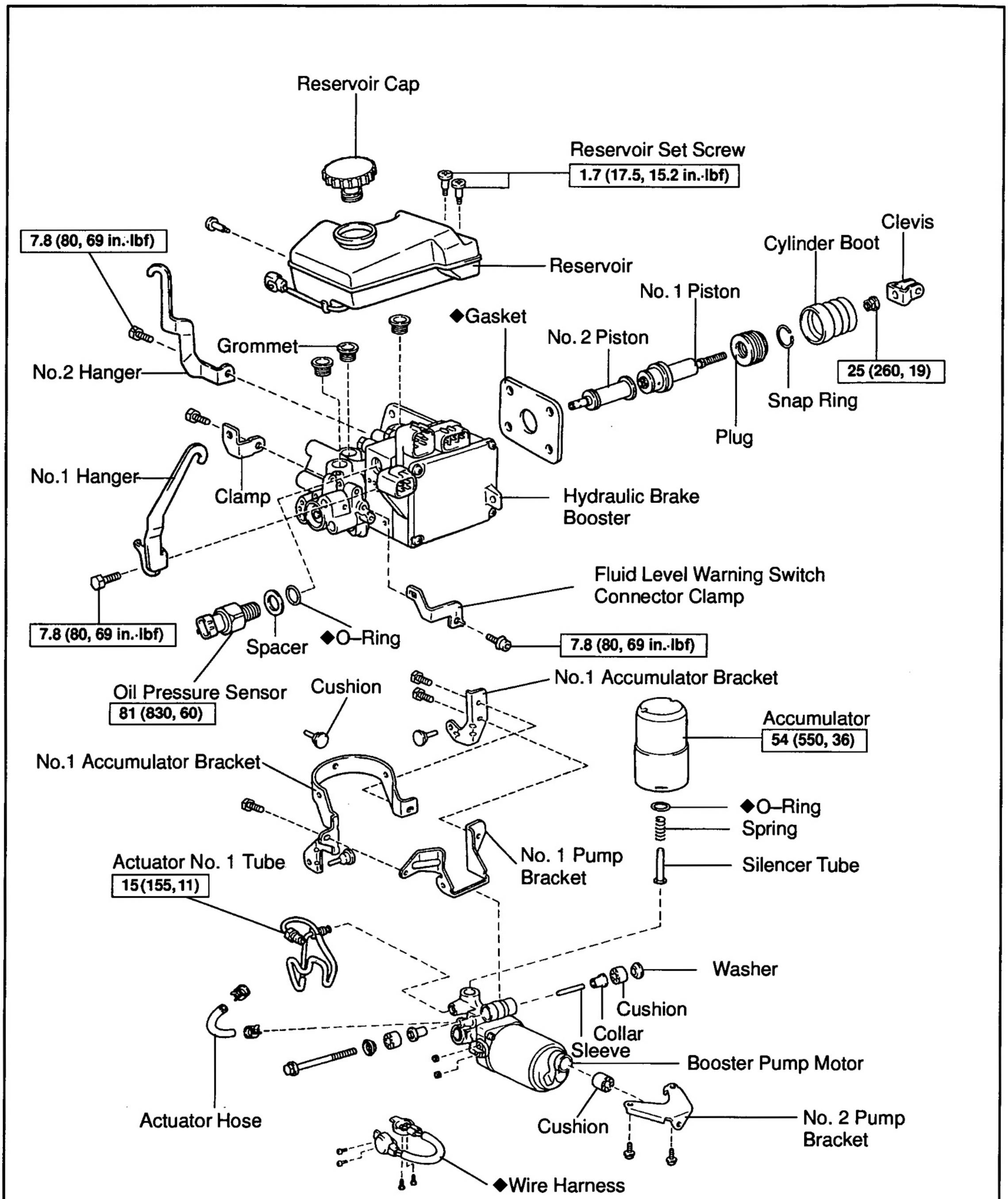

N·m (kgf·cm, ft·lbf) : Specified torque

N◆ Non–reusable part

F09158

BR125-01

REMOVAL

NOTICE:

Before starting the work, make sure that the ignition switch is OFF and depress the brake pedal more than 40 times.

HINT:

When a pressure in power supply system is released, reaction force becomes heavy and stroke becomes shorter.

NOTICE:

- **As high pressure is applied to the brake actuator tube No. 1, never deform it.**
- **Until the work is over, do not turn the ignition switch ON.**

1. DRAW OUT FLUID WITH SYRINGE

NOTICE:

Do not let brake fluid remain on a painted surface. Wash it off immediately.

2. REMOVE LOWER FINISH PANEL, HOOD LOCK RELEASE LEVER, FUEL LID RELEASE LEVER AND NO. 1 HEATER TO REGISTER DUCT (See page BO–14)

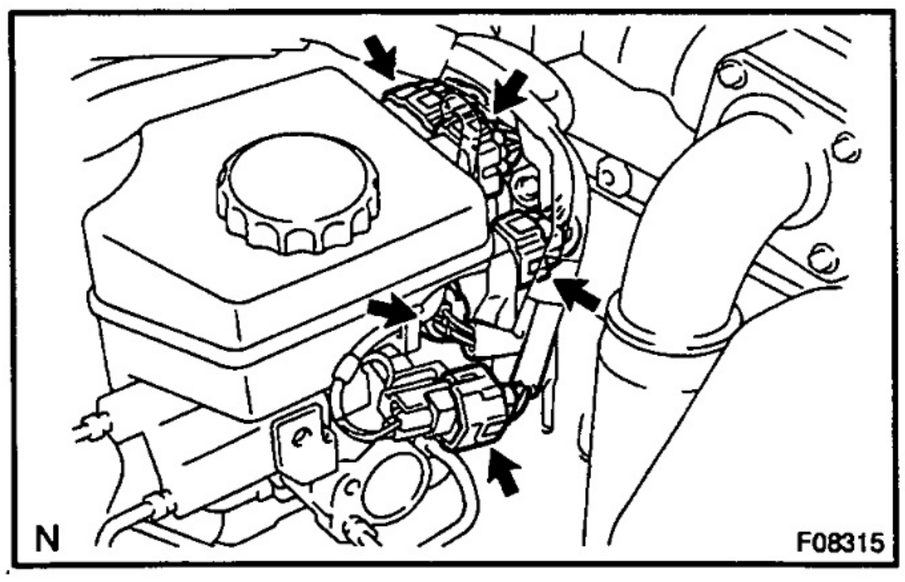

3. DISCONNECT 5 CONNECTORS

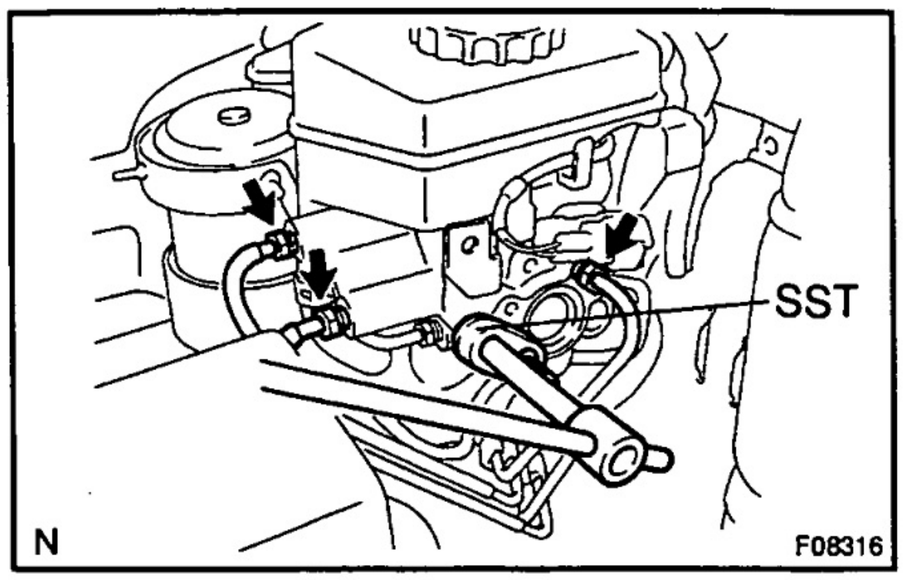

4. DISCONNECT BRAKE LINES

Using SST, disconnect the 4 brake lines.

SST 09023–00100

Torque: 15 N·m (155 kgf·cm, 11 ft·lbf)

5. REMOVE RETURN SPRING, CLIP, WAVE WASHER AND CLEVIS PIN

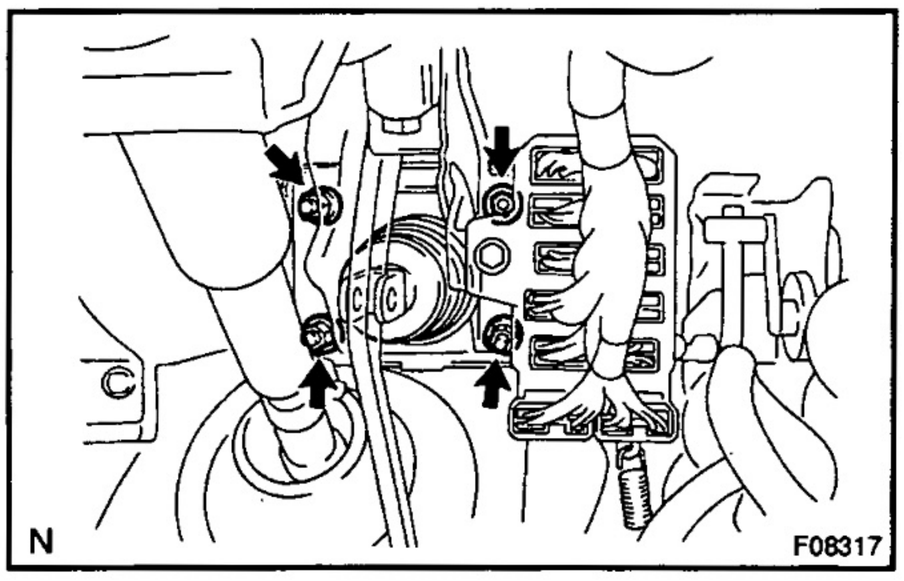

6. REMOVE HYDRAULIC BRAKE BOOSTER ASSEMBLY

(a) Remove the 4 booster installation nuts.

Torque: 15 N·m (155 kgf·cm, 11 ft·lbf)

(b) Remove the booster assembly.

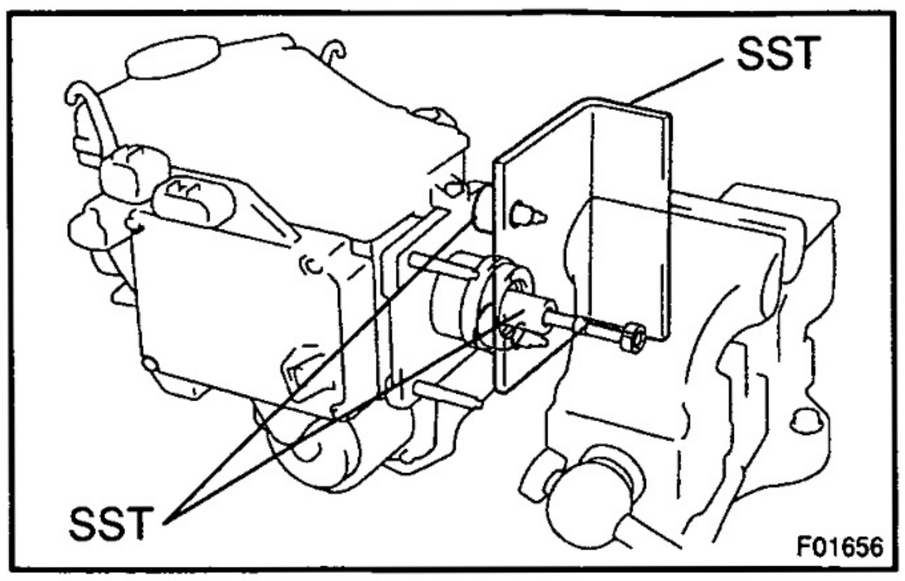

BR126-01

DISASSEMBLY

1. PLACE HYDRAULIC BRAKE BOOSTER IN VISE

Using SST, set the hydraulic brake booster in vise.

SST 09630–00014 (09631–00142),
09950–60010 (09951–00180, 09951–00190)

2. REMOVE FLUID LEVEL WARNING SWITCH CONNECTOR CLAMP

(a) Disconnect the connector.

(b) Remove the bolt and clamp.

Torque: 7.8 N·m (80 kgf·cm, 69 in.·lbf)

3. REMOVE RESERVOIR AND GROMMETS

(a) Remove reservoir cap.

(b) Remove the 3 set screws and pull out the reservoir.

Torque: 1.7 N·m (17.5 kgf·cm, 15.2 in.·lbf)

(c) Remove the 3 grommets.

4. REMOVE CLEVIS AND CYLINDER BOOT

(a) Loosen the lock nut, then remove the clevis and lock nut.

Torque: 25 N·m (260 kgf·cm, 19 ft·lbf)

(b) Remove the cylinder boot.

5. REMOVE 2 BOLTS AND NO. 1 AND NO. 2 HANGERS

Torque: 7.8 N·m (80 kgf·cm, 69 in.·lbf)

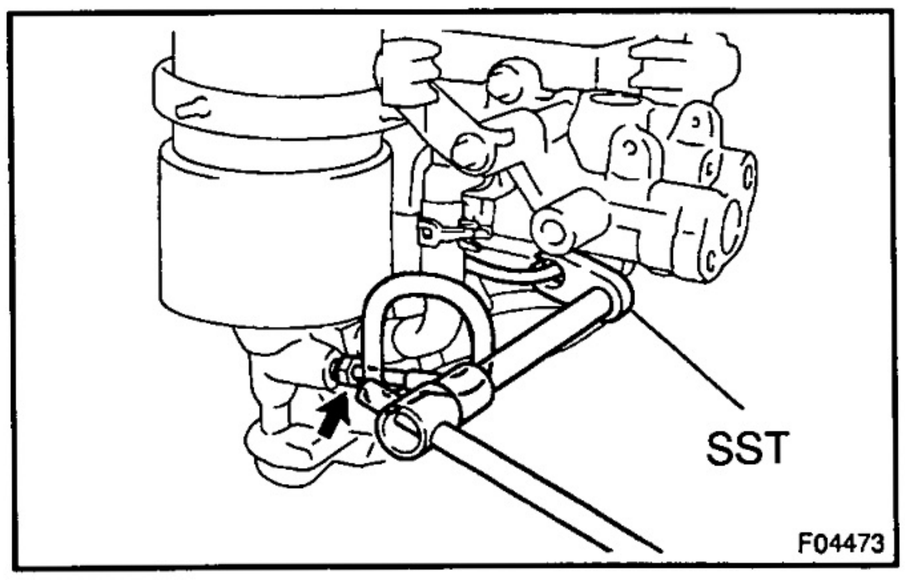

6. REMOVE BRAKE ACTUATOR TUBE NO. 1

Using SST, remove the brake actuator tube No. 1.

SST 09023–00100

Torque: 15 N·m (155 kgf·cm, 11 ft·lbf)

7. REMOVE BOOSTER PUMP AND ASSEMBLY

(a) Remove the actuator hose and 2 clips.

(b) Remove the 4 screws and wire harness from the booster and pump.

(c) Remove the 3 bolts and No. 1 and No. 2 accumulator brackets.

(d) Remove the bolt and No. 1 pump bracket.

(e) Remove the 2 washers, 2 cushions, 2 collars and sleeve.

(f) Remove the 2 bolts and No. 2 pump bracket.

(g) Remove the cushion from No. 2 pump bracket.

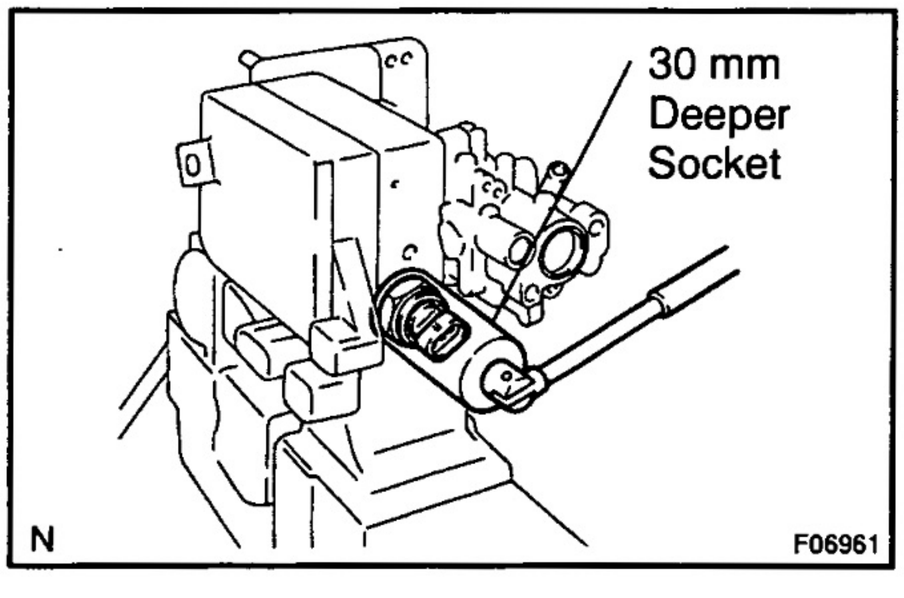

8. REMOVE OIL PRESSURE SENSOR

Using 30 mm deeper socket wrench and remove the oil pressure sensor, spacer and O–ring.

Torque: 81 N·m (830 kgf·cm, 60 ft·lbf)

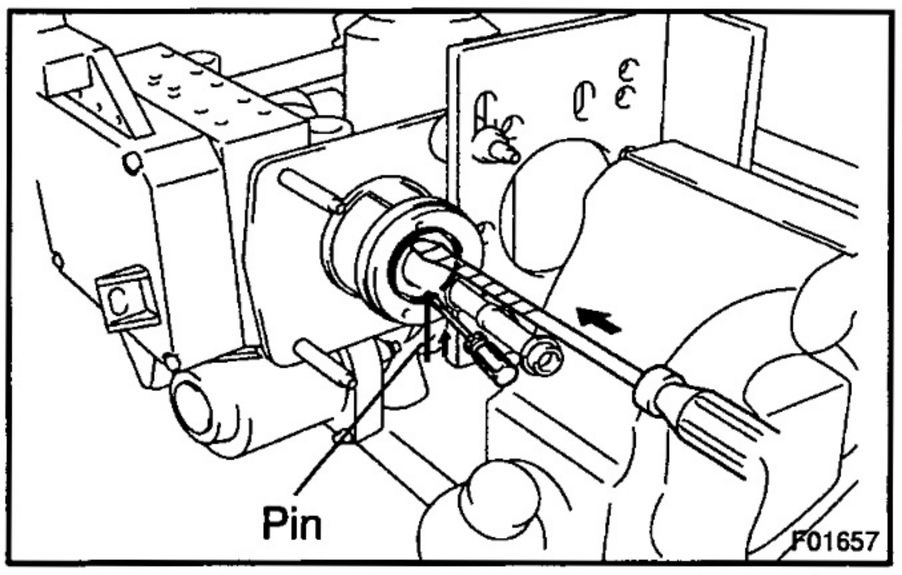

9. REMOVE PISTONS

(a) Pressing the piston in with a screwdriver, use a pin or an equivalent to push the snap ring from the hole in the body then remove it with another screwdriver.

(b) Remove the No. 1, No. 2 pistons and plug, pulling straight out, not at an angle.

NOTICE:

- **If pulled out and installed at an angle, there is a possibility that the cylinder bore could be damaged.**
- **At the time of reassembly, be careful not to damage the rubber lips on the pistons.**

10. REMOVE BOLT AND CLAMP

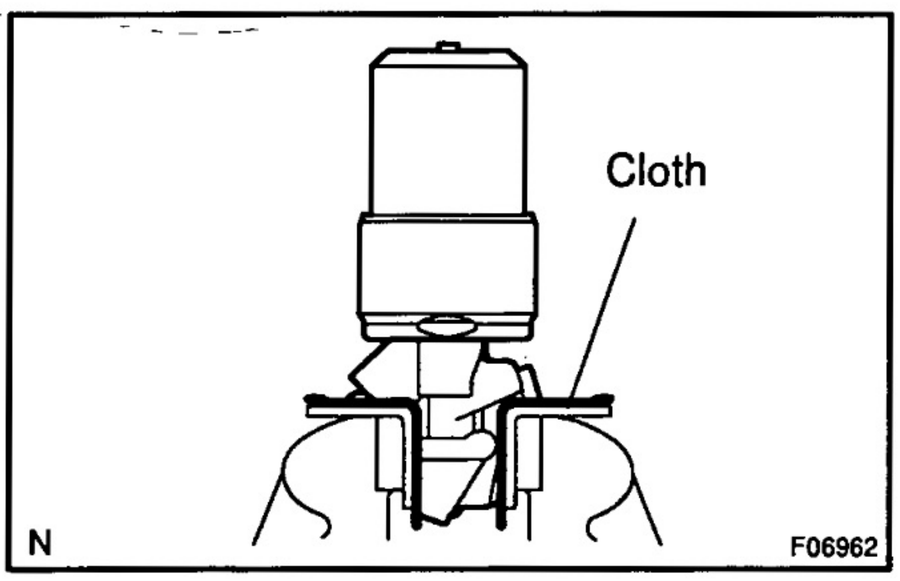

11. PLACE BOOSTER PUMP IN VISE

Place the booster pump with a cloth shown in the illustration on the left.

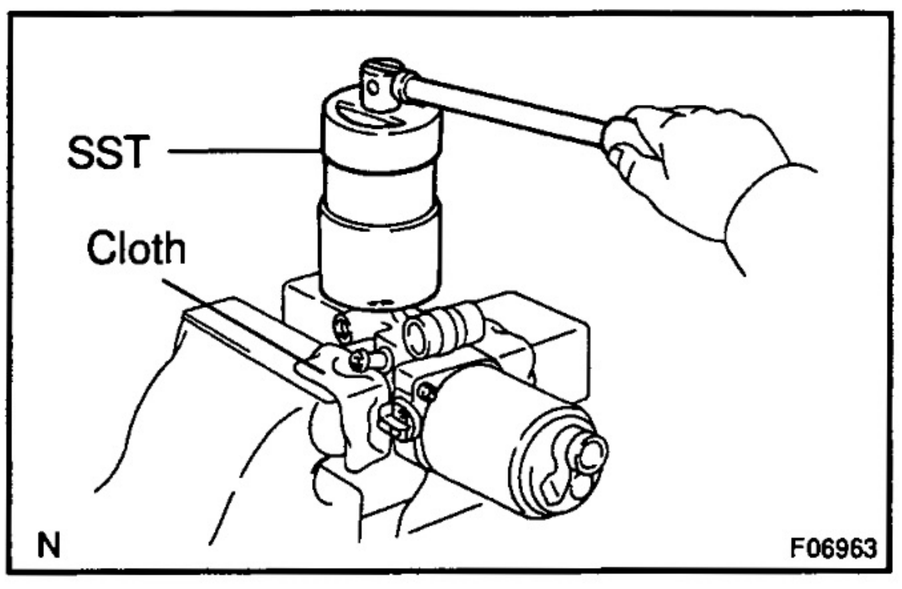

12. REMOVE ACCUMULATOR FROM BOOSTER PUMP

(a) Using SST, remove the accumulator.

SST 09318–12010

Torque: 54 N·m (550 kgf·cm, 36 ft·lbf)

(b) Remove the silencer tube, spring and O–ring.

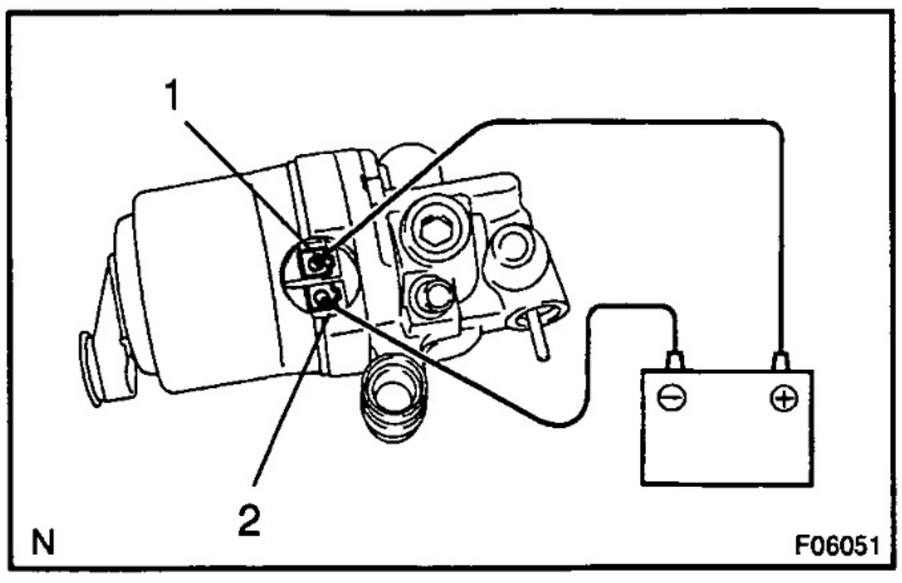

BR120-02

INSPECTION

INSPECT HYDRAULIC BRAKE BOOSTER PUMP MOTOR OPERATION

(a) Connct the positive (+) lead from the battery to terminal 1 of pump motor, and the negative (–) lead to terminal 2.

(b) Check that the pump motor operation.

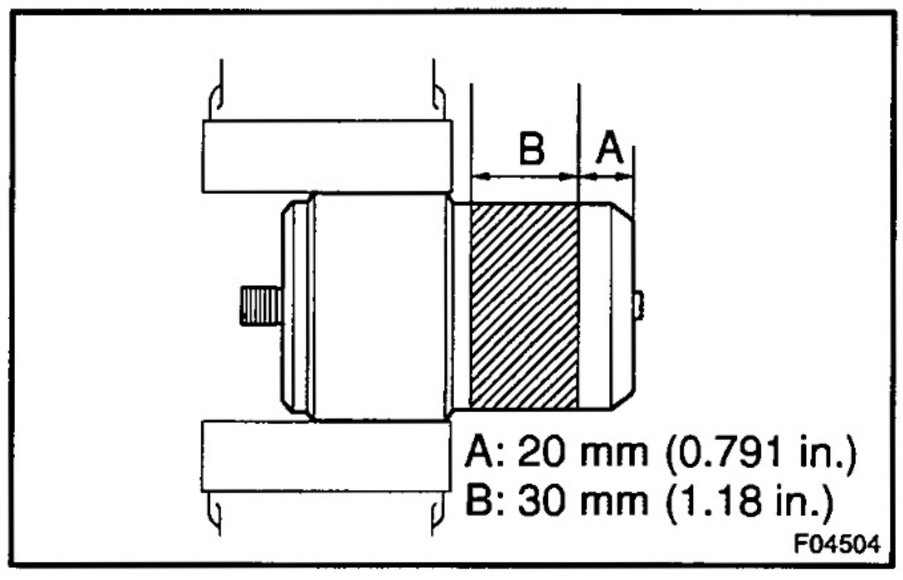

BR127-01

DISPOSAL

DISPOSAL METHOD OF ACCUMULATOR

(a) Follow the procedures described below and drain the high pressure gas from the accumulator.

(b) Place the accumulator in a vise, cover it with a cloth over a saw then cut the accumulator body slowly.

CAUTION:

Never cut at a stretch.

(c) When the outer body of the accumulator is cut, gas discharges.

BR128-01

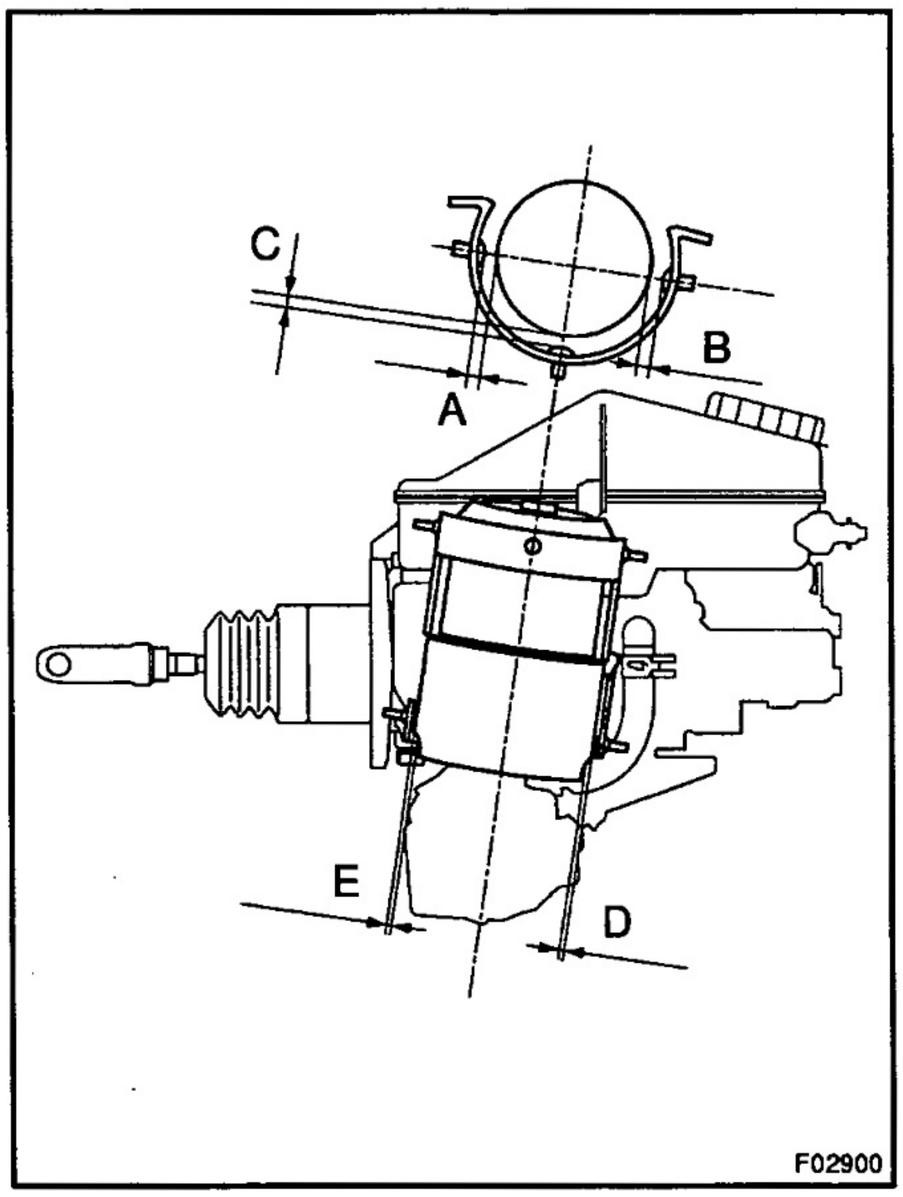

REASSEMBLY

Reassembly is in the reverse order of disassembly (See page BR–23).

INSTALL ACCUMULATOR BRACKET

When installing the accumulator bracket, adjust to ensure that clearance (A, B, D and E) shown in the illustration on the left crresponds to each value in the graphs below and are within the C range, using a thickness gauge.

C range: 0.1 – 0.4 mm (0.004 – 0.016 in.)

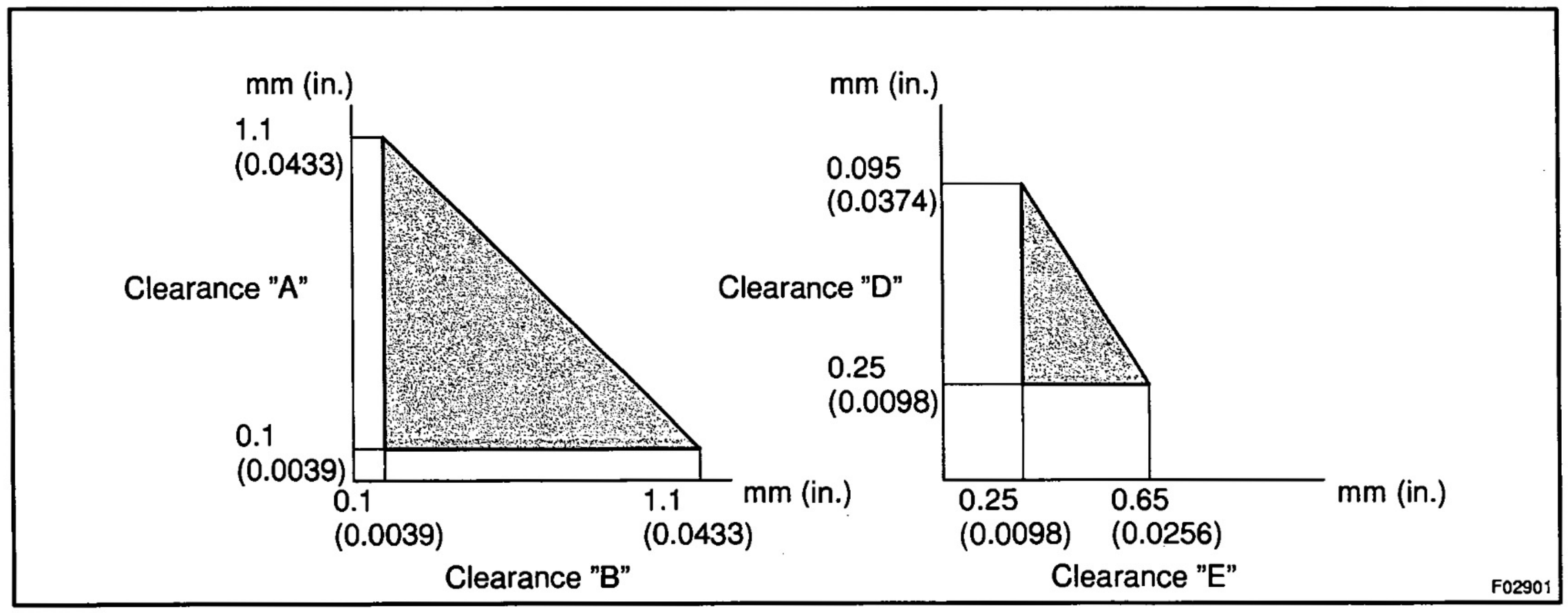

BR129-01

INSTALLATION

Installation is in the reverse order of removal (See page BR–21).

HINT:

- After installation, fill the brake reservoir with brake fluid and bleed brake system (See page BR–1).
- Check for leaks.

BODY ELECTRICAL

IGNITION SWITCH AND KEY UNLOCK WARNING SWITCH BE–1
HEADLIGHT AND TAILLIGHT SYSTEM BE–6
FOG LIGHT SYSTEM BE–8
COMBINATION METER BE–11
ACCESSORY METER BE–25
POWER WINDOW CONTROL SYSTEM BE–35
WIRELESS DOOR LOCK CONTROL SYSTEM BE–37
POWER MIRROR CONTROL SYSTEM BE–52
ENGINE IMMOBILISER SYSTEM (5VZ–FE) BE–54
ENGINE IMMOBILISER SYSTEM (Except 5VZ–FE) BE–56

BE

REFER TO FOLLOWING REPAIR MANUALS:

Manual Name	Pub. No.
LAND CRUISER/LAND CRUISER PRADO Chassis and Body Repair Manual	RM517E
LAND CRUISER/LAND CRUISER PRADO Chassis and Body Repair Manual Supplement	RM627E

NOTE: The above pages contain only the points which differ from the above listed manuals.

IGNITION SWITCH AND KEY UNLOCK WARNING SWITCH

BE1AU–01

LOCATION

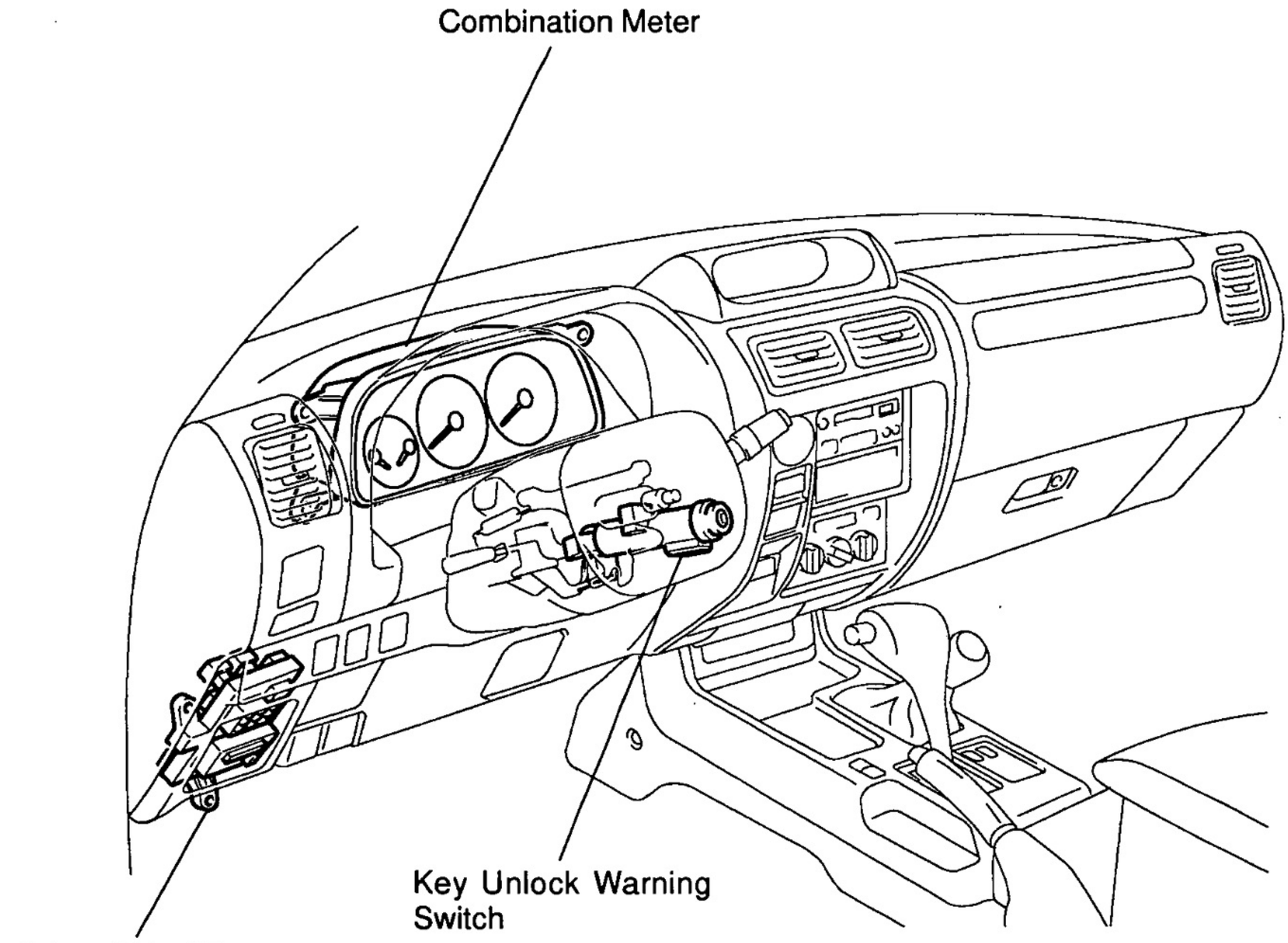

I12694

BE1AV–01

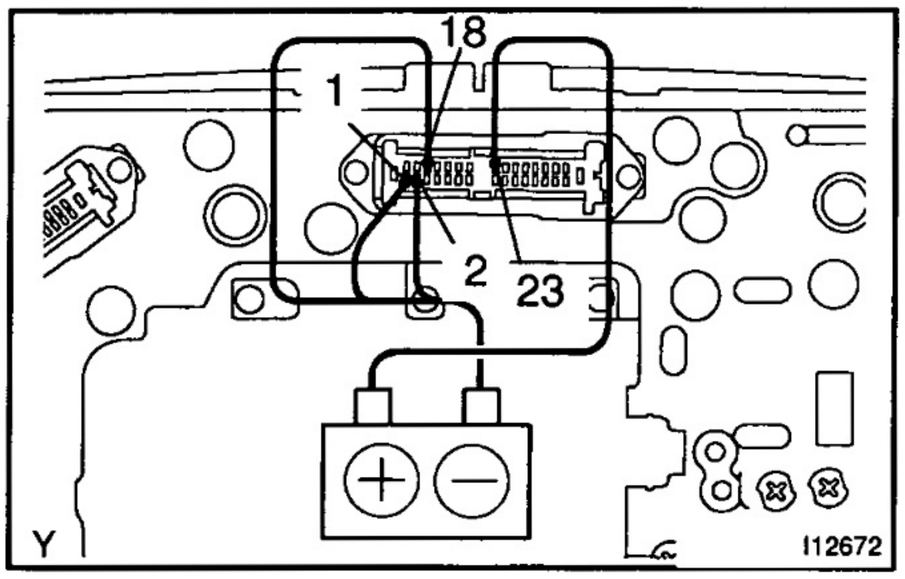

INSPECTION

1. Key unlock warning system:
INSPECT COMBINATION METER OPERATION

(a) Connect the positive (+) lead from the battery to terminal 18 of connector "B".

(b) Connect the negative (–) lead from the battery to terminals 1, 2 and 23 of the connector "B".

(c) Check the chime sounds.

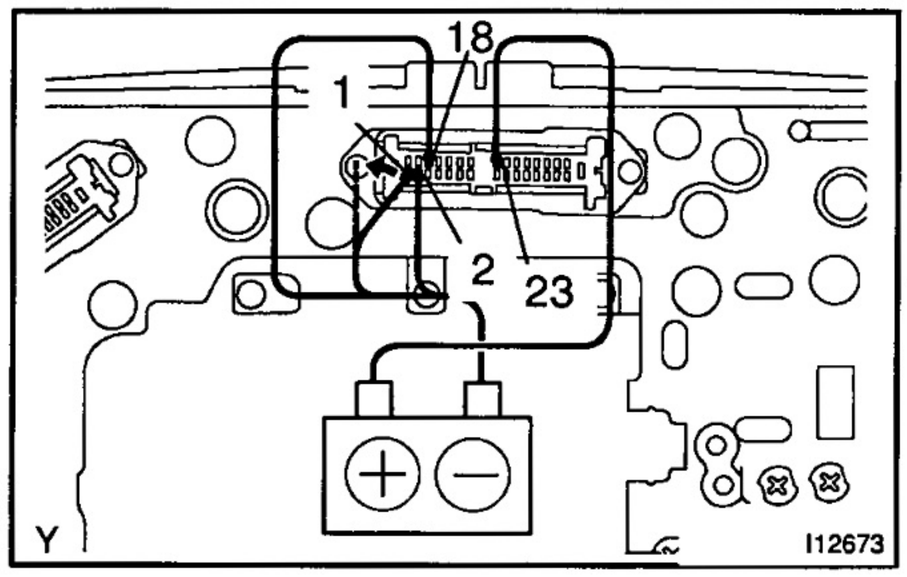

(d) Disconnect the negative (–) lead from the battery to terminal 1 of connector "B".

(e) Check that the chime stops sounding.

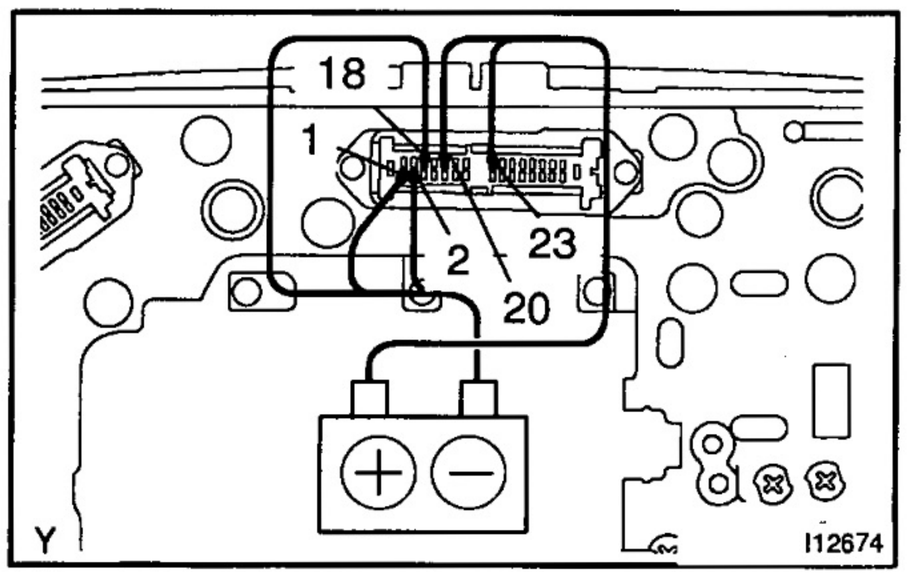

(f) Connect the negative (–) lead from the battery to terminal 1 of the connector "B".

(g) Connect the positive (+) lead from the battery to terminal 20 of the connector "B".

(h) Check that the chime stops sounding.

If operation is not as specified, replace the combination. meter.

BE

2. INSPECT DRIVER SIDE JUNCTION BLOCK CIRCUIT

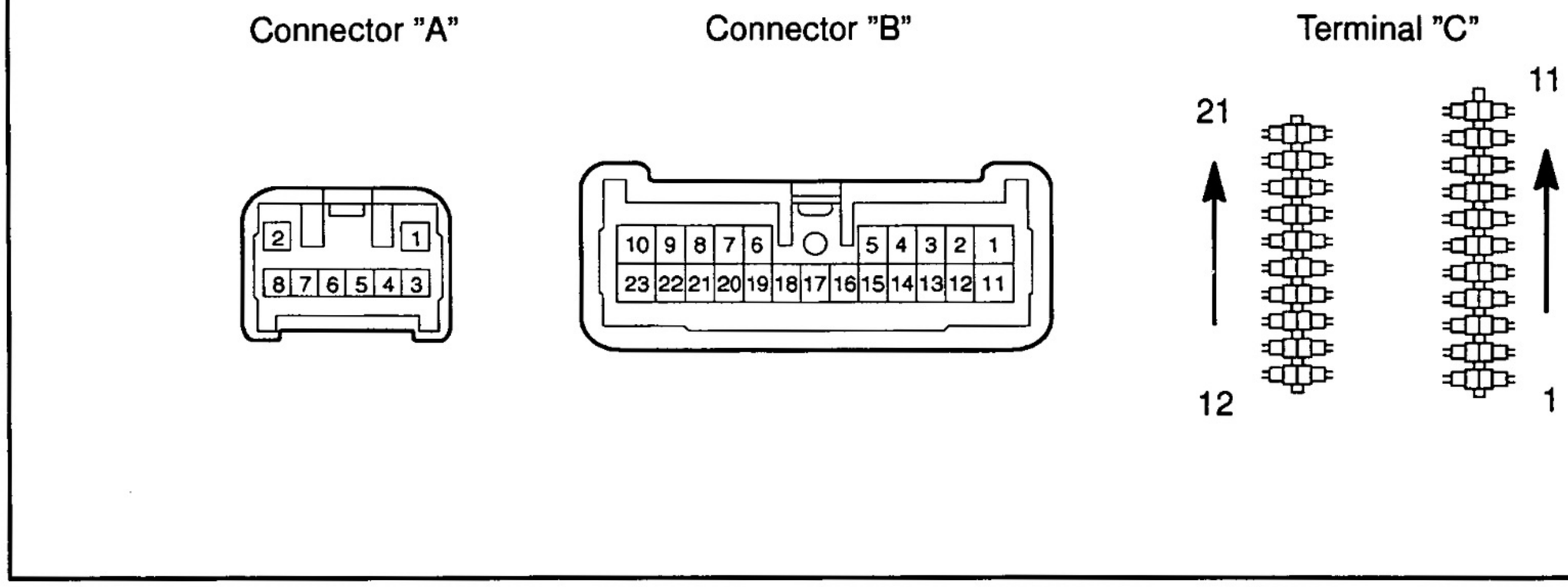

Symbols (Terminals No.)	Condition	STD Voltage (V)
ACC ↔ GND (A1 ↔ B2)	Ignition switch OFF	Below 1.0
	Ignition switch ACC or ON	10 – 14
H–LP SW* ↔ Body ground (A5 ↔ Body ground)	Light control switch OFF or TAIL	Below 1.0
	Light control switch HEAD	10 – 14
HRY* ↔ Body ground (A6 ↔ Body ground)	Headlight relay OFF	Below 1.0
	Headlight relay ON	10 – 14
ACT–(FR) ↔ Body ground (B1 ↔ Body ground)	Power door lock operating to LOCK	10 – 14
	Power door lock not operating or operating to UNLOCK	Below 1.0
GND ↔ Body ground (B2 ↔ Body ground)	Constant	Below 1.0
L ↔ Body ground (B4 ↔ Body ground)	Driver and passenger door key lock & unlock switch OFF or UNLOCK position	Below 1.0
	Driver or passenger door key lock & unlock switch LOCK position	10 – 14
UL ↔ Body ground (B5 ↔ Body ground)	Passenger door key lock & unlock switch OFF or LOCK position	10 – 14
	Passenger door key lock & unlock switch UNLOCK position	Below 1.0
LSWD ↔ Body ground (B6 ↔ Body ground)	Driver door unlock detection switch OFF (Locked)	10 – 14
	Driver door unlock detection switch ON (Unlocked)	Below 1.0
CTY ↔ Body ground (B8 ↔ Body ground)	Passenger, rear and back door courtesy switch OFF (Closed)	10 – 14
	Passenger, rear or back door courtesy switch ON (Open)	Below 1.0
HORN SW ↔ Body ground (B9 ↔ Body ground)	Horn switch OFF	10 – 14
	Horn switch ON	Below 1.0
ACT+(FL,RR) ↔ Body ground (B10 ↔ Body ground)	Power door lock not operating or operating to UNLOCK	Below 1.0
	Power door lock operating to LOCK	10 – 14
ACT–(FL,RR) ↔ Body ground (B11 ↔ Body ground)	Power door lock not operating or operating to UNLOCK	10 – 14
	Power door lock operating to LOCK	Below 1.0
DEF IND ↔ Body ground (B12 ↔ Body ground)	Rear defogger not operating	Below 1.0
	Rear defogger operating	10 – 14
I/UP ↔ Body ground (B13 ↔ Body ground)	Rear defogger not operating and light control switch OFF	Below 1.0
	Rear defogger operating or light control switch TAIL or HEAD	10 – 14

DEF SW ↔ Body ground (B16 ↔ Body ground)	Rear defogger switch OFF	10 – 14
	Rear defogger switch ON	Below 1.0
R/W ON ↔ Body ground (B17 ↔ Body ground)	Rear wiper switch OFF or INT	10 – 14
	Rear wiper switch ON	Below 1.0
R/W INT ↔ Body ground (B18 ↔ Body ground)	Rear wiper switch OFF or ON	10 – 14
	Rear wiper switch INT	Below 1.0
KSW ↔ Body ground (B19 ↔ Body ground)	Key unlock warning switch OFF (Key not inserted)	10 – 14
	Key unlock warning switch ON (Key inserted)	Below 1.0
TAIL SW ↔ Body ground (B20 ↔ Body ground)	Light control switch OFF	Below 1.0
	Light control switch TAIL or HEAD	10 – 14
DCTY ↔ Body ground (B21 ↔ Body ground)	Driver door courtesy switch OFF (Closed)	10 – 14
	Driver door courtesy switch ON (Open)	Below 1.0
ECU–B ↔ GND (B22 ↔ B2)	Constant	10 – 14
ACT+(FR) ↔ Body ground (B23 ↔ Body ground)	Power door lock not operating or operating to UNLOCK	Below 1.0
	Power door lock operating to LOCK	10 – 14
DOOR IND ↔ Body ground (C1 ↔ Body ground)	All door closed	10 – 14
	Any door opened	Below 1.0
MET(KSW) ↔ Body ground (C2 ↔ Body ground)	Key unlock warning switch OFF (Key not inserted)	10 – 14
	Key unlock warning switch ON (Key inserted)	Below 1.0
MET(DCTY) ↔ Body ground (C3 ↔ Body ground)	Driver door courtesy switch OFF (Closed)	10 – 14
	Driver door courtesy switch ON (Open)	Below 1.0
PWR RLY ↔ GND (C4 ↔ C5)	Ignition switch OFF or ACC	10 – 14
	Ignition switch ON	Below 1.0
GND ↔ Body ground (C5 ↔ Body ground)	Constant	Below 1.0
ECU–IG ↔ GND (C6 ↔ C5)	Ignition switch OFF or ACC	Below 1.0
	Ignition switch ON	10 – 14
DEF ↔ GND (C7 ↔ C5)	Ignition switch OFF or ACC	10 – 14
	Ignition switch ON	Below 1.0
ROOM LP ↔ Body ground (C8 ↔ Body ground)	Constant	10 – 14
SM ↔ Body ground (C9 ↔ Body ground)	Rear wiper motor not rotates	Below 1.0
	Rear wiper motor rotates	10 – 14
HORN ↔ GND (C10 ↔ C5)	Horn switch OFF	Below 1.0
	Horn switch ON	10 – 14
TAIL ↔ GND (C11 ↔ C5)	Constant	10 – 14
ACT+(BACK) ↔ Body ground (C12 ↔ Body ground)	Power door lock not operating or operating to UNLOCK	Below 1.0
	Power door lock operating to LOCK	10 – 14
ACT–(BACK) ↔ Body ground (C13 ↔ Body ground)	Power door lock not operating or operating to UNLOCK	10 – 14
	Power door lock operating to LOCK	Below 1.0
LM ↔ Body ground (C14 ↔ Body ground)	Rear wiper arm stoping position	10 – 14
	Rear wiper arm not stoping position	Below 1.0

BE

TAIL LP ↔ Body ground (C17 ↔ Body ground)	Light control switch OFF	Below 1.0
	Light control switch TAIL or HEAD	10 – 14
PWR ↔ GND (C18 ↔ C5)	Constant	10 – 14
WIP ↔ GND (C19 ↔ C5)	Ignition switch OFF or ACC	Below 1.0
	Ignition switch ON	10 – 14
HAZ ↔ GND (C20 ↔ C5)	Constant	10 – 14
RR DEF ↔ GND (C21 ↔ C5)	Rear defogger not operating	Below 1.0
	Rear defogger operating	10 – 14

*: w/ Light auto turn OFF system

HEADLIGHT AND TAILLIGHT SYSTEM

LOCATION

BE1AW–01

Engine Room R/B*2
- Headlight Relay
- Headlight Dimmer Relay
- Taillight Relay
- HEAD (LH) Fuse
- HEAD (RH) Fuse
- HEAD (HI LH) Fuse*3
- HEAD (LO LH) Fuse*3
- HEAD (HI RH) Fuse*3
- HEAD (LO RH) Fuse*3
- TAIL Fuse
- STOP Fuse

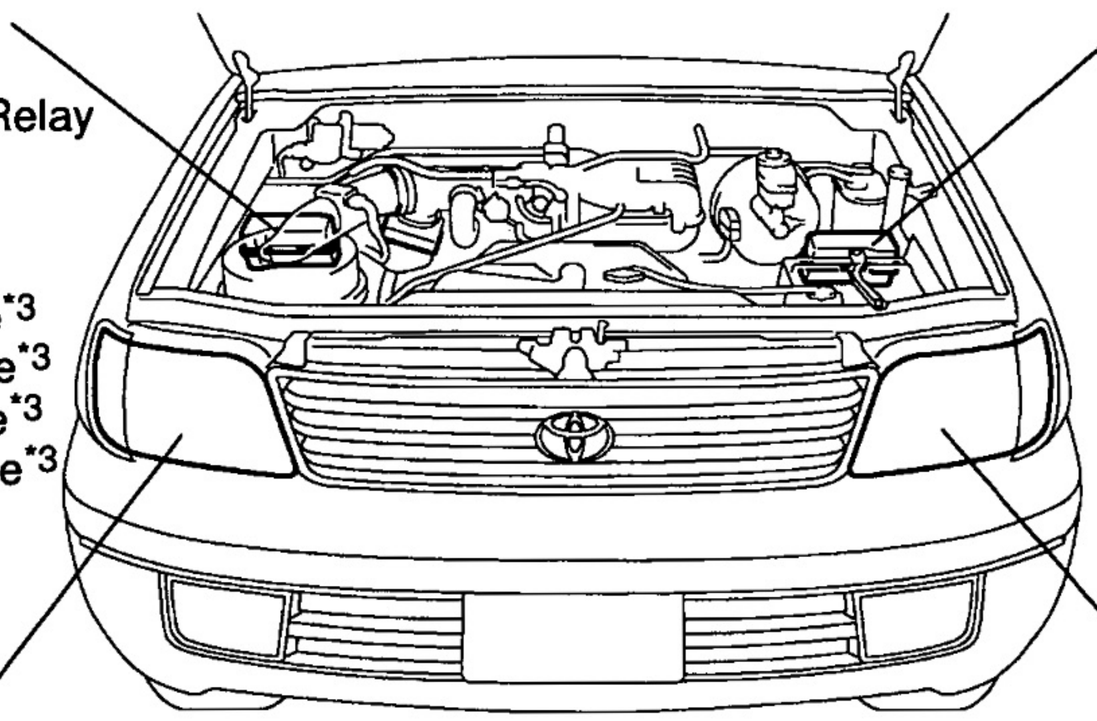

Engine Room R/B*1
- Headlight Relay
- Headlight Dimmer Relay
- Taillight Relay
- HEAD (LH) Fuse
- HEAD (RH) Fuse
- HEAD (HI LH) Fuse*3
- HEAD (LO LH) Fuse*3
- HEAD (HI RH) Fuse*3
- HEAD (LO RH) Fuse*3
- TAIL Fuse
- STOP Fuse

Headlight

Headlight

Combination Meter

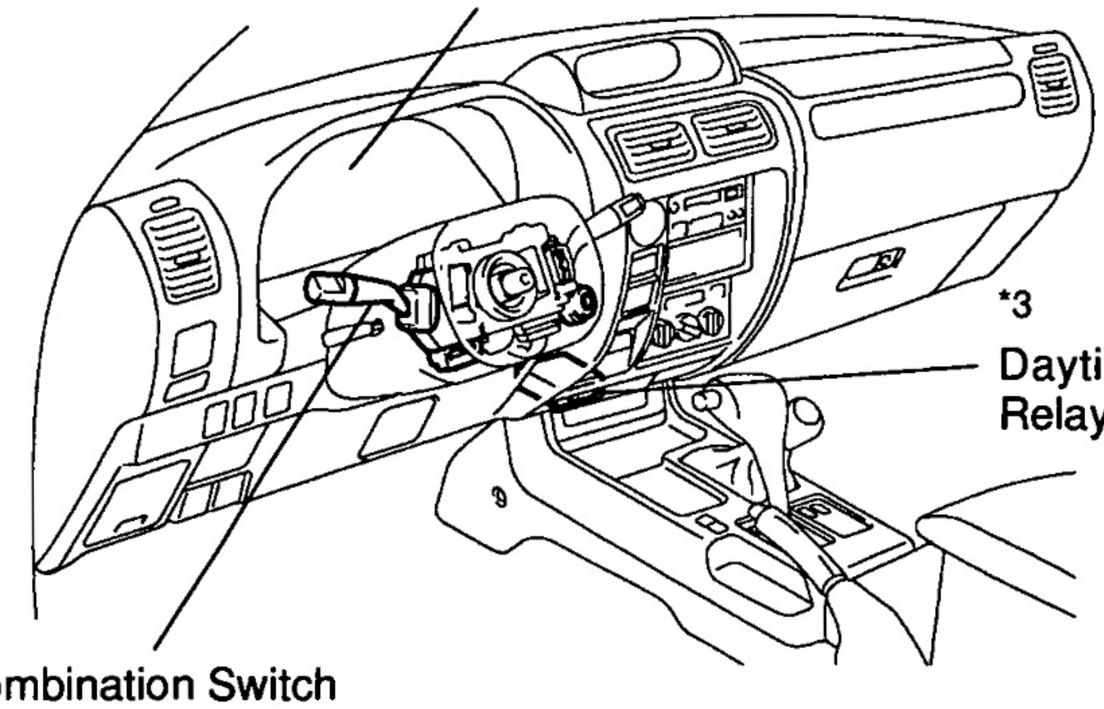

*3

Daytime Running Light Relay

Combination Switch
- Light Control Switch
- Headlight Dimmer Switch

*1: Except Diesel RHD
*2: Diesel RHD
*3: w/ Daytime Running Light

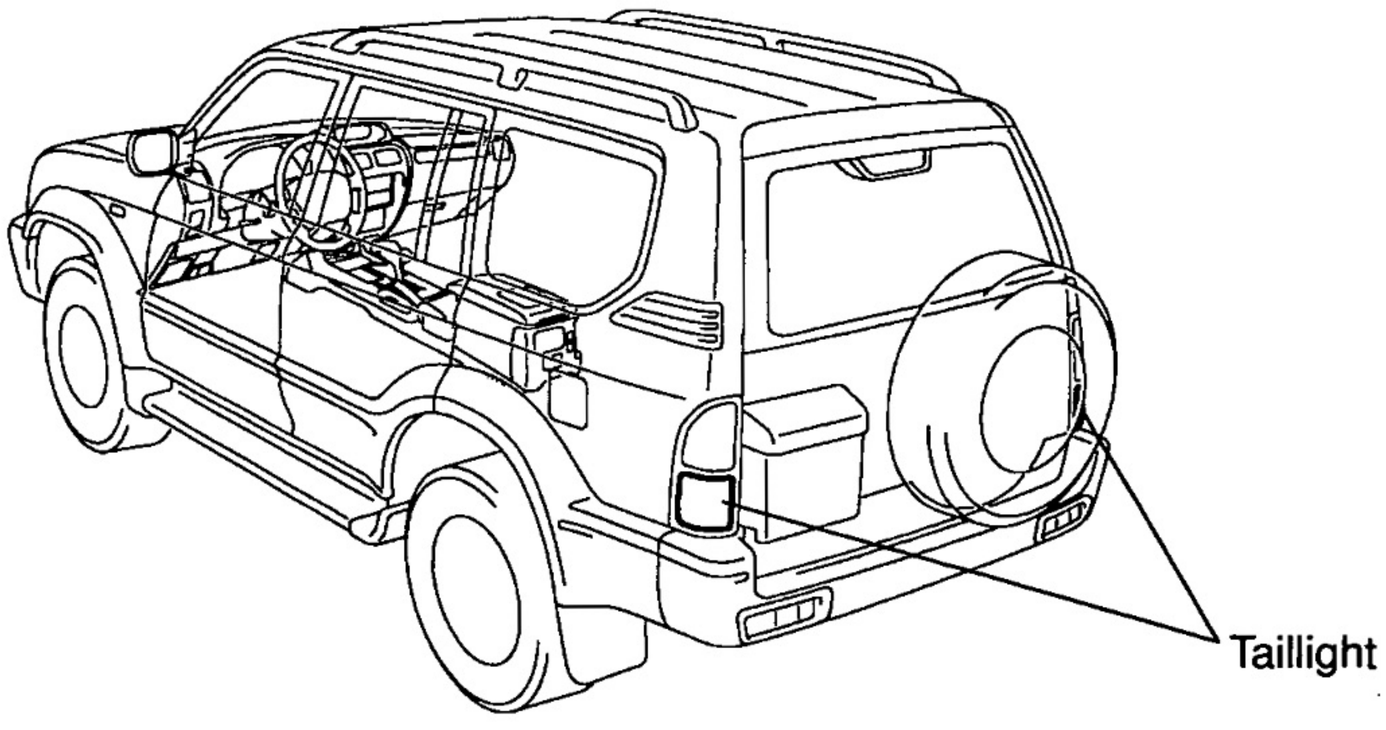

Taillight

Y

I12693

BE1AX–01

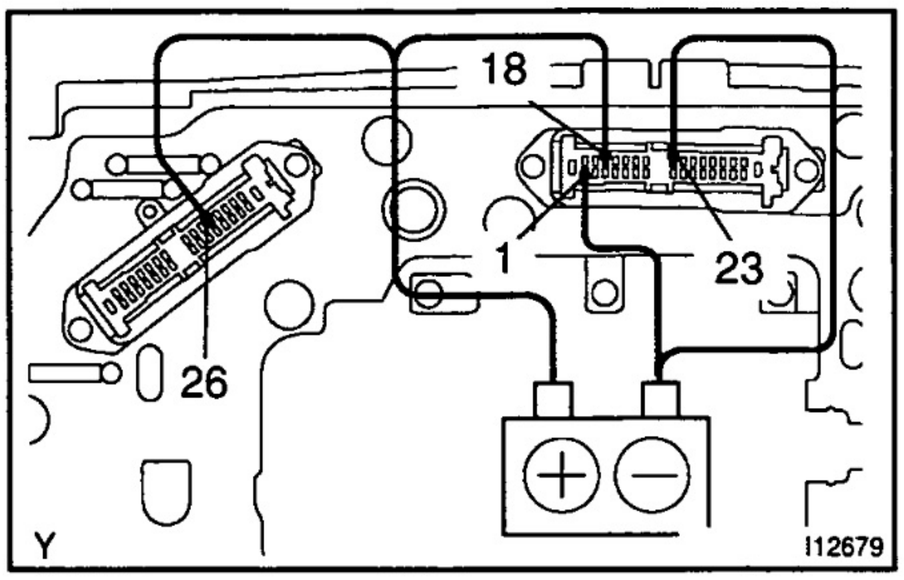

INSPECTION

Light–ON warning system:

INSPECT COMBINATION METER OPERATION

(a) Connect the positive (+) lead from the battery to the terminals 18 of connector "B" and 26 of connector "A", and negative (–) lead from the battery to the terminal 1 and 23 of connector "B".

(b) Check that the buzzer sounds.

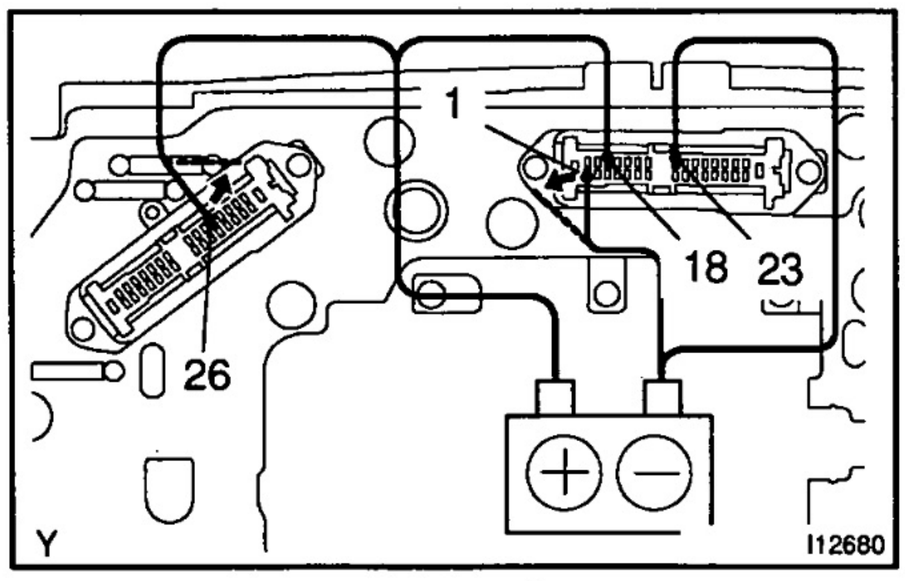

(c) Check that the buzzer stops when disconnecting the terminal 1 of the connector "B" or terminal 26 of the connector "A".

If operation is not as specified, replace the combination meter.

BE

FOG LIGHT SYSTEM

LOCATION

BE0H2–09

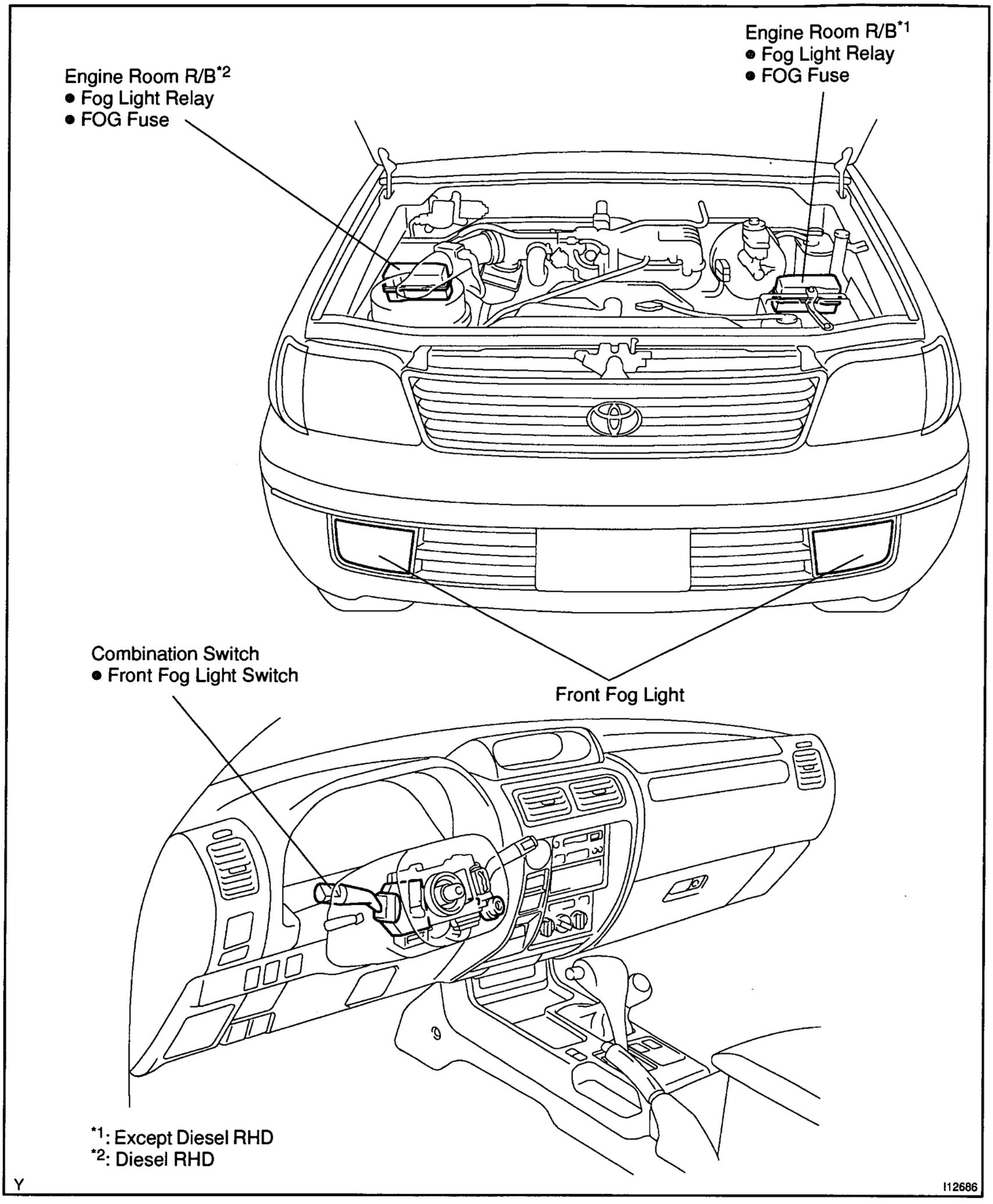

Y

I12686

BE0RT-03

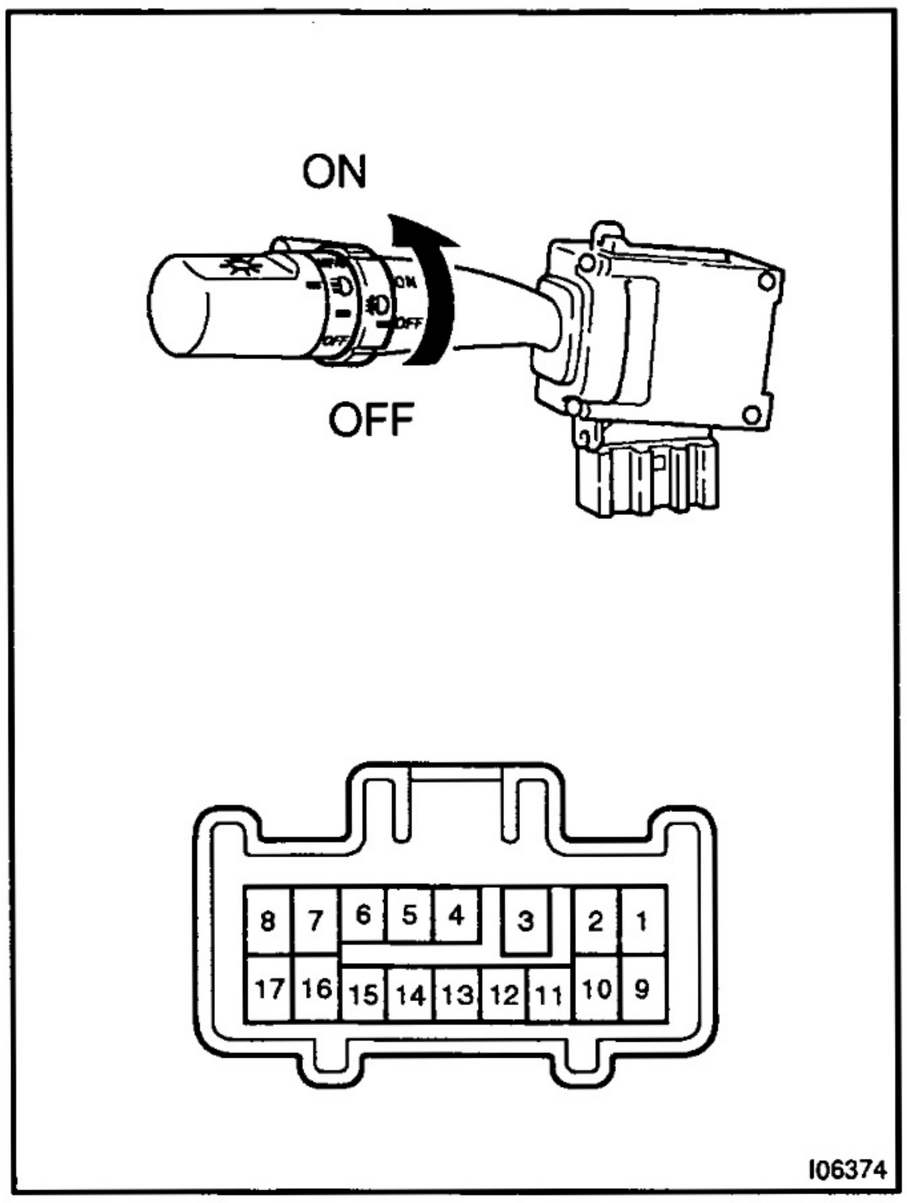

INSPECTION

1. INSPECT FOG LIGHT SWITCH CONTINUITY

Switch position	Tester connection	Specified condition
OFF	–	No continuity
ON	10 – 11	Continuity

If continuity is not as specified, replace the switch.

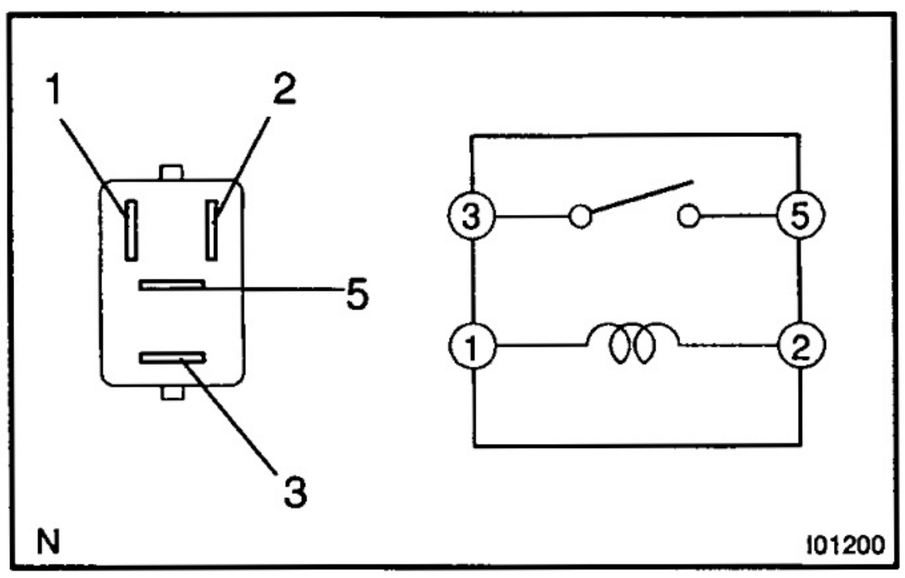

2. INSPECT FOG LIGHT RELAY CONTINUITY

Condition	Tester connection	Specified condition
Constant	1 – 2	Continuity
Apply B+ between terminals 1 and 2.	3 – 5	Continuity

If continuity is not as specified, replace the relay.

BE

BE0RU–03

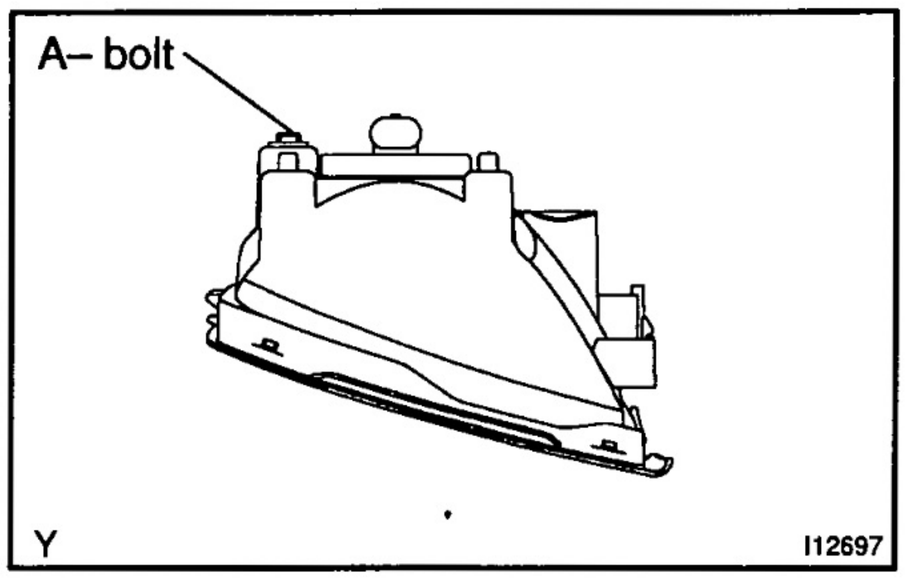

ADJUSTMENT

ADJUST FOGLIGHT AIM

A–bolt : Vertical Direction

COMBINATION METER

CIRCUIT

BE1AY–01

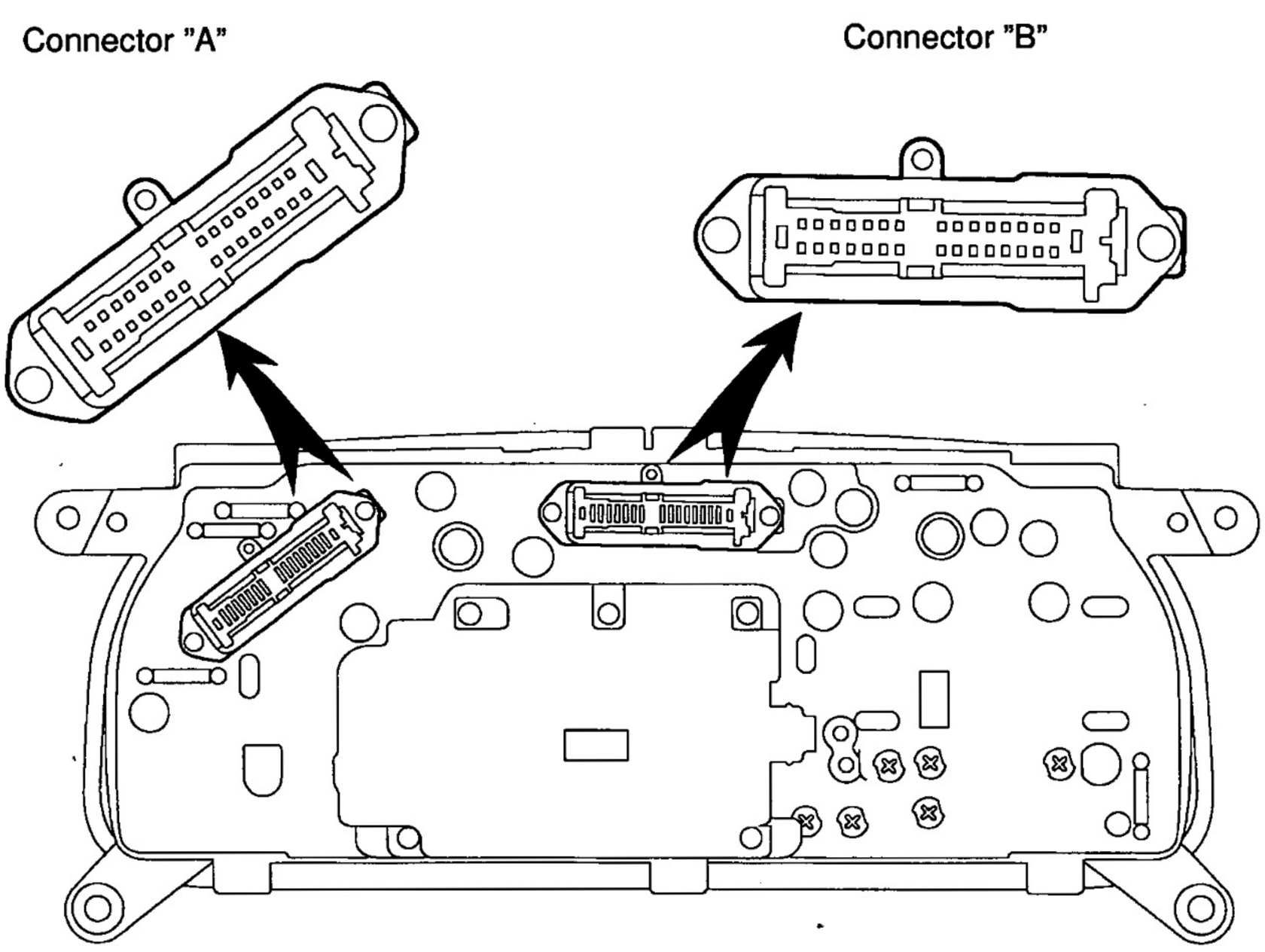

I12671

w/o Active TRC and VSC:

*1: 1KZ–T

*2: Except 3 Land 1KZ–T

*3: A/T

*4: Diesel engine

*5: w/ Engine immobiliser

*6: Full–time 4WD

*7: Part–time 4WD

*8: w/ Rear fog light

*9: w/ Air filter warning

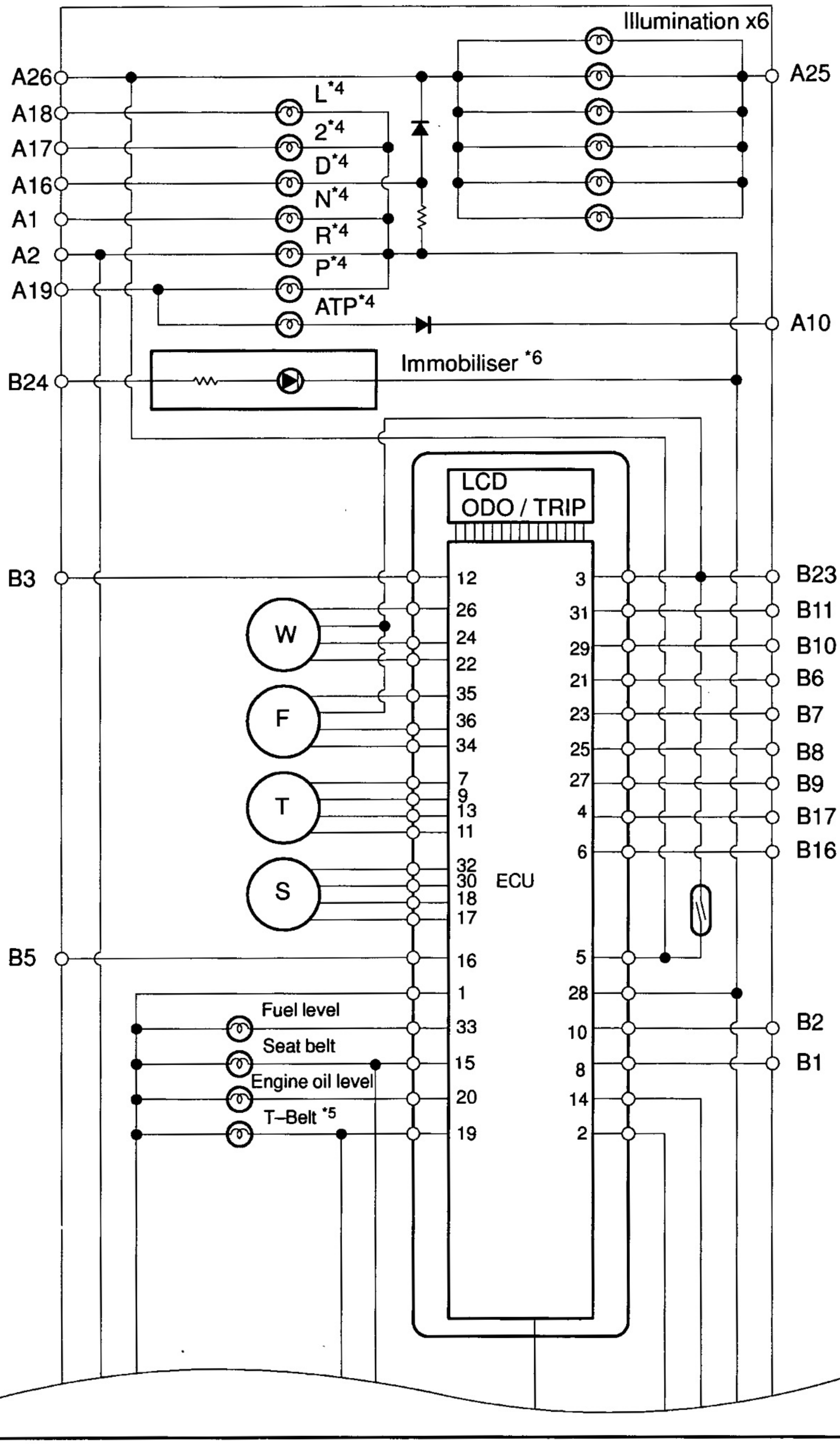

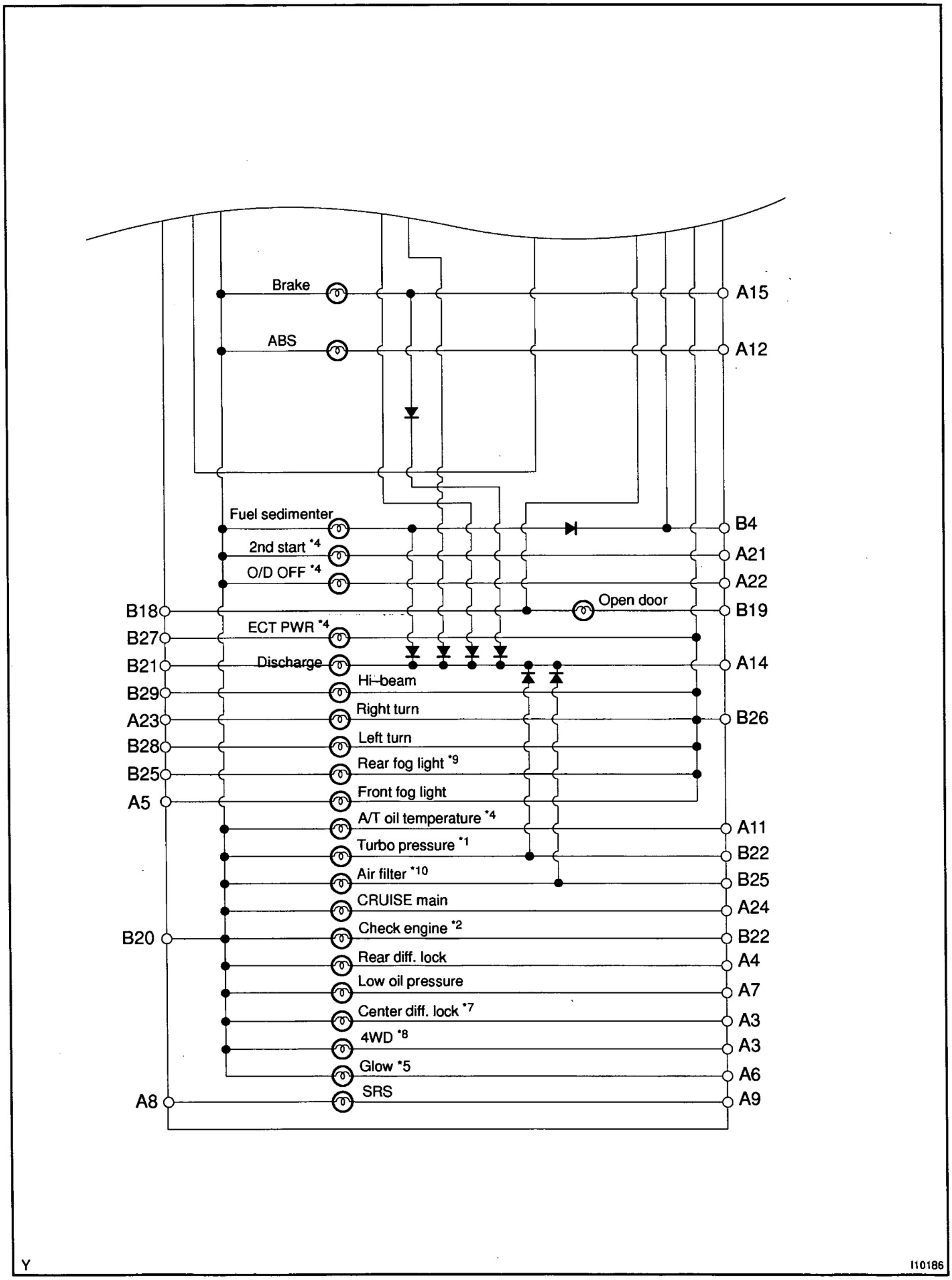
Brake
ABS
Fuel sedimenter
2nd start *4
O/D OFF *4
Open door
ECT PWR *4
Discharge
Hi–beam
Right turn
Left turn
Rear fog light *9
Front fog light
A/T oil temperature *4
Turbo pressure *1
Air filter *10
CRUISE main
Check engine *2
Rear diff. lock
Low oil pressure
Center diff. lock *7
4WD *8
Glow *5
SRS
A15
A12
B4
A21
A22
B19
A14
B26
A11
B22
B25
A24
B22
A4
A7
A3
A3
A6
A9
B18
B27
B21
B29
A23
B28
B25
A5
B20
A8
Y
I10186

w/ Active TRC or VSC:

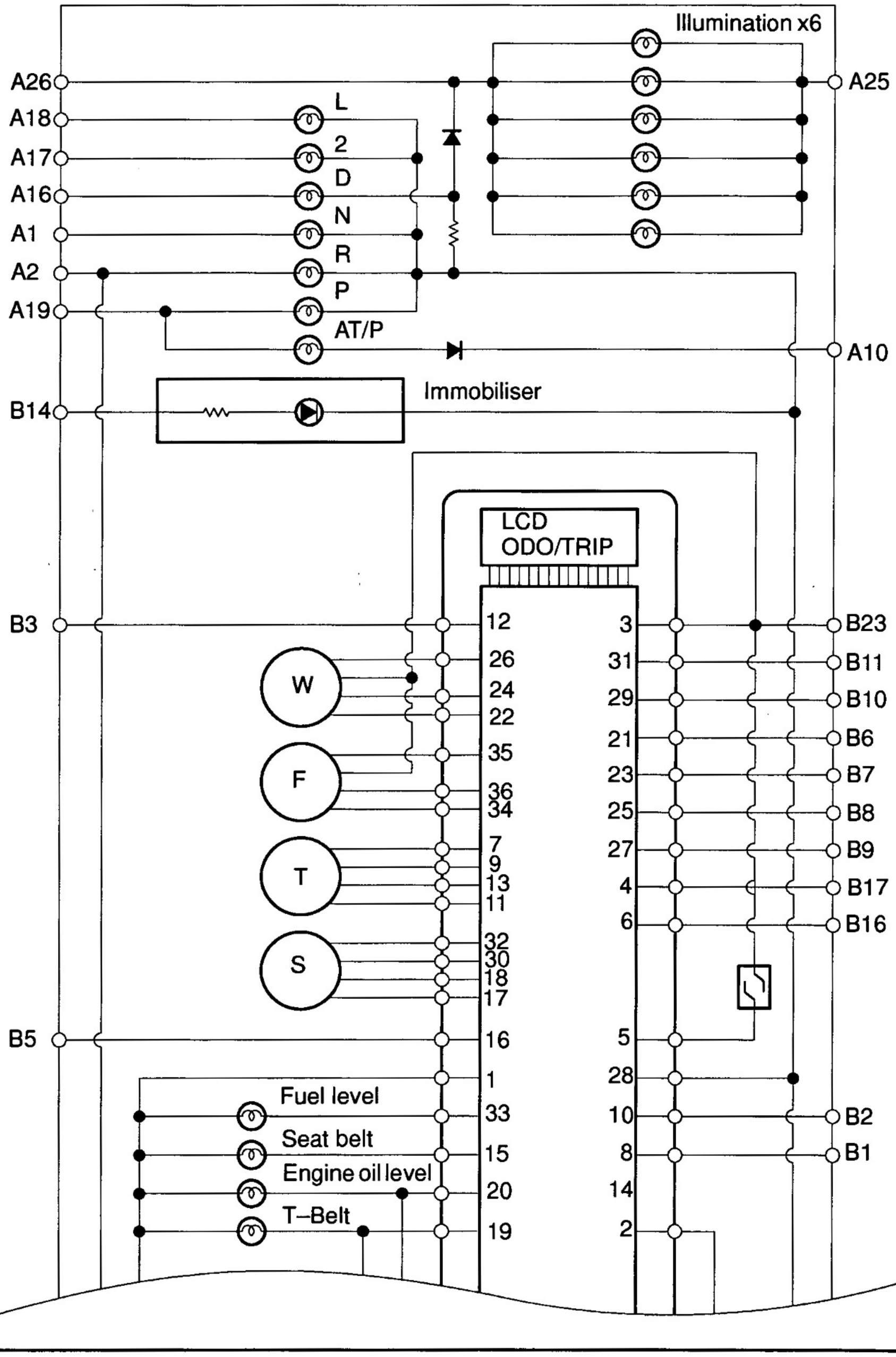

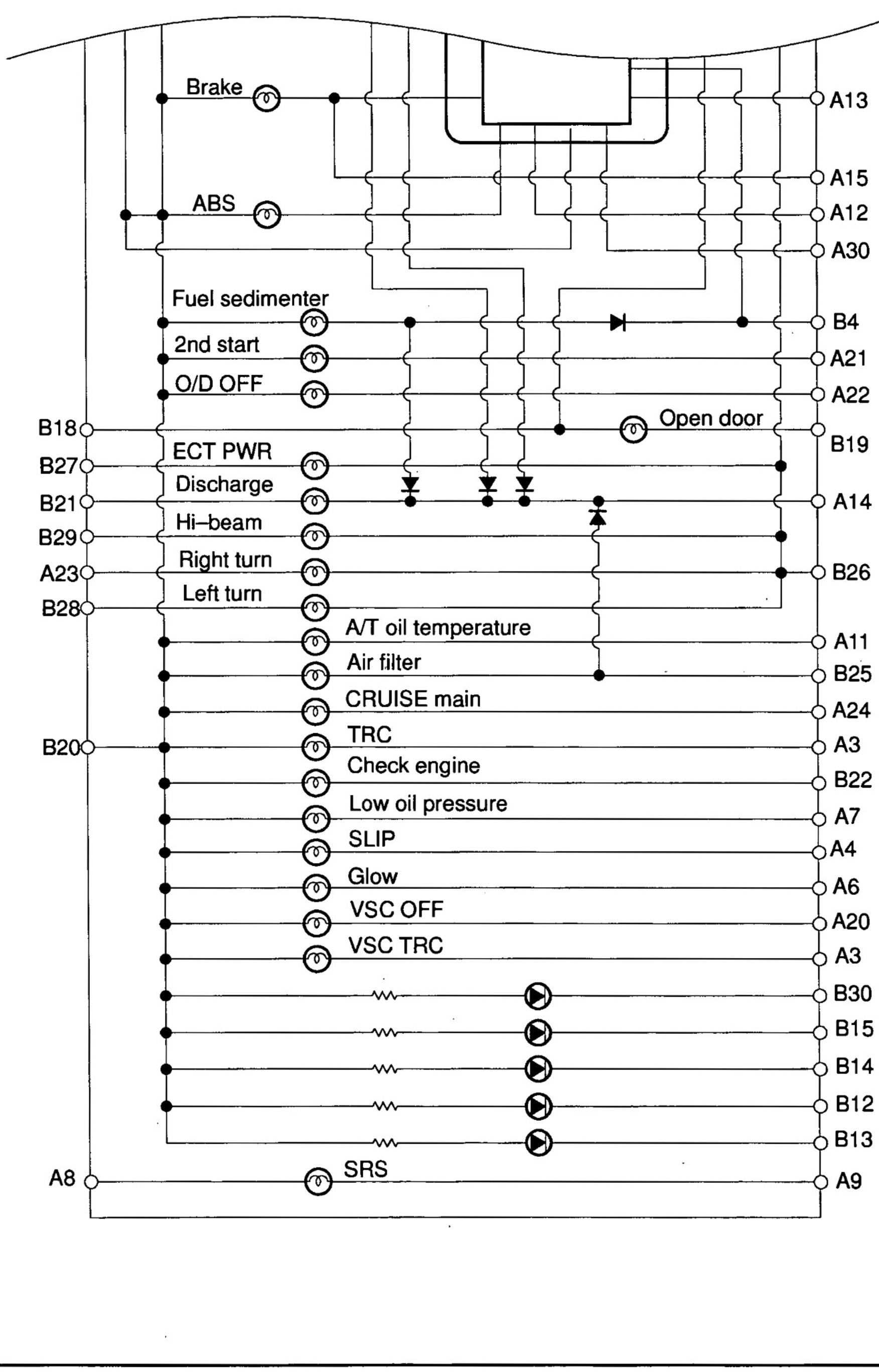
Brake
A13
ABS
A15
A12
A30
Fuel sedimenter
B4
2nd start
A21
O/D OFF
A22
Open door
B18
B19
ECT PWR
B27
Discharge
B21
A14
Hi–beam
B29
Right turn
A23
B26
Left turn
B28
A/T oil temperature
A11
Air filter
B25
CRUISE main
A24
TRC
B20
A3
Check engine
B22
Low oil pressure
A7
SLIP
A4
Glow
A6
VSC OFF
A20
VSC TRC
A3
B30
B15
B14
B12
B13
SRS
A8
A9
Y
I10184

Connector "A"		Connector "B"	
No.	Wiring connector side	No.	Wiring connector side
1	Neutral start switch (N position)	1	Driver door courtesy switch
2	Neutral start switch(R position)	2	Key unlock warning switch
3	Transfer 4WD position detection switch *1	3	Passenger seat belt warning light
	ABS & BA & VSC ECU*2, A–TRC ECU *3	4	Fuel sedimenter switch
4	Rear diff. lock switch *4	5	Speed control unit
	ABS & BA & VSC ECU*2, A–TRC ECU *3	6	Engine oil level warning switch
5	Front fog light switch	7	Engine and ECT ECU, EGR ECU,
6	Pre heating timer or EGR ECU *5		pick up sensor or Igniter
7	Low oil pressure warning switch	8	Vehicle speed sensor
8	ECU–B Fuse	9	Ground
9	Airbag sensor assembly	10	Water temperature sender gauge
10	Transfer neutral detection switch	11	Fuel sender gauge
11	A/T fluid temperature switch	12	ABS & BA & VSC ECU*2, A–TRC ECU *3
12	ABS ECU	13	ABS & BA & VSC ECU*2, A–TRC ECU *3
13	ABS & BA & VSC ECU*2, A–TRC ECU *3	14	Transfer control relay *2, 3
14	Alternator	15	ABS & BA & VSC ECU*2, A–TRC ECU *3
15	Brake fluid level warning switch	16	Driver's seat belt buckle switch
	PKB switch	17	Passenger's seat belt buckle switch
	Vacuum warning switch *5	18	DOME Fuse
16	Neutral start switch (D position)	19	Door courtesy switch
17	Neutral start switch (2 position)	20	IGN Fuse
18	Neutral start switch (L position)	21	IGN Fuse
19	Neutral start switch (P position)	22	Engine and ECT ECU *7
20	ABS & BA & VSC ECU*2, A–TRC ECU *3		Turbo pressure switch *8
21	Engine and ECT ECU	23	Ground
22	O/D main switch	24	Engine and ECT ECU *9
23	Turn signal switch (Right)		Engine immobiliser ECU *10
24	Cruise control ECU	25	Rear fog light switch *11
25	Ground		Air filter warning switch *12
	Light control rheostat *6	26	Ground
26	Taillight control relay	27	ECT Pattern select switch
30	Ground *2, 3	28	Turn signal Switch (Left)
		29	Headlight dimmer switch
		30	ABS & BA & VSC ECU*2, A–TRC ECU *3

*1: w/o VSC and TRC
*2: w/ VSC
*3: w/ A–TRC
*4: w/ Rear diff. lock
*5: Diesel engine
*6: w/ Light control rheostat
*7: Except 3L and 1KZ–T engine
*8: 1KZ–T engine
*9: w/ Engine immobiliser (5VZ–FE engine)
*10: w/ Engine immobiliser (Except 5VZ–FE engine)
*11: w/ Rear fog light
*12: w/ Air filter warning

BE1AZ-01

INSPECTION

1. INSPECT COMBINATION METER CIRCUIT

Connect the connector "A" and "B" to the combination meter and inspect the wire harness side connectors from the back side as shown in the table.

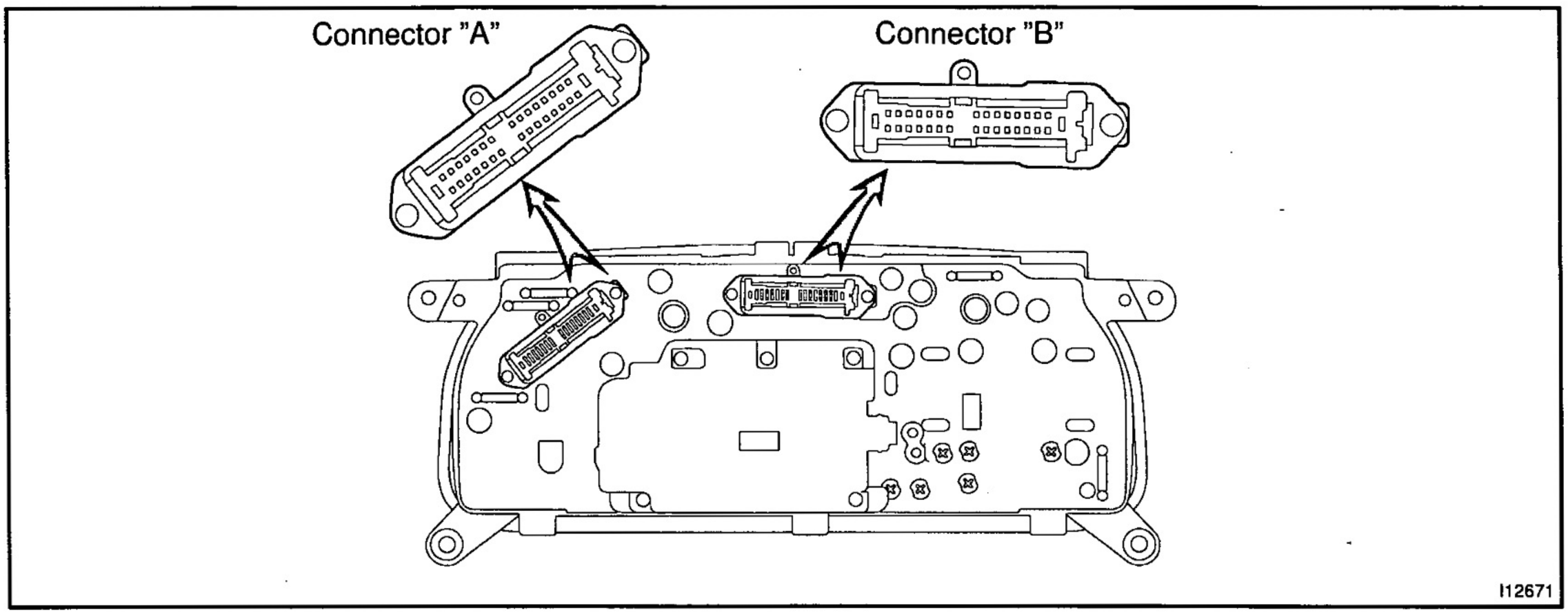

Tester connection	Condition	Specified condition
A1 – Ground	Ignition switch ON and except A/T shift N position	No voltage
	Ignition switch ON and A/T shift N position	Battery voltage
A2 – Ground	Ignition switch ON and except A/T shift R position	No voltage
	Ignition switch ON and A/T shift R position	Battery voltage
A3 – Ground*1	Ignition switch ON and transfer H_L or L_L position	No voltage
	Ignition switch ON and except transfer H_L or L_L position	Battery voltage
A3 – Ground*2	Ignition switch ON and transfer L4 position	No voltage
	Ignition switch ON and except transfer L4 position	Battery voltage
A3 – Ground*3	Ignition switch ON and VSC TRC warning light ON	No voltage
	Ignition switch ON and VSC TRC warning light OFF	Battery voltage
A3 – Ground*4	Ignition switch ON and TRC warning light ON	No voltage
	Ignition switch ON and TRC warning light OFF	Battery voltage
A4 – Ground*5	Ignition switch ON and rear diff. lock switch ON	No voltage
	Ignition switch ON and rear diff. lock switch OFF	Battery voltage
A4 – Ground*3	Ignition switch ON and SLIP warning light ON	No voltage
	Ignition switch ON and SLIP warning light OFF	Battery voltage
A5 – Ground	Ignition switch ON and front fog light switch OFF	No voltage
	Ignition switch ON and front fog light switch ON	Battery voltage
A6 – Ground	Ignition switch ON and glow indicator light lights up	No voltage
	Ignition switch ON and glow indicator does not light up	Battery voltage

A7 – Ground	Ignition switch ON and engine is stopped	No voltage
	Ignition switch ON and engine is running	Battery voltage
A8 – Ground	Constant	Battery voltage
A9 – Ground	Ignition switch ON and SRS indicator light lights up	No voltage
	Ignition switch ON and SRS indicator does not light up	Battery voltage
A10 – Ground	Ignition switch ON and A/T shift P indicator lights up	No voltage
	Ignition switch ON and A/T shift P indicator does not light up	Battery voltage
A11 – Ground	Ignition switch ON and A/T oil temperature indicator lights up	No voltage
	Ignition switch ON and A/T oil temperature indicator does not light up	Battery voltage
A12 – Ground*6	Ignition switch ON and ABS warning light lights up	No voltage
	Ignition switch ON and ABS warning light does not light up	Battery voltage
A13 – Ground	Ignition switch ON and parking brake lever is pulled	No voltage
	Ignition switch ON and parking brake lever is released	Battery voltage
A14 – Ground	Ignition switch ON and engine is stopping	No voltage
	Ignition switch ON and engine is running	Battery voltage
A15 – Ground	Ignition switch ON and brake fluid level warning switch float DOWN	No voltage
	Ignition switch ON and brake fluid level warning switch float UP	Battery voltage
A16 – Ground	Ignition switch ON and except A/T shift D position	No voltage
	Ignition switch ON and A/T shift D position	Battery voltage
A17 – Ground	Ignition switch ON and except A/T shift 2nd position	No voltage
	Ignition switch ON and A/T shift 2nd position	Battery voltage
A18 – Ground	Ignition switch ON and except A/T shift L position	No voltage
	Ignition switch ON and A/T shift L position	Battery voltage
A19 – Ground	Ignition switch ON and except A/T shift P position	No voltage
	Ignition switch ON and A/T shift P position	Battery voltage
A20 – Ground	Ignition switch ON and VSC OFF switch OFF	No voltage
	Ignition switch ON and VSC OFF switch ON	Battery voltage
A21 – Ground	Ignition switch ON and pattern select switch NORM	No voltage
	Ignition switch ON and pattern select switch 2nd start	Battery voltage
A22 – Ground	Ignition switch ON and O/D off switch ON	No voltage
	Ignition switch ON and O/D off switch OFF	Battery voltage
A23 – Ground	Ignition switch ON and turn signal switch OFF or LEFT	No voltage
	Ignition switch ON and turn signal switch RIGHT	Battery voltage

A24 – Ground	Ignition switch ON and cruise control switch ON	No voltage
	Ignition switch ON and cruise control switch OFF	Battery voltage
A25 (w/ rheostat) – Ground	Ignition switch ON and light control rheostat volume maximum	No voltage
	Ignition switch ON and light control rheostat volume maximum	Battery voltage
A25 (w/o rheostat) – Ground	Constant	Continuity
A26 – Ground	Headlight control switch TAIL or HEAD	Battery voltage
	Headlight control switch OFF	No voltage
B1 – Ground	Ignition switch ON and driver door is opened	No voltage
	Ignition switch ON and driver door is closed	Battery voltage
B2 – Ground	Key unlock warning switch ON(Key is inserted)	No voltage
	Key unlock warning switch OFF(Key is removed)	Battery voltage
B3 – Ground	Passenger seat belt warning light ON	Battery voltage
	Passenger seat belt warning light OFF	No voltage
B4 – Ground	Fuel sedimenter switch ON	No voltage
	Fuel sedimenter switch OFF	Battery voltage
B5 – Ground	Ignition switch ON and slowly move the wheel	Pulse signal is output below 1.5 V ↔ aprox. 5 V or below 1.5 V ↔ battery voltage
B6 – Ground	Ignition switch ON and engine oil level waning lights up	No voltage
	Ignition switch ON and engine oil level warning does not light up	Battery voltage
B8 – Ground	Ignition switch ON and slowly move the wheel	Pulse signal is output below 1.5 V ↔ battery voltage
B9 – Ground	Constant	Continuity
B10 – Ground	Ignition switch ON and engine coolant temperature 90 °C	Battery voltage
B11 – Ground	Ignition switch ON and fuel sender gauge float UP	Approx. 0.2 V
	Ignition switch ON and fuel sender gauge float DOWN	Approx. 3.2 V
B12 – Ground	Left rear A–TRC indicator ON	6.5 – 10.5 V
B13 – Ground	Left rear A–TRC indicator ON	6.5 – 10.5 V
B14 – Ground	Center diff. A–TRC indicator ON	6.5 – 10.5 V
B15 – Ground	Right front A–TRC indicator ON	6.5 – 10.5 V
B16 – Ground	Ignition switch ON and driver seat belt is unfastened	No voltage
	Ignition switch ON and driver seat belt is fastened	Battery voltage
B17 – Ground	Ignition switch ON and passenger seat belt is unfastened	No voltage
	Ignition switch ON and passenger seat belt is fastened	Battery voltage
B18 – Ground	Constant	Battery voltage
B19 – Ground	Either door is opened	No voltage
	Either door is closed	Battery voltage

B20 – Ground	Ignition switch OFF	No voltage
	Ignition switch ON	Battery voltage
B21 – Ground	Ignition switch OFF	No voltage
	Ignition switch ON	Battery voltage
B22 – Ground*7	Ignition switch ON and engine is stopped	No voltage
	Ignition switch ON and engine is running	Battery voltage
B22 – Ground*8	Ignition switch ON and tubo pressure switch ON	No voltage
	Ignition switch ON and tubo pressure switch OFF	Battery voltage
B23 – Ground	Constant	Continuity
B24 – Ground	Key unlock warning switch ON(Key is inserted)	No voltage
	Key unlock warning switch OFF(Key is removed)	No voltage ↔ Battery voltage
B22 – Ground	Ignition switch ON and air filter switch ON	No voltage
	Ignition switch ON and air filter switch OFF	Battery voltage
B22 – Ground*9	Ignition switch ON and rear foglight switch ON	No voltage
	Ignition switch ON and rear foglightt switch OFF	Battery voltage
B26 – Ground	Constant	Continuity
B28 – Ground	Ignition switch ON and turn signal switch OFF or RIGHT	No voltage
	Ignition switch ON and turn signal switch LEFT	Battery voltage
B29 – Ground	Headlight dimmer switch HI or flash	Battery voltage
B30 – Ground	Left front A–TRC indicator light ON	6.5 – 10.5 V

*1: Full–time 4WD (w/o VSC or A–TRC)
*2: Part–time 4WD (w/o VSC or A–TRC)
*3: w/ VSC
*4: w/ A–TRC
*5: w/ Rear diff. lock
*6: w/ ABS
*7: Except 1KZ–T engine
*8: 1KZ–T engine
*9: w/ Rear fog light

If circuit is not as specified, wiring diagram and inspect the circuits connected to other parts.

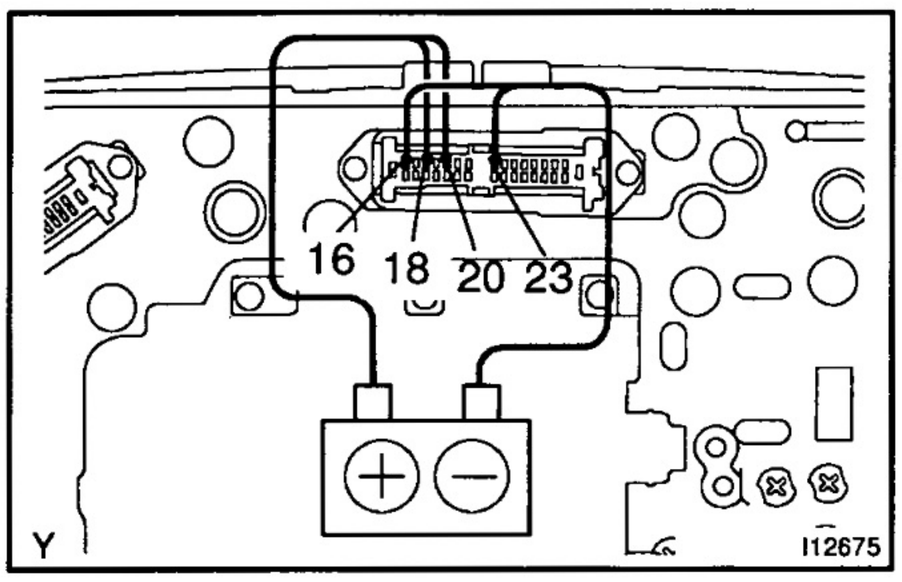

2. Driver's seat belt waring system (Australia):
INSPECT COMBINATION METER OPERATION

(a) Connect the positive (+) lead from the battery to terminals 18 and 20 of connector "B", and negative (–) lead from the battery to terminal 16 and 23 of connector "B".

(b) Check that the driver's seat belt warning light flushes.

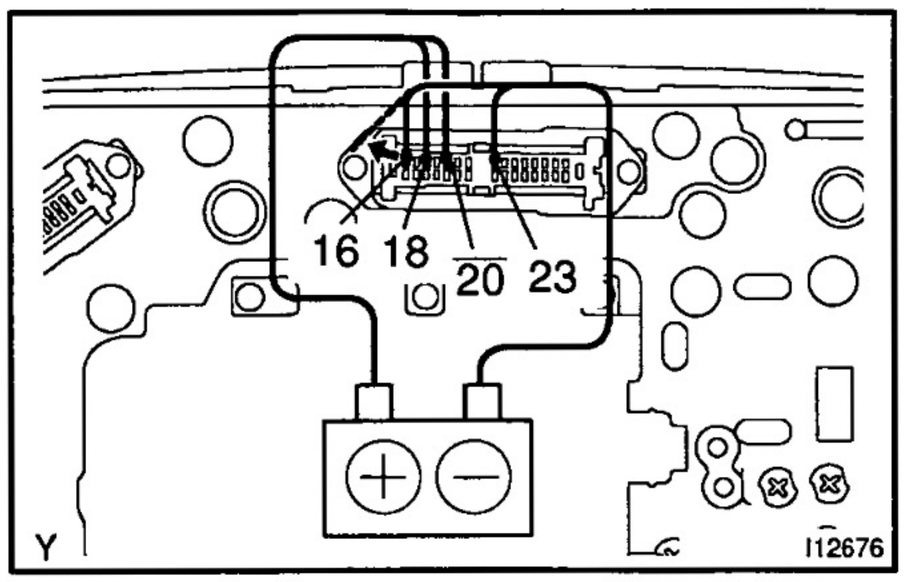

(c) Check that the driver's seat belt warning light gose off when disconnecting terminal 16 of connector "B" from the negative (–) lead.

HINT:
Check the buzzer sounds within a period of approx. 6 secs.
If operation is not as specified, replace the combination meter.

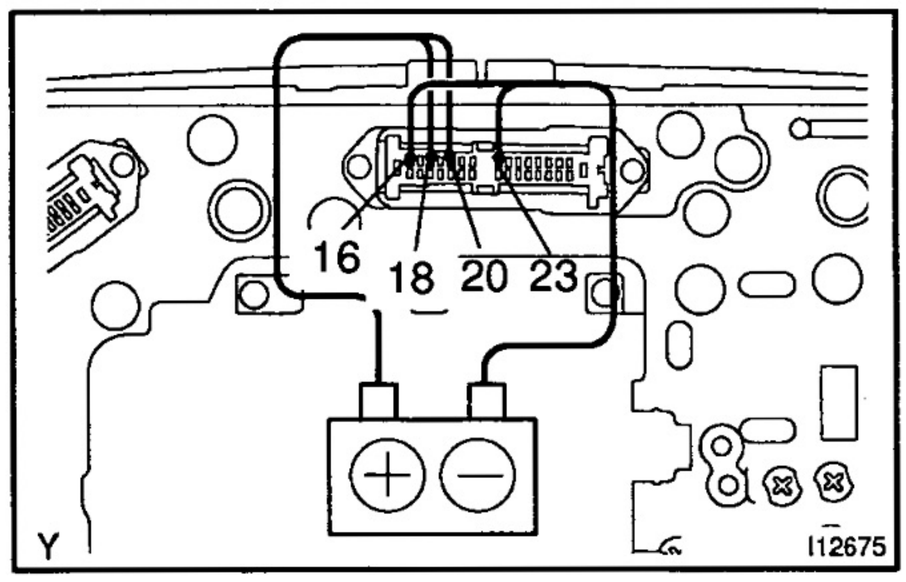

3. Driver's seat belt waring system (G.C.C.):
INSPECT COMBINATION METER OPERATION

(a) Connect the positive (+) lead from the battery to terminals 18 and 20 of connector "B", and negative (–) lead from the battery to terminal 16 and 23 of connector "B".

(b) Check that the driver's seat belt warning light flushes and buzzer sounds for approx. 6 secs.

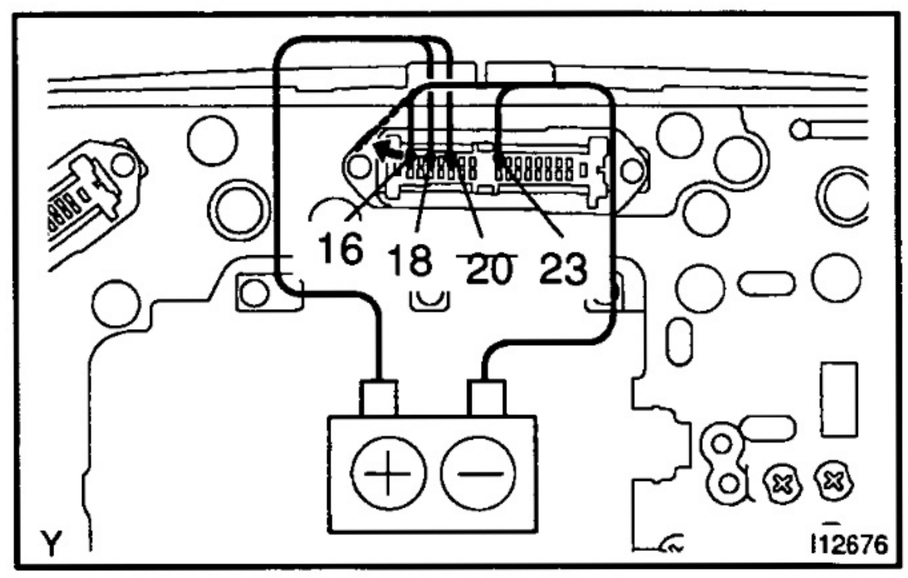

(c) Disconnect the negative (–) lead from the battery to terminal 16 of the connector "B" and reconnect it again.

(d) Check that the buzzer sounds again.

(e) Check that the buzzer stops sounding when disconnecting terminal 16 of connector "B" from the negative (–) lead.

HINT:
Check the buzzer sounds within a period of approx. 6 secs.
If operation is not as specified, replace the combination meter.

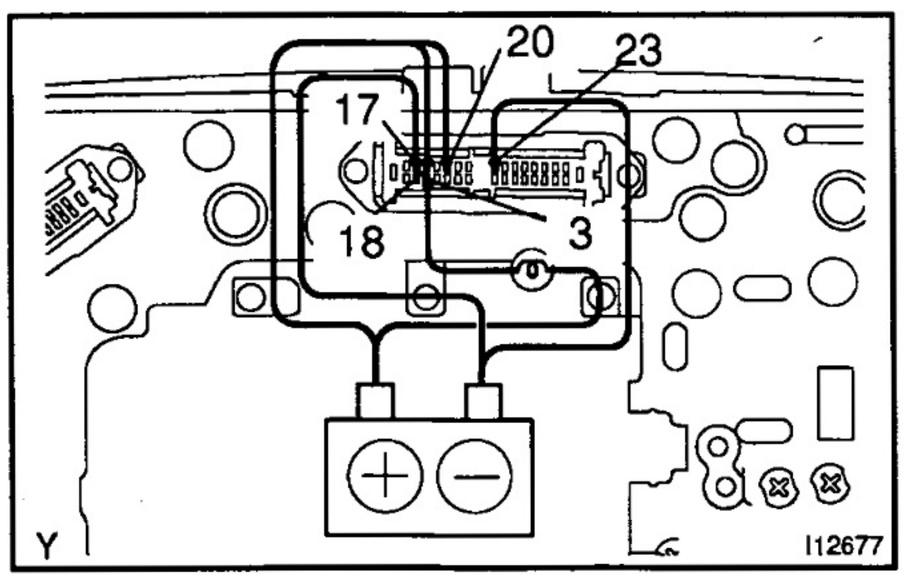

4. Passenger's seat belt warning system:
INSPECT COMBINATION METER OPERATION

(a) Connect the positive (+) lead from the battery to terminals 18 and 20 of connector "B", and negative (–) lead from the battery to terminal 23 of the connector "B".

(b) Connect the terminal 3 of connector "B" to battery positive (+) terminal through the 3.4 – W test bulb.

(c) Connect the negative (–) lead from battery to terminal 17 of connector "B".

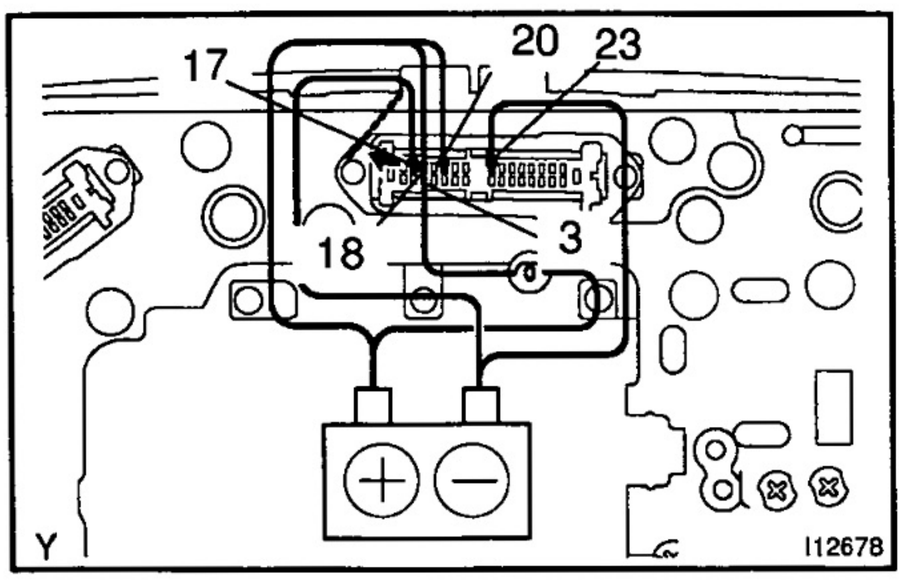

(d) Check that the bulb flashes.

(e) Check that the bulb gose off when disconnecting terminal 17 from the negative (–) lead.

If operation is not as specified, replace the combination meter.

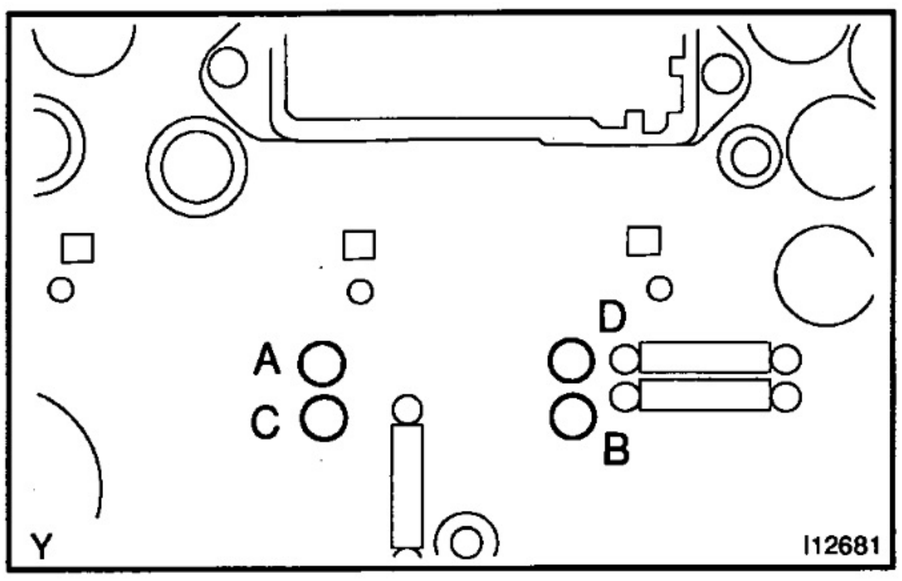

5. INSPECT SPEEDOMETER RESISTANCE

Measure the resistance between terminals while fixing pointer to the stopper.

Tester connection	Resistance (Ω)
A – B	160
C – D	160

If resistance value is not as the specified, replace the meter.

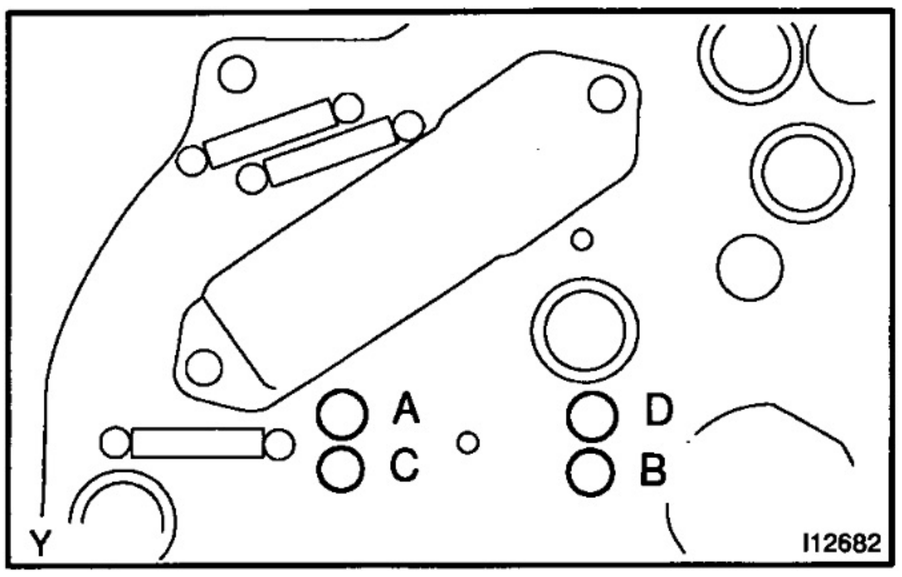

6. INSPECT TACHOMETER RESISTANCE

Measure the resistance between terminals while fixing pointer to the stopper.

Tester connection	Resistance (Ω)
A – B	160
C – D	160

If resistance value is not as specified, replace the meter.

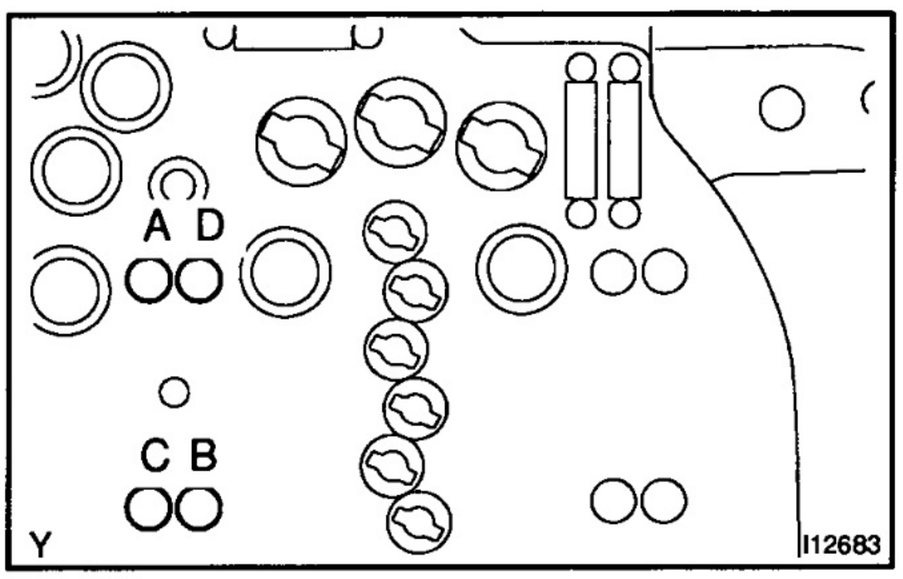

7. INSPECT FUEL RECEIVER GAUGE RESISTANCE

Measure the resistance between terminals while fixing pointer to the stopper.

Tester connection	Resistance (Ω)
A – B	160
C – D	160

If resistance value is not as specified, replace the receiver gauge.

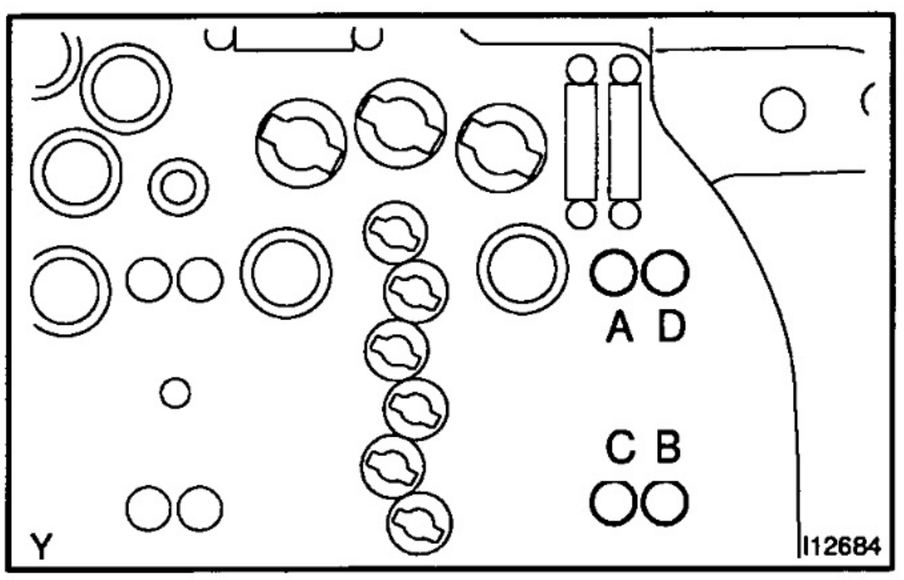

8. INSPECT ENGINE COOLANT TEMPERATURE RECEIVER GAUGE RESISTANCE

Measure the resistance between terminals while fixing pointer to the stopper.

Tester connection	Resistance (Ω)
A – B	160
C – D	160

If resistance value is not as specified, replace the receiver gauge.

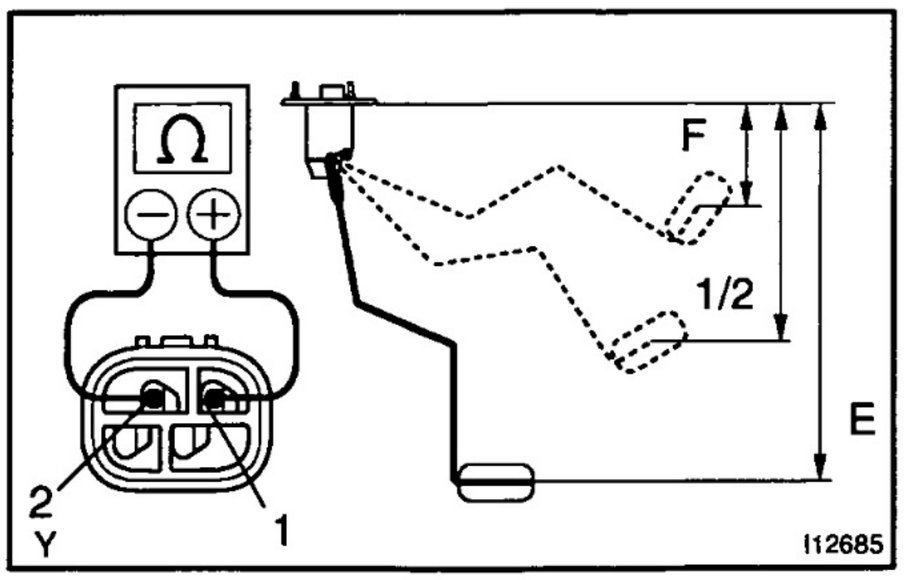

9. INSPECT FUEL SENDER GAUGE

Measure the resistance between terminals 1 and 2 for each float position.

Float position: mm (in.)	Resistance (Ω)
F: Approx. 89.0 (3.504)	Approx. 5
1/2: Approx. 197.5 (7.776)	Approx. 55
E: Approx. 312.1 (12.287)	Approx. 108

If resistance value is not as specified, replace the sender gauge.

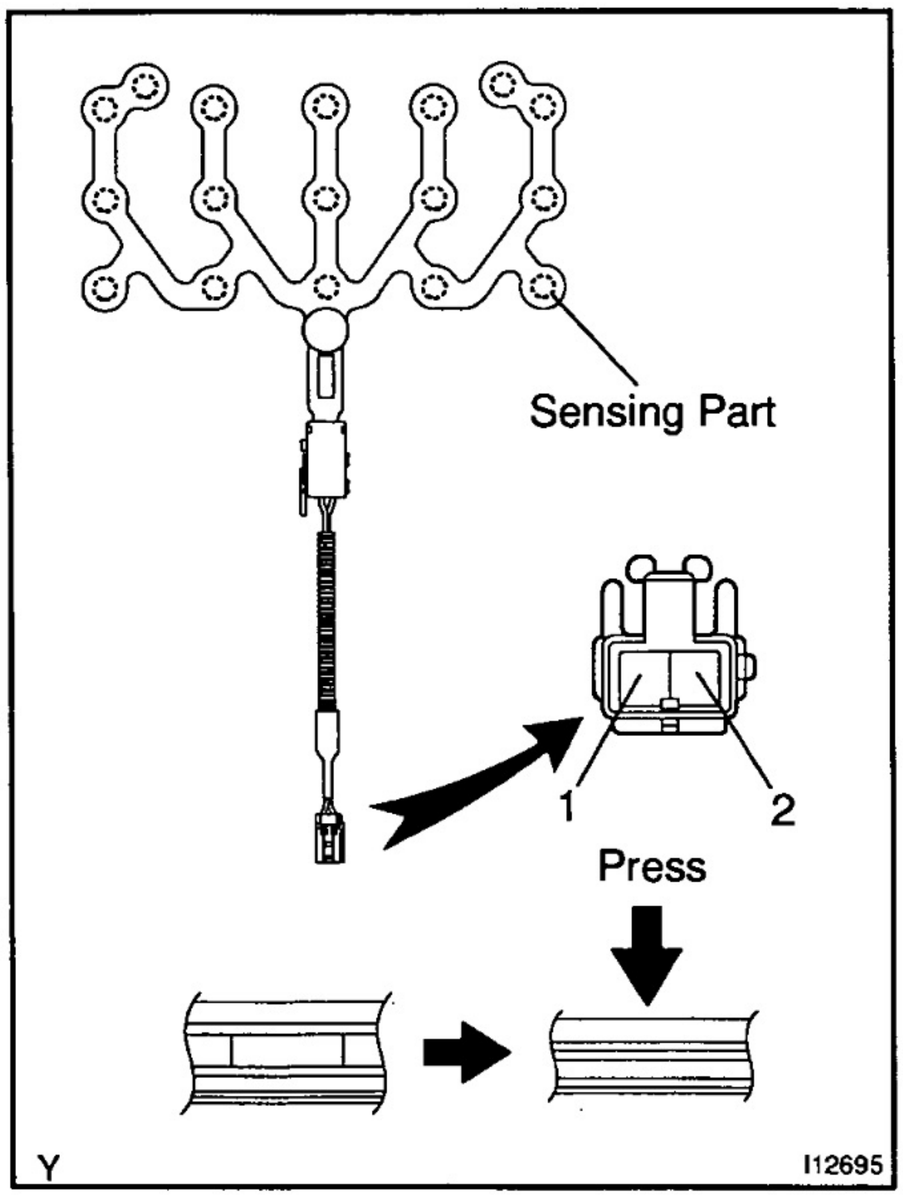

10. Passenger's seat only:
INSPECT SEAT BELT WARNING OCCUPANT DETECTION SENSOR CONTINUITY

Check that continuity exists between the terminals 1 and 2 when pressing the sensing part.
If operation is not as specified, replace the sensor.

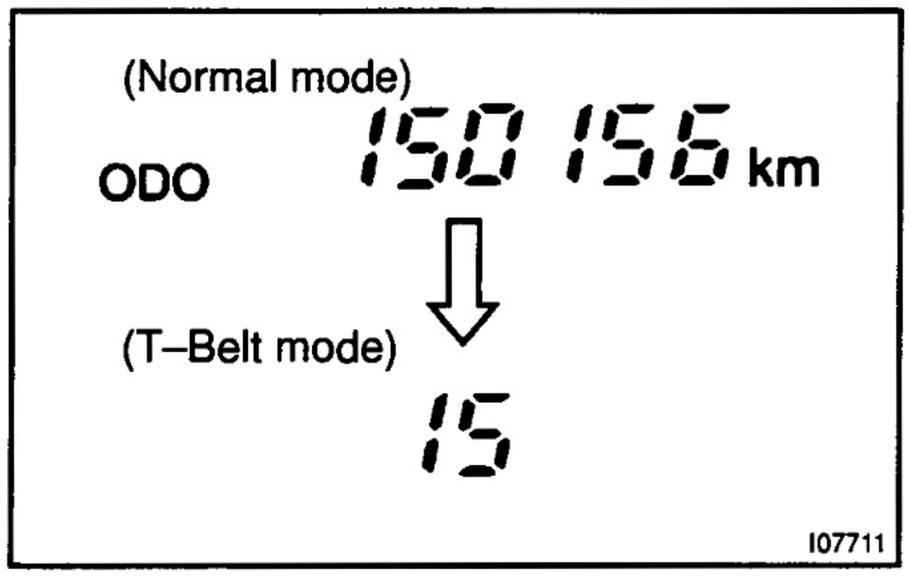

BE1B0–01

ADJUSTMENTADJUSTMENT

ADJUST TIMING WARNING SYSTEM

(a) T–BELT mode display

(1) Turn ODO/TRIP display screen to ODO, and turn the ignition switch OFF.

(2) While pressing the trip switch, turn the ignition switch ON and hold it for 5 secs.

(3) Release the trip switch, then press the trip switch again within 5 secs.

(4) Transfer to T–BELT mode, and following initial setting value is displayed.

km : 15 (0,000 km)

mile : 9 (0,000 mile)

HINT:

If the meter has been replaced before, the displayed value might not be the initial setting value.

(b) Rewriting replacement setting value

Press the trip switch and rewrite the replacement setting value.

Conditions	Setting value
When a belt is replaced	km : 15 (0,000 km) mile : 9 (0,000 mile)
When a meter is replaced	km : (15 (0,000 km)) – (Km when the meter is replaced.) mile : (9 (0,000 mile)) – (Mileage when the meter is replaced.)

HINT:

When pressing the trip switch, the displayed value is changed to 1 (0,000 km) / 1 (0,000 mile) for the first time and after this, increases in increments of 1 (0,000 km) / 1 (0,000 mile) up to 20 (0,000 km) / 20 (0,000 mile). If switch operation is not performed for more than 30 secs, the setting value will not be changed, the display screen turns to "ODO", and the mode returns to the normal mode.

(c) T–BELT mode completion

NOTICE:

If T–BELT mode is completed, even though belt replacement or meter replacement has not been performed, the T–BELT warning is reset.

(1) After setting the replacement setting value, hold the trip switch ON for more than 5 secs. then release the trip switch.

(2) Check that the display has changed to "ODO" and warning light has gone OFF.

ACCESSORY METER

TROUBLESHOOTING

BE1B1-01

1. COMPASS

- Displayed figure blinks
- Direction is not stably displayed
- Wrong direction is displayed
- Displayed direction can not be changed
- Circling rectification can not be finished

Rectification of compass
(Deviation rectification)

NG

Carry out circling rectification

NG

Replace accessory meter ECU

2. CLINOMETER

- Abnormal figure is displayed
- Figure is not changed by tilting
- Horizontality is not displayed when a vehicle is parked on a level surface

Rectification of clinometer

NG

Replace accessory meter ECU

Rectification of clinometer can not be carried out

Check for open in harness and connector between switch and meter ECU

NG

Repair harness or connector

OK

Replace accessory meter panel or accessory meter ECU

3. MALTI INFORMATION DISPLAY

(a) Ambient temperature meter

• Abnormal temperature is displayed • "–E" is displayed

HINT:
- Displayed outside temperature is temperature around the ambient temperature sensor.
- When outside temperature is –30 °C or less or 65 °C or more, the thermometer displays –30 °C or 65 °C respectively. When it is less than –65 °C, however, "–E" is displayed.
- Higher temperature may be displayed due to radiation from the road surface.

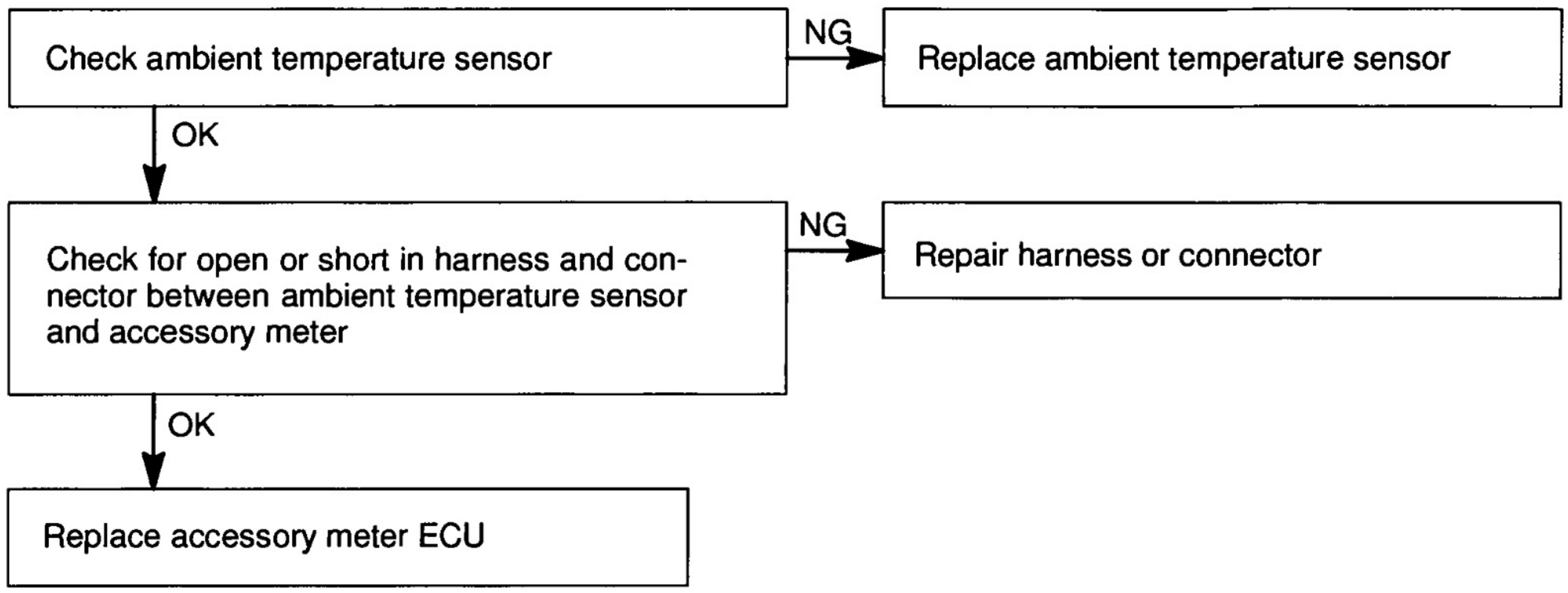

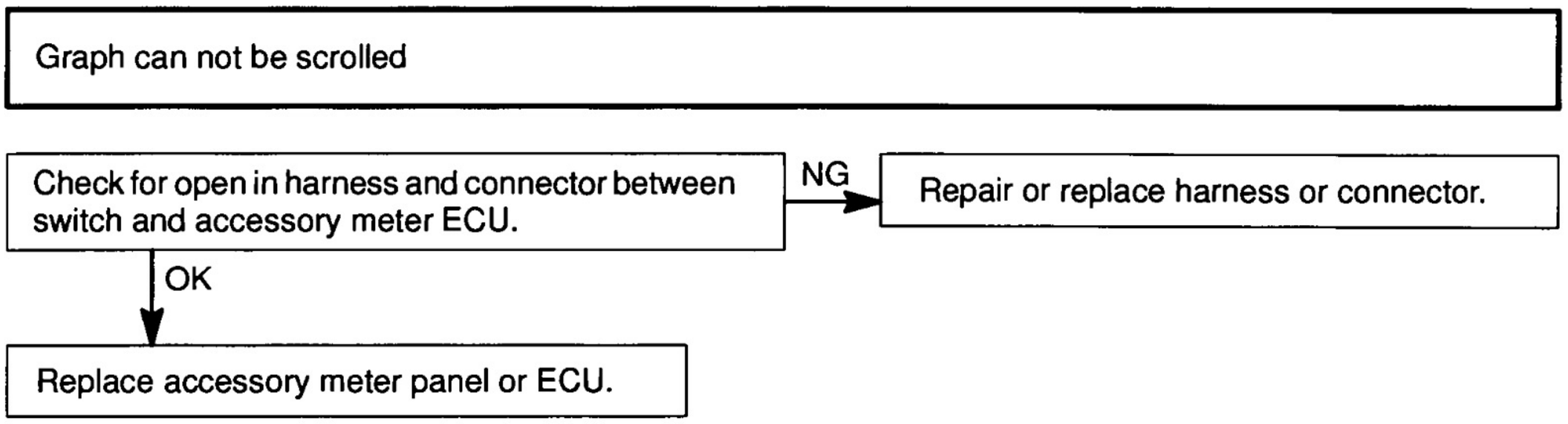

(b) Barometer

Abnormal atmospheric pressure is displayed

HINT:
Since displayed pressure is atmospheric pressure inside a vehicle, it may be different from that outside the vehicle.

Replace accessory meter ECU

Graph can not be scrolled

Check for open in harness and connector between switch and accessory meter ECU. → NG → Repair or replace harness or connector.

↓ OK

Replace accessory meter panel or ECU.

(c) Altimeter

Abnormal altitude is displayed

HINT:
Since the displayed altitude is determined by an arithmetic conversion of the air pressure sensor output, even at the same place, it may vary due to weather conditions.

Replace accessory meter ECU

Altitude can not be rectified

Check for open in harness and connector between switch and accessory meter ECU. → NG → Repair or replace harness or connector.

↓ OK

Replace accessory meter panel or ECU.

(d) Average–speed meter

- Measurement can not be started, stopped or reset
- Abnormal value is displayed

HINT:

- Graph display shows an average vehicle speed which count starts when a battery is connected or when the start switch is ON.
- Digital display shows an average vehicle speed which count starts when the start switch is ON.
- Both graph and digital display counts the speed even when the ignition switch OFF.

Check for open in harness and connector between switch and accessory meter ECU. → NG → Repair or replace harness or connector.

↓ OK

Replace accessory meter panel or ECU.

(e) Timer

Measurement can not be started, stopped or reset

Check for open in harness and connector between switch and accessory meter ECU.

NG → Repair or replace harness or connector.

OK ↓

Replace accessory meter panel or ECU.

Accuracy is extremely bad

Replace accessory meter ECU

4. ILLUMINATION

Back up light is off

Push up key

Light up → Normal

Dose not light up ↓

Remove the accessory meter connector and connect it again

Light up → Normal

Dose not light up ↓

Replace accessory meter lamp or ECU

Back up light turns off

Check if the error code is stored

NG → Replace accessory meter lamp or ECU

OK ↓

Delete the error code and see the condition, or replace the accessory meter ECU

Back up light is irregularly lit

HINT:
When temperature is extremely low, the cold cathode tube itself may not have enough brightness.

Replace accessory meter panel or ECU

5. DISPLAYS

LCD (Liquid Crystal Display) is dim

Adjust the back up light level

NG

Replace accessory meter panel or ECU

HINT:
When temperature is extremely low, LCD response may be slow.

• Irrelevant segment is displayed • Abnormal figure is displayed

Replace accessory meter panel or ECU

ACCESSORY METER

LOCATION

BE0W3–02

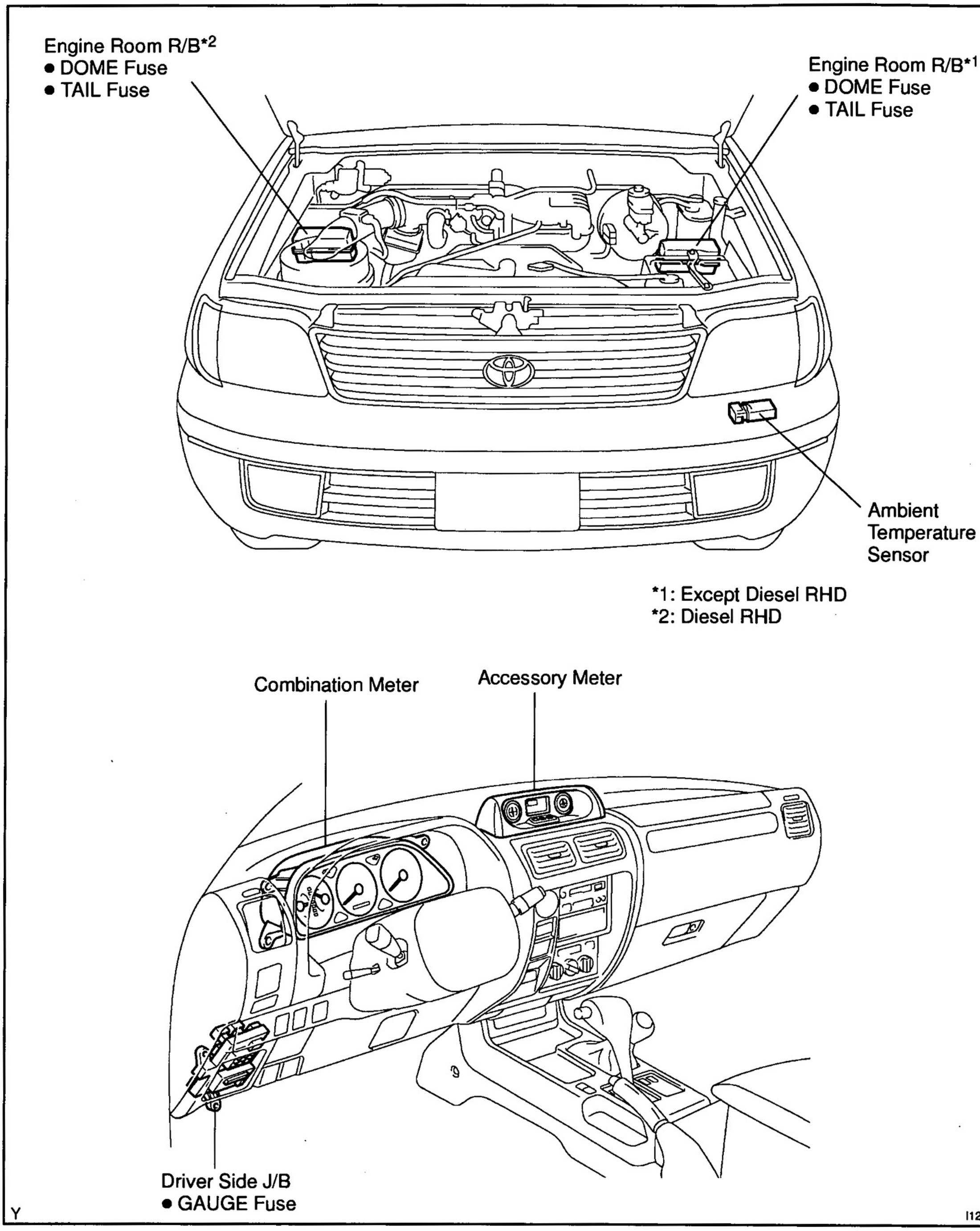

BE0W4–02

CIRCUIT

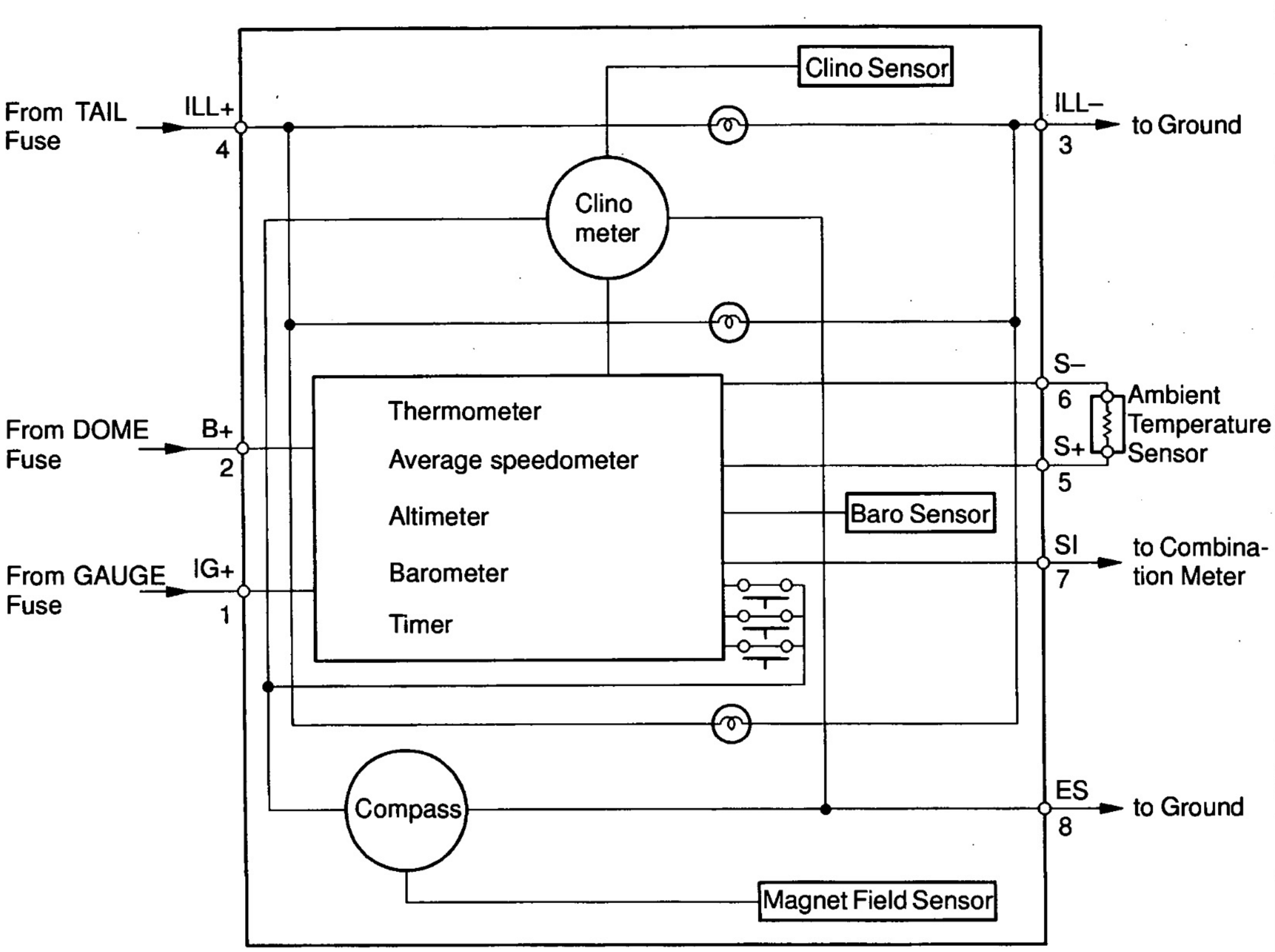

N19847

BE1B2–01

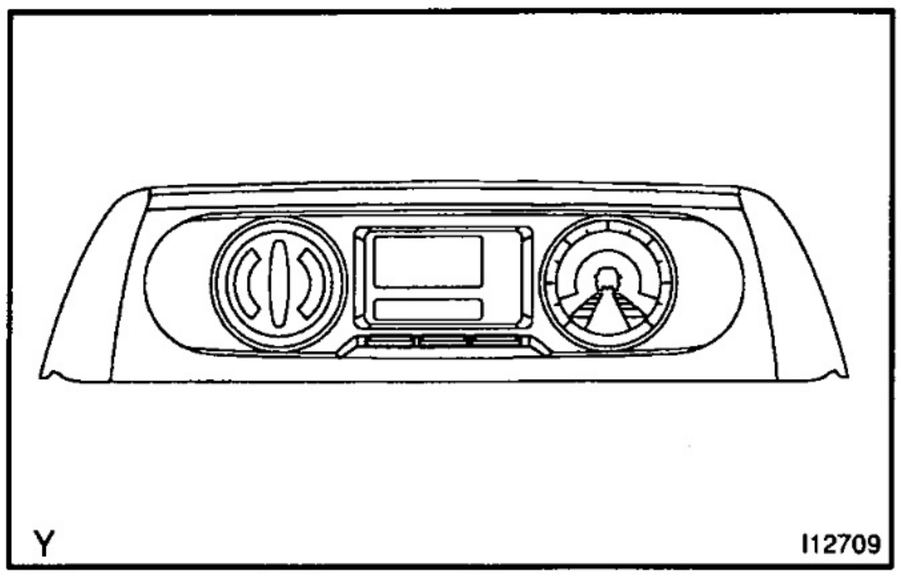

PRE–CHECK

1. CHECK DTC

(a) Turn on the ignition switch while pressing both MODE/ LIGHT key and UP key.

(b) A code in the memory is displayed on the information display for 1 sec.

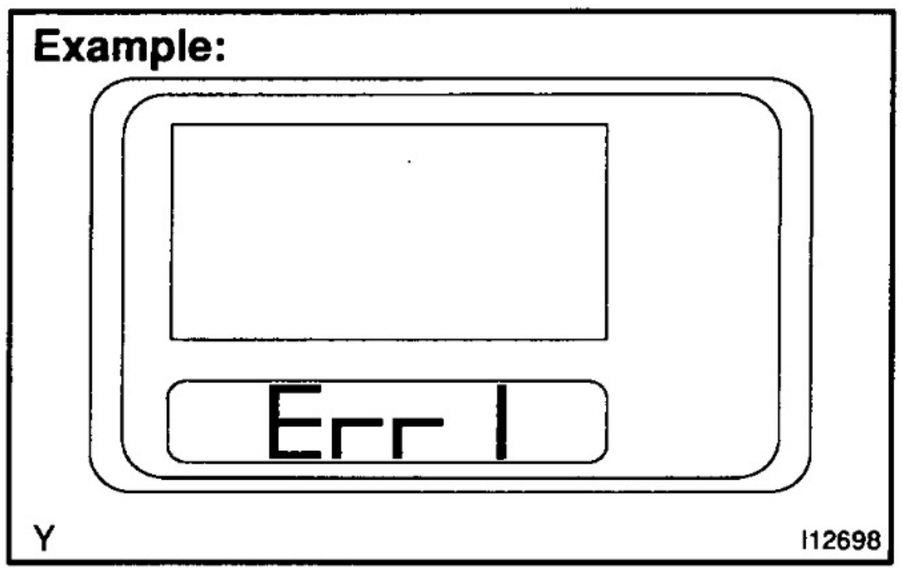

(c) Codes are explained in the table below.

Code	Detection item
Err 1	Abnormal temperature rise inside meter
Err 2	Abnormally high IG terminal voltage
Err 3	Abnormal oscillation
Err 4	• Abnormal temperature rise inside meter • Abnormally high IG terminal voltage
Err 5	• Abnormally high IG terminal voltage • Abnormal oscillation
Err 6	• Abnormal temperature rise inside meter • Abnormal oscillation
Err 7	• Abnormal temperature rise inside meter • Abnormally high IG terminal voltage • Abnormal oscillation

2. CLEAR DTC

Removing the DOME fuse 10 secs. or more.

BE0W5-02

INSPECTION

INSPECT METER CIRCUIT

(a) Connector disconnected:
Disconnect the connector from the accessory meter and inspect the connector on the wire harness side, as shown in the chart.

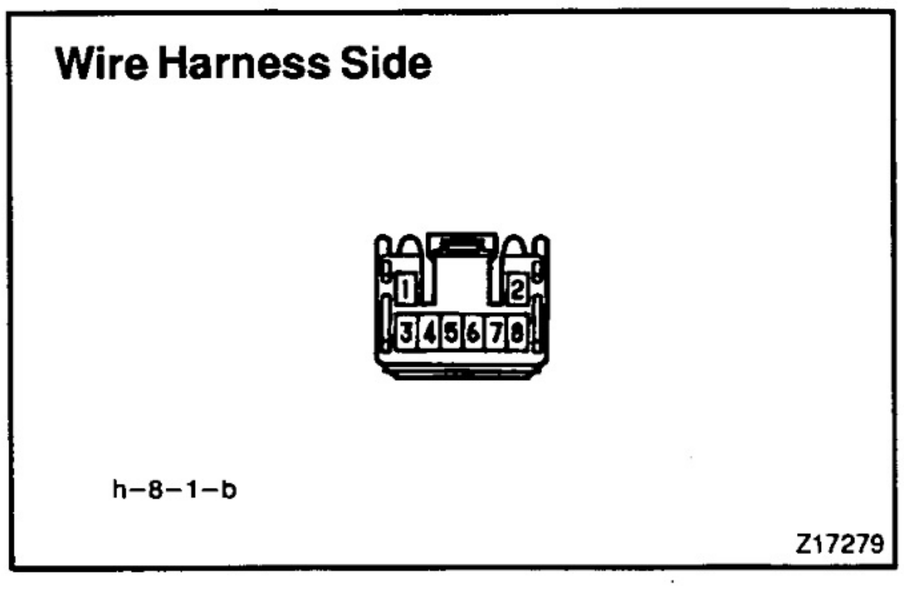

Tester connection	Condition	Specified condition
1 – Ground	Ignition switch LOCK or ACC	No voltage
1 – Ground	Ignition switch ON	Battery voltage
2 – Ground	Constant	Battery voltage
3 – Ground	Constant	Continuity
4 – Ground	Light control switch OFF	No voltage
4 – Ground	Light control switch TAIL or HEAD	Battery voltage
5 – 6	Constant	Approx. 1.7 kΩ at 25 °C (77 °F)
8 – Ground	Constant	Continuity

If the circuit is as specified, try replacing the accessory meter with a new one.
If the circuit is not as specified, inspect the wire harness.

(b) Connector connected:
Connect the connector from the accessory meter and inspect the connector on the back side, as shown in the chart.

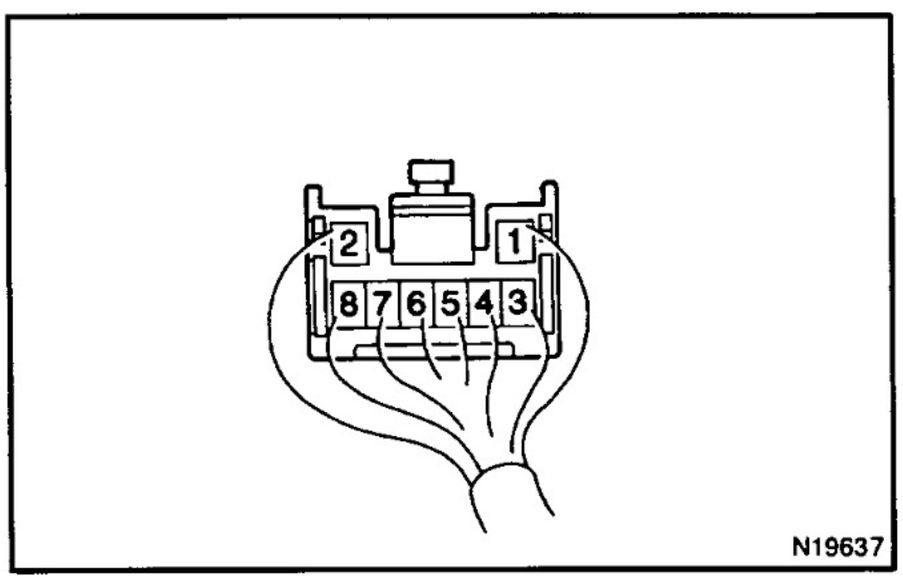

Tester connection	Condition	Specified condition
7 – Ground	Engine start. Stop a vehicle.	4.5 – 5.5 V
7 – Ground	During driving	Repeatedly changes from below 1 V to 4.5 – 5.5 V

If the circuit is as specified, try replacing the relay with a new one.
If the circuit is not as specified, inspect the circuit connected to other parts.

BE1B3-01

ADJUSTMENT

RECTIFICATION COMPASS

HINT:

When the battery is removed or the accessory meter is removed or replaced, carry out a circling rectification.

Circling rectification

(1) Stop the vehicle in a level place

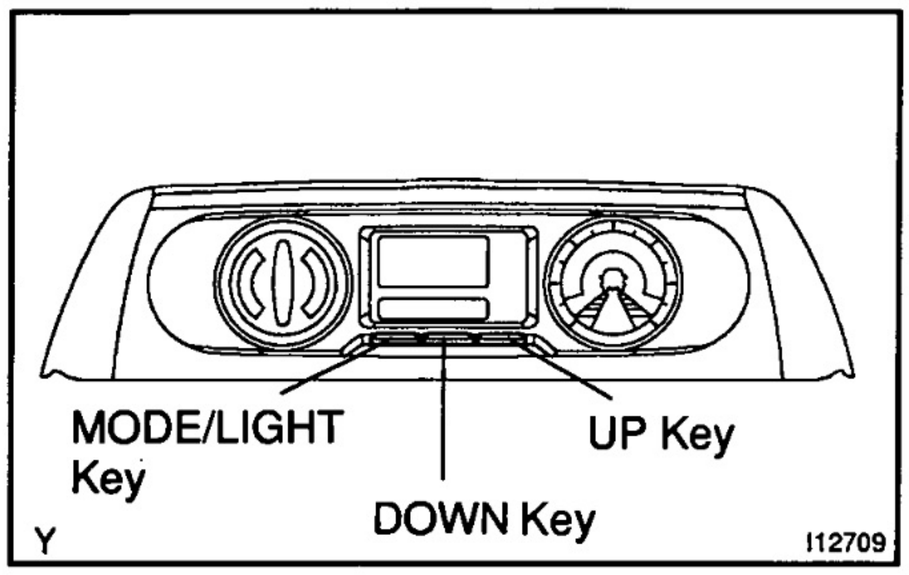

(2) Push the "UP" and "DOWN" keys simultaneously.

(3) Push the "MODE / LIGHT" key once.

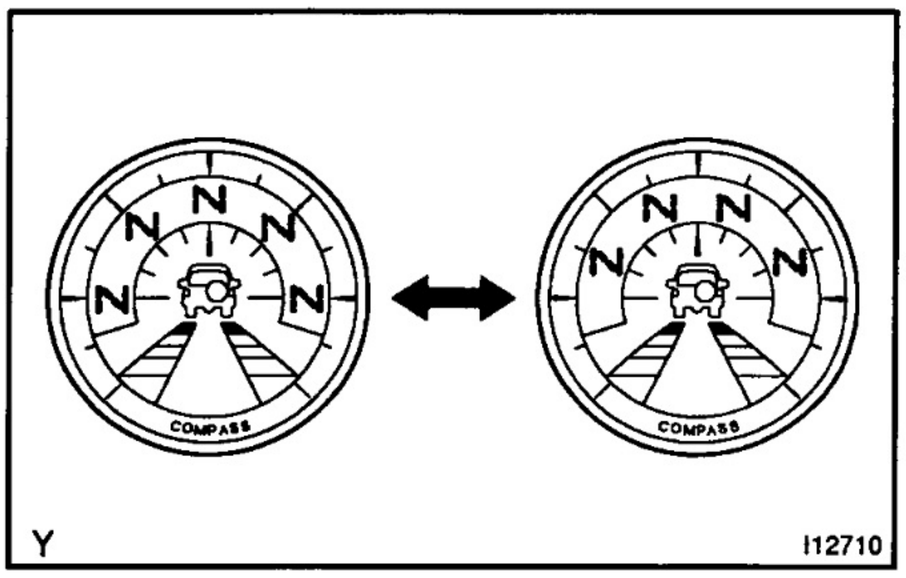

(4) Push the "UP" key. The compass display will blink.

(5) Turn the vehicle 360°or more within 60 secs.

HINT:

If "UP" key is pushed again within 60 secs., the circling is cancelled and retrial is required.

(6) After exceeding 360°, the circling is automatically completed and it returns to the normal mode.

HINT:

Pressing "DOWN" key before the completion of the circling results in forced completion.

POWER WINDOW CONTROL SYSTEM

LOCATION

BE1B4-01

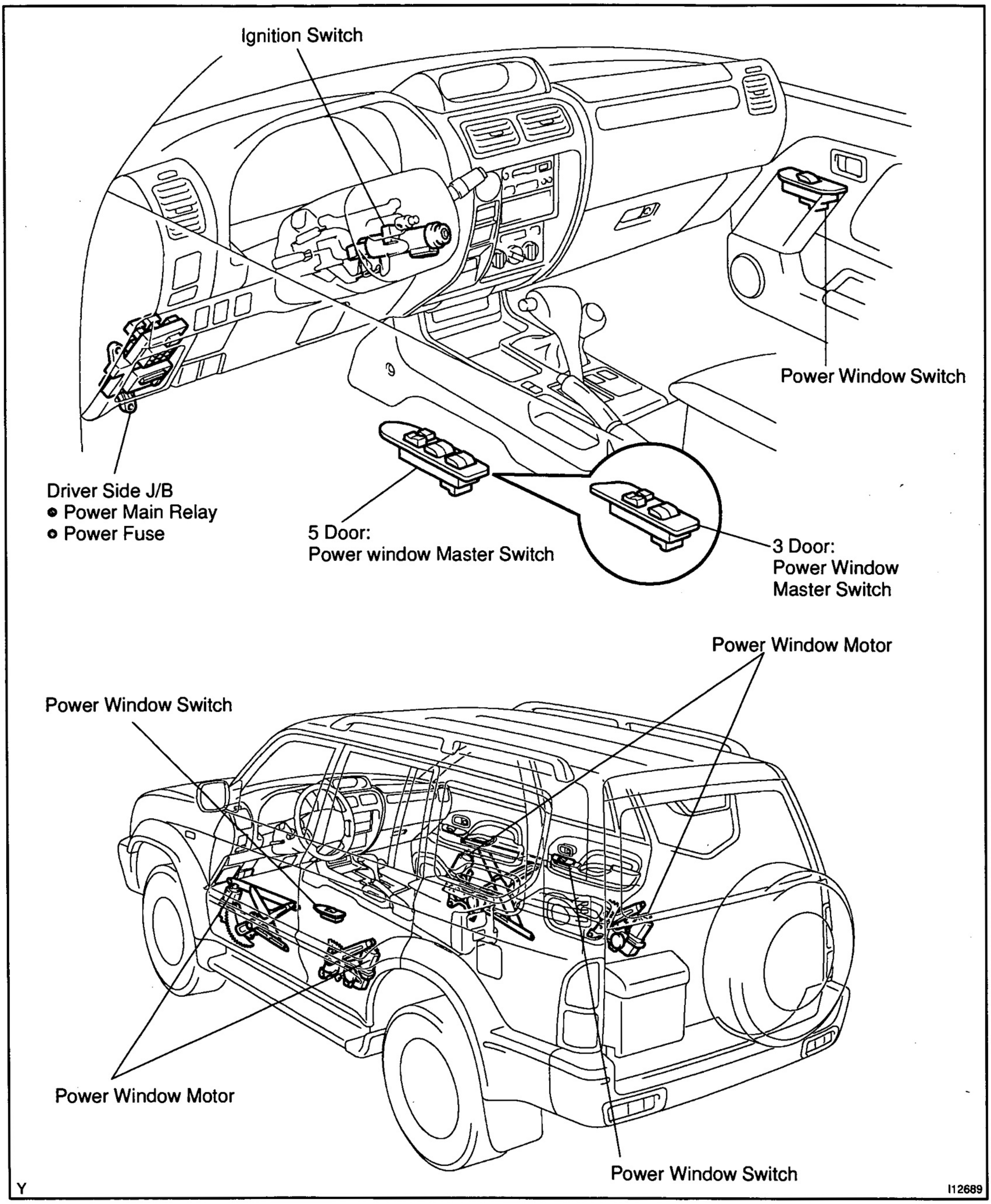

BE1B5-01

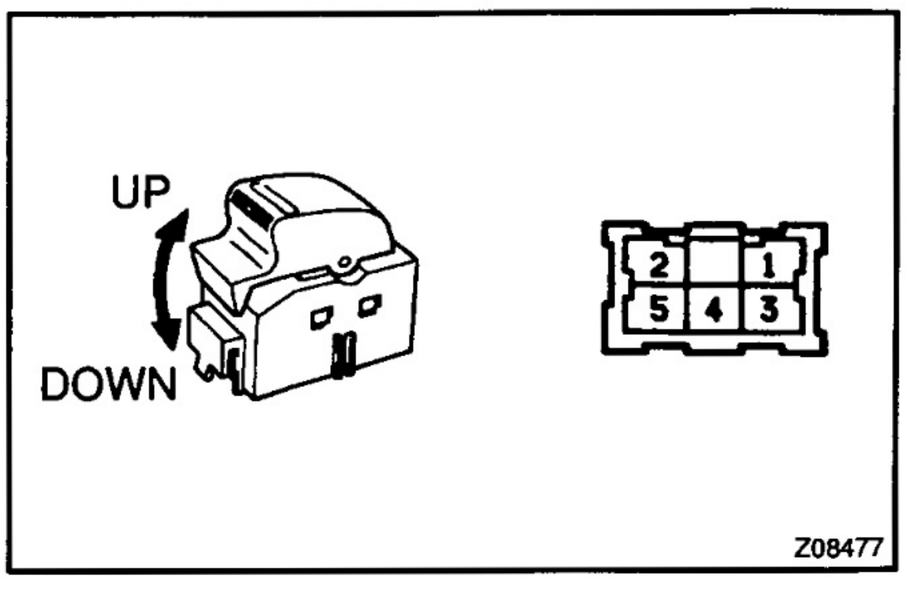

INSPECTION

INSPECT POWER WINDOW SWITCH CONTINUITY

Rear Door:

Switch position	Tester connection	Specified condition
UP	1 – 5, 3 – 4	Continuity
OFF	1 – 2, 3 – 4	Continuity
DOWN	1 – 2, 4 – 5	Continuity

WIRELESS DOOR LOCK CONTROL SYSTEM

LOCATION

BE0GM–06

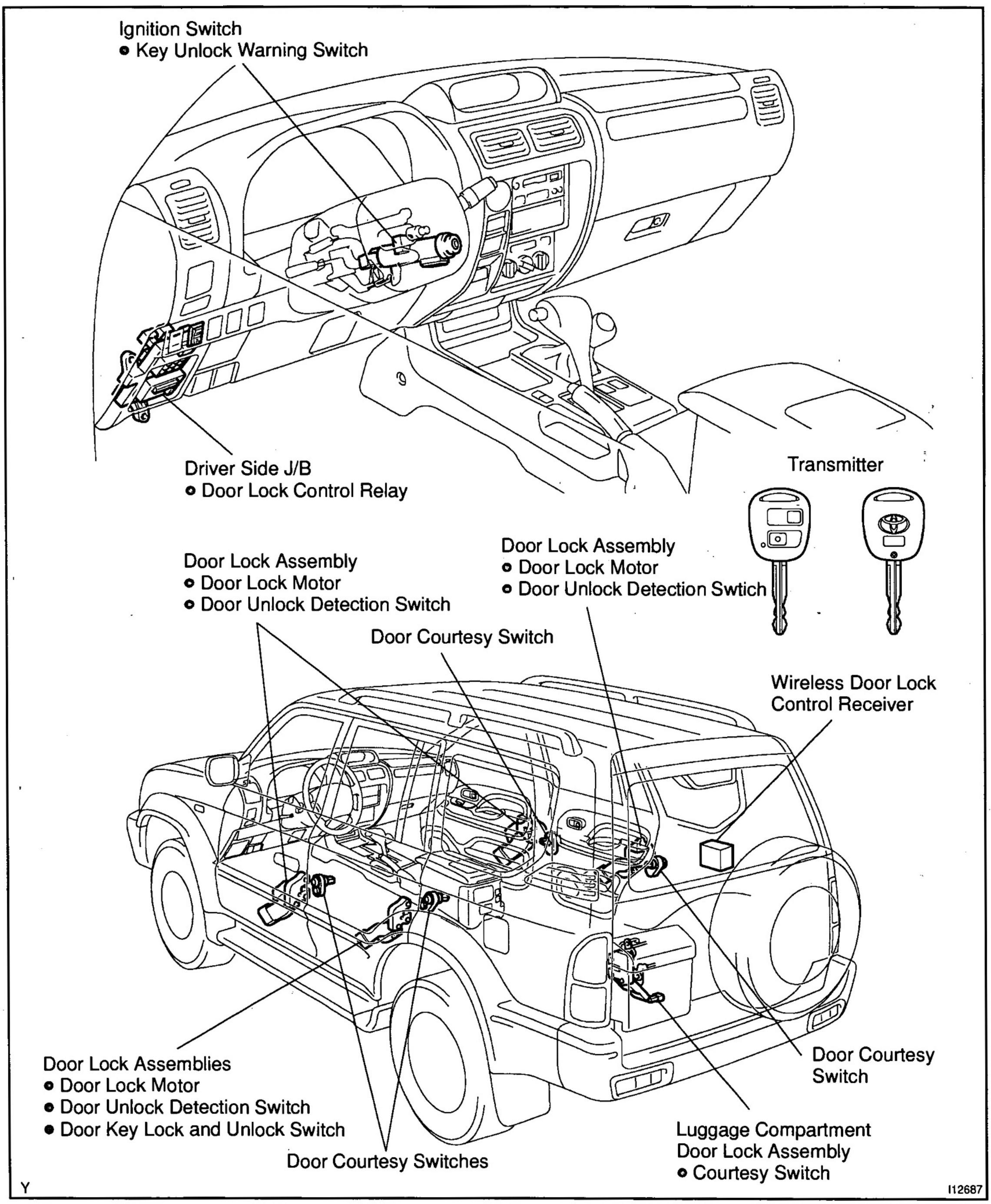

Y

I12687

BE0GN–06

PRE–CHECK

Only wireless function (Remote control) will not operate.
(If a new transmitter or a transmitter of the same type that works properly with the vehicle is not available.)

Make the vehicle in the initialized condition:
The initialized condition is the condition when the following conditions are satisfied.
(1) Key plate has not been inserted in the ignition key cylinder.
(2) All the doors are closed. (Door warning light is OFF.)
(3) All the doors are locked.

Basic function check:

Under the standard operation, when repeating UNLOCK and LOCK switch 3 times or more alternately, check the UNLOCK–LOCK operation from 3rd time onward.
● Following procedures are standard operation.
(1) Keep about 1 M away to the right direction from the outside handle of a driver's seat.
(2) Face the transmitter toward the vehicle and press one of transmitter switches for about 1 sec.
<Reference>
● As of the security function, even the wireless function is normal, there may be the case that only UNLOCK operation will not work.

No

Transmitter LED inspection:

Check when pressing UNLOCK switch and LOCK switch under standard operation, that the transmitter LED lights up once more.

No

Yes

Yes

Normal
<Reference>
● Operative distance may differ according to an operator, the way of holding the transmitter or position.
● Because weak electric wave is used, when there is strong wave or noise in the used frequency ;operation distance might be shortened.

Transmitter battery check:

Replace the transmitter battery with a new or normal one and check UNLOCK–LOCK function works under the standard operation.
<Reference>
- The battery should be replaced by only the shops with sufficient skill as new or normal battery is necessary.
- Battery quality can be judged by checking the remnant volume of the battery.

Yes → Battery faulty.

No

Make the vehicle be in the initialized condition.

Inspection start by using self diagnostic mode:

Enter into the self diagnostic mode.
If operating door control receiver in the order of 1 through 2, the mode turns to diagnostic mode.
(1) Insert the key plate in the ignition key cylinder and pull out, then insert it again and turn ignition switch OFF → ON → OFF once within 5 seconds after pulling out.
(2) After completing the procedure within 30 seconds, turn the ignition switch OFF → ON → OFF 9 times.
HINT:
In the case that either (1) or (2) condition is not satisfied, transfer to normal mode.
<Reference>
When completing self diagnostic mode, turn the ignition switch ON.
LOCK and UNLOCK operation and output of luggage door opener signal are not performed under the self diagnostic mode.

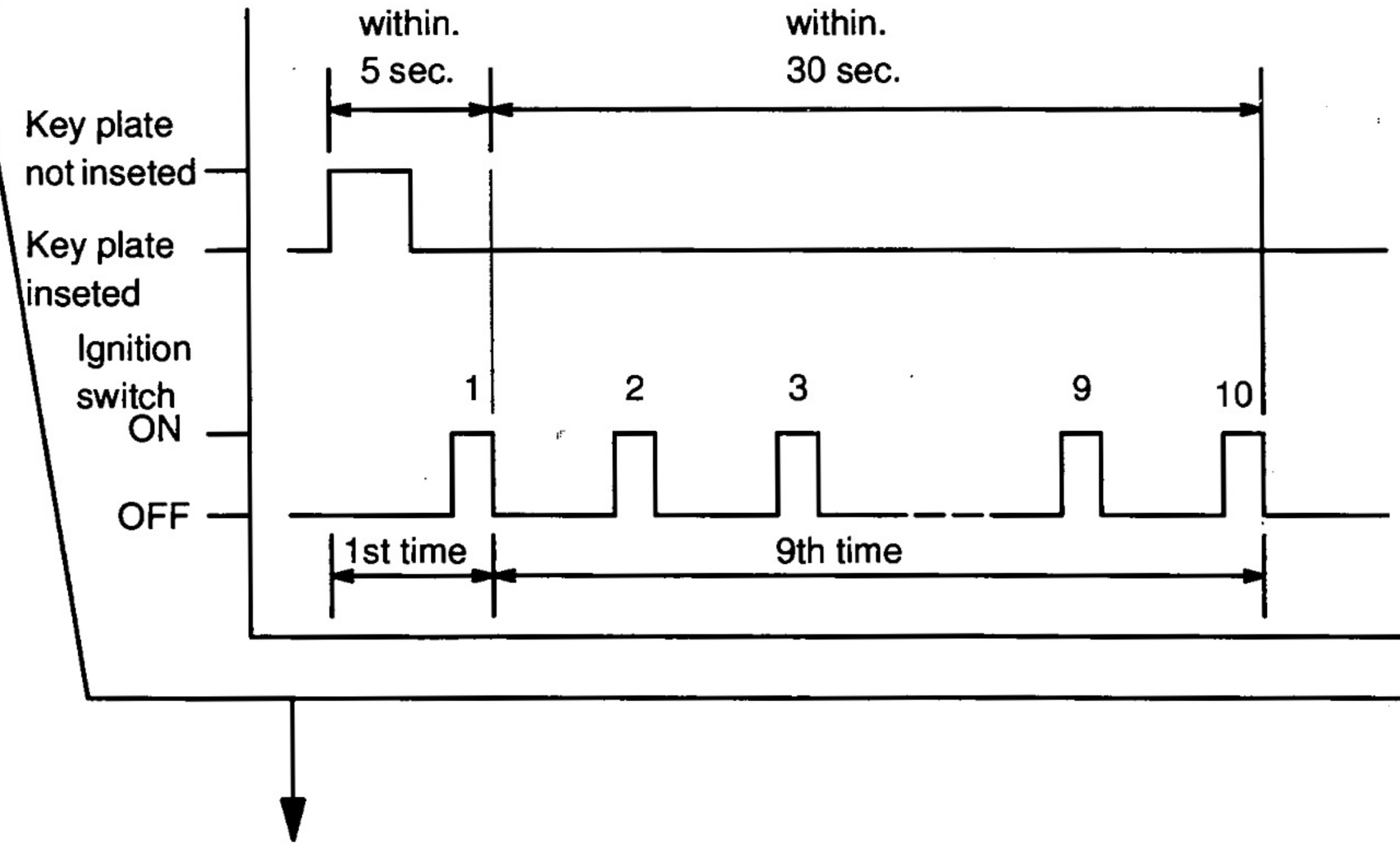

Self diagnostic mode operation check:

After the self diagnostic mode input operation has been performed, check that the room light

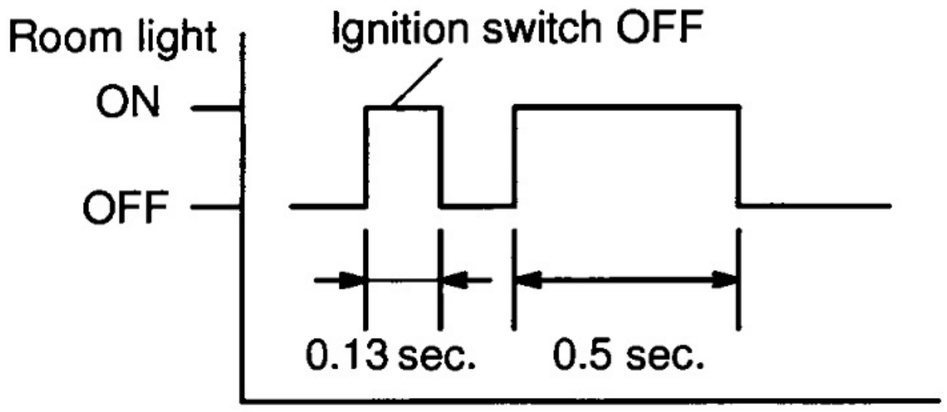

No
(Not entered in self diagnostic mode)

Is the method to enter into the diagnostic mode correct?

No

Yes

Is the chirping function of operation confirmation room light normal?

No

Check door control room light

Yes

Key unlock warning switch inspection:

Check that continuity exists between connector terminal A3 of MPX body ECU on the vehicle side and ground by inserting the key plate into the ignition key cylinder.

Check key unlock warning switch.

Yes
(Entered in self diagnostic mode)

Self diagnostic mode check:

Check that how the room light when pressing each transmitter switch.

(1) Receiver normal wave of LOCK, UNLOCK or TRUCK switch.

Except Europe:

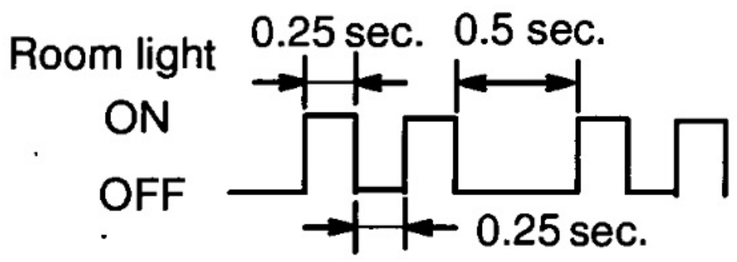

Europe:

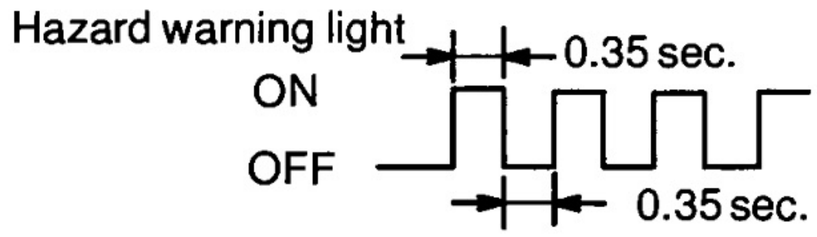

(2) Incompatibility of the recognition code or out from synchronization of rolling code.

Except Europe:

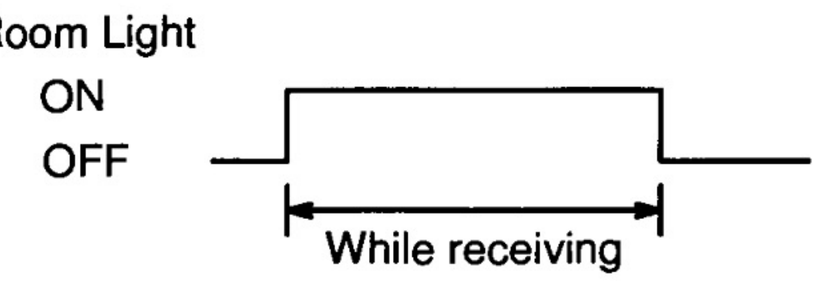

Europe:

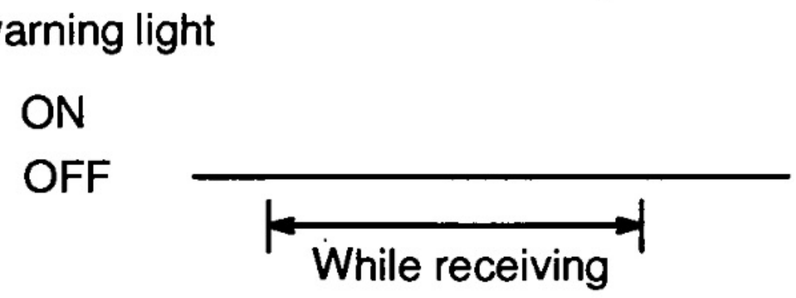

<Reference>:
While turning the ignition switch ON in the self diagnostic mode, the mode returns to normal mode.

(1) is output.

(2) is output.
(All room light response is same.)

Recognition code registration function check:

Check that it is possible to enter into rewrite mode or add mode.
(Refer to "Wireless door lock receiver and transmitter" – "Recognition code registration".)

Wireless door lock operates normally when recognition code is registered.

No response from room light

The wave reaching range check:

Is the wave reaching range normal?
(1 M area around vehicle)
(While the transmitting switch is pressed,
(approx. 20 secs.) the taillight continuously.
After 20 secs., repress the switch again.)

Yes → Other body control system faulty.
(Transmitter and receiver are normal.)

No → Transmitter faulty or wireless door lock receiver faulty.
<Reference>
Check the wave reaching range with another transmitter (normal). When the range is normal, transmitter defection is detected, the range is not normal, wireless door lock receiver defection is defected.

When pressing each switch of the new or normal transmitter used in the same type vehicle, check that all taillights chirps in the same way.

No → Yes → Transmitter faulty.

Wireless door control receiver check:

Check that continuity exists between the receiver terminal 2 (PRG) and integration relay terminal 8 (PRG).
Check that continuity exists between the receiver terminal 4 (RDA) and integration relay terminal 22 (RDA).

Yes → Wire harness faulty (short circuit).

No →

Check RDA terminal circuit.

Check that the voltage of RDA is about 6 – 7 V (when the transmitter is ON).

No → RDA terminal open circuit.

Yes →

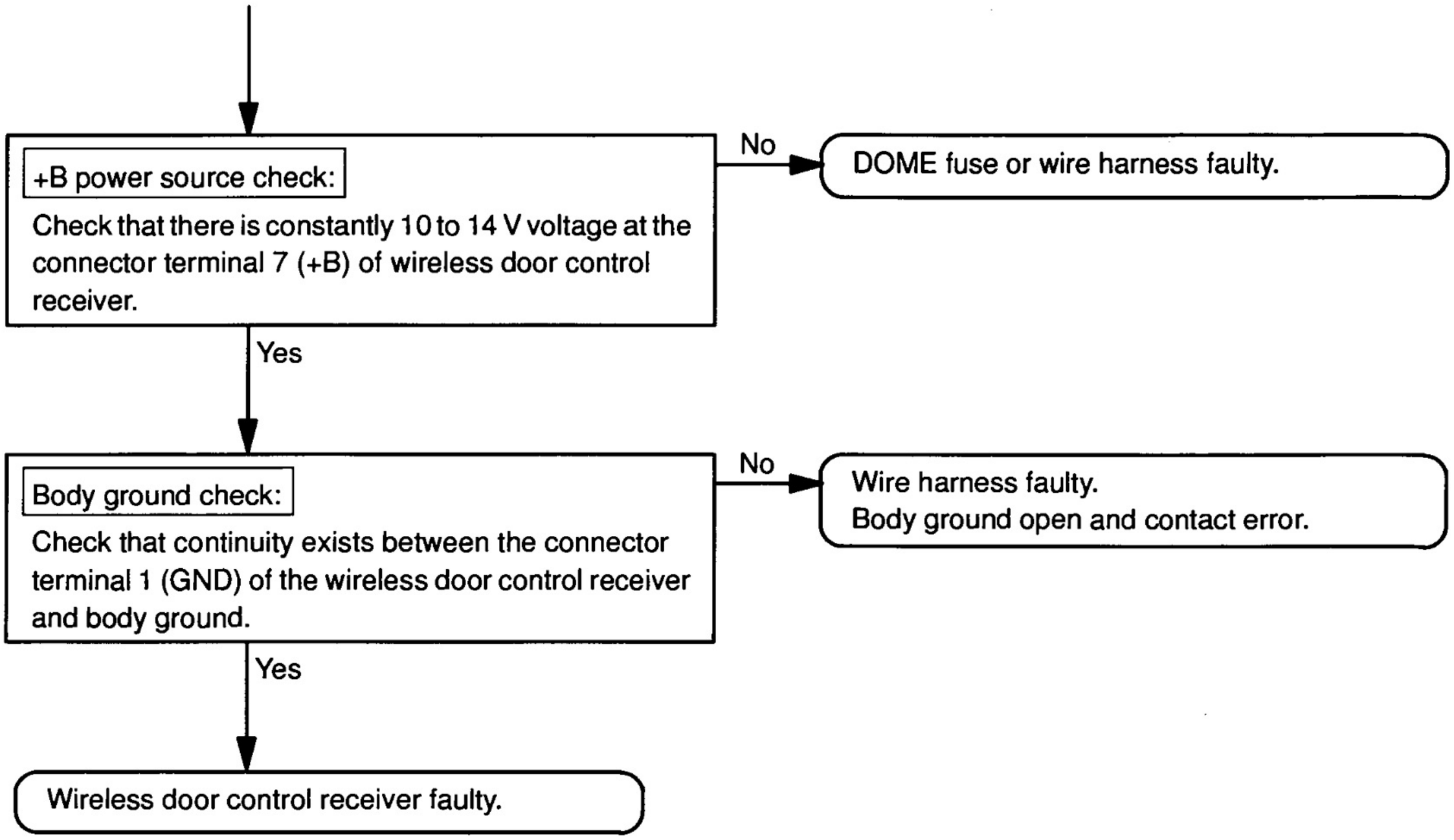
+B power source check:
Check that there is constantly 10 to 14 V voltage at the connector terminal 7 (+B) of wireless door control receiver.
No
DOME fuse or wire harness faulty.
Yes
Body ground check:
Check that continuity exists between the connector terminal 1 (GND) of the wireless door control receiver and body ground.
No
Wire harness faulty.
Body ground open and contact error.
Yes
Wireless door control receiver faulty.

BE1B6-01

INSPECTION

1. INSPECT WIRELESS DOOR LOCK TRANSMITTER OPERATION

HINT:

Refer to "Wireless door lock control transmitter battery replacement" on page BE–47.

(a) Using a screwdriver, remove the screw and cover.

(b) Remove the battery (lithium battery).

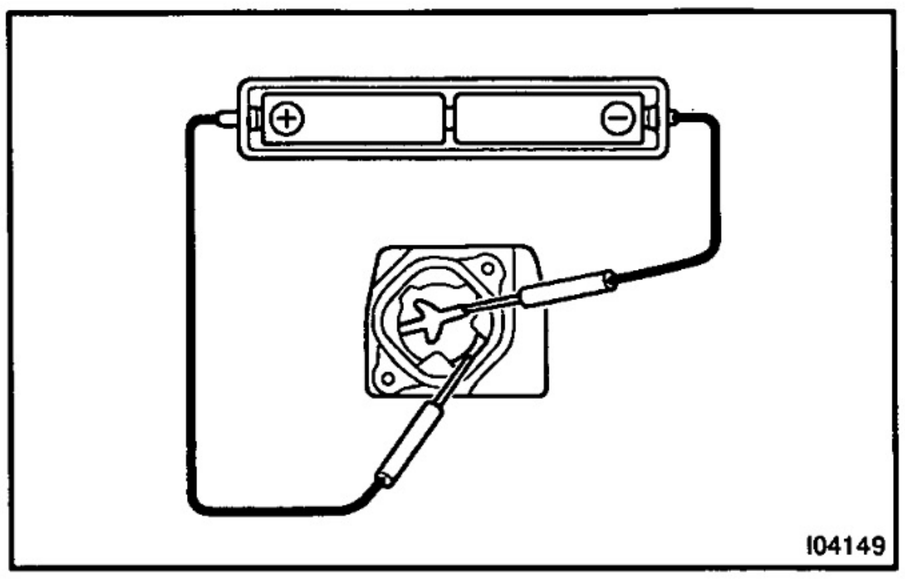

(c) Install a new or normal battery (lithium battery).

HINT:

When a new or normal battery can not be obtained, connect 2 new 1.5 V batteries in series, connect the battery (+) to the battery receptacle side terminal and battery (–) to the bottom terminal, then apply 3 V voltage to the transmitter.

(d) In the location where is approx. 1 M away from driver's outside handle in the right direction, face the key plate of the transmitter to the vehicle, and check the transmitter operation when pressing transmission switch on the side of the transmitter body.

Standard:

- **Remote control of vehicle door lock can be operated.**
- **LED lights up more than once.**

HINT:

- The minimum operation distance differs according to operator, the way of holding the transmitter, and location.
- As weak wave is used, operation distance might be shortened when noise is detected in strong wave or used frequency.

(e) Install the battery (lithium battery).

(f) Install a cover so that O–ring is not distorted or slipped off.

(g) Using a screwdriver, tighten the screw.

2. CHECK BATTERY CAPACITY

HINT:

- Make sure to use the TOYOTA electrical tester.
- With the battery unloaded, judge can not be made whether the battery is available or not on the test.
- When the transmitter is faulty, the energy amount left in the battery might not be checked correctly.
- On the lithium battery used for the transmitter, the voltage more than 2.5 V with the battery unloaded is shown on the tester until the energy is completely consumed. Accordingly when inspecting the energy amount left in the battery, it is necessary to measure the voltage when the battery is loaded. (1.2 kΩ).

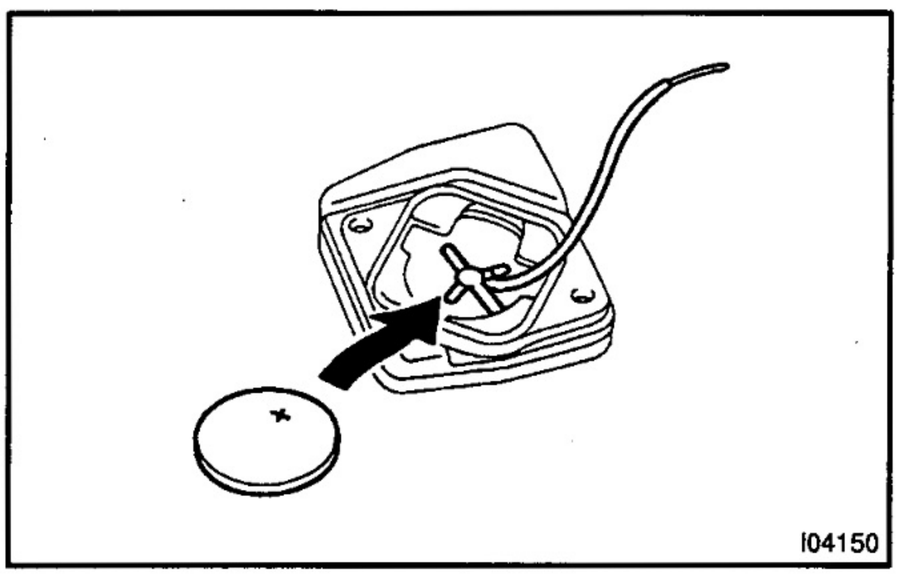

(a) Remove the screws and cover using a (–) driver.
(b) Remove the battery (lithium battery) from the transmitter.
(c) Connect the lead to the (–) terminal of the transmitter and install the battery.

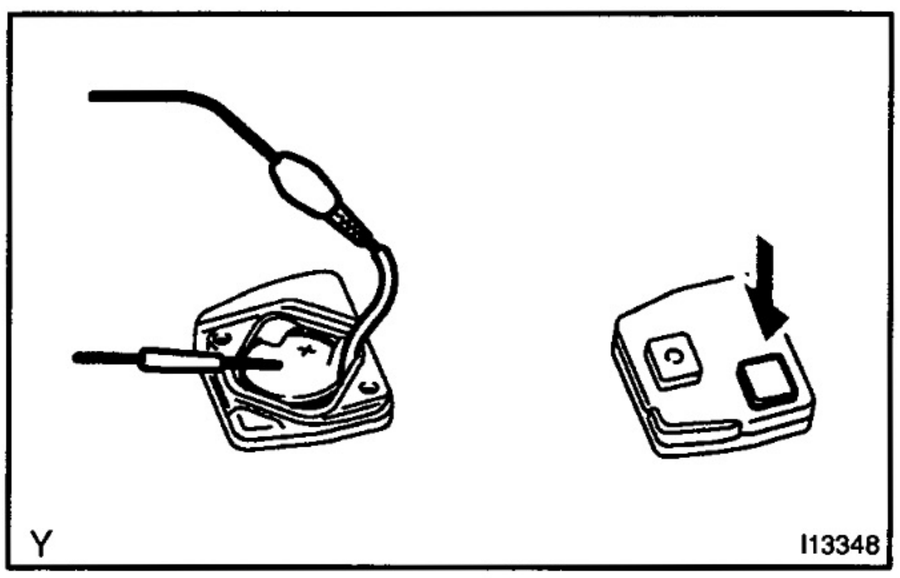

(d) Connect the (+) tester to the (+) battery (lithium battery), and (–) tester to the lead respectively.
(e) Press one of the transmitting switches on the transmitter for approx. 1 second.
(f) Press the transmitting switch on the transmitter again to check the voltage.
Standard: 2.1 V or more

HINT:

- When the temperature of the battery is low, the judge can not be made correctly.
  When the outcome of the test is less than 2.1 V, conduct the test again after leaving the battery in the place at 18 °C for more than 30 minutes.
- By auto power off function, the voltage becomes no load voltage (more than 2.5 V) condition 0.8 seconds after the switch was pressed.
  Make sure to read the voltage before of it.
- High voltage might be shown 1 to 2 times after leaving the battery, judge should be made with the voltage shown at the 3rd time or later.

(g) Disconnect the lead.
(h) Set the battery (lithium battery) in the transmitter.
(i) Install the cover, so that the O–ring is not distorted or slipped off.
(j) Using a screwdriver, tighten the screws.

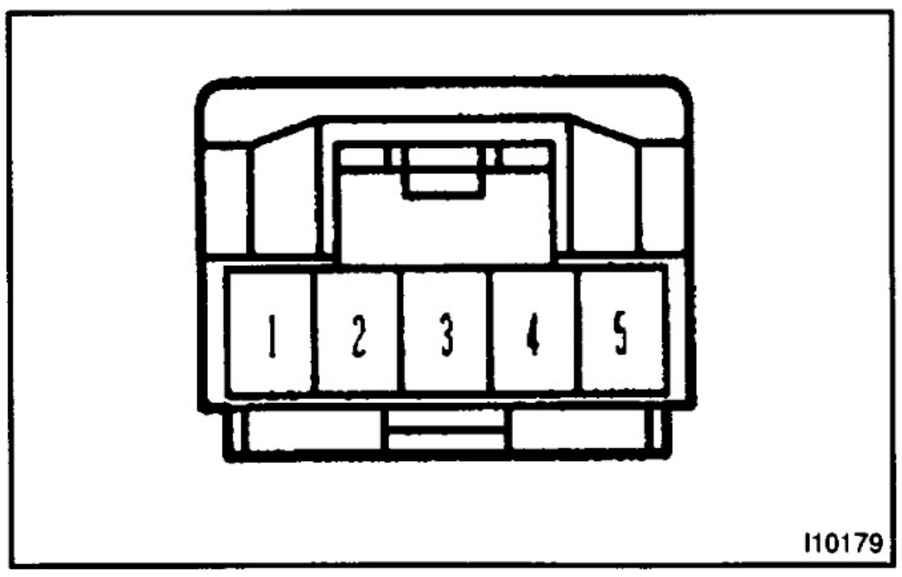

3. INSPECT WIRELESS DOOR LOCK CONTROL RECEIVER CIRCUIT

Connector disconnected:

Disconnect the connector from the receiver and inspect the connector on the wire harness side, as shown.

Tester connection	Condition	Specified condition
1 – Ground	Constant	Continuity
5 – Ground	Constant	Battery voltage

If the circuit is not as specified, inspect the circuits connected to other parts.

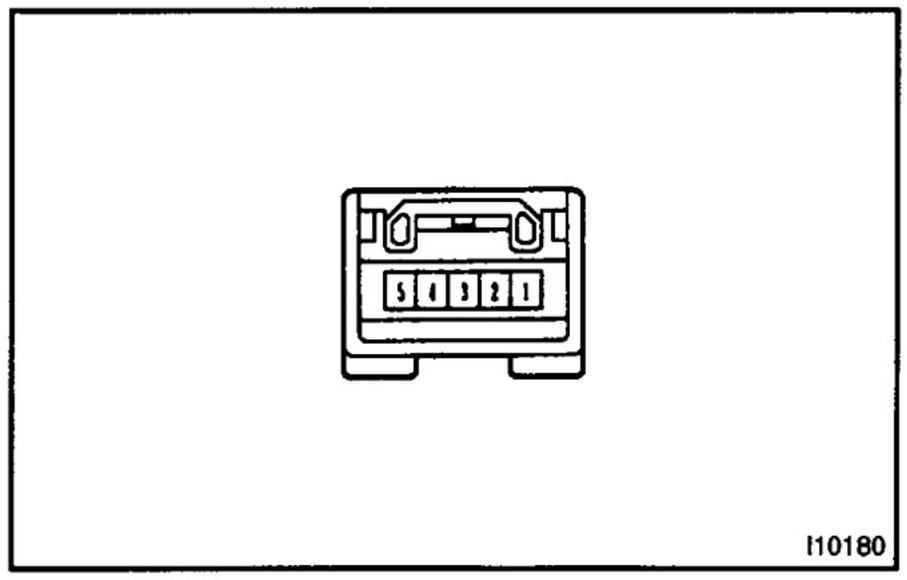

4. INSPECT WIRELESS DOOR LOCK CONTROL RECEIVER CIRCUIT

Connector connected:

Connect the wire harness side connector to the receiver and inspect the wire harness side connector from the back side, as shown.

Tester connection	Condition	Specified condition
3 – Ground	Constant	Battery voltage
2 – Ground	All door closed Transmitter OFF → ON	0 V – 6 V → 0 V

If circuit is as specified, replace the receiver.
If the circuit is not as specified, inspect the circuits connected to other parts.

BE1B7-01

REPLACEMENT

1. REPLACE TRANSMITTER (LITHIUM) BATTERY

NOTICE:

Special caution should be taken for handling each component as they are precision electronic components.

(a) Using a screwdriver, remove the screw and cover.

NOTICE:

Do not pry out the cover forcibly.

HINT:

Push the cover with a finger as shown in the illustration, so that there becomes clearance, then pry out the cover from that clearance.

(b) Remove the transmitter.

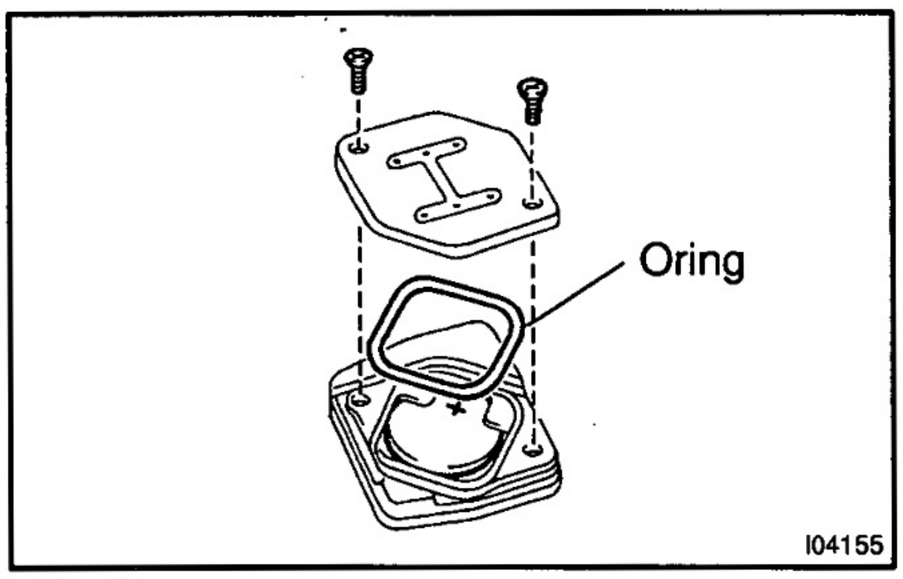

(c) Using a screwdriver, remove the 2 screws and cover.

(d) Remove the battery (lithium battery).

NOTICE:

- **Do not push the terminals with a finger.**
- **If prying up the battery (lithium battery) forcibly to remove, the terminals are deformed.**

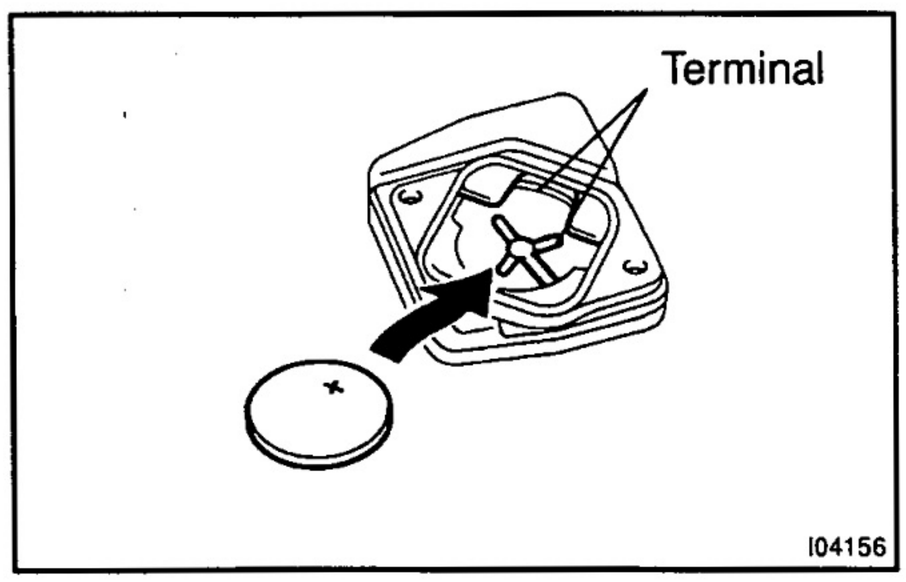

(e) Install a battery (lithium battery) as shown in the illustration.

NOTICE:

Face the battery upward. Take care not to deform the terminals.

(f) Check that O–ring is not distorted or slipped off, and install the cover.

(g) Using a screwdriver, tighten the 2 screws.

NOTICE:

When the shrews are tightened loosely, it might cause faulty contact of battery (lithium battery) and terminals.

(h) Assemble the transmitter to the key plate and the cover.

(i) Using a screwdriver, tighten the screw.

2. REPLACE DOOR CONTROL RECEIVER AND TRANSMITTER

NOTICE:

When replacing the door control receiver and transmitter, registration of recongnition code is necessary because they are provided as single components.

(a) Select which operation mode should be performed from the following modes.
- Add mode
- Rewrite mode
- Prohibition mode
- Confirmation mode

HINT:
- The add mode is used to retain codes already registered while you register new recongnition codes. This mode is used when adding a transmitter. However, if the number of registered codes exceeds 4 codes, previously registered codes are correspondingly erased in order, starting from the first registered code.
- The rewrite mode is used to erase all previously registered codes and register only new recognition codes.
- The prohibition mode is used to erase all registered codes and cancels the wireless door lock function. Use this mode when the transmitter is lost.
- The confirmation mode is for confirming how many recongnition codes are already registered before you register additional recognition codes.

(b) Follow the chart on the following pages to register the transmitter recongnition code at the wireless door lock conrol receiver.

HINT:
- When procedure is out of the specified, the operation returns to normal operation.
- Maximum 4 recognition codes can be registered.

Start registration of recognition code

The vehicle should be in the following conditions.
- The key is not inserted in the ignition key cylinder.
- Driver's door is OPEN. (Other doors are CLOSED)
- Driver's door is UNLOCKED.

Insert the key into the ignition key cylinder, then pull it out.

Within 40 secs.

Press the door lock control switch (for manual operation) 5 times to LOCK/UNLOCK at approx. 1 sec. interval.

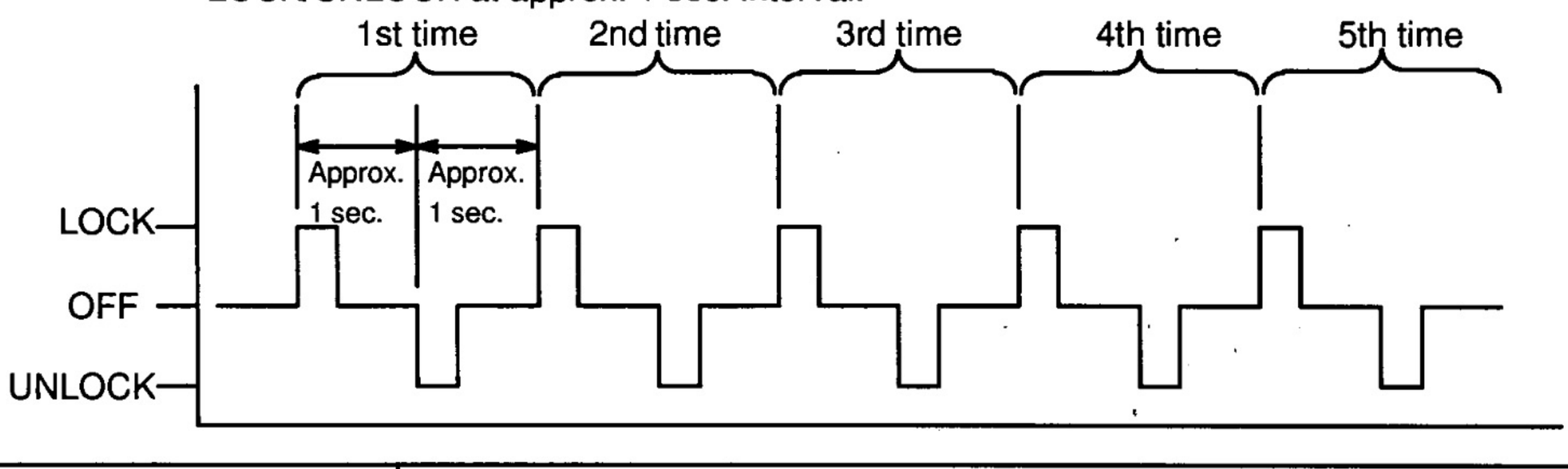

Close the driver's door, then open it.

Within 40 secs.

Again press the door lock control switch (for manual operation) 5 times to LOCK/UNLOCK at approx. 1 sec. interval.

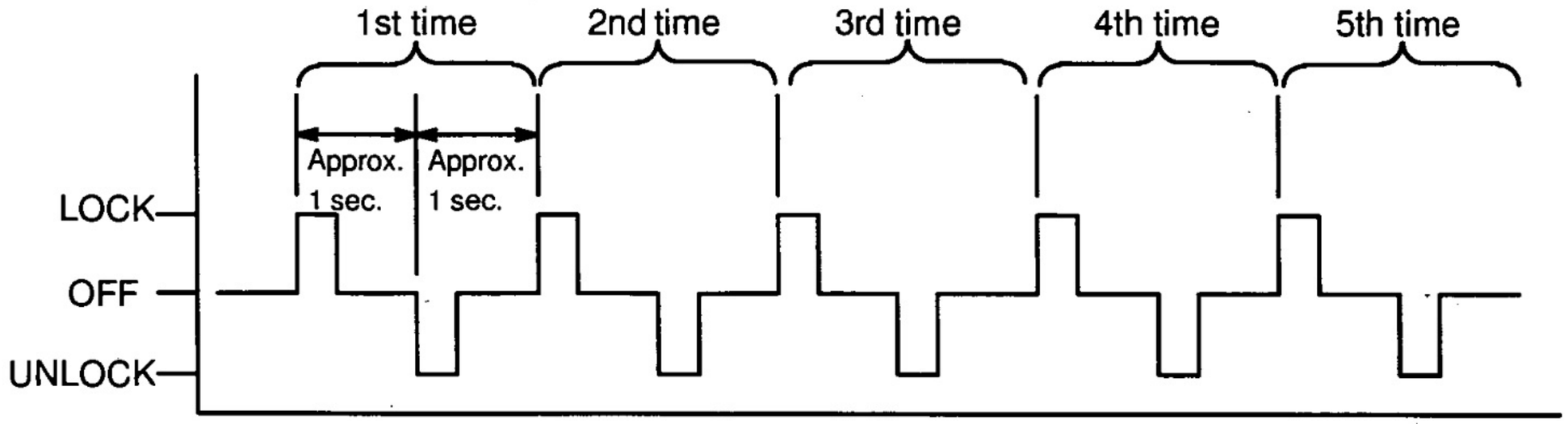

Insert the key into the ignition key cylinder.

Turn the ignition switch from ON to LOCK at approx. 1 sec. interval 1 to 5 times to select the mode.

Add mode

ON – LOCK change occurs 1 time

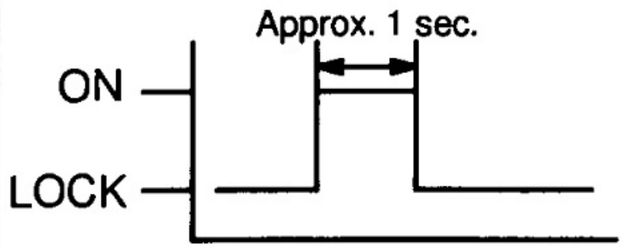

Confirmation mode

ON – LOCK change occurs 3 times

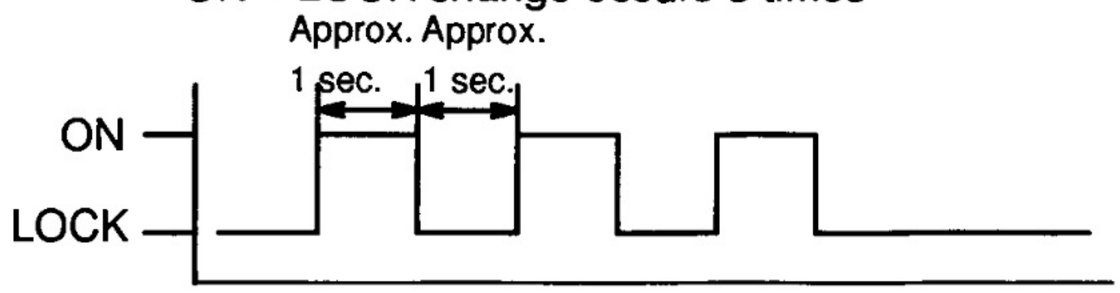

Rewrite mode

ON – LOCK change occurs 2 times

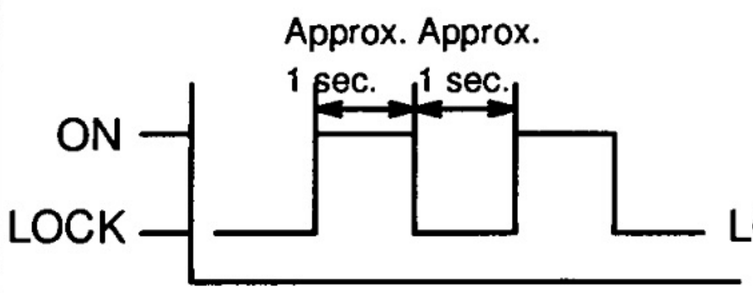

Prohibition mode

ON – LOCK change occurs 5 times

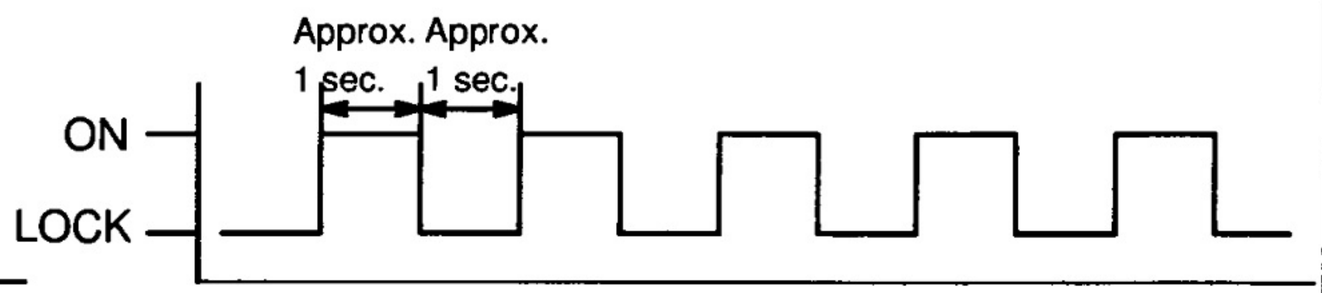

Pull out the key plate from the ignition key cylinder.

Within 3 secs.

When add mode or rewrite mode is selected.

MPX body ECU automatically performs the LOCK–UNLOCK operation once or twice at 1 sec. interval to iniform the operator that either the add mode or rewrite mode has been selected.

LOCK–UNLOCK occurs once

Indicates that add mode has been selected.

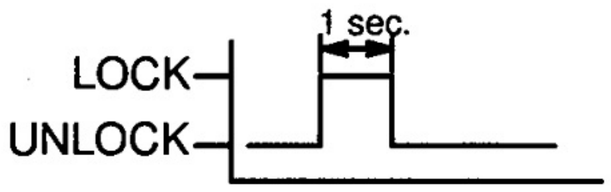

LOCK–UNLOCK occurs twice

Indicates that rewrite mode has been selected.

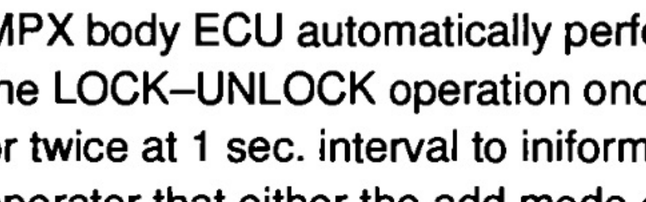

When prohibition mode is selected.

When confirmation mode is selected.

MPX body ECU automatically performs the LOCK–UNLOCK operation 1 to 4 times at 2 sec. interval to inform the operator of the number of the registered codes.
HINT:
When the number of the registered code is 0, the operation is automatically performed 5 times.

Example:
When the operation is performed twice, it directs that 2 types of recognition code have been registered.

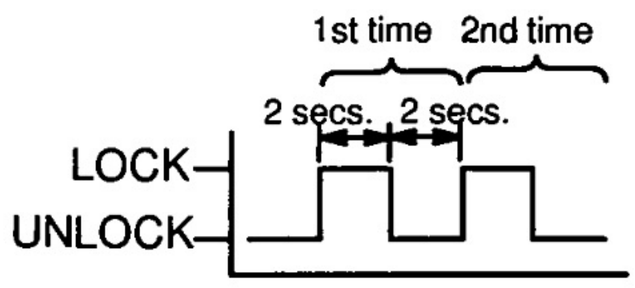

Registration of recognition code (Confirmation mode and prohibition mode) is completed.

Within 40 secs.

When prohibition mode is selected.

MPX body performs LOCK–UNLOCK operation 5 times at a 1 sec. interval to inform the operator that prohibition mode has been selected.

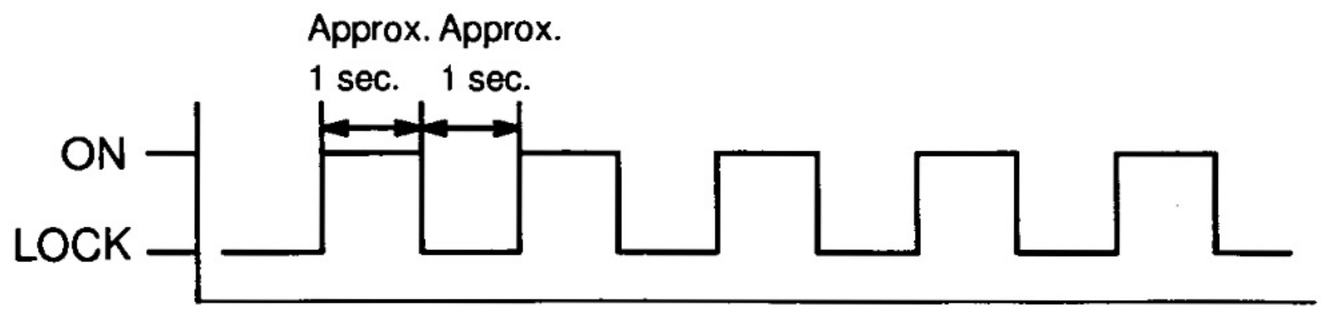

Press the lock and unlock switches on the transmitter simultaneously within. 1.5 sec.

Within 3 secs.

Press again either one of 3 switches on the transmitter for more than 1 sec.

Within 3 secs.

MPX body ECU automatically performs LOCK–UNLOCK operation once or twice at a 1 sec. interval to inform the operator that the receiver has received the signal from the transmitter.

LOCK–UNLOCK occurs once

Registration of recognition code is completed

LOCK–UNLOCK occurs twice

Registration of recognition code has not been completed.

- Recognition code received first time and second time did not match.

If LOCK–UNLOCK operation can not be performed at all, the mode returns to the normal mode, then start with "Start registration of recognition code".

Proceed to finish registration

Proceed to continue registration

Within 40 secs.

If even one of the following conditions is satisfied, registration of recognition codes is completed.

- 40 secs. elapses since the MPX body ECU response.
- The driver's door is closed.
- The key plate is inserted in the ignition key cylinder.
- 4 type recognition codes are registration at one time.

Registration of recognition codes (add mode or rewrite mode) is completed.

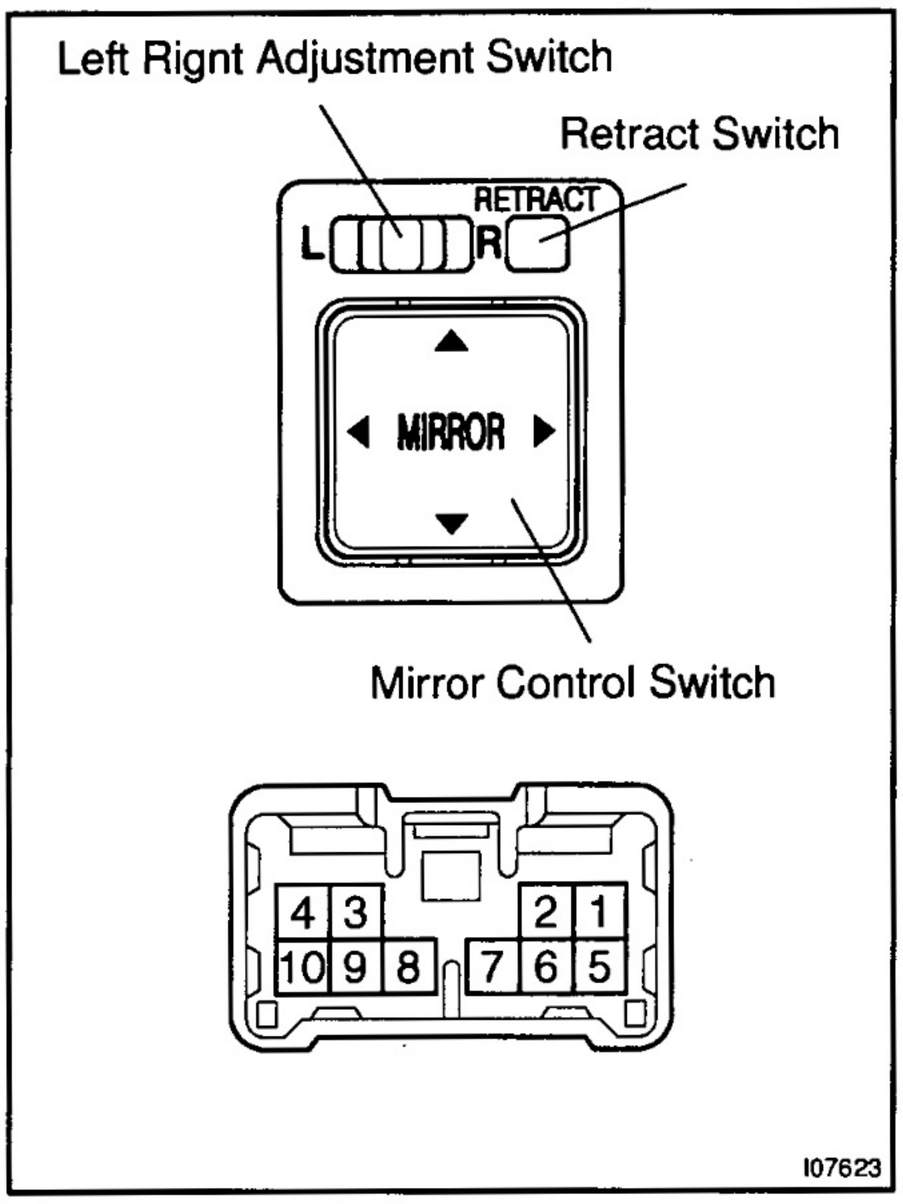

POWER MIRROR CONTROL SYSTEM

INSPECTION

BE1B8-01

1. INSPECT MIRROR SWITCH CONTINUITY

Left Side for Left/Right Adjustment Switch

Switch position	Tester connection	Specified condition
OFF	–	No continuity
UP	1 – 9 6 – 10	Continuity
DOWN	1 – 10 6 – 9	Continuity
LEFT	5 – 9 6 – 10	Continuity
RIGHT	5 – 10 6 – 9	Continuity

Right Side for Left/Right Adjustment Switch

Switch position	Tester connection	Specified condition
OFF	–	No continuity
UP	6 – 10 7 – 9	Continuity
DOWN	6 – 9 7 – 10	Continuity
LEFT	6 – 10 8 – 9	Continuity
RIGHT	6 – 9 8 – 10	Continuity

Retract Switch

Switch position	Tester connection	Specified condition
OFF	3 – 9 4 – 10	Continuity
ON	3 – 10 4 – 9	Continuity

If continuity is not as specified, replace the switch.

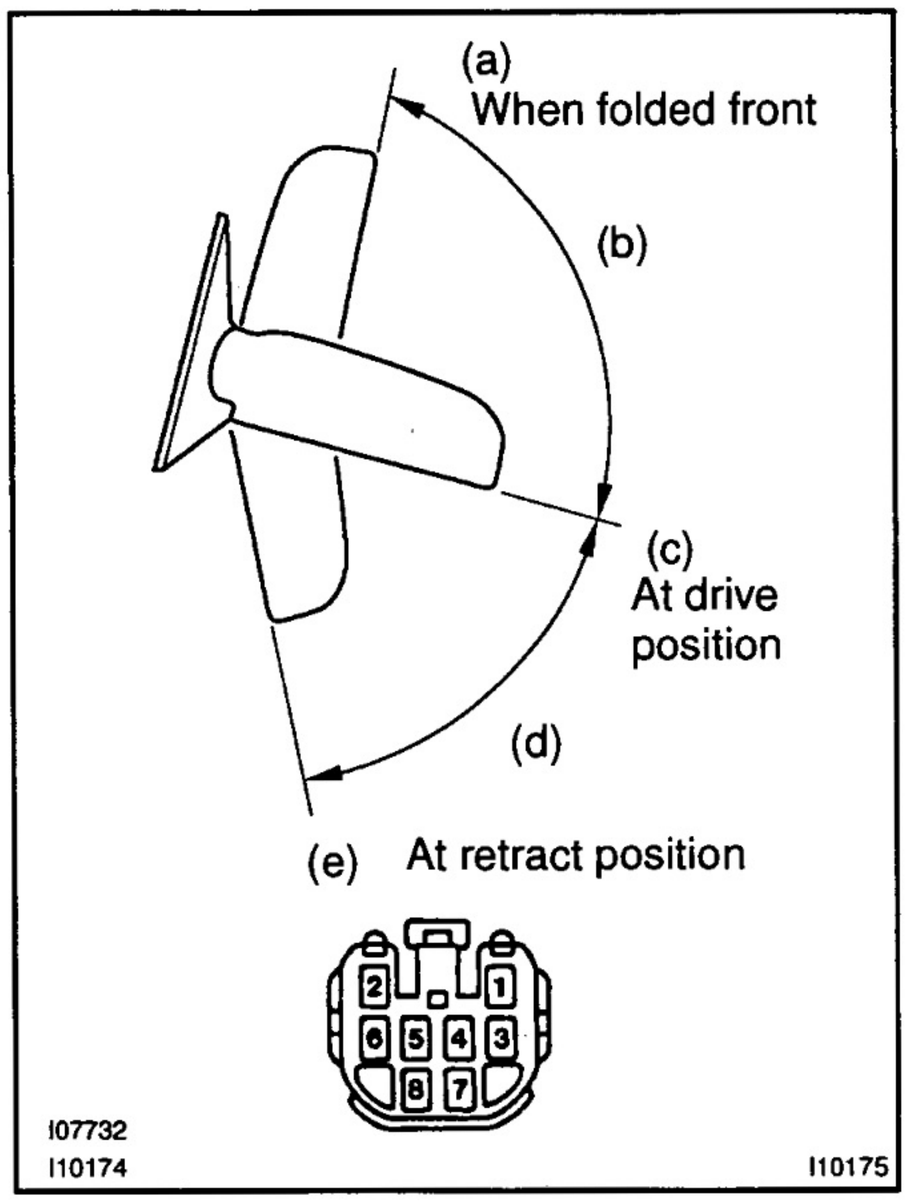

2. INSPECT ELECTRICAL RETRACT MOTOR OPERATION

(a) When folded front position:
  (1) Connect the positive (+) lead from the battery to terminal 7 and negative (–) lead to terminal 8, check that the mirror operates at retract position.
  (2) Reverse the polarity, check that the mirror does not operate.

If operation is not as specified, replace the mirror assembly.

(b) Between folded front position and driving position:
  (1) Connect the positive (+) lead from the battery to terminal 7 and negative (–) lead to terminal 8, check that the mirror operates at retract position.
  (2) Reverse the polarity, check that the mirror operate at folded front position.

If operation is not as specified, replace the mirror assembly.

(c) When driving position:
  (1) Connect the positive (+) lead from the battery to terminal 7 and negative (–) lead to terminal 8, check that the mirror operates at retract position.
  (2) Reverse the polarity, check that the mirror does not operate.

If operation is not as specified, replace the mirror assembly.

(d) Between driving position and retract position:
  (1) Connect the positive (+) lead from the battery to terminal 7 and negative (–) lead to terminal 8, check that the mirror operates at retract position.
  (2) Reverse the polarity, check that the mirror operate at return position (Stopping at driving position).

If operation is not as specified, replace the mirror assembly.

(e) When retract position:
  (1) Connect the positive (+) lead from the battery to terminal 7 and negative (–) lead to terminal 8, check that the mirror does not operates.
  (2) Reverse the polarity, check that the mirror operate at return position (Stopping at driving position).

If operation is not as specified, replace the mirror assembly.

ENGINE IMMOBILISER SYSTEM (5VZ–FE)

LOCATION

BE1B9-01

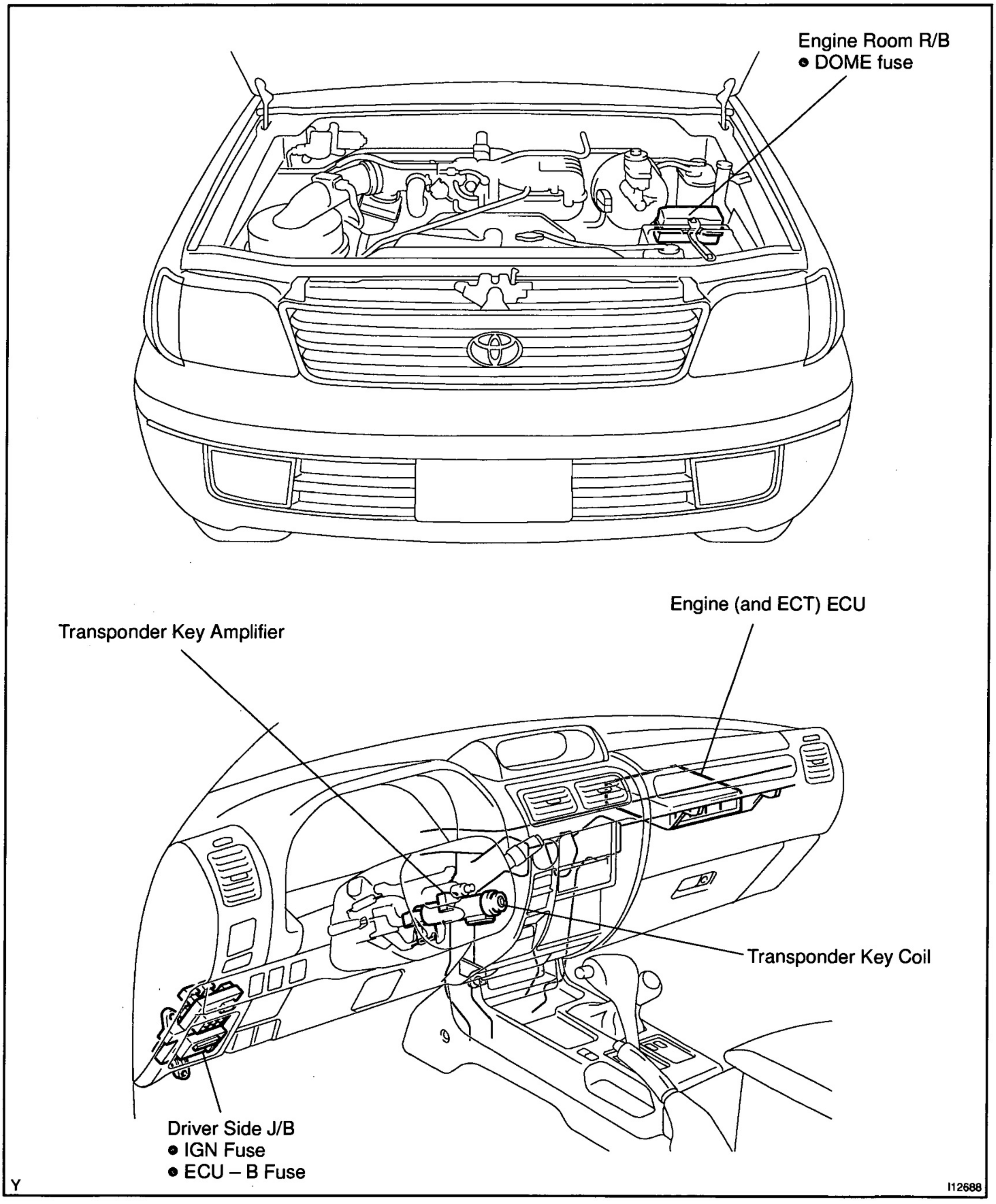

BE1BA–01

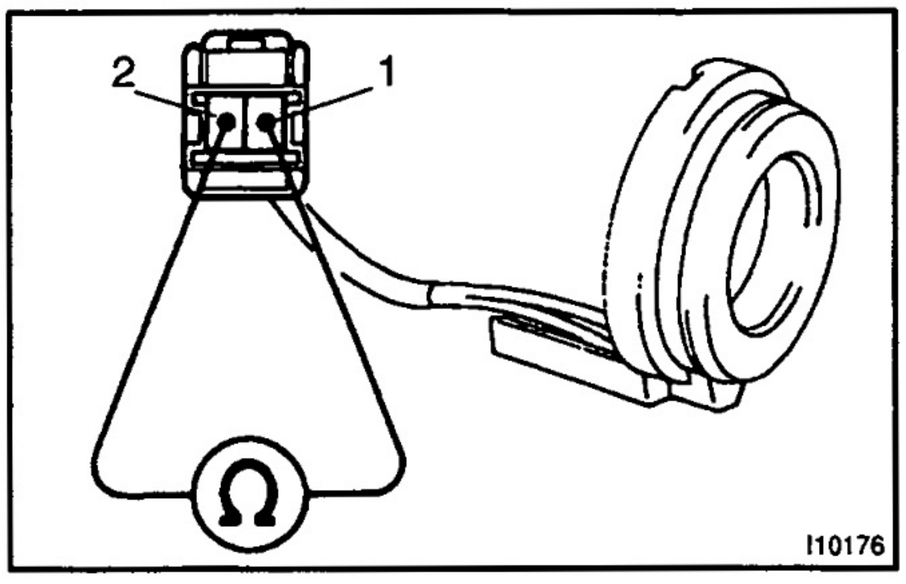

INSPECTION

INSPECT TRANSPONDER KEY COIL CONTINUITY

Check that continuity exists between terminal 1 and 2.

If continuity is not as specified, replace the coil.

ENGINE IMMOBILISER SYSTEM (Except 5VZ–FE)

BE0YJ–03

TROUBLESHOOTING

HINT:

If a malfunction occurs in the engine immobiliser system, either of the following symptoms occurs:

- Cranking occurs, but the engine does not start.
- The engine starts, but stops after 5 seconds.

If either or these symptoms occurs, do troubleshooting to the following flow chart.

1. CRANKING OCCURS, BUT THE ENGINE DOES NOT START

2. ENGINE STARTS, BUT STOPS AFTER 5 SECONDS

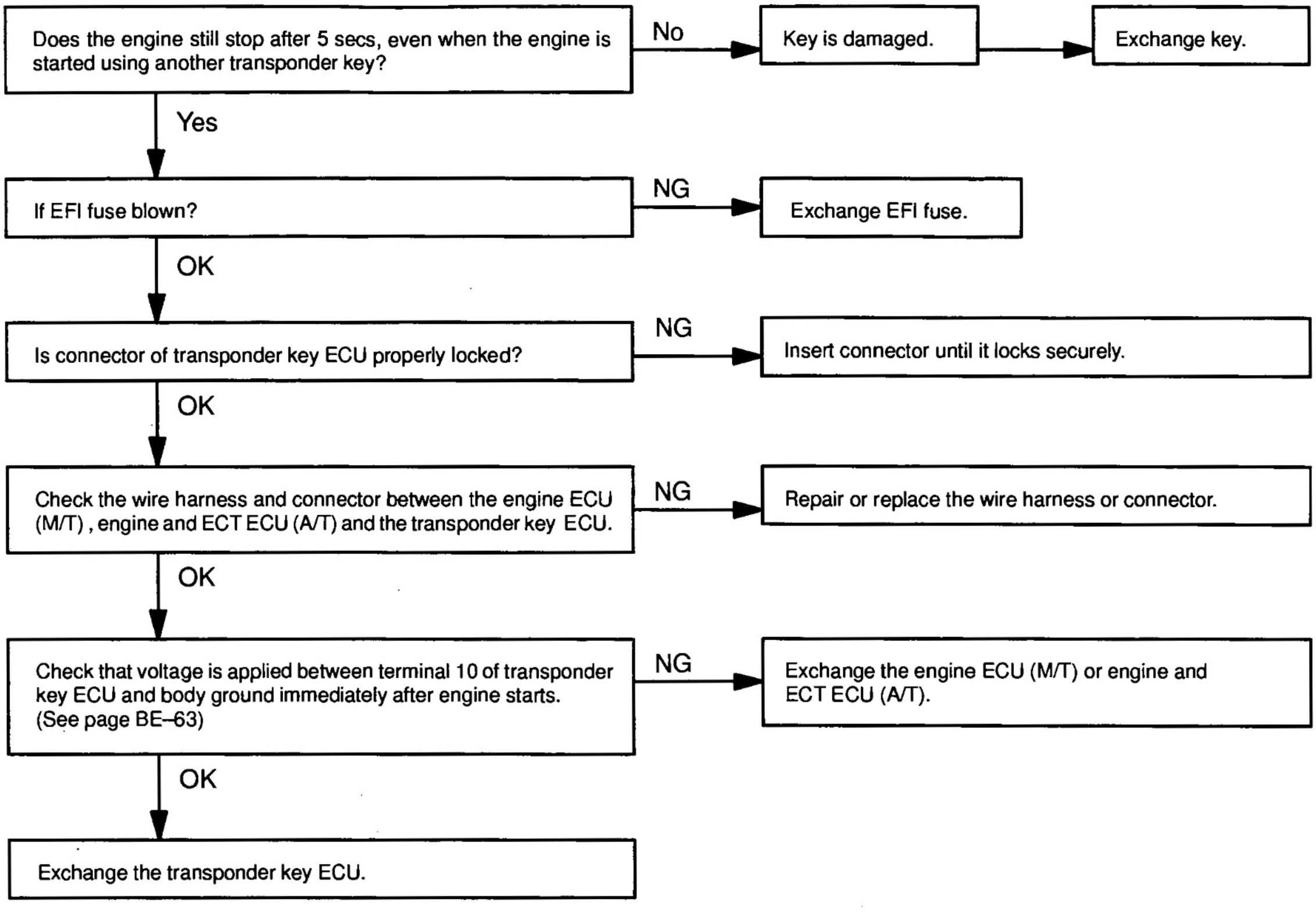

BE1BB–01

LOCATION

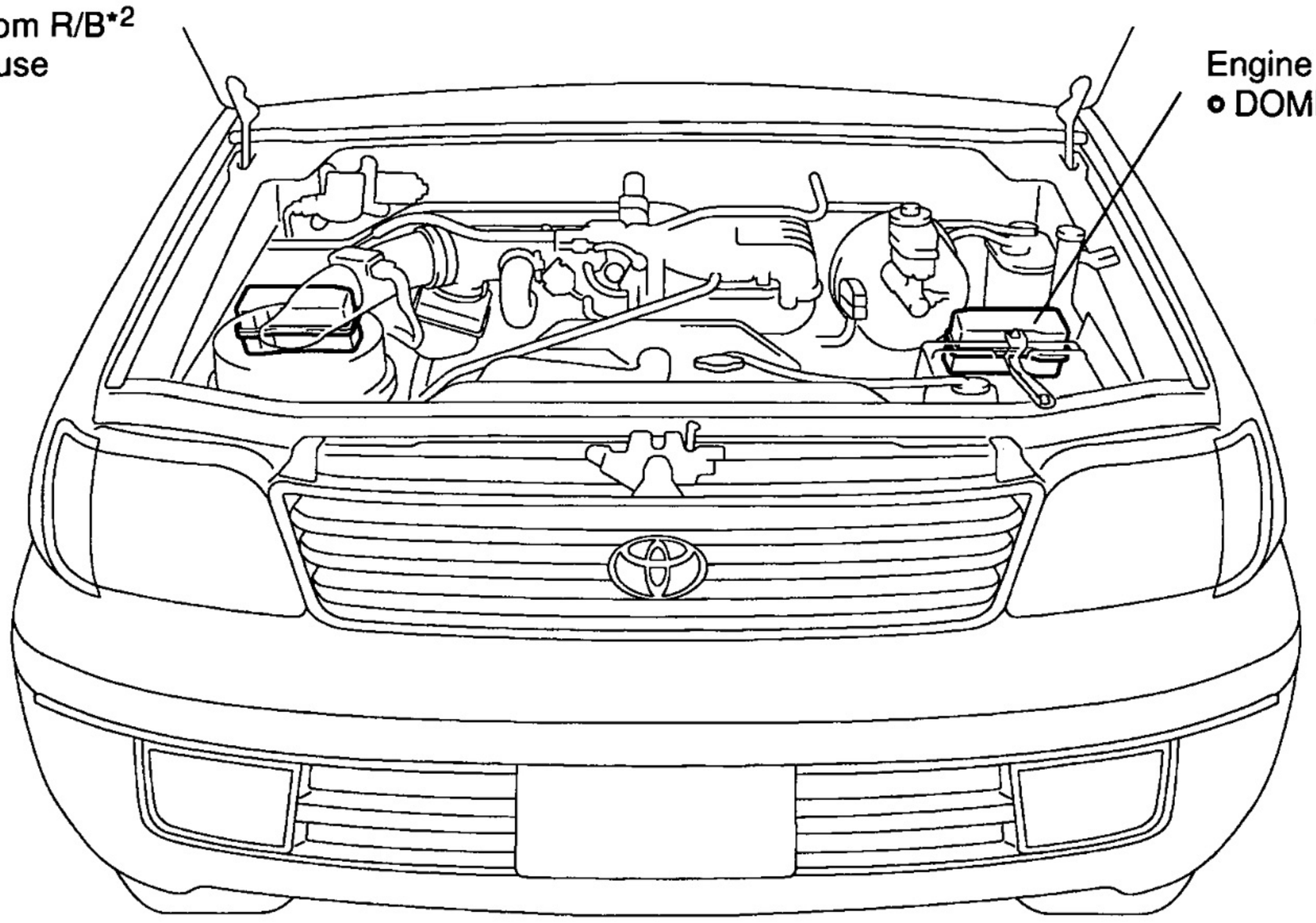

*1: Except Diesel RHD
*2: Diesel RHD

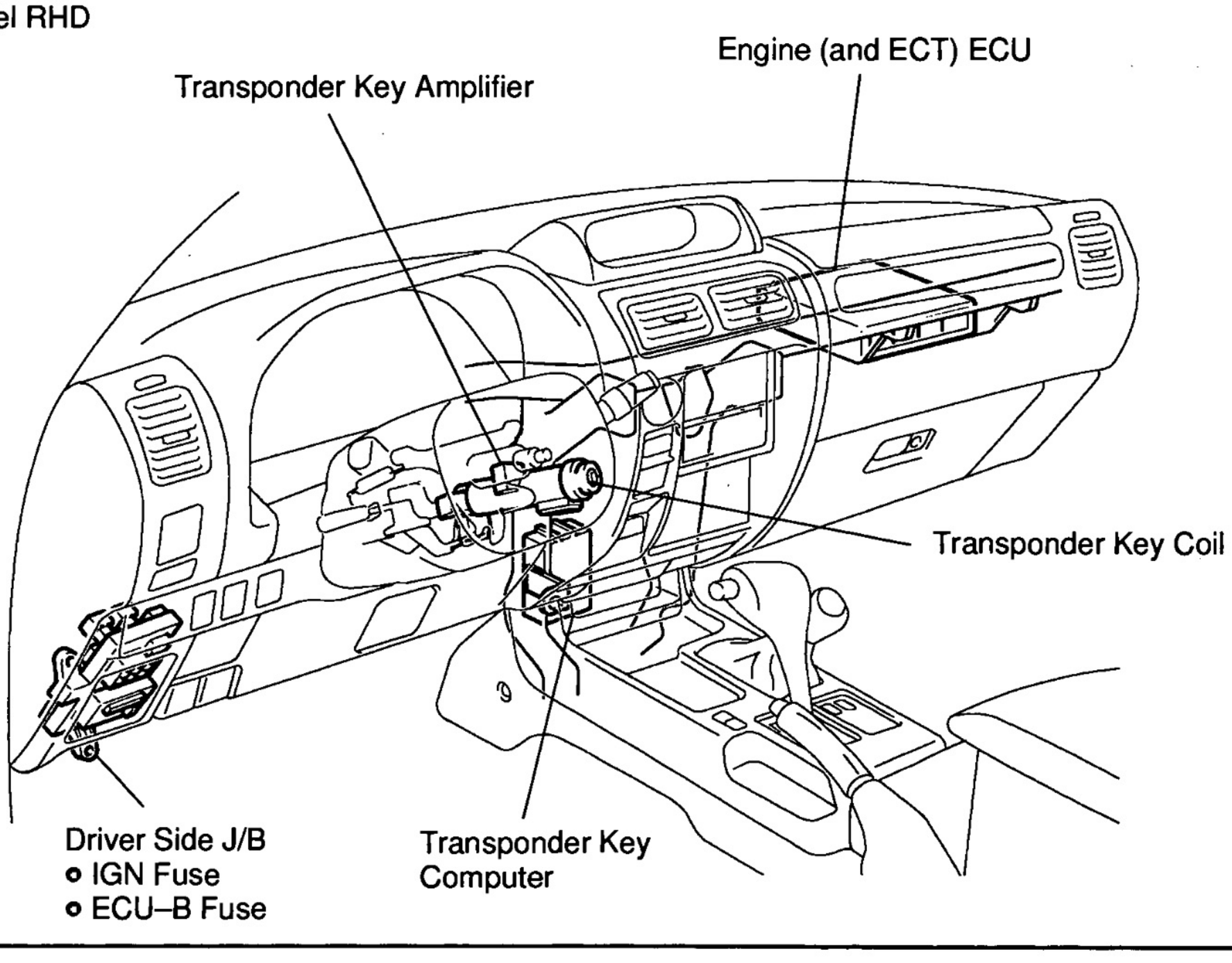

Y

I12699

BE0YL–03

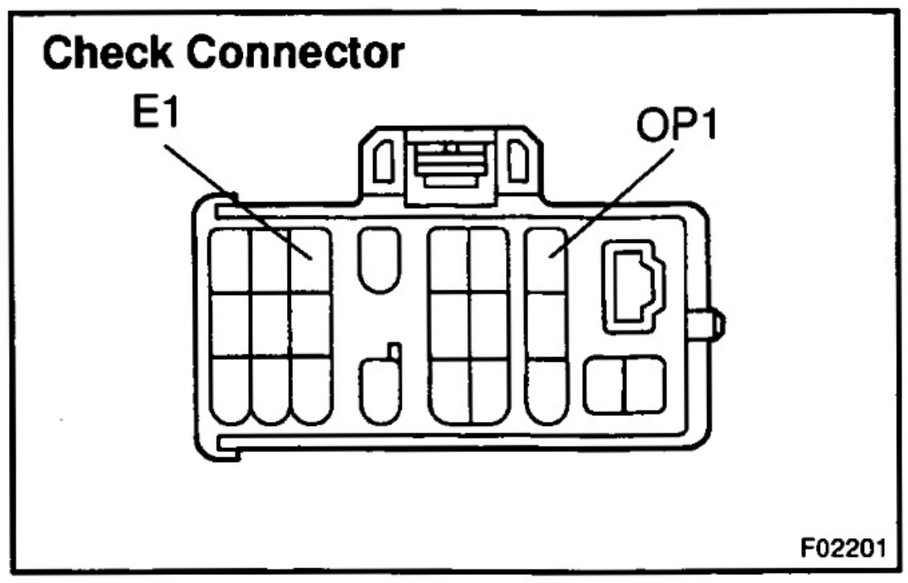

PRE–CHECK

1. TRANSPONDER KEY ECU INPUT CONDITION DISPLAY READ CODE

(a) Connect the positive (+) lead from the volt meter (Analog Type) to OP1 of the check connector and the negative (–) lead to E1 of the check connector.

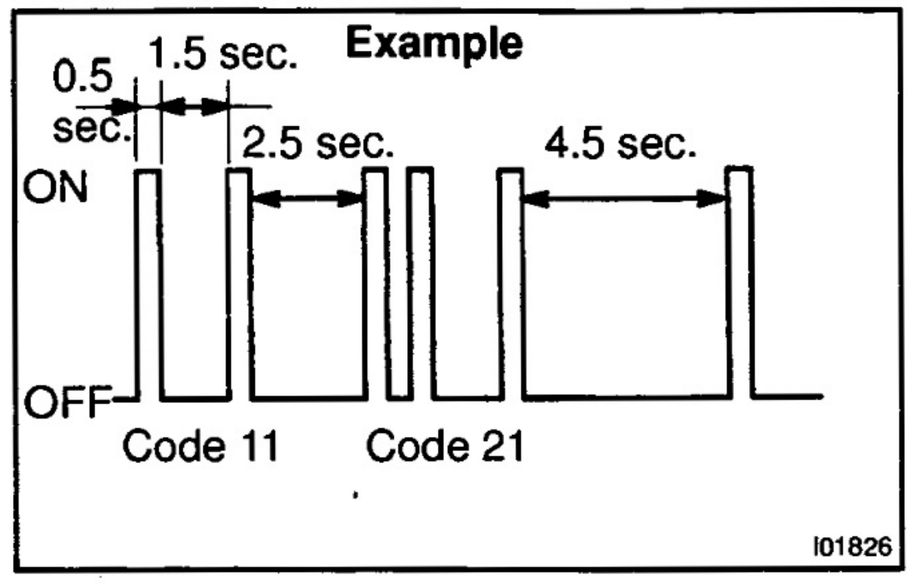

(b) Insert the ignition key in the key cylinder.

(c) Read the code from the movement of the tester needle.

If no code is output, turn the ignition switch ON.

If a code is now output, check if the DOME fuse is blown.

HINT:

- The code can be read using a luminous diode (Recommend activation current 10 – 20 mA) instead of a tester.
- A digital tester can also be used.

Display condition:

- When there are multiple codes, they are output in order staring from the lowest code.
- After all the codes are output, Lo is displayed for 4.5 secs., then all the code are output again starting from the lowest code.
- If the situation changes during code output, Lo is output for 4.5 secs. after output of the current code ceases, then the codes are output again starting from the lowest code. E.g. while 11 (out of 11 and 21) is being output, conditions change and 12 is added. So after 11 is output, Lo is output for 4.5 secs., then 11, 12 and 21 are output.

2. TRANSPONDER KEY ECU INPUT CONDITION DISPLAY CODE LIST

Gasoline engine:

Code	Output condition
11	Key unlock warning switch ON (Ignition key inserted)
12	Any door is open. (Door courtesy switch ON)
13	Ignition switch at ON position
21	Master key is inserted in key cylinder and the immobiliser system is OFF.
22	Sub key is inserted in key cylinder and immobiliser system is OFF.
31	Key code recorded in transponder key ECU differs from code of key inserted in key cylinder.
32	Transponder key code cannot be read.
33	Key code cannot be read because format of chip inside key is wrong.
34	Transponder key ECU has no memory space to register key code.
41	Recognition code is normal and the immobiliser system is OFF.

Diesel engine:

Code	Output condition
11	Key unlock warning switch ON (Ignition key inserted)
12	Any door is open. (Door courtesy switch ON)
13	Ignition switch at ON position
21	Master key is inserted in key cylinder and the immobiliser system is OFF.
22	Sub key is inserted in key cylinder and immobiliser system is OFF.
31	Key code recorded in transponder key ECU differs from code of key inserted in key cylinder.
32	Transponder key code cannot be read.
33	Key code cannot be read because format of chip inside key is wrong.
34	Transponder key ECU has no memory space to register key code.
51	FCVC code is learned.
52	FCVC is unlocked.
53	FCVC code is error.
54	FCVC is check–sum error.
55	FCVC is factory code initialling
56	FCVC code line trouble
57	FCVC trouble
58	While ignition switch ON, no response from FCVC for 5 consecutive sec,

3. TRANSPONDER KEY ECU INPUT CONDITION DISPLAY MALFUNCTION LIST

Symptom	Cause
No code is output.	1. DOME Fuse 2. Wire harness or connector 3. Transponder key ECU
Even when key is inserted in key cylinder, Code 11 is not output.	1. Key unlock warning switch 2. Wire harness or connector 3. Transponder key ECU
Code 12 is not output when the door is open.	1. Door courtesy switch 2. Wire harness or connector 3. Transponder key ECU
Code 13 is not output when ignition switch ON.	1. IGN Fuse 2. Wire harness or connector 3. Transponder key ECU
Code 31 is output when key is inserted in key cylinder.	Key code is not registered.
Code 32 is output.	1. Transponder key coil 2. Transponder key ECU 3. Transponder key amplifier 4. Wire harness or connector
Code 33 is output.	1. Transponder key ECU 2. Transponder key amplifier
Code 34 is output.	Transponder key ECU has no memory space to register key code.

- If code 32 is output, troubleshoot according to this flow chart.

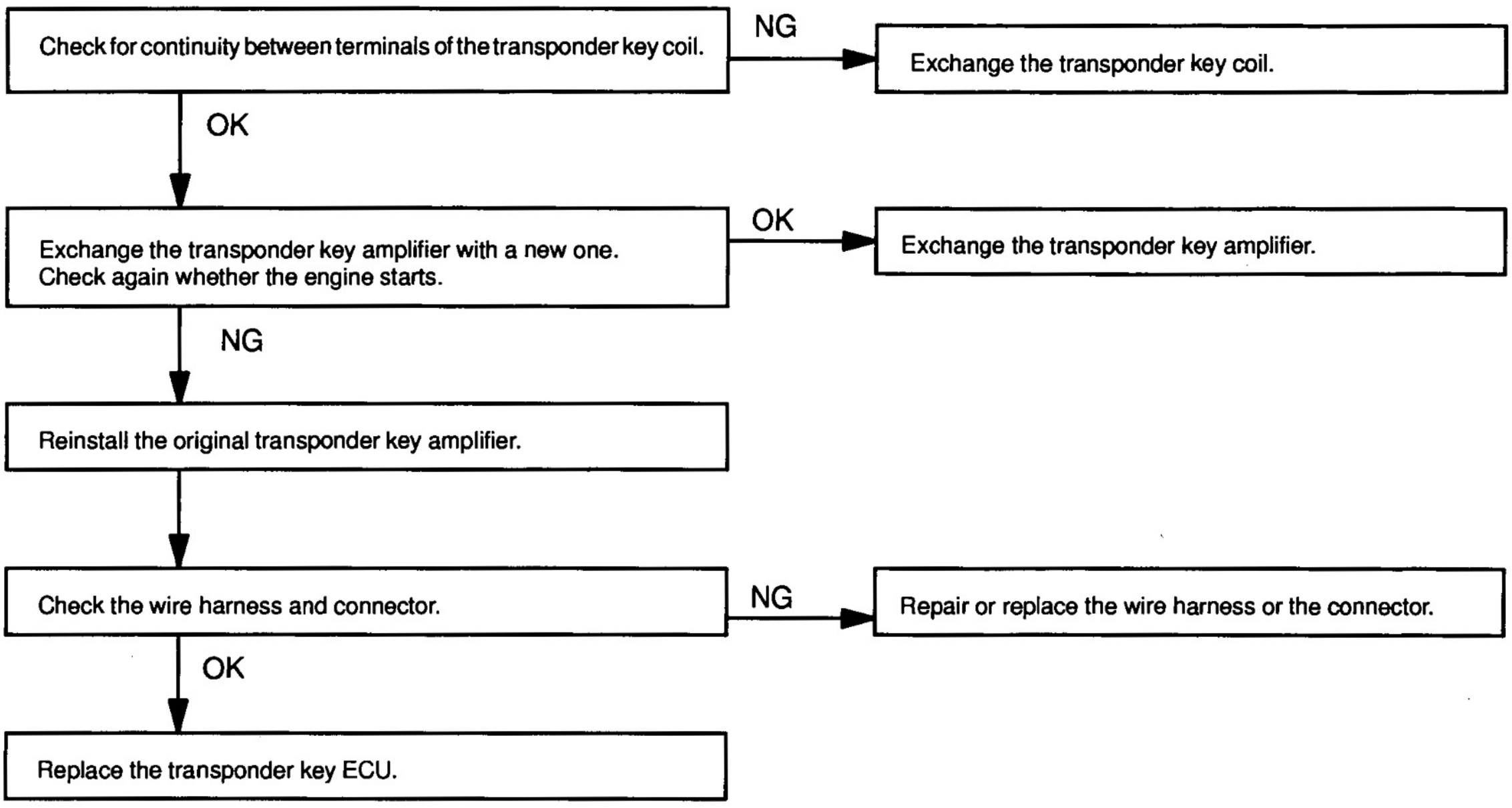

- If code 33 is output, troubleshoot according to this flow chart.

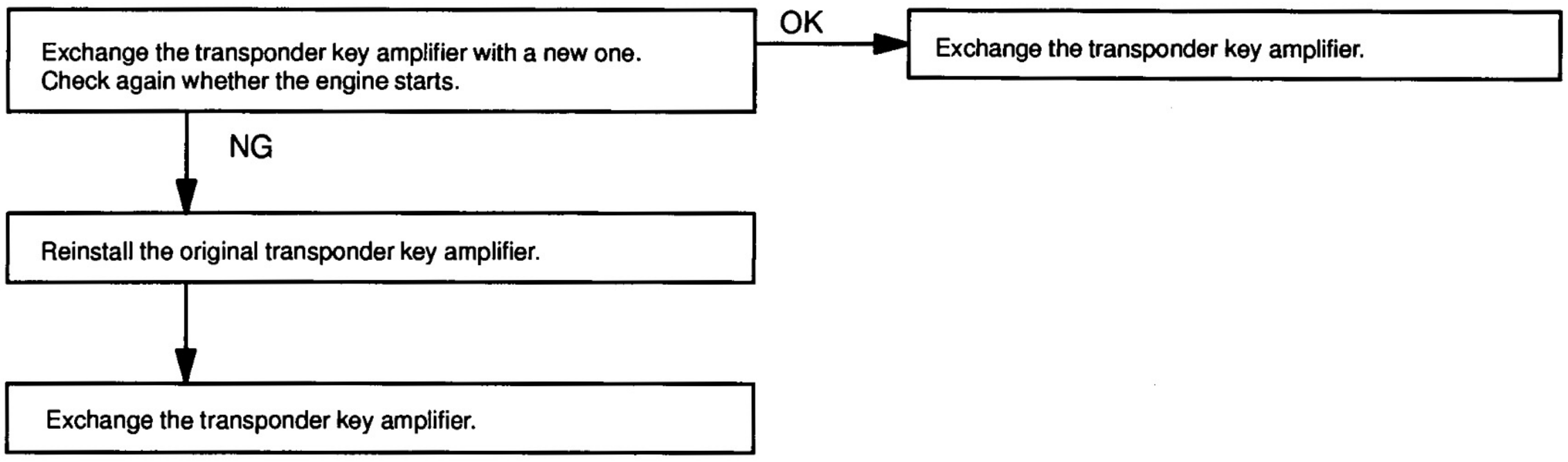

BE0YM–02

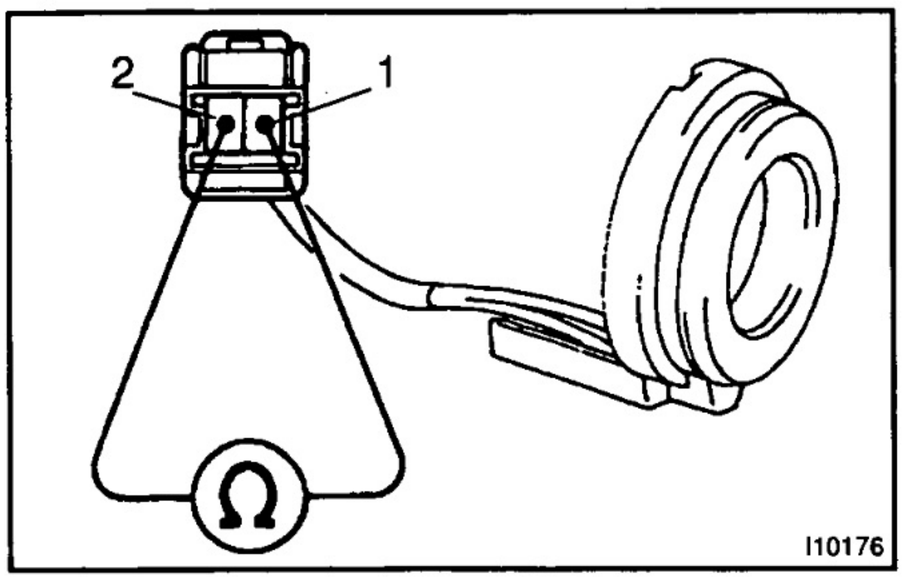

INSPECTION

1. INSPECT TRANSPONDER KEY COIL CONTINUITY

Check that continuity exists between terminal 1 and 2.
If continuity is not as specified, replace the coil.

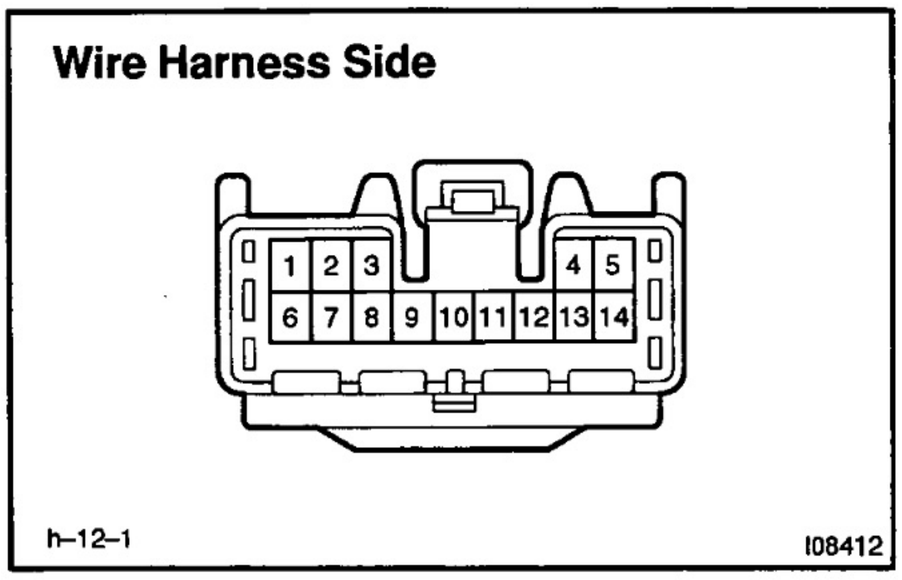

2. INSPECT TRANSPONDER KEY ECU CIRCUIT

Disconnect the connector from the ECU and inspect the connector on the wire harness side, as shown in the table below.

Tester connection	Condition	Specified condition
1 – Ground	Constant	Battery voltage
2 – Ground	Ignition switch ON	Battery voltage
8 – Ground	All doors closed	No continuity
8 – Ground	All doors open	Continuity
9 – Ground	Key unlock warning switch OFF (key removed)	No continuity
9 – Ground	Key unlock warning switch ON (key inserted)	Continuity
14 – Ground	Constant	Continuity

If the circuit is not as specified, try replacing the ECU with a new one.
If the circuit is not as specified, inspect the circuits connected to other parts.

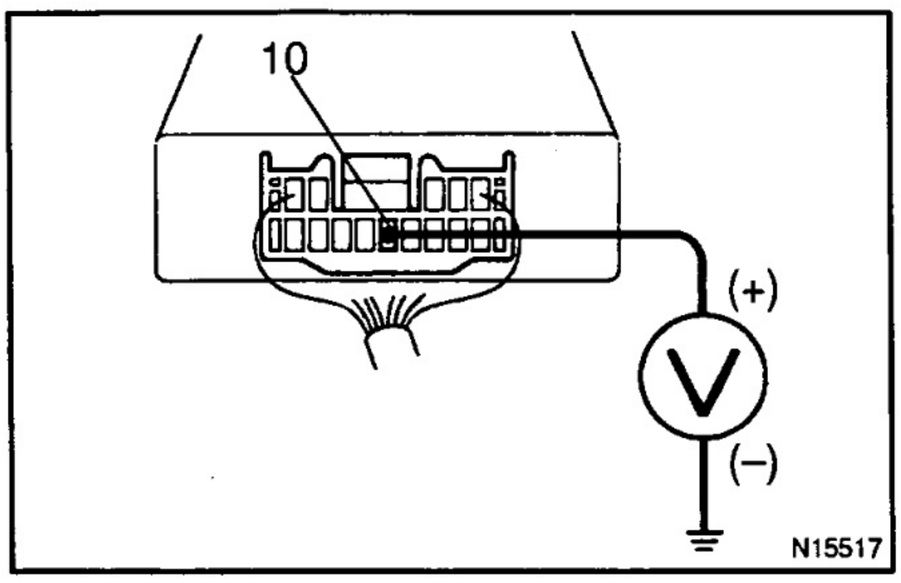

3. INSPECT TRANSPONDER KEY ECU

(a) With the connector connected, connect the positive (+) lead from the analog type tester to terminal 10 and the negative (–) lead to the body ground.
(b) Check that there is battery voltage when the ignition switch turned ON.
(c) Check that the tester needle swings strongly for approx. 1 sec. when the engine is started using the ignition key.

BODY

FRONT BUMPER BO–1
FRONT DOOR BO–2
REAR DOOR BO–8
INSTRUMENT PANEL BO–14
REAR NO.1 SEAT (Split Type) BO–22
REAR NO.1 SEAT
(Split Type: Single Side) BO–31
REAR NO.1 SEAT
(Split Type: Double Side) BO–38

REFER TO FOLLOWING REPAIR MANUALS:

Manual Name	Pub. No.
LAND CRUISER/LAND CRUISER PRADO Chassis and Body Repair Manual	RM517E
LAND CRUISER/LAND CRUISER PRADO Chassis and Body Repair Manual Supplement	RM627E

NOTE: The above pages contain only the points which differ from the above listed manuals.

FRONT BUMPER

COMPONENTS

BO2KP–02

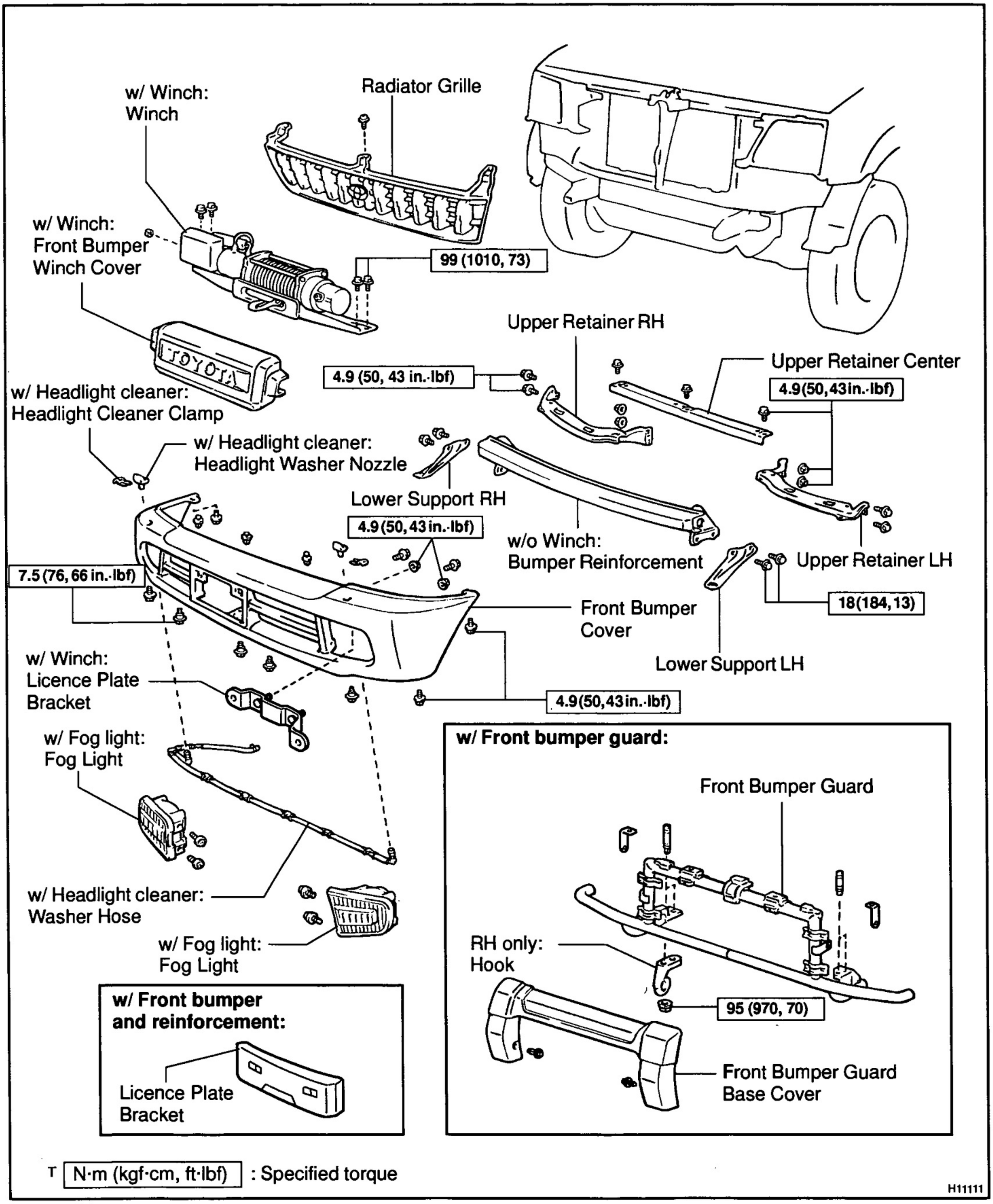

T N·m (kgf·cm, ft·lbf) : Specified torque

H11111

BO

FRONT DOOR

COMPONENTS

BO2KQ–01

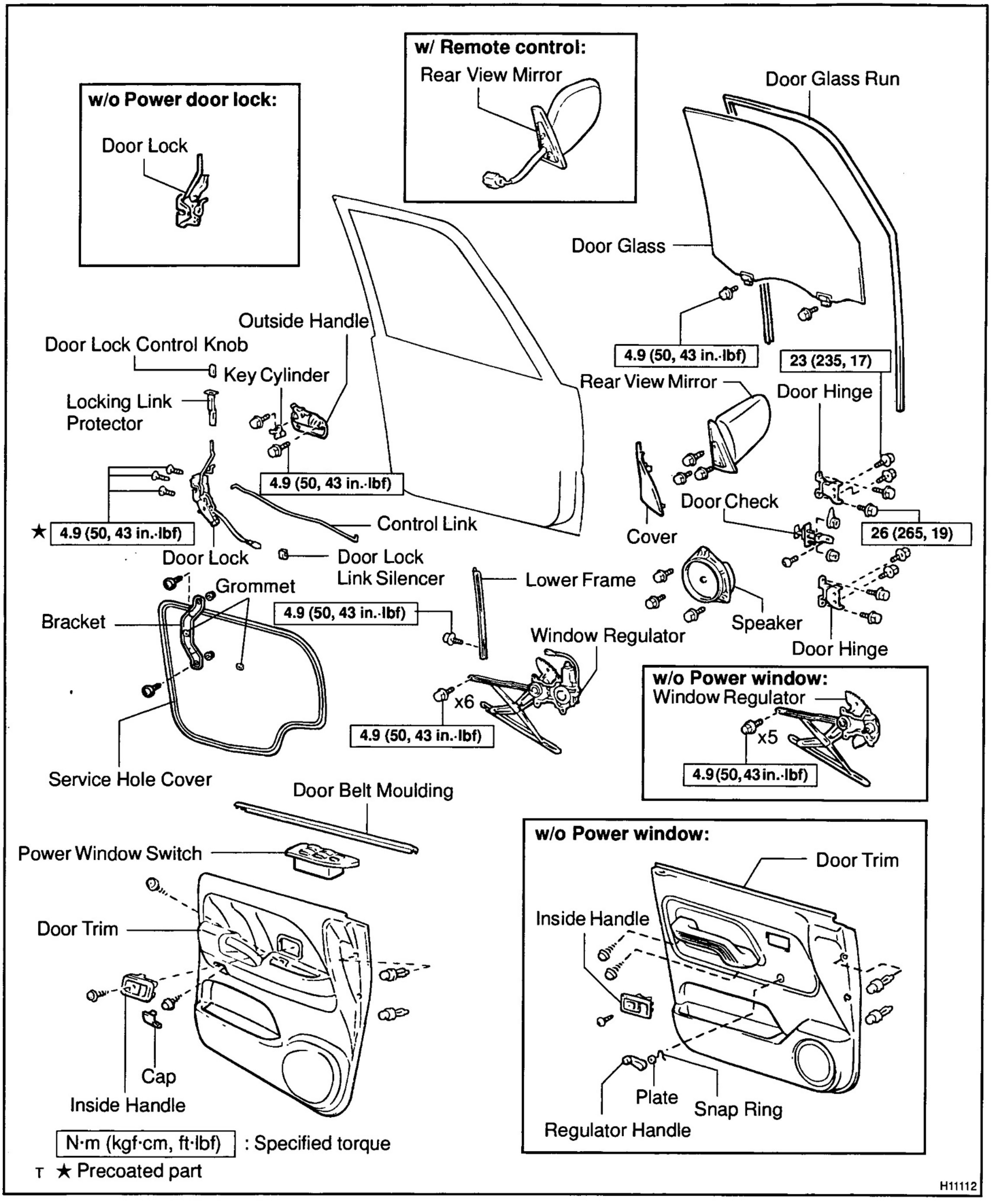

BO2KR–01

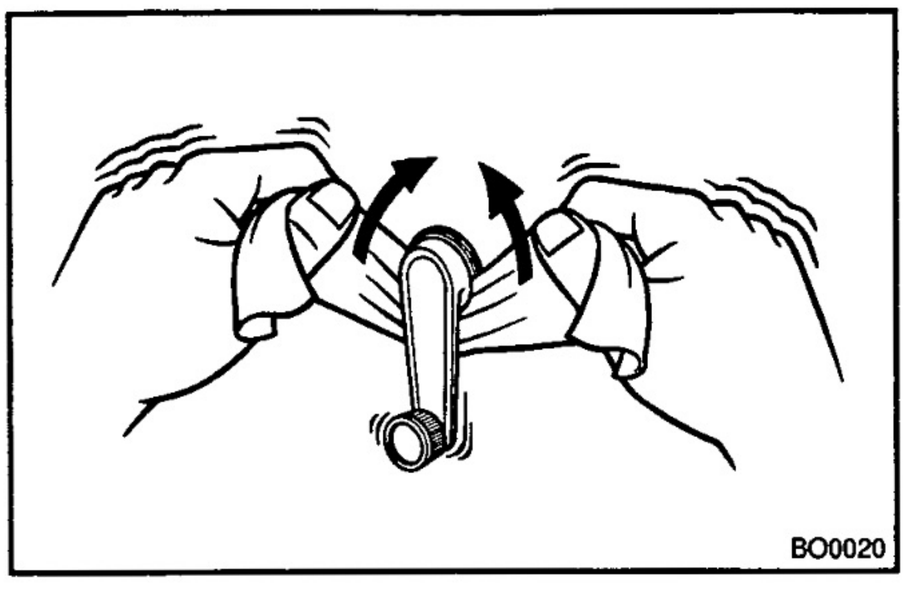

DISASSEMBLY

1. w/o Power window:
REMOVE REGULATOR HANDLE

Pull off the shop rag and remove the regulator handle and plate.

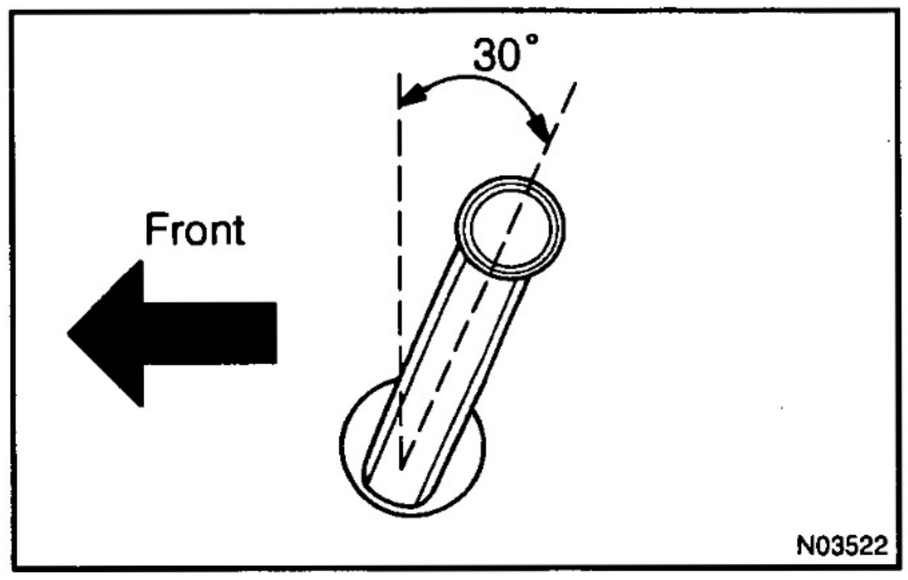

HINT:
At the time of reassembly, please refer to the following item.
With the door glass fully closed, install the plate and the regulator handle with the snap ring.

2. REMOVE INSIDE HANDLE

3. w/ Power window:
REMOVE POWER WINDOW SWITCH

4. REMOVE REAR VIEW MIRROR AND COVER

BO

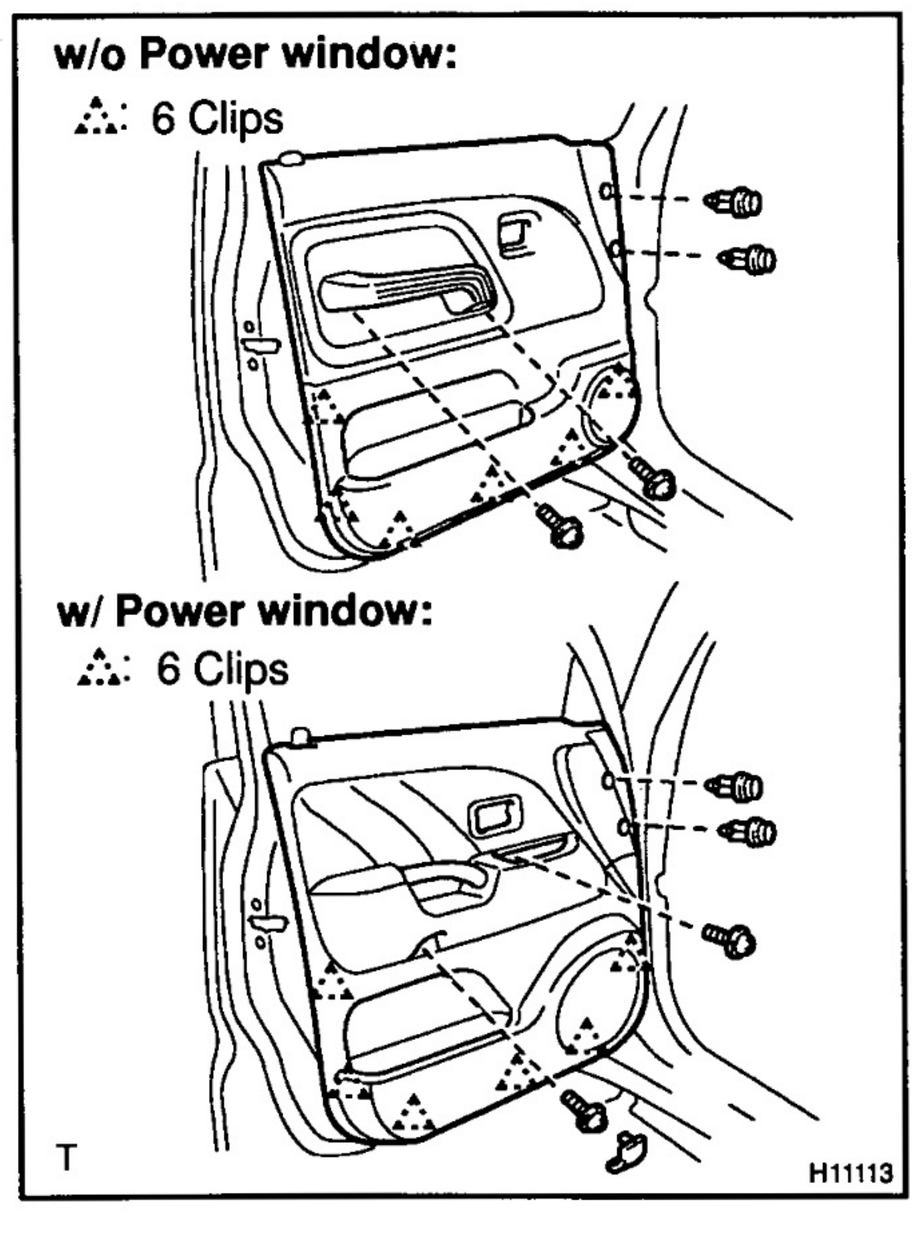

5. REMOVE DOOR TRIM

(a) Remove the 2 clips.

(b) w/o Power window:
Remove the 2 screws.

(c) w/ Power window:
Remove the cap and 2 scews.

(d) Insert a screwdriver between the door and door trim to pry it out.

NOTICE:

Be careful not to damage the door and door trim.

HINT:
Tape the screwdriver tip before use.

(e) Pull the door trim upward to remove it.

6. REMOVE BRACKET

7. REMOVE SERVICE HOLE COVER

(a) Remove the grommets.

(b) Remove the service hole cover.

HINT:
At the time of reassembly, please refer to the following item.
Bring out the control link through the service hole cover.

8. REMOVE SPEAKER

(a) Remove the 3 bolts.

(b) Disconnect the connector and speaker.

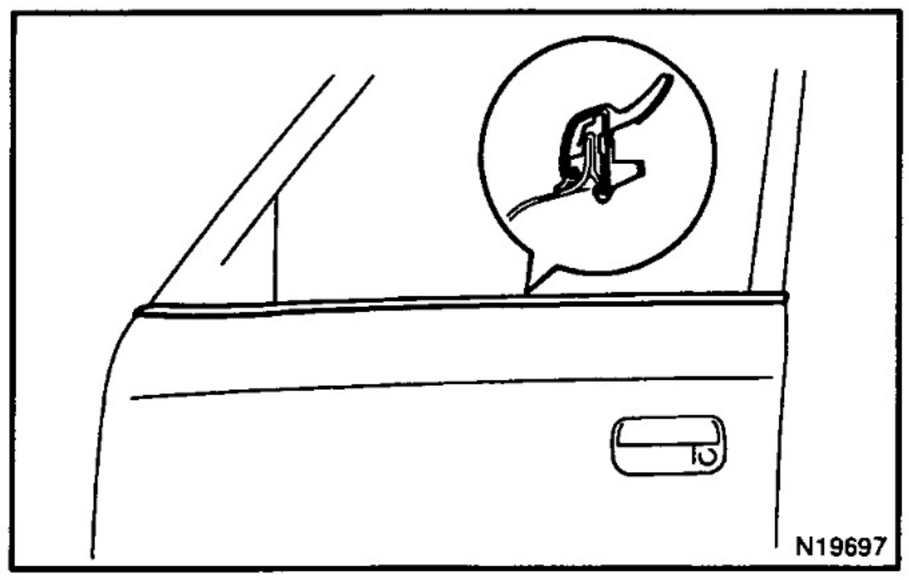

9. REMOVE DOOR BELT MOULDING

Using a scraper, remove the door belt moulding.

HINT:

Tape the scraper tip before use.

10. REMOVE DOOR GLASS RUN

11. REMOVE DOOR GLASS

(a) Open the door glass until the bolts appear in the service holes.

(b) Remove the 2 bolts and door glass.

NOTICE:

Be careful not to damage the door glass.

Torque: 4.9 N·m (50 kgf·cm, 43 in.·lbf)

12. REMOVE LOWER FRAME

Torque: 4.9 N·m (50 kgf·cm, 43 in.·lbf)

13. REMOVE WINDOW REGULATOR

(a) w/ Power window:

Disconnect the connector, then remove the 6 bolts and window regulator.

Torque: 4.9 N·m (50 kgf·cm, 43 in.·lbf)

(b) w/o Power window:

Remove the 5 bolts and window regulator.

Torque: 4.9 N·m (50 kgf·cm, 43 in.·lbf)

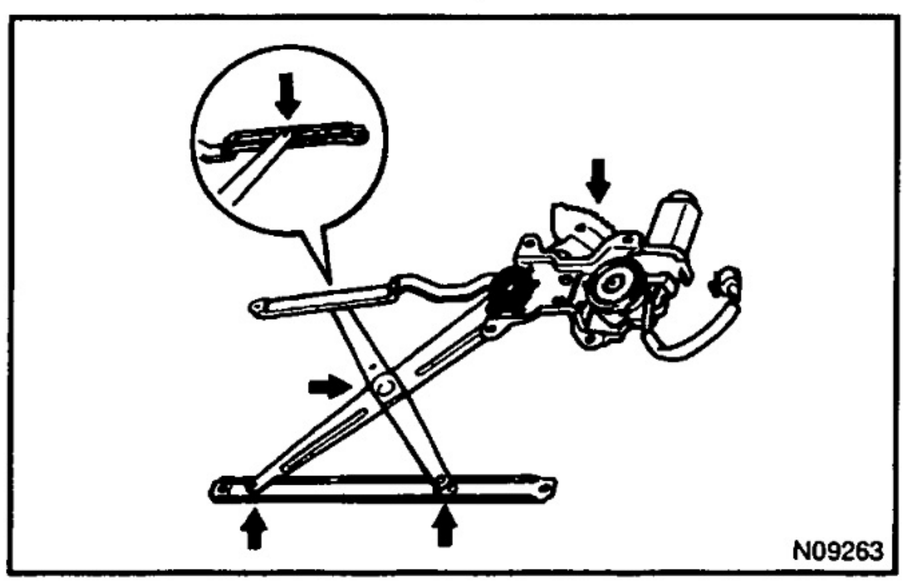

HINT:

At the time of reassembly, please refer to the following item.

Apply MP grease to the sliding and rotating parts of the window regulator.

NOTICE:

At the time of reassembly, please refer to the following item.

Do not apply grease to the spring of the window regulator.

HINT:

Remove the regulator through the service hole.

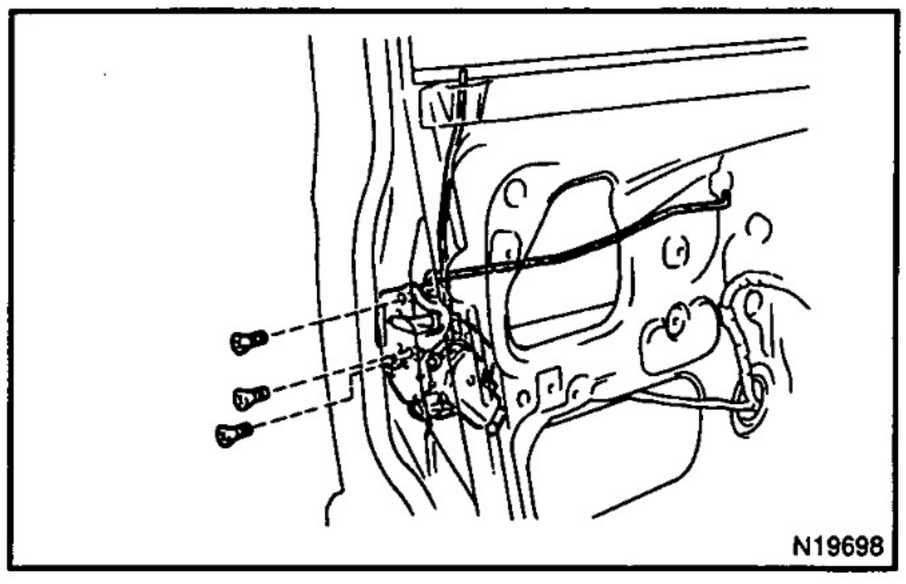

14. REMOVE DOOR LOCK

(a) Disconnect the control link from the door lock.

(b) Disconnect the links from the outside handle with key cylinder.

(c) w/ Power door lock:

Disconnect the connector.

(d) Remove the door lock control knob and locking link protector.

(e) Remove the 3 screws.
Torque: 4.9 N·m (50 kgf·cm, 43 in.·lbf)
Part No. 08833–00070, THREE BOND 1324 or equivalent

(f) Remove the door lock through the service hole.

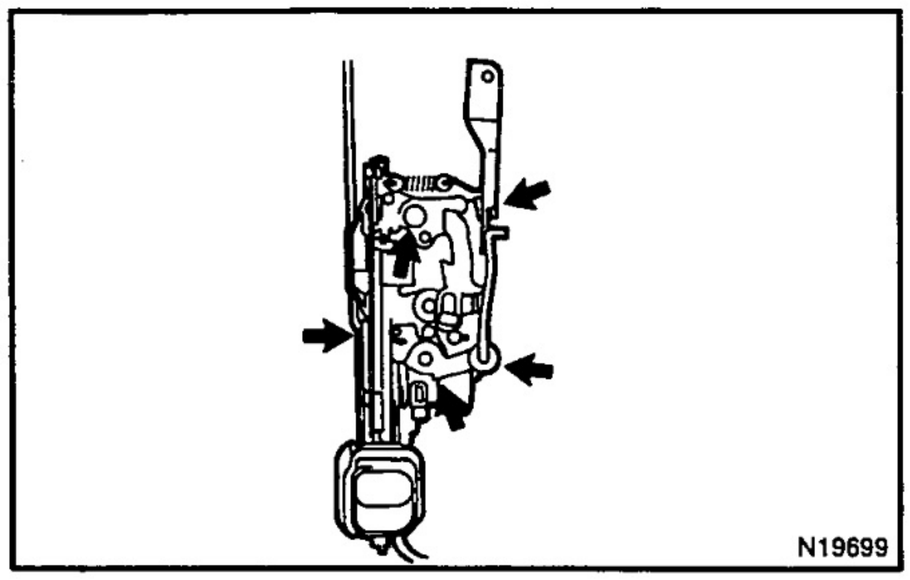
N19699

HINT:
At the time of reassembly, please refer to the following item.
Apply MP grease to the sliding and rotating parts of the door lock.

15. REMOVE OUTSIDE HANDLE
Torque: 4.9 N·m (50 kgf·cm, 43 in.·lbf)

BO2KS–01

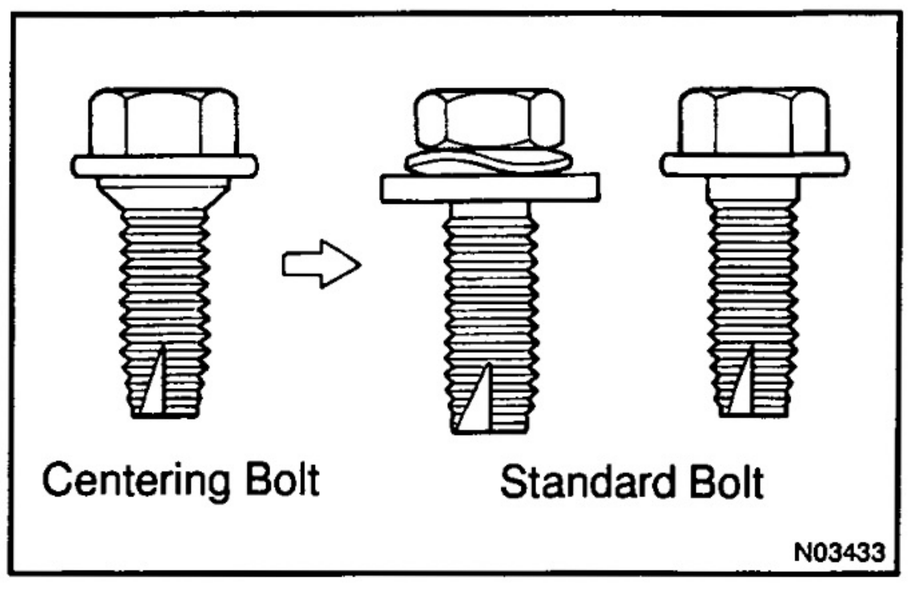

ADJUSTMENT

HINT:

Since the centering bolt is used as a door side hinge bolt, the door hinge cannot be adjusted with it on. Substitute the bolt with a washer for the centering bolt.

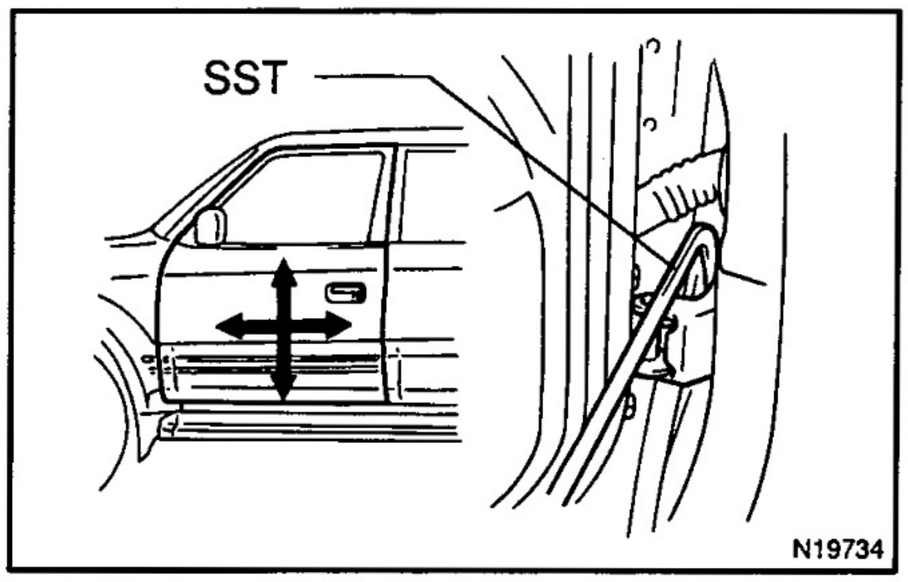

1. ADJUST DOOR IN FORWARD/REARWARD AND VERTICAL DIRECTIONS

Using SST, adjust the door by loosening the body side hinge bolts.

SST 09812–00010

Torque: 23 N·m (235 kgf·cm, 17 ft·lbf)

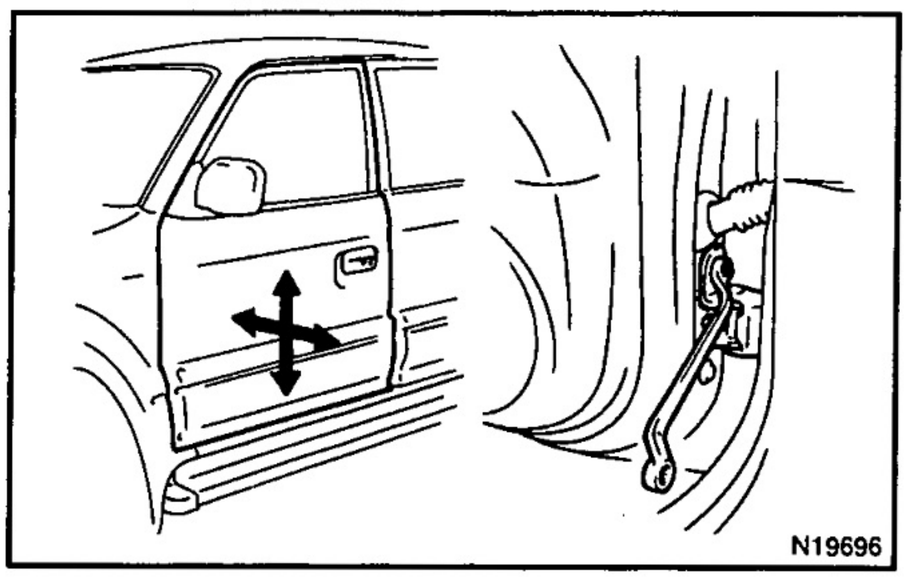

2. ADJUST DOOR IN LEFT/RIGHT AND VERTICAL DIRECTIONS

Loosen the door side hinge bolts to adjust.

Torque: 26 N·m (265 kgf·cm, 19 ft·lbf)

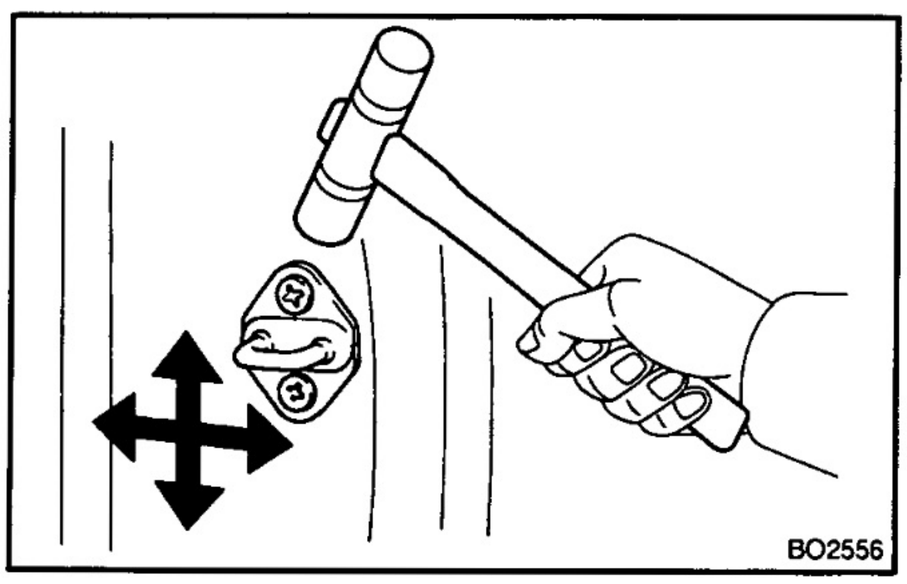

3. ADJUST DOOR LOCK STRIKER

(a) Check that the door fit and door lock linkages are adjusted correctly.

(b) Loosen the striker mounting screws to adjust.

(c) Using a plastic hammer, tap the striker to adjust it.

(d) Tighten the striker mounting screws again.

Torque: 11 N·m (115 kgf·cm, 8.3 ft·lbf)

BO2KT–01

REASSEMBLY

Reassembly is in the reverse order of disassembly (See page BO–3).

REAR DOOR

COMPONENTS

BO2KU–01

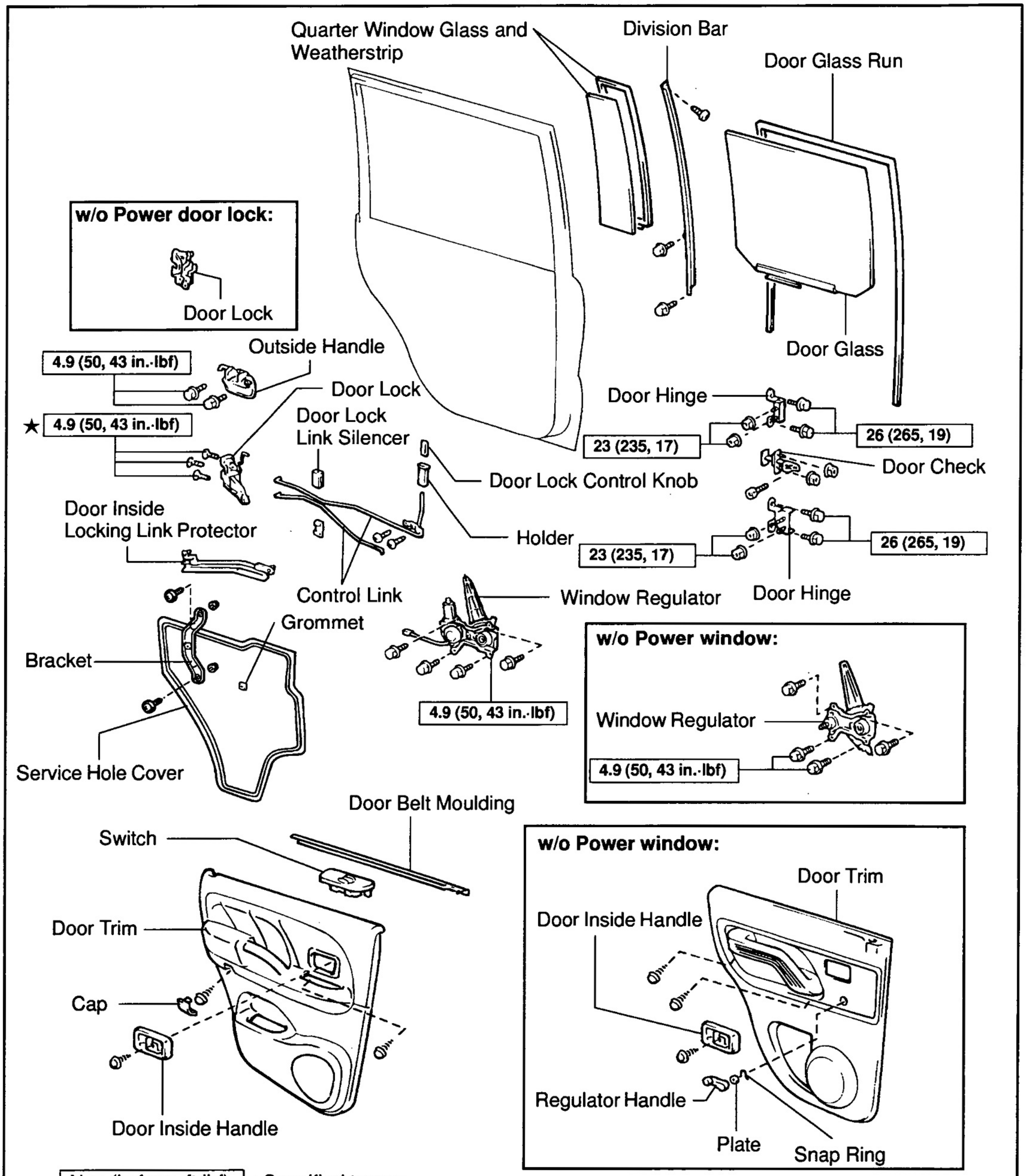

BO2KV–01

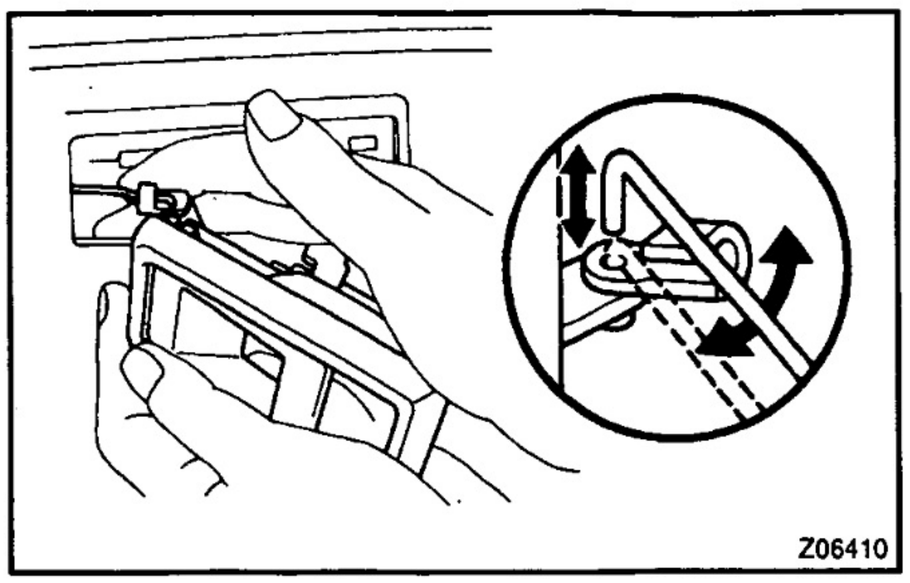

DISASSEMBLY

1. REMOVE DOOR INSIDE HANDLE

(a) Remove the screw.

(b) Using a screwdriver, remove the door inside handle.

HINT:

Tape the screwdriver tip before use.

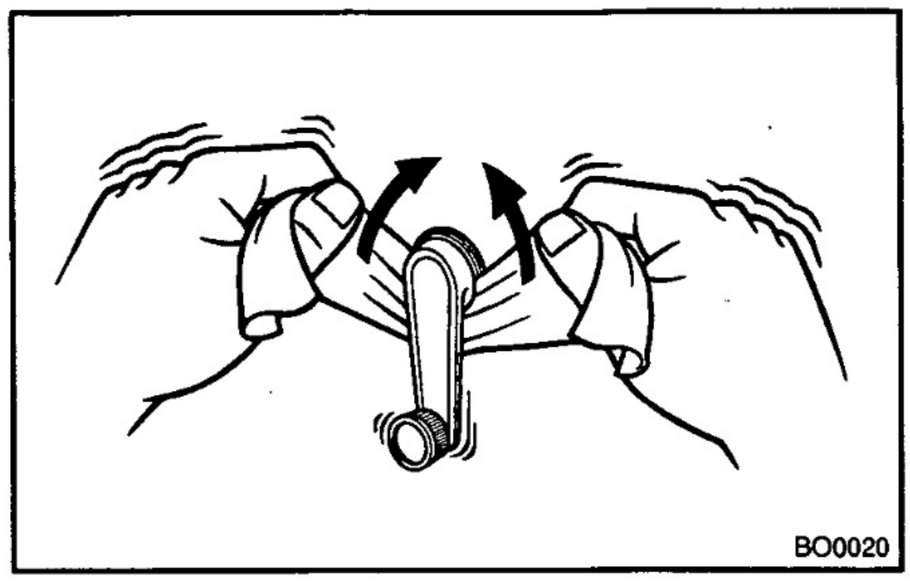

2. w/o Power window:
REMOVE REGULATOR HANDLE

Pull off the snap ring with a shop rag and remove the regulator handle and plate.

BO

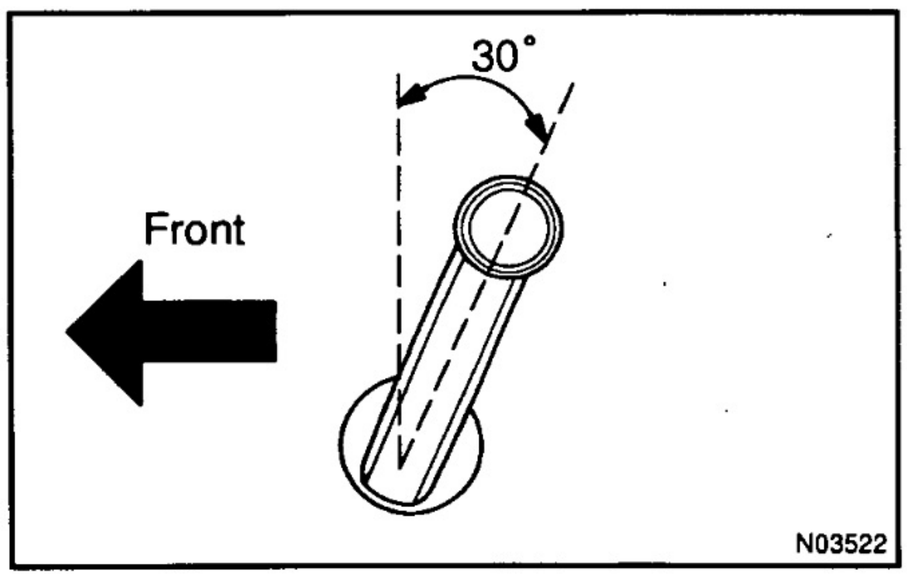

HINT:

At the time reassembly, please refer to the following item.

With the door glass fully closed, install the plate and the regulator handle with the snap ring.

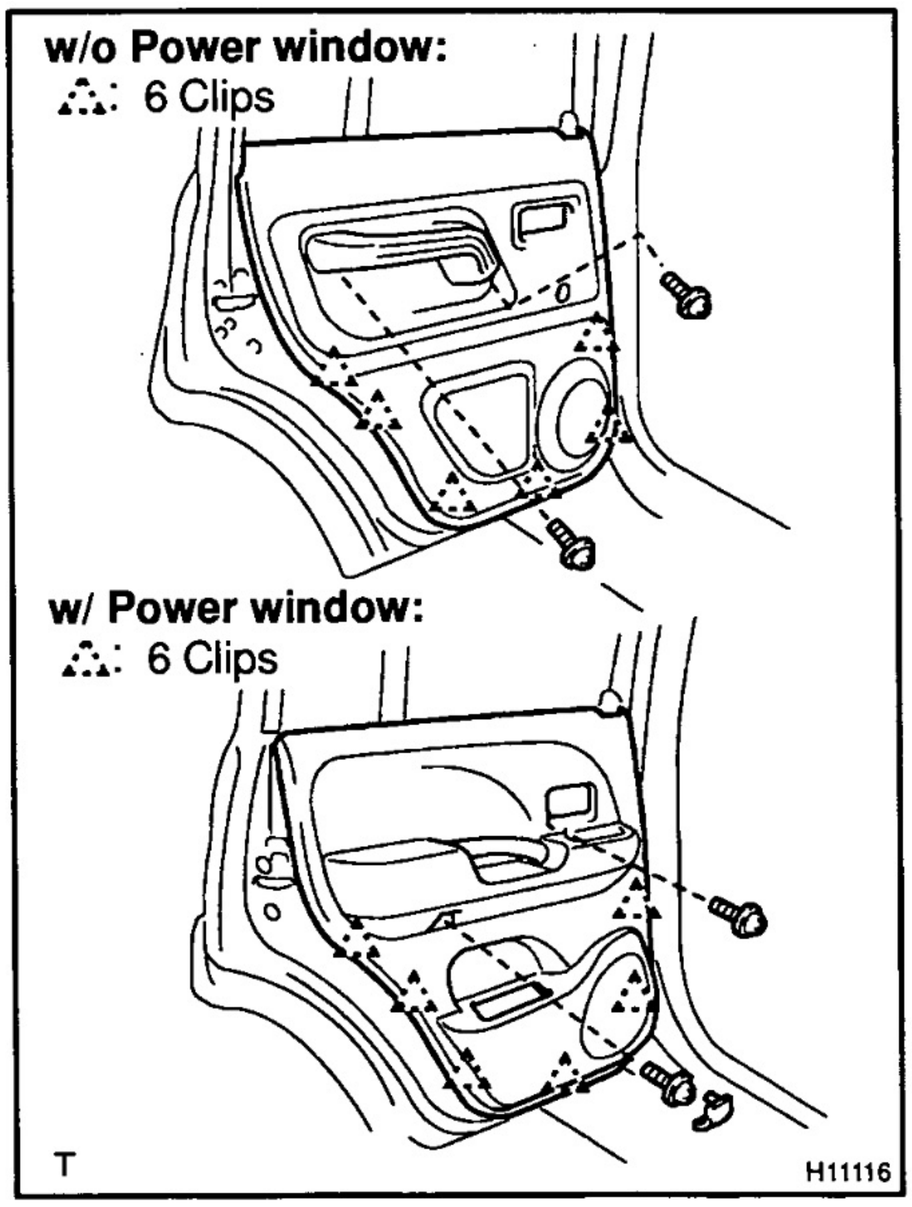

3. REMOVE DOOR TRIM

(a) Remove the switch.

(b) w/o Power window:
Remove the 2 screws.

(c) w/ Power window:
Remove the cap and 2 screws.

(d) Insert a screwdriver between the door and door trim to pry it out.

NOTICE:

Be careful not to damage the door panel and trim.

HINT:

Tape the screwdriver tip before use.

(e) Pull the door trim upward to remove it.

4. REMOVE BRACKET

5. REMOVE DOOR LOCK LINK SILENCER

6. REMOVE SERVICE HOLE COVER

(a) Remove the 3 grommets.

(b) Remove the service hole cover.

HINT:

Bring out the control link and connector through the service hole cover.

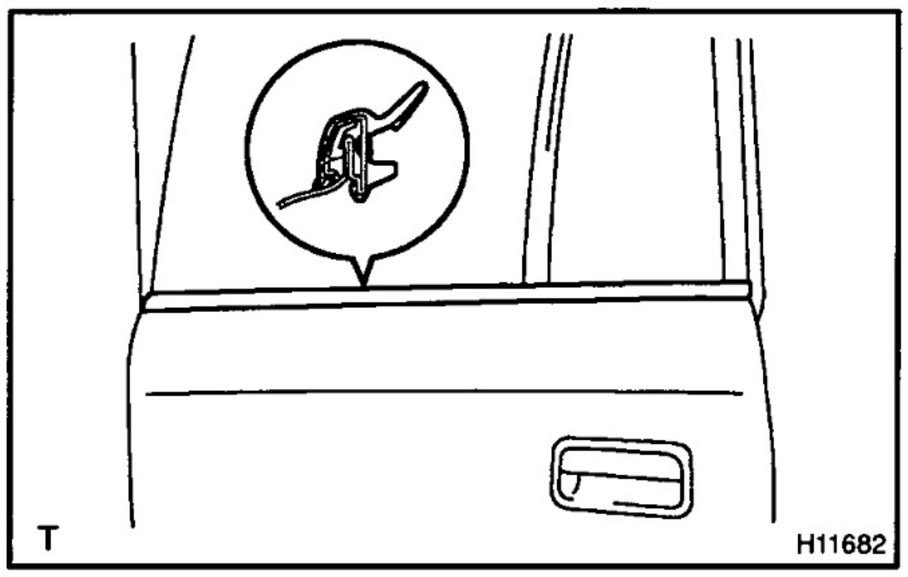

7. REMOVE DOOR BELT MOULDING

Using a scraper, remove the door belt moulding.

HINT:

Tape the scraper tip before use.

8. REMOVE DOOR GLASS RUN

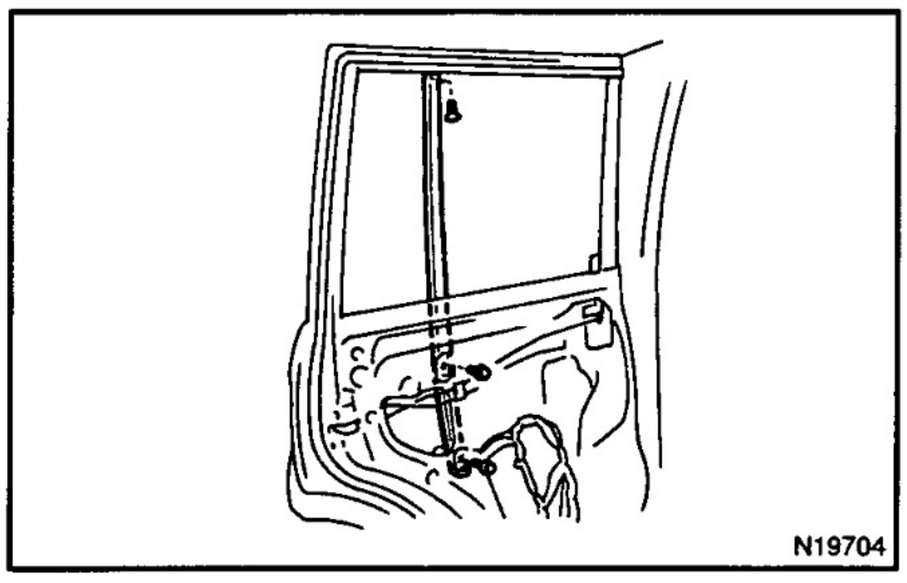

9. REMOVE DIVISION BAR

Remove the 2 bolts, screw and division bar as shown in the illustration.

10. REMOVE DOOR GLASS

11. REMOVE QUARTER WINDOW GLASS AND WEATHERSTRIP

12. REMOVE WINDOW REGULATOR

(a) w/ Power window:

Disconnect the connector.

(b) Remove the 4 bolts and window regulator.

Torque: 4.9 N·m (50 kgf·cm, 43 in.·lbf)

HINT:

Remove the regulator though the service hole.

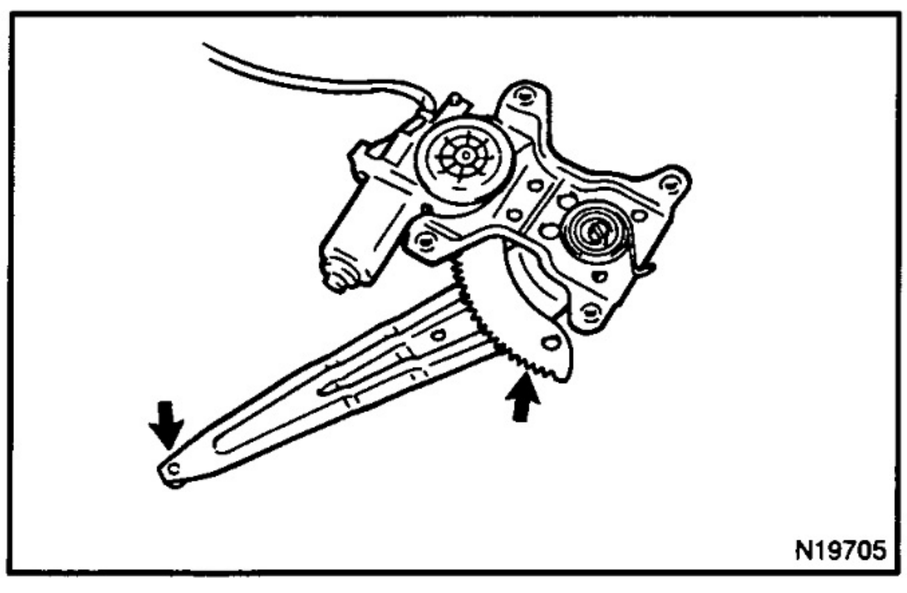

HINT:

At the time of reassembly, please refer to the following item.

Apply MP grease to the sliding and rotating parts of the window regulator.

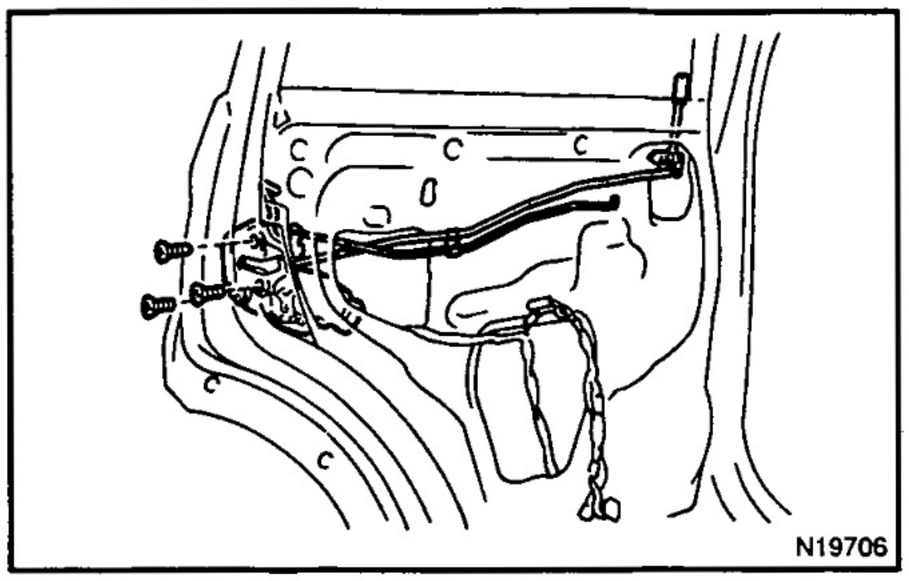

13. REMOVE DOOR LOCK

(a) Remove the door lock control knob and holder.
(b) Disconnect the control links from the door lock.
(c) Remove the screw, grommet, clamp and control links.
(d) w/ Power door lock:
Disconnect the connector.
(e) Remove the door inside locking link protector.
(f) Remove the 3 screws.
Torque: 4.9 N·m (50 kgf·cm, 43 in.·lbf)

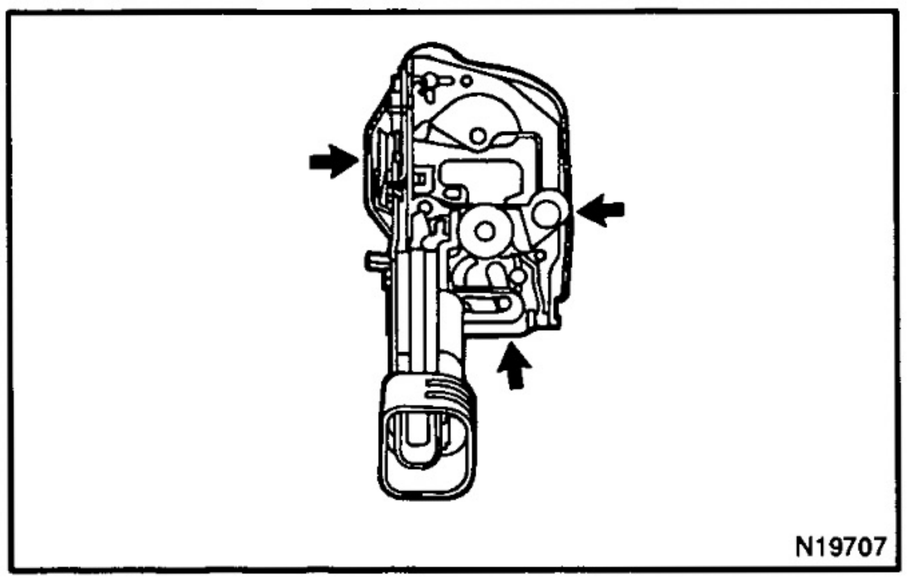

HINT:
At the time of reassembly, please refer to the following item.
Apply adhesive to 3 screws.
Part No. 08833–00070, THREE BOND 1324, or equivalent

(g) Remove the door lock through the service hole.

HINT:
At the time of reassembly, please refer to the following item.
Apply MP grease to the sliding surface to the door lock.

14. REMOVE OUTSIDE HANDLE
Torque: 4.9 N·m (50 kgf·cm, 43 in.·lbf)

BO2KW–01

ADJUSTMENT

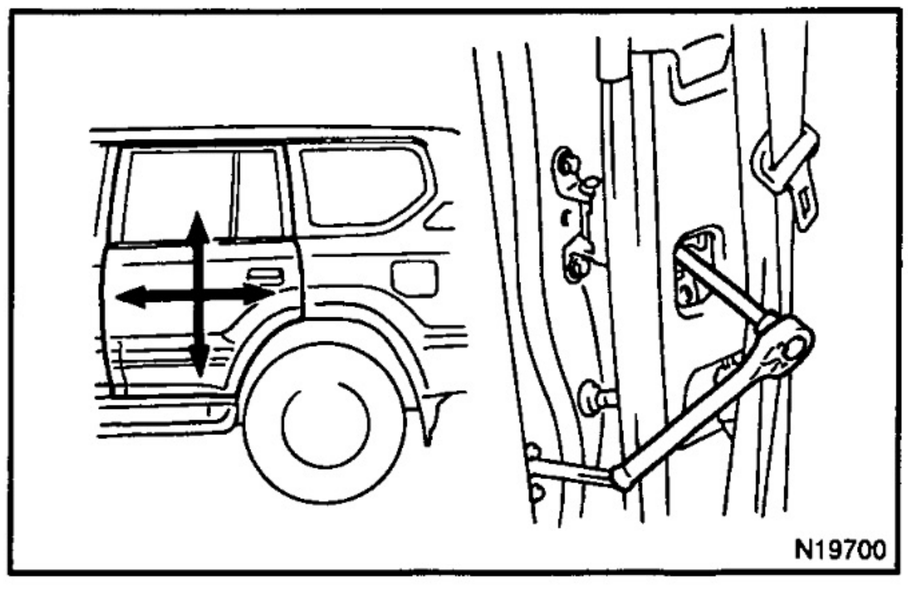

1. ADJUST DOOR IN FORWARD/REARWARD AND VERTICAL DIRECTIONS

(a) Remove the front scuff plate.
(b) Remove the rear scuff plate.
(c) Remove the center pillar lower garnish hole cover.
(d) Remove the center pillar lower garnish.
(e) Loosen the body side hinge nuts to adjust.
Torque: 23 N·m (235 kgf·cm, 17 ft·lbf)
(f) Install the removed parts.

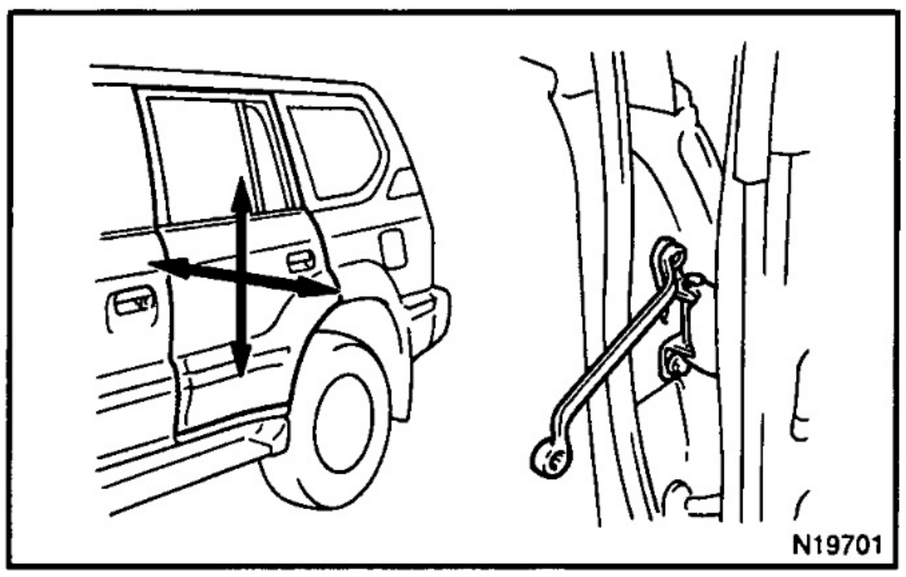

2. ADJUST DOOR IN LEFT/RIGHT AND VERTICAL DIRECTIONS

Loosen the door side hinge bolts to adjust.
Torque: 26 N·m (265 kgf·cm, 19 ft·lbf)

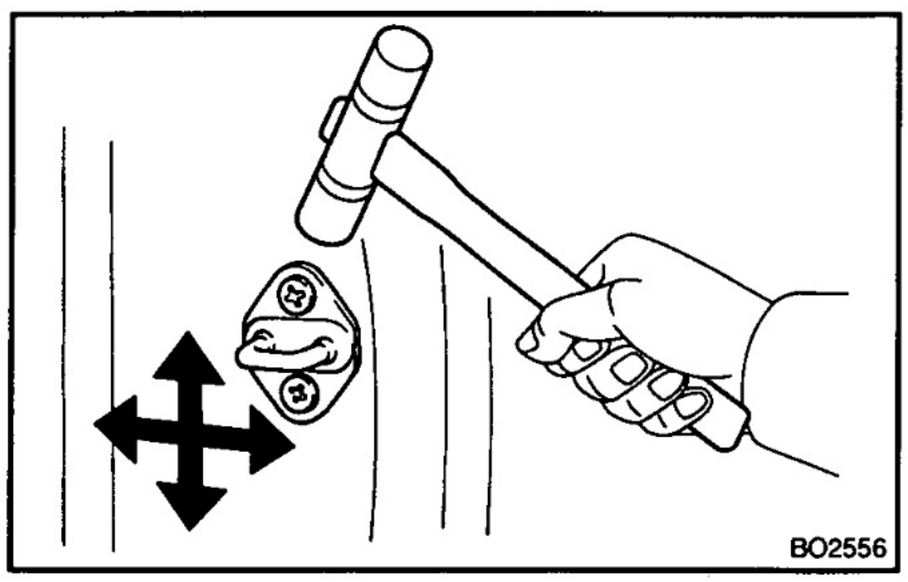

3. ADJUST DOOR LOCK STRIKER

(a) Check that the door fit and door lock linkages are adjusted correctly.
(b) Loosen the striker mounting screws to adjust.
(c) Using a plastic hammer, tap the striker to adjust it.
(d) Tighten the striker mounting screws again.
Torque: 11 N·m (115 kgf·cm, 8.3 ft·lbf)

BO2KX–01

REASSEMBLY

Reassembly is in the reverse order of disassembly (See page BO–9).

INSTRUMENT PANEL

COMPONENTS

BO1T9-04

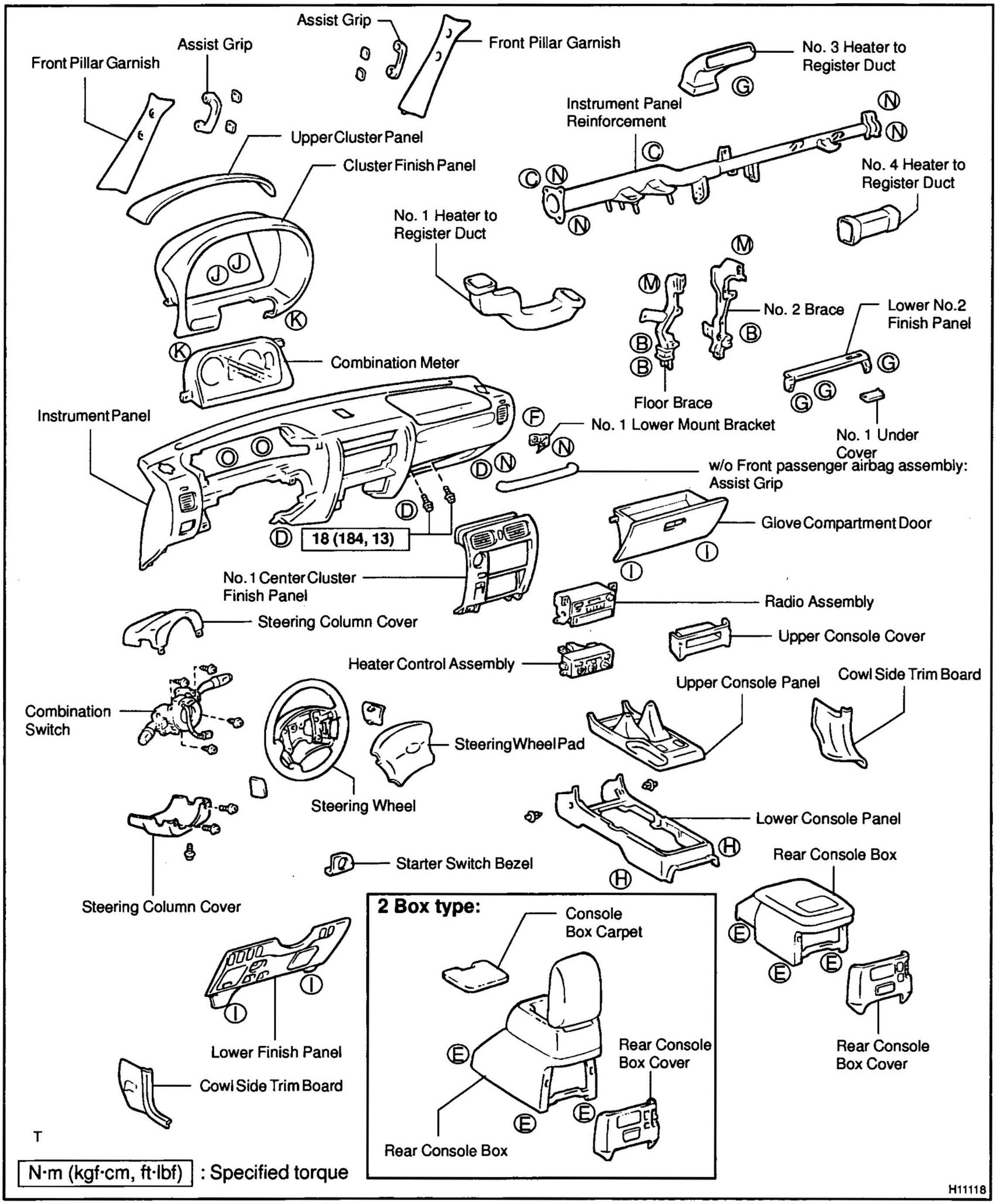

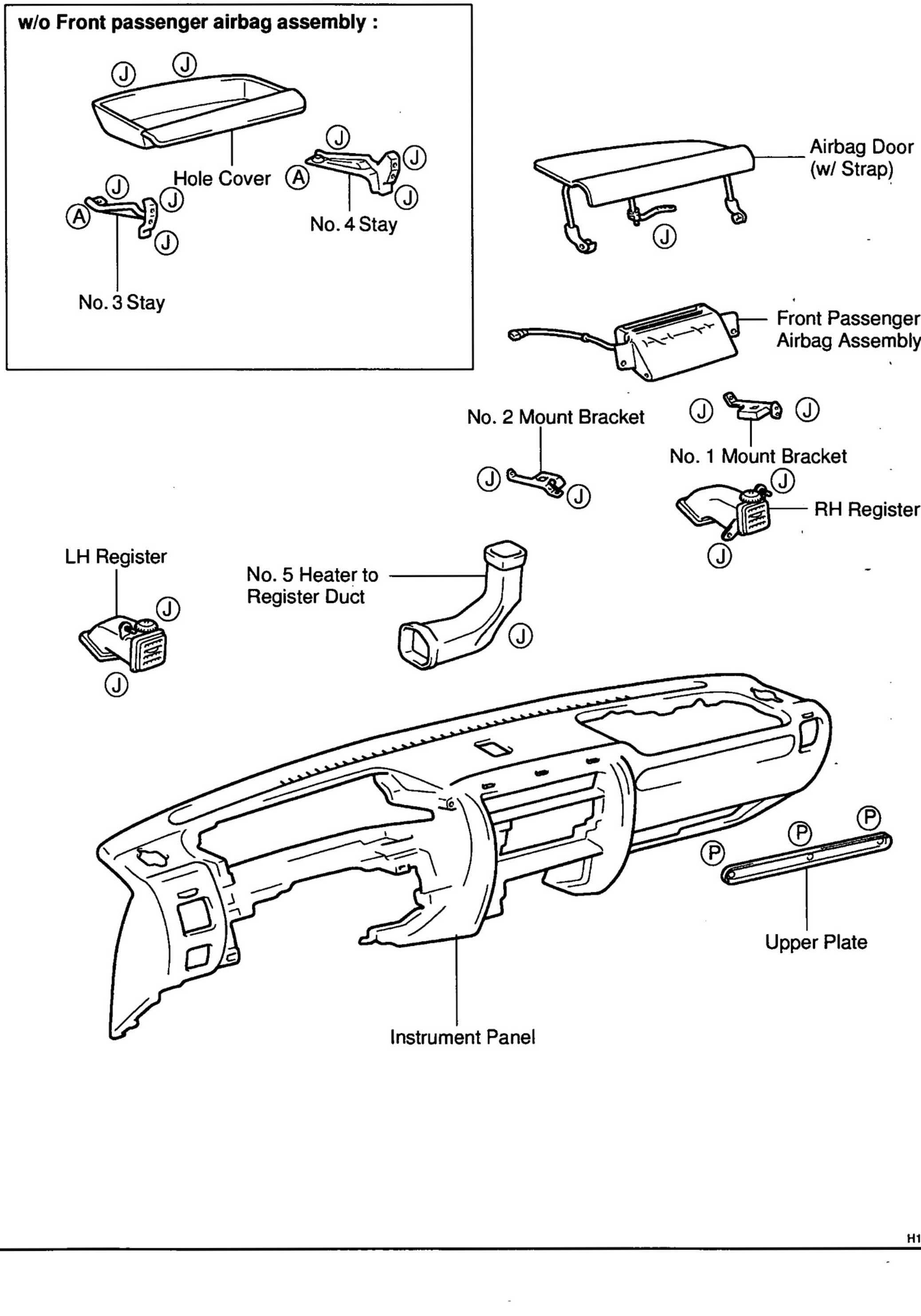
w/o Front passenger airbag assembly :
Hole Cover
No. 4 Stay
No. 3 Stay
Airbag Door
(w/ Strap)
Front Passenger
Airbag Assembly
No. 2 Mount Bracket
No. 1 Mount Bracket
RH Register
LH Register
No. 5 Heater to
Register Duct
Upper Plate
Instrument Panel
H11683

HINT:
Screw shapes and size are indicated in the table below. The codes ("A" – "P") correspond to those indicated on the previous page.

mm (in.)

	Shape	Size		Shape	Size		Shape	Size
Ⓐ	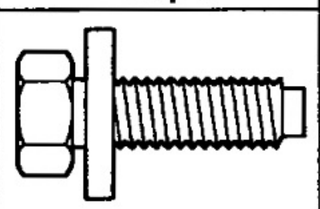	ø = 8 (0.31) L = 22 (0.87)	Ⓑ	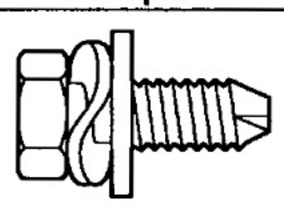	ø = 8 (0.31) L = 18 (0.71)	Ⓒ	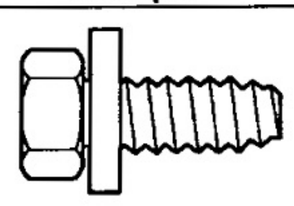	ø = 8 (0.31) L = 16 (0.63)
Ⓓ	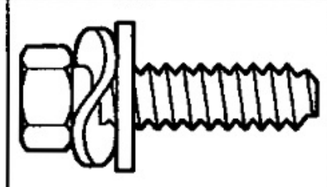	ø = 6 (0.24) L = 22 (0.87)	Ⓔ	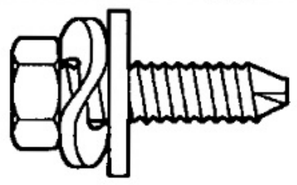	ø = 6 (0.24) L = 20 (0.79)	Ⓕ	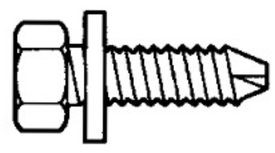	ø = 6 (0.24) L = 18 (0.71)
Ⓖ	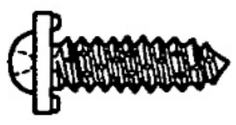	ø = 5.22 (0.2055) L = 16 (0.63)	Ⓗ		ø = 5 (0.20) L = 16 (0.63)	Ⓘ		ø = 5 (0.20) L = 14 (0.55)
Ⓙ		ø = 5 (0.20) L = 14 (0.55)	Ⓚ	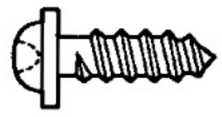	ø = 5 (0.20) L = 14 (0.55)	Ⓛ		ø = 5 (0.20) L = 12 (0.47)
Ⓜ	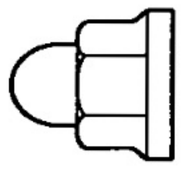	ø = 8 (0.31)	Ⓝ	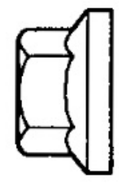	ø = 6 (0.24)	Ⓞ	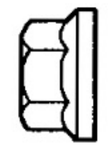	ø = 6 (0.24)
Ⓟ	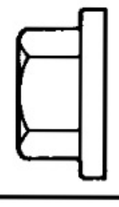	ø = 8 (0.31)						

H06501

BO1TA-02

REMOVAL

1. **REMOVE FRONT DOOR SCUFF PLATES**
2. **REMOVE COWL SIDE TRIM BOARDS**
3. **REMOVE STEERING WHEEL**
   (See Pub. No. RM627E on page SR–1)
4. **REMOVE ASSIST GRIPS**
5. **REMOVE FRONT PILLAR GARNISHES**
6. **REMOVE STEERING COLUMN COVERS**

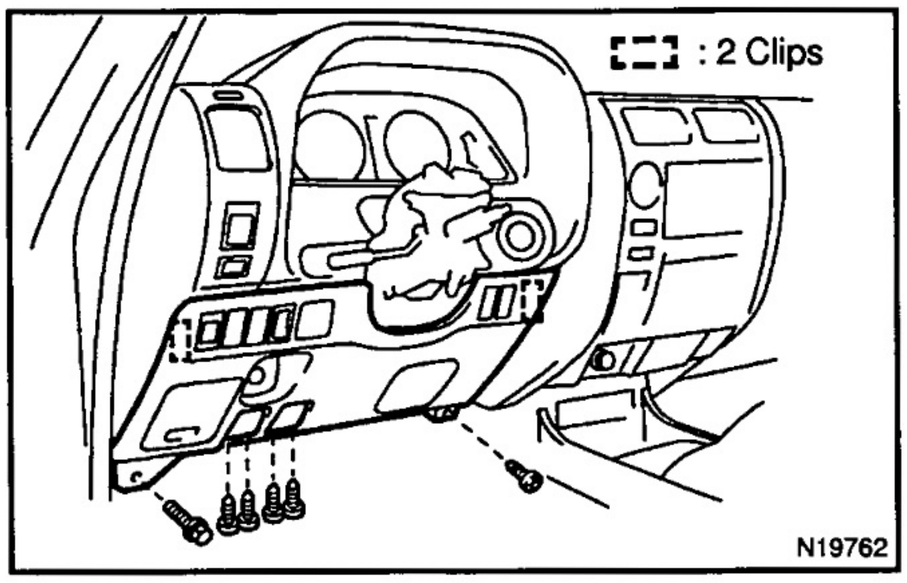

7. **REMOVE LOWER FINISH PANEL**

(a) Remove the 2 screws and hood lock release lever.
(b) Remove the 2 screws and fuel lid opener.
(c) Remove the 2 bolts and panel then disconnect the connectors.

8. **REMOVE STARTER SWITCH BEZEL**
9. **REMOVE NO. 1 HEATER TO REGISTER DUCT**

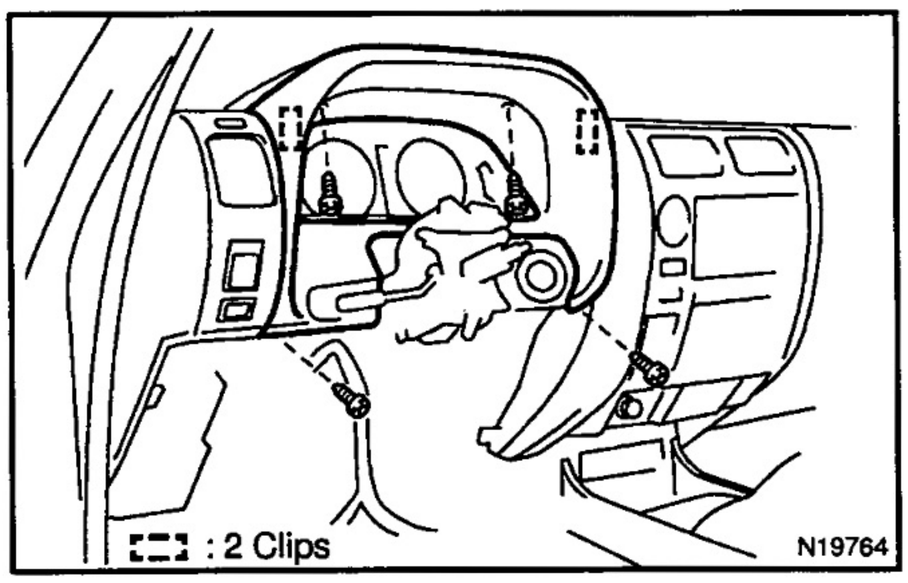

10. **REMOVE CLUSTER FINISH PANEL**

Remove the 4 screws and panel.

11. **REMOVE UPPER CLUSTER FINISH PANEL**
12. **REMOVE COMBINATION METER**
13. **w/o Front passenger airbag assembly:**
    REMOVE ASSIST GRIP

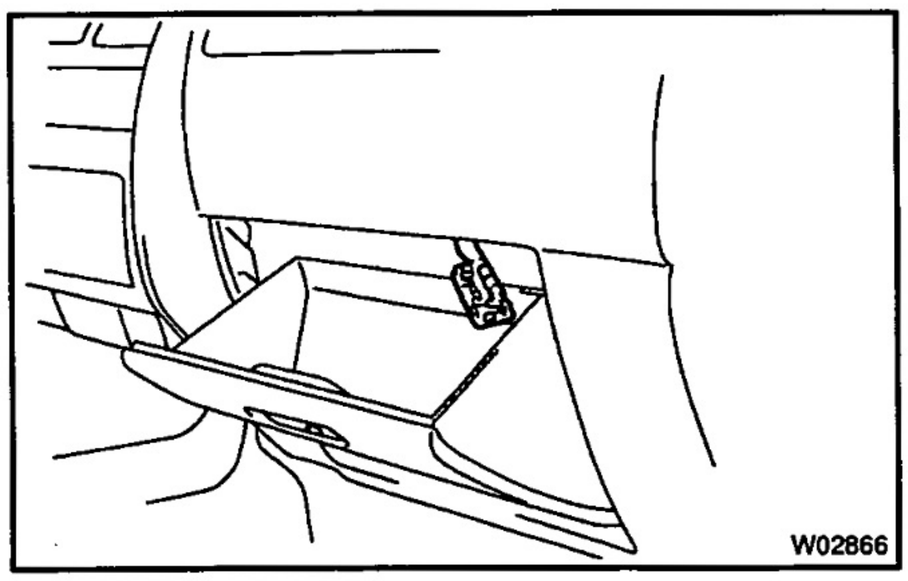

14. **REMOVE GLOVE COMPARTMENT DOOR**

(a) w/ Front passenger airbag assembly:
Remove the No. 1 under cover inside the glove compartment door.

NOTICE:
When handling the airbag connector, take care not to damage the airbag wire harness.

(b) w/ Front passenger airbag assembly:
Pull up and disconnect the airbag connector.
(See Pub. No. RM627E on page RS–26)
(c) Remove the 2 screws and glove compartment door.
(d) Remove the 3 screws and lower No. 2 finish panel.

15. **REMOVE NO. 4 HEATER TO REGISTER DUCT**

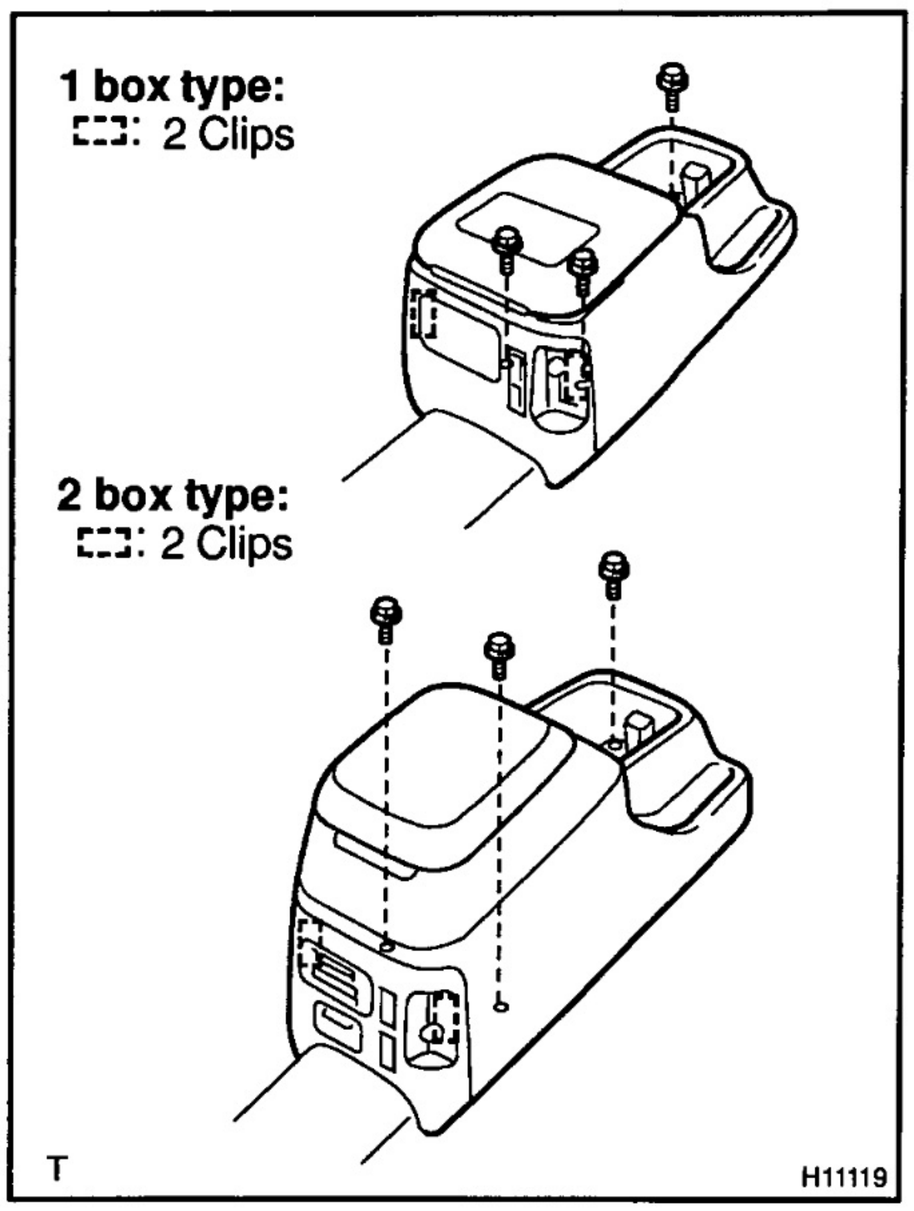

16. w/ Console box:
REMOVE REAR CONSOLE BOX

(a) Remove the rear console box cover, then disconnect the connectors.

(b) Remove the 3 bolts and rear console box, then disconnect the connectors.

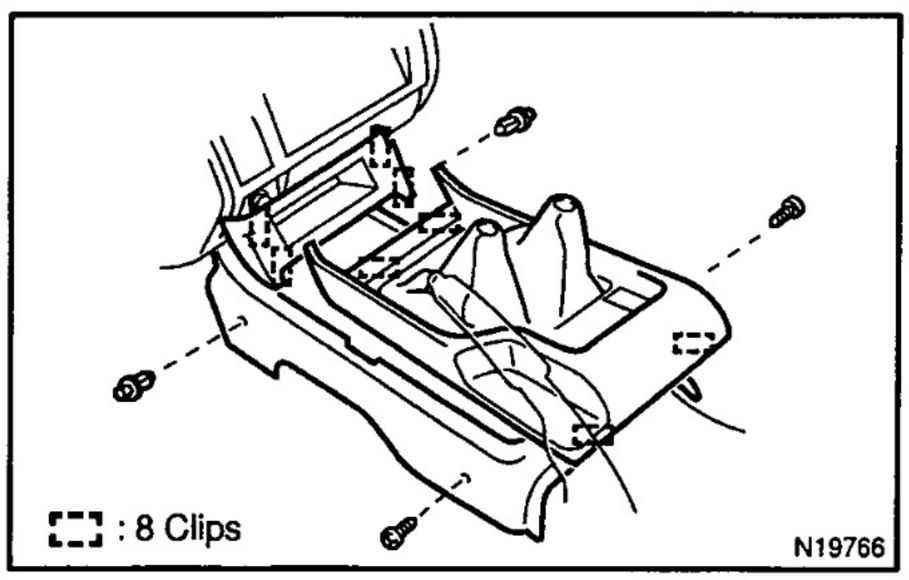

17. w/ Console box:
REMOVE UPPER CONSOLE COVER

18. w/ Console box:
REMOVE UPPER CONSOLE PANEL

19. w/ Console box:
REMOVE LOWER CONSOLE PANEL

20. w/o Console box:
REMOVE LOWER CENTER COVER

Remove the 2 clips and cover.

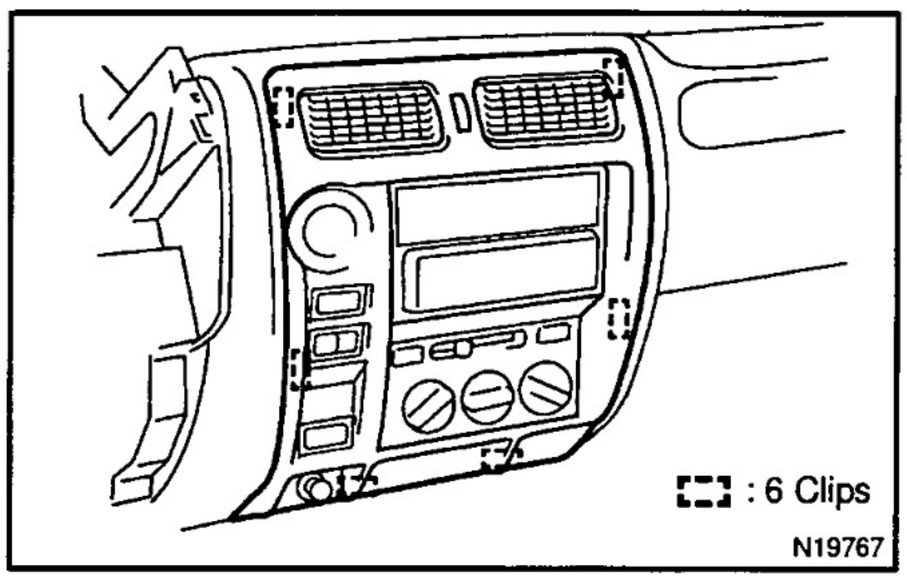

21. REMOVE NO. 1 CENTER CLUSTER FINISH PANEL

Remove the panel, then disconnect the connector.

22. REMOVE RADIO ASSEMBLY

23. Manual A/C:
REMOVE HEATER CONTROL ASSEMBLY
(See Pub. No. RM517E on page AC–80)

24. Auto A/C:
REMOVE HEATER CONTROL ASSEMBLY
(See page AC–30)

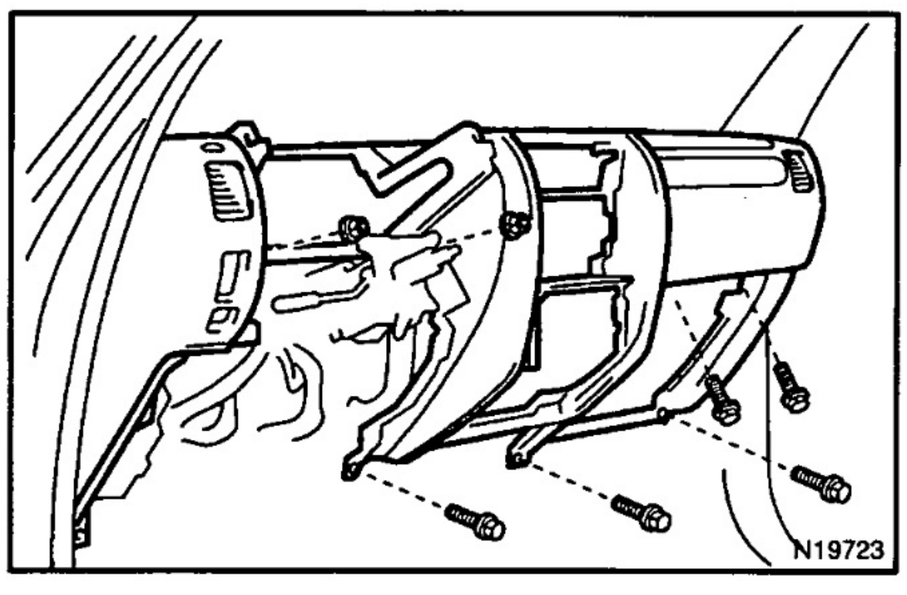

25. REMOVE INSTRUMENT PANEL

(a) Remove the 5 bolts and 2 nuts.

(b) Remove the instrument panel.

Torque: Passenger airbag assembly bolts
18 N·m (184 kgf·cm, 13 ft·lbf)

26. REMOVE INSTRUMENT PANEL REINFORCEMENT

(a) Remove the 2 bolts, nut and floor brace.

(b) Remove the bolt, nut and No. 2 brace.

(c) Remove the screw and No. 3 heater to register duct.

(d) Remove the 2 bolts, 4 nuts and reinforcement.

DISASSEMBLY

1. REMOVE NO. 5 HEATER TO REGISTER DUCT
2. REMOVE LH AND RH REGISTER
3. REMOVE CENTER BRACKET
4. w/o Front passenger airbag assembly:
   REMOVE NO. 3 STAY
5. w/o Front passenger airbag assembly:
   REMOVE NO. 4 STAY
6. w/o Front passenger airbag assembly:
   REMOVE HOLE COVER
7. w/ Front passenger airbag assembly:
   REMOVE FRONT PASSENGER AIRBAG ASSEMBLY
   (See Pub. No. RM627E on page RS–26)

BO1TC–04

REASSEMBLY

Reassembly is in the reverse order of disassembly (See page BO–19).

BO1TD–02

INSTALLATION

Installation is in the reverse order of removal (See page BO–17).

REAR NO.1 SEAT (Split Type)

COMPONENTS

BO2KY–01

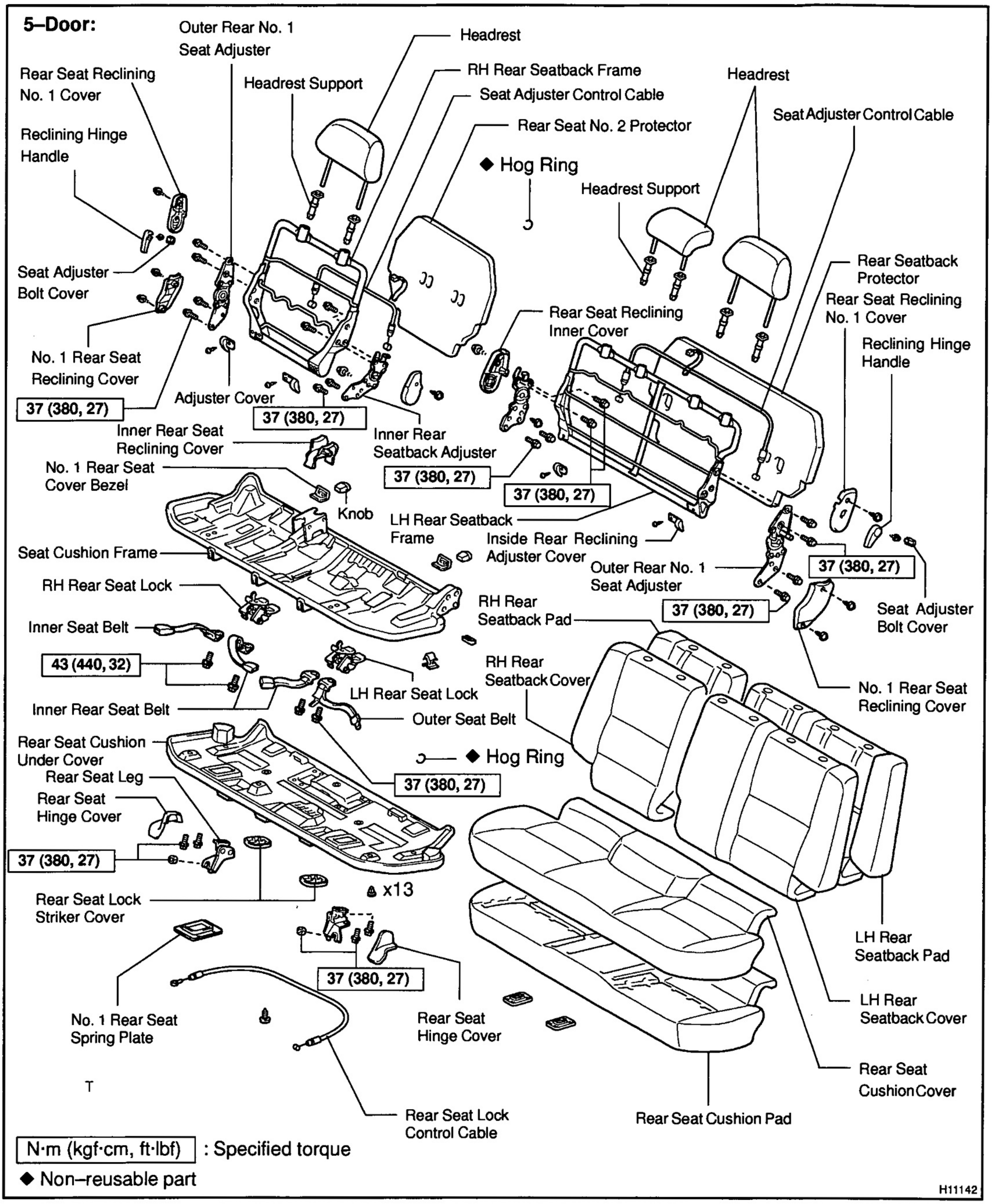

3–Door:

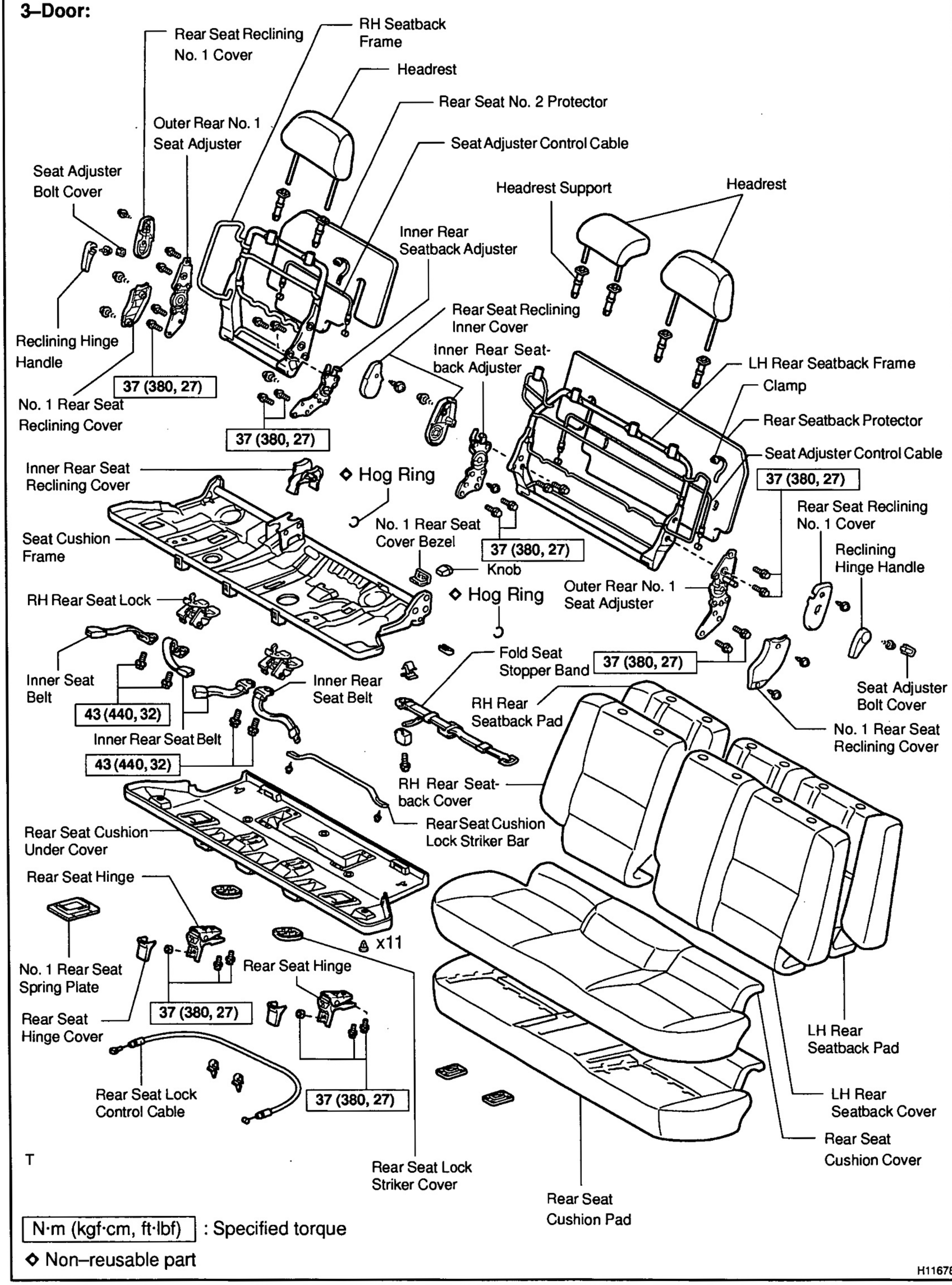

N·m (kgf·cm, ft·lbf) : Specified torque

◇ Non–reusable part

H11678

BO2KZ-01

REMOVAL

REMOVE REAR NO. 1 SEAT

(a) Fold the seatback down.

(b) Unlock the seat lock, and swing up the whole seat and forward.

(c) Using a screwdriver, remove the rear seat hinge cover.

HINT:

Tape the screwdriver tip before use.

(d) Remove the 2 nuts, bolts and rear No. 1 seat.

Torque: 37 N·m (380 kgf·cm, 27 ft·lbf)

BO2L0-01

DISASSEMBLY

1. REMOVE REAR SEAT LEGS

(a) Remove the 3 bolts and connecting rod from the rear seat leg.
Torque: 18 N·m (185 kgf·cm, 13 ft·lbf)

(b) Remove the 4 bolts and rear seat legs.
Torque: 37 N·m (380 kgf·cm, 27 ft·lbf)

2. REMOVE REAR SEAT CUSHION UNDER COVER

(a) Remove the rear seat lock handle knob.

(b) Remove the No. 1 rear seat cover bezel.

(c) Employ the same manner described above to the other side.

(d) Remove the screw, cushion and fold seat stopper band.

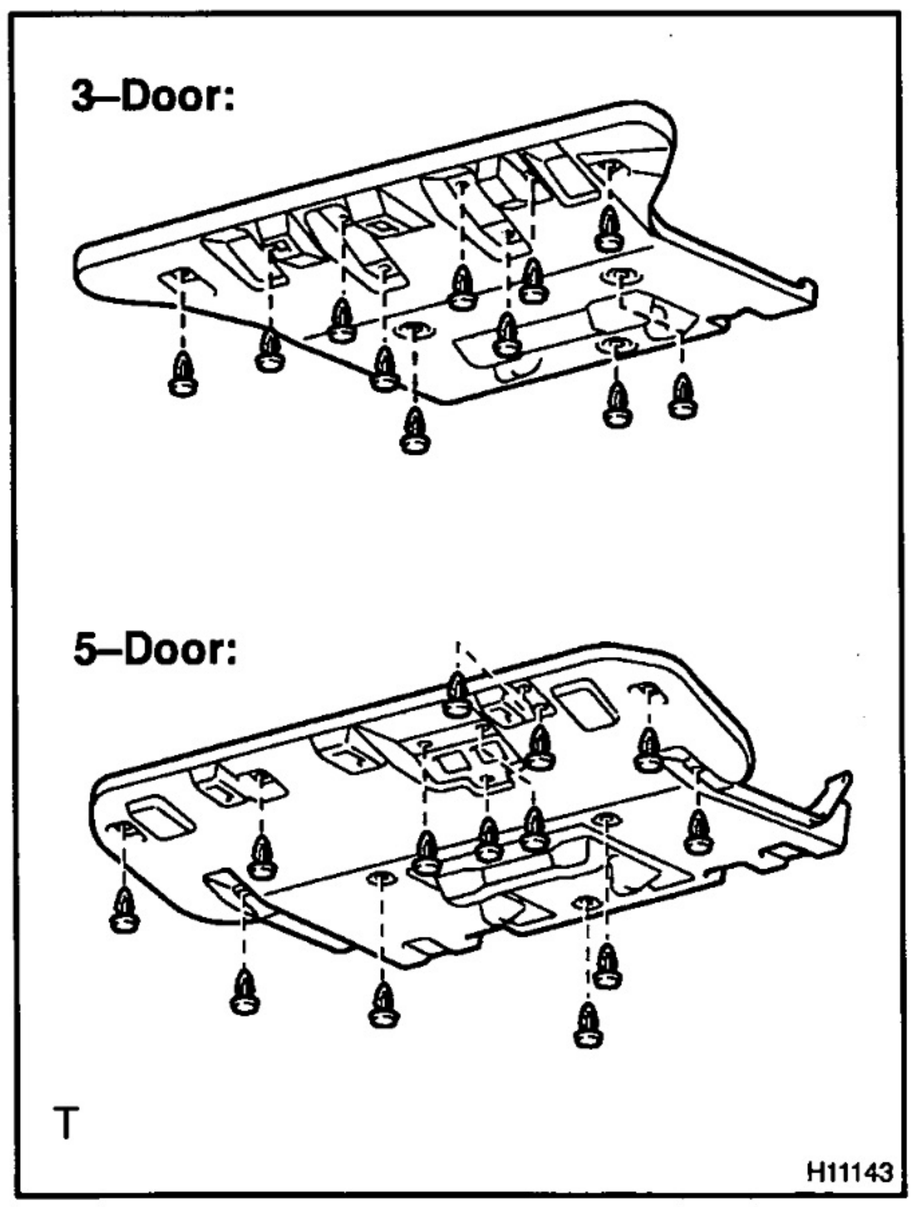

(e) 3–Door:
Remove the 11 clips and rear seat cushion under cover.

(f) 5–Door:
Remove the 13 clips and rear seat cushion under cover.

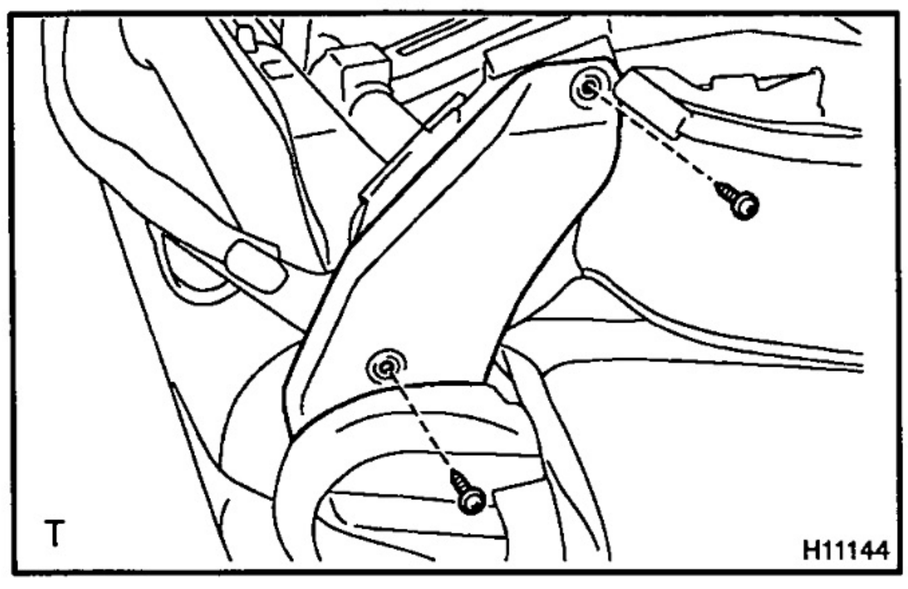

3. REMOVE NO. 1 REAR SEAT RECLINING COVER

(a) Remove the 2 screws and No. 1 rear seat reclining cover.

(b) Employ the same manner described above to the other side.

4. REMOVE REAR SEAT RECLINING INNER COVERS

(a) Unzip the fastener.

(b) Remove the 2 screws and rear seat reclining inner covers.

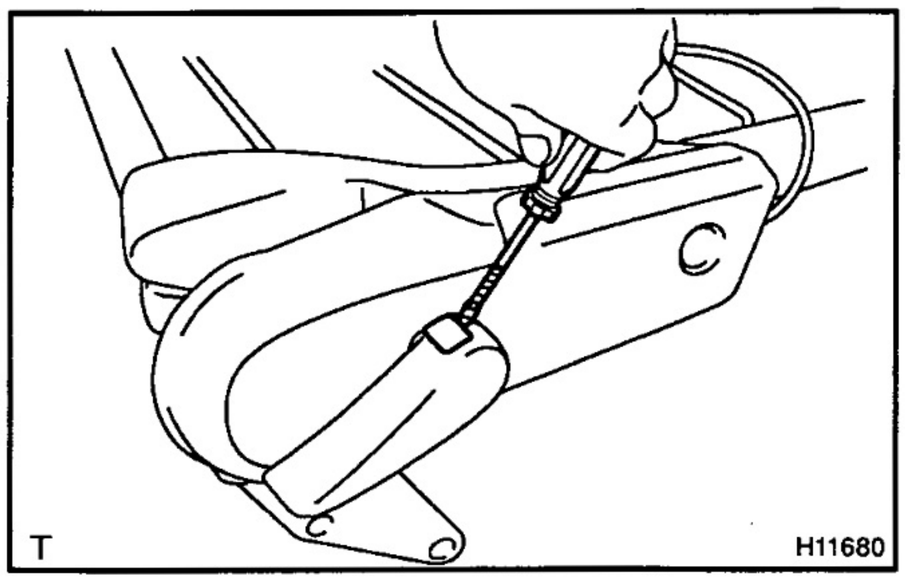

5. REMOVE RH REAR SEAT RECLINING NO. 1 COVER

(a) Using a screwdriver, remove the seat adjuster bolt cover.

HINT:

Tape the screwdriver tip before use.

(b) Remove the screw and reclining hinge handle.

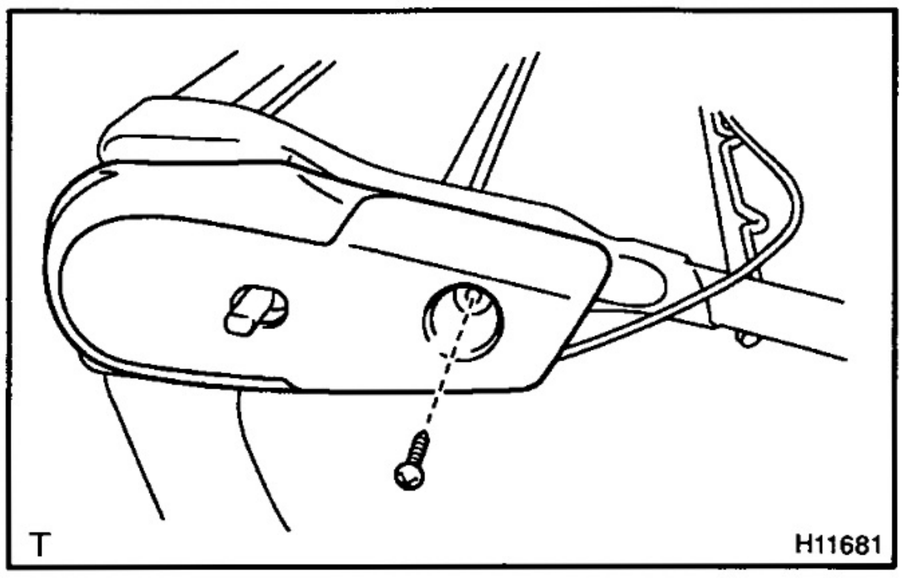

(c) Remove the screw and RH rear seat reclining No. 1 cover.

6. REMOVE REAR SEAT NO. 2 PROTECTOR

(a) Remove the hog rings.

(b) Remove the rear seat No. 2 protector.

HINT:

At the time of reassembly, please refer to the following item.

When installing hog rings, take care to prevent wrinkles as little as possible.

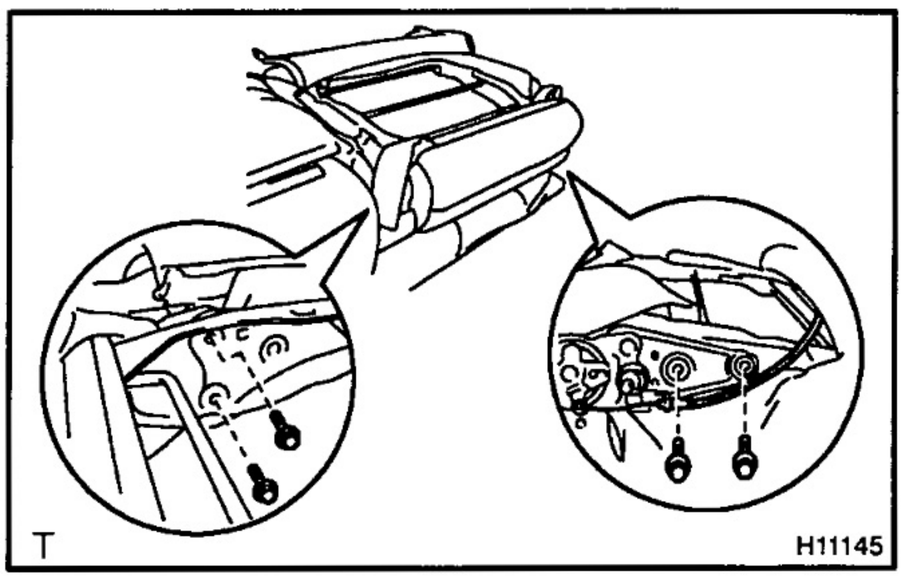

7. REMOVE RH REAR SEATBACK ASSEMBLY

(a) Remove the seat adjuster control cable.

(b) Remove the 4 bolts and RH rear seatback assembly.

Torque: 37 N·m (380 kgf·cm, 27 ft·lbf)

8. REMOVE RH REAR SEATBACK FRAME

(a) Remove the headrest and headrest support.

(b) Remove the RH rear seatback frame from the seatback pad with cover.

(c) Remove the inside rear reclining adjuster covers.

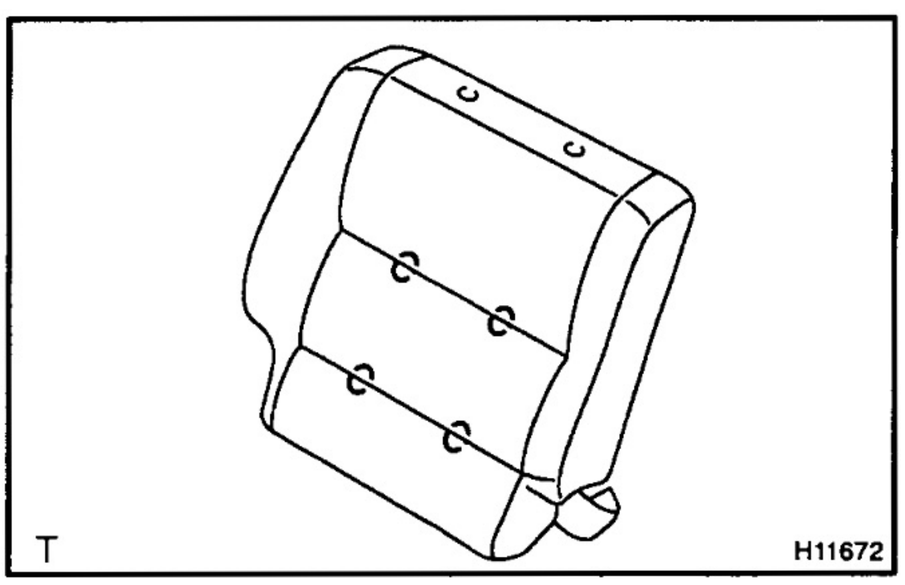

9. REMOVE RH SEATBACK COVER

Remove the 4 hog rings and seatback cover from the pad.

HINT:

At the time of reassembly, please refer to the following item.

When installing hog rings, take care to prevent wrinkles as little as possible.

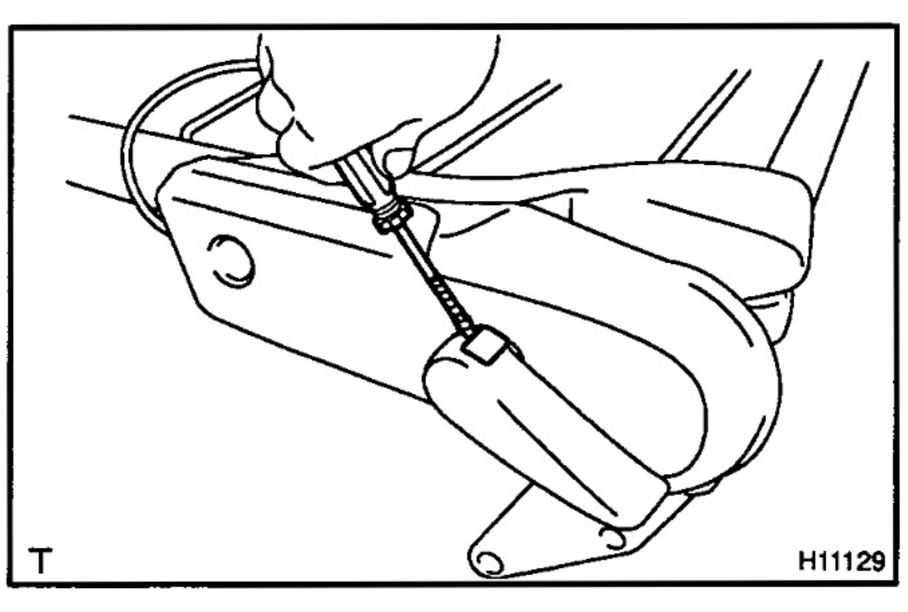

10. REMOVE LH REAR SEAT RECLINING NO. 1 COVER

(a) Using a screwdriver, remove the seat adjuster bolt cover.

HINT:

Tape the screwdriver tip before use.

(b) Remove the screw and reclining hinge handle.

(c) Remove the screw and LH rear seat reclining No. 1 cover.

11. REMOVE REAR SEATBACK PROTECTOR

(a) Disengage the hook.

(b) Remove the hog rings.

(c) Remove the rear seatback protector.

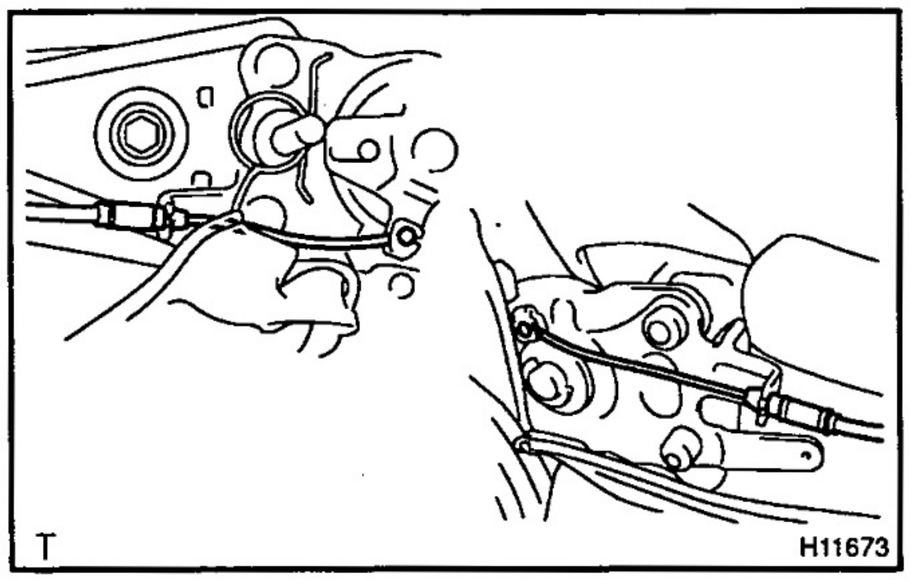

12. REMOVE LH REAR SEATBACK ASSEMBLY

(a) Remove the seat adjuster control cable.

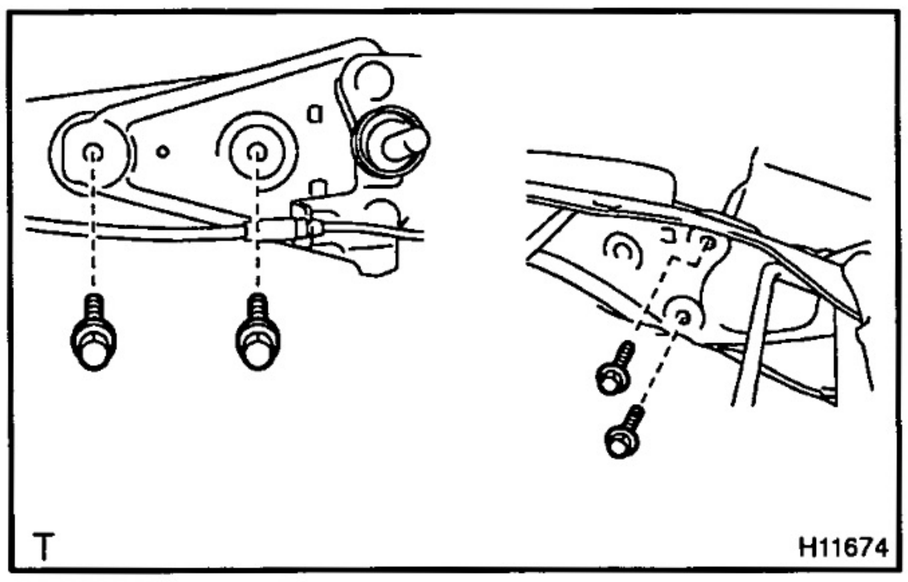

(b) Remove the 4 bolts and LH rear seatback assembly.
Torque: 37 N·m (380 kgf·cm, 27 ft·lbf)

13. REMOVE LH SEATBACK FRAME

(a) Remove the 2 headrests and 4 headrest supports.

(b) Remove the LH seatback frame from the seatback pad with cover.

(c) Remove the inside rear reclining adjuster covers.

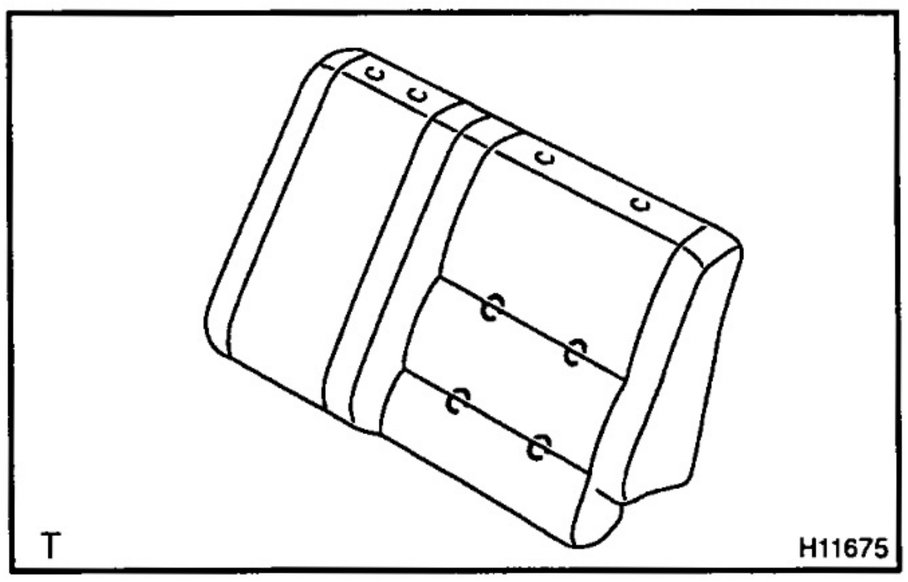

14. REMOVE LH SEATBACK COVER

Remove the 4 hog rings and seatback cover from the pad.

HINT:

At the time of reassembly, please refer to the following item.

When installing hog rings, take care to prevent wrinkles as little as possible.

15. REMOVE REAR 2 SEAT LOCK CONTROL CABLES

16. REMOVE REAR SEAT LOCKS

(a) Remove the 4 bolts and seat belts.
Torque: 43 N·m (440 kgf·cm, 32 ft·lbf)

(b) Remove the rear seat locks from the seat cushion frame.

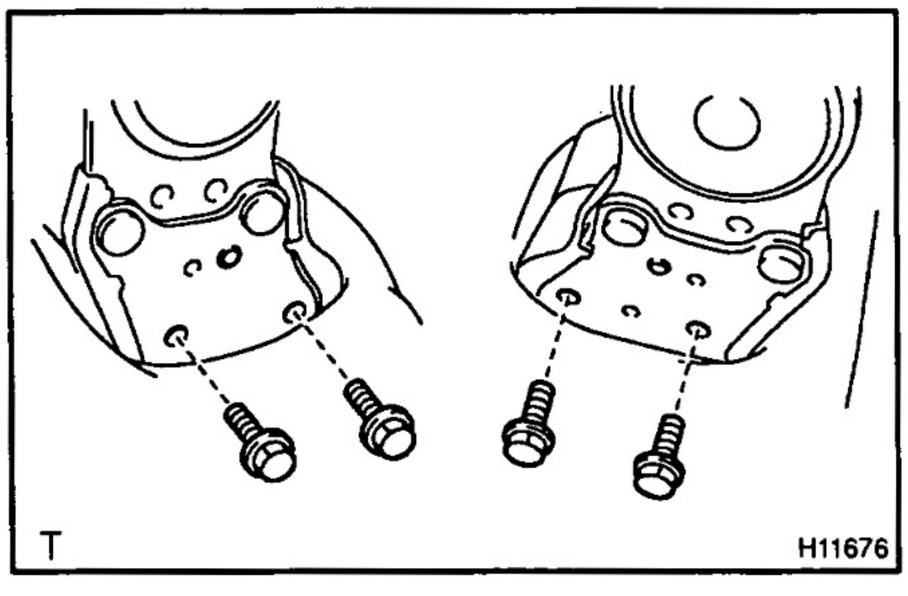

17. REMOVE INNER REAR SEATBACK ADJUSTERS WITH INNER REAR SEAT RECLINING COVER

(a) Remove the 4 bolts and inner rear seatback adjusters with inner rear seat reclining cover.
Torque: 37 N·m (380 kgf·cm, 27 ft·lbf)

(b) Remove the inner rear seatback adjusters.

18. REMOVE OUTER REAR NO. 1 SEAT ADJUSTERS

Remove the 4 bolts and outer rear No. 1 seat adjuster.
Torque: 37 N·m (380 kgf·cm, 27 ft·lbf)

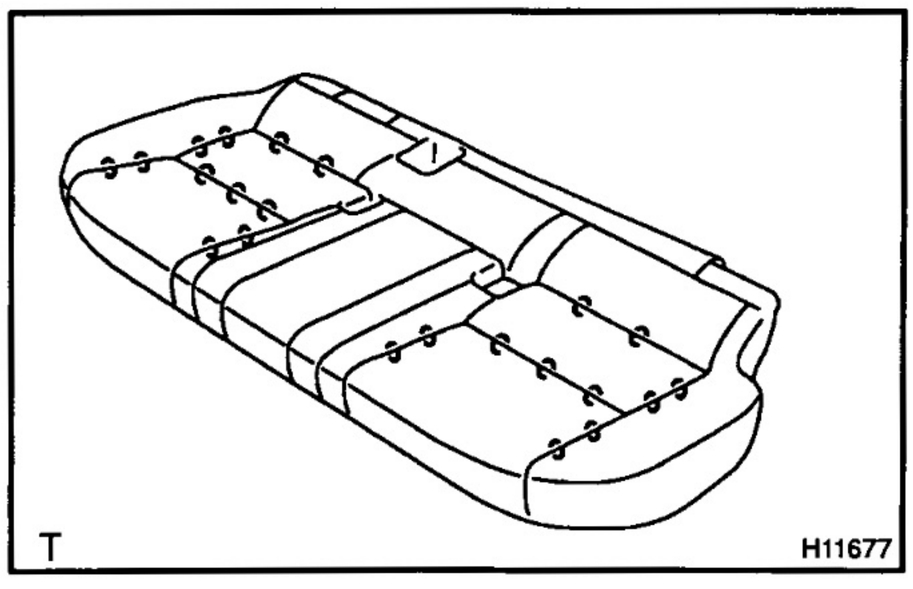

19. REMOVE REAR SEAT CUSHION COVER

(a) Remove the seat cushion frame from the seat cushion pad with cover.

(b) Remove the hog rings and rear seat cushion cover from pad.

HINT:

At the time of reassembly, please refer to the following item.

When installing hog rings, take care to prevent wrinkles as little as possible.

BO2L1-01

REASSEMBLY

Reassembly is in the reverse order of disassembly (See page BO–25).

BO2L2-01

INSTALLATION

Installation is in the reverse order of removal (See page BO–24).

REAR NO.1 SEAT (Split Type: Single Side)

COMPONENTS

BOZL3-01

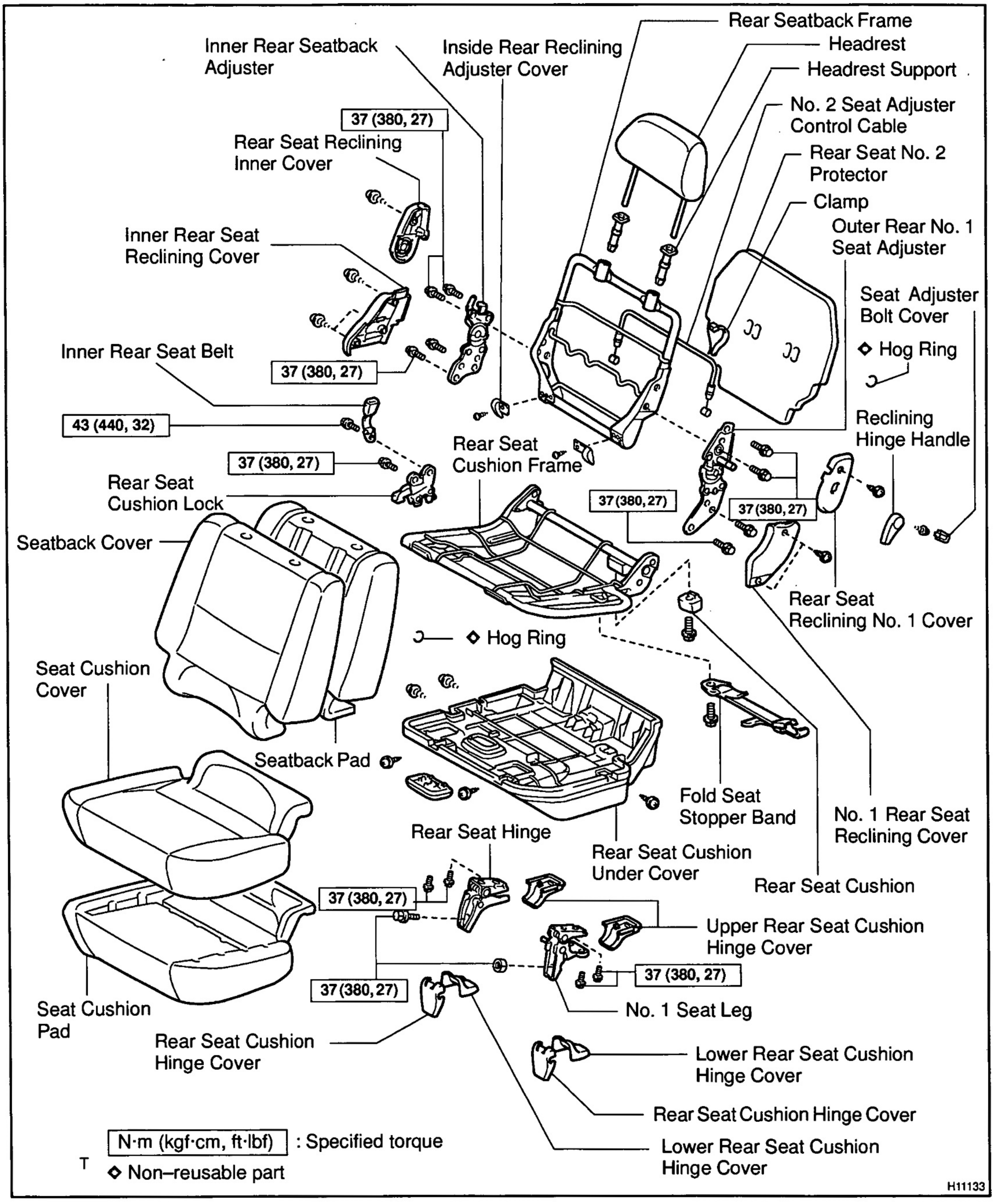

BO2L4-01

REMOVAL

REMOVE REAR NO. 1 SEAT

(a) Fold the seatback down.

(b) Unlock the seat lock, and swing up the whole seat and forward.

(c) Using a screwdriver, remove the No. 2 cover and lower rear seat cushion hinge cover.

HINT:

Tape the screwdriver tip before use.

(d) Remove the bolts, nut and rear No. 1 seat.

Torque: 37 N·m (380 kgf·cm, 27 ft·lbf)

BO2L5-01

DISASSEMBLY

1. REMOVE REAR SEAT CUSHION UNDER COVER

(a) Remove the 2 upper rear seat cushion hinge covers.
(b) Remove the 2 bolts and rear seat hinge.
(c) Remove the 2 bolts and No. 1 seat leg.
(d) Disengage the hook.

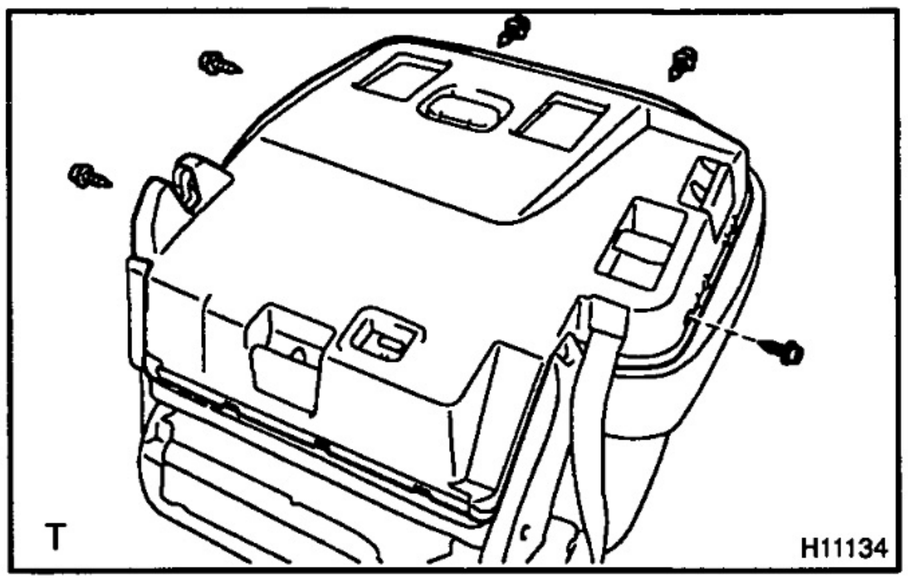

(e) Remove the 5 screws and pull the rear seat cushion under cover upward to remove it.

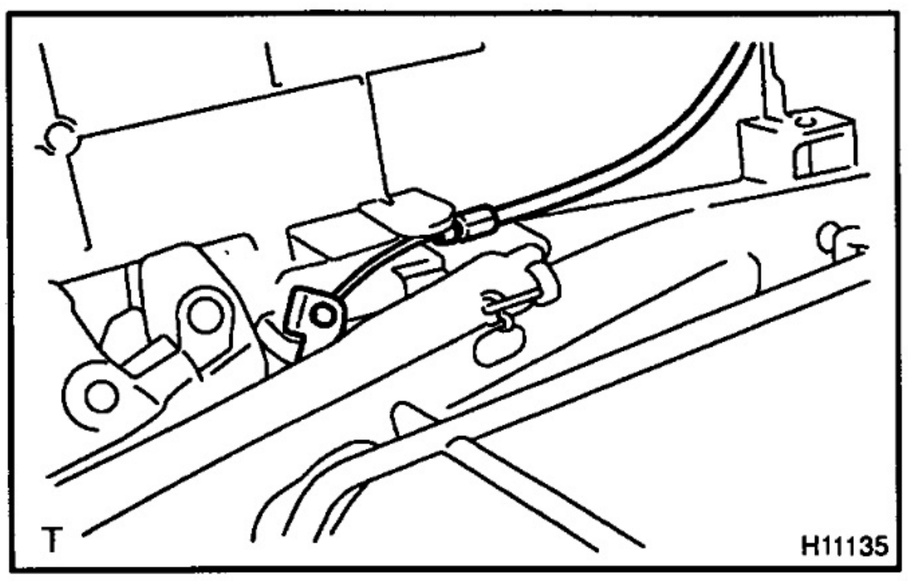

(f) Disconnect the control cable from the rear seat cushion lock.
(g) Disconnect the rear seat cushion under cover from the control cable.
(h) Remove the rear seat lock striker cover.

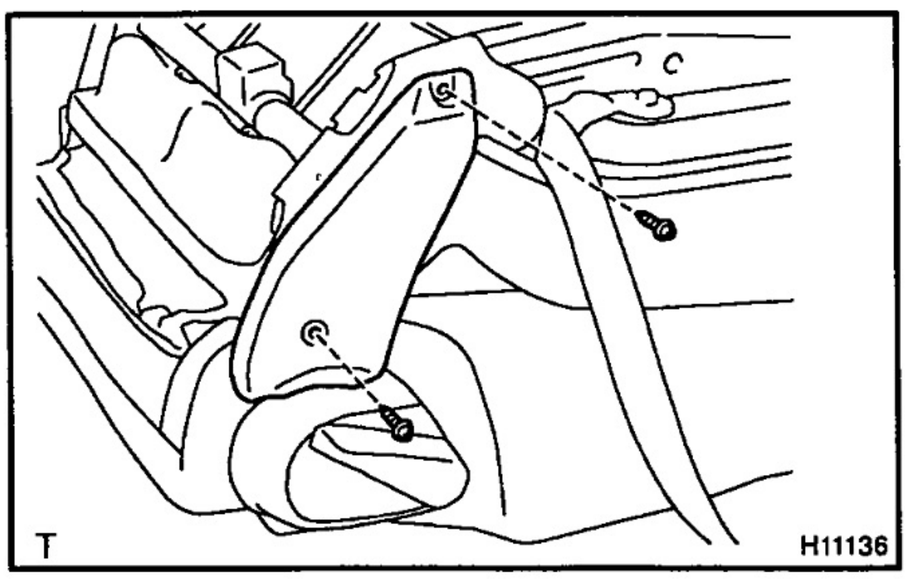

2. REMOVE NO. 1 REAR SEAT RECLINING COVER

Remove the 2 screws and No. 1 rear seat reclining cover.

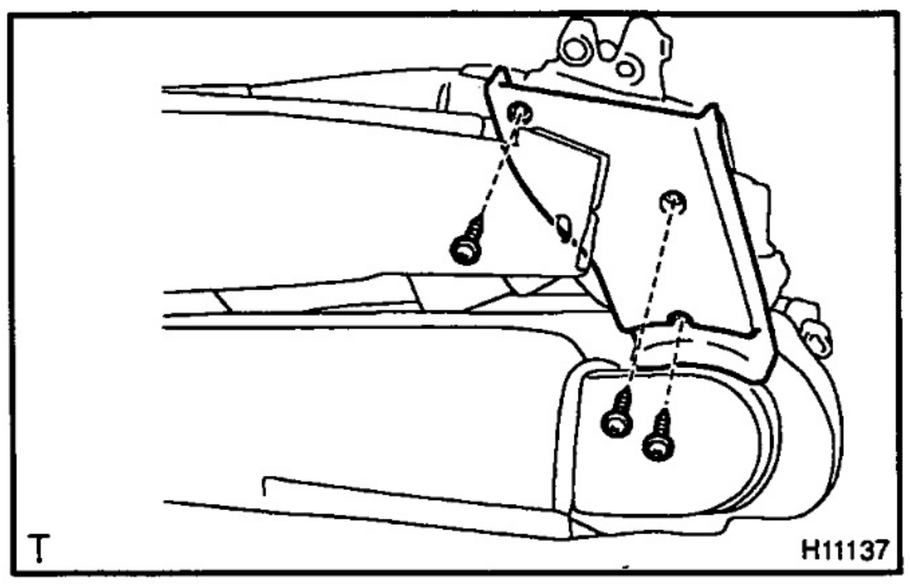

3. REMOVE INNER REAR SEAT RECLINING COVER

Remove the 3 screws and inner rear seat reclining cover.

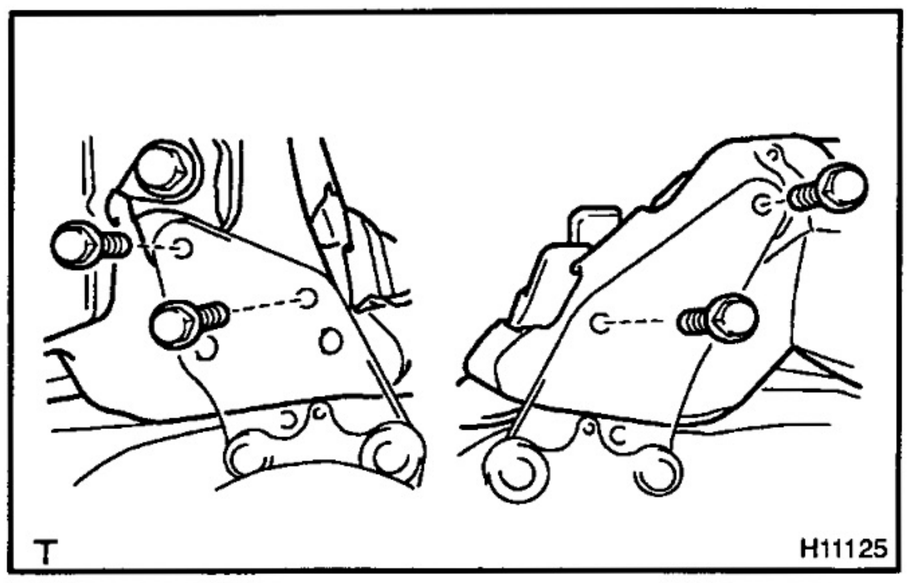

4. REMOVE SEAT CUSHION ASSEMBLY

Remove the 4 bolts and seat cushion assembly.

Torque: 37 N·m (380 kgf·cm, 27 ft·lbf)

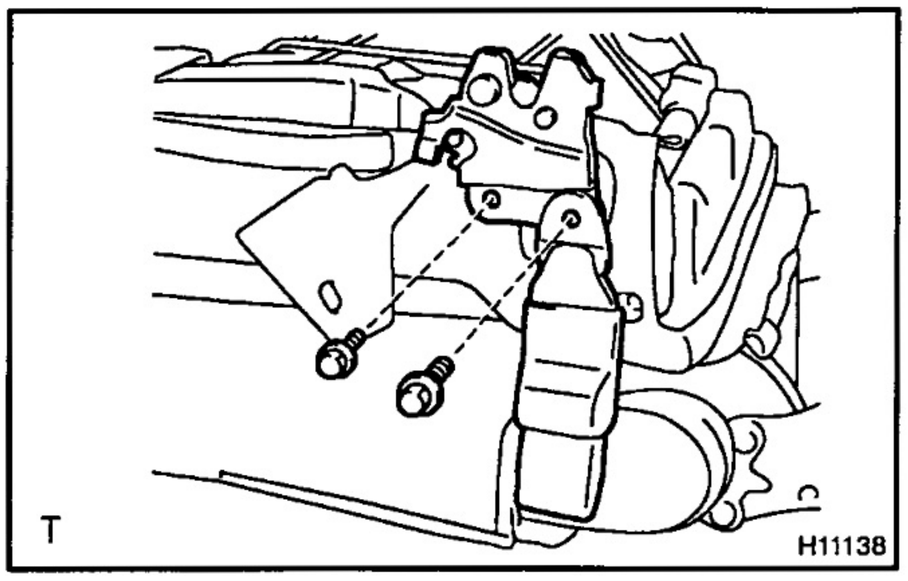

5. REMOVE REAR SEAT CUSHION LOCK

(a) Remove the bolt and inner rear seat belt.

Torque: 43 N·m (440 kgf·cm, 32 ft·lbf)

(b) Remove the bolt and rear seat cushion lock.

Torque: 37 N·m (380 kgf·cm, 27 ft·lbf)

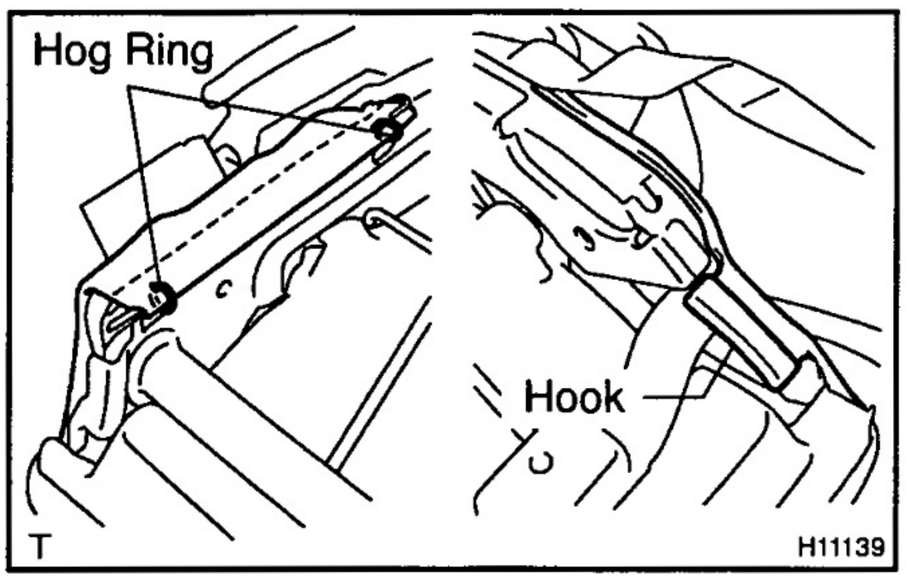

6. REMOVE REAR SEAT CUSHION FRAME

(a) Remove the 2 hog rings and disengage the hook.

(b) Remove the rear seat cushion frame from the seat cushion pad with cover.

HINT:

At the time of reassembly, please refer to the following item.

When installing hog rings, take care to prevent wrinkles as little as possible.

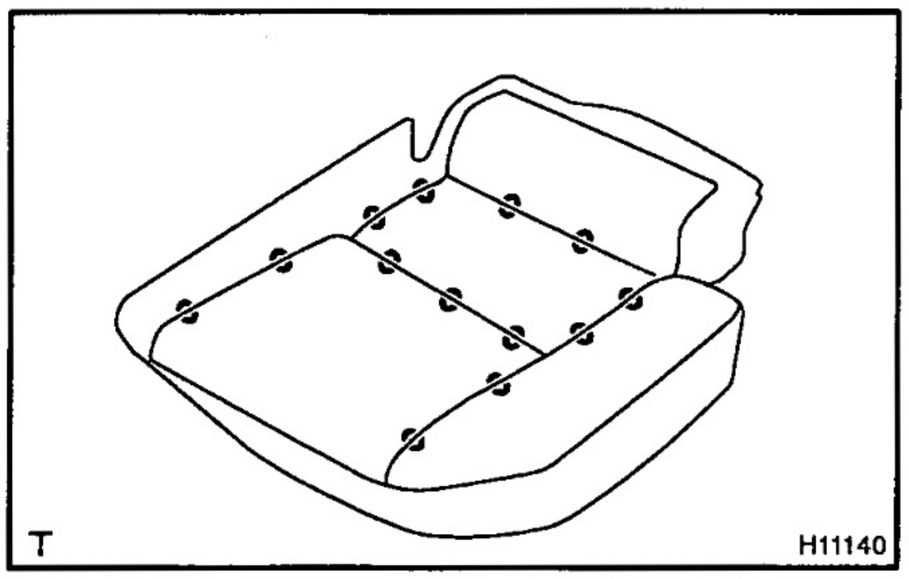

7. REMOVE SEAT CUSHION COVER

Remove the 13 hog rings and seat cushion cover from pad.

8. REMOVE FOLD SEAT STOPPER BAND

Remove the screw and fold seat stopper band.

9. REMOVE REAR SEATBACK PROTECTOR

(a) Disengage the hook.

(b) Remove the 5 hog rings.

HINT:

At the time of reassembly, please refer to the following item.

When installing hog rings, take care to prevent wrinkles as little as possible.

(c) Remove the rear seatback protector.

10. REMOVE REAR SEATBACK FRAME

(a) Remove the headrest and 2 headrest supports.

(b) Remove the rear seatback frame from the seatback pad with cover.

(c) Remove the inside rear reclining adjuster covers.

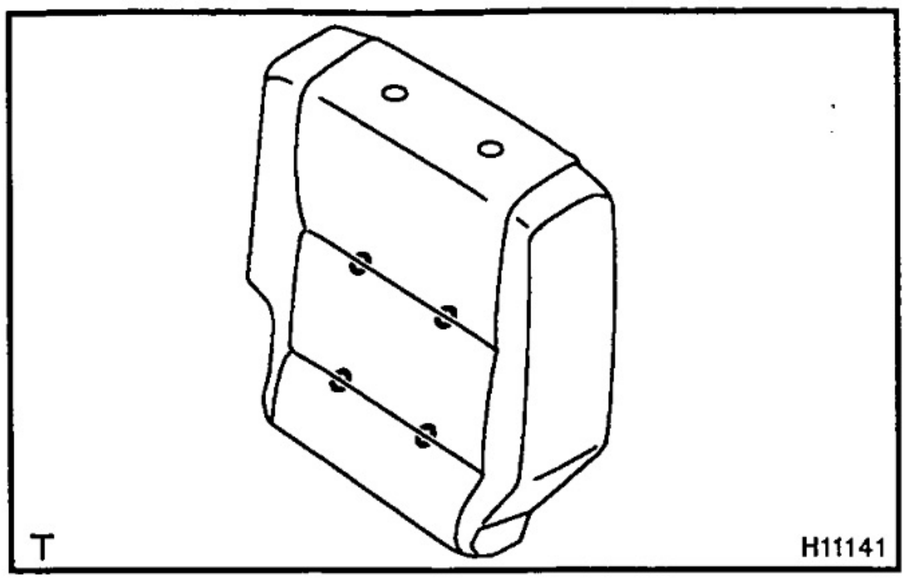

11. REMOVE SEATBACK COVER

Remove the 4 hog rings and seatback cover from the seatback pad.

HINT:

At the time of reassembly, please refer to the following item.

When installing hog rings, take care to prevent wrinkles as little as possible.

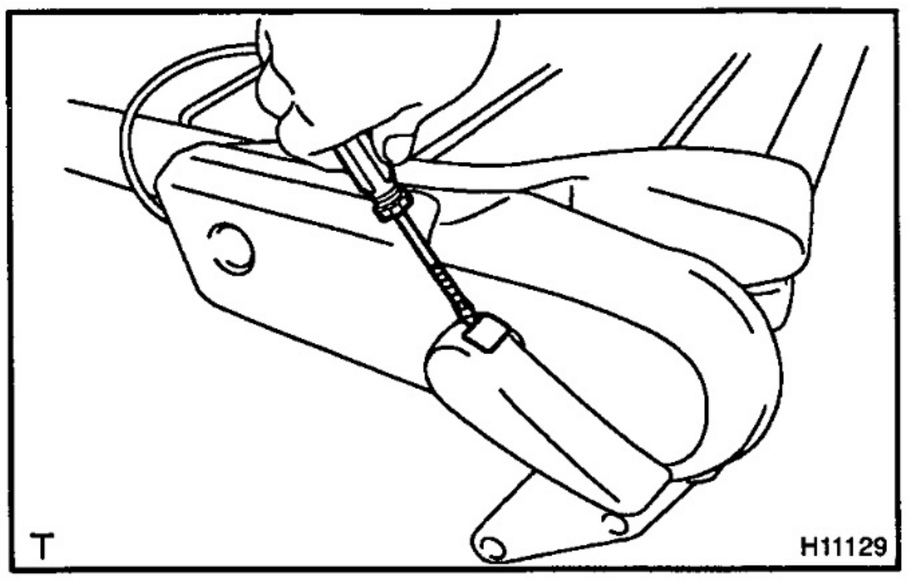

12. REMOVE REAR SEAT RECLINING NO. 1 COVER

(a) Using a screwdriver, remove the seat adjuster bolt cover.

HINT:

Tape the screwdriver tip before use.

(b) Remove the screw and reclining hinge handle.

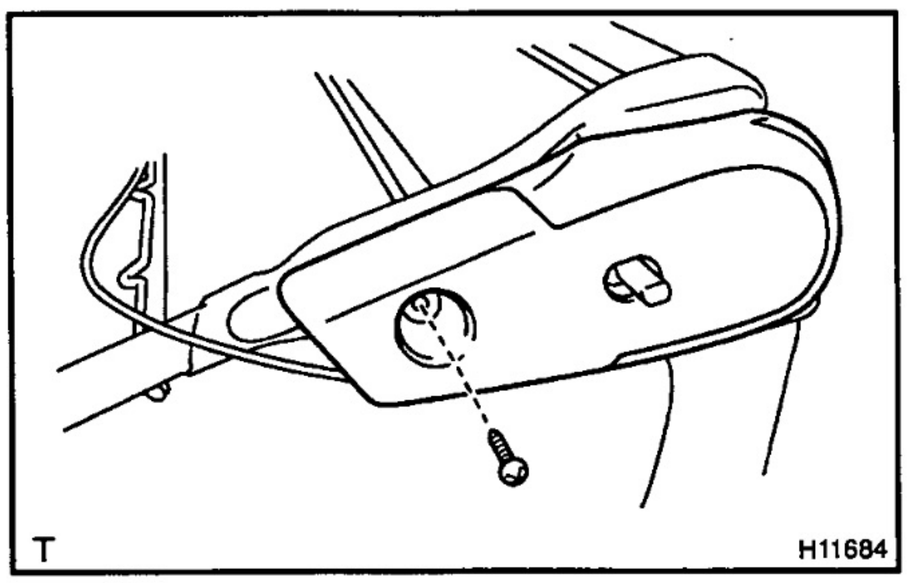

(c) Remove the screw and rear seat reclining No. 1 cover.

13. REMOVE RECLINING INNER COVER

Remove the screw and reclining inner cover.

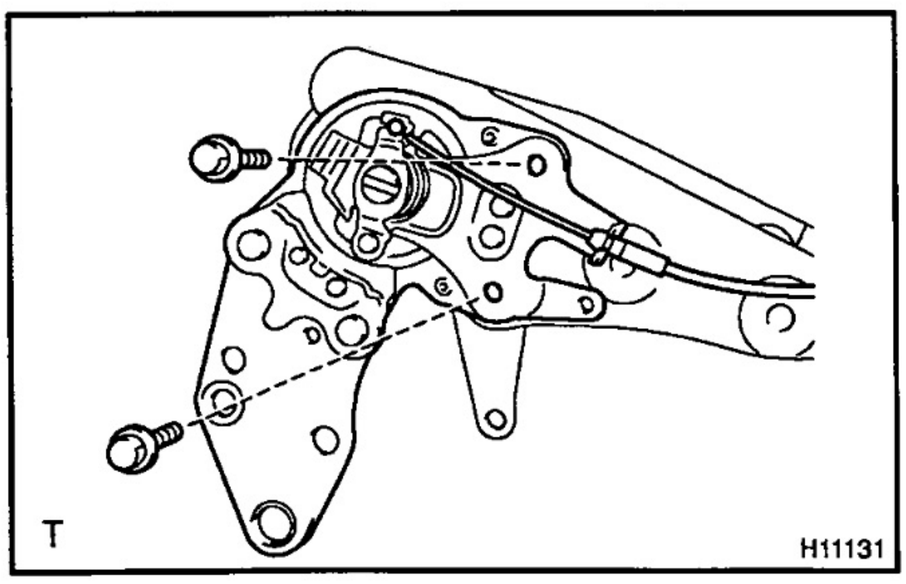

14. REMOVE INNER REAR SEATBACK ADJUSTER

(a) Remove the 2 clamps.

(b) Remove the clamp and No. 2 seat adjuster control cable.

(c) Remove the 2 bolts and inner rear seatback adjustor.

Torque: 37 N·m (380 kgf·cm, 27 ft·lbf)

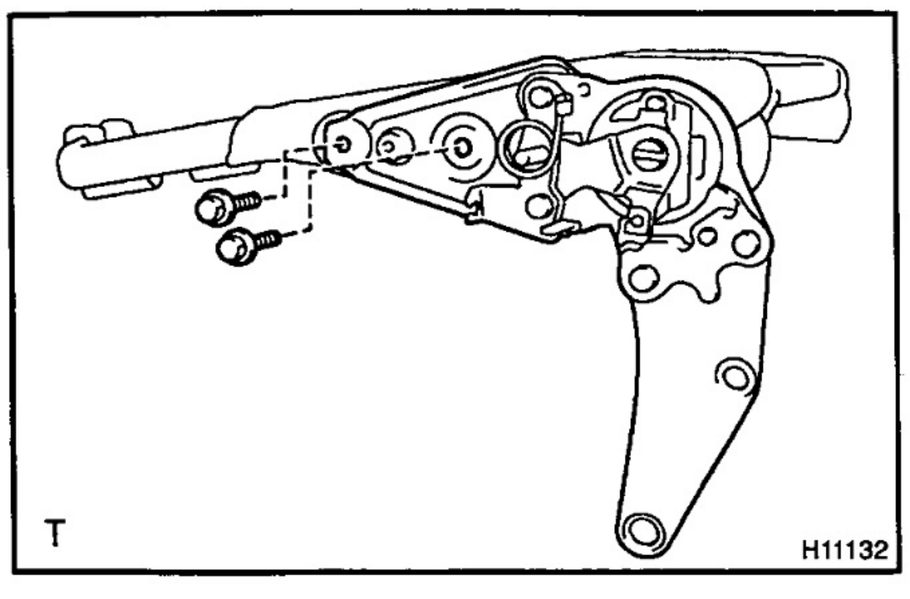

15. REMOVE OUTER REAR NO. 1 SEAT ADJUSTER

Remove the 2 bolts and outer rear No. 1 seat adjuster.

Torque: 37 N·m (380 kgf·cm, 27 ft·lbf)

BO2L6–01

REASSEMBLY

Reassembly is in the reverse order of disassembly (See page BO–33).

BO2L7-01

INSTALLATION

Installation is in the reverse order of removal (See page BO–32).

REAR NO.1 SEAT (Split Type: Double Side)

COMPONENTS

BO2LS-01

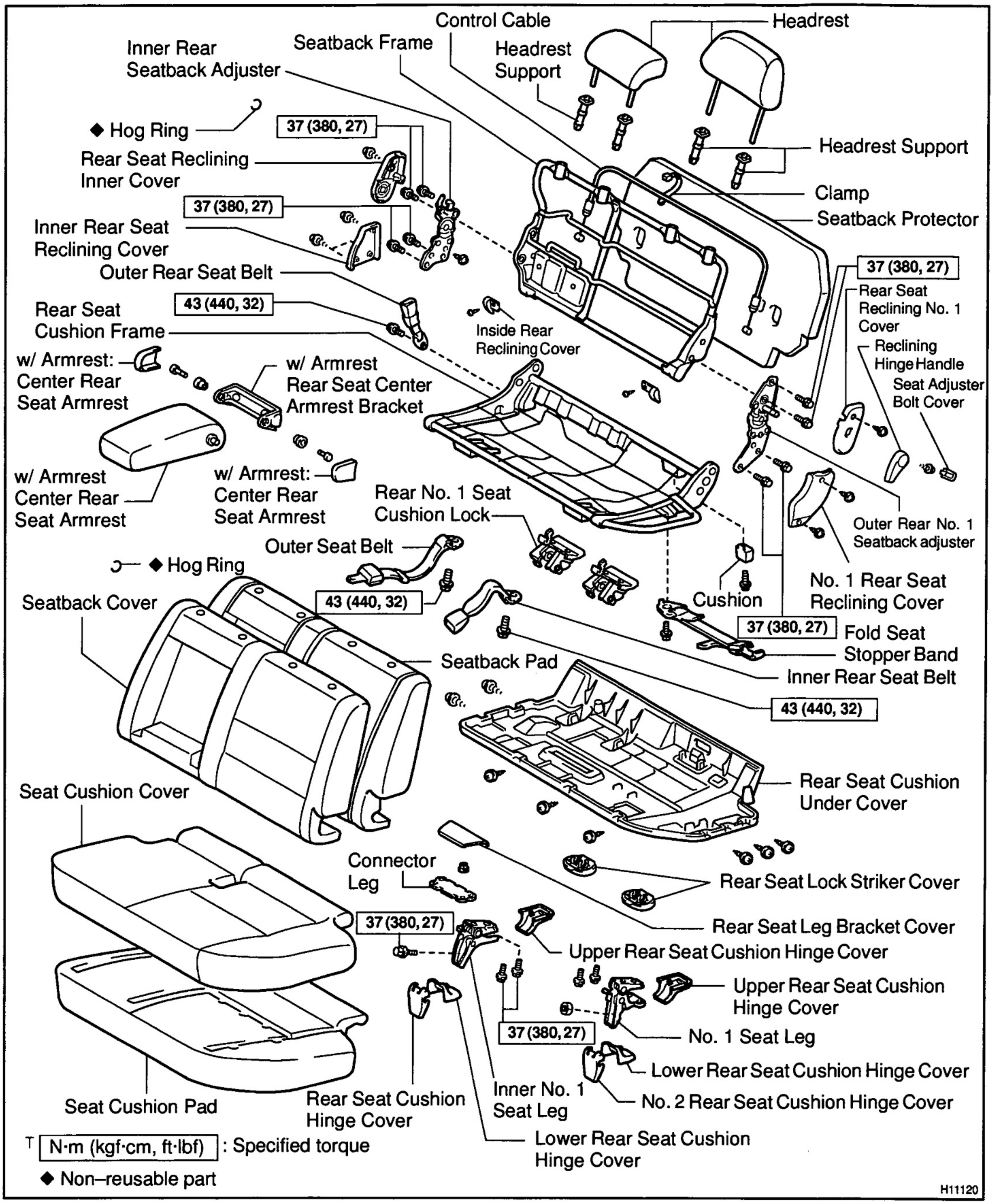

BO2L9-01

REMOVAL

REMOVE REAR NO. 1 SEAT

(a) Fold the seatback down.

(b) Unlock the seat lock, and swing up the whole seat forward.

(c) Using a screwdriver, remove the seat leg covers.

HINT:

Tape the screwdriver tip before use.

(d) Remove the 4 bolts, nut and rear No. 1 seat.

Torque: 37 N·m (380 kgf·cm, 27 ft·lbf)

BO2LA-01

DISASSEMBLY

1. REMOVE REAR NO. 1 SEAT LEG

Remove the 2 bolts and No. 1 seat leg.

Torque: 37 N·m (380 kgf·cm, 27 ft·lbf)

2. REMOVE INNER NO. 1 SEAT LEG

Remove the 2 bolts and inner seat leg.

Torque: 37 N·m (380 kgf·cm, 27 ft·lbf)

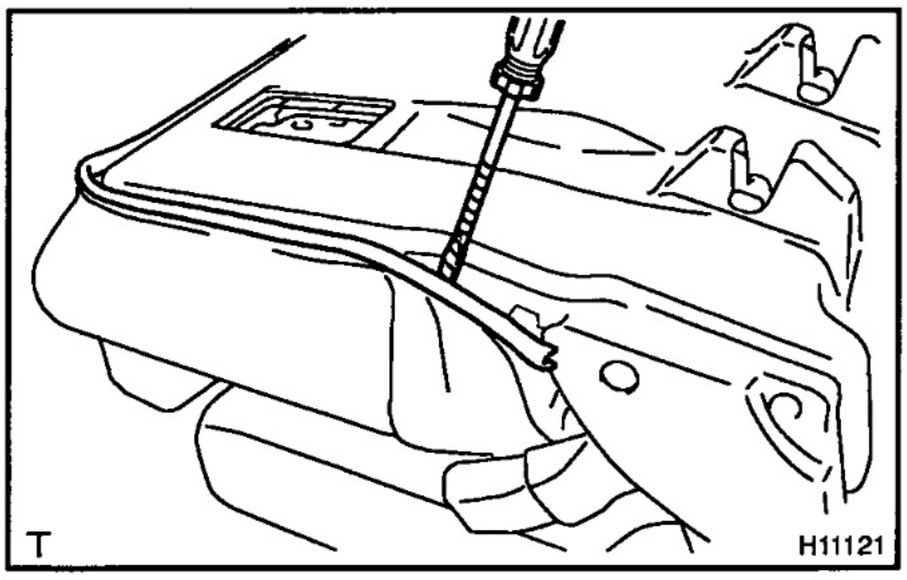

3. REMOVE REAR SEAT CUSHION COVER

(a) Using a screwdriver, disengage the hooks as shown in the illustration.

HINT:

Tape the screwdriver tip before use.

(b) Remove the rear seat lock striker covers.

(c) Remove the screw and cushion.

(d) Remove the 8 screws.

(e) Pull the rear seat cushion cover upward to remove it.

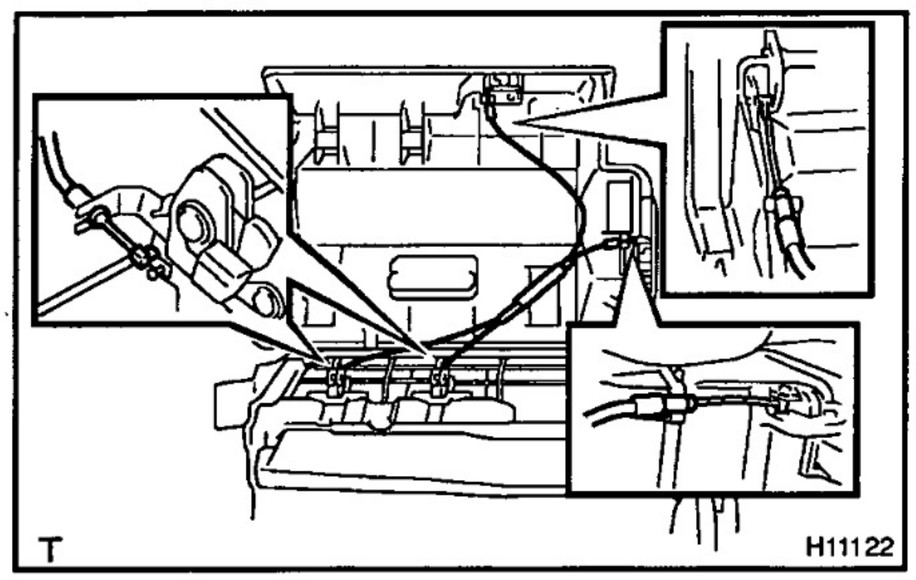

(f) Disconnect the control cables from the rear seat cushion under cover and rear No. 1 seat cushion lock assemblies.

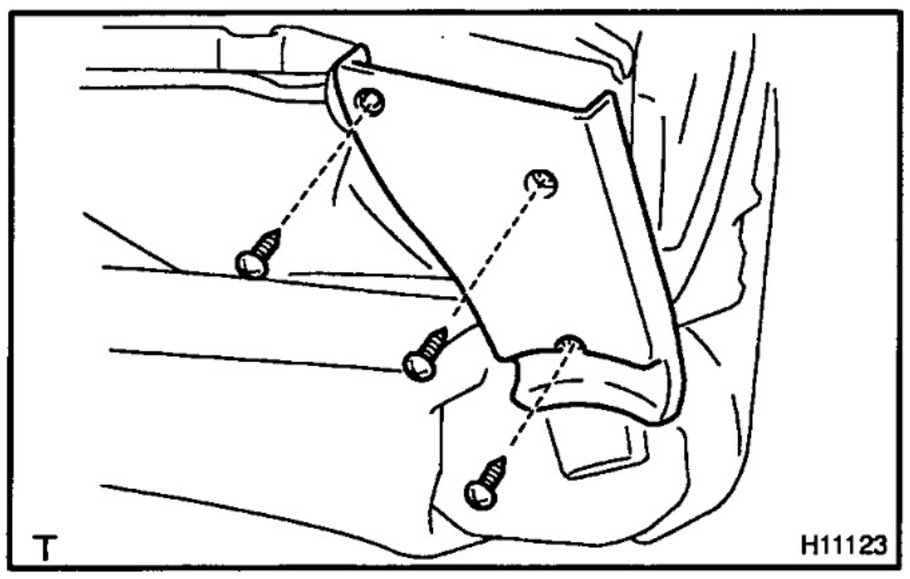

4. REMOVE INNER REAR SEAT RECLINING COVER

Remove the 3 screws and inner rear seat reclining cover.

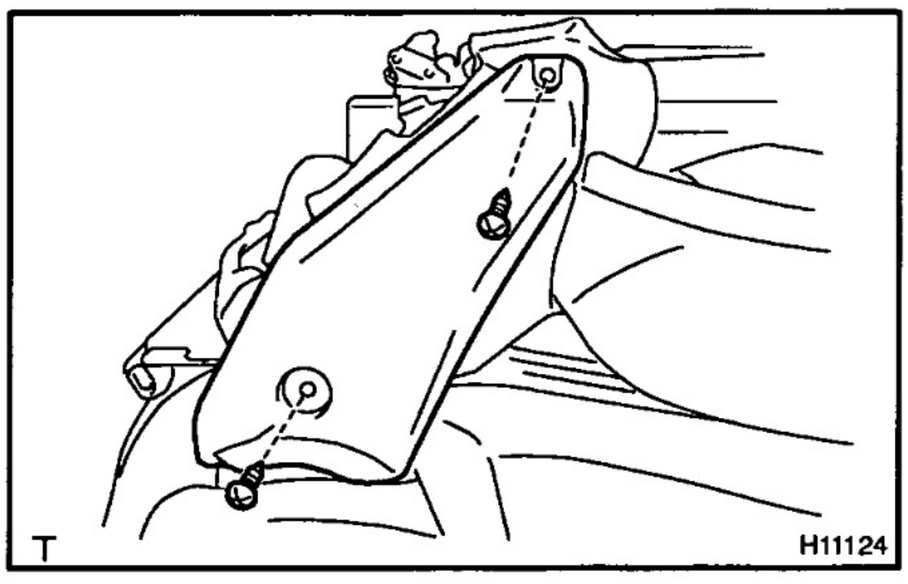

5. REMOVE NO. 1 REAR SEAT RECLINING COVER

Remove the 2 screws and No. 1 rear seat reclining cover.

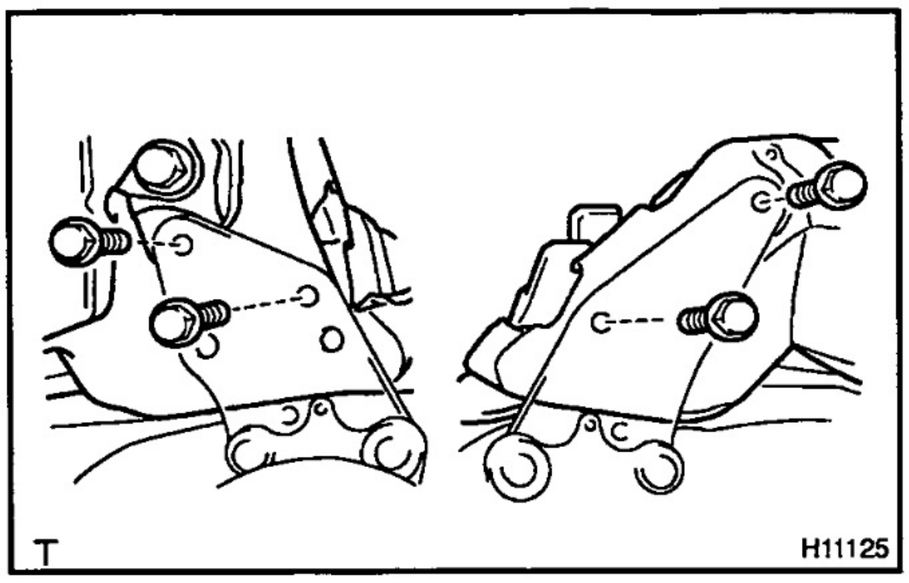

6. REMOVE SEAT CUSHION ASSEMBLY

Remove the 4 bolts and seat cushion assembly.

Torque: 37 N·m (380 kgf·cm, 27 ft·lbf)

7. REMOVE OUTER REAR SEAT BELT

Torque: 43 N·m (440 kgf·cm, 32 ft·lbf)

8. REMOVE REAR SEAT CUSHION FRAME

(a) Remove the 2 bolts, inner and outer seat belts.

Torque: 43 N·m (440 kgf·cm, 32 ft·lbf)

(b) Remove the rear No. 1 seat cushion lock assembly.

(c) Remove the hog rings and seat cushion frame from the seat cushion pad with cover.

HINT:

At the time of reassembly, please refer to the following item.

When installing hog rings, take care to prevent wrinkles as little as possible.

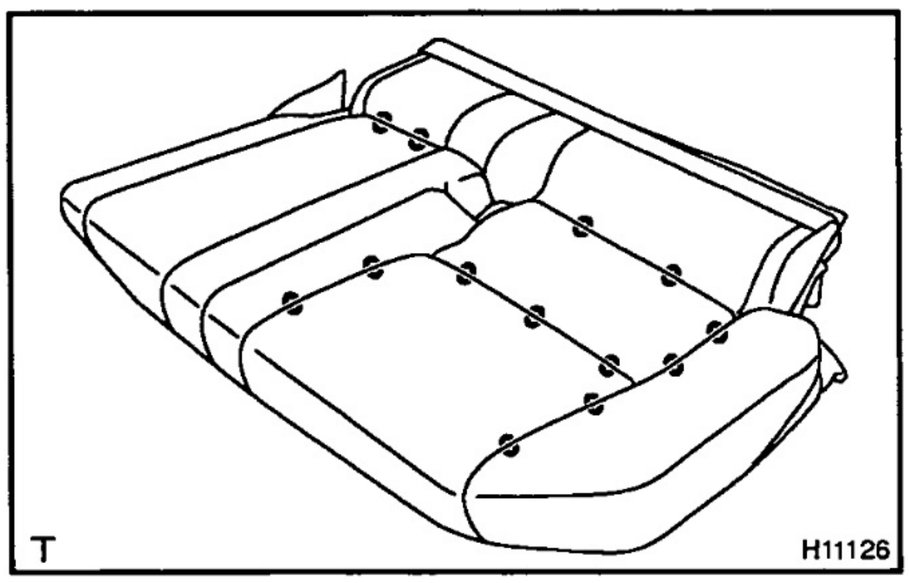

9. REMOVE SEAT CUSHION COVER

Remove the 13 hog rings and seat cushion cover from pad.

10. REMOVE FOLD SEAT STOPPER BAND

11. REMOVE REAR SEATBACK PROTECTOR

(a) Disengage the hook.

(b) Remove the 5 hog rings.

HINT:

At the time of reassembly, please refer to the following item.

When installing hog rings, take care to prevent wrinkles as little as possible.

(c) Remove the rear seatback protector.

12. REMOVE HEADRESTS

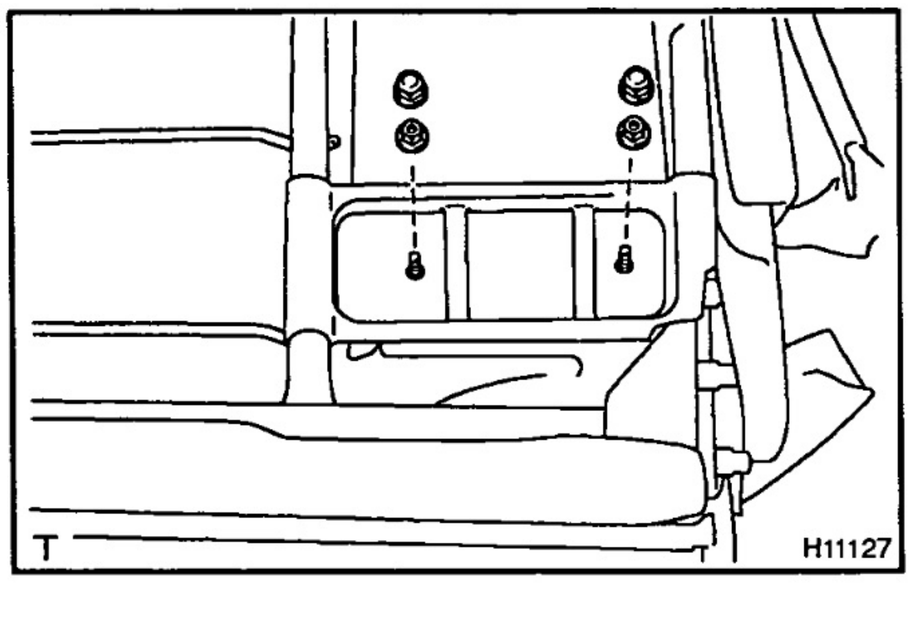

13. w/ Armrest:

REMOVE ARMREST

(a) Remove the 4 nuts and armrest.

(b) Remove the 2 hinge covers.

(c) Remove the 2 bolts and rear seat center armrest bracket.

14. REMOVE SEATBACK PAD WITH COVER

(a) Remove the 4 headrest supports.

(b) Remove the hog rings and seatback pad with cover from the seatback frame.

(c) Remove the inside rear reclining adjuster covers.

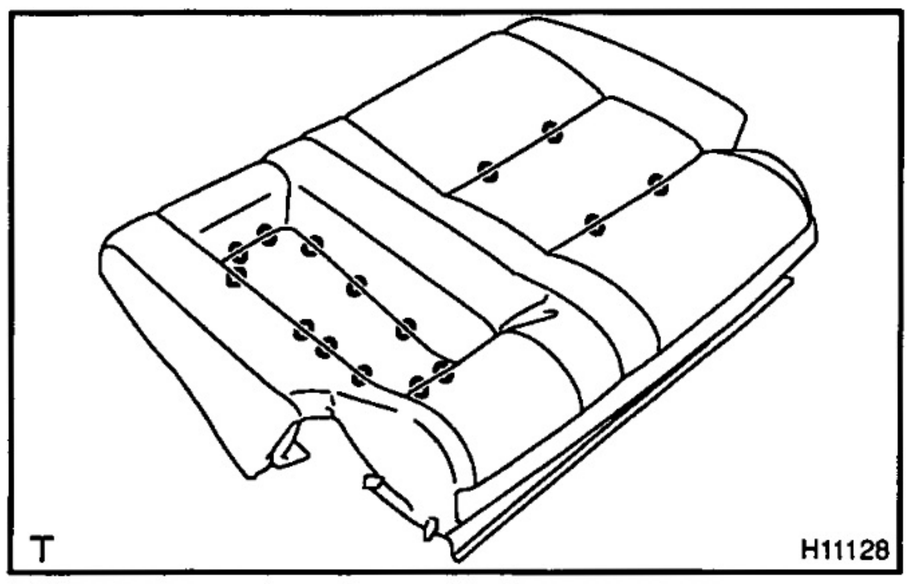

15. REMOVE SEATBACK COVER

Remove the 15 hog rings and seatback cover from the seat cushion pad.

HINT:

At the time of reassembly, please refer to the following item.

When installing hog rings, take care to prevent wrinkles as little as possible.

16. REMOVE REAR SEAT RECLINING INNER COVER

Remove the screw and reclining inner cover.

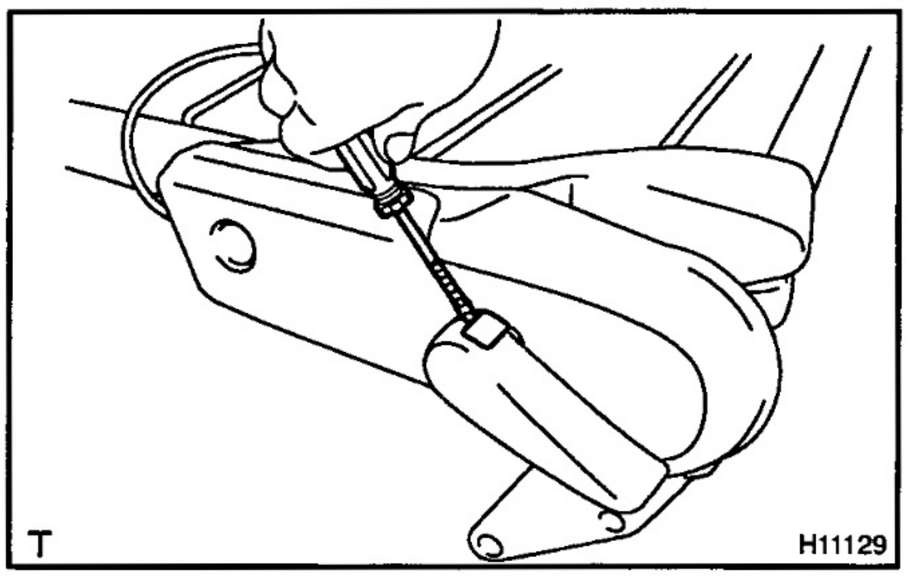

17. REMOVE RECLINING NO. 1 COVER

(a) Using a screwdriver, remove the seat adjuster bolt cover.

HINT:

Tape the screwdriver tip before use.

(b) Remove the screw and reclining hinge handle.

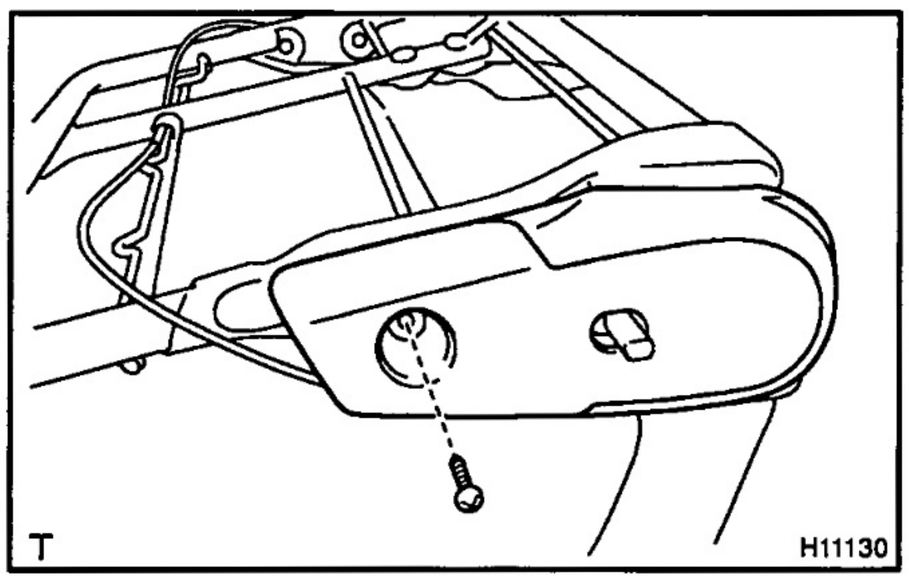

(c) Remove the screw and reclining No. 1 cover.

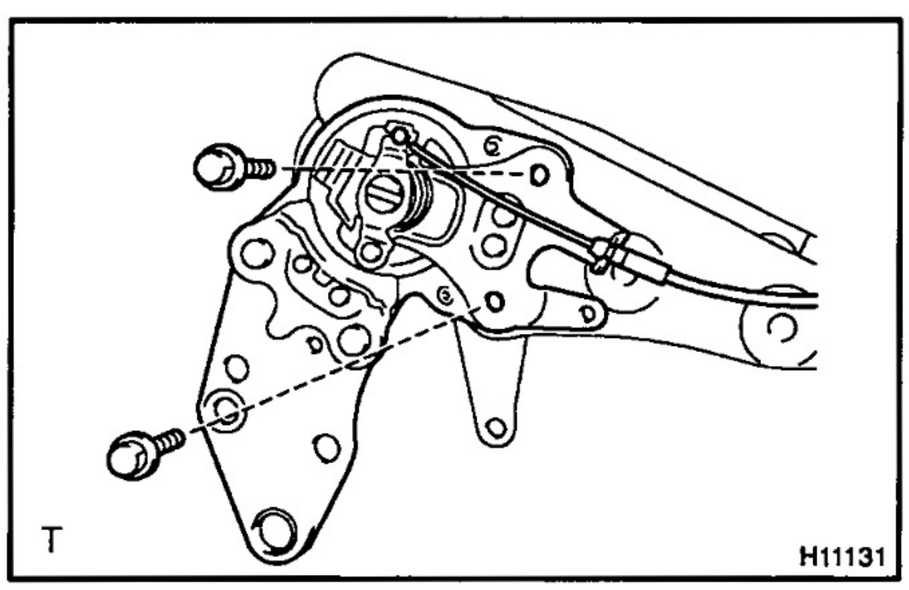

18. REMOVE INNER REAR SEATBACK ADJUSTER

(a) Remove the 2 clamps.

(b) Remove the control cable.

(c) Remove the 2 bolts and inner rear seatback adjuster.

Torque: 37 N·m (380 kgf·cm, 27 ft·lbf)

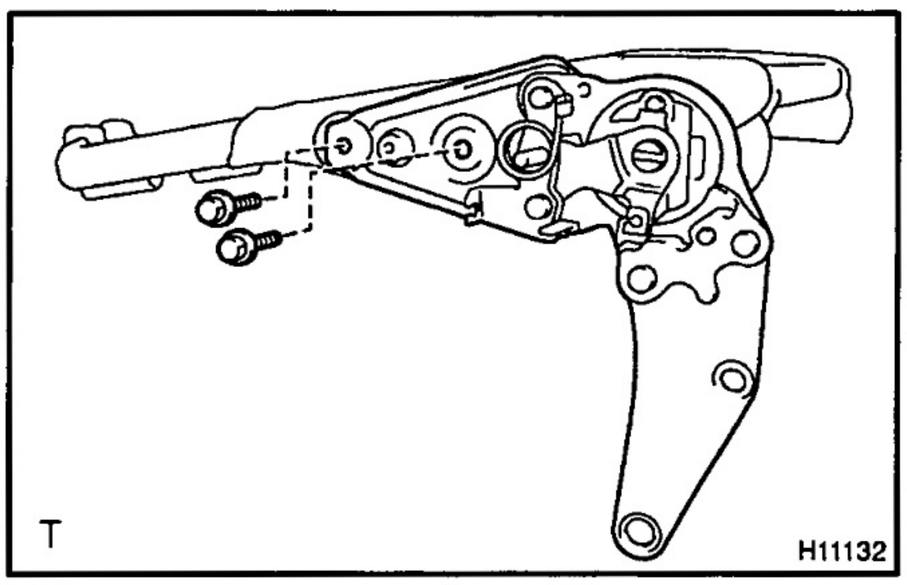

19. REMOVE OUTER REAR NO. 1 SEAT ADJUSTER

Remove the 2 bolts and outer rear No. 1 seat adjuster.

Torque: 37 N·m (380 kgf·cm, 27 ft·lbf)

BO2LB–01

REASSEMBLY

Reassembly is in the reverse order of disassembly (See page BO–40).

BO2LC–01

INSTALLATION

Installation is in the reverse order of removal (See page BO–39).

AIR CONDITIONING

AIR CONDITIONING SYSTEM AC–1
FRONT COOLING UNIT (Auto A/C) AC–3
REAR COOLING UNIT (Auto A/C) AC–7
FRONT HEATER UNIT (Auto A/C) AC–12
BLOWER UNIT (Auto A/C) AC–16
POWER TRANSISTOR (for Front A/C) AC–20
POWER TRANSISTOR (for Rear A/C) AC–21
AIR OUTLET SERVOMOTOR
(Auto A/C) AC–22
SOLAR SENSOR (Auto A/C) AC–23
ROOM TEMPERATURE SENSOR
(Auto A/C) AC–24
AMBIENT TEMPERATURE SENSOR
(Auto A/C) AC–25
MAGNETIC CLUTCH RELAY
(Auto A/C) AC–26
EXTRA–HI RELAY (Auto A/C) AC–27
EXTRA–HI RELAY (for Rear A/C) AC–28
AIR CONDITIONING CONTROL ASSEMBLY
(Auto A/C) AC–29

REFER TO LAND CRUISER/LAND CRUISER PRADO REPAIR MANUAL FOR CHASSIS AND BODY (Pub. No. RM517E)

NOTE: The above pages contain only the points which differ from the above listed manual.

AIR CONDITIONING SYSTEM

LOCATION

AC2EM-01

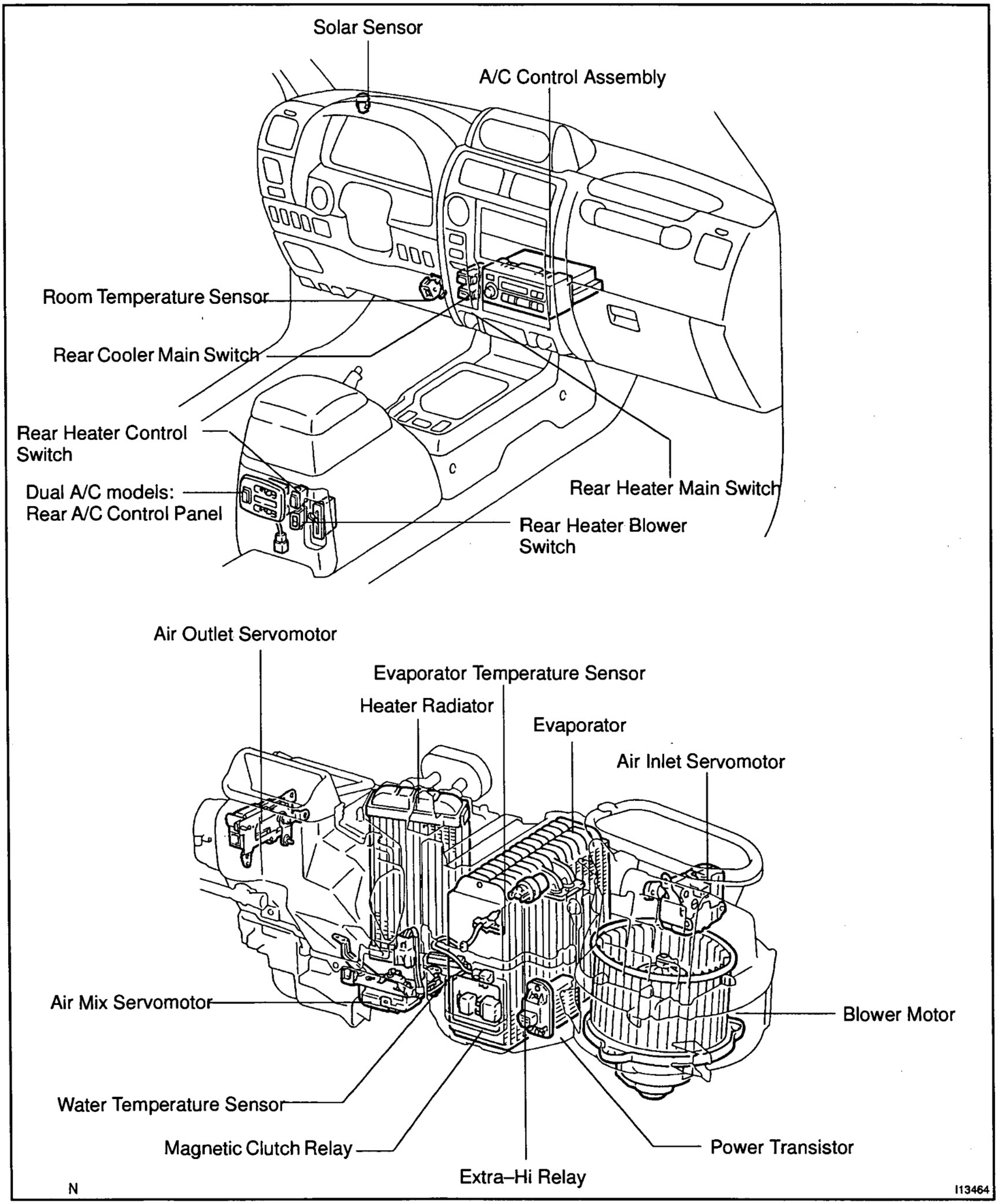

AC

Dual A/C:

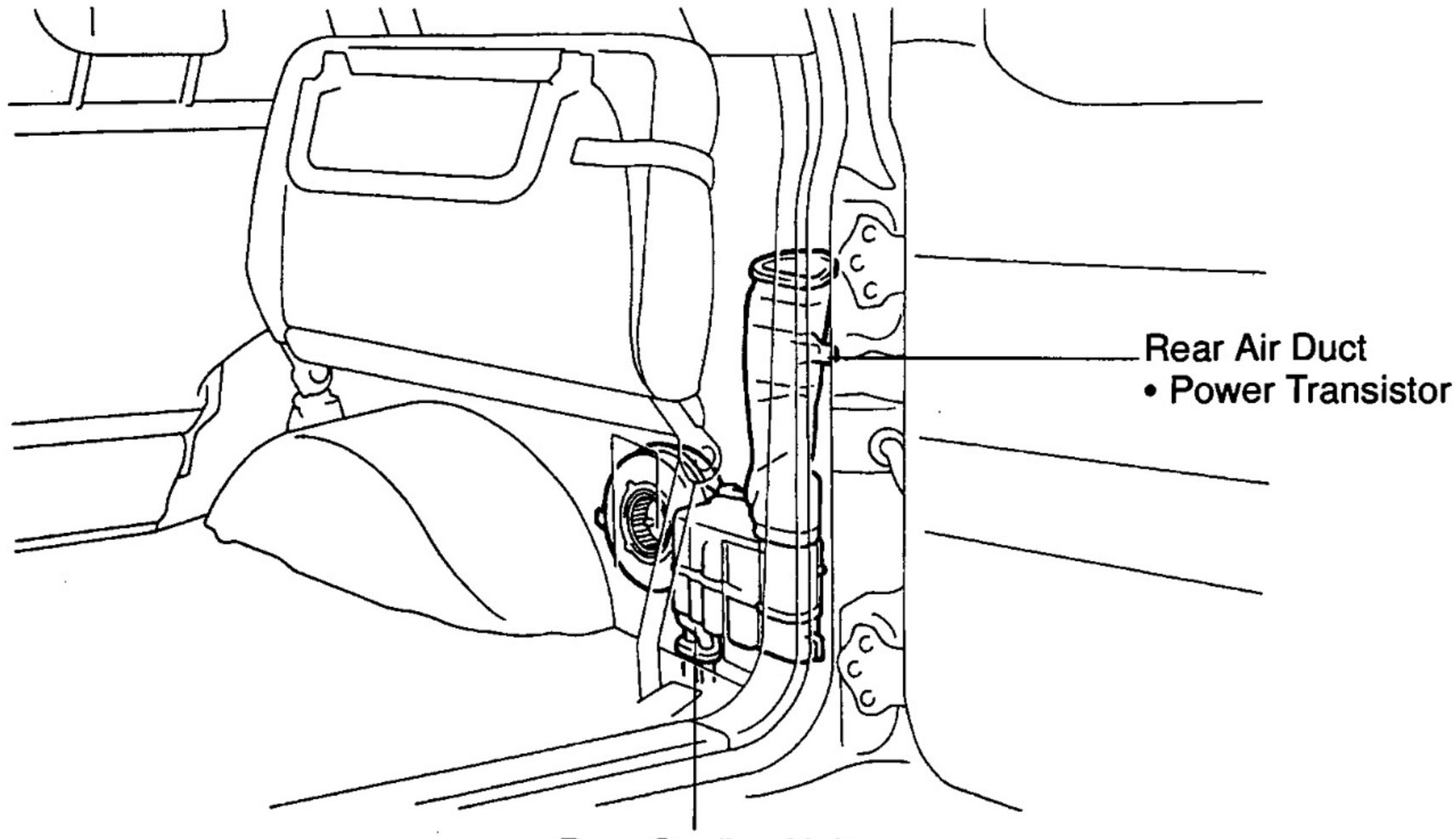

I13223

FRONT COOLING UNIT (Auto A/C)

COMPONENTS

AC2FE–01

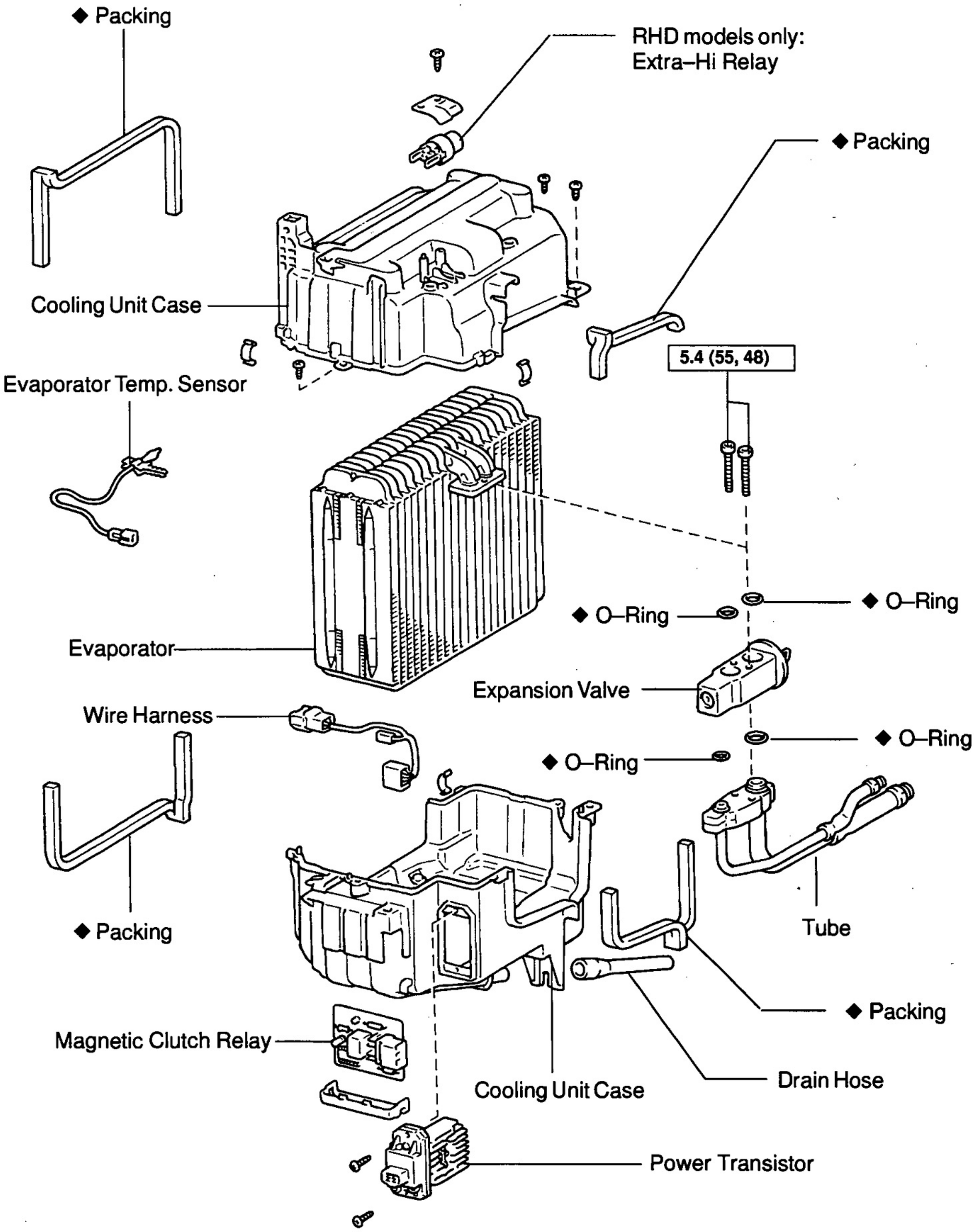

N·m (kgf·cm, in.·lbf) : Specified torque

◆ Non–reusable part

I13531

AC2FF–01

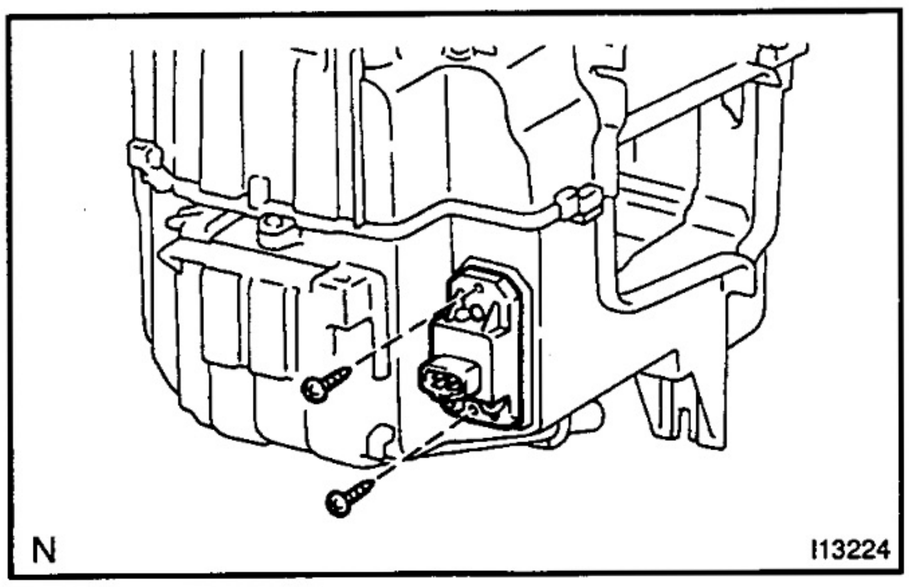

DISASSEMBLY

1. REMOVE POWER TRANSISTOR

Remove the 2 screws and power transistor.

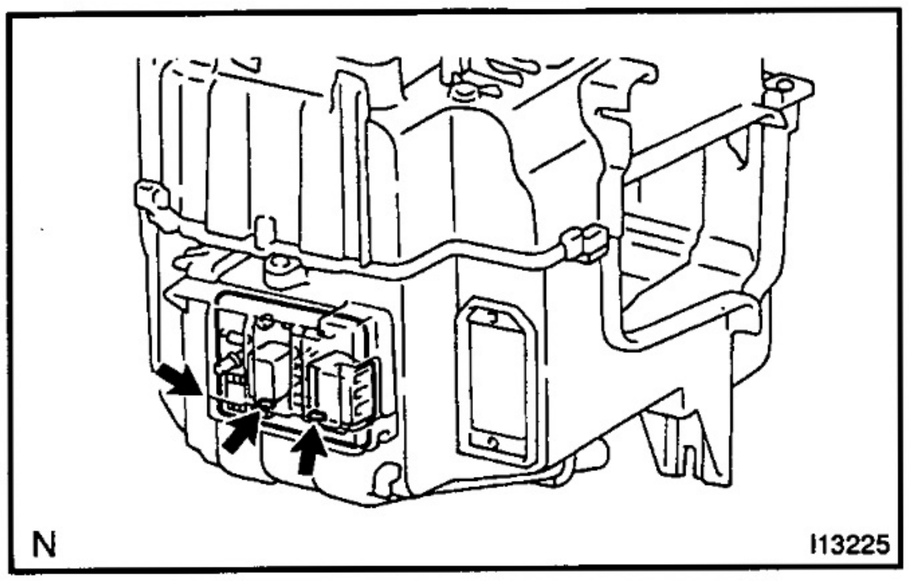

2. REMOVE MAGNETIC CLUTCH RELAY

(a) Disconnect the connector.

(b) Using a screwdriver, pry out the No. 1 cover.

HINT:

Tape the screwdriver tip before use.

(c) Remove the magnetic clutch relay.

3. REMOVE WIRER HARNESS

4. REMOVE DRAIN HOSE

AC

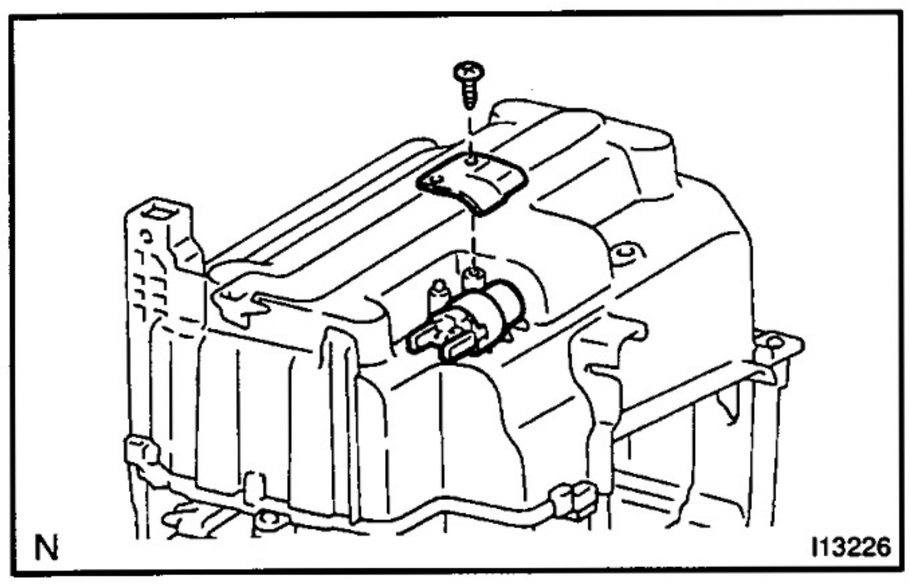

5. REMOVE EXTRA–HI RELAY

Remove the screw, clamp and relay.

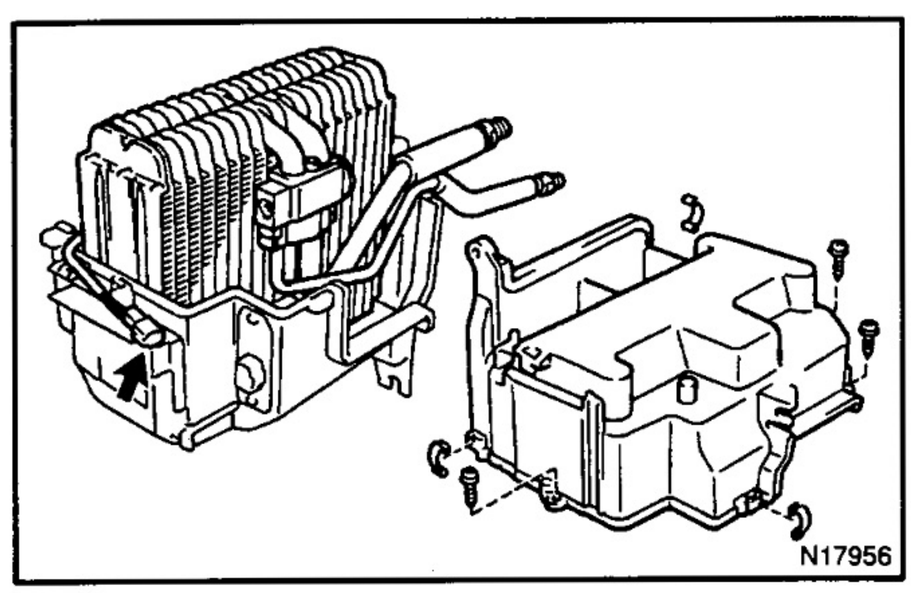

6. REMOVE EVAPORATOR

(a) Using a knife, cut off each packing.

(b) Disconnect the evaporator temperature sensor clamp.

(c) Remove the 3 screws, 3 holding springs and separate the cooling unit cases.

(d) Remove the evaporator.

7. REMOVE EVAPORATOR TEMPERATURE SENSOR

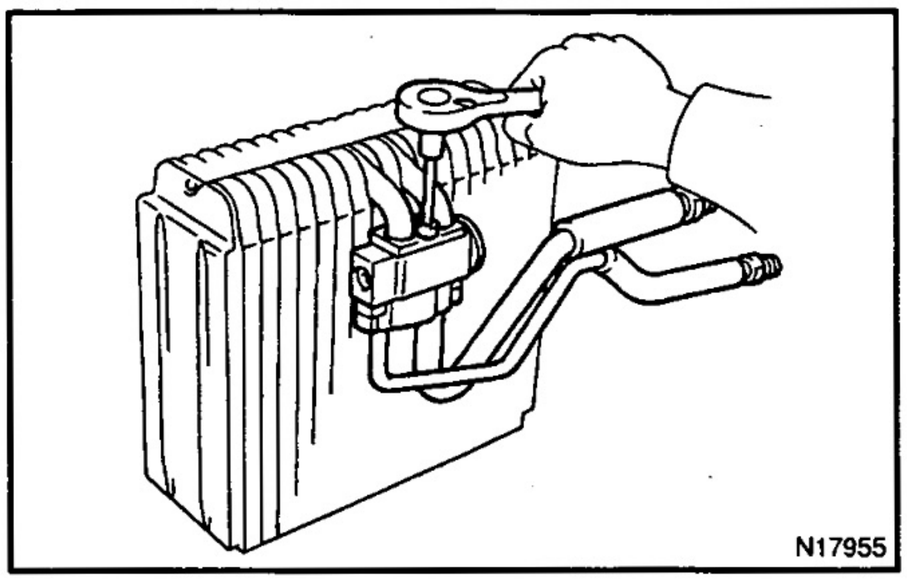

8. REMOVE EXPANSION VALVE

Using a hexagon wrench (5.0 mm, 0.20 in.), remove the 2 bolts and separate the expansion valve and evaporator.

Torque: 5.4 N·m (55 kgf·cm, 48 in.·lbf)

NOTICE:

Cap the open fittings immediately to keep moisture or dirt out of the system.

HINT:

At the time reassembly, please refer to the following item.

- Lubricate 4 new O–rings with compressor oil and install them to the valve.
- If evaporator is replaced, add compressor oil to the evaporator.

  Add: 40 cc (1.4 fl.oz.)

  Compressor oil: ND–OIL8 or equivalent

AC2FG–01

REASSEMBLY

Reassembly is in the reverse order of disassembly (See page AC–4).

REAR COOLING UNIT (Auto A/C)

COMPONENTS

AC2EN–01

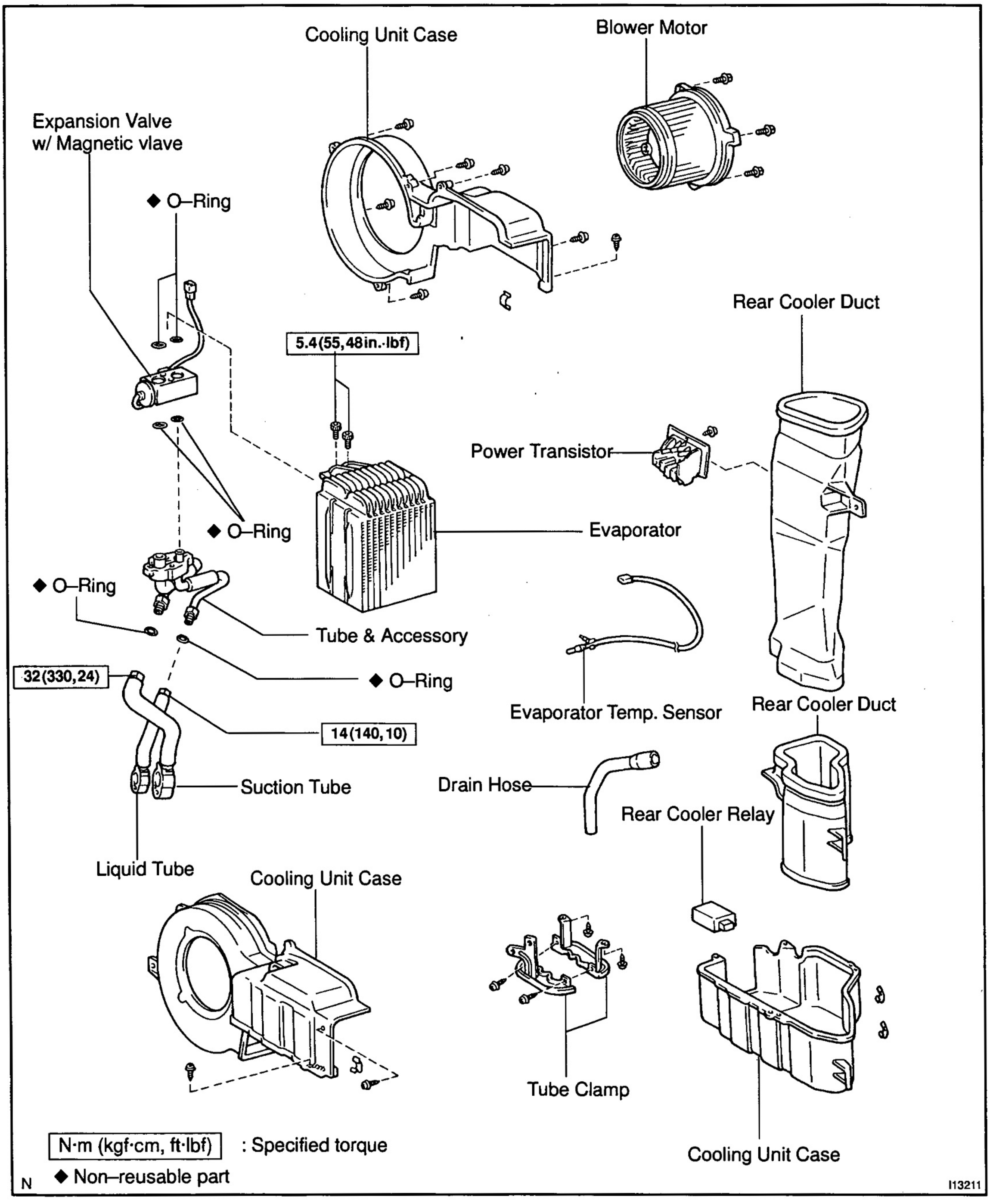

AC

AC2EO–01

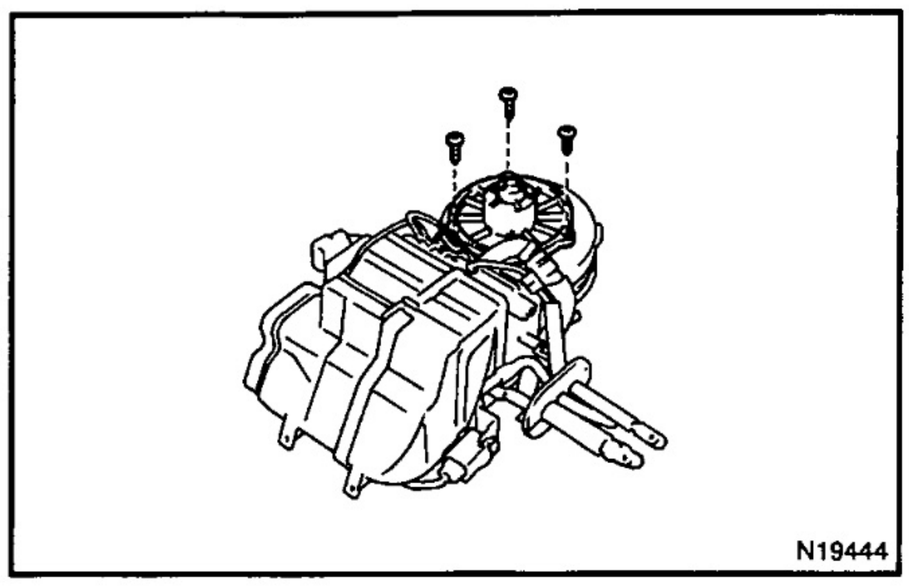

N19444

DISASSEMBLY

1. REMOVE BLOWER MOTOR

(a) Disconnect the connector.

(b) Remove the 3 screws and blower motor.

2. REMOVE LIQUID TUBE AND SUCTION TUBE

(a) Remove the 4 screws and tube clamps.

(b) Loosen the 2 nuts and remove the both tubes.

Torque:
Liquid line: 14 N·m (140 kgf·cm, 10 ft·lbf)
Suction line: 32 N·m (330 kgf·cm, 24 ft·lbf)

NOTICE:
Cap the open fittings immediately to keep moisture or dirt out of the system.

HINT:
At the time of reassembly, please refer to the following item. Lubricate 2 new O–rings with compressor oil and install them to the tubes.

3. REMOVE DRAIN HOSE

4. REMOVE REAR COOLER RELAY

5. REMOVE EVAPORATOR

(a) Remove the 8 screws, 4 holding springs and separate the cooling unit cases.

(b) Remove the evaporator.

If evaporator is replaced, add compressor oil to the evaporator.

Add: 40 cc (1.4 fl.oz.)
Compressor oil: ND–OIL8 or equivalent

6. REMOVE EVAPORATOR TEMPERATURE SENSOR

AC

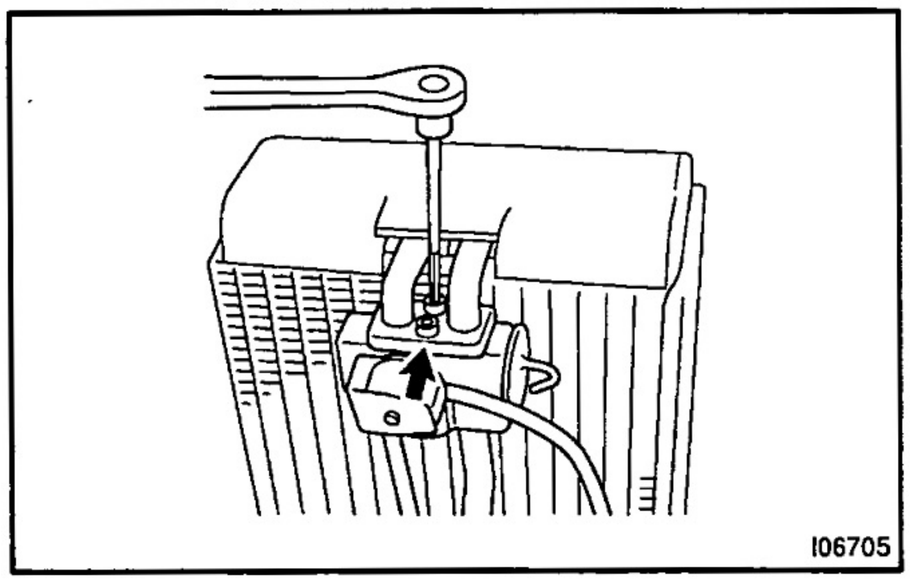

7. REMOVE EXPANSION VALVE

Using a hexagon wrench (5.0 mm, 0.20 in.), remove the 2 bolts and separate the expansion valve and evaporator.

Torque: 5.4 N·m (55 kgf·cm, 48 in.·lbf)

NOTICE:

Cap the open fittings immediately to keep moisture or dirt out of the system.

HINT:

At the time of reassembly, please refer to the following item.

Lubricate 4 new O–rings with compressor oil and install them to the valve.

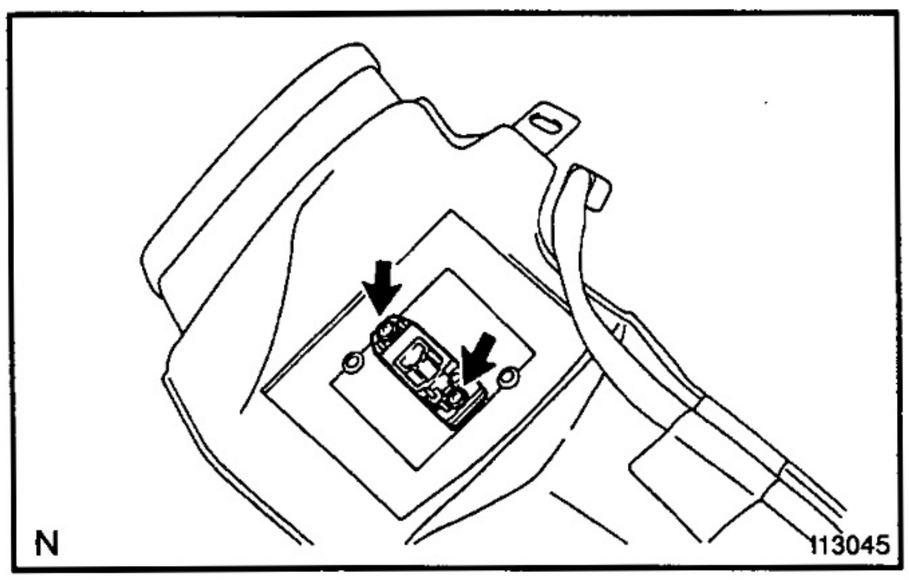

8. REMOVE POWER TRANSISTOR

Remove the screw and power transistor.

AC2EP-01

INSPECTION

1. INSPECT EVAPORATOR FINS FOR BLOCKAGE

If the fins are clogged, clean them with compressed air.

NOTICE:

Never use water to clean the evaporator.

2. INSPECT EVAPORATOR FITTINGS FOR CRACKS OR SCRATCHES

If necessary, repair or replace.

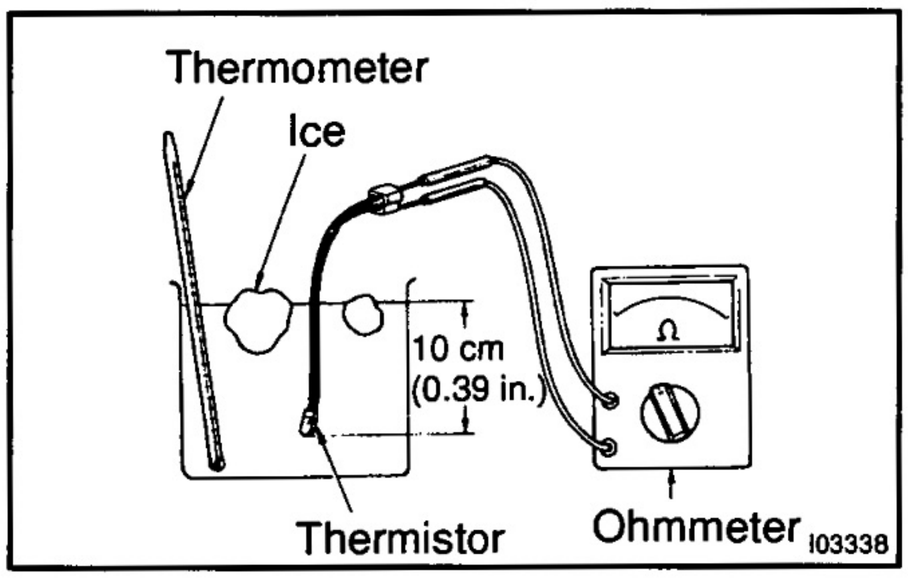

3. INSPECT EVAPORATOR TEMPERATURE SENSOR

(a) Place the thermistor in cold water, and while changing the temperature of water, measure resistance at the connector and at the same time, measure temperature of water with a thermometer.

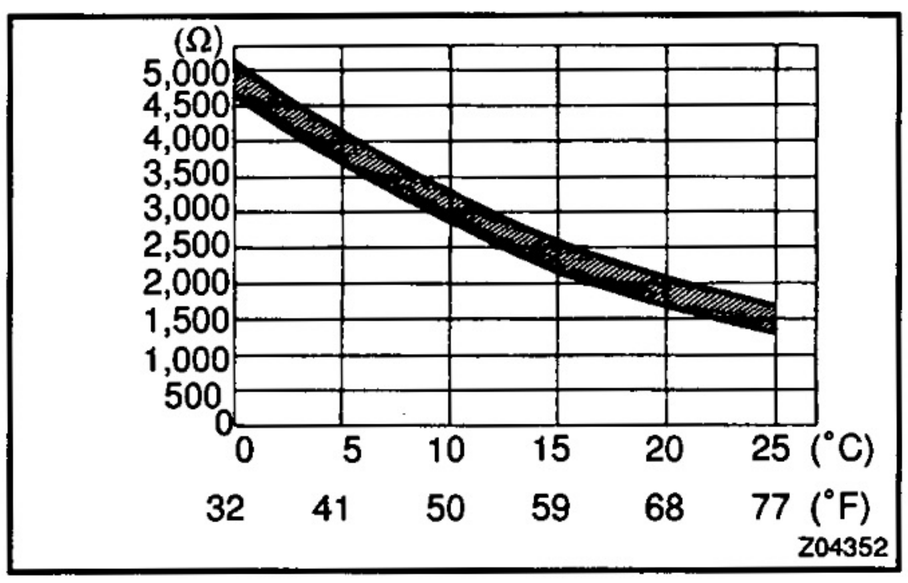

(b) Compare the 2 readings on the chart.

If resistance value is not as specified, replace the thermistor.

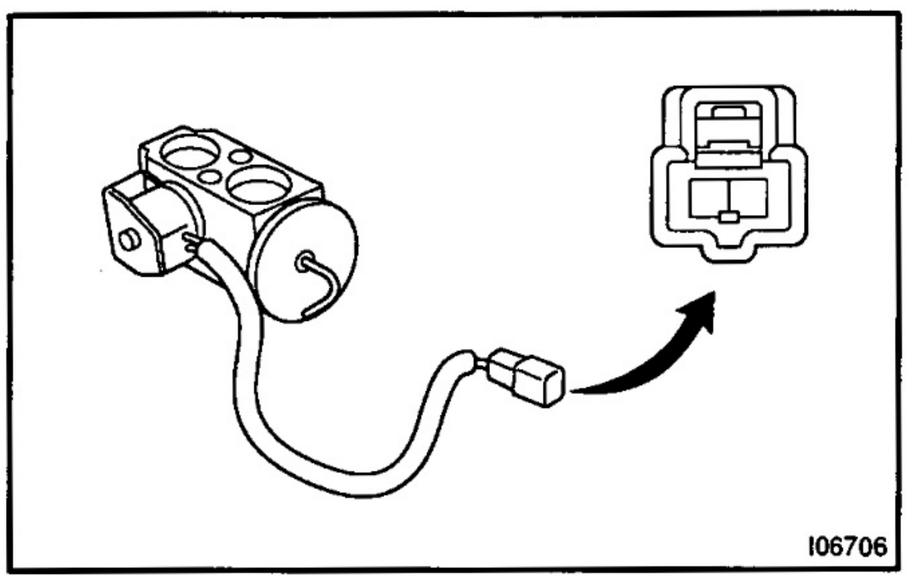

4. INSPECT MAGNETIC VALVE OPERATION

Check the air passage through the valve with and without the battery positive voltage applied between terminals as shown in the chart.

Condition	Air passage
Apply B+ between terminals	Free passage
Not apply B+ between terminals	No passage

If operation is not as specified, replace the magnetic valve with expansion valve.

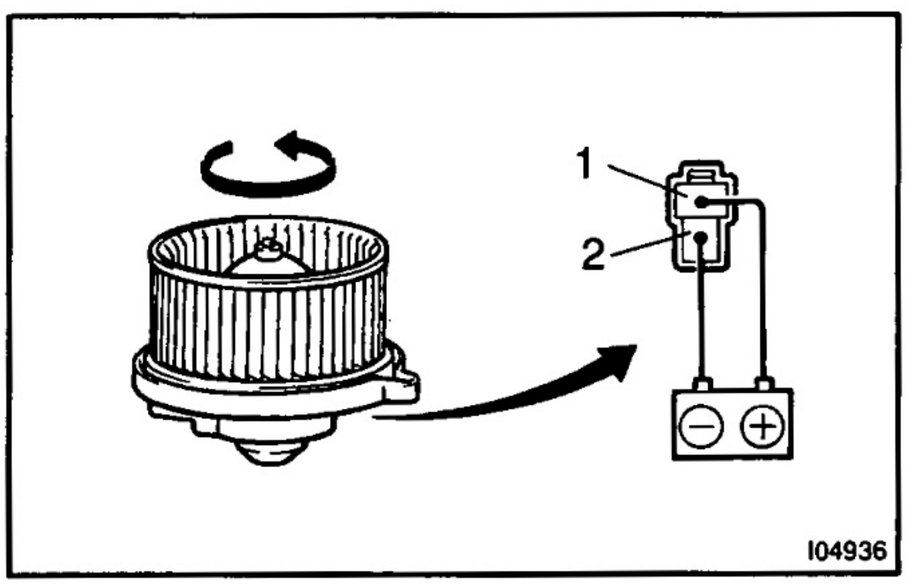

5. INSPECT BLOWER MOTOR OPERATION

Connect the positive (+) lead from the battery to terminal 1 and the negative (–) lead to terminal 2, then check that the motor rotates smoothly.

If operation is not as specified, replace the blower motor.

AC2EC–01

REASSEMBLY

Reassembly is in the reverse order of disassembly (See page AC–8).

FRONT HEATER UNIT (Auto A/C)

COMPONENTS

AC2ER–01

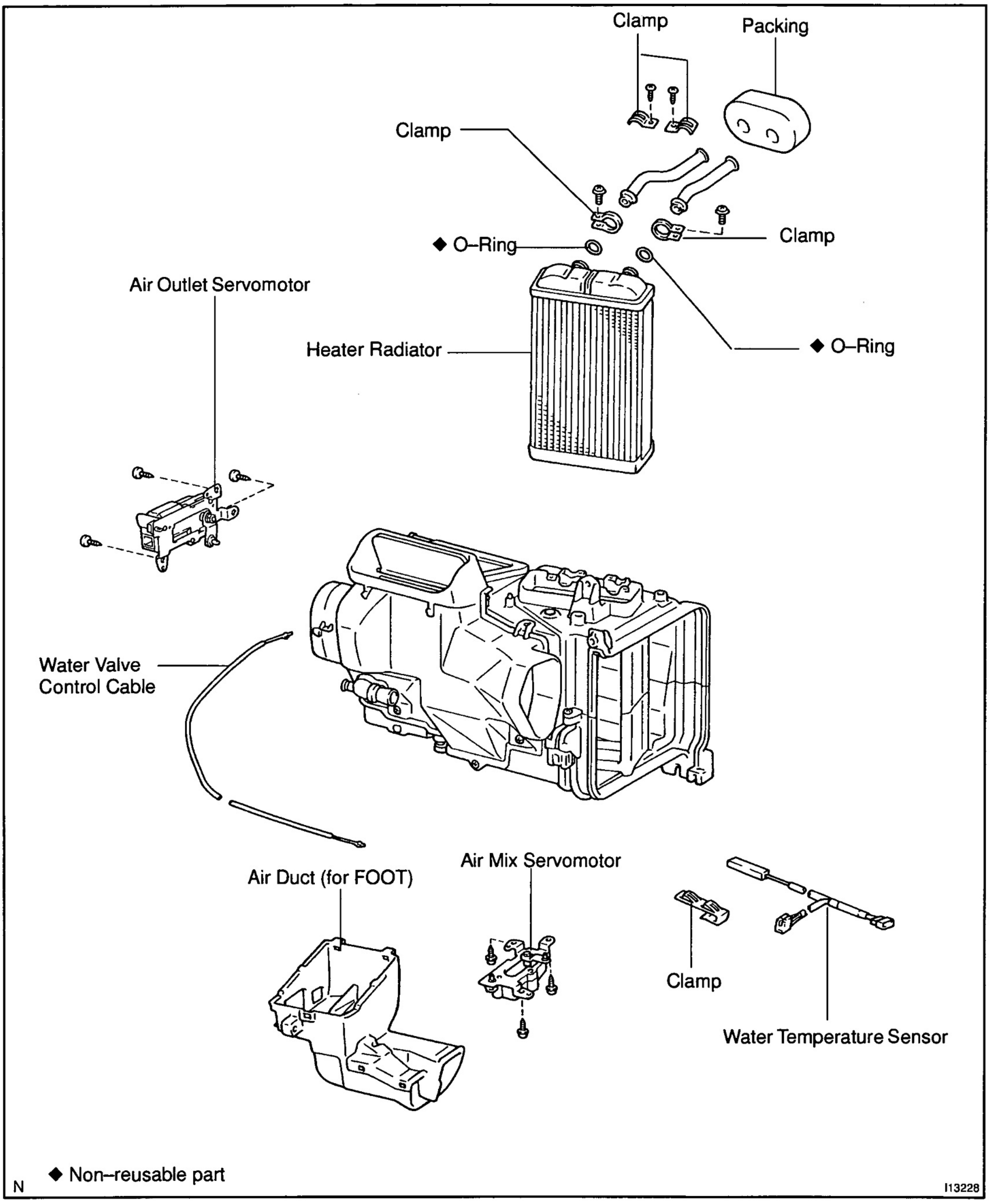

AC2ES–01

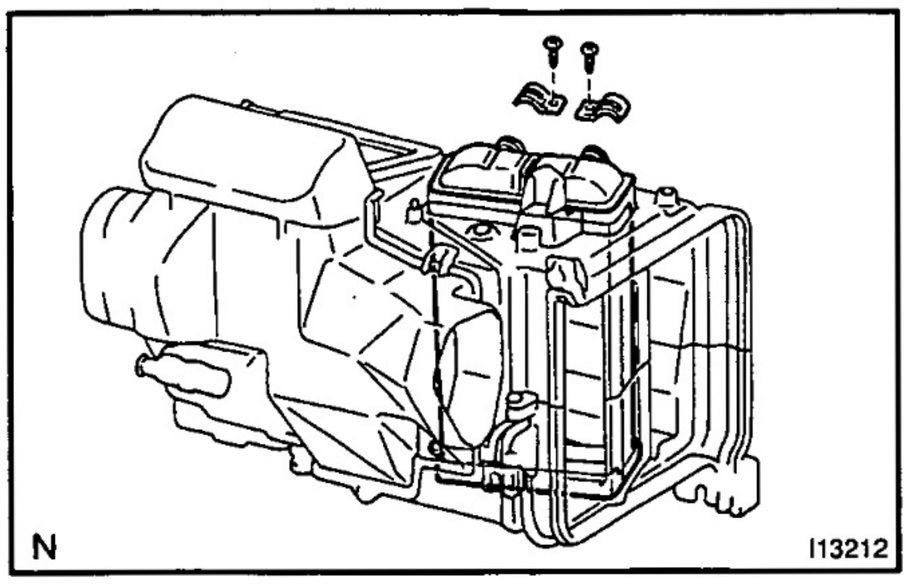

DISASSEMBLY

1. REMOVE HEATER RADIATOR

(a) Remove the packing.
(b) Remove the 2 screws and 2 clamps.
(c) Pull out the heater radiator.
(d) Remove the 2 screws, 2 clamps and 2 heater radiator pipes.
(e) Remove the 2 O–rings.

HINT:
At the time of reassembly, please refer to the following item.
Do not reuse the 2 O–rings.

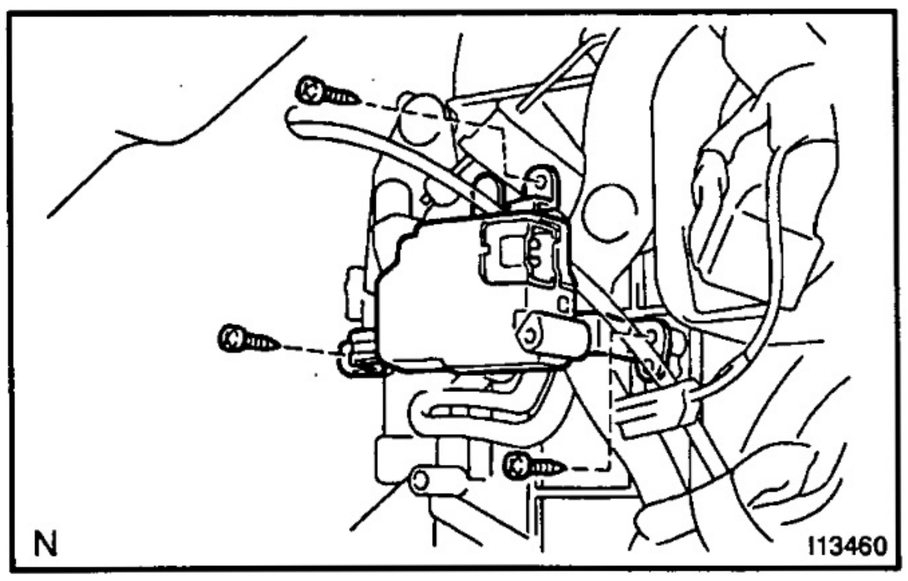

2. REMOVE AIR OUTLET SERVOMOTOR

Remove the 3 screws and air outlet servomotor.

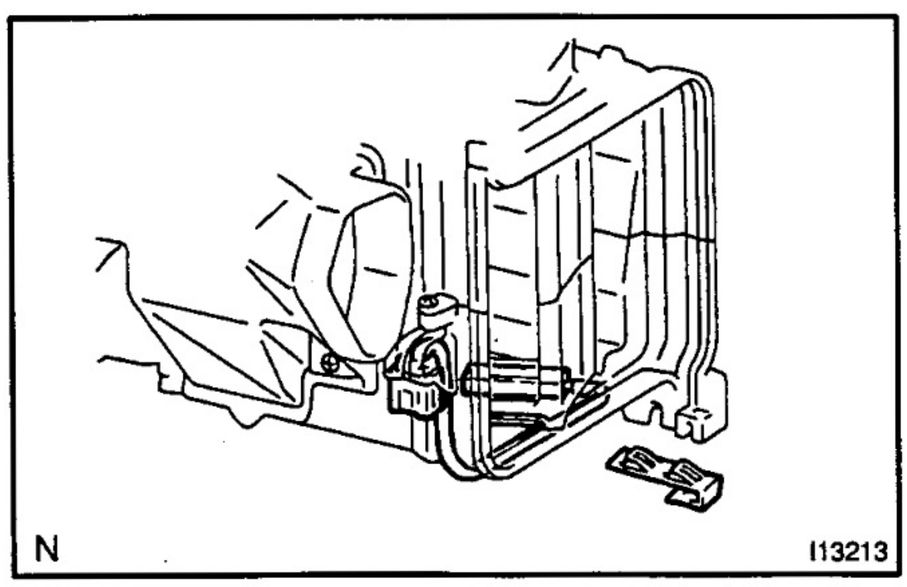

3. REMOVE WATER TEMPERATURE SENSOR

After pulling off the clamp, pull out the sensor.

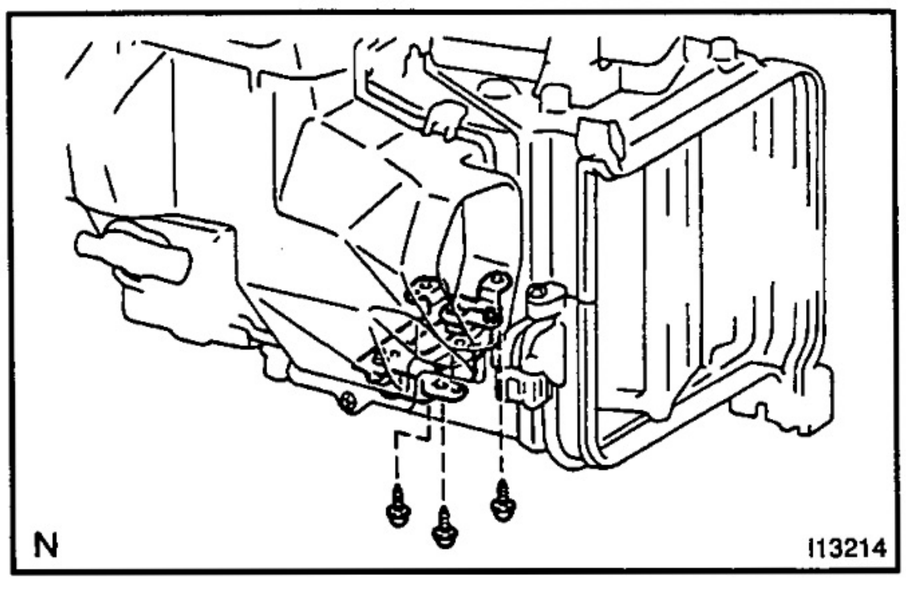

4. REMOVE AIR MIX SERVOMOTOR

(a) Remove the air duct (for FOOT).
(b) Remove the 3 screws and air mix servomotor.
(c) Remove the water valve control cable from air mix servomotor.

5. REMOVE AIR DUCT (for VENT)

(a) Remove the 3 screws.
(b) Release the 3 claws and remove the air duct.

AC2ET–01

INSPECTION

1. **INSPECT AIR MIX SERVOMOTOR OPERATION (See page DI–314)**
2. **INSPECT AIR MIX DAMPER POSITION SENSOR (See page DI–311)**
3. **INSPECT WATER TEMPERATURE SENSOR (See page DI–302)**

AC2EU–01

REASSEMBLY

Reassembly is in the reverse order of disassembly (See page AC–13).

BLOWER UNIT (Auto A/C)

COMPONENTS

AC2EV–01

LHD models:

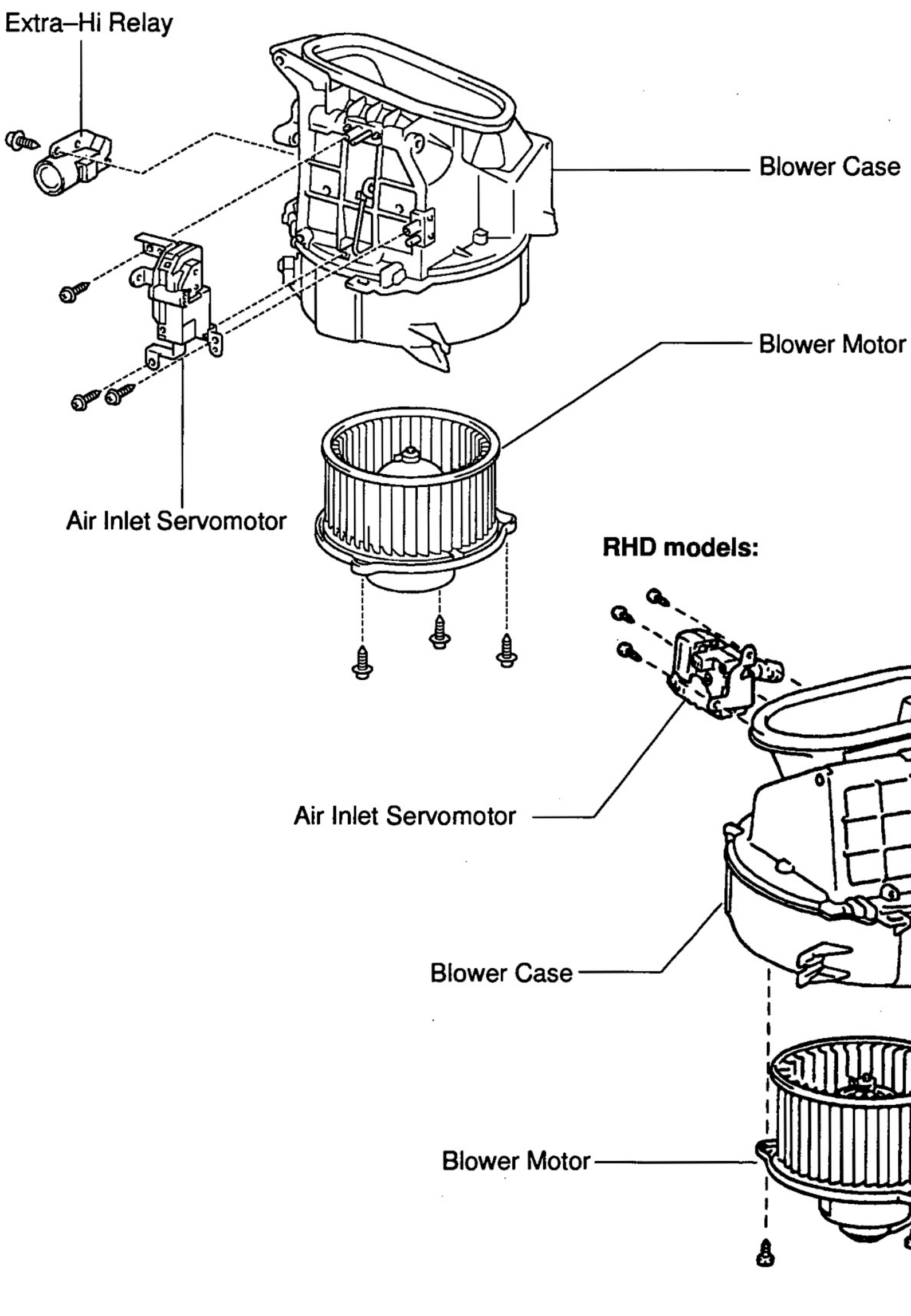

RHD models:

I13530

AC2EW–01

DISASSEMBLY

1. REMOVE BLOWER MOTOR

Remove the 3 screws and blower motor.

2. REMOVE AIR INLET SERVOMOTOR

(a) LHD models only:
Disconnect the control link of servomotor

(b) Remove the 3 screws and air inlet servomotor.

3. LHD models only:
REMOVE EXTRA–HI RELAY

Remove the screw and extra–hi relay.

AC2EX–01

INSPECTION

INSPECT AIR INLET SERVOMOTOR OPERATION (See page DI–318)

AC2EY–01

REASSEMBLY

Reassembly is in the reverse order of disassembly (See page AC–17).

POWER TRANSISTOR (for Front A/C)

AC2EZ–01

INSPECTION

1. **REMOVE GLOVE COMPARTMENT DOOR**
   (See Pub. No. RM517E on page BO–55)
2. **REMOVE NO. 4 HEATER TO REGISTER DUCT**

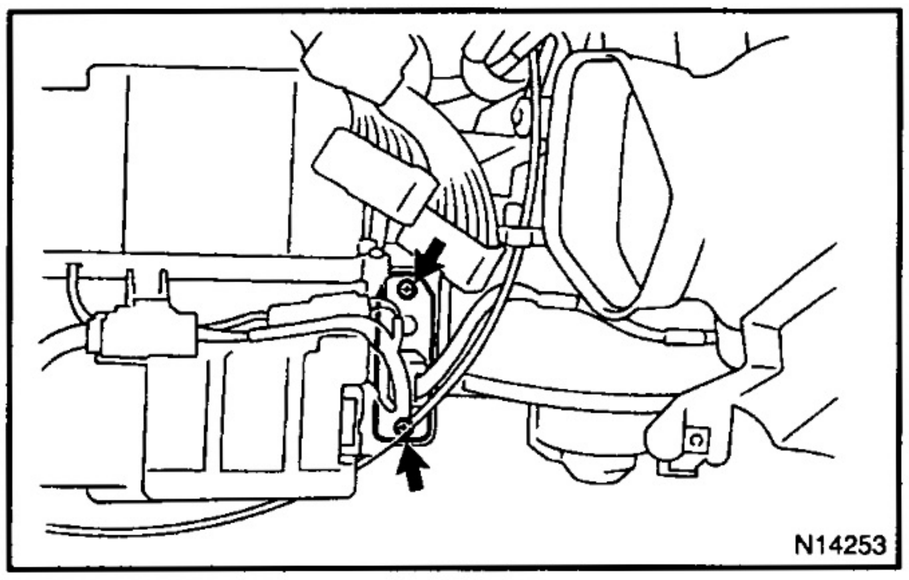

3. **REMOVE POWER TRANSISTOR**

(a) Disconnect the connector.

(b) Remove the 2 screws and power transistor.

4. **INSPECT POWER TRANSISTOR (See page DI–333)**

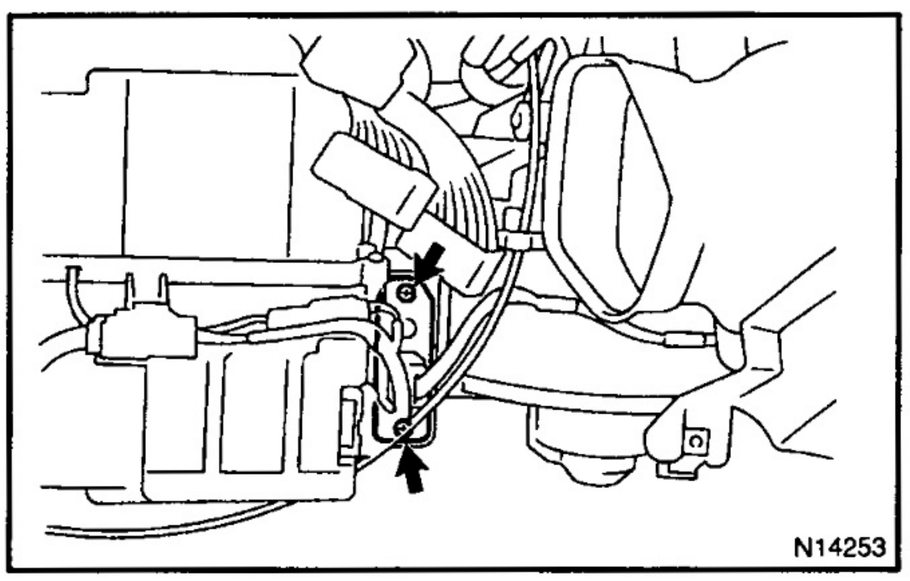

5. **INSTALL POWER TRANSISTOR**

(a) Install the power transistor with 2 screws.

(b) Connect the connector.

6. **INSTALL NO. 4 HEATER TO REGISTER DUCT**
7. **INSTALL GLOVE COMPARTMENT DOOR**

POWER TRANSISTOR (for Rear A/C)

AC2F0–01

INSPECTION

1. REMOVE QUARTER PILLAR GARNISH RH
(See Pub. No. RM517E on page BO–41)

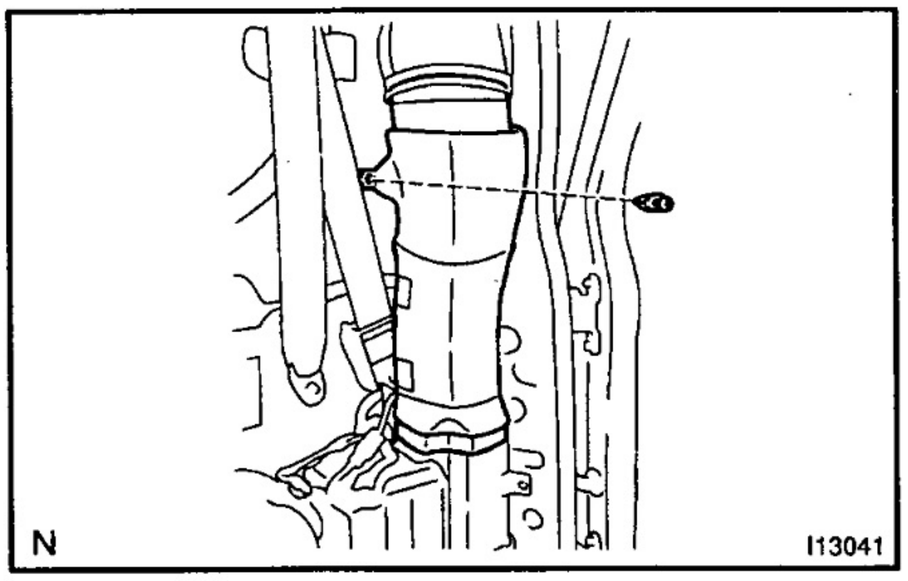

2. REMOVE REAR AIR DUCT

Remove the clip and rear air duct, then disconnect the power transistor connector.

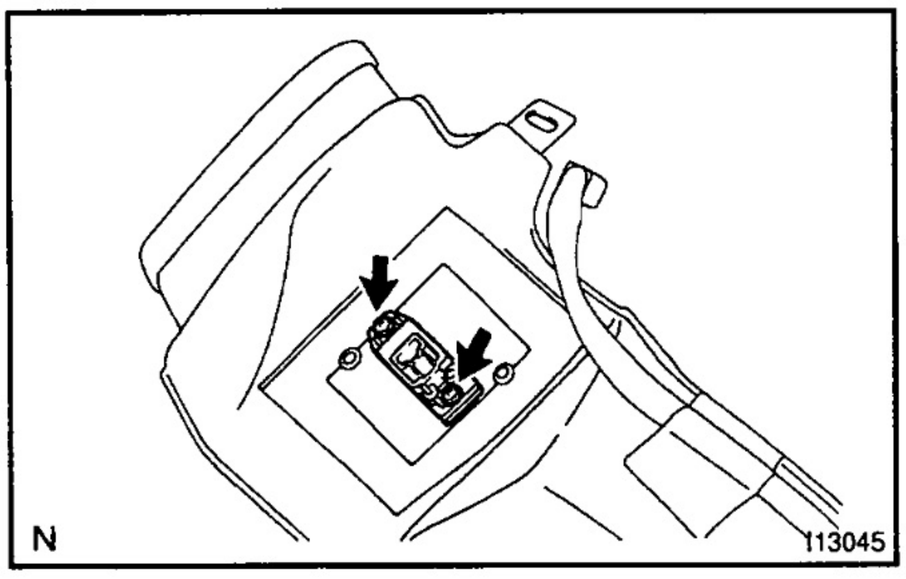

3. REMOVE POWER TRANSISTOR

Remove the screw and power transistor.

4. INSPECT POWER TRANSISTOR OPERATION (See page DI–333)

5. INSTALL POWER TRANSISTOR

Install the power transistor with screw.

6. REMOVE REAR AIR DUCT

(a) Connect the power transistor connector.

(b) Install the rear air duct with clip.

7. INSTALL QUARTER PILLAR GARNISH RH

AIR OUTLET SERVOMOTOR (Auto A/C)

AC2F1-01

INSPECTION

1. **REMOVE FRONT DOOR SCUFF PLATE**
2. **REMOVE COWL SIDE TRIM BOARD**
3. **REMOVE LOWER FINISH PANEL**
   (See Pub. No. RM517E on page BO–55)
4. **REMOVE NO. 1 HEATER TO REGISTER DUCT**

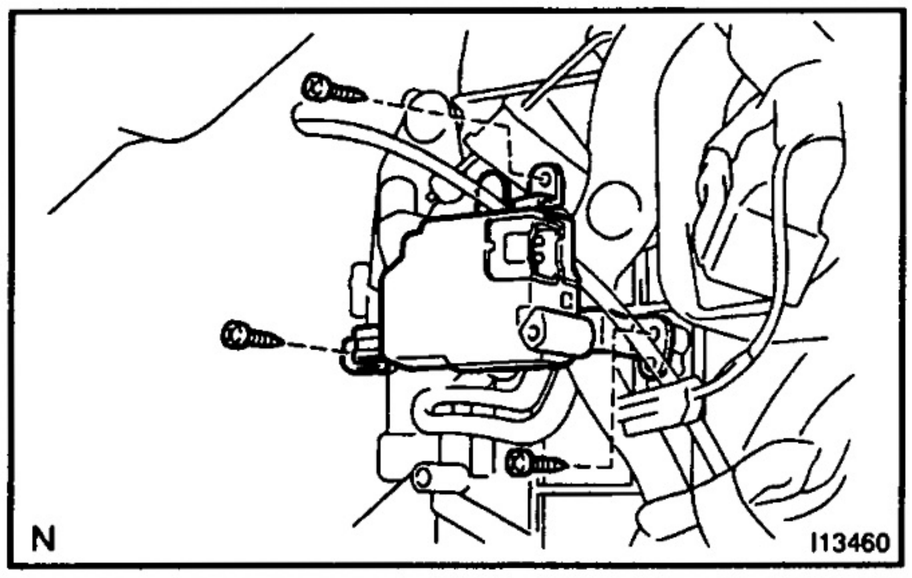

5. **REMOVE AIR OUTLET SERVOMOTOR**

(a) Disconnect the connector.

(b) Remove the 3 screws and air outlet servomotor.

6. **INSPECT AIR OUTLET SERVOMOTOR**
   (See page DI–322)
7. **INSTALL AIR OUTLET SERVOMOTOR**

(a) Install the air outlet servomotor with 3 screws.

(b) Connect the connector.

8. **INSTALL NO. 1 HEATER TO REGISTER DUCT**
9. **INSTALL LOWER FINISH PANEL**
10. **INSTALL COWL SIDE TRIM BOARD**
11. **INSTALL FRONT DOOR SCUFF PLATE**

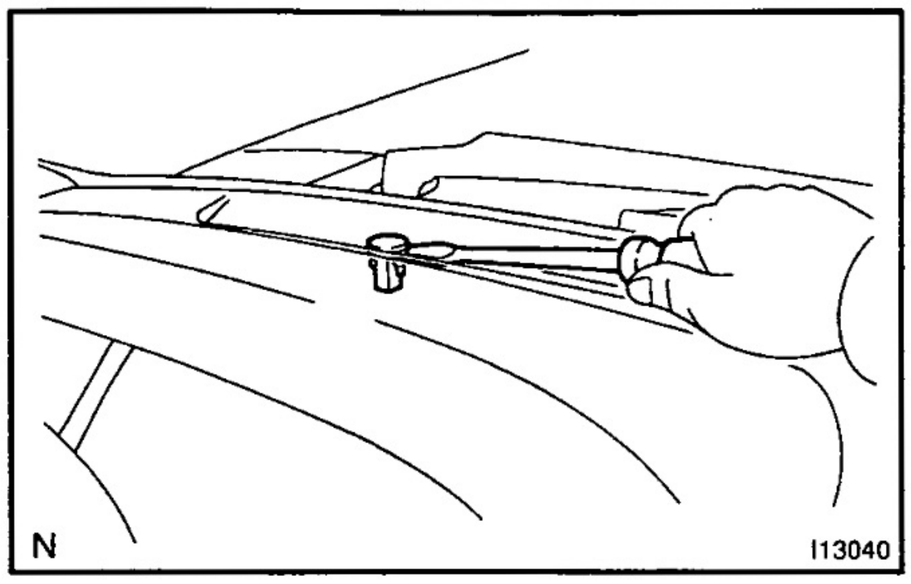

SOLAR SENSOR (Auto A/C)

AC2F2-01

INSPECTION

1. REMOVE SOLAR SENSOR

(a) Using a screwdriver, pull out the sensor with the holder, then disconnect the connector.

HINT:

Tape the screwdriver tip before use.

(b) LHD models only:
Release the 2 claws and remove the solar sensor from the bezel.

2. INSPECT SOLAR SENSOR CIRCUIT
(See page DI–305)

3. INSTALL SOLAR SENSOR

(a) Connect the connector.

(b) Insert the solar sensor to the instrument panel.

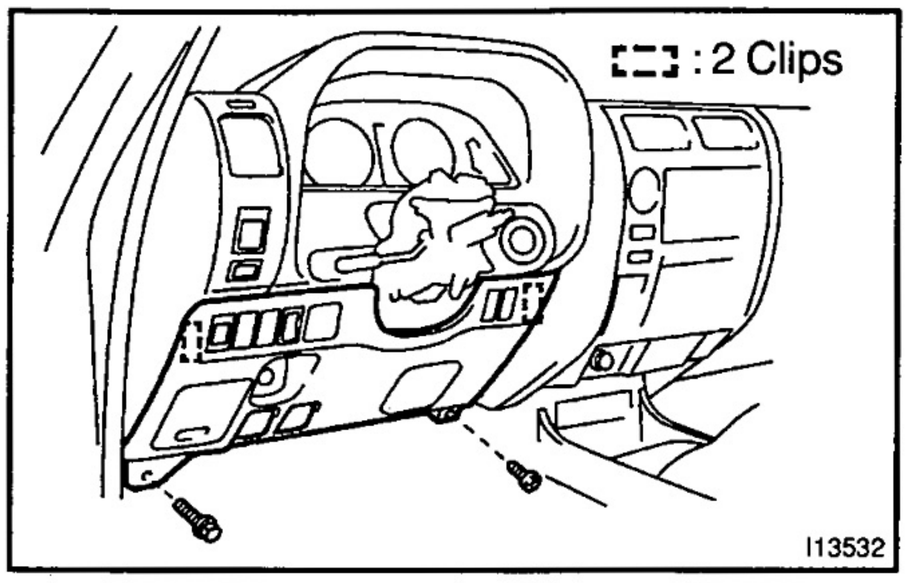

ROOM TEMPERATURE SENSOR (Auto A/C)

INSPECTION

AC2F3–01

1. REMOVE LOWER FINISH PANEL

(a) Remove the 2 screws.

(b) Using a screwdriver, remove the lower finish panel with food lock control cable and fuel lid control cable still connected.

HINT:

Tape the screwdriver tip before use.

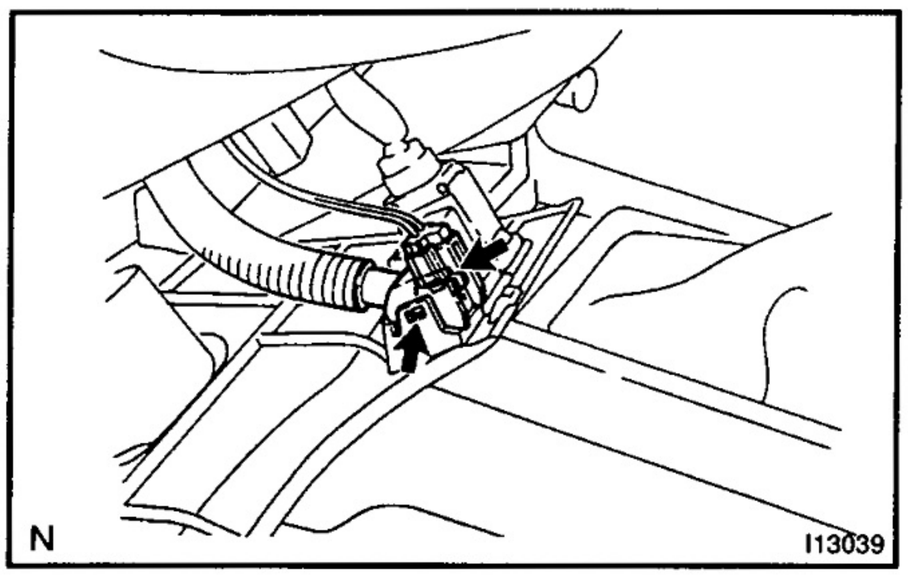

2. REMOVE ROOM TEMPERATURE SENSOR

(a) Disconnect the aspirator hose.

(b) Disconnect the connector.

(c) Release the 2 claws and pull out the sensor from lower finish panel.

3. INSPECT ROOM TEMPERATURE SENSOR CIRCUIT (See page DI–290)

4. INSTALL ROOM TEMPERATURE SENSOR

(a) Install the room temperature sensor to lower finish panel.

(b) Connect the connector and aspirator hose.

5. INSTALL LOWER FINISH PANEL

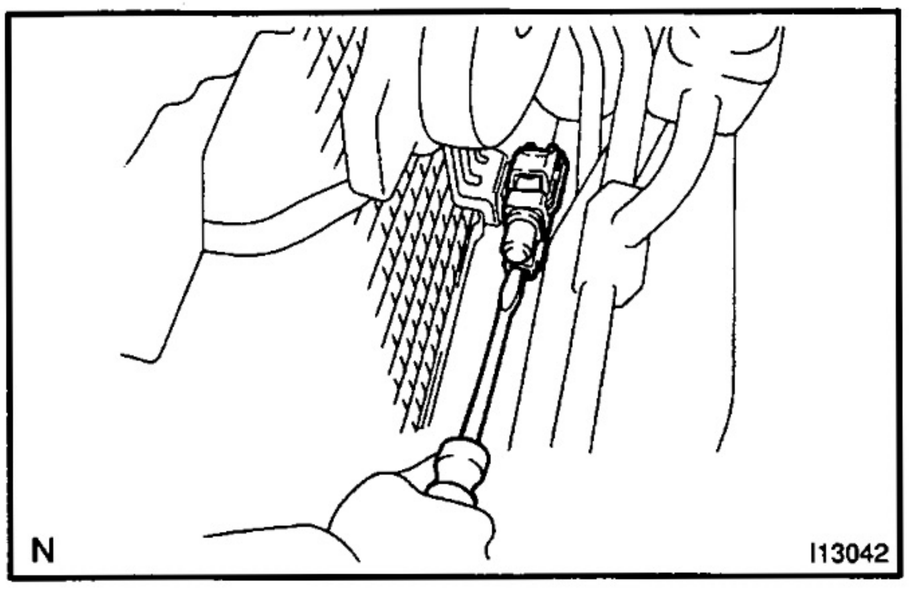

AMBIENT TEMPERATURE SENSOR (Auto A/C)

AC2F4-01

INSPECTION

1. REMOVE AMBIENT TEMPERATURE SENSOR

(a) Disconnect the connector.

(b) Using a clip remover, pull out the sensor from front bumper reinforcement.

2. INSPECT AMBIENT TEMPERATURE SENSOR (See page DI–293)

3. INSTALL AMBIENT TEMPERATURE SENSOR

Install the ambient temperature sensor to front bumper reinforcement.

MAGNETIC CLUTCH RELAY (Auto A/C)

AC2F5-01

INSPECTION

1. **REMOVE GLOVE COMPARTMENT DOOR**
   (See Pub. No. RM517E on page BO–55)
2. **REMOVE NO. 4 HEATER TO REGISTER DUCT**

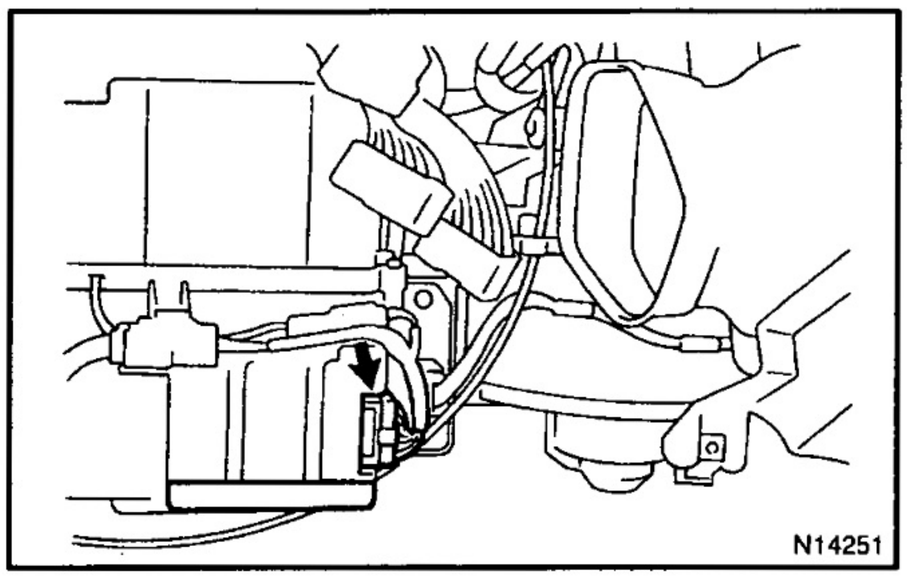

3. **REMOVE MAGNETIC CLUTCH RELAY**
   (a) Disconnect the connector from the amplifier.
   (b) Remove amplifier cover.
   (c) Remove the amplifier from the cooling unit.

4. **INSPECT MAGNETIC CLUTCH RELAY**
   (See page DI–347)
5. **INSTALL MAGNETIC CLUTCH RELAY**
6. **INSTALL NO. 4 HEATER TO REGISTER DUCT**
7. **INSTALL GLOVE COMPARTMENT DOOR**

EXTRA–HI RELAY (Auto A/C)

AC2F7–01

INSPECTION

1. **REMOVE GLOVE COMPARTMENT DOOR**
   (See Pub. No. RM517E on page BO–55)
2. **REMOVE NO. 4 HEATER TO REGISTER DUCT**

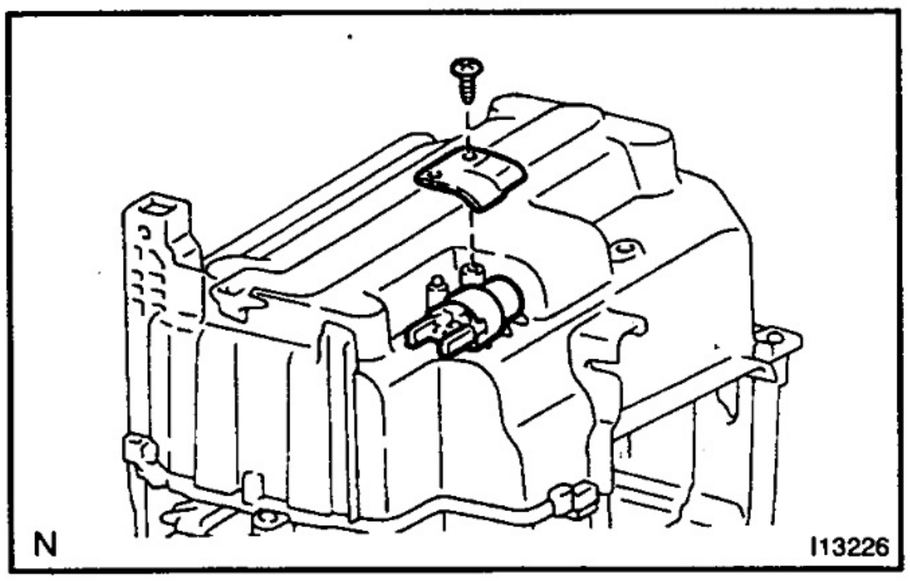

3. **REMOVE EXTRA–HI RELAY**
(a) Disconnect the connector.
(b) Remove the screw and extra–hi relay.

4. **INSPECT EXTRA–HI RELAY (See page DI–337)**
5. **INSTALL EXTRA–HI RELAY**
6. **INSTALL NO. 4 HEATER TO REGISTER DUCT**
7. **INSTALL GLOVE COMPARTMENT DOOR**

EXTRA–HI RELAY (for Rear A/C)

AC2F6–01

INSPECTION

1. REMOVE REAR QUARTER TRIM RH

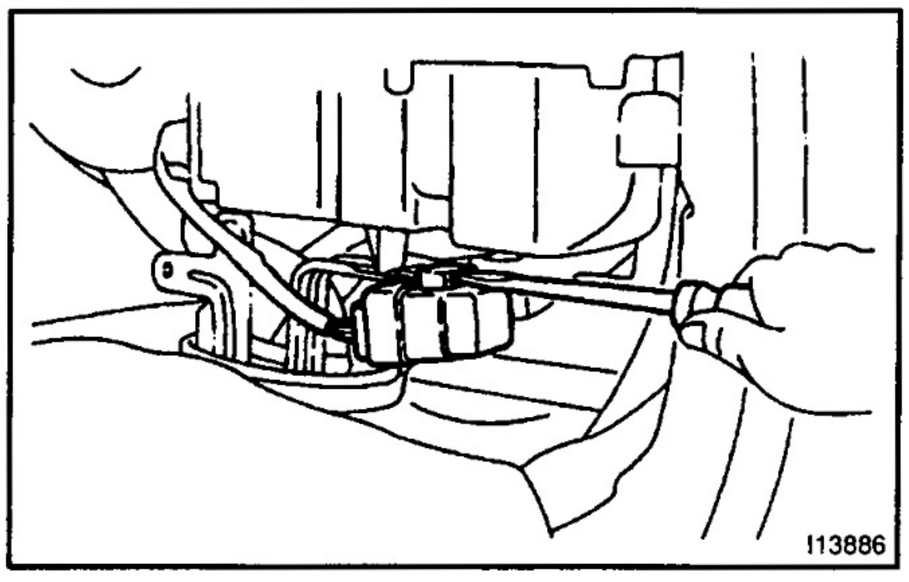

2. REMOVE EXTRA–HI RELAY

(a) Disconnect the connector.

(b) Using a screwdriver, remove the extra–hi relay.

HINT:

Type the screwdriver tip before use.

3. INSPECT EXTRA–HI RELAY (See page DI–340)

4. INSTALL EXTRA–HI RELAY

5. INSTALL REAR QUARTER TRIM RH

AIR CONDITIONING CONTROL ASSEMBLY (Auto A/C)

COMPONENTS

AC2F8-01

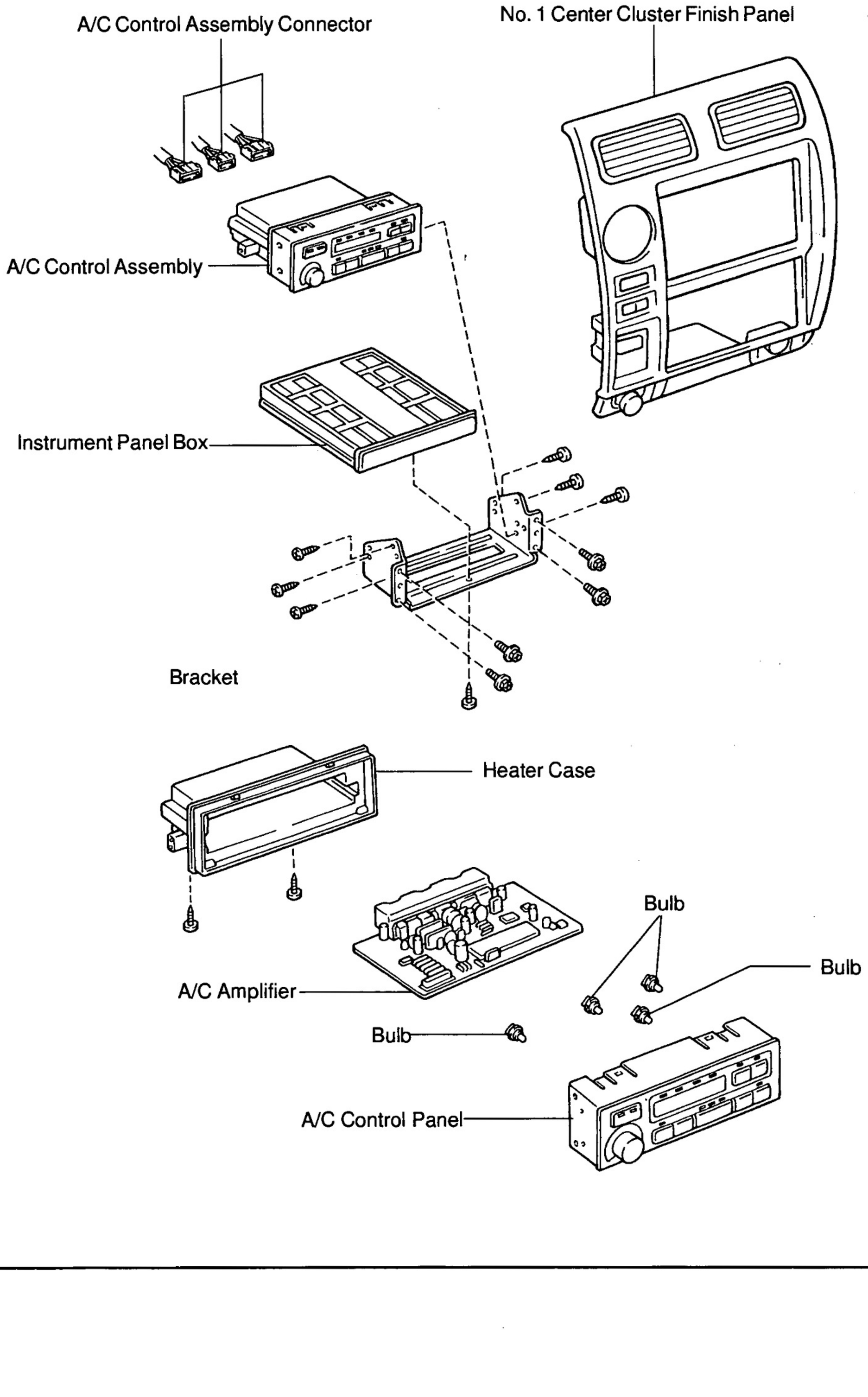

N

I13463

AC2F9–01

REMOVAL

1. REMOVE NO. 1 CENTER CLUSTER FINISH PANEL
(See Pub.. No. RM517E on page BO–55)

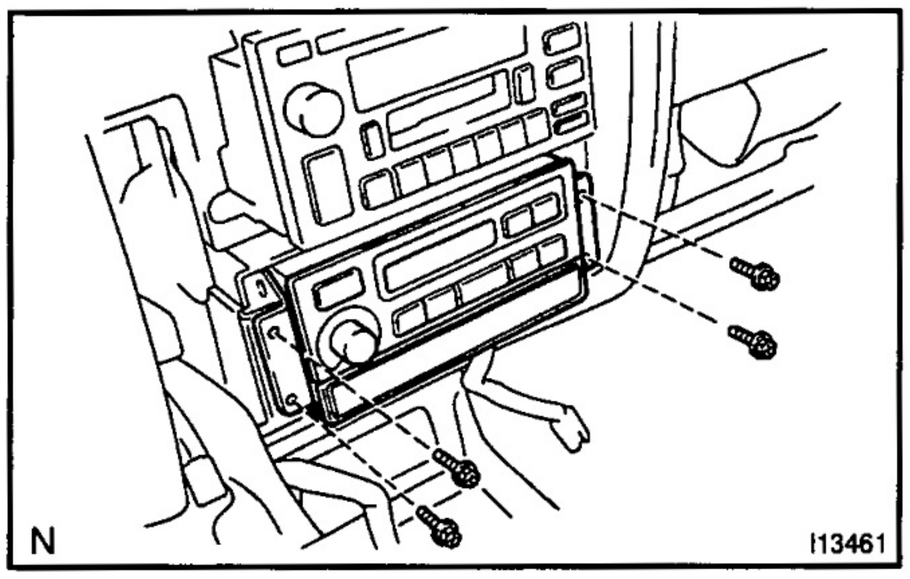

2. REMOVE A/C CONTROL ASSEMBLY

(a) Remove the 4 bolts and A/C control assembly with instrument panel box, then disconnect the connectors.

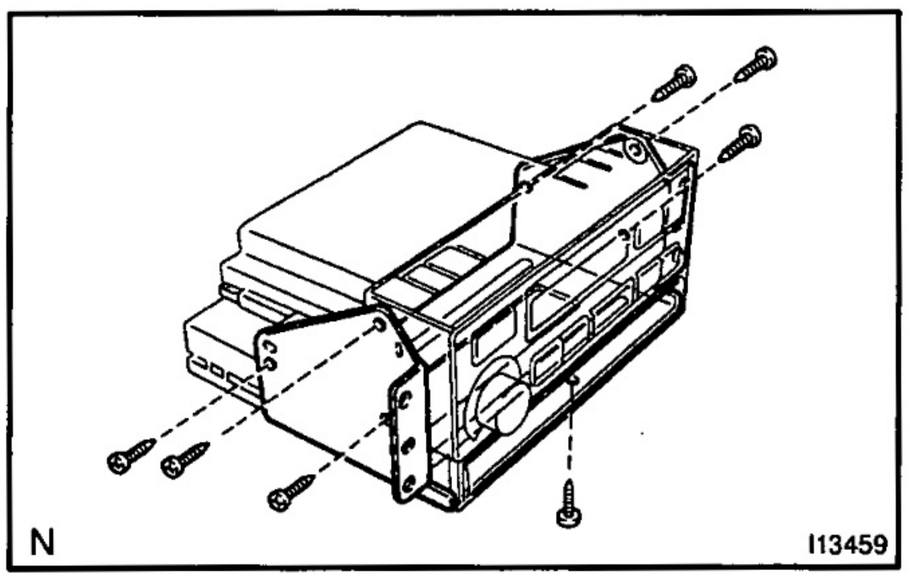

(b) Remove the 6 screws and separate the A/C control assembly and instrument panel box.

AC2FA-01

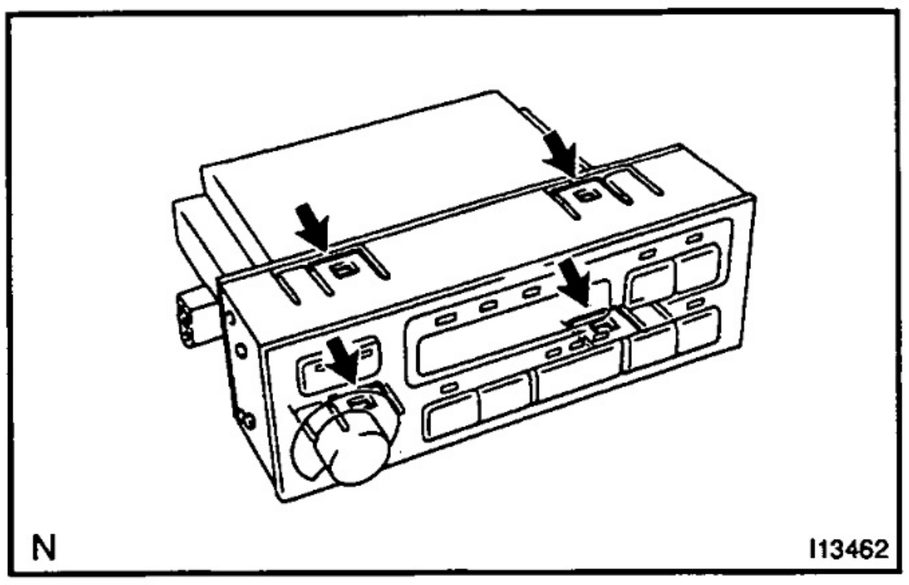

DISASSEMBLY

1. REMOVE A/C AMPLIFIER

(a) Using a screwdriver, release the 4 claws and separate the A/C control panel and A/C amplifier then disconnect the flat harness.

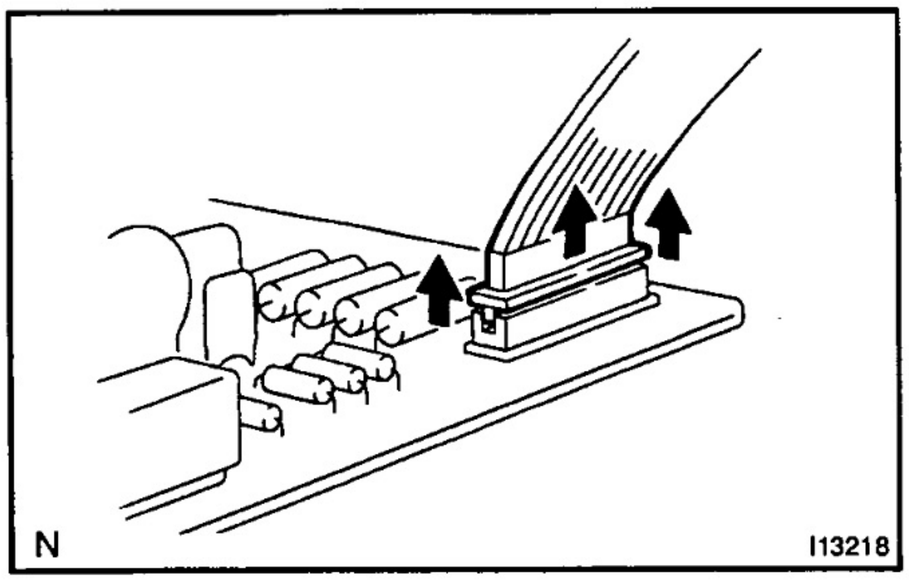

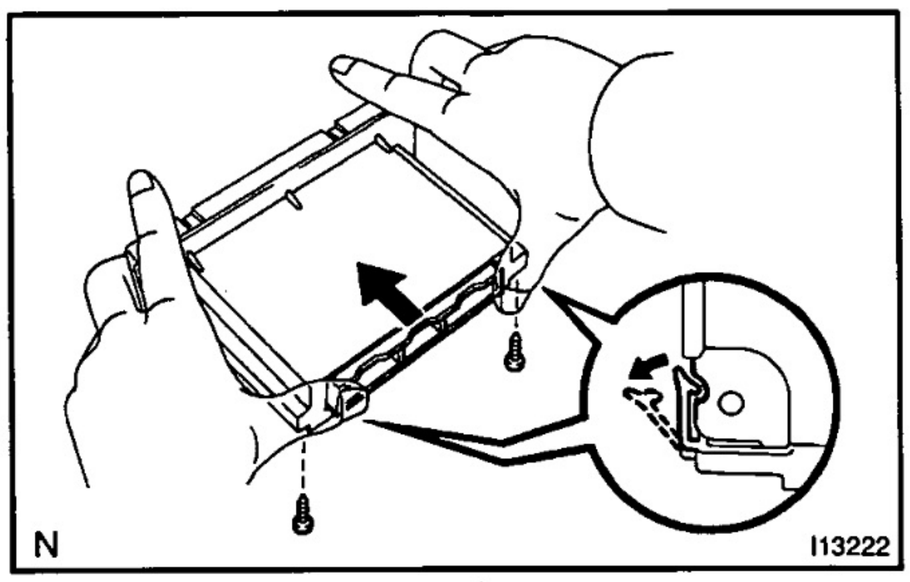

(b) Remove the 2 screws.
(c) Release the 2 claws.
(d) Push the connector of A/C amplifier and remove the A/C amplifier from the heater case.

2. REMOVE BULBS

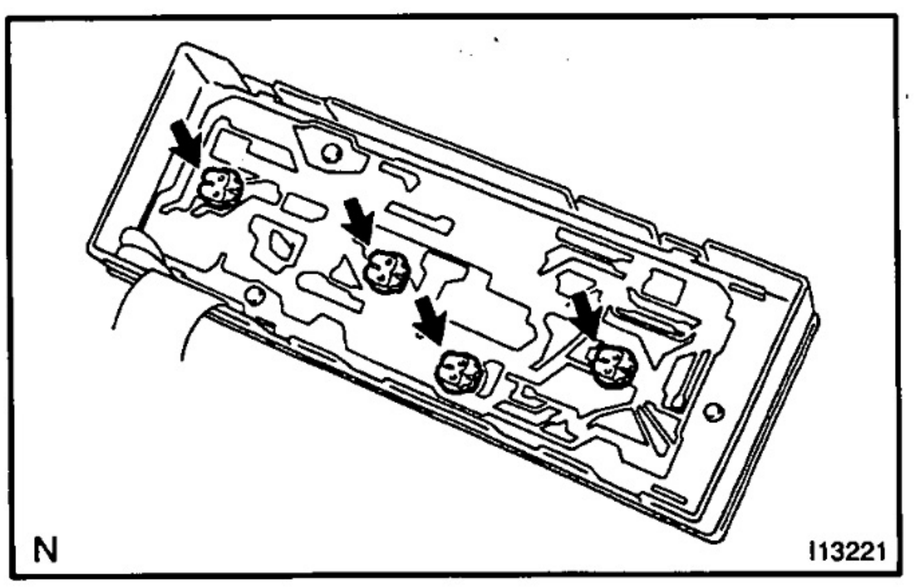

AC2FB–01

INSPECTION

1. INSPECT ILLUMINATION OPERATION

(a) Connect the positive (+) lead from the battery to terminal C–9 and negative (–) lead to terminal C–4, then check that the illuminations light up.

If illuminations does not light up, proceed next inspection.

(b) Separate the A/C control panel and A/C amplifier (See page AC–31).

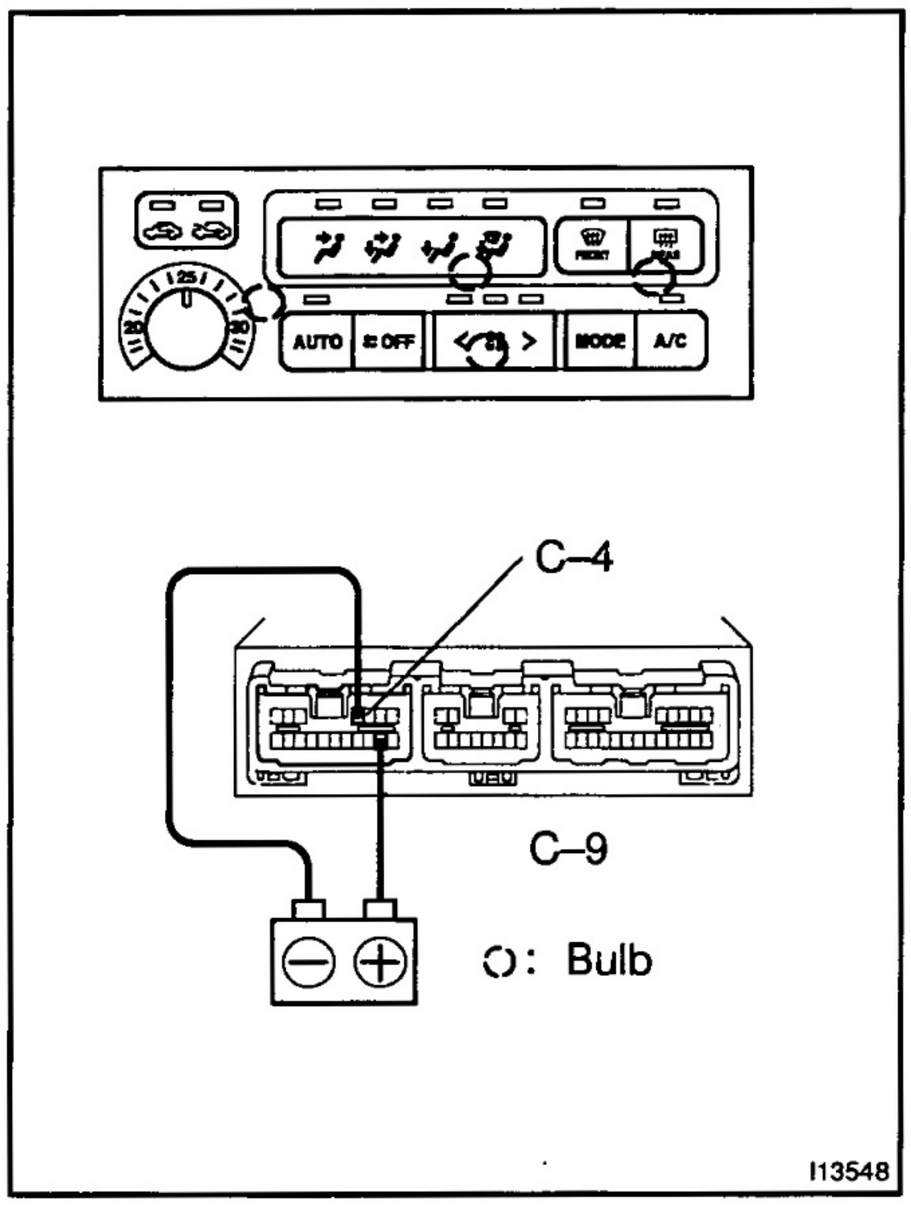

(c) Connect the positive (+) lead from the eight 1.5 V dry cell batteries to terminal 20 and negative (–) lead to terminal 2 then check that illuminations light up.

If there is bulb not light up, replace the bulb only.

If all bulb does not light up, replace the A/C control panel.

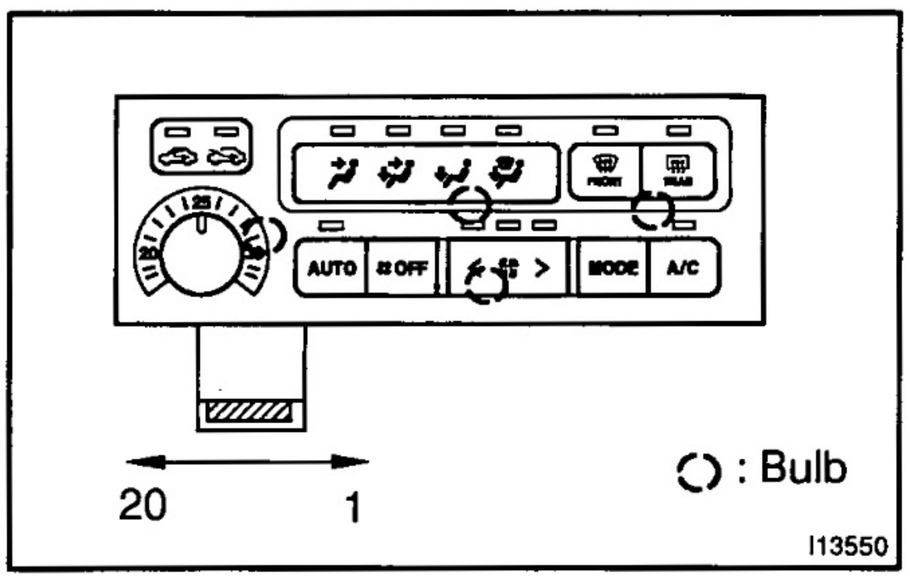

2. INSPECT INDICATOR OPERATION

(a) Connect the positive (+) lead from the battery to terminal A–1 and negative (–) lead to terminal A–18, then check that the indicators light up.

If indicators does not light up, proceed next inspection.

(b) Separate A/C control panel and A/C amplifier (See page AC–31).

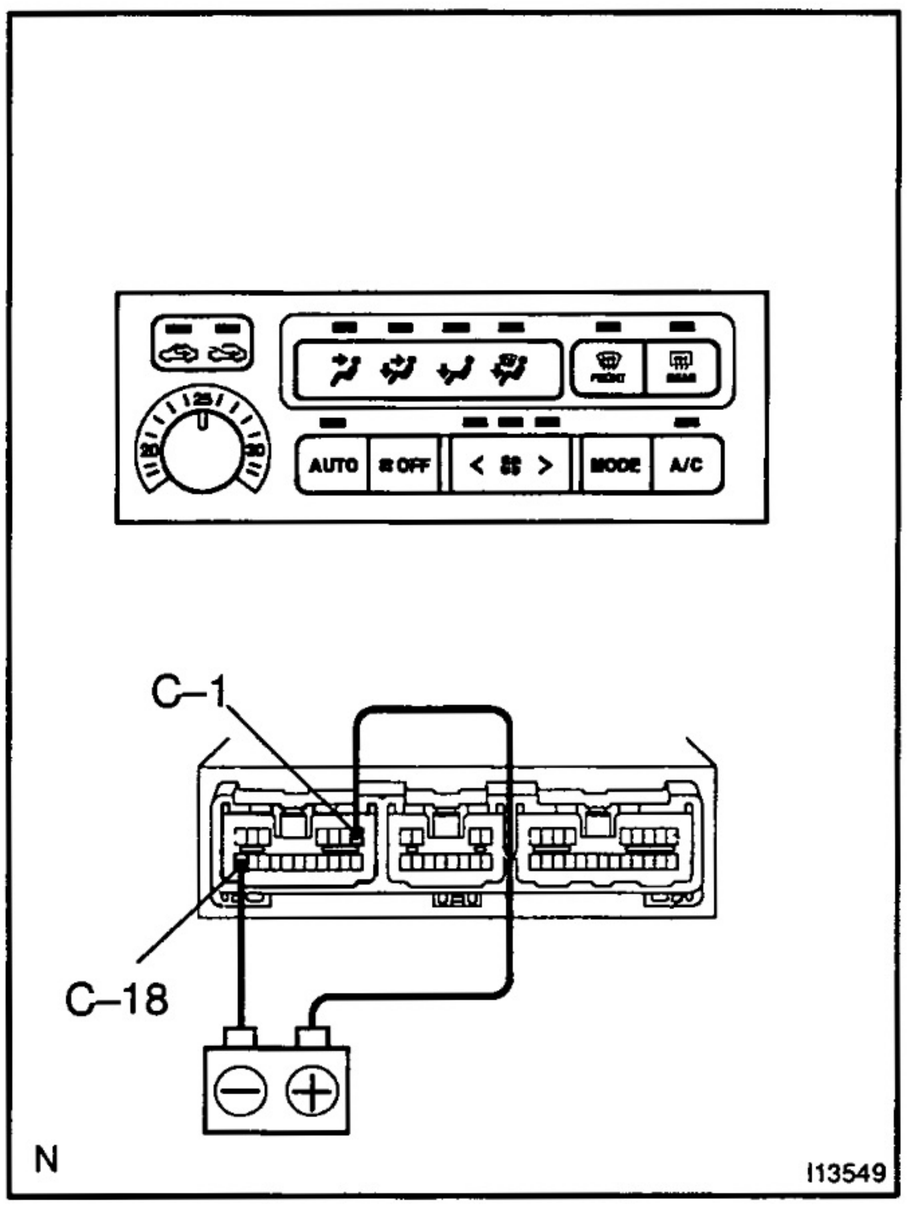

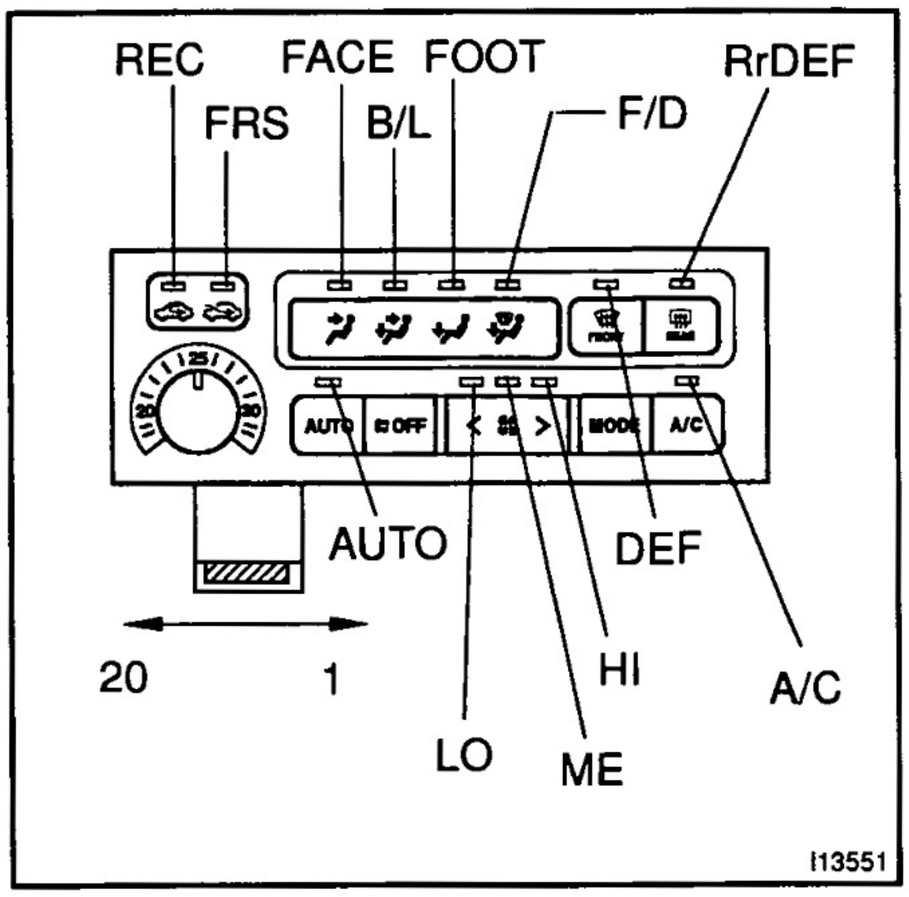

(c) Connect two 1.5 V dry cell batteries to the terminals in the table to the below, and then check that the indicators light up.

Indicator	Terminal to connect to dry cell (+)	Terminal to connect to dry cell (–)
DEF	18	12
F/D	18	10
FOOT	18	8
B/L	18	6
FACE	18	4
A/C	16	10
RrDEF	16	8
REC	16	6
FRS	16	4
AUTO	14	10
HI	14	8
ME	14	6
LO	14	4

If operation is not as specified, replace the A/C control panel.
If operation is as specified, replace A/C amplifier.

NOTICE:

- **The indicator lamp uses LEDs so do not mix up the positive (+) and negative (–) terminal of the dry cell batteries.**
- **To protect the LEDs, inspect each indicator for no more than 3 seconds each time.**

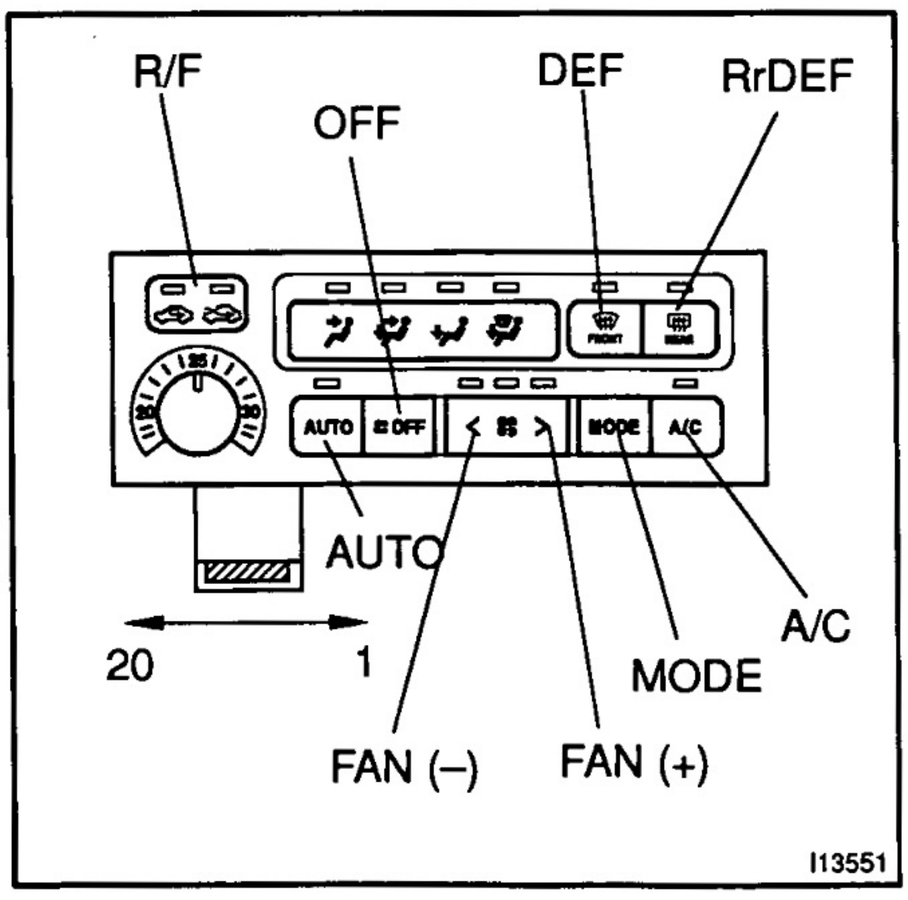

3. INSPECT SWITCH OPERATION

Check that continuity exists between terminals while the switch is pressed.

Switch	Tester connection	Specified condition
R/F	9 – 3	Continuity
RrDEF	9 – 5	Continuity
FrDEF	9 – 7	Continuity
MODE	11 – 3	Continuity
FAN (+)	11 – 5	Continuity
FAN (–)	11 – 7	Continuity
OFF	13 – 3	Continuity
A/C	13 – 5	Continuity
AUTO	13 – 7	Continuity

If operations are not as specified, replace the A/C control panel.

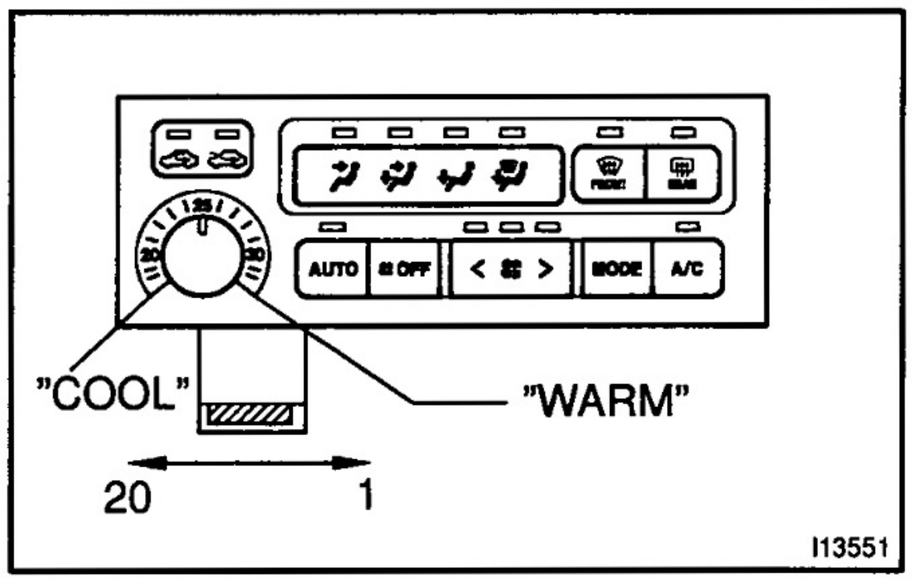

4. INSPECT TEMPERATURE SET SWITCH OPERATION

(a) Measure resistance between terminals 19 and 1.
Standard resistance: 3.0 kΩ

(b) Gradually move the temperature control dial from the "WARM" side to "COOL" side, then check that the resistance between terminals 17 and 19 increase from 0 to 3.0 kΩ.

If operation is not as specified, replace the A/C control panel.

AC2FC–01

REASSEMBLY

1. INSTALL BULB

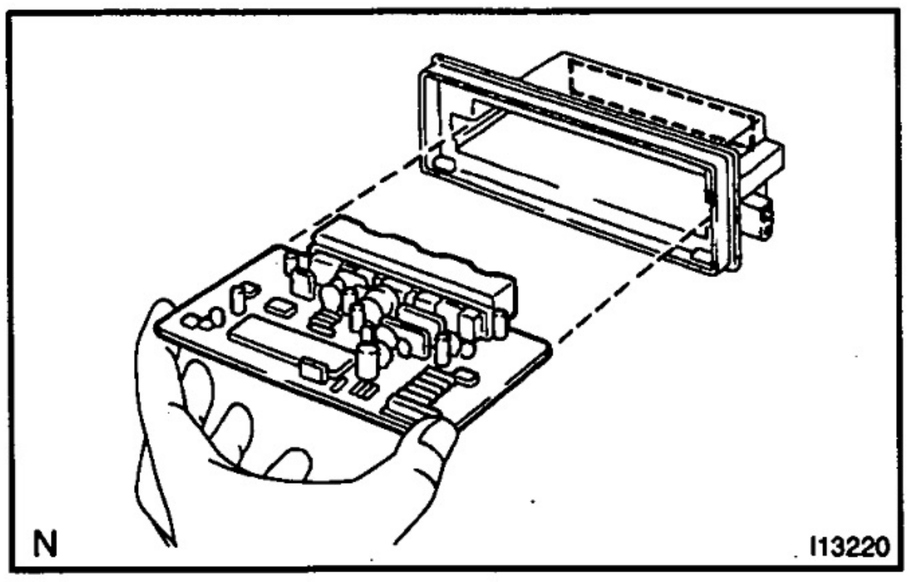

2. INSTALL A/C AMPLIFIER

(a) Install the A/C amplifier to the heater case.

(b) Fit the 2 claws of the heater case and install the 2 screws.

HINT:

Hold the supply parts A/C amplifier using the electrostatic prevention bag it comes packed in.

NOTICE:

- **When installing the A/C amplifier in the case, always hold the A/C amplifier as shown in the illustration.**
- **Do not hold the A/C amplifier in you bare hands–static electricity may burn out the A/C amplifier.**

(c) Connect the flat harness of A/C control panel to A/C amplifier.

(d) Install the A/C control panel to A/C amplifier and fit the 4 claws.

AC2FD–01

INSTALLATION

Installation is in the reverse order of removal (See page AC–30).

ALPHABETICAL INDEX

A

	Page
ABBREVIATIONS USED IN THIS MANUAL (TERMS)	IN–38
ACCESSORY METER	BE–25
ACTIVE TRACTION CONTROL & BRAKE ASSIST (BA) SYSTEM (DIAGNOSTICS)	DI–235
AIR CONDITIONING (PREPARATION)	PP–24
AIR CONDITIONING (SERVICE SPECIFICATIONS)	SS–15
AIR CONDITIONING CONTROL ASSEMBLY (Auto A/C)	AC–29
AIR CONDITIONING SYSTEM	AC–1
AIR CONDITIONING SYSTEM (DIAGNOSTICS)	DI–278
AIR OUTLET SERVOMOTOR (Auto A/C)	AC–22
AMBIENT TEMPERATURE SENSOR (Auto A/C)	AC–25
ANTI–LOCK BRAKE SYSTEM (DIAGNOSTICS)	DI–84
AUTOMATIC TRANSMISSION (DIAGNOSTICS)	DI–1
AUTOMATIC TRANSMISSION (PREPARATION)	PP–1
AUTOMATIC TRANSMISSION (SERVICE SPECIFICATIONS)	SS–4

B

	Page
BLOWER UNIT (Auto A/C)	AC–16
BODY (PREPARATION)	PP–20
BODY (SERVICE SPECIFICATIONS)	SS–13
BODY ELECTRICAL (PREPARATION)	PP–18
BRAKE (PREPARATION)	PP–13
BRAKE (SERVICE SPECIFICATIONS)	SS–11
BRAKE FLUID	BR–1
BRAKE PEDAL	BR–6

C

	Page
CENTER DIFFERENTIAL (VF3BM)	TR–26
CIRCUIT INSPECTION (ACTIVE TRACTION CONTROL & BRAKE ASSIST (BA) SYSTEM) (DIAGNOSTICS)	DI–244
CIRCUIT INSPECTION (AIR CONDITIONING SYSTEM) (DIAGNOSTICS)	DI–290
CIRCUIT INSPECTION (ANTI–LOCK BRAKE SYSTEM) (DIAGNOSTICS)	DI–101
CIRCUIT INSPECTION (AUTOMATIC TRANSMISSION) (DIAGNOSTICS)	DI–28
CIRCUIT INSPECTION (ENGINE IMMOBILISER SYSTEM (5VZ–FE)) (DIAGNOSTICS)	DI–267
CIRCUIT INSPECTION (VEHICLE STABILITY CONTROL (VSC) & BRAKE ASSIST (BA) SYSTEM) (DIAGNOSTICS)	DI–194
COMBINATION METER	BE–11
CUSTOMER PROBLEM ANALYSIS CHECK (ACTIVE TRACTION CONTROL & BRAKE ASSIST (BA) SYSTEM) (DIAGNOSTICS)	DI–236
CUSTOMER PROBLEM ANALYSIS CHECK (AIR CONDITIONING SYSTEM) (DIAGNOSTICS)	DI–279
CUSTOMER PROBLEM ANALYSIS CHECK (ANTI–LOCK BRAKE SYSTEM) (DIAGNOSTICS)	DI–85
CUSTOMER PROBLEM ANALYSIS CHECK (AUTOMATIC TRANSMISSION) (DIAGNOSTICS)	DI–3
CUSTOMER PROBLEM ANALYSIS CHECK (ENGINE IMMOBILISER SYSTEM (5VZ–FE)) (DIAGNOSTICS)	DI–259
CUSTOMER PROBLEM ANALYSIS CHECK (VEHICLE STABILITY CONTROL (VSC) & BRAKE ASSIST (BA) SYSTEM) (DIAGNOSTICS)	DI–183

D

	Page
DIAGNOSTIC TROUBLE CODE CHART (ACTIVE TRACTION CONTROL & BRAKE ASSIST (BA) SYSTEM) (DIAGNOSTICS)	DI–240
DIAGNOSTIC TROUBLE CODE CHART (AIR CONDITIONING SYSTEM) (DIAGNOSTICS)	DI–284
DIAGNOSTIC TROUBLE CODE CHART (ANTI–LOCK BRAKE SYSTEM) (DIAGNOSTICS)	DI–92
DIAGNOSTIC TROUBLE CODE CHART (AUTOMATIC TRANSMISSION) (DIAGNOSTICS)	DI–17
DIAGNOSTIC TROUBLE CODE CHART (ENGINE IMMOBILISER SYSTEM (5VZ–FE)) (DIAGNOSTICS)	DI–263
DIAGNOSTIC TROUBLE CODE CHART (VEHICLE STABILITY CONTROL (VSC) & BRAKE ASSIST (BA) SYSTEM) (DIAGNOSTICS)	DI–190
DRIVEN SPROCKET (VF3BM)	TR–17

E

	Page
ENGINE IMMOBILISER SYSTEM (Except 5VZ–FE)	BE–56
ENGINE IMMOBILISER SYSTEM (5VZ–FE)	BE–54
ENGINE IMMOBILISER SYSTEM (5VZ–FE) (DIAGNOSTICS)	DI–258
EXTRA–HI RELAY (Auto A/C)	AC–27
EXTRA–HI RELAY (for Rear A/C)	AC–28

F

	Page
FOG LIGHT SYSTEM	BE–8
FOR ALL OF VEHICLES	IN–9
FRONT BUMPER	BO–1
FRONT COOLING UNIT (Auto A/C)	AC–3
FRONT DOOR	BO–2
FRONT HEATER UNIT (Auto A/C)	AC–12

G

	Page
GENERAL INFORMATION (HOW TO TROUBLESHOOT ECU CONTROLLED SYSTEMS)	IN–22
GENERAL INFORMATION (HOW TO USE THIS MANUAL)	IN–1
GENERAL INFORMATION (REPAIR INSTRUCTIONS)	IN–4

ID

H

	Page
HEADLIGHT AND TAILLIGHT SYSTEM	BE–6
HOW TO PROCEED WITH TROUBLESHOOTING (ACTIVE TRACTION CONTROL & BRAKE ASSIST (BA) SYSTEM) (DIAGNOSTICS)	DI–235
HOW TO PROCEED WITH TROUBLESHOOTING (AIR CONDITIONING SYSTEM) (DIAGNOSTICS)	DI–278
HOW TO PROCEED WITH TROUBLESHOOTING (ANTI–LOCK BRAKE SYSTEM) (DIAGNOSTICS)	DI–84
HOW TO PROCEED WITH TROUBLESHOOTING (AUTOMATIC TRANSMISSION) (DIAGNOSTICS)	DI–1
HOW TO PROCEED WITH TROUBLESHOOTING (ENGINE IMMOBILISER SYSTEM (5VZ–FE)) (DIAGNOSTICS)	DI–258
HOW TO PROCEED WITH TROUBLESHOOTING (HOW TO TROUBLESHOOT ECU CONTROLLED SYSTEMS)	IN–23
HOW TO PROCEED WITH TROUBLESHOOTING (VEHICLE STABILITY CONTROL (VSC) & BRAKE ASSIST (BA) SYSTEM) (DIAGNOSTICS)	DI–182
HOW TO TROUBLESHOOT ECU CONTROLLED SYSTEMS	IN–22
HOW TO USE THE DIAGNOSTIC CHART AND INSPECTION PROCEDURE (HOW TO TROUBLESHOOT ECU CONTROLLED SYSTEMS)	IN–33
HOW TO USE THIS MANUAL	IN–1
HYDRAULIC BRAKE BOOSTER	BR–8

I

IDENTIFICATION INFORMATION	IN–3
IGNITION SWITCH AND KEY UNLOCK WARNING SWITCH	BE–1
INPUT SHAFT (VF3BM)	TR–24
INSTRUMENT PANEL	BO–14

M

MAGNETIC CLUTCH RELAY (Auto A/C)	AC–26

O

OIL PUMP BODY (VF3BM)	TR–13
OIL SEAL (VF3BM)	TR–33

P

	Page
PARKING LOCK PAWL	AT–5
PARTS LOCATION (ACTIVE TRACTION CONTROL & BRAKE ASSIST (BA) SYSTEM) (DIAGNOSTICS)	DI–241
PARTS LOCATION (ANTI–LOCK BRAKE SYSTEM) (DIAGNOSTICS)	DI–95
PARTS LOCATION (AUTOMATIC TRANSMISSION) (DIAGNOSTICS)	DI–18
PARTS LOCATION (ENGINE IMMOBILISER SYSTEM (5VZ–FE)) (DIAGNOSTICS)	DI–264
PARTS LOCATION (VEHICLE STABILITY CONTROL (VSC) & BRAKE ASSIST (BA) SYSTEM) (DIAGNOSTICS)	DI–191
PLANETARY GEAR (VF3BM)	TR–30
POWER MIRROR CONTROL SYSTEM	BE–52
POWER TRANSISTOR (for Front A/C)	AC–20
POWER TRANSISTOR (for Rear A/C)	AC–21
POWER WINDOW CONTROL SYSTEM	BE–35
PRE–CHECK (ACTIVE TRACTION CONTROL & BRAKE ASSIST (BA) SYSTEM) (DIAGNOSTICS)	DI–237
PRE–CHECK (AIR CONDITIONING SYSTEM) (DIAGNOSTICS)	DI–280
PRE–CHECK (ANTI–LOCK BRAKE SYSTEM) (DIAGNOSTICS)	DI–86
PRE–CHECK (AUTOMATIC TRANSMISSION) (DIAGNOSTICS)	DI–4
PRE–CHECK (ENGINE IMMOBILISER SYSTEM (5VZ–FE)) (DIAGNOSTICS)	DI–260
PRE–CHECK (VEHICLE STABILITY CONTROL (VSC) & BRAKE ASSIST (BA) SYSTEM) (DIAGNOSTICS)	DI–184
PRECAUTION (FOR ALL OF VEHICLES)	IN–9
PROBLEM SYMPTOMS TABLE (ACTIVE TRACTION CONTROL & BRAKE ASSIST (BA) SYSTEM) (DIAGNOSTICS)	DI–243
PROBLEM SYMPTOMS TABLE (AIR CONDITIONING SYSTEM) (DIAGNOSTICS)	DI–288
PROBLEM SYMPTOMS TABLE (ANTI–LOCK BRAKE SYSTEM) (DIAGNOSTICS)	DI–100
PROBLEM SYMPTOMS TABLE (AUTOMATIC TRANSMISSION) (DIAGNOSTICS)	DI–24
PROBLEM SYMPTOMS TABLE (ENGINE IMMOBILISER SYSTEM (5VZ–FE)) (DIAGNOSTICS)	DI–266
PROBLEM SYMPTOMS TABLE (VEHICLE STABILITY CONTROL (VSC) & BRAKE ASSIST (BA) SYSTEM) (DIAGNOSTICS)	DI–193

R

REAR COOLING UNIT (Auto A/C)	AC–7
REAR DOOR	BO–8
REAR NO.1 SEAT (Split Type)	BO–22
REAR NO.1 SEAT (Split Type: Double Side)	BO–38
REAR NO.1 SEAT (Split Type: Single Side)	BO–31
REAR OUTPUT SHAFT (VF3BM)	TR–19
REPAIR INSTRUCTIONS	IN–4
ROOM TEMPERATURE SENSOR (Auto A/C)	AC–24

S

SOLAR SENSOR (Auto A/C)	AC–23
STANDARD BOLT (SERVICE SPECIFICATIONS)	SS–1

T

Page

TERMINALS OF ECU
(ACTIVE TRACTION CONTROL &
BRAKE ASSIST (BA) SYSTEM)
(DIAGNOSTICS) DI–242
TERMINALS OF ECU (AIR CONDITIONING SYSTEM)
(DIAGNOSTICS) DI–285
TERMINALS OF ECU (ANTI–LOCK BRAKE SYSTEM)
(DIAGNOSTICS) DI–96
TERMINALS OF ECU (AUTOMATIC TRANSMISSION)
(DIAGNOSTICS) DI–20
TERMINALS OF ECU
(ENGINE IMMOBILISER SYSTEM (5VZ–FE))
(DIAGNOSTICS) DI–265
TERMINALS OF ECU
(VEHICLE STABILITY CONTROL (VSC) &
BRAKE ASSIST (BA) SYSTEM)
(DIAGNOSTICS) DI–192
TERMS IN–38
TRANSFER (VF3BM)
(PREPARATION) PP–6
TRANSFER (VF3BM)
(SERVICE SPECIFICATIONS) SS–8
TRANSFER ASSEMBLY (VF3BM) TR–1

V

VALVE BODY ASSEMBLY (1KZ–TE) AT–1
VEHICLE IDENTIFICATION AND ENGINE SERIAL
NUMBER (IDENTIFICATION INFORMATION) IN–3
VEHICLE LIFT AND SUPPORT LOCATIONS
(REPAIR INSTRUCTIONS) IN–8
VEHICLE STABILITY CONTROL (VSC) &
BRAKE ASSIST (BA) SYSTEM
(DIAGNOSTICS) DI–182

W

WIRELESS DOOR LOCK CONTROL SYSTEM BE–37