TOYOTA

2L, 3L ENGINE

REPAIR MANUAL

Apr., 1996

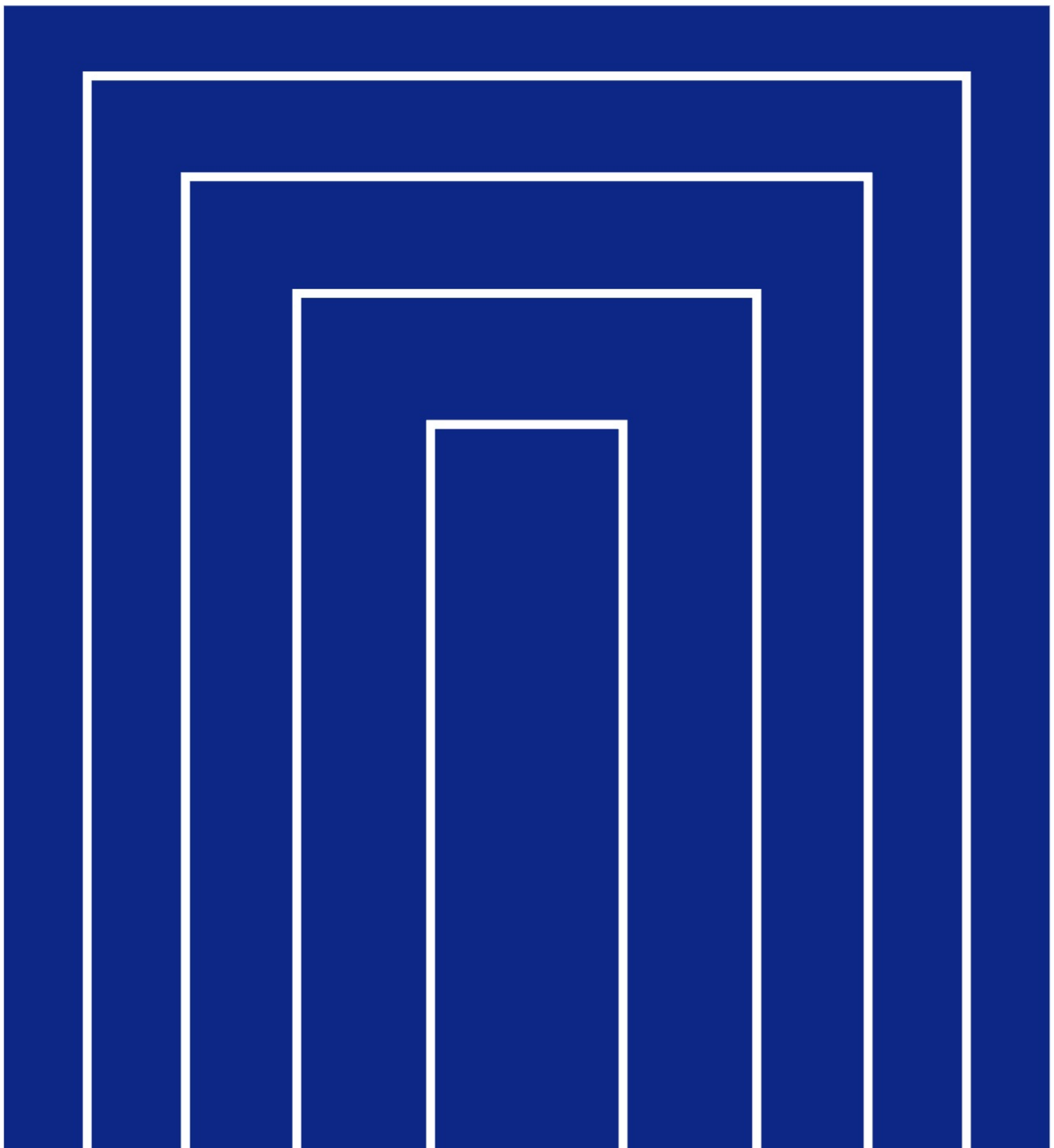

Pub. No. RM520E

FOREWORD

This repair manual has been prepared to provide information covering general service repairs for the 2L and 3L engines mounted on the TOYOTA LAND CRUISER/LAND CRUISER PRADO, HIACE, HILUX, DYNA100 and DYNA150.

Applicable models:
LJ 90, 95 series
LH 102, 103, 104, 112, 113, 114, 115, 125 series
LN 80, 81, 85, 86, 90, 105, 106, 107, 108, 110, 111 series
LY 100, 211 series

Please note that the publications below have also been prepared as relevant service manuals to the components and system in this engine.

Manual Name	Pub. No.
• LAND CRUISER/LAND CRUISER PRADO New Car Features	NCF131E

All informations in this manual is based on the latest product information at the time of publication. However, specifications and procedures are subject to change without notice.

TOYOTA MOTOR CORPORATION

©1996 TOYOTA MOTOR CORPORATION
All rights reserved. This book may not be reproduced or copied, in whole or in part, without the written permission of Toyota Motor Corporation.

INTRODUCTION IN
ENGINE EG
STARTING ST
CHARGING CH

INTRODUCTION

HOW TO USE THIS MANUAL ..... IN— 2
IDENTIFICATION INFORMATION ..... IN— 4
GENERAL REPAIR INSTRUCTIONS ..... IN— 4
PRECAUTION ..... IN— 7
ABBREVIATIONS USED IN THIS MANUAL ..... IN— 8
STANDARD BOLT TORQUE SPECIFICATIONS ..... IN— 9

HOW TO USE THIS MANUAL

IN002-16

INDEX

An INDEX is provided on the first page of each section to guide you to the item to be repaired. To assist you in finding your way through the manual, the Section Title and major heading are given at the top of every page.

IN

GENERAL DESCRIPTION

At the beginning of each section, a General Description (Precautions) is given that pertains to all repair operations contained in that section.
Read these precautions before starting any repair task.

TROUBLESHOOTING

TROUBLESHOOTING tables are included for each system to help you diagnose the problem and find the cause.

PREPARATION

Preparation lists the SST (Special Service Tools), recommended tools, equipment, lubricant and SSM (Special Service Materials) which should be prepared before beginning the operation and explains the purpose of each one.

REPAIR PROCEDURES

Most repair operations begin with an overview illustration. It identifies the components and shows how the parts fit together.
Example:

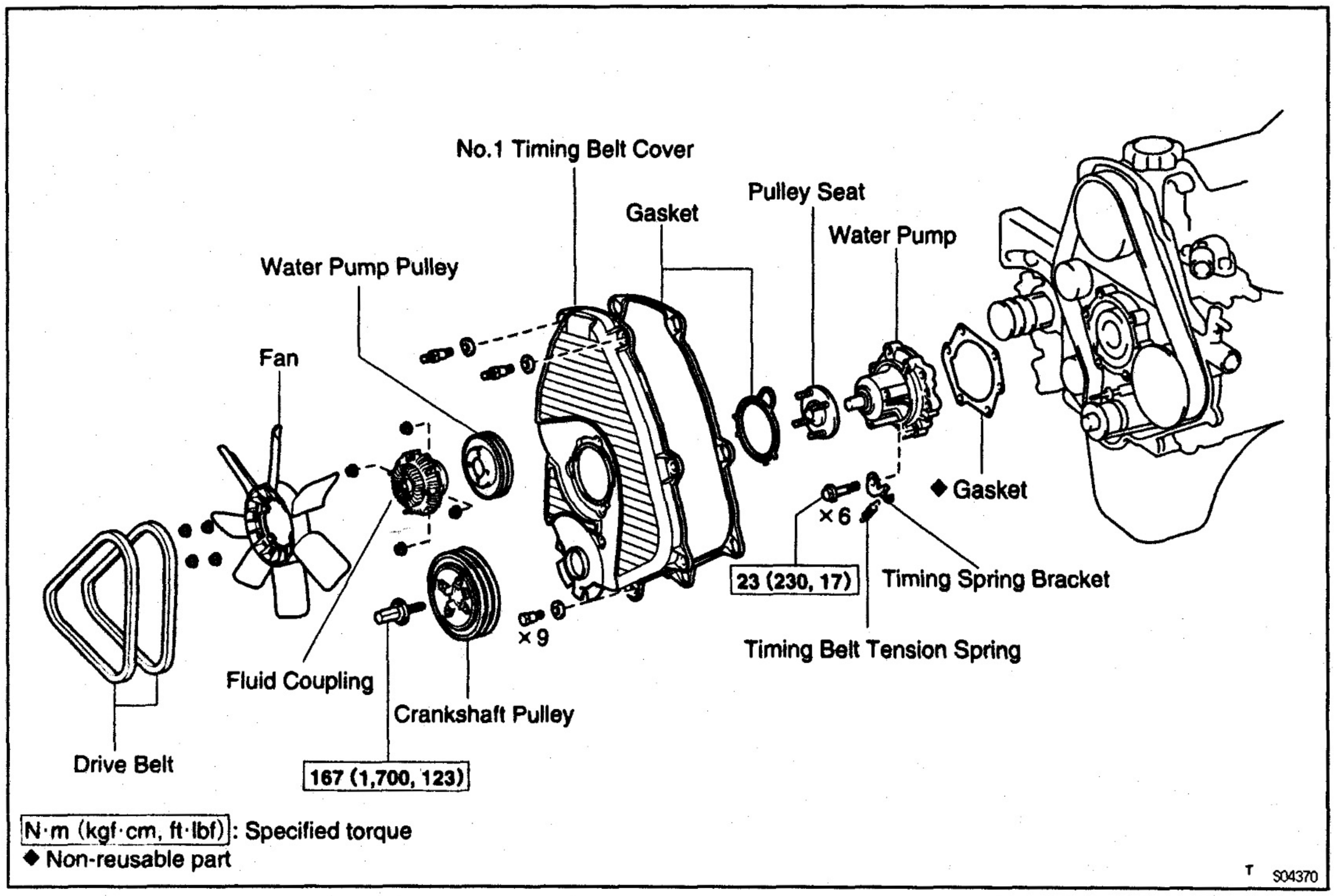

The procedures are presented in a step–by–step format:

- The illustration shows what to do and where to do it.
- The task heading tells what to do.
- The detailed text tells how to perform the task and gives other information such as specifications and warnings.

Example:

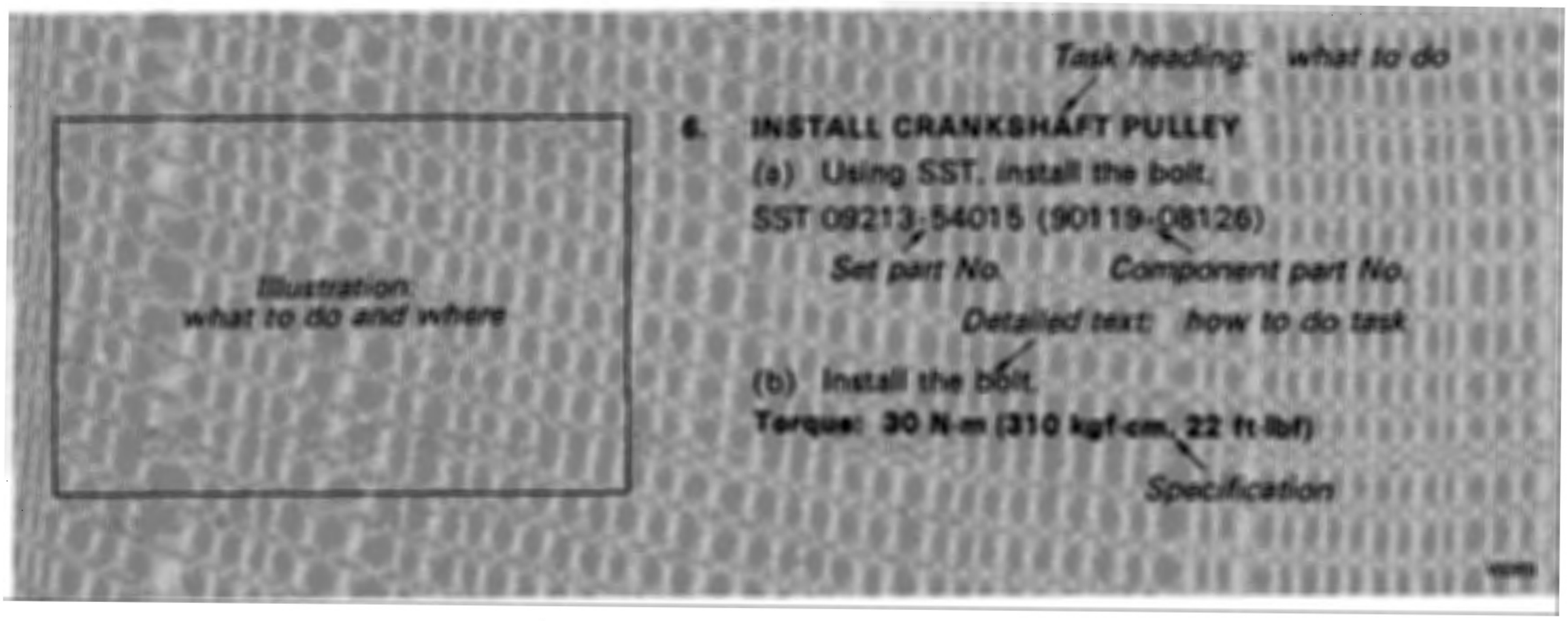

This format provides the experienced technician with a FAST TRACK to the information needed. The upper case task heading can be read at a glance when necessary, and the text below it provides detailed information. Important specifications and warnings always stand out in bold type.

REFERENCES

References have been kept to a minimum. However, when they are required you are given the page to refer to.

SPECIFICATIONS

Specifications are presented in bold type throughout the text where needed. You never have to leave the procedure to look up your specifications. They are also found at the end of each section, for quick reference.

CAUTIONS, NOTICES, HINTS:

- CAUTIONS are presented in bold type, and indicate there is a possibility of injury to you or other people.
- NOTICES are also presented in bold type, and indicate the possibility of damage to the components being repaired.
- HINTS are separated from the text but do not appear in bold. They provide additional information to help you efficiently perform the repair.

SI UNIT

The UNIT given in this manual are primarily expressed with the SI UNIT (International System of Unit), and alternately expressed in the metric system and in the yard/pound system.
Example:
Torque: 30 N·m (310 kgf·cm, 22 ft·lbf)

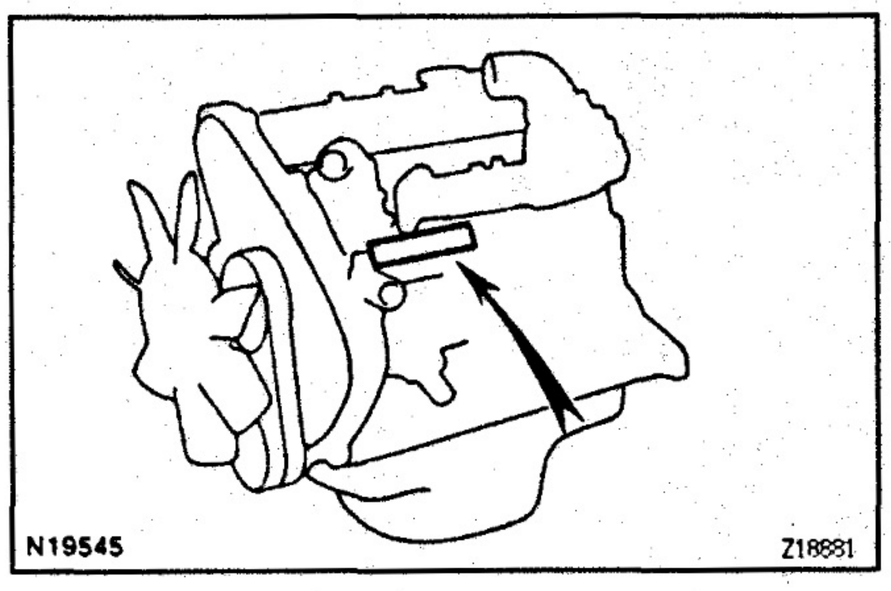

IDENTIFICATION INFORMATION

IN004-02

ENGINE SERIAL NUMBER

The engine serial number is stamped on the engine block as shown.

GENERAL REPAIR INSTRUCTIONS

IN05V-01

1. Use fender, seat and floor covers to keep the vehicle clean and prevent damage.
2. During disassembly, keep parts in the appropriate order to facilitate reassembly.
3. Observe the following:
   (a) Before doing electrical work, disconnect the negative cable from the battery terminal.
   (b) If it is necessary to disconnect the battery for inspection or repair, always disconnect the cable from the negative (–) terminal which is grounded to the vehicle body.
   (c) To prevent damage to the battery terminal post, loosen the terminal nut and raise the cable straight up without twisting or prying it.
   (d) Clean the battery terminal posts and cable terminals with a clean shop rag. Do not scrape them with a file or other abrasive objects.
   (e) Install the cable terminal to the battery post with the nut loose, and tighten the nut after installation. Do not use a hammer to tap the terminal onto the post.
   (f) Be sure the cover for the positive (+) terminal is properly in place.
4. Check hose and wiring connectors to make sure that they are secure and correct.

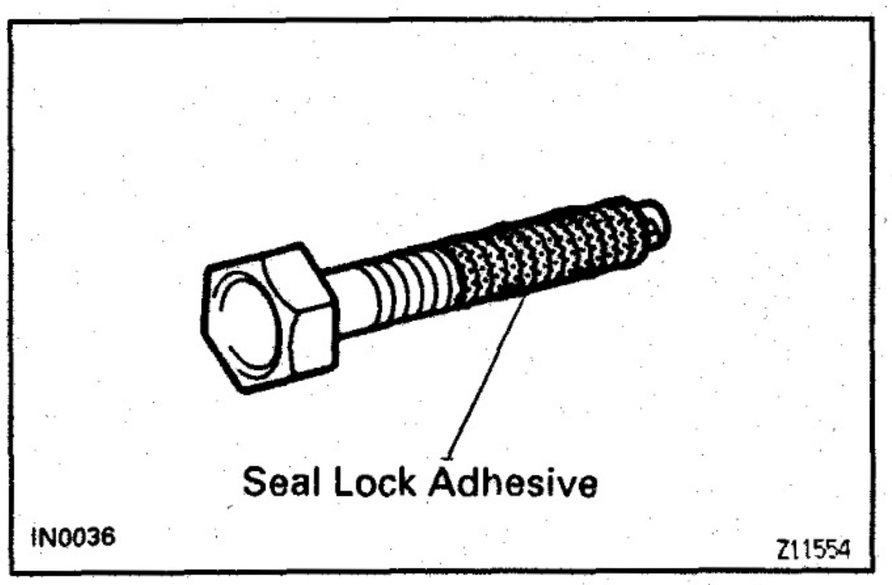

5. Non—reusable parts
   (a) Always replace cotter pins, gaskets, O—rings and oil seals etc. with new ones.
   (b) Non—reusable parts are indicated in the component illustrations by the "◆" symbol.
6. Precoated parts
   Precoated parts are bolts and nuts, etc. that are coated with a seal lock adhesive at the factory.
   (a) If a precoated part is retightened, loosened or caused to move in any way, it must be recoated with the specified adhesive.
   (b) When reusing precoated parts, clean off the old adhesive and dry with compressed air. Then apply the specified seal lock adhesive to the bolt, nut or threads.
   (c) Precoated parts are indicated in the component illustrations by the "★" symbol.
7. When necessary, use a sealer on gaskets to prevent leaks.
8. Carefully observe all specifications for bolt tightening torques. Always use a torque wrench.
9. Use of SST and SSM may be required, depending on the nature of the repair. Be sure to use SST and SSM where specified and follow the proper work procedure. A list of SST and SSM can be found in the preparation part at the front of each section in this manual.
10. When replacing fuses, be sure the new fuse has the correct amperage rating. DO NOT exceed the rating or use one with a lower rating.

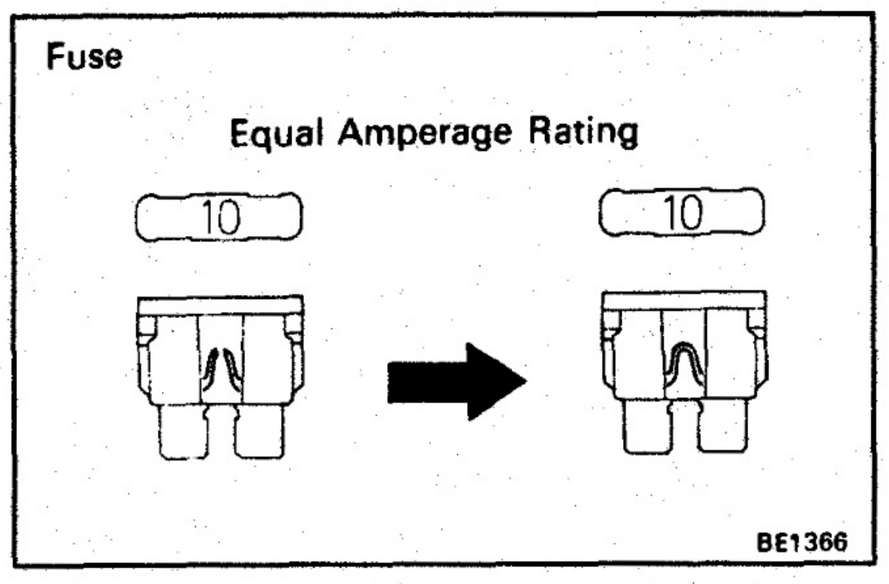

Illustration	Symbol	Part Name	Abbreviation
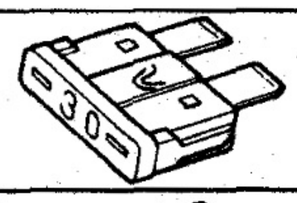 BE5594	 IN0365	FUSE	FUSE
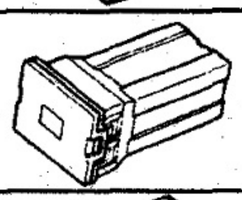 BE5595	 IN0366	MEDIUM CURRENT FUSE	M-FUSE
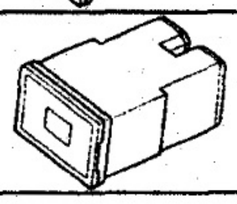 BE5596	 IN0367	HIGH CURRENT FUSE	H-FUSE
 BE5597	 IN0367	FUSIBLE LINK	FL
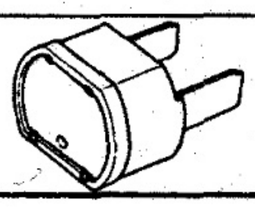 BE5598	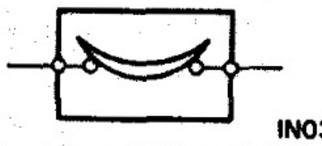 IN0366	CIRCUIT BREAKER	CB

V00076

11. Care must be taken when jacking up and supporting the vehicle. Be sure to lift and support the vehicle at the proper locations.
    (a) If the vehicle is to be jacked up only at the front or rear end, be sure to block the wheels at the opposite end in order to ensure safety.
    (b) After the vehicle is jacked up, be sure to support it on stands. It is extremely dangerous to do any work on a vehicle raised on a jack alone, even for a small job that can be finished quickly.
12. Observe these precautions to avoid damage to the parts:
    (a) Do not open the cover or case of the ECU unless absolutely necessary. (If the IC terminals are touched, the IC may be destroyed by static electricity.)
    (b) To disconnect vacuum hoses, pull on the end, not the middle of the hose.
    (c) To pull apart electrical connectors, pull on the connector itself, not the wires.
    (d) Be careful not to drop electrical components, such as sensors or relays. If they are dropped on a hard floor, they should be replaced and not reused.
    (e) When steam cleaning an engine, protect the electronic components, air filter, and emissions related components from water.
    (f) Never use an impact wrench to remove or install temperature switches or temperature sensors.
    (g) When checking continuity at the wire connector, insert the tester probe carefully to prevent terminals from bending.
    (h) When using a vacuum gauge, never force the hose onto a connector that is too large. Use a step—down adapter instead. Once the hose has been stretched, it may leak.
13. Tag hoses before disconnecting them:
    (a) When disconnecting vacuum hoses, use tags to identify how they should be reconnected.
    (b) After completing a job, double check that the vacuum hoses are properly connected. A label under the hood shows the proper layout.
14. Unless otherwise stated, all resistance is measured at an ambient temperature of 20°C (68°F). Because the resistance may be outside specifications if measured at high temperatures immediately after the vehicle has been running, measurements should be made when the engine has cooled down.

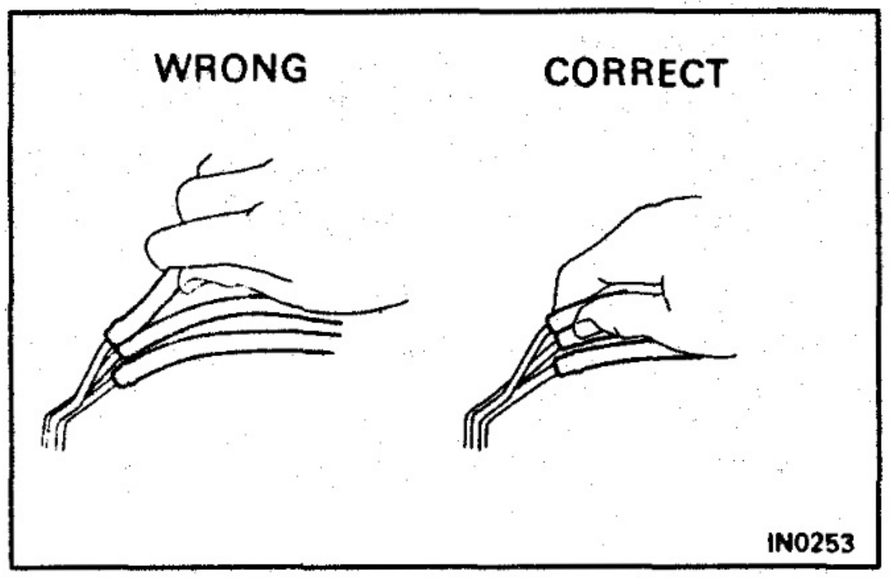

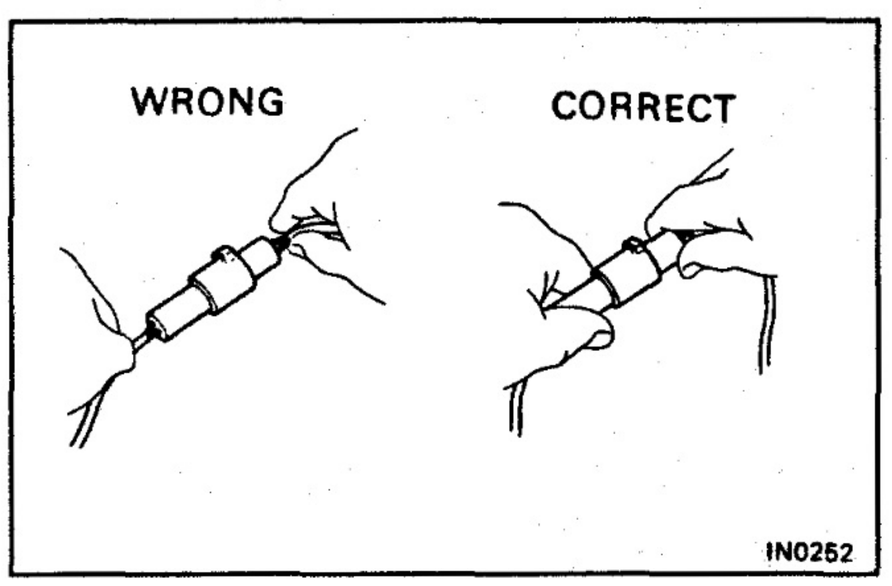

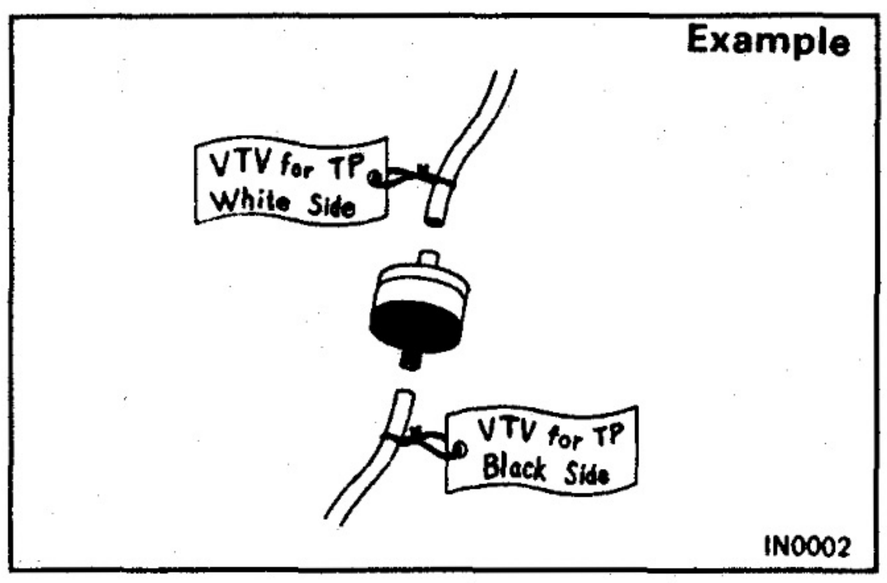

PRECAUTION

IF VEHICLE IS EQUIPPED WITH MOBILE COMMUNICATION SYSTEM IN03R-08

For vehicles with mobile communication systems such as two–way radios and cellular telephones, observe the following precautions.

(1) Install the antenna as far as possible away from the ECU and sensors of the vehicle's electronic system.

(2) Install the antenna feeder at least 20 cm (7.87 in.) away from the ECU and sensors of the vehicle's electronics systems. For details about ECU and sensors locations, refer to the section on the applicable component.

(3) Do not wind the antenna feeder together with the other wiring. As much as possible, also avoid running the antenna feeder parallel with other wire harnesses.

(4) Confirm that the antenna and feeder are correctly adjusted.

(5) Do not install powerful mobile communications system.

ABBREVIATIONS USED IN THIS MANUAL

IN0S0-05

A/C	Air Conditioner
ACSD	Automatic Cold Start Device
A/T	Automatic Transmission
BTDC	Bottom Top Dead Center
EX	Exhaust
FIPG	Formed in Place Gasket
HAC	High Altitude Compensator
H—Fuse	High Current Fuse
IFS	Independent Front Suspension
IN	Intake
M—Fuse	Medium Current Fuse
MP	Multipurpose
M/T	Manual Transmission
O/S	Oversized
PCV	Positive Crankcase Ventilation
PS	Power Steering
SSM	Special Service Materials
SST	Special Service Tools
STD	Standard
TDC	Top Dead Center
TCV	Timing Control Valve
U/S	Undersize
VSV	Vacuum Switching Valve
w/	With
w/o	Without

STANDARD BOLT TORQUE SPECIFICATIONS

IN00V–03

HOW TO DETERMINE BOLT STRENGTH

	Mark	Class		Mark	Class
Hexagon head bolt		4T 5T 6T 7T 8T 9T 10T 11T	Hexagon flange bolt w/ washer hexagon bolt	 4 Protruding lines	9T
			Hexagon flange bolt w/ washer hexagon bolt	 5 Protruding lines	10T
	 No mark	4T	Hexagon flange bolt w/ washer hexagon bolt	 6 Protruding lines	11T
Hexagon flange bolt w/ washer hexagon bolt	 No mark	4T	Stud bolt	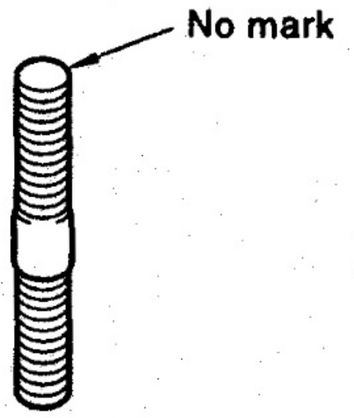	4T
Hexagon head bolt	 2 Protruding lines	5T			
Hexagon flange bolt w/ washer hexagon bolt	 2 Protruding lines	6T		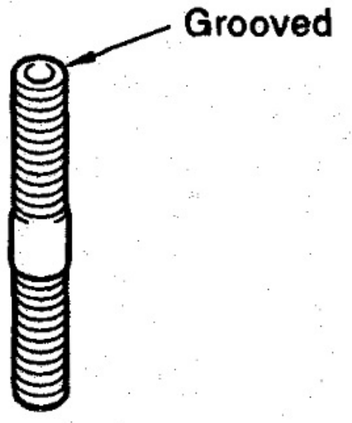	6T
Hexagon head bolt	 3 Protruding lines	7T	Welded bolt	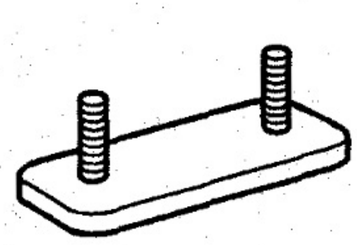	4T
Hexagon head bolt	 4 Protruding lines	8T			

V06821

SPECIFIED TORQUE FOR STANDARD BOLTS

Class	Diameter mm	Pitch mm	Specified torque					
			Hexagon head bolt			Hexagon flange bolt		
			N·m	kgf·cm	ft·lbf	N·m	kgf·cm	ft·lbf
4T	6	1	5	55	48 in.·lbf	6	60	52 in.·lbf
	8	1.25	12.5	130	9	14	145	10
	10	1.25	26	260	19	29	290	21
	12	1.25	47	480	35	53	540	39
	14	1.5	74	760	55	84	850	61
	16	1.5	115	1,150	83	—	—	—
5T	6	1	6.5	65	56 in.·lbf	7.5	75	65 in.·lbf
	8	1.25	15.5	160	12	17.5	175	13
	10	1.25	32	330	24	36	360	26
	12	1.25	59	600	43	65	670	48
	14	1.5	91	930	67	100	1,050	76
	16	1.5	140	1,400	101	—	—	—
6T	6	1	8	80	69 in.·lbf	9	90	78 in.·lbf
	8	1.25	19	195	14	21	210	15
	10	1.25	39	400	29	44	440	32
	12	1.25	71	730	53	80	810	59
	14	1.5	110	1,100	80	125	1,250	90
	16	1.5	170	1,750	127	—	—	—
7T	6	1	10.5	110	8	12	120	9
	8	1.25	25	260	19	28	290	21
	10	1.25	52	530	38	58	590	43
	12	1.25	95	970	70	105	1,050	76
	14	1.5	145	1,500	108	165	1,700	123
	16	1.5	230	2,300	166	—	—	—
8T	8	1.25	29	300	22	33	330	24
	10	1.25	61	620	45	68	690	50
	12	1.25	110	1,100	80	120	1,250	90
9T	8	1.25	34	340	25	37	380	27
	10	1.25	70	710	51	78	790	57
	12	1.25	125	1,300	94	140	1,450	105
10T	8	1.25	38	390	28	42	430	31
	10	1.25	78	800	58	88	890	64
	12	1.25	140	1,450	105	155	1,600	116
11T	8	1.25	42	430	31	47	480	35
	10	1.25	87	890	64	97	990	72
	12	1.25	155	1,600	116	175	1,800	130

V00079

ENGINE

ENGINE MECHANICAL
- PREPARATION ..... EG– 2
- AIR FILTER INSPECTION AND CLEANING ..... EG– 6
- COMPRESSION CHECK ..... EG– 7
- VALVE CLEARANCE INSPECTION AND ADJUSTMENT ..... EG– 8
- INJECTION TIMING INSPECTION AND ADJUSTMENT ..... EG– 12
- IDLE SPEED AND MAXIMUM SPEED INSPECTION AND ADJUSTMENT ..... EG– 14
- A/C IDLE–UP SPEED INSPECTION AND ADJUSTMENT ..... EG– 16
- INTAKE SHUTTER INSPECTION (LJ only) ..... EG– 17
- TIMING BELT ..... EG– 19
- CYLINDER HEAD ..... EG– 28
- CYLINDER BLOCK ..... EG– 53
- SERVICE SPECIFICATIONS ..... EG– 78

FUEL SYSTEM
- PREPARATION ..... EG– 84
- FUEL FILTER REPLACEMENT ..... EG– 86
- FUEL HEATER SYSTEM ..... EG– 88
- INJECTION NOZZLE ..... EG– 90
- INJECTION PUMP ..... EG– 96
- SERVICE SPECIFICATIONS EG–155

COOLING SYSTEM
- PREPARATION EG–158
- COOLANT CHECK EG–159
- COOLANT REPLACEMENT EG–160
- WATER PUMP EG–162
- THERMOSTAT EG–165
- RADIATOR EG–167
- SERVICE SPECIFICATIONS EG–171

LUBRICATION SYSTEM
- PREPARATION EG–172
- OIL PRESSURE CHECK EG–174
- OIL AND FILTER REPLACEMENT EG–175
- OIL PUMP EG–177
- OIL COOLER EG–186
- OIL NOZZLE EG–189
- SERVICE SPECIFICATIONS EG–191

ENGINE MECHANICAL

PREPARATION

SST (SPECIAL SERVICE TOOLS)

EGOAY-2P

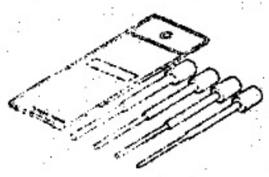	09201−10000 Valve Guide Bushing Remover & Replacer Set	
	(09201−01080) Valve Guide Bushing Remover & Replacer 8	
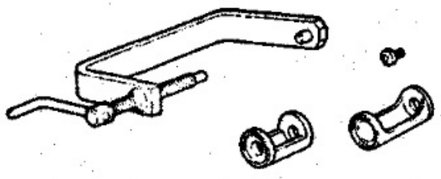	09202−70020 Valve Spring Compressor	
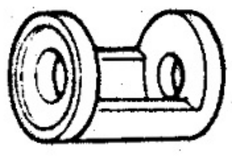	(09202−00030) Attachment	
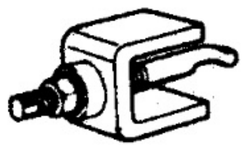	09208−48010 Combustion Chamber Remover	
	09213−54015 Crankshaft Pulley Holding Tool	
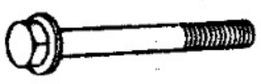	(91651−60855) Bolt	
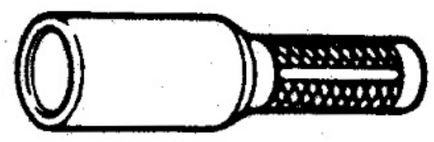	09214−60010 Crankshaft Pulley & Gear Replacer	Crankshaft front oil seal
	09222−54011 Connecting Rod Bushing Remover & Replacer	
	(09222−03016) Remover & Replacer	3L
	(09222−03021) Guide	3L
	(09222−03026) Base	3L

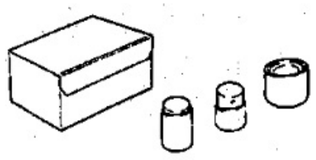	09222–64012	Connecting Rod Bushing Remover & Replacer	
	(09222–02022)	Remover & Replacer	2L
	(09222–02031)	Guide	2L
	(09222–02041)	Base	2L
	09223–15030	Oil Seal & Bearing Replacer	Crankshaft rear oil seal
	09223–46011	Crankshaft Front Oil Seal Replacer	Crankshaft timing pulley Camshaft oil seal
	09248–64011	Valve Clearance Adjusting Tool	
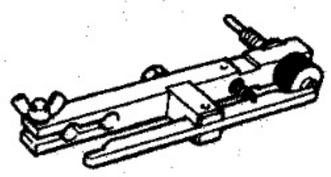	09275–54011	Plunger Stroke Measuring Tool	
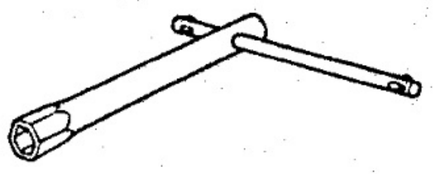	09275–54020	Maximum Speed Adjusting Screw Lock Nut Wrench	
	09330–00021	Companion Flange Holding Tool	Crankshaft pulley
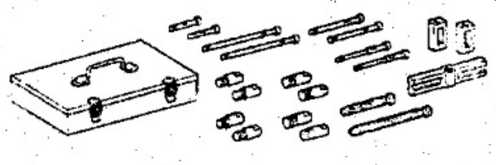	09950–50010	Puller C Set	
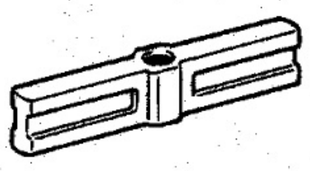	(09951–05010)	Hanger 150	Crankshaft pulley Crankshaft timing pulley Camshaft timing pulley Injection pump drive pulley
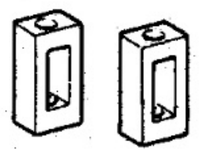	(09952–05010)	Slide Arm	Crankshaft pulley Crankshaft timing pulley Camshaft timing pulley Injection pump drive pulley
	(09953–05010)	Center Bolt 100	Crankshaft pulley Crankshaft timing pulley Injection pump drive pulley

EG

	(09953−05020) Center Bolt 150	Crankshaft pulley Crankshaft timing pulley Camshaft timing pulley
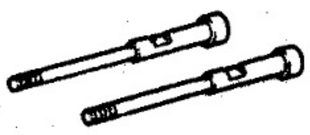	(09954−05010) Claw No.1	Crankshaft timing pulley
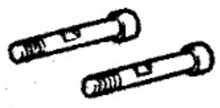	(09954−05020) Claw No.2	Camshaft timing pulley Injection pump drive pulley
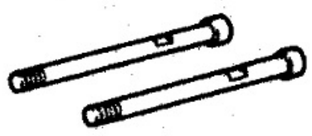	(09954−05030) Claw No.3	Crankshaft pulley
	09960−10010 Variable Pin Wrench Set	
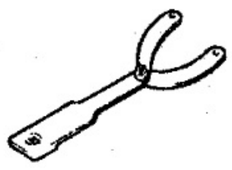	(09962−01000) Variable Pin Wrench Arm Assy	Camshaft timing pulley Injection pump drive pulley
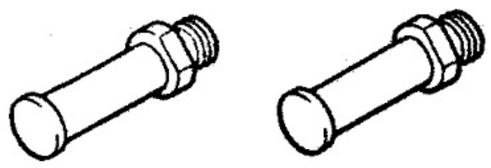	(09963−01000) Pin 10	Camshaft timing pulley Injection pump drive pulley
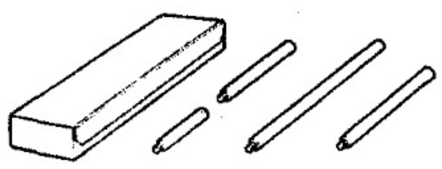	09950−70010 Handle Set	
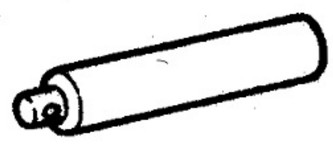	(09951−07100) Handle 100	Valve guide bushing
	(09951−07150) Handle 150	Crankshaft rear oil seal
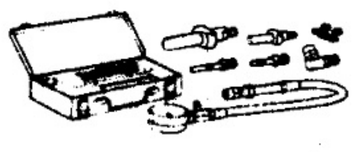	09992−00024 Cylinder Compression Check Gauge Set	
	(09992−00121) No. 4 Attachment	
	(09992−00211) Gauge Assy	

RECOMMENDED TOOLS

E00AZ–1X

	09082–00040	TOYOTA Electrical Tester.	VSV for intake sutter
	09200–00010	Engine Adjust Kit .	
	09904–00010	Expander Set .	

EQUIPMENT

E0080–20

Caliper gauge	
Connecting rod aligner	
Cylinder gauge	
Dial indicator	
Dye penetrant	
Engine tune–up tester	
Heater	
Magnetic finger	
Micrometer	
Piston ring compressor	
Piston ring expander	
Plastic–faces hammer	
Plastigage	
Precision straight edge	
Ridge reamer	
Soft brush	
Spring tester	Valve spring
Steel square	Valve spring
Thermometer	
Torque wrench	
Valve seat cutter	
V–block	
Vernier calipers	
Wire brush	

SSM (SERVICE SPECIAL MATERIALS)

E0081–20

08826–00080	Seal Packing Black or equivalent (FIPG)	Cylinder head semi–circular plug Cylinder head Camshaft oil seal retainer
08833–00070	Adhesive 1324, THREE BOND 1324 or equivalent	Union Flywheel bolt Drive plate bolt

EG

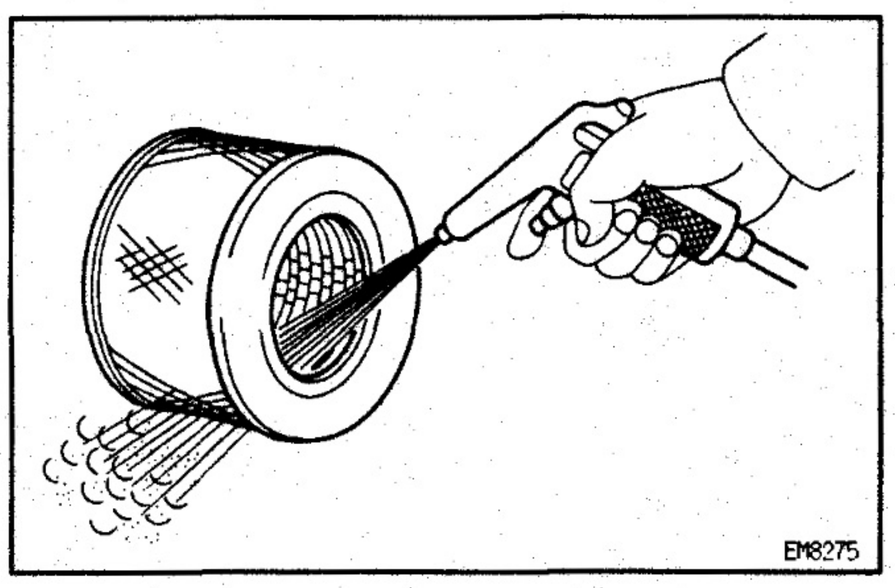

AIR FILTER INSPECTION AND CLEANING

5G34H-04

Paper Filter Type:

1. **REMOVE AIR FILTER**
2. **INSPECT AIR FILTER**
   Visually check that the filter element is not excessively dirty, damaged or oily.
3. **CLEAN AIR FILTER**
   Clean the filter element with compressed air.
   First blow from the inside thoroughly. Then blow off the outside of the filter element.
4. **REINSTALL AIR FILTER**

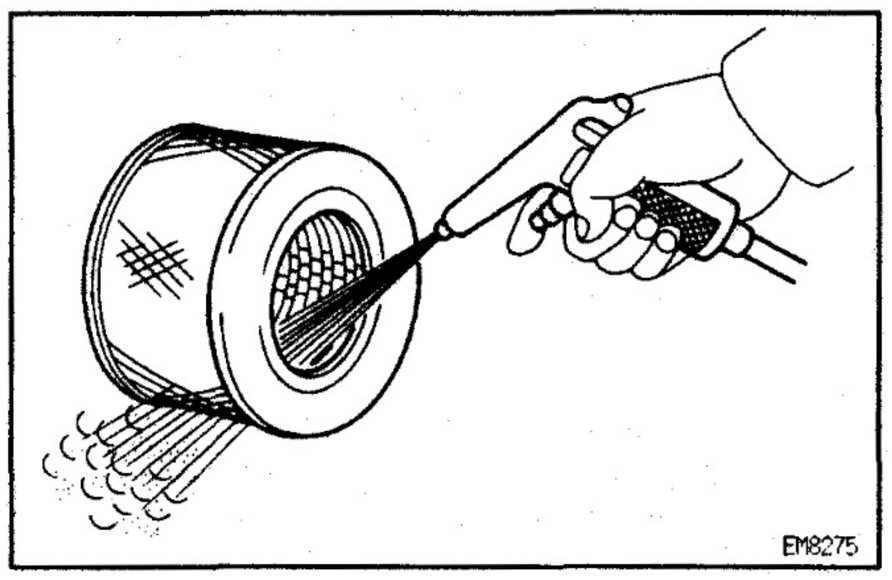

Washable Type:

1. **REMOVE AIR FILTER**
2. **INSPECT AIR FILTER**
   Visually check that the filter element is not excessively dirty, damaged or oily.
3. **CLEAN AIR FILTER**

(a) Blow dirt off in the filter element with compressed air.

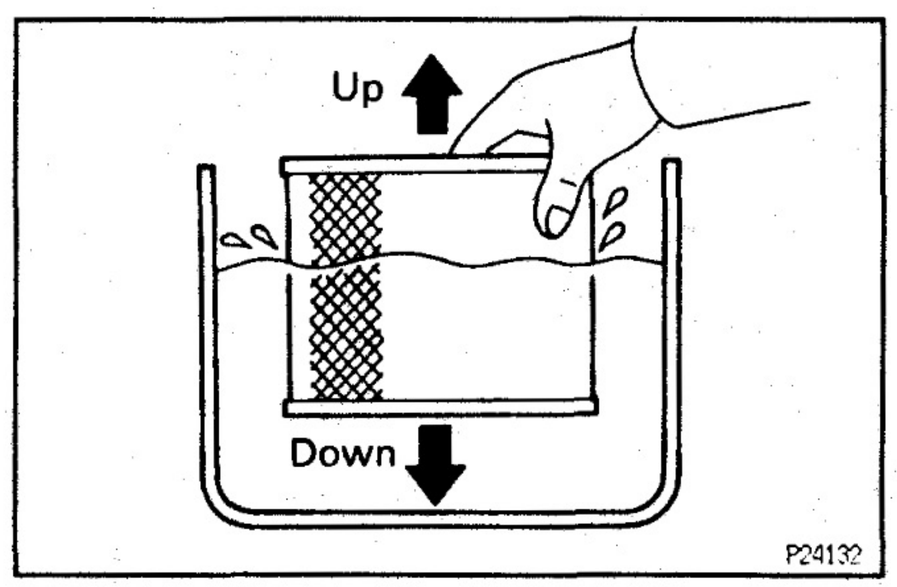

(b) Submerge the filter element in the water, and agitate it up and down more than 10 times.
(c) Repeat rinsing in clean water until rinsing water is clear.

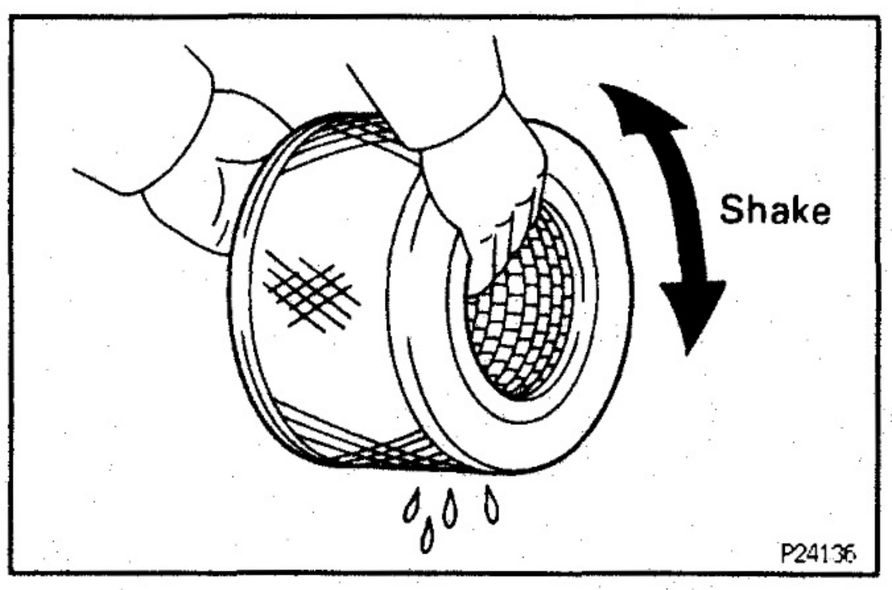

(d) Remove excess water by shaking the filter element or blowing with compressed air.
NOTICE: Do not beat or drop filter element.
(e) Wipe off dust on the air cleaner case interior.

4. **REINSTALL AIR FILTER**

COMPRESSION CHECK

EG5XW-03

HINT: If there is lack of power, excessive oil consumption or poor fuel economy, measure the compression pressure.

1. **WARM UP AND STOP ENGINE**
   Allow the engine to warm up to normal operating temperature.
2. **REMOVE GLOW PLUGS**
   (See steps 2 to 5 in cylinder head removal)
3. **DISCONNECT INJECTION PUMP (FUEL CUT SOLENOID) CONNECTOR**
4. **CHECK CYLINDER COMPRESSION PRESSURE**
   HINT: Turn the starter before measuring the compression and discharge the foreign objects.

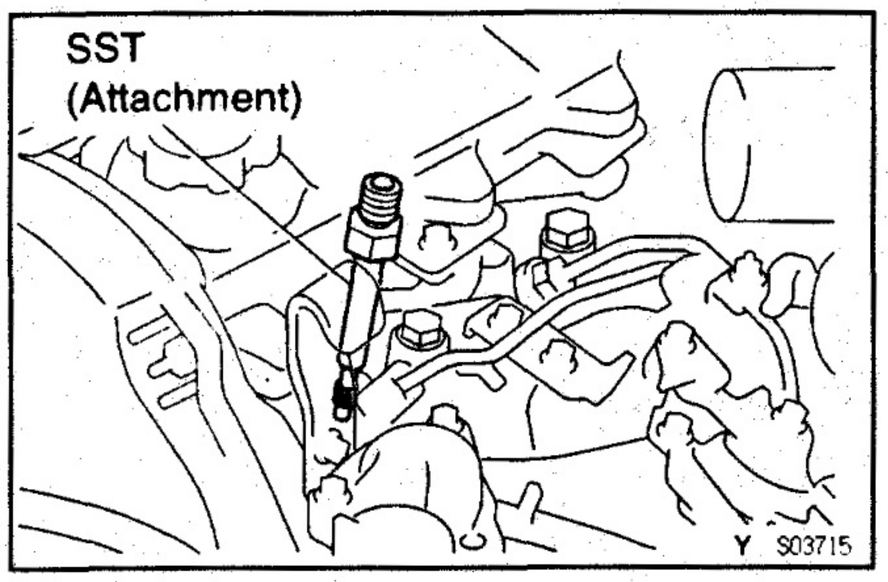

(a) Install SST (attachment) to the glow plug hole.
SST 09992−00024 (09992−00121)
Torque: 13 N·m (130 kgf·cm, 9 ft·lbf)

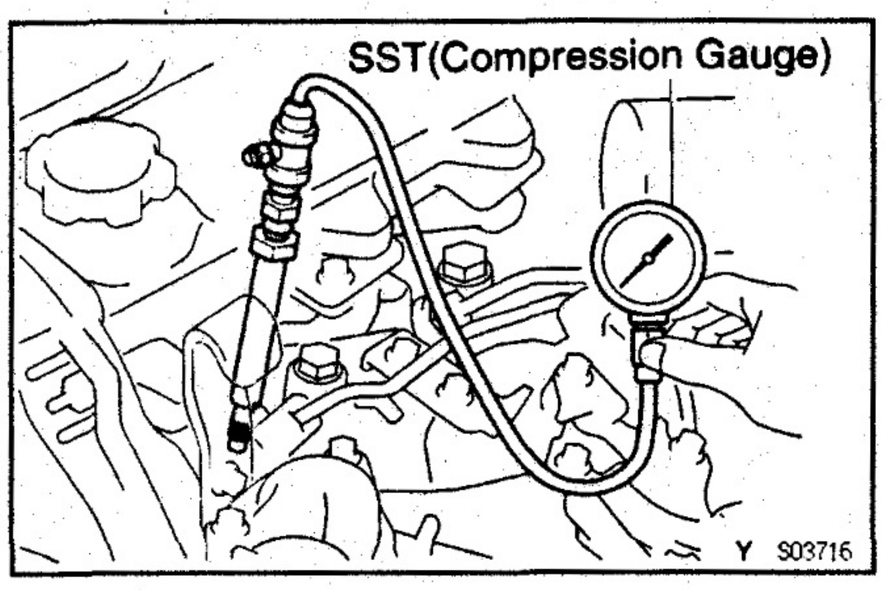

(b) Connect SST (compression gauge) to the SST (attachment).
SST 09992−00024 (09992−00211)

(c) Fully open the throttle valve, and start the engine.

(d) While cranking the engine, measure the compression pressure.
HINT: Always use a fully charged battery to obtain engine revolution of 250 rpm or more.

(e) Repeat steps (a) through (d) for each cylinder.
NOTICE: This measurement must be done in as short a time as possible.
Compression pressure:
3,138 kPa (32.0 kgf/cm², 455 psi) or more
Minimum pressure:
1,961 kPa (20.0 kgf/cm², 284 psi)
Difference between each cylinder:
490 kPa (5.0 kgf/cm², 71 psi) or less

(f) If the cylinder compression in one or more cylinders is low, pour a small amount of engine oil into the cylinder through the glow plug hole and repeat steps (a) through (d) for the cylinder with low compression.
- If adding oil helps the compression, chances are that the piston rings and/or cylinder bore are worn or damaged.
- If pressure stays low, a valve may be sticking or seating improperly, or there may be leakage past the gasket.

(g) Remove the SST.
SST 09992−00024 (09992−00121, 09992−00211)

EG

5. **RECONNECT INJECTION PUMP (FUEL CUT SOLENOID) CONNECTOR**
6. **REINSTALL GLOW PLUGS**
   (See steps 14 to 17 in cylinder head installation)
   Torque: 12.5 N·m (127 kgf·cm, 9 ft·lbf)
7. **START ENGINE AND CHECK FOR LEAKS**

EG

VALVE CLEARANCE INSPECTION AND ADJUSTMENT

EG7A4-01

HINT: Inspect and adjust the valve clearance when the engine is cold.

1. **LH:**
   REMOVE INTAKE AIR CONNECTOR
   (See steps 2 and 3 in cylinder head removal)
2. **LY Europe:**
   REMOVE NO.2 CYLINDER HEAD COVER
   (See steps 2 and 4 in cylinder head removal)
3. **REMOVE CYLINDER HEAD COVER**
   (See step 15 in cylinder head removal)

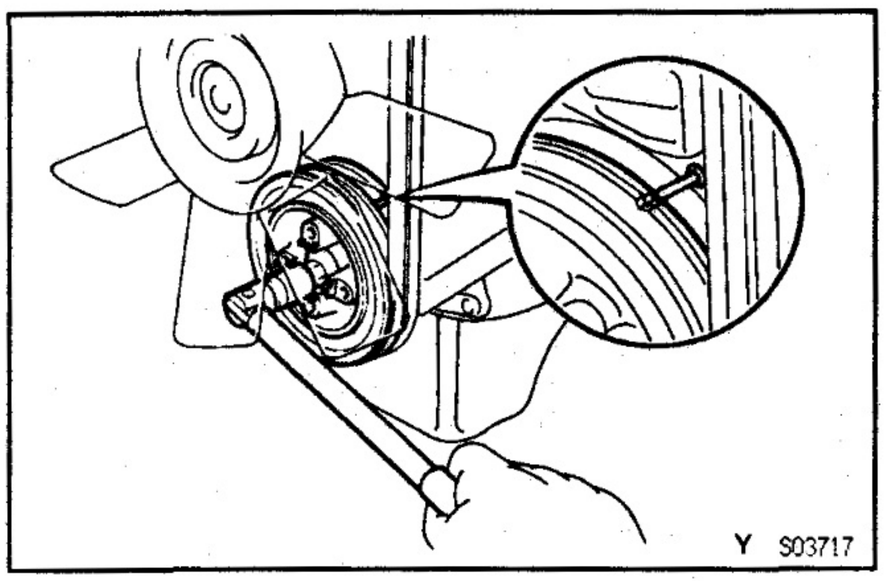

4. **SET NO.1 CYLINDER TO TDC/COMPRESSION**

(a) Turn the crankshaft pulley and align its groove with timing pointer.

(b) Check that the valve lifters on the No.1 cylinder are loose and valve lifters on the No.4 are tight.
If not, turn the crankshaft one revolution (360°) and align the mark as above.

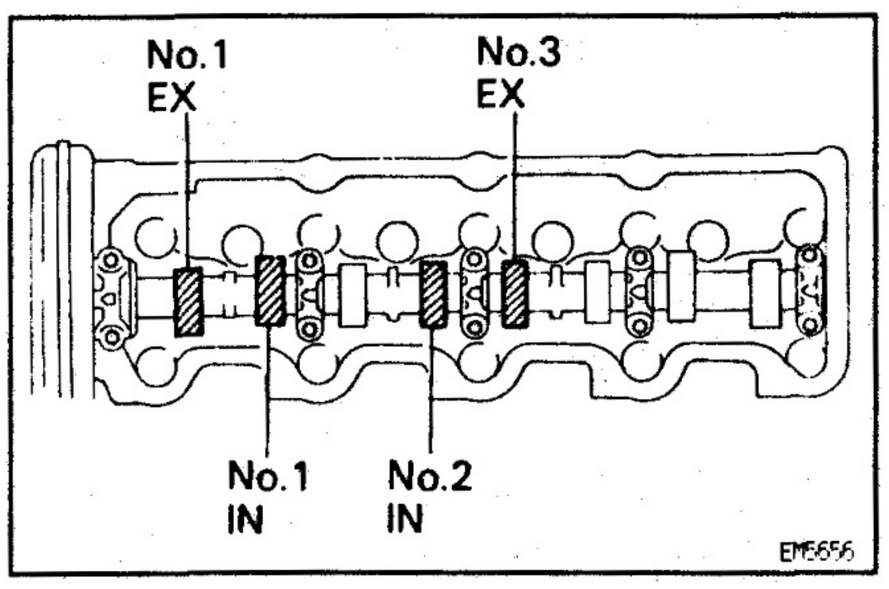

5. **INSPECT VALVE CLEARANCE**

(a) Check only the valves indicated.

- Using a feeler gauge, measure the clearance between the valve lifter and camshaft.
- Record the out — of — specification valve clearance measurements. They will be used later to determine the required replacement adjusting shim.

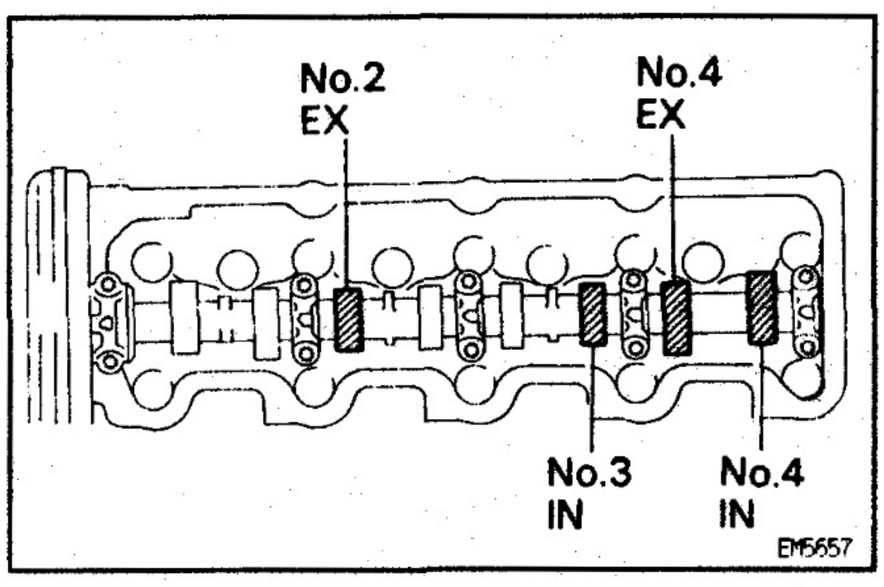

Valve clearance (Cold):

Intake

0.20 – 0.30 mm (0.008 – 0.012 in.)

Exhaust

0.40 – 0.50 mm (0.016 – 0.020 in.)

(b) Turn the crankshaft one revolution (360°) and align the mark as above. (See procedure in step 4)

(c) Check only the valves indicated as shown. Measure the valve clearance. (See procedure in step (a))

EG

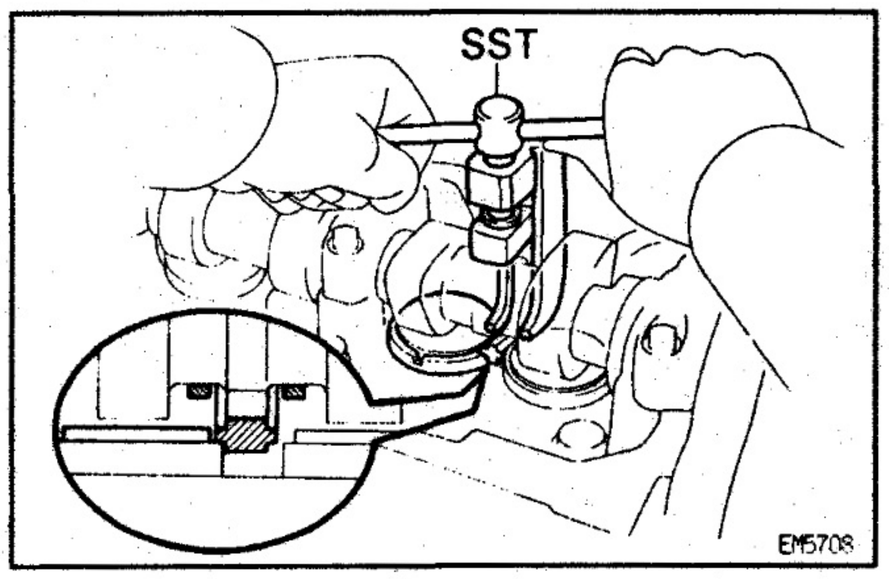

6. ADJUST VALVE CLEARANCE

(a) Remove the adjusting shim.

- Turn the crankshaft so that the cam lobe of the camshaft on the adjusting valve points upward.
- Using SST, press down the valve lifter.
- Position the notch of the valve lifter facing the exhaust manifold side.

SST 09248–64011

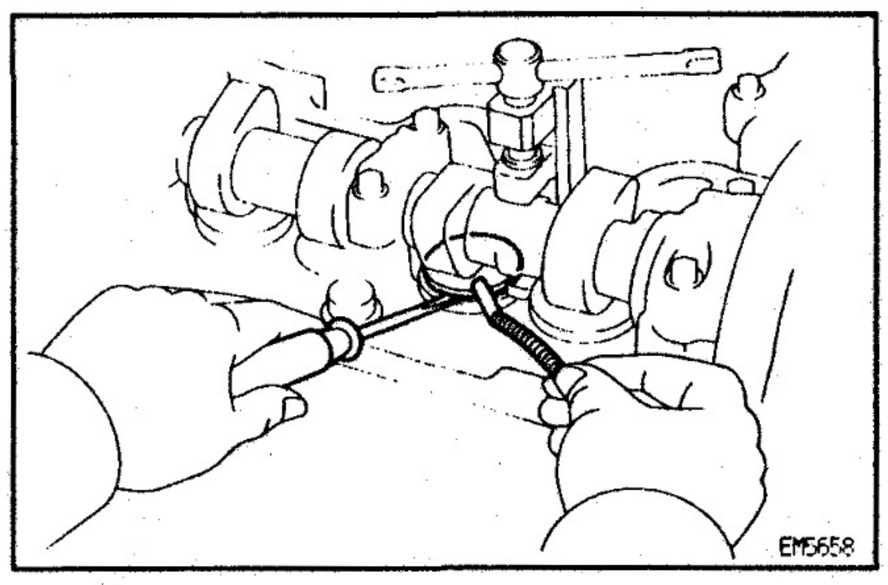

HINT:

- Remove the adjusting shim with a small screwdriver and magnetic finger.

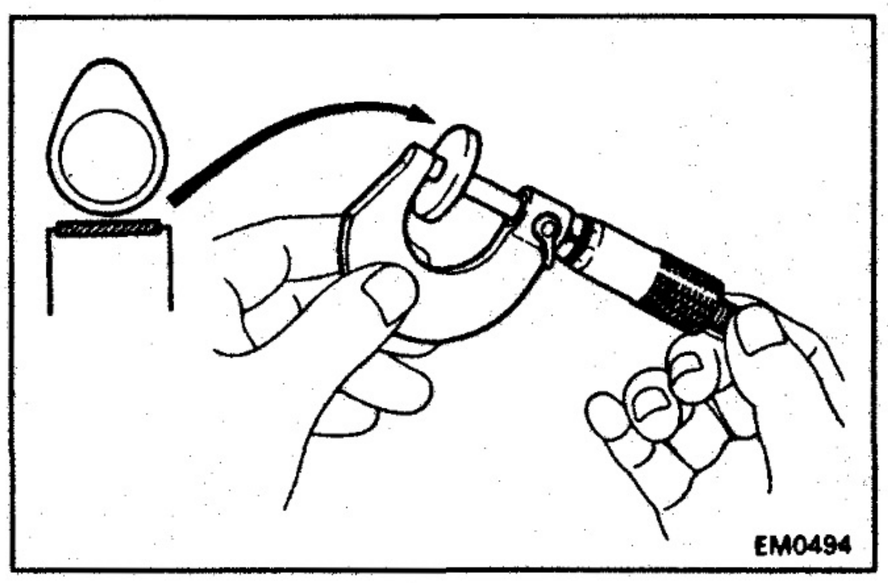

(b) Determine the replacement adjusting shim size by following the Formula or Charts:

- Using a micrometer, measure the thickness of the removed shim.
- Calculate the thickness of a new shim so that the valve clearance comes within specified value.

T ..... Thickness of removed shim

A ..... Measured valve clearance

N ..... Thickness of new shim

Intake:

N = T + (A – 0.25 mm (0.010 in.))

Exhaust:

N = T + (A – 0.45 mm (0.018 in.))

- Select a new shim with a thickness as close as possible to the calculated value.

HINT: Shims are available in 17 sizes in increments of 0.05 mm (0.0020 in.), from 2.50 mm (0.0984 in.) to 3.30 mm (0.1299 in.).

EG

Adjusting Shim Selection Using Chart

INTAKE

| Measured clearance mm (in.) | Installed shim thickness mm (in.) | | |

Adjusting Shim Selection Using Chart

EXHAUST

| Measured clearance mm (in.) | Installed shim thickness mm (in.) | | |

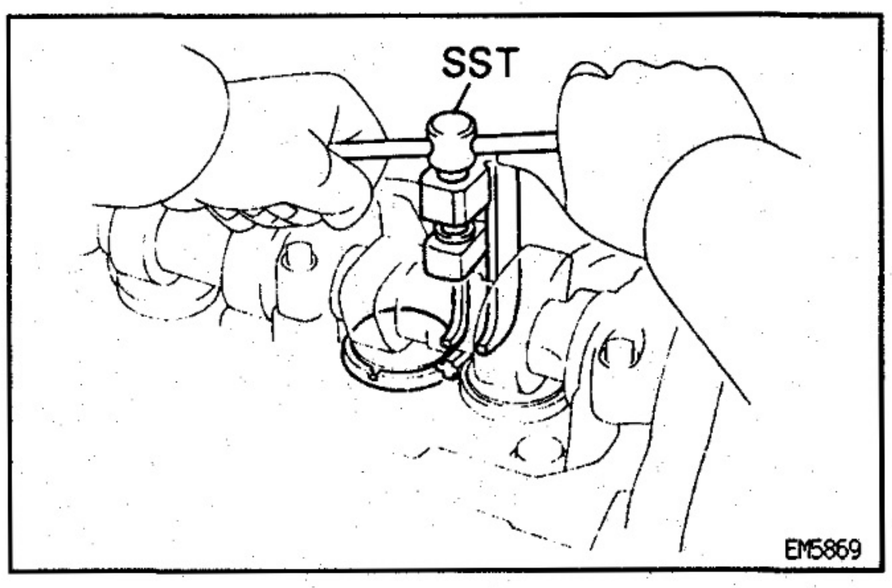

(c) Install a new adjusting shim.
- Place a new adjusting shim on the valve lifter.
- Remove the SST.

SST 09248–64011

(d) Recheck the valve clearance.

7. REINSTALL CYLINDER HEAD COVER
(See step 4 in cylinder head installation)

8. LY Europe:
REINSTALL NO.2 CYLINDER HEAD COVER
(See step 15 and 17 in cylinder head installation)

9. LH:
REINSTALL INTAKE AIR CONNECTOR
(See steps 16 and 17 in cylinder head installation)

INJECTION TIMING INSPECTION AND ADJUSTMENT

EG7A5–01

HINT: Inspect and adjust the injection timing when the engine cold.

1. INSTALL SST AND DIAL INDICATOR

(a) Remove the plug bolt and gasket from the distributive head plug of the injection pump.

(b) Install SST (plunger stroke measuring tool) and a dial indicator to the plug bolt hole of distributive head plug.

SST 09275–54011

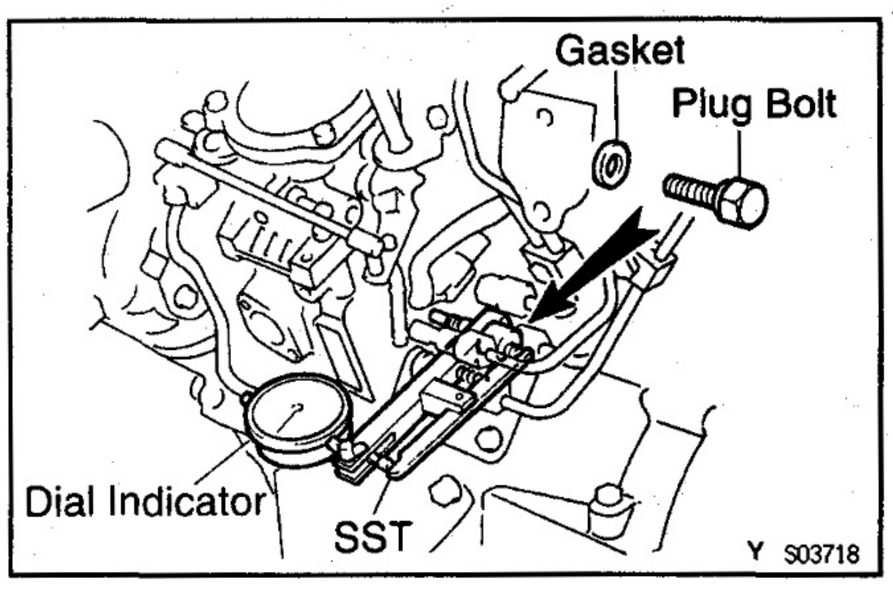

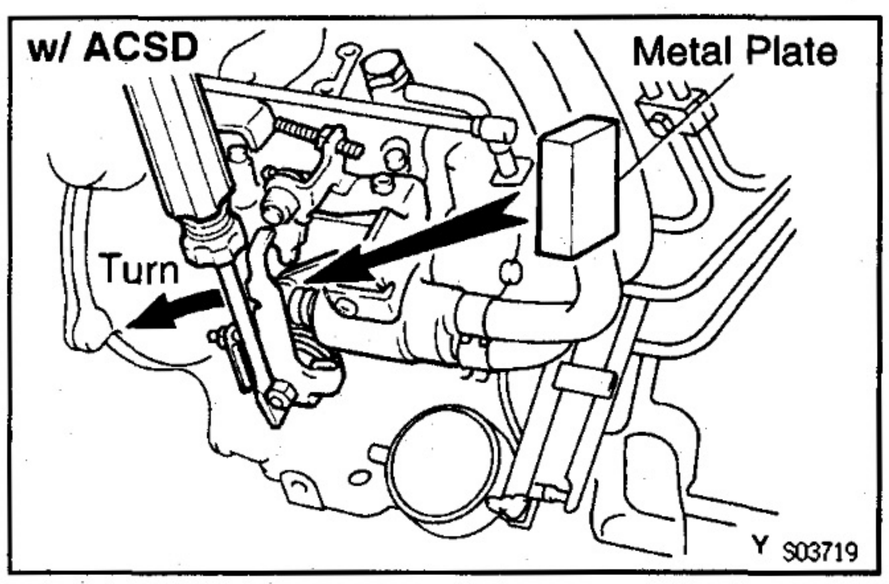

2. w/ ACSD:
RELEASE ACSD ADVANCE

(a) Using a screwdriver, turn the cold starting lever counterclockwise approx. 20°.

(b) Put a metal plate (thickness of 8.5 – 10.0 mm (0.335 – 0.394 in.)) between the cold starting lever and thermo wax plunger.

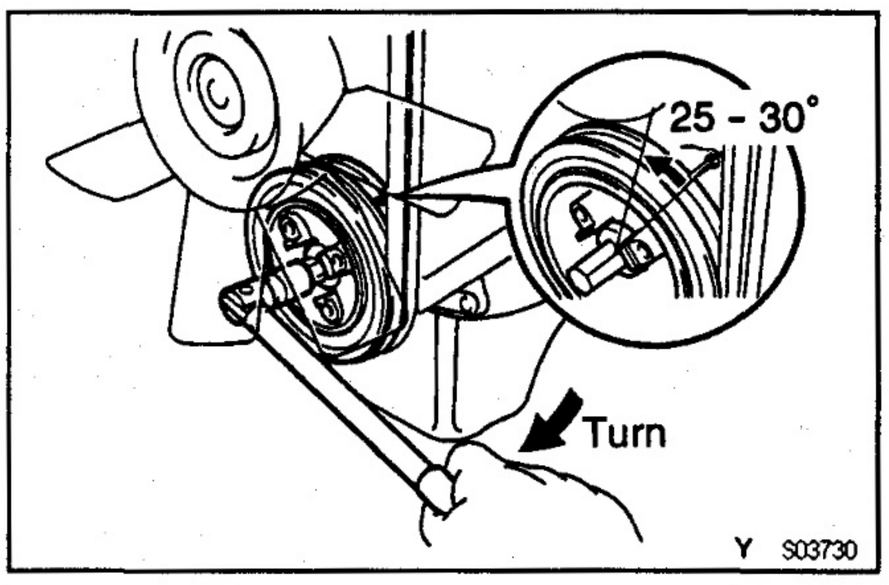

3. SET NO.1 OR NO.4 CYLINDER TO 25 – 30° BTDC/COMPRESSION

Turn the crankshaft pulley clockwise so the pulley groove is 25 – 30° from the timing pointer.

NOTICE: Do not turn the crankshaft pulley counterclockwise.

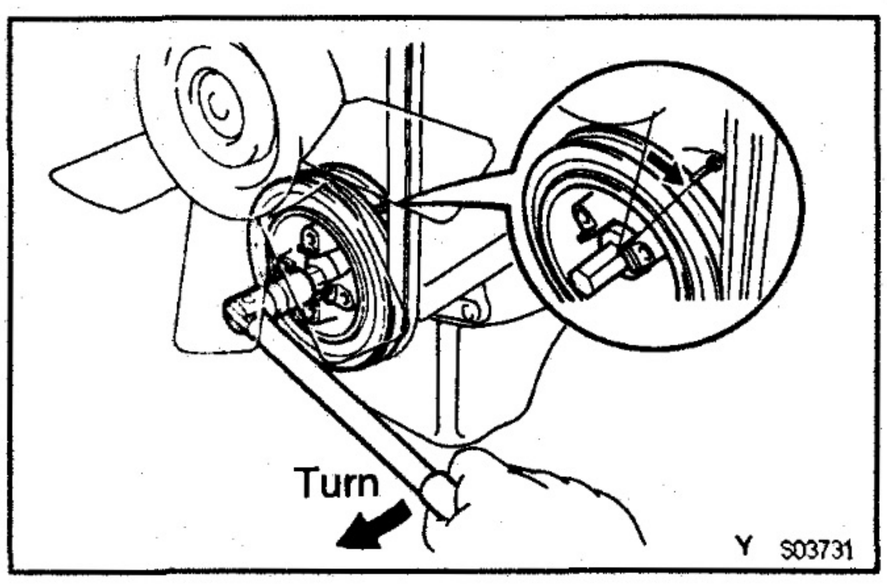

4. INSPECT AND ADJUST INJECTION TIMING

(a) Set the dial indicator at 0 mm (0 in.).

(b) Slowly rotate the crankshaft pulley clockwise until its groove is aligned with the timing pointer.

(c) Measure the plunger stroke.

Plunger stroke:

w/ ACSD (2L Europe)

0.44 – 0.56 mm (0.0173 – 0.0220 in.)

w/ ACSD (3L Europe and Others)

0.54 – 0.66 mm (0.0213 – 0.0260 in.)

w/o ACSD

0.84 – 0.96 mm (0.0331 – 0.0378 in.)

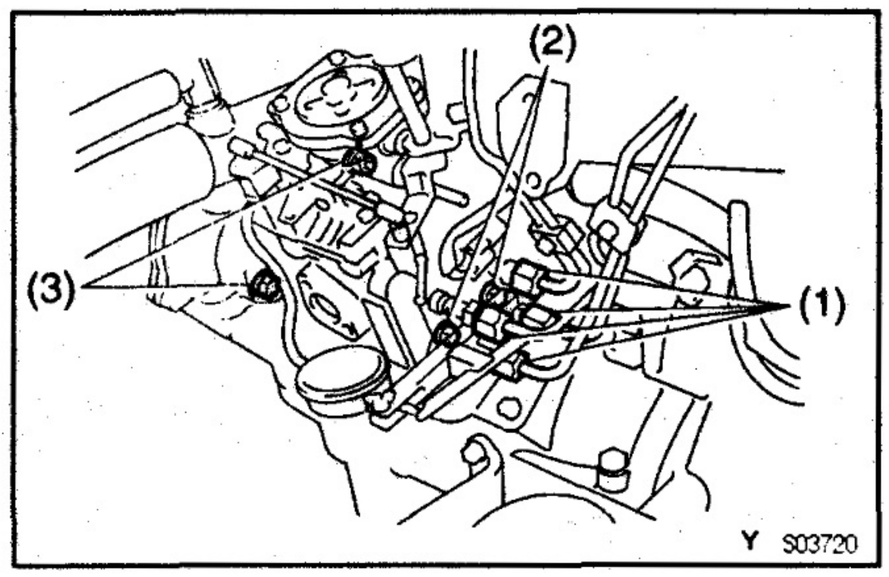

(d) Loosen these nuts and bolts:

(1) 4 union nuts holding injection pipes to injection pump

(2) 2 bolts holding injection pump to injection pump stay

(3) 2 nuts holding injection pump to timing belt case

NOTICE: Do not turn the nuts more than 90°.

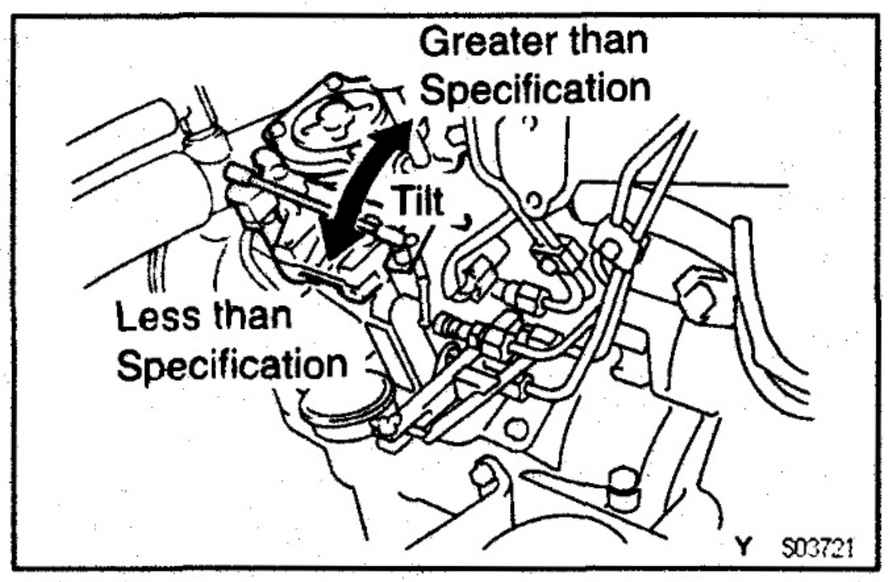

(e) Adjust plunger stroke by slightly tilting the injection pump body.

If the stroke is less than specification, tilt the pump toward the engine.

If the stroke is greater than specification, tilt the pump away from the engine.

(f) Tighten these nuts and bolts:

- 2 nuts holding injection pump to timing belt case

Torque: 20.5 N·m (210 kgf·cm, 15 ft·lbf)

- 2 bolts holding injection pump to injection pump stay

Torque: 18 N·m (185 kgf·cm, 13 ft·lbf)

- 4 nuts holding injection pipes to injection pump

Torque: 24.5 N·m (250 kgf·cm, 18 ft·lbf)

(g) Recheck the plunger stroke.

5. REMOVE SST AND DIAL INDICATOR

6. w/ ACSD:
REMOVE METAL PLATE

(a) Remove the SST and dial indicator.
SST 09275—54011

(b) Install a new gasket and the plug bolt of the distributive head plug.
Torque: 17 N·m (170 kgf·cm, 12 ft·lbf)

7. START ENGINE AND CHECK FOR FUEL LEAKS

IDLE SPEED AND MAXIMUM SPEED INSPECTION AND ADJUSTMENT

E07A8-01

1. INITIAL CONDITIONS

(a) Engine at normal operating temperature
(b) Air cleaner installed
(c) All accessories switched OFF
(d) All vacuum lines properly connected
(e) Valve clearance set correctly
(f) Injection timing set correctly
(g) Transmission in neutral position
(h) w/ PS:
Steering wheel at straight—ahead position

2. CONNECT TACHOMETER

3. INSPECT AND ADJUST IDLE SPEED

(a) Check that the adjusting lever touches the idle speed adjusting screw when the accelerator pedal is released.
If not, adjust the accelerator linkage.

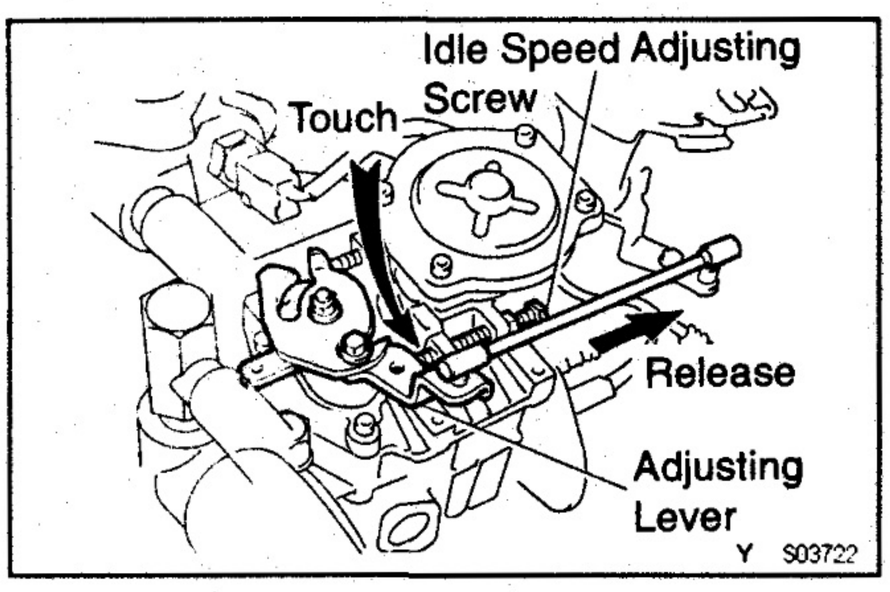

(b) Start the engine.

(c) Check the idle speed.
Idle speed:
M/T
650 — 750 rpm
A/T
750 — 850 rpm

(d) Adjust the idle speed.
- Disconnect the accelerator linkage.
- Loosen the lock nut of the idle speed adjusting screw.
- Adjust the idle speed by turning the idle speed adjusting screw.
- Securely tighten the lock nut, and recheck the idle speed.
- Reconnect the accelerator linkage.
- After adjustment, adjust the accelerator linkage.

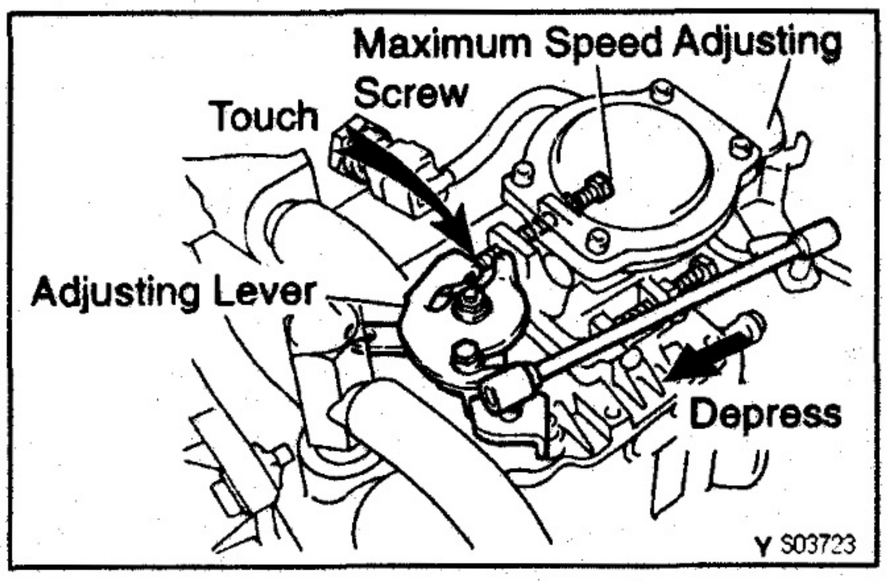

4. INSPECT AND ADJUST MAXIMUM SPEED

(a) Check that the adjusting lever touches the maximum speed adjusting screw when the accelerator pedal is depressed all the way.
If not, adjust the accelerator linkage.

(b) Start the engine.

(c) Depress the accelerator pedal all the way.

(d) Check the maximum speed.

Maximum speed:

2L (Europe, Israel and Ukraina)
5,020 — 5,280 rpm
2L (Hong Kong, Singapore, Malaysia and LY General)
4,570 — 4,830 rpm
2L (Others)
4,770 — 5,030 rpm
3L (Europe)
4,670 — 4,930 rpm
3L (Hong Kong, Singapore, Malaysia and LY General)
4,270 — 4,530 rpm
3L (Others)
4,470 — 4,730 rpm

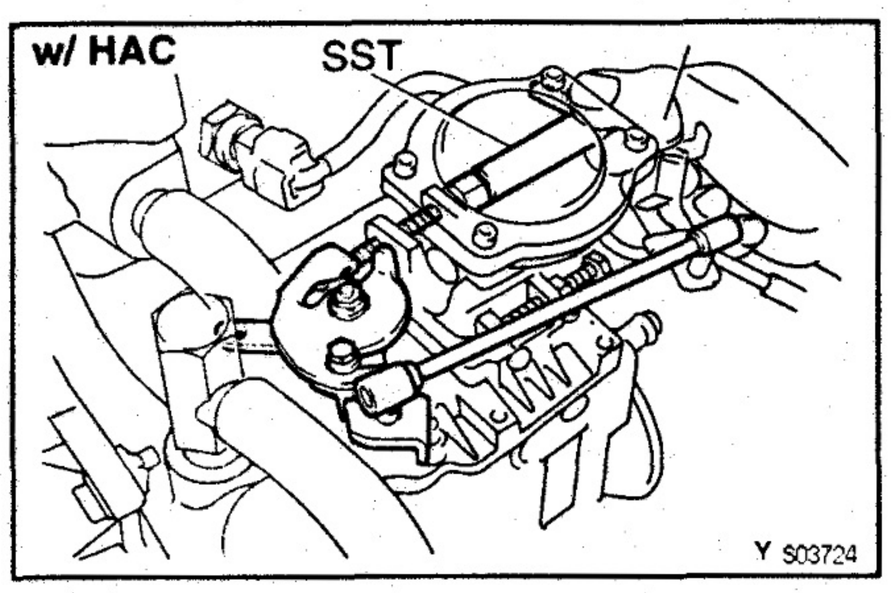

(e) Adjust the idle speed.

- Disconnect the accelerator linkage.
- Cut off the seal wire of the maximum speed adjusting screw.
- w/ HAC:
  Using SST, loosen the lock nut of the maximum speed adjusting screw.

SST 09275—54020

- w/o HAC:
  Loosen the lock nut of the maximum speed adjusting screw.
- Adjust the maximum speed by turning the maximum speed adjusting screw.

HINT: Adjust at idle speed. Then, raise engine speed and recheck the maximum speed.

- w/ HAC:
  Using SST, securely tighten the lock nut.

SST 09275—54020

- w/o HAC:
  Securely tighten the lock nut.
- Recheck the maximum speed.
- Reconnect the accelerator linkage.
- After adjustment, adjust the accelerator linkage.
- Seal the maximum speed adjusting screw with a new seal wire.

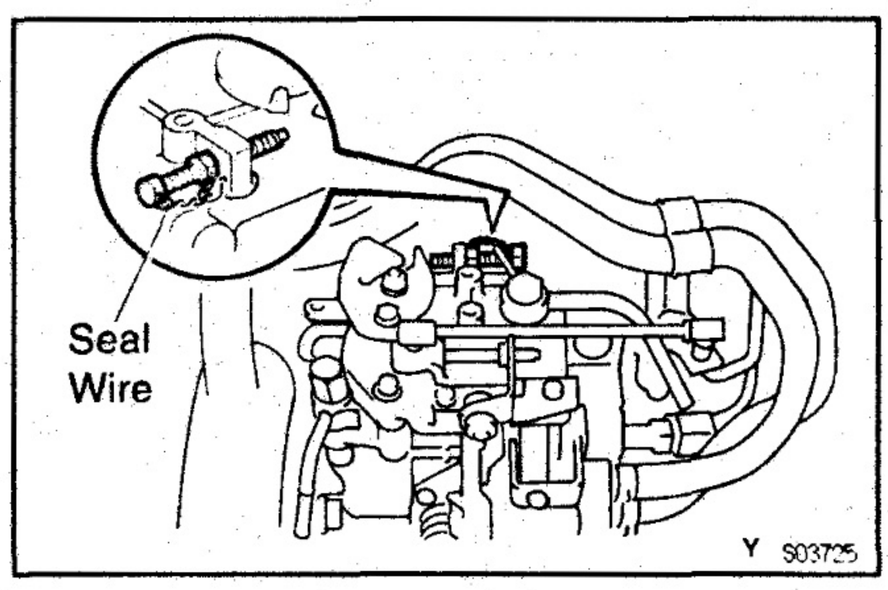

EG

EG

A/C IDLE—UP SPEED INSPECTION AND ADJUSTMENT

E0638-02

1. INITIAL CONDITIONS

(a) Engine at normal operating temperature
(b) Air cleaner installed
(c) All accessories switched OFF
(d) All vacuum lines properly connected
(e) Valve clearance set correctly
(f) Injection timing set correctly
(g) w/ PS:
Steering wheel at straight—ahead position
(h) Idle speed set correctly

2. CONNECT TACHOMETER

3. INSPECT AND ADJUST A/C IDLE—UP SPEED

(a) Start the engine.
(b) Turn the A/C switch ON, and set these position:
- Blower switch to HI
- Air intake control lever to RECIRCULATED AIR
- Air flow control lever to FACE
- Temperature control lever to COOL

(c) Check the idle—up speed.
A/C idle—up speed:
900 — 1,000 rpm

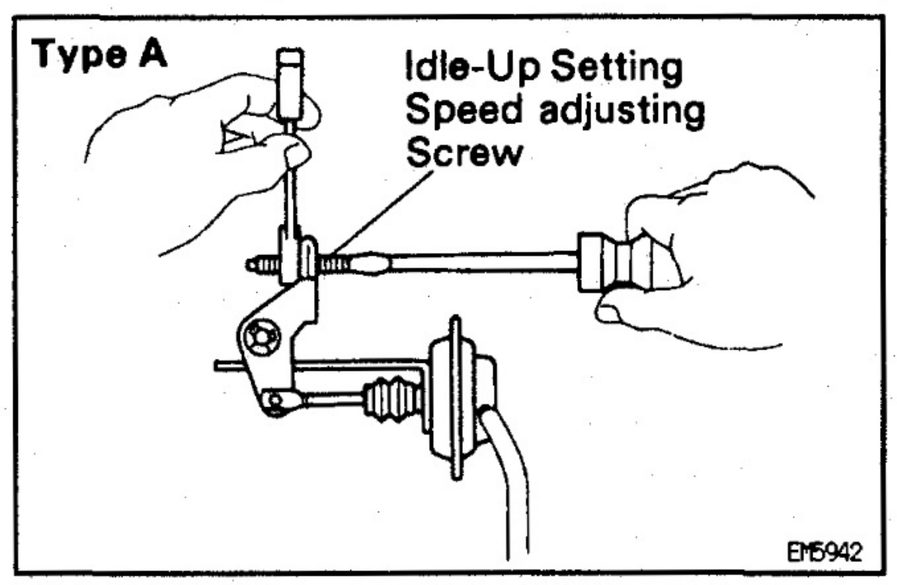

(d) Adjust the idle—up setting speed by turning the idle—up setting speed adjusting screw.
(e) Turn the A/C switch OFF, then ON again, and recheck the idle—up speed.

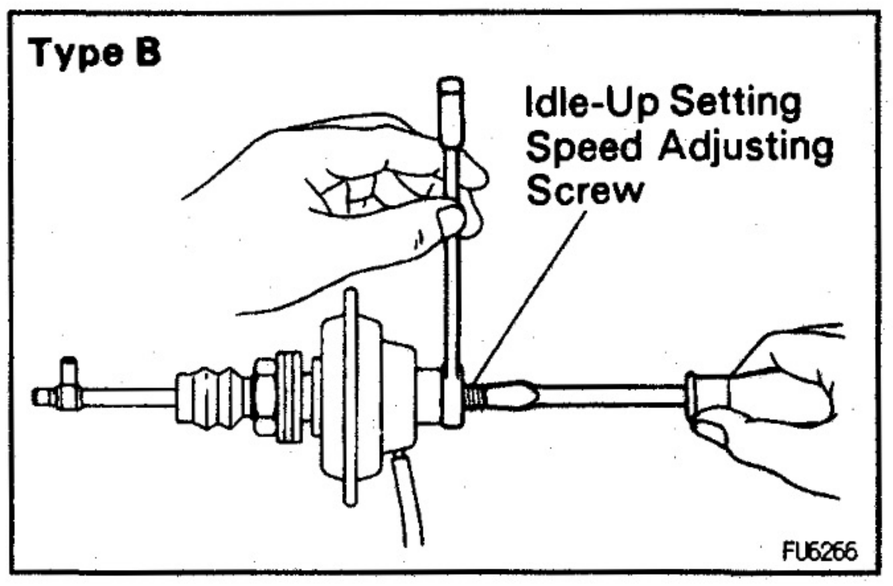

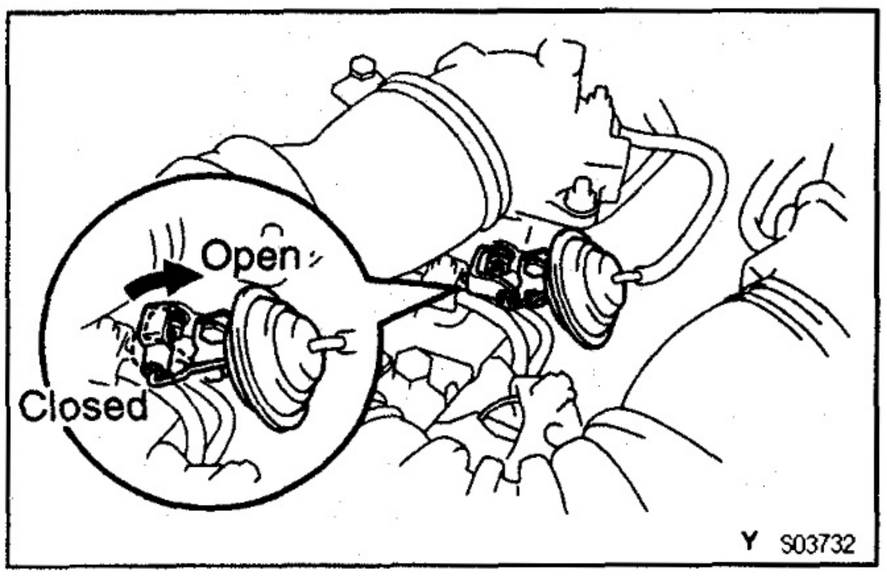

INTAKE SHUTTER INSPECTION (LJ only)

EG7DF-01

INTAKE SHUTTER INSPECTION

1. INSPECT INTAKE SHUTTER OPERATION

(a) Start the engine.
(b) When running the engine, check the diaphragm rod is fully open position.
(c) When the engine stops (IG OFF), check that the diaphragm rod is fully closed position.
(d) A few seconds after the engine stops (IG OFF), check that the diaphragm rod is fully open position.

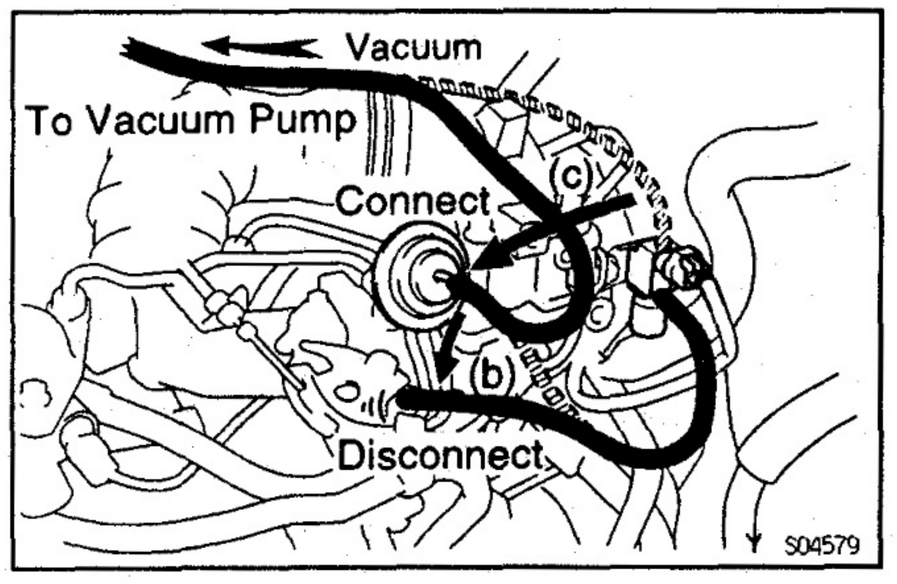

2. INSPECT VENTURI

(a) Start the engine.
(b) Disconnect the vacuum hose from the actuator.
(c) Apply vacuum directly to the actuator with the engine idling.
(d) Check that the engine runs rough or dies.
(e) Reconnect the vacuum hoses to the proper locations.

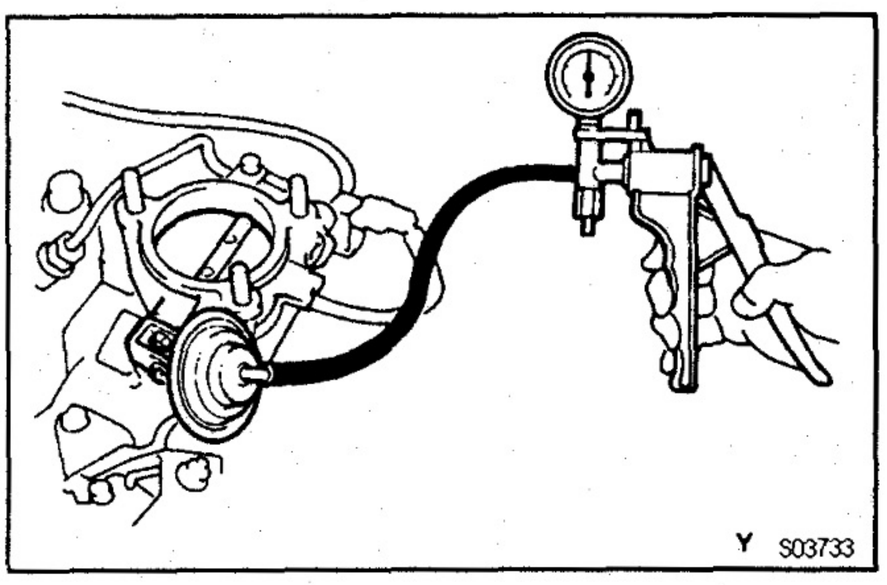

3. INSPECT THROTTLE VALVE

(a) Remove the 3 nuts, intake flange and gasket.
(b) Fully close the throttle valve, and check that it return smoothly.
(c) Apply at least 29.3 kPa (220 mmHg, 8.66 in.Hg) of vacuum to the actuator.
(d) Check that the vacuum does not drop immediately.
(e) Install a new gasket and the intake flange with the 3 nuts.

Torque: 12 N·m (120 kgf·cm, 9 ft·lbf)

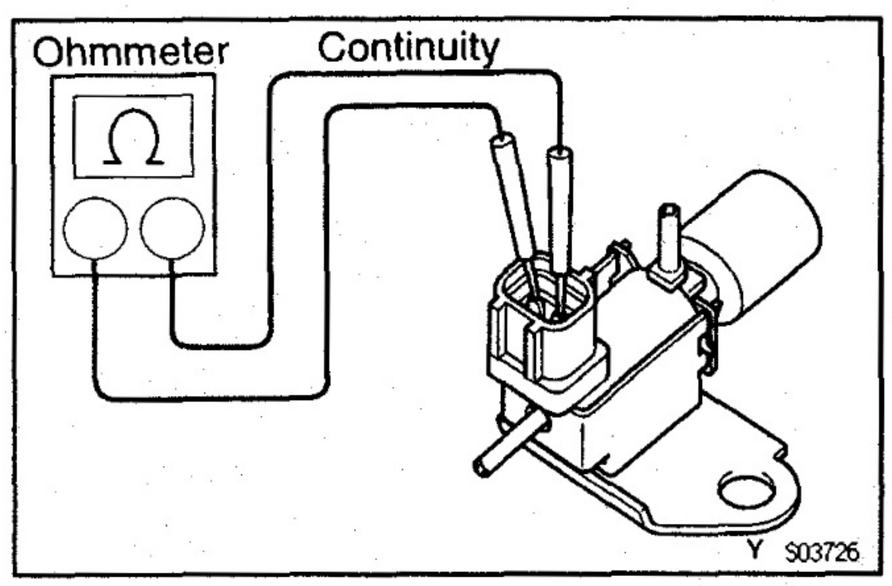

4. INSPECT VSV

A. Inspect VSV for open circuit

Using an ohmmeter, check that there is continuity between the terminals.

Resistance:

37 – 44 Ω at 20°C (68°F)

If there is no continuity, replace the VSV.

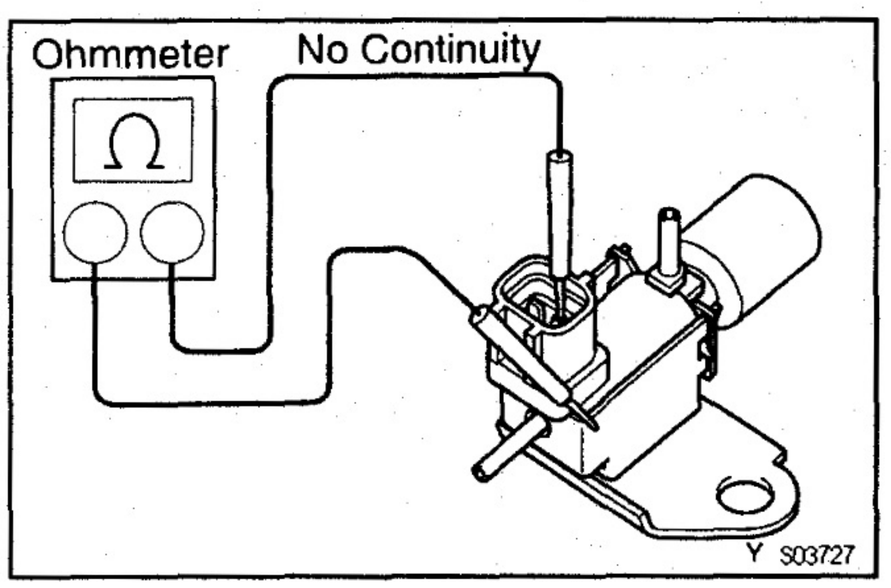

B. Inspect VSV for ground

Using an ohmmeter, check that there is no continuity between each terminal and the body.
If there is continuity, replace the VSV.

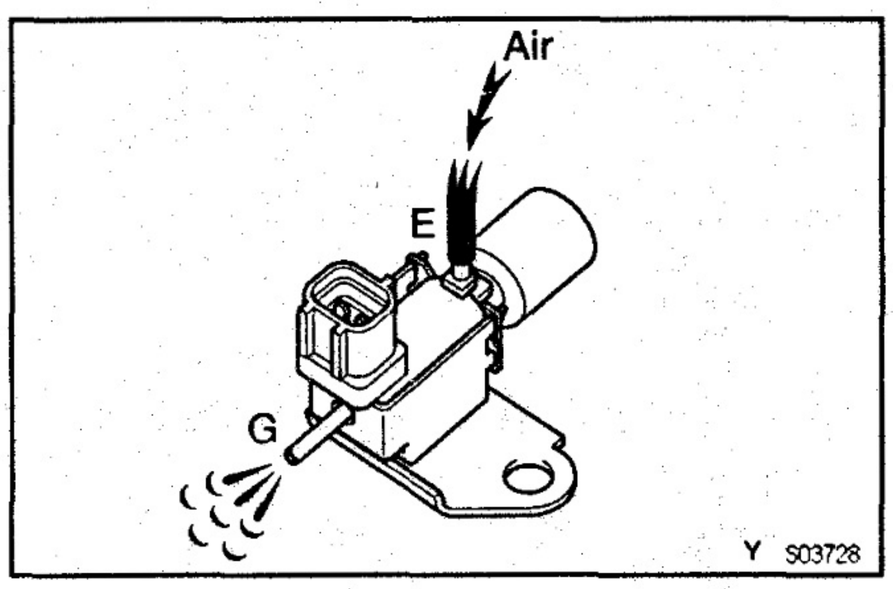

C. Inspect VSV operation

(a) Check that air flows from port E to port G.

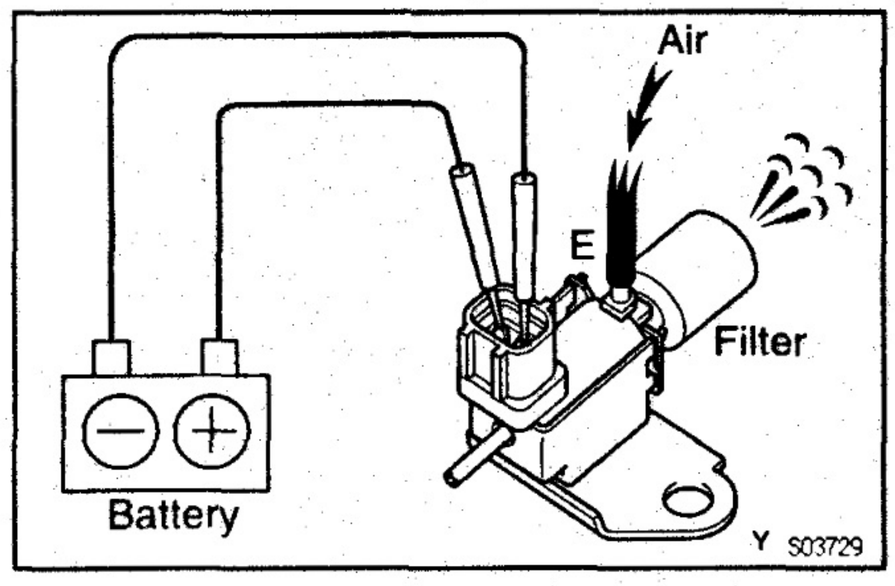

(b) Apply battery positive voltage across the terminals.

(c) Check that air flows from port E to the filter.
If operation is not as specified, replace the VSV.

TIMING BELT

EG17P–00

HINT: If replacing the timing belt before the timing belt warning light comes on, (light comes on after 100,000 km of driving), be sure to reset the timing belt counter of the speedometer to zero.

COMPONENTS FOR REMOVAL AND INSTALLATION

EG

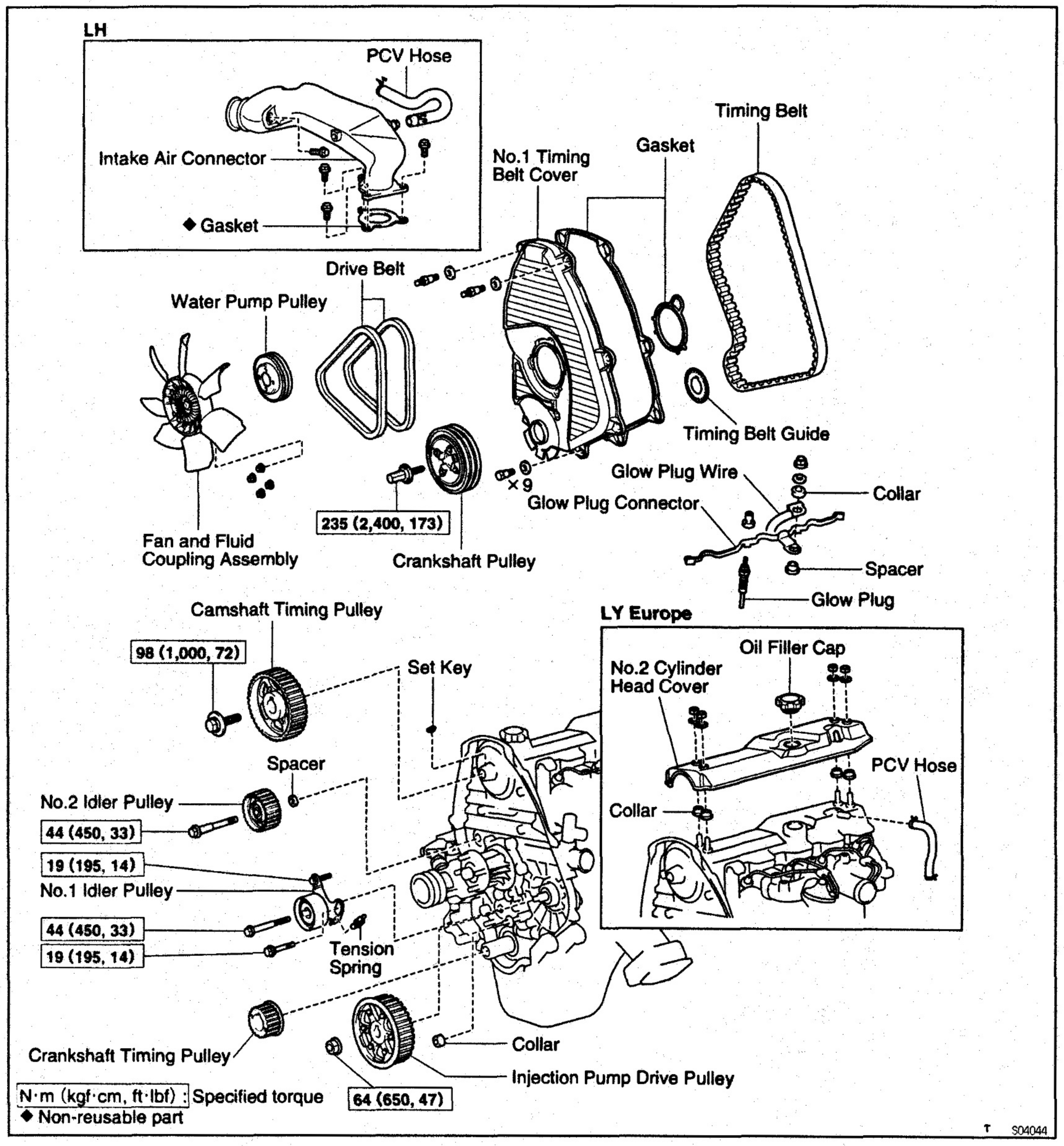

EG

TIMING BELT REMOVAL

E07A7-01

1. **REMOVE GLOW PLUGS**
   (See steps 2 to 5 in cylinder head removal)
2. **REMOVE DRIVE BELTS, FAN, FLUID COUPLING ASSEMBLY AND WATER PUMP PULLEY**
   (See step 2 in water pump removal in Cooling System)

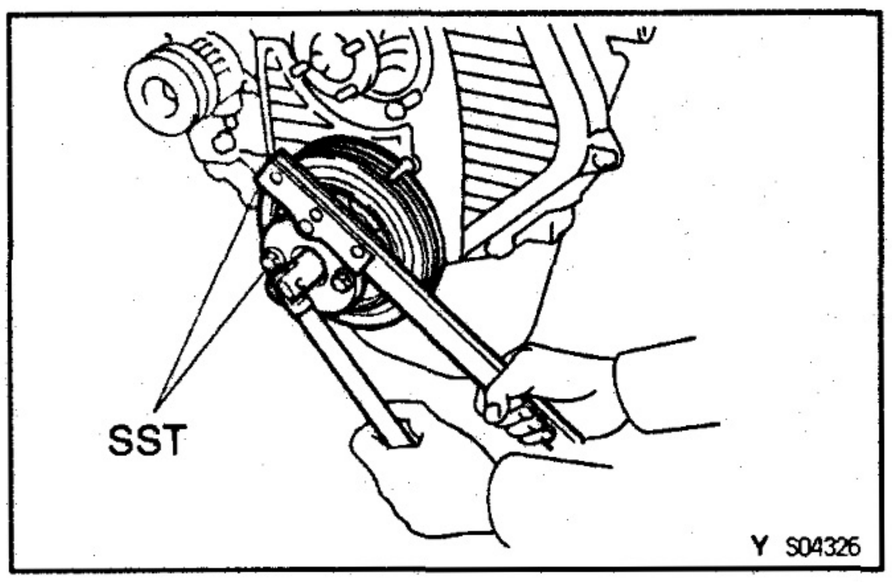

3. **REMOVE CRANKSHAFT PULLEY**

(a) Using SST, remove the pulley bolt.
SST 09213−54015 (91651−60855),
09330−00021

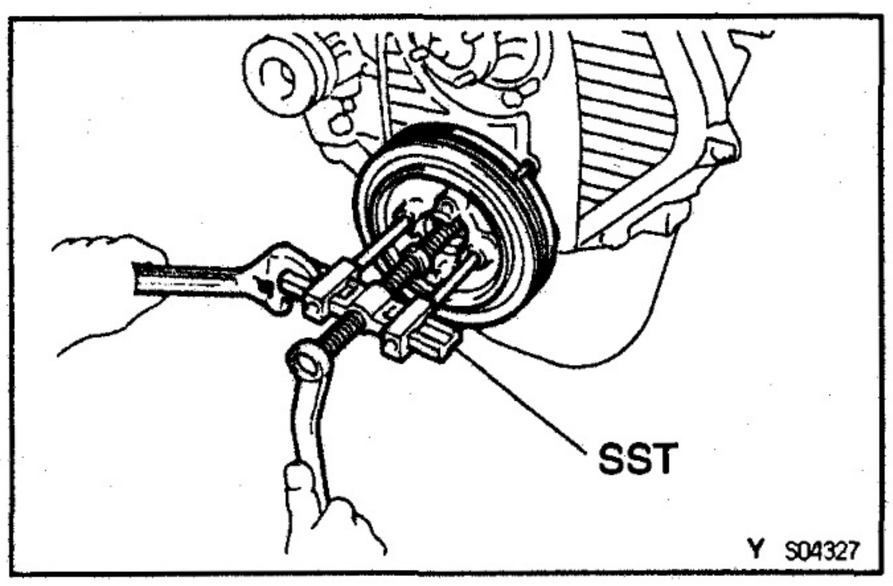

(b) Using SST, remove the pulley.
SST 09950−50010 (09951−05000, 09952−05010,
09953−05010, 09953−05020, 09954−05030)

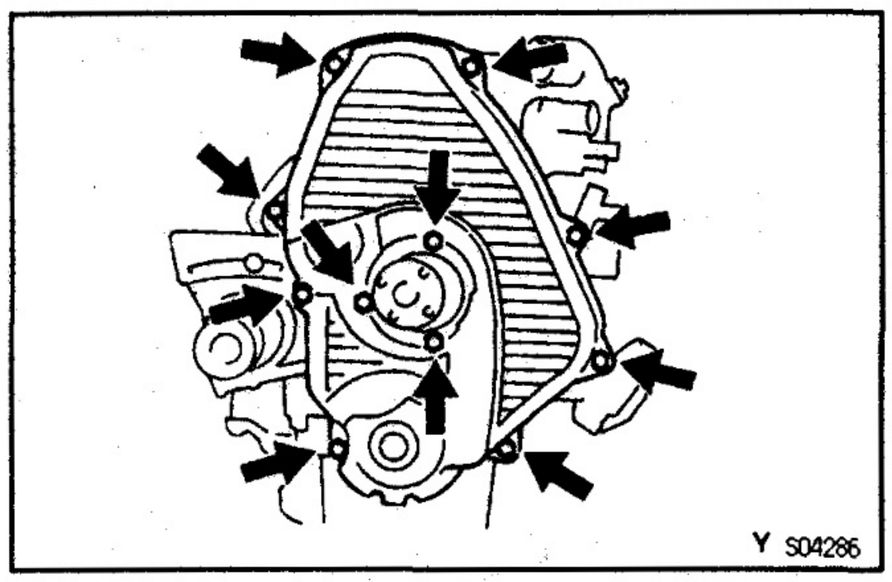

4. **REMOVE NO.1 TIMING BELT COVER**

(a) Remove the 11 bolts, washers, timing belt cover and 2 gaskets.

(b) Remove the collar from the timing pointer.

5. **REMOVE TIMING BELT GUIDE**

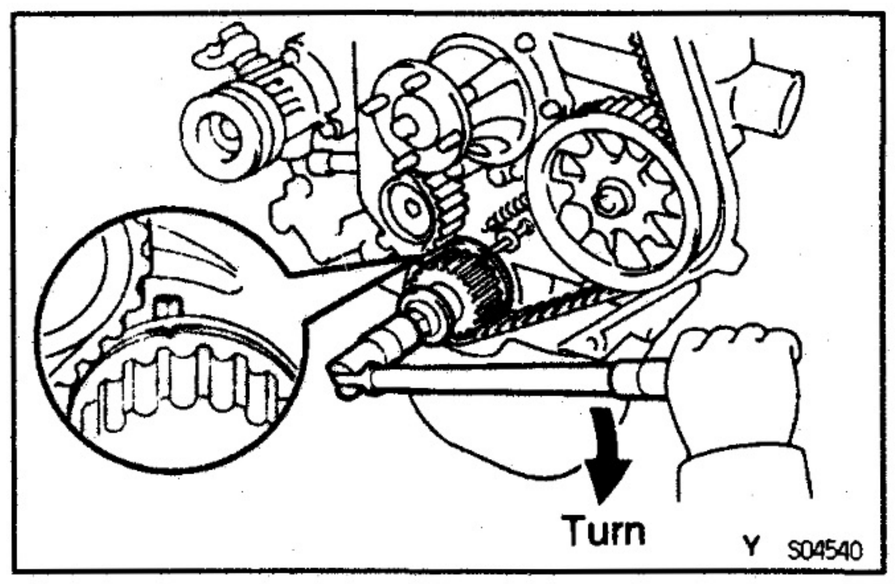

6. **SET NO.1 CYLINDER TO TDC/COMPRESSION**

(a) Using the crankshaft pulley bolt, align its groove with the timing pointer by turning the crankshaft clockwise.

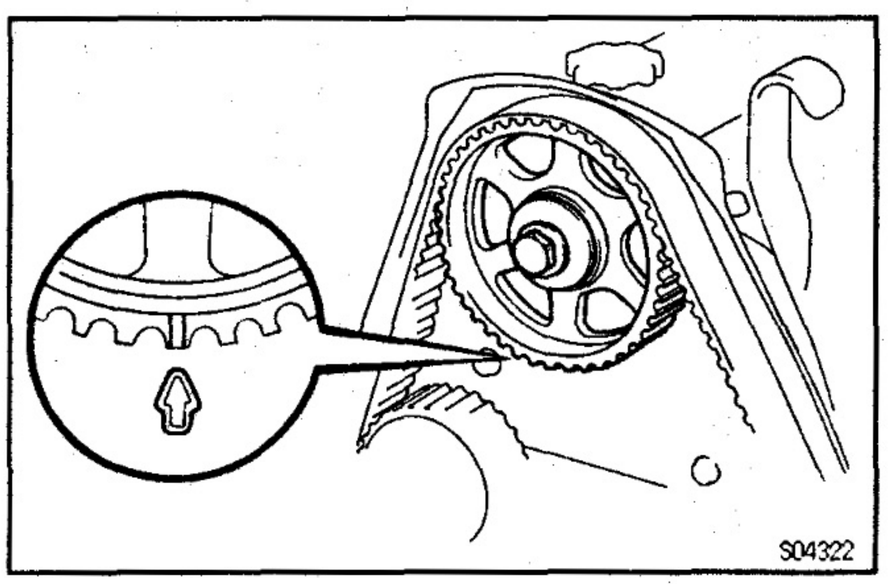

(b) Check that timing marks of the camshaft timing pulley and No.2 timing belt cover are aligned.
If not, turn the crankshaft 1 revolution (360°).

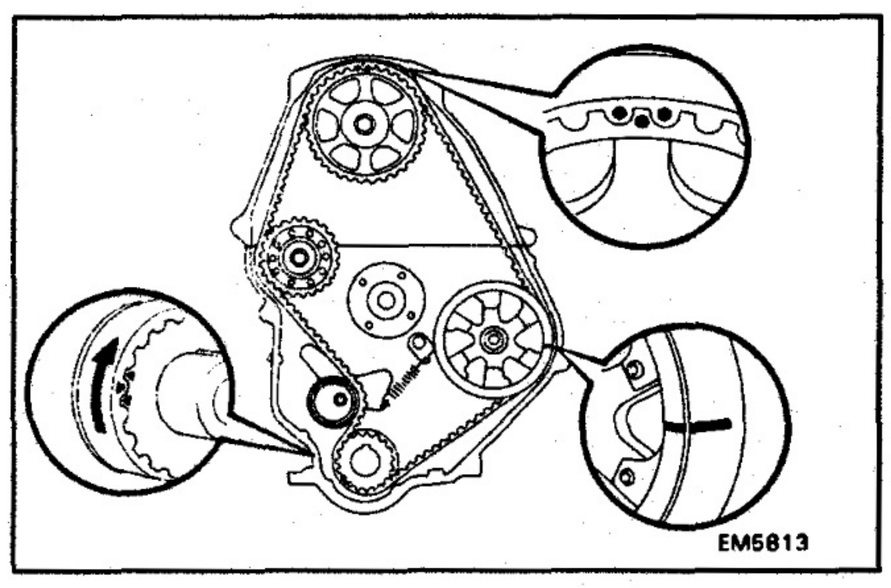

7. REMOVE TIMING BELT

HINT: If re—using the timing belt, draw a direction arrow on the timing belt (in direction of engine revolution), and place matchmarks on the pulleys and timing belt.

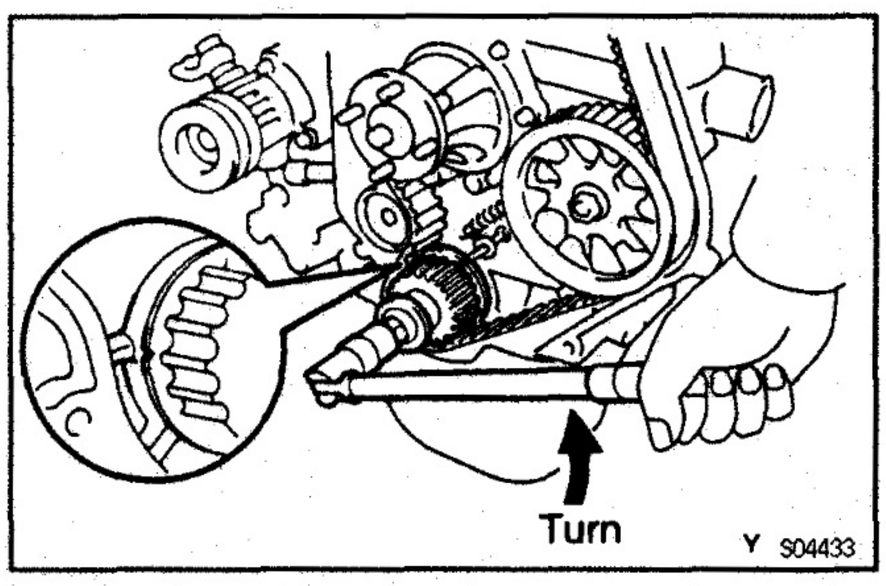

(a) Turn the crankshaft 90° counterclockwise, and put the timing mark of the crankshaft timing pulley with the protrusion of the timing belt case.

NOTICE: If the timing belt is disengaged, having the crankshaft timing pulley at the wrong angle can cause the piston head and valve head to come into contact with each other when you remove the camshaft timing pulley (step 9), causing damage. So always set the crankshaft pulley at the correct angle.

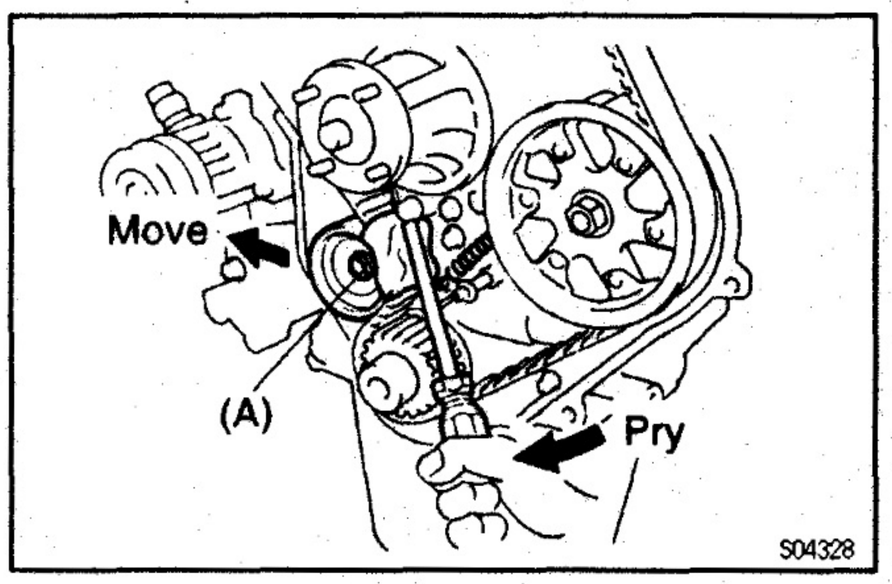

(b) Loosen the No.1 idler pulley bolt (A), and shift left as far as it will go.
(c) Temporarily tighten the pulley bolt (A), and then relieve the timing belt tension.
(d) Remove the timing belt.

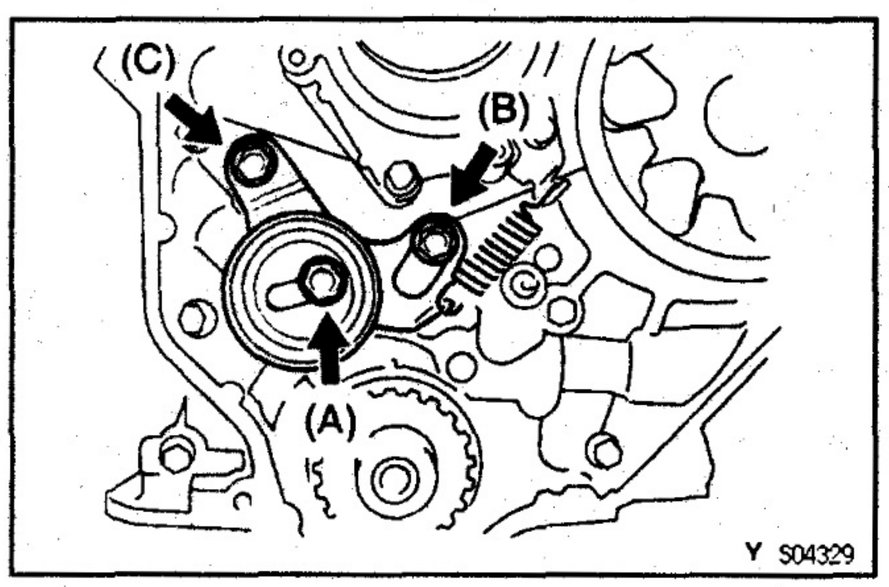

8. REMOVE NO.1 IDLER PULLEY

(a) Remove the 2 bolts (A and B).
(b) Loosen the bolt (C), and remove it, the idler pulley and tension spring.

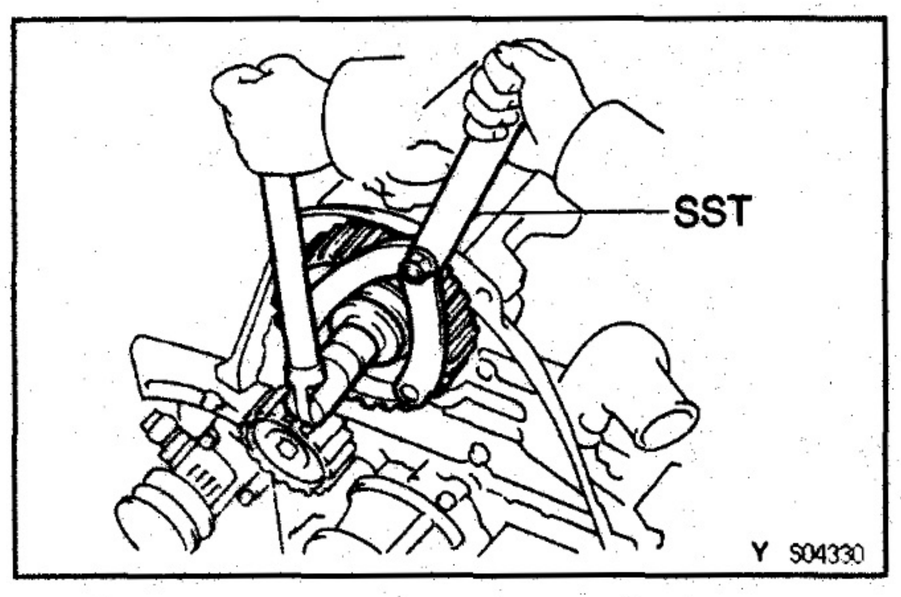

9. REMOVE CAMSHAFT TIMING PULLEY

(a) Using SST, remove the pulley bolt.
SST 09960–10010 (09962–01000, 09963–01000)

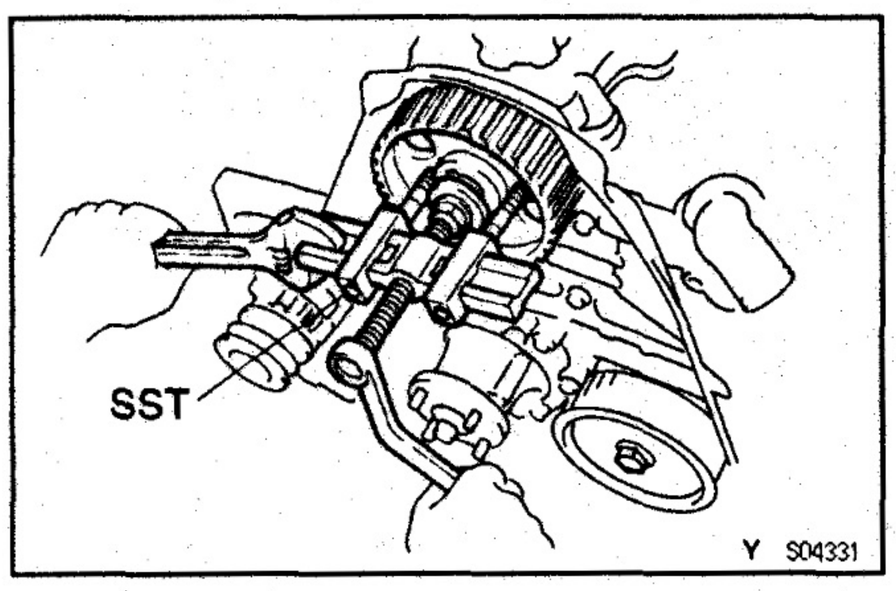

(b) Using SST, remove the timing pulley. Remove the set key.
SST 09950–50010 (09951–05010, 09952–05020, 09953–05010, 09954–05020)

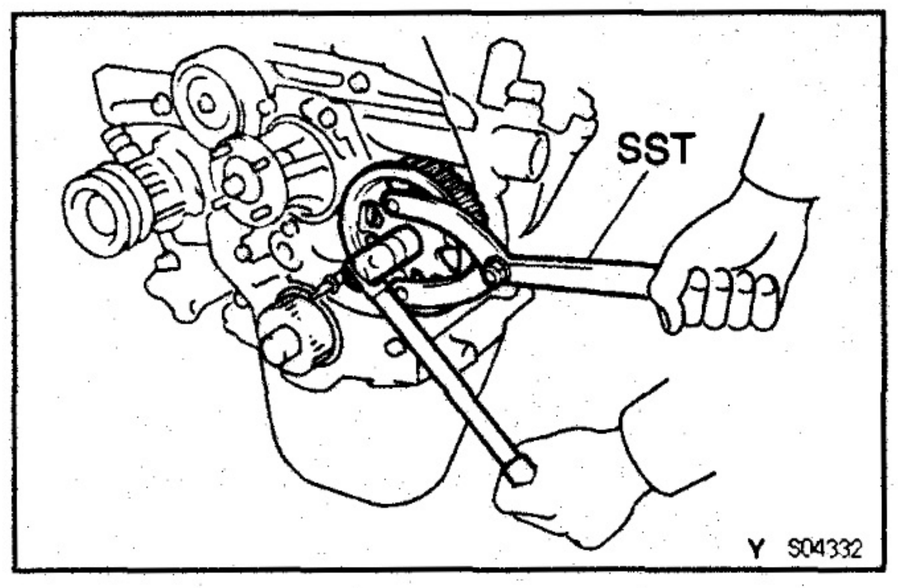

10. REMOVE INJECTION PUMP DRIVE PULLEY

(a) Using SST, remove the pulley bolt.
SST 09960–10010 (09962–01000, 09963–01000)

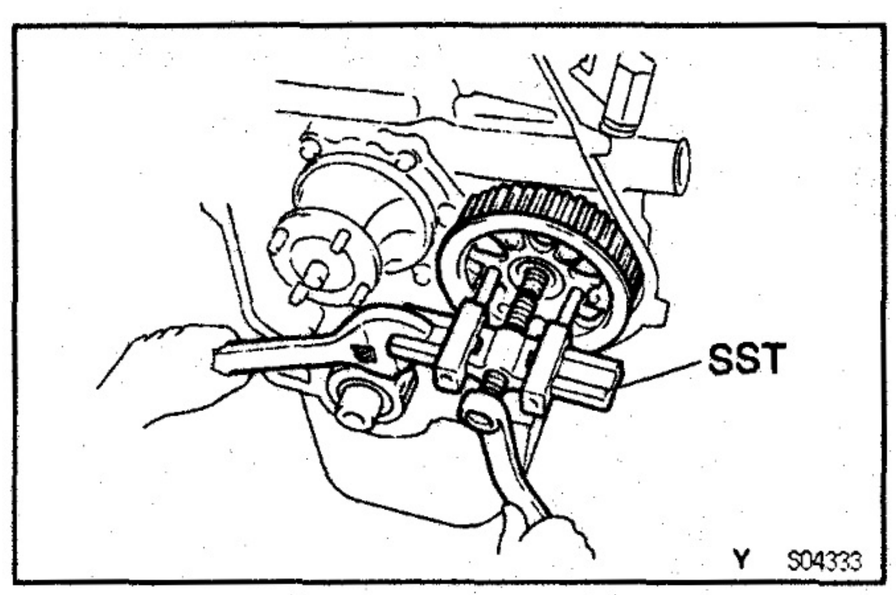

(b) Using SST, remove the drive pulley.
SST 09950–50010 (09951–05010, 09952–05010, 09953–05020, 09954–05020)

11. REMOVE NO.2 IDLER PULLEY

Remove the bolt, idler pulley and spacer.

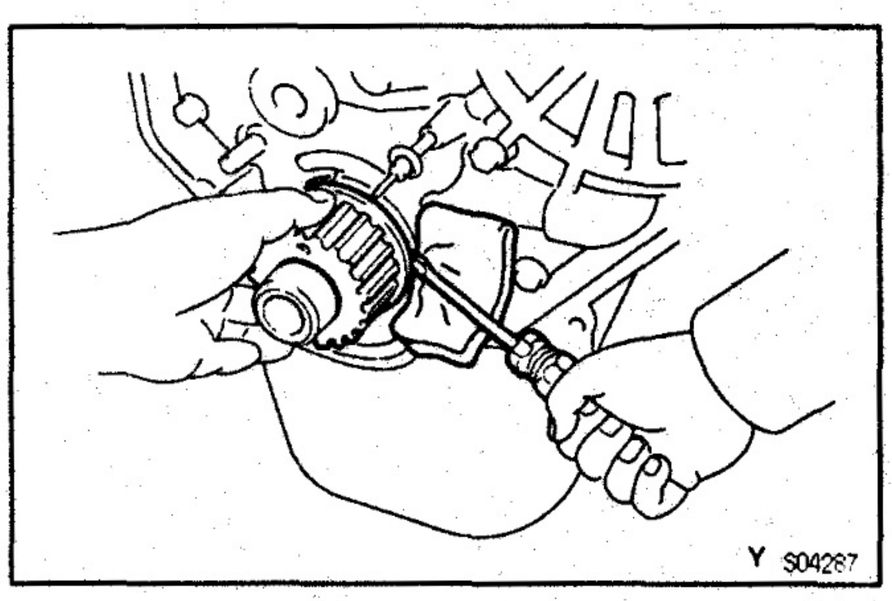

12. REMOVE CRANKSHAFT TIMING PULLEY

Using a screwdriver, remove the timing pulley.
HINT: Position shop rag as shown to prevent damage.

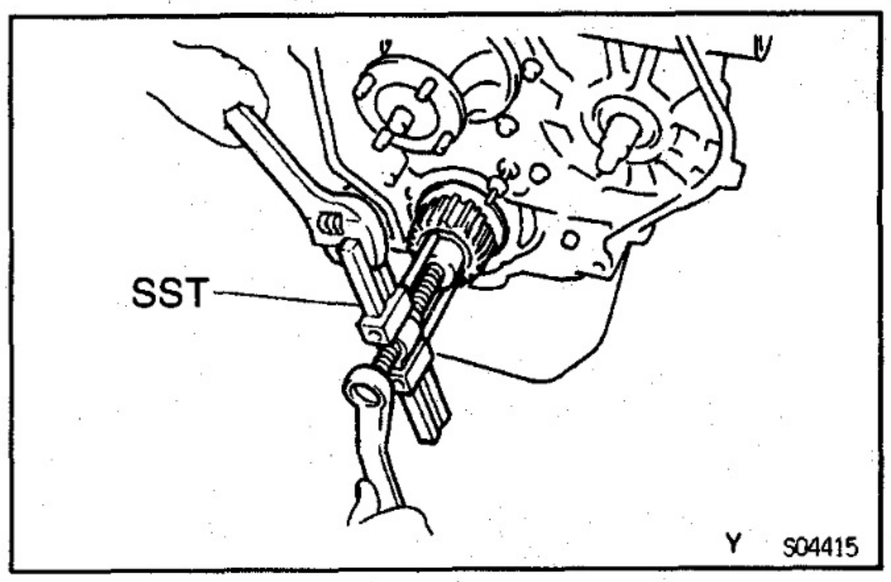

If the pulley cannot be remove by screwdriver, use SST, remove the timing pulley.
SST 09950—05010 (09951—05010, 09952—05010, 09953—05010, 09953—05020, 09954—05010)

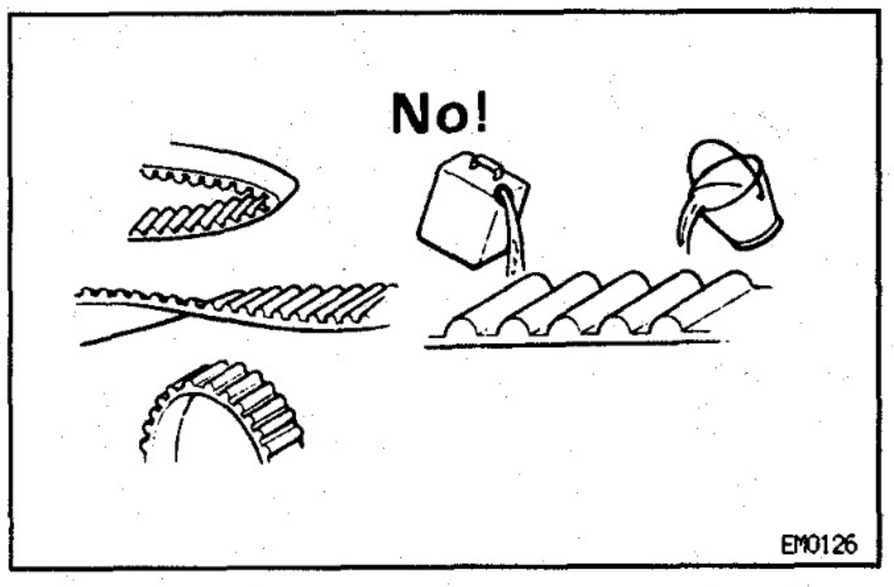

TIMING BELT COMPONENTS INSPECTION EGSYZ—02

1. INSPECT TIMING BELT

NOTICE:

- **Do not bend, twist or turn the timing belt inside out.**
- **Do not allow the timing belt to come into contact with oil, water or steam.**
- **Do not utilize timing belt tension when installing or removing the mounting bolt of the camshaft timing pulley.**

If there are any defects, as shown in the illustration, check these points:

(a) Premature parting
- Check the proper installation.
- Check the timing cover gasket for damage and proper installation.

(b) If the belt teeth are cracked or damaged, check to see if either camshaft is locked.

(c) If there is noticeable wear or cracks on the belt face, check to see if there are nicks on the side of the idler pulley lock and water pump.

(d) If there is wear or damage on only one side of the belt, check the belt guide and the alignment of each pulley.

(e) If there is noticeable wear on the belt teeth, check the timing cover for damage, and check gasket has been installed correctly and for foreign material on the pulley teeth.
If necessary, replace the timing belt.

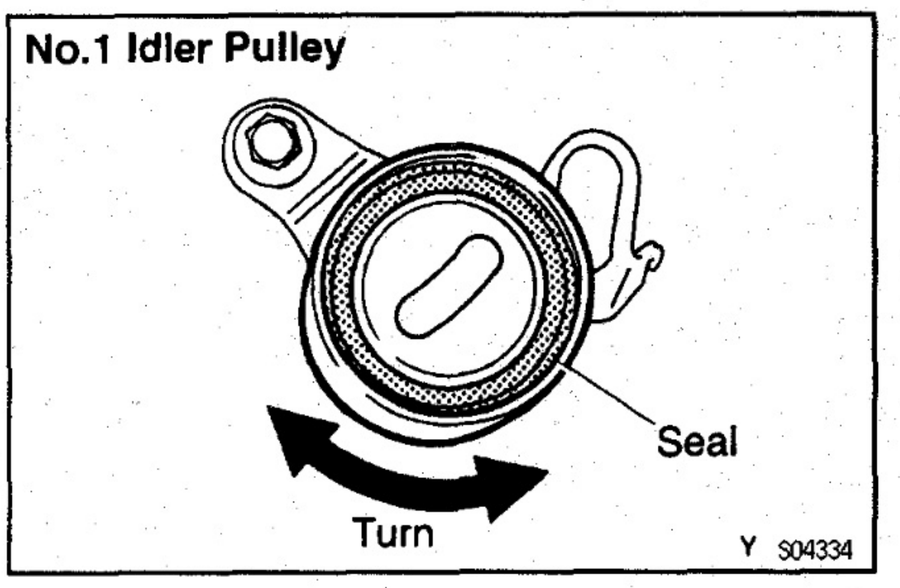

2. INSPECT IDLER PULLEYS

(a) No.1 Idler Pulley:
Visually check the seal portion of the idler pulley for oil leakage.
If leakage is found, replace the idler pulley.

(b) Check that the idler pulley turns smoothly.
If necessary, replace the idler pulley.

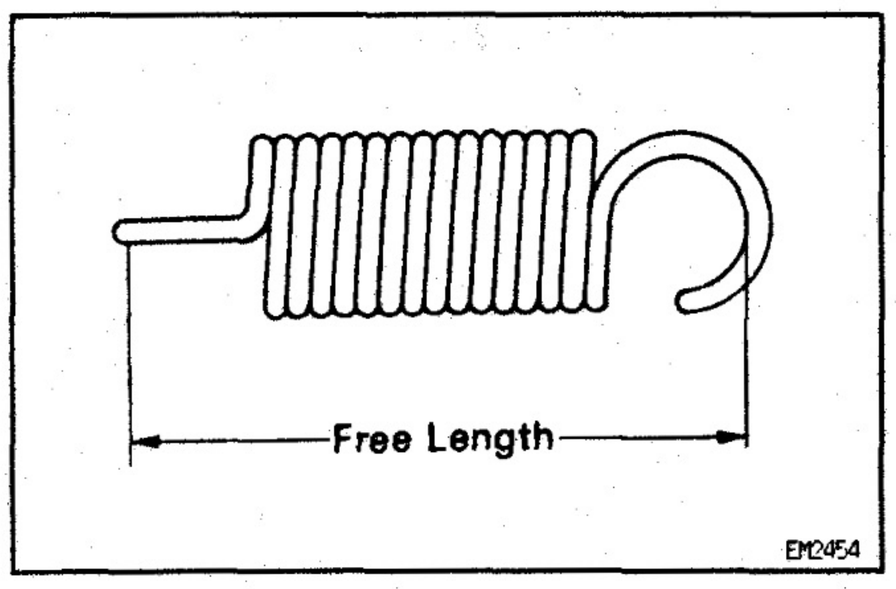

EG

3. INSPECT TENSION SPRING

(a) Measure the free length of tension spring.
Free length:
44.4 — 45.4 mm (1.748 — 1.787 in.)
If the free length is not as specified, replace the tension spring.

(b) Measure the tension of the tension spring at the specified installed length.
Installed tension (at 52.1 mm (2.051 in.)):
53 — 59 N (5.42 — 5.98 kgf, 11.9 — 13.2 lbf)
If the installed tension is not as specified, replace the tension spring.

TIMING BELT INSTALLATION

E07AB-01

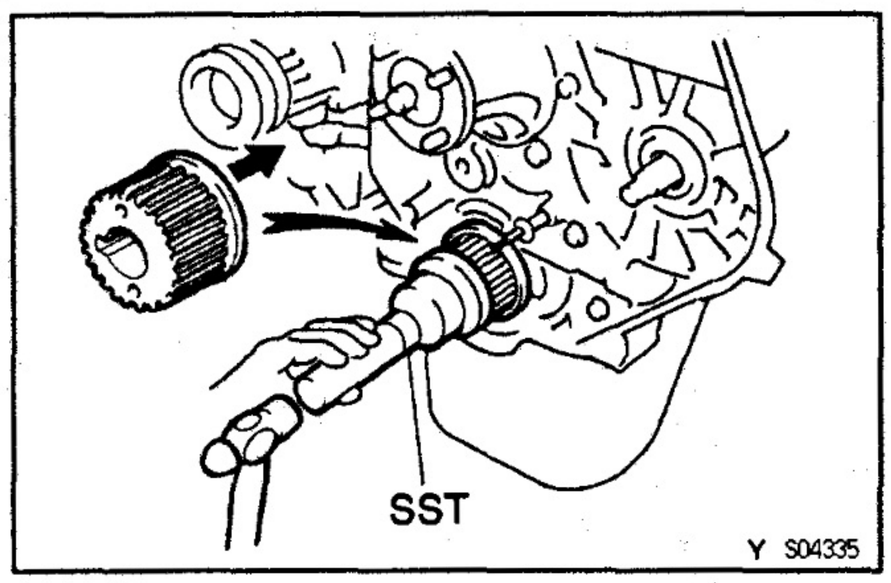

1. INSTALL CRANKSHAFT TIMING PULLEY

(a) Align the pulley set key with the key groove of the timing pulley.

(b) Using SST and a hammer, tap in the timing pulley, facing the flange side inward.
SST 09223—46011

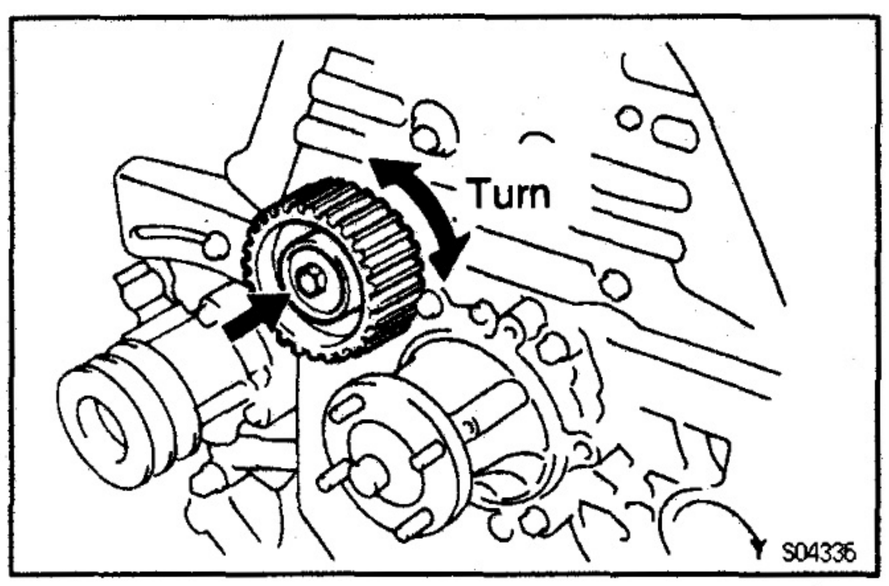

2. INSTALL NO.2 IDLER PULLEY

(a) Install the spacer and idler pulley with the bolt.
Torque: 44 N·m (450 kgf·cm, 33 ft·lbf)

(b) Check that the idler pulley moves smoothly.

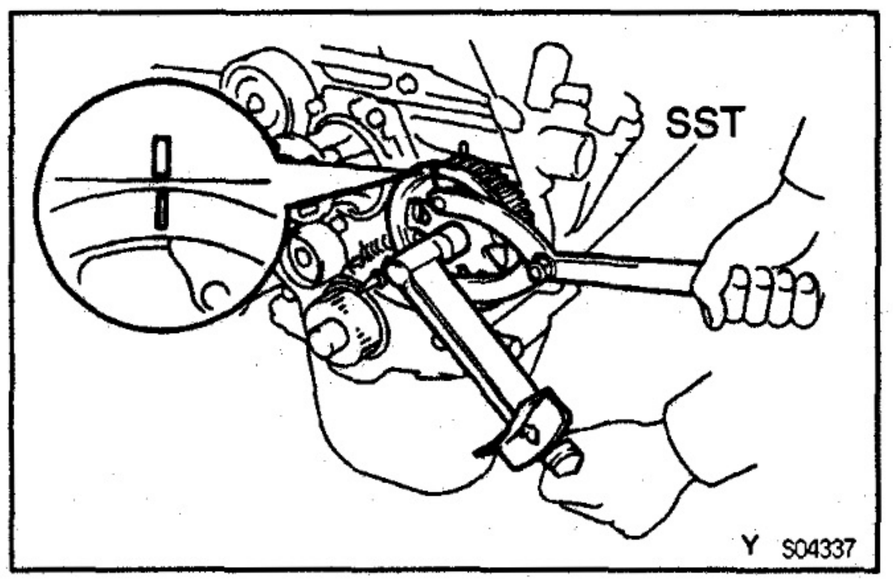

3. INSTALL INJECTION PUMP DRIVE PULLEY

(a) Align the pulley set key with the key groove of the drive pulley.

(b) Slide the drive pulley, facing the timing mark (or flange side) outward.

(c) Using SST, install the pulley bolt.
SST 09960—10010 (09962—01000, 09963—01000)
Torque: 64 N·m (650 kgf·cm, 47 ft·lbf)

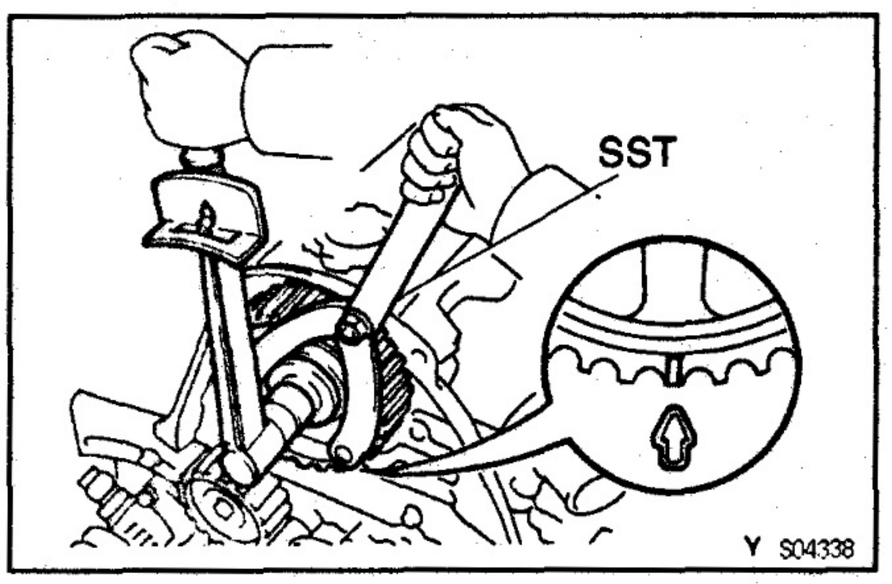

4. INSTALL CAMSHAFT TIMING PULLEY

(a) Install the set key to the key groove of the camshaft.

(b) Align the pulley set key with the key groove of the timing pulley.

(c) Slide the timing pulley, facing the timing mark outward.

(d) Using SST, install the pulley bolt.
SST 09960–10010 (09962–01000, 09963–01000)
Torque: 98 N·m (1,000 kgf·cm, 72 ft·lbf)

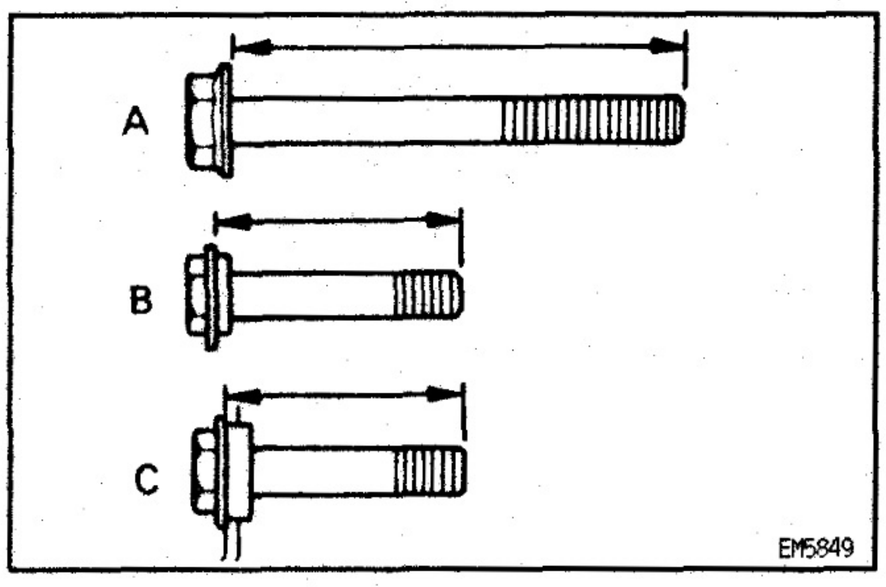

5. TEMPORARILY INSTALL NO.1 IDLER PULLEY AND TENSION SPRING

HINT:

- The bolt lengths for bolt types A, B and C shown in the illustration are:
  A 76.5 mm (3.012 in.)
  B 42.9 mm (1.689 in.) Color: Yellow
  C 41.3 mm (1.626 in.) Color: Silver
- Bolt C is combined with the idler pulley.

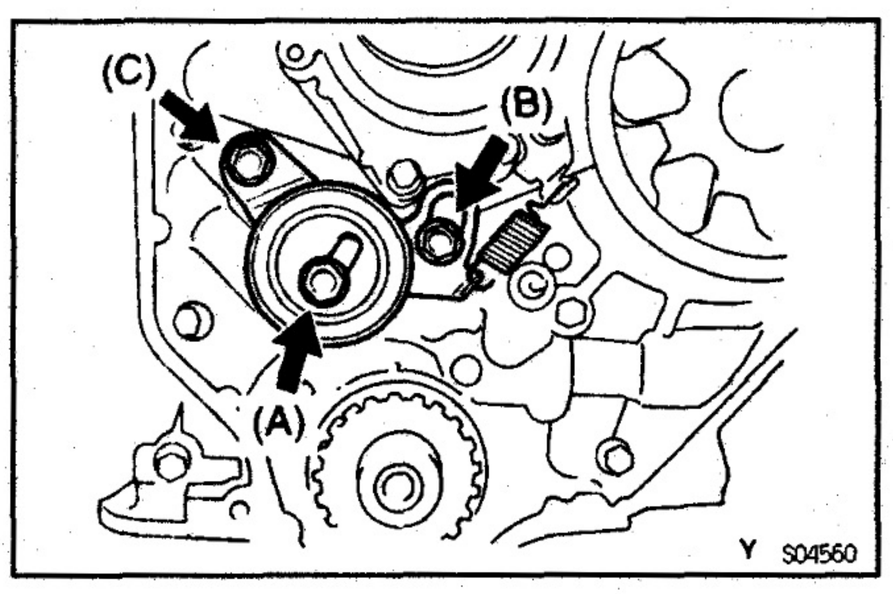

(a) Install the idler pulley with the 3 bolts. Tightening the 2 bolts (B and C).
Torque: 19 N·m (195 kgf·cm, 14 ft·lbf)

(b) Install the tension spring.

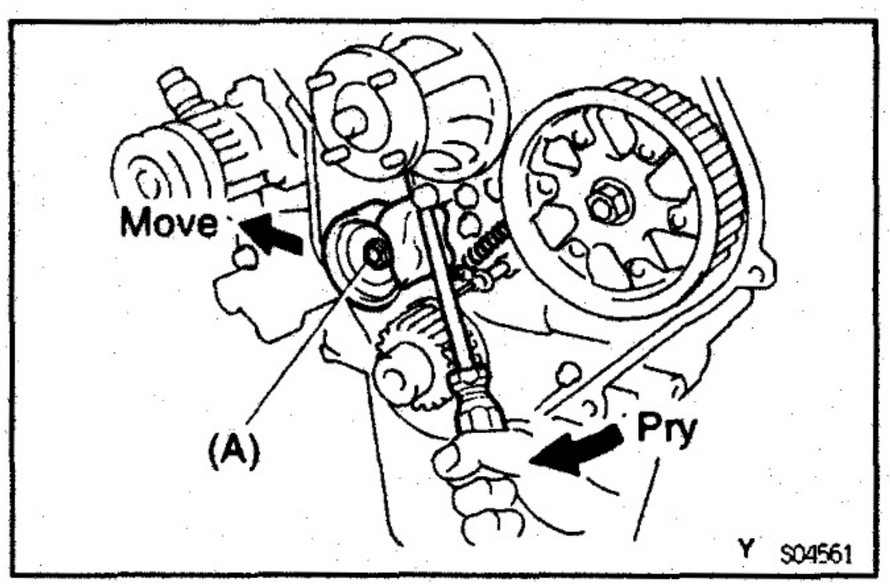

(c) Pry the bracket of the idler pulley toward the left as far as it will go and tighten the bolt (A).

(d) Check that the idler pulley moves smoothly.

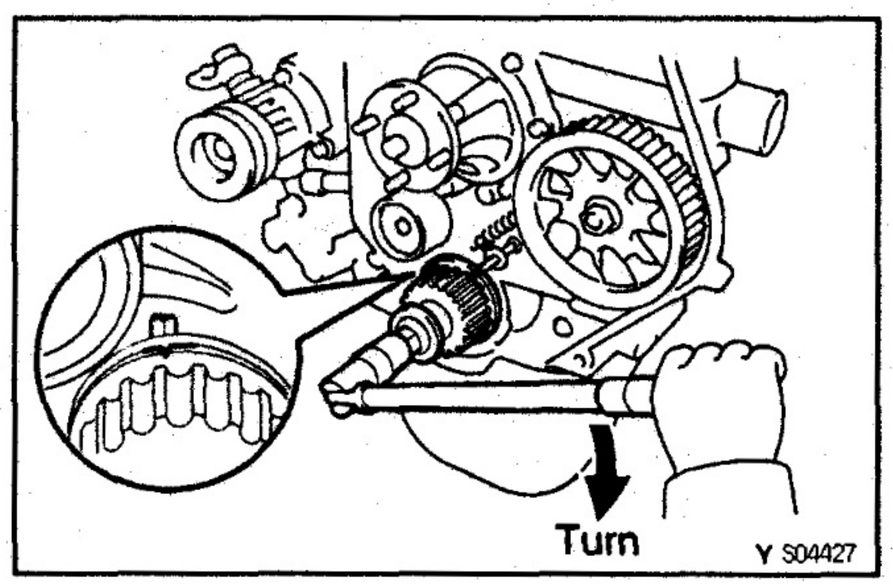

6. SET NO.1 CYLINDER TO TDC/COMPRESSION

(a) Using the crankshaft pulley bolt, align its groove with the timing pointer by turning the crankshaft clockwise.
NOTICE: Do not turn the crankshaft pulley counterclockwise.

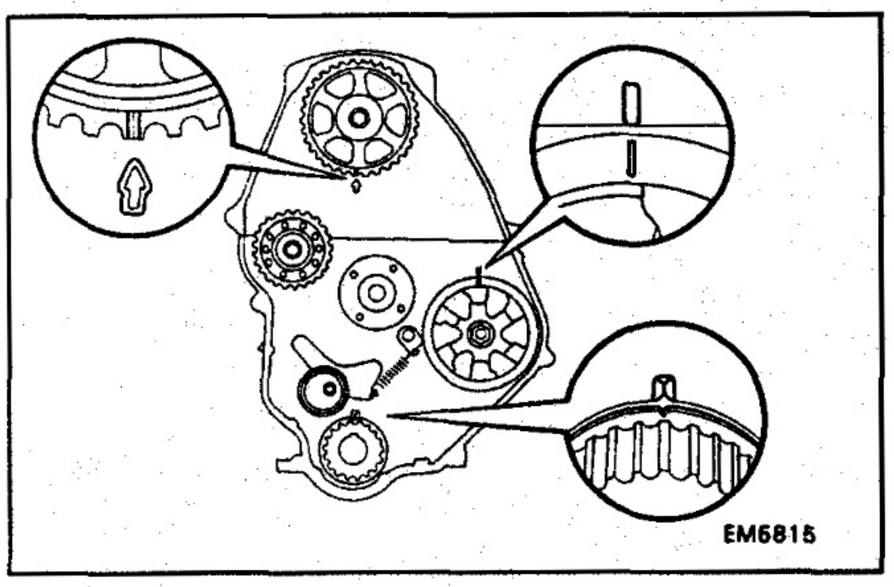

(b) Set the timing and drive pulleys at each position.
NOTICE:
- **The engine should be cold.**
- **When turning the crankshaft or camshaft, the valve heads will hit against the piston top so do not turn them move than necessary.**

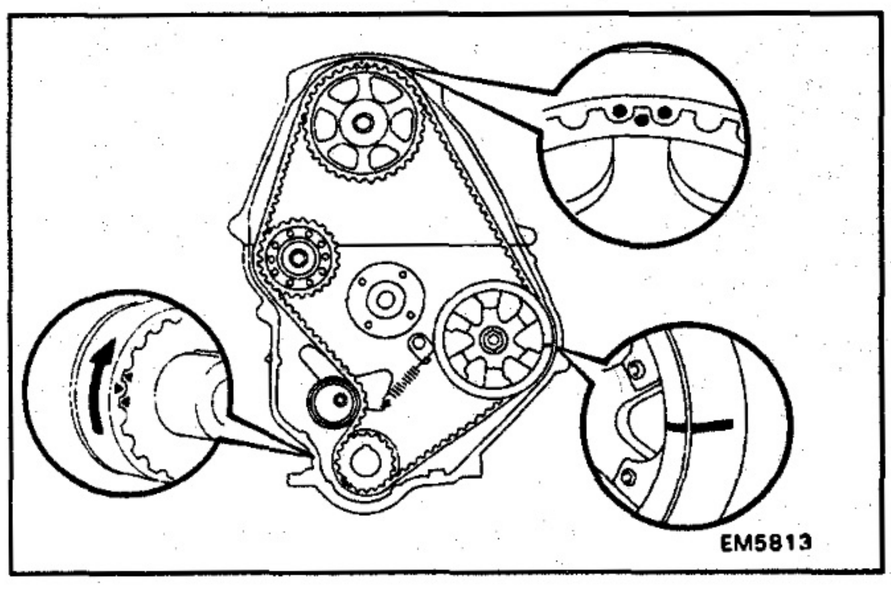

7. INSTALL TIMING BELT

HINT: If re—using the timing belt, align the points marked during removal, and install the timing belt with the arrow pointing in the direction of engine revolution.

(a) Remove any oil or water on each pulleys, and keep them clean.

(b) Install the timing belt on the crankshaft timing and No.1 idler pulleys.

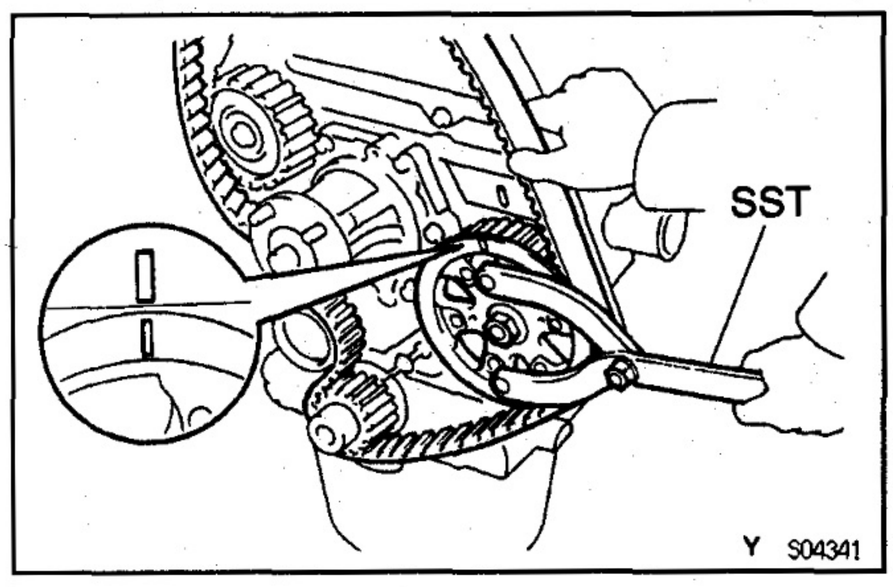

(c) Using SST, slightly turn the injection pump drive pulley clockwise. Hang the timing belt on the drive pulley, and align the timing marks of the drive pulley and timing belt case.
SST 09960—10010 (09962—01000, 09963—01000)

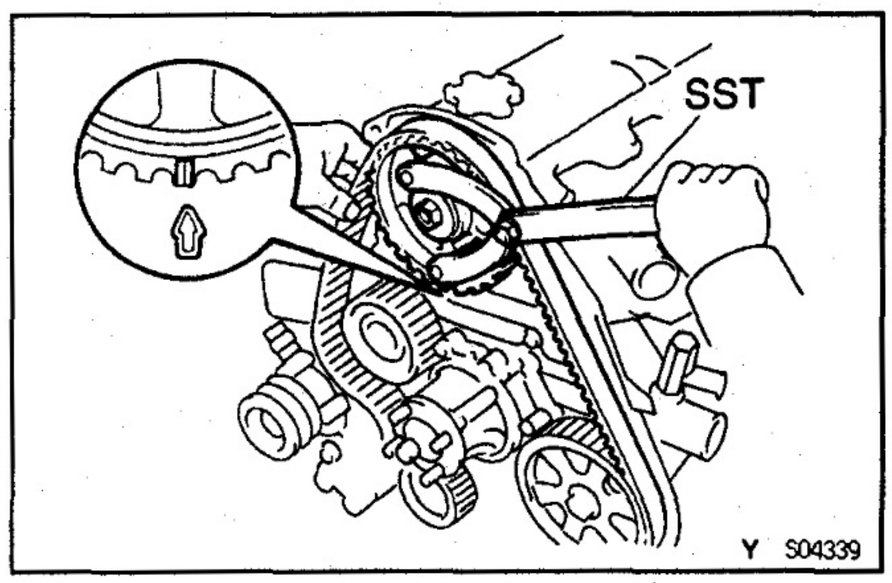

(d) Using SST, slightly turn the camshaft timing pulley clockwise. Hang the timing belt on the timing pulley, and align the timing marks of the timing pulley and timing belt case.
SST 09960—10010 (09962—01000, 09963—01000)

(e) Check that the timing belt has tension between the injection pump drive and camshaft timing pulleys.

(f) Install the timing belt on the No.2 idler pulley.

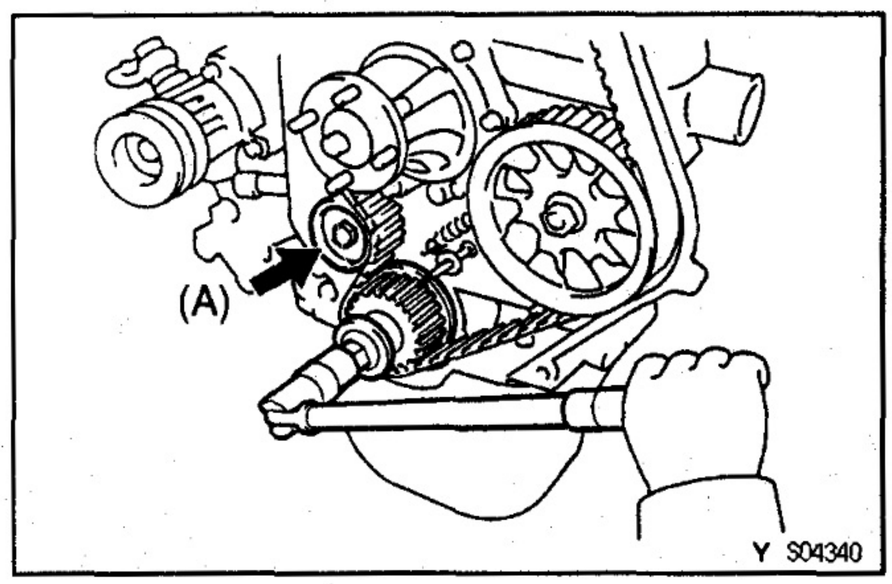

8. CHECK VALVE TIMING

(a) Loosen the No.1 idler pulley bolt (A), and stretch the timing belt.

(b) Slowly the crankshaft pulley 2 revolutions from TDC to TDC.
NOTICE: Always turn the crankshaft clockwise.

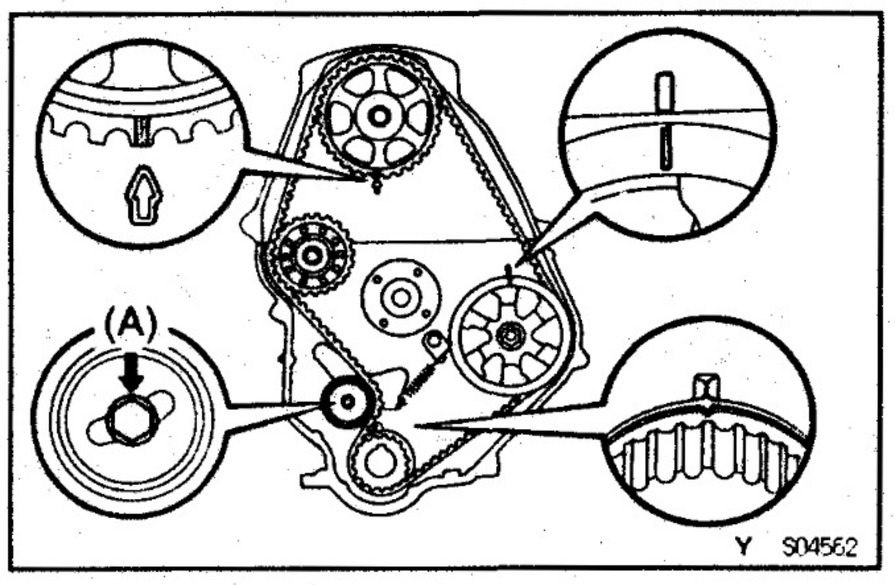

(c) Check that each pulley aligns with the timing marks as shown in the illustration.
If the timing marks do not align, remove the timing belt and reinstall it.
(d) Tighten the No.1 idler pulley bolt (A).
Torque: 44 N·m (450 kgf·cm, 33 ft·lbf)

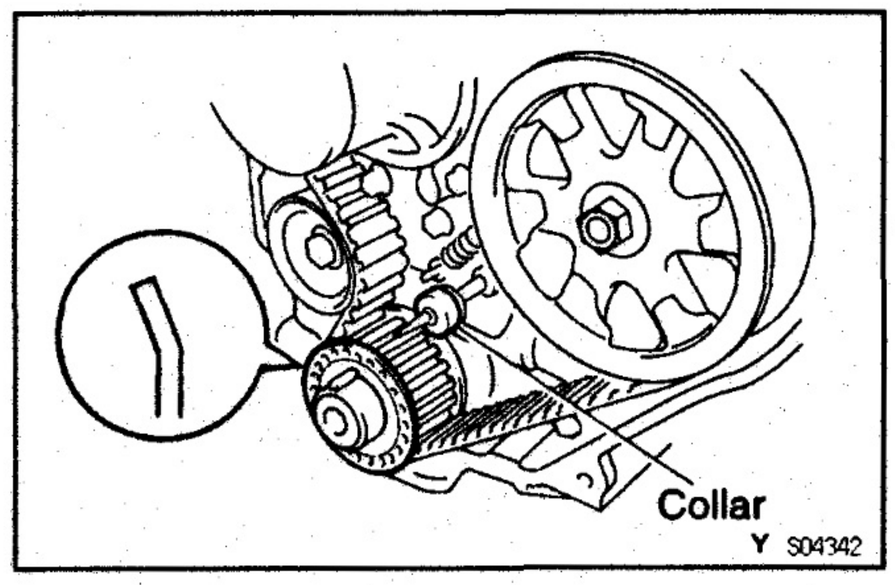

9. INSTALL TIMING BELT GUIDE
Install the belt guide, facing the cup side outward.

10. INSTALL NO.1 TIMING BELT COVER
(a) Install the collar to the timing pointer.
(b) Install the 2 gaskets to the timing belt cover.
(c) Install the timing belt cover with the 11 bolts.

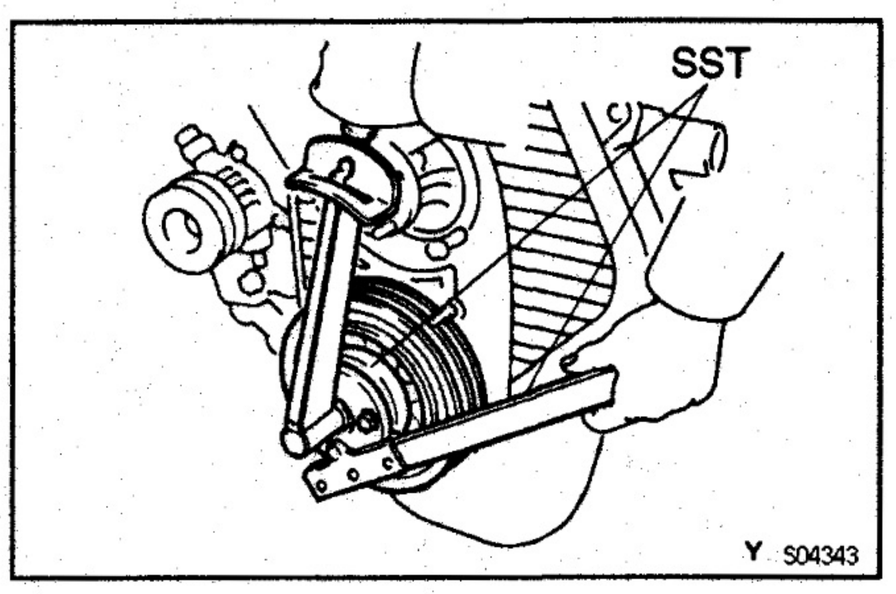

11. INSTALL CRANKSHAFT PULLEY
(a) Align the pulley set key with the key groove of the pulley, and slide the pulley to the crankshaft.
(b) Using SST, install the pulley bolt.
SST 09213−54015 (91651−60855),
09330−00021
Torque: 235 N·m (2,400 kgf·cm, 173 ft·lbf)

12. INSTALL WATER PUMP PULLEY, FAN, FLUID COUPLING ASSEMBLY AND DRIVE BELTS
(See step 4 in water pump installation in Cooling System)

13. INSTALL GLOW PLUGS
(See steps 14 to 17 in cylinder head installation)

CYLINDER HEAD

EG5XF-04
HINT: If replacing the timing belt before the timing belt warning light comes on, (light comes on after 100,000 km of driving), be sure to reset the timing belt counter of the speedometer to zero.

COMPONENTS FOR REMOVAL AND INSTALLATION

EG

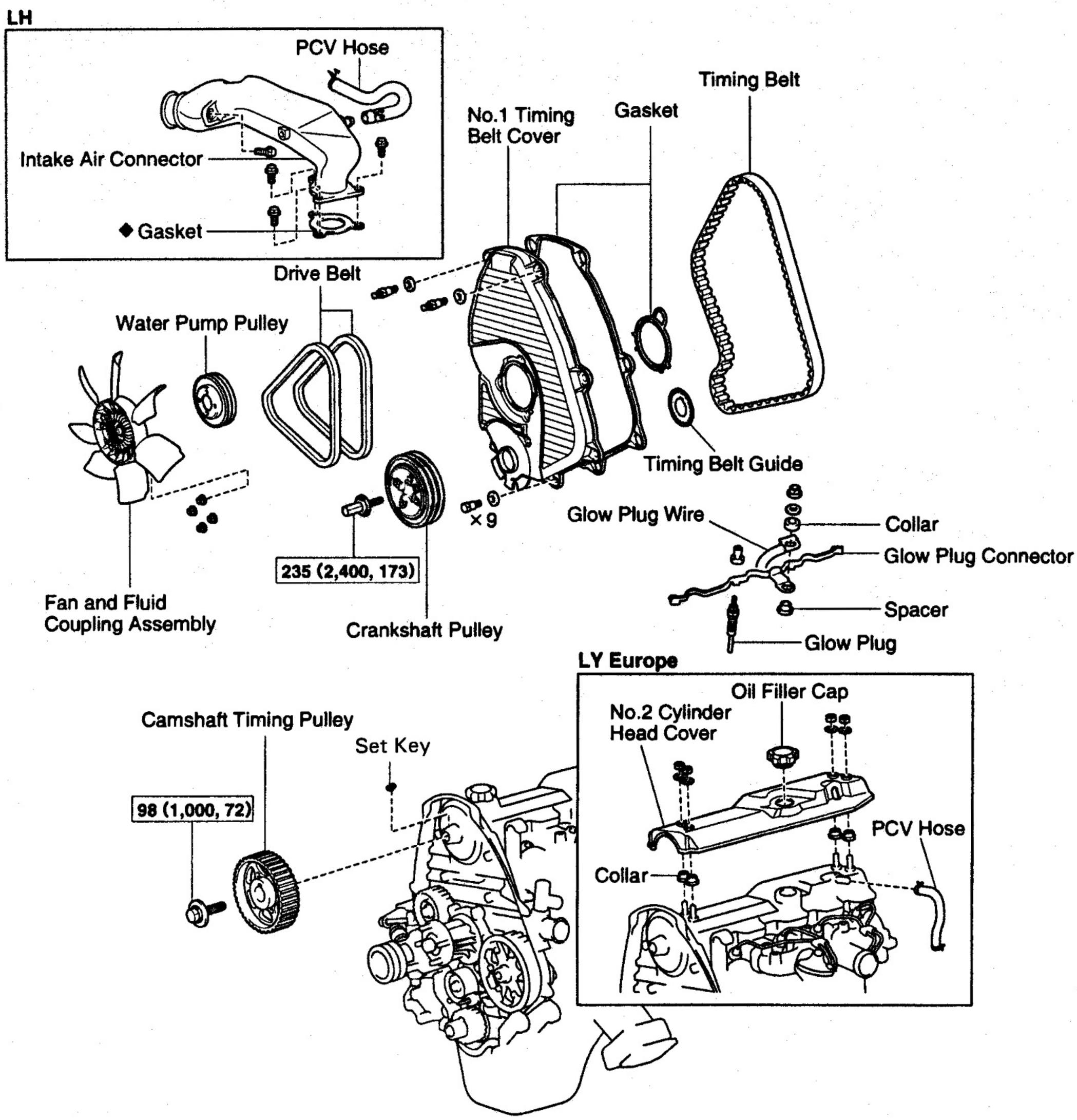

N·m (kgf·cm, ft·lbf): Specified torque
◆ Non-reusable part

S04380

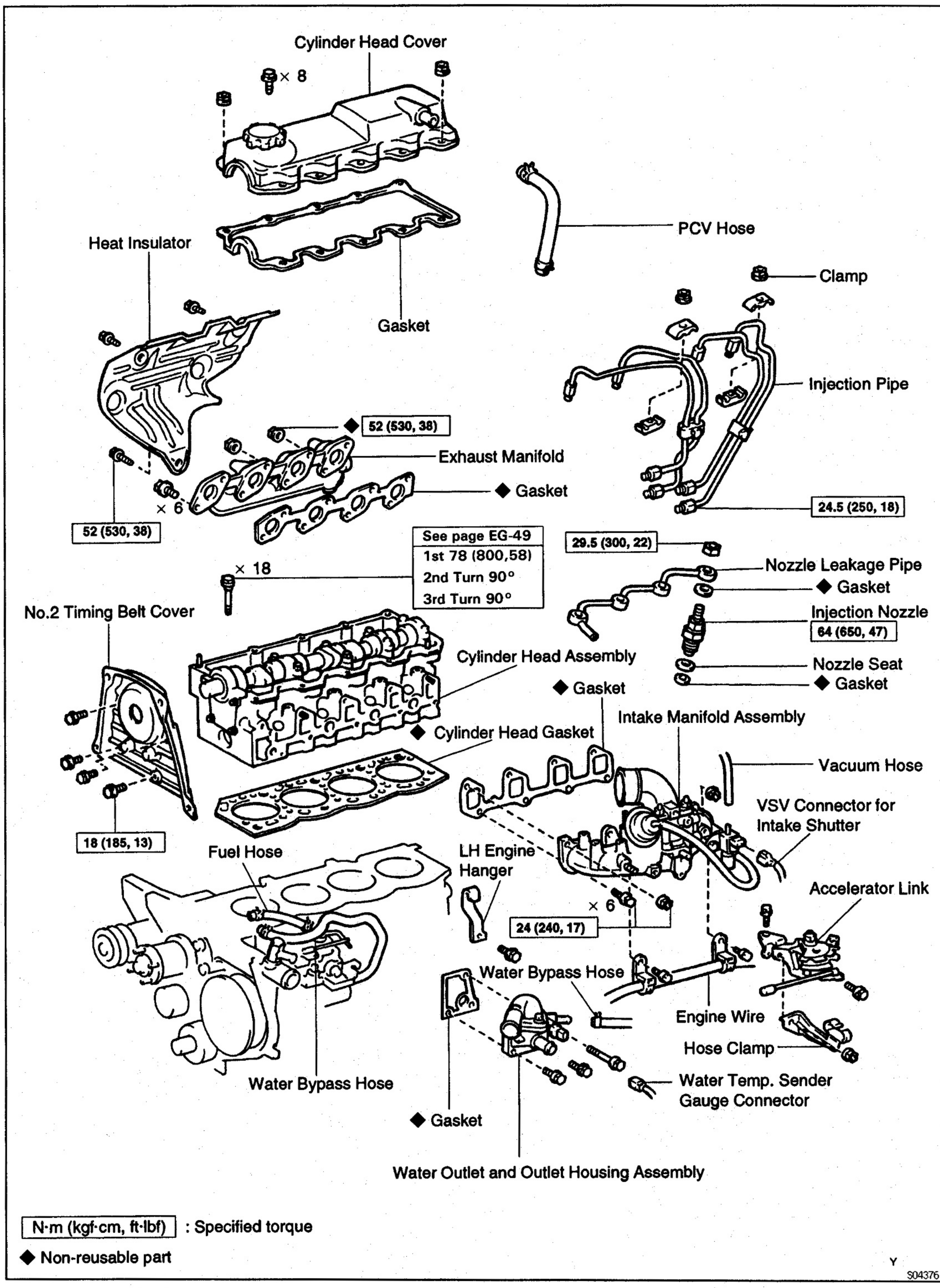

N·m (kgf·cm, ft·lbf) : Specified torque

◆ Non-reusable part

Y

S04376

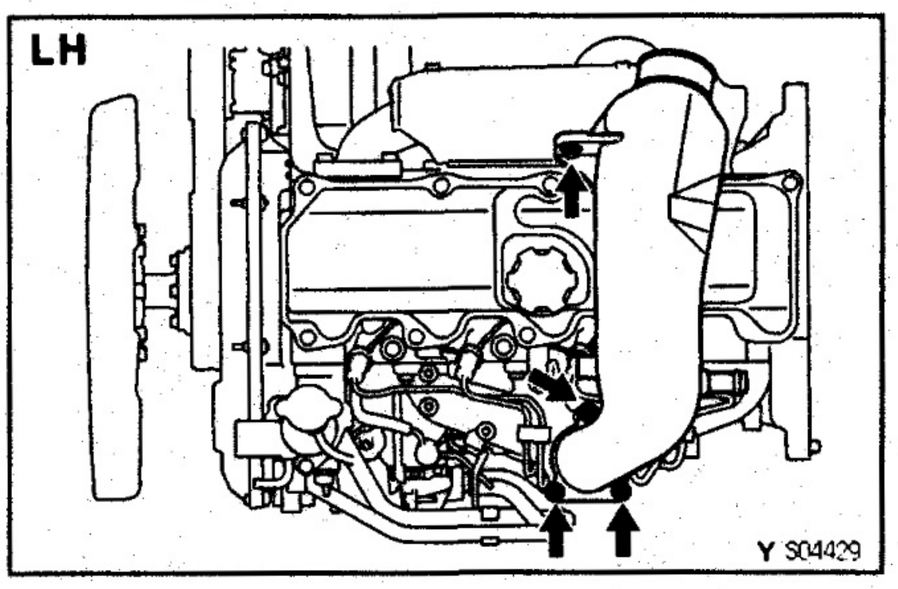

CYLINDER HEAD REMOVAL

E07A8-01

1. **DRAIN ENGINE COOLANT**
2. **REMOVE PCV HOSE**
3. **LH:**
   REMOVE INTAKE AIR CONNECTOR
   Remove the 4 bolts, intake air connector and gasket.

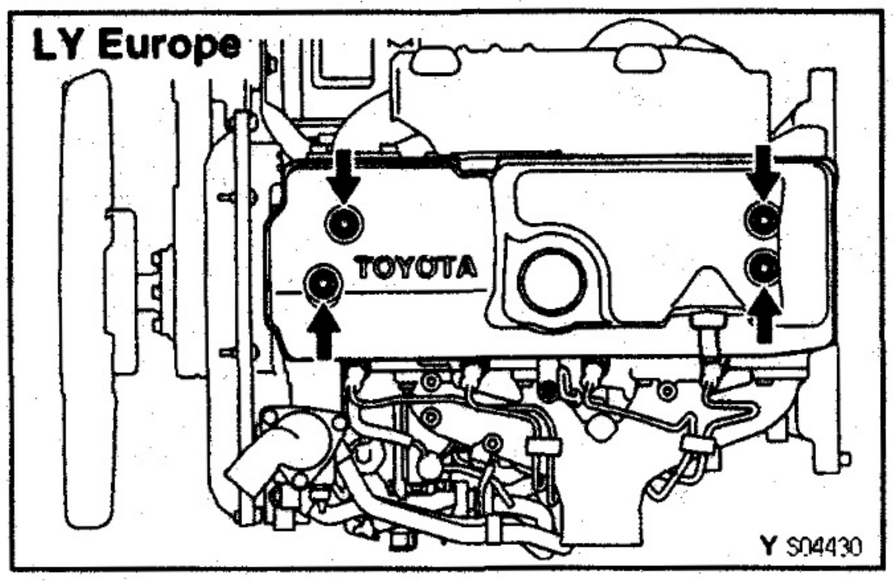

4. **LY Europe:**
   REMOVE NO.2 CYLINDER HEAD COVER
   (a) Remove the oil filler cap.
   (b) Remove the 4 nuts, plate washers, cylinder head cover and collars.
   (c) Remove the silencer, 4 grommets and bushings from the cylinder head cover.

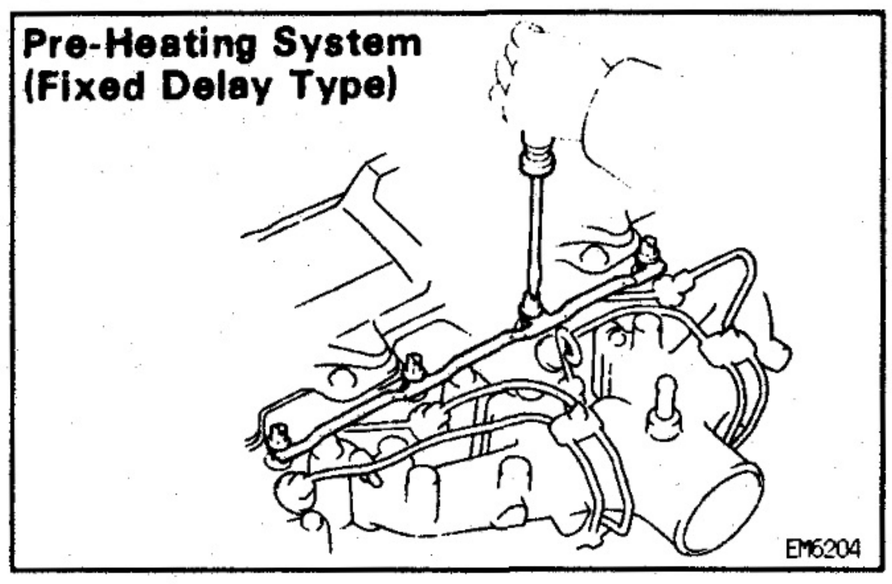

5. **REMOVE GLOW PLUGS**
   (a) Pre—Heating System (Fixed Delay Type):
   Remove the 4 bolts and glow plug connector.

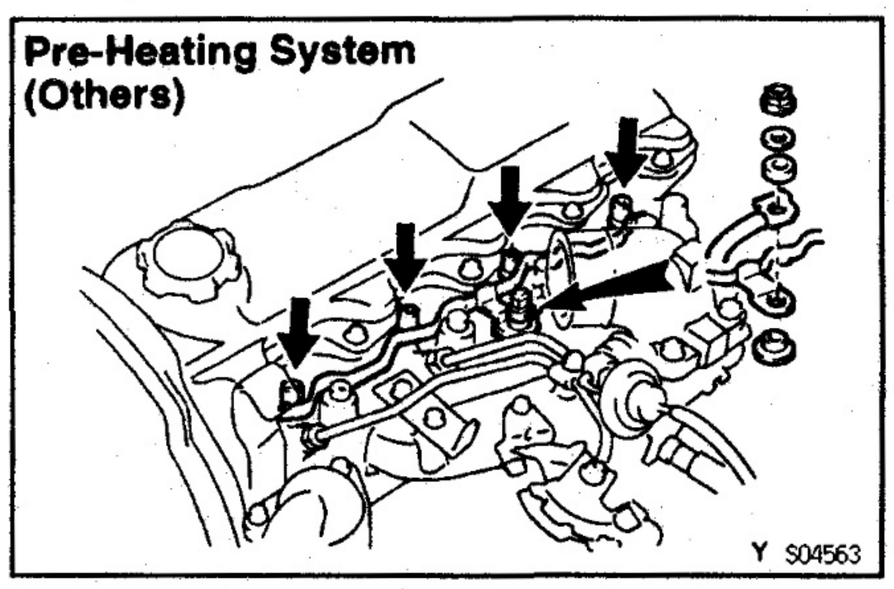

   (b) Pre—Heating System (Others):
   Remove the 4 nuts holding the glow plug connector to the glow plugs.
   (c) Pre—Heating System (Others):
   Remove the nut and plate washer holding the glow plug connector to the intake manifold, and disconnect the glow plug wire.
   NOTICE: In order not to short the glow plug wire, apply vinyl tape around the terminal.
   (d) Pre—Heating System (Others):
   Remove the glow plug connector and spacer.
   (e) Using a 12 mm deep socket wrench, remove the 4 glow plugs.

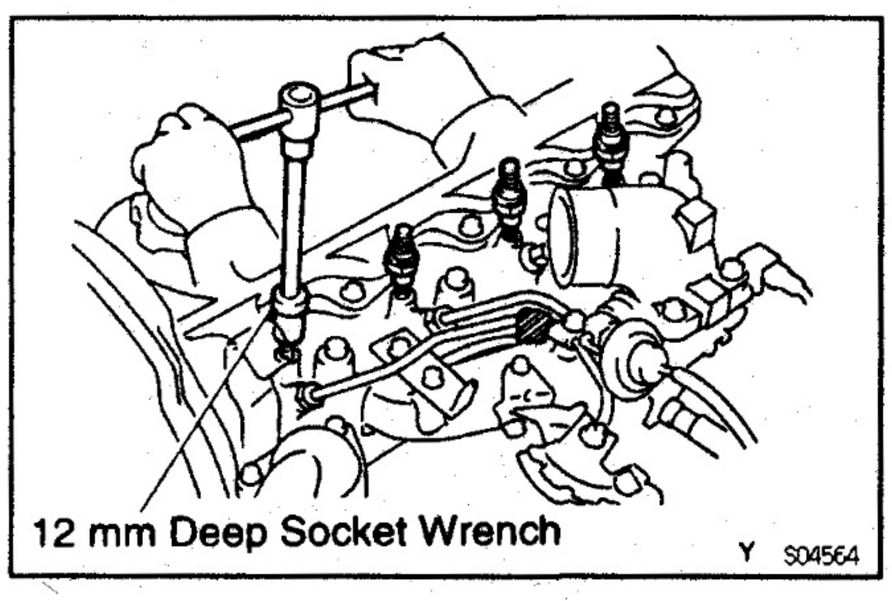

6. **REMOVE DRIVE BELTS, FAN, FLUID COUPLING ASSEMBLY AND WATER PUMP PULLEY**
   (See step 2 in water pump removal in Cooling System)
7. **REMOVE TIMING BELT**
   (See steps 3 to 7 in timing belt removal)
8. **REMOVE CAMSHAFT TIMING PULLEY**
   (See step 9 in timing belt removal)
9. **REMOVE INJECTION NOZZLES**
   (See steps 2 to 4 in injection nozzles removal in Fuel System)
10. **REMOVE NO.2 TIMING BELT COVER**
    Remove the 4 bolts and timing belt cover.

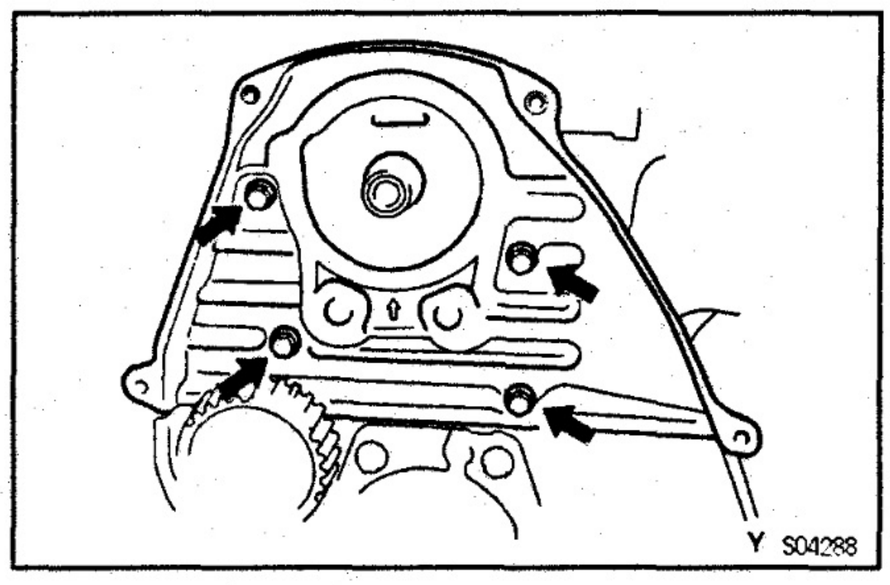

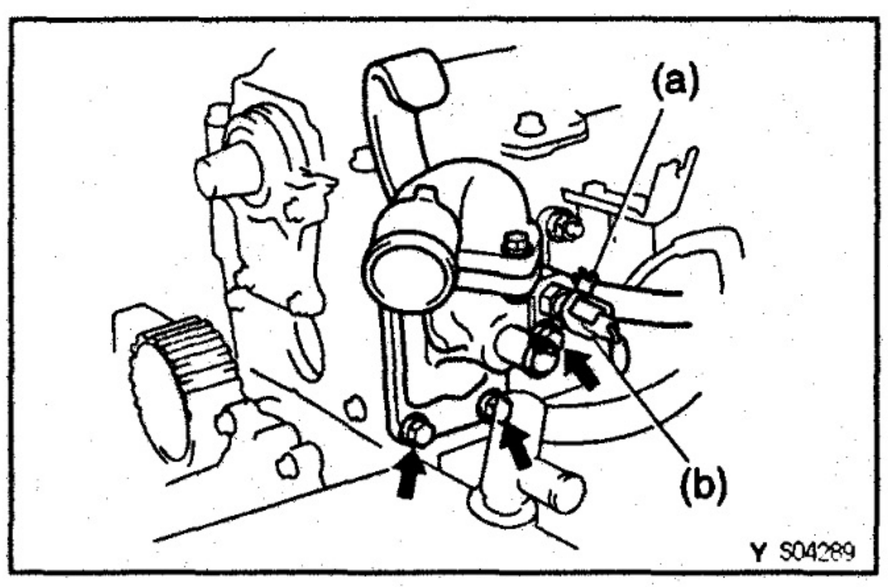

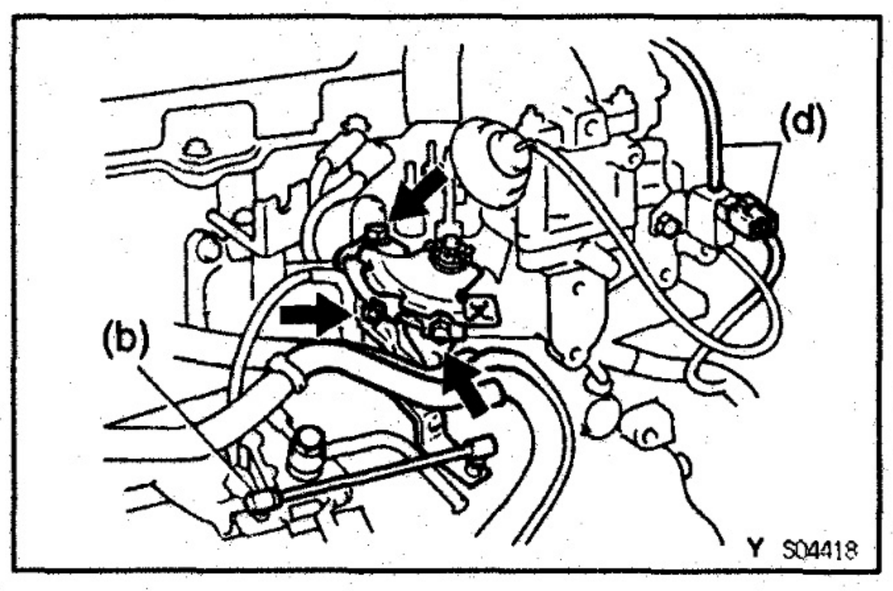

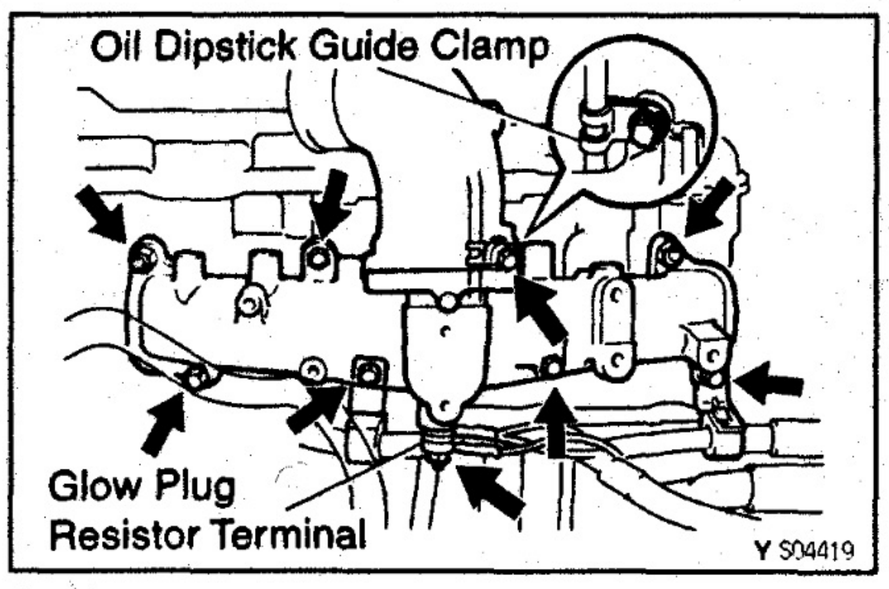

11. **REMOVE WATER OUTLET AND HOUSING ASSEMBLY**
(a) w/ ACSD:
Disconnect the water bypass hose from the water housing.
(b) Disconnect the water temperature sender gauge connector.
(c) Remove the 3 bolts, the water outlet, outlet housing assembly and gasket.
12. **REMOVE LH ENGINE HANGER**
13. **REMOVE INTAKE MANIFOLD ASSEMBLY**
(a) w/ ACSD:
Disconnect the 2 water bypass hoses from the hose clamp.
(b) Disconnect the accelerator link from the injection pump.
(c) Remove the 2 bolts, nut, accelerator link and hose clamp (w/ ACSD).
(d) LJ:
Disconnect the vacuum hose and connector from the VSV for intake shutter.
(e) Pre—Heating System (Super Glow Type):
Remove the nut and collar, disconnect the glow plug resistor terminals.
(f) Remove the 6 bolts, 2 nuts, 2 engine wire brackets, oil dipstick guide clamp (except LJ), intake manifold assembly and gasket.

EG

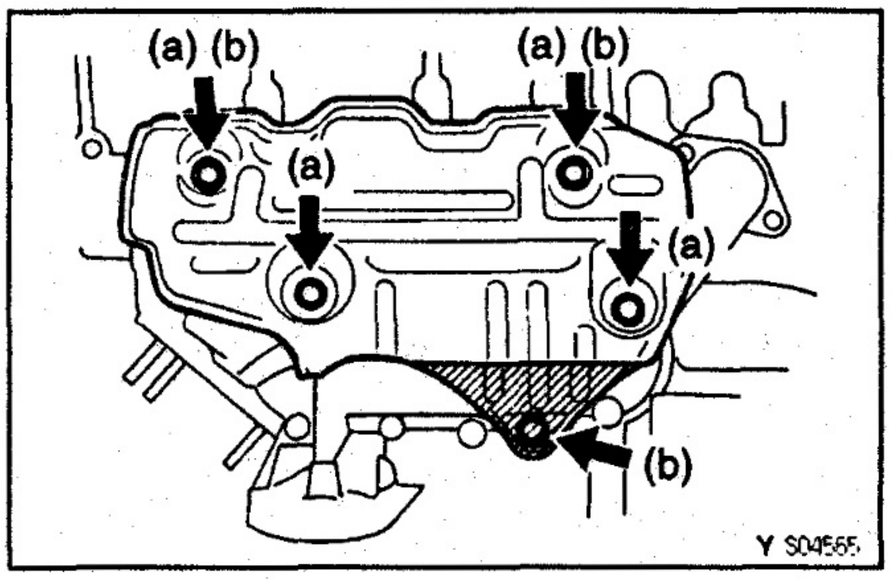

14. REMOVE EXHAUST MANIFOLD

(a) LN Thailand:
Remove the 4 bolts and heat insulator.

(b) Others:
Remove the 3 bolts and heat insulator.

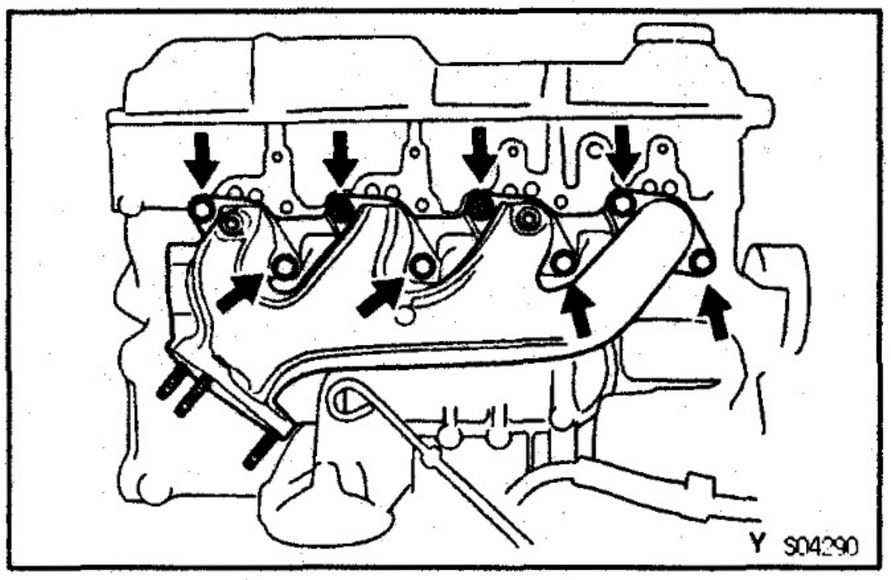

(c) Remove the 6 bolts, 2 nuts, exhaust manifold and gasket.

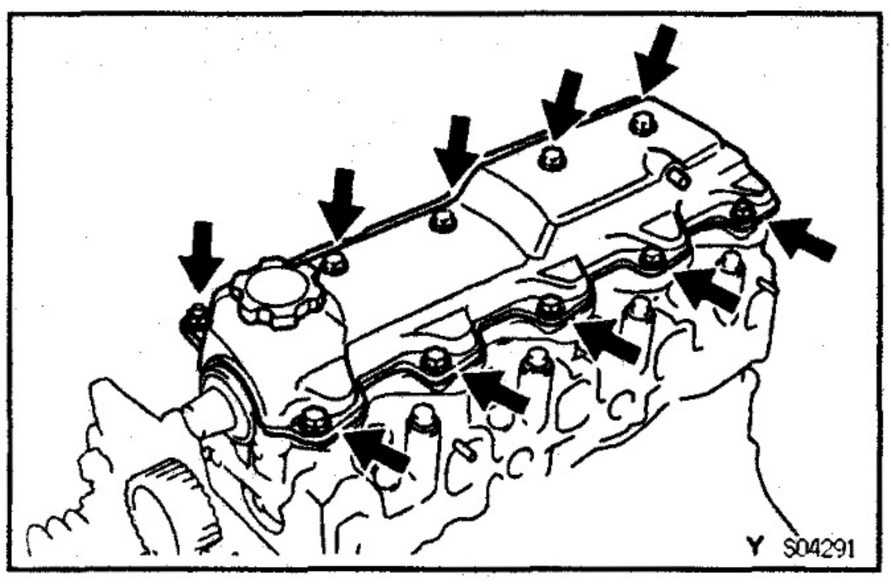

15. REMOVE CYLINDER HEAD COVER

Remove the 8 bolts, 2 nuts, cylinder head cover and gasket.

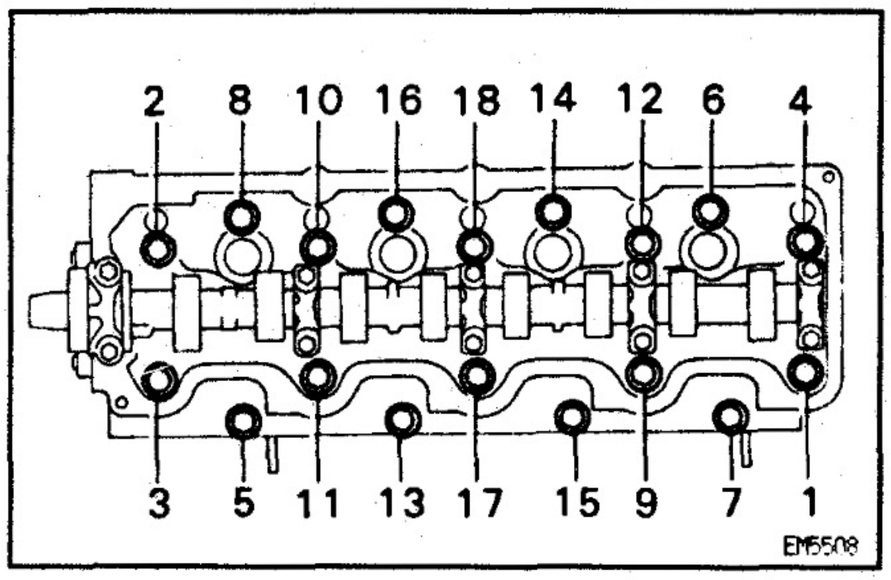

16. REMOVE CYLINDER HEAD ASSEMBLY

(a) Uniformly loosen and remove the 18 cylinder head bolts, in several passes, in the sequence shown.
NOTICE: Head warpage or cracking could result from removing bolts in incorrect order.

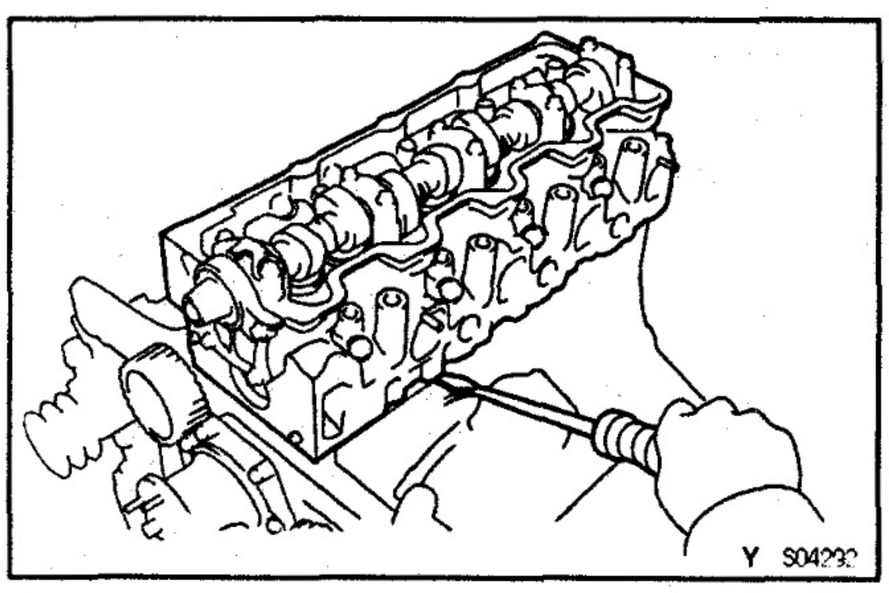

(b) Lift the cylinder head from the dowels on the cylinder block, and place the cylinder head on wooden blocks on a bench.
HINT: If the cylinder head is difficult to lift off, pry with a screwdriver between the cylinder head and block.
NOTICE: Be careful no to damage the contact surfaces of the cylinder head and cylinder block.

COMPONENTS FOR DISASSEMBLY AND ASSEMBLY

EGSXH-04

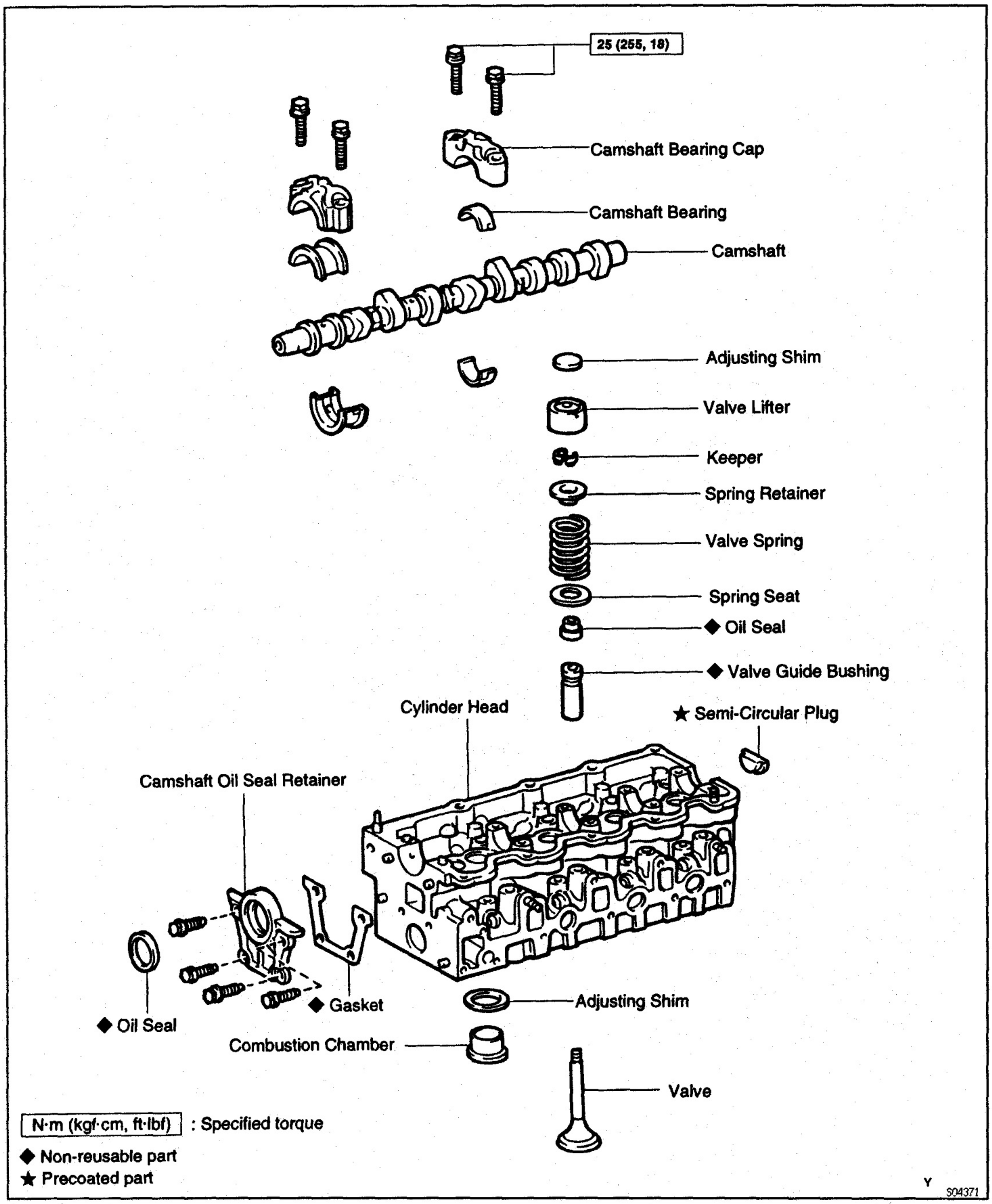

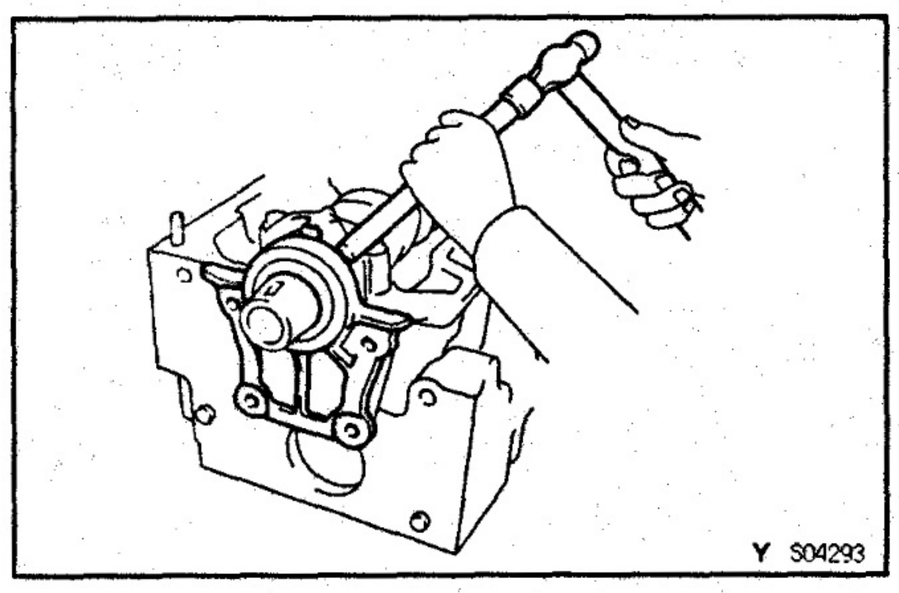

CYLINDER HEAD DISASSEMBLY

S07AA-01

1. REMOVE SEMI—CIRCULAR PLUG

2. REMOVE CAMSHAFT OIL SEAL RETAINER

(a) Remove the 4 bolts.

(b) Using a brass bar and hammer, remove the retainer.

(c) Remove the gasket.

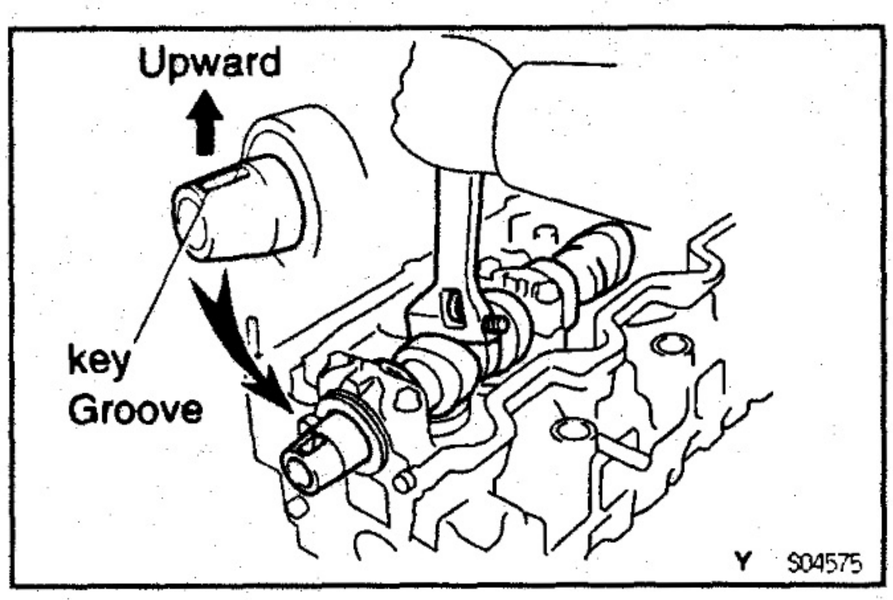

3. REMOVE CAMSHAFT

(a) Set the key groove of the camshaft, facing upward by turning the camshaft with a wrench.

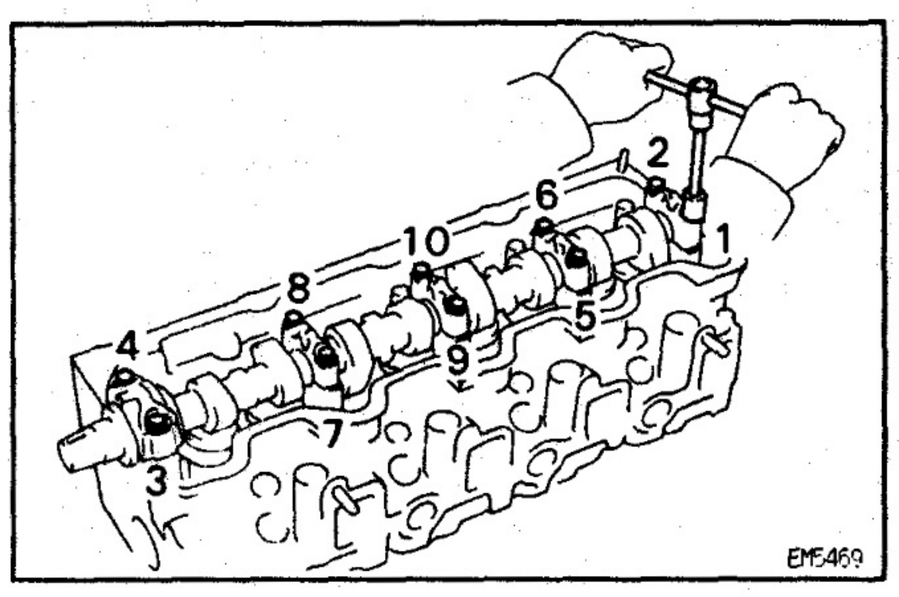

(b) Uniformly loosen and remove the 10 bearing cap bolts, in several passes, in the sequence shown.

(c) Remove the 5 bearing caps and camshaft.

(d) Remove the 10 bearings from the bearing caps and cylinder head.

HINT: Arrange the bearing caps and bearings incorrect order.

4. REMOVE VALVE LIFTERS AND SHIMS

HINT: Arrange the valve lifters and shims incorrect order.

5. REMOVE VALVES

(a) Using SST, compress the valve spring and remove the 2 keepers.

SST 09202—70020 (09202—00030)

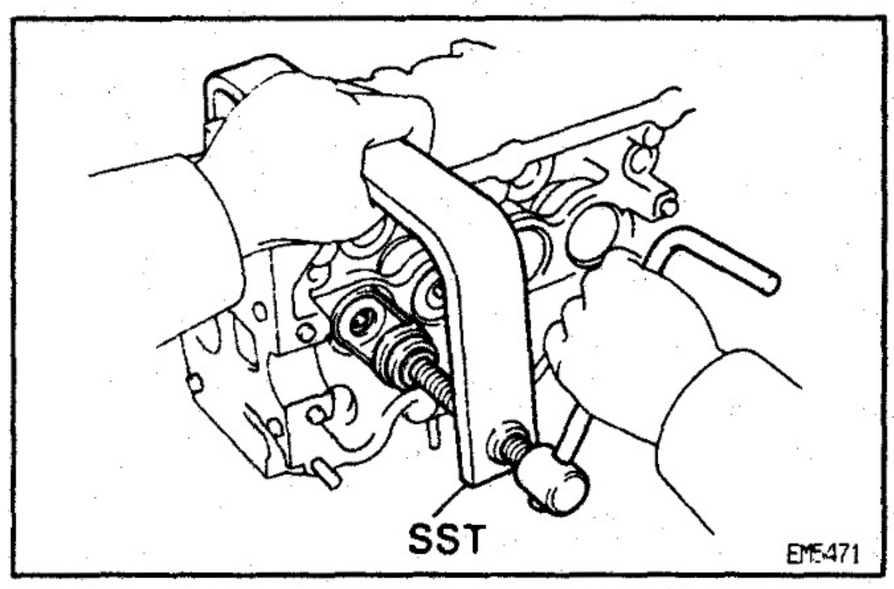

(b) Remove these parts:

- Spring retainer
- Valve spring
- Valve
- Spring seat

HINT: Arrange the valves, valve springs, spring seats and spring retainers incorrect order.

(c) Using needle—nose pliers, remove the oil seal.

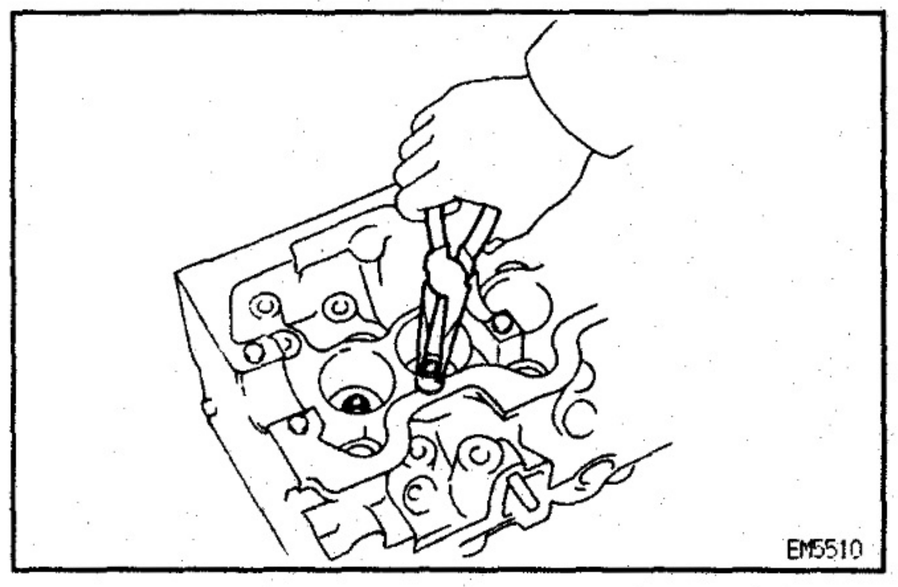

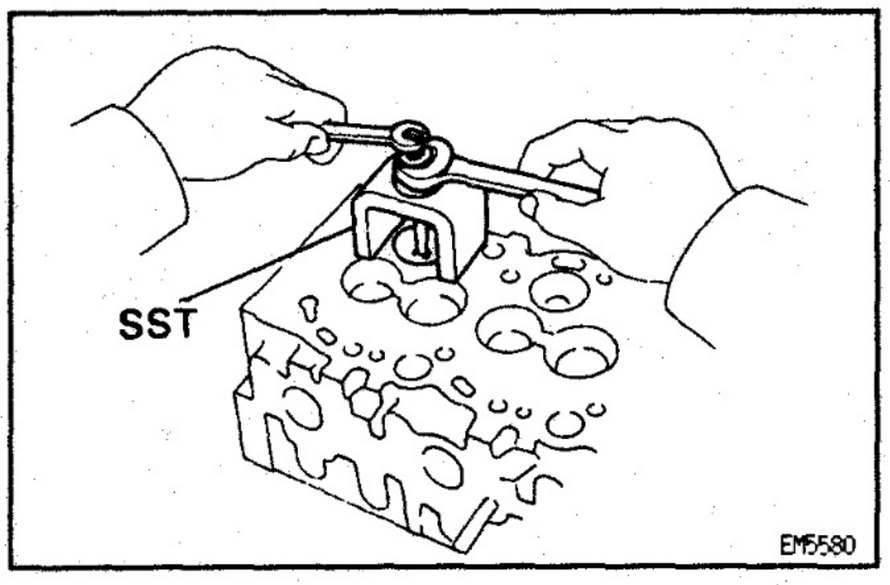

6. REMOVE COMBUSTION CHAMBERS

Using SST, remove the 4 combustion chambers (and shims).

SST 09208–48010

HINT: Arrange the combustion chambers (and shims) incorrect order.

EG

B07DD–01

CYLINDER HEAD COMPONENTS INSPECTION AND REPAIR

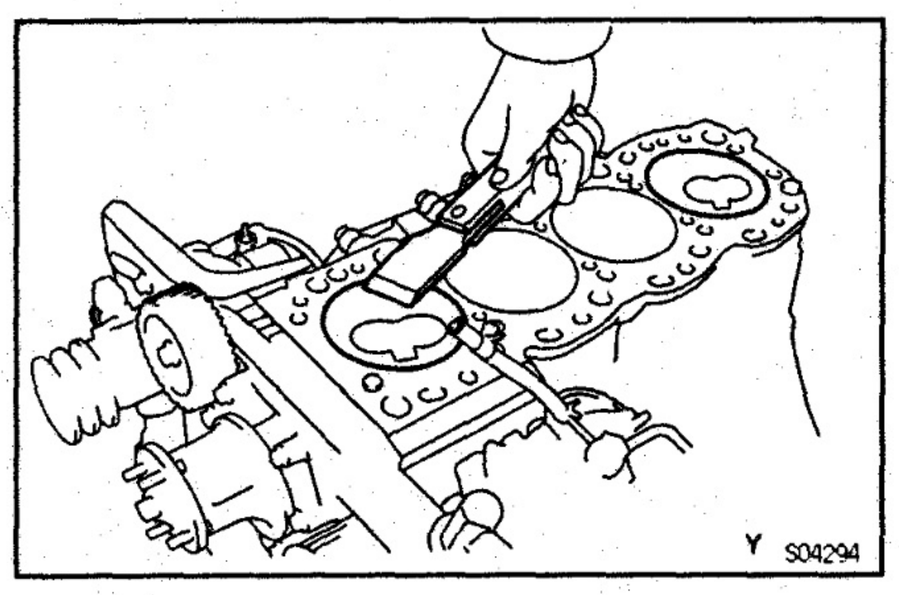

1. CLEAN TOP SURFACES OF PISTONS AND CYLINDER BLOCK

(a) Turn the crankshaft, and bring each piston to the top dead center (TDC). Using a gasket scraper, remove all the carbon from the piston top surface.

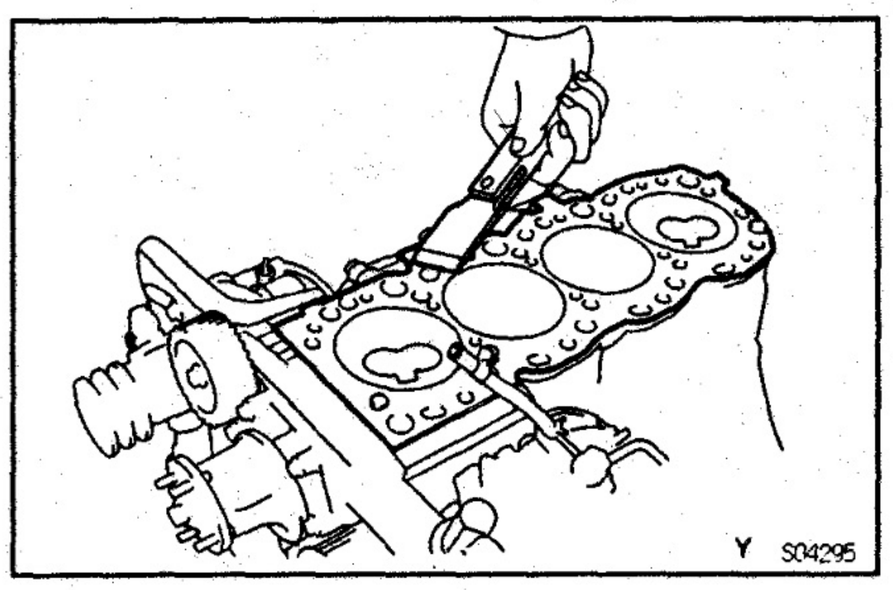

(b) Remove all the gasket material from the top of the cylinder block.

NOTICE: Be careful not to scratch the surfaces.

(c) Using compressed air, blow carbon and oil from the bolt holes.

CAUTION: Protect your eyes when using high – compressed air.

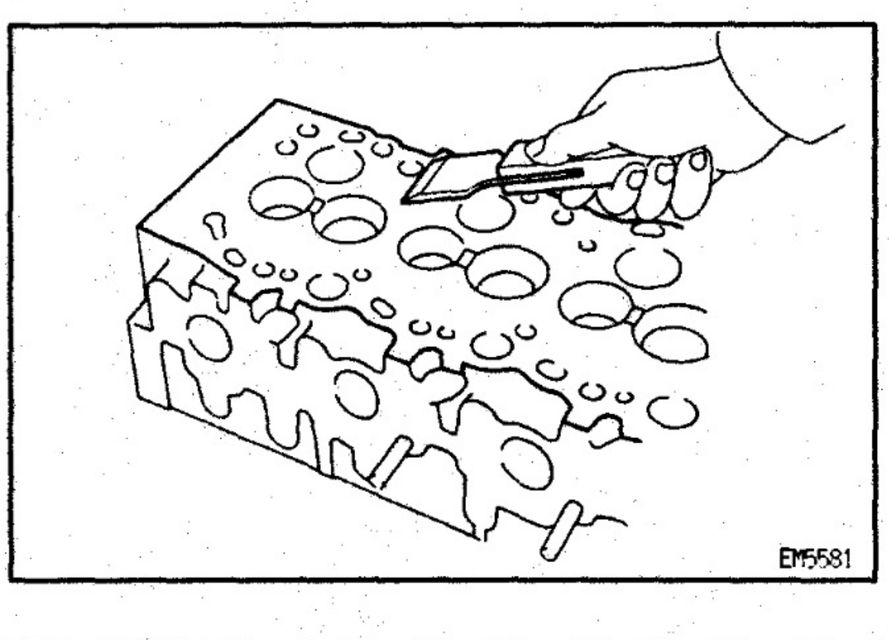

2. CLEAN CYLINDER HEAD

A. Remove gasket material

Using a gasket scraper, remove all the gasket material from the cylinder block contact surface.

NOTICE: Be careful not to scratch the cylinder block contact surface.

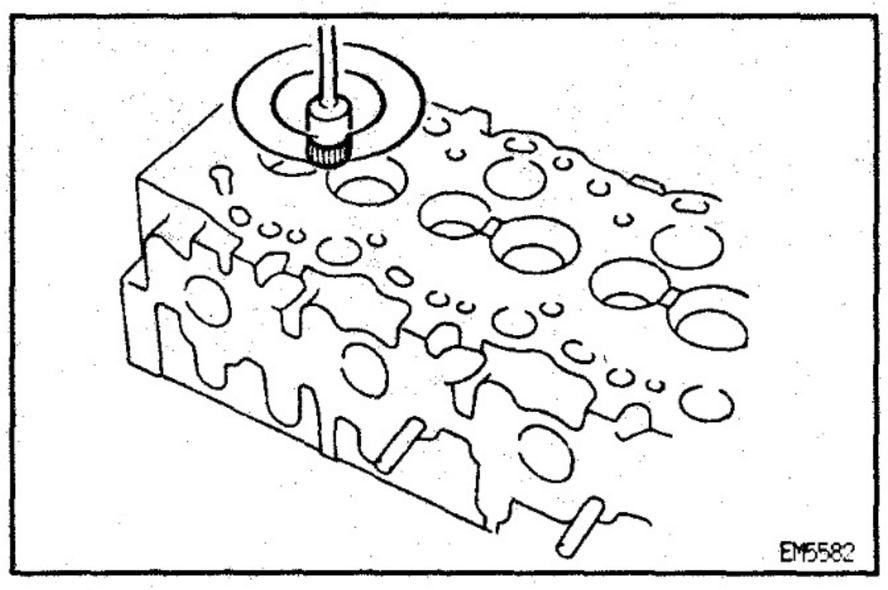

B. Clean intake and exhaust ports

Using a wire brush, remove all the carbon from the intake and exhaust ports.

NOTICE: Be careful not to scratch the valve contact surface.

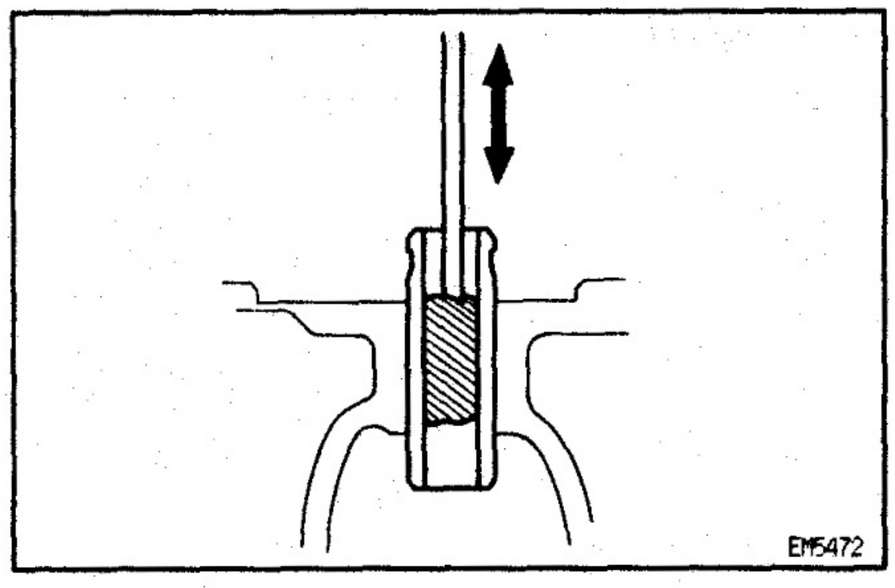

C. Clean valve guide bushings
Using a valve guide bushing brush and solvent, clean all the guide bushings.

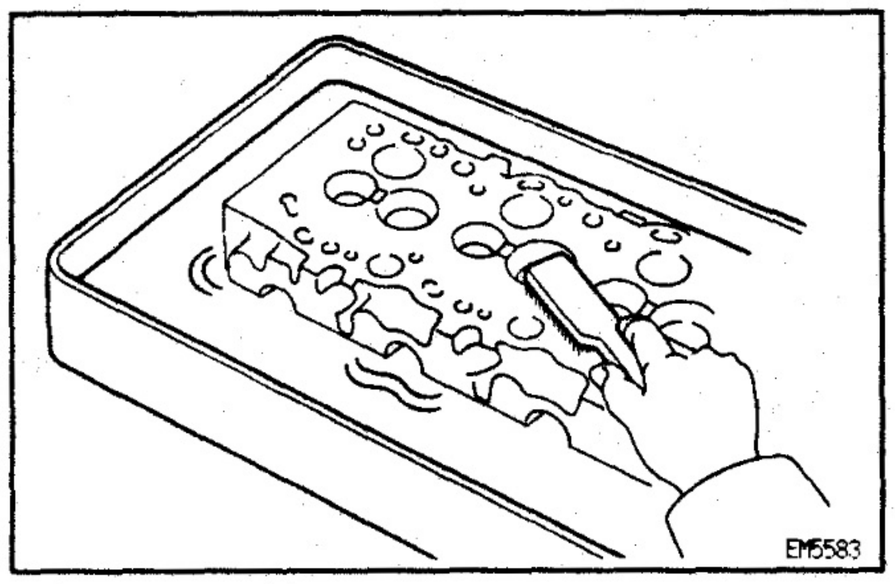

D. Clean cylinder head
Using a soft brush and solvent, thoroughly clean the cylinder head.

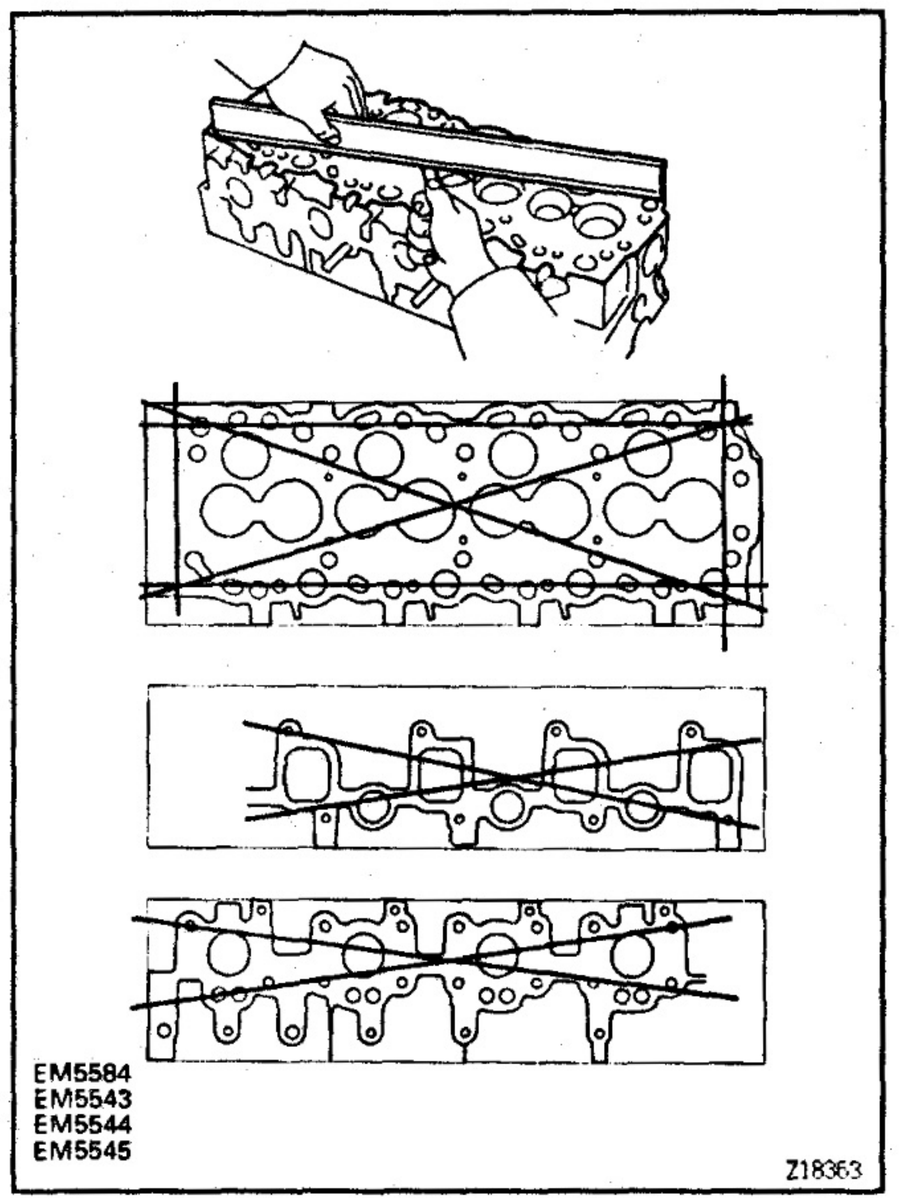

3. INSPECT CYLINDER HEAD

A. Inspect for flatness
Using a precision straight edge and feeler gauge, measure the surfaces contacting the cylinder block and the manifolds for warpage.
Maximum warpage:
0.20 mm (0.0079 in.)
If warpage is greater than maximum, replace the cylinder head.

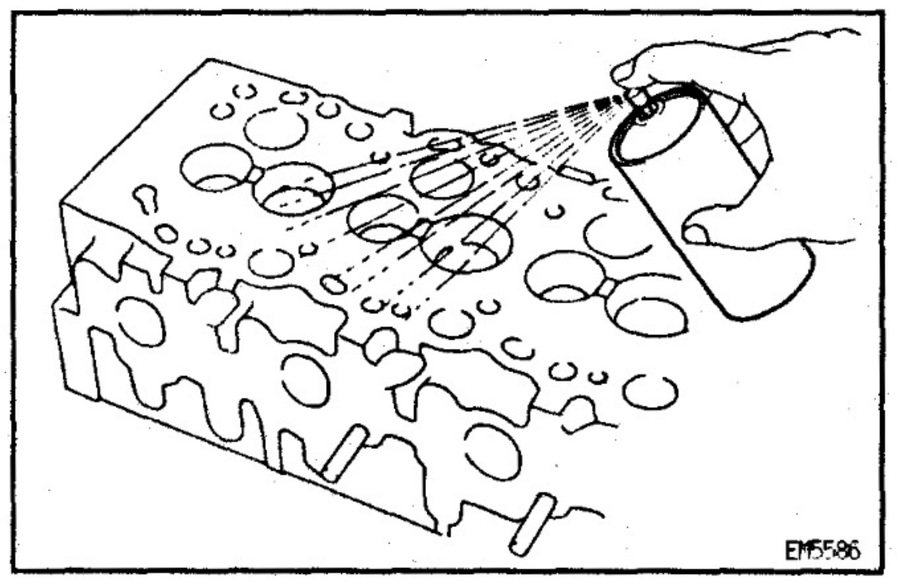

B. Inspect for cracks
Using a dye penetrant, check the intake ports, exhaust ports and surface contacting the cylinder block.
If cracked, replace the cylinder head.

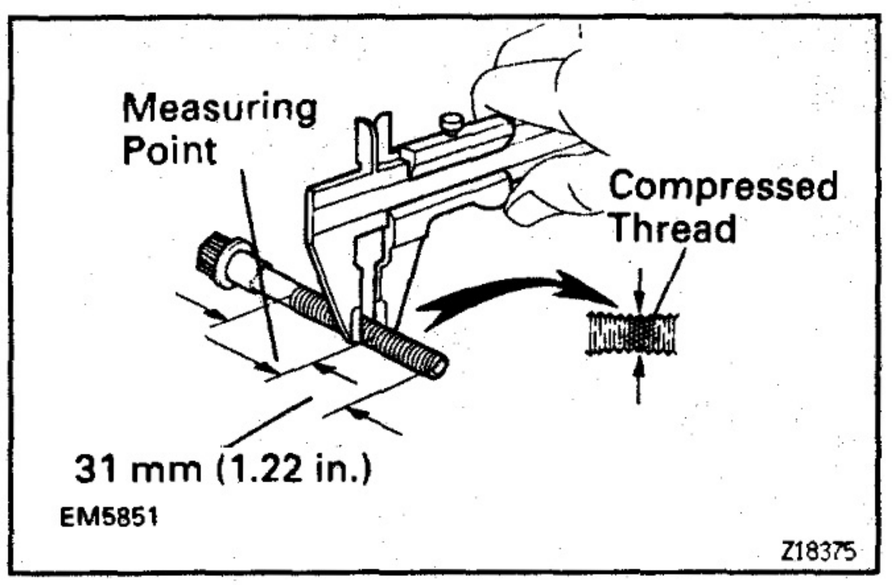

C. Inspect cylinder head bolts

Using vernier calipers, measure the minimum outer diameter of the compressed thread at the measuring point.

Standard outer diameter:

11.800 — 12.000 mm (0.4646 — 0.4724 in.)

Minimum outer diameter:

11.60 mm (0.4567 in.)

If the outer diameter is less than minimum, replace the bolt.

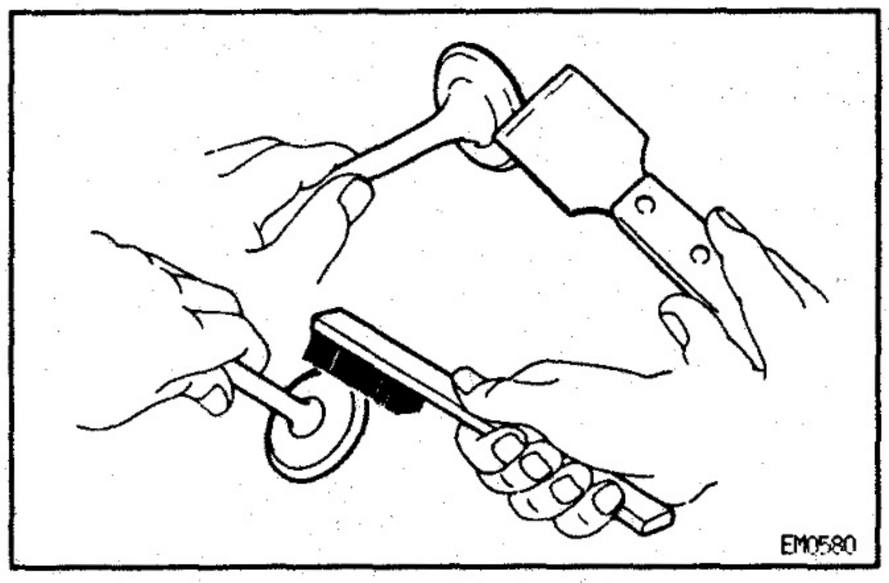

4. CLEAN VALVES

(a) Using a gasket scraper, chip off any carbon from the valve head.

(b) Using a wire brush, thoroughly clean the valve.

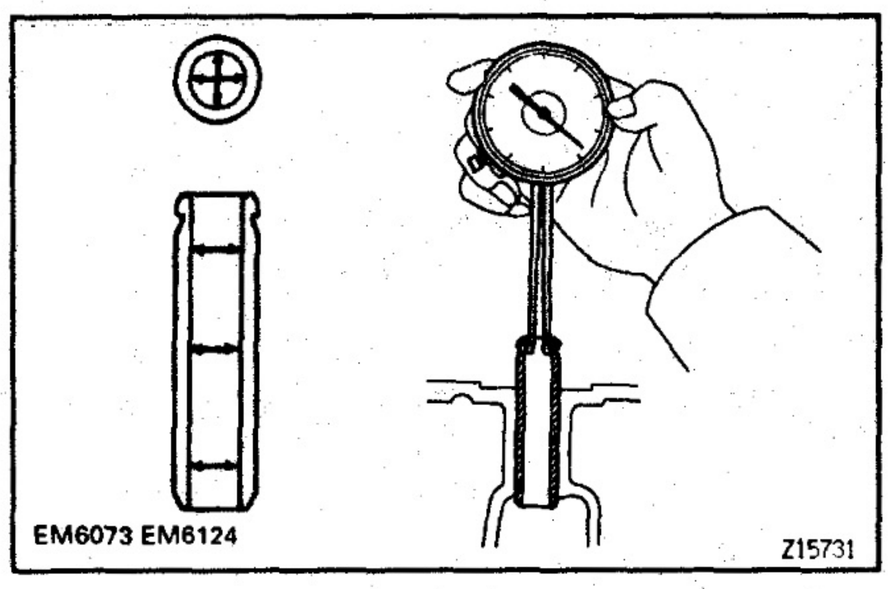

5. INSPECT VALVE STEMS AND GUIDE BUSHINGS

(a) Using a caliper gauge, measure the inside diameter of the guide bushing.

Bushing inside diameter:

8.010 — 8.030 mm (0.3154 — 0.3161 in.)

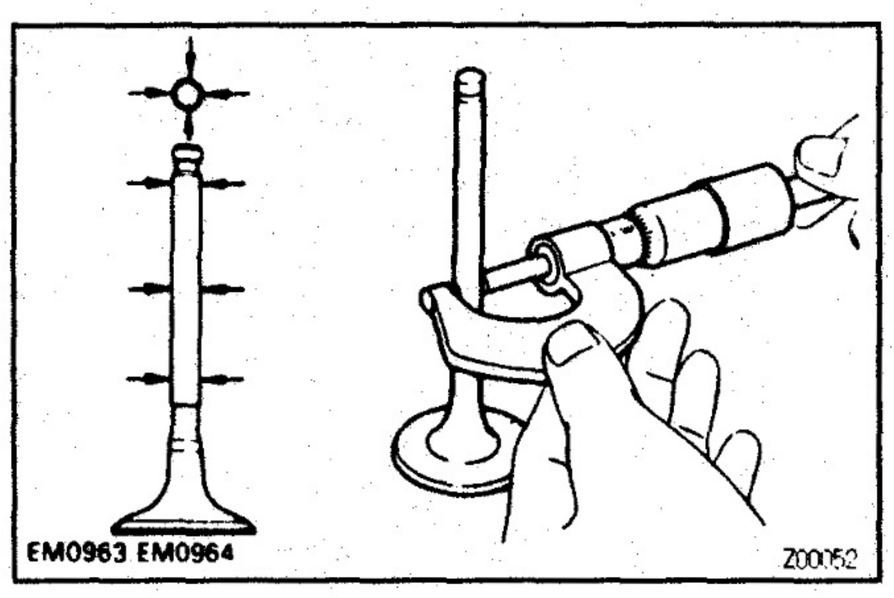

(b) Using a micrometer, measure the diameter of the valve stem.

Valve stem diameter:

Intake

7.975 — 7.990 mm (0.3140 — 0.3146 in.)

Exhaust

7.960 — 7.975 mm (0.3134 — 0.3140 in.)

(c) Subtract the valve stem diameter measurement from the guide bushing inside diameter measurement.

Standard oil clearance:

Intake

0.020 — 0.055 mm (0.0008 — 0.0022 in.)

Exhaust

0.035 — 0.070 mm (0.0014 — 0.0028 in.)

Maximum oil clearance:

Intake

0.08 mm (0.0031 in.)

Exhaust

0.10 mm (0.0039 in.)

EG

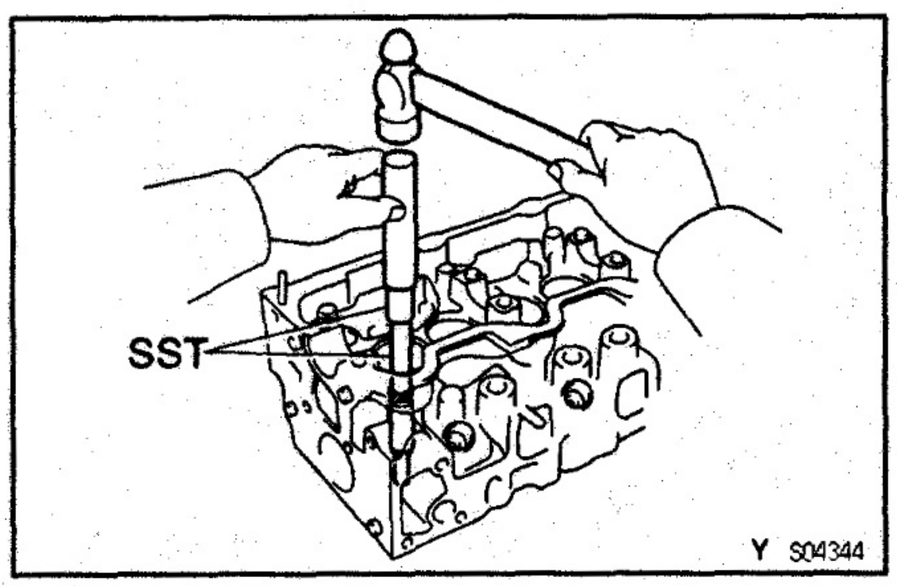

If the clearance is greater than maximum, replace the valve and guide bushing.

6. IF NECESSARY, REPLACE VALVE GUIDE BUSHING

(a) Using SST and a hammer, tap out the valve guide bushing.
SST 09201—10000 (09201—01080),
09950—70010 (09951—07100)

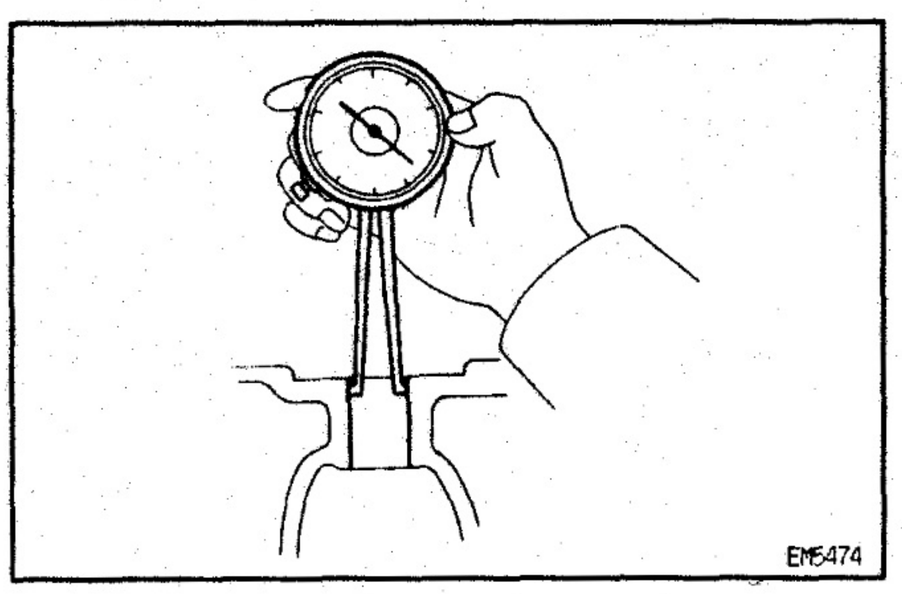

(b) Using a caliper gauge, measure the bushing bore diameter of the cylinder head.

Bushing bore diameter mm (in.)	Bushing size
13.004 – 13.025 (0.5112 – 0.5128)	Use STD
13.054 – 13.075 (0.5139 – 0.5148)	Use O/S 0.05

(c) Select a new guide bushing (STD or O/S 0.05).
If the bushing bore diameter of the cylinder head is greater than 13.025 mm (0.5128 in.), machine the bushing bore to the following dimension:
13.054 – 13.075 mm (0.5139 – 0.5148 in.)
If the bushing bore diameter of the cylinder head is greater than 13.075 mm (0.5148 in.), replace the cylinder head.

V07987

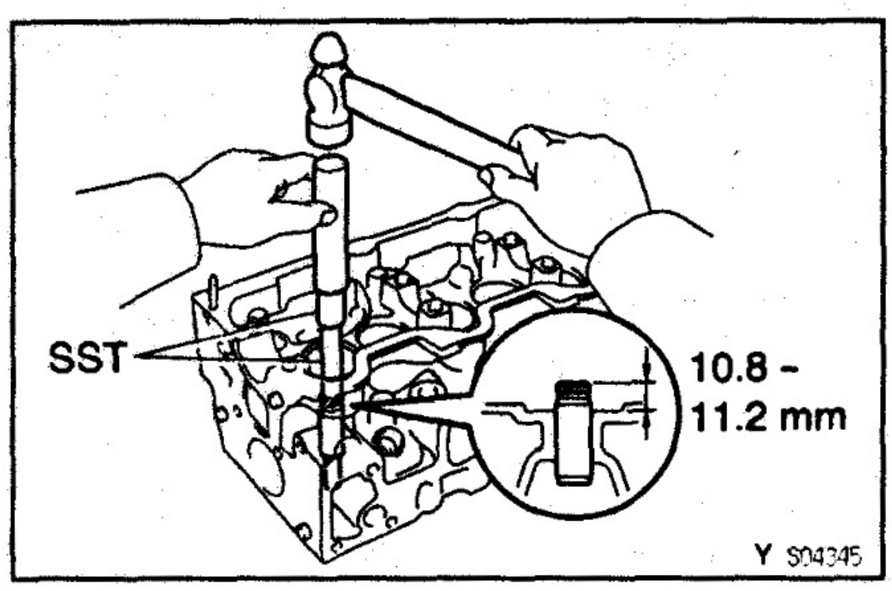

(d) Using SST and a hammer, tap in a new valve guide bushing to where there is 10.8 — 11.2 mm (0.425 — 0.441 in.) protruding from the cylinder head.
SST 09201—10000 (09201—01080),
09950—70010 (09951—07100)

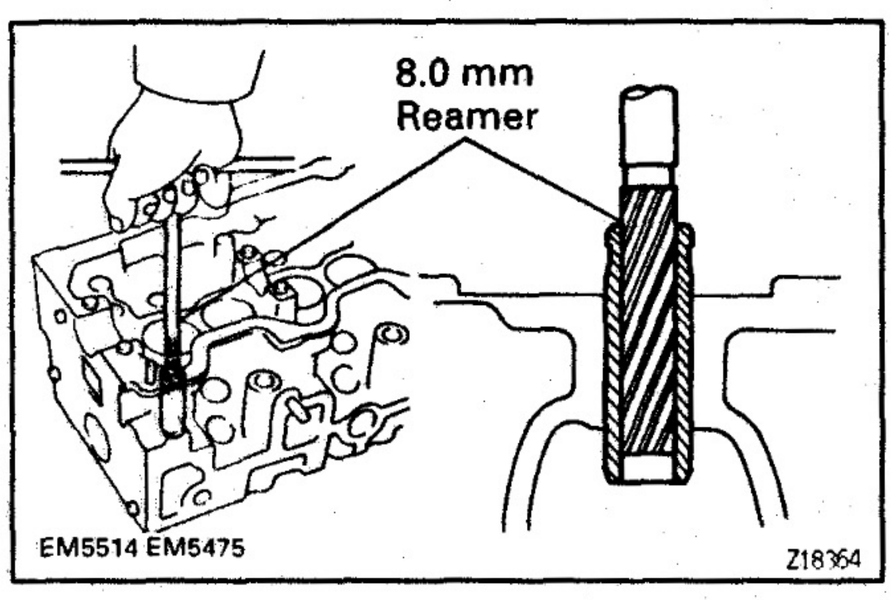

(e) Using a sharp 8.0 mm reamer, ream the valve guide bushing to obtain the standard specified clearance (See step 5 above) between the valve guide bushing and new valve stem.

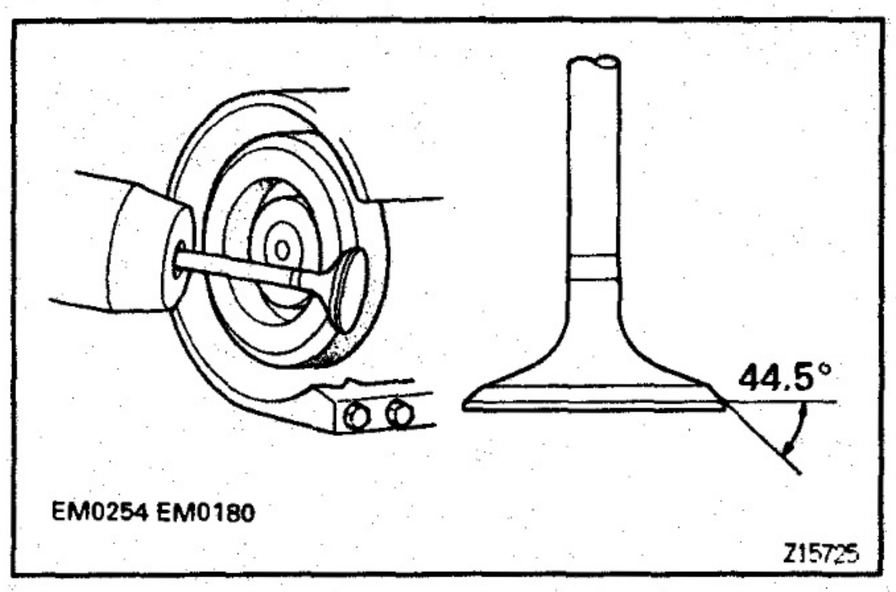

7. INSPECT AND GRIND VALVES

(a) Grind the valve only enough to remove pits and carbon.

(b) Check that the valve is ground to the correct valve face angle.

Valve face angle:

44.5°

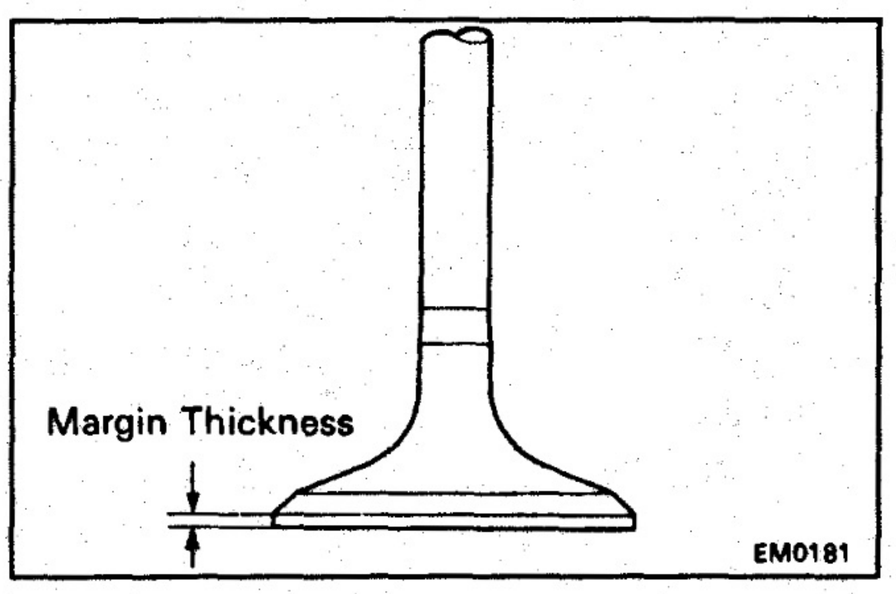

(c) Check the valve head margin thickness.

Standard margin thickness:

Intake

1.6 mm (0.063 in.)

Exhaust

1.7 mm (0.067 in.)

Minimum margin thickness:

Intake

1.1 mm (0.043 in.)

Exhaust

1.2 mm (0.047 in.)

If the margin thickness is less than minimum, replace the valve.

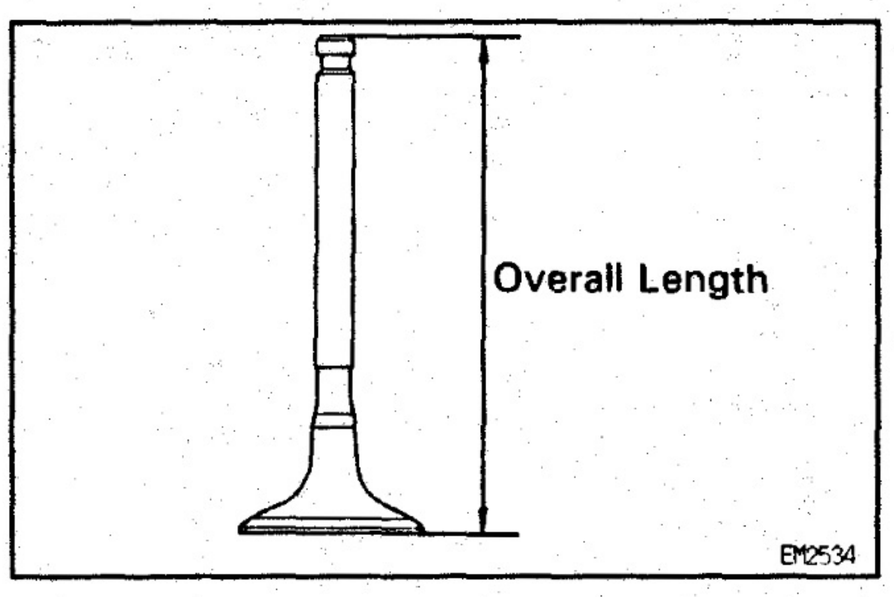

(d) Check the valve overall length.

Standard overall length:

Intake

103.29 – 103.69 mm (4.0665 – 4.0823 in.)

Exhaust

103.14 – 103.54 mm (4.0606 – 4.0764 in.)

Minimum overall length:

Intake

102.79 mm (4.0468 in.)

Exhaust

102.64 mm (4.0409 in.)

If the overall length is less than minimum, replace the valve.

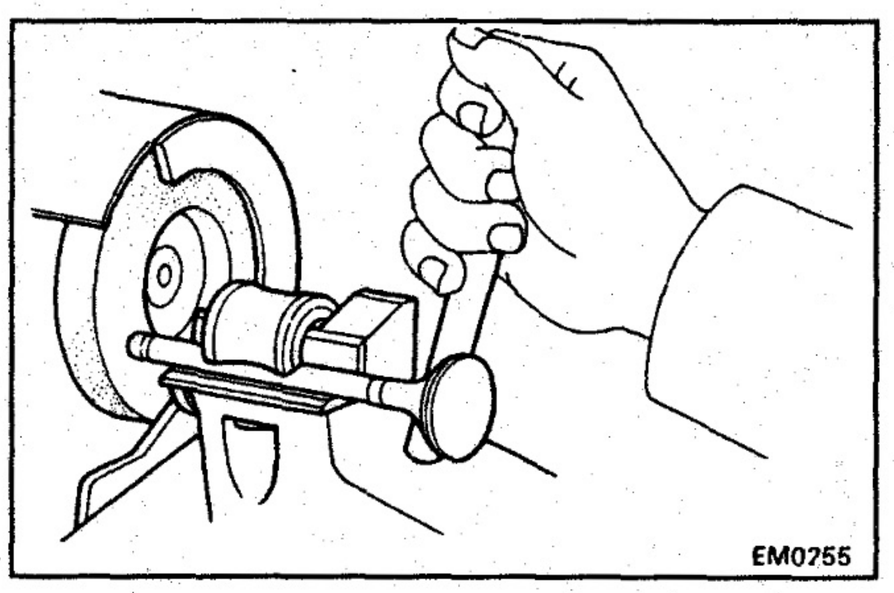

(e) Check the surface of the valve stem tip for wear.
If the valve stem tip is worn, resurface the tip with a grinder or replace the valve.

NOTICE: Do not grind off more than minimum.

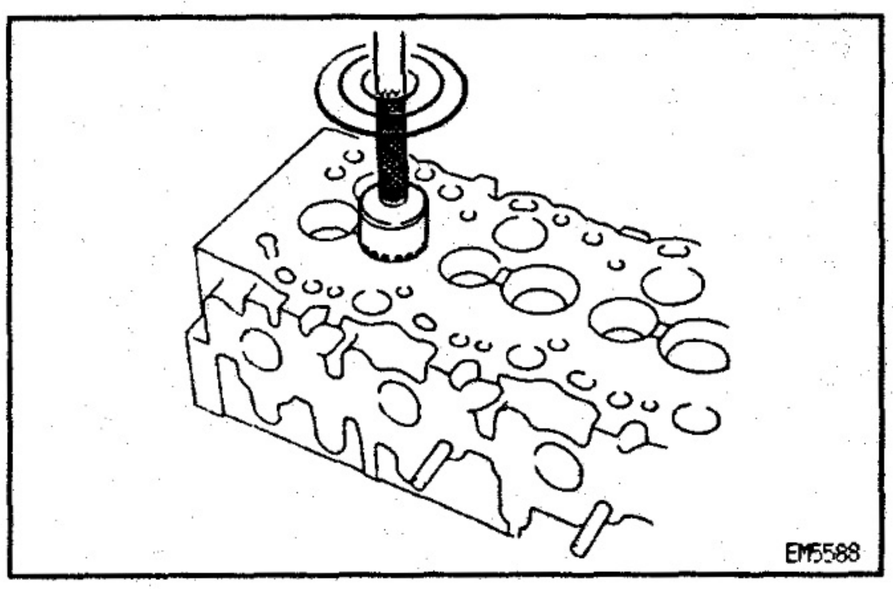

8. INSPECT AND CLEAN VALVE SEATS

(a) Using a 45° carbide cutter, resurface the valve seats. Remove only enough metal to clean the seats.

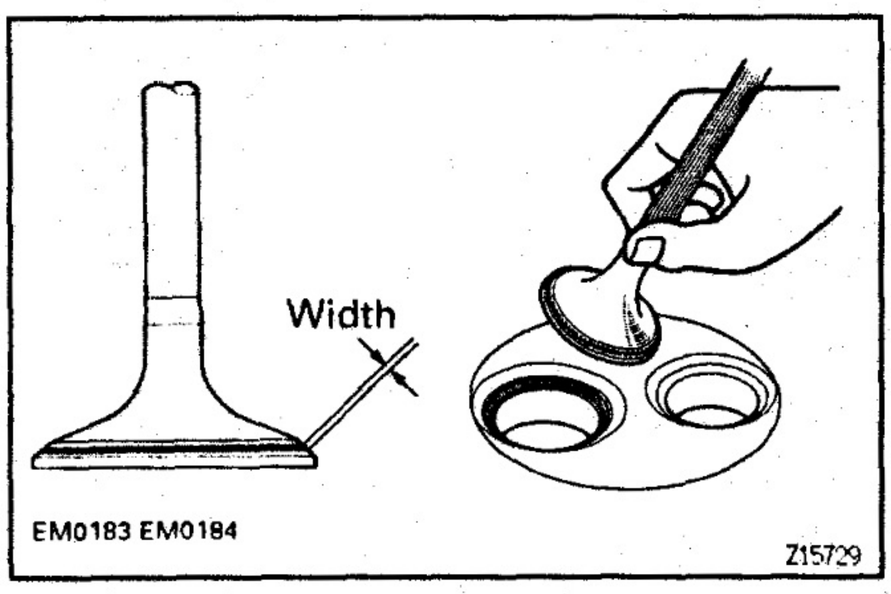

(b) Check the valve seating position.
Apply a light coat of prussian blue (or white lead) to the valve face. Lightly press the valve against the seat. Do not rotate valve.

(c) Check the valve face and seat for the following:
- If blue appears 360° around the valve face, the valve is concentric. If not, replace the valve.
- If blue appears 360° around the valve seat, the guide and face are concentric. If not, resurface the seat.
- Check that the seat contact is in the middle of the valve face with the following width:

Intake

1.5 — 1.9 mm (0.059 — 0.075 in.)

Exhaust

1.8 — 2.2 mm (0.071 — 0.087 in.)

If not, correct the valve seats as follows:

(1) If the seating is too high on the valve face, use 20° and 45° cutters to correct the seat.

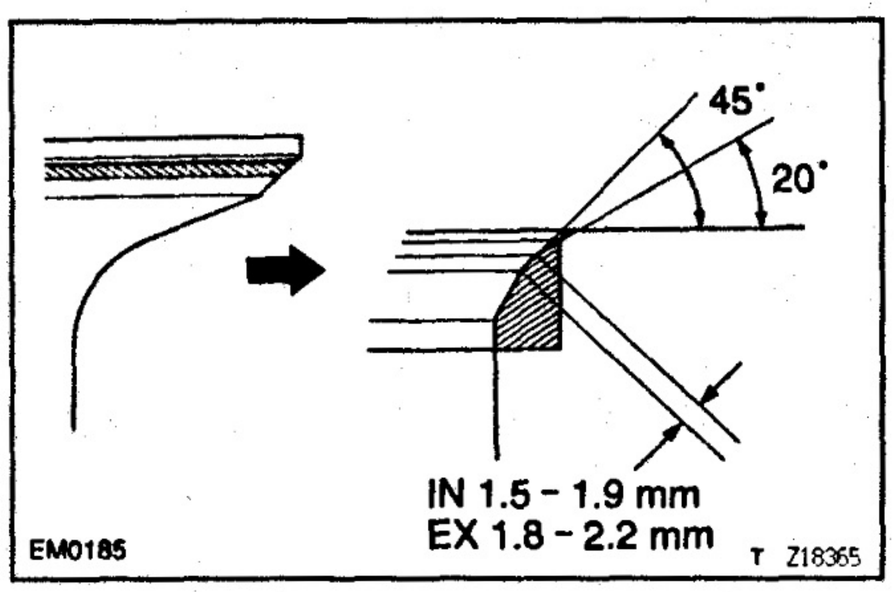

(2) If the seating is too low on the valve face, use 70° (Intake), 75° (Exhaust) and 45° cutters to correct the seat.

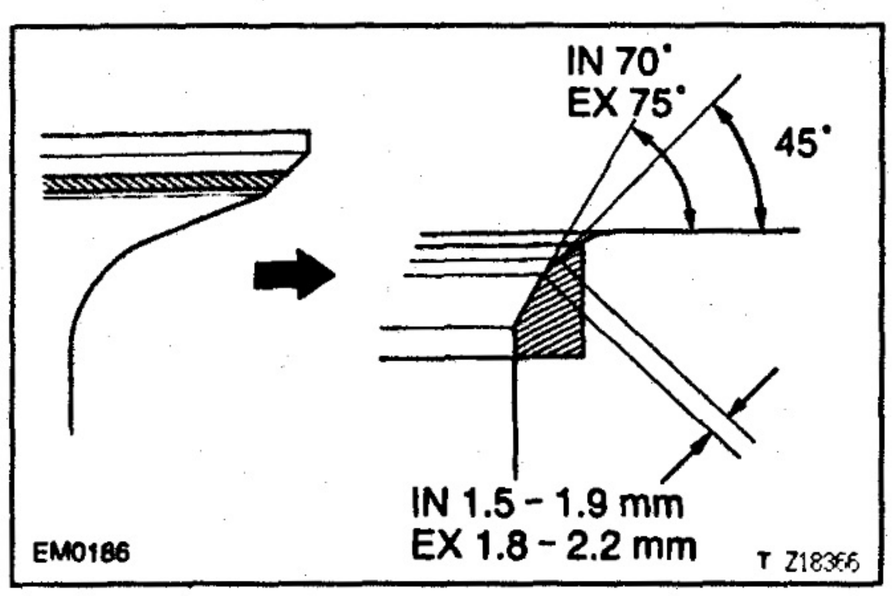

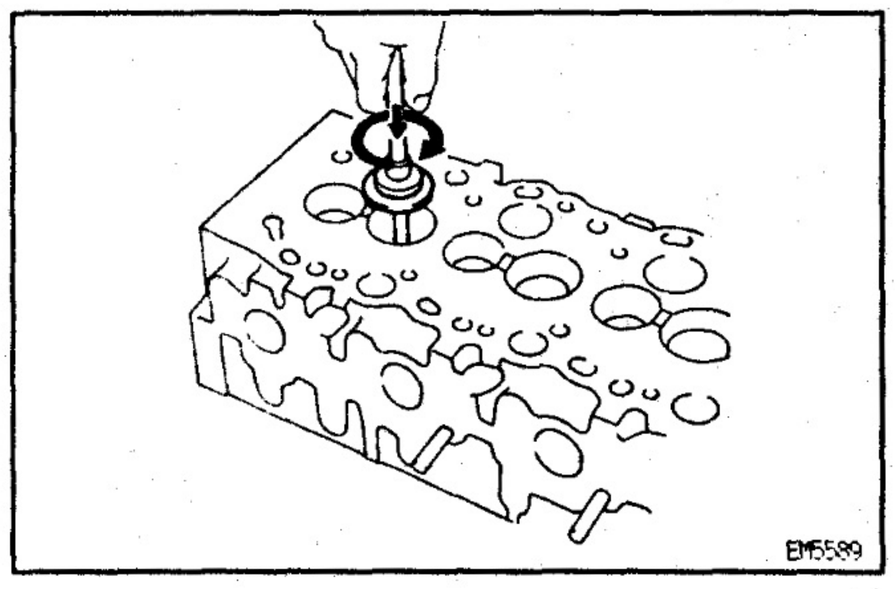

(d) Hand—lap the valve and valve seat with an abrasive compound.

(e) After hand—lapping, clean the valve and valve seat.

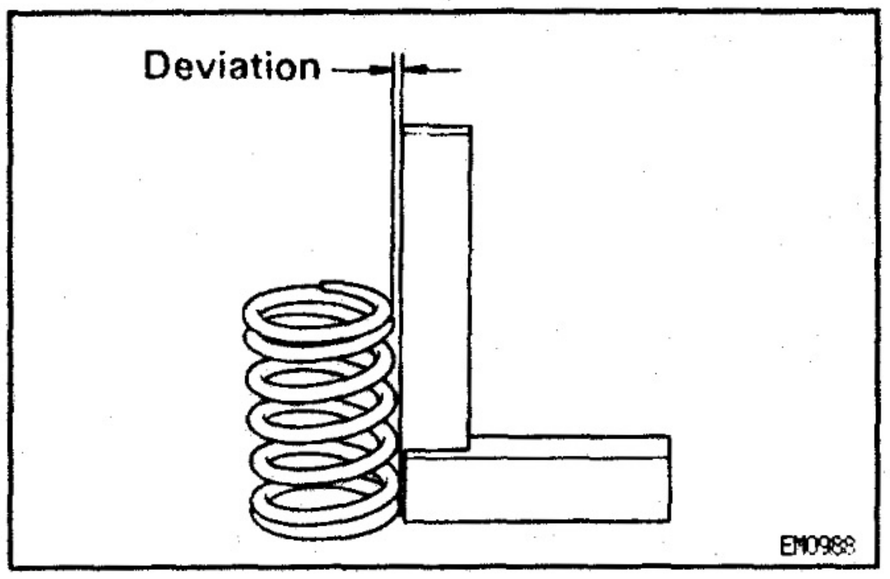

9. INSPECT VALVE SPRINGS

(a) Using a steel square, measure the deviation of the valve spring.

Maximum deviation:

2.0 mm (0.079 in.)

If the deviation is greater than maximum, replace the valve spring.

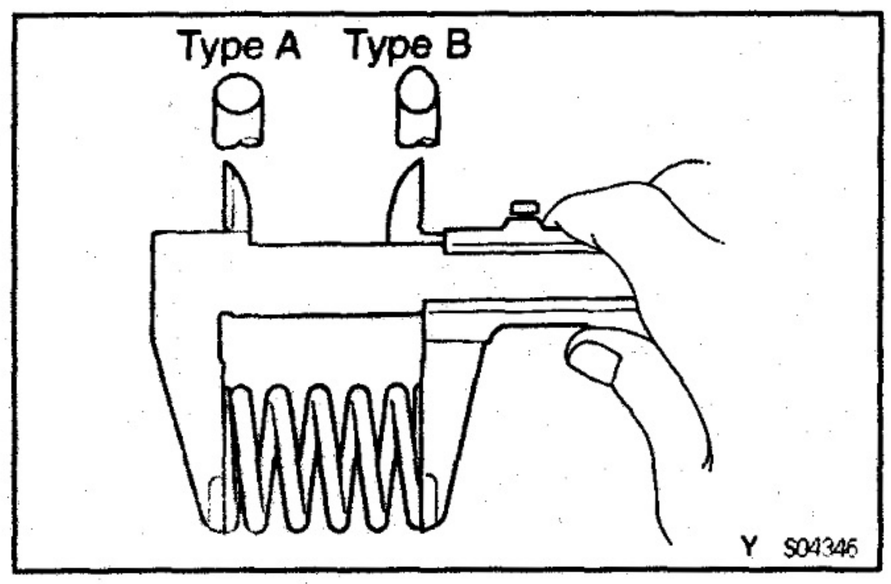

(b) Using vernier calipers, measure the free length of the valve spring.

Free length:

Type A

46.20 mm (1.8189 in.)

Type B

48.54 mm (1.9110 in.)

If the free length is not as specified, replace the valve spring.

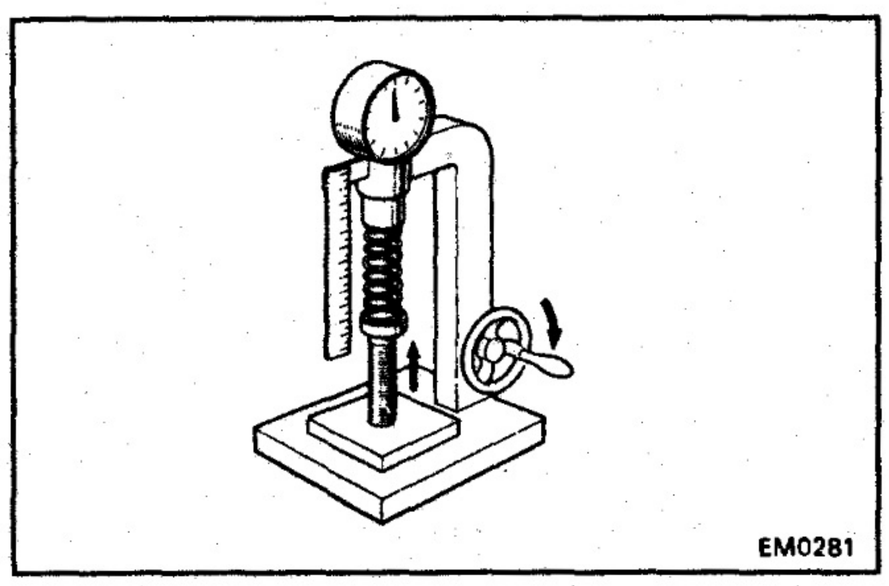

(c) Using a spring tester, measure the tension of the valve spring at the specified installed length.

Installed tension:

301 — 322 N (30.7 — 33.9 kgf, 67.7 — 74.7 lbf)

at 37.0 mm (1.457 in.)

If the installed tension is not as specified, replace the valve spring.

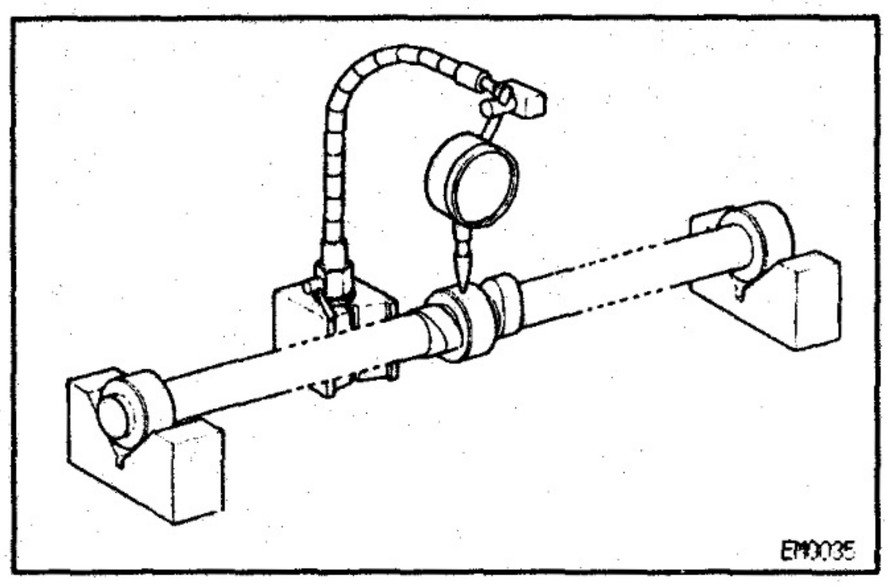

10. INSPECT CAMSHAFT AND BEARINGS

A. Inspect camshaft for runout

(a) Place the camshaft on V—blocks.

(b) Using a dial indicator, measure the circle runout at the center journal.

Maximum circle runout:

0.10 mm (0.0039 in.)

If the circle runout is greater than maximum, replace the camshaft.

B. Inspect cam lobes

Using a micrometer, measure the cam lobe height.

Standard cam lobe height:

Intake

2L

53.850 — 53.870 mm (2.1201 — 2.1209 in.)

3L

54.290 — 54.310 mm (2.1374 — 2.1382 in.)

Exhaust

54.990 — 55.010 mm (2.1650 — 2.1657 in.)

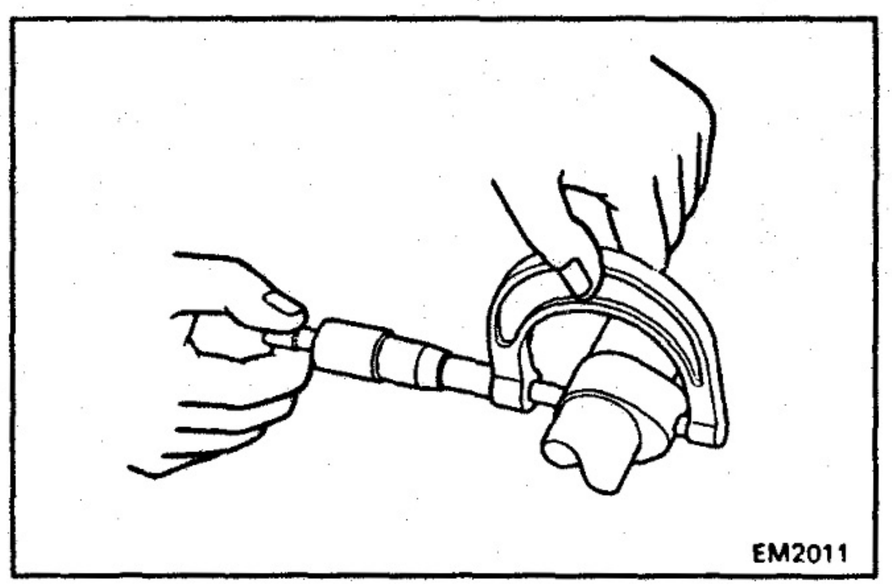

Minimum cam lobe height:

Intake

2L

53.35 mm (2.1004 in.)

3L

53.79 mm (2.1177 in.)

Exhaust

54.49 mm (2.1453 in.)

If the cam lobe height is less than minimum, replace the camshaft.

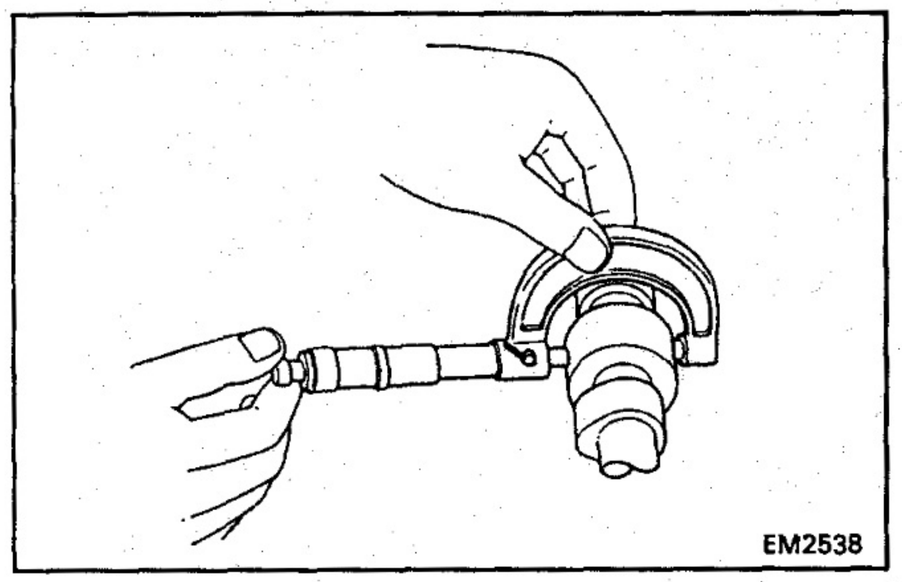

C. Inspect camshaft journals

Using a micrometer, measure the journal diameter.

Journal diameter:

STD

No.1

34.969 — 34.985 mm (1.3767 — 1.3774 in.)

Others

27.969 — 27.985 mm (1.1011 — 1.1018 in.)

U/S 0.125

No.1

34.844 — 34.860 mm (1.3718 — 1.3724 in.)

Others

27.844 — 27.860 mm (1.0962 — 1.0968 in.)

U/S 0.250

No.1

34.719 — 34.735 mm (1.3669 — 1.3675 in.)

Others

27.719 — 27.735 mm (1.0913 — 1.0919 in.)

If the journal diameter is not as specified, check the oil clearance.

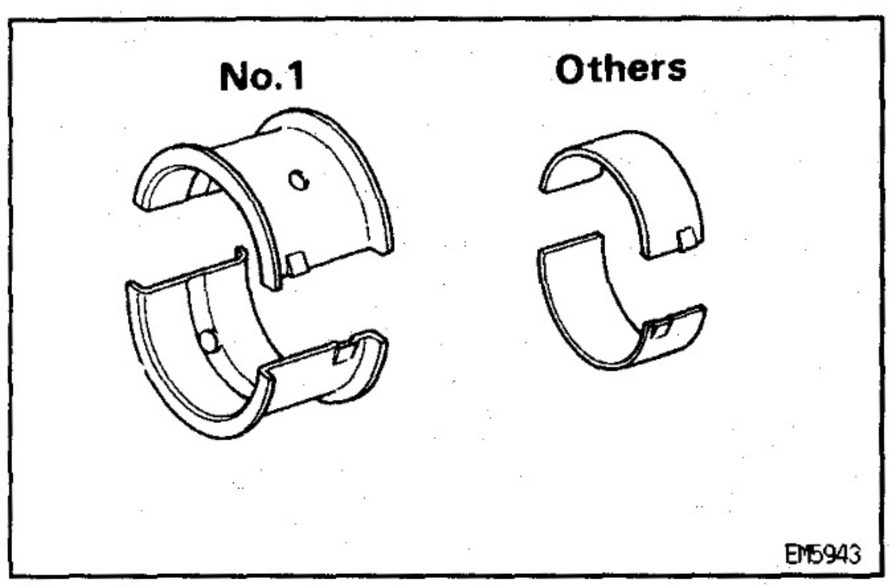

D. Inspect camshaft bearings

Check that bearings for flaking and scoring.

If the bearings are damaged, replace the bearings.

E. Inspect camshaft journal oil clearance

(a) Install the bearings to the bearing caps and cylinder head.

(b) Clean the bearings and camshaft journals.

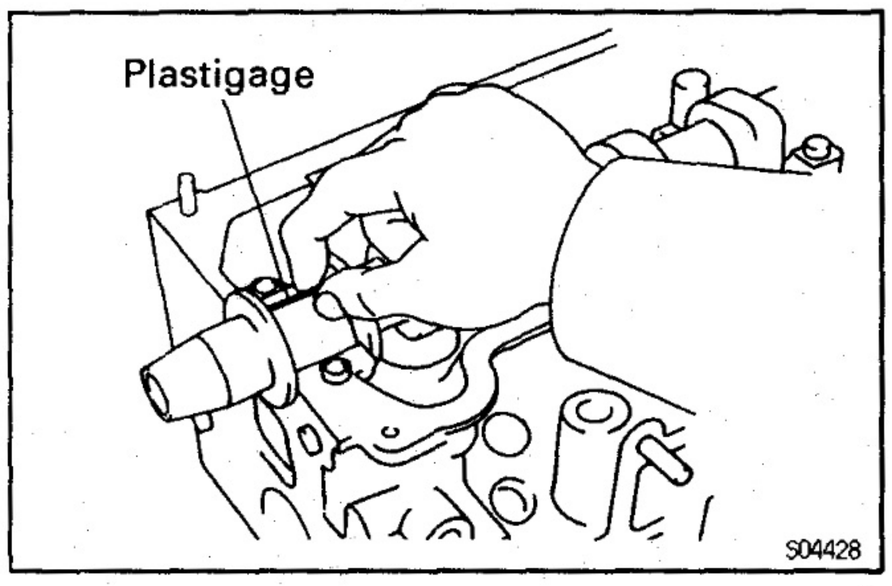

(c) Place the camshaft on the cylinder head.

(d) Lay a strip of Plastigage across each of the camshaft journals.

(e) Install the bearing caps.
(See step 4 in cylinder head assembly)
Torque: 25 N·m (255 kgf·cm, 18 ft·lbf)
NOTICE: Do not turn the camshaft.

(f) Remove the bearing caps.

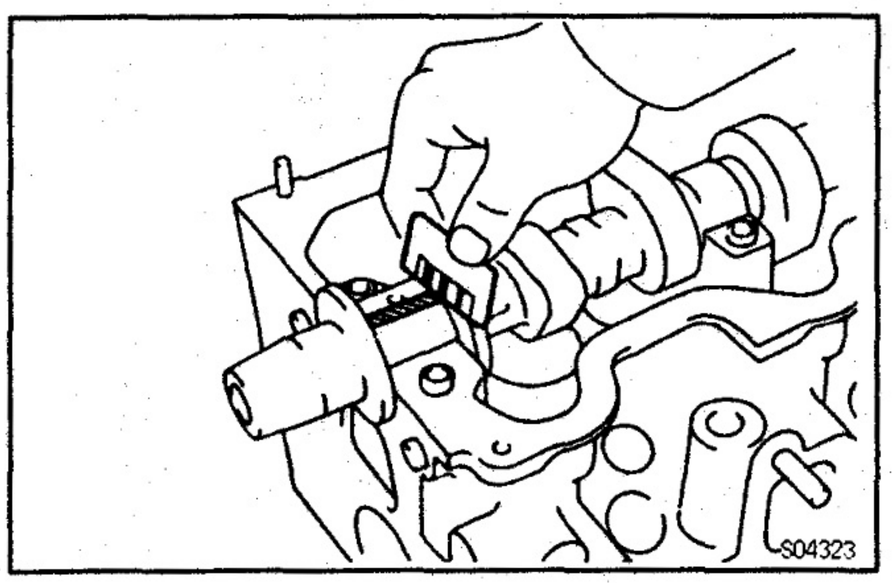

(g) Measure the Plastigage at its widest point.
Standard oil clearance:
0.022 — 0.074 mm (0.0009 — 0.0029 in.)
Maximum oil clearance:
0.10 mm (0.0039 in.)
If the oil clearance is greater than maximum, replace the bearings. If necessary, grind or replace the camshaft.
(h) Completely remove the Plastigage.

F. If necessary, grind and hone camshaft journals
Grind and hone the journals to U/S diameter.
(See procedure C.)
Install new journal U/S bearings.

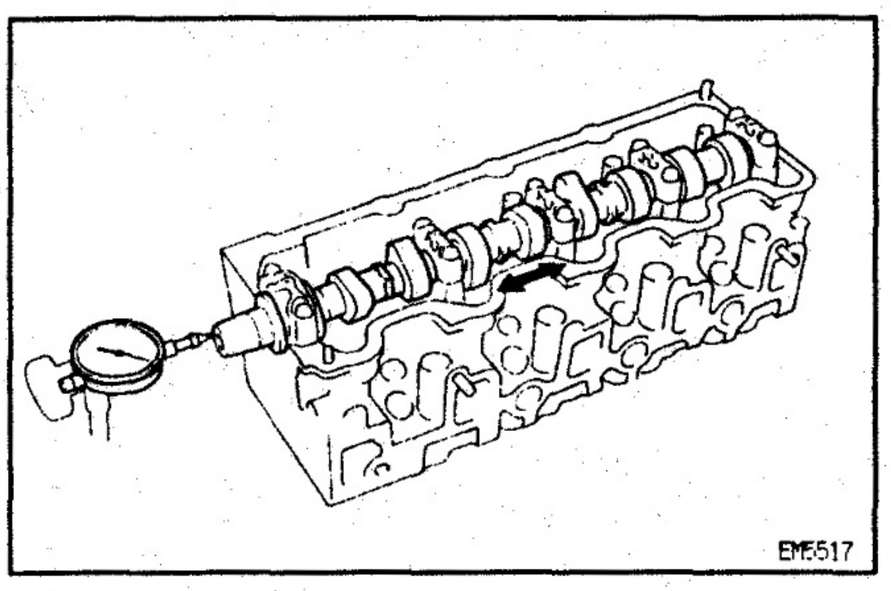

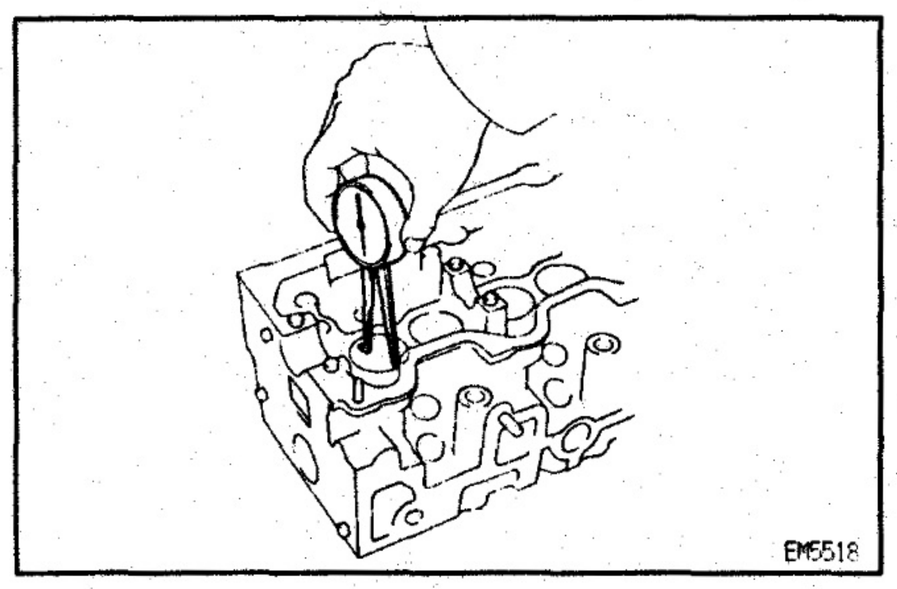

G. Inspect camshaft thrust clearance
(a) Install the camshaft.
(See step 4 in cylinder head assembly)
(b) Using a dial indicator, measure the thrust clearance while moving the camshaft back and forth.
Standard thrust clearance:
0.080 — 0.280 mm (0.0031 — 0.0110 in.)
Maximum thrust clearance:
0.35 mm (0.0138 in.)
If the thrust clearance is greater than maximum, replace the No.1 bearing. If necessary, replace the camshaft.
(c) Remove the camshaft.

11. INSPECT VALVE LIFTERS AND LIFTER BORES
(a) Using a caliper gauge, measure the lifter bore diameter of the cylinder head.
Lifter bore diameter:
40.960 — 40.980 mm (1.6126 — 1.6134 in.)

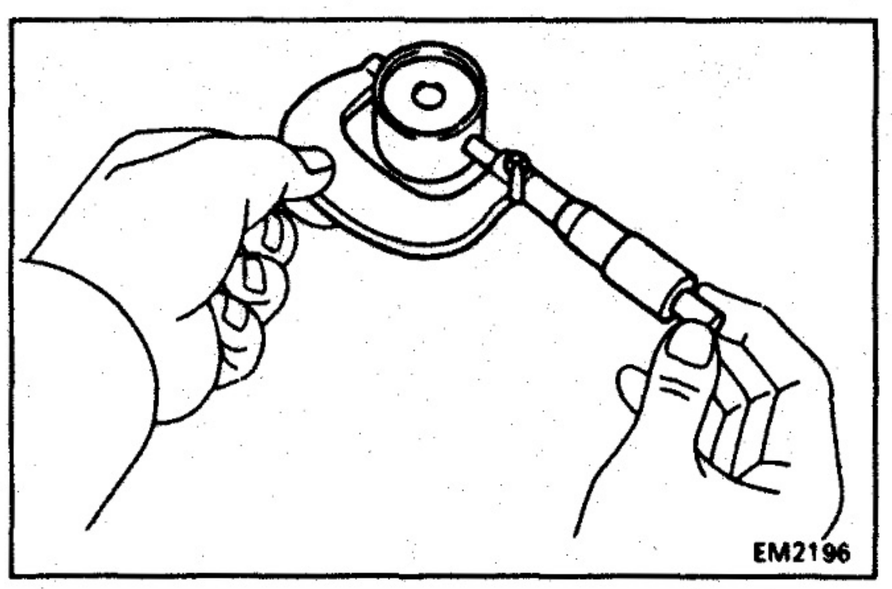

(b) Using a micrometer, measure the lifter diameter.
Lifter diameter:
40.892 — 40.902 mm (1.6099 — 1.6103 in.)

(c) Subtract the lifter diameter measurement from the lifter bore diameter measurement.
Standard oil clearance:
0.058 — 0.088 mm (0.0023 — 0.0035 in.)
Maximum oil clearance:
0.10 mm (0.0039 in.)
If the oil clearance is greater than maximum, replace the lifter. If necessary, replace the cylinder head.

EG

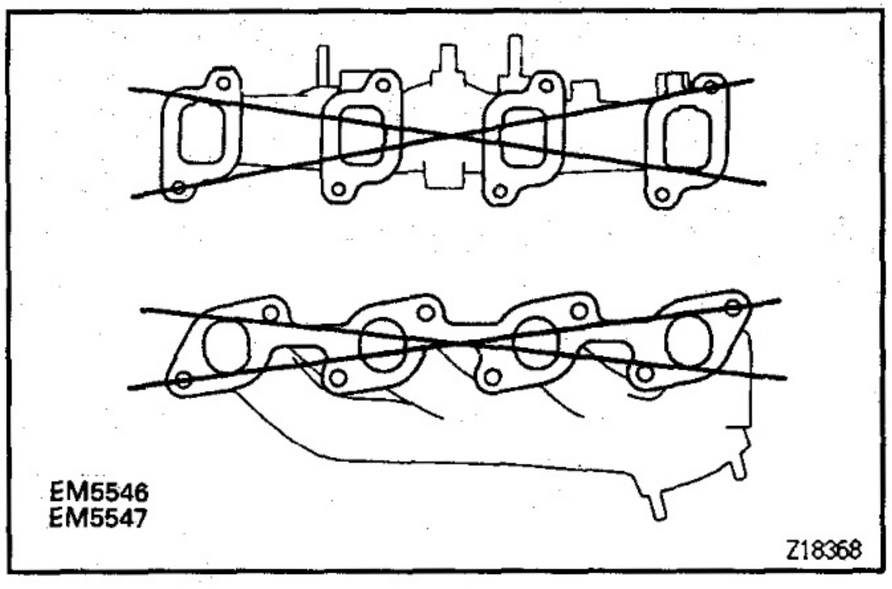

12. INSPECT INTAKE AND EXHAUST MANIFOLDS
Using a precision straight edge and feeler gauge, measure the surface contacting the cylinder head for warpage.
Maximum warpage:
0.40 mm (0.0157 in.)
If warpage is greater than maximum, replace the manifold.

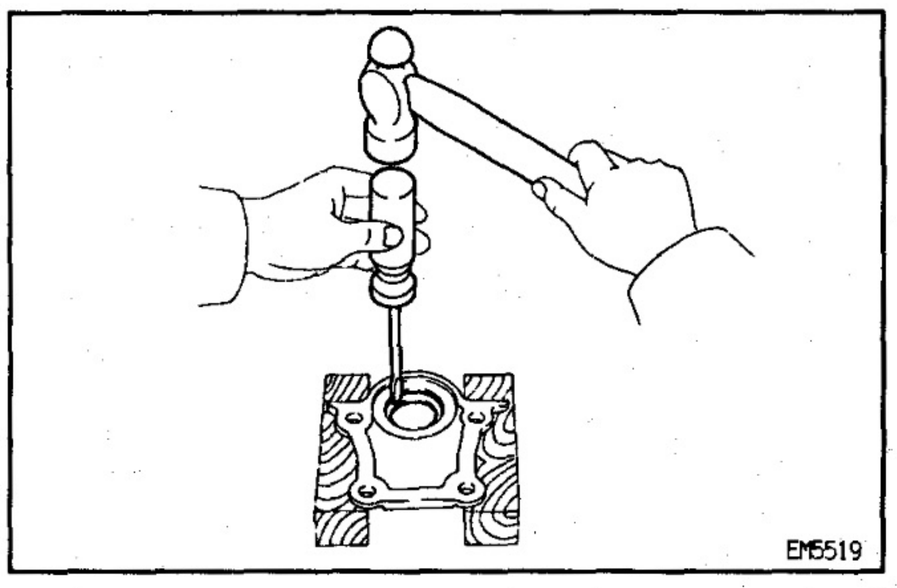

CAMSHAFT OIL SEAL REPLACEMENT EG33K—05

HINT: There are 2 methods (A and B) to replace the oil seal which are as follows:
REPLACE CAMSHAFT OIL SEAL

A. If camshaft oil seal retainer is removed from cylinder head:

(a) Using a screwdriver and hammer, tap out the oil seal.

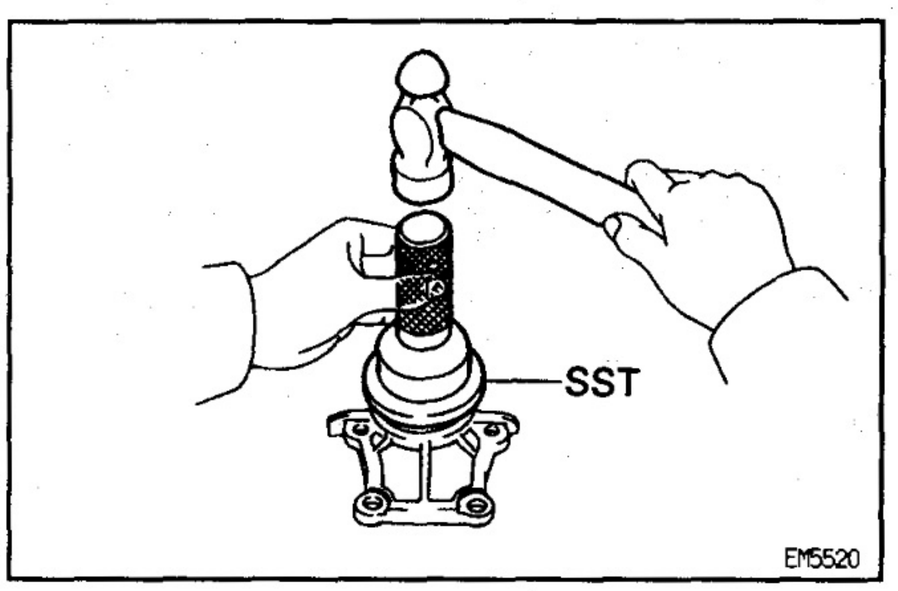

(b) Using SST and a hammer, tap in a new oil seal until its surface is flush with the oil seal retainer edge.
SST 09223—46011
(c) Apply MP grease to the oil seal lip.

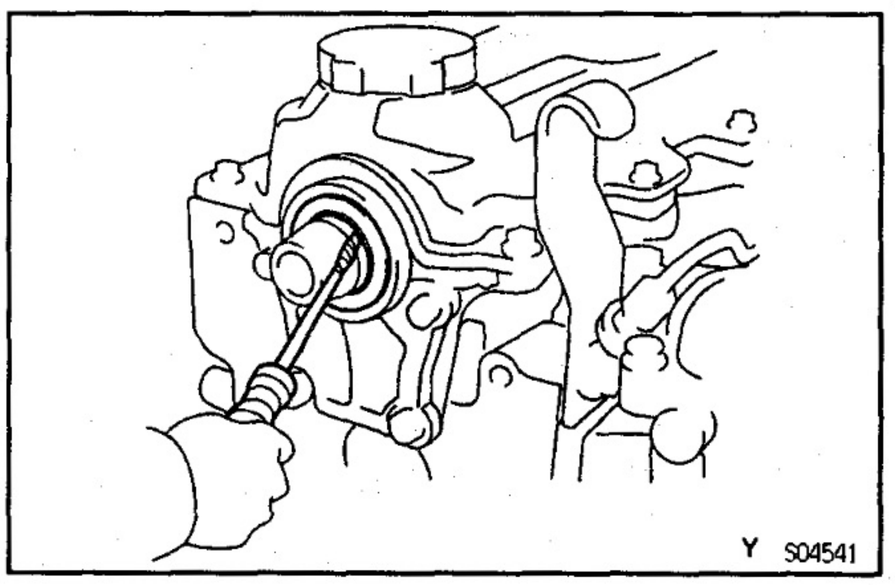

B. If camshaft oil seal retainer is installed to cylinder head:

(a) Using a knife, cut off the oil seal lip.
(b) Using a screwdriver, pry out the oil seal.
NOTICE: Be careful not to damage the camshaft. Tape the screwdriver tip.

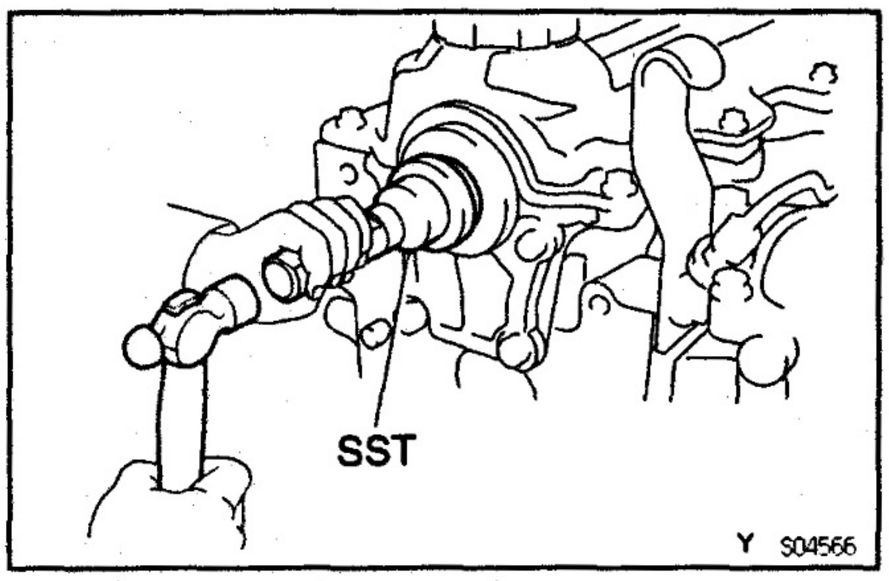

(c) Apply MP grease to a new oil seal lip.
(d) Using SST and a hammer, tap in the oil seal until its surface is flush with the oil seal retainer edge.
SST 09223–46011

EG

E67AC–01

CYLINDER HEAD ASSEMBLY

HINT:
- Thoroughly clean all parts to be assembled.
- Before installing the parts, apply fresh engine oil to all sliding and rotating surfaces.
- Replace all gaskets and oil seals with new ones.

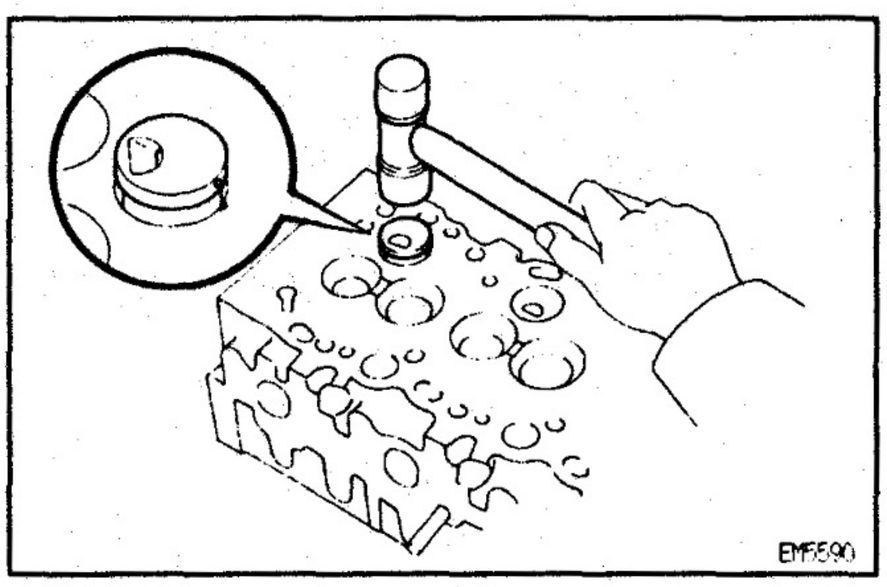

1. INSTALL COMBUSTION CHAMBERS

(a) Align the combustion chamber knock pin with the cylinder head notch.
(b) Using a plastic–faces hammer, tap in the combustion chamber.

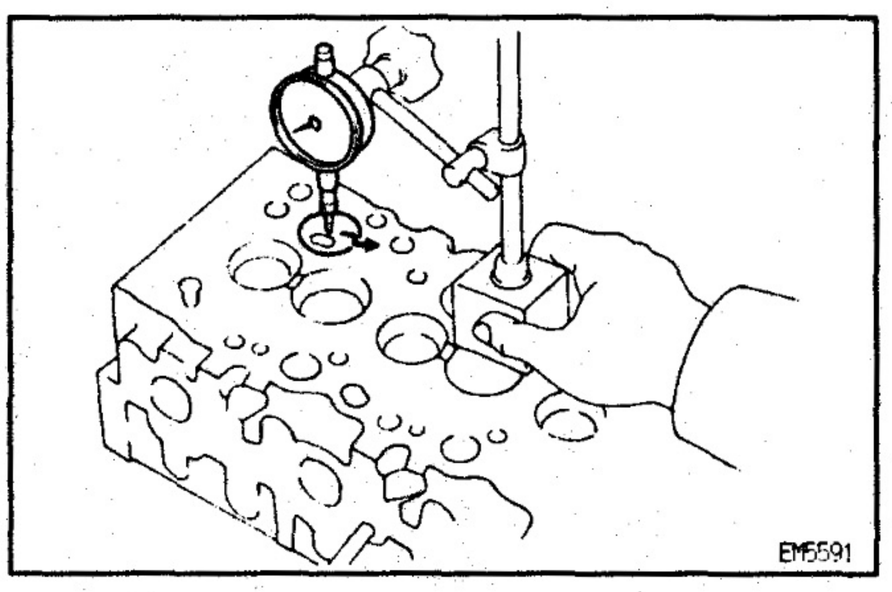

(c) Using a dial indicator, check the combustion chamber protrusion.

Combustion chamber protrusion:

Minus 0.03 – Plus 0.03 mm

(Minus 0.0012 – Plus 0.0012 in.)

If the protrusion is less than specified, adjust with shims.

Shim thickness:

0.03 mm (0.0012 in.)

If the protrusion is greater than specified, replace the chamber and recheck the protrusion.

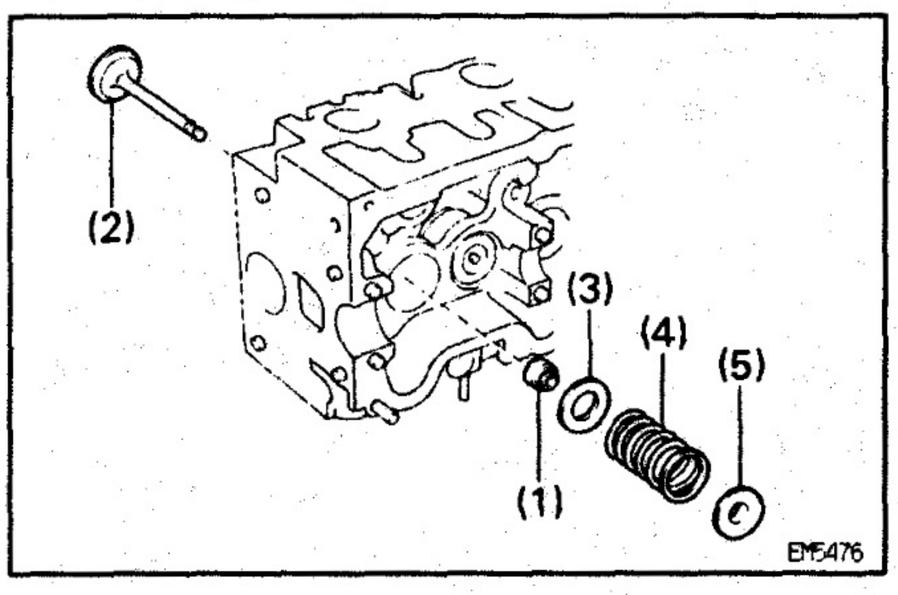

2. INSTALL VALVES

(a) Install these parts:
- (1) Oil seal
- (2) Valve
- (3) Spring seat
- (4) Valve spring
- (5) Spring retainer

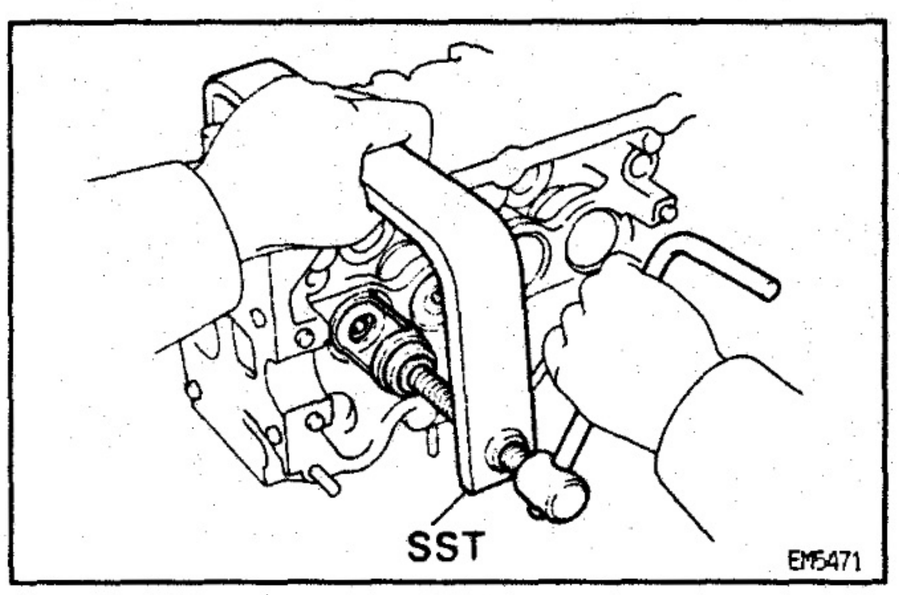

(b) Using SST, compress the valve spring and place the 2 keepers around the valve stem.
SST 09202—70020 (09202—00030)

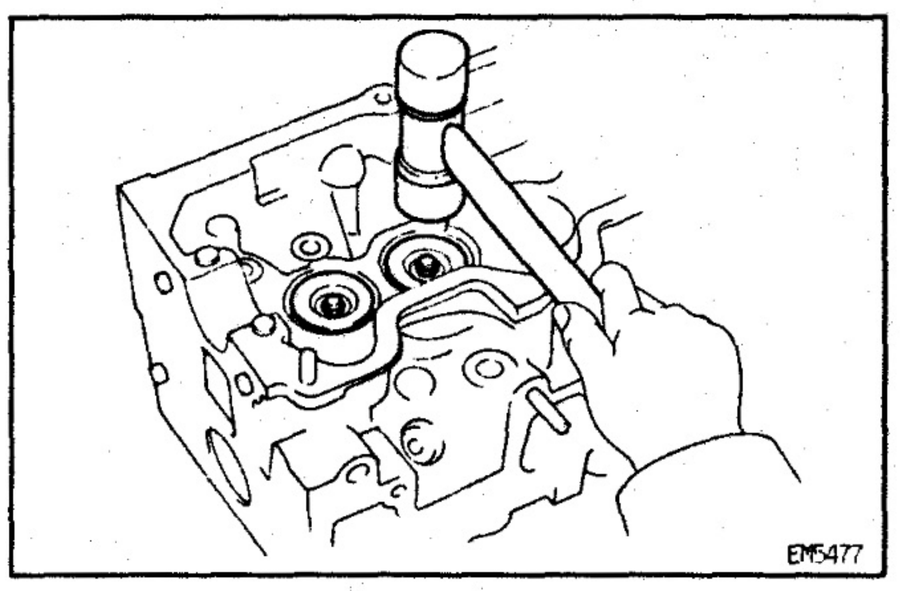

(c) Using a plastic—faced hammer, lightly tap the valve stem tip to assure a proper fit.

3. INSTALL VALVE LIFTERS AND SHIMS

(a) Install the valve lifter and shim.

(b) Check that the valve lifter rotates smoothly by hand.

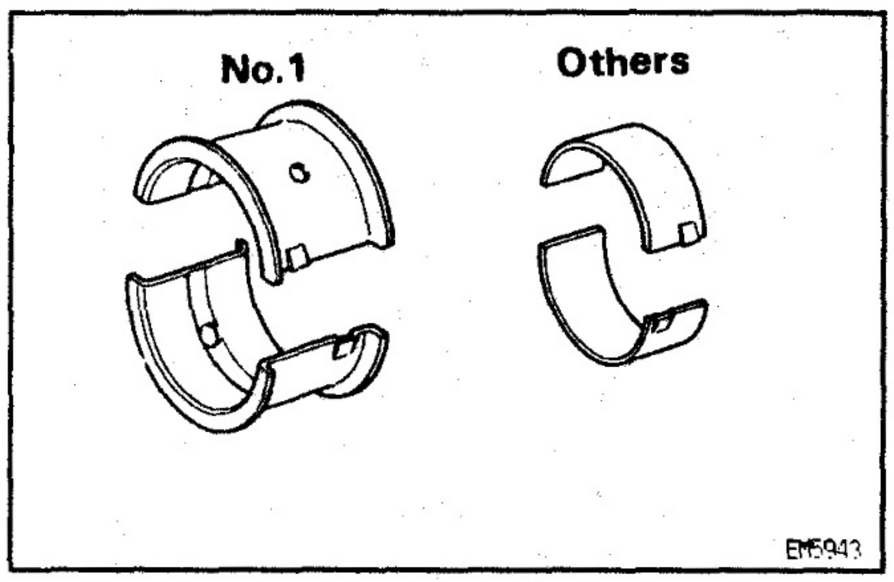

4. INSTALL CAMSHAFT

HINT: Different the bearing are used for the No.1 and others.

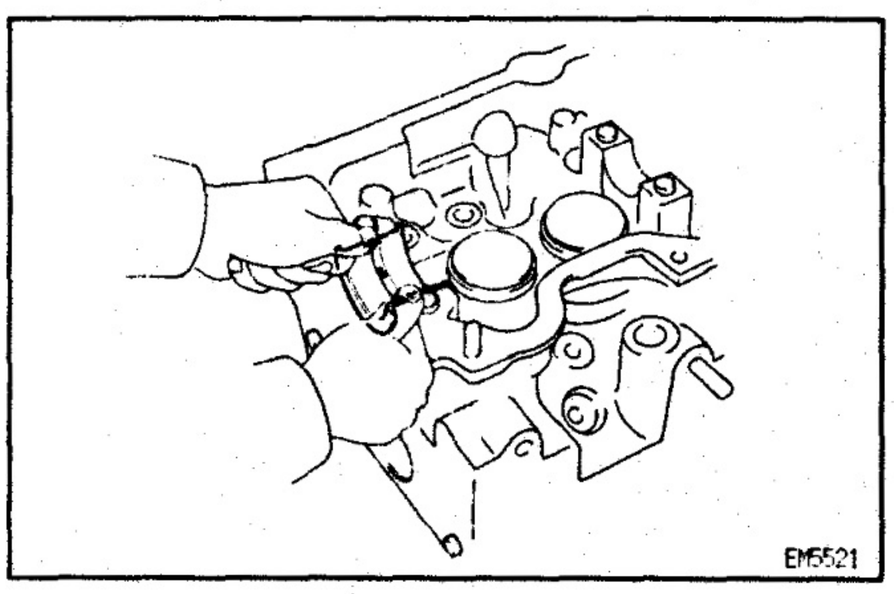

(a) Install the 10 bearings to the bearing caps and cylinder head.

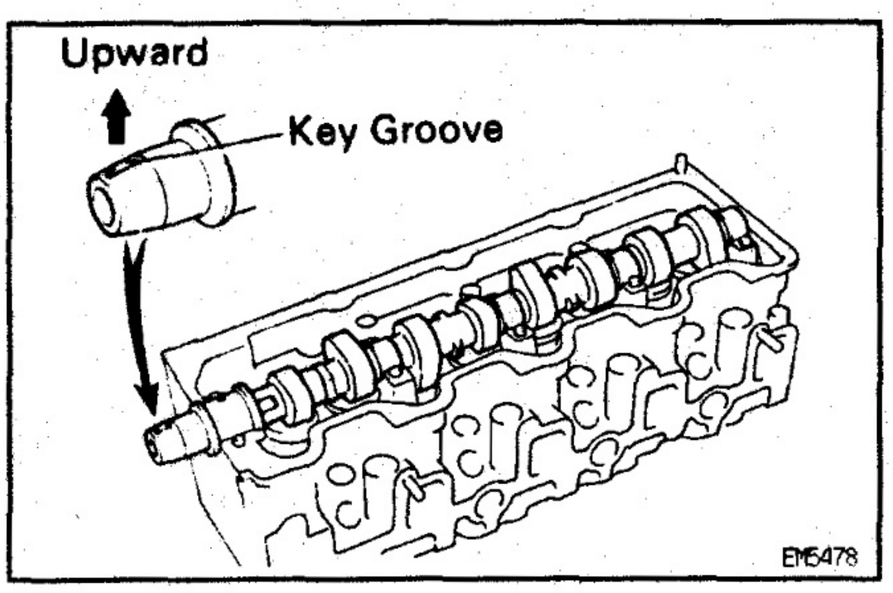

(b) Place the camshaft on the cylinder head, facing the key groove upward.

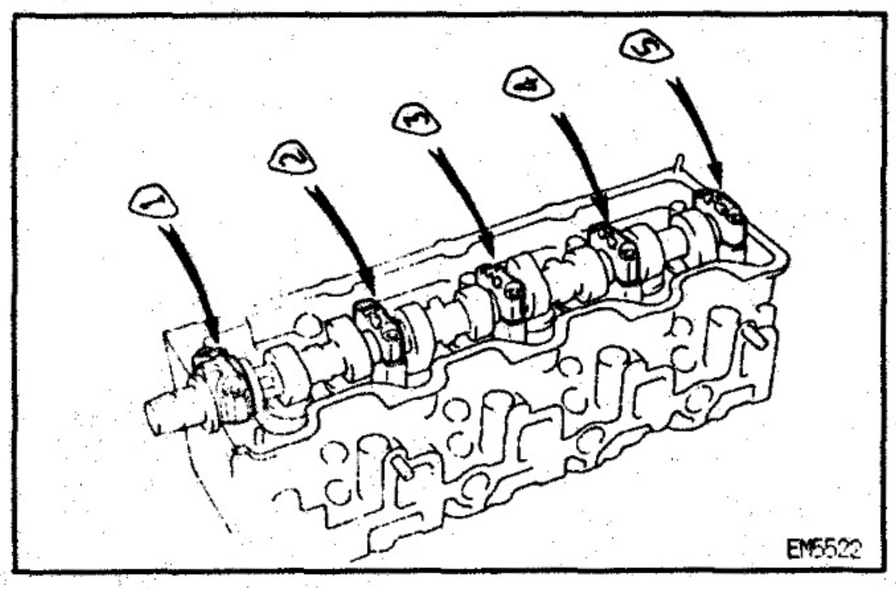

(c) Install the 5 bearing caps in their proper locations.

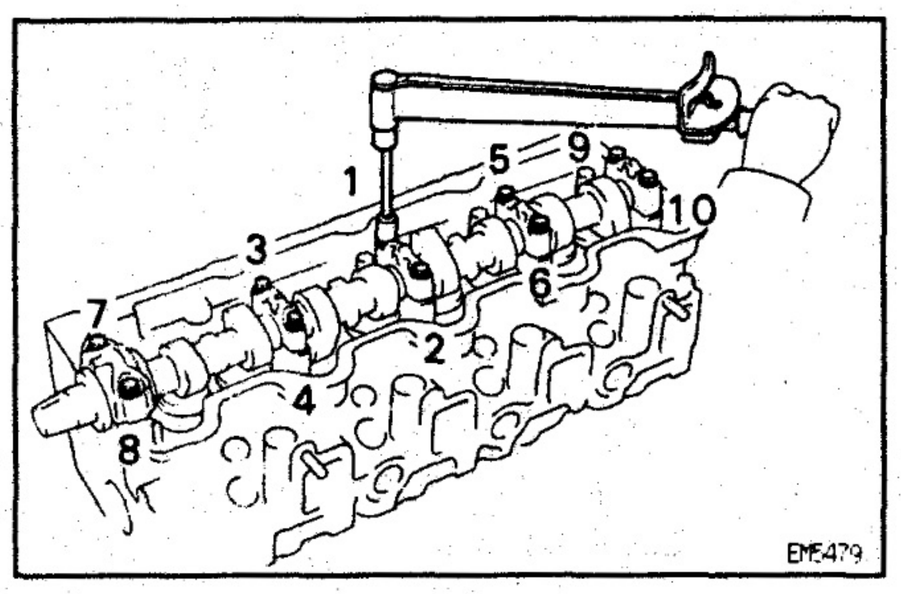

(d) Apply a light coat of engine oil on the threads and under the heads of the bearing cap bolts.
(e) Install and uniformly tighten the 10 bearing cap bolts, in several passes, in the sequence shown.
Torque: 25 N·m (255 kgf·cm, 18 ft·lbf)

5. CHECK AND ADJUST VALVE CLEARANCE
(See steps 5 and 6 in valve clearance inspection and adjustment)

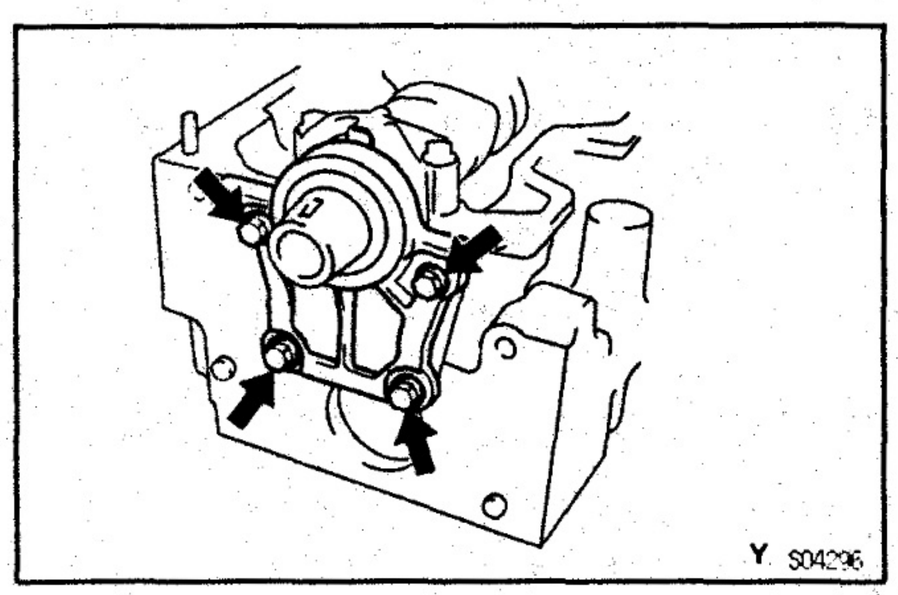

6. INSTALL CAMSHAFT OIL SEAL RETAINER
Install a new gasket and the retainer with the 4 bolts.
Torque: 18 N·m (185 kgf·cm, 13 ft·lbf)

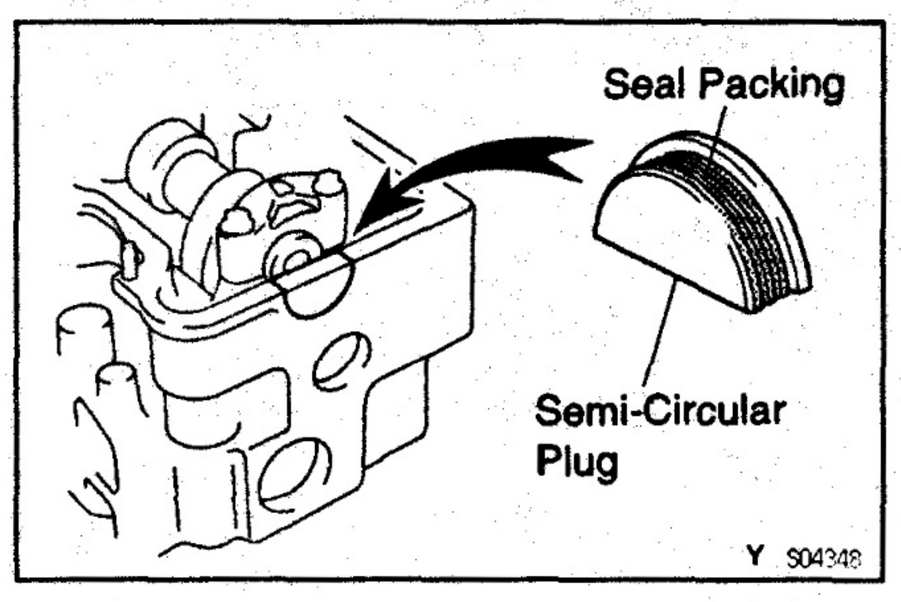

7. INSTALL SEMI—CIRCULAR PLUG
(a) Remove any old packing (FIPG) material.
(b) Apply seal packing to the semi — circular plug as shown in the illustration.
Seal packing:
Part No. 08826—00080 or equivalent
(c) Install the semi—circular plug to the cylinder head.

EG

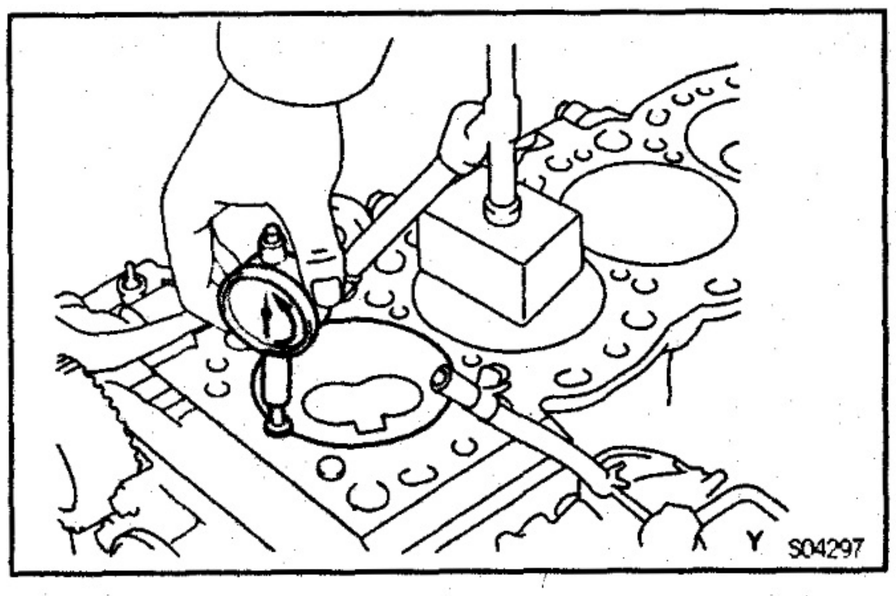

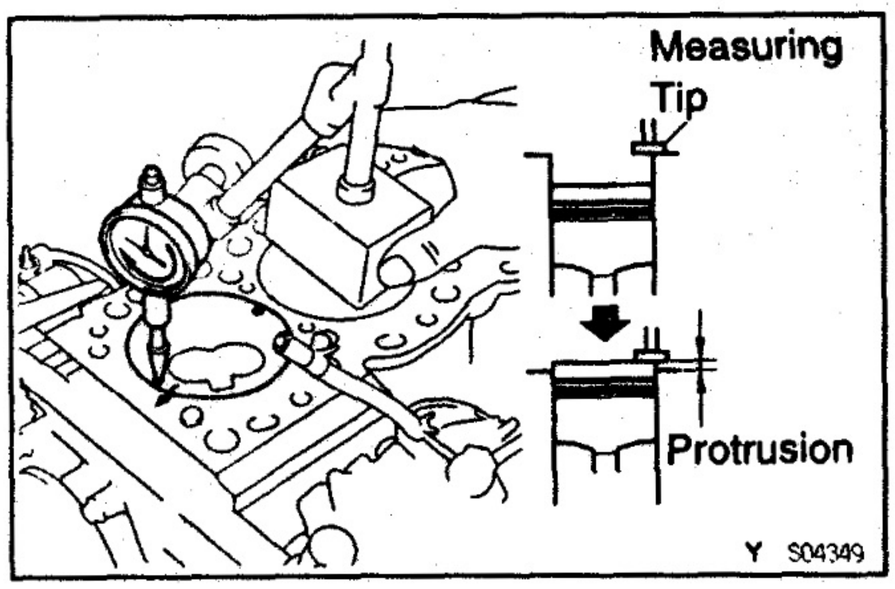

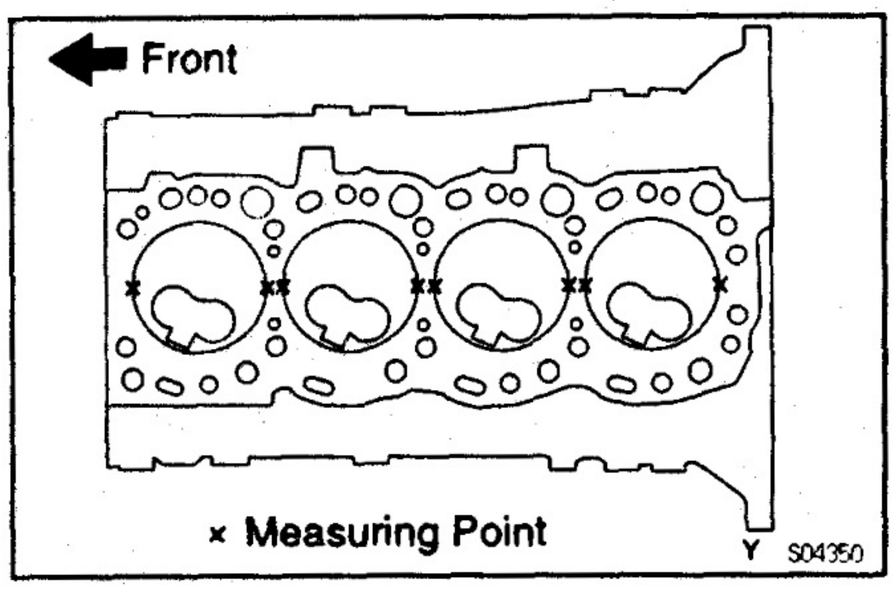

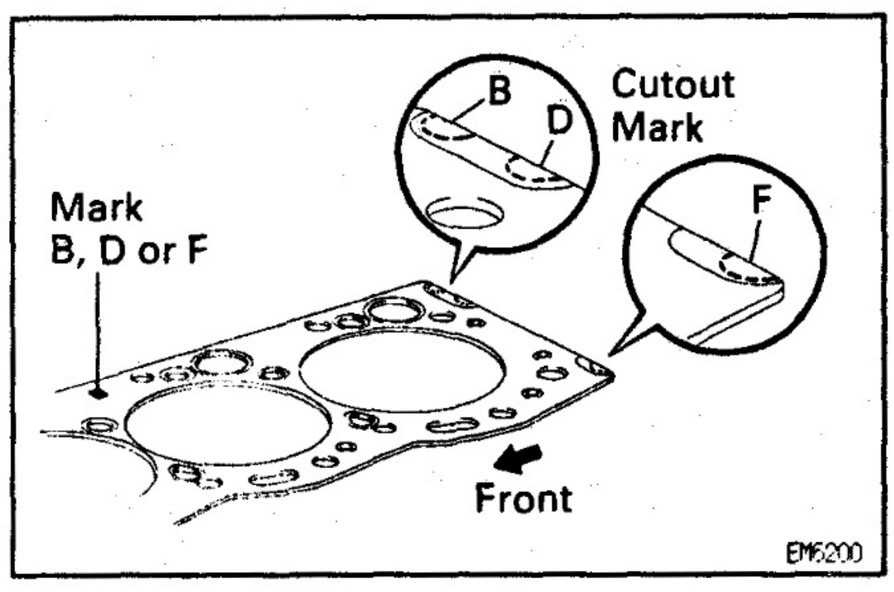

CYLINDER HEAD INSTALLATION

E07AD-01

1. CHECK PISTON PROTRUSION AND SELECT CYLINDER HEAD GASKET

A. Check piston protrusions for each cylinder

(a) Clean the cylinder block with solvent.

(b) Set the piston of the cylinder to be measured to slightly before TDC.

(c) Place a dial indicator on the cylinder block, and set the dial indicator at 0 mm (0 in.).

HINT:

- Use a dial indicator measuring tip as shown in the illustration.
- Make sure that the measuring tip is square to the cylinder block gasket surface and piston head when taking the measurements.

(d) Find where the piston head protrudes most by slowly turning the crankshaft clockwise and counterclockwise.

(e) Measure each cylinder at 2 places as shown in the illustration, making a total of 8 measurements.

(f) For the piston protrusion value of each cylinder, use the average of the 2 measurements of each cylinder.

Protrusion:

0.68 — 0.97 mm (0.0268 — 0.0382 in.)

When removing piston and connecting rod assembly:
If the protrusion is not as specified, remove the piston and connecting rod assembly and reinstall it.
(See cylinder block disassembly and assembly)

B. Select new cylinder head gasket

HINT: There are 3 sizes of new cylinder head gaskets, marked "B", "D" or "F" accordingly.

New installed cylinder head gasket thickness:

Mark B	1.40 — 1.50 mm (0.0551 — 0.0591 in.)
Mark D	1.50 — 1.60 mm (0.0591 — 0.0630 in.)
Mark F	1.60 — 1.70 mm (0.0630 — 0.0669 in.)

Select the largest piston protrusion value from the measurements made, then select a new appropriate gasket according to the table below.

Piston protrusion mm (in.)	Gasket size
0.68 — 0.77 (0.0268 — 0.0303)	Use B
0.78 — 0.87 (0.0307 — 0.0343)	Use D
0.88 — 0.97 (0.0346 — 0.0382)	Use F

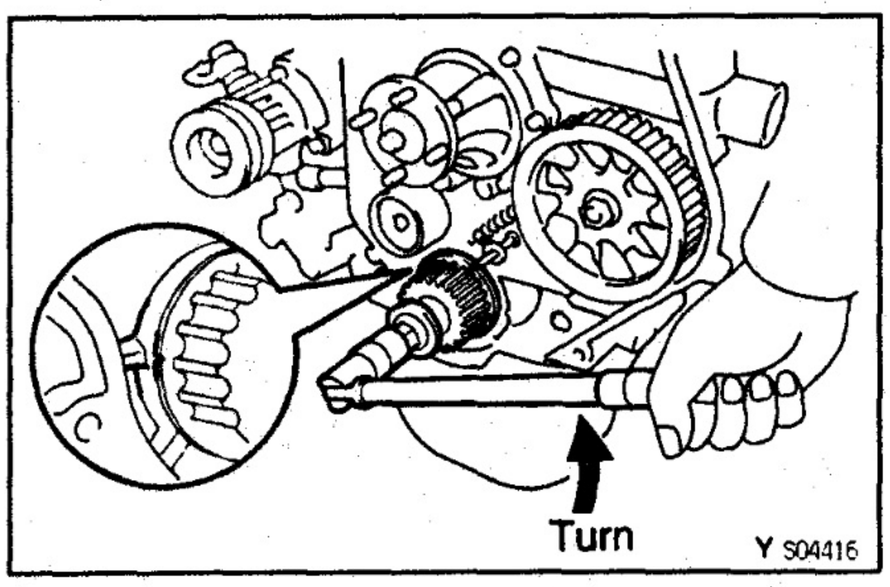

2. SET NO.1 CYLINDER TO 90° BTDC/COMPRESSION

HINT: Set the No.1 cylinder to 90° BTDC/compression to avoid interference with the piston top and valve head.

Using the crankshaft pulley bolt, turn the crankshaft 90° counterclockwise, and put the timing mark of the crankshaft timing pulley with the protrusion of the timing belt case.

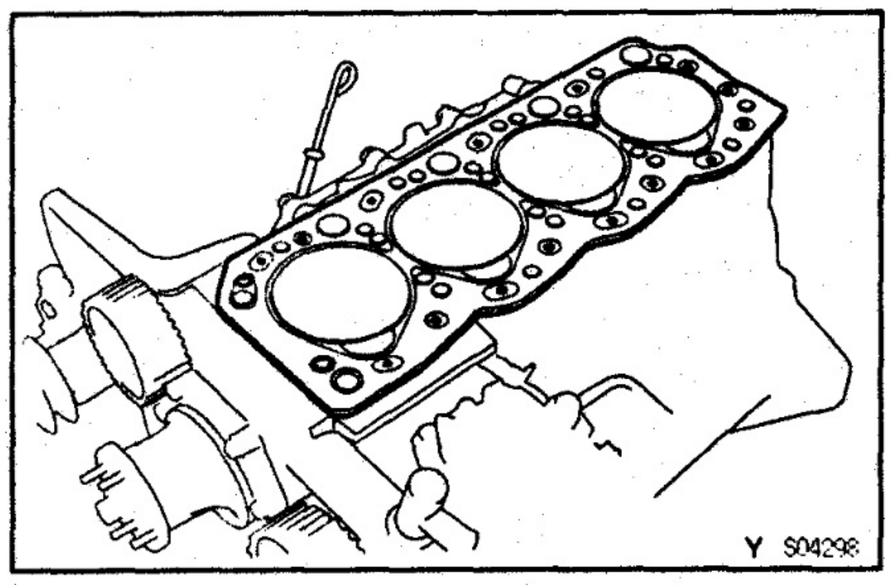

3. INSTALL CYLINDER HEAD

A. Place cylinder head on cylinder block

(a) Place a new cylinder head gasket in position on the cylinder block.

NOTICE: *Be careful of the installation direction.*

(b) Place the cylinder head in position on the cylinder head gasket.

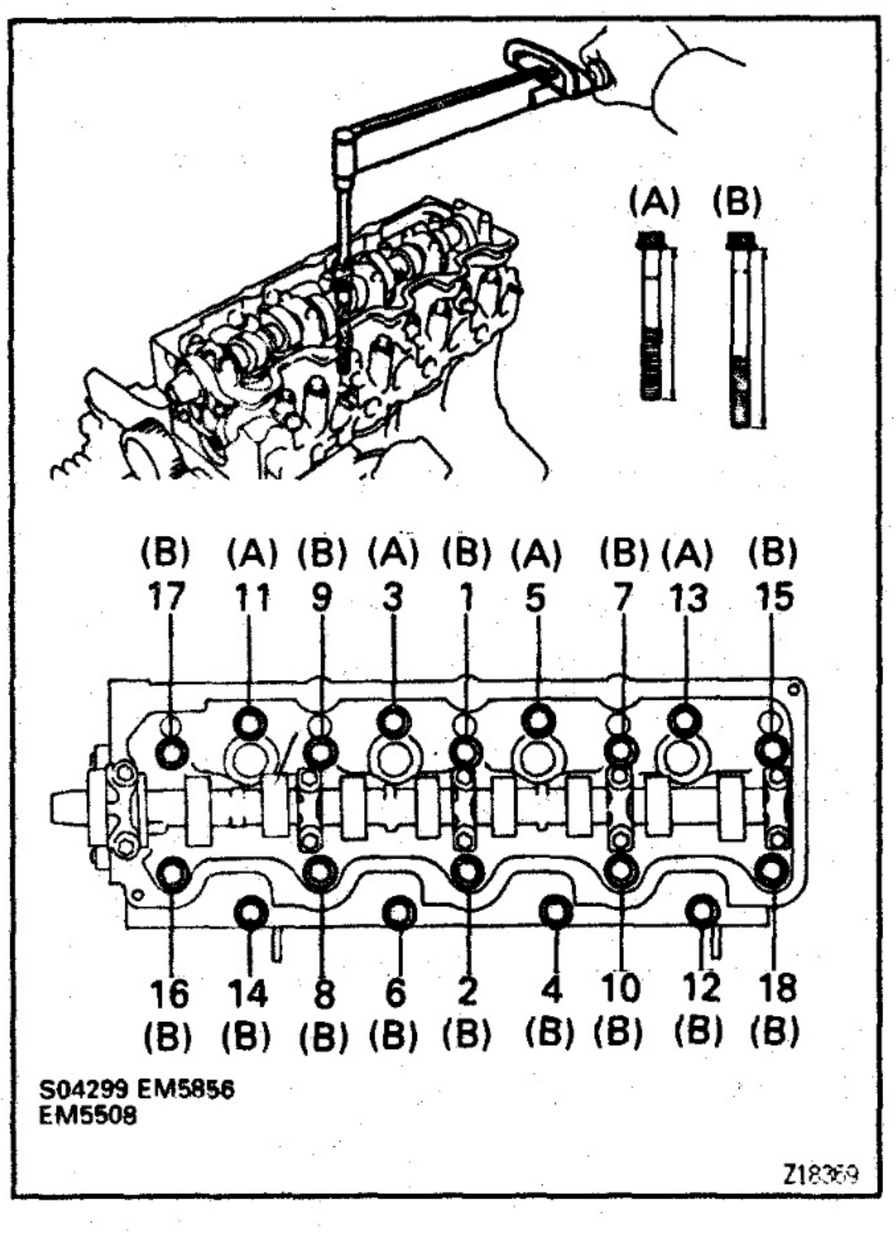

B. Install cylinder head bolts

HINT:

- The cylinder head bolts are tightened in 3 progressive steps (steps (b), (d) and (e)).
- If any bolts is broken or deformed, replace it.

(a) Apply a light coat of engine oil on the threads and under the heads of the cylinder head bolts.

(b) Install and uniformly tighten the 18 cylinder head bolts, in several passes, in the sequence shown.

Torque: 78 N·m (800 kgf·cm, 58 ft·lbf)

HINT: Each bolt length is indicated in the illustration.

Bolt length:

A	107 mm (4.12 in.)
B	127 mm (5.00 in.)

If any one of the cylinder head bolts does not meet the torque specification, replace the cylinder head bolt.

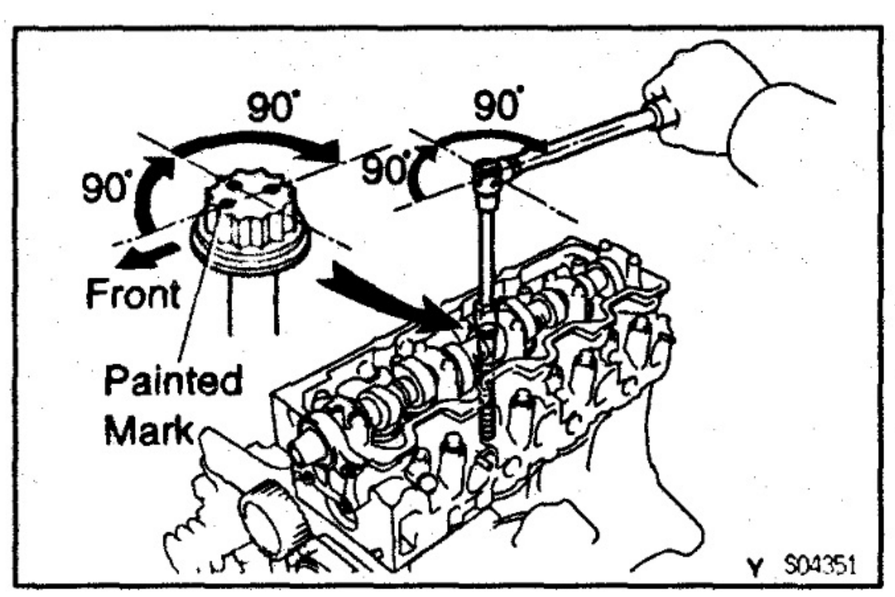

(c) Mark the front of the cylinder head bolt with paint.

(d) Retighten the cylinder head bolts 90° in the numerical order shown.

(e) Retighten cylinder head bolts by an additional 90°.

(f) Check that the painted mark is now facing rearward.

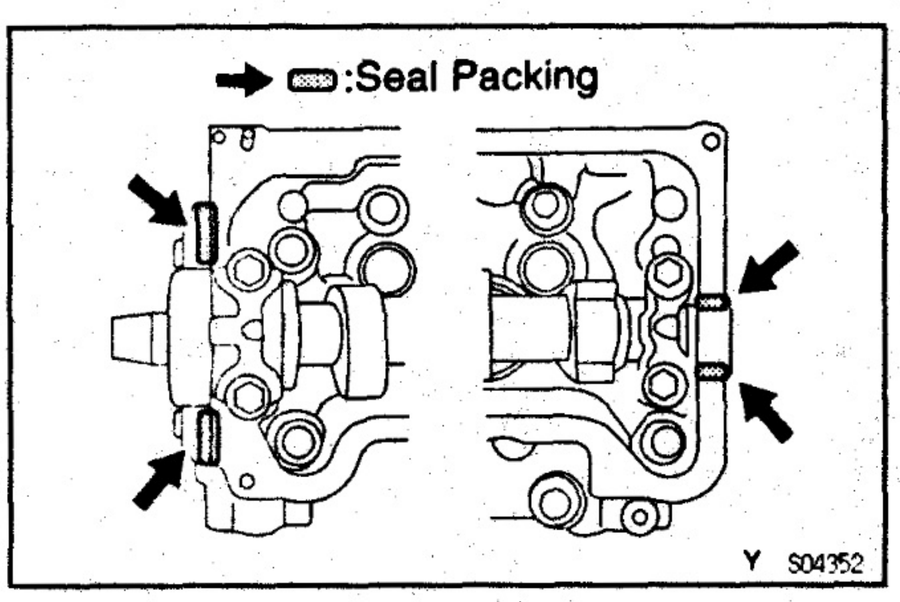

4. INSTALL CYLINDER HEAD COVER

(a) Remove any old packing (FIPG) material.

(b) Apply seal packing to the cylinder head as shown in the illustration.

Seal packing:

Part No. 08826—00080 or equivalent

(c) Install the gasket to the cylinder head cover.

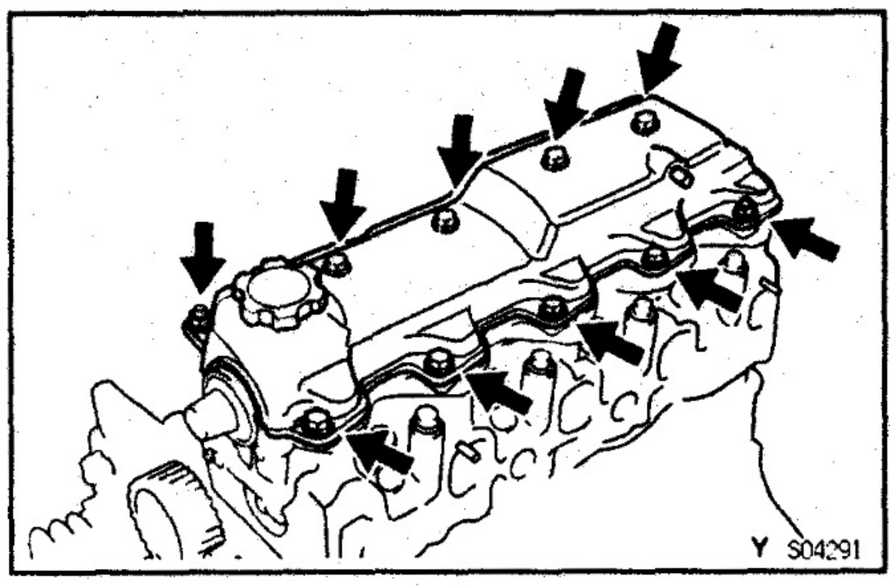

(d) Install the cylinder head cover with 8 bolts and 2 nuts. Uniformly tighten the bolts and nuts in several passes.

Torque: 12 N·m (120 kgf·cm, 9 ft·lbf)

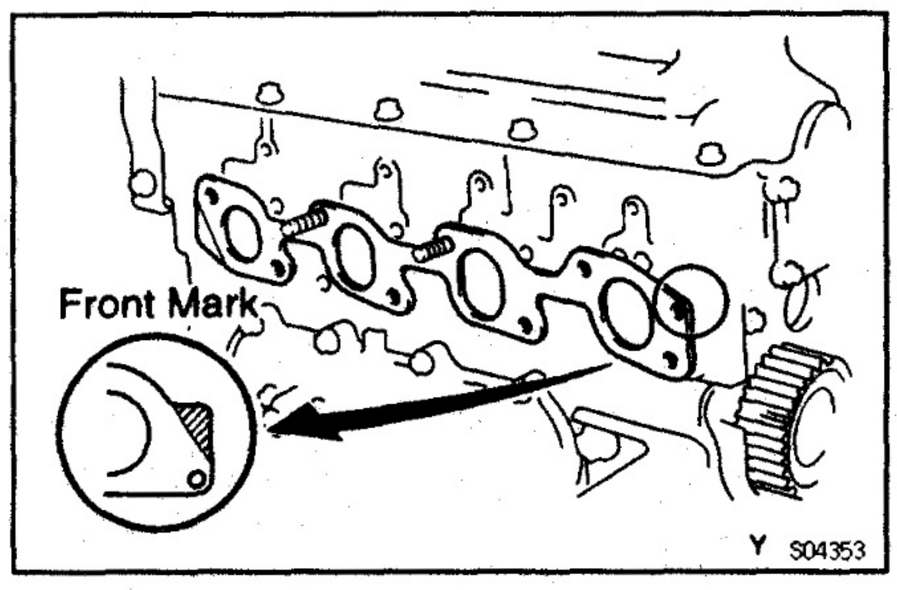

5. INSTALL EXHAUST MANIFOLD

(a) Install a new gasket to the cylinder head.

HINT: The direction of a new gasket is in the illustration.

(b) Install the exhaust manifold with the 6 bolts and 2 new nuts. Uniformly tighten the bolts and nuts in several passes.

Torque: 52 N·m (530 kgf·cm, 38 ft·lbf)

(c) LN Thailand:

Install the heat insulator with the 4 bolts.

Torque: 12 N·m (120 kgf·cm, 9 ft·lbf)

(d) Others:

Install the heat insulator with the 3 bolts.

Torque:

Exhaust manifold side

12 N·m (120 kgf·cm, 9 ft·lbf)

Oil cooler side

19 N·m (195 kgf·cm, 14 ft·lbf)

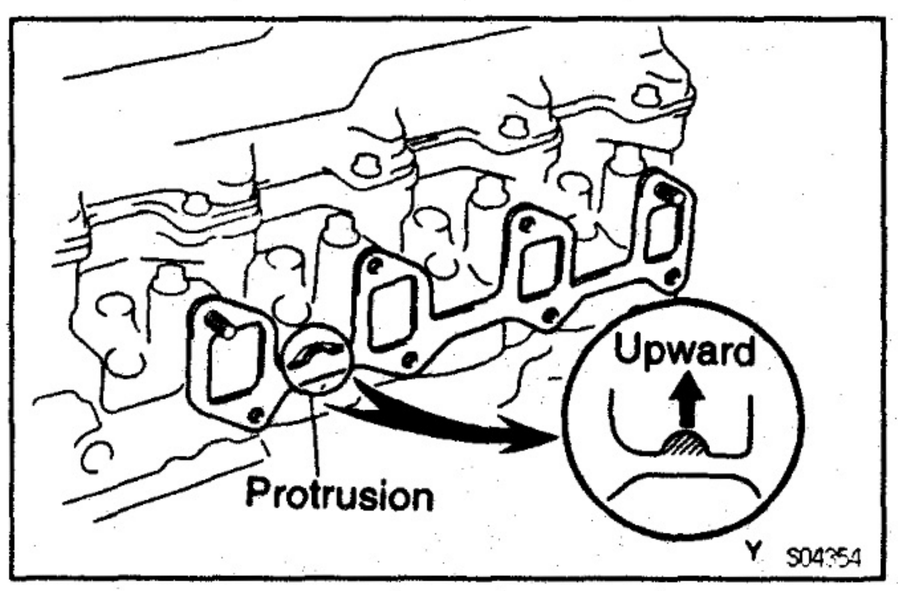

6. INSTALL INTAKE MANIFOLD ASSEMBLY

(a) Install a new gasket to the cylinder head, facing the protrusion upward.

(b) Install the intake manifold, 2 engine wire brackets, oil dipstick guide bracket (except LJ) with the 6 bolts and 2 nuts. Uniformly tighten the bolts and nuts in several passes.

Torque: 24 N·m (240 kgf·cm, 17 ft·lbf)

(c) Pre—Heating System (Super Glow Type):
Install the glow plug resistor terminals and collar with the nut.
(d) LJ:
Connect the vacuum hose and connector to the VSV for intake shutter.
(e) Install the accelerator link and hose clamp (w/ ACSD) with the 2 bolts and nut.
(f) Connect the accelerator link to the injection pump.
(g) w/ ACSD:
Connect the 2 water bypass hoses to the hose clamp.

7. INSTALL LH ENGINE HANGER
Torque: 59 N·m (600 kgf·cm, 43 ft·lbf)

8. INSTALL WATER OUTLET AND OUTLET HOUSING ASSEMBLY
(a) Install a new gasket, the water outlet and outlet housing assembly with the 3 bolts.
Torque: 19 N·m (195 kgf·cm, 14 ft·lbf)
(b) Connect the water temperature sender gauge connector.
(c) w/ ACSD:
Connect the water bypass hose to the water housing.

9. INSTALL NO.2 TIMING BELT COVER
Install the timing belt cover with the 4 bolts.
Torque: 18 N·m (185 kgf·cm, 13 ft·lbf)

10. INSTALL INJECTION NOZZLES
(See steps 1 to 3 in injection nozzles installation in Fuel System)

11. INSTALL CAMSHAFT TIMING PULLEY
(See step 4 in timing belt installation)

12. INSTALL TIMING BELT
(See steps 6 to 11 in timing belt installation)

13. INSTALL WATER PUMP PULLEY, FAN, FLUID COUPLING ASSEMBLY AND DRIVE BELTS
(See step 4 in water pump installaiton in Cooling System)

14. INSTALL GLOW PLUGS
(a) Using a 12 mm deep socket wrench, install the 4 glow plugs.
Torque: 13 N·m (130 kgf·cm, 9 ft·lbf)
(b) Pre—Heating System (Fixed Delay Type):
Install the glow plug connector with the 4 nuts.
Torque: 1.0 N·m (10 kgf·cm, 8.7 in.·lbf)
(c) Pre—Heating System (Others):
Place the spacer on the intake manifold.
(d) Pre—Heating System (Others):
Place the glow plug connector on the glow plugs and spacer.

(e) Pre–Heating System (Others):
Install the glow plug wire and collar with the plate washer and nut.

(f) Pre–Heating System (Others):
Install the 4 nuts holding the glow plugs to the glow plug connector.

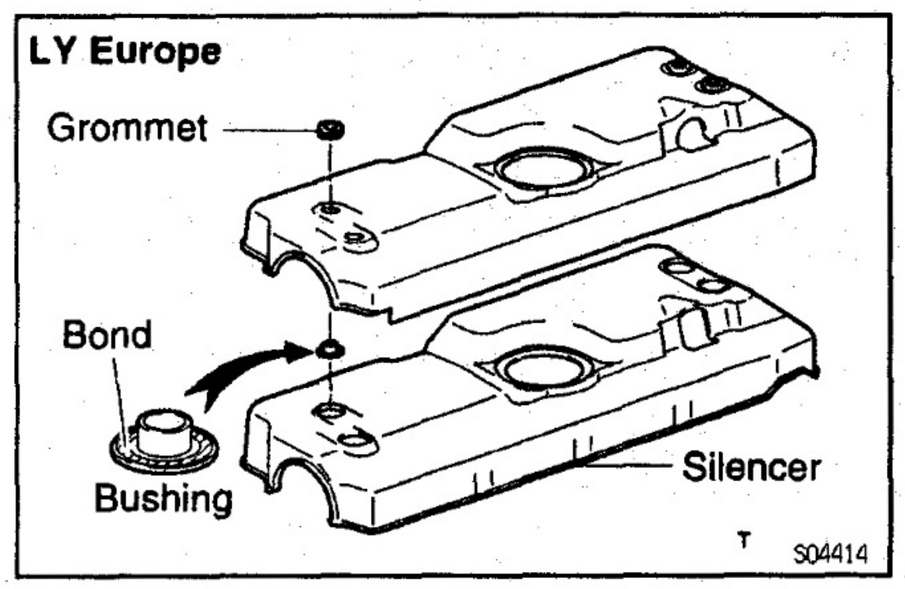

15. LY Europe:
INSTALL NO.2 CYLINDER HEAD COVER

(a) Apply bond to the bushings as shown in the illustration.

(b) Install the 4 grommets, bushings and silencer to the cylinder head cover.

(c) Install the cylinder head cover with the 4 plate washers and nuts.
Torque: 12 N·m (120 kgf·cm, 9 ft·lbf)

(d) Install the oil filler cap.

16. LH:
INSTALL INTAKE AIR CONNECTOR

(a) Install a new gasket to the intake manifold.

(b) Install the intake air connector with the 4 bolts.

17. INSTALL PCV HOSE

18. FILL WITH ENGINE COOLANT

19. START ENGINE AND CHECK FOR LEAKS

20. RECHECK ENGINE COOLANT LEVEL AND OIL LEVEL

CYLINDER BLOCK

COMPONENTS FOR PREPARATION AND AFTER ASSEMBLY

E0880-07

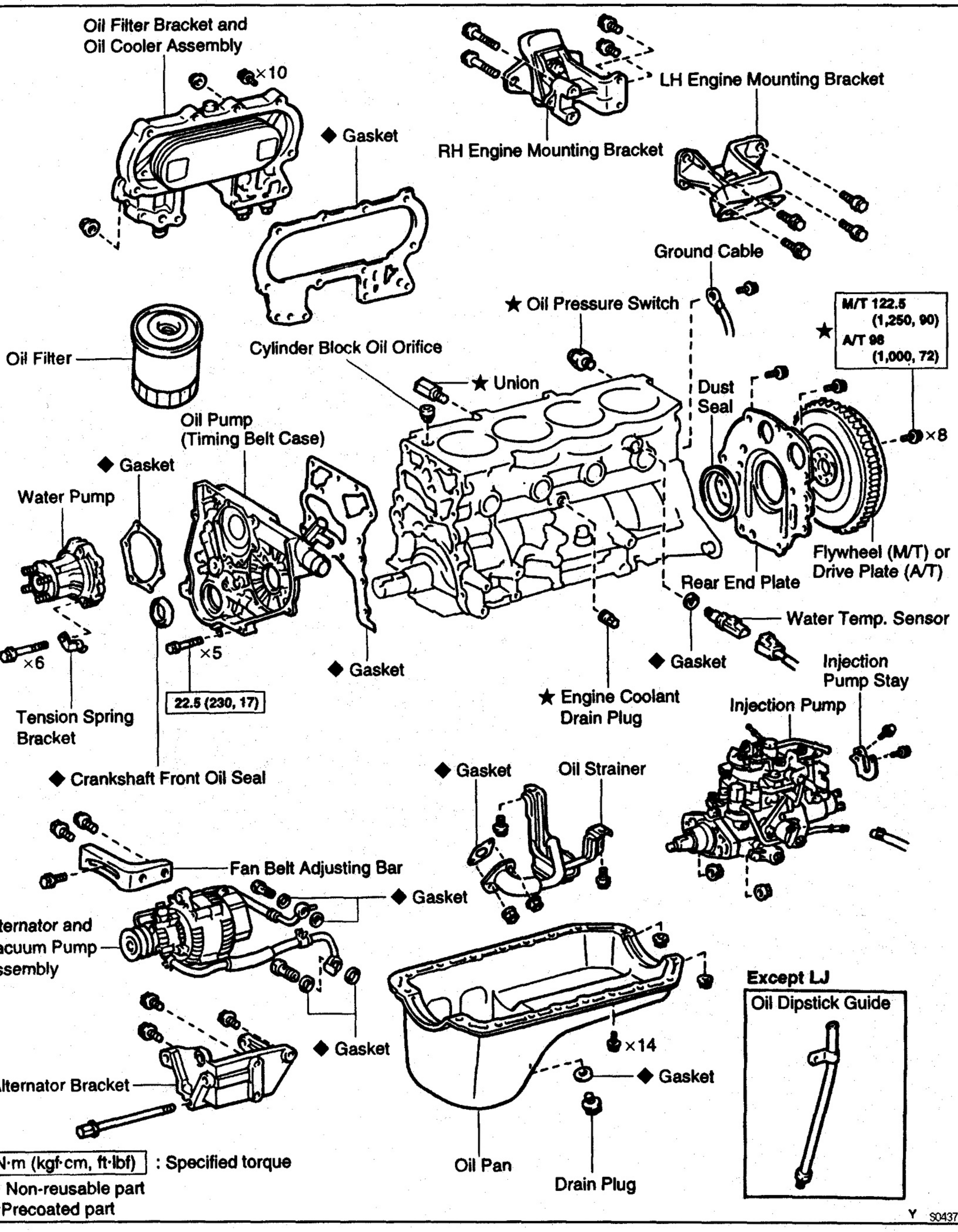

50501-02

PREPARATION FOR DISASSEMBLY

1. M/T:
   REMOVE FLYWHEEL
2. A/T:
   REMOVE DRIVE PLATE
3. REMOVE REAR END PLATE
   Remove the 2 bolts, end plate and dust seal.
4. INSTALL ENGINE TO ENGINE STAND FOR DISASSEMBLY
5. REMOVE TIMING BELT AND PULLEYS
   (See timing belt removal)
6. REMOVE WATER PUMP
   (See water pump removal in Cooling System)
7. REMOVE CYLINDER HEAD
   (See cylinder head removal)
8. REMOVE INJECTION PUMP AND STAY
   (See injection pump removal in Fuel System)
9. REMOVE OIL FILTER, OIL FILTER BRACKET AND OIL COOLER ASSEMBLY
   (See oil cooler removal in Lubrication System)
10. REMOVE ENGINE MOUNTING AND ALTERNATOR BRACKETS
11. REMOVE ALTERNATOR AND VACUUM PUMP ASSEMBLY (WITH HOSES)
12. REMOVE OIL PAN, OIL STRAINER AND TIMING BELT CASE (OIL PUMP)
    (See oil pump removal in Lubrication System)
13. REMOVE FAN BELT ADJUSTING BAR
14. Pre—Heating System (Super Glow Type):
    REMOVE WATER TEMPERATURE SENSOR
15. REMOVE OIL PRESSURE SWITCH
16. REMOVE ENGINE COOLANT DRAIN PLUG
17. REMOVE UNION FOR ALTTERNATOR HOSE
18. REMOVE OIL DIPSTICK GUIDE (PLUG)
19. 2L for Thailand:
    REMOVE CYLINDER BLOCK OIL ORIFICE
20. DISCONNECT GROUND CABLE

COMPONENTS FOR DISASSEMBLY AND ASSEMBLY

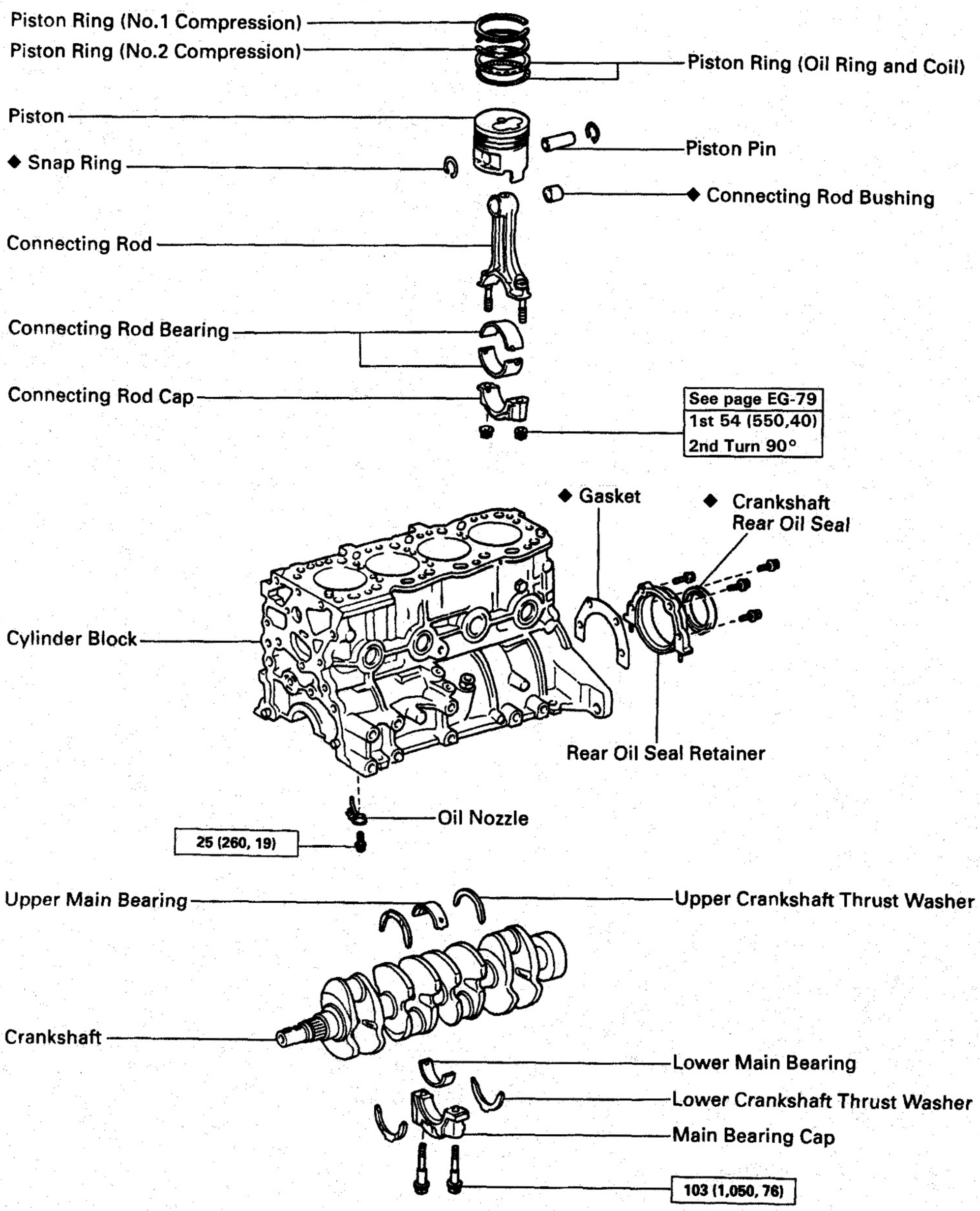

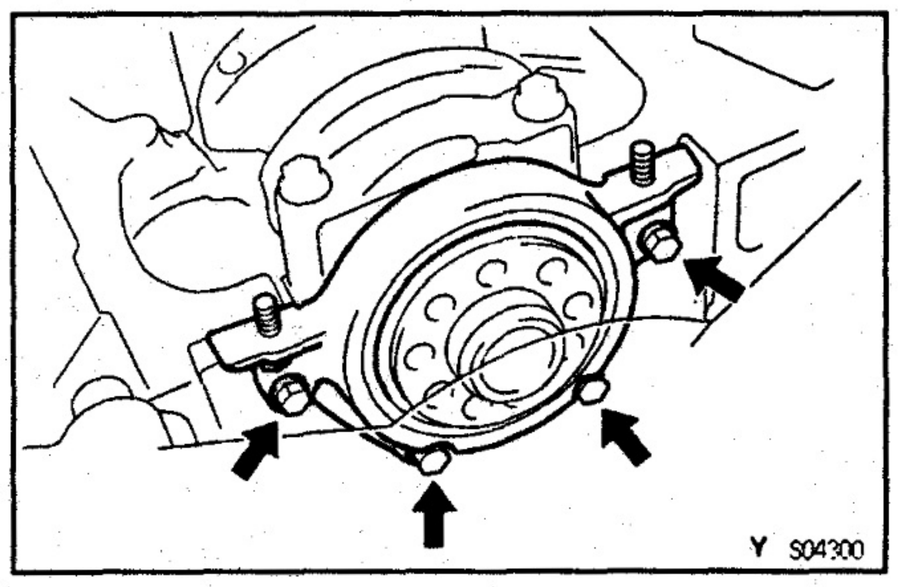

CYLINDER BLOCK DISASSEMBLY

EG7AE-01

1. REMOVE REAR OIL SEAL RETAINER

Remove the 4 bolts, oil seal retainer and gasket.

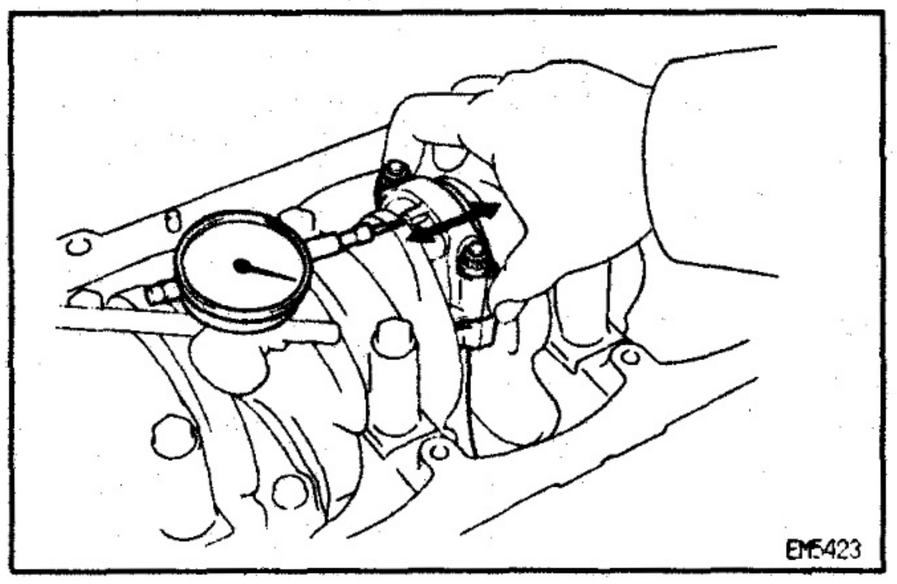

2. CHECK CONNECTING ROD THRUST CLEARANCE

Using a dial indicator, measure the thrust clearance while moving the connecting rod back and forth.

Standard thrust clearance:

0.080 — 0.300 mm (0.0031 — 0.0118 in.)

Maximum thrust clearance:

0.35 mm (0.0138 in.)

If the thrust clearance is greater than maximum, replace the connecting rod assembly. If necessary, replace the crankshaft.

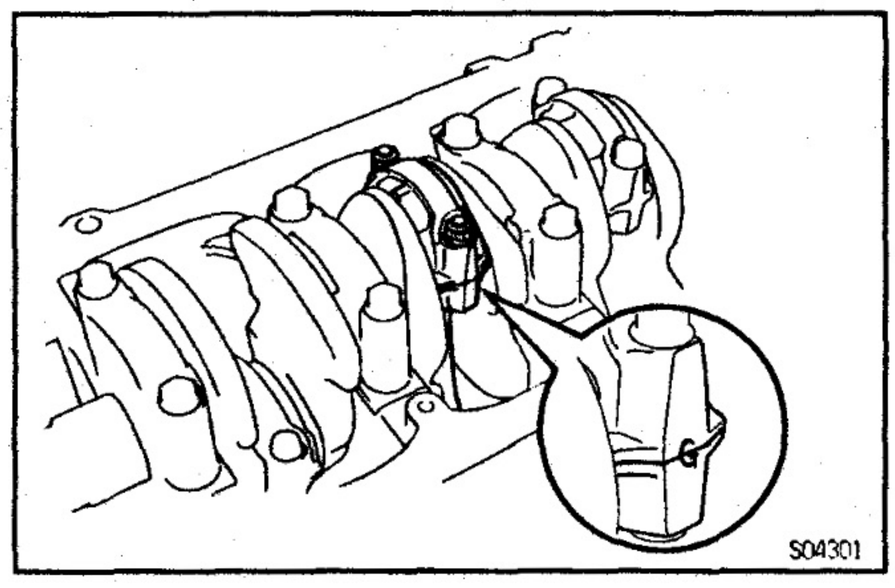

3. REMOVE CONNECTING ROD CAPS AND CHECK OIL CLEARANCE

(a) Check the matchmarks on the connecting rod and cap to ensure correct reassembly.

(b) Remove the 2 connecting rod cap nuts.

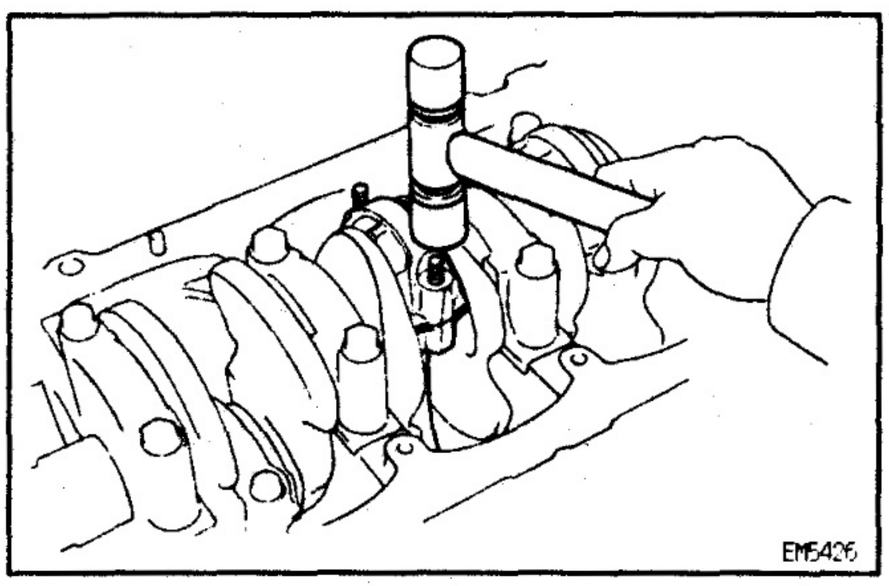

(c) Using a plastic—faced hammer, lightly tap the connecting rod bolts and lift off the connecting rod cap.
HINT: Keep the lower bearing inserted with the connecting rod cap.

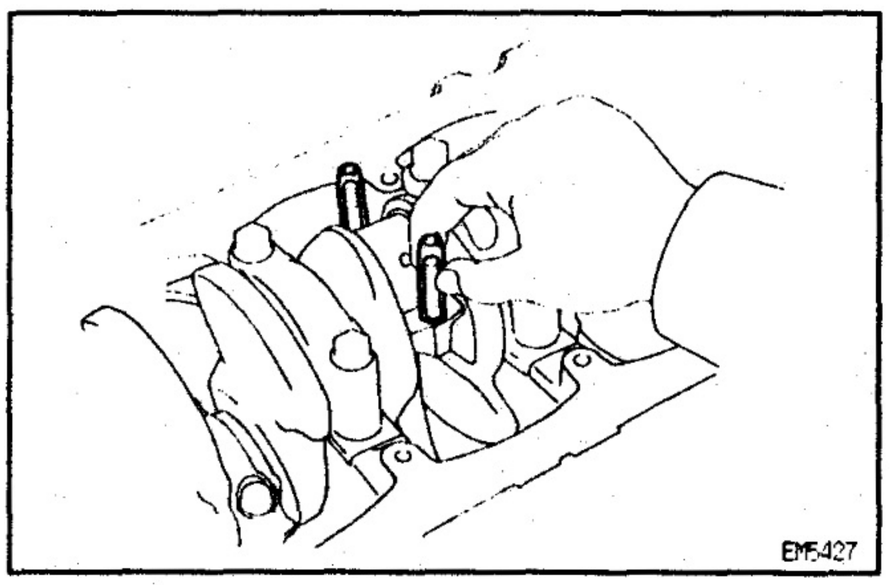

(d) Cover the connecting rod bolts with a short piece of hose to protect the crankshaft from damage.

(e) Clean the crank pin and bearing.

(f) Check the crank pin and bearing for pitting and scratches.
If the crank pin or bearing is damaged, replace the bearings. If necessary, grind or replace the crankshaft.

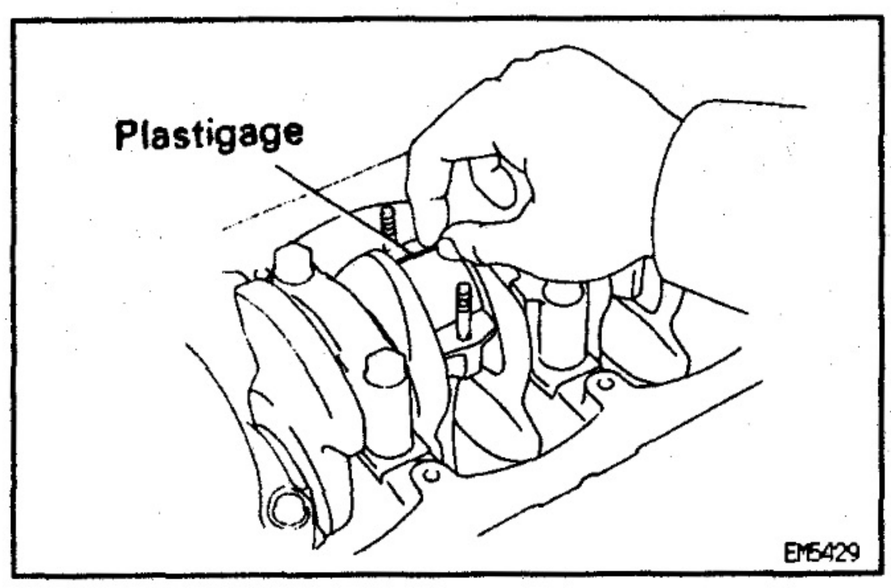

(g) Lay a strip of Plastigage across the crank pin.
(h) Install the connecting rod cap with the 2 nuts. (See step 8 in cylinder block assembly)
Torque:
1st
54 N·m (550 kgf·cm, 40 ft·lbf)
2nd
Turn 90°
NOTICE: Do not turn the crankshaft.

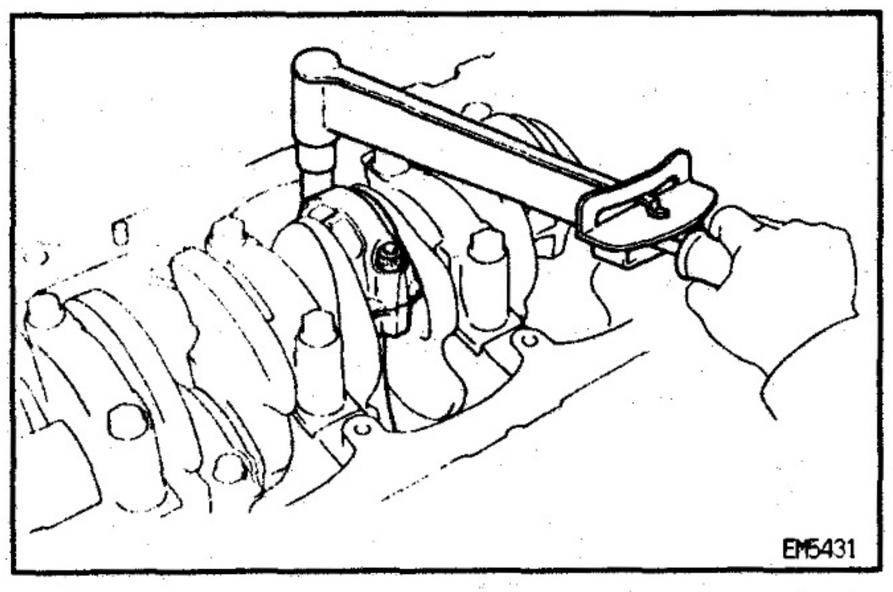

(i) Remove the 2 nuts, connecting rod cap and lower bearing. (See procedure (b) and (c) above)
(j) Measure the Plastigage at its widest point.
Standard oil clearance:
STD
0.036 – 0.064 mm (0.0014 – 0.0025 in.)
U/S 0.25 and U/S 0.50
2L
0.023 – 0.073 mm (0.0009 – 0.0029 in.)
3L
0.033 – 0.079 mm (0.0013 – 0.0031 in.)
Maximum oil clearance:
0.10 mm (0.0039 in.)
If the oil clearance is greater than maximum, replace the bearings. If necessary, grind or replace the crankshaft.

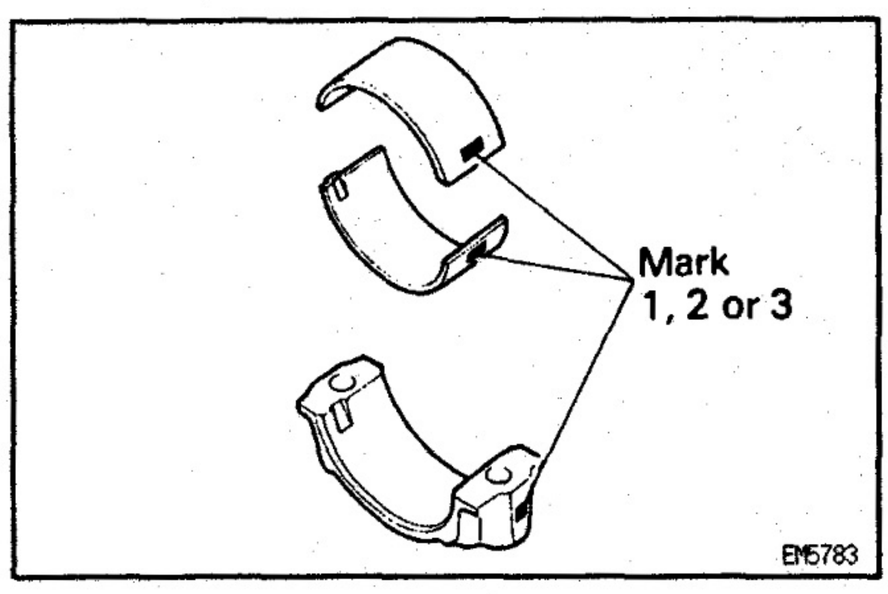

HINT: If using a standard bearing, replace it with one having the same number marked on the connecting rod cap. There are 3 sizes of standard bearings, marked "1", "2" and "3" accordingly.
Standard sized bearing center wall thickness:

Mark 1	1.478 – 1.482 mm (0.0582 – 0.0583 in.)
Mark 2	1.482 – 1.486 mm (0.0583 – 0.0585 in.)
Mark 3	1.486 – 1.490 mm (0.0585 – 0.0587 in.)

(k) Completely remove the Plastigage.

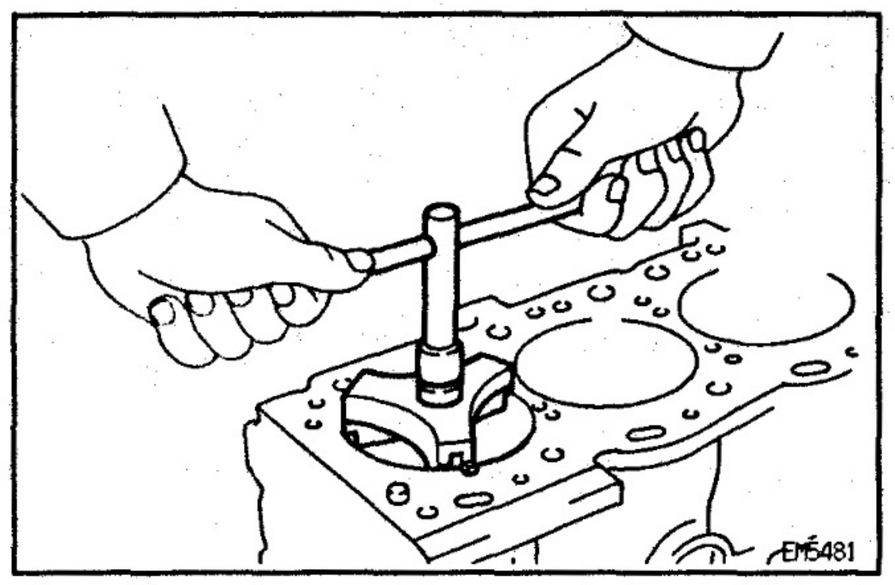

4. REMOVE PISTON AND CONNECTING ROD ASSEMBLIES
(a) Using a ridge reamer, remove all the carbon from the top of the cylinder.
(b) Cover the connecting rod bolts with a short piece of hose to protect the crankshaft from damage.
(c) Push the piston, connecting rod assembly and upper bearing through the top of the cylinder block.

HINT:

- Keep the bearings, connecting rod and cap together.
- Arrange the piston and connecting rod assemblies in correct order.

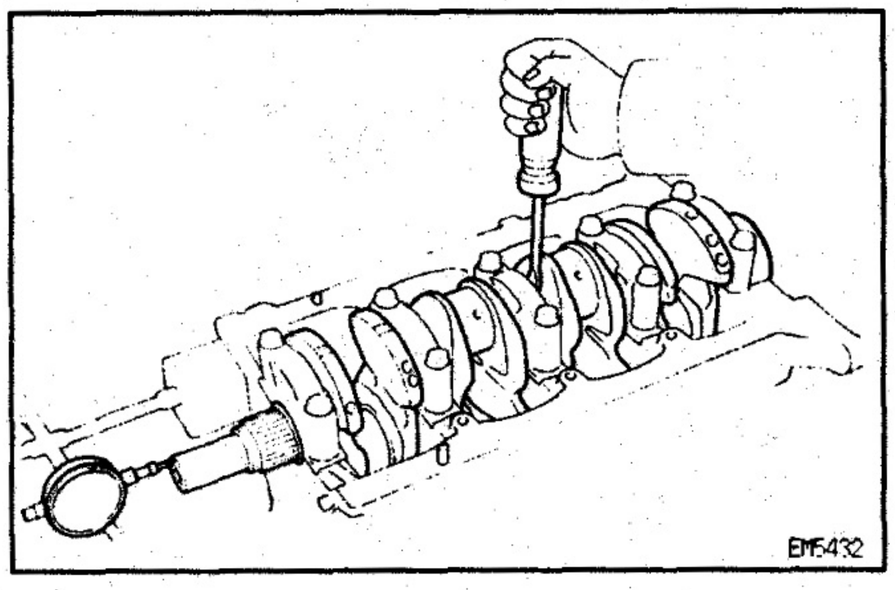

5. CHECK CRANKSHAFT THRUST CLEARANCE

Using a dial indicator, measure the thrust clearance while prying the crankshaft back and forth with a screwdriver.

Standard thrust clearance:

0.040 — 0.250 mm (0.0016 — 0.0098 in.)

Maximum thrust clearance:

0.30 mm (0.0118 in.)

If the thrust clearance is greater than maximum, replace the thrust washers as a set.

Thrust washer thickness:

STD	2.430 — 2.480 mm (0.0957 — 0.0976 in.)
O/S 0.125	2.493 — 2.543 mm (0.0981 — 0.1001 in.)
O/S 0.250	2.555 — 2.605 mm (0.1006 — 0.1026 in.)

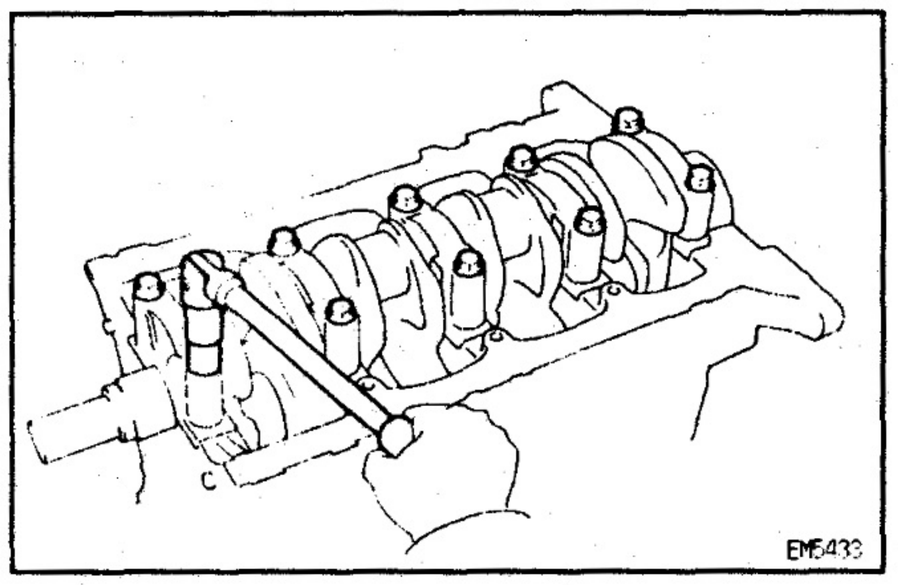

6. REMOVE MAIN BEARING CAPS AND CHECK OIL CLEARANCE

(a) Remove the 10 main bearing cap bolts.

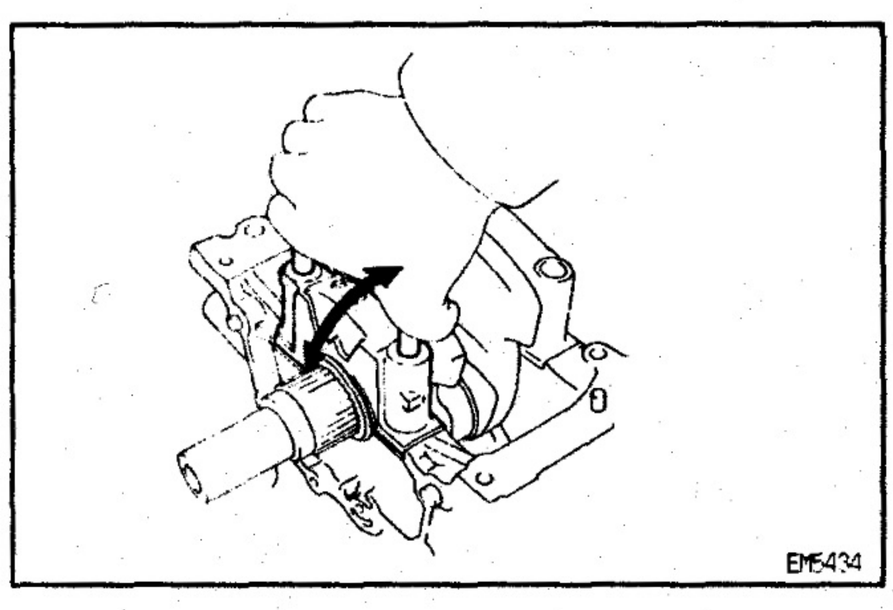

(b) Using the removed main bearing cap bolts, pry the cap back and forth, and remove the main bearing caps, lower main bearings and lower thrust washers (No.3 main bearing cap only).

HINT:

- Keep the lower bearing and main bearings cap together.
- Arrange the thrust washers in correct order.

(c) Lift out the crankshaft.

HINT: Keep the upper main bearings and upper thrust washers together with the cylinder block.

(d) Clean each main journal and bearing.

(e) Check each main journal and bearing for pitting and scratches.
If the journal or bearing is damaged, replace the bearings. If necessary, grind or replace the crankshaft.

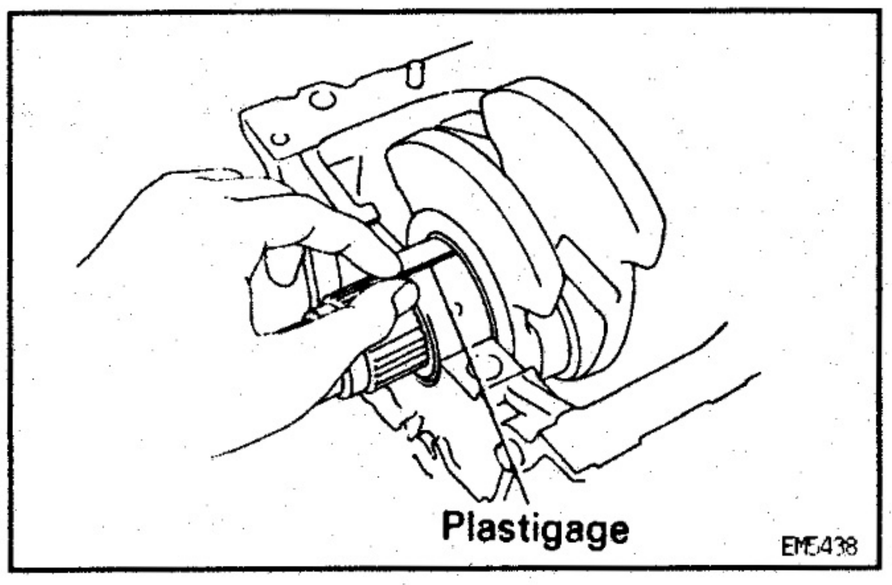

(f) Place the crankshaft on the cylinder block.

(g) Lay a strip of Plastigage across each journal.

(h) Install the 5 main bearing caps with the 10 bolts.
(See step 5 in cylinder block assembly)
Torque:
103 N·m (1,050 kgf·cm, 76 ft·lbf)
NOTICE: Do not turn the crankshaft.

(i) Remove the 10 bolts and 5 main bearing caps.
(See procedure (b) and (c) above)

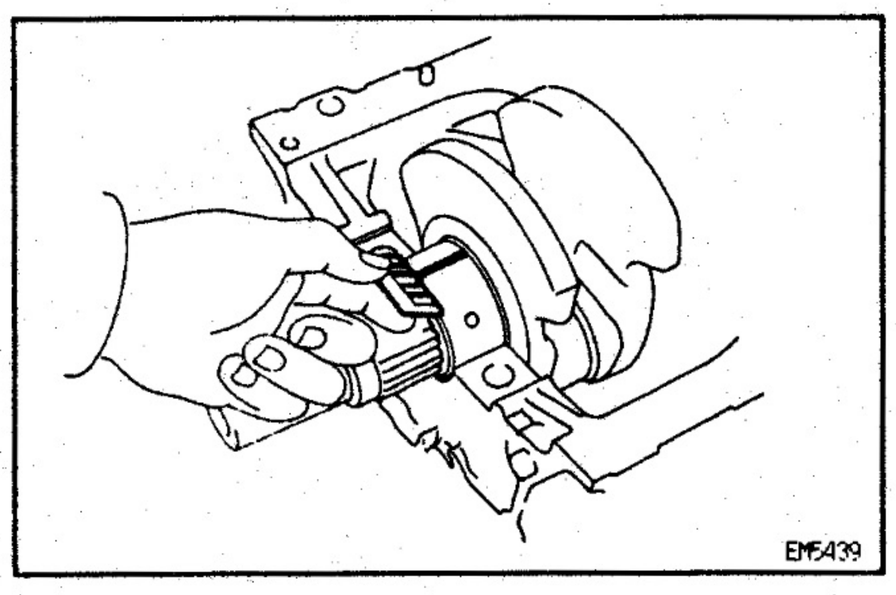

(j) Measure the Plastigage at its widest point.
Standard oil clearance:
STD
0.034 — 0.065 mm (0.0013 — 0.0026 in.)
U/S 0.25 and U/S 0.50
0.033 — 0.079 mm (0.0013 — 0.0031 in.)
Maximum clearance:
0.10 mm (0.0039 in.)

If the oil clearance is greater than maximum, replace the bearings. If necessary, grind or replace the crankshaft.

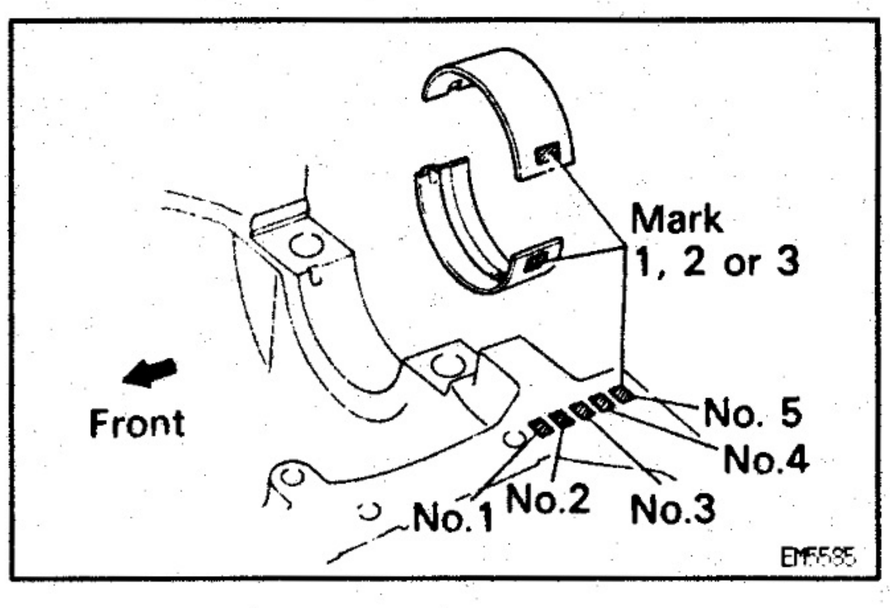

HINT: If using a standard bearing, replace it with one having the same number marked on the connecting rod cap. There are 3 sizes of standard bearings, marked "1", "2" and "3" accordingly.
Standard sized bearing center wall thickness:

Mark 1	1.979 — 1.983 mm (0.0779 — 0.0781 in.)
Mark 2	1.983 — 1.987 mm (0.0781 — 0.0782 in.)
Mark 3	1.987 — 1.991 mm (0.0782 — 0.0784 in.)

(k) Completely remove the Plastigage.

7. REMOVE CRANKSHAFT

(a) Lift out the crankshaft.

(b) Remove the upper bearings and upper thrust washers from the cylinder block.
HINT: Arrange the main bearing caps, bearings and thrust washers in correct order.

8. REMOVE CHECK VALVES AND OIL NOZZLES
(See step 3 in oil nozzles removal in Lubrication System)

EG0SE-02

CYLINDER BLOCK INSPECTION

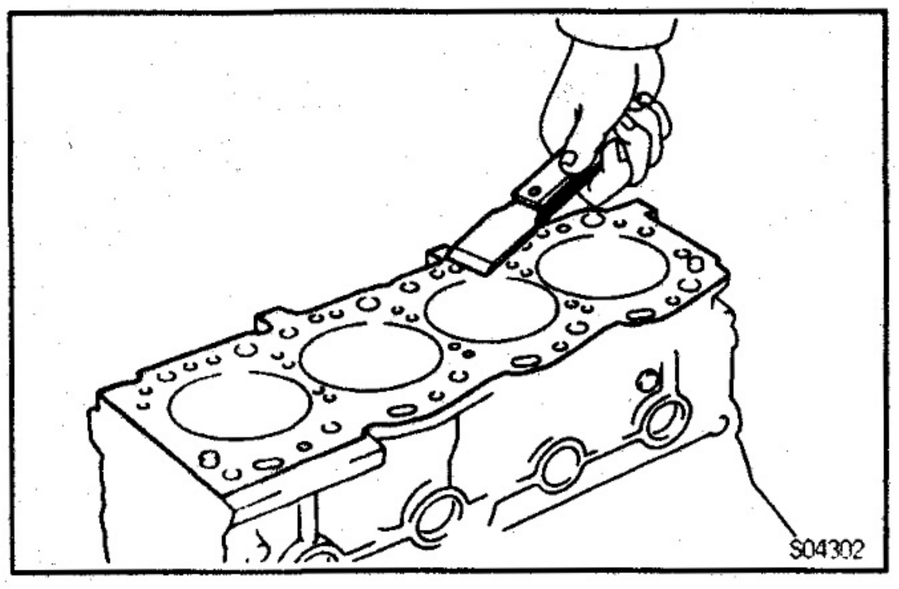

1. CLEAN CYLINDER BLOCK

A. Remove gasket material
Using a gasket scraper, remove all the gasket material from the top surface of the cylinder block.

B. Clean cylinder block
Using a soft brush and solvent, thoroughly clean the cylinder block.

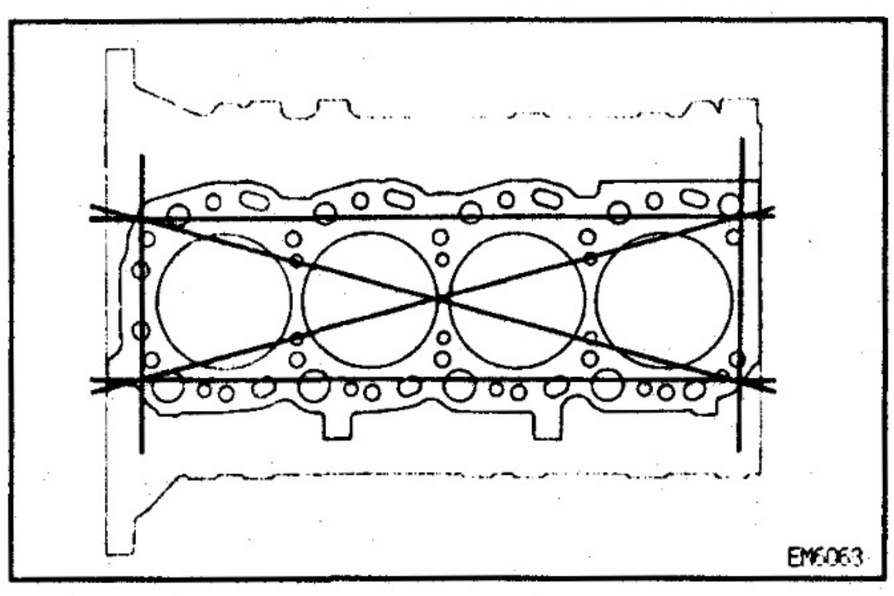

2. INSPECT TOP SURFACE OF CYLINDER BLOCK FOR FLATNESS
Using a precision straight edge and feeler gauge, measure the surfaces contacting the cylinder head gasket for warpage.
Maximum warpage:
0.20 mm (0.0079 in.)
If warpage is greater than maximum, replace the cylinder block.

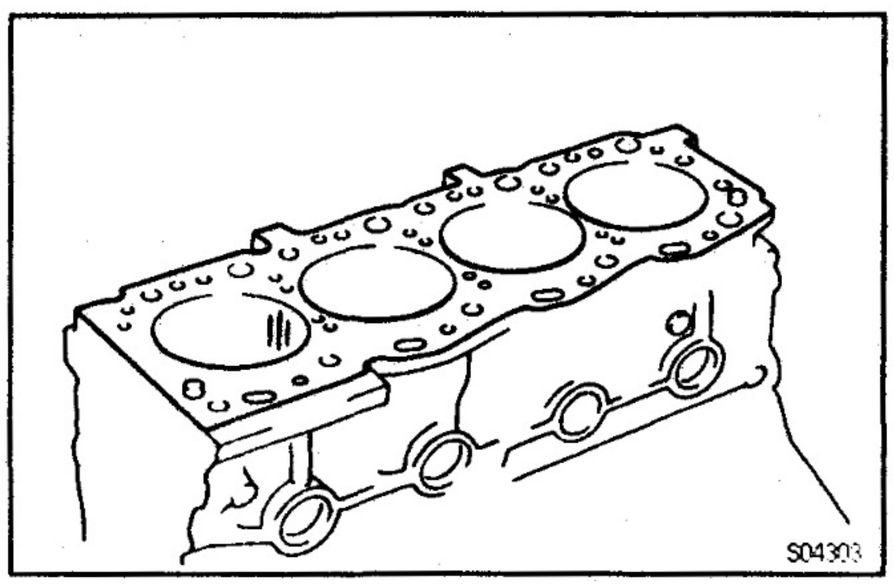

3. INSPECT CYLINDER FOR VERTICAL SCRATCHES
Visually check the cylinder for vertical scratches.
If deep scratches are present, rebore all the 4 cylinders. If necessary, replace the cylinder block.

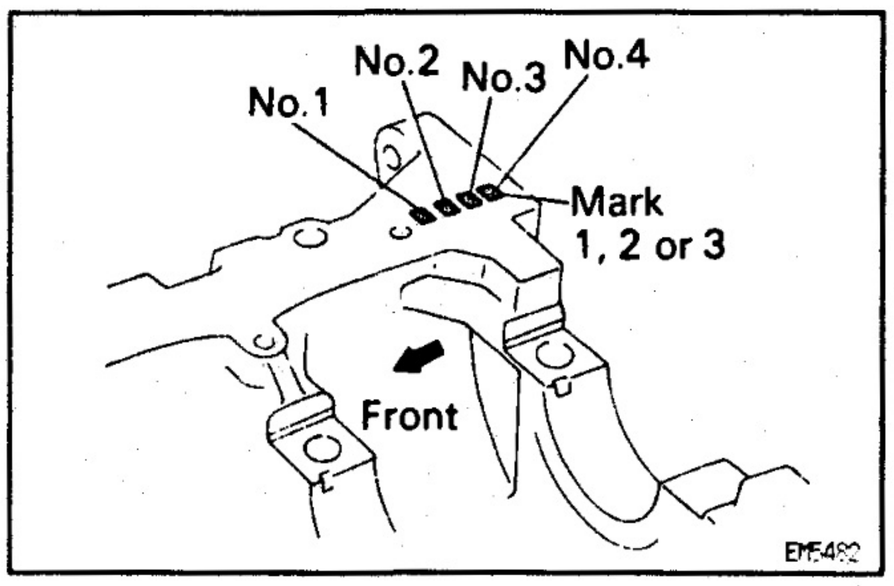

4. INSPECT CYLINDER BORE DIAMETER
HINT: There are 3 sizes of the standard cylinder bore diameter, marked "1", "2" and "3" accordingly. The mark is stamped on the lower left rear of the cylinder block.

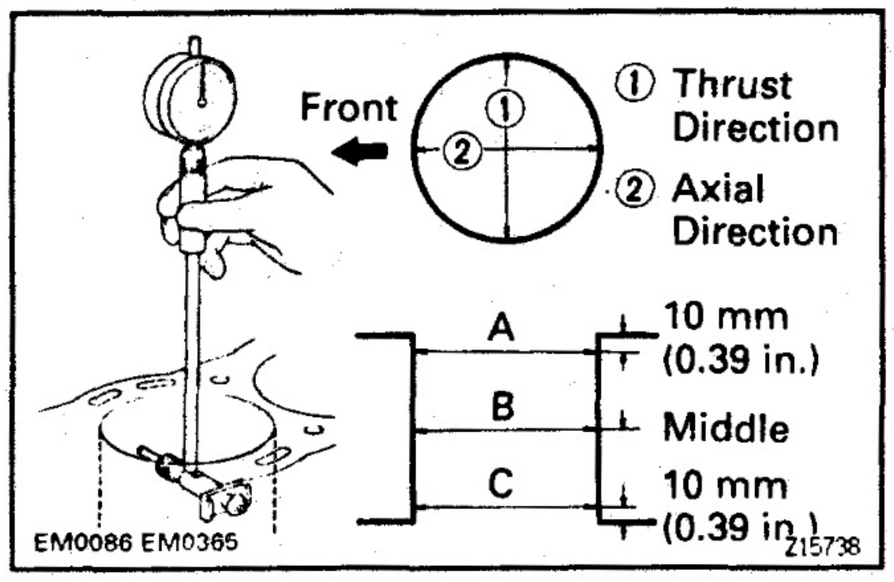

Using a cylinder gauge, measure the cylinder bore diameter at positions A, B and C in the thrust and axial directions.

Standard diameter:

2L

92.000 – 92.030 mm (3.6220 – 3.6232 in.)

STD Mark 1	92.000 – 92.010 mm (3.6220 – 3.6224 in.)
STD Mark 2	92.010 – 92.020 mm (3.6224 – 3.6228 in.)
STD Mark 3	92.020 – 92.030 mm (3.6228 – 3.6232 in.)

3L

96.000 – 96.030 mm (3.7795 – 3.7807 in.)

STD Mark 1	96.000 – 96.010 mm (3.7795 – 3.7799 in.)
STD Mark 2	96.010 – 96.020 mm (3.7799 – 3.7803 in.)
STD Mark 3	96.020 – 96.030 mm (3.7803 – 3.7807 in.)

Maximum diameter:

2L STD

92.23 mm (3.6311 in.)

2L O/S 0.50

92.73 mm (3.6508 in.)

3L STD

96.23 mm (3.7886 in.)

3L O/S 0.50

96.73 mm (3.8083 in.)

If the diameter is greater than maximum, rebore all the 4 cylinders. If necessary, replace the cylinder block.

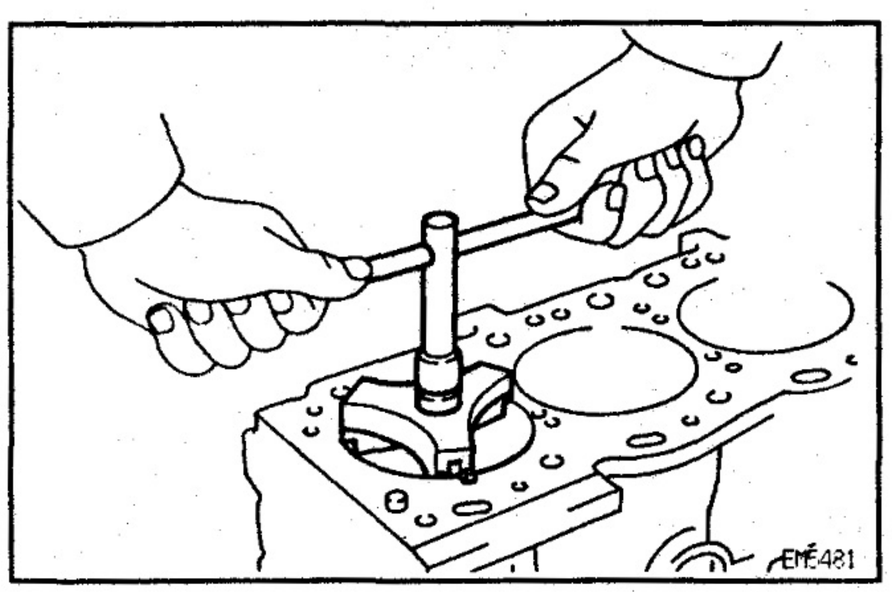

5. REMOVE CYLINDER RIDGE

If the wear is less than 0.2 mm (0.008 in.), using a ridge reamer, grind the top of the cylinder.

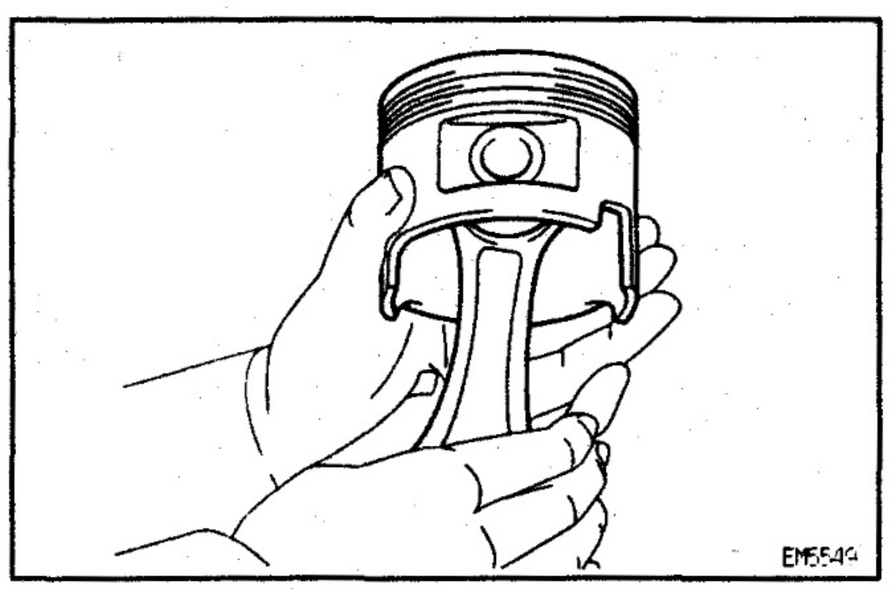

PISTON AND CONNECTING ROD DISASSEMBLY

1. CHECK FIT BETWEEN PISTON AND PISTON PIN

Try to move the piston back and forth on the piston pin.

If any movement is felt, replace the piston and pin as a set.

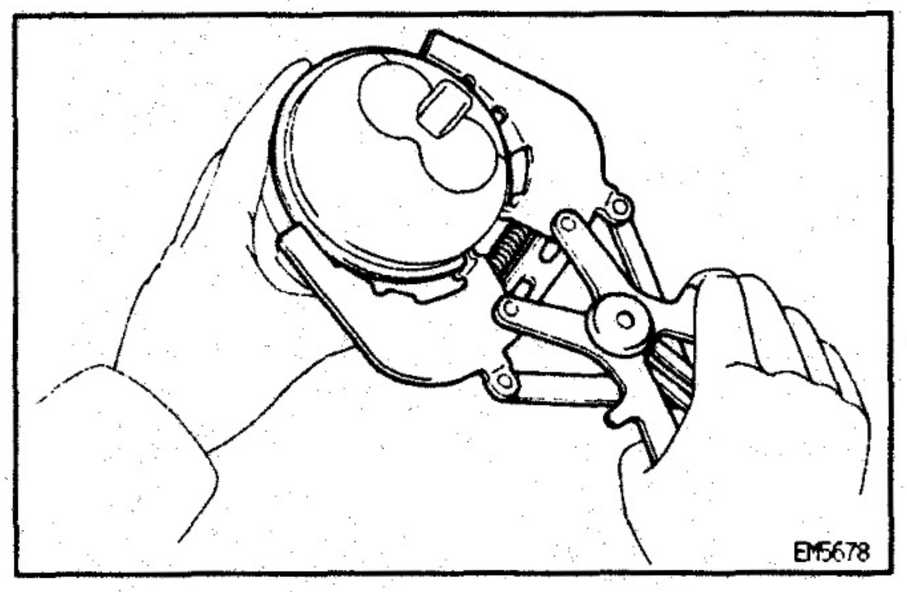

2. REMOVE PISTON RINGS

(a) Using a piston ring expander, remove the 2 compression rings.

(b) Remove the oil ring and coil by hand.
HINT: Arrange the rings in correct order only.

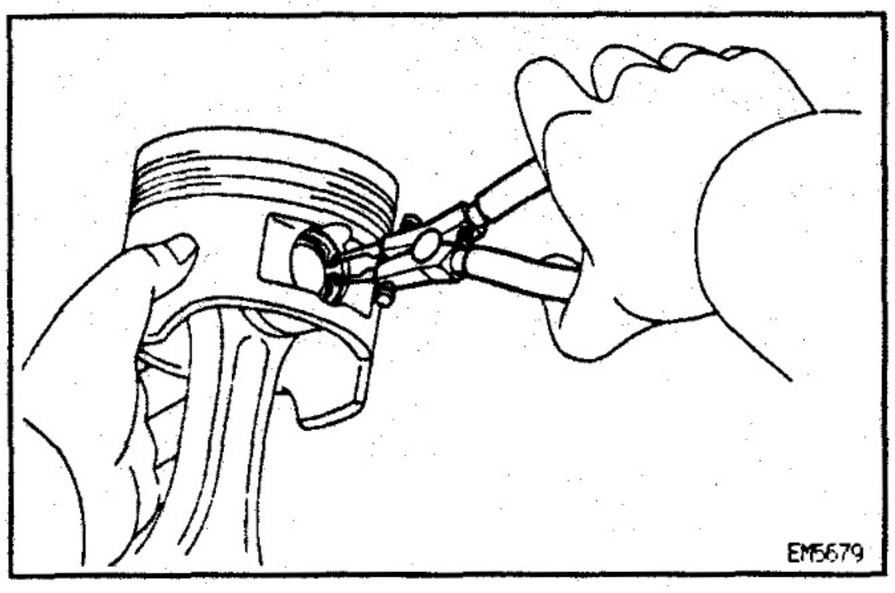

3. DISCONNECT CONNECTING ROD FROM PISTON

(a) Using needle—nose pliers, remove the snap rings.

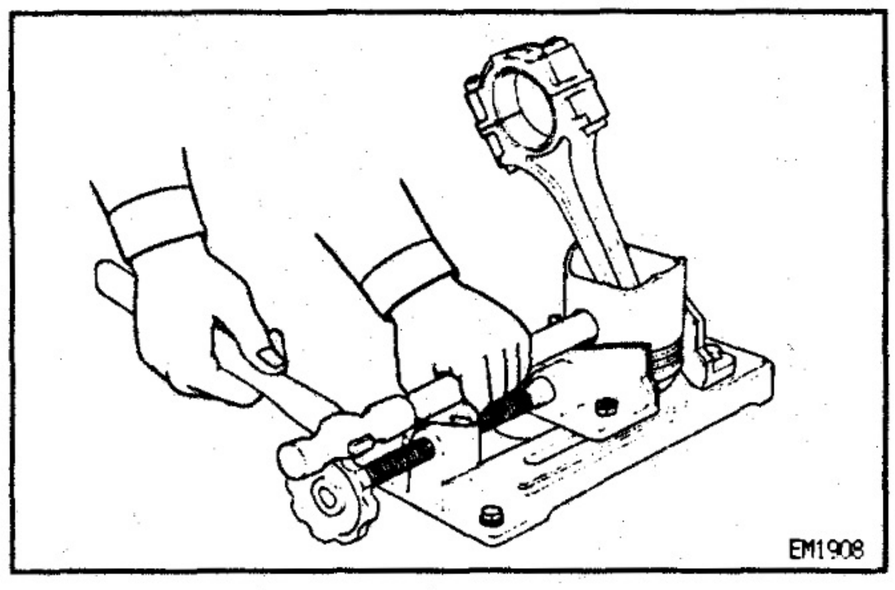

(b) Gradually heat the piston to approx. 60°C (140°F).

(c) Using a plastic—faced hammer and brass bar, lightly tap out the piston pin and remove the connecting rod.
HINT:

- The piston and pin are a matched set.
- Arrange the pistons, pins, rings, connecting rods and bearings in correct order.

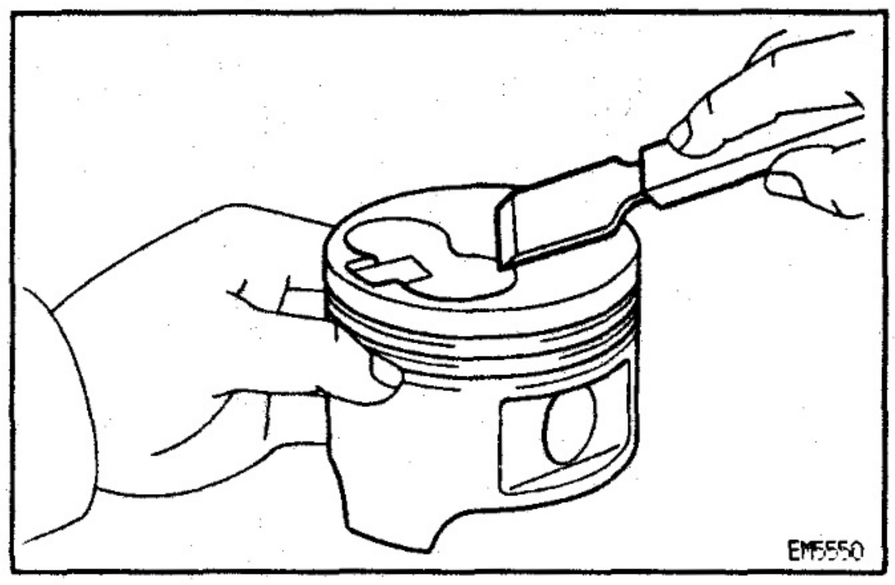

PISTON AND CONNECTING ROD INSPECTION

9G7AF—01

1. CLEAN PISTON

(a) Using a gasket scraper, remove the carbon from the piston top.

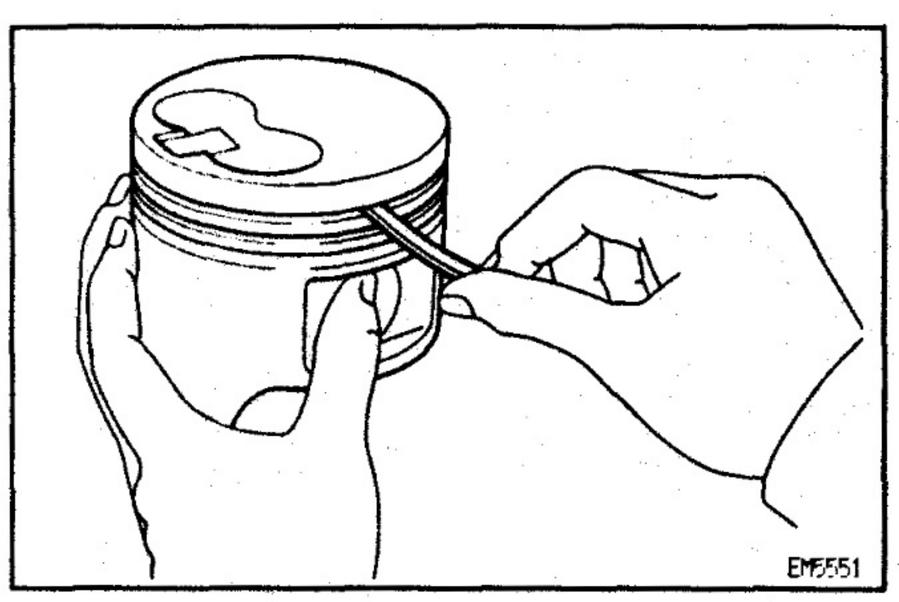

(b) Using a groove cleaning tool or broken ring, clean the piston ring grooves.

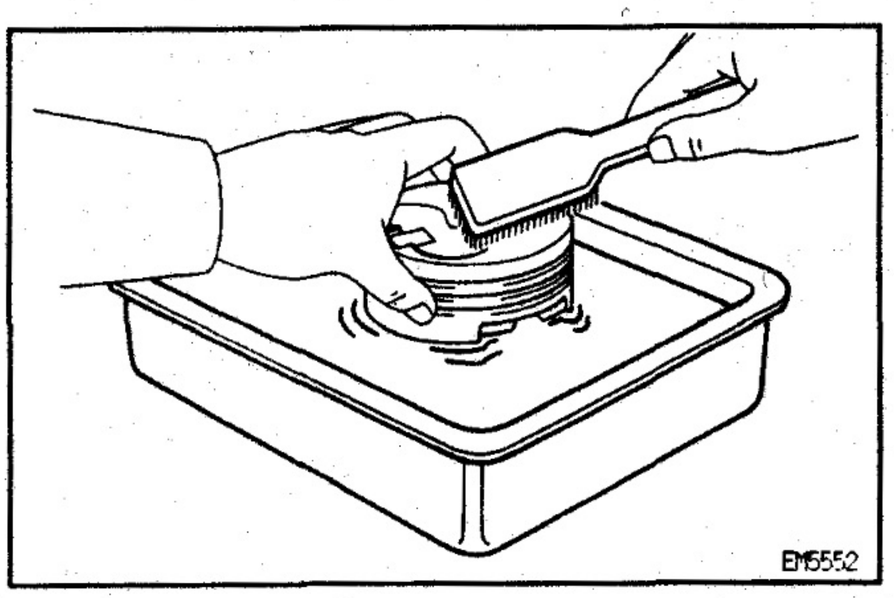

(c) Using solvent and a brush, thoroughly clean the piston.
NOTICE: Do not use a wire brush.

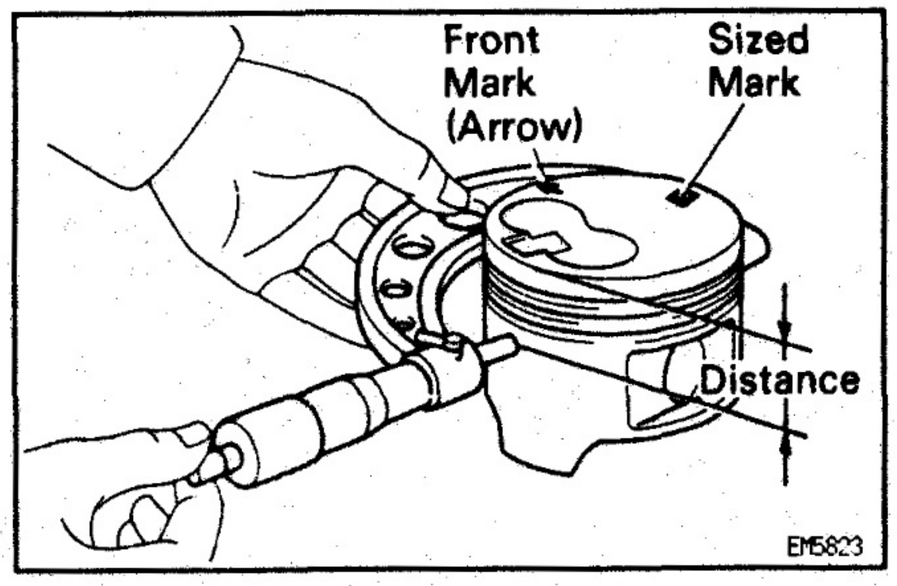

2. INSPECT PISTON AND PISTON RING

A. Inspect piston diameter and oil clearance

HINT: There are 3 sizes of the standard piston diameter, marked "1", "2" and "3" accordingly. The mark is stamped on the piston top.

(a) Using a micrometer, measure the piston diameter at right angles to the piston pin center line, the indicated distance from the piston head.

Distance:

2L	58.27 – 58.33 mm (2.2941 – 2.2965 in.)
3L	56.27 – 56.33 mm (2.2153 – 2.2177 in.)

Piston diameter:

2L

STD Mark 1	91.940 – 91.950 mm (3.6197 – 3.6201 in.)
STD Mark 2	91.950 – 91.960 mm (3.6201 – 3.6205 in.)
STD Mark 3	91.960 – 91.970 mm (3.6205 – 3.6209 in.)
O/S 0.50	92.440 – 92.470 mm (3.6394 – 3.6405 in.)

3L

STD Mark 1	95.940 – 95.950 mm (3.7772 – 3.7776 in.)
STD Mark 2	95.950 – 95.960 mm (3.7776 – 3.7779 in.)
STD Mark 3	95.960 – 95.970 mm (3.7779 – 3.7783 in.)
O/S 0.50	96.440 – 96.470 mm (3.7968 – 3.7980 in.)

(b) Measure the cylinder bore diameter in the thrust directions. (See step 4 in cylinder block inspection)

(c) Subtract the piston diameter measurement from the cylinder bore diameter measurement.

Standard oil clearance:

0.050 – 0.070 mm (0.0020 – 0.0028 in.)

Maximum oil clearance:

0.14 mm (0.0055 in.)

If the oil clearance is greater than maximum, replace all the 4 pistons and rebore all the 4 cylinders. If necessary, replace the cylinder block.

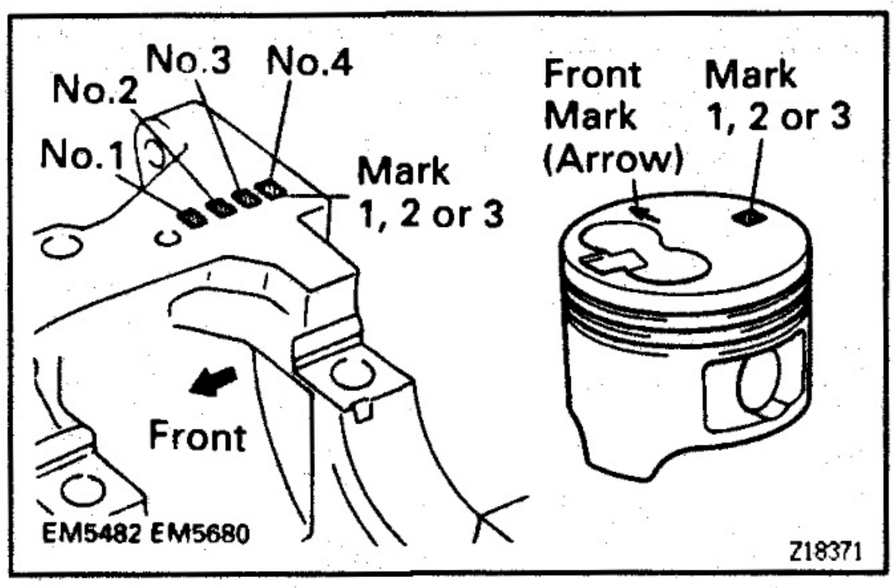

HINT (Use new cylinder block): Use a piston with the same number mark as the cylinder bore diameter marked on the cylinder block.

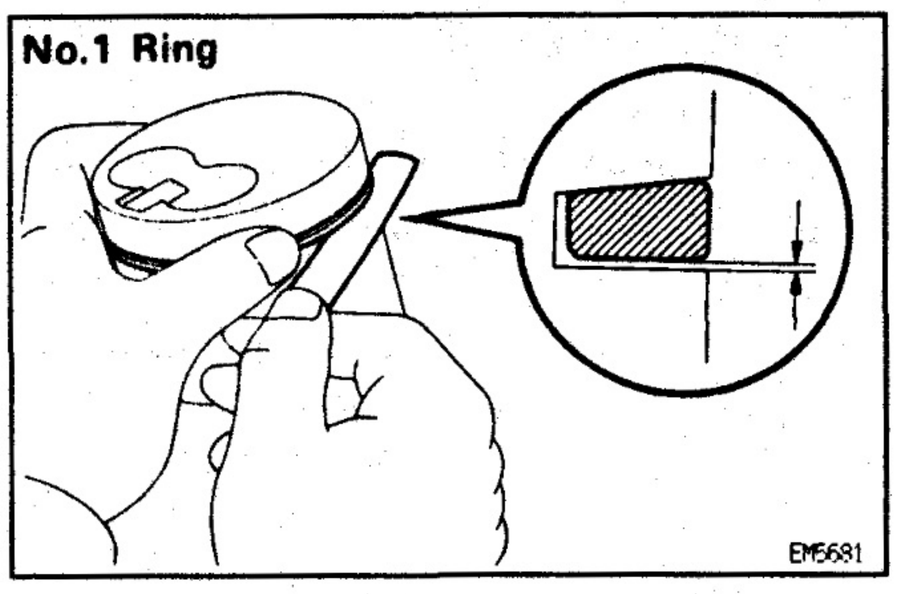

B. Inspect piston ring groove clearance

No.1 Ring:

Install a new piston ring to the piston. Using a feeler gauge, measure the clearance between the piston ring and the wall of the ring groove.

Standard groove clearance:

0.031 — 0.079 mm (0.0012 — 0.0031 in.)

Maximum groove clearance:

0.20 mm (0.0079 in.)

If the clearance is greater than maximum, replace the piston.

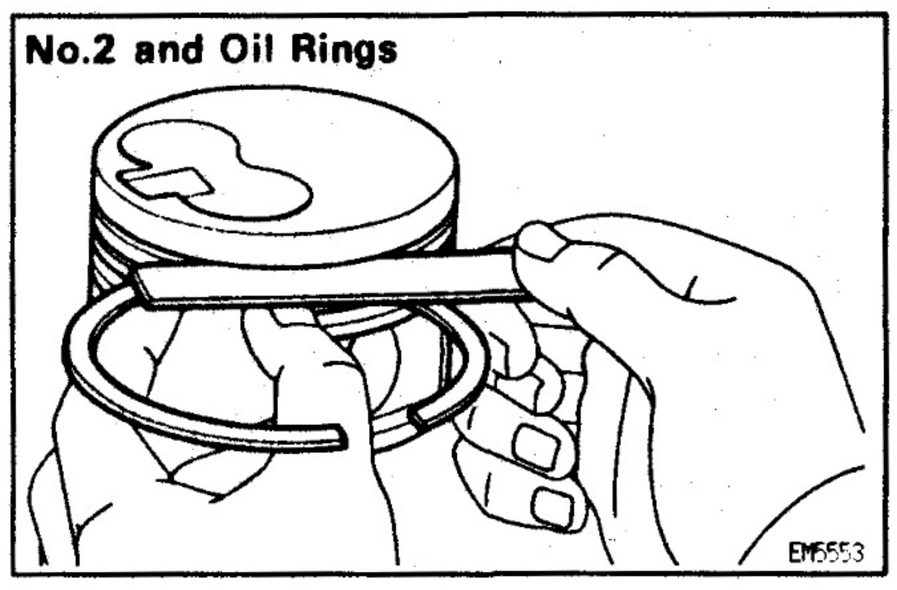

No.2 and Oil Rings:

Using a feeler gauge, measure the clearance between a new piston ring and the wall of the ring groove.

Standard groove clearance:

No.2

0.060 — 0.105 mm (0.0024 — 0.0041 in.)

Oil

0.030 — 0.070 mm (0.0012 — 0.0028 in.)

Maximum groove clearance:

0.20 mm (0.0079 in.)

If the clearance is greater than maximum, replace the piston.

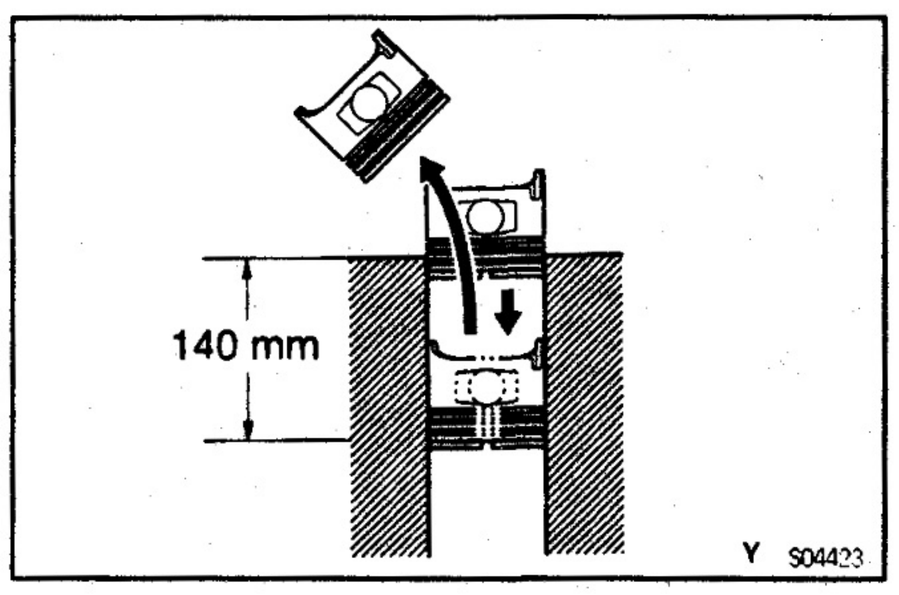

C. Inspect piston ring end gap

(a) Insert the piston ring into the cylinder bore.

(b) Using a piston, push the piston ring a little beyond the bottom of the ring travel, 140 mm (5.51 in.) from the top of the cylinder block.

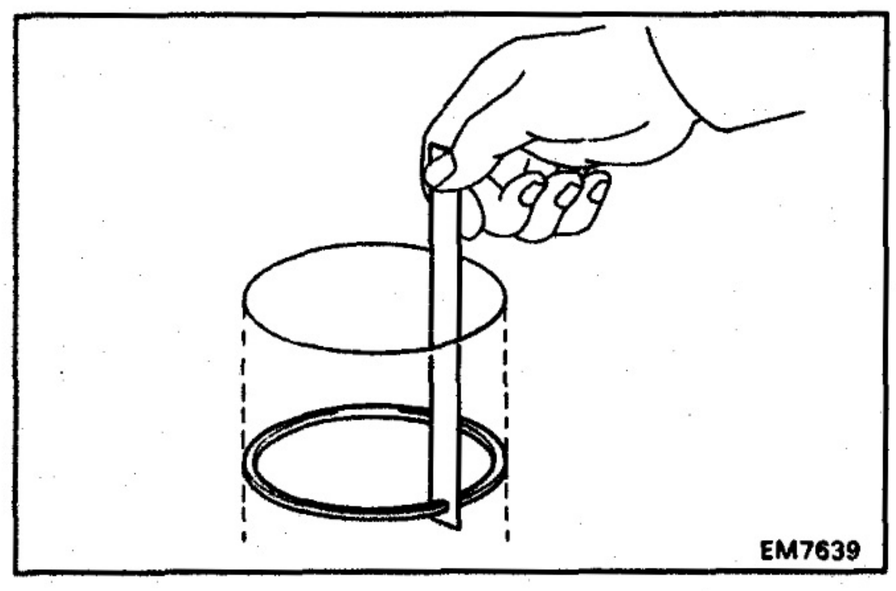

(c) Using a feeler gauge, measure the end gap.

Standard end gap:

No.1

0.350 — 0.590 mm (0.0138 — 0.0232 in.)

No.2

0.400 — 0.720 mm (0.0118 — 0.0283 in.)

Oil

0.200 — 0.520 mm (0.0079 — 0.0205 in.)

Maximum end gap:

No.1

1.29 mm (0.0508 in.)

No.2

1.42 mm (0.0559 in.)

Oil

1.22 mm (0.0480 in.)

If the end gap is greater than maximum, replace the piston ring. If the end gap is greater than maximum, even with a new piston ring, rebore all the 4 cylinders or replace the cylinder block.

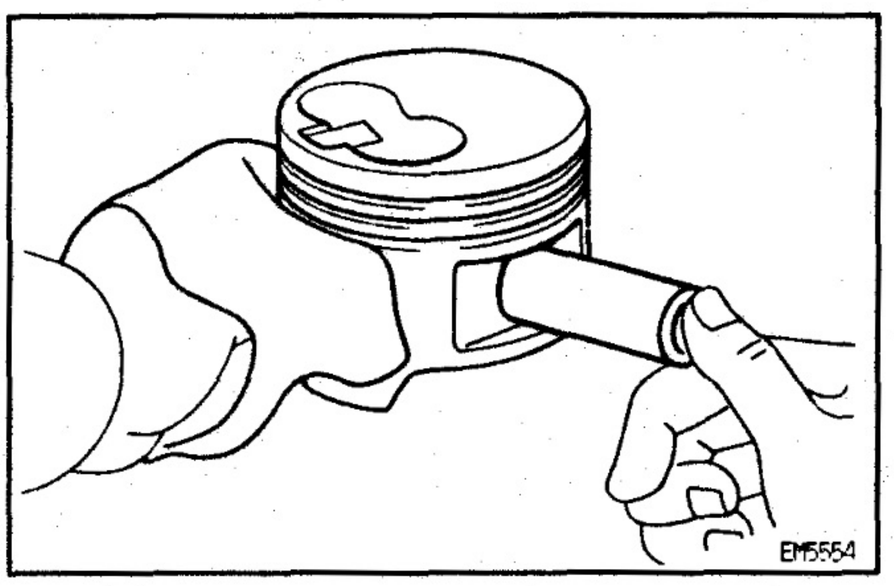

3. INSPECT PISTON PIN FIT

At 60°C (140°F), you should be able to push the piston pin into the piston pin hole with your thumb.

If the pin can be installed at a lower temperature, replace the piston and pin as set.

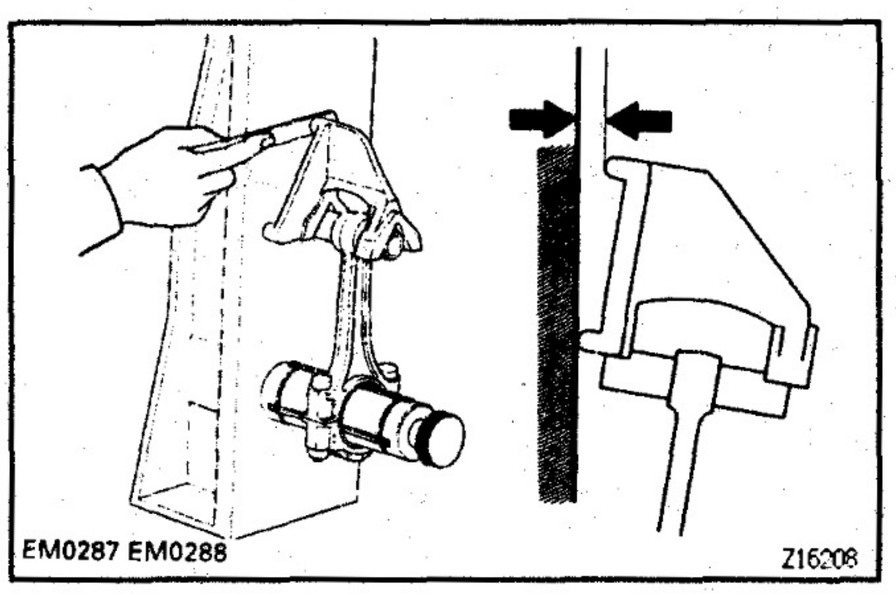

4. INSPECT CONNECTING ROD

A. Inspect connecting rod alignment

Using a rod aligner and feeler gauge, check the connecting rod alignment.

- Check for out—of—alignment.

Maximum out—of—alignment:

0.05 mm (0.0020 in.) per 100 mm (3.94 in.)

If out—of—alignment is greater than maximum, replace the connecting rod assembly.

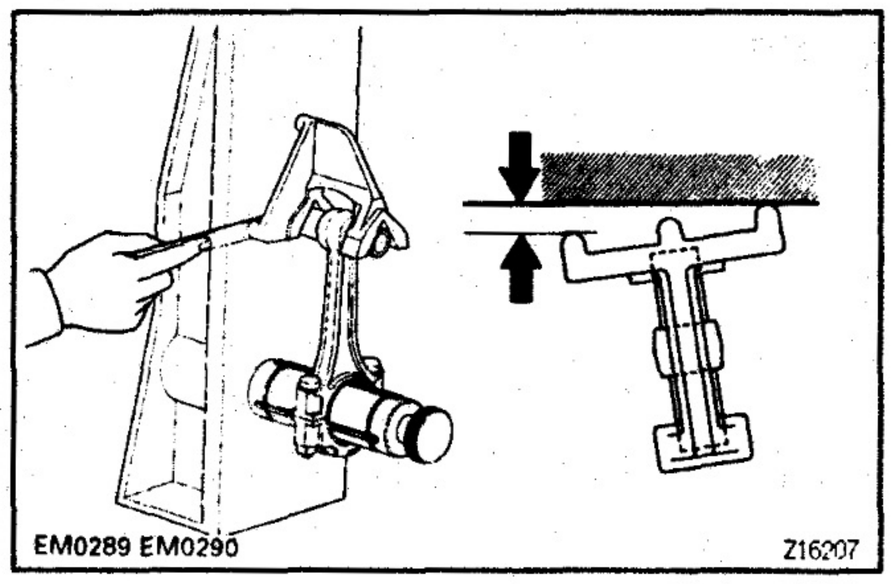

- Check for twist

Maximum twist:

0.15 mm (0.0059 in.) per 100 mm (3.94 in.)

If twist is greater than maximum, replace the connecting rod assembly.

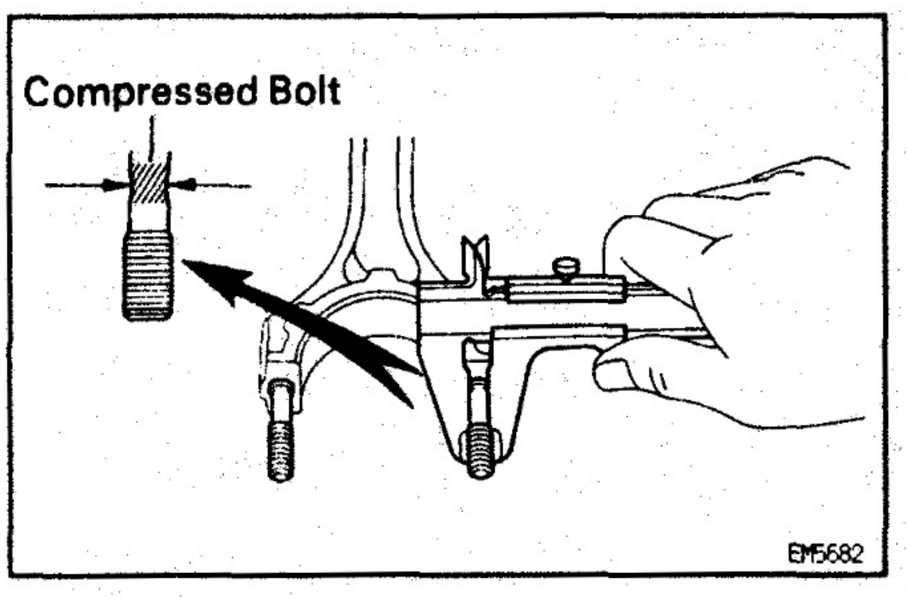

B. Inspect connecting rod bolts

Using vernier calipers, measure the tension portion diameter.

Standard diameter:

8.400 – 8.600 mm (0.3307 – 0.3386 in.)

Minimum diameter:

8.20 mm (0.3228 in.)

If the diameter is less than minimum, replace the connecting rod bolt.

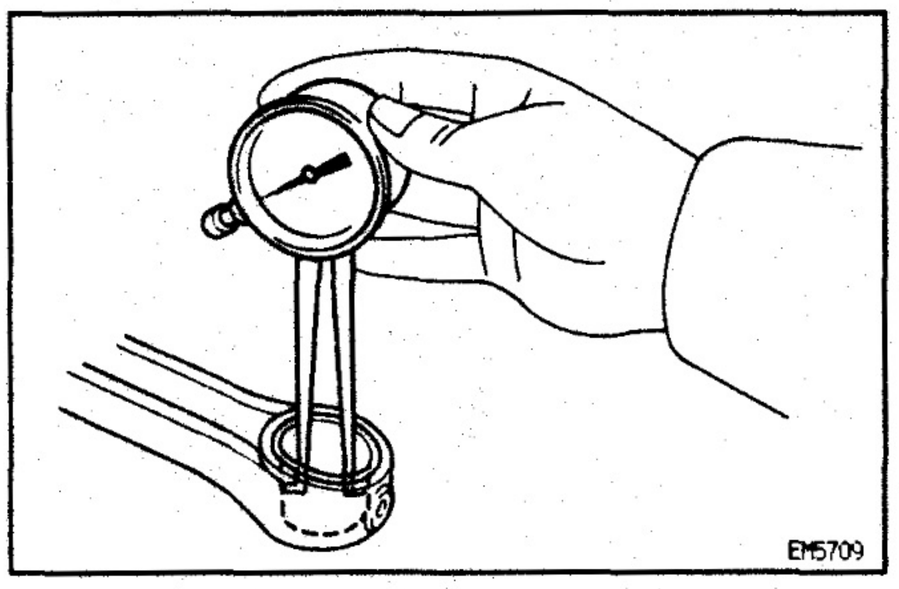

C. Inspect piston pin oil clearance

(a) Using a caliper gauge, measure the inside diameter of the connecting rod bushing.

Bushing inside diameter:

2L

27.008 – 27.020 mm (1.0633 – 1.0638 in.)

3L

29.008 – 29.020 mm (1.1420 – 1.1425 in.)

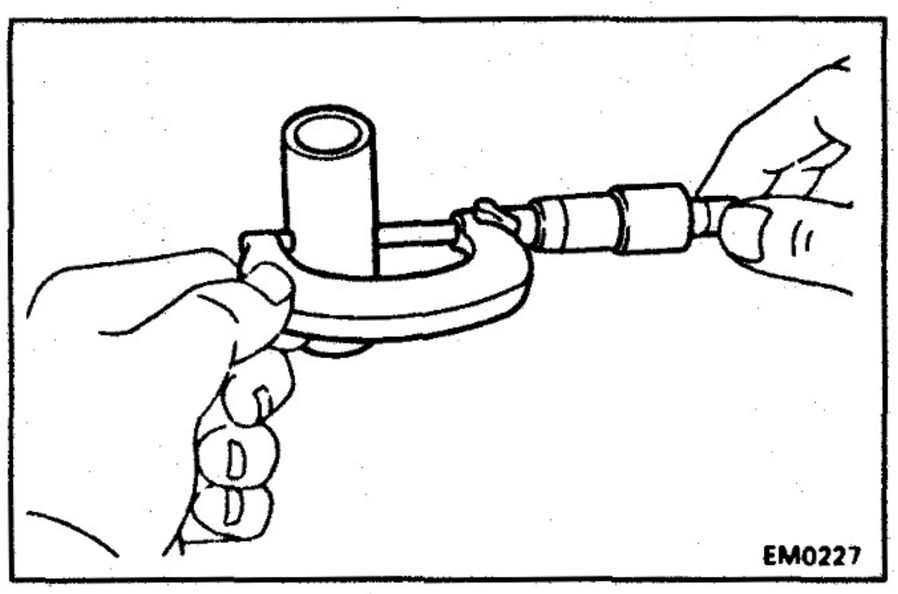

(b) Using a micrometer, measure the piston pin diameter.

Piston pin diameter:

2L

27.000 – 27.012 mm (1.0630 – 1.0635 in.)

3L

29.000 – 29.012 mm (1.1417 – 1.1422 in.)

(c) Subtract the piston pin diameter measurement from the bushing inside diameter measurement.

Standard oil clearance:

0.004 – 0.012 mm (0.0002 – 0.0005 in.)

Maximum oil clearance:

0.05 mm (0.0020 in.)

If the oil clearance is greater than maximum, replace the bushing. If necessary, replace the piston and piston pin as a set.

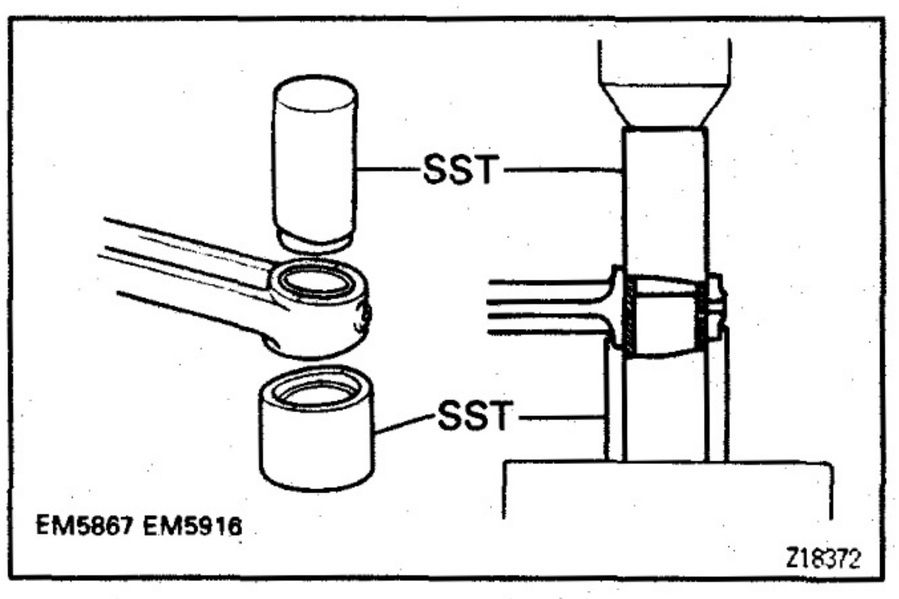

D. If necessary, replace connecting rod bushing

(a) Using SST and a press, press out the bushing.

SST

2L:
09222–64012 (09222–02022, 09222–02041)

3L:
09222–54011 (09222–03016, 09222–03026)

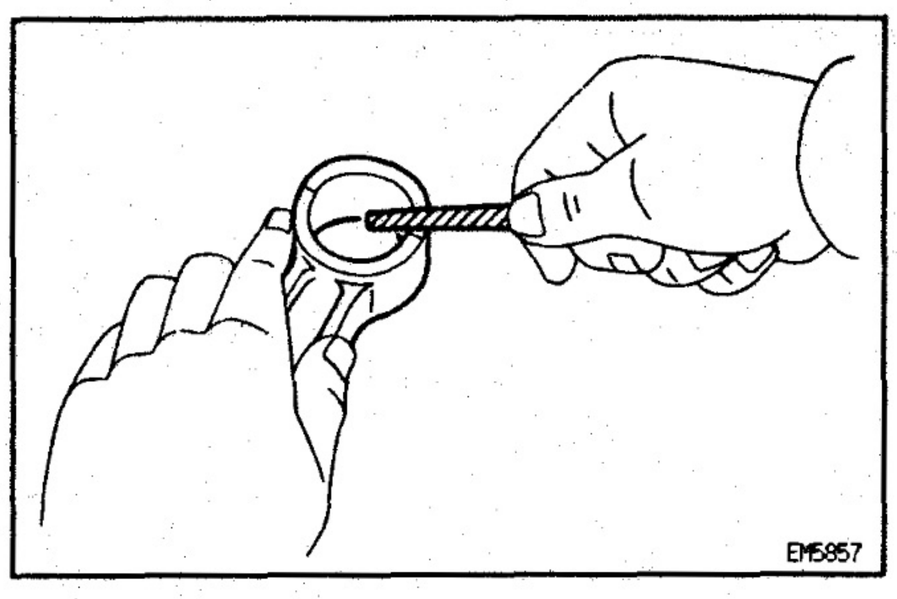

(b) Using a round file, lightly file off any roughness from the small end of the connecting rod.

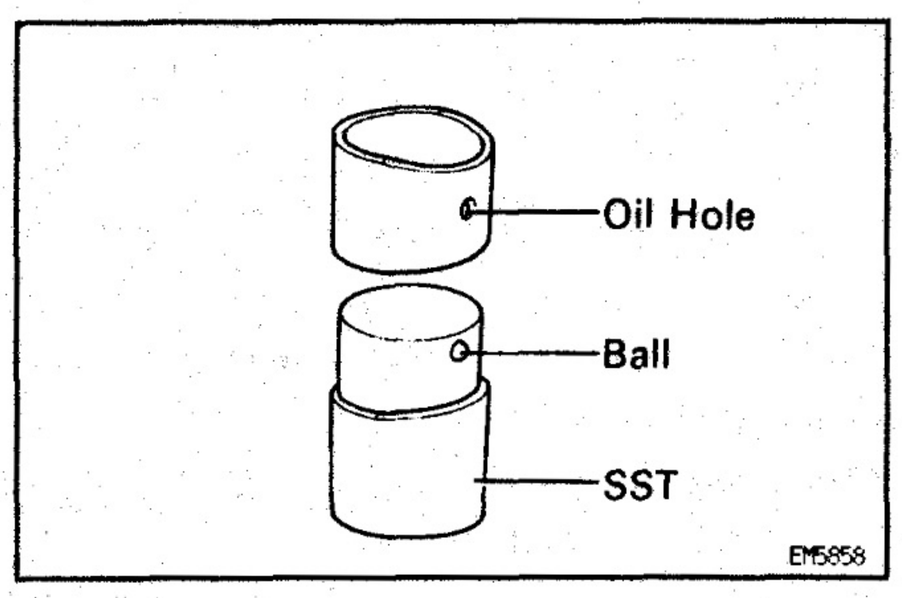

(c) Attach the bushing to SST with the ball of SST inside the oil hole of the bushing.
SST
2L:
09222–64012 (09222–02031)
3L:
09222–54011 (09222–03021)

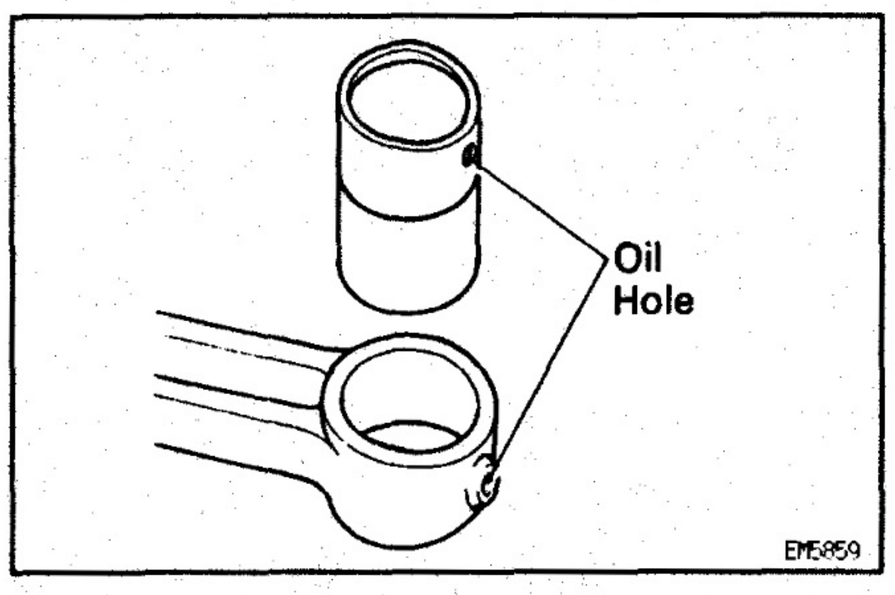

(d) Align the oil holes of a new bushing and the connecting rod.

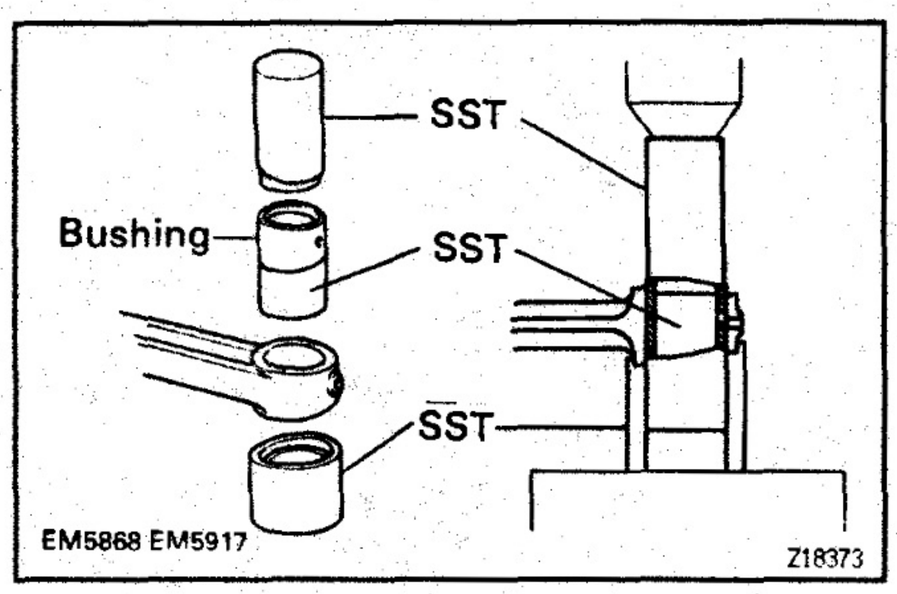

(e) Using SST and a press, press in the bushing.
SST
2L:
09222–64012 (09222–02022, 09222–02031, 09222–02041)
3L:
09222–54011 (09222–03016, 09222–03021, 09222–03026)

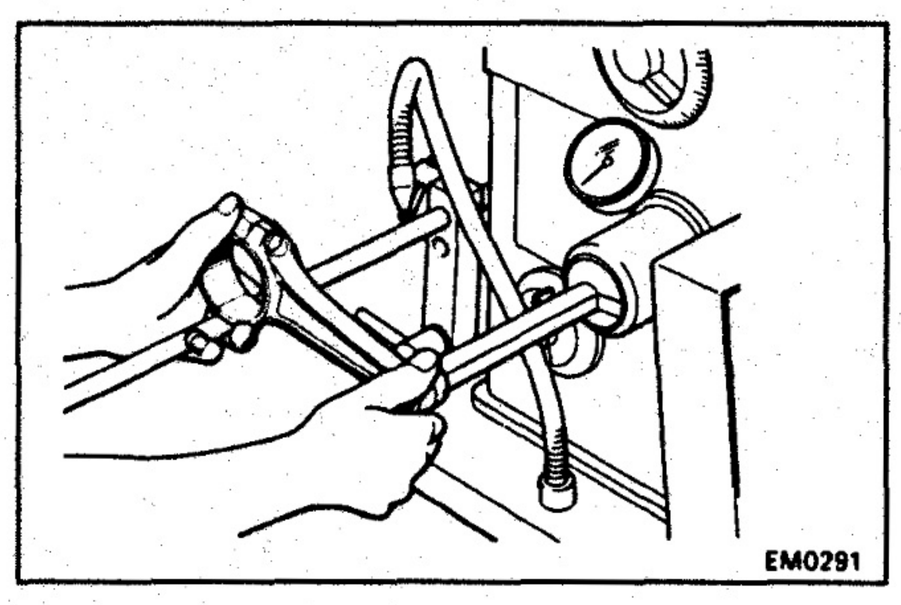

(f) Using a pin hole grinder, hone the bushing to obtain the standard specified clearance (see item C above) between the bushing and piston pin.

EG

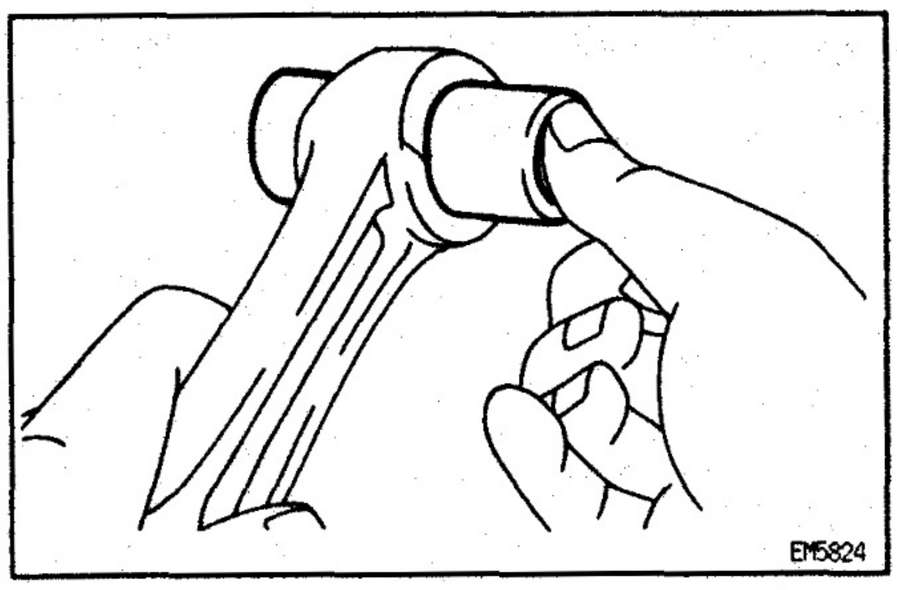

(g) Check the piston pin fit at normal room temperature. Coat the piston pin with engine oil, and push it into the connecting rod with your thumb.

EG

B27DE-01

CYLINDER BORING

HINT:

- Bore all the 4 cylinders to the oversized piston outside diameter.
- Replace all the piston rings with ones to match the oversized pistons.

1. KEEP OVERSIZED PISTONS

Oversized (O/S 0.50) piston diameter:

2L

92.440 — 92.470 mm (3.6394 — 3.6405 in.)

3L

96.440 — 96.470 mm (3.7968 — 3.7980 in.)

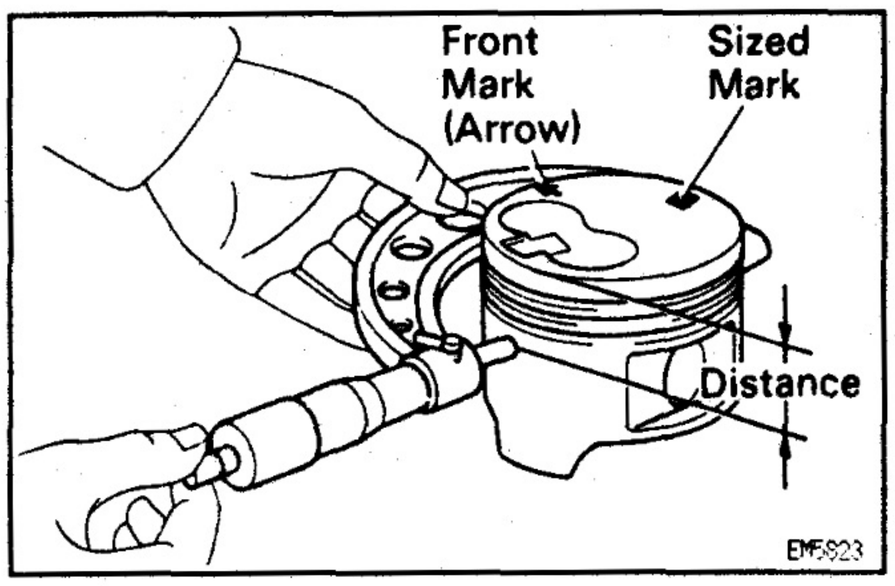

2. CALCULATE AMOUNT TO BORE CYLINDERS

(a) Using a micrometer, measure the piston diameter at right angles to the piston pin center line, the indicated distance from the piston head.

Distance:

2L	58.27 — 58.33 mm (2.2941 — 2.2965 in.)
3L	56.27 — 56.33 mm (2.2153 — 2.2177 in.)

(b) Calculate the amount each cylinder is to be rebored as follows:

Size to be rebored = P + C — H

P = Piston diameter

C = Piston clearance

0.050 — 0.070 mm (0.0020 — 0.0028 in.)

H = Allowance for honing

0.02 mm (0.0008 in.) or less

3. BORE AND HONE CYLINDER TO CALCULATED DIMENSIONS

Maximum honing:

0.02 mm (0.0008 in.)

NOTICE: Excess honing will destroy the finished roundness.

CRANKSHAFT INSPECTION AND REPAIR

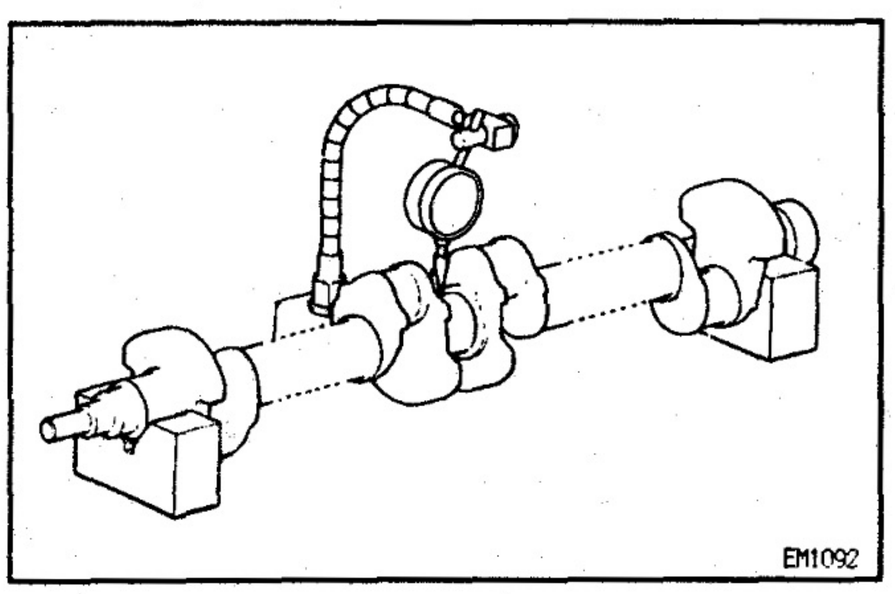

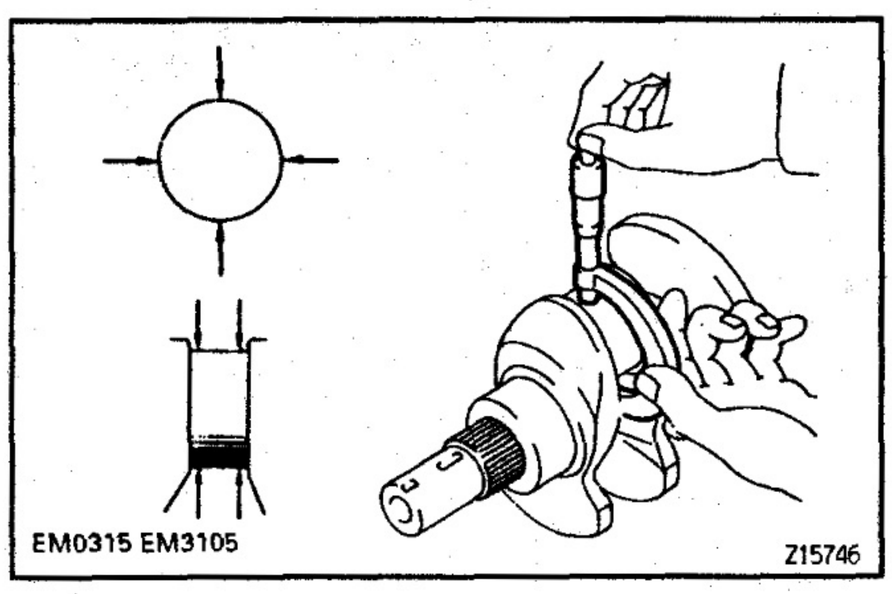

1. INSPECT CRANKSHAFT FOR RUNOUT

(a) Place the crankshaft on V—blocks.

(b) Using a dial indicator, measure the circle runout at the center journal.

Maximum circle runout:

0.06 mm (0.0024 in.)

If the circle runout is greater than maximum, replace the crankshaft.

2. INSPECT MAIN JOURNALS AND CRANK PINS

(a) Using a micrometer, measure the diameter of each main journal and crank pin.

Main journal diameter:

STD

61.985 — 62.000 mm (2.4403 — 2.4409 in.)

U/S 0.25

61.745 — 61.755 mm (2.4309 — 2.4313 in.)

U/S 0.50

61.495 — 61.505 mm (2.4211 — 2.4215 in.)

Crank pin diameter:

2L

STD

52.988 — 53.000 mm (2.0861 — 2.0866 in.)

U/S 0.25

52.745 — 52.755 mm (2.0766 — 2.0770 in.)

U/S 0.50

52.495 — 52.505 mm (2.0667 — 2.0671 in.)

3L

STD

54.988 — 55.000 mm (2.1649 — 2.1654 in.)

U/S 0.25

54.745 — 54.755 mm (2.1553 — 2.1557 in.)

U/S 0.50

54.495 — 54.505 mm (2.1455 — 2.1459 in.)

If the diameter is not as specified, check the oil clearance. (See steps 5 and 8 in cylinder block assembly)
If necessary, grind or replace the crankshaft.

(b) Check each main journal and crank pin for taper and out—of—round as shown.
Maximum taper and out—of—round:
0.02 mm (0.0008 in.)
If the taper and out—of—round is greater than maximum, replace the crankshaft.

3. IF NECESSARY, GRIND AND HONE MAIN JOURNALS AND/OR CRANK PINS

Grind and hone the main journals and/or crank pins to the finished undersized diameter (See procedure in step 2).
Install new main journal and/or crankshaft pin undersized bearing.

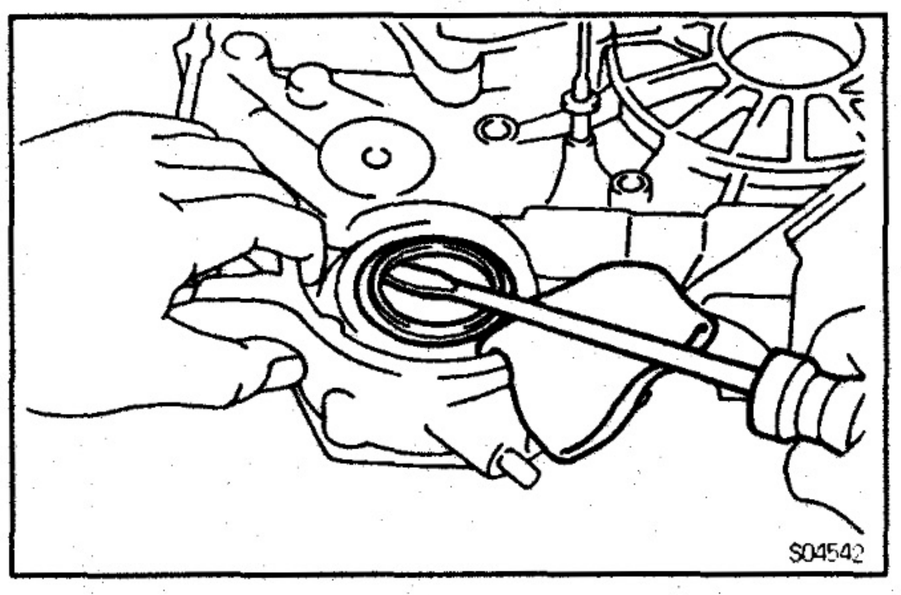

CRANKSHAFT OIL SEALS REPLACEMENT EQ7AQ-01

HINT: There are 2 methods (A and B) to replace the oil seal which are as follows:

1. REPLACE CRANKSHAFT FRONT OIL SEAL

A. If oil pump is removed from cylinder block:

(a) Using a screwdriver, pry out the oil seal.

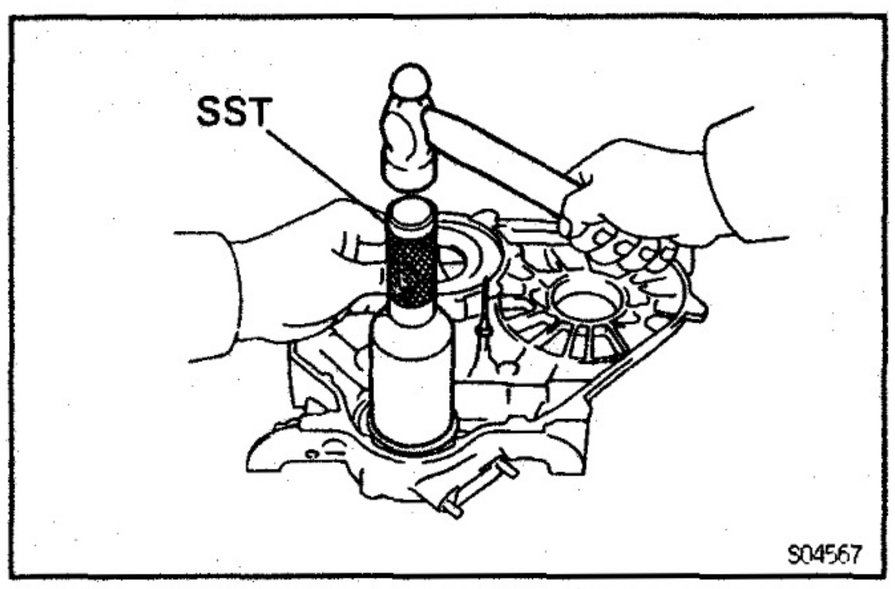

(b) Using SST and a hammer, tap in a new oil seal to the depth of 0.5 mm (0.020 in.) from the oil pump case edge.
SST 09223—60010

(c) Apply MP grease to the oil seal lip.

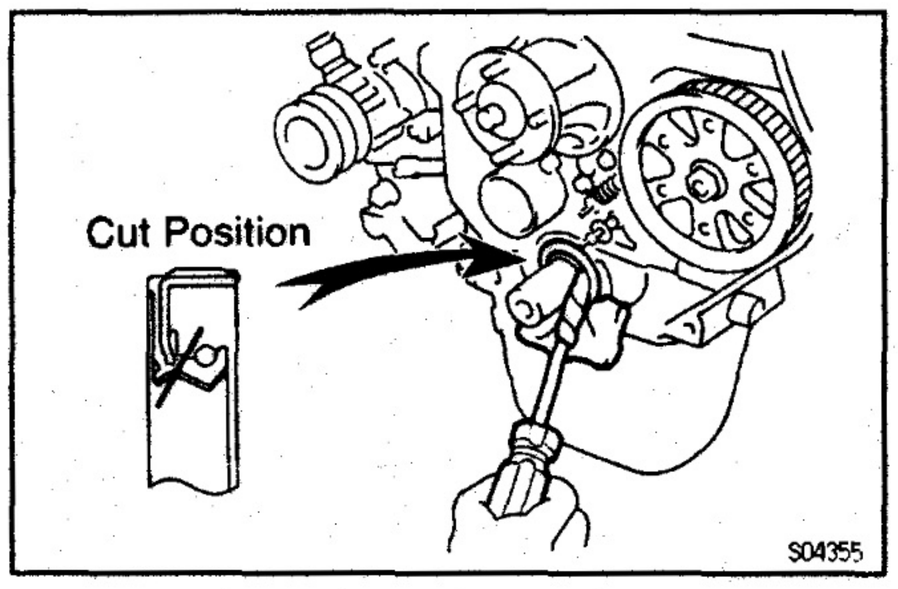

B. If oil pump is installed to cylinder block:

(a) Using a knife, cut off the oil seal lip.

(b) Using a screwdriver, pry out the oil seal.
NOTICE: Be careful not to damage the crankshaft.
Tape the screwdriver tip.

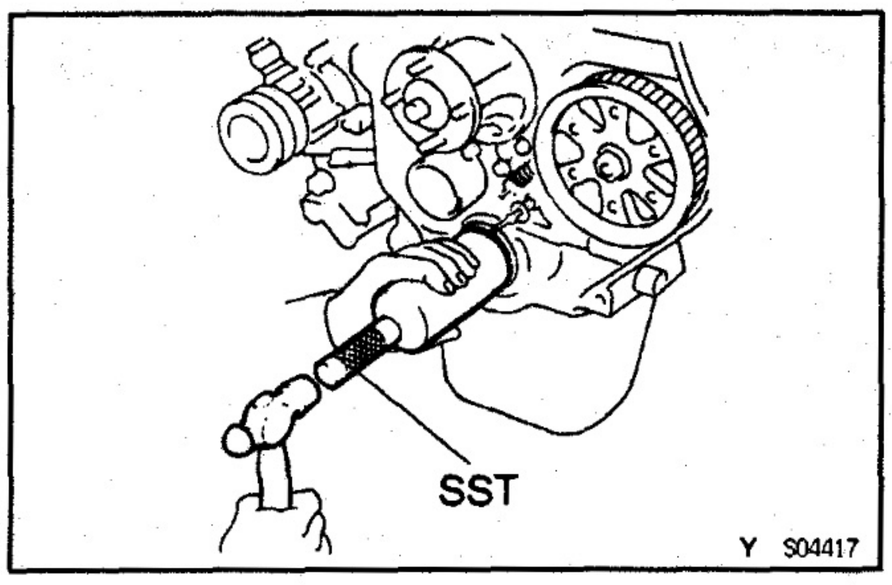

(c) Apply MP grease to a new oil seal lip.
(d) Using SST and a hammer, tap in the oil seal to the depth of 0.5 mm (0.020 in.) from the oil pump case edge.
SST 09223–60010

1. REPLACE CRANKSHAFT REAR OIL SEAL

A. If rear oil seal retainer is removed from cylinder block:

(a) Using a screwdriver and hammer, tap out the oil seal.

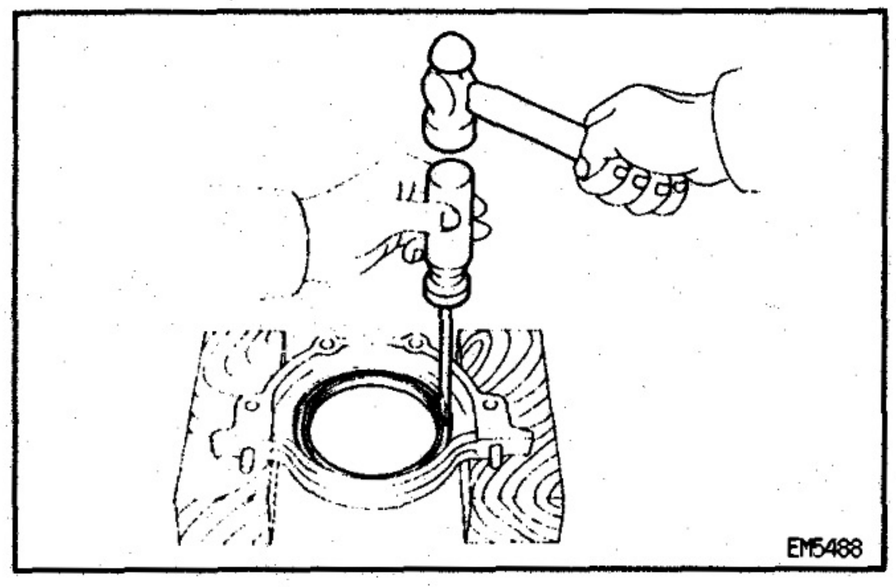

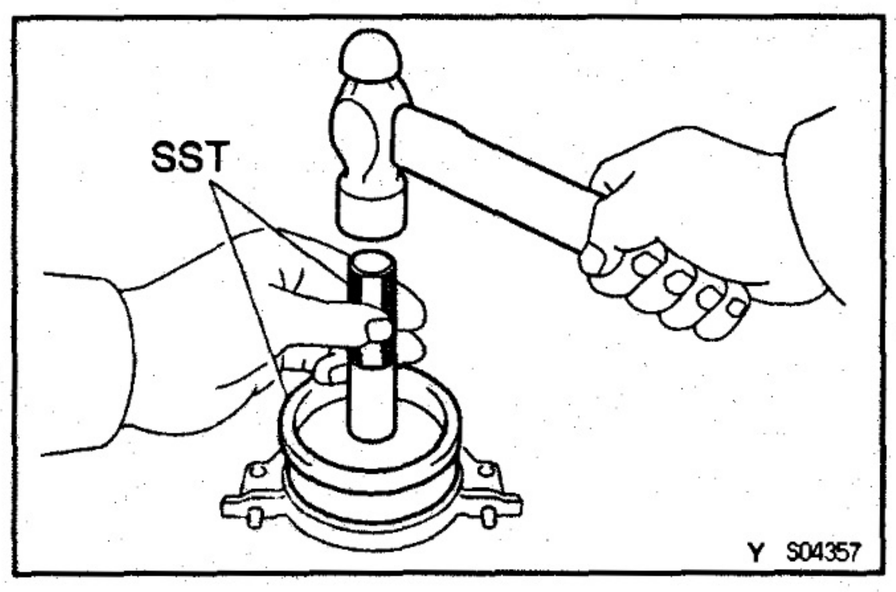

(b) Using SST and a hammer, tap in a new oil seal until its surface is flush with the rear oil seal retainer edge.
SST 09223–15030, 09950–70010 (09951–07150)
(c) Apply MP grease to the oil seal lip.

B. If rear oil seal retainer is installed to cylinder block:

(a) Using a knife, cut off the oil seal lip.
(b) Using a screwdriver, pry out the oil seal.
NOTICE: Be careful not to damage the crankshaft.
Tape the screwdriver tip.

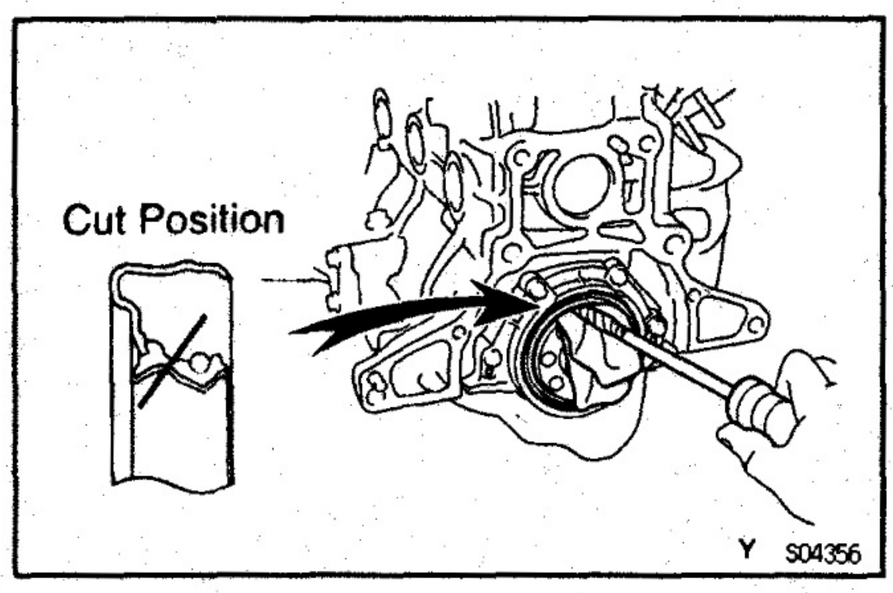

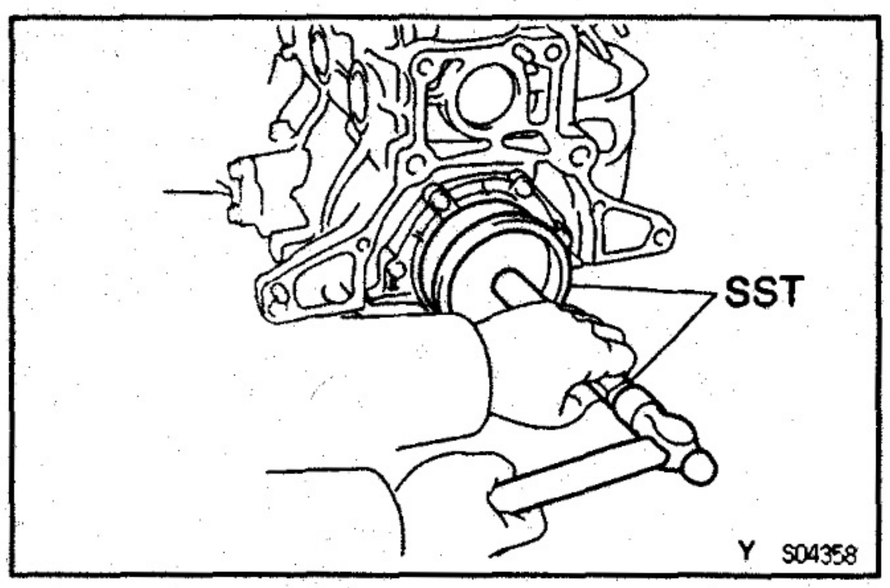

(c) Apply MP grease to a new oil seal lip.
(d) Using SST and a hammer, tap in the oil seal until its surface is flush with the rear oil seal retainer edge.
SST 09223–15030, 09950–70010 (09951–07150)

EG

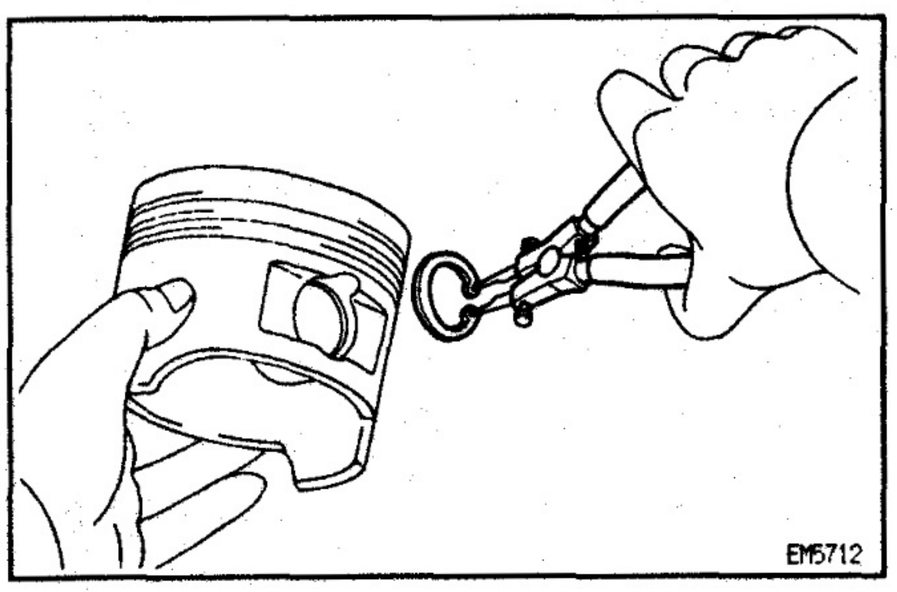

B87AH-01

PISTON AND CONNECTING ROD ASSEMBLY

1. ASSEMBLE PISTON AND CONNECTING ROD

(a) Install a new snap ring on one side of the piston pin hole.

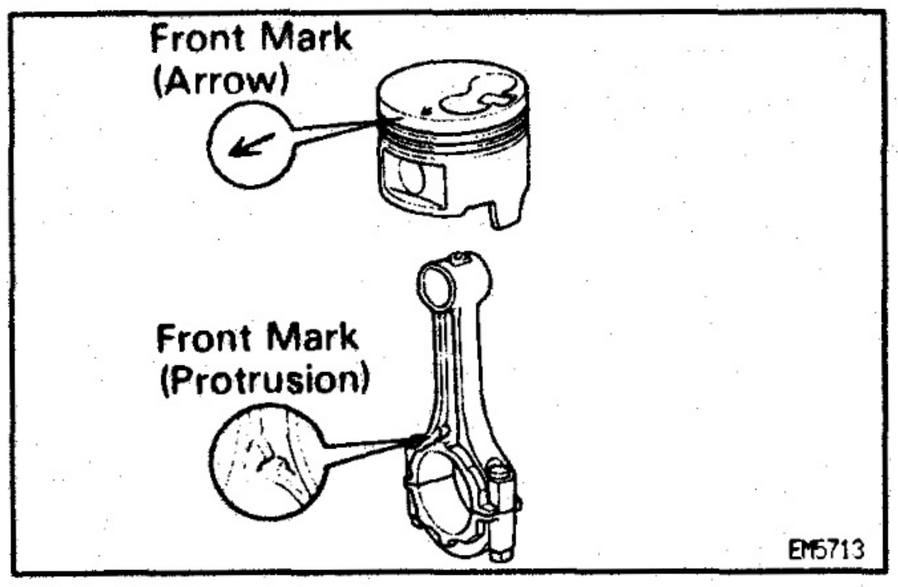

(b) Gradually heat the piston to 60°C (140°F).

(c) Coat the piston pin with engine oil.

(d) Align the front marks of the piston and connecting rod, and push in the piston pin with your thumb.

(e) Install a new snap ring on the other side of the piston pin hole.

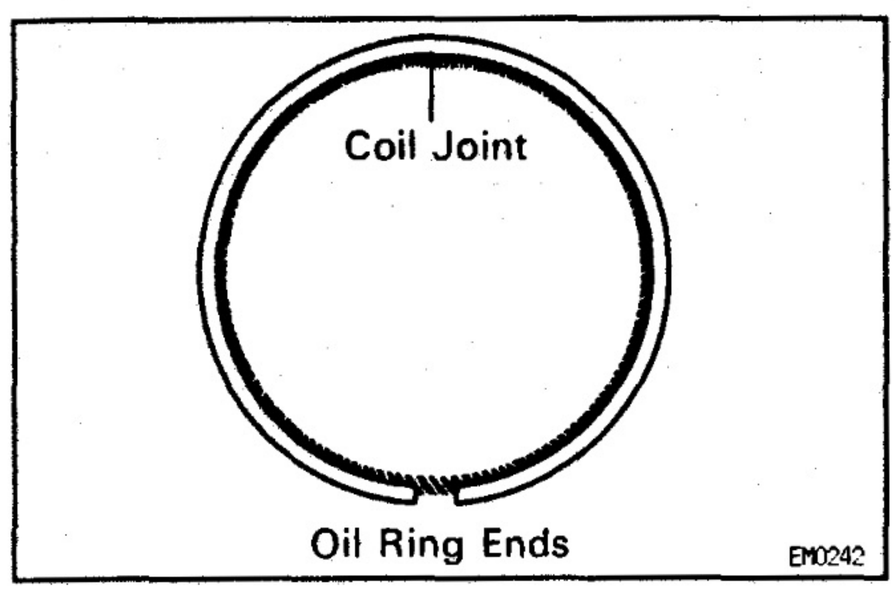

2. INSTALL PISTON RINGS

(a) Install the coil and oil ring by hand.
HINT: Face the end gap of the oil ring in the opposite direction coil joint.

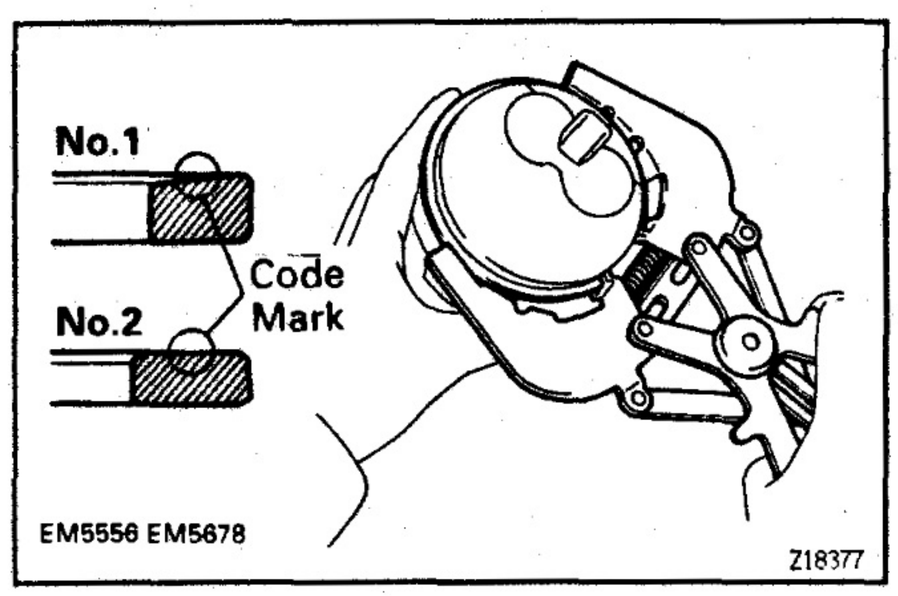

(b) Using a piston ring expander, install the No.1 and No. 2 piston rings with the code mark facing upward.
Code mark:

Item	2L	3L
No.1	T1 or 1N	T1 or N1
No.2	2T or 2N	T or 2N

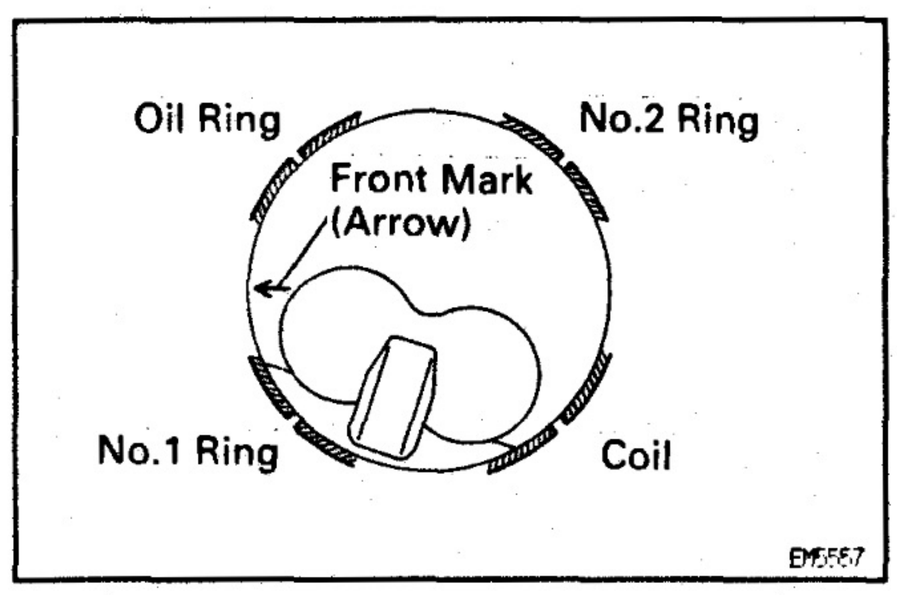

(c) Position the piston rings so that the ring ends are as shown.
NOTICE: Do not align the ring ends.

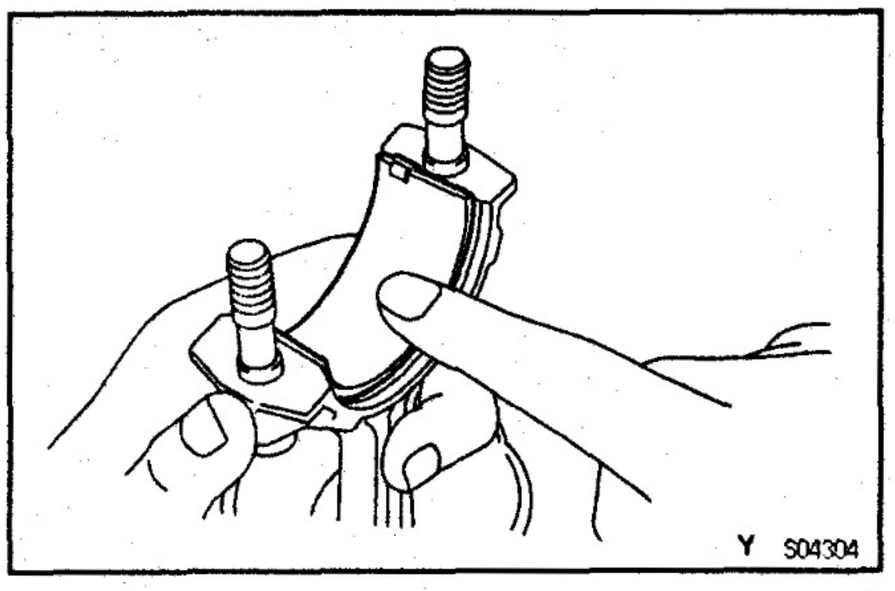

3. INSTALL CONNECTING ROD BEARINGS

(a) Align the bearing claw with the groove of the connecting rod or connecting rod cap.

(b) Install the bearings in the connecting rod and connecting rod cap.

CYLINDER BLOCK ASSEMBLY

E07AJ-01

HINT:

- Thoroughly clean all parts to be assembled.
- Before installing the parts, apply fresh engine oil to all sliding and rotating surfaces.
- Replace all gaskets and oil seals with new ones.

1. INSTALL OIL NOZZLES AND CHECK VALVES

(See step 1 in oil nozzles installation in Lubrication System)

2. INSTALL MAIN BEARINGS

HINT: Upper bearings have an oil groove and oil hole; lower bearings do not.

(a) Align the bearing claw with the claw groove of the cylinder block, and push in the 5 upper bearings.

(b) Align the bearing claw with the claw groove of the main bearing cap, and push in the 5 lower bearings.

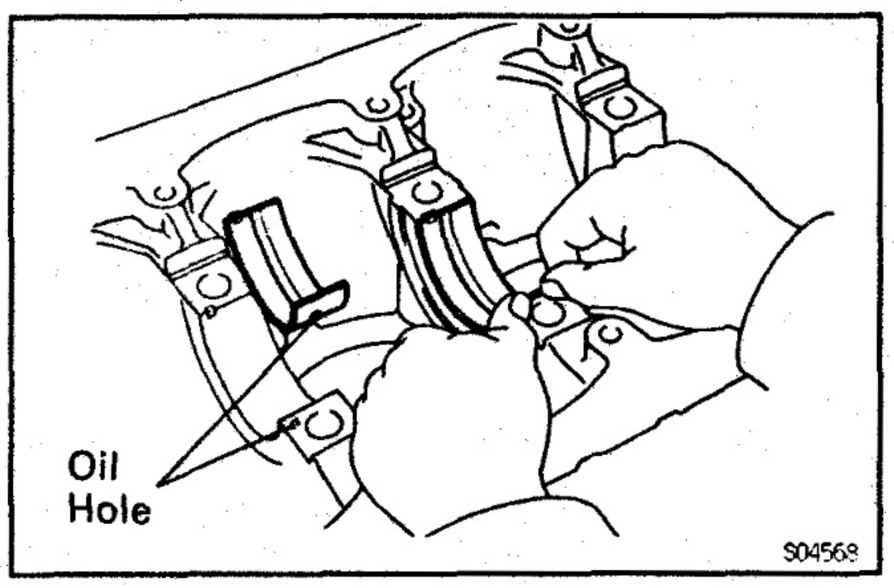

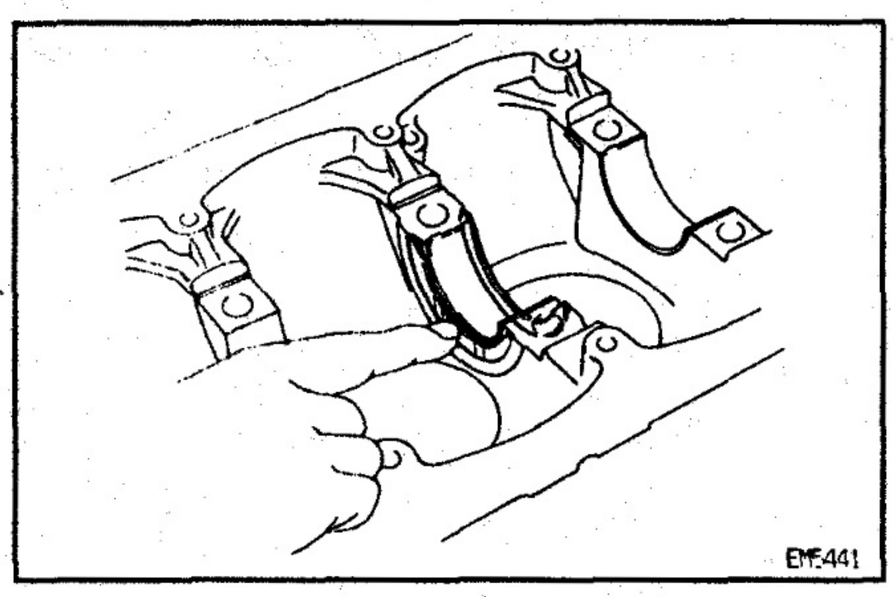

3. INSTALL UPPER THRUST WASHERS

Install the 2 thrust washers under the No.3 journal position of the cylinder block with the oil grooves facing outward.

4. PLACE CRANKSHAFT ON CYLINDER BLOCK

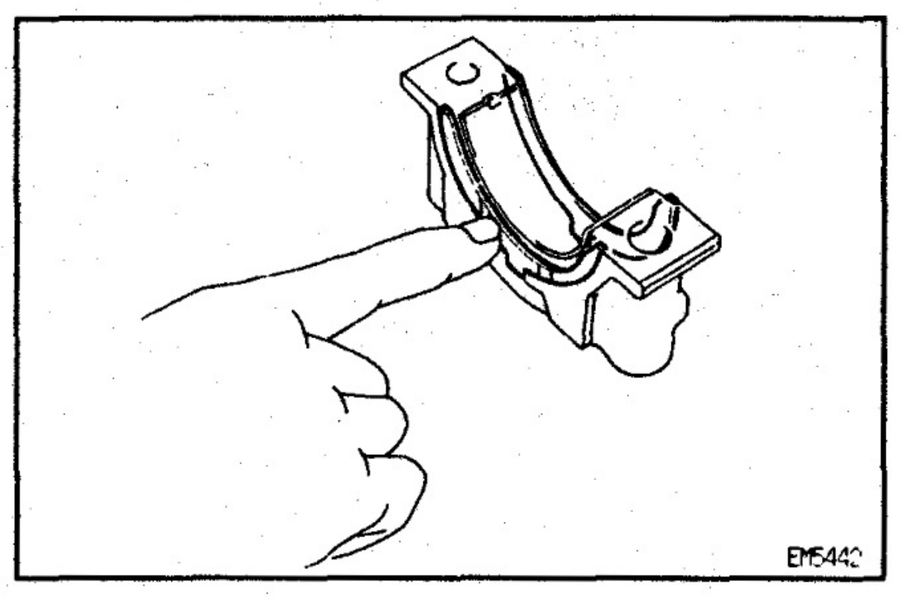

5. INSTALL MAIN BEARING CAPS AND LOWER THRUST WASHERS

(a) Install the 2 lower thrust washers on the No.3 main bearing cap with the grooves facing outward.

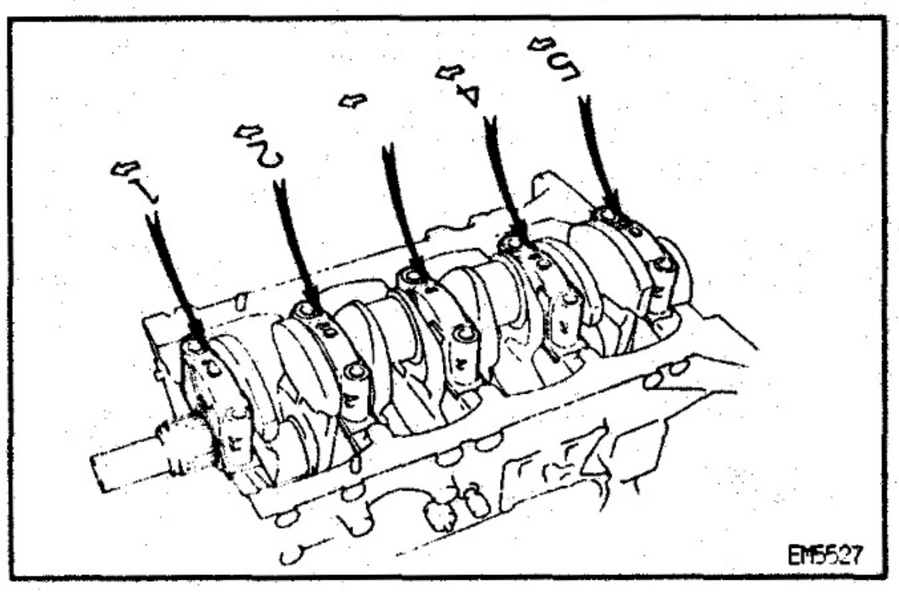

(b) Install the 5 main bearing caps in their proper locations.

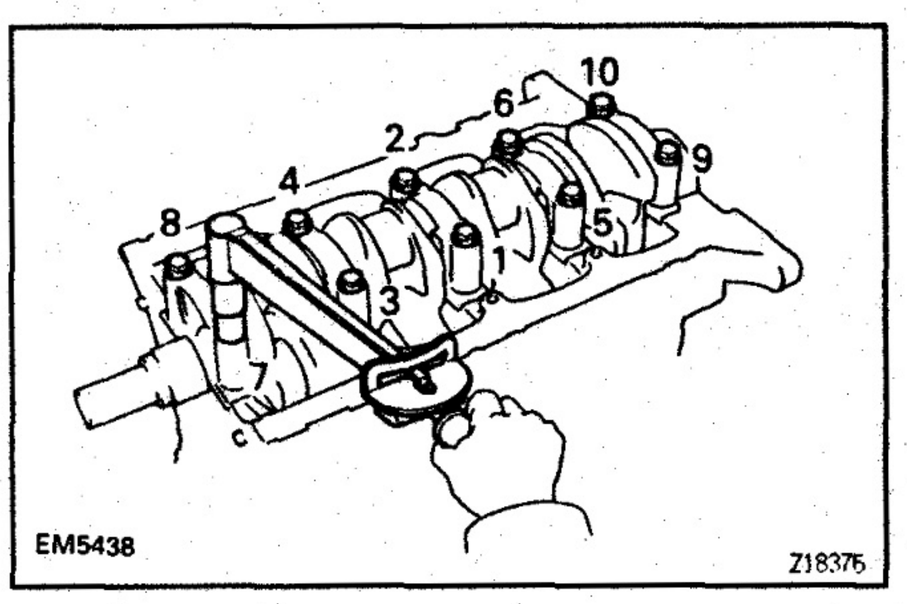

(c) Apply a light coat of the engine oil on the threads and under the bolt heads of the main bearing caps.

(d) Install and uniformly tighten the 10 bolts of the main bearing caps, in several passes, in the sequence shown.

Torque: 103 N·m (1,050 kgf·cm, 76 ft·lbf)

(e) Check that the crankshaft turns smoothly.

6. CHECK CRANKSHAFT THRUST CLEARANCE

(See step 5 in cylinder block disassembly)

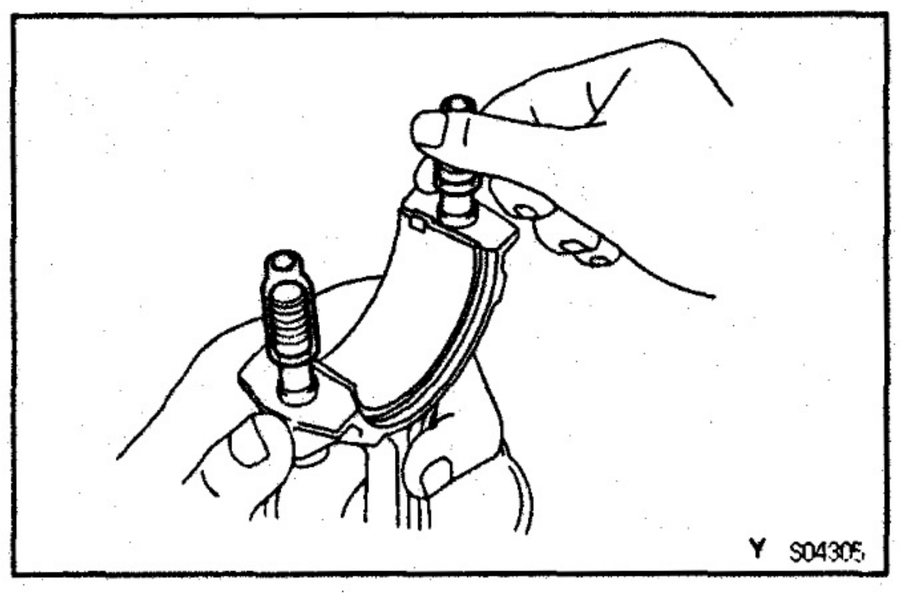

7. INSTALLATION PISTON AND CONNECTING ROD ASSEMBLIES

(a) Cover the connecting rod bolts with a short piece of hose to protect the crankshaft and cylinder bore from damage.

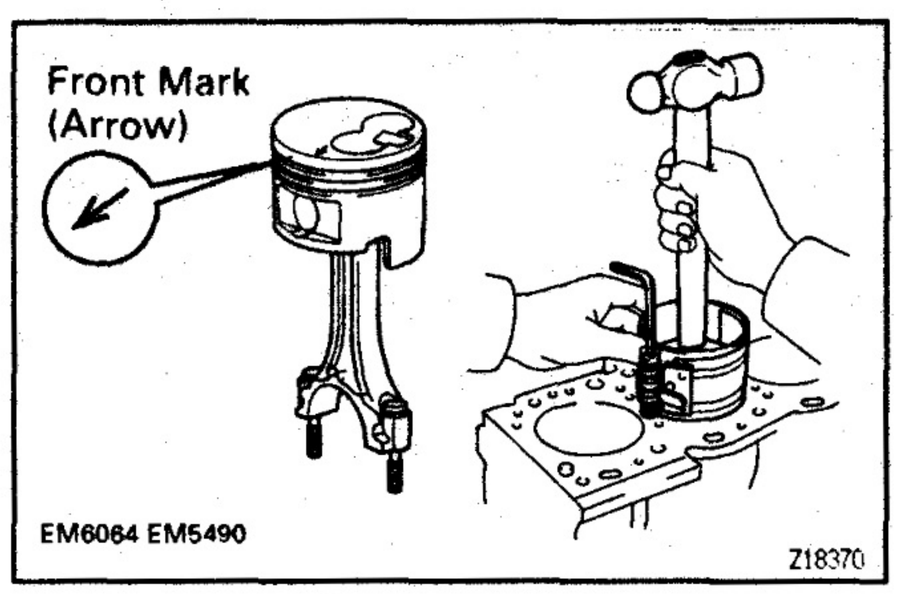

(b) Using a piston ring compressor, push the correctly numbered piston and connecting rod assembly into the cylinder with the front mark of the piston facing forward.

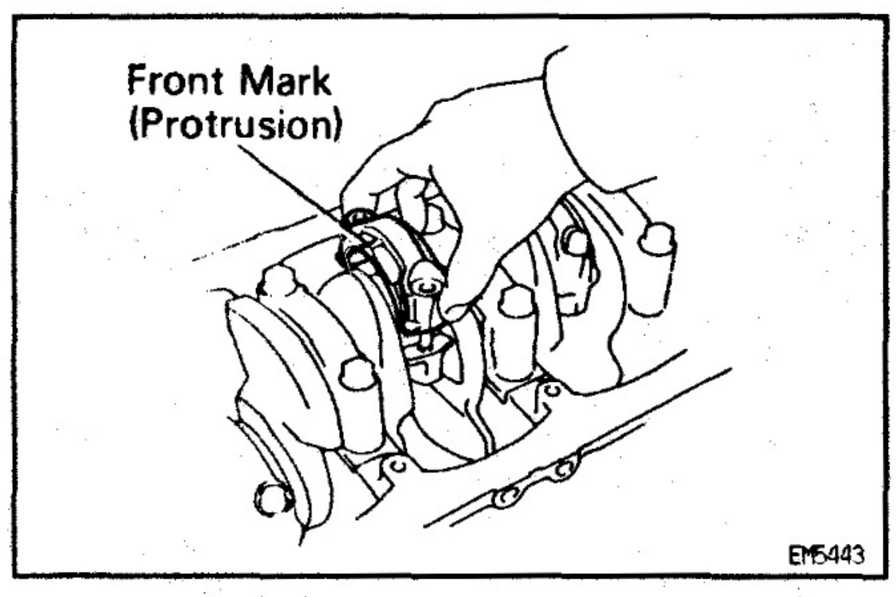

8. INSTALL CONNECTING ROD CAPS

A. Place connecting rod cap on connecting rod

(a) Match the numbered connecting rod cap with the connecting rod.

(b) Install the connecting rod cap with the front mark facing forward.

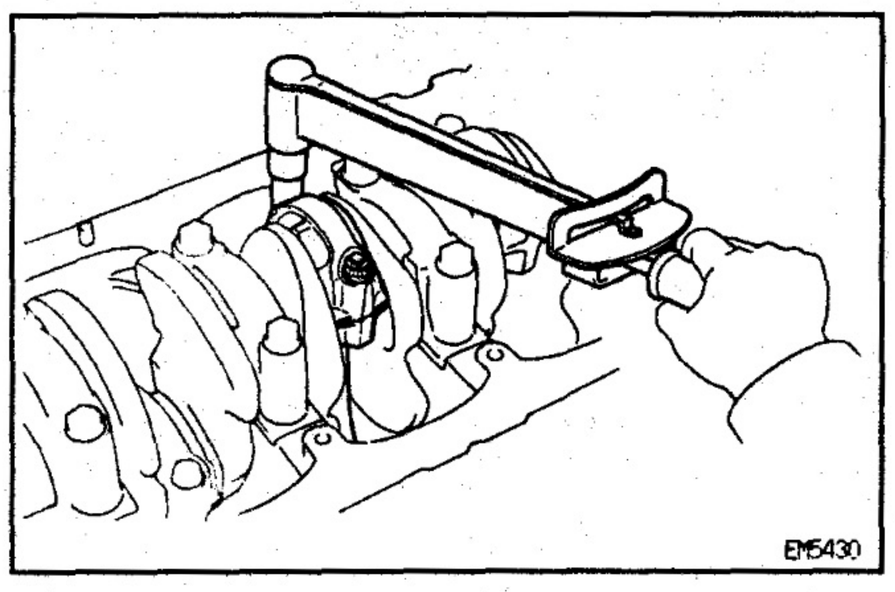

B. Install connecting rod cap nuts

HINT:

- The connecting rod cap nuts are tightened in 2 progressive steps (steps (b) and (d)).
- If any connecting rod bolt is broken or deformed, replace it.

(a) Apply a light of engine oil on the threads and under the heads of the connecting rod cap nuts.

(b) Install and alternately tighten the nuts of the connecting rod cap in several passes.

Torque: 54 N·m (550 kgf·cm, 40 ft·lbf)

If any one of the connecting rod cap nuts does not meet the torque specification, replace the cap nuts.

(c) Mark the front of the connecting rod cap nuts with paint.

(d) Retighten the connecting rod cap nuts 90° as shown.

(e) Check that the painted mark is now at a 90° angle to the front.

(f) Check that the crankshaft turns smoothly.

9. CHECK CONNECTING ROD THRUST CLEARANCE (See step 2 in cylinder block disassembly)

10. INSTALL REAR OIL SEAL RETAINER

Install a new gasket and the retainer with the 4 bolts.

Torque: 13 N·m (130 kgf·cm, 9 ft·lbf)

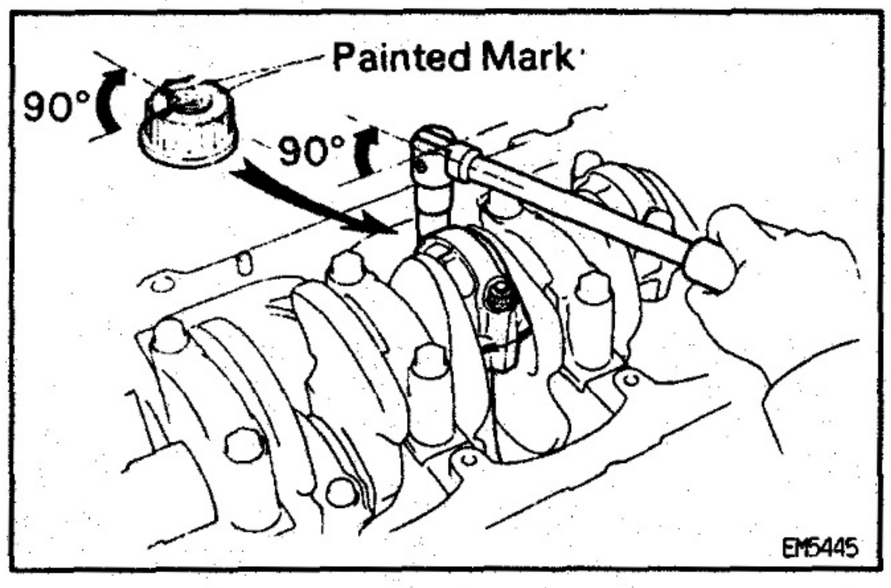

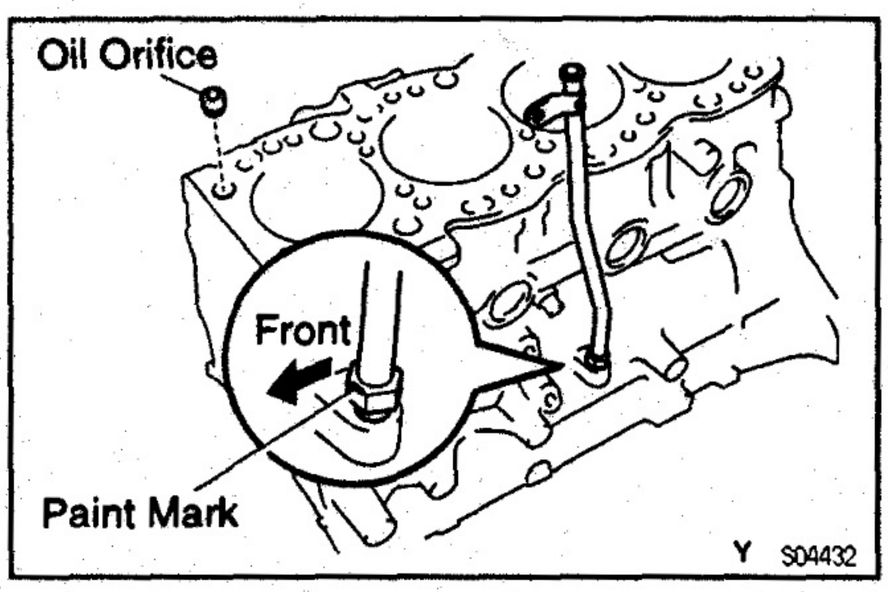

AFTER ASSEMBLY

B67AK-01

1. CONNECT GROUND CABLE

2. 2L for Thailand:
INSTALL CYLINDER BLOCK OIL ORIFICE

3. INSTALL OIL DIPSTICK GUIDE (PLUG)

Using a bass bar and hammer, tap in the dipstick guide end into the guide hole of the cylinder block, facing the paint mark front.

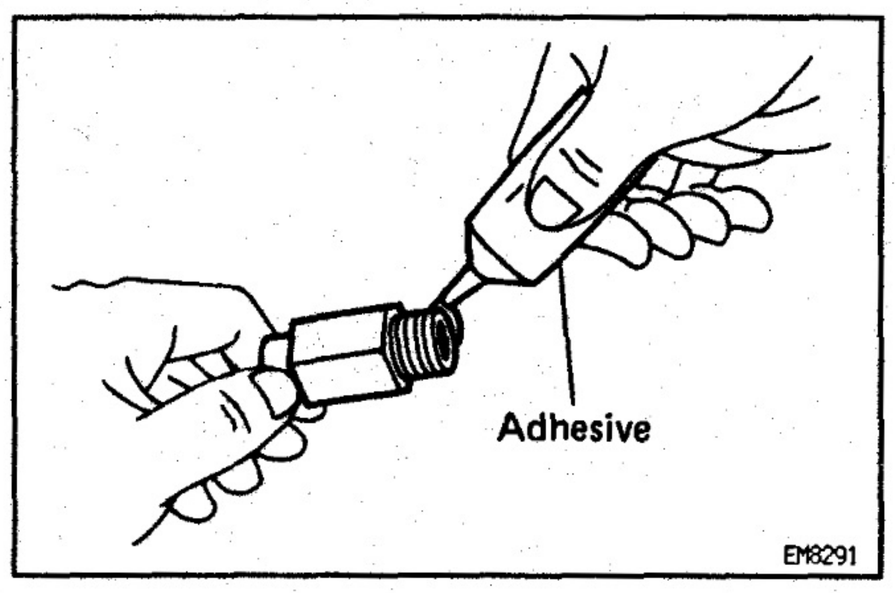

4. INSTALL UNION FOR ALTERNATOR HOSE

(a) Apply adhesive to 2 or 3 threads of the union.

Adhesive:

Part No. 08833–00070, THREE BOND 1324 or equivalent

(b) Install the union.

Torque: 32 N·m (320 kgf·cm, 24 ft·lbf)

5. **INSTALL ENGINE COOLANT DRAIN PLUG**
   (See step 1 (c) and (d) in coolant check in Cooling System)
6. **INSTALL OIL PRESSURE SWITCH**
   (See step 8 in oil pressure check in Lubrication System)
7. **Pre—Heating System (Super Glow Type):**
   INSTALL WATER TEMPERATURE SENSOR
8. **INSTALL FAN BELT ADJUSTING BAR**
   Torque: 45 N·m (460 kgf·cm, 33 ft·lbf)
9. **INSTALL TIMING BELT CASE (OIL PUMP), OIL STRAINER AND OIL PAN**
   (See oil pump installation in Lubrication System)
10. **INSTALL OIL COOLER, OIL FILTER BRACKET ASSEMBLY AND OIL FILTER**
    (See oil cooler installation in Lubrication System)
11. **INSTALL ALTERNATOR AND VACUUM PUMP ASSEMBLY (WITH HOSES)**
12. **INSTALL ENGINE MOUNTING AND ALTERNATOR BRACKETS**
    Torque: 39 N·m (400 kgf·cm, 29 ft·lbf)
13. **INSTALL INJECTION PUMP AND STAY**
    (See injection pump installation in Fuel System)
14. **INSTALL CYLINDER HEAD**
    (See cylinder head installation)
15. **INSTALL WATER PUMP**
    (See water pump installation in Cooling System)
16. **INSTALL PULLEYS AND TIMING BELT**
    (See timing belt installation)
17. **DISCONNECT ENGINE FROM ENGINE STAND**
18. **INSTALL REAR END PLATE**

(a) Install the dust seal to the crankshaft.

(b) Install the rear end plate with the 2 bolts.
Torque: 12 N·m (120 kgf·cm, 9 ft·lbf)

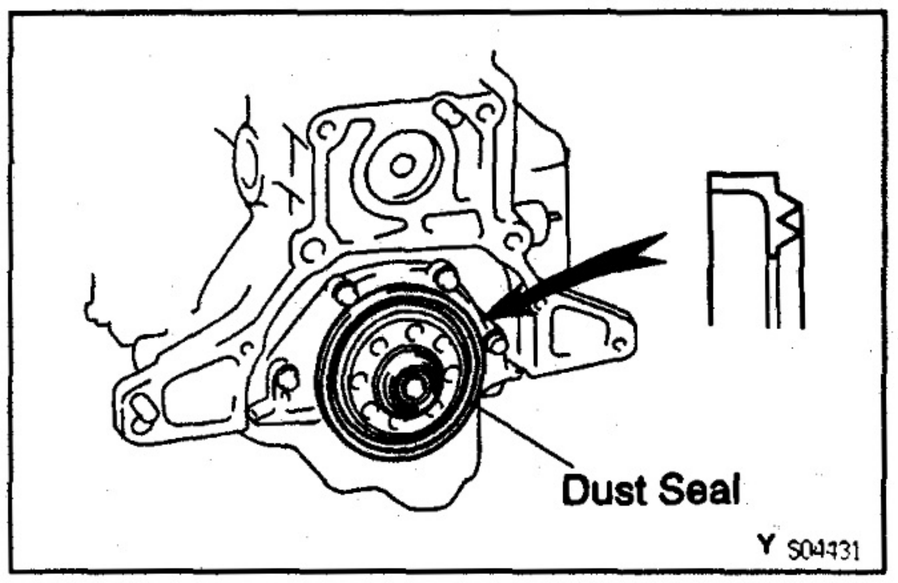

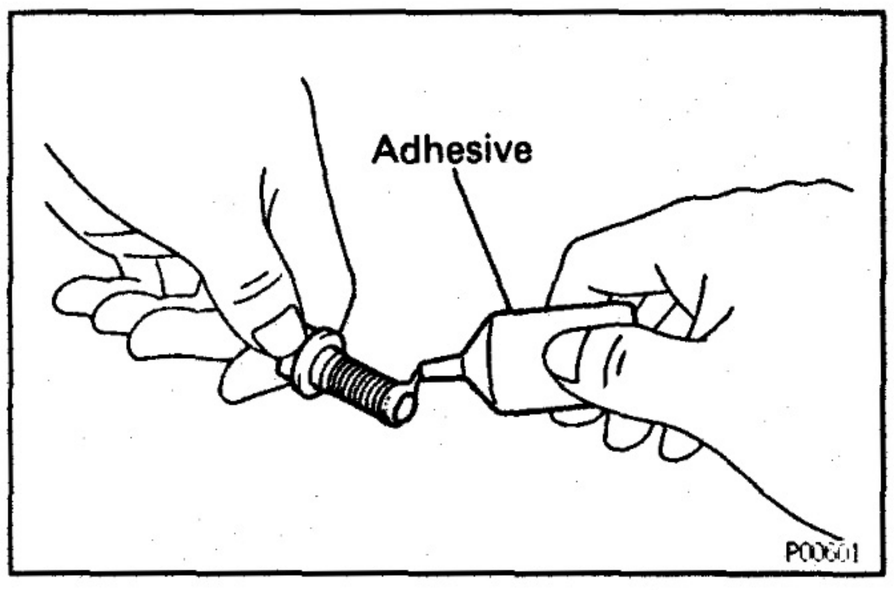

19. **M/T:**
    INSTALL FLYWHEEL

(a) Apply adhesive to 2 or 3 threads of the mounting bolt end.
Adhesive:
Part No. 08833—00070, THREE BOND 1324 or equivalent

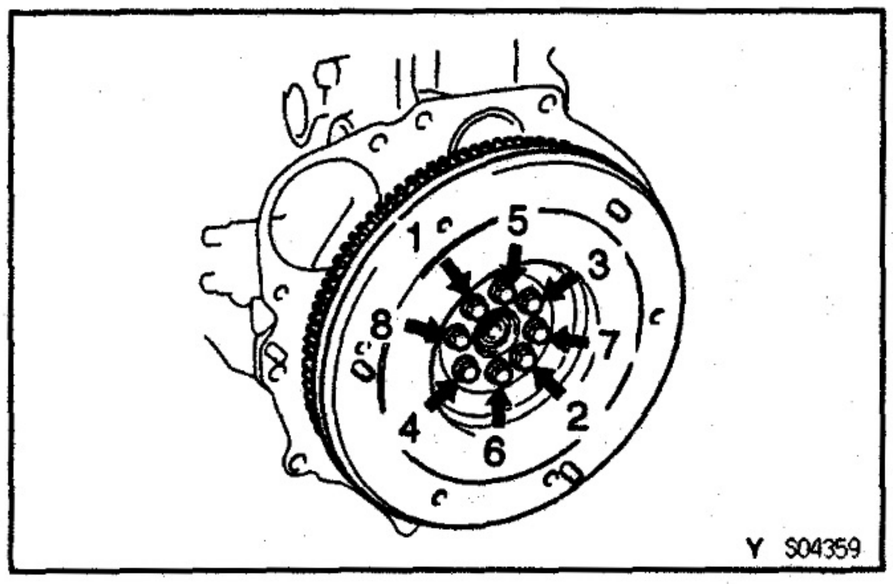

(b) Install the flywheel on the crankshaft.
(c) Apply a light of engine oil on the threads and under the heads of the flywheel bolts.
(d) Install and uniformly tighten the bolts, in several passes, in the sequence shown.
Torque: 122.5 N·m (1,250 kgf·cm, 90 ft·lbf)

20. A/T:
INSTALL DRIVE PLATE
(See procedure step 19)
Torque: 98 N·m (1,000 kgf·cm, 72 ft·lbf)

SERVICE SPECIFICATIONS

SERVICE DATA

EG0C8-1X

Compression pressure	At 250 rpm	STD	3,138 kPa (32.0 kgf/cm², 455 psi) or more
		Minimum	1,961 kPa (20.0 kgf/cm², 284 psi)
	Difference of pressure between each cylinder		490 kPa (5.0 kgf/cm², 71 psi) or less
Valve clearance	at cold	Intake	0.20 — 0.30 mm (0.008 — 0.012 in.)
		Exhaust	0.40 — 0.50 mm (0.016 — 0.020 in.)
	Adjusting shim thickness (for repair part)	No.01	2.50 mm (0.0984 in.)
		No.42	2.55 mm (0.1004 in.)
		No.06	2.60 mm (0.1024 in.)
		No.43	2.65 mm (0.1043 in.)
		No.11	2.70 mm (0.1063 in.)
		No.44	2.75 mm (0.1083 in.)
		No.16	2.80 mm (0.1102 in.)
		No.45	2.85 mm (0.1122 in.)
		No.21	2.90 mm (0.1142 in.)
		No.46	2.95 mm (0.1161 in.)
		No.26	3.00 mm (0.1181 in.)
		No.47	3.05 mm (0.1201 in.)
		No.31	3.10 mm (0.1220 in.)
		No.48	3.15 mm (0.1240 in.)
		No.36	3.20 mm (0.1260 in.)
		No.49	3.25 mm (0.1280 in.)
		No.41	3.30 mm (0.1299 in.)
Injection timing	Plunger stroke	w/ ACSD (2L Europe)	0.44 — 0.56 mm (0.0173 — 0.0220 in.)
		w/ ACSD (3L Europe & Others)	0.54 — 0.66 mm (0.0213 — 0.0260 in.)
		w/o ACSD	0.84 — 0.96 mm (0.0331 — 0.0378 in.)
Idle speed		M/T	650 — 750 rpm
		A/T	750 — 850 rpm
Maximum speed		2L (Europe, Israel and Ukraina)	5,020 — 5,280 rpm
	2L (Hong Kong, Singapore, Malaysia and LY General)		4,570 — 4,830 rpm
		2L (Others)	4,770 — 5,030 rpm
		3L (Europe)	4,670 — 4,930 rpm
	3L (Hong Kong, Singapore, Malaysia and LY General)		4,270 — 4,530 rpm
		3L (Others)	4,470 — 4,730 rpm
A/C idle—up speed	—		900 — 1,000 rpm
VSV for intake shutter (LJ)		at 20°C (68°F)	37 — 44 Ω
Idler pulley tension spring	Free length		44.4 — 45.4 mm (1.748 — 1.787 in.)
	Installed load at 52.1 mm (2.051 in.)		53 — 59 N (5.42 — 5.98 kgf, 11.9 — 13.2 lbf)

Cylinder head	Warpage	Maximum	0.20 mm (0.0079 in.)
	Valve seat		
	Refacing angle	Intake	20°, 45°, 70°
		Exhaust	20°, 45°, 75°
	Contacting angle		45°
	Contacting width	Intake	1.5 — 1.9 mm (0.059 — 0.075 in.)
		Exhaust	1.8 — 2.2 mm (0.071 — 0.087 in.)
	Cylinder head bolt thread inside diameter	STD	11.800 — 12.000 mm (0.4646 — 0.4724 in.)
		Minimum	11.60 mm (0.4567 in.)
	Cylinder head gasket thickness	Mark B	1.40 —1.50 mm (0.0551 — 0.0591 in.)
		Mark D	1.50 —1.60 mm (0.0591 — 0.0630 in.)
		Mark F	1.60 —1.70 mm (0.0630 — 0.0669 in.)
Valve guide bushing	Inside diameter		8.010 — 8.030 mm (0.3154 — 0.3161 in.)
	Outside diameter for repair part	STD	13.040 — 13.051 mm (0.5134 — 0.5138 in.)
		O/S 0.05	13.090 — 13.101 mm (0.5154 — 0.5158 in.)
Valve	Valve overall length	STD Intake	103.29 — 103.69 mm (4.0665 — 4.0823 in.)
		Exhaust	103.14 — 103.54 mm (4.0606 — 4.0764 in.)
		Minimum Intake	102.79 mm (4.0468 in.)
		Exhaust	102.64 mm (4.0409 in.)
	Valve face angle		44.5°
	Stem diameter	Intake	7.975 — 7.990 mm (0.3140 — 0.3146 in.)
		Exhaust	7.960 — 7.975 mm (0.3134 — 0.3140 in.)
	Stem oil clearance	STD Intake	0.020 — 0.055 mm (0.0008 — 0.0022 in.)
		Exhaust	0.035 — 0.070 mm (0.0014 — 0.0028 in.)
		Maximum Intake	0.08 mm (0.0031 in.)
		Exhaust	0.10 mm (0.0039 in.)
	Margin thickness	STD Intake	1.6 mm (0.063 in.)
		Exhaust	1.7 mm (0.067 in.)
		Minimum Intake	1.1 mm (0.043 in.)
		Exhaust	1.2 mm (0.047 in.)
Valve spring	Deviation	Maximum	2.0 mm (0.079 in.)
	Free length	Type A	46.20 mm (1.8189 in.)
		Type B	48.54 mm (1.9110 in.)
	Installed tension at 37.0 mm (1.457 in.)		301 — 332 N (30.7 — 33.9 kgf, 67.7 — 74.7 lbf)
Valve lifter	Valve lifter inside diameter		40.892 — 40.902 mm (1.6099 — 1.6103 in.)
	Cylinder head lifter bore diameter		40.960 — 40.980 mm (1.6126 — 1.6134 in.)
	Oil clearance	STD	0.058 — 0.088 mm (0.0023 — 0.0035 in.)
		Maximum	0.10 mm (0.0039 in.)
Manifold	Warpage	Maximum	0.40 mm (0.0157 in.)

Camshaft	Circle runout	Maximum	0.10 mm (0.0039 in.)
	Cam lobe height		
	2L	STD Intake	53.850 — 53.870 mm (2.1201 — 2.1209 in.)
		Exhaust	54.990 — 55.010 mm (2.1650 — 2.1657 in.)
		Minimum Intake	53.35 mm (2.1004 in.)
		Exhaust	54.49 mm (2.1453 in.)
	3L	STD Intake	54.290 — 54.310 mm (2.1374 — 2.1382 in.)
		Exhaust	54.990 — 55.010 mm (2.1650 — 2.1657 in.)
		Minimum Intake	53.79 mm (2.1777 in.)
		Exhaust	53.49 mm (2.1453 in.)
	Journal diameter	STD No.1	34.969 — 34.985 mm (1.3767 — 1.3774 in.)
		Others	27.969 — 27.985 mm (1.1011 — 1.1018 in.)
		U/S 0.125 No.1	34.844 — 34.860 mm (1.3718 — 1.3724 in.)
		Others	27.844 — 27.860 mm (1.0962 — 1.0968 in.)
		U/S 0.250 No.1	34.719 — 34.735 mm (1.3669 — 1.3675 in.)
		Others	27.719 — 27.735 mm (1.0913 — 1.0919 in.)
	Journal oil clearance	STD	0.022 — 0.074 mm (0.0009 — 0.0029 in.)
		Maximum	0.10 mm (0.0039 in.)
	Thrust clearance	STD	0.080 — 0.280 mm (0.0031 — 0.0110 in.)
		Maximum	0.35 mm (0.0138 in.)
Combustion chamber	Protrusion		± 0.03 mm (0.0012 in.)
	Shim thickness		0.03 mm (0.0012 in.)
Connecting rod	Thrust clearance	STD	0.080 — 0.300 mm (0.0031 — 0.0118 in.)
		Maximum	0.35 mm (0.0138 in.)
	Connecting rod oil clearance		
	2L	STD STD	0.036 — 0.064 mm (0.0014 — 0.0025 in.)
		U/S 0.25, 0.50	0.023 — 0.073 mm (0.0009 — 0.0029 in.)
		Maximum	0.10 mm (0.0039 in.)
	3L	STD STD	0.036 — 0.064 mm (0.0014 — 0.0025 in.)
		U/S 0.25, 0.50	0.033 — 0.079 mm (0.0013 — 0.0031 in.)
		Maximum	0.10 mm (0.0039 in.)
	Connecting rod bearing center wall thickness		
	Reference	STD Mark 1	1.478 — 1.482 mm (0.0582 — 0.0583 in.)
		Mark 2	1.482 — 1.486 mm (0.0583 — 0.0585 in.)
		Mark 3	1.486 — 1.490 mm (0.0585 — 0.0587 in.)
	Rod out—of—alignment		
		Maximum per 100 mm (3.94 in.)	0.05 mm (0.0020 in.)
	Rod twist	Maximum per 100 mm (3.94 in.)	0.15 mm (0.0059 in.)
	Bushing inside diameter	2L	27.008 — 27.020 mm (1.0633 — 1.0638 in.)
		3L	29.008 — 29.020 mm (1.1420 — 1.1425 in.)
	Piston pin diameter	2L	27.000 — 27.012 mm (1.0630 — 1.0635 in.)
		3L	29.000 — 29.012 mm (1.1417 — 1.1422 in.)
	Bushing oil clearance	STD	0.004 — 0.012 mm (0.0002 — 0.0005 in)
		Maximum	0.05 mm (0.0020 in.)
	Connecting rod bolt tension portion diameter	STD	8.400 — 8.600 mm (0.3307 — 0.3386 in.)
		Minimum	8.20 mm (0.3228 in.)

Cylinder block	Cylinder head surface warpage	Maximum	0.20 mm (0.0079 in.)
	Cylinder bore diameter		
	2L	STD Mark 1	92.000 – 92.010 mm (3.6220 – 3.6224 in.)
		Mark 2	92.010 – 92.020 mm (3.6224 – 3.6228 in.)
		Mark 3	92.020 – 92.030 mm (3.6228 – 3.6232 in.)
		Maximum STD	92.23 mm (3.6311 in.)
		O/S 0.50	92.73 mm (3.6508 in.)
	3L	STD Mark 1	96.000 – 96.010 mm (3.7795 – 3.7799 in.)
		Mark 2	96.010 – 96.020 mm (3.7799 – 3.7803 in.)
		Mark 3	96.020 – 96.030 mm (3.7803 – 3.7807 in.)
		Maximum STD	96.23 mm (3.7886 in.)
		O/S 0.50	96.73 mm (3.8083 in.)
Piston and piston ring	Piston diameter		
	2L	STD Mark 1	91.940 – 91.950 mm (3.6197 – 3.6201 in.)
		Mark 2	91.950 – 91.960 mm (3.6201 – 3.6205 in.)
		Mark 3	91.960 – 91.970 mm (3.6205 – 3.6209 in.)
		O/S 0.50	92.440 – 92.470 mm (3.6394 – 3.6405 in.)
	3L	STD Mark 1	95.940 – 95.950 mm (3.7772 – 3.7776 in.)
		Mark 2	95.950 – 95.960 mm (3.7776 – 3.7779 in.)
		Mark 3	95.960 – 95.970 mm (3.7779 – 3.7783 in.)
		O/S 0.50	96.440 – 96.470 mm (3.7968 – 3.7980 in.)
	Piston oil clearance	STD	0.050 – 0.070 mm (0.0020 – 0.0028 in.)
		Maximum	0.14 mm (0.0055 in.)
	Piston ring groove clearance	STD No.1	0.031 – 0.079 mm (0.0012 – 0.0031 in.)
		No.2	0.060 – 0.105 mm (0.0024 – 0.0041 in.)
		Oil	0.030 – 0.070 mm (0.0012 – 0.0028 in.)
		Maximum	0.20 mm (0.0079 in.)
	Piston ring end gap	STD No.1	0.350 – 0.590 mm (0.0138 – 0.0232 in.)
		No.2	0.400 – 0.720 mm (0.0157 – 0.0283 in.)
		Oil	0.200 – 0.520 mm (0.0079 – 0.0205 in.)
		Maximum No.1	1.29 mm (0.0508 in.)
		No.2	1.42 mm (0.0559 in.)
		Oil	1.22 mm (0.0480 in.)
	Piston protrusion from cylinder block		0.68 – 0.97 mm (0.0268 – 0.0382 in.)

Crankshaft	Thrust clearance	STD	0.040 — 0.250 mm (0.0016 — 0.0098 in.)
		Maximum	0.30 mm (0.0118 in.)
	Thrust washer thickness	STD	2.430 — 2.480 mm (0.0957 — 0.0976 in.)
		O/S 0.125	2.493 — 2.543 mm (0.0981 — 0.1001 in.)
		O/S 0.250	2.555 — 2.605 mm (0.1006 — 0.1026 in.)
	Main journal oil clearance	STD STD	0.034 — 0.065 mm (0.0013 — 0.0026 in.)
		U/S 0.25, 0.50	0.033 — 0.079 mm (0.0013 — 0.0031 in.)
		Maximum	0.10 mm (0.0039 in.)
	Main journal diameter	STD	61.985 — 62.000 mm (2.4403 — 2.4409 in.)
		U/S 0.25	61.745 — 61.755 mm (2.4309 — 2.4413 in.)
		U/S 0.50	61.495 — 61.505 mm (2.4211 — 2.4215 in.)
	Main bearing center wall thickness		
	Reference	STD Mark 1	1.979 — 1.983 mm (0.0779 — 0.0781 in.)
		Mark 2	1.983 — 1.987 mm (0.0781 — 0.0782 in.)
		Mark 3	1.987 — 1.991 mm (0.0782 — 0.0784 in.)
	Crank pin diameter		
	2L	STD	52.988 — 53.000 mm (2.0861 — 2.0866 in.)
		U/S 0.25	52.745 — 52.755 mm (2.0766 — 2.0770 in.)
		U/S 0.50	52.495 — 52.505 mm (2.0667 — 2.0671 in.)
	3L	STD	54.988 — 55.000 mm (2.1649 — 2.1654 in.)
		U/S 0.25	54.745 — 54.755 mm (2.1553 — 2.1557 in.)
		U/S 0.50	54.495 — 54.505 mm (2.1455 — 2.1459 in.)
	Circle runout	Maximum	0.06 mm (0.0024 in.)
	Main journal taper and out—of—round	Maximum	0.02 mm (0.0008 in.)
	Crank pin taper and out—of—round	Maximum	0.02 mm (0.0008 in.)

EG

TORQUE SPECIFICATION

Part tightened		N·m	kgf·cm	ft·lbf
Injection pump x Timing belt case		20.5	210	15
Injection pump x Injection pump stay		18	185	13
Injection pipe x Injection pump		24.5	250	18
Plug bolt x Distributive head plug on injection pump		17	170	12
Intake flange x Intake manifold		12	120	9
No.2 idler pulley x Cylinder block		44	450	33
Injection pump drive pulley x Injection pump		64	650	47
Camshaft timing pulley x Camshaft		98	1,000	72
No.1 idler pulley x Cylinder block	12 mm head	19	195	14
	14 mm head	44	450	33
Cylinder head x Cylinder block	1st	78	800	58
	2nd	Turn 90°	Turn 90°	Turn 90°
	3rd	Turn 90°	Turn 90°	Turn 90°
Cylinder head cover x Cylinder head		12	120	9
No.2 cylinder head cover x Cylinder head cover		12	120	9
Exhaust manifold x Cylinder head		52	530	38
Exhaust manifold heat insulator x Exhaust manifold		12	120	9
Exhaust manifold heat insulator x Oil filter bracket		19	195	14
Intake manifold x Cylinder head		24	240	17
Engine hanger x Cylinder head	LH	59	600	43
	RH (Reference)	37	380	27

Water outlet housing x Cylinder head		19	195	14
No.2 timing belt cover x Cylinder head		18	185	13
Glow plug x Cylinder head		13	130	9
Camshaft oil seal retainer x Cylinder head		18	185	13
Camshaft bearing cap x Cylinder head		25	255	18
Crankshaft pulley x Crankshaft		235	2,400	173
Main bearing cap x Cylinder block		103	1,050	76
Connecting rod cap x Connecting rod	1st	54	550	40
	2nd	Turn 90°	Turn 90°	Turn 90°
Rear oil seal retainer x Cylinder block		13	130	9
Union for alternator hose x Cylinder		32	330	24
Fan belt adjusting bar x Cylinder block		45	460	33
Engine mounting bracket x Cylinder block		39	400	29
Alternator bracket x Cylinder block		39	400	29
Rear end plate x Cylinder block		12	120	9
Flywheel x Crankshaft	M/T	123	1,250	90
Drive plate x Crankshaft	A/T	98	1,000	72

FUEL SYSTEM

PREPARATION

SST (SPECIAL SERVICE TOOLS)

E80CP-2A

EG

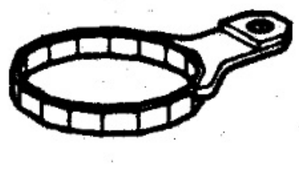	09228-34010 Fuel Filter Wrench	LN Thailand
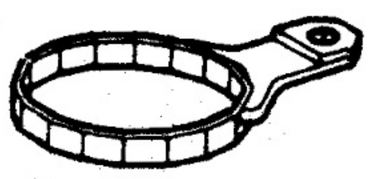	09228-64010 Fuel Filter Wrench	Except LN Thailand
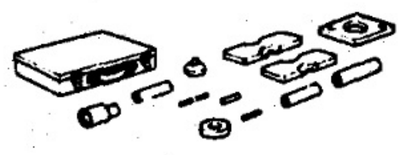	09236-00101 Water Pump Overhaul Tool Set	
	(09237-00070) Shaft "C"	Governor sleeve plug
	09241-76022 Injection Pump Stand Set	
	09245-54010 Injection Pump Stand Arm	
	09260-54012 Injection Pump Tool Set	
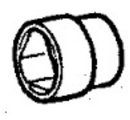	(09262-54010) Distributor Head Plug Wrench	
	(09262-54020) Regulator Valve Wrench	
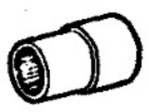	(09269-54020) Socket 14 mm	
	(09269-54030) Tweezers	
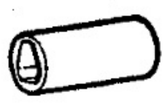	(09269-54040) Governor Lever Support Bolt Wrench	

	09268–64010 Injection Nozzle Wrench Set	
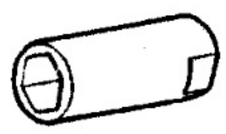	(09268–64020) Injection Nozzle Holder Retaining Nut Wrench	
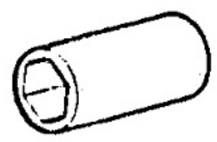	(09268–64030) Injection Nozzle Holder Wrench	

EG

ST01C–01Y

RECOMMENDED TOOLS

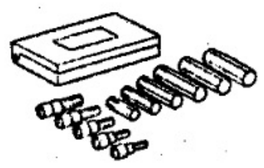	09040–00010 Hexagon Wrench Set .	
	09082–00040 TOYOTA Electrical Tester.	
	09200–00010 Engine Adjust Kit .	

EBOCH–22

EQUIPMENT

Angle gauge	
Brass brush	Injection nozzle
Dial indicator with magnetic base	
Graduated cylinder	
Injection nozzle tester	
Injection pump tester	
Inner pressure gauge	
Micrometer	
Steel square	
Timer measuring device	
Torque wrench	
Vernier calipers	
Wooden stick	Injection nozzle

EG

FUEL FILTER REPLACEMENT

1. REMOVE FUEL FILTER ASSEMBLY FROM FUEL FILTER SUPPORT (EG70B-01)
2. REPLACE FUEL FILTER

A. Drain fuel from fuel filter

Loosen the drain plug, and drain the fuel from the fuel filter.

B. Mount fuel filter cap in soft jaw vise

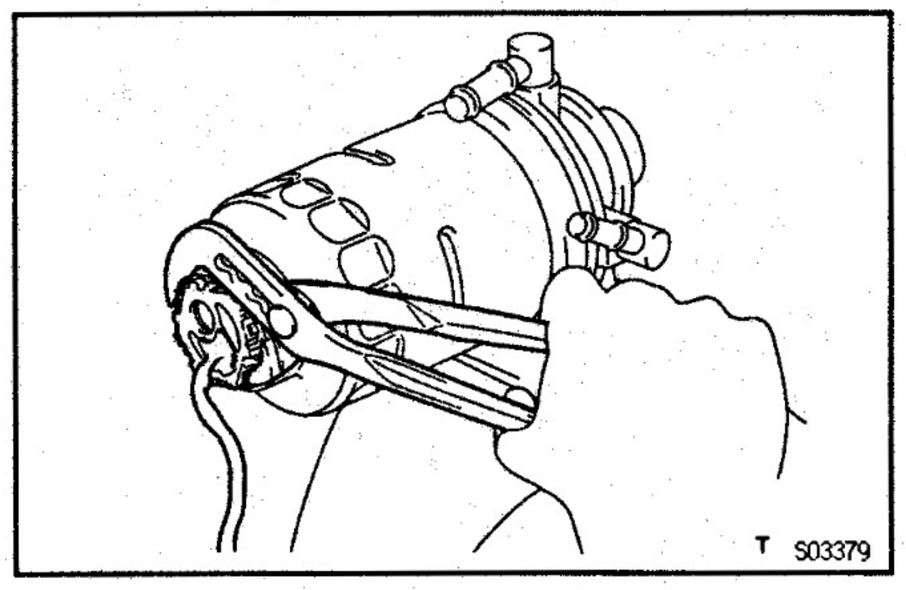

C. Remove fuel filter warning switch from fuel filter

Drain union (LJ):

Loosen the lock nut, and remove the drain union and O—ring.

Warning switch:

Using pliers, remove the warning switch and O—ring.

NOTICE: Be careful not to damage the warning switch.

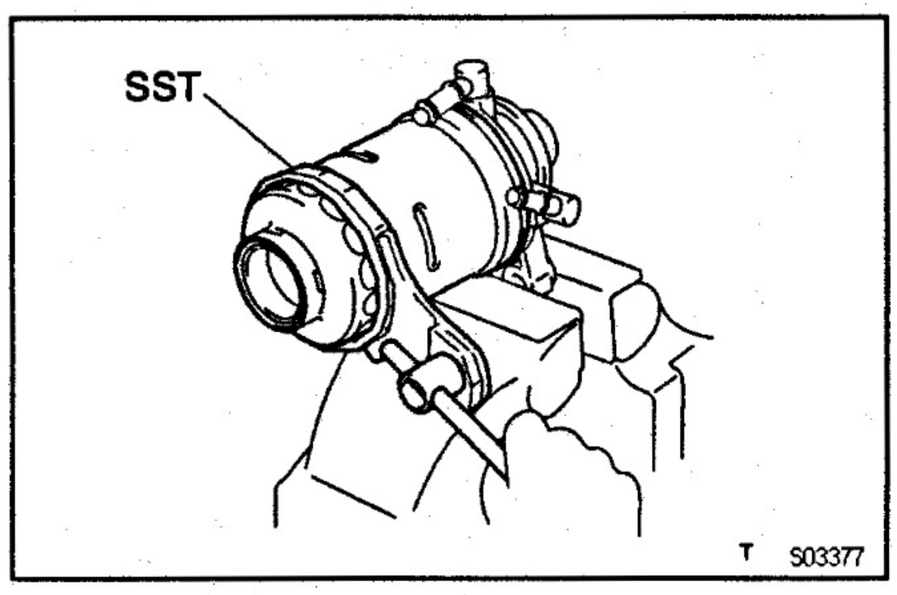

D. Remove fuel filter

Using SST, remove the fuel filter.

SST 09228—34010 for LN Thailand
09228—64010 for Except LN Thailand

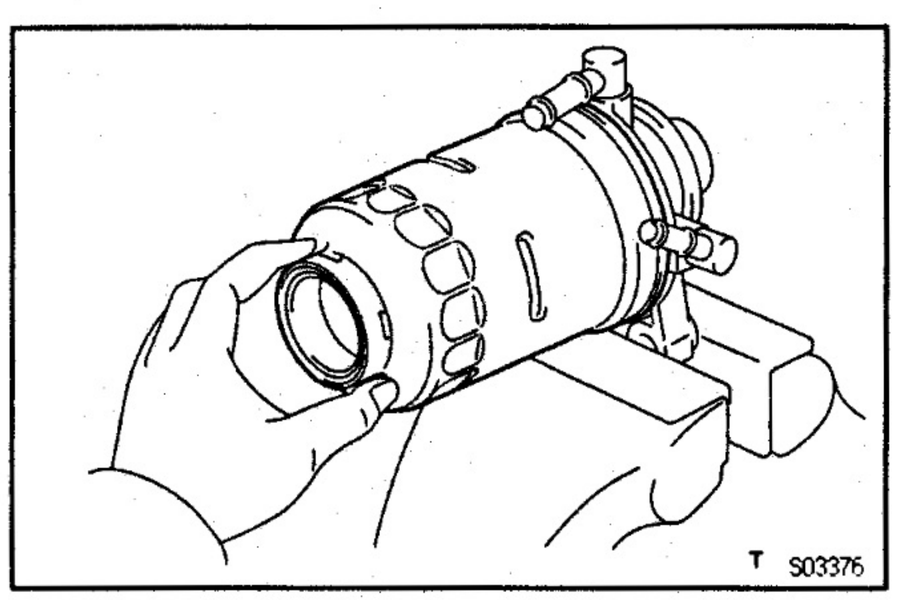

E. Install new fuel filter

(a) Check and clean the fuel filter installation surface.
(b) Apply fuel to the gasket on a new fuel filter.
(c) Lightly screw the fuel filter into place, and tighten it until the gasket comes into contact with the seat.
(d) Tighten it additional 3/4 turn by hand.

F. Install fuel filter warning switch to new fuel filter

Warning switch:

(a) Install a new O—ring to the warning switch.
(b) Apply fuel to the O—ring on the warning switch.
(c) Install the warning switch to a new fuel filter by hand.

Drain union (LJ):

(a) Fully loosen the lock nut on the drain union.
(b) Install a new O—ring to the drain union.
(c) Apply fuel to the O—ring on the drain union.

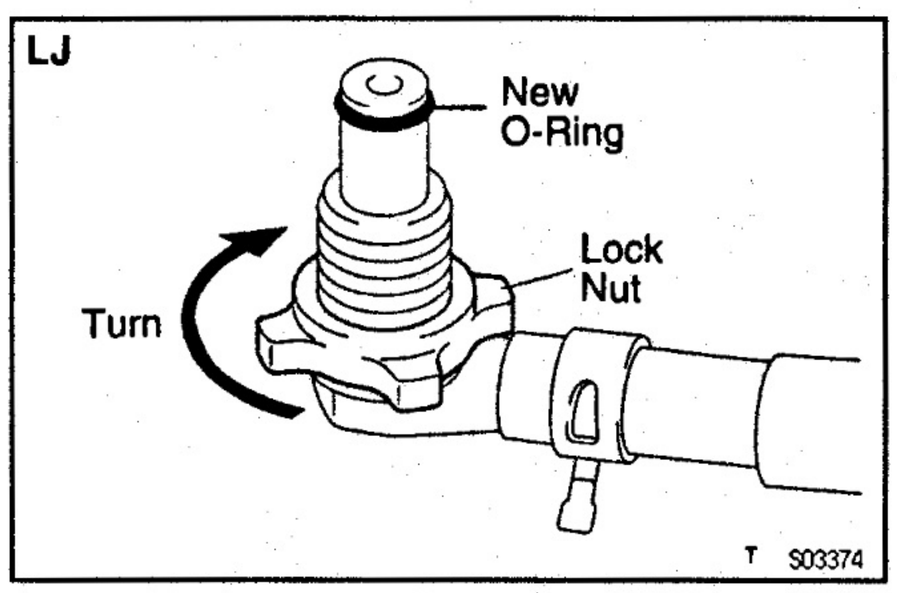

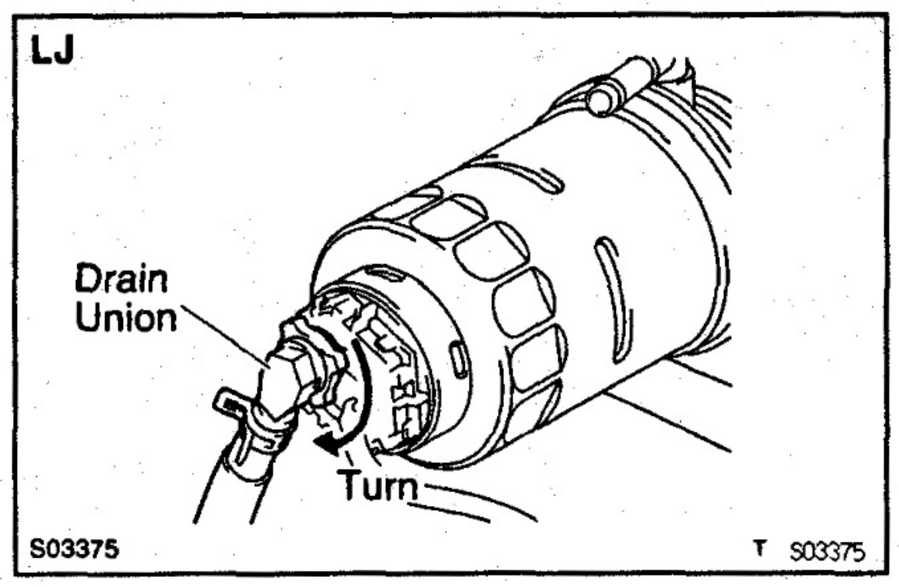

(d) Install the drain union by turning it with a hand until it slightly stops.

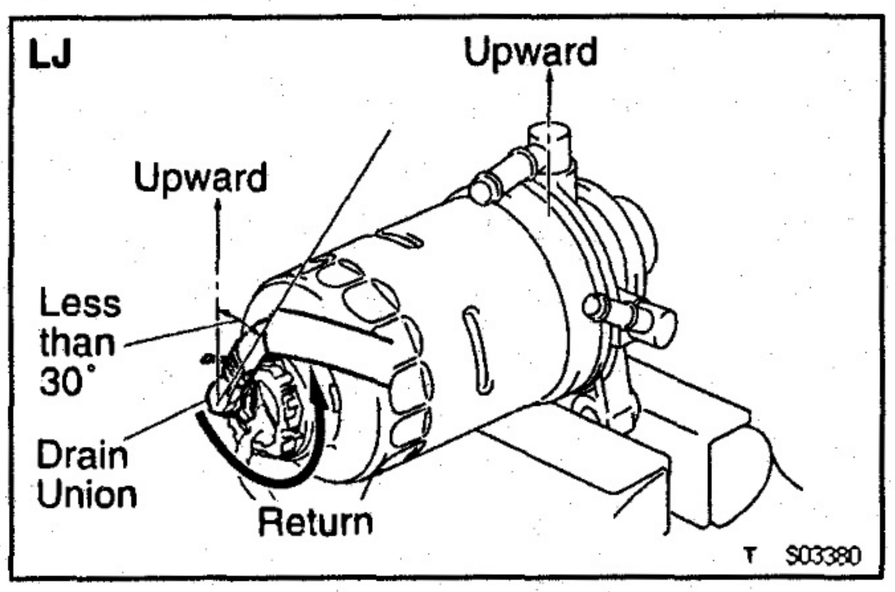

(e) Return the drain union in the direction indicated in the illustration.
NOTICE: If the drain union has turned to the same direction as the wire harness did, shift the direction of the drain union.

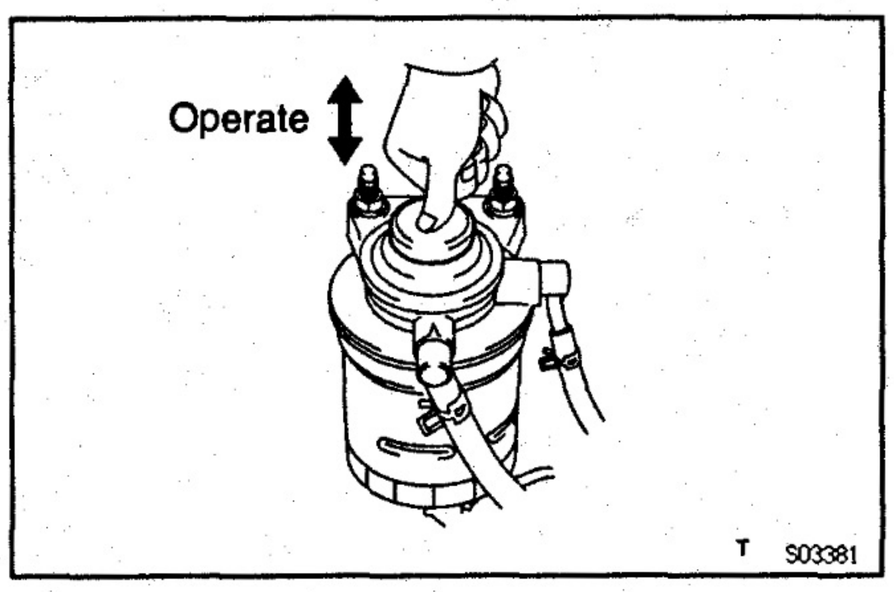

3. **REINSTALL FUEL FILTER ASSEMBLY TO FUEL FILTER SUPPORT**
4. **REFILL FUEL FILTER WITH FUEL**
   Operate the hand pump until you feel more resistance.
5. **START ENGINE AND CHECK FOR FUEL LEAKS**

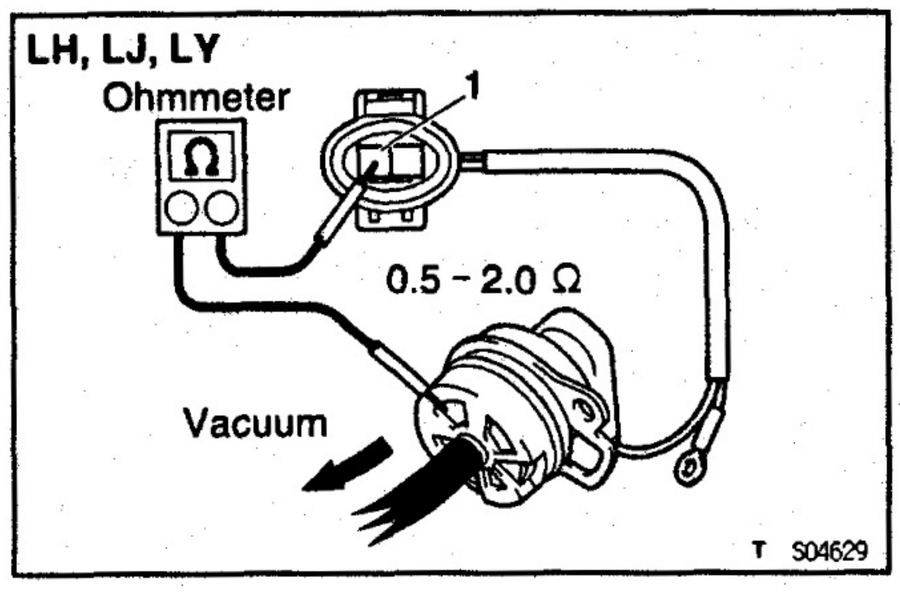

FUEL HEATER SYSTEM
COMPONENTS INSPECTION

E07DA-01

Fuel Heater (LH, LJ, LY)

1. **REMOVE FUEL HEATER FROM FUEL FILTER CAP**
2. **INSPECT FUEL HEATER**

(a) Apply a vacuum of 34.7 ± 5.3 kPa (260 ± 40 mmHg, 10.24 ± 1.57 in.Hg) or more to the vacuum switch port.

(b) Using an ohmmeter, measure the resistance between terminal 1 and the switch body.

Resistance at 20°C (68°F):

0.5 – 2.0 Ω

If the resistance is not as specified, replace the fuel heater and vacuum switch assembly.

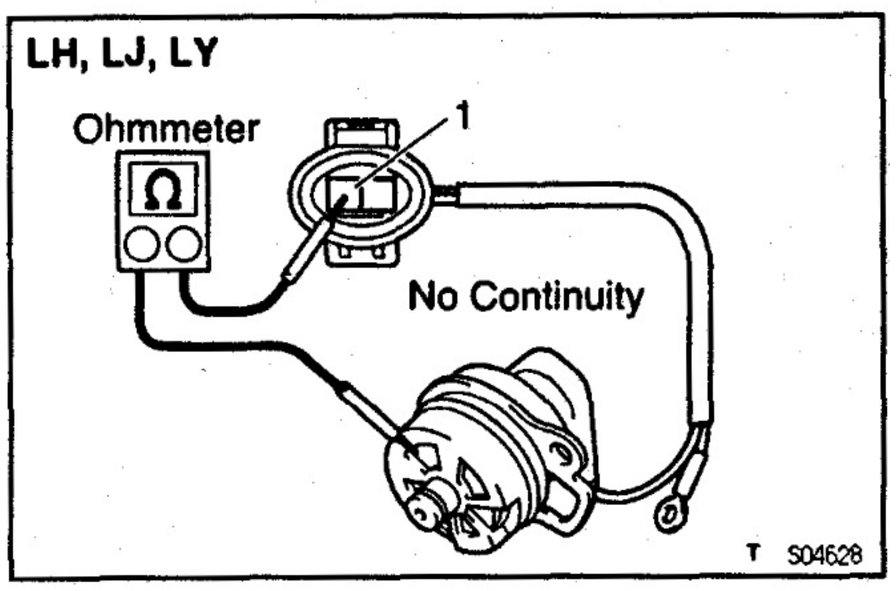

3. **INSPECT VACUUM SWITCH**

A. **Inspect switch continuity**

Using an ohmmeter, check that there is no continuity between terminal 1 and the switch body.

If there is continuity, replace the fuel heater and vacuum switch assembly.

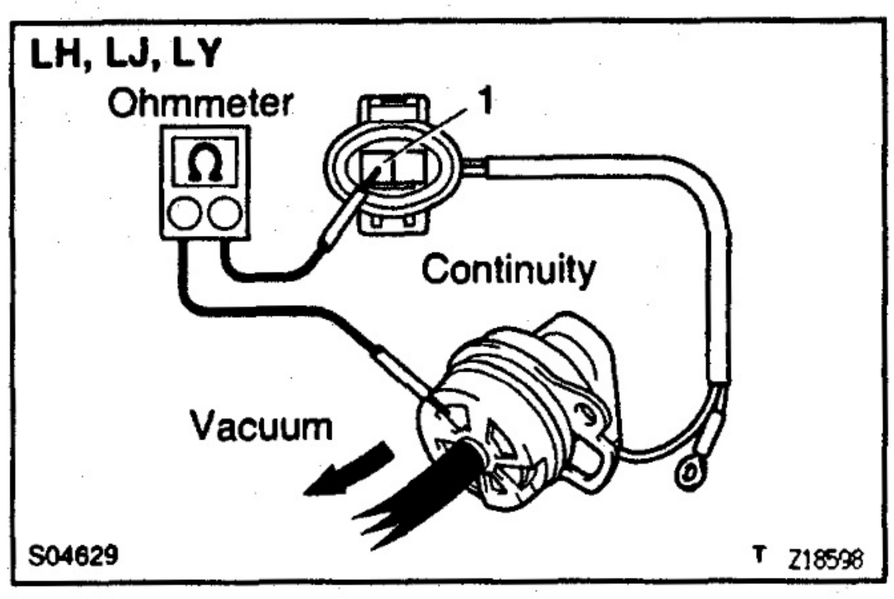

B. **Inspect switch operation**

(a) Apply a vacuum of 34.7 ± 5.3 kPa (260 ± 40 mmHg, 10.24 ± 1.57 in.Hg) or more to the vacuum switch port.

(b) Using an ohmmeter, check that there is continuity between terminal 1 and the switch body.

If there is no continuity, replace the fuel heater and vacuum switch assembly.

4. **REINSTALL FUEL HEATER TO FUEL FILTER CAP**

Torque: 3.19 N·m (32.5 kgf·cm, 28 in.·lbf)

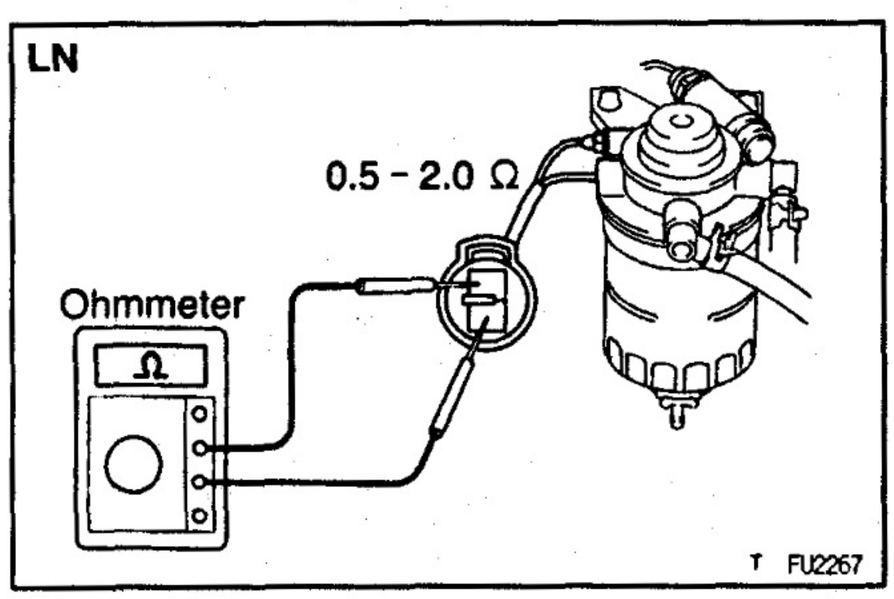

Fuel Heater (LN)

1. **DISCONNECT FUEL HEATER CONNECTOR**
2. **INSPECT FUEL HEATER**

(a) Apply a vacuum of 34.7 ± 5.3 kPa (260 ± 40 mmHg, 10.24 ± 1.57 in.Hg) or more to the vacuum switch port.

(b) Using an ohmmeter, measure the resistance between terminal 1 and the switch body.

Resistance at 20°C (68°F):

0.5 – 2.0 Ω

If the resistance is not as specified, replace the fuel heater and vacuum switch assembly.

3. **RECONNECT FUEL HEATER CONNECTOR**

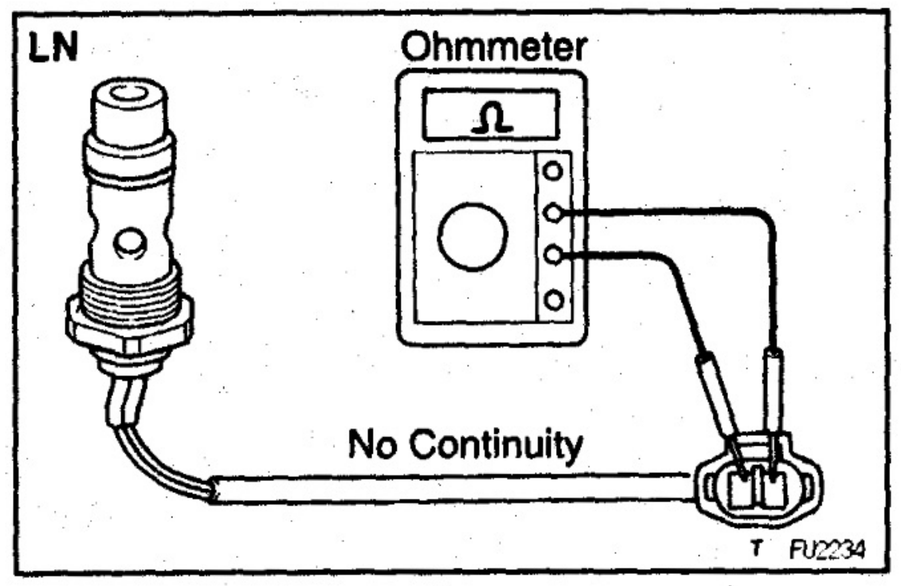

Vacuum Switch (LN)

1. **REMOVE VACUUM SWITCH FROM FUEL FILTER CAP**
2. **INSPECT VACUUM SWITCH**

A. Inspect switch continuity

Using an ohmmeter, check that there is no continuity between terminal 1 and the switch body.
If there is continuity, replace the vacuum switch.

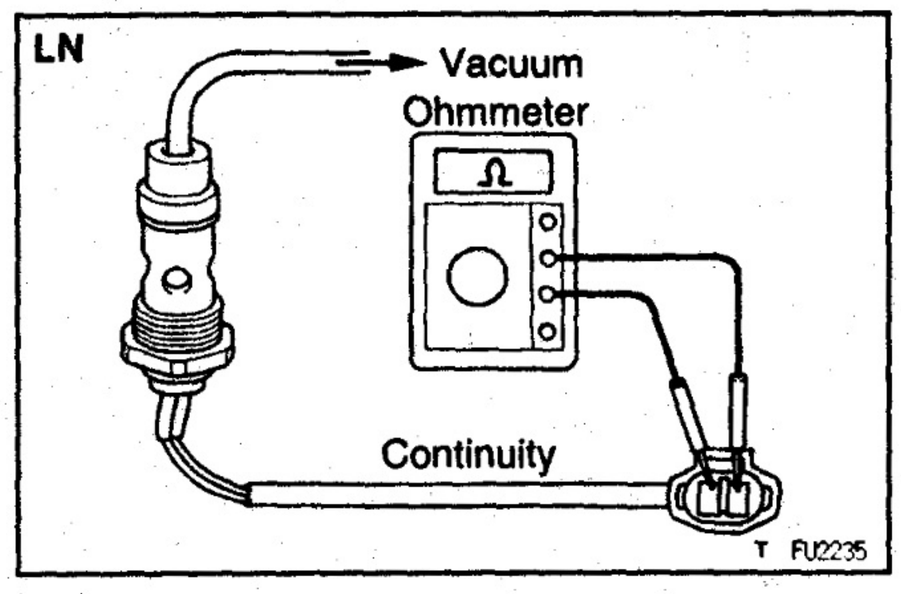

B. Inspect switch operation

(a) Apply a vacuum of 26.7 ± 6.7 kPa (200 ± 50 mmHg, 7.87 ± 1.97 in.Hg) or more to the vacuum switch port.

(b) Using an ohmmeter, check that there is continuity between terminal 1 and the switch body.
If there is no continuity, replace the vacuum switch.

3. **REINSTALL VACUUM SWITCH TO FUEL FILTER CAP**

Torque: 36.8 N·m (375 kgf·cm, 27 ft·lbf)

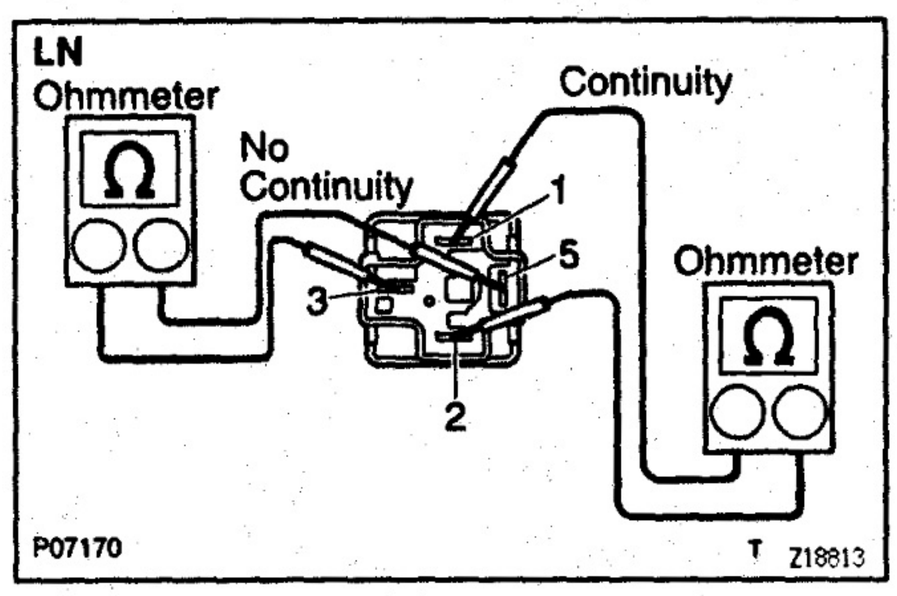

Fuel Heater Relay (LN)

1. **REMOVE FUEL HEATER RELAY**
LOCATION: See relay locations in Electrical Wiring Diagram.
2. **INSPECT FUEL HEATER RELAY**

A. Inspect relay continuity

(a) Using an ohmmeter, check that there is continuity between terminals 1 and 2.
If there is no continuity, replace the relay.

(b) Check that there is no continuity between terminals 3 and 5.
If there is continuity, replace the relay.

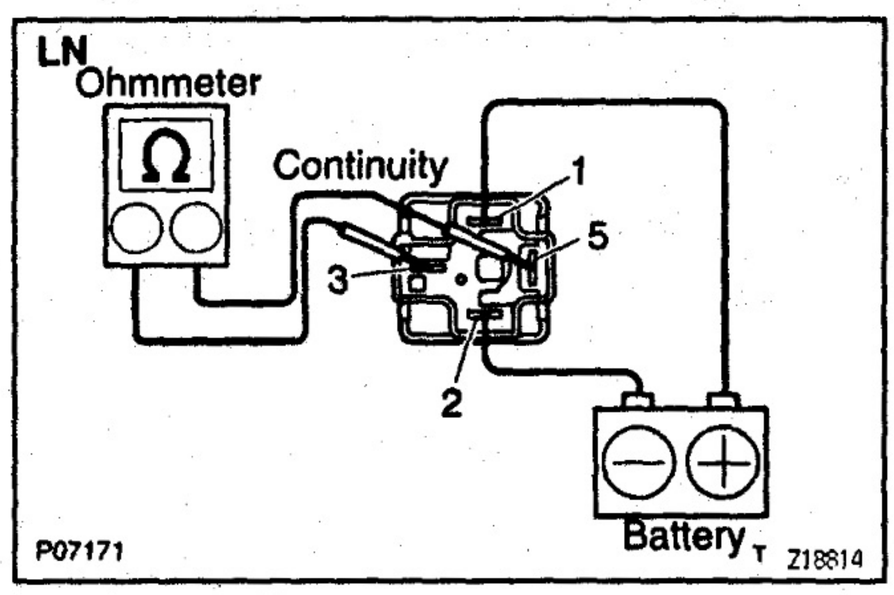

B. Inspect relay operation

(a) Apply battery voltage across terminals 1 and 2.

(b) Using an ohmmeter, check that there is continuity between terminals 3 and 5.
If there is no continuity, replace the relay.

3. **REINSTALL FUEL HEATER RELAY**

INJECTION NOZZLE
COMPONENTS FOR REMOVAL AND INSTALLATION

EG2230W-08

EG

LY Europe

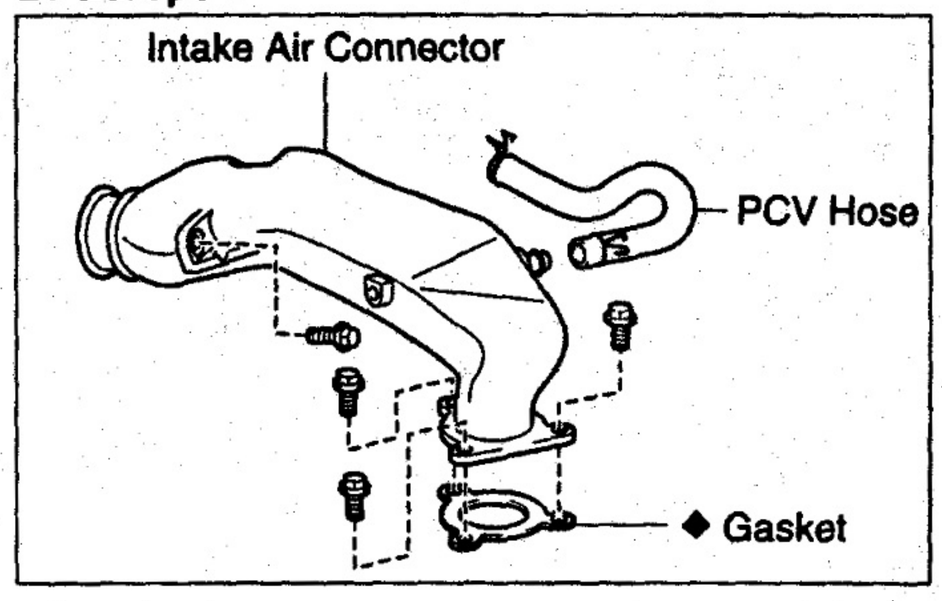

LH

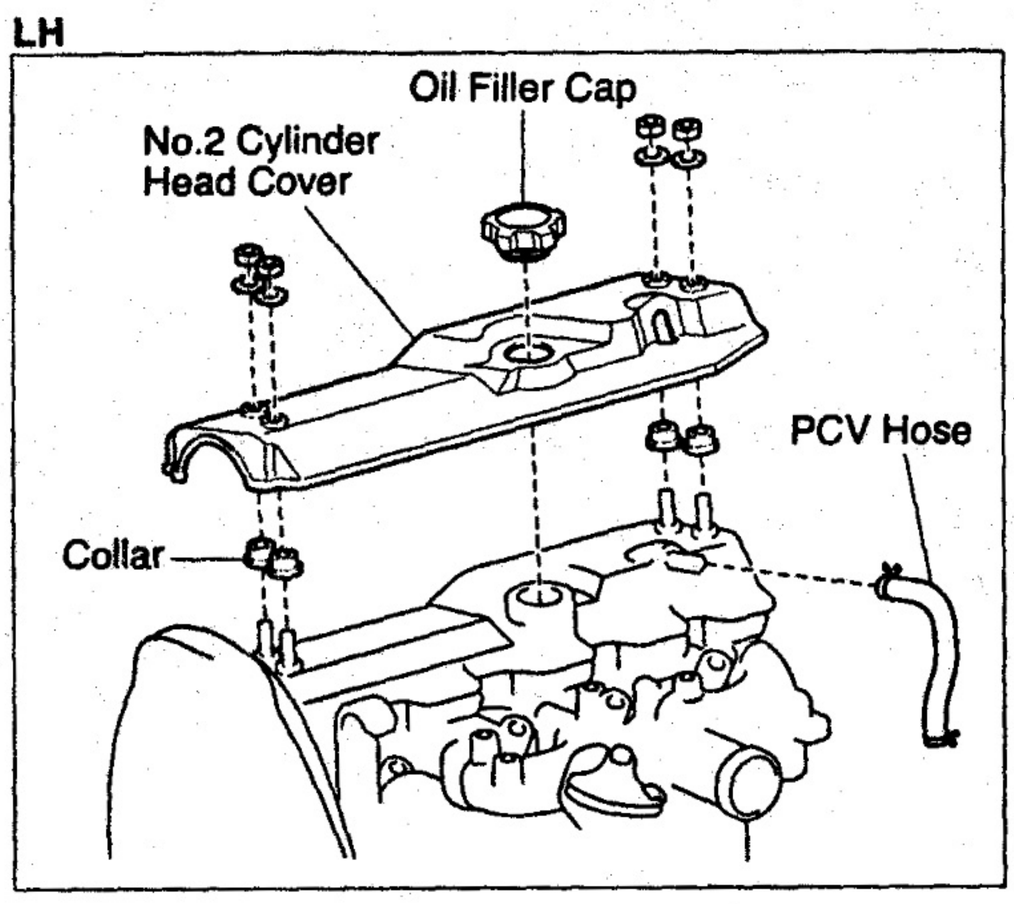

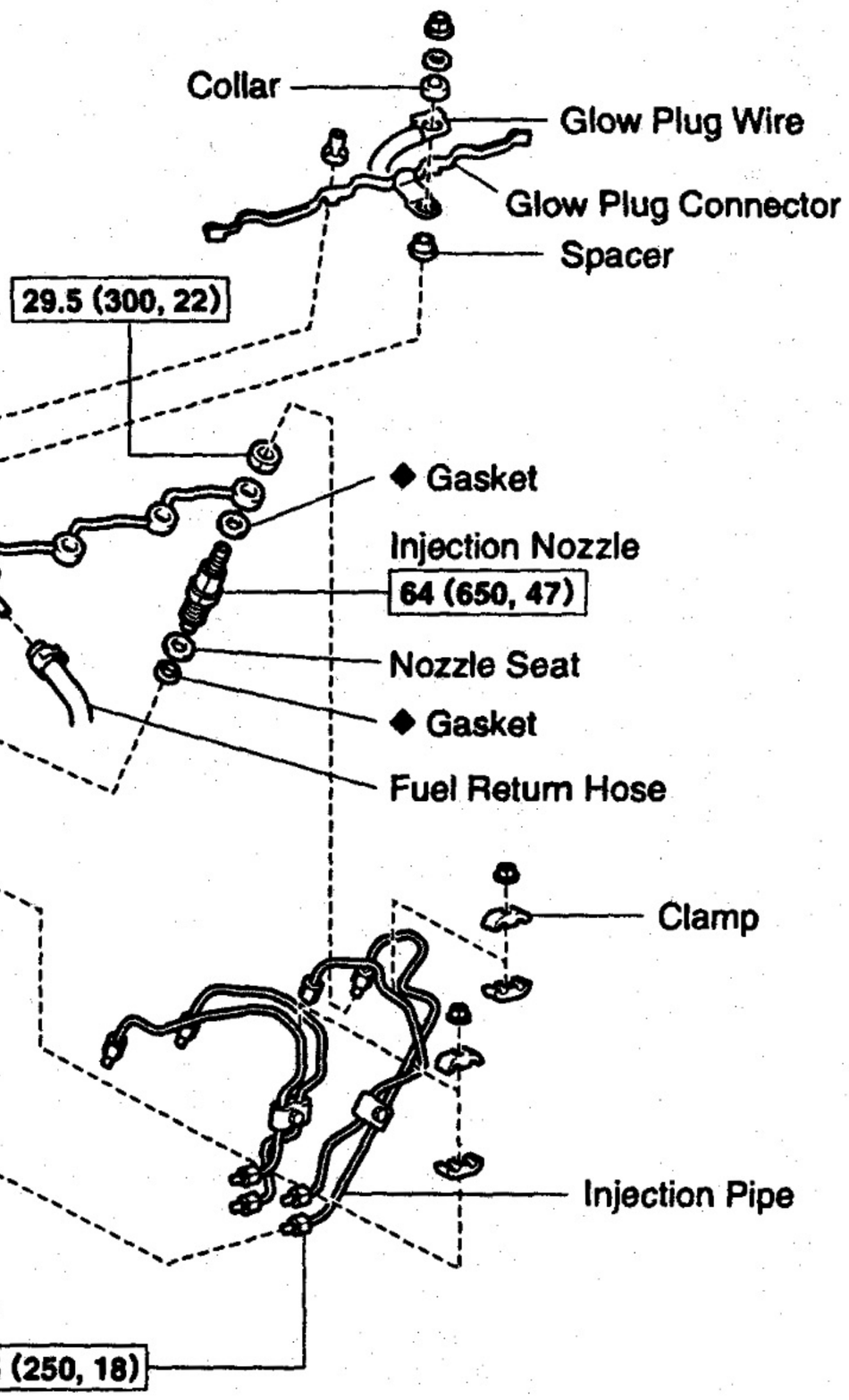

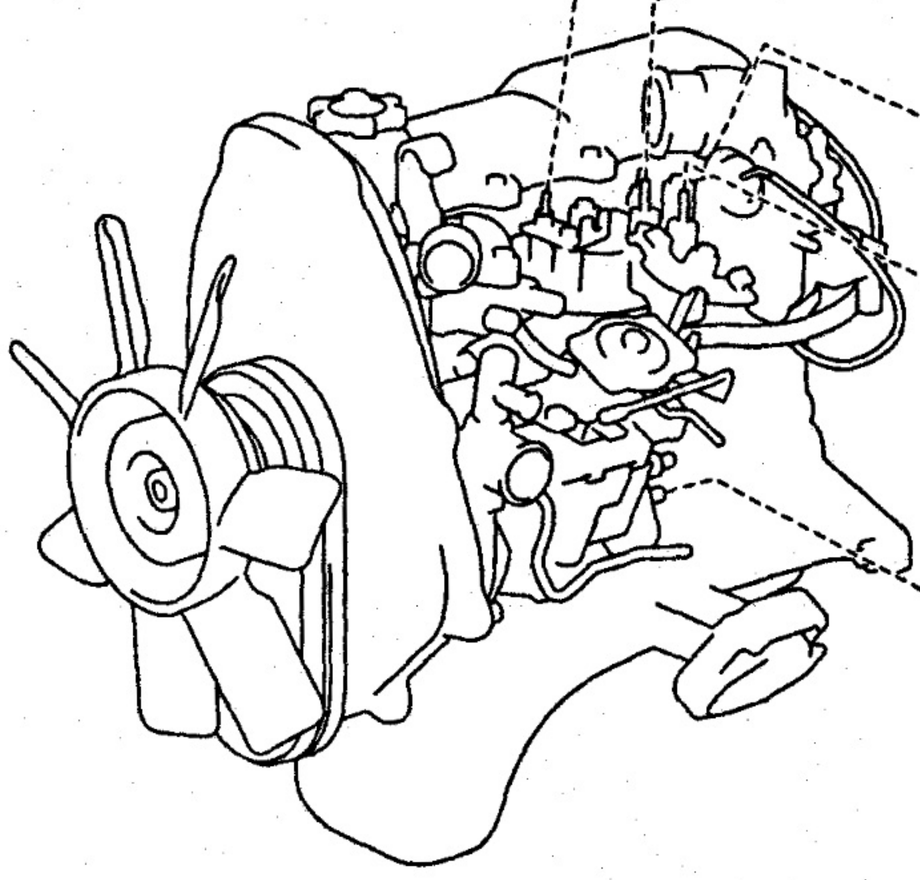

N·m (kgf·cm, ft·lbf): Specified torque
◆ Non-reusable part

T

S04656

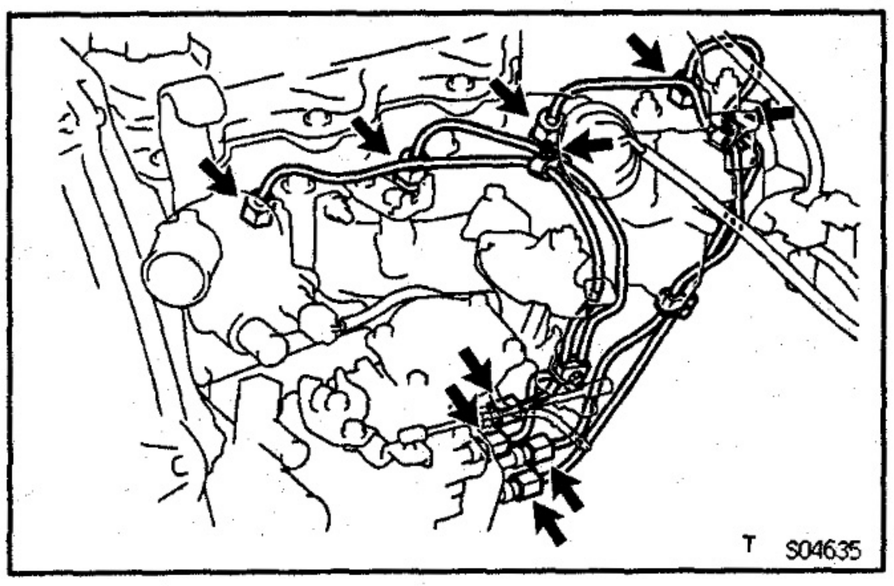

INJECTION NOZZLES REMOVAL

1. **REMOVE GLOW PLUG CONNECTOR**
(See steps 2 to 5 in cylinder head removal in Engine Mechanical)
2. **REMOVE INJECTION PIPES**
(a) Loosen the 8 union nuts of the 4 injection pipes.
(b) Remove the 2 nuts, 2 upper pipe clamps, 4 injection pipes and lower pipe clamps.

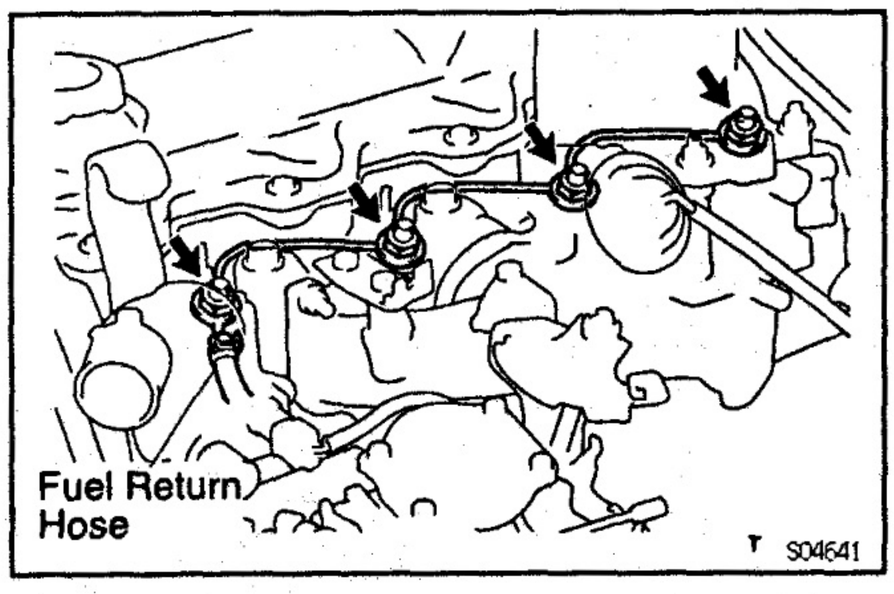

3. **REMOVE NOZZLE LEAKAGE PIPE**
(a) Disconnect the fuel return hose from the leakage pipe.
(b) Remove the 4 nuts, leakage pipe and 4 gaskets.

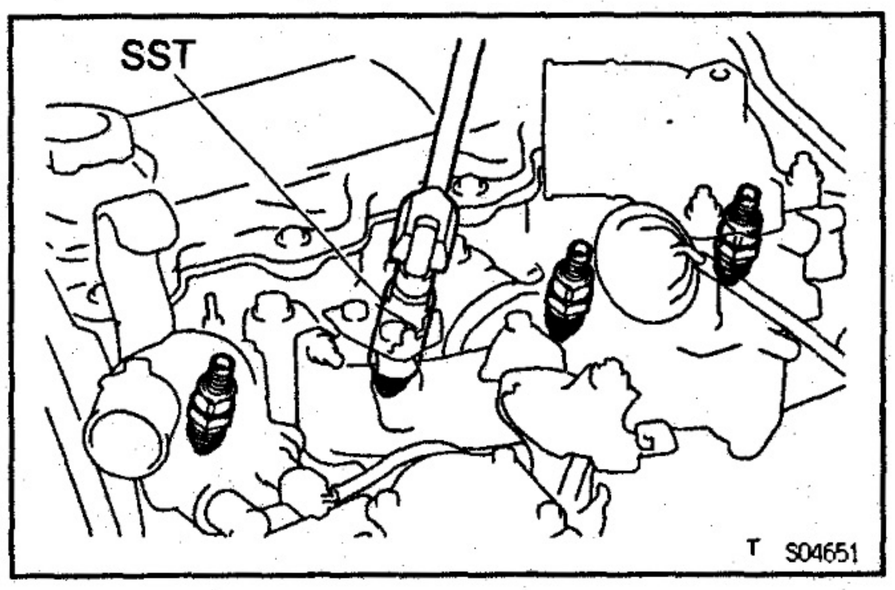

4. **REMOVE INJECTION NOZZLES**
Using SST, remove the 4 injection nozzles, 4 seats and 4 gaskets.
SST 09268—64010 (09268—64020)
HINT: Arrange the injection nozzles in correct order.

INJECTION NOZZLES TEST

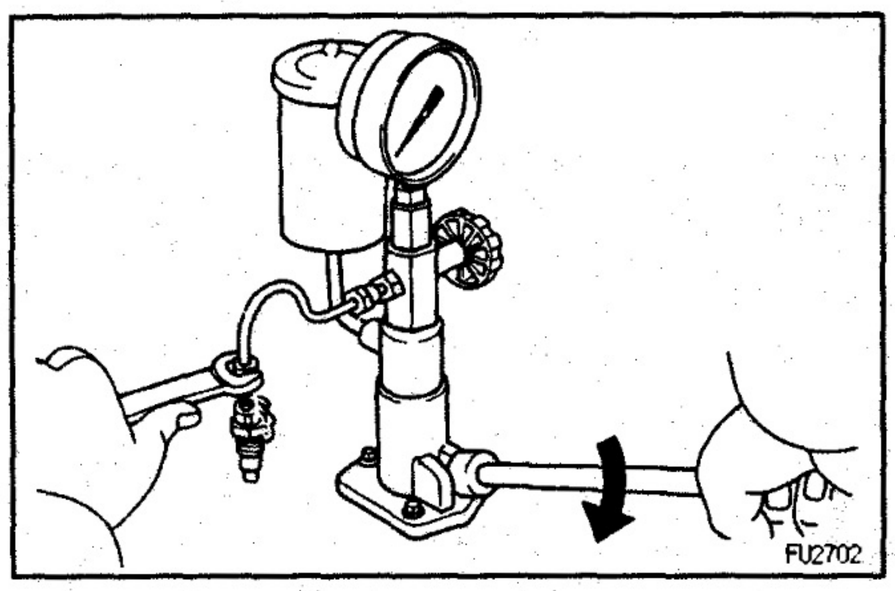

1. **INJECTION PRESSURE TEST**
(a) Install the injection nozzle to the injection nozzle hand tester and bleed air from the union nut.
CAUTION: Do not place your finger over the nozzle injection hole.
(b) Pump the tester handle a few times as fast as possible to discharge the carbon from the injection hole.
(c) Pump the tester handle slowly and observe the pressure gauge.
(d) Read the pressure gauge just as the injection pressure begins to drop.

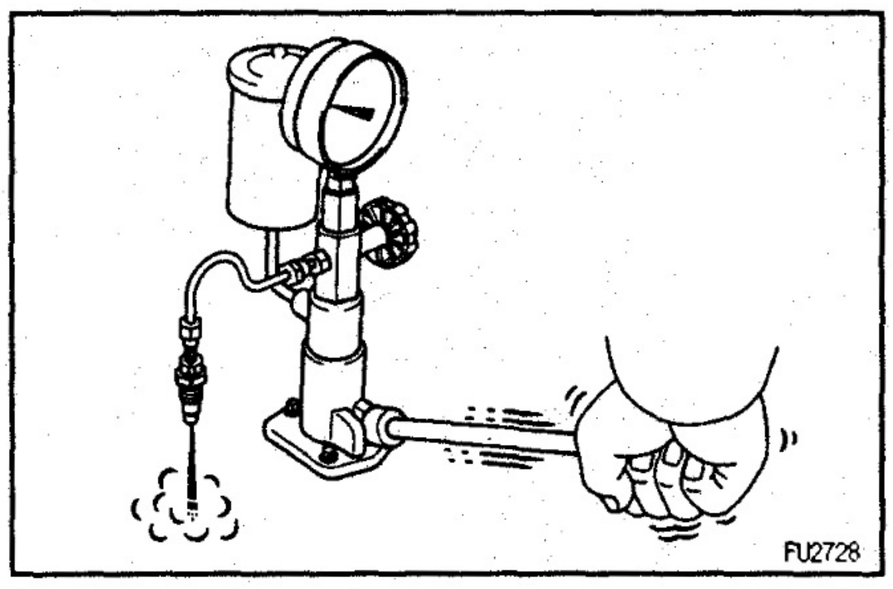

Opening pressure:

New nozzle

14,810 — 15,590 kPa

(151 — 159 kgf/cm², 2,148 — 2,262 psi)

Reused nozzle

13,729 — 15,690 kPa

(140 — 160 kgf/cm², 1,991 — 2,276 psi)

HINT: Proper nozzle operation can be determined by a swishing sound.

If the opening pressure is not as specified, disassemble the nozzle holder and change the adjusting shim on the top of the pressure spring.

Adjusted opening pressure:

13,729 — 15,690 kPa

(140 — 160 kgf/cm², 1,991 — 2,276 psi)

Adjusting shim thickness: **mm (in.)**

0.900 (0.0354)	1.300 (0.0512)	1.700 (0.0669)
0.950 (0.0374)	1.350 (0.0531)	1.750 (0.0689)
1.000 (0.0394)	1.400 (0.0551)	1.800 (0.0709)
1.050 (0.0413)	1.450 (0.0571)	1.850 (0.0728)
1.100 (0.0433)	1.500 (0.0591)	1.900 (0.0748)
1.150 (0.0453)	1.550 (0.0610)	1.950 (0.0768)
1.200 (0.0472)	1.600 (0.0630)	—
1.250 (0.0492)	1.650 (0.0650)	—

HINT:

- Varying the adjusting shim thickness by 0.05 mm (0.0020 in.) changes the injection pressure by about 628 kPa (6.4 kgf/cm², 91 psi) .
- Only one adjusting shim should be used.

(e) There should be no dripping after injection.

2. LEAKAGE TEST

While maintaining pressure at about 981 — 1,961 kPa (10 — 20 kgf/cm², 142 — 284 psi) below opening pressure (adjust by tester handle), check that there is no dripping for 10 seconds from the injection hole or around the retaining nut.

If the nozzle drips within 10 seconds, replace or clean and overhaul the nozzle assembly.

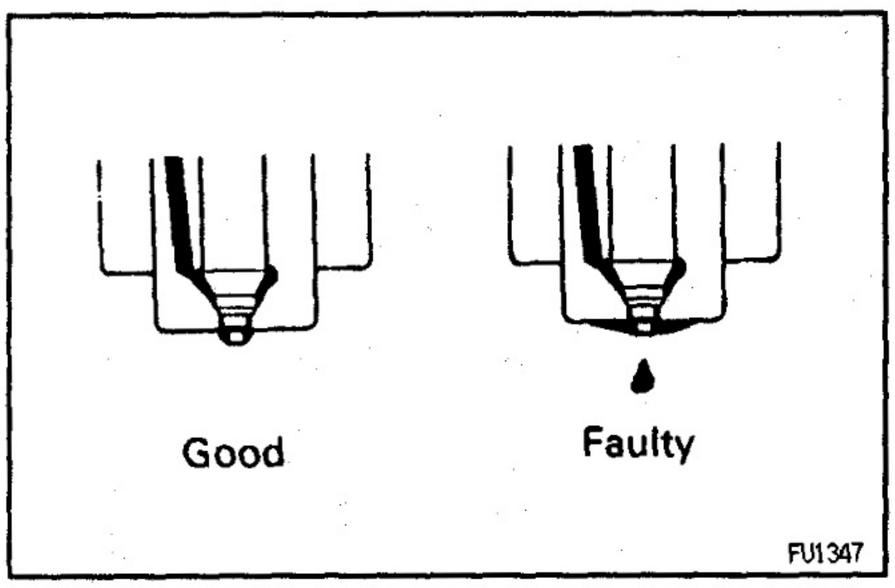

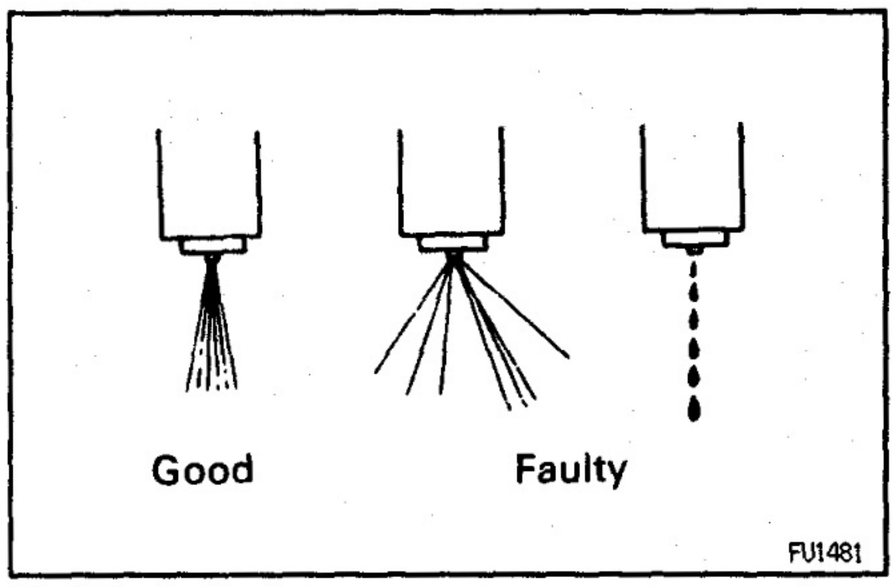

3. SPRAY PATTERN TEST

(a) The injection nozzle should shudder at a certain pumping speed between 15 — 60 times (old nozzle) or 30 — 60 times (new nozzle) per minute.

(b) Check the spray pattern during shuddering.

If the spray pattern is not correct during shuddering, the nozzle must be replaced or cleaned.

COMPONENTS FOR DISASSEMBLY AND ASSEMBLY

EG882Z-03

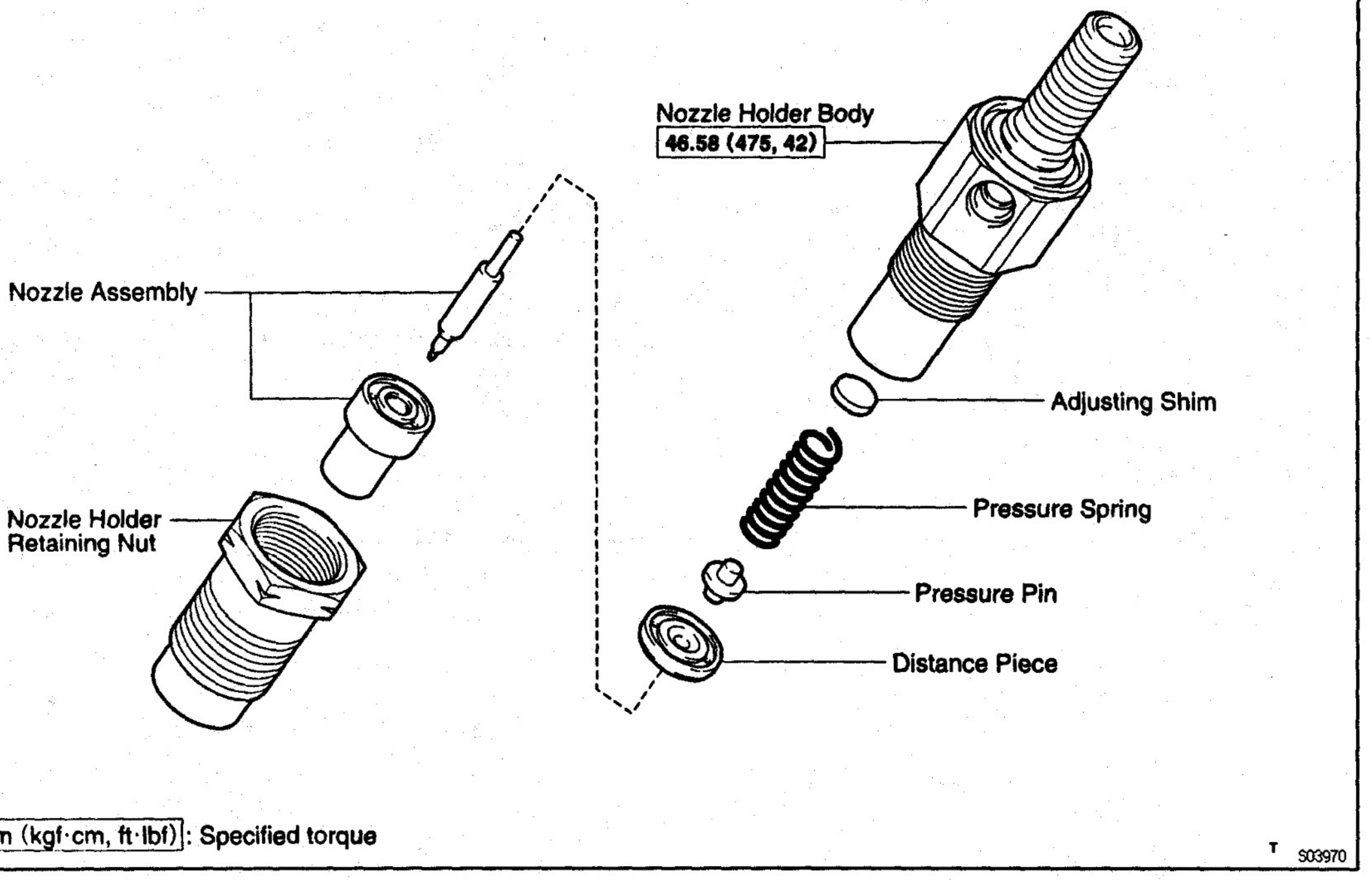

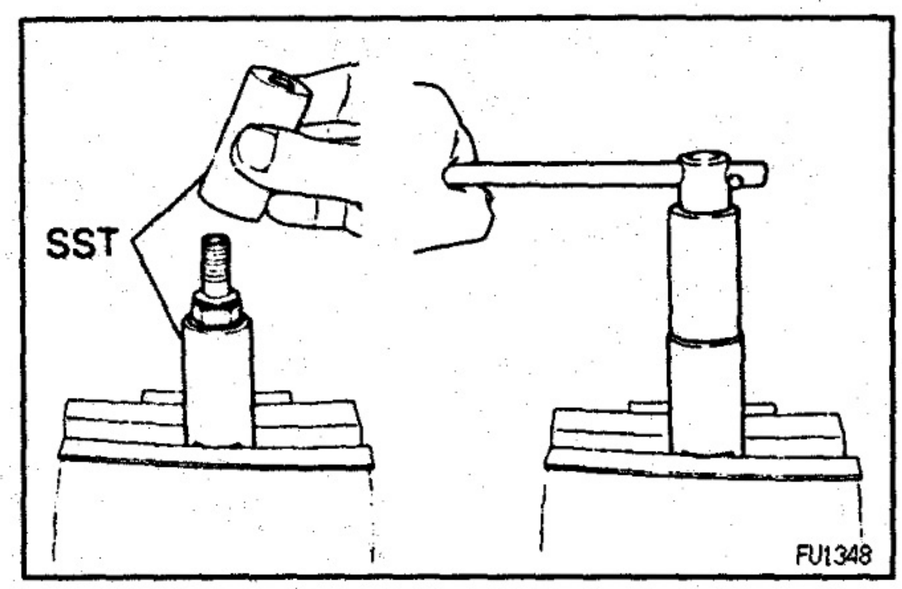

INJECTION NOZZLE DISASSEMBLY

EG940-06

DISASSEMBLE INJECTION NOZZLES

(a) Using SST, remove the nozzle holder body.
SST 09268–64010 (09268–64020, 09268–64030)
NOTICE: When disassembling the nozzle, be careful not to drop the inner parts.

(b) Remove the pressure spring, shim, pressure pin, distance piece and the nozzle assembly.

INJECTION NOZZLES CLEANING AND INSPECTION

EG60M-02

1. NOZZLE CLEANING

(a) To wash the nozzles, use a wooden stick and brass brush. Wash them in clean diesel fuel.
HINT: Do not touch the nozzle mating surfaces with your fingers.

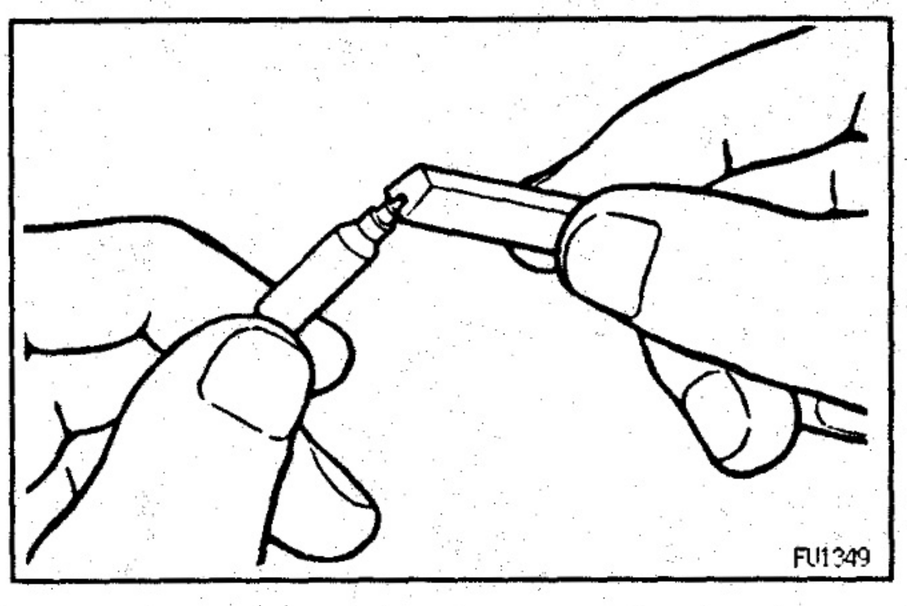

(b) Using a wooden stick, remove the carbon adhering to the nozzle needle tip.

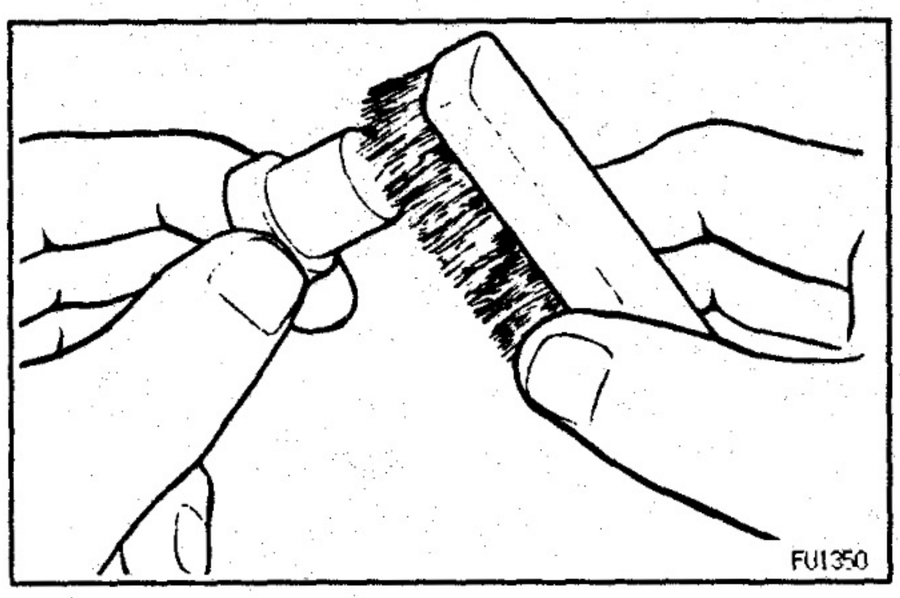

(c) Using a brass brush, remove the carbon from the exterior of the nozzle body (except lapped surface).
(d) Check the seat of the nozzle body for burns or corrosion.
(e) Check the nozzle needle tip for damage or corrosion.
If any of these conditions are present, replace the nozzle assembly.

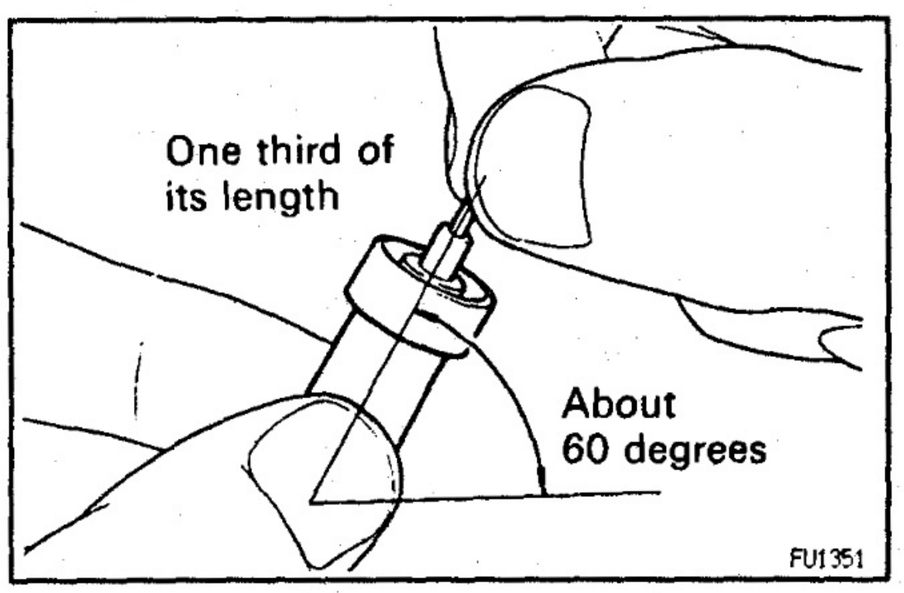

2. INSPECT NOZZLE ASSEMBLY

(a) Wash the nozzle in clean diesel fuel.
HINT: Do not touch the nozzle mating surfaces with your fingers.
(b) Tilt the nozzle body about 60 degrees and pull the needle out about one third of its length.

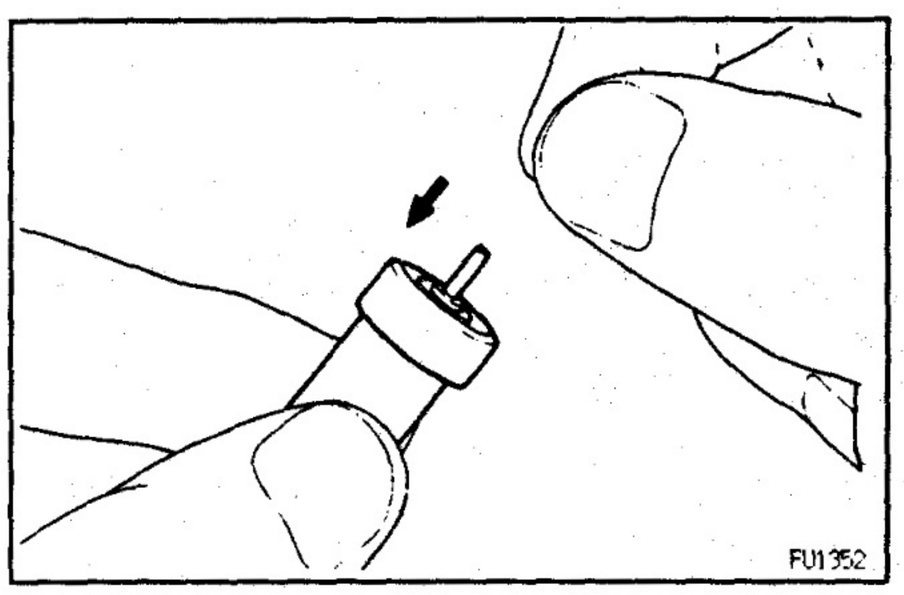

(c) When released, the needle should sink down into the body vent smoothly by its own weight.
(d) Repeat this test, rotating the needle slightly each time.
If the needle does not sink freely, replace the nozzle assembly.

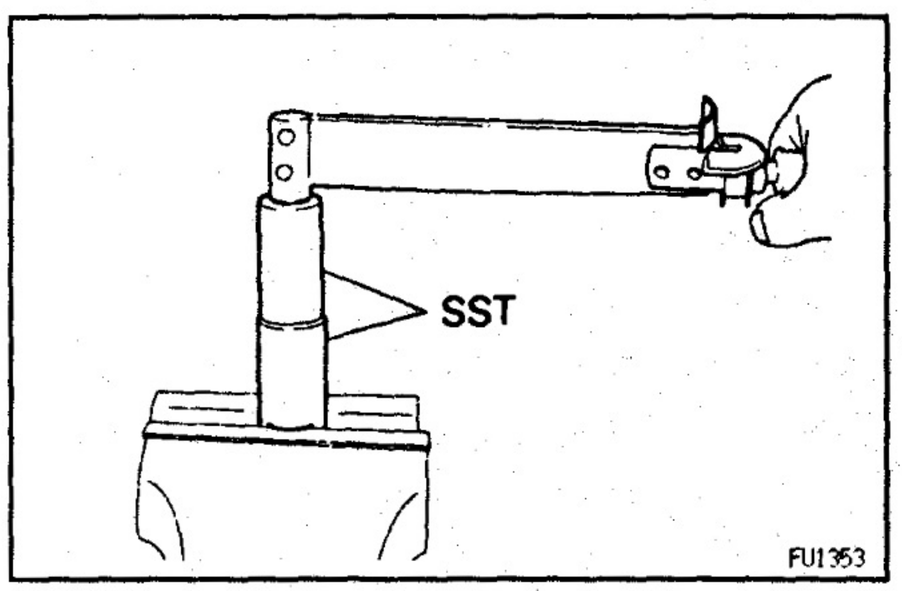

INJECTION NOZZLES ASSEMBLY

1. ASSEMBLE INJECTION NOZZLE HOLDERS

(a) Assemble the nozzle holder retaining nut, the nozzle assembly, distance piece, pressure pin, pressure spring, adjusting shim and nozzle holder body, and finger tighten the retaining nut.
(b) Using SST, tighten the nozzle holder body.
SST 09268–64010 (09268–64020, 09268–64030)

Torque: 46.58 N·m (475 kgf·cm, 42 ft·lbf)

NOTICE: Over torquing could cause nozzle deformation and needle adhesion or other defects.

2. PERFORM PRESSURE AND SPRAY PATTERN TEST

(See injection nozzles test)

INJECTION NOZZLES INSTALLATION

B97DC-01

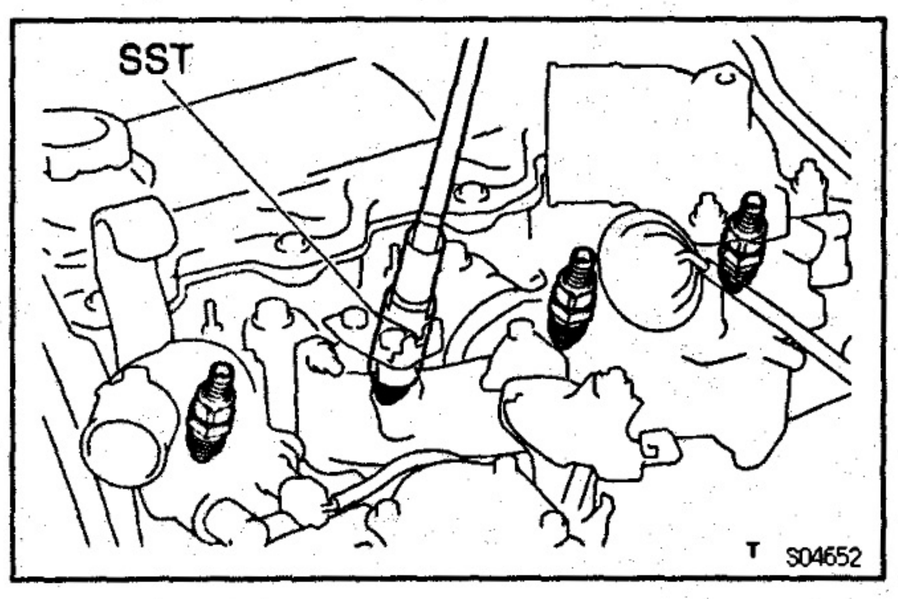

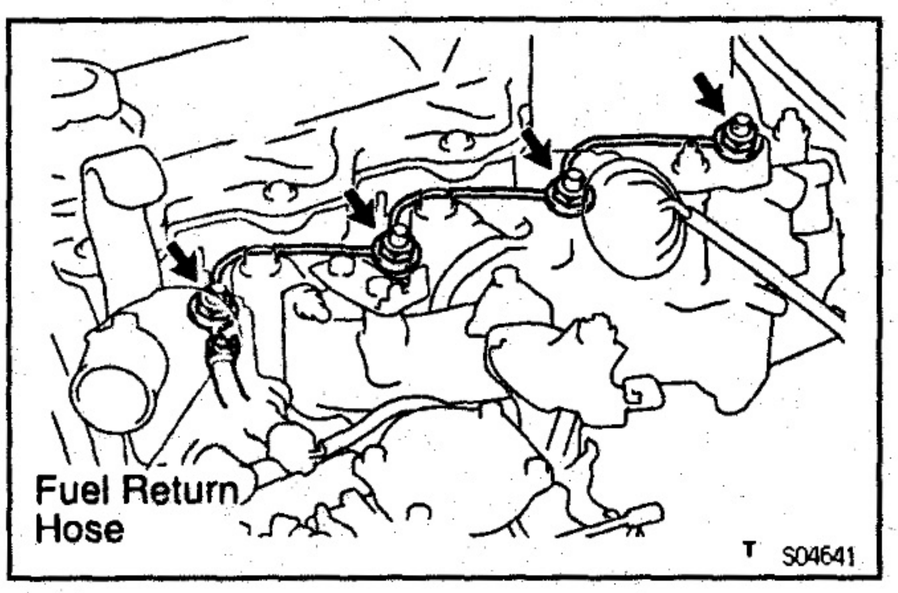

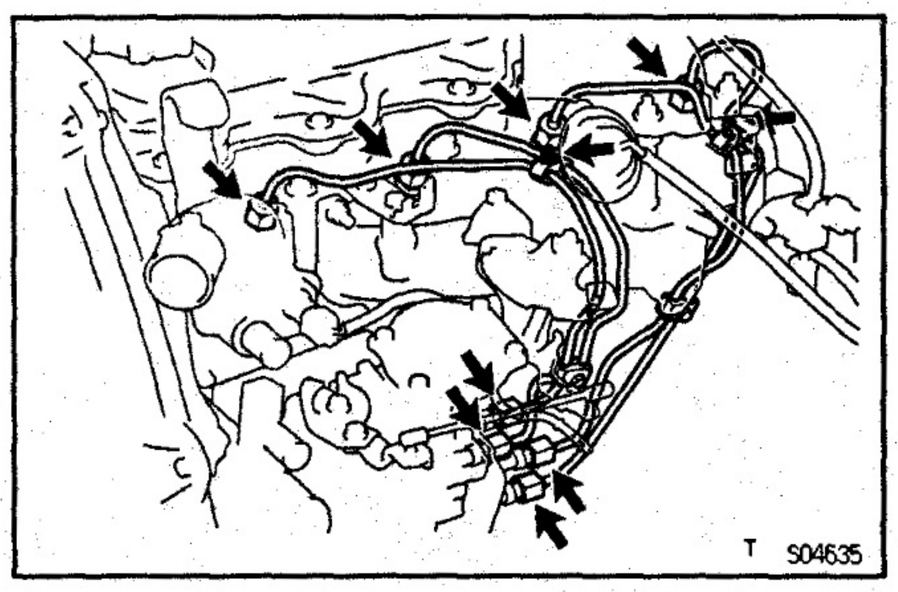

1. INSTALL INJECTION NOZZLES

(a) Place 4 new gaskets and the 4 nozzle seats into the injection nozzle holes of the cylinder head.

(b) Using SST, install the 4 injection nozzles.
SST 09268–64010 (09268–64020)
Torque: 64 N·m (650 kgf·cm, 47 ft·lbf)
NOTICE: Over torquing could cause nozzle deformation and needle adhesion or other defects.

2. INSTALL NOZZLE LEAKAGE PIPE

(a) Install 4 new gaskets and the leakage pipe with the 4 nuts.
Torque: 29.5 N·m (300 kgf·cm, 22 ft·lbf)

(b) Connect the fuel hose to the leakage pipe.

3. INSTALL INJECTION PIPES

(a) Place the 2 lower clamps on the intake manifold.

(b) Install the 4 injection pipes.
Torque: 24.5 N·m (250 kgf·cm, 18 ft·lbf)

(c) Secure the injection pipes with the 2 upper pipe clamps and 2 bolts.

4. INSTALL GLOW PLUG CONNECTOR

(See steps 14 to 17 in cylinder head installation in Engine Mechanical)

5. START ENGINE AND CHECK FOR LEAKS

INJECTION PUMP
COMPONENTS FOR REMOVAL AND INSTALLATION

E070G-01

EG

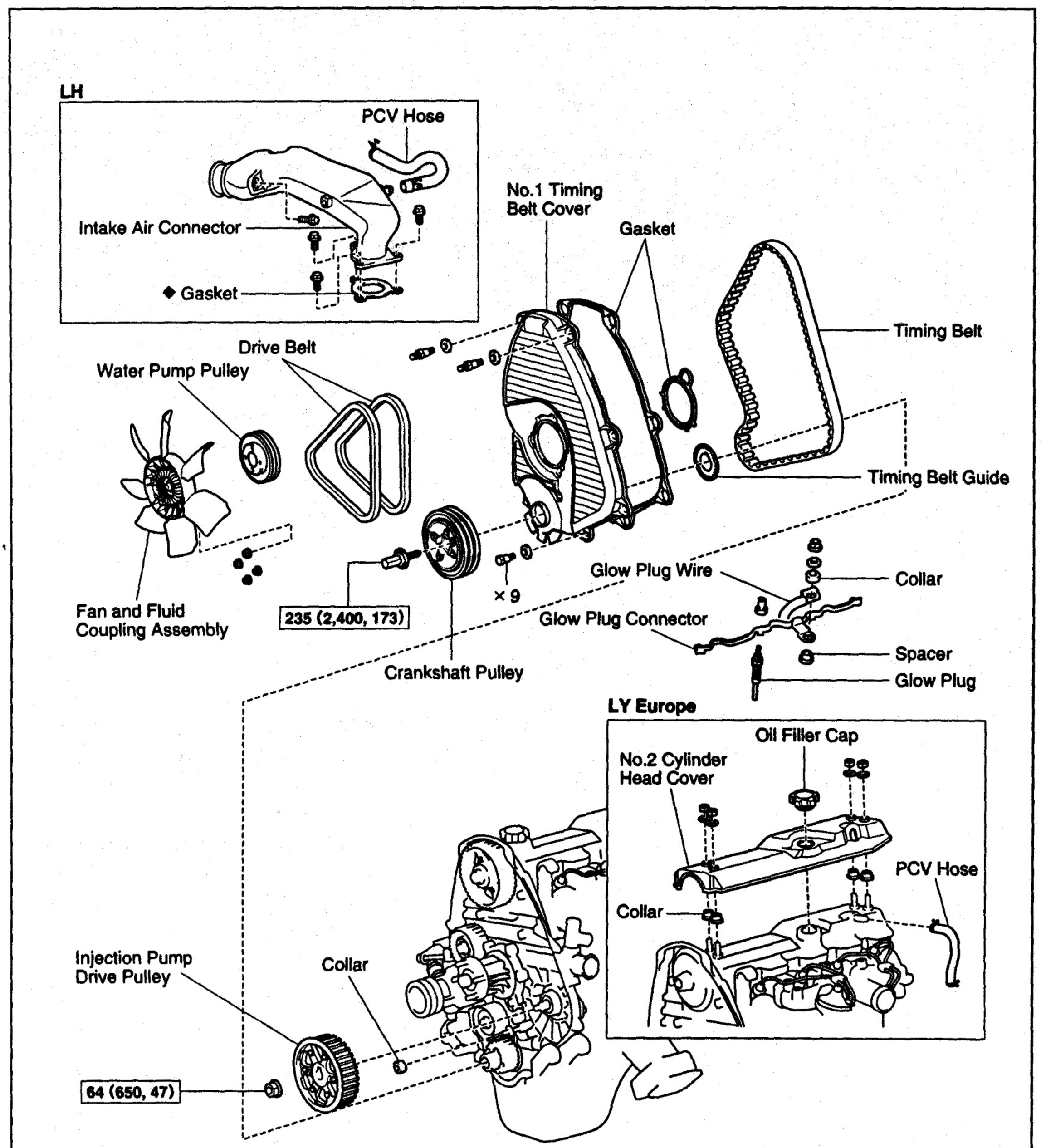

N·m (kgf·cm, ft·lbf): Specified torque
◆ Non-reusable part

T S04655

w/o HAC

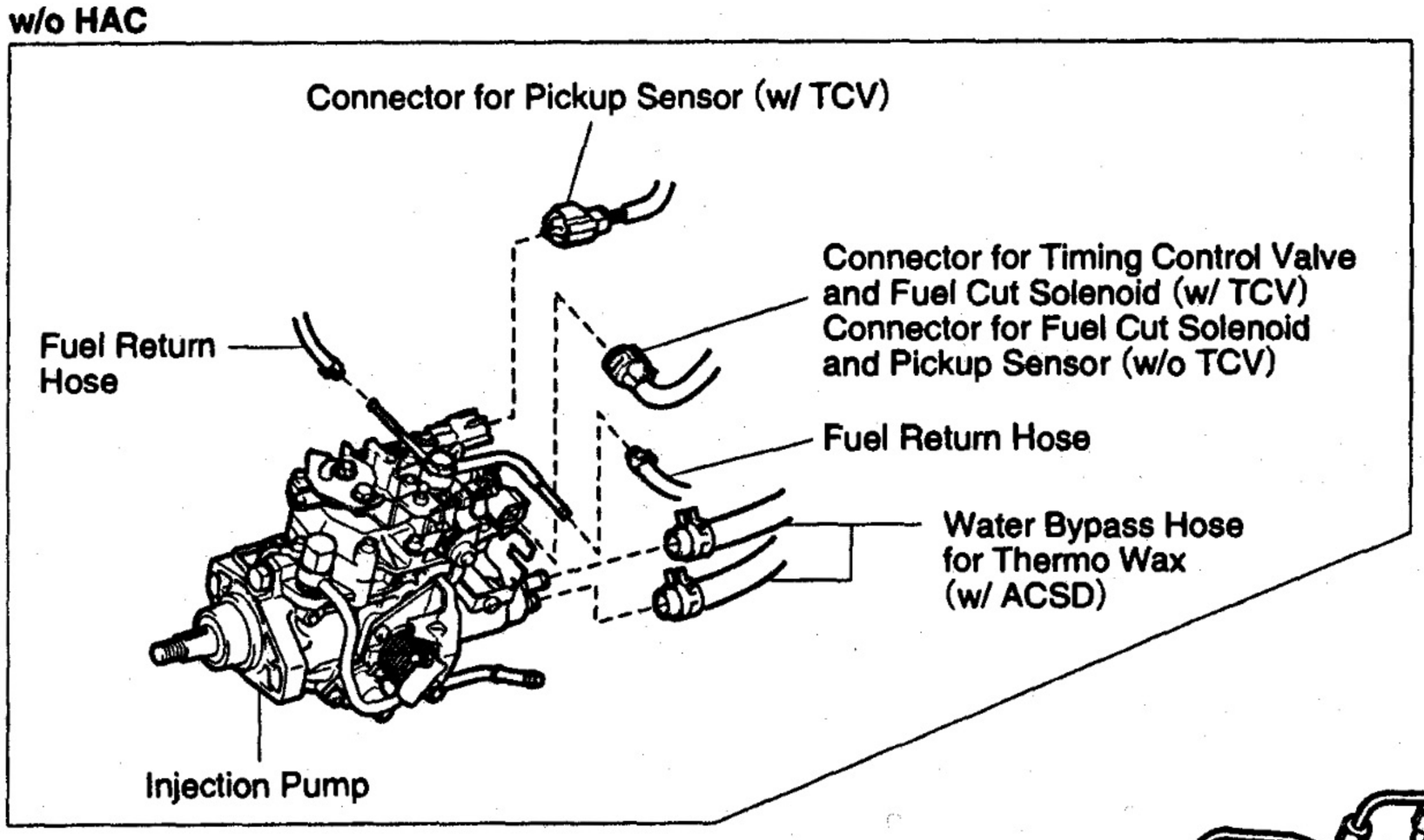

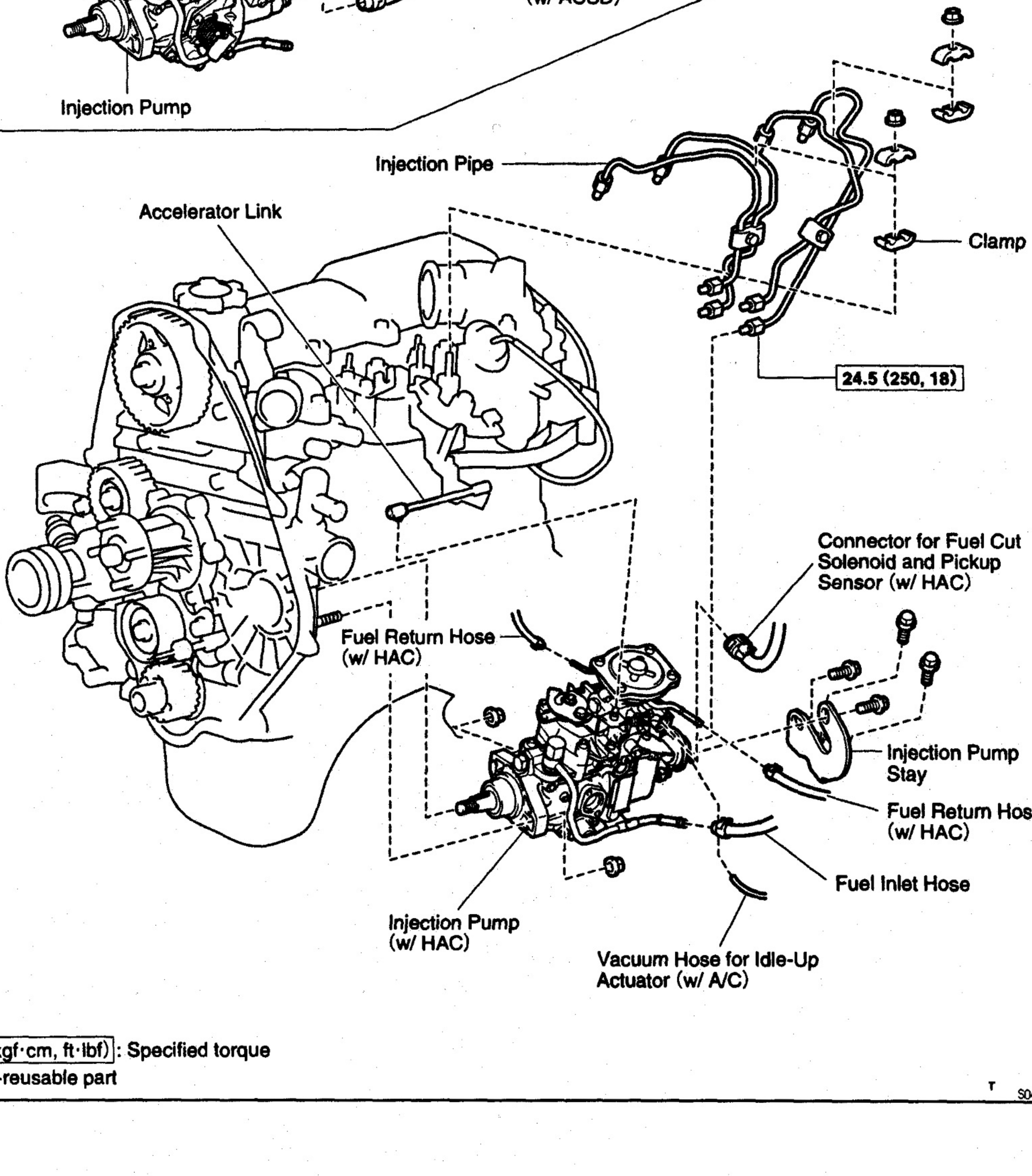

N·m (kgf·cm, ft·lbf): Specified torque
◆ Non-reusable part

T

S04687

EG

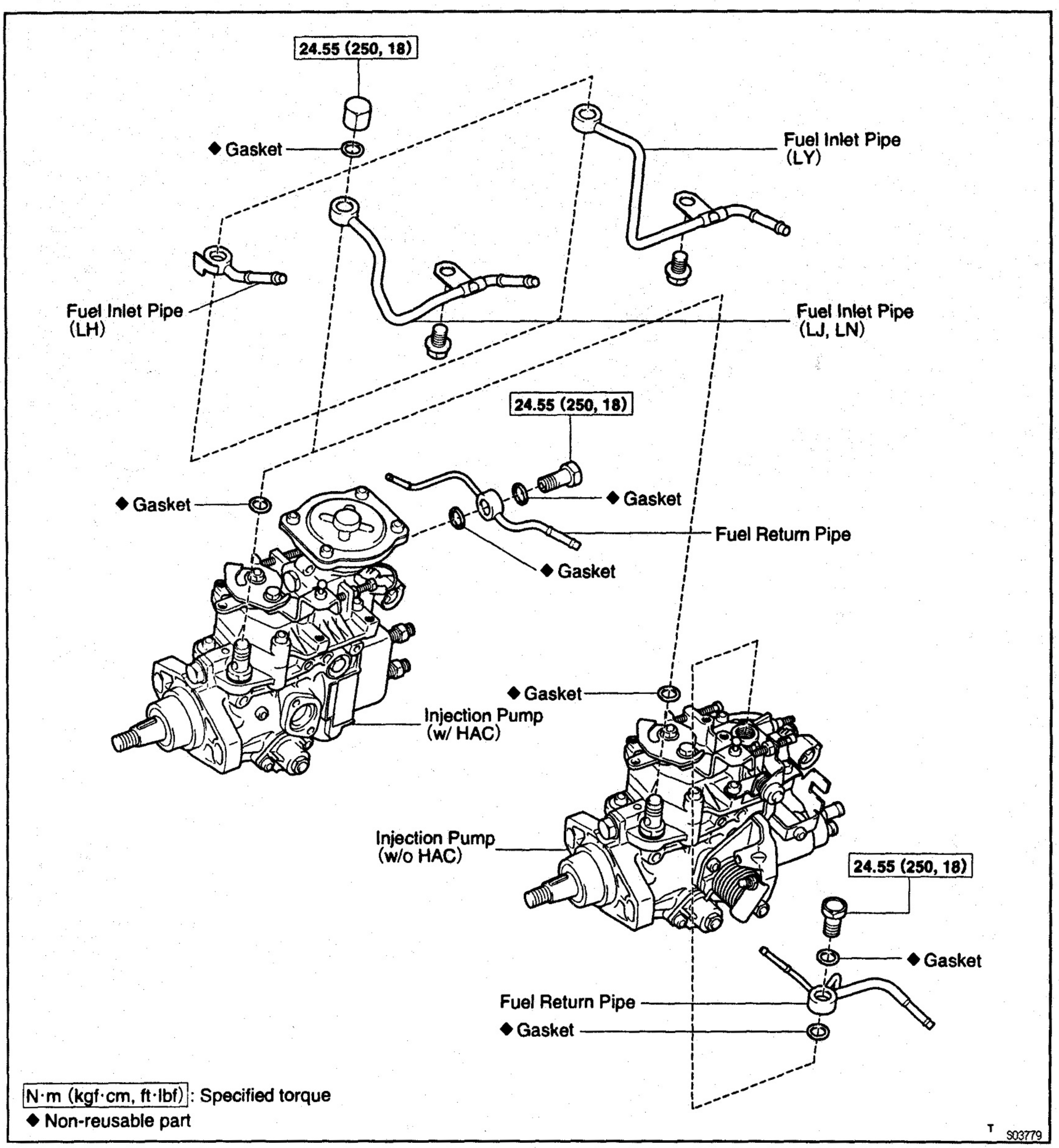

E0616-02

INJECTION PUMP REMOVAL

1. w/ ACSD:
   DRAIN ENGINE COOLANT
2. REMOVE TIMING BELT
   (See steps 1 to 7 in timing belt removal in Engine Mechanical)

3. REMOVE INJECTION PUMP DRIVE PULLEY
(See step 10 in timing belt removal in Engine Mechanical)

4. DISCONNECT CONNECTORS, LINK AND HOSES
Disconnect the connectors, link and hoses:
- w/ TCV:
  Connector for timing control valve and fuel cut solenoid
- w/ TCV:
  Connector for pickup sensor
- w/o TCV:
  Connector for fuel cut solenoid and pickup sensor
- Accelerator link from injection pump
- Fuel inlet hose from fuel inlet pipe
- 2 fuel return hoses from fuel return pipe
- w/ A/C:
  Vacuum hose from idle–up actuator
- w/ ACSD:
  2 water bypass hoses from thermo wax

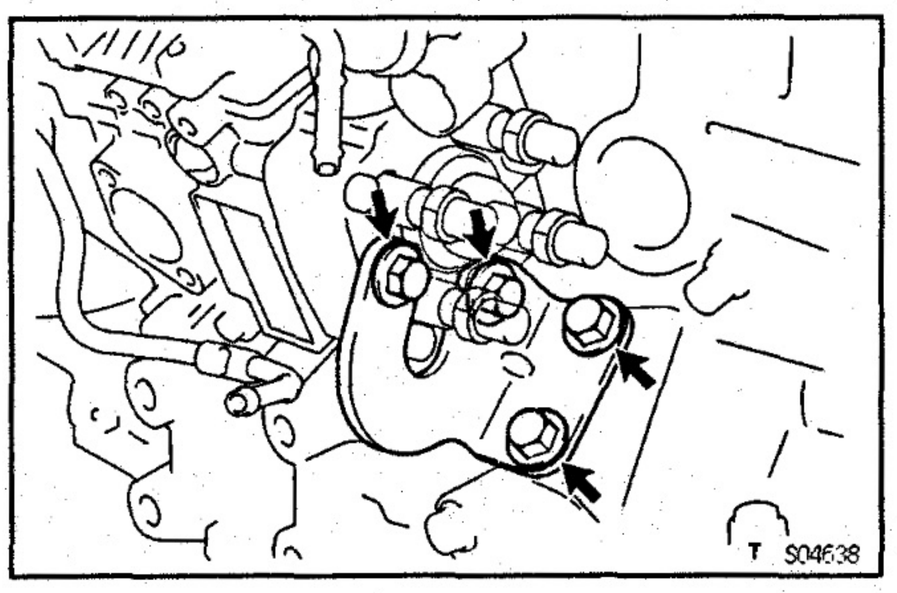

5. REMOVE INJECTION PIPES
(See injection nozzles removal)

6. REMOVE INJECTION PUMP

(a) Remove the 4 bolts and injection pump stay.

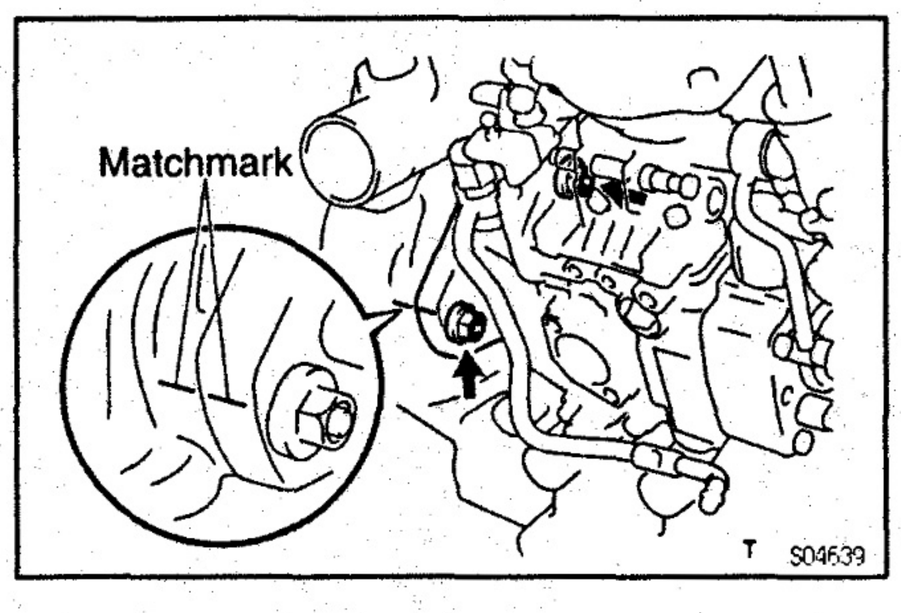

(b) Before removing the injection pump, check if the matchmarks are aligned.
If not, place new matchmarks for reinstallation.

(c) Remove the 2 nuts and injection pump.
NOTICE:
- **Do not hold or carry the injection pump by the adjusting lever.**
- **w/ HAC:**
  Do not put the injection pump at an angle more than 45° from the horizontal.

7. REMOVE FUEL INLET PIPE FROM INJECTION PUMP

(a) LJ, LN, LY:
Remove the bolt for the pipe clamp.

(b) Remove the union bolt, inlet pipe and 2 gaskets.

8. REMOVE FUEL RETURN PIPE FROM INJECTION PUMP
Remove the union bolt, return pipe and 2 gaskets.

COMPONENTS FOR DISASSEMBLY AND ASSEMBLY

S07DH-01

EG

w/ HAC

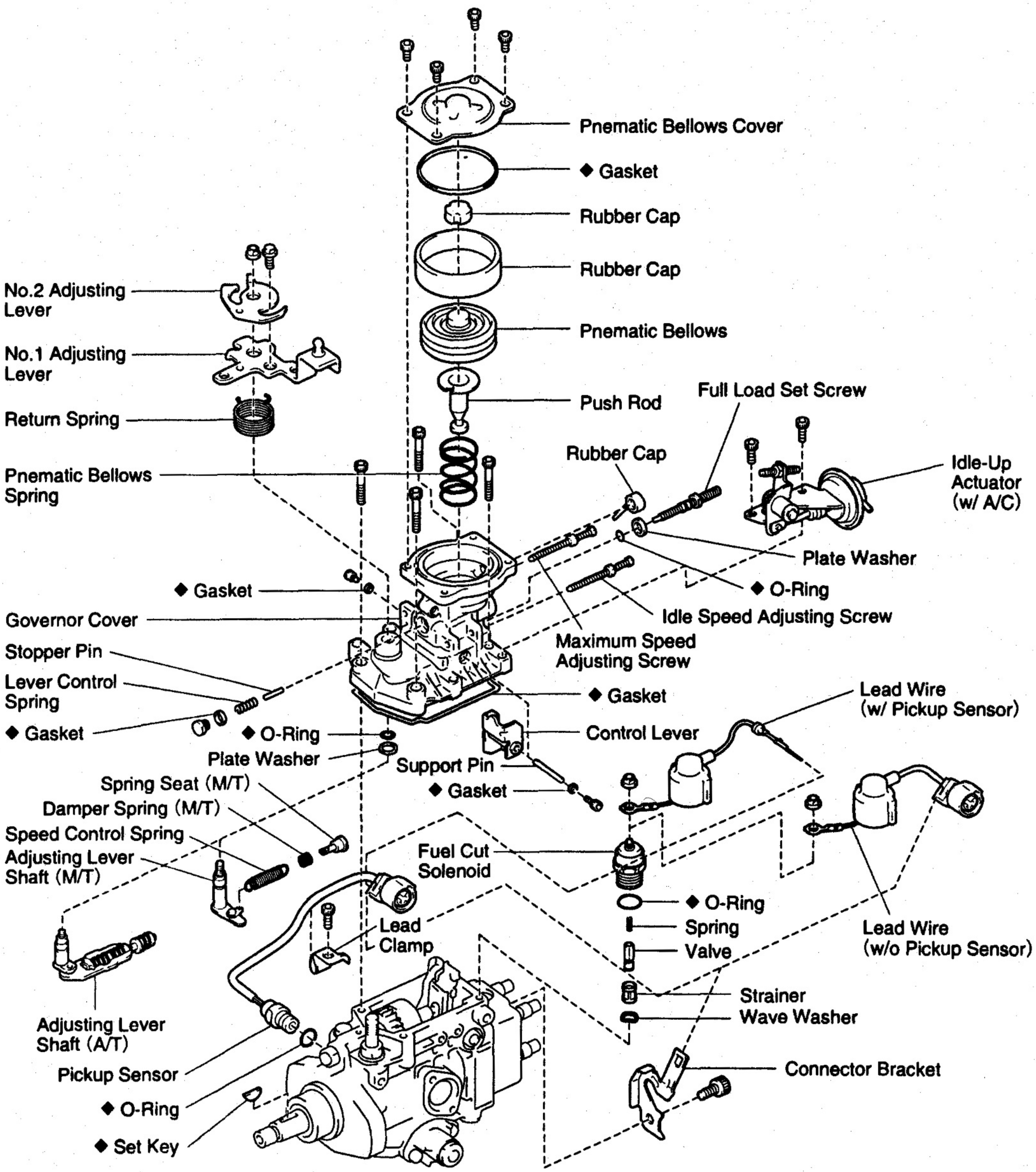

◆ Non-reusable part

T

S03754

w/o HAC

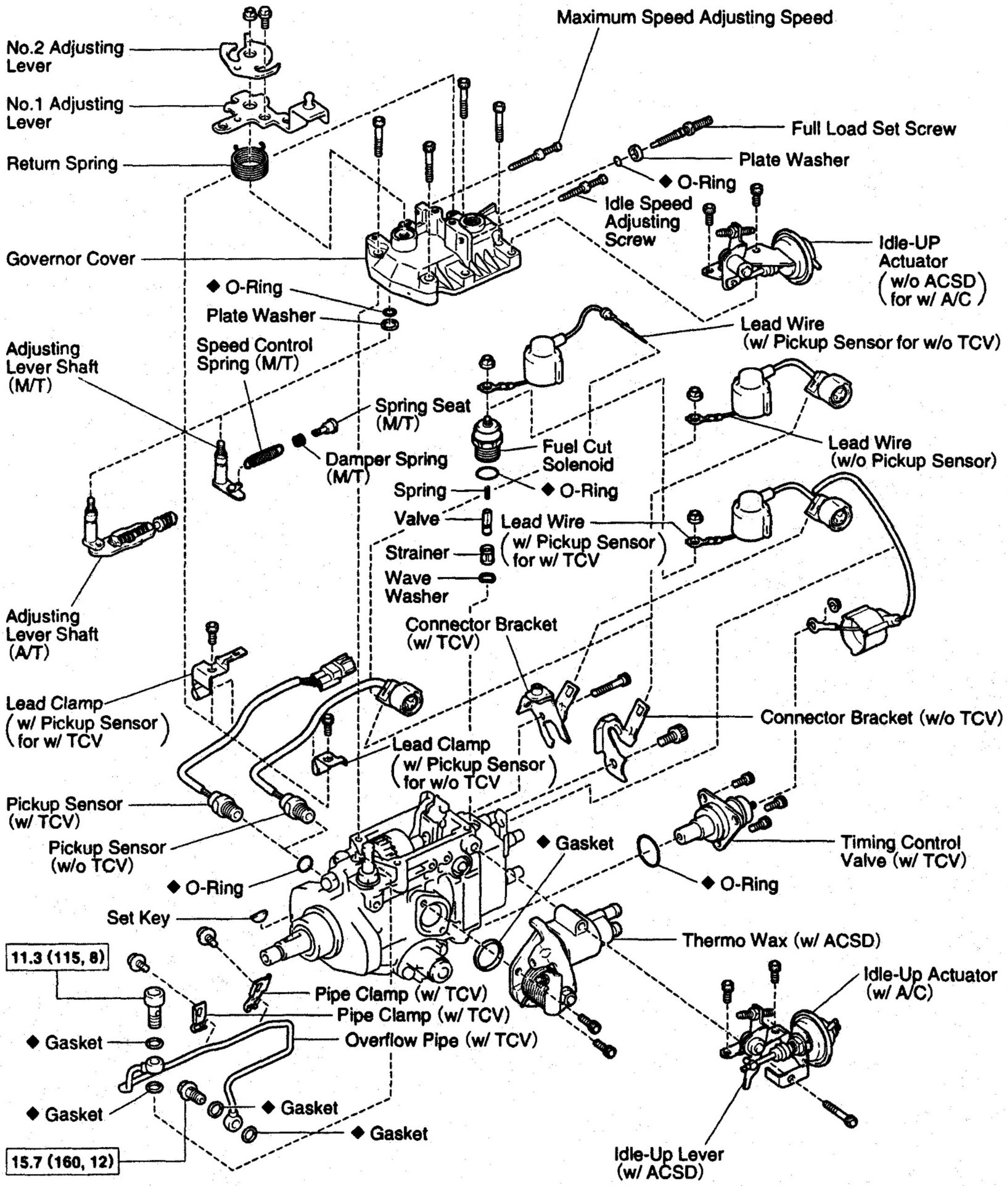

N·m (kgf·cm, ft·lbf): Specified torque
◆ Non-reusable part

T S03755

EG

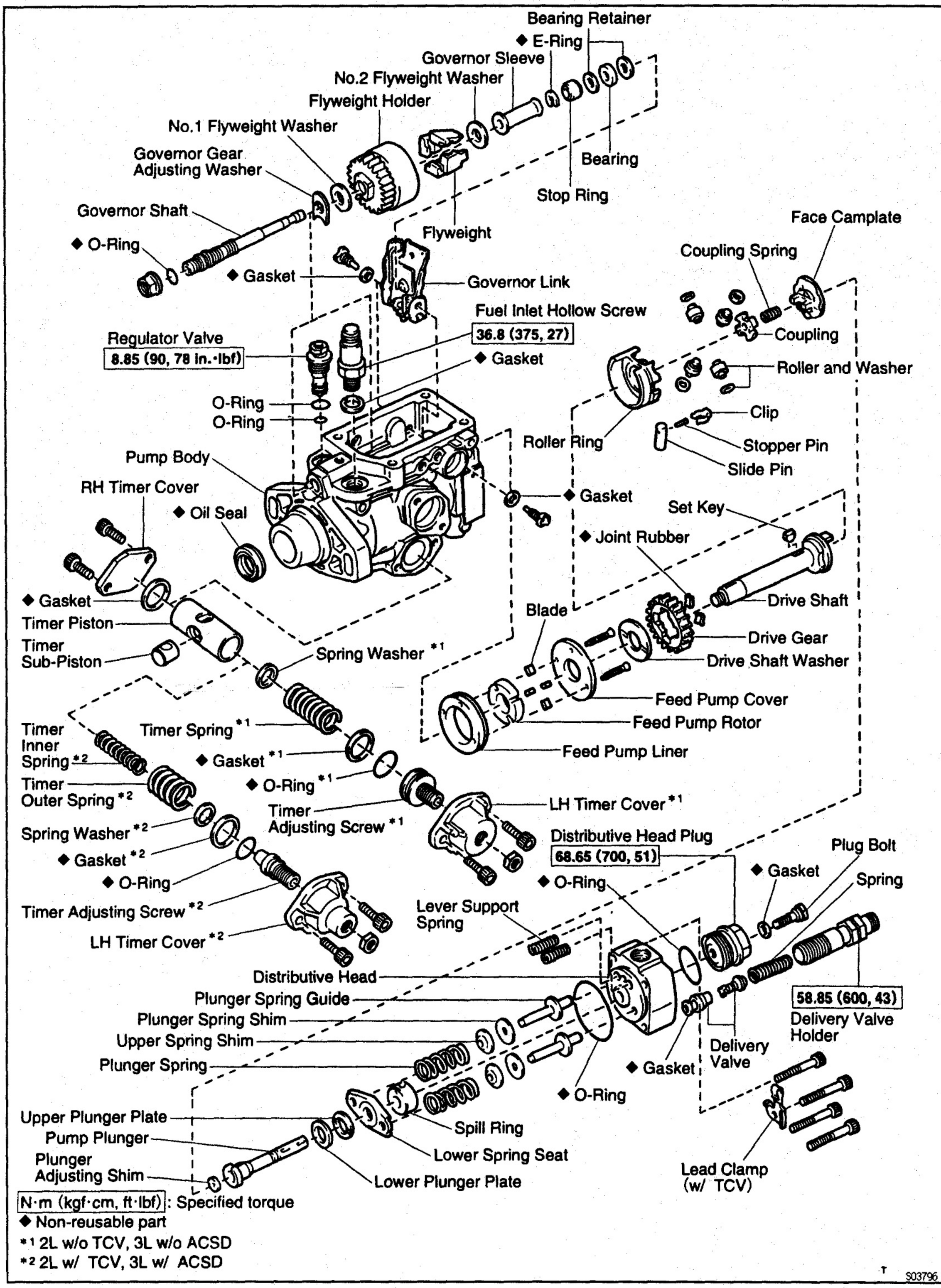
Bearing Retainer
◆ E-Ring
Governor Sleeve
No.2 Flyweight Washer
Flyweight Holder
No.1 Flyweight Washer
Governor Gear Adjusting Washer
Governor Shaft
◆ O-Ring
Bearing
Stop Ring
Flyweight
◆ Gasket
Governor Link
Face Camplate
Coupling Spring
Coupling
Fuel Inlet Hollow Screw
36.8 (375, 27)
◆ Gasket
Regulator Valve
8.85 (90, 78 in.·lbf)
Roller and Washer
O-Ring
O-Ring
Clip
Roller Ring
Stopper Pin
Slide Pin
Pump Body
RH Timer Cover
◆ Oil Seal
◆ Gasket
Set Key
◆ Joint Rubber
Drive Shaft
◆ Gasket
Timer Piston
Timer Sub-Piston
Blade
Drive Gear
Drive Shaft Washer
Spring Washer *1
Feed Pump Cover
Feed Pump Rotor
Feed Pump Liner
Timer Inner Spring *2
Timer Spring *1
◆ Gasket *1
◆ O-Ring *1
Timer Outer Spring *2
Timer Adjusting Screw *1
LH Timer Cover *1
Spring Washer *2
◆ Gasket *2
◆ O-Ring
Timer Adjusting Screw *2
LH Timer Cover *2
Distributive Head Plug
68.65 (700, 51)
◆ O-Ring
◆ Gasket
Plug Bolt
Spring
Lever Support Spring
Distributive Head
Plunger Spring Guide
Plunger Spring Shim
Upper Spring Shim
Plunger Spring
58.85 (600, 43)
Delivery Valve Holder
Delivery Valve
◆ Gasket
◆ O-Ring
Upper Plunger Plate
Pump Plunger
Plunger Adjusting Shim
Spill Ring
Lower Spring Seat
Lower Plunger Plate
Lead Clamp (w/ TCV)
N·m (kgf·cm, ft·lbf): Specified torque
◆ Non-reusable part
*1 2L w/o TCV, 3L w/o ACSD
*2 2L w/ TCV, 3L w/ ACSD
S03796

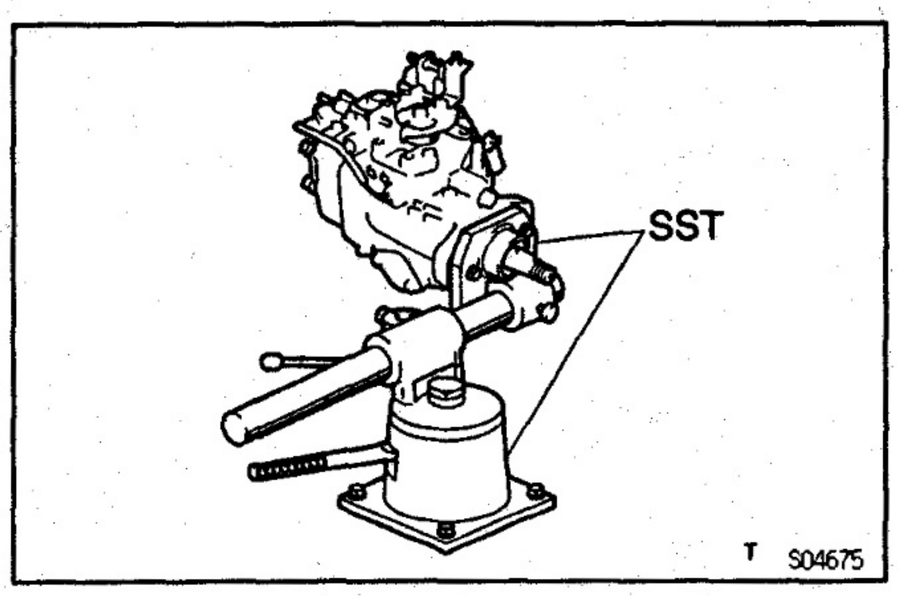

INJECTION PUMP DISASSEMBLY

S07DJ-01

NOTICE (w/ HAC): When re–using the governor cover assembly, to prevent oil spilling out from the bushing of the governor cover when doing steps 1 to 13, remove it without tilting it 45° or more from the horizontal.

1. **MOUNT PUMP ASSEMBLY TO SST (STAND)**
   SST 09241–76022, 09245–54010
2. **REMOVE SET KEY OF DRIVE PULLEY FROM DRIVE SHAFT**
3. **w/ ACSD:**
   REMOVE IDLE–UP LEVER AND ACTUATOR (w/ A/C) ASSEMBLY
   Using a 5 mm hexagon wrench, remove the 3 bolts, the idle–up lever and actuator (w/ A/C) assembly.
4. **w/o ACSD for w/ A/C:**
   REMOVE IDLE–UP ACTUATOR
   Using a 5 mm hexagon wrench, remove the 2 bolts and idle–up actuator.

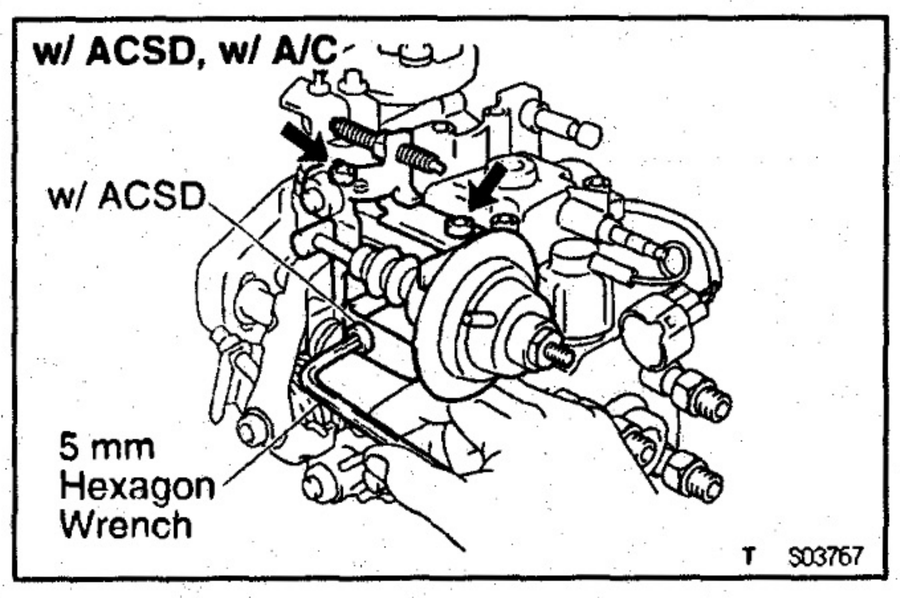

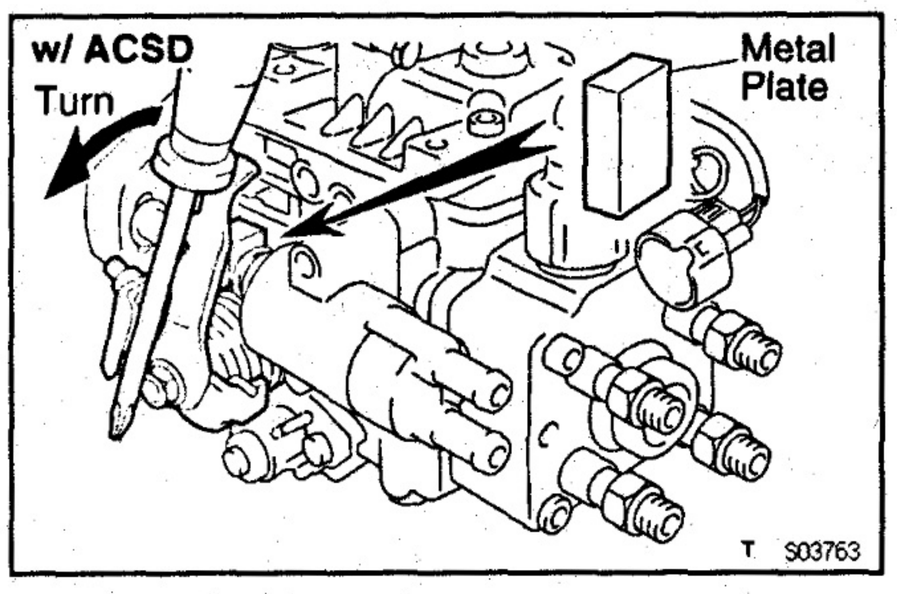

5. **w/ ACSD:**
   REMOVE THERMO WAX
   (a) Using a screwdriver, turn the cold starting lever counterclockwise approx. 20°.
   (b) Put a metal plate (thickness of 8.5 – 10.0 mm (0.335 – 0.394 in.)) between the cold starting lever and thermo wax plunger.

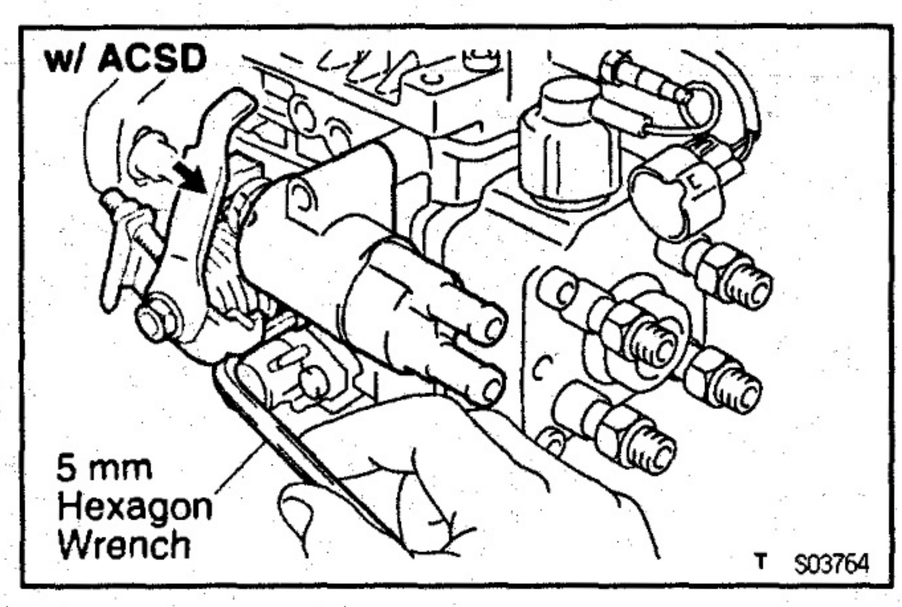

   (c) Using a 5 mm hexagon wrench, remove the 2 bolts, thermo wax and gasket.

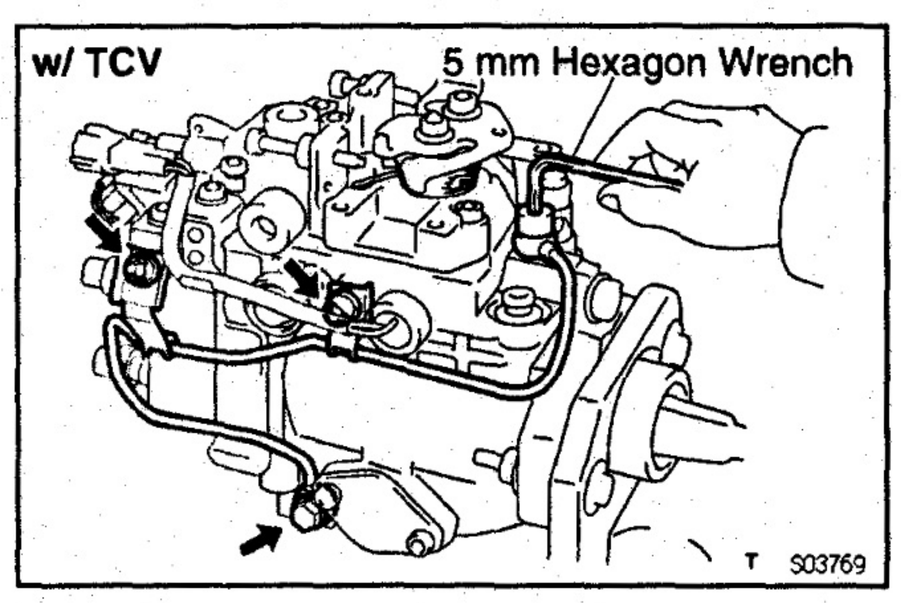

6. **w/ TCV:**
   REMOVE OVERFLOW PIPE
   Using a 5 mm hexagon wrench, remove the 2 bolts, 2 union bolts, 4 gaskets, overflow pipe and 2 pipe clamps.

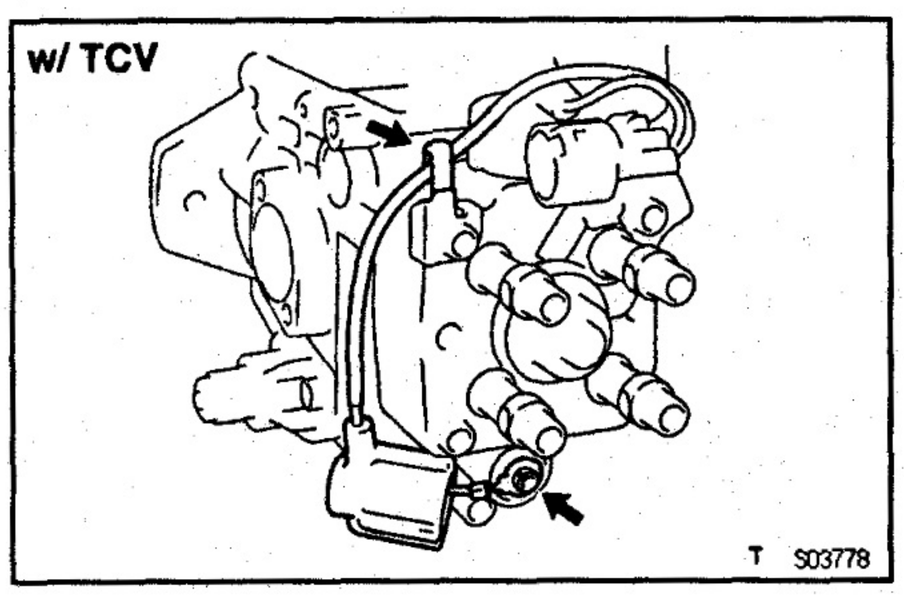

7. **w/ TCV:**
REMOVE TIMING CONTROL VALVE
(a) Disconnect the dust cover from the timing control valve.
(b) Remove the nut, and disconnect the lead wire from the timing control valve.
(c) Disconnect the lead wire from the lead clamp on the distributive head.

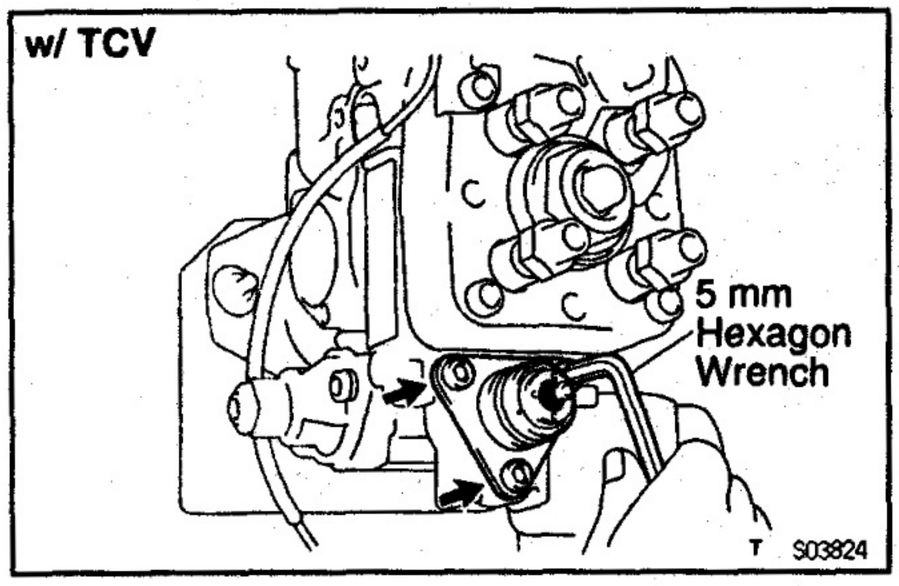

(d) Using a 5 mm hexagon wrench, remove the 3 bolts and timing control valve.
(e) Remove the O–ring from the timing control valve.

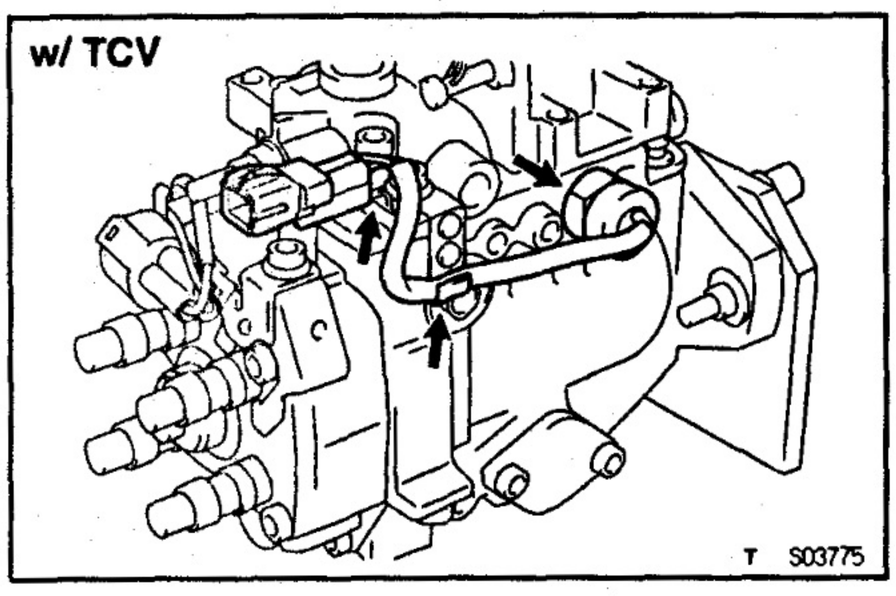

8. **REMOVE PICKUP SENSOR**
w/ TCV:
(a) Disconnect the lead wire and connector from the lead clamp on the governor cover.
(b) Remove the pickup sensor and O–ring.

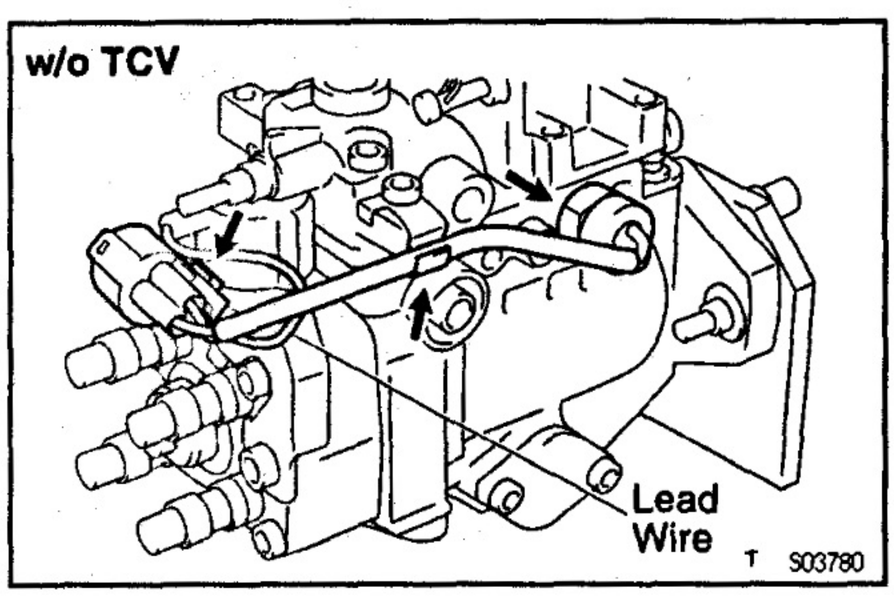

w/o TCV:
(a) Disconnect the lead wire from the lead clamp on the governor cover.
(b) Disconnect the connector from the connector bracket on the distributive head.
(c) Disconnect the lead wire for fuel cut solenoid from the connector.
(d) Remove the pickup sensor and O–ring.

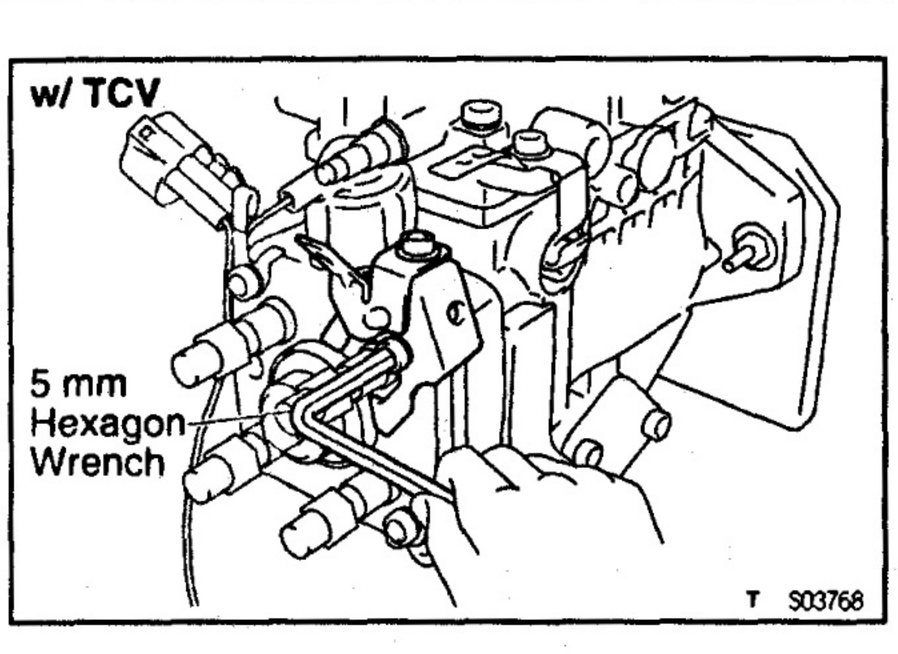

9. **REMOVE CONNECTOR BRACKET**
w/ TCV:
Using a 5 mm hexagon wrench, remove the bolt and connector bracket.

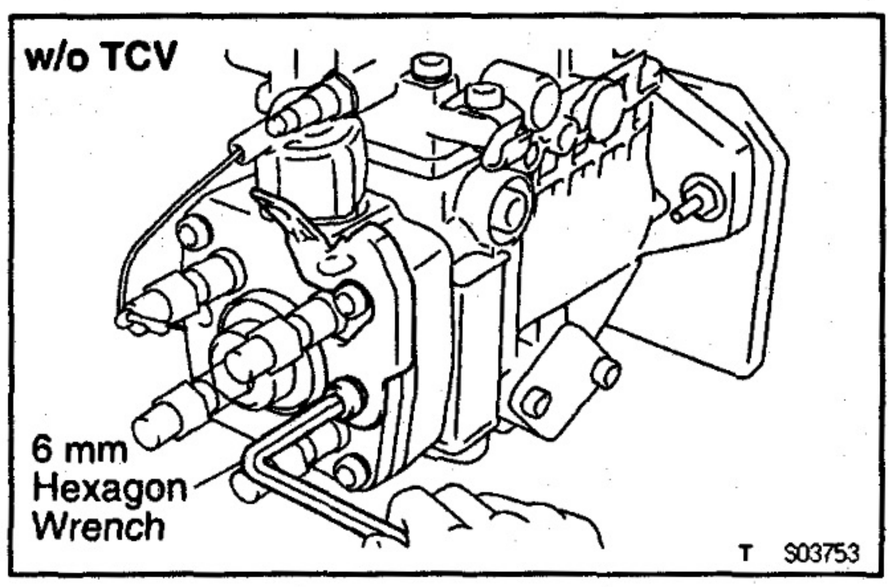

w/o TCV:
Using a 6 mm hexagon wrench, remove the bolt and connector bracket.

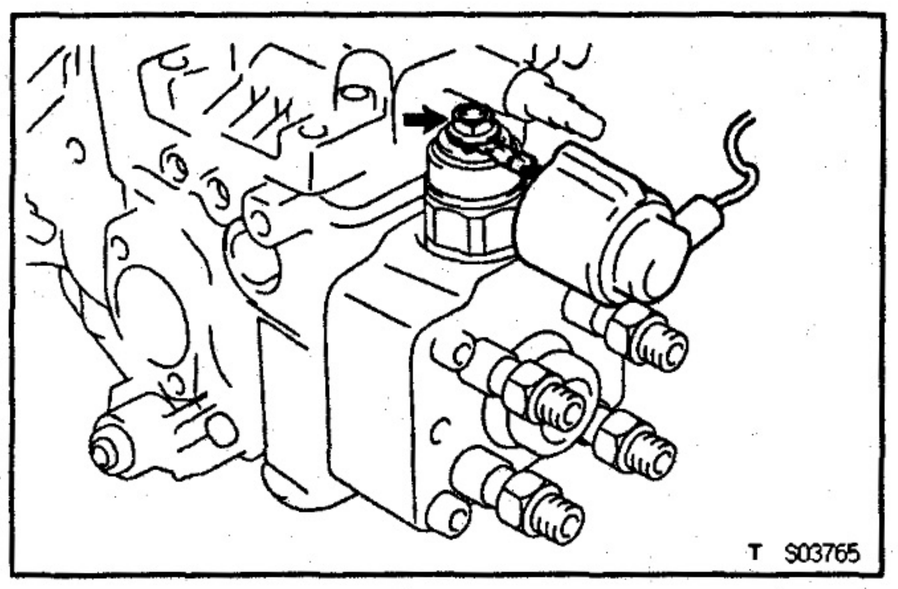

10. REMOVE FUEL CUT SOLENOID

(a) Disconnect the dust cover from the fuel cut solenoid.

(b) Remove the nut and lead wire.

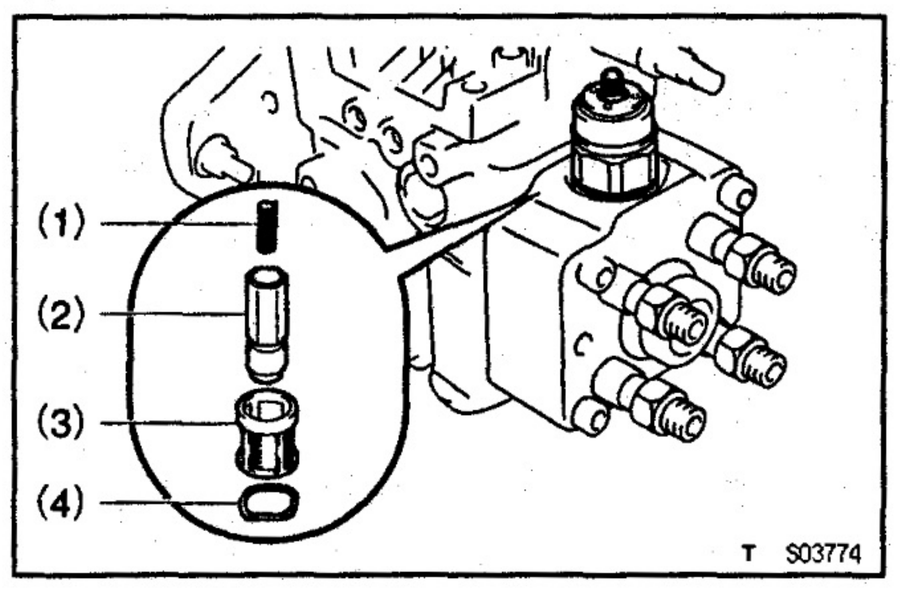

(c) Remove the fuel cut solenoid, O—ring and these parts:
- (1) Spring
- (2) Valve
- (3) Strainer
- (4) Wave washer

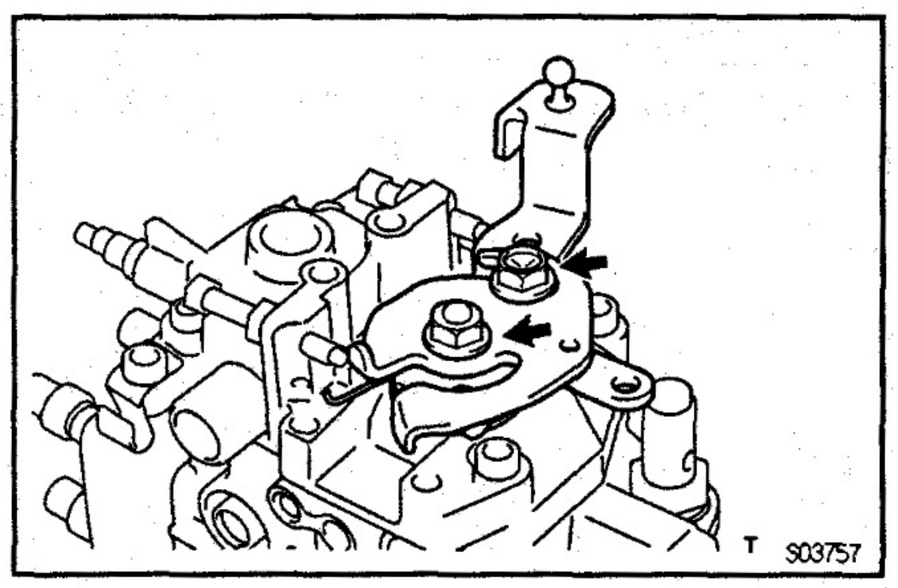

11. REMOVE ADJUSTING LEVERS

Remove the bolt, nut, No.1 and No.2 adjusting levers and return spring.

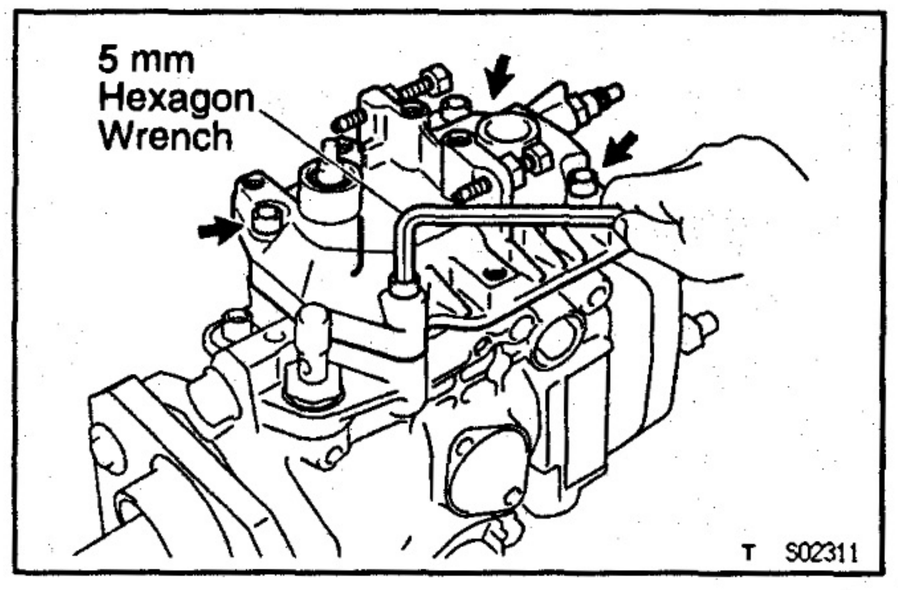

12. REMOVE GOVERNOR COVER

(a) w/ HAC:
Remove the idle speed adjusting screw.

(b) Using a 5 mm hexagon wrench, remove the 4 bolts.

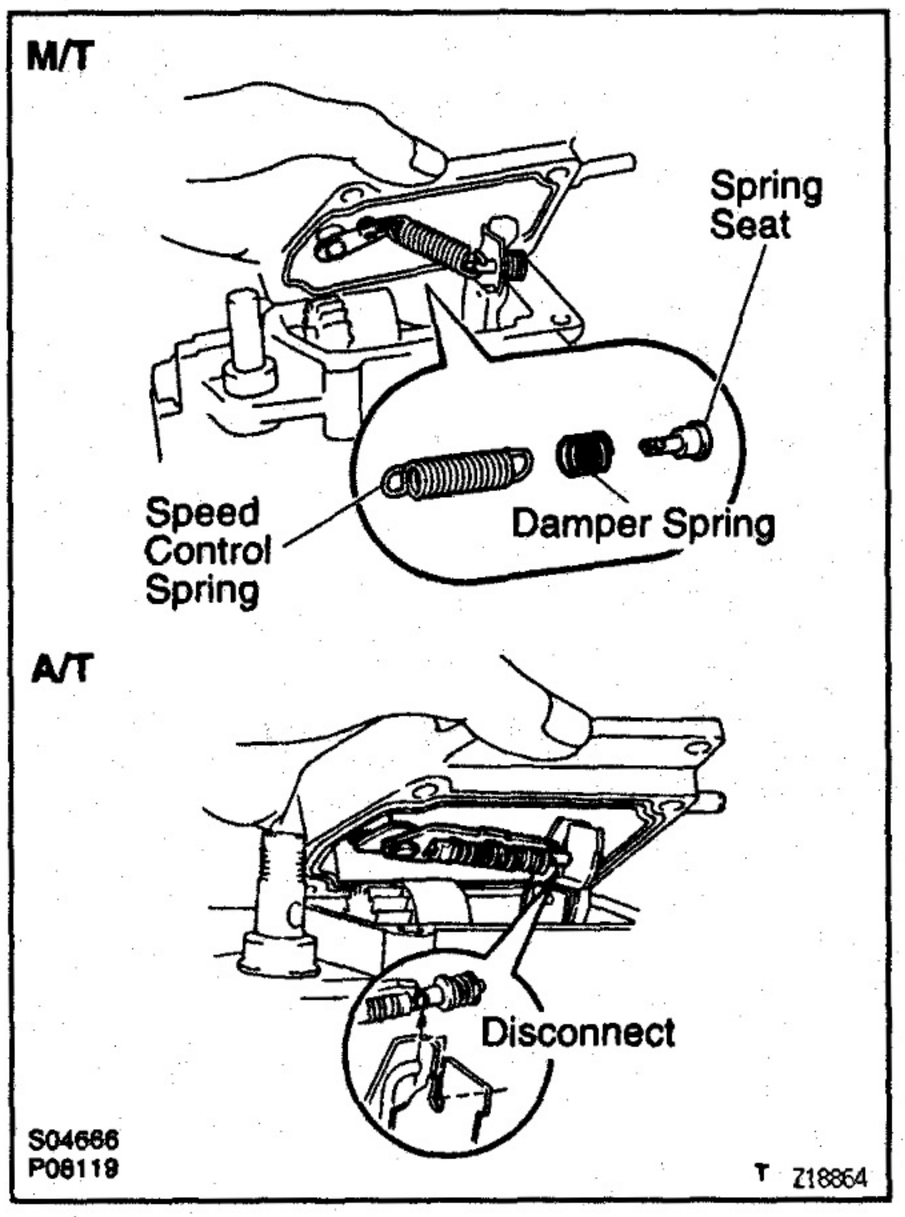

(c) Disconnect the adjusting lever shaft from the governor cover, and remove the governor cover and gasket.

(d) M/T:
Remove the adjusting lever shaft, speed control spring, spring seat and damper spring from the governor link.

(e) A/T:
Disconnect the adjusting lever shaft from the governor link, and remove the adjusting lever shaft.

(f) Remove the O–ring and plate washer from the adjusting lever shaft.
NOTICE (w/ HAC): After removing the governor cover assembly, do not place it at an angle 45° or more from the horizontal.

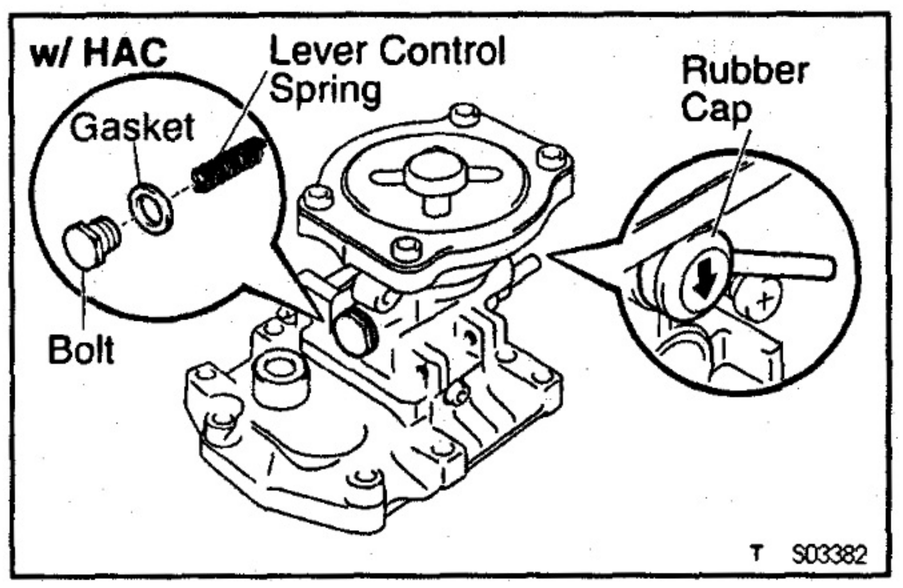

13. w/ HAC:
DISASSEMBLE HIGH ALTITUDE COMPENSATOR

A. Remove lever control spring
Remove the bolt, gasket and lever control spring.

B. Remove rubber cap

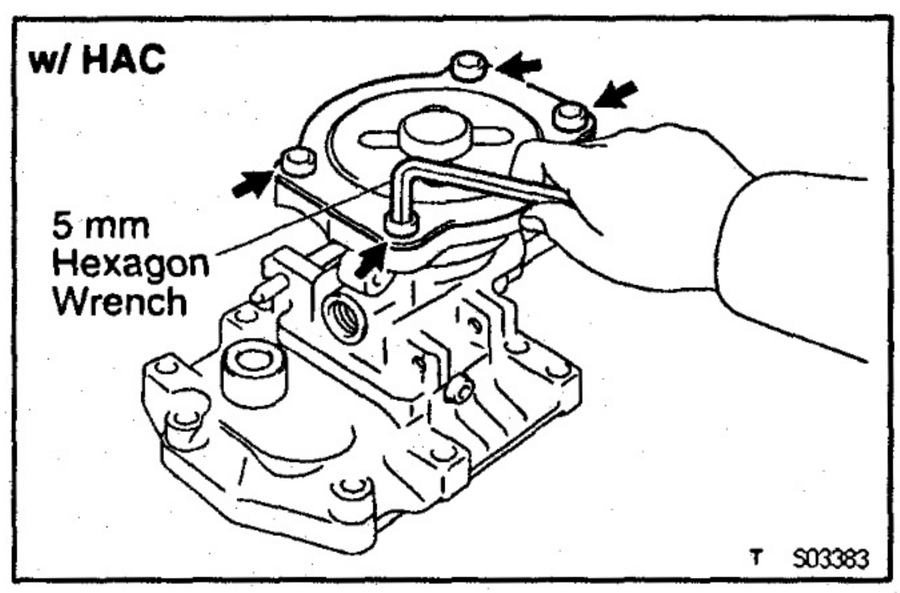

C. Remove pneumatic bellows

(a) Using a 5 mm hexagon wrench, remove the 4 bolts, pneumatic bellows cover and gasket.

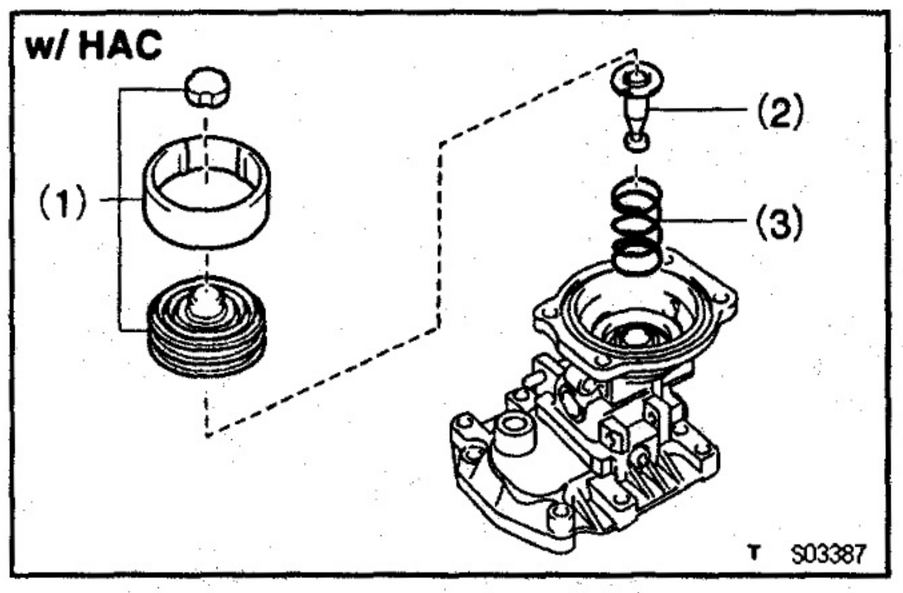

(b) Remove these parts:
(1) Pneumatic bellows and 2 rubber caps
(2) Push rod
(3) Pneumatic bellows spring

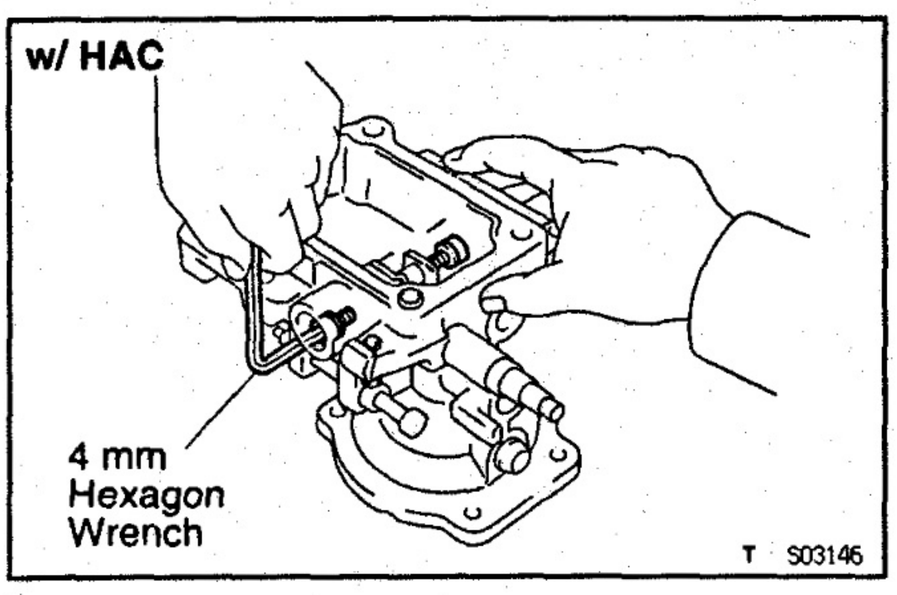

D. Remove control lever

(a) Using a 4 mm hexagon wrench, remove the 2 bolts and gaskets.

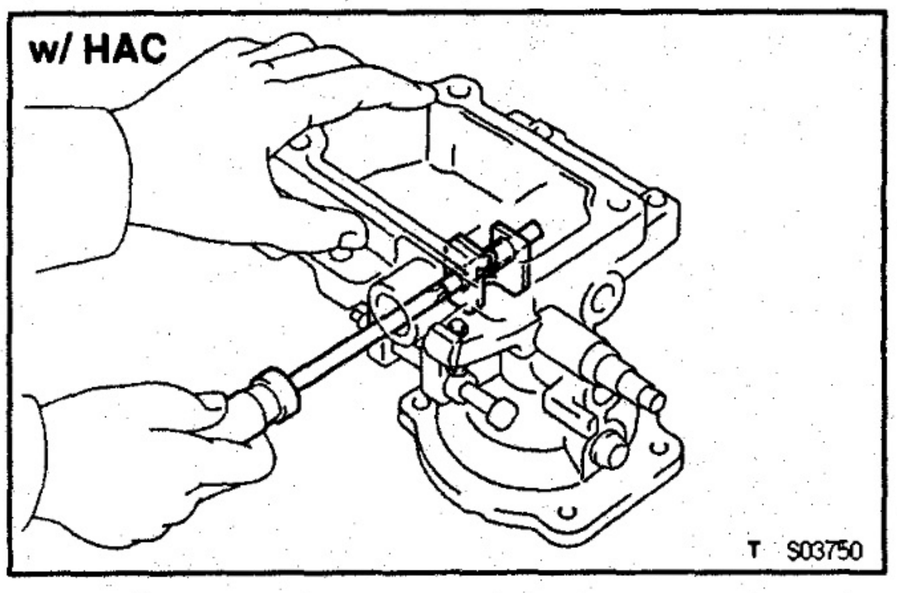

(b) Using a small screwdriver, push out the support pin and remove the control lever.

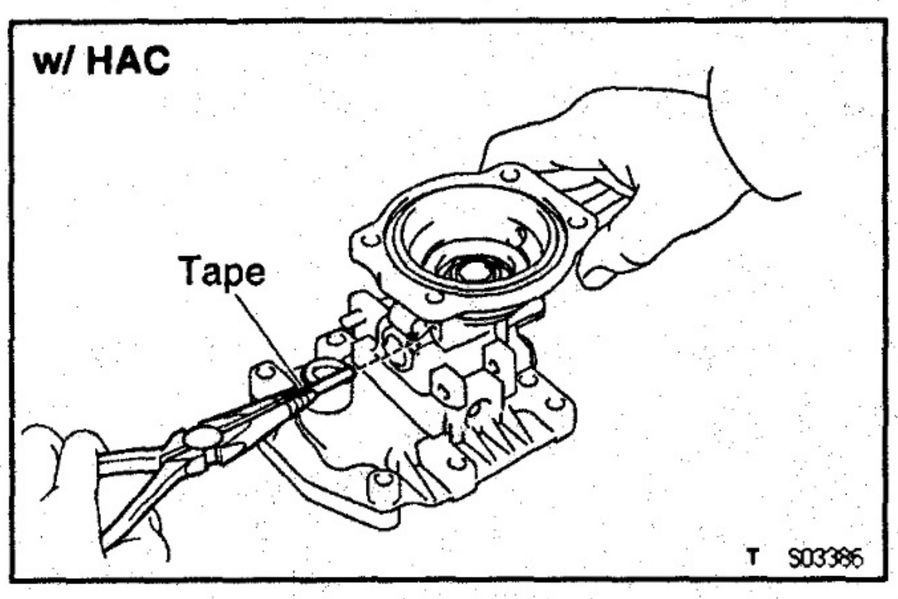

(c) Using needle nose pliers, remove the connecting pin.
NOTICE: Be careful not to damage the connecting pin. Tape the tip of the pliers.

14. CHECK FLYWEIGHT HOLDER THRUST CLEARANCE
(See step 20 in injection pump assembly)

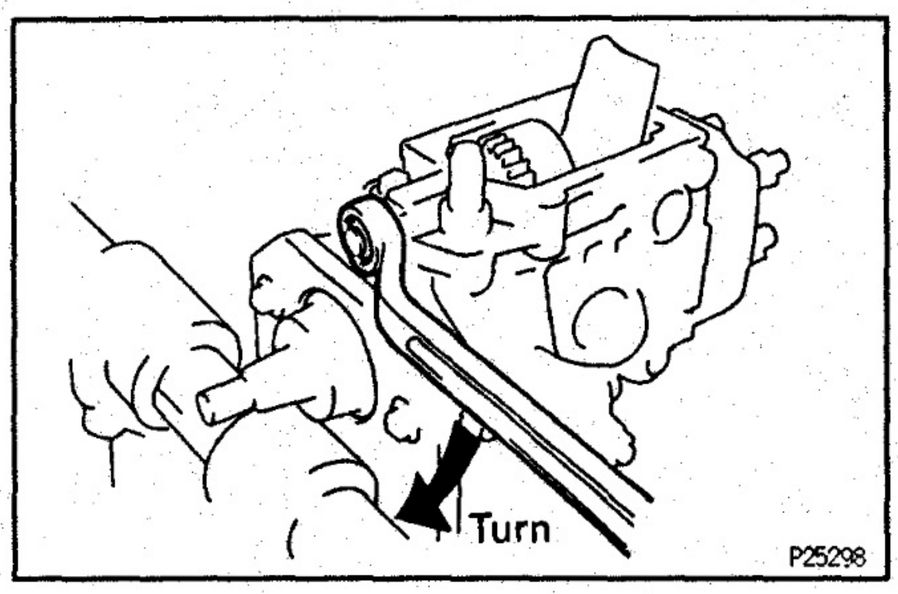

15. REMOVE GOVERNOR SHAFT AND FLYWEIGHT HOLDER

(a) Remove the governor shaft lock nut by turning it clockwise.
NOTICE: The governor shaft and lock nut have LH threads.

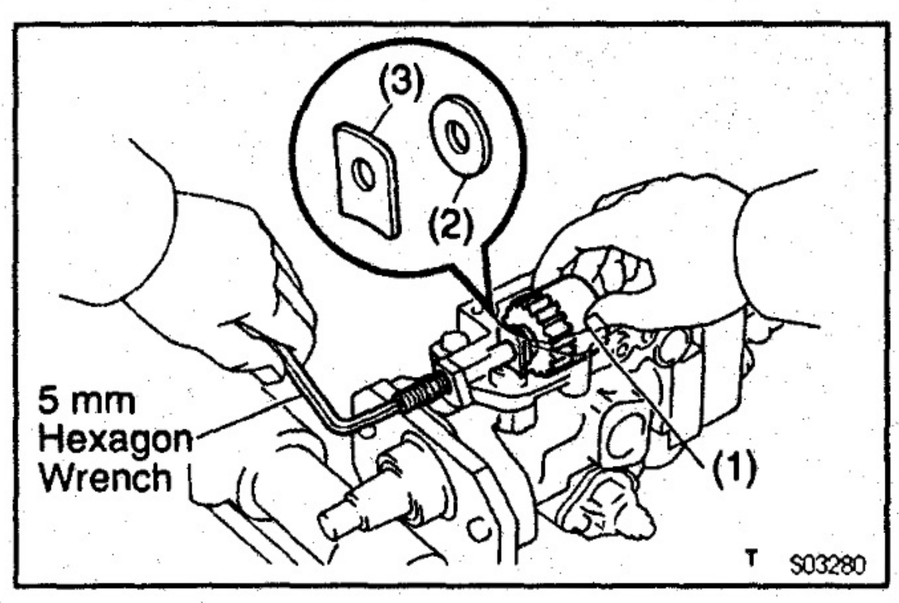

(b) Using a 5 mm hexagon wrench, remove the governor shaft clockwise, and remove these parts:
(1) Flyweight holder assembly
(2) No.1 flyweight washer
(3) Governor gear adjusting washer
HINT: Be careful not to drop the 2 washers into the pump housing.

(c) Remove the O–ring from the governor shaft.

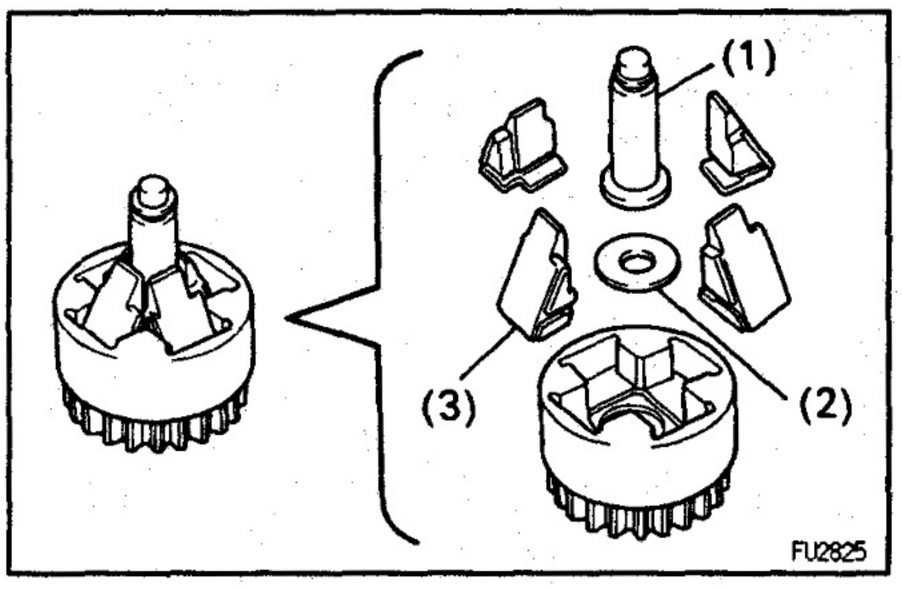

(d) Remove these parts from the flyweight holder:
(1) Governor sleeve
(2) No.2 flyweight washer
(3) 4 flyweights

EG

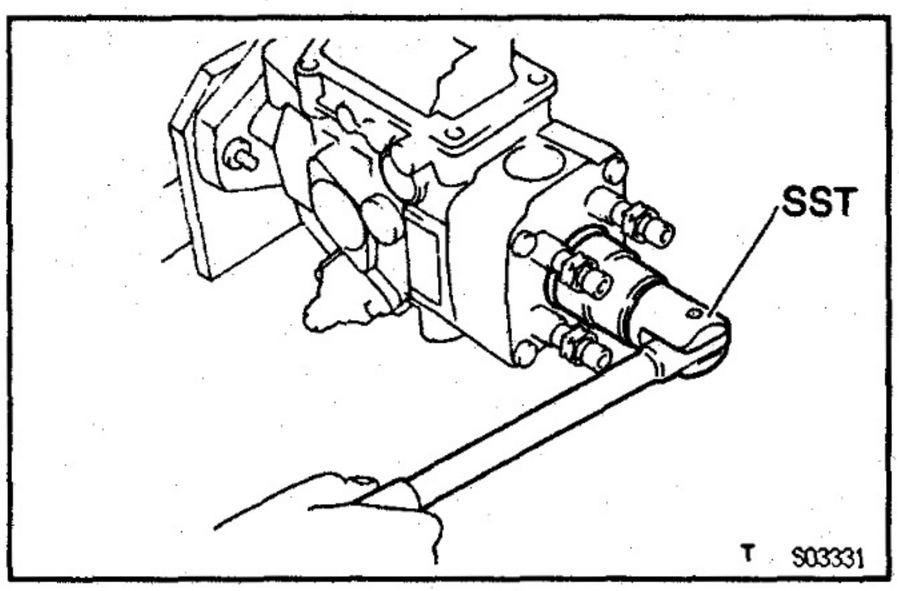

16. REMOVE DISTRIBUTIVE HEAD PLUG

Using SST, remove the distributive head plug and O—ring.
SST 09260—54012 (09262—54010)

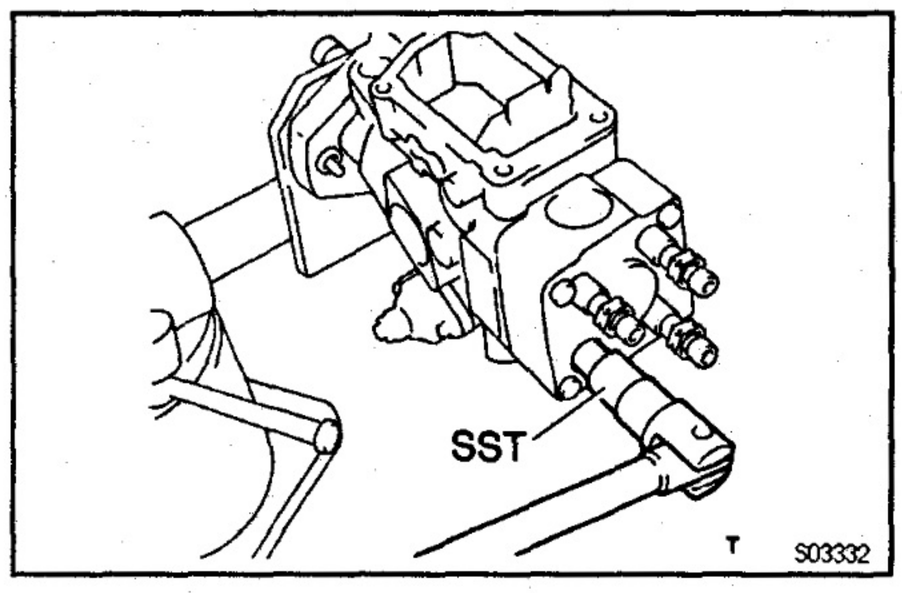

17. REMOVE DELIVERY VALVE HOLDERS

(a) Using SST, remove the 4 delivery valve holders and springs.
SST 09260—54012 (09269—54020)

(b) Remove the 4 delivery valves and gaskets.
NOTICE: Do not touch the sliding surfaces of the delivery valve with your hand.
HINT: Arrange the delivery valves, springs, and holders in order.

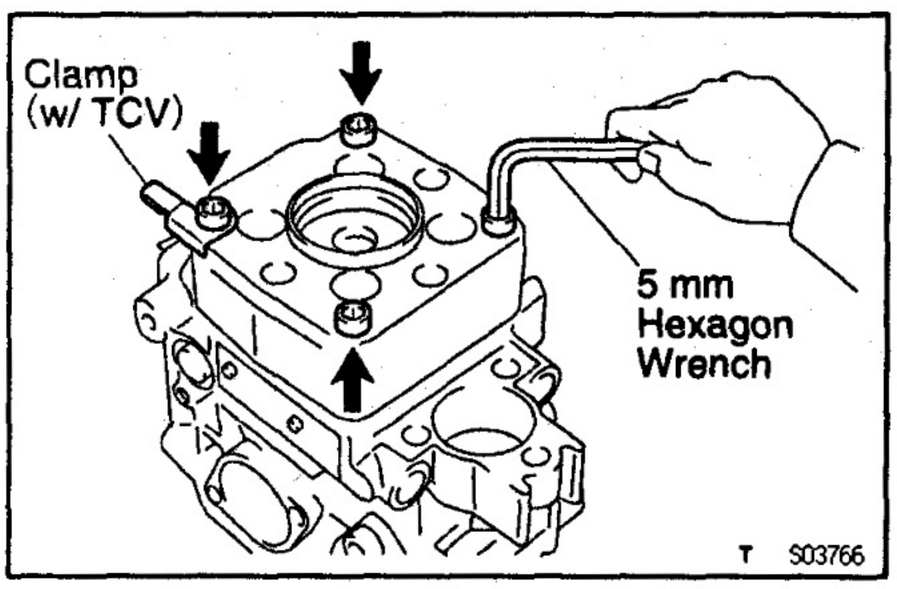

18. REMOVE DISTRIBUTIVE HEAD

(a) Using a 5 mm hexagon wrench, remove the 4 bolts and lead clamp (w/ TCV).

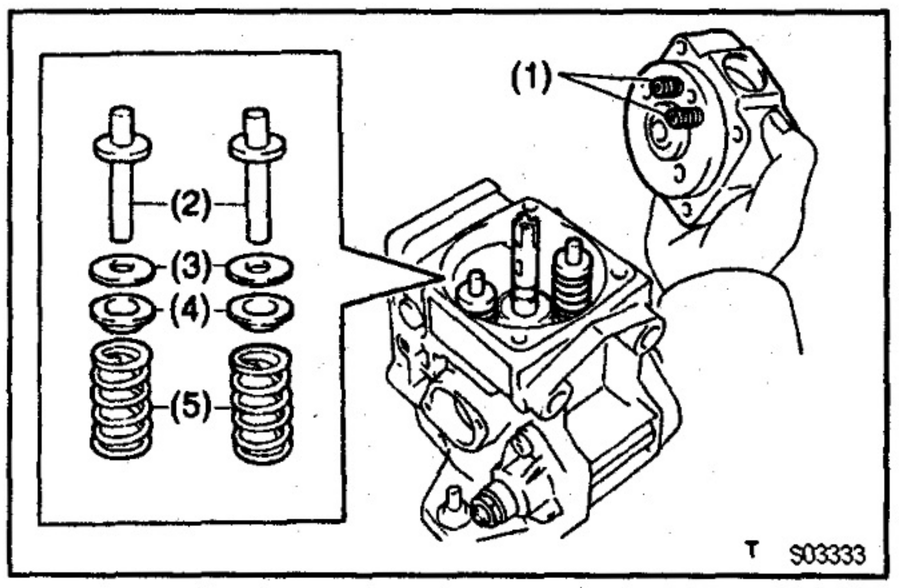

(b) Remove the distributive head and these parts:
(1) 2 lever support springs
(2) 2 plunger spring guides
(3) 2 plunger spring shims
(4) 2 upper spring seats
(5) 2 plunger springs

(c) Remove the 0—ring from the distributive head.

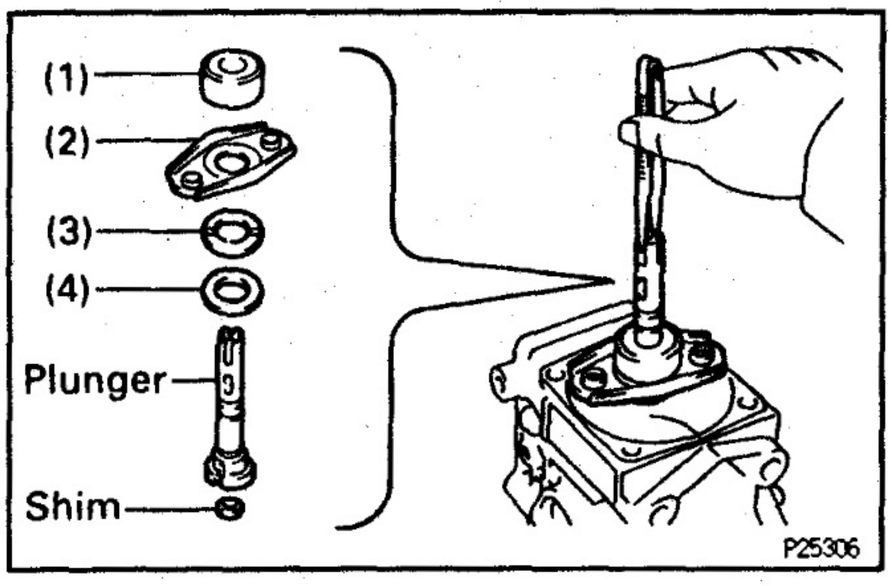

19. REMOVE PUMP PLUNGER

Using SST, remove the pump plunger and plunger adjusting shim together with these parts:

(1) Spill ring
(2) Lower spring seat
(3) Upper plunger plate
(4) Lower plunger plate

SST 09260–54012 (09269–54030)

NOTICE: Do not touch the sliding surfaces of the pump plunger with your hand.

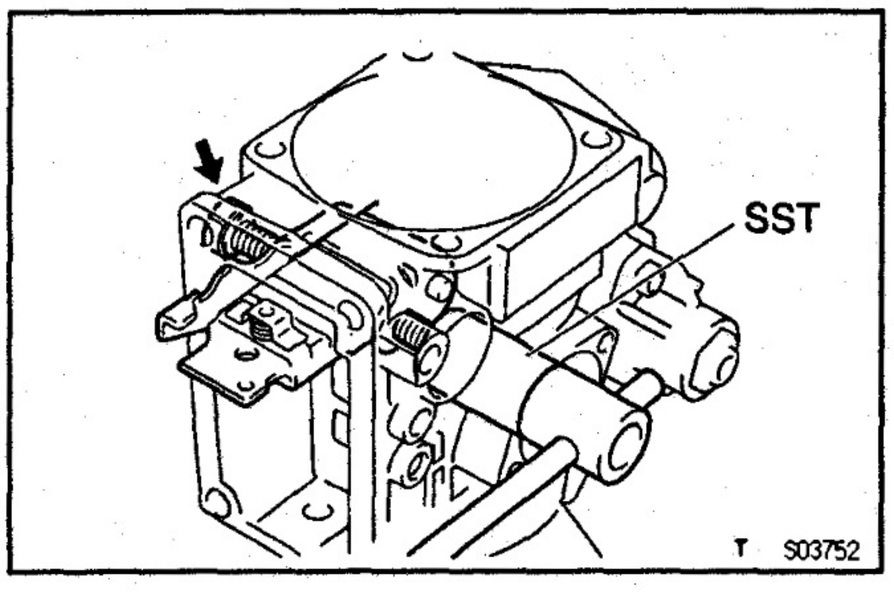

20. REMOVE GOVERNOR LINK

Using SST, remove the 2 support bolts, 2 gaskets and governor link.

SST 09260–54012 (09269–54040)

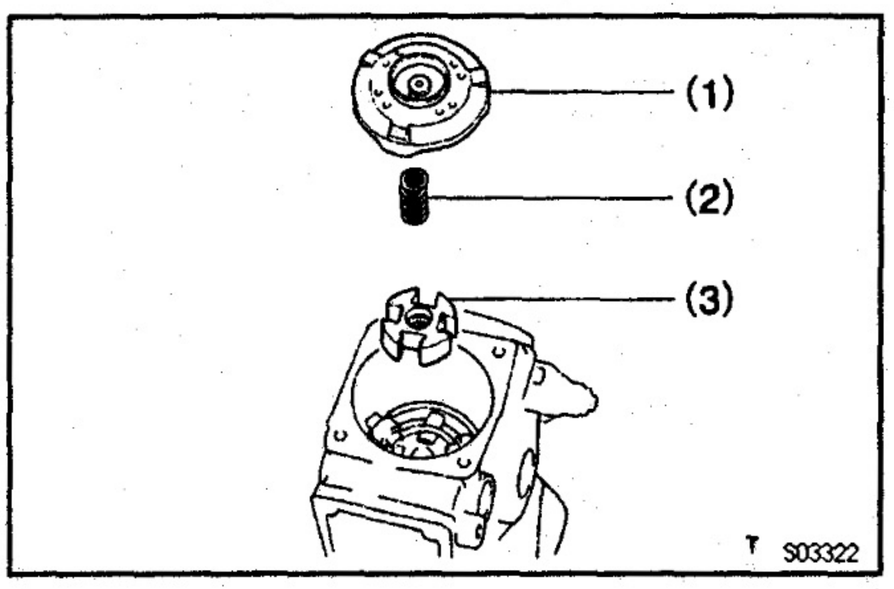

21. REMOVE FACE CAMPLATE AND COUPLING

Remove these parts:

(1) Face camplate
(2) Coupling spring
(3) Coupling

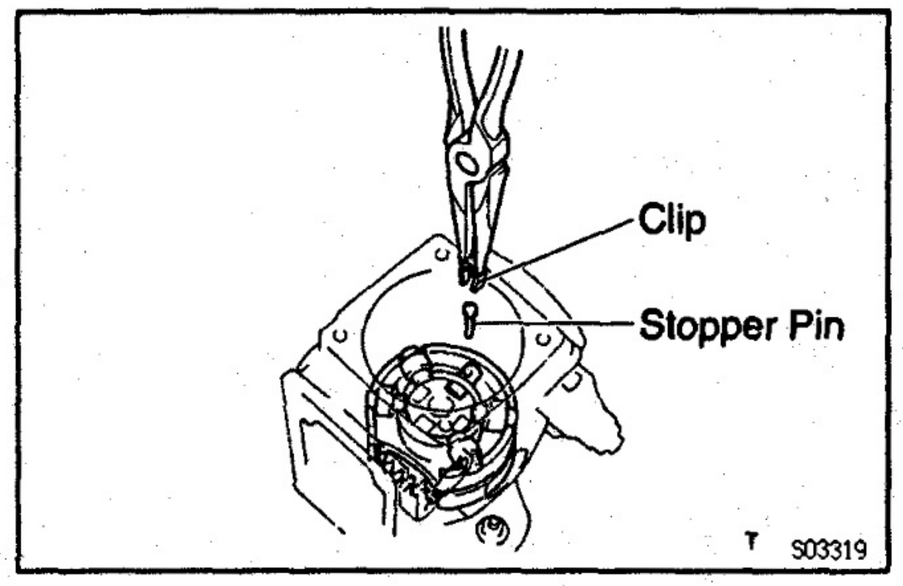

22. REMOVE ROLLER RING AND DRIVE SHAFT

(a) Remove the clip and stopper pin.

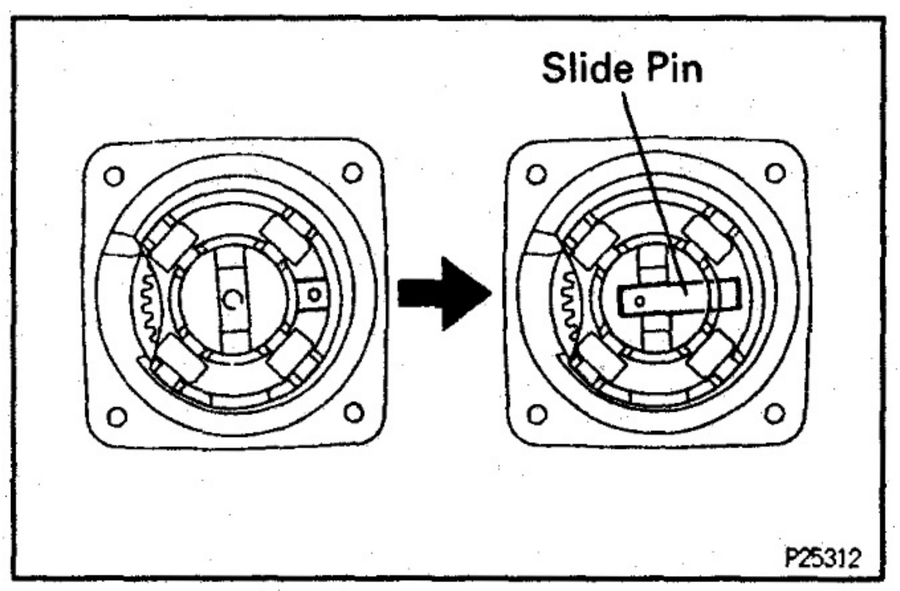

(b) Push the slide pin toward inside.

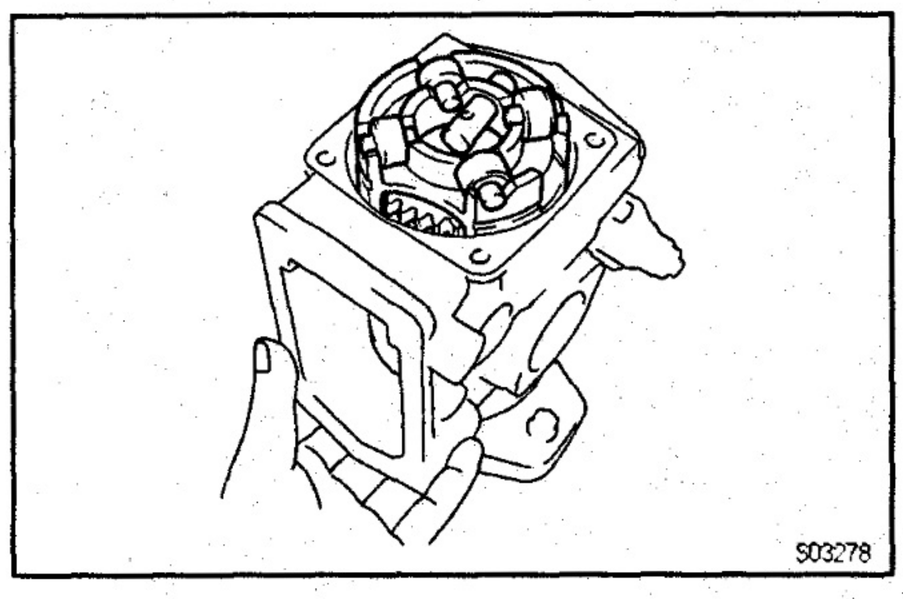

(c) Push the drive shaft, and remove the roller ring, 4 rollers and washers assembly.
NOTICE:
- **Be careful not to drop the rollers.**
- **Do not alter the position or assembly of the rollers.**

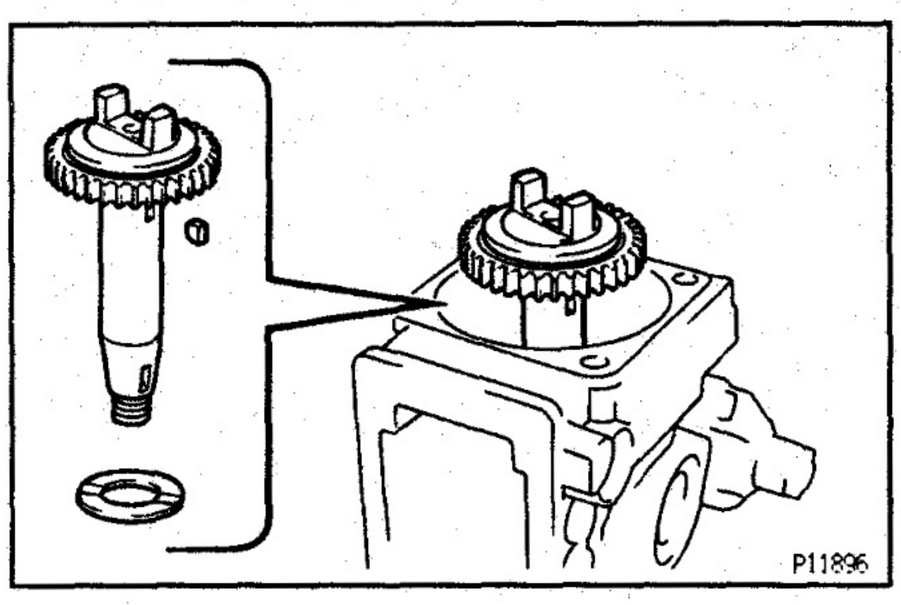

(d) Remove the drive shaft, governor drive gear, 2 joint rubbers assembly, set key and drive shaft washer.
(e) Remove the drive gear and 2 joint rubbers from the drive shaft.

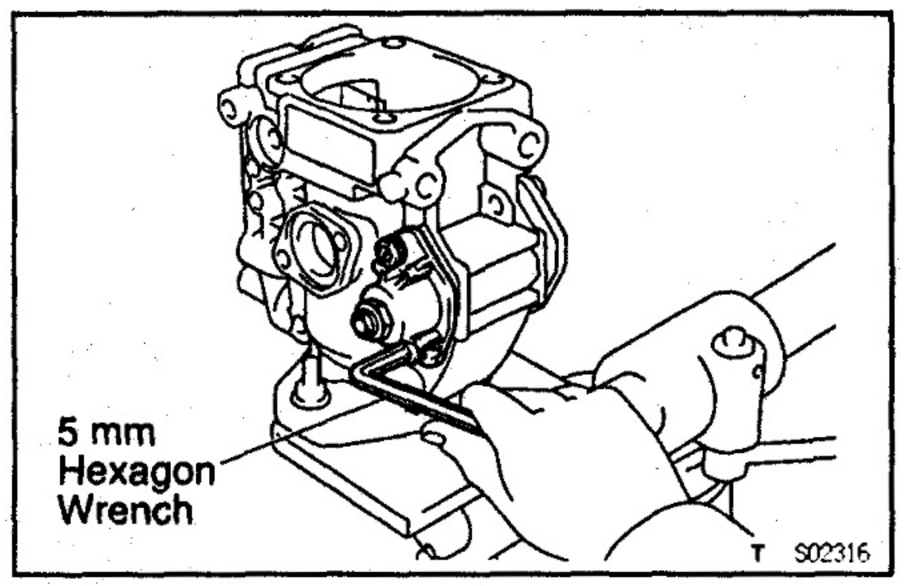

23. REMOVE TIMER

(a) Using a 5 mm hexagon wrench, remove the 2 LH timer cover bolts.

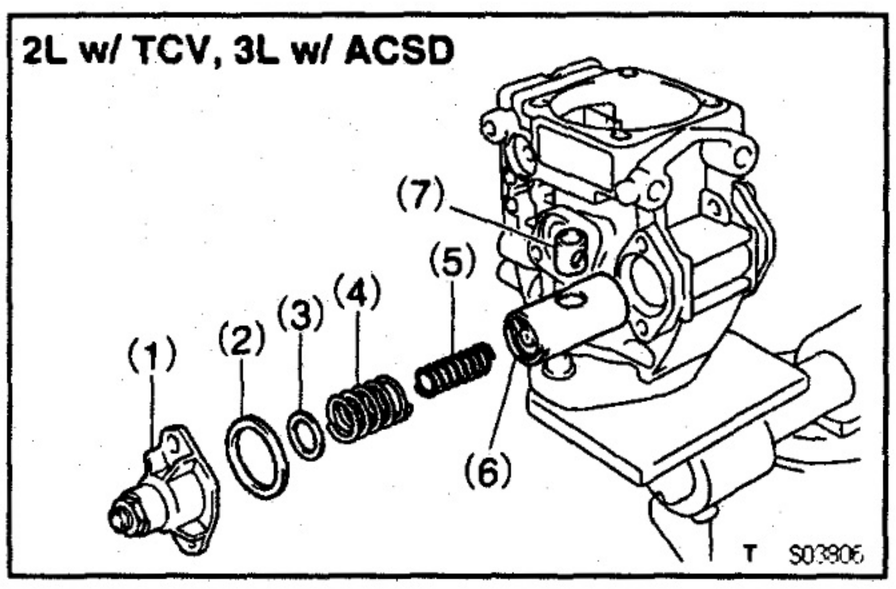

(b) 2L w/ TCV, 3L w/ ACSD:
Remove these parts:
(1) LH timer cover, timer adjusting screw and nut assembly
(2) Gasket
(3) Spring washer
(4) Timer outer spring
(5) Timer inner spring
(6) Timer piston
(7) Timer sub–piston

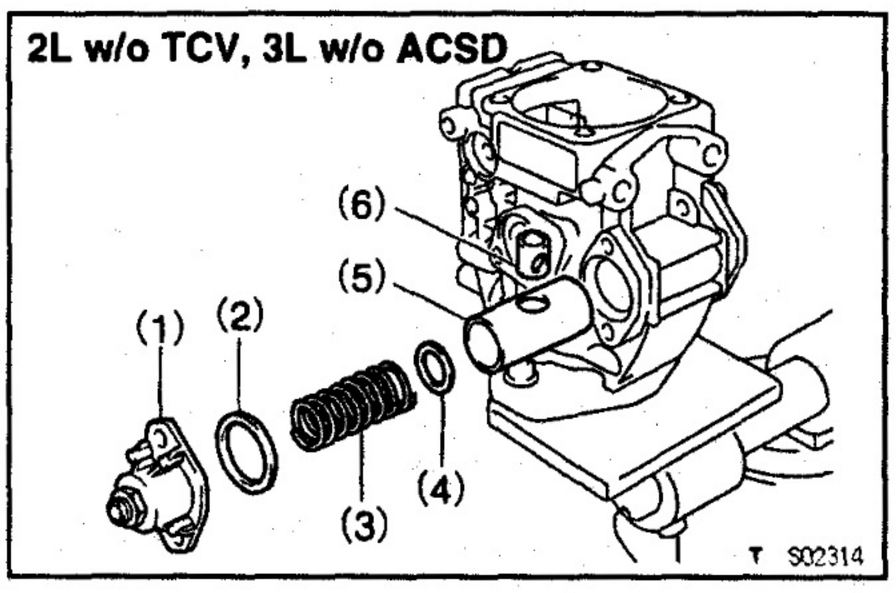

(c) 2L w/o TCV, 3L w/o ACSD:
Remove these parts:
(1) LH timer cover, timer adjusting screw and nut assembly
(2) Gasket
(3) Spring washer
(4) Timer spring
(5) Timer piston
(6) Timer sub–piston

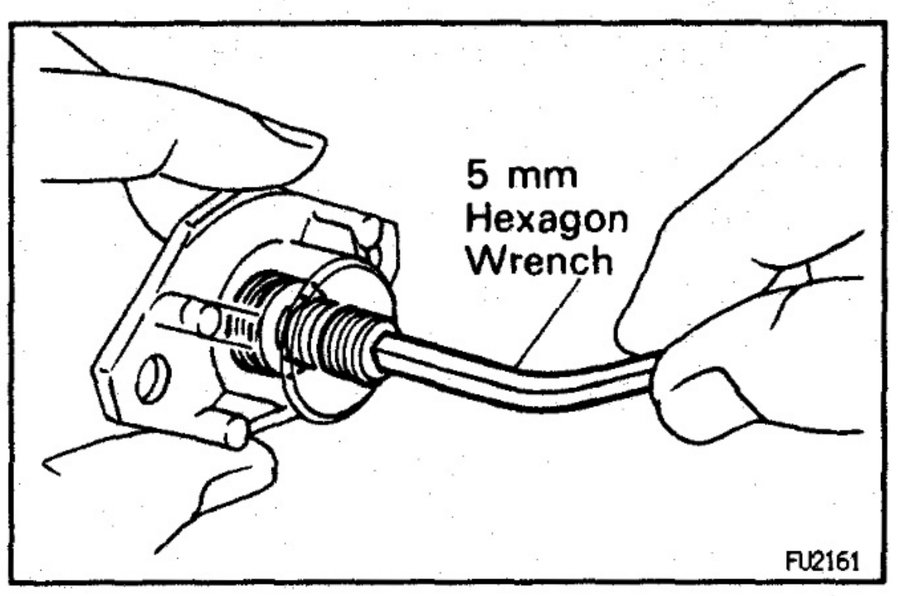

(d) Remove the nut from the LH timer cover.
(e) Using a 5 mm hexagon wrench, remove the timer adjusting screw.
(f) Remove the O–ring from the timer adjusting ring.

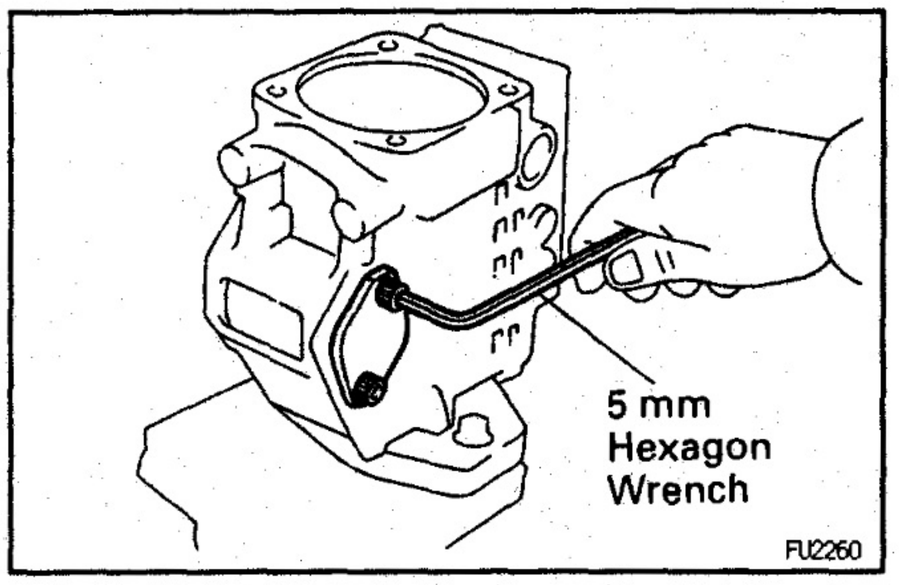

(g) Using a 5 mm hexagon wrench, remove the 2 bolts, RH timer cover and O–ring.

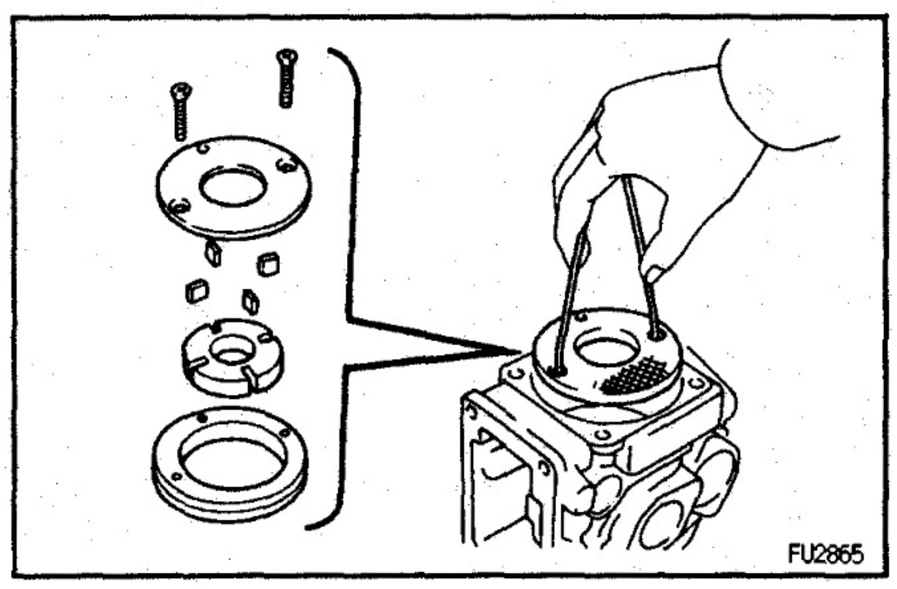

24. REMOVE FUEL FEED PUMP
(a) Remove the 2 screws.
(b) Using a piece of wire, remove the feed pump cover.
(c) Remove the feed pump rotor, 4 blades and liner.
NOTICE:
- **Be careful not to interchange the blade positions.**
- **Be careful not to damage the pump body.**

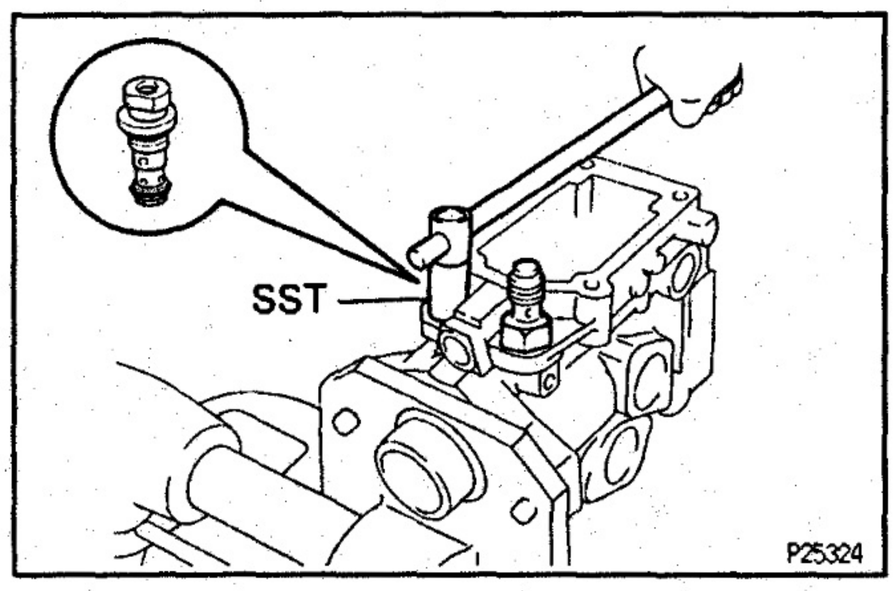

25. REMOVE REGULATOR VALVE
Using SST, remove the regulator valve and 2 O–rings.
SST 09260–54012 (09262–54020)

26. REMOVE FUEL INLET HOLLOW SCREW
Remove the hollow screw and gasket.

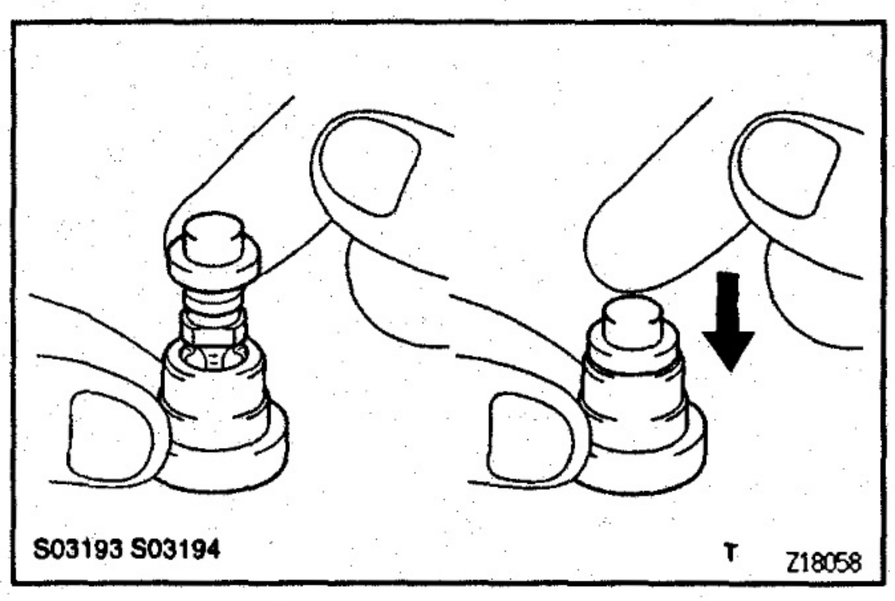

INJECTION PUMP COMPONENTS INSPECTION

E97DK–01

1. INSPECT DELIVERY VALVES
NOTICE: Do not touch the sliding surfaces of the pump plunger and delivery valves.
Pull up the valve, and release it. Check that it sinks smoothly to the valve seat.

If operation is not as specified, replace the valve as a set.

HINT: Before using a new valve set, wash off the rust prevention compound with light oil or gasoline. Then re – wash with diesel fuel and perform the above tests.

EG

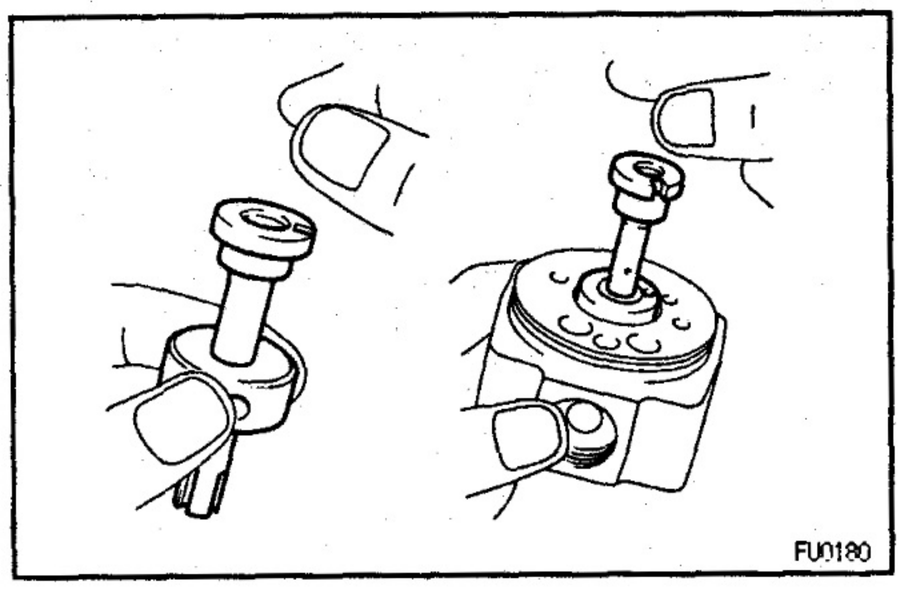

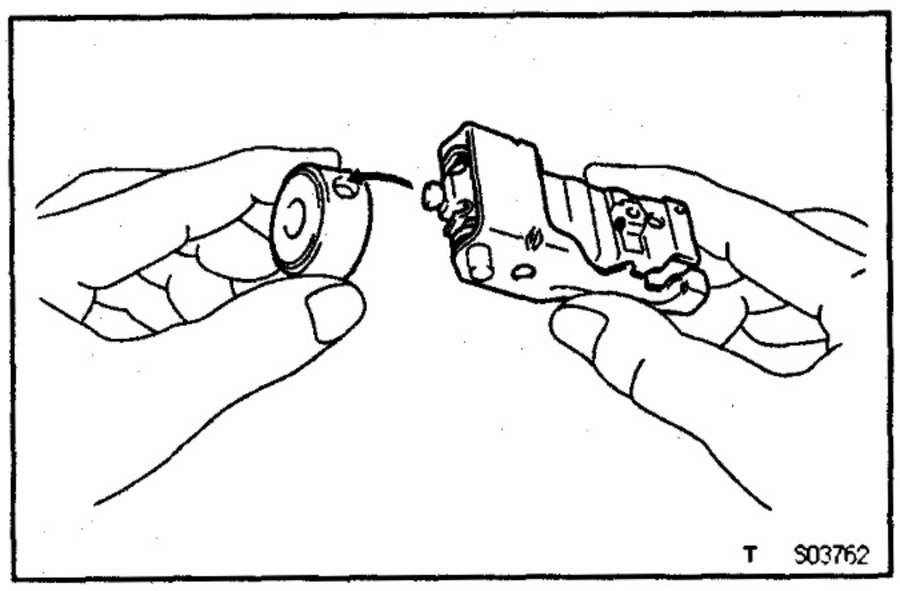

2. INSPECT PUMP PLUNGER, SPILL RING AND DISTRIBUTIVE HEAD

(a) Tilt the spill ring (distributive head) slightly, and pull out the plunger.

(b) When released, the plunger should sink down smoothly into the spill ring (distributive head) by its own weight.

(c) Rotate the plunger, and repeat the test at various positions.

If the plunger sticks at any position, replace the parts as a set.

NOTICE: Do not touch the sliding surface of the pump plunger.

(d) Insert the governor link ball pin into the spill ring, and check that it moves smoothly without any play.

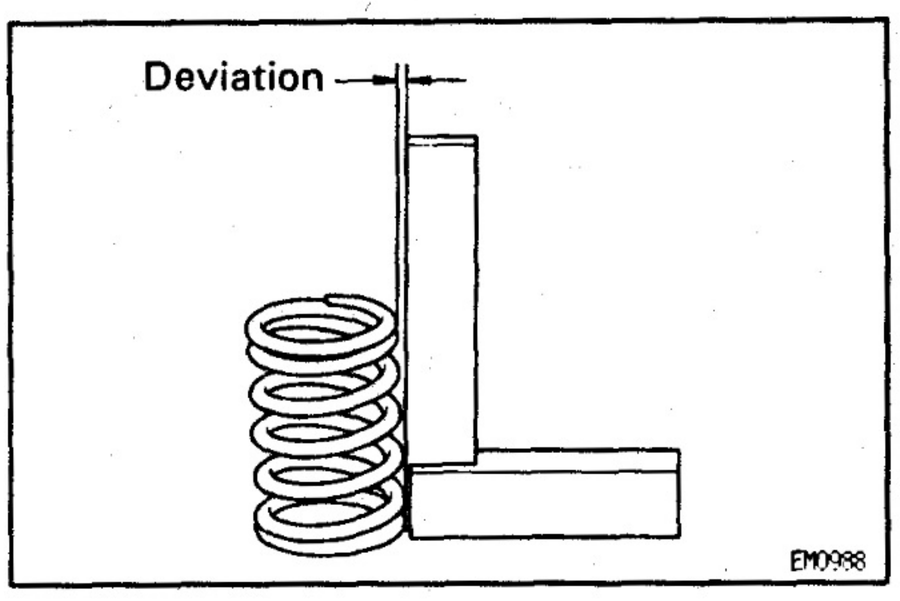

3. INSPECT PLUNGER SPRINGS FOR DEVIATION

Using a steel square, check the deviation of the plunger springs.

Maximum deviation:

2.0 mm (0.079 in.)

If deviation is greater than maximum, replace both springs.

4. INSPECT SPRING LENGTH

Using vernier calipers, measure the free length of each spring.

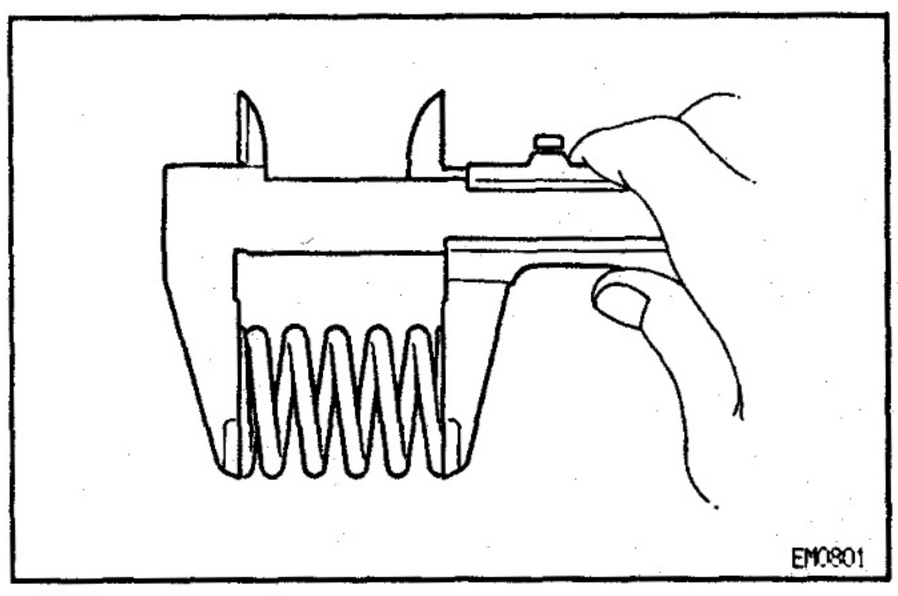

Spring free length: **mm (in.)**

Delivery valve spring	24.4 (0.961)
Plunger spring	30.0 (1.181)
Coupling spring	16.6 (0.654)
Pneumatic bellows spring (w/ HAC)	30.0 (1.181)

If the free length is not as specified, replace the spring (s).

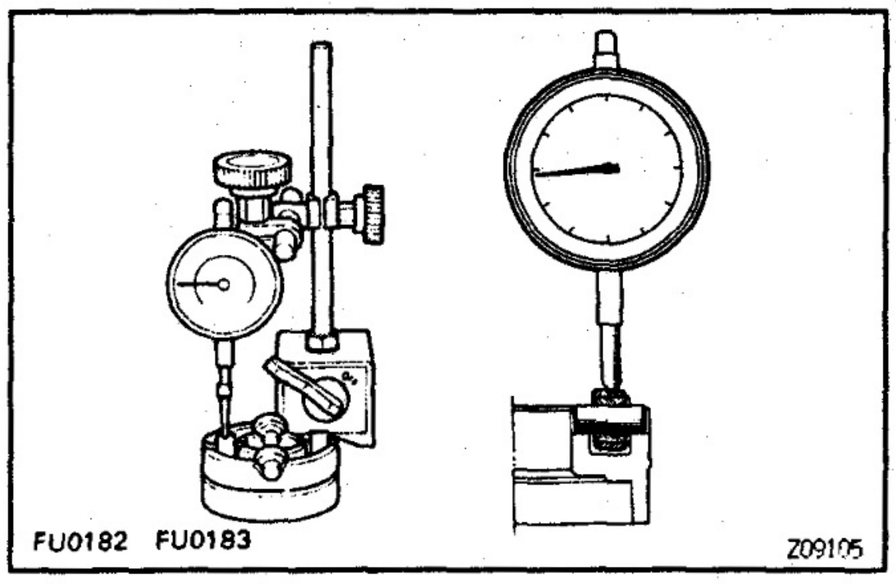

5. INSPECT ROLLER RING AND ROLLERS

Using a dial indicator, measure the roller height.

Maximum roller height variation:

0.02 mm (0.0008 in.)

If the variation is greater than specification, replace the roller ring and roller as a set.

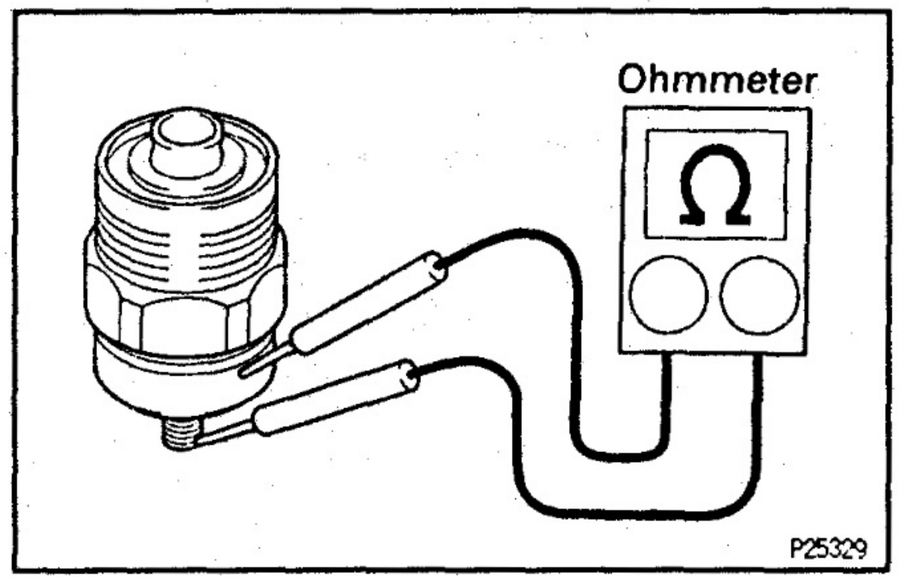

6. INSPECT FUEL CUT SOLENOID

Using an ohmmeter, measure the resistance between the terminal and solenoid body.

Resistance at 20°C (68°F):

9.5 – 11.9 Ω

If the resistance is not as specified, replace the solenoid.

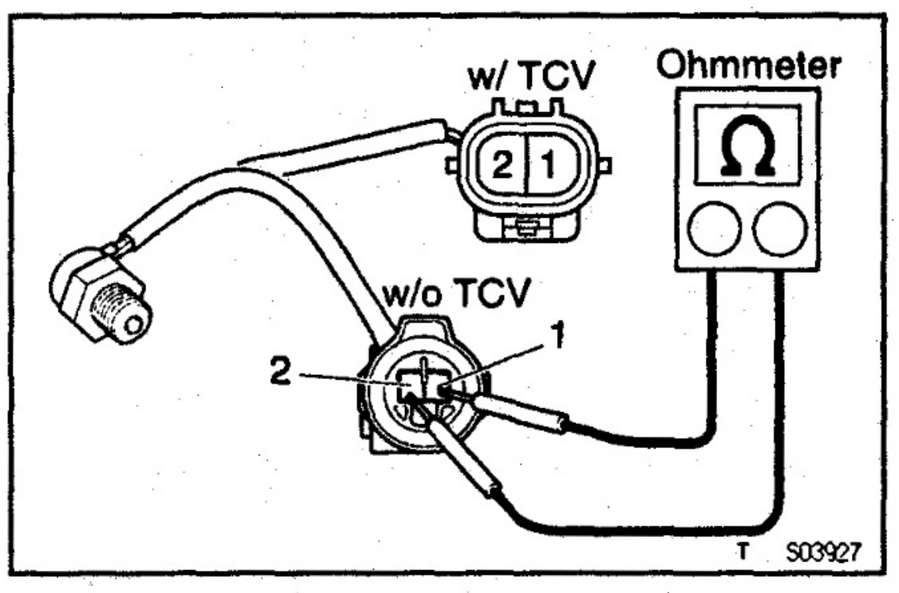

7. INSPECT PICKUP SENSOR

Using an ohmmeter, measure the resistance between terminals 1 and 2.

Resistance at 20°C (68°F):

650 – 970 Ω

If the resistance is not as specified, replace the sensor.

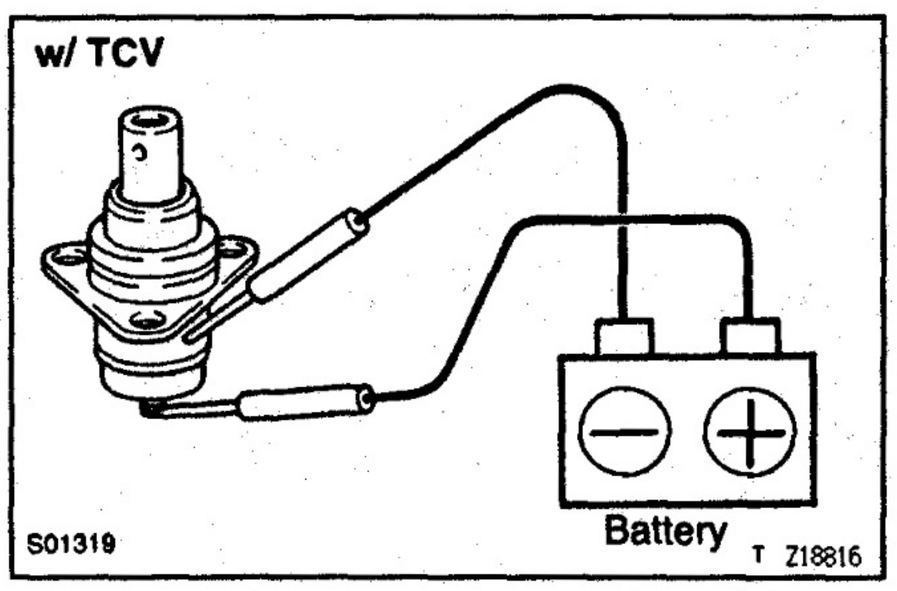

8. w/ TCV:

INSPECT TIMING CONTROL VALVE

(a) Connect the valve body and terminal to the battery terminals.

(b) You should feel the click from the control valve when the battery power is connected and disconnected.

If the control valve is not operating properly, replace it.

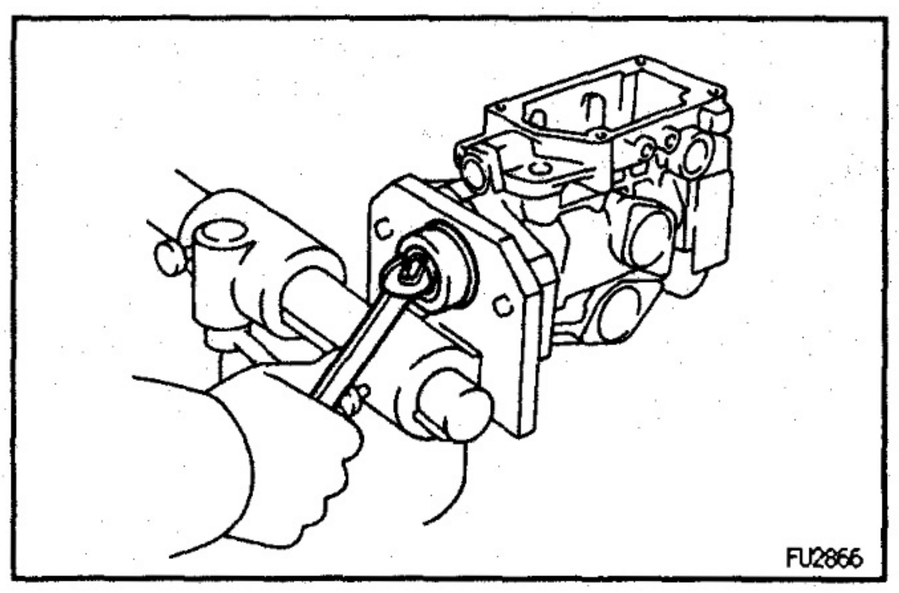

9. IF NECESSARY, REPLACE OIL SEAL

(a) Using a wrench, pry out the oil seal.

NOTICE: Be careful not to damage to the pump body.

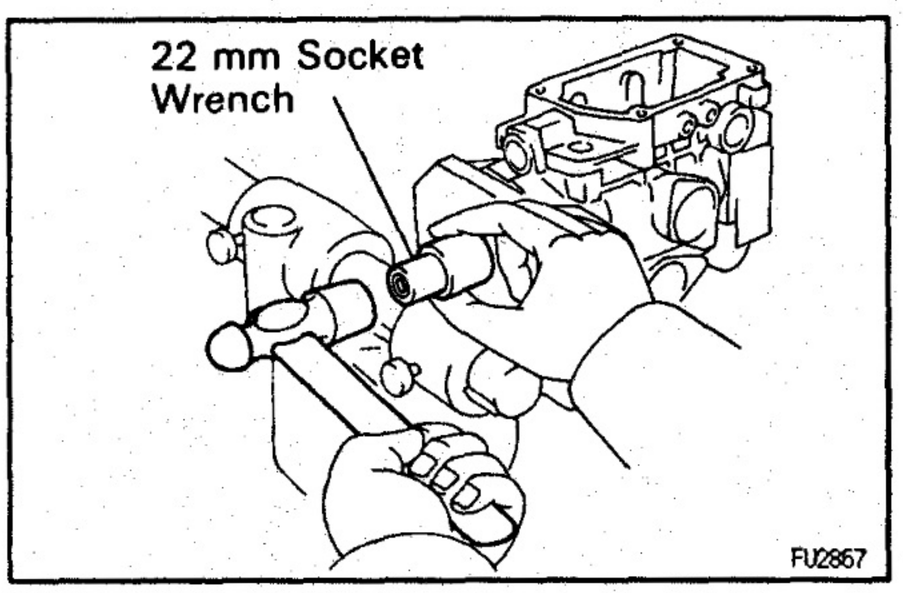

(b) Apply MP grease to the lip of a new oil seal.
(c) Using a 22 mm socket wrench, tap in the oil seal until its surface is flush with the pump body.

EG

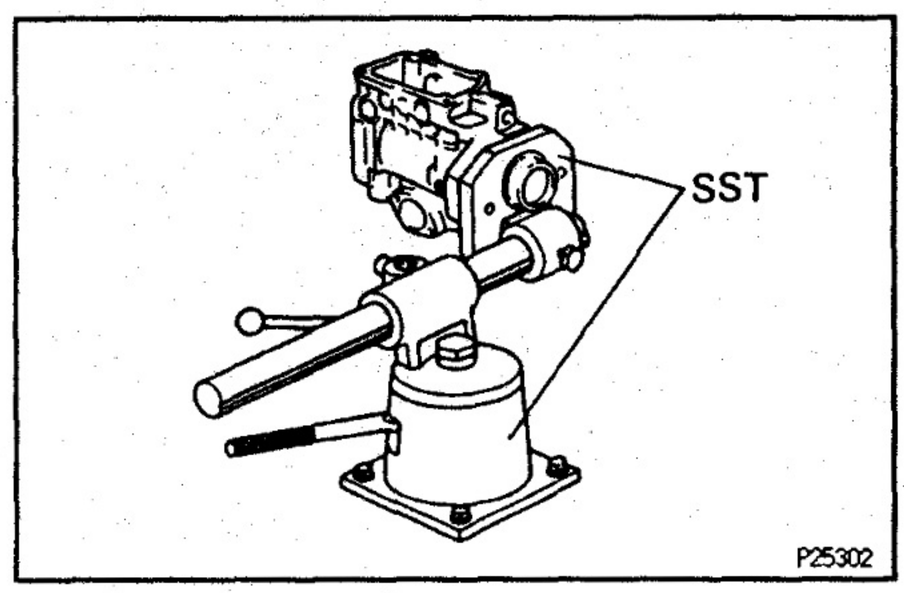

INJECTION PUMP ASSEMBLY

1. **MOUNT PUMP BODY TO SST (STAND)**
SST 09241–76022, 09245–54010

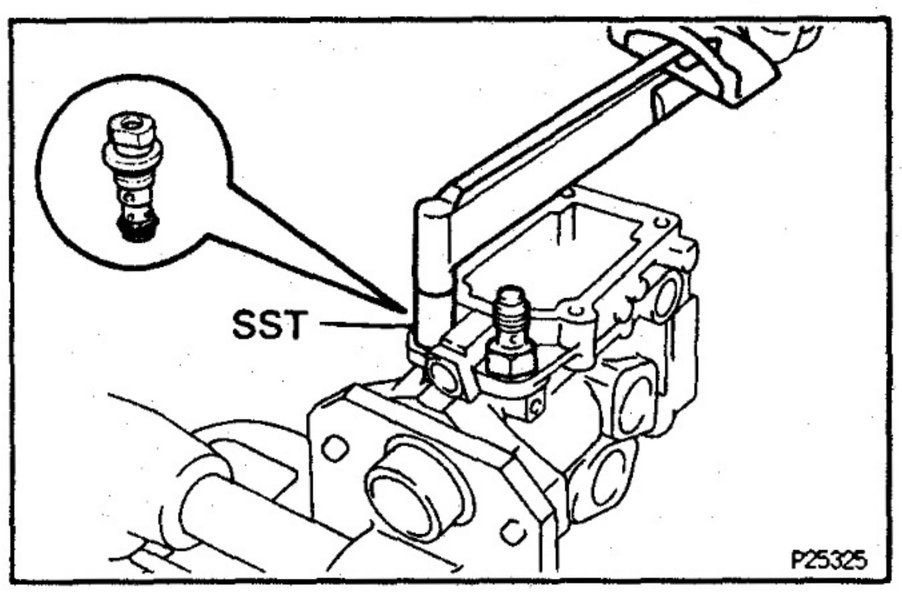

2. **INSTALL FUEL INLET HOLLOW SCREW**
Install a new gasket and the hollow screw.
Torque: 36.8 N·m (375 kgf·cm, 27 ft·lbf)

3. **INSTALL REGULATOR VALVE**
(a) Install the 2 O–rings to the regulator valve.
(b) Using SST, install the regulator valve.
SST 09260–54012 (09262–54020)
Torque: 8.85 N·m (90 kgf·cm, 78 in.·lbf)

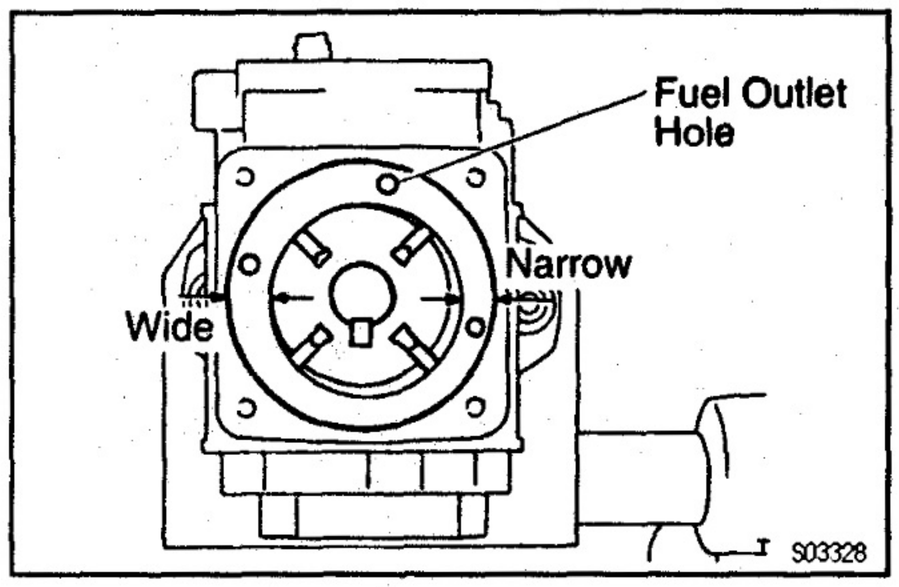

4. **INSTALL FUEL FEED PUMP**
(a) Install the liner, rotor and 4 blades.
(b) Check that the liner and blades are facing in the correct direction, as shown.
(c) Check that the blades move smoothly.

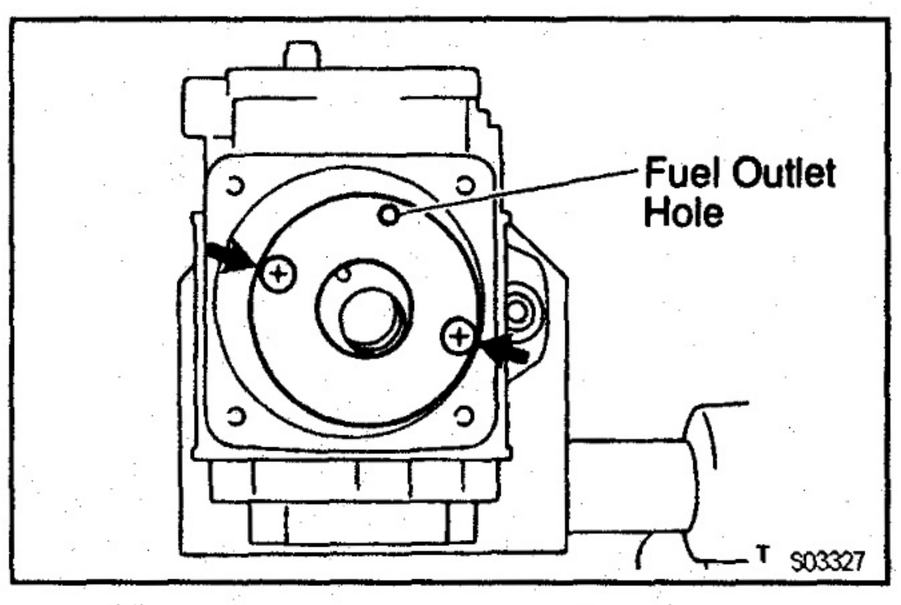

(d) Align the fuel outlet holes of the cover and liner.
(e) Install the pump cover with the 2 screws.
Torque: 2.45 N·m (25 kgf·cm, 22 in.·lbf)
(f) Check that the rotor moves smoothly.

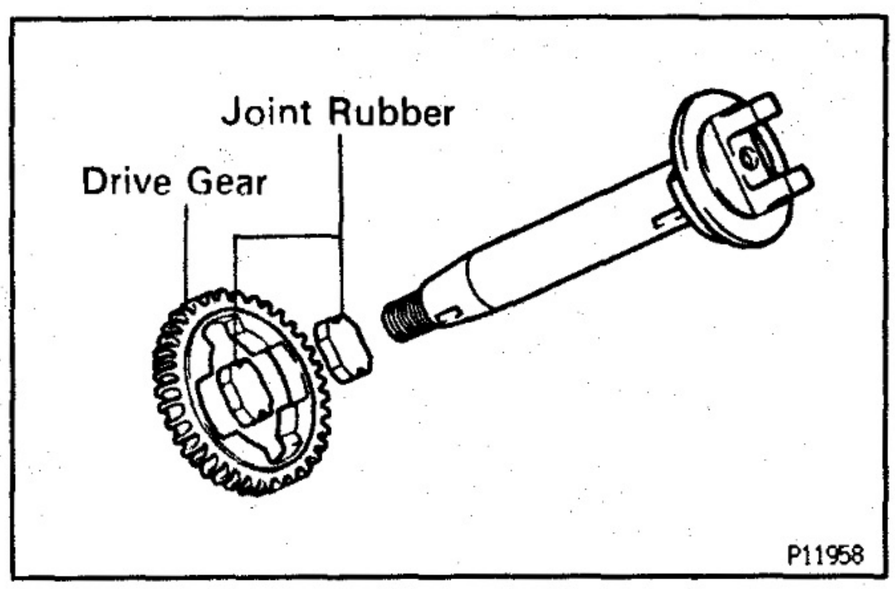

5. INSTALL DRIVE SHAFT

(a) Install the drive gear on the drive shaft assembly as shown.

(b) Install 2 new joint rubbers into the drive gear.

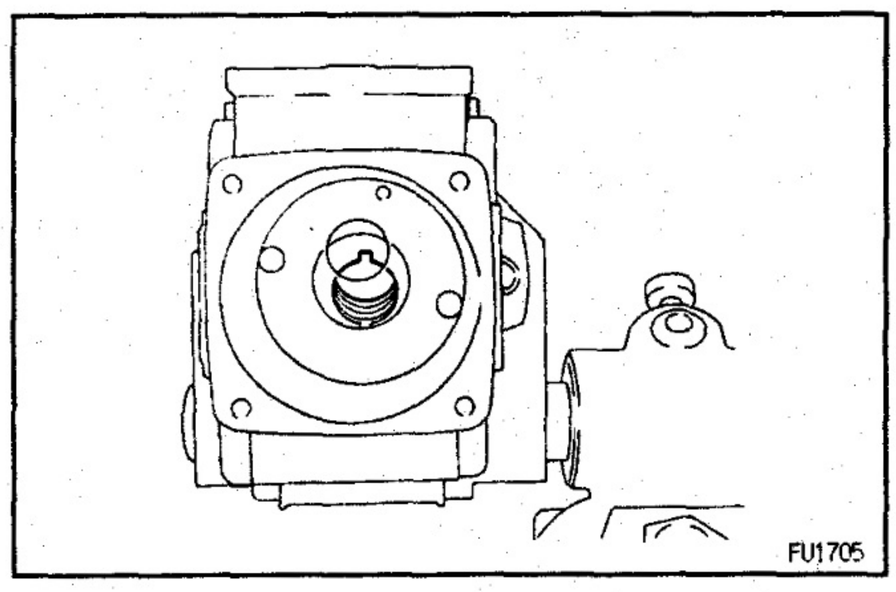

(c) Position the key groove of the feed pump rotor upward.

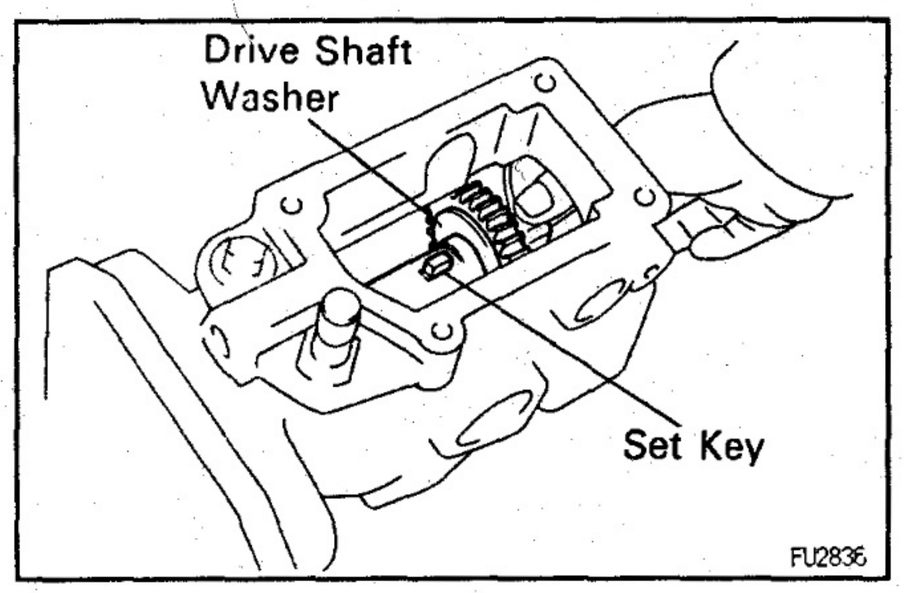

(d) Install the set key and drive shaft washer on the drive shaft and insert the drive shaft assembly into the pump housing.

(e) Check that the drive shaft turns without catching.

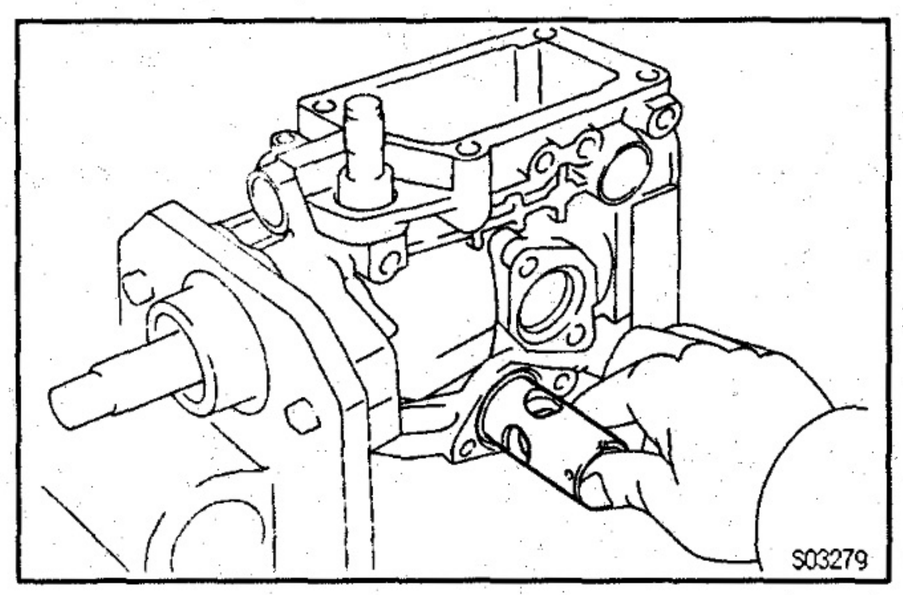

6. INSTALL TIMER PISTON

(a) Apply grease to the timer piston.

(b) Install the sub–piston into the timer piston.

(c) Insert the timer piston into the pump housing.

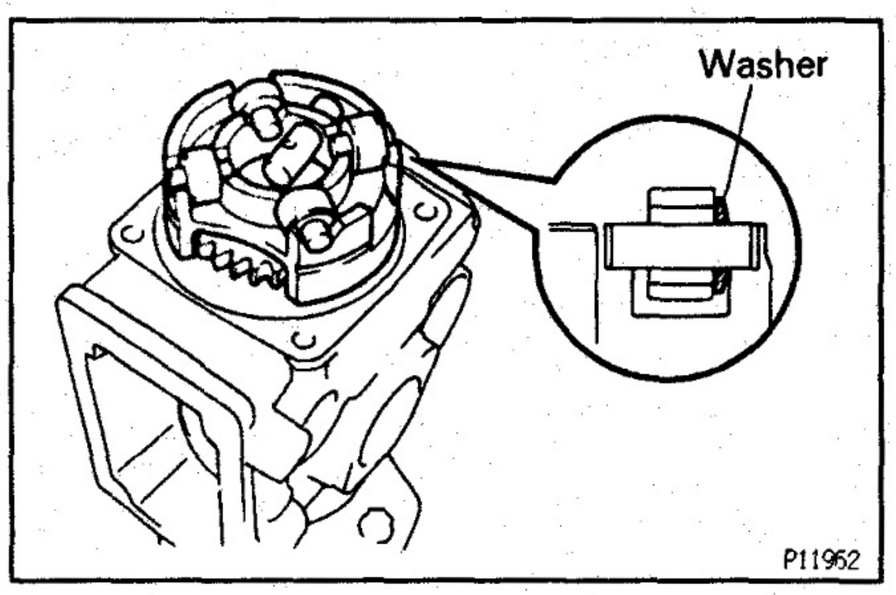

7. INSTALL ROLLER RING

(a) Turn the drive shaft clockwise or counterclockwise approx. 90°.

(b) Install the slide pin, 4 rollers and washers on the roller ring.

(c) Check that the roller is facing the flat surface of the washer.

(d) Install the roller ring into the pump housing.

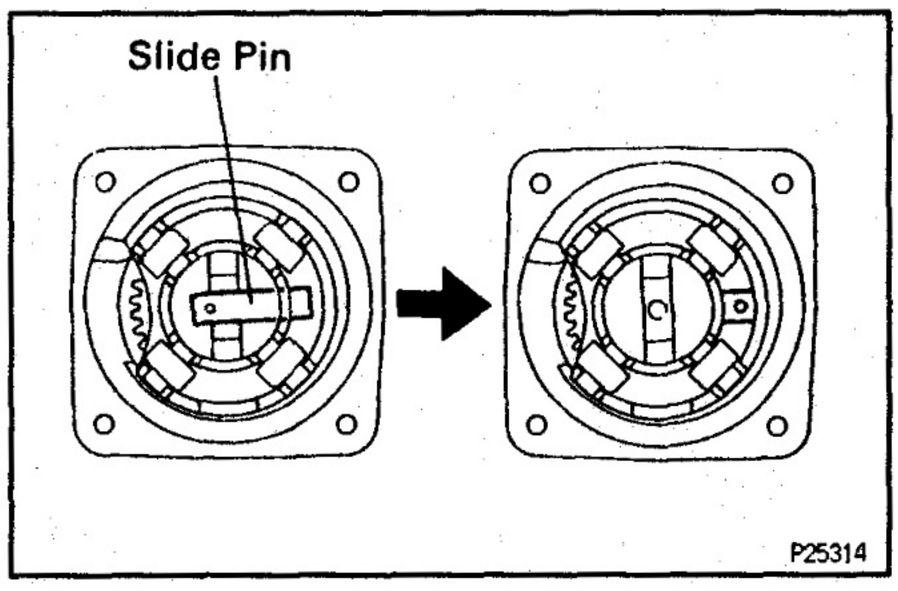

(e) Carefully install the slide pin into the sub–piston.

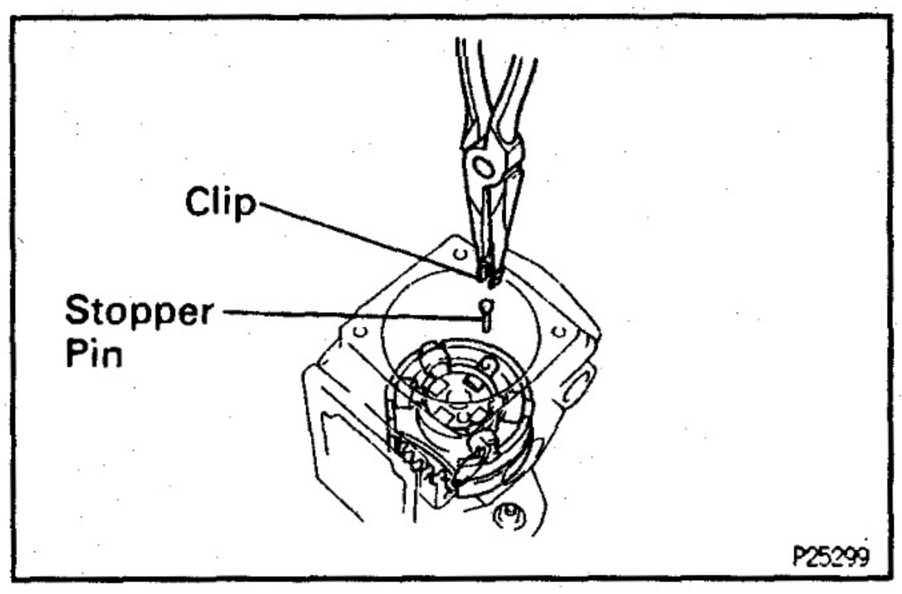

(f) Install the stopper pin and clip.

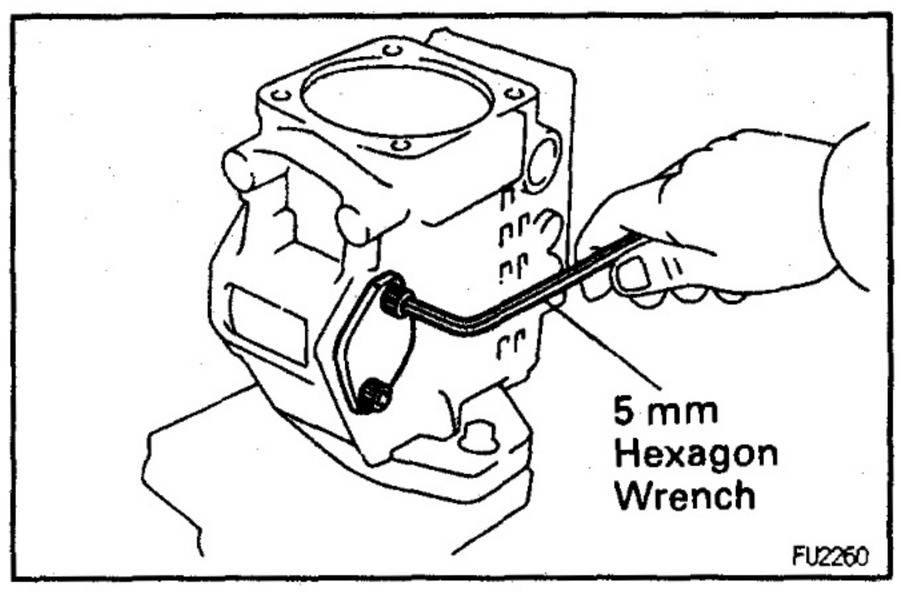

8. INSTALL TIMER SPRING

(a) Using a 5 mm hexagon wrench, install a new O–ring and the RH timer cover with the 2 bolts.
Torque: 8.35 N·m (85 kgf·cm, 74 in.·lbf)

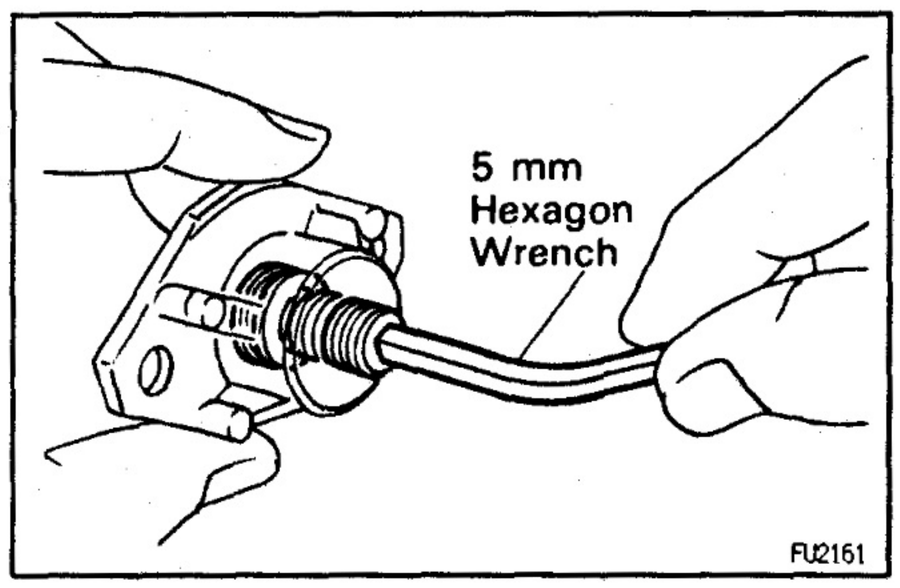

(b) Install a new O–ring to the timer adjusting screw.
(c) Using a 5 mm hexagon wrench, install the timer adjusting screw to the LH timer cover and temporarily install the nut.

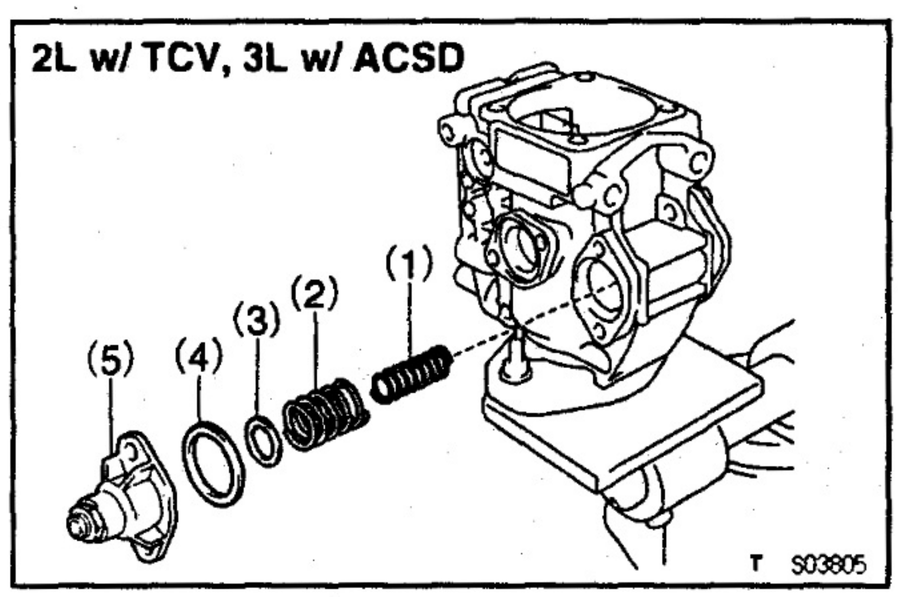

(d) 2L w/ TCV, 3L w/ ACSD:
Install these parts:
(1) Timer inner spring
(2) Timer outer spring
(3) Spring washer
(4) New gasket
(5) LH timer cover, timer adjusting screw and nut assembly

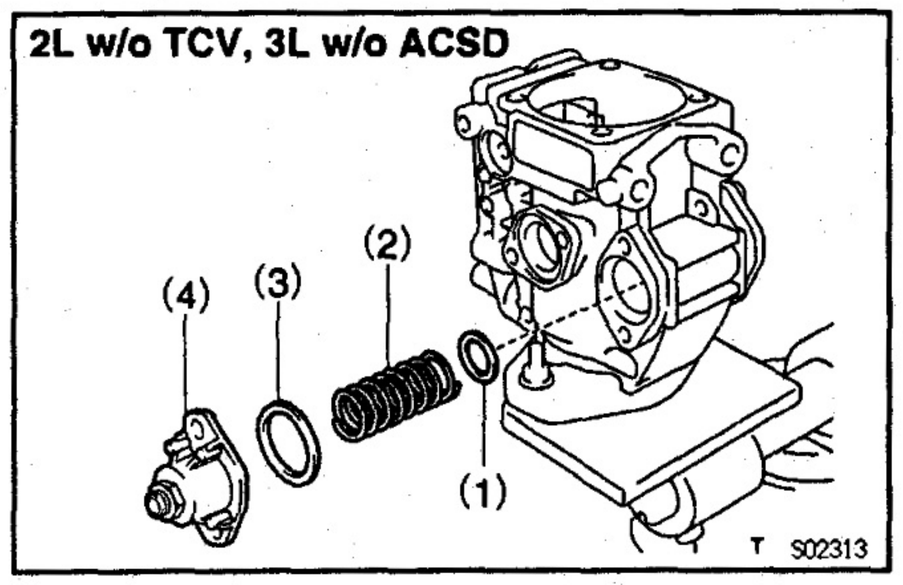

(e) 2L w/o TCV, 3L w/o ACSD:
Install these parts:
(1) Timer spring
(2) Spring washer
(3) New gasket
(4) LH timer cover, timer adjusting screw and nut assembly

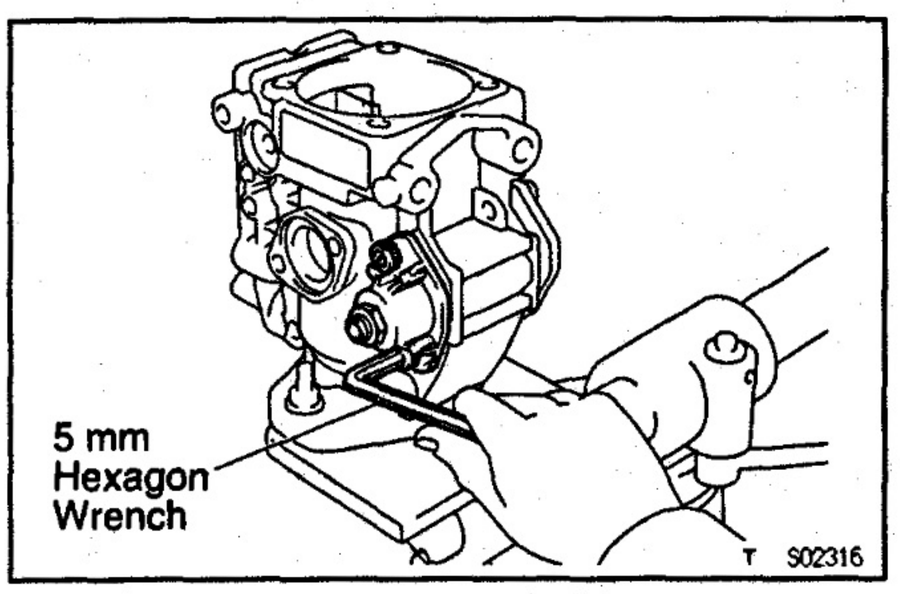

(f) Using a 5 mm hexagon wrench, install the 2 LH timer cover bolts.
Torque: 8.35 N·m (85 kgf·cm, 74 in.·lbf)

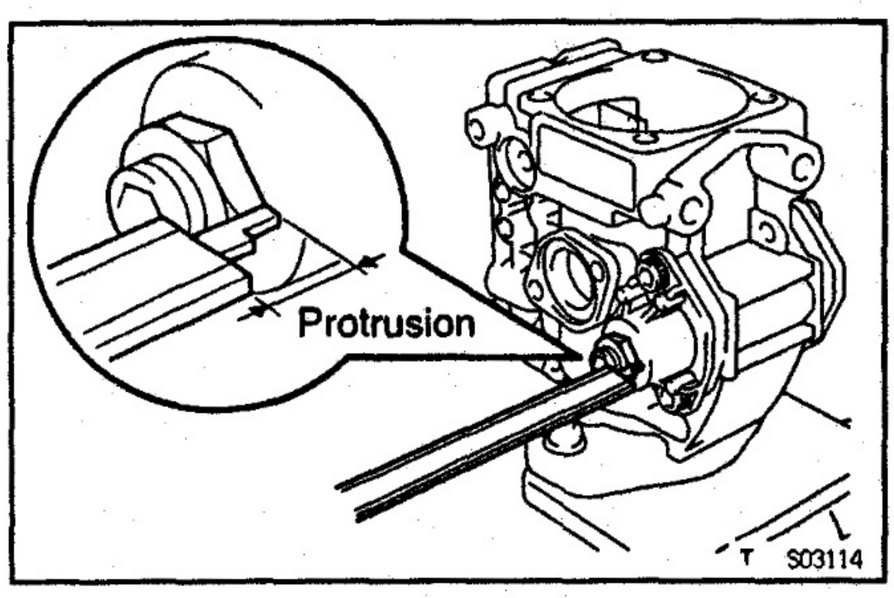

9. PRE–SET TIMER ADJUSTING SCREW

(a) Using vernier calipers, measure the protrusion of the adjusting screw from the timer cover.
Protrusion:
5.0 – 6.0 mm (0.197 – 0.236 in.)

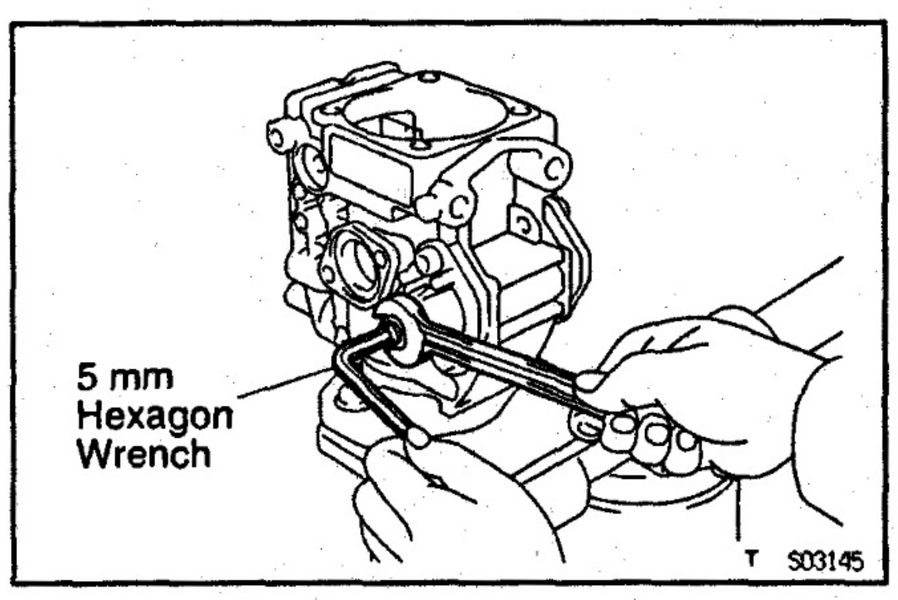

(b) Using a 5 mm hexagon wrench, adjust the protrusion of the adjusting screw from the timer cover.
Torque: 14.2 N·m (145 kgf·cm, 10 ft·lbf)

10. ADJUST PLUNGER SPRING SHIM

(a) Install these parts to the distributive head:

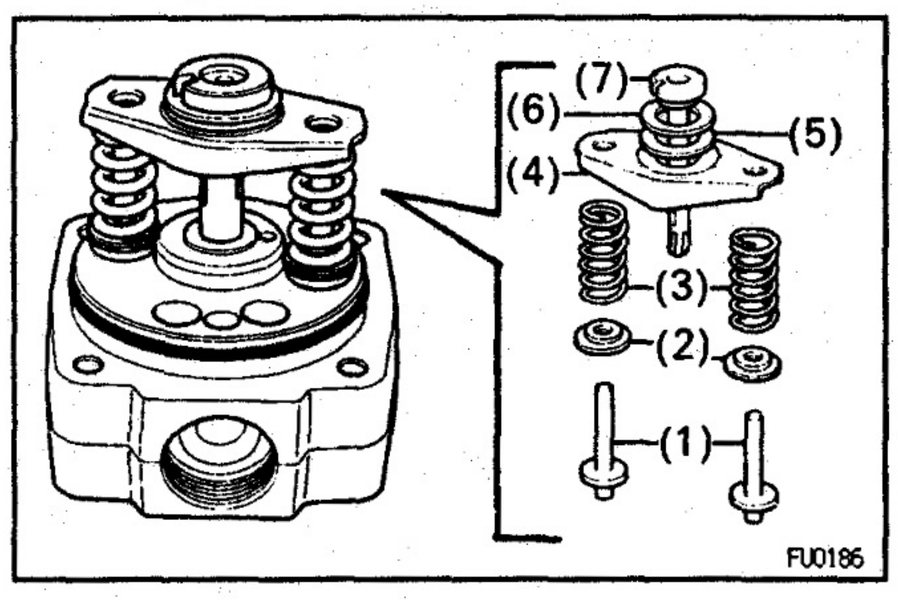

(1) 2 plunger spring guides
(2) 2 upper spring seats
(3) 2 plunger springs
(4) Lower spring seat
(5) Upper plunger plate
(6) Lower plunger plate
(7) Pump plunger

HINT: Do not assemble the plunger spring shims at this time.

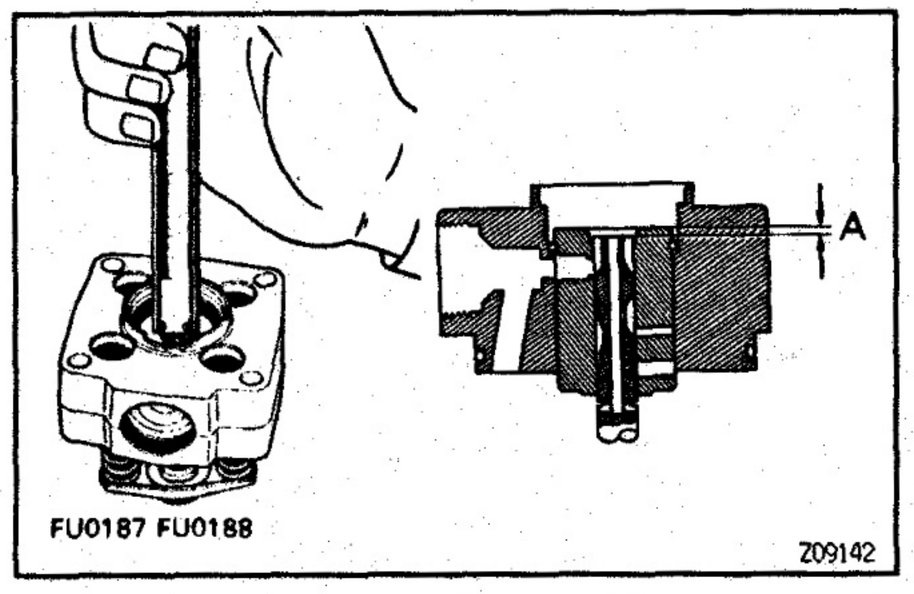

(b) Using vernier calipers, measure clearance A indicated in the illustration.

(c) Determine the plunger spring shim size by using these formula and chart.

New plunger spring shim thickness = 5.8 – A

A ... Measured plunger position

Plunger spring shim selection chart: **mm (in.)**

Measured clearance	Shim thickness
More than 5.3 (0.209)	0.5 (0.020)
5.0 – 5.2 (0.196 – 0.205)	0.8 (0.031)
4.8 – 4.9 (0.189 – 0.193)	1.0 (0.039)
4.6 – 4.7 (0.181 – 0.185)	1.2 (0.047)
4.3 – 4.5 (0.169 – 0.177)	1.5 (0.059)
4.0 – 4.2 (0.157 – 0.165)	1.8 (0.071)
Less than 3.9 (0.154)	2.0 (0.079)

HINT:

- For a measurement between listed sizes, use the next larger size. e.g. If thickness is 1.1 mm (0.043 in.) by calculation, use a 1.2 mm (0.047 in.) shim.
- Select 2 shims which have the same thickness.

11. INSTALL COUPLING

12. ADJUST PLUNGER ADJUSTING SHIM

(a) Install the face camplate.

HINT: Do not install the coupling spring.

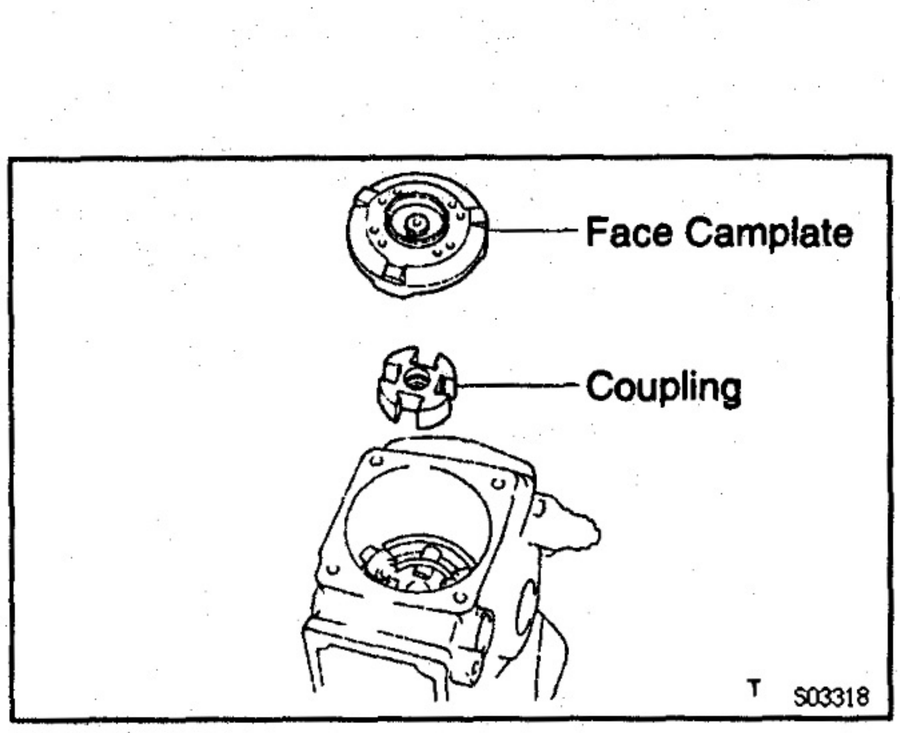

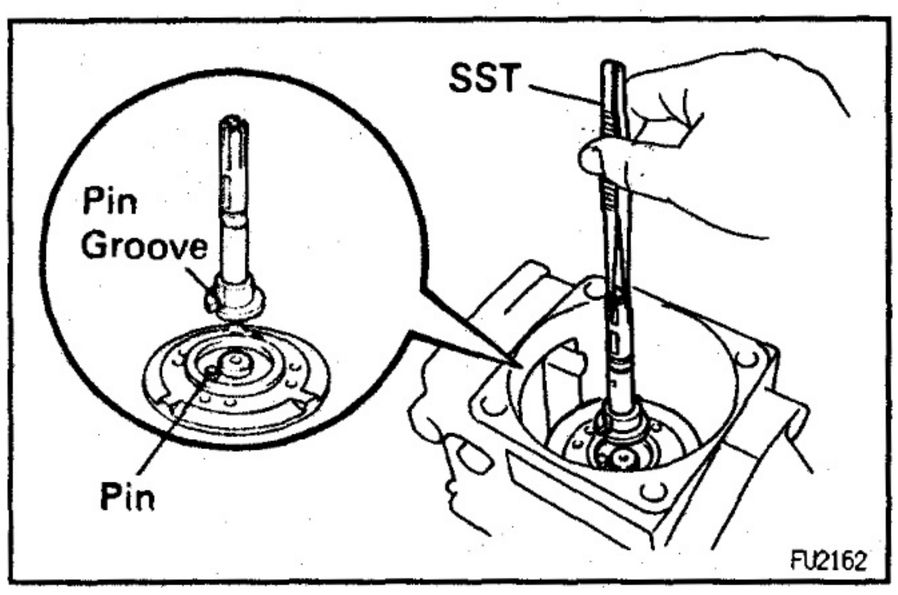

(b) Clean the plunger adjusting shim and contacting surface area.

(c) Align the pin groove of the pump plunger with the face camplate pin.

(d) Using SST, install the used plunger adjusting shim and pump plunger.

SST 09260–54012 (09269–54030)

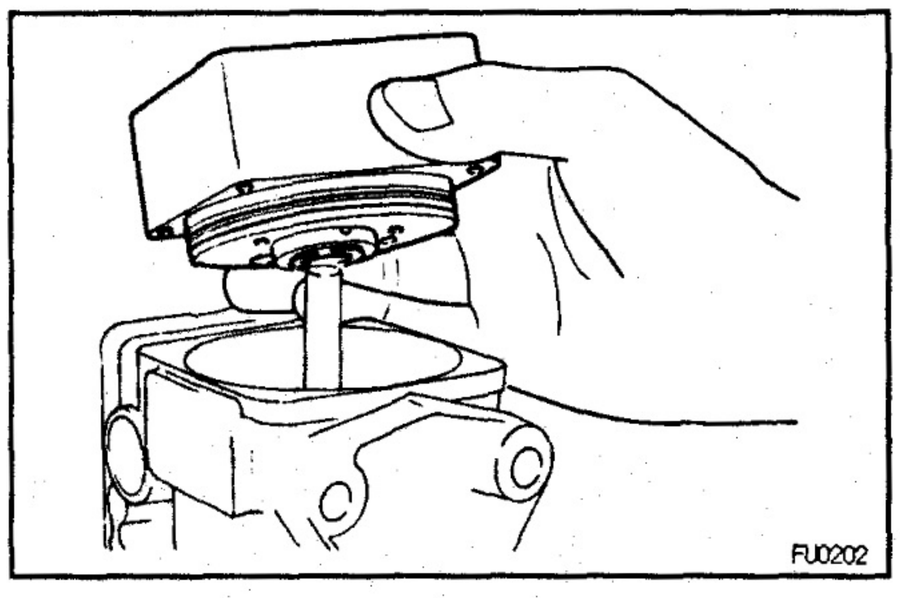

(e) Install the distributive head with the 4 bolts.

Torque: 11.75 N·m (120 kgf·cm, 9 ft·lbf)

NOTICE: Be careful not to damage the pump plunger.

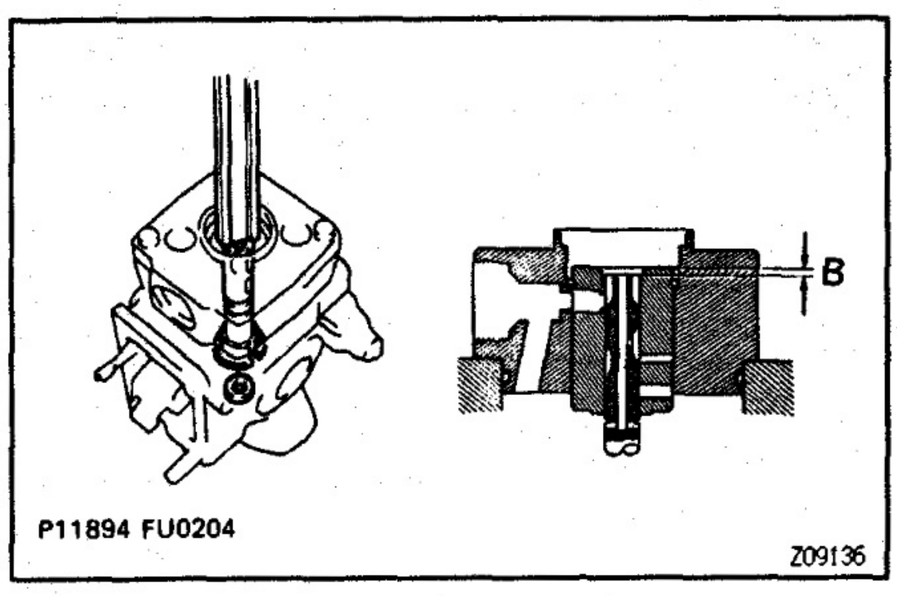

(f) Using vernier calipers, measure dimension B indicated in the illustration.

(g) Determine the plunger adjusting shim size by using these formula and chart:
New adjusting shim thickness = T + (B – 3.3)
T ... Thickness of used shim
B ... Measured plunger position

EG

Plunger adjusting shim selection chart

Installed shim mm	Measured clearance mm																			
	2.3	2.4	2.5	2.6	2.7	2.8	2.9	3.0	3.1	3.2 – 3.4	3.5	3.6	**3.7**	3.8	3.9	4.0	4.1	4.2	4.3	4.4
1.9											2.1	2.2	2.3	2.4	2.5	2.6	2.7	2.8	2.9	2.9
2.0									1.9		2.2	2.3	2.4	2.5	2.6	2.7	2.8	2.9	2.9	
2.1								1.9	1.9		2.3	2.4	2.5	2.6	2.7	2.8	2.9	2.9		
2.2							1.9	1.9	2.0		2.4	2.5	2.6	2.7	2.8	2.9	2.9			
2.3						1.9	1.9	2.0	2.1		2.5	2.6	2.7	2.8	2.9	2.9				
2.4					1.9	1.9	2.0	2.1	2.2		2.6	2.7	**2.8**	2.9	2.9					
2.5				1.9	1.9	2.0	2.1	2.2	2.3		2.7	2.8	2.9	2.9						
2.6			1.9	1.9	2.0	2.1	2.2	2.3	2.4		2.8	2.9	2.9							
2.7		1.9	1.9	2.0	2.1	2.2	2.3	2.4	2.5		2.9	2.9								
2.8	1.9	1.9	2.0	2.1	2.2	2.3	2.4	2.5	2.6		2.9									
2.9	1.9	2.0	2.1	2.2	2.3	2.4	2.5	2.6	2.7											

Plunger adjusting shim thickness mm (in.)	1.9 (0.075)	2.0 (0.079)	2.1 (0.083)	2.2 (0.087)	2.3 (0.091)	2.4 (0.094)	2.5 (0.098)	2.6 (0.102)	2.7 (0.106)	2.8 (0.110)	2.9 (0.114)

V03690

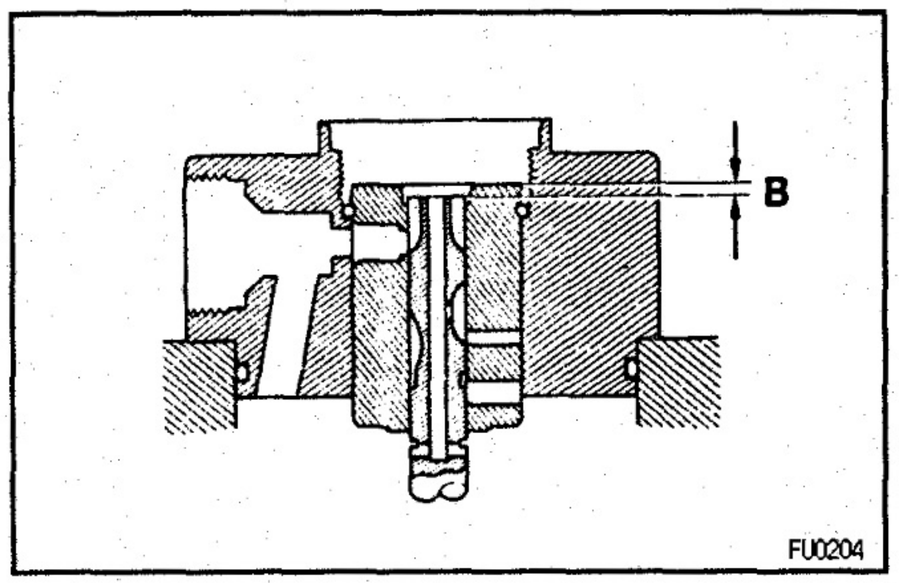

EXAMPLE: The 2.4 mm (0.094 in.) shim is installed and measured clearance is 3.7 mm (0.146 in.). Replace the 2.4 mm (0.094 in.) shim with a 2.8 mm (0.110 in.) shim.

(h) Install a new plunger adjusting shim, and recheck dimension B.
Dimension B:
3.2 – 3.4 mm (0.126 – 0.134 in.)

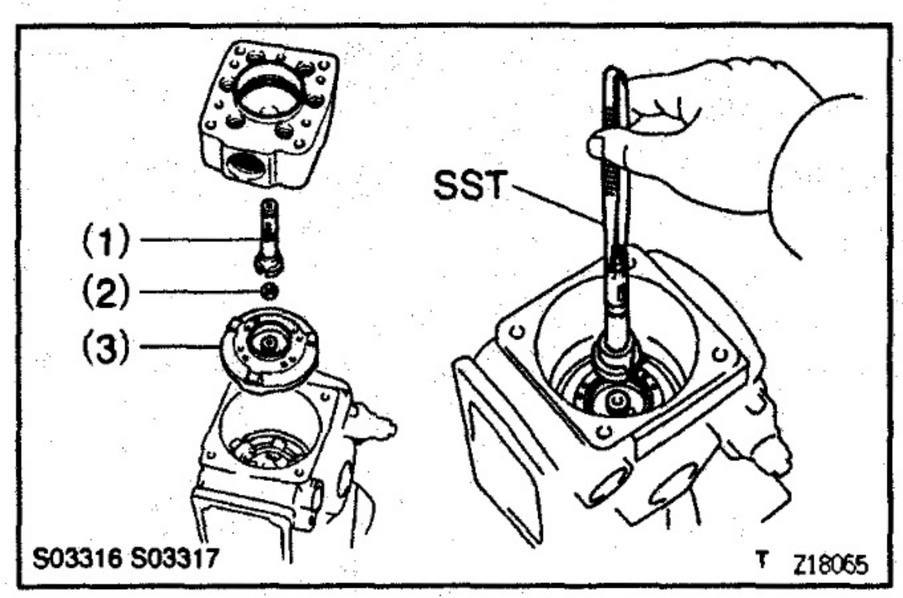

(i) Remove the distributive head.

(j) Using SST, remove these parts:
(1) Pump plunger
(2) Plunger adjusting shim
(3) Face camplate
SST 09260–54012 (09269–54030)

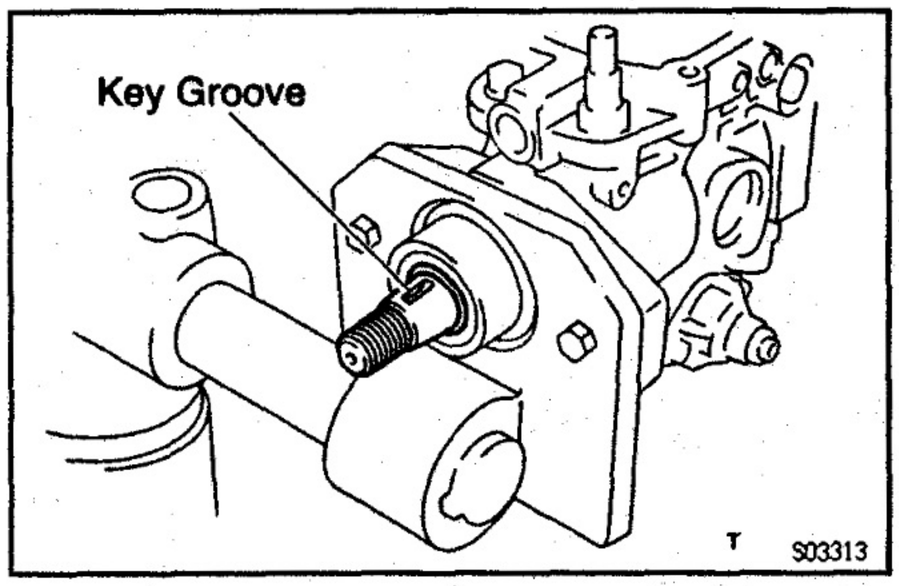

13. INSTALL FACE CAMPLATE

(a) Face the drive shaft with the key groove facing upward.

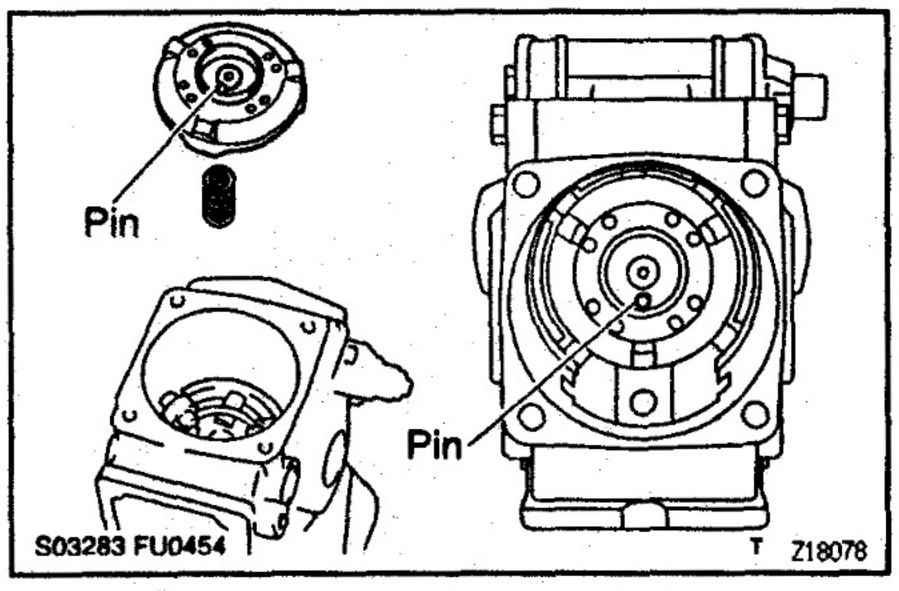

(b) Install the coupling spring and camplate with the camplate pin facing the governor cover side.

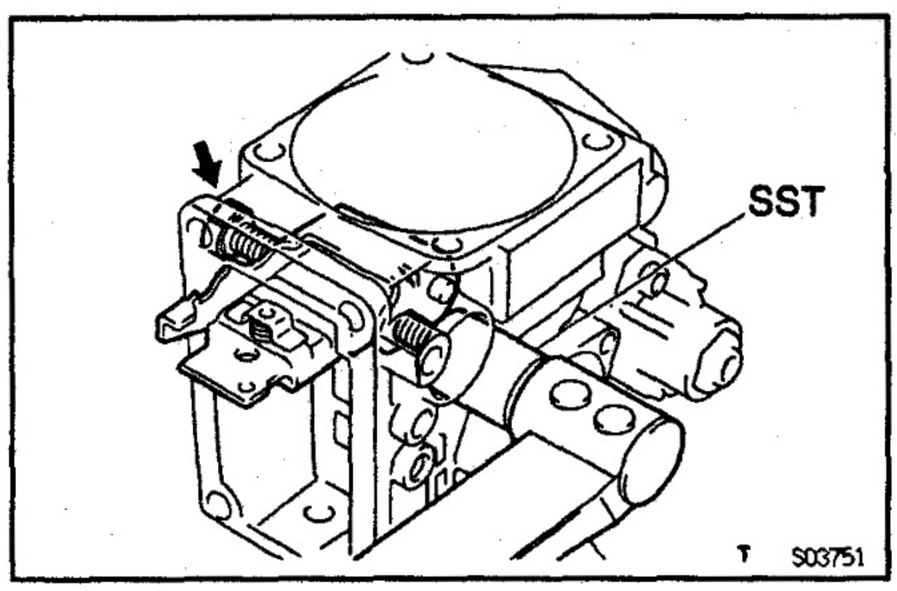

14. INSTALL GOVERNOR LINK

(a) Using SST, install the governor link with 2 new gaskets and the 2 support bolts.
Torque: 13.75 N·m (140 kgf·cm, 10 ft·lbf)
SST 09260−54012 (09269−54040)

(b) Check that the governor link moves smoothly.

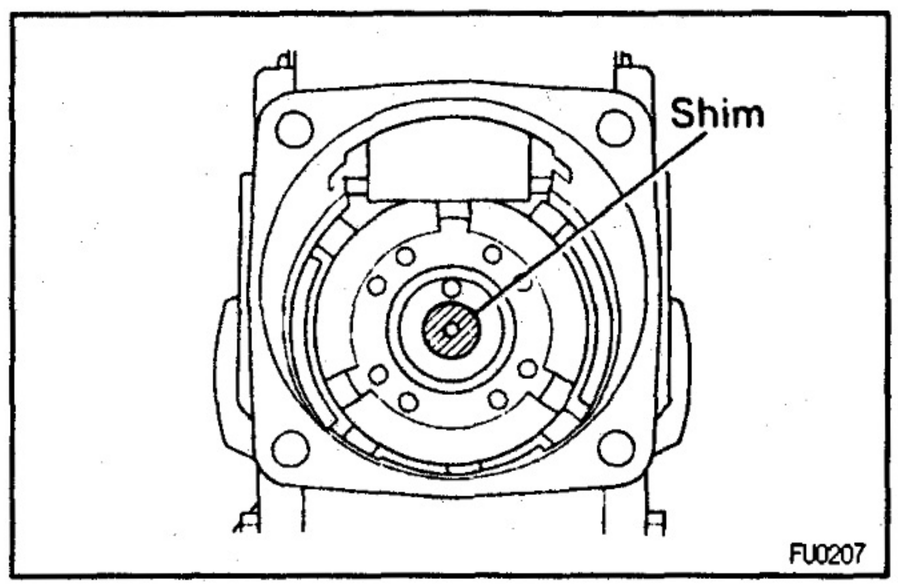

15. INSTALL PUMP PLUNGER

(a) Place the selected new plunger adjusting shim on the center of the camplate.
NOTICE: Do not apply grease to the shim.

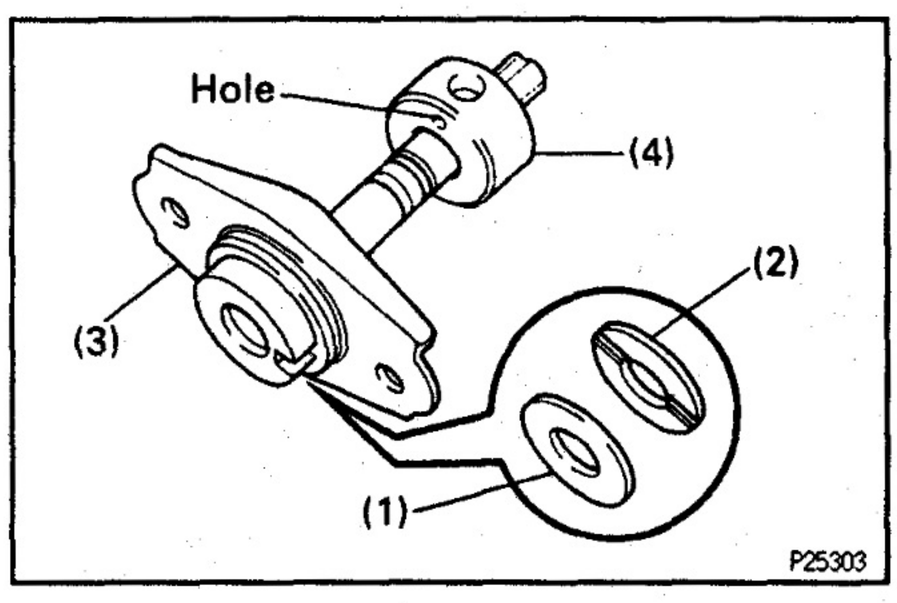

(b) Install these parts to the pump plunger:
(1) Lower plunger plate
(2) Upper plunger plate
(3) Lower spring seat
(4) Spill ring
HINT: Face the spill ring with the hole facing the lower spring seat.

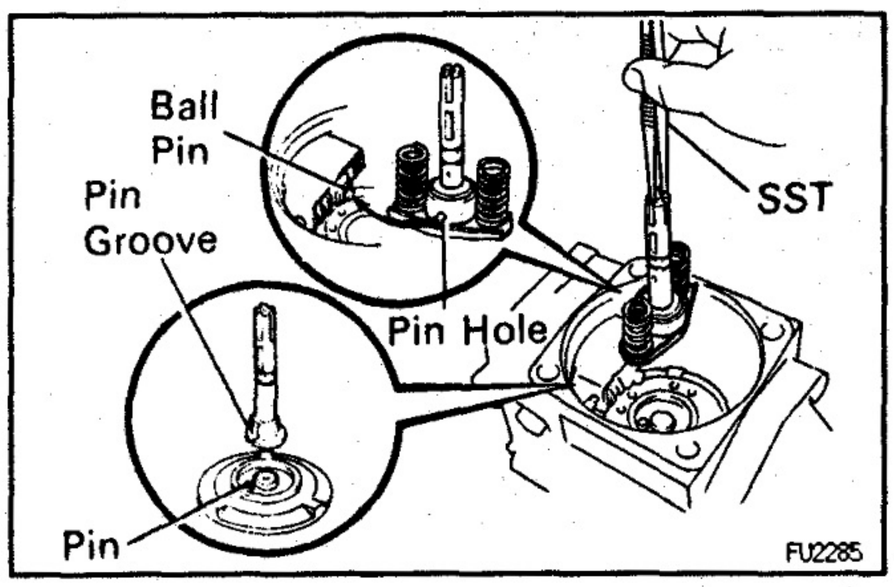

(c) Align the pin groove of the plunger with the pin of the face camplate.
(d) Align the ball pin of the governor link with the pin hole of the spill ring.
(e) Using SST, install the pump plunger and 2 plunger springs.
SST 09260–54012 (09269–54030)

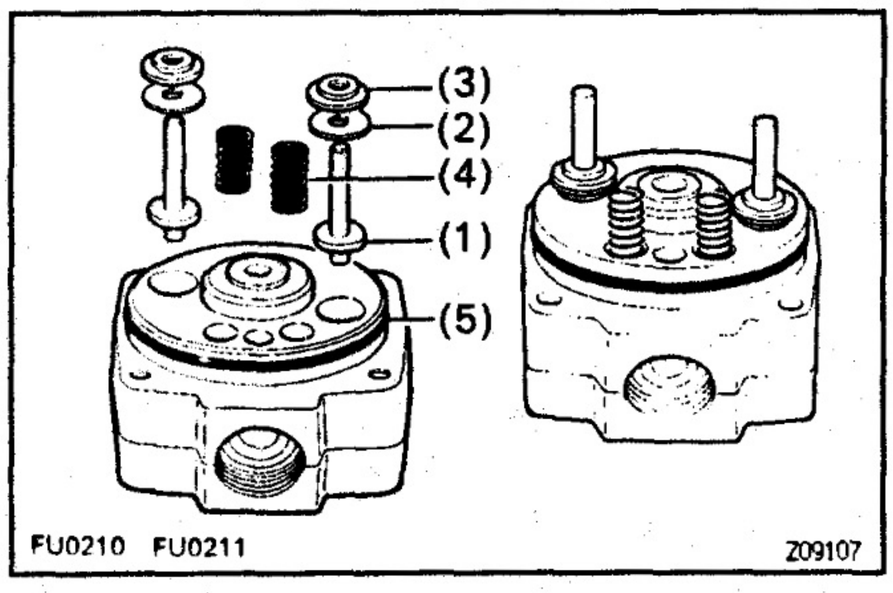

16. INSTALL DISTRIBUTIVE HEAD

(a) Apply grease to these parts, and install them to the distributive head:
(1) 2 plunger spring guides
(2) 2 new selected plunger spring shims
(3) 2 upper spring seats
(4) 2 lever support springs
(5) New O–ring

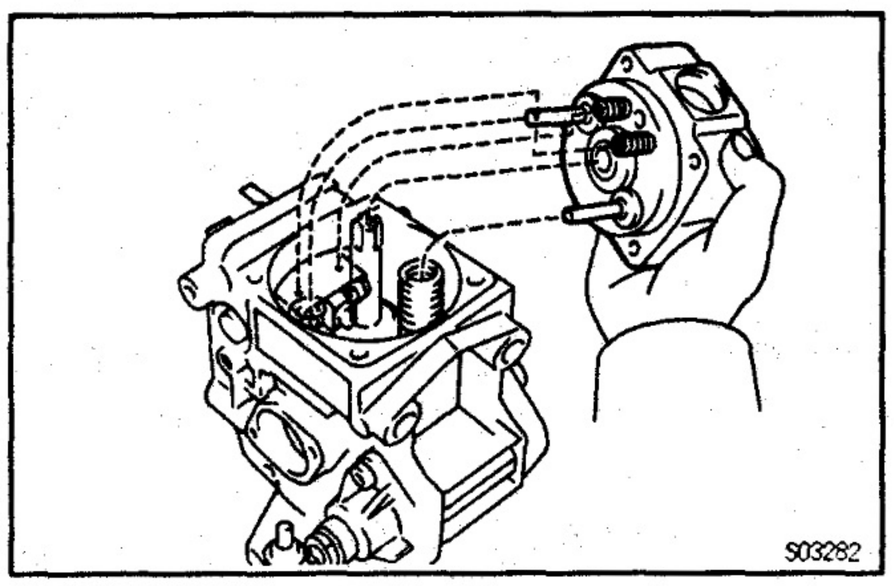

(b) Install the distributive head.
NOTICE: Be careful not to damage the pump plunger.

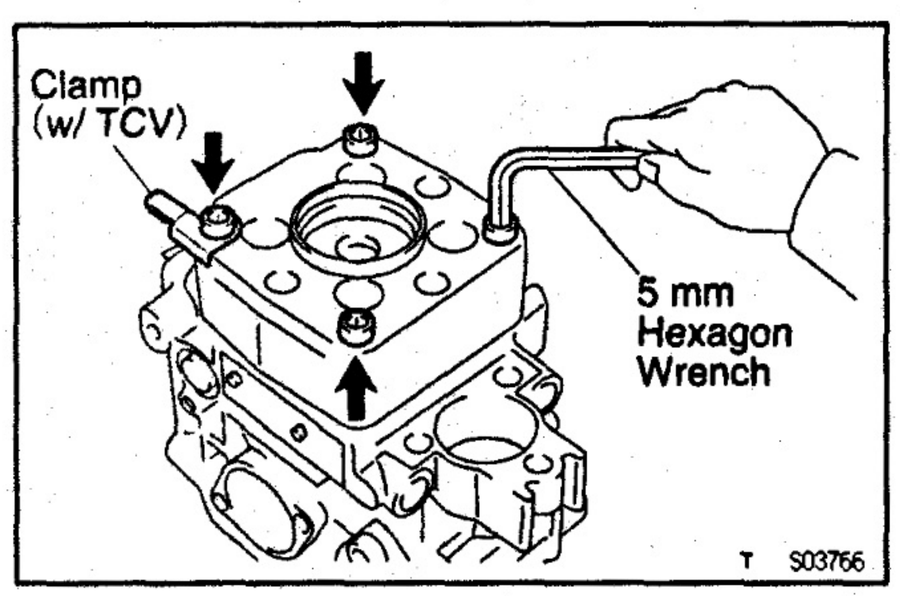

(c) Using a 5 mm hexagon wrench, install the 2 lead clamp (w/ TCV) and 4 bolts. Uniformly tighten the bolts in several passes.
Torque: 11.75 N·m (120 kgf·cm, 9 ft·lbf)
HINT: Use the bolt which is 45 mm (1.77 in.) in length.

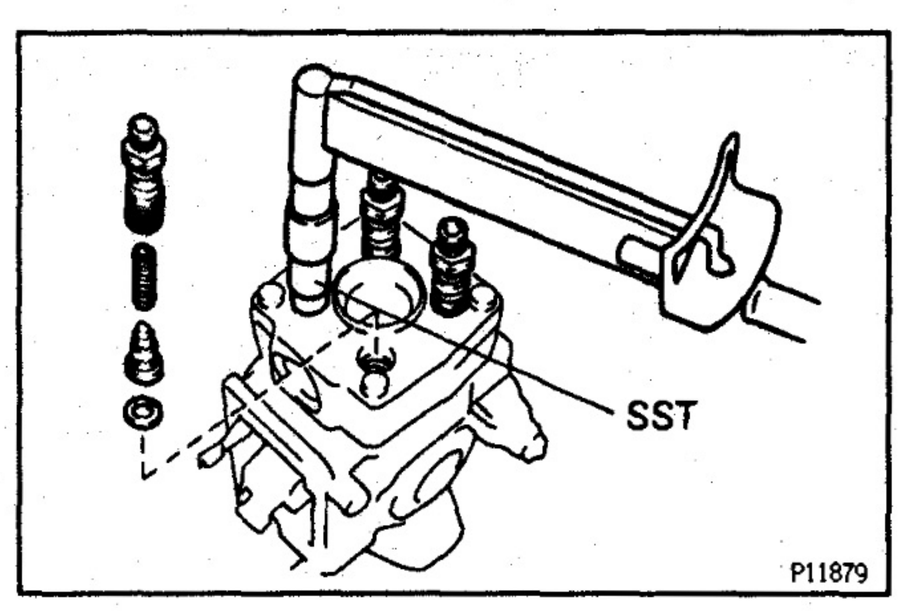

17. INSTALL DELIVERY VALVE HOLDERS

(a) Install new gaskets and the valves into the distributive head.
(b) Install the springs into the delivery valve holders.
(c) Using SST, install the delivery valve holders.
SST 09260–54012 (09269–54020)
Torque: 58.85 N·m (600 kgf·cm, 43 ft·lbf)

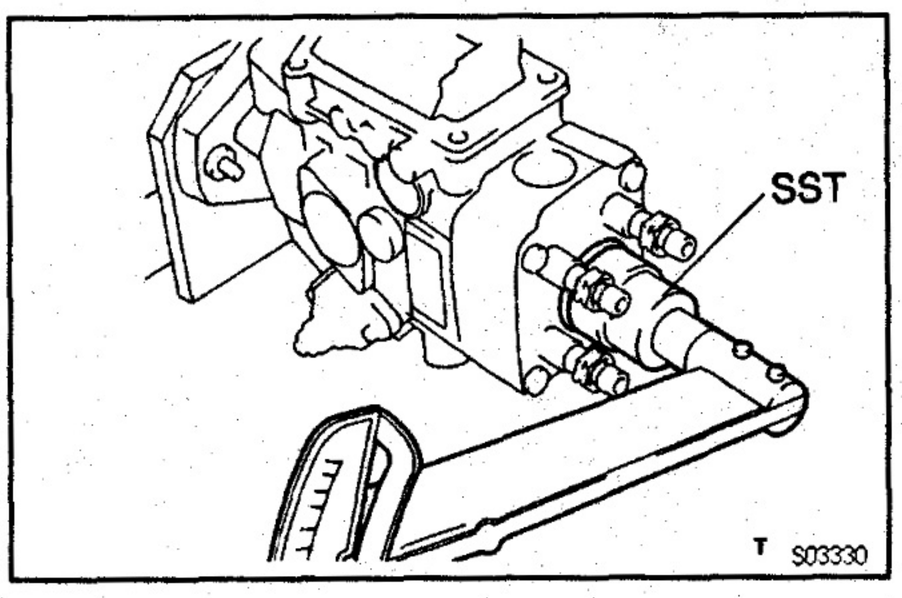

18. INSTALL DISTRIBUTIVE HEAD PLUG

(a) Install a new O–ring to the head plug.

(b) Using SST, install the head plug.
SST 09260–54012 (09262–54010)
Torque: 68.65 N·m (700 kgf·cm, 51 ft·lbf)

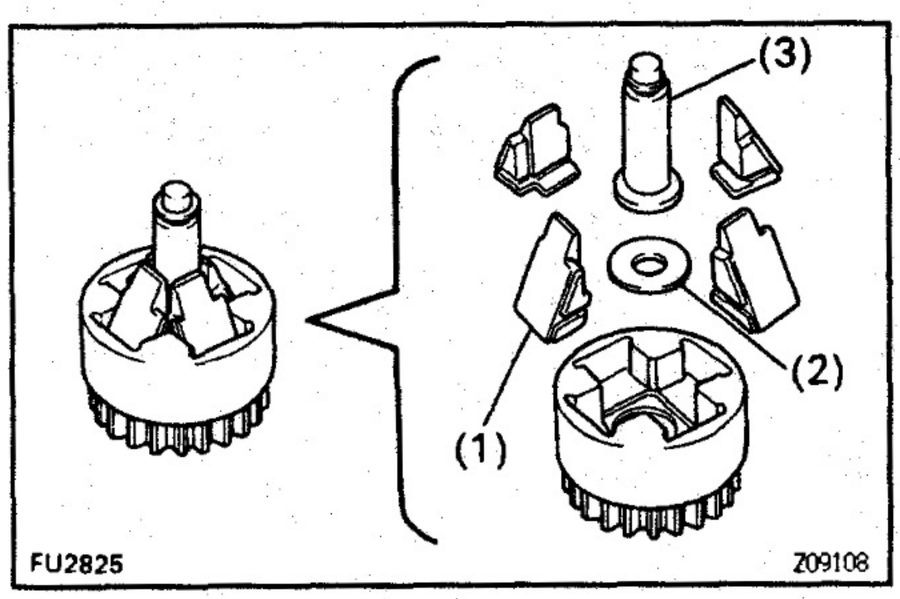

19. INSTALL GOVERNOR SHAFT AND FLYWEIGHT HOLDER

(a) Install these parts to the flyweight holder:
(1) 4 flyweights
(2) No.2 flyweight washer
(3) Governor sleeve
HINT: Replace the 4 flyweights as a set.

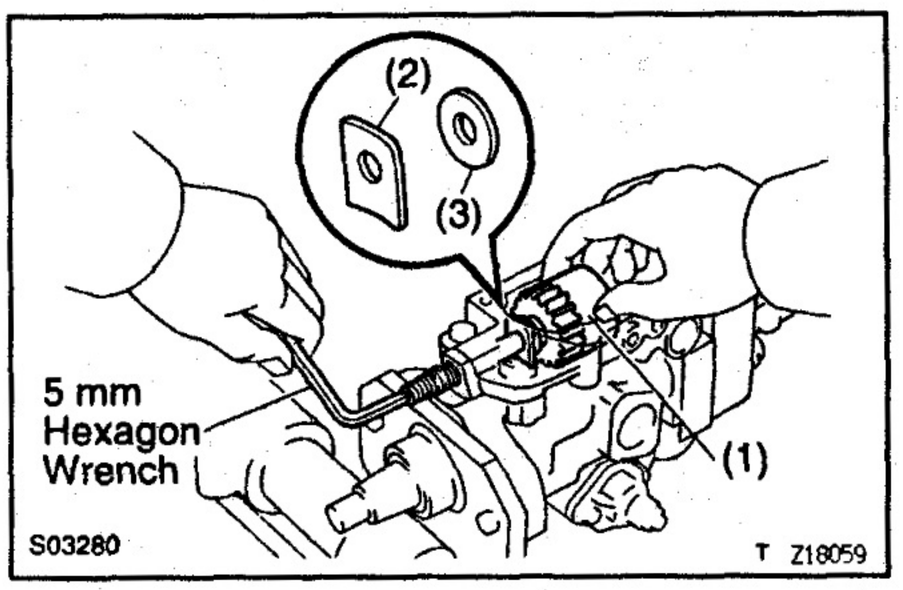

(b) Install a new O–ring to the governor shaft.

(c) Place the flyweight holder assembly (1) in position, and install the governor gear adjusting washer (2) and No. 1 flyweight washer (3) between the flyweight holder and pump housing.

(d) Install the governor shaft through the governor gear adjusting washer, No. 1 flyweight washer and flyweight holder assembly.

(e) Using a 5 mm hexagon wrench, turn the governor shaft counterclockwise.
HINT: The governor shaft has LH threads.

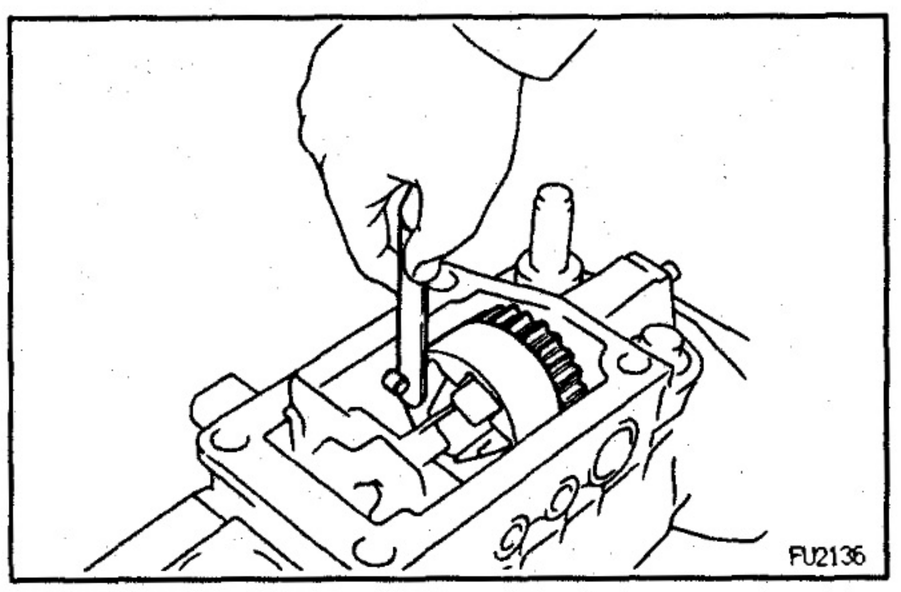

20. CHECK FLYWEIGHT HOLDER THRUST CLEARANCE

Using a feeler gauge, measure the thrust clearance between the housing pin and flyweight holder.
Thrust clearance:
0.15 – 0.35 mm (0.0059 – 0.0138 in.)

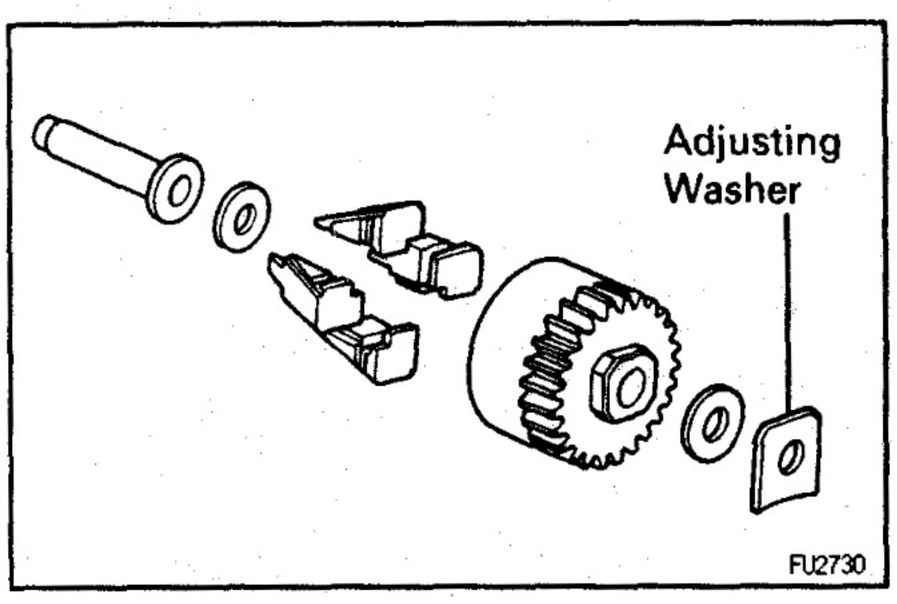

If the thrust clearance is not as specified, adjust with a governor gear adjusting washer.
Governor gear adjusting washer thickness: mm (in.)

1.05 (0.0413)	1.65 (0.0650)
1.25 (0.0492)	1.85 (0.0728)
1.45 (0.0571)	–

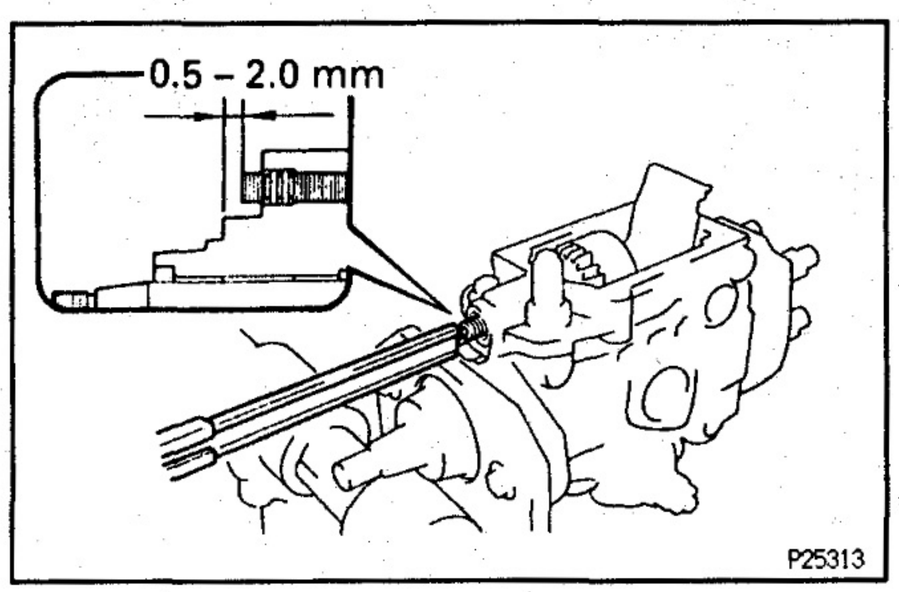

21. ADJUST PROTRUSION OF GOVERNOR SHAFT

(a) Using vernier calipers, measure the protrusion of the governor shaft.

Protrusion:

0.5 – 2.0 mm (0.020 – 0.079 in.)

If the protrusion is not as specified, adjust by turning the governor shaft.

HINT: The governor cover shaft has LH threads.

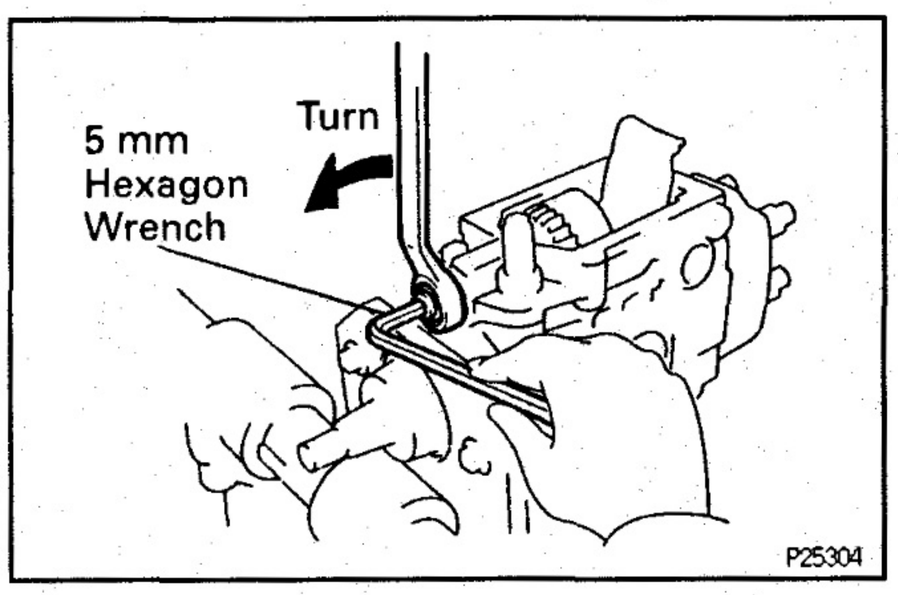

(b) Install and tighten the nut while holding the governor shaft with a 5 mm hexagon wrench.

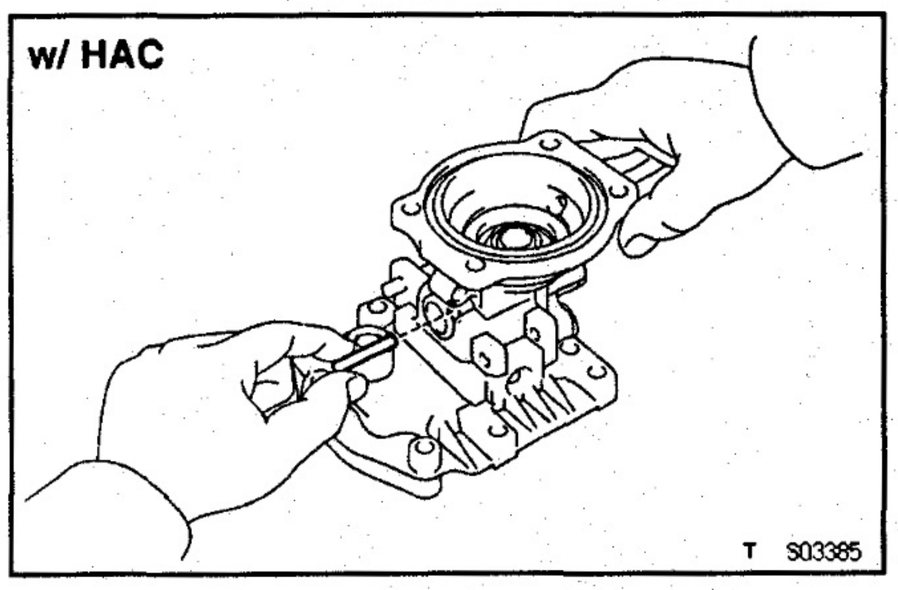

22. w/ HAC: ASSEMBLE HIGH ALTITUDE COMPENSATOR

A. Install control lever

(a) Insert the connecting pin into the governor cover.

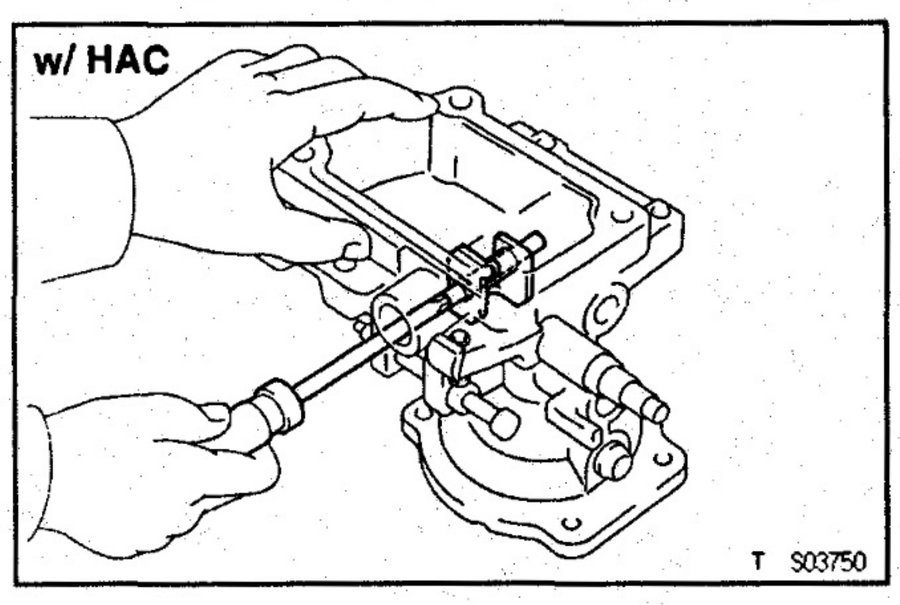

(b) Using a small screwdriver, install the control lever with the support pin.

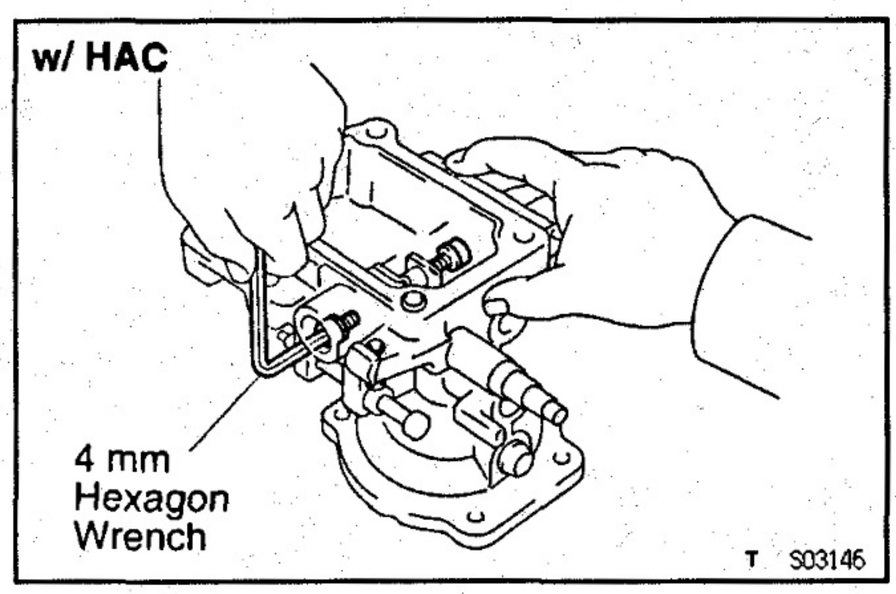

(c) Using a 4 mm hexagon wrench, install 2 new gaskets and the 2 bolts.

Torque: 6.85 N·m (70 kgf·cm, 61 in.·lbf)

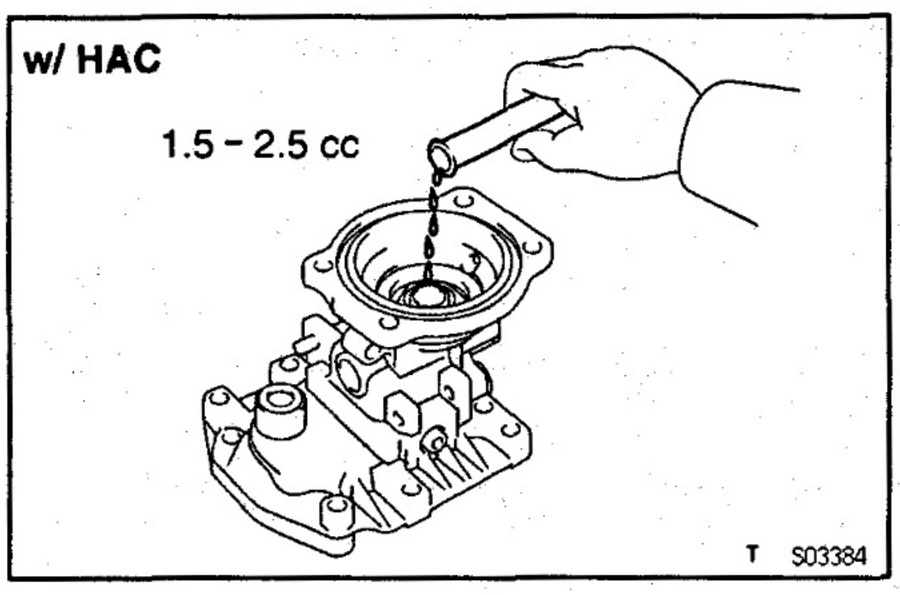

B. Install pneumatic bellows

(a) Insert 1.5 – 2.5 cc (0.09 – 0.15 cu in.) of engine oil into the bushing hole.

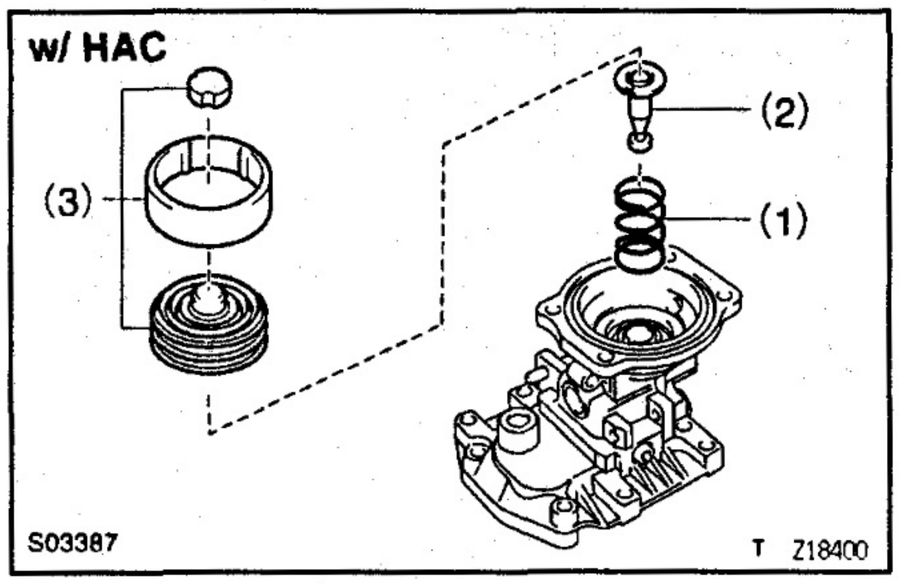

(b) Install these parts:
(1) Pneumatic bellows spring
(2) Push rod
(3) Pneumatic bellows and 2 rubber caps

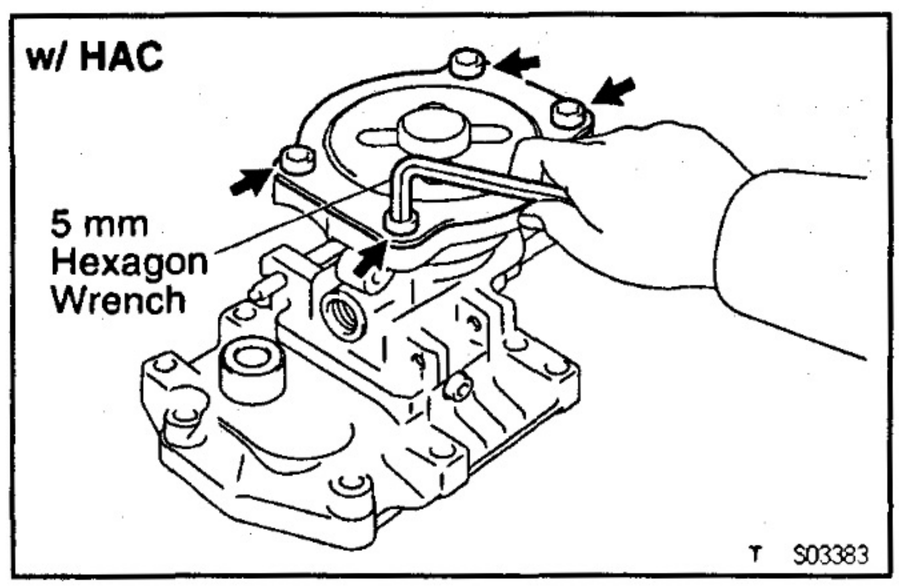

(c) Using a 5 mm hexagon wrench, install a new gasket and the pneumatic bellows cover with the 4 bolts.
Torque: 7.35 N·m (75 kgf·cm, 65 in.·lbf)

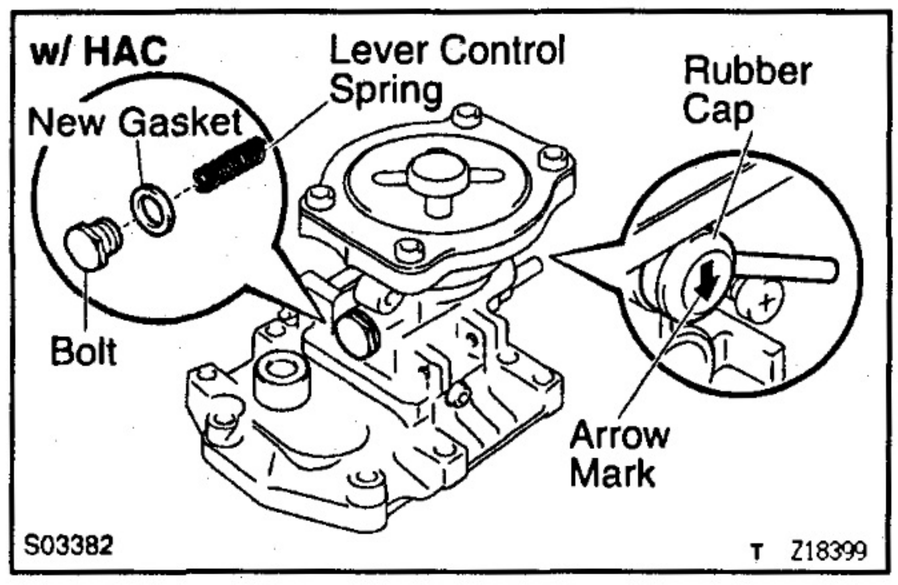

C. Install rubber cap

Install the rubber cap with the arrow mark facing downward.

D. Install lever control spring

Install the lever control spring with a new gasket and the bolt.
Torque: 11.3 N·m (115 kgf·cm, 8 ft·lbf)

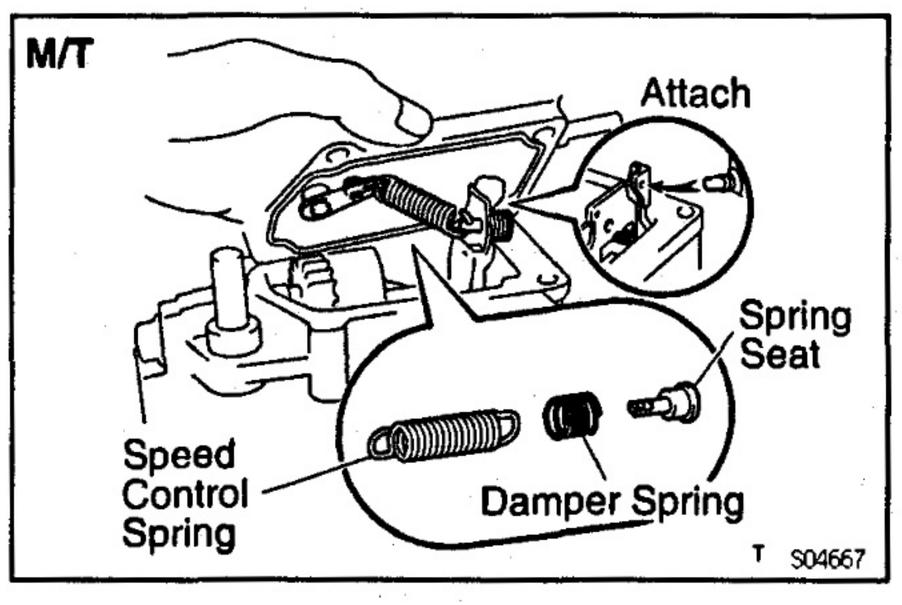

23. INSTALL GOVERNOR COVER

(a) Install the plate washer and a new O–ring to the adjusting lever shaft.

(b) M/T:
Install the damper spring, spring seat, speed control spring and adjusting lever shaft to the governor link.

(c) A/T:
Connect the adjusting lever shaft to the governor link.

(d) Install the adjusting lever shaft to the governor cover.

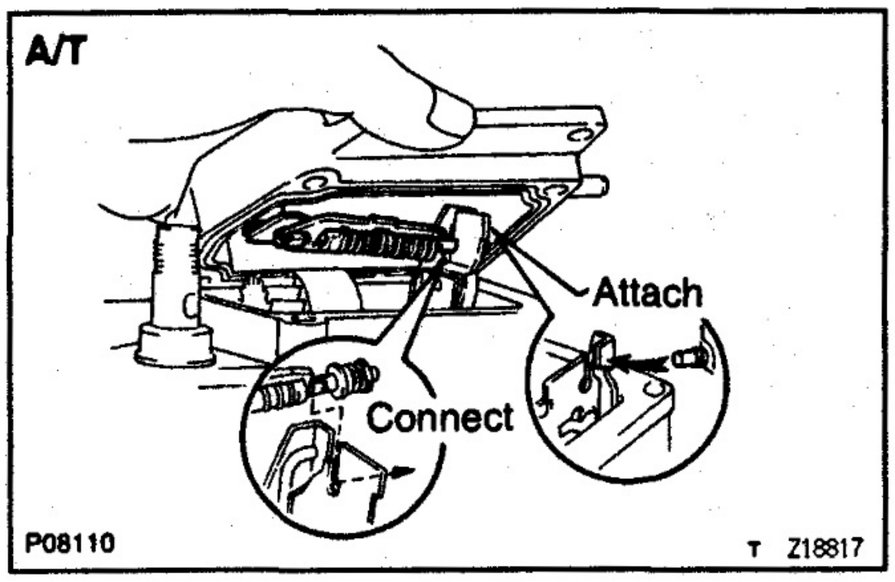

(e) Attach the full load set screw to the governor link.

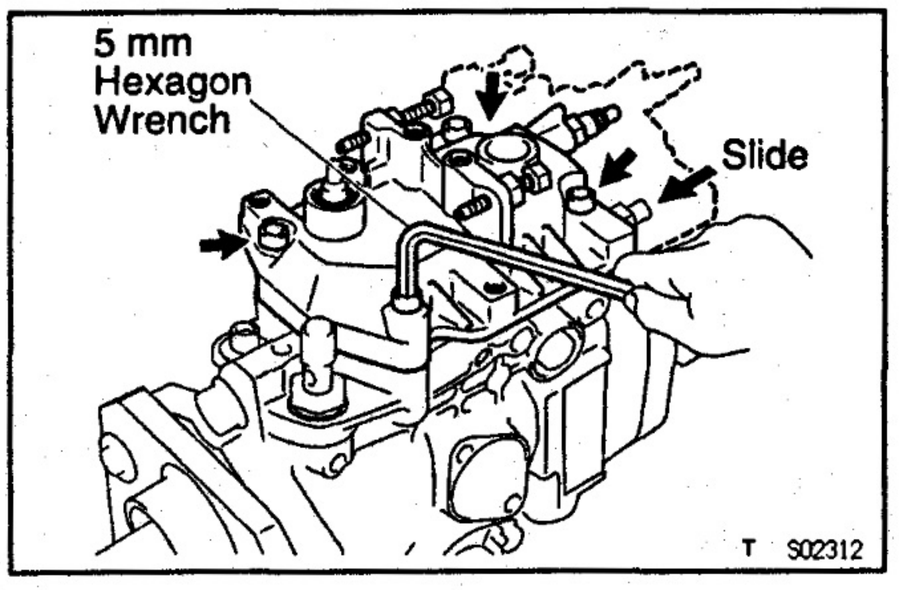

(f) Slide the governor cover forward.
(g) Using a 5 mm hexagon wrench, install the governor cover with the 4 bolts. Uniformly tighten the bolts in several passes.
Torque: 8.35 N·m (85 kgf·cm, 74 in.·lbf)
HINT: Use the bolt which is 35 mm (1.38 in.) length.
(h) w/ HAC:
Install the idle speed adjusting screw.

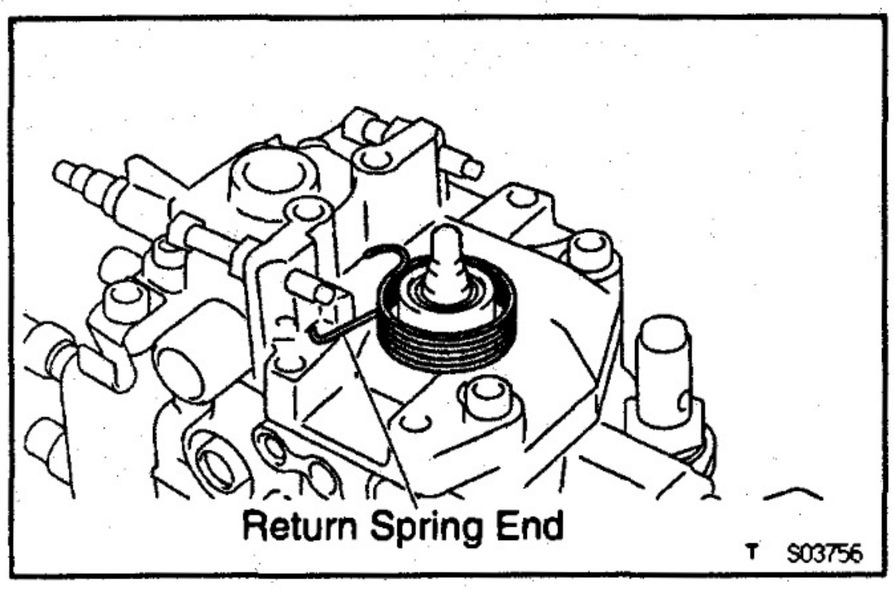

24. INSTALL ADJUSTING LEVERS

(a) Place the return spring on the governor cover as shown in the illustration.

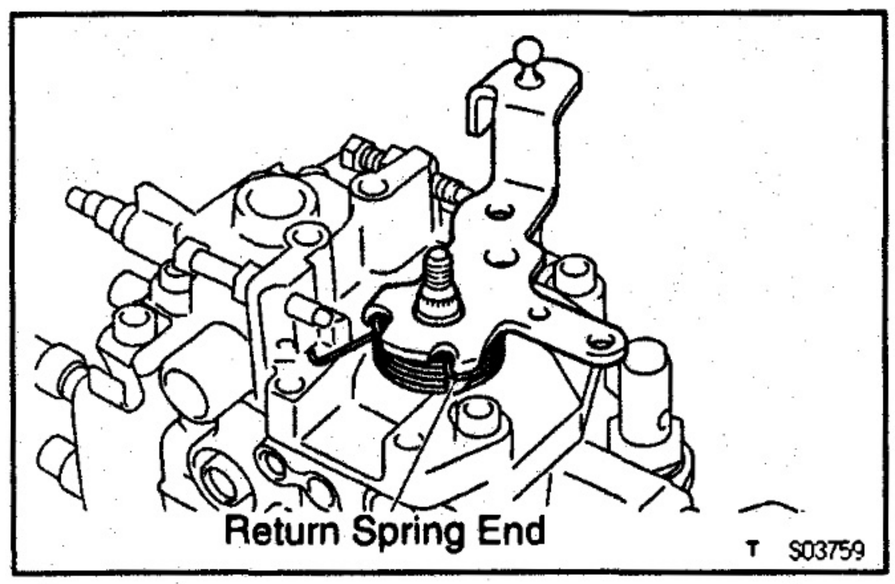

(b) Hook the return spring to the No.1 adjusting lever.
(c) Attach the No.1 adjusting lever to the idle speed adjusting screw end.

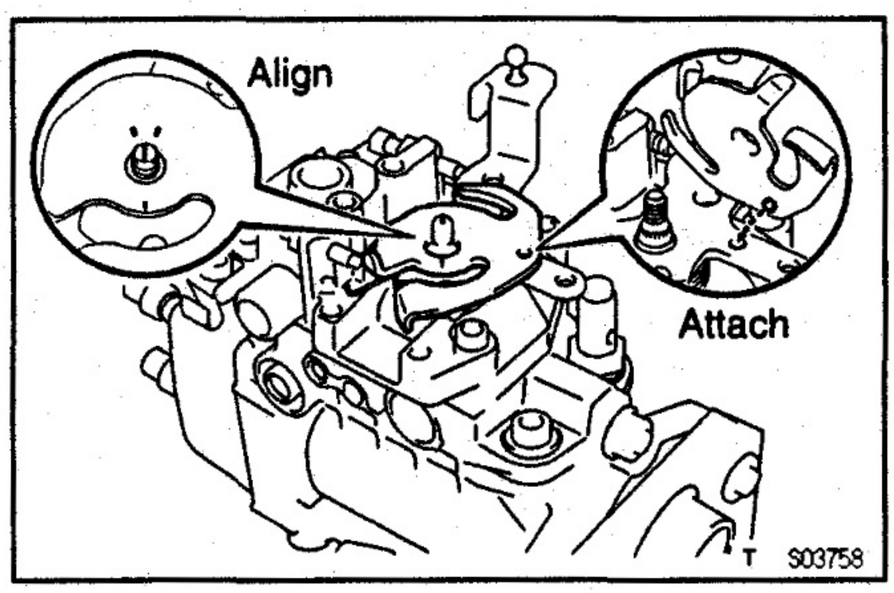

(d) Align the lines of the adjusting shaft and No.2 adjusting lever.
(e) Attach the protrusion of the No.2 adjusting lever to the hole of the No.1 adjusting lever.
(f) Place the No.2 adjusting lever on the No.1 adjusting lever.

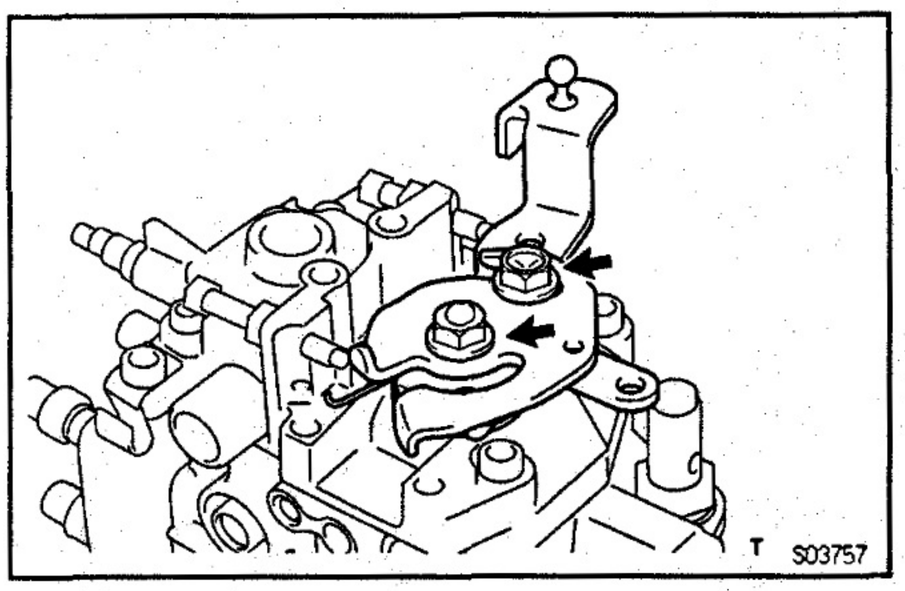

(g) Install the 2 adjusting levers with the nut and bolt.
Torque:
Nut
8.35 N·m (85 kgf·cm, 74 in.·lbf)
Bolt
6.05 N·m (62 kgf·cm, 54 in.·lbf)

EG

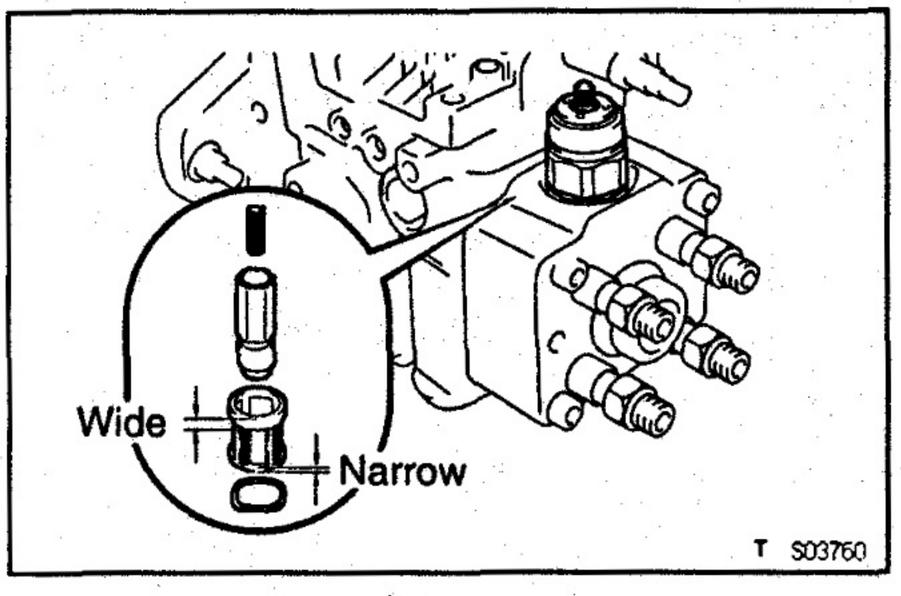

25. INSTALL FUEL CUT SOLENOID

(a) Install these parts:
(1) Wave washer
(2) Strainer
NOTICE: Be careful of the installation direction.
(3) Valve
(4) Spring
(b) Install a new O–ring to the fuel cut solenoid.
(c) Install the fuel cut solenoid.
Torque: 22.1 N·m (225 kgf·cm, 16 ft·lbf)
(d) Install the lead wire to the fuel cut solenoid with the nut.
Torque: 1.7 N·m (17.5 kgf·cm, 15 in.·lbf)
(e) Install the dust cover to the fuel cut solenoid.

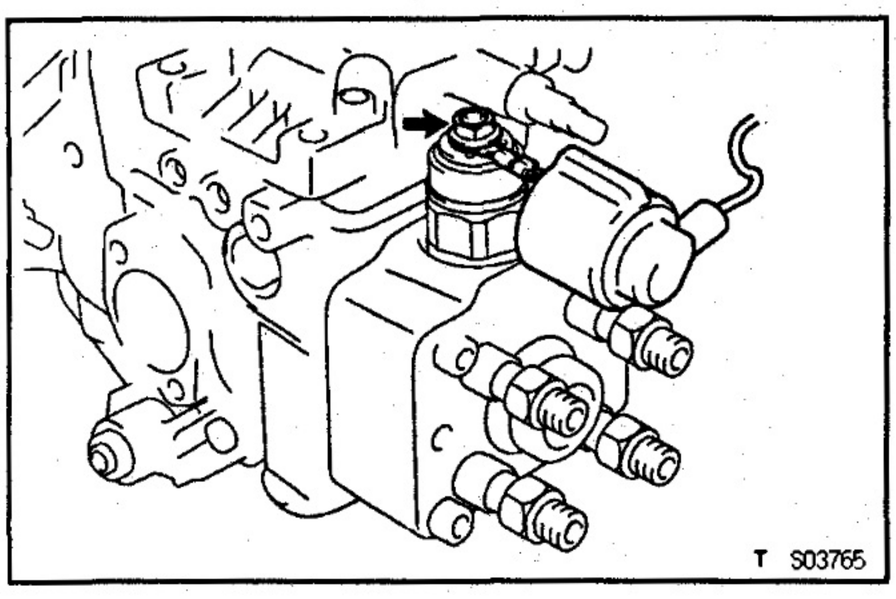

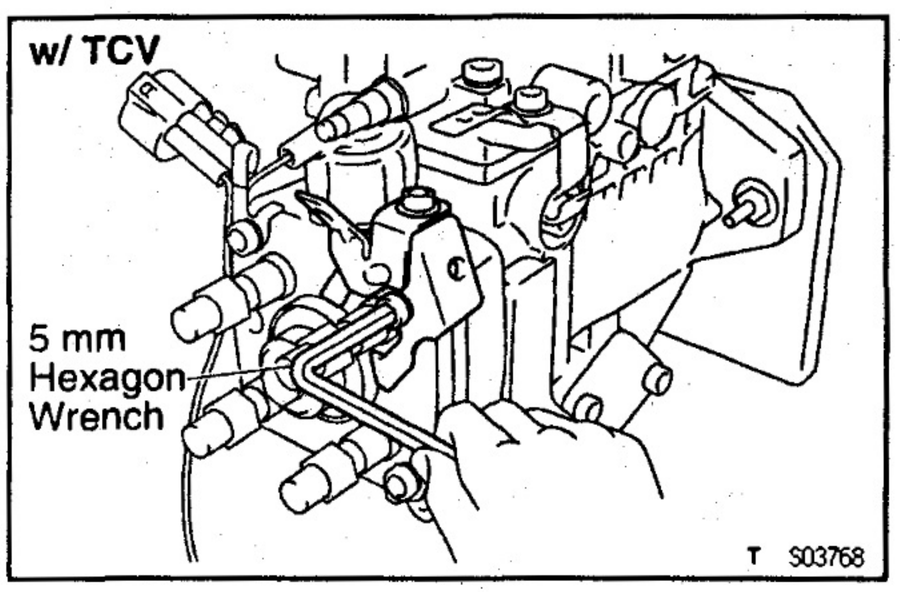

26. INSTALL CONNECTOR BRACKET

w/ TCV:
Using a 5 mm hexagon wrench, install the connector bracket with the bolt.
Torque: 11.75 N·m (120 kgf·cm, 9 ft·lbf)

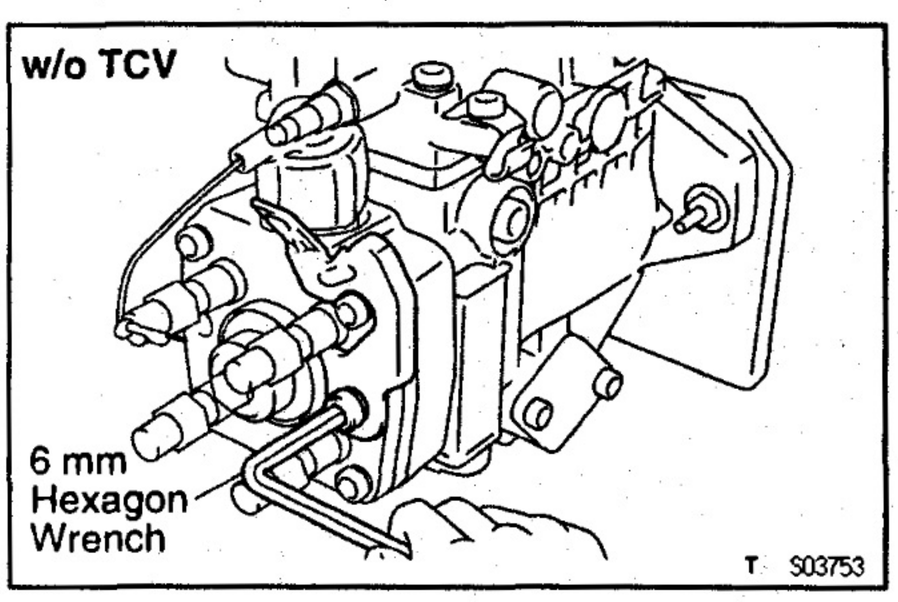

w/o TCV:
Using a 6 mm hexagon wrench, install the connector bracket with the bolt.
Torque: 20.1 N·m (205 kgf·cm, 15 ft·lbf)

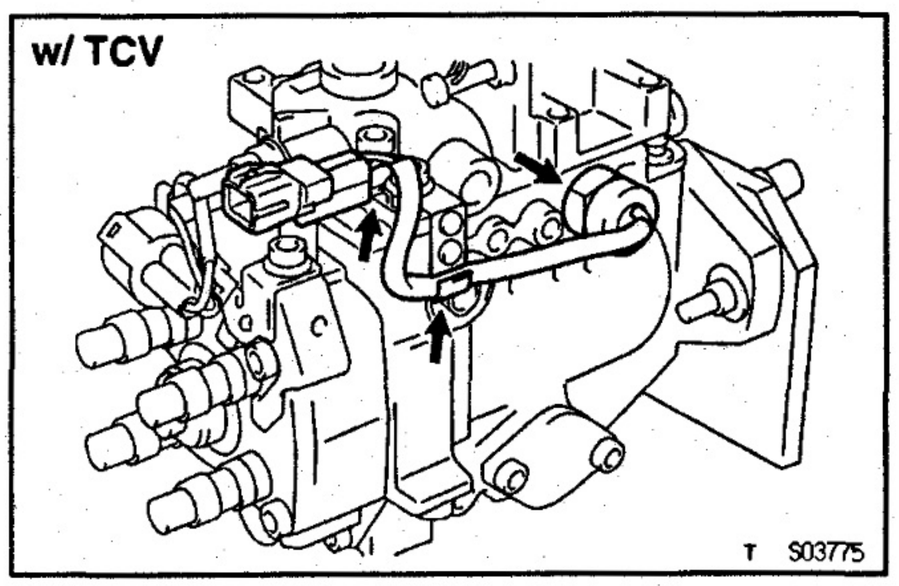

27. INSTALL PICKUP SENSOR

w/ TCV:

(a) Install a new O–ring and the pickup sensor.
Torque: 20.6 N·m (210 kgf·cm, 15 ft·lbf)

(b) Install the lead wire and connector to the lead clamp on the governor cover.

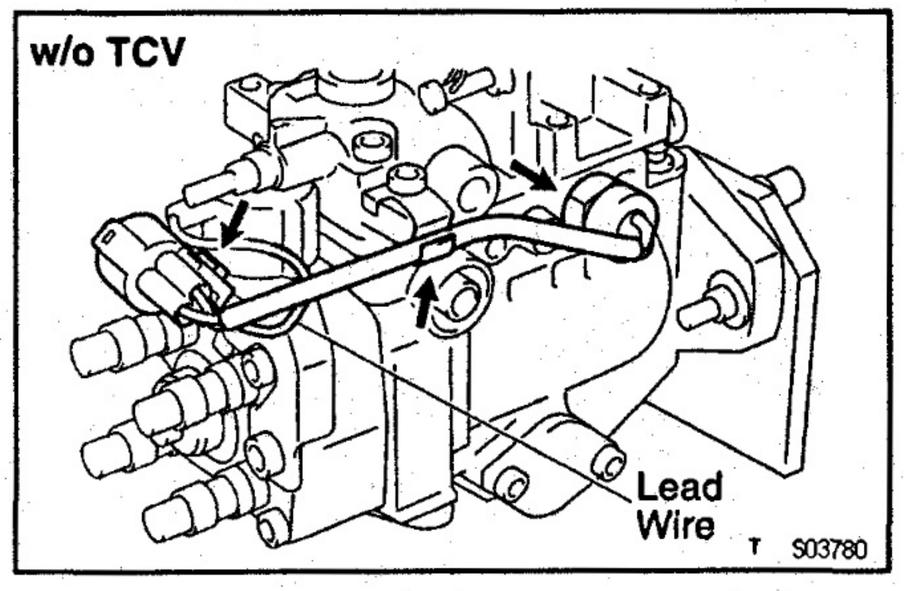

w/o TCV:

(a) Install a new O–ring and the pickup sensor.
Torque: 20.6 N·m (210 kgf·cm, 15 ft·lbf)

(b) Connect the lead wire for the fuel cut solenoid to the connector.

(c) Install the connector to connector bracket on the distributive head.

(d) Install the lead wire to the lead clamp on the governor cover.

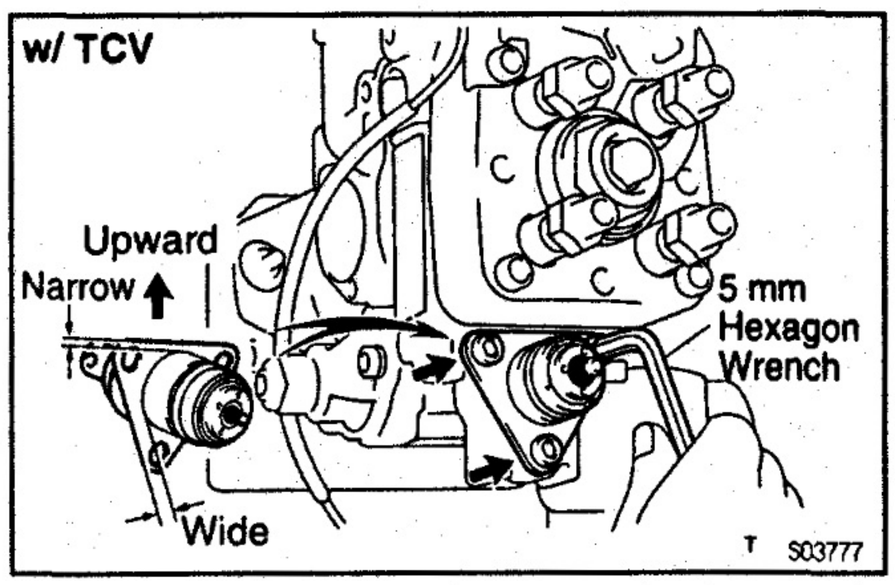

28. w/ TCV:
INSTALL TIMING CONTROL VALVE

(a) Install a new O–ring and the timing control valve.

(b) Using a 5 mm hexagon wrench, install the timing control valve with the 3 bolts.
Torque: 8.35 N·m (85 kgf·cm, 74 ft·lbf)
NOTICE: Be careful of the installation direction.

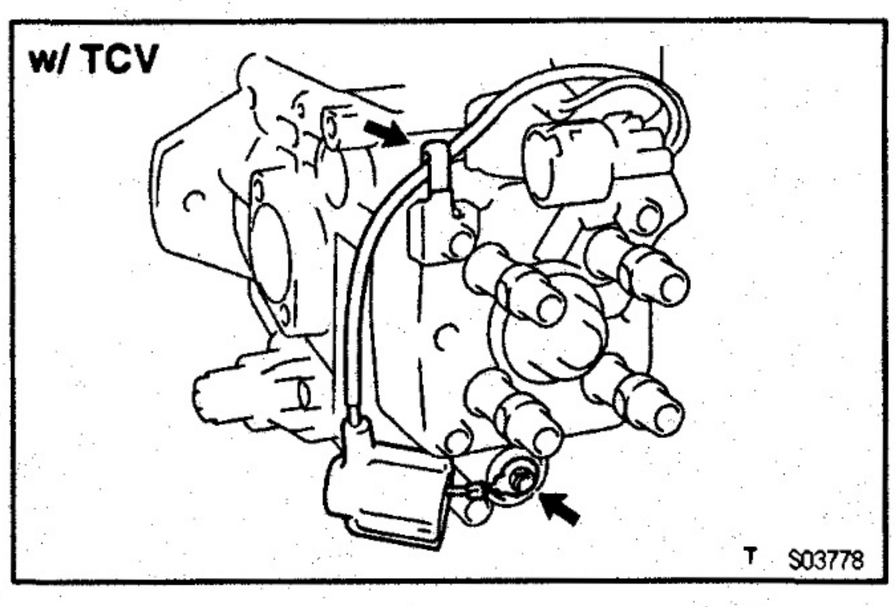

(c) Install the lead wire to the timing control valve with the nut.
Torque: 1.7 N·m (17.5 kgf·cm, 15 in.·lbf)

(d) Install the dust cover to the timing control valve.

(e) Install the lead wire to the lead clamp on the distributive head.

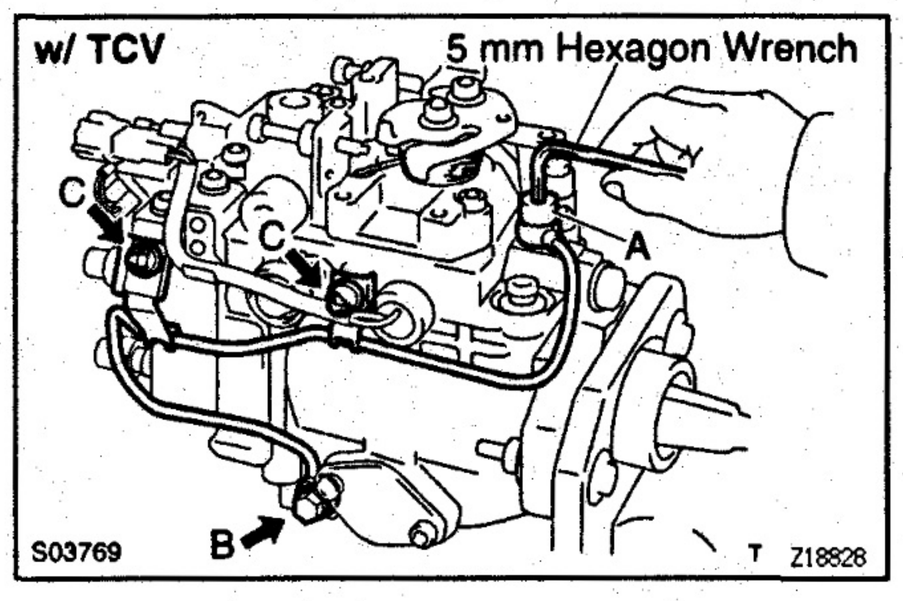

29. w/ TCV:
INSTALL OVERFLOW PIPE

Using a 5 mm hexagon wrench, install the overflow pipe and 2 pipe clamps with 4 new gaskets, the 2 union bolts and 2 bolts.

Torque:

Union bolt A
14.2 N·m (145 kgf·cm, 10 ft·lbf)

Union bolt B
19.6 N·m (200 kgf·cm, 14 ft·lbf)

Bolt C
8.35 N·m (85 kgf·cm, 74 in.·lbf)

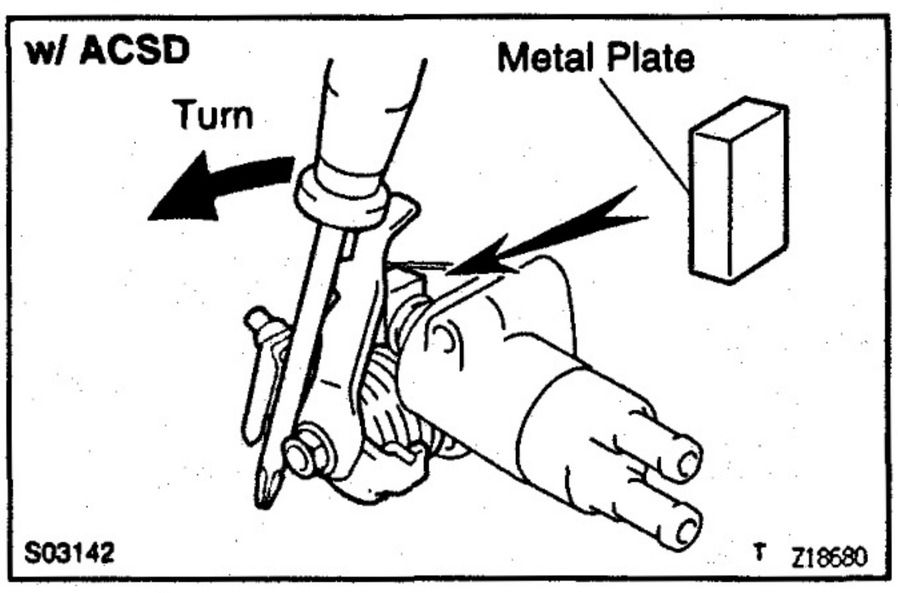

30. w/ ACSD:
INSTALL THERMO WAX

(a) Using a screwdriver, turn the cold starting lever counterclockwise approx. 20°.

(b) Put a metal plate (thickness of 8.5 – 10.0 mm (0.335 – 0.394 in.)) between the cold starting lever and thermo wax plunger.

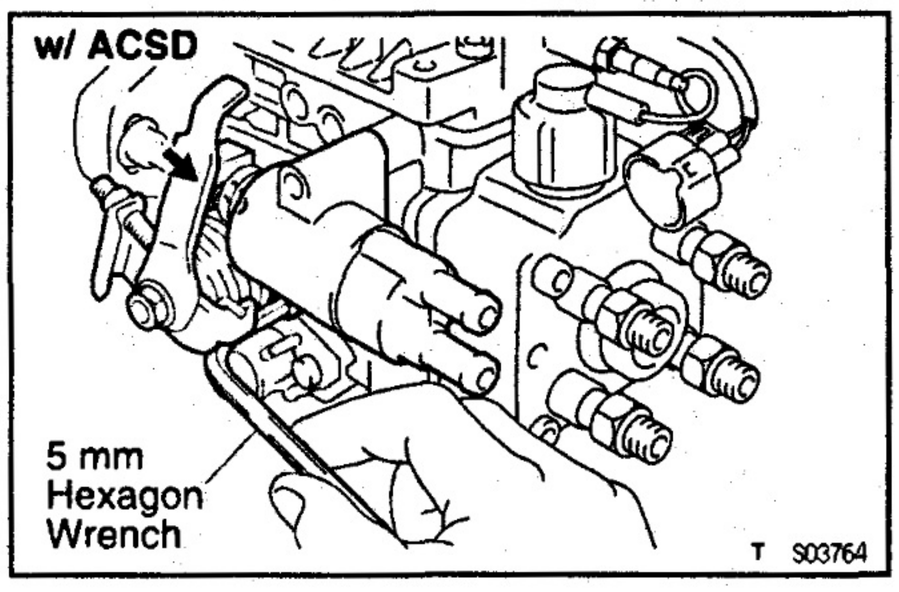

(c) Install a new gasket to the pump body.

(d) Using a 5 mm hexagon wrench, install the thermo wax with the 2 bolts.
Torque: 8.35 N·m (85 kgf·cm, 74 in.·lbf)

(e) Remove the metal plate.

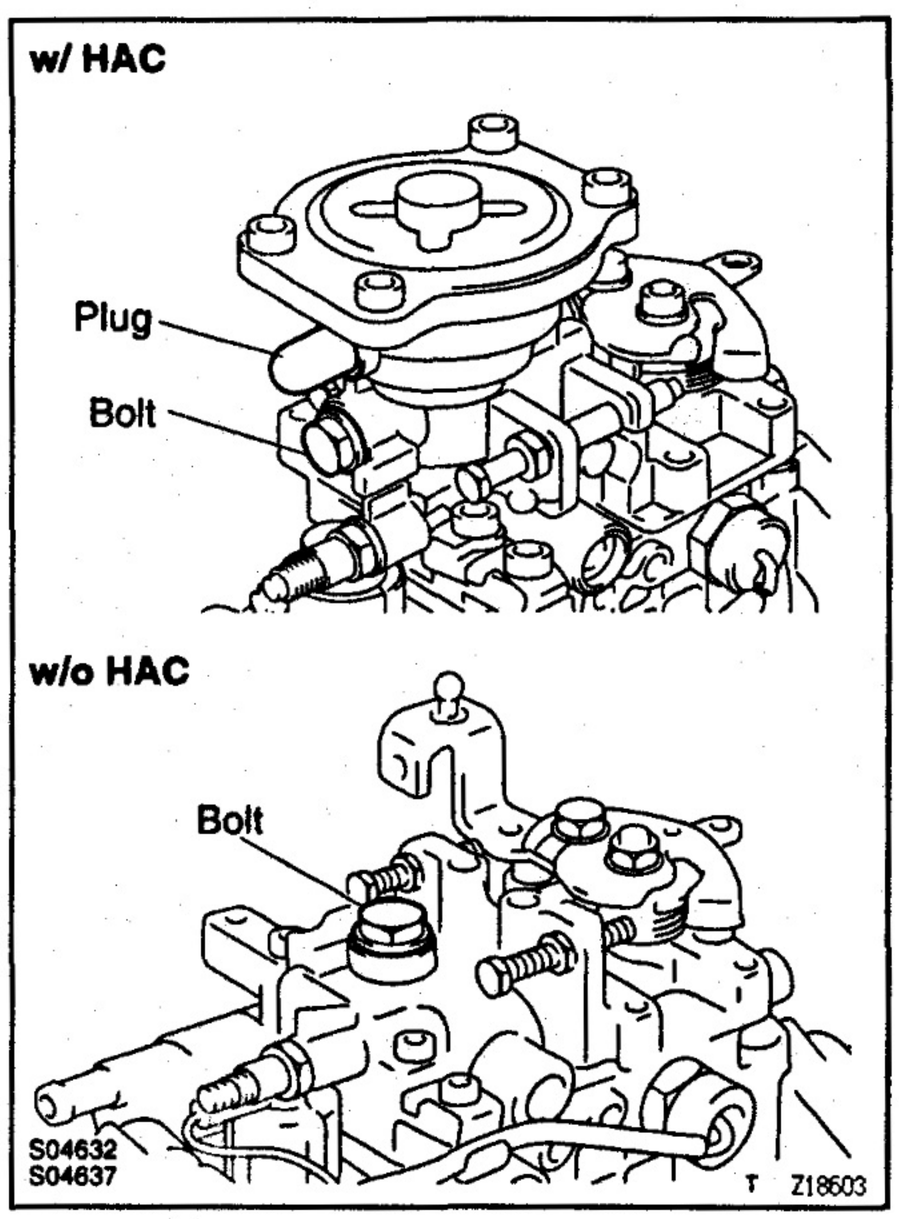

31. PERFORM AIR TIGHT TEST

(a) Plug each port with a bolt and plug.

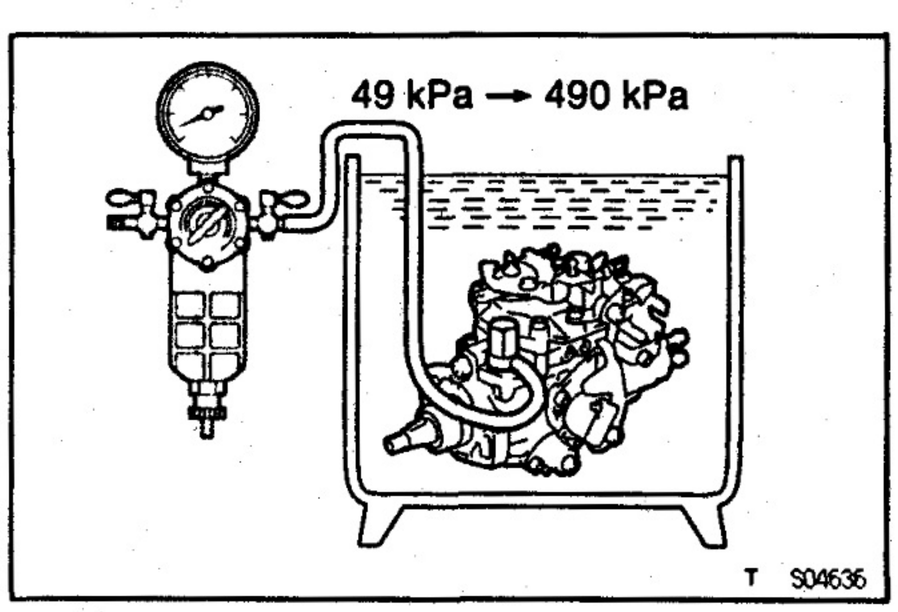

(b) Connect an air hose to the fuel inlet pipe and place the injection pump into diesel fuel.

(c) Apply 49 kPa (0.5 kgf/cm², 7 psi) of pressure and confirm that there are no leaks.

(d) Next check that there are no leaks with 490 kPa (5.0 kgf/cm², 71 psi) of pressure applied.

(e) Remove the bolt and plug from the overflow port and idle–up actuator.

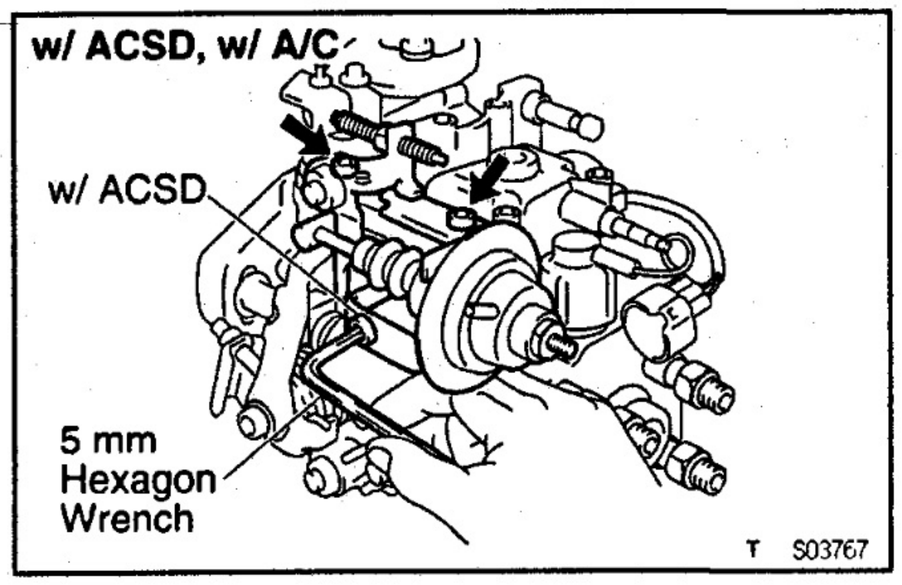

32. w/ ACSD:
INSTALL IDLE—UP LEVER AND ACTUATOR (w/ A/C) ASSEMBLY
Using a 5 mm hexagon wrench, install the idle—up lever and actuator (w/ A/C) assembly with the 3 bolts. Alternately tighten the bolts in several passes.
Torque: 8.35 N·m (85 kgf·cm, 74 in.·lbf)

33. w/o ACSD for w/ A/C:
INSTALL IDLE—UP ACTUATOR
Using a 5 mm hexagon wrench, install the idle—up actuator with the 2 bolts.
Torque: 8.35 N·m (85 kgf·cm, 74 in.·lbf)

34. REMOVE INJECTION PUMP FROM SST (STAND)
SST 09241—76022, 09245—54010

35. INSTALL SET KEY OF INJECTION PUMP DRIVE PULLEY ON DRIVE SHAFT

EG

INJECTION PUMP ADJUSTMENT

E0753-02

1. PRE—TEST CHECK AND PREPARATION

(a) The specifications for test nozzle and nozzle holders are as follows.
Test nozzle:
DN12SD12 (NIPPONDENSO)
Test nozzle opening pressure:
14,220 — 15,200 kPa
(145 — 155 kgf/cm², 2,062 — 2,205 psi)

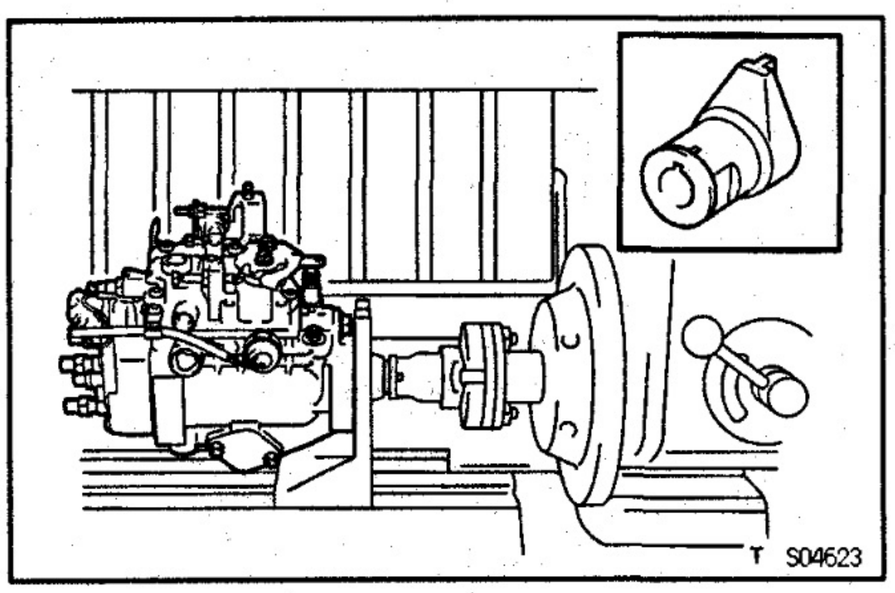

(b) Check the accuracy of the tachometer.
Allowable error:
± 40 rpm

(c) Install the angle gauge stand.

(d) Mount the injection pump body on the pump tester.
HINT: Place a mark on the key groove portion of the coupling.

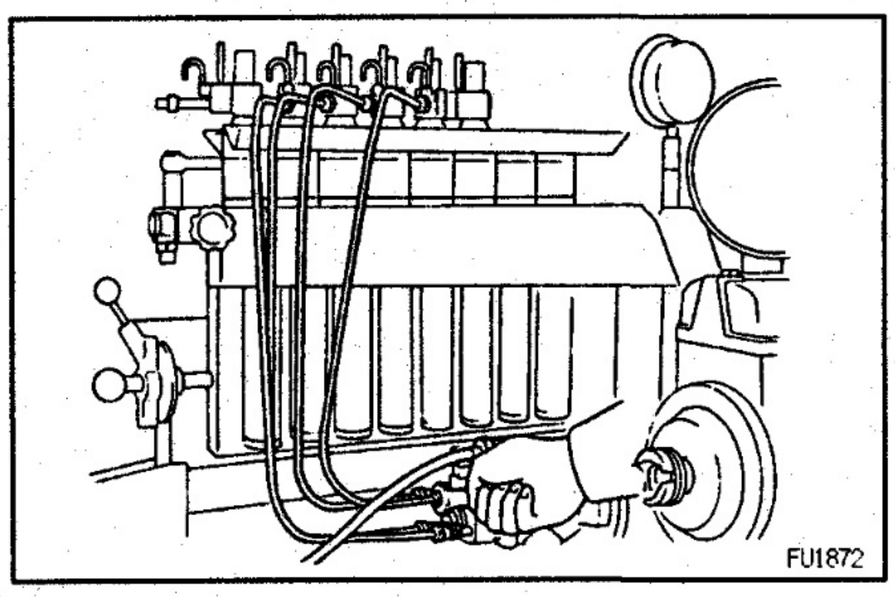

(e) Install an injection pipe with these specifications:

Outer diameter	6.0 mm (0.236 in.)
Inner diameter	2.0 mm (0.079 in.)
Length	840 mm (33.07 in.)
Minimum bending radius	25 mm (0.98 in.) or more

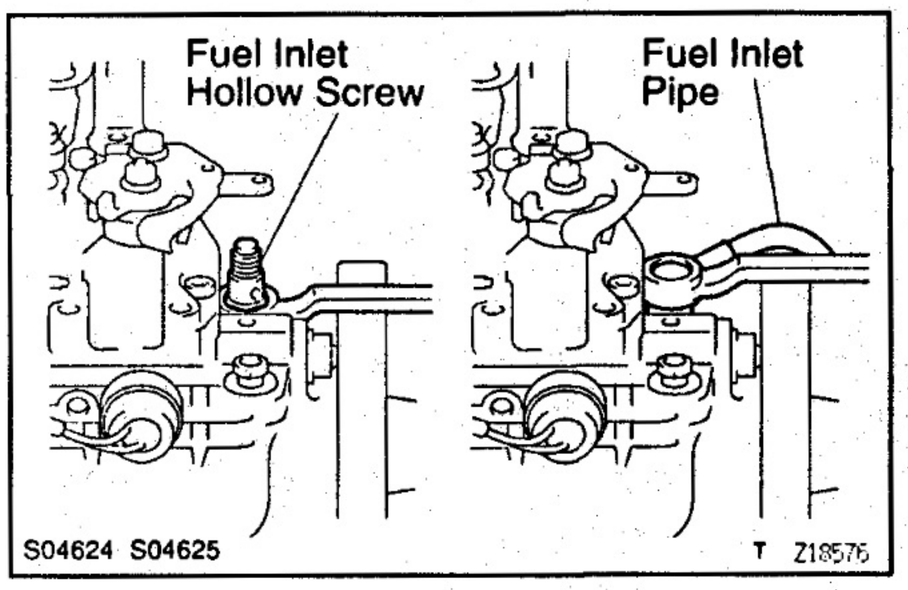

(f) Remove the fuel inlet hollow screw.

(g) Connect the fuel inlet pipe with an adapter.
Torque: 24.55 N·m (250 kgf·cm, 18 ft·lbf)

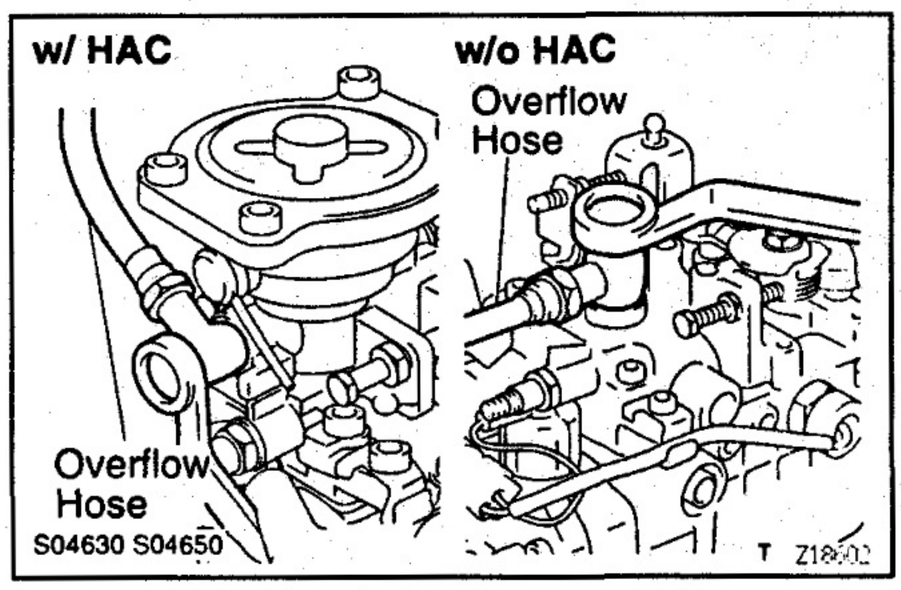

(h) Install an overflow hose with the 2 gaskets and an overflow screw.
Torque: 24.55 N·m (250 kgf·cm, 18 ft·lbf)
HINT: Always use the overflow screw installed on the pump to be adjusted.

(i) Using a 5 mm hexagon wrench, remove the 2 bolts and RH timer cover.

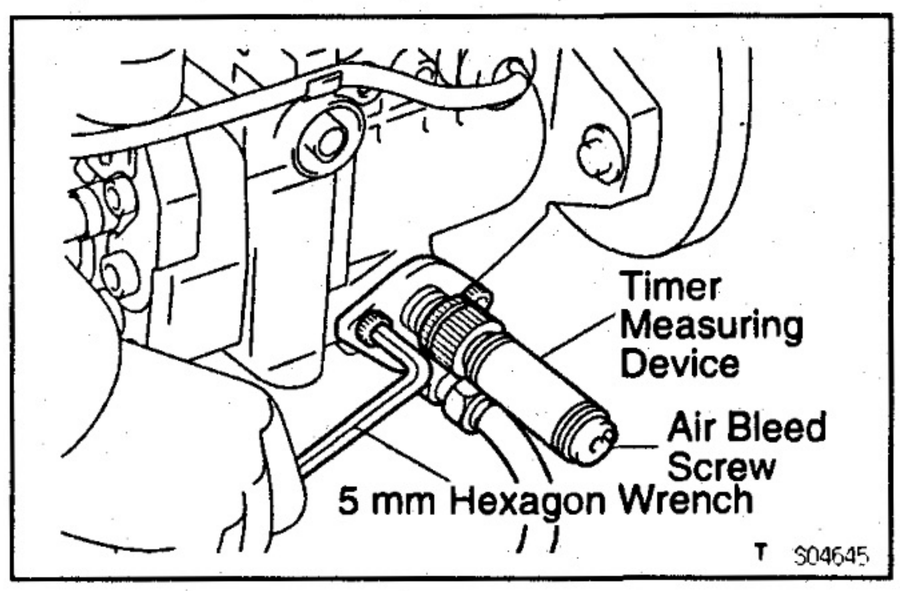

(j) Install the inner pressure gauge with the timer measuring device.
Part No. 95095—10231, 95095—10480
(NIPPONDENSO)
Torque: 8.35 N·m (85 kgf·cm, 74 in.·lbf)
HINT: Bleed the air by the air bleed screw.

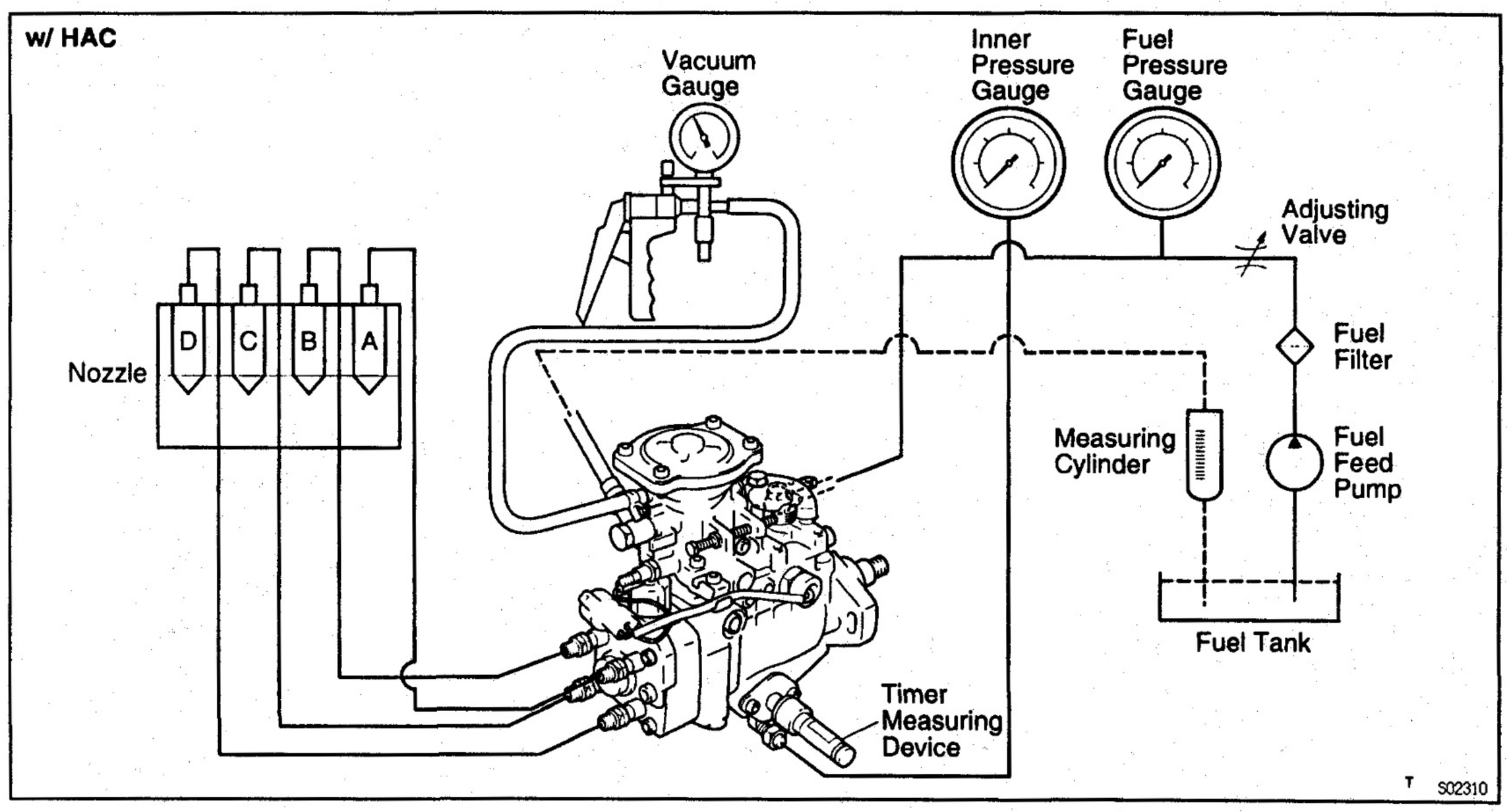

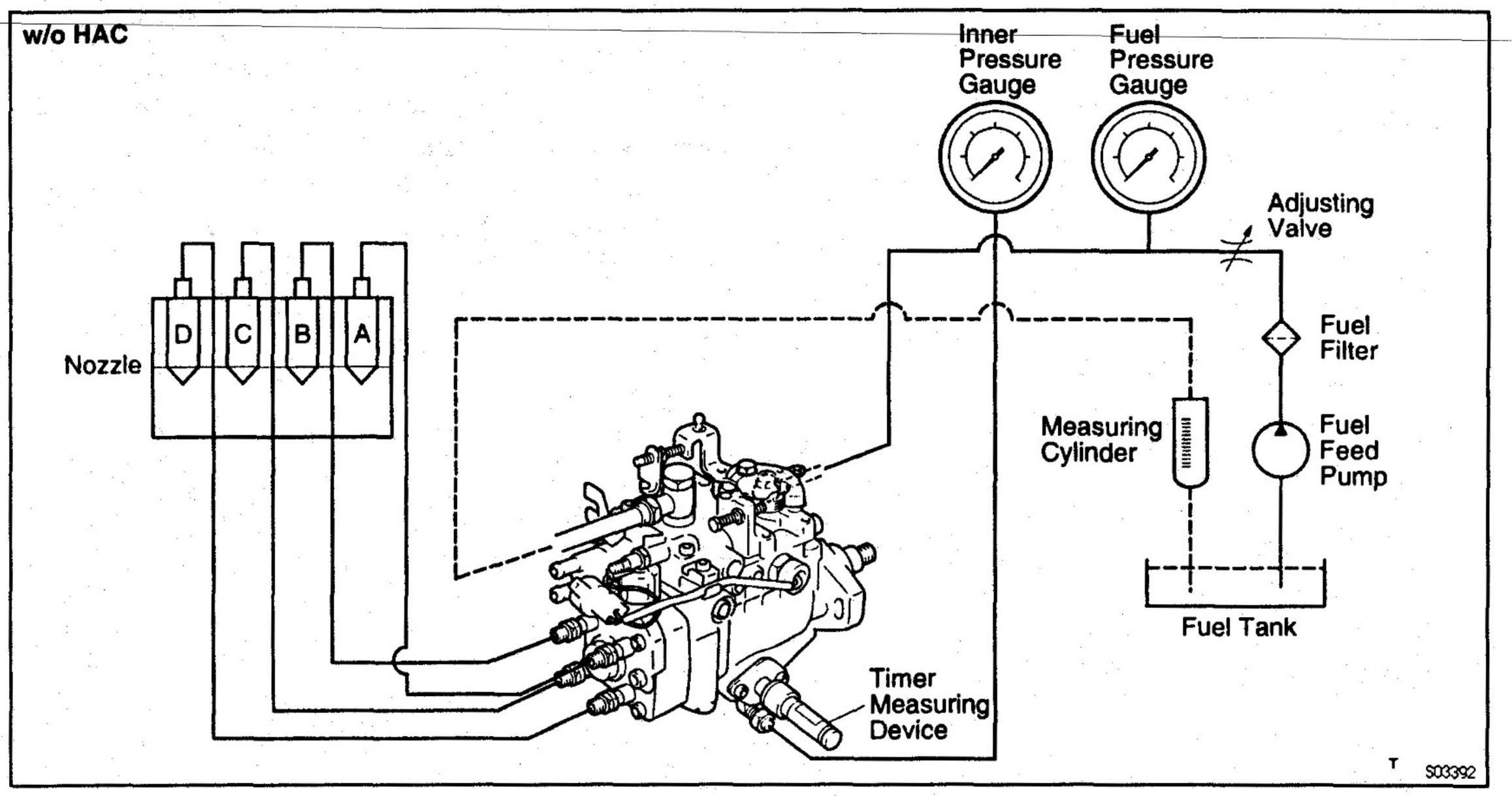

(k) Apply about 6 or 12 volts of DC power to the fuel cut solenoid.

NOTICE:

- **When applying voltage to the solenoid, position the battery as far away from the solenoid as possible so that a spark does not occur.**
- **When connecting the battery cable, connect the solenoid side first.**

HINT: Connect the battery through a 10 W bulb.

(l) The pressure for feeding fuel to the injection pump should be 20 kPa (0.2 kgf/cm², 2.8 psi). The fuel temperature for pump testing should be 40 — 45°C (104 — 113°F).

(m) Install an angle gauge to the stand, and set it to the adjusting lever.

Part No. 95095—10360 (Stand w/ angle gauge)

(n) Secure the adjusting lever fully on the maximum speed side.

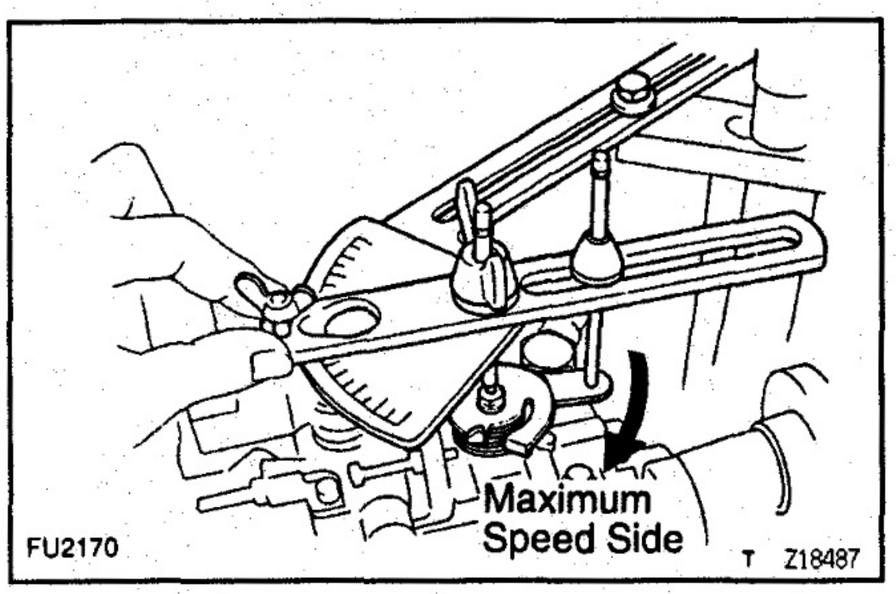

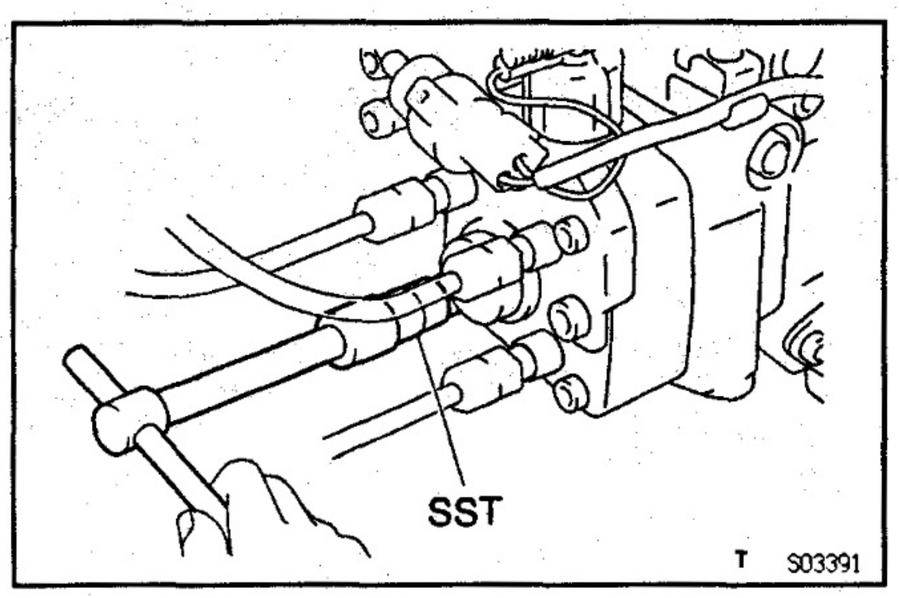

(o) Check the installation direction of the camplate as follows:

- Disconnect the injection pipe from the position marked *"C"* on the distributive head.
- Using SST, remove the delivery valve holder.

SST 09260—54012 (09269—54020)

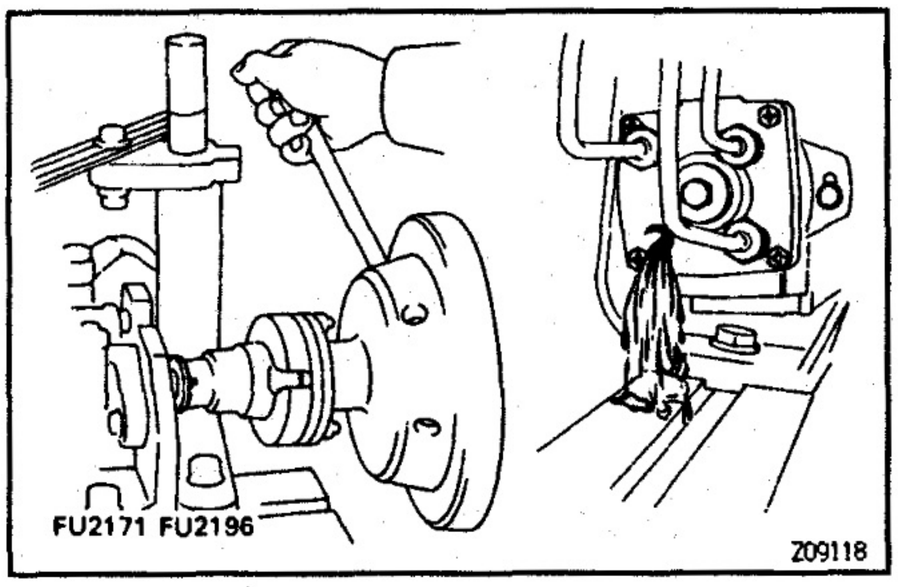

- Check that fuel is flowing out when the mark is in the position shown in the illustration.

If not, it is improperly assembled.

- Disassemble and change the camplate position 180° in the opposite direction.

HINT: At this time, disconnect the fuel cut solenoid wire harness.

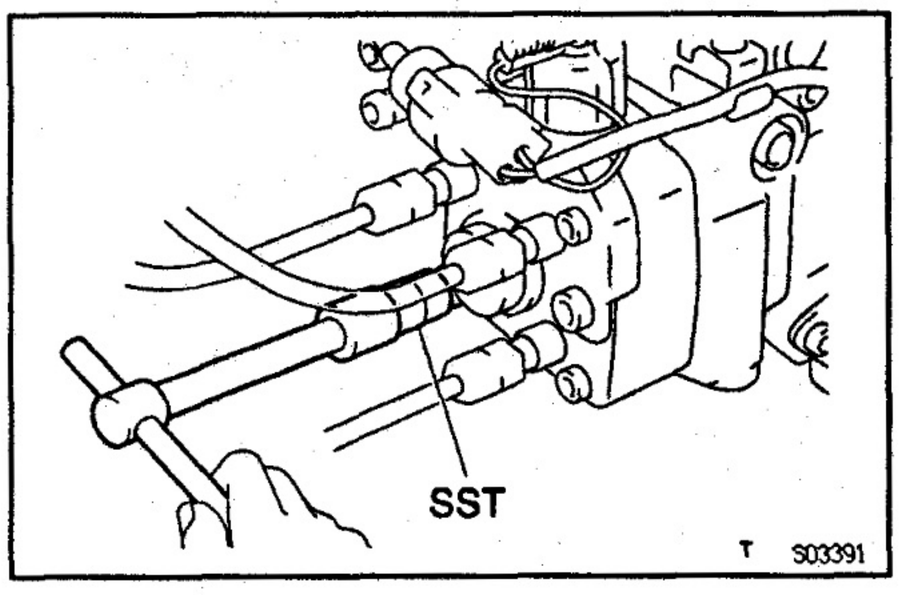

- Using SST, install the delivery valve holder.

SST 09260−54012 (09269−54020)

Torque: 58.85 N·m (600 kgf·cm, 43 ft·lbf)

- Connect the injection pipe.

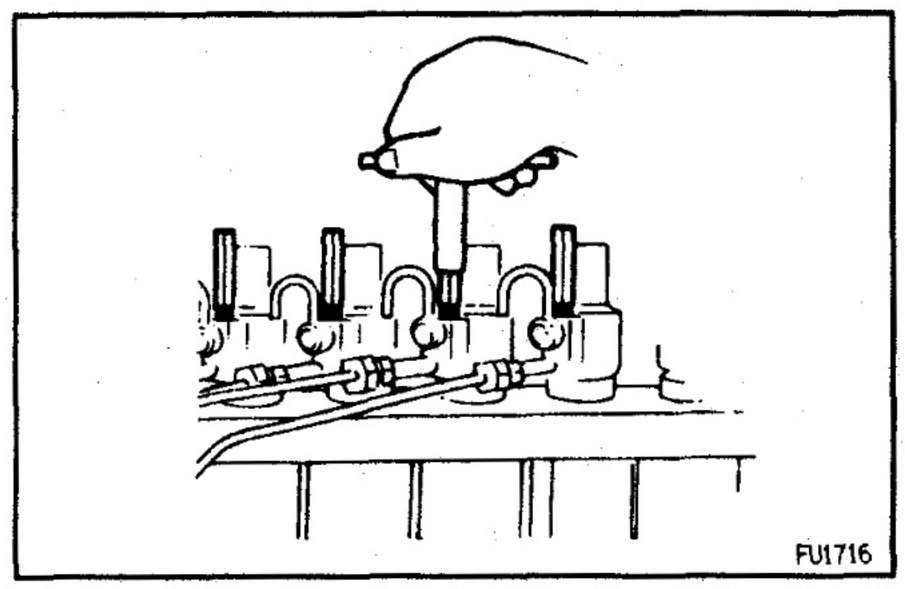

(p) Bleed the air from the injection pipes.

(q) Race the injection pump for 5 minutes at 2,000 rpm.
HINT: Do this operation by replacing the overflow screw to a hollow screw.

NOTICE: Check that there is no fuel leakage or abnormal noise.

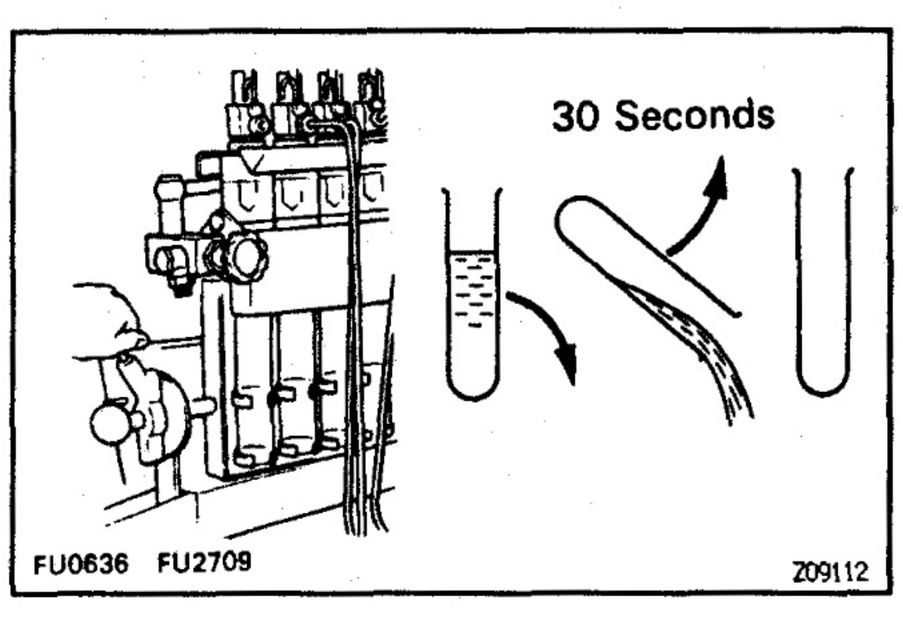

HINT:

- Measure the volume of each injection cylinder with a measuring cylinder.
- Before measuring the injection volume, first hold the cylinder tilted for at least 30 seconds to discard all the fuel.

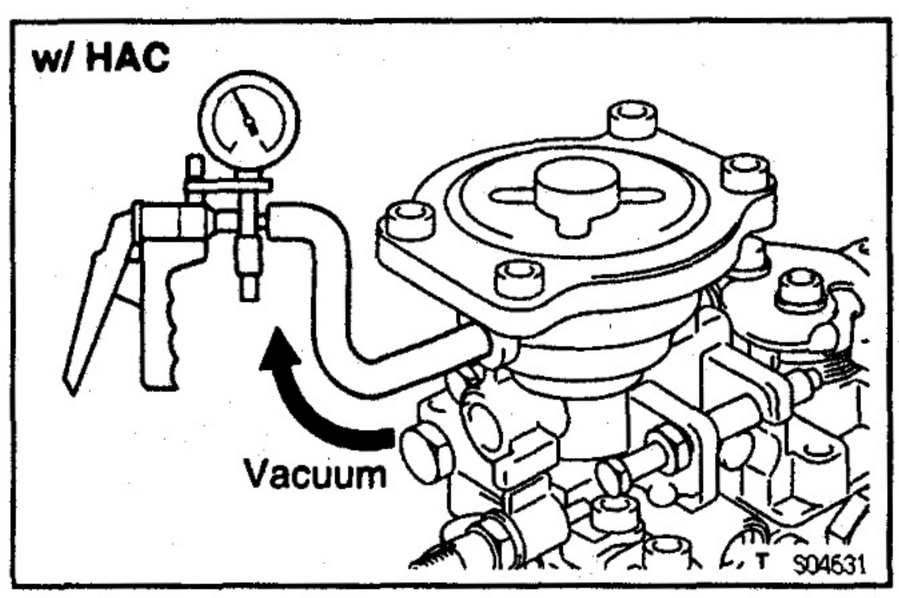

2. **w/ HAC:**
CHECK HIGH ALTITUDE COMPENSATOR FOR AIR TIGHTNESS

(a) Apply 73 kPa (548 mmHg, 21.56 in.Hg) of vacuum to the high altitude compensator.

(b) Measure the time it takes for vacuum to drop to 72 kPa (540 mmHg, 21.26 in.Hg).

Vacuum drop:

5 seconds or more

3. PRE–SET FULL LOAD INJECTION VOLUME

(a) Set the adjusting lever to maximum position.

(b) w/ HAC:
Apply 101 kPa (760 mmHg, 29.83 in.Hg) of vacuum to the high altitude compensator.

(c) Measure the injection volume.

2L for LN Europe:

(Part No. 22100–5B320, 5B360)

Pump rpm	No. of measuring strokes	Injection volume of each cylinder cc (cu in.)
1,200	200	11.04 – 11.36 (0.67 – 0.69)

2L for LN Thailand

(Part No. 22100–5B500, 5B590)

Pump rpm	No. of measuring strokes	Injection volume of each cylinder cc (cu in.)
1,200	200	10.20 – 10.52 (0.62 – 0.64)

2L for Except LN Europe, Thailand:

(Part No. 22100–54770, 54780, 54800, 54810, 5B170)

Pump rpm	No. of measuring strokes	Injection volume of each cylinder cc (cu in.)
1,200	200	10.42 – 10.74 (0.64 – 0.66)

2L for Except LN Europe, Thailand:

(Part No. 22100–5B060, 5B430)

Pump rpm	No. of measuring strokes	Injection volume of each cylinder cc (cu in.)
1,200	200	9.62 – 9.94 (0.59 – 0.61)

3L:

(Part No. 22100–54850, 54860, 54870, 54880, 5B121, 5B520)

Pump rpm	No. of measuring strokes	Injection volume of each cylinder cc (cu in.)
1,200	200	11.56 – 11.88 (0.71 – 0.72)

EG

3L:

(Part No. 22100−54710, 5B030, 5B510)

Pump rpm	No. of measuring strokes	Injection volume of each cylinder cc (cu in.)
1,200	200	10.96 − 11.28 (0.067− 0.69)

EG

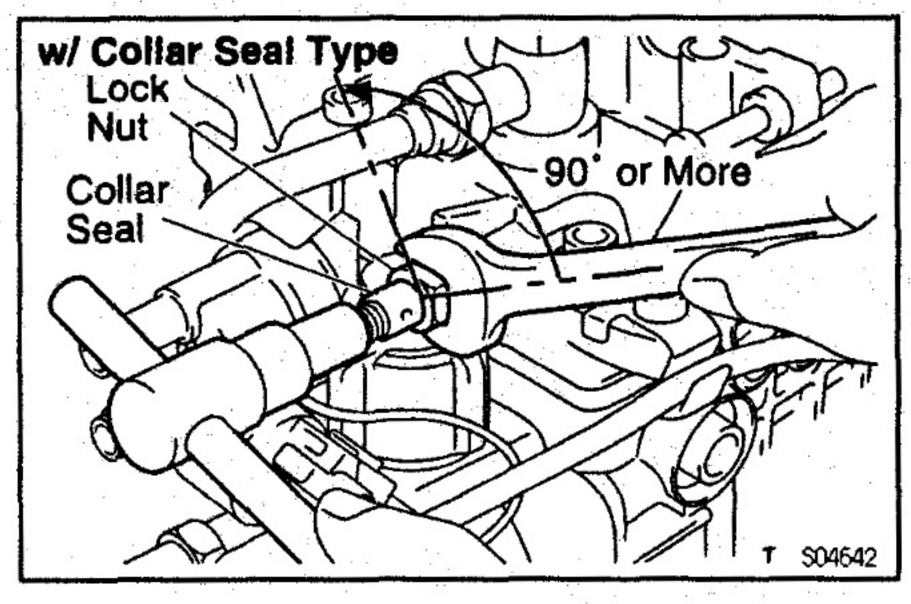

(d) w/ Collar Seal Type:
Remove the collar seal as follows:

- Hold the full load set screw, and release the collar seal from the spot weld by turning the lock nut counterclockwise by 90° or more.

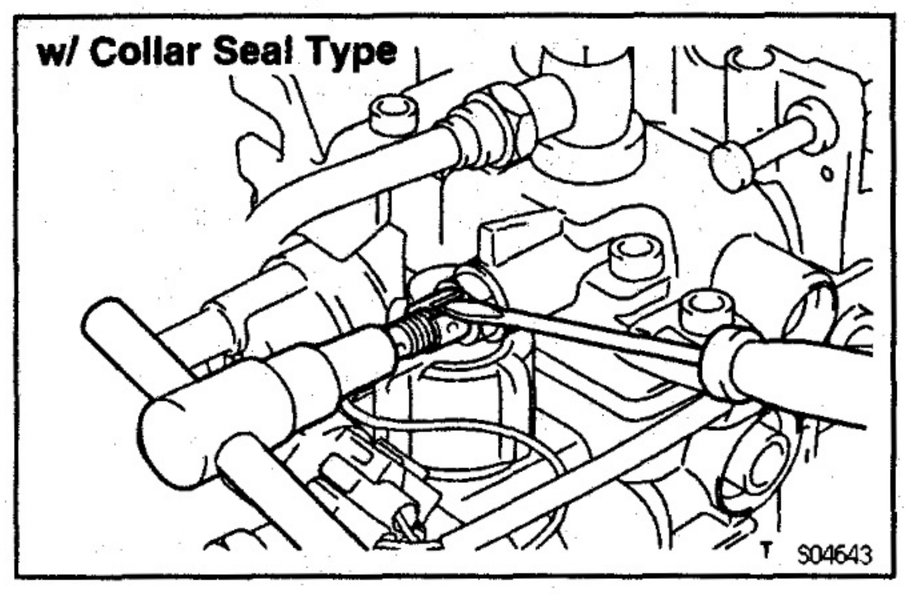

- Using a screwdriver, pry out the collar seal.

(e) w/ Wire Seal Type:
Cut off the wire seal.

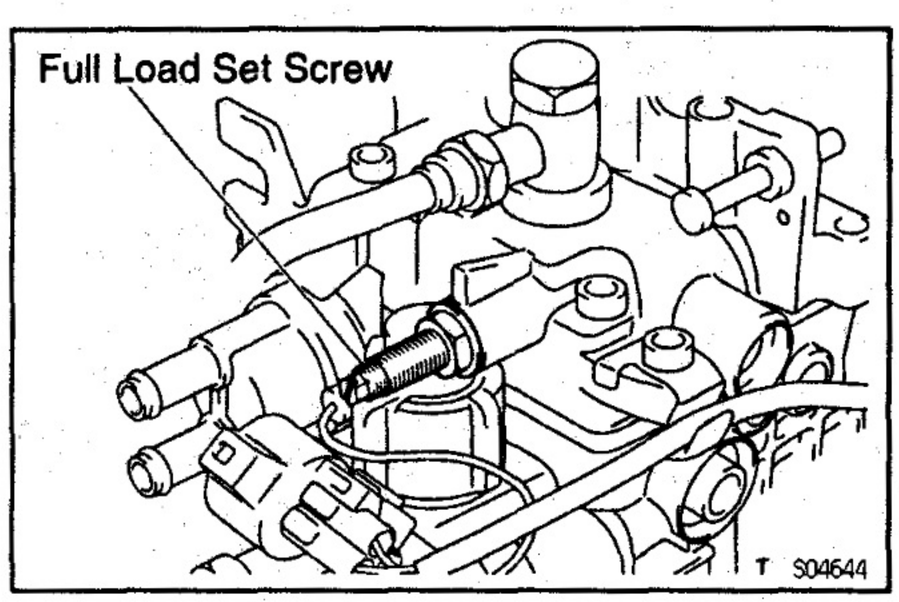

(f) Adjust by turning the full load set screw.
HINT: The injection volume will increase about 3 cc (0.18 cu in.) with each 1/2 turn of the screw.

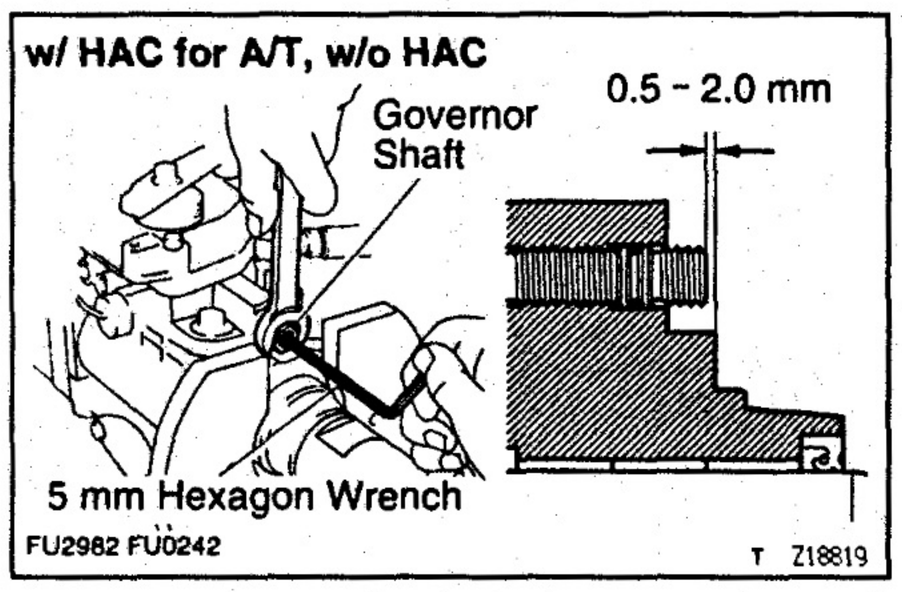

4. w/ HAC for A/T, w/o HAC:
PRE−SET LOAD SENSING TIMER
Using a 5 mm hexagon wrench, adjust the protrusion of the governor shaft.
Protrusion:

0.5 − 2.0 mm (0.020 − 0.079 in.)

5. PRE−SET MAXIMUM SPEED

(a) Set the adjusting lever to maximum position.

(b) w/ HAC:
Apply 101 kPa (760 mmHg, 29.83 in.Hg) of vacuum to the high altitude compensator.

(c) Measure the injection volume.

2L w/ ACSD for LN Thailand, w/o ACSD:
(Part No. 22100−54770, 54780, 54800, 54810, 5B500, 5B590)

Pump rpm	No. of measuring strokes	Injection volume of each cylinder cc (cu in.)
2,450	200	4.0 − 5.6 (0.24 − 0.34)

2L w/ ACSD for Except LN Thailand:
(Part No. 22100−5B170, 5B320, 5B360)

Pump rpm	No. of measuring strokes	Injection volume of each cylinder cc (cu in.)
2,575	200	4.0 − 5.6 (0.24 − 0.34)

2L w/o ACSD:
(Part No. 22100−5B060, 5B430)

Pump rpm	No. of measuring strokes	Injection volume of each cylinder cc (cu in.)
2,350	200	4.0 − 5.6 (0.24 − 0.34)

3L w/ ACSD for w/ TCV:
(Part No. 22100−5B520)

Pump rpm	No. of measuring strokes	Injection volume of each cylinder cc (cu in.)
2,400	200	4.6 − 6.2 (0.28 − 0.38)

3L w/ ACSD for w/o TCV, w/o ACSD:
(Part No. 22100−54710, 5B030, 5B510)

Pump rpm	No. of measuring strokes	Injection volume of each cylinder cc (cu in.)
2,200	200	4.6 − 6.2 (0.28 − 0.38)

3L w/o ACSD:

(Part No. 22100–54850, 54860, 54870, 54880, 5B121)

Pump rpm	No. of measuring strokes	Injection volume of each cylinder cc (cu in.)
2,300	200	4.6 – 6.2 (0.28 – 0.38)

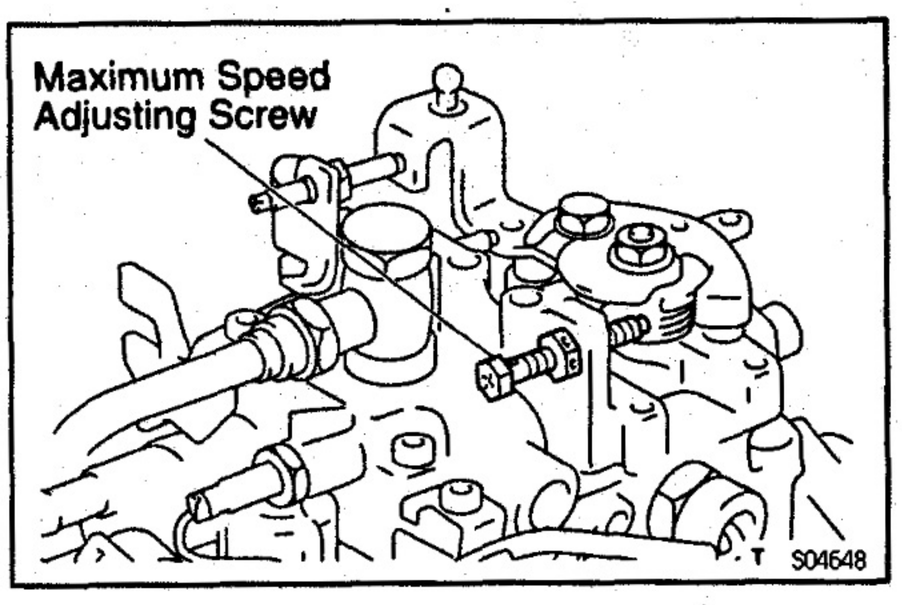

(d) Cut off the seal wire.

(e) Adjust the injection volume with the maximum speed adjusting screw.

6. ADJUST PUMP INNER PRESSURE

(a) Set the adjusting lever to maximum position.

(b) w/ HAC:
Apply 101 kPa (760 mmHg, 29.83 in.Hg) of vacuum to the high altitude compensator.

(c) Measure the pump inner pressure at the below listed rpm.

Pump rpm	Inner pressure kPa (kgf/cm², psi)
500	314 – 373 (3.2 – 3.8, 46 – 54)
2,100	647 – 706 (6.6 – 7.2, 94 – 102)

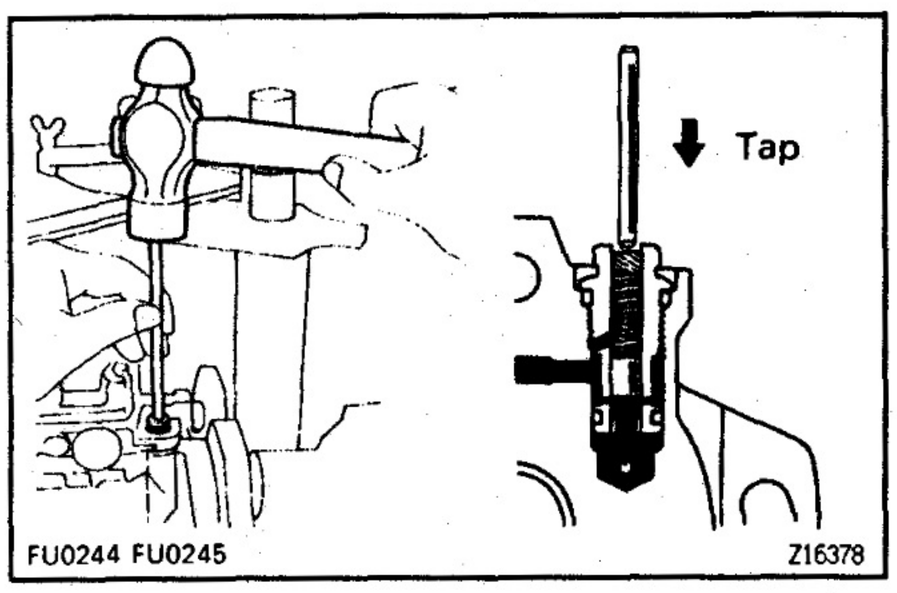

(d) If the pressure is low, adjust by lightly tapping the regulator valve piston while watching the pressure gauge.
HINT: If the pressure is too high or if the regulator valve was tapped in too far, the regulator valve must be replaced.

7. CHECK OVERFLOW VOLUME

(a) Set adjusting lever to maximum position.

(b) w/ HAC:
Apply 101 kPa (760 mmHg, 29.83 in.Hg) of vacuum to the high altitude compensator.

(c) Measure the overflow volume at the below listed rpm.

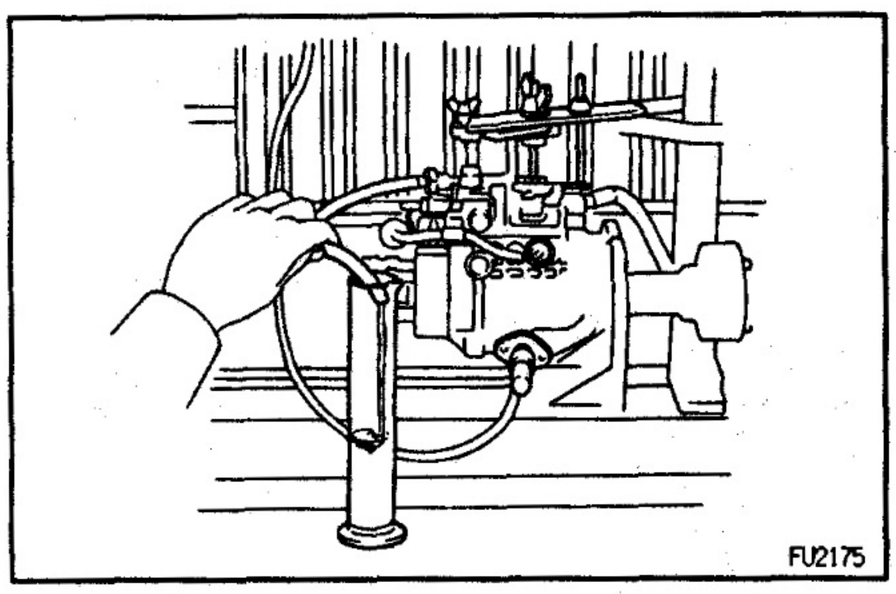

Pump rpm	Overflow volume cc/min. (cu in./min.)
2,200	367 – 800 (22.4 – 48.8)

HINT: Always use the overflow screw installed on the pump to be adjusted.

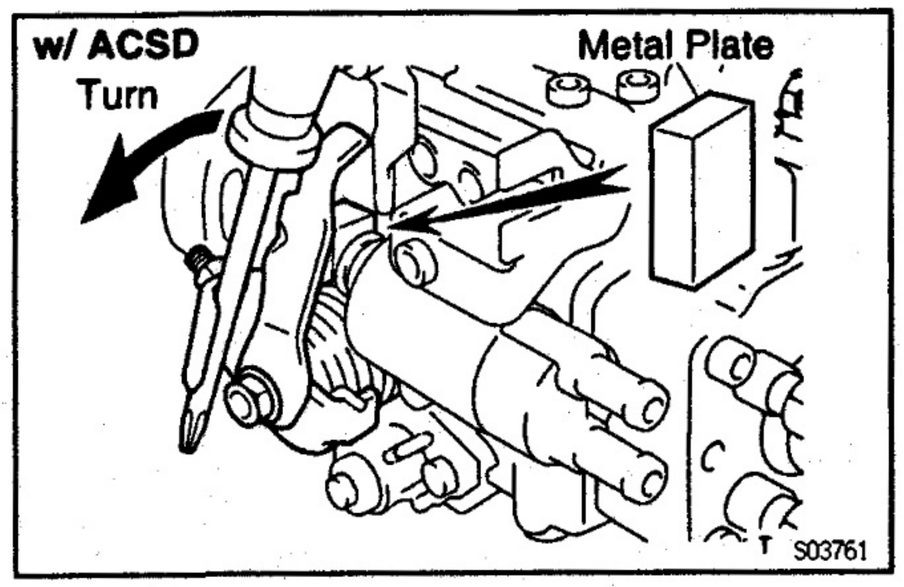

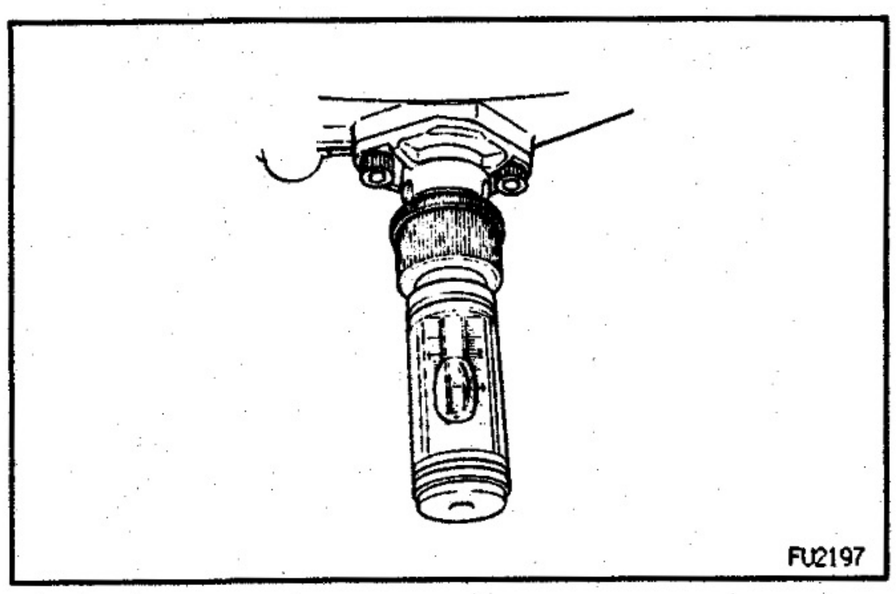

8. **w/ ACSD:**
RELEASE COLD STARTING SYSTEM FOR NEXT INSPECTIONS

(a) Using a screwdriver, turn the cold starting lever counterclockwise approx. 20°.

(b) Put a metal plate (thickness of 8.5 – 10.0 mm (0.335 – 0.394 in.)) between the cold starting lever and thermo wax plunger.
HINT: Keep the cold starting system released until all measurements and adjustments are finished.

9. **ADJUST TIMER**

(a) Set the timer measuring device at zero.

(b) w/ HAC:
Apply 101 kPa (760 mmHg, 29.83 in.Hg) of vacuum to the high altitude compensator.

(c) Measure the timer piston stroke at the below listed rpm.

2L w/ ACSD for w/ TCV:
(Part No. 22100–5B320, 5B360, 5B500, 5B590)

Pump rpm	Piston stroke mm (in.)
600	w/ TCV OFF 1.00 – 1.80 (0.0394 – 0.0709)
1,200	w/ TCV OFF 4.00 – 4.80 (0.1575 – 0.1890) w/ TCV ON 3.70 – 5.10 (0.1457 – 0.2008)
2,000	w/ TCV OFF 8.00 – 8.80 (0.3150 – 0.3465)
2,300	w/ TCV OFF 8.76 – 9.24 (0.3449 – 0.3638)

2L w/ ACSD for w/o TCV:
(Part No. 22100–5B170)

Pump rpm	Piston stroke mm (in.)
800	2.30 – 3.10 (0.0906 – 0.1220)
1,200	3.80 – 4.60 (0.1496 – 0.1811)
2,000	6.80 – 7.60 (0.2677 – 0.2992)
2,300	7.96 – 8.44 (0.3134 – 0.3323)

2L w/o ACSD:
(Part No. 22100–54770, 54780, 54800, 54810, 5B060, 5B430)

Pump rpm	Piston stroke mm (in.)
800	0.70 – 1.50 (0.0276 – 0.0591)
1,200	2.10 – 2.90 (0.0827 – 0.1142)
2,000	4.90 – 5.70 (0.1929 – 0.2244)
2,300	5.86 – 6.34 (0.2307 – 0.2496)

EG

3L w/ ACSD for w/ TCV:
(Part No. 22100–5B520)

Pump rpm	Piston stroke mm (in.)
800	w/ TCV OFF 2.00 – 3.00 (0.0787 – 0.1181)
1,200	w/ TCV OFF 3.40 – 4.40 (0.1339 – 0.1732)
2,000	w/ TCV OFF 6.30 – 7.30 (0.2480 – 0.2874) w/ TCV ON 3.20 – 4.60 (0.1260 – 0.1811)
2,300	w/ TCV OFF 7.06 – 7.54 (0.2780 – 0.2968)

3L w/ ACSD for w/o TCV:
(Part No. 22100–5B510)

Pump rpm	Piston stroke mm (in.)
800	2.10 – 2.90 (0.0827 – 0.1142)
1,200	3.50 – 4.30 (0.1378 – 0.1693)
2,000	6.40 – 7.20 (0.2520 – 0.2835)
2,300	7.06 – 7.54 (0.2780 – 0.2968)

3L w/o ACSD:
(Part No. 22100–54710, 54850, 54860, 54870, 54880, 5B030, 5B121)

Pump rpm	Piston stroke mm (in.)
800	0.60 – 1.40 (0.0236 – 0.0551)
1,200	1.80 – 2.60 (0.0709 – 0.1024)
2,000	4.40 – 5.20 (0.1732 – 0.2047)
2,300	4.86 – 5.34 (0.1913 – 0.2102)

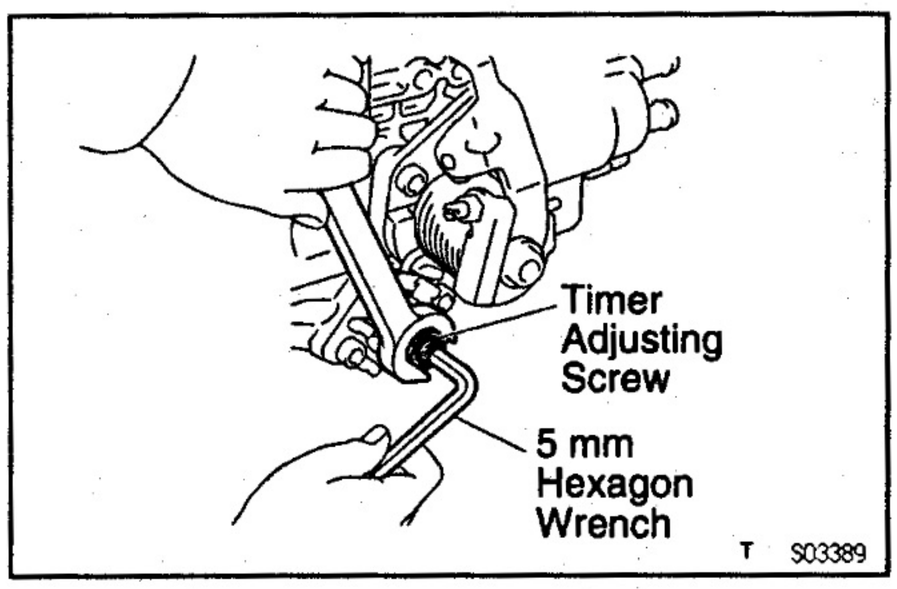

HINT: Check that the hysteresis is within 0.3 mm (0.012 in.).

(d) Using a 5 mm hexagon wrench, adjust by turning the timer adjusting screw.
HINT: Turn clockwise to reduce the stroke, turn counterclockwise to increase the stroke.

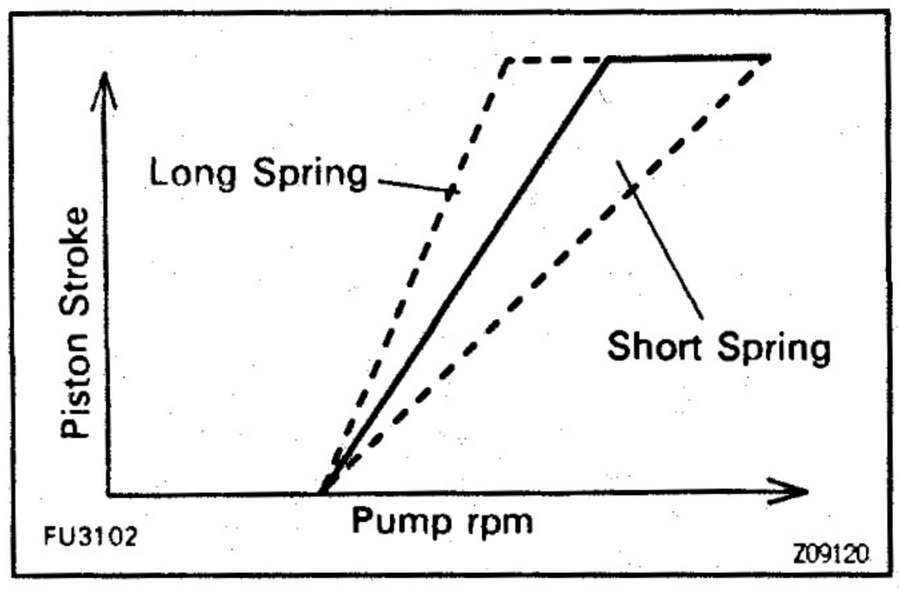

(e) Check the timer stroke for characteristic tendency.

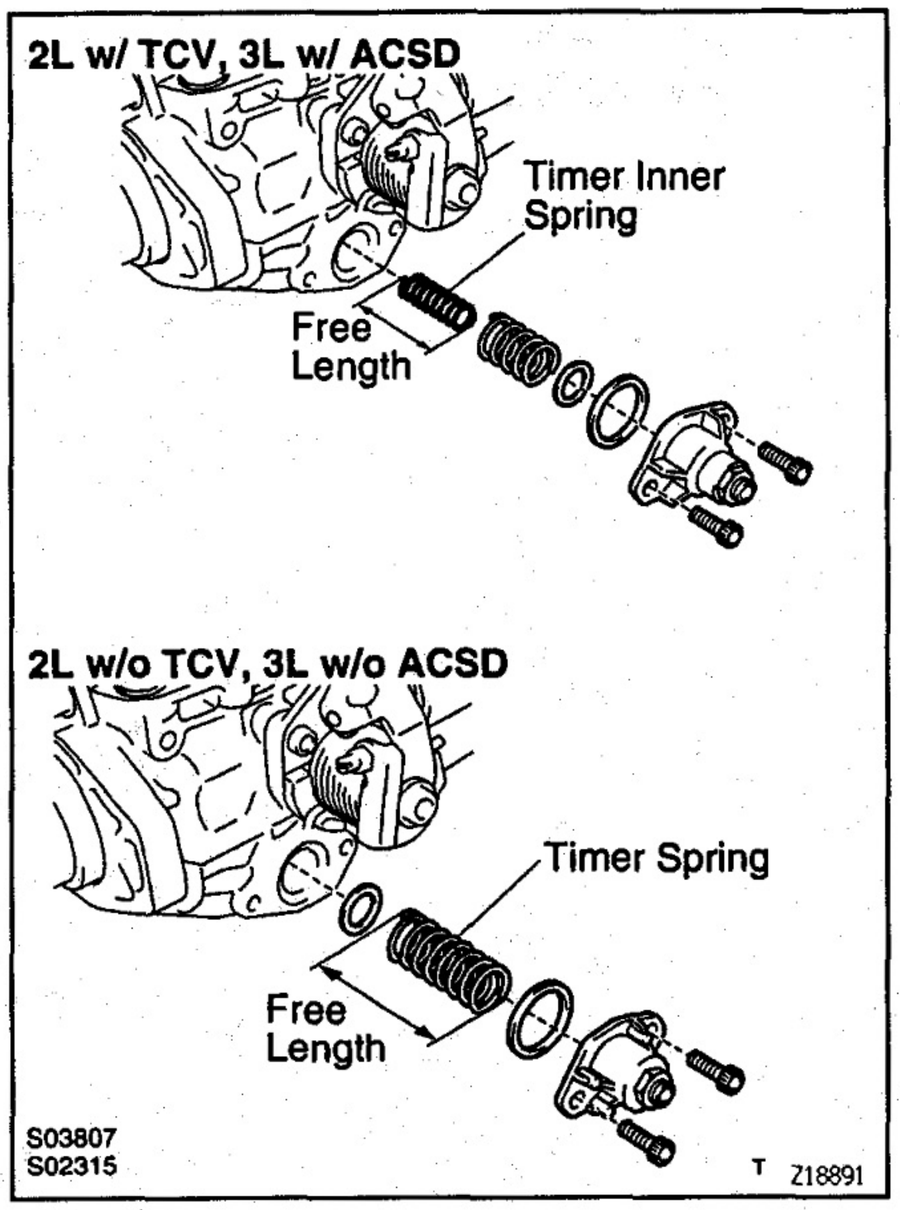

(f) If tendency is not as specified, select and replace the timer (inner) spring.
HINT: The timer stroke will increase with a long spring and decrease with a short spring.

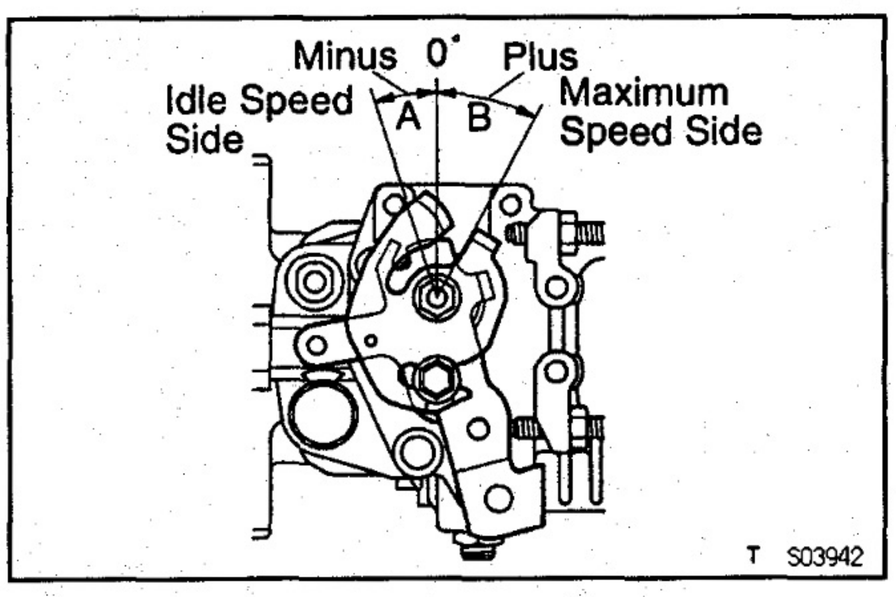

10. ADJUST FULL LOAD INJECTION VOLUME

(a) The adjusting lever angle for the adjustment below should be as shown in the illustration.
Adjusting lever angle:

A (Maximum speed side)	B (Idle speed side)
Plus 23.5 – 33.5°	M/T Minus 12.5 – 22.5° A/T Minus 13.5 – 21.5°

(b) w/ HAC:
Apply 101 kPa (760 mmHg, 29.83 in.Hg) of vacuum to the high altitude compensator.

(c) Measure the full load injection volume.
2L for LN Europe:
(Part No. 22100–5B320, 5B360)

Pump rpm	No. of measuring strokes	Injection volume of each cylinder cc (cu in.)
1,200	200	11.04 – 11.36 (0.67 – 0.69)

2L for LN Thailand:
(Part No. 22100–5B500, 5B590)

Pump rpm	No. of measuring strokes	Injection volume of each cylinder cc (cu in.)
1,200	200	10.20 – 10.52 (0.62 – 0.64)

2L for Except LN Europe, Thailand:
(Part No. 22100–54770, 54780, 54800, 54810, 5B170)

Pump rpm	No. of measuring strokes	Injection volume of each cylinder cc (cu in.)
1,200	200	10.42 – 10.74 (0.64 – 0.66)

2L for Except LN Europe, Thailand:
(Part No. 22100–5B060, 5B430)

Pump rpm	No. of measuring strokes	Injection volume of each cylinder cc (cu in.)
1,200	200	9.62 – 9.94 (0.59 – 0.61)

3L:
(Part No. 22100–54850, 54860, 54870, 54880, 5B121, 5B520)

Pump rpm	No. of measuring strokes	Injection volume of each cylinder cc (cu in.)
1,200	200	11.56 – 11.88 (0.71 – 0.72)

3L:
(Part No. 22100–54710, 5B030, 5B510)

Pump rpm	No. of measuring strokes	Injection volume of each cylinder cc (cu in.)
1,200	200	10.96 – 11.28 (0.067 – 0.69)

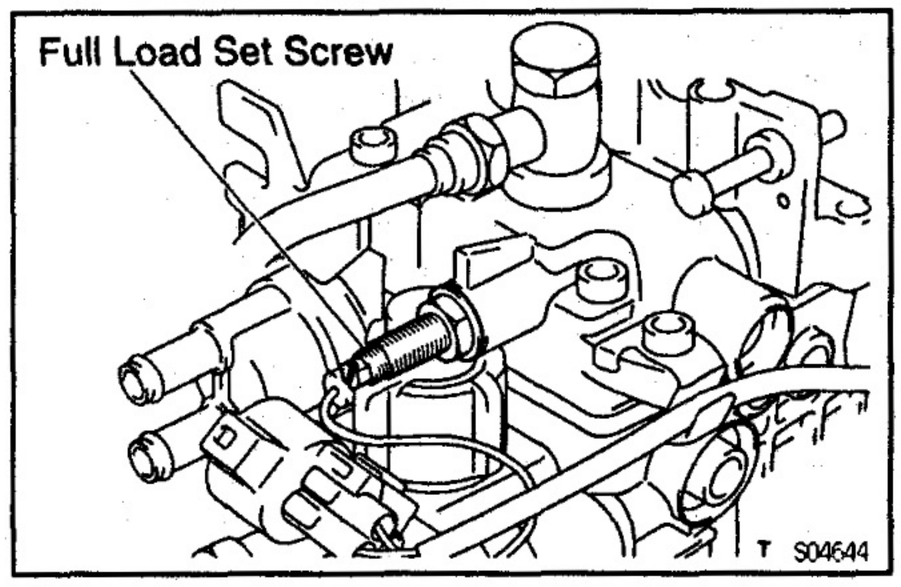

(d) Adjust by turning the full load set screw.
HINT: The injection volume will increase about 3 cc (0.18 cu in.) with each 1/2 turn of the screw.

11. ADJUST MAXIMUM SPEED

(a) w/ HAC:
Apply 101 kPa (760 mmHg, 29.83 in.Hg) of vacuum to the high altitude compensator.

(b) Measure the injection volume at each pump rpm.

2L w/ ACSD for w/ TCV for LN Europe:

(Part No. 22100–5B320, 5B360)

Adjusting lever angle	Pump rpm	No. of measuring strokes	Injection volume of each cylinder cc (cu in.)	Remark
Plus 23.5 - 33.5°	2,200	200	8.0 - 9.6 (0.49 - 0.59)	–
	2,575		4.0 - 5.6 (0.24 - 0.34)	Adjust
	2,850		1.0 (0.06) or less	–

T V07875

2L w/ ACSD for w/ TCV for LN Thailand:

(Part No. 22100–5B500, 5B590)

Adjusting lever angle	Pump rpm	No. of measuring strokes	Injection volume of each cylinder cc (cu in.)	Remark
Plus 23.5 - 33.5°	2,250	200	6.9 - 8.5 (0.42 - 0.52)	–
	2,450		4.0 - 5.6 (0.24 - 0.34)	Adjust
	2,700		1.3 (0.08) or less	–

T V08062

2L w/ ACSD for w/o TCV:

(Part No. 22100–5B170)

Adjusting lever angle	Pump rpm	No. of measuring strokes	Injection volume of each cylinder cc (cu in.)	Remark
Plus 23.5 - 33.5°	2,250	200	8.0 - 9.6 (0.49 - 0.59)	–
	2,575		4.0 - 5.6 (0.24 - 0.34)	Adjust
	2,850		1.3 (0.08) or less	–

T V07874

2L w/o ACSD:

(Part No. 22100–54770, 54780, 54800, 54810)

Adjusting lever angle	Pump rpm	No. of measuring strokes	Injection volume of each cylinder cc (cu in.)	Remark
Plus 23.5 - 33.5°	2,250	200	7.66 - 9.26 (0.47 - 0.57)	–
	2,450		4.0 - 5.6 (0.24 - 0.34)	Adjust
	2,700		1.3 (0.08) or less	–

T V07876

2L w/o ACSD:

(Part No. 22100–5B060, 5B430)

Adjusting lever angle	Pump rpm	No. of measuring strokes	Injection volume of each cylinder cc (cu in.)	Remark
Plus 23.5 - 33.5°	2,150	200	6.9 - 8.9 (0.42 - 0.54)	–
	2,350		4.0 - 5.6 (0.24 - 0.34)	Adjust
	2,700		1.3 (0.08) or less	–

T V07877

3L w/ ACSD for w/ TCV:

(Part No. 22100—5B520)

Adjusting lever angle	Pump rpm	No. of measuring strokes	Injection volume of each cylinder cc (cu in.)	Remark
Plus 23.5 - 33.5°	1,900	200	9.3 - 11.3 (0.57 - 0.69)	—
	2,400		4.6 - 6.2 (0.28 - 0.38)	Adjust
	2,800		1.3 (0.08) or less	—

T V07928

3L w/ ACSD for w/o TCV, w/o ACSD:

(Part No. 22100—54710, 5B030, 5B510)

Adjusting lever angle	Pump rpm	No. of measuring strokes	Injection volume of each cylinder cc (cu in.)	Remark
Plus 23.5 - 33.5°	2,000	200	8.44 - 10.44 (0.52 - 0.64)	—
	2,200		4.6 - 6.2 (0.28 - 0.38)	Adjust
	2,450		1.3 (0.08) or less	—

T V07878

3L w/o ACSD:

(Part No. 22100—54850, 54860, 54870, 54880, 5B121)

Adjusting lever angle	Pump rpm	No. of measuring strokes	Injection volume of each cylinder cc (cu in.)	Remark
Plus 23.5 - 33.5°	2,100	200	9.08 - 11.08 (0.55 - 0.68)	—
	2,300		4.6 - 6.2 (0.28 - 0.38)	Adjust
	2,550		1.3 (0.08) or less	—

T V07879

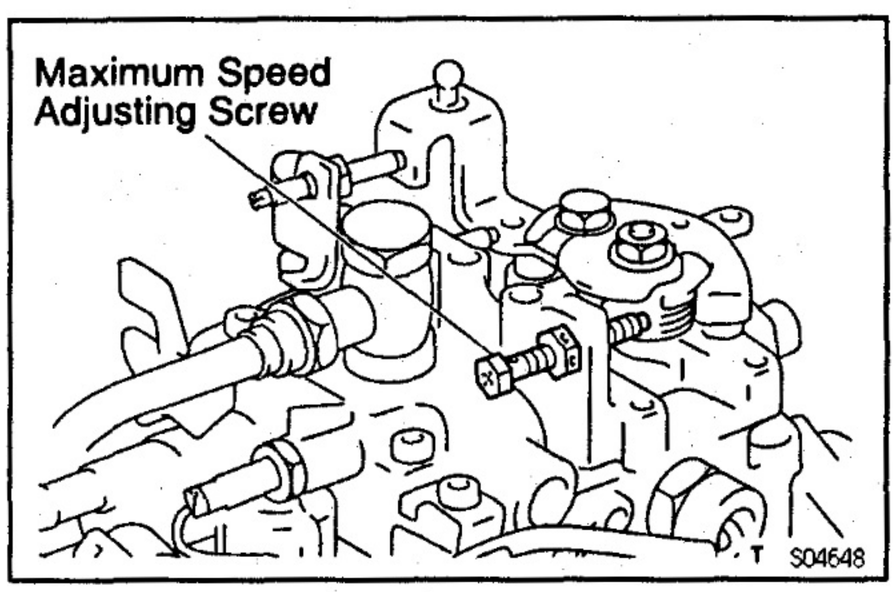

(c) Adjust by turning the maximum speed adjusting screw.

12. CHECK INJECTION VOLUME

Measure the injection volume at each pump rpm and HAC vacuum (w/ HAC).

2L w/ HAC:

(Part No. 22100–54800, 54810)

Adjusting lever angle	Pump rpm	HAC vacuum kPa (mmHg, in.Hg)	No. of measuring strokes	Injection volume of each cylinder cc (cu in.)	Variation limit cc (cu in.)	Remark
Plus 23.5 - 33.5°	100	101 (760, 29.83)	200	10.6 - 15.4 (0.65 - 0.94)	1.2 (0.07)	Volume during starting
	350	101 (760, 29.83)		11.2 - 13.8 (0.68 - 0.84)	–	–
	500	101 (760, 29.83)		9.32 - 10.32 (0.57 - 0.63)	0.5 (0.03)	–
	1,200	101 (760, 29.83)		10.42 - 10.74 (0.64 - 0.66)	0.4 (0.02)	Basic full load injection volume
		90.7 (680, 26.78)		9.88 - 10.48 (0.60 - 0.64)	–	–
		70.7 (530, 20.88)		8.38 - 8.98 (0.51 - 0.55)	–	–
	2,100	101 (760, 29.83)		8.95 - 9.85 (0.55 - 0.60)	0.5 (0.03)	–

T V07925

2L w/o HAC for w/ TCV for LN Europe:

(Part No. 22100–5B320, 5B360)

Adjusting lever angle	Pump rpm	No. of measuring strokes	Injection volume of each cylinder cc (cu in.)	Variation limit cc (cu in.)	Remark
Plus 23.5 - 33.5°	100	200	10.6 - 15.4 (0.65 - 0.94)	1.2 (0.07)	Volume during starting
	500		10.1 - 11.1 (0.62 - 0.68)	0.5 (0.03)	–
	1,200		11.04 - 11.36 (0.67 - 0.69)	0.4 (0.02)	Basic full load injection volume
	2,000		9.7 - 10.7 (0.59 - 0.65)	0.5 (0.03)	–

T V07890

2L w/o HAC for w/ TCV for LN Thailand:

(Part No. 22100–5B500, 5B590)

Adjusting lever angle	Pump rpm	No. of measuring strokes	Injection volume of each cylinder cc (cu in.)	Variation limit cc (cu in.)	Remark
Plus 23.5 - 33.5°	100	200	10.6 - 15.4 (0.65 - 0.94)	1.2 (0.07)	Volume during starting
	500		9.4 - 10.4 (0.57 - 0.63)	0.5 (0.03)	–
	1,200		10.20 - 10.52 (0.62 - 0.64)	0.4 (0.02)	Basic full load injection volume
	2,100		8.03 - 8.93 (0.49 - 0.54)	0.5 (0.03)	–

T V08063

EG

2L w/o HAC for w/o TCV:

(Part No. 22100—54770, 54780, 5B170)

Adjusting lever angle	Pump rpm	No. of measuring strokes	Injection volume of each cylinder cc (cu in.)	Variation limit cc (cu in.)	Remark
Plus 23.5 - 33.5°	100	200	10.6 - 15.4 (0.65 - 0.94)	1.2 (0.07)	Volume during starting
	350		11.2 - 13.8 (0.68 - 0.84)	—	—
	500		9.32 - 10.32 (0.57 - 0.63)	0.5 (0.03)	—
	1,200		10.42 - 10.74 (0.64 - 0.66)	0.4 (0.02)	Basic full load injection volume
	2,100		8.95 - 9.85 (0.55 - 0.60)	0.5 (0.03)	—

T V07926

2L w/o HAC for w/o TCV:

(Part No. 22100—5B060, 5B430)

Adjusting lever angle	Pump rpm	No. of measuring strokes	Injection volume of each cylinder cc (cu in.)	Variation limit cc (cu in.)	Remark
Plus 23.5 - 33.5°	100	200	10.6 - 15.4 (0.65 - 0.94)	1.2 (0.07)	Volume during starting
	350		10.4 - 13.0 (0.63 - 0.79)	—	—
	500		8.32 - 9.72 (0.51 - 0.59)	0.5 (0.03)	—
	1,200		9.62 - 9.94 (0.59 - 0.61)	0.4 (0.02)	Basic full load injection volume
	2,050		7.95 - 9.25 (0.49 - 0.56)	0.5 (0.03)	—

T V07927

3L w/ HAC:

(Part No. 22100—54870, 54880, 5B121)

Adjusting lever angle	Pump rpm	HAC vacuum kPa (mmHg, in.Hg)	No. of measuring strokes	Injection volume of each cylinder cc (cu in.)	Variation limit cc (cu in.)	Remark
Plus 23.5 - 33.5°	100	101 (760, 29.83)	200	11.6 - 16.4 (0.71 - 1.00)	1.2 (0.07)	Volume during starting
	350*	101 (760, 29.83)		12.2 - 14.8 (0.74 - 0.90)	—	—
	500	101 (760, 29.83)		10.44 - 11.44 (0.64 - 0.70)	0.5 (0.03)	—
	1,200	101 (760, 29.83)		11.56 - 11.88 (0.71 - 0.72)	0.4 (0.02)	Basic full load injection volume
		70.7 (530, 20.88)		9.36 - 10.12 (0.57 - 0.62)	—	—
	2,000	101 (760, 29.83)		10.19 - 11.09 (0.62 - 0.68)	0.5 (0.03)	—

* Except A/T (Part No.22100 - 5B121)

T V07951

3L w/o HAC for w/ TCV:

(Part No. 22100—5B520)

Adjusting lever angle	Pump rpm	No. of measuring strokes	Injection volume of each cylinder cc (cu in.)	Variation limit cc (cu in.)	Remark
Plus 23.5 - 33.5°	100	200	11.6 - 16.4 (0.71 - 1.00)	1.2 (0.07)	Volume during starting
	350		12.2 - 14.8 (0.74 - 0.90)	—	—
	500		10.44 - 11.44 (0.64 - 0.70)	0.5 (0.03)	—
	1,200		11.56 - 11.88 (0.71 - 0.72)	0.4 (0.02)	Basic full load injection volume
	1,800		10.49 - 11.79 (0.64 - 0.72)	0.5 (0.03)	—

T V07952

3L w/o HAC for w/o TCV:

(Part No. 22100—54710, 5B030, 5B510)

Adjusting lever angle	Pump rpm	No. of measuring strokes	Injection volume of each cylinder cc (cu in.)	Variation limit cc (cu in.)	Remark
Plus 23.5 - 33.5°	100	200	11.6 - 16.4 (0.71 - 1.00)	1.2 (0.07)	Volume during starting
	350		11.4 - 14.0 (0.70 - 0.85)	—	—
	500		9.64 - 11.04 (0.59 - 0.67)	0.5 (0.03)	—
	1,200		10.96 - 11.28 (0.67 - 0.69)	0.4 (0.02)	Basic full load injection volume
	1,900		9.39 - 10.69 (0.57 - 0.65)	0.5 (0.03)	—

T V07953

3L w/o HAC for w/o TCV:

(Part No. 22100—54850, 54860)

Adjusting lever angle	Pump rpm	No. of measuring strokes	Injection volume of each cylinder cc (cu in.)	Variation limit cc (cu in.)	Remark
Plus 23.5 - 33.5°	100	200	11.6 - 16.4 (0.71 - 1.00)	1.2 (0.07)	Volume during starting
	350		12.2 - 14.8 (0.74 - 0.90)	—	—
	500		10.44 - 11.44 (0.64 - 0.70)	0.5 (0.03)	—
	1,200		11.56 - 11.88 (0.71 - 0.72)	0.4 (0.02)	Basic full load injection volume
	2,000		10.19 - 11.09 (0.62 - 0.68)	0.5 (0.03)	—

T V07954

EG

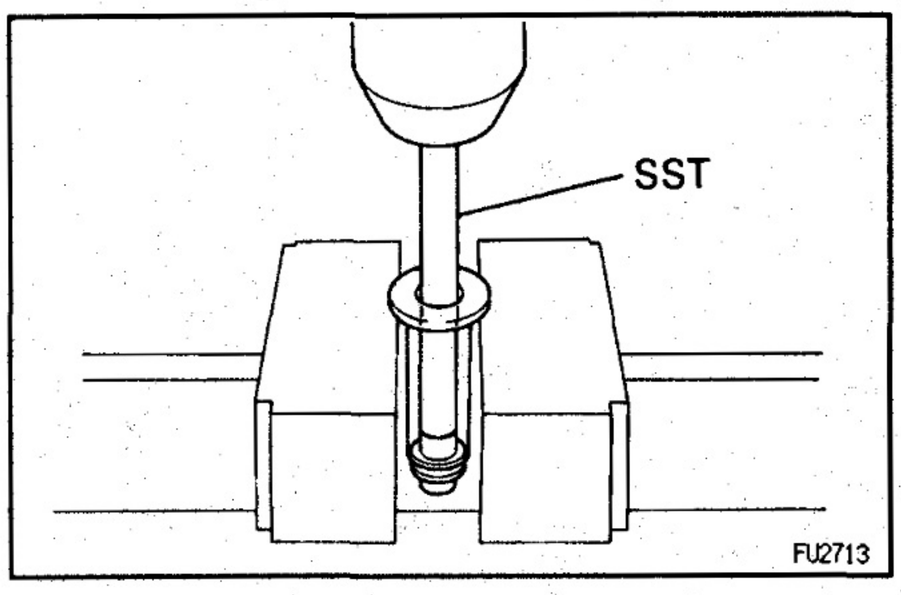

If the injection volume at 100 rpm is not as specified, replace the governor sleeve plug as follows:

- Using SST and a press, press out the sleeve plug assembly from the governor sleeve.

SST 09236–00101 (09237–00070)

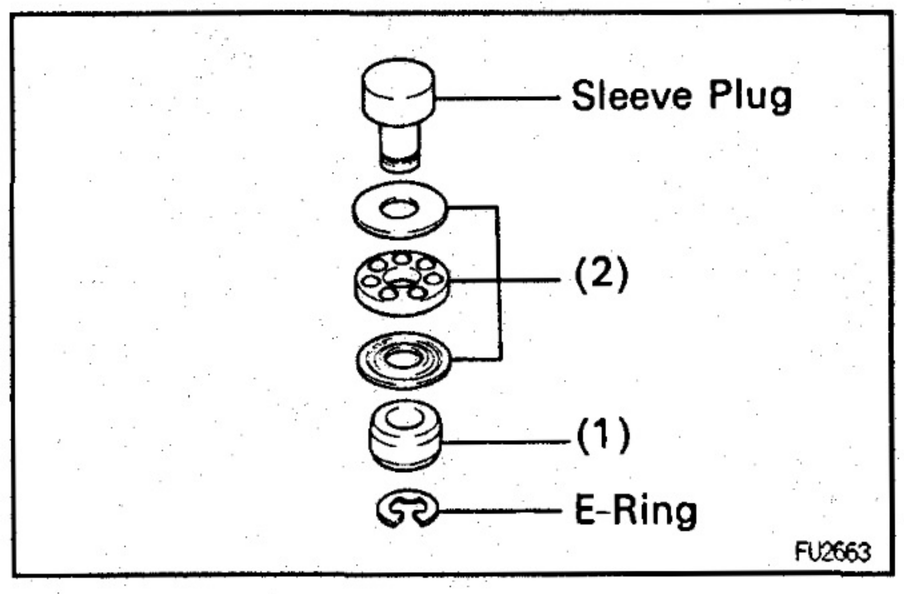

- Remove the E–ring and these parts from the sleeve plug:

(1) Stop ring
(2) Bearing and 2 bearing retainers

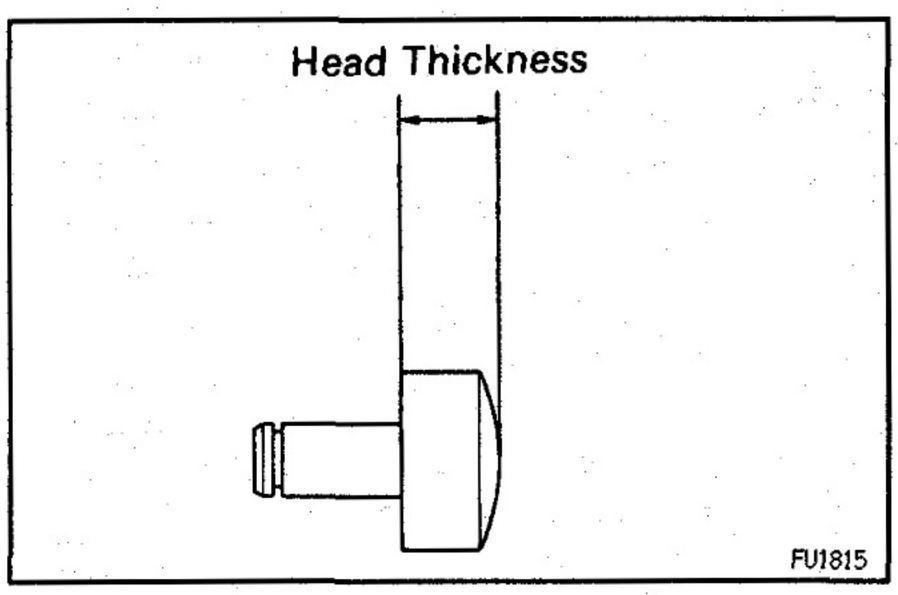

- Measure the head thickness of the sleeve plug, and select a new sleeve plug.

Governor sleeve plug head thickness: **mm (in.)**

3.0 (0.118)	3.5 (0.138)	4.0 (0.157)
3.1 (0.122)	3.6 (0.142)	4.1 (0.161)
3.2 (0.126)	3.7 (0.146)	4.2 (0.165)
3.3 (0.130)	3.8 (0.150)	–
3.4 (0.134)	3.9 (0.154)	–

HINT: Lengthening the plug by 0.1 mm (0.004 in.) will decrease injection volume by 0.6 cc (0.04 cu in.).
If the variation limit is greater than specified, replace the delivery valve.

- Install these parts to the new sleeve plug with a new E–ring:

(1) Bearing and 2 retainers
(2) Stop ring

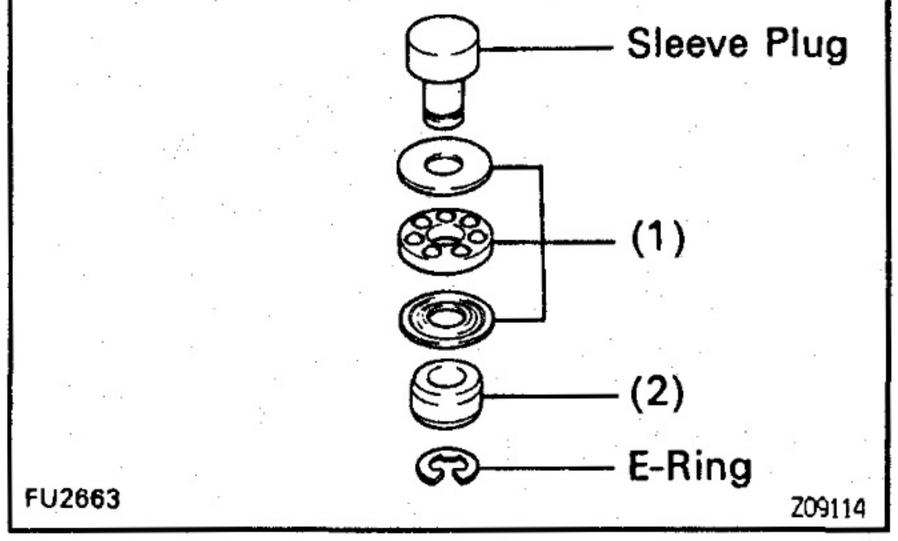

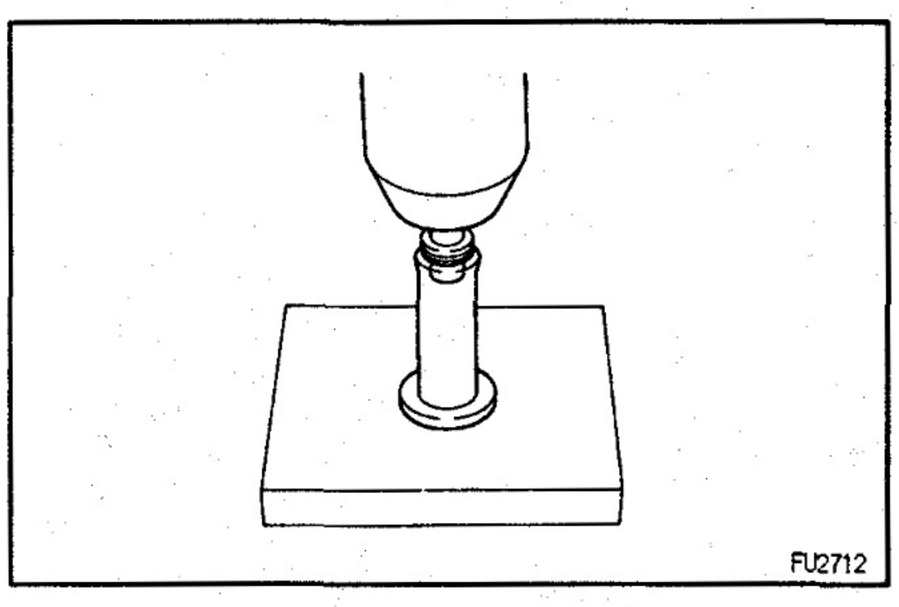

- Using a press, press in the sleeve plug assembly to the governor sleeve.

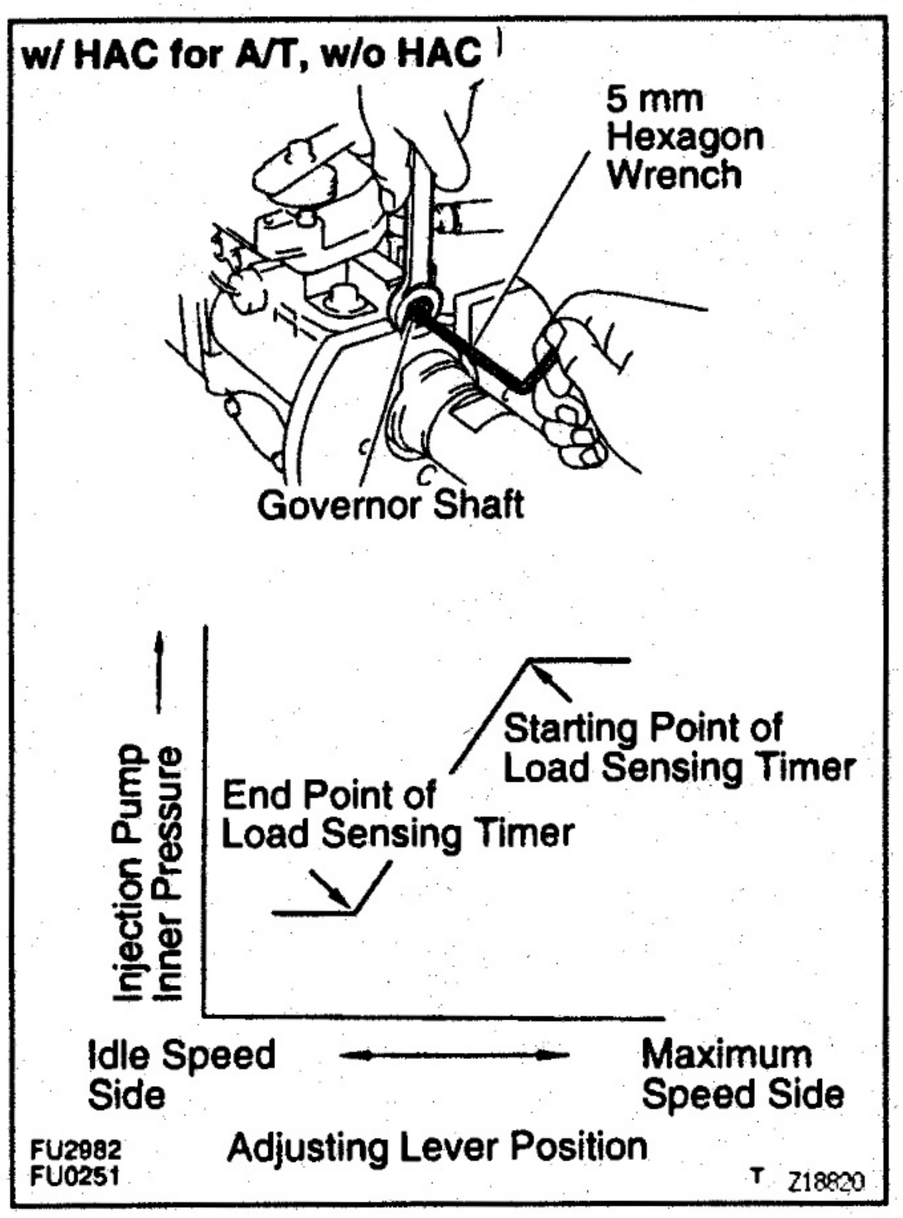

13. w/ HAC for A/T, w/o HAC:
ADJUST LOAD SENSING TIMER

(a) Using a 5 mm hexagon wrench, adjust the starting and end points of the load sensing timer by turning the governor shaft.

(b) Set the adjusting lever to maximum position.

(c) w/ HAC:
Apply 101 kPa (760 mmHg, 29.83 in.Hg) of vacuum to the high altitude compensator.

(d) Measure the injection volume.

Adjusting lever position	Pump rpm	No. of measuring strokes
Maximum speed side	1,200	200

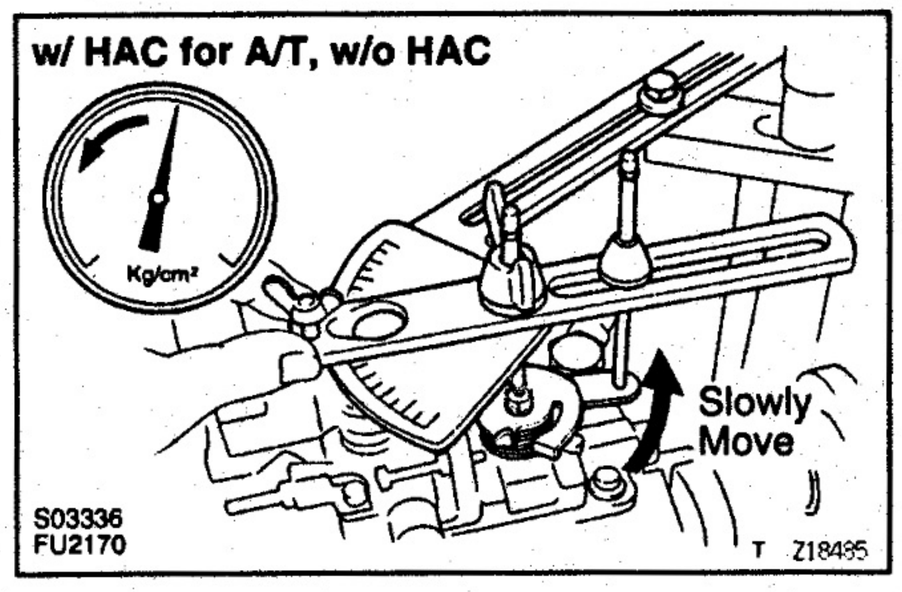

(e) Slowly move the adjusting lever from the maximum speed side to the idle speed side, and secure it at the point where the pump inner pressure begins to drop.

(f) Measure the injection volume at the drop point (starting point.

Pump rpm	No. of measuring strokes	Injection volume of each cylinder cc (cu in.)
1,200	200	Measured value at step (d) minus 1.0 (0.06) ± 0.4 (0.02)

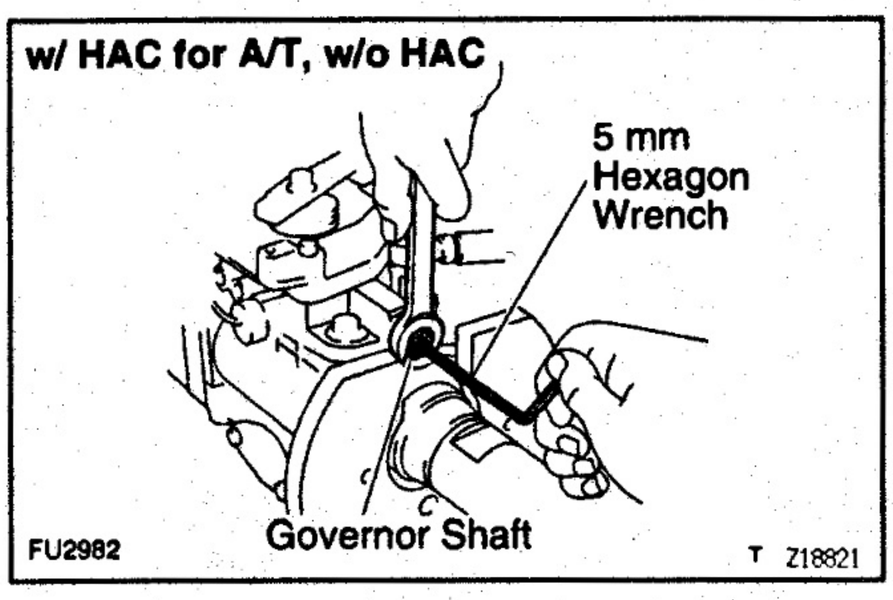

(g) Using a 5 mm hexagon wrench, adjust the load sensing timer by turning the governor shaft, and perform the measurement again as specified.
HINT: The injection volume will increase approx. 3 cc (0.2 cu in.) with each 1/2 turn of the governor shaft.

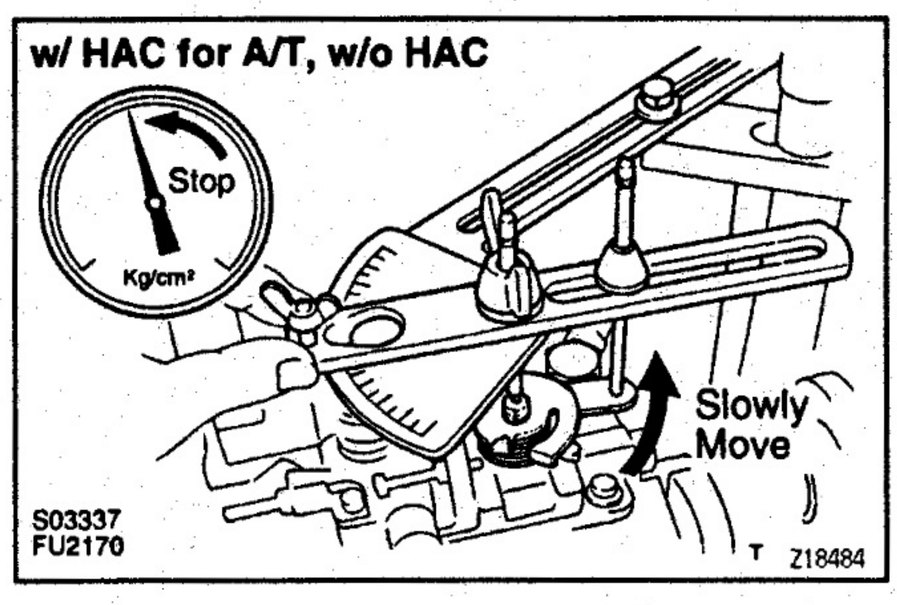

(h) Check the end point injection volume by slowly moving the adjusting lever from the maximum speed side to the idle speed side, and secure it at the point where the pump inner pressure stops dropping.

EG

2L w/ ACSD for w/ TCV for LN Europe:
(Part No. 22100—5B320, 5B360)

Pump rpm	No. of measuring strokes	Injection volume of each cylinder cc (cu in.)
1,200	200	9.0 — 9.4 (0.55 — 0.57)

2L w/ ACSD for w/ TCV for LN Thailand:
(Part No. 22100—5B320, 5B360)

Pump rpm	No. of measuring strokes	Injection volume of each cylinder cc (cu in.)
1,200	200	8.16 — 8.56 (0.50 — 0.52)

2L w/ ACSD for w/o TCV, w/o ACSD:
(Part No. 22100—54770, 54780, 5B170)

Pump rpm	No. of measuring strokes	Injection volume of each cylinder cc (cu in.)
1,200	200	8.38 — 8.78 (0.51 — 0.54)

2L w/o ACSD:
(Part No. 22100—5B060, 5B430)

Pump rpm	No. of measuring strokes	Injection volume of each cylinder cc (cu in.)
1,200	200	7.58 — 7.98 (0.46 — 0.49)

3L:
(Part No. 22100—54710, 5B030, 5B510)

Pump rpm	No. of measuring strokes	Injection volume of each cylinder cc (cu in.)
1,200	200	8.12 — 8.52 (0.50 — 0.52)

3L:
(Part No. 22100—54850, 54860, 5B121, 5B520)

Pump rpm	No. of measuring strokes	Injection volume of each cylinder cc (cu in.)
1,200	200	8.72 — 9.12 (0.53 — 0.56)

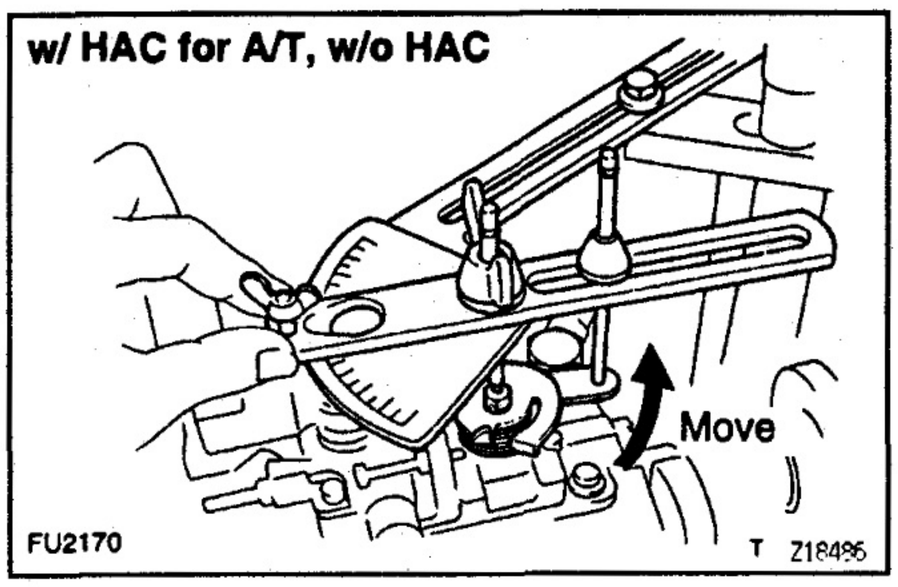

(i) Check the timer piston fluctuation when the adjusting lever is moved from the maximum speed side to the idle speed side.

2L w/ ACSD for w/ TCV:

(Part No. 22100–5B320, 5B360, 5B500, 5B590)

Pump rpm	Timer piston fluctuation mm (in.)
1,200	w/ TCV OFF 1.80 – 2.60 (0.0709 – 0.1024)

2L w/ ACSD for w/o TCV, w/o ACSD:

(Part No. 22100–54770, 54780, 5B060, 5B170, 5B430)

Pump rpm	Timer piston fluctuation mm (in.)
1,200	0.62 – 1.02 (0.0244 – 0.0402)

3L w/ ACSD for w/ TCV:

(Part No. 22100–5B520)

Pump rpm	Timer piston fluctuation mm (in.)
1,200	w/ TCV OFF 1.44 – 1.84 (0.0567 – 0.0724)

3L w/ ACSD for w/o TCV:

(Part No. 22100–5B510)

Pump rpm	Timer piston fluctuation mm (in.)
1,200	1.90 – 2.70 (0.0748 – 0.1063)

3L w/o ACSD:

(Part No. 22100–54710, 54850, 54860, 5B030, 5B121)

Pump rpm	Timer piston fluctuation mm (in.)
1,200	0.62 – 1.02 (0.0244 – 0.0402)

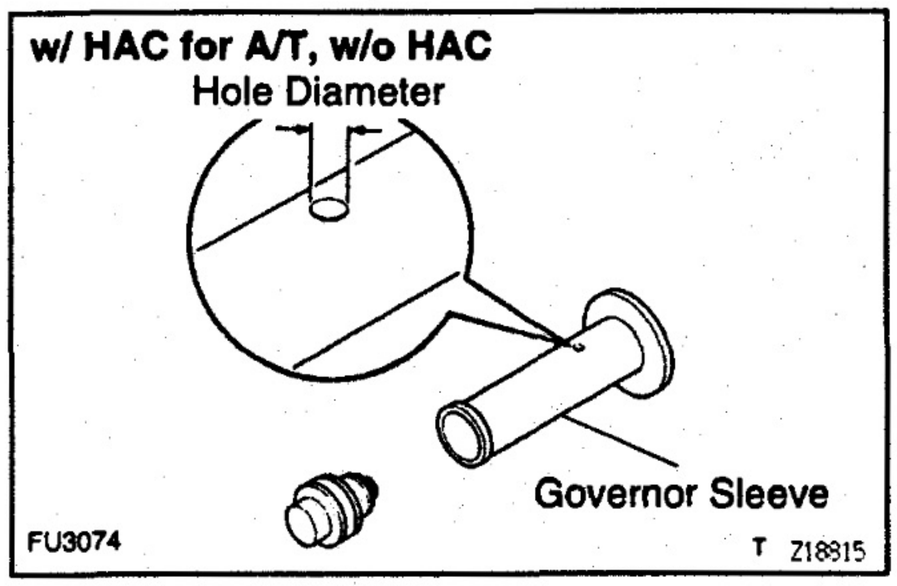

(j) If the timer stroke is not as specified when the load sensing is at maximum retard angle, select a new governor sleeve.

HINT: A large hole diameter decreases the timer stroke and a smaller hole diameter increases the timer stroke.

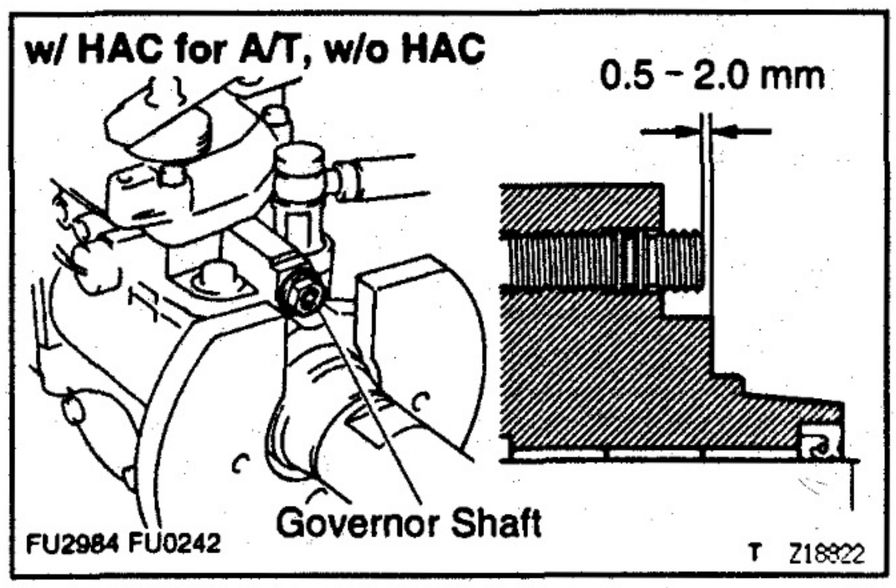

(k) Check the protrusion of the governor shaft.

Protrusion:

0.5 – 2.0 mm (0.020 – 0.079 in.)

14. ADJUST IDLE SPEED

(a) Measure the injection volume for each pump rpm.

2L for M/T:

(Part No. 22100—54770, 54780, 54800, 54810, 5B170, 5B320, 5B360, 5B590)

Adjusting lever angle	Pump rpm	No. of measuring strokes	Injection volume of each cylinder cc (cu in.)	Variation limit cc (cu in.)	Remark
Minus 12.5 - 22.5°	350	200	1.7 - 2.7 (0.10 - 0.16)	0.34 (0.02)	Adjust
	525		1.2 (0.07) or less	—	—

T V07880

2L for M/T:

(Part No. 22100—5B060, 5B430)

Adjusting lever angle	Pump rpm	No. of measuring strokes	Injection volume of each cylinder cc (cu in.)	Variation limit cc (cu in.)	Remark
Minus 12.5 - 22.5°	350	200	1.5 - 2.5 (0.09 - 0.15)	0.34 (0.02)	Adjust
	525		1.2 (0.07) or less	—	—

T V07881

2L for A/T:

(Part No. 22100—5B500)

Adjusting lever angle	Pump rpm	No. of measuring strokes	Injection volume of each cylinder cc (cu in.)	Variation limit cc (cu in.)	Remark
Minus 12.5 - 22.5°	350	200	1.7 - 2.7 (0.10 - 0.16)	0.34 (0.02)	Adjust
	575		1.2 (0.07) or less	—	—

T V08064

3L for M/T:

(Part No. 22100—54710, 54850, 54860, 54870, 54880, 5B030, 5B510, 5B520)

Adjusting lever angle	Pump rpm	No. of measuring strokes	Injection volume of each cylinder cc (cu in.)	Variation limit cc (cu in.)	Remark
Minus 12.5 - 22.5°	350	200	1.8 - 2.8 (0.11 - 0.17)	0.34 (0.02)	Adjust
	525		1.2 (0.07) or less	—	—

T V07882

3L for A/T:

(Part No. 22100—5B121)

Adjusting lever angle	Pump rpm	No. of measuring strokes	Injection volume of each cylinder cc (cu in.)	Variation limit cc (cu in.)	Remark
Minus 13.5 - 21.5°	400	200	q = 1.8 - 2.8 (0.11 - 0.17)	0.34 (0.02)	Adjust
	375		q plus 0.5 (0.03) or more	—	—
	475		q minus 0.7 - 1.7 (0.04 - 0.10)	—	—

T V07883

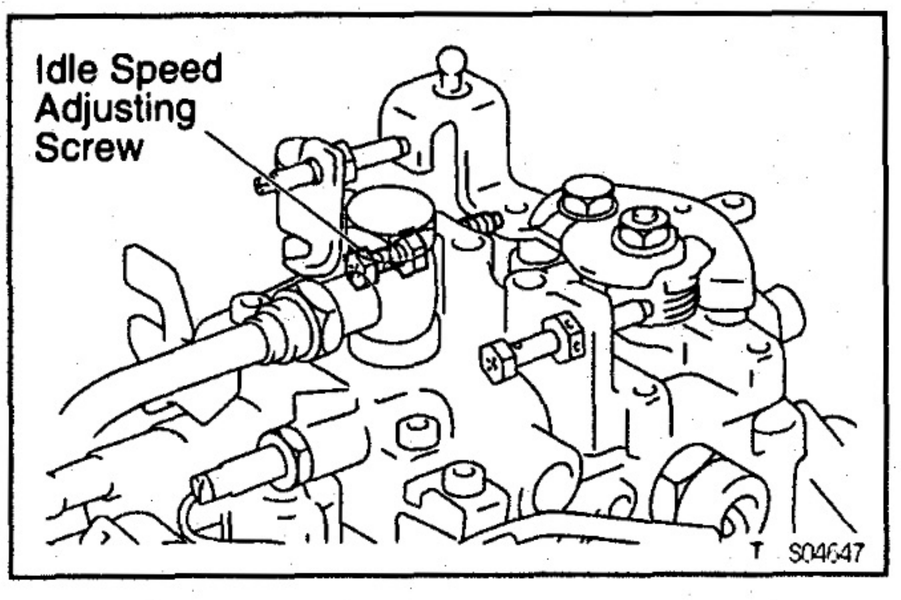

(b) Adjust injection volume by turning the idle speed adjusting screw.

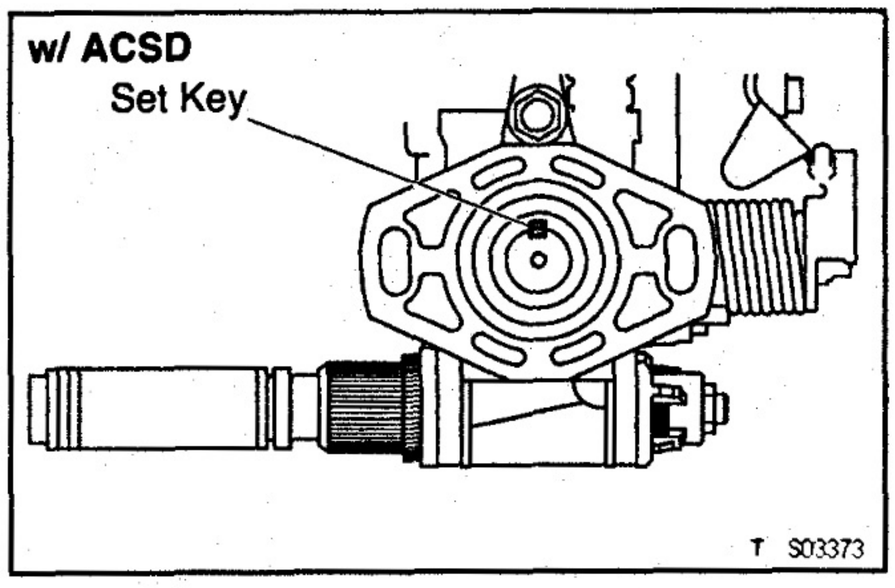

15. w/ ACSD:

ADJUST COLD STARTING SYSTEM

(a) Remove the overflow screw and check the fuel temperature in the fuel pump.

Fuel temperature:

15 – 35°C (59 – 95°F)

(b) Set the set key of the pump drive shaft in a vertical or horizontal position.

(c) Set the scale of the timer measuring device to zero.

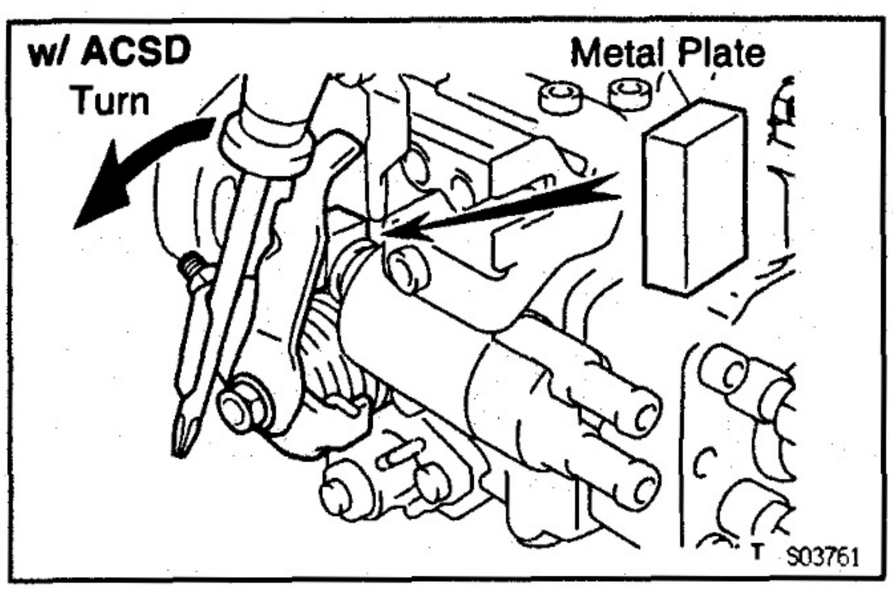

(d) Check the adjusting lever opening angle and consider this angle as zero.

(e) Remove the metal plate between the cold starting lever and thermo wax plunger.

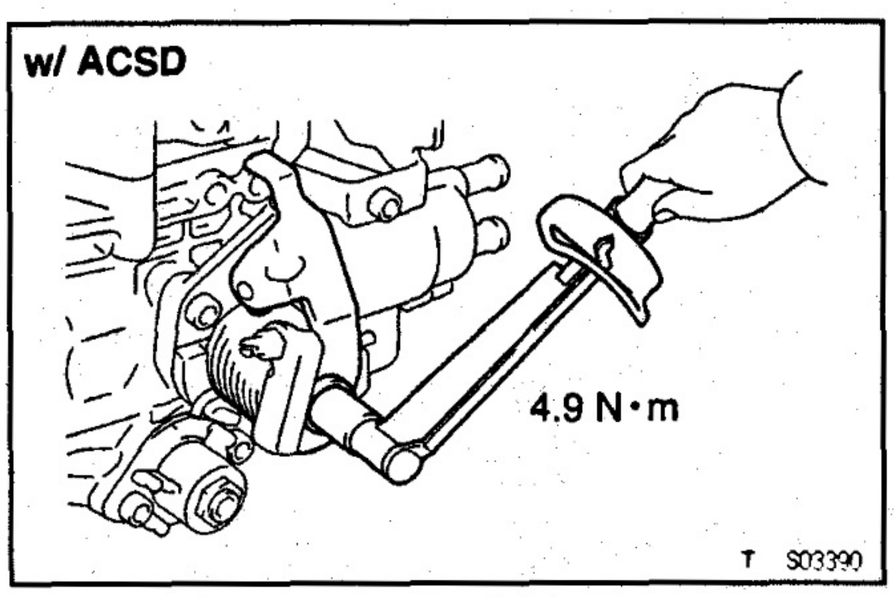

(f) Torque the cold starting lever clockwise to approx. 4.9 N·m (50 kgf·cm, 43 in.·lbf) and keep the lever tightened for about 10 seconds. Then release the torque.

(g) Measure the timer piston stroke.

2L for w/ TCV:

(Part No. 22100–5B320, 5B360, 5B500, 5B590)

Fuel temperature °C (°F)	Pump rpm	Piston strokes mm (in.)
25 (77)	350	1.50 – 1.90 (0.0591 – 0.0748)

2L for w/o TCV:

(Part No. 22100–5B170)

Fuel temperature °C (°F)	Pump rpm	Piston strokes mm (in.)
25 (77)	350	0.85 – 1.05 (0.0335 – 0.0413)

EG

3L:

(Part No. 22100–5B510, 5B520)

Fuel temperature °C (°F)	Pump rpm	Piston strokes mm (in.)
25 (77)	350	0.85 – 1.05 (0.0335 – 0.0413)

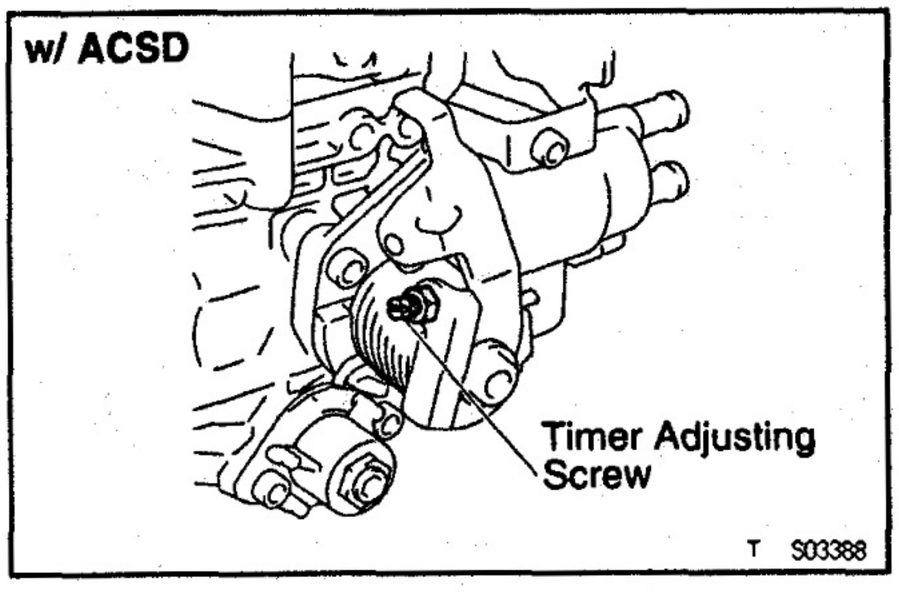

(h) Adjust by turning the timer adjusting screw.
HINT: Screw in for stroke decrease.

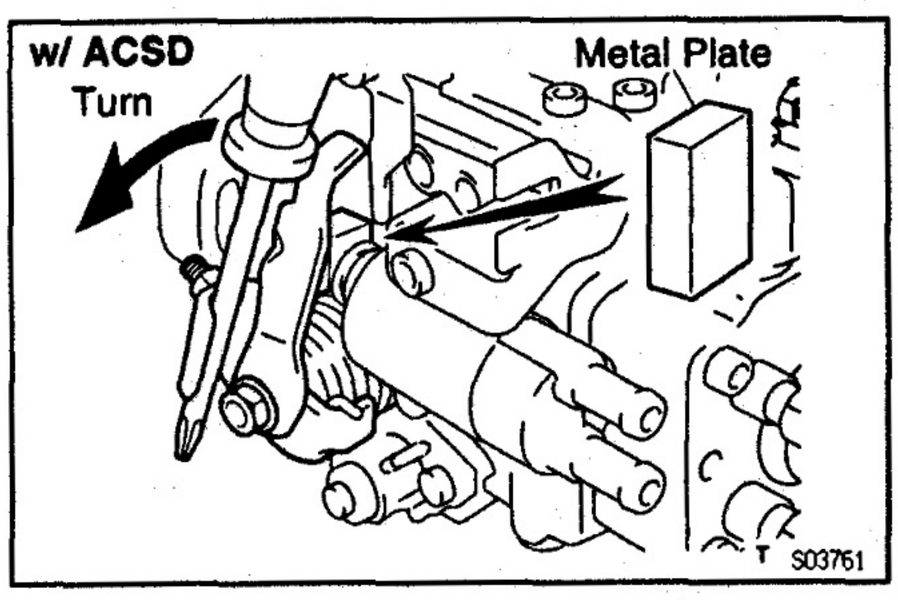

B970M–01

16. w/ ACSD:
ADJUST FAST IDLE SPEED

(a) Release the cold starting system.
- Using a screwdriver, turn the cold starting lever counterclockwise approx. 20°.
- Put a metal plate (thickness of 8.5 – 10.0 mm (0.335 – 0.394 in.)) between the cold starting lever and thermo wax plunger.

(b) Set the adjusting lever to idle position.

(c) Measure the injection volume.

2L:

Pump rpm	No. of measuring strokes	Injection volume of each cylinder cc (cu in.)
350	200	q = 1.7 – 2.7 (0.10 – 0.16)

3L:

Pump rpm	No. of measuring strokes	Injection volume of each cylinder cc (cu in.)
350	200	q = 1.8 – 2.8 (0.11 – 0.17)

(d) Remove the metal plate between the cold starting lever and thermo wax plunger.

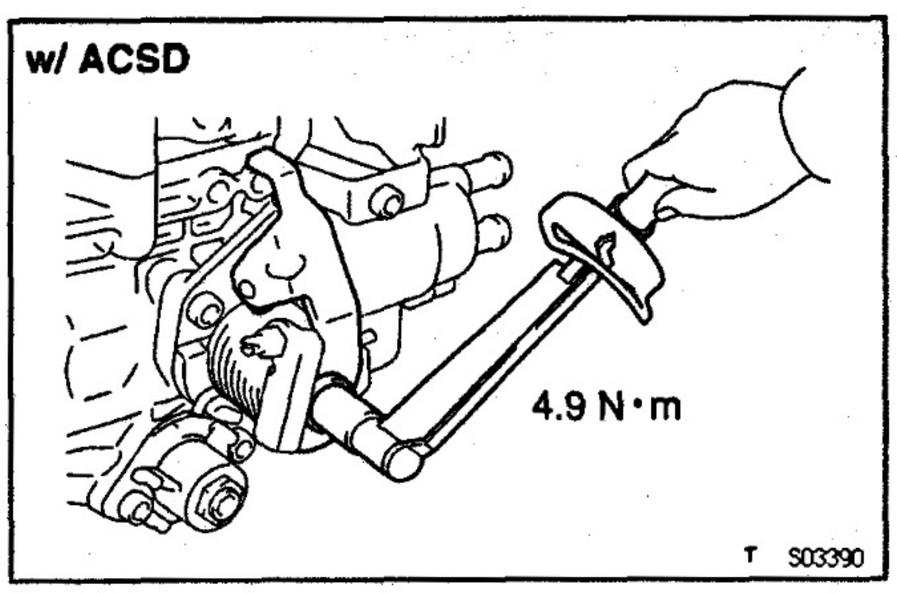

(e) Torque the cold starting lever clockwise to approx. 4.9 N·m (50 kgf·cm, 43 in.·lbf) and keep the lever tightened for about 10 seconds. Then release the torque.

(f) Measure the injection volume.

Pump rpm	No. of measuring strokes	Injection volume of each cylinder cc (cu in.)
350	200	q plus 2.0 – 2.2 (0.12 – 0.13)

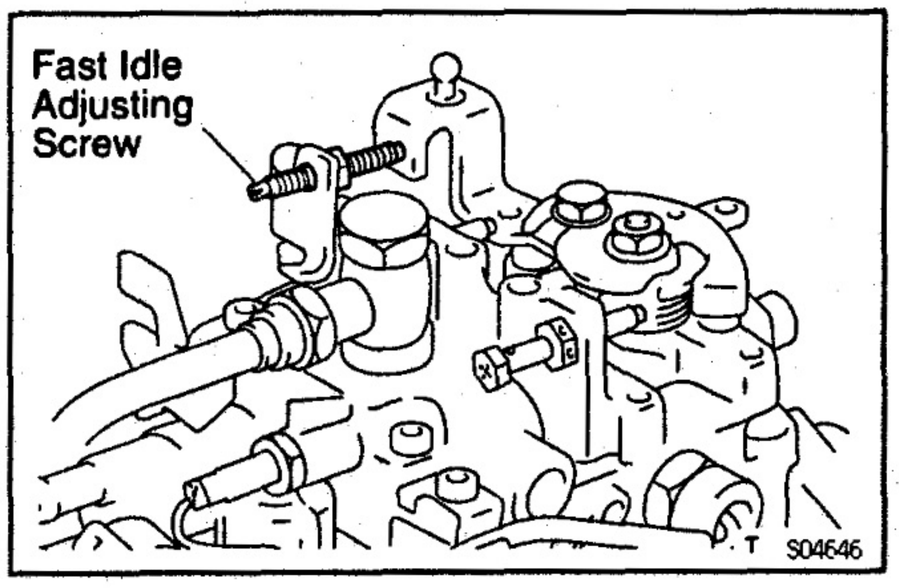

(g) Adjust the injection volume by turning the fast idle adjusting screw.

17. POST ADJUSTMENT CHECK

(a) Check that injection stops when the fuel cut solenoid harness is removed.

Pump revolution:

100 rpm

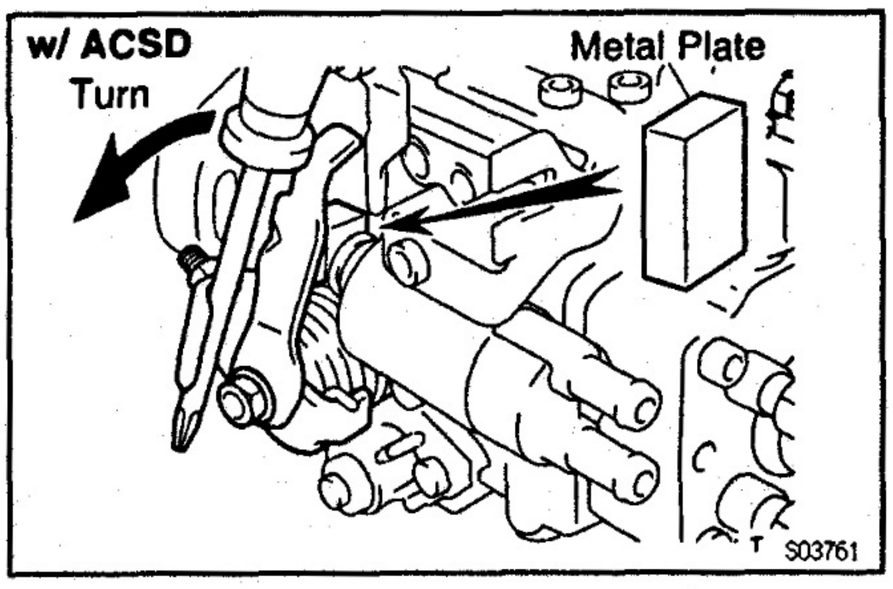

(b) w/ ACSD:

Release the cold starting system.

- Using a screwdriver, turn the cold starting lever counterclockwise approx. 20°.
- Put a metal plate (thickness of 8.5 – 10.0 mm (0.335 – 0.394 in.)) between the cold starting lever and thermo wax plunger.

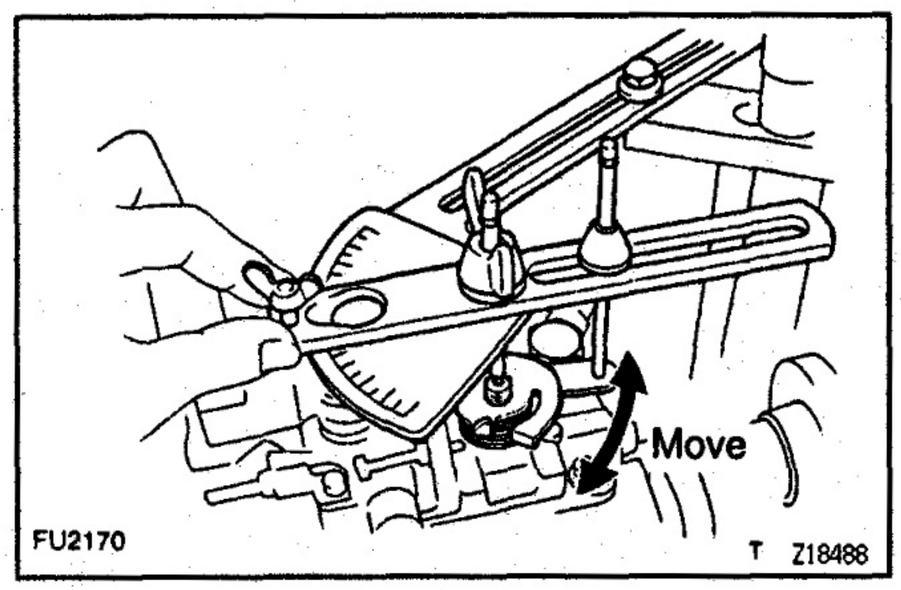

(c) Check the adjusting lever movement.

Adjusting lever angle:

M/T	43 – 49°
A/T	41 – 51°

(d) w/ ACSD:

Remove the metal plate between the cold starting lever and thermo wax plunger.

18. REMOVE INJECTION PUMP FROM PUMP TESTER

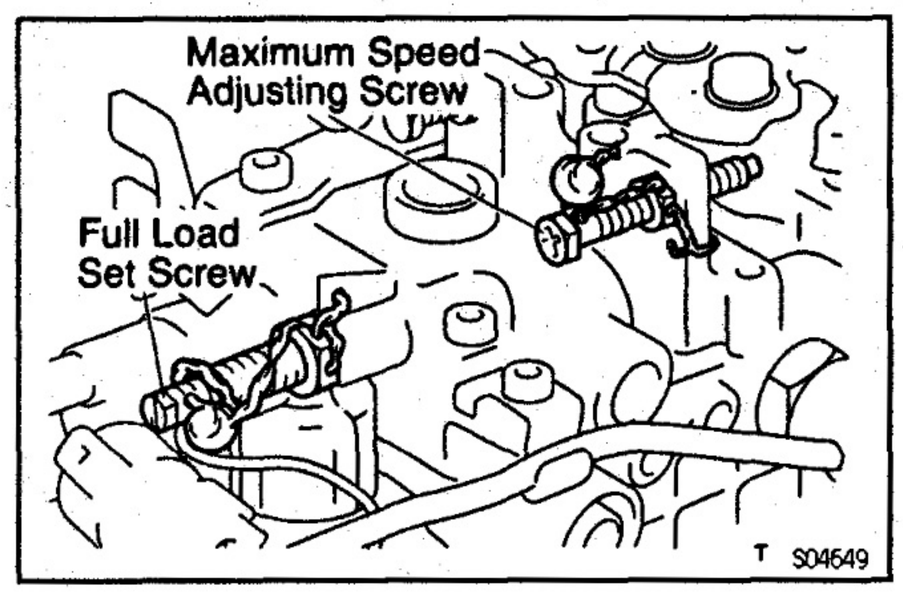

19. SEAL PARTS

Seal the full load set screw and maximum speed adjusting screw with new lead seals.

EG

B87DN-01

INJECTION PUMP INSTALLATION

1. INSTALL FUEL INLET PIPE TO INJECTION PUMP

(a) Install the inlet pipe with 2 new gaskets and the union bolt.
Torque: 24.55 N·m (250 kgf·cm, 18 ft·lbf)

(b) LJ, LN, LY:
Install the bolt for the pipe clamp.

2. INSTALL FUEL RETURN PIPE TO INJECTION PUMP

Install the return pipe with 2 new gaskets and the union bolt.
Torque: 24.55 N·m (250 kgf·cm, 18 ft·lbf)

3. INSTALL INJECTION PUMP

NOTICE (w/ HAC): Do not put the injection pump at an angle more than 45° from the horizontal.

(a) Align the matchmarks of the injection pump flange and timing gear case.

(b) Install the injection pump with the 2 nuts.
Torque: 20.5 N·m (210 kgf·cm, 15 ft·lbf)

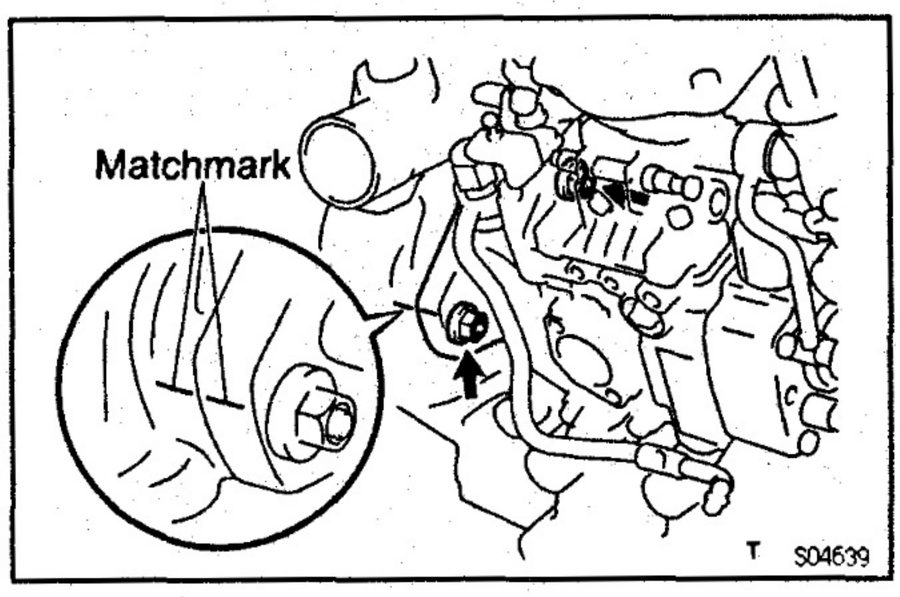

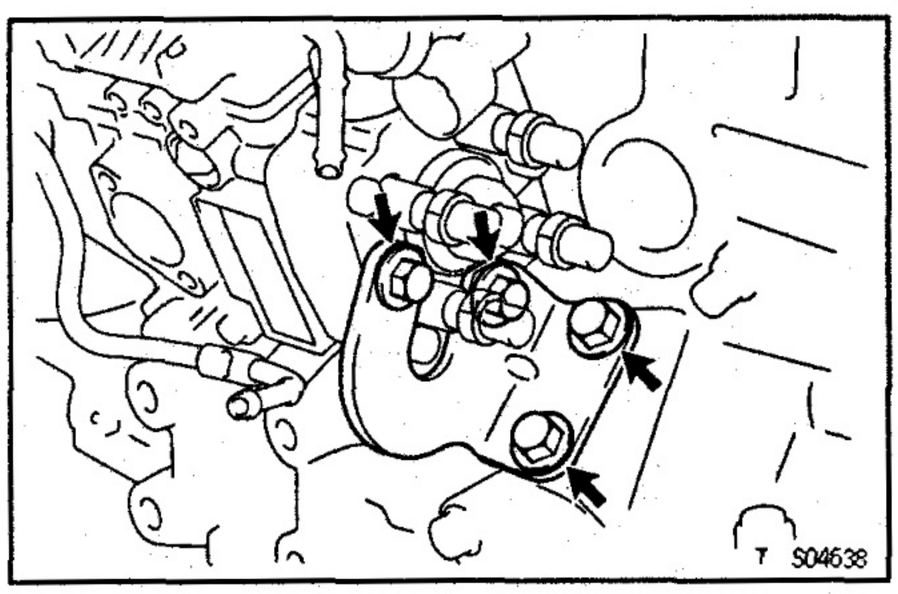

(c) Install the injection pump stay with the 4 bolts.
Torque: 18 N·m (185 kgf·cm, 13 ft·lbf)

4. INSTALL INJECTION PIPES

(See injection nozzles installation)

5. CONNECT HOSES, LINK AND CONNECTORS

Connect the hoses, link and connectors:

- Fuel inlet hose to fuel inlet pipe
- 2 fuel return hoses to fuel return pipe
- w/ ACSD:
  2 water bypass hoses to thermo wax
- w/ A/C:
  Vacuum hose to idle—up actuator
- Accelerator link to injection pump
- w/ TCV:
  Connector for timing control valve and fuel cut solenoid
- w/ TCV:
  Connector for pickup sensor
- w/o TCV:
  Connector for fuel cut solenoid and pickup sensor

6. INSTALL INJECTION PUMP DRIVE PULLEY

(See step 3 in timing belt installation in Engine Mechanical)

7. INSTALL TIMING BELT

(See steps 6 to 13 in timing belt installation in Engine Mechanical)

8. CHECK INJECTION TIMING
   (See injection timing inspection and adjustment in Engine Mechanical)
9. w/ ACSD:
   FILL WITH ENGINE COOLANT
10. START ENGINE AND CHECK FOR FUEL LEAKS
11. CHECK ENGINE IDLE SPEED AND MAXIMUM SPEED
    (See idle speed and maximum speed inspection and adjustment in Engine Mechanical)

SERVICE SPECIFICATIONS

SERVICE DATA

E061C-07

Fuel heater	Resistance	at 20°C (68°F)	0.5 — 2.0 Ω	
Injection nozzles	Nozzle opening pressure	New nozzle	14,810 — 15,590 kPa (151 — 159 kgf/cm², 2,148 — 2,262 psi)	
		Reused nozzle	13,729 — 15,690 kPa (140 — 160 kgf/cm², 1,991 — 2,276 psi)	
	Adjusting shim thickness		0.900 mm (0.0354 in.)	0.950 mm (0.0374 in.)
			1.000 mm (0.0394 in.)	1.050 mm (0.0413 in.)
			1.100 mm (0.0433 in.)	1.150 mm (0.0453 in.)
			1.200 mm (0.0472 in.)	1.250 mm (0.0492 in.)
			1.300 mm (0.0512 in.)	1.350 mm (0.0531 in.)
			1.400 mm (0.0551 in.)	1.450 mm (0.0571 in.)
			1.500 mm (0.0591 in.)	1.550 mm (0.0610 in.)
			1.600 mm (0.0630 in.)	1.650 mm (0.0650 in.)
			1.700 mm (0.0669 in.)	1.750 mm (0.0689 in.)
			1.800 mm (0.0709 in.)	1.850 mm (0.0728 in.)
			1.900 mm (0.0748 in.)	1.950 mm (0.0768 in.)
Injection pump	Direction of rotation		Clockwise as seen from drive side	
	Injection order		1 — 3 — 4 — 2 (A — B — C — D)	
	Plunger spring deviation		2.0 mm (0.079 in.)	
	Spring free length			
	Delivery valve spring		24.4 mm (0.961 in.)	
	Plunger spring		30.0 mm (1.181 in.)	
	Coupling spring		16.6 mm (0.654 in.)	
	Pneumatic bellows spring	w/ HAC	30.0 mm (1.181 in.)	
	Roller height variation		0.02 mm (0.0008 in.)	
	Fuel cut solenoid resistance	at 20°C (68°F)	9.5 — 11.9 Ω	
	Pickup sensor resistance	at 20°C (68°F)	650 — 970 Ω	
	Timer adjusting screw protrusion pre—setting		5.0 — 6.0 mm (0.197 — 0.236 in.)	
	Plunger spring shim thickness		0.5 mm (0.020 in.)	0.8 mm (0.031 in.)
			1.0 mm (0.039 in.)	1.2 mm (0.047 in.)
			1.5 mm (0.059 in.)	1.8 mm (0.071 in.)
			2.0 mm (0.079 in.)	

Injection pump (cont'd)	Plunger adjusting shim thickness	1.9 mm (0.075 in.)	2.0 mm (0.079 in.)
		2.1 mm (0.083 in.)	2.2 mm (0.087 in.)
		2.3 mm (0.091 in.)	2.4 mm (0.094 in.)
		2.5 mm (0.098 in.)	2.6 mm (0.102 in.)
		2.7 mm (0.106 in.)	2.8 mm (0.110 in.)
		2.9 mm (0.114 in.)	
	Flyweight holder thrust clearance	0.15 — 0.35 mm (0.0059 — 0.0138 in.)	
	Governor gear adjusting washer thickness	1.05 mm (0.0413 in.)	1.25 mm (0.0492 in.)
		1.45 mm (0.0571 in.)	1.65 mm (0.0650 in.)
		1.85 mm (0.0728 in.)	
	Governor shaft protrusion	0.5 — 2.0 mm (0.020 — 0.079 in.)	
	Governor sleeve plug head thickness	3.0 mm (0.118 in.)	3.1 mm (0.122 in.)
		3.2 mm (0.126 in.)	3.3 mm (0.130 in.)
		3.4 mm (0.134 in.)	3.5 mm (0.138 in.)
		3.6 mm (0.142 in.)	3.7 mm (0.146 in.)
		3.8 mm (0.150 in.)	3.9 mm (0.154 in.)
		4.0 mm (0.157 in.)	4.1 mm (0.161 in.)
		4.2 mm (0.165 in.)	

EG

EGOEE-2L

TORQUE SPECIFICATIONS

Part tightened		N·m	kgf·cm	ft·lbf
Fuel heater x Fuel filter cap	LH, LJ, LY	3.19	32.5	28 in.·lbf
Vacuum switch x Fuel filter cap	LN	36.8	375	27
Nozzle holder body x Nozzle holder retaining nut		46.58	475	42
Injection nozzle x Cylinder head		64	650	47
Nozzle leakage pipe x Injection nozzle		29.5	300	22
Injection pipe x Injection nozzle, Injection pump		24.5	250	18
Fuel inlet hollow screw x Injection pump body		36.8	375	27
Regulator valve x Injection pump body		8.85	90	78 in.·lbf
Feed pump cover x Injection pump body		2.45	25	22 in.·lbf
Timer cover, Governor cover x Injection pump body		8.35	85	74 in.·lbf
Timer adjusting screw x Timer cover		14.2	145	10
Governor link support bolt x Injection pump body		13.75	140	10
Connector bracket (w/ TCV), Distributive head x Injection pump body		11.75	120	9
Delivery valve holder x Distributive head		58.85	600	43
Distributive head plug x Distributive head		68.65	700	51
Bolt for control lever x Governor cover	w/ HAC	6.85	70	61 in.·lbf
Pneumatic bellows cover x Governor cover	w/ HAC	7.35	75	65 in.·lbf
Bolt for lever control spring x Governor cover	w/ HAC	11.3	115	8
No.2 adjusting lever x Governor adjusting shaft		8.35	85	74 in.·lbf
No.2 adjusting lever x No.1 adjusting lever		6.05	62	54 in.·lbf
Fuel cut solenoid x Distributive head		22.1	225	16
Lead wire x Fuel cut solenoid		1.7	17.5	15 in.·lbf
Connector bracket x Distributive head	w/o TCV	20.1	205	15
Pickup sensor x Injection pump body		20.6	210	15
Timing control valve x Injection pump body	w/ TCV	8.35	85	74 in.·lbf
Lead wire x Timing control valve	w/ TCV	1.7	17.5	15 in.·lbf

Overflow pipe x Injection pump body w/ TCV Upper union bolt	14.2	145	10
Lower union bolt	19.6	200	14
Overflow pipe clamp x Injection pump body, Connector bracket w/ TCV	8.35	85	74 in.·lbf
Thermo wax x Injection pump body	8.35	85	74 in.·lbf
Idle–up lever x Governor cover, Injection pump body w/ ACSD	8.35	85	74 in.·lbf
Idle–up actuator x Governor cover w/o ACSD for w/ A/C	8.35	85	74 in.·lbf
Fuel inlet pipe, Fuel return pipe x Injection pump	24.55	250	18
Injection pump x Timing belt case	20.5	210	15
Injection pump stay x Injection pump, Cylinder block	18	185	13

COOLING SYSTEM

PREPARATION

SST (SPECIAL SERVICE TOOLS)

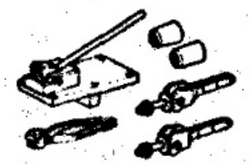	09230–00010 Radiator Service Tool Set	LY
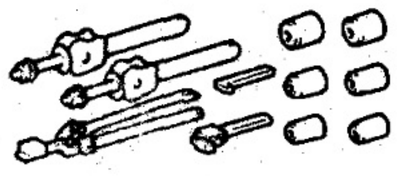	09230–01010 Radiator Service Tool Set	
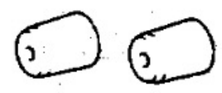	(09231–00060) No.3 Plug	For inspection water leakage
	09236–00101 Water Pump Overhaul Tool Set	
	(09237–00010) Water Pump Bearing Remover & Replacer	
	(09237–00050) Shaft "B"	

9812W–0U

EQUIPMENT

Heater	
Radiator cap tester	
Thermometer	
Torque wrench	
Vernier caliper	

9812X–13

COOLANT

Item	Capacity	Classification
Engine coolant/LJ		Ethylene–glycol base
w/ Front and rear heaters	11.0 liters (11.6 US qts, 9.7 Imp. qts)	
w/ Front heater	10.0 liters (10.6 US qts, 8.8 Imp. qts)	
w/o Heater	9.3 liters (9.8 US qts, 8.2 Imp. qts)	
Engine coolant/LH		Ethylene–glycol base
w/ Front and rear heaters	11.0 liters (11.6 US qts, 9.7 Imp. qts)	
w/ Front Heater	9.5 liters (10.0 US qts, 8.4 Imp. qts)	
w/o Heater	8.5 liters (9.0 US qts, 7.5 Imp. qts)	
Engine coolant/LN 2WD		Ethylene–glycol base
2L	9.2 liters (9.7 US qts, 8.1 Imp. qts)	
3L M/T	8.9 liters (9.4 US qts, 7.8 Imp. qts)	
3L A/T	8.8 liters (9.3 US qts, 7.7 Imp. qts)	

Engine coolant/LN 4WD		Ethylene–glycol base
2L	9.3 liters (9.8 US qts, 8.2 Imp. qts)	
3L w/ Heater	9.0 liters (9.5 US qts, 7.9 Imp. qts)	
w/o Heater	8.1 liters (8.5 US qts, 7.1 Imp. qts)	
Engine coolant/LY		Ethylene–glycol base
2L w/ Heater	10.4 liters (11.0 US qts, 9.2 Imp. qts)	
w/o Heater	9.5 liters (10.0 US qts, 8.4 Imp. qts)	
3L Europe w/ Heater	10.8 liters (11.4 US qts, 9.5 Imp. qts)	
w/o Heater	9.9 liters (10.5 US qts, 8.7 Imp. qts)	
3L Australia	11.1 liters (11.7 US qts, 9.8 Imp. qts)	
3L Others	10.2 liters (10.8 US qts, 9.0 Imp. qts)	

EG12S–0P

SSM (SERVICE SPECIAL MATERIALS)

08833–00070	Adhesive 1324, THREE BOND 1324 or equivalent	Engine coolant drain plug

COOLANT CHECK

EG65N–04

HINT: Check the coolant level when the engine is cold.

1. **CHECK ENGINE COOLANT LEVEL AT RADIATOR RESERVOIR**

   The engine coolant level should be between the "L" and "F" lines.

   If low, check for leaks and add engine coolant up to the "F" line.

2. **CHECK ENGINE COOLANT QUALITY**

   (a) Remove the radiator cap.

   CAUTION: To avoid the danger of being burned, do not remove the radiator cap while the engine and radiator are still hot, as fluid and steam can be blown out under pressure.

   (b) There should not be any excessive deposits of rust or scale around the radiator cap or water filler hole, and the coolant should be free from oil.

   If excessively dirty, replace the coolant.

   (c) Reinstall the radiator cap.

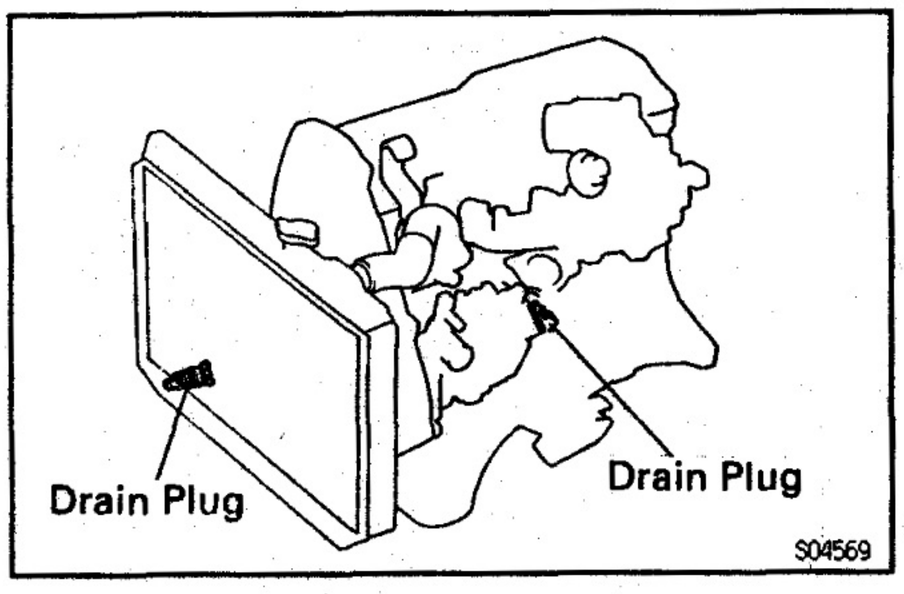

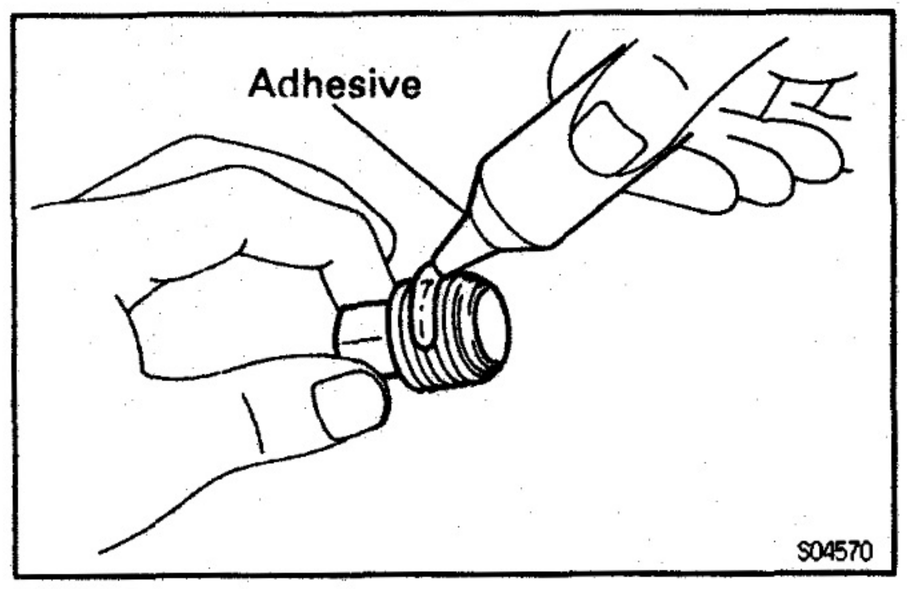

COOLANT REPLACEMENT

E0618-03

1. DRAIN ENGINE COOLANT

(a) Remove the radiator cap.

CAUTION: To avoid the danger of being burned, do not remove the radiator cap while the engine and radiator are still hot, as fluid and steam can be blown out under pressure.

(b) Loosen the radiator drain plug (on the radiator lower tank) and engine drain plug (on the right side of the cylinder block), and drain the coolant.

(c) Apply adhesive to 2 or 3 threads of the engine drain plug.

Adhesive:

Part No. 08833—00070, THREE BOND 1324 or equivalent

(d) Close the drain plugs.

Torque (Engine): 29 N·m (300 kgf·cm, 22 ft·lbf)

2. FILL ENGINE COOLANT

(a) Slowly fill the system with coolant.

- Use a good brand of ethylene—glycol base coolant and mix it according to the manufacturer's directions.
- Using coolant which includes more than 50 % ethylene—glycol (but not more than 70 %) is recommended.

NOTICE:

- **Do not use an alcohol type coolant.**
- **The coolant should be mixed with demineralized water or distilled water.**

Coolant capacity:

LJ	
w/ Front and rear heaters	11.0 liters (11.6 US qts, 9.7 Imp. qts)
w/ Front heater	10.0 liters (10.6 US qts, 8.8 Imp. qts)
w/o Heater	9.3 liters (9.8 US qts, 8.2 Imp. qts)
LH	
w/ Front and rear heaters	11.0 liters (11.6 US qts, 9.7 Imp. qts)
w/ Front heater	9.5 liters (10.0 US qts, 8.4 Imp. qts)
w/o Heater	8.5 liters (9.0 US qts, 7.5 Imp. qts)
LN 2WD	
2L	9.2 liters (9.7 US qts, 8.1 Imp. qts)
3L M/T	8.9 liters (9.4 US qts, 7.8 Imp. qts)
3L A/T	8.8 liters (9.3 US qts, 7.7 Imp. qts)

LN 4WD		
2L		9.3 liters (9.8 US qts, 8.2 Imp. qts)
3L	w/ Heater	9.0 liters (9.5 US qts, 7.9 Imp. qts)
	w/o Heater	8.1 liters (8.5 US qts, 7.1 Imp. qts)
LY		
2L	w/ Heater	10.4 liters (11.0 US qts, 9.2 Imp. qts)
	w/o Heater	9.5 liters (10.0 US qts, 8.4 Imp. qts)
3L Europe	w/ Heater	10.8 liters (11.4 US qts, 9.4 Imp. qts)
	w/o Heater	9.9 liters (10.5 US qts, 8.7 Imp. qts)
3L Australia		11.1 liters (11.7 US qts, 9.8 Imp. qts)
3L Others		10.2 liters (10.8 US qts, 9.0 Imp. qts)

(b) Install the radiator cap.

(c) Start the engine, and bleed the cooling system.

- Open the heater water valve.
- Warm up the engine.
- Stop the engine, and wait until the engine coolant cools down.
- Refill the radiator reservoir with coolant until it reaches the "F" line.

3. CHECK ENGINE COOLANT FOR LEAKS

WATER PUMP
COMPONENTS FOR REMOVAL AND INSTALLATION

E07AL-01

EG

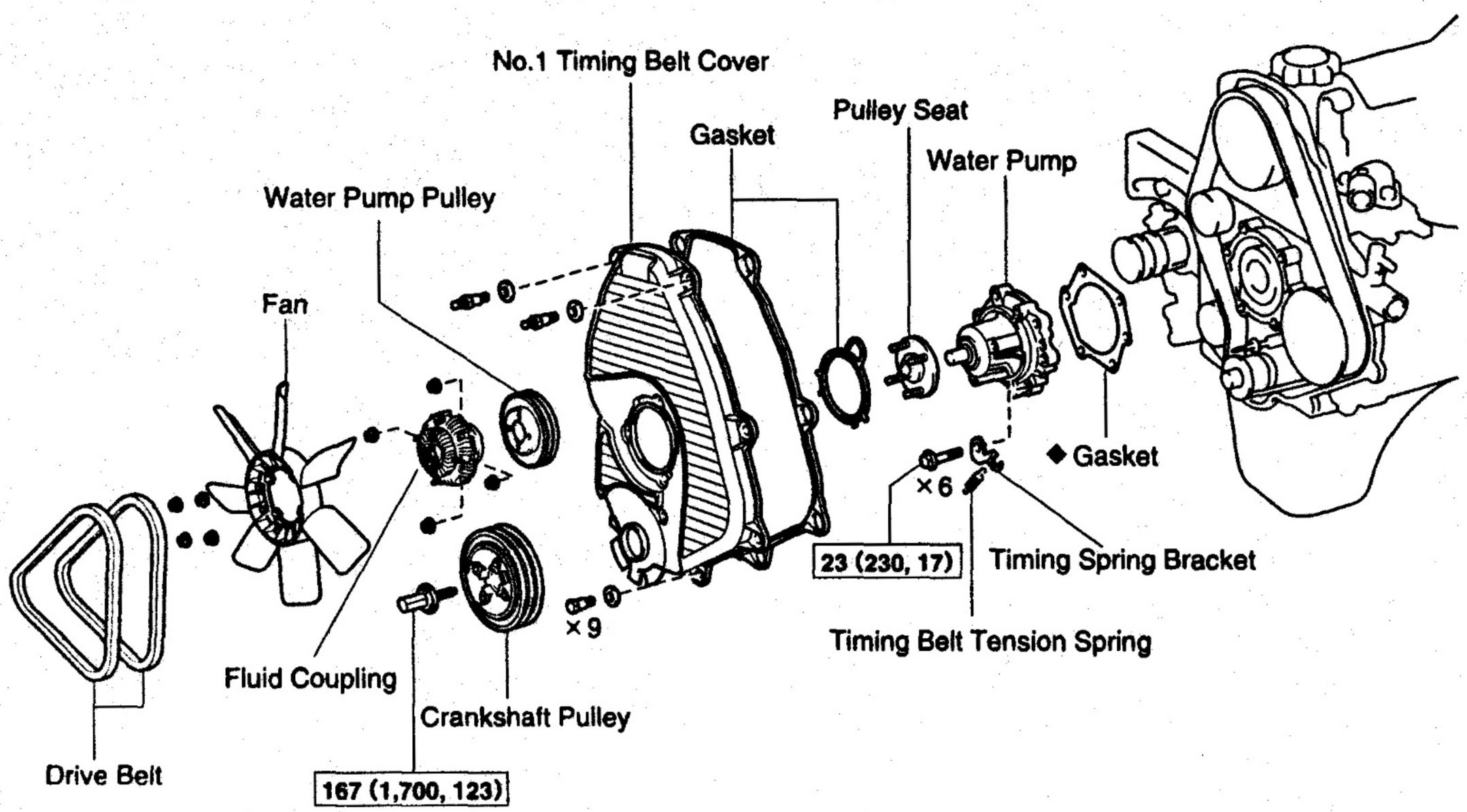

N·m (kgf·cm, ft·lbf): Specified torque
◆ Non-reusable part

T S04370

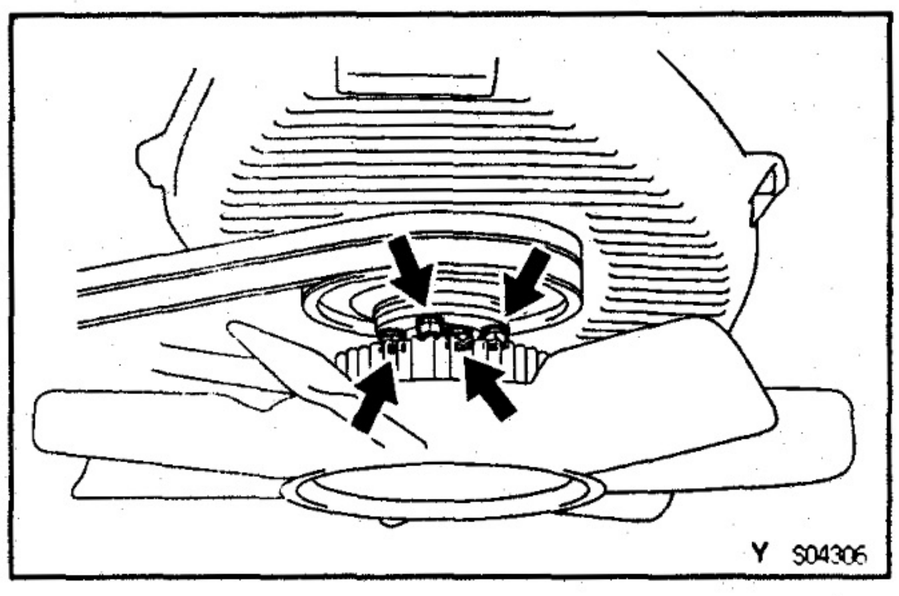

Y S04306

E03AS-02

WATER PUMP REMOVAL

1. **DRAIN ENGINE COOLANT**
2. **REMOVE DRIVE BELTS, FAN, FLUID COUPLING AND WATER PUMP PULLEY**
(a) Loosen the 4 water pump pulley nuts.
(b) Loosen the alternator pivot bolt and adjusting lock bolt.
(c) Loosen the adjusting bolt, and remove the 2 drive belts.
(d) Remove the 4 nuts, the fan, fluid coupling assembly and pulley.
(e) Remove the 4 nuts and fan from the fluid coupling.
3. **REMOVE CRANKSHAFT PULLEY AND NO.1 TIMING BELT COVER**
(See steps 3 and 4 in timing belt removal in Engine Mechanical)
4. **REMOVE TIMING BELT TENSION SPRING**
Using needle nose pliers, remove the tension spring.

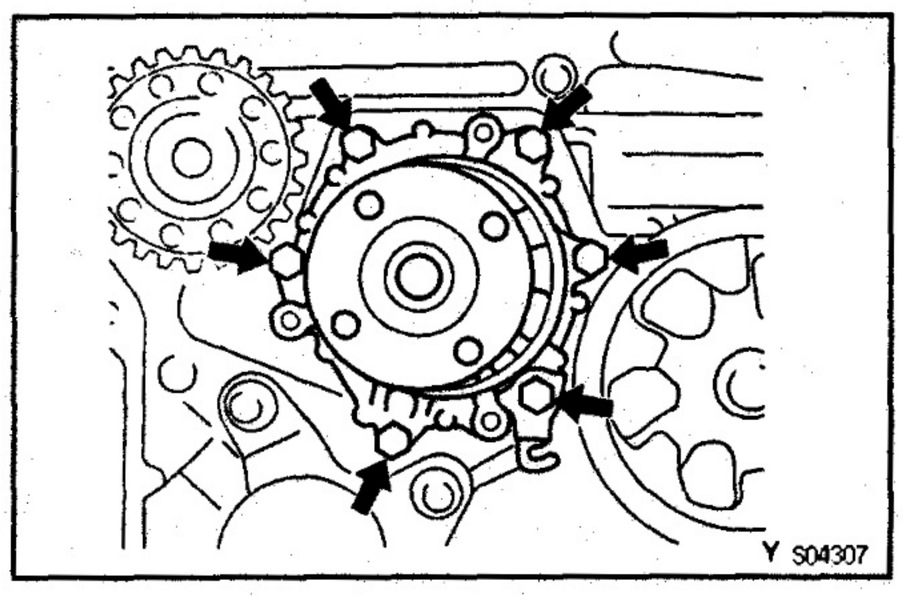

5. REMOVE WATER PUMP

Remove the 6 bolts, tension spring bracket, water pump and gasket.

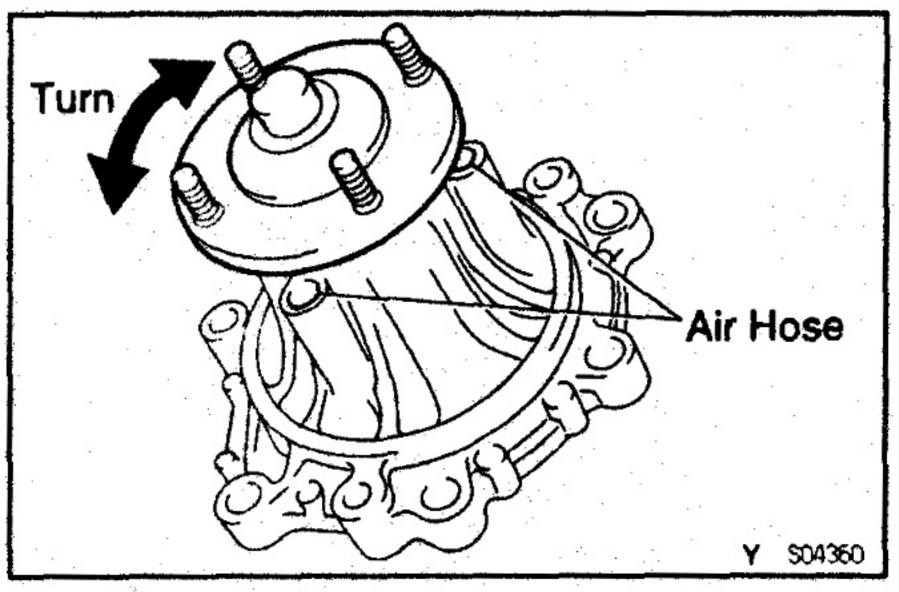

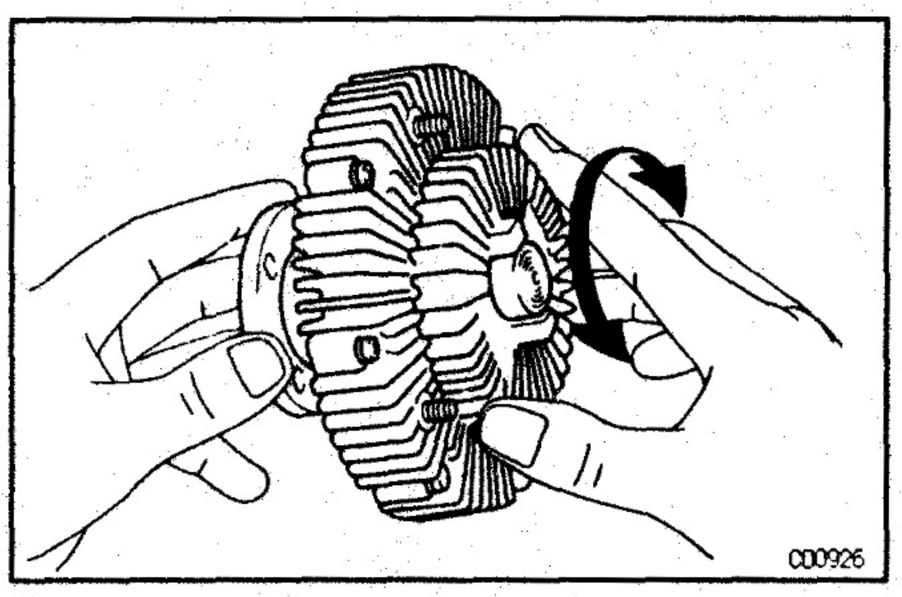

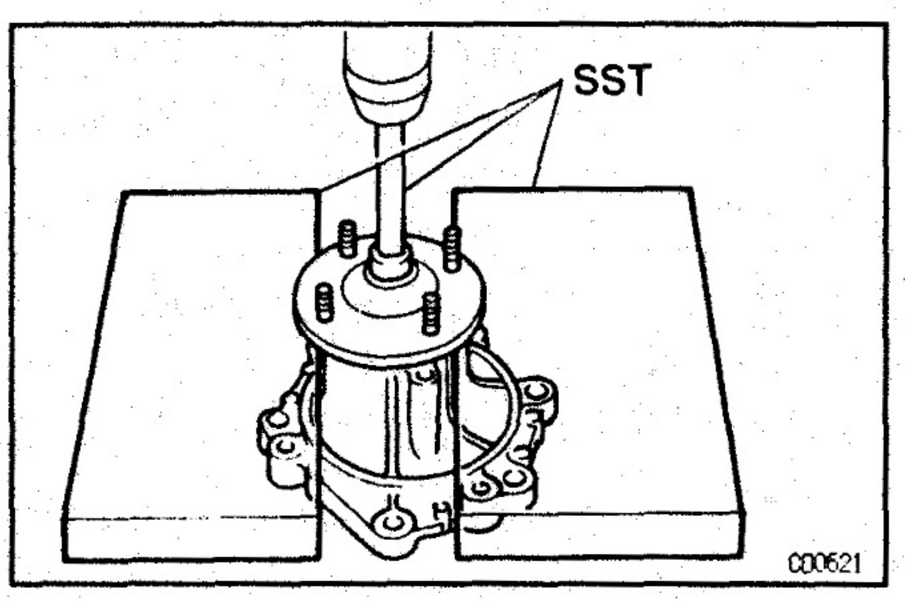

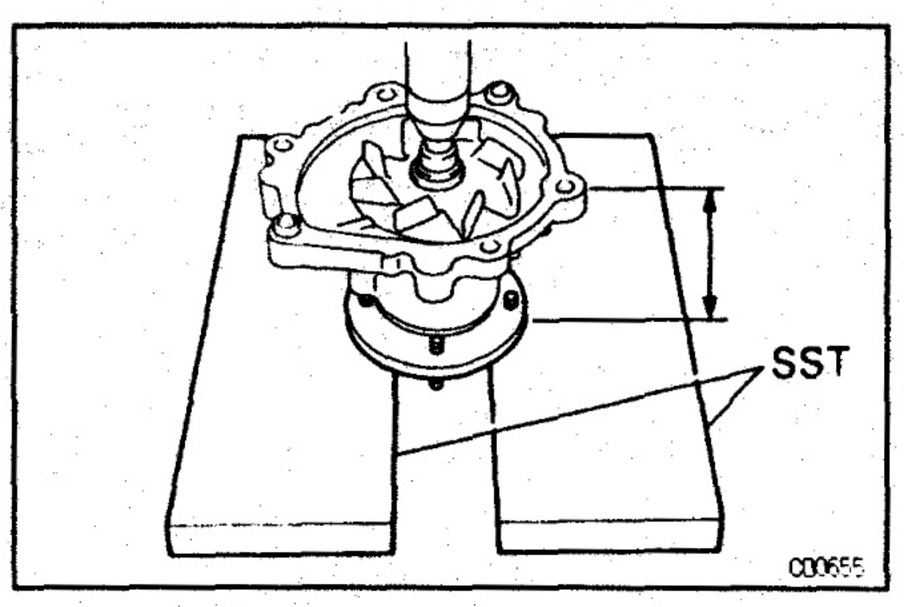

WATER PUMP INSPECTION

1. INSPECT WATER PUMP

(a) Visually check the air holes for coolant leakage.
If leakage is found, replace the water pump.
If engine coolant has leaked onto the timing belt, replace the timing belt.

(b) Turn the pulley and check that the water pump bearing moves smoothly and quietly.
If necessary, replace the water pump.

2. INSPECT FLUID COUPLING

Check the fluid coupling for damage and silicon oil leakage.
If necessary, replace the fluid coupling.

3. REPLACE PULLEY SEAT

(a) Using SST and a press, press the shaft of the bearing and remove the pulley seat.
SST 09236–00101 (09237–00010, 09237–00050)

(b) Using SST and a press, press the shaft of the bearing and install a new pulley seat to a distance of 76.5 – 77.5 mm (3.012 – 3.051 in.) between the pulley seat and pump body.
SST 09236–00101 (09237–00010)

TIMING BELT COMPONENTS INSPECTION

(See timing belt in Engine Mechanical)

EG

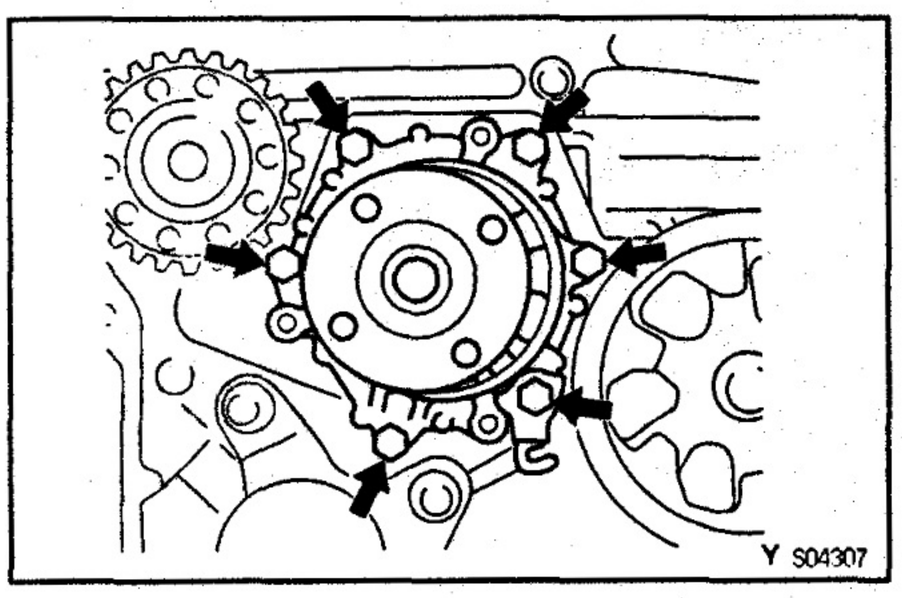

WATER PUMP INSTALLATION

1. **INSTALL WATER PUMP**
   Install a new gasket, the water pump and tension spring bracket with the 6 bolts.
   Torque: 23 N·m (230 kgf·cm, 17 ft·lbf)

2. **INSTALL TIMING BELT TENSION SPRING**
   Using needle nose pliers, install the tension spring.
3. **INSTALL NO.1 TIMING BELT COVER AND CRANKSHAFT PULLEY**
   (See steps 10 and 11 in timing belt installation in Engine Mechanical)

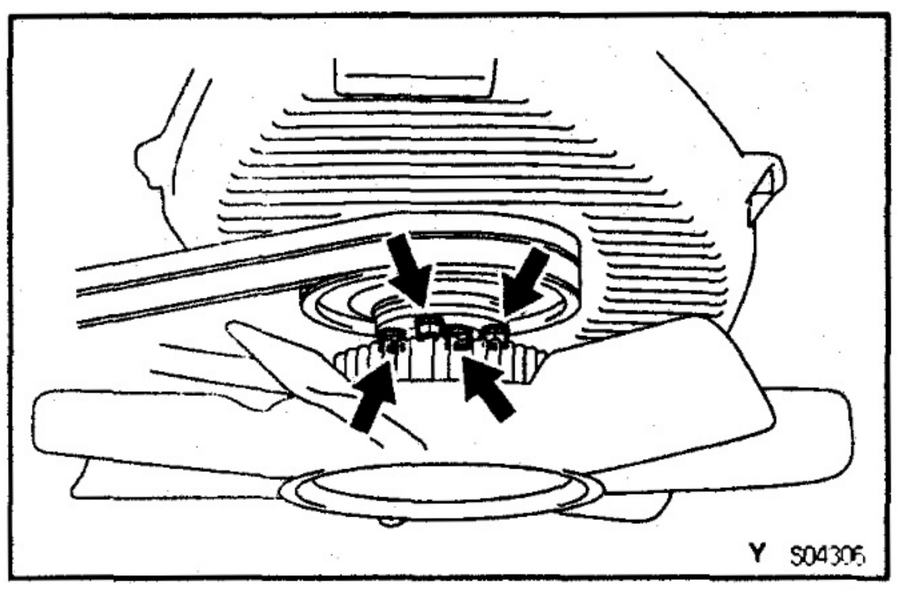

4. **INSTALL WATER PUMP PULLEY, FLUID COUPLING, FAN AND DRIVE BELTS**
   (a) Install the fan to the fluid coupling with the 4 nuts.
   Torque: 6.5 N·m (65 kgf·cm, 57 in.·lbf)
   (b) Temporarily install the pump pulley, the fan and fluid coupling assembly with the 4 nuts.
   (c) Install and adjust the drive belts.
   (d) Stretch the belts tighten the 4 water pump pulley nuts.
   Torque: 12 N·m (120 kgf·cm, 9 ft·lbf)
5. **FILL WITH ENGINE COOLANT**
6. **START ENGINE, AND CHECK FOR COOLANT LEAKS**

THERMOSTAT

COMPONENTS FOR REMOVAL AND INSTALLATION

B0130-1K

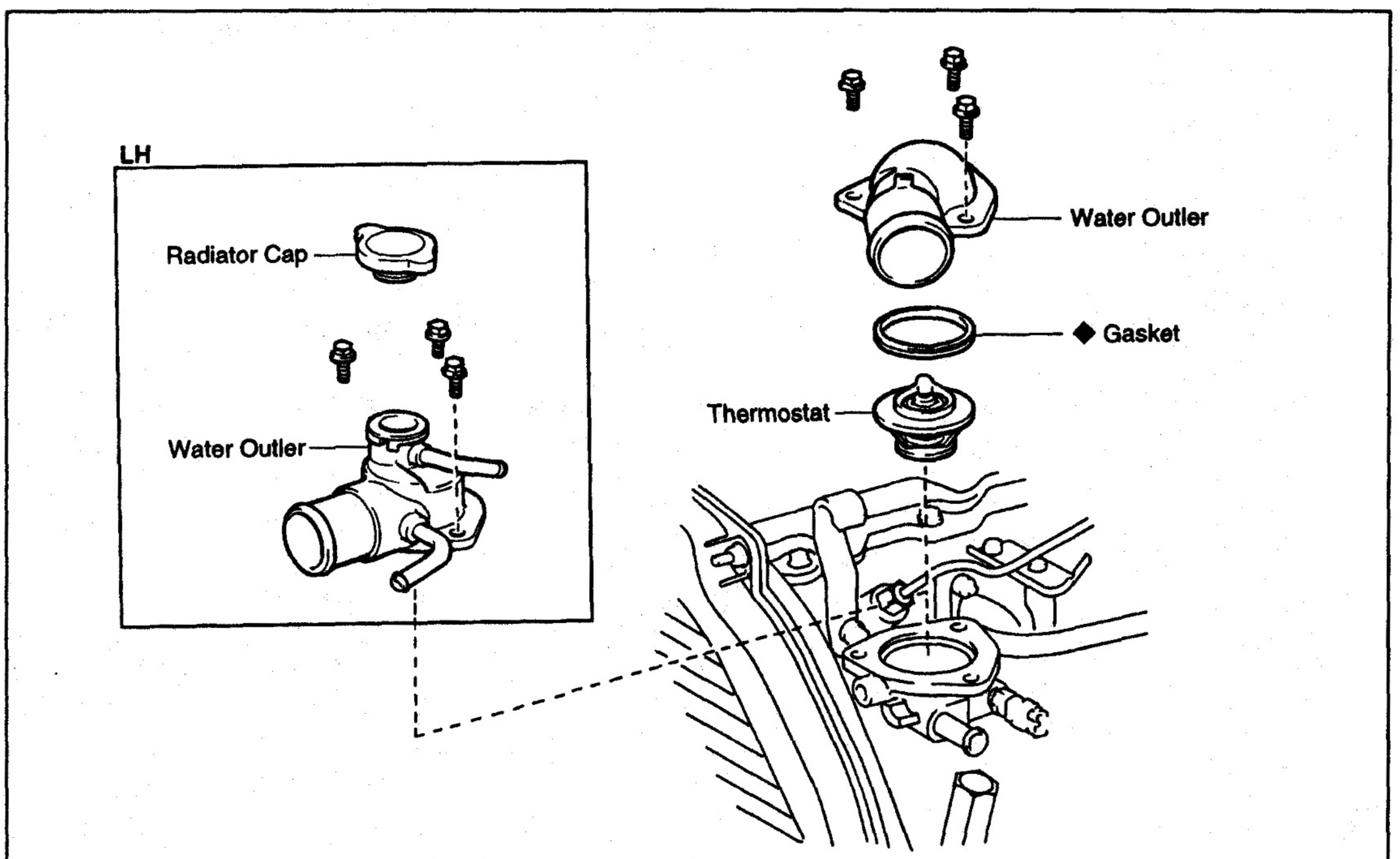

B0683-03

THERMOSTAT REMOVAL

HINT: Removal of the thermostat would have an adverse effect, causing a lowering of cooling efficiency. Do not remove the thermostat, even if the engine tends to overheat.

1. **DRAIN ENGINE COOLANT**
2. **REMOVE WATER OUTLET AND THERMOSTAT**

(a) Remove the 3 bolts, water outlet and thermostat.

(b) Remove the gasket from the thermostat.

B0134-0P

THERMOSTAT INSPECTION

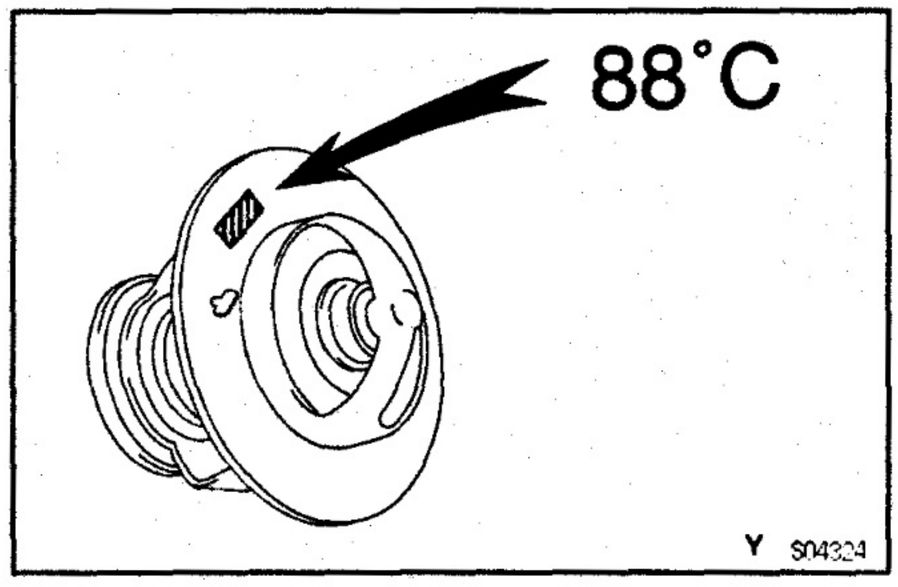

INSPECT THERMOSTAT

HINT: The thermostat is numbered with the valve opening temperature.

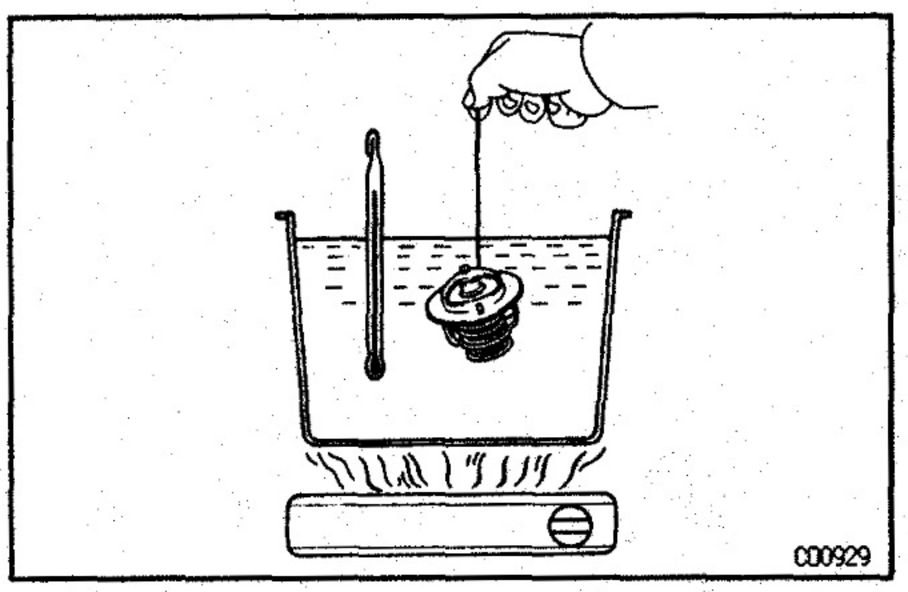

(a) Immerse the thermostat in water and gradually heat the water.

(b) Check the valve opening temperature.

Valve opening temperature:

86 – 90°C (187 – 194°F)

If the valve opening temperature is not as specified, replace the thermostat.

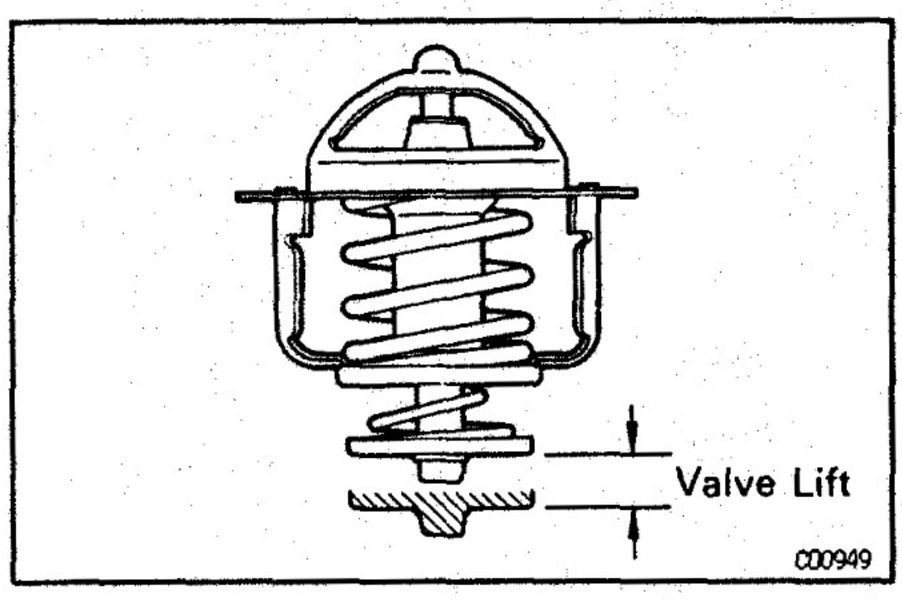

(c) Check the valve lift.

Valve lift:

8 mm (0.31 in.) or more at 100°C (212°F)

If the valve lift is not as specified, replace the thermostat.

(d) Check that the valve is fully closed when the thermostat is at low temperatures (below 40°C (104°F)).
If not closed, replace the thermostat.

THERMOSTAT INSTALLATION

B87AP-01

1. PLACE THERMOSTAT IN WATER OUTLET HOUSING

(a) Install a new gasket to the thermostat.

(b) Insert the thermostat in the water outlet housing.

2. INSTALL WATER OUTLET AND THERMOSTAT

Install the water outlet and thermostat with the 3 bolts.

Torque: 19 N·m (195 kgf·cm, 14 ft·lbf)

3. FILL WITH ENGINE COOLANT

4. START ENGINE AND CHECK FOR LEAKS

RADIATOR

RADIATOR CLEANING

887AG-02

Using water or a steam cleaner, remove any mud and dirt from the radiator core.

NOTICE: If using a high pressure type cleaner, be careful not to deform the fins of the radiator core. (i.e. Maintain a distance between the cleaner nozzle and radiator core.)

EG

RADIATOR INSPECTION

1. REMOVE RADIATOR CAP

CAUTION: To avoid the danger of being burned, do not remove the radiator cap while the engine and radiator are still hot, as fluid and steam can be blown out under pressure.

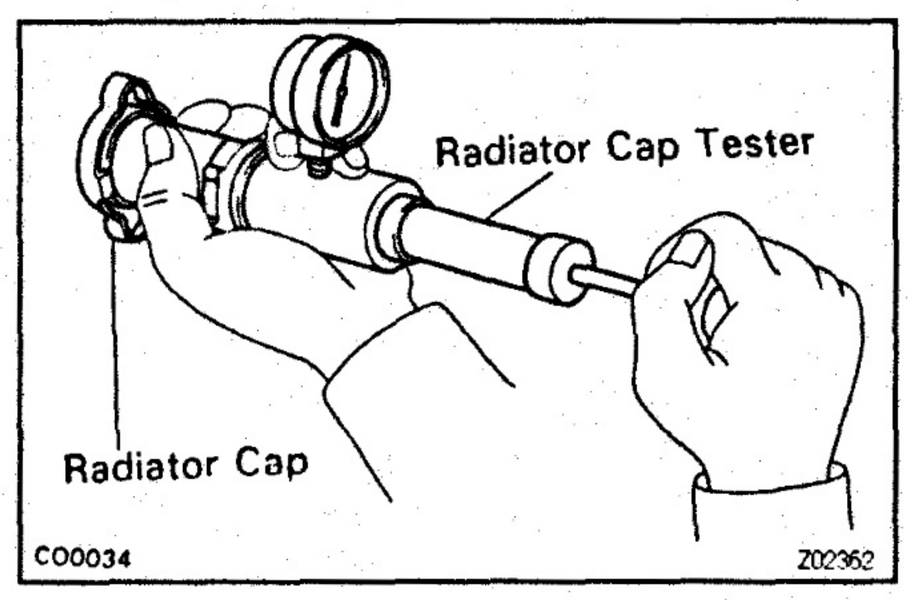

2. INSPECT RADIATOR CAP

NOTICE:

- **If the radiator cap has contaminations, always rinse it with water.**
- **Before using a radiator cap tester, wet the relief valve and pressure valve with engine coolant or water.**

Using a radiator cap tester, pump the tester and measure the relief valve opening pressure.

Standard opening pressure:

74 — 103 kPa

(0.75 — 1.05 kgf/cm², 10.7 — 14.9 psi)

Minimum opening pressure:

59 kPa (0.6 kgf/cm², 8.5 psi)

HINT: Use the tester's maximum reading as the opening pressure.

If the opening pressure is less than minimum, replace the radiator cap.

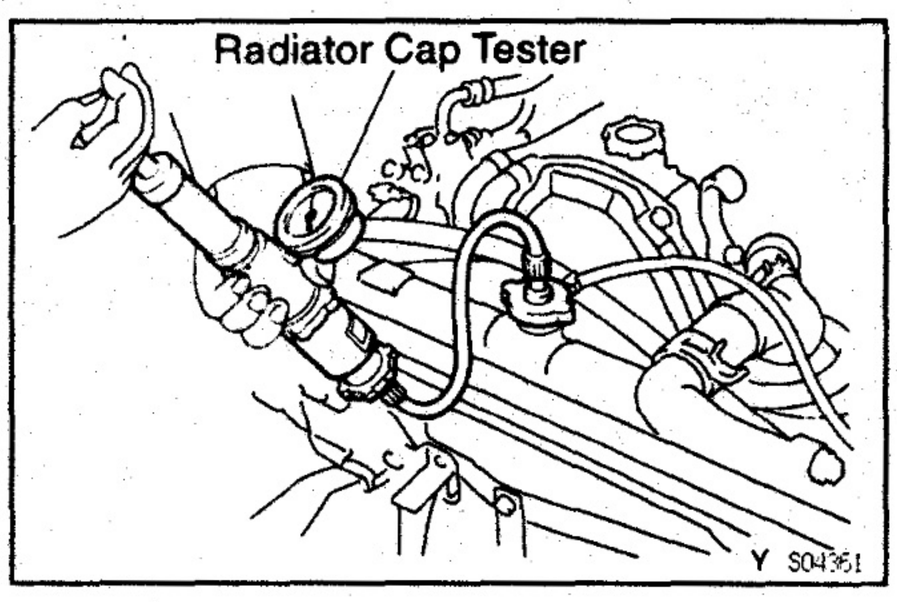

3. INSPECT COOLING SYSTEM FOR LEAKS

(a) Fill the radiator and engine with coolant, and attach a radiator cap tester to the water outlet.

(b) Warm up the engine.

(c) Pump it to 118 kPa (1.2 kgf/cm², 17.1 psi), and check that the pressure does not drop.

If the pressure drops, check the hoses, radiator or water pump for leaks. If no external leaks are found, check the heater core, cylinder block and head.

4. REINSTALL RADIATOR CAP

COMPONENTS FOR DISASSEMBLY AND ASSEMBLY

B21J6-06

LY

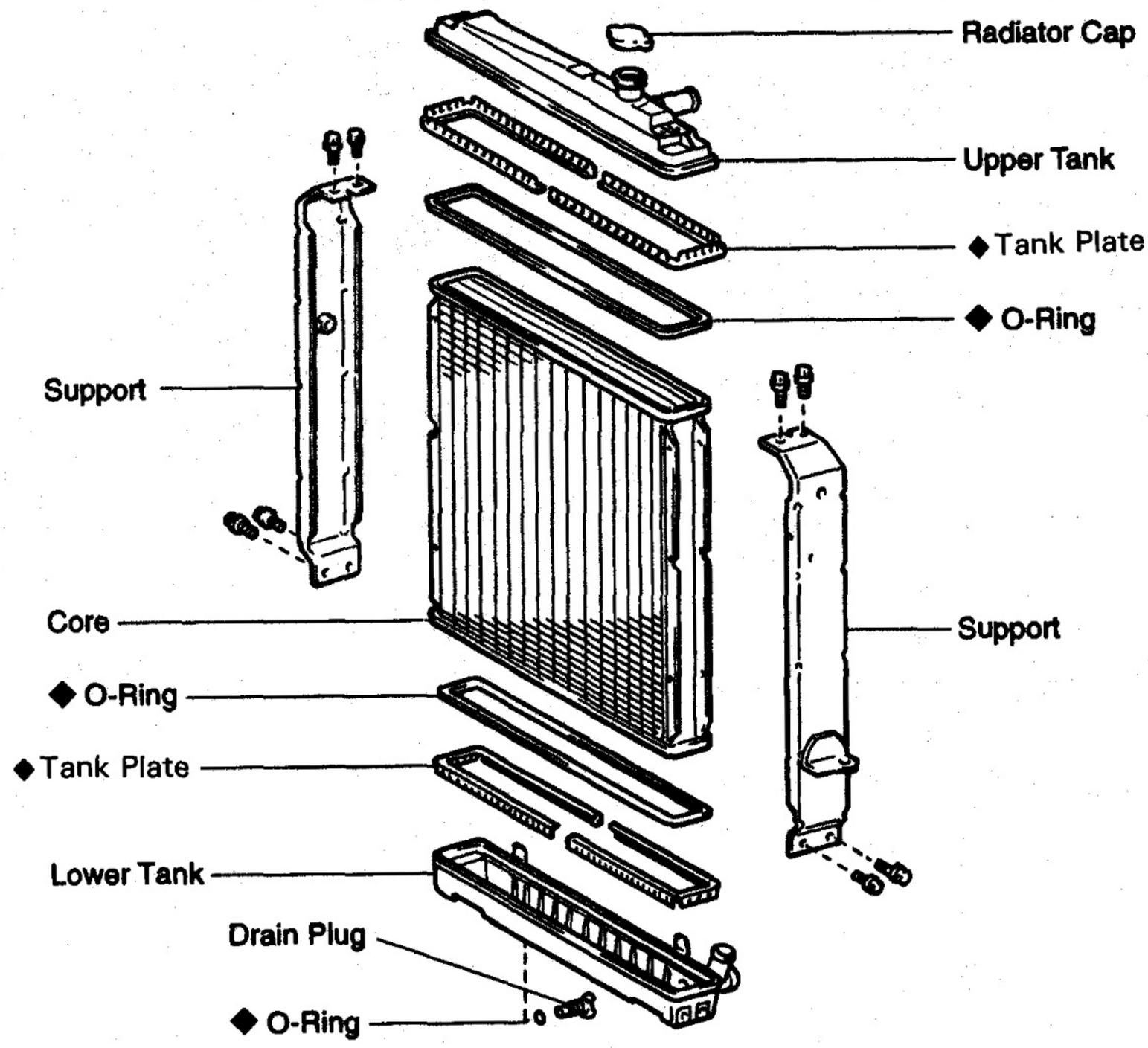

◆ Non-reusable part

Y S04366

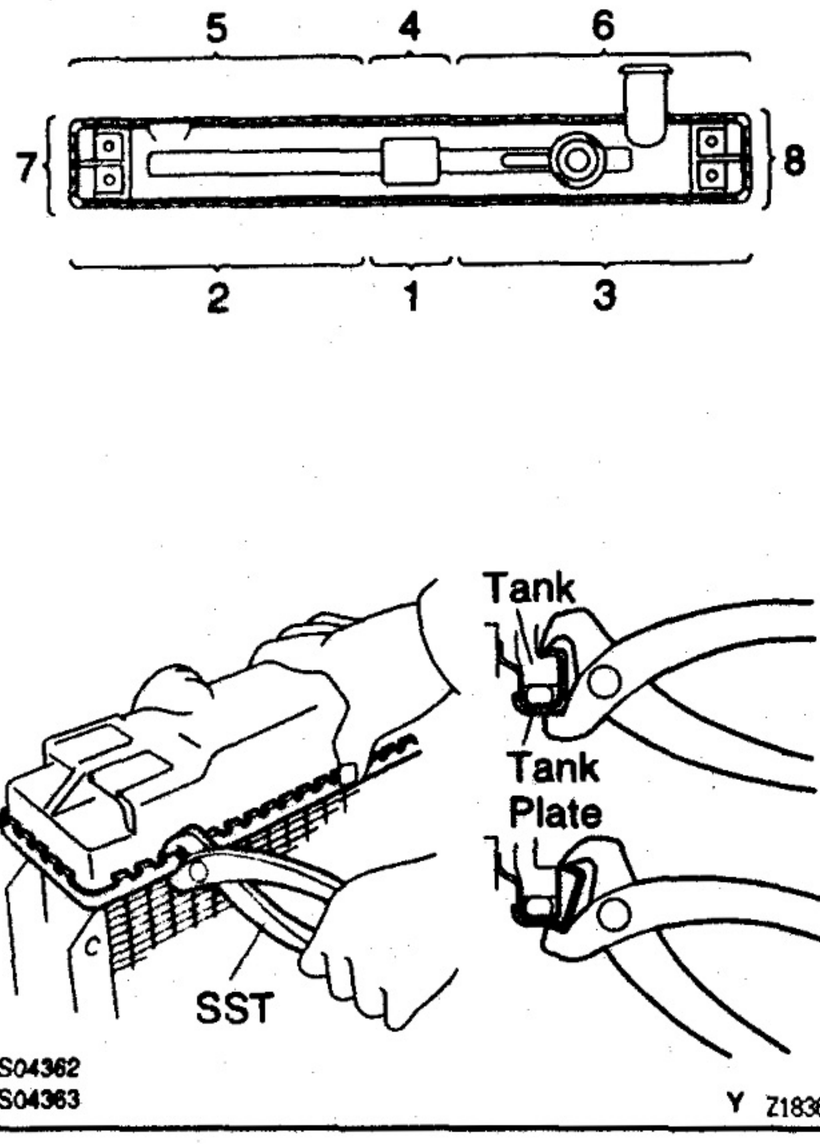

S04362
S04363

Y Z18362

B05MW-04

RADIATOR DISASSEMBLY

1. **REMOVE RADIATOR CAP OR INSULATORS**
2. **LJ and LY:**
   REMOVE SUPPORTS
3. **REMOVE DRAIN PLUG**
4. **LY:**
   REMOVE TANK PLATE

(a) Raise the claws of the tank plates with SST in the numerical order shown in the illustration.
SST 09230−00010
NOTICE: Be careful not to damage the core plate.

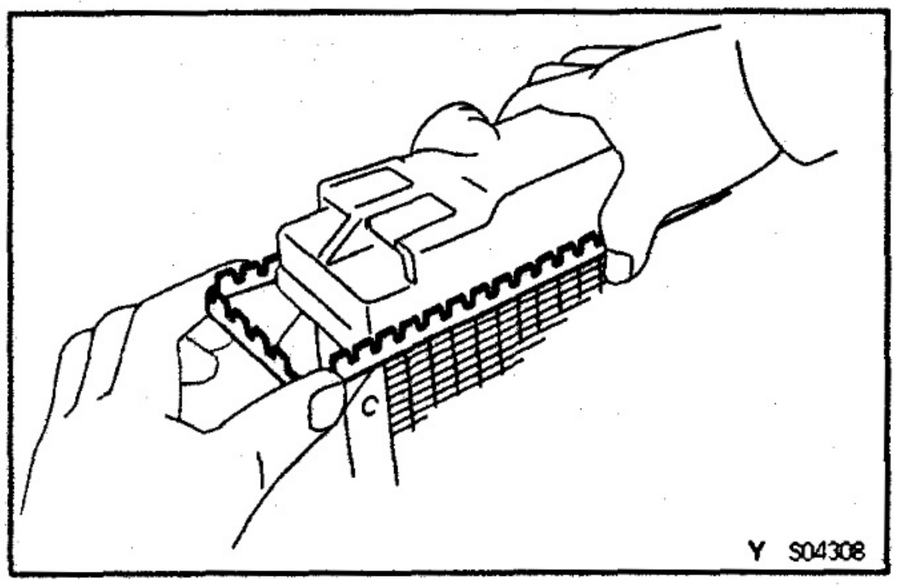

(b) Pull the tank plates outward.

5. LY:
REMOVE TANK

(a) Pull the tank upward.

(b) Remove the O–ring.

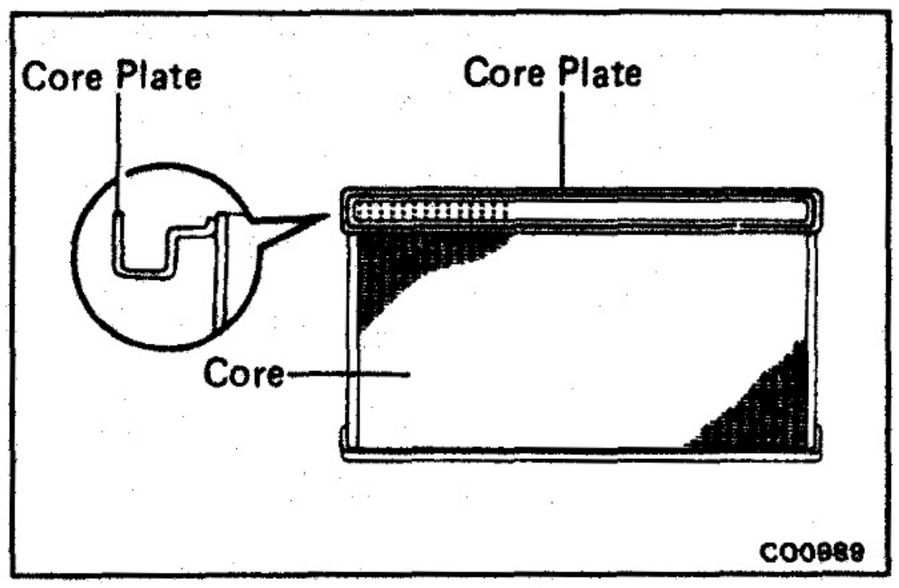

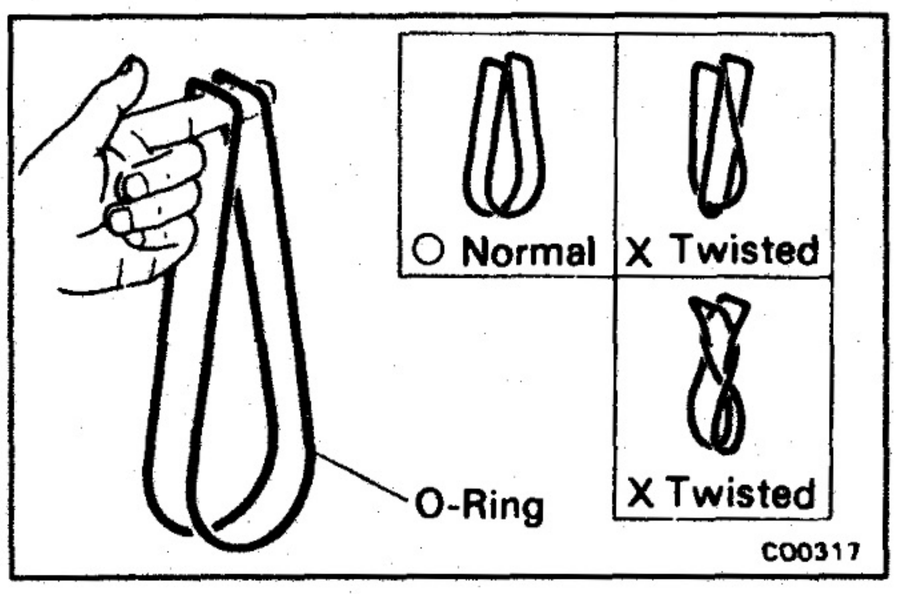

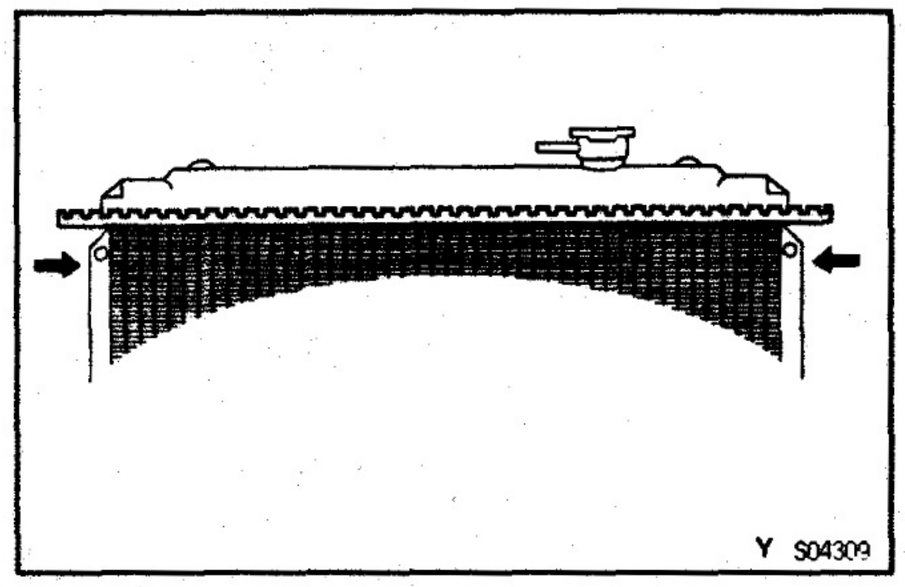

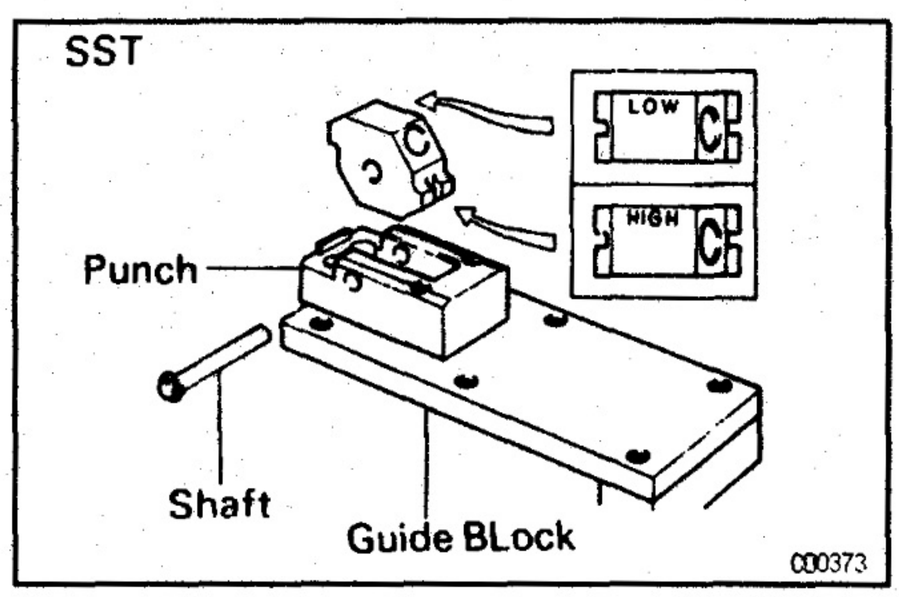

RADIATOR ASSEMBLY

1. LY:
CHECK CORE PLATE FOR DAMAGE
HINT:
- If the sides of the core plate groove are deformed, reassembly of the tank will be impossible. Therefore, first correct any deformation with pliers.
- Water leakage will result if the bottom of the core plate groove is damaged or dented. Therefore, repair or replace if necessary.

2. LY:
INSTALL TANK
Install a new O–ring and the tank.
HINT:
- Clean the tank and core plate.
- Take out any twists.

3. LY:
INSTALL TANK PLATE
Insert new tank plates from both ends in the direction of the arrows. Firmly set the tank plates in the core plate.

4. LY:
STAKE CLAWS OF TANK PLATES

(a) Set the punch of SST to "LOW".
SST 09230–00010

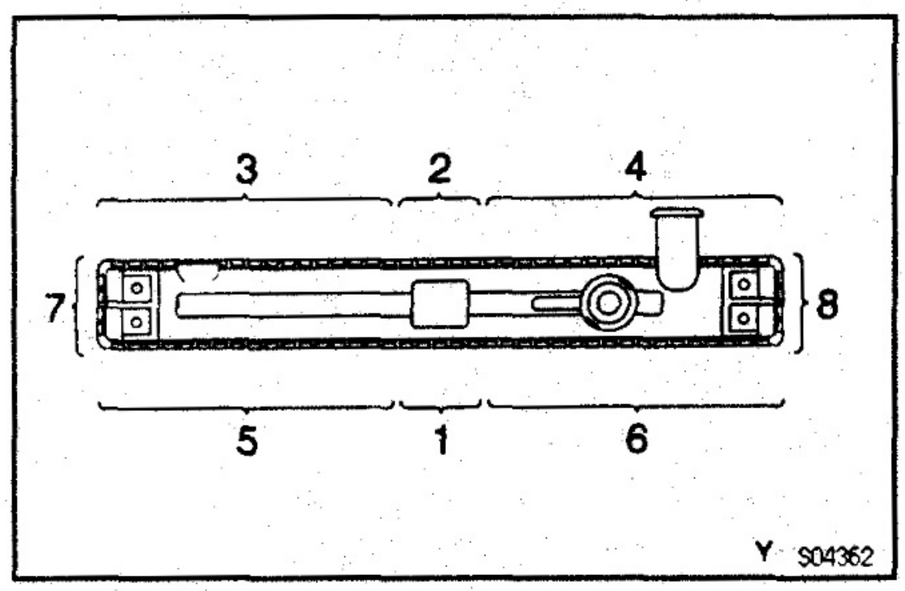

(b) Stake the claws of the tank plates with SST in the numerical order shown in the illustration.

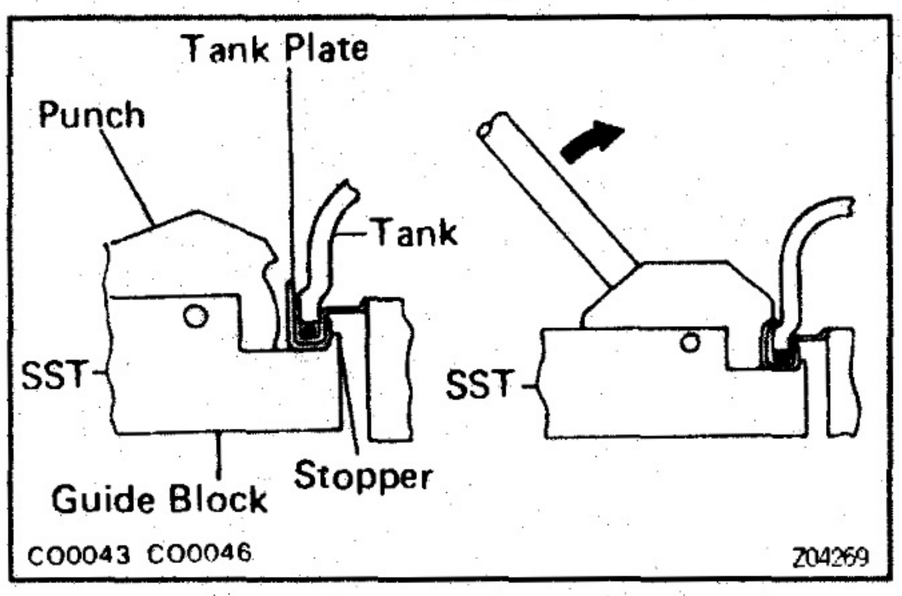

NOTICE: If the bottom of the core plate is staked with the SST on the guide block stopper, it may result in water leakage.

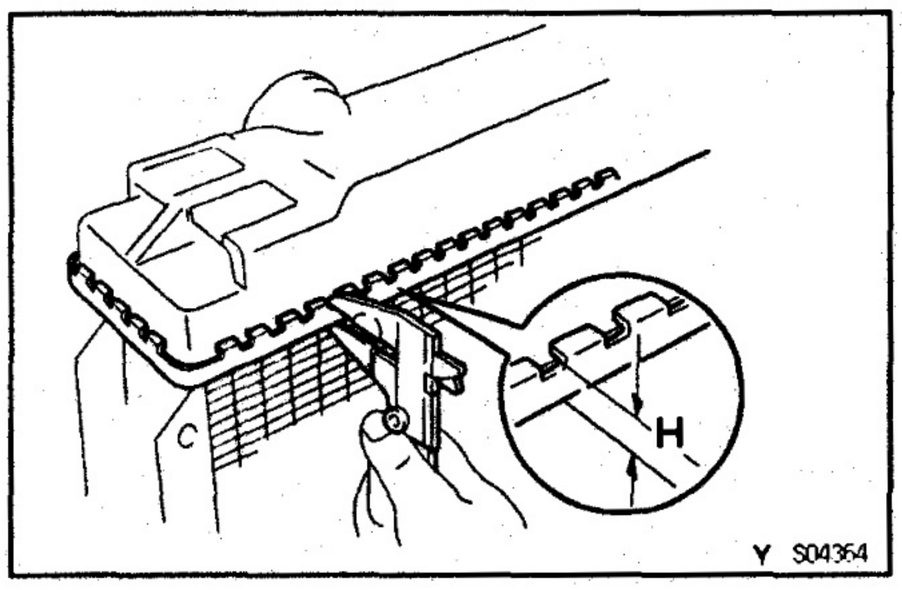

HINT:

- Stake with just enough pressure to leave a mark on the claw. The staked plate height (H) should be as follows:

Plate height (H):

8.4 – 8.8 mm (0.331 – 0.346 in.)

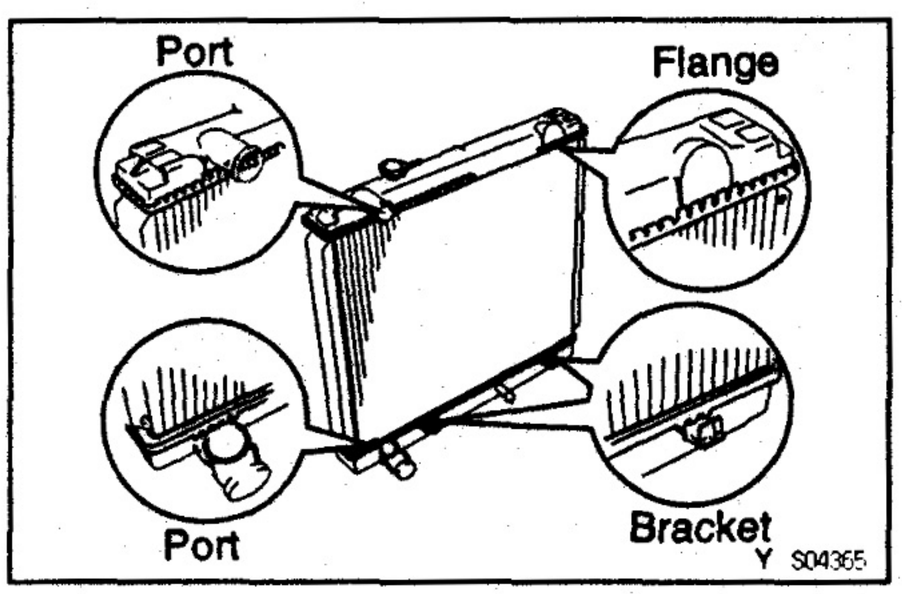

- Do not stake the areas protruding around the ports, flange and brackets.

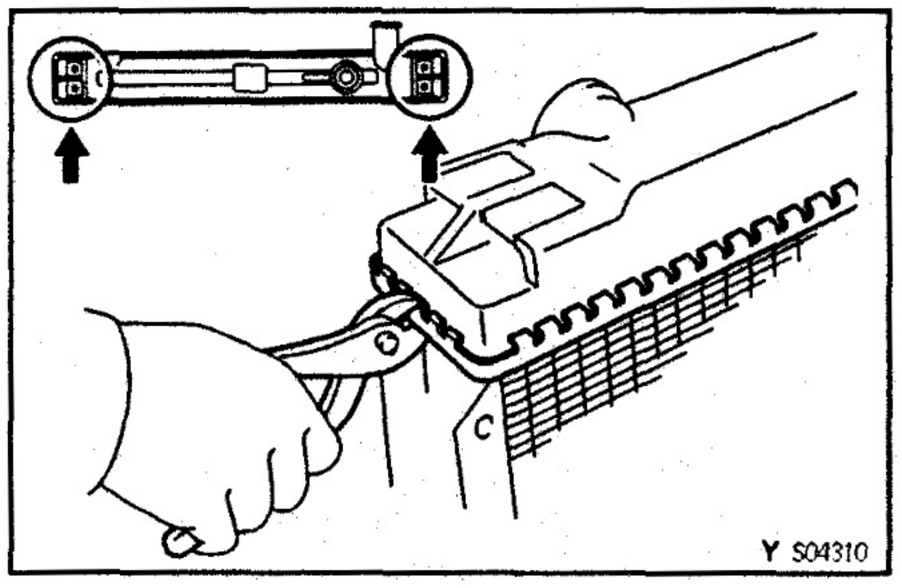

- The points shown in the illustration cannot be staked with the SST. Use pliers and be careful not to damage the core plates.

5. INSTALL DRAIN PLUG

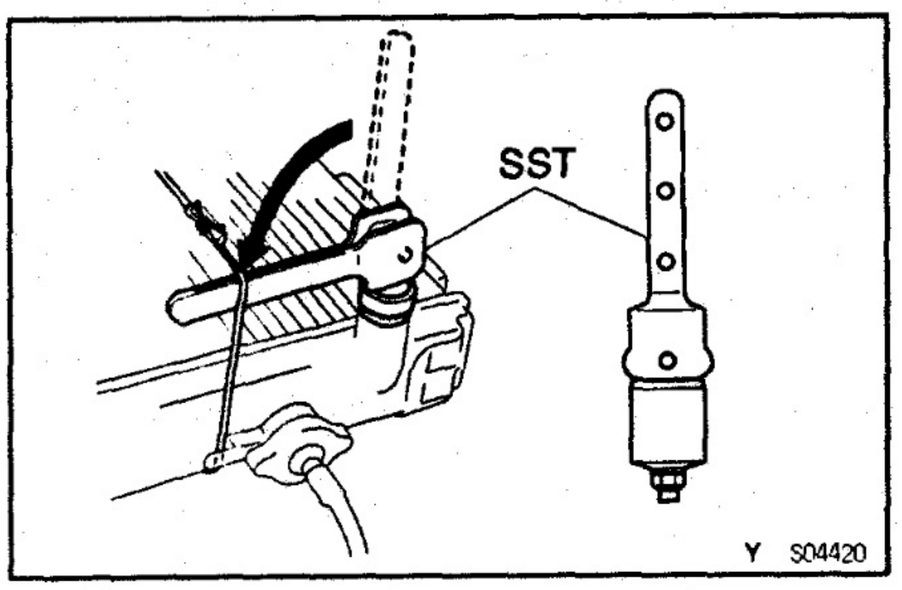

6. CHECK FOR WATER LEAKS

(a) Using SST, plug the inlet and outlet pipes of the radiator.
SST 09230–01010 (09231–00060)

(b) Using a radiator cap tester, apply pressure to the radiator.
Test pressure:
147 kPa (1.5 kgf/cm², 21 psi)

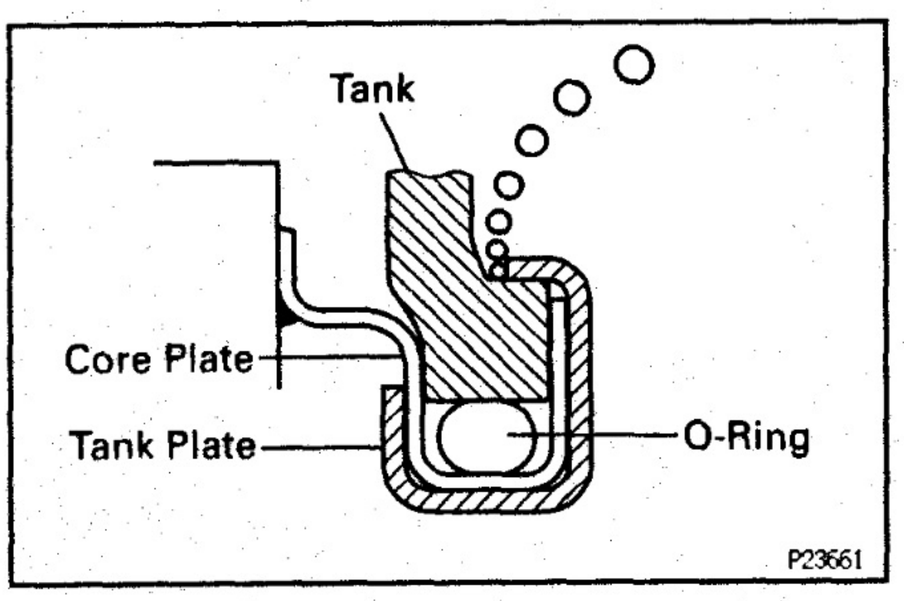

(c) Check for water leaks.
HINT: On radiators with resin tanks, there is a clearance between the core plate and tank plate where a minute amount of air will remain, giving the appearance of an air leak when the radiator is submerged in water. Therefore, before performing the water leak test, first swirl the radiator around in the water until all air bubbles disappear.

7. PAINT TANK PLATE
HINT: If the water leak test checks out okay, allow the radiator to dry completely and then paint the tank plate.

8. LJ and LY:
INSTALL SUPPORTS
Torque: 12.7 N·m (130 kgf·cm, 9 ft·lbf)

9. INSTALL RADIATOR CAP OR INSULATORS

SERVICE SPECIFICATIONS

SERVICE DATA

EG07L–23

Thermostat	Valve opening temperature		86 – 90°C (187 – 194°F)
	Valve lift	at 100°C (212°F)	8 mm (0.31 in.) or more
Radiator cap	Relief valve opening pressure	STD	74 – 103 kPa (0.75 – 1.05 kgf/cm², 10.7 – 14.9 psi)
		Minimum	59 kPa (0.6 kgf/cm², 8.5 psi)

TORQUE SPECIFICATIONS

EG07M–26

Part tightened	N·m	kgf·cm	ft·lbf
Engine coolant drain plug x Cylinder block	29	300	22
Water pump x Cylinder block	23	230	17
Fan x Fluid coupling	6.5	65	57 in.·lbf
Fluid coupling x Water pump pulley	12	120	9
Water outlet x Water outlet housing	19	195	14
Support x Tank on radiator	12.7	130	9

LUBRICATION SYSTEM

PREPARATION

SST (SPECIAL SERVICE TOOLS)

EG14U-10

EG

	09032-00100 Oil Pan Seal Cutter	
	09228-10002 Oil Filter Wrench	Europe
	09228-44011 Oil Filter Wrench	Others
	09326-20011 Output Shaft Bearing Lock Nut Wrench	Union for oil filter
	09816-30010 Oil Pressure Switch Socket	

RECOMMENDED TOOLS

EG14V-0V

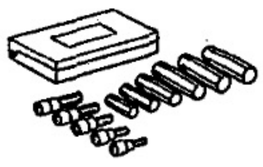	09040-00010 Hexagon Wrench Set .	Relief valve for oil pump
	09200-00010 Engine Adjust Kit .	

EQUIPMENT

EG14W-0X

Oil pressure gauge	
Precision straight edge	
Torque wrench	
Wooden block	Oil pump

LUBRICANT

EG14X-1N

Item	Capacity	Classification
Engine oil/LJ		API grade CD
Dry fill	6.0 liters (6.3 US qts, 5.3 Imp. qts)	(You may also use API CE or API CF)
Drain and refill		
w/ Oil filter change	5.5 liters (5.8 US qts, 4.8 Imp. qts)	
w/o Oil filter change	4.5 liters (4.8 US qts, 4.0 Imp. qts)	

Engine oil/LH and LN 2WD		API grade CD
Dry fill	6.5 liters (6.9 US qts, 5.7 Imp. qts)	(You may also use API CE or API CF)
Drain and refill		
w/ Oil filter change	5.8 liters (6.1 US qts, 5.1 Imp. qts)	
w/o Oil filter change	4.8 liters (5.1 US qts, 4.2 Imp. qts)	
Engine oil/LN 4WD (w/ IFS)		API grade CD
Dry fill	7.5 liters (7.9 US qts, 6.6 Imp. qts)	(You may also use API CE or API CF)
Drain and refill		
w/ Oil filter change	6.8 liters (7.2 US qts, 6.0 Imp. qts)	
w/o Oil filter change	5.8 liters (6.1 US qts, 5.1 Imp. qts)	
Engine oil/LN 4WD (w/o IFS)		API grade CD
Dry fill	6.0 liters (6.3 US qts, 5.3 Imp. qts)	(You may also use API CE or API CF)
Drain and refill		
w/ Oil filter change	5.3 liters (5.6 US qts, 4.7 Imp. qts)	
w/o Oil filter change	4.3 liters (4.5 US qts, 3.8 Imp. qts)	
Engine oil/LY (2L)		API grade CD
Dry fill	6.5 liters (6.9 US qts, 5.7 Imp. qts)	(You may also use API CE or API CF)
Drain and refill		
w/ Oil filter change	6.2 liters (6.6 US qts, 5.5 Imp. qts)	
w/o Oil filter change	5.2 liters (5.5 US qts, 4.6 Imp. qts)	
Engine oil/LY (3L)		API grade CD
Dry fill	6.3 liters (6.7 US qts, 5.5 Imp. qts)	(You may also use API CE or API CF)
Drain and refill		
w/ Oil filter change	6.0 liters (6.3 US qts, 5.3 Imp. qts)	
w/o Oil filter change	5.0 liters (5.3 US qts, 4.4 Imp. qts)	

EG14Y–0Y

SSM (SPECIAL SERVICE MATERIALS)

08826–00080	Seal Packing Black or equivalent (FIPG)	Oil pan
08833–00070	Adhesive 1324, THREE BOND 1324 or equivalent	Union for oil filter
08833–00080	Adhesive 1344, THREE BOND 1344, LOCTITE 242 or equivalent	Oil pressure switch Oil pump body cover

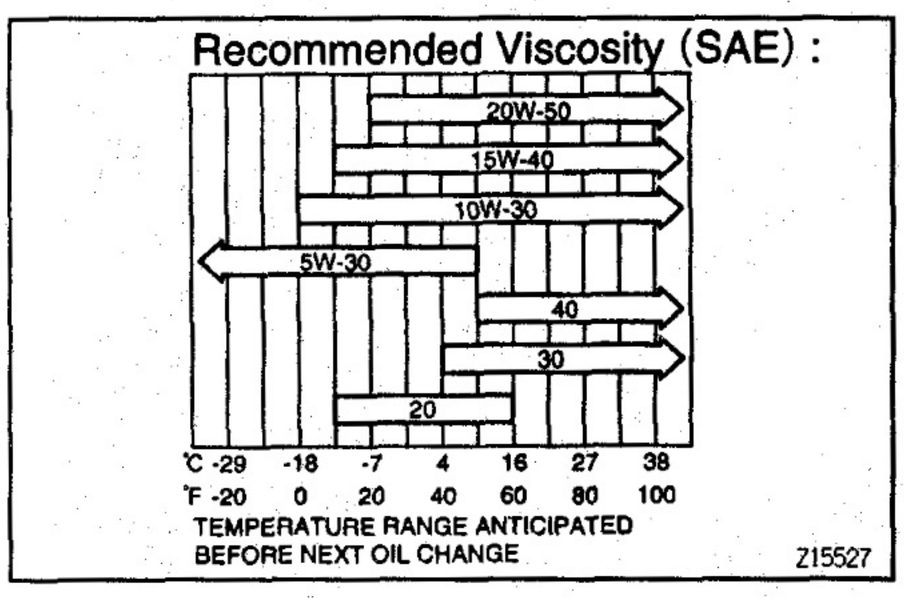

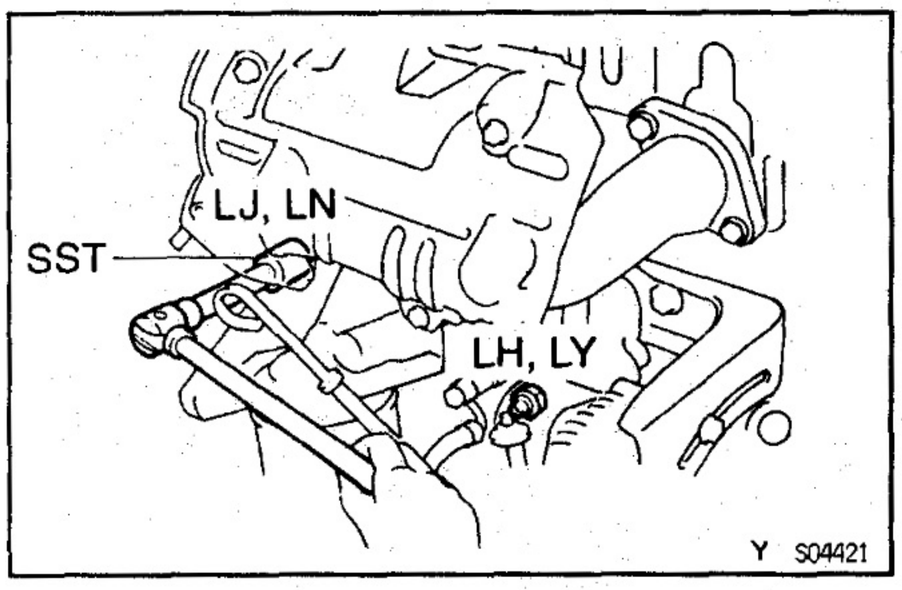

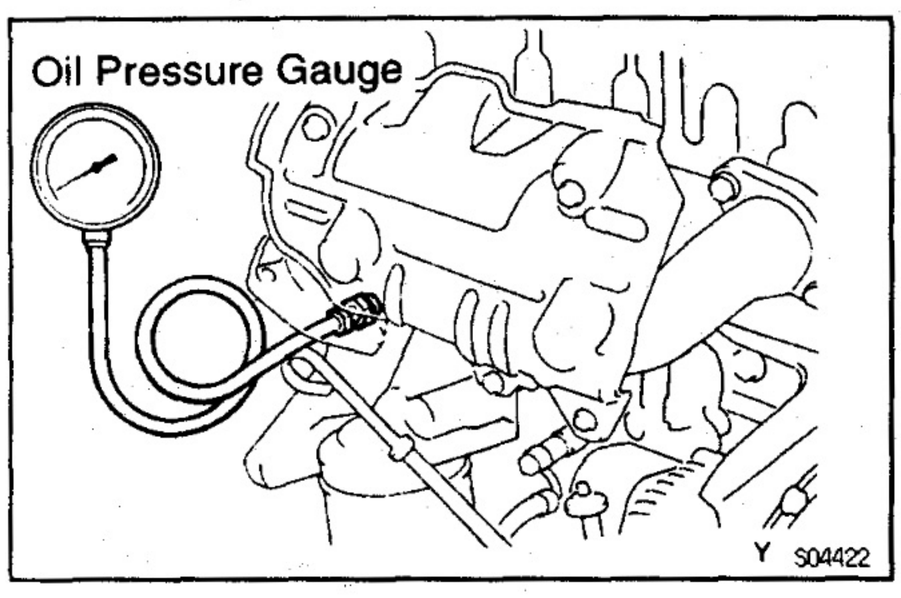

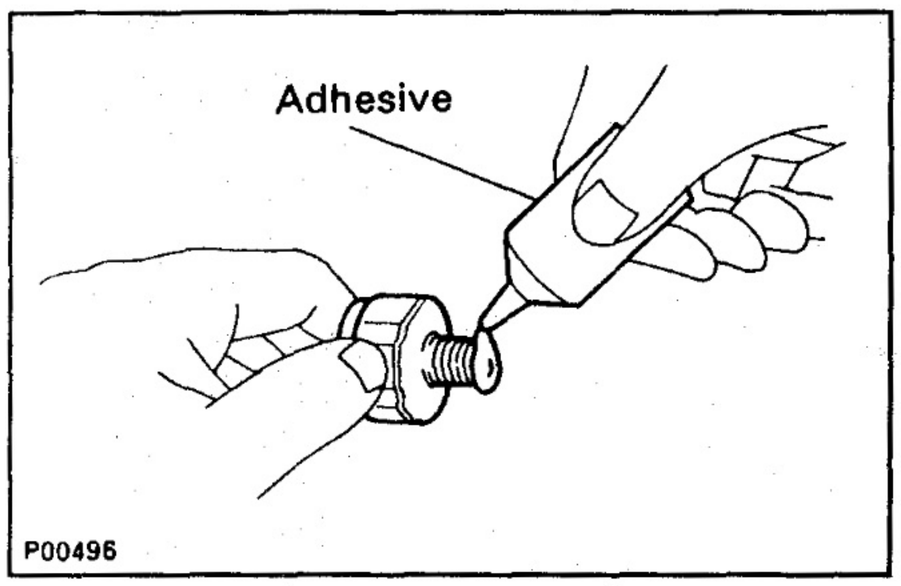

OIL PRESSURE CHECK

EQ7AR-01

1. CHECK ENGINE OIL QUALITY

Check the oil for deterioration, entry of water, discoloring or thinning.

If the quality is visibly poor, replace the oil.

Oil grade:

API grade CD

(You may also use API CE or API CF)

Recommended viscosity:

Refer to illustration

2. CHECK ENGINE OIL LEVEL

The oil level should be between the "L" and "F" marks on the dipstick.

If low, check for leakage and add oil up to "F" mark.

3. REMOVE OIL PRESSURE SWITCH

Using SST, remove the oil pressure switch.

SST 09816–30010

4. INSTALL OIL PRESSURE GAUGE

5. WARM UP ENGINE

Allow the engine to warm up to normal operating temperature.

6. CHECK OIL PRESSURE

Oil pressure:

At idle

29 kPa (0.3 kgf/cm², 4.3 psi) or more

At 3,000 rpm

294 — 539 kPa

(3.0 — 5.5 kgf/cm², 43 — 78 psi)

7. REMOVE OIL PRESSURE GAUGE

8. REINSTALL OIL PRESSURE SWITCH

(a) Apply adhesive to 2 or 3 threads of the oil pressure switch.

Adhesive:

Part No. 08833–00080, THREE BOND 1344, LOCTITE 242 or equivalent

(b) Using SST, install the oil pressure switch.

SST 09816–30010

Torque: 15 N·m (150 kgf·cm, 11 ft·lbf)

9. START ENGINE AND CHECK FOR OIL LEAKS

OIL AND FILTER REPLACEMENT

EG7A6-01

CAUTION:

- **Prolonged and repeated contact with mineral oil will result in the removal of natural fats from the skin, leading to dryness, irritation and dermatitis. In addition, used engine oil contains potentially harmful contaminants which may cause skin cancer.**
- **Care should be taken, therefore, when changing engine oil to minimize the frequency and length of time your skin is exposed to used engine oil. Protective clothing and gloves that cannot be penetrated by oil should be worn. The skin should be thoroughly washed with soap and water, or use water—less hand cleaner, to remove any used engine oil. Do not use gasoline, thinners, or solvents.**
- **In order to preserve the environment, used oil and used oil filters must be disposed of only at designated disposal sites.**

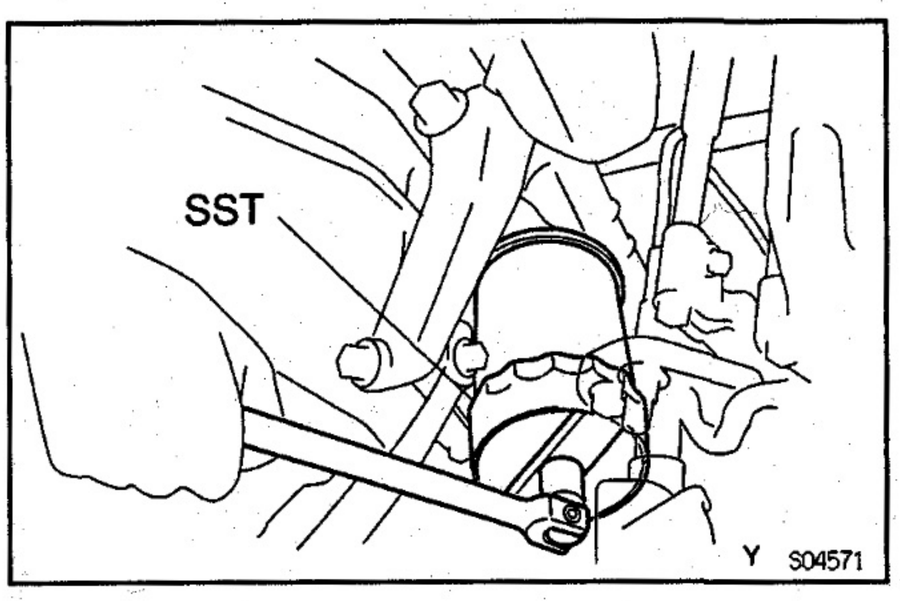

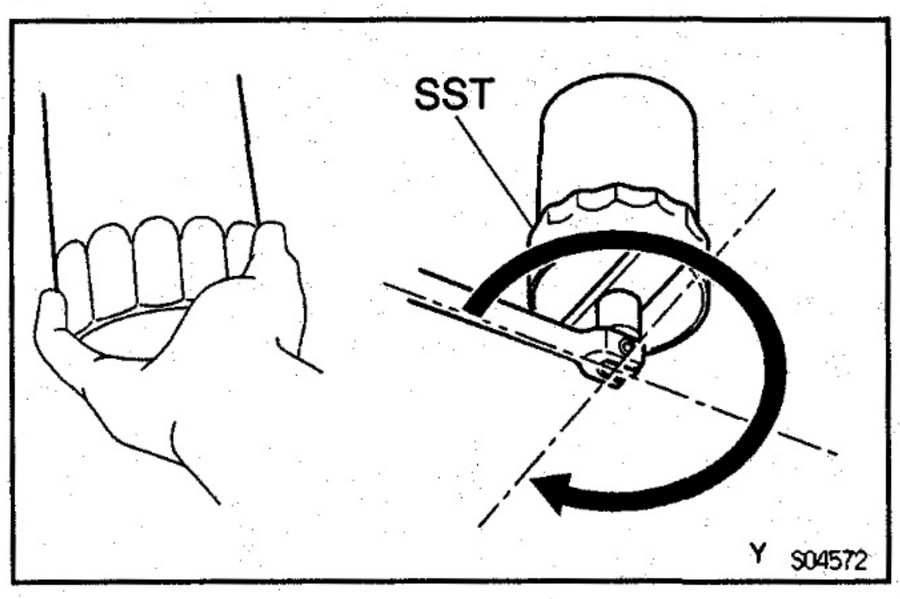

1. DRAIN ENGINE OIL

(a) Remove the oil filler cap.

(b) Remove the oil drain plug, and drain the oil into a container.

2. REPLACE OIL FILTER

(a) Using SST, remove the oil filter.
SST
Europe: 09228—10002
Others: 09228—44011

(b) Clean the oil filter contact surface on the oil filter mounting.

(c) Lubricate the filter rubber gasket with clean engine oil.

(d) Tighten the oil filter by hand until the rubber gasket contacts the seat of the filter mounting.

(e) Using SST, give it an additional 3/4 turn to seat the filter.
SST
Europe: 09228—10002
Others: 09228—44011

3. REFILL WITH ENGINE OIL

(a) Clean the drain plug, and install a new gasket and it.
Torque: 34.5 N·m (350 kgf·cm, 25 ft·lbf)

(b) Fill with fresh engine oil.

Oil capacity:

LJ	
Dry fill	6.0 liters (6.3 US qts, 5.3 Imp. qts)
Drain and refill	
w/ Oil filter change	5.5 liters (5.8 US qts, 4.8 Imp. qts)
w/o Oil filter change	4.5 liters (4.8 US qts, 4.0 Imp. qts)
LH and LN 2WD	
Dry fill	6.5 liters (6.9 US qts, 5.7 Imp. qts)
Drain and refill	
w/ Oil filter change	5.8 liters (6.1 US qts, 5.1 Imp. qts)
w/o Oil filter change	4.8 liters (5.1 US qts, 4.2 Imp. qts)
LN 4WD (w/ IFS)	
Dry fill	7.5 liters (7.9 US qts, 6.6 Imp. qts)
Drain and refill	
w/ Oil filter change	6.8 liters (7.2 US qts, 6.0 Imp. qts)
w/o Oil filter change	5.8 liters (6.1 US qts, 5.1 Imp. qts)
LN 4WD (w/o IFS)	
Dry fill	6.0 liters (6.3 US qts, 5.3 Imp. qts)
Drain and refill	
w/ Oil filter change	5.3 liters (5.6 US qts, 4.7 Imp. qts)
w/o Oil filter change	4.3 liters (4.5 US qts, 3.8 Imp. qts)
LY (2L)	
Dry fill	6.5 liters (6.9 US qts, 5.7 Imp. qts)
Drain and refill	
w/ Oil filter change	6.2 liters (6.6 US qts, 5.5 Imp. qts)
w/o Oil filter change	5.2 liters (5.5 US qts, 4.6 Imp. qts)
LY (3L)	
Dry fill	6.3 liters (6.7 US qts, 5.5 Imp. qts)
Drain and refill	
w/ Oil filter change	6.0 liters (6.3 US qts, 5.3 Imp. qts)
w/o Oil filter change	5.0 liters (5.3 US qts, 4.4 Imp. qts)

(c) Reinstall the oil filler cap.

4. START ENGINE AND CHECK FOR OIL LEAKS

5. RECHECK ENGINE OIL LEVEL

OIL PUMP

EG7AT–01

HINT: If replacing the timing belt before the timing belt warning light comes on, (light comes on after 100,000 km of driving), be sure to reset the timing belt counter of the speedometer to zero.

COMPONENTS FOR REMOVAL AND INSTALLATION

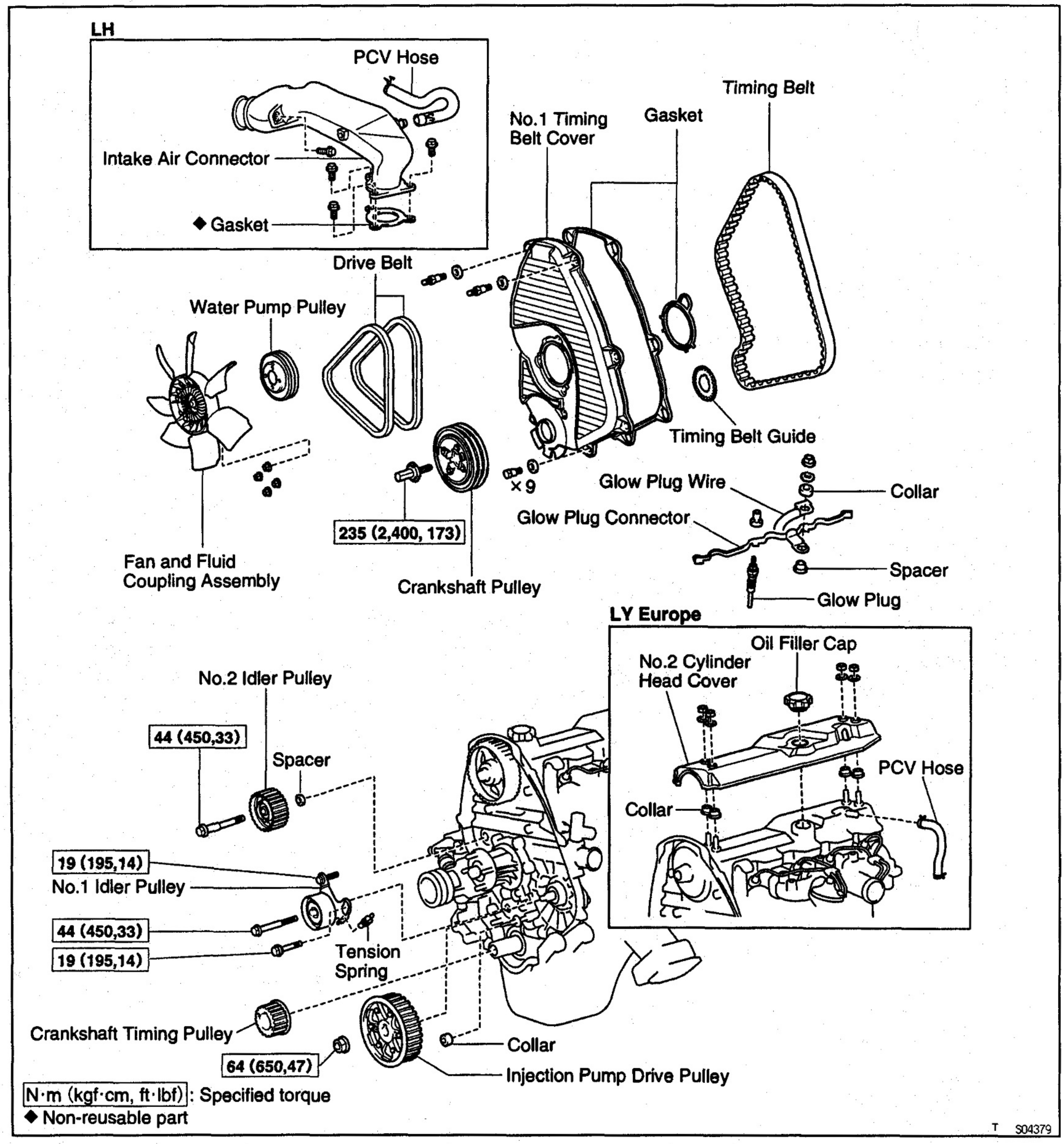

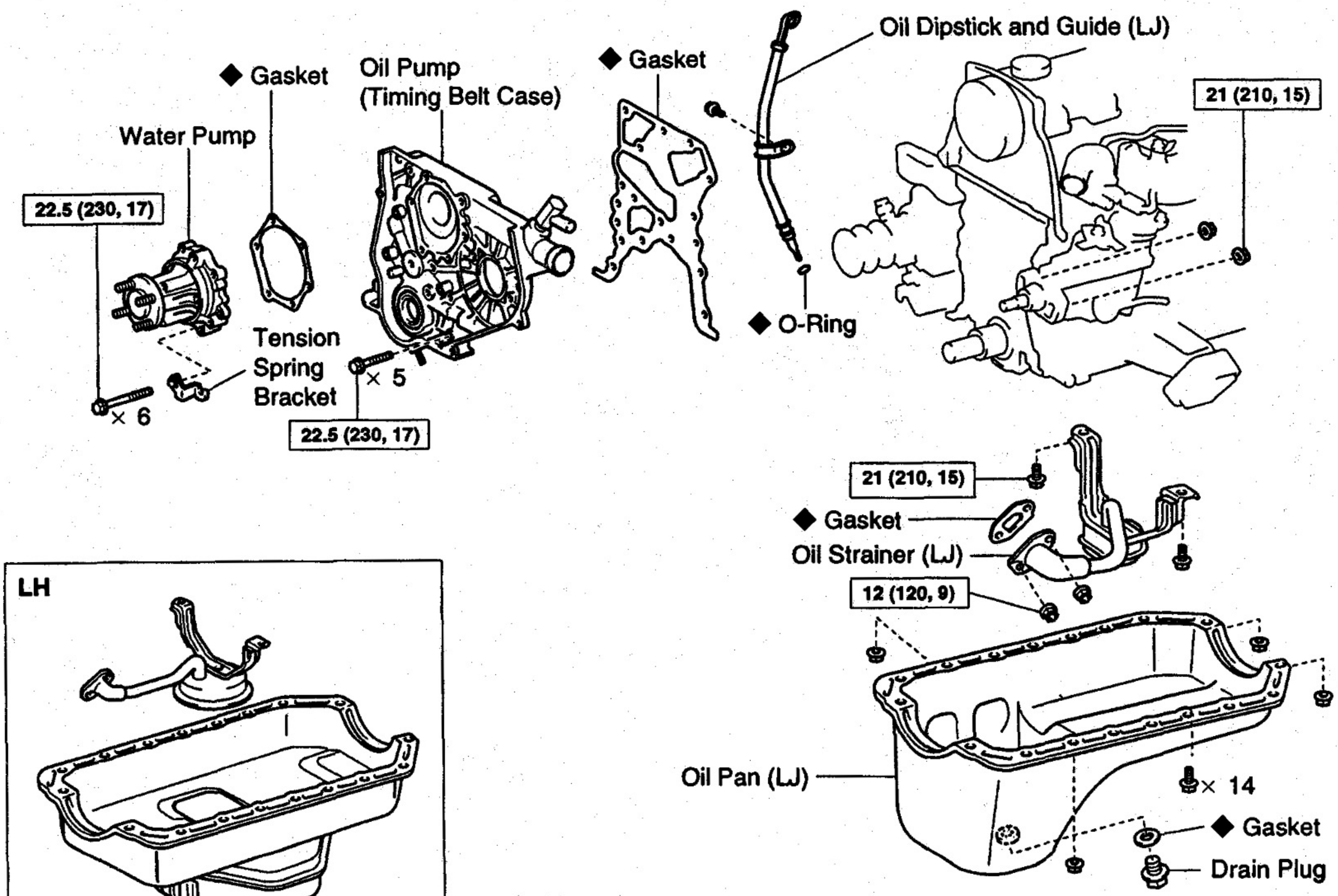

N·m (kgf·cm, ft·lbf) : Specified torque

◆ Non-reusable part

Y

S04377

EG7AU-01

OIL PUMP REMOVAL

HINT: When repairing the oil pump, the oil pan and strainer should be removed and cleaned.

1. **DRAIN ENGINE COOLANT**
2. **DRAIN ENGINE OIL**
3. **REMOVE GLOW PLUGS**
   (See steps 2 to 5 in cylinder head removal)
4. **REMOVE DRIVE BELTS, FAN, FLUID COUPLING ASSEMBLY AND WATER PUMP PULLEY**
   (See step 2 in water pump removal in Cooling System)
5. **REMOVE TIMING BELT AND PULLEYS WITHOUT CAMSHAFT TIMING PULLEY**
   (See steps 3 to 8 and 10 to 12 in timing belt removal in Engine Mechanical)
6. **REMOVE WATER PUMP**
   (See step 5 in water pump removal in Cooling System)
7. **LJ:**
   REMOVE OIL DIPSTICK AND GUIDE
   (a) Remove the bolt.
   (b) Pull out the dipstick guide together with the dipstick.
   (c) Remove the O—ring from the dipstick guide.
8. **REMOVE OIL PAN**
   (a) Remove the 14 bolts and 4 nuts.

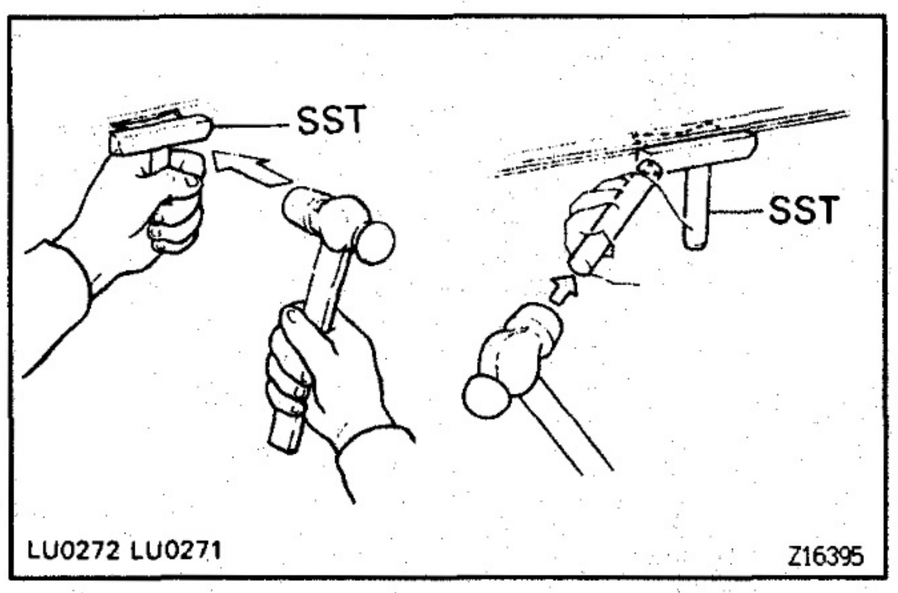

(b) Insert the blade of SST between the oil pan and cylinder block, and cut off applied sealer and remove the oil pan.
SST 09032—00100
NOTICE:
- **Do not use SST for the timing belt case side and rear oil seal retainer.**
- **Be careful not to damage the oil pan flange.**

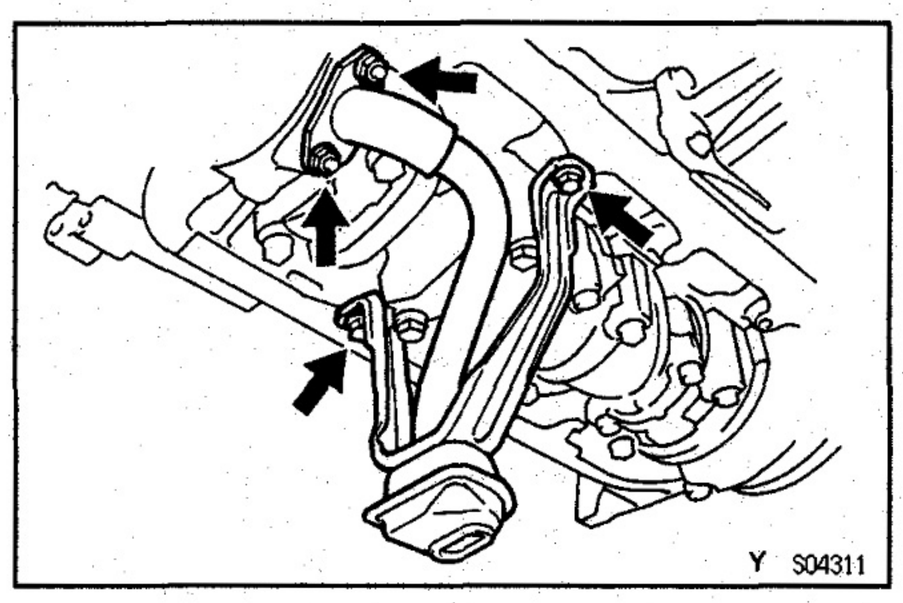

9. **REMOVE OIL STRAINER**
   Remove the 2 bolts, 2 nuts, oil strainer and gasket.

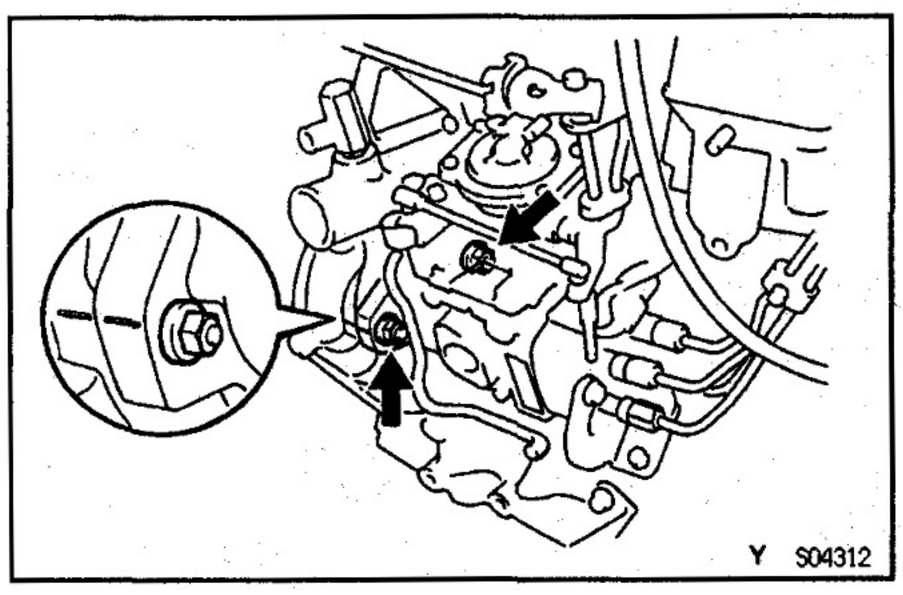

10. REMOVE OIL PUMP (TIMING BELT CASE)

(a) w/ ACSD:
Disconnect the thermo wax water bypass hose from the timing belt case.

(b) Before removing the 2 nuts holding the timing belt case to the injection pump, check if the injection pump period lines are aligned.
If not, place new matchmarks for reinstallation.

(c) Remove the 2 nuts.

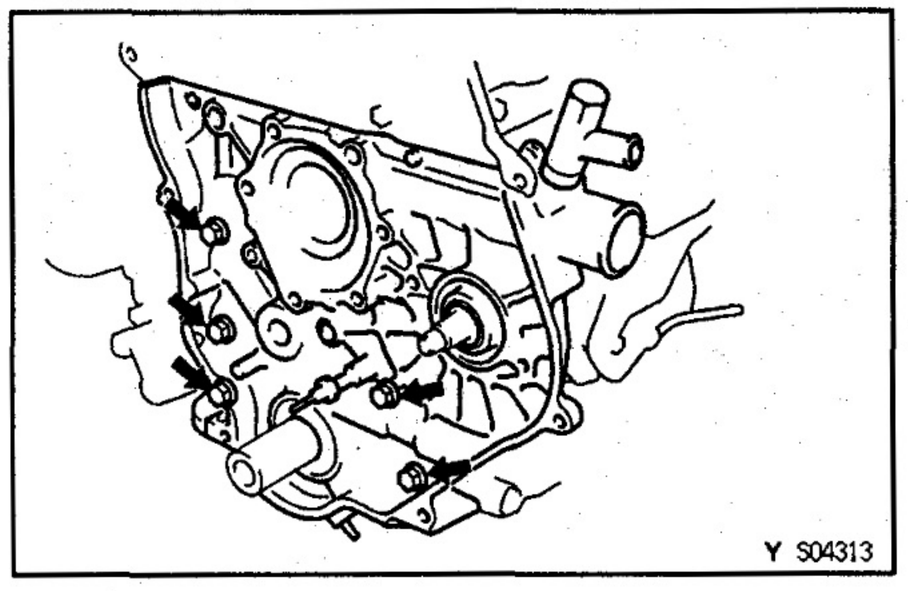

(d) Remove the 5 bolts, timing belt case and gasket.

COMPONENTS FOR DISASSEMBLY AND ASSEMBLY EG155-0Z

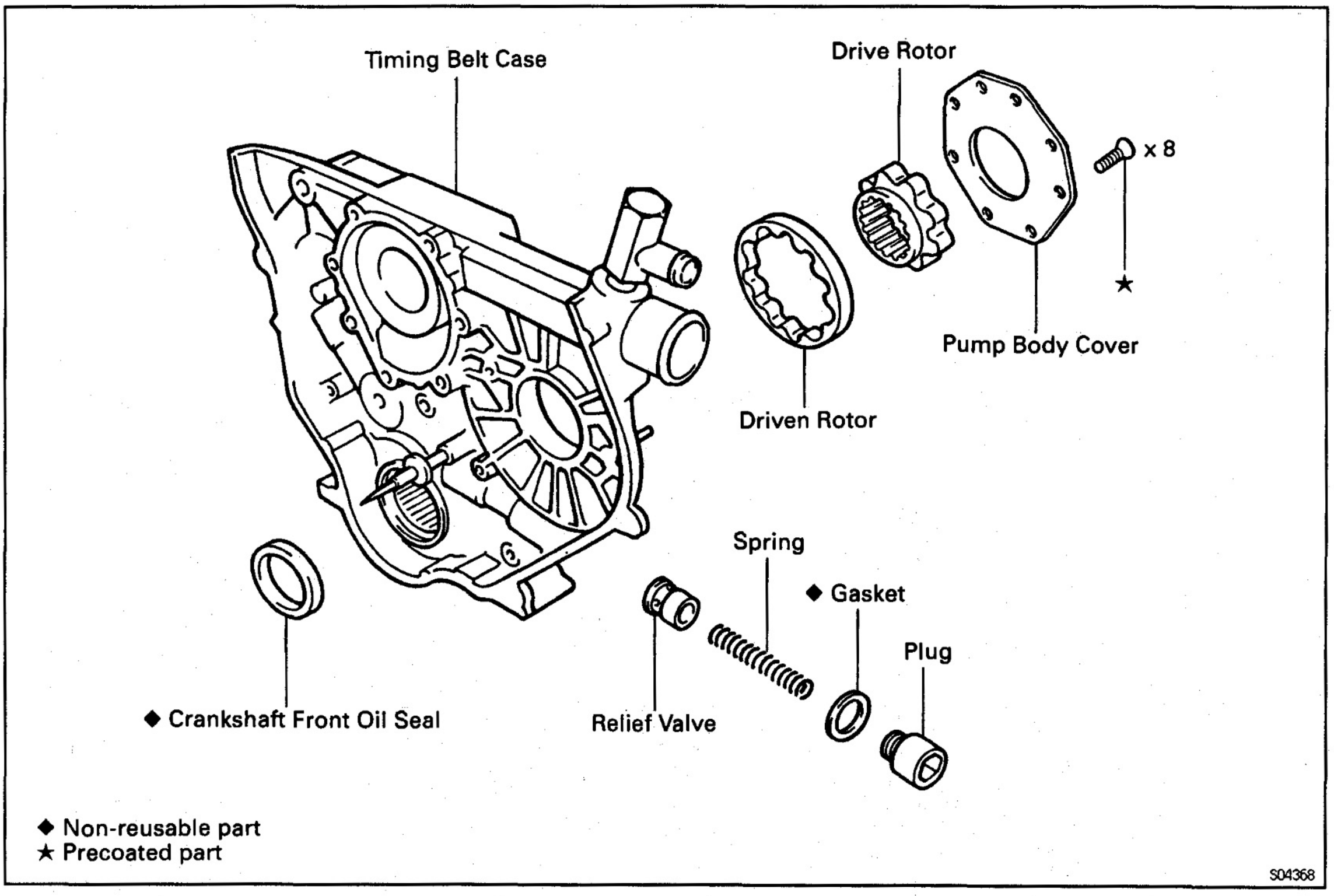

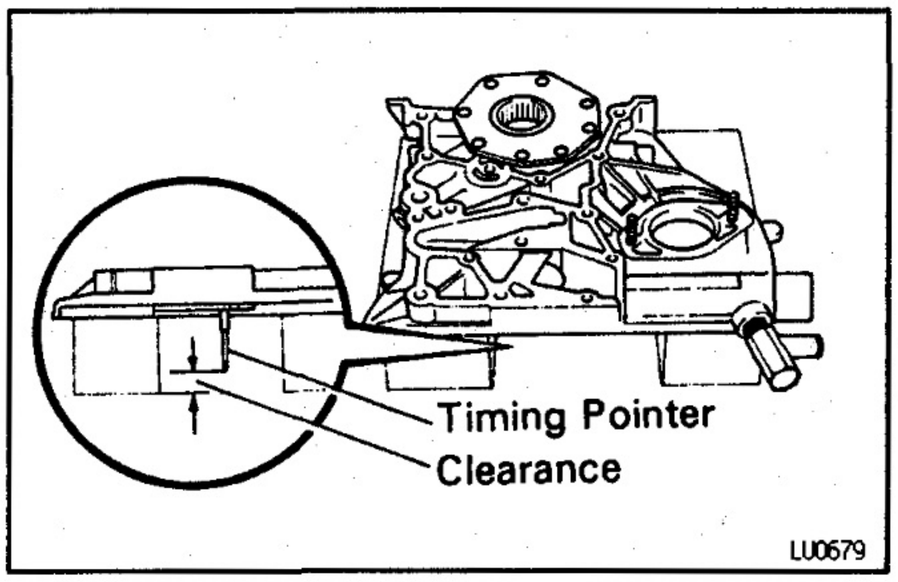

EG7AV–01

OIL PUMP DISASSEMBLY

1. PLACE TIMING BELT CASE ON WOODEN BLOCKS

NOTICE: Be careful not to damage the timing pointer.

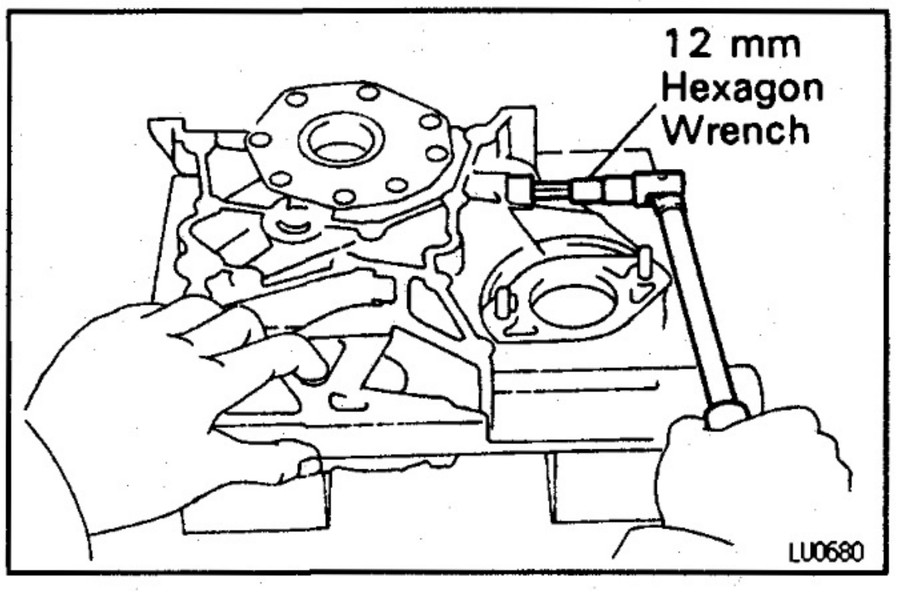

2. REMOVE RELIEF VALVE

Using a 12 mm hexagon wrench, remove the plug, gasket, spring and relief valve.

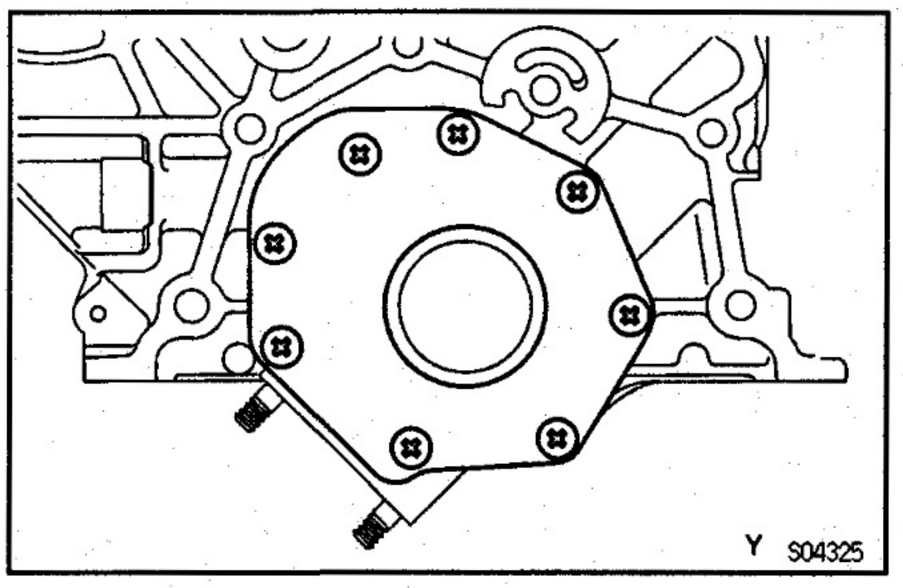

3. REMOVE DRIVE AND DRIVEN ROTORS

Remove the 8 screws, pump body cover, the drive and driven rotors.

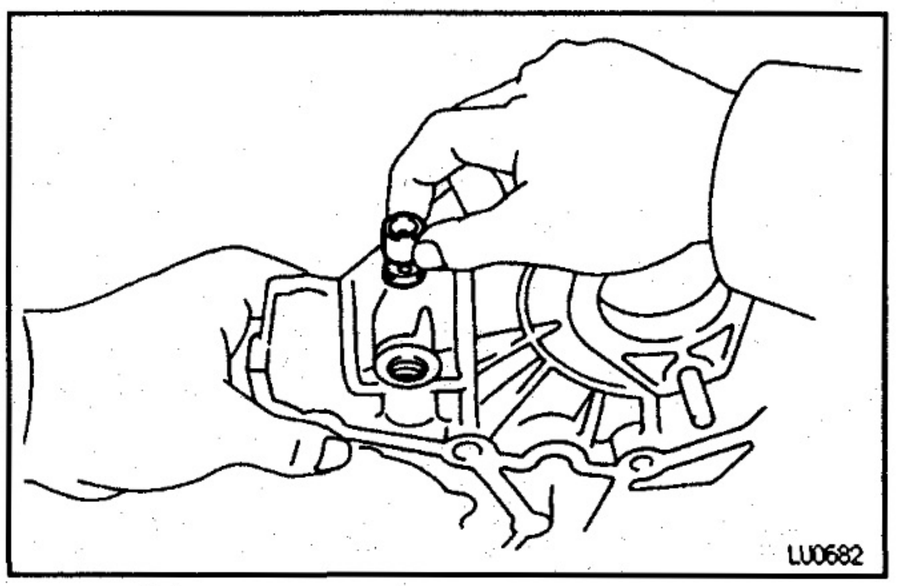

EG7AW–01

OIL PUMP INSPECTION

1. INSPECT RELIEF VALVE

Coat the valve with engine oil and check that it falls smoothly into the valve hole by its own weight.
If it doesn't, replace the relief valve. If necessary, replace the oil pump assembly.

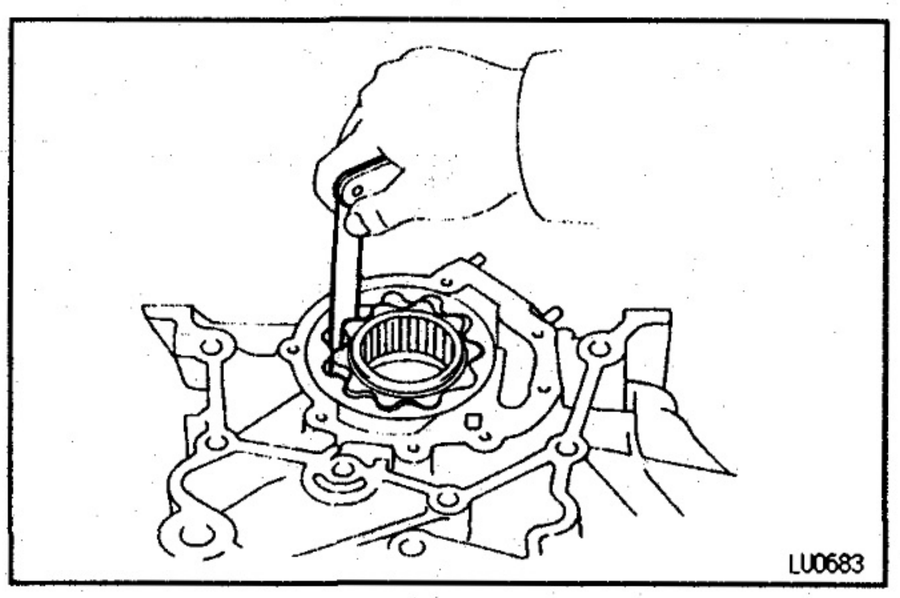

2. INSPECT DRIVE AND DRIVEN ROTORS

A. Inspect rotor tip clearance

Using a feeler gauge, measure the clearance between the drive and driven rotor tips.

Standard tip clearance:

0.110 — 0.240 mm (0.0043 — 0.0094 in.)

Maximum tip clearance:

0.30 mm (0.0118 in.)

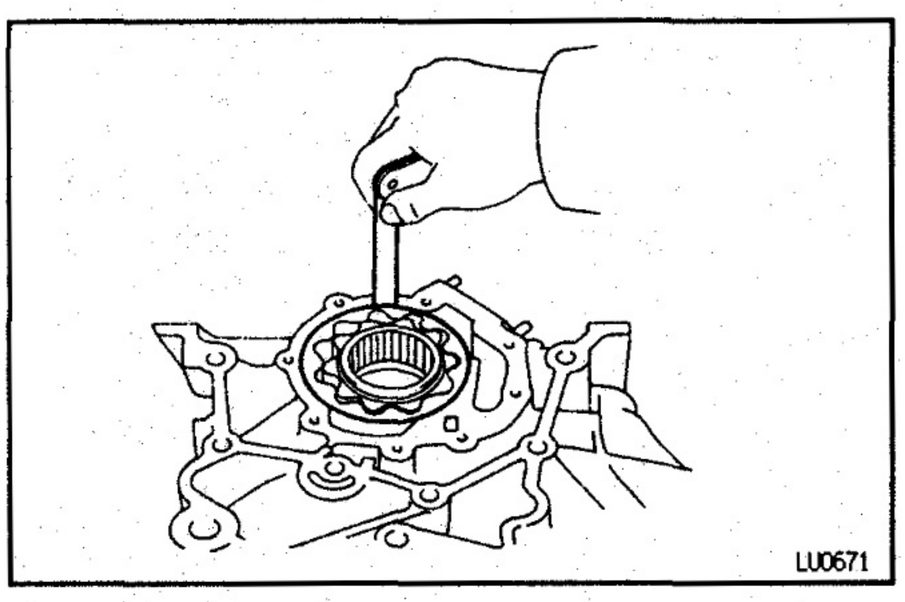

If the tip clearance is greater than maximum, replace the rotors as set.

B. Inspect rotor body clearance

Using a feeler gauge, measure the clearance between the driven rotor and body.

Standard body clearance:

0.144 – 0.219 mm (0.0057 – 0.0086 in.)

Maximum body clearance:

0.40 mm (0.0157 in.)

If the body clearance is greater than maximum, replace the rotors as set. If necessary, replace the oil pump assembly.

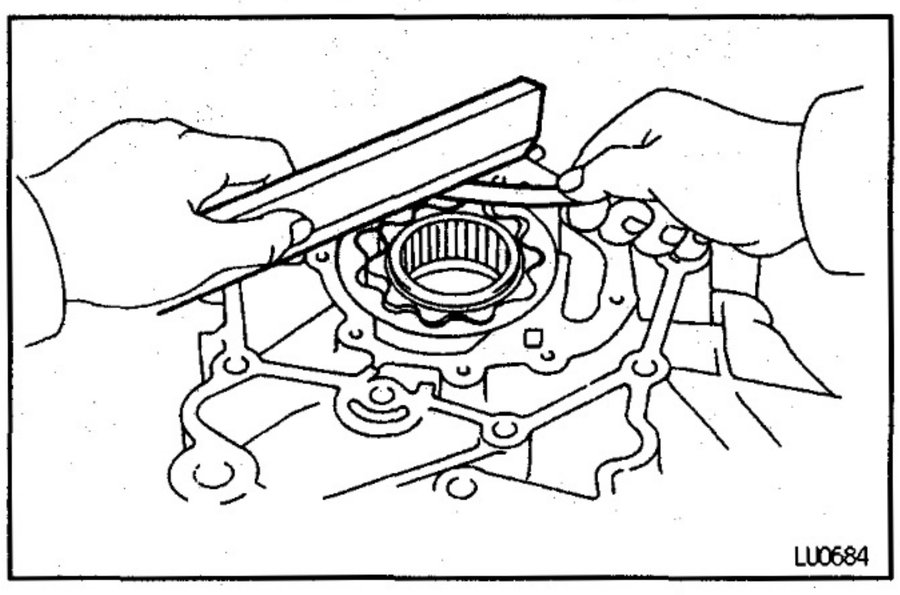

C. Inspect rotor side clearance

Using a feeler gauge and precision straight edge, measure the clearance between the rotors and precision straight edge.

Standard side clearance:

0.035 – 0.085 mm (0.0014 – 0.0033 in.)

Maximum side clearance:

0.15 mm (0.0059 in.)

If the side clearance is greater than maximum, replace the rotors as set. If necessary, replace the oil pump assembly.

EG7AX–01

CRANKSHAFT FRONT OIL SEAL REPLACEMENT

(See crankshaft oil seals replacement in cylinder block in Engine Mechanical)

EG7AY–01

OIL PUMP ASSEMBLY

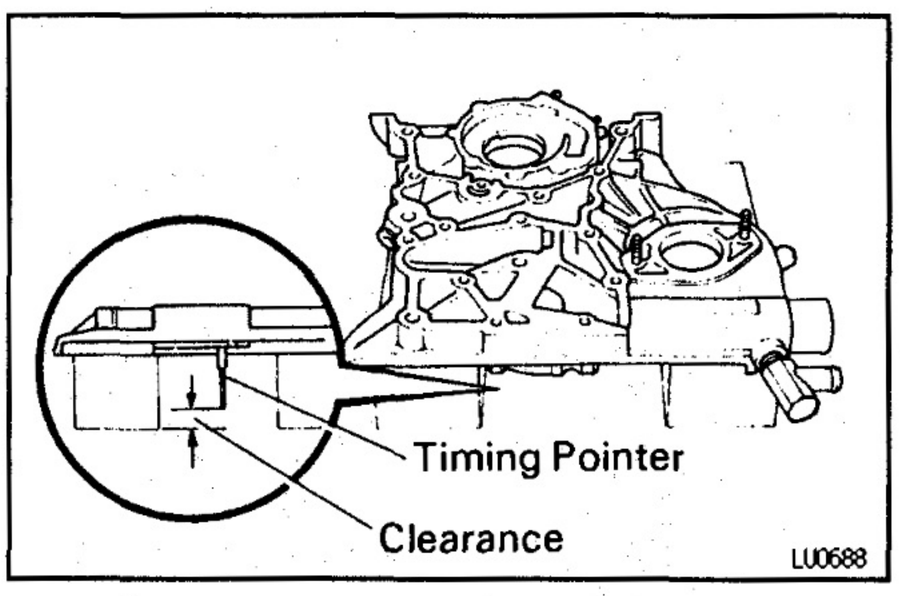

1. PLACE TIMING BELT CASE ON WOODEN BLOCKS

NOTICE: Be careful not to damage the timing pointer.

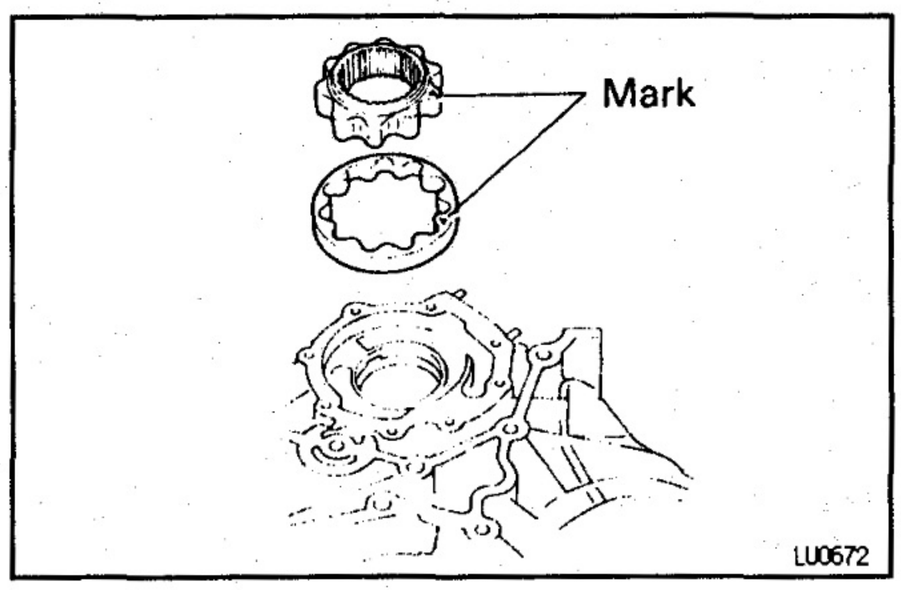

2. INSTALL DRIVE AND DRIVEN ROTORS

(a) Place the drive and driven rotors into timing belt case with the marks facing the pump body cover side.

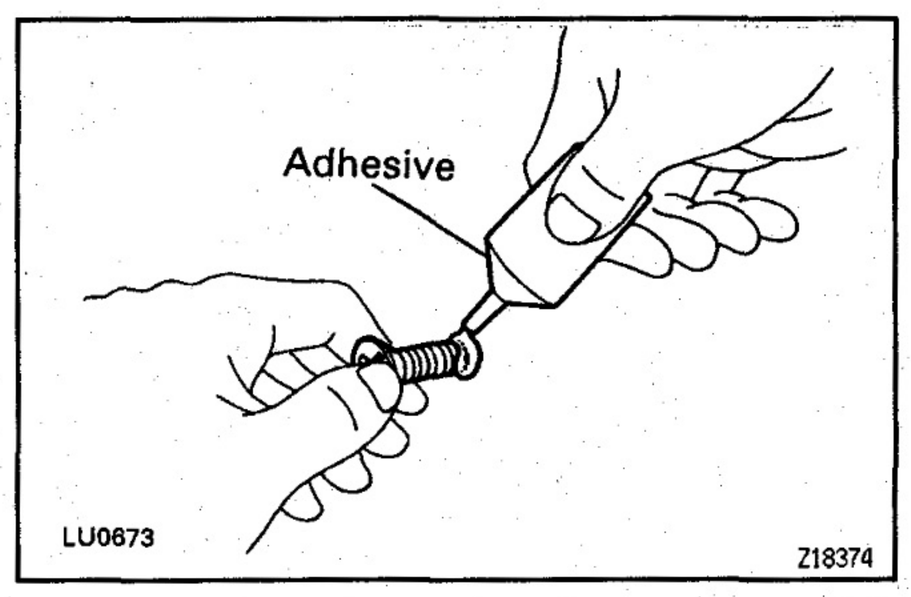

(b) Apply adhesive to 2 or 3 threads of the screws.
Adhesive:
Part No. 08833–00080, THREE BOND 1344
LOCTITE 242 or equivalent

(c) Install the pump body cover with the 8 screws.
Torque: 10 N·m (105 kgf·cm, 8 ft·lbf)

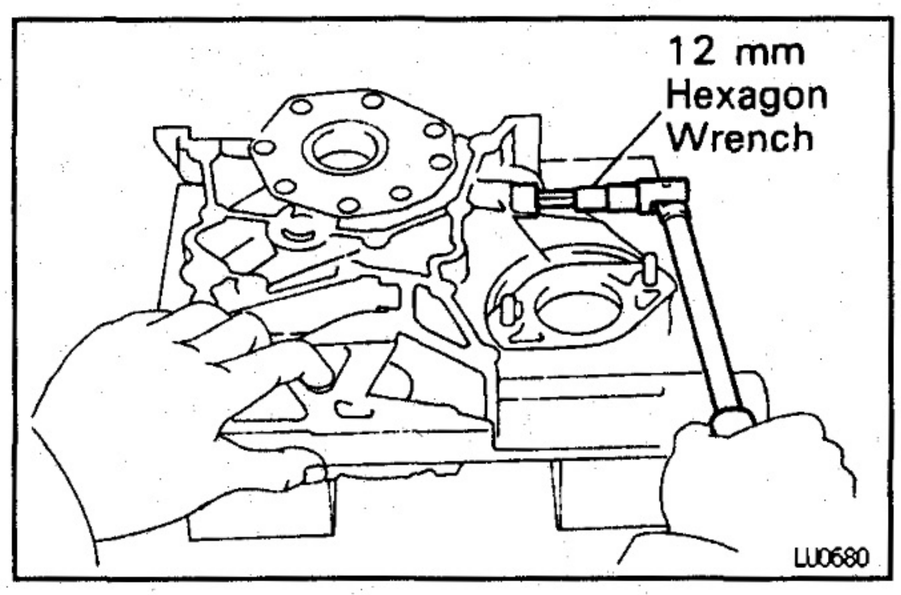

3. INSTALL RELIEF VALVE

(a) Insert the relief valve and spring into the installation hole of the timing belt case.

(b) Using a 12 mm hexagon wrench, install a new gasket and the plug.
Torque: 37 N·m (375 kgf·cm, 27 ft·lbf)

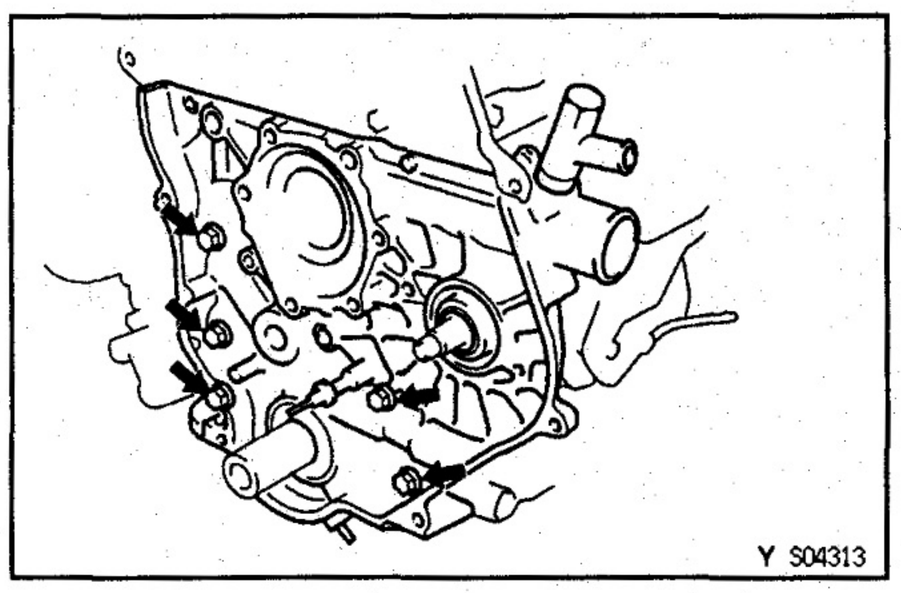

OIL PUMP INSTALLATION

EG7DP–01

1. INSTALL OIL PUMP (TIMING BELT CASE)

(a) Place a new gasket on the cylinder block.

(b) Install the timing belt case with the 5 bolts.
Torque: 22.5 N·m (230 kgf·cm, 17 ft·lbf)

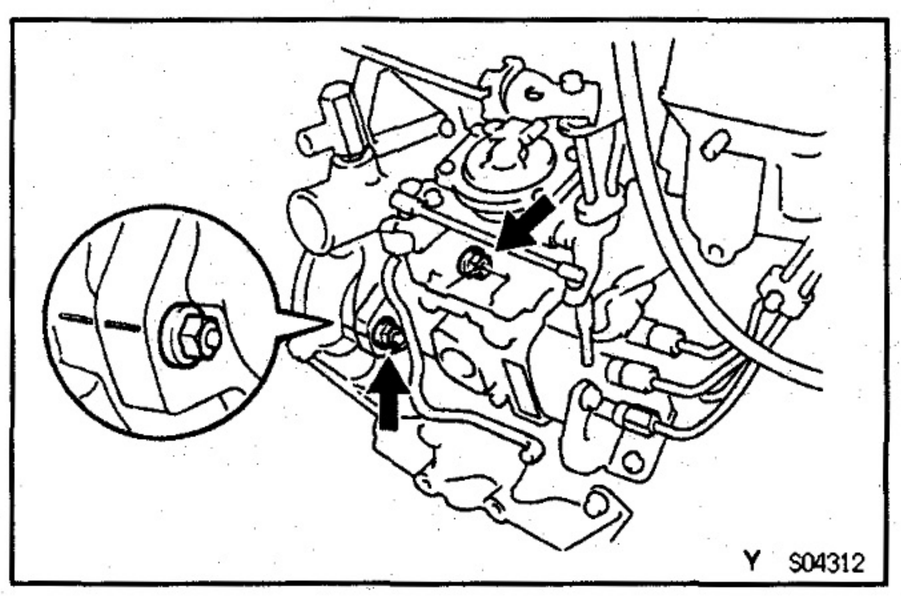

(c) Install the 2 nuts holding the injection pump to the timing belt case.
Torque: 20.5 N·m (210 kgf·cm, 15 ft·lbf)

(d) Check that the injection pump period lines (or matchmarks) are aligned.
If not correct, align the period lines (or matchmarks) by tilting the injection pump.

(e) w/ ACSD:
Connect the thermo wax water bypass hose to the timing belt case.

2. INSTALL OIL STRAINER

Install a new gasket and the oil strainer with the 2 bolts and 2 nuts.

Torque:

Nut

21 N·m (210 kgf·cm, 15 ft·lbf)

Bolt

18 N·m (180 kgf·cm, 13 ft·lbf)

3. INSTALL OIL PAN

(a) Remove any old packing (FIPG) material and be careful not to drop any oil on the contact surfaces of the oil pan and cylinder block.

- Using a razor blade and gasket scraper, remove all the old packing (FIPG) material from the gasket surfaces and sealing groove.
- Thoroughly clean all components to remove all the loose material.
- Using a non—residue solvent, clean both sealing surfaces.

NOTICE: Do not use a solvent which will affect the painted surfaces.

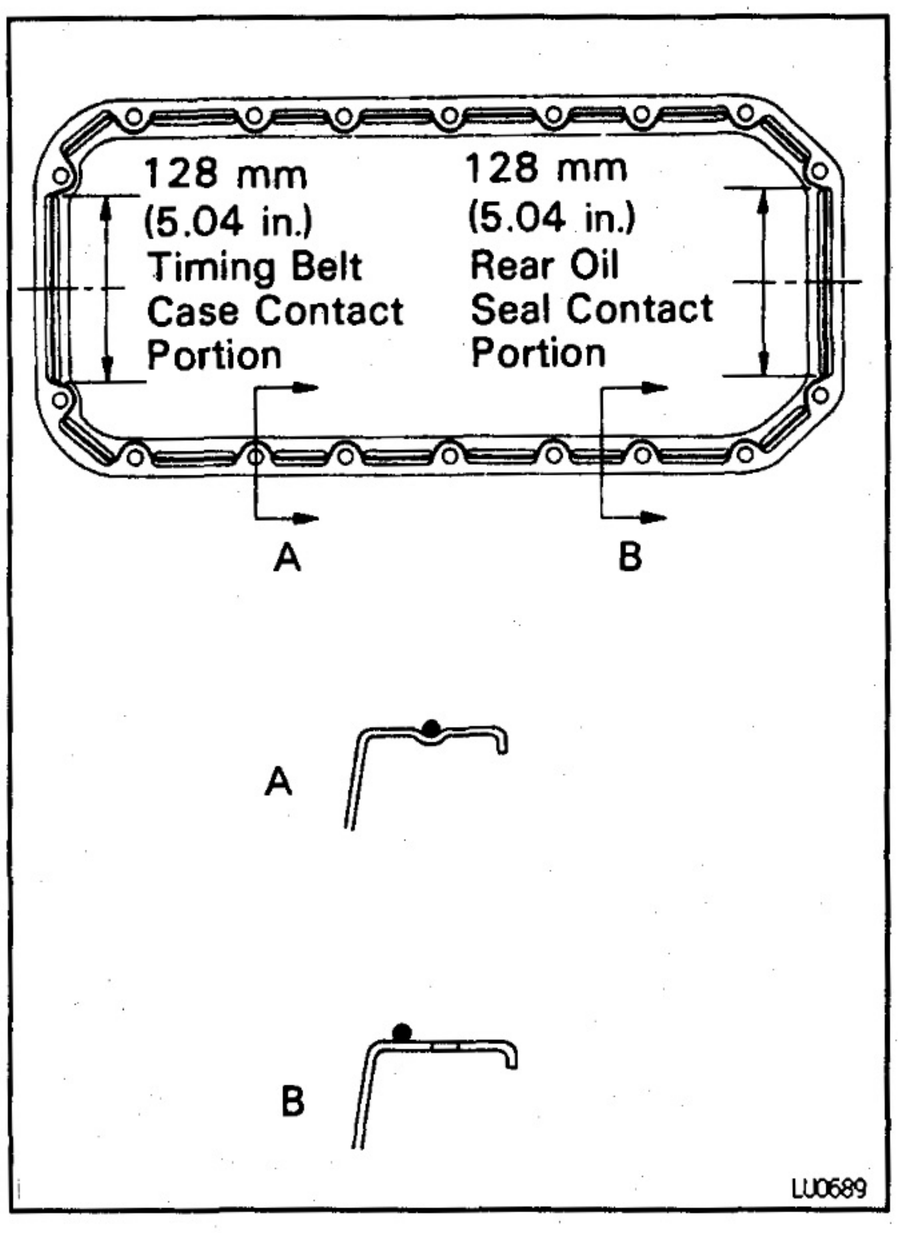

(b) Apply seal packing to the oil pan as shown in the illustration.

HINT: Apply at least 5 mm (0.20 in.) (preferably slightly more) of seal packing to the portions of the oil pan in contact with the timing belt case and rear oil seal retainer.

Seal packing:

Part No. 08826—00080 or equivalent

- Install a nozzle that has been cut to a 4 — 5 mm (0.16 — 0.20 in.) opening.

HINT: Avoid applying an excessive amount to the surface. Be particularly careful near oil passages.

- Parts must be assembled within 5 minutes of application. Otherwise the material must be removed and reapplied.
- Immediately remove nozzle from the tube and reinstall cap.

(c) Install the oil pan with the 14 bolts and 4 nuts. Uniformly tighten the bolts and nuts in several passes.
Torque: 18 N·m (180 kgf·cm, 13 ft·lbf)

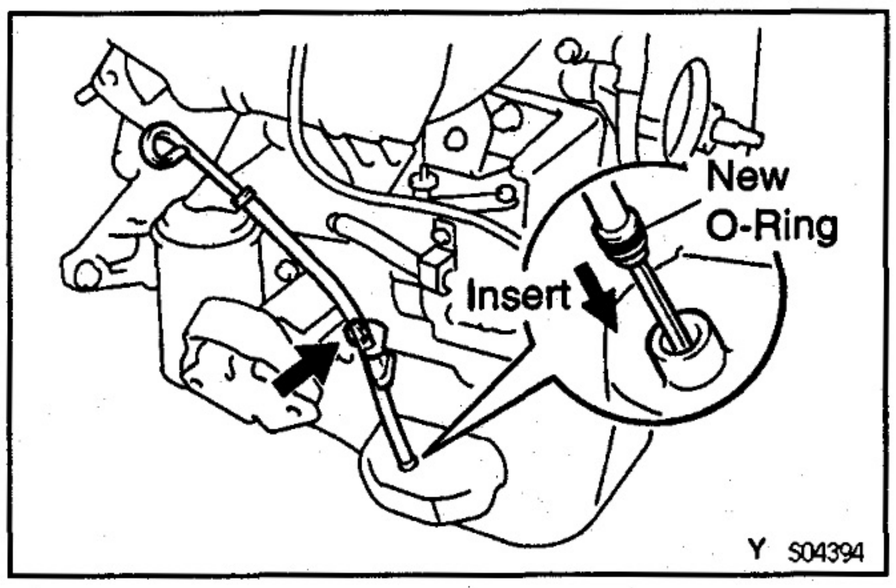

4. LJ:
INSTALL OIL DIPSTICK GUIDE AND OIL DIPSTICK
(a) Install a new O—ring on the dipstick guide.
(b) Apply soapy water on the O—ring.
(c) Connect the dipstick guide end to the oil pan.
(d) Install the dipstick guide with the bolt.
(e) Install the dipstick.

5. INSTALL WATER PUMP
(See step 1 in water pump installation in Cooling System)

6. INSTALL PULLEYS AND TIMING BELT
(See steps 1 to 3 and 5 to 11 in timing belt installation in Engine Mechanical)

7. INSTALL WATER PUMP PULLEY, FAN, FLUID COUPLING ASSEMBLY AND DRIVE BELTS
(See step 4 in water pump installation in Cooling System)

8. INSTALL GLOW PLUGS
(See steps 13 to 16 in cylinder head installation in Engine Mechanical)

9. FILL WITH ENGINE OIL

10. FILL WITH ENGINE COOLANT

11. START ENGINE AND CHECK FOR OIL LEAKS

12. RECHECK ENGINE OIL LEVEL

OIL COOLER
COMPONENTS FOR REMOVAL AND INSTALLATION

EG623-03

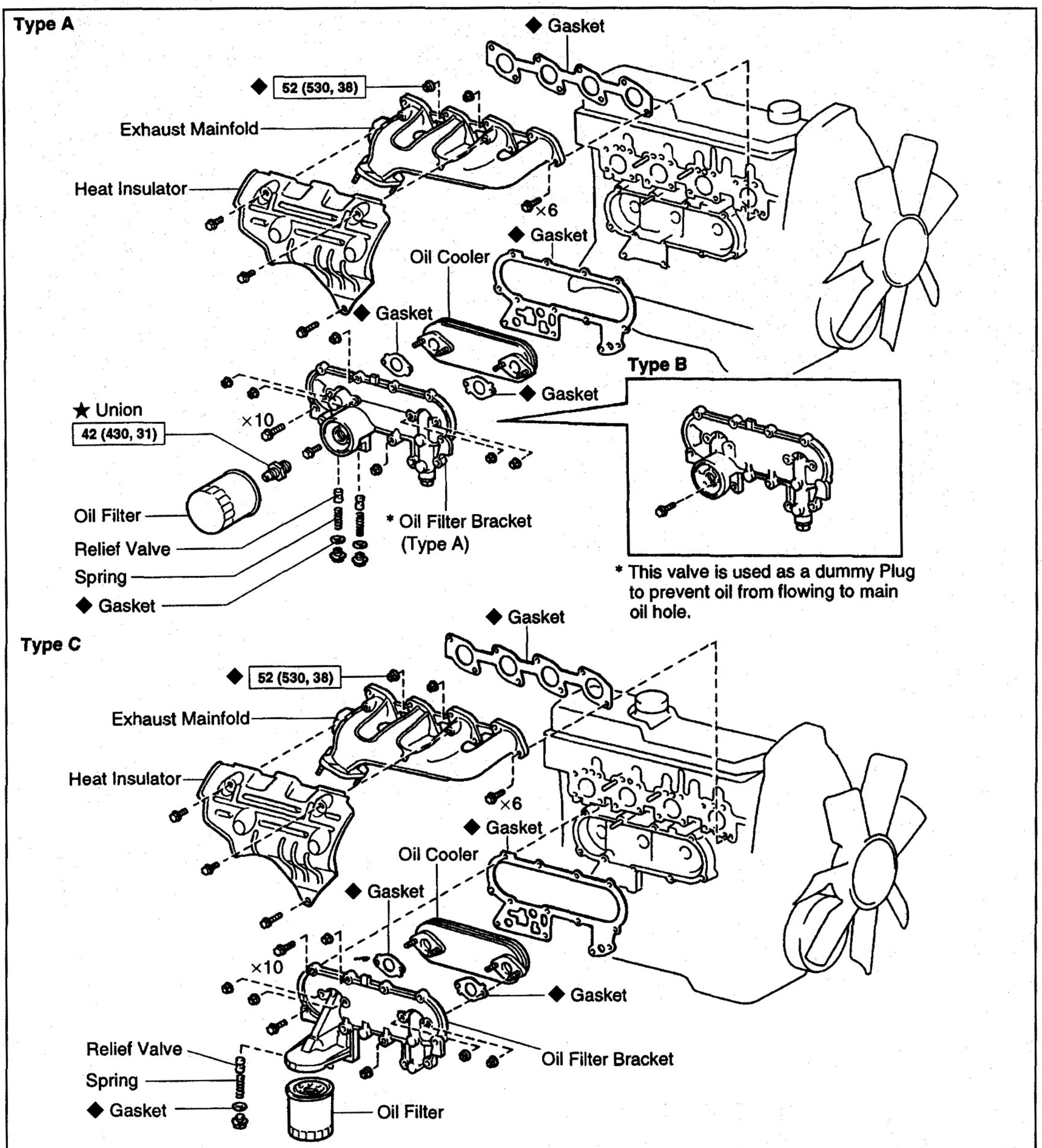

EG7B0-01

OIL COOLER REMOVAL

1. **DRAIN ENGINE COOLANT**
2. **REMOVE EXHAUST MANIFOLD**
   (See step 14 in cylinder head removal in Engine Mechanical)
3. **REMOVE OIL FILTER**
   (See step 2 in oil and filter replacement)
4. **REMOVE RELIEF VALVE(S)**
   Remove the plug, gasket, spring, relief valve and gasket.
   HINT (Types A and B):
   - Remove the 2 relief valves.
   - Arrange the spring and relief valve in correct order.
5. **Type A:**
   REMOVE UNION FOR OIL FILTER
   Using SST, remove the union.
   SST 09326–20011
6. **REMOVE OIL COOLER AND OIL FILTER BRACKET ASSEMBLY**
   Remove the 10 bolts, (11 bolts for LN Thailand) 4 nuts, the oil cooler, oil filter bracket assembly and gasket.
7. **REMOVE OIL COOLER FROM OIL FILTER BRACKET**
   Remove the 4 nuts, oil cooler and 2 gaskets from the filter bracket.

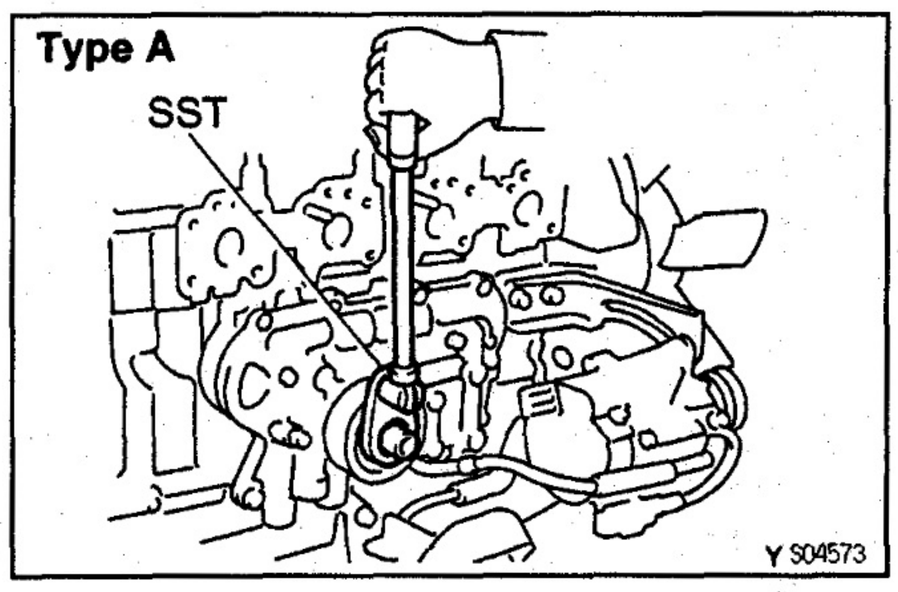

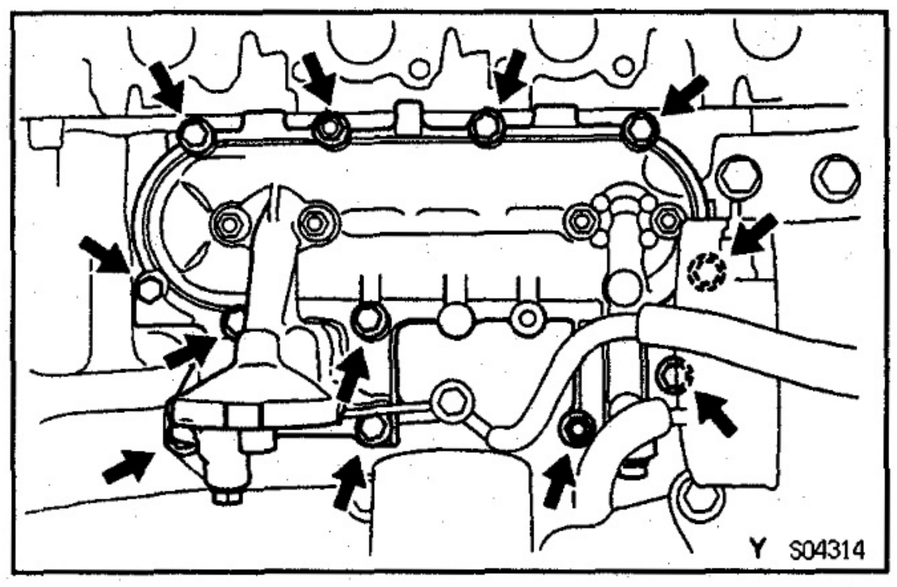

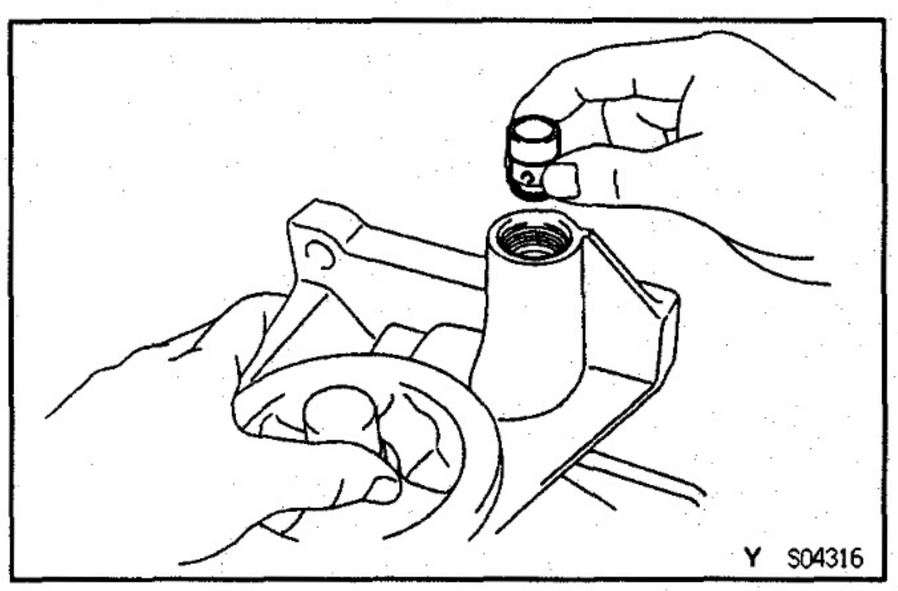

EG625-02

OIL COOLER AND RELIEF VALVE INSPECTION

1. **INSPECT RELIEF VALVE**
   Coat the valve with engine oil and check that it falls smoothly into the oil filter bracket by its own weigh. If is not, replace the relief valve. If necessary, replace the oil filter bracket.

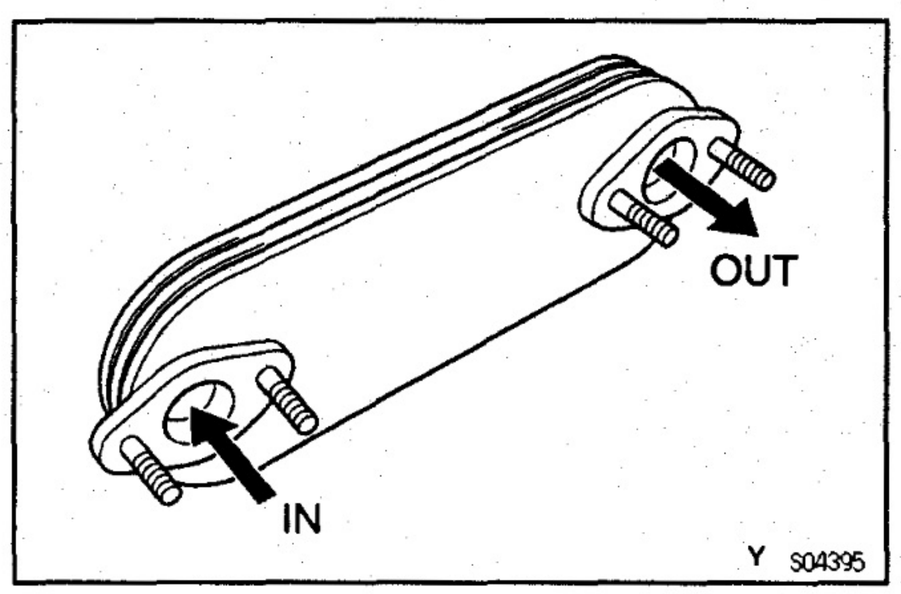

2. **INSPECT OIL COOLER**
   Check the oil cooler for damage or clogging.
   If necessary, replace the oil cooler.

EG781–01

OIL COOLER INSTALLATION

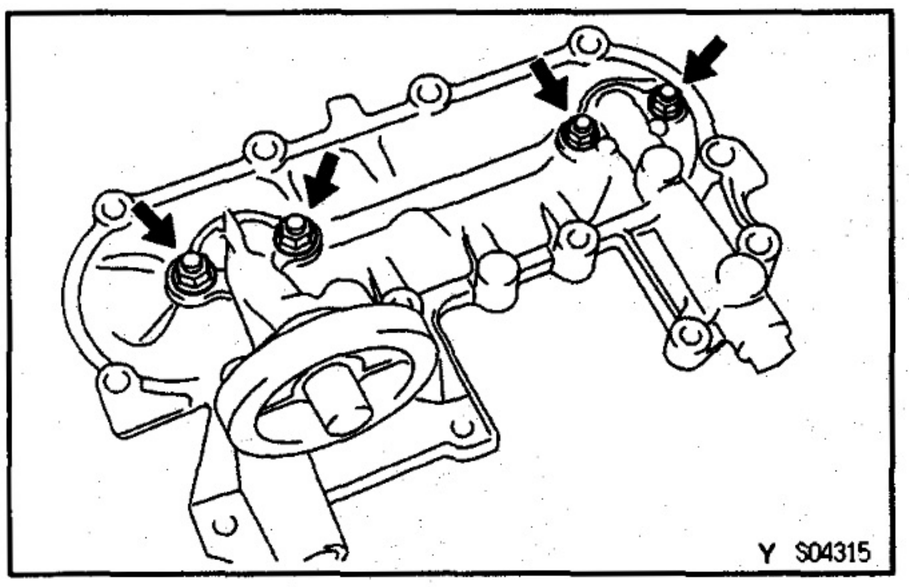

1. INSTALL OIL COOLER TO OIL FILTER BRACKET

Install 2 new gaskets and the oil cooler to the oil filter bracket with the 4 nuts.

Torque: 15.5 N·m (160 kgf·cm, 11 ft·lbf)

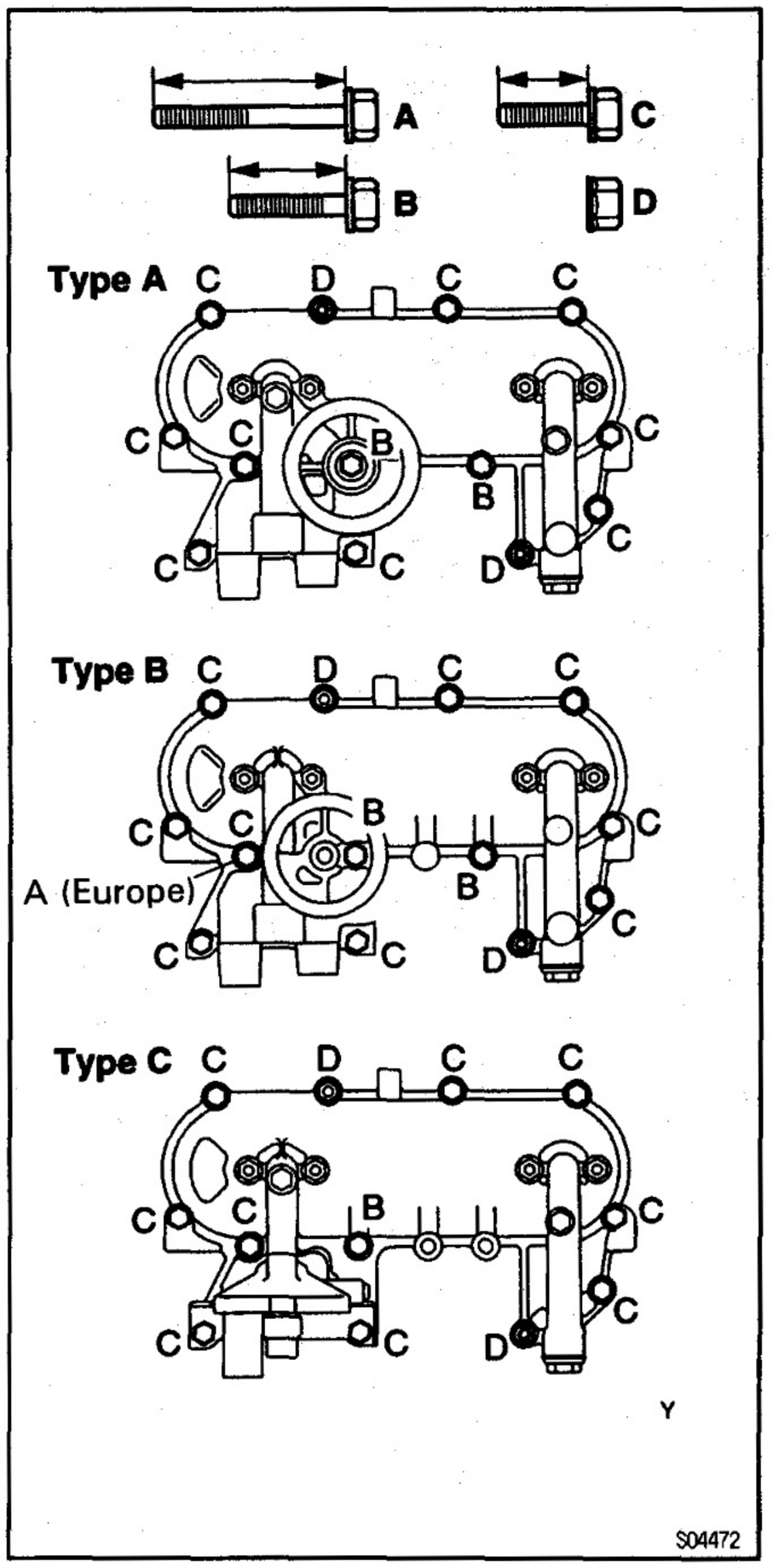

2. INSTALL OIL COOLER AND OIL FILTER BRACKET ASSEMBLY

Install a new gasket, the oil cooler and filter bracket assembly with the 10 bolts (11 bolts for LN Thailand) and 4 nuts.

Torque:

Bolt

19 N·m (195 kgf·cm, 14 ft·lbf)

Nut

20.5 N·m (210 kgf·cm, 15 ft·lbf)

HINT: Each bolt length is indicated in the illustration.

Bolt length:

A 50 mm (1.97 in.)
B 35 mm (1.38 in.)
C 25 mm (0.98 in.)

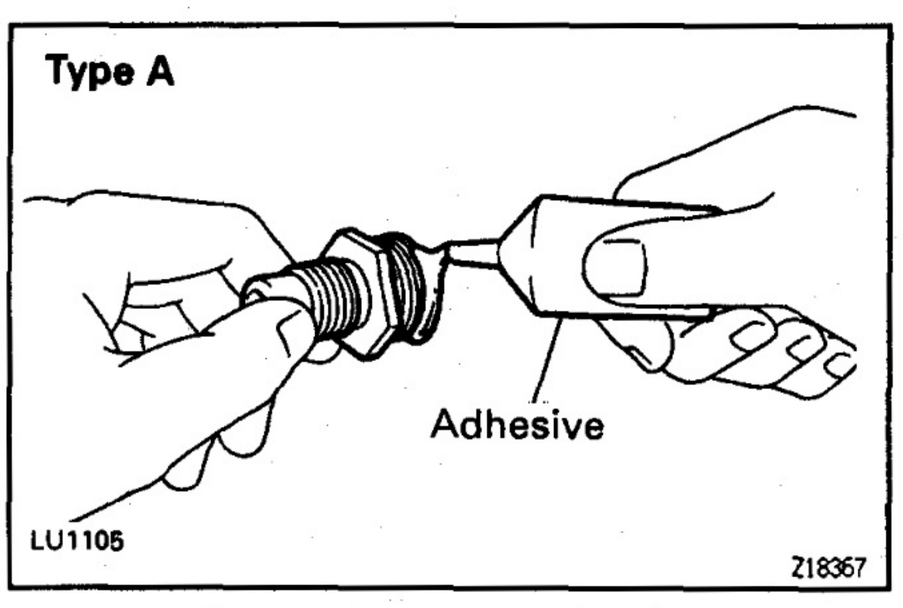

3. Type A:

INSTALL UNION FOR OIL FILTER

(a) Apply adhesive to 2 or 3 threads (oil cooler side) of the union.

Adhesive:

Part No. 08833–00070, THREE BOND 1324 or equivalent

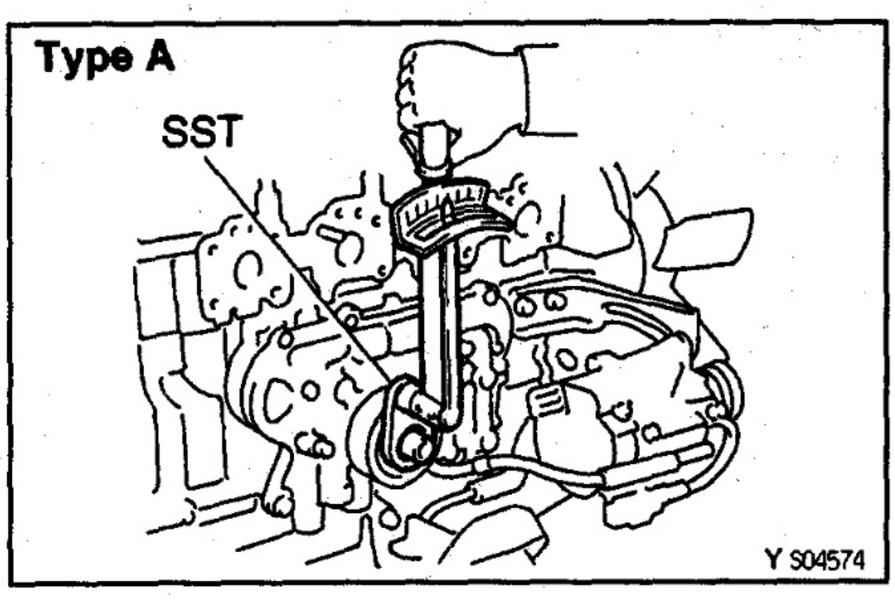

(b) Using SST, install the union.
SST 09326−20011
Torque: 49 N·m (500 kgf·cm, 36 ft·lbf)
42 N·m (430 kgf·cm, 31 ft·lbf) for SST
HINT: Use a torque wrench with a fulcrum length of 300 mm (11.81 in.).

4. **INSTALL RELIEF VALVE(S)**
Install the relief valve and spring with a new gasket and the relief valve.
Torque: 36 N·m (370 kgf·cm, 27 ft·lbf)
5. **INSTALL OIL FILTER**
(See step 2 in oil and filter replacement)
6. **INSTALL EXHAUST MANIFOLD**
(See step 5 in cylinder head installation in Engine Mechanical)
7. **FILL WITH ENGINE COOLANT**
8. **START ENGINE AND CHECK FOR LEAKS**
9. **CHECK ENGINE OIL LEVEL**

EG

OIL NOZZLE

COMPONENTS FOR REMOVAL AND INSTALLATION

EG2K2−08

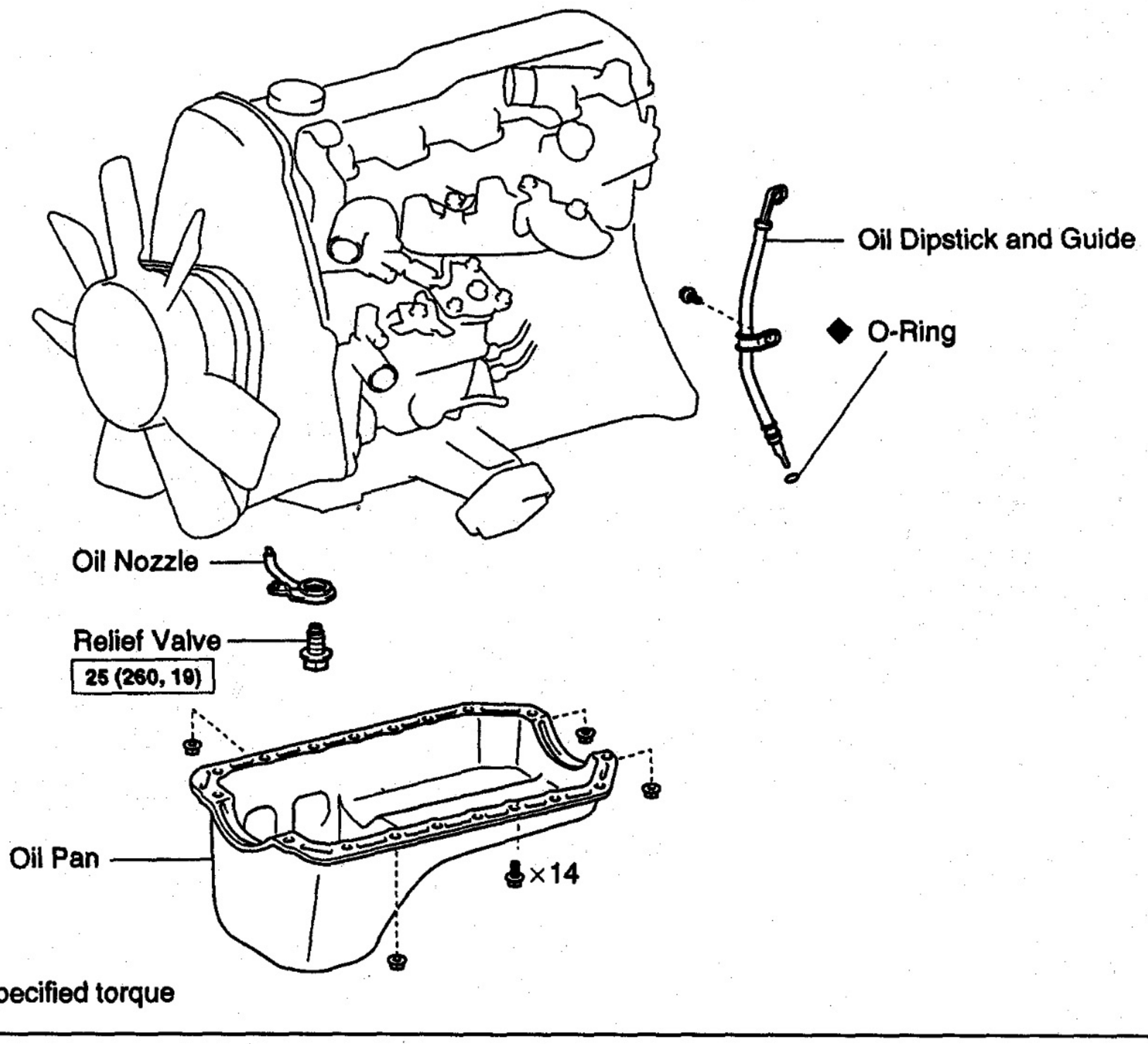

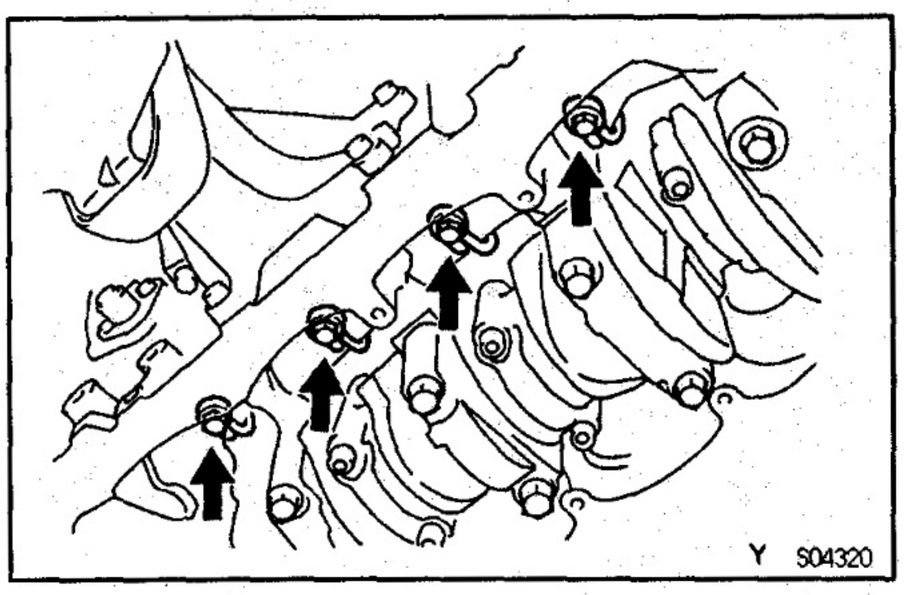

EG2K3–08

OIL NOZZLES REMOVAL

1. **DRAIN ENGINE OIL**
2. **REMOVE OIL PAN**
   (See steps 7 and 8 in oil pump removal)
3. **REMOVE CHECK VALVES AND OIL NOZZLES**
   Remove the 4 check valves and oil nozzles.

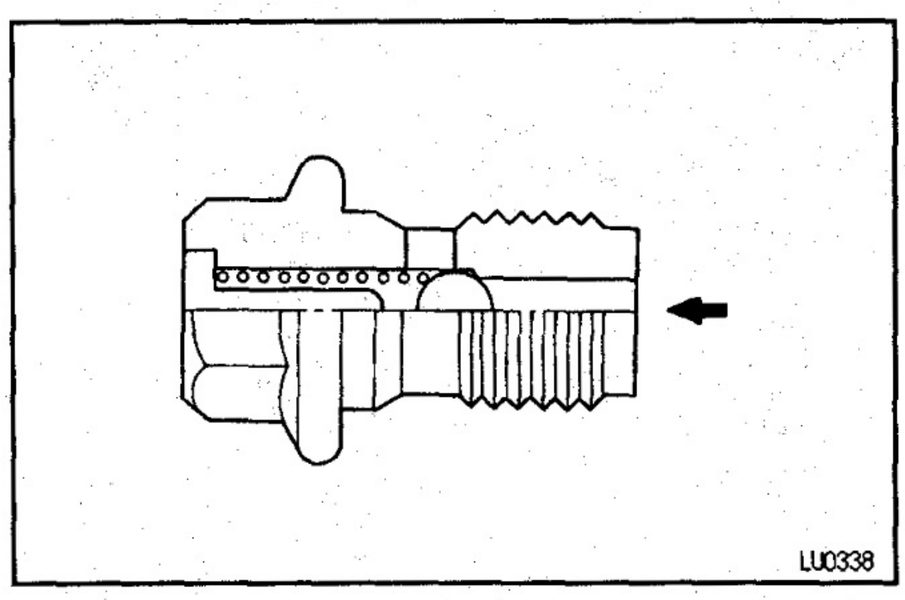

EG35G–06

OIL NOZZLES INSPECTION

1. **INSPECT CHECK VALVES**
   Push the valve with a wooden stick to check if it is stuck.
   If stuck, replace the check valve.

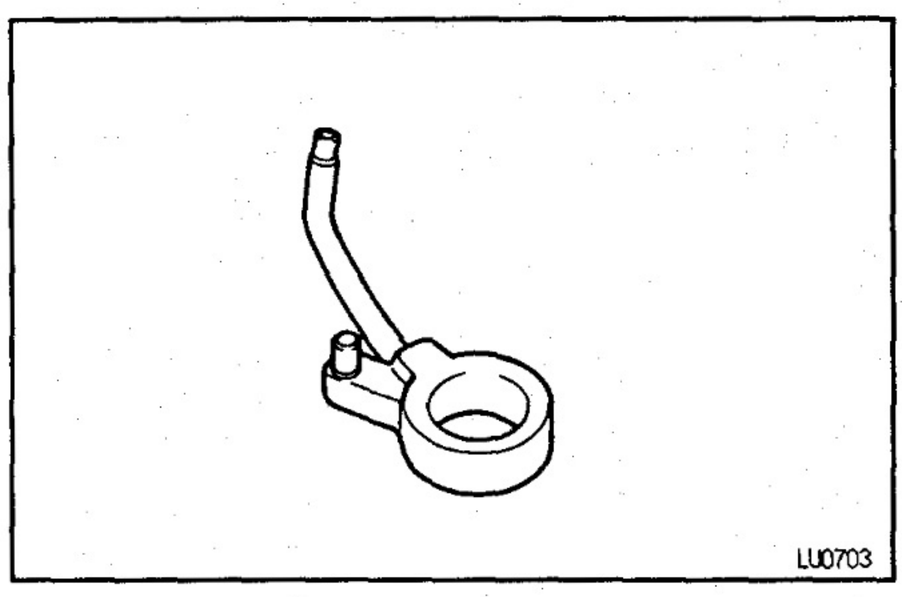

2. **INSPECT OIL NOZZLES**
   Check the oil nozzles for damage or clogging. If necessary, replace the oil nozzle.

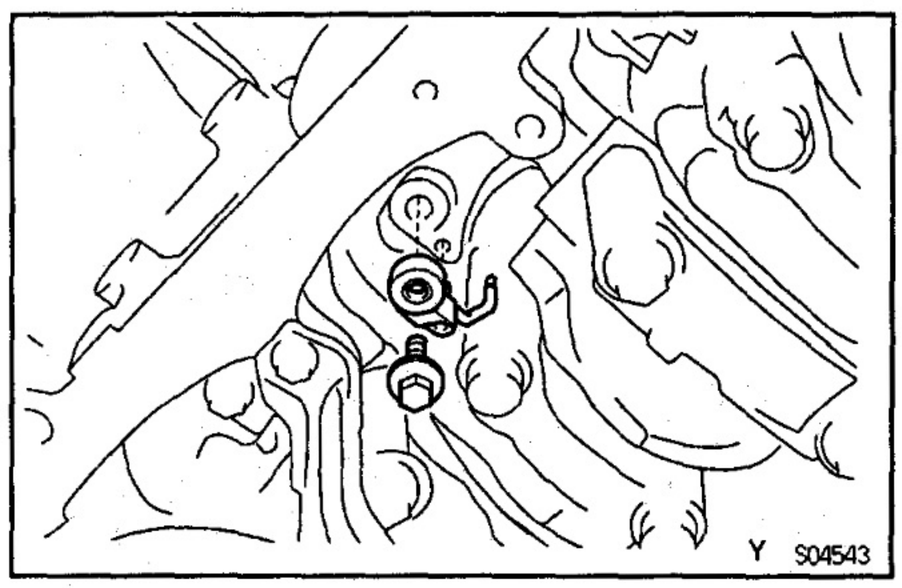

EG36H–02

OIL NOZZLES INSTALLATION

1. **INSTALL OIL NOZZLES AND CHECK VALVES**

(a) Align the pin of the oil nozzle with the pin hole of the cylinder block.

(b) Install the oil nozzle with the check valve. Install the 4 oil nozzles and check valves.
Torque: 25 N·m (260 kgf·cm, 19 ft·lbf)

2. **INSTALL OIL PAN**
   (See steps 3 and 4 in oil pump installation)
3. **FILL WITH ENGINE OIL**
4. **START ENGINE AND CHECK FOR LEAKS**

SERVICE SPECIFICATIONS

SERVICE DATA

EG15A–02

Oil pressure		at idle speed	29 kPa (0.3 kgf/cm², 43 psi) or more
		at 3,000 rpm	294 – 539 kPa (3.0 – 5.5 kgf/cm², 43 – 78 psi)
Oil pump	Tip clearance	STD	0.110 – 0.240 mm (0.0043 – 0.0094 in.)
		Maximum	0.30 mm (0.0118 in.)
	Body clearance	STD	0.114 – 0.219 mm (0.0057 – 0.0086 in.)
		Maximum	0.40 mm (0.0157 in.)
	Side clearance	STD	0.035 – 0.085 mm (0.0014 – 0.0033 in.)
		Maximum	0.15 mm (0.0059 in.)

EG

TORQUE SPECIFICATIONS

EG15C–16

Part tightened		N·m	kgf·cm	ft·lbf
Drain plug x Oil pan		34.5	350	25
Oil pump cover x Oil pump		10	105	8
Plug x Oil pump		37	375	27
Oil pump (Timing belt case) x Cylinder block		22.5	230	17
Oil pump (Timing belt case) x Injection pump		20.5	210	15
Oil strainer x Cylinder block	Bolt	18	180	13
	Nut	21	210	15
Oil pan x Cylinder block		18	180	13
Oil pan x Oil pump (Timing belt case)		18	180	13
Oil pan x Rear oil seal retainer		18	180	13
Union for oil filter x Oil filter bracket		49	500	36
	Use SST	42	430	31
Oil filter bracket x Oil cooler		15.5	160	11
Oil filter bracket x Relief valve plug		36	370	27
Oil filter bracket x Union bolt		20	200	14
Oil filter bracket x Cylinder block	Bolt	19	195	14
	Nut	20.5	210	15

STARTING

PREPARATION ····· ST– 2
TROUBLESHOOTING ····· ST– 3
PRE–HEATING SYSTEM
(Super Glow Type/with Resistor) ····· ST– 6
PRE–HEATING SYSTEM
(Super Glow Type/without Resistor) ····· ST– 10
PRE–HEATING SYSTEM
(Variable Delay Type) ····· ST– 12
PRE–HEATING SYSTEM
(Fixed Delay Type) ····· ST– 14
STARTER
(2.0 kW for LN Thailand) ····· ST– 15
STARTER
(2.0 kW for Except LN Thailand)····· ST– 28
STARTER (2.7 kW) ····· ST– 39
STARTER RELAY (LH, LJ) ····· ST– 49
STARTER RELAY (LN, LY) ····· ST– 50
SERVICE SPECIFICATIONS ····· ST– 51

PREPARATION

SST (SPECIAL SERVICE TOOLS)

ST00S-1D

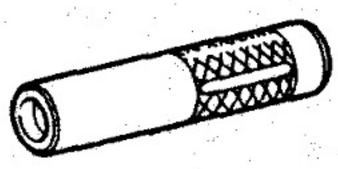	09201-41020	Valve Stem Oil Seal Replacer	Armature front bearing for 2.0 kW for LN Thailand
	09285-76010	Injection Pump Camshaft Bearing Cone Replacer	Armature front bearing for 2.7 kW
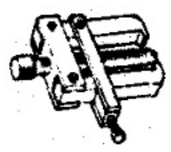	09286-46011	Injection Pump Spline Shaft Puller	Armature bearing (Except rear bearing for 2.0 kW for LN Thailand)
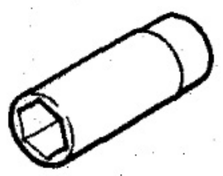	09810-38140	Starter Magnet Switch Nut Wrench 14	2.0 kW
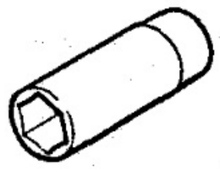	09810-38170	Starter Magnet Switch Nut Wrench 17	2.7 kW
	09820-00030	Alternator Rear Bearing Replacer	Armature front bearing for 2.0 kW for Except LN Thailand
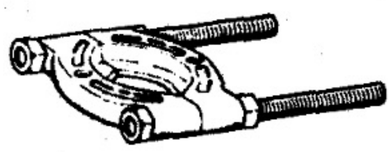	09950-00020	Bearing Remover	Armature rear bearing for 2.0 kW for LN Thailand

ST00T-14

RECOMMENDED TOOLS

	09082-00040	TOYOTA Electrical Tester.	

ST00U-0W

EQUIPMENT

Dial indicator	Commutator
Heater	Water temperature Sensor
Magnetic finger	
Pull scale	Brush spring
Sandpaper	Commutator
Thermometer	Water temperature Sensor
Torque wrench	
V-block	
Vernier calipers	Commutator, Brush

TROUBLESHOOTING

Diesel Electrical System Diagnosis (Engine does not start cold)

ST0FH-01

HINT:

- Battery voltage at 12 V — Ignition switch OFF.
- Engine cranks normally.
- Fusible link okay.
- Check the voltage marked with an asterisk (*) just as the ignition switch is placed at ON because the voltage will change.

PRE-HEATING SYSTEM (Super Glow Type/with Resistor)

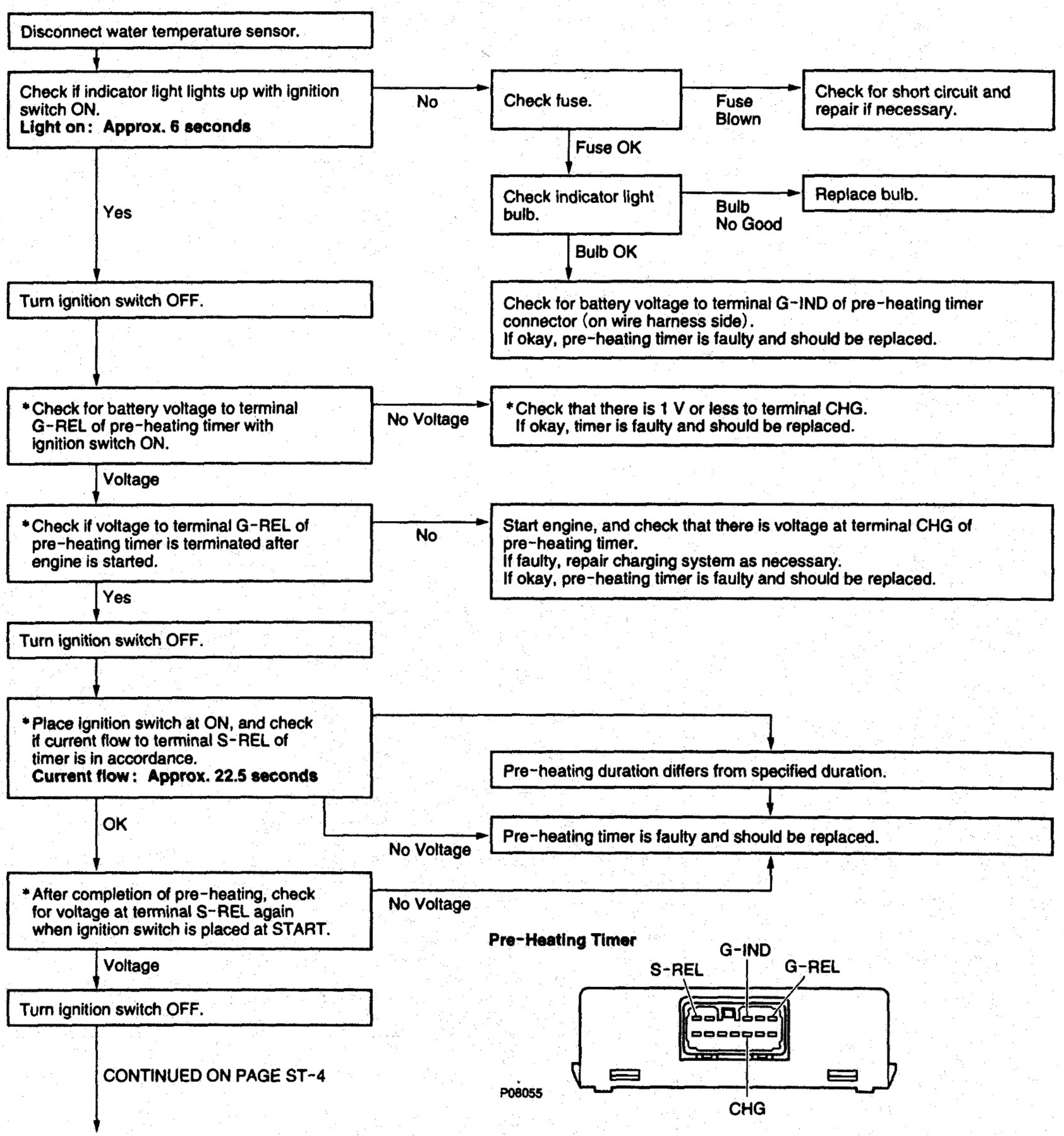

Pre-Heating Timer

P08055

T V08077

CONTINUED FROM PAGE ST-3

* Place ignition switch at ON, and check for voltage to glow plug a few seconds later. Thereafter, voltage should drop about 1/2.

No Voltage at All → Replace No.1 and No.2 glow plug relays.

Voltage Remains at Battery Voltage or 1/2 Battery Voltage 32 Seconds → No.1 glow plug relay is faulty and should be replaced.

1/2 Battery Voltage at All or Falls to 0 V → * Check for battery voltage to positive (+) side of glow plug resistor.
If okay, replace the resistor.
If no voltage, No.2 glow plug relay is faulty and should be replaced.

OK

Turn ignition switch OFF.

Check glow plug for resistance.

Infinuity → Glow plug is faulty and should be replaced.

OK

Reconnect water temperature sensor.

T V08078

PRE—HEATING SYSTEM (Super Glow Type/without Resistor)

Disconnect water temperature sensor.

Check if indicator light lights up with ignition switch ON.
Light on: Approx. 6.0 seconds

No → Check fuse.

Fuse Blown → Check for short circuit and repair if necessary.

Fuse OK

Check indicator light bulb.

Bulb No Good → Replace bulb.

Bulb OK

Check for battery voltage to terminal G-IND of pre-heating timer connector (on wire harness side).
If okay, pre-heating timer is faulty and should be replaced.

Yes

Turn ignition switch OFF.

* Check for battery voltage to terminal S-REL of pre-heating timer with ignition switch ON.

No Voltage → * Check that there is 1 V or less to terminal CHG.
If okay, timer is faulty and should be replaced.

Voltage

* Check if voltage to terminal S-REL of pre-heating timer is terminated after engine is started.

No → Start engine, and check that there is voltage at terminal CHG of pre-heating timer.
If faulty, repair charging system as necessary.
If okay, pre-heating timer is faulty and should be replaced.

Yes

Turn ignition switch OFF.

CONTINUED ON PAGE ST-5

T V08079

CONTINUED FROM PAGE ST-4

* Place starter switch at ON and check if current flow to terminal S-REL of pre-heating timer is in accordance.
Current flow: 120 seconds

→ Pre-heating duration differs from specified duration.

OK

No Voltage → Pre-heating timer is faulty and should be replaced.

* After completion of pre-heating, check for voltage at terminal S-REL again when ignition switch is placed at START.

No Voltage → Pre-heating timer is faulty and should be replaced.

Voltage

Turn ignition switch OFF.

Pre-Heating Timer

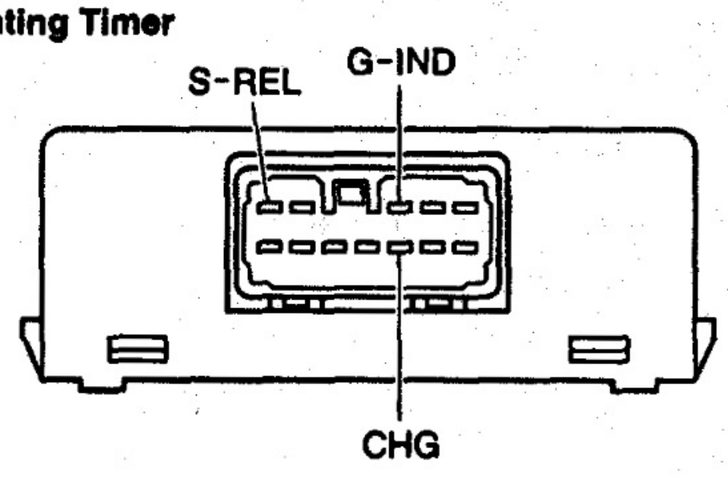

* Place ignition switch at ON and check for voltage to glow plug.

No Voltage → Check and replace glow plug relay.

No Voltage → Check and replace glow plug.

OK

Reconnect water temperature sensor.

T V08080

FUEL CUT SOLENOID VALVE

With ignition switch turned ON, check for fuel cut solenoid valve operation noise (clicking sound) while repeatedly connecting and disconnecting fuel cut solenoid valve.

Noise → Fuel cut solenoid valve okay.

No Noise

Check fuse.

Fuse Blown → Check for short circuit, and repair as necessary.

Fuse OK

Apply battery voltage directly to solenoid, and check for noise.

Noise → Check wire harness from fuse to fuel cut solenoid.

No Noise

Replace fuel cut solenoid valve.

T V07859

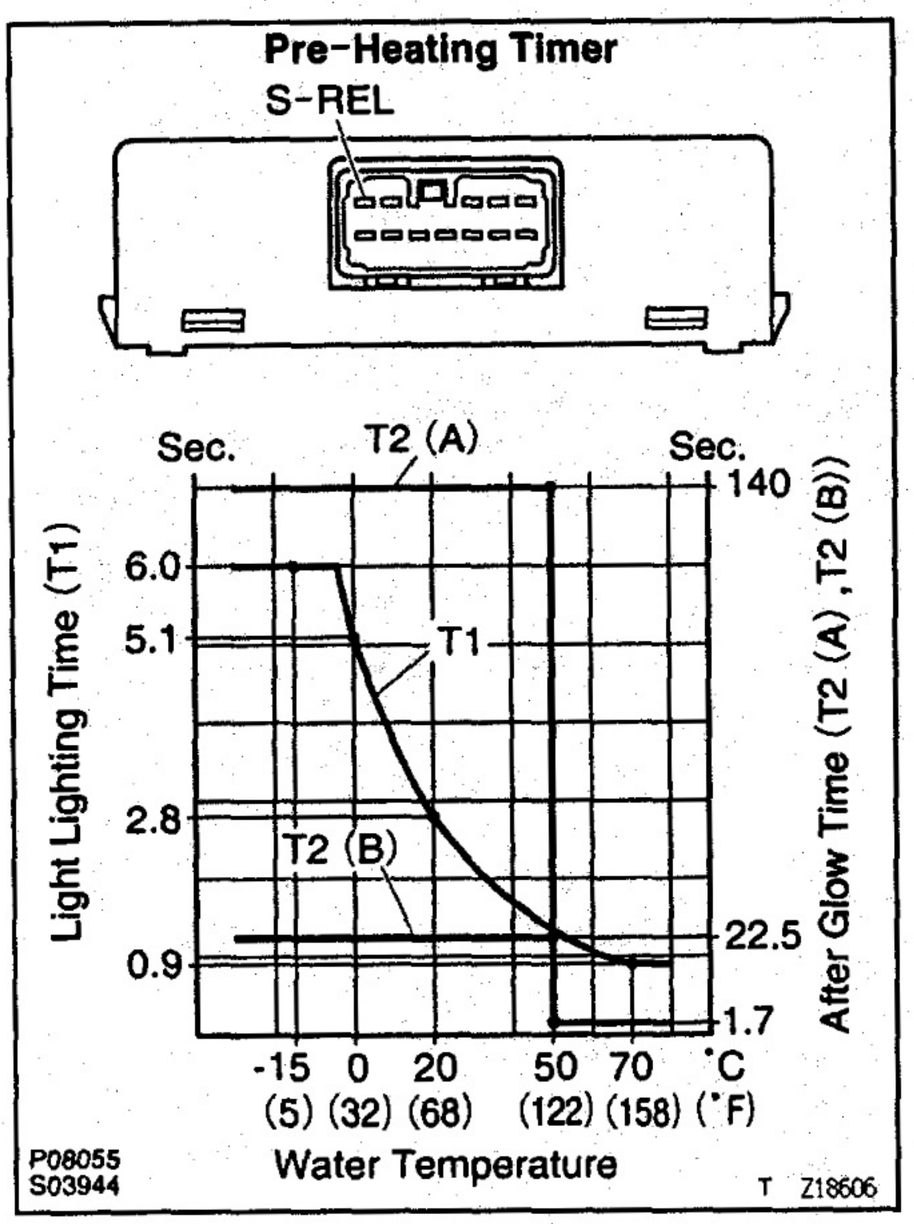

PRE—HEATING SYSTEM (Super Glow Type/with Resistor)

ST05Q—0C

On—Vehicle Inspection

1. INSPECT LIGHTING TIME OF GLOW INDICATOR LIGHT

Turn the ignition switch ON, and measure the lighting time.

Light lighting time (T1):

Refer to the chart graph

2. INSPECT AFTER GLOW TIME

Turn the ignition switch ON, and measure the time battery voltage is applied to terminal S—REL of the pre—heating timer.

After glow time (T2 (A), T2 (B)):

Refer to the chart graph

T2 (A) Before starting the engine

T2 (B) After starting the engine

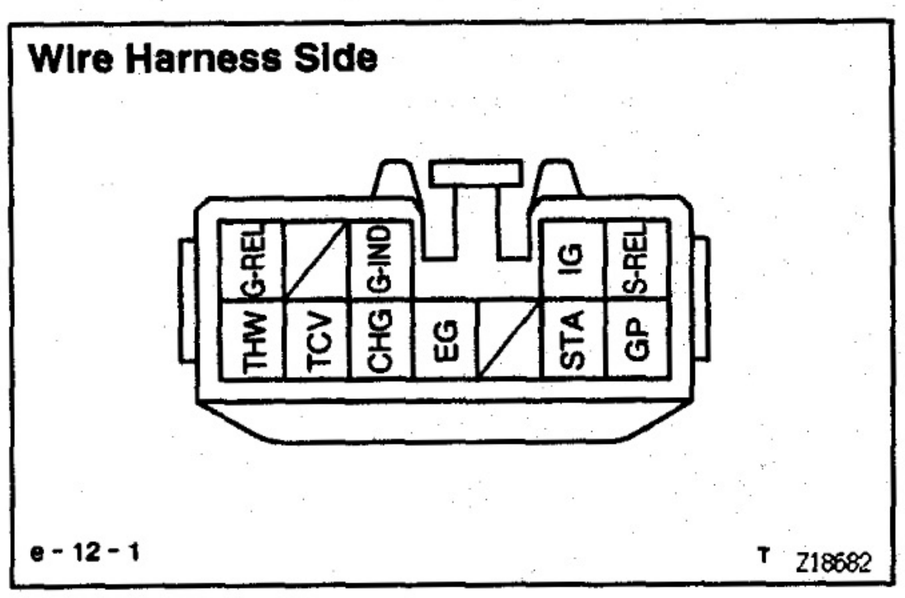

ST0AV—07

Pre—Heating Timer

PRE—HEATING TIMER INSPECTION

1. DISCONNECT PRE—HEATING TIMER CONNECTOR

LOCATION: See relay locations in Electrical Wiring Diagram.

2. INSPECT PRE—HEATING TIMER CIRCUIT

Check the connector on the wire harness side as shown in these chart:

Check for	Tester connection	Condition	Specified value
Voltage	G-IND - Ground	Ignition switch OFF	No voltage
		Ignition switch ON	Battery voltage
Voltage	IG - Ground	Ignition switch OFF	No voltage
		Ignition switch ON	Battery voltage
Voltage	STA - Ground	Ignition switch OFF	No voltage
		Ignition switch START	Battery voltage
Continuity	G-REL, S-REL - Ground	—	Continuity
Continuity	GP - Ground	—	Continuity
Continuity	THW - Ground	—	Continuity
Continuity	EG - Ground	—	Continuity
Continuity	TCV (w/ TCV) - Ground	—	Continuity

T V08081

3. RECONNECT PRE—HEATING TIMER CONNECTOR

ST0AW-05

No.1 Glow Plug Relay (LH)

NO.1 GLOW PLUG RELAY INSPECTION

1. **REMOVE NO.1 GLOW PLUG RELAY**
   LOCATION: See relay locations in Electrical Wiring Diagram.

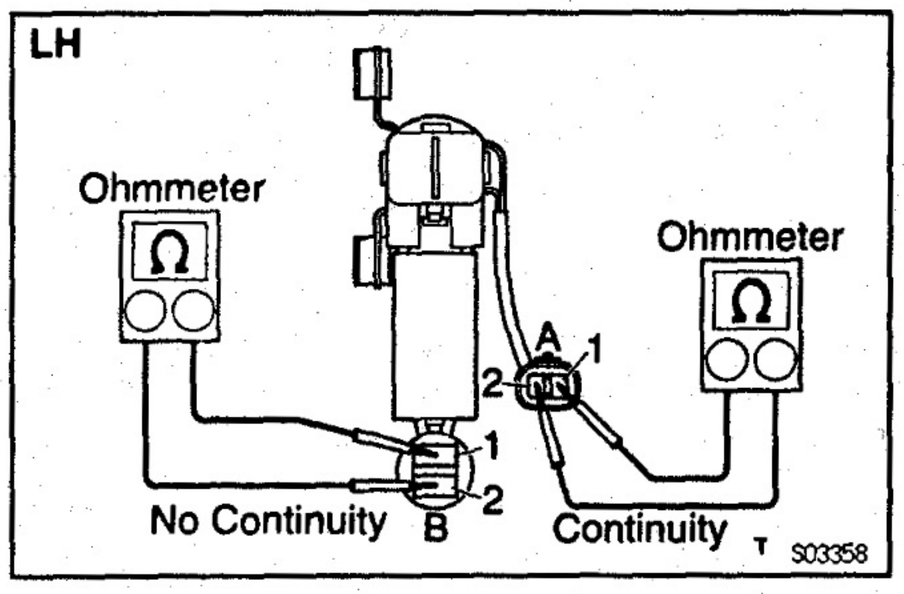

2. **INSPECT NO.1 GLOW PLUG RELAY**

A. Inspect relay continuity

(a) Using an ohmmeter, check that there is continuity between terminals 1 and 2 of connector A.
If there is no continuity, replace the relay.

(b) Check that there is no continuity between terminals 1 and 2 of connector B.
If there is continuity, replace the relay.

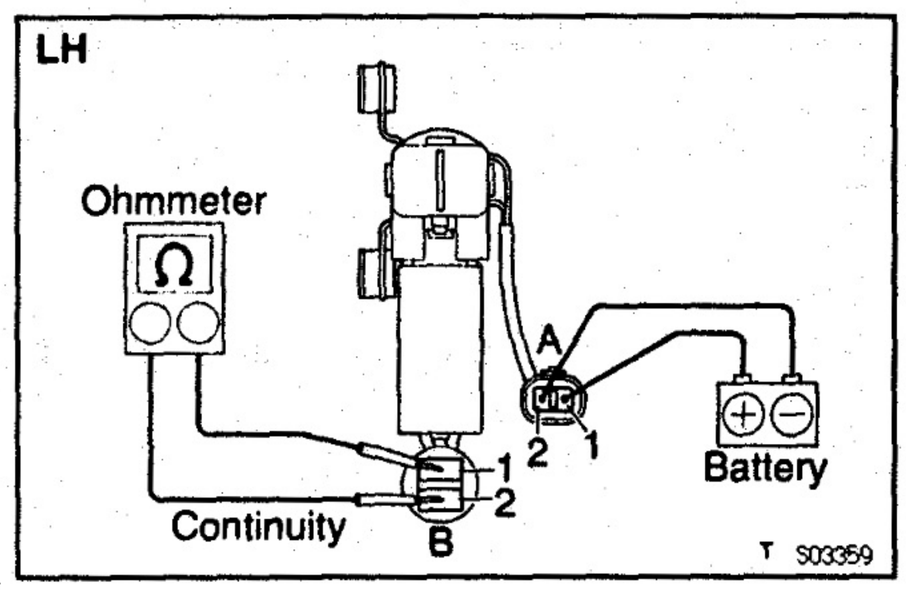

B. Inspect relay operation

(a) Apply battery voltage across terminals 1 and 2 of connector A.

(b) Using an ohmmeter, check that there is continuity between terminals 1 and 2 of connector B.
If there is no continuity, replace the relay.

3. **REINSTALL NO.1 GLOW PLUG RELAY**

ST0AX-04

No.2 Glow Plug Relay (LH)

NO.2 GLOW PLUG RELAY INSPECTION

1. **REMOVE NO.2 GLOW PLUG RELAY**
   LOCATION: See relay locations in Electrical Wiring Diagram.

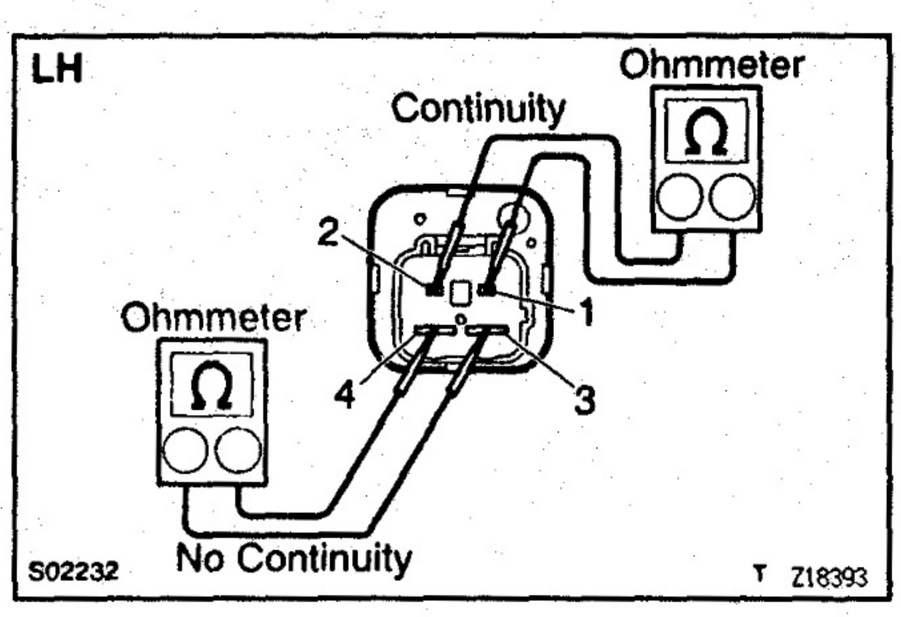

2. **INSPECT NO.2 GLOW PLUG RELAY**

A. Inspect relay continuity

(a) Using an ohmmeter, check that there is continuity between terminals 1 and 2.
If there is no continuity, replace the relay.

(b) Check that there is no continuity between terminals 3 and 4.
If there is continuity, replace the relay.

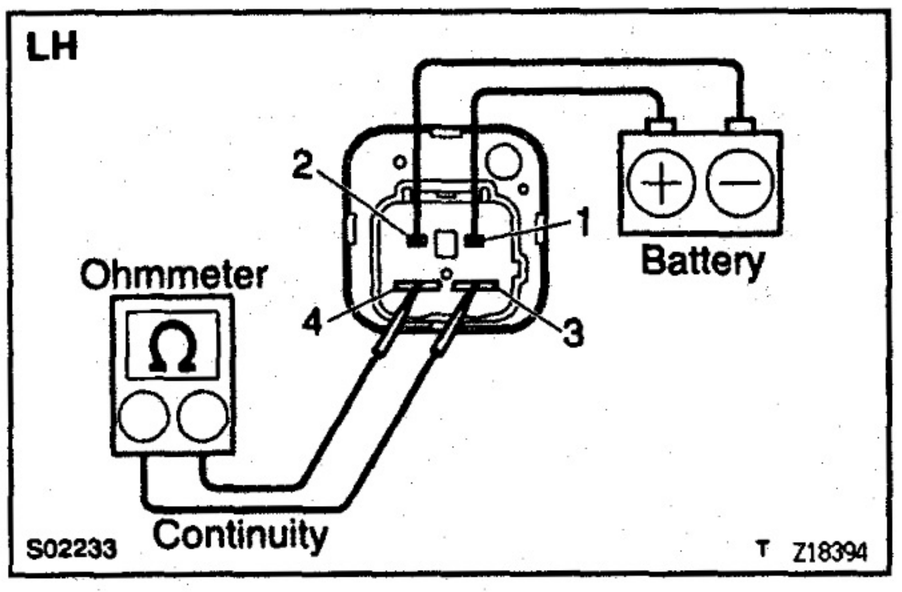

B. Inspect relay operation

(a) Apply battery voltage across terminals 1 and 2.

(b) Using an ohmmeter, check that there is continuity between terminals 3 and 4.
If there is no continuity, replace the relay.

3. REINSTALL NO.2 GLOW PLUG RELAY

ST

ST0AW–08

No.1 and No.2 Glow Plug Relays (LN)

NO.1 AND NO.2 GLOW PLUG RELAYS INSPECTION

1. REMOVE NO.1 AND NO.2 GLOW PLUG RELAYS
LOCATION: See relay locations in Electrical Wiring Diagram.

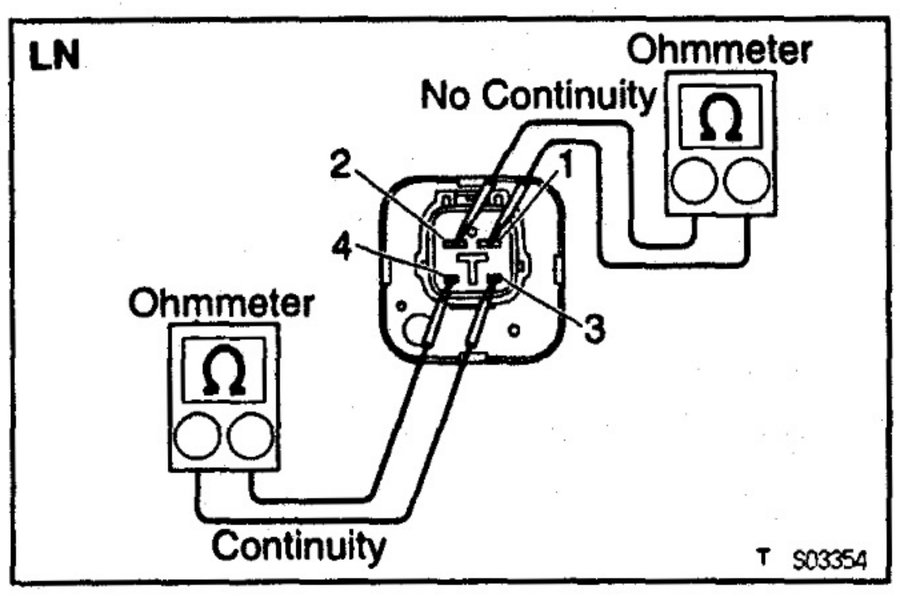

2. INSPECT NO.1 AND NO.2 GLOW PLUG RELAYS

A. Inspect relay continuity

(a) Using an ohmmeter, check that there is no continuity between terminals 1 and 2.
If there is continuity, replace the relay.

(b) Check that there is continuity between terminals 3 and 4.
If there is no continuity, replace the relay.

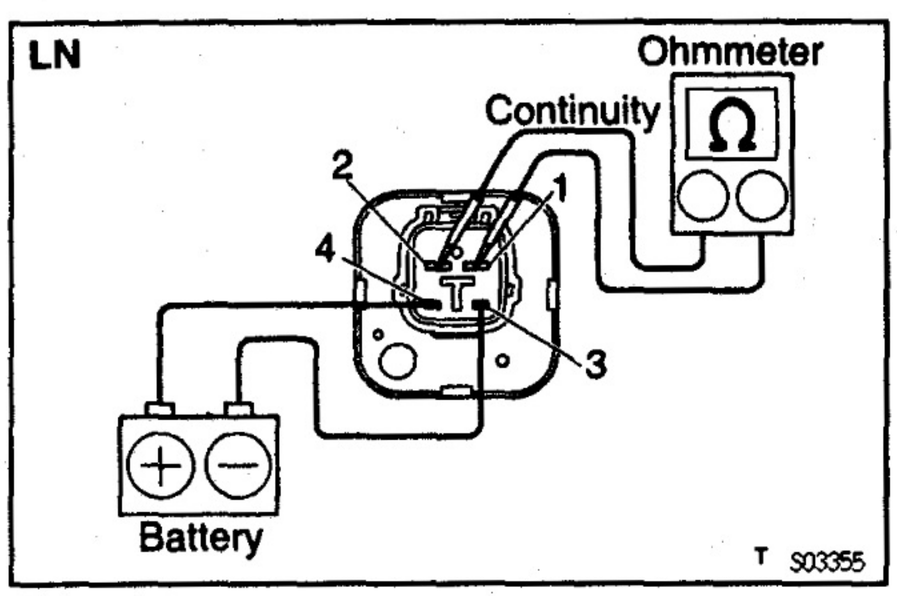

B. Inspect relay operation

(a) Apply battery voltage across terminals 3 and 4.

(b) Using an ohmmeter, check that there is continuity between terminals 1 and 2.
If there is no continuity, replace the relay.

3. REINSTALL NO.1 AND NO.2 GLOW PLUG RELAYS

ST0AW–07

No.1 Glow Plug Relay (LY)

NO.1 GLOW PLUG RELAY INSPECTION

1. REMOVE NO.1 GLOW PLUG RELAY
LOCATION: See relay locations in Electrical Wiring Diagram.

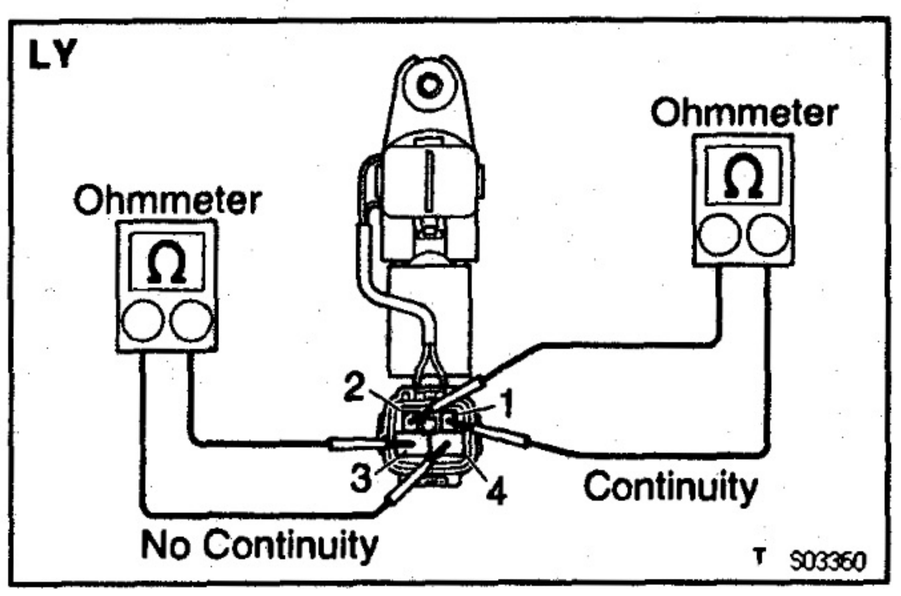

2. INSPECT NO.1 GLOW PLUG RELAY

A. Inspect relay continuity

(a) Using an ohmmeter, check that there is continuity between terminals 1 and 2.
If there is no continuity, replace the relay.

(b) Check that there is no continuity between terminals 3 and 4.
If there is continuity, replace the relay.

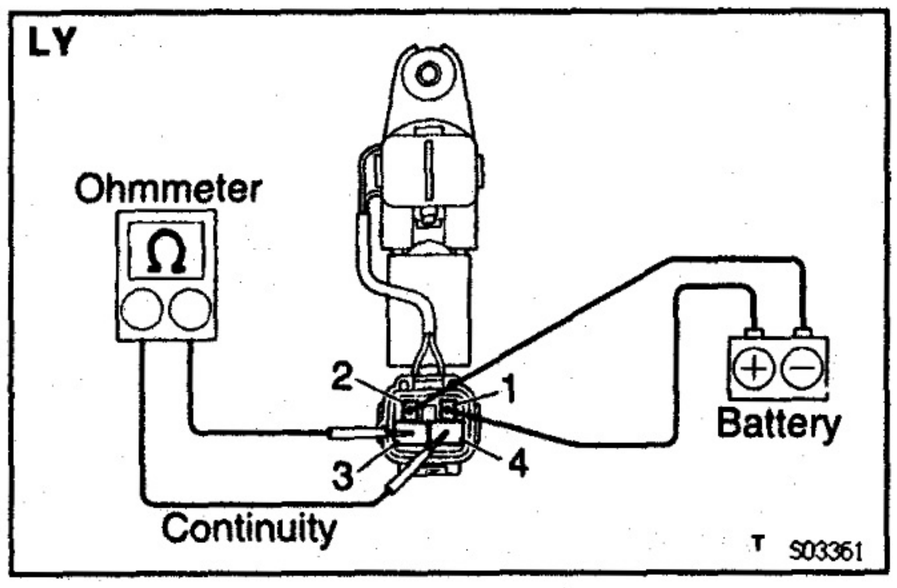

B. Inspect relay operation

(a) Apply battery voltage across terminals 1 and 2.

(b) Using an ohmmeter, check that there is continuity between terminals 3 and 4.
If there is no continuity, replace the relay.

3. REINSTALL NO.1 GLOW PLUG RELAY

No.2 Glow Plug Relay (LY)

STOFP–01

(See No.1 and No.2 glow plug relays (LN))

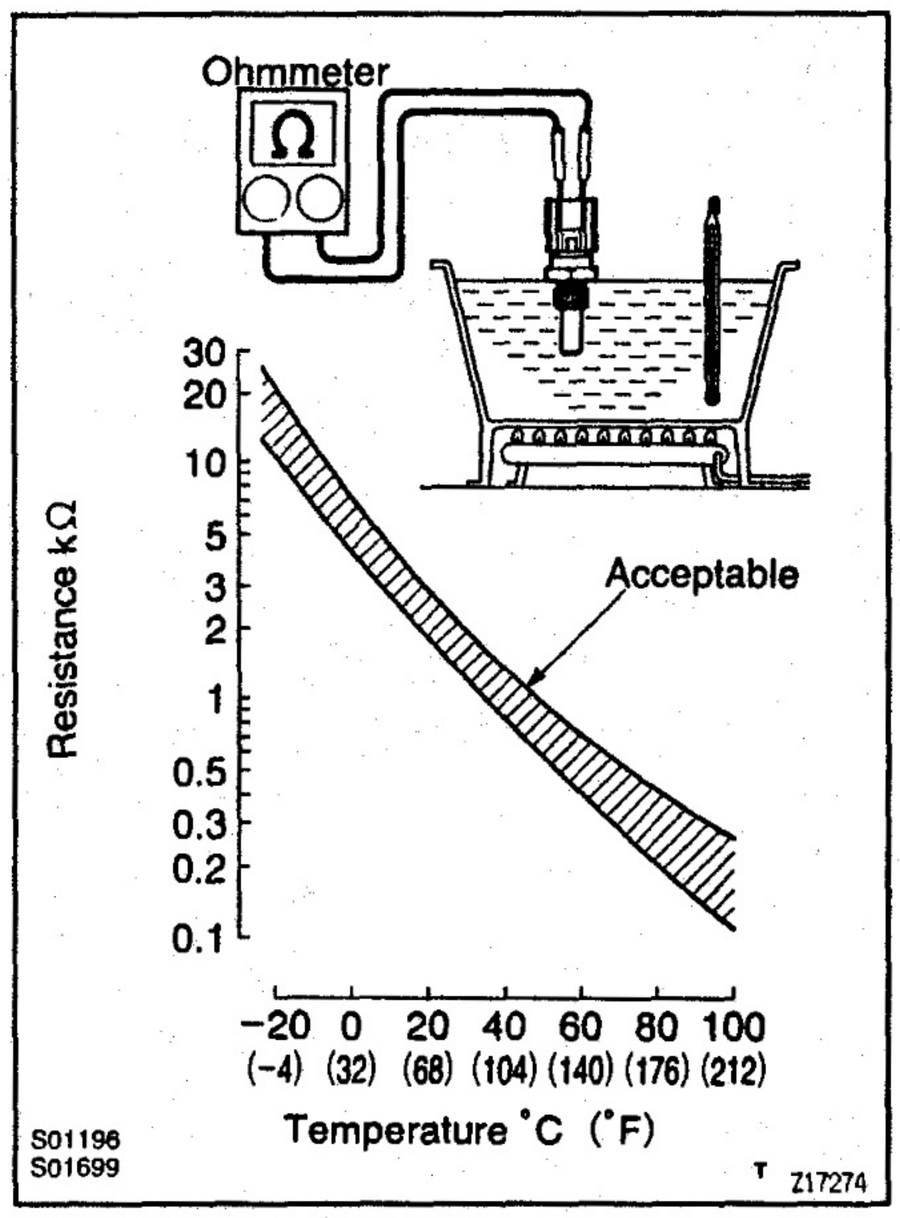

S02A1–05

Water Temperature Sensor

WATER TEMPERATURE SENSOR INSPECTION

1. REMOVE WATER TEMPERATURE SENSOR
LOCATION: In water outlet housing.

2. INSPECT WATER TEMPERATURE SENSOR
Using an ohmmeter, measure the resistance between the terminals.
Resistance:
Refer to the chart graph
If the resistance is not as specified, replace the sensor.

3. REINSTALL WATER TEMPERATURE SENSOR
Torque: 17.5 N·m (178 kgf·cm, 13 ft·lbf)

ST

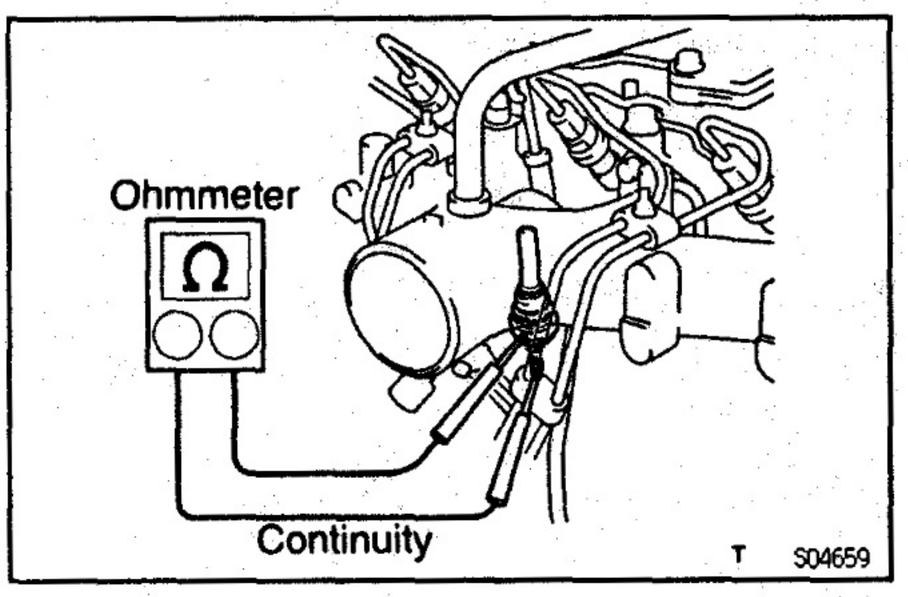

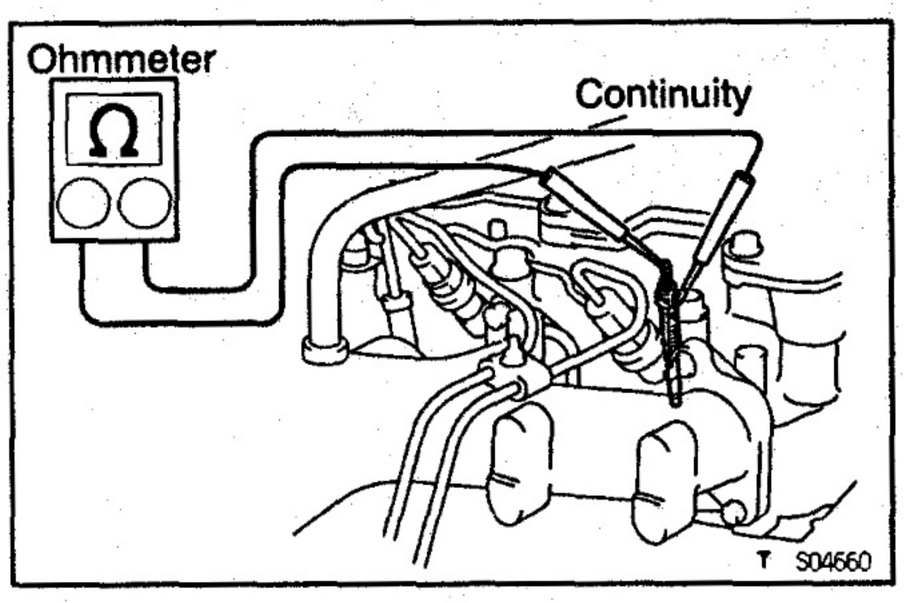

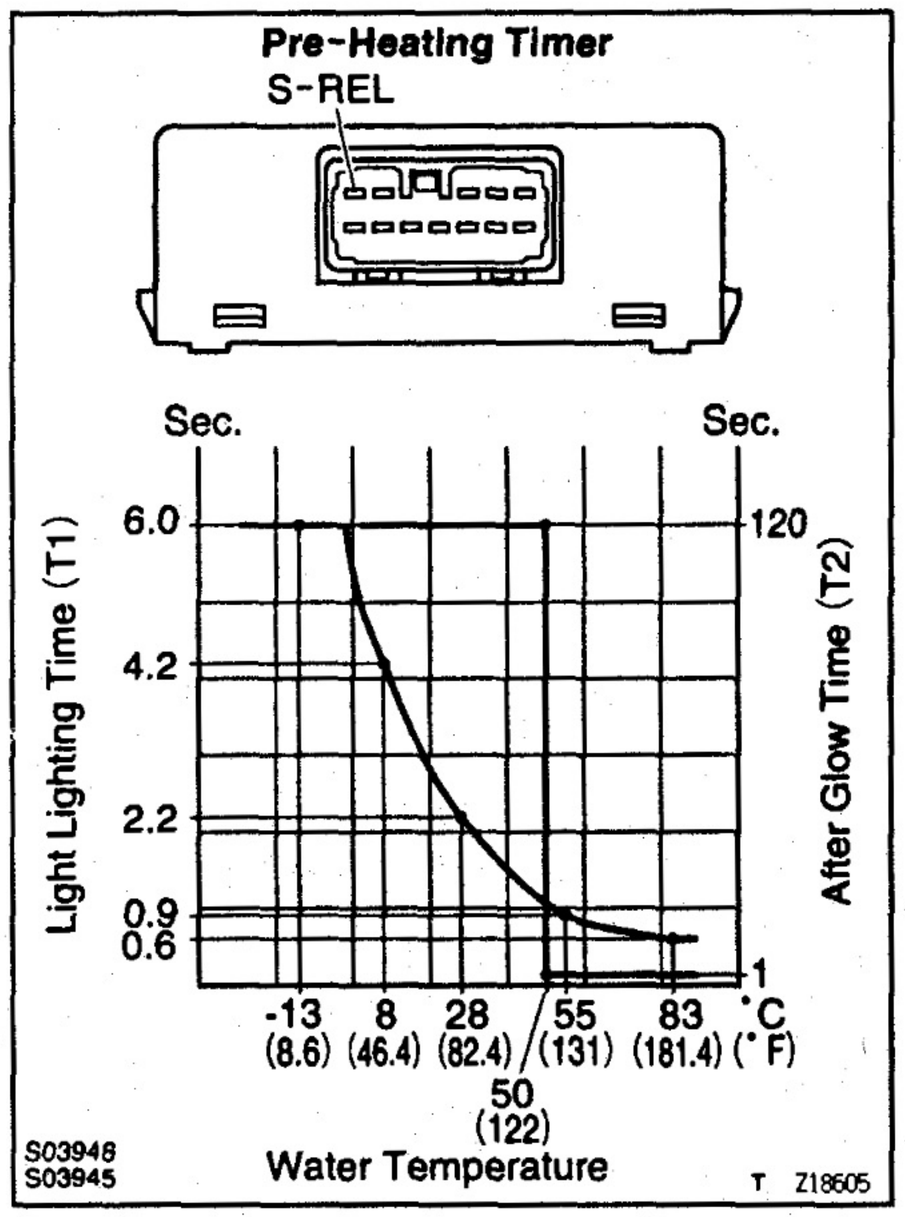

ST08R-08

Glow Plug Resistor

GLOW PLUG RESISTOR INSPECTION

INSPECT GLOW PLUG RESISTOR

Using an ohmmeter, check that there is continuity between the glow plug resistor terminal and ground.

Standard resistance at 20°C (68°F):

Approx. 0.17 Ω

If there is no continuity, replace the glow plug resistor.

Torque: 34 N·m (350 kgf·cm, 25 ft·lbf)

ST0AY-07

Glow Plugs

GLOW PLUGS INSPECTION

INSPECT GLOW PLUGS

Using an ohmmeter, check that there is continuity between the glow plug terminal and ground.

Standard resistance at 20°C (68°F):

Approx. 0.65 Ω

If there is no continuity, replace the glow plug.

Torque: 13 N·m (130 kgf·cm, 9 ft·lbf)

NOTICE:

- **Be careful not to damage the glow plug pipes as it could cause an open circuit or shorten life of the glow plugs.**
- **Avoid getting oil and gasoline on the glow plug when cleaning.**
- **During inspection, be sure to wipe any oil off the terminal and bakelite washer with a dry cloth.**
- **Be careful not to apply more than 11 V to the glow plug as it could cause an open circuit.**

PRE—HEATING SYSTEM (Super Glow Type/without Resistor)

ST08Q-00

On—Vehicle Inspection

1. INSPECT LIGHTING TIME OF GLOW INDICATOR LIGHT

Turn the ignition switch ON, and measure the lighting time.

Light lighting time (T1):

Refer to the chart graph

2. INSPECT AFTER GLOW TIME

Turn the ignition switch ON, and measure the time battery voltage is applied to terminal SREL of the pre—heating timer.

After glow time (T2):

Refer to the chart graph

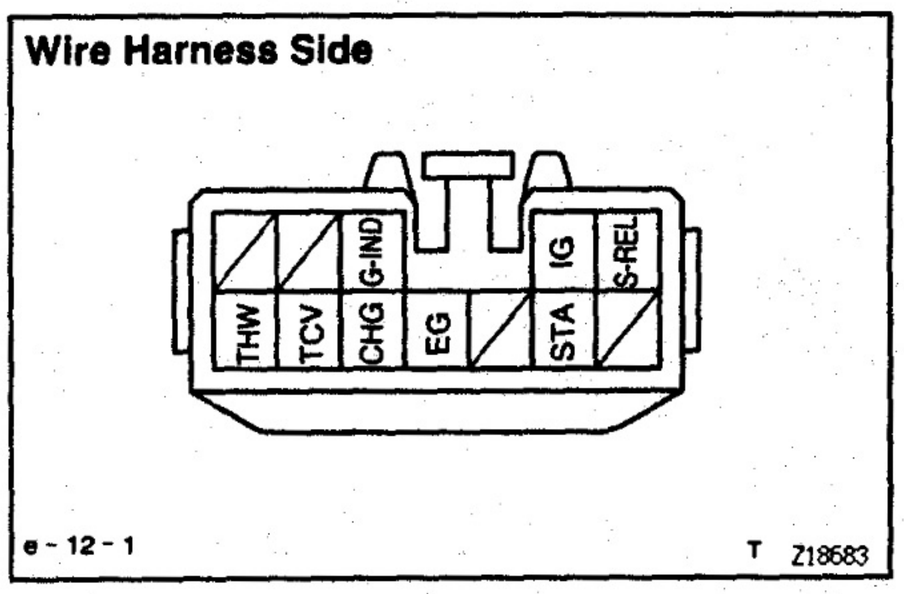

ST0AV–06

Pre–Heating Timer

PRE–HEATING TIMER INSPECTION

1. **DISCONNECT PRE–HEATING TIMER CONNECTOR**
   LOCATION: See relay locations in Electrical Wiring Diagram.
2. **INSPECT PRE–HEATING TIMER CIRCUIT**
   Check the connector on the wire harness side as shown in these chart:

Check for	Tester connection	Condition	Specified value
Voltage	G–IND – Ground	Ignition switch OFF	No voltage
		Ignition switch ON	Battery voltage
Voltage	IG – Ground	Ignition switch OFF	No voltage
		Ignition switch ON	Battery voltage
Voltage	STA – Ground	Ignition switch OFF	No voltage
		Ignition switch START	Battery voltage
Continuity	S–REL – Ground	–	Continuity
Continuity	THW – Ground	–	Continuity
Continuity	EG – Ground	–	Continuity
Continuity	TCV (w/ TCV) – Ground	–	Continuity

T V08082

3. **RECONNECT PRE–HEATING TIMER CONNECTOR**

ST0FQ–01

Glow Plug Relay (LJ)

GLOW PLUG RELAY INSPECTION

1. **REMOVE GLOW PLUG RELAY**
   LOCATION: See relay locations in Electrical Wiring Diagram.

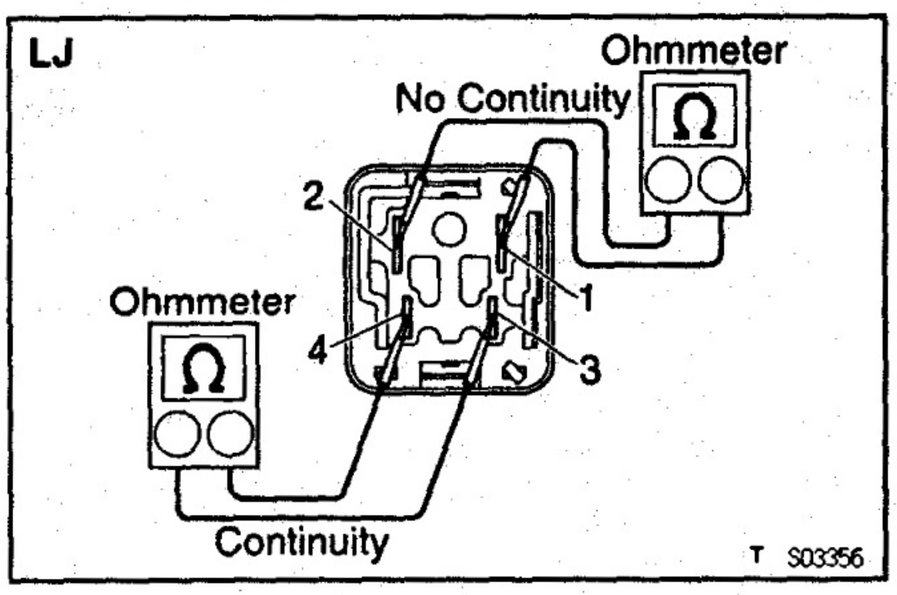

2. **INSPECT GLOW PLUG RELAY**

A. Inspect relay continuity

(a) Using an ohmmeter, check that there is no continuity between terminals 1 and 2.
If there is continuity, replace the relay.

(b) Check that there is continuity between terminals 3 and 4.
If there is no continuity, replace the relay.

ST

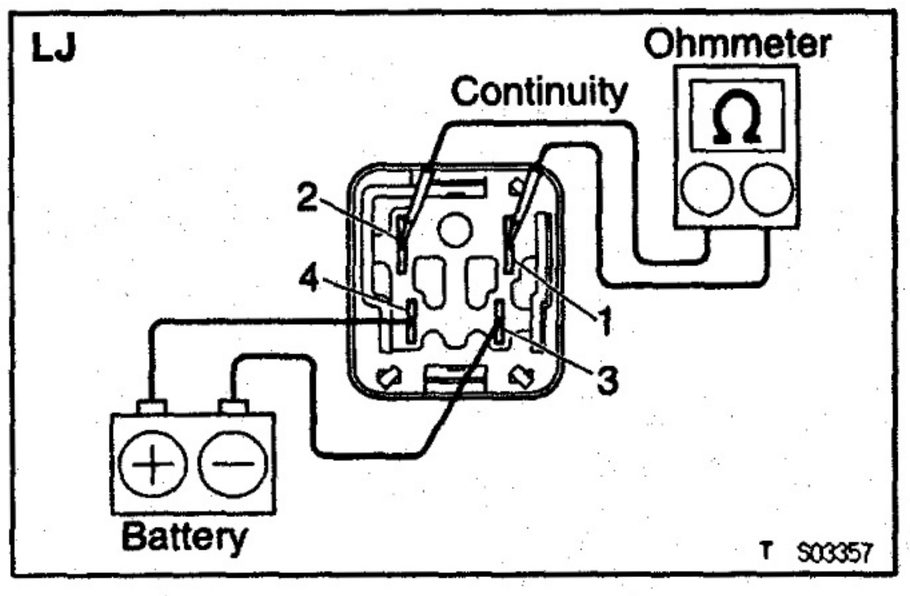

B. Inspect relay operation

(a) Apply battery voltage across terminals 3 and 4.

(b) Using an ohmmeter, check that there is continuity between terminals 1 and 2.
If there is no continuity, replace the relay.

3. REINSTALL GLOW PLUG RELAY

ST

STOFR–01

Glow Plug Relay (LH)

(See No.2 glow plug relay (LH) in pre–heating system (super glow type/with resistor)

STOFS–01

Glow Plug Relay (LN)

(See No.2 glow plug relay (LH) in pre–heating system (super glow type/with resistor)

STOFT–01

Glow Plug Relay (LY)

(See No.2 glow plug relay (LH) in pre–heating system (super glow type/with resistor)

STOFU–01

Water Temperature Sensor

(See pre–heating system (super glow type/with resistor))

STOFV–01

Glow Plugs

(See pre–heating system (super glow type/with resistor)

PRE–HEATING SYSTEM (Variable Delay Type)

STOCJ–03

On–Vehicle Inspection

1. INSPECT LIGHTING TIME OF GLOW INDICATOR LIGHT

Turn the ignition switch ON, and measure the lighting time.

Light lighting time:

Approx. 5 seconds

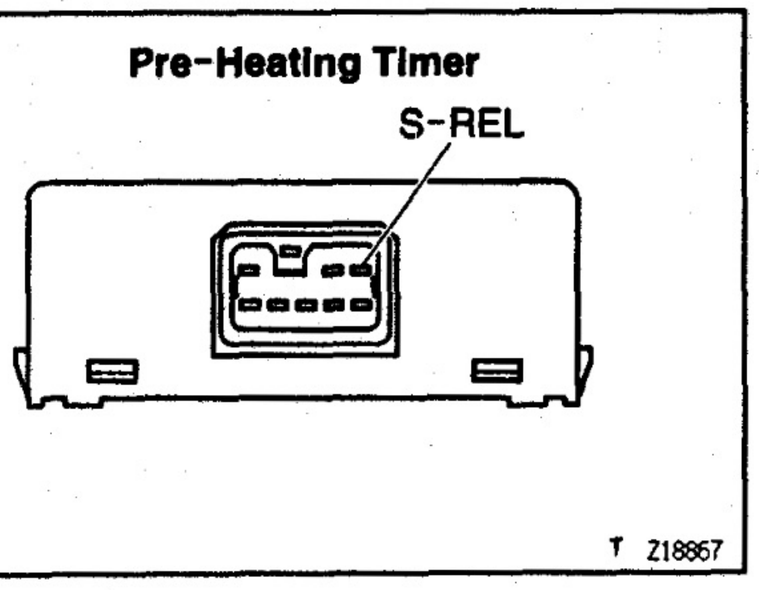

2. INSPECT AFTER GLOW TIME

Turn the ignition switch ON, and measure the time battery voltage is applied to terminal S–REL of the pre–heating timer.

After glow time:

Approx. 18 seconds

ST

ST080–05

Pre–Heating Timer

PRE–HEATING TIMER INSPECTION

1. DISCONNECT PRE–HEATING TIMER CONNECTOR

LOCATION: See relay locations in Electrical Wiring Diagram.

2. INSPECT PRE–HEATING TIMER CIRCUIT

Check the connector on the wire harness side as shown in these chart:

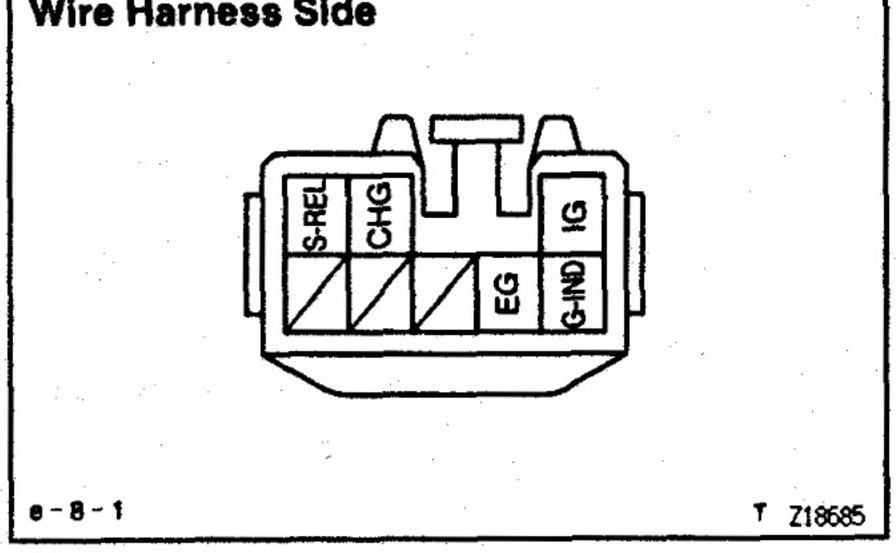

Check for	Tester connection	Condition	Specified value
Voltage	G-IND - Ground	Ignition switch OFF	No voltage
		Ignition switch ON	Battery voltage
Voltage	IG - Ground	Ignition switch OFF	No voltage
		Ignition switch ON	Battery voltage
Continuity	S-REL - Ground	–	Continuity
Continuity	EG - Ground	–	Continuity

T V08083

3. RECONNECT PRE–HEATING TIMER CONNECTOR

ST0CL–03

Glow Plug Relay (LH)

(See No.2 glow plug relay (LH) in pre–heating system (super glow type/with resistor))

ST0FW–01

Glow Plug Relay (LJ)

(See No.2 glow plug relay (LJ) in pre–heating system (super glow type/without resistor))

ST0CL–04

Glow Plug Relay (LN)

(See No.1 and No.2 glow plug relays (LN) in pre–heating system (super glow type/with resistor))

ST0FX—01

Glow Plug Relay (LY)

(See No.1 and No.2 glow plug relays (LN) in pre—heating system (super glow type/with resistor))

ST0CM—02

Glow Plugs

(See pre—heating system (super glow type/with resistor))

ST

PRE—HEATING SYSTEM (Fixed Delay Type)

ST0AZ—03

On—Vehicle Inspection

INSPECT LIGHTING TIME OF GLOW INDICATOR LIGHT

Turn the ignition switch ON, and measure the lighting time.

Light lighting time:

Approx. 5 seconds

ST0B0—03

Pre—Heating Timer

PRE—HEATING TIMER INSPECTION

1. **DISCONNECT PRE—HEATING TIMER CONNECTOR**
   LOCATION: See relay locations in Electrical Wiring Diagram.
2. **INSPECT PRE—HEATING TIMER CIRCUIT**
   Check the connector on the wire harness side as shown in these chart:

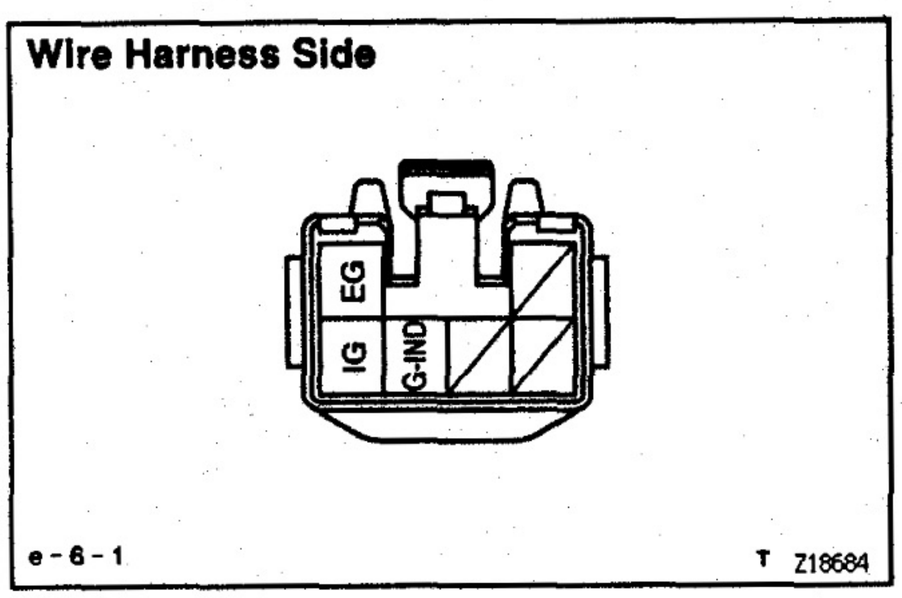

Check for	Tester connection	Condition	Specified value
Voltage	G-IND - Ground	Ignition switch OFF	No voltage
		Ignition switch ON	Battery voltage
Voltage	IG - Ground	Ignition switch OFF	No voltage
		Ignition switch ON	Battery voltage
Continuity	EG - Ground	—	Continuity

T V08084

3. **RECONNECT PRE—HEATING TIMER CONNECTOR**

ST0FY—01

Glow Plug Relay (LY)

(See No.1 and No.2 glow plug relays (LN) in pre—heating system (super glow type/with resistor))

STARTER
(2.0 kW for LN Thailand)
COMPONENTS FOR DISASSEMBLY AND ASSEMBLY

ST0FZ-01

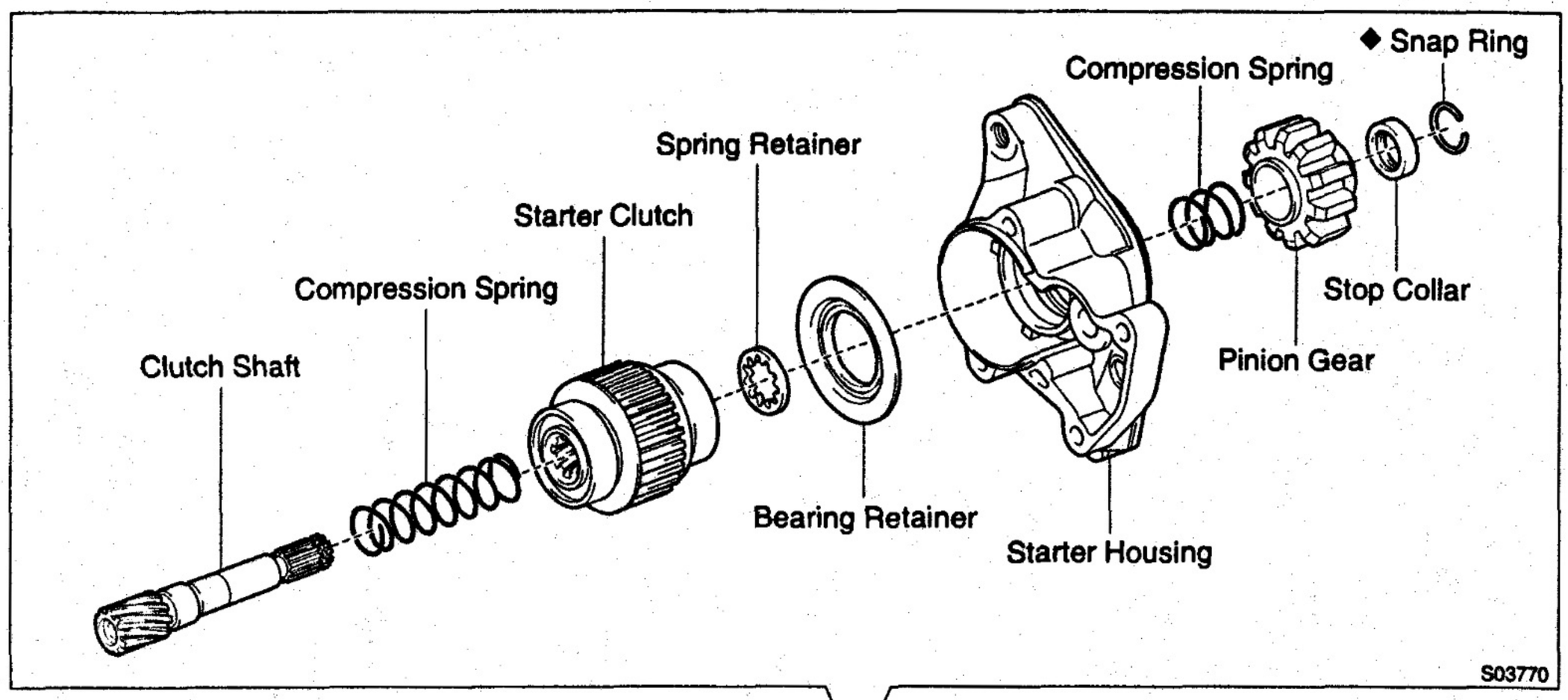

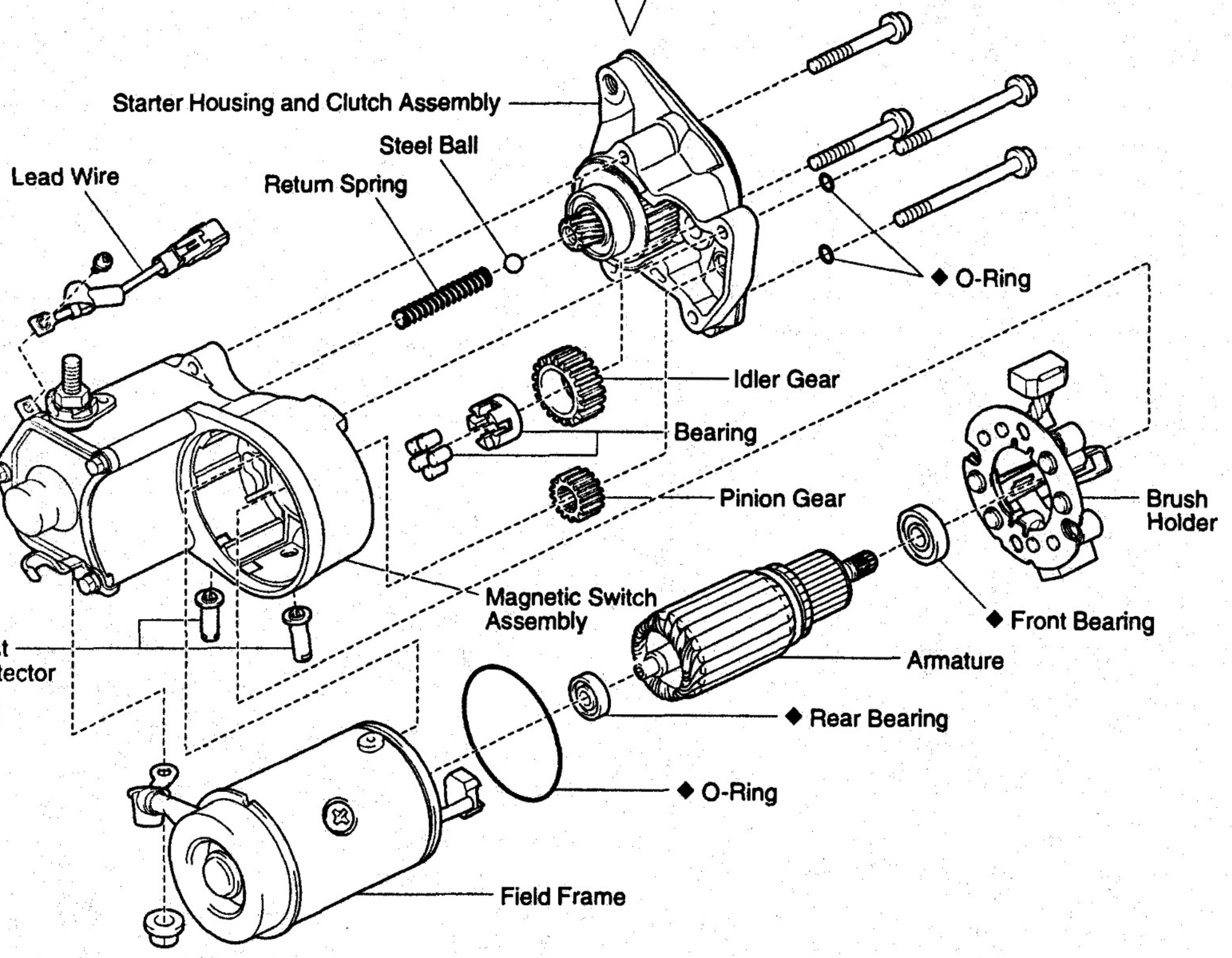

N·m (kgf·cm, ft·lbf): Specified torque
◆ Non-reusable part

S03782

T Z18422

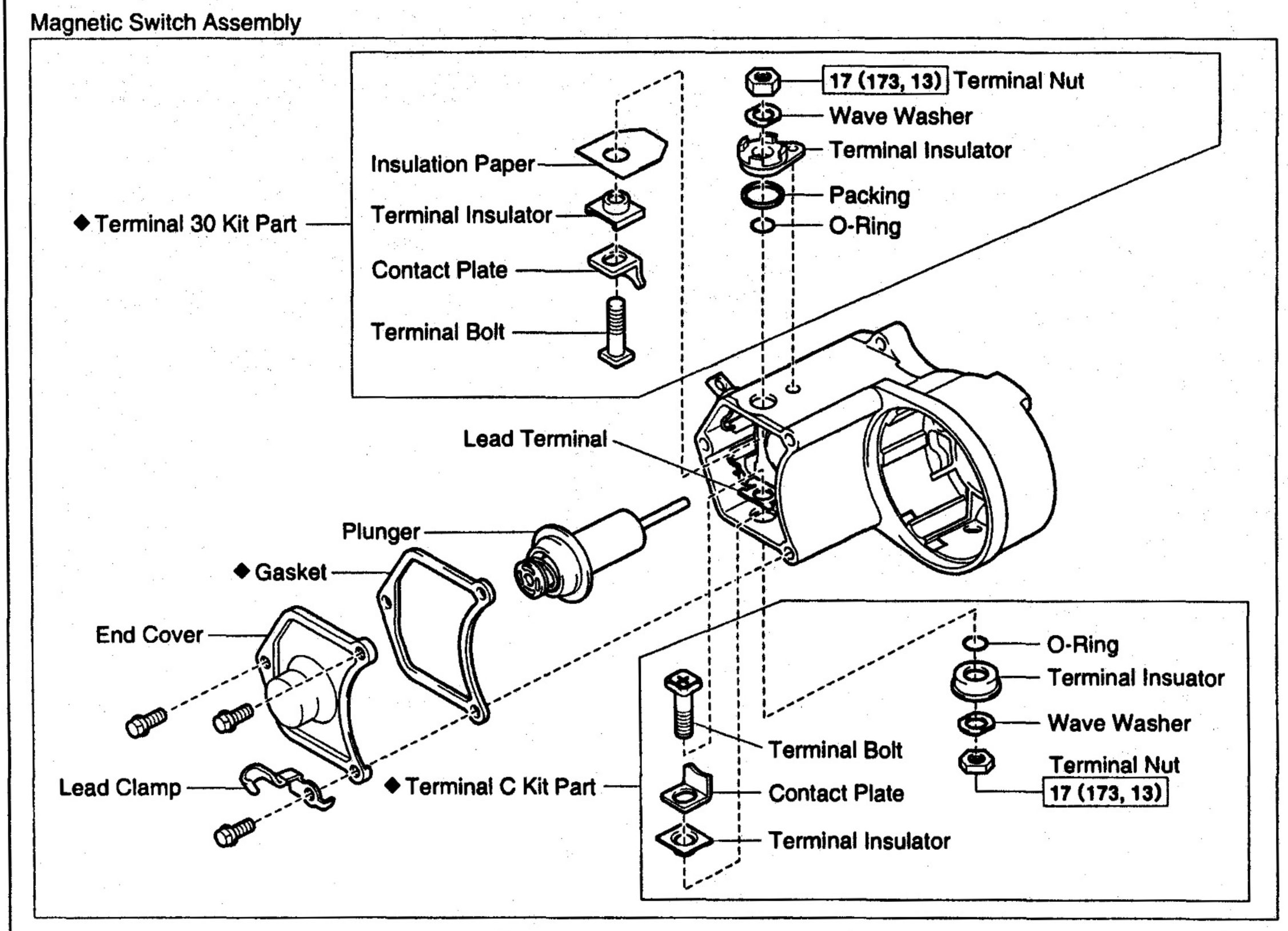

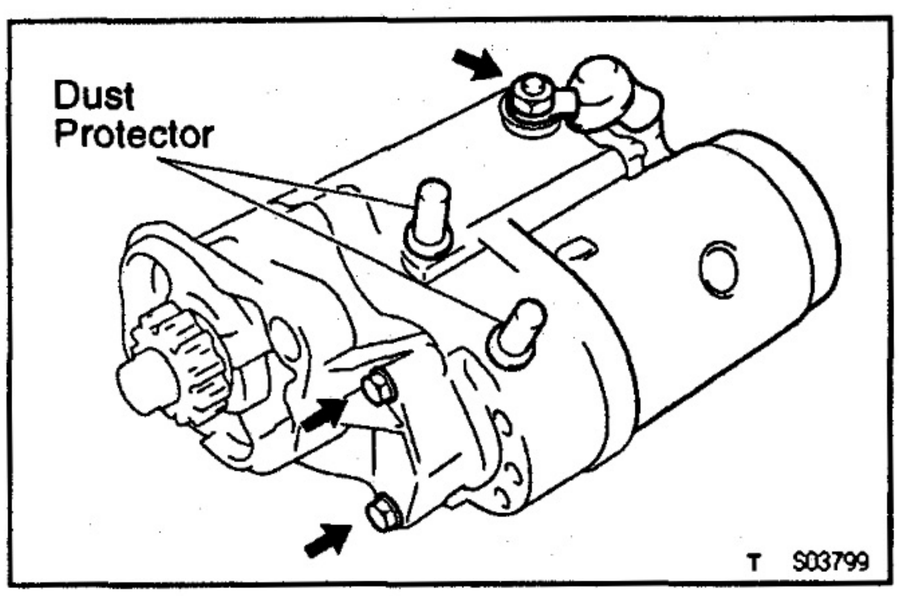

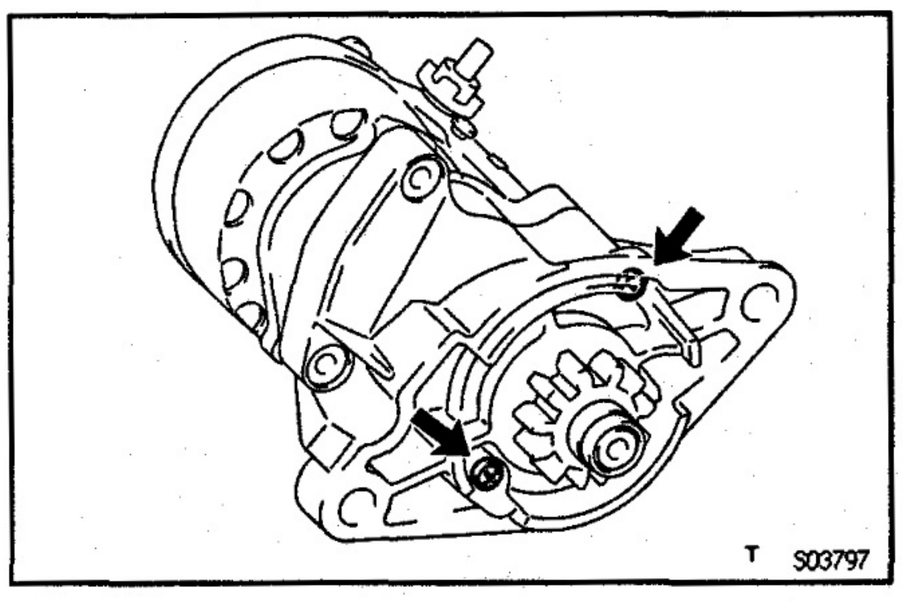

ST0C8-02

STARTER DISASSEMBLY

1. **REMOVE LEAD WIRE**
   Remove the screw and lead wire.
2. **REMOVE DUST PROTECTORS**
3. **REMOVE FIELD FRAME AND ARMATURE**

(a) Remove the nut, and disconnect the lead wire from the magnetic switch terminal.
(b) Remove the 2 through bolts and 2 O—rings.
(c) Pull out the field frame together with the armature from the magnetic switch.
(d) Remove the O—ring from the field frame.

4. **REMOVE STARTER HOUSING, CLUTCH ASSEMBLY AND GEARS**

(a) Remove the 2 screws.
(b) Remove these parts from the magnetic switch:
- Starter housing and clutch assembly
- Return spring
- Pinion gear

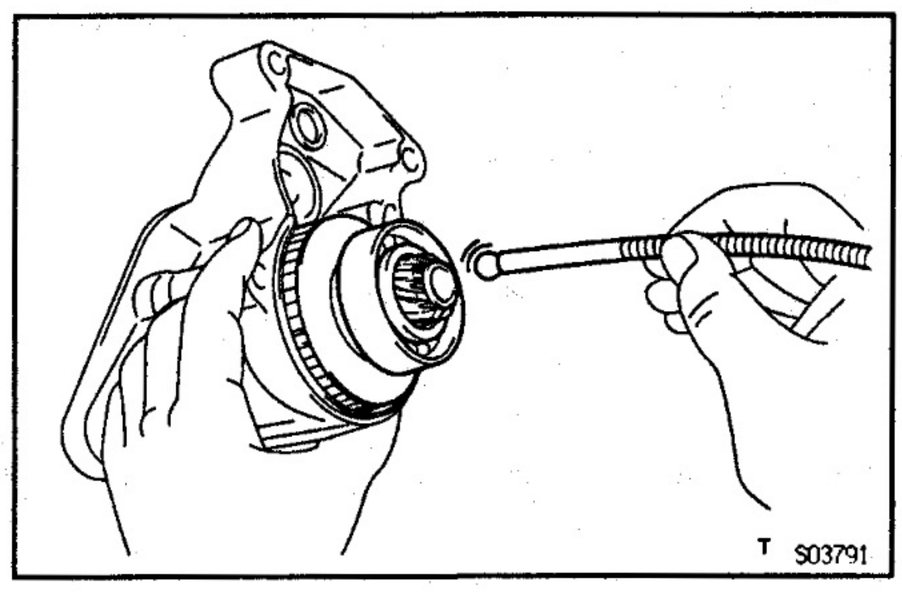

- Bearing
- Idler gear

5. REMOVE STEEL BALL

Using a magnetic finger, remove the steel ball from the clutch shaft hole.

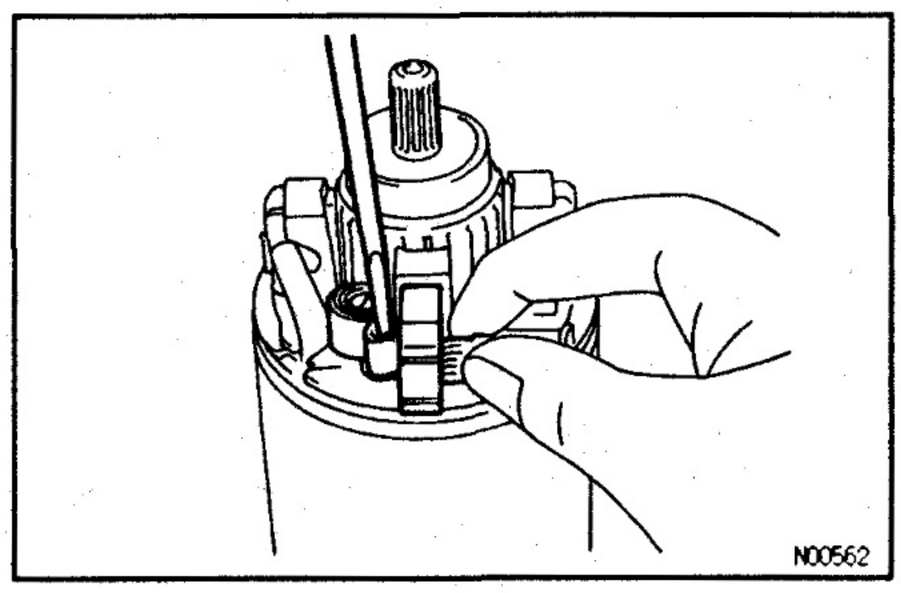

6. REMOVE BRUSH HOLDER

Using a screwdriver, hold the spring back and disconnect the brush from the brush holder. Disconnect the 4 brushes, and remove the brush holder.

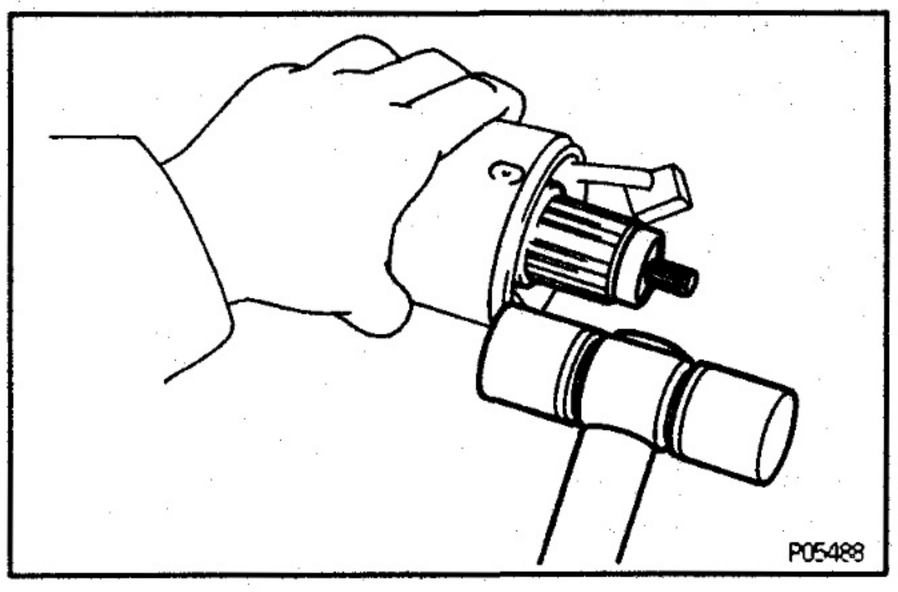

7. REMOVE ARMATURE FROM FIELD FRAME

Using a plastic—faced hammer, tap the field frame end and remove the armature.

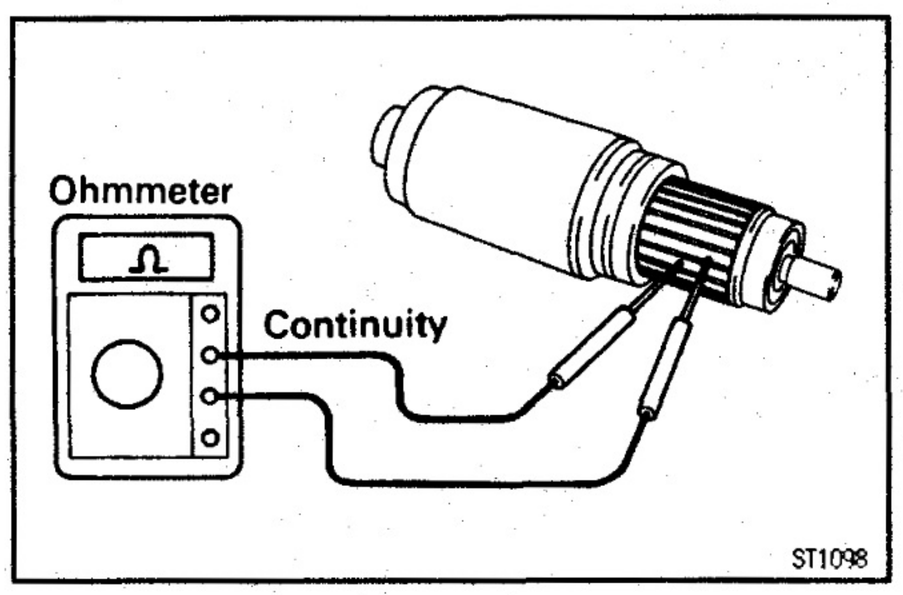

STARTER INSPECTION AND REPAIR

ST0GG-01

Armature Coil

1. INSPECT COMMUTATOR FOR OPEN CIRCUIT

Using an ohmmeter, check that there is continuity between the segments of the commutator.
If there is no continuity between any segment, replace the armature.

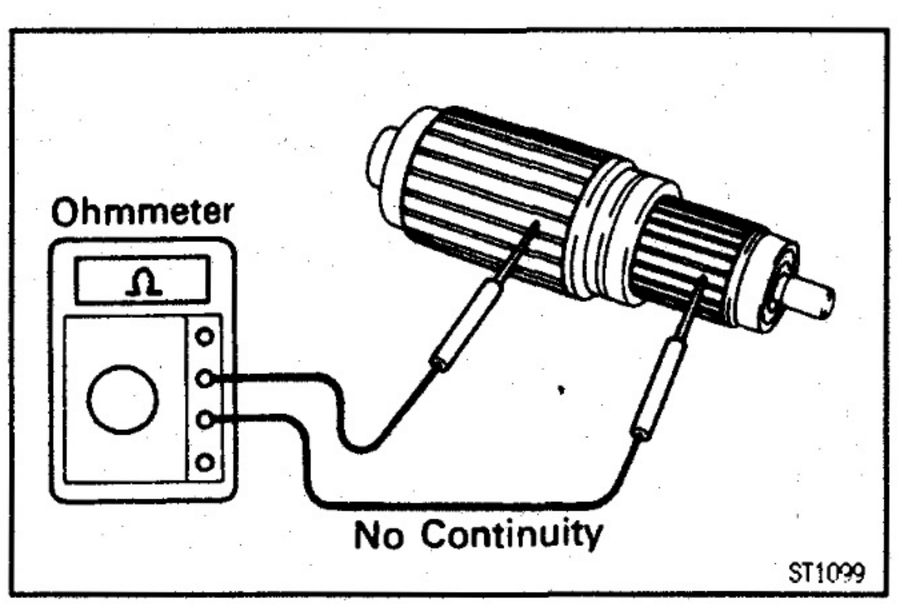

2. INSPECT COMMUTATOR FOR GROUND

Using an ohmmeter, check that there is no continuity between the commutator and armature coil core.
If there is continuity, replace the armature.

Commutator

1. INSPECT COMMUTATOR FOR DIRTY AND BURNT SURFACES

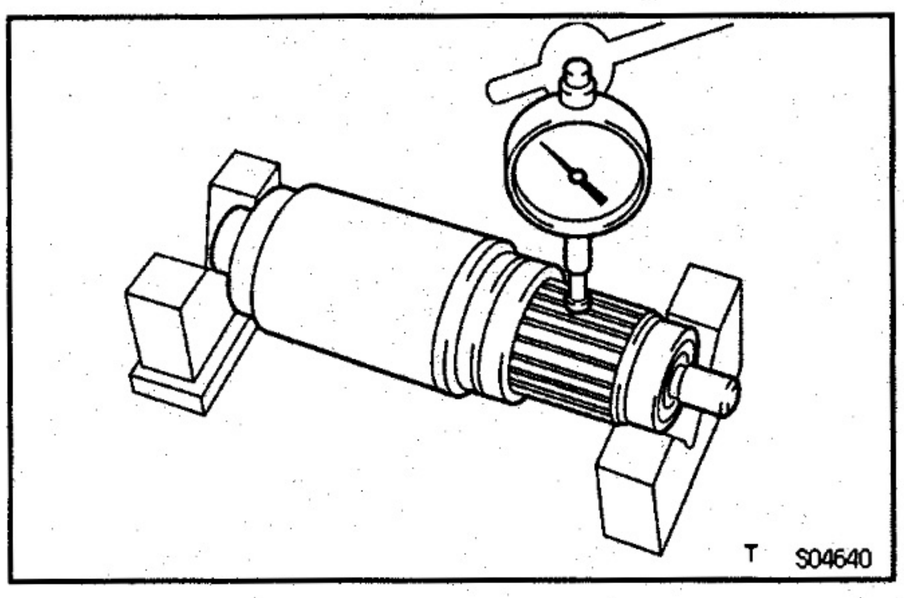

If the surface is dirty or burnt, correct it with sandpaper (No.400) or on a lathe.

2. INSPECT COMMUTATOR CIRCLE RUNOUT

(a) Place the commutator on V—blocks.

(b) Using a dial gauge, measure the circle runout.

Maximum circle runout:

0.05 mm (0.0020 in.)

If the circle runout is greater than maximum, correct it on a lathe.

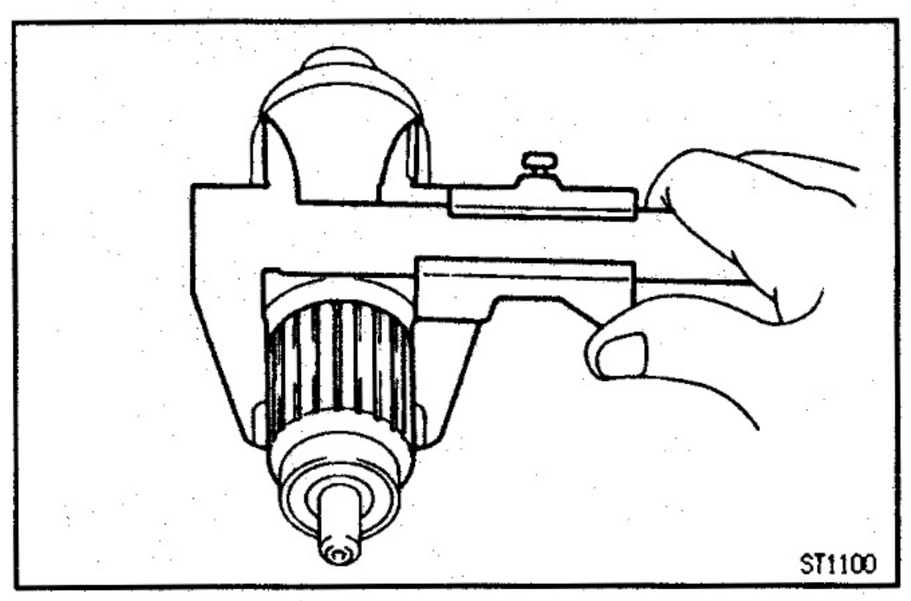

3. INSPECT COMMUTATOR DIAMETER

Using vernier calipers, measure the commutator diameter.

Standard diameter:

35.0 mm (1.378 in.)

Minimum diameter:

34.0 mm (1.339 in.)

If the diameter is less than minimum, replace the armature.

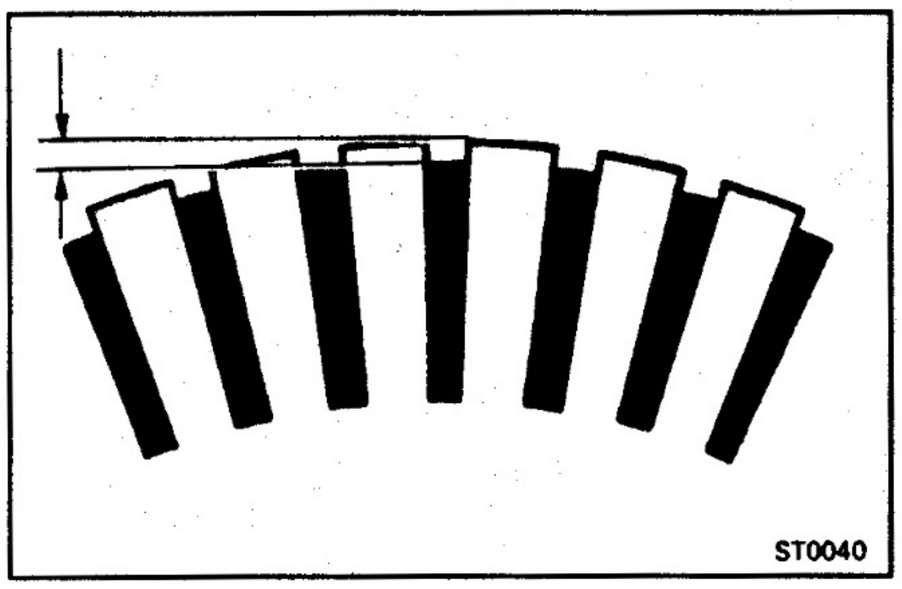

4. INSPECT UNDERCUT DEPTH

Check that the undercut depth is clean and free of foreign materials. Smooth out the edge.

Standard undercut depth:

0.7 mm (0.028 in.)

Minimum undercut depth:

0.2 mm (0.008 in.)

If the undercut depth is less than minimum, correct it with a hacksaw blade.

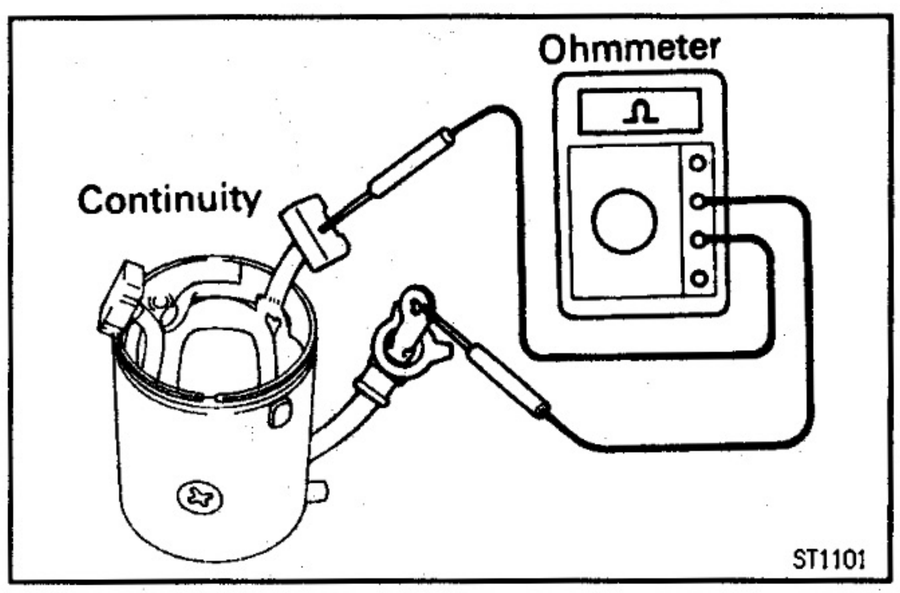

Field Coil (Field frame)

1. INSPECT FIELD COIL FOR OPEN CIRCUIT

Using an ohmmeter, check that there is continuity between the lead wire and field coil brush lead.

If there is no continuity, replace the field frame.

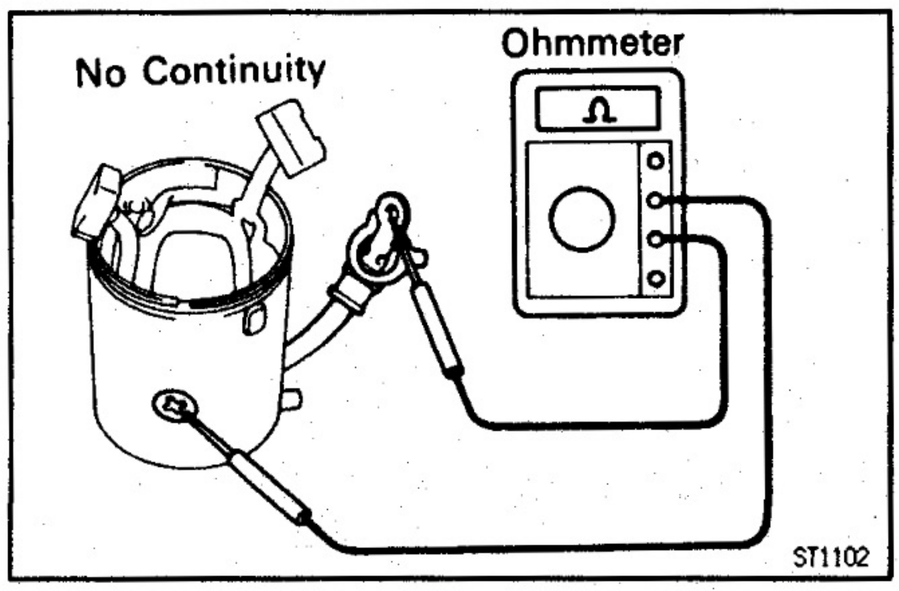

2. INSPECT FIELD COIL FOR GROUND

Using an ohmmeter, check that there is no continuity between the coil end and field frame.

If there is continuity, replace the field frame.

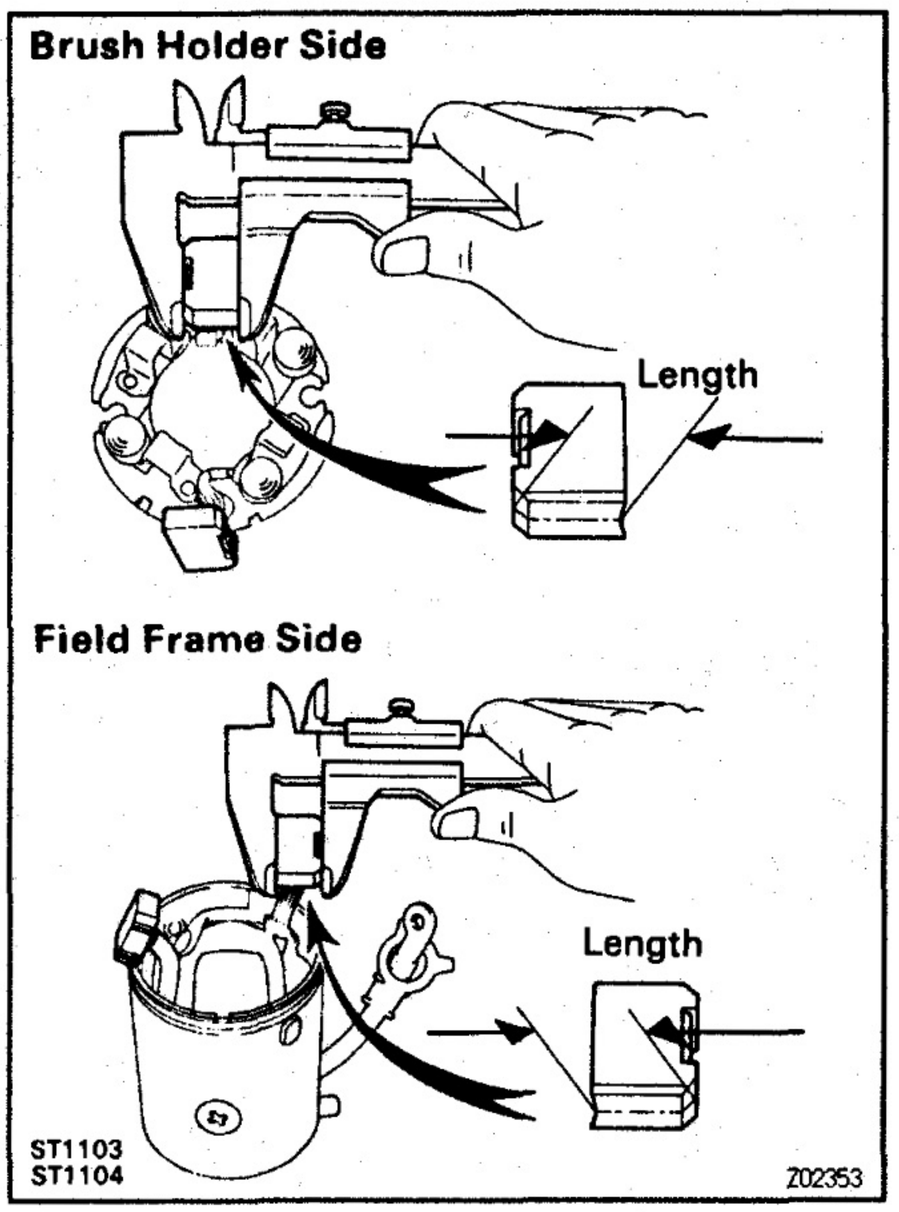

Brushes

INSPECT BRUSH LENGTH

Using vernier calipers, measure the brush length.

Standard length:

15.0 mm (0.591 in.)

Minimum length:

10.0 mm (0.394 in.)

If the length is less than minimum, replace the brush holder and field frame.

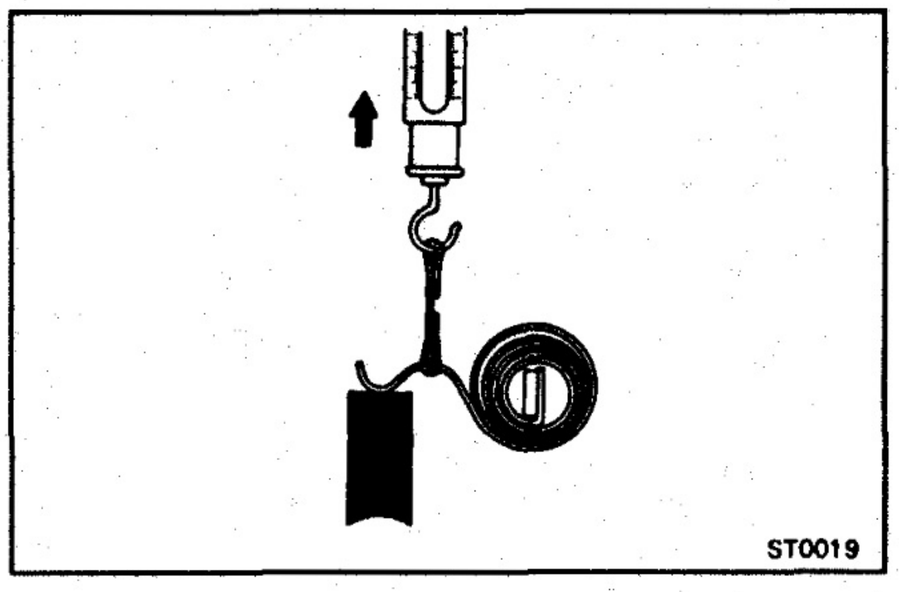

Brush Springs

INSPECT BRUSH SPRING LOAD

Take the pull scale reading the instant the brush spring separates from the brush.

Standard spring installed load:

26.5 — 32.3 N (2.7 — 3.3 kgf, 6.0 — 7.3 lbf)

Minimum spring installed load:

17.6 N (1.8 kgf, 4.0 lbf)

If the installed load is less than minimum replace the brush springs.

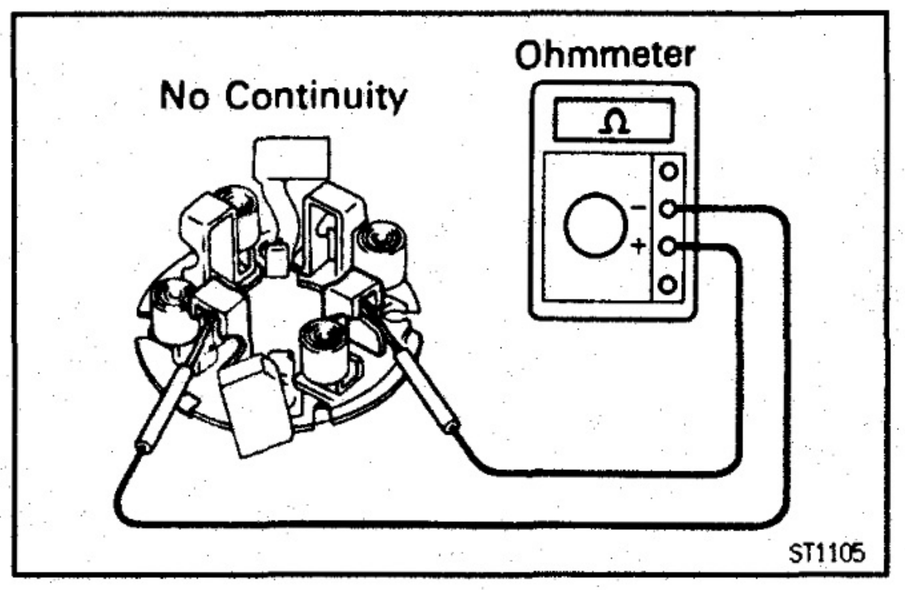

Brush Holder

INSPECT BRUSH HOLDER INSULATION

Using an ohmmeter, check that there is no continuity between the positive (+) and negative (—) brush holders.

If there is continuity, repair or replace the brush holder.

Clutch and Gears

1. **INSPECT GEAR TEETH**

   Check the gear teeth on the pinion gear, idle gear and clutch assembly for wear or damage.

   If damaged, replace the gear or clutch assembly.

   If damaged, also check the ring gear of the flywheel/drive plate for wear or damage.

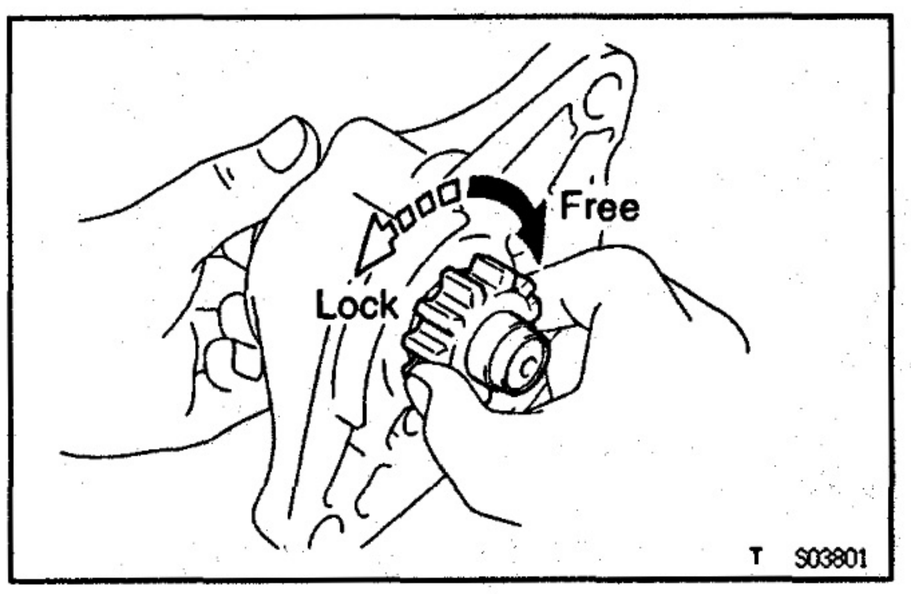

2. INSPECT CLUTCH PINION GEAR

Hold the starter clutch and rotate the pinion gear clockwise, and check that it turns freely. Try to rotate the pinion gear counterclockwise and check that it locks.

If necessary, replace the clutch assembly.

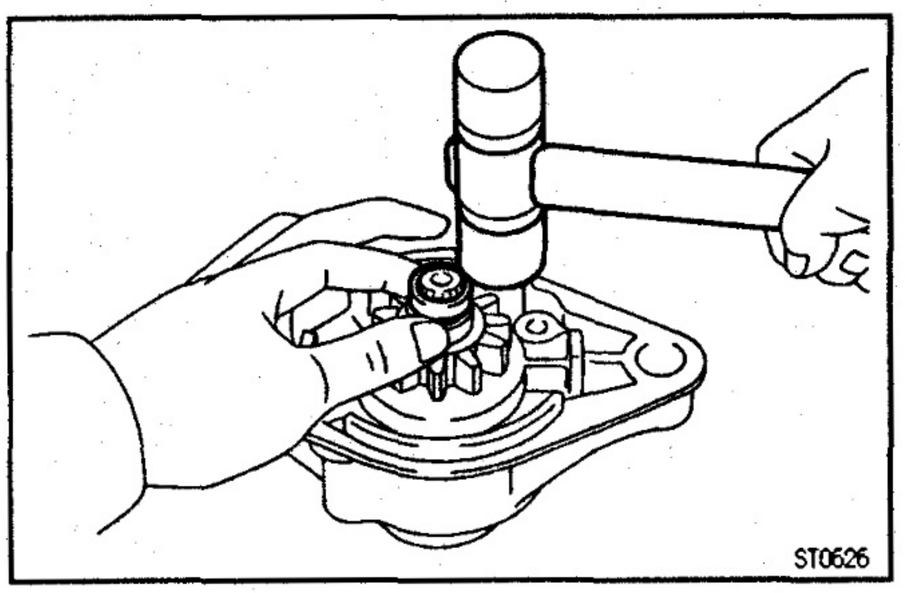

3. IF NECESSARY, REPLACE CLUTCH ASSEMBLY

A. Disassemble starter housing and clutch assembly

(a) Push down the pinion gear.

(b) Using a plastic–faced hammer, tap down the stop collar.

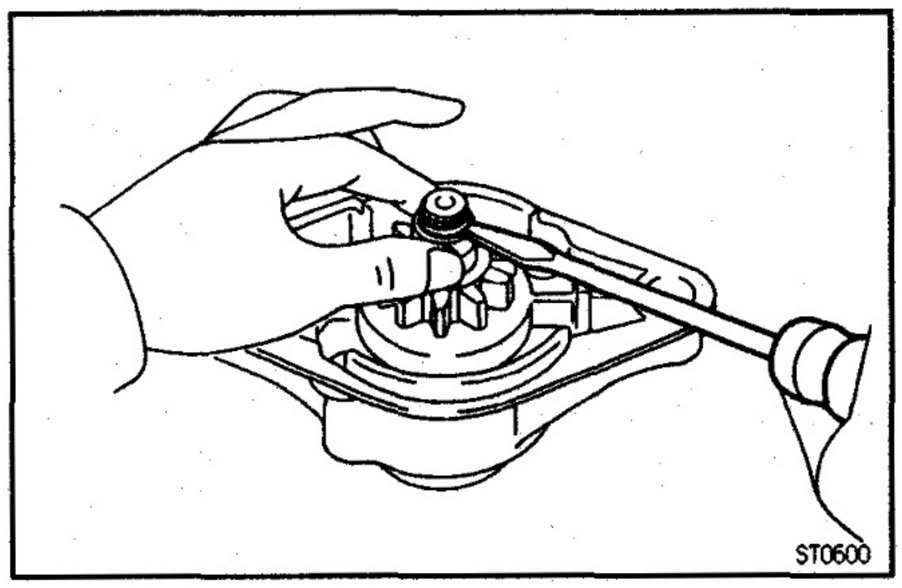

(c) Using a screwdriver, pry out the snap ring.

(d) Disassembly these parts:

- Stop collar
- Pinion gear
- Compression spring
- Starter housing
- Bearing retainer
- Spring retainer
- Starter clutch
- Compression spring
- Clutch shaft

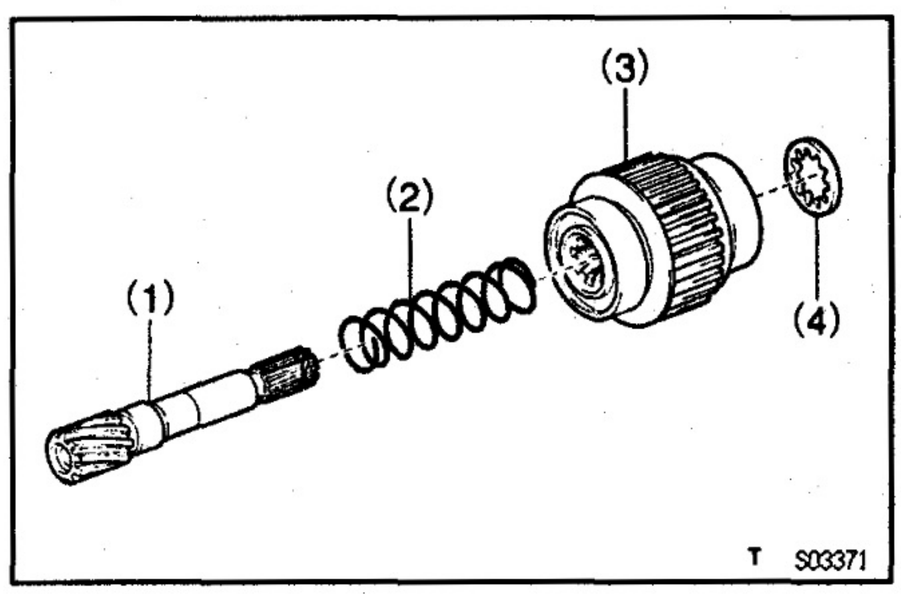

B. Assemble starter housing and clutch assembly

(a) 1st, assemble these parts:

(1) Clutch shaft
(2) Compression spring
(3) Starter clutch
(4) Spring retainer

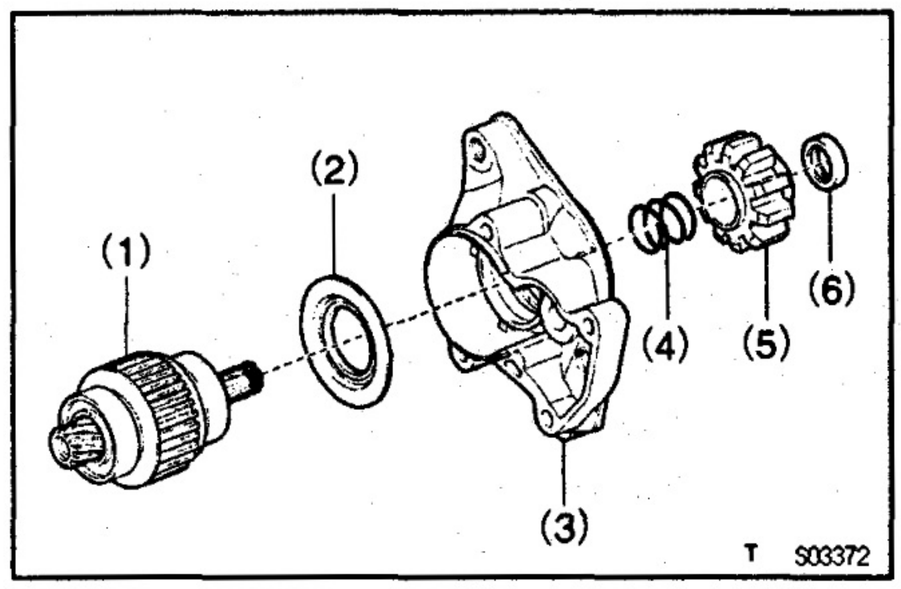

(b) 2nd, assemble these parts:

(1) Clutch shaft and starter clutch assembly
(2) Bearing retainer
(3) Starter housing
(4) Compression spring
(5) Pinion gear
(6) Stop collar

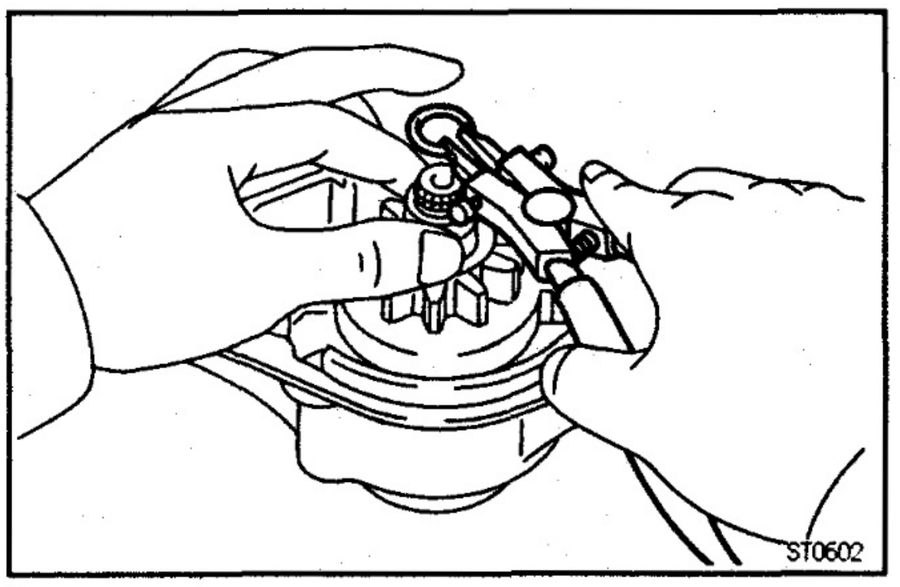

(c) Push down the pinion gear.
(d) Using snap ring pliers, install a new snap ring.

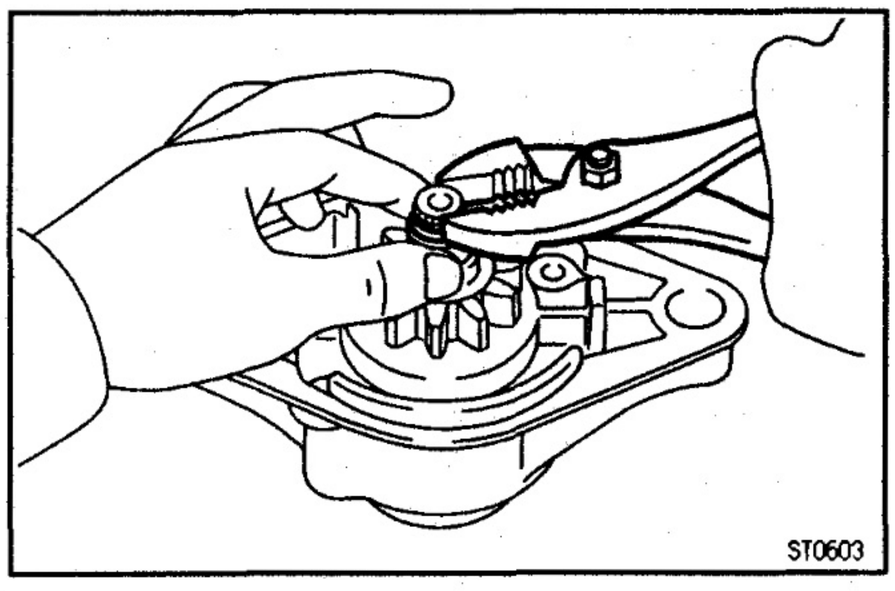

(e) Using pliers, compress the snap ring.
(f) Check that the snap ring fits correctly.

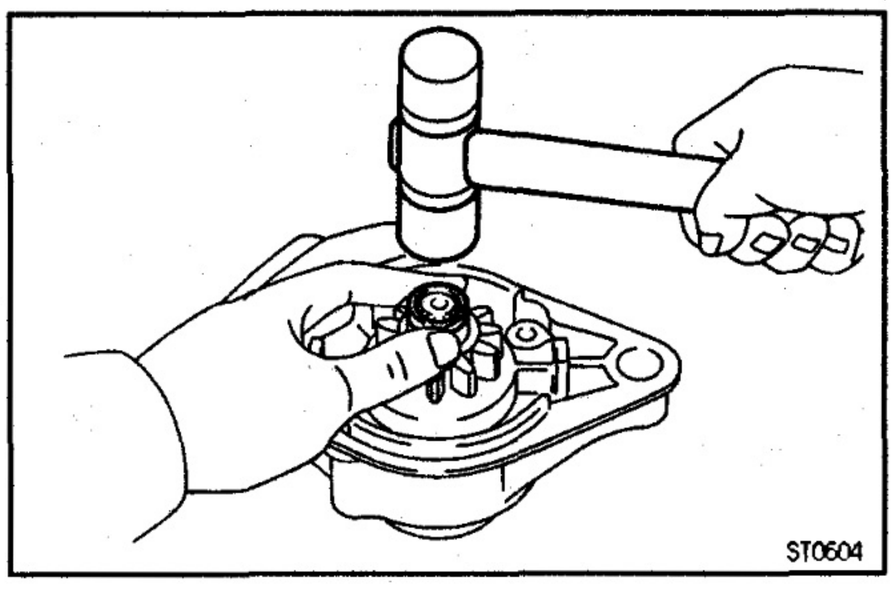

(g) Using a plastic—faced hammer, tap the clutch shaft and install the stop collar onto the snap ring.

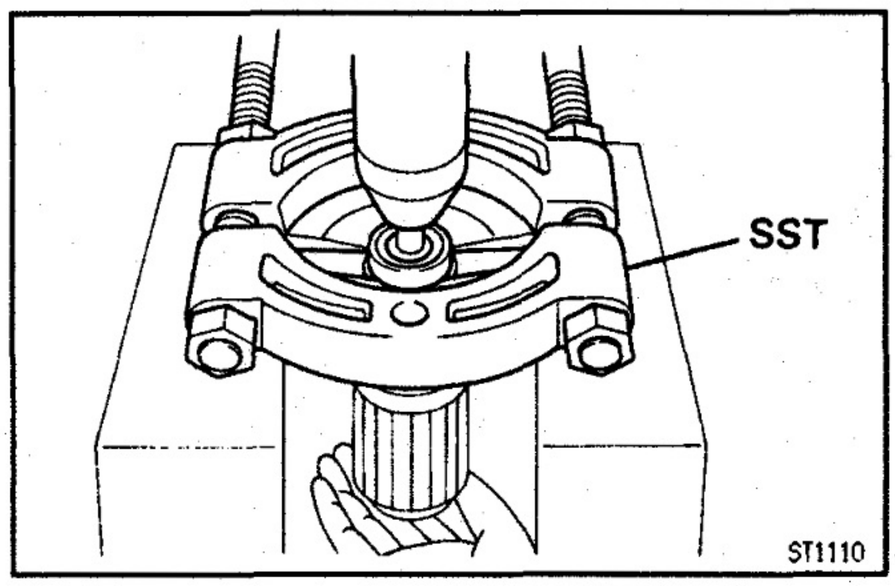

Bearings

1. **INSPECT FRONT BEARING**
   Turn the bearing by hand while applying inward force. If resistance is felt or the bearing sticks, replace the bearing.
2. **IF NECESSARY, REPLACE FRONT BEARING**

(a) Using SST and a press, press out the bearing.
SST 09950—00020

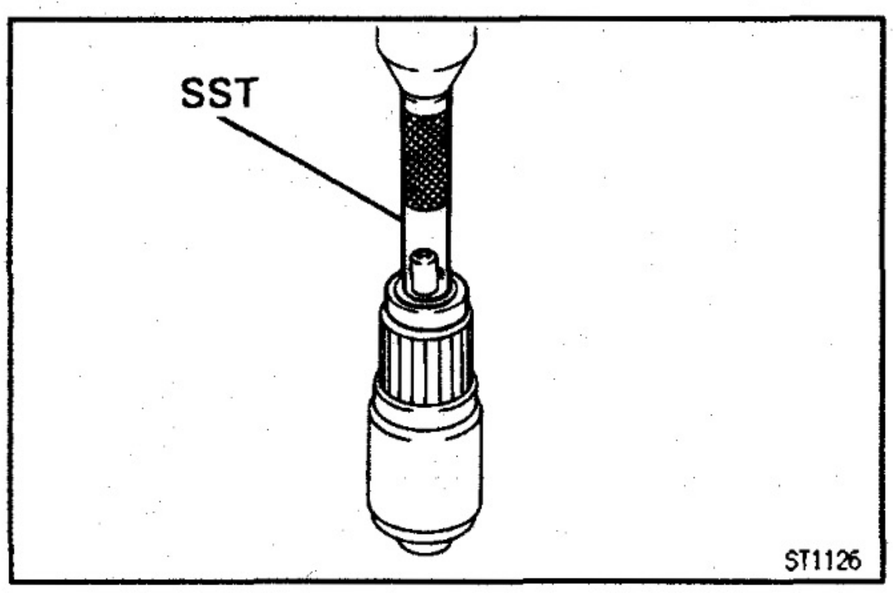

(b) Using SST and a press, press in a new bearing.
SST 09201—41020

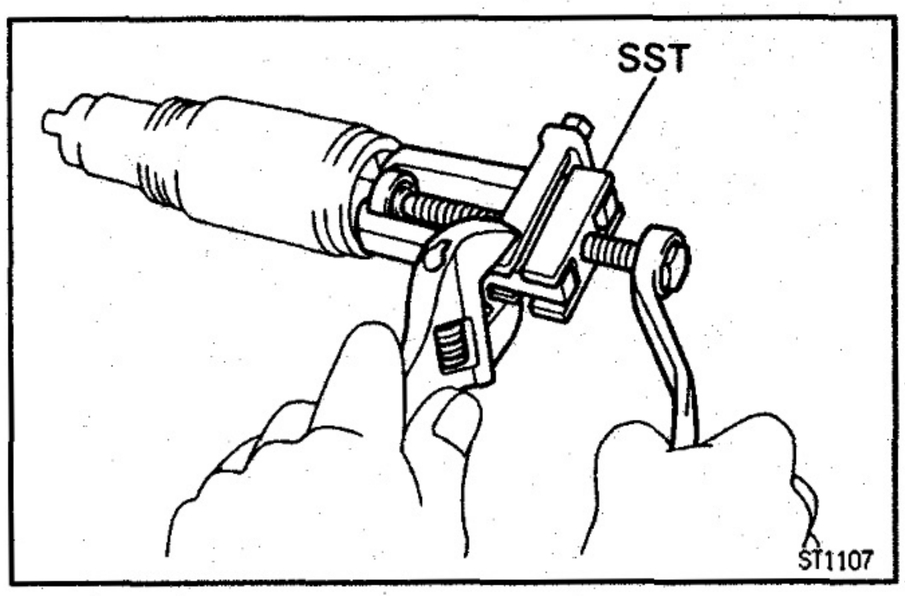

3. INSPECT REAR BEARING

Turn the bearing by hand while applying inward force.
If resistance is felt or the bearing sticks, replace the bearing.

4. IF NECESSARY, REPLACE REAR BEARING

(a) Using SST, remove the bearing.
SST 09286–46011

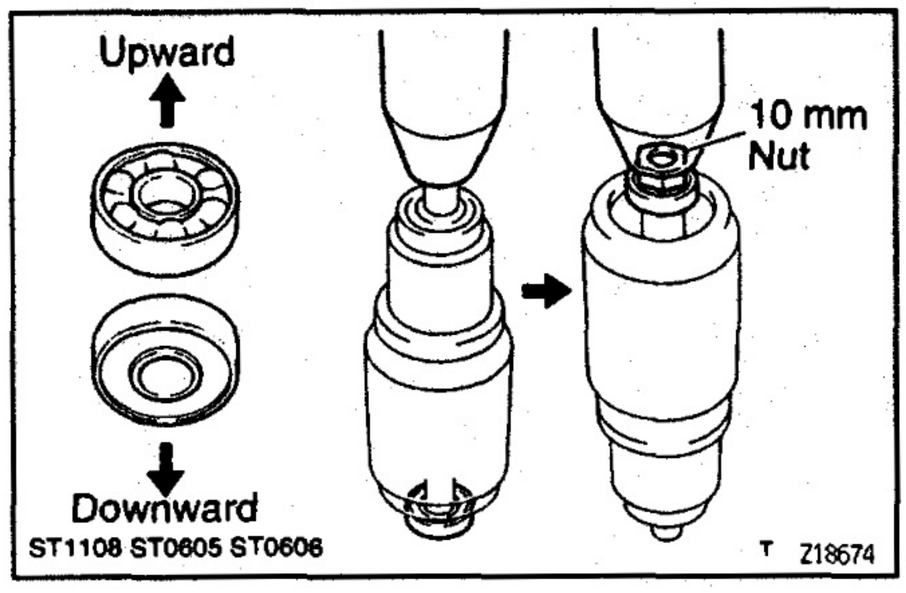

(b) Using a 10 mm (for thread diameter) nut and press, press in a new bearing.
NOTICE: Be careful of the installation direction.

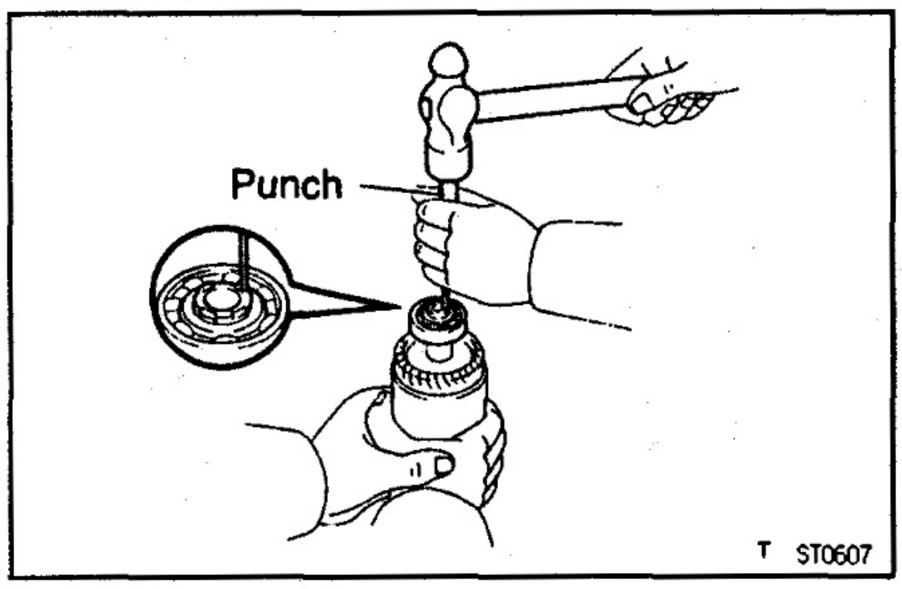

(c) Using a punch, stake the armature shaft.

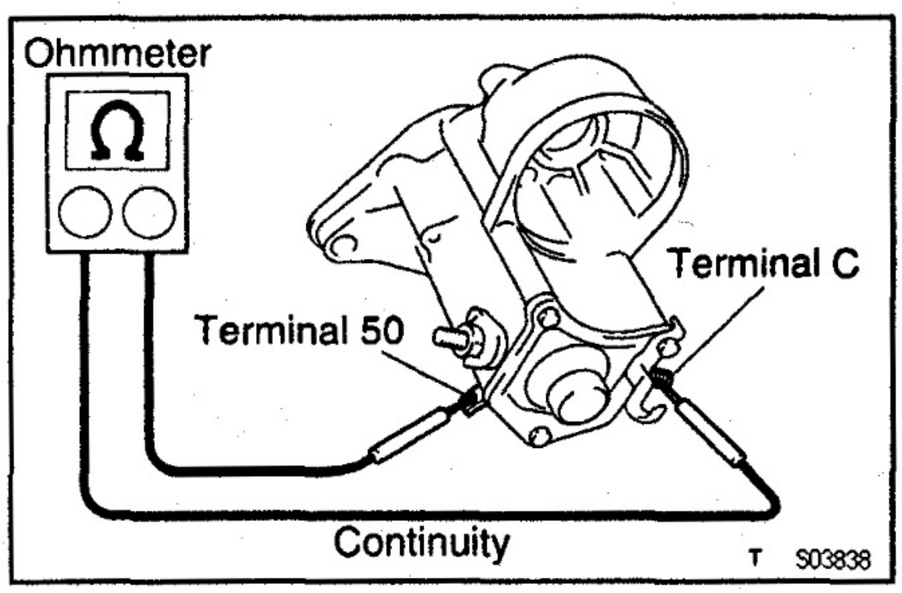

Magnetic Switch

1. PERFORM PULL–IN COIL OPEN CIRCUIT TEST

Using an ohmmeter, check that there is continuity between terminals 50 and C.
If there is no continuity, replace the magnetic switch.

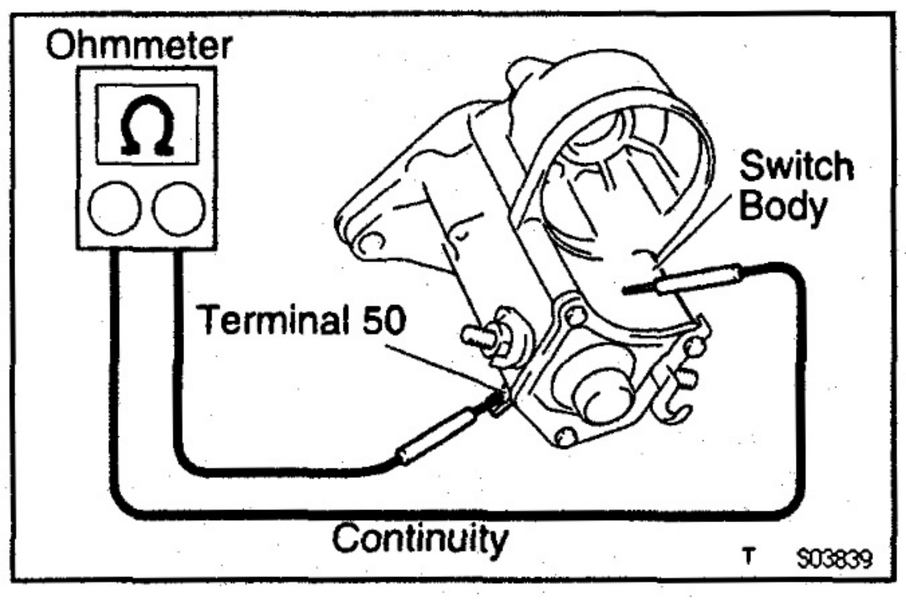

2. PERFORM HOLD–IN COIL OPEN CIRCUIT TEST

Using an ohmmeter, check that there is continuity between terminal 50 and the switch body.
If there is no continuity, replace the magnetic switch.

ST0CU-02

MAGNETIC SWITCH TERMINAL KIT PARTS REPLACEMENT

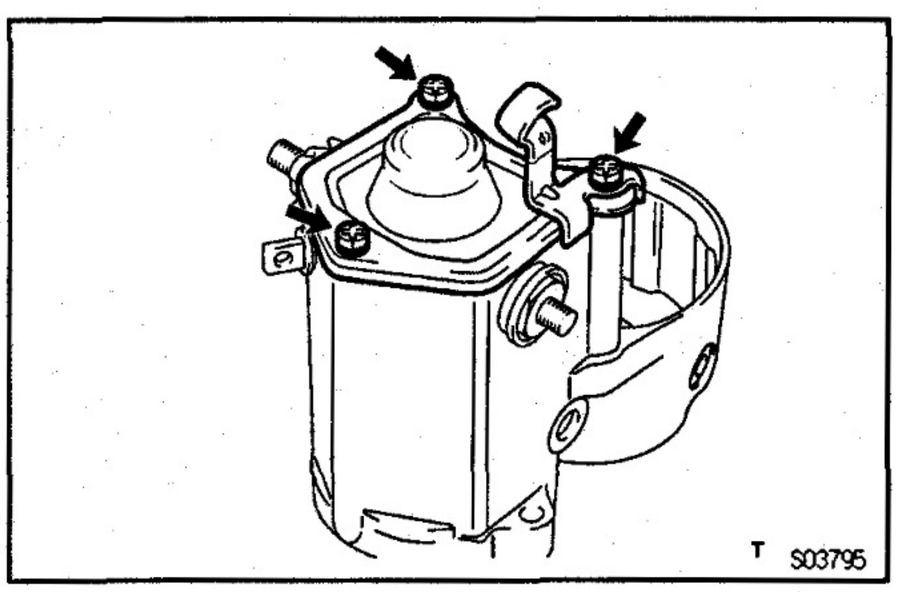

1. REMOVE MAGNETIC SWITCH END COVER

Remove the 3 bolts, lead clamp, end cover, gasket and plunger.

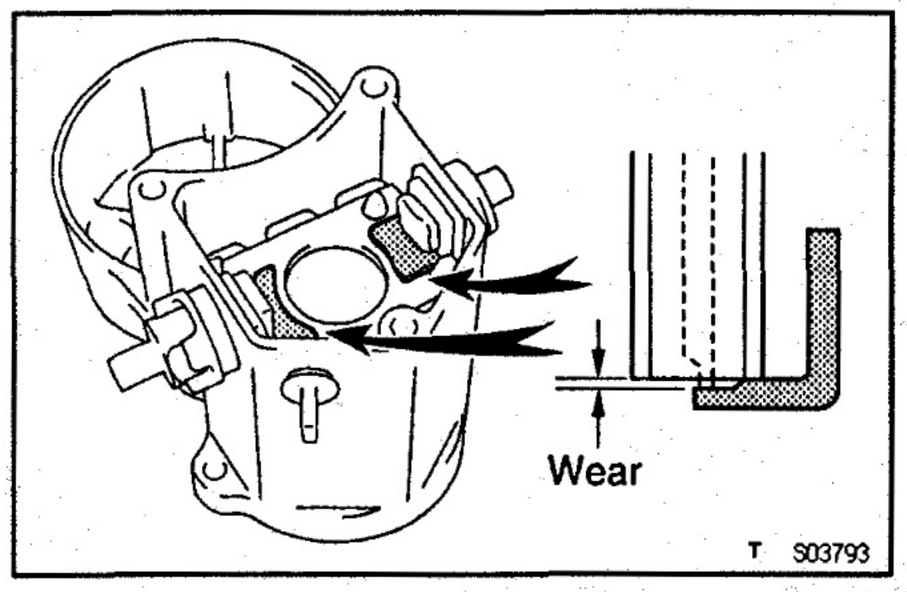

2. INSPECT CONTACT PLATE FOR WEAR

Using vernier calipers, measure the contact plate for depth of wear.

Maximum wear:

0.9 mm (0.035 in.)

If the depth of wear is greater than the maximum, replace the contact plate.

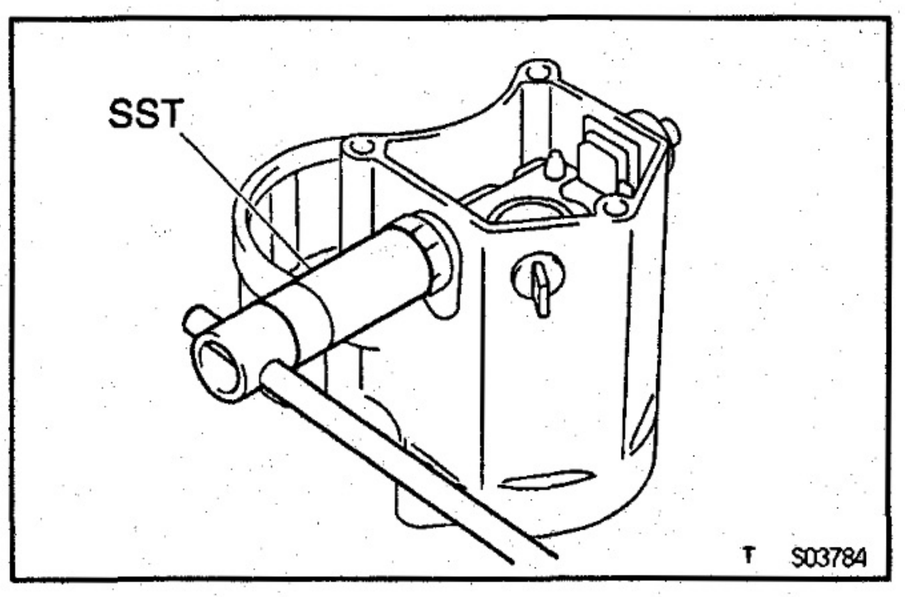

3. REMOVE TERMINAL KIT PARTS

(a) Using SST, loosen the terminal nuts.
SST 09810−38140

(b) Terminal C:
Remove the terminal nut, wave washer, terminal insulator (outside), O−ring, terminal bolt, contact plate and terminal insulator (inside).

(c) Terminal 30:
Remove the terminal nut, wave washer, terminal insulator (outside), packing, O−ring, terminal bolt, contact plate, terminal insulator (inside) and insulation paper.

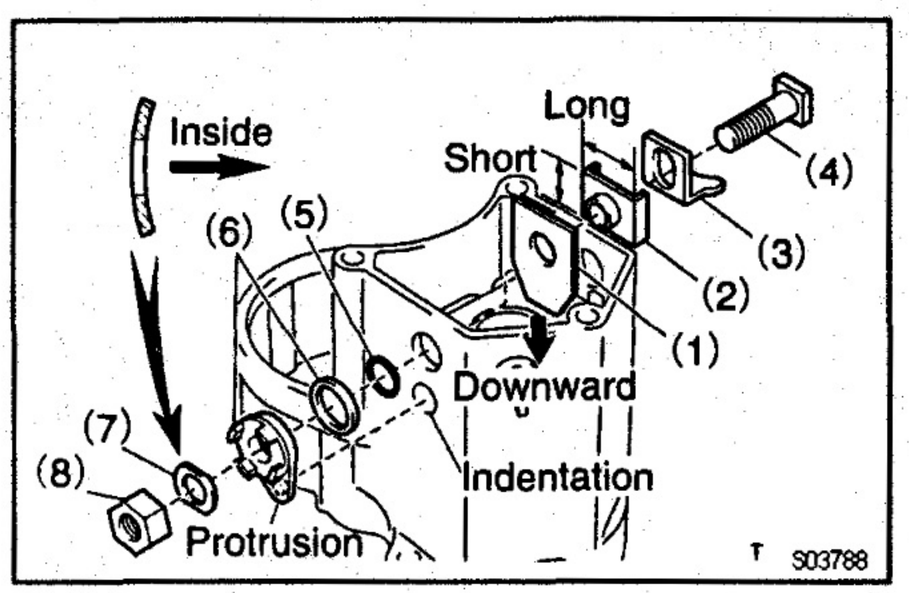

4. REINSTALL TERMINAL KIT PARTS

(a) Install these new parts:
Terminal 30:
(1) Insulation paper
(2) Terminal insulator (inside)
(3) Contact plate
(4) Terminal bolt
(5) O−ring
(6) Packing and terminal insulator (outside)
Install the packing to the terminal insulator, and install them.

HINT: Match the protrusion of the insulator with the indentation of the housing.

(7) Wave washer
(8) Terminal nut

NOTICE: Be careful to install the insulation paper, terminal insulator (inside) and wave washer in the correct direction.

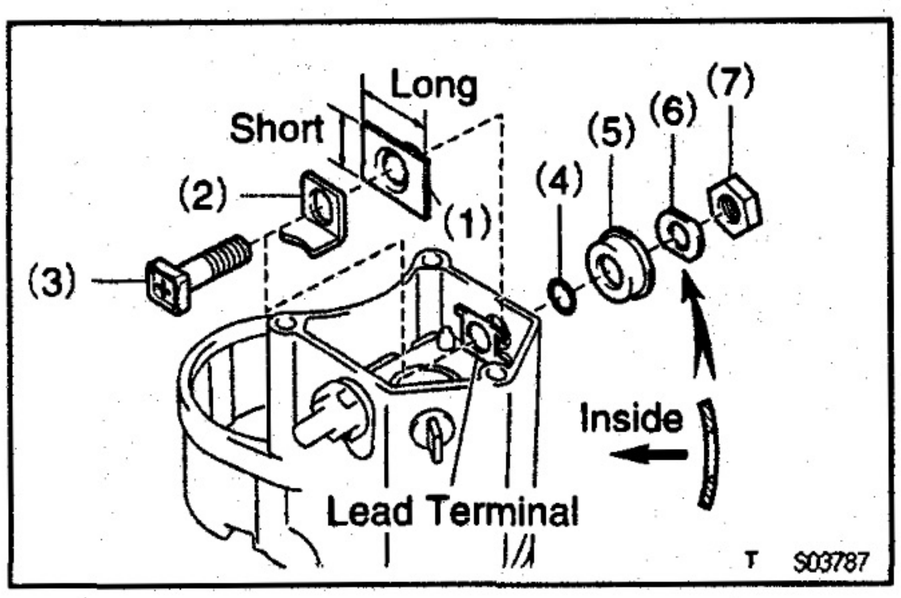

Terminal C:
(1) Terminal insulator (inside)
(2) Contact plate
(3) Terminal bolt
(4) O–ring
(5) Terminal insulator (outside)
(6) Wave washer
(7) Terminal nut

NOTICE: Be careful to install the terminal insulator (inside) and wave washer in the correct direction.

(b) Temporarily tighten the terminal nuts.

5. TIGHTEN TERMINAL NUT

(a) Put a wooden block on the contact plate and press it down with a hand press.

Dimensions of wooden block:

20 x 37 x 40 mm (0.79 x 1.46 x 1.57 in.)

Press force:

981 N (100 kgf, 221 lbf)

NOTICE:

- **Check the diameter of the hand press ram. Then calculate the gauge pressure of the press when 981 N (100 kgf, 221 lbf) of force is applied.**

Gauge pressure:

$$(\text{kgf/cm}^2) = \frac{100\ \text{kgf}}{\left(\frac{\text{Ram diameter (cm)}}{2}\right)^2 \times 3.14\ (\pi)}$$

$$(\text{psi}) = \frac{221\ \text{lbf}}{\left(\frac{\text{Ram diameter (in.)}}{2}\right)^2 \times 3.14\ (\pi)}$$

(kPa) = (kgf/cm²) x 98.1

(kPa) = (psi) x 6.9

V06796

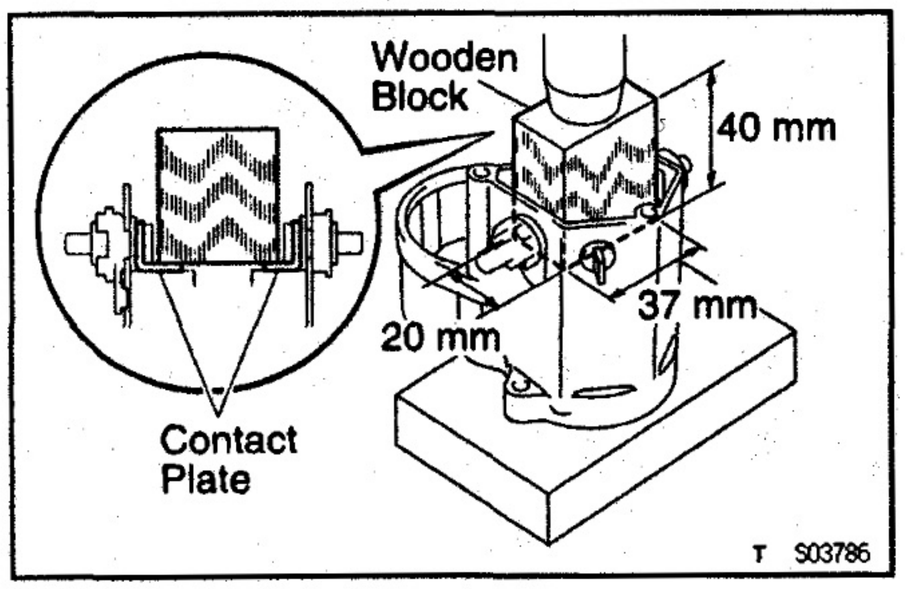

- **If the contact plate is not pressed down with the specified pressure, the contact plate may tilt due to coil deformation or the tightening of the nut.**

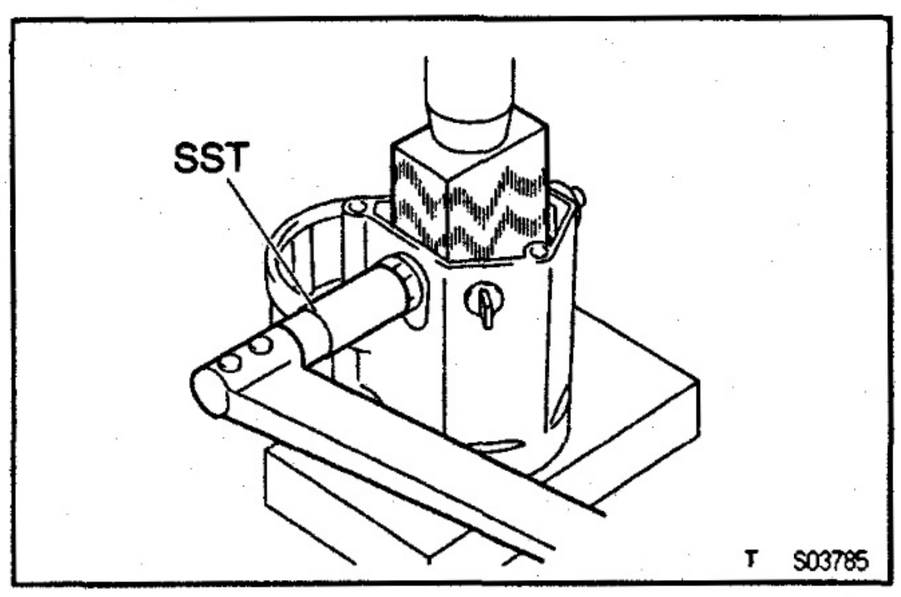

(b) Using SST, tighten the nuts to the specified torque.
SST 09810–38140
Torque: 17 N·m (173 kgf·cm, 13 ft·lbf)
NOTICE: If the nut is over tightened, it may cause cracks on the inside of the insulator.

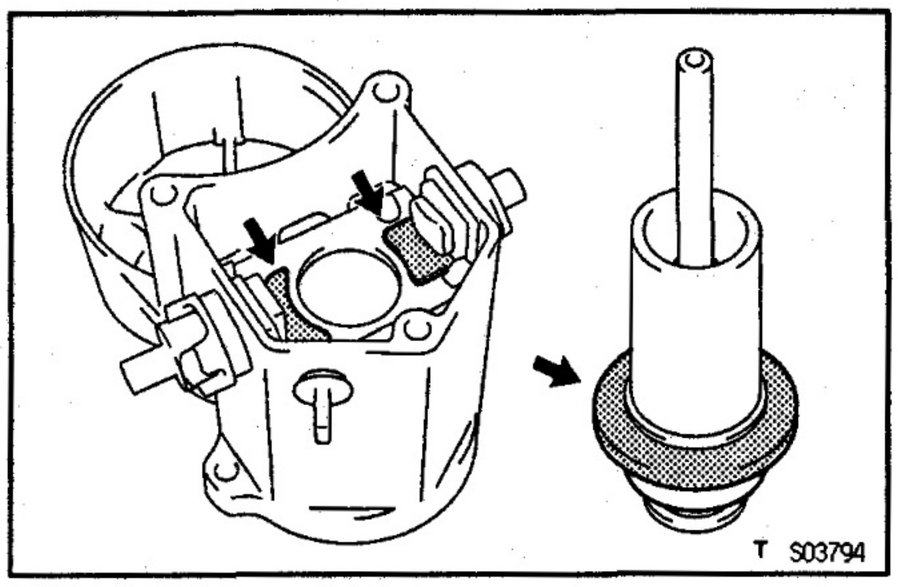

6. CLEAN CONTACT SURFACES OF CONTACT PLATE AND PLUNGER

Clean the contact surfaces of the remaining contact plate and plunger with a dry shop rag.

7. REINSTALL MAGNETIC SWITCH END COVER

Install the plunger, a new gasket, the end cover and lead clamp with the 3 bolts.

Torque: 3.6 N·m (37 kgf·cm, 32 in.·lbf)

ST

ST0CV-03

STARTER ASSEMBLY

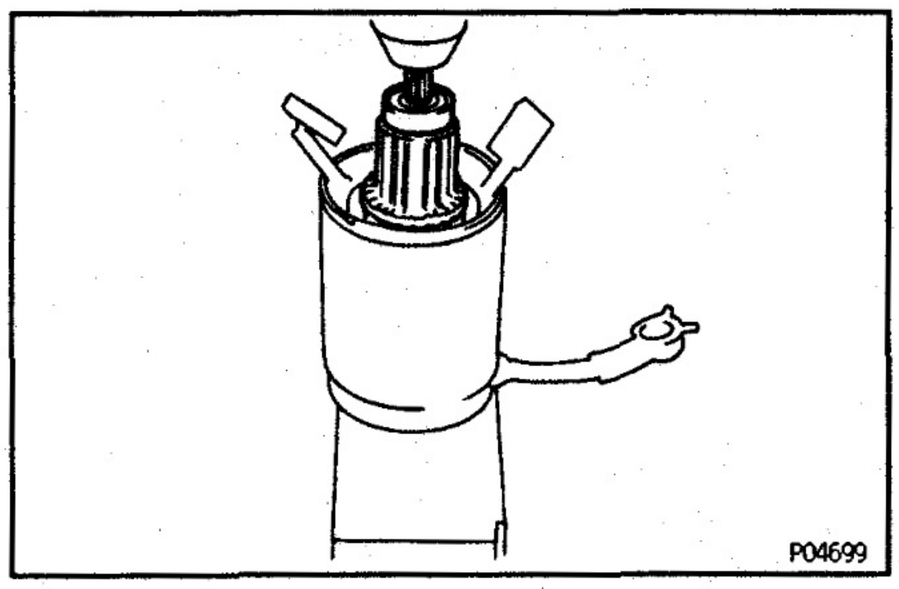

HINT: Use high—temperature grease to lubricate the bearings and gears when assembling the starter.

1. PLACE ARMATURE INTO FIELD FRAME

(a) Apply grease to the armature bearings.

(b) Using a press, press in armature.

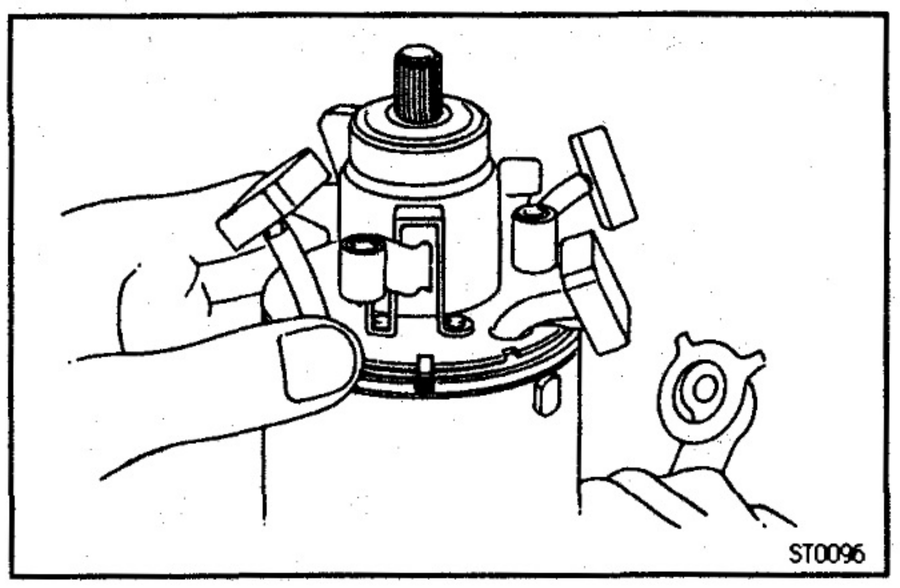

2. INSTALL BRUSH HOLDER

(a) Align the claw of the brush holder with the claw groove of the field frame.

(b) Place the brush holder on the field frame.

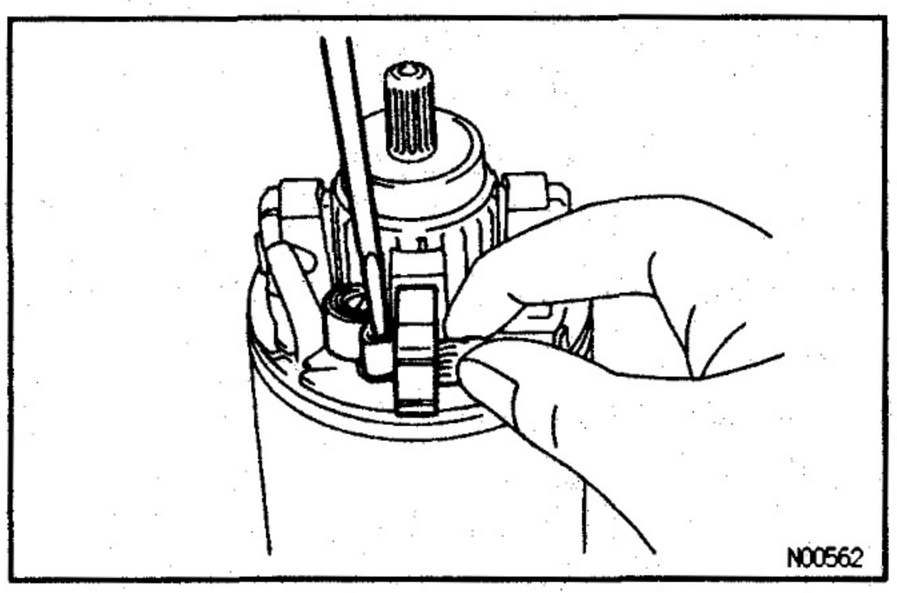

(c) Using a screwdriver, hold the brush spring back, and connect the brush into the brush holder. Connect the 4 brushes.

NOTICE: Check that the positive (+) lead wires are not grounded.

(d) Install a new O—ring to the groove of the field frame.

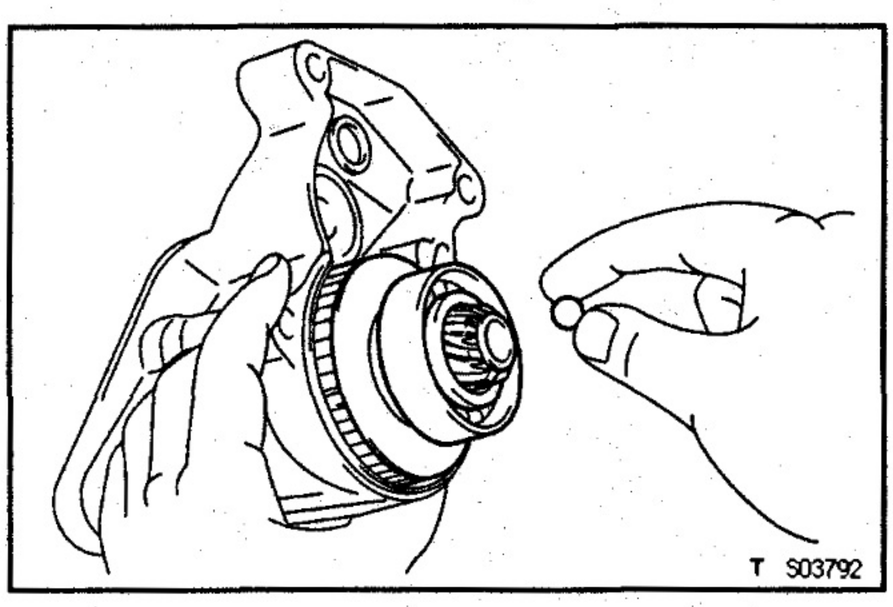

3. INSERT STEEL BALL INTO CLUTCH SHAFT HOLE

(a) Apply grease to the steel ball.

(b) Insert the steel ball into the clutch shaft hole.

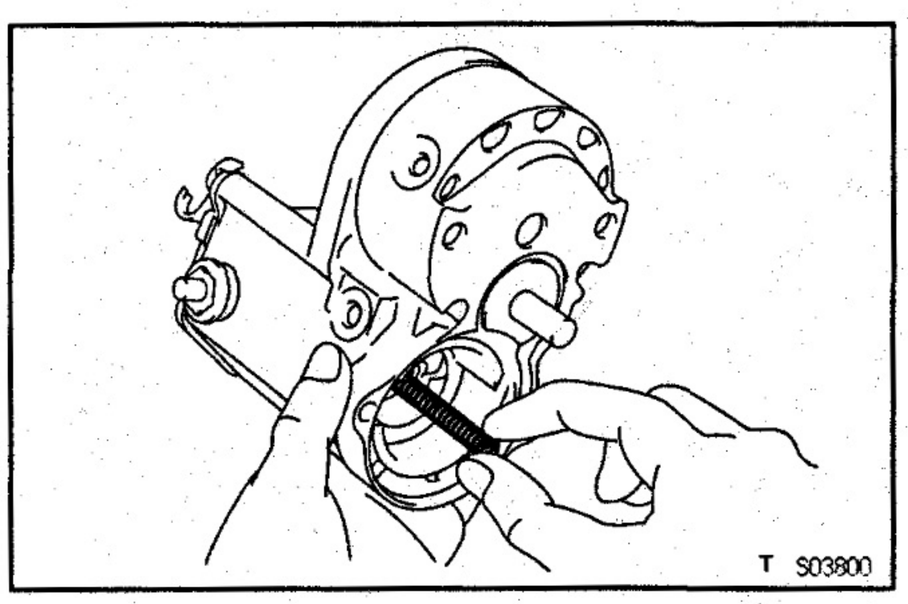

4. INSTALL STARTER HOUSING, CLUTCH ASSEMBLY AND GEARS

(a) Apply grease to the return spring.

(b) Insert the return spring into the magnetic switch hole.

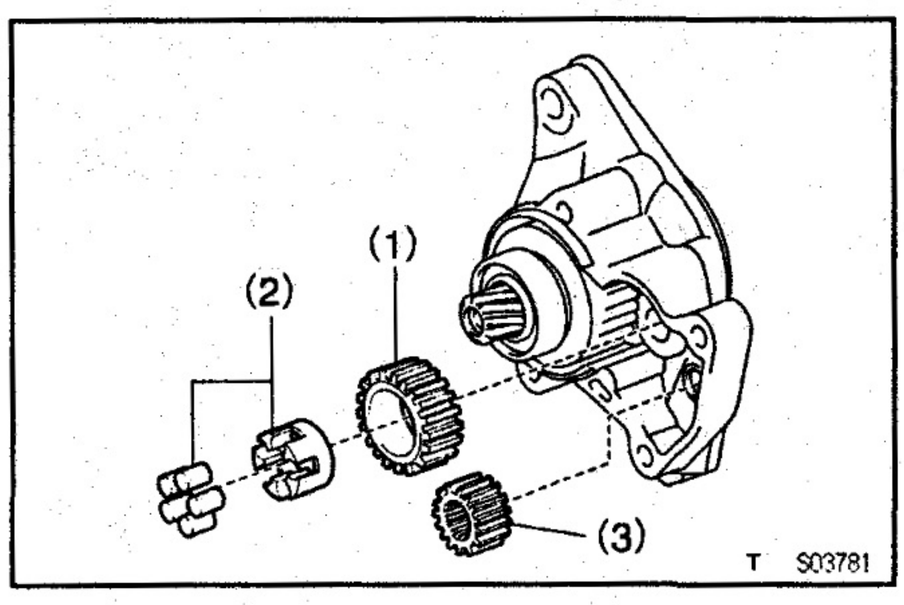

(c) Place these parts on the starter housing:
- (1) Idler gear
- (2) Bearing
- (3) Pinion gear

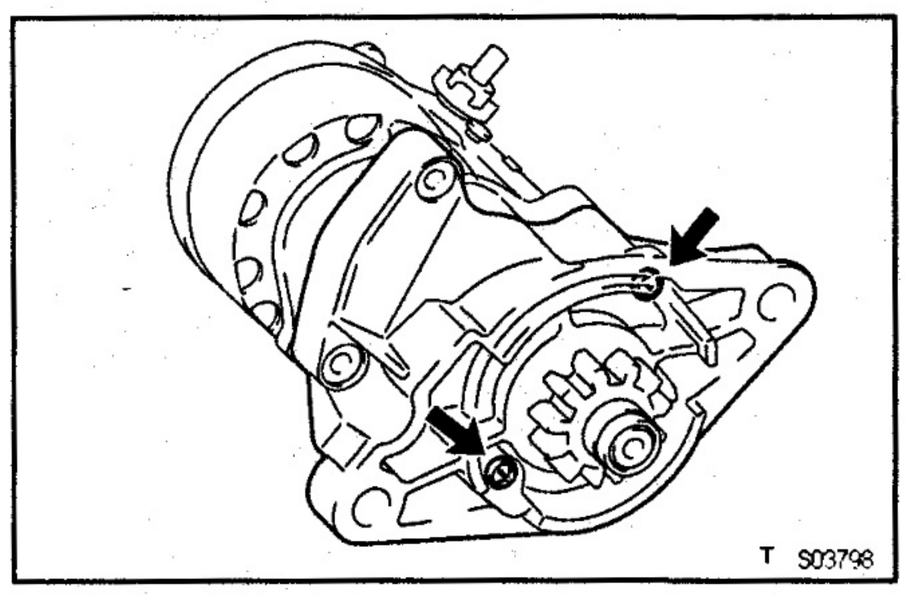

(d) Install the starter housing to the magnetic switch with the 2 screws.
Torque: 9.3 N·m (95 kgf·cm, 82 in.·lbf)

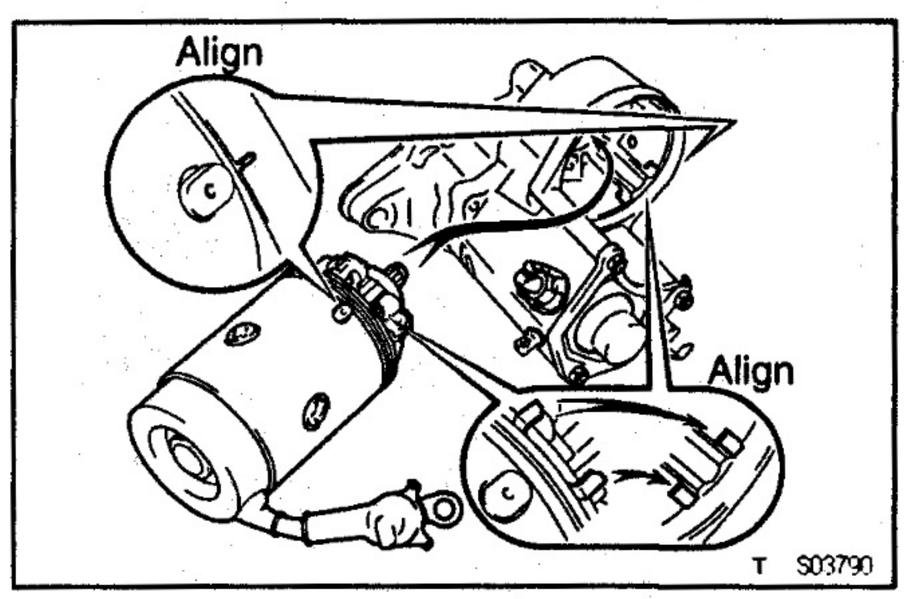

5. INSTALL FIELD FRAME AND ARMATURE ASSEMBLY

(a) Install a new O–ring to the groove of the field frame.

(b) Align the claws of the brush holder with the grooves of the magnetic switch, and install the filed frame and armature shaft assembly.

(c) Align the punch mark of the field frame with the line of the magnet switch.

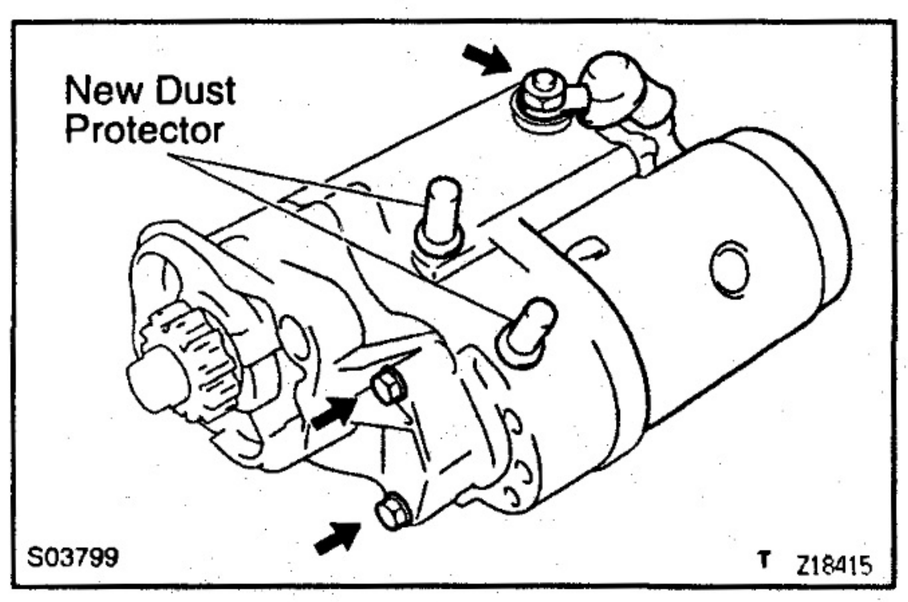

(d) Install a new O–ring to the through bolt.

(e) Install the field frame and armature assembly with the 2 through bolts.
Torque: 12.7 N·m (130 kgf·cm, 9 ft·lbf)

(f) Connect the lead wire to terminal C, and install the nut.
Torque: 5.9 N·m (60 kgf·cm, 52 in.·lbf)

6. INSTALL DUST PROTECTORS

Install 2 new dust protectors.

7. INSTALL LEAD WIRE

Install the lead wire with the screw.

Torque: 3.6 N·m (37 kgf·cm, 32 in.·lbf)

ST

ST010-1J

STARTER PERFORMANCE TEST

NOTICE: These tests must be performed within 3 to 5 seconds to avoid burning out the coil.

1. PERFORM PULL—IN TEST

(a) Disconnect the field coil lead wire from terminal C.

(b) Connect the battery to the magnetic switch as shown. Check that the clutch pinion gear moves outward.

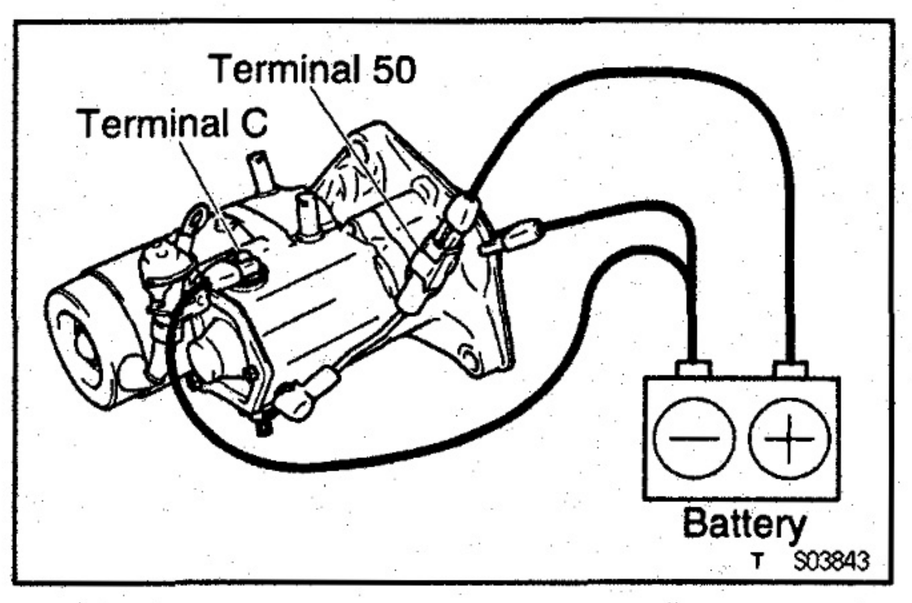

2. PERFORM HOLD—IN TEST

With battery connected as above with the clutch pinion gear out, disconnect the negative (—) lead from terminal C. Check that the pinion gear remains out.

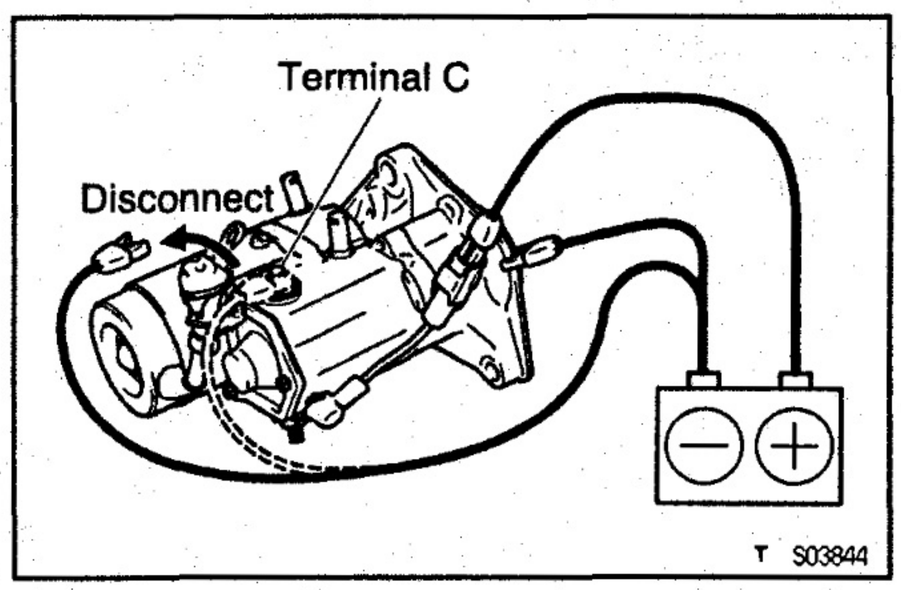

3. INSPECT CLUTCH PINION GEAR RETURN

Disconnect the negative (—) lead from the switch body. Check that the clutch pinion gear returns inward.

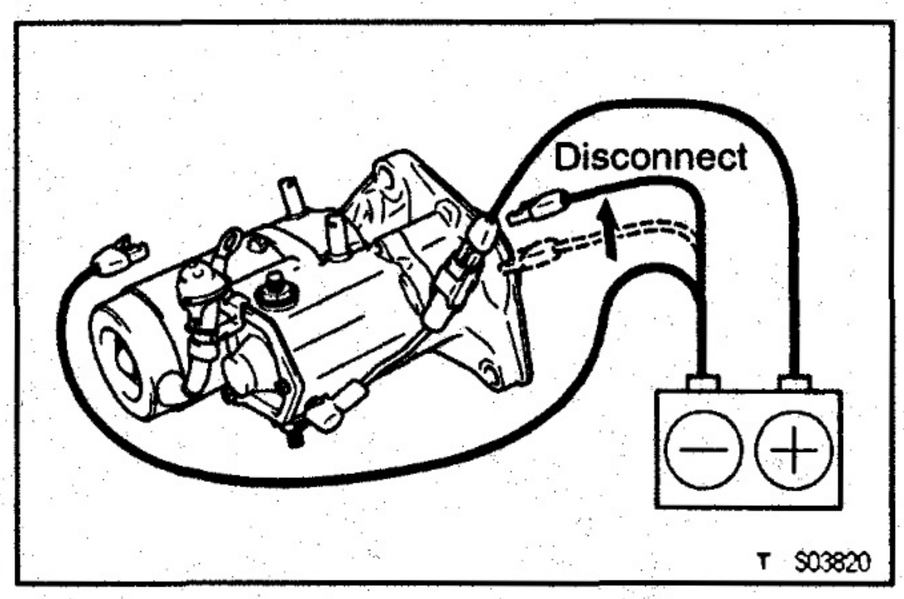

4. PERFORM NO—LOAD PERFORMANCE TEST

(a) Connect the battery and ammeter to the starter as shown.

(b) Check that the starter rotates smoothly and steadily with the pinion gear moving out. Check that the ammeter shows the specified current.

Specified current at 11.5 V:

120 A or less

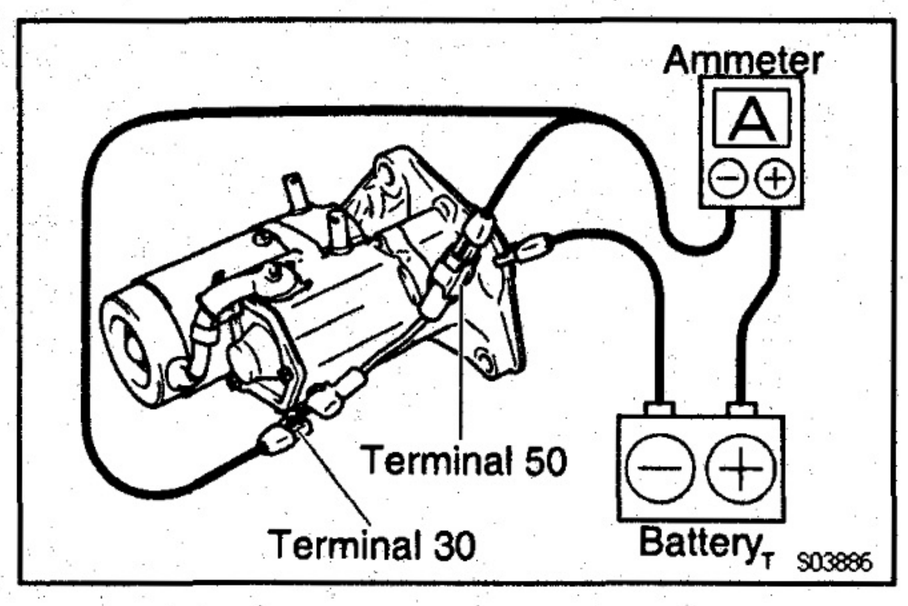

STARTER (2.0 kW for Except LN Thailand)

COMPONENTS FOR DISASSEMBLY AND ASSEMBLY

ST00W-1Y

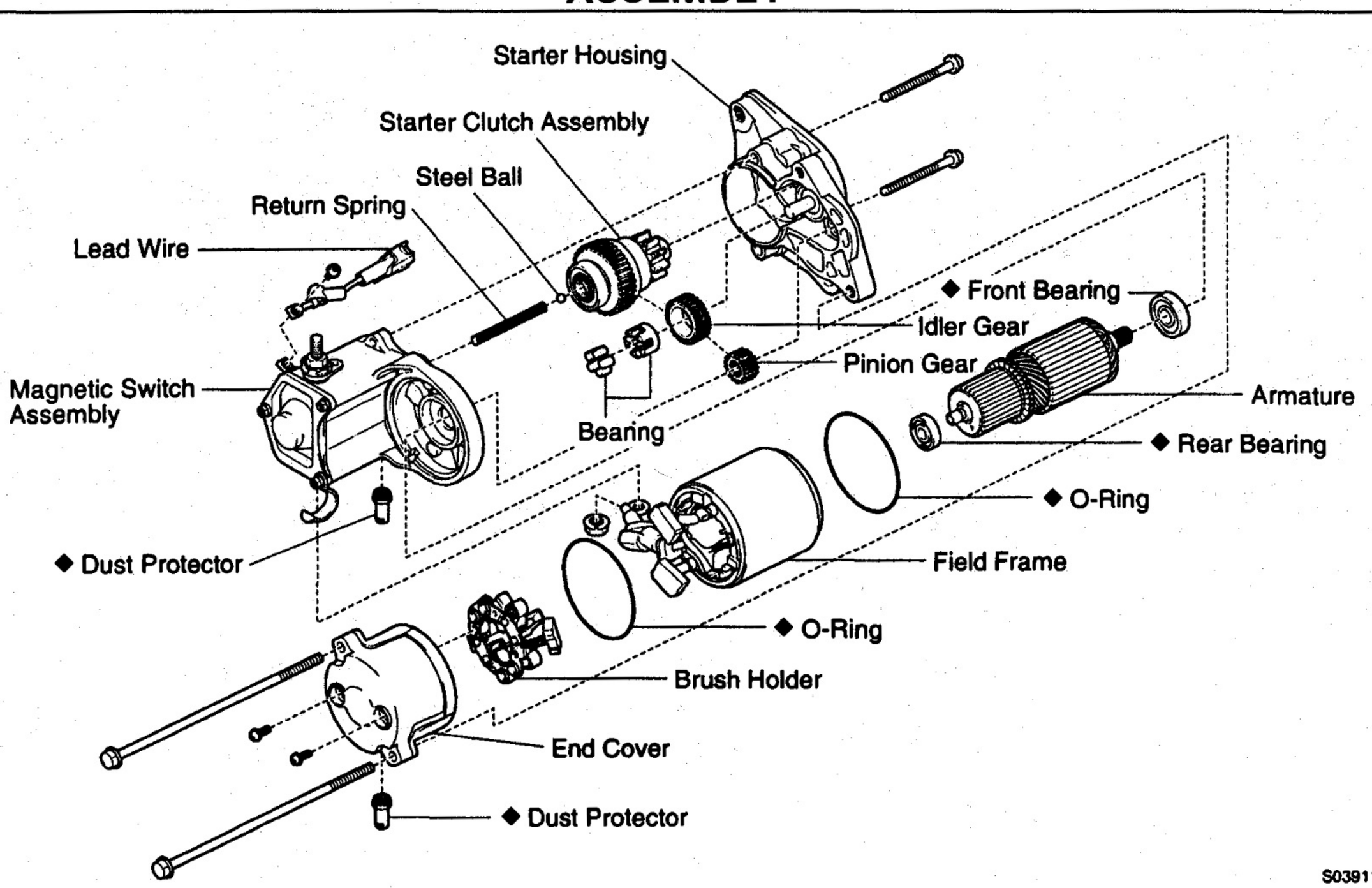

Magnetic Switch Assembly

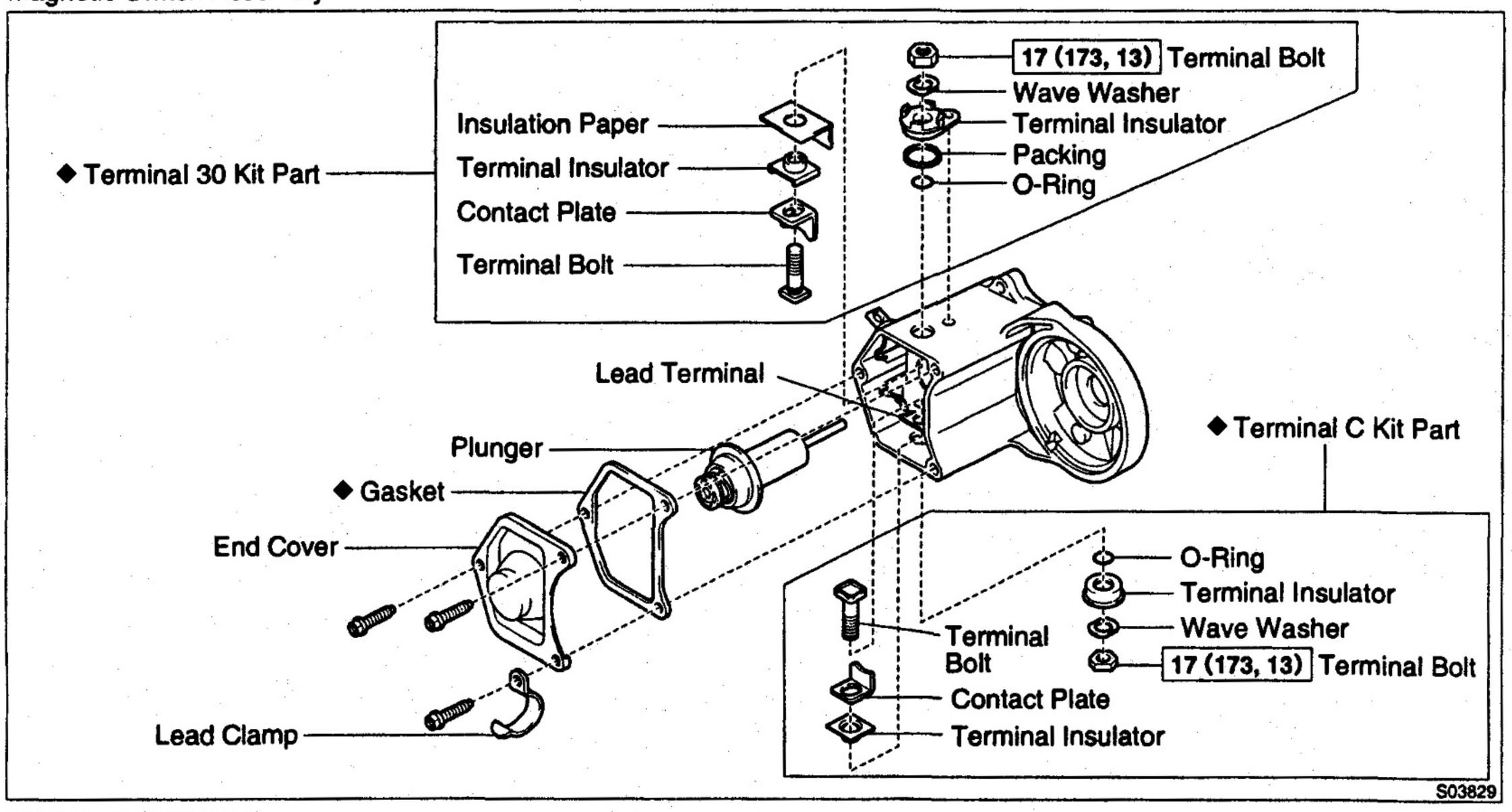

N·m (kgf·cm, ft·lbf): Specified torque
◆ Non-reusable part

T Z18494

ST0F1-02

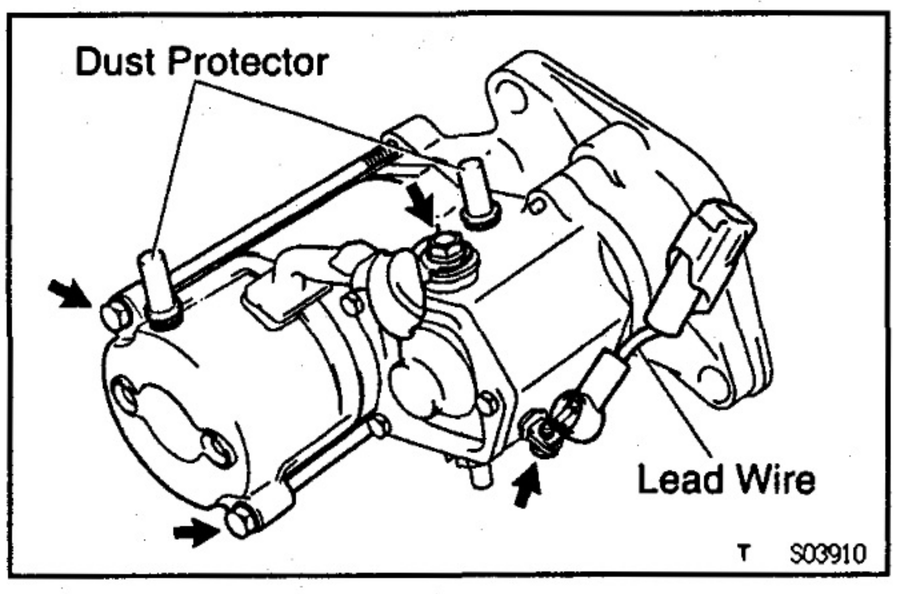

STARTER DISASSEMBLY

1. REMOVE LEAD WIRE

Remove the screw and lead wire.

2. REMOVE DUST PROTECTORS

3. REMOVE FIELD FRAME AND ARMATURE

(a) Remove the nut, and disconnect the lead wire from the magnetic switch terminal.

(b) Remove the 2 through bolts.

(c) Pull out the field frame with the armature from the magnetic switch.

(d) Remove the O–ring.

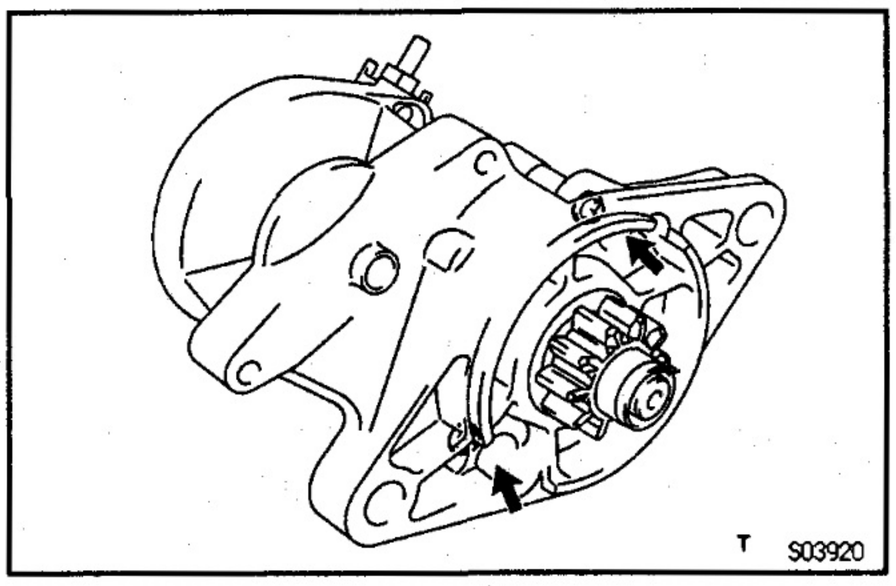

4. REMOVE STARTER HOUSING, CLUTCH ASSEMBLY AND GEAR

(a) Remove the 2 screws.

(b) Remove these parts from the magnetic switch:

- Starter housing
- Return spring
- Pinion gear
- Bearing
- Idler gear
- Starter clutch assembly

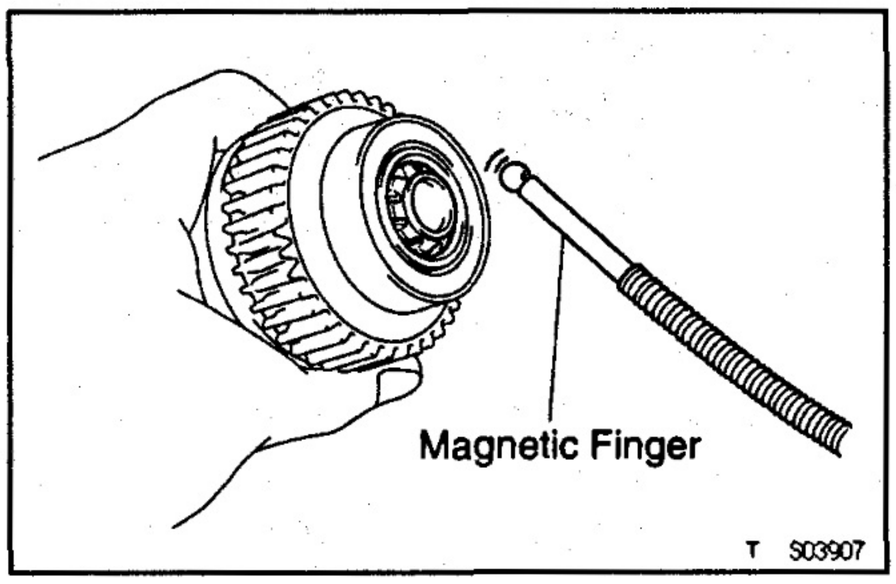

5. REMOVE STEEL BALL

Using a magnetic finger, remove the steel ball from the clutch shaft hole.

6. REMOVE BRUSH HOLDER

(a) Remove the 2 screws and end cover from the field frame.

(b) Remove the O–ring from the field frame.

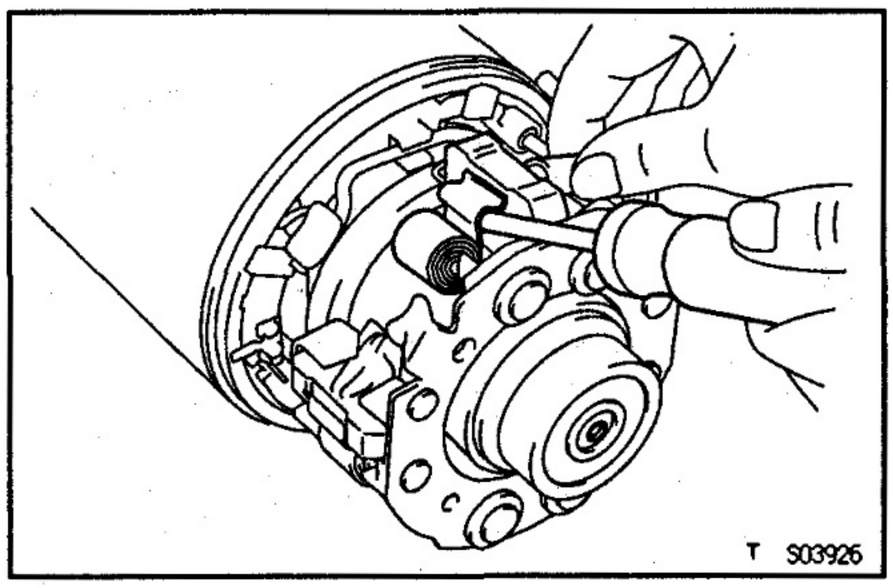

(c) Using a screwdriver, hold the spring back and disconnect the brush from the brush holder. Disconnect the four brushes and remove the brush holder.

7. REMOVE ARMATURE FROM FIELD FRAME

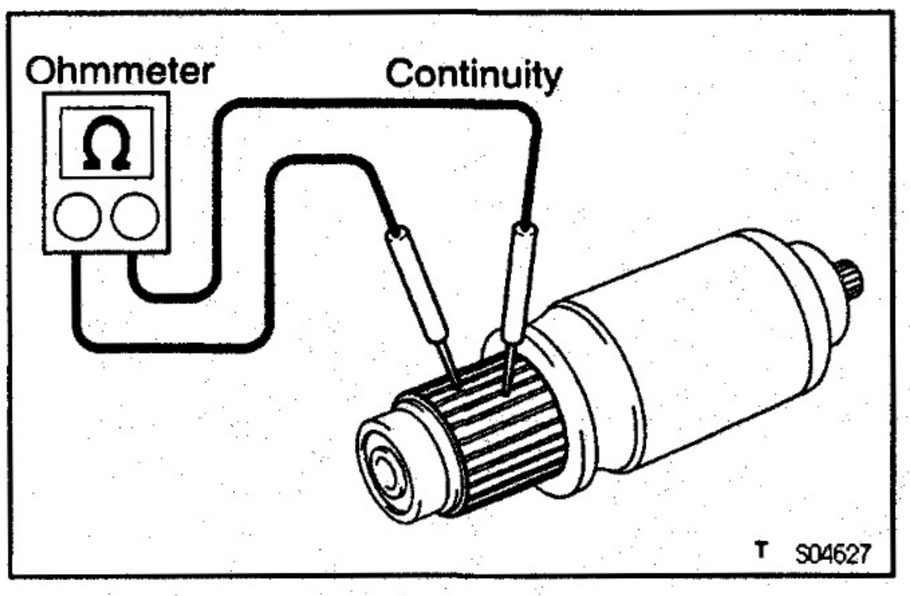

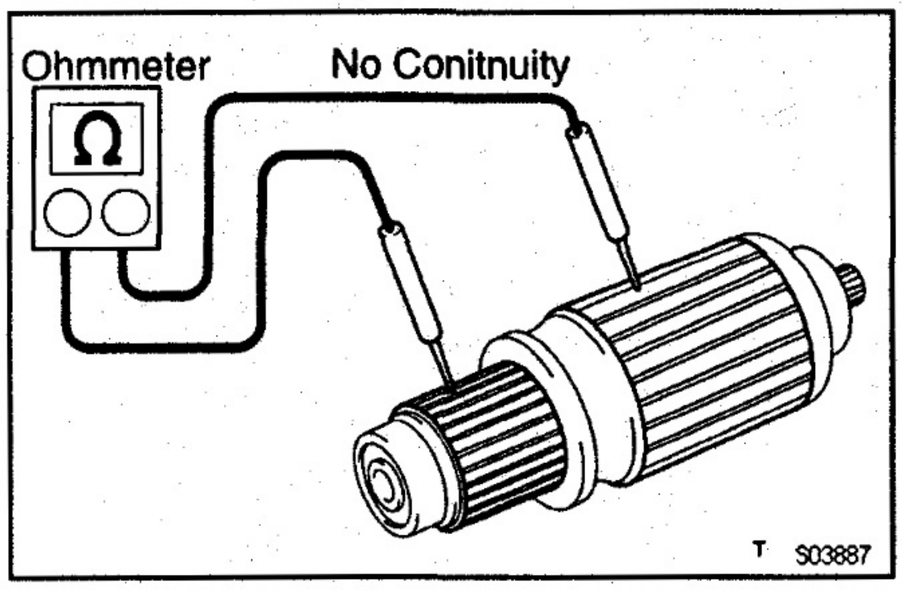

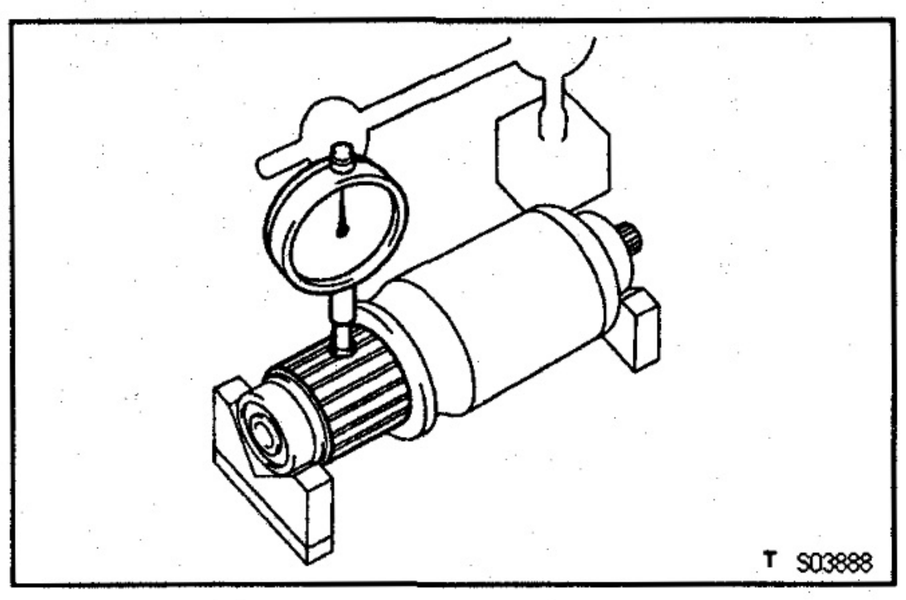

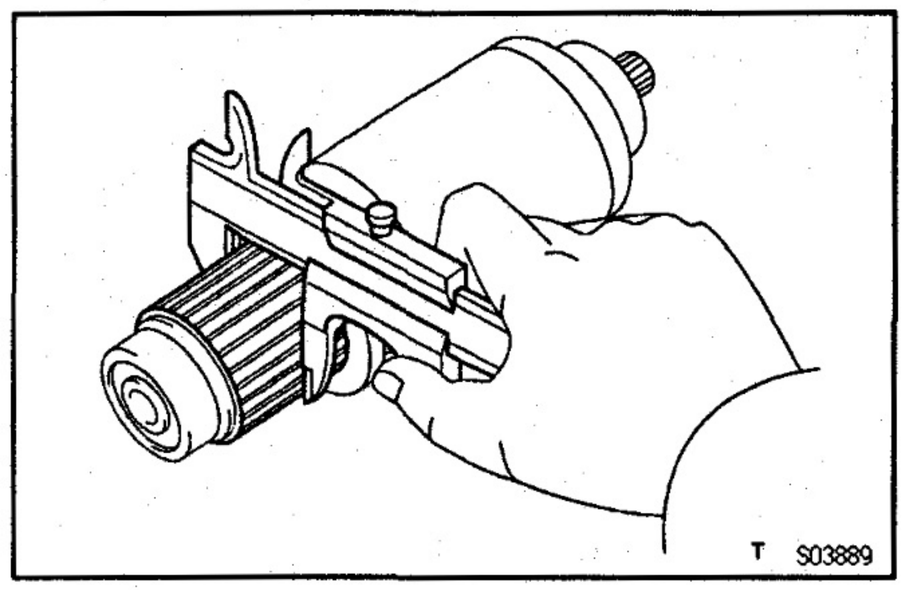

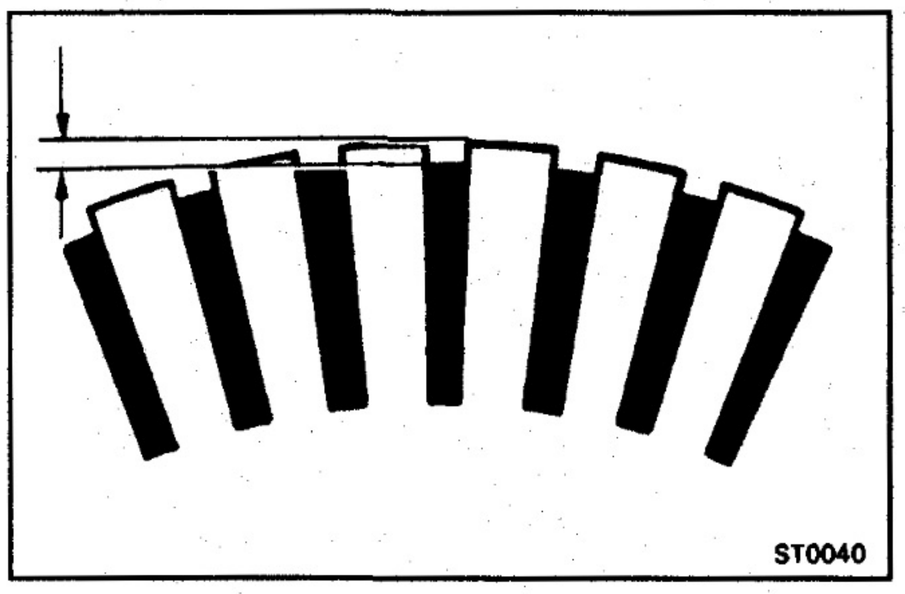

ST0001-01

STARTER INSPECTION AND REPAIR

Armature Coil

1. INSPECT COMMUTATOR FOR OPEN CIRCUIT

Using an ohmmeter, check that there is continuity between the segments of the commutator.

If there is no continuity between any segment, replace the armature.

2. INSPECT COMMUTATOR FOR GROUND

Using an ohmmeter, check that there is no continuity between the commutator and armature coil core.

If there is continuity, replace the armature.

Commutator

1. INSPECT COMMUTATOR FOR DIRTY AND BURNT SURFACES

If the surface is dirty or burnt, correct it with sandpaper (No. 400) or on a lathe.

2. INSPECT COMMUTATOR CIRCLE RUNOUT

(a) Place the commutator on V—blocks.

(b) Using a dial gauge, measure the circle runout.

Maximum circle runout:

0.05 mm (0.0020 in.)

If the circle runout is greater than maximum, correct it on a lathe.

3. INSPECT COMMUTATOR DIAMETER

Using vernier calipers, measure the commutator diameter.

Standard diameter:

35.0 mm (1.378 in.)

Minimum diameter:

34.0 mm (1.339 in.)

If the diameter is less than minimum, replace the armature.

4. INSPECT UNDERCUT DEPTH

Check that the undercut depth is clean and free of foreign materials. Smooth out the edge.

Standard undercut depth:

0.7 mm (0.028 in.)

Minimum undercut depth:

0.2 mm (0.008 in.)

If the undercut depth is less than minimum, correct it with a hacksaw blade.

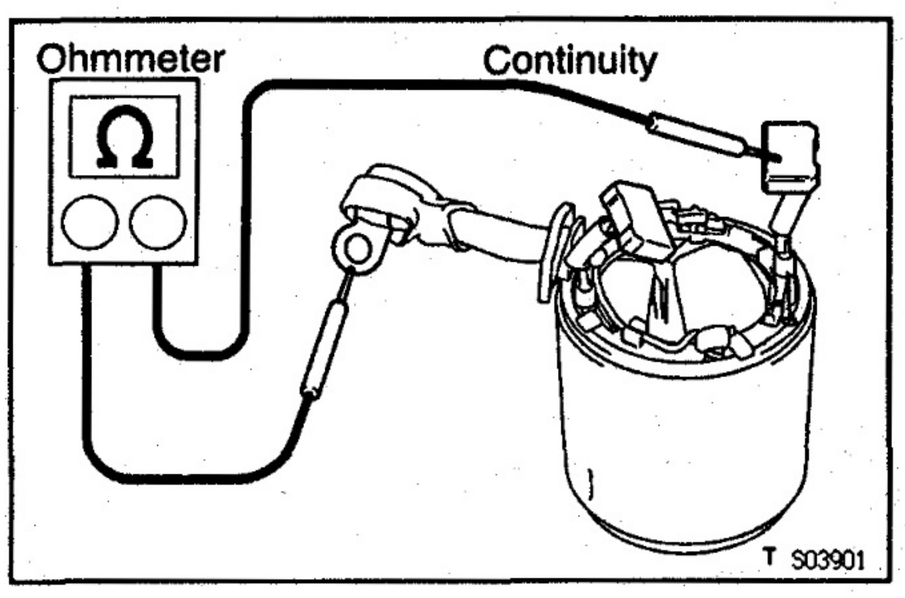

Field Frame (Field Coil, Shunt Coil)

1. **INSPECT FIELD COIL FOR OPEN CIRCUIT**
Using an ohmmeter, check that there is continuity between the lead wire and field coil brush lead.
If there is no continuity, replace the field frame.

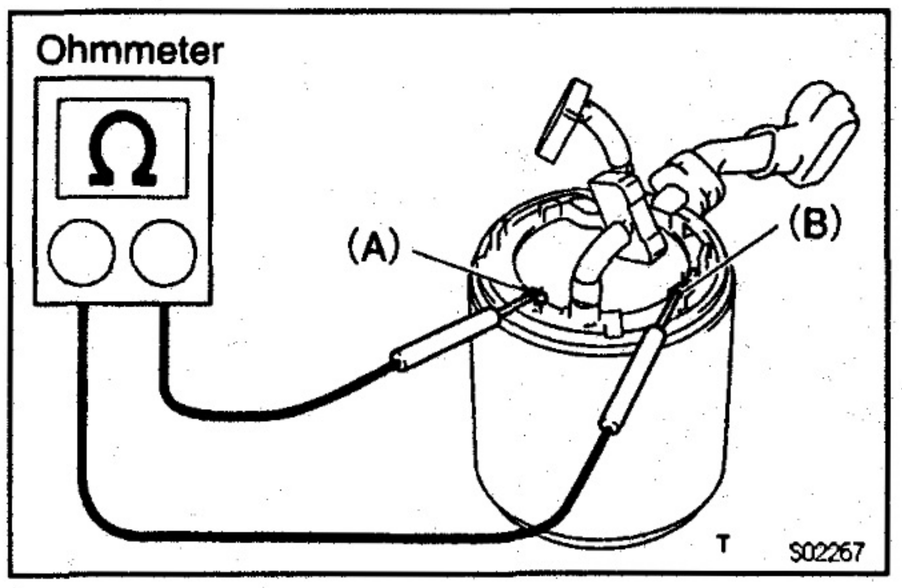

2. **INSPECT SHUNT COIL FOR OPEN CIRCUIT**
Using an ohmmeter, measure the resistance between shunt coil terminals (A) and (B).
Resistance at 20°C (68°F):
1.5 — 1.9 Ω
If the resistance is not as specified, replace the field frame.

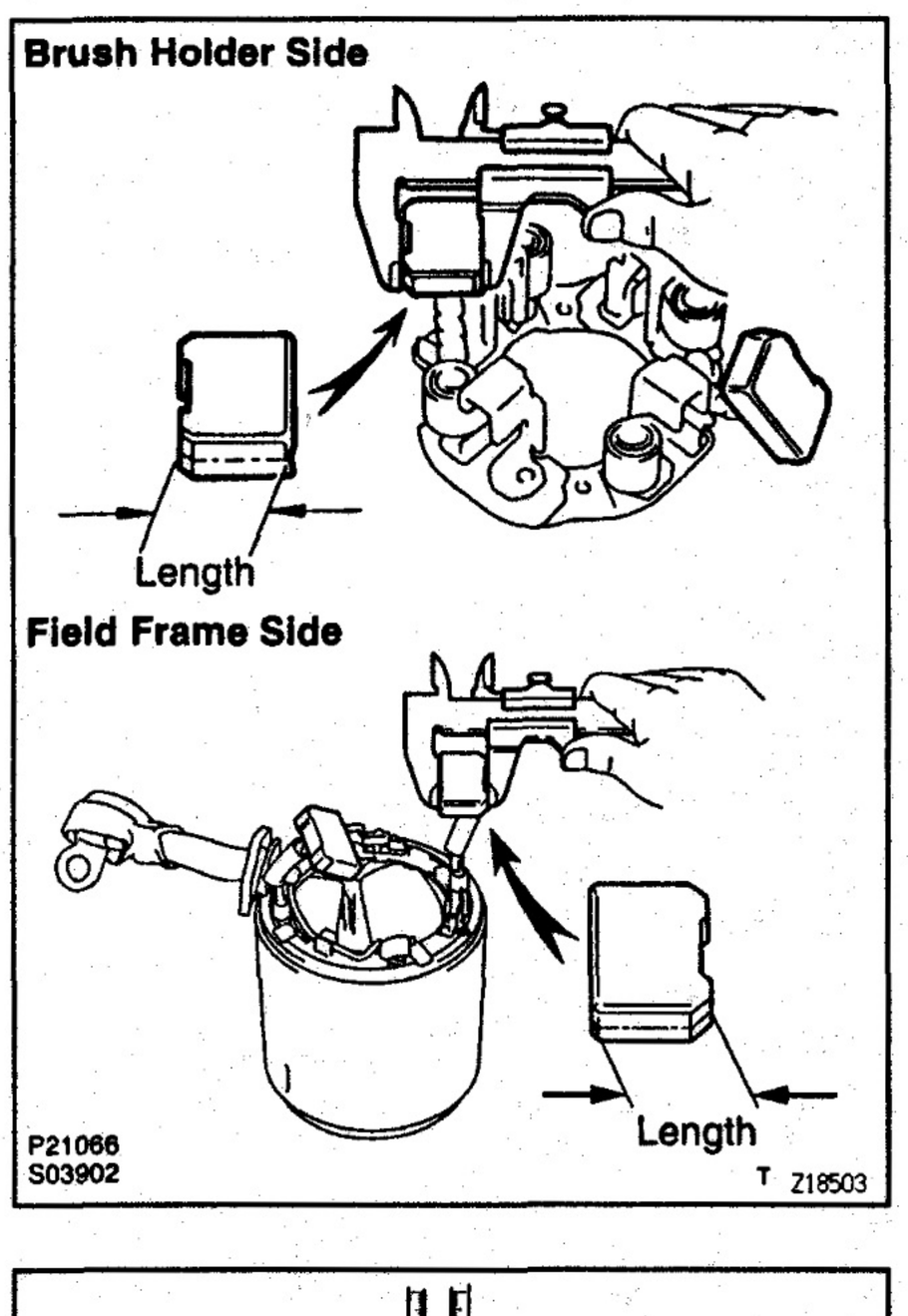

Brushes

INSPECT BRUSH LENGTH
Using vernier calipers, measure the brush length.
Standard length:
15.0 mm (0.591 in.)
Minimum length:
9.0 mm (0.354 in.)
If the length is less than minimum, replace the brush holder and field frame.

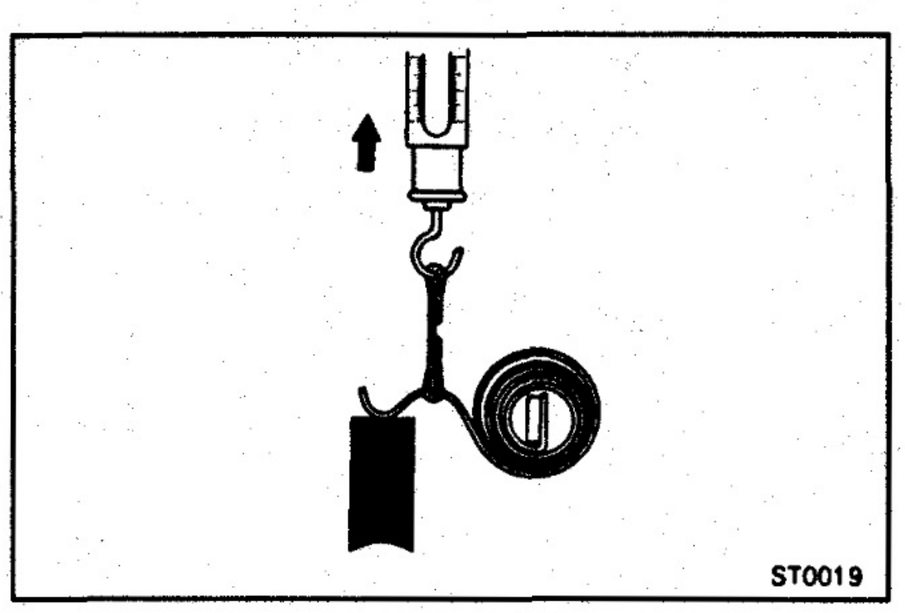

Brush Springs

INSPECT BRUSH SPRING LOAD
Take the pull scale reading the instant the brush spring separates from the brush.
Standard spring installed load:
21.5 — 27.5 N (2.2 — 2.8 kgf, 4.9 — 6.2 lbf)
Minimum spring installed load:
12.7 N (1.3 kgf, 2.9 lbf)
If the installed load is less than minimum replace the brush springs.

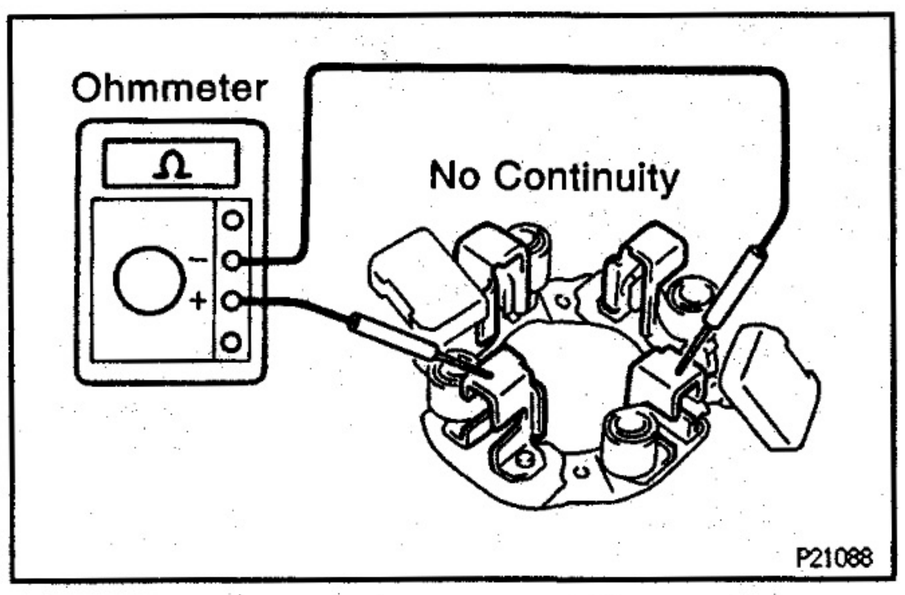

Brush Holder

INSPECT BRUSH HOLDER INSULATION

Using an ohmmeter, check that there is no continuity between the positive (+) and negative (–) brush holders.

If there is continuity, repair or replace the brush holder.

ST

Clutch and Gears

1. **INSPECT GEAR TEETH**

Check the gear teeth on the pinion gear, idle gear and clutch assembly for wear or damage.

If damaged, replace the gear or clutch assembly.

If damaged, also check the ring gear of the flywheel/drive plate for wear or damage.

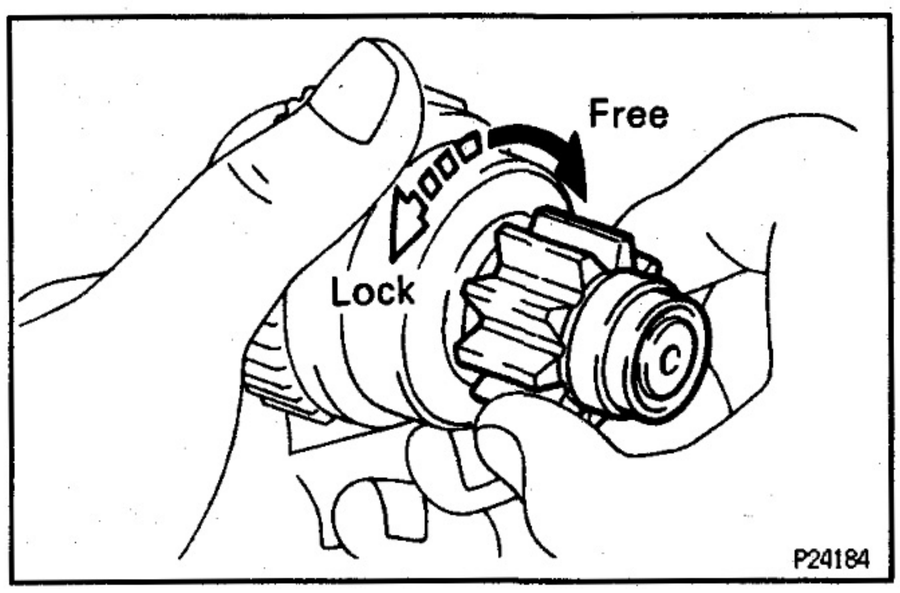

2. **INSPECT CLUTCH PINION GEAR**

Hold the starter clutch and rotate the pinion gear clockwise, and check that it turns freely. Try to rotate the pinion gear counterclockwise and check that it locks.

If necessary, replace the clutch assembly.

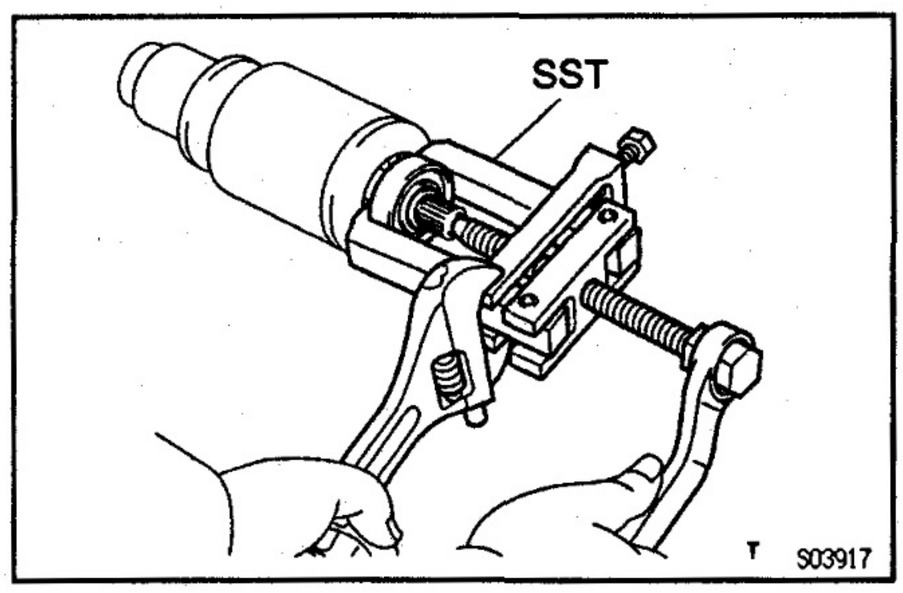

Bearings

1. **INSPECT FRONT BEARING**

Turn the bearing by hand while applying inward force.

If resistance is felt or the bearing sticks, replace the bearing.

2. **IF NECESSARY, REPLACE FRONT BEARING**

(a) Using SST, remove the bearing.

SST 09286–46011

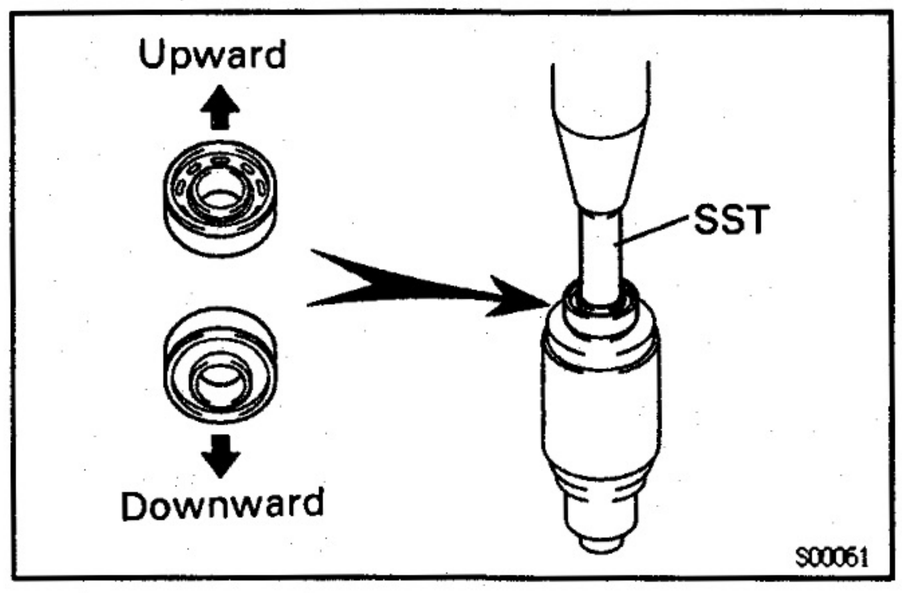

(b) Using a press, press in a new bearing.

NOTICE: Be careful of the bearing installation direction.

SST 09820–00030

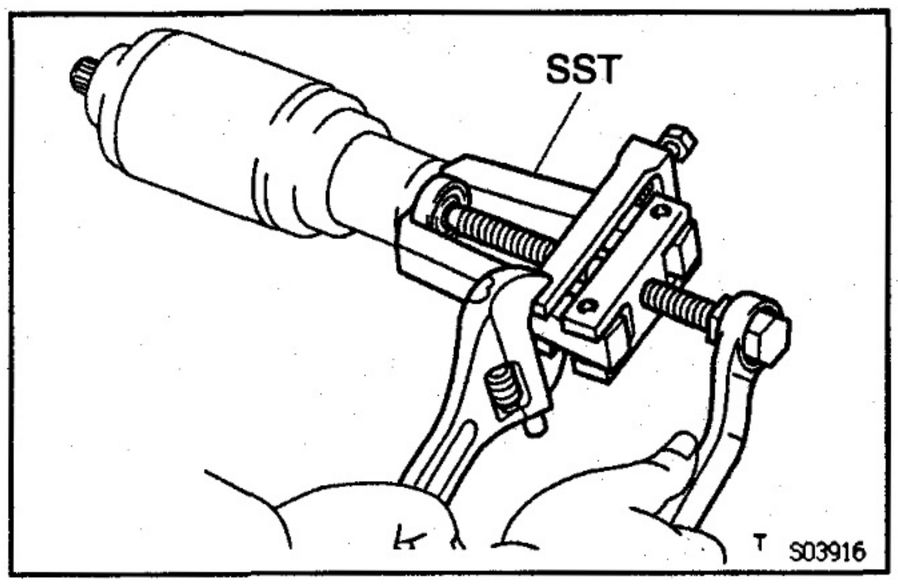

3. INSPECT REAR BEARING

Turn the bearing by hand while applying inward force.
If resistance is felt or the bearing sticks, replace the bearing.

4. IF NECESSARY, REPLACE REAR BEARING

(a) Using SST, remove the bearing.
SST 09286—46011

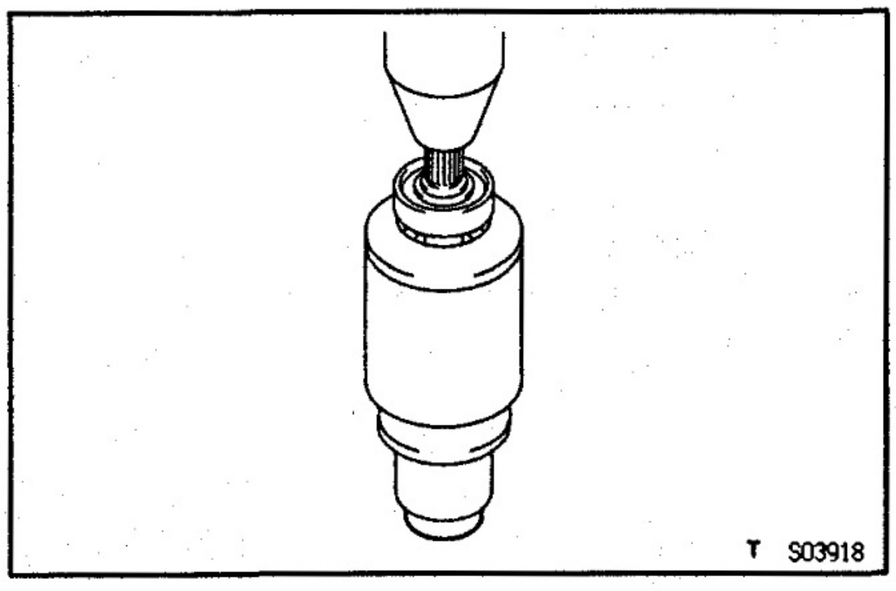

(b) Using a press, press in a new bearing.

Magnetic Switch

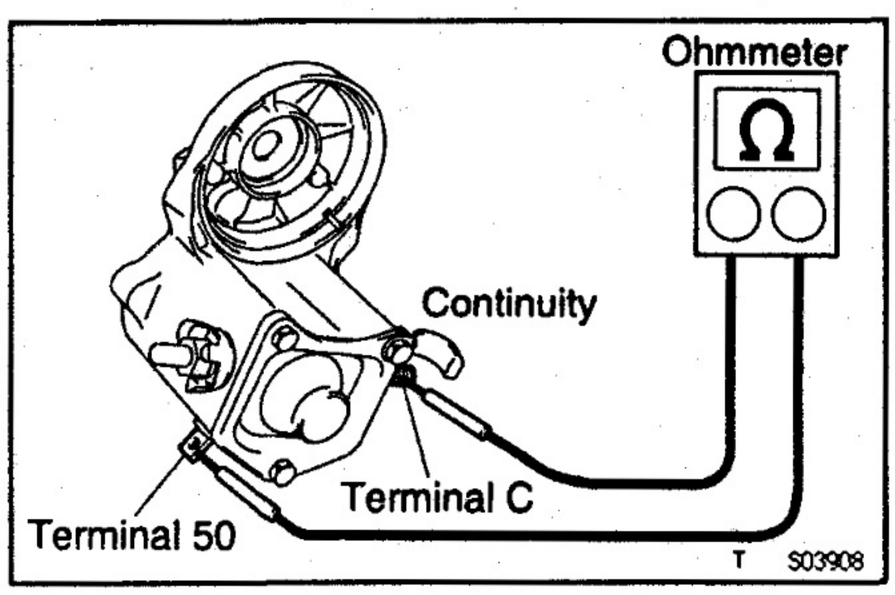

1. PERFORM PULL—IN COIL OPEN CIRCUIT TEST

Using an ohmmeter, check that there is continuity between terminals 50 and C.
If there is no continuity, replace the magnetic switch.

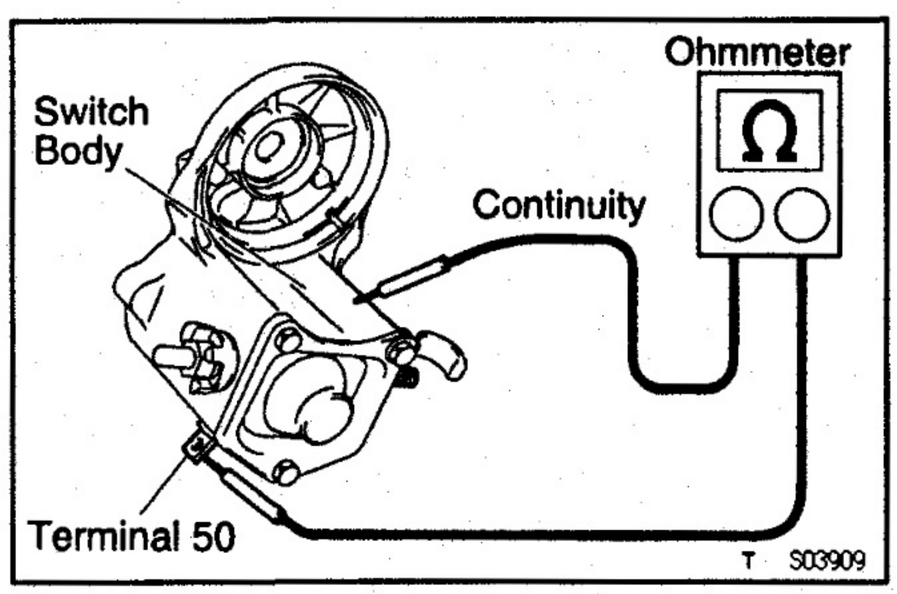

2. PERFORM HOLD—IN COIL OPEN CIRCUIT TEST

Using an ohmmeter, check that there is continuity between terminal 50 and the switch body.
If there is no continuity, replace the magnetic switch.

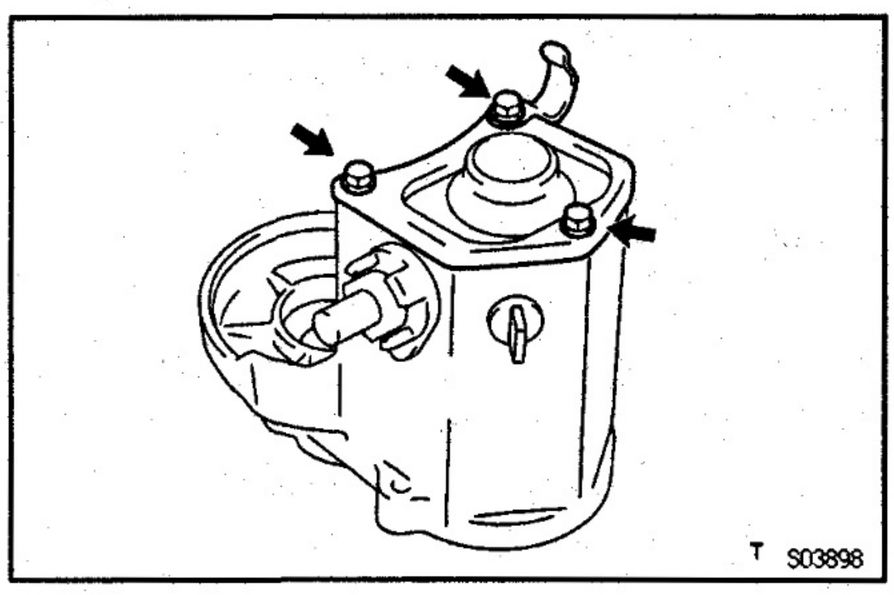

ST002-01

MAGNETIC SWITCH TERMINAL KIT PARTS REPLACEMENT

1. REMOVE MAGNETIC SWITCH END COVER

Remove the 3 bolts, lead clamp, end cover, gasket and plunger.

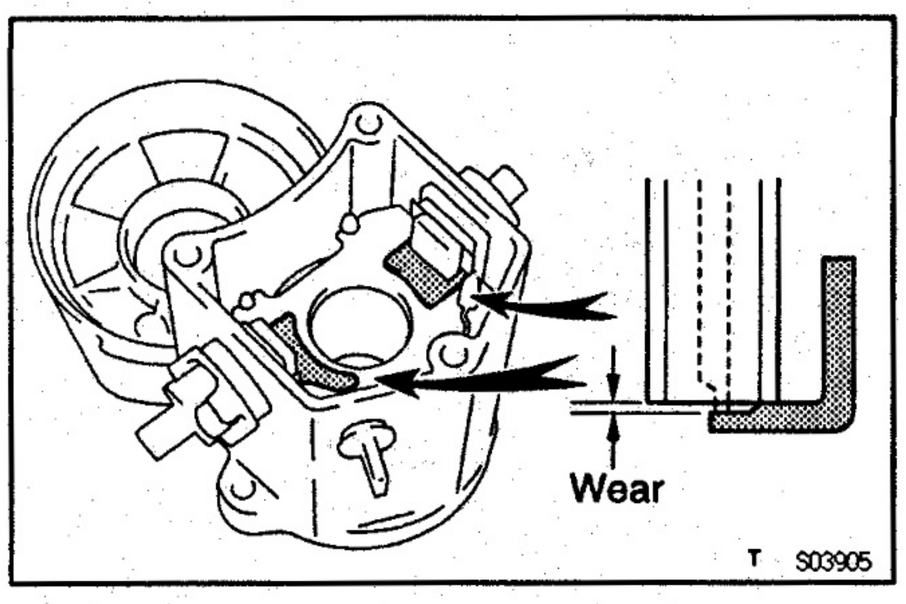

2. INSPECT CONTACT PLATE FOR WEAR

Using vernier calipers, measure the contact plate for depth of wear.

Maximum wear:

0.9 mm (0.035 in.)

If the depth of wear is greater than the maximum, replace the contact plate.

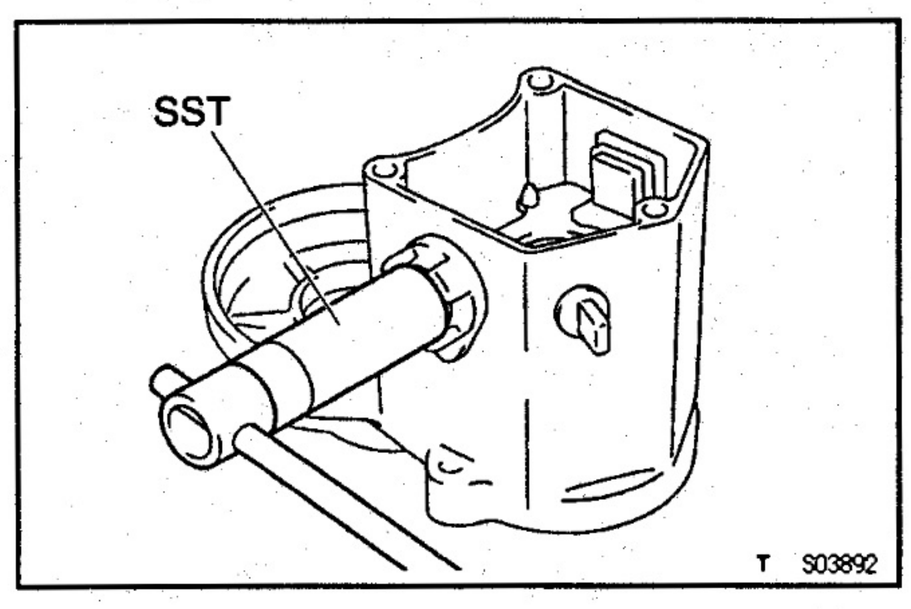

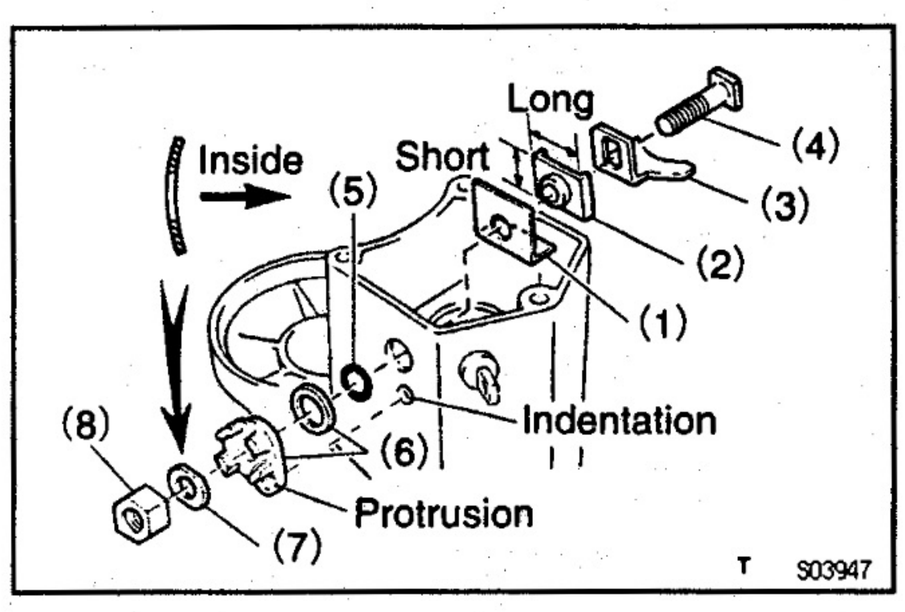

3. REMOVE TERMINAL KIT PARTS

(a) Using SST, loosen the terminal nuts.
SST 09810−38140

(b) Terminal C:
Remove the terminal nut, wave washer, terminal insulator (outside), O−ring, terminal bolt, contact plate and terminal insulator (inside).

(c) Terminal 30:
Remove the terminal nut, wave washer, terminal insulator (outside), packing, O−ring, terminal bolt, contact plate, terminal insulator (inside) and insulation paper.

4. REINSTALL TERMINAL KIT PARTS

(a) Install these new parts:

Terminal 30:

(1) Insulation paper
(2) Terminal insulator (inside)
(3) Contact plate
(4) Terminal bolt
(5) O−ring
(6) Packing and terminal insulator (outside)
Install the packing to the terminal insulator, and install them.

HINT: Match the protrusion of the insulator with the indentation of the housing.

(7) Wave washer
(8) Terminal nut

NOTICE: Be careful to install the terminal insulator (inside) and wave washer in the correct direction.

Terminal C:

(1) Terminal insulator (inside)
(2) Contact plate
(3) Terminal bolt
(4) O−ring
(5) Terminal insulator (outside)
(6) Wave washer
(7) Terminal nut

NOTICE: Be careful to install the terminal insulator (inside) and wave washer in the correct direction.

(b) Temporarily tighten the terminal nuts.

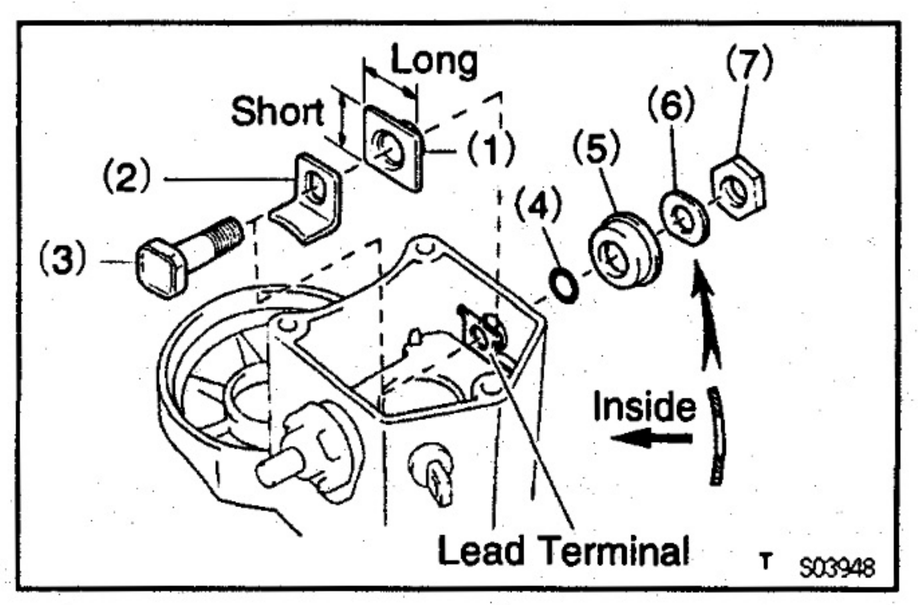

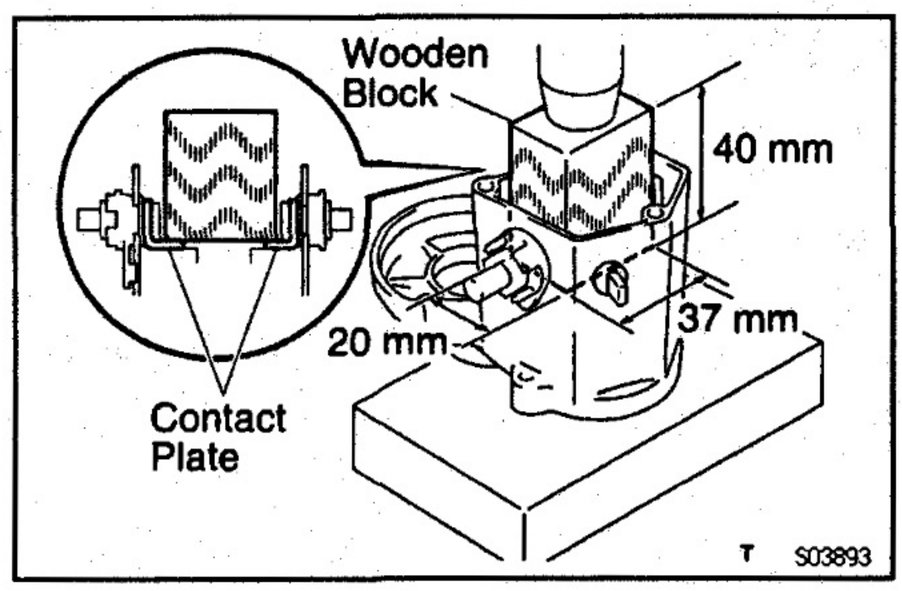

5. TIGHTEN TERMINAL NUT

(a) Put a wooden block on the contact plate and press it down with a hand press.

Dimensions of wooden block:

20 x 37 x 40 mm (0.79 x 1.46 x 1.57 in.)

Press force:

981 N (100 kgf, 221 lbf)

NOTICE:

- **Check the diameter of the hand press ram. Then calculate the gauge pressure of the press when 981 N (100 kgf, 221 lbf) of force is applied.**

Gauge pressure:

$$(kgf/cm^2) = \frac{100\ kgf}{\left(\frac{\text{Ram diameter (cm)}}{2}\right)^2 \times 3.14\ (\pi)}$$

$$(psi) = \frac{221\ lbf}{\left(\frac{\text{Ram diameter (in.)}}{2}\right)^2 \times 3.14\ (\pi)}$$

(kPa) = (kgf/cm²) x 98.1

(kPa) = (psi) x 6.9

V06796

- **If the contact plate is not pressed down with the specified pressure, the contact plate may tilt due to coil deformation or the tightening of the nut.**

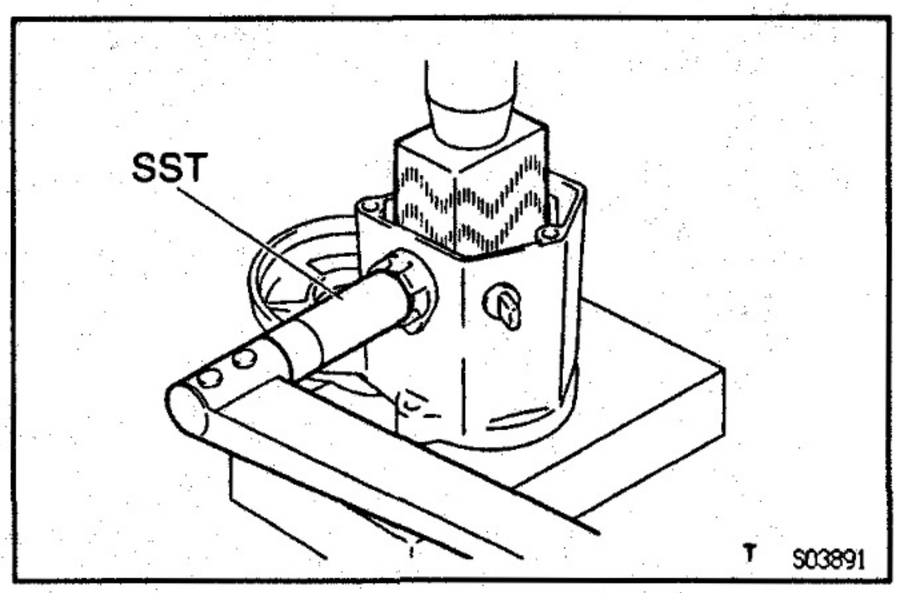

(b) Using SST, tighten the nuts to the specified torque.
SST 09810−38140
Torque: 17 N·m (173 kgf·cm, 13 ft·lbf)
NOTICE: If the nut is over tightened, it may cause cracks on the inside of the insulator.

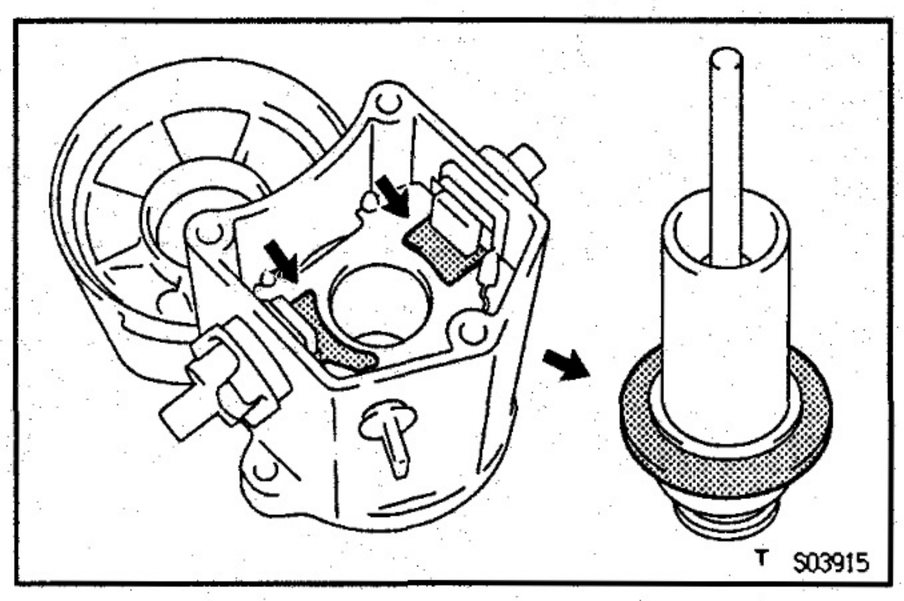

6. CLEAN CONTACT SURFACES OF CONTACT PLATE AND PLUNGER

Clean the contact surfaces of the remaining contact plate and plunger with a dry shop rag.

7. REINSTALL MAGNETIC SWITCH END COVER

Install the plunger, a new gasket, the end cover and lead clamp with the 3 bolts.

Torque: 3.6 N·m (37 kgf·cm, 32 in.·lbf)

ST0F3–02

STARTER ASSEMBLY

HINT: Use high—temperature grease to lubricate the bearings and gears when assembling the starter.

1. PLACE ARMATURE INTO FIELD FRAME

Apply grease to the armature bearings, and insert the armature into the field frame.

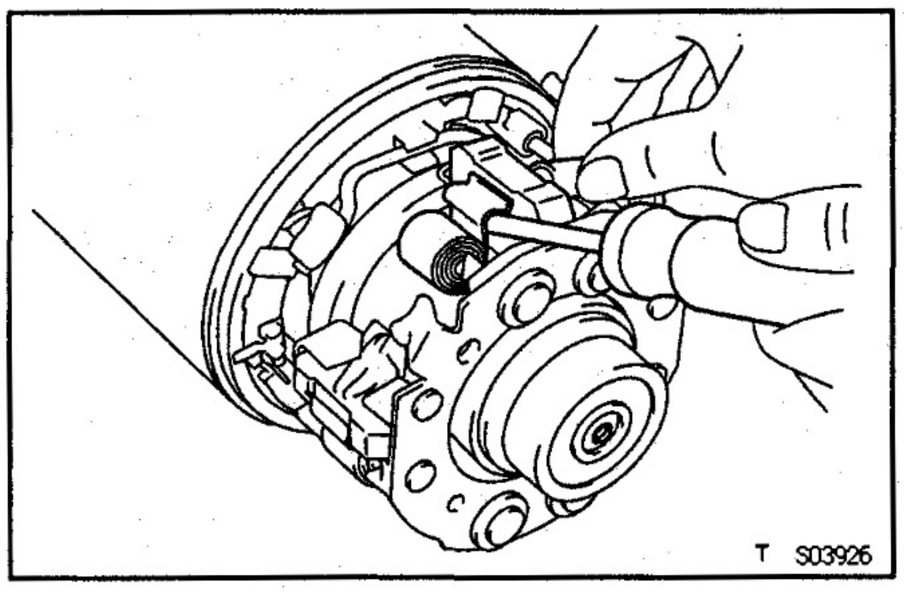

2. INSTALL BRUSH HOLDER

(a) Place the brush holder on the armature.

(b) Using a screwdriver, hold the brush spring back, and connect the brush into the brush holder. Connect the 4 brushes.

NOTICE: Check that the positive (+) lead wires are not grounded.

(c) Place a new O—ring in position on the field frame.

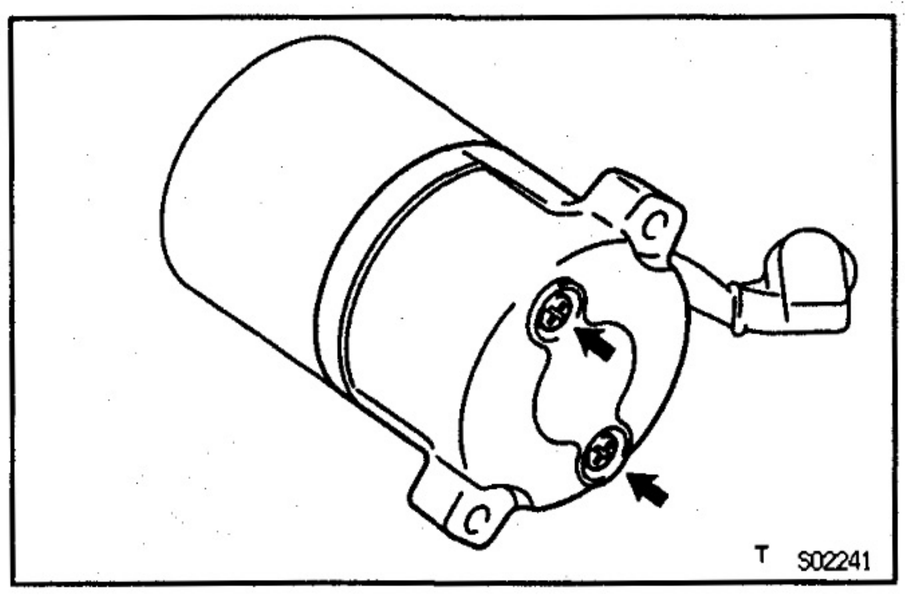

(d) Install the end cover to the field frame with the 2 screws.

Torque: 3.8 N·m (39 kgf·cm, 34 in.·lbf)

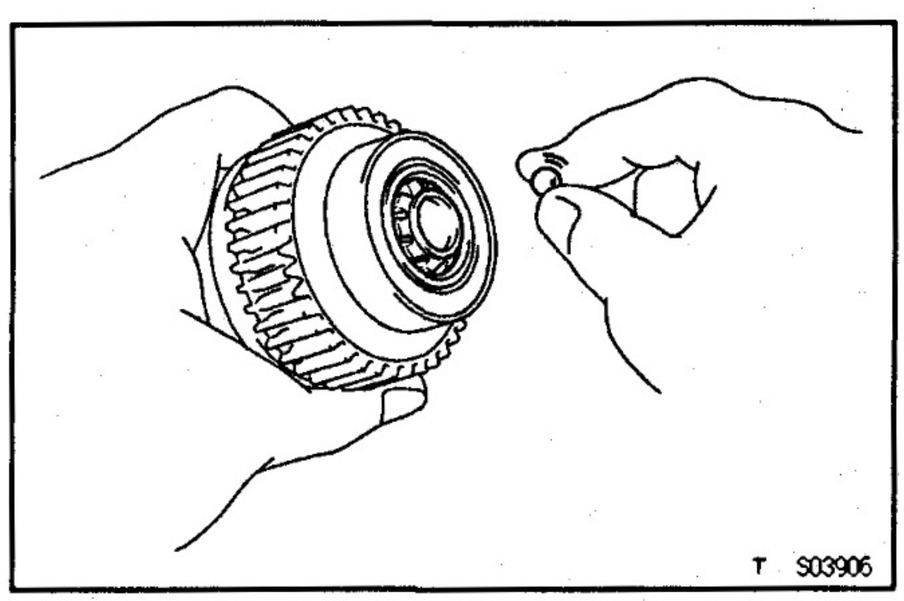

3. INSERT STEEL BALL INTO CLUTCH SHAFT HOLE

(a) Apply grease to the steel ball.

(b) Insert the steel ball into the clutch shaft hole.

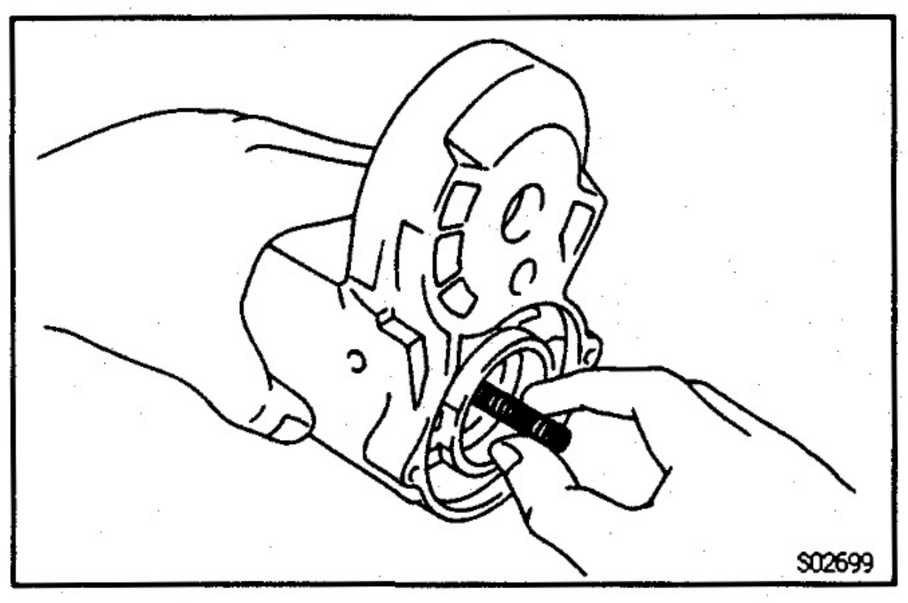

4. INSTALL STARTER HOUSING, CLUTCH ASSEMBLY AND GEAR

(a) Apply grease to the return spring.

(b) Insert the return spring into the magnetic switch hole.

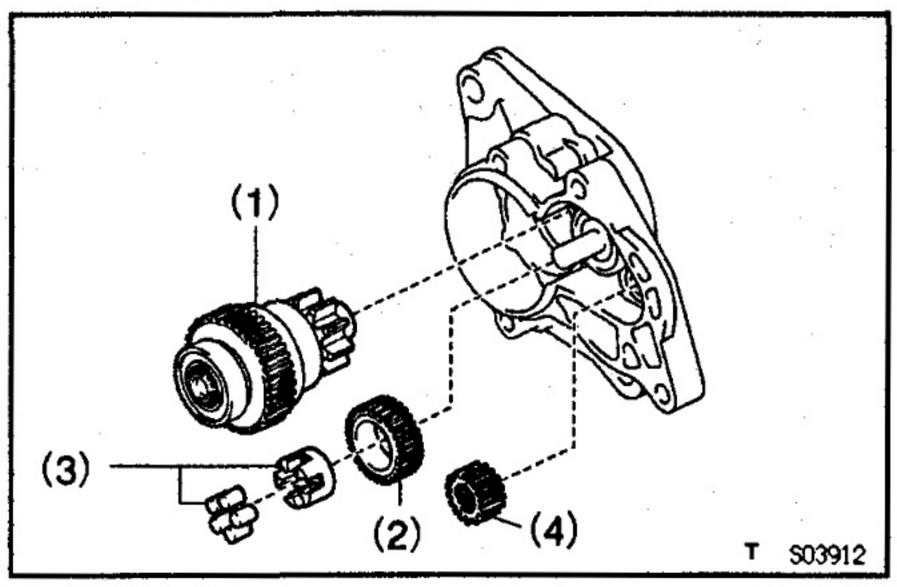

(c) Place these parts on the starter housing:
(1) Starter clutch assembly
(2) Idler gear
(3) Bearing
(4) Pinion gear

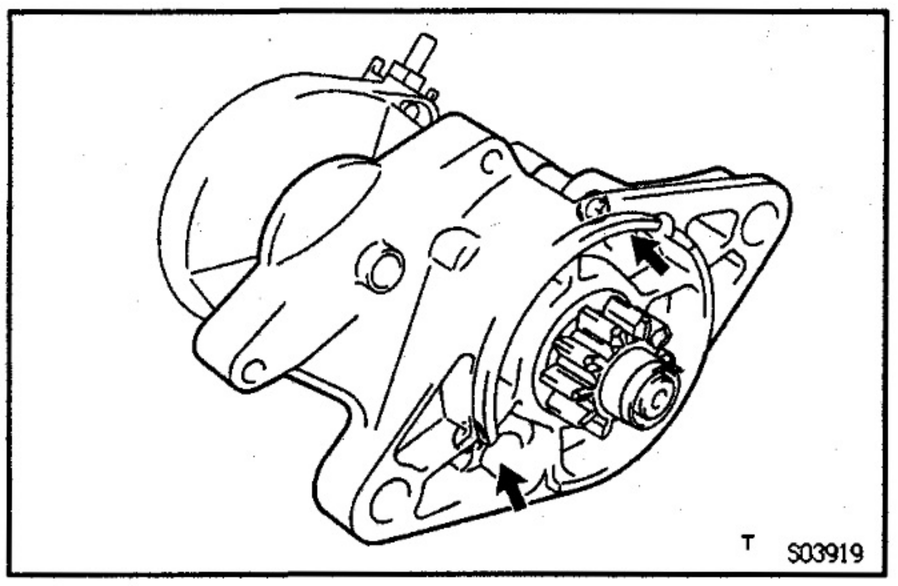

(d) Install the starter housing to the magnetic switch with the 2 screws.
Torque: 9.3 N·m (95 kgf·cm, 82 in.·lbf)

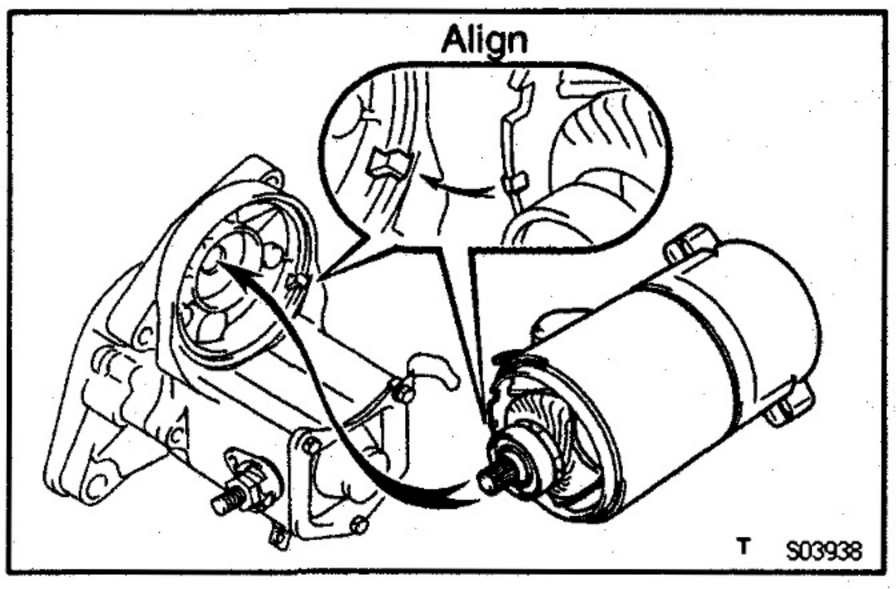

5. INSTALL FIELD FRAME AND ARMATURE ASSEMBLY

(a) Place a new O–ring in position on the field frame.
(b) Align the protrusion of the field frame with the cutout of the magnetic switch.

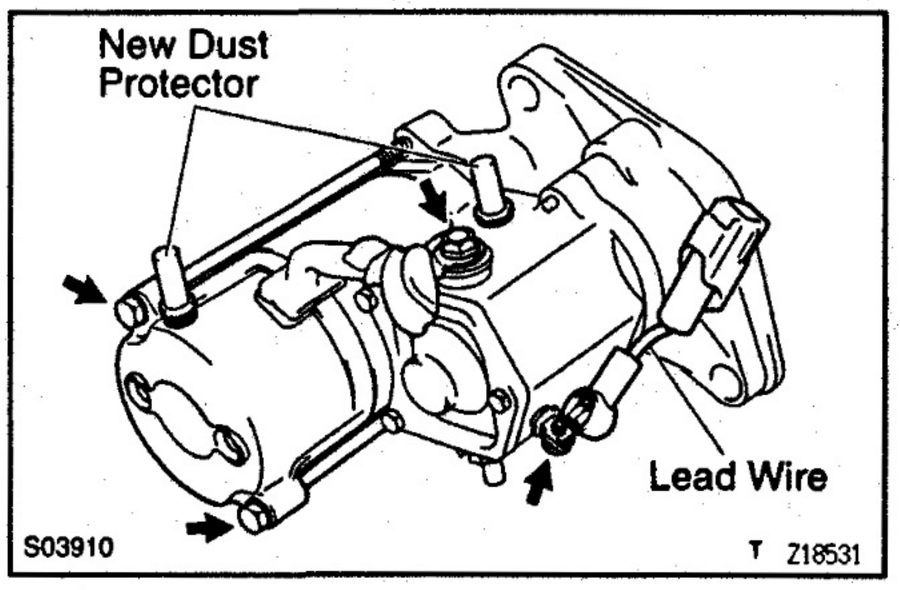

(c) Install the field frame and armature assembly with the 2 through bolts.
Torque: 9.3 N·m (95 kgf·cm, 82 in.·lbf)
(d) Connect the lead wire to terminal C with the nut.
Torque: 5.9 N·m (60 kgf·cm, 52 in.·lbf)

6. INSTALL DUST PROTECTORS

Install 2 new dust protectors.

7. INSTALL LEAD WIRE

Install the lead wire with the screw.
Torque: 3.6 N·m (37 kgf·cm, 32 in.·lbf)

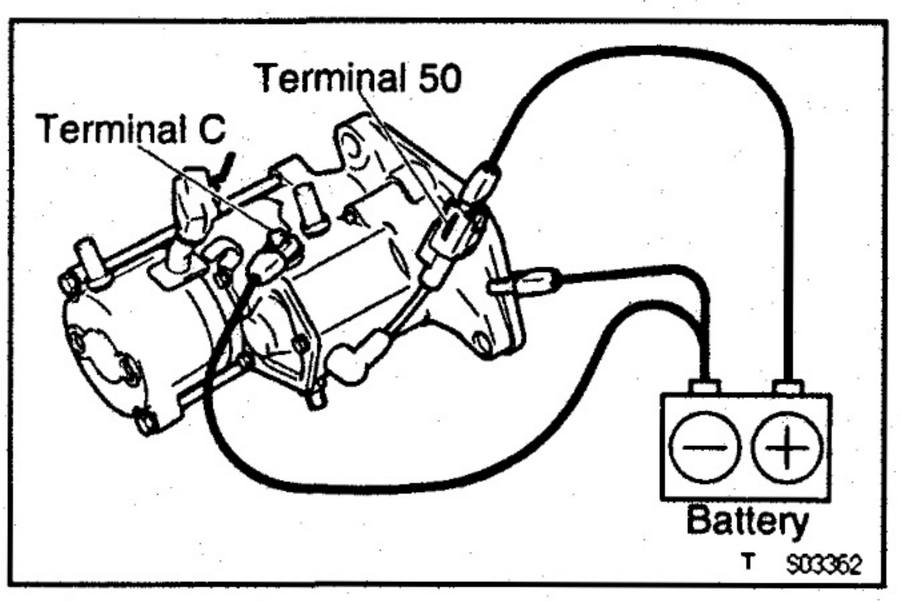

ST010-1K

STARTER PERFORMANCE TEST

NOTICE: These tests must be performed within 3 to 5 seconds to avoid burning out the coil.

1. PERFORM PULL–IN TEST

(a) Disconnect the field coil lead wire from terminal C.
(b) Connect the battery to the magnetic switch as shown. Check that the clutch pinion gear moves outward.

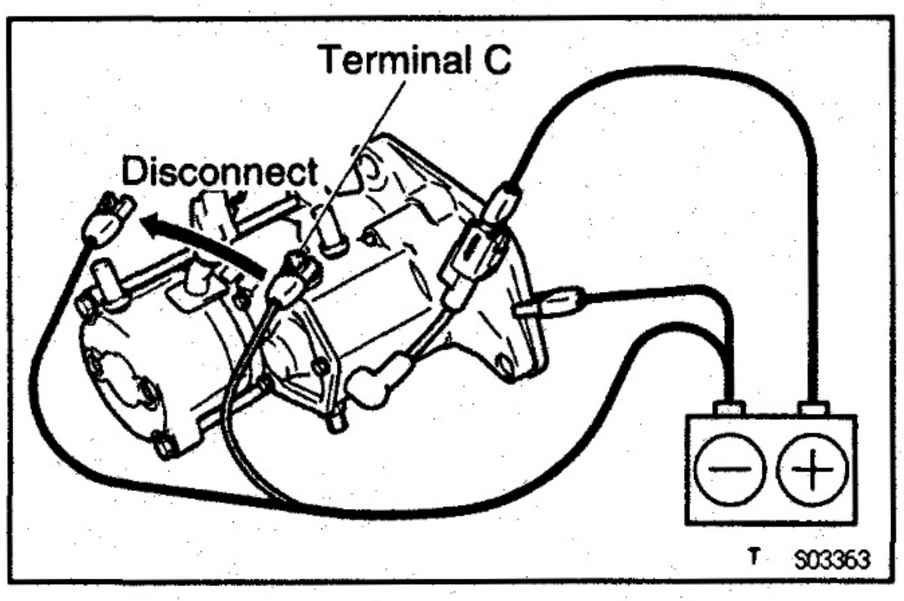

2. PERFORM HOLD–IN TEST

With battery connected as above with the clutch pinion gear out, disconnect the negative (–) lead from terminal C. Check that the pinion gear remains out.

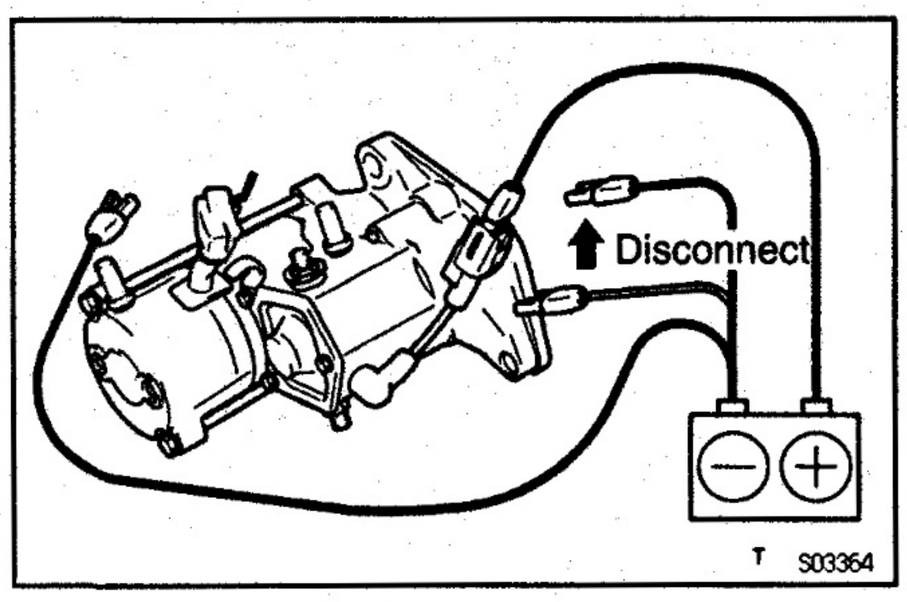

3. INSPECT CLUTCH PINION GEAR RETURN

Disconnect the negative (–) lead from the switch body.

Check that the clutch pinion gear returns inward.

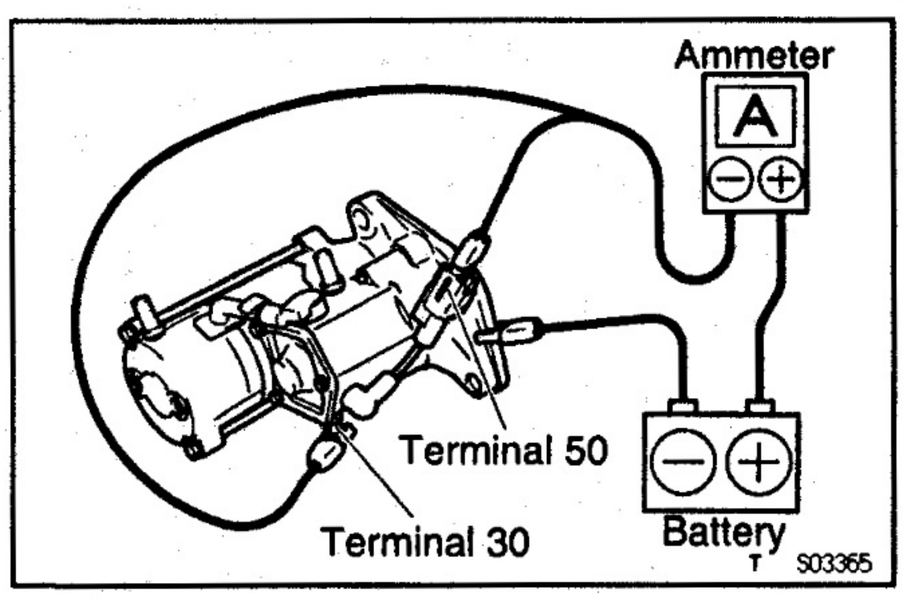

4. PERFORM NO–LOAD PERFORMANCE TEST

(a) Connect the battery and ammeter to the starter as shown.

(b) Check that the starter rotates smoothly and steadily with the pinion gear moving out. Check that the ammeter shows the specified current.

Specified current at 11.5 V:

100 A or less

STARTER (2.7 kW)

COMPONENTS FOR DISASSEMBLY AND ASSEMBLY

ST00W-1Z

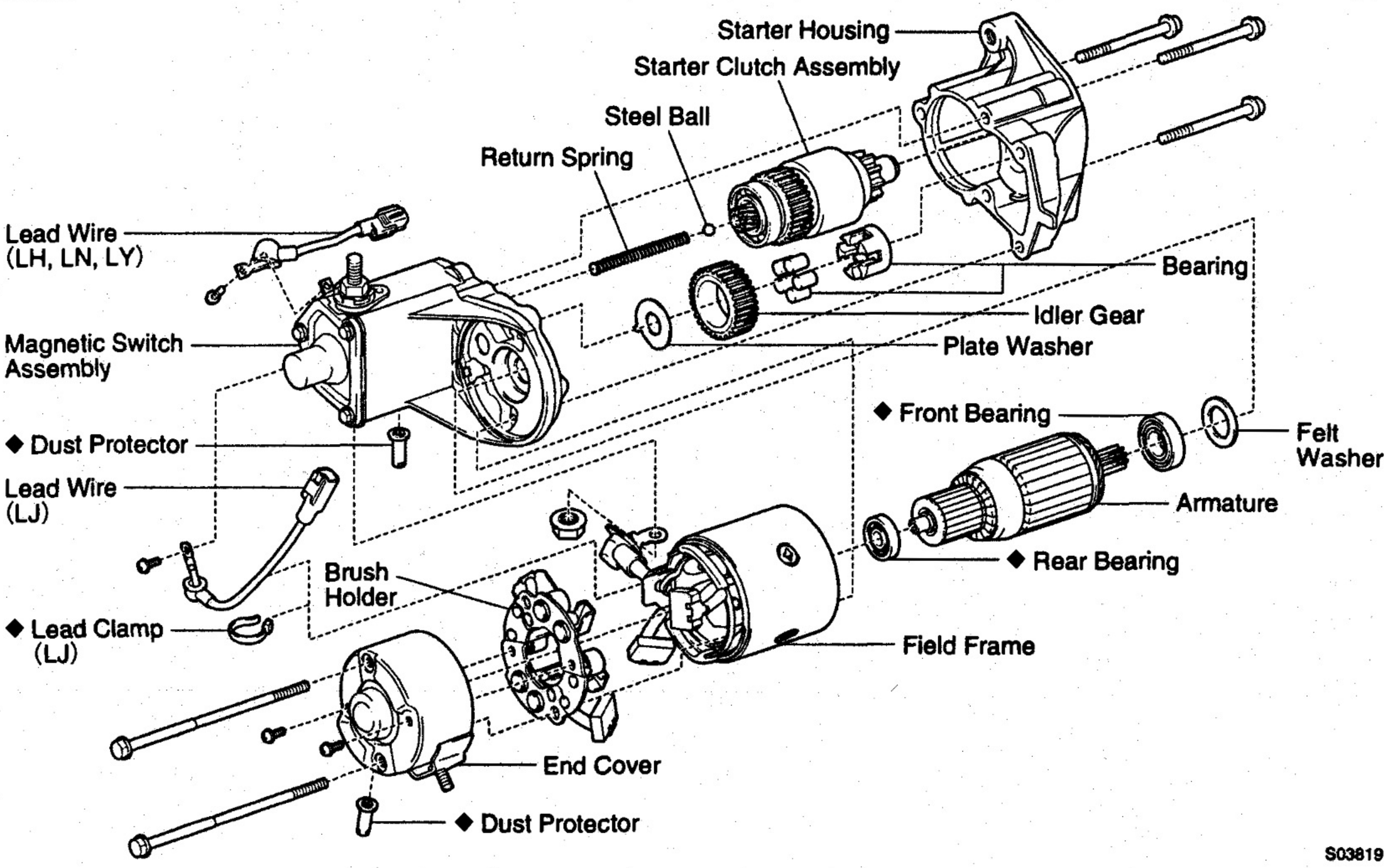

Magnectic Switch Assembly

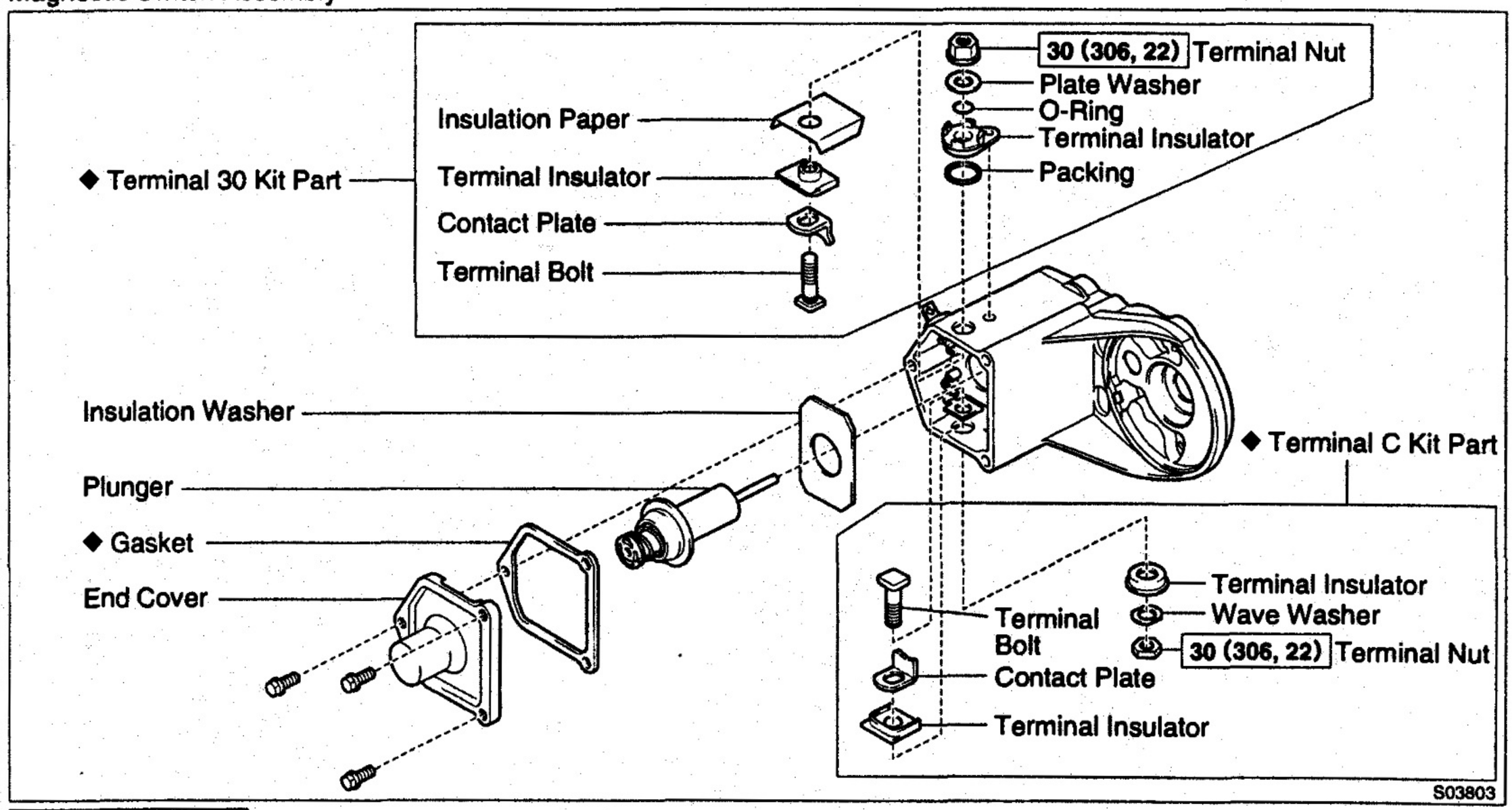

N·m (kgf·cm, ft·lbf): Specified torque

◆ Non-reusable part

T Z18416

ST003-01

STARTER DISASSEMBLY

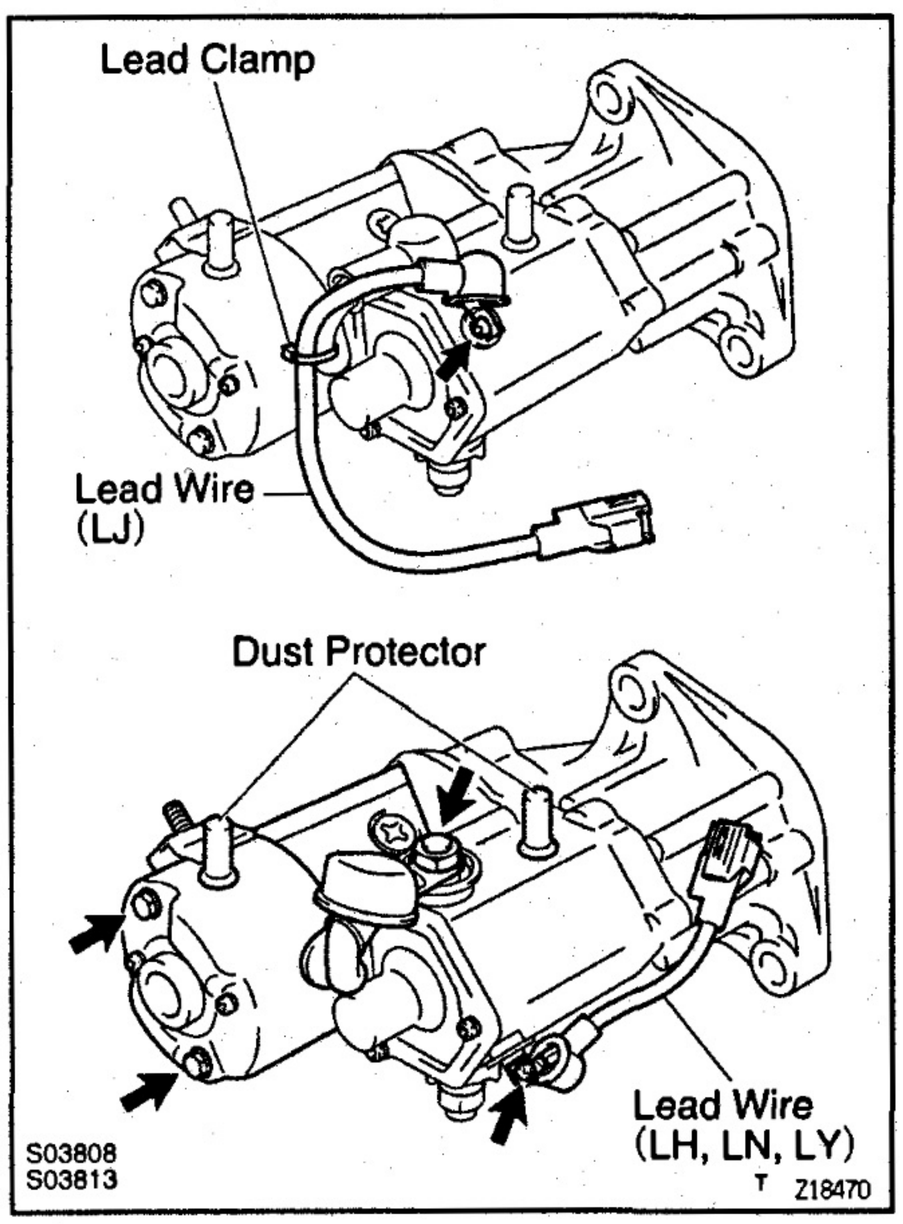

1. REMOVE LEAD WIRE

(a) LJ:
Remove the lead clamp.

(b) Remove the screw and lead wire.

2. REMOVE DUST PROTECTORS

3. REMOVE FIELD FRAME AND ARMATURE

(a) Remove the nut, and disconnect the lead wire from the magnetic switch terminal.

(b) Remove the 2 through bolts.

(c) Pull out the field frame together with the armature from the magnetic switch.

(d) Remove the felt washer.

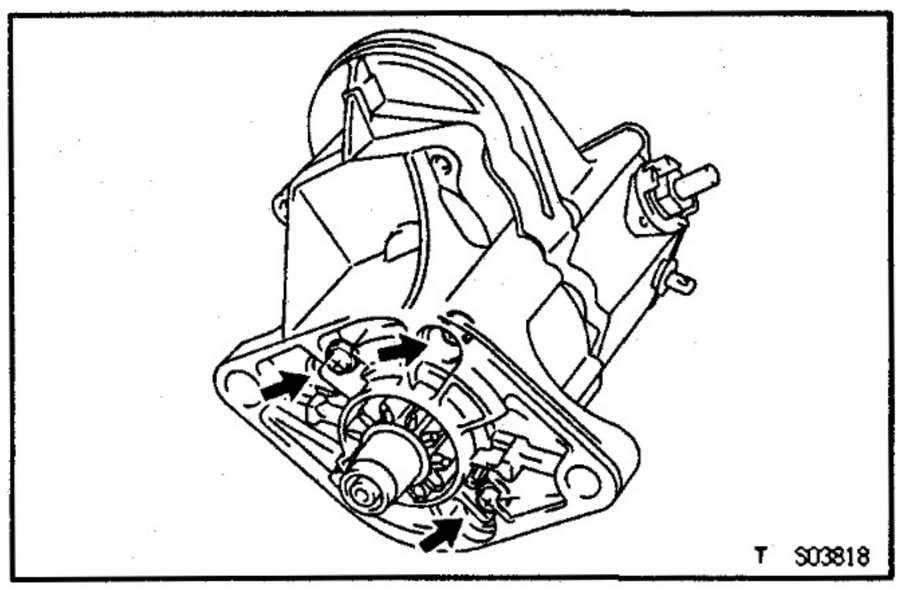

4. REMOVE STARTER HOUSING, CLUTCH ASSEMBLY AND GEAR

(a) Remove the 3 screws.

(b) Remove these parts from the magnetic switch:

- Starter housing
- Return spring
- Idler gear
- Bearing
- Starter clutch assembly
- Plate washer

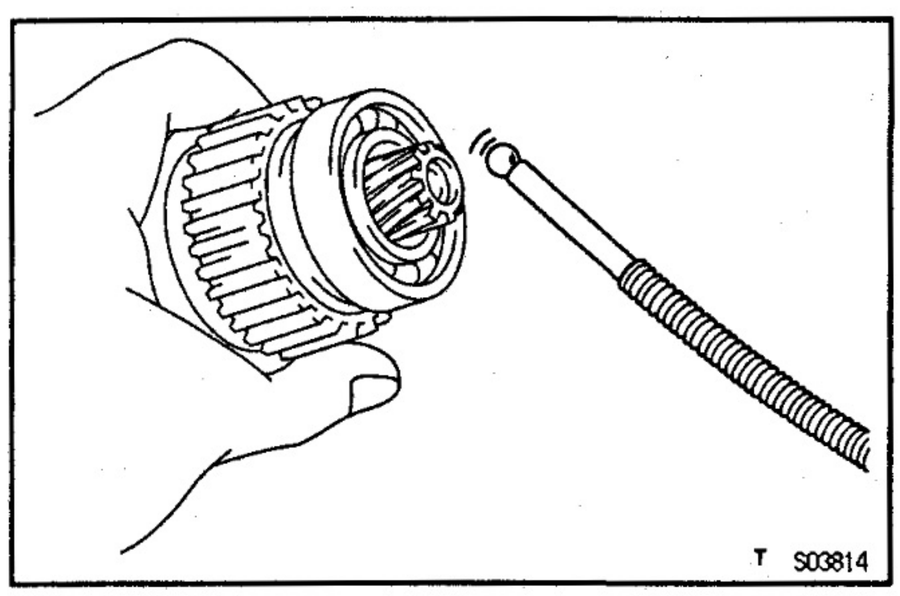

5. REMOVE STEEL BALL

Using a magnetic finger, remove the steel ball from the clutch shaft hole.

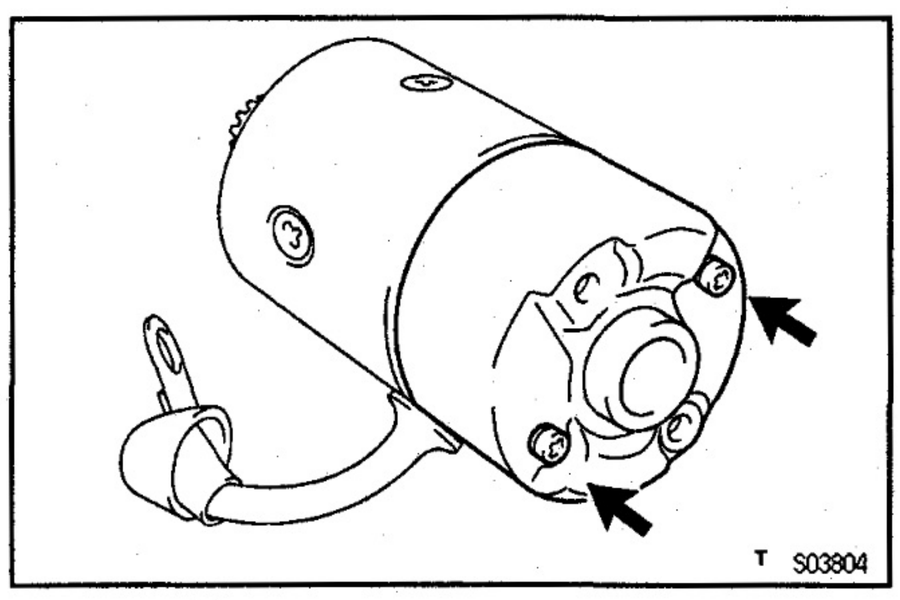

6. REMOVE BRUSH HOLDER

(a) Remove the 2 screws and end cover from the field frame.

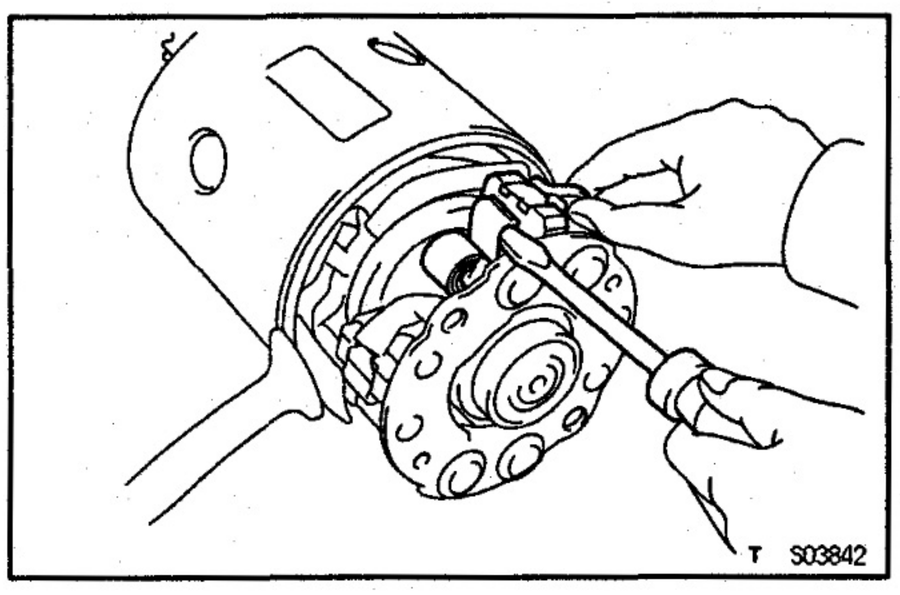

(b) Using a screwdriver, hold the spring back and disconnect the brush from the brush holder. Disconnect the 4 brushes, and remove the brush holder.

7. REMOVE ARMATURE FROM FIELD FRAME

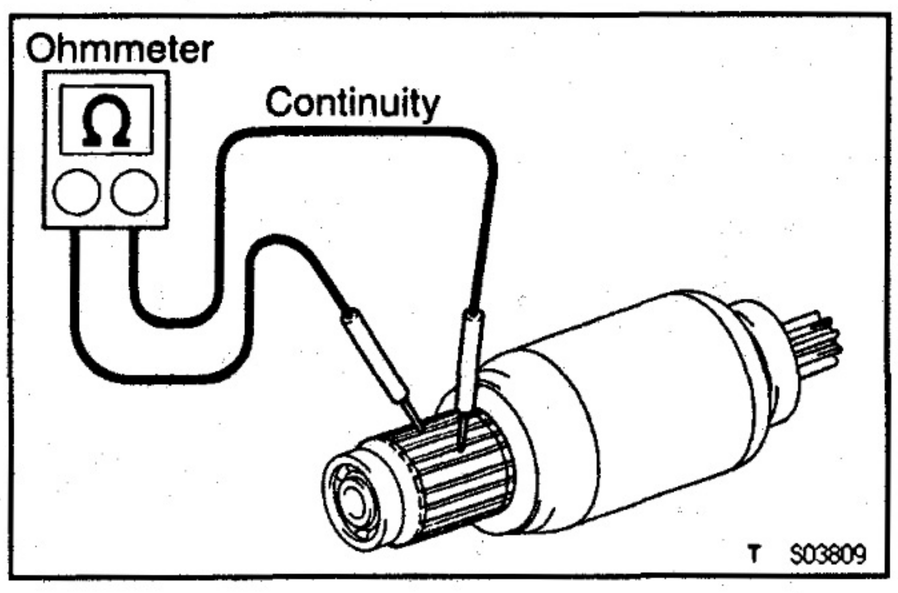

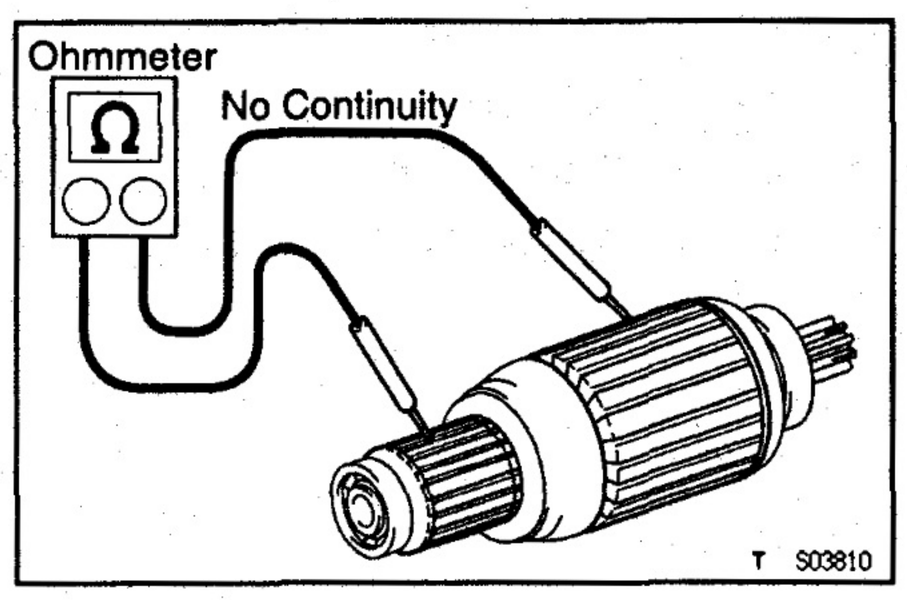

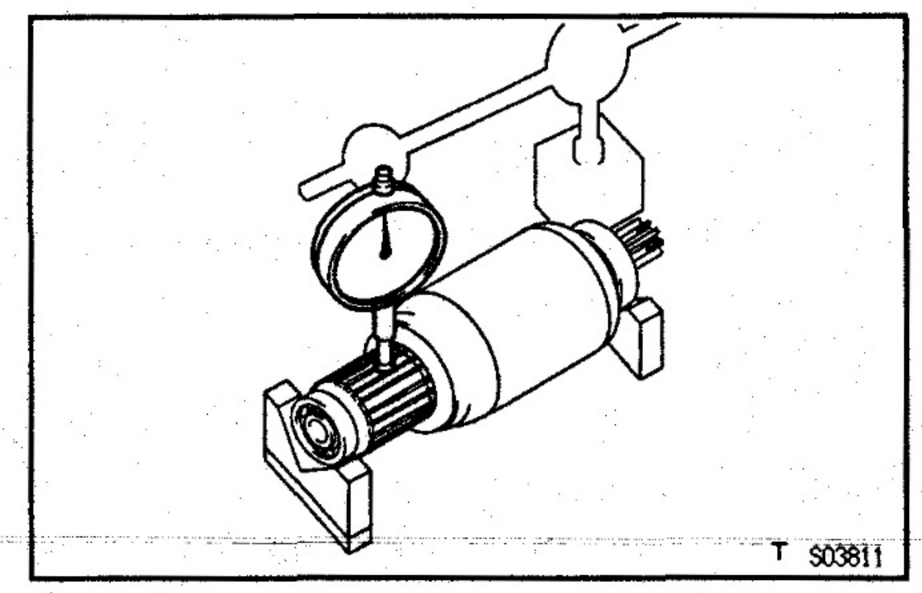

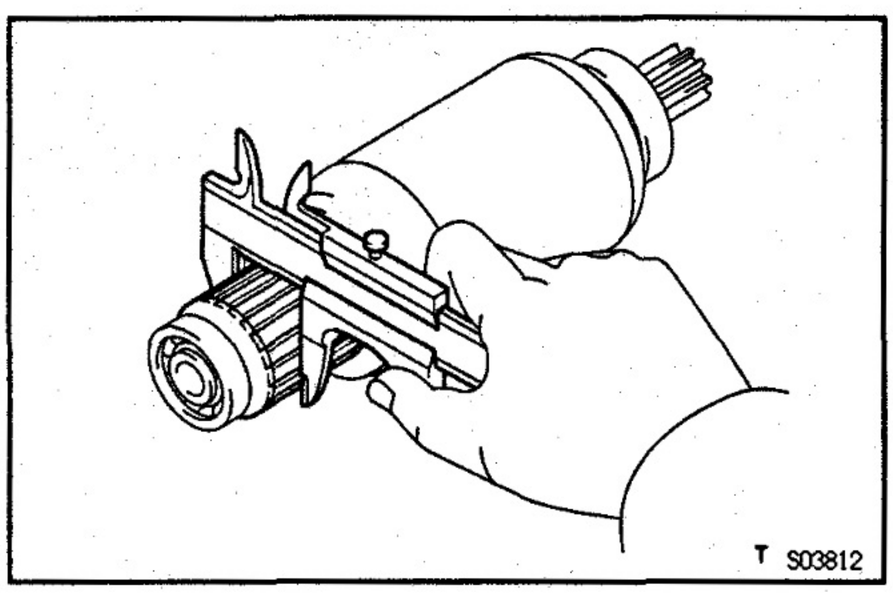

ST0CP–04

STARTER INSPECTION AND REPAIR

Armature Coil

1. INSPECT COMMUTATOR FOR OPEN CIRCUIT

Using an ohmmeter, check that there is continuity between the segments of the commutator.

If there is no continuity between any segment, replace the armature.

2. INSPECT COMMUTATOR FOR GROUND

Using an ohmmeter, check that there is no continuity between the commutator and armature coil core.

If there is continuity, replace the armature.

Commutator

1. INSPECT COMMUTATOR FOR DIRTY AND BURNT SURFACES

If the surface is dirty or burnt, correct it with sandpaper (No.400) or on a lathe.

2. INSPECT COMMUTATOR CIRCLE RUNOUT

(a) Place the commutator on V–blocks.

(b) Using a dial gauge, measure the circle runout.

Maximum circle runout:

0.05 mm (0.0020 in.)

If the circle runout is greater than maximum, correct it on a lathe.

3. INSPECT COMMUTATOR DIAMETER

Using vernier calipers, measure the commutator diameter.

Standard diameter:

36.0 mm (1.417 in.)

Minimum diameter:

35.0 mm (1.378 in.)

If the diameter is less than minimum, replace the armature.

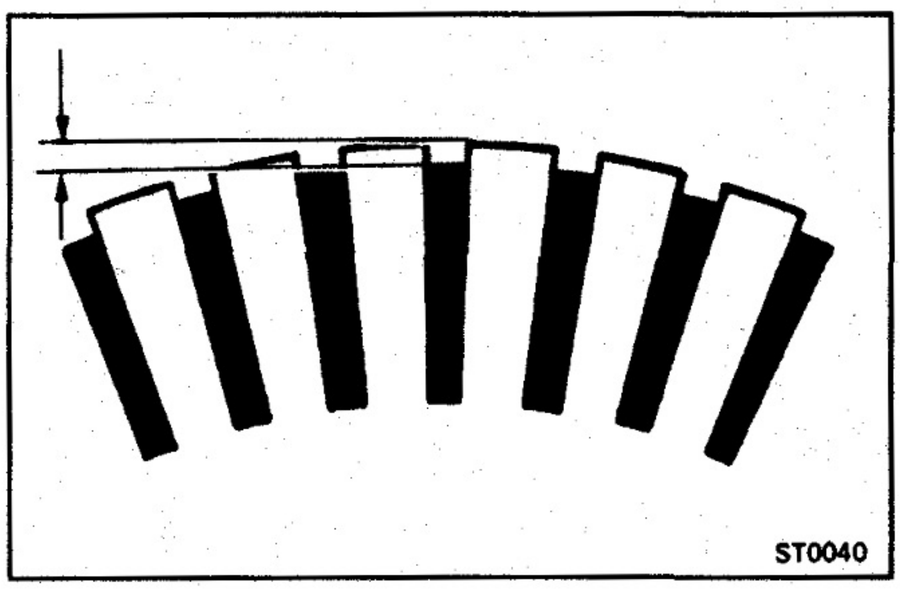

4. INSPECT UNDERCUT DEPTH

Check that the undercut depth is clean and free of foreign materials. Smooth out the edge.

Standard undercut depth:

0.7 mm (0.028 in.)

Minimum undercut depth:

0.2 mm (0.008 in.)

If the undercut depth is less than minimum, correct it with a hacksaw blade.

Field Coil (Field frame)

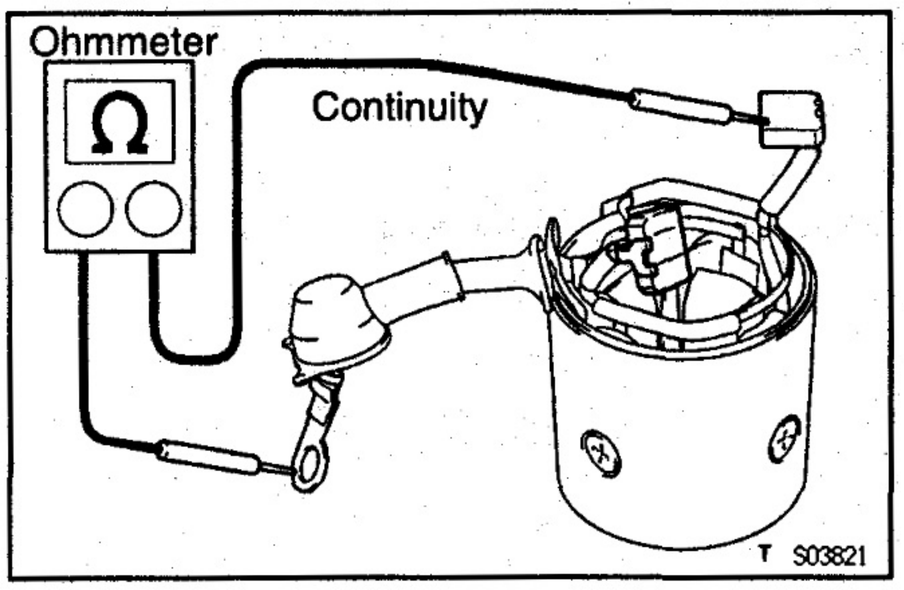

1. INSPECT FIELD COIL FOR OPEN CIRCUIT

Using an ohmmeter, check that there is continuity between the lead wire and field coil brush lead.

If there is no continuity, replace the field frame.

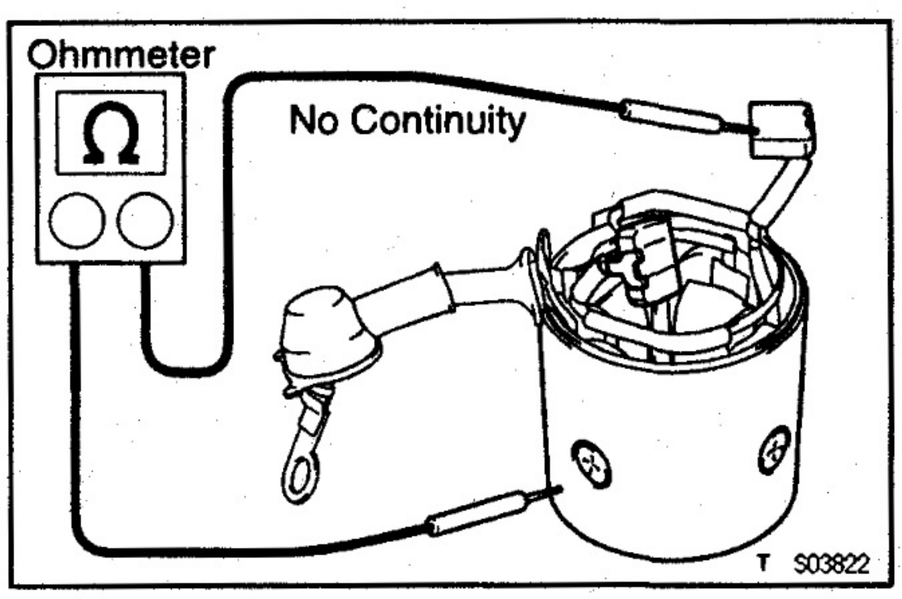

2. INSPECT FIELD COIL FOR GROUND

Using an ohmmeter, check that there is no continuity between the coil end and field frame.

If there is continuity, replace the field frame.

Brushes

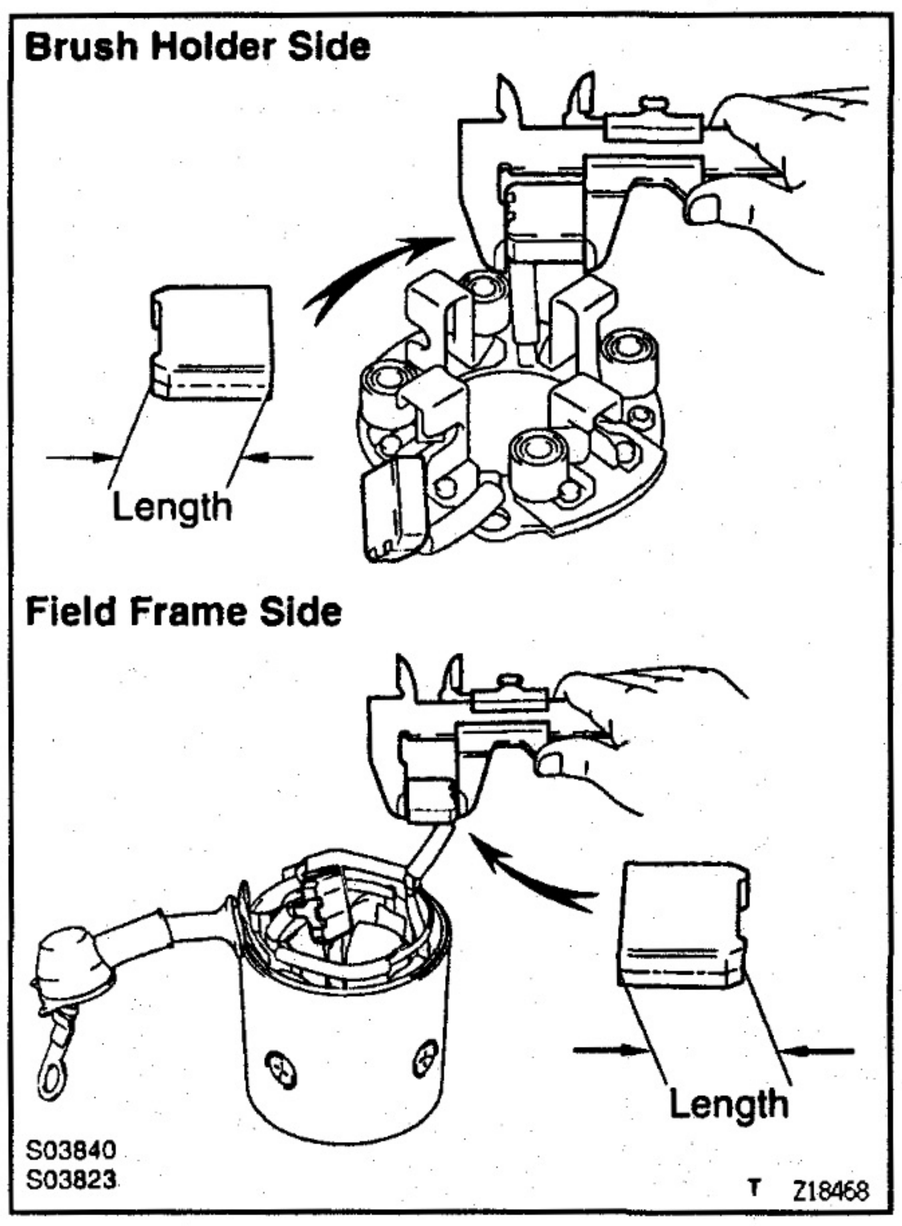

INSPECT BRUSH LENGTH

Using vernier calipers, measure the brush length.

Standard length:

20.5 mm (0.807 in.)

Minimum length:

11.0 mm (0.433 in.)

If the length is less than minimum, replace the brush holder and field frame.

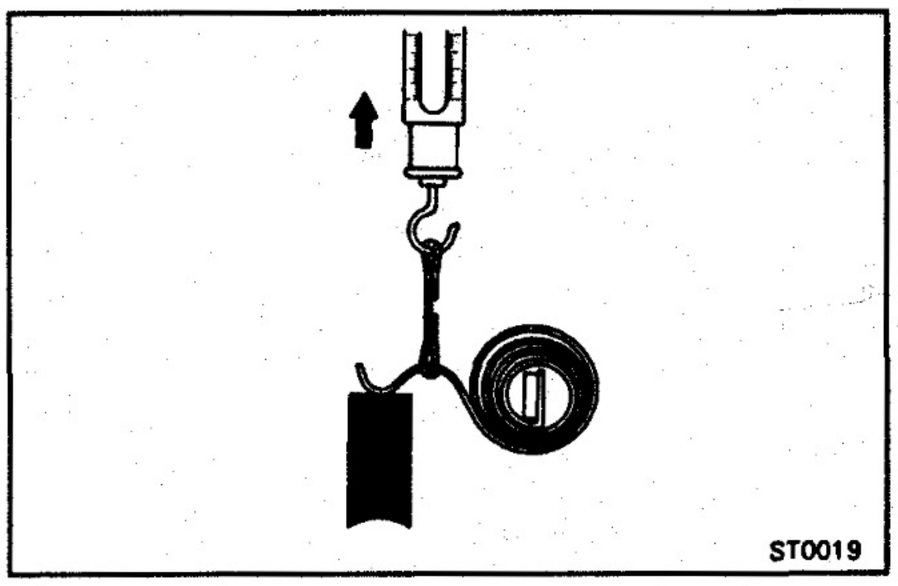

Brush Springs

INSPECT BRUSH SPRING LOAD

Take the pull scale reading the instant the brush spring separates from the brush.

Standard spring installed load:

34.3 — 42.1 N (3.5 — 4.3 kgf, 7.7 — 9.5 lbf)

Minimum spring installed load:

18.6 N (1.9 kgf, 4.2 lbf)

If the installed load is less than minimum replace the brush springs.

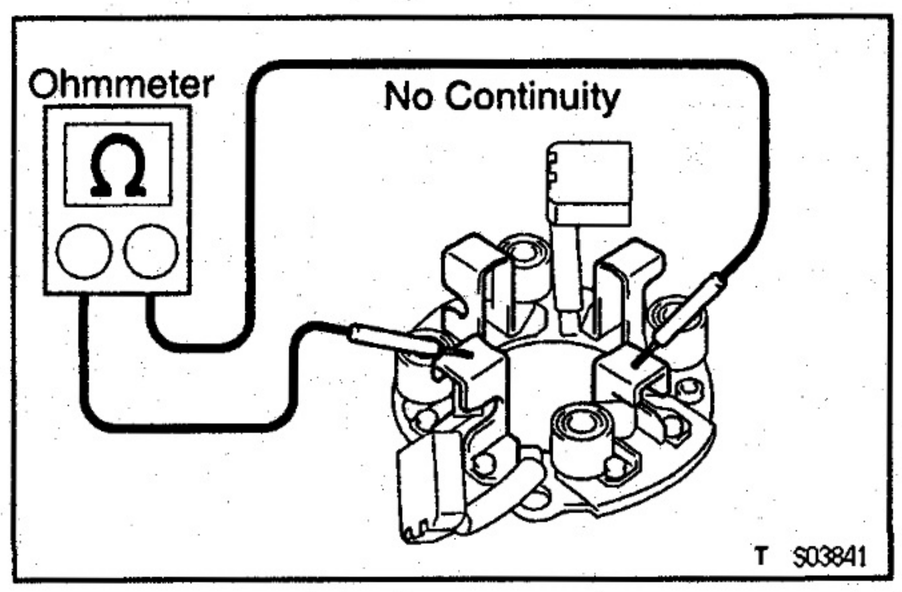

Brush Holder

INSPECT BRUSH HOLDER INSULATION

Using an ohmmeter, check that there is no continuity between the positive (+) and negative (—) brush holders.

If there is continuity, repair or replace the brush holder.

Clutch and Gears

1. **INSPECT GEAR TEETH**

Check the gear teeth on the pinion gear, idle gear and clutch assembly for wear or damage.

If damaged, replace the gear or clutch assembly.

If damaged, also check the ring gear of the flywheel/drive plate for wear or damage.

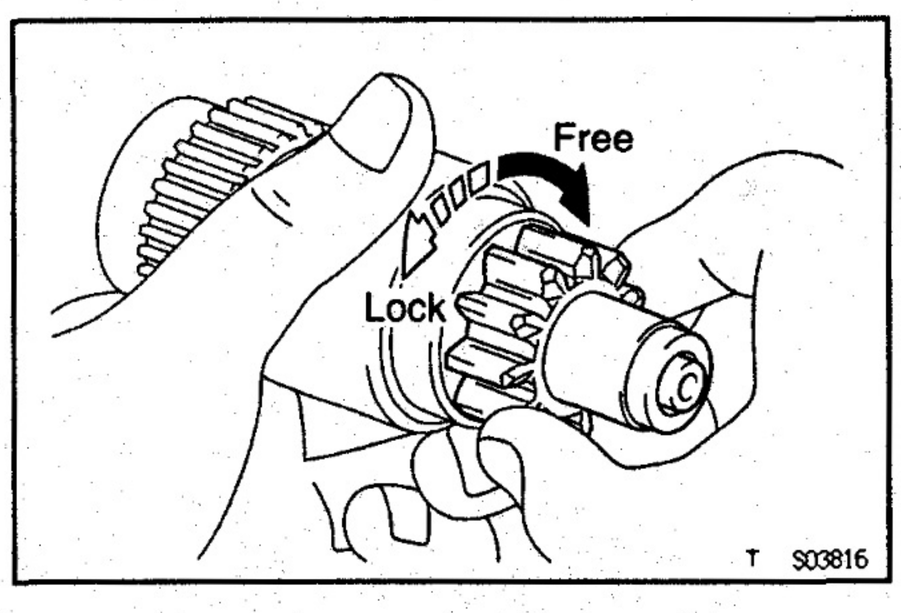

2. **INSPECT CLUTCH PINION GEAR**

Hold the starter clutch and rotate the pinion gear clockwise, and check that it turns freely. Try to rotate the pinion gear counterclockwise and check that it locks.

If necessary, replace the clutch assembly.

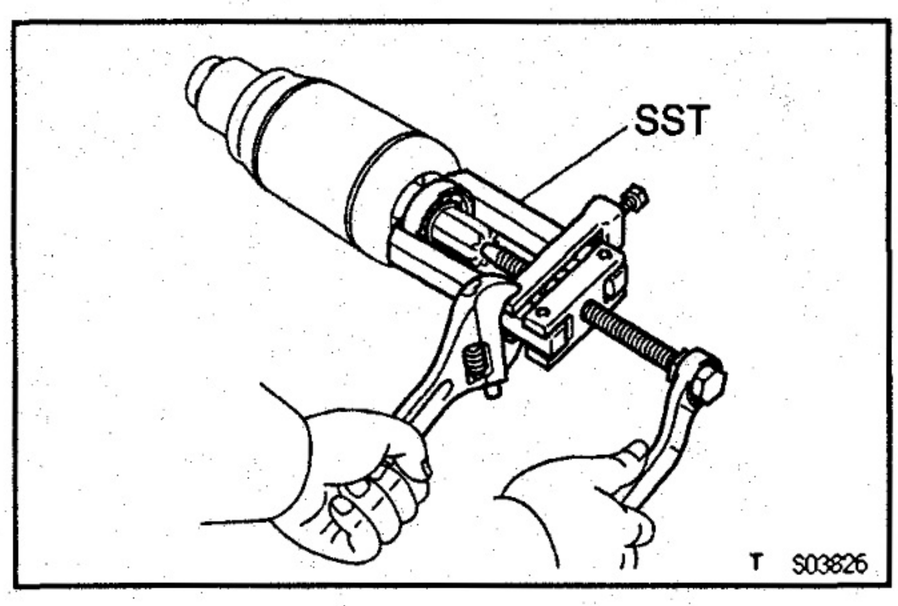

Bearings

1. **INSPECT FRONT BEARING**

Turn the bearing by hand while applying inward force.

If resistance is felt or the bearing sticks, replace the bearing.

2. **IF NECESSARY, REPLACE FRONT BEARING**

(a) Using SST, remove the bearing.

SST 09286—46011

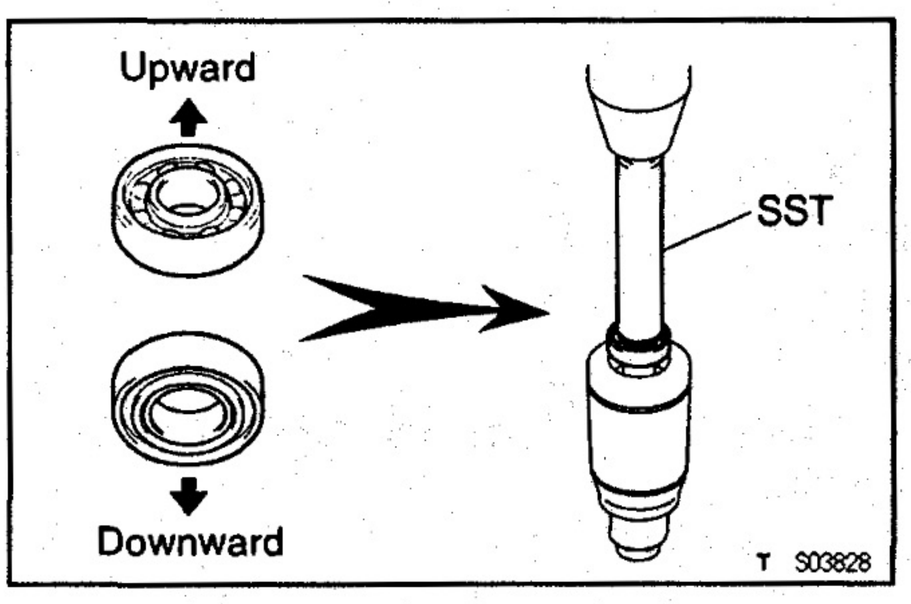

(b) Using SST and a press, press in a new bearing.
SST 09285–76010
NOTICE: Be careful of the installation direction.

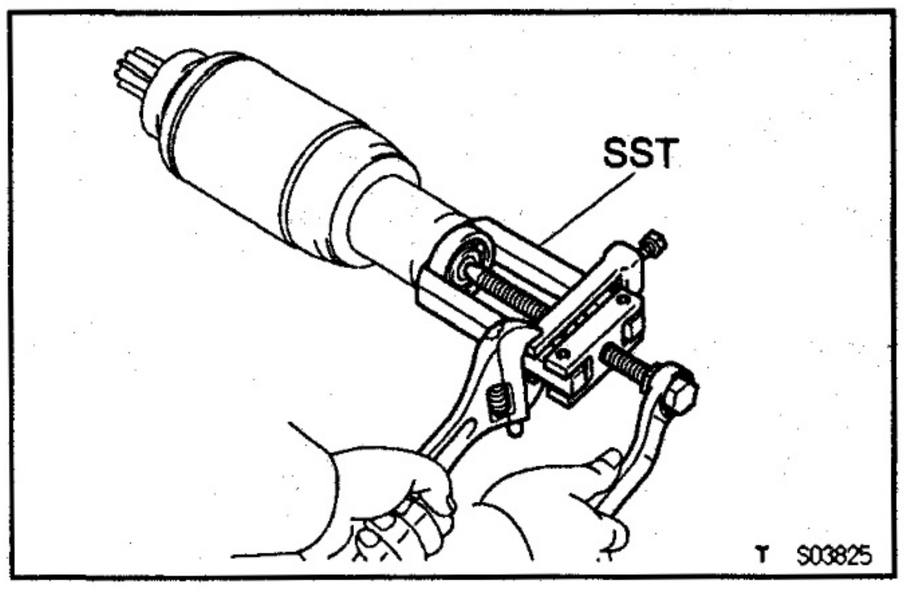

3. INSPECT REAR BEARING
Turn the bearing by hand while applying inward force.
If resistance is felt or the bearing sticks, replace the bearing.

4. IF NECESSARY, REPLACE REAR BEARING

(a) Using SST, remove the bearing.
SST 09286–46011

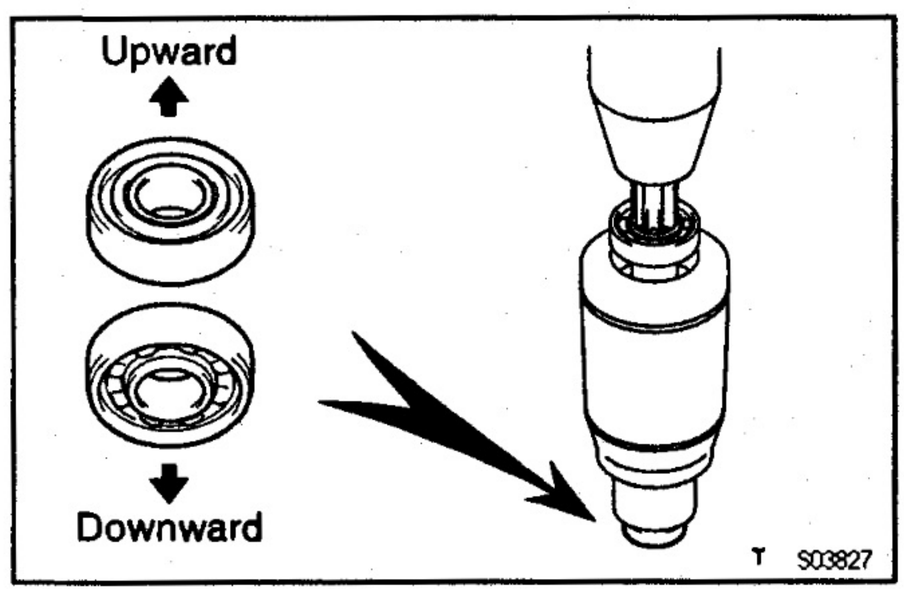

(b) Using a press, press in a new bearing.

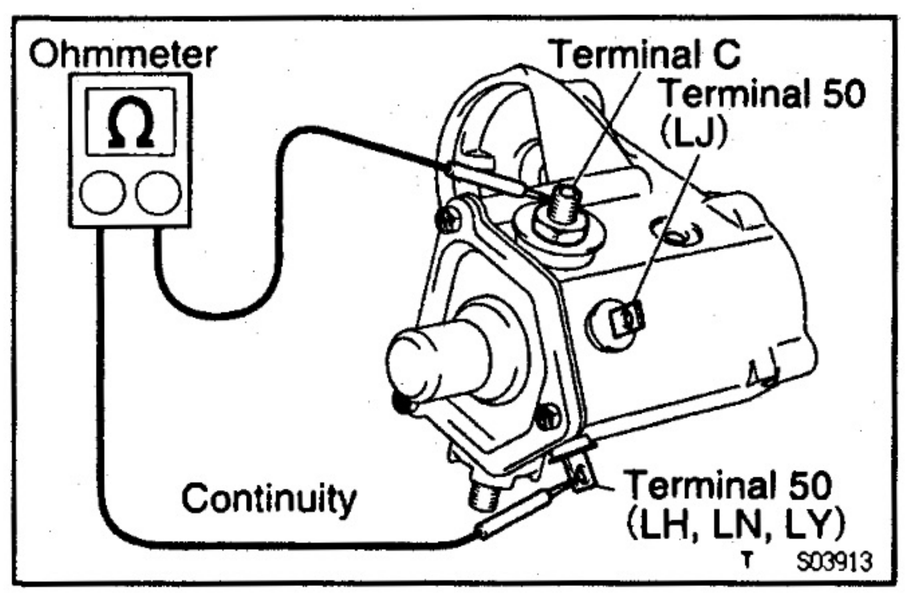

Magnetic Switch

1. PERFORM PULL–IN COIL OPEN CIRCUIT TEST
Using an ohmmeter, check that there is continuity between terminals 50 and C.
If there is no continuity, replace the magnetic switch.

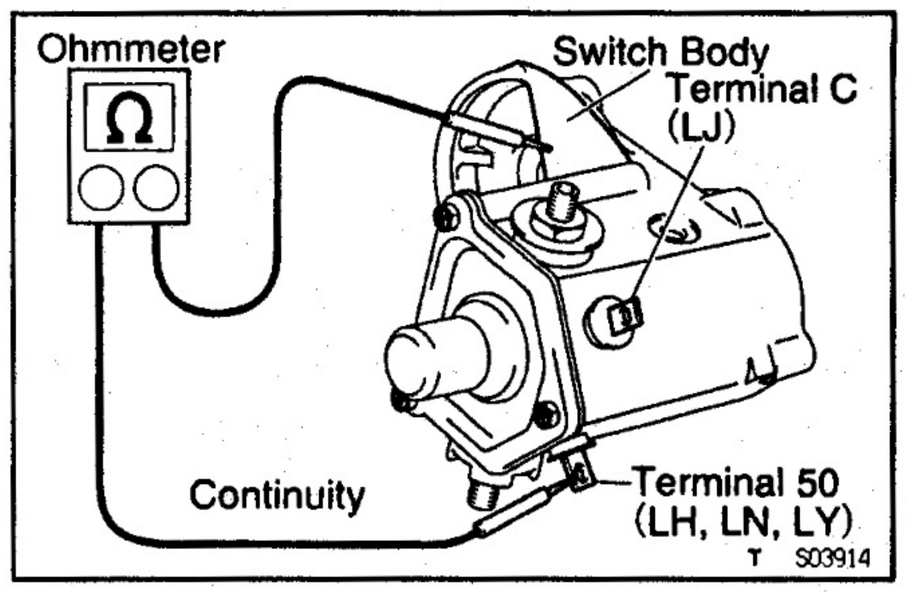

2. PERFORM HOLD–IN COIL OPEN CIRCUIT TEST
Using an ohmmeter, check that there is continuity between terminal 50 and the switch body.
If there is no continuity, replace the magnetic switch.

ST004–01

MAGNETIC SWITCH TERMINAL KIT PARTS REPLACEMENT

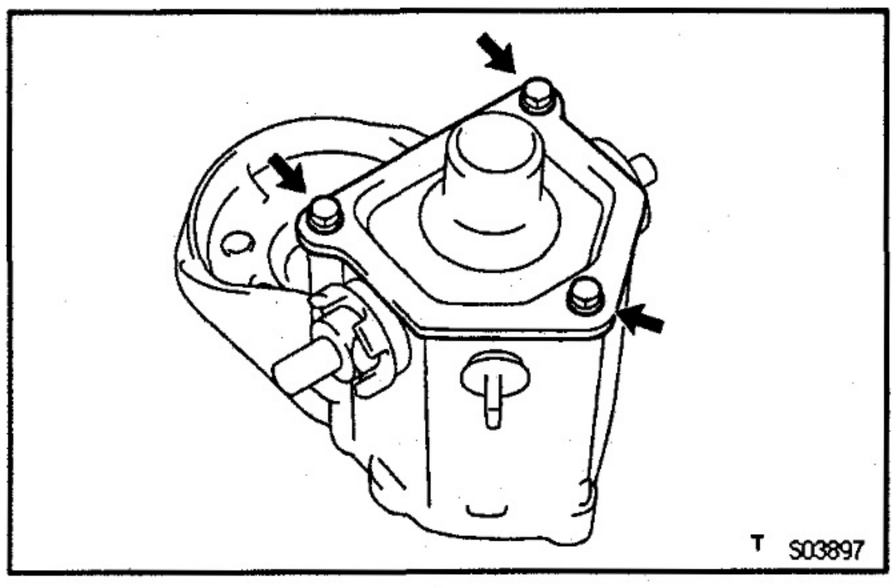

1. REMOVE MAGNETIC SWITCH END COVER

Remove the 3 bolts, end cover, gasket and plunger.

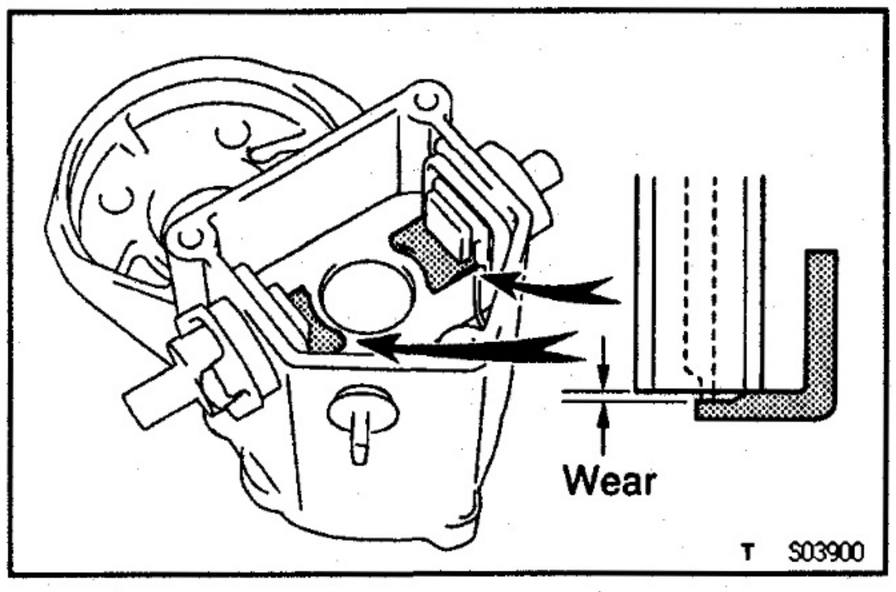

2. INSPECT CONTACT PLATE FOR WEAR

Using vernier calipers, measure the contact plate for depth of wear.

Maximum wear:

1.6 mm (0.063 in.)

If the depth of wear is greater than the maximum, replace the contact plate.

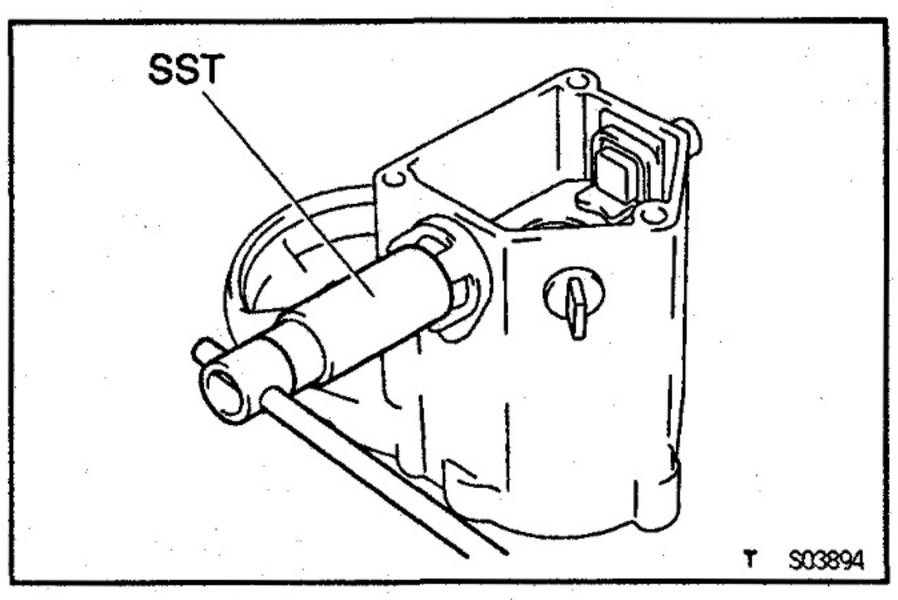

3. REMOVE TERMINAL KIT PARTS

(a) Using SST, loosen the terminal nuts.
SST 09810–38170

(b) Terminal C:
Remove the terminal nut, wave washer, terminal insulator (outside), terminal bolt, contact plate and terminal insulator (inside).

(c) Terminal 30:
Remove the terminal nut, plate washer, terminal insulator (outside), packing, O–ring, terminal bolt, contact plate, terminal insulator (inside) and insulation paper.

(d) Remove the insulation washer.

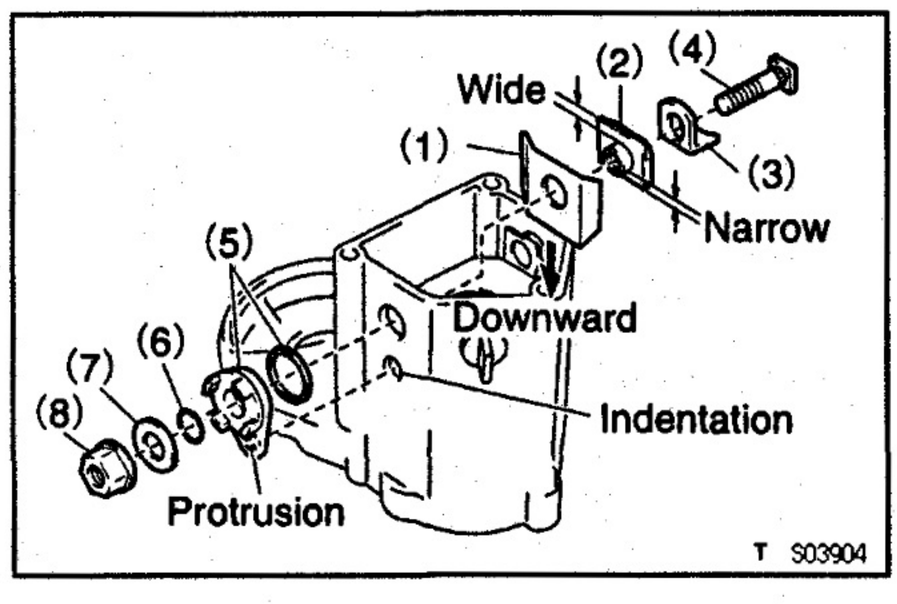

4. REINSTALL TERMINAL KIT PARTS

(a) Install the insulation washer.

(b) Install these new parts:
Terminal 30:
(1) Insulation paper
(2) Terminal insulator (inside)
(3) Contact plate
(4) Terminal bolt
(5) Packing and terminal insulator (outside)
Install the packing to the terminal insulator, and install them.

HINT: Match the protrusion of the insulator with the indentation of the housing.

(6) O–ring
(7) Plate washer
(8) Terminal nut

NOTICE: Be careful to install the insulation paper, terminal insulator (inside) in the correct direction.

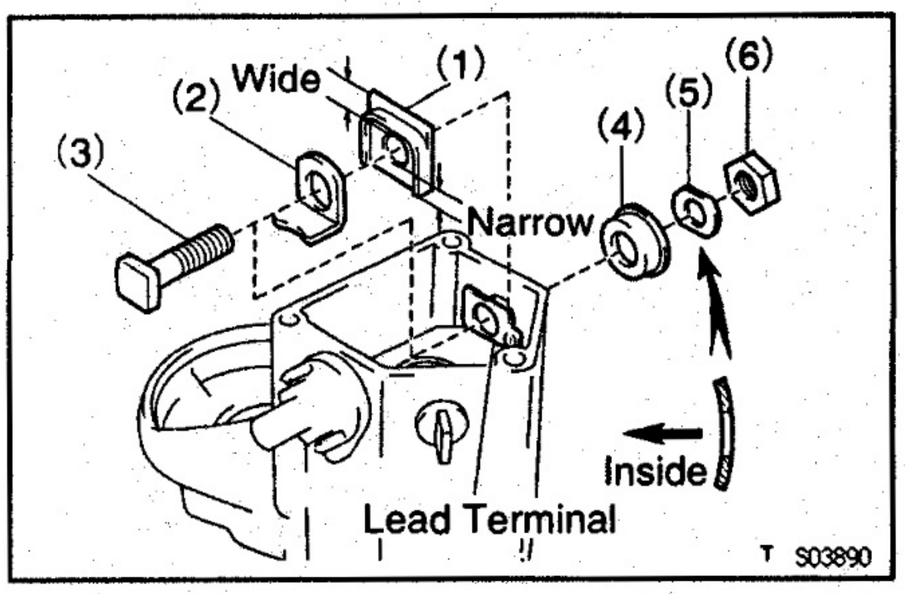

Terminal C:
(1) Terminal insulator (inside)
(2) Contact plate
(3) Terminal bolt
(4) Terminal insulator (outside)
(5) Wave washer
(6) Terminal nut

NOTICE: Be careful to install the terminal insulator (inside) and wave washer in the correct direction.

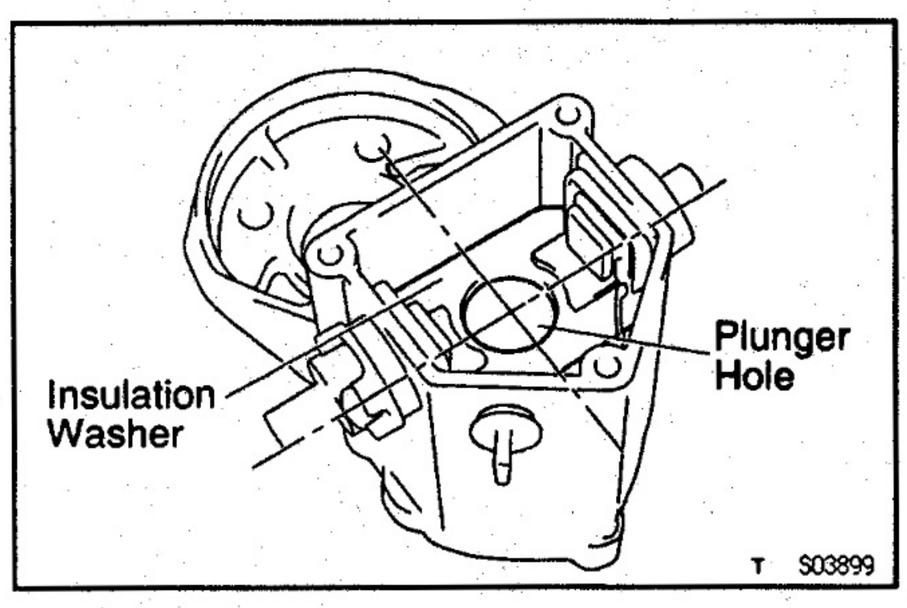

(c) Align the plunger holes of the insulation washer and magnetic switch housing.
(d) Temporarily tighten the terminal nuts.

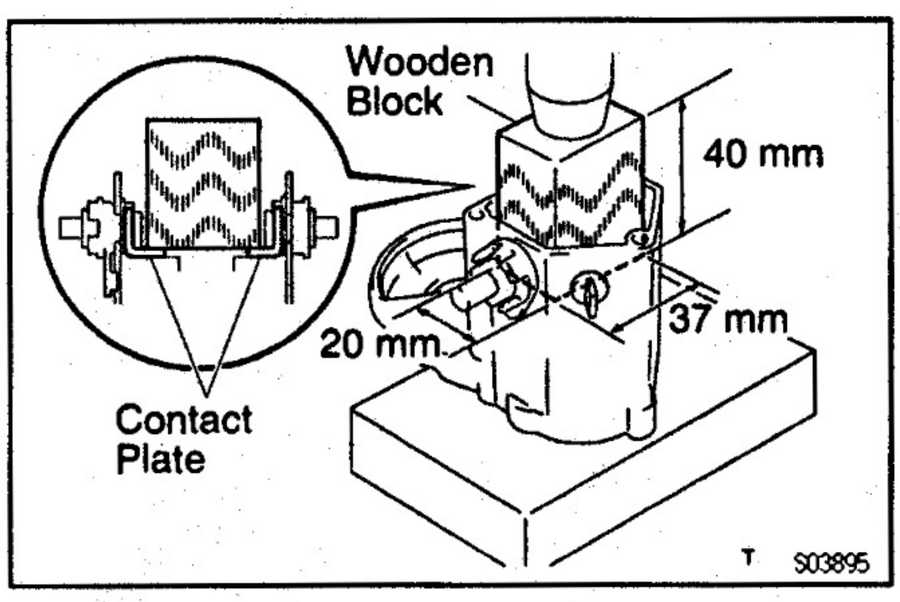

5. TIGHTEN TERMINAL NUT

(a) Put a wooden block on the contact plate and press it down with a hand press.

Dimensions of wooden block:

20 x 37 x 40 mm (0.79 x 1.46 x 1.57 in.)

Press force:

981 N (100 kgf, 221 lbf)

NOTICE:

- **Check the diameter of the hand press ram. Then calculate the gauge pressure of the press when 981 N (100 kgf, 221 lbf) of force is applied.**

Gauge pressure:

$$(\text{kgf/cm}^2) = \frac{100\ \text{kgf}}{\left(\frac{\text{Ram diameter (cm)}}{2}\right)^2 \times 3.14\ (\pi)}$$

$$(\text{psi}) = \frac{221\ \text{lbf}}{\left(\frac{\text{Ram diameter (in.)}}{2}\right)^2 \times 3.14\ (\pi)}$$

(kPa) = (kgf/cm²) x 98.1

(kPa) = (psi) x 6.9

V06796

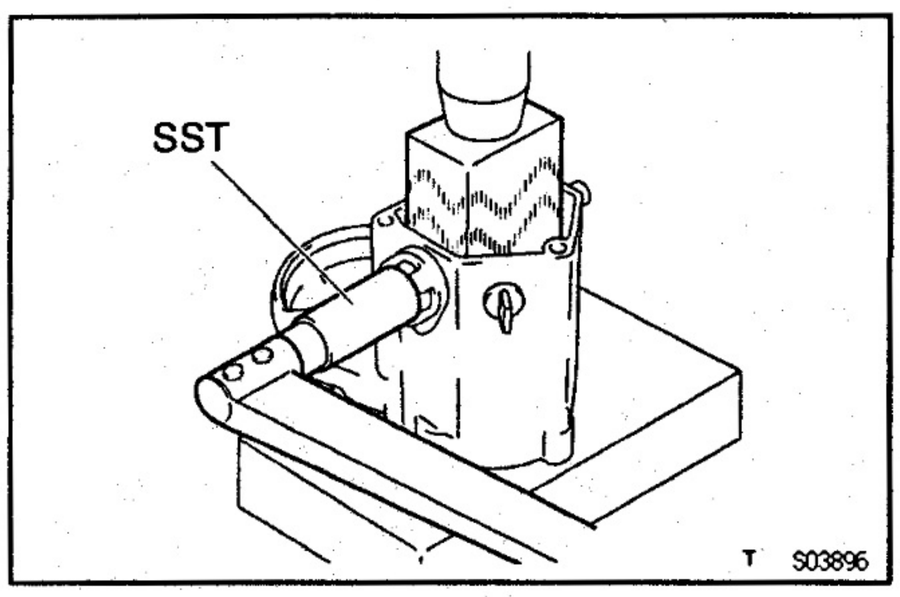

- **If the contact plate is not pressed down with the specified pressure, the contact plate may tilt due to coil deformation or the tightening of the nut.**

(b) Using SST, tighten the nuts to the specified torque.
SST 09810–38170
Torque: 30 N·m (306 kgf·cm, 22 ft·lbf)
NOTICE: If the nut is over tightened, it may cause cracks on the inside of the insulator.

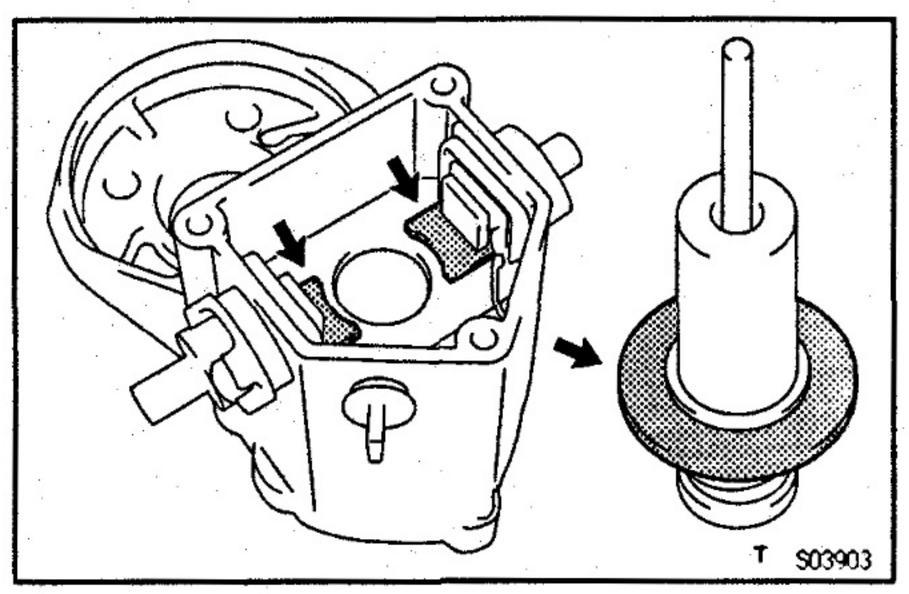

6. CLEAN CONTACT SURFACES OF CONTACT PLATE AND PLUNGER

Clean the contact surfaces of the remaining contact plate and plunger with a dry shop rag.

7. REINSTALL MAGNETIC SWITCH END COVER

Install the plunger, a new gasket and the end cover with the 3 bolts.

Torque: 3.6 N·m (37 kgf·cm, 32 in.·lbf)

ST

ST008-01

STARTER ASSEMBLY

HINT: Use high—temperature grease to lubricate the bearings and gears when assembling the starter.

1. PLACE ARMATURE INTO FIELD FRAME

Apply grease to the armature bearings, and insert the armature into the field frame.

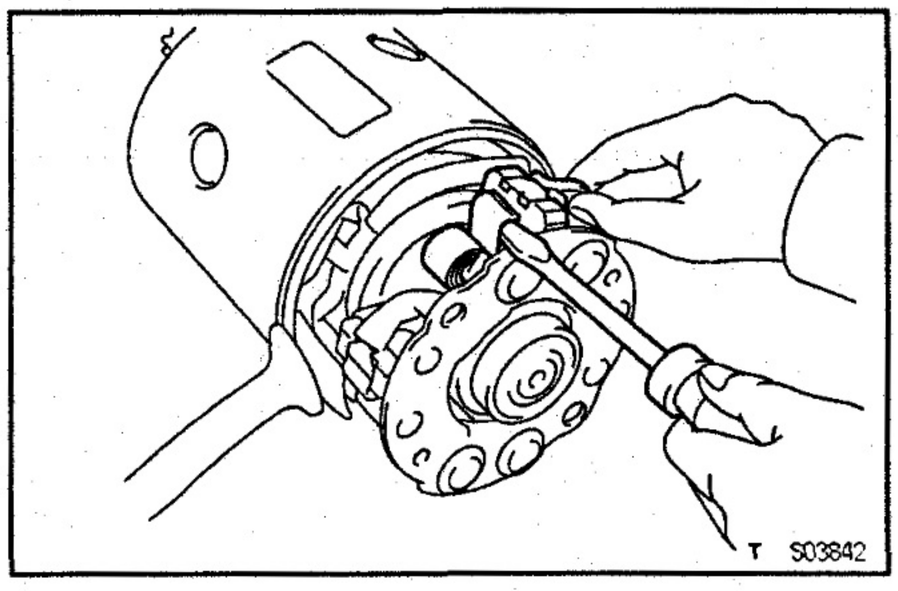

2. INSTALL BRUSH HOLDER

(a) Place the brush holder on the armature.

(b) Using a screwdriver, hold the brush spring back, and connect the brush into the brush holder. Connect the 4 brushes.

NOTICE: Check that the positive (+) lead wires are not grounded.

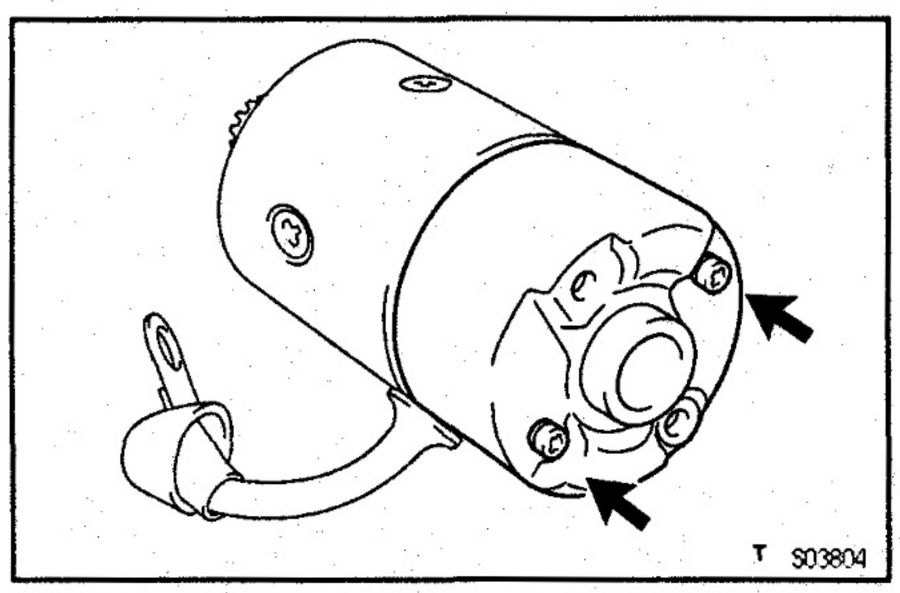

(c) Install the end cover to the field frame with the 2 screws.

Torque: 3.6 N·m (37 kgf·cm, 32 in.·lbf)

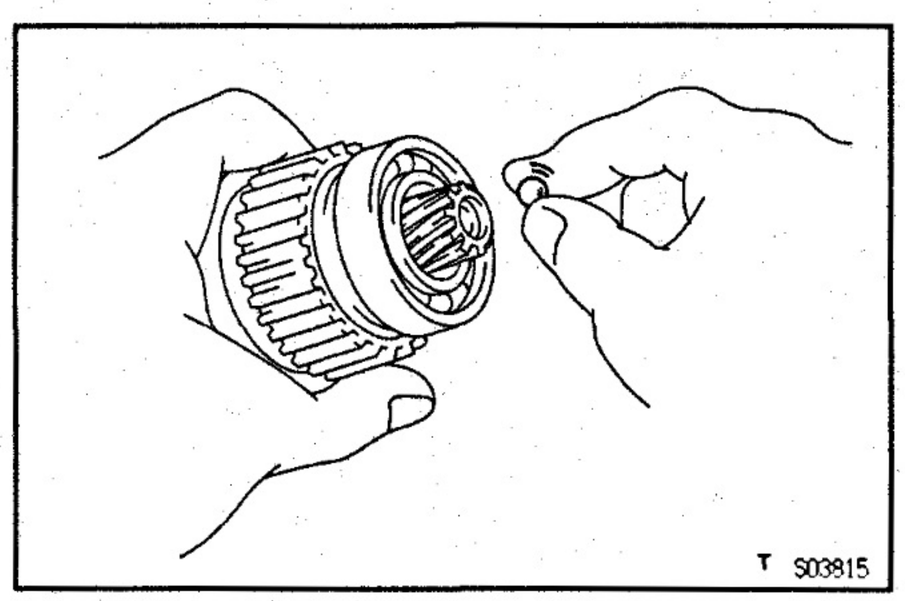

3. INSERT STEEL BALL INTO CLUTCH SHAFT HOLE

(a) Apply grease to the steel ball.

(b) Insert the steel ball into the clutch shaft hole.

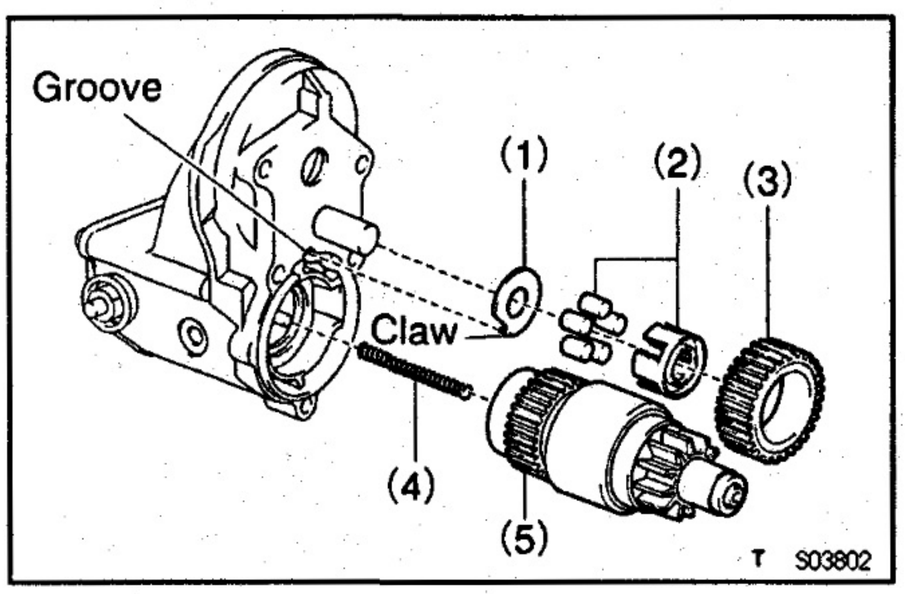

ST

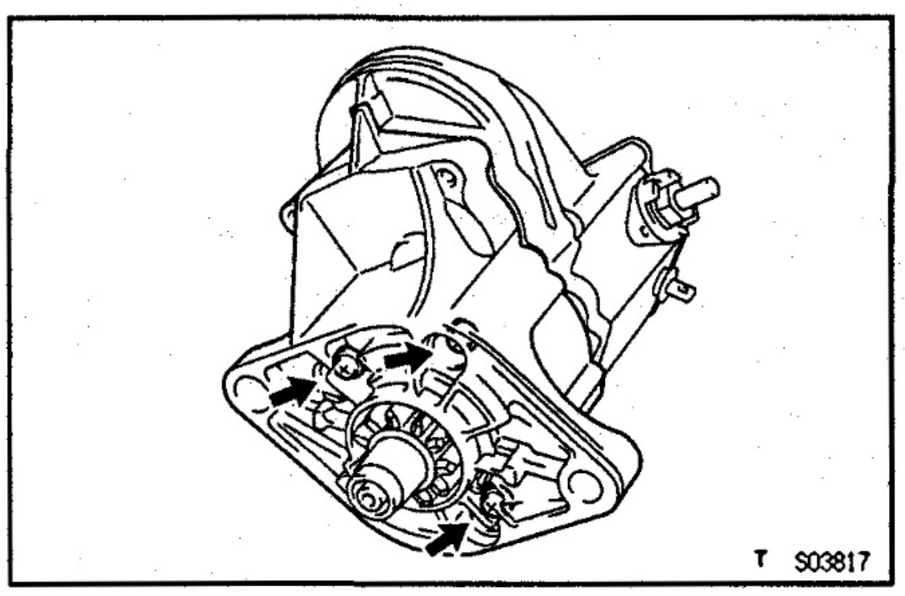

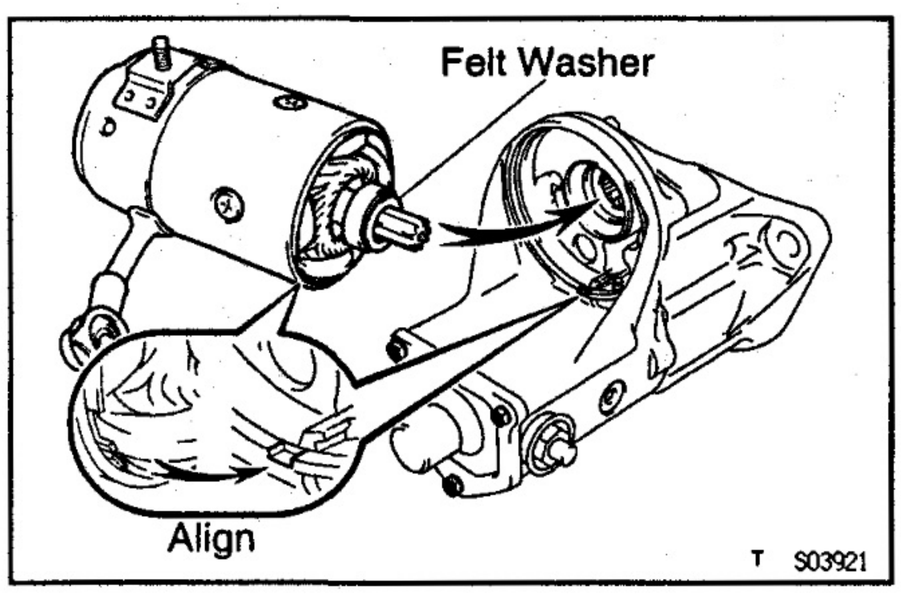

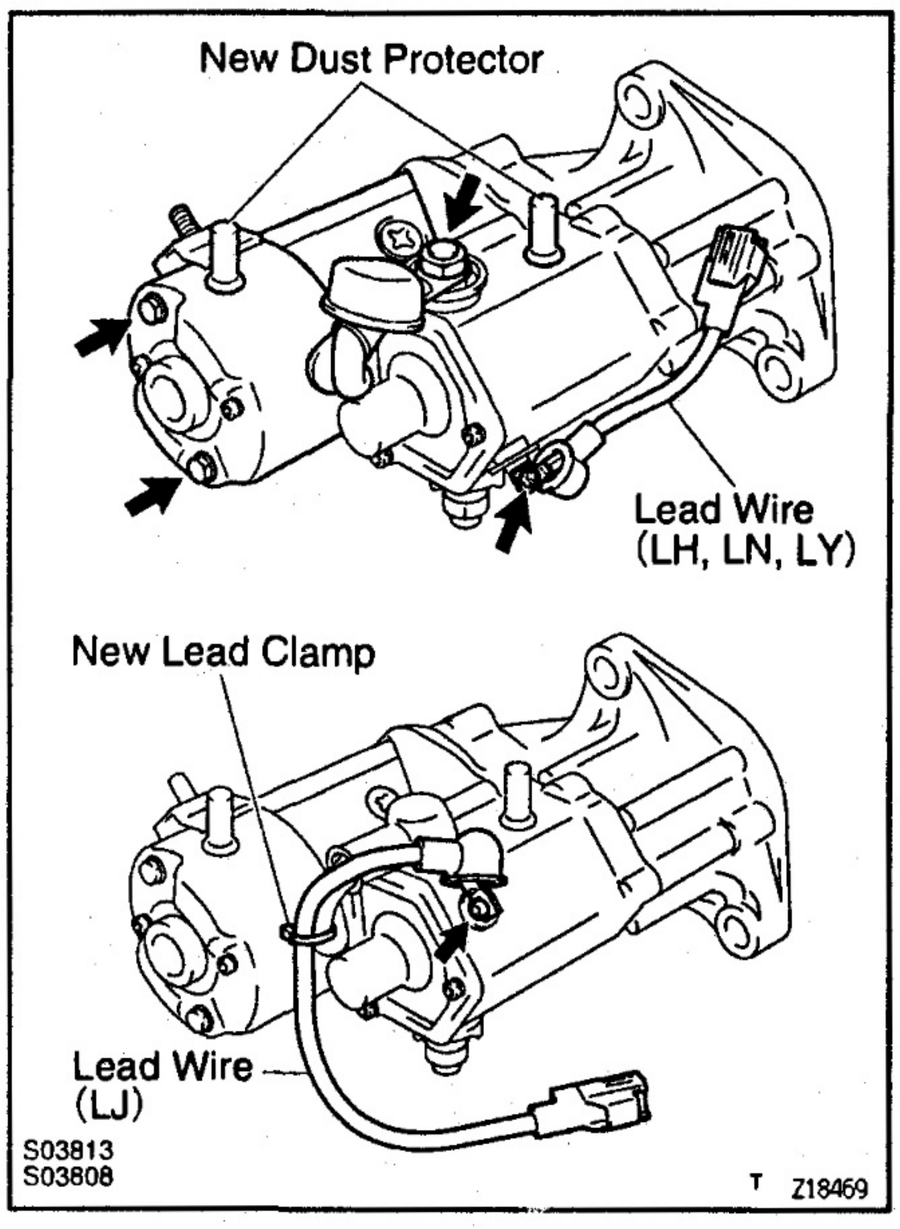

4. INSTALL STARTER HOUSING, CLUTCH ASSEMBLY AND GEAR

(a) Place these parts on the starter housing:
  (1) Plate washer
    Align the claw of the plate washer with the groove of the magnetic switch.
  (2) Bearing
  (3) Idler gear
  (4) Return spring
    Apply grease to the return spring.
  (5) Starter clutch assembly

(b) Install the starter housing to the magnetic switch with the 3 screws.
  Torque: 9.3 N·m (95 kgf·cm, 82 in.·lbf)

5. INSTALL FIELD FRAME AND ARMATURE ASSEMBLY

(a) Install the felt washer to the armature shaft.

(b) Align the protrusion of the field frame with the cutout of the magnetic switch.

(c) Install the field frame and armature assembly with the 2 through bolts.
  Torque: 9.3 N·m (95 kgf·cm, 82 in.·lbf)

(d) Connect the lead wire to terminal C, and install the nut.
  Torque: 24 N·m (245 kgf·cm, 18 ft·lbf)

6. INSTALL DUST PROTECTORS

7. INSTALL LEAD WIRE

(a) Install the lead wire with the screw.
  Torque: 3.6 N·m (37 kgf·cm, 32 in.·lbf)

(b) LJ:
  Secure the lead wire with a new lead clamp.

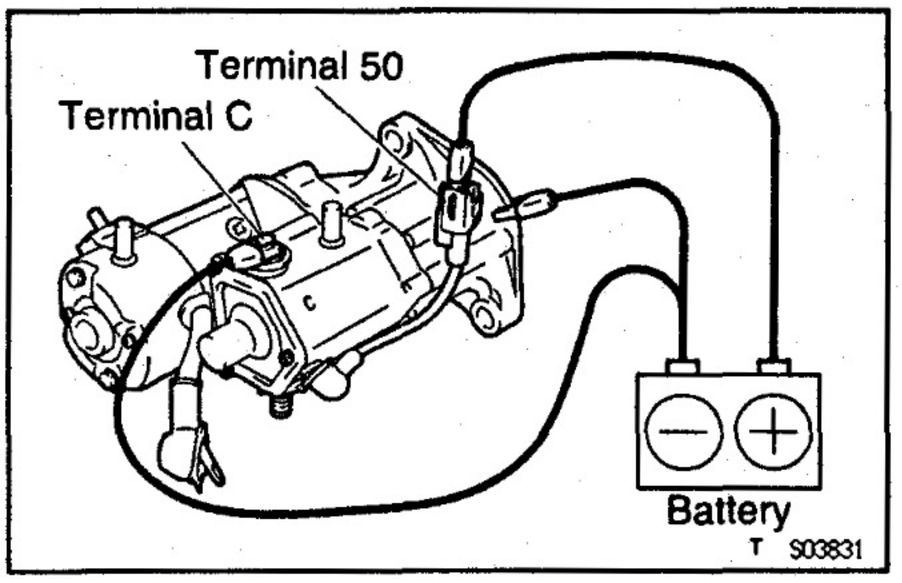

ST010-1L

STARTER PERFORMANCE TEST

NOTICE: These tests must be performed within 3 to 5 seconds to avoid burning out the coil.

1. PERFORM PULL–IN TEST

(a) Disconnect the field coil lead wire from terminal C.

(b) Connect the battery to the magnetic switch as shown. Check that the clutch pinion gear moves outward.

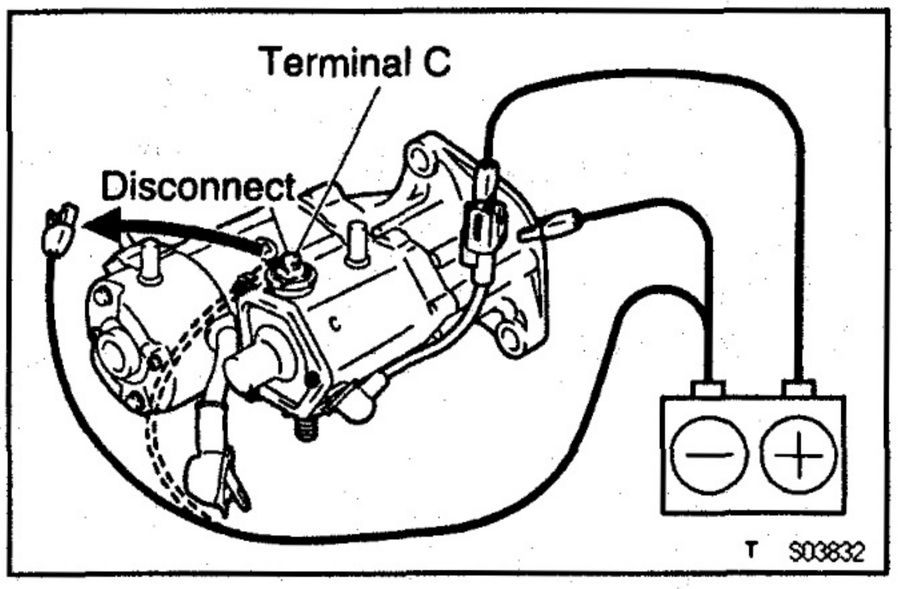

2. PERFORM HOLD–IN TEST

With battery connected as above with the clutch pinion gear out, disconnect the negative (–) lead from terminal C. Check that the pinion gear remains out.

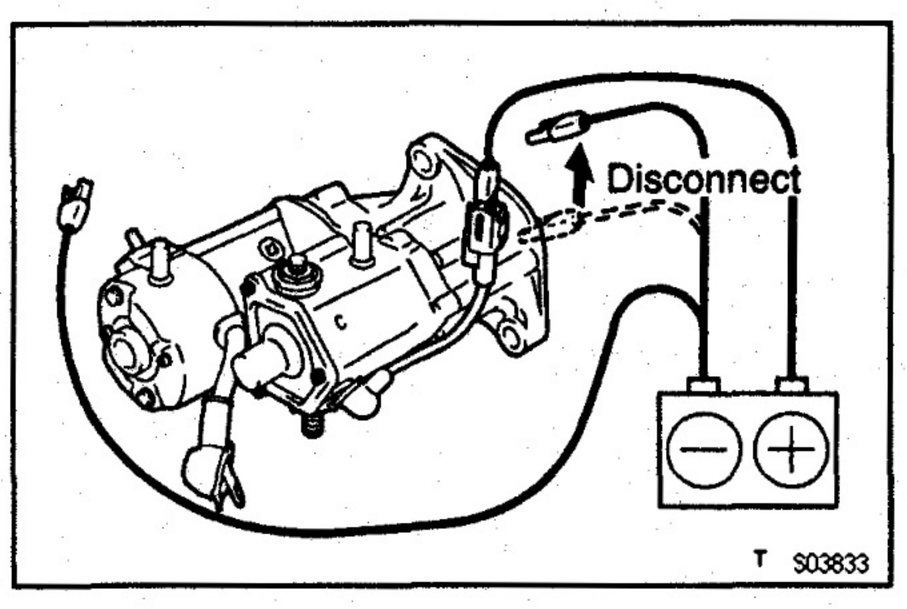

3. INSPECT CLUTCH PINION GEAR RETURN

Disconnect the negative (–) lead from the switch body. Check that the clutch pinion gear returns inward.

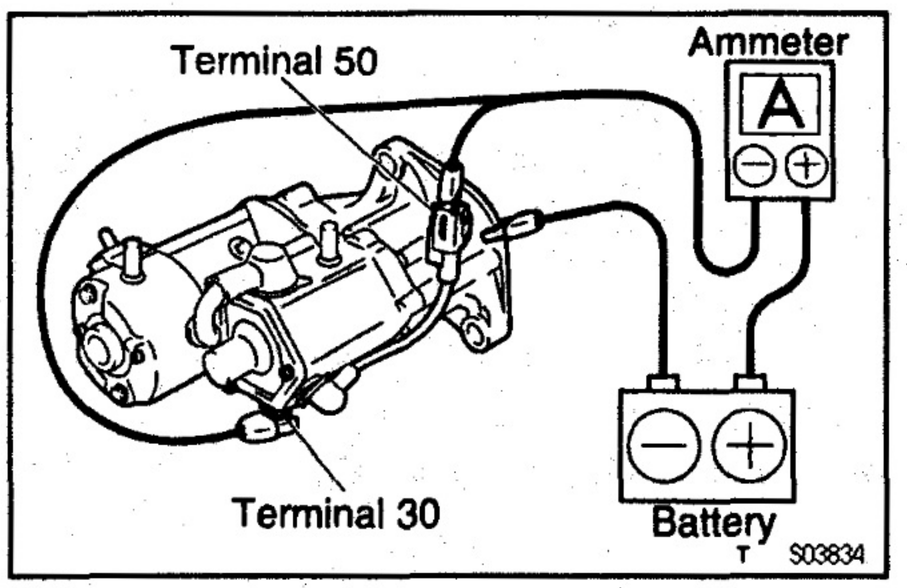

4. PERFORM NO–LOAD PERFORMANCE TEST

(a) Connect the battery and ammeter to the starter as shown.

(b) Check that the starter rotates smoothly and steadily with the pinion gear moving out. Check that the ammeter shows the specified current.

Specified current at 11.0 V:

180 A or less

STARTER RELAY (LH, LJ)

STARTER RELAY INSPECTION

ST036-01

1. REMOVE STARTER RELAY

LOCATION: See relay locations in Electrical Wiring Diagram.

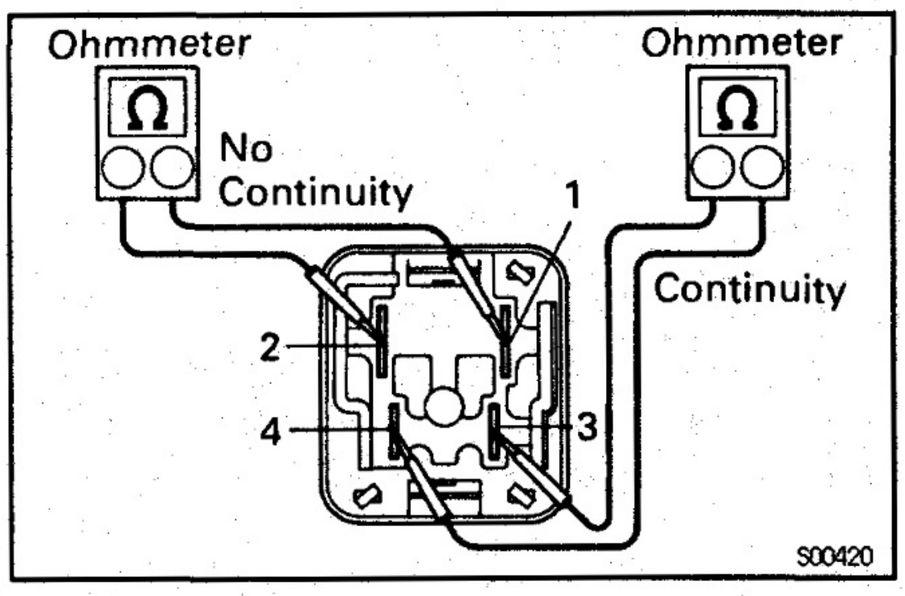

2. INSPECT STARTER RELAY

A. Inspect relay continuity

(a) Using an ohmmeter, check that there is no continuity between terminals 1 and 2.
If there is continuity, replace the relay.

(b) Check that there is continuity between terminals 3 and 4.
If there is no continuity, replace the relay.

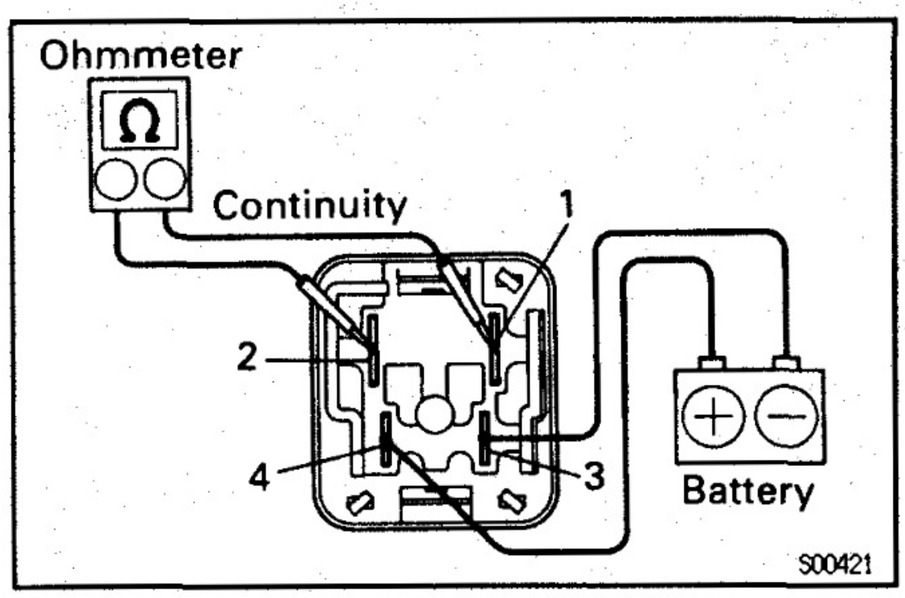

B. Inspect relay operation

(a) Apply battery voltage across terminals 3 and 4.

(b) Using an ohmmeter, check that there is continuity between terminals 1 and 2.
If there is no continuity, replace the relay.

3. REINSTALL STARTER RELAY

STARTER RELAY (LN, LY)

ST007-01

STARTER RELAY INSPECTION

1. REMOVE STARTER RELAY

LOCATION: See relay locations in Electrical Wiring Diagram.

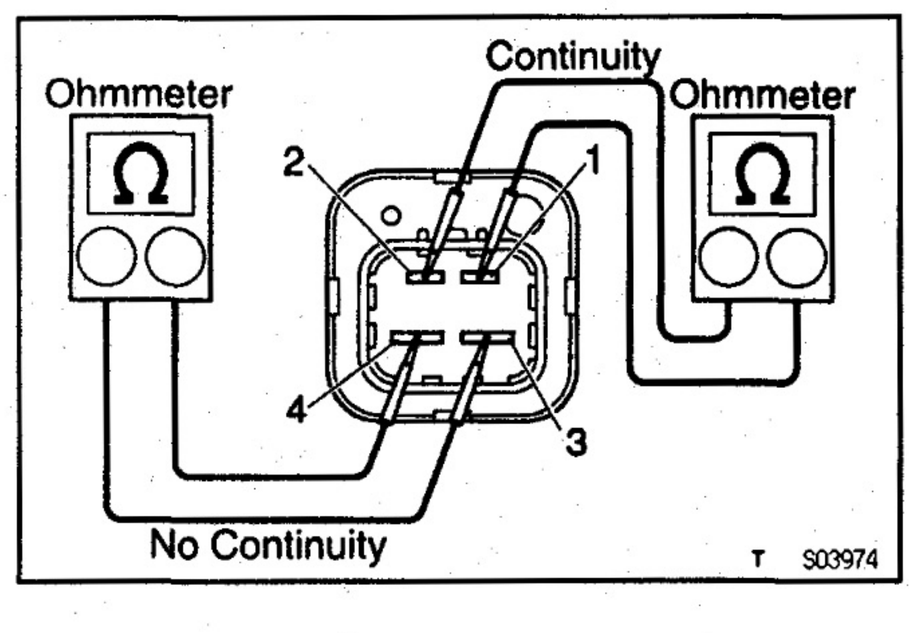

2. INSPECT STARTER RELAY

A. Inspect relay continuity

(a) Using an ohmmeter, check that there is no continuity between terminals 1 and 2.
If there is continuity, replace the relay.

(b) Check that there is continuity between terminals 3 and 4.
If there is no continuity, replace the relay.

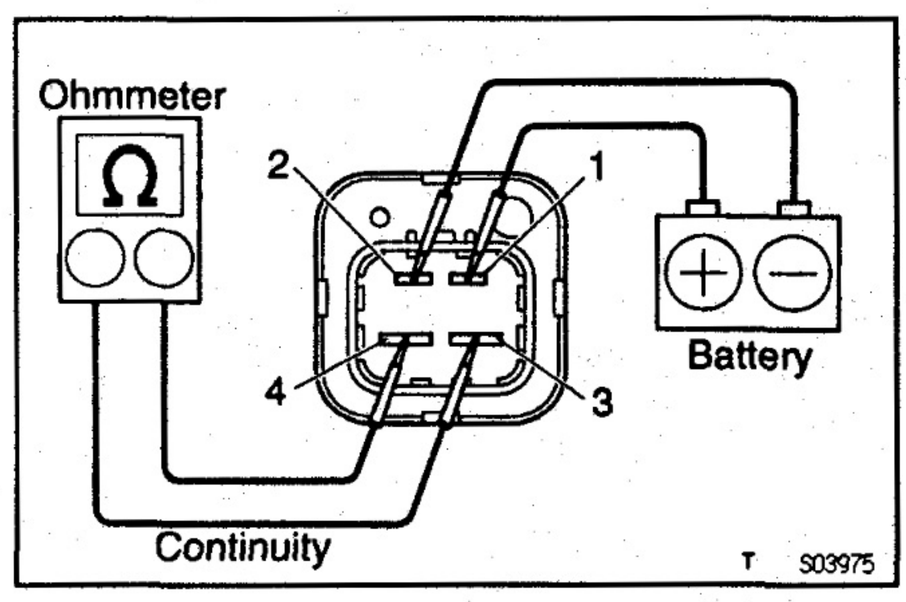

B. Inspect relay operation

(a) Apply battery voltage across terminals 3 and 4.

(b) Using an ohmmeter, check that there is continuity between terminals 1 and 2.
If there is no continuity, replace the relay.

3. REINSTALL STARTER RELAY

SERVICE SPECIFICATIONS

SERVICE DATA

ST015-1T

Pre—heating system	Light lighting time		
	Super glow type/with resistor	at 20°C (68°F)	Approx. 2.8 seconds
	Super glow type/without resistor	at 28°C (82.4°F)	Approx. 2.2 seconds
	Variable delay type, Fixed delay type		Approx. 5 seconds
Starter (2.0 kW for LN Thailand)	Rated voltage and output power		12 V 2.0 kW
	No—load characteristics	Current	120 A or less at 11. 5 V
		rpm	4,000 rpm or more
	Brush length	STD	15.0 mm (0.591 in.)
		Minimum	10.0 mm (0.394 in.)
	Brush spring installed load	STD	26.5 — 32.3 N (2.7 — 3.3 kgf, 6.0 — 7.3 lbf)
		Minimum	17.6 N (1.8 kgf, 4.0 lbf)
	Commutator		
	Diameter	STD	35.0 mm (1.378 in.)
		Minimum	34.0 mm (1.339 in.)
	Undercut depth	STD	0.7 mm (0.028 in.)
		Minimum	0.2 mm (0.008 in.)
	Circle runout	Maximum	0.05 mm (0.0020 in.)
	Magnetic switch		
	Contact plate for wear	Maximum	0.9 mm (0.035 in.)
Starter (2.0 kW for Except LN Thailand)	Rated voltage and output power		12 V 2.0 kW
	No—load characteristics	Current	100 A or less at 11. 5 V
		rpm	4,000 rpm or more
	Brush length	STD	15.0 mm (0.591 in.)
		Minimum	9.0 mm (0.354 in.)
	Brush spring installed load	STD	21.5 — 27.5 N (2.2 — 2.8 kgf, 4.9 — 6.2 lbf)
		Minimum	12.7 N (1.3 kgf, 2.9 lbf)
	Commutator		
	Diameter	STD	35.0 mm (1.378 in.)
		Minimum	34.0 mm (1.339 in.)
	Undercut depth	STD	0.7 mm (0.028 in.)
		Minimum	0.2 mm (0.008 in.)
	Circle runout	Maximum	0.05 mm (0.0020 in.)
	Field frame		
	Shunt coil resistance	at 20°C (68°F)	1.5 — 1.9 Ω
	Magnetic switch		
	Contact plate for wear	Maximum	0.9 mm (0.035 in.)

Starter (2.7 kW)	Rated voltage and output power		12 V 2.7 kW
	No—load characteristics	Current	180 A or less at 11. 0 V
		rpm	3,500 rpm or more
	Brush length	STD	20.5 mm (0.807 in.)
		Minimum	11.0 mm (0.433 in.)
	Brush spring installed load	STD	34.3 — 42.1 N (3.5 — 4.3 kgf, 7.7 — 9.5 lbf)
		Minimum	18.6 N (1.9 kgf, 4.2 lbf)
	Commutator		
	Diameter	STD	36.0 mm (1.417 in.)
		Minimum	35.0 mm (1.378 in.)
	Undercut depth	STD	0.7 mm (0.028 in.)
		Minimum	0.2 mm (0.008 in.)
	Circle runout	Maximum	0.05 mm (0.0020 in.)
	Magnetic switch		
	Contact plate for wear	Maximum	1.6 mm (0.063 in.)

ST018—1J

TORQUE SPECIFICATIONS

Part tightened		N·m	kgf·cm	ft·lbf
Glow plug resistor x Intake manifold		34	350	25
Water temperature sensor x Cylinder block		17.5	178	13
Glow plug x Cylinder head		13	130	9
Terminal 30 nut, Terminal C nut x Terminal bolt	2.0 kW	17	173	13
	2.7 kW	30	306	22
End cover x Magnetic switch housing		3.6	37	32 in.·lbf
End cover x Brush holder	2.0 kW for Except LN Thailand	3.8	39	34 in.·lbf
	2.7 kW	3.6	37	32 in.·lbf
Starter housing x Magnetic switch		9.3	95	82 in.·lbf
Starter housing x Field frame	2.0 kW for LN Thailand	12.7	130	9
End cover x Starter housing	2.0 kW for Except LN Thailand, 2.7 kW	9.3	95	82 in.·lbf
Lead wire of field frame x Terminal C	2.0 kW	5.9	60	52 in.·lbf
	2.7 kW	24	245	18
Lead wire x Terminal 50 of magnetic switch		3.6	37	32 in.·lbf

CHARGING

PRECAUTION ..... CH– 2
PREPARATION ..... CH– 2
ON–VEHICLE INSPECTION ..... CH– 3
ALTERNATOR
(Conventional Type) ..... CH– 7
ALTERNATOR
(Hi–Speed Compact Type) ..... CH– 15
ALTERNATOR REGULATOR
(w/o IC Regulator) ..... CH– 26
SERVICE SPECIFICATIONS ..... CH– 27

PRECAUTION

CH00K–02

1. Check that the battery cables are connected to the correct terminals.
2. Disconnect the battery cables when the battery is given a quick charge.
3. Do not perform tests with a high voltage insulation resistance tester.
4. Never disconnect the battery while the engine is running.

PREPARATION

CH00Q–10

SST (SPECIAL SERVICE TOOLS)

CH

	09285–76010	Injection Pump Camshaft Bearing Cone Replacer	Rotor rear bearing cover for hi–speed compact type
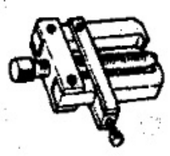	09286–46011	Injection Pump Spline Shaft Puller	Rectifier end frame for hi–speed compact type
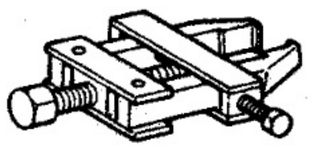	09820–00021	Alternator Rear Bearing Puller	Rotor rear bearing for hi–speed compact type
	09820–00030	Alternator Rear Bearing Replacer	Rotor rear bearing for hi–speed compact type
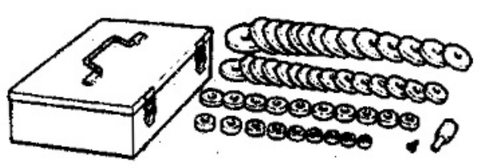	09950–60010	Replacer Set	
	(09951–00180)	Replacer 18	Rotor for hi–speed compact type
	(09951–00230)	Replacer 23	Rotor front bearing for hi–speed compact type
	(09951–00340)	Replacer 34	Oil seal for hi–speed compact type
	(09951–00400)	Replacer 40	Rotor front bearing for hi–speed compact type
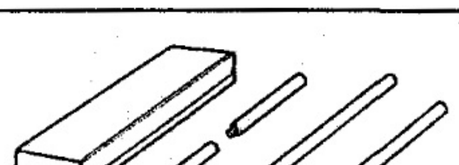	09950–70010	Handle Set	
	(09951–07100)	Handle 100	Rotor, rotor front bearing, oil seal for hi–speed compact type

CH00S—17

RECOMMENDED TOOLS

	09082—00040 TOYOTA Electrical Tester.	
	09216—00021 Belt Tension Gauge .	
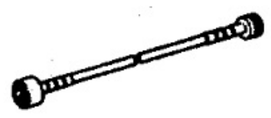	09216—00030 Belt Tension Gauge Cable .	

CH00U—1F

EQUIPMENT

Battery specific gravity gauge	
Torque wrench	
Vernier calipers	Rotor (Slip ring), Brush

ON—VEHICLE INSPECTION

CH0ED—01

1. CHECK BATTERY ELECTROLYTE LEVEL

Check the electrolyte quantity of each cell.

Maintenance—Free Battery:

If under the lower level, replace the battery (or add distilled water if possible). Check the charging system.

Except Maintenance—Free Battery:

If under the lower level, add distilled water.

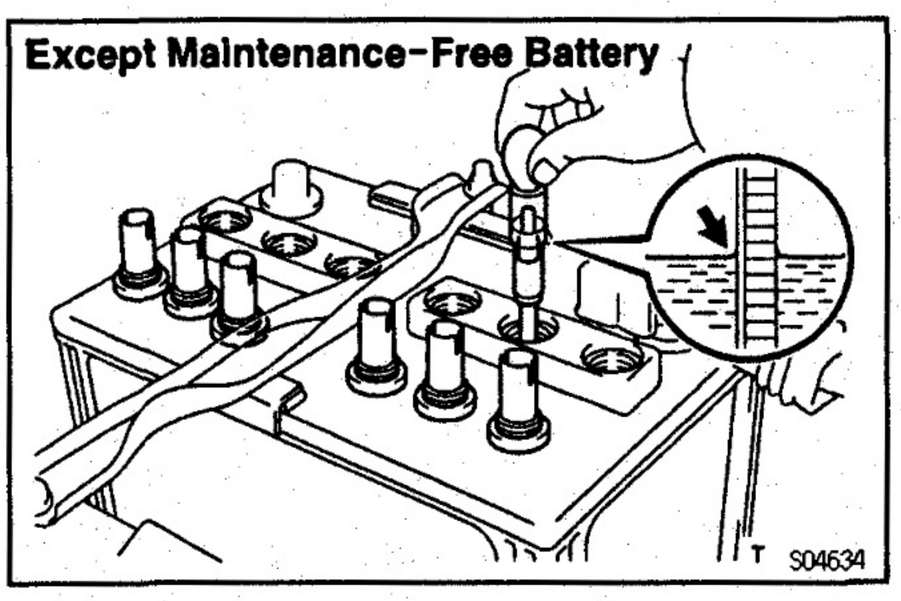

2. Except Maintenance—Free Battery:
CHECK BATTERY SPECIFIC GRAVITY

(b) Check the specific gravity of each cell.

Standard specific gravity at 20°C (68°F):

1.25 — 1.29

If the gravity is less than specification, charge the battery.

3. Maintenance—Free Battery:
CHECK BATTERY VOLTAGE

(a) After having driven the vehicle and in the case that 20 minutes have not passed after having stopped the engine, turn the ignition switch ON and turn on the electrical system (headlight, blower motor, rear defogger etc.) for 60 seconds to remove the surface charge.

(b) Turn the ignition switch OFF and turn off the electrical systems.

(c) Measure the battery voltage between the negative (—) and positive (+) terminals of the battery.

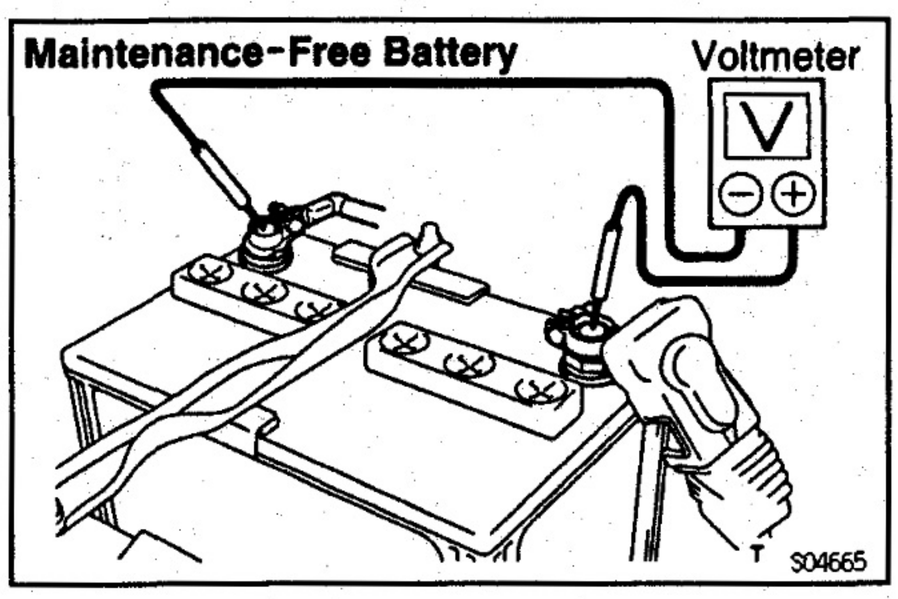

Standard voltage at 20°C (68°F):

12.5 — 12.9 V

If the voltage is less than specification, charge the battery.

4. CHECK BATTERY TERMINALS, FUSIBLE LINK AND FUSES

(a) Check that the battery terminals are not loose or corroded.
If the terminals are corroded, clean the terminals.

(b) Check the fusible link and fuses for continuity.

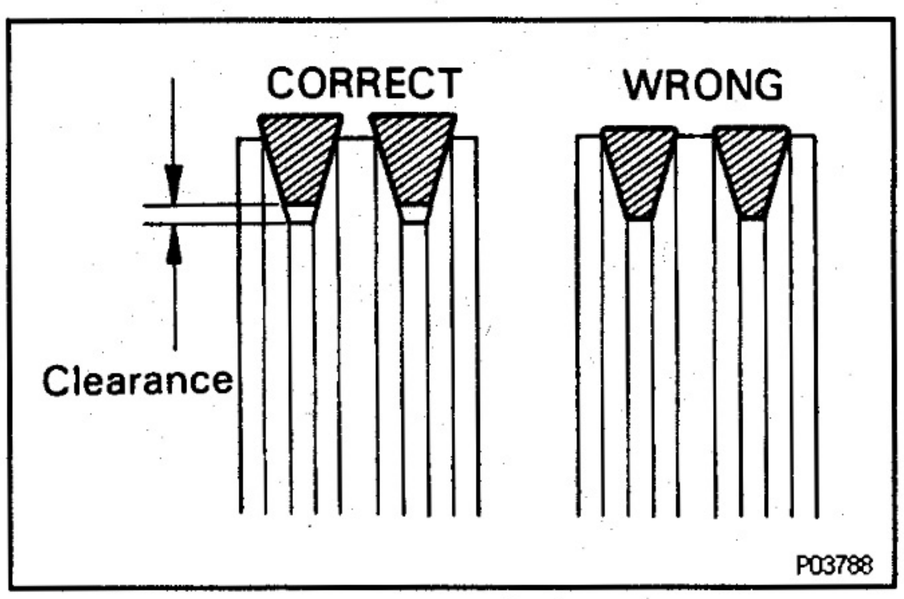

5. INSPECT DRIVE BELTS

(a) Visually check the belt for cracks, oiliness or wear. Check that the belt does not touch the bottom of the pulley groove.
If the belt has any of the above defects, replace it.

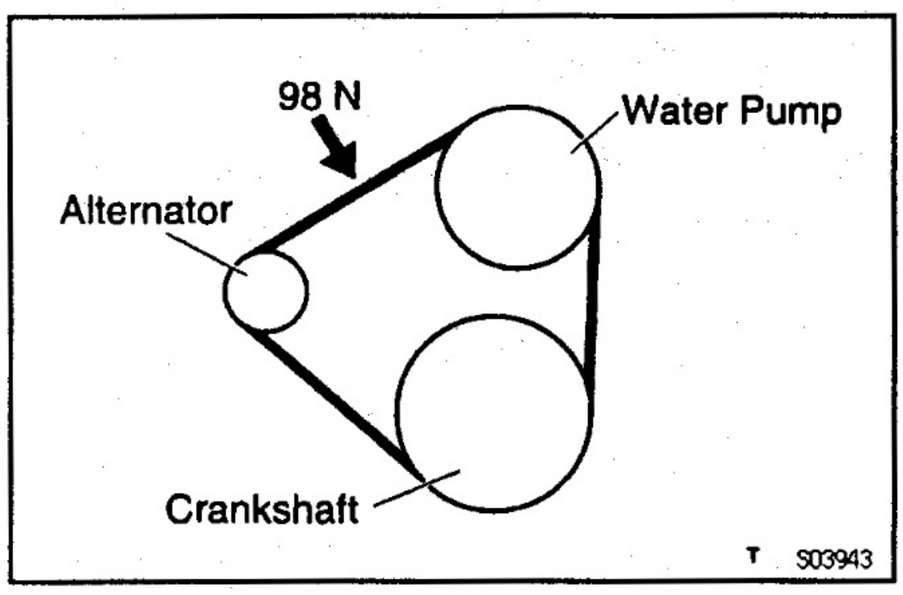

(b) Check the drive belt deflection by pressing on the belt at the points indicated in the illustration with 98 N (10 kgf, 22 lbf) of pressure.

Drive belt deflection:

New belt	7 — 10 mm (0.28 — 39 in.)
Used belt	10 — 14 mm (0.39 — 55 in.)

If the belt deflection is not as specified, adjust it.

Reference:

Using a belt tension gauge, check the drive belt tension.

Drive belt tension:

New belt	440 — 540 N (45 — 55 kgf)
Used belt	200 — 340 N (20 — 35 kgf)

If the belt tension is not as specified, adjust it.

HINT:

- "New belt" refers to a belt which has been used less than 5 minutes on a running engine.
- "Used belt" refers to a belt which has been used on a running engine for 5 minutes or more.
- After installing a new belt, run the engine for about 5 minutes and recheck the belt tension.

6. VISUALLY CHECK ALTERNATOR WIRING AND LISTEN FOR ABNORMAL NOISES

(a) Check that the wiring is in good condition.

(b) Check that there is no abnormal noise from the alternator while the engine is running.

7. CHECK CHARGE WARNING LIGHT CIRCUIT

(a) Warm up the engine and then turn it off.

(b) Turn off all accessories.

(c) Turn the ignition switch ON. Check that the charge warning light is lit.

(d) Start the engine. Check that the light goes off.
If the light does not go off as specified, troubleshoot the charge light circuit.

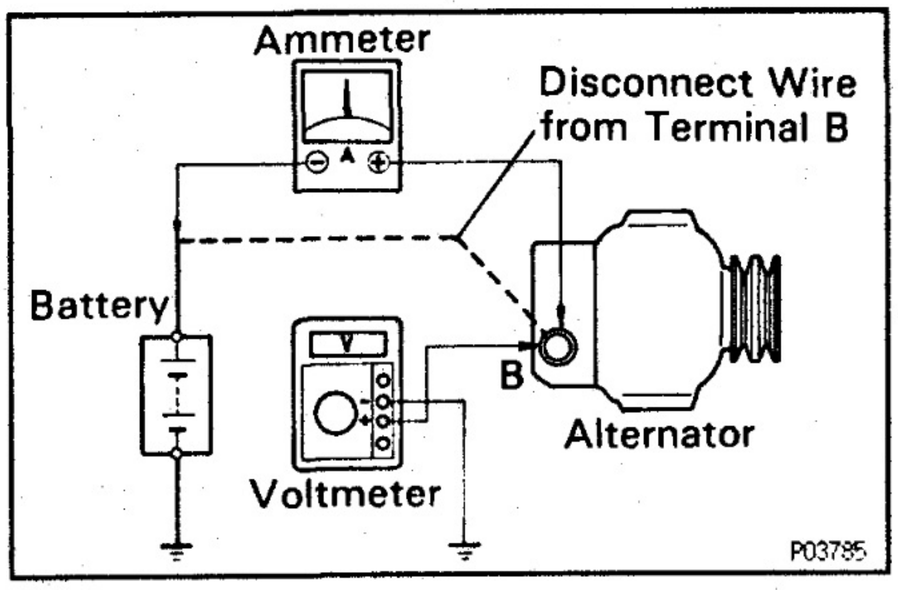

8. INSPECT CHARGING CIRCUIT WITHOUT LOAD

HINT: If a battery/alternator tester is available, connect the tester to the charging circuit as per manufacturer's instructions.

(a) If a tester is not available, connect a voltmeter and ammeter to the charging circuit as follows:

- Disconnect the wire from terminal B of the alternator, and connect it to the negative (−) tester probe of the ammeter.
- Connect the positive (+) tester probe of the ammeter to terminal B of the alternator.
- Connect the positive (+) tester probe of the voltmeter to terminal B of the alternator.
- Ground the negative (−) tester probe of the voltmeter.

(b) Check the charging circuit as follows:
With the engine running from idling to 2,000 rpm, check the reading on the ammeter and voltmeter.

w/ IC Regulator:

Standard amperage:

10 A or less

Standard voltage:

Conventional type

at 55°C (131°F)	13.3 – 14.7 V
at 135°C (275°F)	13.2 – 14.0 V

Hi–speed compact type for 60 A

at 25°C (77°F)	13.5 – 14.1 V
at 135°C (275°F)	12.6 – 14.1 V

Hi–speed compact type for 70 A, 80 A

at 25°C (77°F)	13.8 – 14.4 V
at 135°C (275°F)	12.9 – 14.4 V

If the voltmeter reading is more than standard voltage, replace the IC regulator.

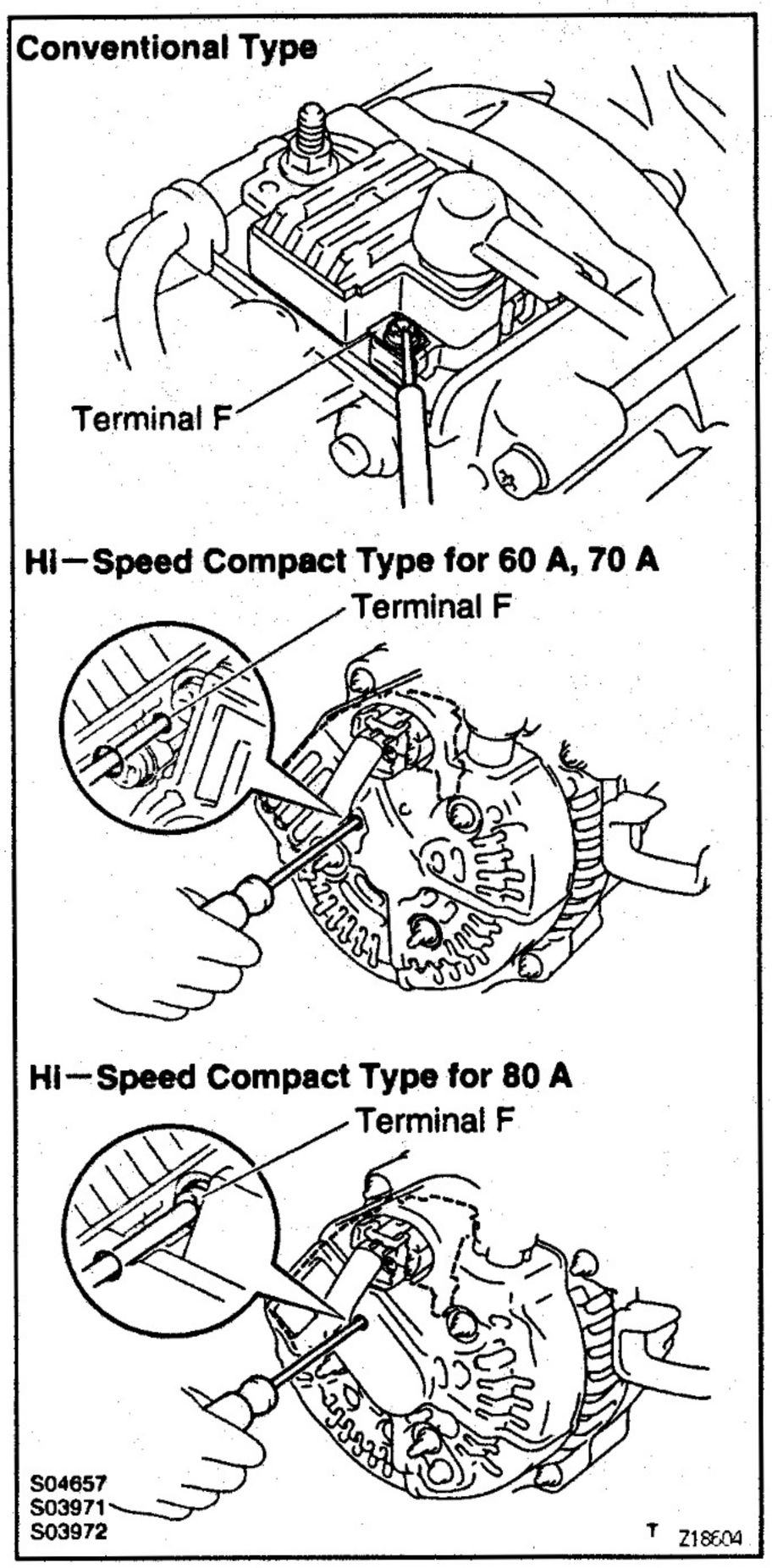

If the voltmeter reading is less than standard voltage, check the IC regulator and alternator as follows:

- Conventional type:
  Remove the brush holder cover, and connect the terminal B wire to the orginal position.

CAUTION: Battery voltage is applied to terminal B, so disconnect the battery before beginning work.

- With terminal F grounded, start the engine and check the voltmeter reading of terminal B.
- If the voltmeter reading is more than standard voltage, replace the IC regulator.
- If the voltmeter reading is less than standard voltage, check the alternator.

w/o IC Regulator:

Standard amperage:

10 A or less

Standard voltage:

at 20°C (68°F)	13.8 — 14.8 V
at 60°C (140°F)	13.3 — 15.5 V

If the voltmeter reading is more than standard voltage, replace the alternator regulator.

9. INSPECT CHARGING CIRCUIT WITH LOAD

(a) With the engine running at 2,000 rpm, turn on the high beam headlights and place the heater blower switch at HI.

(b) Check the reading on the ammeter.

Standard amperage:

30 A or more

If the ammeter reading is less than the standard amperage, repair the alternator.

HINT: If the battery is fully charged, the indication will sometimes be less than standard amperage.

ALTERNATOR (Conventional Type)

COMPONENTS FOR DISASSEMBLY AND ASSEMBLY

CH0EE-01

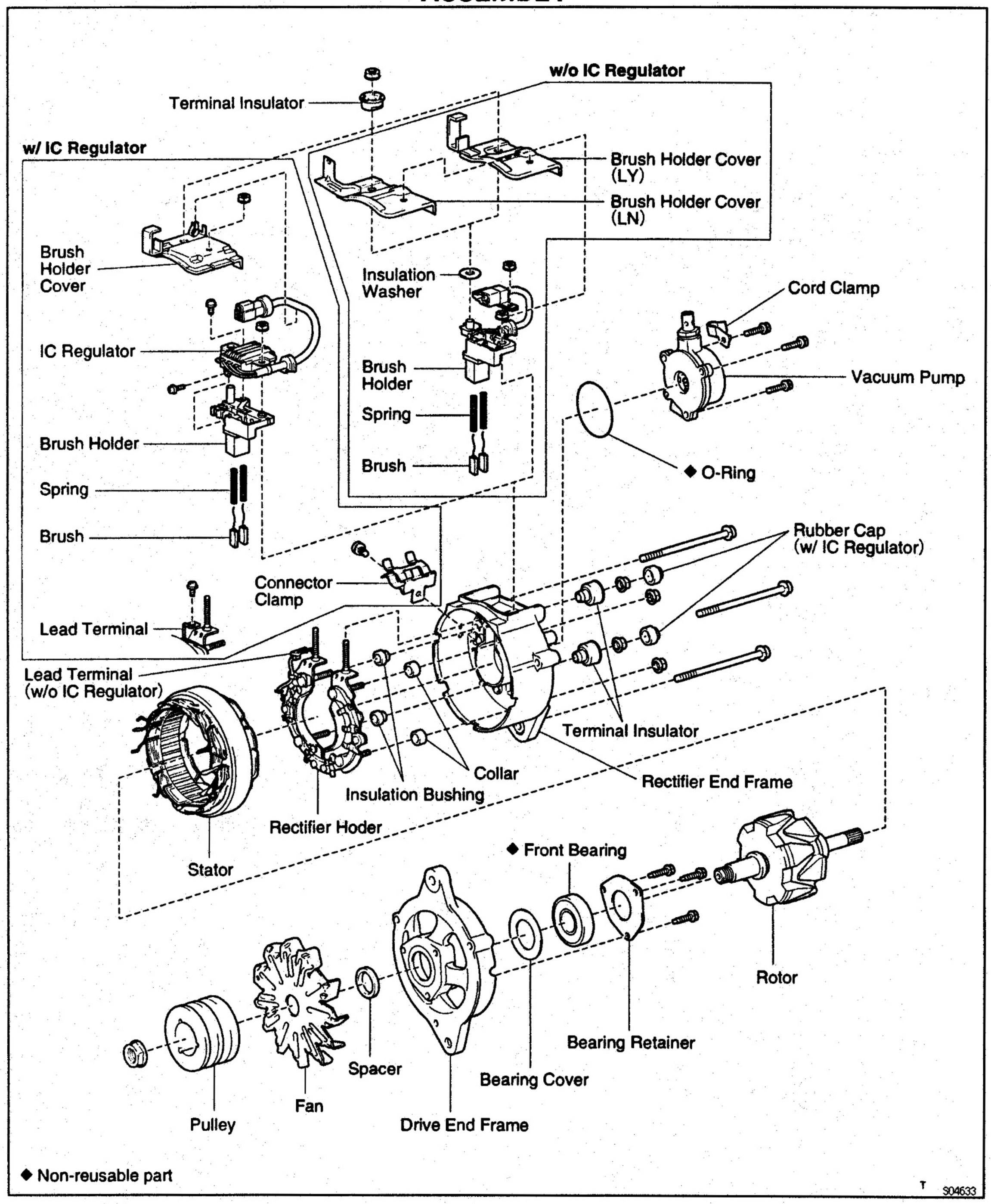

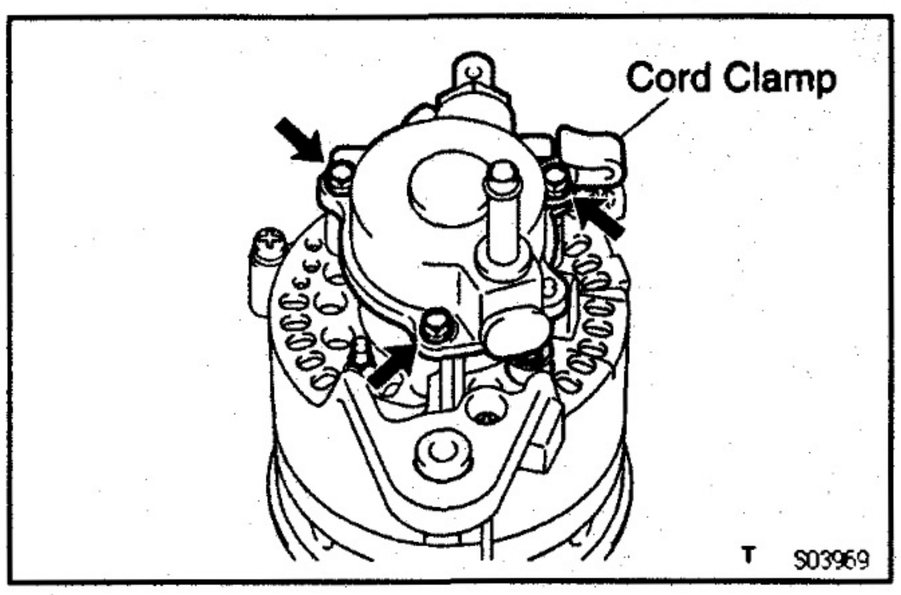

CH0EF-01

ALTERNATOR DISASSEMBLY

1. REMOVE VACUUM PUMP

Remove the 3 bolts, cord clamp, vacuum pump and O —ring.

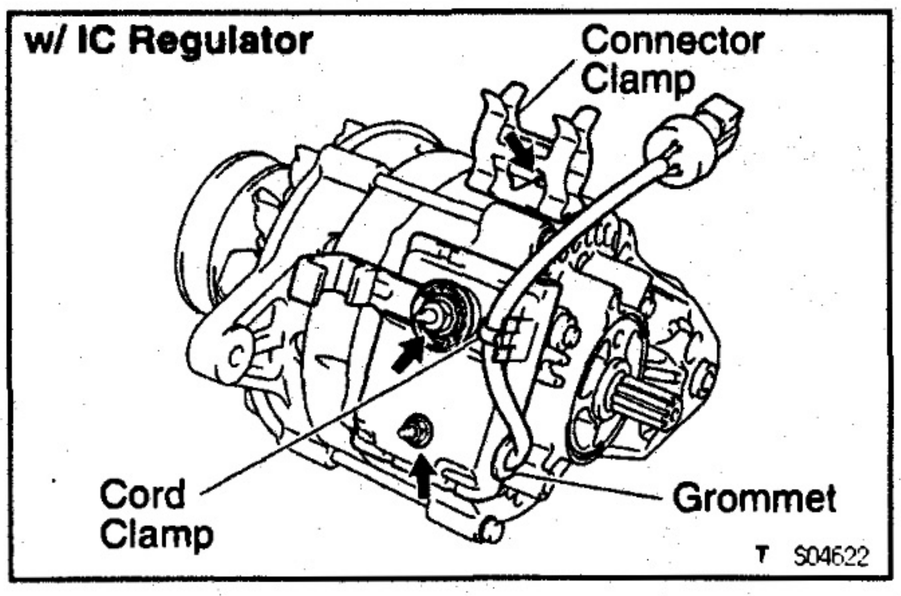

2. w/ IC Regulator:
REMOVE CONNECTOR CLAMP

Remove the screw and connector clamp.

3. REMOVE BRUSH HOLDER COVER

w/ IC Regulator:

(a) Disconnect the lead wire from the cord clamp on the brush holder cover.
(b) Remove the 2 nuts and terminal insulator.
(c) Disconnect the grommet from the cover, and remove the brush holder cover.

w/o IC Regulator:

(a) Remove the 2 nuts and terminal insulator.
(b) Disconnect the lead grommet from the cover, and remove the brush holder cover.

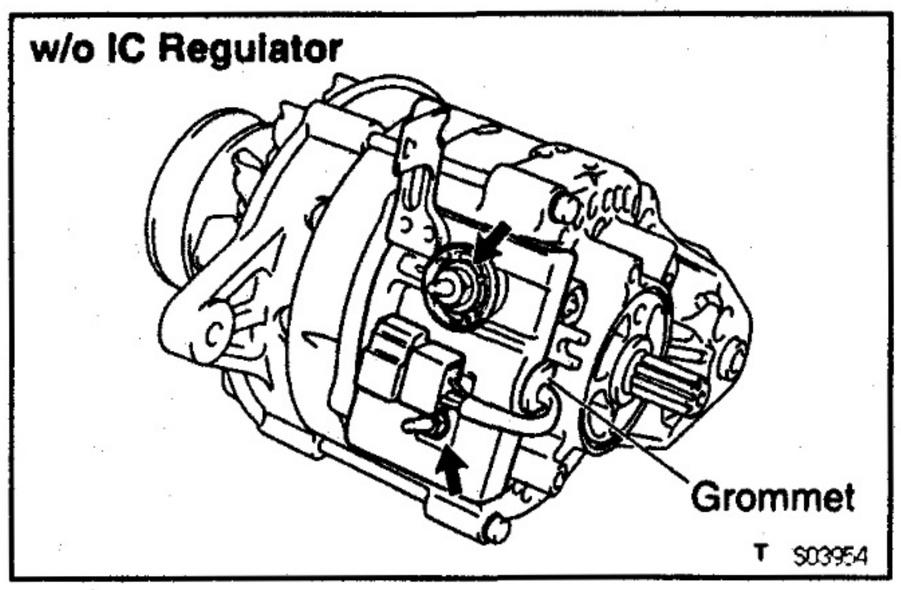

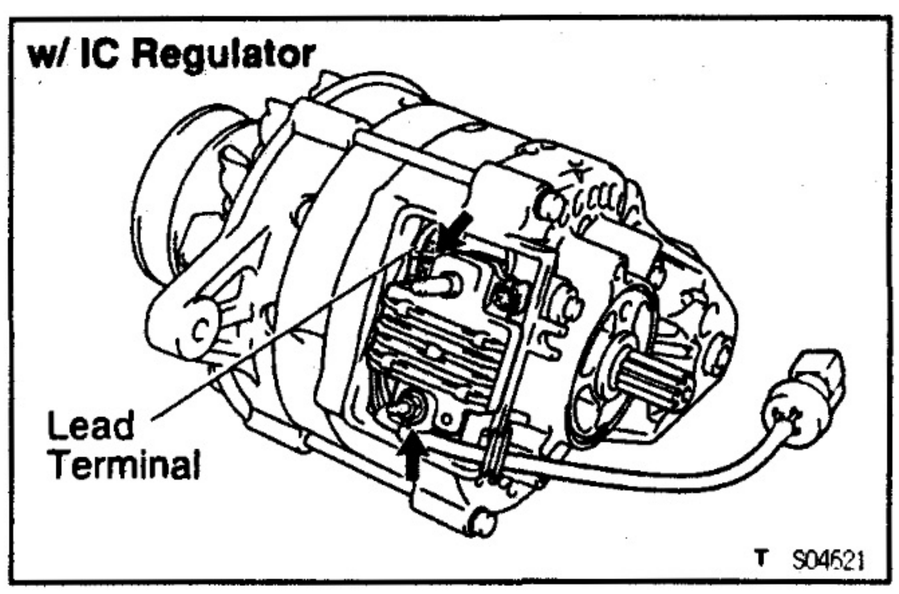

4. w/ IC Regulator:
REMOVE IC REGULATOR AND BRUSH HOLDER ASSEMBLY

(a) Remove the screw, and disconnect the lead terminal from the IC regulator.
(b) Remove the nut, the IC regulator and brush holder assembly.

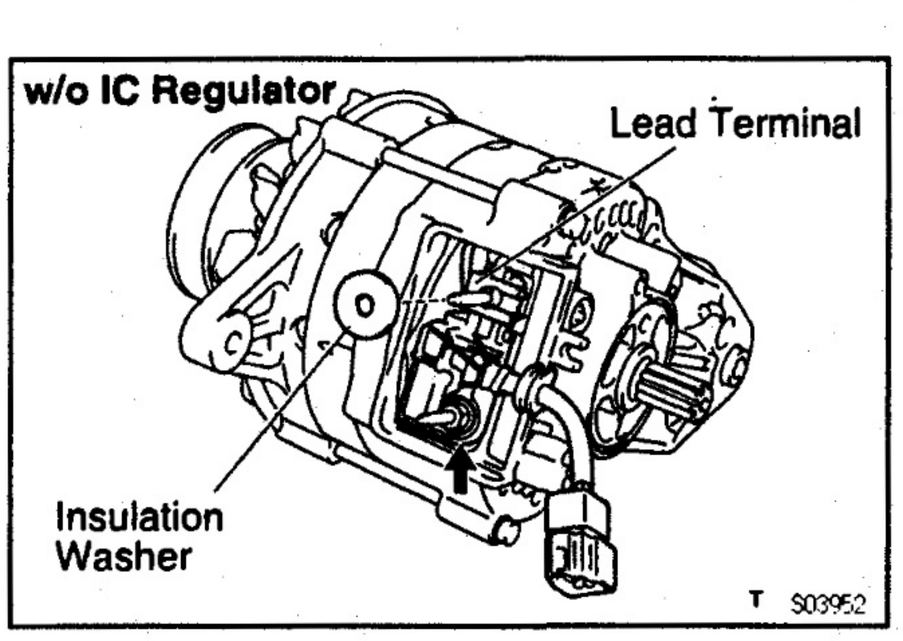

5. w/o IC Regulator:
REMOVE BRUSH HOLDER

(a) Remove the insulation washer.
(b) Disconnect the lead terminal from the brush holder.
(c) Remove the nut and brush holder.

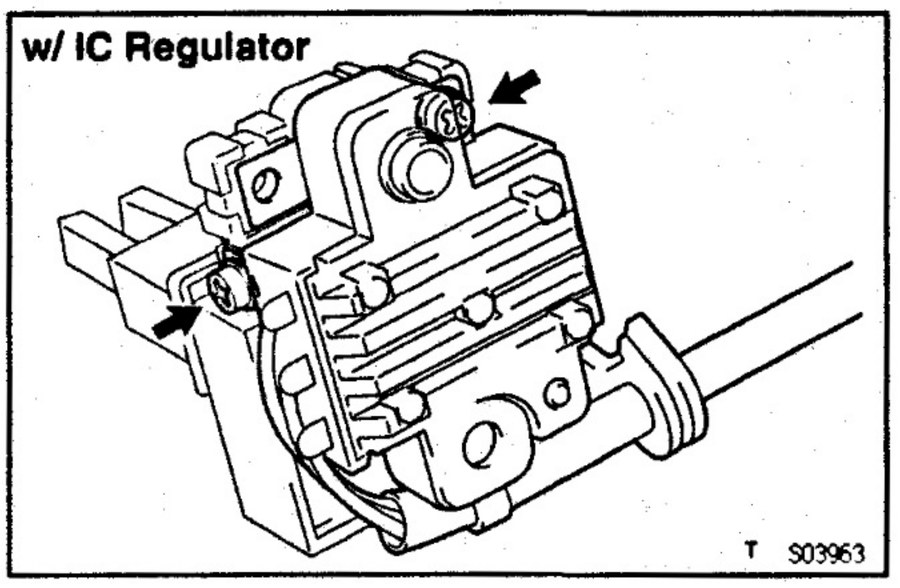

6. **w/ IC Regulator:**
REMOVE IC REGULATOR FROM BRUSH HOLDER
Remove the 2 screws and IC regulator.

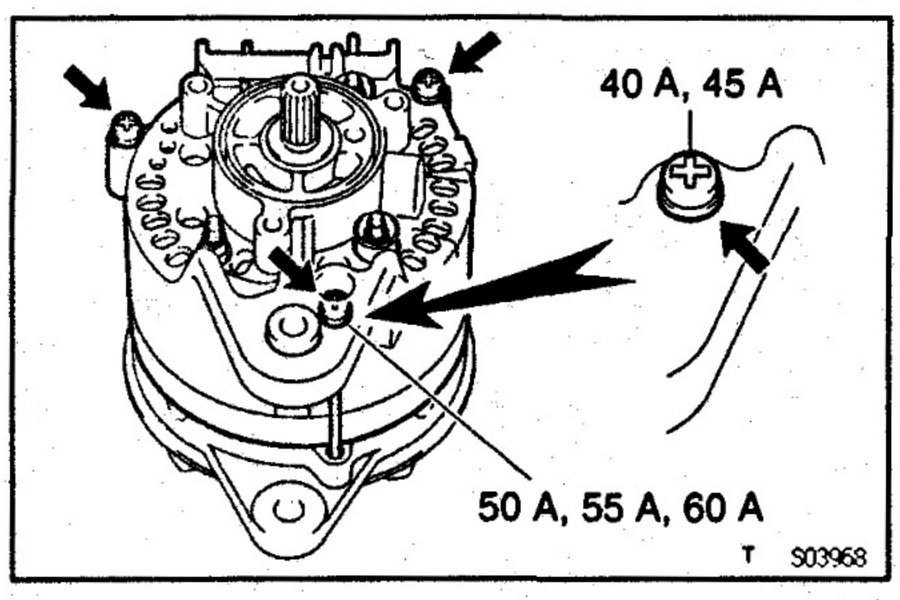

7. **REMOVE RECTIFIER END FRAME, RECTIFIER HOLDER AND STATOR ASSEMBLY**
Remove the 3 through screws, the rectifier end frame, rectifier holder and stator assembly.

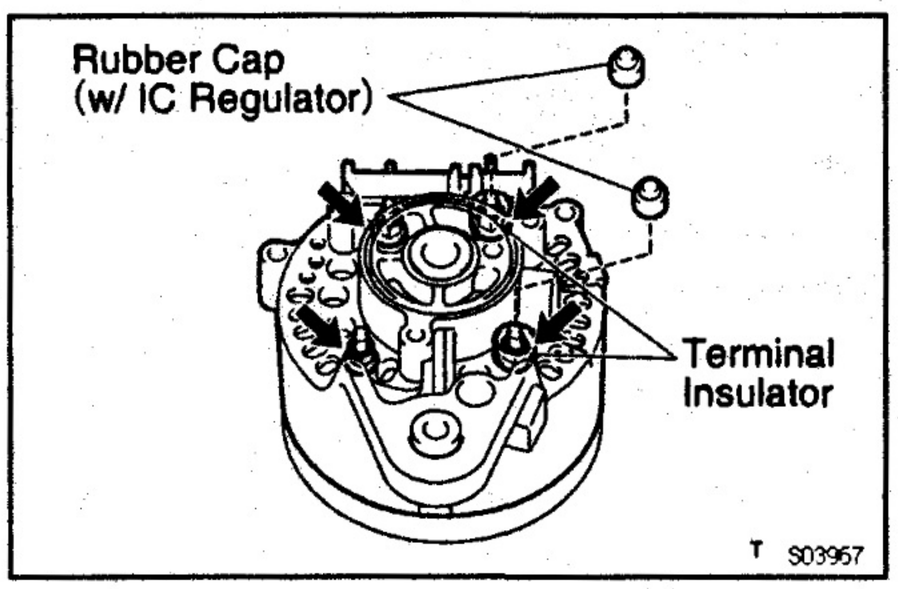

8. **REMOVE RECTIFIER END FRAME FROM RECTIFIER HOLDER**
(a) w/ IC Regulator:
Remove the 2 rubber caps.
(b) Remove the 4 nuts and 2 terminal insulators.
(c) Remove the rectifier end frame.
(d) Remove the 2 insulation bushing and 2 collars from the rectifier holder studs.

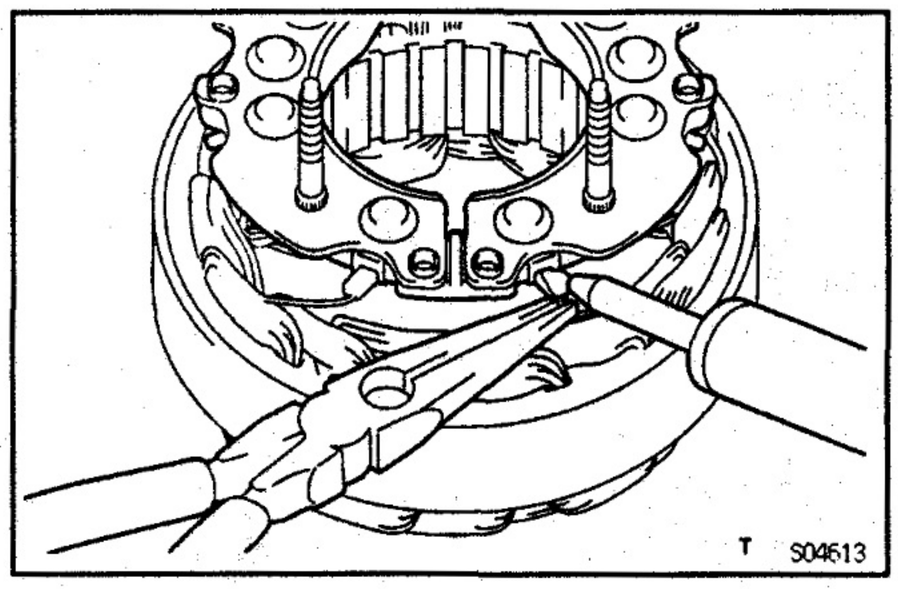

9. **REMOVE RECTIFIER HOLDER FROM STATOR**
Hold the stator coil lead with needle–nose pliers, and unsolder the leads.
NOTICE: Protect the rectifiers from heat.

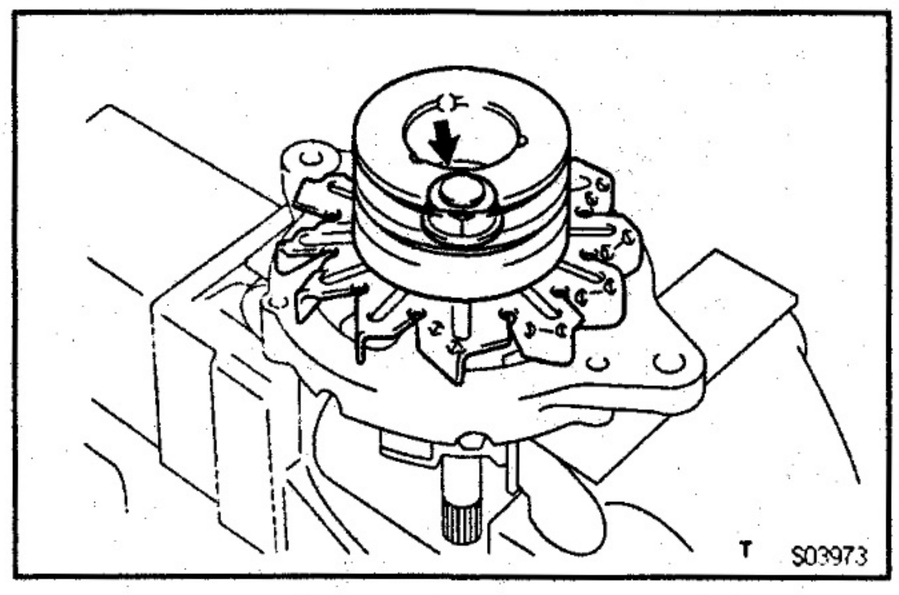

10. **REMOVE PULLEY AND FAN FROM DRIVE END FRAME**
(a) Mount the rotor in a soft jaw vise.
(b) Remove the pulley nut, pulley, fan and spacer.

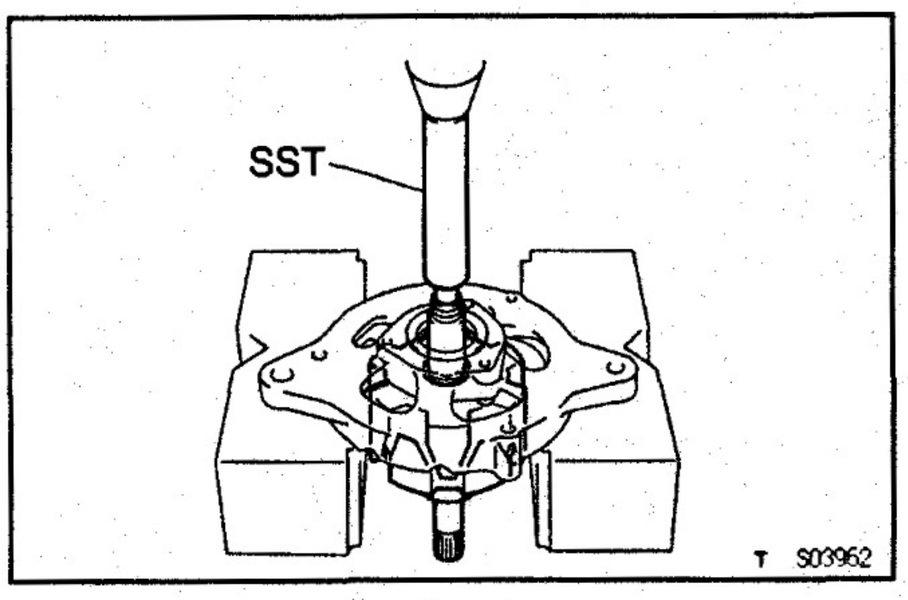

11. REMOVE ROTOR FROM DRIVE END FRAME

Using SST and a press, press out the rotor.
09950–70010 (09951–07100)

CH

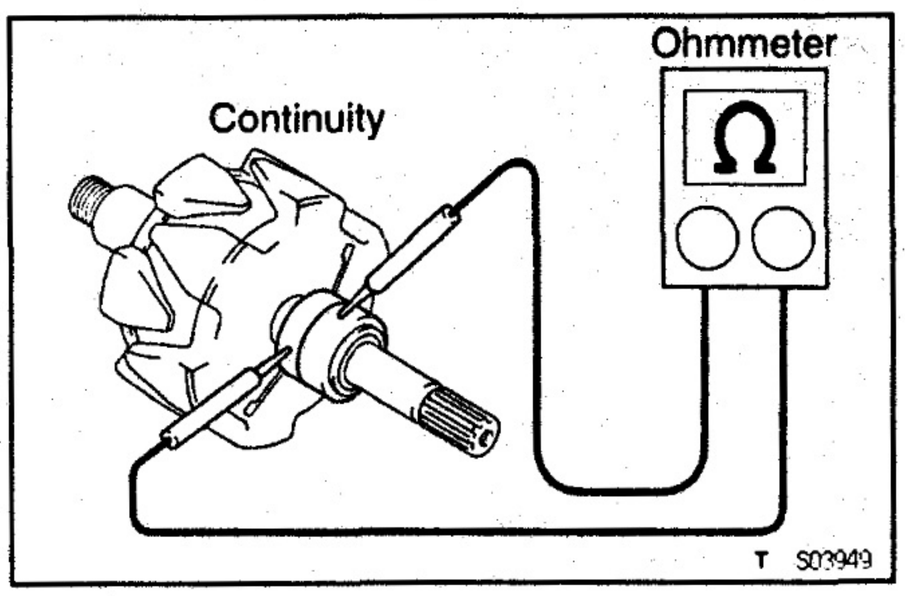

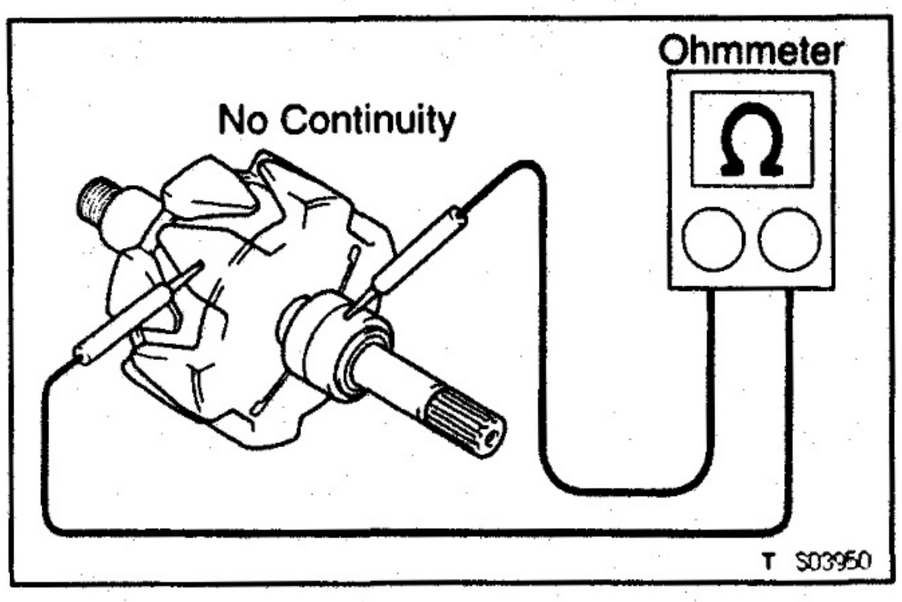

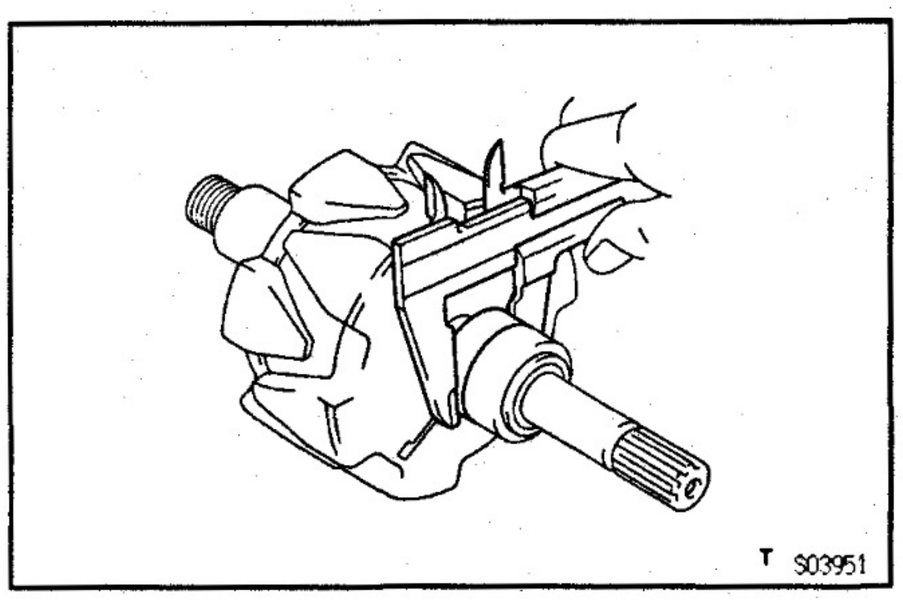

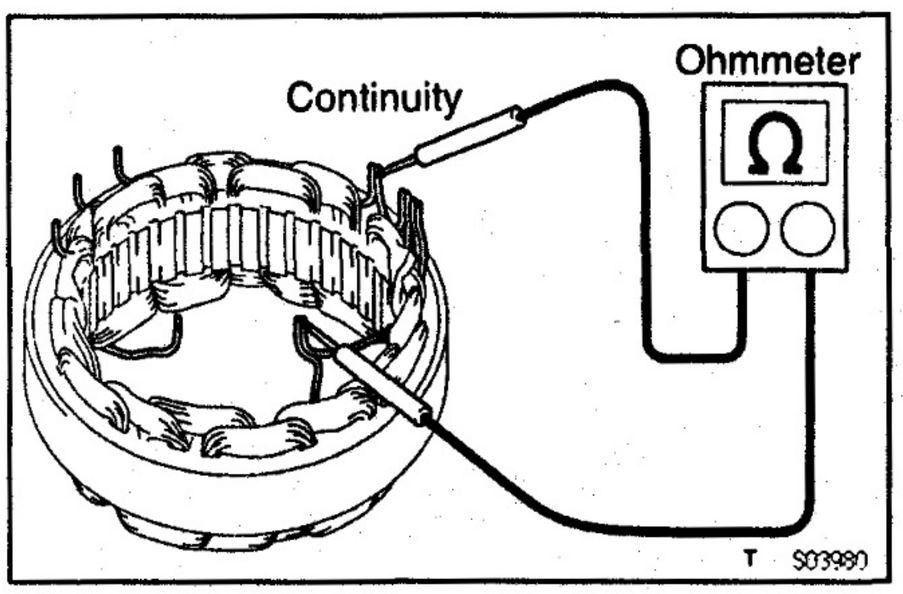

ALTERNATOR INSPECTION AND REPAIR CH0EG-01

Rotor

1. INSPECT ROTOR FOR OPEN CIRCUIT

Using an ohmmeter, check that there is continuity between the slip rings.

Standard resistance at 20°C (68°F):

w/ IC regulator	2.7 – 3.1 Ω
w/o IC regulator	3.9 – 4.1 Ω

If there is no continuity, replace the rotor.

2. INSPECT ROTOR FOR GROUND

Using an ohmmeter, check that there is no continuity between the slip ring and rotor.

If there is continuity, replace the rotor.

3. INSPECT SLIP RINGS

(a) Check that the slip rings are not rough or scored.
If rough or scored, replace the rotor.

(b) Using vernier calipers, measure the slip ring diameter.

Standard diameter:

32.3 – 32.5 mm (1.272 – 1.280 in.)

Minimum diameter:

32.1 mm (1.264 in.)

If the diameter is less than minimum, replace the rotor.

Stator

1. INSPECT STATOR FOR OPEN CIRCUIT

Using an ohmmeter, check that there is continuity between the coil leads.

If there is no continuity, replace the drive end frame assembly.

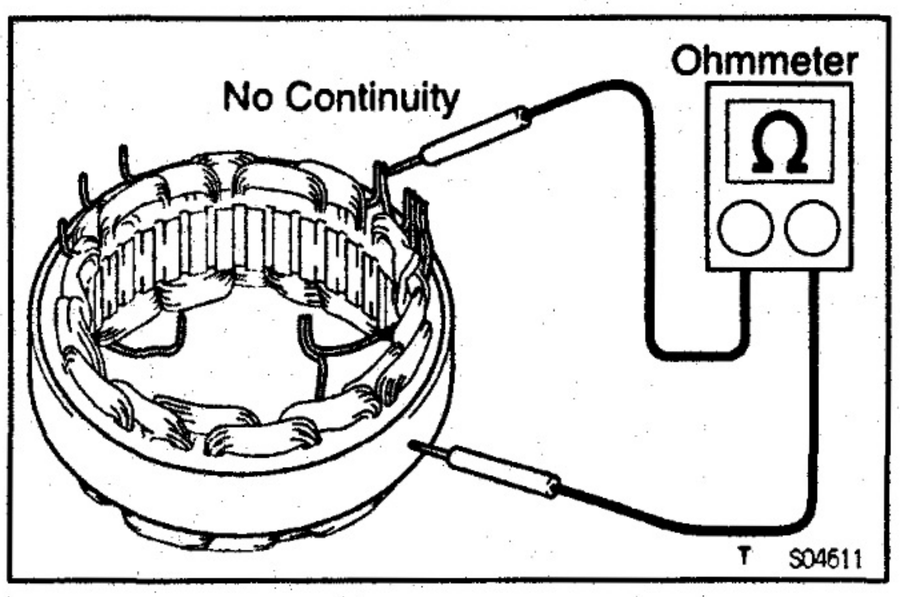

2. INSPECT STATOR FOR GROUND

Using an ohmmeter, check that there is no continuity between the coil lead and drive end frame.

If there is continuity, replace the drive end frame assembly.

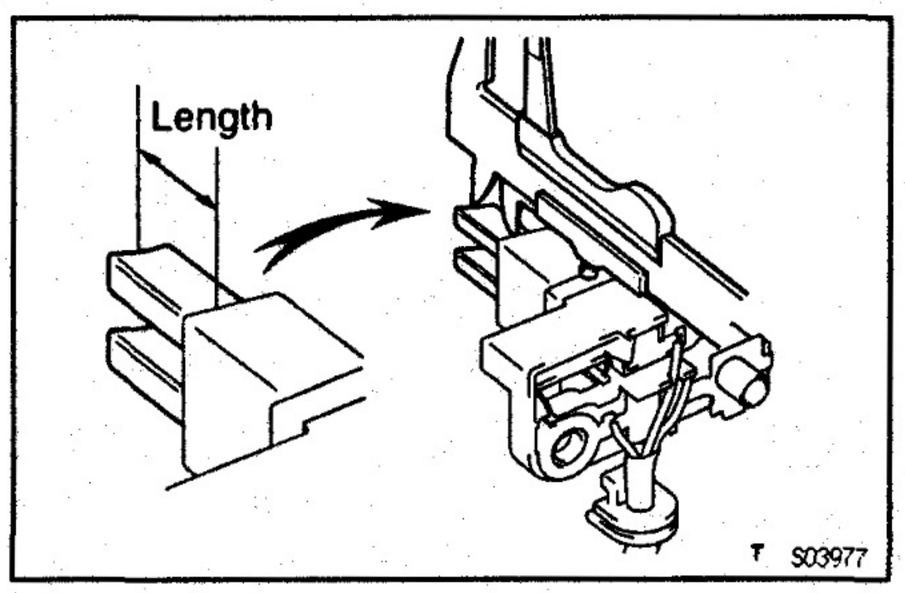

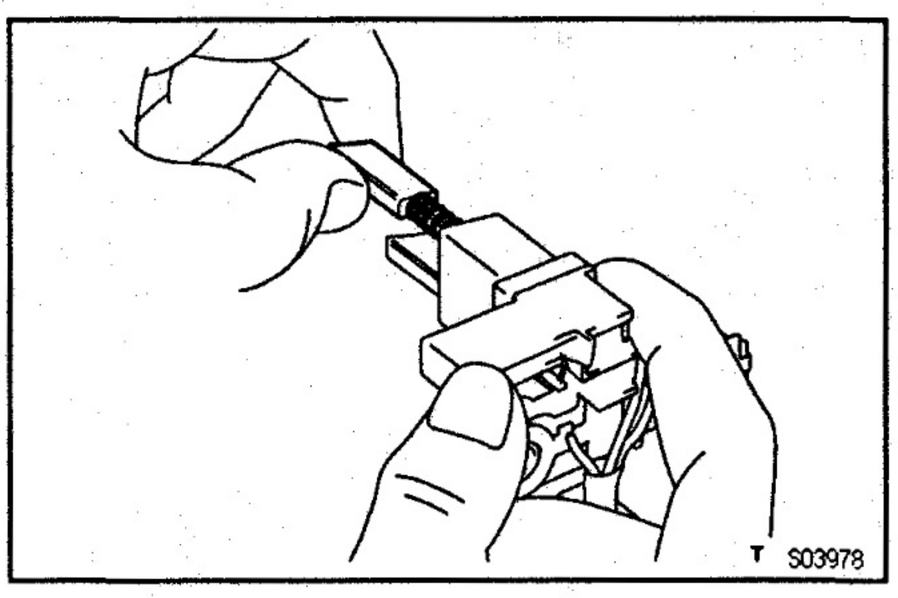

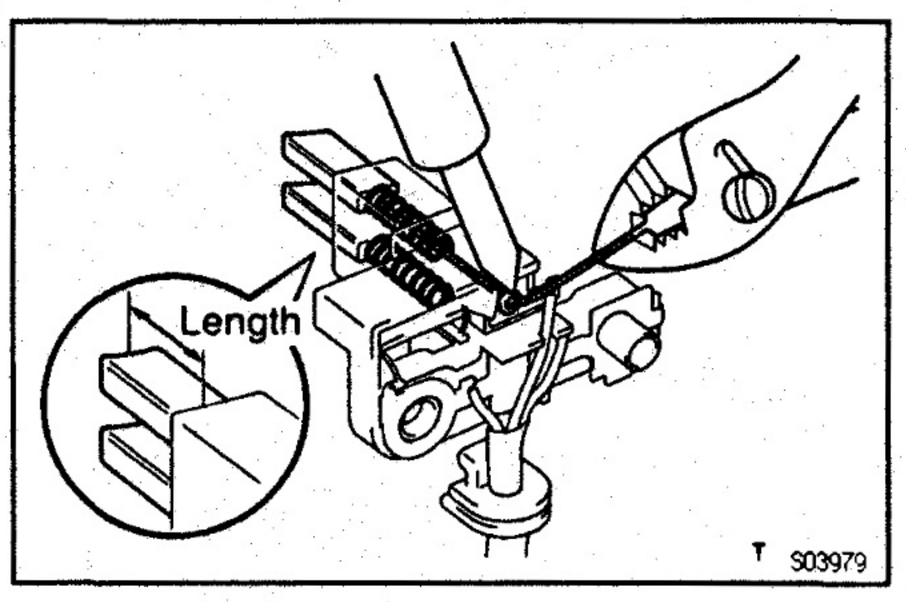

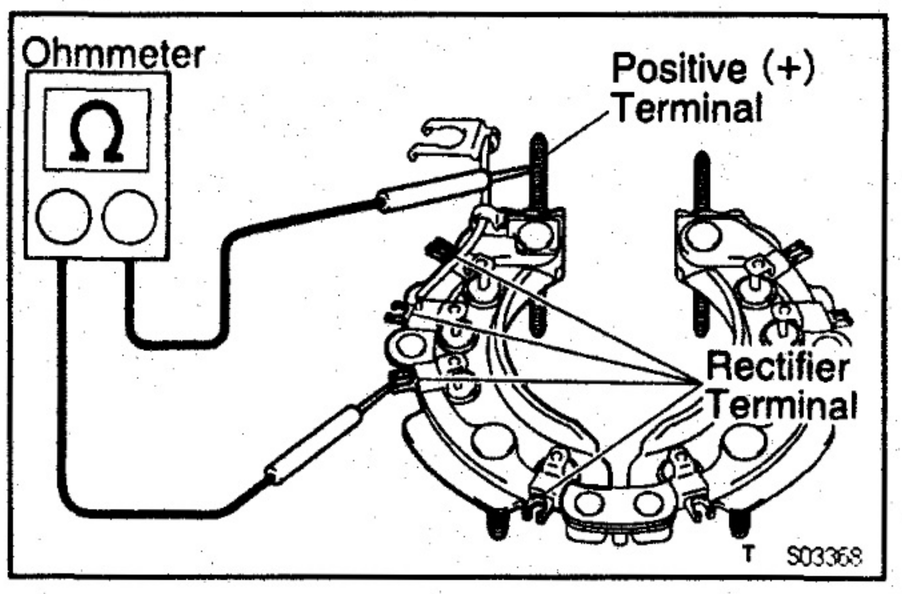

Brushes

1. INSPECT EXPOSED BRUSH LENGTH

Using vernier calipers, measure the exposed brush length.

Standard exposed length:

20.0 mm (0.787 in.)

Minimum exposed length:

5.5 mm (0.217 in.)

If the exposed length is less than minimum, replace the brushes.

2. IF NECESSARY, REPLACE BRUSHES

(a) Unsolder and remove the brush and spring.

(b) Run the wire of a new brush through the spring and the hole in the brush holder, and insert the spring and brush into the brush holder.

(c) Solder the brush wire to the brush holder at specified exposed length.

Exposed length:

20.0 mm (0.787 in.)

(d) Check that the brush moves smoothly in the brush holder.

(e) Cut off the excess wire.

(f) Apply insulation paint to the soldered area.

Rectifiers (Rectifier Holder)

1. INSPECT POSITIVE SIDE RECTIFIER

(a) Using an ohmmeter, connect one tester probe to the positive (+) terminal and the other to each rectifier terminal.

(b) Reverse the polarity of the tester probes and repeat step (a).

(c) Check that one shows continuity and the other shows no continuity.

If continuity is not as specified, replace the rectifier holder.

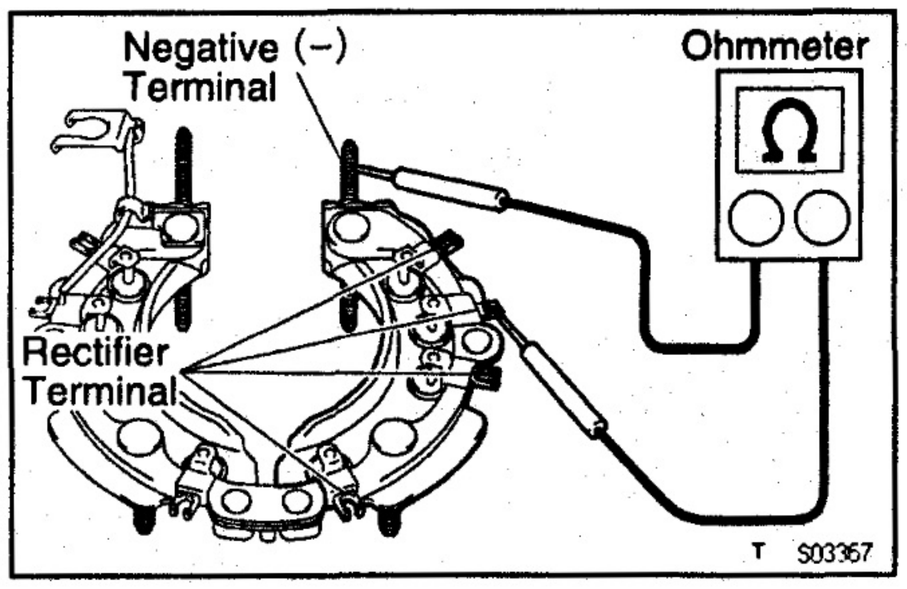

2. INSPECT NEGATIVE SIDE RECTIFIER

(a) Using an ohmmeter, connect one tester probe to each negative (–) terminal and the other to each rectifier terminal.

(b) Reverse the polarity of the tester probes and repeat step (a).

(c) Check that one shows continuity and the other shows no continuity.
If continuity is not as specified, replace the rectifier holder.

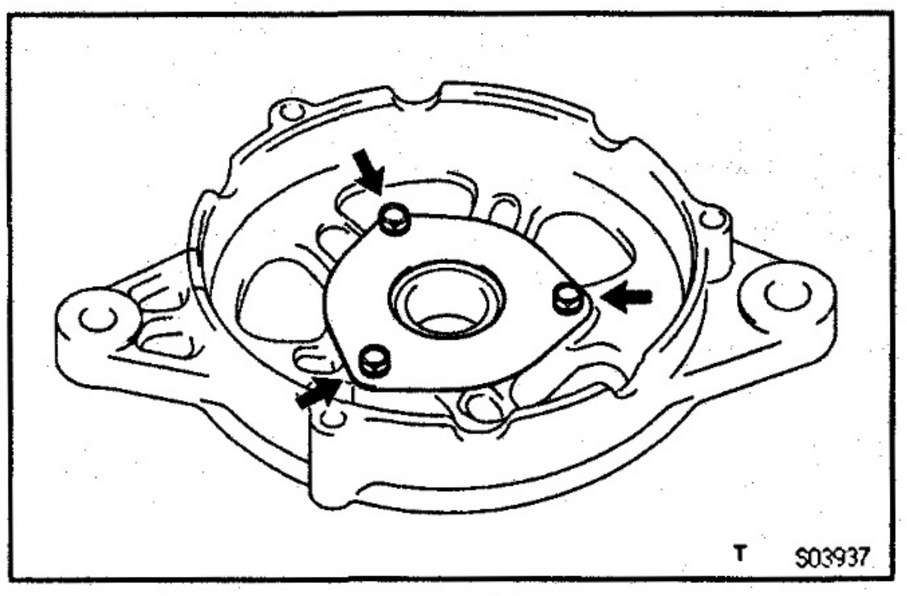

Bearings

1. INSPECT FRONT BEARING
Check that the bearing is not rough or worn.

2. IF NECESSARY, REPLACE FRONT BEARING

(a) Remove the 3 bolts, bearing retainer, bearing and bearing cover.

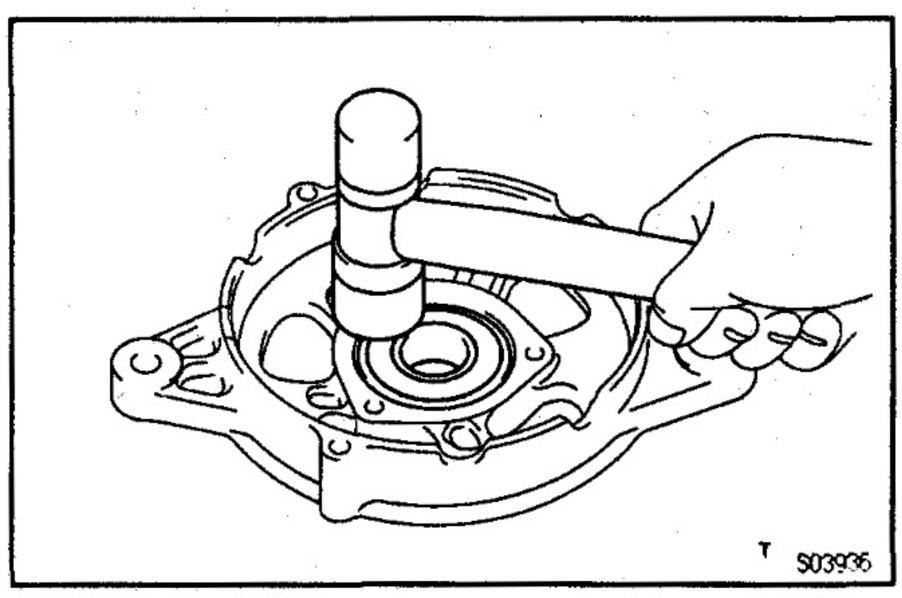

(b) Install the bearing cover, a new bearing and the bearing retainer with the 3 bolts.
Torque: 6.9 N·m (70 kgf·cm, 61 in.·lbf)
If necessary, lightly tap the bearing with a plastic–faced hammer.

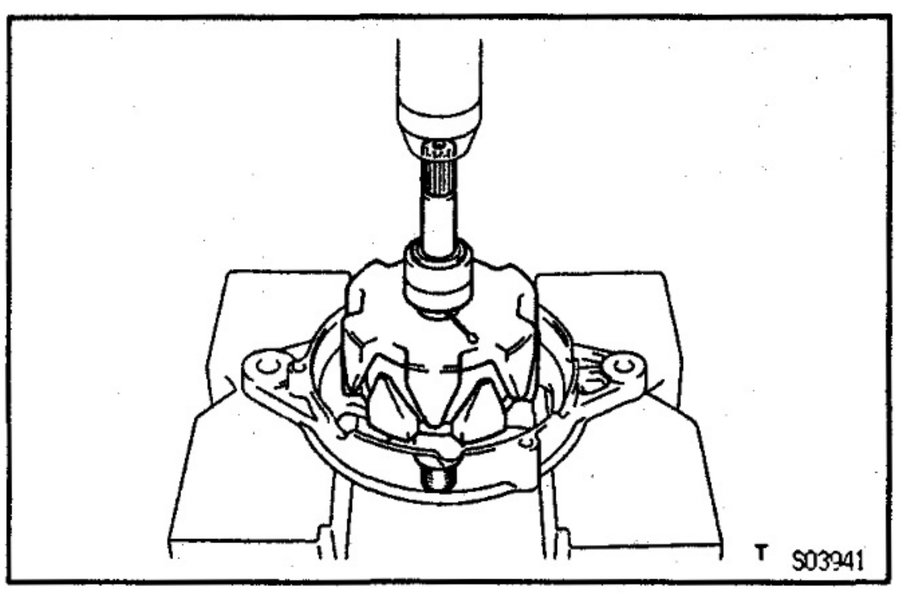

ALTERNATOR ASSEMBLY

CH0EH–01

1. INSTALL ROTOR TO DRIVE END FRAME
Using a press, press in the rotor.

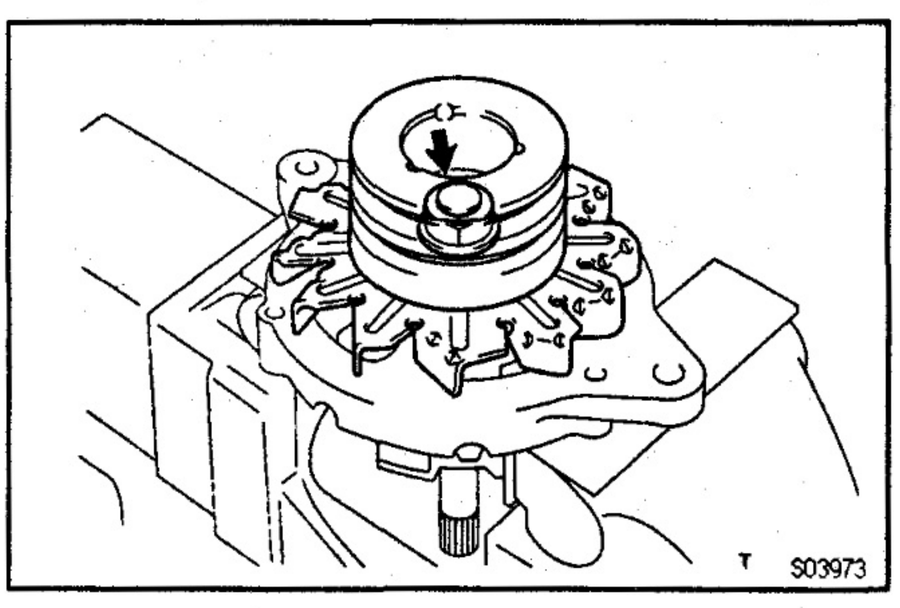

2. INSTALL PULLEY FAN AND PULLEY TO DRIVE END FRAME

(a) Mount the rotor in a soft jaw vise.

(b) Slide the spacer collar onto the rotor shaft.

(c) Install the fan and pulley with the nut.
Torque: 176.5 N·m (1,800 kgf·cm, 136 ft·lbf)

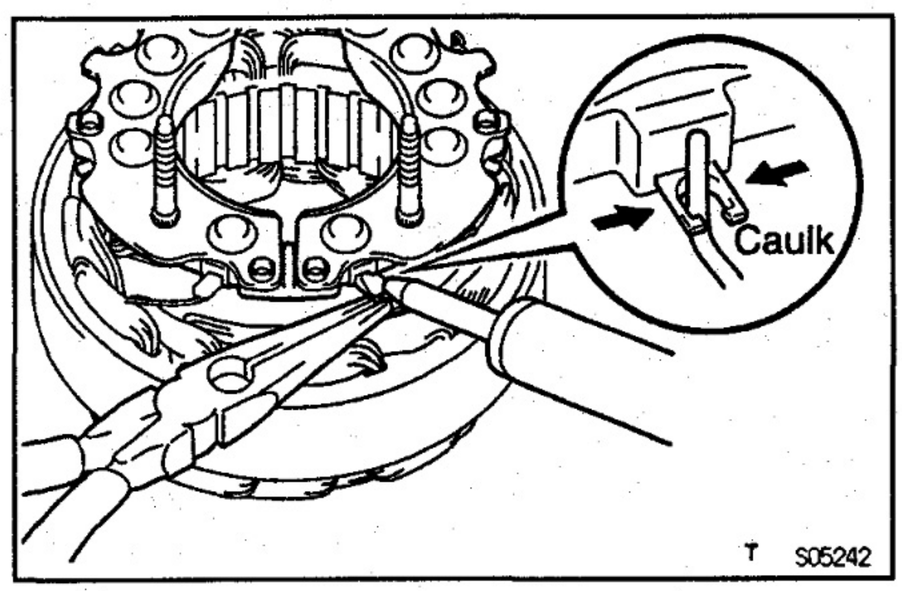

3. INSTALL RECTIFIER HOLDER TO STATOR

(a) Connect the stator coil leads to the rectifier terminals by caulking the terminals securely.

(b) Hold the stator coil lead with needle–nose pliers, and solder the leads.

NOTICE: Protect the rectifiers from heat.

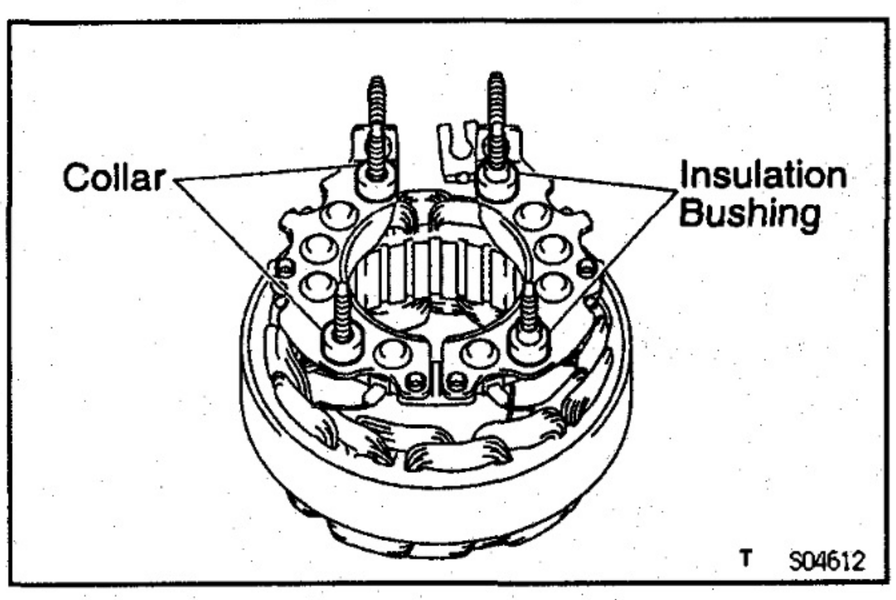

4. INSTALL RECTIFIER END FRAME TO RECTIFIER HOLDER

(a) Install the 2 insulation bushings on the positive (+) studs of the rectifier holder.

(b) Install the 2 collars on the negative (–) studs of the rectifier holder.

(c) Install the rectifier end frame on the rectifier holder.

NOTICE: Check that the leads are not touching the rectifier end frame.

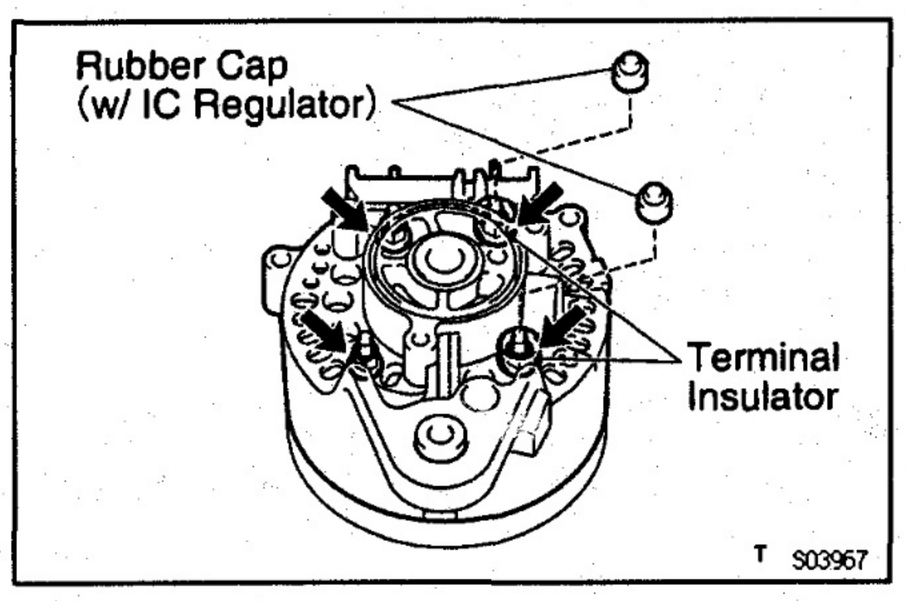

(d) Install the 2 terminal insulators on the positive (+) studs of the rectifier holder.

(e) Install the 4 nuts.

Torque: 3.9 N·m (40 kgf·cm, 35 in.·lbf)

(f) w/ IC Regulator:
Install the 2 rubber caps.

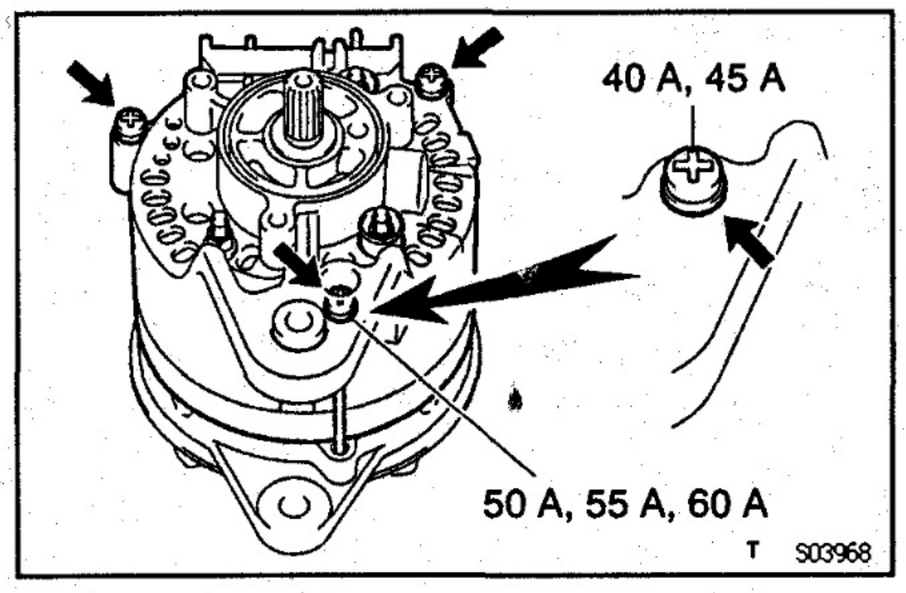

5. INSTALL RECTIFIER END FRAME, RECTIFIER HOLDER AND STATOR ASSEMBLY

Install the rectifier end frame, rectifier holder and stator assembly with the 3 through screws.

Torque: 7.8 N·m (80 kgf·cm, 69 in.·lbf)

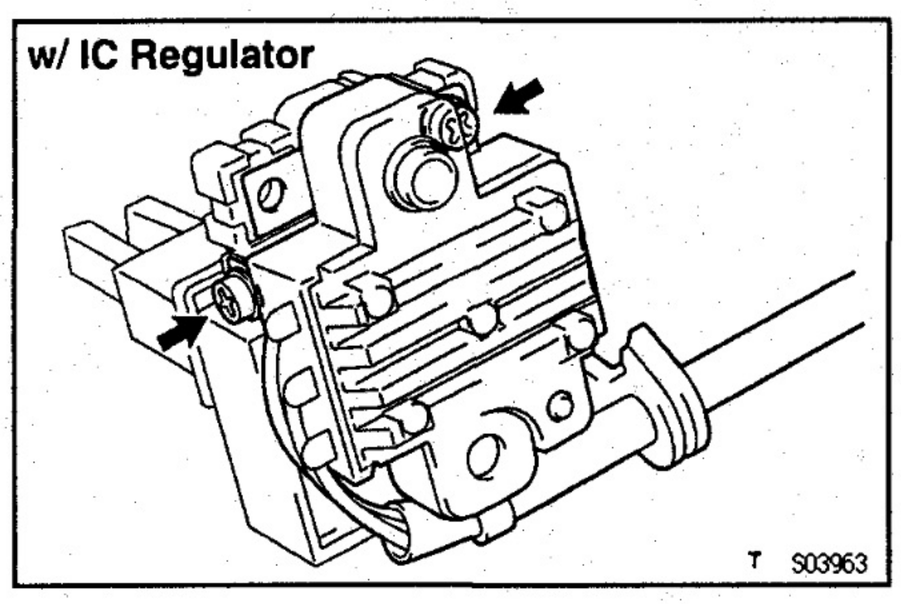

6. w/ IC Regulator: INSTALL IC REGULATOR TO BRUSH HOLDER

Install the IC regulator with the 2 screws.

Torque: 2.5 N·m (25 kgf·cm, 22 in.·lbf)

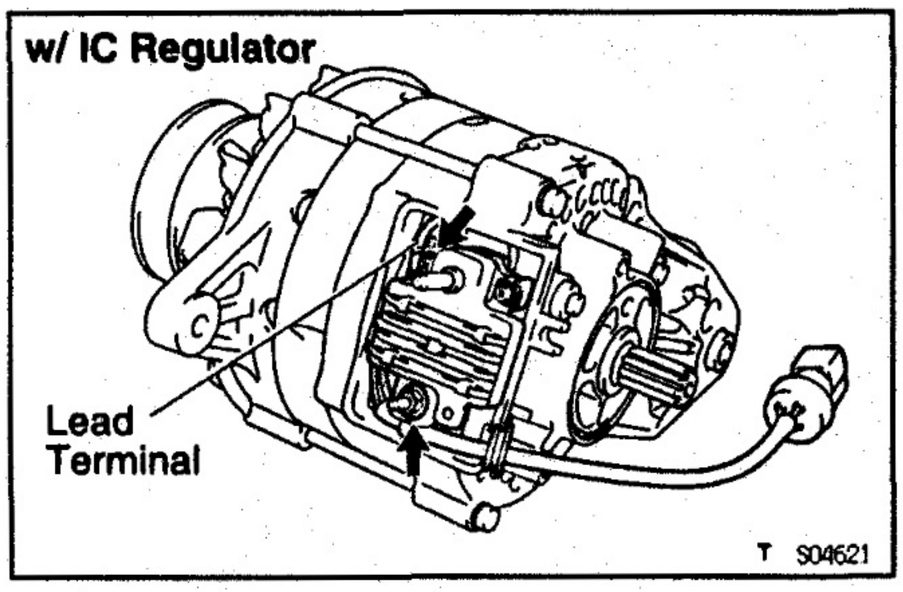

7. w/ IC Regulator:
INSTALL IC REGULATOR AND BRUSH HOLDER ASSEMBLY

(a) Install the brush holder and IC regulator assembly with the nut.
Torque: 3.9 N·m (40 kgf·cm, 35 in.·lbf)

(b) Install the lead terminal with the screw.
Torque: 2.5 N·m (25 kgf·cm, 22 in.·lbf)

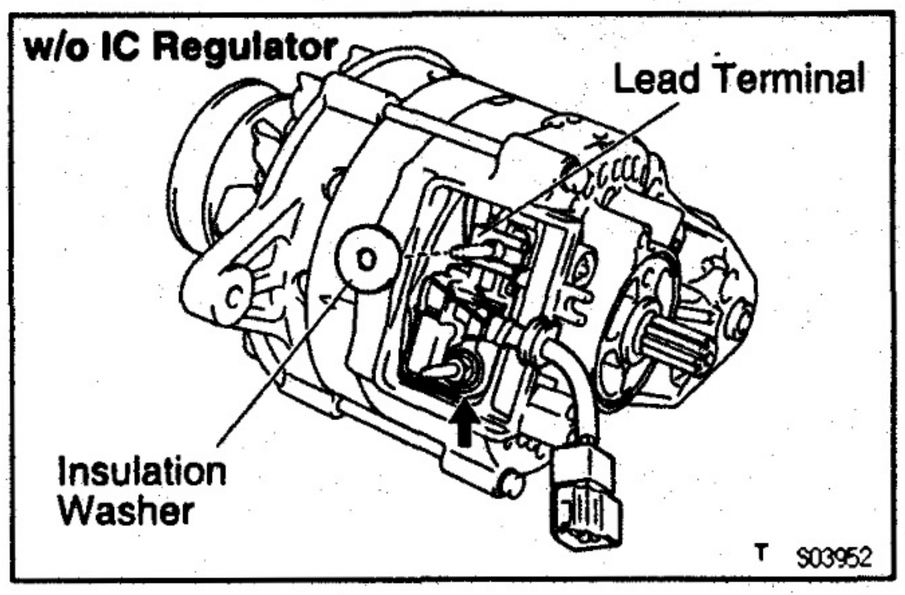

8. w/o IC Regulator:
INSTALL BRUSH HOLDER

(a) Install the brush holder with the nut.
Torque: 3.9 N·m (40 kgf·cm, 35 in.·lbf)

(b) Install the lead terminal.

(c) Install the insulation washer.

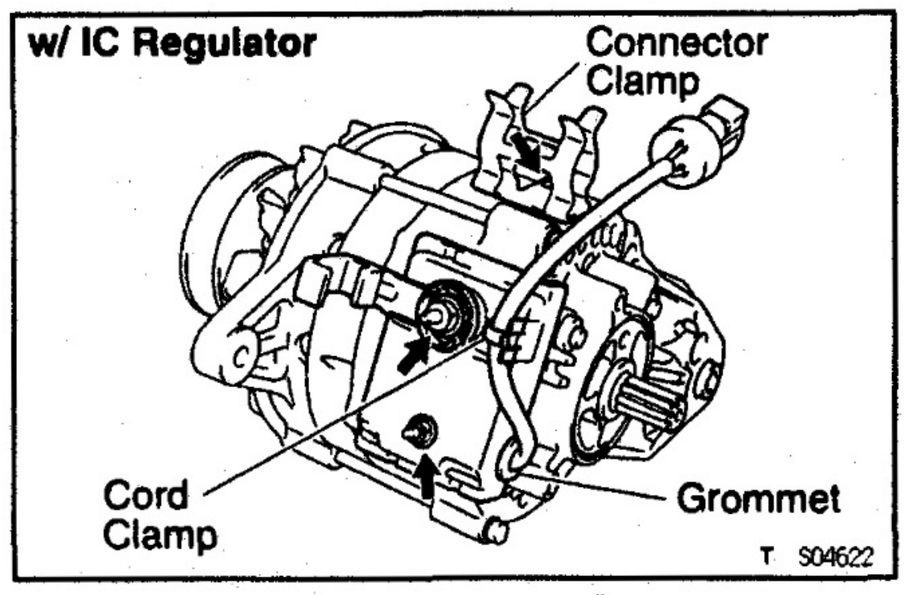

9. w/ IC Regulator:
INSTALL CONNECTOR CLAMP
Install the connector clamp with the screw.
Torque: 3.9 N·m (40 kgf·cm, 35 in.·lbf)

10. INSTALL BRUSH HOLDER COVER
w/ IC Regulator:

(a) Install the grommet to the brush holder cover.

(b) Install the brush holder cover and terminal insulator with the 2 nuts.
Torque: 3.9 N·m (40 kgf·cm, 35 in.·lbf)

(c) Install the lead wire to the lead clamp on the brush holder cover.

w/o IC Regulator:

(a) Install the grommet to the brush holder cover.

(b) Install the brush holder cover, terminal insulator and connector clamp with the 2 nuts.
Torque: 3.9 N·m (40 kgf·cm, 35 in.·lbf)

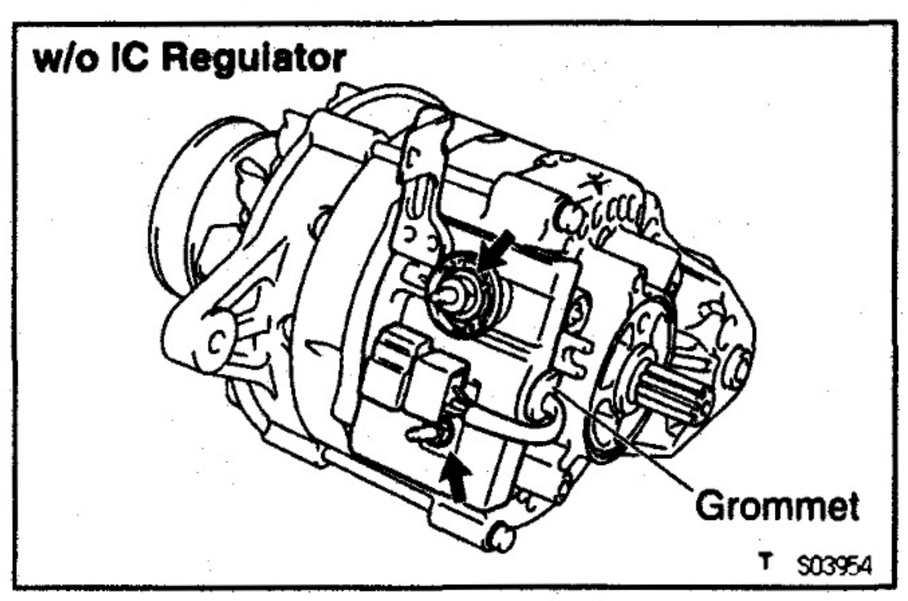

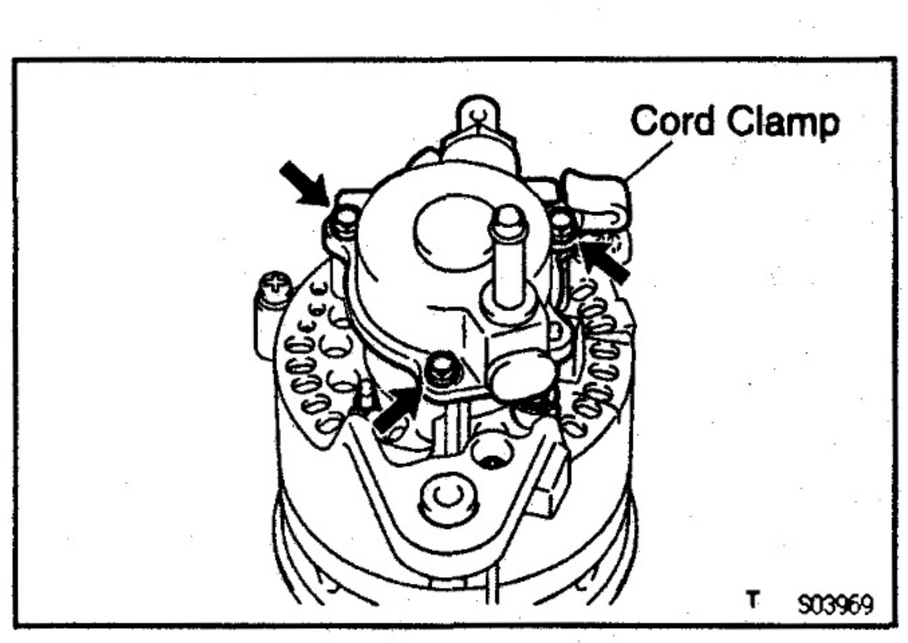

11. INSTALL VACUUM PUMP
Install a new O—ring, the vacuum pump and cord clamp with the 3 bolts.
Torque: 7.8 N·m (80 kgf·cm, 69 in.·lbf)

12. CHECK THAT ROTOR ROTATES SMOOTHLY

ALTERNATOR (Hi—Speed Compact Type)

COMPONENTS FOR DISASSEMBLY AND ASSEMBLY

CH0EJ—01

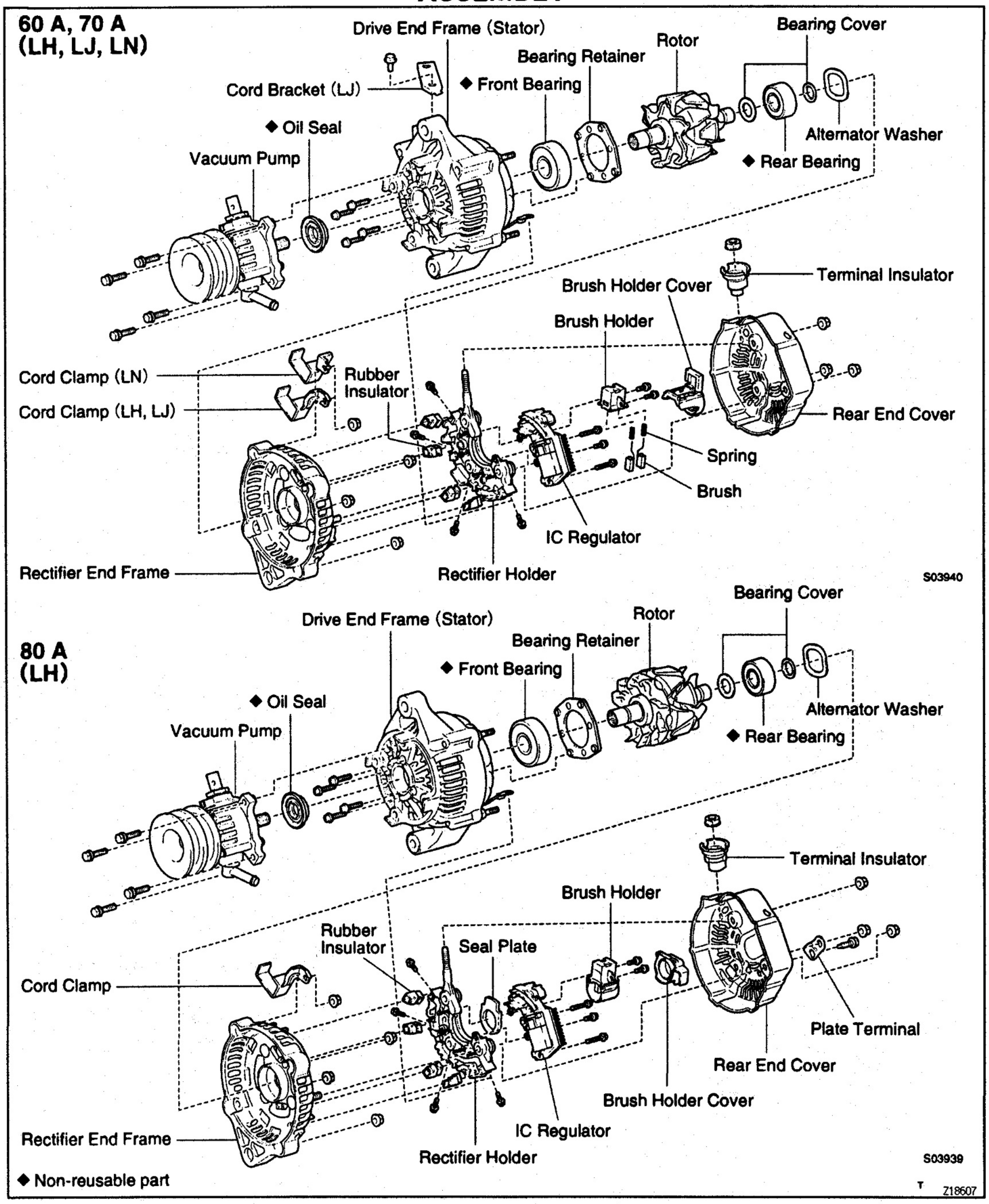

CH0EK–01

ALTERNATOR DISASSEMBLY

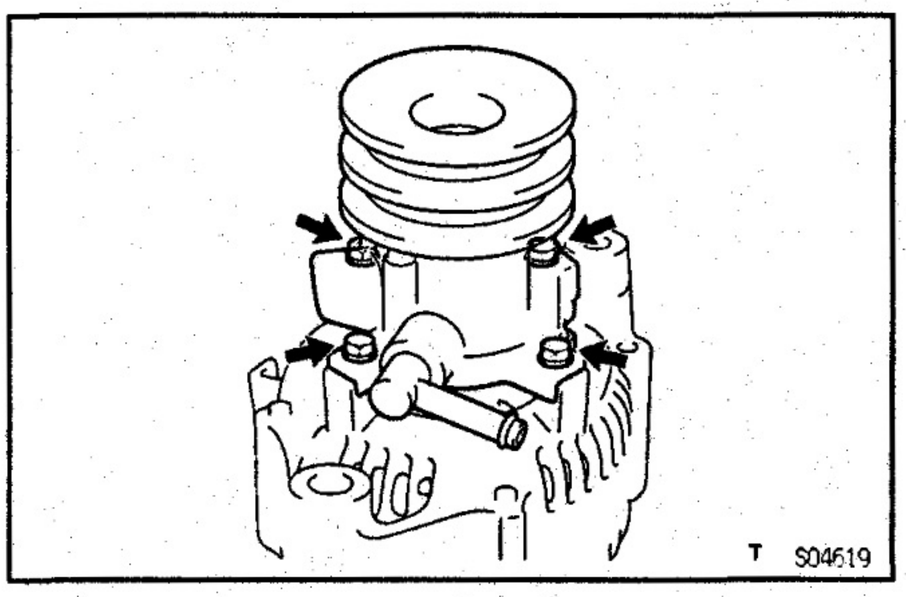

1. REMOVE VACUUM PUMP

Remove the 4 bolts and vacuum pump.

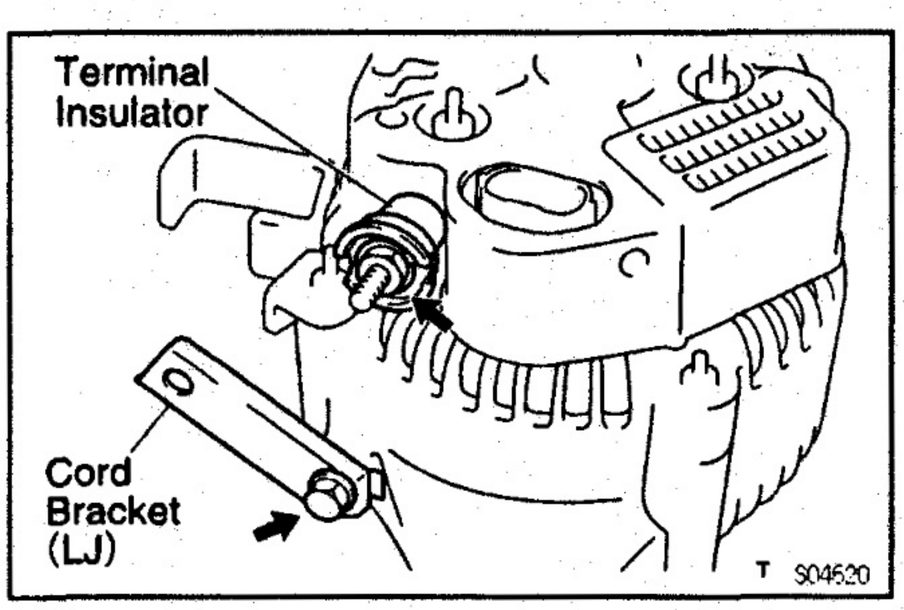

2. LJ:
REMOVE CORD BRACKET

Remove the bolt and cord bracket.

3. REMOVE REAR END COVER

(a) Remove the nut and terminal insulator.

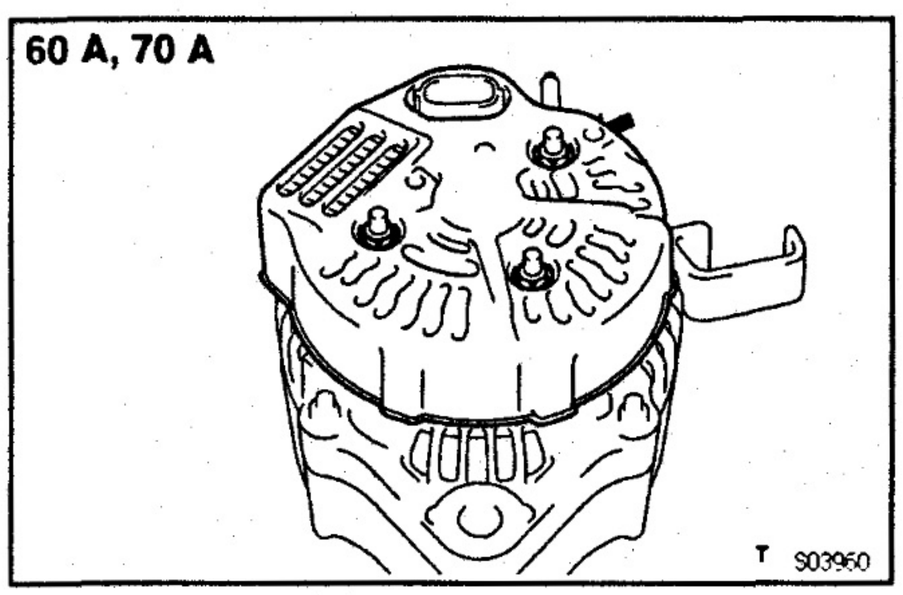

(b) 60 A, 70 A:
Remove the 3 bolts and rear end cover.

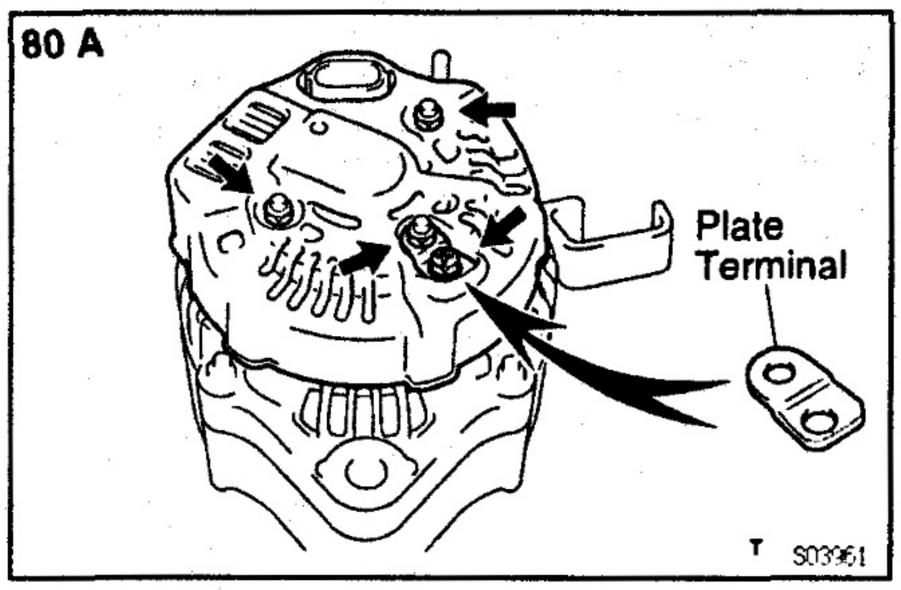

(c) 80 A:
Remove the bolt, 3 nuts, plate terminal and rear end cover.

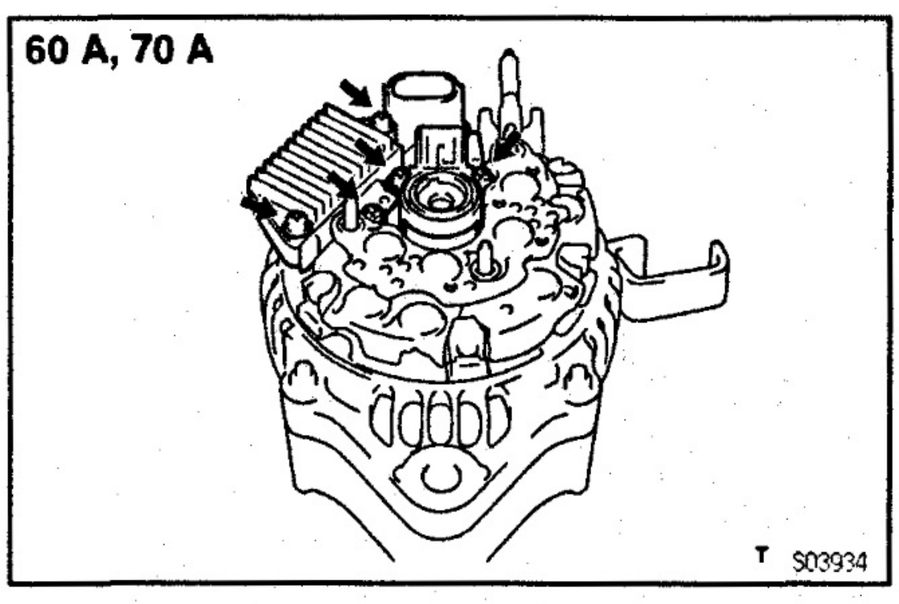

4. REMOVE BRUSH HOLDER AND IC REGULATOR
60 A, 70 A:

(a) Remove the 5 screws, brush holder and IC regulator.
(b) Remove the brush holder cover from the brush holder.

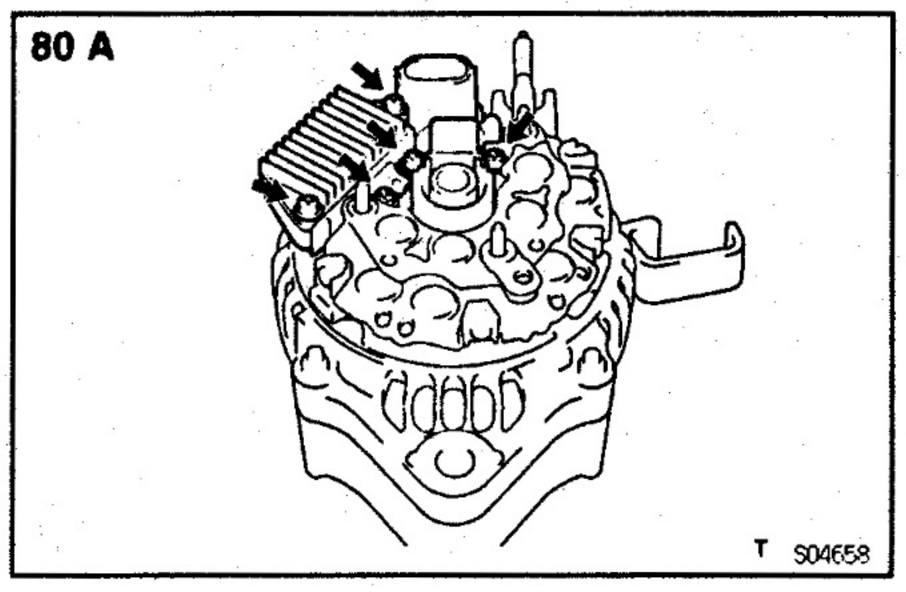

80 A:

(a) Remove the brush holder cover from the brush holder.
(b) Remove the 5 screws, brush holder and IC regulator.
(c) Remove the seal plate from the rectifier end frame.

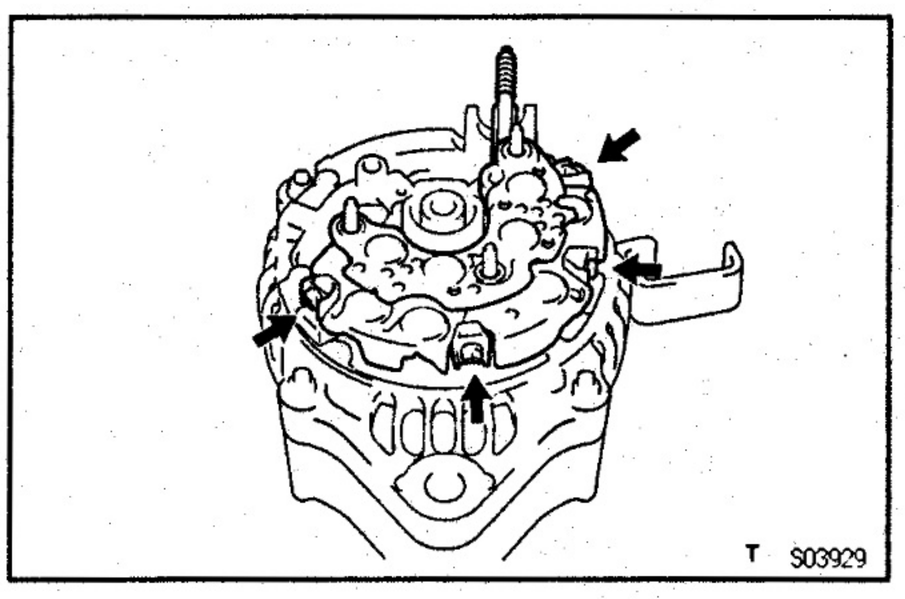

5. REMOVE RECTIFIER HOLDER

(a) Remove the 4 screws and rectifier holder.
(b) Remove the 4 rubber insulators.

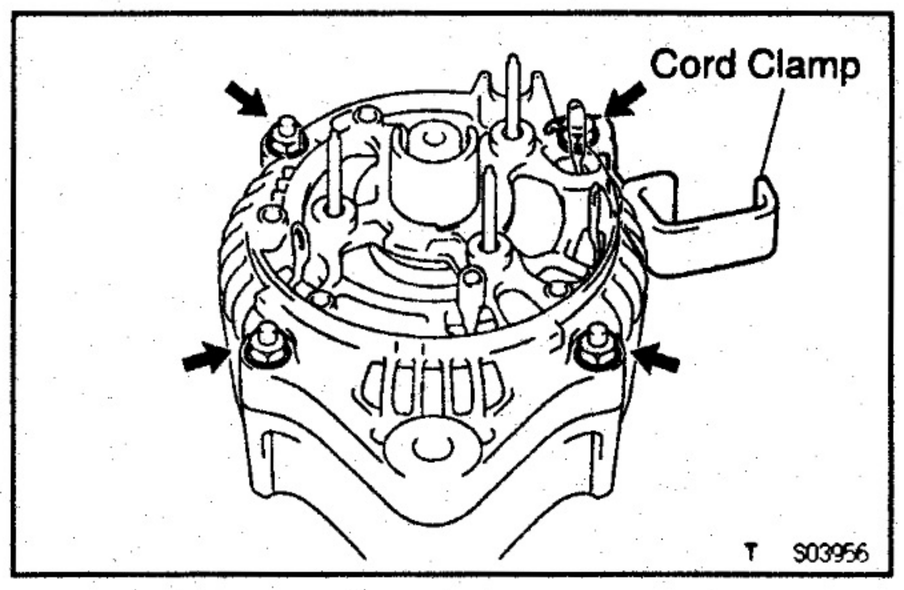

6. REMOVE RECTIFIER END FRAME

(a) Remove the 4 nuts and cord clamp.

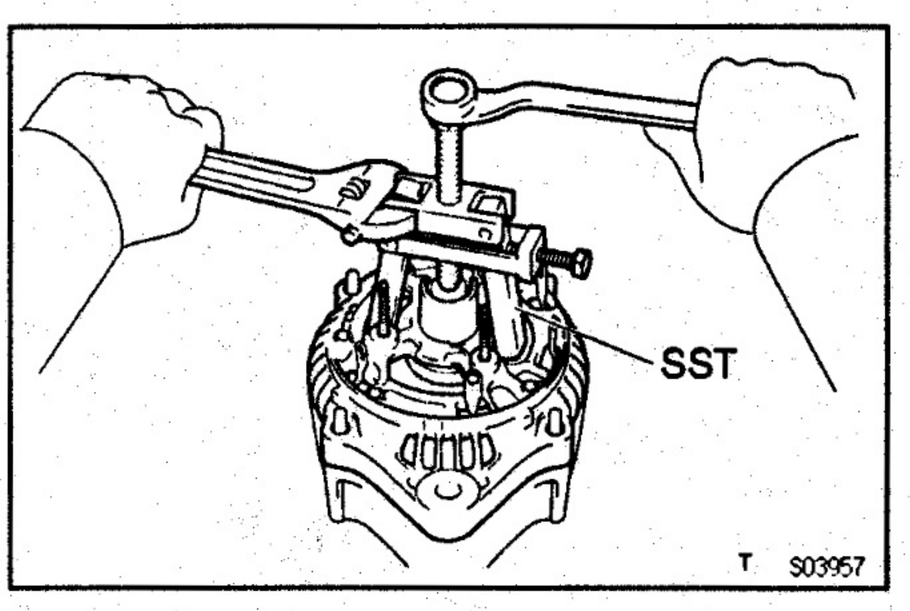

(b) Using SST, remove the rectifier end frame.
SST 09286—46011

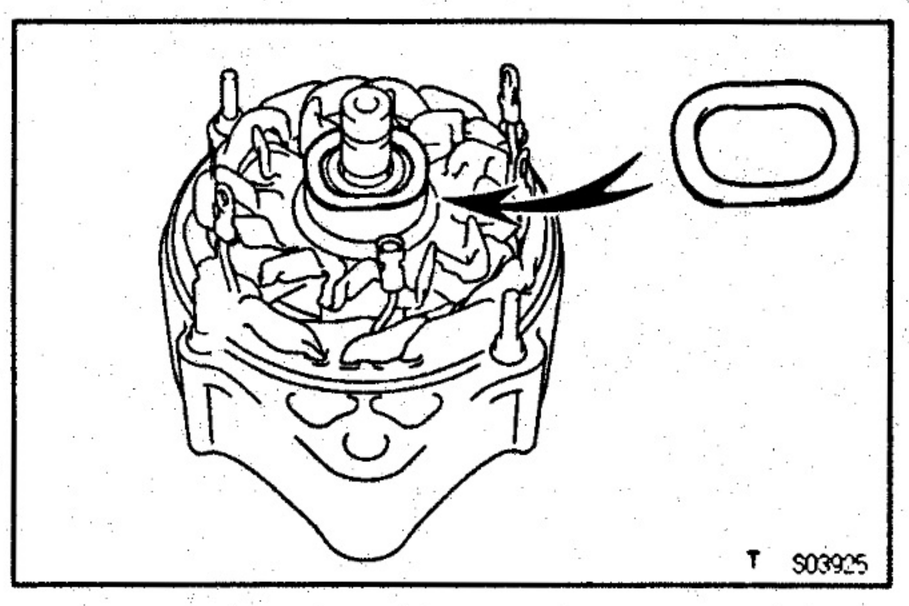

(c) Remove the alternator washer from the rotor.

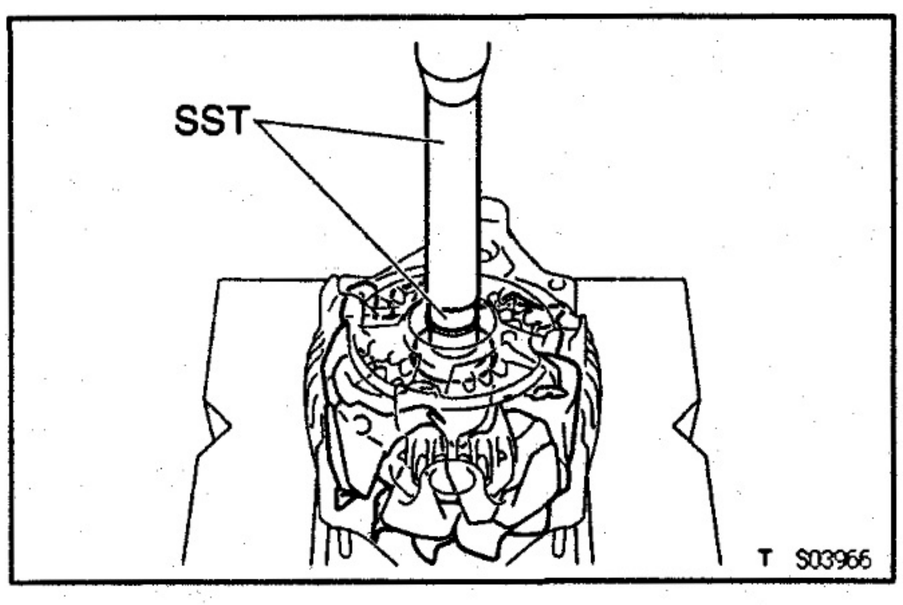

7. REMOVE ROTOR FROM DRIVE END FRAME

Using SST and a press, press out the rotor.

SST 09950–60010 (09951–00180),
09950–70010 (09951–07100)

CH

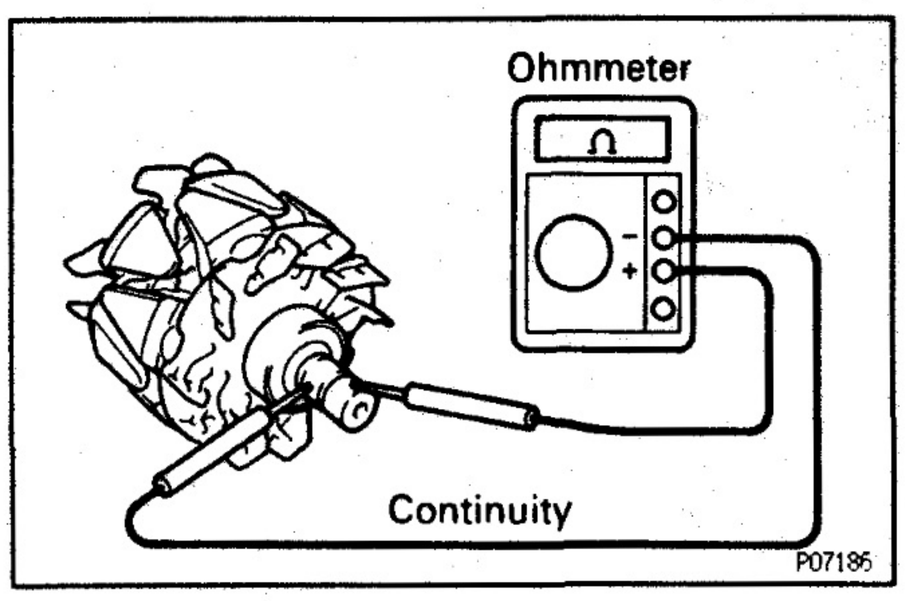

ALTERNATOR INSPECTION AND REPAIR

CHDIEL–01

Rotor

1. INSPECT ROTOR FOR OPEN CIRCUIT

Using an ohmmeter, check that there is continuity between the slip rings.

Standard resistance at 20°C (68°F):

2.7 – 3.1 Ω

If there is no continuity, replace the rotor.

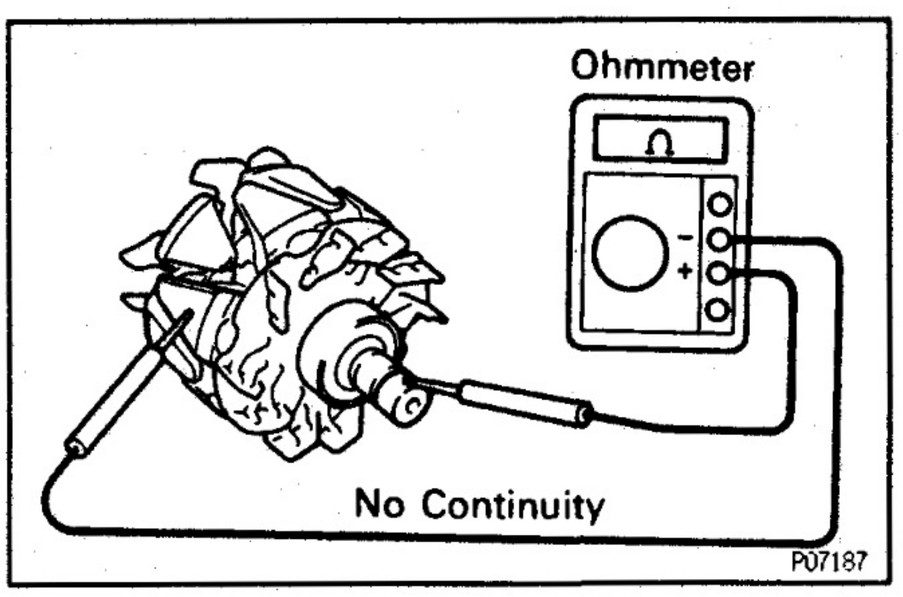

2. INSPECT ROTOR FOR GROUND

Using an ohmmeter, check that there is no continuity between the slip ring and rotor.

If there is continuity, replace the rotor.

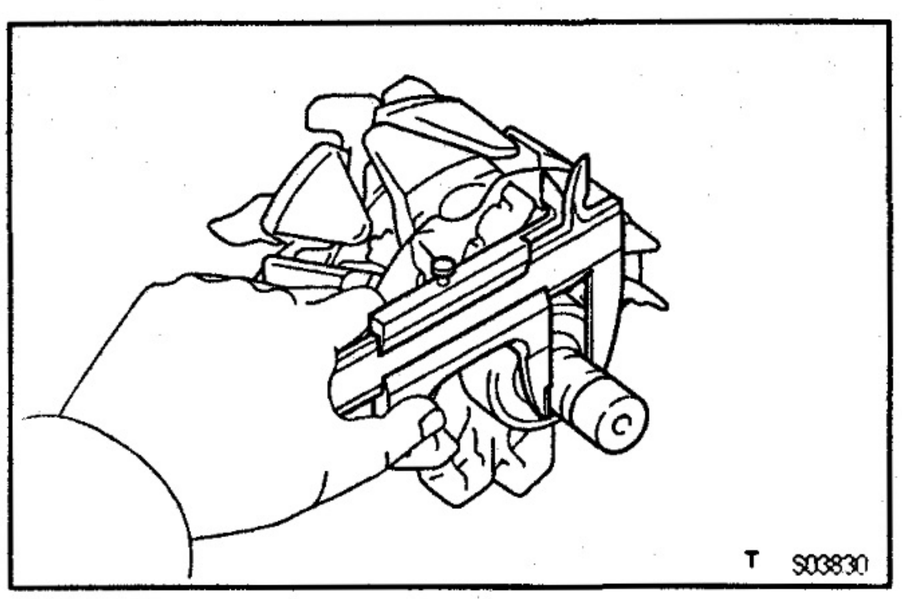

3. INSPECT SLIP RINGS

(a) Check that the slip rings are not rough or scored.
If rough or scored, replace the rotor.

(b) Using vernier calipers, measure the slip ring diameter.

Standard diameter:

14.2 – 14.4 mm (0.559 – 0.567 in.)

Minimum diameter:

12.8 mm (0.504 in.)

If the diameter is less than minimum, replace the rotor.

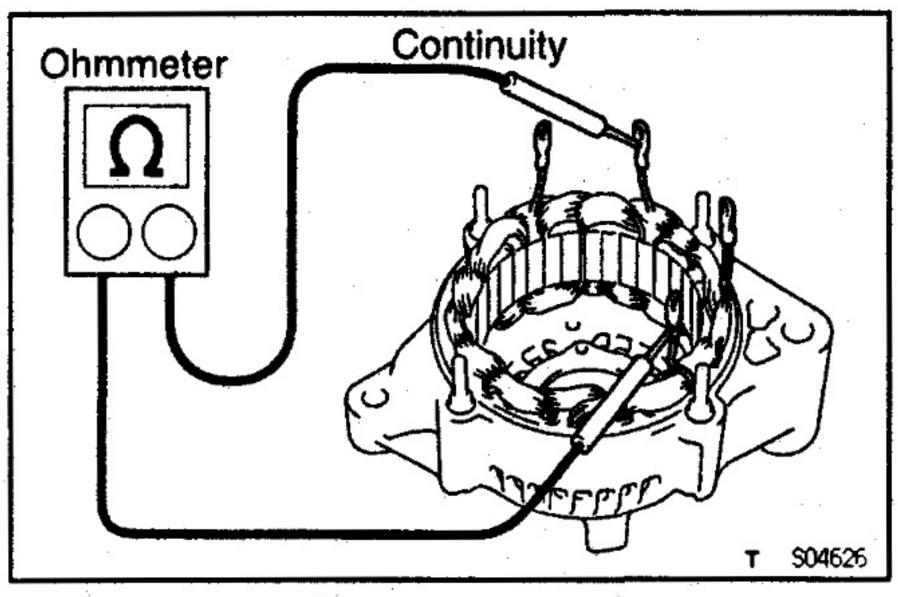

Stator (Drive End Frame)

1. INSPECT STATOR FOR OPEN CIRCUIT

Using an ohmmeter, check that there is continuity between the coil leads.

If there is no continuity, replace the drive end frame assembly.

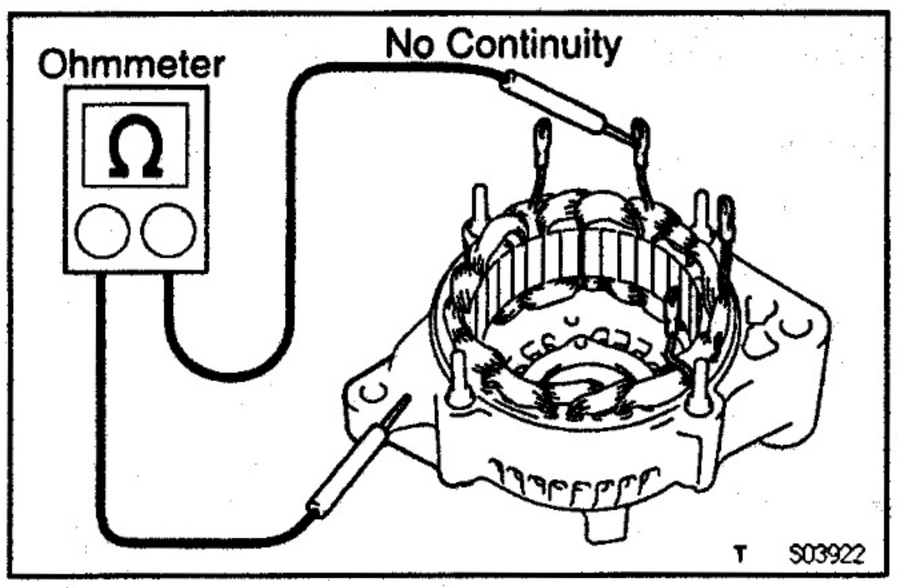

2. INSPECT STATOR FOR GROUND

Using an ohmmeter, check that there is no continuity between the coil lead and drive end frame.

If there is continuity, replace the drive end frame assembly.

Brushes

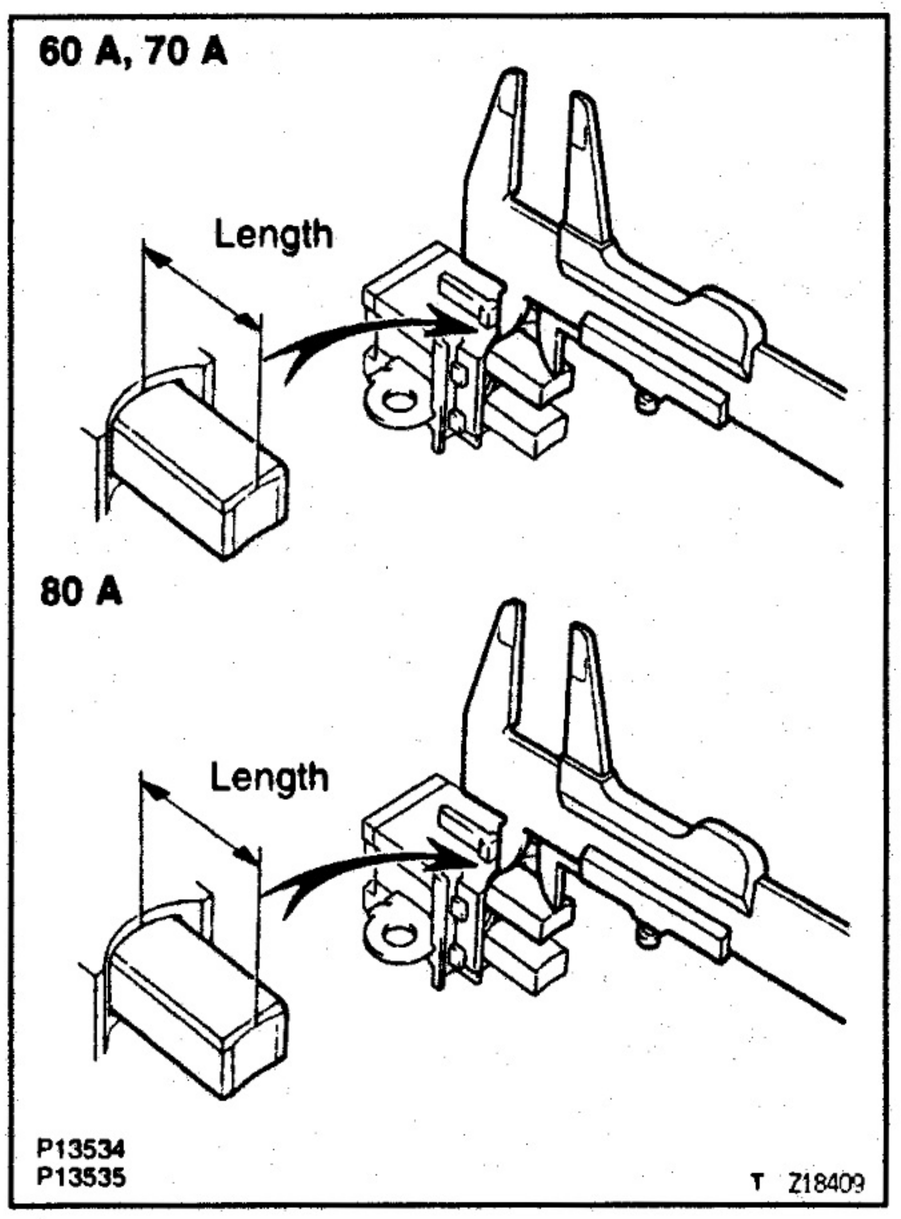

1. INSPECT EXPOSED BRUSH LENGTH

Using vernier calipers, measure the exposed brush length.

Standard exposed length:

10.5 mm (0.413 in.)

Minimum exposed length:

1.5 mm (0.059 in.)

If the exposed length is less than minimum, replace the brushes (60 A, 70 A) or brush holder assembly (80 A).

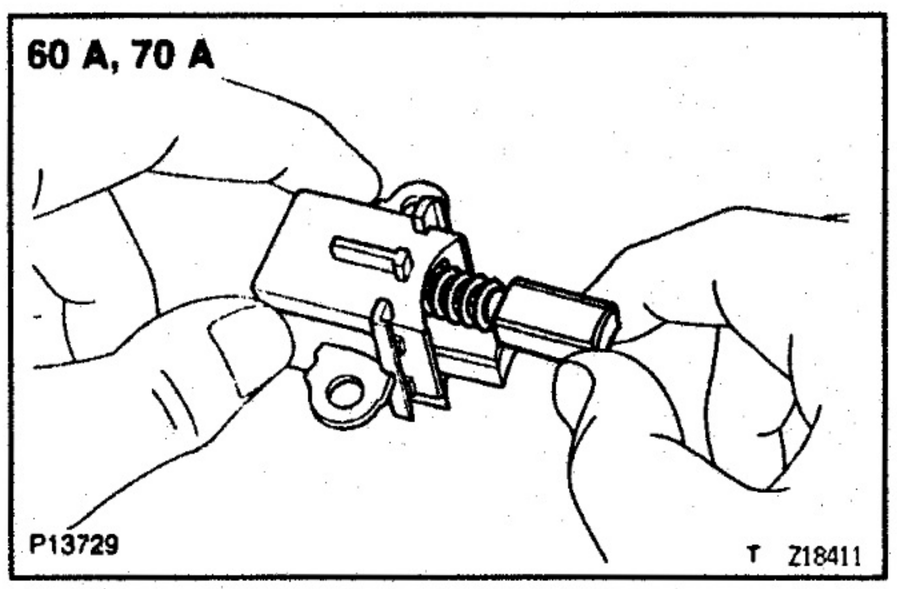

2. 60 A, 70 A:
IF NECESSARY, REPLACE BRUSHES

(a) Unsolder and remove the brush and spring.

(b) Run the wire of a new brush through the spring and the hole in the brush holder, and insert the spring and brush into the brush holder.

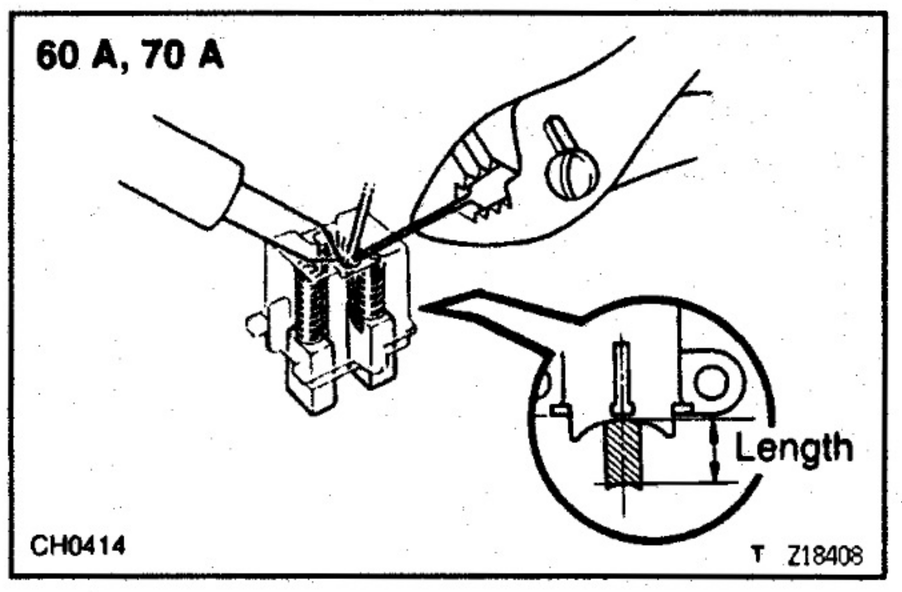

(c) Solder the brush wire to the brush holder at specified exposed length.

Exposed length:

10.5 mm (0.413 in.)

(d) Check that the brush moves smoothly in the brush holder.

(e) Cut off the excess wire.

(f) Apply insulation paint to the soldered area.

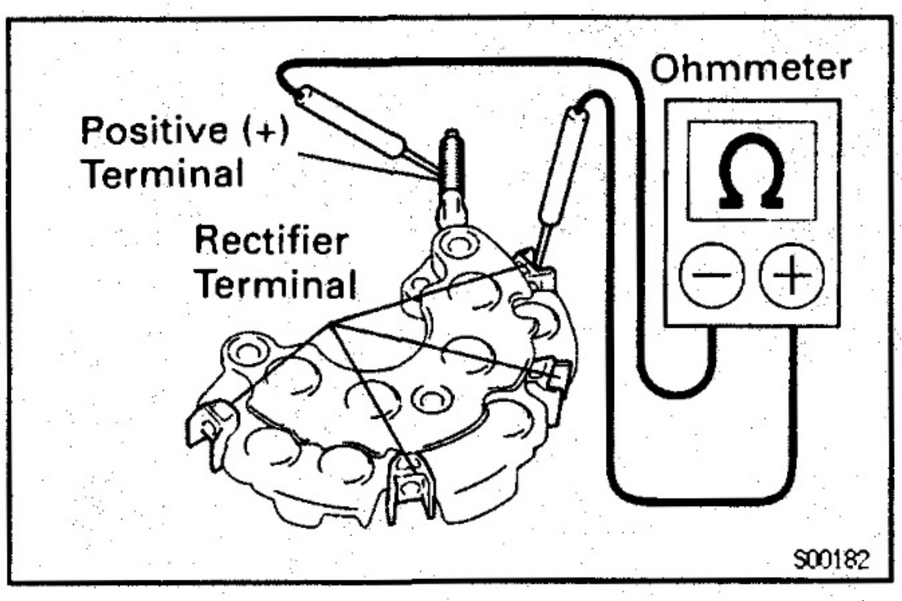

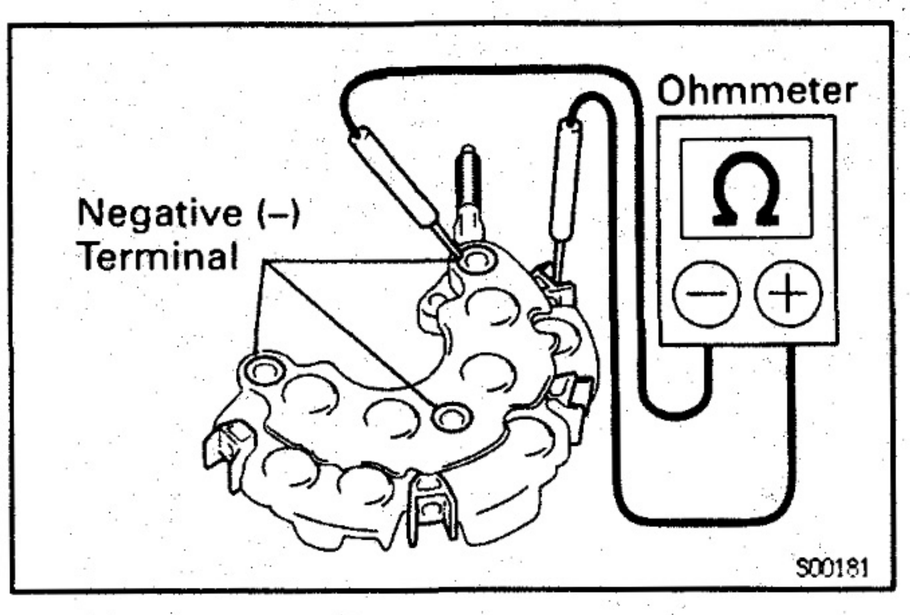

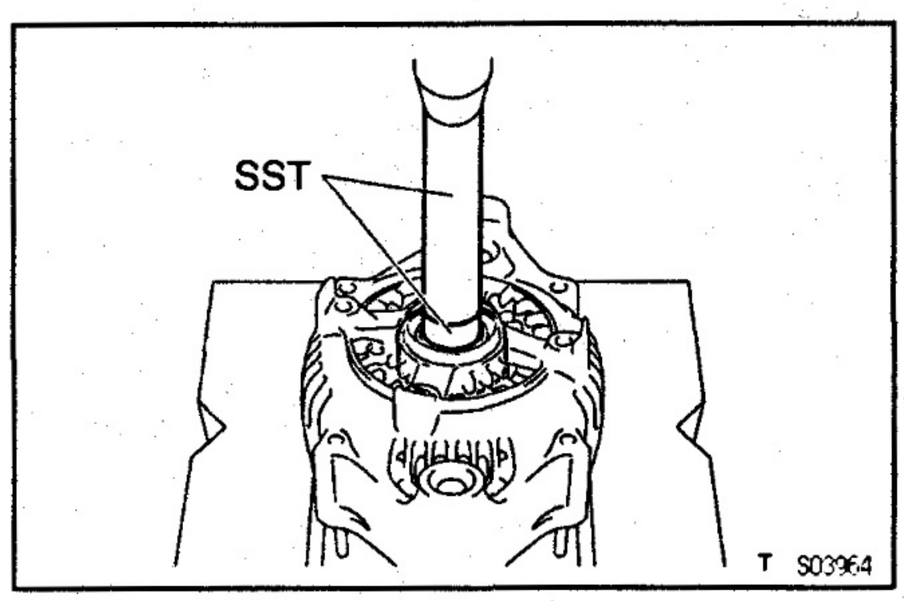

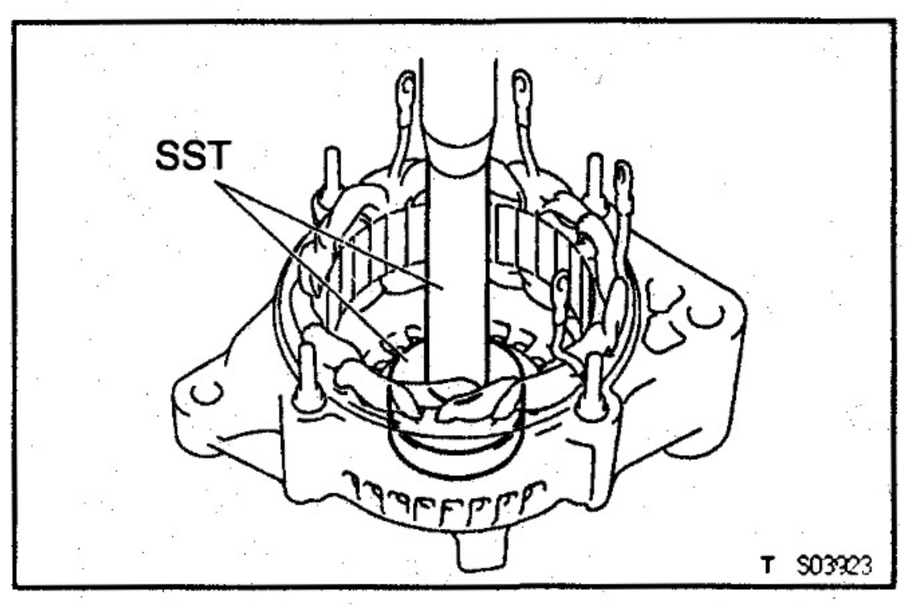

Rectifiers (Rectifier Holder)

1. INSPECT POSITIVE RECTIFIER

(a) Using an ohmmeter, connect one tester probe to the positive (+) terminal and the other to each rectifier terminal.

(b) Reverse the polarity of the tester probes and repeat step (a).

(c) Check that one shows continuity and the other shows no continuity.

If continuity is not as specified, replace the rectifier holder.

2. INSPECT NEGATIVE RECTIFIER

(a) Using an ohmmeter, connect one tester probe to each negative (–) terminal and the other to each rectifier terminal.

(b) Reverse the polarity of the tester probes and repeat step (a).

(c) Check that one shows continuity and the other shows no continuity.

If continuity is not as specified, replace the rectifier holder.

Bearing

1. INSPECT FRONT BEARING

Check that the bearing is not rough or worn.

2. IF NECESSARY, REPLACE FRONT BEARING

(a) Remove the oil seal.

(b) Remove the 4 screws and bearing retainer.

(c) Using SST and a press, press out the bearing.
SST 09950–60010 (09951–00230),
09950–70010 (09951–07100)

(d) Using SST and a press, press in a new bearing.
SST 09950–60010 (09951–00400),
09950–70010 (09951–07100)

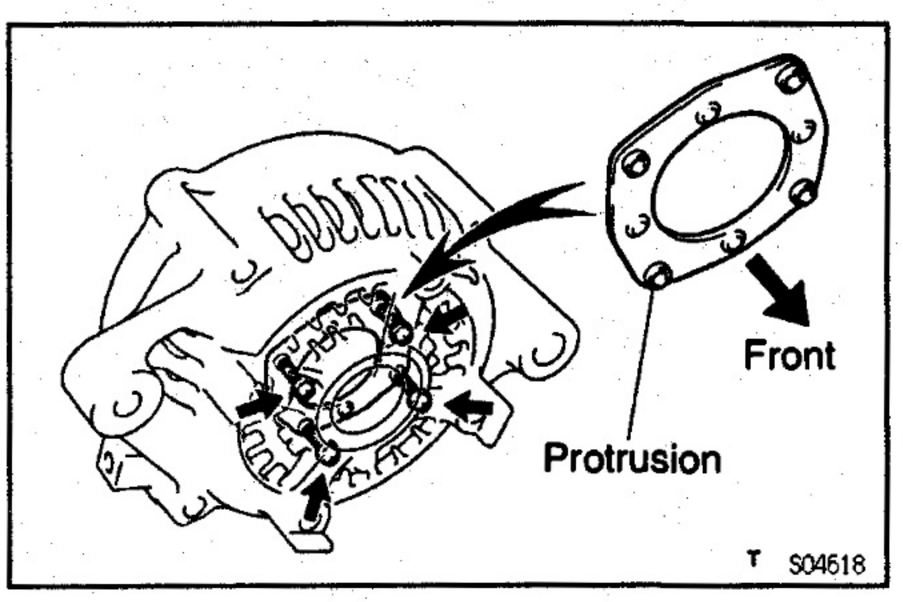

(e) Place the bearing retainer on the drive end frame with the protrusions facing forward.

(f) Install the bearing retainer with the 4 screws.
Torque: 2.6 N·m (26.5 kgf·cm, 23 in.·lbf)

(g) Install the oil seal.

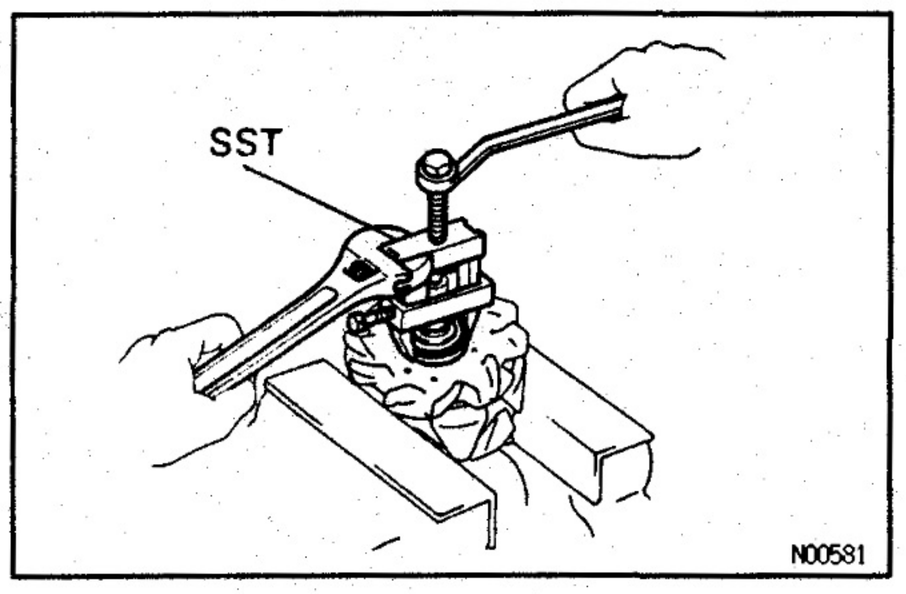

3. INSPECT REAR BEARING

Check that the bearing is not rough or worn.

4. IF NECESSARY, REPLACE REAR BEARING

(a) Using SST, remove the bearing cover (outside) and bearing.
SST 09820–00021
NOTICE: Be careful not to damage the fan.

(b) Remove the bearing cover (inside).

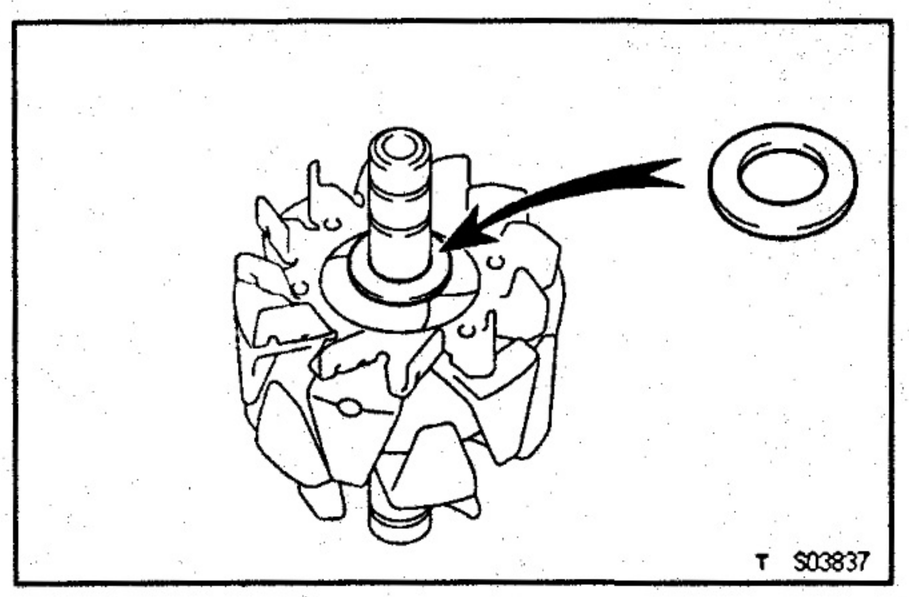

(c) Place the bearing cover (inside) on the rotor.

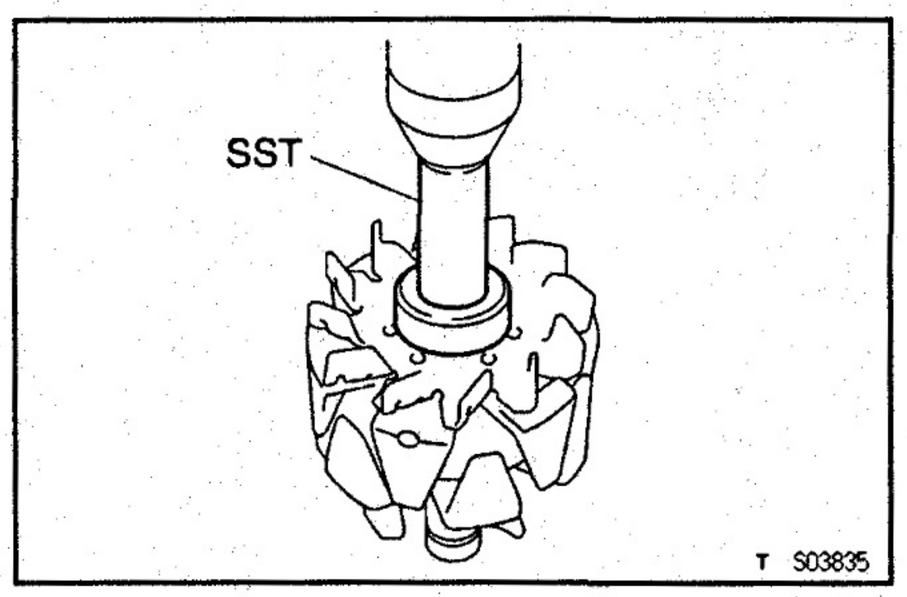

(d) Using SST and a press, press in a new bearing.
SST 09820–00030

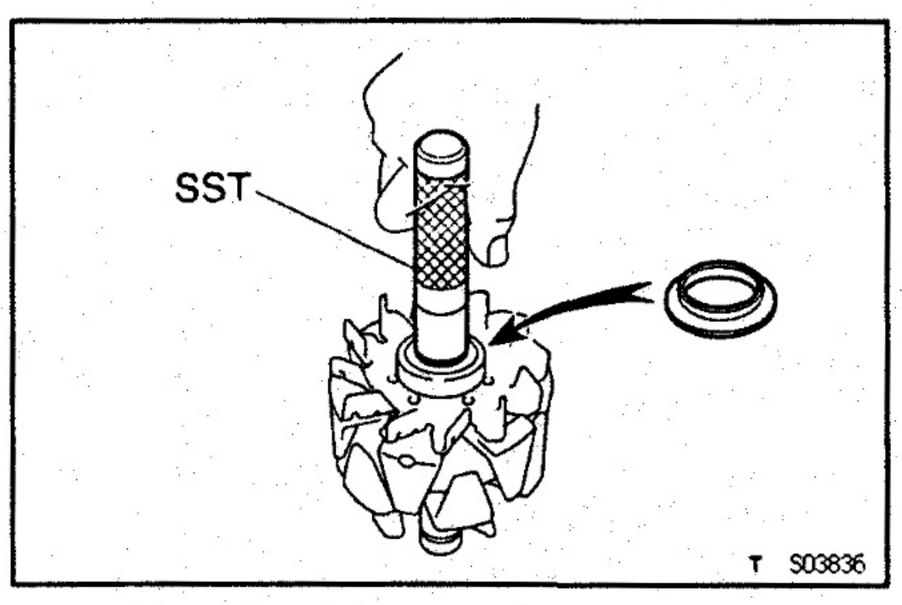

(e) Using SST, push in the bearing cover (outside).
SST 09285–76010

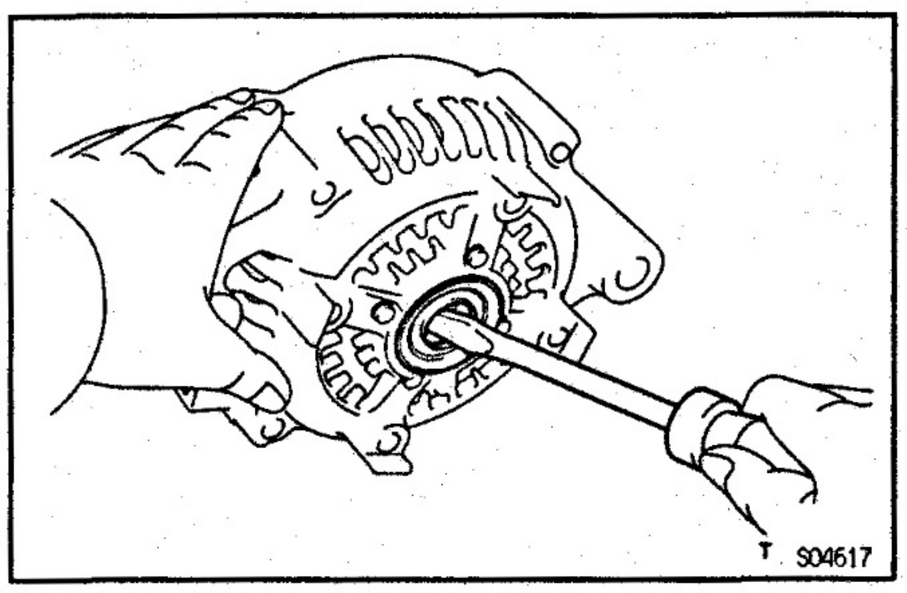

Oil Seal

REPLACE OIL SEAL

(a) Using a screwdriver, pry out the oil seal.

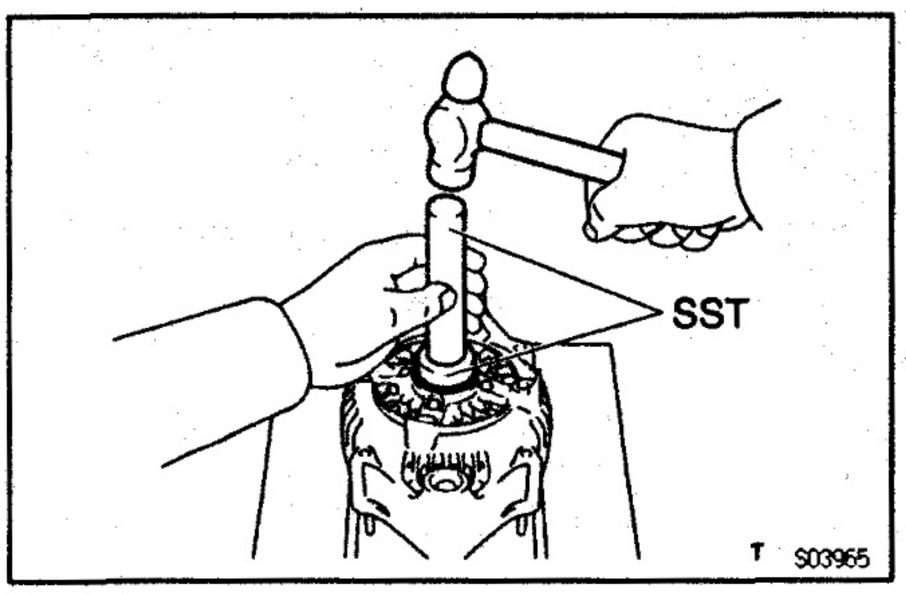

(b) Using SST and hammer, tap in the oil seal.
SST 09950–60010 (09951–00340),
09950–70010 (09951–07100)

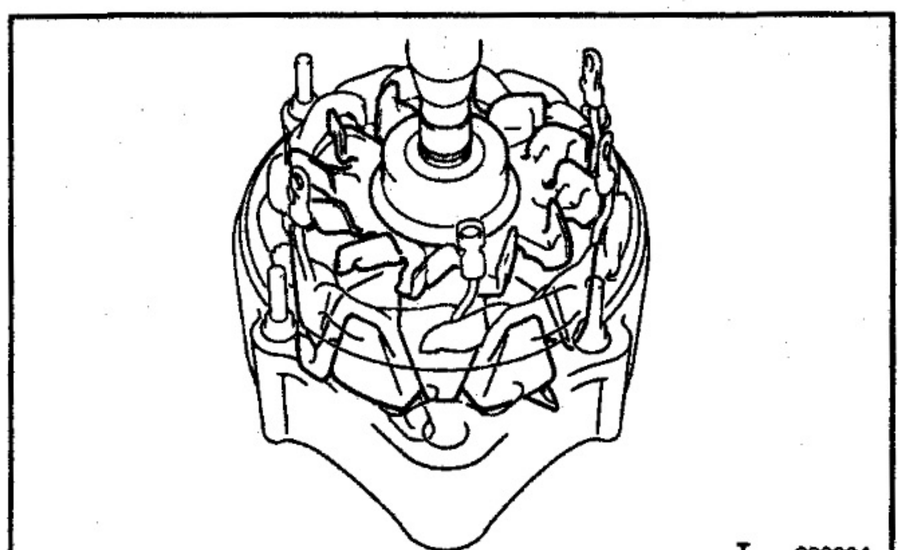

CH0EM–01

ALTERNATOR ASSEMBLY

1. INSTALL ROTOR TO DRIVE END FRAME

Using a press, press in the rotor.

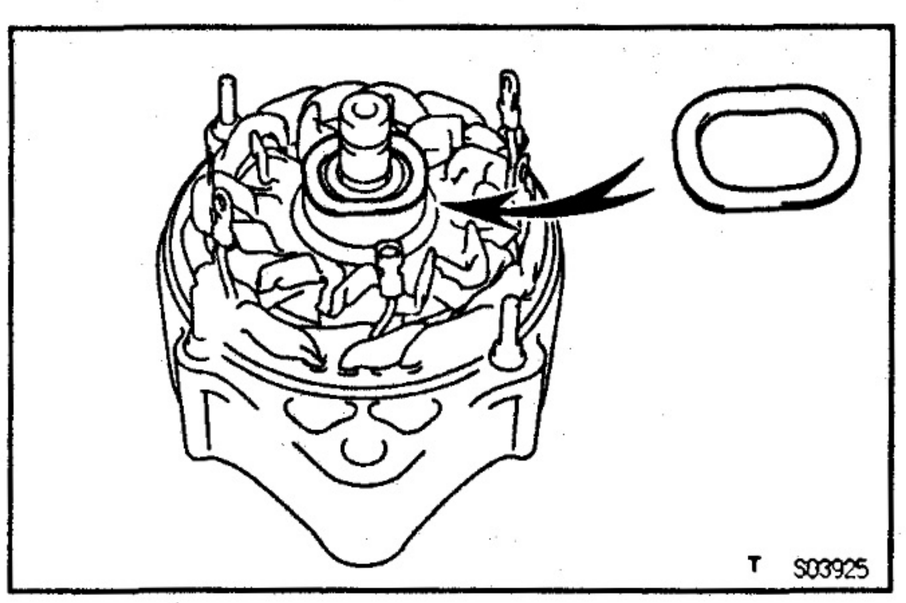

2. INSTALL RECTIFIER END FRAME

(a) Place the alternator washer on the rotor.

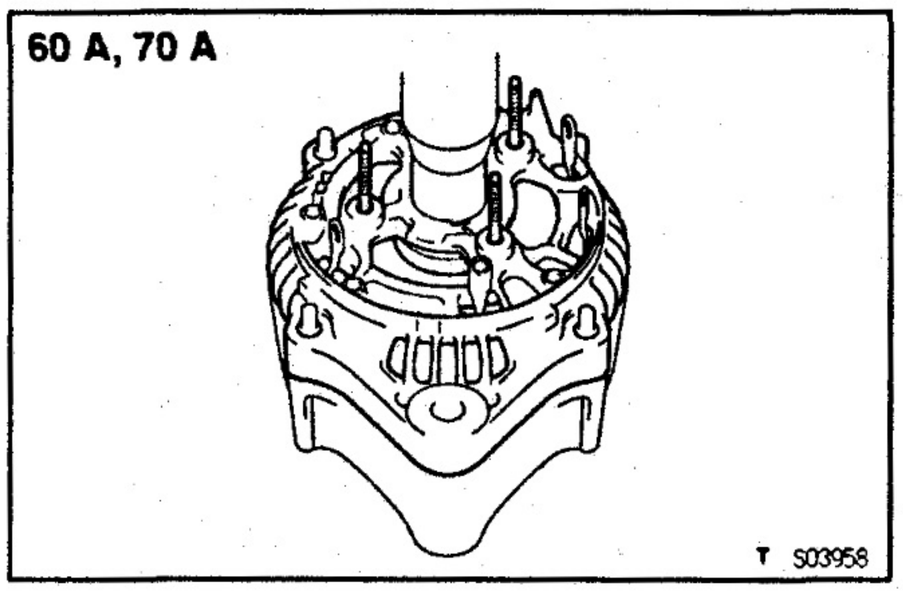

(b) 60 A, 70 A:
Using a press, slowly press in the rectifier end frame.

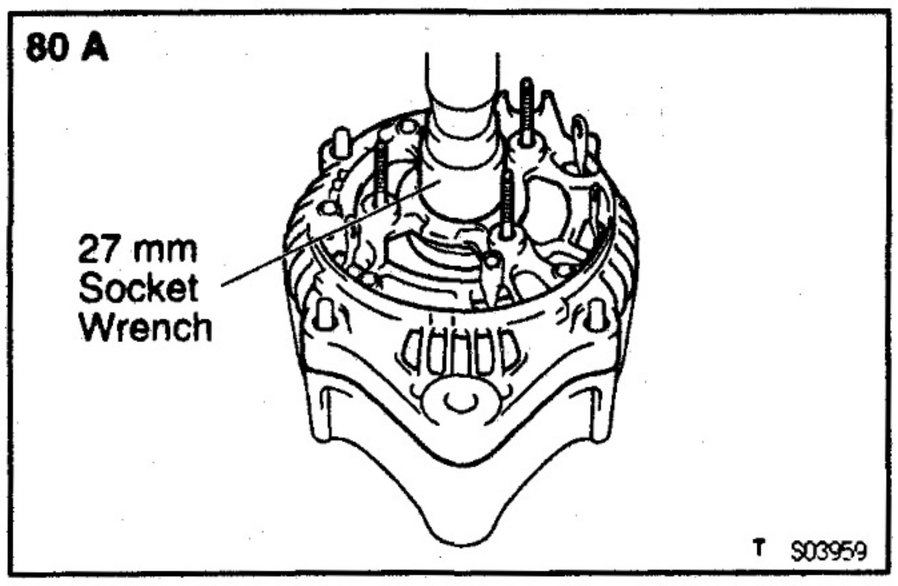

(c) 80 A:
Using a 27 mm socket wrench and press, slowly press in the rectifier end frame.

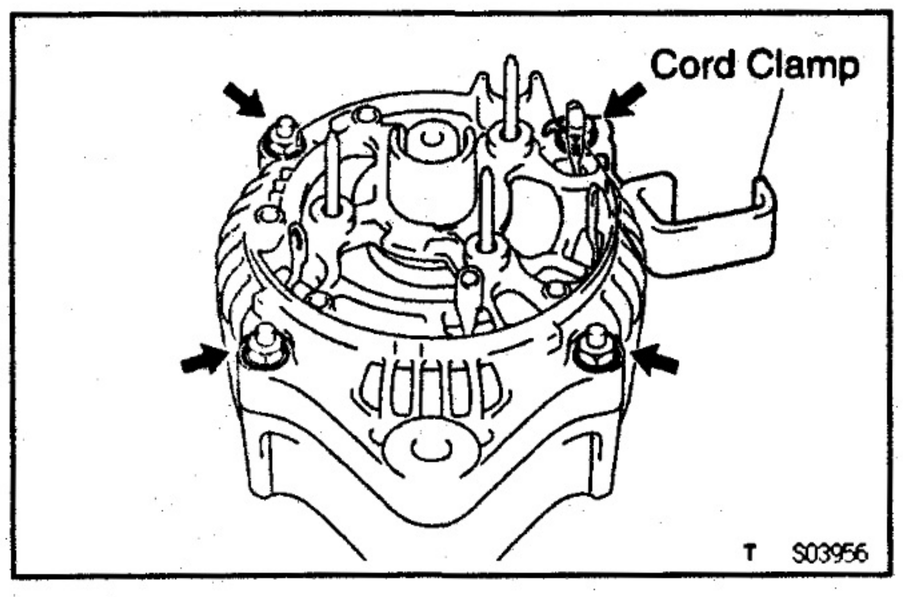

(d) Install the cord clamp and 4 nuts.
Torque: 4.5 N·m (46 kgf·cm, 40 in.·lbf)

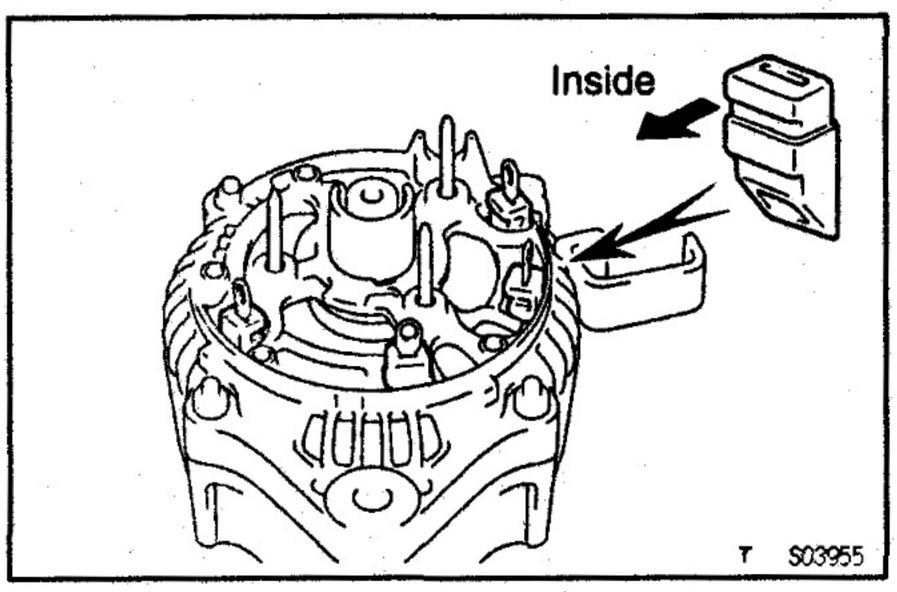

3. INSTALL RECTIFIER HOLDER

(a) Install the 4 rubber insulators on the lead wires.
NOTICE: Be careful of the rubber insulators installation direction.

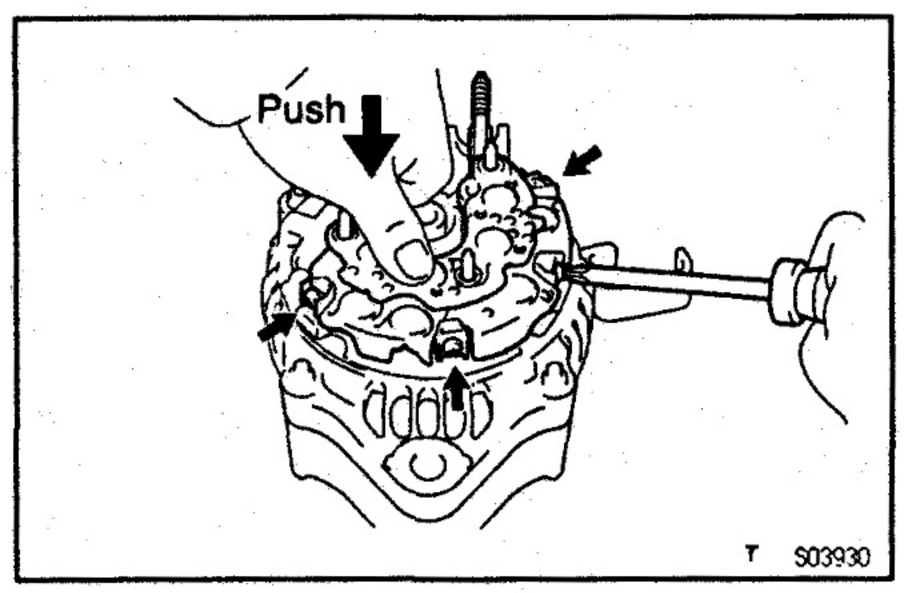

(b) Install the rectifier holder while pushing it with the 4 screws.
Torque:
60 A, 70 A
2.0 N·m (20 kgf·cm, 18 in.·lbf)
80 A
2.9 N·m (30 kgf·cm, 26 in.·lbf)

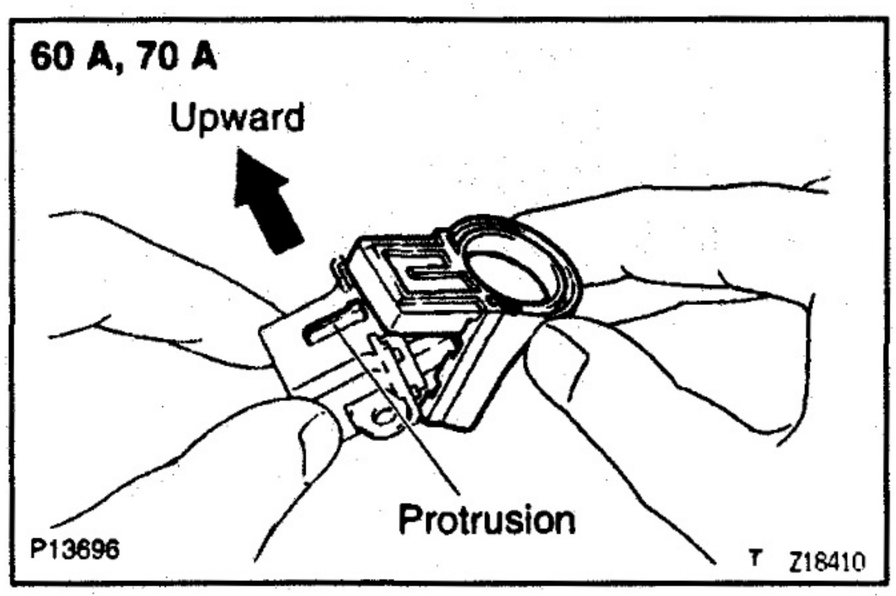

4. INSTALL IC REGULATOR AND BRUSH HOLDER

60 A, 70 A:

(a) Install the brush holder cover to the brush holder.
NOTICE: Be careful of the holder installation direction.

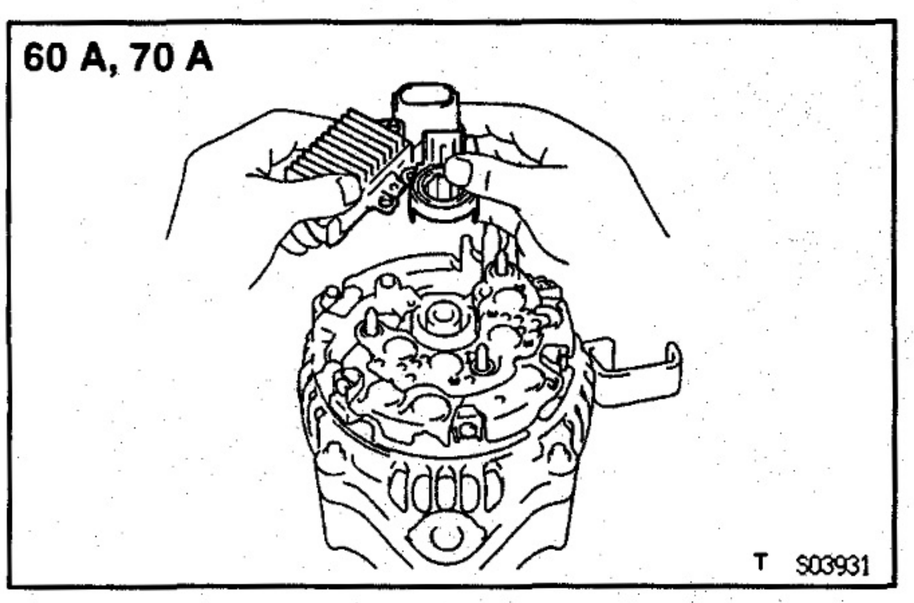

(b) Place the IC regulator together with the brush holder horizontally on the rectifier end frame.

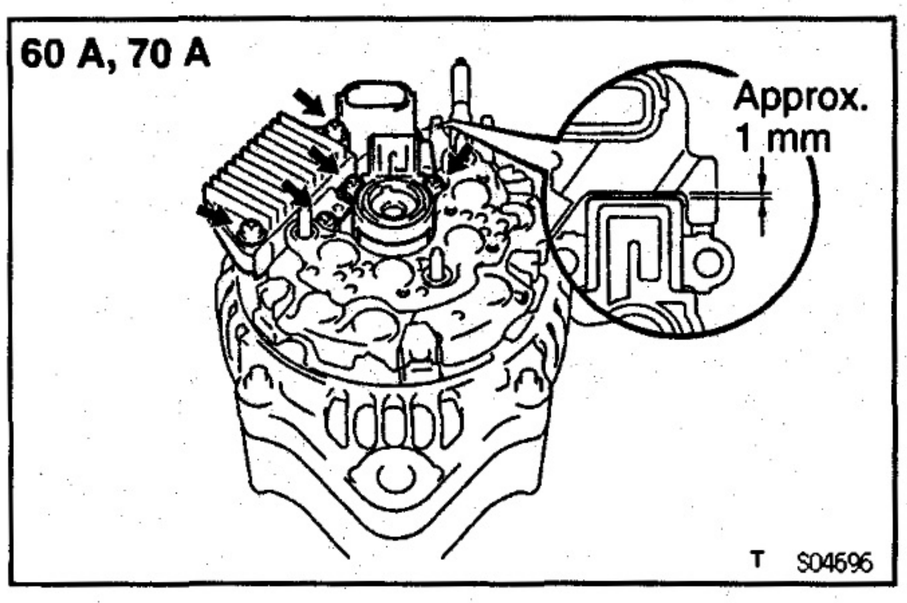

(c) Install the 5 screws until there is a clearance of approx. 1 mm (0.04 in.) between the IC regulator and brush holder.
Torque: 2.0 N·m (20 kgf·cm, 18 in.·lbf)

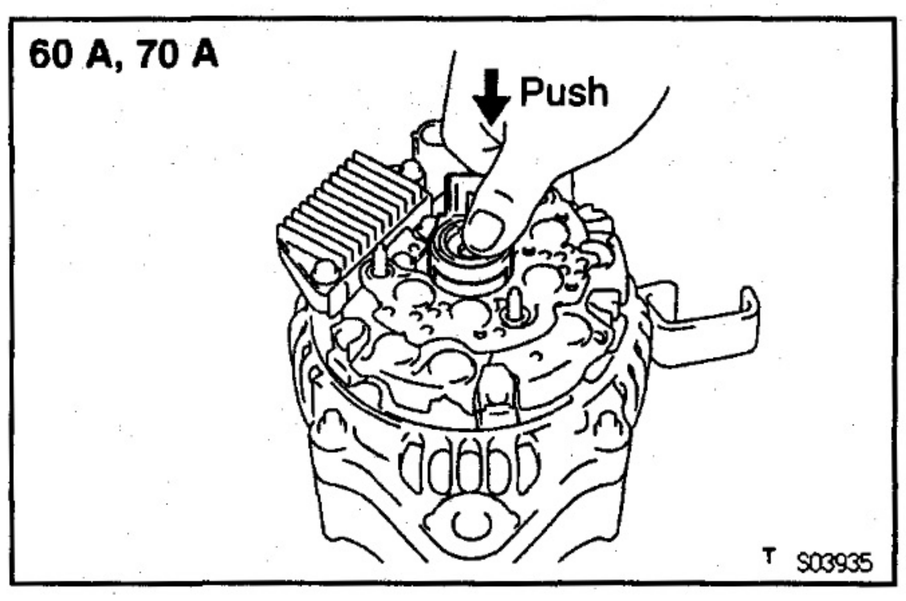

(d) Fit the brush holder cover.

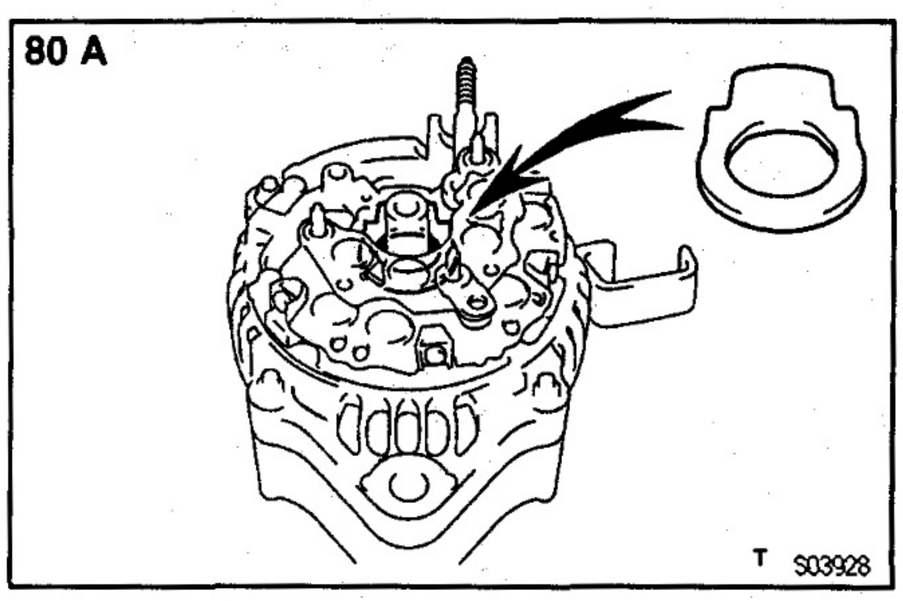

80 A:

(a) Place the seal plate on the rectifier end frame.

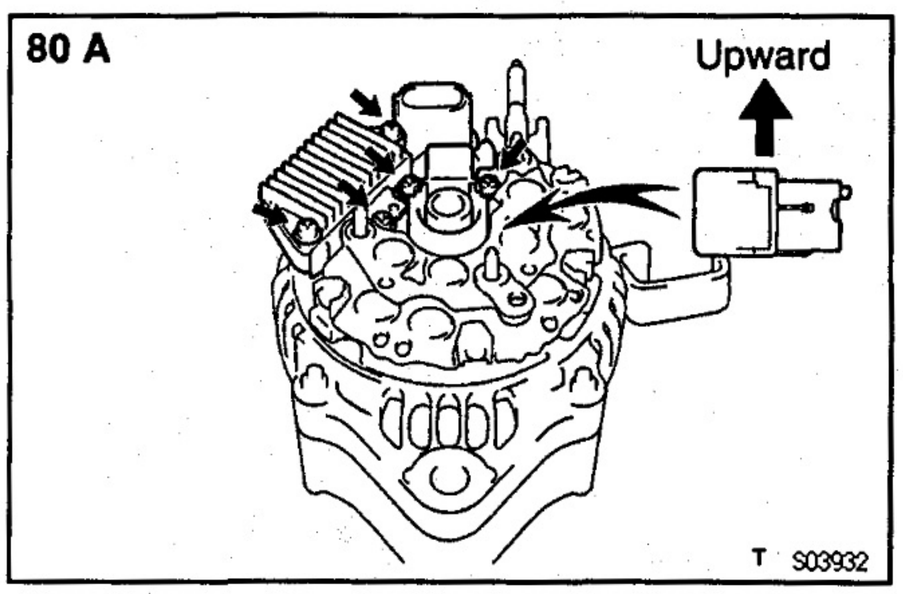

(b) Install the IC regulator and brush holder with the 5 screws.
Torque: 2.0 N·m (20 kgf·cm, 18 in.·lbf)
NOTICE: Be careful of the holder installation direction.

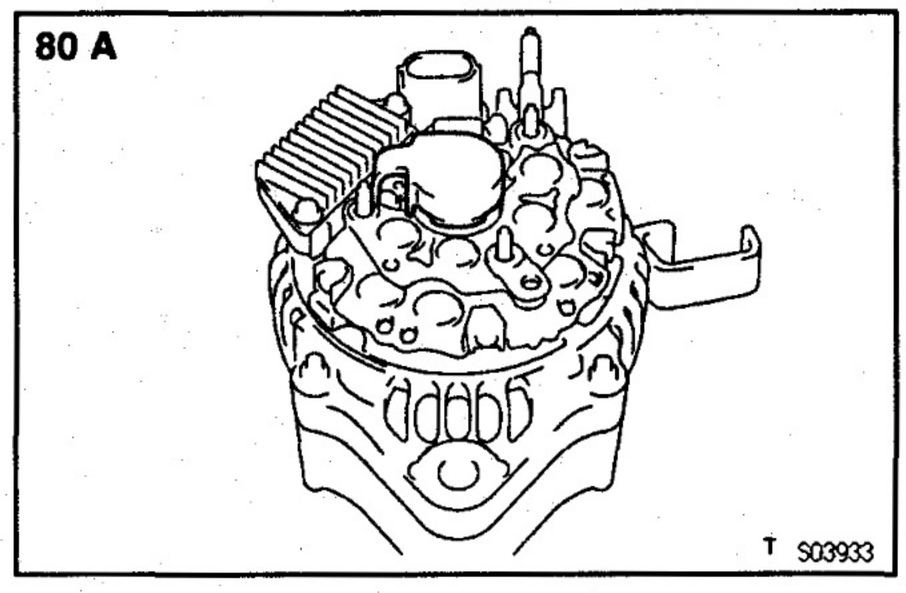

(c) Place the brush holder cover on the brush holder.

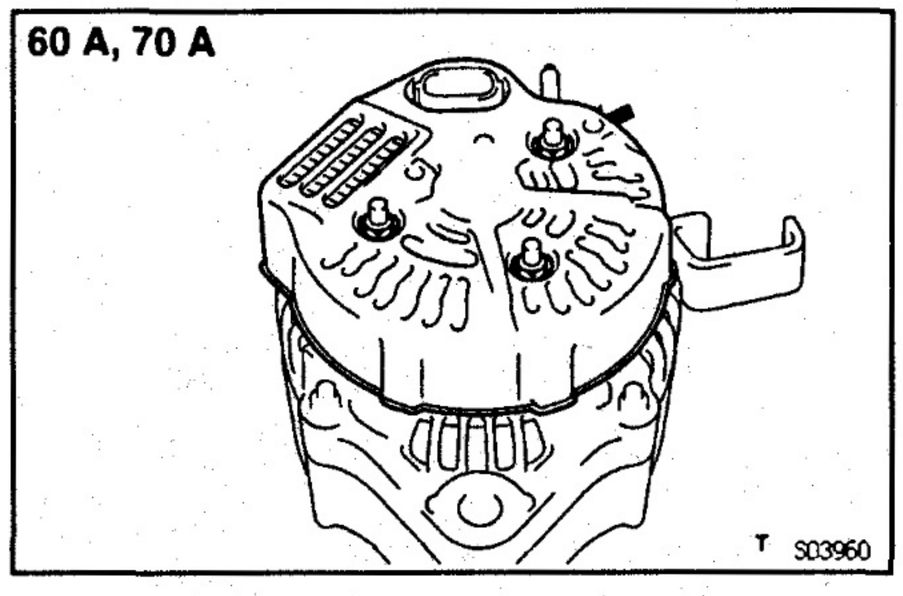

5. INSTALL REAR END COVER

(a) 60 A, 70 A:

Install the rear end cover with the 3 bolts.

Torque: 4.4 N·m (45 kgf·cm, 39 in.·lbf)

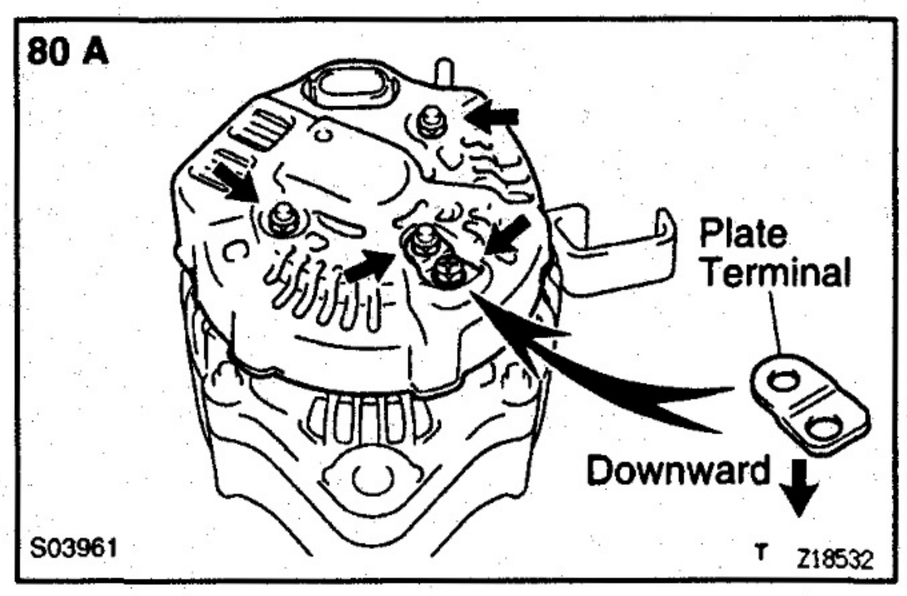

(b) 80 A:

Install the rear end cover and plate terminal with the bolt and 3 nuts.

Torque:

Nut

4.4 N·m (45 kgf·cm, 39 in.·lbf)

Bolt

3.8 N·m (39 kgf·cm, 34 in.·lbf)

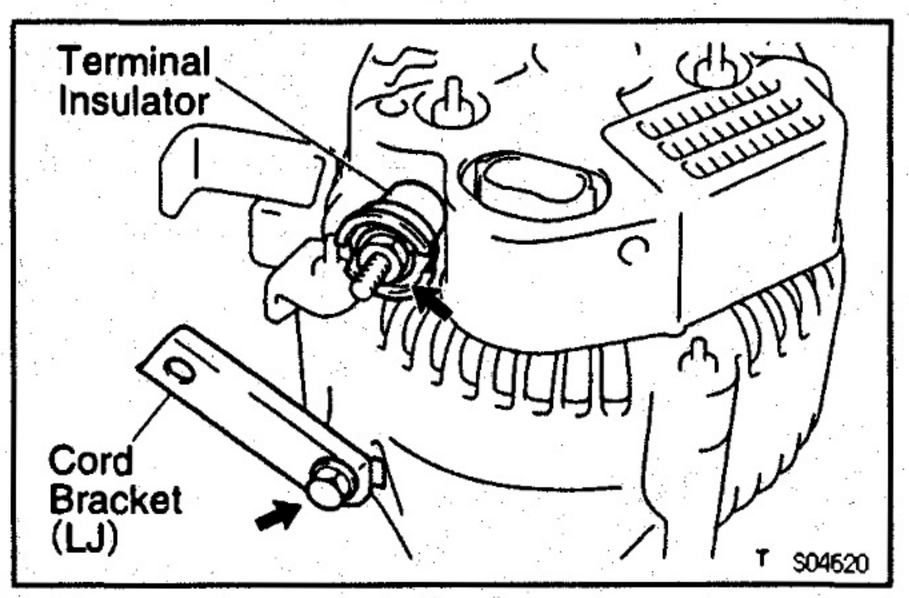

(c) Install the terminal insulator with the nut.

Torque: 4.1 N·m (41.5 kgf·cm, 36 in.·lbf)

6. LJ:

INSTALL CORD BRACKET

Install the cord bracket with the bolt.

Torque: 6.0 N·m (60 kgf·cm, 53 in.·lbf)

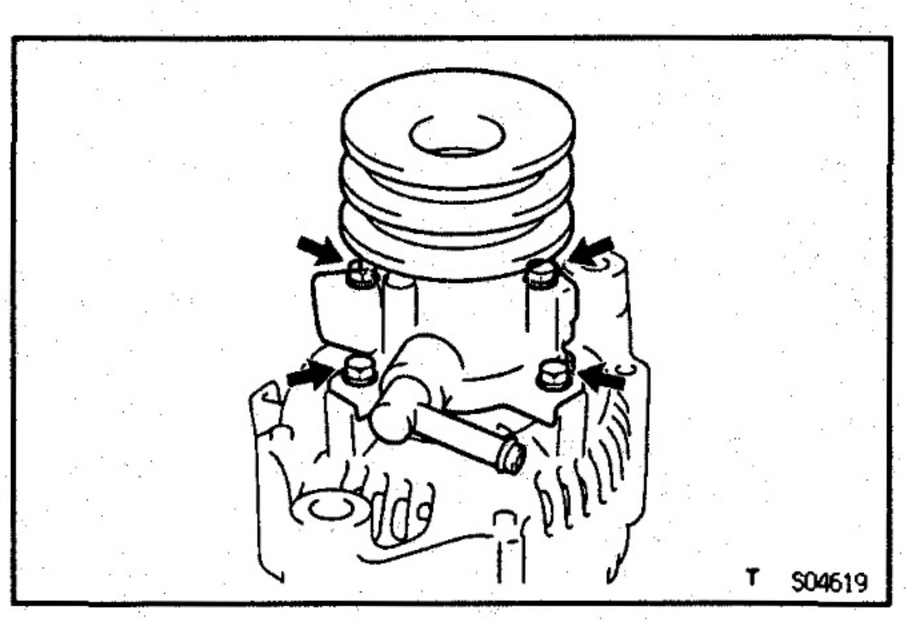

7. INSTALL VACUUM PUMP

Install the vacuum pump with the 4 bolts.

Torque: 7.8 N·m (80 kgf·cm, 69 in.·lbf)

8. CHECK THAT ROTOR ROTATES SMOOTHLY

CH

ALTERNATOR REGULATOR (w/o IC Regulator)

ALTERNATOR REGULATOR INSPECTION CHGEN-01

1. REMOVE ALTERNATOR REGULATOR

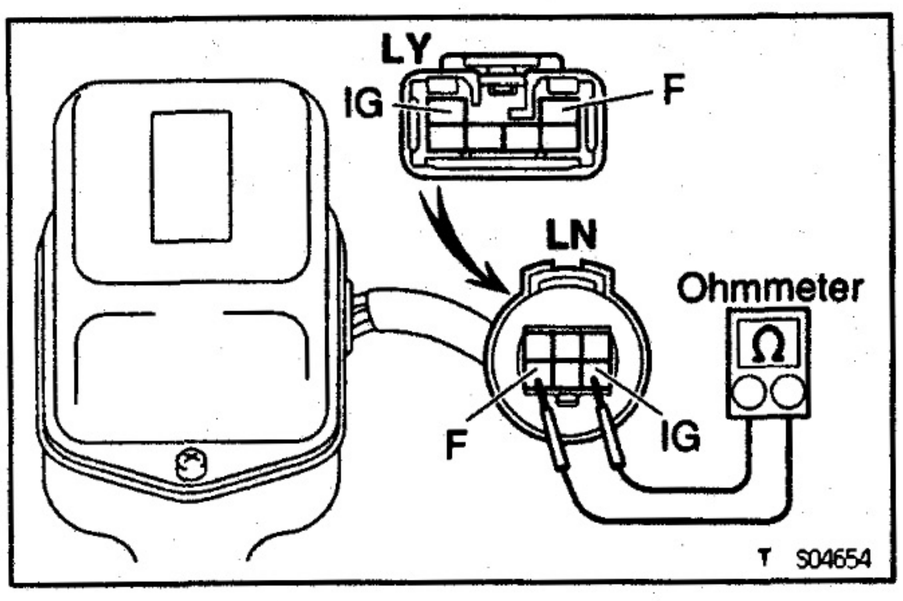

2. INSPECT ALTERNATOR REGULATOR

(a) Voltage Regulator:
Using an ohmmeter, measure the resistance between terminals IG and F.
Resistance:

Terminals IG — F	0 Ω

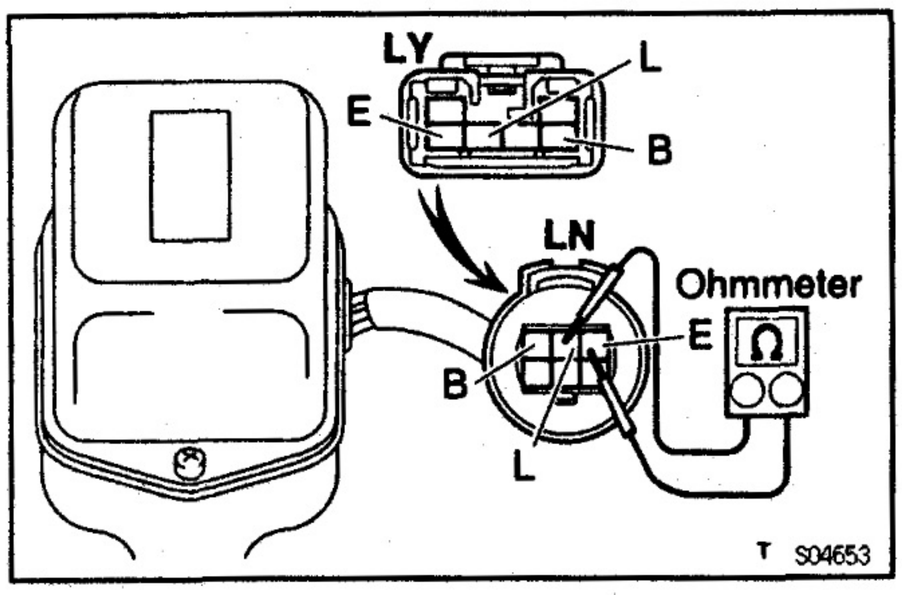

(b) Voltage Relay:
Using an ohmmeter, measure the resistance between each terminal (E — L, B — E, B — L).
Resistance:

Terminals E — L	0 Ω
Terminals B — E	Infinity
Terminals B — L	Infinity

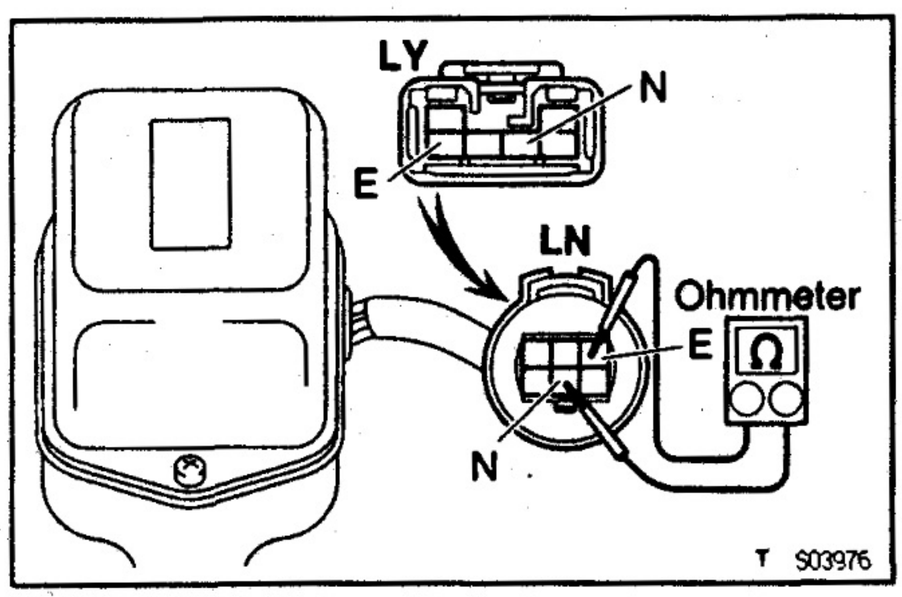

(c) Using an ohmmeter, measure the resistance between terminals N and E.
Resistance:

Terminals N — E	Approx. 23 Ω

If any of the above checks are not positive, replace the alternator regulator.

3. REINSTALL ALTERNATOR REGULATOR

SERVICE SPECIFICATIONS

SERVICE DATA

CH01A–16

Battery	Specific gravity	at 20°C (68°F)	1.25 — 1.29
	Voltage	at 20°C (68°F)	12.5 — 12.9 V
Drive belt	Deflection	New belt	7 — 10 mm (0.28 — 0.39 in.)
		Used belt	10 — 14 mm (0.39 — 0.55 in.)
	Tension	New belt	440 — 540 N (45 — 55 kgf)
		Used belt	200 — 340 N (20 — 35 kgf)
Alternator	Rated output		12 V 40 A, 12V 45 A, 12 V 50 A, 12 V 55 A 12 V 60 A
	Rotor coil resistance		
		at 20°C (68°F) w/ IC regulator	2.7 — 3.1 Ω
		w/o IC regulator	3.9 — 4.1 Ω
	Slip ring diameter	STD	32.3 — 32.5 mm (1.272 — 1.280 in.)
		Minimum	32.1 mm (1.264 in.)
	Brush exposed length	STD	20.0 mm (0.787 in.)
		Minimum	5.5 mm (0.217 in.)
Alternator	Rated output		12 V 60 A, 12 V 70 A, 12 V 80 A
	Rotor coil resistance	at 20°C (68°F)	2.7 — 3.1 Ω
	Slip ring diameter	STD	14.2 — 14.4 mm (0.559 — 0.567 in.)
		Minimum	12.8 mm (0.504 in.)
	Brush exposed length	STD	10.5 mm (0.413 in.)
		Minimum	1.5 mm (0.059 in.)
IC regulator for conventional type for w/ IC regulator	Regulating voltage	at 55 °C (131°F)	13.3 — 14.7 V
		at 135°C (275°F)	13.2 — 14.0 V
IC regulator for hi—speed compact type for 60 A	Regulating voltage	at 25°C (77°F)	13.5 — 14.1 V
		at 135°C (275°F)	12.6 — 14.1 V
IC regulator for hi—speed compact type for 70 A, 80 A	Regulating voltage	at 25°C (77°F)	13.8 — 14.4 V
		at 135°C (275°F)	12.9 — 14.4 V
Alternator regulator for conventional type for w/o IC regulator	Regulating voltage	at 20°C (68°F)	13.8 — 14.8 V
		at 60°C (140°F)	13.3 — 15.5 V

TORQUE SPECIFICATIONS (Conventional Type Alternator)

CH01C–17

Part tightened	N·m	kgf·cm	ft·lbf
Bearing retainer x Drive end frame	6.9	70	60 in.·lbf
Alternator pulley x Rotor	176.5	1,800	136
Rectifier end frame x Rectifier holder	3.9	40	35 in.·lbf
Rectifier end frame x Drive end frame	7.8	80	69 in.·lbf

IC regulator x Brush holder	w/ IC regulator	2.5	25	22 in.·lbf
IC regulator x Rectifier end frame	w/ IC regulator	3.9	40	35 in.·lbf
Lead terminal x IC regulator	w/ IC regulator	2.5	25	22 in.·lbf
Brush holder x Rectifier end frame	w/o IC regulator	3.9	40	35 in.·lbf
Connector clamp x Rectifier end frame	w/ IC regulator	3.9	40	35 in.·lbf
Brush holder cover x Rectifier end frame		3.9	40	35 in.·lbf
Vacuum pump x Rectifier end frame		7.8	80	69 in.·lbf

CH01C-16

TORQUE SPECIFICATIONS (Hi–Speed Compact Type Alternator)

CH

Part tightened		N·m	kgf·cm	ft·lbf
Bearing retainer x Drive end frame		2.6	26.5	23 in.·lbf
Rectifier end frame x Drive end frame		4.5	46	40 in.·lbf
Rectifier holder x Coil lead on rectifier end frame	60 A, 70 A	2.0	20	18 in.·lbf
	80 A	2.9	30	26 in.·lbf
IC regulator x Rectifier end frame		2.0	20	18 in.·lbf
IC regulator, Brush holder x Rectifier holder		2.0	20	18 in.·lbf
Brush holder x IC regulator		2.0	20	18 in.·lbf
Rear end cover x Rectifier holder		4.4	45	39 in.·lbf
Plate terminal x Rectifier holder	80 A Nut	4.4	45	39 in.·lbf
	Bolt	3.8	39	34 in.·lbf
Terminal insulator x Rectifier holder		4.1	41.5	36 in.·lbf
Cord bracket x Drive end frame	LJ	6.0	60	53 in.·lbf
Vacuum pump x Rectifier end frame		7.8	80	69 in.·lbf