TOYOTA

REPAIR MANUAL FOR CHASSIS & BODY

LAND CRUISER/ LAND CRUISER PRADO

RZJ9_, VZJ9_ series
KZJ9_, LJ9_ series

Apr., 1996

Pub. No. RM517E

FOREWORD

This repair manual has been prepared to provide information covering general service repairs for the chassis and body of the TOYOTA LAND CRUISER/LAND CRUISER PRADO.

Applicable models: RZJ90, 95 series
VZJ90, 95 series
KZJ90, 95 series
LJ90, 95 series

For the service specifications and repair procedures of the above model other than those listed in this manual, refer to the following manuals.

Manual Name	Pub. No.
• 3RZ-F, 3RZ-FE Engine Repair Manual	RM521E
• 5VZ-FE Engine Repair Manual	RM519E
• 1KZ-T Engine Repair Manual	RM353E
• 1KZ-T, 1KZ-TE Engine Repair Manual Supplement	RM522E
• 2L, 3L Engine Repair Manual	RM520E
• A343F Automatic Transmission Repair Manual	RM528E
• Land Cruiser/Land Cruiser Prado Electrical Wiring Diagram	EWD269F
• Land Cruiser/Land Cruiser Prado New Car Features	NCF131E

All information in this manual is based on the latest product information at the time of publication. However, specifications and procedures are subject to change without notice.

TOYOTA MOTOR CORPORATION

©1996 TOYOTA MOTOR CORPORATION
All rights reserved. This book may not be reproduced or copied, in whole or in part, without the written permission of Toyota Motor Corporation.

INTRODUCTION IN
CLUTCH CL
G52 MANUAL TRANSMISSION MT
W56 MANUAL TRANSMISSION MT
R150F MANUAL TRANSMISSION MT
AUTOMATIC TRANSMISSION AT
TRANSFER TR
PROPELLER SHAFT PR
SUSPENSION AND AXLE SA
BRAKE BR
STEERING SR
SUPPLEMENTAL RESTRAINT SYSTEM RS
BODY ELECTRICAL BE
BODY BO
WINCH WI
AIR CONDITIONING AC

INTRODUCTION

HOW TO USE THIS MANUAL ..... IN– 2
IDENTIFICATION INFORMATION ..... IN– 5
GENERAL REPAIR INSTRUCTIONS ..... IN– 6
PRECAUTION ..... IN– 9
HOW TO TROUBLESHOOT ECU CONTROLLED SYSTEMS ..... IN– 19
VEHICLE LIFT AND SUPPORT LOCATIONS ..... IN– 36
ABBREVIATIONS USED IN THIS MANUAL ..... IN– 37
STANDARD BOLT TORQUE SPECIFICATIONS ..... IN– 39

HOW TO USE THIS MANUAL

IN02E–01

INDEX

An INDEX is provided on the first page of each section to guide you to the item to be repaired. To assist you in finding your way through the manual, the Section Title and major heading are given at the top of every page.

IN

IN02G–02

GENERAL DESCRIPTION

At the beginning of each section, a General Description is given that pertains to all repair operations contained in that section.
Read these precautions before starting any repair task.

IN02H–02

TROUBLESHOOTING

TROUBLESHOOTING tables are included for each system to help you diagnose the problem and find the cause. The fundamentals of how to proceed with troubleshooting are described on page IN–19. Be sure to read this before performing troubleshooting.

IN02J–01

PREPARATION

Preparation lists the SST (Special Service Tools), recommended tools, equipment, lubricant and SSM (Special Service Materials) which should be prepared before beginning the operation and explains the purpose of each one.

IN02K–01

REPAIR PROCEDURES

Most repair operations begin with an overview illustration. It identifies the components and shows how the parts fit together.
Example:

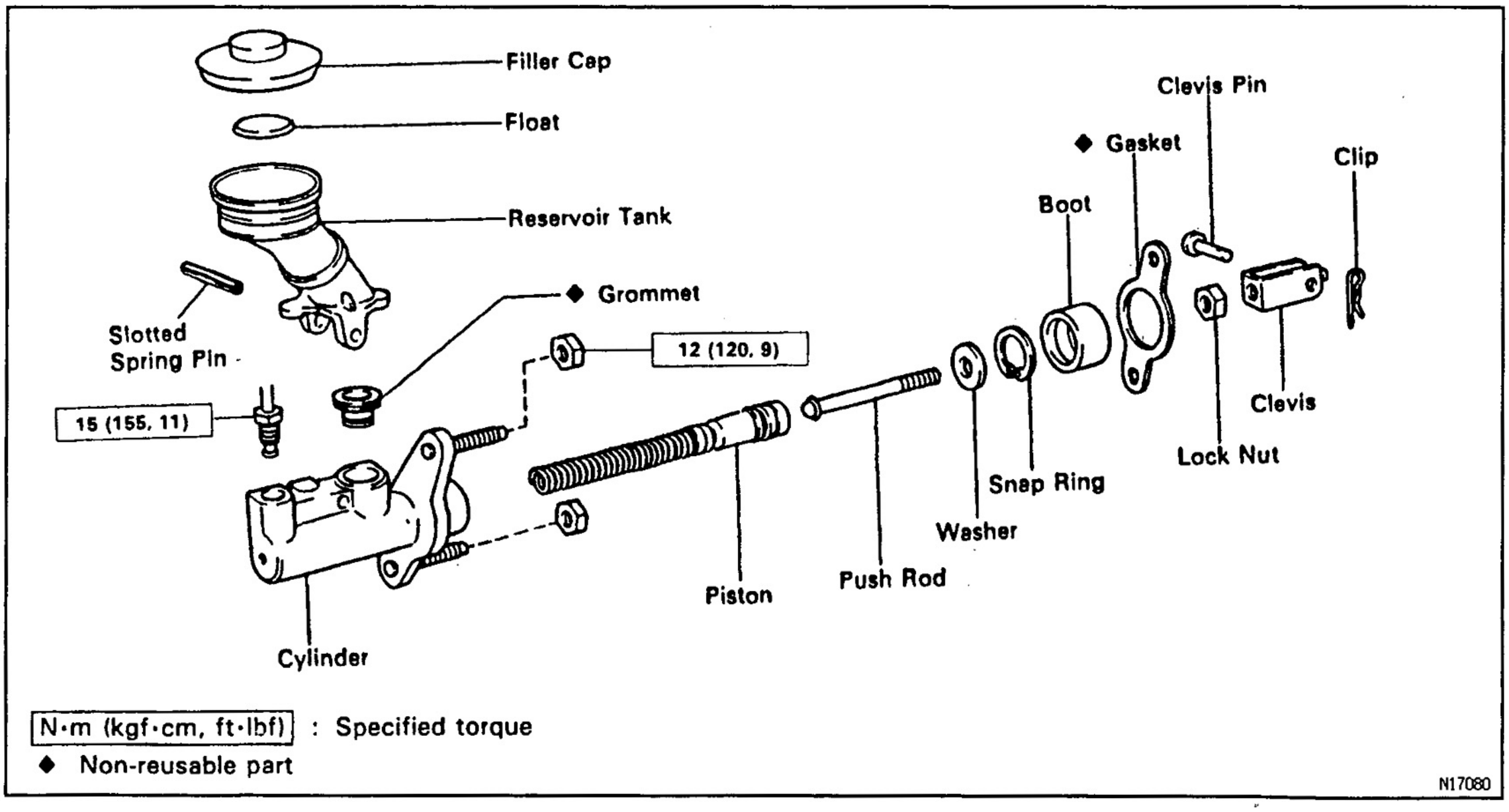

The procedures are presented in a step–by–step format:

- The illustration shows what to do and where to do it.
- The task heading tells what to do.
- The detailed text tells how to perform the task and gives other information such as specifications and warnings.

Example:

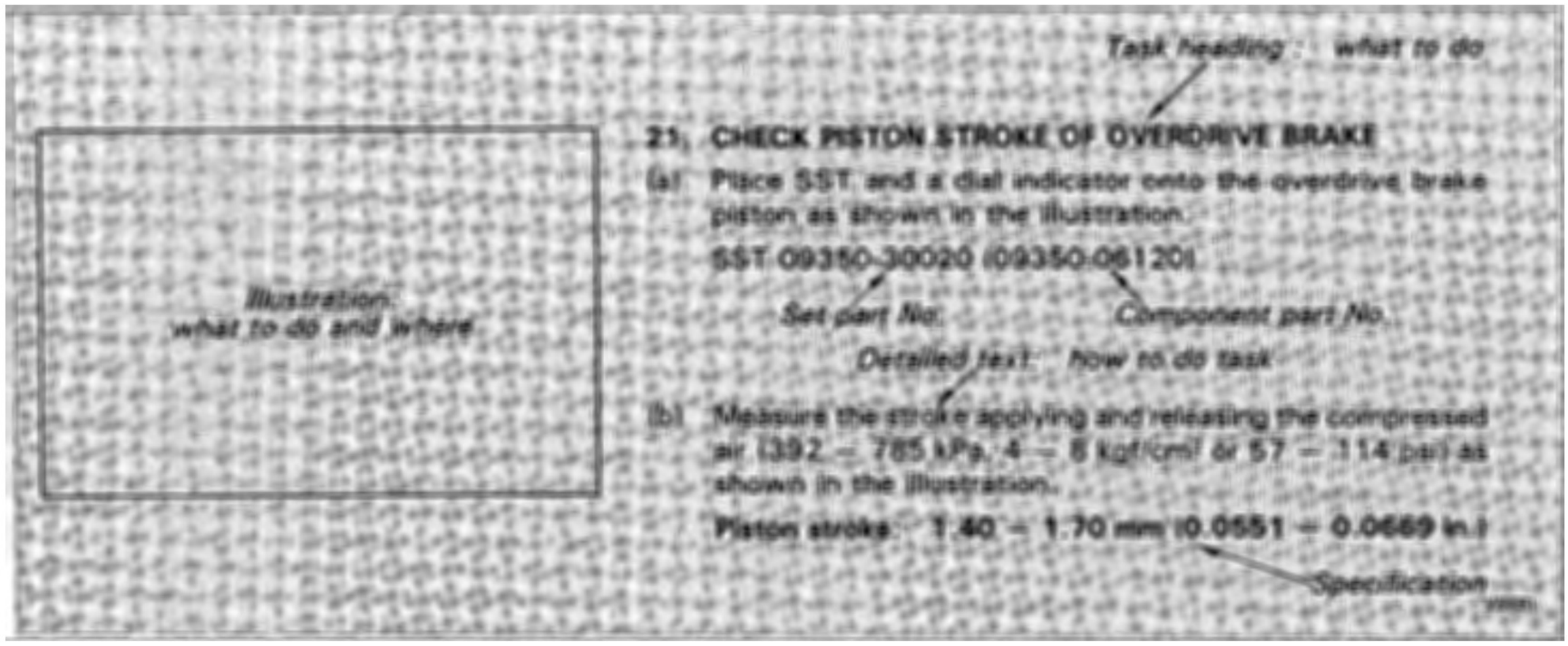

This format provides the experienced technician with a FAST TRACK to the information needed. The upper case task heading can be read at a glance when necessary, and the text below it provides detailed information. Important specifications and warnings always stand out in bold type.

IN02L–01

REFERENCES

References have been kept to a minimum. However, when they are required you are given the page to refer to.

IN02M–01

SPECIFICATIONS

Specifications are presented in bold type throughout the text where needed. You never have to leave the procedure to look up your specifications. They are also found at the end of each section, for quick reference.

IN02N–01

CAUTIONS, NOTICES, HINTS:

- CAUTIONS are presented in bold type, and indicate there is a possibility of injury to you or other people.
- NOTICES are also presented in bold type, and indicate the possibility of damage to the components being repaired.
- HINTS are separated from the text but do not appear in bold. They provide additional information to help you perform the repair efficiently.

IN02P–02

SI UNIT

The UNITS given in this manual are primarily expressed according to the SI UNIT (International System of Unit), and alternately expressed in the metric system and in the English System.

Example:

Torque: 30 N·m (310 kgf·cm, 22 ft·lbf)

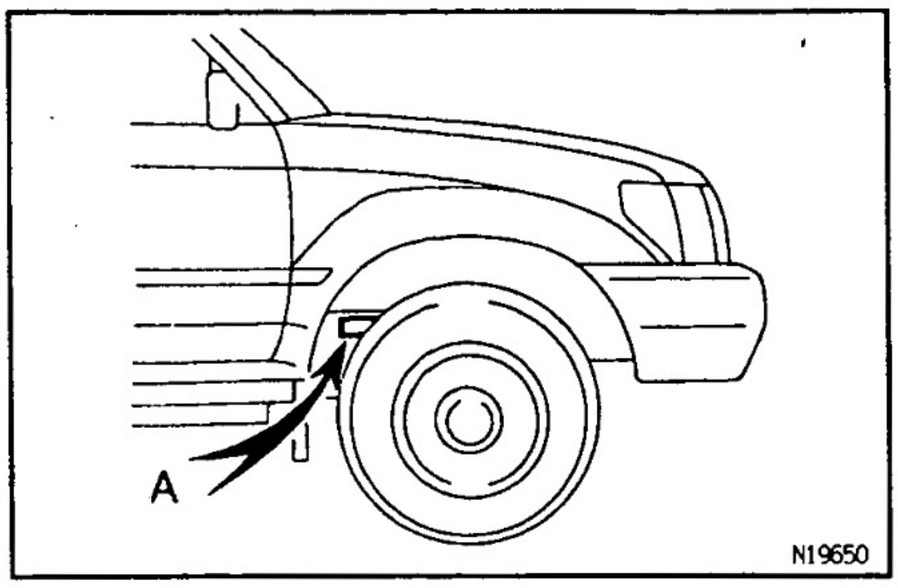

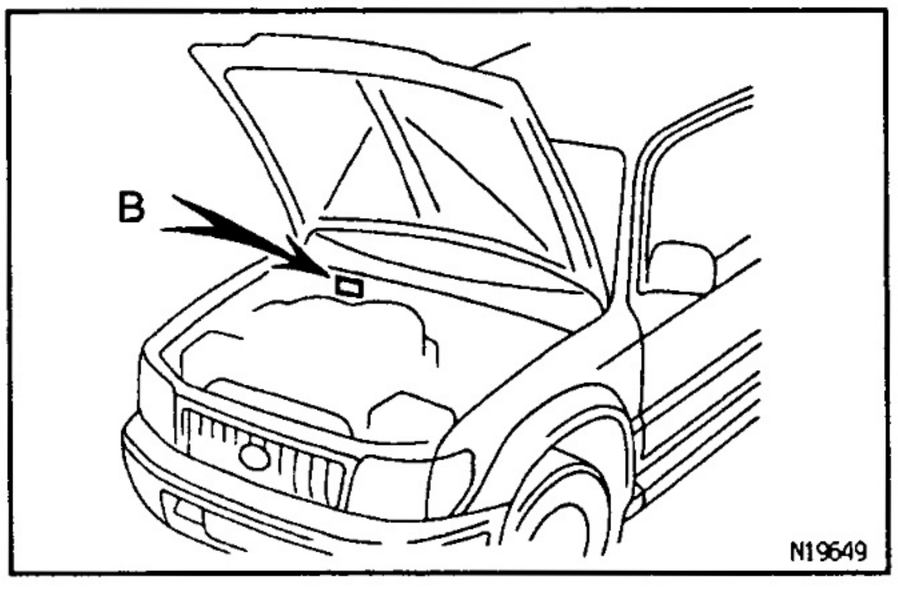

IDENTIFICATION INFORMATION

VEHICLE IDENTIFICATION NUMBER

IN07G-02

The vehicle identification number is stamped on the vehicle identification number, manufacture's plate and certification label.

A. Vehicle Identification Number

B. Manufacture's Plate

ENGINE SERIAL NUMBER

IN04V-03

The engine serial number is stamped on the engine block as shown.

3L-Engine

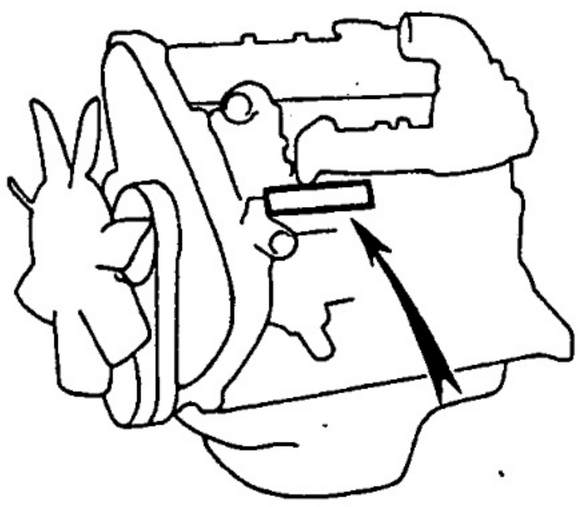

1KZ-T, 1KZ-TE Engine

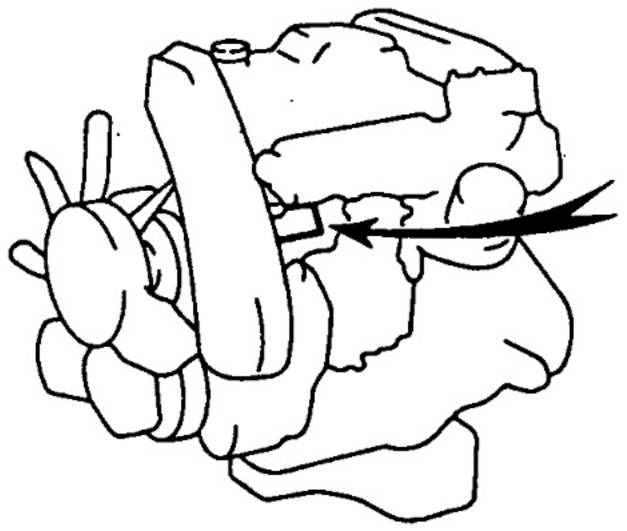

3RZ-F, 3RZ-FE Engine

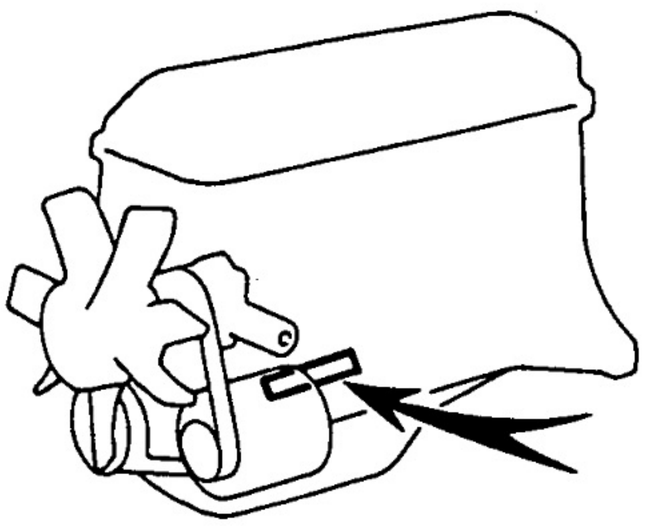

5VZ-FE Engine

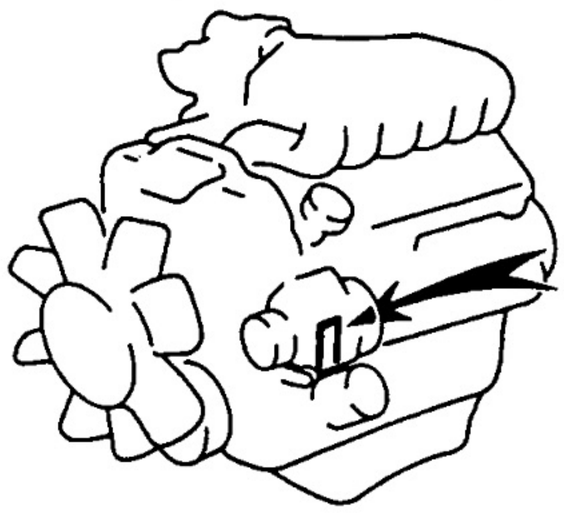

N19545 N09034
N17730 N17731

Z18427

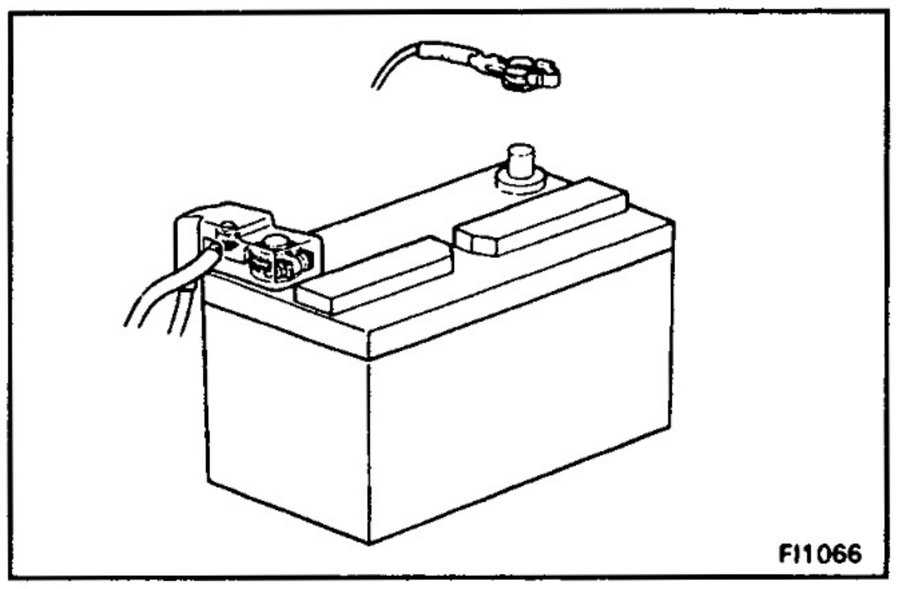
FI1066

GENERAL REPAIR INSTRUCTIONS

IN068-03

1. Use fender, seat and floor covers to keep the vehicle clean and prevent damage.
2. During disassembly, keep parts in the appropriate order to facilitate reassembly.
3. Observe the following:
   (a) Before performing electrical work, disconnect the negative (−) terminal cable from the battery.
   (b) If it is necessary to disconnect the battery for inspection or repair, always disconnect the negative (−) terminal cable which is grounded to the vehicle body.
   (c) To prevent damage to the battery terminal, loosen the cable nut and raise the cable straight up without twisting or prying it.
   (d) Clean the battery terminals and cable ends with a clean shop rag. Do not scrape them with a file or other abrasive objects.
   (e) Install the cable ends to the battery terminals with the nut loose, and tighten the nut after installation. Do not use a hammer to tap the cable ends onto the terminals.
   (f) Be sure the cover for the positive (+) terminal is properly in place.
4. Check hose and wiring connectors to make sure that they are secure and correct.
5. Non−reusable parts
   (a) Always replace cotter pins, gaskets, O−rings and oil seals etc. with new ones.
   (b) Non−reusable parts are indicated in the component illustrations by the "◇" symbol.
6. Precoated parts
   Precoated parts are bolts and nuts, etc. that are coated with a seal lock adhesive at the factory.
   (a) If a precoated part is retightened, loosened or caused to move in any way, it must be recoated with the specified adhesive.
   (b) When reusing precoated parts, clean off the old adhesive and dry with compressed air. Then apply the specified seal lock adhesive to the bolt, nut or threads.
   (c) Precoated parts are indicated in the component illustrations by the "☆" symbol.
7. When necessary, use a sealer on gaskets to prevent leaks.
8. Carefully observe all specifications for bolt tightening torques. Always use a torque wrench.

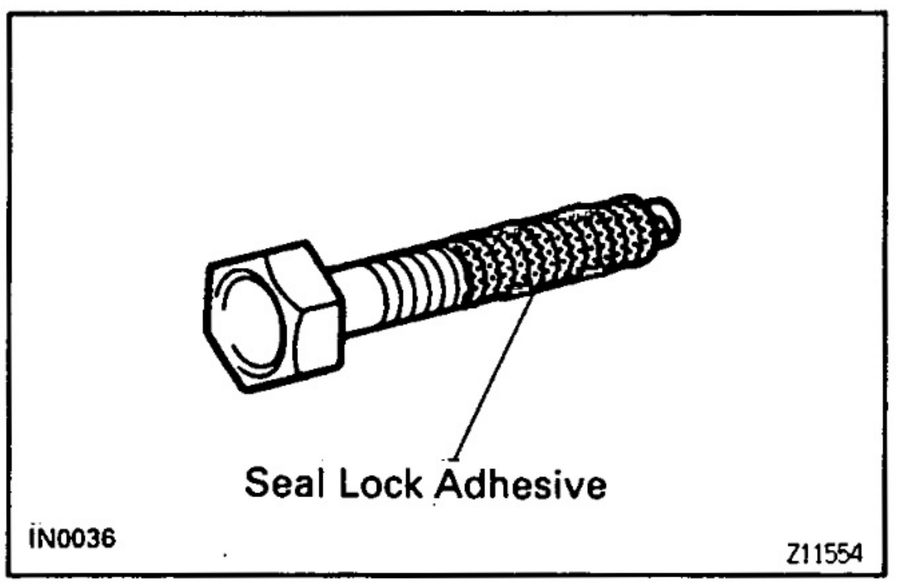

IN0036
Z11554

9. Use of special service tools (SST) and special service materials (SSM) may be required, depending on the nature of the repair. Be sure to use SST and SSM where specified and follow the proper work procedure. A list of SST and SSM can be found in the preparation part at the front of each section in this manual.

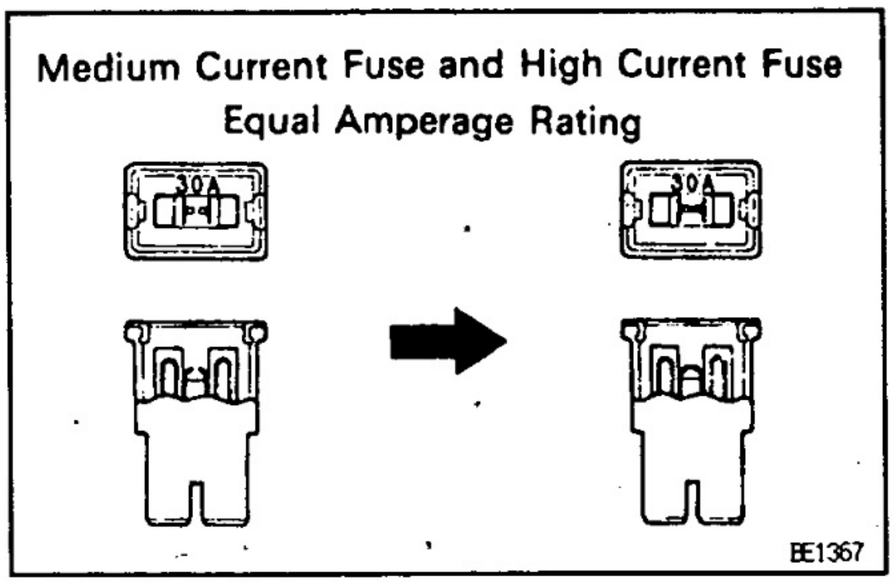

10. When replacing fuses, be sure the new fuse has the correct amperage rating. DO NOT exceed the rating or use one with a lower rating.

Illustration	Symbol	Part Name	Abbreviation
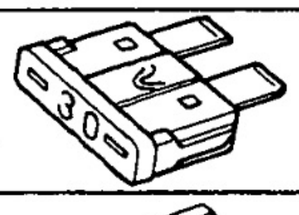 BE5594	 IN0365	FUSE	FUSE
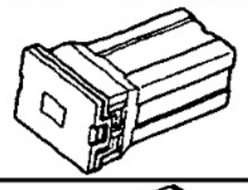 BE5595	 IN0366	MEDIUM CURRENT FUSE	M-FUSE
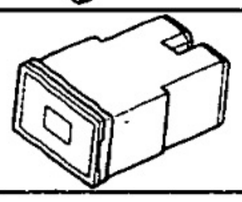 BE5596	 IN0367	HIGH CURRENT FUSE	H-FUSE
 BE5597	 IN0367	FUSIBLE LINK	FL
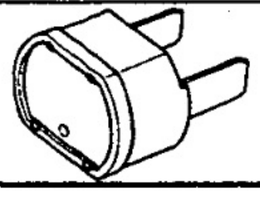 BE5598	 IN0368	CIRCUIT BREAKER	CB

V00076

11. Care must be taken when jacking up and supporting the vehicle. Be sure to lift and support the vehicle at the proper locations (See page IN—36).
    (a) If the vehicle is to be jacked up only at the front or rear end, be sure to block the wheels at the opposite end in order to ensure safety.

(b) After the vehicle is jacked up, be sure to support it on stands. It is extremely dangerous to do any work on a vehicle raised on a jack alone, even for a small job that can be finished quickly.

12. Observe the following precautions to avoid damage to the following parts:
    (a) Do not open the cover or case of the ECU unless absolutely necessary. (If the IC terminals are touched, the IC may be destroyed by static electricity.)
    (b) To disconnect vacuum hoses, pull on the end, not the middle of the hose.
    (c) To pull apart electrical connectors, pull on the connector itself, not the wires.
    (d) Be careful not to drop electrical components, such as sensors or relays. If they are dropped on a hard floor, they should be replaced and not reused.
    (e) When steam cleaning an engine, protect the electronic components, air filter and emissions—related components from water.
    (f) Never use an impact wrench to remove or install temperature switches or temperature sensors.
    (g) When checking continuity at the wire connector, insert the tester probe carefully to prevent terminals from bending.
    (h) When using a vacuum gauge, never force the hose onto a connector that is too large. Use a step—down adapter instead. Once the hose has been stretched, it may leak.

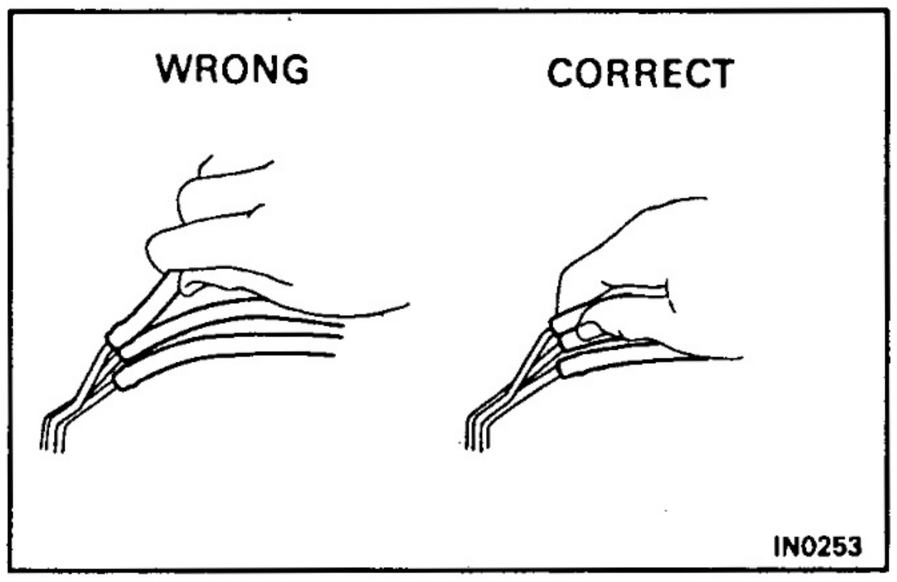

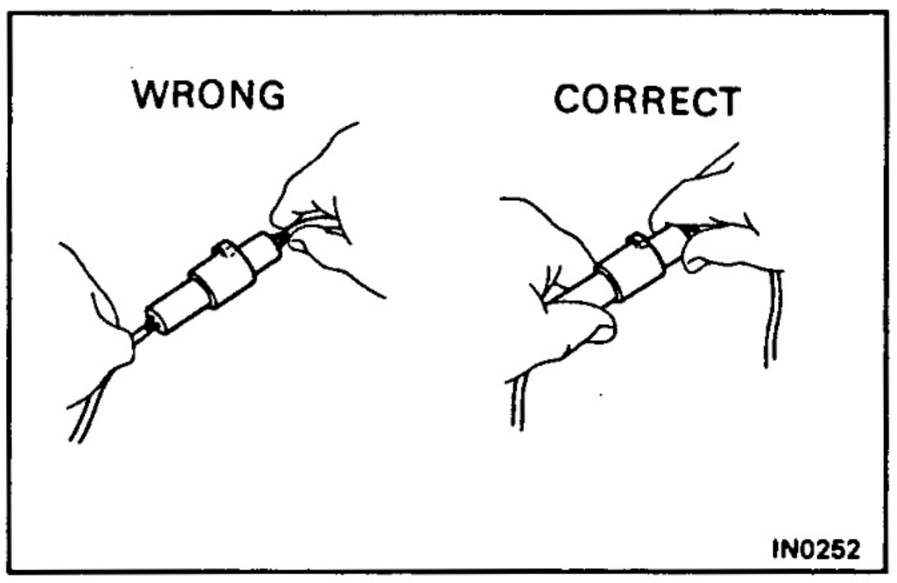

13. Tag hoses before disconnecting them:
    (a) When disconnecting vacuum hoses, use tags to identify how they should be reconnected.
    (b) After completing a job, double check that the vacuum hoses are properly connected. A label under the hood shows the proper layout.

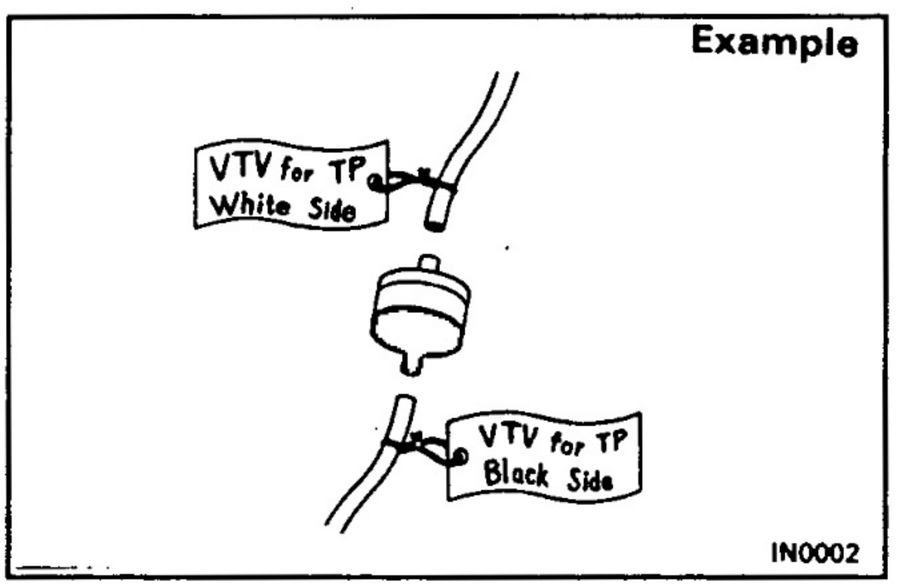

14. Unless otherwise stated, all resistance is measured at an ambient temperature of 20°C (68°F). Because the resistance may be outside specifications if measured at high temperatures immediately after the vehicle has been running, measurements should be made when the engine has cooled down.

PRECAUTION

FOR VEHICLES EQUIPPED WITH SRS AIRBAG AND SEAT BELT PRETENSIONER

IN07J-04

The LAND CRUISER /LAND CRUISER PRADO specifications is equipped with an SRS (Supplemental Restraint System), such as the driver airbag, front passenger airbag and seat belt pretensioner.

Failure to carry out service operations in the correct sequence could cause the airbag system to unexpectedly deploy during servicing, possibly leading to a serious accident.

Further, if a mistake is made in servicing the airbag system, it is possible the airbag may fail to operate when required. Before servicing (including removal or installation of parts, inspection or replacement), be sure to read the following items carefully, then follow the correct procedure described in this manual.

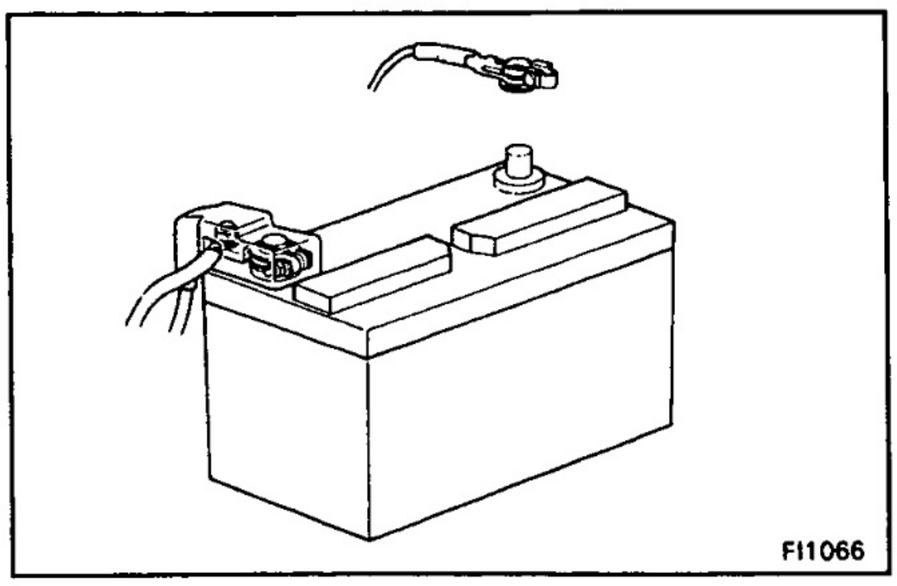
FI1066

1. Malfunction symptoms of the airbag system are difficult to confirm, so the diagnostic codes become the most important source of information when troubleshooting. When troubleshooting the airbag system, always inspect the diagnostic codes before disconnecting the battery (See page RS−32).
2. **Work must be started after approx 90 seconds from the time the ignition switch is turned to the "LOCK" position and the negative (−) terminal cable is disconnected from the battery.**
   (The airbag system is equipped with a back−up power source so that if work is started within 90 seconds of disconnecting the negative (−) terminal cable from the battery, the airbag may deploy.)
   When the negative (−) terminal cable is disconnected from the battery, memory of the clock and audio systems will be cancelled. So before starting work, make a record of the contents memorized by each memory system. Then when work is finished, reset the clock and audio systems as before.
   To avoid erasing the memory of each memory system, never use a back−up power supply from outside the vehicle.
3. Even in cases of a minor collision where the airbag does not deploy, the airbag sensor assembly, front passenger airbag assembly, seat belt pretensioner and steering wheel pad should be inspected (See page RS −9, 24, BO−73).

4. Never use airbag parts from another vehicle. When replacing parts, replace them with new parts.
5. Before repairs, remove the airbag sensors if shocks are likely to be applied to the sensors during repairs.
6. Never disassemble and repair the airbag sensor assembly, steering wheel pad, front passenger airbag assembly or seat belt pretensioners in order to reuse it.
7. If the airbag sensor assembly, steering wheel pad, front passenger airbag assembly or seat belt pretensioners have been dropped, or if there are cracks, dents or other defects in the case, bracket or connector, replace them with new ones.
8. Do not expose the airbag sensor assembly, steering wheel pad, front passenger airbag assembly or seat belt pretensioners directly to hot air or flames.
9. Use a volt/ohmmeter with high impedance (10 kΩ/V minimum) for troubleshooting of the electrical circuit.
10. Information labels are attached to the periphery of the airbag components. Follow the notices.
11. After work on the airbag system is completed, perform the airbag warning light check (See page RS–32).

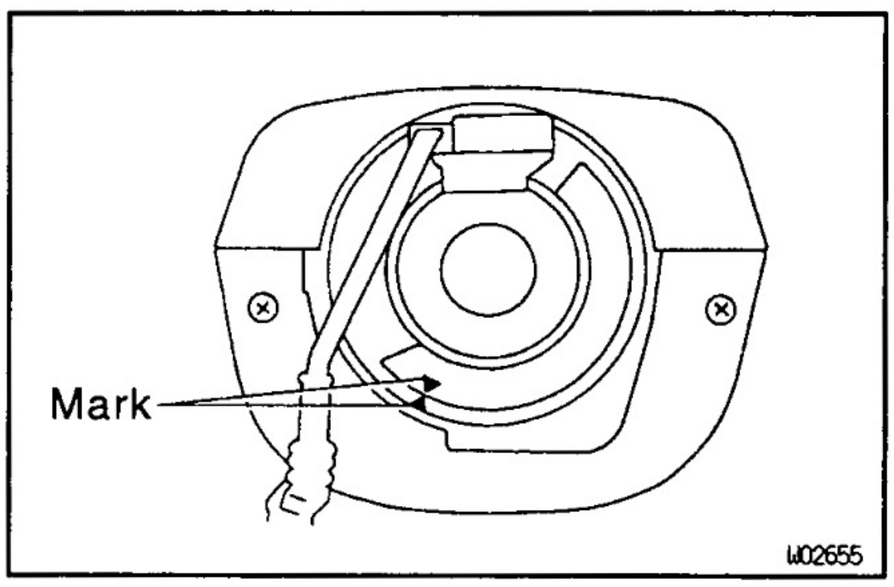

Spiral Cable (in Combination Switch)

The steering wheel must be fitted correctly to the steering column with the spiral cable at the neutral position; otherwise cable disconnection and other troubles may result. Refer to page SR–24 concerning correct steering wheel installation.

Steering Wheel Pad (with Airbag)

1. **When removing the steering wheel pad or handling a new steering wheel pad, it should be placed with the pad top surface facing up.**
   In this case, the twin—lock type connector lock lever should be in the locked state and care should be taken to place it so the connector will not be damaged. Do not store a steering wheel pad on top of another one. (Storing the pad with its metallic surface up may lead to a serious accident if the airbag inflates for some reason.)
2. **Never measure the resistance of the airbag squib. (This may cause the airbag to deploy, which is very dangerous.)**
3. Grease should not be applied to the steering wheel pad and the pad should not be cleaned with detergents of any kind.
4. Store the steering wheel pad where the ambient temperature remains below 93°C (200°F), without high humidity and away from electrical noise.
5. When using electric welding, first disconnect the airbag connector (yellow color and 2 pins) under the steering column near the combination switch connector before starting work.
6. **When disposing of a vehicle or the steering wheel pad alone, the airbag should be deployed using an SST before disposal (See page RS—14). Carry out the operation in a place away from electrical noise.**

Example:

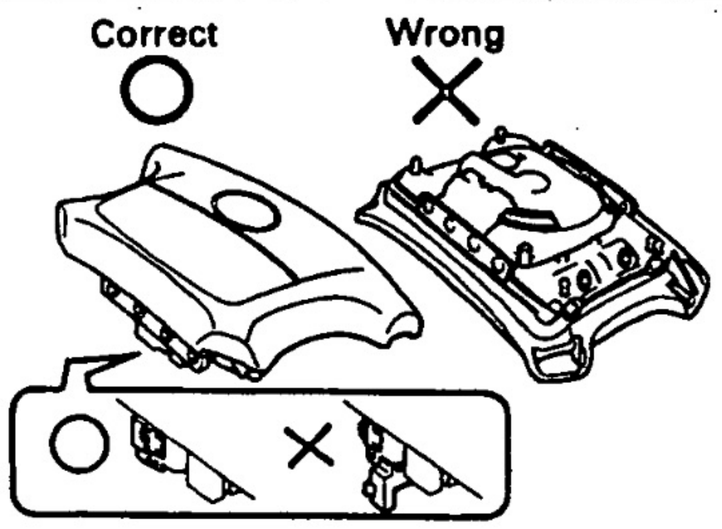

N01560

Z13953

Example:

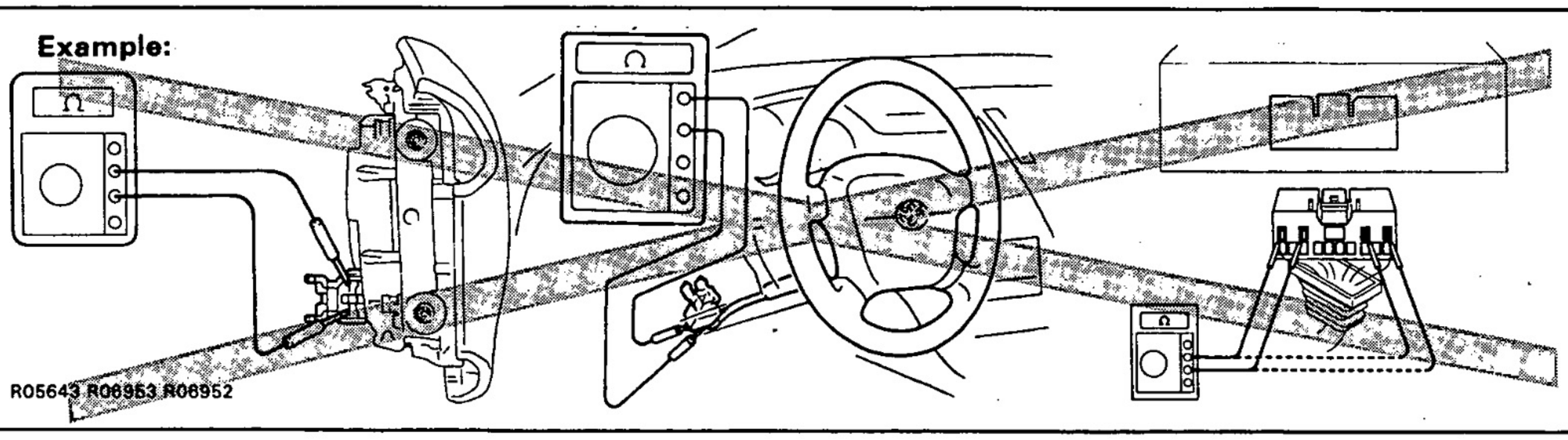

R05643 R06953 R06952

Z13950

IN

Front Passenger Airbag Assembly

1. **Always store a removed or new front passenger airbag assembly with the airbag deployment direction facing up.**
   Storing the airbag assembly with the airbag deployment direction facing down could cause a serious accident if the airbag inflates.
2. **Never measure the resistance of the airbag squib. (This may cause the airbag deploy, which is very dangerous.)**
3. Grease should not be applied to the front passenger airbag assembly and the airbag door should not be cleaned with detergents of any kind.
4. Store the airbag assembly where the ambient temperature remains below 93°C (200°F), without high humidity and away from electrical noise.
5. When using electric welding, first disconnect the airbag connector (yellow color and 2 pins) installed on the glove compartment finish plate at the left side of the glove compartment before starting work.
6. **When disposing of a vehicle or the airbag assembly alone, the airbag should be deployed using an SST before disposal (See page RS—14). Carry out the operation in a safe place away from electrical noise.**

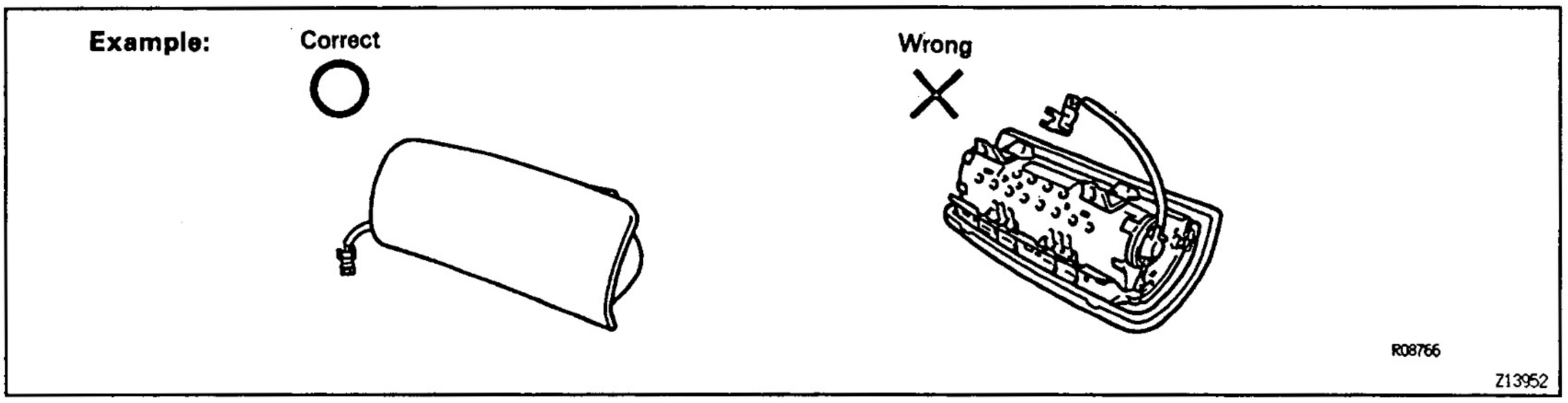

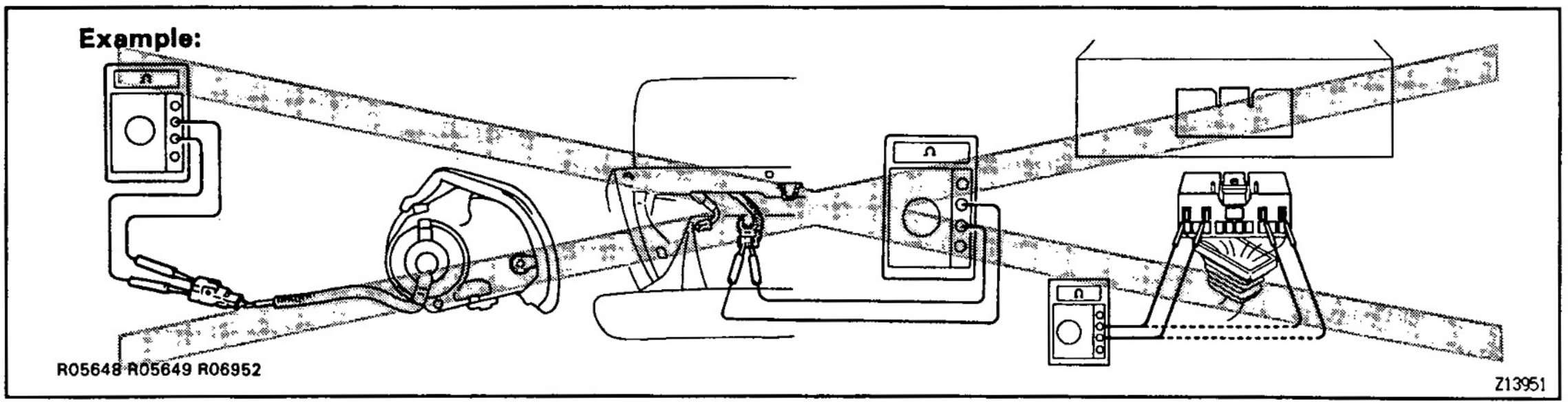

Seat Belt Pretensioner

1. Before doing any operation which will apply a strong shock to the vehicle, or before removing the seat belt pretensioner, be sure to apply the sensor shock.
2. Never disassemble the seat belt pretensioner.
3. Do not subject the seat belt pretensioner to shocks or bring magnets close to it.
4. Do not expose the seat belt pretensioner to hight temperature or fire.
5. Do not drop the seat belt pretensioner. Never use a seat belt pretensioner which has been dropped.
6. Never install the seat belt pretensioner in another vehicle.
7. Store removed seat belt pretensioners on a flat, stable surface.
8. After frontal collision, always check whether the seat belt pretensioners have been activated.
9. When disposing of a vehicle or the pretensioner by itself, always activate the pretensioner before disposal (See page BO—74).
10. The seat belt pretensioner is hot when activated, so let it cool down fully before you dispose of it. Never apply water to the seat belt pretensioner.

Airbag Sensor Assembly

The connector to the airbag sensor assembly should be connected or disconnected with the sensor mounted on the floor. If the connector is connected or disconnected while the airbag sensor assembly is not mounted to the floor, it could cause undesired ignition of the airbag system.

Wire Harness and Connector

The airbag system's wire harness is integrated with the cowl wire harness assembly. The wires for the airbag wire harness are encased in a yellow corrugated tube. All the connectors for the system are also a standard yellow color. If the airbag system wire harness becomes disconnected or the connector becomes broken due to an accident, etc., repair or replace it.

IN

WHEN SERVICING FULL—TIME 4WD VEHICLES

IN04M—01

The Full—Time 4WD LAND CRUISER /LAND CRUISER PRADO is equipped with the mechanical lock type center differential system.
When carrying out any kind of servicing or testing on a full—time 4WD in which the front or rear wheels are made to rotate (braking test, speedometer test, on—vehicle wheel balancing, etc.), or when towing the vehicle, be sure to observe the precautions given below.
If incorrect preparations or test procedures are used, the test will not only be unsuccessful, but may be dangerous as well.
Therefore, before beginning any such servicing or test, be sure to check the following items:

(1) Whether wheels should be touching ground or jacked up
(2) Transmission gear position
(3) Maximum testing vehicle speed
(4) Maximum testing time
(5) Transfer gear position

Also, make sure the following are observed:

CAUTION:

- **Never accelerate or decelerate the vehicle suddenly**
- **Observe the other cautions given for each individual test**

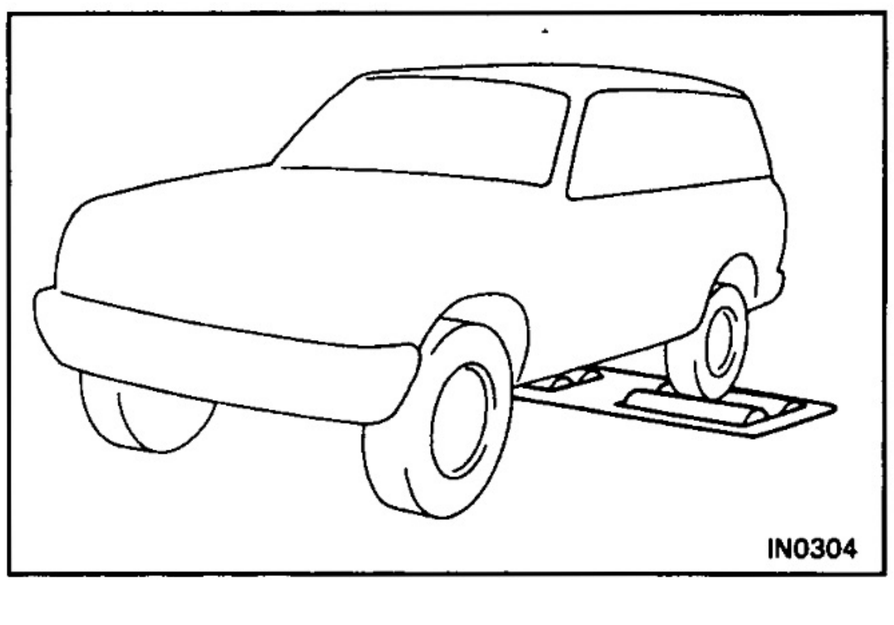
IN0304

Before Beginning Test

During tests with a brake tester or chassis dynamometer, such as braking force tests or speedometer tests, if only the front or rear wheels are to be rotated, it is necessary to set the position of the center differential to the FREE position or to the LOCK position depending on the type of test being performed.

(1) Select the position of the center differential by select the transfer shift lever HL position.
(2) After selecting the position, confirm the operation of indicator light.

Braking Force Test

Vehicle Speed: Below 0.5 km/h or 0.3 mph

When doing low—speed type brake tester measurements, observe the following instructions.

(1) Position the wheels to be tested (front or rear) on the tester.
(2) Shift the transmission shift lever to Neutral.
(3) Idle the engine, operate the brake booster and do the test.

Speedometer Test or Other Tests (Using Speedometer Tester or Chassis Dynamometer)

No.	Chassis Dynamometer Type	Vehicle Condition	Vehicle Speed and Test Time	4-Wheel Drive Control Lever Position
1	2-Wheel Chassis Dynamometer	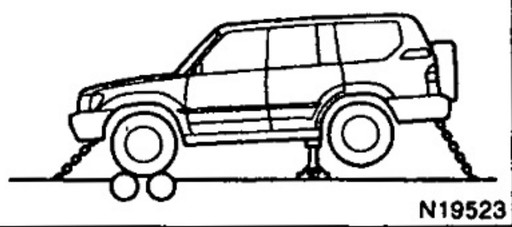 N19523	Low speed (60 km/h or less) and 1minute or less	HL (Locked)
		Remove propeller Shaft. 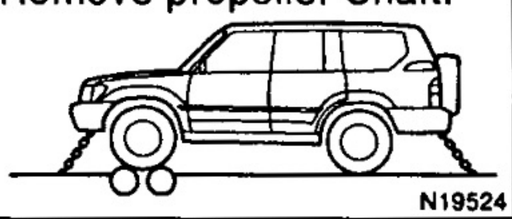 N19524	No restriction on vehicle speed or duration of test	HL (Locked)
2	4-Wheel Free Chassis Dynamometer	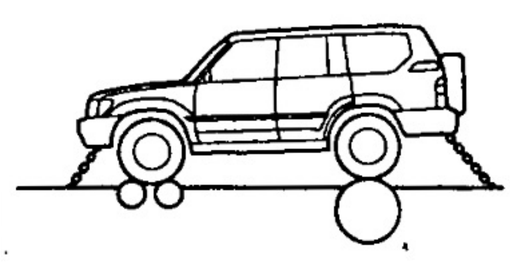 N19525	Low speed (60 km/h or less) and 1minute or less	HL (Locked)
			No restriction on vehicle speed or duration of test	HL (Locked)
3	4-Wheel Driven Chassis Dynamometer	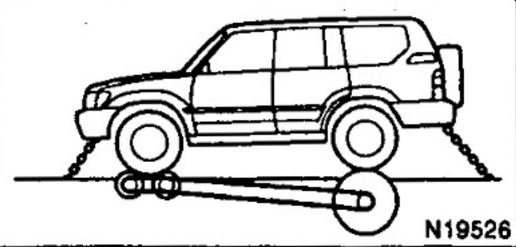 N19526	No restriction on vehicle speed or duration of test	HF (Free)

V07999

NOTICE:

1. **Confirm that the vehicle is securely immobilized.**
2. **Never operate the clutch or brakes suddenly, suddenly drive the wheels, or suddenly decelerate.**

On–Vehicle Wheel Balancing

When doing on–vehicle wheel balancing on a full–time 4WD vehicle, to prevent the wheels from rotating at different speeds in different directions from each other (which could damage the center differential), always be sure to observe the following precautions:

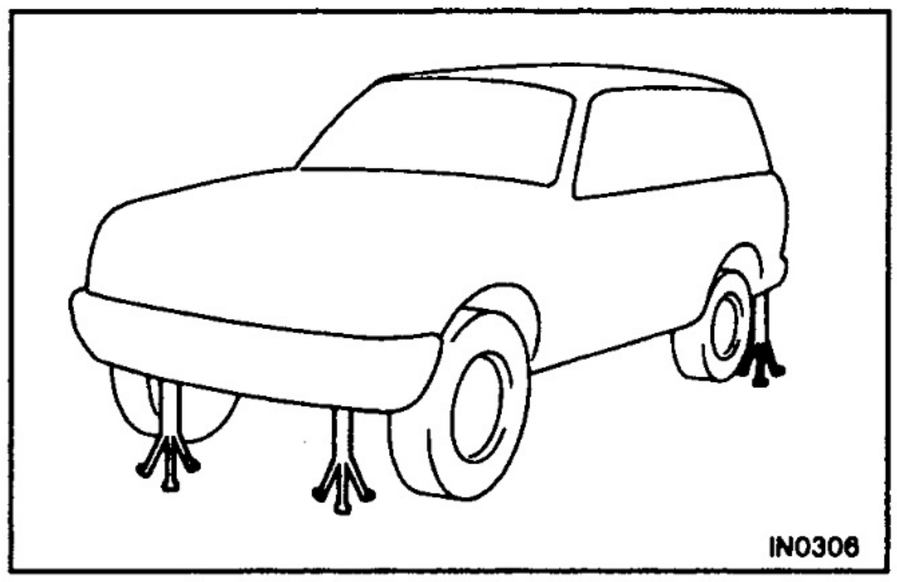
IN0306

(1) All 4 wheels should be jacked up, clearing the ground completely.
(2) The center differential should be in the LOCK position with the transfer gear in HL position.
(3) The parking brake lever should be fully released.

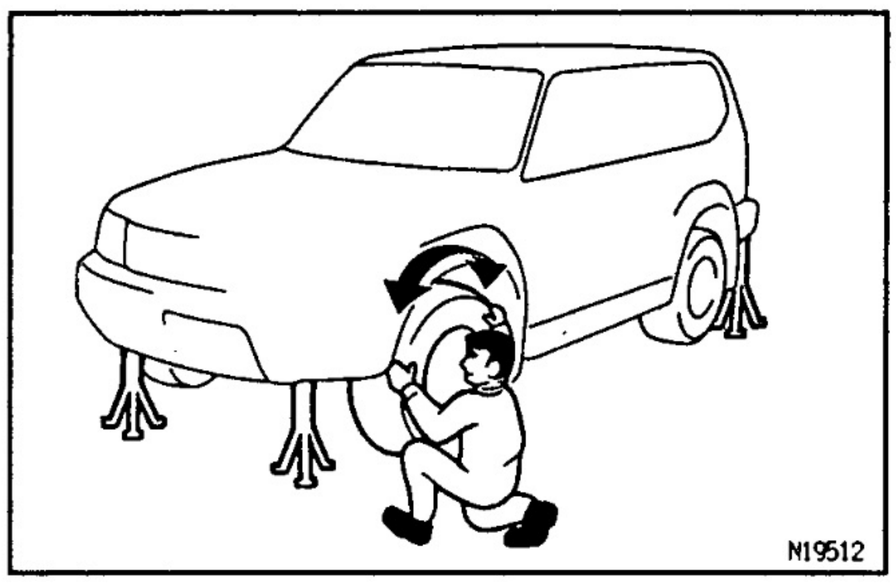
N19512

(4) None of the brakes should be allowed to drag.

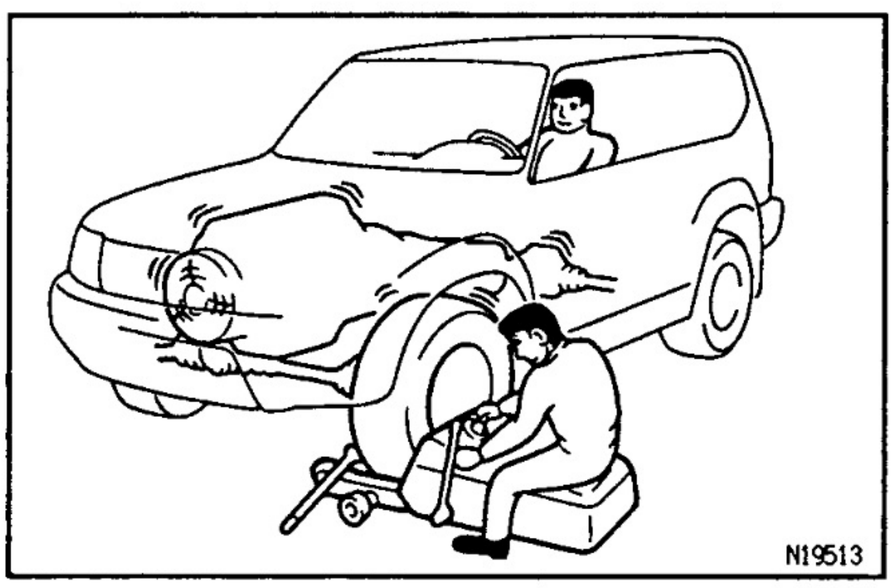
N19513

(5) The wheels should be driven with both the engine and the wheel balancer.

HINT: When doing this, be careful of the other wheels, which will rotate at the same time.

(6) Avoid sudden acceleration, deceleration and braking.
(7) Carry out the wheel balancing with the transmission in D range or 3rd gear.

W04K-04

WHEN TOWING FULL–TIME 4WD VEHICLES

1. Only use one of the methods shown below to tow the vehicle.
2. When there is trouble with the chassis and drive train, use method ① (flat bed truck)

IN

Towing Method \ Condition	Parking Brake	Transmission Shift Lever Position (M/T)	Transmission Shift Lever Position (A/T)	Transfer Shift Lever Position
① Flat Bed Truck 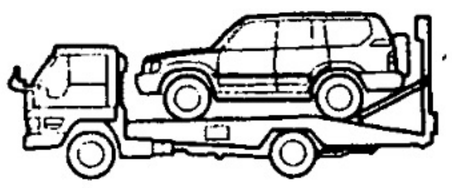 N19527	Applied		"P" Range	"H" Position
② Wheel Lift Type Truck with Dollies – From Front 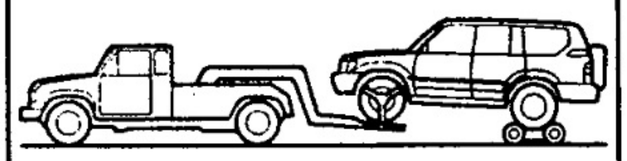 N20098				
③ Wheel Lift Type Truck with Dollies – From Rear  N20099				
④ Towing with Rope 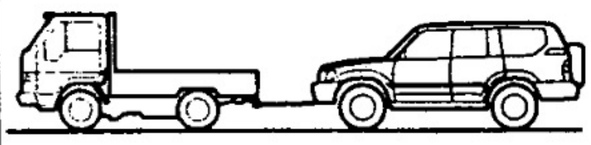 N19530	Released	Neutral	"N" Range	"HF" Position
	HINT : Do not tow the vehicle at a speed faster than 45 km/h (30mph) or distance greater than 80 km (50 miles).			

V08065

HINT: Do not use any towing methoeds other than shown above.
For example, the towing method shown below is dangerous, so do not use it.

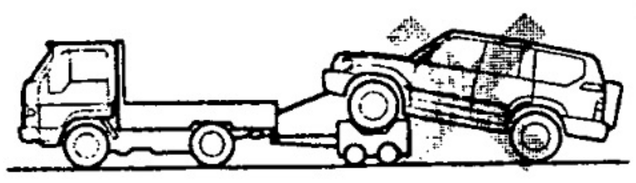 N19531	During towing with this towing method, there is a danger of the drive train heating up and causing breakdown, or of the front wheels flying off the dolly.

V08066

FOR VEHICLES EQUIPPED WITH A CATALYTIC CONVERTER

IN006-06

CAUTION: If large amounts of unburned gasoline flow into the converter, it may overheat and create a fire hazard. To prevent this, observe the following precautions and explain them to your customer.

1. **Use only unleaded gasoline.**
2. **Avoid prolonged idling.**
   Avoid running the engine at idle speed for more than 20 minutes.
3. **Avoid spark jump test.**

(a) Perform spark jump test only when absolutely necessary. Perform this test as rapidly as possible.
(b) While testing, never race the engine.

4. **Avoid prolonged engine compression measurement.**
   Engine compression tests must be done as rapidly as possible.
5. **Do not run engine when fuel tank is nearly empty.**
   This may cause the engine to misfire and create an extra load on the converter.
6. **Avoid coasting with ignition turned off and prolonged braking.**
7. **Do not dispose of used catalyst along with parts contaminated with gasoline or oil.**

IF VEHICLE IS EQUIPPED WITH MOBILE COMMUNICATION SYSTEM

IN06A-02

For vehicles with mobile communication systems such as two—way radios and cellular telephones, observe the following precautions.

(1) Install the antenna as far as possible away from the ECU and sensors of the vehicle's electronic system.
(2) Install the antenna feeder at least 20 cm (7.87 in.) away from the ECU and sensors of the vehicle's electronics systems. For details about ECU and sensors locations, refer to the section on the applicable component.
(3) Do not wind the antenna feeder together with the other wiring. As much as possible, also avoid running the antenna feeder parallel with other wire harnesses.
(4) Confirm that the antenna and feeder are correctly adjusted.
(5) Do not install powerful mobile communications system.

HOW TO TROUBLESHOOT ECU CONTROLLED SYSTEMS

A large number of ECU controlled systems are used in the LAND CRUISER/LAND CRUISER PRADO. In general, the ECU controlled system is considered to be a very intricate system requiring a high level of technical knowledge and expert skill to troubleshoot. However, the fact is that if you proceed to inspect the circuits one by one, troubleshooting of these systems is not complex. If you have adequate understanding of the system and a basic knowledge of electricity, accurate diagnosis and necessary repair can be performed to locate and fix the problem. This manual is designed through emphasis of the above standpoint to help service technicians perform accurate and effective troubleshooting, and is compiled for the following major ECU controlled systems:

System	Page
1. Automatic Transmission	AT-19
2. Anti-Lock Brake	BR-55
3. Supplemental Restraint System	RS-29
4. Cruise Control	BE-189

The troubleshooting procedure and how to make use of it are described on the following pages.

HOW TO PROCEED WITH TROUBLESHOOTING

Carry out troubleshooting in accordance with the procedure on the following page. Here, only the basic procedure is shown. Details are provided in each section, showing the most effective methods for each circuit. Confirm the troubleshooting procedures first for the relevant circuit before beginning troubleshooting of that circuit.

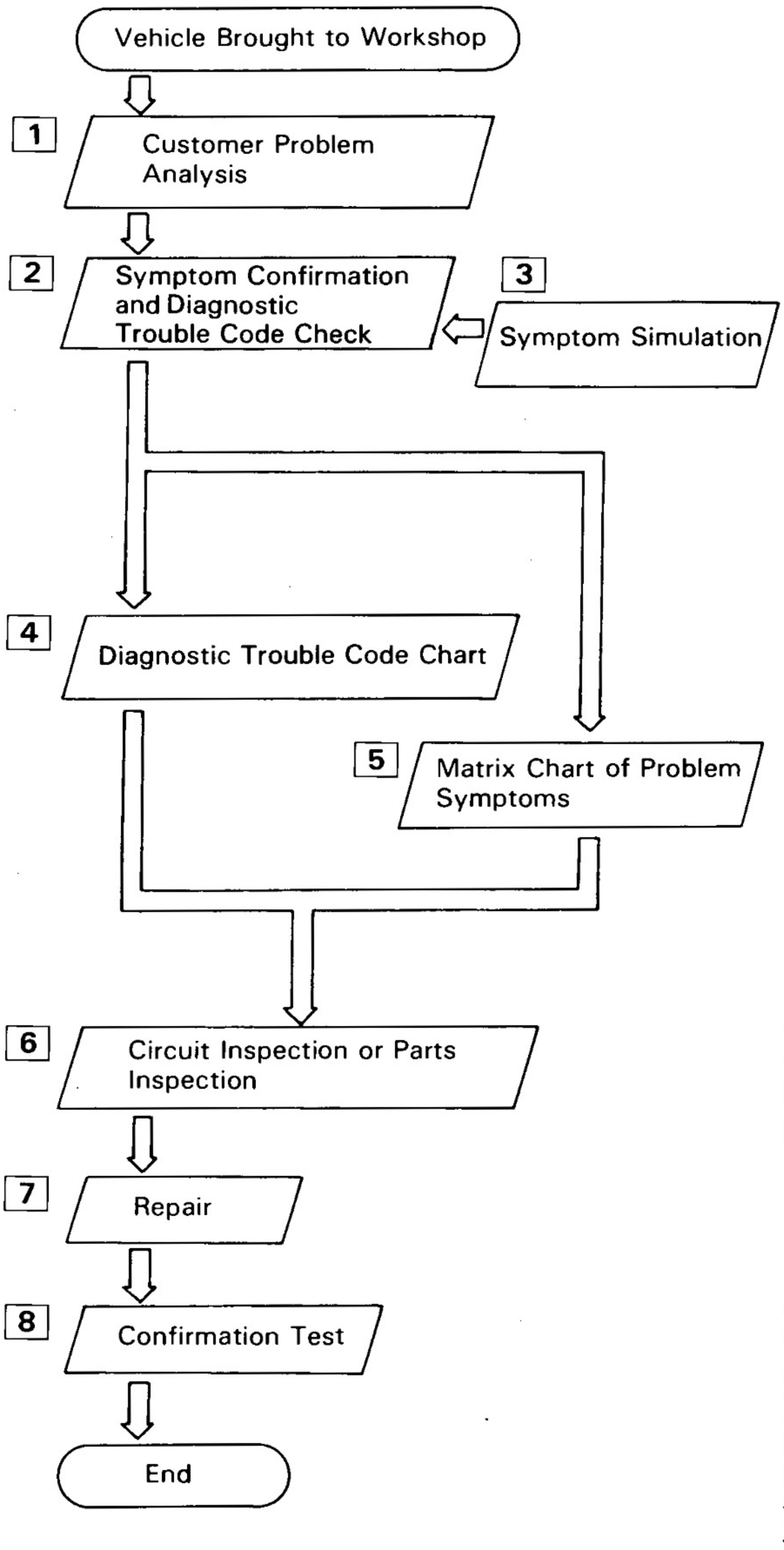

1

Ask the customer about the conditions and the environment when the problem occurred.

2 3

Confirm the symptoms and the problem conditions, and check the diagnostic trouble codes. (When the problem symptoms do not appear during confirmation, use the symptom simulation method described later on.)

4 5 6

Check the results obtained in Step 2 , then confirm the inspection procedure for the system or the part which should be checked using the diagnostic trouble code chart or the matrix chart of problem symptoms.

7

Check and repair the affected system or part in accordance with the instructions in Step 6 .

8

After completing repairs, confirm that the problem has been eliminated.
(If the problem is not reproduced, perform the confirmation test under the same conditions and in the same environment as when it occurred for the first time.)

1 CUSTOMER PROBLEM ANALYSIS

In troubleshooting, the problem symptoms must be confirmed accurately and all preconceptions must be cleared away in order to give an accurate judgement. To ascertain just what the problem symptoms are, it is extremely important to ask the customer about the problem and the conditions at the time it occurred.

Important Points in the Problem Analysis

The following 5 items are important points in the problem analysis. Past problems which are thought to be unrelated and the repair history, etc. may also help in some cases, so as much information as possible should be gathered and its relationship with the problem symptoms should be correctly ascertained for reference in troubleshooting. A customer problem analysis table is provided in the troubleshooting section for each system for your use.

Important Points in the Customer Problem Analysis

- What ——— Vehicle model, system name
- When ——— Date, time, occurrence frequency
- Where ——— Road conditions
- Under what conditions? ——— Running conditions, driving conditions, weather conditions
- How did it happen? ——— Problem symptoms

(Sample) Transmission Control System Check Sheet

CUSTOMER PROBLEM ANALYSIS AX090-1P

Electronically-Controlled Automatic Transmission Check Sheet	Inspector's Name:

Customer's Name		**Registration No.**	
		Registration Year	/ /
		Frame No.	
Date Vehicle Brought In	/ /	**Odometer Reading**	km mile

Date Problem Occurred	/ /
How Often does Problem Occur	☐ Continuous ☐ Intermittent (times a day)

Symptoms	☐ Vehicle does not move. (☐ Any range ☐ Paticular range)
	☐ No up-shift (☐ 1st → 2nd ☐ 2nd → 3rd ☐ 3rd → O/D)
	☐ No down-shift (☐ O/D → 3rd ☐ 3rd → 2nd ☐ 2nd → 1st)
	☐ Lock-up malfunction
	☐ Shift point too high or too low.
	☐ Harsh engagement (☐ N → D ☐ Lock-up ☐ Any drive range)
	☐ Slip or shudder
	☐ No Kick-down
	☐ Others

	☐ Normal

2 SYMPTOM CONFIRMATION AND DIAGNOSTIC TROUBLE CODE CHECK

The diagnostic system in the LAND CRUISER/LAND CRUISER PRADO fulfills various functions. The first function is the Diagnostic Trouble Code Check in which a malfunction in the signal circuits to the ECU is stored in code in the ECU memory at the time of occurrence, to be output by the technician during troubleshooting. Another function is the Input Signal Check which checks if the signals from various switches are sent to the ECU correctly. The air conditioner system has an Actuator Check function whereby the ECU automatically operates the actuators of the damper and blowermotor, etc. to check the operation. By using these check functions, the problem areas can be narrowed down quickly and troubleshooting can be performed effectively. Diagnostic functions are incorporated in the following systems in the LAND CRUISER/LAND CRUISER PRADO.

System	Diagnostic Trouble Code Check	Input Signal Check (Sensor Check)	Other Diagnosis Function
Automatic Transmission	○ (with Test Mode)	○	
Anti-Lock Brake	○	○	
Supplemental Restraint System	○		
Cruise Control	○	○	Cancel Signal Check

In diagnostic trouble code check, it is very important to determine whether the problem indicated by the diagnostic trouble code is still occurring or occurred in the past but returned to normal at present. In addition, it must be checked in the problem symptom check whether the malfunction indicated by the diagnostic trouble code is directly related to the problem symptom or not. For this reason, the diagnostic trouble codes should be checked before and after the symptom confirmation to determine the current conditions, as shown in the table below. If this is not done, it may depending on the case, result in unnecessary troubleshooting for normally operating systems, thus making it more difficult to locate the problem, or in repairs not pertinent to the problem. Therefore, always follow the procedure in correct order and perform the diagnostic trouble code check.

DIAGNOSTIC TROUBLE CODE CHECK PROCEDURE

Diagnostic Trouble Code Check (Make a note of and then clear)	Confirmation of Symptoms	Diagnostic Trouble Code Check	Problem Condition
Diagnostic Trouble Code Display	⇨ Problem symptoms exist	Same diagnostic trouble code is displayed	Problem is still occurring in the diagnostic circuit.
		Normal code is displayed	The problem is still occurring in a place other than in the diagnostic circuit. (The diagnostic trouble code displayed first is either for a past problem or it is a secondary problem.)
	⇨ No problem symptoms exist		The problem occurred in the diagnostic circuit in the past.
Normal Code Display	⇨ Problem symptoms exist	Normal code is displayed	The problem is still occurring in a place other than in the diagnostic circuit.
	⇨ No problem symptoms exist	Normal code is displayed	The problem occurred in a place other than in the diagnostic circuit in the past.

Taking into account the above points, a flow chart showing how to proceed with troubleshooting using the diagnostic trouble code check is shown below. This flow chart shows how to utilize the diagnostic trouble code check effectively, then by carefully checking the results, indicates how to proceed either to diagnostic trouble code troubleshooting or to troubleshooting of problem symptoms.

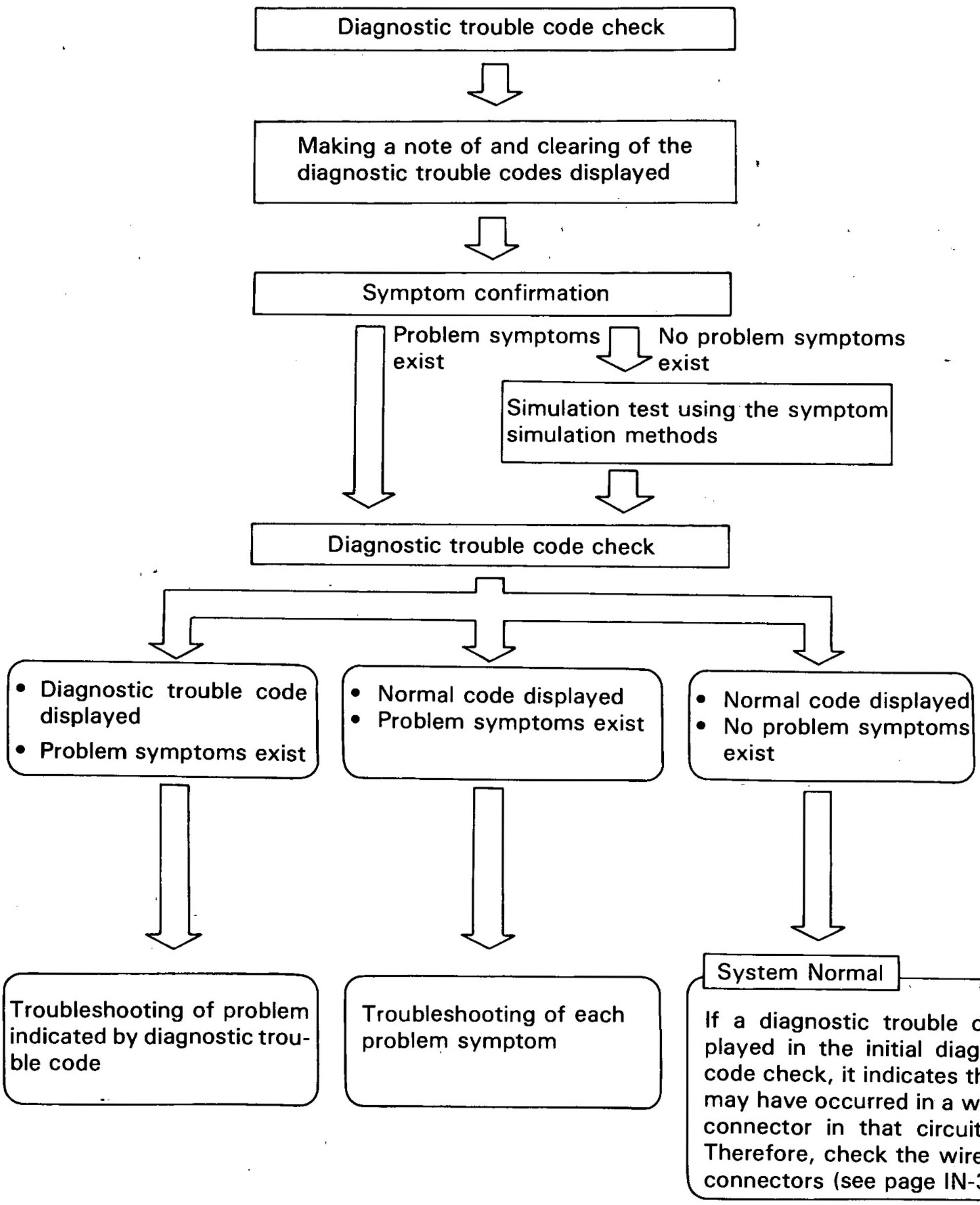

3 SYMPTOM SIMULATION

The most difficult case in troubleshooting is when there are no problem symptoms occurring. In such cases, a thorough customer problem analysis must be carried out, then simulate the same or similar conditions and environment in which the problem occurred in the customer's vehicle. No matter how much experience a technician has, or how skilled he may be, if he proceeds to troubleshoot without confirming the problem symptoms he will tend to overlook something important in the repair operation and make a wrong guess somewhere, which will only lead to a standstill. For example, for a problem which only occurs when the engine is cold, or for a problem which occurs due to vibration caused by the road during driving, etc., the problem can never be determined so long as the symptoms are confirmed with the engine hot condition or the vehicle at a standstill. Since vibration, heat or water penetration (moisture) are likely causes for problems which are difficult to reproduce, the symptom simulation tests introduced here are effective measures in that the external causes are applied to the vehicle in a stopped condition.

Important Points in the Symptom Simulation Test

In the symptom simulation test, the problem symptoms should of course be confirmed, but the problem area or parts must also be found out. To do this, narrow down the possible problem circuits according to the symptoms before starting this test and connect a tester beforehand. After that, carry out the symptom simulation test, judging whether the circuit being tested is defective or normal and also confirming the problem symptoms at the same time. Refer to the matrix chart of problem symptoms for each system to narrow down the possible causes of the symptom.

1 VIBRATION METHOD: When vibration seems to be the major cause.

CONNECTORS

Slightly shake the connector vertically and horizontally.

WIRE HARNESS

Slightly shake the wire harness vertically and horizontally. The connector joint, fulcrum of the vibration, and body through portion are the major areas to be checked thoroughly.

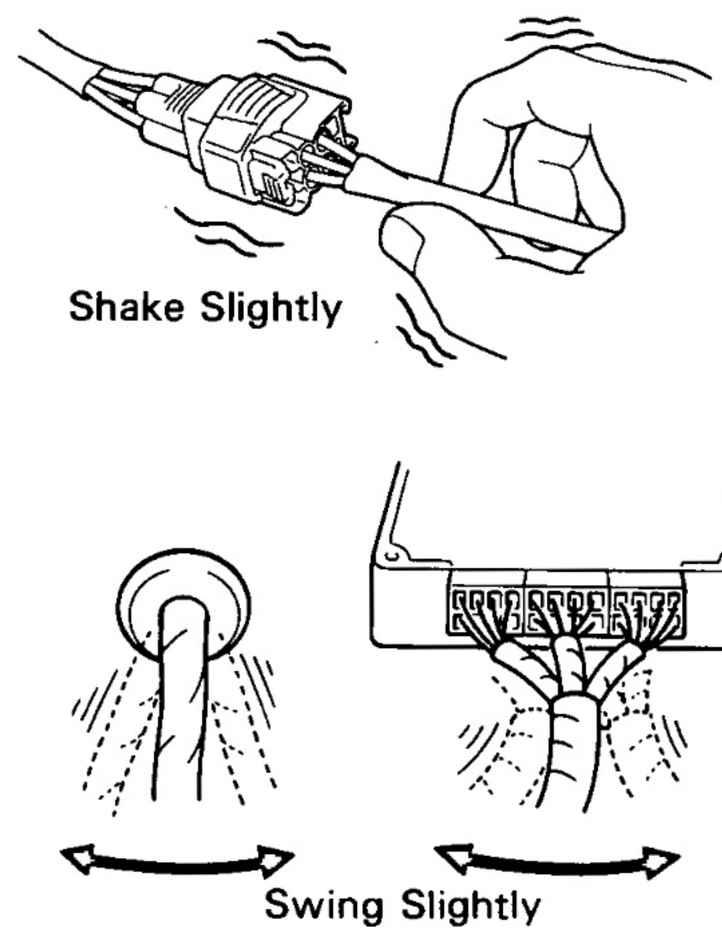

P19981
FI2332

PARTS AND SENSORS

Apply slight vibration with a finger to the part of the sensor considered to be the problem cause and check if the malfunction occurs.

HINT: Applying strong vibration to relays may result in open relays.

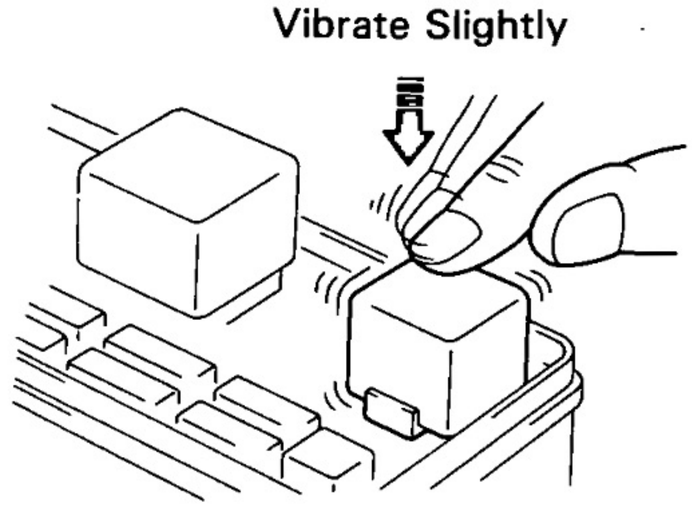

P20001

2 **HEAT METHOD: When the problem seems to occur when the suspect area is heated.**

Heat the component that is the likely cause of the malfunction with a hair dryer or similar object. Check to see if the malfunction occurs.

NOTICE:

(1) Do not heat to more than 60°C (140°F). (Temperature limit that no damage is done to the component).

(2) Do not apply heat directly to parts in the ECU.

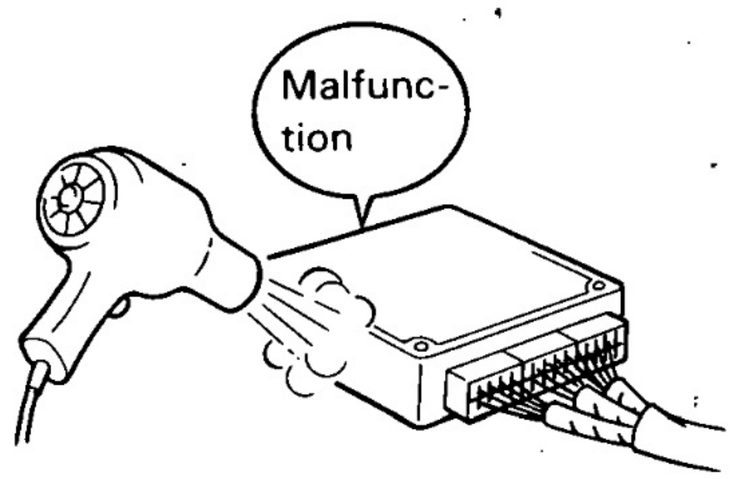

FI2334

3 **WATER SPRINKLING METHOD: When the malfunction seems to occur on a rainy day or in a high-humidity condition.**

Sprinkle water onto the vehicle and check to see if the malfunction occurs.

NOTICE:

(1) Never sprinkle water directly into the engine compartment, but indirectly change the temperature and humidity by applying water spray onto the radiator front surface.

(2) Never apply water directly onto the electronic components.

(Service hint)
If a vehicle is subject to water leakage, the leaked water may contaminate the ECU. When testing a vehicle with a water leakage problem, special caution must be used.



FI6649

4 **OTHER: When a malfunction seems to occur when electrical load is excessive.**

Turn on all electrical loads including the heater blower, head lights, rear window defogger, etc. and check to see if the malfunction occurs.

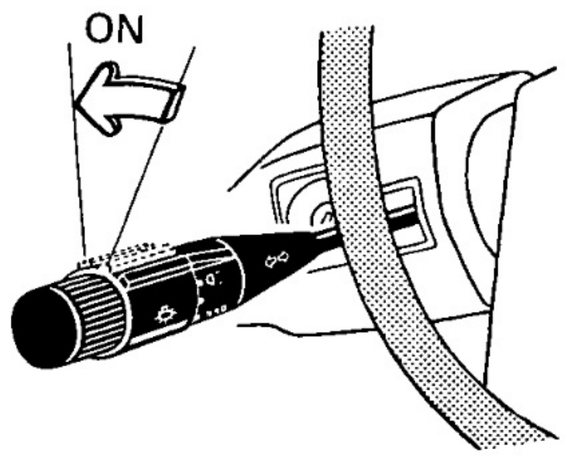

FI2336

IN

4 DIAGNOSTIC TROUBLE CODE CHART

The inspection procedure is shown in the table below. This table permits efficient and accurate troubleshooting using the diagnostic trouble codes displayed in the diagnostic trouble code check. Proceed with troubleshooting in accordance with the inspection procedure given in the diagnostic chart corresponding to the diagnostic trouble codes displayed.
The engine diagnostic trouble code chart is shown below as an example.

- DTC No.
  Indicates the diagnostic trouble code.
- Page or Instructions
  Indicates the page where the inspection procedure for each circuit is to be found, or gives instructions for checking and repairs.

- Detection Item
  Indicates the system of the problem or contents of the problem.

DTC CHART

AT100-04

If a DTC is displayed during the DTC check, check the circuit listed for that code in the table below and proceed to the page given.

DTC No. (See page)	Detection Item	Trouble Area	O/D OFF Light Blinks	Memory
38 (AT-44)	ATF Temperature Sensor Circuit Malfunction	• Open or short in ATF temperature sensor circuit • ATF temperature sensor faulty • Engine & ECT ECU faulty	○	○
42 (AT-46)	No.1 Speed Sensor Circuit (Back-up Sensor) Malfunction	• Open or short in No.1 speed sensor circuit • No.1 speed sensor (in combination meter) faulty • Engine & ECT ECU faulty	○	○
61 (AT-49)	No.2 Speed Sensor Circuit Malfunction	• Open or short in No.2 speed sensor circuit • No.2 speed sensor (in ATM) faulty • Engine & ECT ECU faulty	○	○
62 (AT-52)	No.1 Solenoid Valve Circuit Malfunction	• Open or short in No.1 solenoid valve circuit • No.1 solenoid valve faulty • Engine & ECT ECU faulty	○	○
63 (AT-52)	No.2 Solenoid Valve Circuit Malfunction	• Open or short in No.2 solenoid valve circuit • No.2 solenoid valve faulty • Engine & ECT ECU faulty	○	○
64 (AT-56)	Lock-up Solenoid Valve Circuit Malfunction	• Open or short in lock-up solenoid valve circuit • Lock-up solenoid valve faulty • Engine & ECT ECU faulty	×	○

V09011

- Trouble Area
  Indicates the suspect area of the problem.

5 MATRIX CHART OF PROBLEM SYMPTOMS

The suspect circuits or parts for each problem symptom are shown in the table below. Use this table to troubleshoot the problem when a "Normal" code is displayed in the diagnostic trouble code check but the problem is still occurring. Numbers in the table indicate the inspection order in which the circuits or parts should be checked.

HINT: When the problem is not detected by the diagnostic system even though the problem symptom is present, it is considered that the problem is occurring outside the detection range of the diagnostic system, or that the problem is occurring in a system other than the diagnostic system.

- Problem Symptom
- Page
  Indicates the page where the flow chart for each circuit is located.
- Circuit or Part Name
  Indicates the circuit or part which needs to be checked.

AT164-02

MATRIX CHART OF PROBLEM SYMPTOMS

If a normal code is displayed during the DTC check but the trouble still occurs, check the circuits for each symptom in the order given in the charts on the following pages and proceed to the page given for troubleshooting.
The Matrix Chart is divided into 3 chapters.
Chapter 1: Electronic Circuit Matrix Chart
Chapter 2: On—Vehicle Repair Matrix Chart
Chapter 3: Off—Vehicle Repair Matrix Chart
When troubleshooting, check Chapter 1 first. If instructions are given in Chapter 1 to proceed to Chapter 2 or 3, proceed as instructed.

1. If the instruction "Proceed to next circuit inspection shown on matrix chart" is given in the flow chart for each circuit, proceed to the circuit with the next highest number in the table to continue the check.
2. If the trouble still occurs even though there are no abnormalities in any of the other circuits, then check or replace the ECM.

Chapter 1. Electronic Circuit

See Page / Suspect Area / Symptom		AT-60 Neutral start switch circuit	AT-63 O/D cancel signal circuit (5VZ-FE only)	AT-65 O/D main switch & O/D OFF indicator light circuit	AT-69 Pattern select switch circuit	AT-75 Stop light switch circuit	AT-78 Throttle position sensor circuit	AT-81 Water temperature sensor circuit	AT-35 ECM
No up-shift	A particular gear, from 1st to 3rd gear,is not up-shifted	1							2
	3rd → O/D			3			2	1	4
No down-shift	O/D → 3rd		2	1					3
	A particular gear,from 1st to 3rd gear, is not down-shifted	1							2
No lock-up						1			2
						1			2
	oo low				1				
	O/D main switch is OFF			1					
	e is cold								

- Circuit Inspection, Inspection Order
  Indicates the circuit which needs to be checked for each problem symptom. Check in the order indicated by the numbers.

6 CIRCUIT INSPECTION

How to read and use each page is shown below.

- Diagnostic Trouble Code No. and Detection Item

- Circuit Description

  The major role and operation, etc. of the circuit and its component parts are explained.

DTC	38	ATF Temperature Sensor Circuit Malfunction

CIRCUIT DESCRIPTION

The ATF temperature sensor converts fluid temperature into a resistance value which is input into the Engine & ECT ECU.

DTC No.	DTC Detecting Condition	Trouble Area
38	Either a) or b) is detected for 0.5 sec. or more. a) Temp. sensor resistance is less than 79 Ω b) After the engine has been operating for 15 minutes or more, the resistance et the temp. sensor is more than 156 kΩ	• Open or short in ATF temperature sensor • ATF temperature sensor • Engine & ECT ECU

- Indicates the diagnostic trouble code, diagnostic trouble code set parameter and suspect area of the problem.

WIRING DIAGRAM

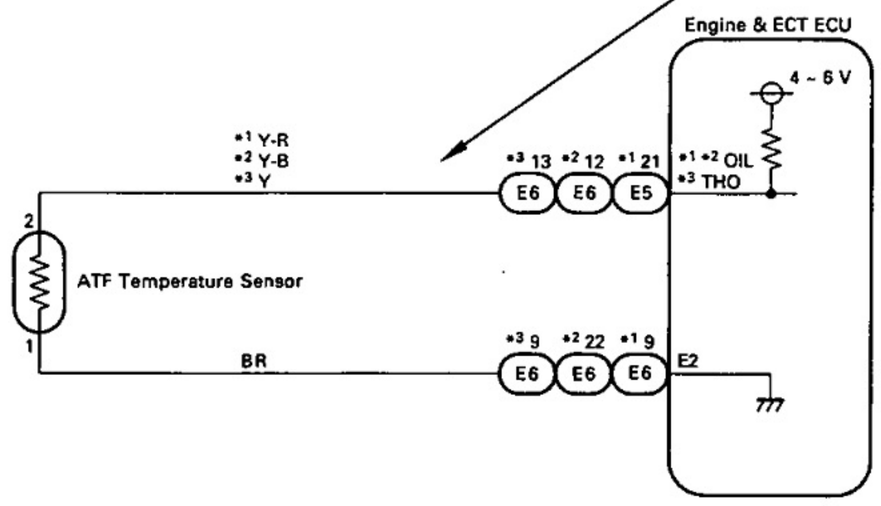

*1: 3RZ-FE
*2: 5VZ-FE
*3: 1KZ-TE

- Wiring Diagram

  This shows a wiring diagram of the circuit. Use this diagram together with ELECTRICAL WIRING DIAGRAM to thoroughly understand the circuit.

  Wire colors are indicated by an alphabetical code.

B = Black	L = Blue	R = Red
BR = Brown	LG = Light Green	V = Violet
G = Green	O = Orange	W = White
GR = Gray	P = Pink	Y = Yellow

  The first letter indicates the basic wire color and the second letter indicates the color of the stripe.

- Indicates the position of the ignition switch during the check.

LOCK Ignition Switch LOCK (OFF)
ON Ignition Switch ON
START Ignition Switch START
ACC Ignition Switch ACC

- **Inspection Procedure**

Use the inspection procedure to determine if the circuit is normal or abnormal, and, if it is abnormal, use it to determine whether the problem is located in the sensors, actuators, wire harness or ECU.

1 Check voltage between terminal OD1 of Engine & ECT ECU and body ground.

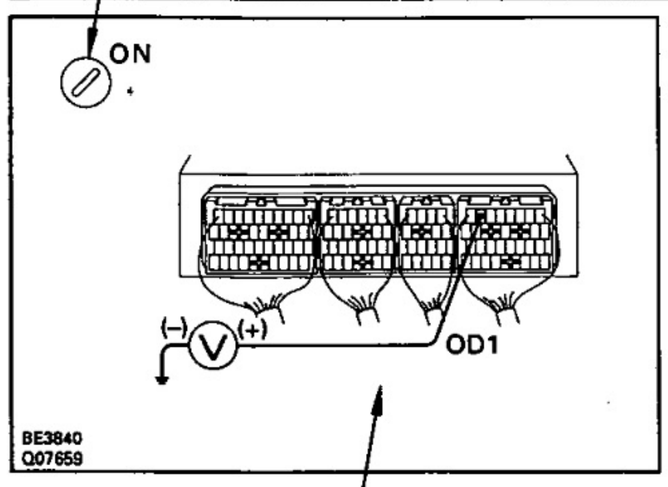

PREPARATION:
Turn the ignition switch ON.

CHECK:
Measure voltage between terminal OD1 of Engine & ECT ECU end body ground.

OK:
Voltage: 9 ~ 14 V

NG

OK **Proceed to next circuit inspection shown on matrix chart (See page AT-39).**

2 Check voltage between terminal OD of cruise control ECU harness side connector and body ground.



ruise control ECU connector.
itch ON.
of cruise control

- Indicates the place to check the voltage or resistance.
- Indicates the connector position to be checked, from the front or back side.

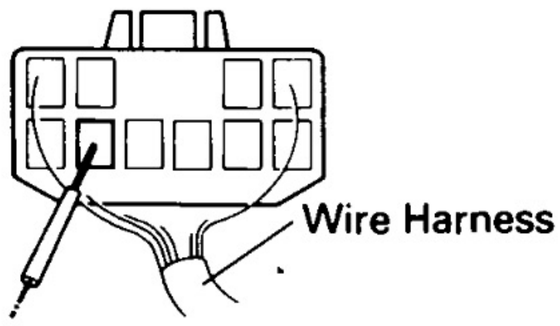

Check from the connector back side. (with harness)

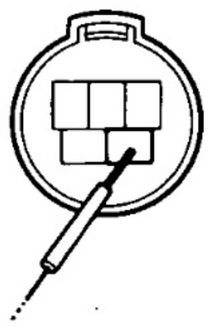

Check from the connector front side (without harness) In this case, care must be taken not to bend the terminals.

- Indicates the condition of the connector of ECU during the ckeck.

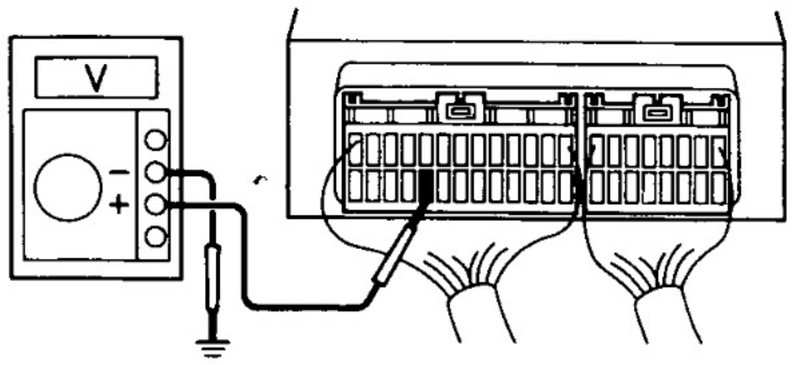

Connector being checked is connected.

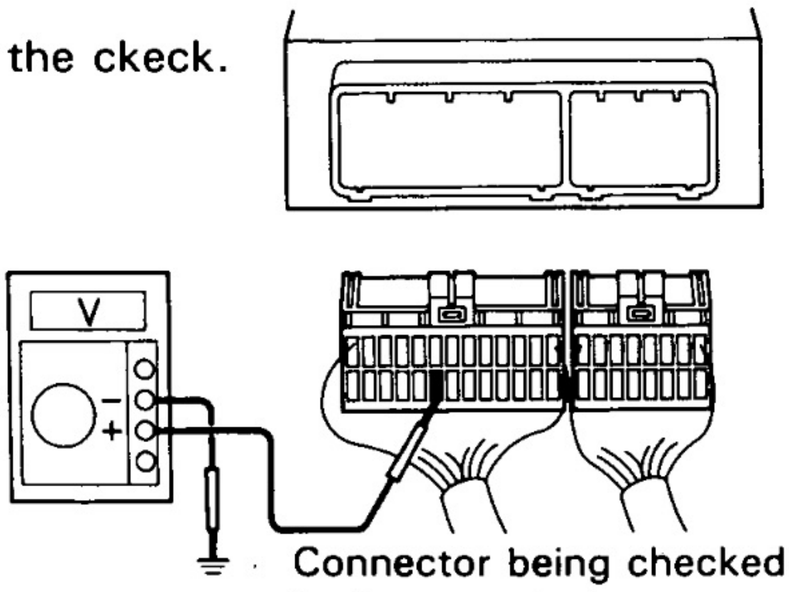

Connector being checked is disconnected.

HOW TO USE THE DIAGNOSTIC CHART AND INSPECTION PROCEDURE

1. For troubleshooting, diagnostic trouble code charts or problem symptom charts are provided for each circuit with detailed inspection procedures on the following pages.
2. When all the component parts, wire harnesses and connectors of each circuit except the ECU are found to be normal in troubleshooting, then it is determined that the problem is in the ECU. Accordingly, if diagnosis is performed without the problem symptoms occurring, the instruction will be to check and replace the ECU, even if the problem is not in the ECU. So, always confirm that the problem symptoms are occurring, or proceed with inspection while using the symptom simulation method.
3. The instructions "Check wire harness and connector" and "Check and replace ECU" which appear in the inspection procedure, are common and applicable to all diagnostic trouble codes. Follow the procedure outlined below whenever these instructions appear.

Check Wire Harness and Connector

The problem in the wire harness or connector is an open circuit or a short circuit.

OPEN CIRCUIT:

This could be due to a disconnected wire harness, faulty contact in the connector, a connector terminal pulled out, etc.

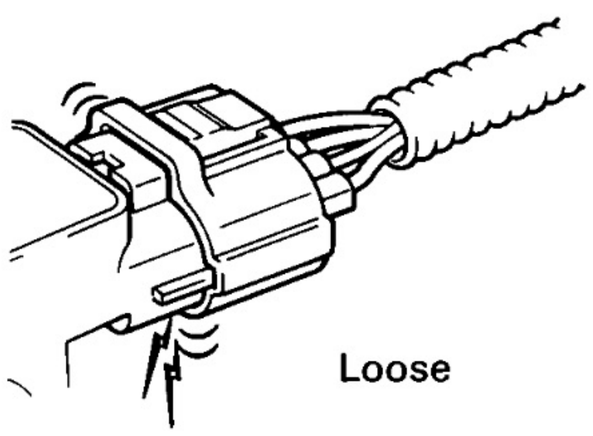

Loose

FI7049

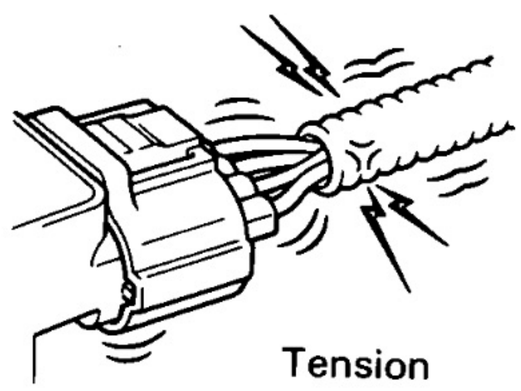

Tension

FI7048

HINT:

1. It is rarely the case that a wire is broken in the middle of it. Most cases occur at the connector. In particular, carefully check the connectors of sensors and actuators.
2. Faulty contact could be due to rusting of the connector terminals, to foreign materials entering terminals or a drop in the contact pressure between the male and female terminals of the connector. Simply disconnecting and reconnecting the connectors once changes the condition of the connection and may result in a return to normal operation.
   Therefore, in troubleshooting, if no abnormality is found in the wire harness and connector check, but the problem disappears after the check, then the cause is considered to be in the wire harness or connectors.

SHORT CIRCUIT:

This could be due to a short circuit between the wire harness and the body ground or to a short inside the switch, etc.

HINT:

- When there is a short between the wire harness and body ground, check thoroughly whether the wire harness is caught in the body or is clamped properly.

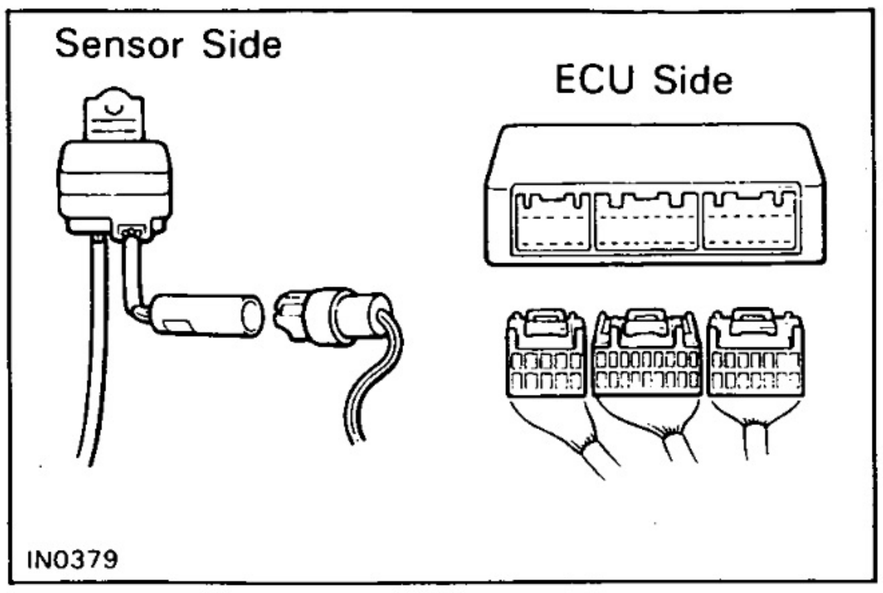

1. CONTINUITY CHECK (OPEN CIRCUIT CHECK)

(1) Disconnect the connectors at both ECU and sensor sides.

(2) Measure the resistance between the applicable terminals of the connectors.

Resistance: 1 Ω or less

HINT:

- Measure the resistance while lightly shaking the wire harness vertically and horizontally.
- When tester probes are inserted into a connector, insert the probes from the back. For waterproof connectors in which the probes cannot be inserted from the back, be careful not to bend the termianls when inserting the tester probes.

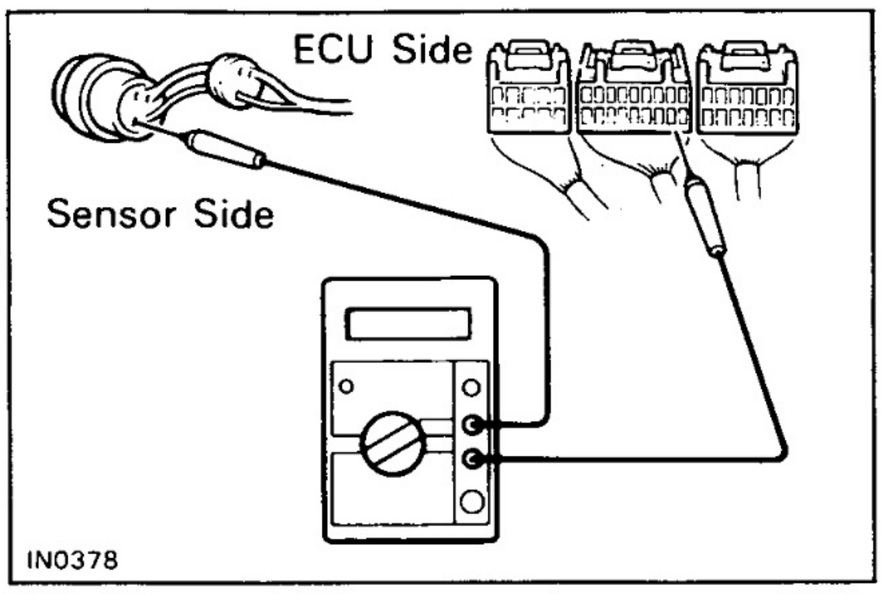

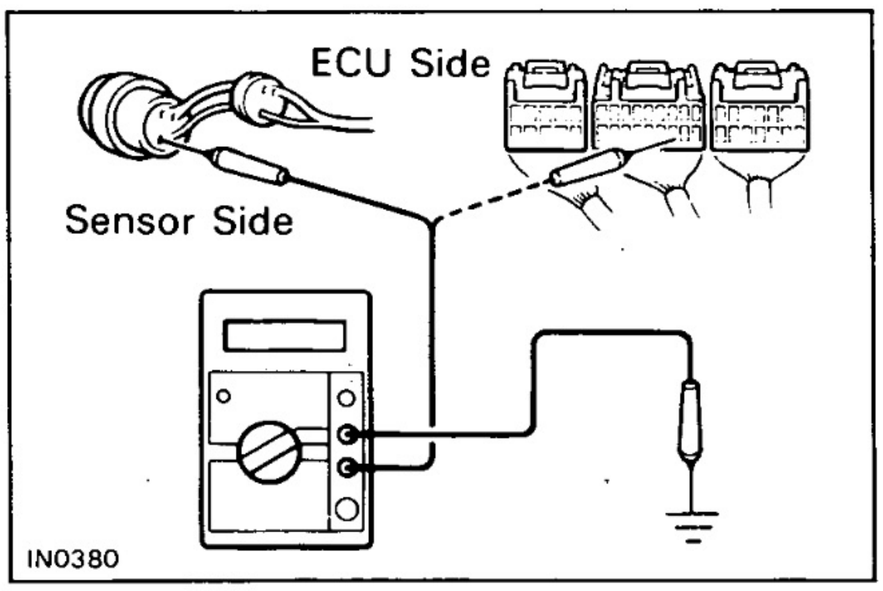

2. RESISTANCE CHECK (SHORT CIRCUIT CHECK)

(1) Disconnect the connectors at both ends.

(2) Measure the resistance between the applicable terminals of the connectors and body ground. Be sure to carry out this check on the connectors on both ends.

Resistance: 1 MΩ or higher

HINT: Measure the resistance while lightly shaking the wire harness vertically and horizontally.

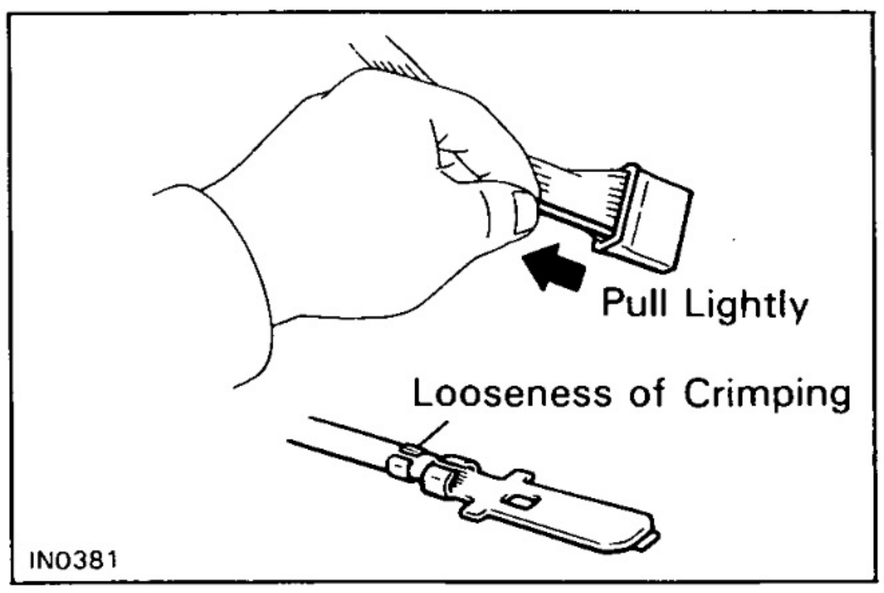

3. VISUAL CHECK AND CONTACT PRESSURE CHECK

(1) Disconnect the connectors at both ends.

(2) Check for rust or foreign material, etc. on the terminals of the connectors.

(3) Check crimped portions for looseness or damage and check if the terminals are secured in the lock position.

HINT: The terminals should not come out when pulled lightly.

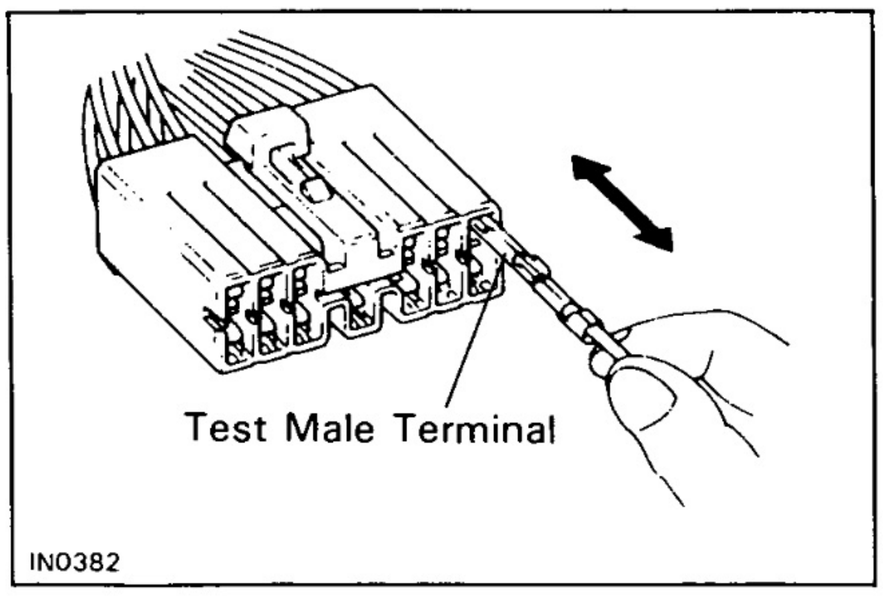

(4) Prepare a test male terminal and insert it in the female terminal, then pull it out.

HINT: When the test terminal is pulled out more easily than others, there may be poor contact in that section.

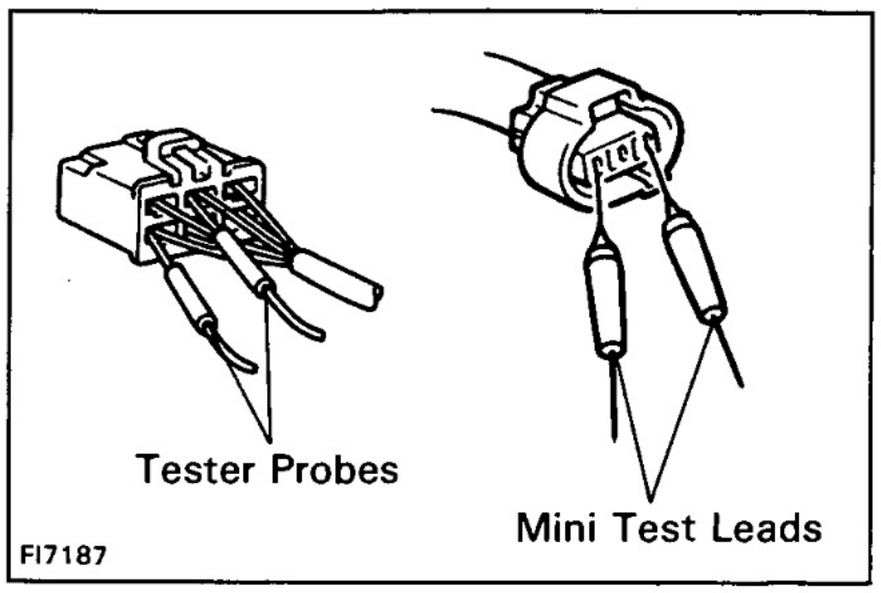

4. CONNECTOR HANDLING

When inserting tester probes into a connector, insert them from the rear of the connector. When necessary, use mini test leads. For water resistant connectors which cannot be accessed from behind, take good care not to deform the connector terminals.

Actual examples of the inspection method for open circuit and short circuit are explained below.

1. OPEN CIRCUIT CHECK

For the open circuit in the wire harness in Fig. 1, perform "(a) Continuity Check" or "(b) Voltage Check" to locate the section.

Fig. 1

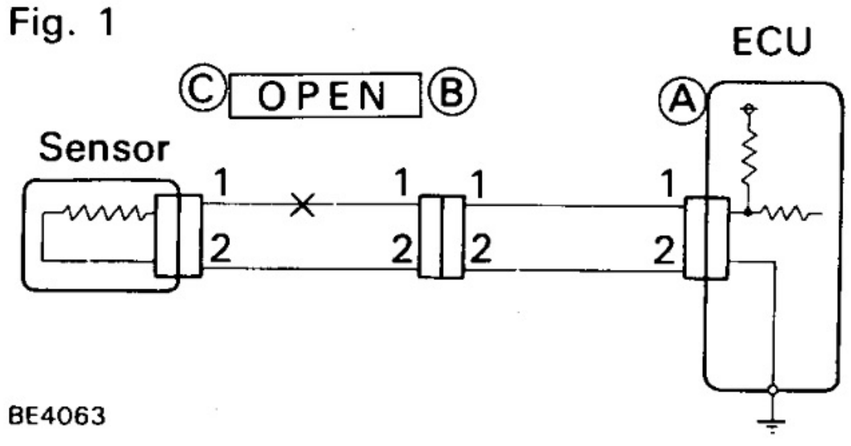

(a) Continuity Check

(1) Disconnect connectors Ⓐ and Ⓒ and measure the resistance betwen them.

In the case of Fig. 2,
Between terminal 1 of connector Ⓐ and terminal 1 of connector Ⓒ → No continuity (open)
Between terminal 2 of connector Ⓐ and terminal 2 of connector Ⓒ → Continuity
Therefore, it is found out that there is an open circuit between terminal 1 of connector Ⓐ and terminal 1 of connector Ⓒ.

Fig. 2

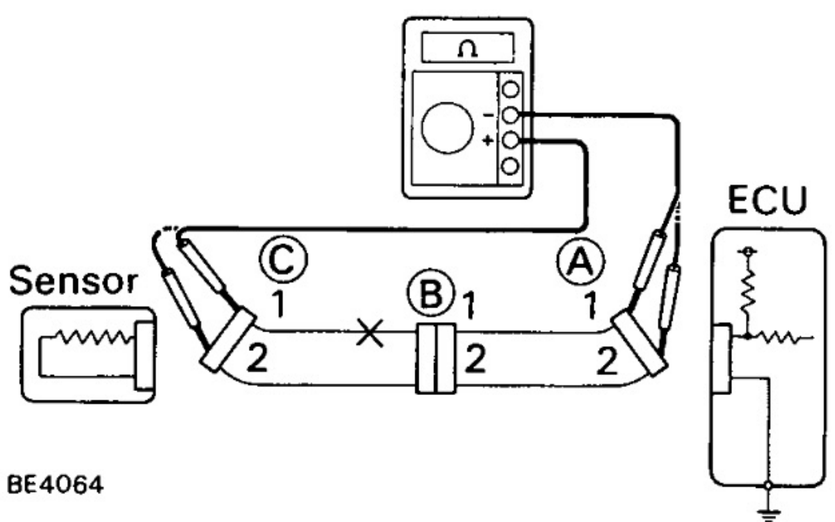

(2) Disconnect connector Ⓑ and measure the resistance between connectors Ⓐ and Ⓑ1, Ⓑ2 and Ⓒ.

In the case of Fig. 3,
Between terminal 1 of connector Ⓐ and terminal 1 of connector Ⓑ1 → Continuity
Between terminal 1 of connector Ⓑ2 and terminal 1 of connector Ⓒ → No Continuity (open)

Therefore, it is found out that there is an open circuit between terminal 1 of connector Ⓑ and terminal 1 of connector Ⓒ.

Fig. 3

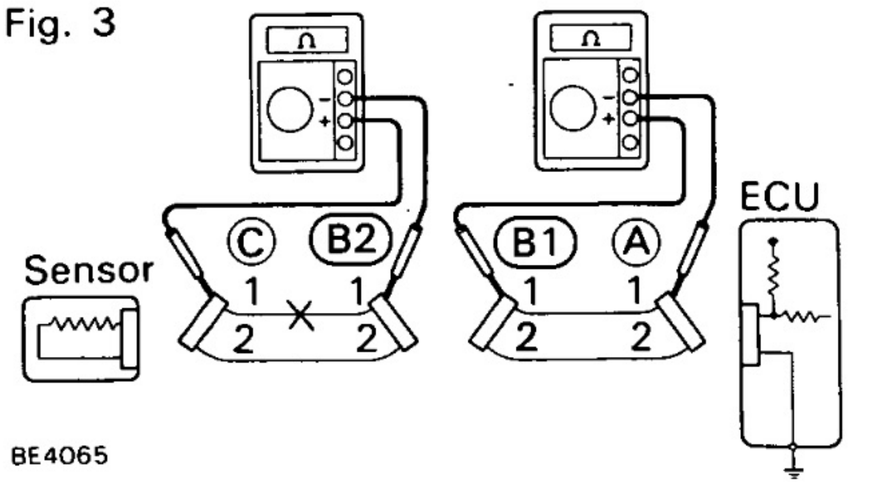

(b) Voltage Check

In a circuit in which voltage is applied (to the ECU connector terminal), an open circuit can be checked for by conducting a voltage check.

(1) As shown in Fig. 4, with each connector still connected, measure the voltage between body ground and terminal 1 of connector Ⓐ at the ECU 5 V output terminal, terminal 1 of connector Ⓑ, and terminal 1 of connector Ⓒ, in that order.

If the results are:

5 V: Between Terminal 1 of connector Ⓐ and Body Ground
5 V: Between Terminal 1 of connector Ⓑ and Body Ground
0 V: Between Terminal 1 of connector Ⓒ and Body Ground
then it is found out that there is an open circuit in the wire harness between terminal 1 of Ⓑ and terminal 1 of Ⓒ.

Fig. 4

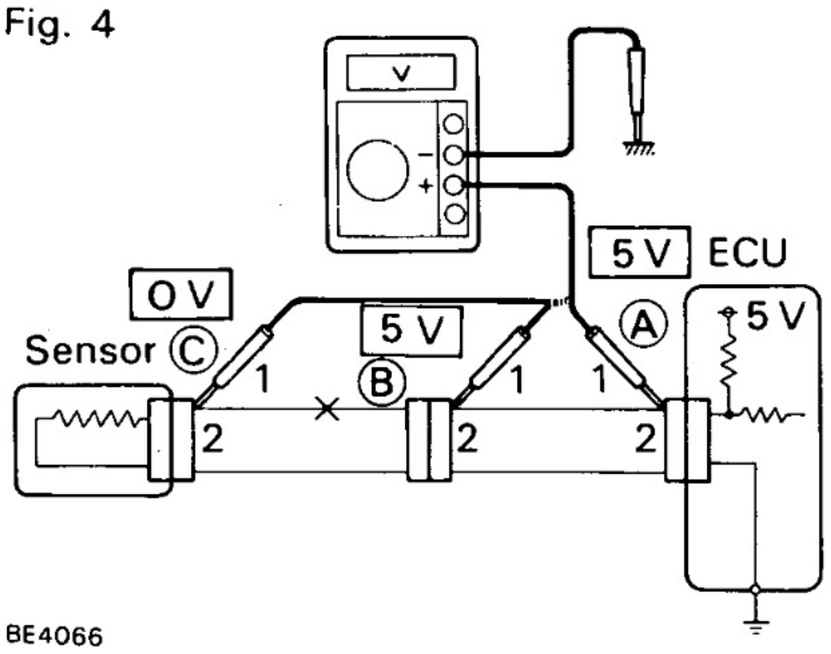

2. SHORT CIRCUIT CHECK

If the wire harness is ground shorted as in Fig. 5, locate the section by conducting a "continuity check with ground".

Fig. 5

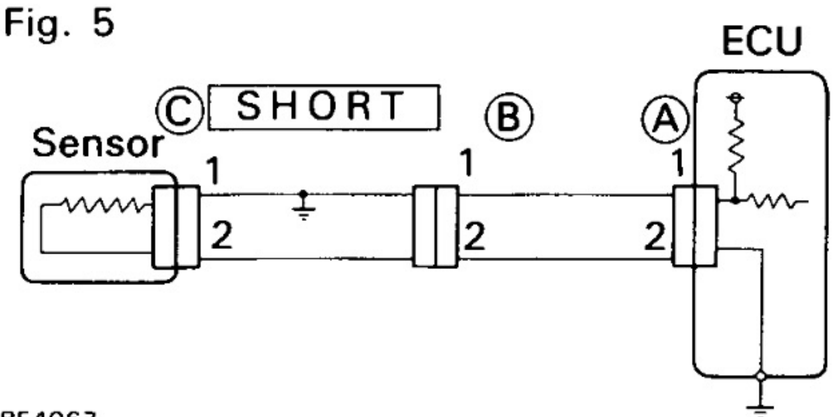

(a) Continuity Check with Ground

(1) Disconnect connectors Ⓐ and Ⓒ and measure the resistance between terminals 1 and 2 of connector Ⓐ and body ground.

In the case of Fig. 6,
Between terminal 1 of connector Ⓐ and body ground → Continuity
Between terminal 2 of connector Ⓐ and body ground → No continuity (short)
Therefore, it is found out that there is a short circuit between terminal 1 of connector Ⓐ and terminal 1 of connector Ⓒ.

Fig. 6

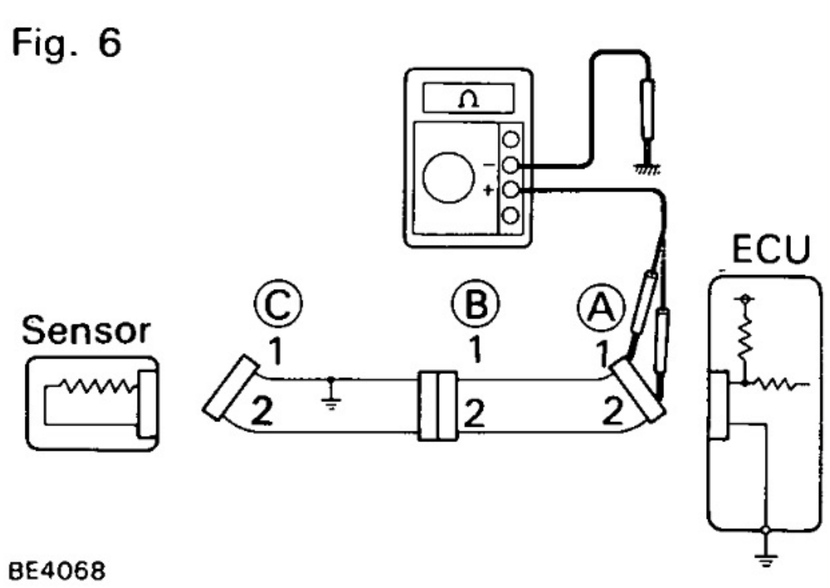

(2) Disconnect connector Ⓑ and measure the resistance between terminal 1 of connector Ⓐ and body ground, and terminal 1 of connector (B2) and body ground.

Between terminal 1 of connector Ⓐ and body ground → No continuity (short)
Between terminal 1 of connector (B2) and body ground → Continuity
Therefore, it is found out that there is a short circuit between terminal 1 of connector (B2) and terminal 1 of connector Ⓒ.

Fig. 7

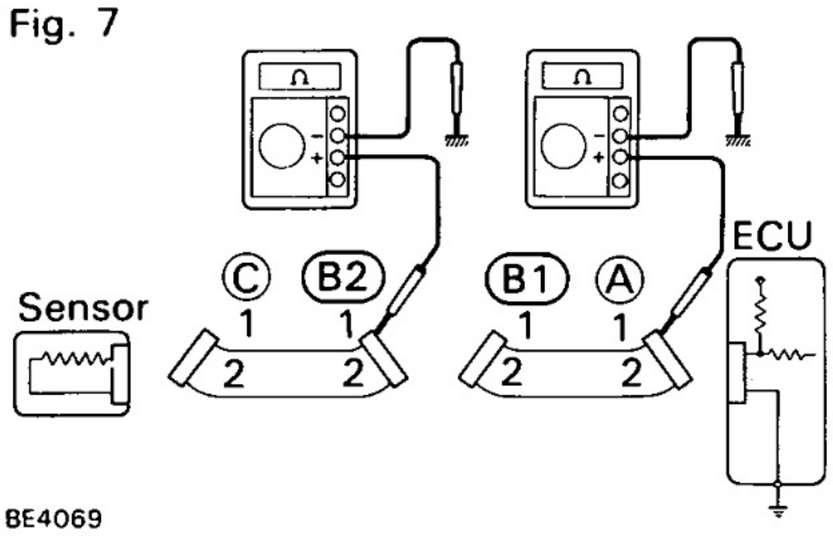

Check and Replace ECU

First check the ECU ground circuit. If it is faulty, repair it. If it is normal, the ECU could be faulty, so replace the ECU with a known good one and check if the symptoms appear.

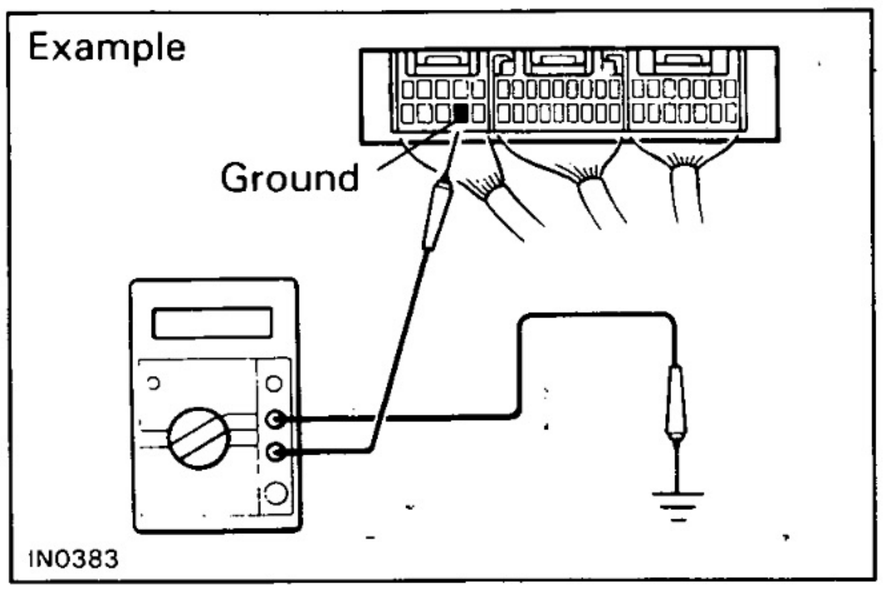

(1) Measure the resistance between the ECU ground terminal and the body ground.

Resistance: 1 Ω or less

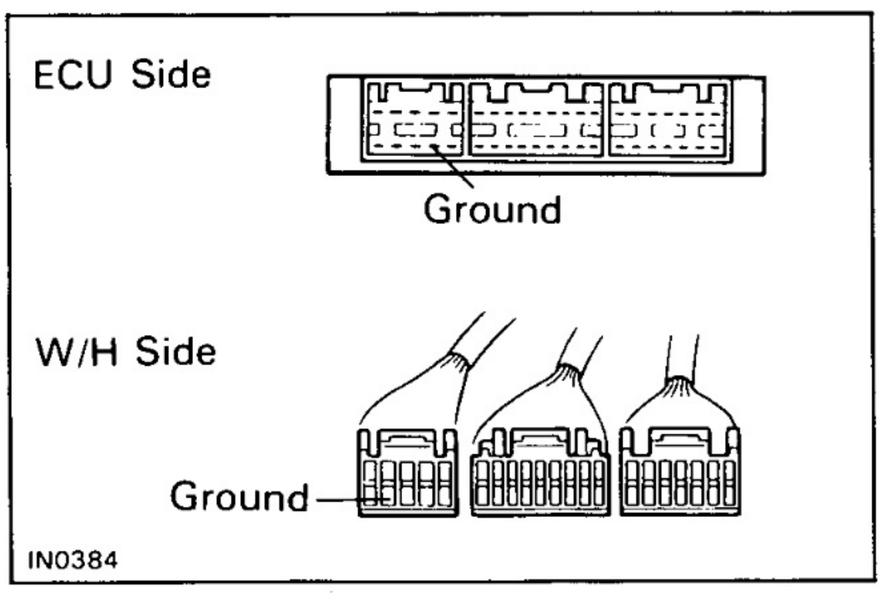

(2) Disconnect the ECU connector, check the ground terminals on the ECU side and the wire harness side for bend and check the contact pressure.

VEHICLE LIFT AND SUPPORT LOCATIONS

IN007-0T

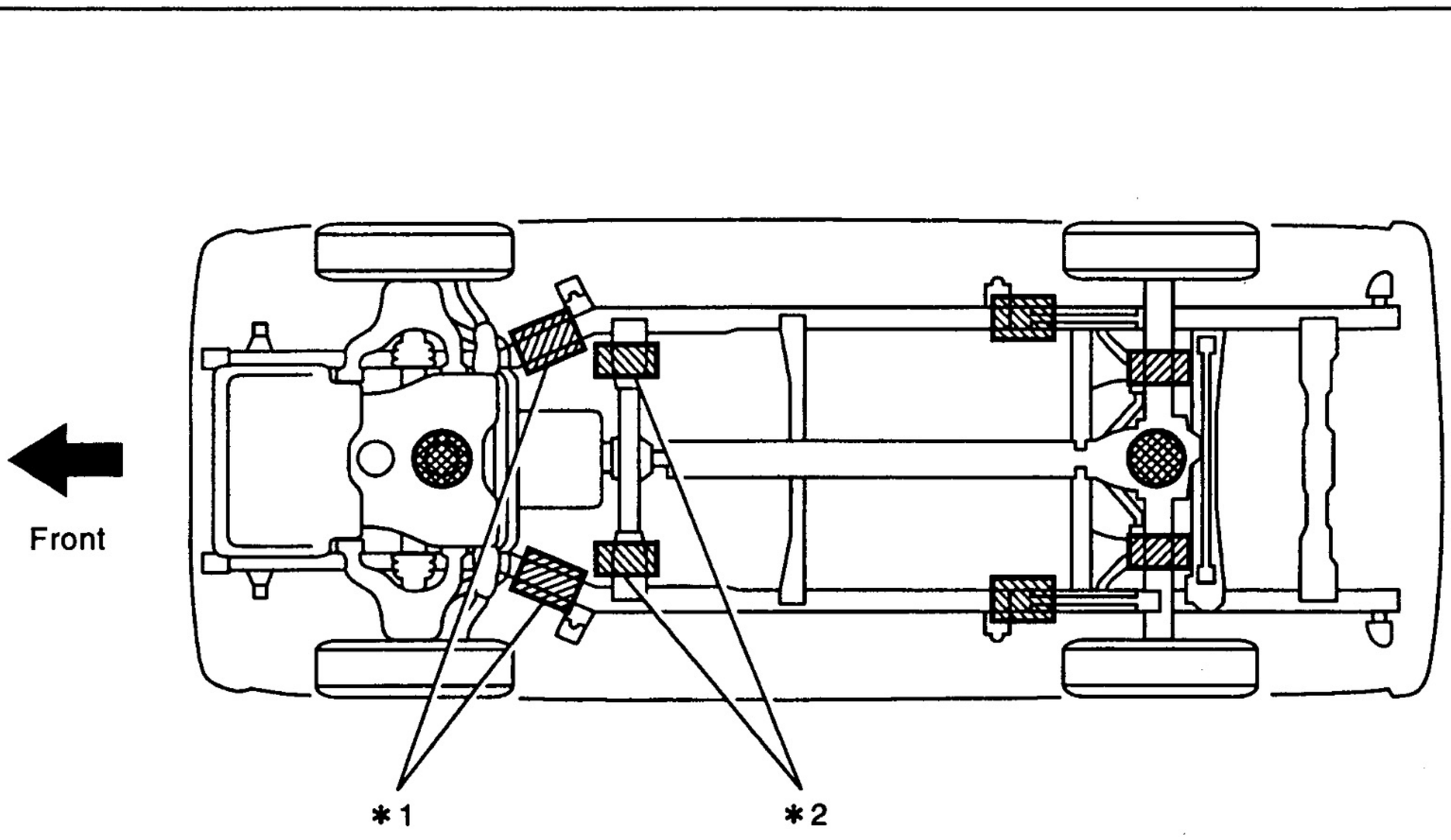

JACK POSITION ● Center of crossmember

Front ● Center of crossmember
Rear ● Center of rear axle housing

SUPPORT POSITION

Safety stand ●
Swing arm type lift ●

*1 : Support position when equipping without side step.
*2 : Support position when equipping with side step.

CAUTION : For 3 door models, do not use the swing arm type lift as this type lift may not support the short wheel based models securely.

N19546

ABBREVIATIONS USED IN THIS MANUAL

IN01D-28

ABS	Anti—Lock Brake System
ALR	Automatic Locking Retractor
A/T	Automatic Transmission
ATF	Automatic Transmission Fluid
BDC	Bottom Dead Center
BTDC	Before Top Dead Center
CB	Circuit Breaker
CRS	Child Restraint System
Diff. Lock	Differential Locking System
DP	Dash Pot
DTC	Diagnostic Trouble Code
ECU	Electronic Control Unit
E/G	Engine
ELR	Emergency Locking Retractor
ESA	Electronic Spark Advance
FIPG	Formed in Place Gasket
FL	Fusible Link
Fr	Front
IG	Ignition
IN	Intake (Manifold, Valve)
I/P	Instrument Panel
J/B	Junction Block
LED	Light Emitting Diode
LH	Left—Hand
LSPV	Load Sensing Proportioning Valve
Max.	Maximum
Min.	Minimum
MP	Multipurpose
M/T	Manual Transmission
O/D, OD	Overdrive
O/S	Oversize
PCV	Positive Crankcase Ventilation
PKB	Parking Brake
PS	Power Steering
RH	Right—Hand
Rr	Rear
SRS	Supplemental Restraint System
SSM	Special Service Materials
SST	Special Service Tools
STD	Standard
SW	Switch

TDC	Top Dead Center
TEMP.	Temperature
T/M	Transmission
U/S	Undersize
VCV	Vacuum Control Valve
VSV	Vacuum Switching Valve
VTV	Vacuum Transmitting Valve
w/	With
w/o	Without

STANDARD BOLT TORQUE SPECIFICATIONS

IN008-01

HOW TO DETERMINE BOLT STRENGTH

	Mark	Class		Mark	Class
Hexagon head bolt		4T 5T 6T 7T 8T 9T 10T 11T	Hexagon flange bolt w/ washer hexagon bolt	 4 Protruding lines	9T
	 No mark	4T	Hexagon flange bolt w/ washer hexagon bolt	 5 Protruding lines	10T
Hexagon flange bolt w/ washer hexagon bolt	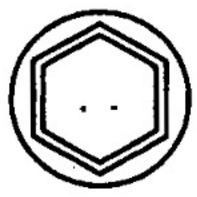 No mark	4T	Hexagon flange bolt w/ washer hexagon bolt	 6 Protruding lines	11T
Hexagon head bolt	 2 Protruding lines	5T	Stud bolt	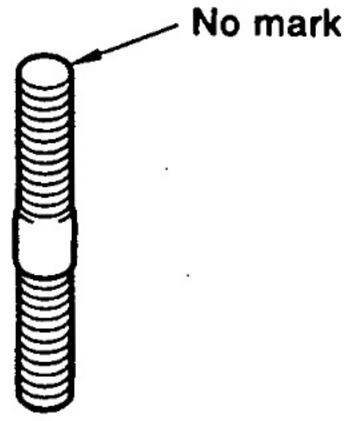	4T
Hexagon flange bolt w/ washer hexagon bolt	 2 Protruding lines	6T		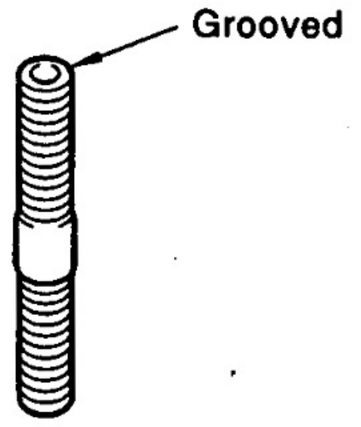	6T
Hexagon head bolt	 3 Protruding lines	7T	Welded bolt	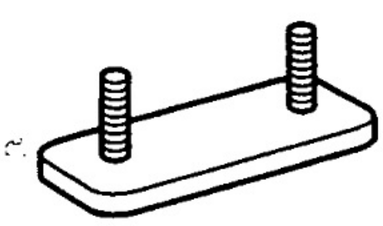	4T
Hexagon head bolt	 4 Protruding lines	8T			

V06821

IN

SPECIFIED TORQUE FOR STANDARD BOLTS

Class	Diameter mm	Pitch mm	Specified torque					
			Hexagon head bolt			Hexagon flange bolt		
			N·m	kgf·cm	ft·lbf	N·m	kgf·cm	ft·lbf
4T	6	1	5	55	48 in.·lbf	6	60	52 in.·lbf
	8	1.25	12.5	130	9	14	145	10
	10	1.25	26	260	19	29	290	21
	12	1.25	47	480	35	53	540	39
	14	1.5	74	760	55	84	850	61
	16	1.5	115	1,150	83	–	–	–
5T	6	1	6.5	65	56 in.·lbf	7.5	75	65 in.·lbf
	8	1.25	15.5	160	12	17.5	175	13
	10	1.25	32	330	24	36	360	26
	12	1.25	59	600	43	65	670	48
	14	1.5	91	930	67	100	1,050	76
	16	1.5	140	1,400	101	–	–	–
6T	6	1	8	80	69 in.·lbf	9	90	78 in.·lbf
	8	1.25	19	195	14	21	210	15
	10	1.25	39	400	29	44	440	32
	12	1.25	71	730	53	80	810	59
	14	1.5	110	1,100	80	125	1,250	90
	16	1.5	170	1,750	127	–	–	–
7T	6	1	10.5	110	8	12	120	9
	8	1.25	25	260	19	28	290	21
	10	1.25	52	530	38	58	590	43
	12	1.25	95	970	70	105	1,050	76
	14	1.5	145	1,500	108	165	1,700	123
	16	1.5	230	2,300	166	–	–	–
8T	8	1.25	29	300	22	33	330	24
	10	1.25	61	620	45	68	690	50
	12	1.25	110	1,100	80	120	1,250	90
9T	8	1.25	34	340	25	37	380	27
	10	1.25	70	710	51	78	790	57
	12	1.25	125	1,300	94	140	1,450	105
10T	8	1.25	38	390	28	42	430	31
	10	1.25	78	800	58	88	890	64
	12	1.25	140	1,450	105	155	1,600	116
11T	8	1.25	42	430	31	47	480	35
	10	1.25	87	890	64	97	990	72
	12	1.25	155	1,600	116	175	1,800	130

V00079

CLUTCH

PREPARATION ..... CL– 2
TROUBLESHOOTING ..... CL– 3
CLUTCH PEDAL ..... CL– 4
CLUTCH MASTER CYLINDER ..... CL– 5
CLUTCH RELEASE CYLINDER ..... CL– 7
CLUTCH UNIT ..... CL– 9
SERVICE SPECIFICATIONS ..... CL– 13

PREPARATION

SST(SPECIAL SERVICE TOOLS)

FP043–01

	09023–00100 Union Nut Wrench 10 mm	Clutch line
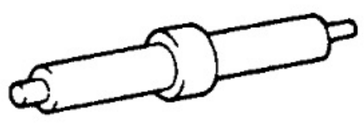	09301–00110 Clutch Guide Tool	
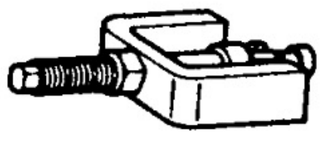	09303–35011 Input Shaft Front Bearing Puller	
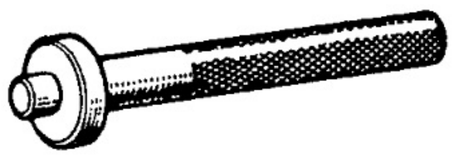	09304–30012 Input Shaft Front Bearing Replacer	
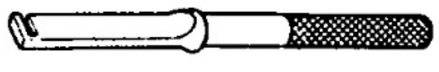	09333–00013 Clutch Diaphragm Spring Aligner	
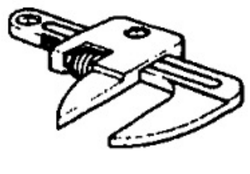	09922–10010 Variable Open Wrench	

FP04C–01

RECOMMENDED TOOLS

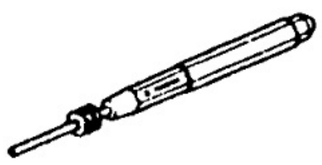	09031–00030 Pin Punch .	Reservoir tank
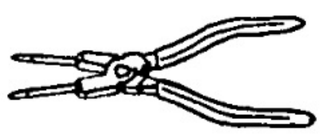	09905–00013 Snap Ring Pliers .	

FP04D–01

EQUIPMENT

Calipers	
Torque wrench	
Dial indicator with magnetic base	

TROUBLESHOOTING

Use the table below to help you find the cause of the problem. The numbers indicate the priority of the likely cause of the problem. Check each part in order. If necessary, replace these parts. CL0E4-02

Trouble / Parts Name	Clutch pedal (Freeplay out of adjustment)	Clutch line (Air in line)	Master cylinder cup (Damaged)	Release cylinder cup (Damaged)	Engine mounting (Loosen)	Release bearing (Worn, dirty or damaged)	Input shaft bearing (Worn or damaged)	Clutch disc (Out of true)	Clutch disc (Runout is excessive)	Clutch disc (Lining broken)	Clutch disc (Dirty or burred)	Clutch disc (Oily)	Clutch disc (Worn out)	Clutch disc torsion rubber (Damaged)	Clutch disc (Glazed)	Clutch disc (Lack of spline grease)	Diaphragm spring (Damaged)	Diaphragm spring (Out of tip alignment)	Pressure plate (Distortion)	Flywheel (Distortion)
See Page	CL-4	—	CL-5	CL-7	—	CL-9	CL-9	CL-9	CL-9	CL-9	CL-9	CL-9	CL-9	CL-9	CL-9	CL-9	CL-9	CL-11	—	—
Clutch grabs/chatters					1				2			2	2	2	2			2		
Clutch pedal spongy		1	2	2																
Clutch noisy						1	2							3						
Clutch slips	1											2	2				3		4	5
Clutch does not disengage	1	2	3	4			5	6	6	6	6	6				6	7	7	8	

V05513

CL

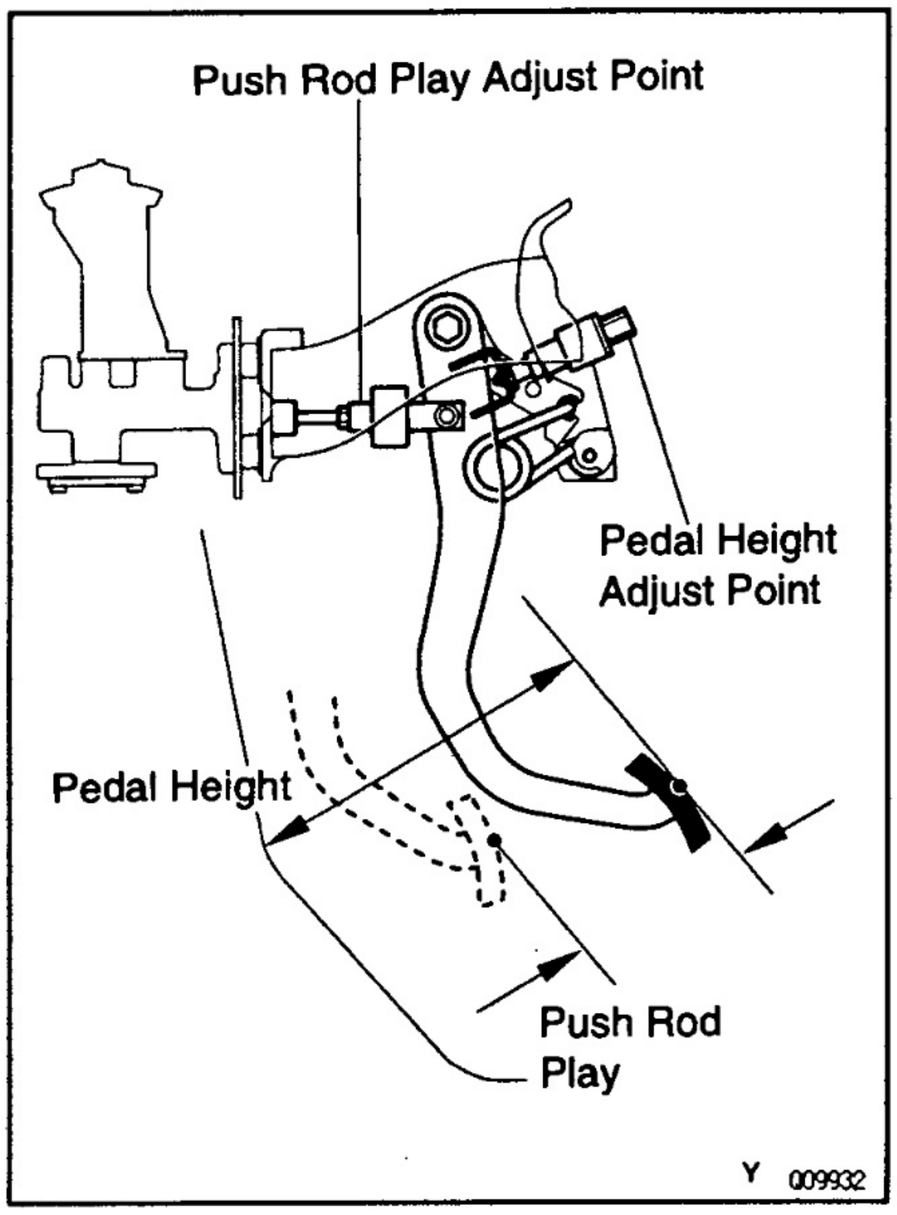

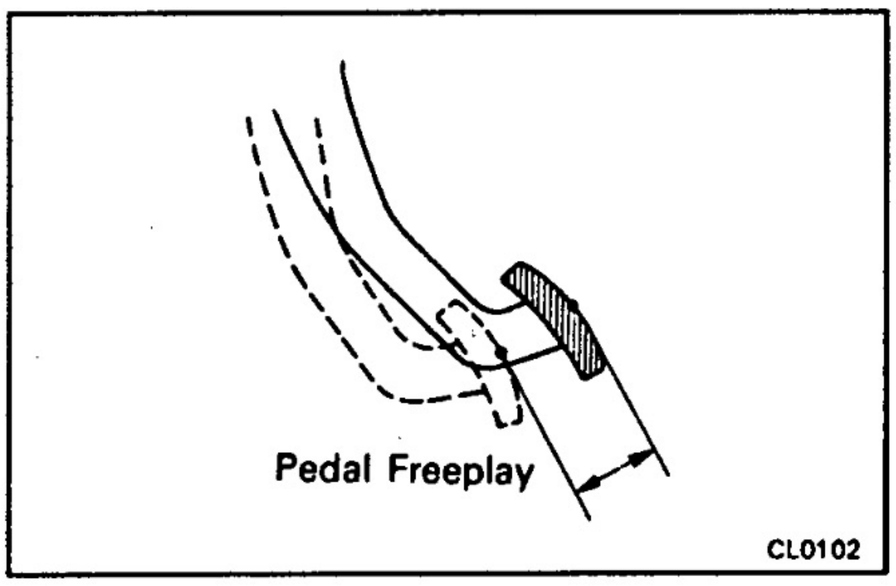

CLUTCH PEDAL

CL0EW-01

CLUTCH PEDAL CHECK AND ADJUSTMENT

1. CHECK THAT PEDAL HEIGHT IS CORRECT

Pedal height from floor panel:

RHD: 212.6–222.6 mm (8.370–8.764 in.)

LHD: 215.8–225.8 mm (8.495–8.889 in.)

2. IF NECESSARY, ADJUST PEDAL HEIGHT

Loosen the lock nut and turn the stopper bolt until the height is correct. Tighten the lock nut.

3. CHECK THAT PEDAL FREEPLAY AND PUSH ROD PLAY ARE CORRECT

Push in on the pedal until the beginning of clutch resistance is felt.

Pedal freeplay: 5.0–15.0 mm (0.197–0.591 in.)

Gently push on the pedal until the resistance begins to increase a little.

Push rod play at pedal top:

1.0–5.0 mm (0.039–0.197 in.)

4. IF NECESSARY, ADJUST PEDAL FREEPLAY AND PUSH ROD PLAY

(a) Loosen the lock nut and turn the push rod until the freeplay and push rod play are correct.

(b) Tighten the lock nut.

(c) After adjusting the pedal freeplay, check the pedal height.

(d) Connect the air duct and install the lower finish panel.

5. CHECK CLUTCH RELEASE POINT

(a) Pull the parking brake lever and install wheel stopper.

(b) Start the engine and idle the engine.

(c) Without depressing the clutch pedal, slowly shift the shift lever into reverse position until the gears contact.

(d) Gradually depress the clutch pedal and measure the stroke distance from the point the gear noise stops (release point) up to the full stroke end position.

Standard distance:

25 mm (0.98 in.) or more

(From pedal stroke end position to release point)

If the distance not as specified, perform the following operation.

- Check pedal height.
- Check push rod play and pedal freeplay.
- Bleed the clutch line.
- Check the clutch cover and disc.

CLUTCH MASTER CYLINDER

COMPONENTS

CL008-02

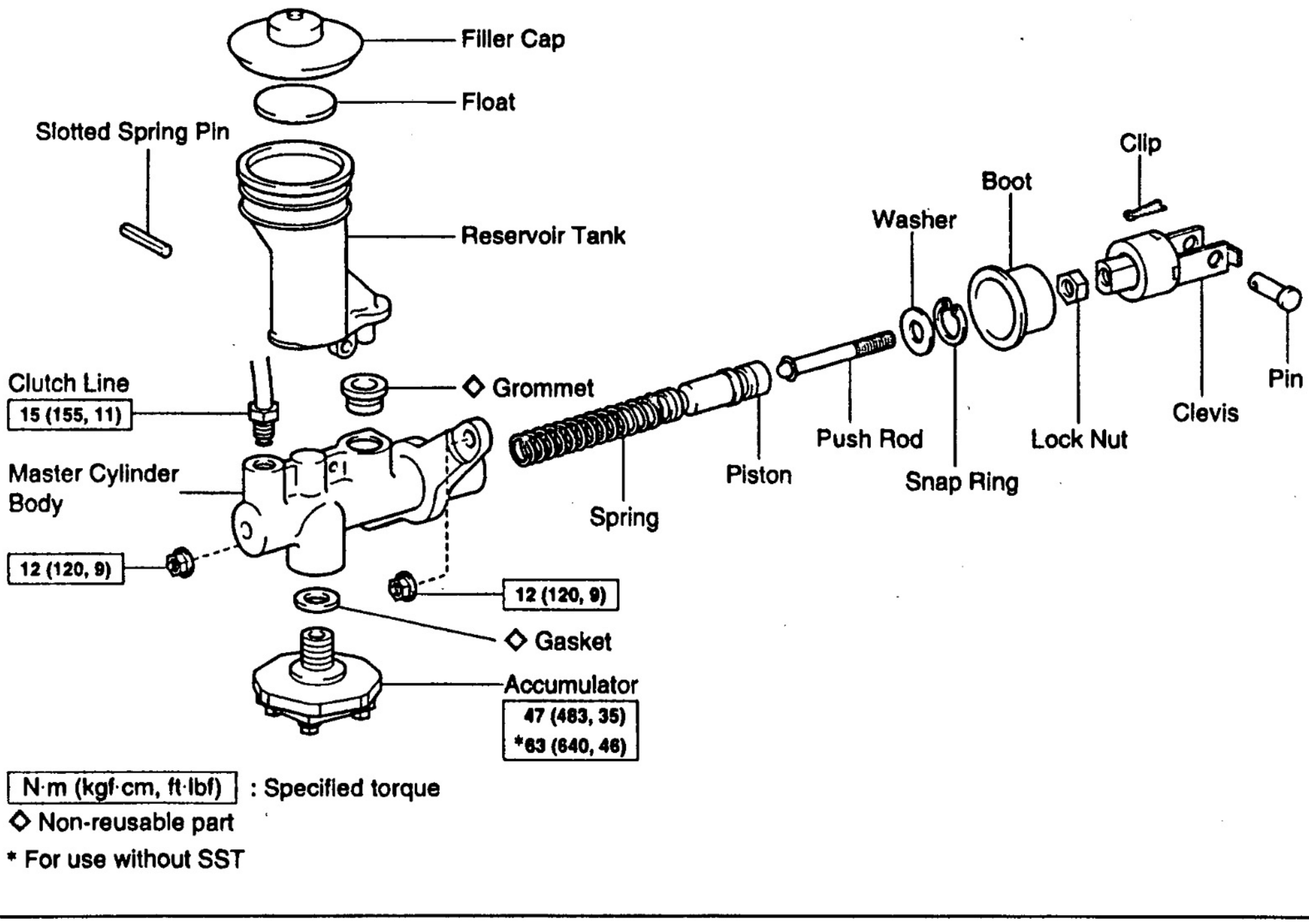

N·m (kgf·cm, ft·lbf) : Specified torque

◇ Non-reusable part

* For use without SST

Z18491

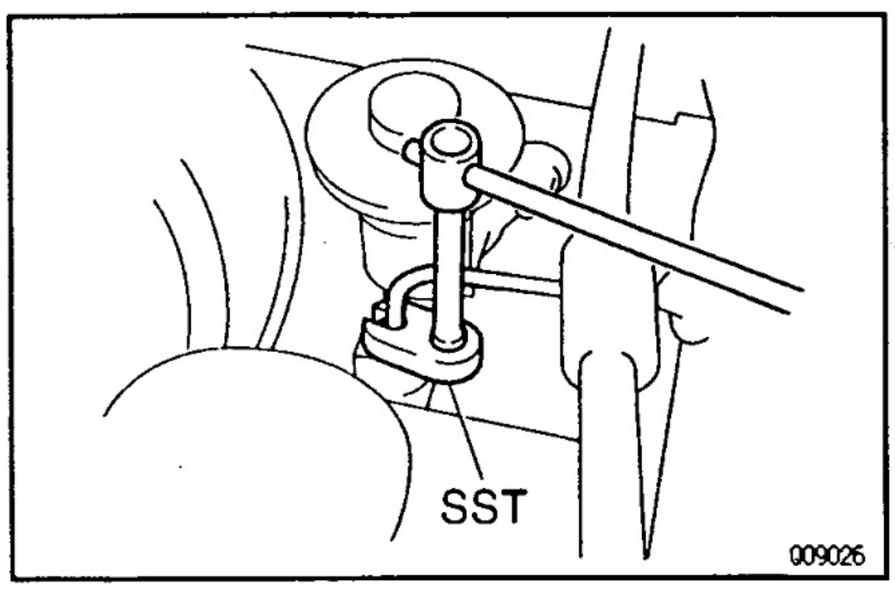

CL009-01

MASTER CYLINDER REMOVAL

1. **DRAW OUT FLUID WITH SYRINGE**
2. **DISCONNECT CLUTCH LINE**
   Using SST, disconnect the line. Use a container to catch the fluid.
   SST 09023–00100
   Torque: 15 N·m (155 kgf·cm, 11 ft·lbf)
3. **REMOVE CLIP AND CLEVIS PIN**
4. **REMOVE 2 MOUNTING NUTS AND PULL OUT MASTER CYLINDER**
   Torque: 12 N·m (120 kgf·cm, 9 ft·lbf)

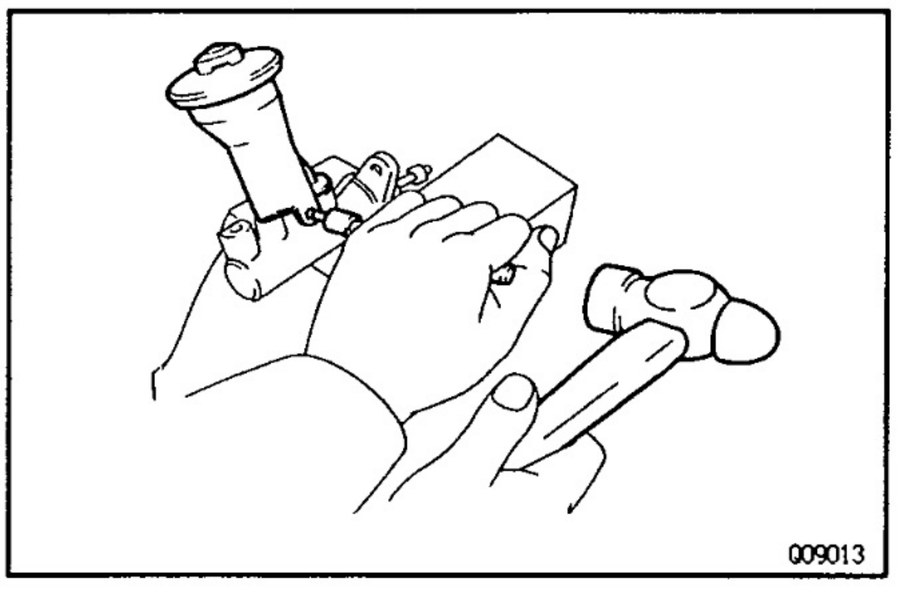

MASTER CYLINDER DISSASSEMBLY

CL0EX-01

1. REMOVE RESERVOIR TANK

(a) Using a pin punch and hammer, drive out the slotted spring pin.

(b) Remove the reservoir tank and grommet.

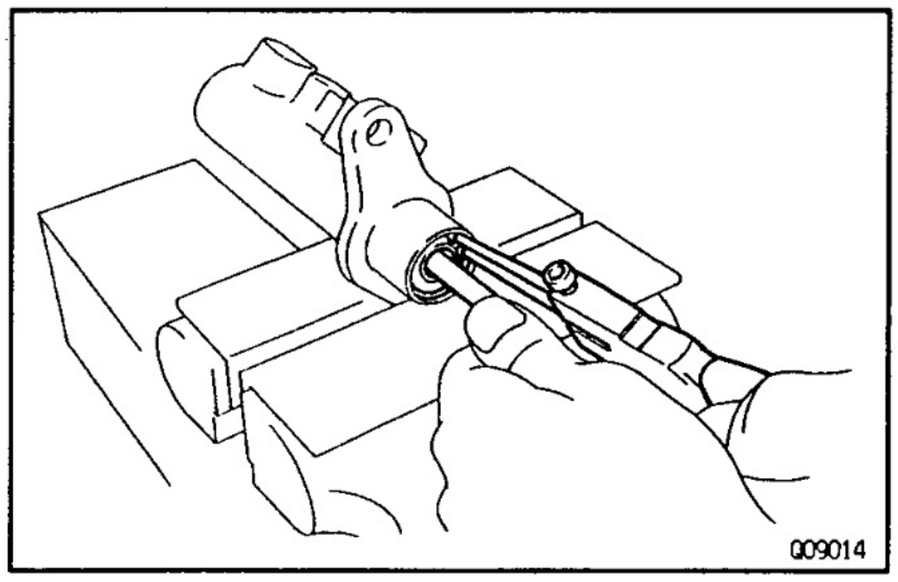

2. REMOVE PUSH ROD

Pull back the boot, and using snap ring pliers, remove the snap ring.

3. REMOVE PISTON

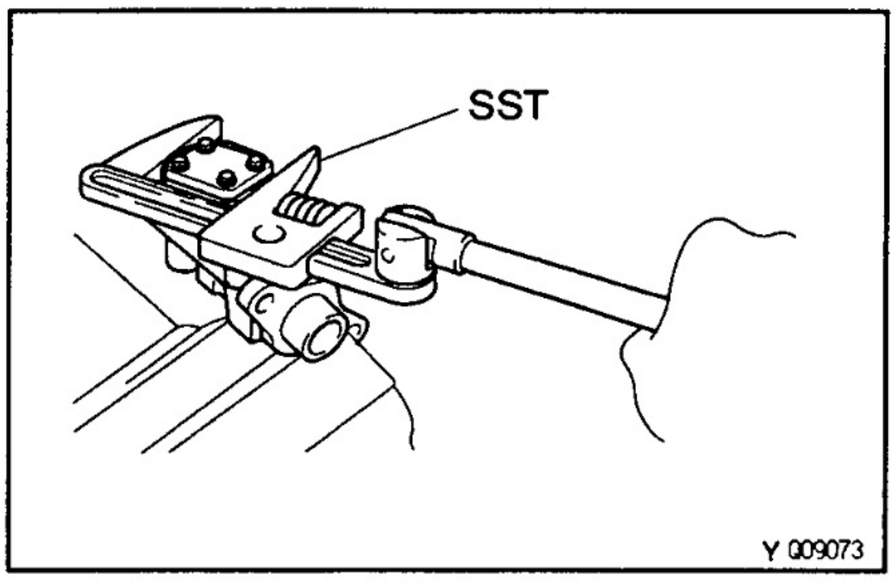

4. REMOVE ACCUMULATOR

(a) Using SST, remove the accumulator.
SST 09922–10010

(b) Remove the gasket.

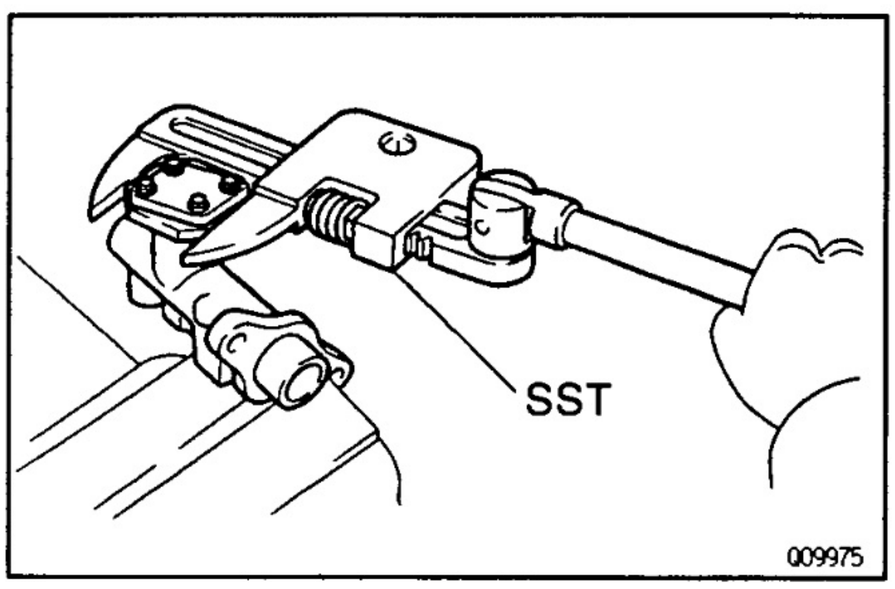

MASTER CYLINDER ASSEMBLY

CL0EY-01

1. INSTALL ACCUMULATOR

(a) Install a new gasket.

(b) Using SST, install and torque the accumulator.
SST 09922–10010
Torque: 47 N·m (483 kgf·cm, 35 ft·lbf)
HINT: Use a torque wrench with a fulcrum length of 345 mm (13.6 in.).

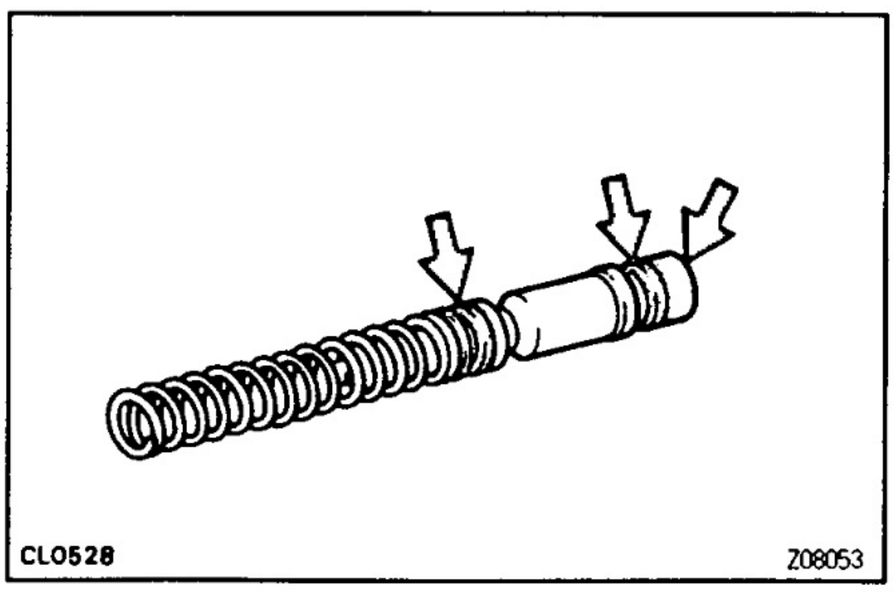

2. COAT PARTS WITH LITHIUM SOAP BASE GLYCOL GREASE, AS SHOWN

3. INSERT PISTON INTO CYLINDER

4. INSTALL PUSH ROD ASSEMBLY WITH SNAP RING

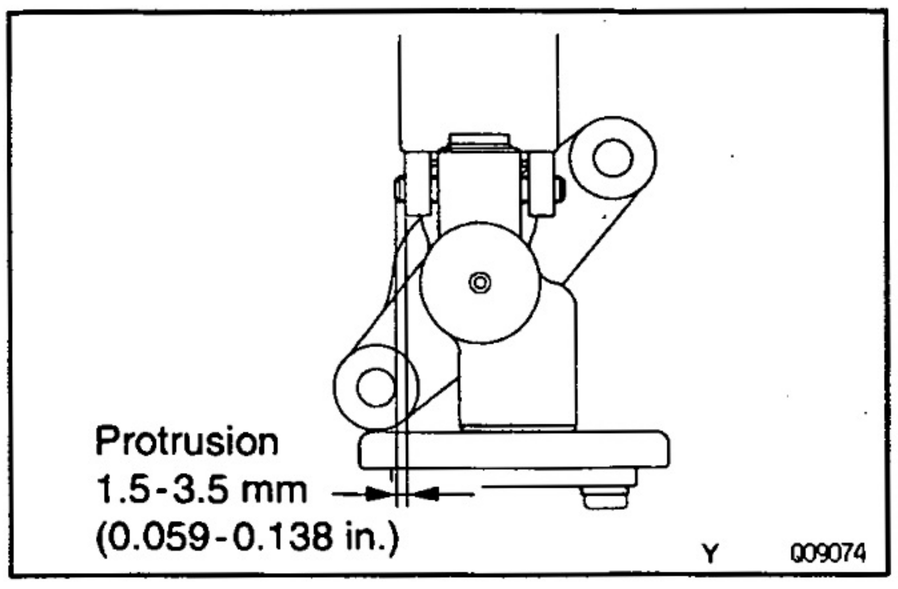

5. INSTALL RESERVOIR TANK

(a) Install the reservoir tank and a new grommet.

(b) Using a pin punch and hammer, drive in the slotted spring pin.

CL0E7-02

MASTER CYLINDER INSTALLATION

Installation is in the reverse order of removal.

HINT: After installation, bleed system and adjust clutch pedal.(See page CL–4)

CL0GE-16

CLUTCH RELEASE CYLINDER COMPONENTS

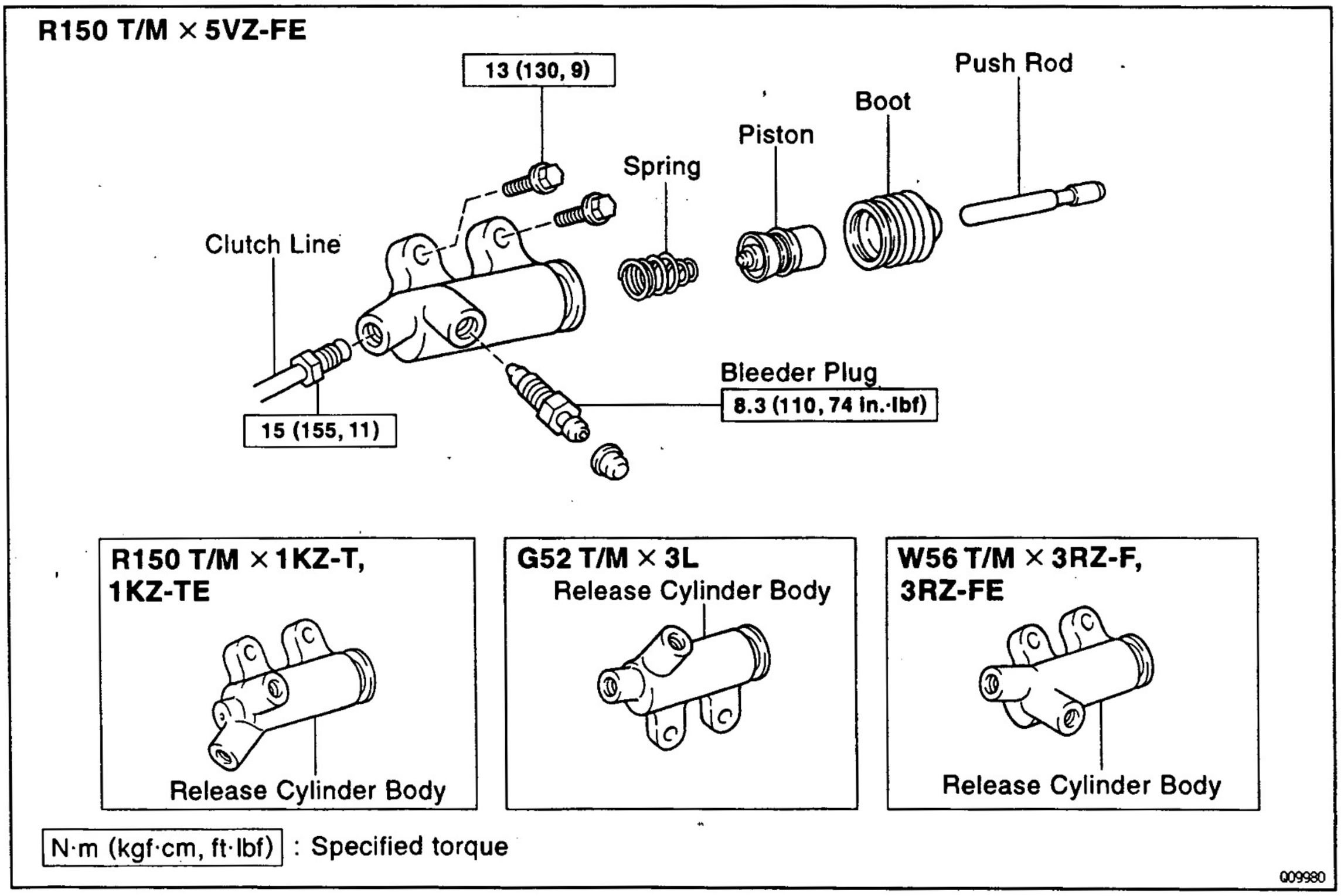

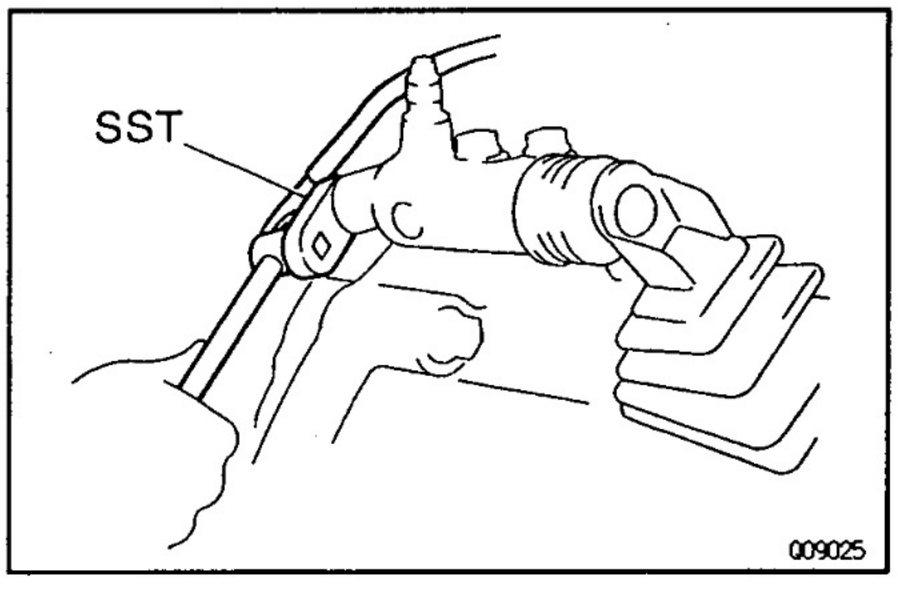

CL02W–0A

RELEASE CYLINDER REMOVAL

1. **DISCONNECT CLUTCH LINE**
   Using SST, disconnect the line. Use a container to catch the fluid.
   SST 09023–00100
   Torque: 15 N·m (155 kgf·cm, 11 ft·lbf)

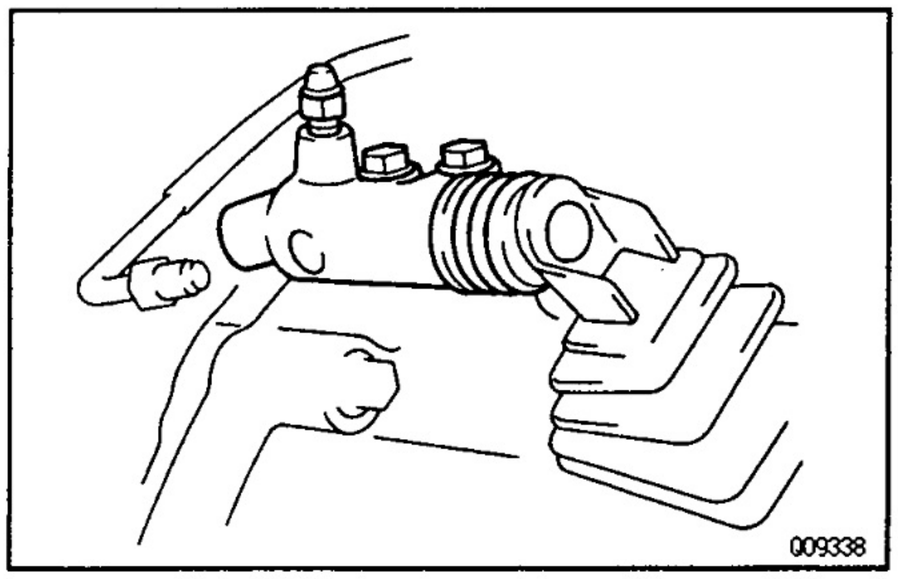

2. **REMOVE 2 BOLTS AND PULL OUT RELEASE CYLINDER**
   Torque: 13 N·m (130 kgf·cm, 9 ft·lbf)

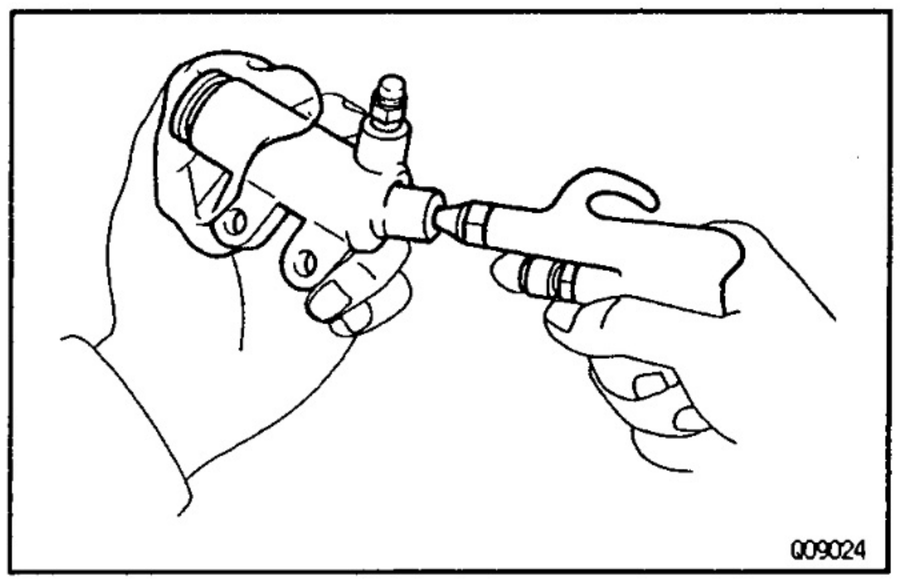

CL00G–0K

RELEASE CYLINDER DISASSEMBLY

1. **PULL OUT BOOT WITH PUSH ROD**
2. **REMOVE PISTON**
   Using compressed air, remove the piston with the spring from the cylinder.

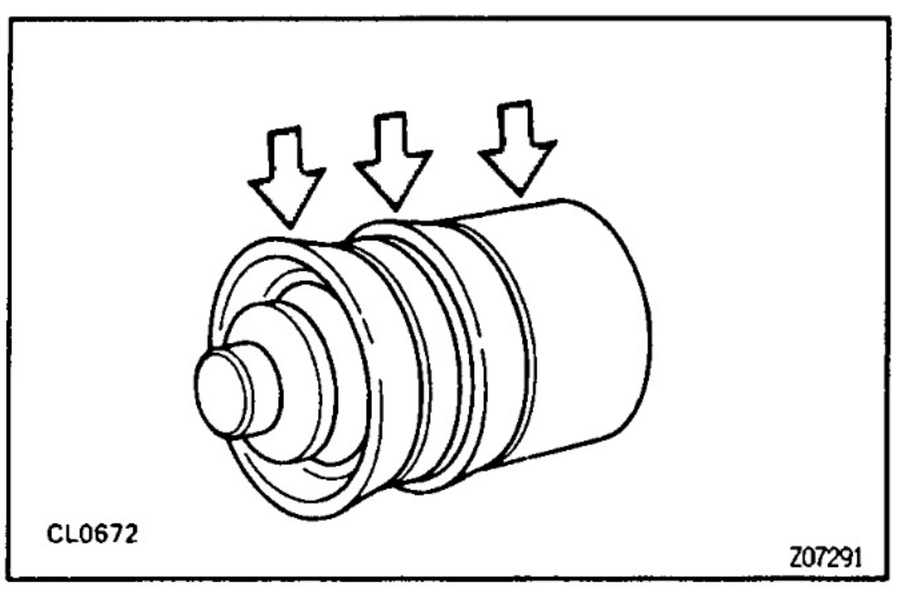

CL00H–0J

RELEASE CYLINDER ASSEMBLY

1. **COAT PISTON WITH LITHIUM SOAP BASE GLYCOL GREASE, AS SHOWN**
2. **INSTALL PISTON WITH SPRING INTO CYLINDER**
3. **INSTALL BOOT WITH PUSH ROD TO CYLINDER**

CL0CP–03

RELEASE CYLINDER INSTALLATION

Installation is in the reverse order of removal.
HINT: After installation, bleed clutch system.

CLUTCH UNIT
COMPONENTS

CL00K–18

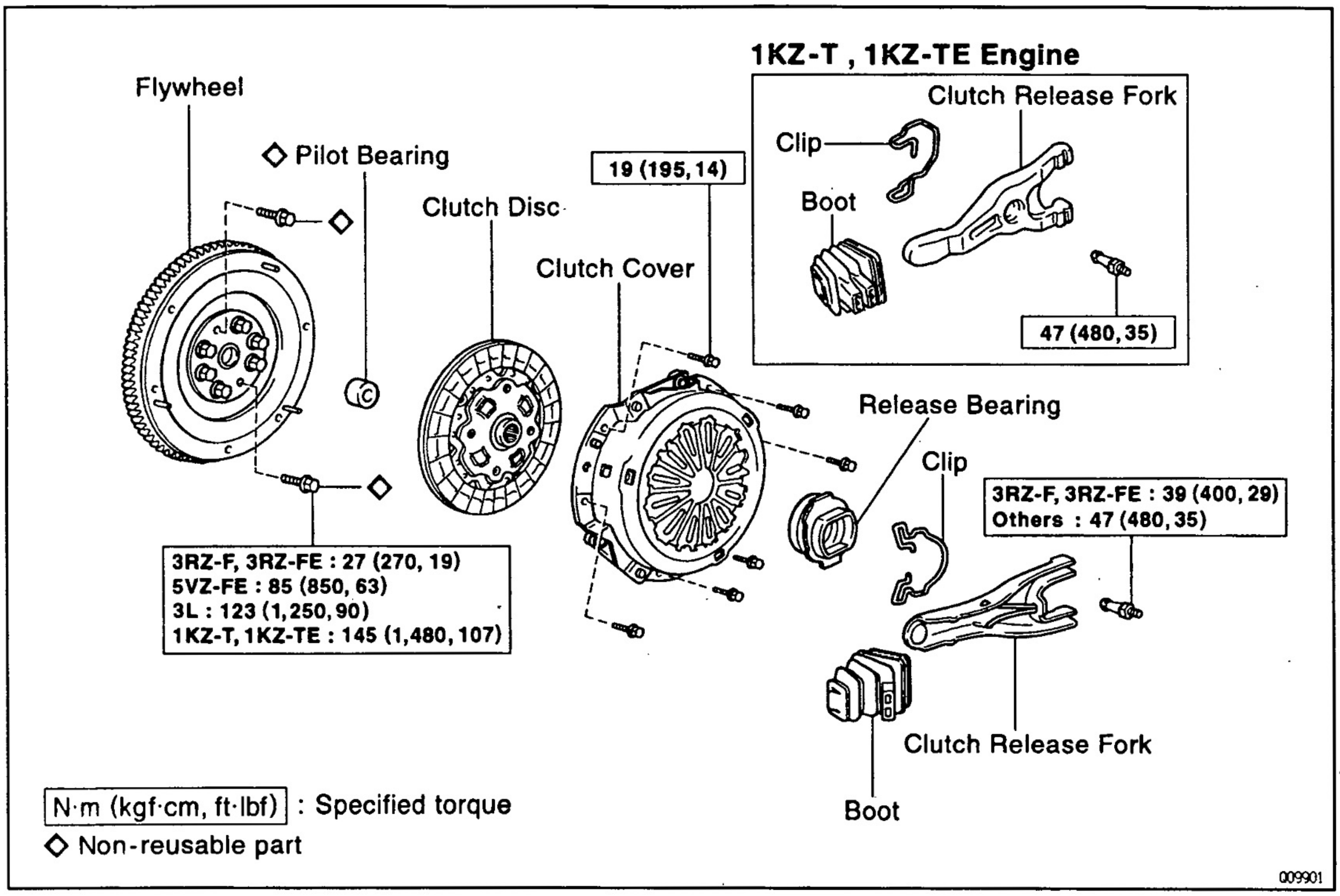

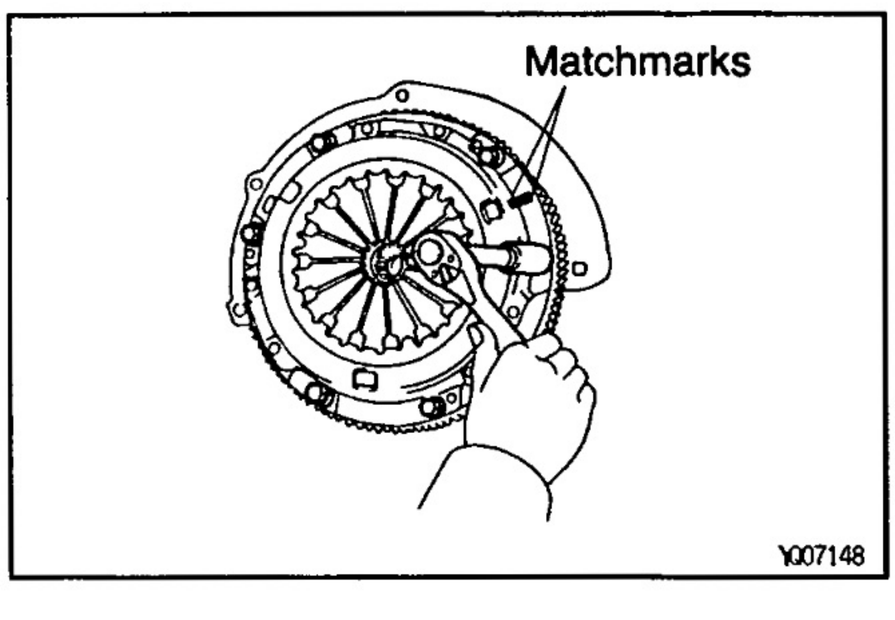

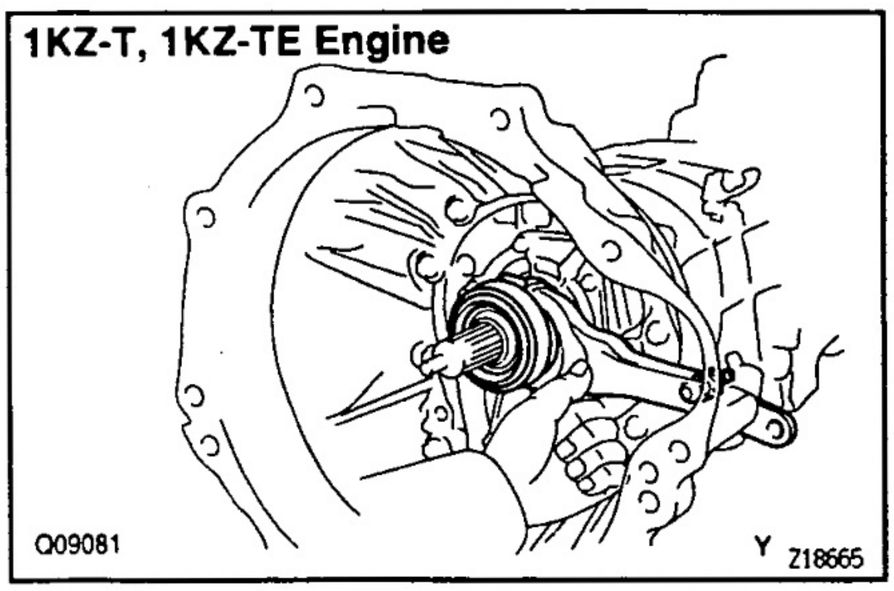

CL0EZ–01

CLUTCH UNIT REMOVAL

1. **REMOVE TRANSMISSION FROM ENGINE**
   R150 x 5VZ–FE: See page MT–10
   R150 x 1KZ–T, 1KZ–TE: See page MT–5
   G52 : See page MT–5
   W56 : See page MT–6
2. **REMOVE CLUTCH COVER AND DISC**

(a) Place matchmarks on the flywheel and clutch cover.

(b) Loosen each set bolt one turn at a time until spring tension is released.

(c) Remove the set bolts, and pull off the clutch cover with the clutch disc.

NOTICE: Do not drop the clutch disc.

3. **REMOVE BOOT, RELEASE BEARING AND FORK FROM TRANSMISSION**

Remove the boot and release bearing together with the fork and then separate them.

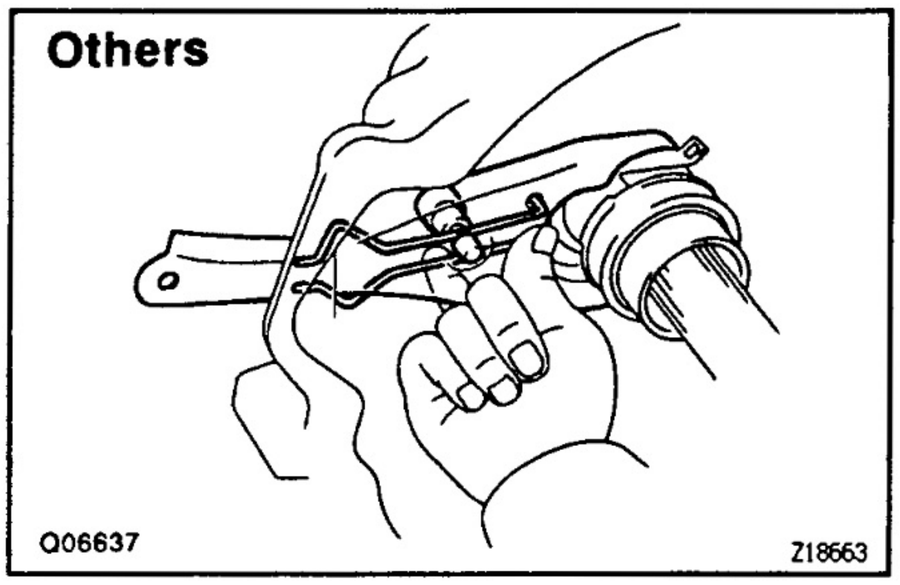

CL

CL02X-08

CLUTCH PARTS INSPECTION

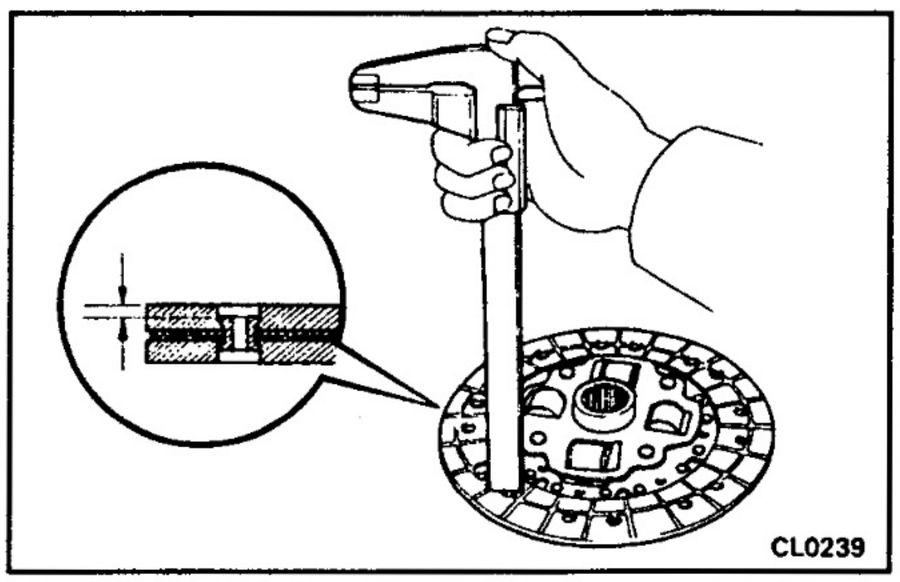

1. **INSPECT CLUTCH DISC FOR WEAR OR DAMAGE**
   Using calipers, measure the rivet head depth.
   Minimum rivet depth: 0.3 mm (0.012 in.)
   If it is not as specified, replace the clutch disc.

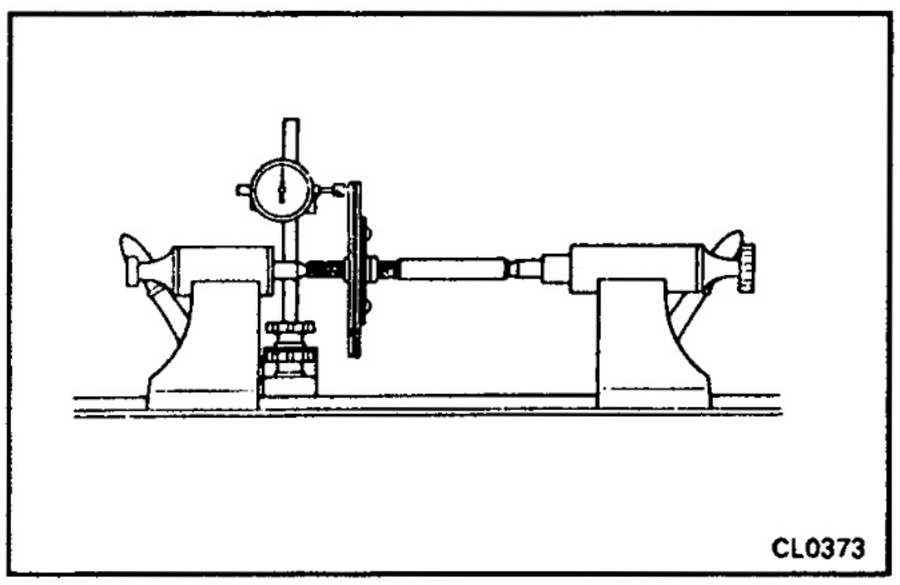

2. **INSPECT CLUTCH DISC RUNOUT**
   Using a dial indicator, check the disc runout.
   Maximum runout: 0.8 mm (0.031 in.)
   If it is not as specified, replace the clutch disc.

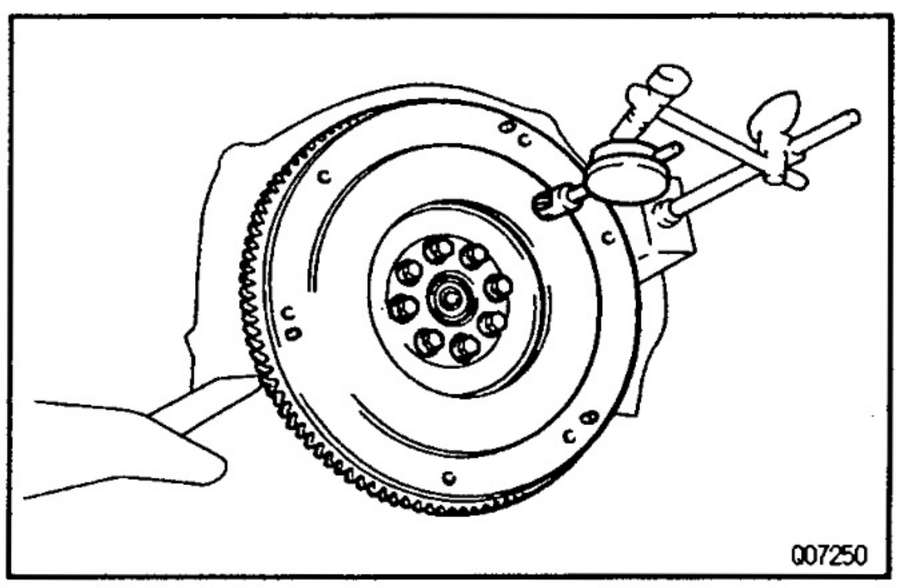

3. **INSPECT FLYWHEEL RUNOUT**
   Using a dial indicator, check the flywheel runout.
   Maximum runout: 0.1 mm (0.004 in.)
   If it is not as specified, replace the clutch disc.

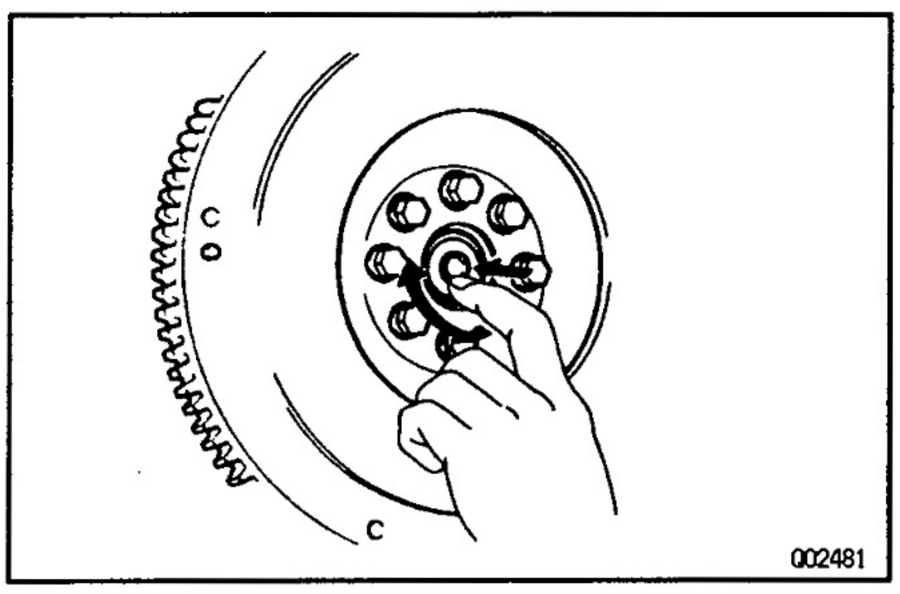

4. **INSPECT PILOT BEARING**
   Turn the bearing by hand while applying force in the rotation direction.
   If the bearing sticks or has much resistance, replace the pilot bearing.
   HINT: The bearing is permanently lubricated and requires no clearing or lubrication.

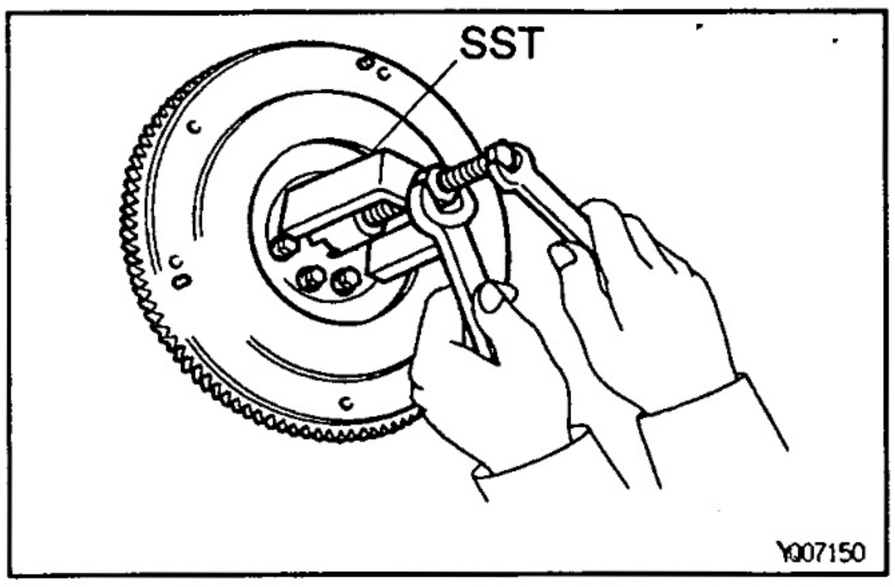

5. IF NECESSARY, REPLACE PILOT BEARING

(a) Remove the 2 bolts at diametrically opposite points.

(b) Using SST, remove the pilot bearing.
SST 09303–35011

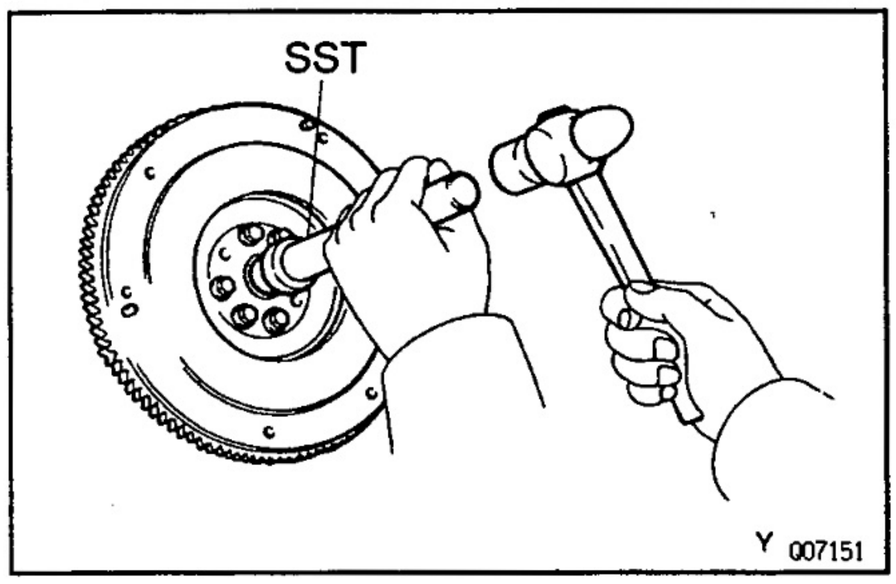

(c) Using SST and a hammer, install a new pilot bearing.
SST 09304–30012
HINT: After assembling the pilot bearing to the hub, install sure that it rotates smoothly.

(d) Install 2 new bolts.
Torque:
3RZ–F, 3RZ–FE: 27 N·m (270 kgf·cm, 19 ft·lbf)
5VZ–FE: 85 N·m (850 kgf·cm, 63 ft·lbf)
3L: 123 N·m (1,250 kgf·cm, 90 ft·lbf)
1KZ–T,1KZ–TE: 145 N·m (1,480 kgf·cm, 107 ft·lbf)

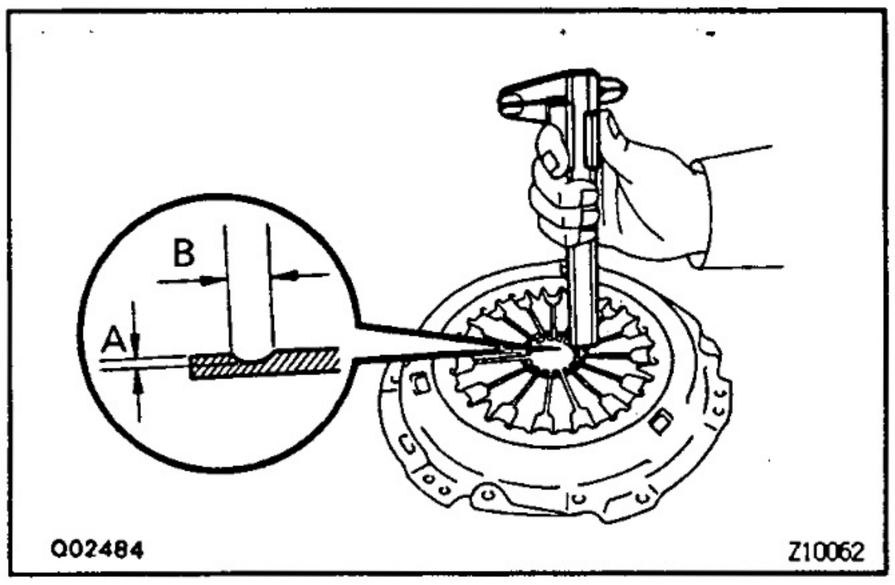

6. INSPECT DIAPHRAGM SPRING FOR WEAR

Using calipers, measure the diaphragm spring for depth and width of wear.
Maximum depth: A: 0.6 mm (0.024 in.)
Maximum width: B: 5.0 mm (0.197 in.)
If it is not as specified, replace the clutch cover.

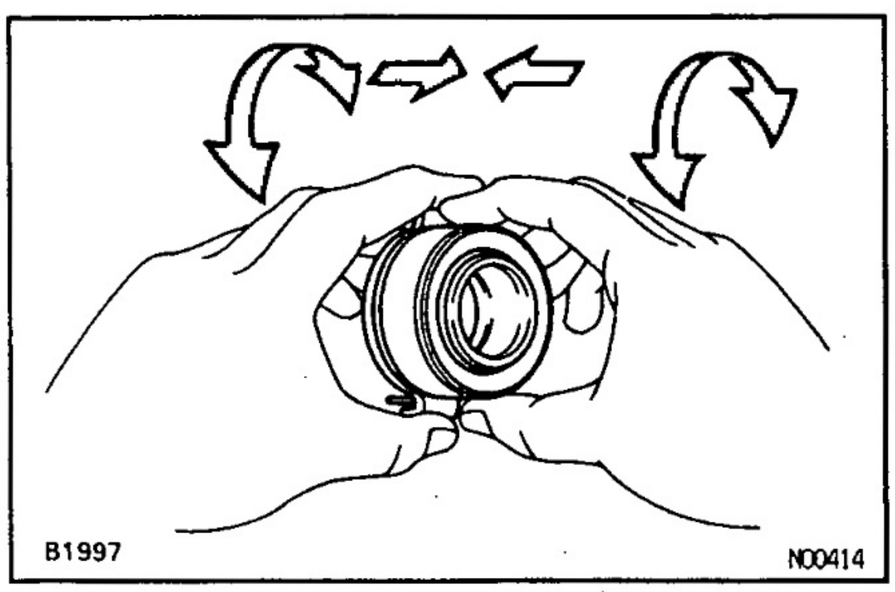

7. INSPECT RELEASE BEARING

Turn the bearing by hand while applying force in the axial direction.
HINT: The bearing is permanently lubricated and requires no cleaning or lubrication.
If necessary, replace the release bearing.

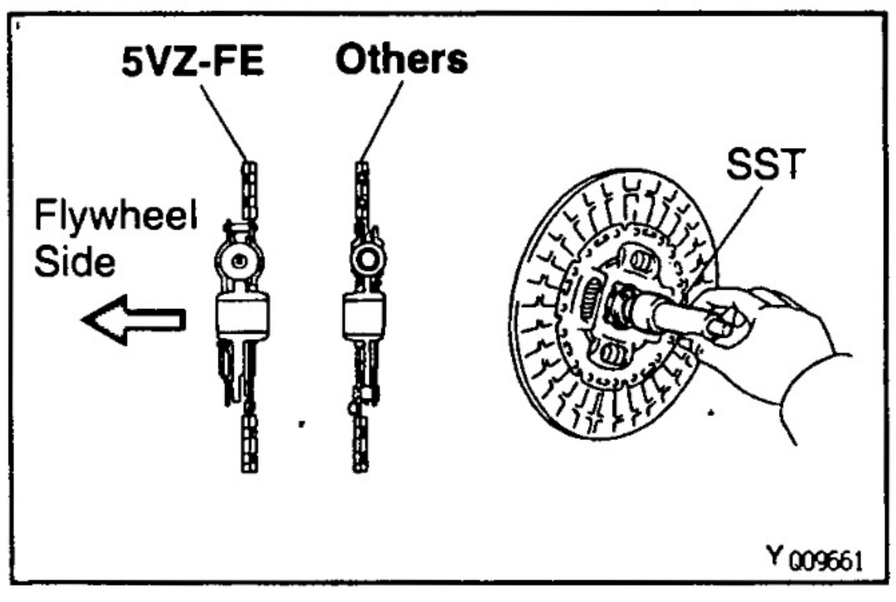

CL0F0-01

CLUTH UNIT INSTALLATION

1. INSTALL CLUTCH DISC AND CLUTCH COVER ON FLYWHEEL

(a) Insert SST in the clutch disc, and then set them.
SST 09301–00110

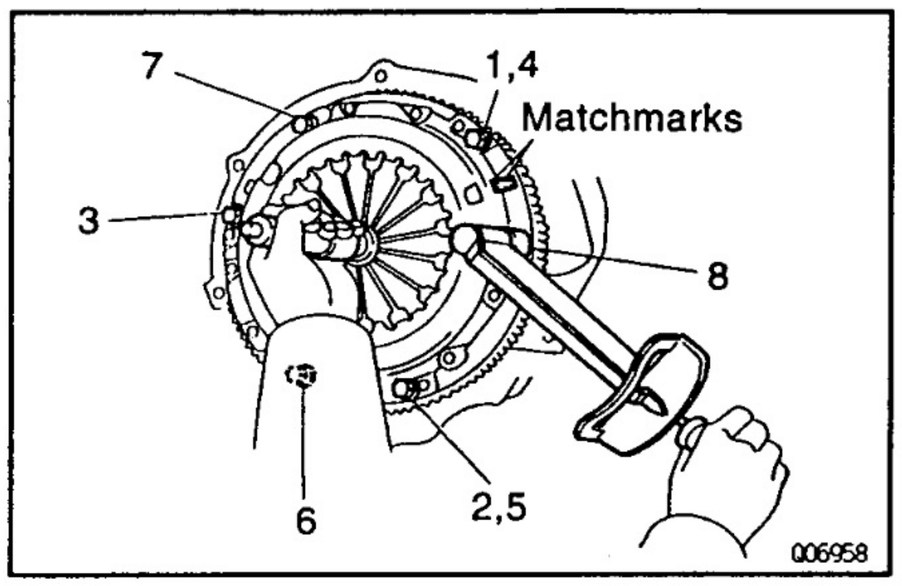

(b) Align the matchmarks on the clutch cover and flywheel.

(c) Torque the 6 bolts on the clutch cover in the order shown.
Torque: 19 N·m (195 kgf·cm, 14 ft·lbf)
HINT: Temporarily tighten the No.1 and No.2 bolts.

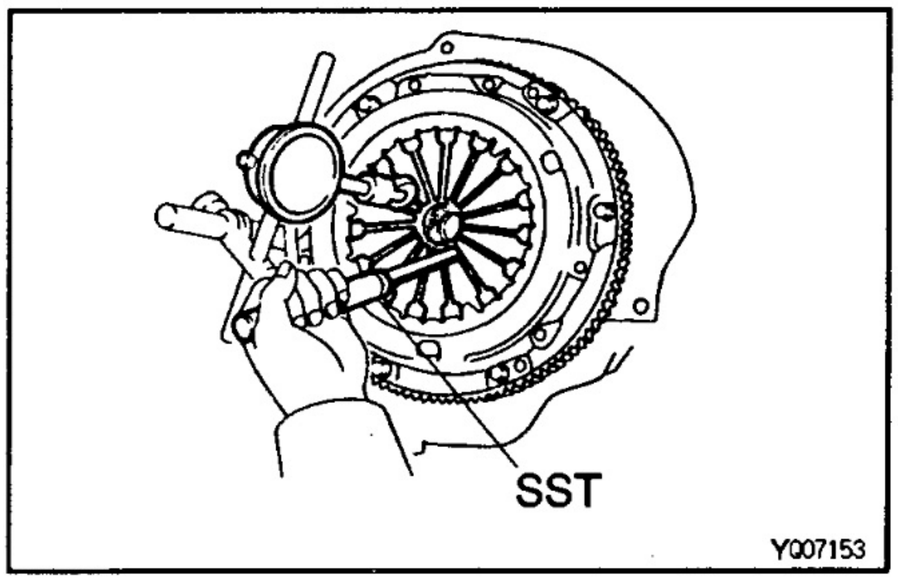

2. CHECK DIAPHRAGM SPRING TIP ALIGNMENT

Using a dial indicator with roller instrument, check the diaphragm spring tip alignment.
Maximum non–alignment: 0.5 mm (0.020 in.)
If the alignment is not as specified, with SST, adjust the diaphragm spring tip alignment.
SST 09333–00013

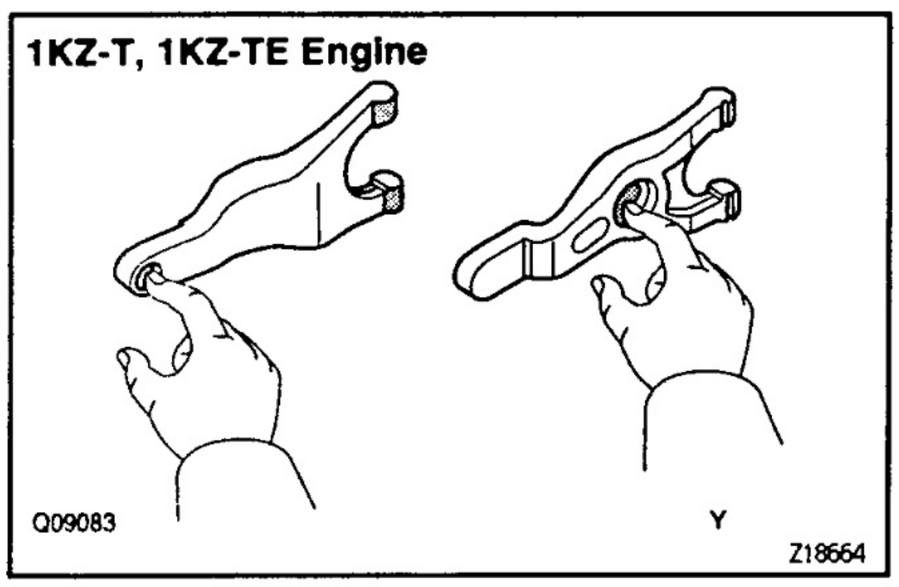

3. APPLY MOLYBDENUM DISULPHIDE LITHIUM BASE GREASE (NLGI NO.2)

(a) Apply release hub grease to the these parts.
- Release fork and hub contact point
- Release fork and push rod contact point
- Release fork pivot point

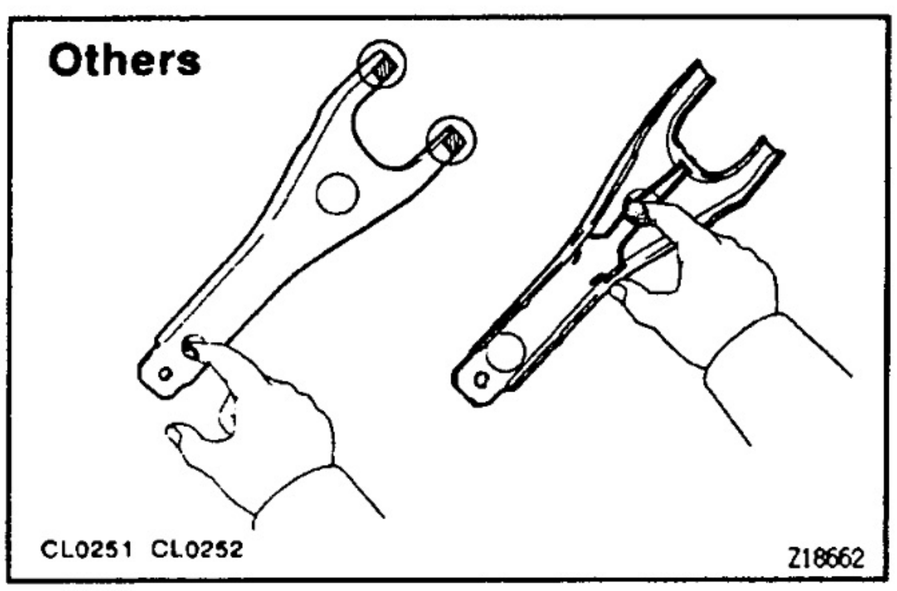

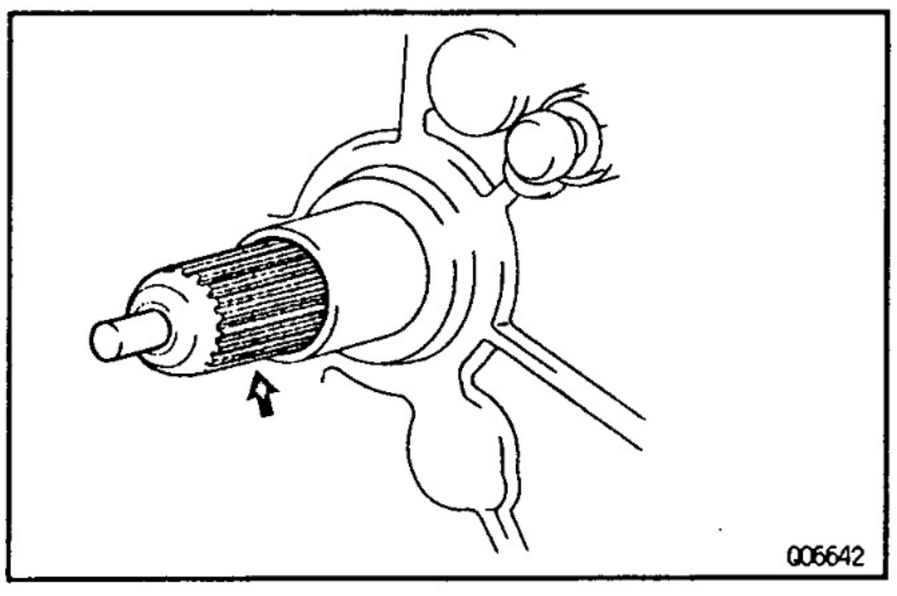

(b) Apply clutch spline grease.
- Clutch disc spline

HINT: Recommended grease part number 08887–01706 (100 g).

4. INSTALL BOOT, RELEASE BEARING AND FORK TO TRANSMISSION

Install the boot and bearing to the release fork, and then install them to the transmission.transmission.

5. **INSTALL TRANSMISSION TO ENGINE**
R150 x 5VZ–FE: See page MT–10
R150 x 1KZ–T, 1KZ–TE: See page MT–5
G52 : See page MT–5
W56 : See page MT–6

SERVICE SPECIFICATIONS

SERVICE DATA

Pedal height from floor panel	RHD	212.6–222.6 mm (8.370–8.764 in.)
	LHD	215.8–225.8 mm (8.495–8.889 in.)
Pedal freeplay		5.0–15.0 mm (0.197–0.591 in.)
Push rod play at pedal top		1.0–5.0 mm (0.039–0.197 in.)
Clutch release point from pedal full stroke end position		25 mm (0.98 in.) or more
Slotted spring pin protrusion		1.5–3.5 mm (0.059–0.138 in.)
Disc rivet head depth	Min.	0.3 mm (0.012 in.)
Disc runout	Max.	0.8 mm (0.031 in.)
Flywheel runout	Max.	0.1 mm (0.004 in.)
Diaphragm spring finger wear	Max. depth	0.6 mm (0.024 in.)
Diaphragm spring finger wear	Max. width	5.0 mm (0.197 in.)
Diaphragm spring tip non–alignment	Max.	0.5 mm (0.020 in.)

TORQUE SPECIFICATIONS

Part tightened		N·m	kgf·cm	ft·lbf
Clutch line union		15	155	11
Master cylinder installation nut		12	120	9
Bleeder plug		11	110	8
Release cylinder installation bolt		13	130	9
Clutch cover x Flywheel		19	195	14
Release fork support		47	480	35
Flywheel set bolt	3RZ–F, 3RZ–FE	27	270	19
	5VZ–FE	85	850	63
	3L	123	1,250	90
	1KZ–T, 1KZ–TE	145	1,480	107

G52 MANUAL TRANSMISSION

PRECAUTION ..... MT– 2
PREPARATION ..... MT– 2
TROUBLESHOOTING ..... MT– 4
ASSEMBLY REMOVAL AND INSTALLATION ..... MT– 5
COMPONENT PARTS REMOVAL AND INSTALLATION ..... MT– 9
INPUT SHAFT ..... MT– 18
OUTPUT SHAFT ..... MT– 20
COUNTER GEAR AND REVERSE IDLER GEAR ..... MT– 27
FRONT BEARING RETAINER ..... MT– 30
TRANSFER ADAPTOR ..... MT– 30
SERVICE SPECIFICATIONS ..... MT– 32

PRECAUTION

MX022–16

When working with FIPG material, you must observe the following.

- Using a razor blade and gasket scraper, remove all the old FIPG material from the gasket surfaces.
- Thoroughly clean all components to remove all the loose material.
- Clean both sealing surfaces with a non–residue solvent.
- Apply FIPG in an approx. 1 mm (0.04 in.) wide bead along the sealing surface.
- Parts must be assembled within 10 minutes of application. Otherwise, the FIPG material must be removed and reapplied.

PREPARATION

SST (SPECIAL SERVICE TOOLS)

MT012–0W

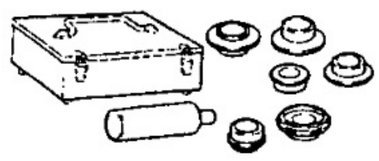	09316–60011 Transmission & Transfer Bearing Replacer	
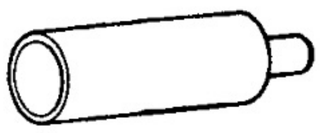	(09316–00011) Replacer Pipe	Counter gear rear bearing
	09506–35010 Differential Drive Pinion Rear Bearing Replacer	Output shaft rear bearing 5th gear Input shaft bearing
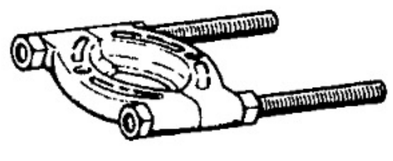	09950–00020 Bearing Remover	Counter gear front bearing
	09950–40010 Puller B Set	Counter gear rear bearing
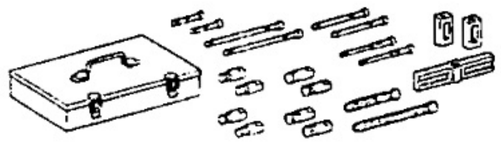	09950–50010 Puller C Set	Gear spline piece No.5
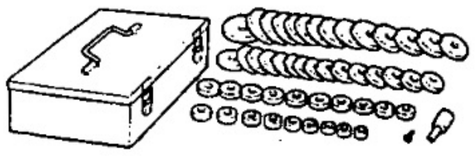	09950–60010 Replacer Set	
	(09951–00440) Replacer 44	Front bearing retainer oil seal
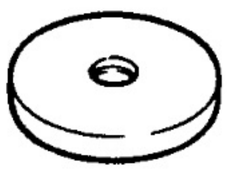	(09951–00570) Replacer 57	Transfer adaptor oil seal
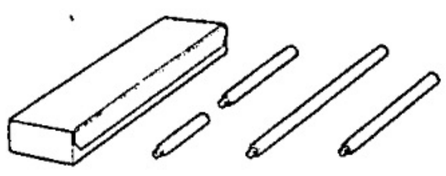	09950–70010 Handle Set	

	(09951–07150) Handle 150	Front bearing retainer oil seal Transfer adaptor oil seal

MT013–0N

RECOMMENDED TOOLS

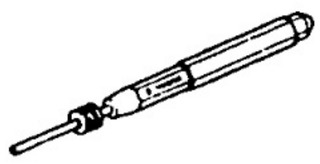	09031–00030 Pin Punch .	
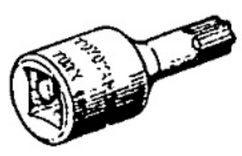	09042–00020 Torx Socket T40 .	
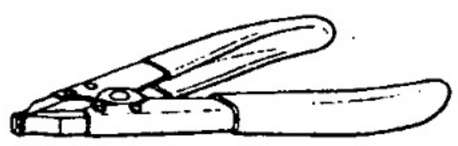	09905–00012 Snap Ring No.1 Expander .	

MX027–14

EQUIPMENT

Calipers	
Dial indicator	
Micrometer	
Torque wrench	
Feeler gauge	
Magnetic finger	

MX028–1D

LUBRICANT

Item	Capacity	Classification
Manual transmission oil	2.2 liters (2.3 US qts, 1.9 Imp. qts)	API GL–4 or GL–5 SAE 75W–90

MX029–0Z

SSM (SPECIAL SERVICE MATERIALS)

	08826–00090 Seal Packing 1281, THREE BOND 1281 or equivalent (FIPG)	Intermediate plate x Transmission case Intermediate plate x Transfer adaptor
	08833–00080 Adhesive 1344, THREE BOND 1344, LOCTITE 242 or equivalent	Straight screw plug Front bearing retainer set bolt

MT

TROUBLESHOOTING

MX02A-0X

Use the table below to help you find the cause of the problem. The numbers indicate the priority of the likely cause of the problem. Check each part in order. If necessary, replace these parts.

MT

See Page / Parts Name / Trouble	—	MT-3	—	MT-9	MT-9	—	—	MT-9	MT-9	MT-9	MT-9	MT-18,20 MT-27	MT-20,27			
	Oil (Level low)	Oil (Wrong)	Oil (Level too high)	Gasket (Damaged)	Oil seal (Worn or damaged)	O-Ring (Worn or damaged)	Control cable (Faulty)	Locking ball spring (Damaged)	Shift fork (Worn)	Gear (Worn or damaged)	Bearing (Worn or damaged)	Synchronizer ring (Worn or damaged)	Shifting key spring (Damaged)			
Noise	1	2								3	3					
Oil leakage			1	2	2	3										
Hard to shift or will not shift							1					2	3			
Jumps out of gear								1	2	3	3					

V00310

ASSEMBLY REMOVAL AND INSTALLATION

COMPONENTS

MTOHG–01

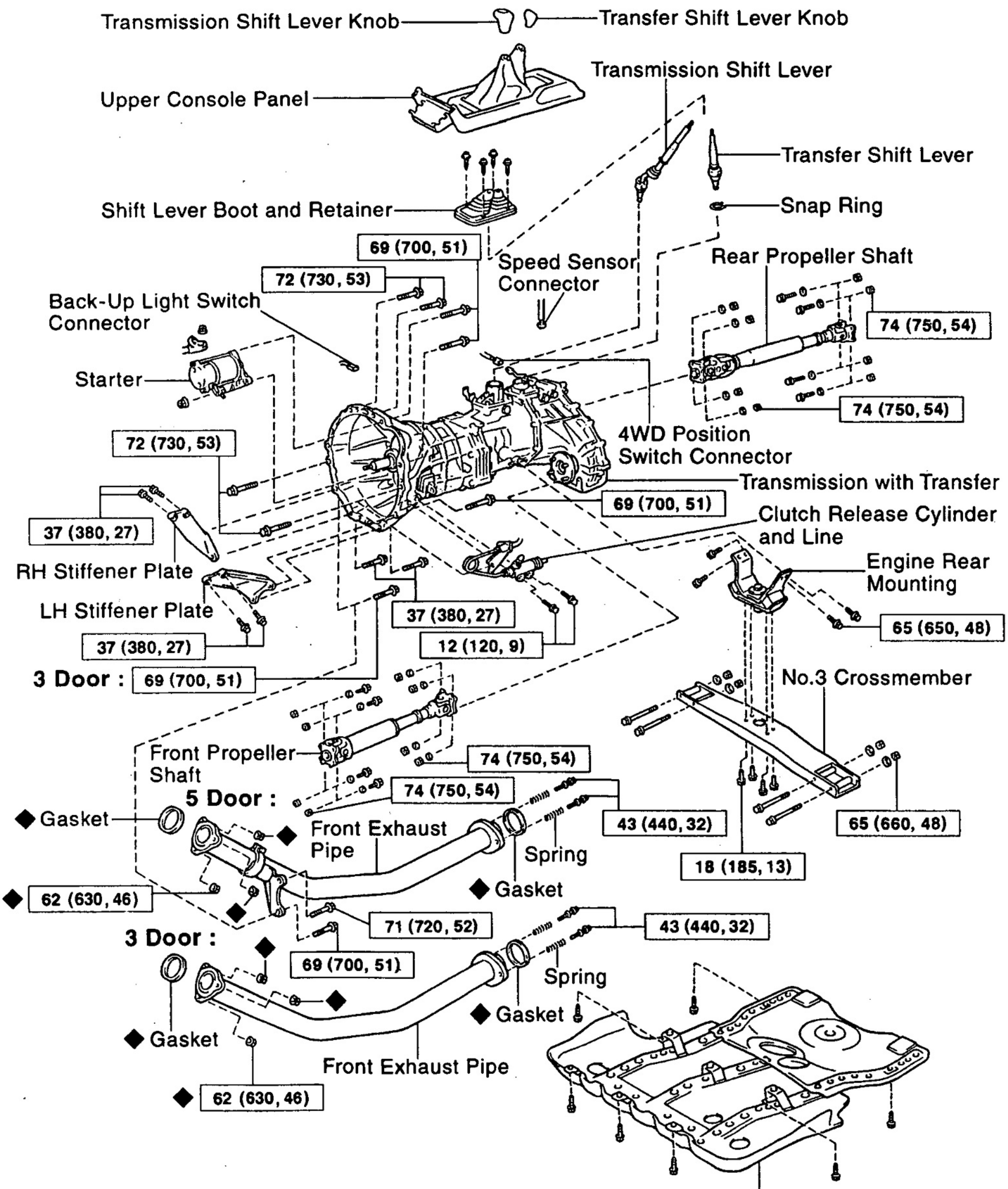

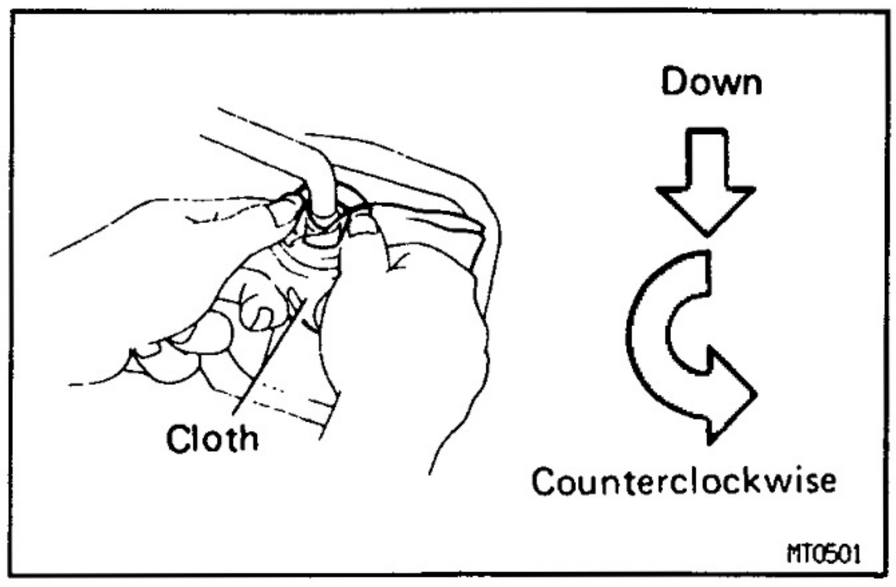

MT0HH-01

TRANSMISSION REMOVAL

1. REMOVE TRANSMISSION SHIFT LEVER

(a) Remove the upper console panel.

(b) Remove the 4 screws, shift lever boot and retainer.

(c) Cover the shift lever cap with a cloth.

(d) Pressing down on the shift lever cap and rotate it counterclockwise to remove.

(e) Pull out the shift lever.
INSTALLATION HINT: Apply MP grease to the tip of the shift lever.

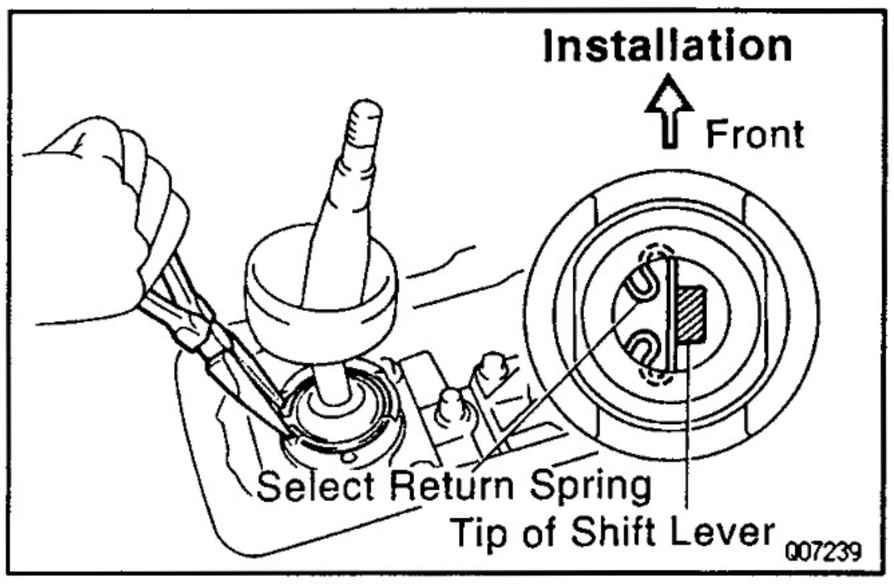

2. REMOVE TRANSFER SHIFT LEVER

Using pliers, remove the snap ring and pull out the shift lever.
HINT: Shift the transfer shift lever to the "H4" position.
INSTALLATION HINT: Apply MP grease to the tip of the shift lever.

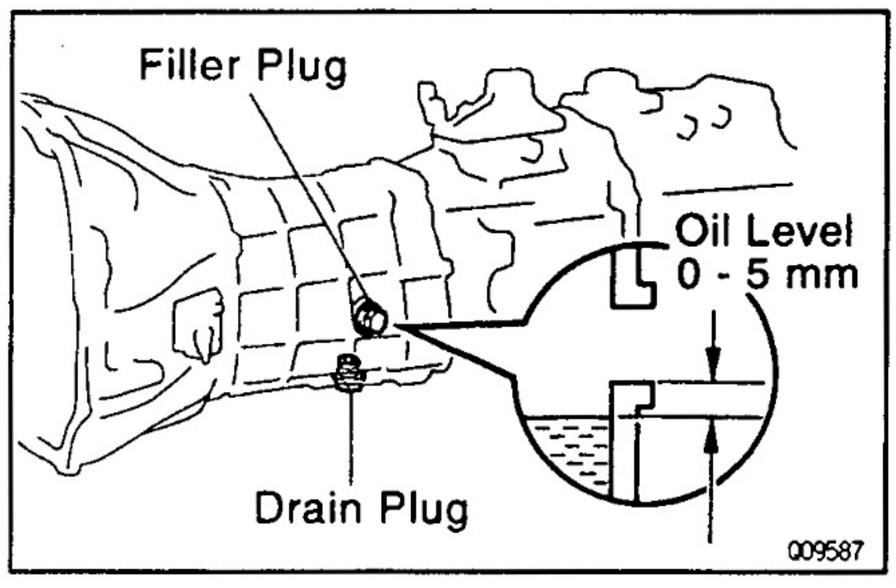

3. RAISE VEHICLE AND DRAIN TRANSMISSION OIL

Oil grade: API GL–4 or GL–5
Viscosity: SAE 75W–90
Capacity: 2.2 liters (2.3 US qts, 1.9 Imp. qts)
Torque: 37 N·m (380 kgf·cm, 27 ft·lbf)

4. REMOVE NO.1 AND NO.2 ENGINE UNDER COVERS

5. REMOVE FRONT AND REAR PROPELLER SHAFTS
(See page PR–3)

6. REMOVE CLUTCH RELEASE CYLINDER

Remove the 2 bolts and release cylinder.
Torque: 12 N·m (120 kgf·cm, 9 ft·lbf)

7. DISCONNECT THESE CONNECTORS:

- Back–up light switch connector
- Speed sensor connector
- 4WD position switch connector

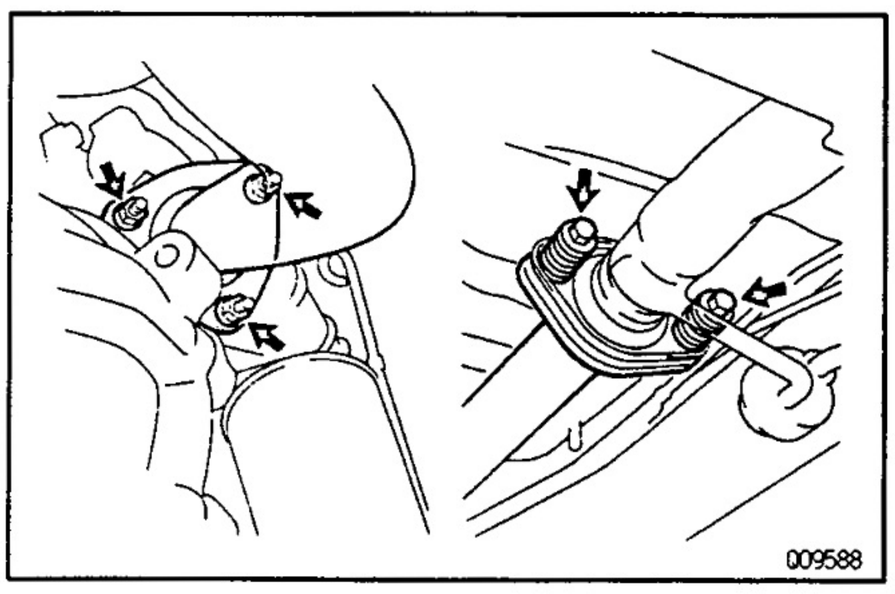

8. REMOVE FRONT EXHAUST PIPE

3 Door:

(a) Remove the 3 nuts and gasket from the exhaust manifold.
Torque: 62 N·m (630 kgf·cm, 46 ft·lbf)

(b) Remove the 2 bolts, springs, gasket and pipe.
Torque: 43 N·m (440 kgf·cm, 32 ft·lbf)

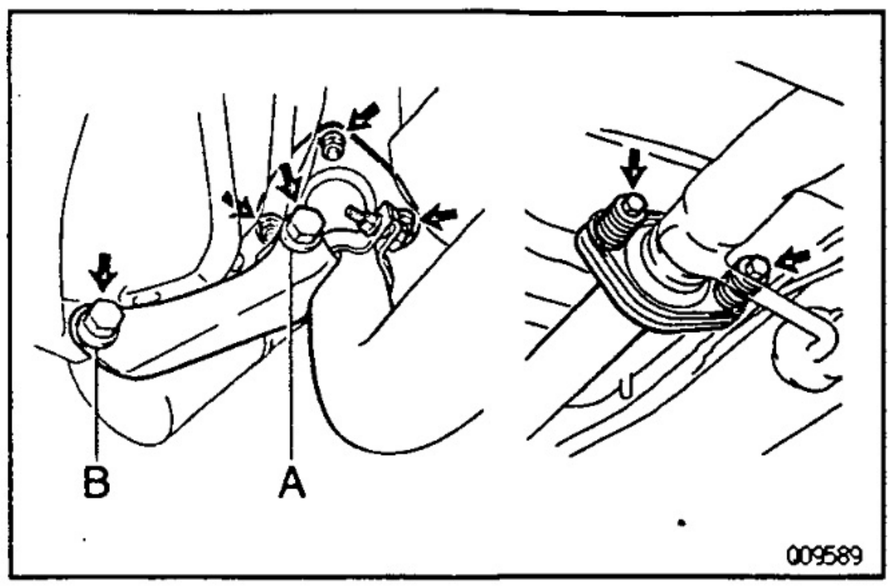

5 Door:

(a) Remove the 2 bolts from the clutch housing.
Torque:
Bolt A: 71 N·m (720 kgf·cm, 52 ft·lbf)
Bolt B: 69 N·m (700 kgf·cm, 51 ft·lbf)

(b) Remove the 3 nuts and gasket from the exhaust manifold.
Torque: 62 N·m (630 kgf·cm, 46 ft·lbf)

(c) Remove the 2 bolts, springs, gasket and pipe.
Torque: 43 N·m (440 kgf·cm, 32 ft·lbf)

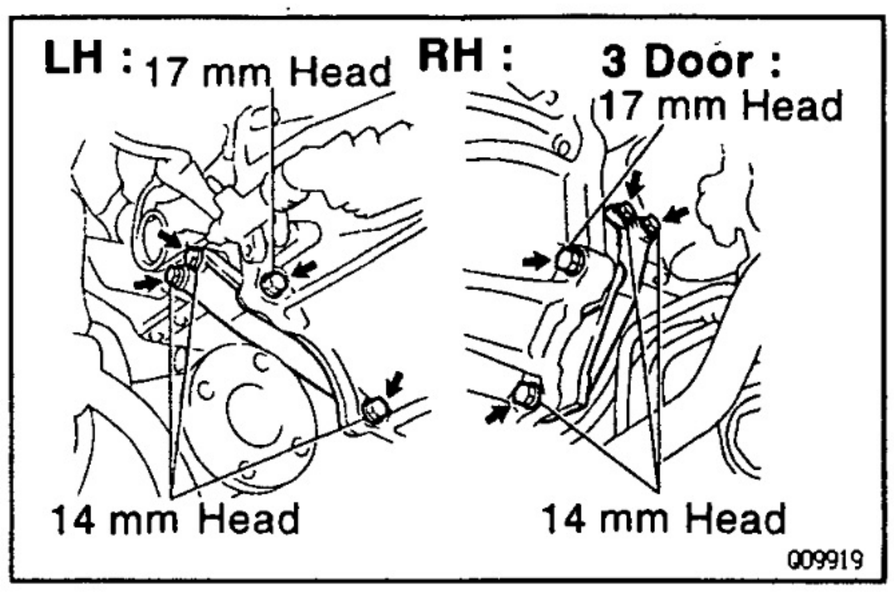

9. REMOVE LH AND RH STIFFENER PLATES

(a) Remove the 4 bolts and LH stiffener plate.
Torque:
17 mm head: 69 N·m (700 kgf·cm, 51 ft·lbf)
14 mm head: 37 N·m (380 kgf·cm, 27 ft·lbf)

(b) Remove the 3 (5 door) or 4 (3 door) bolts and RH stiffener plate.
Torque:
17 mm head: 69 N·m (700 kgf·cm, 51 ft·lbf)
14 mm head: 37 N·m (380 kgf·cm, 27 ft·lbf)

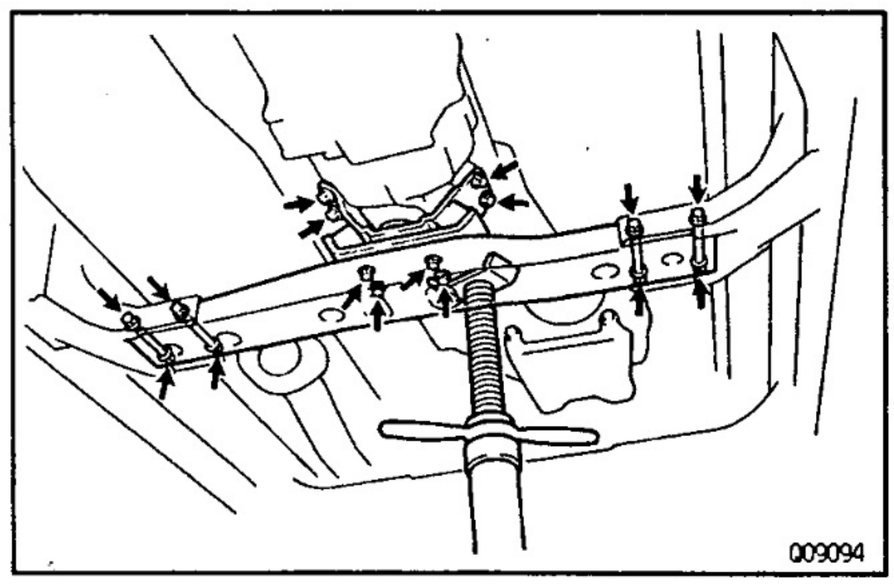

10. REMOVE NO.3 CROSSMEMBER

(a) Support the transmission rear side.

(b) Remove the 4 set bolts of the engine rear mounting.
Torque: 18 N·m (185 kgf·cm, 13 ft·lbf)

(c) Remove the 4 bolts, nuts and crossmember.
Torque: 65 N·m (660 kgf·cm, 48 ft·lbf)

11. REMOVE ENGINE REAR MOUNTING

Remove the 4 bolts and engine rear mounting from the transmission.
Torque: 65 N·m (650 kgf·cm, 48 ft·lbf)

12. JACK UP TRANSMISSION SLIGHTLY

Using a transmission jack, support the transmission.

13. REMOVE STARTER

(a) Remove the nut and disconnect the wire from the starter.

(b) Remove the 2 bolts, nut and starter.
Torque: 69 N·m (700 kgf·cm, 51 ft·lbf)

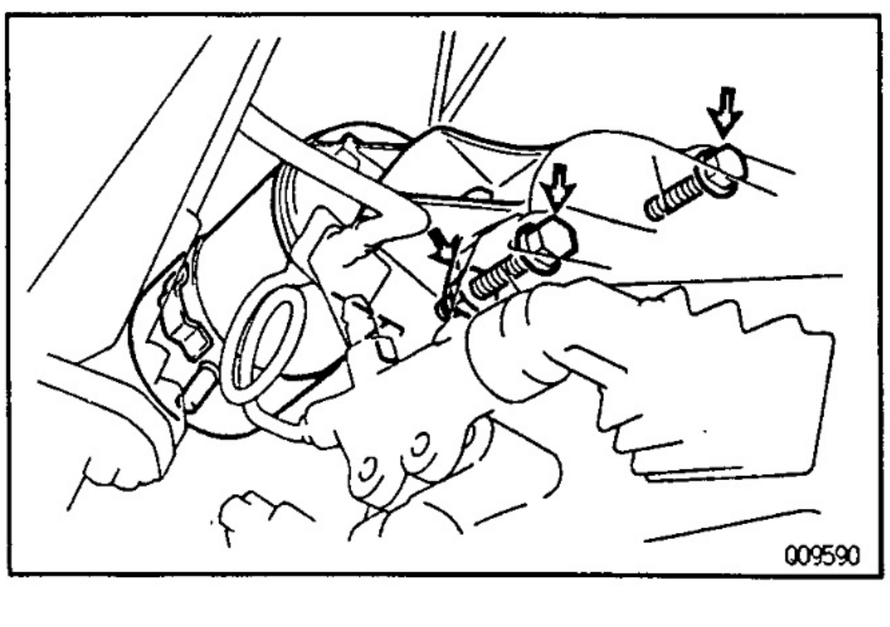

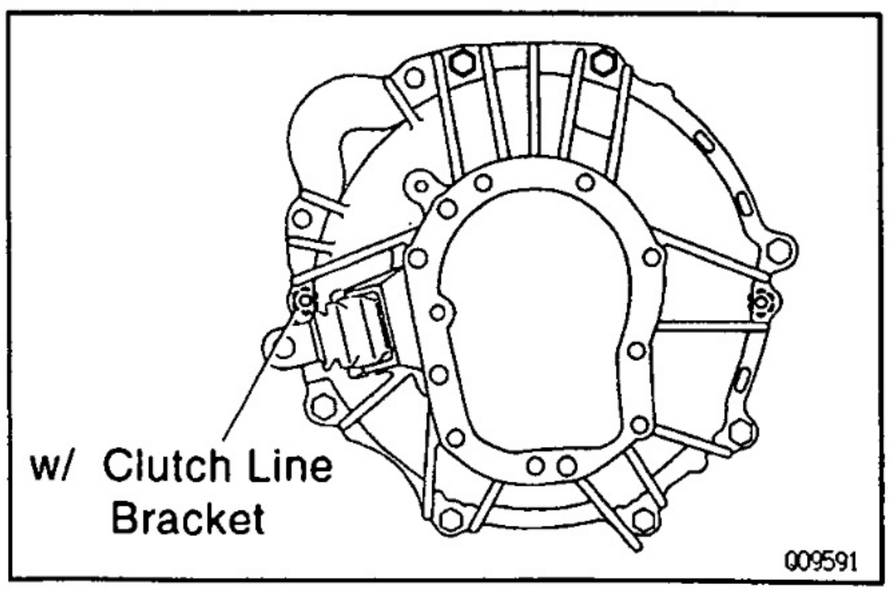

14. REMOVE TRANSMISSION WITH TRANSFER

(a) Disconnect the wire harness from the transmission.

(b) Remove the 4 transmission mounting bolts from the engine.
Torque: 72 N·m (730 kgf·cm, 53 ft·lbf)

(c) Pull out the transmission with the transfer down and toward the rear.

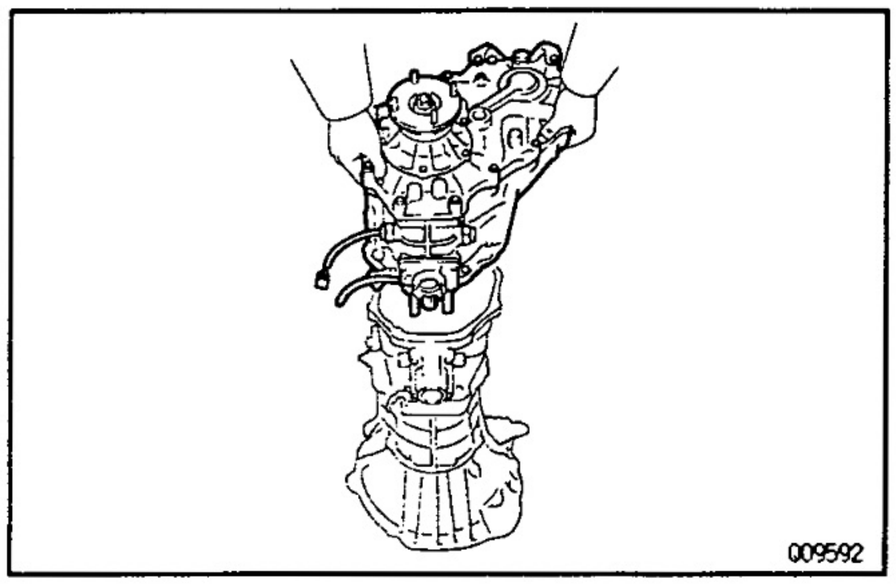

MT

15. REMOVE TRANSFER FROM TRANSMISSION

(a) Disconnect the breather hose and remove the 8 transfer adaptor rear mounting bolts.
Torque: 24 N·m (240 kgf·cm, 17 ft·lbf)

(b) Pull the transfer straight up and remove it from the transmission.
HINT: Take care not to damage the transfer adaptor oil seal with the transfer input gear spline.
INSTALLATION HINT: Apply MP grease to the transfer adaptor oil seal.

MT0HJ–01

TRANSMISSION INSTALLATION

Installation is in the reverse order of removal.
HINT: After installation, do the road test.

COMPONENT PARTS REMOVAL AND INSTALLATION

COMPONENTS

MTOCE–03

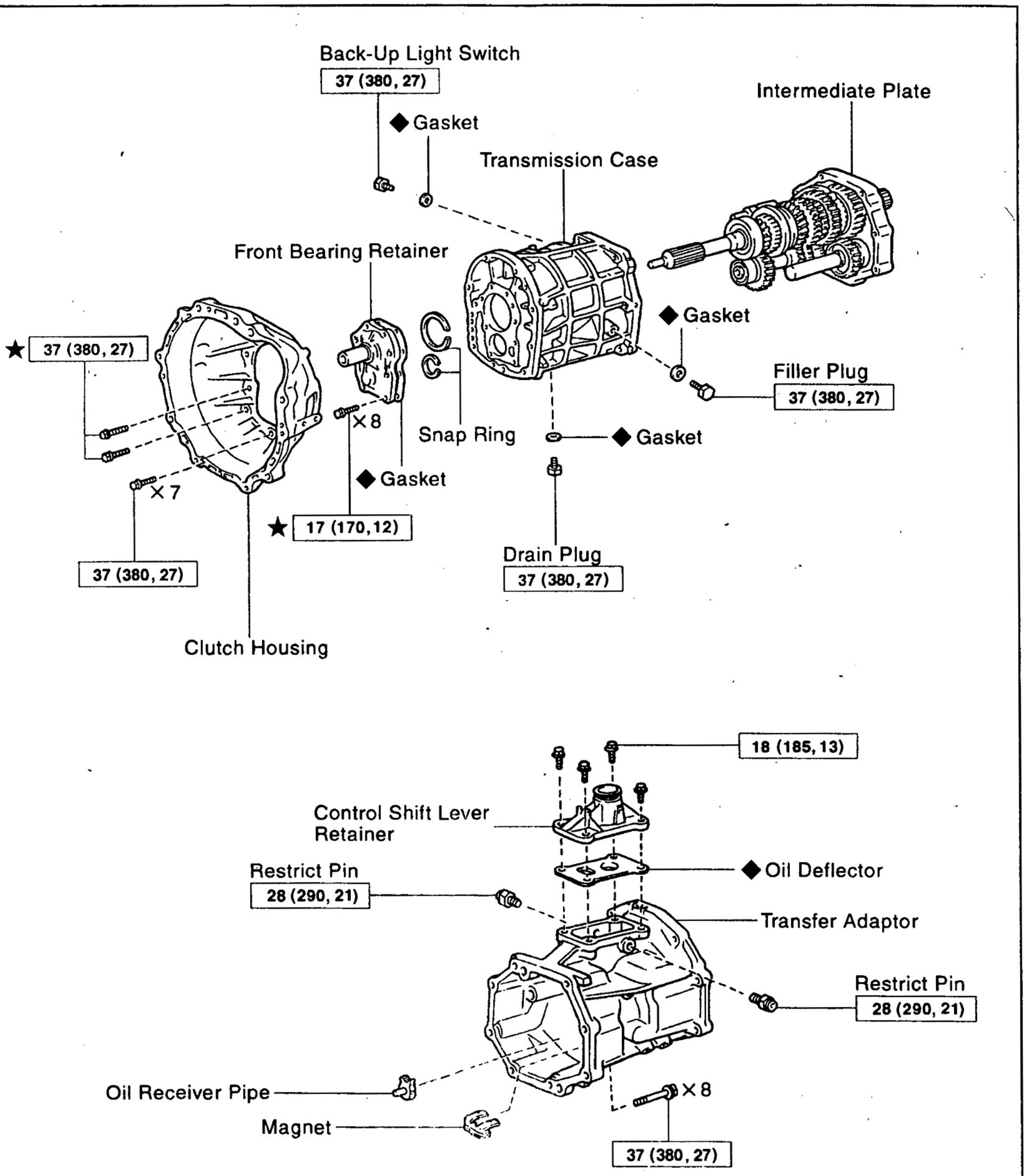

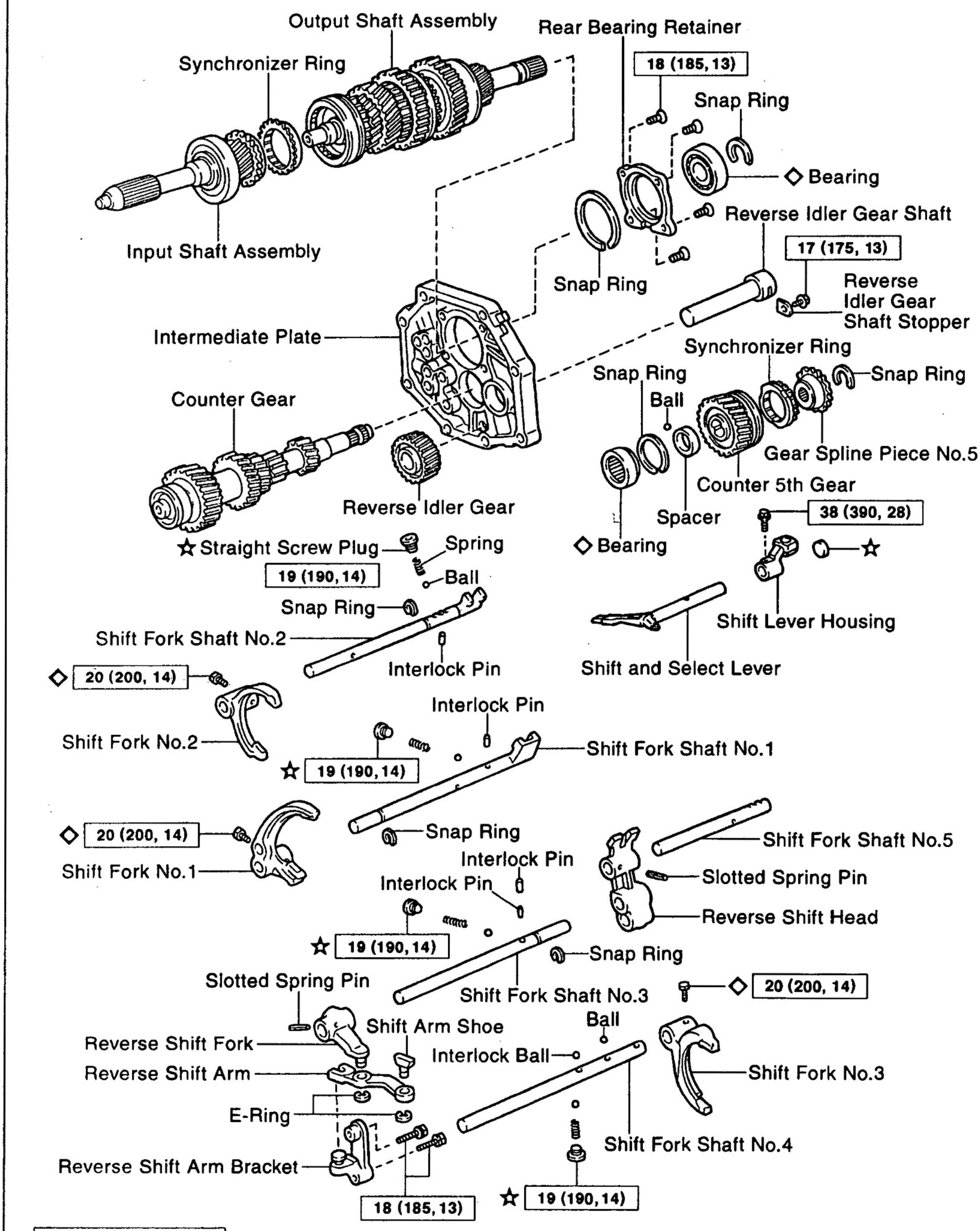

N·m (kgf·cm, ft·lbf) : Specified torque

◇ Non-reusable part

☆ Precoated part

009490

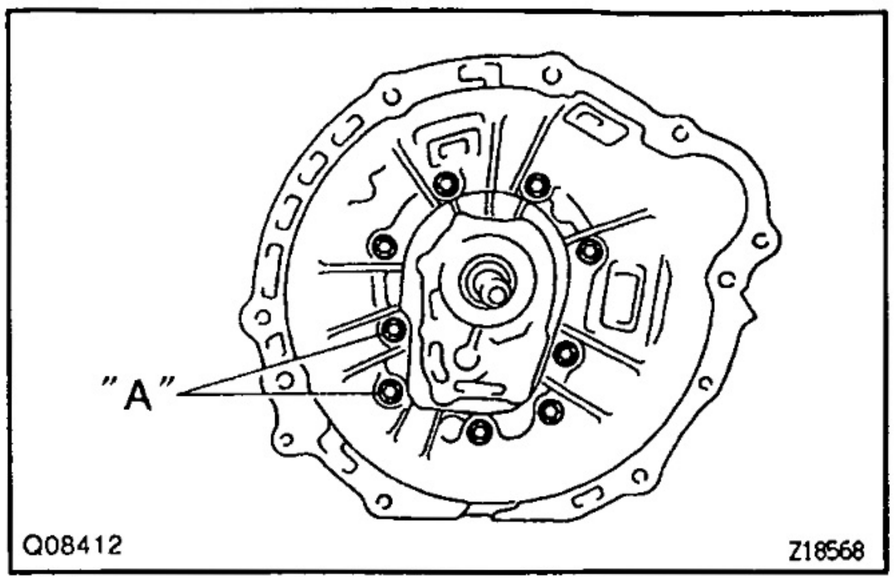

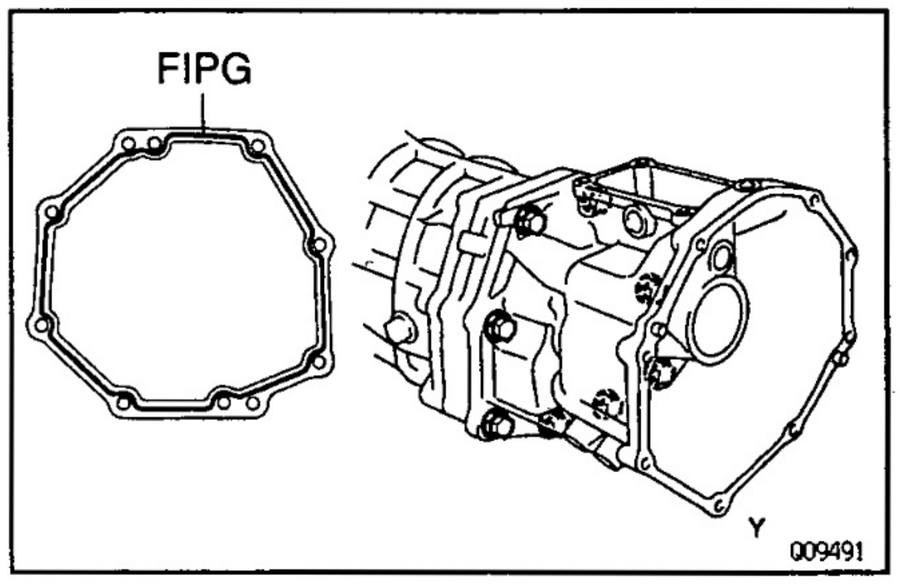

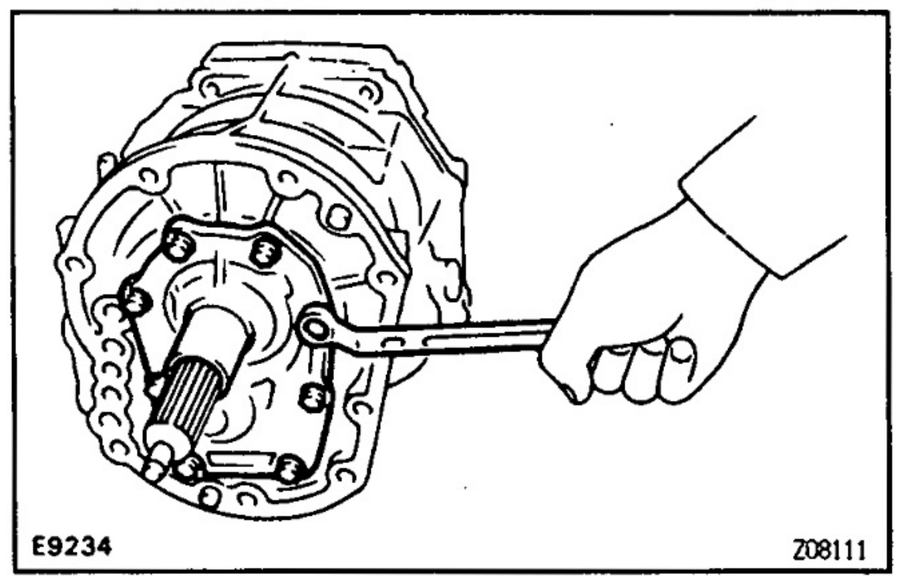

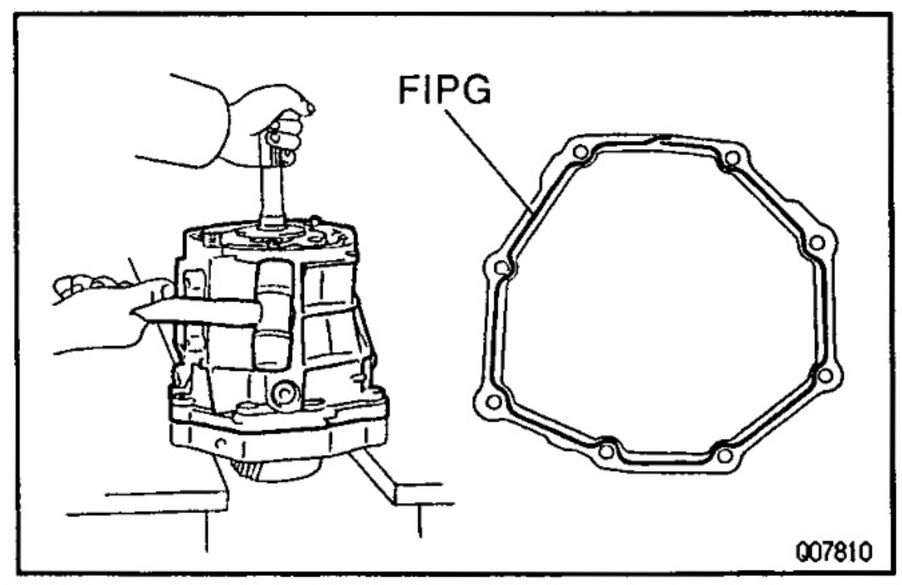

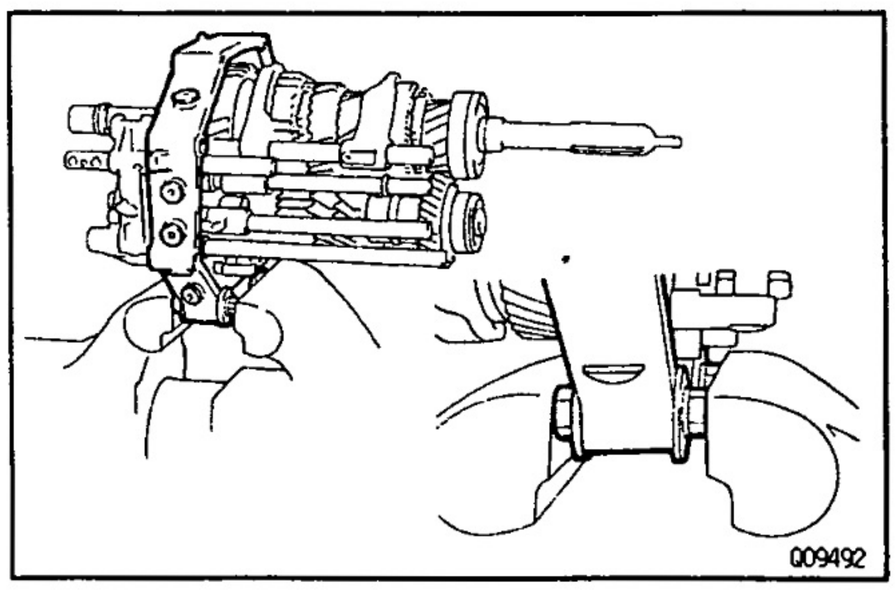

MTOHK-01

BASIC SUBASSEMBLY SEPARATION

1. REMOVE BACK–UP LIGHT SWITCH AND GASKET
Torque: 37 N·m (380 kgf·cm, 27 ft·lbf)

2. REMOVE CLUTCH HOUSING
Remove the 9 bolts and clutch housing.
Torque: 37 N·m (380 kgf·cm, 27 ft·lbf)
INSTALLATION HINT: Apply liquid sealer to the "A" bolt threads.
Sealant: Part No. 08833 – 00080, THREE BOND 1344, LOCTITE 242 or equivalent

3. REMOVE CONTROL SHIFT LEVER RETAINER
Remove the 4 bolts, retainer and oil deflector.
Torque: 18 N·m (185 kgf·cm, 13 ft·lbf)

4. REMOVE 2 RESTRICT PINS
Torque: 28 N·m (290 kgf·cm, 21 ft·lbf)

5. REMOVE TRANSFER ADAPTOR
(a) Remove the shift lever housing set bolt.
Torque: 38 N·m (390 kgf·cm, 28 ft·lbf)
(b) Remove the 8 bolts.
Torque: 37 N·m (380 kgf·cm, 27 ft·lbf)
(c) Using a plastic hammer, tap the transfer adaptor and remove it.
FIPG: Part No. 08826–00090, THREE BOND 1281 or equivalent

6. REMOVE FRONT BEARING RETAINER
Remove the 8 bolts, gasket and retainer.
Sealant: Part No. 08833 – 00080, THREE BOND 1344, LOCTITE 242 or equivalent
Torque: 17 N·m (170 kgf·cm, 12 ft·lbf)

7. SEPARATE INTERMEDIATE PLATE FROM TRANSMISSION CASE
(a) Using a snap ring expander, remove the 2 snap rings from the input shaft and counter gear.
(b) Stand the transmission, as shown.
(c) Using a plastic hammer, carefully tap the transmission case and remove it.
FIPG: Part No. 08826–00090, THREE BOND 1281 or equivalent

8. MOUNT INTERMEDIATE PLATE IN VISE
(a) Using the 2 clutch housing bolts, plate washers and suitable nuts, as shown.
INSTALLATION NOTICE: Increase or decrease plate washers so that the bolt tip does not protrude from the nut.
(b) Mount the intermediate plate in a vise.

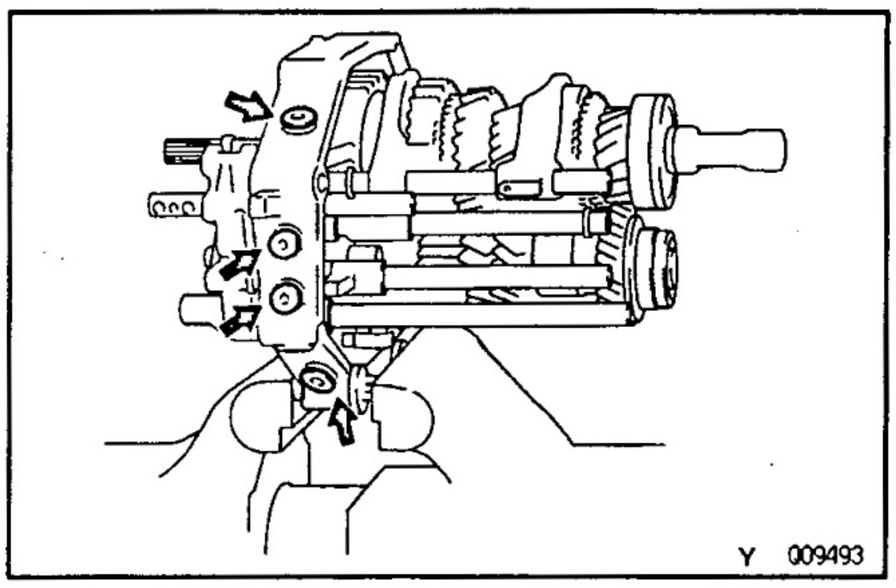

9. REMOVE STRAIGHT SCREW PLUG, SPRING AND BALL

(a) Using a torx socket wrench (T40), remove the 4 screw plugs from the intermediate plate.

Sealant: Part No. 08833 – 00080, THREE BOND 1344, LOCTITE 242 or equivalent

Torque: 19 N·m (190 kgf·cm, 14 ft·lbf)

(b) Using a magnetic finger, remove the 4 springs and balls.

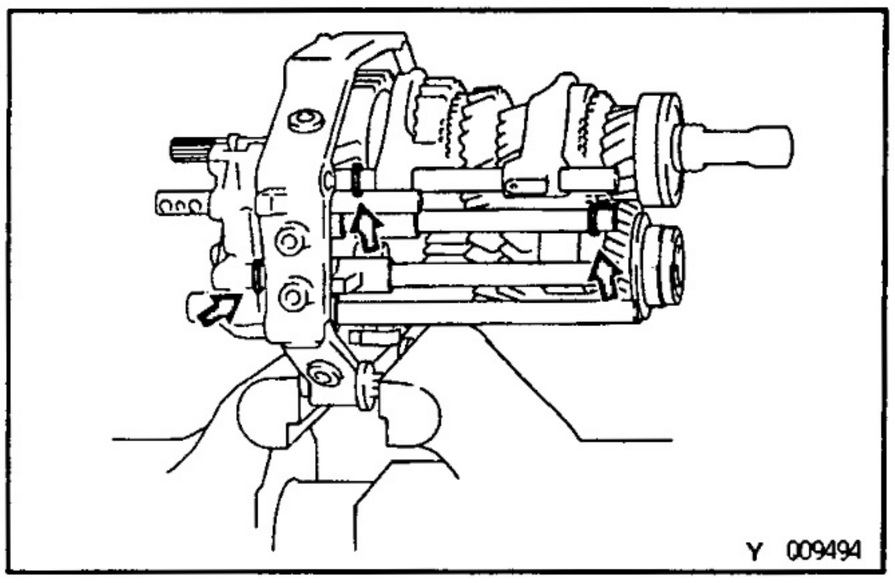

10. REMOVE SHIFT FORK SHAFT SNAP RING

Using 2 screwdrivers and a hammer, drive out the 3 snap rings.

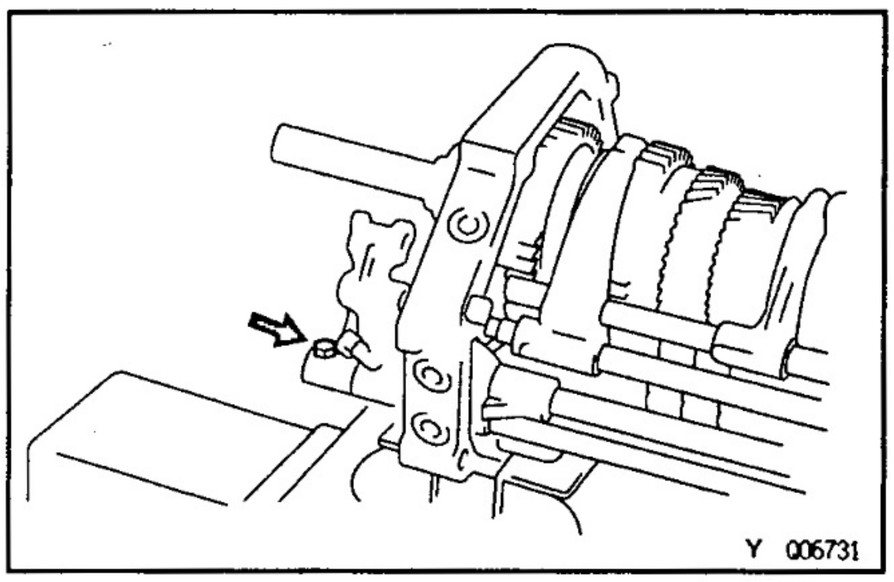

11. REMOVE SHIFT FORK NO.3, SHIFT FORK SHAFT NO.4 AND REVERSE SHIFT HEAD

(a) Remove the shift fork No.3 set bolt.

Torque: 20 N·m (200 kgf·cm, 14 ft·lbf)

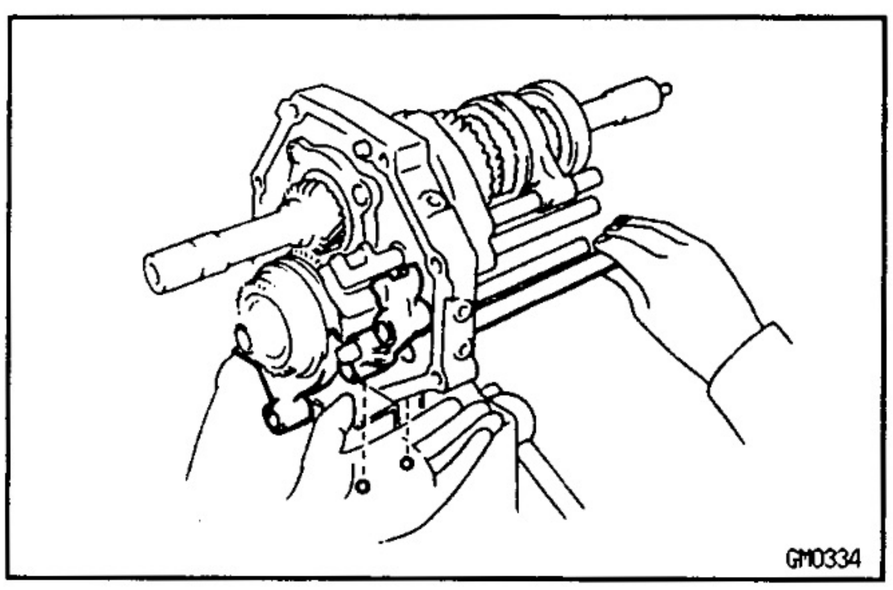

(b) Remove the shift fork No.3, shift fork shaft No.4, reverse shift head and 2 balls.

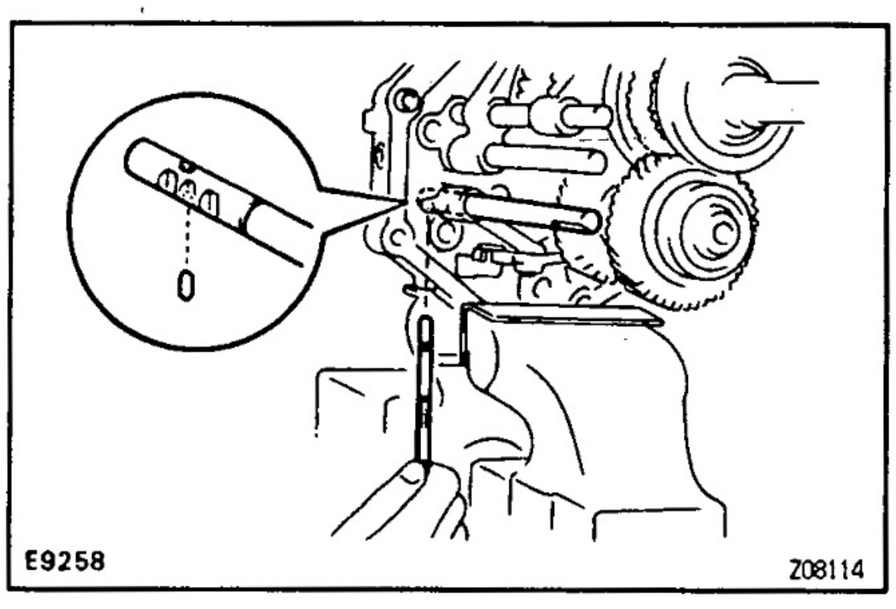

12. REMOVE REVERSE SHIFT ARM, REVERSE SHIFT FORK AND SHIFT FORK SHAFT NO.3

(a) Using a magnetic finger, remove the interlock pin from the shift fork shaft No.3.

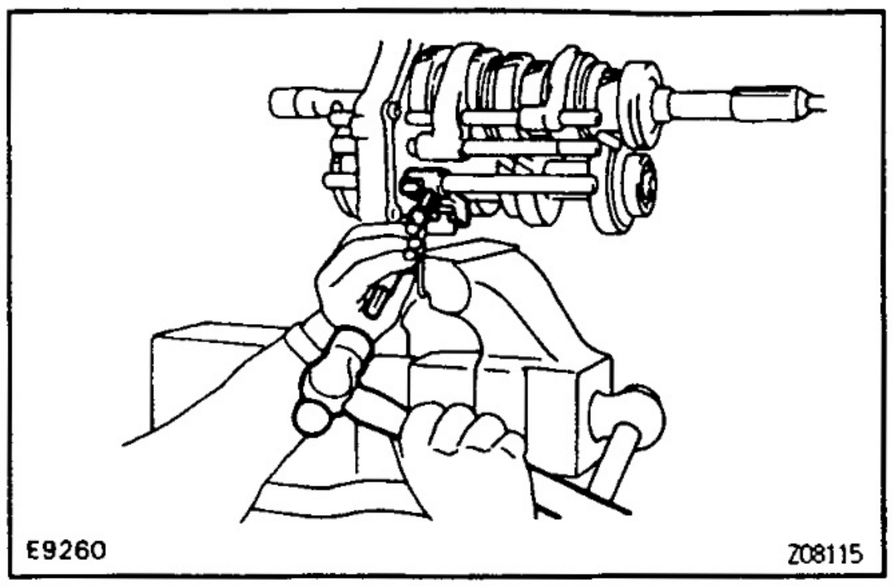

(b) Using a pin punch and hammer, drive out the slotted spring pin.

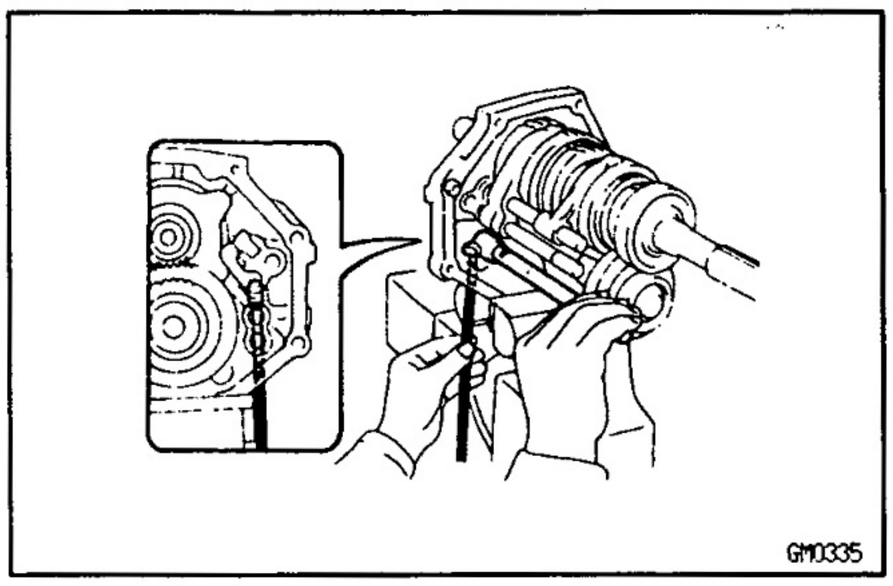

(c) Remove the shift fork shaft No.3.
(d) Using a manetic finger, remove the interlock pin.

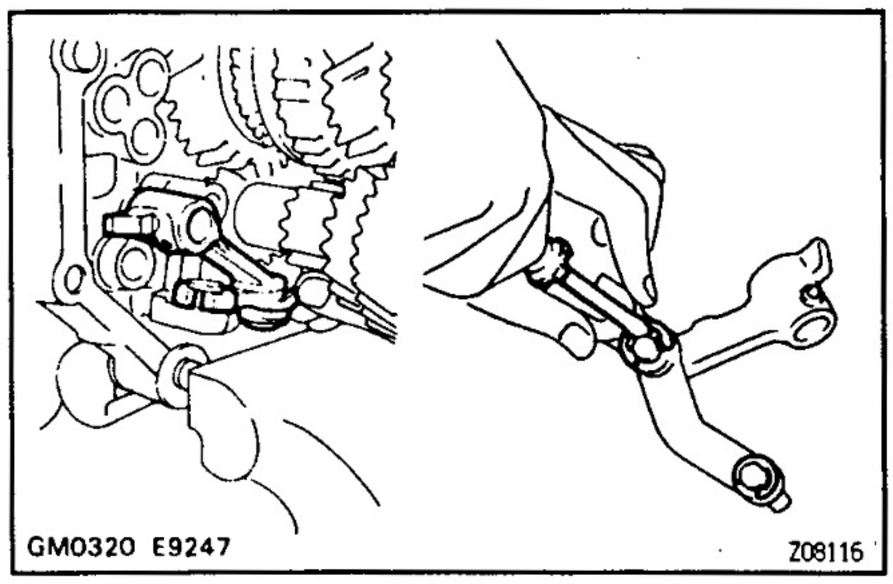

(e) Remove the reverse shift arm and fork.
(f) Using a screwdriver, remove the 2 E–rings.
(g) Separate the shift arm, fork and shoe.

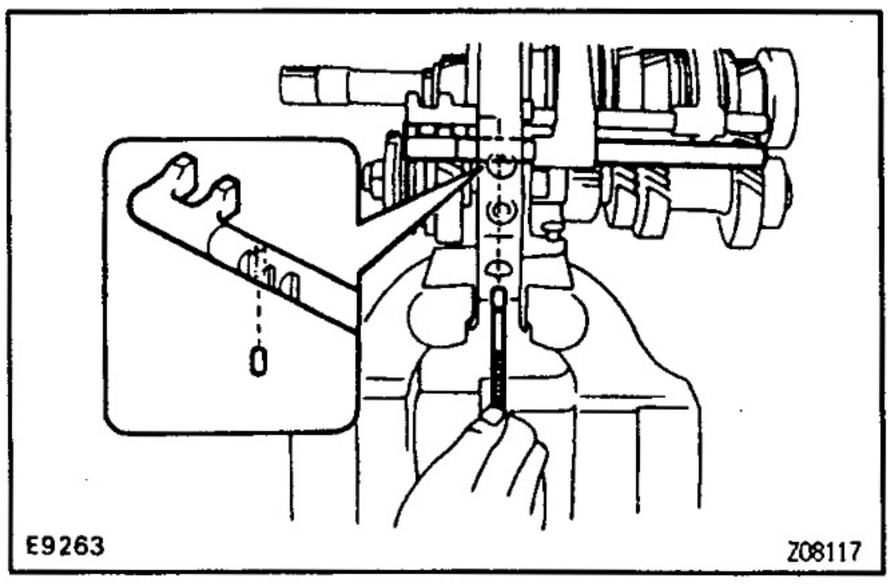

13. REMOVE SHIFT FORK SHAFTS NO.1, NO.2 AND SHIFT FORKS NO.1, NO.2

(a) Using a magnetic finger, remove the interlock pin from the shift fork shaft No.2.

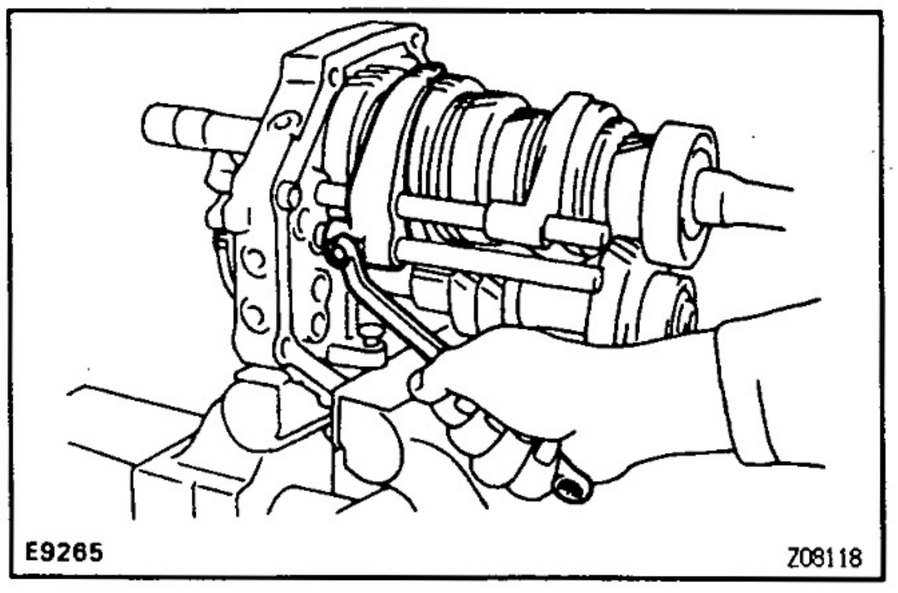

(b) Remove the shift fork No.1 set bolt.
Torque: 20 N·m (200 kgf·cm, 14 ft·lbf)

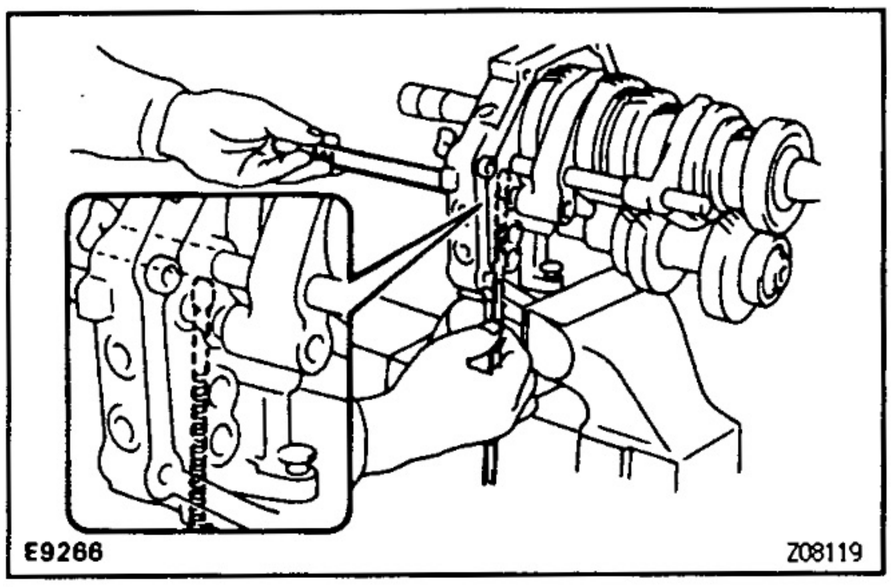

(c) Remove the shift fork shaft No.1.

(d) Using a magnetic finger, remove the interlock pin.

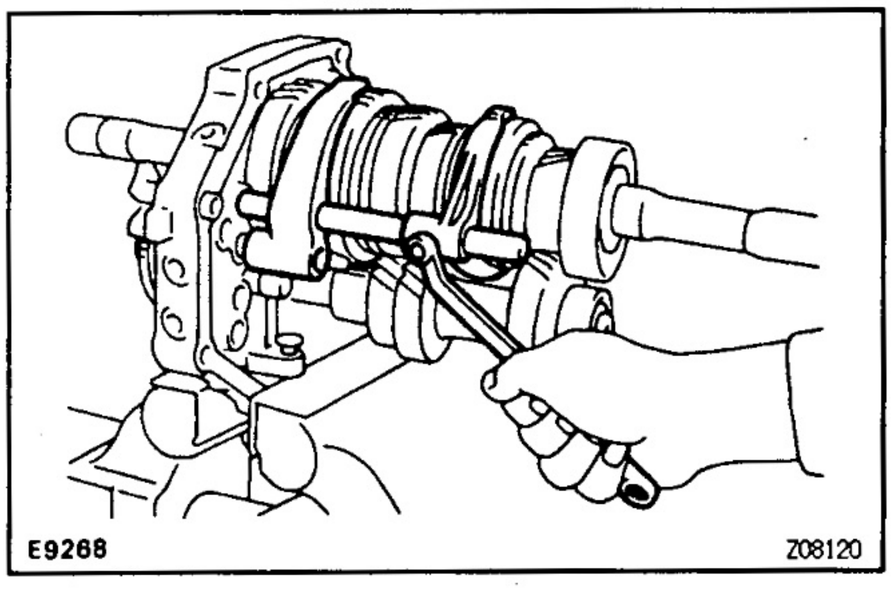

(e) Remove the shift fork No.2 set bolt.
Torque: 20 N·m (200 kgf·cm, 14 ft·lbf)

(f) Remove the shift forks No.1, No.2 and shift fork shaft No.2.

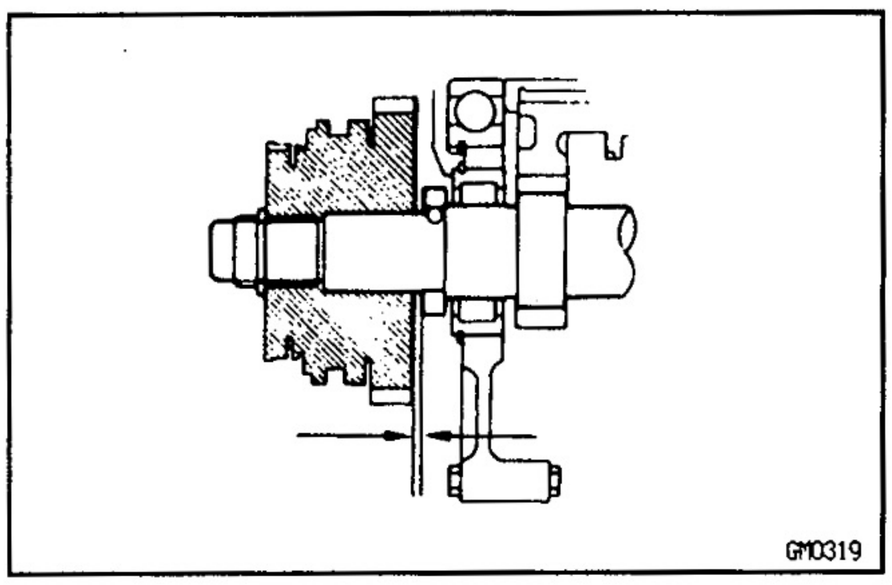

14. MEASURE COUNTER 5TH GEAR THRUST CLEARANCE

Using a feeler gauge, measure the counter 5th gear thrust clearance.
Standard clearance: 0.10–0.30 mm (0.0039–0.0118 in.)
Maximum clearance: 0.35 mm (0.0138 in.)

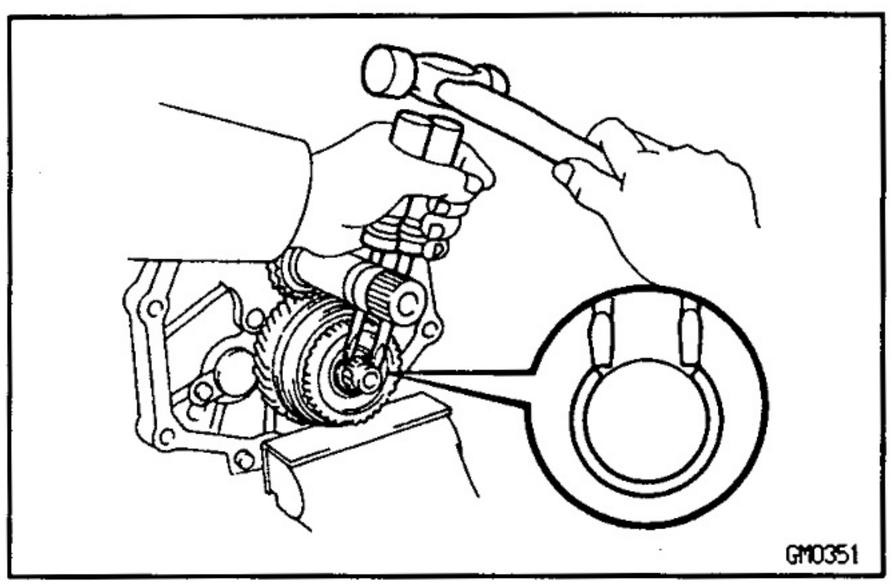

15. REMOVE GEAR SPLINE PIECE NO.5, SYNCHRONIZER RING, NEEDLE ROLLER BEARING AND COUNTER 5TH GEAR WITH HUB SLEEVE NO.3

(a) Using 2 screwdrivers and a hammer, tap out the snap ring.
INSTALLATION HINT: Select a snap ring that will allow minimum axial play.

Mark	Thickness mm (in.)
A	2.80–2.85 (0.110–0.112)
B	2.85–2.90 (0.112–0.114)
C	2.90–2.95 (0.114–0.116)
D	2.95–3.00 (0.116–0.118)
E	3.00–3.05 (0.118–0.120)
F	3.05–3.10 (0.120–0.122)
G	3.10–3.15 (0.122–0.124)

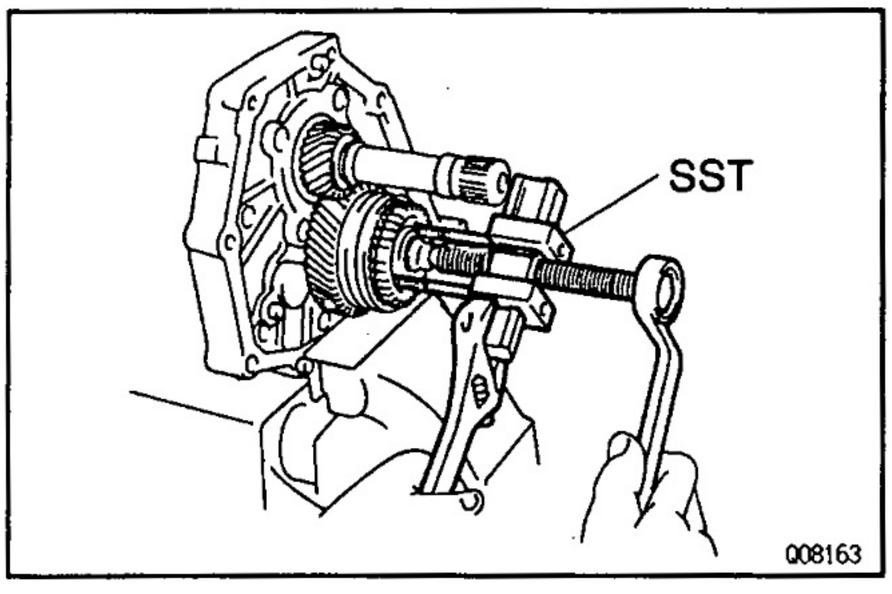

(b) Using SST, remove the gear spline piece No.5.
SST 09950–50010

(c) Remove the synchronizer ring, needle roller bearing and counter 5th gear.

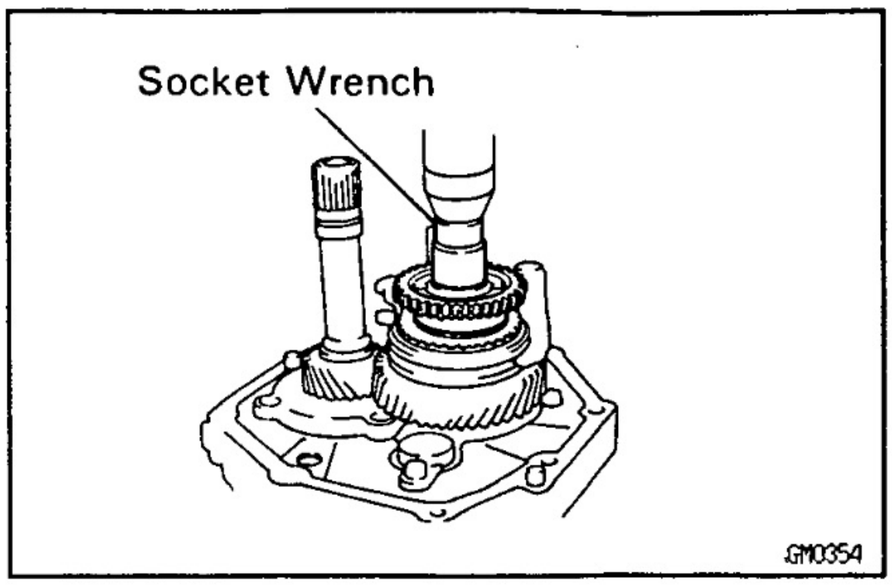

INSTALLATION HINT: Using a press and socket wrench, install the gear spline piece No.5 with the synchronizer ring slots aligned with the shifting keys.

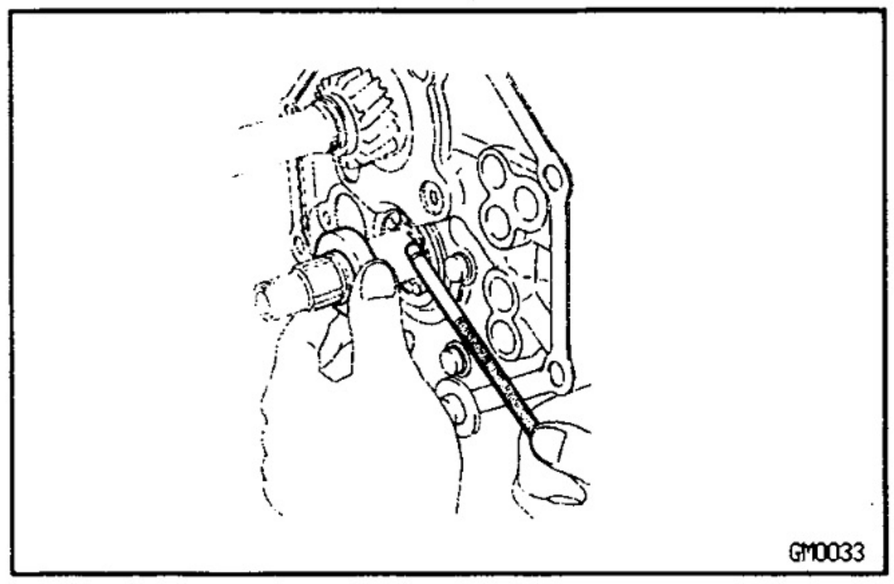

16. REMOVE SPACER AND BALL

(a) Remove the spacer.

(b) Using a magnetic finger, remove the ball.

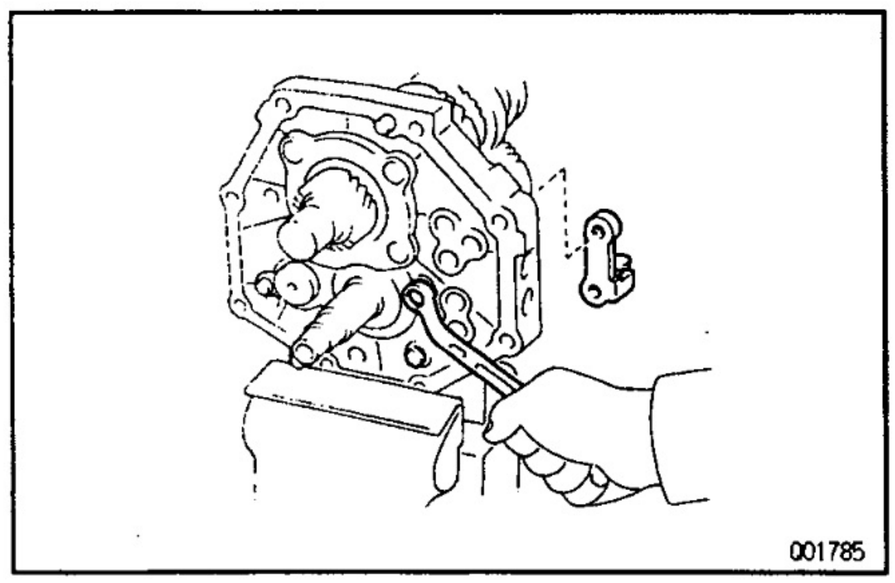

17. REMOVE REVERSE SHIFT ARM BRACKET

Remove the 2 bolts and reverse shift arm bracket.

Torque: 18 N·m (185 kgf·cm, 13 ft·lbf)

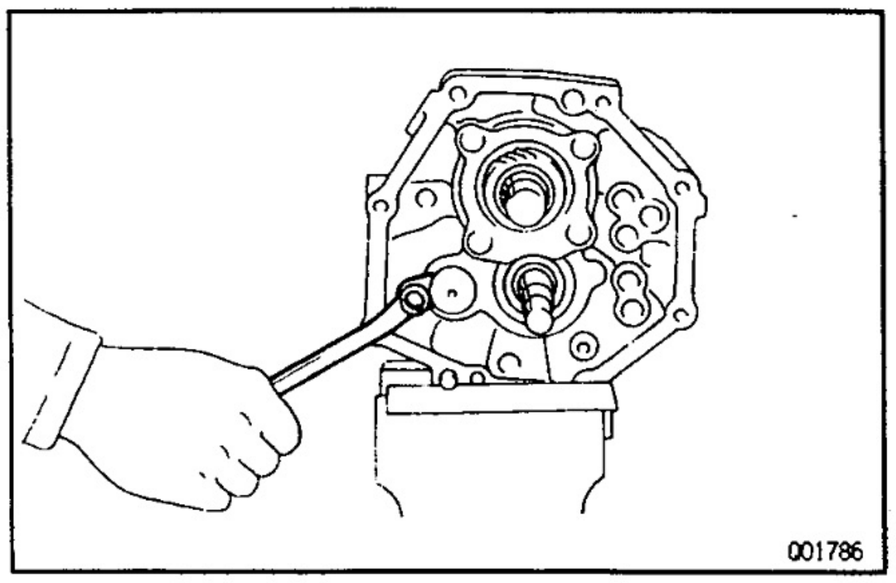

18. REMOVE REVERSE IDLER GEAR AND SHAFT

(a) Remove the reverse idler gear shaft stopper set bolt and stopper.

Torque: 17 N·m (175 kgf·cm, 13 ft·lbf)

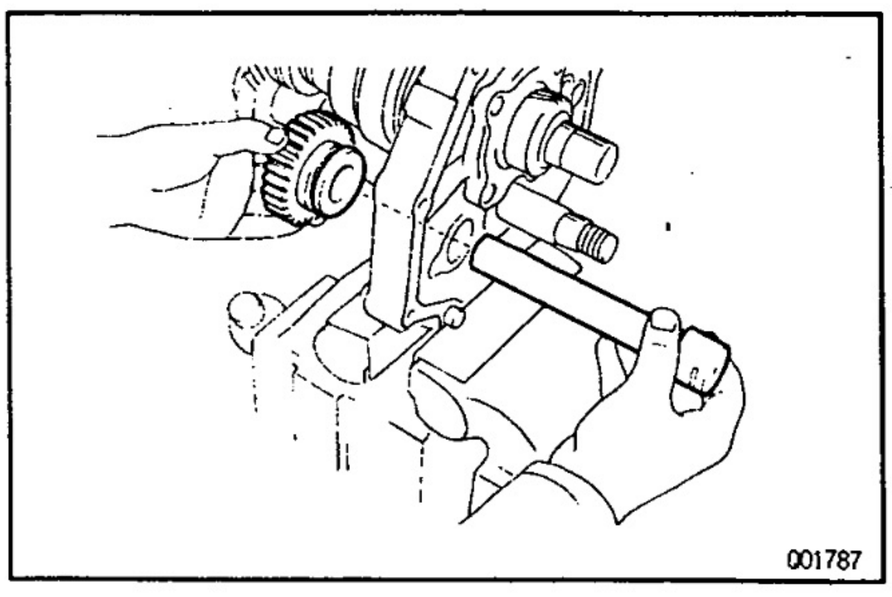

(b) Remove the reverse idler gear and shaft.

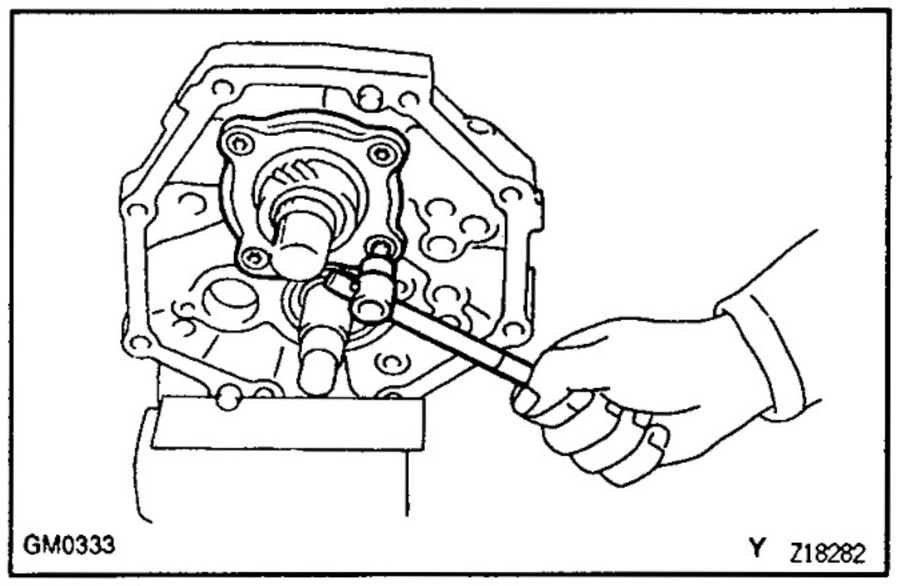

19. REMOVE REAR BEARING RETAINER

Using a torx socket wrench (T40), remove the 4 screw plugs and retainer.

Torque: 18 N·m (185 kgf·cm, 13 ft·lbf)

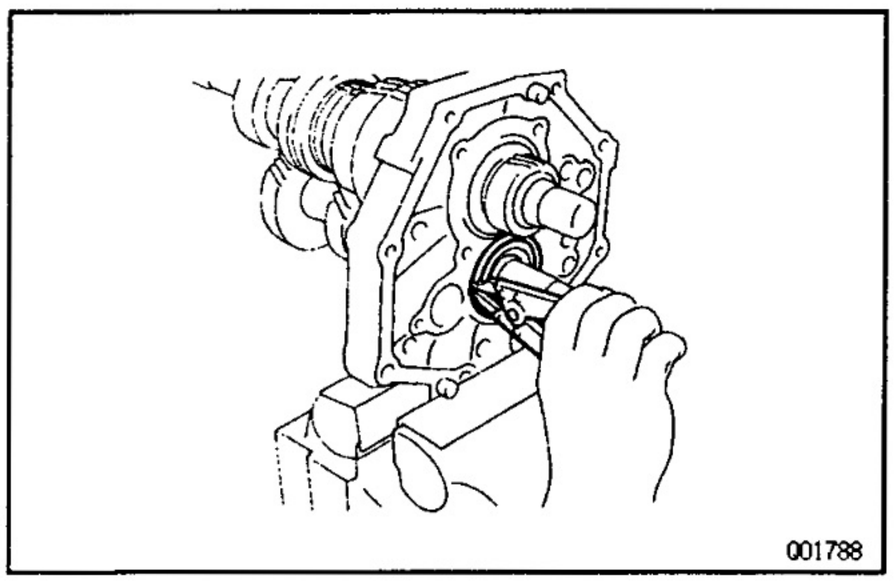

20. REMOVE COUNTER GEAR

(a) Using a snap ring expander, remove the counter gear rear bearing snap ring.

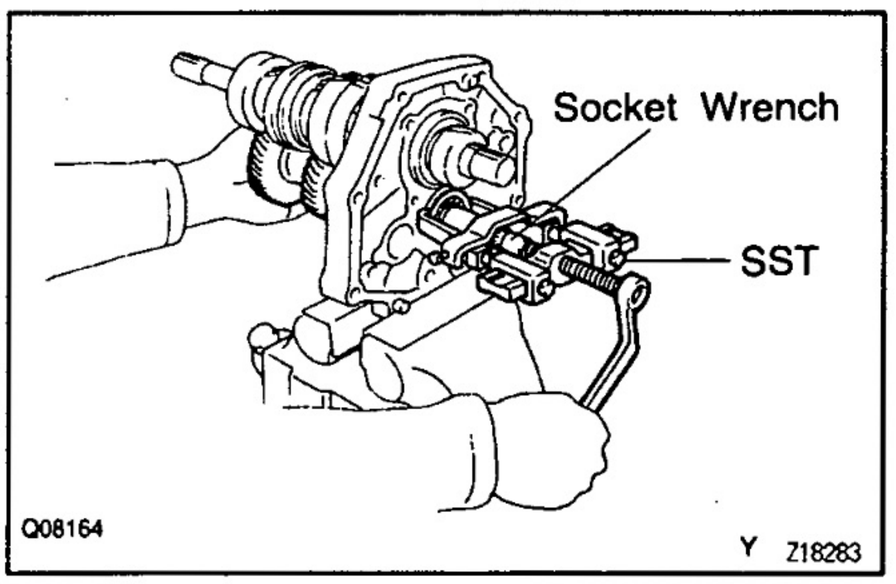

(b) Using SST and a socket wrench, remove the counter gear rear bearing.
SST 09950–40010

(c) Remove the counter gear.

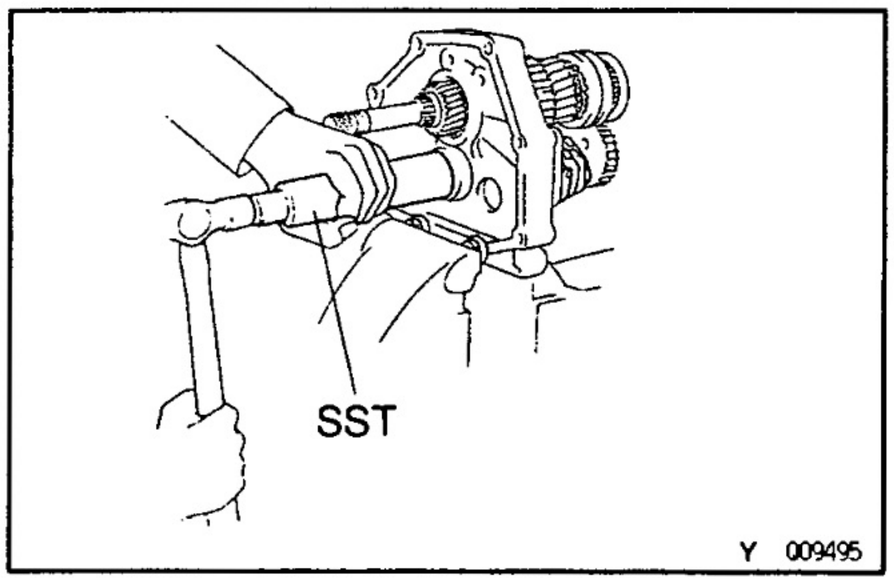

INSTALLATION HINT: Install the counter gear into the intermediate plate while holding the counter gear, and installing the counter rear bearing with SST.
SST 09316–60011 (09316–00011)

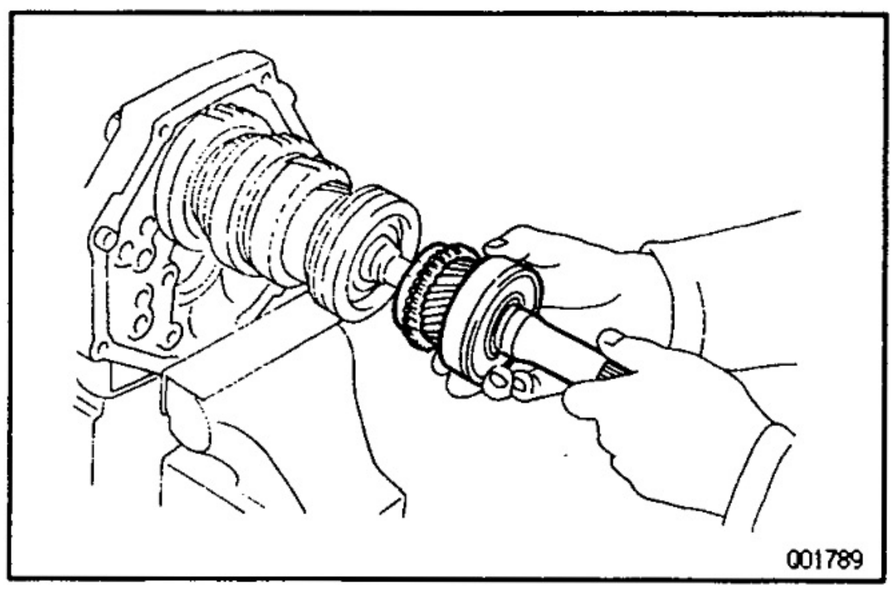

21. REMOVE INPUT SHAFT ASSEMBLY

Remove the input shaft with the 13 needle roller bearings and synchronizer ring from the output shaft.
INSTALLATION HINT: Install the input shaft to the output shaft with the synchronizer ring slots aligned with the shifting keys.

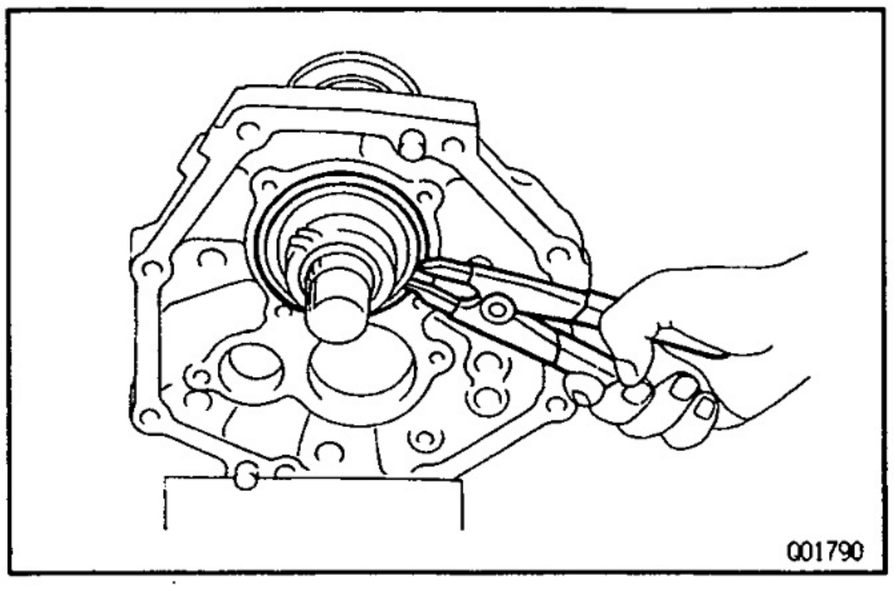

22. REMOVE OUTPUT SHAFT ASSEMBLY

(a) Using a snap ring expander, remove the output shaft center bearing snap ring.
INSTALLATION HINT: Be sure the snap ring is flush with the intermediate plate surface.

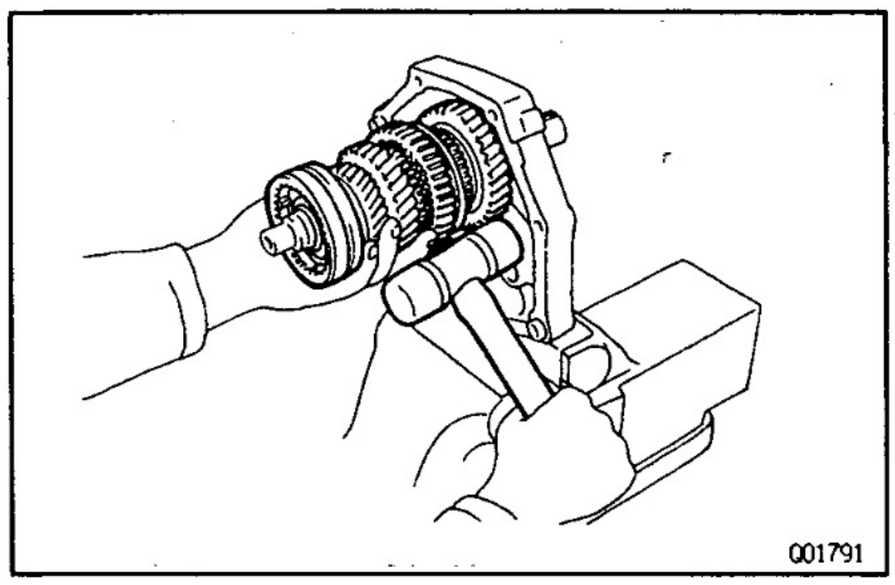

(b) Remove the output shaft from the intermediate plate by pulling on the output shaft and tapping on the intermediate plate with a plastic hammer.

MT

BASIC SUBASSEMBLY REASSEMBLY

MT0HL-01

Reassembly is in the reverse order of separation.
HINT: Coat all of the sliding and rotating surfaces with gear oil before assembly.

INPUT SHAFT
COMPONENTS

MT01F–06

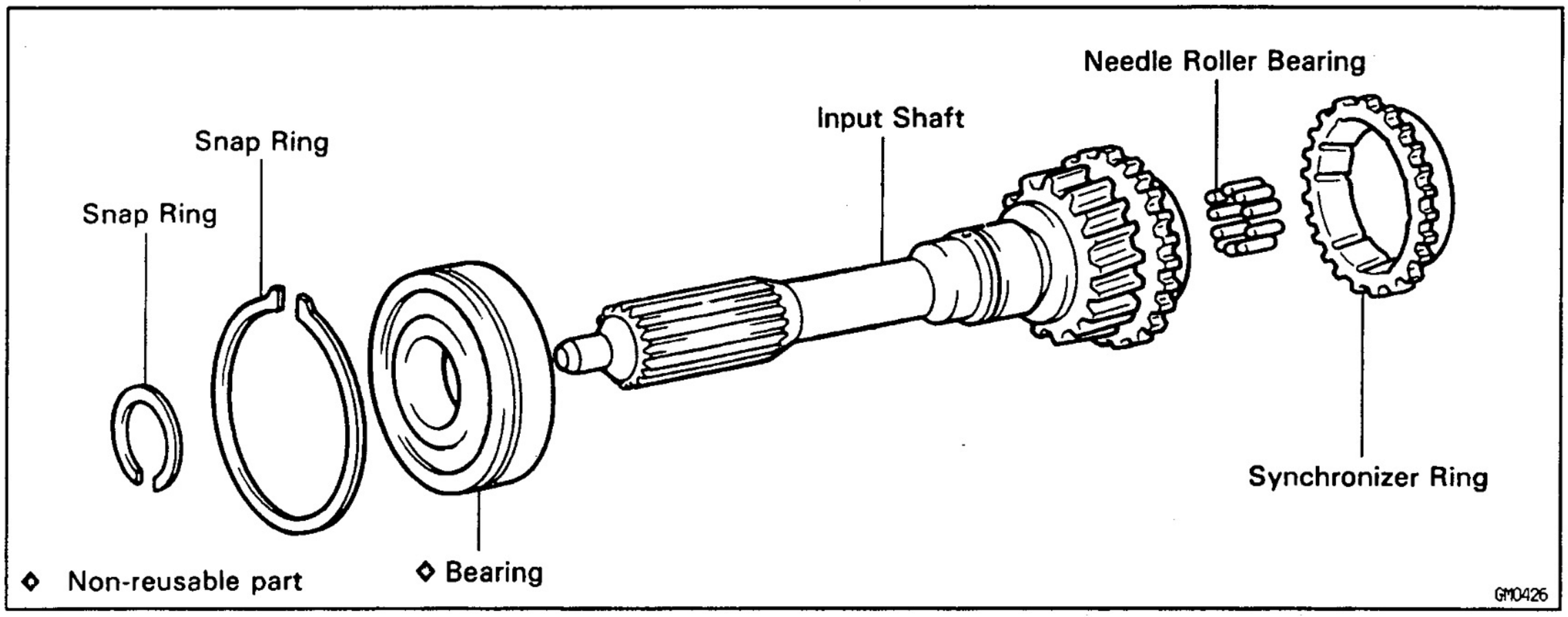

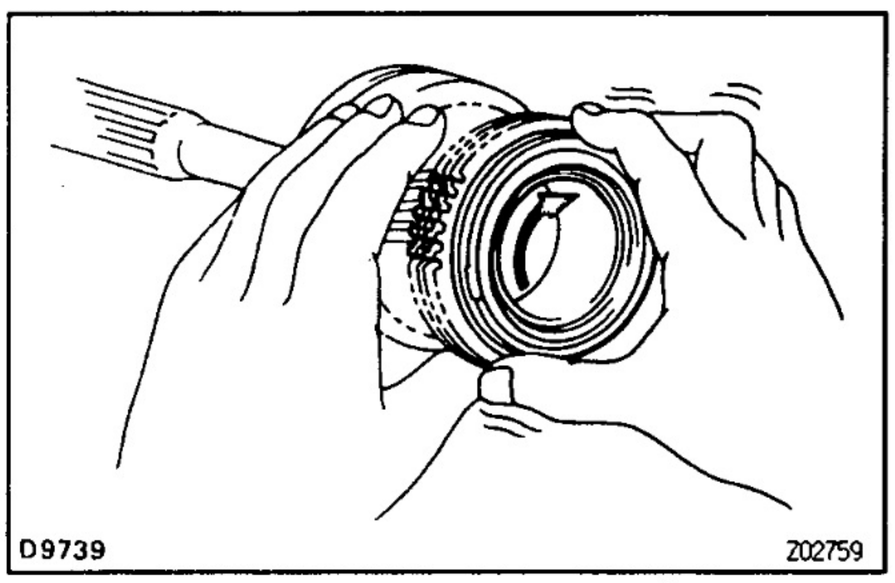

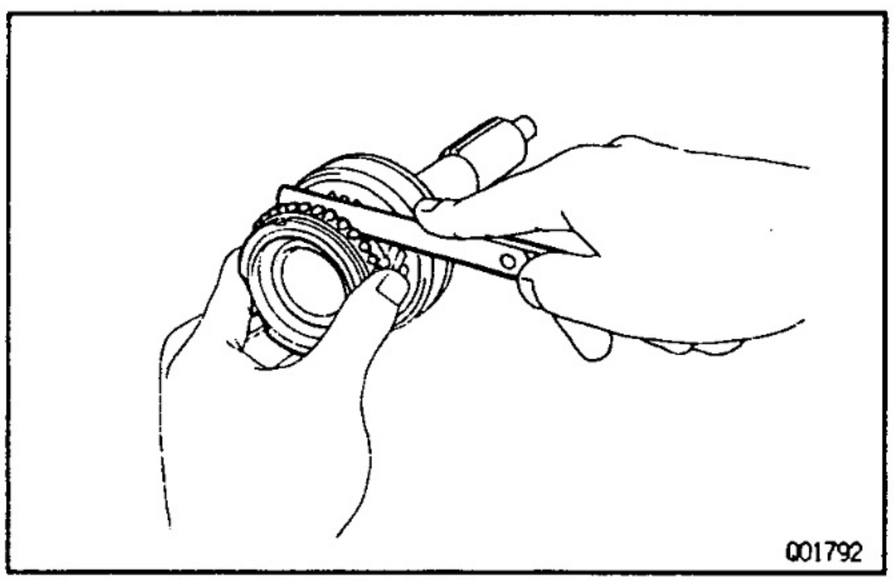

MT01G–08

INPUT SHAFT INSPECTION

INSPECT SYNCHRONIZER RING

(a) Check for wear or damage.

(b) Check the braking effect of the synchronizer ring.
Turn the synchronizer ring in one direction while pushing it to the gear cone. Check that the ring locks.
If the braking effect is insufficient, apply a small amount of fine lapping compound between the synchronizer ring and gear cone. Lightly rub the synchronizer ring and gear cone together.
NOTICE: Ensure the fine lapping compound is completely washed off after rubbing.

(c) Check again the braking effect of the synchronizer ring.

(d) Using a feeler gauge, measure the clearance between the synchronizer ring back and gear spline end.
Minimum clearance: 0.8 mm (0.031 in.)
If the clearance is less than the minimum, replace the synchronizer ring and gear cone by applying a small amount of fine lapping compound.
NOTICE: Ensure the fine lapping compound is completely washed off after rubbing.

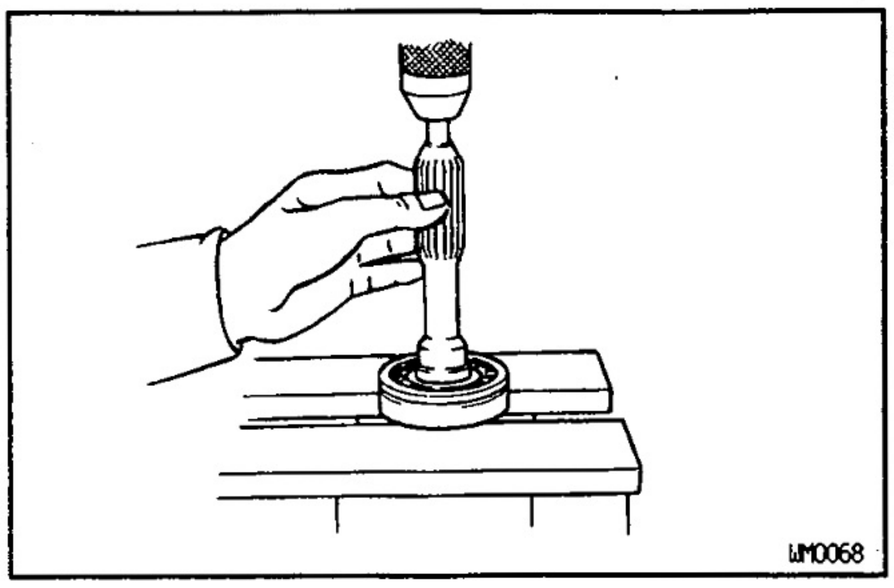
WM0068

MT0CG–03

BEARING REPLACEMENT

IF NECESSARY, REPLACE INPUT SHAFT BEARING

(a) Using a snap ring expander, remove the snap ring.

(b) Using a press, remove the bearing.

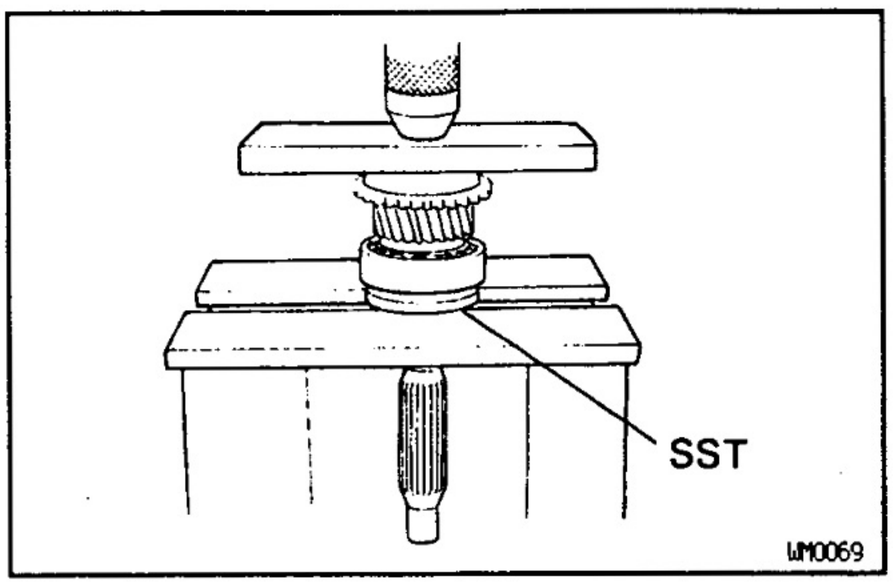

(c) Using SST and a press, install a new bearing.
SST 09506–35010

(d) Select a snap ring that will allow minimum axial play.

Mark	Thickness mm (in.)
0	2.05–2.10 (0.0807–0.0827)
1	2.10–2.15 (0.0827–0.0846)
2	2.15–2.20 (0.0846–0.0866)
3	2.20–2.25 (0.0866–0.0886)
4	2.25–2.30 (0.0886–0.0906)
5	2.30–2.35 (0.0906–0.0925)

(e) Using a snap ring expander, install the snap ring.

OUTPUT SHAFT
COMPONENTS

MT01J-0A

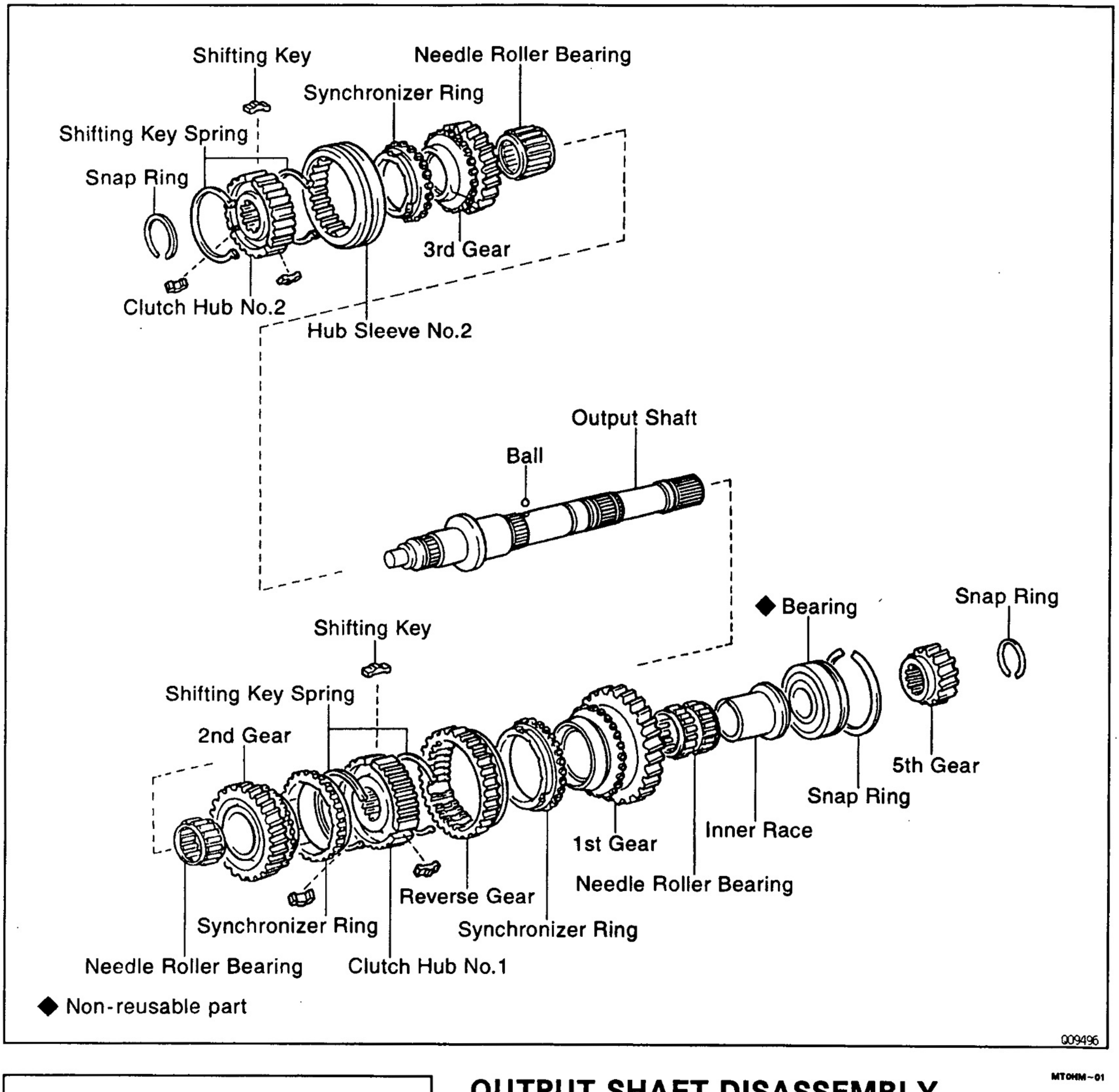

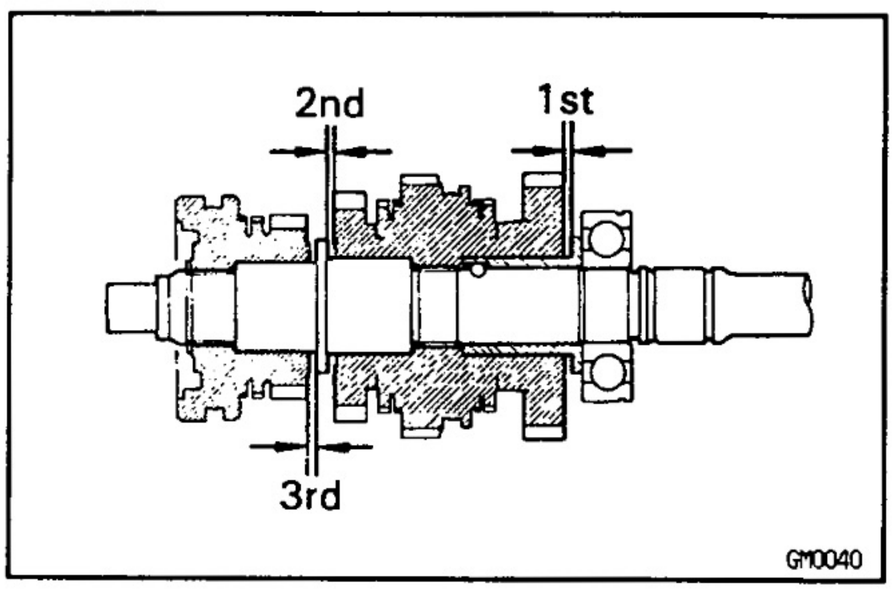

MTOHM-01

OUTPUT SHAFT DISASSEMBLY

1. **MEASURE EACH GEAR THRUST CLEARANCE**
   Using a feeler gauge, measure the thrust clearance of each gear.
   Standard clearance: 0.10—0.25 mm (0.0039—0.0098 in.)
   Maximum clearance: 0.30 mm (0.0118 in.)

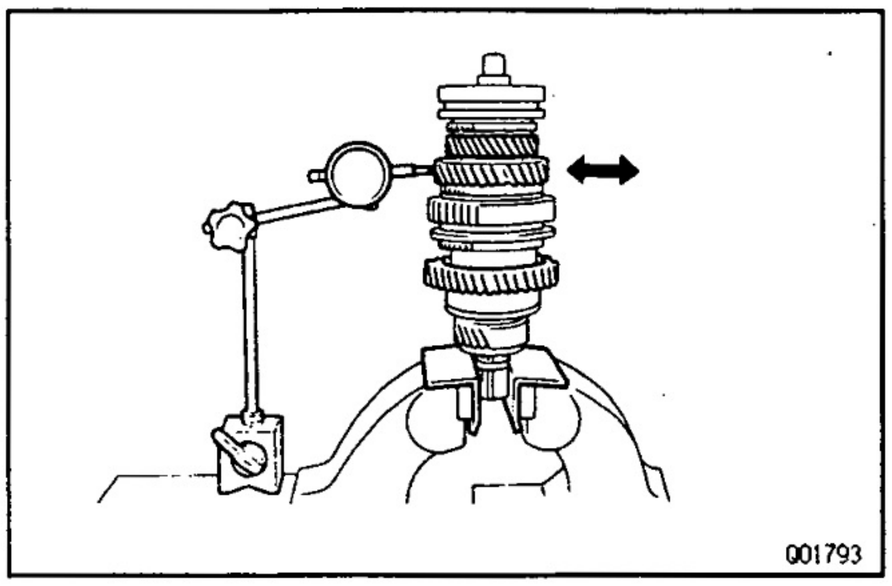

2. MEASURE EACH GEAR RADIAL CLEARANCE

Using a dial indicator, measure the radial clearance of each gear.

Standard clearance:

2nd and 3rd gears:

0.009–0.033 mm (0.0004–0.0013 in.)

1st gear: 0.009–0.032 mm (0.0004–0.0013 in.)

Maximum clearance:

2nd and 3rd gears: 0.033 mm (0.0013 in.)

1st gear: 0.032 mm (0.0013 in.)

If the clearance exceeds the maximum, replace the gear, needle roller bearing or shaft.

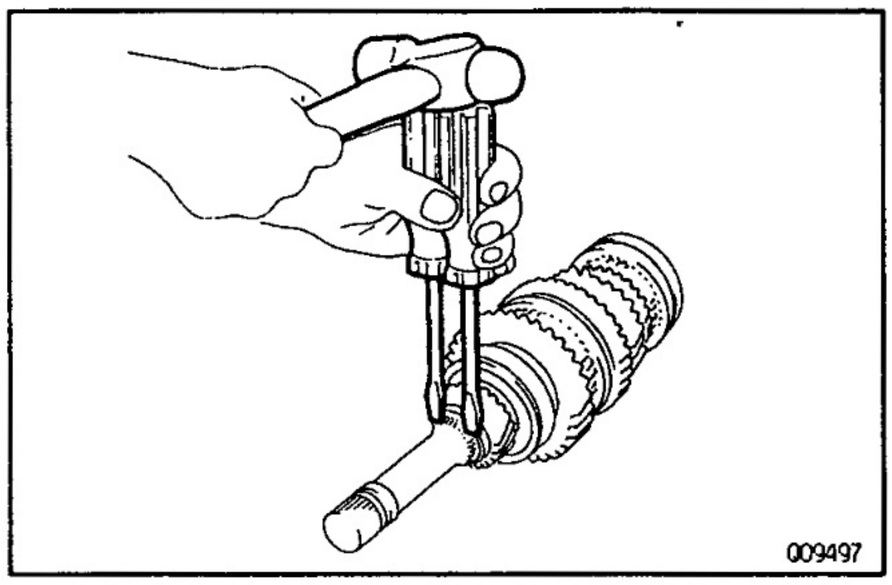

3. REMOVE 5TH GEAR, REAR BEARING, 1ST GEAR, INNER RACE AND NEEDLE ROLLER BEARING

(a) Using 2 screwdrivers and a hammer, tap out the snap ring.

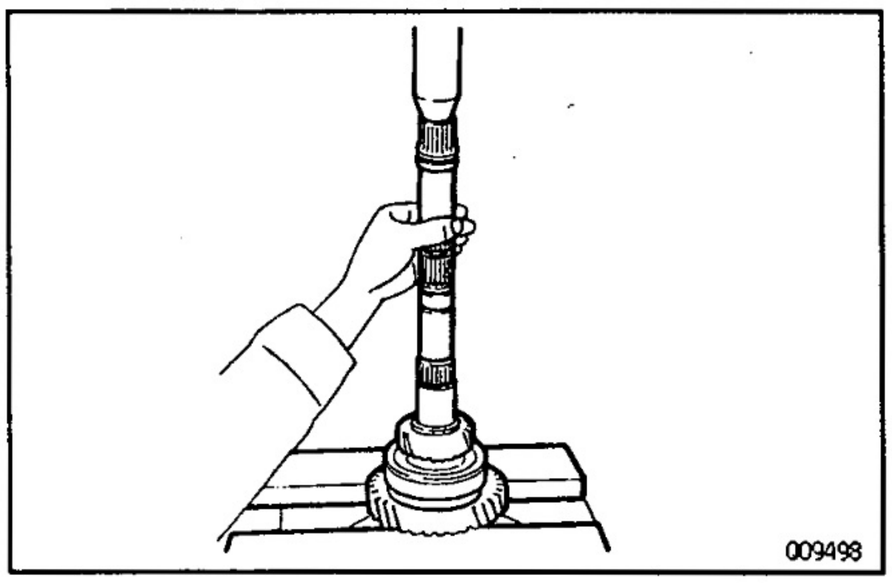

(b) Using a press, remove the 5th gear, rear bearing, 1st gear and inner race.

(c) Remove the needle roller bearing.

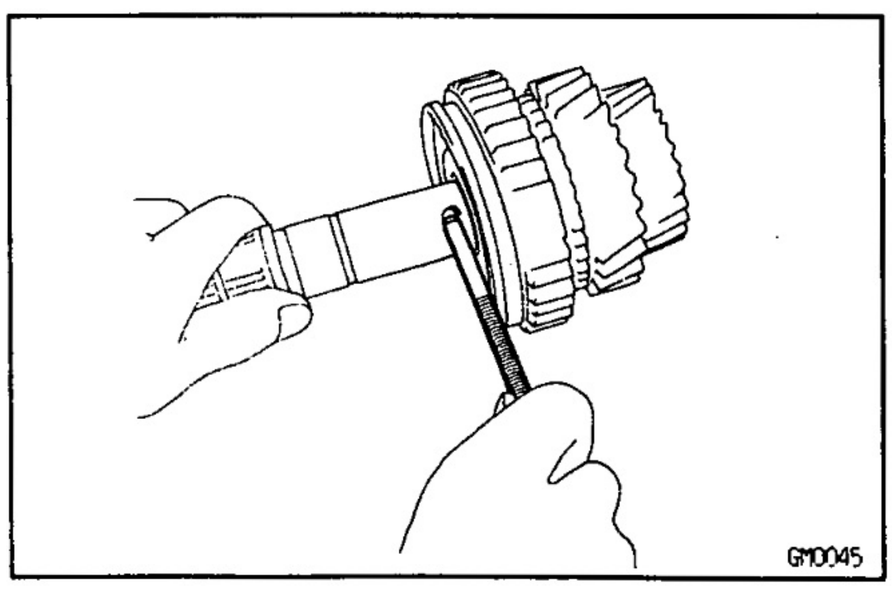

4. REMOVE SYNCHRONIZER RING

5. REMOVE LOCKING BALL

Using a magnetic finger, remove the locking ball.

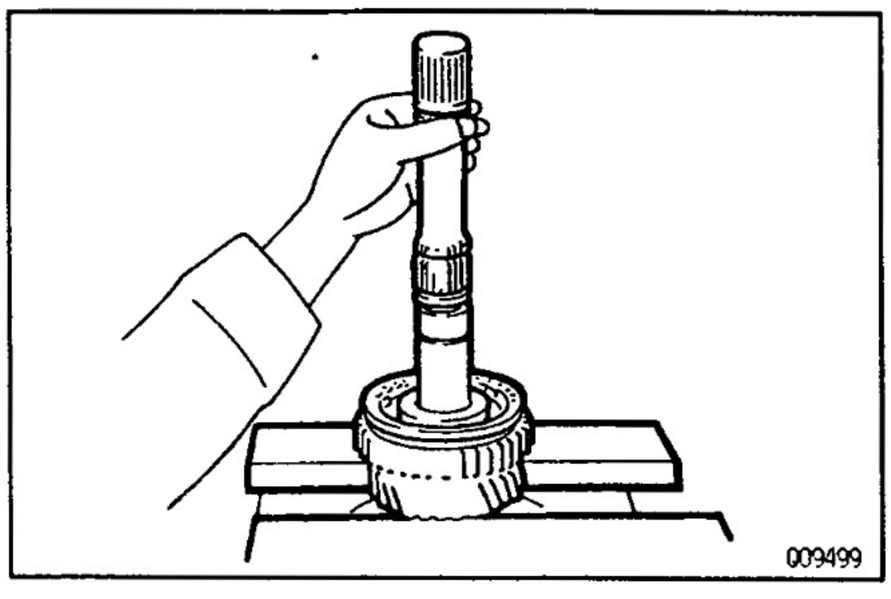

6. REMOVE REVERSE GEAR ASSEMBLY, SYNCHRONIZER RING, 2 ND GEAR AND NEEDLE ROLLER BEARING

(a) Using a press, remove the reverse gear assembly, synchronizer ring and 2nd gear.

(b) Remove the needle roller bearing.

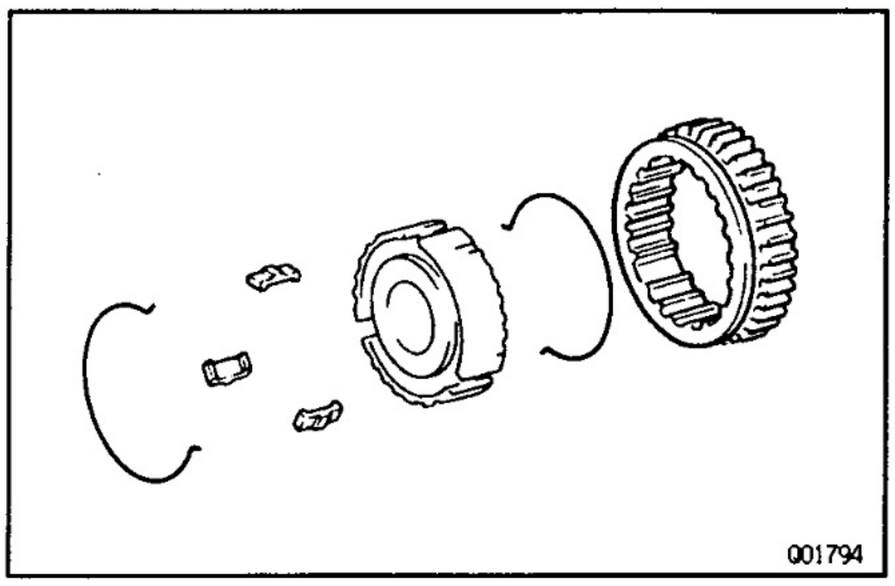

7. REMOVE REVERSE GEAR, SHIFTING KEY AND SPRING FROM CLUTCH HUB NO.1.

Using a screwdriver, remove the 3 shifting keys and 2 springs from the clutch hub No.1.

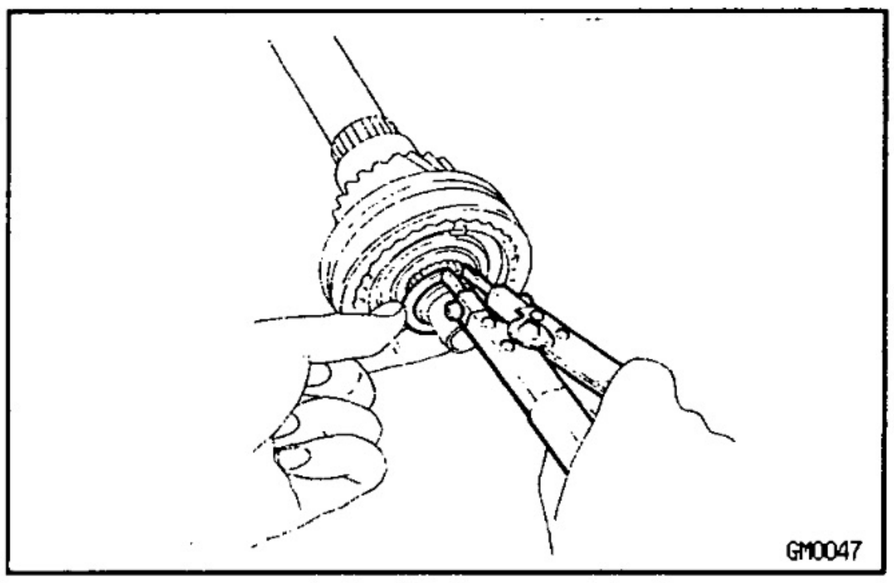

8. REMOVE HUB SLEEVE NO.2 ASSEMBLY, SYNCHRONIZER RING, 3RD GEAR AND NEEDLE ROLLER BEARING

(a) Using a snap ring expander, remove the snap ring.

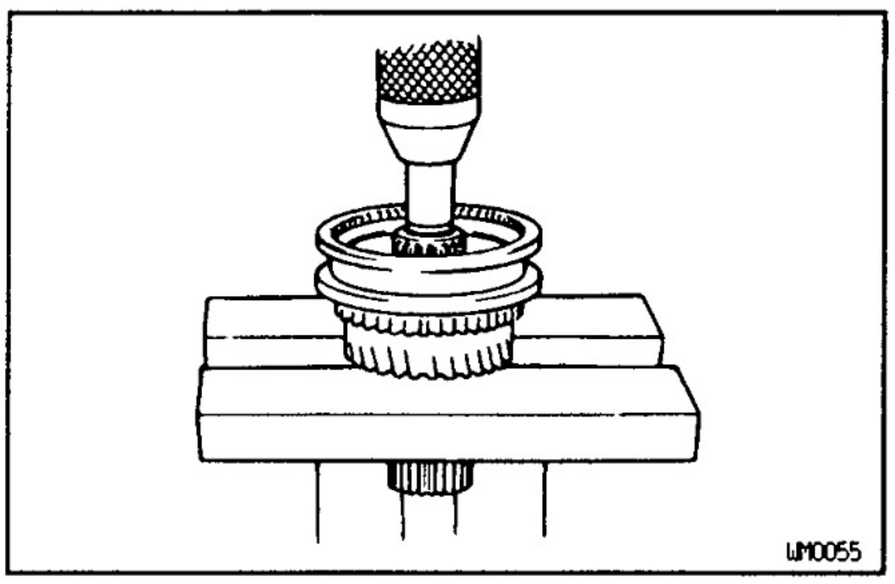

(b) Using a press, remove the hub sleeve No.2 assembly, synchronizer ring and 3rd gear.

(c) Remove the needle roller bearing.

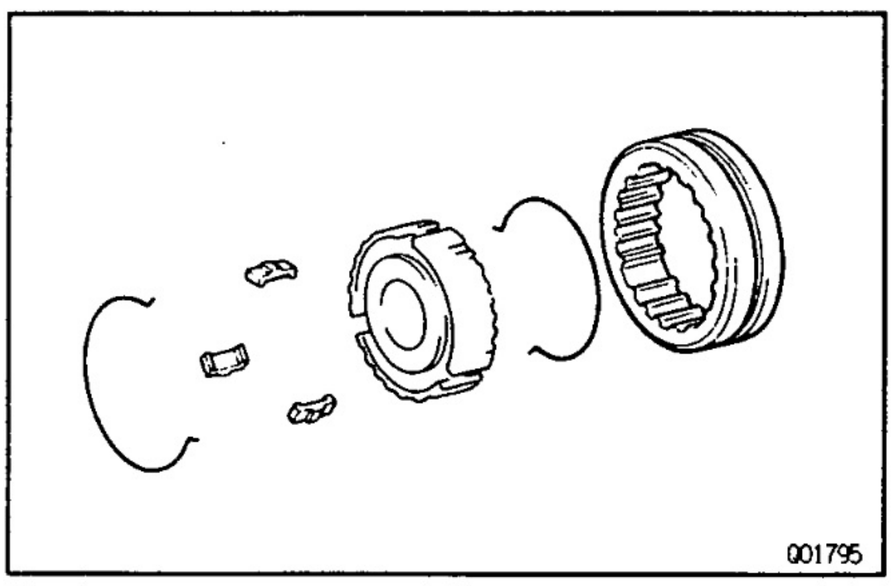

9. REMOVE HUB SLEEVE NO.2, SHIFTING KEY AND SPRING FROM CLUTCH HUB NO.2

Using a screwdriver, remove the 3 shifting keys and springs from the clutch hub No.2.

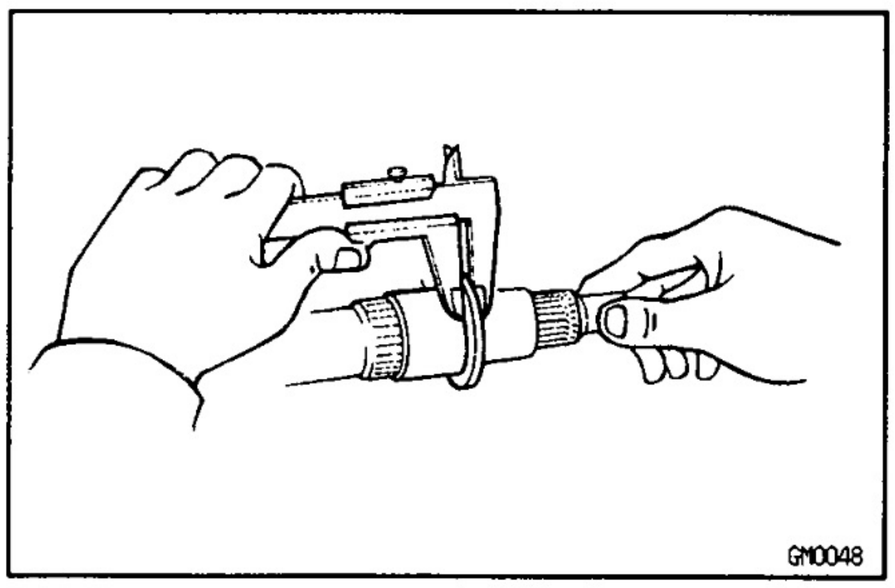

OUTPUT SHAFT COMPONENT PARTS INSPECTION

MT0HN-01

1. INSPECT OUTPUT SHAFT AND INNER RACE

(a) Using calipers, measure the output shaft flange thickness.

Minimum thickness: 4.70 mm (0.1850 in.)

If the thickness is less than the minimum, replace the output shaft.

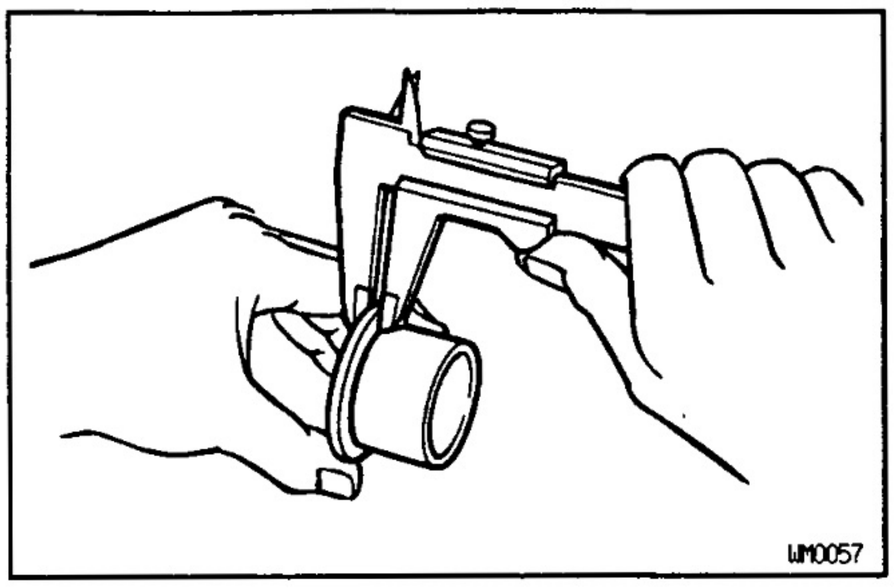

(b) Using calipers, measure the inner race flange thickness.
Minimum thickness: 3.99 mm (0.1571 in.)
If the thickness is less than the minimum, replace the inner race.

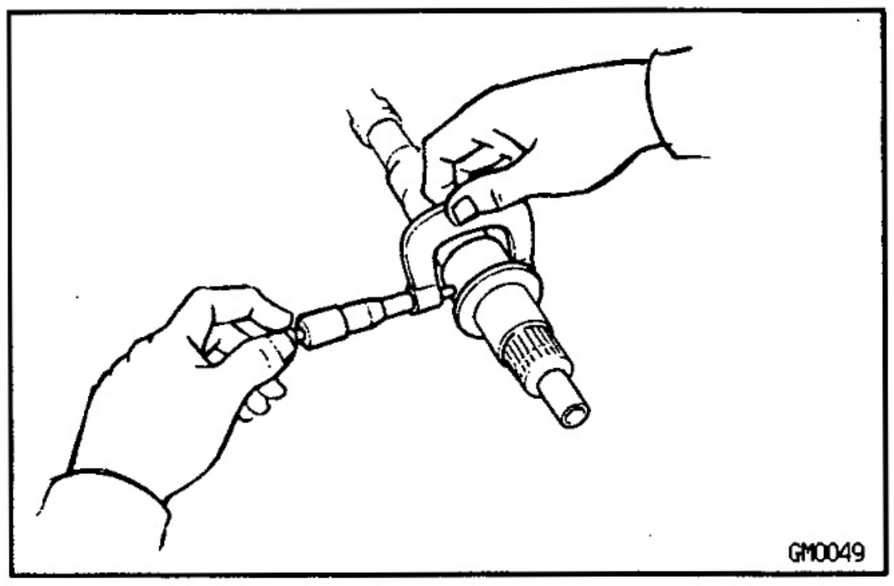

(c) Using a micrometer, measure the outer diameter of the output shaft journal.
Minimum diameter:
2nd gear: 37.86 mm (1.4905 in.)
3rd gear: 34.86 mm (1.3724 in.)
If the outer diameter is less than the minimum, replace the output shaft.

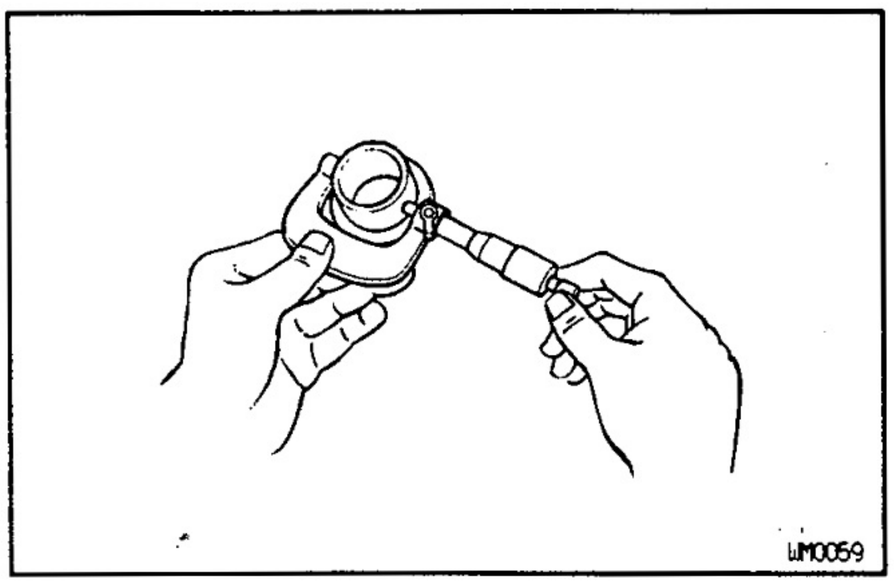

(d) Using a micrometer, measure the outer diameter of the inner race.
Minimum diameter: 38.985 mm (1.5348 in.)
If the outer diameter is less than the minimum, replace the inner race.

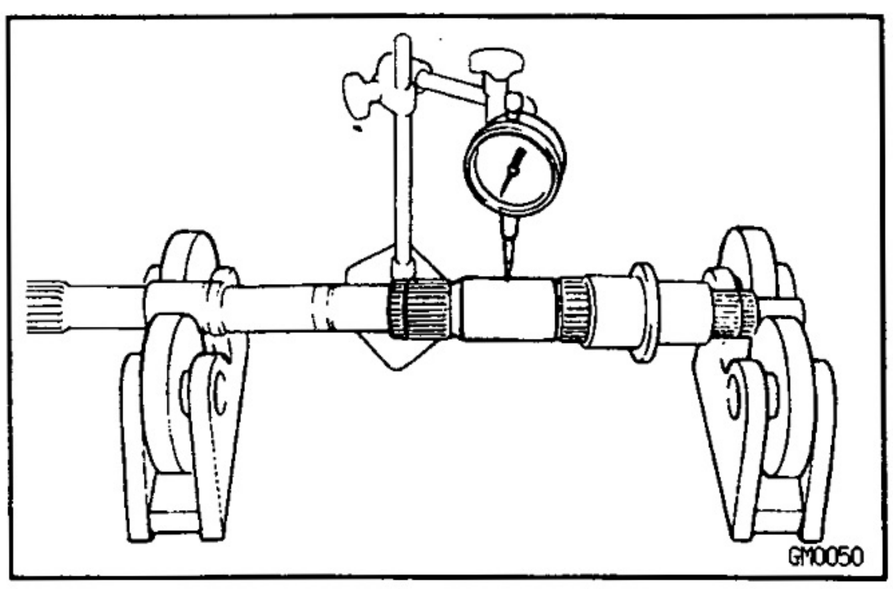

(e) Using a dial indicator, check the shaft runout.
Maximum runout: 0.06 mm (0.0024 in.)
If the runout exceeds the maximum, replace the output shaft.

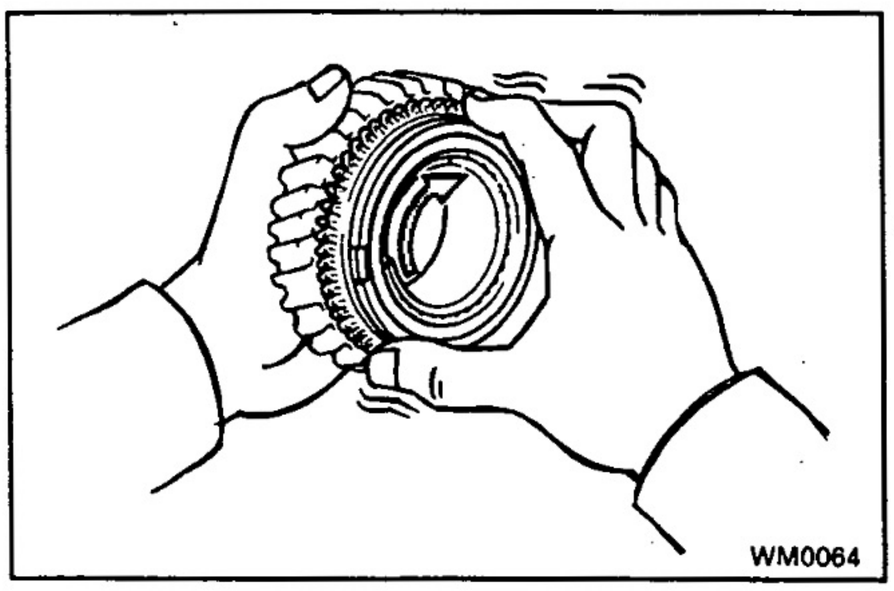

2. INSPECT SYNCHRONIZER RING

(a) Check for wear or damage.

(b) Check the braking effect of the synchronizer ring.
Turn the synchronizer ring in one direction while pushing it to the gear cone. Check that the ring locks.
If the braking effect is insufficient, apply a small amount of fine lapping compound between the synchronizer ring and gear cone. Lightly rub the synchronizer ring and gear cone together.

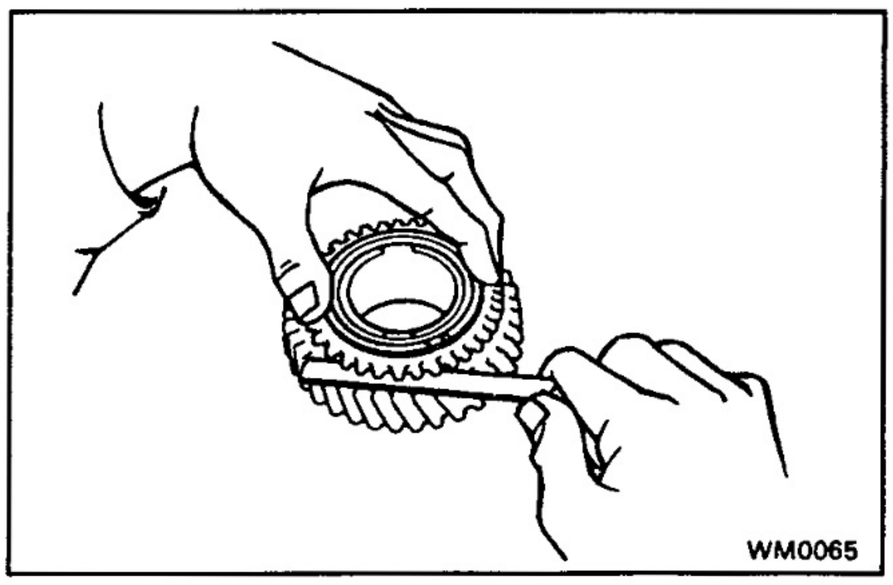

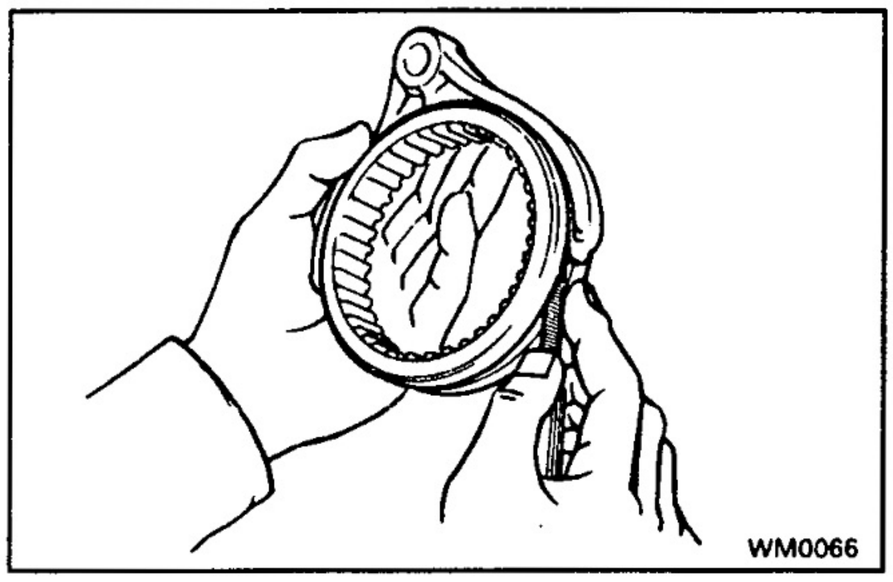

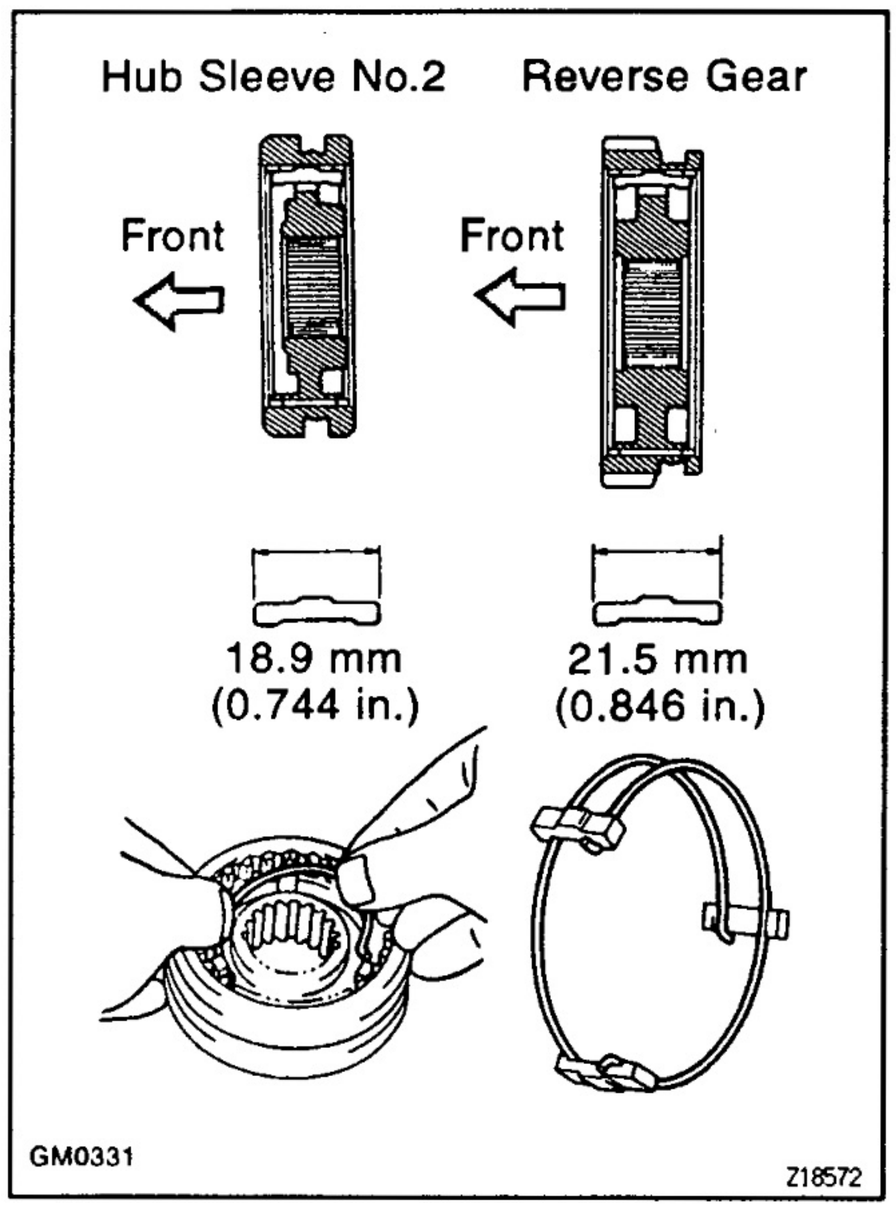

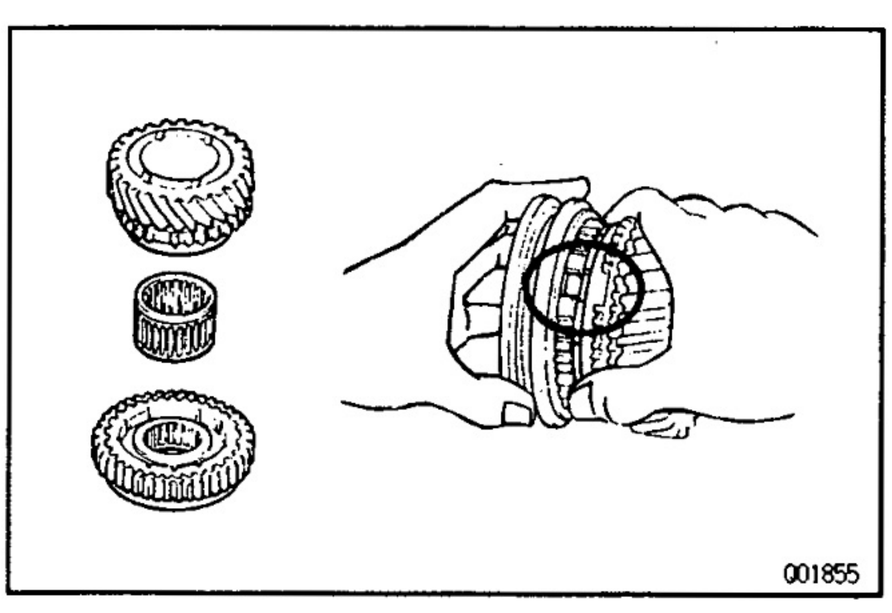

NOTICE: Ensure the fine lapping compound is completely washed off after rubbing.

(c) Check again the braking effect of the synchronizer ring.

(d) Using a feeler gauge, measure the clearance between the synchronizer ring back and gear spline end.
Minimum clearance: 0.8 mm (0.031 in.)
If the clearance is less than the minimum, replace the synchronizer ring and gear cone by applying a small amount of fine lapping compound.
NOTICE: Ensure the fine lapping compound is completely washed off after rubbing.

3. MEASURE SHIFT FORK AND HUB SLEEVE CLEARANCE

Using a feeler gauge, measure the clearance between the hub sleeve and shift fork.
Maximum clearance: 1.0 mm (0.039 in.)
If the clearance exceeds the maximum, replace the shift fork or hub sleeve.

MTOHP-01

OUTPUT SHAFT ASSEMBLY

HINT: Coat all of the sliding and rotating surfaces with gear oil before assembly.

1. INSTALL CLUTCH HUBS NO.1 AND NO.2 INTO REVERSE GEAR AND HUB SLEEVE NO.2

(a) Install the clutch hub No.2 and shifting keys to the hub sleeve No.2.

(b) Install the clutch hub No.1 and shifting keys to the reverse gear.

(c) Install the shifting key springs under the shifting keys.
NOTICE: Install the key springs so that their end gaps are not in line.

2. INSTALL 3RD GEAR AND HUB SLEEVE NO.2 ON OUTPUT SHAFT

(a) Apply gear oil to the shaft and needle roller bearing.

(b) Place the synchronizer ring on the gear and align the ring slots with the shifting keys.

(c) Install the needle roller bearing in the 3rd gear.

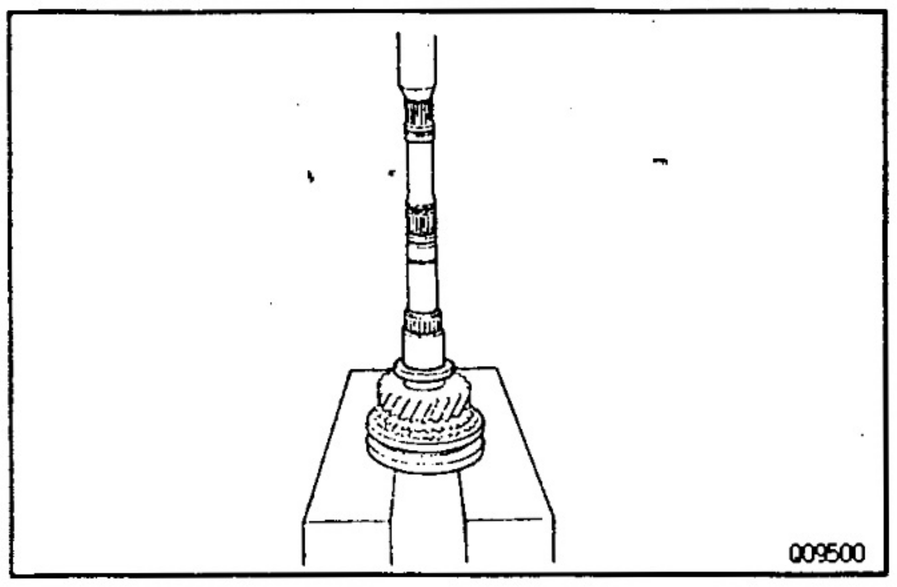

009500

(d) Using a press, install the 3rd gear and hub sleeve No.2.

3. INSTALL SNAP RING

(a) Select a snap ring that will allow minimum axial play.

Mark	Thickness mm (in.)
C–1	1.75–1.80 (0.0689–0.0709)
D	1.80–1.85 (0.0709–0.0728)
D–1	1.85–1.90 (0.0728–0.0748)
E	1.90–1.95 (0.0748–0.0768)
E–1	1.95–2.00 (0.0768–0.0787)
F	2.00–2.05 (0.0787–0.0807)
F–1	2.05–2.10 (0.0807–0.0827)

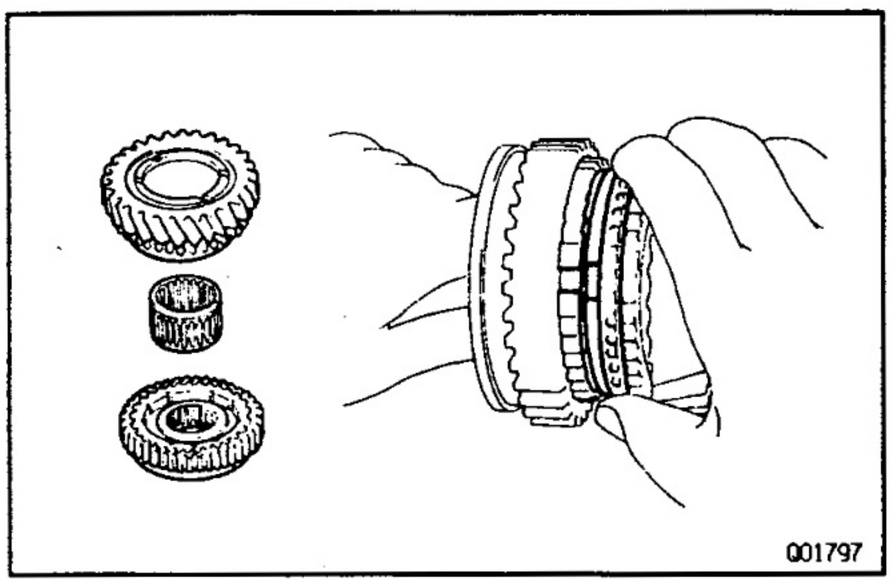

001797

(b) Using a snap ring expander, install the snap ring.

4. MEASURE 3RD GEAR THRUST CLEARANCE
(See page MT–20)

5. INSTALL 2ND GEAR AND REVERSE GEAR ASSEMBLY

(a) Apply gear oil to the shaft and needle roller bearing.

(b) Place the synchronizer ring on the gear and align the ring slots with the shifting keys.

(c) Install the needle roller bearing in the 2nd gear.

(d) Using a press, install the 2nd gear and reverse gear assembly.

6. MEASURE 2ND GEAR THRUST CLEARANCE
(See page MT–20)

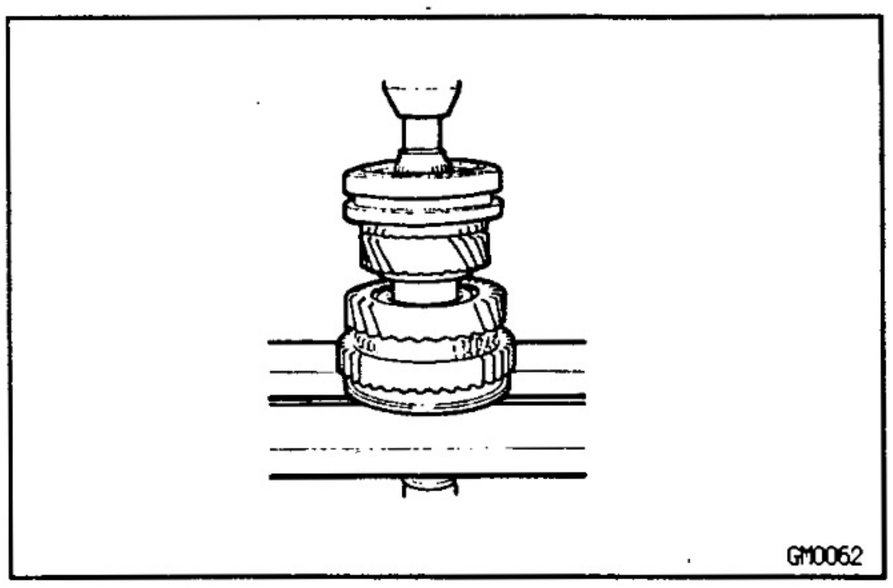

GM0062

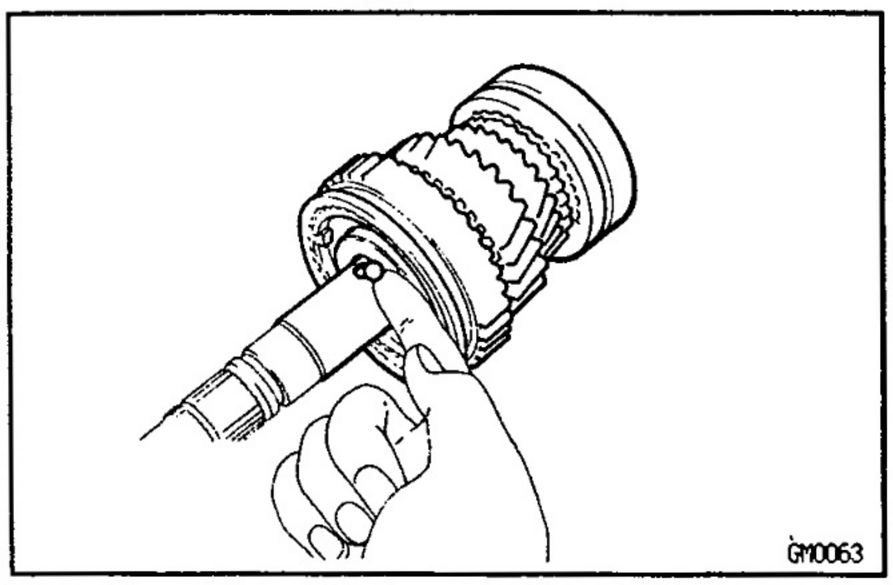

GM0063

7. INSTALL LOCKING BALL AND 1ST GEAR ASSEMBLY

(a) Install the locking ball in the shaft.

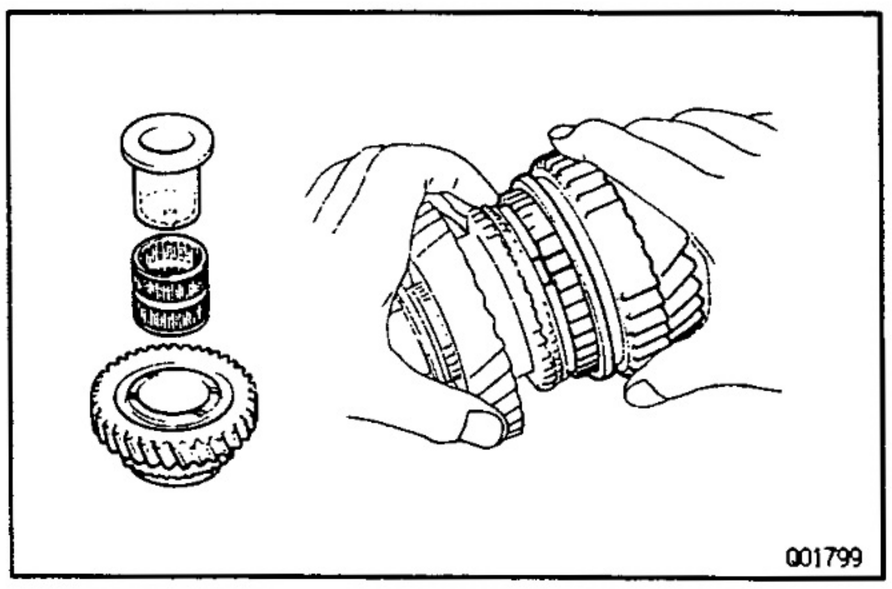

001799

(b) Apply gear oil to the needle roller bearing.

(c) Assemble the 1st gear, synchronizer ring, needle roller bearing and bearing inner race.

(d) Install the assembly on the output shaft with the synchronizer ring slots aligned with the shifting keys.

(e) Turn the inner race to align it with the locking ball.

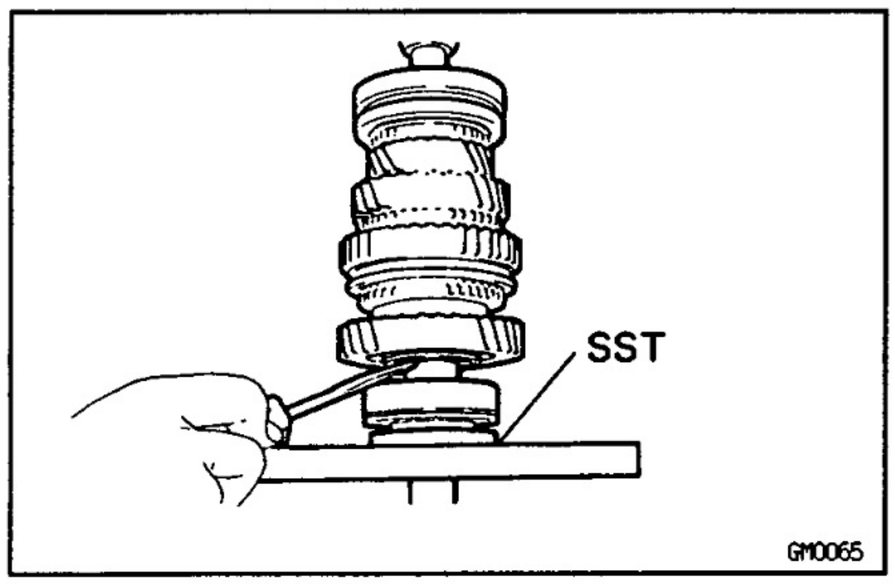

8. INSTALL OUTPUT SHAFT REAR BEARING

Using SST and a press, install the bearing on the output shaft with the outer race snap ring groove toward the rear.

HINT: Hold the 1st gear inner race to prevent it from falling, as shown.

SST 09506–35010

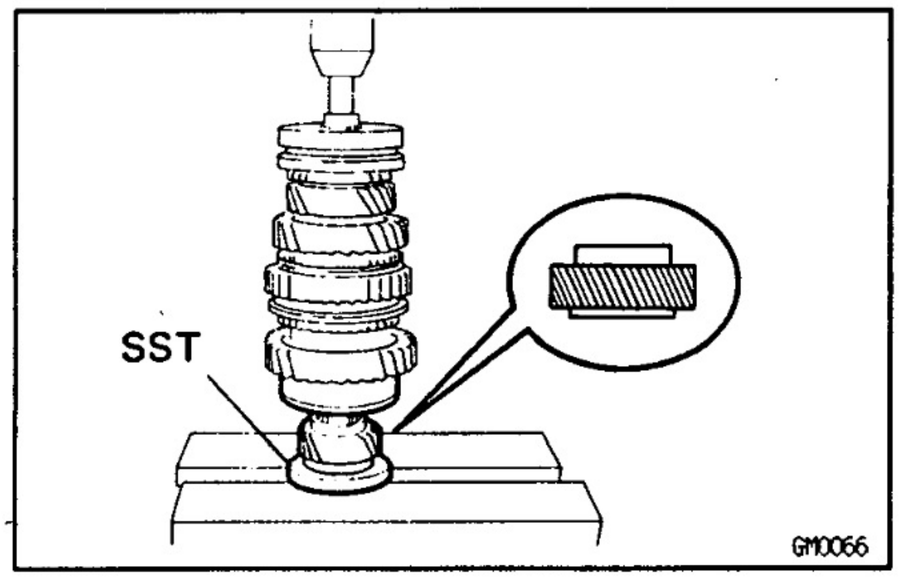

9. INSTALL 5TH GEAR

Using SST and a press, install the 5th gear.

SST 09506–35010

10. INSTALL SNAP RING

(a) Select a snap ring that will allow minimum axial play.

Mark	Thickness mm (in.)
A	2.67–2.72 (0.1051–0.1071)
B	2.73–2.78 (0.1075–0.1094)
C	2.79–2.84 (0.1098–0.1118)
D	2.85–2.90 (0.1122–0.1142)
E	2.91–2.96 (0.1146–0.1165)
F	2.97–3.02 (0.1169–0.1189)
G	3.03–3.08 (0.1193–0.1213)
H	3.09–3.14 (0.1217–0.1236)
J	3.15–3.20 (0.1240–0.1260)
K	3.21–3.26 (0.1264–0.1283)
L	3.27–3.32 (0.1287–0.1307)

(b) Using a screwdriver and hammer, tap in the snap ring.

11. MEASURE 1ST GEAR THRUST CLEARANCE

(See page MT–20)

COUNTER GEAR AND REVERSE IDLER GEAR

COMPONENTS

MT01N–06

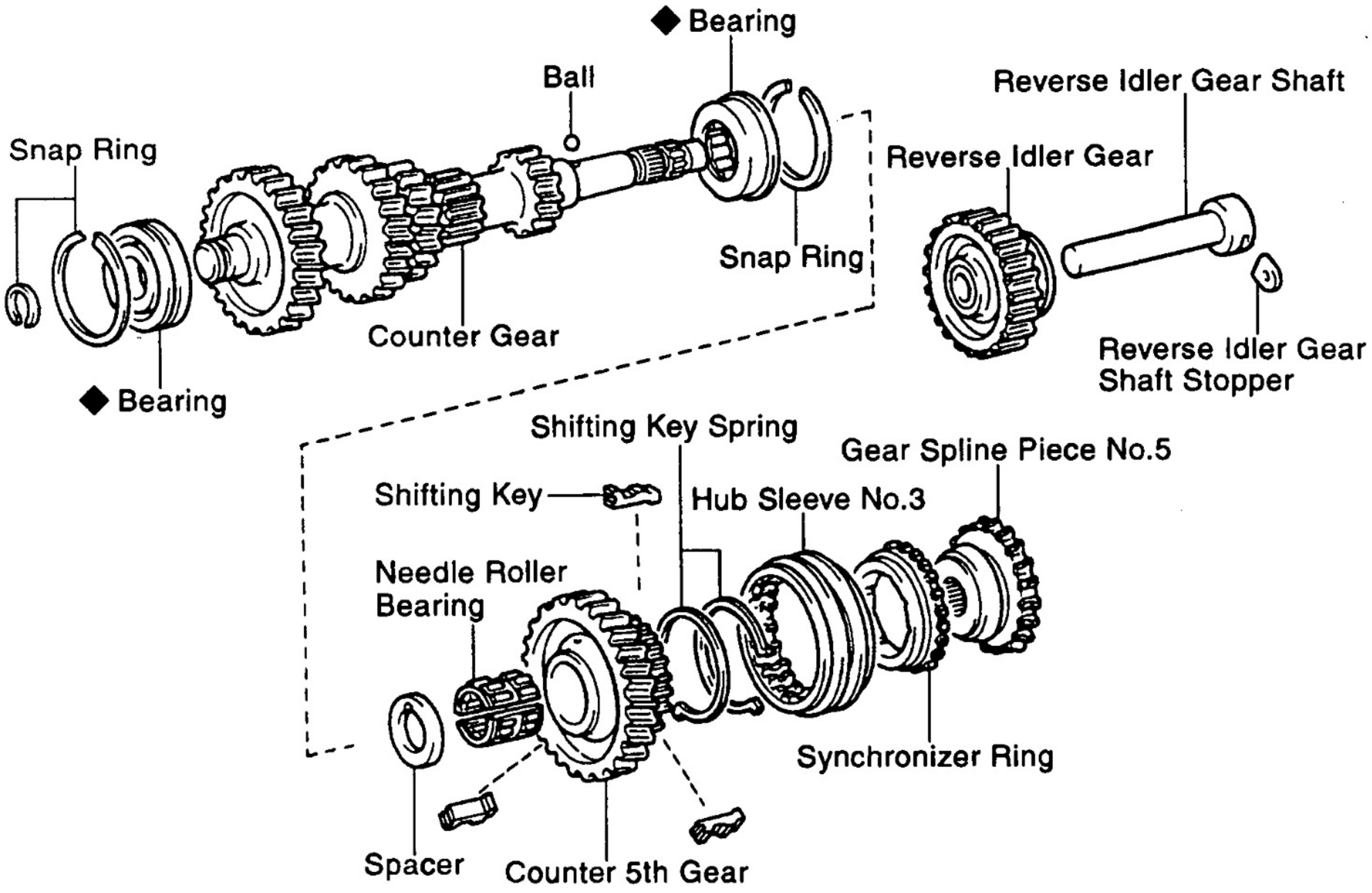

◆ Non-reusable part

009501

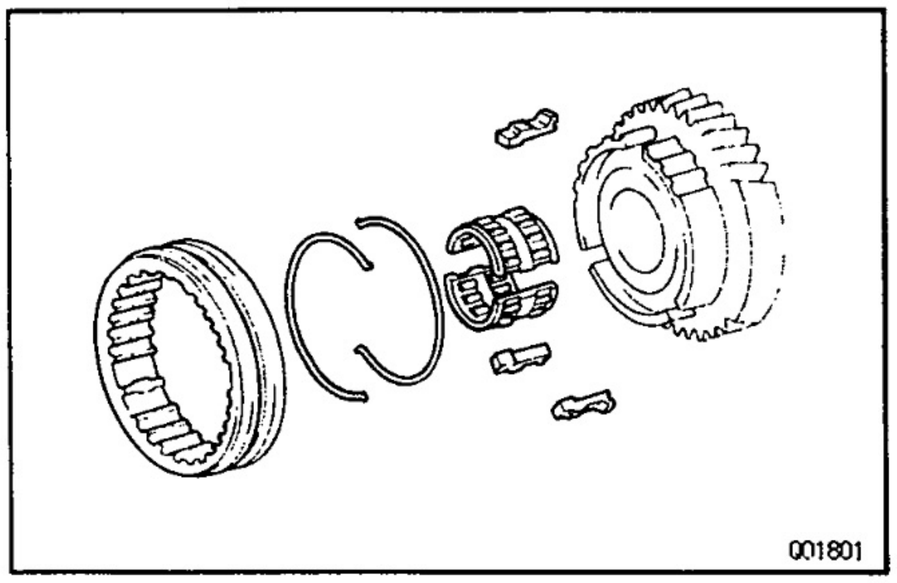

001801

COUNTER GEAR COMPONENT PARTS DISASSEMBLY

MT01P–06

REMOVE HUB SLEEVE NO.3, SHIFTING KEY AND SPRING

(a) Remove the hub sleeve No.3.

(b) Using a screwdriver, remove the 3 shifting keys and 2 springs.

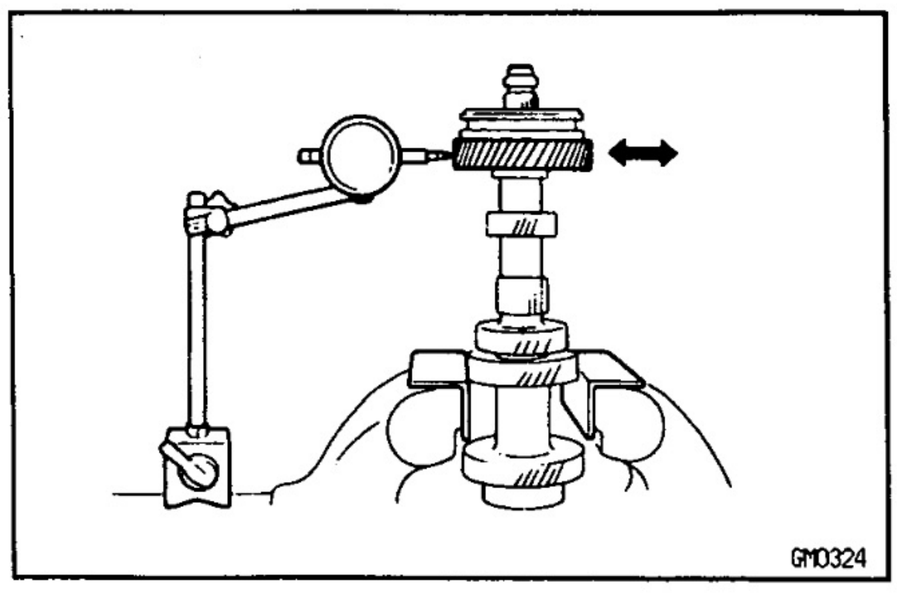

GM0324

COUNTER GEAR AND REVERSE IDLER GEAR COMPONENT PARTS INSPECTION

MT01Q–06

1. MEASURE COUNTER 5TH GEAR RADIAL CLEARANCE

(a) Install the spacer, needle roller bearing and counter 5th gear to the counter gear.

(b) Using a dial indicator, measure the counter 5th gear radial clearance.

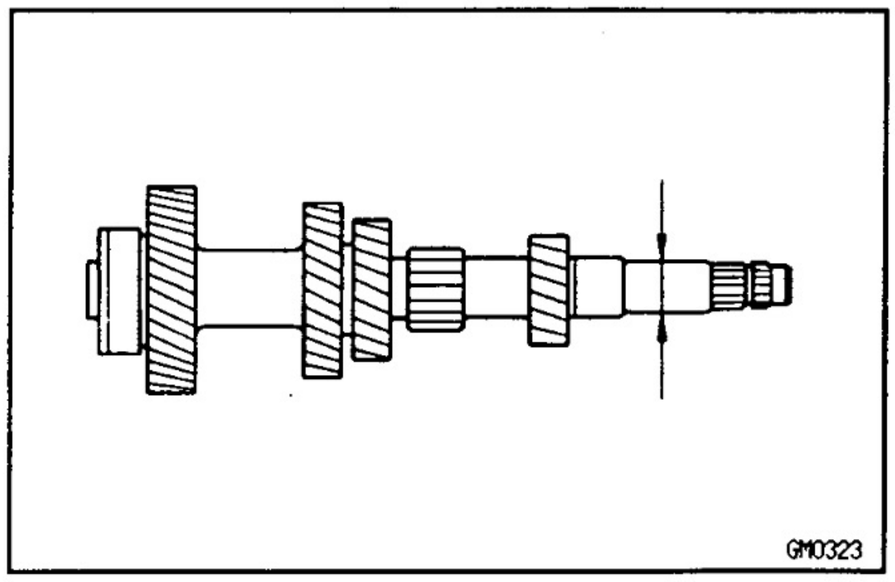

Standard clearance:

0.009–0.032 mm (0.0004–0.0013 in.)

Maximum clearance: 0.032 mm (0.0013 in.)

2. INSPECT COUNTER GEAR

Using a micrometer, measure the outer diameter of needle roller bearing race.

Standard outer diameter:

25.98–26.00 mm (1.0228–1.0236 in.)

Minimum outer diameter: 25.86 mm (1.0181 in.)

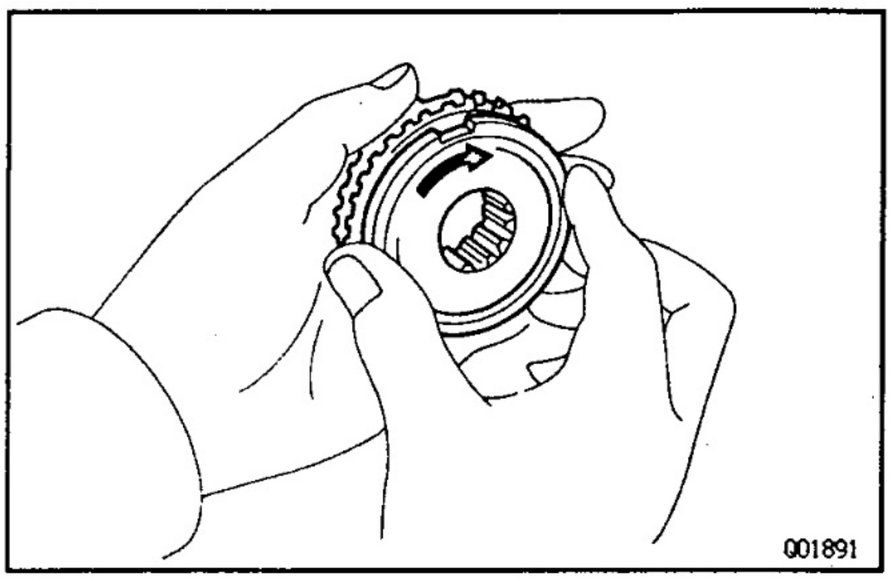

3. INSPECT SYNCHRONIZER RING

(a) Check for wear or damage.

(b) Check the braking effect of the synchronizer ring.

Turn the synchronizer ring in one direction while pushing it to the gear cone. Check that the ring locks.

If the braking effect is insufficient, apply a small amount of fine lapping compound between the synchronizer ring and gear cone. Lightly rub the synchronizer ring and gear cone together.

NOTICE: Ensure the fine lapping compound is completely washed off after rubbing.

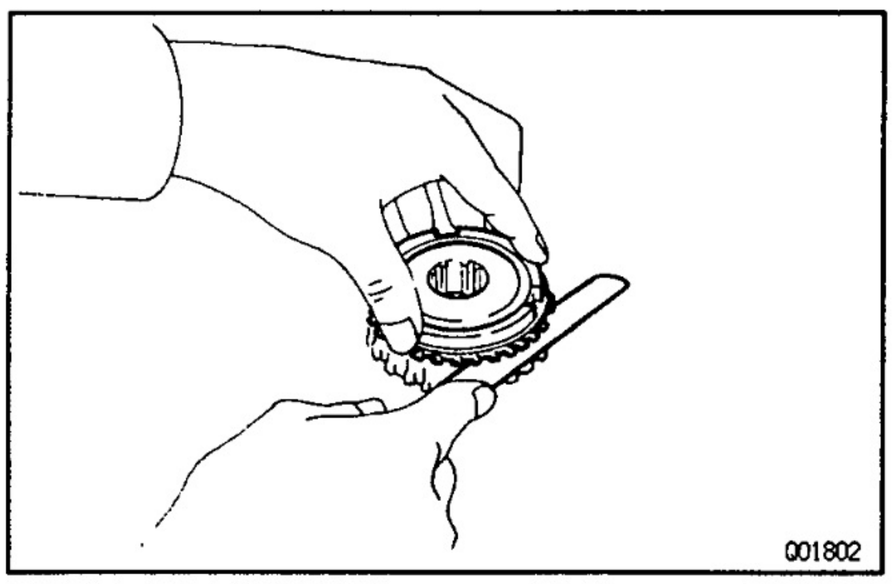

(c) Check again the braking effect of the synchronizer ring.

(d) Using a feeler gauge, measure the clearance between the synchronizer ring back and gear spline end.

Minimum clearance: 0.8 mm (0.031 in.)

If the clearance is less than the minimum, replace the synchronizer ring and gear cone by applying a small amount of fine lapping compound.

NOTICE: Ensure the fine lapping compound is completely washed off after rubbing.

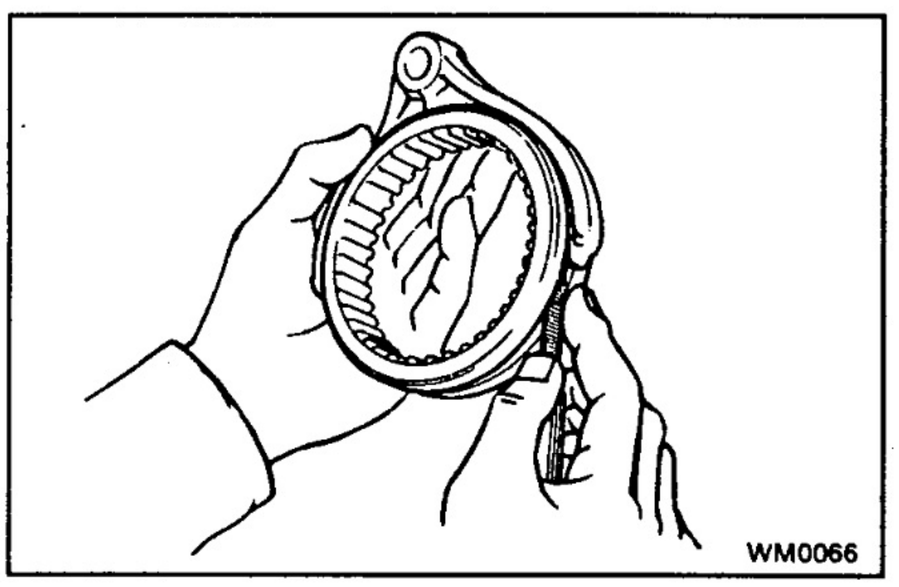

4. MEASURE SHIFT FORK AND HUB SLEEVE CLEARANCE

Using a feeler gauge, measure the clearance between the hub sleeve and shift fork.

Maximum clearance: 1.0 mm (0.039 in.)

If the clearance exceeds the maximum, replace the shift fork or hub sleeve.

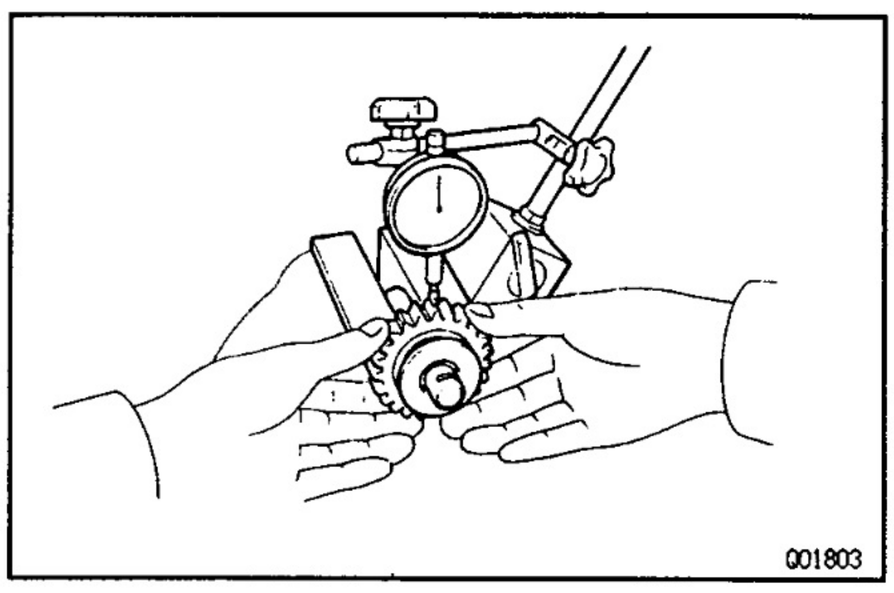

5. MEASURE REVERSE IDLER GEAR RADIAL CLEARANCE

Using a dial indicator, measure the reverse idler gear radial clearance.

Standard clearance: 0.04–0.08 mm (0.0016–0.0031 in.)

Maximum clearance: 0.13 mm (0.0051 in.)

If the clearance exceeds the maximum, replace the reverse idler gear or reverse idler gear shaft.

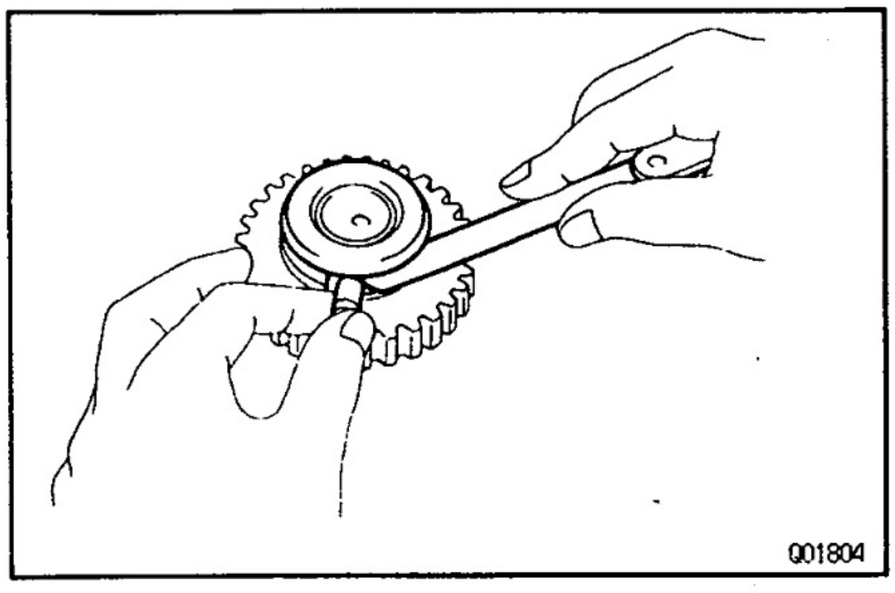
001804

6. MEASURE REVERSE IDLER GEAR AND SHIFT ARM SHOE CLEARANCE

Using a feeler gauge, measure the clearance between the reverse idler gear and shift arm shoe.

Standard clearance: 0.05–0.28 mm (0.0020–0.0110 in.)

Maximum clearance: 0.50 mm (0.0197 in.)

If the clearance exceeds the maximum, replace the shift arm or reverse idler gear.

MT

MTOCK–03

BEARING REPLACEMENT

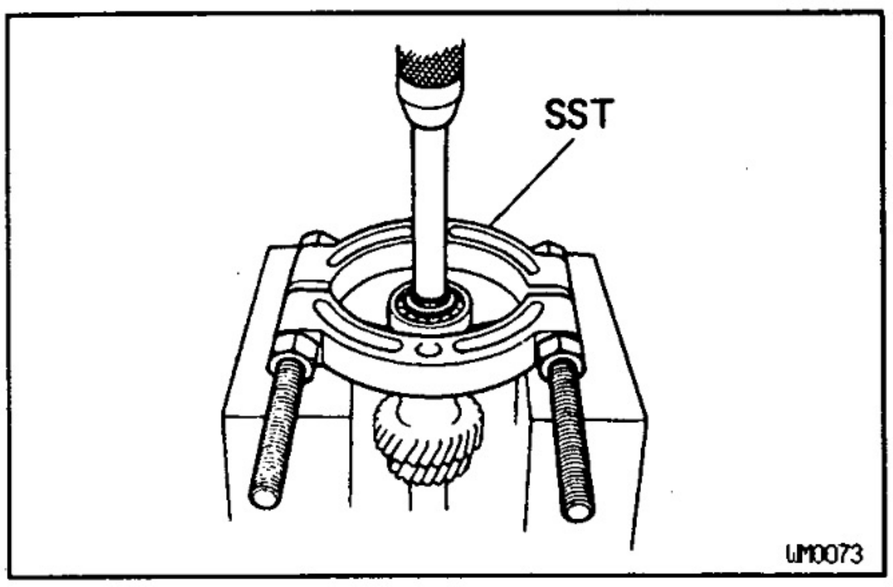

UM0073

IF NECESSARY, REPLACE COUNTER GEAR FRONT BEARING

(a) Using a snap ring expander, remove the snap ring.

(b) Using SST and a press, remove the bearing.
SST 09950–00020

(c) Replace the side race.

(d) Using a press and socket wrench, install the bearing, side race and innerrace.

(e) Select a snap ring that will allow minimum axial play.

Mark	Thickness mm (in.)
1	2.05–2.10 (0.0807–0.0827)
2	2.10–2.15 (0.0827–0.0846)
3	2.15–2.20 (0.0846–0.0866)
4	2.20–2.25 (0.0866–0.0886)
5	2.25–2.30 (0.0886–0.0906)
6	2.30–2.35 (0.0906–0.0925)

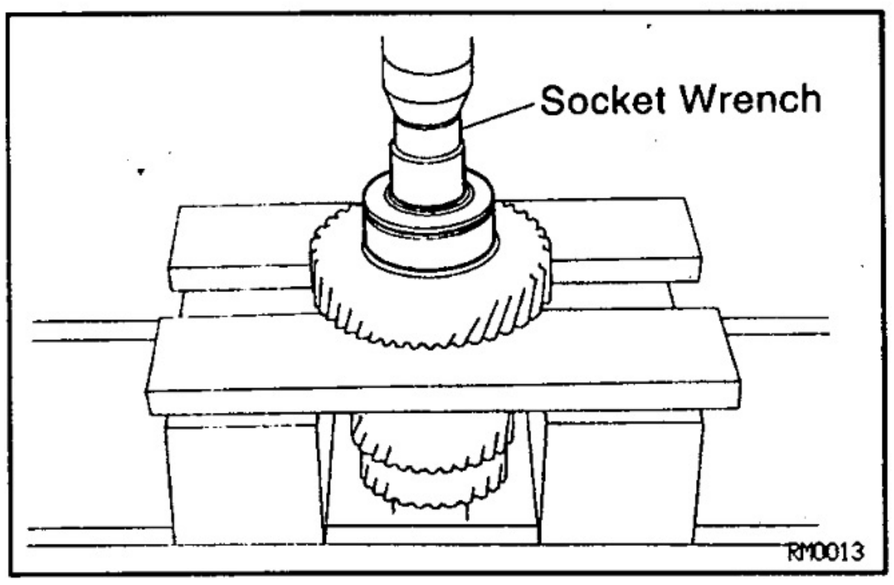

RM0013

MT01S–06

COUNTER GEAR COMPONENT PARTS ASSEMBLY

INSTALL HUB SLEEVE NO.3, SHIFTING KEY AND SPRING

(a) Install the hub sleeve No.3 and shifting keys to the counter 5th gear.

(b) Install the shifting key springs under the shifting keys.
NOTICE: Position the key springs so that their end gaps are not in line.

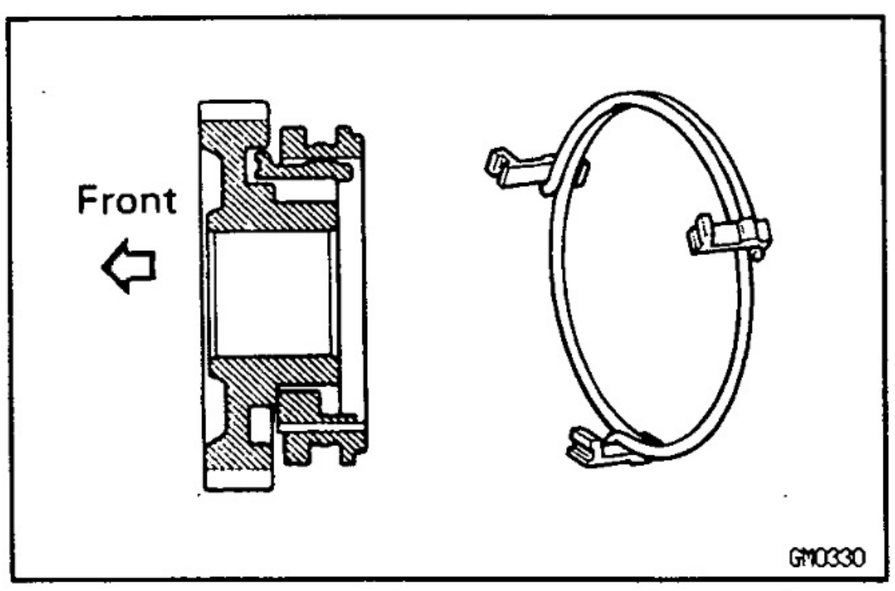

GM0330

FRONT BEARING RETAINER

COMPONENTS

MT01X–05

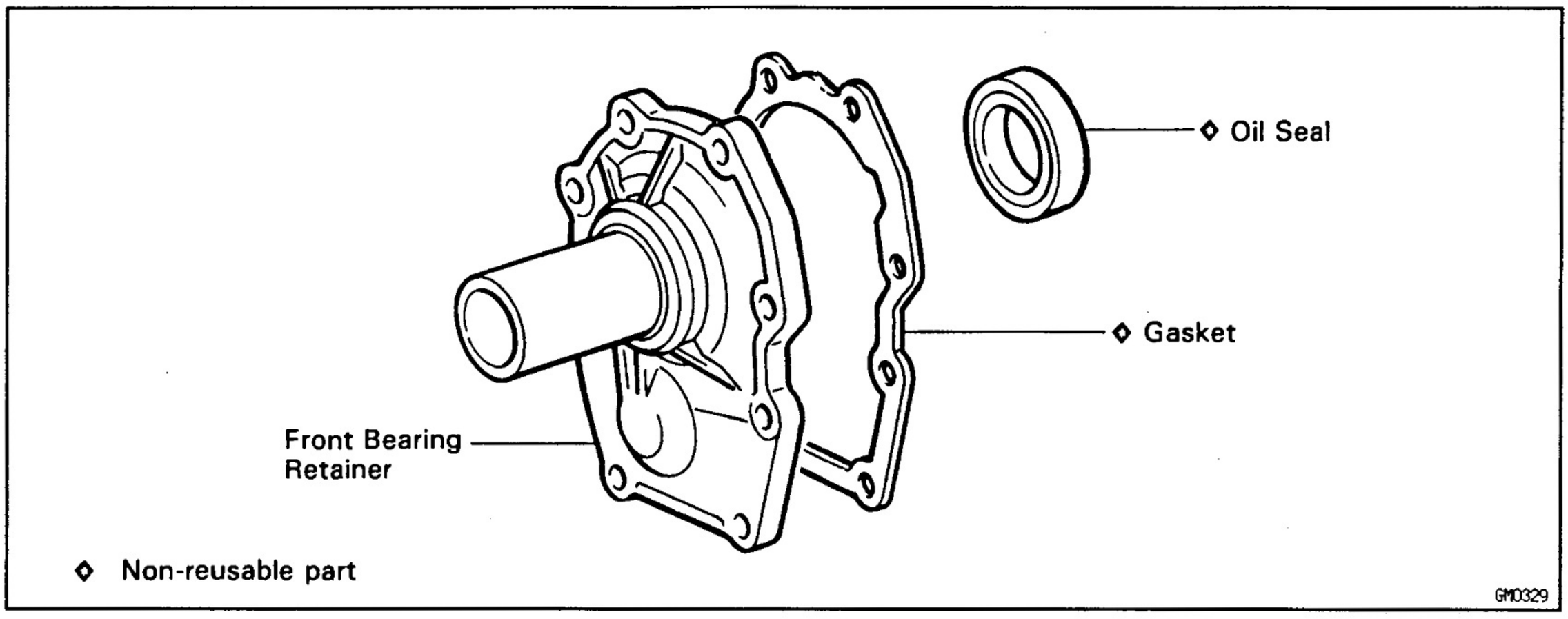

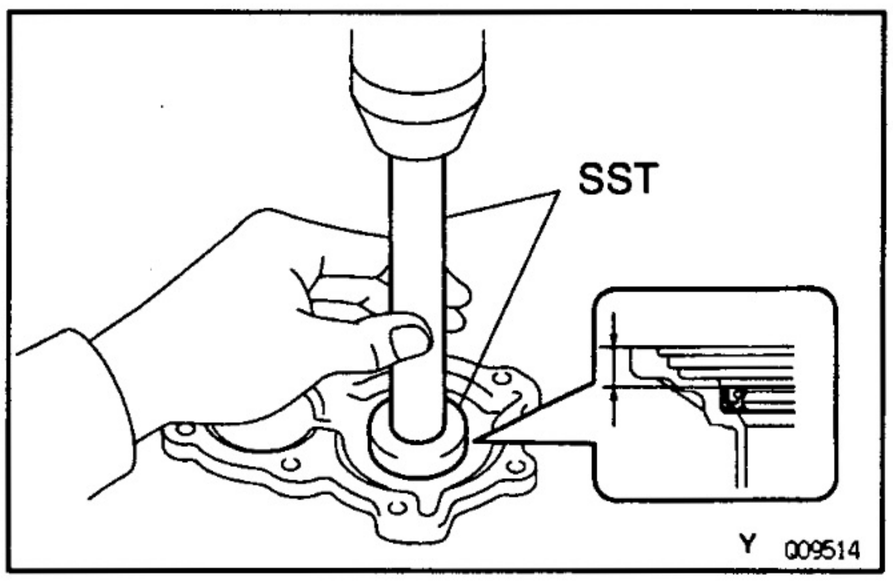

MT0CN–03

OIL SEAL REPLACEMENT

IF NECESSARY, REPLACE FRONT BEARING RETAINER OIL SEAL

(a) Using a screwdriver, remove the oil seal.

(b) Using SST and a press, install a new oil seal.

SST 09950–60010 (09951–00440),
09950–70010 (09951–07150)

Drive in depth: 12.7 ± 0.5 mm (0.500 ± 0.020 in.) from retainer end

TRANSFER ADAPTOR

COMPONENTS

MT01Z–07

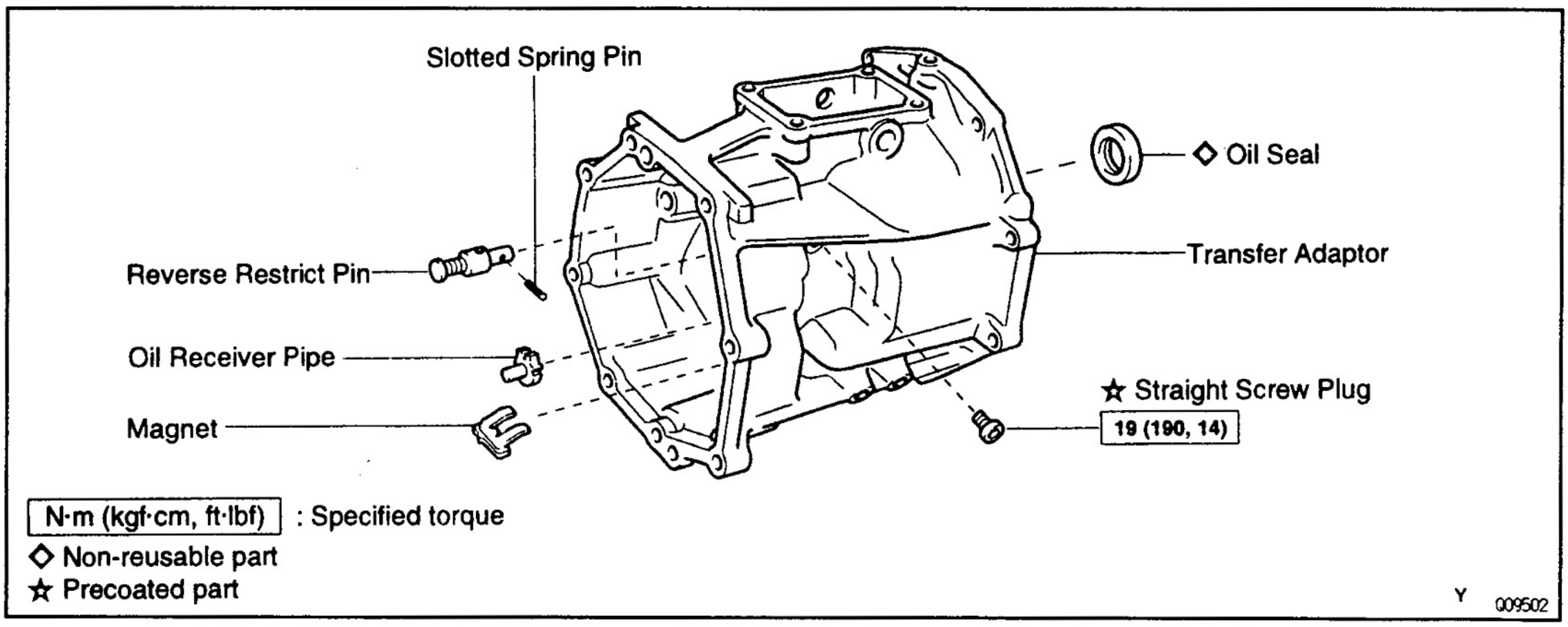

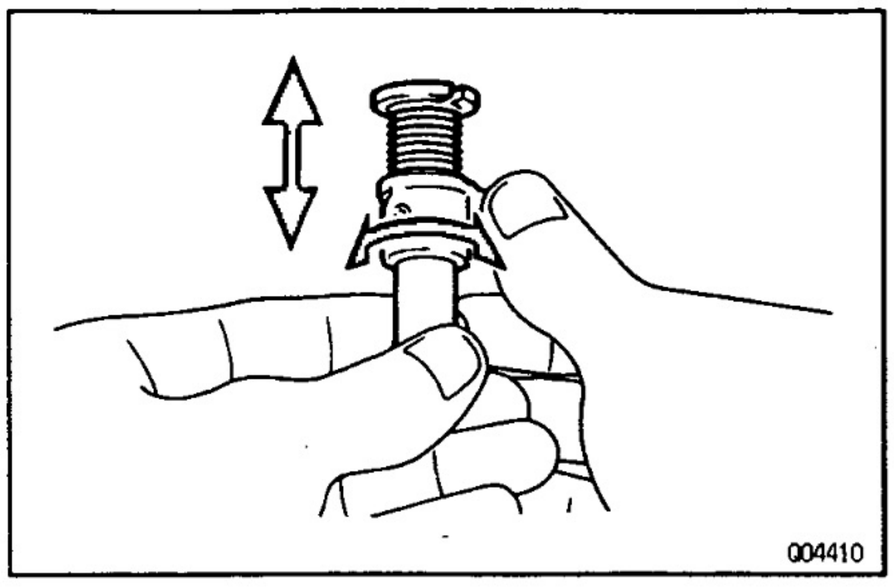

REVERSE RESTRICT PIN REPLACEMENT MTOHQ-01

1. REMOVE REVERSE RESTRICT PIN

(a) Using a torx socket wrench (T40), remove the screw plug.

(b) Using a pin punch and hammer, drive out the slotted spring pin.

(c) Remove the reverse restrict pin.

2. INSPECT REVERSE RESTRICT PIN

Turn and push the reverse restrict pin by hand.
Check for smooth operation.

3. INSTALL REVERSE RESTRICT PIN

(a) Install the reverse restrict pin to the transfer adaptor.

(b) Using a pin punch and hammer, drive in the slotted spring pin, as shown.

(c) Apply sealant to the plug threads.
Sealant: Part No. 08833 – 00080, THREE BOND 1344, LOCTITE 242 or equivalent

(d) Using a torx socket wrench (T40), install and torque the screw plug.
Torque: 19 N·m (190 kgf·cm, 14 ft·lbf)

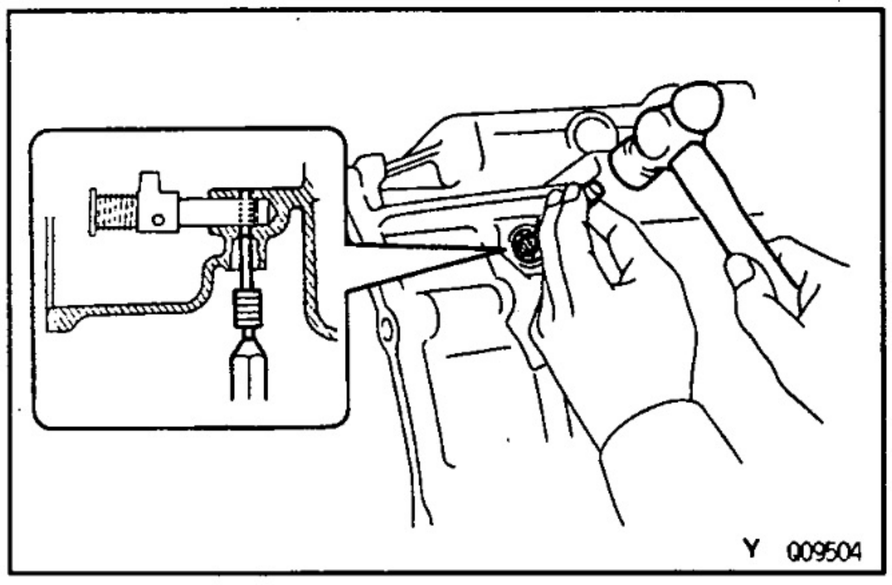

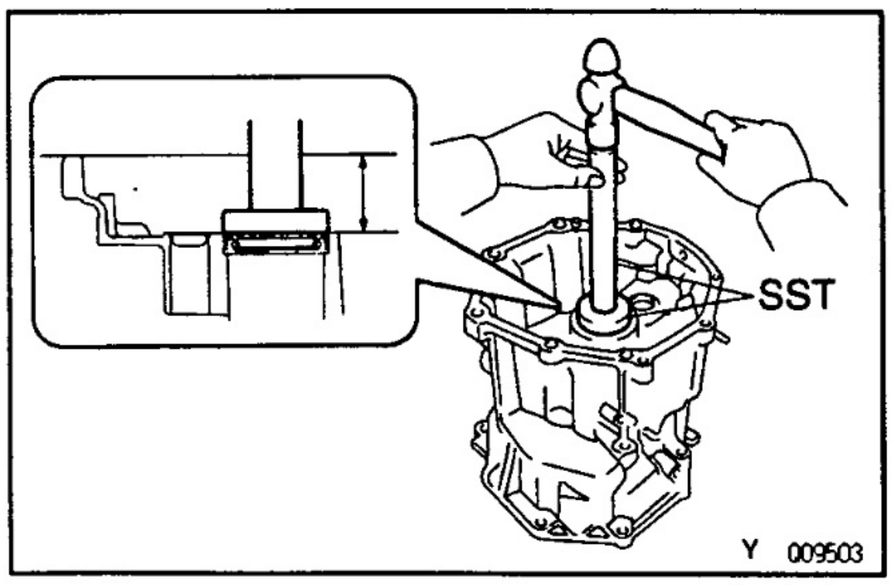

OIL SEAL REPLACEMENT MTOHR-01

IF NECESSARY, REPLACE TRANSFER ADAPTOR OIL SEAL

(a) Using a screwdriver, remove the oil seal.

(b) Using SST and a hammer, install a new oil seal.
SST 09950–60010 (09951–00570),
09950–70010 (09951–07150)
Drive in depth: 45.5 ± 0.5 mm (1.791 ± 0.020 in.)

MT

SERVICE SPECIFICATIONS

SERVICE DATA

MT022-09

Output shaft 2nd gear journal diameter	Min.	37.86 mm (1.4905 in.)
Output shaft 3rd gear journal diameter	Min.	34.86 mm (1.3724 in.)
Output shaft flange thickness	Min.	4.70 mm (0.1850 in.)
Output shaft runout	Max.	0.06 mm (0.0024 in.)
Inner race flange thickness	Min.	3.99 mm (0.1571 in.)
Inner race outer diameter	Min.	38.985 mm (1.5348 in.)
Gear thrust clearance 1st, 2nd & 3rd	STD	0.10—0.25 mm (0.0039—0.0098 in.)
	Max.	0.30 mm (0.0118 in.)
Gear radial clearance 1st	STD	0.009—0.032 mm (0.0004—0.0013 in.)
	Max.	0.032 mm (0.0013 in.)
Gear radial clearance 2nd & 3rd	STD	0.009—0.033 mm (0.0004—0.0013 in.)
	Max.	0.033 mm (0.0013 in.)
Shift fork to hub sleeve clearance	Max.	1.0 mm (0.039 in.)
Synchronizer ring to gear clearance	Min.	0.8 mm (0.031 in.)
Input shaft snap ring thickness		
	Mark 0	2.05—2.10 mm (0.0807—0.0827 in.)
	Mark 1	2.10—2.15 mm (0.0827—0.0846 in.)
	Mark 2	2.15—2.20 mm (0.0846—0.0866 in.)
	Mark 3	2.20—2.25 mm (0.0866—0.0886 in.)
	Mark 4	2.25—2.30 mm (0.0886—0.0906 in.)
	Mark 5	2.30—2.35 mm (0.0906—0.0925 in.)
Output shaft snap ring thickness		
Front	Mark C—1	1.75—1.80 mm (0.0689—0.0709 in.)
	Mark D	1.80—1.85 mm (0.0709—0.0728 in.)
	Mark D—1	1.85—1.90 mm (0.0728—0.0748 in.)
	Mark E	1.90—1.95 mm (0.0748—0.0768 in.)
	Mark E—1	1.95—2.00 mm (0.0768—0.0787 in.)
	Mark F	2.00—2.05 mm (0.0787—0.0807 in.)
	Mark F—1	2.05—2.10 mm (0.0807—0.0827 in.)
Output shaft snap ring thickness		
Rear	Mark A	2.67—2.72 mm (0.1051—0.1071 in.)
	Mark B	2.73—2.78 mm (0.1075—0.1094 in.)
	Mark C	2.79—2.84 mm (0.1098—0.1118 in.)
	Mark D	2.85—2.90 mm (0.1122—0.1142 in.)
	Mark E	2.91—2.96 mm (0.1146—0.1165 in.)
	Mark F	2.97—3.02 mm (0.1169—0.1189 in.)
	Mark G	3.03—3.08 mm (0.1193—0.1213 in.)
	Mark H	3.09—3.14 mm (0.1217—0.1236 in.)
	Mark J	3.15—3.20 mm (0.1240—0.1260 in.)
	Mark K	3.21—3.26 mm (0.1264—0.1283 in.)
	Mark L	3.27—3.32 mm (0.1287—0.1307 in.)
Counter gear needle roller bearing race diameter	STD	25.98—26.00 mm (1.0228—1.0236 in.)
	Min.	25.86 mm (1.0181 in.)
Counter 5th gear thrust clearance	STD	0.10—0.30 mm (0.0039—0.0118 in.)
	Max.	0.35 mm (0.0138 in.)

Counter 5th gear radial clearance	STD	0.009–0.032 mm (0.0004–0.0013 in.)
	Max.	0.032 mm (0.0013 in.)
Reverse idler gear radial clearance	STD	0.04–0.08 mm (0.0016–0.0031 in.)
	Max.	0.13 mm (0.0051 in.)
Reverse idler gear to shift arm shoe clearance	STD	0.05–0.28 mm (0.0020–0.0110 in.)
	Max.	0.50 mm (0.0197 in.)
Counter gear snap ring thickness		
Front bearing	Mark 1	2.05–2.10 mm (0.0807–0.0827 in.)
	Mark 2	2.10–2.15 mm (0.0827–0.0846 in.)
	Mark 3	2.15–2.20 mm (0.0846–0.0866 in.)
	Mark 4	2.20–2.25 mm (0.0866–0.0886 in.)
	Mark 5	2.25–2.30 mm (0.0886–0.0906 in.)
	Mark 6	2.30–2.35 mm (0.0906–0.0925 in.)
Counter gear snap ring thickness		
Gear spline piece No.5	Mark A	2.80–2.85 mm (0.110–0.112 in.)
	Mark B	2.85–2.90 mm (0.112–0.114 in.)
	Mark C	2.90–2.95 mm (0.114–0.116 in.)
	Mark D	2.95–3.00 mm (0.116–0.118 in.)
	Mark E	3.00–3.05 mm (0.118–0.120 in.)
	Mark F	3.05–3.10 mm (0.120–0.122 in.)
	Mark G	3.10–3.15 mm (0.122–0.124 in.)
Oil seal drive in depth		
Front bearing retainer (from retainer end)		12.7 ± 0.5 mm (0.500 ± 0.020 in.)
Transfer adaptor		45.5 ± 0.5 mm (1.791 ± 0.020 in.)

MT

MT023–08

TORQUE SPECIFICATIONS

Part tightened		N·m	kgf·cm	ft·lbf
Transmission x Engine		72	730	53
Clutch release cylinder x Transmission		12	120	9
Front exhaust pipe x Exhaust manifold		62	630	46
Front exhaust pipe x Center exhaust pipe		43	440	32
Front exhaust pipe bracket x Clutch housing (5 door)	Bolt A	71	720	52
(See page MT–7)	Bolt B	69	700	51
LH and RH stiffener plate	17 mm head	69	700	51
	14 mm head	37	380	27
No.3 crossmember x Engine rear mounting		18	185	13
No.3 crossmember x Frame		65	660	48
Engine rear mounting x Transmission		65	650	48
Starter x Transmission		69	700	51
Transfer x Transmission		24	240	17
Straight screw plug		19	190	14
Transfer adaptor x Transmission case		37	380	27
Front bearing retainer x Transmission case		17	170	12
Rear bearing retainer x Intermediate plate		18	185	13
Reverse shift arm bracket		18	185	13
Shift fork x Shift fork shaft		20	200	14
Back–up light switch		37	380	27
Reverse idler gear shaft stopper bolt		17	175	13

Clutch housing x Transmission case	37	380	27
Control shift lever retainer x Transfer adaptor	18	185	13
Restrict pin	28	290	21
Shift lever housing x Shift and select lever	38	390	28
Filler and drain plug	37	380	27

W56 MANUAL TRANSMISSION

PRECAUTION ..... MT– 2
PREPARATION ..... MT– 2
TROUBLESHOOTING ..... MT– 5
ASSEMBLY REMOVAL AND INSTALLATION ..... MT– 6
COMPONENT PARTS REMOVAL AND INSTALLATION ..... MT– 11
INPUT SHAFT ..... MT– 20
OUTPUT SHAFT ..... MT– 22
COUNTER GEAR AND REVERSE IDLER GEAR ..... MT– 29
FRONT BEARING RETAINER ..... MT– 34
TRANSFER ADAPTOR ..... MT– 35
SERVICE SPECIFICATIONS ..... MT– 37

PRECAUTION

MX022–19

When working with FIPG material, you must observe the following.

- **Using a razor blade and gasket scraper, remove all the old FIPG material from the gasket surfaces.**
- **Thoroughly clean all components to remove all the loose material.**
- **Clean both sealing surfaces with a non–residue solvent.**
- **Apply FIPG in an approx. 1 mm (0.04 in.) wide bead along the sealing surface.**
- **Parts must be assembled within 10 minutes of application. Otherwise, the FIPG material must be removed and reapplied.**

MT

PREPARATION

SST (SPECIAL SERVICE TOOLS)

MT004–0J

	09308–00010	Oil Seal Puller	Output shaft rear bearing outer race
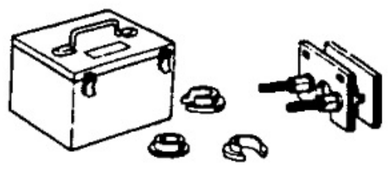	09312–20011	Transmission Gear Remover & Replacer	5th gear Output shaft rear bearing Reverse gear
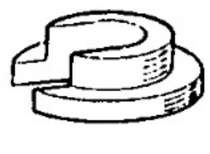	(09313–00010)	Reverse Gear Remover	
	(09313–00030)	Rear Bearing Replacer	
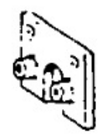	(09313–00040)	Plate "A"	
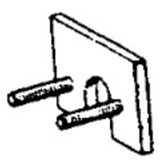	(09313–00050)	Plate "B"	
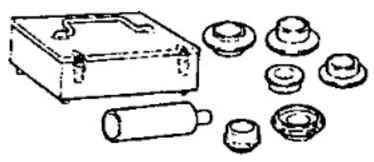	09316–60011	Transmission & Transfer Bearing Replacer	No.3 clutch hub Counter gear center bearing outer race
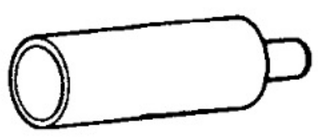	(09316–00011)	Replacer Pipe	
	(09316–00071)	Replacer "F"	
	09506–35010	Differential Drive Pinion Rear Bearing Replacer	Input shaft bearing Output shaft center bearing

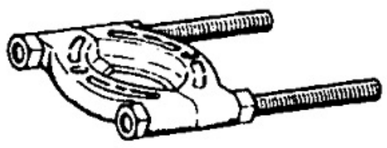	09950–00020	Bearing Remover	
	09950–40010	Puller B Set	Counter 5th gear No.3 clutch hub Reverse gear Counter gear side race
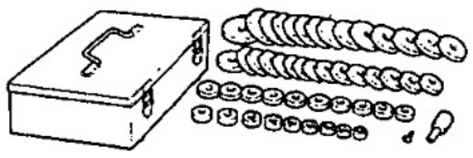	09950–60010	Replacer Set	
	(09951–00440)	Replacer 44	Front bearing retainer oil seal
	(09951–00510)	Replacer 51	Counter gear center bearing outer race
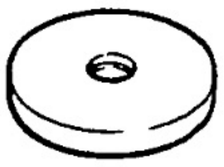	(09951–00560)	Replacer 56	Output shaft rear bearing outer race Transfer adaptor oil seal
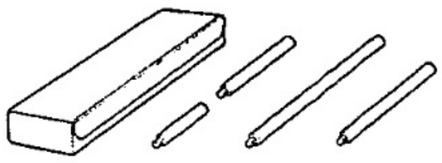	09950–70010	Handle Set	
	(09951–07150)	Handle 150	

MT005–0A

RECOMMENDED TOOLS

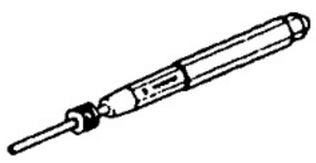	09031–00030	Pin Punch .	
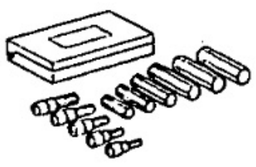	09040–00010	Hexagon Wrench Set .	
	09042–00020	Torx Socket T40 .	
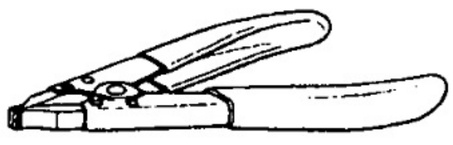	09905–00012	Snap Ring No.1 Expander .	

MT006–0A

EQUIPMENT

Dial indicator	
Calipers	
Micrometer	
Torque wrench	
Feeler gauge	
Magnetic finger	

MT007–0G

LUBRICANT

Item	Capacity	Classification
Manual transmission oil	2.5 liters (2.6 US qts, 2.2 Imp. qts)	API GL–4 or GL–5 SAE 75W–90

MT008–0B

SSM (SPECIAL SERVICE MATERIALS)

08826–00090	Seal Packing 1281, THREE BOND 1281 or equivalent (FIPG)	Transmission case x Intermediate plate Front bearing retainer x Transmission case
08833–00080	Adhesive 1344, THREE BOND 1344, LOCTITE 242 or equivalent	Straight screw plug Front bearing retainer bolt Control shift lever retainer set bolt

TROUBLESHOOTING

MT009-08

Use the table below to help you find the cause of the problem. The numbers indicate the priority of the likely cause of the problem. Check each part in order. If necessary, replace these parts.

Trouble / Parts Name	Oil (Level low)	Oil (Wrong)	Oil (Level too high)	Gasket (Damaged)	Oil seal (Worn or damaged)	O-Ring (Worn or damaged)	Locking ball spring (Damaged)	Shift fork (Worn)	Gear (Worn or damaged)	Bearing (Worn or damaged)	Synchronizer ring (Worn or damaged)	Shifting key spring (Damaged)				
See page	–	MT-4	–	MT-11	MT-11	–	MT-11	MT-11	MT-11	MT-11	MT-20,22 MT-29	MT-22,29				
Noise	1	2							3	3						
Oil leakage			1	2	2	3										
Hard to shift or will not shift											1	2				
Jumps out of gear							1	2	3	3						

MT

V00794

ASSEMBLY REMOVAL AND INSTALLATION

COMPONENTS

MTOHS-01

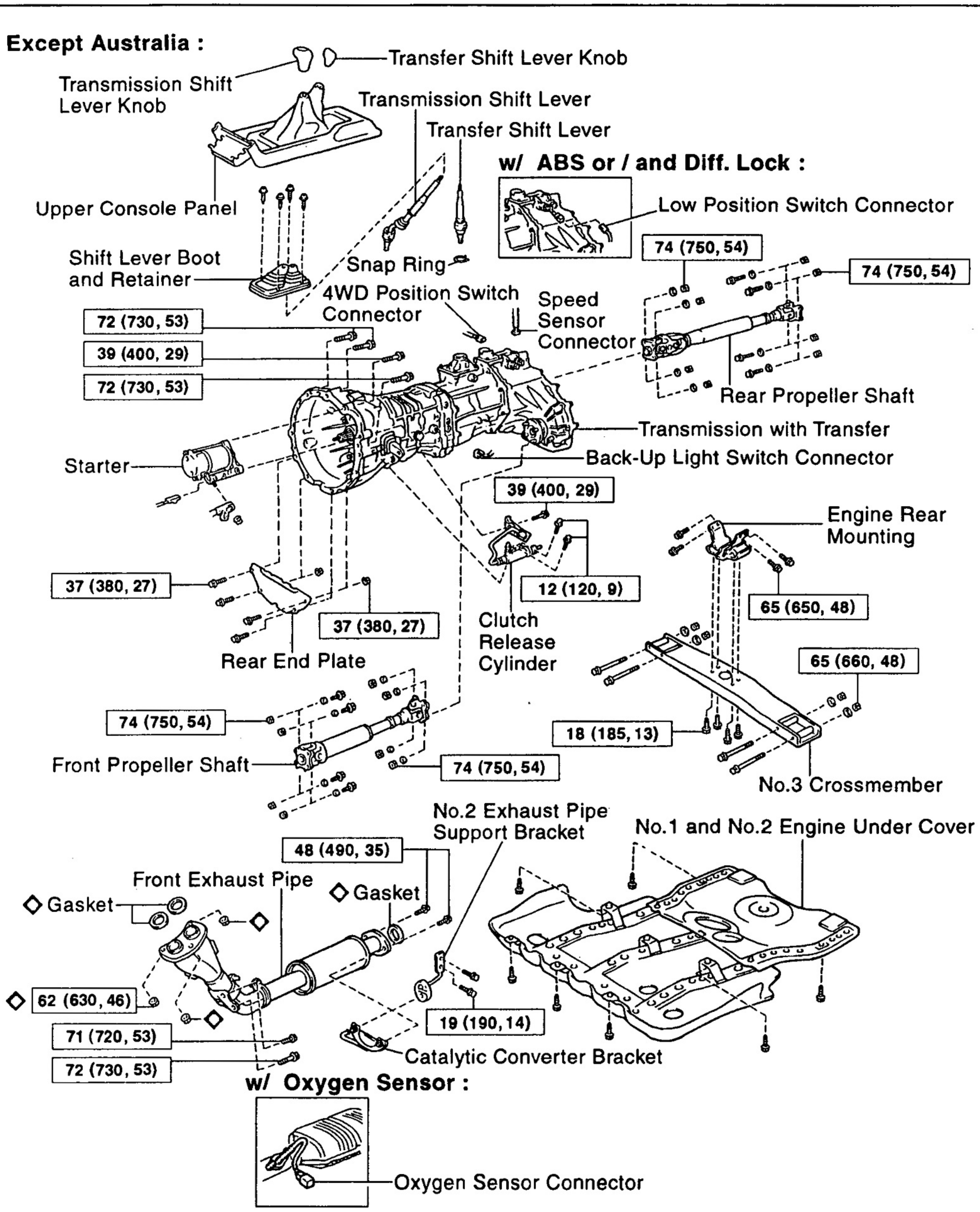

Australia :

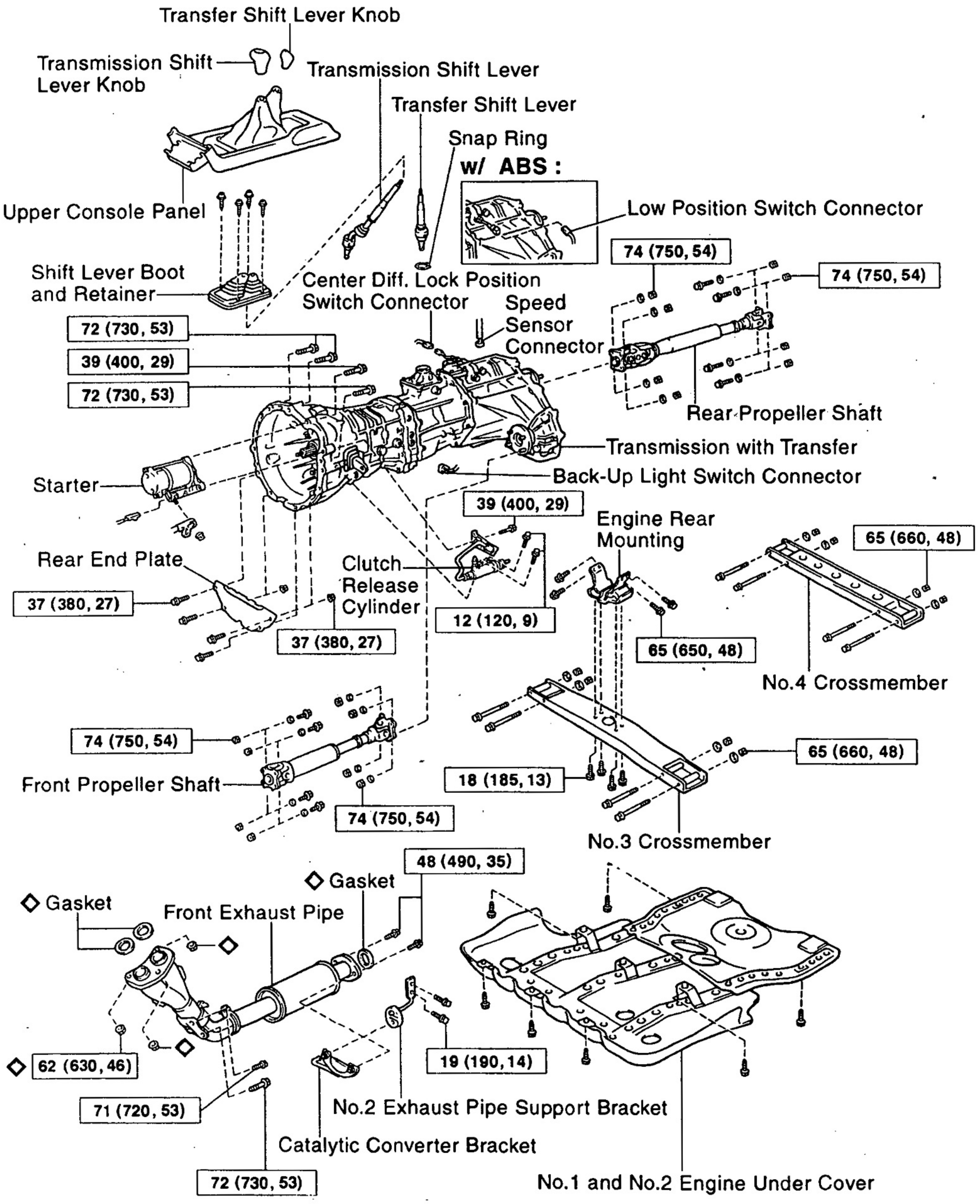

N·m (kgf·cm, ft·lbf) : Specified torque

◇ Non-reusable part

009920

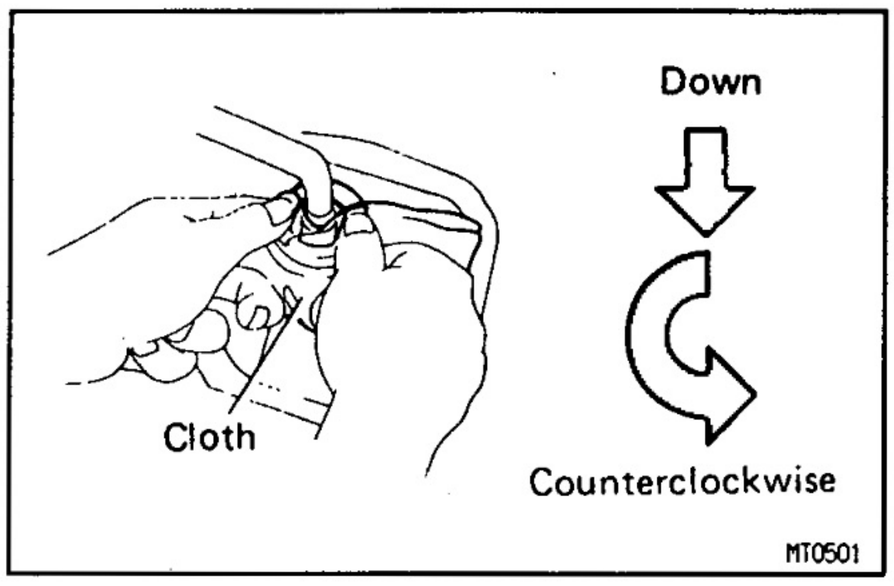

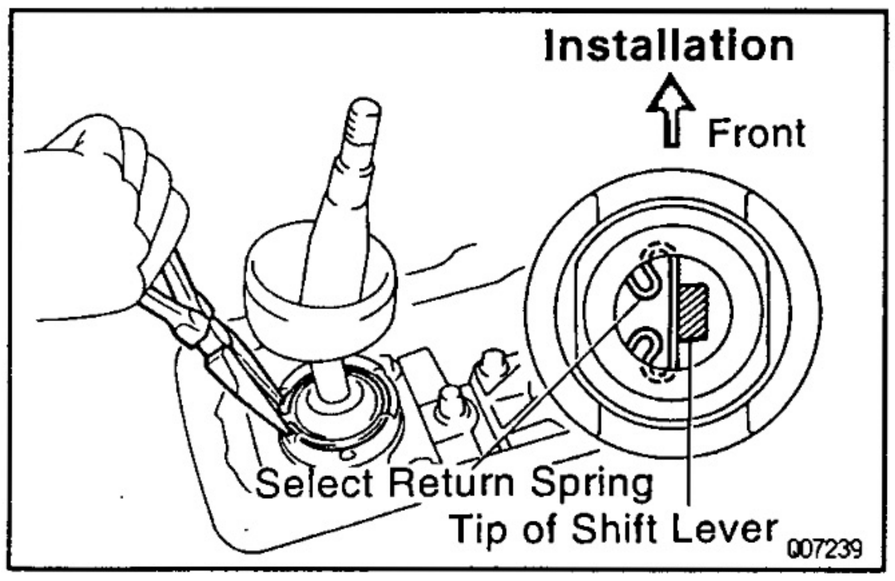

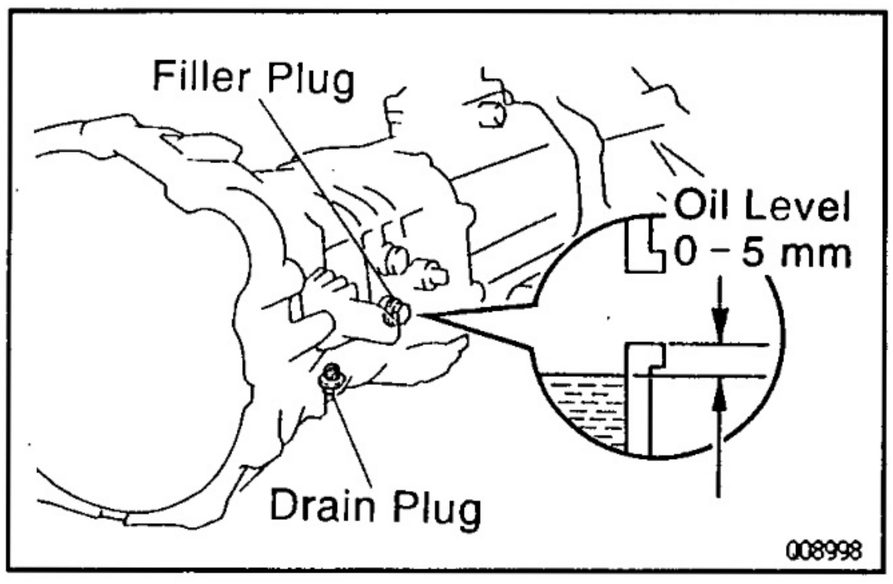

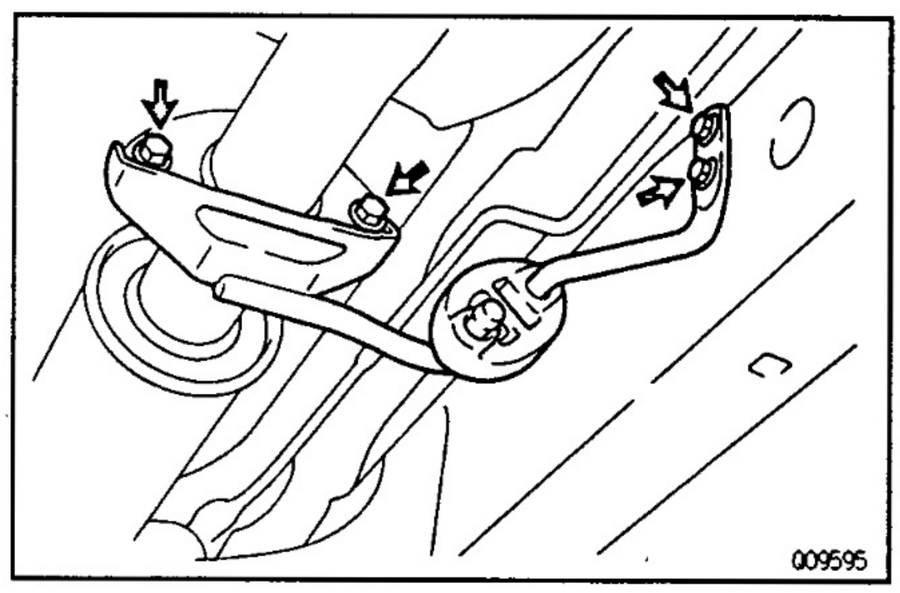

MT0HT–01

TRANSMISSION REMOVAL

1. REMOVE TRANSMISSION SHIFT LEVER

(a) Remove the upper console panel.

(b) Remove the 4 screws, shift lever boot and retainer.

(c) Cover the shift lever cap with a cloth.

(d) Pressing down on the shift lever cap and rotate it counterclockwise to remove.

(e) Pull out the shift lever.
INSTALLATION HINT: Apply MP grease to the tip of the shift lever.

2. REMOVE TRANSFER SHIFT LEVER

Using pliers, remove the snap ring and pull out the shift lever.
HINT: Shift the transfer shift lever to the "H4" (except Australia) or "HL" (Australia) position.
INSTALLATION HINT: Apply MP grease to the tip of the shift lever.

3. RAISE VEHICLE AND DRAIN TRANSMISSION OIL

Oil grade: API GL–4 or GL–5
Viscosity: SAE 75W–90
Capacity: 2.5 liters (2.6 US qts, 2.2 Imp. qts)
Torque: 37 N·m (380 kgf·cm, 27 ft·lbf)

4. REMOVE NO.1 AND NO.2 ENGINE UNDER COVERS

5. REMOVE FRONT AND REAR PROPELLER SHAFTS
(See page PR–3)

6. REMOVE CLUTCH RELEASE CYLINDER

Remove the 2 bolts and release cylinder.
Torque: 12 N·m (120 kgf·cm, 9 ft·lbf)

7. DISCONNECT THESE CONNECTORS:

- Back–up light switch connector
- Speed sensor connector
- Except Australia:
  4WD position switch connector
- Australia:
  Center diff. lock position switch connector
- w/ ABS or / and Diff. Lock:
  Low position switch connector

8. REMOVE FRONT EXHAUST PIPE

(a) Disconnect the ring, and remove the 2 bolts and support bracket.
Torque: 19 N·m (190 kgf·cm, 14 ft·lbf)

(b) Remove the 2 bolts, bracket and gasket.
Torque: 48 N·m (490 kgf·cm, 35 ft·lbf)

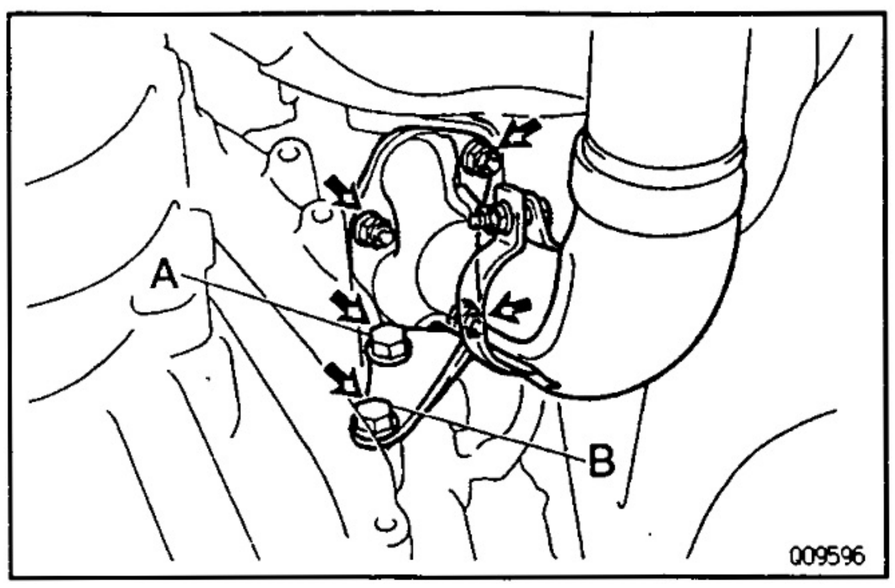

(c) w/ Oxygen Sensor:
Disconnect the oxygen sensor connector.

(d) Remove the 2 set bolts of the front exhaust pipe bracket.
Torque:
Bolt A: 71 N·m (720 kgf·cm, 52 ft·lbf)
Bolt B: 72 N·m (730 kgf·cm, 53 ft·lbf)

(e) Remove the 3 nuts, front exhaust pipe and 2 gaskets.
Torque: 62 N·m (630 kgf·cm, 46 ft·lbf)

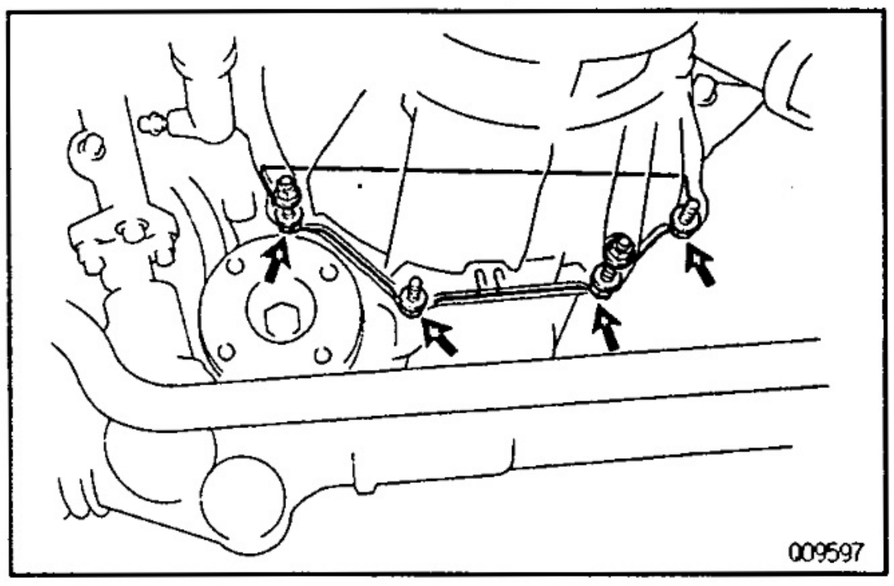

9. REMOVE REAR END PLATE
Remove the 4 bolts, 2 nuts and rear end plate.
Torque: 37 N·m (380 kgf·cm, 27 ft·lbf)

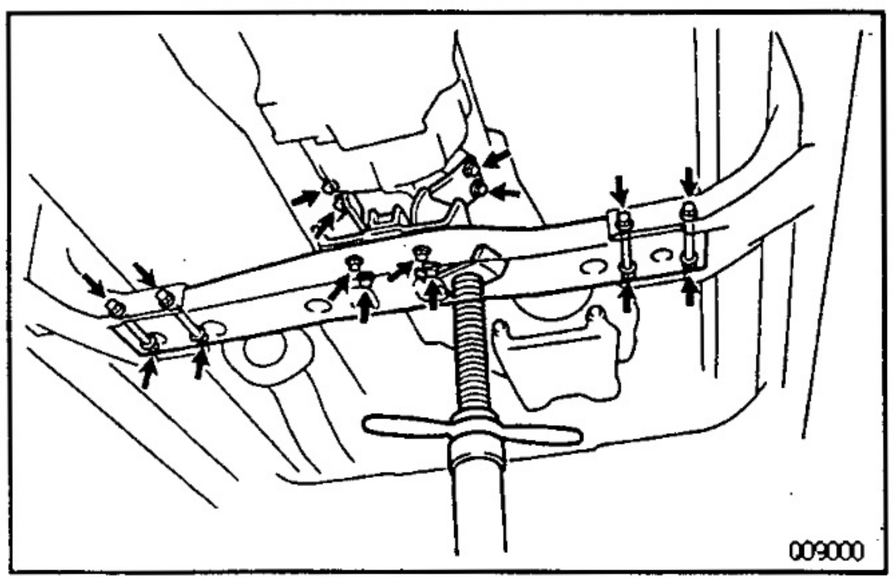

10. REMOVE NO.3 CROSSMEMBER
(a) Support the transmission rear side.
(b) Remove the 4 set bolts of the engine rear mounting.
Torque: 18 N·m (185 kgf·cm, 13 ft·lbf)
(c) Remove the 4 bolts, nuts and crossmember.
Torque: 65 N·m (660 kgf·cm, 48 ft·lbf)

11. REMOVE ENGINE REAR MOUNTING
Remove the 4 bolts and engine rear mounting from the transmission.
Torque: 65 N·m (650 kgf·cm, 48 ft·lbf)

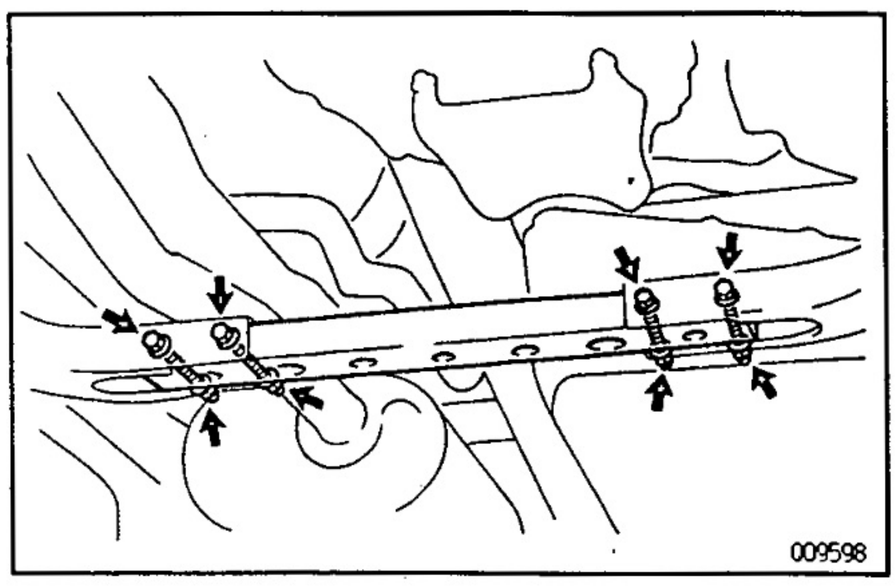

12. Australia:
REMOVE NO.4 CROSSMEMBER
Remove the 4 bolts, nuts and crossmember.
Torque: 65 N·m (660 kgf·cm, 48 ft·lbf)

13. JACK UP TRANSMISSION SLIGHTLY
Using a transmission jack, support the transmission.

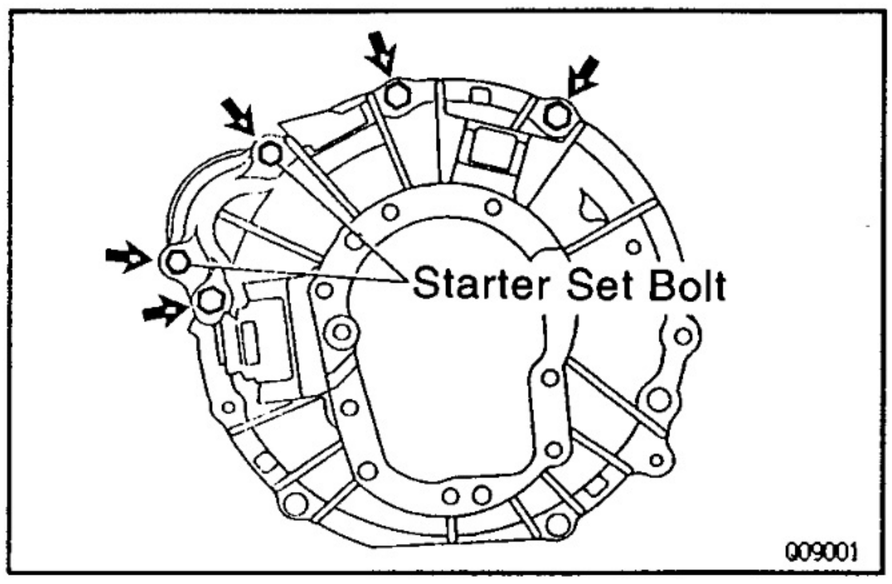

14. REMOVE STARTER

(a) Remove the set bolt of the starter lower side with the clutch line bracket.
Torque: 39 N·m (400 kgf·cm, 29 ft·lbf)

(b) Disconnect the connector and wire, and remove the set bolt of the starter upper side and starter.
Torque: 39 N·m (400 kgf·cm, 29 ft·lbf)

15. REMOVE TRANSMISSION WITH TRANSFER

(a) Disconnect the wire harness from the transmission.

(b) Remove the 3 transmission mounting bolts from the engine.
Torque: 72 N·m (730 kgf·cm, 53 ft·lbf)

(c) Pull out the transmission with the transfer down and toward the rear.

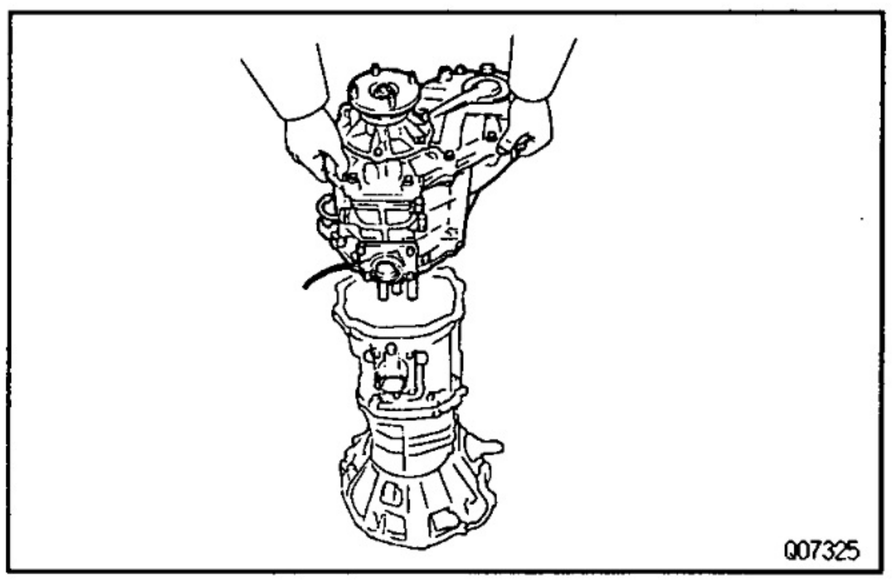

16. REMOVE TRANSFER FROM TRANSMISSION

(a) Disconnect the breather hose and remove the 8 transfer adaptor rear mounting bolts.
Torque: 24 N·m (240 kgf·cm, 17 ft·lbf)

(b) Pull the transfer straight up and remove it from the transmission.
HINT: Take care not to damage the transfer adaptor oil seal with the transfer input gear spline.
INSTALLATION HINT: Apply MP grease to the transfer adaptor oil seal.

MT0DH–02

TRANSMISSION INSTALLATION

Installation is in the reverse order of removal.
HINT: After installation, do the road test.

COMPONENT PARTS REMOVAL AND INSTALLATION

COMPONENTS

MT00D-0P

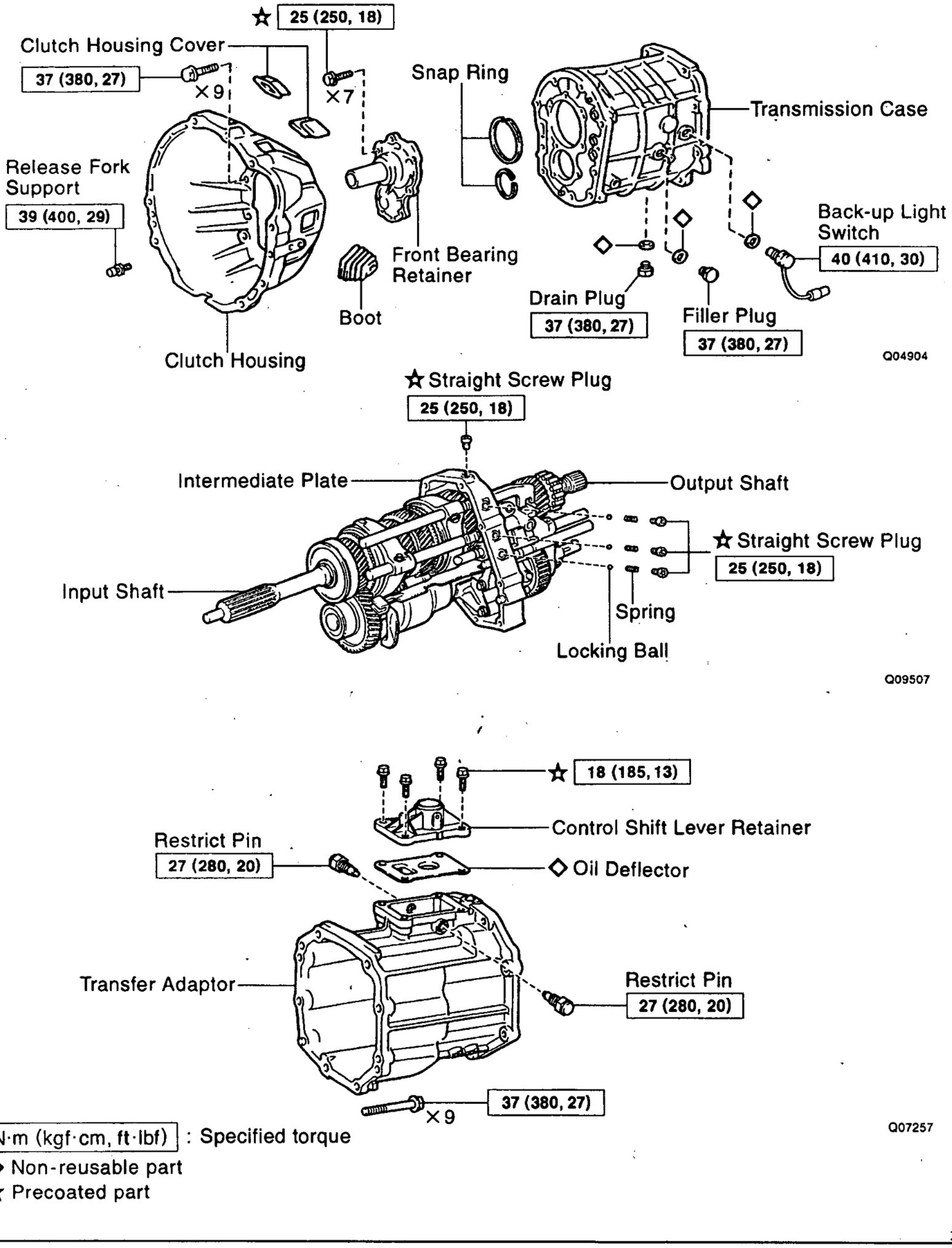

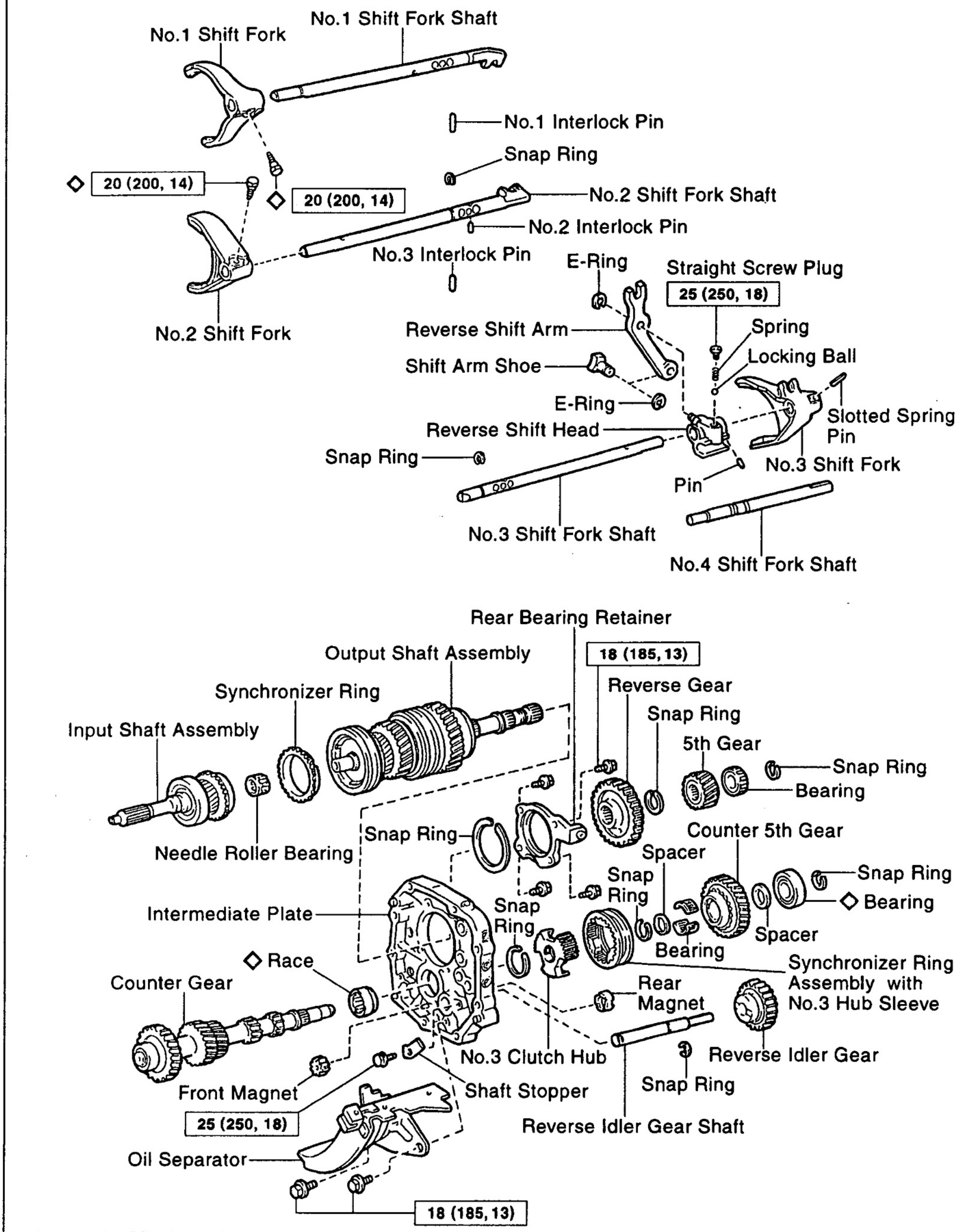

N·m (kgf·cm, ft·lbf) : Specified torque

◇ Non-reusable part

Q009426

MT0HU-01

BASIC SUBASSEMBLY SEPARATION

1. REMOVE BACK–UP LIGHT SWITCH
Torque: 40 N·m (410 kgf·cm, 30 ft·lbf)

2. REMOVE CLUTCH HOUSING
Remove the 9 bolts and clutch housing from the transmission case.
Torque: 37 N·m (380 kgf·cm, 27 ft·lbf)

3. REMOVE CONTROL SHIFT LEVER RETAINER
(a) Remove the 4 bolts.
Sealant: Part No. 08833 – 00080, THREE BOND 1344, LOCTITE 242 or equivalent
Torque: 18 N·m (185 kgf·cm, 13 ft·lbf)
(b) Remove the retainer and oil deflector.

4. REMOVE 2 RESTRICT PINS
INSTALLATION HINT: Install the black pin on the reverse gear/5th gear side.
Torque: 27 N·m (280 kgf·cm, 20 ft·lbf)

5. REMOVE TRANSFER ADAPTOR
(a) Remove the shift lever housing set bolt.
Torque: 39 N·m (400 kgf·cm, 29 ft·lbf)
(b) Remove the 9 bolts from the transfer adaptor.
Torque: 37 N·m (380 kgf·cm, 27 ft·lbf)
(c) Using a plastic hammer, carefully tap the adaptor.
(d) Disengage the shift and select lever from the shift head.
(e) Pull out the transfer adaptor.
FIPG: Part No. 08826–00090, THREE BOND 1281 or equivalent

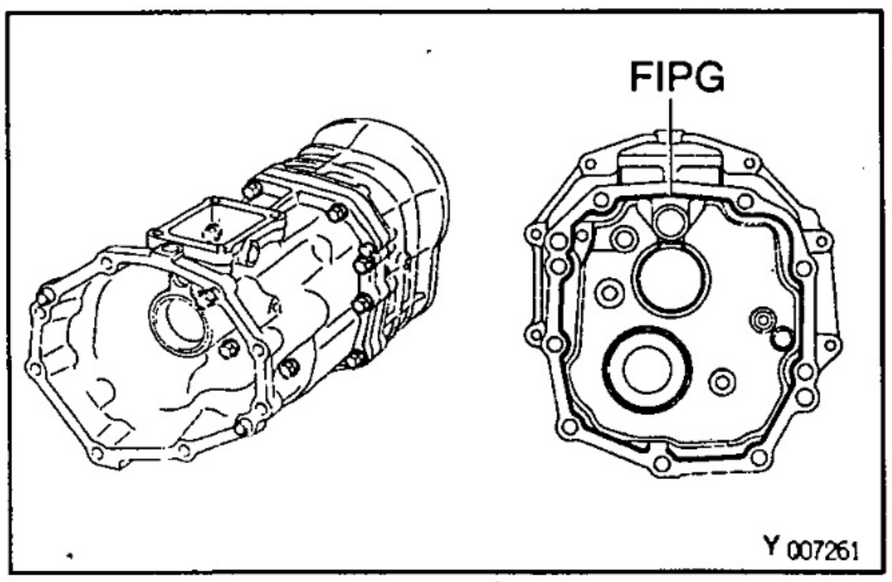

6. REMOVE FRONT BEARING RETAINER AND BEARING SNAP RING
(a) Remove the 7 bolts.
Sealant: Part No.08833–00080, THREE BOND 1344, LOCTITE 242 or equivalent
Torque: 25 N·m (250 kgf·cm, 18 ft·lbf)
(b) Remove the front bearing retainer.
FIPG: Part No. 08826–00090, THREE BOND 1281 or equivalent
(c) Using a snap ring expander, remove the 2 snap rings.

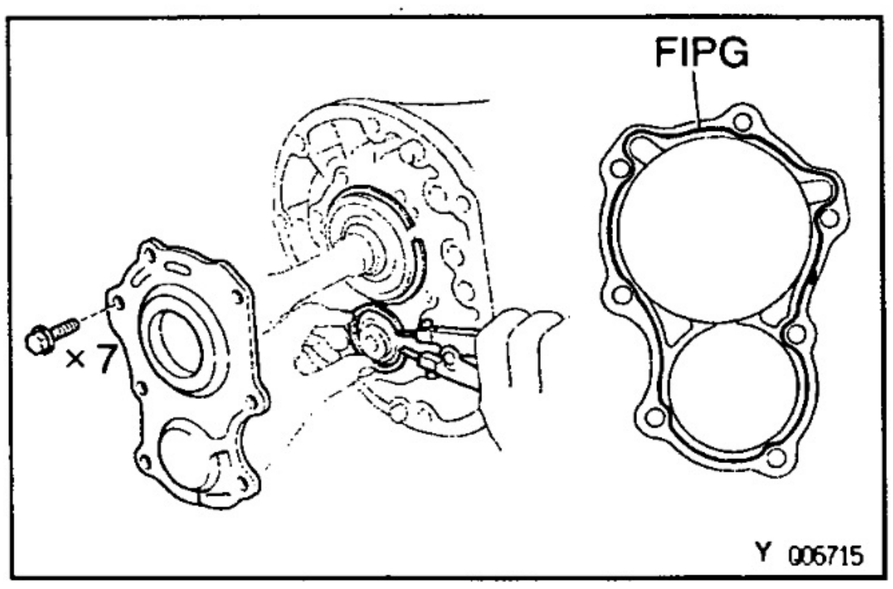

7. SEPARATE INTERMEDIATE PLATE FROM TRANSMISSION CASE
(a) Using a plastic hammer, carefully tap the transmission case.
(b) Pull the transmission case from the intermediate plate.
INSTALLATION HINT: Align each bearing outer race and each shift fork shaft end with the case holes.
FIPG: Part No. 08826–00090, THREE BOND 1281 or equivalent

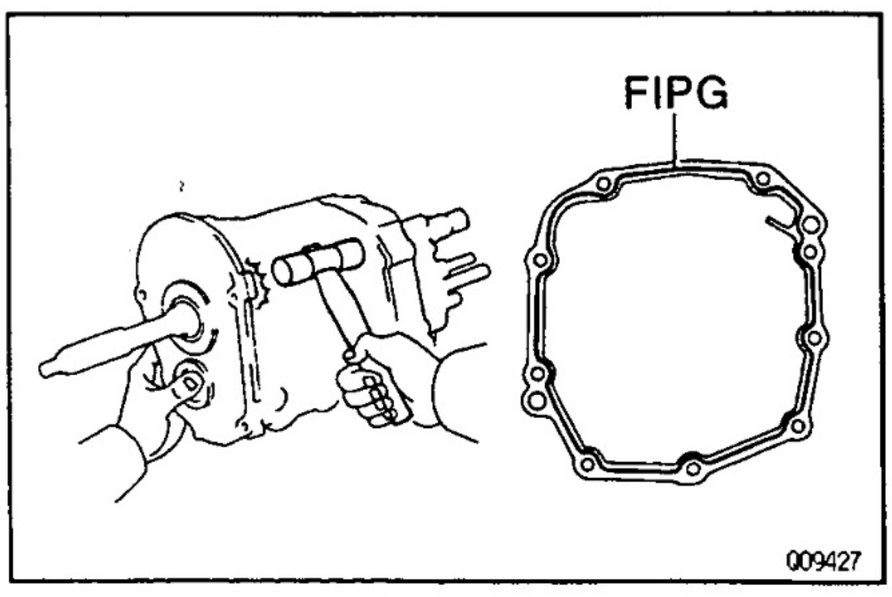

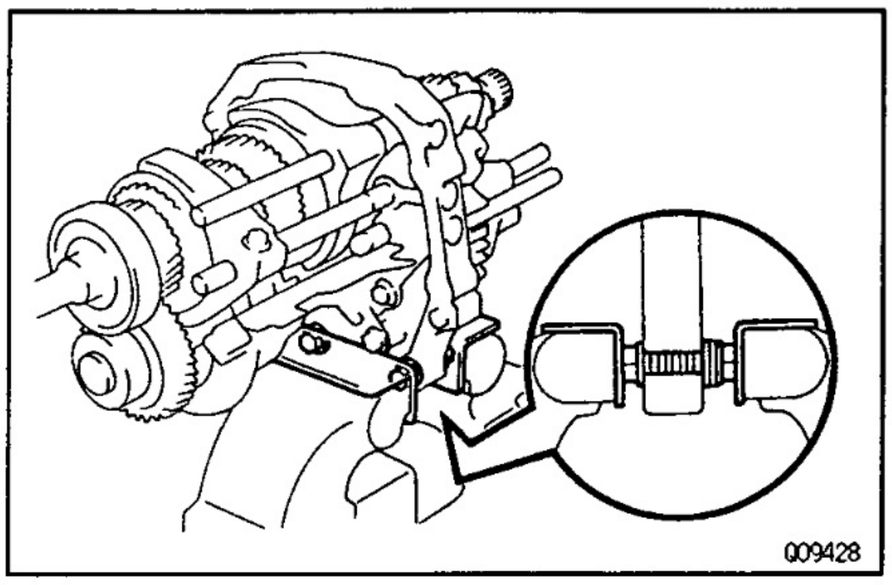

8. MOUNT INTERMEDIATE PLATE IN VISE

(a) Use the 2 long clutch housing bolts, plate washers and suitable nuts, as shown.

REMOVAL NOTICE: Increase or decrease plate washers so that the bolt tip does not protrude from the nut.

(b) Mount the intermediate plate in a vise.

9. REMOVE OIL SEPARATOR

Remove the 2 bolts and oil separator.

Torque: 18 N·m (185 kgf·cm, 13 ft·lbf)

MT

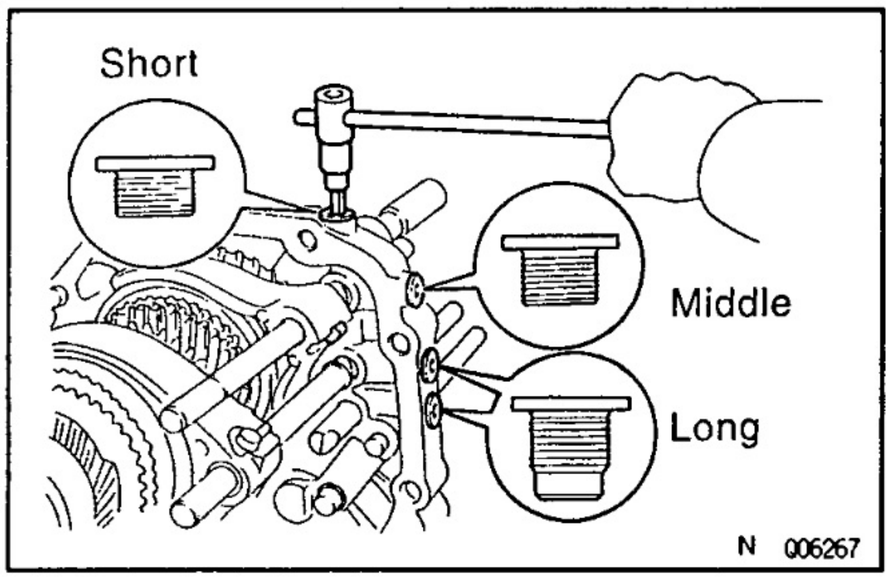

10. REMOVE FRONT MAGNET

11. REMOVE LOCKING BALL AND SPRING

(a) Using a hexagon wrench, remove the 4 straight screw plugs.

Sealant: Part No.08833–00080, THREE BOND 1344, LOCTITE 242 or equivalent

Torque: 25 N·m (250 kgf·cm, 18 ft·lbf)

(b) Using a magnetic finger, remove the 3 springs and balls.

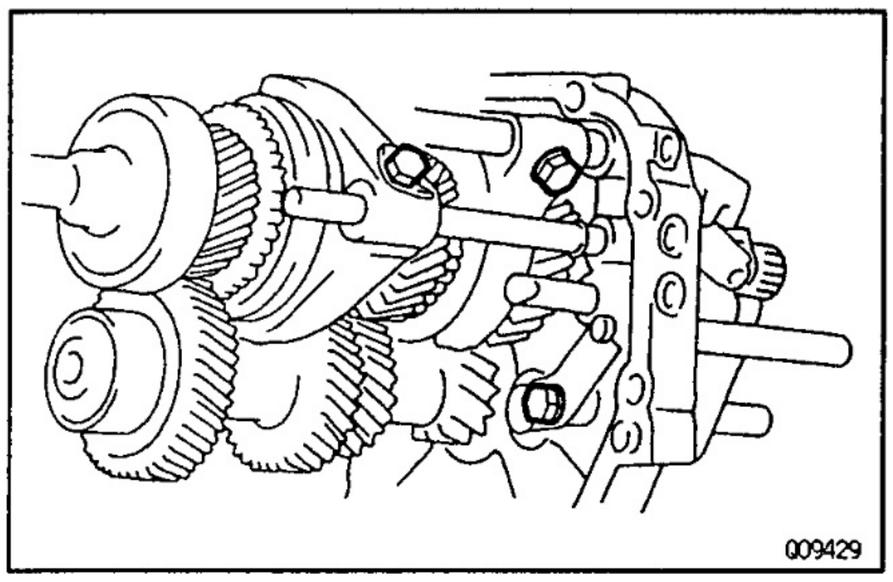

12. REMOVE SHIFT FORK, SHIFT FORK SHAFT AND REVERSE IDLER GEAR

(a) Remove the No.1 shift fork set bolt.

Torque: 20 N·m (200 kgf·cm, 14 ft·lbf)

(b) Remove the No.2 shift fork set bolt.

Torque: 20 N·m (200 kgf·cm, 14 ft·lbf)

(c) Remove the bolt and reverse idler gear shaft stopper.

Torque: 25 N·m (250 kgf·cm, 18 ft·lbf)

(d) Remove the reverse idler gear and shaft with the snap ring.

(e) Remove the No.1 shift fork and shaft.

(f) Using a magnetic finger, remove the No.1 and No.2 interlock pins.

INSTALLATION HINT: Apply MP grease to the No.1 and No.2 interlock pins.

(g) Using 2 screwdrivers and a hammer, tap out the No. 2 shift fork shaft snap ring.

(h) Remove the No. 2 shift fork and shaft.

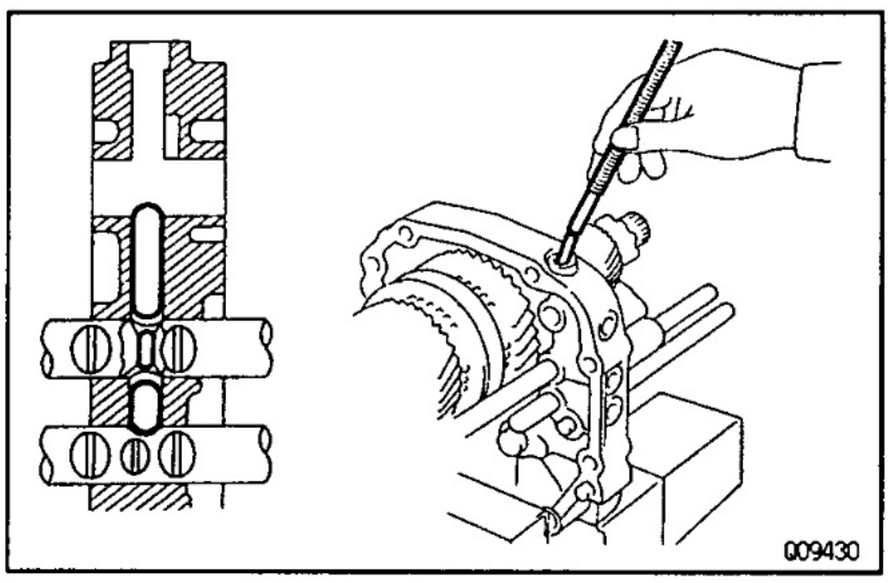

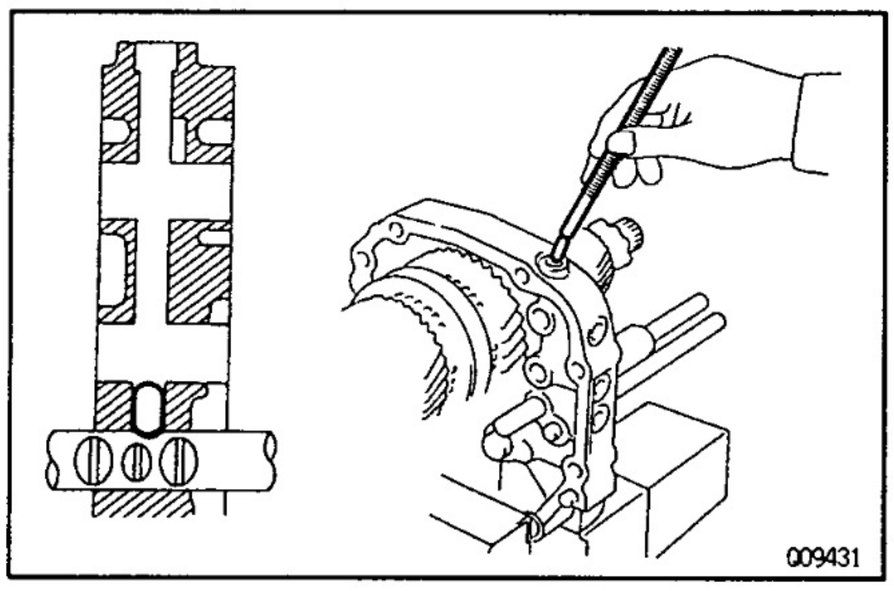

(i) Using a magnetic finger, remove the No. 3 interlock pin.

INSTALLATION HINT: Apply MP grease to the No.3 interlock pin.

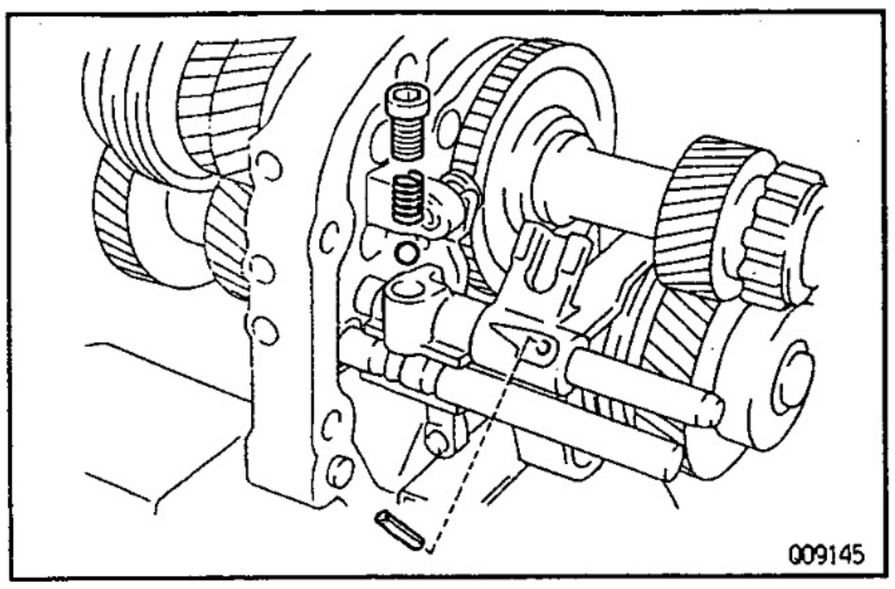
009145

(j) Using a pin punch and hammer, drive out the No. 3 shift fork pin.

(k) Using a hexagon wrench, remove the plug.
Torque: 25 N·m (250 kgf·cm, 18 ft·lbf)

(l) Using a magnetic finger, remove the spring and ball.

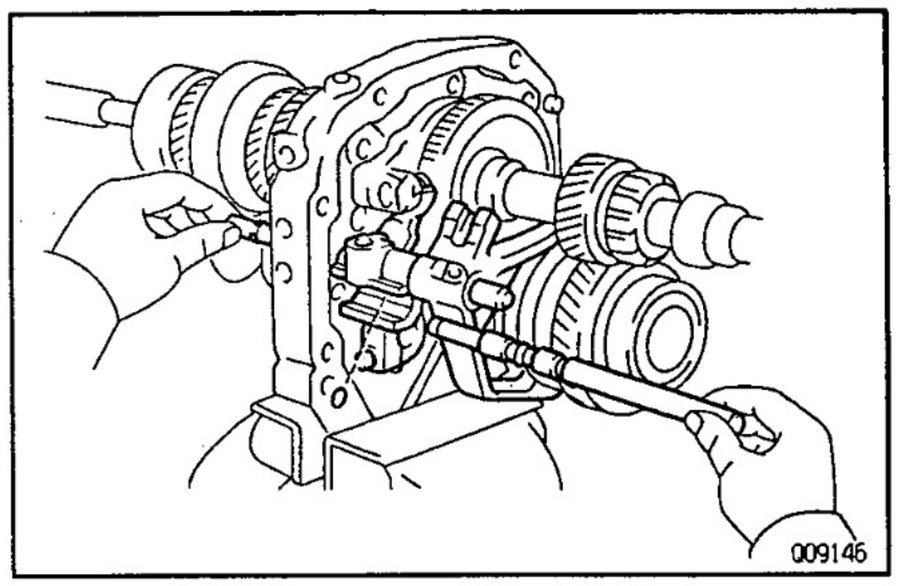
009146

(m) Pull out the No.4 shift fork shaft.

(n) Remove the pin from the reverse shift head.
INSTALLATION HINT: Apply MP grease to the pin.

(o) Remove the No.3 shift fork, fork shaft and reverse shift arm with the snap ring.
INSTALLATION HINT: Align the No.3 shift fork with the No.3 hub sleeve groove, put the reverse shift arm into the pivot of bearing retainer and align the reverse shift arm shoe with the reverse idler gear groove.

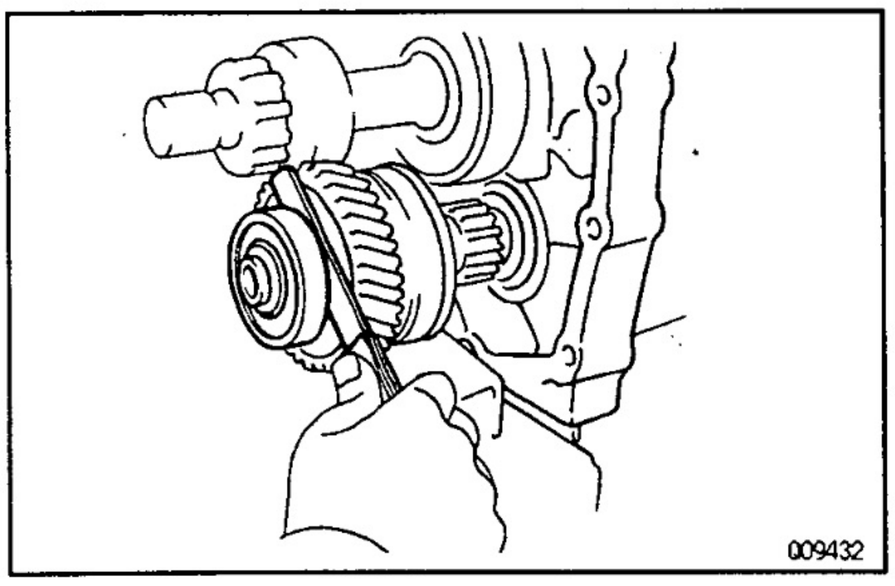
009432

13. INSPECT COUNTER 5TH GEAR THRUST CLEARANCE

Using a feeler gauge, measure the counter 5th gear thrust clearance.

Standard clearance:

0.10–0.41 mm (0.0039–0.0161 in.)

Maximum clearance: 0.46 mm (0.0181 in.)

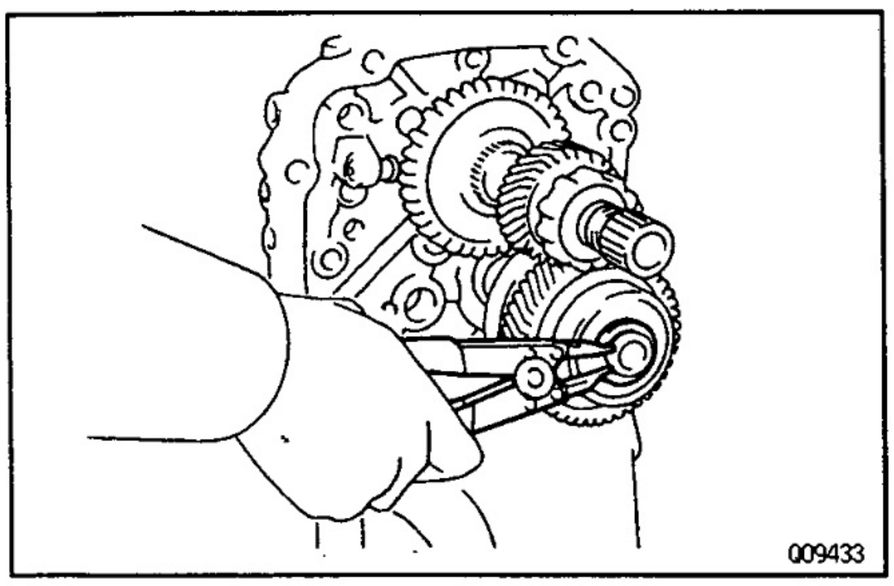
009433

14. REMOVE COUNTER REAR BEARING, SPACER, COUNTER 5TH GEAR AND NEEDLE ROLLER BEARING

(a) Using a snap ring expander, remove the snap ring.
INSTALLATION HINT: Select a snap ring that will allow minimum axial play.

Mark	Thickness mm (in.)
1	1.90–1.95 (0.0748–0.0768)
2	1.96–2.01 (0.0772–0.0791)
3	2.02–2.07 (0.0795–0.0815)
4	2.08–2.13 (0.0819–0.0839)
5	2.14–2.19 (0.0843–0.0862)
6	2.20–2.25 (0.0866–0.0886)
7	2.26–2.31 (0.0890–0.0909)

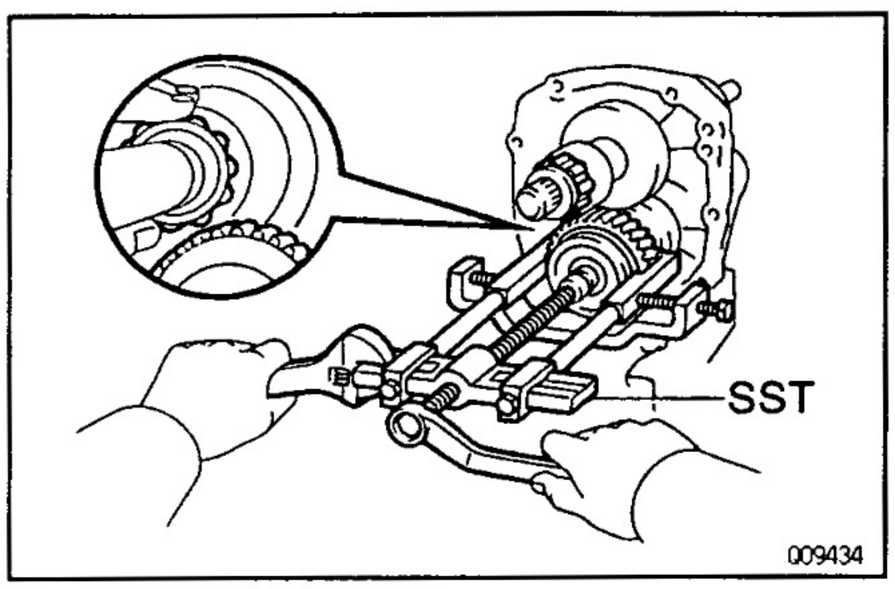

(b) Using SST, remove the rear bearing, spacer, 5th gear and bearing.
SST 09950–40010
REMOVAL NOTICE: Be careful not to catch the output shaft rear bearing roller on the counter 5th gear.

(c) Remove the spacer.

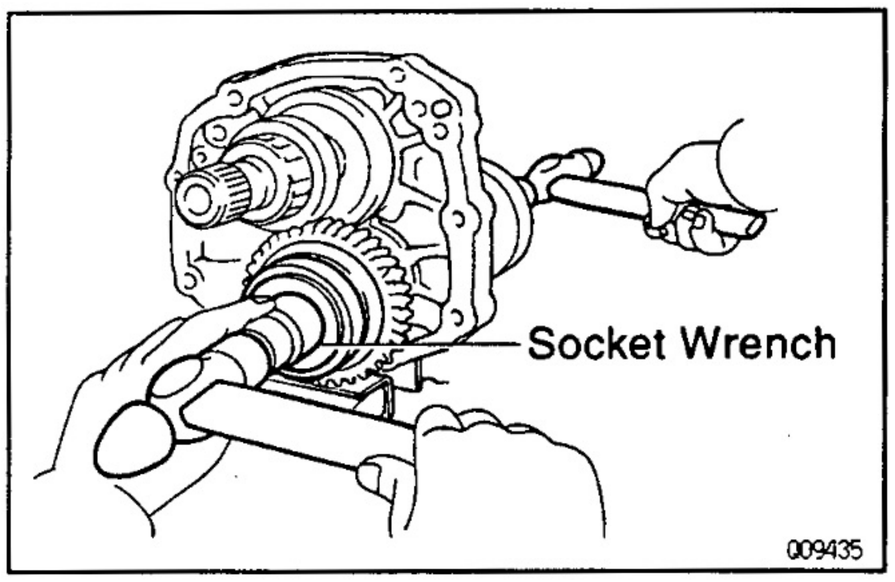

INSTALLATION HINT:
- Install the counter 5th gear with the 5th gear gaps aligned with the synchronizer cone ring pin.
- Using a socket wrench and hammer, drive in the bearing.
- When driving in the bearing, support the counter shaft in front with a 3–5 lb hammer or equivalent.

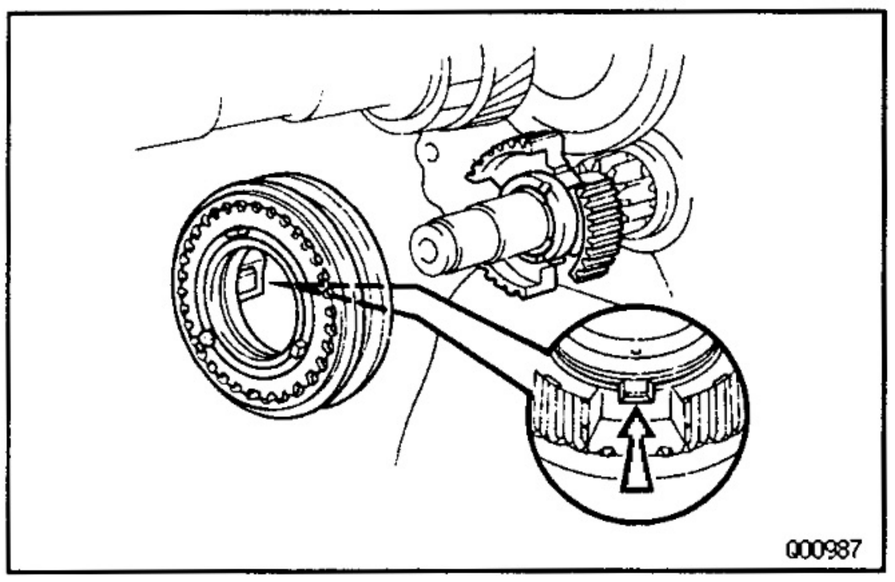

15. REMOVE SYNCHRONIZER RING ASSEMBLY WITH NO.3 HUB SLEEVE AND NO.3 CLUTCH HUB

(a) Remove the synchronizer ring assembly with the No.3 hub sleeve from the No.3 clutch hub.

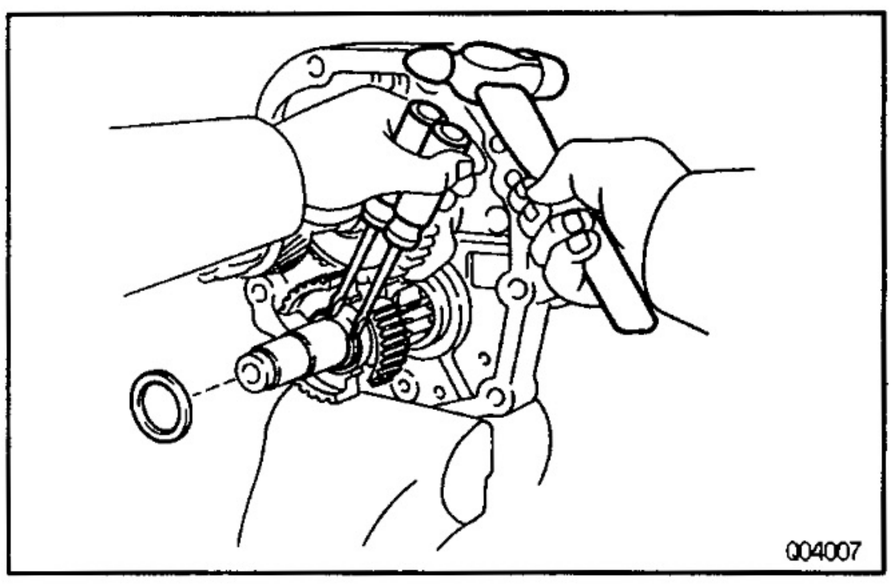

(b) Remove the spacer.

(c) Using 2 screwdrivers and a hammer, tap out the snap ring.
INSTALLATION HINT: Select a snap ring that will allow minimum axial play.

Mark	Thickness mm (in.)
2	2.06–2.11 (0.0811–0.0831)
3	2.12–2.17 (0.0835–0.0854)
4	2.18–2.23 (0.0858–0.0878)
5	2.24–2.29 (0.0882–0.0902)

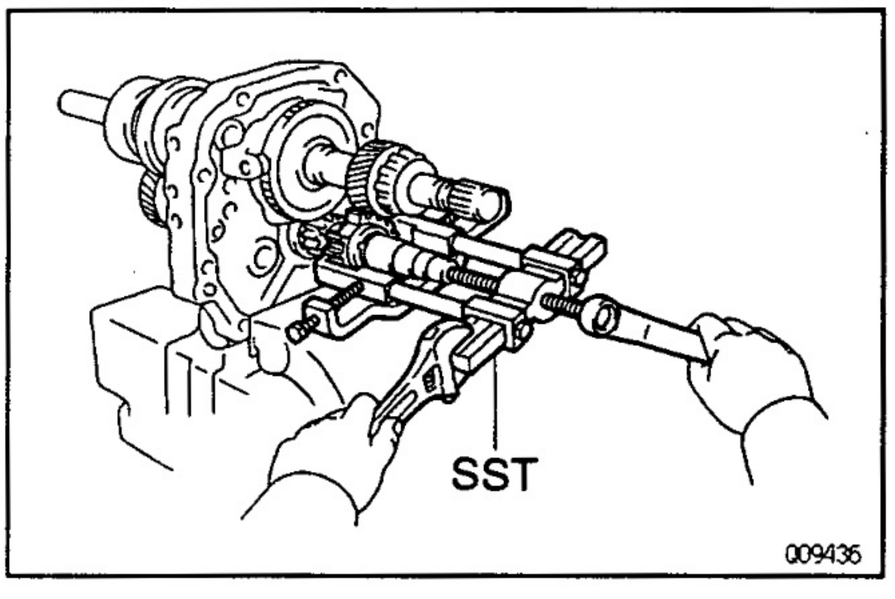

(d) Using SST, remove the No.3 clutch hub.
SST 09950–40010

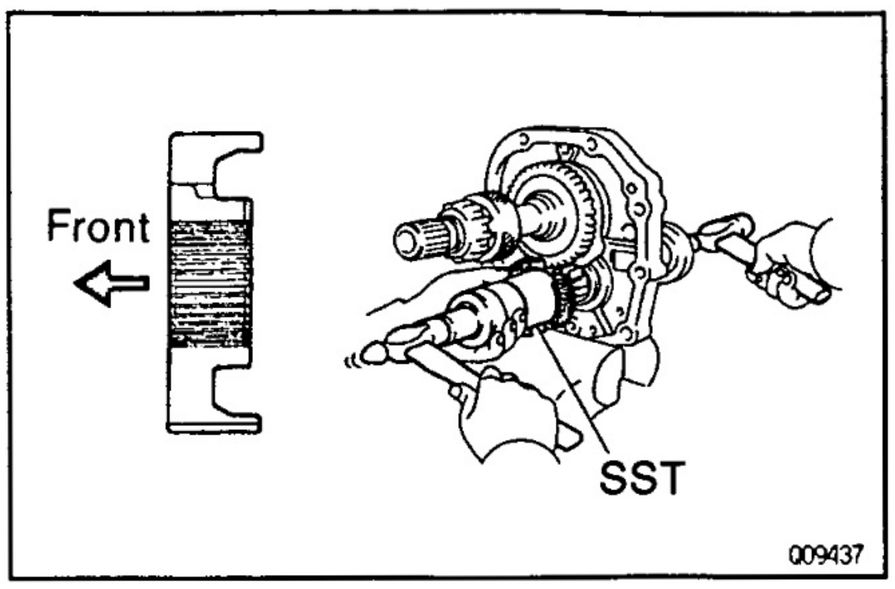

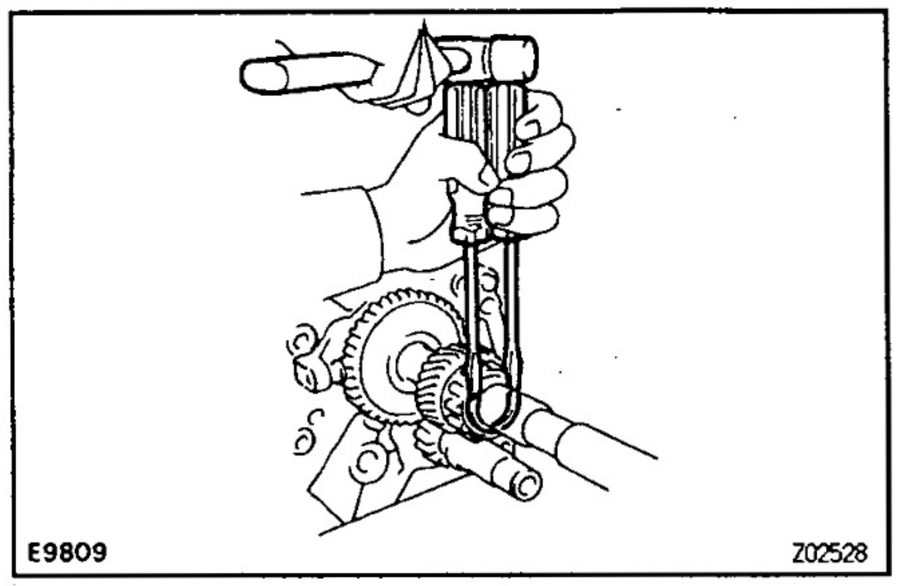

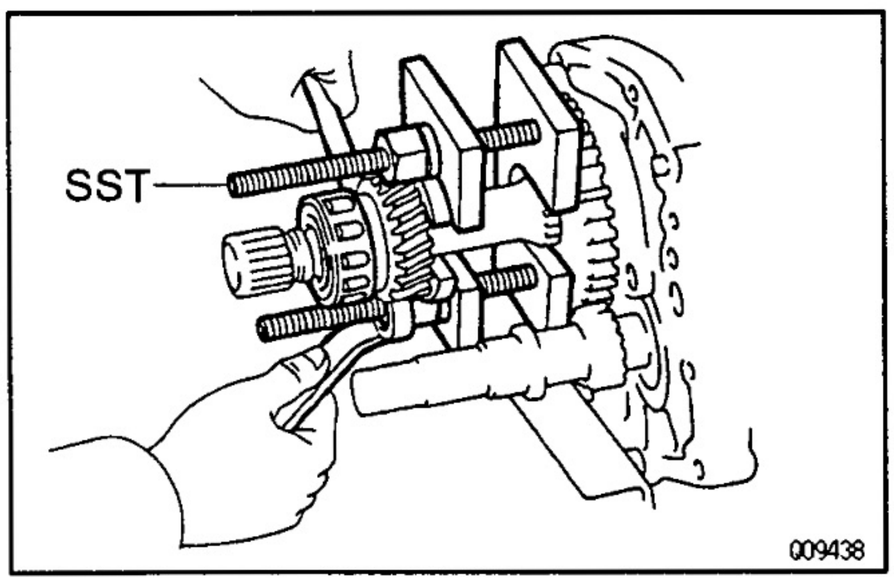

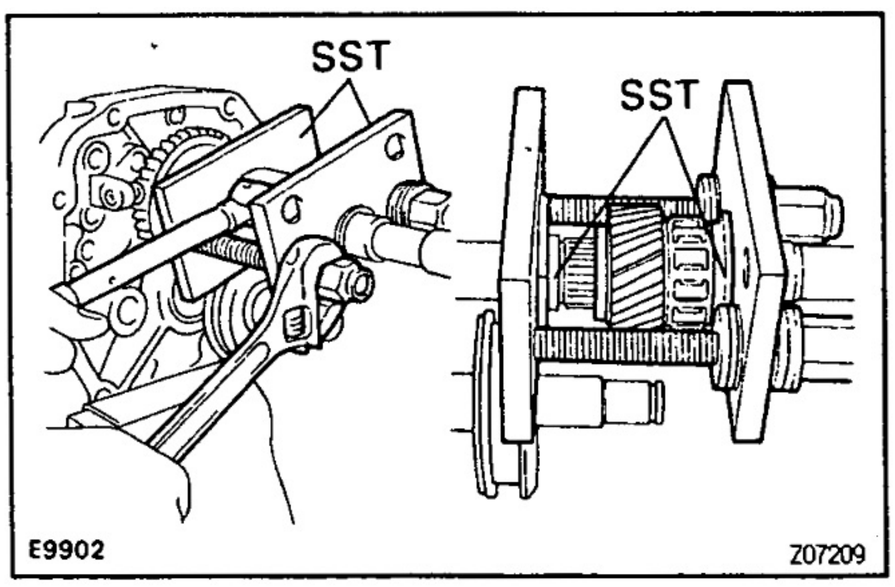

INSTALLATION HINT:

- Using SST and a hammer, drive in the No.3 clutch hub.

SST 09316–60011 (09316–00011, 09316–00071)

- When installing the No.3 clutch hub, support the counter shaft in front with a 3–5 lb hammer or equivalent.

16. REMOVE REAR MAGNET

17. REMOVE OUTPUT SHAFT REAR BEARING AND 5TH GEAR

(a) Using 2 screwdrivers and a hammer, tap out the snap ring.

INSTALLATION HINT: Select a snap ring that will allow minimum axial play.

Mark	Thickness mm (in.)
8	2.31–2.36 (0.0909–0.0929)
9	2.37–2.42 (0.0933–0.0953)
10	2.43–2.48 (0.0957–0.0976)
11	2.49–2.54 (0.0980–0.1000)
12	2.55–2.60 (0.1004–0.1024)
13	2.61–2.66 (0.1028–0.1047)
14	2.68–2.73 (0.1055–0.1075)
15	2.74–2.79 (0.1079–0.1098)

(b) Using SST, remove the rear bearing and 5th gear.

SST 09312–20011 (09313–00030, 09313–00040, 09313–00050)

INSTALLATION HINT: Using SST, install the 5th gear and rear bearing.

SST 09312–20011 (09313–00010, 09313–00030, 09313–00040, 09313–00050)

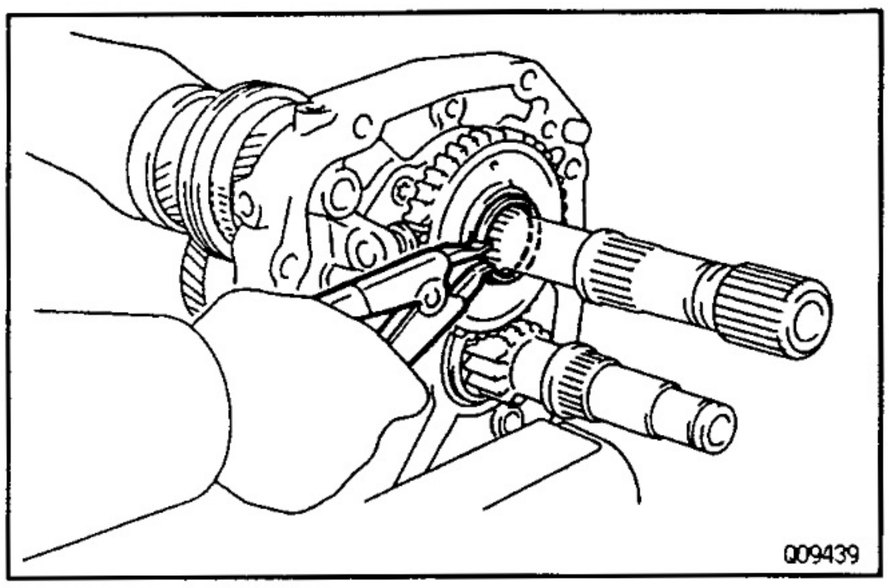

MT

18. REMOVE REVERSE GEAR

(a) Using a snap ring expander, remove the snap ring.
INSTALLATION HINT: Select a snap ring that will allow minimum axial play.

Mark	Thickness mm (in.)
5	2.25–2.30 (0.0886–0.0906)
11	2.30–2.35 (0.0906–0.0925)
12	2.35–2.40 (0.0925–0.0945)
13	2.40–2.45 (0.0945–0.0965)
14	2.45–2.50 (0.0965–0.0984)
15	2.50–2.55 (0.0984–0.1004)
16	2.55–2.60 (0.1004–0.1024)
17	2.61–2.66 (0.1028–0.1047)
18	2.67–2.72 (0.1051–0.1071)
19	2.73–2.78 (0.1075–0.1094)
20	2.79–2.84 (0.1098–0.1118)
21	2.85–2.90 (0.1122–0.1142)
22	2.91–2.96 (0.1146–0.1165)
23	2.97–3.02 (0.1169–0.1189)

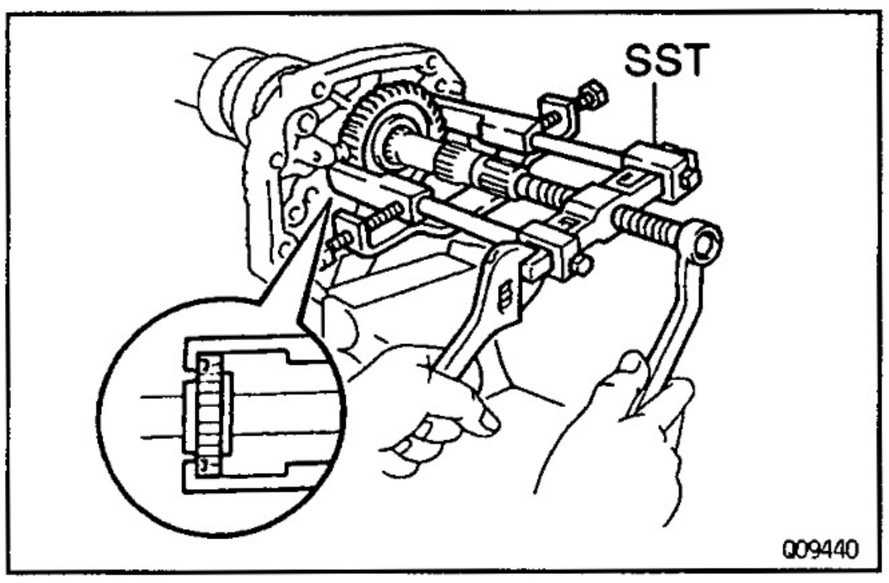

(b) Using SST, remove the reverse gear.
SST 09950–40010

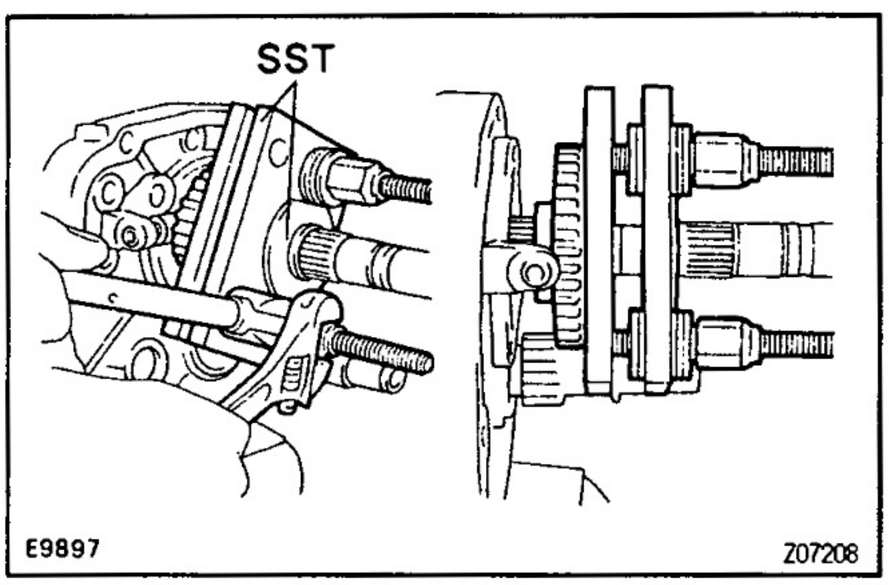

INSTALLATION HINT: Using SST, install the reverse gear.
SST 09312–20011 (09313–00030, 09313–00040, 09313–00050)

19. REMOVE REAR BEARING RETAINER

(a) Using a torx socket wrench (T40), unscrew the 4 torx screws and remove the rear bearing retainer.
Torque: 18 N·m (185 kgf·cm, 13 ft·lbf)

(b) Using a snap ring expander, remove the 2 snap rings.
INSTALLATION HINT: Be sure the snap ring is flush with the intermediate plate surface.

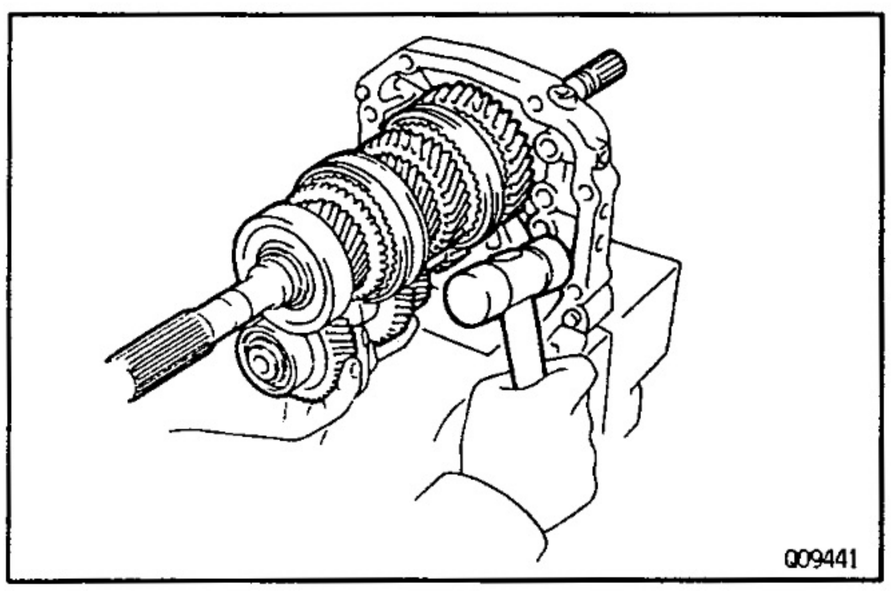

20. REMOVE OUTPUT SHAFT AND COUNTER GEAR FROM INTERMEDIATE PLATE

(a) Remove the output shaft, input shaft and counter gear as a unit from the intermediate plate by pulling on the counter gear and tapping on the intermediate plate with a plastic hammer.

(b) Remove the input shaft from the output shaft.

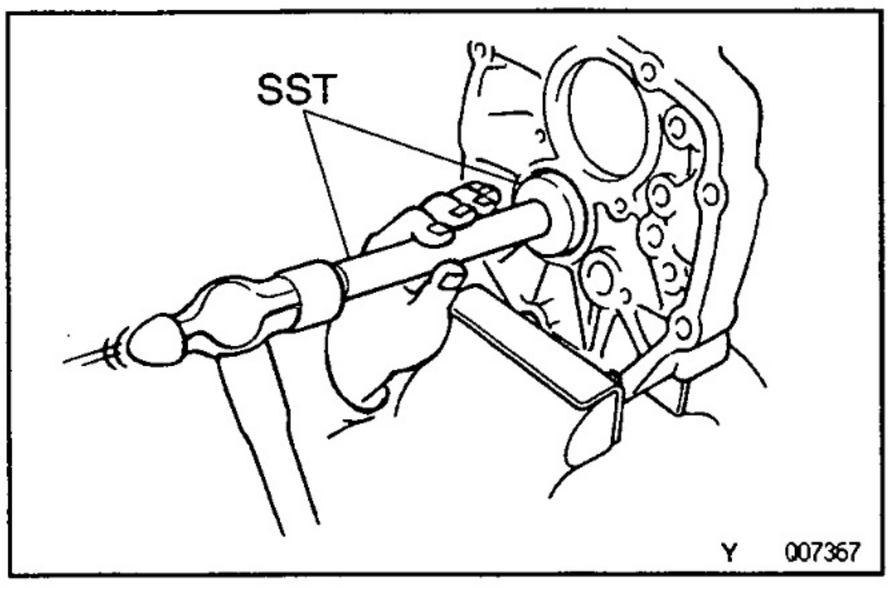

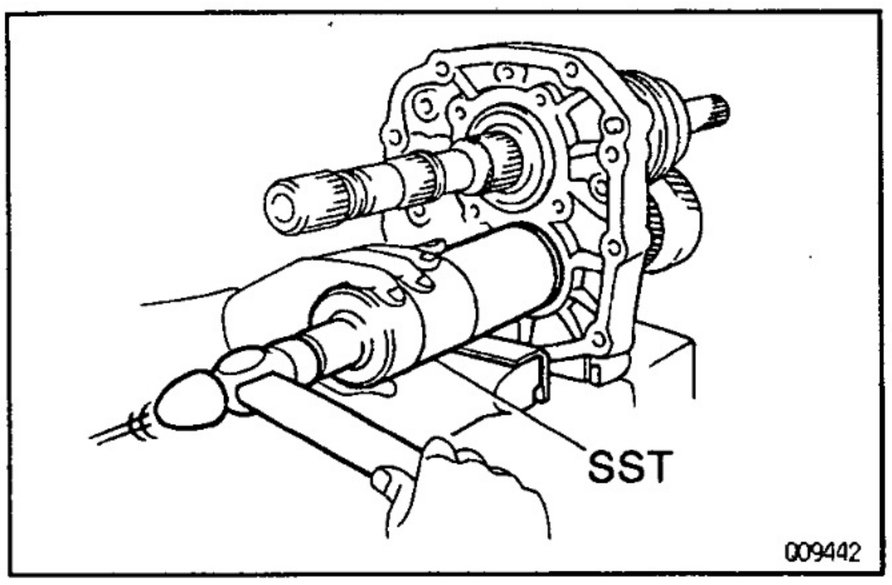

INSTALLATION HINT:

- Before installing the output shaft, use SST to remove the counter gear center bearing outer race.

SST 09950–60010 (09951–00510),
09950–70010 (09951–07150)

- Install the outer race after installing the counter gear.
- Install the output shaft into the intermediate plate by pulling on the output shaft and tapping on the intermediate plate.

INSTALLATION HINT:

- Apply gear oil to the needle roller bearing.
- Install the needle roller bearing to the input shaft.
- Install the input shaft and counter gear together.
- Using SST and a hammer, install a new counter gear center bearing outer race.

SST 09316–60011 (09316–00011)

- Be careful not to damage the bearing rollers.

MT

BASIC SUBASSEMBLY REASSEMBLY

MT0DK–02

Reassembly is in the reverse order of separation.

HINT: Coat all of the sliding and rotating surfaces with gear oil before assembly.

INPUT SHAFT
COMPONENTS

MT00F–06

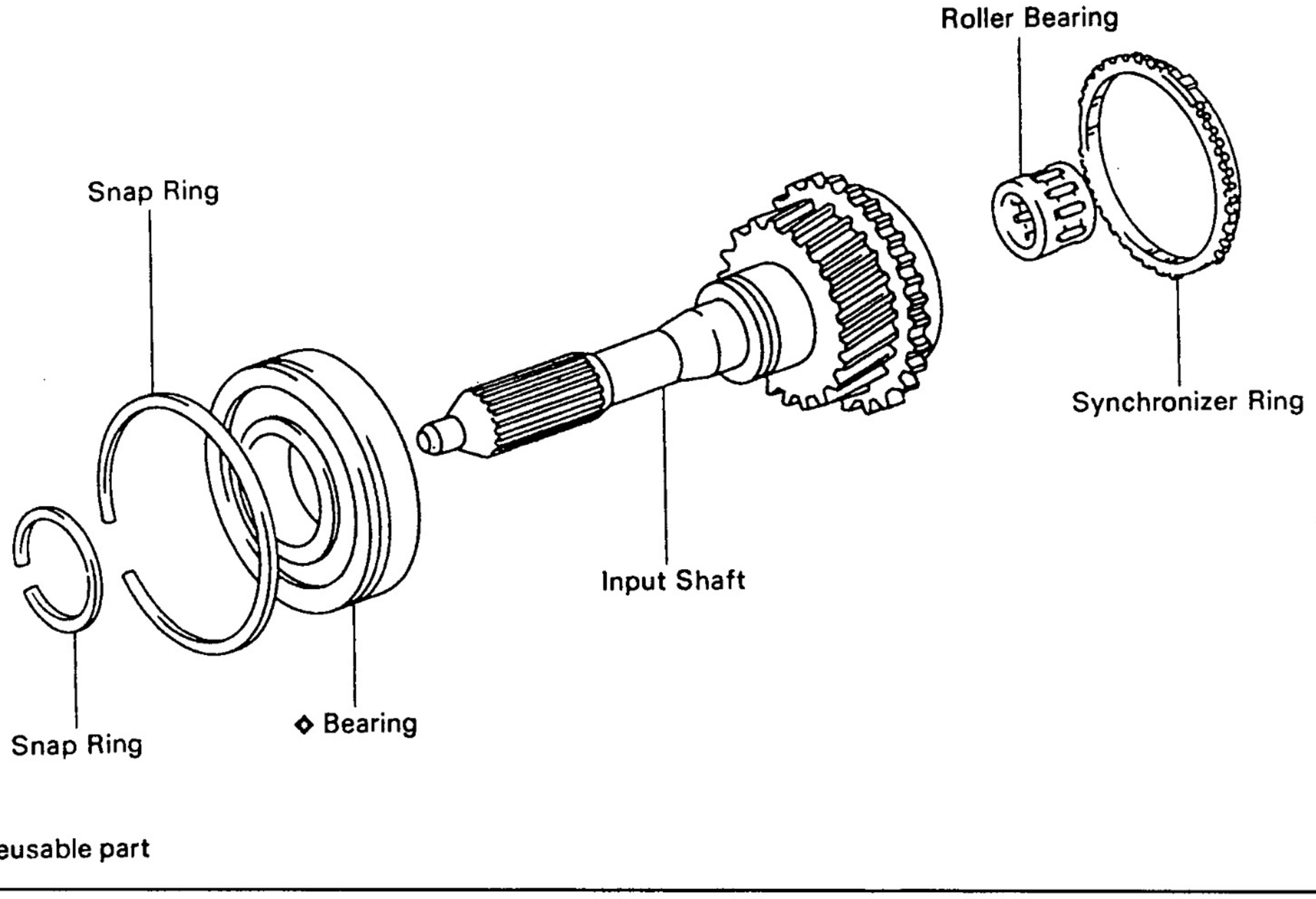

◆ Non-reusable part

000884

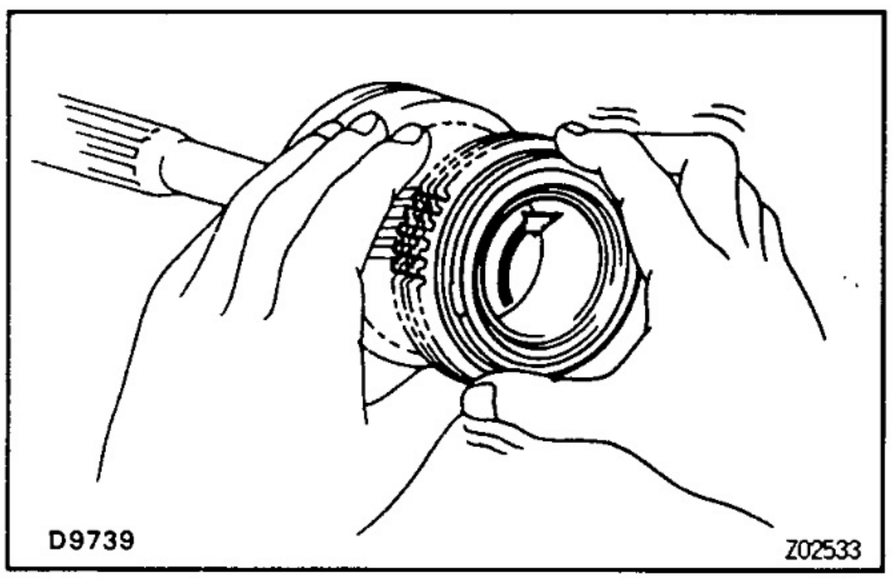

MT00G–0F

INPUT SHAFT INSPECTION

INSPECT SYNCHRONIZER RING

(a) Check for wear or damage.

(b) Check the braking effect of the synchronizer ring.
Turn the synchronizer ring in one direction while pushing it to the gear cone. Check that the ring locks.
If the braking effect is insufficient, apply a small amount of fine lapping compound between the synchronizer ring and gear cone. Lightly rub the synchronizer ring and gear cone together.
NOTICE: Ensure the fine lapping compound is completely washed off after rubbing.

(c) Check again the braking effect of the synchronizer ring.

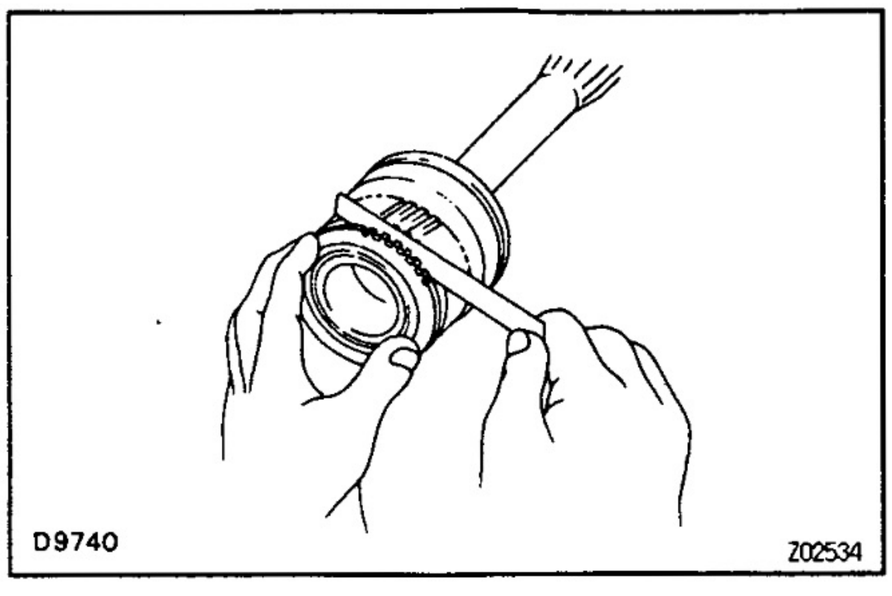

(d) Using a feeler gauge, measure the clearance between the synchronizer ring back and gear spline end.
Minimum clearance: 0.5 mm (0.020 in.)
If the clearance is less than the minimum, replace the synchronizer ring and gear cone by applying a small amount of fine lapping compound.
NOTICE: Ensure the fine lapping compound is completely washed off after rubbing.

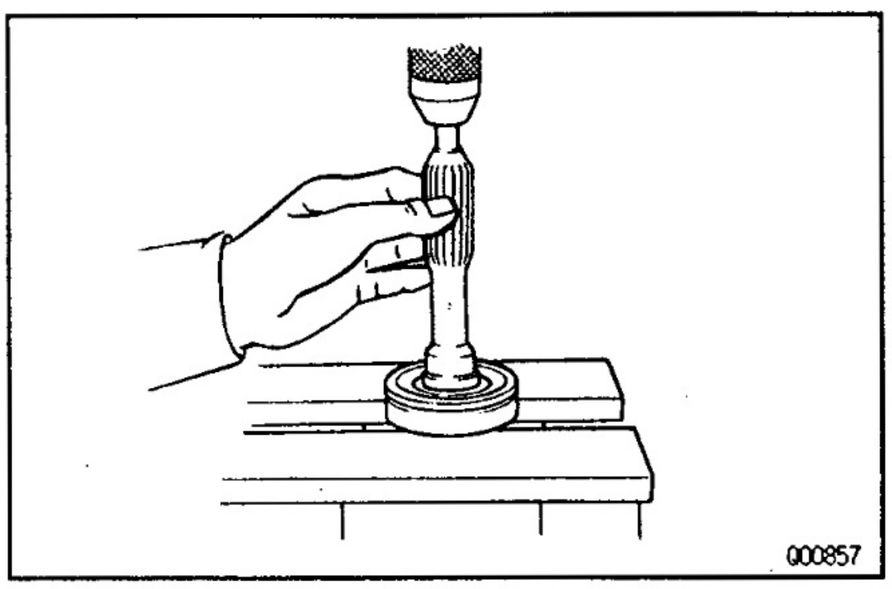

MT0AZ–03

BEARING REPLACEMENT

MT

IF NECESSARY, REPLACE INPUT SHAFT BEARING

(a) Using a snap ring expander, remove the snap ring.

(b) Using a press, remove the bearing.

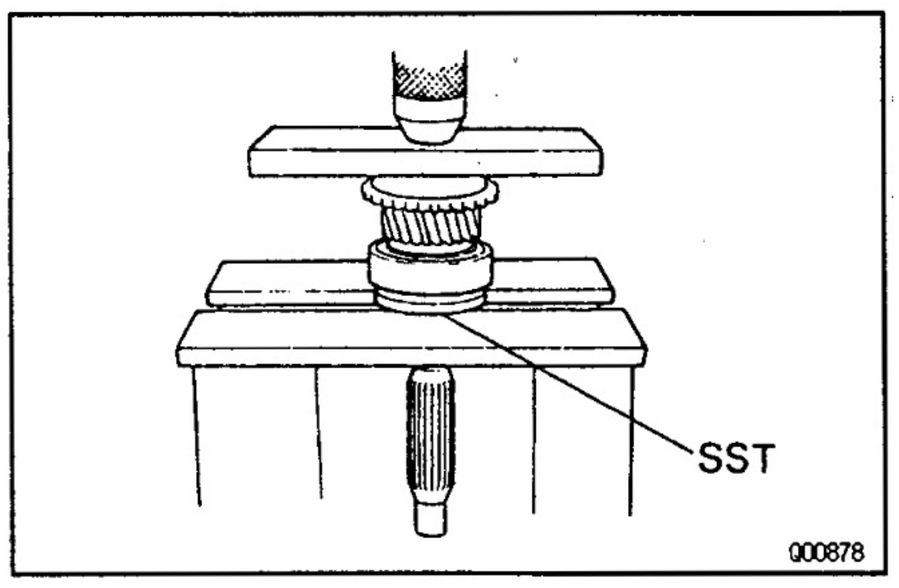

(c) Using SST and a press, install a new bearing.
SST 09506–35010

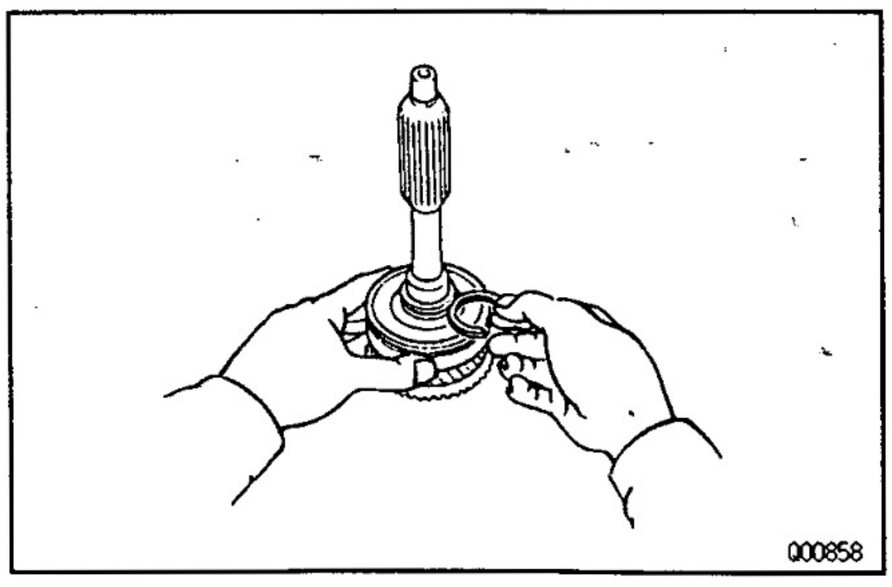

(d) Select a snap ring that will allow minimum axial play.

Mark	Thickness mm (in.)
1	2.05 – 2.10 (0.0807 – 0.0827)
2	2.10 – 2.15 (0.0827 – 0.0846)
3	2.15 – 2.20 (0.0846 – 0.0866)
4	2.20 – 2.25 (0.0866 – 0.0886)
5	2.25 – 2.30 (0.0886 – 0.0906)
11	2.30 – 2.35 (0.0906 – 0.0925)
12	2.35 – 2.40 (0.0925 – 0.0945)

(e) Using a snap ring expander, install the snap ring.

OUTPUT SHAFT
COMPONENTS

MT00J-08

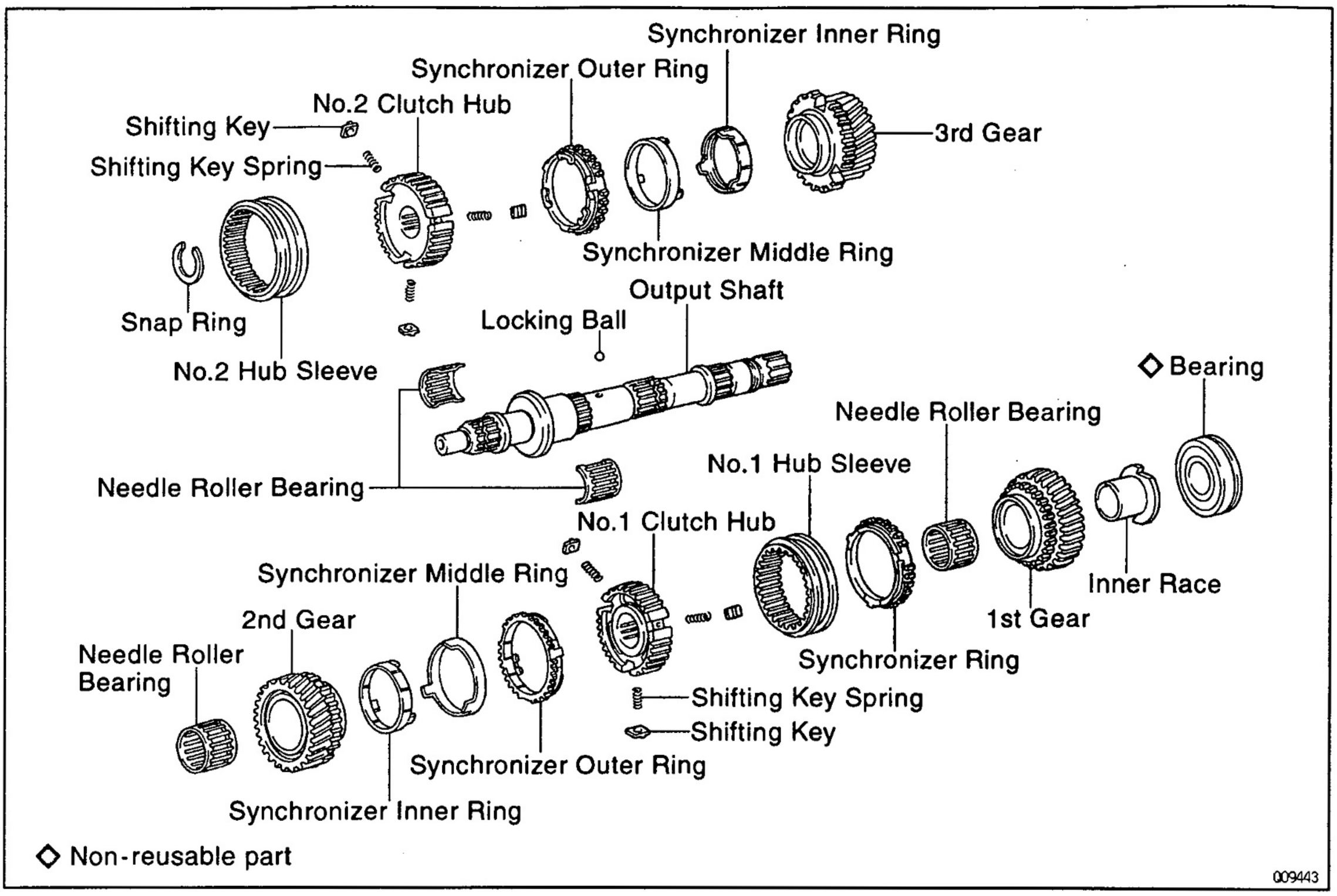

009443

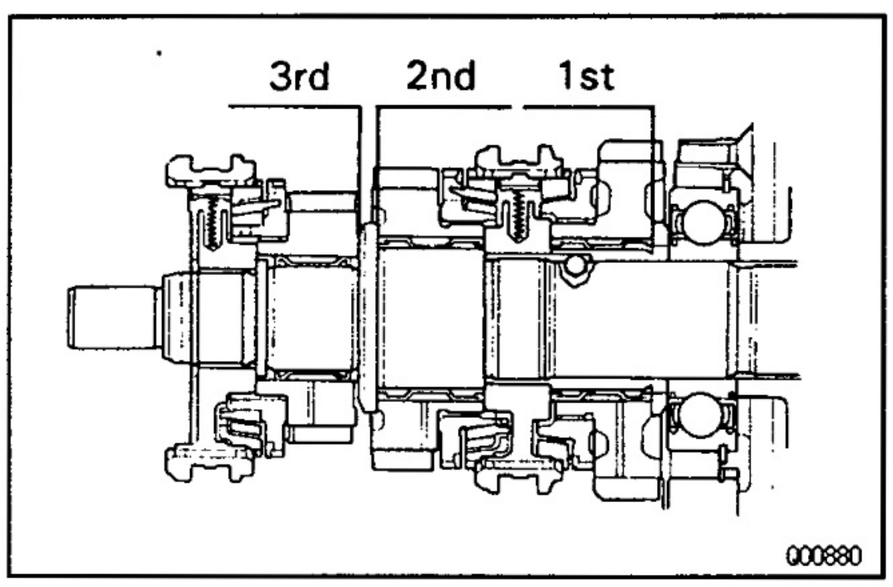

000880

MT0B0-08

OUTPUT SHAFT DISASSEMBLY

1. **INSPECT EACH GEAR THRUST CLEARANCE**
   Using a feeler gauge, measure the thrust clearance of each gear.
   Standard clearance:
   0.10—0.25 mm (0.0039—0.0098 in.)
   Maximum clearance: 0.30 mm (0.0118 in.)

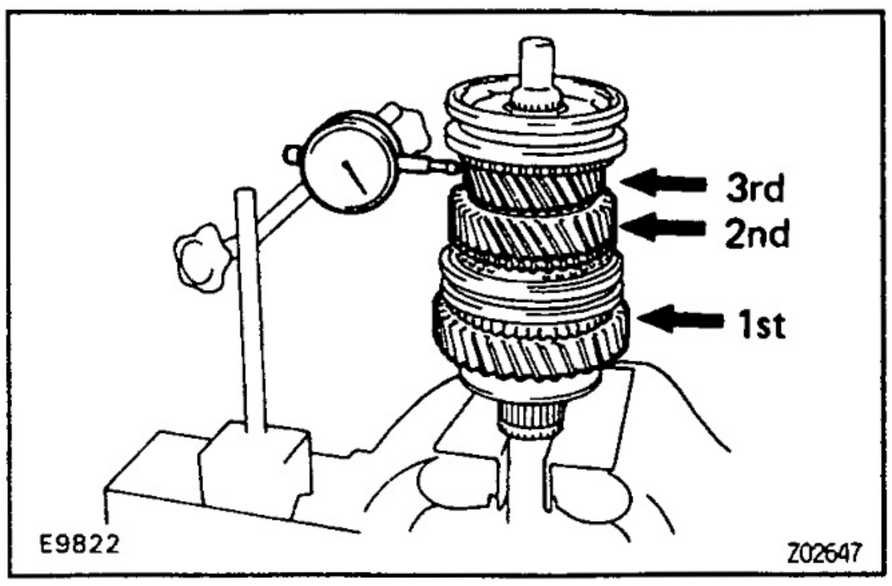

2. INSPECT EACH GEAR RADIAL CLEARANCE

Using a dial indicator, measure the radial clearance of each gear.

Standard clearance:

1st and 2nd gears:

0.009–0.060 mm (0.0004–0.0024 in.)

3rd gear: 0.015–0.066 mm (0.0006–0.0026 in.)

Maximum clearance:

1st and 2nd gears:0.150 mm (0.0059 in.)

3rd gear: 0.200 mm (0.0079 in.)

If the clearance exceeds the maximum, replace the gear, shaft or needle roller bearing.

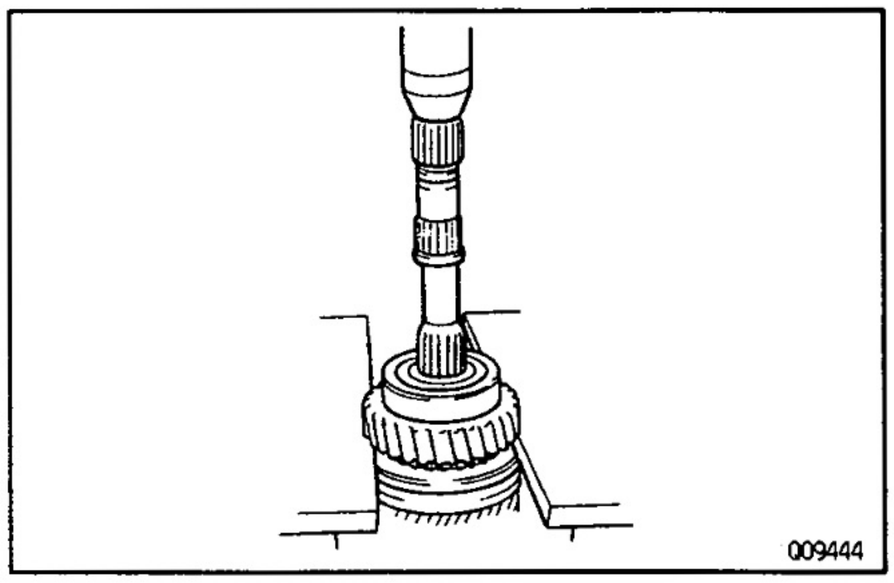

3. REMOVE OUTPUT SHAFT CENTER BEARING AND 1ST GEAR ASSEMBLY

(a) Shift the No.1 hub sleeve onto the 2nd gear.

(b) Using a press, remove the center bearing, 1st gear, needle roller bearing, inner race and synchronizer ring.

4. REMOVE LOCKING BALL ON OUTPUT SHAFT

Using a magnetic finger, remove the locking ball.

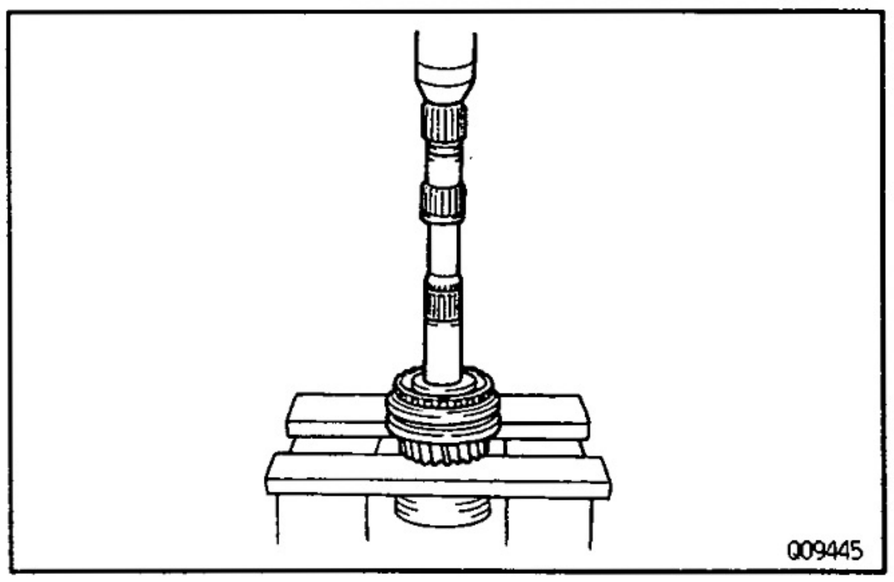

5. REMOVE NO. 1 HUB SLEEVE ASSEMBLY, 2 ND GEAR AND NEEDLE ROLLER BEARING

Using a press, remove the parts from the shaft as an assembly.

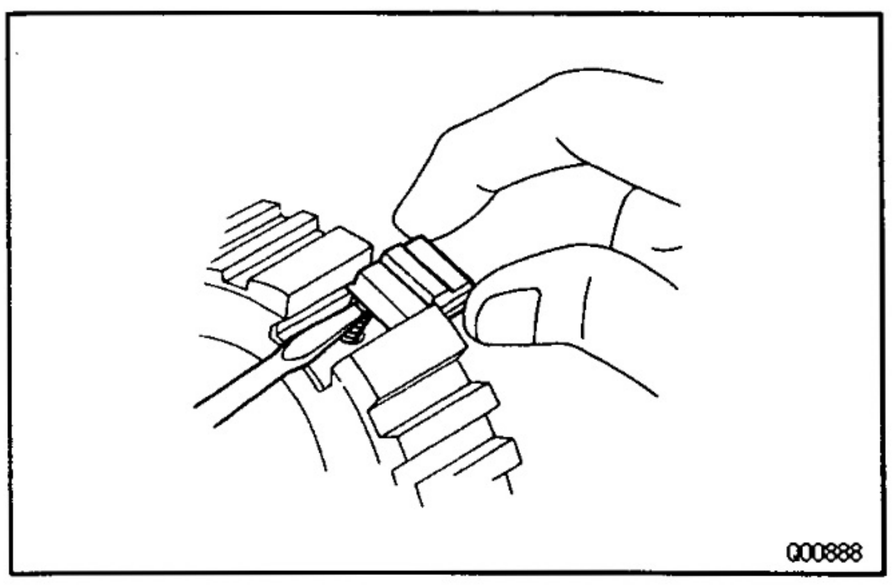

6. REMOVE NO.1 HUB SLEEVE, SHIFTING KEY AND SPRING FROM NO. 1 CLUTCH HUB

(a) Remove the No.1 hub sleeve from the No.1 clutch hub.

(b) Push the shifting key spring with a screwdriver, remove the 3 shifting keys and key springs.

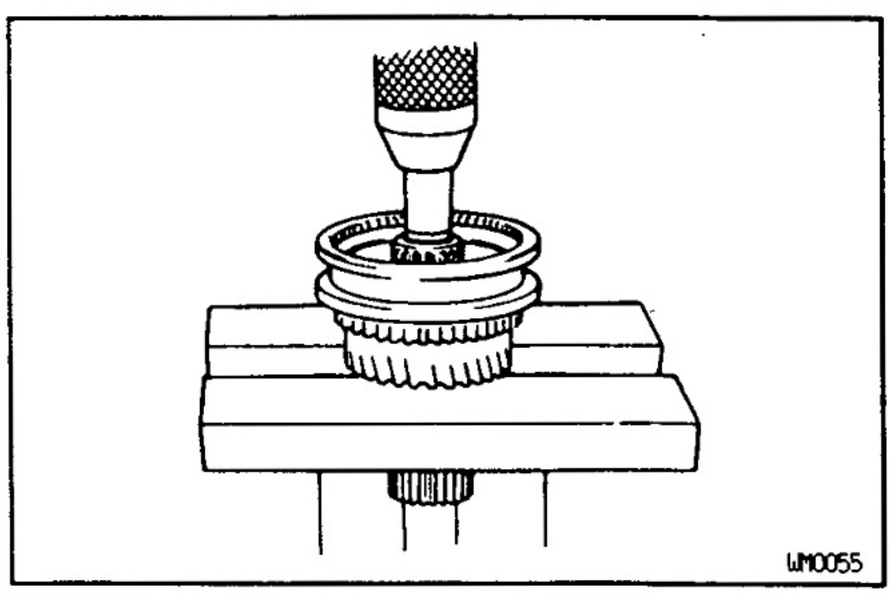

7. REMOVE NO.2 HUB SLEEVE ASSEMBLY AND 3RD GEAR

(a) Using a snap ring expander, remove the snap ring.

(b) Using a press, remove the No. 2 hub sleeve, synchronizer ring and 3rd gear.

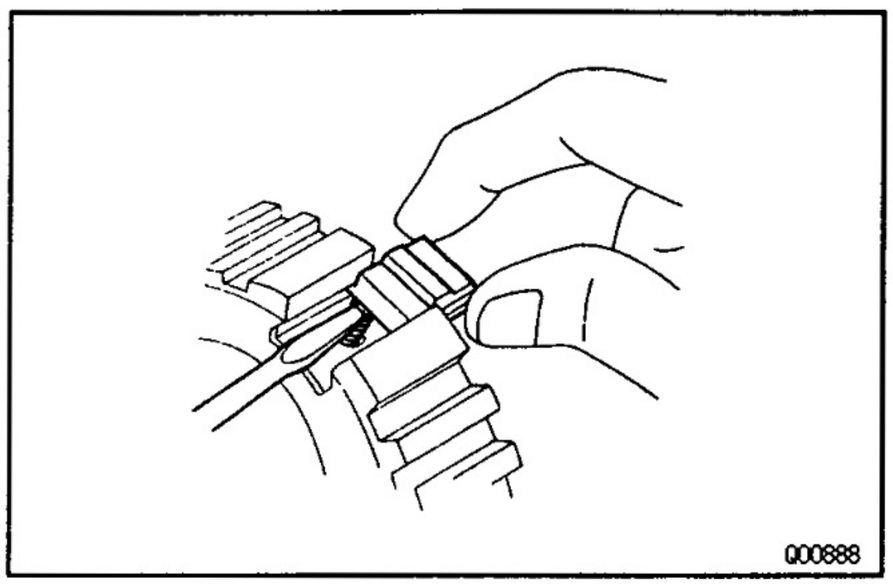

8. REMOVE NO.2 HUB SLEEVE, SHIFTING KEY AND SPRING FROM NO.2 CLUTCH HUB

(a) Remove the No.2 hub sleeve from the No.2 clutch hub.

(b) Push the shifting key spring with a screwdriver, remove the 3 shifting keys and key springs.

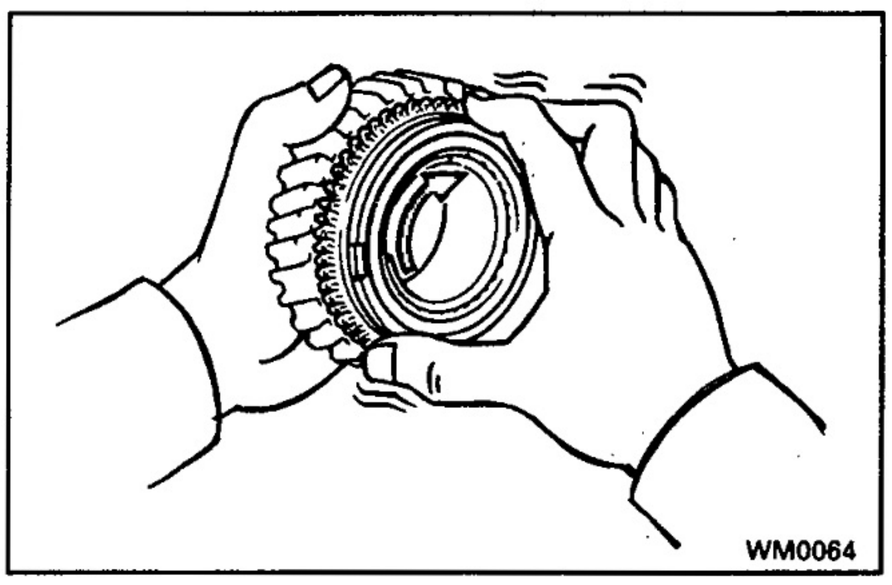

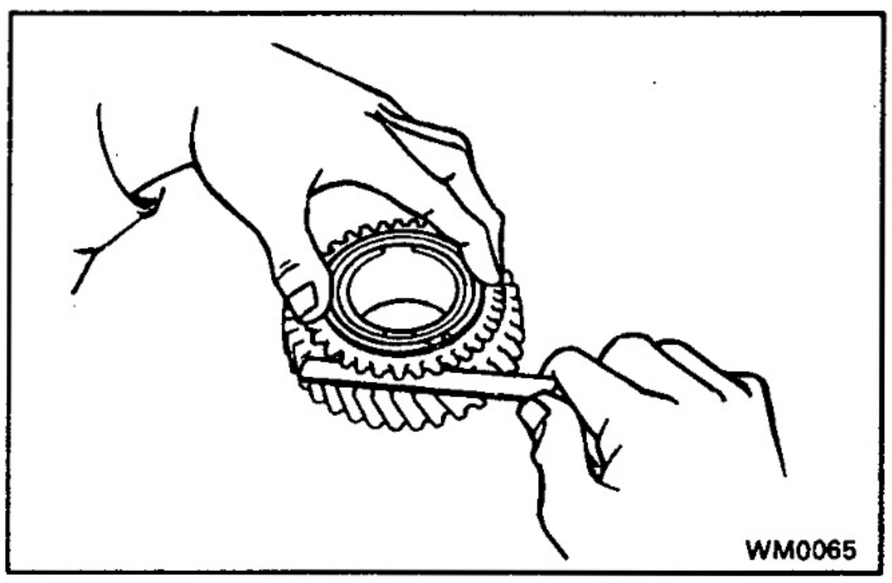

OUTPUT SHAFT COMPONENT PARTS INSPECTION

1. INSPECT 1ST GEAR SYNCHRONIZER RING

(a) Check for wear or damage.

(b) Check the braking effect of the synchronizer ring.
Turn the synchronizer ring in one direction while pushing it to the gear cone. Check that the ring locks.
If the braking effect is insufficient, apply a small amount of fine lapping compound between the synchronizer ring and gear cone. Lightly rub the synchronizer ring and gear cone together.
NOTICE: Ensure the fine lapping compound is completely washed off after rubbing.

(c) Check again the braking effect of the synchronizer ring.

(d) Using a feeler gauge, measure the clearance between the synchronizer ring back and gear spline end.
Minimum clearance: 0.5 mm (0.020 in.)
If the clearance is less than the minimum, replace the synchronizer ring and gear cone by applying a small amount of fine lapping compound.
NOTICE: Ensure the fine lapping compound is completely washed off after rubbing.

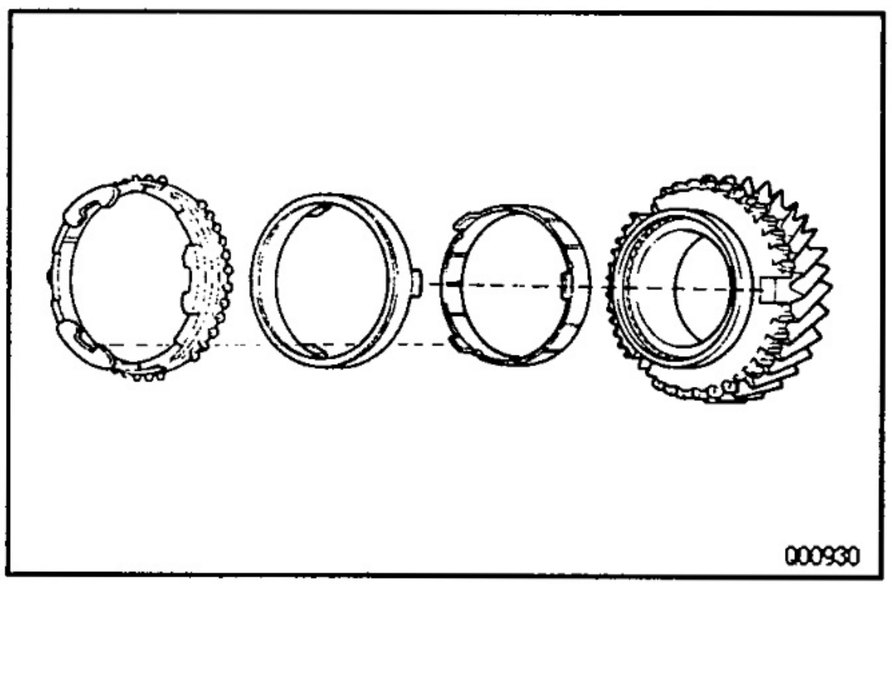

2. INSPECT 2ND AND 3RD GEARS SYNCHRONIZER RING

(a) Check for wear or damage.

(b) Install the synchronizer inner ring, middle ring and outer ring to each gear.

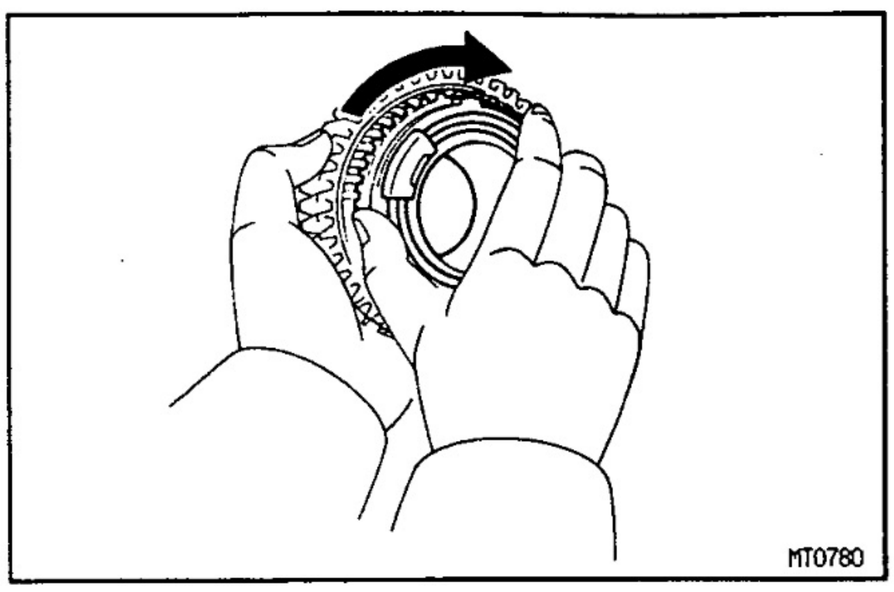

(c) Check the braking effect of the synchronizer ring. Turn the synchronizer ring in one direction while pushing it to the gear cone. Check that the ring locks.
If it does not lock, replace the synchronizer ring.

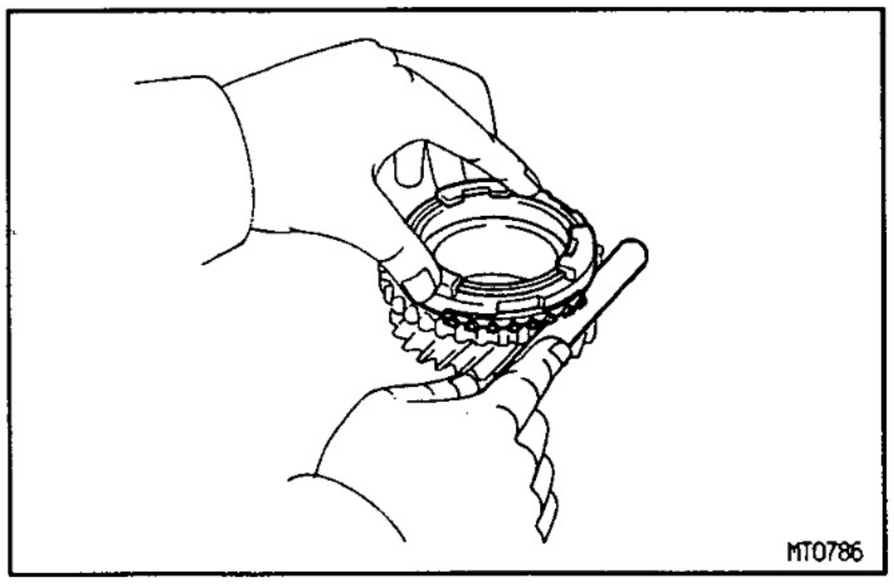

(d) Using a feeler gauge, measure the clearance between the synchronizer ring back and the gear spline end.
Minimum clearance: 0.7 mm (0.028 in.)
If the clearance is less than the minimum, replace the synchronizer ring.

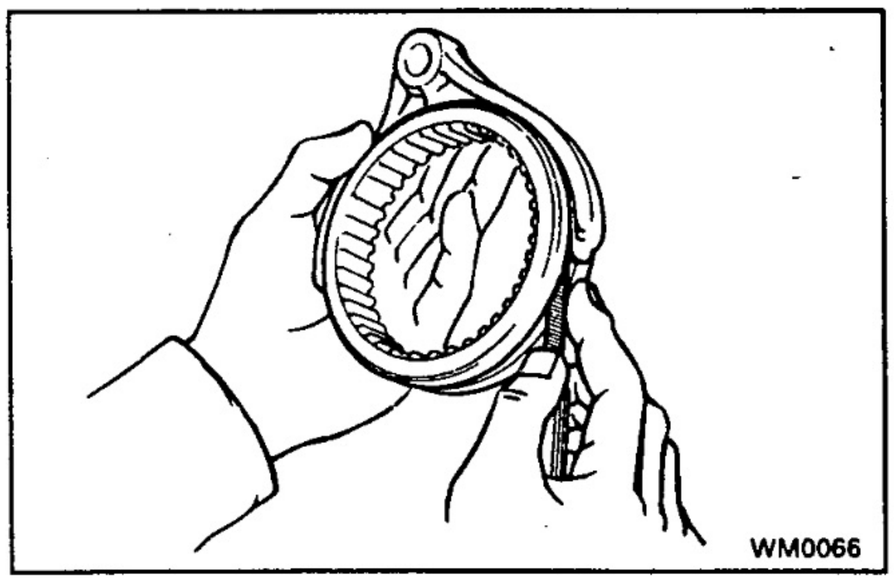

3. INSPECT SHIFT FORK AND HUB SLEEVE CLEARANCE

Using a feeler gauge, measure the clearance between the hub sleeves and shift forks.
Maximum clearance: 1.0 mm (0.039 in.)
If the clearance exceeds the maximum, replace the shift fork or hub sleeve.

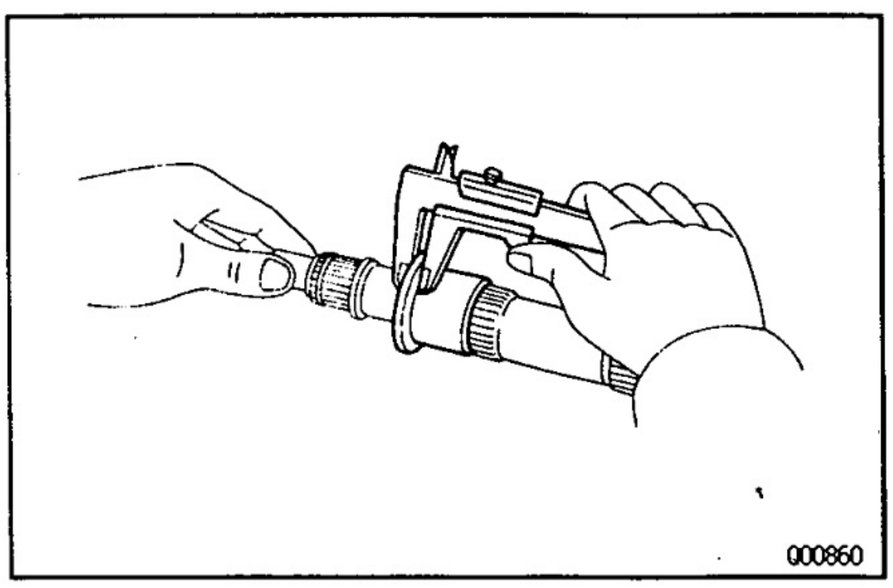

4. INSPECT OUTPUT SHAFT AND INNER RACE

(a) Using vernier calipers, measure the output shaft flange thickness.
Minimum thickness: 5.60 mm (0.2205 in.)
If the thickness is less than the minimum, replace the output shaft.

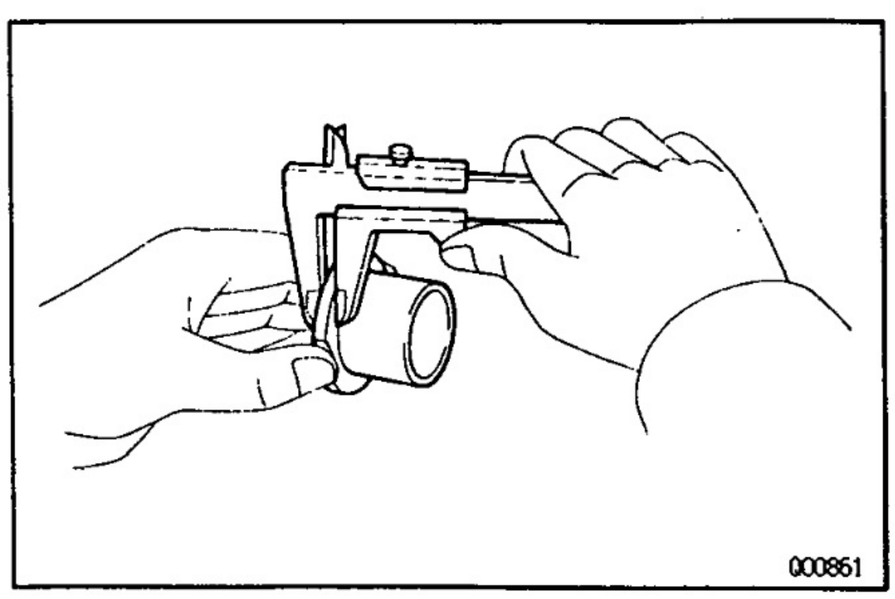

(b) Using vernier calipers, measure the inner race flange thickness.
Minimum thickness: 4.78 mm (0.1881 in.)
If the thickness is less than the minimum, replace the inner race.

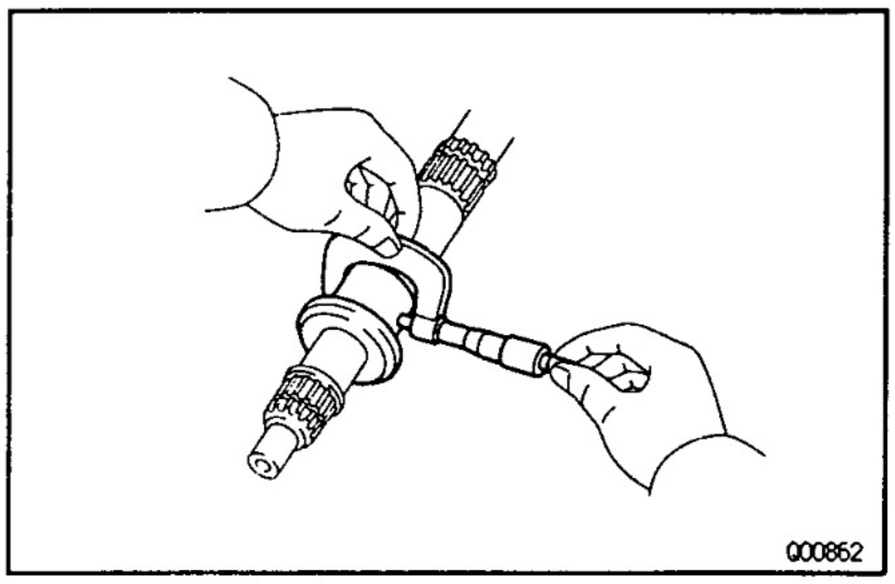
Q00862

(c) Using a micrometer, measure the outer diameter of the output shaft journal.
Minimum diameter:
2nd gear: 42.975 mm (1.6919 in.)
3rd gear: 31.969 mm (1.2586 in.)
If the outer diameter is less than the minimum, replace the output shaft.

MT

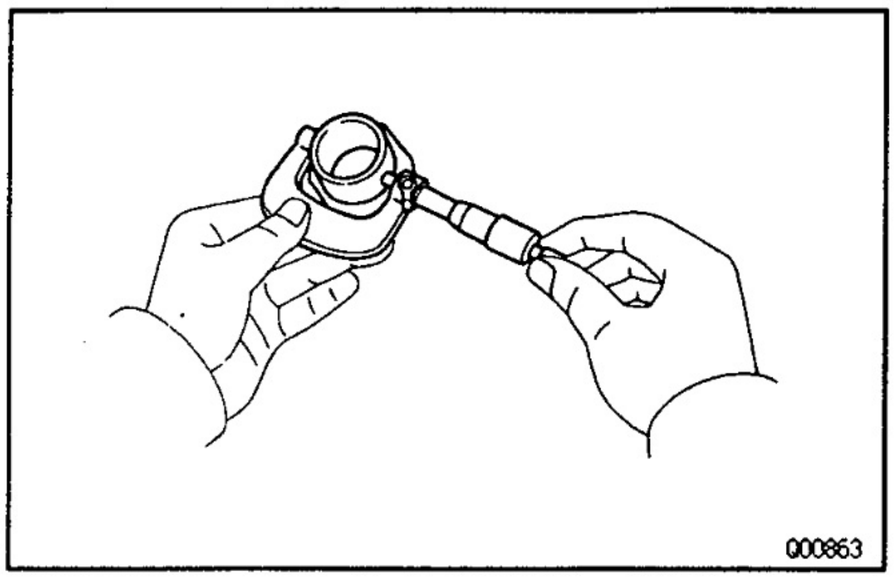
000863

(d) Using a micrometer, measure the outer diameter of the inner race.
Minimum diameter: 42.975 mm (1.6919 in.)
If the outer diameter is less than the minimum, replace the inner race.

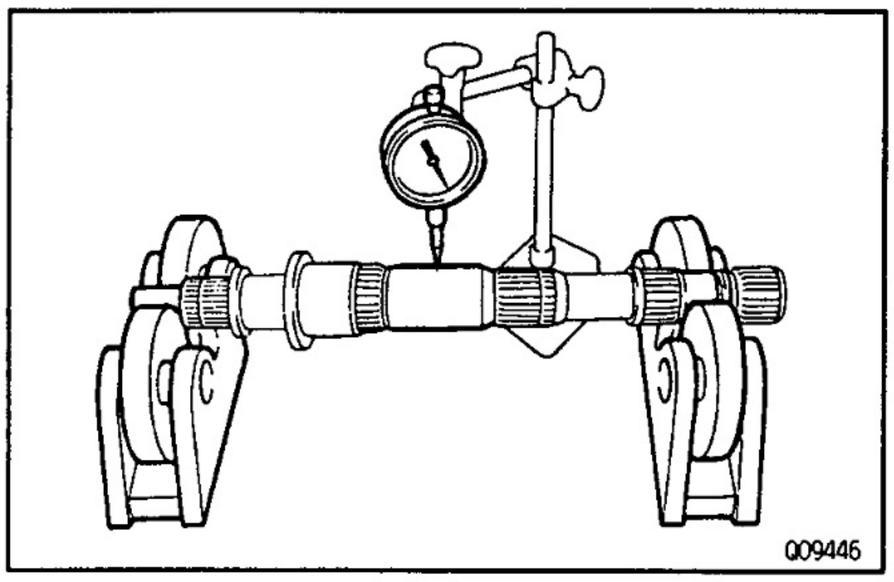
Q09446

(e) Using a dial indicator, check the shaft runout.
Maximum runout: 0.06 mm (0.0024 in.)
If the runout exceeds the maximum, replace the output shaft.

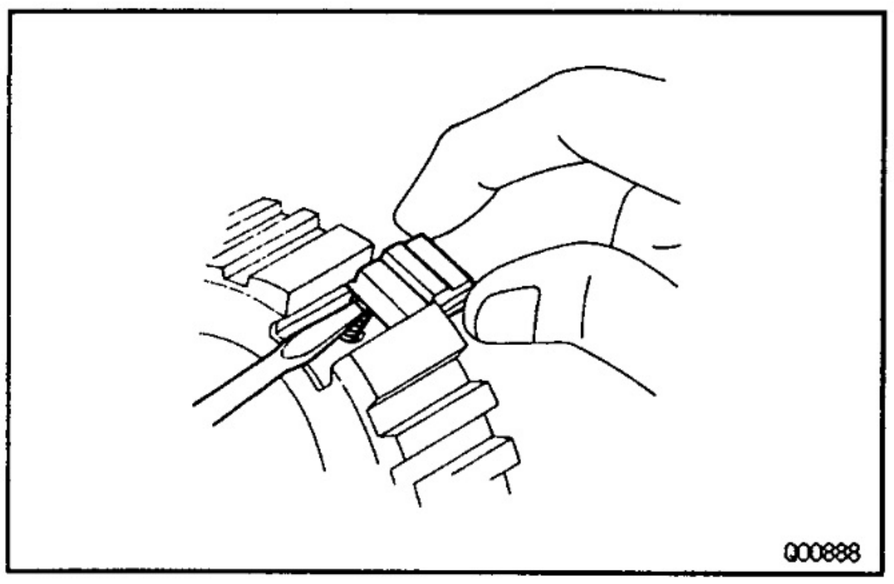
Q00888

OUTPUT SHAFT ASSEMBLY

MT081-07

HINT: Coat all of the sliding and rotating surfaces with gear oil before assembly.

1. INSTALL NO.1 AND NO.2 CLUTCH HUBS INTO HUB SLEEVE

(a) Install the 3 shifting key springs to the clutch hub.
(b) While pushing the shifting key spring with a screwdriver, install the 3 shifting keys.

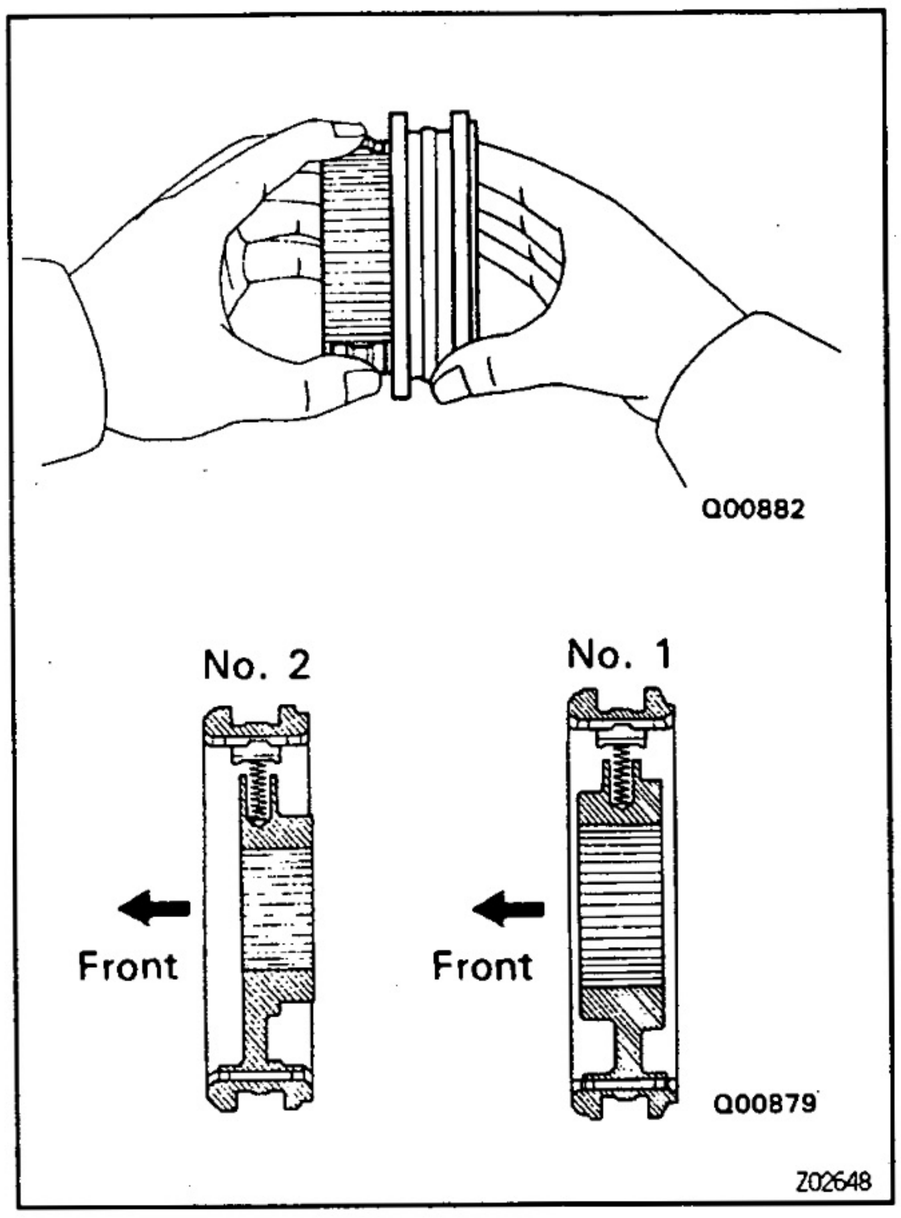

(c) While pushing the 3 shifting keys, install the clutch hub to the hub sleeve, as shown.

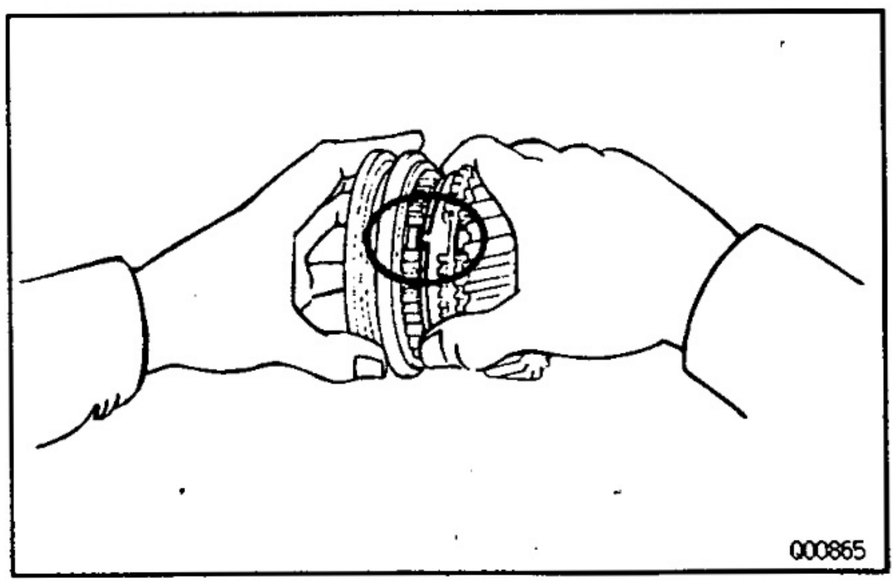

2. INSTALL 3RD GEAR AND NO.2 CLUTCH HUB ON OUTPUT SHAFT

(a) Apply gear oil to the shaft.

(b) Place the synchronizer ring on the gear and align the ring slots with the shifting keys.

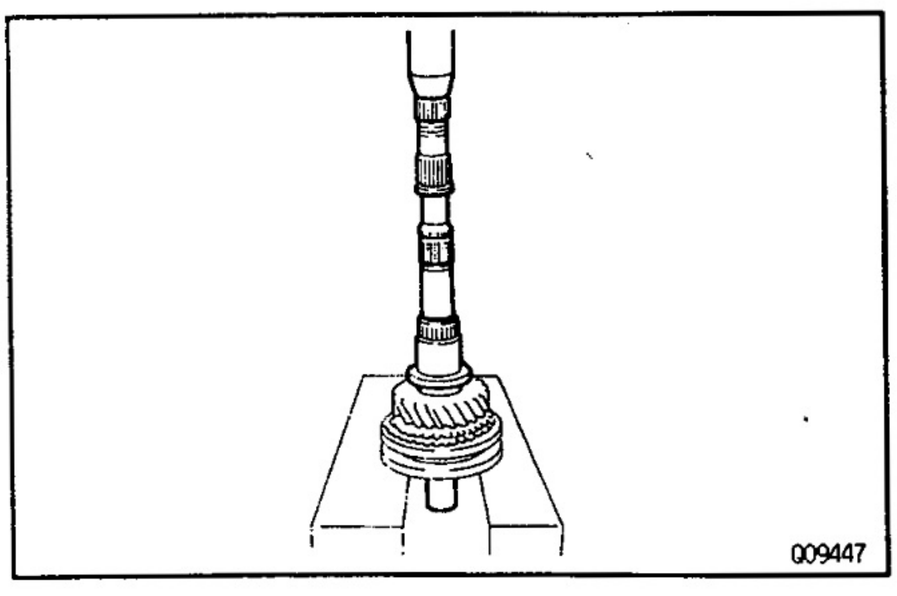

(c) Using a press, install the 3rd gear and No.2 clutch hub.

3. INSTALL SNAP RING

(a) Select a snap ring that will allow minimum axial play.

Mark	Thickness mm (in.)
C–1	1.75–1.80 (0.0689–0.0709)
D	1.80–1.85 (0.0709–0.0728)
11	1.86–1.91 (0.0732–0.0752)
12	1.92–1.97 (0.0756–0.0776)
13	1.98–2.03 (0.0780–0.0799)
14	2.04–2.09 (0.0803–0.0823)
15	2.10–2.15 (0.0827–0.0846)

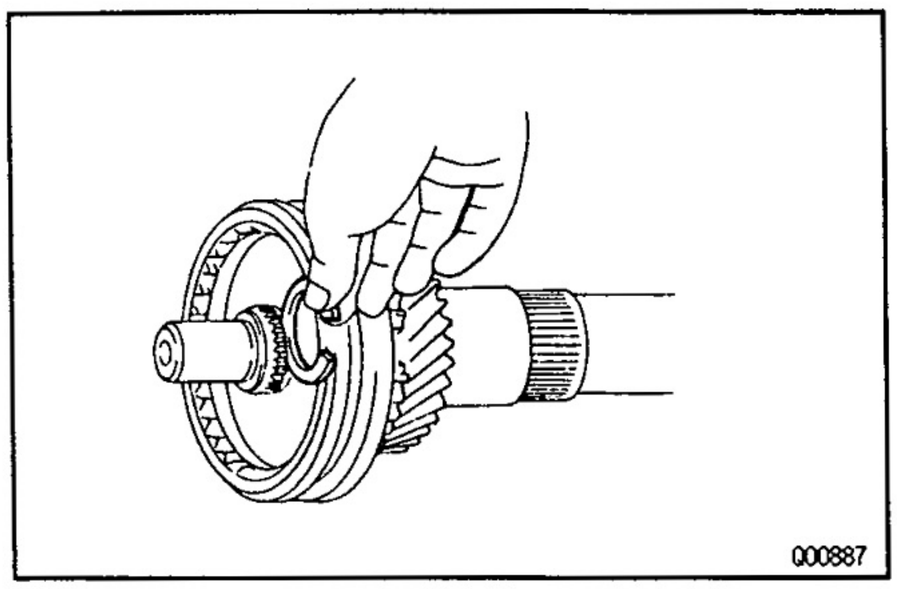

(b) Using a snap ring expander, install the snap ring.

4. INSPECT 3RD GEAR THRUST CLEARANCE
(See page MT–22)

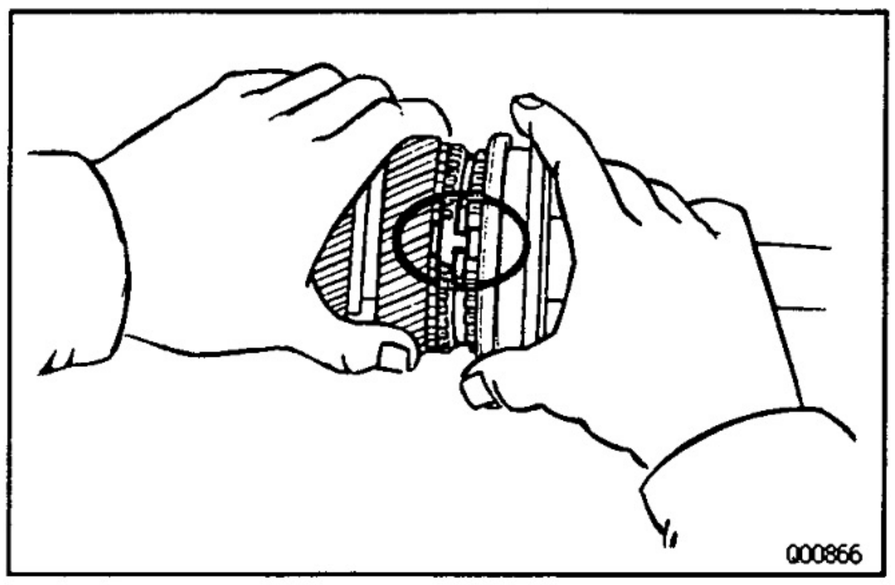

5. INSTALL 2ND GEAR AND NO.1 CLUTCH HUB

(a) Apply gear oil to the shaft and needle roller bearing.
(b) Place the synchronizer ring on the gear and align the ring slots with the shifting keys.
(c) Install the needle roller bearing in the 2nd gear.

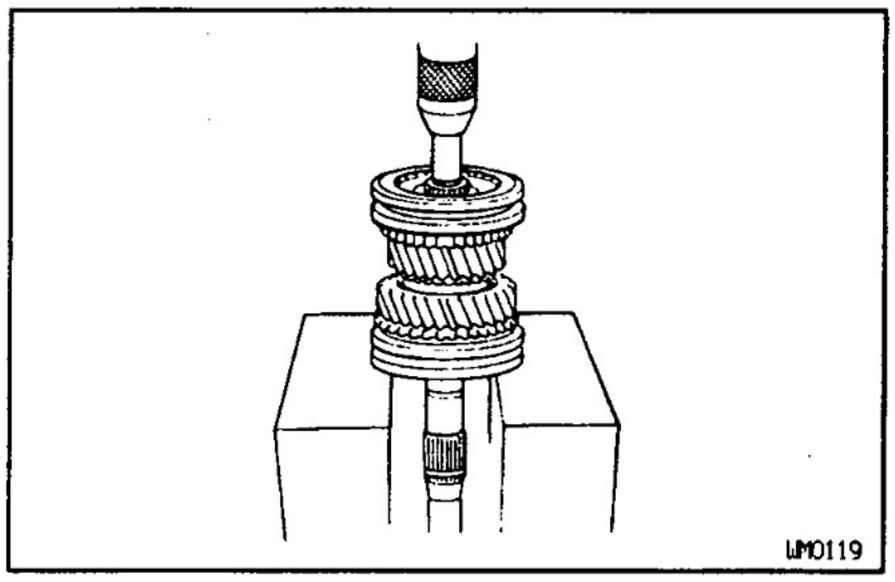

(d) Using a press, install the 2nd gear and No.1 clutch hub.

6. INSPECT 2ND GEAR THRUST CLEARANCE
(See page MT–22)

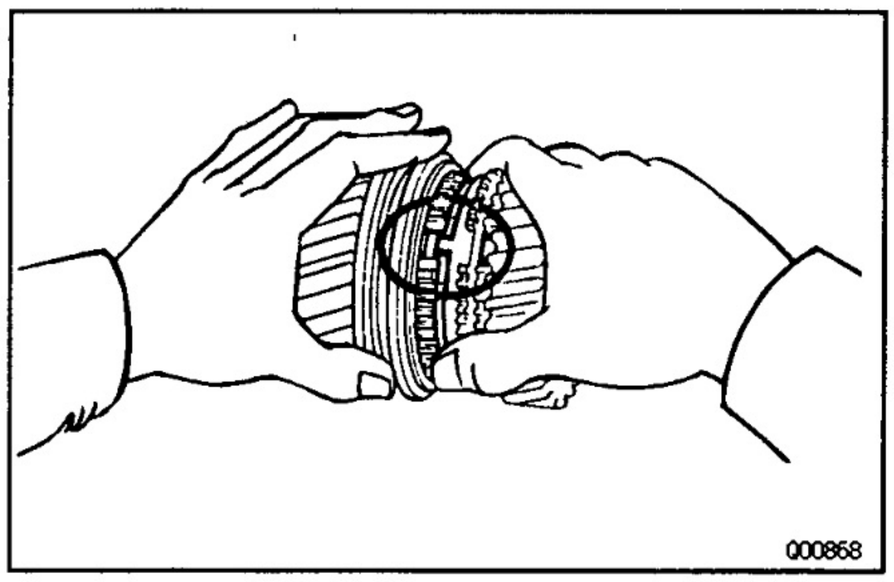

7. INSTALL LOCKING BALL AND 1ST GEAR ASSEMBLY

(a) Install the locking ball in the shaft.
(b) Apply gear oil to the bearing.
(c) Assemble the 1st gear, synchronizer ring, needle roller bearing and bearing inner race.
(d) Install the assembly on the output shaft with the synchronizer ring slots aligned with the shifting keys and turn the inner race to align it with the locking ball.

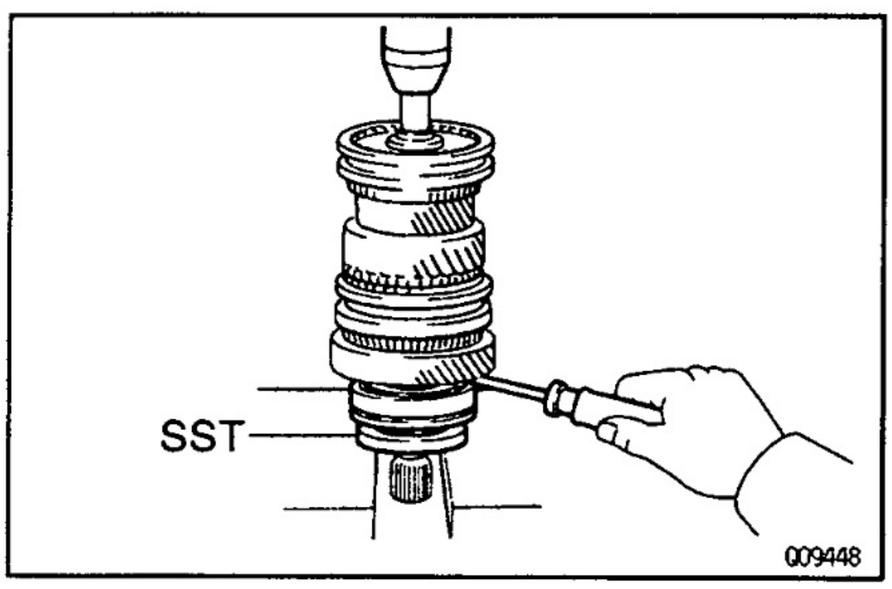

8. INSTALL OUTPUT SHAFT CENTER BEARING

Using SST and a press, install the bearing on the output shaft with the outer race snap ring groove toward the rear.
HINT: Hold the 1st gear inner race to prevent it from falling.
SST 09506–35010

9. INSPECT 1ST GEAR THRUST CLEARANCE
(See page MT–22)

COUNTER GEAR AND REVERSE IDLER GEAR

COMPONENTS

MTOON–OH

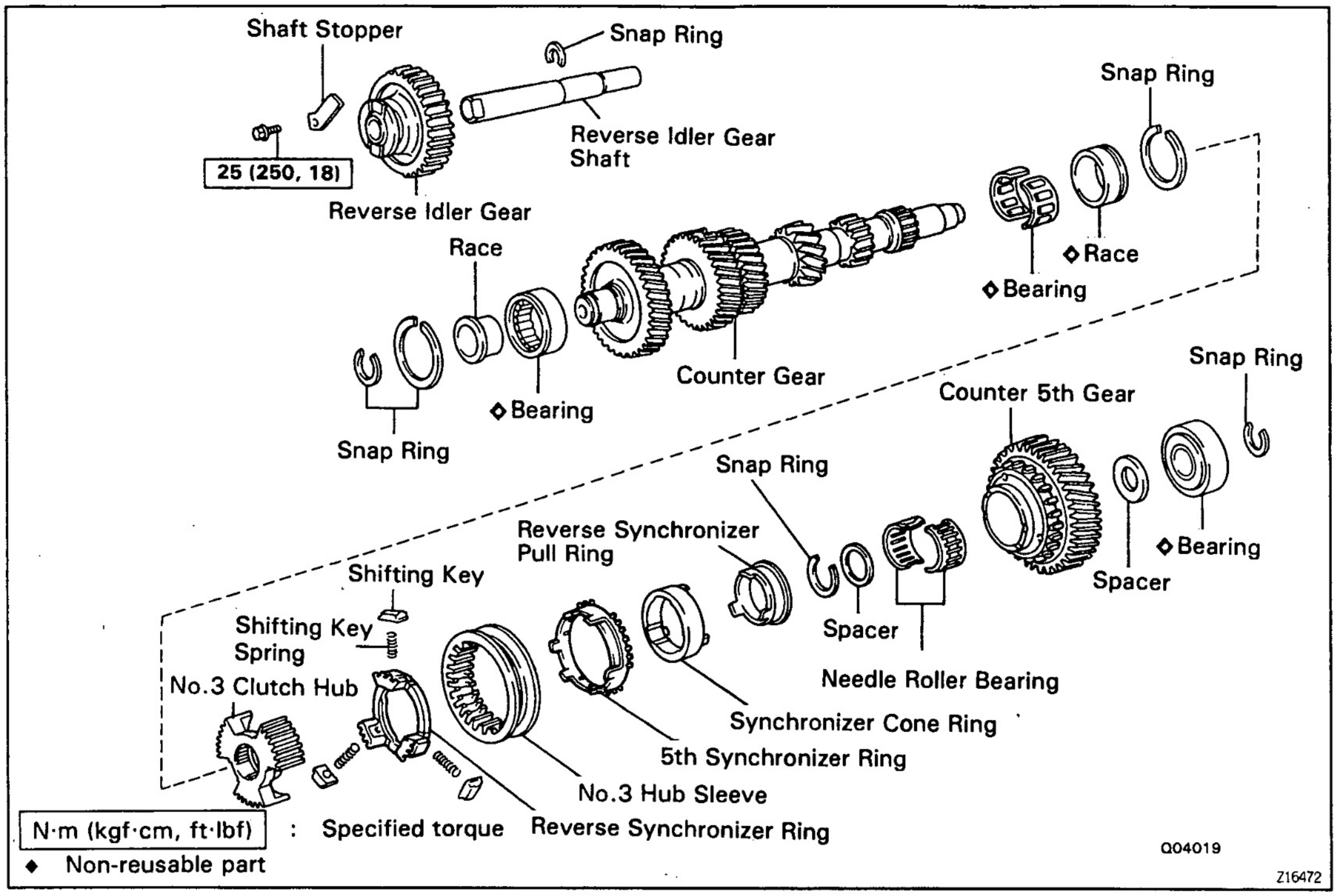

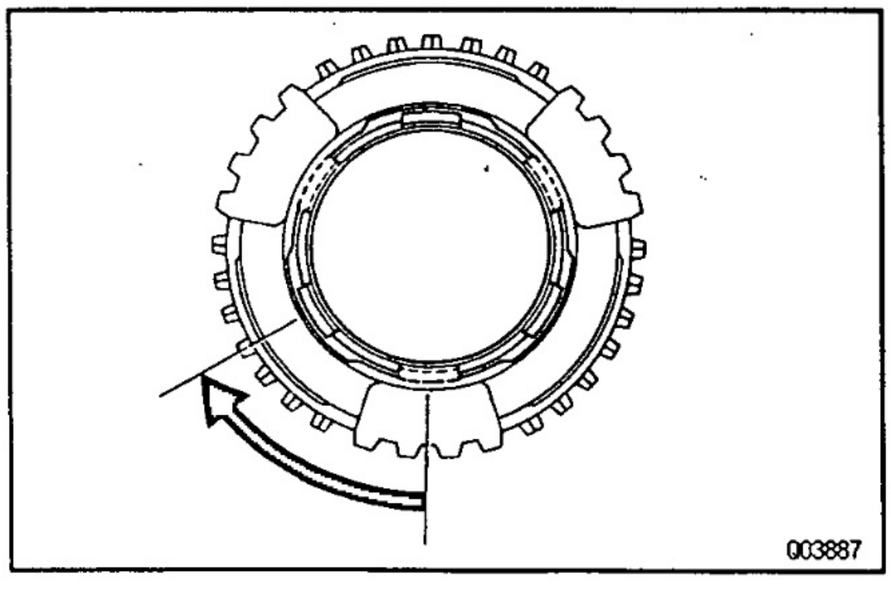

COUNTER GEAR COMPONENT PARTS DISASSEMBLY

MT0B2–04

REMOVE NO.3 HUB SLEEVE, SHIFTING KEY AND SPRING FROM SYNCHRONIZER RING

(a) Remove the synchronizer ring assembly from the No.3 hub sleeve.

(b) Turn the reverse synchronizer pull ring.

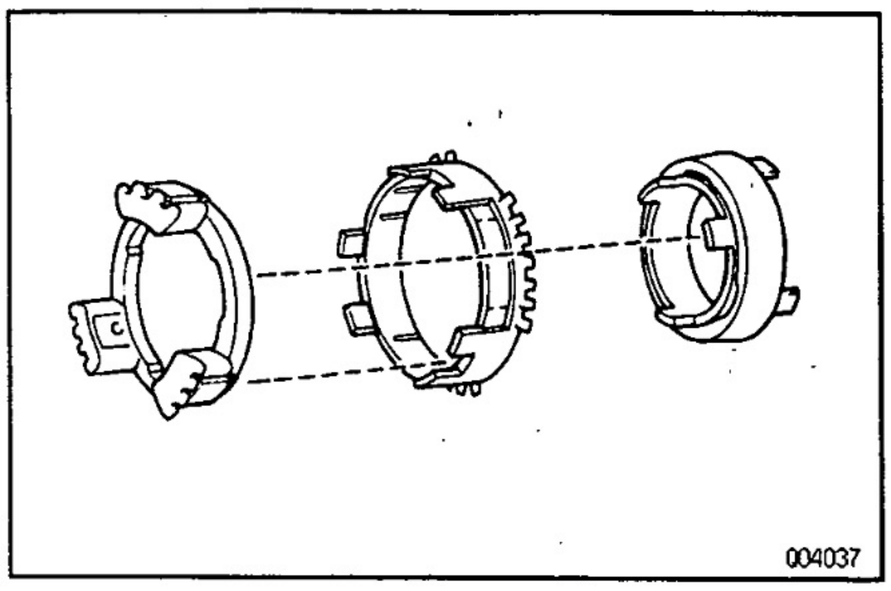

(c) Remove the reverse synchronizer ring and 5th synchronizer ring from the synchronizer pull ring and cone ring.

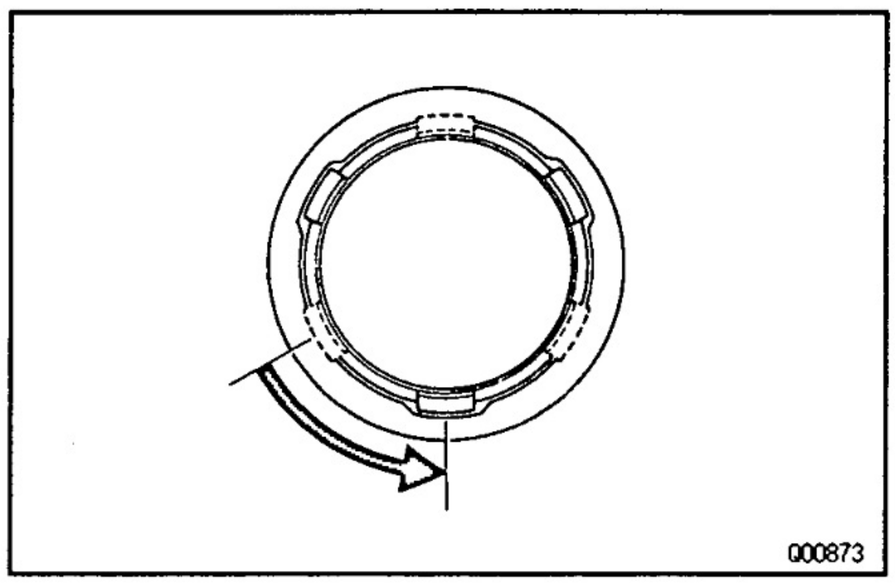

(d) Turn the reverse synchronizer pull ring and separate the pull ring and cone ring.

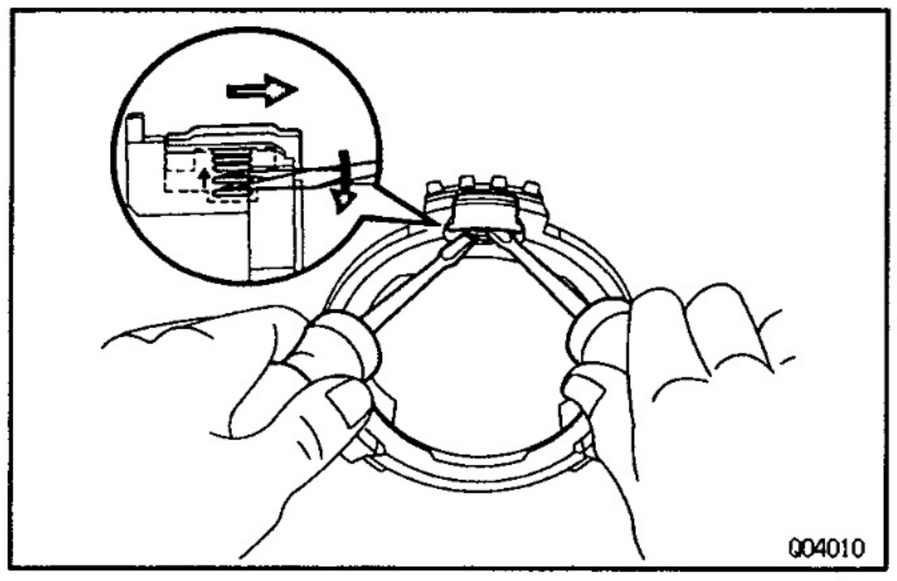

(e) Remove the 3 shifting keys and key springs by carefully levering up the shifting key spring with one screwdriver and levering the shifting key away from the reverse synchronizer ring with another screwdriver.

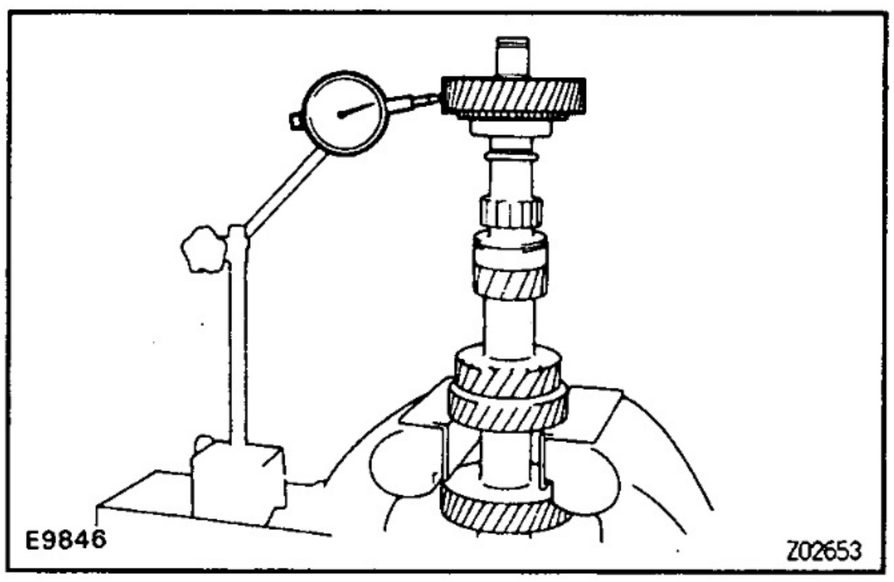

COUNTER GEAR AND REVERSE IDLER GEAR COMPONENT PARTS INSPECTION

MT00Q-0E

1. INSPECT COUNTER 5TH GEAR RADIAL CLEARANCE

(a) Install the spacer, counter 5th gear and needle roller bearing to the counter gear.

(b) Using a dial indicator, measure the counter 5th gear radial clearance.

Standard clearance:

0.009–0.060 mm (0.0004–0.0024 in.)

Maximum clearance: 0.150 mm (0.0059 in.)

If the clearance exceeds the maximum, replace the counter gear, needle roller bearing or counter 5th gear.

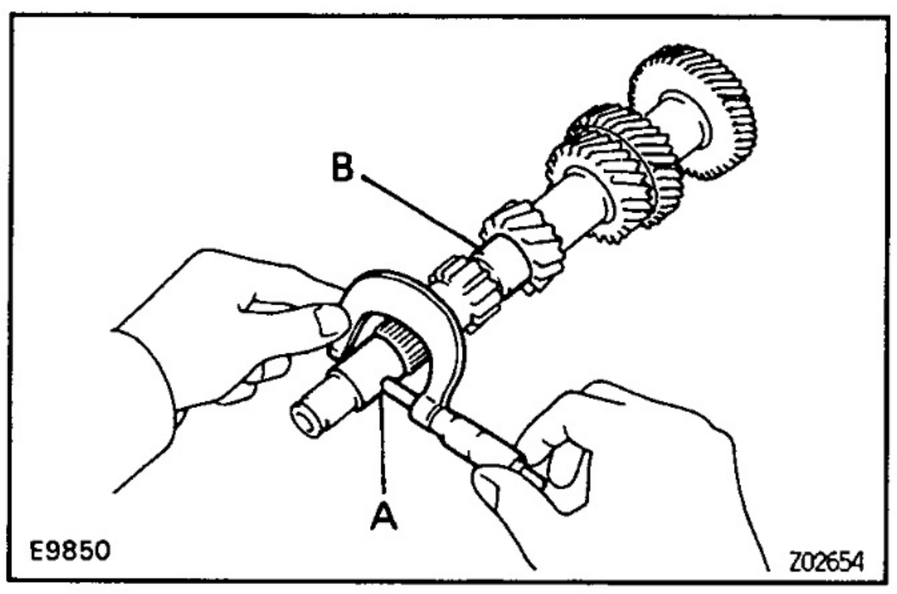

2. INSPECT COUNTER GEAR

Using a micrometer, measure the outer diameter of the counter shaft journal.

Minimum diameter:

Part A: 26.975 mm (1.0620 in.)

Part B: 29.950 mm (1.1791 in.)

If the outer race is less than the minimum, replace the counter gear.

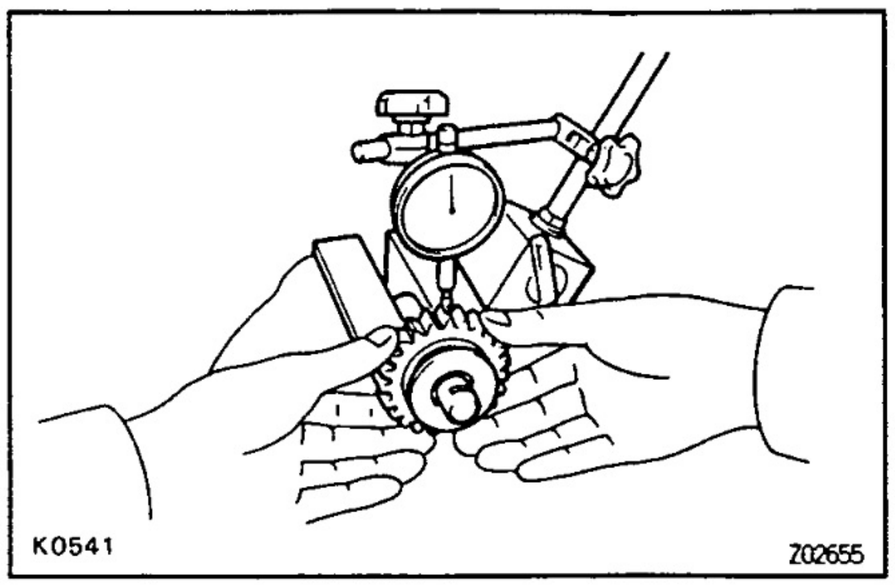

3. INSPECT REVERSE IDLER GEAR RADIAL CLEARANCE

Using a dial indicator, measure the reverse idler gear radial clearance.

Standard clearance:

0.041 – 0.074 mm (0.0016 – 0.0029 in.)

Maximum clearance: 0.194 mm (0.0076 in.)

If the clearance exceeds the maximum, replace the gear or shaft.

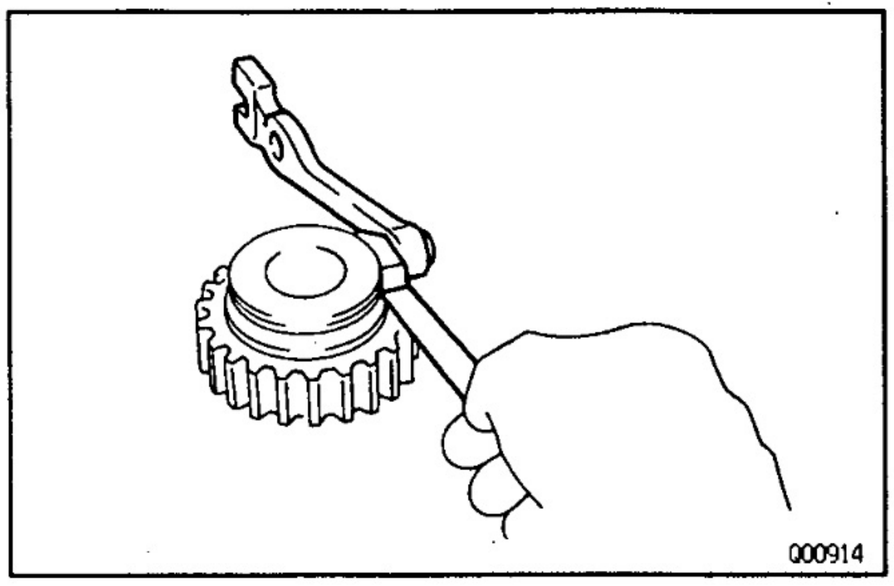

4. INSPECT REVERSE IDLER GEAR AND SHIFT ARM SHOE CLEARANCE

Using a feeler gauge, measure the clearance between the reverse idler gear and shift arm shoe.

Standard clearance:

0.20 – 0.41 mm (0.0079 – 0.0161 in.)

Maximum clearance: 0.90 mm (0.0354 in.)

If the clearance exceeds the maximum, replace the shift arm shoe or reverse idler gear.

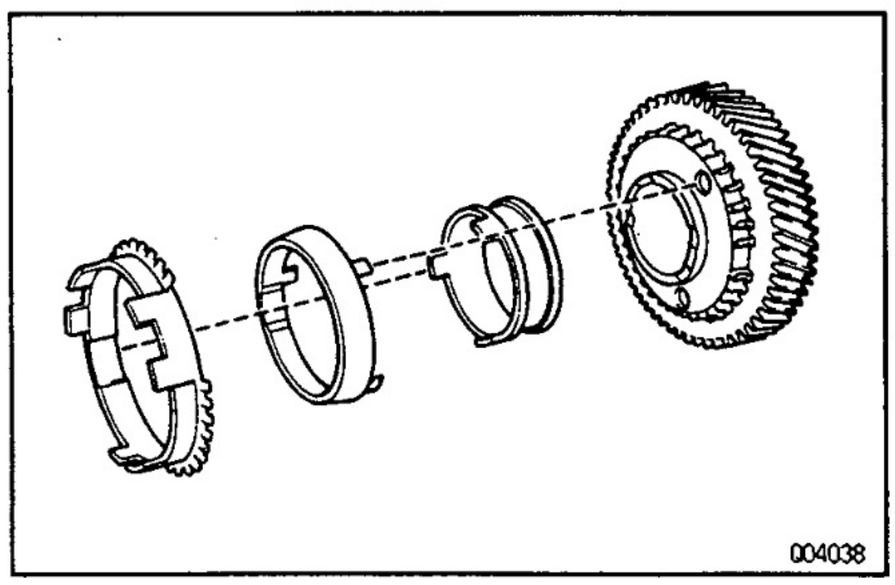

5. INSPECT 5TH GEAR SYNCHRONIZER RING

(a) Check for wear or damage.

(b) Install the synchronizer pull ring, cone ring and outer ring to the 5th gear.

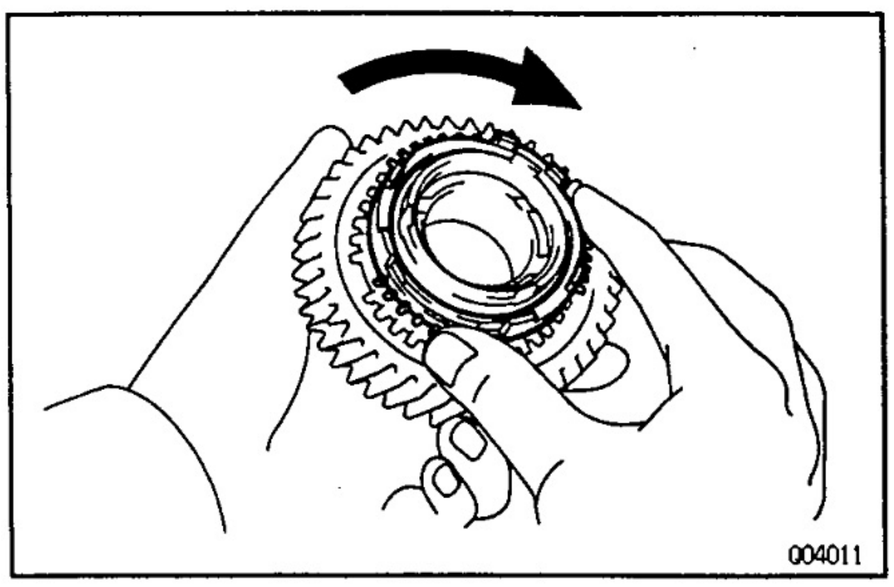

(c) Check the braking effect of the synchronizer ring. Turn the synchronizer ring in one direction while pushing it to the gear cone. Check that the ring locks.
If it does not lock, replace the synchronizer ring.

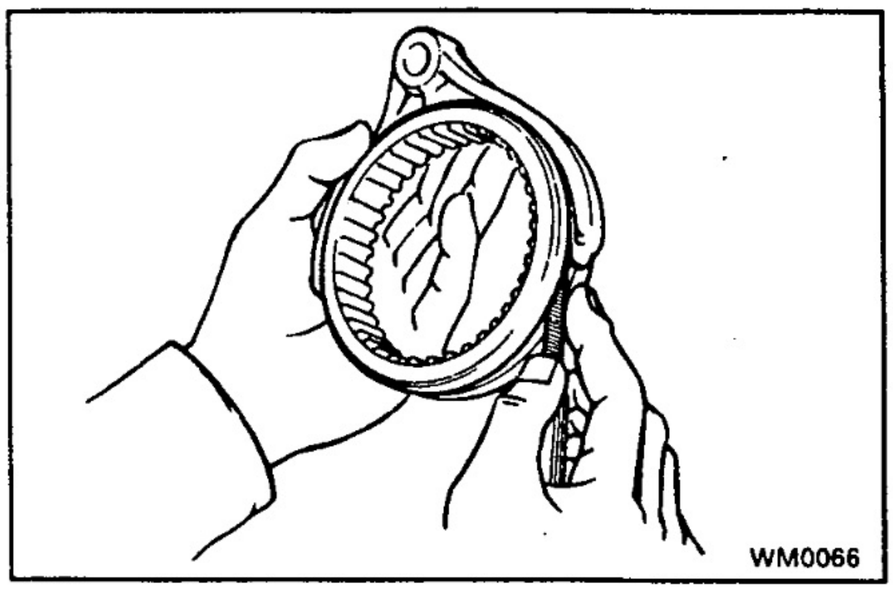

6. INSPECT SHIFT FORK AND HUB SLEEVE CLEARANCE

Using a feeler gauge, measure the clearance between the hub sleeves and shift forks.

Maximum clearance: 1.0 mm (0.039 in.)

If the clearance exceeds the maximum, replace the shift fork or hub sleeve.

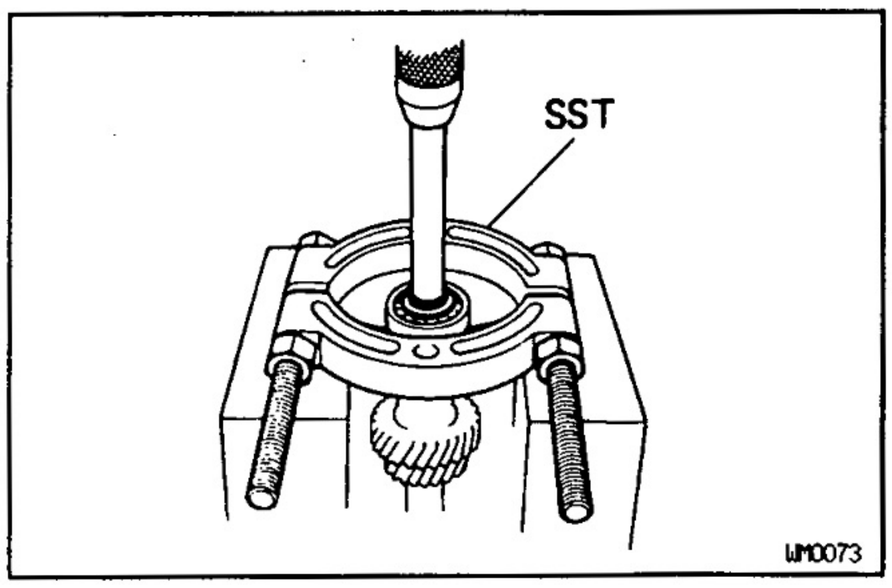

MT0S3-03

BEARING REPLACEMENT

1. IF NECESSARY, REPLACE COUNTER GEAR FRONT BEARING AND SIDE RACE

(a) Using a snap ring expander, remove the snap ring.

(b) Using SST and a press, press out the bearing.
SST 09950–00020

(c) Check the side race for wear or damage.

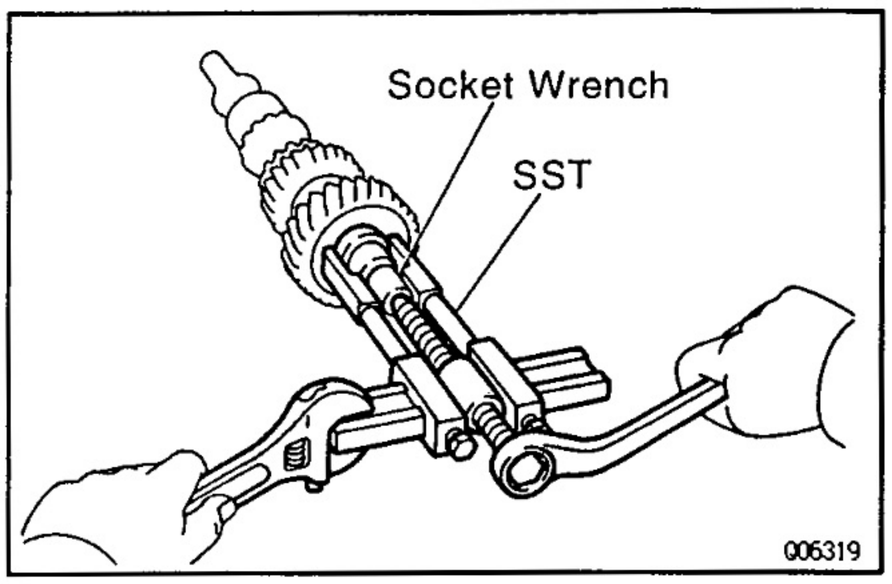

(d) If necessary, remove the side race.

- Using SST and a socket wrench, remove the side race.

SST 09950–40010

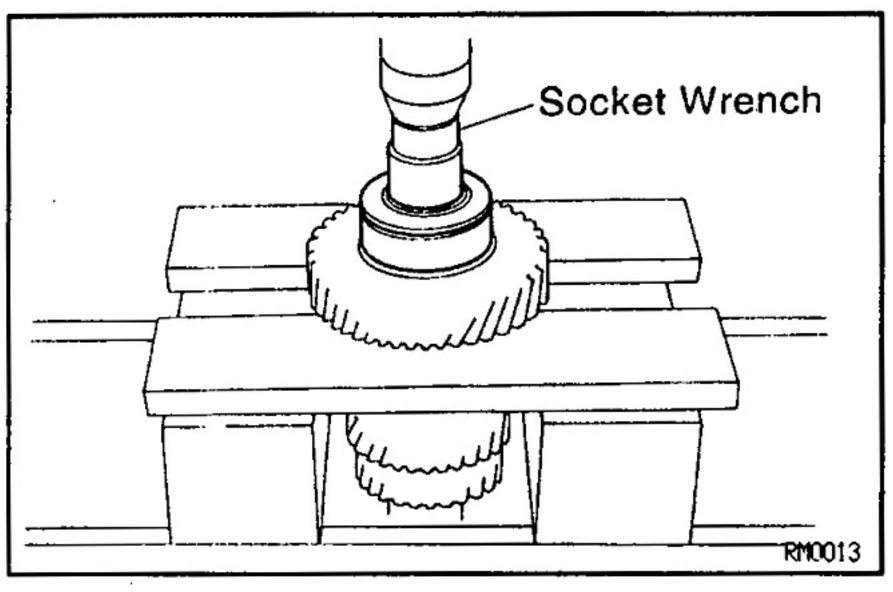

(e) Using a socket wrench and press, install a new bearing, side race and inner race.

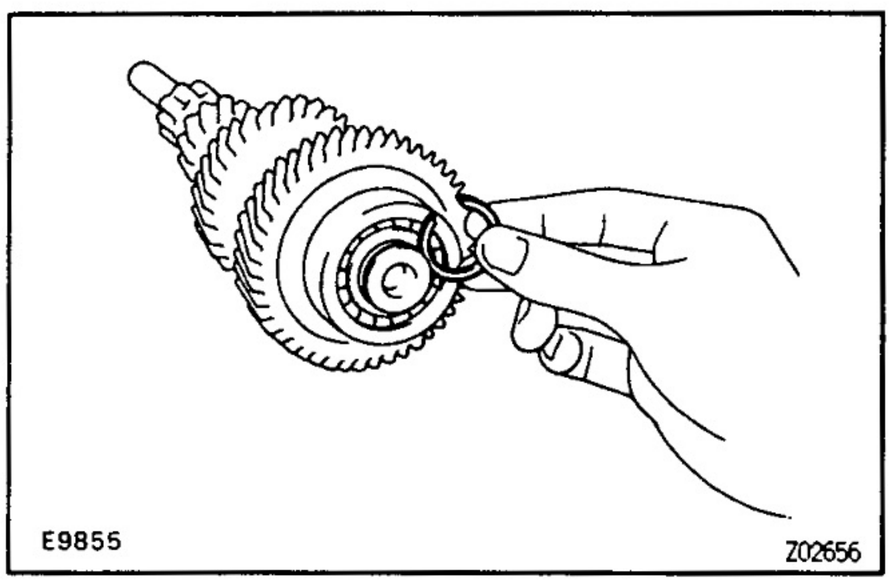

(f) Select a snap ring that will allow minimum axial play.

Mark	Thickness mm (in.)
A	2.05–2.10 (0.0807–0.0827)
B	2.10–2.15 (0.0827–0.0846)
C	2.15–2.20 (0.0846–0.0866)
D	2.20–2.25 (0.0866–0.0886)
E	2.25–2.30 (0.0886–0.0906)
F	2.30–2.35 (0.0906–0.0925)

(g) Using a snap ring expander, install the snap ring.

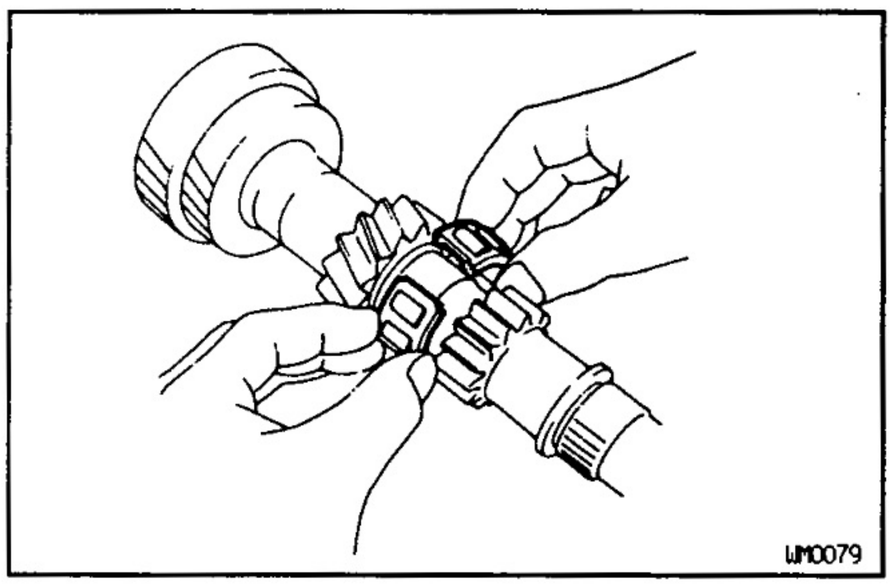

2. IF NECESSARY, REPLACE COUNTER GEAR CENTER BEARING

(a) Remove the bearing from the counter gear.

(b) Install a new bearing on the counter gear.
HINT: Engage the roller cages.

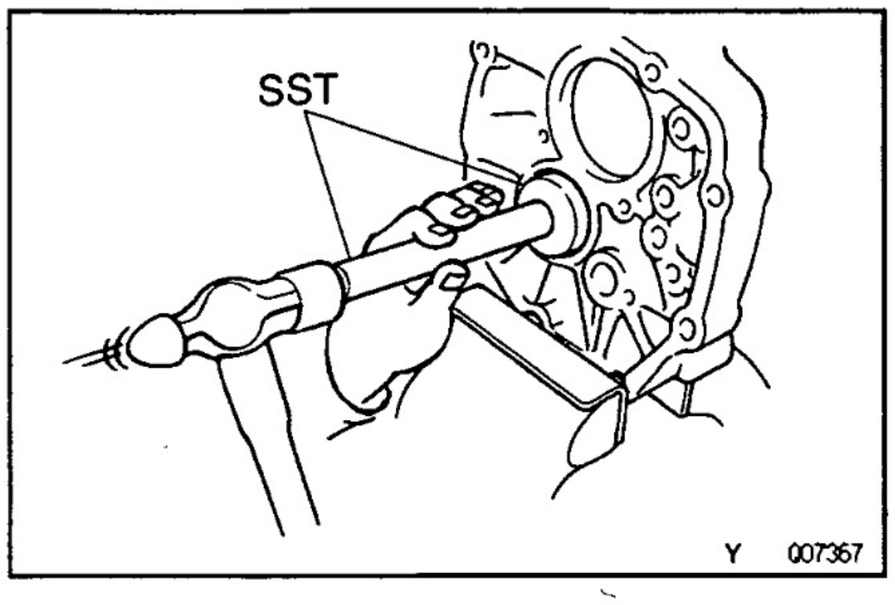

(c) Using SST, tap out the bearing outer race.
SST 09950–60010 (09951–00510),
09950–70010 (09951–07150)
HINT: The outer race will be installed later, as the transmission is assembled.

MT084–02

COUNTER GEAR ASSEMBLY

MT

INSTALL SYNCHRONIZER RING ASSEMBLY TO NO.3 HUB SLEEVE

(a) Push the synchronizer key spring, install the shifting key and key spring to the reverse synchronizer ring.
(b) Using a screwdriver, push the 3 key springs into the synchronizer ring spring gaps.

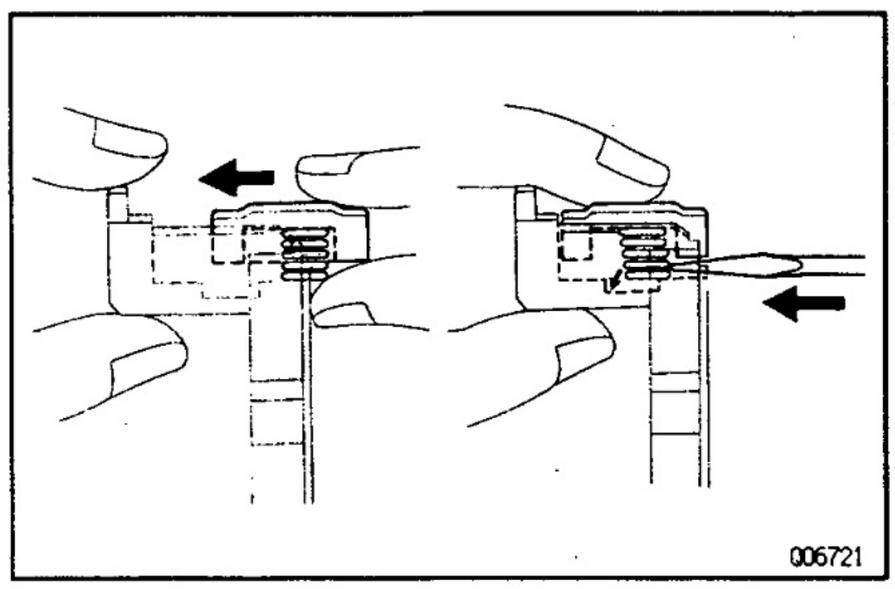

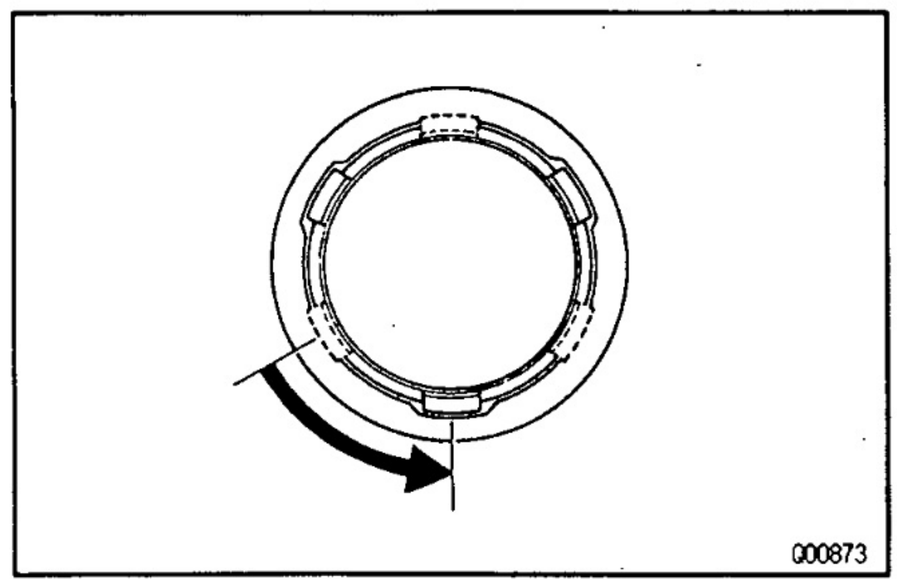

(c) Install the synchronizer cone ring to the reverse synchronizer pull ring and turn the pull ring.

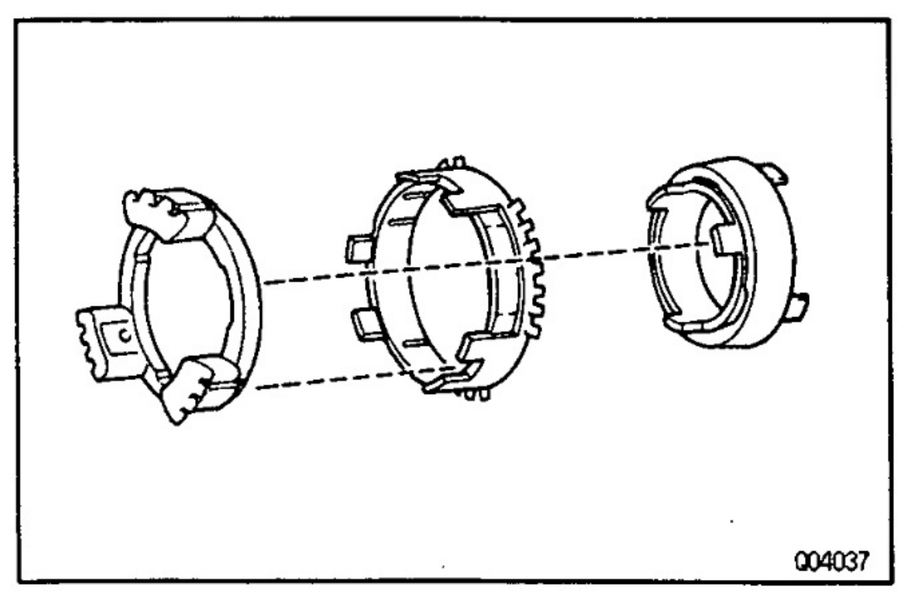

(d) Install the 5th synchronizer ring.
(e) Install the reverse synchronizer ring.

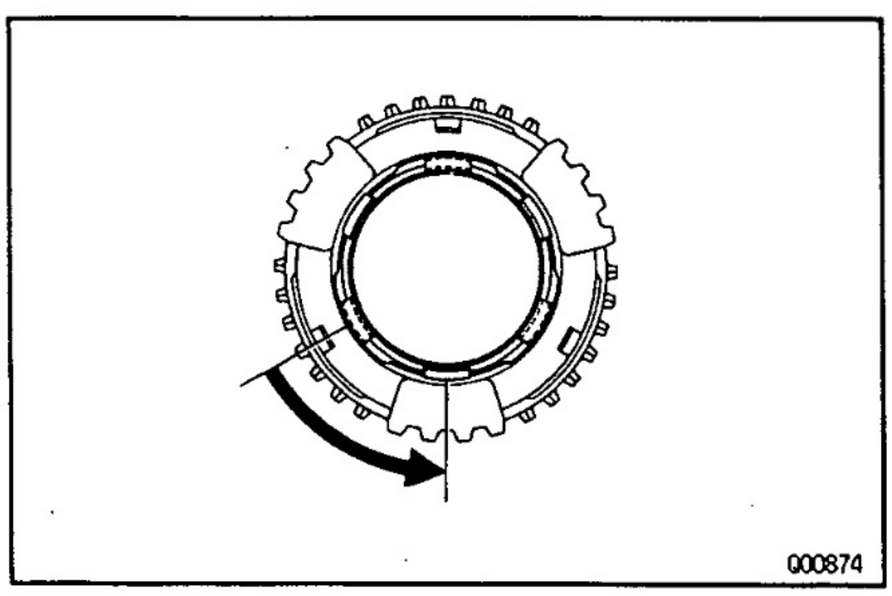

(f) Turn the reverse synchronizer pull ring.

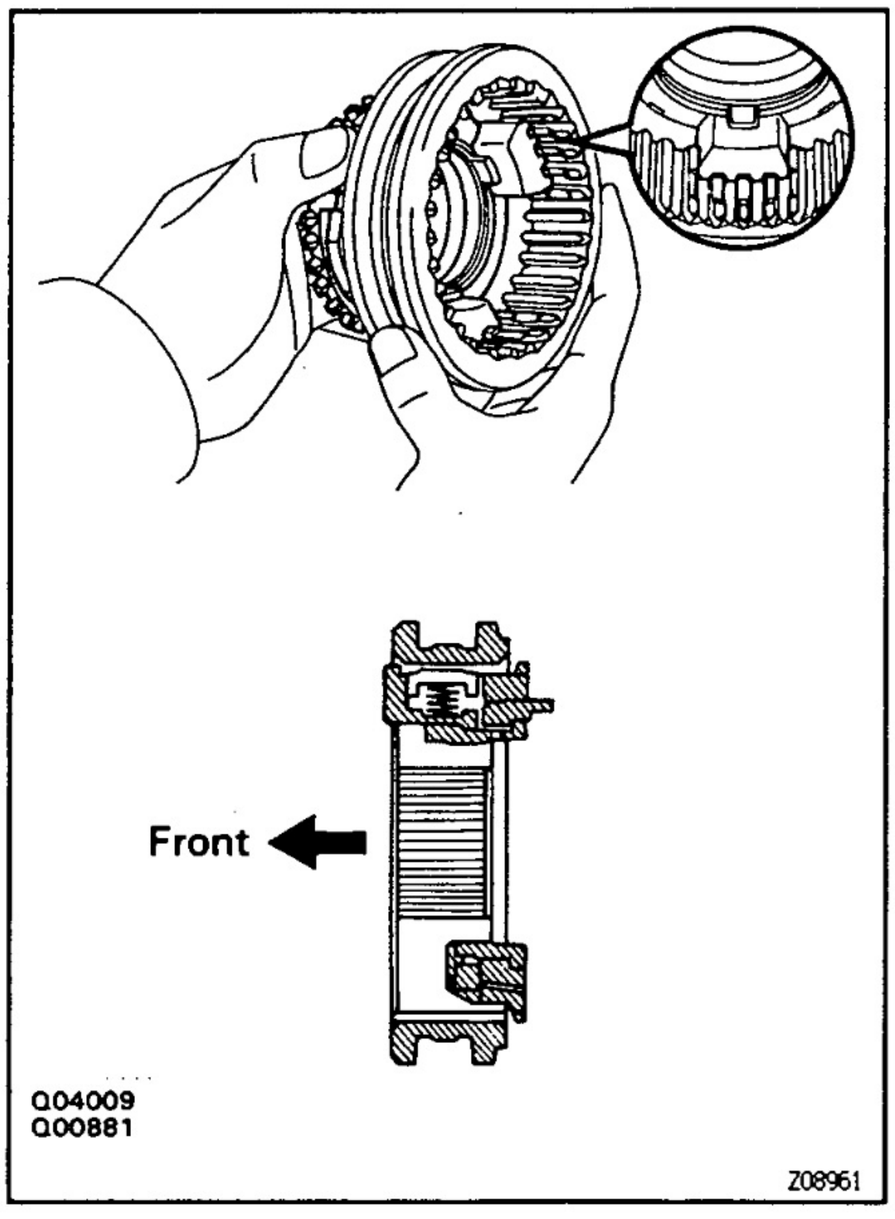

(g) While pushing 3 shifting keys, install the synchronizer ring assembly to the No.3 hub sleeve.

MT

FRONT BEARING RETAINER COMPONENTS

MT00T–08

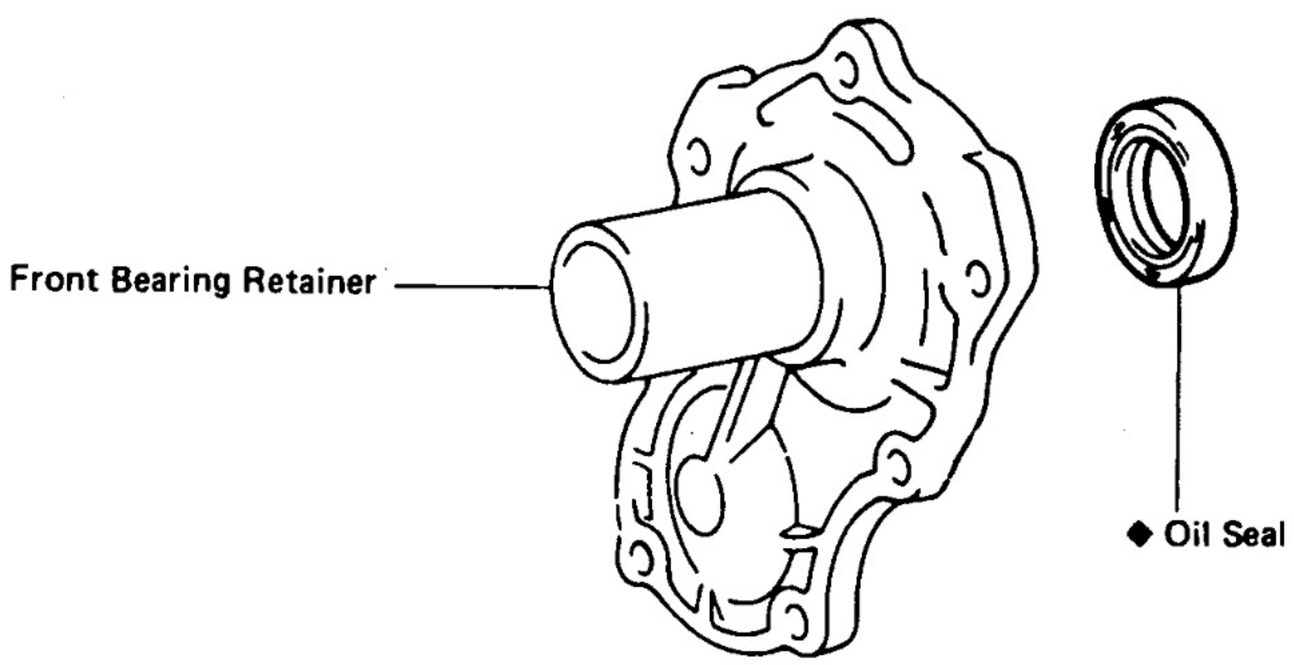

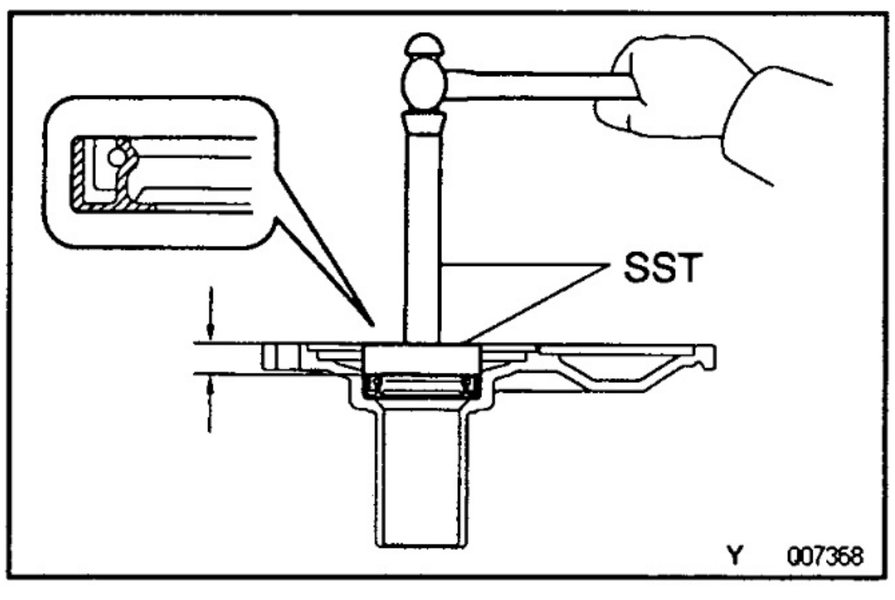

OIL SEAL REPLACEMENT

MT0CB–01

IF NECESSARY, REPLACE FRONT BEARING RETAINER OIL SEAL

(a) Using a screwdriver, pry out the oil seal.

(b) Using SST and a press, install a new oil seal.
SST 09950–60010 (09951–00440),
09950–70010 (09951–07150)
Drive in depth: 12.2 ± 0.5 mm (0.480 ± 0.020 in.)

TRANSFER ADAPTOR

COMPONENTS

MT00V–0L

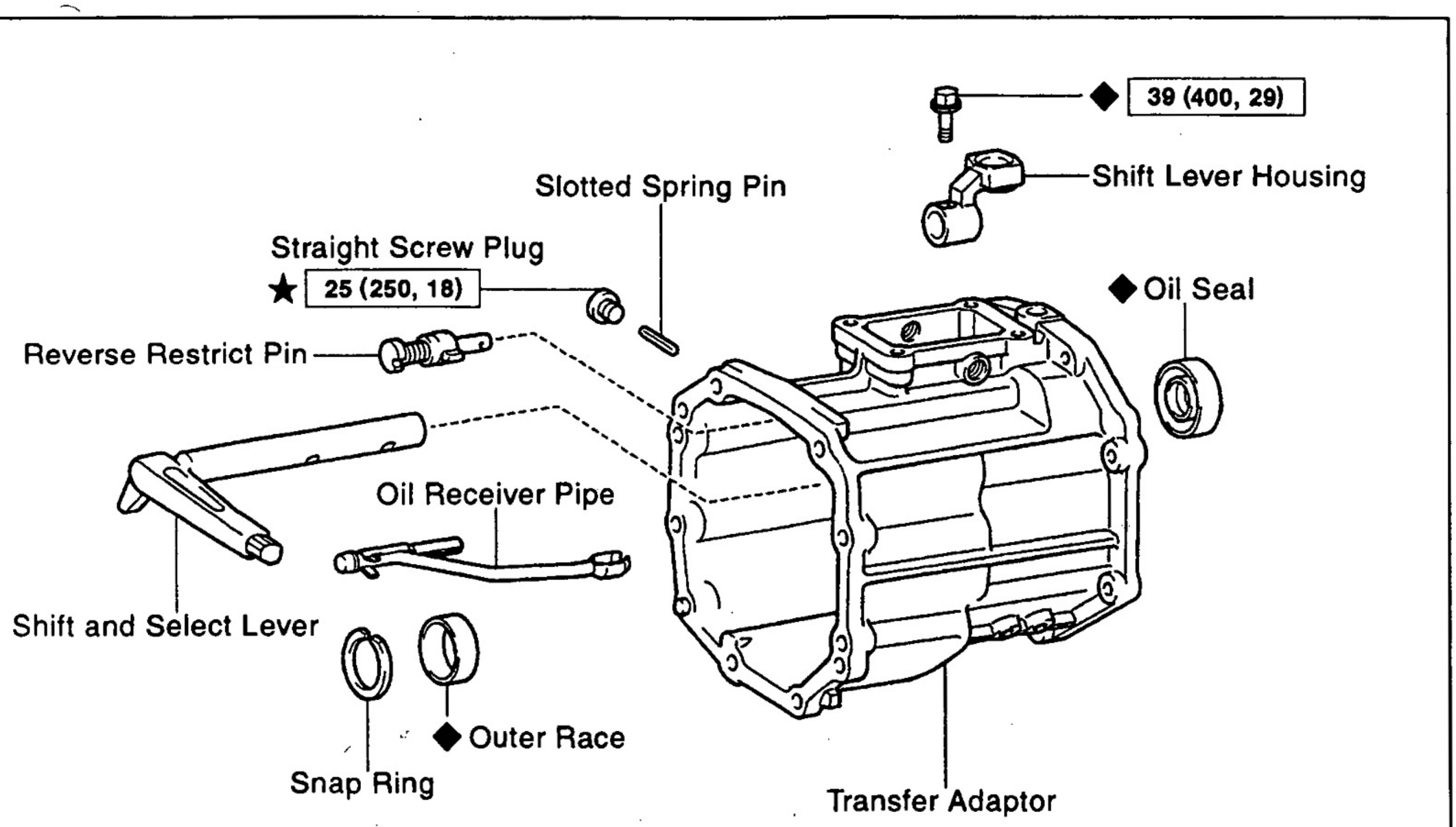

N·m (kgf·cm, ft·lbf) : Specified torque
◆ Non-reusable part
★ Precoated part

Q09449

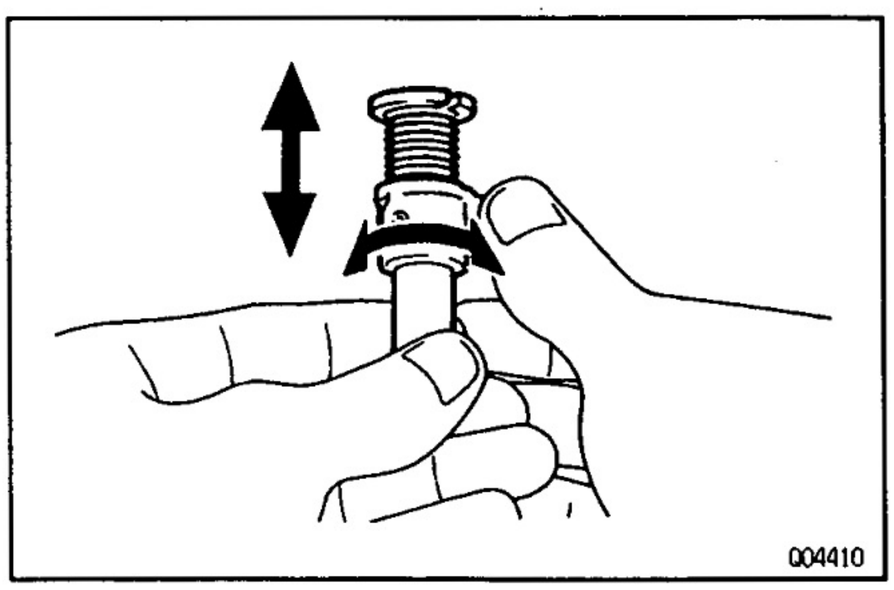

Q04410

REVERSE RESTRICT PIN REPLACEMENT

MT0B5–03

1. REMOVE REVERSE RESTRICT PIN

(a) Using a hexagon wrench, remove the screw plug.

(b) Using a pin punch and hammer, drive out the slotted spring pin.

(c) Pull off the lever housing and slide out the shaft.

2. INSPECT REVERSE RESTRICT PIN

Turn and push the reverse restrict pin by hand.
Check for smooth operation.

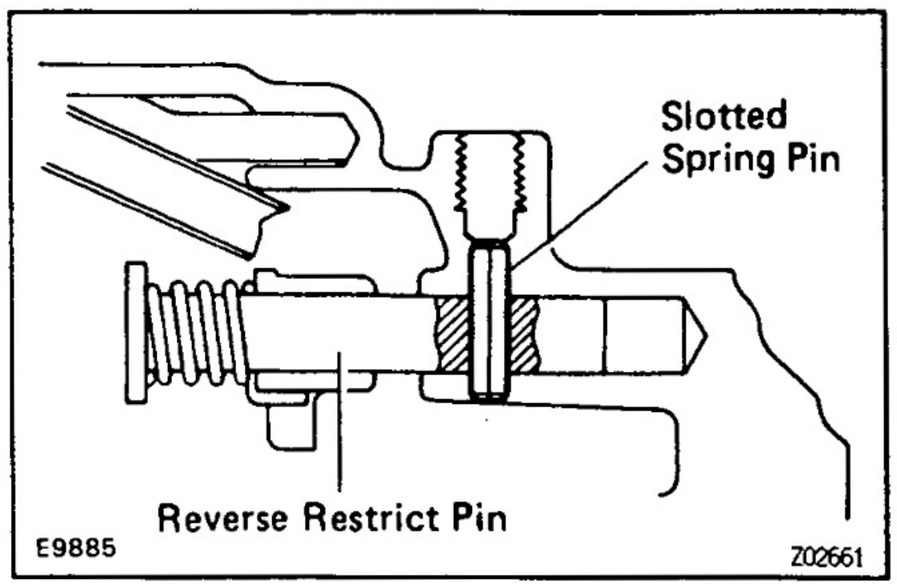

3. INSTALL REVERSE RESTRICT PIN

(a) Install the lever housing.

(b) Using a pin punch and hammer, drive in the slotted spring pin, as shown.

(c) Apply sealant to the plug.
Sealant: Part No. 08833 – 00080, THREE BOND 1344, LOCTITE 242 or equivalent

(d) Install and torque the screw plug.
Torque: 25 N·m (250 kgf·cm, 18 ft·lbf)

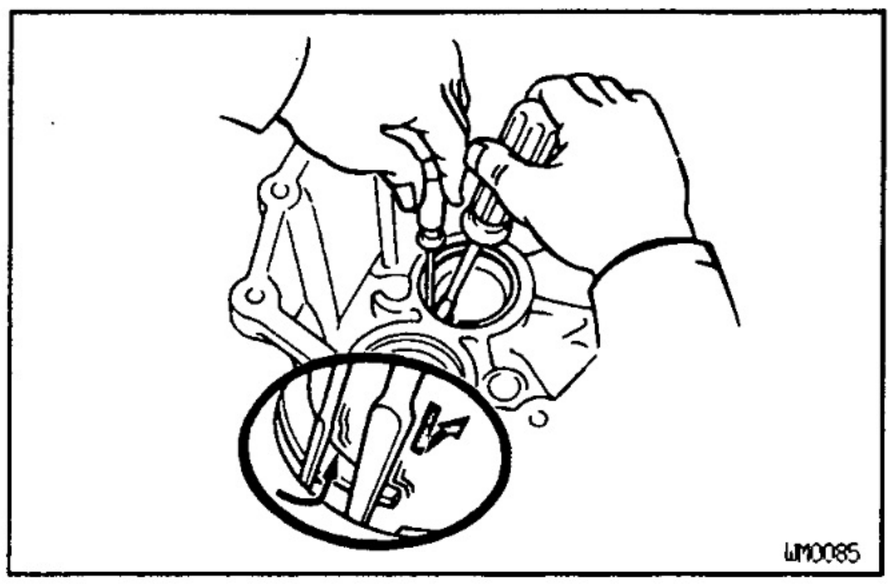

MT0HV-01

OUTER RACE REPLACEMENT

IF NECESSARY, REPLACE REAR BEARING OUTER RACE

(a) Using 2 screwdrivers, remove the snap ring.

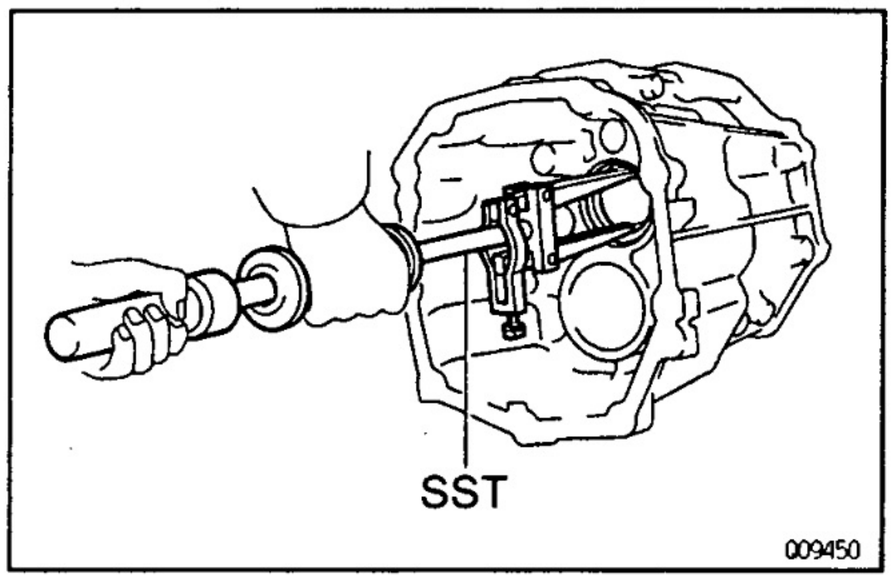

(b) Using SST, remove the outer race.
SST 09308–00010

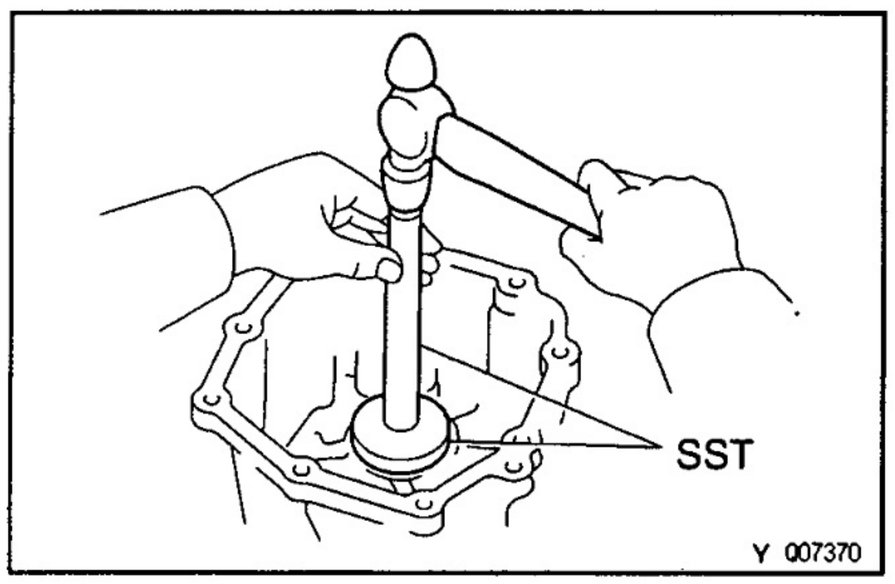

(c) Using SST, install a new outer race.
SST 09950–60010 (09951–00560),
09950–70010 (09951–07150)

(d) Using a screwdriver, install the snap ring.

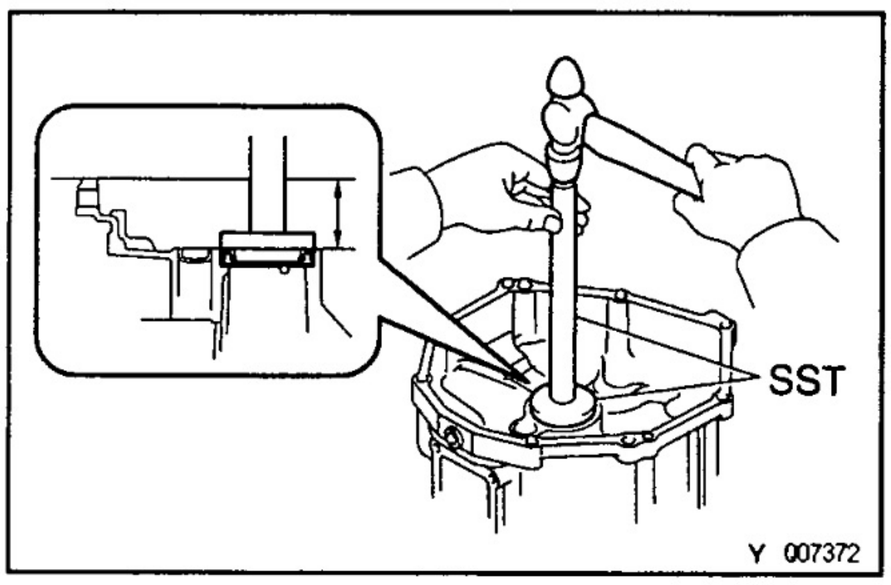

MT0HW-01

OIL SEAL REPLACEMENT

IF NECESSARY, REPLACE TRANSFER ADAPTOR OIL SEAL

(a) Using a screwdriver, pry out the oil seal.

(b) Using SST and a hammer, drive in a new oil seal.
SST 09950–60010 (09951–00560),
09950–70010 (09951–07150)
Drive in depth: 45.5 ± 0.5 mm (1.791 ± 0.020 in.)

SERVICE SPECIFICATIONS

SERVICE DATA

MT010-01

Output shaft 2nd gear journal diameter	Min.	42.975 mm (1.6919 in.)
Output shaft 3rd gear journal diameter	Min.	31.969 mm (1.2586 in.)
Output shaft flange thickness	Min.	5.60 mm (0.2205 in.)
Output shaft runout	Max.	0.06 mm (0.0024 in.)
1st gear inner race flange thickness	Min.	4.78 mm (0.1881 in.)
1st gear inner race outer diameter	Min.	42.975 mm (1.6919 in.)
Counter gear bearing journal diameter	Min.	29.950 mm (1.1791 in.)
Counter 5th gear journal diameter	Min.	26.975 mm (1.0620 in.)
1st, 2nd and 3rd gear thrust clearance	STD	0.10 – 0.25 mm (0.0039 – 0.0098 in.)
	Max.	0.30 mm (0.0118 in.)
Counter 5th gear thrust clearance	STD	0.10 – 0.41 mm (0.0039 – 0.0161 in.)
	Max.	0.46 mm (0.0181 in.)
1st, 2nd and counter 5th gear radial clearance	STD	0.009 – 0.060 mm (0.0004 – 0.0024 in.)
	Max.	0.150 mm (0.0059 in.)
3rd gear radial clearance	STD	0.015 – 0.066 mm (0.0006 – 0.0026 in.)
	Max.	0.200 mm (0.0079 in.)
Reverse idler gear radial clearance	STD	0.041 – 0.074 mm (0.0016 – 0.0029 in.)
	Max.	0.194 mm (0.0076 in.)
Reverse idler gear to shift arm shoe clearance	STD	0.20 – 0.41 mm (0.0080 – 0.0161 in.)
	Max.	0.90 mm (0.0354 in.)
Shift fork to hub sleeve clearance	Max.	1.0 mm (0.039 in.)
Synchronizer ring to 1st and 4th gear clearance	Min.	0.5 mm (0.020 in.)
Synchronizer ring to 2nd and 3rd gear clearance	Min.	0.7 mm (0.028 in.)
Input shaft snap ring thickness		
	Mark 1	2.05 – 2.10 mm (0.0807 – 0.0827 in.)
	Mark 2	2.10 – 2.15 mm (0.0827 – 0.0846 in.)
	Mark 3	2.15 – 2.20 mm (0.0846 – 0.0866 in.)
	Mark 4	2.20 – 2.25 mm (0.0866 – 0.0886 in.)
	Mark 5	2.25 – 2.30 mm (0.0886 – 0.0906 in.)
	Mark 11	2.30 – 2.35 mm (0.0906 – 0.0925 in.)
	Mark 12	2.35 – 2.40 mm (0.0925 – 0.0945 in.)
Output shaft snap ring thickness		
No.2 clutch hub	Mark C–1	1.75 – 1.80 mm (0.0689 – 0.0709 in.)
	Mark D	1.80 – 1.85 mm (0.0709 – 0.0728 in.)
	Mark 11	1.86 – 1.91 mm (0.0732 – 0.0752 in.)
	Mark 12	1.92 – 1.97 mm (0.0756 – 0.0776 in.)
	Mark 13	1.98 – 2.03 mm (0.0780 – 0.0799 in.)
	Mark 14	2.04 – 2.09 mm (0.0803 – 0.0823 in.)
	Mark 15	2.10 – 2.15 mm (0.0827 – 0.0846 in.)

Output shaft snap ring thickness		
Rear bearing	Mark 8	2.31 — 2.36 mm (0.0909 — 0.0929 in.)
	Mark 9	2.37 — 2.42 mm (0.0933 — 0.0953 in.)
	Mark 10	2.43 — 2.48 mm (0.0957 — 0.0976 in.)
	Mark 11	2.49 — 2.54 mm (0.0980 — 0.1000 in.)
	Mark 12	2.55 — 2.60 mm (0.1004 — 0.1024 in.)
	Mark 13	2.61 — 2.66 mm (0.1028 — 0.1047 in.)
	Mark 14	2.68 — 2.73 mm (0.1055 — 0.1075 in.)
	Mark 15	2.74 — 2.79 mm (0.1079 — 0.1098 in.)
Output shaft snap ring thickness		
Reverse gear	Mark 5	2.25 — 2.30 mm (0.0886 — 0.0906 in.)
	Mark 11	2.30 — 2.35 mm (0.0906 — 0.0925 in.)
	Mark 12	2.35 — 2.40 mm (0.0925 — 0.0945 in.)
	Mark 13	2.40 — 2.45 mm (0.0945 — 0.0965 in.)
	Mark 14	2.45 — 2.50 mm (0.0965 — 0.0984 in.)
	Mark 15	2.50 — 2.55 mm (0.0984 — 0.1004 in.)
	Mark 16	2.55 — 2.60 mm (0.1004 — 0.1024 in.)
	Mark 17	2.61 — 2.66 mm (0.1028 — 0.1047 in.)
	Mark 18	2.67 — 2.72 mm (0.1051 — 0.1071 in.)
	Mark 19	2.73 — 2.78 mm (0.1075 — 0.1094 in.)
	Mark 20	2.79 — 2.84 mm (0.1098 — 0.1118 in.)
	Mark 21	2.85 — 2.90 mm (0.1122 — 0.1142 in.)
	Mark 22	2.91 — 2.96 mm (0.1146 — 0.1165 in.)
	Mark 23	2.97 — 3.02 mm (0.1169 — 0.1189 in.)
Coutner gear snap ring thickness		
Front bearing	Mark A	2.05 — 2.10 mm (0.0807 — 0.0827 in.)
	Mark B	2.10 — 2.15 mm (0.0827 — 0.0846 in.)
	Mark C	2.15 — 2.20 mm (0.0846 — 0.0866 in.)
	Mark D	2.20 — 2.25 mm (0.0866 — 0.0886 in.)
	Mark E	2.25 — 2.30 mm (0.0886 — 0.0906 in.)
	Mark F	2.30 — 2.35 mm (0.0906 — 0.0925 in.)
Counter gear snap ring thickness		
No.3 clutch hub	Mark 2	2.06 — 2.11 mm (0.0811 — 0.0831 in.)
	Mark 3	2.12 — 2.17 mm (0.0835 — 0.0854 in.)
	Mark 4	2.18 — 2.23 mm (0.0858 — 0.0878 in.)
	Mark 5	2.24 — 2.29 mm (0.0882 — 0.0902 in.)
Counter gear snap ring thickness		
Rear bearing	Mark 1	1.90 — 1.95 mm (0.0748 — 0.0768 in.)
	Mark 2	1.96 — 2.01 mm (0.0772 — 0.0791 in.)
	Mark 3	2.02 — 2.07 mm (0.0795 — 0.0815 in.)
	Mark 4	2.08 — 2.13 mm (0.0819 — 0.0839 in.)
	Mark 5	2.14 — 2.19 mm (0.0843 — 0.0862 in.)
	Mark 6	2.20 — 2.25 mm (0.0866 — 0.0886 in.)
	Mark 7	2.26 — 2.31 mm (0.0890 — 0.0909 in.)

Oil seal drive in depth	
Front bearing retainer (from retainer end)	12.2 ± 0.5 mm (0.480 ± 0.020 in.)
Transfer adaptor	45.5 ± 0.5 mm (1.791 ± 0.020 in.)

MT011–0P

TORQUE SPECIFICATIONS

Part tightened		N·m	kgf·cm	ft·lbf
Transmission x Engine		72	730	53
Transmission x Starter		39	400	29
No.2 exhaust pipe support bracket x Frame		19	190	14
Front exhaust pipe x Center exhaust pipe		48	490	35
Front exhaust pipe bracket set bolt	Bolt A	71	720	52
(See page MT–9)	Bolt B	72	730	53
Front exhaust pipe x Exhaust manifold		62	630	46
Rear end plate x Transmission		37	380	27
Engine rear mounting x No.3 crossmember		18	185	13
No.3 crossmember x Frame		65	660	48
No.4 crossmember x Frame (Australia)		65	660	48
Engine rear mounting x Transmission		65	650	48
Transmission x Transfer		24	240	17
Clutch release cylinder x Transmission		12	120	9
Shift fork set bolt		20	200	14
Straight screw plug		25	250	18
Reverse idler gear shaft stopper bolt		25	250	18
Oil separator x Intermediate plate		18	185	13
Front bearing retainer set bolt		25	250	18
Transfer adaptor x Intermediate plate		37	380	27
Restrict pin		27	280	20
Shift lever housing x Shift and select lever shaft		39	400	29
Control shift lever retainer x Transfer adaptor		18	185	13
Drain and filler plugs		37	380	27
Back–up light switch		40	410	30
Clutch housing x Transmission case		37	380	27
Rear bearing retainer x Intermediate plate		18	185	13

R150F MANUAL TRANSMISSION

PRECAUTION ..... MT– 2
PREPARATION ..... MT– 2
TROUBLESHOOTING ..... MT– 4
ASSEMBLY REMOVAL AND
INSTALLATION ..... MT– 5
(1KZ–T, 1KZ–TE) ..... MT– 5
ASSEMBLY REMOVAL AND
INSTALLATION ..... MT– 10
(5VZ–FE) ..... MT– 10
COMPONENT PARTS REMOVAL AND
INSTALLATION ..... MT– 14
INPUT SHAFT ..... MT– 22
OUTPUT SHAFT ..... MT– 24
COUNTER GEAR AND
REVERSE IDLER GEAR ..... MT– 31
FRONT BEARING RETAINER ..... MT– 35
TRANSFER ADAPTOR ..... MT– 36
SERVICE SPECIFICATIONS ..... MT– 37

PRECAUTION

MT07Q-06

When working with FIPG material, you must observe the following.

- **Using a razor blade and gasket scraper, remove all the old FIPG material from the gasket surfaces.**
- **Thoroughly clean all components to remove all the loose material.**
- **Clean both sealing surfaces with a non-residue solvent.**
- **Apply FIPG in an approx. 1 mm (0.04 in.) wide bead along the sealing surface.**
- **Part must be assembled within 10 minutes of application. Otherwise, the FIPG material must be removed and reapplied.**

PREPARATION

MT

MT0HX-01

SST (SPECIAL SERVICE TOOLS)

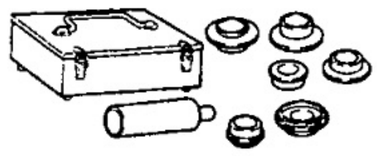	09316-60011 Transmission & Transfer Bearing Replacer	
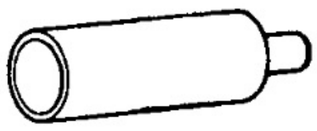	(09316-00011) Replacer Pipe	Output shaft rear bearing Gear spline piece No.5
	(09316-00031) Replacer "B"	5th gear
	(09316-00071) Replacer "F"	Output shaft rear bearing Output shaft center bearing
	09506-35010 Differential Drive Pinion Rear Bearing Replacer	Input shaft bearing
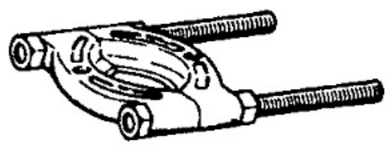	09950-00020 Bearing Remover	
	09950-40010 Puller B Set	Output shaft rear bearing
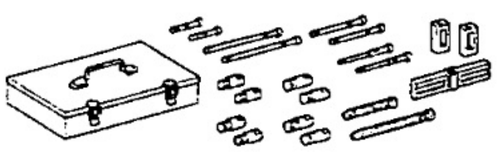	09950-50010 Puller C Set	Gear spline piece No.5
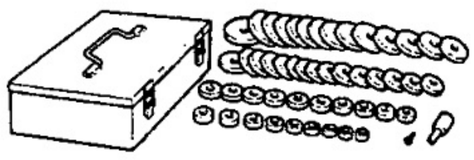	09950-60010 Replacer Set	
	(09951-00510) Replacer 51	Front bearing retainer oil seal

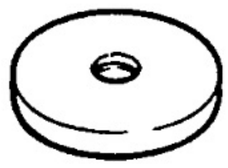	(09951−00570) Replacer 57	Transfer adaptor oil seal
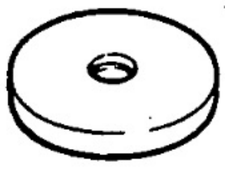	(09951−00620) Replacer 62	Counter rear bearing
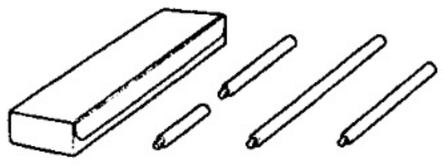	09950−70010 Handle Set	
	(09951−07150) Handle 150	

MT

MT0HY−01

RECOMMENDED TOOLS

	09031−00030 Pin Punch .	
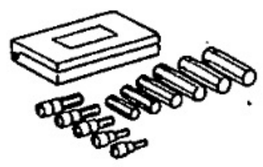	09040−00010 Hexagon Wrench Set .	
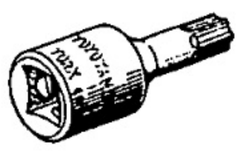	09042−00020 Torx Socket T40 .	
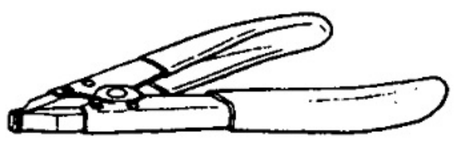	09905−00012 Snap Ring No.1 Expander .	

MT0HZ−01

EQUIPMENT

Dial indicator	
Calipers	
Micrometer	
Torque wrench	
Feeler gauge	
Magnetic finger	

MT0J0−02

LUBRICANT

Item	Capacity	Classification
Manual transmission oil	2.2 liters (2.3 US qts, 1.9 Imp. qts)	API GL−4 or GL−5 SAE 75W−90

MT0J1–01

SSM (SPECIAL SERVICE MATERIALS)

08826–00090	Seal Packing 1281, THREE BOND 1281 or equivalent (FIPG)	Intermediate plate x Transmission case Front bearing retainer x Transmission case
08833–00080	Adhesive 1344, THREE BOND 1344, LOCTITE 242 or equivalent	Straight screw plug Shift lever housing set bolt Front bearing retainer set bolt

TROUBLESHOOTING

MT

MX02A–0R

Use the table below to help you find the cause of the problem. The numbers indicate the priority of the likely cause of the problem. Check each part in order. If necessary, replace these parts.

See Page / Parts Name / Trouble	–	MT-3	–	MT-14	MT-14	–	–	MT-14	MT-14	MT-14	MT-14	MT-22,24,31	MT-24,31			
	Oil (Level low)	Oil (Wrong)	Oil (Level too high)	Gasket (Damaged)	Oil seal (Worn or damaged)	O-Ring (Worn or damaged)	Control cable (Faulty)	Locking ball spring (Damaged)	Shift fork (Worn)	Gear (Worn or damaged)	Bearing (Worn or damaged)	Synchronizer ring (Worn or damaged)	Shifting key spring (Damaged)			
Noise	1	2								3	3					
Oil leakage			1	2	2	3										
Hard to shift or will not shift							1					2	3			
Jumps out of gear								1	2	3	3					

V00310

ASSEMBLY REMOVAL AND INSTALLATION (1KZ–T, 1KZ–TE)

COMPONENTS

MT0J2–01

1KZ-T Engine :

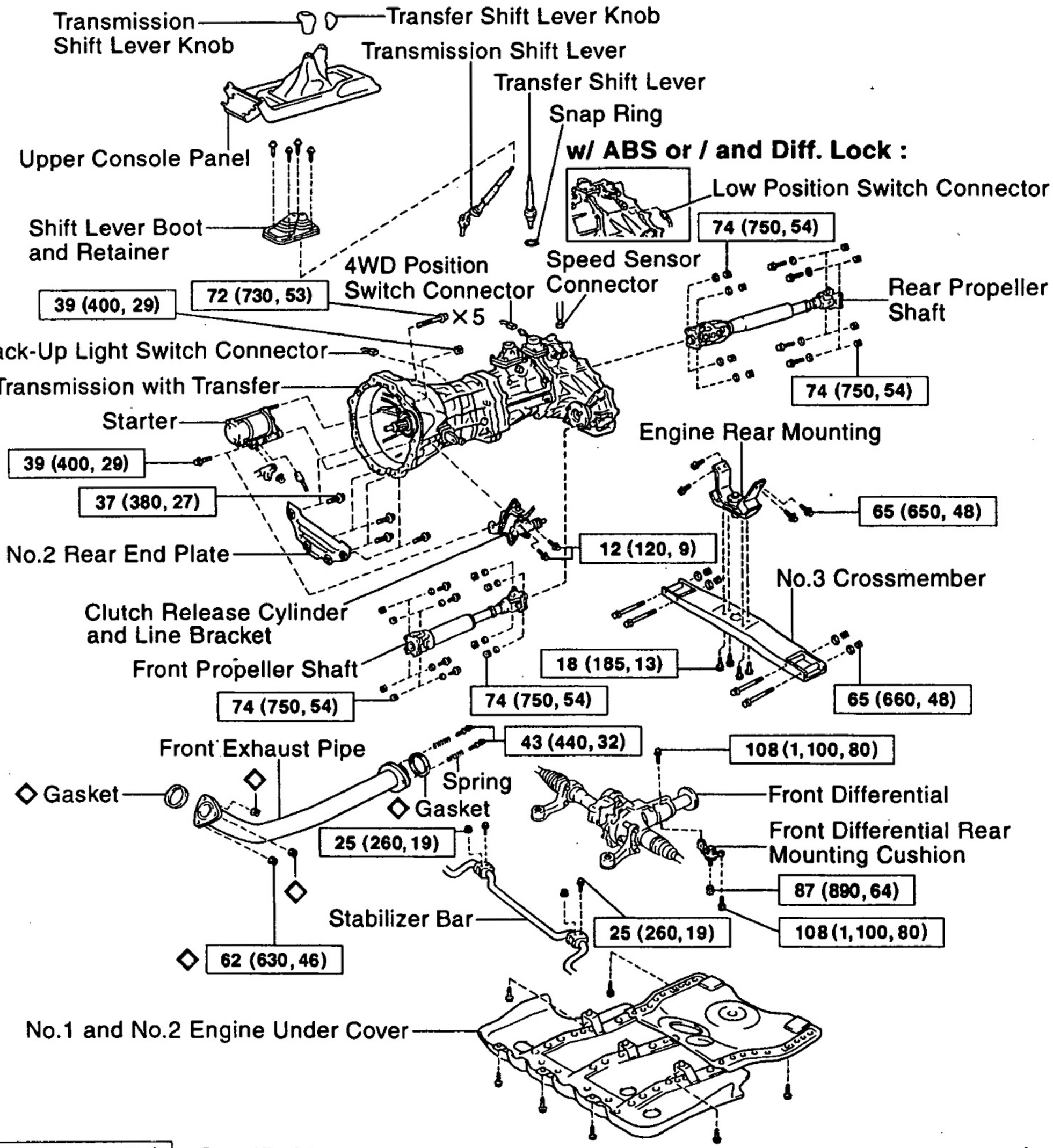

N·m (kgf·cm, ft·lbf) : Specified torque

◇ Non-reusable part

009603

1KZ-TE Engine :

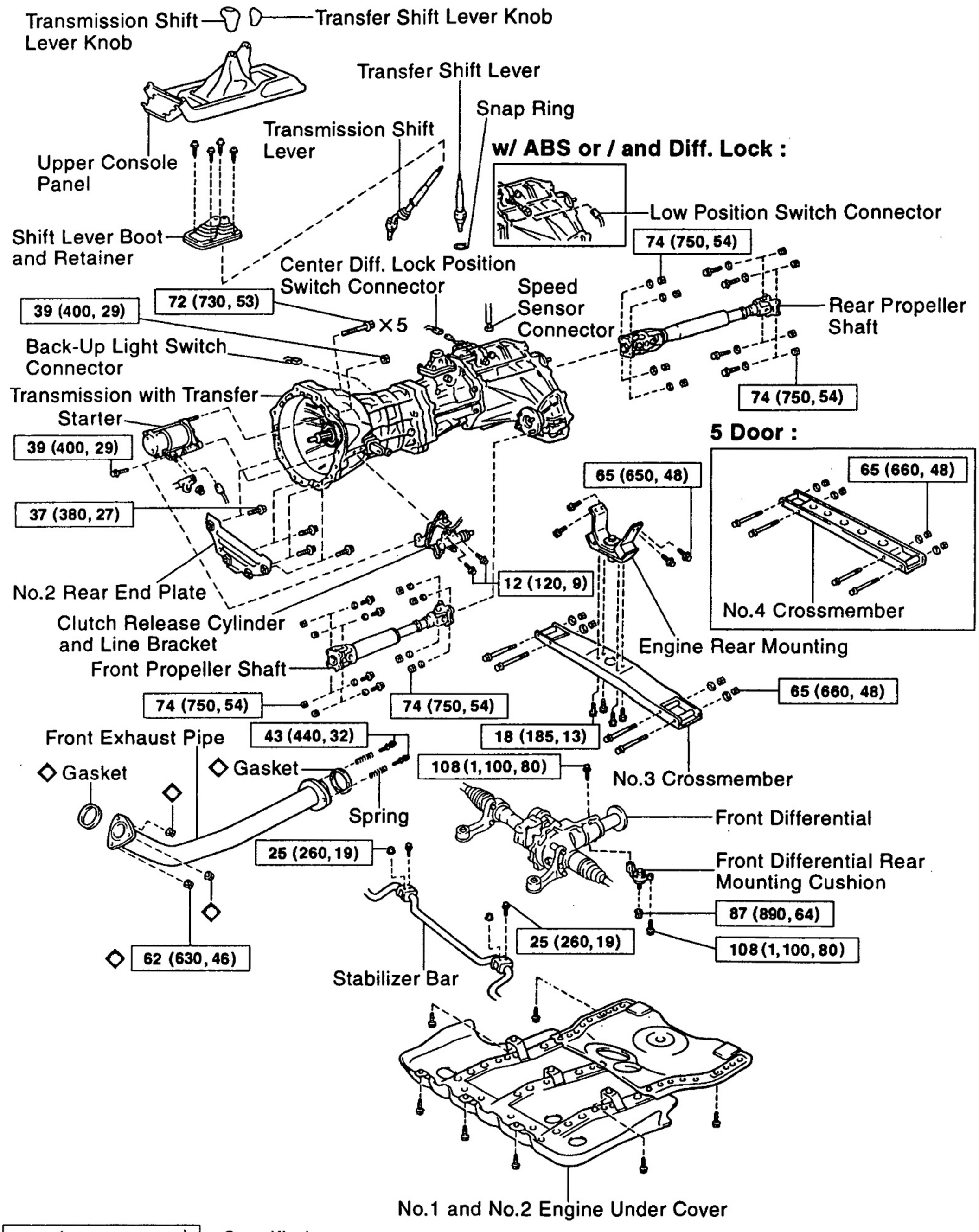

N·m (kgf·cm, ft·lbf) : Specified torque

◇ Non-reusable part

009918

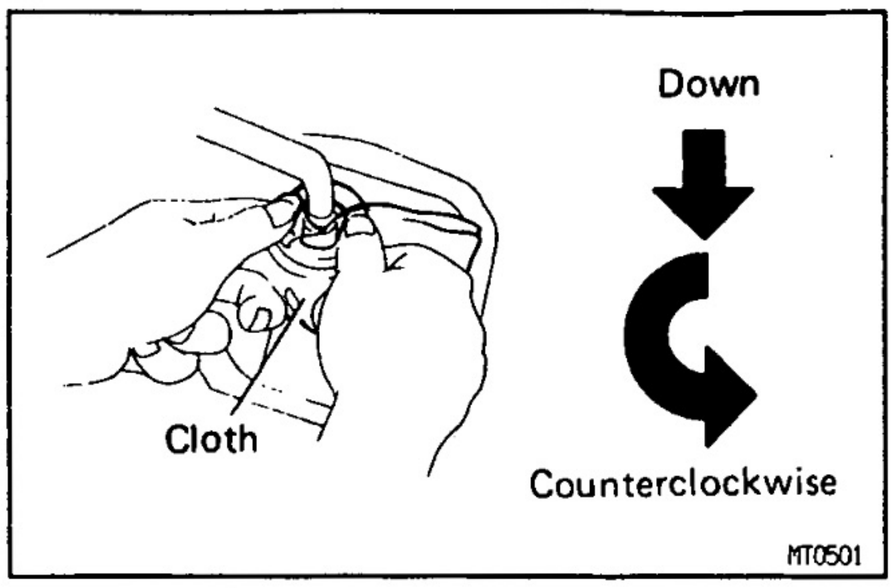

MT0J3–01

TRANSMISSION REMOVAL

1. REMOVE TRANSMISSION SHIFT LEVER

(a) Remove the upper console panel.

(b) Remove the 4 screws, shift lever boot and retainer.

(c) Cover the shift lever cap with a cloth.

(d) Pressing down on the shift lever cap and rotate it counterclockwise to remove.

(e) Pull out the shift lever.
INSTALLATION HINT: Apply MP grease to the tip of the shift lever.

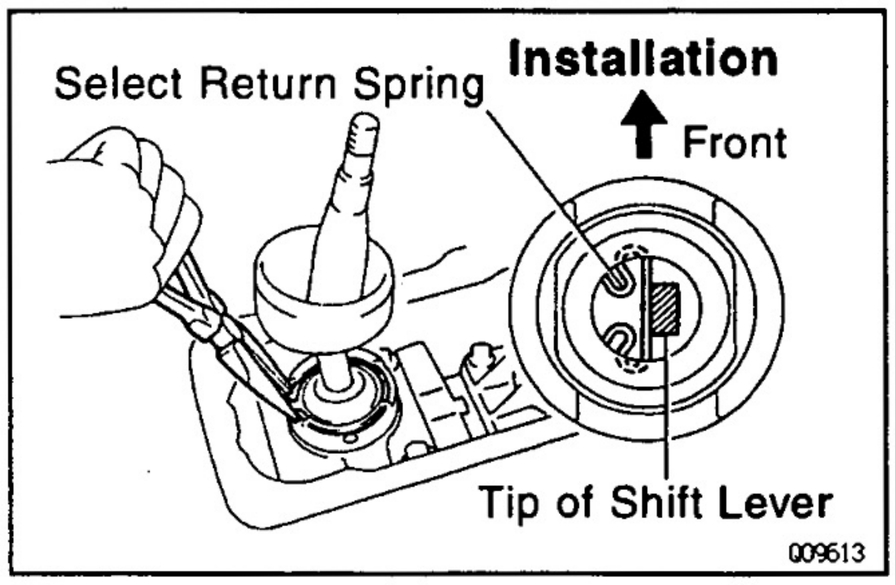

2. REMOVE TRANSFER SHIFT LEVER

Using pliers, remove the snap ring and pull out the shift lever.
HINT: Shift the transfer shift lever to the "H4" (1KZ–T engine) or "HL" (1KZ–TE engine) position.
INSTALLATION HINT: Apply MP grease to the tip of the shift lever.

MT

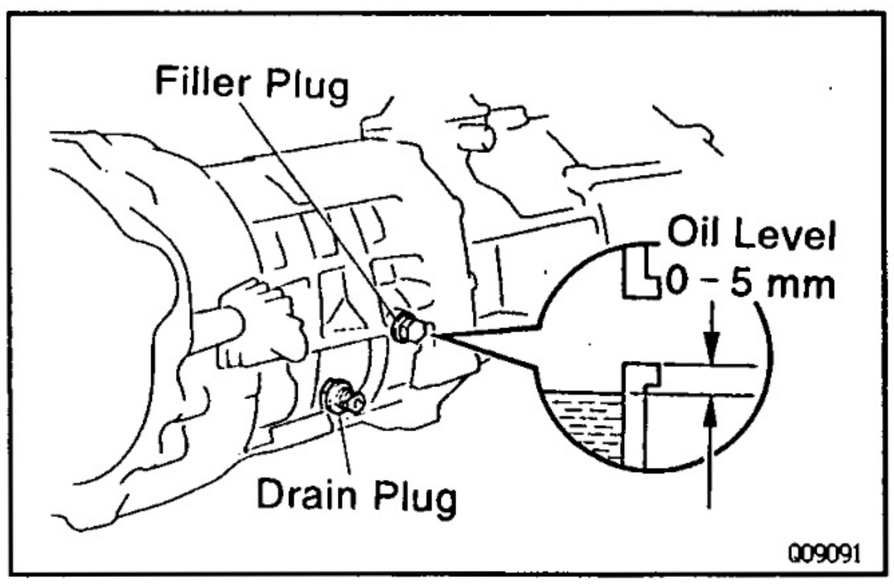

3. RAISE VEHICLE AND DRAIN TRANSMISSION OIL

Oil grade: API GL–4 or GL–5
Viscosity: SAE 75W–90
Capacity: 2.2 liters (2.3 US qts, 1.9 Imp. qts)
Torque: 37 N·m (380 kgf·cm, 27 ft·lbf)

4. REMOVE NO.1 AND NO.2 ENGINE UNDER COVERS

5. REMOVE FRONT AND REAR PROPELLER SHAFTS
(See page PR–3)

6. REMOVE CLUTCH RELEASE CYLINDER

Remove the 2 bolts and release cylinder.
Torque: 12 N·m (120 kgf·cm, 9 ft·lbf)

7. DISCONNECT THESE CONNECTORS:

- Back–up light switch connector
- Speed sensor connector
- 1KZ–T Engine:
  4WD position switch connector
- 1KZ–TE Engine:
  Center diff. lock position switch connector
- w/ ABS or / and Diff. Lock:
  Low position switch connector

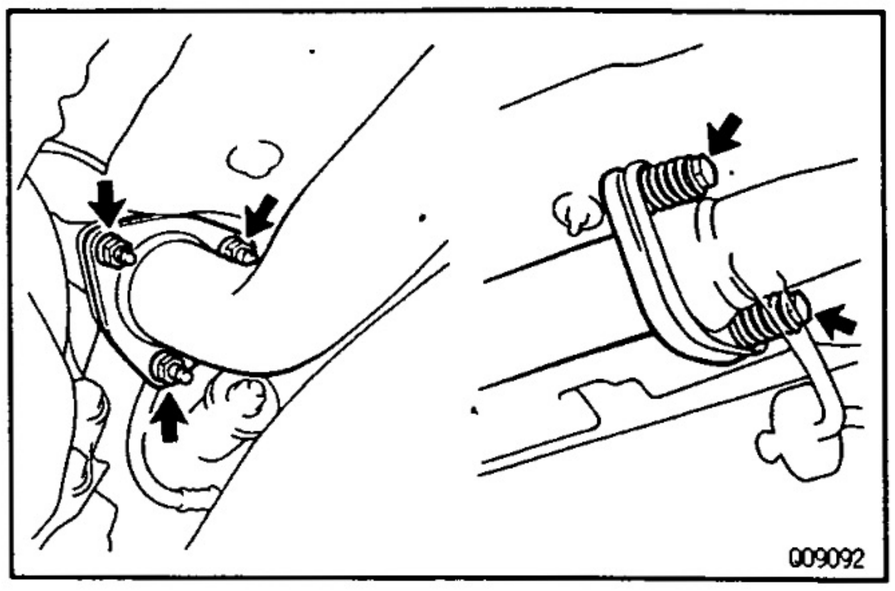

8. REMOVE FRONT EXHAUST PIPE

(a) Remove the 3 nuts and gasket from the exhaust manifold.
Torque: 62 N·m (630 kgf·cm, 46 ft·lbf)

(b) Remove the 2 bolts, springs, gasket and pipe.
Torque: 43 N·m (440 kgf·cm, 32 ft·lbf)

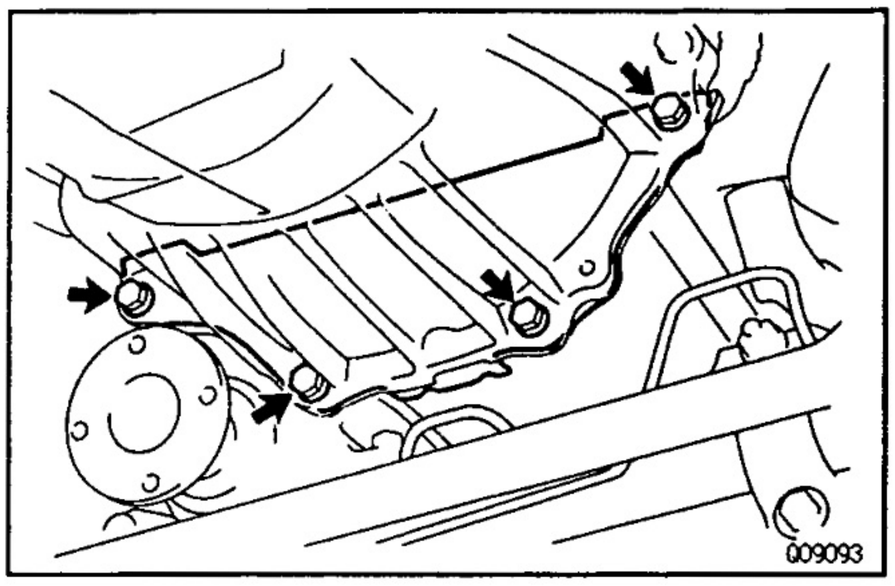

9. REMOVE NO.2 REAR END PLATE

Remove the 4 bolts and No.2 rear end plate.

Torque: 37 N·m (380 kgf·cm, 27 ft·lbf)

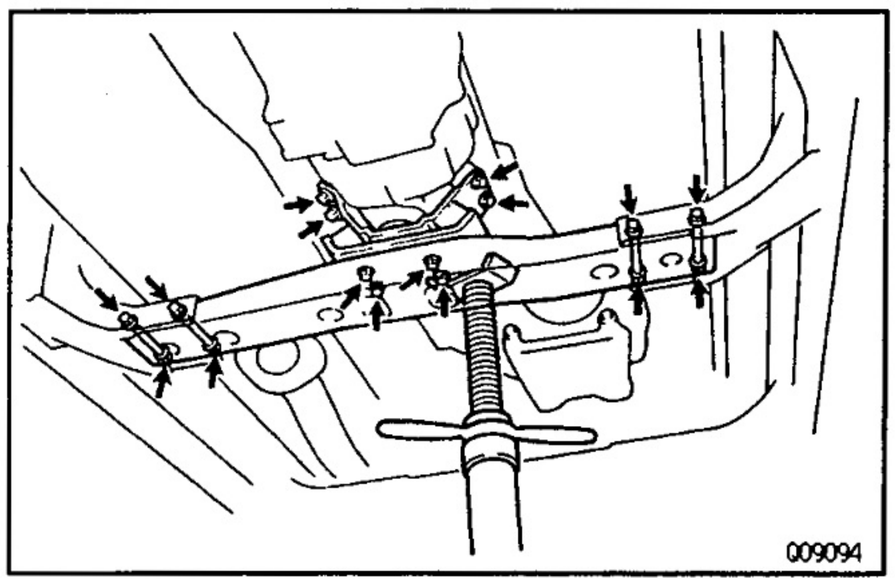

10. REMOVE NO.3 CROSSMEMBER

(a) Support the transmission rear side.

(b) Remove the 4 set bolts of the engine rear mounting.

Torque: 18 N·m (185 kgf·cm, 13 ft·lbf)

(c) Remove the 4 bolts, nuts and crossmember.

Torque: 65 N·m (660 kgf·cm, 48 ft·lbf)

11. REMOVE ENGINE REAR MOUNTING

Remove the 4 bolts and engine rear mounting from the transmission.

Torque: 65 N·m (650 kgf·cm, 48 ft·lbf)

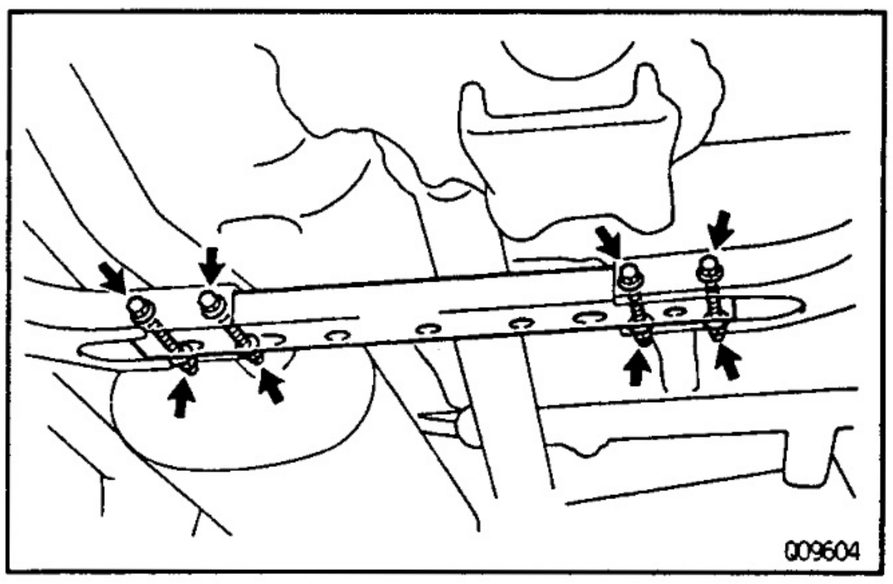

12. 5 Door of 1KZ–TE Engine: REMOVE NO.4 CROSSMEMBER

Remove the 4 bolts, nuts and crossmember.

Torque: 65 N·m (660 kgf·cm, 48 ft·lbf)

13. JACK UP TRANSMISSION SLIGHTLY

Using a transmission jack, support the transmission.

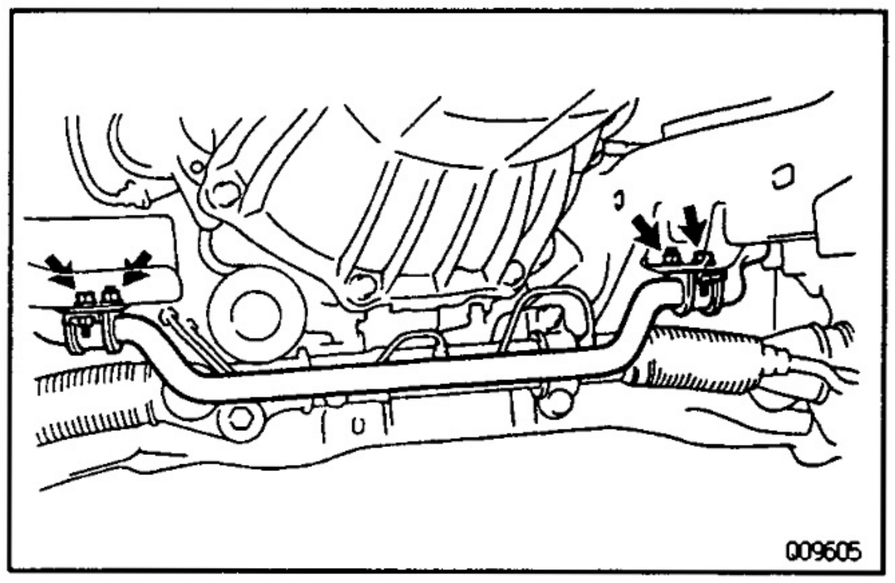

14. DISCONNECT STABILIZER BAR

(a) Remove the 2 set bolts and nuts of the stabilizer bar bracket.

Torque: 25 N·m (260 kgf·cm, 19 ft·lbf)

(b) Disconnect the stabilizer bar.

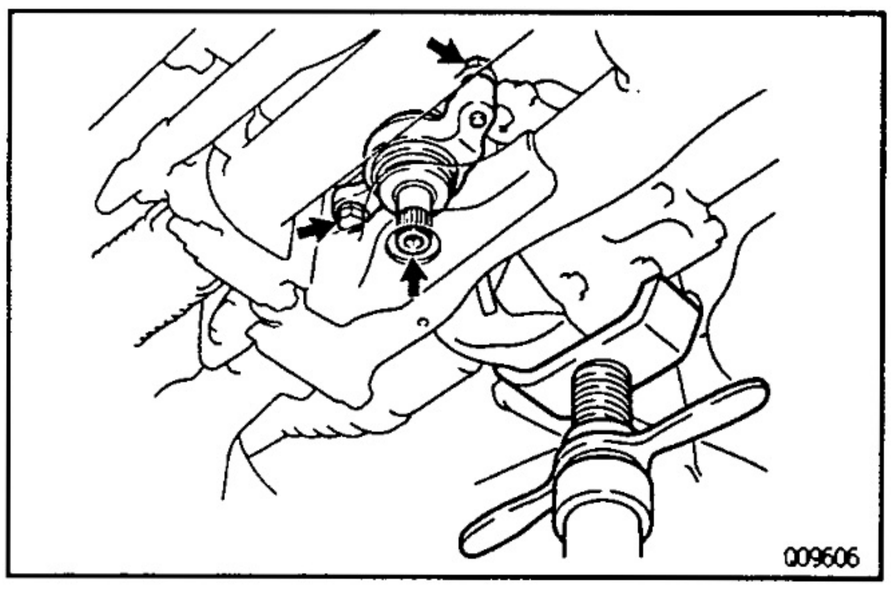

15. REMOVE FRONT DIFFERENTIAL REAR MOUNTING CUSHION

(a) Using a hexagon wrench, remove the nut.

Torque: 87 N·m (890 kgf·cm, 64 ft·lbf)

(b) Remove the 2 bolts and rear mounting cushion.

Torque: 108 N·m (1,100 kgf·cm, 80 ft·lbf)

(c) Lift up the front differential to lower the companion flange side.

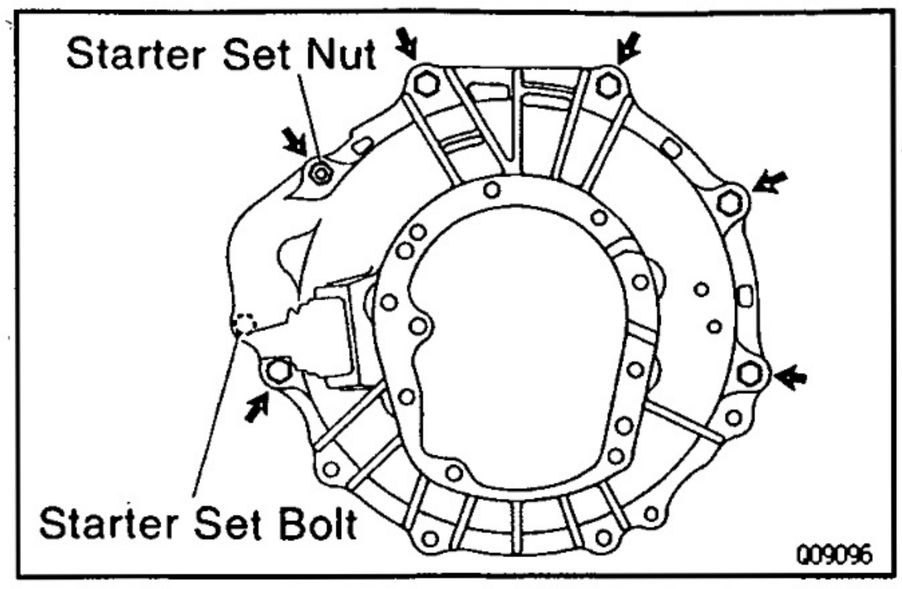

16. REMOVE STARTER

(a) Remove the set bolt of the starter lower side with the clutch line bracket.
Torque: 39 N·m (400 kgf·cm, 29 ft·lbf)

(b) Disconnect the connector and wire, and remove the set nut of the starter upper side and starter.
Torque: 39 N·m (400 kgf·cm, 29 ft·lbf)

17. REMOVE TRANSMISSION WITH TRANSFER

(a) Disconnect the wire harness from the transmission.

(b) Remove the 5 transmission mounting bolts from the engine.
Torque: 72 N·m (730 kgf·cm, 53 ft·lbf)

(c) Pull out the transmission with the transfer down and toward the rear.

MT

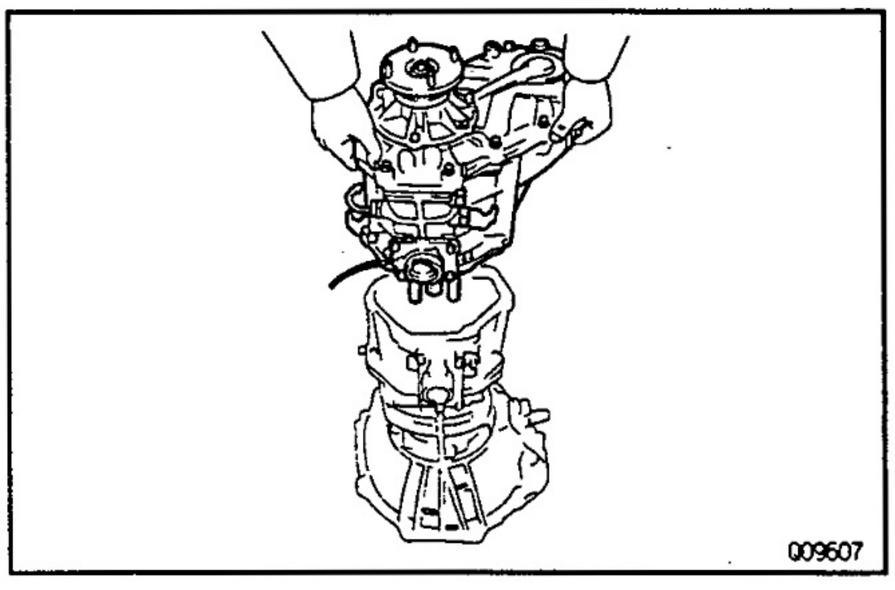

18. REMOVE TRANSFER FROM TRANSMISSION

(a) Disconnect the breather hose and remove the 8 transfer adaptor rear mounting bolts.
Torque: 24 N·m (240 kgf·cm, 17 ft·lbf)

(b) Pull the transfer straight up and remove it from the transmission.
HINT: Take care not to damage the transfer adaptor oil seal with the transfer input gear spline.
INSTALLATION HINT: Apply MP grease to the transfer adaptor oil seal.

MTGJ4–01

TRANSMISSION INSTALLATION

Installation is in the reverse order of removal.
HINT: After installation, do the road test.

ASSEMBLY REMOVAL AND INSTALLATION (5VZ–FE)

COMPONENTS

MT0F8–02

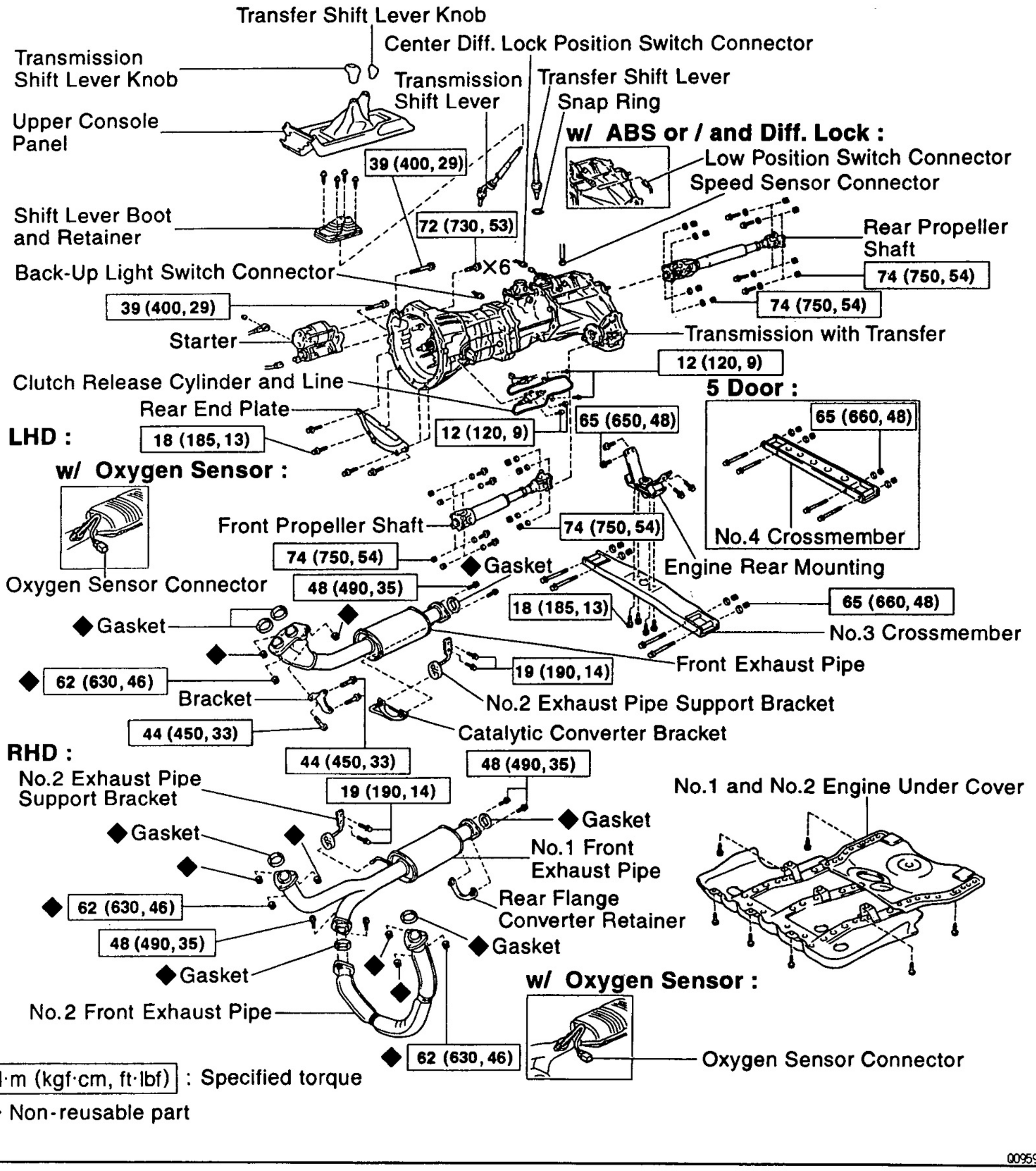

009599

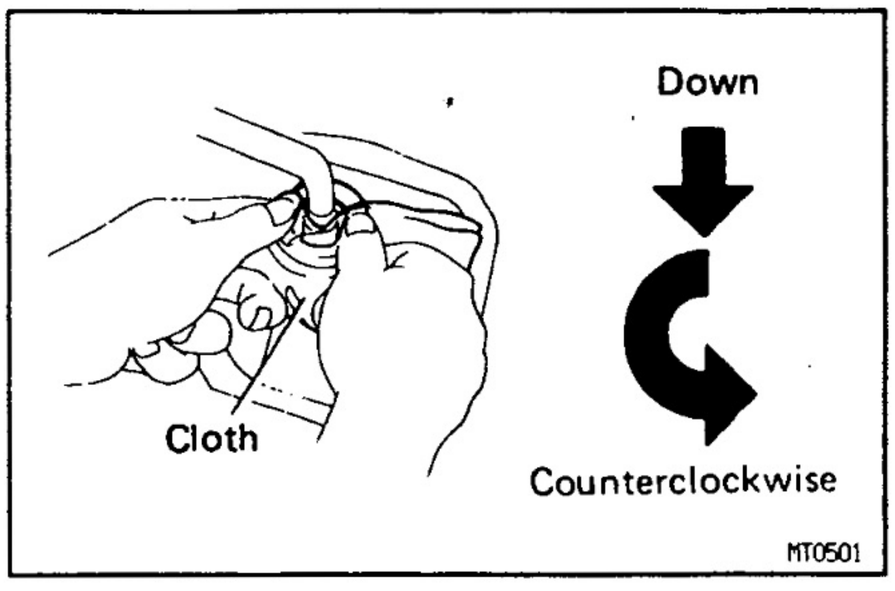

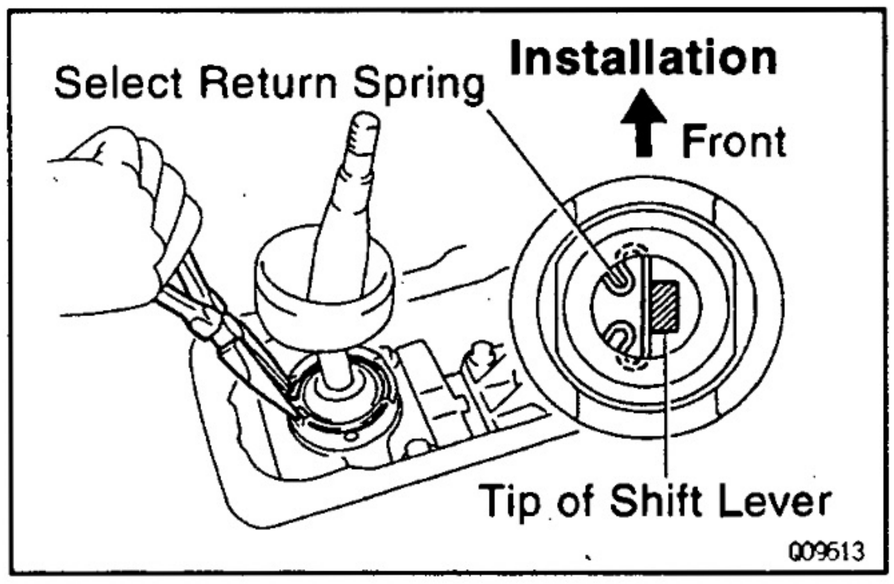

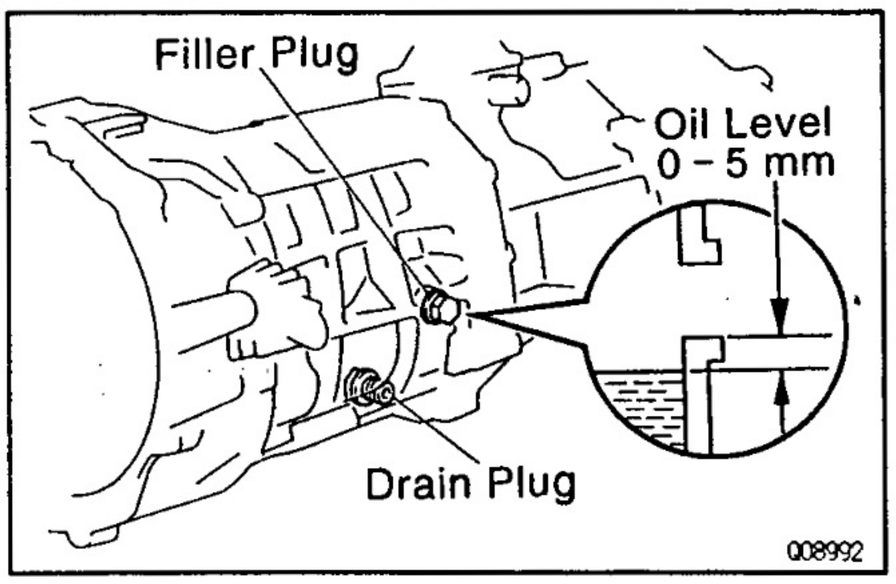

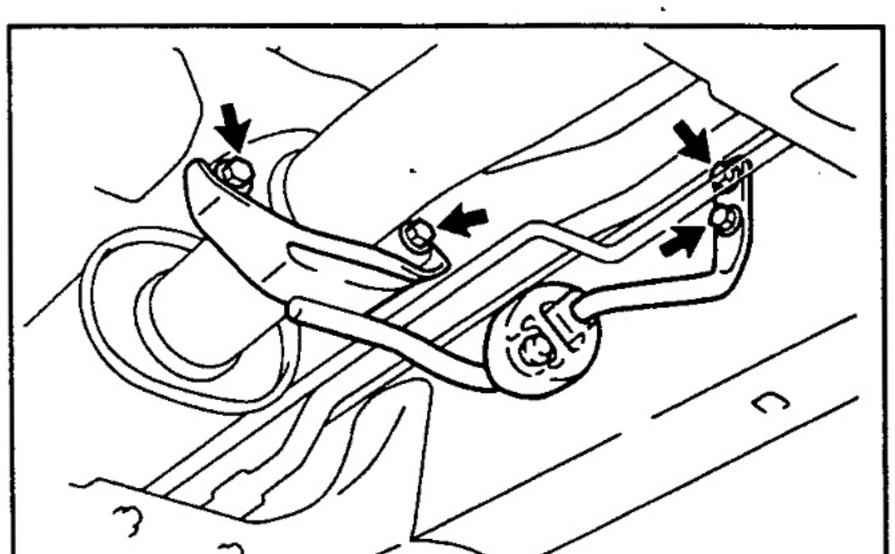

MT0J0–01

TRANSMISSION REMOVAL

1. REMOVE TRANSMISSION SHIFT LEVER

(a) Remove the upper console panel.

(b) Remove the 4 screws, shift lever boot and retainer.

(c) Cover the shift lever cap with a cloth.

(d) Pressing down on the shift lever cap and rotate it counterclockwise to remove.

(e) Pull out the shift lever.
INSTALLATION HINT: Apply MP grease to the tip of the shift lever.

2. REMOVE TRANSFER SHIFT LEVER

Using pliers, remove the snap ring and pull out the shift lever.
HINT: Shift the transfer shift lever to the "HL" position.
INSTALLATION HINT: Apply MP grease to the tip of the shift lever.

MT

3. RAISE VEHICLE AND DRAIN TRANSMISSION OIL

Oil grade: API GL–4 or GL–5
Viscosity: SAE 75W–90
Capacity: 2.2 liters (2.3 US qts, 1.9 Imp. qts)
Torque: 37 N·m (380 kgf·cm, 27 ft·lbf)

4. REMOVE NO.1 AND NO.2 ENGINE UNDER COVERS

5. REMOVE FRONT AND REAR PROPELLER SHAFTS
(See page PR–3)

6. REMOVE CLUTCH RELEASE CYLINDER AND LINE

Remove the 4 bolts and release cylinder and line.
Torque: 12 N·m (120 kgf·cm, 9 ft·lbf)

7. DISCONNECT THESE CONNECTORS:

- Back–up light switch connector
- Speed sensor connector
- Center diff. lock position switch connector
- w/ ABS or / and Diff. Lock:
  Low position switch connector

8. LHD:
REMOVE FRONT EXHAUST PIPE

(a) Disconnect the ring, remove the 2 bolts and support bracket.
Torque: 19 N·m (190 kgf·cm, 14 ft·lbf)

(b) Remove the 2 bolts, bracket and gasket.
Torque: 48 N·m (490 kgf·cm, 35 ft·lbf)

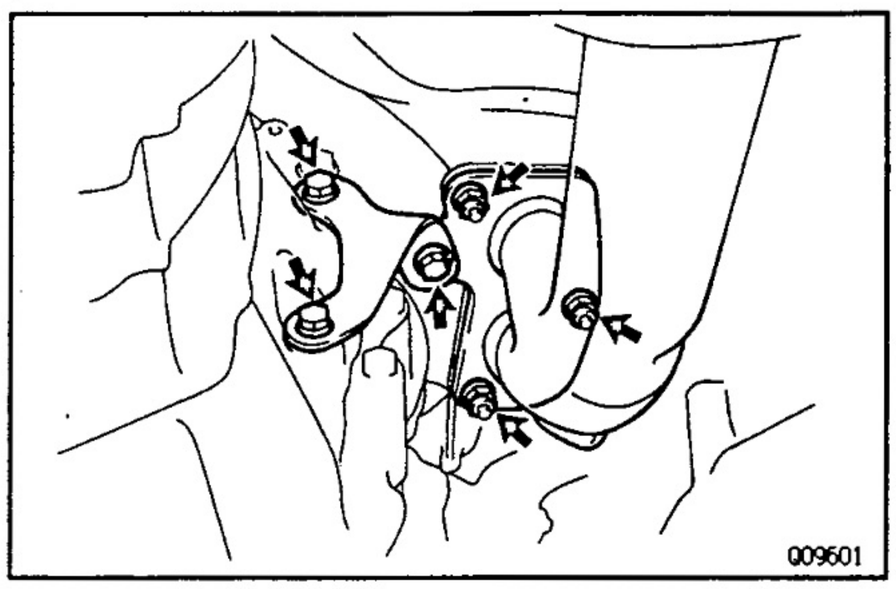

(c) w/ Oxygen Sensor:
Disconnect the oxygen sensor connector.

(d) Remove the 3 bolts and bracket.
Torque: 44 N·m (450 kgf·cm, 33 ft·lbf)

(e) Remove the 3 nuts, front exhaust pipe and 2 gaskets.
Torque: 62 N·m (630 kgf·cm, 46 ft·lbf)

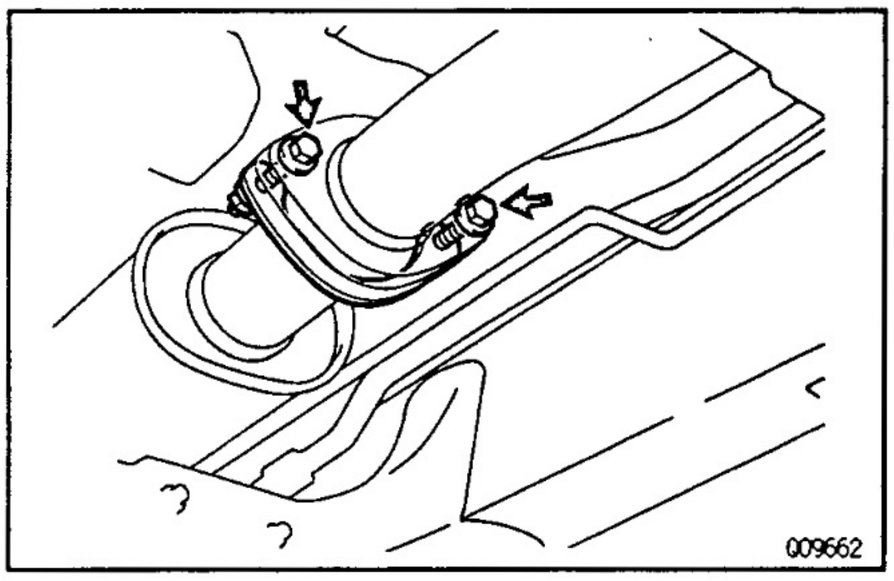

9. RHD:
REMOVE NO.1 AND NO.2 FRONT EXHAUST PIPES

(a) Disconnect the ring, remove the 2 bolts and support bracket.
Torque: 19 N·m (190 kgf·cm, 14 ft·lbf)

(b) Remove the 2 bolts, retainer and gasket.
Torque: 48 N·m (490 kgf·cm, 35 ft·lbf)

(c) w/ Oxygen Sensor:
Disconnect the oxygen sensor connector.

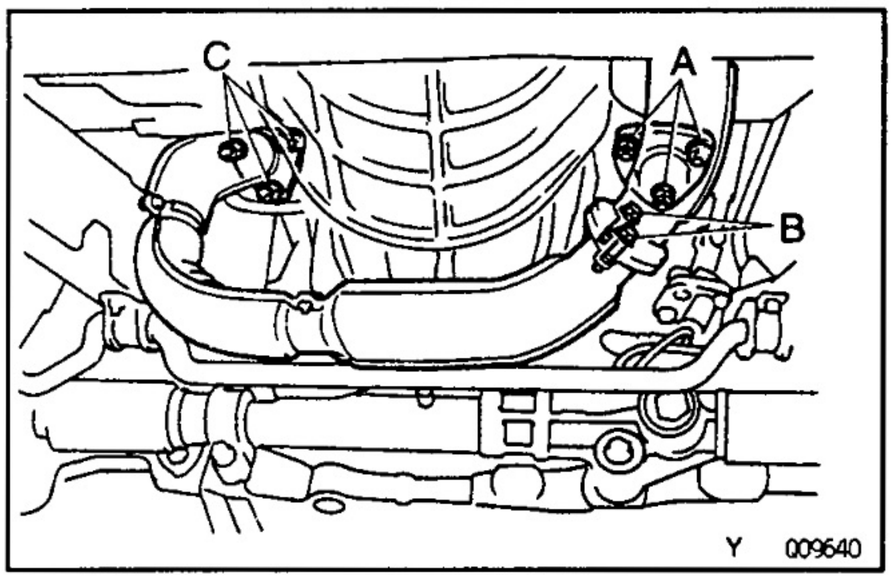

(d) Remove the 3 nuts (A), 2 bolts (B), 2 gaskets and No.1 front exhaust pipe.
Torque:
Nut A: 62 N·m (630 kgf·cm, 46 ft·lbf)
Bolt B: 48 N·m (490 kgf·cm, 35 ft·lbf)

(e) Remove the 3 nuts (C), gasket and No.2 front exhaust pipe.
Torque:
Nut C: 62 N·m (630 kgf·cm, 46 ft·lbf)

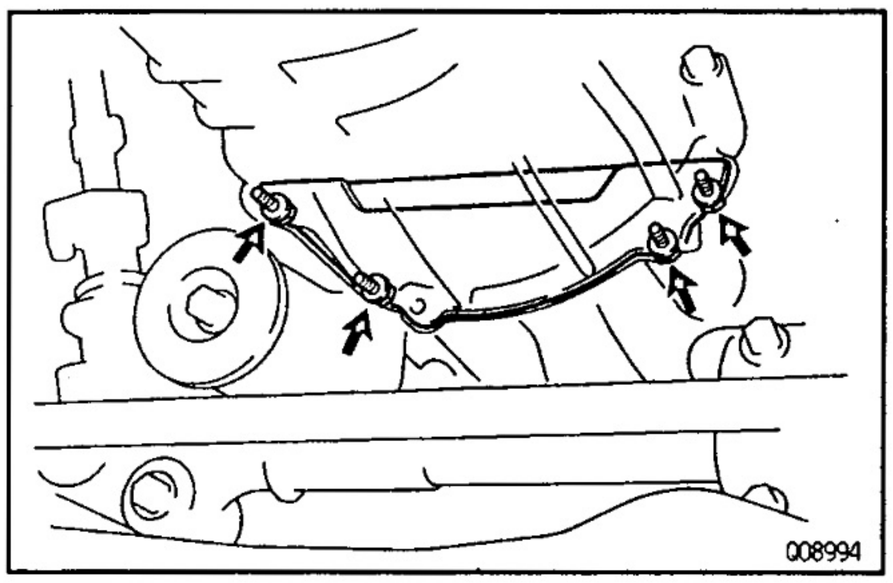

10. REMOVE REAR END PLATE
Remove the 4 bolts and rear end plate.
Torque: 18 N·m (185 kgf·cm, 13 ft·lbf)

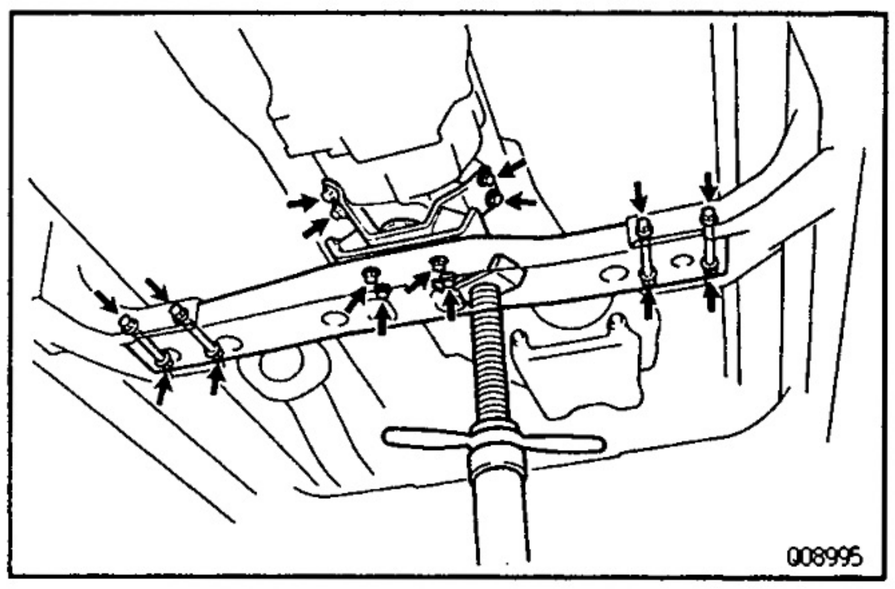

11. REMOVE NO.3 CROSSMEMBER

(a) Support the transmission rear side.

(b) Remove the 4 set bolts of the engine rear mounting.
Torque: 18 N·m (185 kgf·cm, 13 ft·lbf)

(c) Remove the 4 bolts, nuts and crossmember.
Torque: 65 N·m (660 kgf·cm, 48 ft·lbf)

12. REMOVE ENGINE REAR MOUNTING
Remove the 4 bolts and engine rear mounting from the transmission.
Torque: 65 N·m (650 kgf·cm, 48 ft·lbf)

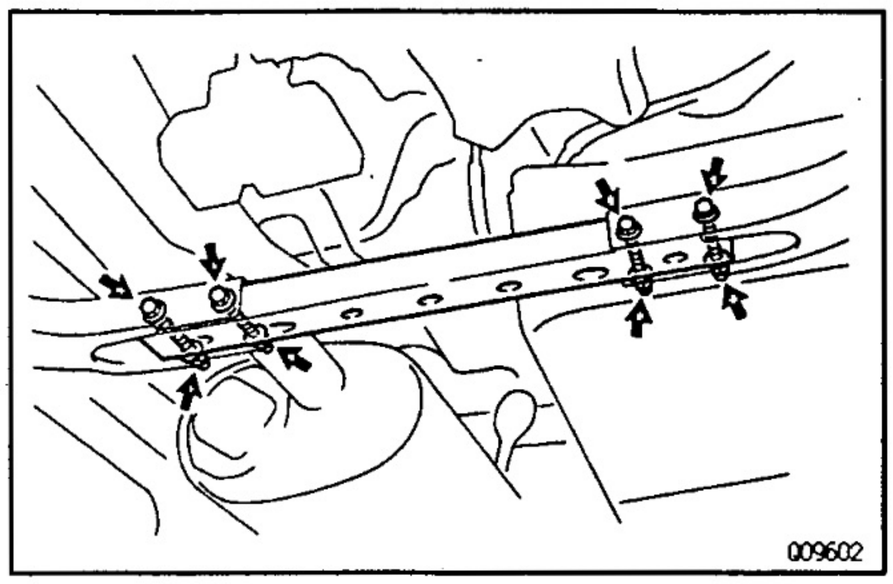

13. **5 Door:**
REMOVE NO.4 CROSSMEMBER
Remove the 4 bolts, nuts and crossmember.
Torque: 65 N·m (660 kgf·cm, 48 ft·lbf)

14. **JACK UP TRANSMISSION SLIGHTLY**
Using a transmission jack, support the transmission.

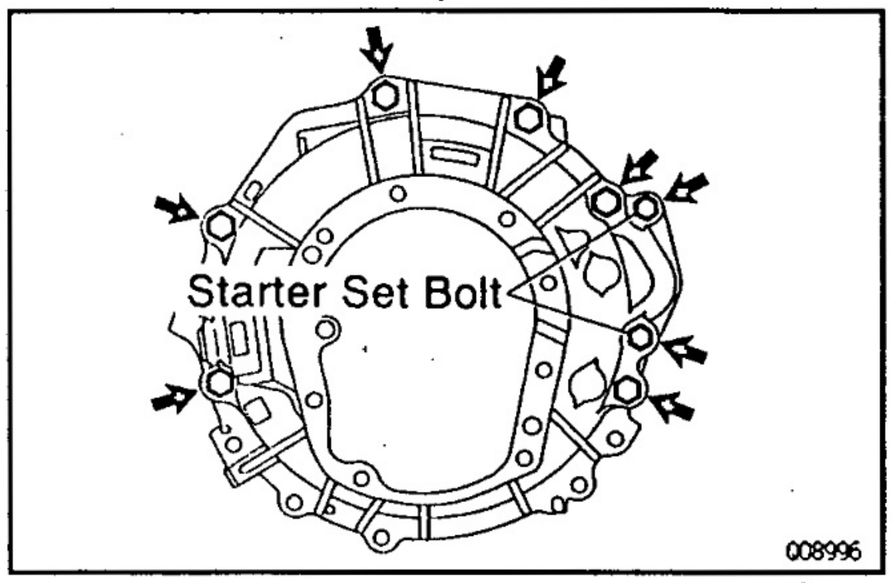

15. **REMOVE STARTER**
(a) Disconnect the connector and wire from the starter.
(b) Remove the 2 bolts and starter.
Torque: 39 N·m (400 kgf·cm, 29 ft·lbf)

16. **REMOVE TRANSMISSION WITH TRANSFER**
(a) Disconnect the wire harness from the transmission.
(b) Remove the 6 transmission mounting bolts from the engine.
Torque: 72 N·m (730 kgf·cm, 53 ft·lbf)
(c) Pull out the transmission with the transfer down and toward the rear.

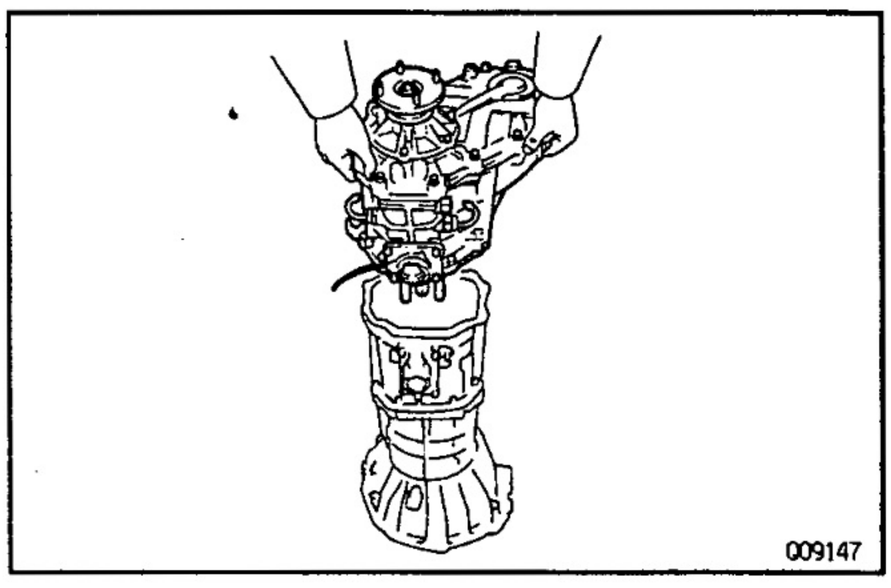

17. **REMOVE TRANSFER FROM TRANSMISSION**
(a) Disconnect the breather hose and remove the 8 transfer adaptor rear mounting bolts.
Torque: 24 N·m (240 kgf·cm, 17 ft·lbf)
(b) Pull the transfer straight up and remove it from the transmission.
HINT: Take care not to damage the transfer adaptor oil seal with the transfer input gear spline.
INSTALLATION HINT: Apply MP grease to the transfer adaptor oil seal.

TRANSMISSION INSTALLATION

MT0FU–02

Installation is in the reverse order of removal.
HINT: After installation, do the road test.

COMPONENT PARTS REMOVAL AND INSTALLATION

COMPONENTS

MT02D–0C

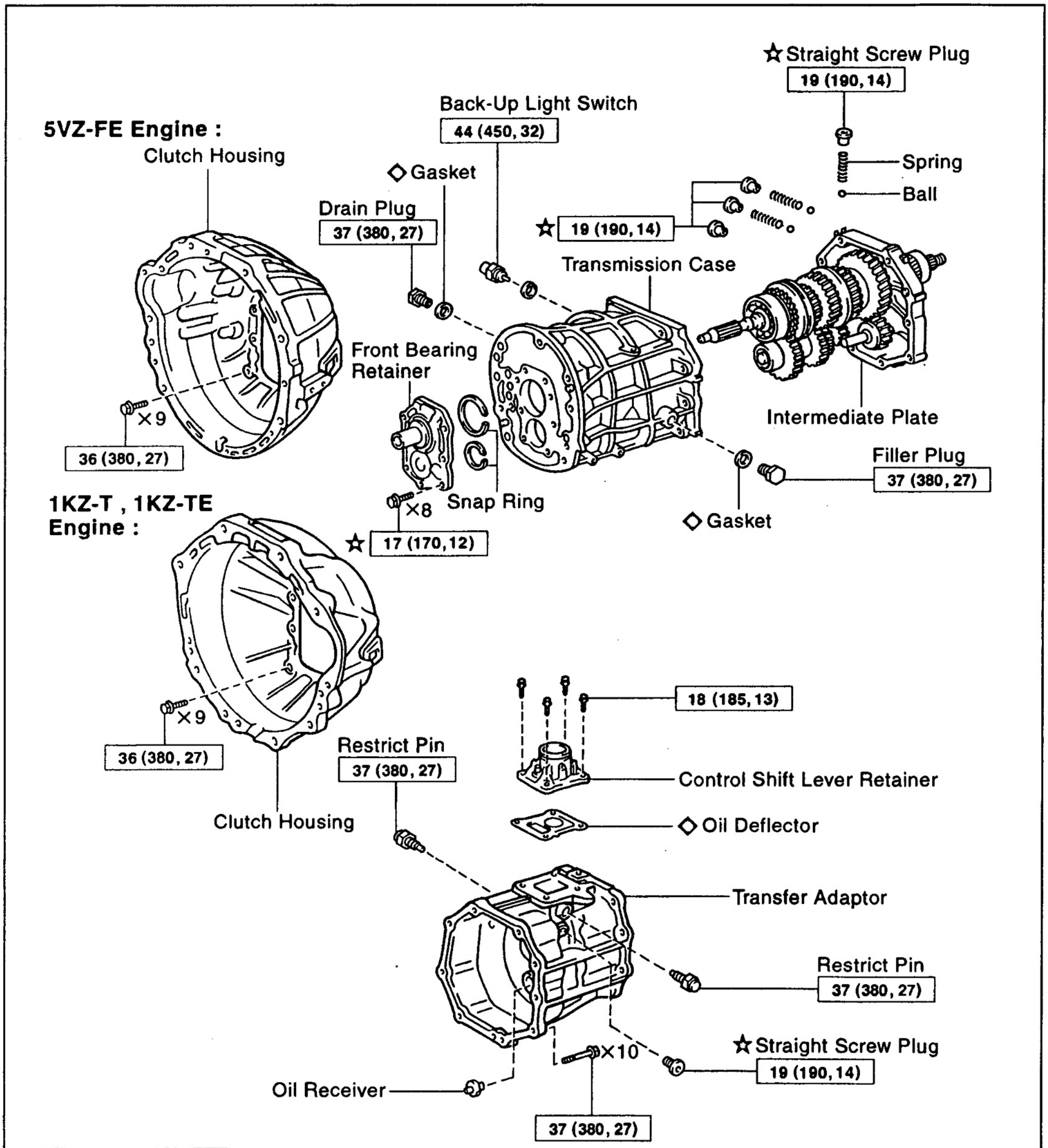

009638

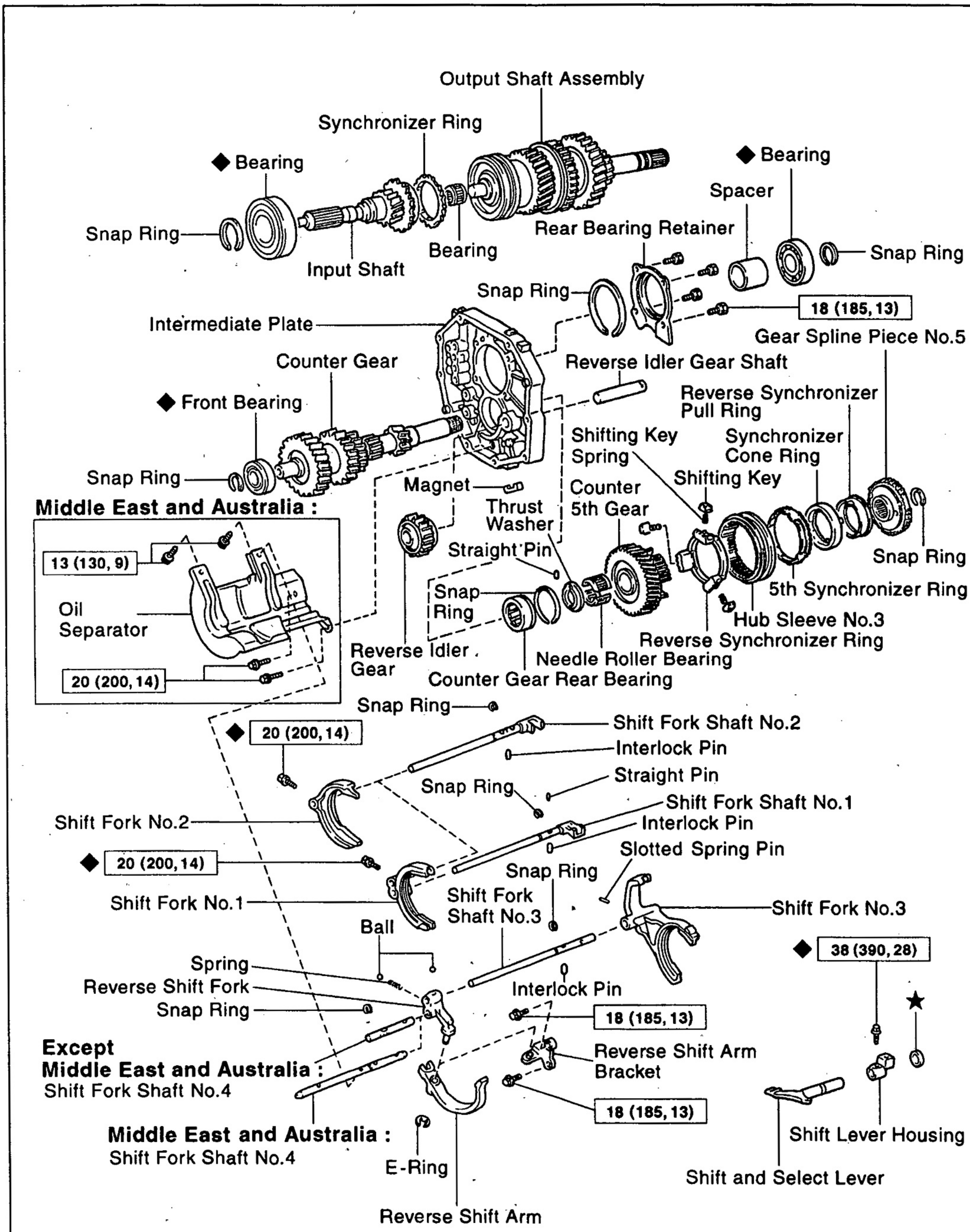
Output Shaft Assembly
Synchronizer Ring
◆ Bearing
Snap Ring
Input Shaft
Bearing
Rear Bearing Retainer
◆ Bearing
Spacer
Snap Ring
Snap Ring
18 (185, 13)
Gear Spline Piece No.5
Intermediate Plate
Counter Gear
Reverse Idler Gear Shaft
◆ Front Bearing
Reverse Synchronizer Pull Ring
Shifting Key Spring
Synchronizer Cone Ring
Shifting Key
Snap Ring
Magnet
Counter 5th Gear
Thrust Washer
Straight Pin
Middle East and Australia :
13 (130, 9)
Oil Separator
20 (200, 14)
Snap Ring
Reverse Idler Gear
Needle Roller Bearing
Counter Gear Rear Bearing
5th Synchronizer Ring
Hub Sleeve No.3
Reverse Synchronizer Ring
Snap Ring
Shift Fork Shaft No.2
◆ 20 (200, 14)
Interlock Pin
Straight Pin
Snap Ring
Shift Fork Shaft No.1
Shift Fork No.2
Interlock Pin
◆ 20 (200, 14)
Slotted Spring Pin
Snap Ring
Shift Fork No.1
Shift Fork Shaft No.3
Shift Fork No.3
Ball
◆ 38 (390, 28)
Spring
Reverse Shift Fork
Snap Ring
Interlock Pin
18 (185, 13)
★
Except Middle East and Australia :
Shift Fork Shaft No.4
Reverse Shift Arm Bracket
18 (185, 13)
Middle East and Australia :
Shift Fork Shaft No.4
E-Ring
Reverse Shift Arm
Shift Lever Housing
Shift and Select Lever
N·m (kgf·cm, ft·lbf) : Specified torque
◆ Non-reusable part
★ Precoated part
009505

MT0JS–01

BASIC SUBASSEMBLY SEPARATION

1. REMOVE BACK–UP LIGHT SWITCH
Torque: 44 N·m (450 kgf·cm, 32 ft·lbf)

2. REMOVE CLUTCH HOUSING
Remove the 9 bolts and clutch housing.
Torque: 36 N·m (370 kgf·cm, 27 ft·lbf)

3. REMOVE CONTROL SHIFT LEVER RETAINER
Remove the 4 bolts, retainer and oil deflector.
Torque: 18 N·m (185 kgf·cm, 13 ft·lbf)

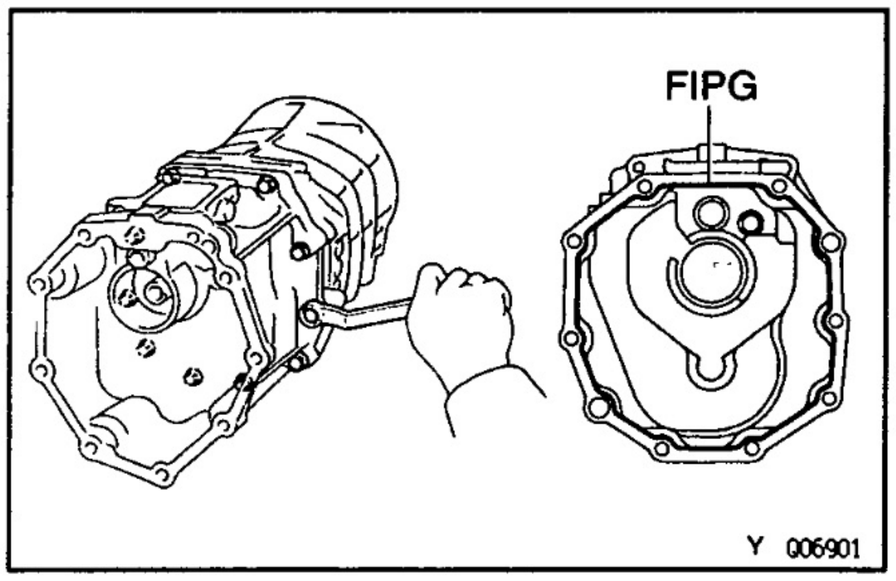

4. REMOVE 2 RESTRICT PINS
Torque: 37 N·m (380 kgf·cm, 27 ft·lbf)

5. REMOVE TRANSFER ADAPTOR
(a) Remove the shift lever housing set bolt.
Torque: 38 N·m (390 kgf·cm, 28 ft·lbf)
(b) Remove the 10 bolts.
Torque: 37 N·m (380 kgf·cm, 27 ft·lbf)
(c) Using a plastic hammer, tap the transfer adaptor, remove the shift lever housing and shift and select lever.
FIPG: Part No. 08826–00090, THREE BOND 1281 or equivalent

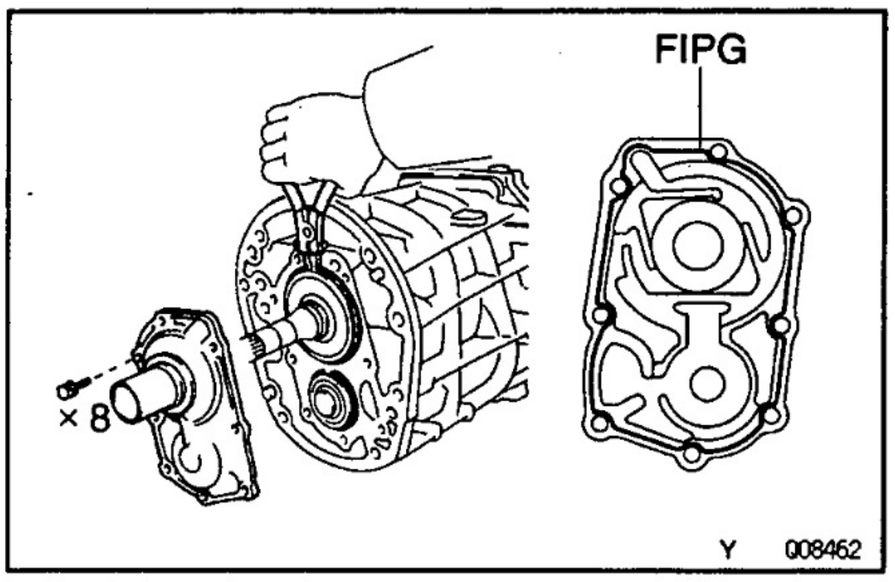

6. REMOVE FRONT BEARING RETAINER
(a) Remove the 8 bolts.
Sealant: Part No.08833–000080, THREE BOND 1344, LOCTITE 242 or equivalent
Torque: 17 N·m (170 kgf·cm, 12 ft·lbf)
(b) Using a plastic hammer, tap the front bearing retainer.
FIPG: Part No. 08826–00090, THREE BOND 1281 or equivalent

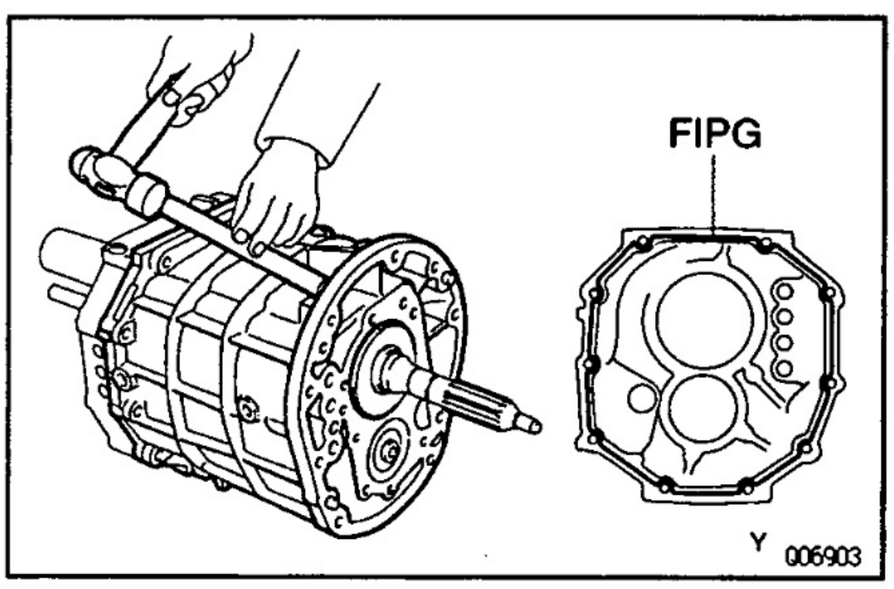

7. REMOVE BEARING SNAP RING
Using a snap ring expander, remove the 2 snap rings.

8. SEPARATE INTERMEDIATE PLATE FROM TRANSMISSION CASE
(a) Using a brass bar and hammer, carefully tap the transmission case.
(b) Remove the transmission case from the intermediate plate.
INSTALLATION HINT: Align the each bearing outer race, each fork shaft end and reverse idler gear shaft end with the case installation holes.
FIPG: Part No. 08826–00090, THREE BOND 1281 or equivalent

9. REMOVE MAGNET FROM INTERMEDIATE PLATE

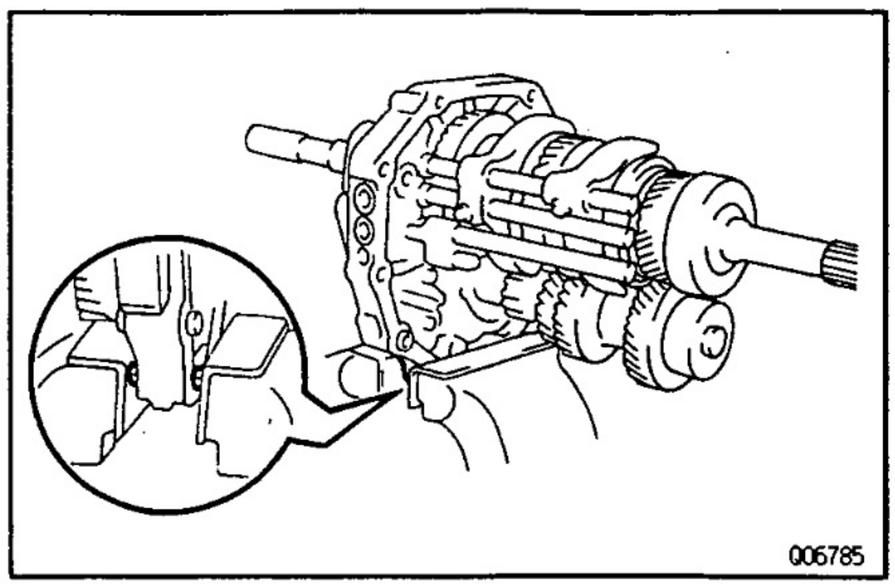

10. MOUNT INTERMEDIATE PLATE IN VISE

(a) Use the 2 clutch housing bolts, plate washers and suitable nuts, as shown.

INSTALLATION NOTICE: Increase or decrease plate washers so that the bolt tip does not protrude from the nut.

(b) Mount the intermediate plate in a vise.

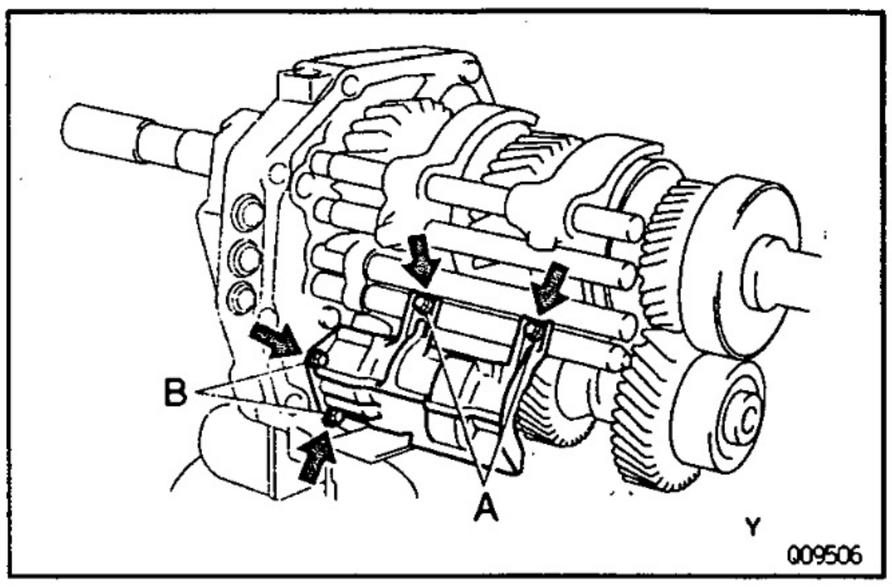

11. Middle East and Australia:
REMOVE OIL SEPARATOR

Remove the 4 bolts and separator.

Torque:

Bolt A: 13 N·m (130 kgf·cm, 10 ft·lbf)

Bolt B: 20 N·m (200 kgf·cm, 14 ft·lbf)

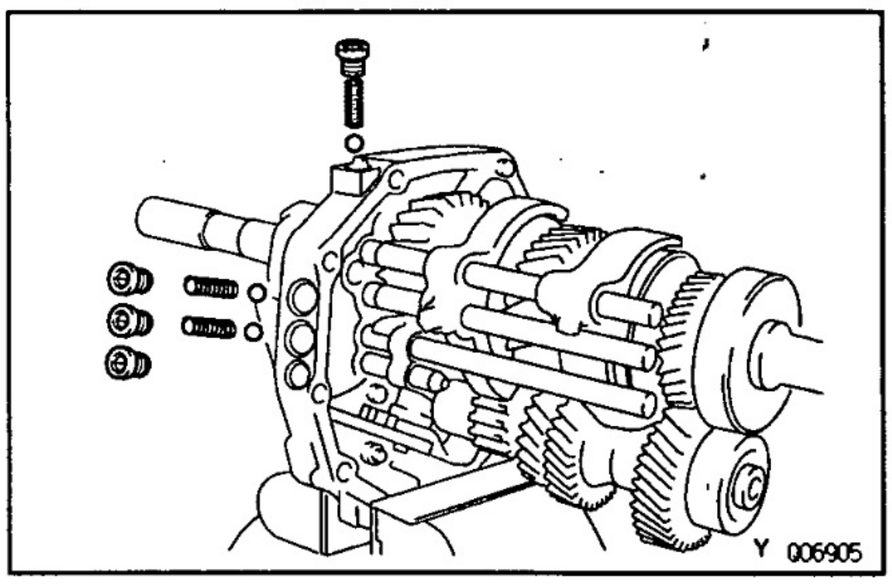

12. REMOVE STRAIGHT SCREW PLUG, LOCKING BALL AND SPRING

(a) Using a hexagon wrench, remove the 4 plugs.

Sealant: Part No. 08833 – 00080, THREE BOND 1344, LOCTITE 242 or equivalent

Torque: 19 N·m (190 kgf·cm, 14 ft·lbf)

(b) Using a magnetic finger, remove the 3 springs and balls.

13. REMOVE SHIFT FORK SET BOLT

Remove the 2 bolts from the shift forks No.1 and No.2.

Torque: 20 N·m (200 kgf·cm, 14 ft·lbf)

14. REMOVE SLOTTED SPRING PIN

Using a pin punch and hammer, drive out the pin from the shift fork No.3.

15. REMOVE SNAP RING

Using 2 screwdrivers and a hammer, tap out the 4 snap rings from each shift fork shaft.

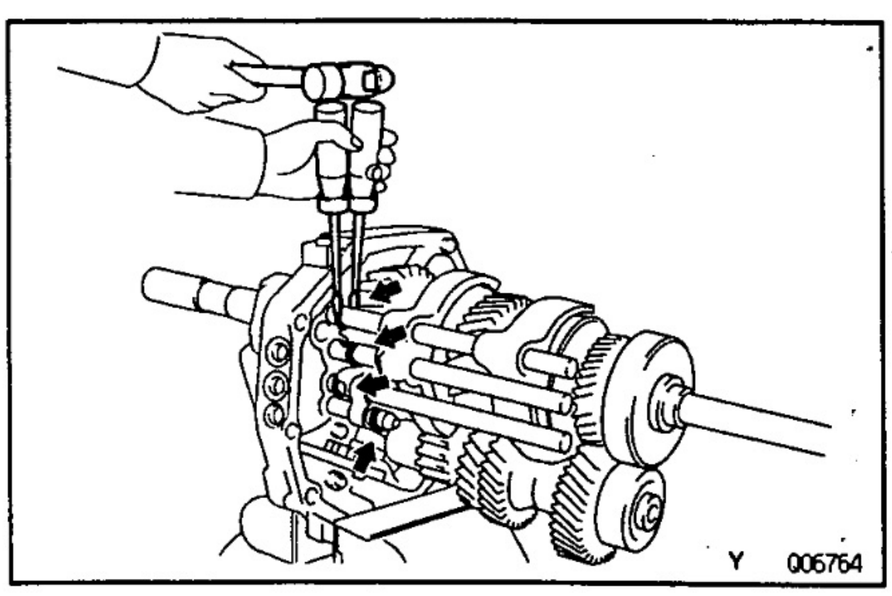

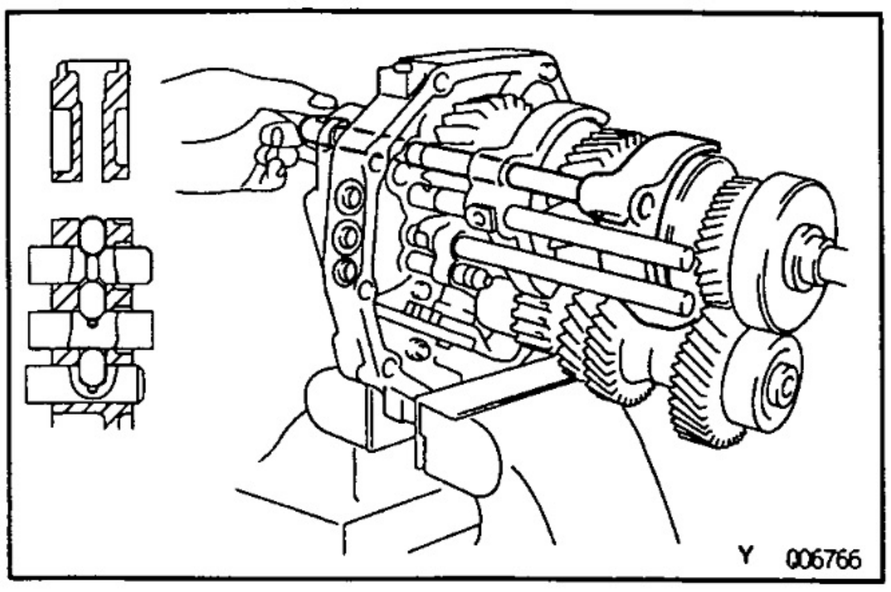

16. REMOVE SHIFT FORK SHAFT NO.2 AND SHIFT FORK NO.2

(a) Pull out the shift fork shaft No.2 from the shift forks No.1, No.2 and intermediate plate.

(b) Remove the shift fork No.2 from the groove of hub sleeve No.2.

(c) Using a magnetic finger, remove the interlock pin from the intermediate plate.

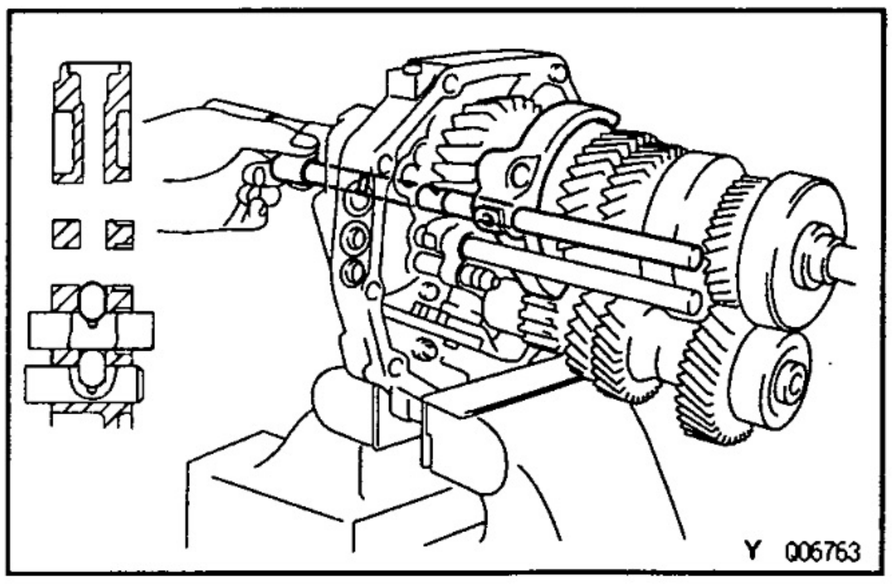

17. REMOVE SHIFT FORK SHAFT NO.1 AND SHIFT FORK NO.1

(a) Pull out the shift fork shaft No.1 with the straight pin from the shift fork No.1 and intermediate plate.

(b) Remove the shift fork No.1 from the groove of reverse gear.

(c) Using a magnetic finger, remove the interlock pin from the intermediate plate.

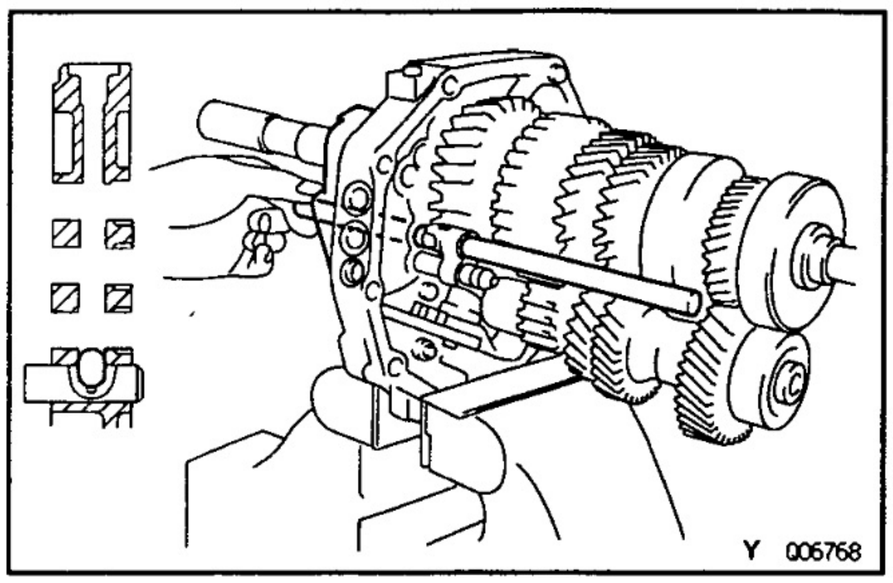

18. REMOVE SHIFT FORK SHAFT NO.3 AND SHIFT FORK NO.3

(a) Pull out the shift fork shaft No.3 from the shift fork No.3, reverse shift fork and intermediate plate.

(b) Remove the shift fork No.3 from the groove of hub sleeve No.3.

(c) Using a magnetic finger, remove the interlock pin from the intermediate plate.

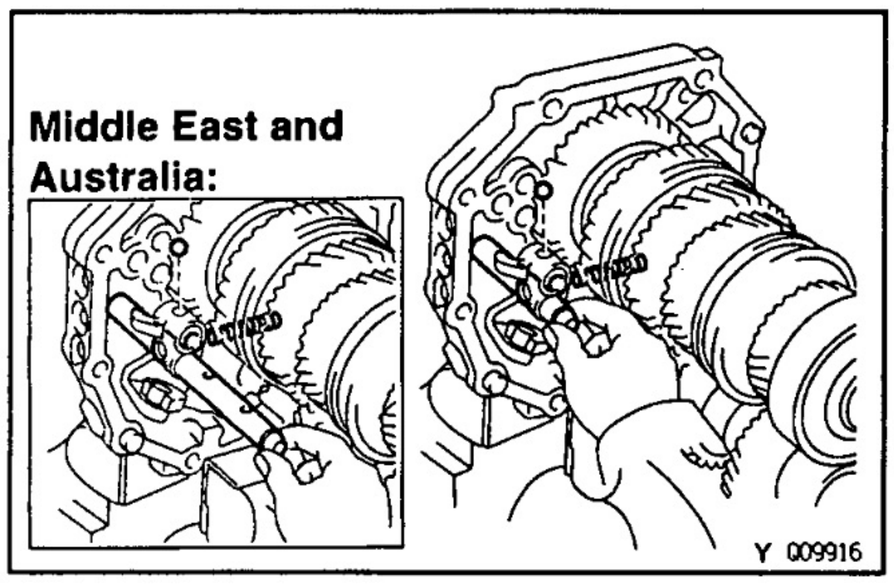

19. REMOVE SHIFT FORK SHAFT NO.4

(a) Using a magnetic finger, remove the ball.

(b) Pull out the shift fork shaft No.4 from the reverse shift fork and intermediate plate.

REMOVAL NOTICE: Take care of the ball in the reverse shift fork. It will spring out when you pull out the shift fork shaft No.4.

(c) Using a magnetic finger, remove the spring from the reverse shift fork.

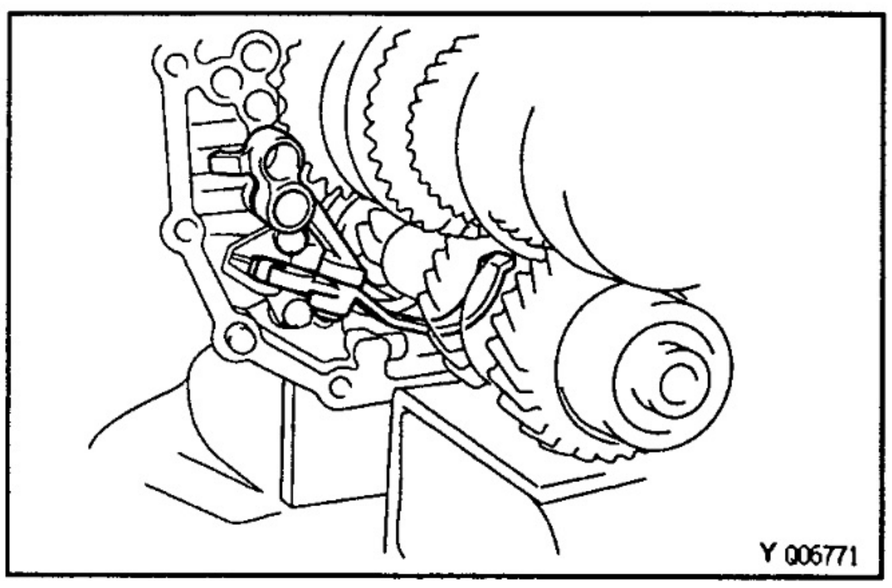

20. REMOVE REVERSE SHIFT FORK AND ARM

(a) Remove the reverse shift fork and arm.

INSTALLATION HINT: Align the reverse shift arm to the pivot of the reverse shift arm bracket.

(b) Using a screwdriver, remove the E—ring.

(c) Separate the reverse shift fork and arm.

21. REMOVE REVERSE SHIFT ARM BRACKET

Remove the 2 bolts and reverse shift arm bracket.

Torque: 18 N·m (185 kgf·cm, 13 ft·lbf)

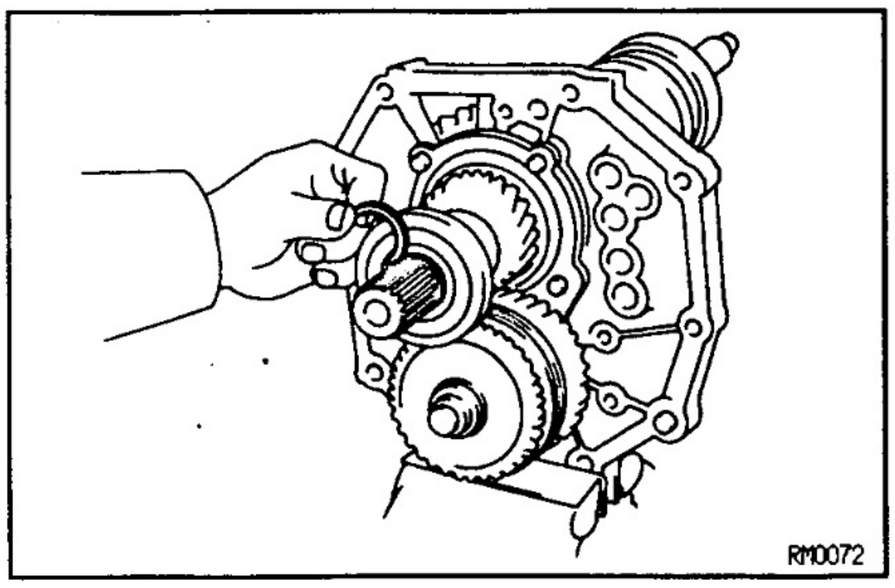

22. REMOVE OUTPUT SHAFT REAR BEARING

(a) Using 2 screwdrivers and a hammer, tap out the snap ring.

INSTALLATION HINT: Select a snap ring that will allow minimum axial play.

Mark	Thickness mm (in.)
A	2.65 — 2.70 (0.1043 — 0.1063)
B	2.70 — 2.75 (0.1063 — 0.1083)
C	2.75 — 2.80 (0.1083 — 0.1102)
D	2.80 — 2.85 (0.1102 — 0.1122)
E	2.85 — 2.90 (0.1122 — 0.1142)
F	2.90 — 2.95 (0.1142 — 0.1161)
G	2.95 — 3.00 (0.1161 — 0.1181)
H	3.00 — 3.05 (0.1181 — 0.1201)
J	3.05 — 3.10 (0.1201 — 0.1220)
K	3.10 — 3.15 (0.1220 — 0.1240)
L	3.15 — 3.20 (0.1240 — 0.1260)
M	3.20 — 3.25 (0.1260 — 0.1280)
N	3.25 — 3.30 (0.1280 — 0.1299)
P	3.30 — 3.35 (0.1299 — 0.1319)
Q	3.35 — 3.40 (0.1319 — 0.1339)
R	3.40 — 3.45 (0.1339 — 0.1358)
S	3.45 — 3.50 (0.1358 — 0.1378)

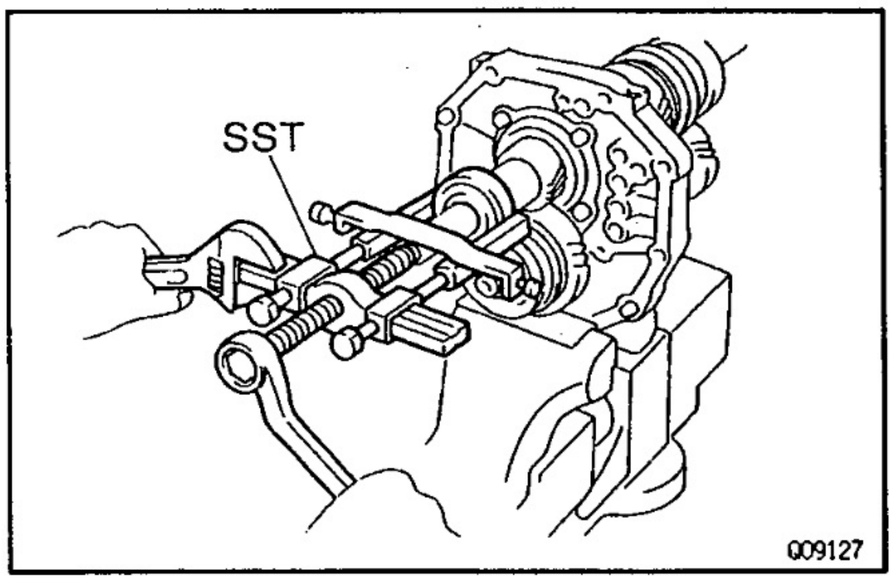

(b) Using SST, remove the rear bearing.
SST 09950—40010

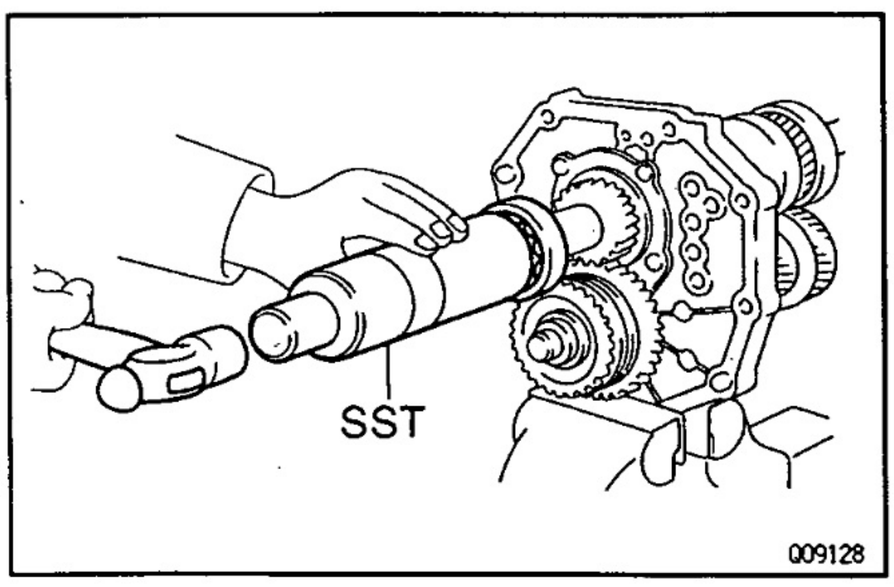

INSTALLATION HINT: Using SST and a hammer, drive in a new bearing.
SST 09316—60011
(09316—00011, 09316—00071)

23. REMOVE SPACER

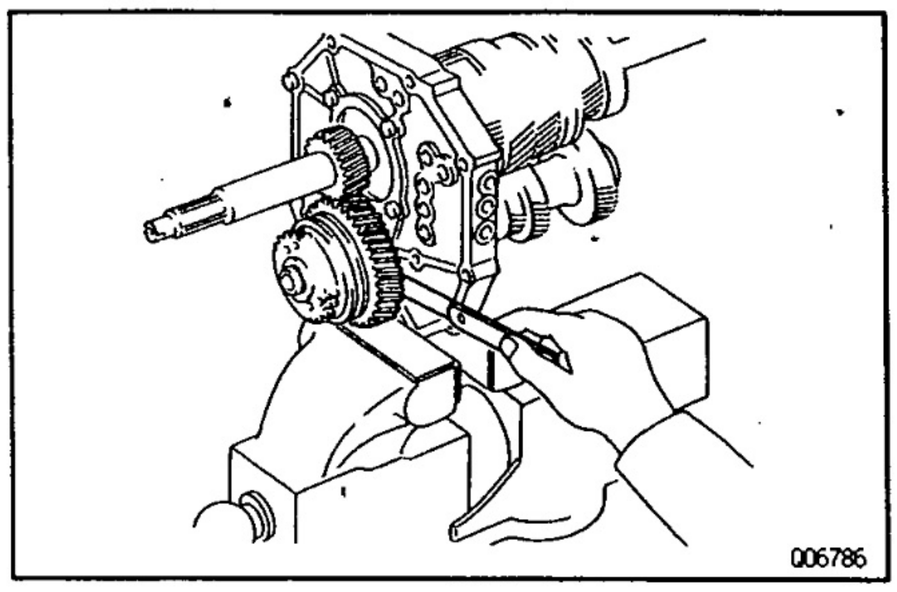

24. INSPECT COUNTER 5TH GEAR THRUST CLEARANCE

Using a feeler gauge, measure the counter 5th gear thrust clearance.

Standard clearance:
0.10 — 0.35 mm (0.0039 — 0.0138 in.)
Maximum clearance: 0.40 mm (0.0157 in.)

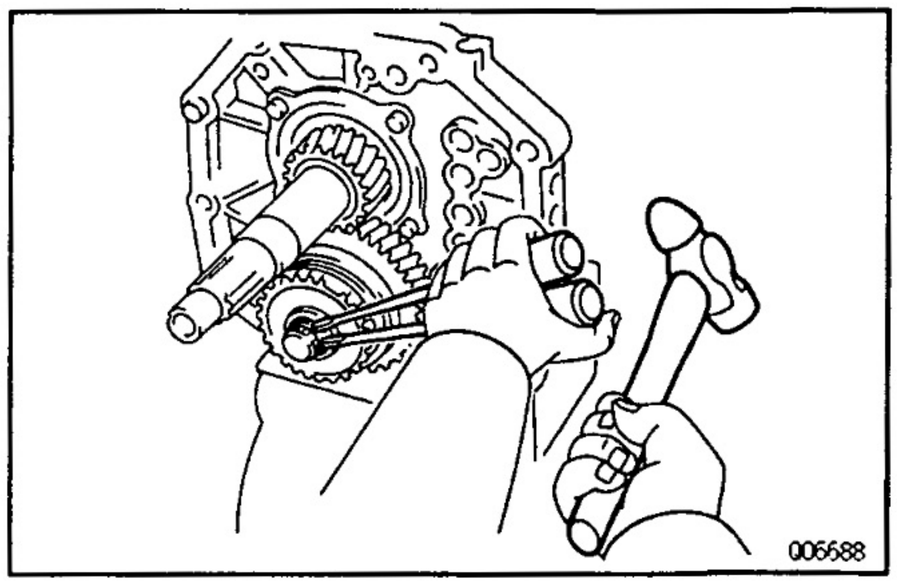

25. REMOVE GEAR SPLINE PIECE NO.5, SYNCHRONIZER RING, NEEDLE ROLLER BEARING AND COUNTER 5TH GEAR WITH HUB SLEEVE NO.3

(a) Using 2 screwdrivers and a hammer, tap out the snap ring.

INSTALLATION HINT: Select a snap ring that will allow minimum axial play.

Mark	Thickness mm (in.)
A	2.80 – 2.85 (0.1102 – 0.1122)
B	2.85 – 2.90 (0.1122 – 0.1142)
C	2.90 – 2.95 (0.1142 – 0.1161)
D	2.95 – 3.00 (0.1161 – 0.1181)
E	3.00 – 3.05 (0.1181 – 0.1201)
F	3.05 – 3.10 (0.1201 – 0.1220)
G	3.10 – 3.15 (0.1220 – 0.1240)

MT

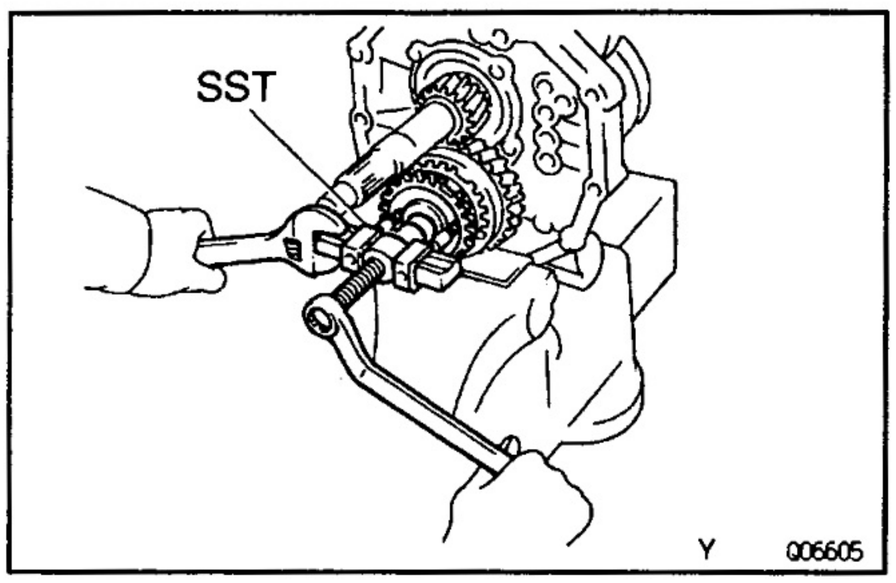

(b) Using SST, remove the gear spline piece No.5.
SST 09950–50010

(c) Remove the counter 5th gear with the hub sleeve No.3.

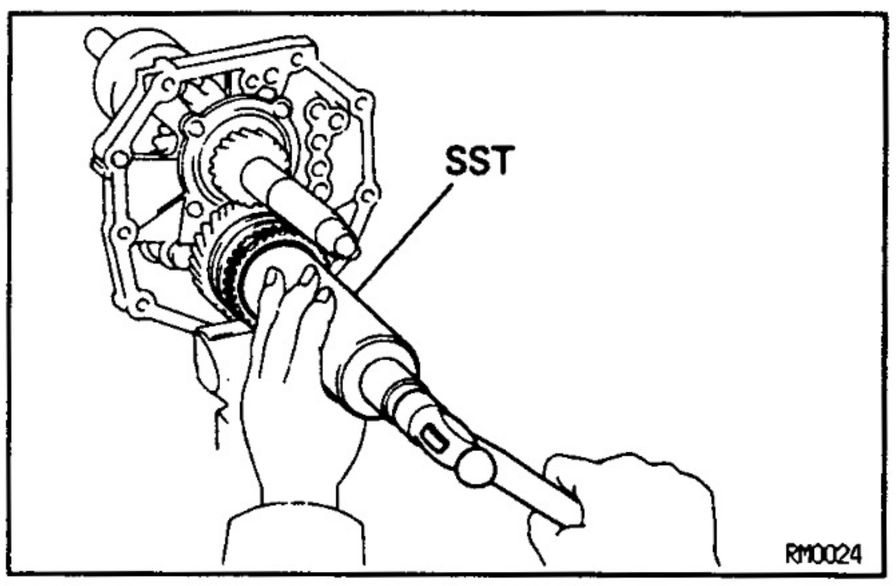

INSTALLATION HINT:

- Using SST and a hammer, drive in the gear spline piece No.5 with the synchronizer ring slots aligned with the shifting keys.

SST 09316–60011 (09316–00011)

- When installing the gear spline piece No.5, support the counter gear in front with a 3–5 lb hammer or equivalent.

26. REMOVE THRUST WASHER AND BALL FROM COUNTER GEAR

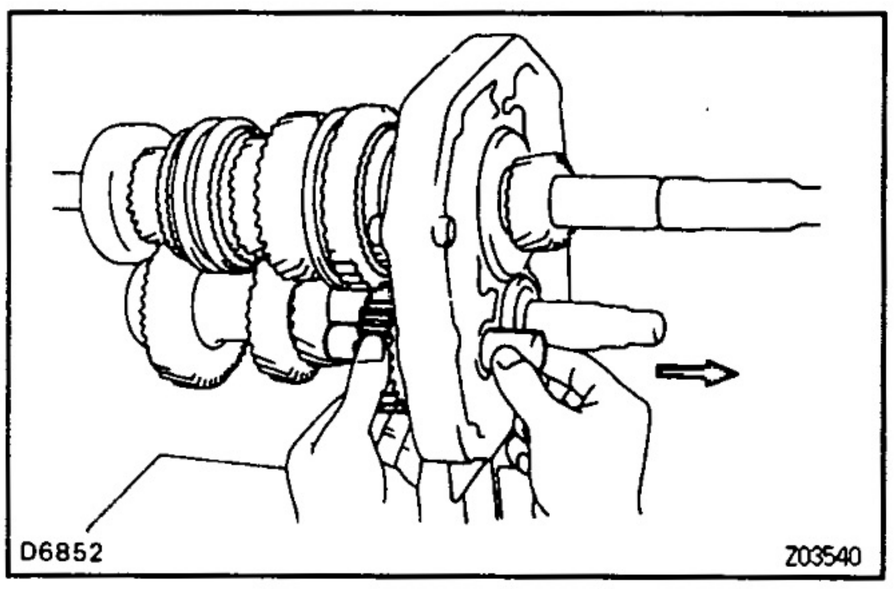

27. REMOVE REAR BEARING RETAINER

Remove the 4 bolts and rear bearing retainer.

INSTALLATION HINT: Align the rear bearing retainer to the reverse idler gear shaft groove.

Torque: 18 N·m (185 kgf·cm, 13 ft·lbf)

28. REMOVE REVERSE IDLER GEAR AND SHAFT

Pull out the shaft toward the rear.

INSTALLATION HINT: Align the reverse shift arm to the reverse idler gear shaft.

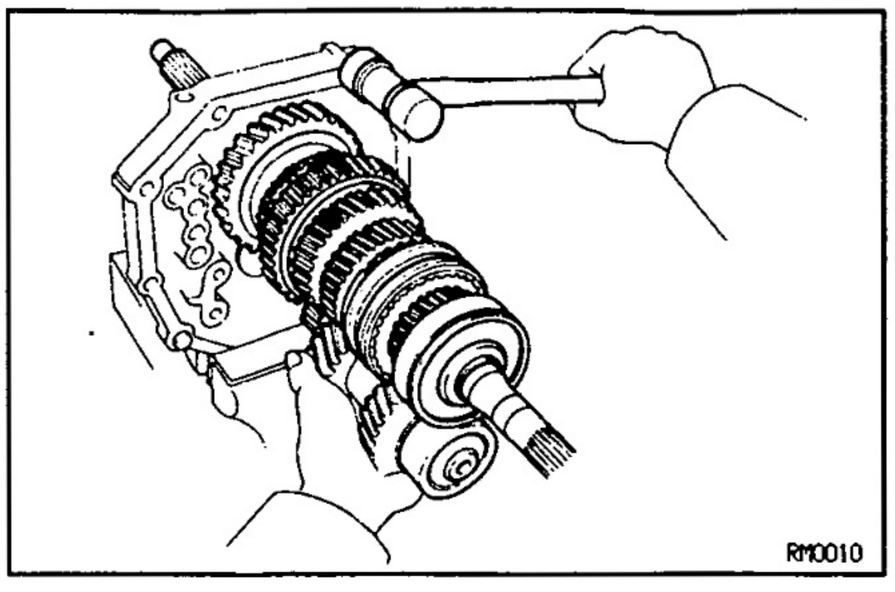

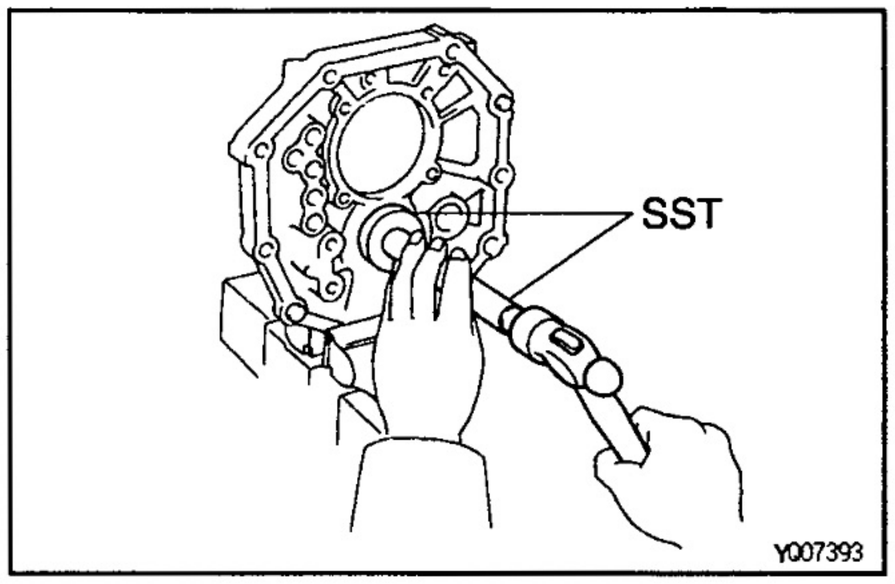

29. REMOVE OUTPUT SHAFT CENTER BEARING SNAP RING

Using a snap ring expander, remove the snap ring.

30. REMOVE OUTPUT SHAFT AND COUNTER GEAR FROM INTERMEDIATE PLATE

(a) Remove the output shaft, counter gear and input shaft as a unit from the intermediate plate by pulling on the counter gear and tapping on the intermediate plate with a plastic hammer.

(b) Remove the input shaft with the needle roller bearing from the output shaft.

31. REMOVE COUNTER REAR BEARING FROM INTERMEDIATE PLATE

Using SST and a hammer, remove the counter rear bearing.

SST 09950–60010 (09951–00620),
09950–70010 (09951–07150)

MT

BASIC SUBASSEMBLY REASSEMBLY MT0C5–02

Reassembly is in the reverse order of separation.

HINT: Coat all of the sliding and rotating surfaces with gear oil before assembly.

INPUT SHAFT
COMPONENTS

MT02F–05

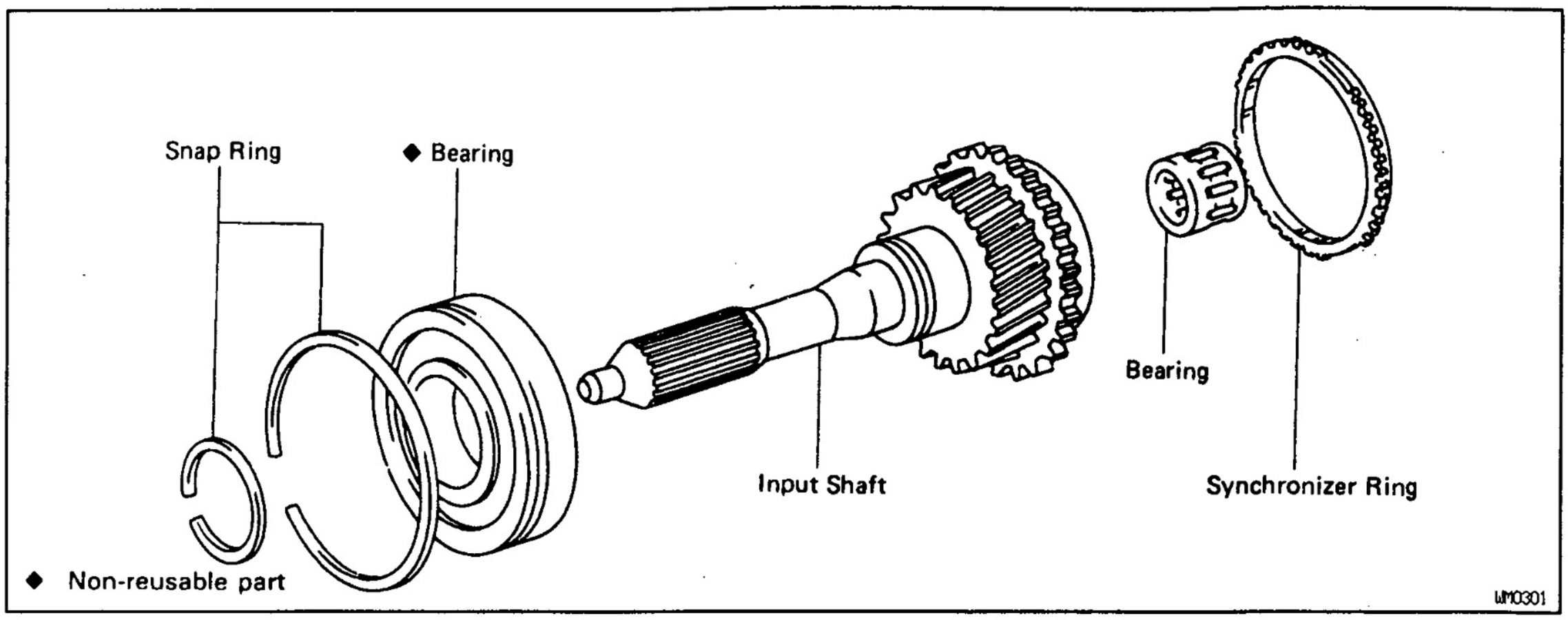

MT02G–0F

INPUT SHAFT INSPECTION

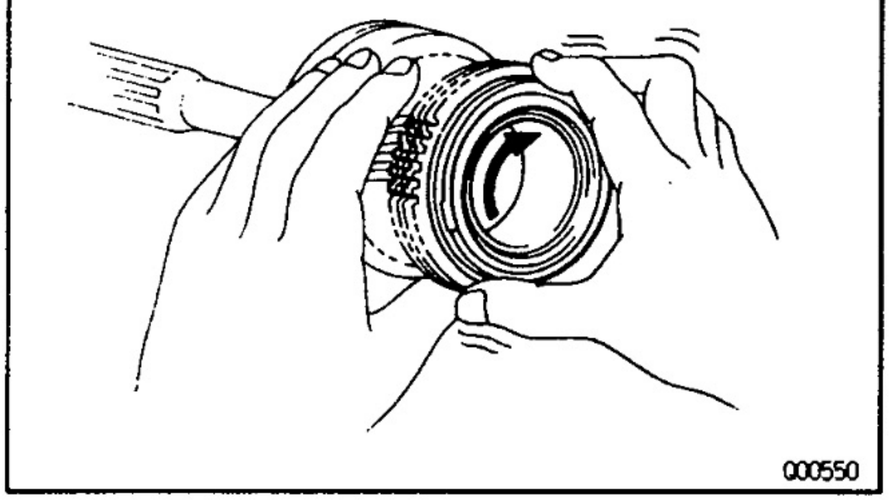

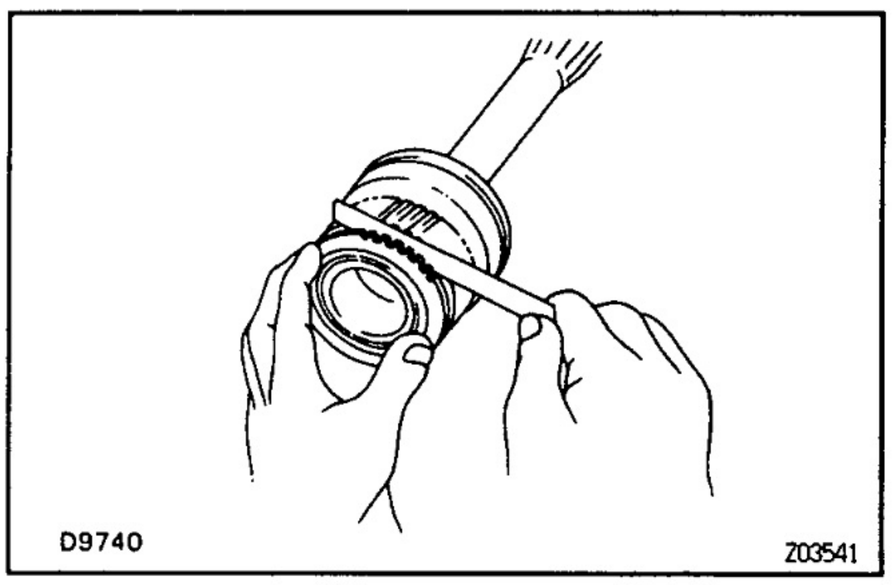

INSPECT SYNCHRONIZER RING

(a) Check for wear or damage.

(b) Check the braking effect of the synchronizer ring.
Turn the synchronizer ring in one direction while pushing it to the gear cone. Check that the ring locks.
If the braking effect is insufficient, apply a small amount of fine lapping compound between the synchronizer ring and gear cone. Lightly rub the synchronizer ring and gear cone together.
NOTICE: Ensure the fine lapping compound is completely washed off after rubbing.

(c) Check again the braking effect of the synchronizer ring.

(d) Using a feeler gauge, measure the clearance between the synchronizer ring back and gear spline end.
Minimum clearance: 0.8 mm (0.031 in.)
If the clearance is less than the minimum, replace the synchronizer ring and gear cone by applying a small amount of fine lapping compound.
NOTICE: Ensure the fine lapping compound is completely washed off after rubbing.

MT08B–04

BEARING REPLACEMENT

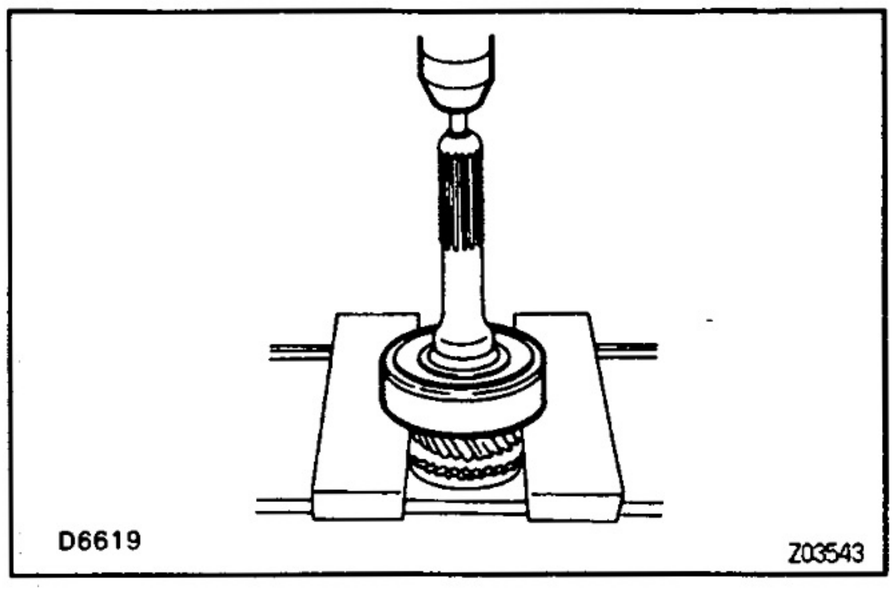

IF NECESSARY, REPLACE INPUT SHAFT BEARING

(a) Using a snap ring expander, remove the snap ring.

(b) Using a press, remove the bearing.

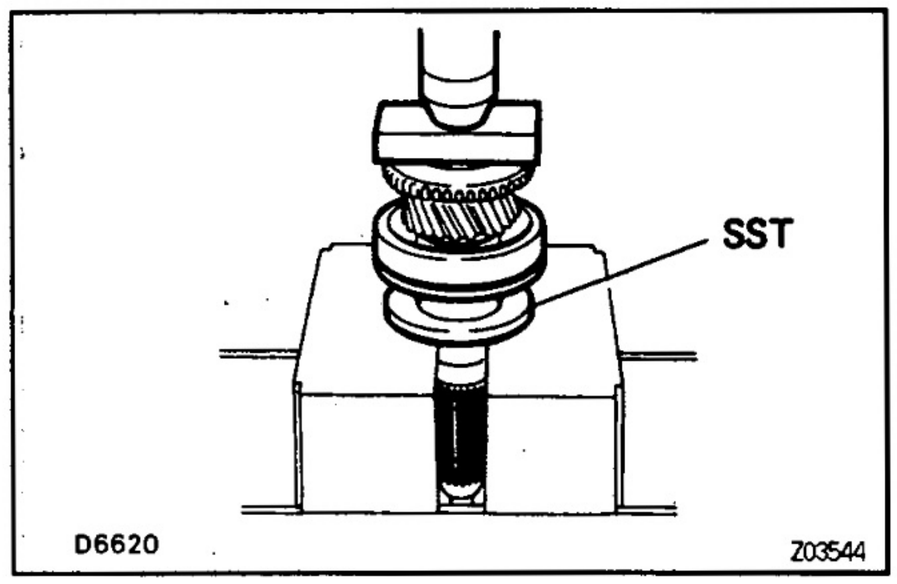

(c) Using SST and a press, install a new bearing.
SST 09506–35010

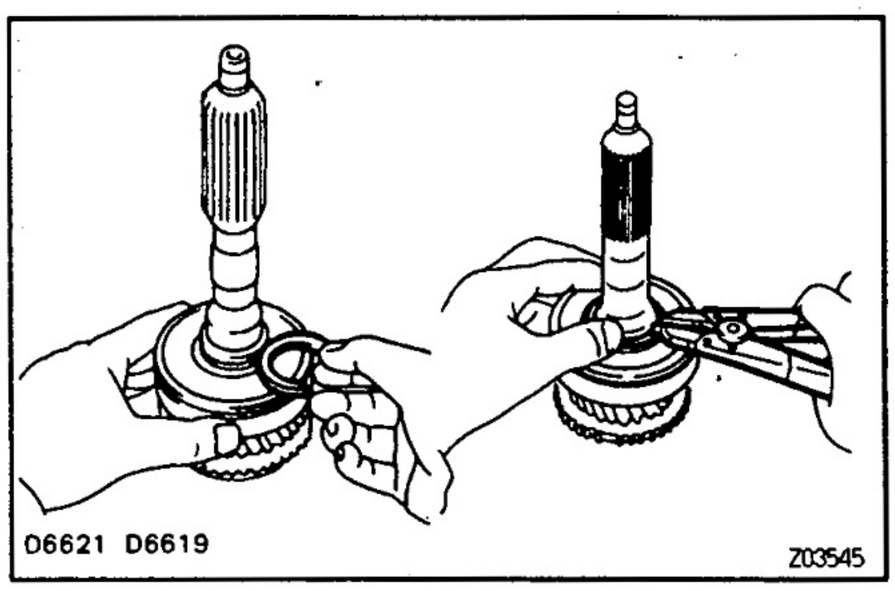

(d) Select a snap ring that will allow minimum axial play.

Mark	Thickness mm (in.)
A	2.10 – 2.15 (0.0827 – 0.0846)
B	2.15 – 2.20 (0.0846 – 0.0866)
C	2.20 – 2.25 (0.0866 – 0.0886)
D	2.25 – 2.30 (0.0886 – 0.0906)
E	2.30 – 2.35 (0.0906 – 0.0925)
F	2.35 – 2.40 (0.0925 – 0.0945)
G	2.40 – 2.45 (0.0945 – 0.0965)

(e) Using a snap ring expander, install the snap ring.

OUTPUT SHAFT
COMPONENTS

MT02J–0C

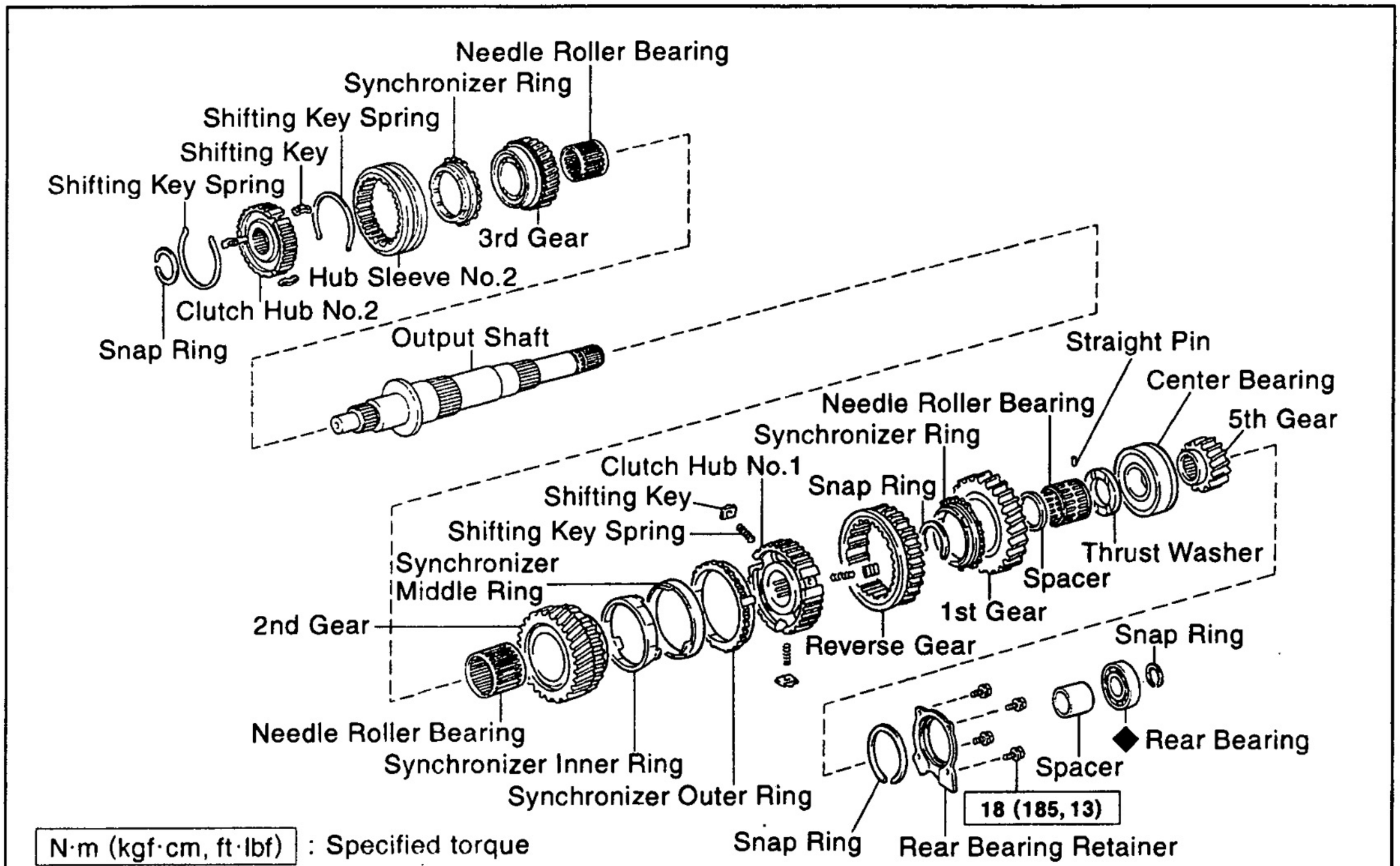

009917

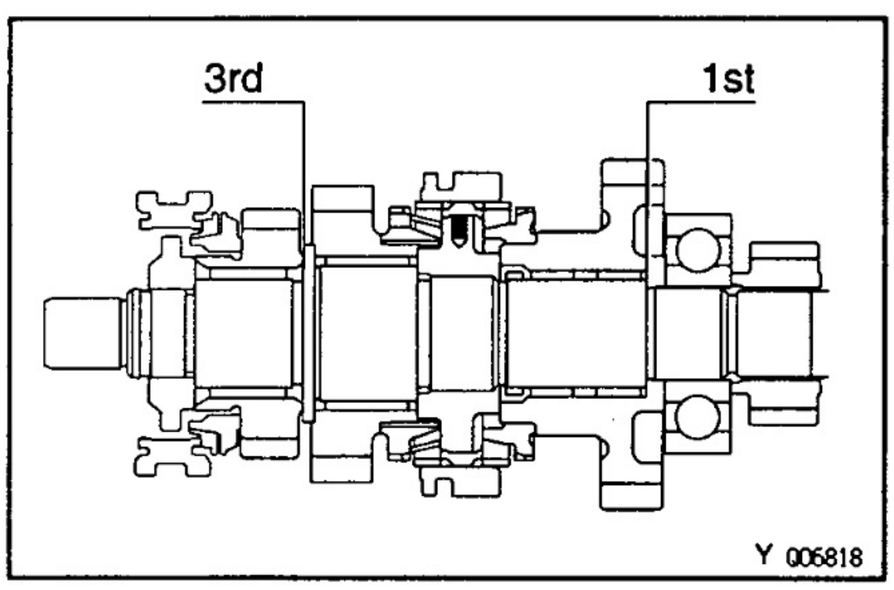

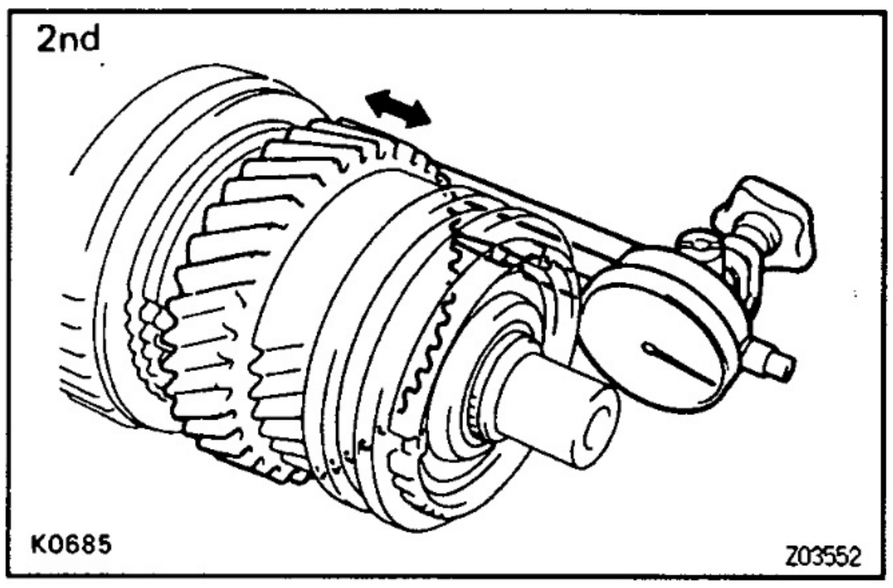

MT08C–06

OUTPUT SHAFT DISASSEMBLY

1. INSPECT EACH GEAR THRUST CLEARANCE

Measure the thrust clearance of each gear.

Standard clearance:

1st gear: 0.15–0.45 mm (0.0059–0.0177 in.)

2nd and 3rd gears:

0.10–0.25 mm (0.0039–0.0098 in.)

Maximum clearance:

1st gear: 0.50 mm (0.0197 in.)

2nd and 3rd gears: 0.30 mm (0.0118 in.)

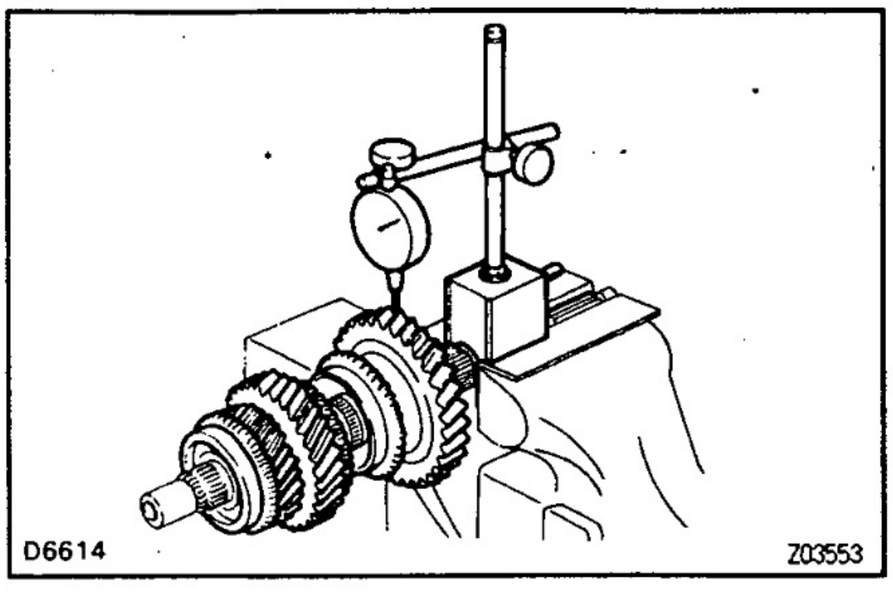

2. INSPECT EACH GEAR RADIAL CLEARANCE

Using a dial indicator, measure the radial clearance of each gear.

Standard clearance:

1st gear: 0.020–0.073 mm (0.0008–0.0029 in.)

2nd and 3rd gears:

0.015–0.068 mm (0.0006–0.0027 in.)

Maximum clearance:

1st gear: 0.160 mm (0.0063 in.)

2nd and 3rd gears: 0.160 mm (0.0063 in.)

If the clearance exceeds the maximum, replace the gear, needle roller bearing or shaft.

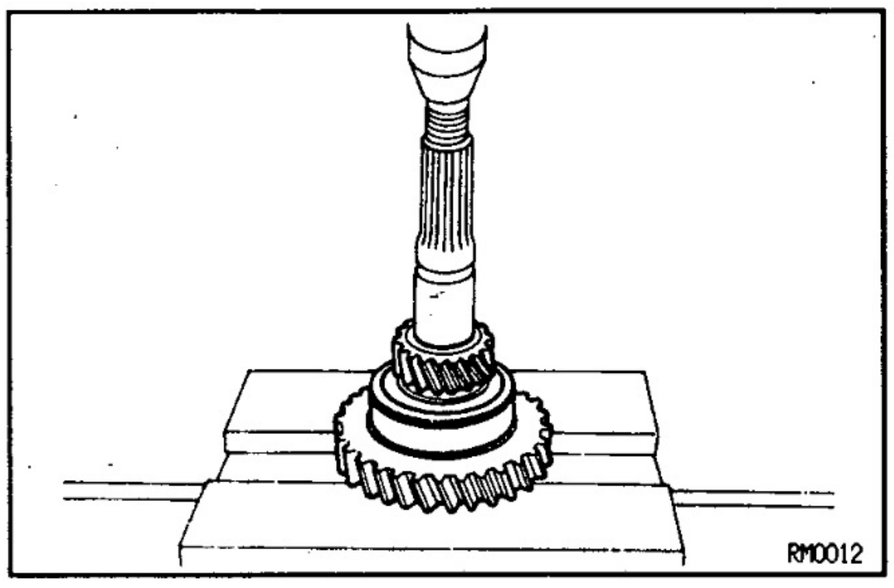

3. REMOVE 5 TH GEAR, OUTPUT SHAFT CENTER BEARING AND 1ST GEAR ASSEMBLY

(a) Using a press, remove the 5th gear, center bearing, thrust washer and 1st gear.

(b) Remove the synchronizer ring.

(c) Remove the straight pin and needle roller bearing.

(d) Remove the spacer.

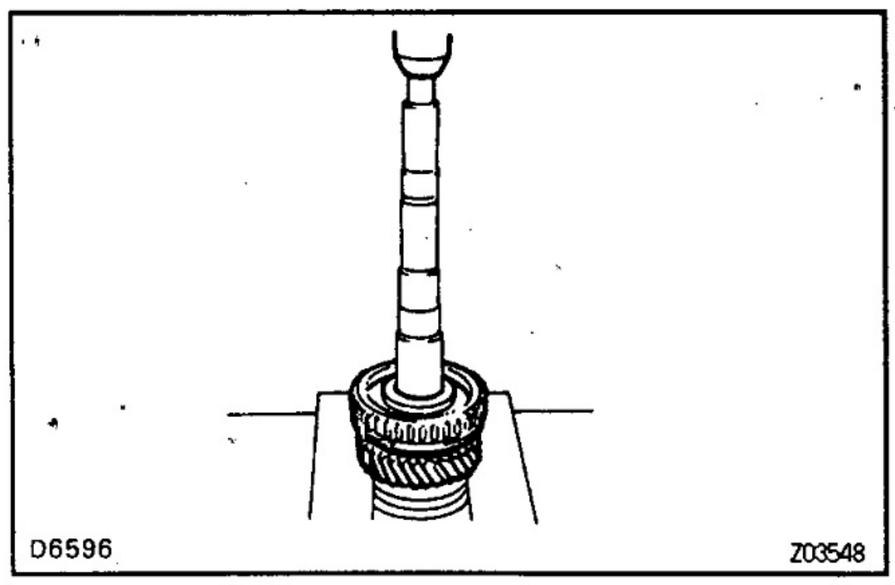

4. REMOVE REVERSE GEAR ASSEMBLY AND 2 ND GEAR ASSEMBLY

(a) Using 2 screwdrivers and a hammer, tap out the snap ring.

(b) Using a press, remove the reverse gear assembly and 2nd gear assembly.

(c) Remove the needle roller bearing.

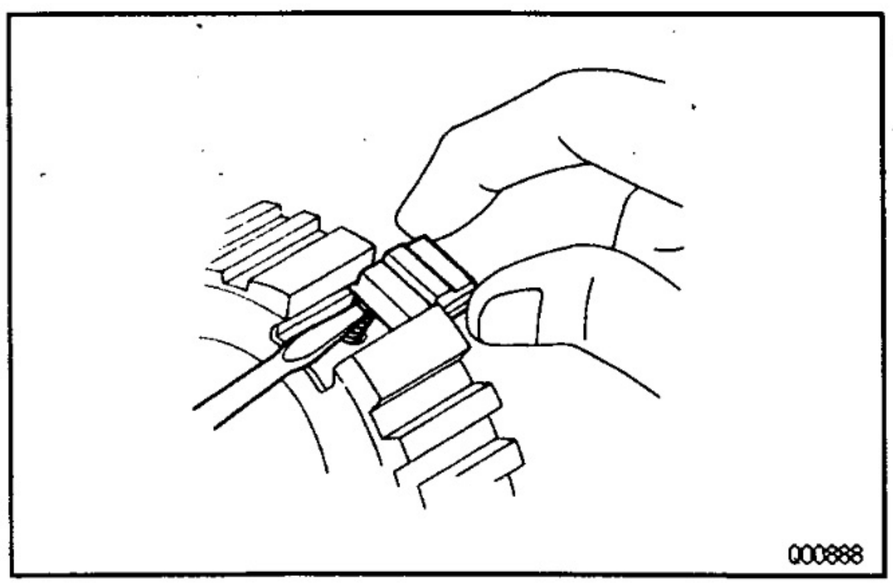

5. REMOVE REVERSE GEAR, SHIFTING KEY AND SPRING FROM CLUTCH HUB NO.1

(a) Remove the reverse gear from the clutch hub No.1.

(b) Push the shifting key spring with a screwdriver, remove the 3 shifting keys and key springs.

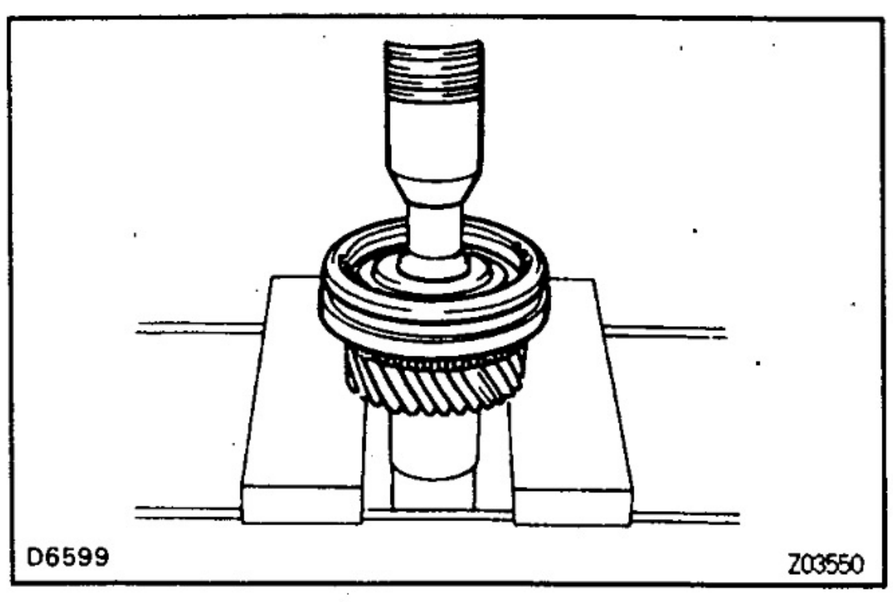

6. REMOVE HUB SLEEVE NO.2 ASSEMBLY AND 3RD GEAR ASSEMBLY

(a) Using a snap ring expander, remove the snap ring.

(b) Using a press, remove the hub sleeve No.2 assembly and 3rd gear assembly.

(c) Remove the needle roller bearing.

7. REMOVE SHIFTING KEY AND SPRING FROM HUB SLEEVE NO.2 ASSEMBLY

Using a screwdriver, remove the 3 shifting keys and 2 springs.

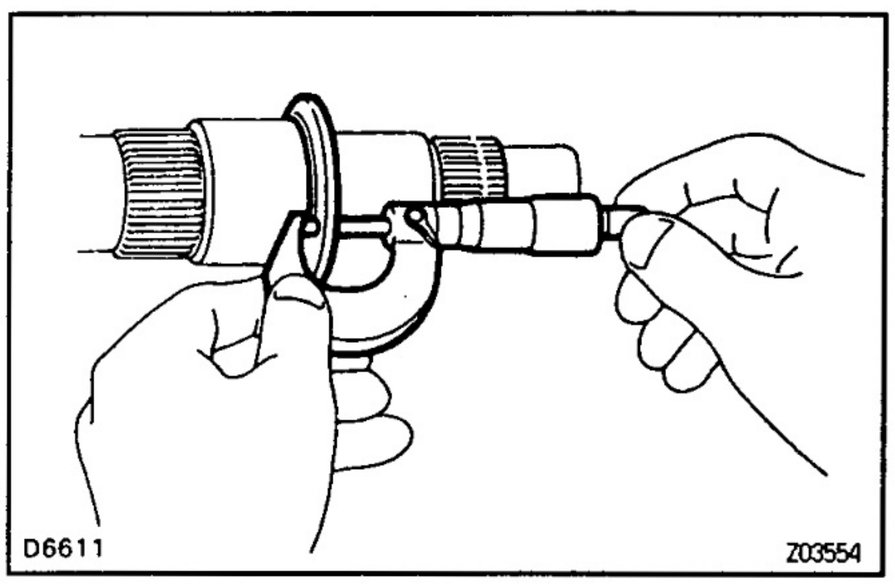

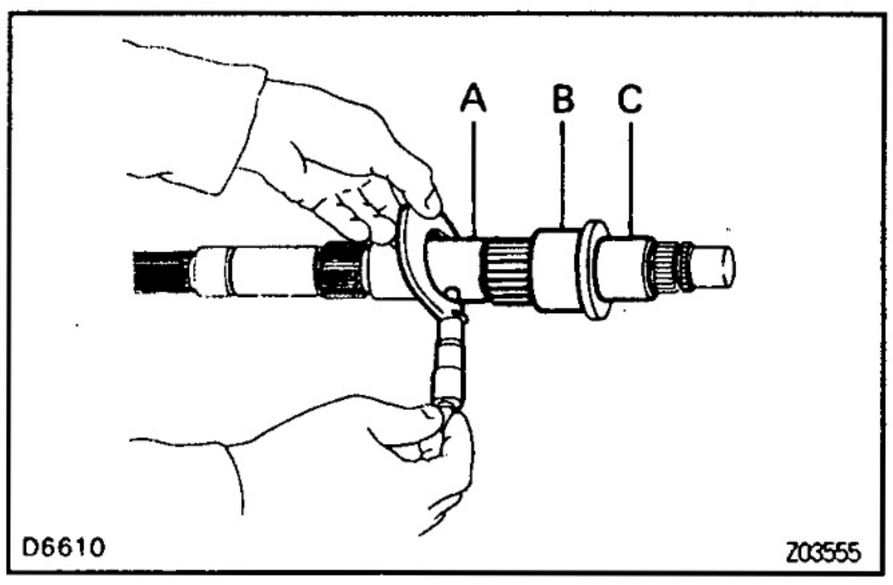

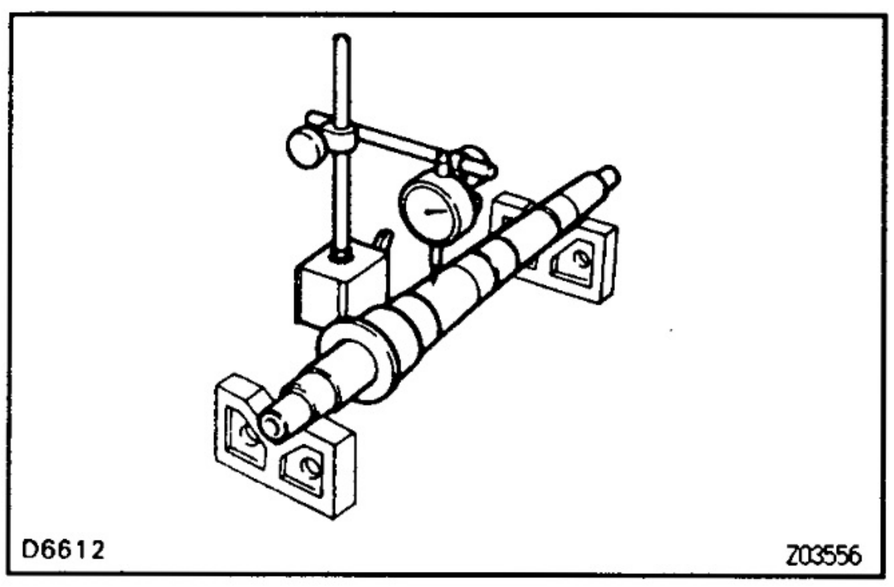

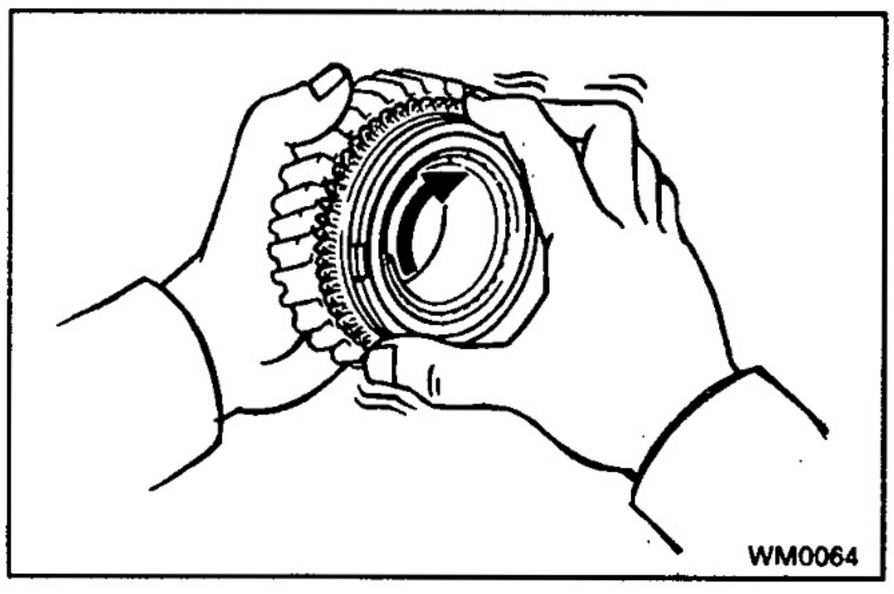

OUTPUT SHAFT COMPONENT PARTS INSPECTION

MT0J6-01

1. INSPECT OUTPUT SHAFT

(a) Using a micrometer, measure the output shaft flange thickness.
Minimum thickness: 4.70 mm (0.1850 in.)
If the thickness is less than the minimum, replace the output shaft.

(b) Using a micrometer, measure the outer diameter of the output shaft journal.
Minimum diameter:
A 1st gear: 38.860 mm (1.5299 in.)
B 2nd gear: 46.860 mm (1.8449 in.)
C 3rd gear: 37.860 mm (1.4905 in.)
If the outer diameter is less than the minimum, replace the output shaft.

(c) Using a dial indicator, check the shaft runout.
Maximum runout: 0.06 mm (0.0024 in.)
If the runout exceeds the maximum, replace the output shaft.

2. INSPECT 1ST AND 3RD GEARS SYNCHRONIZER RING

(a) Check for wear or damage.
(b) Check the braking effect of the synchronizer ring.
Turn the synchronizer ring in one direction while pushing it to the gear cone. Check that the ring locks.

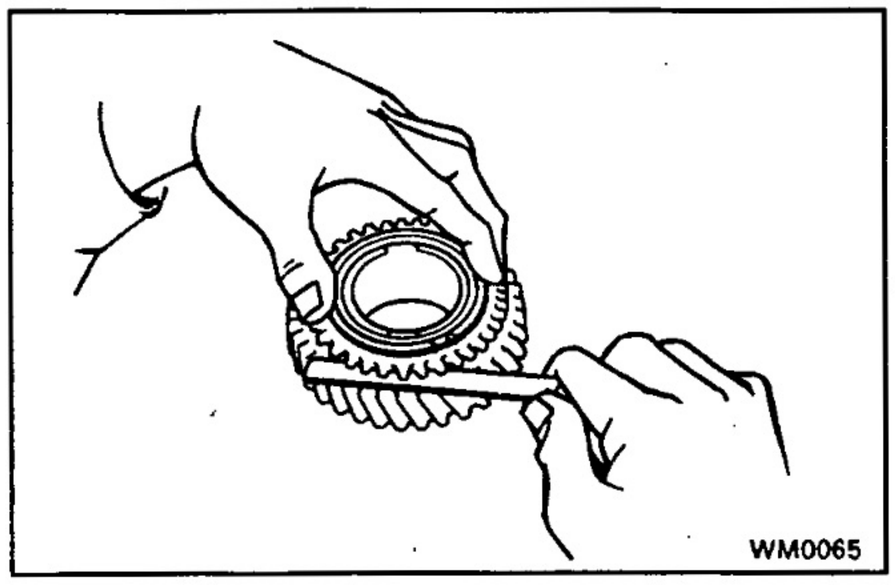

If the braking effect is insufficient, apply a small amount of fine lapping compound between the synchronizer ring and gear cone. Lightly rub the synchronizer ring and gear cone together.

NOTICE: Ensure the fine lapping compound is completely washed off after rubbing.

(c) Check again the braking effect of the synchronizer ring.

(d) Using a feeler gauge, measure the clearance between the synchronizer ring back and gear spline end.

Minimum clearance: 0.8 mm (0.031 in.)

If the clearance is less than the minimum, replace the synchronizer ring and gear cone by applying a small amount of fine lapping compound.

NOTICE: Ensure the fine lapping compound is completely washed off after rubbing.

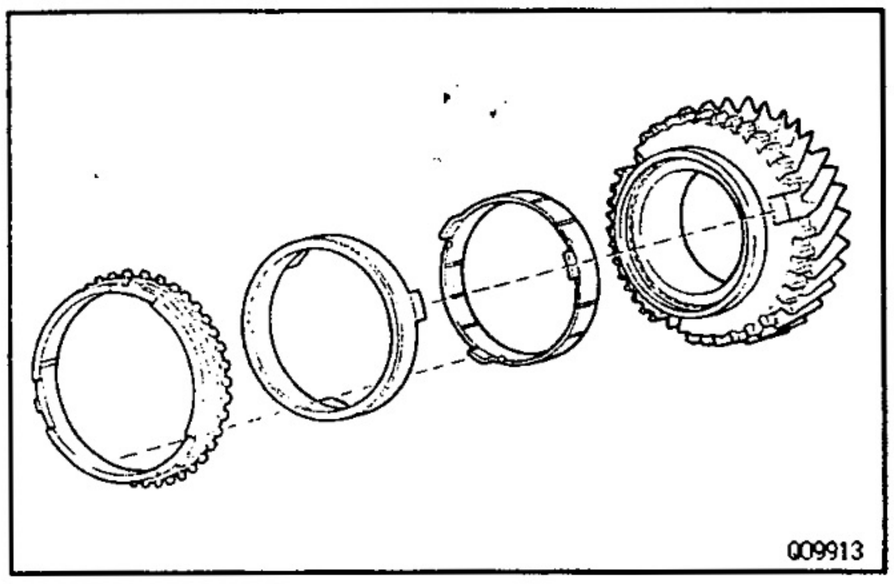

3. INSPECT 2ND GEAR SYNCHRONIZER RING

(a) Check for wear or damage.

(b) Install the synchronizer inner ring, middle ring and outer ring to each gear.

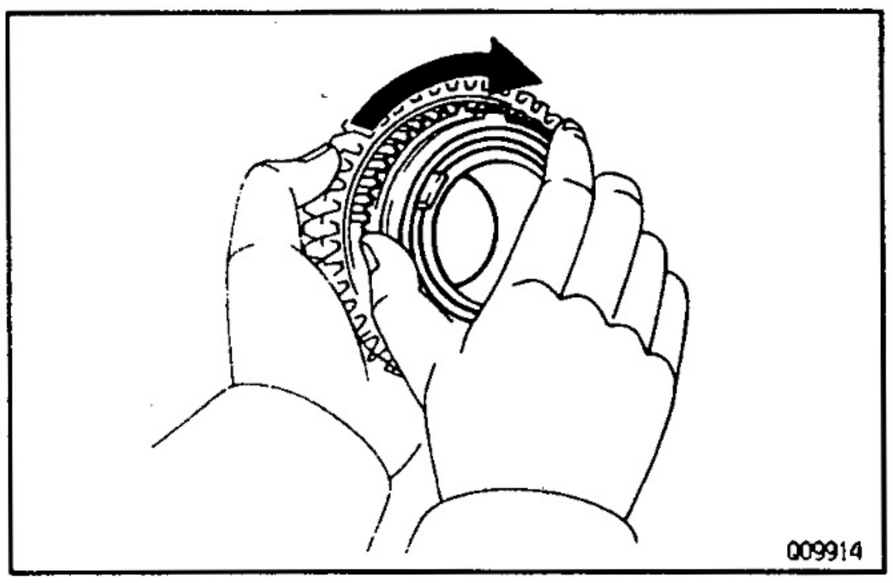

(c) Check the braking effect of the synchronizer ring. Turn the synchronizer ring in one direction while pushing it to the gear cone. Check that the ring locks. If it does not lock, replace the synchronizer ring.

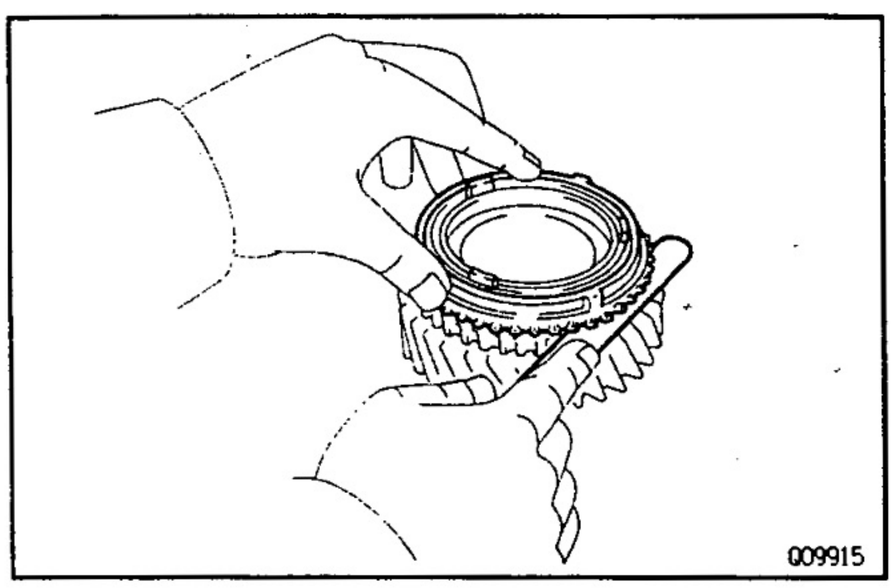

(d) Using a feeler gauge, measure the clearance between the synchronizer ring back and gear spline end.

Minimum clearance: 0.8 mm (0.031 in.)

If the clearance is less than the minimum, replace the synchronizer ring.

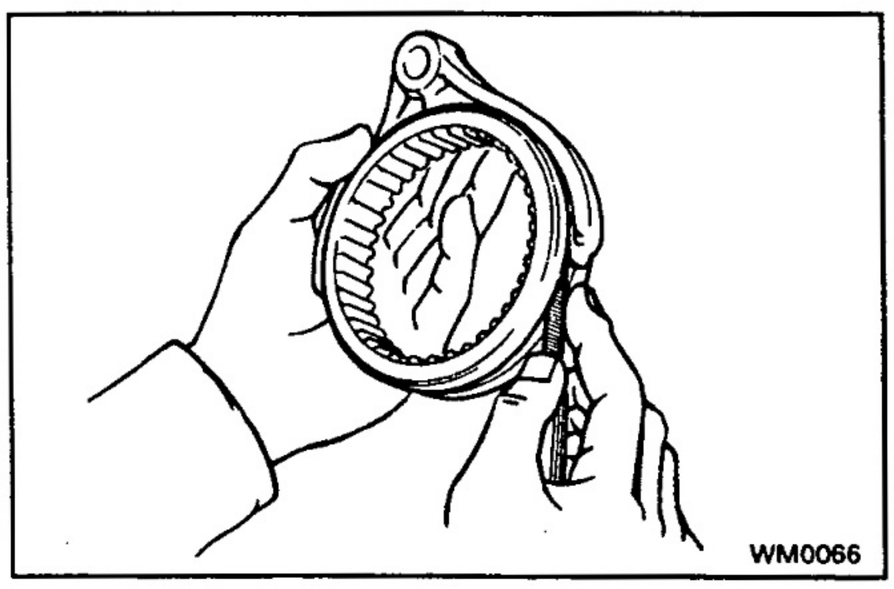

4. INSPECT SHIFT FORK AND HUB SLEEVE CLEARANCE

Using a feeler gauge, measure the clearance between the hub sleeve and shift fork.

Maximum clearance: 1.0 mm (0.039 in.)

If the clearance exceeds the maximum, replace the shift fork or hub sleeve.

MT0J7–01

OUTPUT SHAFT ASSEMBLY

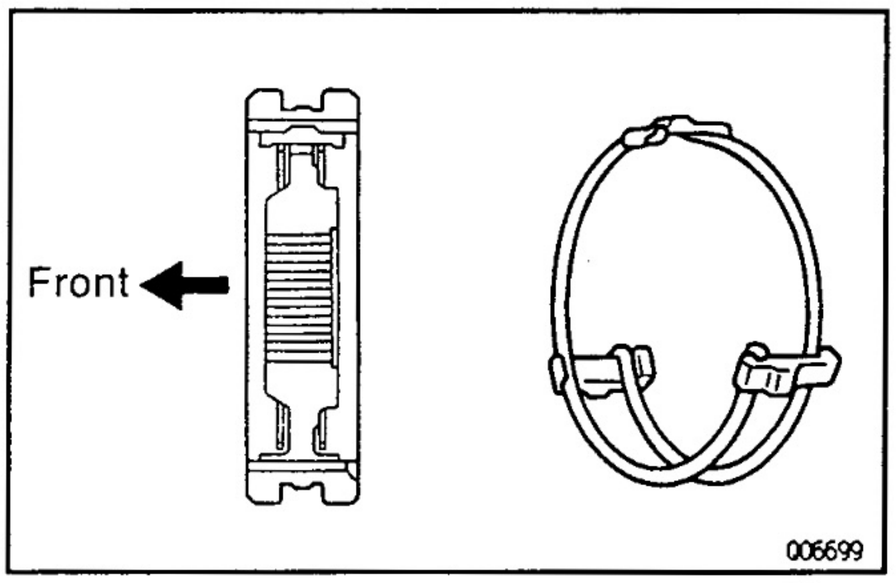

HINT: Coat all of the sliding and rotating surfaces with gear oil before assembly.

1. INSTALL CLUTCH HUB NO.2 INTO HUB SLEEVE NO.2

(a) Install the clutch hub No.2 and shifting keys to the hub sleeve No.2.

(b) Install the shifting key springs under the shifting keys.
NOTICE: Position the key springs so that their end gaps are not in line.

2. INSTALL CLUTCH HUB NO.1 INTO REVERSE GEAR

(a) Install the 3 shifting key springs to the clutch hub No.1.

(b) While pushing the shifting key spring with a screwdriver, install the 3 shifting keys.

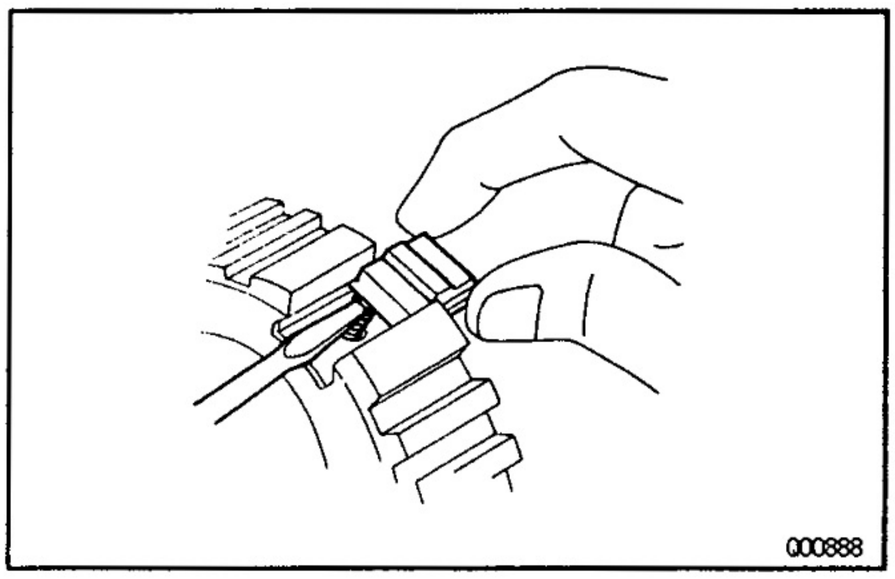

(c) While pushing the 3 shifting keys, install the clutch hub No.1 to the reverse gear, as shown.

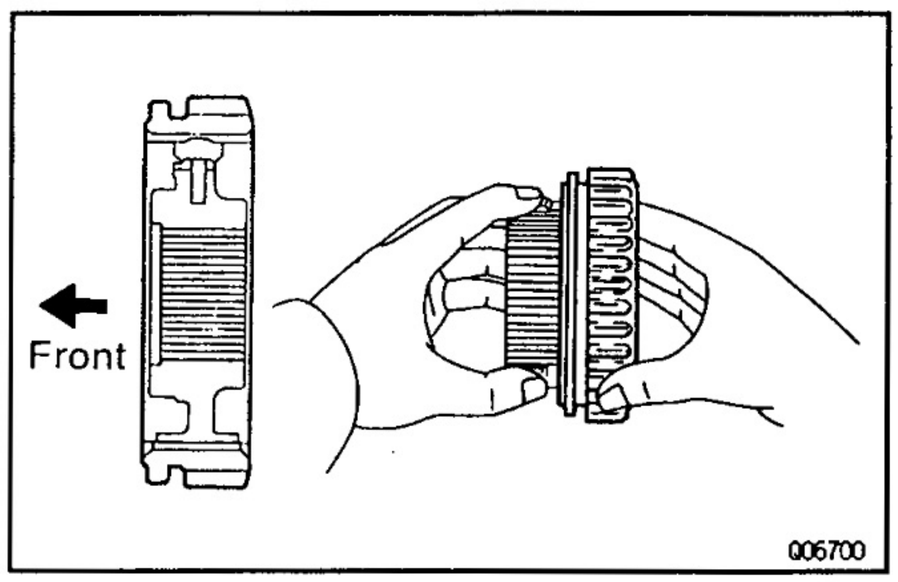

3. INSTALL 3RD GEAR AND HUB SLEEVE NO.2 ON OUTPUT SHAFT

(a) Apply gear oil to the shaft and needle roller bearing.

(b) Place the synchronizer ring on the gear and align the ring slots with the shifting keys.

(c) Install the needle roller bearing in the 3rd gear.

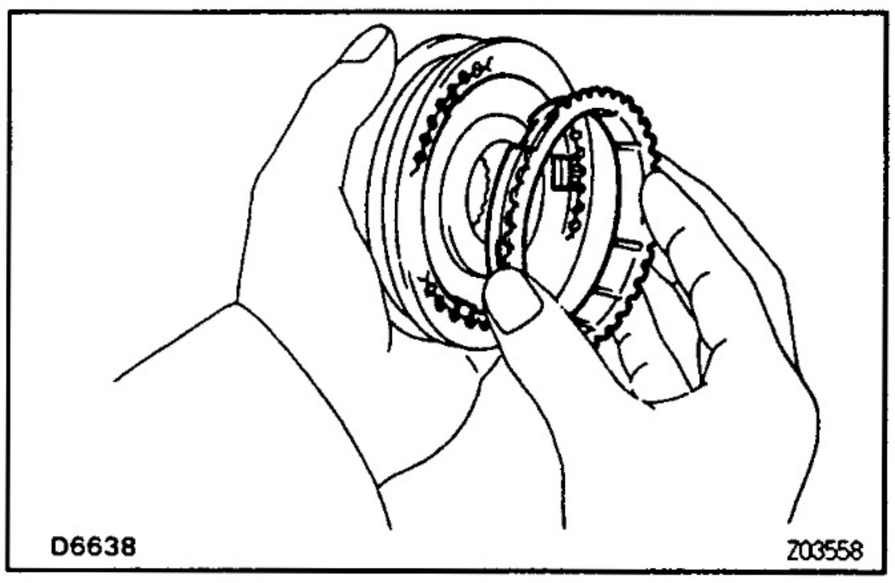

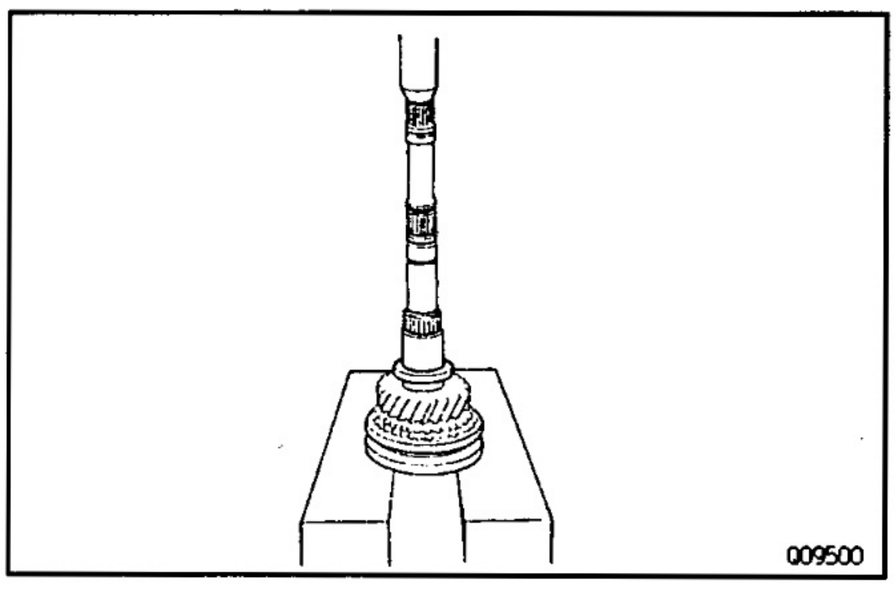

(d) Using a press, install the 3rd gear and hub sleeve No.2.

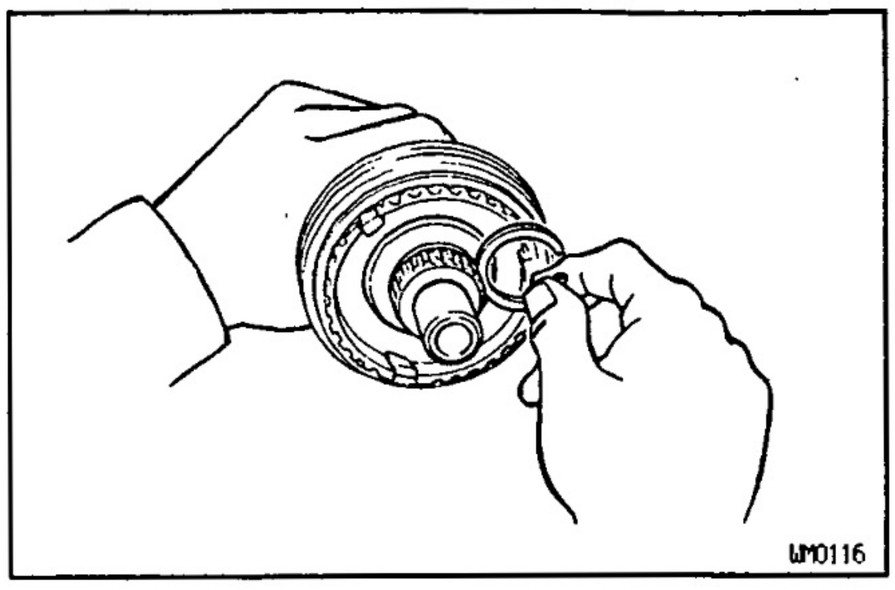

4. INSTALL SNAP RING

(a) Select a snap ring that will allow minimum axial play.

Mark	Thickness mm (in.)
A	1.80 – 1.85 (0.0709 – 0.0728)
B	1.85 – 1.90 (0.0728 – 0.0748)
C	1.90 – 1.95 (0.0748 – 0.0768)
D	1.95 – 2.00 (0.0768 – 0.0787)
E	2.00 – 2.05 (0.0787 – 0.0807)
F	2.05 – 2.10 (0.0807 – 0.0827)
G	2.10 – 2.15 (0.0827 – 0.0846)

(b) Using a snap ring expander, install the snap ring.

5. INSPECT 3RD GEAR THRUST CLEARANCE

(See page MT–24)

6. INSTALL 2ND GEAR AND REVERSE GEAR

(a) Apply gear oil to the shaft and needle roller bearing.

(b) Place the synchronizer ring on the gear and align the ring slots with the shifting keys.

(c) Align the prjection of the synchronizer inner ring with the slots of the clutch hub No.1.

(d) Install the needle roller bearing in the 2nd gear.

(e) Using a press, install the 2nd gear assembly and reverse gear assembly.

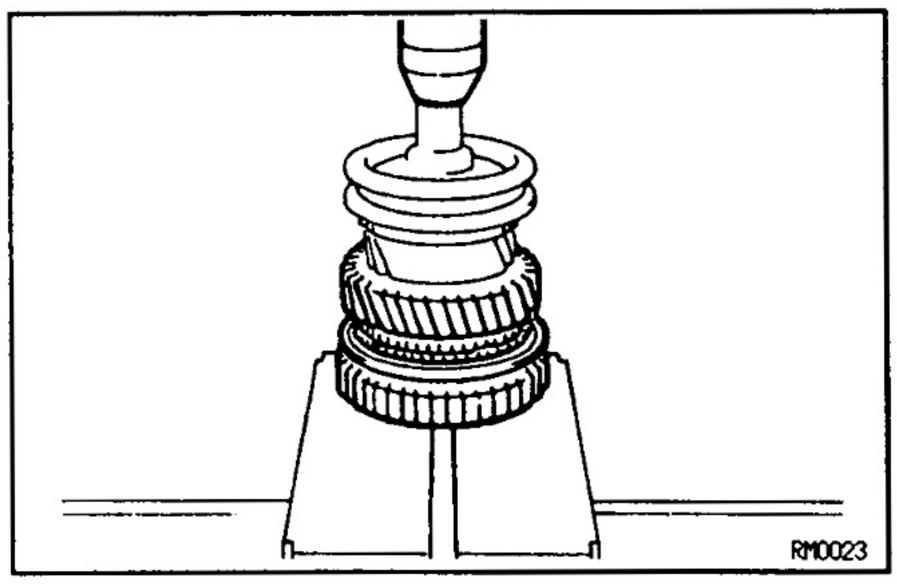

7. INSTALL SNAP RING

(a) Select a snap ring that will allow minimum axial play.

Mark	Thickness mm (in.)
A	2.30 – 2.35 (0.0906 – 0.0925)
B	2.35 – 2.40 (0.0925 – 0.0945)
C	2.40 – 2.45 (0.0945 – 0.0965)
D	2.45 – 2.50 (0.0965 – 0.0984)
E	2.50 – 2.55 (0.0984 – 0.1004)
F	2.55 – 2.60 (0.1004 – 0.1024)
G	2.60 – 2.65 (0.1024 – 0.1043)

(b) Using a screwdriver and hammer, install the snap ring.

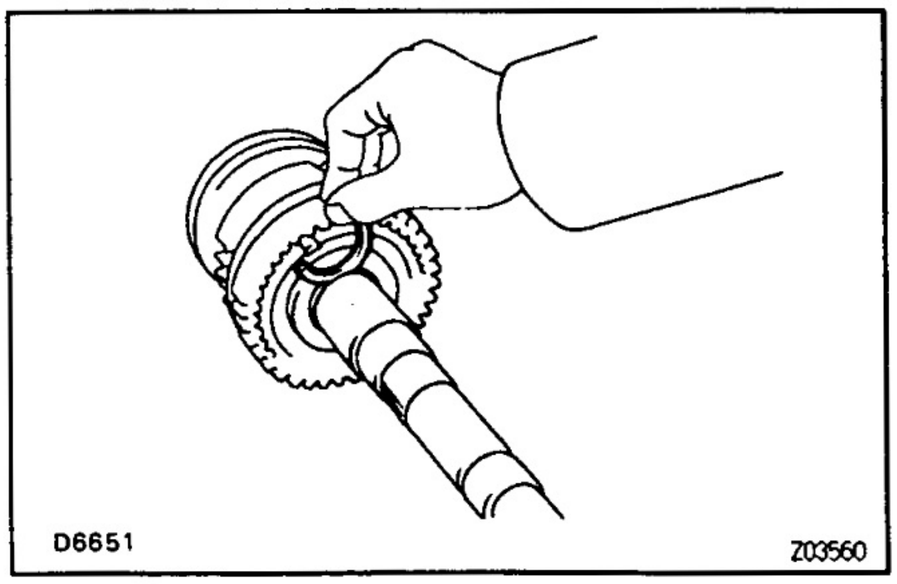

8. INSTALL SPACER AND 1ST GEAR ASSEMBLY

(a) Install the spacer on the output shaft.

(b) Apply gear oil to the needle roller bearing.

(c) Assemble the 1st gear, synchronizer ring and needle roller bearing.

(d) Install the assembly on the output shaft with the synchronizer ring slots aligned with the shifting keys.

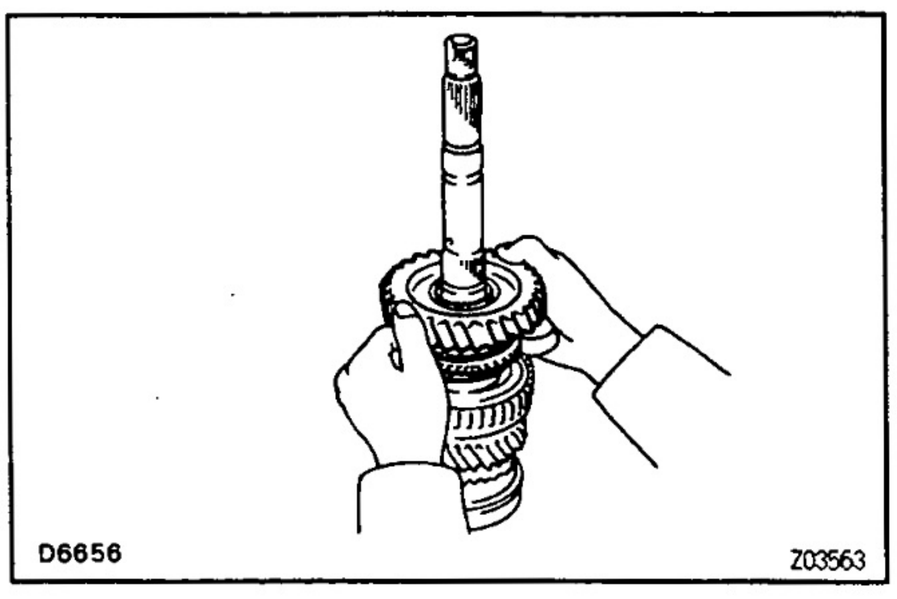

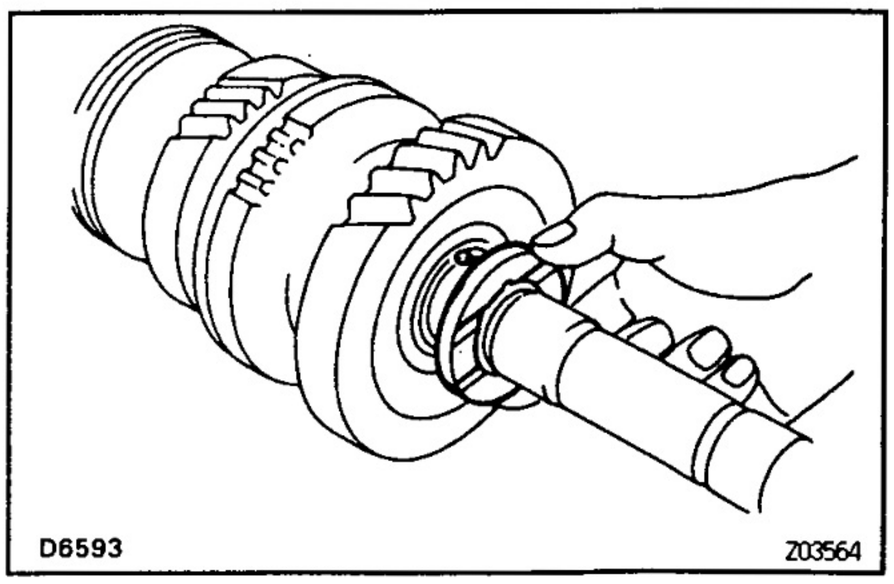

9. INSTALL STRAIGHT PIN AND 1ST GEAR THRUST WASHER

Install the 1st gear thrust washer onto the output shaft with the straight pin aligned with the 1st gear thrust washer.

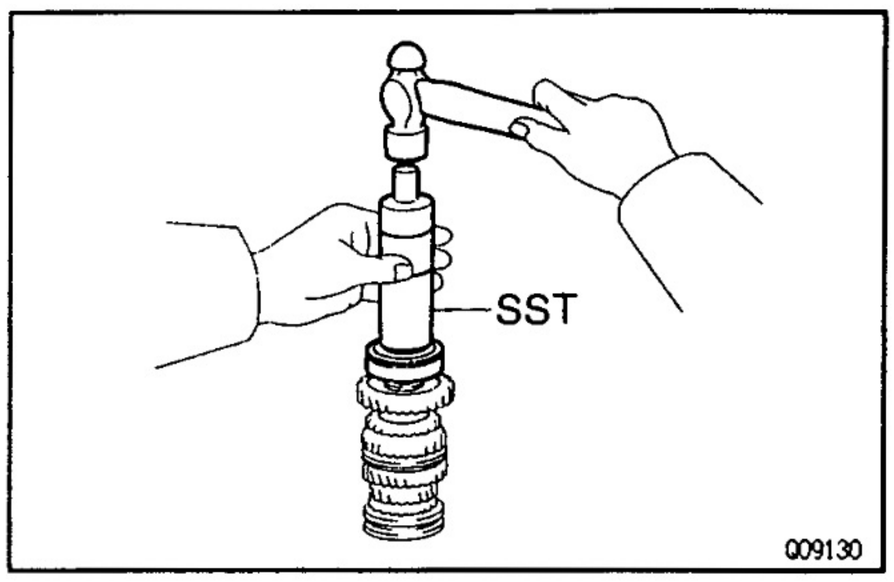

10. INSTALL OUTPUT SHAFT CENTER BEARING

Using SST and a hammer, drive in the bearing with the outer race snap ring groove toward the rear.
SST 09316–60011 (09316–00011, 09316–00071)

11. INSPECT 1ST GEAR THRUST CLEARANCE

(See page MT–24)

12. INSPECT 2ND GEAR THRUST CLEARANCE

(See page MT–24)

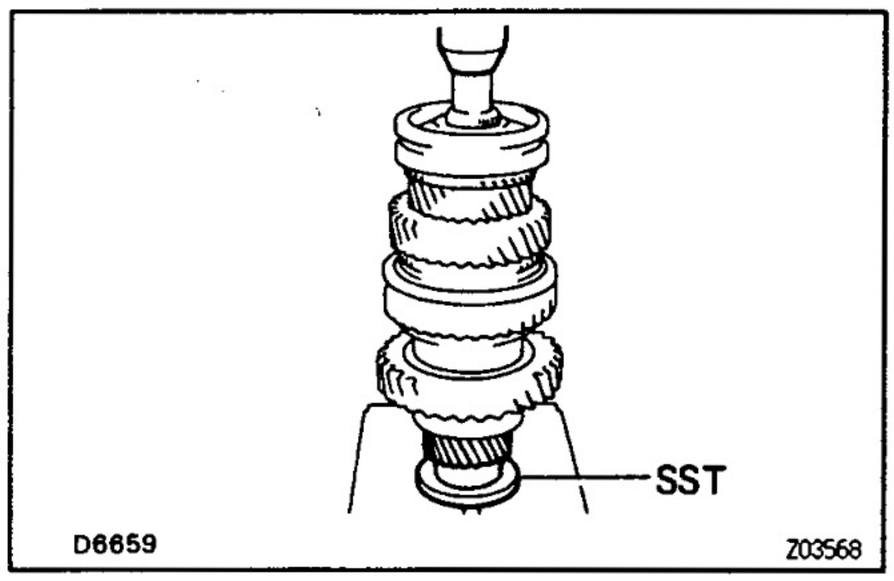

13. INSTALL 5TH GEAR

Using SST and a press, install the 5th gear.
SST 09316–60011 (09316–00031)

COUNTER GEAR AND REVERSE IDLER GEAR

COMPONENTS

MT02N-05

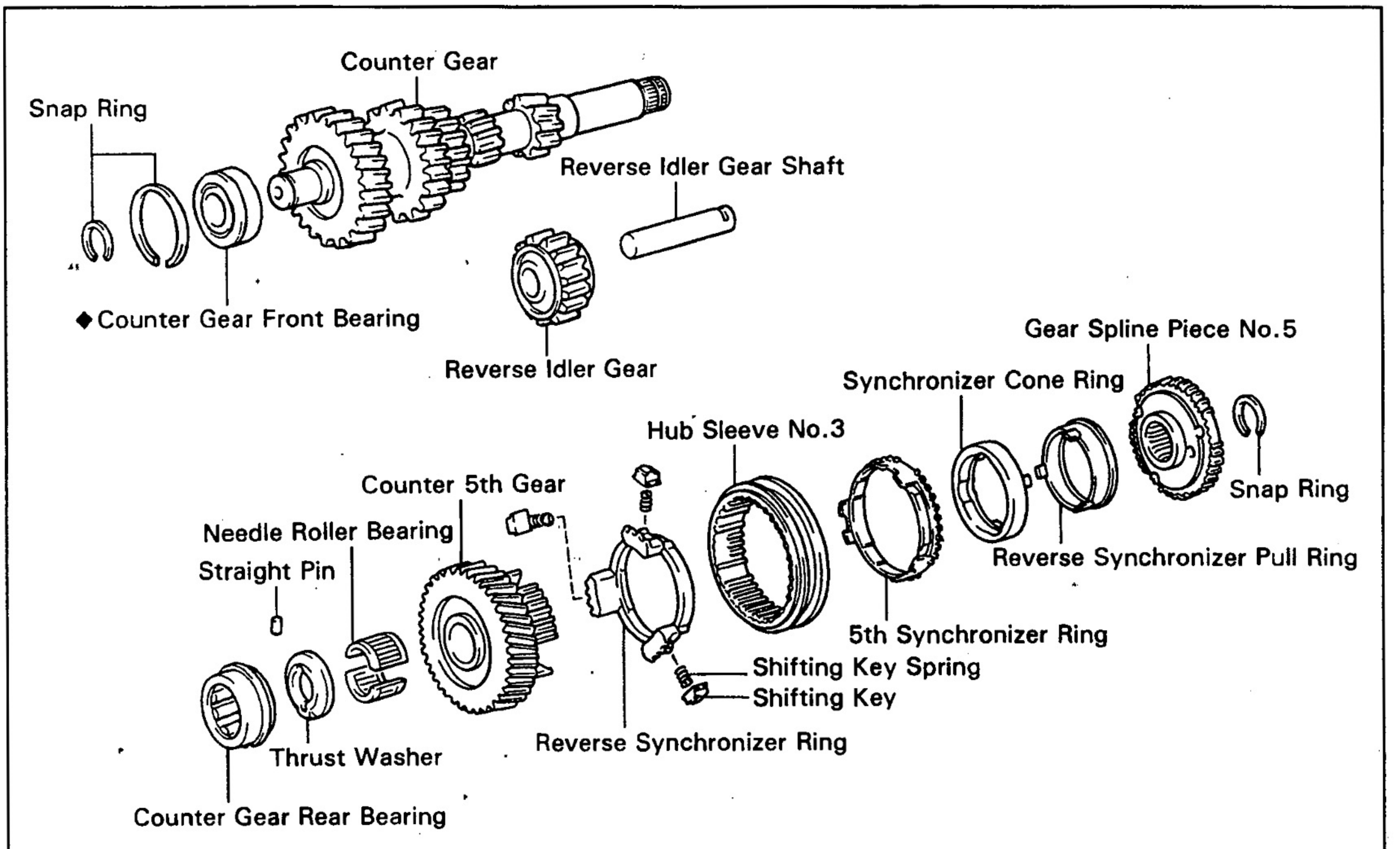

◆ Non-reusable part

Z15462

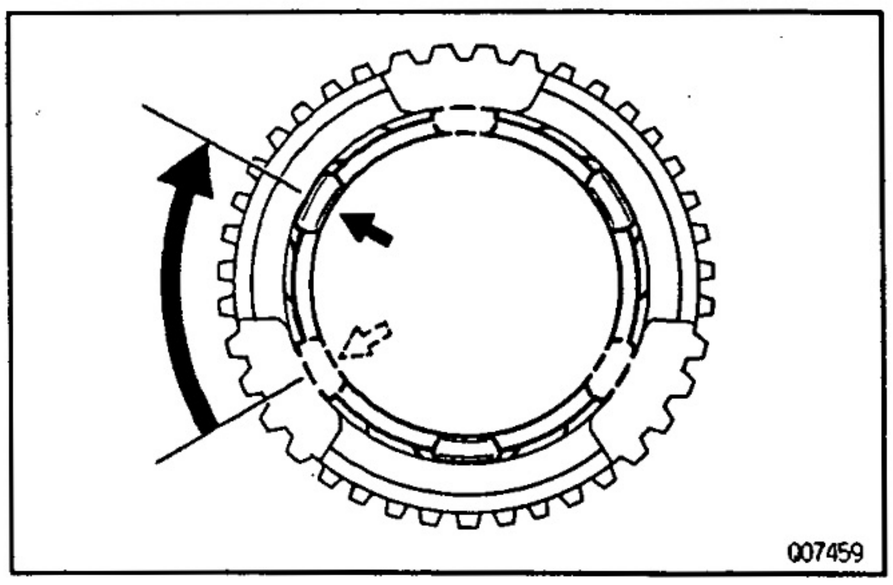

MT08F-04

COUNTER GEAR COMPONENT PARTS DISASSEMBLY

REMOVE HUB SLEEVE NO.3, SHIFTING KEY AND SPRING FROM SYNCHRONIZER RING

(a) Remove the synchronizer ring assembly from the hub sleeve No.3.

(b) Turn the reverse synchronizer pull ring.

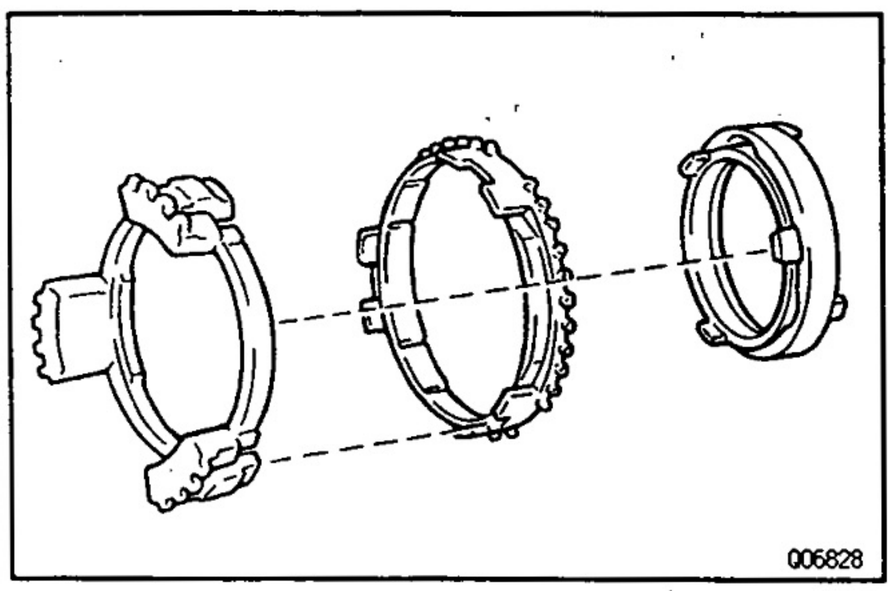

(c) Remove the reverse synchronizer ring and 5th synchronizer ring from the synchronizer pull ring and cone ring.

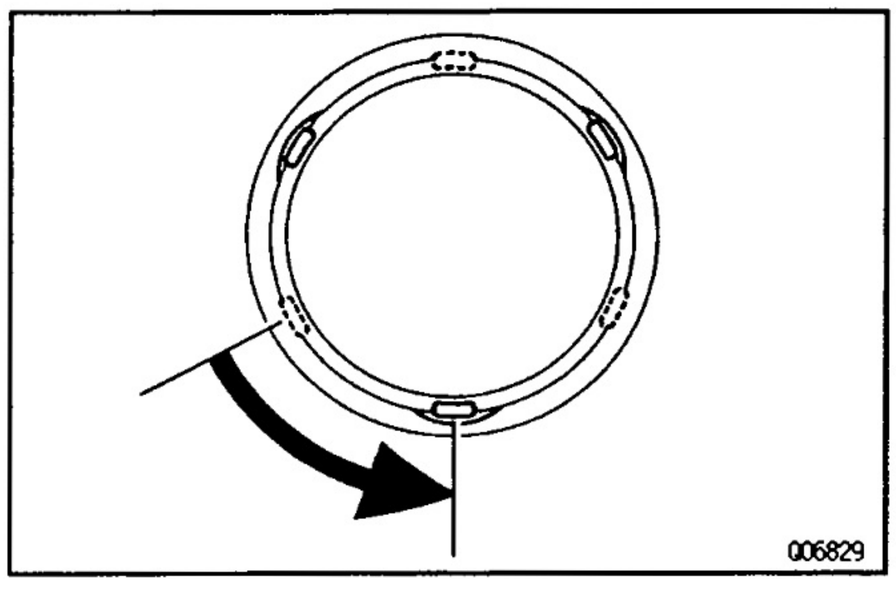

(d) Turn the reverse synchronizer pull ring, separate the pull ring and cone ring.
(e) Push the shifting key and spring, and remove the 3 shifting keys and springs to the reverse synchronizer ring.

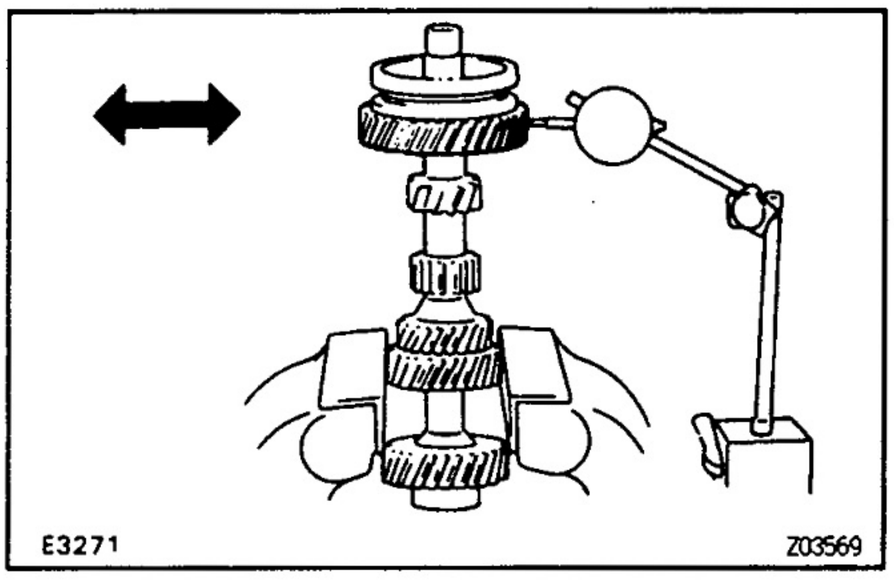

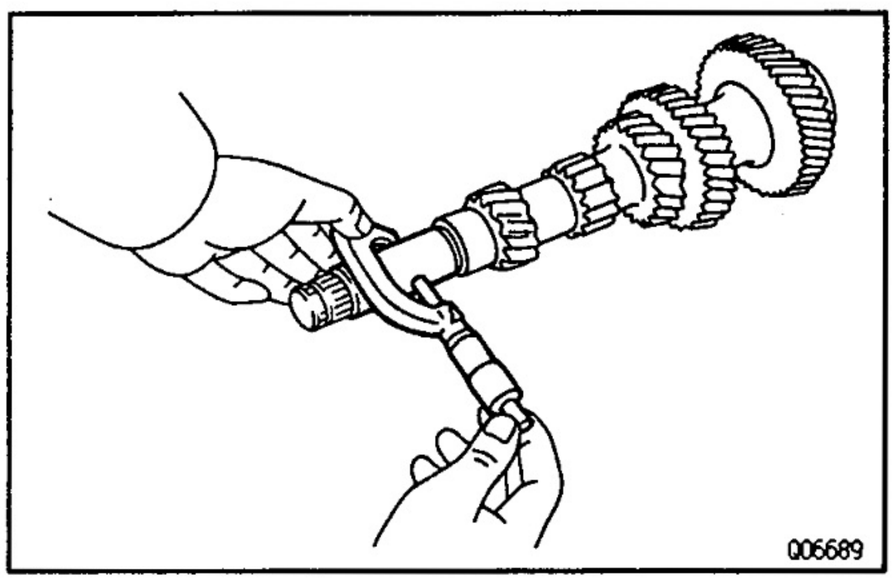

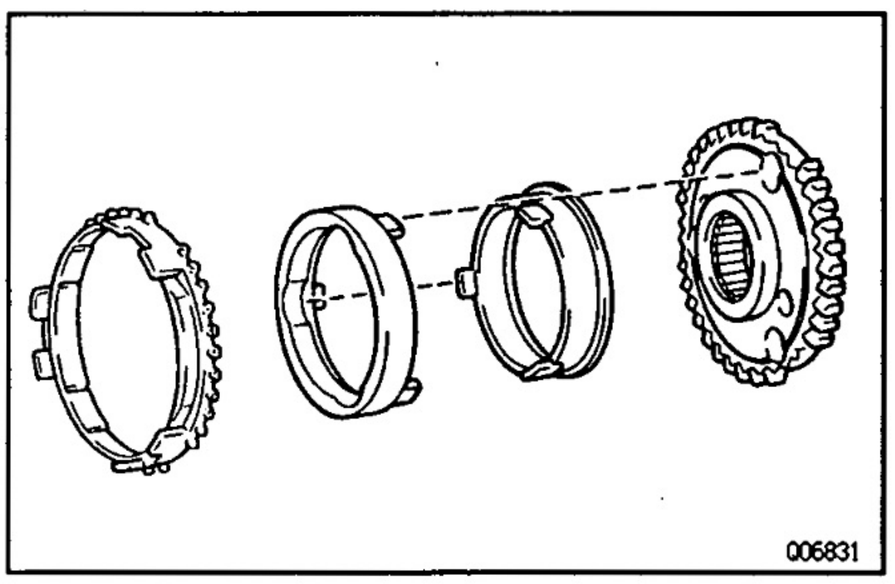

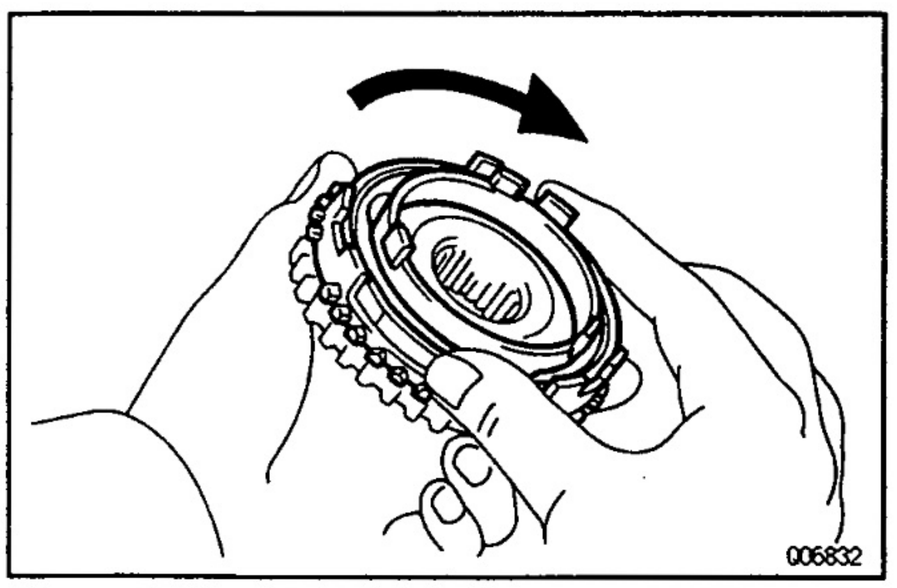

MT020-0C

COUNTER GEAR AND REVERSE IDLER GEAR COMPONENT PARTS INSPECTION

1. INSPECT 5TH GEAR RADIAL CLEARANCE

(a) Install the spacer, counter 5th gear and needle roller bearings.
(b) Using a dial indicator, measure the counter 5th gear radial clearance.

Standard clearance:

0.015 – 0.068 mm (0.0006 – 0.0027 in.)

Maximum clearance: 0.160 mm (0.0063 in.)

If the clearance exceeds the maximum, replace the gear bearing or shaft.

2. INSPECT COUNTER GEAR

Using a micrometer, measure the outer diameter of the counter gear journal.

Minimum diameter: 27.860 mm (1.0968 in.)

If the outer diameter is less than the minimum, replace the counter gear.

3. INSPECT 5TH SYNCHRONIZER RING

(a) Check for wear or damage.
(b) Install the synchronizer pull ring, cone ring and outer ring to the gear spline piece No.5.

(c) Check the braking effect of the synchronizer ring. Turn the synchronizer ring in one direction while pushing it to the gear cone. Check that the ring locks. If it does not lock, replace the synchronizer ring.

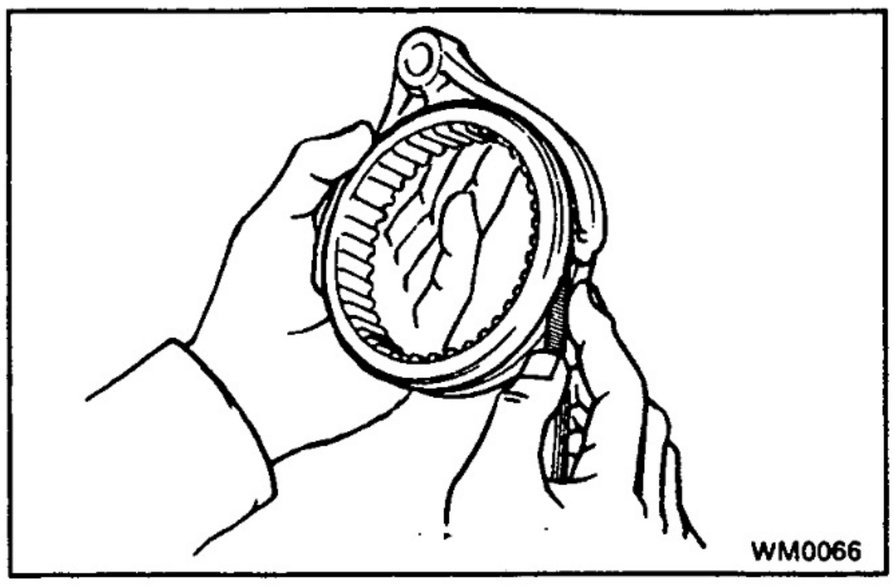

4. INSPECT SHIFT FORK AND HUB SLEEVE CLEARANCE

Using a feeler gauge, measure the clearance between the hub sleeve and shift fork.

Maximum clearance: 1.0 mm (0.039 in.)

If the clearance exceeds the maximum, replace the shift fork or hub sleeve.

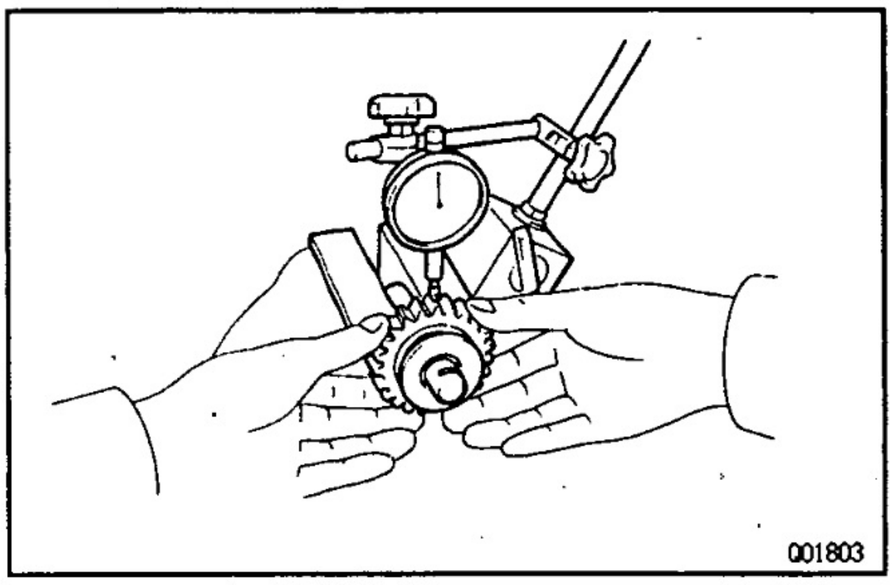

5. INSPECT REVERSE IDLER GEAR RADIAL CLEARANCE

Using a dial indicator, measure the reverse idler gear radial clearance.

Standard clearance:

0.040—0.082 mm (0.0016—0.0032 in.)

Maximum clearance: 0.130 mm (0.0051 in.)

If the clearance exceeds the maximum, replace the reverse idler gear or reverse idler gear shaft.

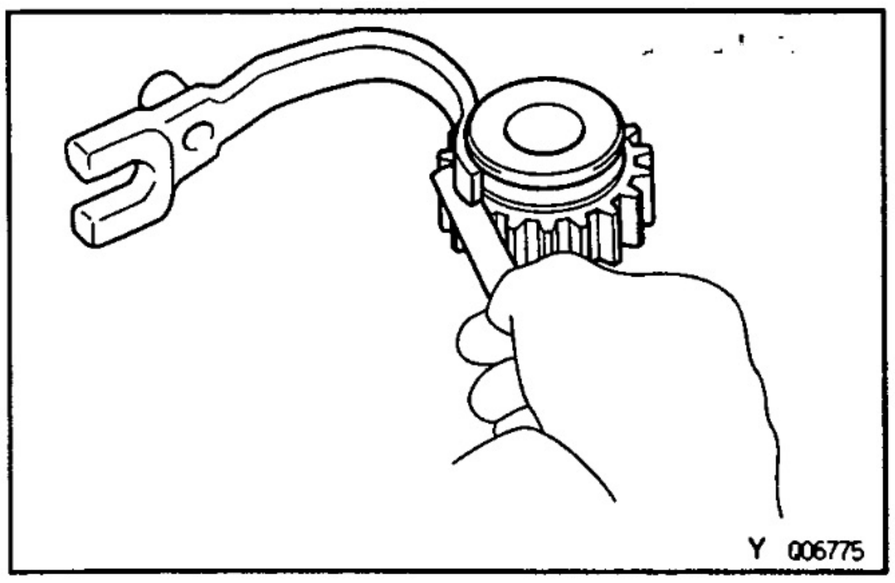

6. INSPECT REVERSE IDLER GEAR AND SHIFT ARM CLEARANCE

Using a feeler gauge, measure the clearance between the reverse idler gear and shift arm.

Standard clearance:

0.05—0.35 mm (0.0020—0.0138 in.)

Maximum clearance: 0.50 mm (0.0197 in.)

If the clearance exceeds the maximum, replace the shift arm or reverse idler gear.

BEARING REPLACEMENT

MT02R-05

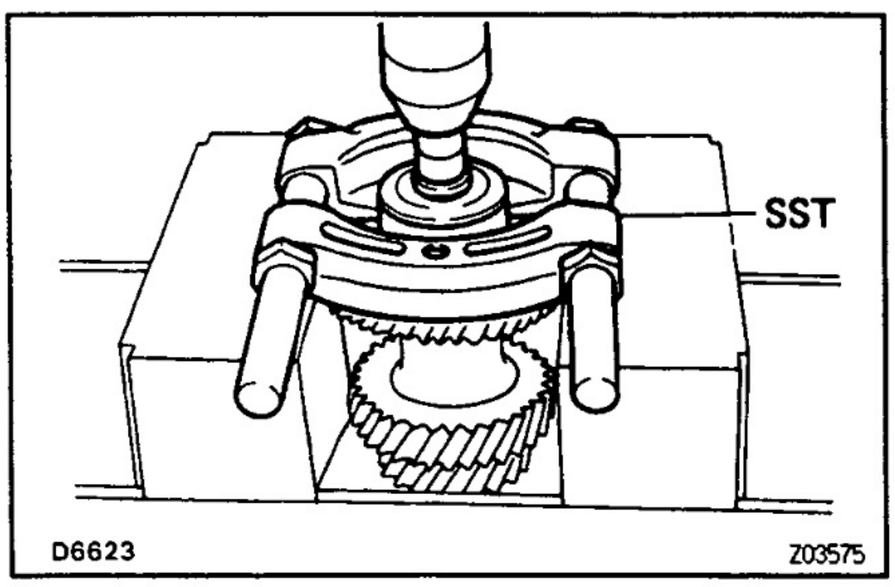

IF NECESSARY, REPLACE COUNTER GEAR FRONT BEARING

(a) Using a snap ring expander, remove the snap ring.

(b) Using SST and a press, remove the bearing.
SST 09950—00020

(c) Replace the side race.

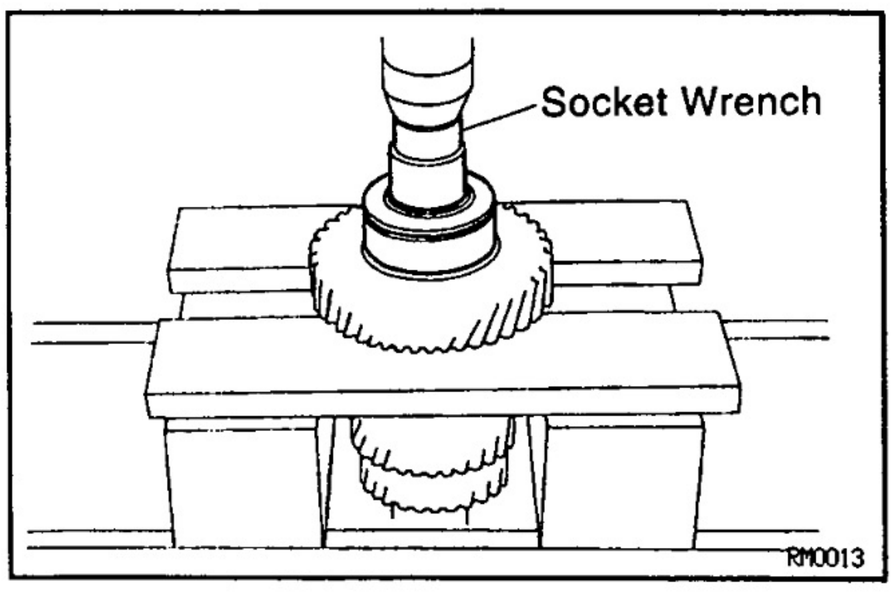

(d) Using a socket wrench and press, install a new bearing and side race.

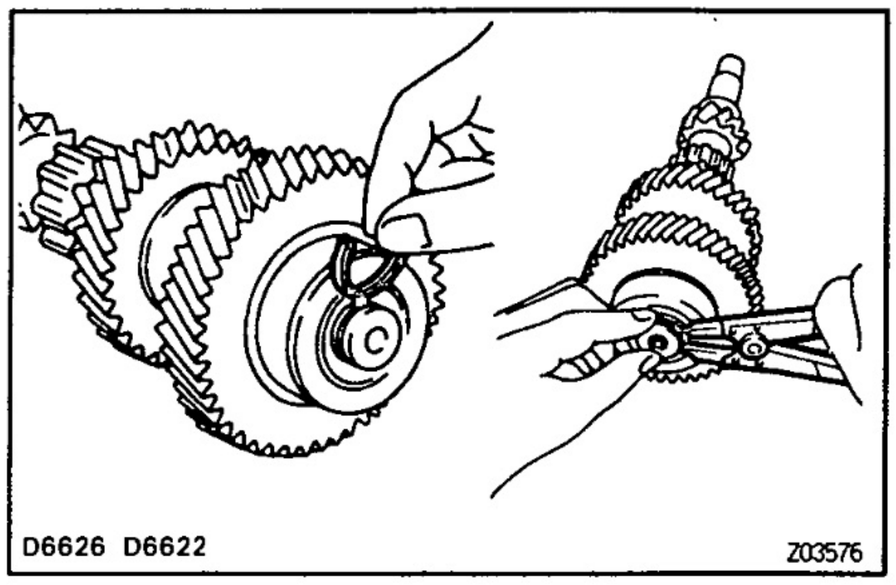

(e) Select a snap ring that will allow minimum axial play.

Mark	Thickness mm (in.)
A	2.00 – 2.05 (0.0787 – 0.0807)
B	2.05 – 2.10 (0.0807 – 0.0827)
C	2.10 – 2.15 (0.0827 – 0.0846)
D	2.15 – 2.20 (0.0846 – 0.0866)
E	2.20 – 2.25 (0.0866 – 0.0886)
F	2.25 – 2.30 (0.0886 – 0.0906)

(f) Using a snap ring expander, install the snap ring.

MT

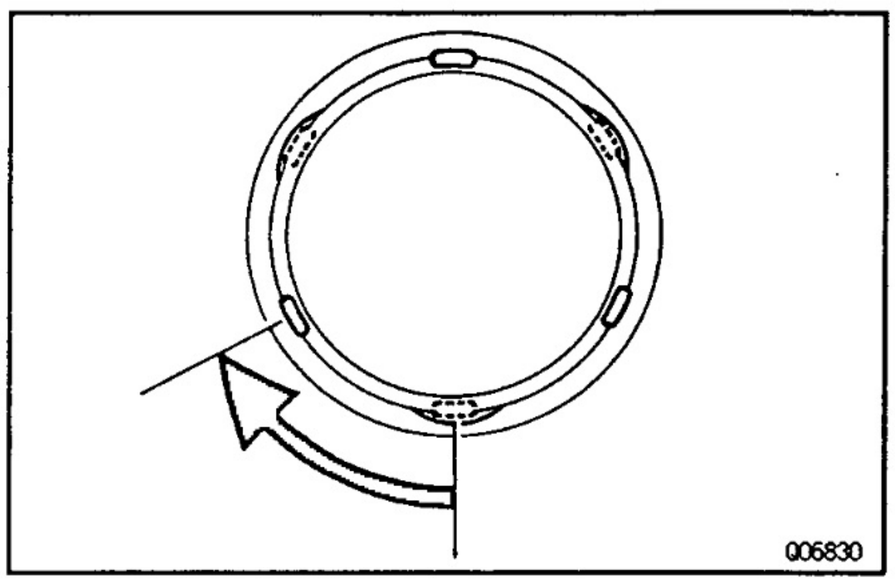

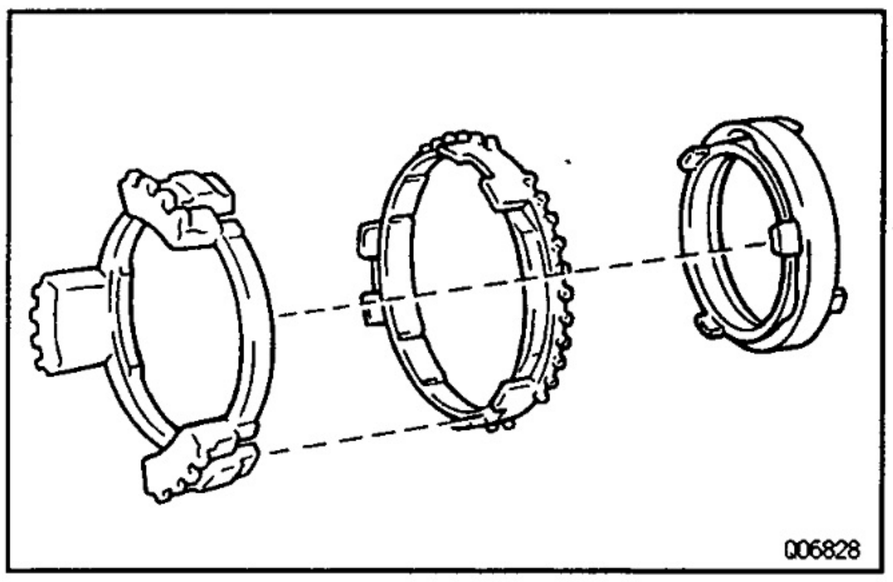

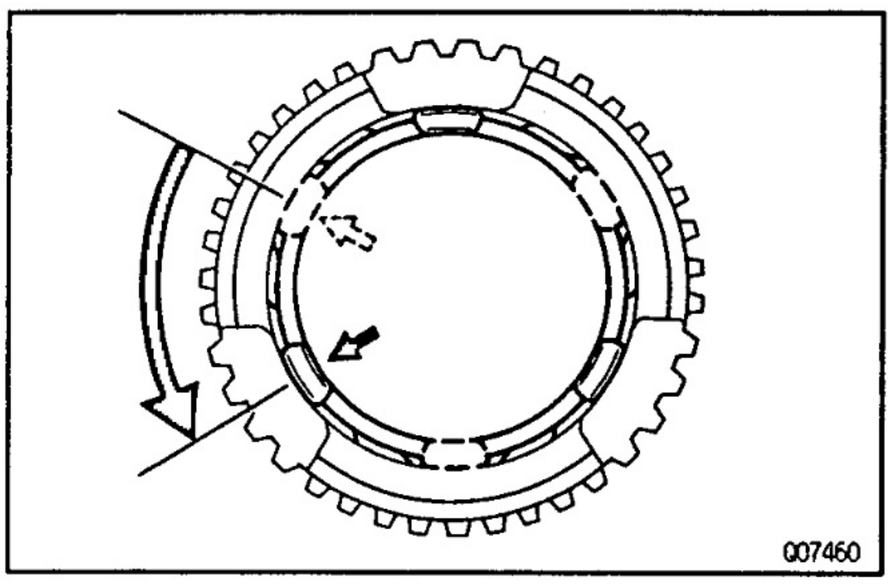

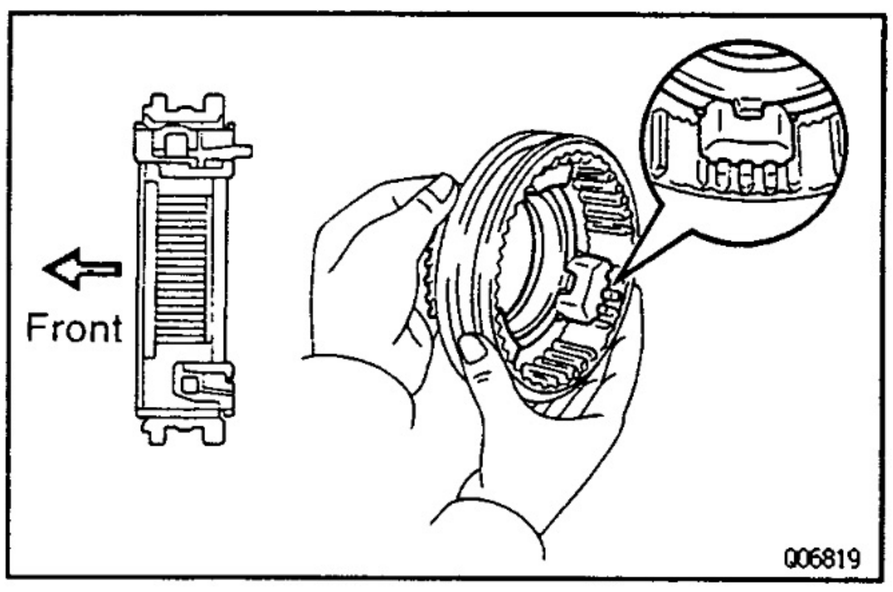

COUNTER GEAR COMPONENT PARTS ASSEMBLY

MT08Q-03

INSTALL SYNCHRONIZER RING ASSEMBLY TO HUB SLEEVE NO.3

(a) Put the key spring to the hole of the shifting key.
(b) Push the 3 shifting keys with the 3 key springs to the reverse synchronizer ring.
(c) Install the synchronizer cone ring to the reverse synchronizer pull ring and turn the pull ring.
(d) Install the 5th synchronizer ring.
(e) Install the reverse synchronizer ring.
(f) Turn the reverse synchronizer pull ring.
(g) While pushing the 3 shifting keys, install the synchronizer ring assembly to the hub sleeve No.3.

FRONT BEARING RETAINER

COMPONENTS

MT03T–04

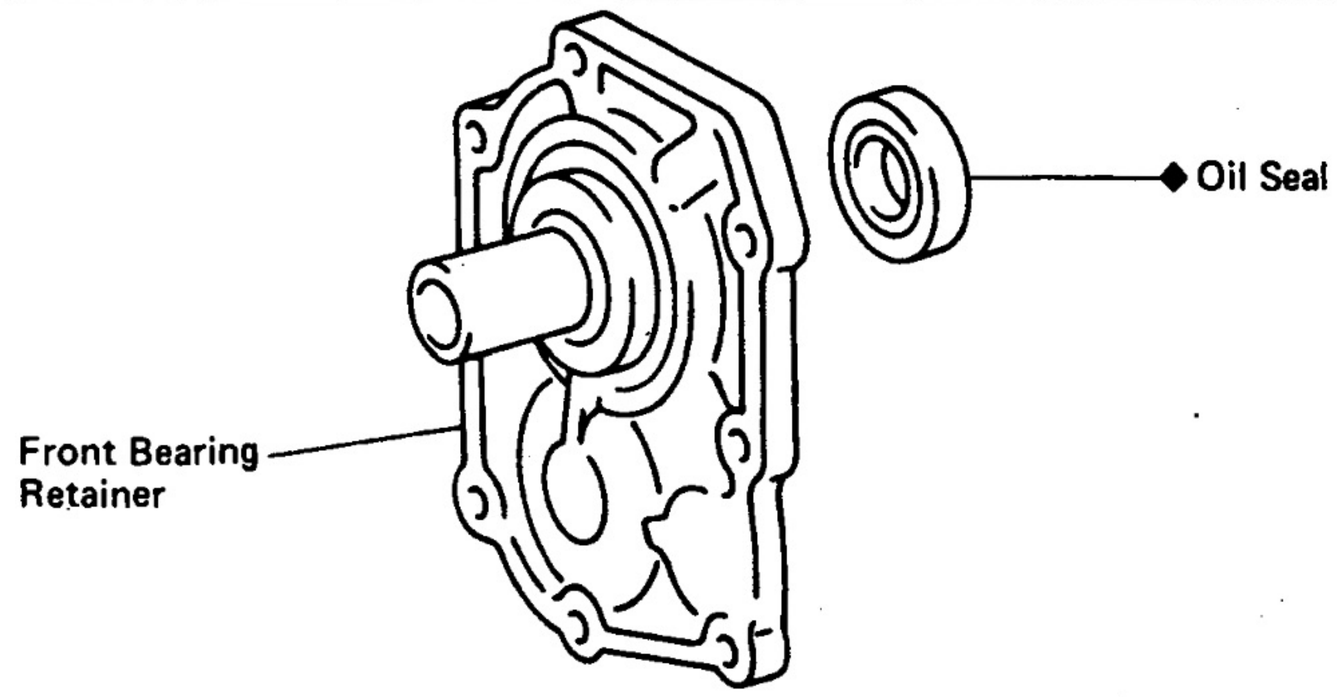

◆ Non-reusable part

RM0322

MT02U–0A

OIL SEAL REPLACEMENT

IF NECESSARY, REPLACE FRONT BEARING RETAINER OIL SEAL

(a) Using a screwdriver, pry out the oil seal.

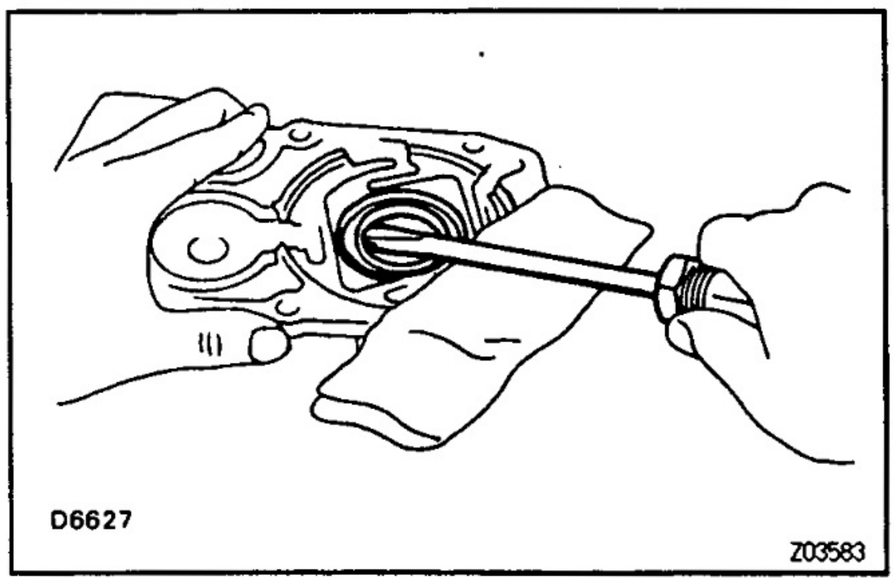

D6627

Z03583

(b) Using SST and a hammer, drive in a new oil seal.
SST 09950–60010 (09951–00510),
09950–70010 (09951–07150)
Drive in depth: 11.7 ± 0.5 mm (0.461 ± 0.020 in.) from retainer end

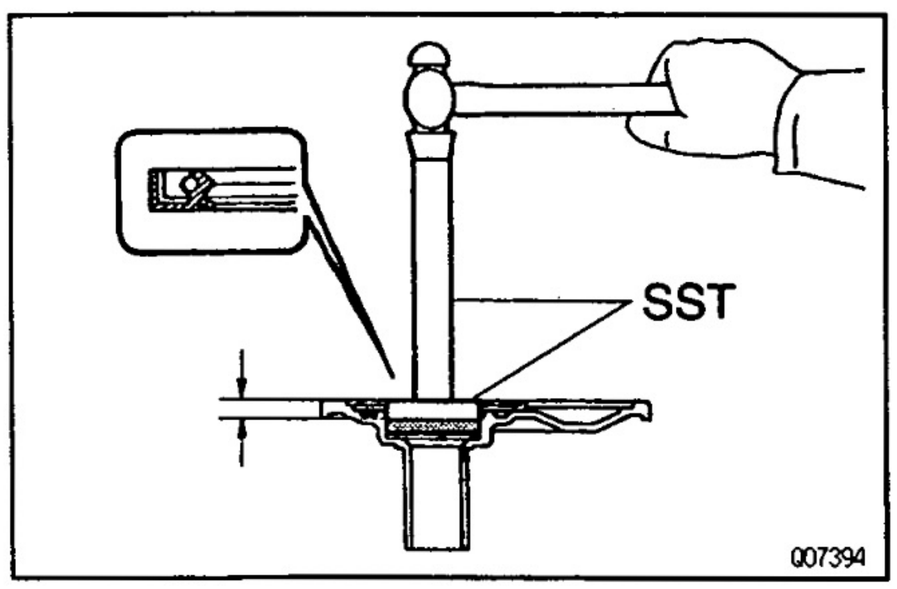

Q07394

TRANSFER ADAPTOR

COMPONENTS

MT02V-0A

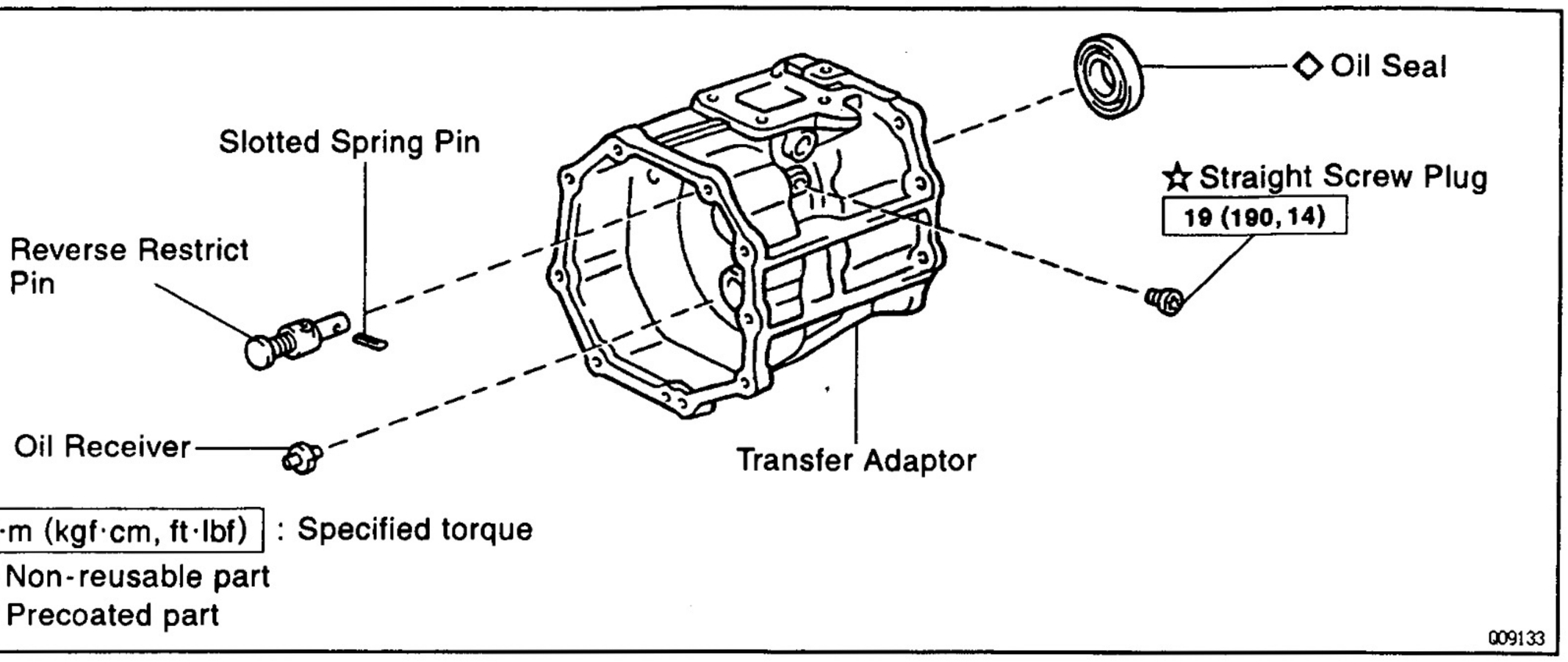

N·m (kgf·cm, ft·lbf) : Specified torque
◇ Non-reusable part
☆ Precoated part

009133

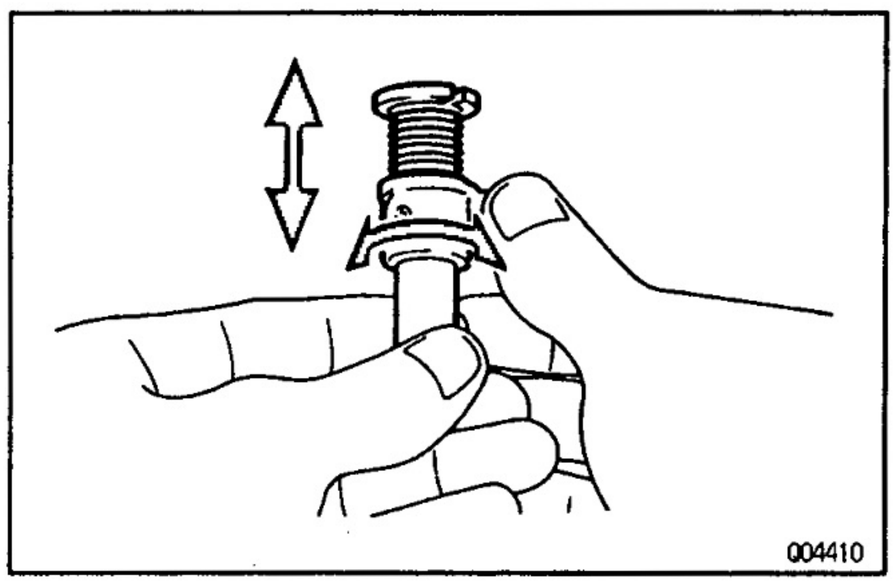

004410

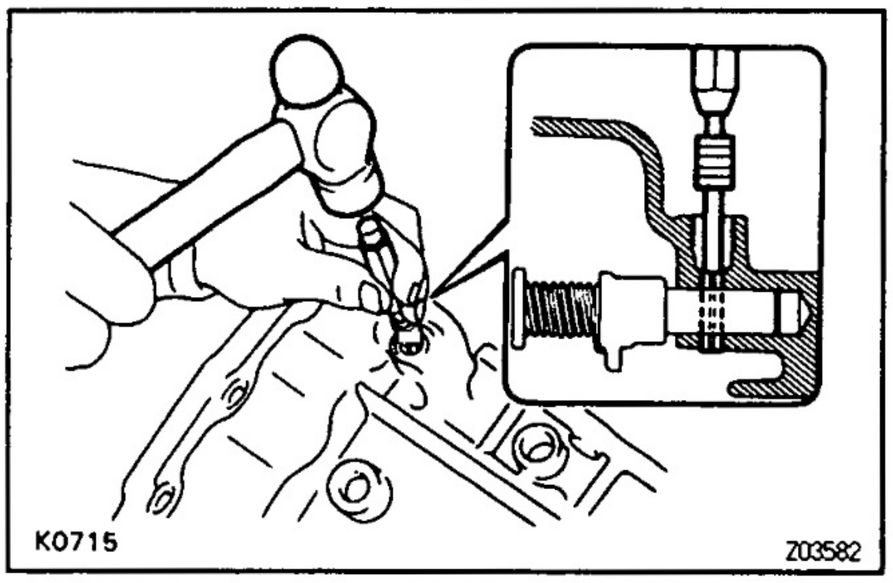

K0715 Z03582

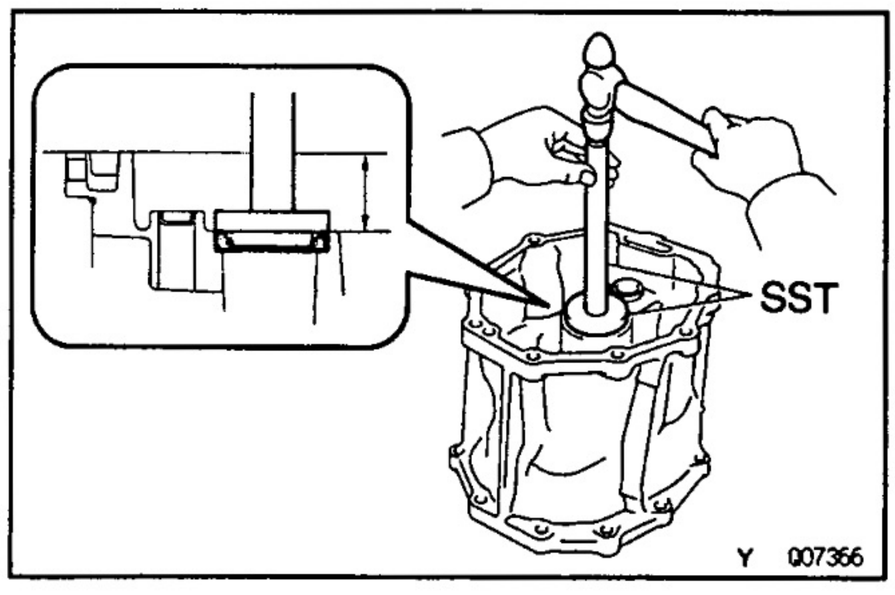

Y 007366

REVERSE RESTRICT PIN REPLACEMENT

MT0BH-05

1. REMOVE REVERSE RESTRICT PIN

(a) Using a torx socket wrench (T40), remove the plug.

(b) Using a pin punch and hammer, drive out the slotted spring pin.

(c) Remove the reverse restrict pin.

2. INSPECT REVERSE RESTRICT PIN

Turn and push the reverse restrict pin by hand.
Check for smooth operation.

3. INSTALL REVERSE RESTRICT PIN

(a) Install the reverse restrict pin to the transfer adaptor.

(b) Using a pin punch and hammer, drive in the slotted spring pin, as shown.

(c) Apply sealant to the plug threads.
Sealant: Part No. 08833 – 00080, THREE BOND 1344, LOCTITE 242 or equivalent

(d) Using a torx socket wrench (T40), install and torque the plug.
Torque: 19 N·m (190 kgf·cm, 14 ft·lbf)

OIL SEAL REPLACEMENT

MT0J8-01

IF NECESSARY, REPLACE TRANSFER ADAPTOR OIL SEAL

(a) Using a screwdriver, pry out the oil seal.

(b) Using SST and a hammer, drive in a new oil seal.
SST 09950–60010 (09951–00570),
09950–70010 (09951–07150)
Drive in depth: 45.6 ± 0.5 mm (1.795 ± 0.020 in.)

SERVICE SPECIFICATIONS

SERVICE DATA

MT02Z–0C

Output shaft 1st gear journal diameter	Min.	38.860 mm (1.5299 in.)
Output shaft 2nd gear journal diameter	Min.	46.860 mm (1.8449 in.)
Output shaft 3rd gear journal diameter	Min.	37.860 mm (1.4905 in.)
Output shaft flange thickness	Min.	4.70 mm (0.1850 in.)
Output shaft runout	Max.	0.06 mm (0.0024 in.)
Gear thrust clearance 1st	STD	0.15–0.45 mm (0.0059–0.0177 in.)
	Max.	0.50 mm (0.0197 in.)
Gear thrust clearance 2nd and 3rd	STD	0.10–0.25 mm (0.0039–0.0098 in.)
	Max.	0.30 mm (0.0118 in.)
Gear radial clearance 1st	STD	0.020–0.073 mm (0.0008–0.0029 in.)
	Max.	0.160 mm (0.0063 in.)
Gear radial clearance 2nd and 3rd	STD	0.015–0.068 mm (0.0006–0.0027 in.)
	Max.	0.160 mm (0.0063 in.)
Shift fork to hub sleeve clearance	Max.	1.0 mm (0.039 in.)
Synchronizer ring to gear clearance	Min.	0.8 mm (0.031 in.)
Input shaft snap ring thickness		
	Mark A	2.10–2.15 mm (0.0827–0.0846 in.)
	Mark B	2.15–2.20 mm (0.0846–0.0866 in.)
	Mark C	2.20–2.25 mm (0.0866–0.0886 in.)
	Mark D	2.25–2.30 mm (0.0886–0.0906 in.)
	Mark E	2.30–2.35 mm (0.0906–0.0925 in.)
	Mark F	2.35–2.40 mm (0.0925–0.0945 in.)
	Mark G	2.40–2.45 mm (0.0945–0.0965 in.)
Output shaft snap ring thickness		
Clutch hub No.1	Mark A	2.30–2.35 mm (0.0906–0.0925 in.)
	Mark B	2.35–2.40 mm (0.0925–0.0945 in.)
	Mark C	2.40–2.45 mm (0.0945–0.0965 in.)
	Mark D	2.45–2.50 mm (0.0965–0.0984 in.)
	Mark E	2.50–2.55 mm (0.0984–0.1004 in.)
	Mark F	2.55–2.60 mm (0.1004–0.1024 in.)
	Mark G	2.60–2.65 mm (0.1024–0.1043 in.)
Output shaft snap ring thickness		
Clutch hub No.2	Mark A	1.80–1.85 mm (0.0709–0.0728 in.)
	Mark B	1.85–1.90 mm (0.0728–0.0748 in.)
	Mark C	1.90–1.95 mm (0.0748–0.0768 in.)
	Mark D	1.95–2.00 mm (0.0768–0.0787 in.)
	Mark E	2.00–2.05 mm (0.0787–0.0807 in.)
	Mark F	2.05–2.10 mm (0.0807–0.0827 in.)
	Mark G	2.10–2.15 mm (0.0827–0.0846 in.)

Output shaft snap ring thickness		
Rear	Mark A	2.65—2.70 mm (0.1043—0.1063 in.)
	Mark B	2.70—2.75 mm (0.1063—0.1083 in.)
	Mark C	2.75—2.80 mm (0.1083—0.1102 in.)
	Mark D	2.80—2.85 mm (0.1102—0.1122 in.)
	Mark E	2.85—2.90 mm (0.1122—0.1142 in.)
	Mark F	2.90—2.95 mm (0.1142—0.1161 in.)
	Mark G	2.95—3.00 mm (0.1161—0.1181 in.)
	Mark H	3.00—3.05 mm (0.1181—0.1201 in.)
	Mark J	3.05—3.10 mm (0.1201—0.1220 in.)
	Mark K	3.10—3.15 mm (0.1220—0.1240 in.)
	Mark L	3.15—3.20 mm (0.1240—0.1260 in.)
	Mark M	3.20—3.25 mm (0.1260—0.1280 in.)
	Mark N	3.25—3.30 mm (0.1280—0.1299 in.)
	Mark P	3.30—3.35 mm (0.1299—0.1319 in.)
	Mark Q	3.35—3.40 mm (0.1319—0.1339 in.)
	Mark R	3.40—3.45 mm (0.1339—0.1358 in.)
	Mark S	3.45—3.50 mm (0.1358—0.1378 in.)
Counter gear roller bearing journal diameter	Min.	27.860 mm (1.0968 in.)
Counter 5th gear thrust clearance	STD	0.10—0.35 mm (0.0039—0.0138 in.)
	Max.	0.40 mm (0.0157 in.)
Counter 5th radial clearance	STD	0.015—0.068 mm (0.0006—0.0027 in.)
	Max.	0.160 mm (0.0063 in.)
Reverse idler gear radial clearance	STD	0.040—0.082 mm (0.0016—0.0032 in.)
	Max.	0.130 mm (0.0051 in.)
Reverse idler gear to shift arm clearance	STD	0.05—0.35 mm (0.0020—0.0138 in.)
	Max.	0.50 mm (0.0197 in.)
Counter gear snap ring thickness		
Front	Mark A	2.00—2.05 mm (0.0787—0.0807 in.)
	Mark B	2.05—2.10 mm (0.0807—0.0827 in.)
	Mark C	2.10—2.15 mm (0.0827—0.0846 in.)
	Mark D	2.15—2.20 mm (0.0846—0.0866 in.)
	Mark E	2.20—2.25 mm (0.0866—0.0886 in.)
	Mark F	2.25—2.30 mm (0.0886—0.0906 in.)
Counter gear snap ring thickness		
Rear	Mark A	2.80—2.85 mm (0.1102—0.1122 in.)
	Mark B	2.85—2.90 mm (0.1122—0.1142 in.)
	Mark C	2.90—2.95 mm (0.1142—0.1161 in.)
	Mark D	2.95—3.00 mm (0.1161—0.1181 in.)
	Mark E	3.00—3.05 mm (0.1181—0.1201 in.)
	Mark F	3.05—3.10 mm (0.1201—0.1220 in.)
	Mark G	3.10—3.15 mm (0.1220—0.1240 in.)
Oil seal drive in depth		
Front bearing retainer (from retainer end)		11.7 ± 0.5 mm (0.461 ± 0.020 in.)
Transfer adaptor		45.6 ± 0.5 mm (1.795 ± 0.020 in.)

MT030–0H

TORQUE SPECIFICATIONS

Part tightened		N·m	kgf·cm	ft·lbf
Transmission x Engine		72	730	53
Starter x Transmission		39	400	29
No.2 rear end plate x Transmission (1KZ–T, 1KZ–TE)		37	380	27
Rear end plate x Transmission (5VZ–FE)		18	185	13
Clutch release cylinder x Transmission		12	120	9
Front exhaust pipe x Exhaust manifold (1KZ–T, 1KZ–TE)		62	630	46
No.1 front exhaust pipe x Exhaust manifold (RHD of 5VZ–FE)		62	630	46
No.2 front exhaust pipe x Exhaust manifold (RHD of 5VZ–FE)		62	630	46
Front exhaust pipe x Center exhaust pipe (1KZ–T, 1KZ–TE)		43	440	32
Front exhaust pipe x Center exhaust pipe (5VZ–FE)		48	490	35
No.2 exhaust pipe support bracket x Frame (5VZ–FE)		19	190	14
No.1 front exhaust pipe x No.2 pipe (RHD of 5VZ–FE)		48	490	35
Front exhaust pipe bracket (LHD of 5VZ–FE)		44	450	33
No.3 crossmember x Engine rear mounting		18	185	13
No.3 crossmember x Frame		65	660	48
Engine rear mounting x Transmission		65	650	48
No.4 crossmember x Frame (5 door of 1KZ–TE, 5VZ–FE)		65	660	48
Stabilizer bar bracket x Frame (1KZ–T, 1KZ–TE)		25	260	19
Front differential rear mounting cushion (1KZ–T, 1KZ–TE)	Bolt	108	1,100	80
	Nut	87	890	64
Transmission x Transfer		24	240	17
Reverse shift arm bracket set bolt		18	185	13
Rear bearing retainer x Intermediate plate		18	185	13
Shift fork x Shift fork shaft		20	200	14
Oil separator x Shift fork shaft No.4 (Middle East and Australia)		13	130	10
Oil separator x Intermediate plate (Middle East and Australia)		20	200	14
Straight screw plug		19	190	14
Front bearing retainer x Transmission case		17	170	12
Transmission case x Transfer adaptor		37	380	27
Shift lever housing x Shift and select lever		38	390	28
Clutch housing x Transmission case		36	370	27
Back–up light switch		44	450	32
Restrict pin		37	380	27
Control shift lever retainer x Transfer adaptor		18	185	13
Filler and drain plug		37	380	27

A343F AUTOMATIC TRANSMISSION

OPERATION ..... AT– 2
PRECAUTION ..... AT– 3
PREPARATION ..... AT– 3
ON–VEHICLE REPAIR ..... AT– 4
ASSEMBLY REMOVAL AND INSTALLATION ..... AT– 9
TROUBLESHOOTING AT–19
SERVICE SPECIFICATIONS AT–89

AT

OPERATION

AT1SM—02

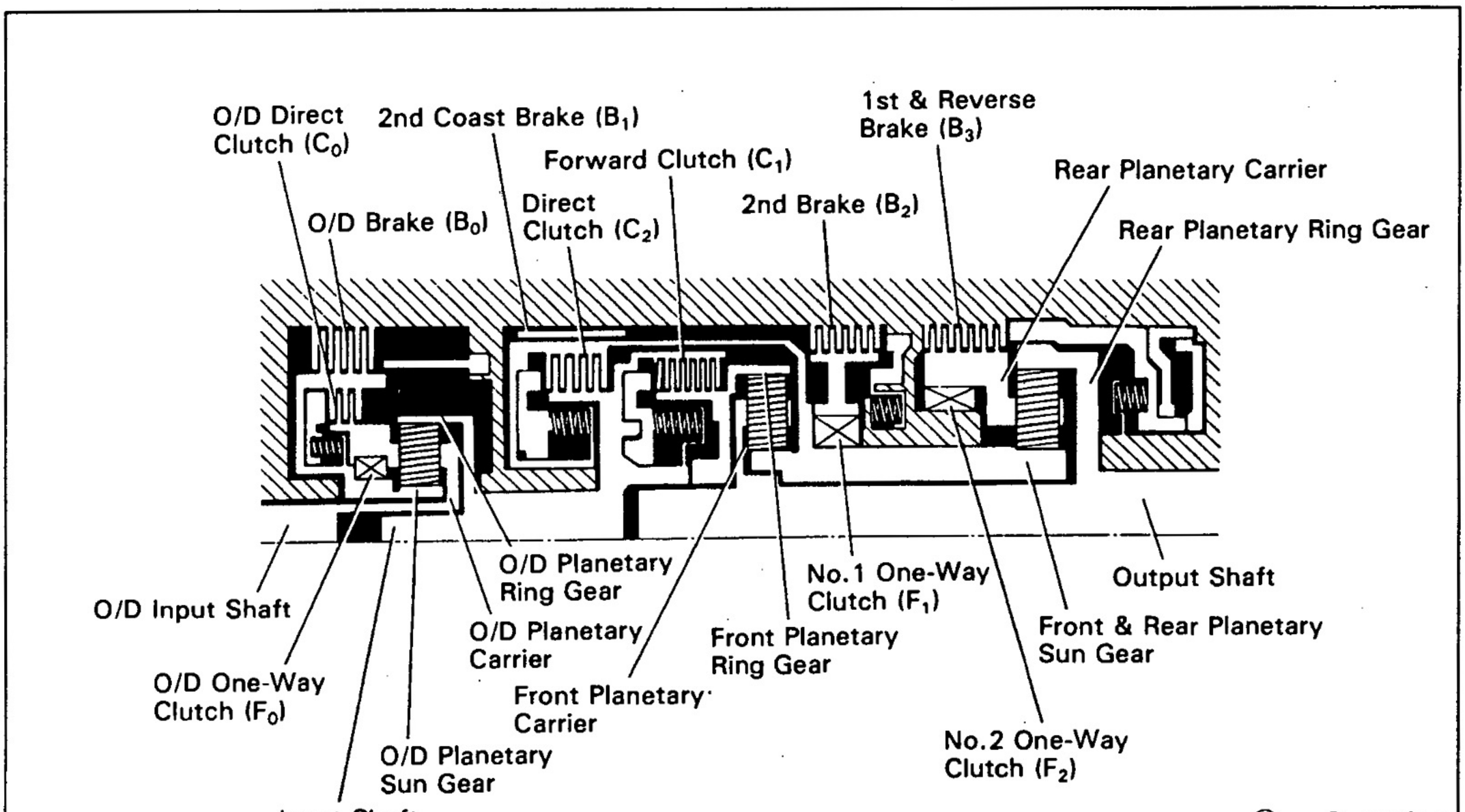

AT2157

○ ... Operating

Shift lever range	Gear position	C_0	C_1	C_2	B_0	B_1	B_2	B_3	F_0	F_1	F_2
P	Parking	○									
R	Reverse	○		○				○	○		
N	Neutral	○									
D	1st	○	○						○		○
	2nd	○	○				○		○	○	
	3rd	○	○	○			○		○		
	O/D		○	○	○		○				
2	1st	○	○						○		○
	2nd	○	○			○	○		○	○	
	*1 3rd	○	○	○			○		○		
L	1st	○	○					○	○		○
	*2 2nd	○	○			○	○		○	○	

*1 Down-shift only in the 2 range and 3rd gear — no up-shift.
*2 Down-shift only in the L range and 2nd gear — no up-shift.

V08008

PRECAUTION

AX0VH-0A

When working with FIPG material, you must observe the following.

- **Using a razor blade and a gasket scraper, remove all old FIPG material from the gasket surfaces.**
- **Thoroughly clean all components to remove all loose material.**
- **Clean both sealing surfaces with a non—residue solvent.**
- **Apply FIPG in an approx. 1 mm (0.04 in.) wide bead along the sealing surface.**
- **Parts must be assembled within 10 minutes of application. Otherwise, the FIPG material must be removed and reapplied.**

If the vehicle is equipped with a mobile communication system, refer to the precautions in the IN section.

PREPARATION

SST (SPECIAL SERVICE TOOLS)

AX01C-0W

AT

	09032—00100 Oil Pan Seal Cutter	
	09350—30020 TOYOTA Automatic Transmission Tool Set	
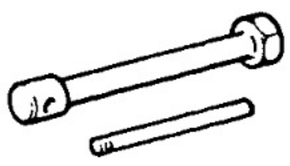	(09351—32010) One—way Clutch Test Tool	
	(09351—32020) Stator Stopper	
	09843—18020 Diagnosis Check Wire	
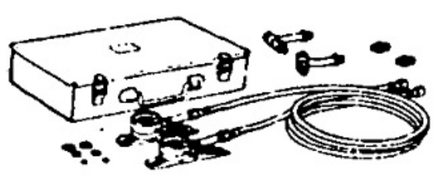	09992—00094 Automatic Transmission Oil Pressure Gauge Set	Line pressure

RECOMMENDED TOOLS

AX01D-1B

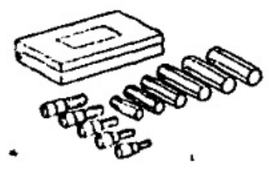	09040—00010 Hexagon Wrench Set .	
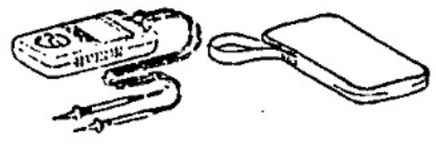	09082—00040 TOYOTA Electrical Tester.	

AX01E–0Y

EQUIPMENT

Straight edge	Check torque converter installation.
Vernier calipers	Check torque converter installation.
Dial indicator or dial indicator with magnetic base	Measure drive plate runout.
Hexagon Wrench (12 mm)	
Torque wrench	

AX01Q–0W

LUBRICANT

Item	Capacity	Classification
ATF		
Dry fill	10.1 liters (10.7 US qts, 8.9 Imp. qts)	ATF D–II or DEXRON®III (DEXRON®II)
Drain and refill	2.0 liters (2.1 US qts, 1.8 Imp. qts)	

AT

AX01F–0M

SSM (SPECIAL SERVICE MATERIALS)

08826–00090	Seal Packing 1281, THREE BOND 1281 or equivalent (FIPG)	Oil pan

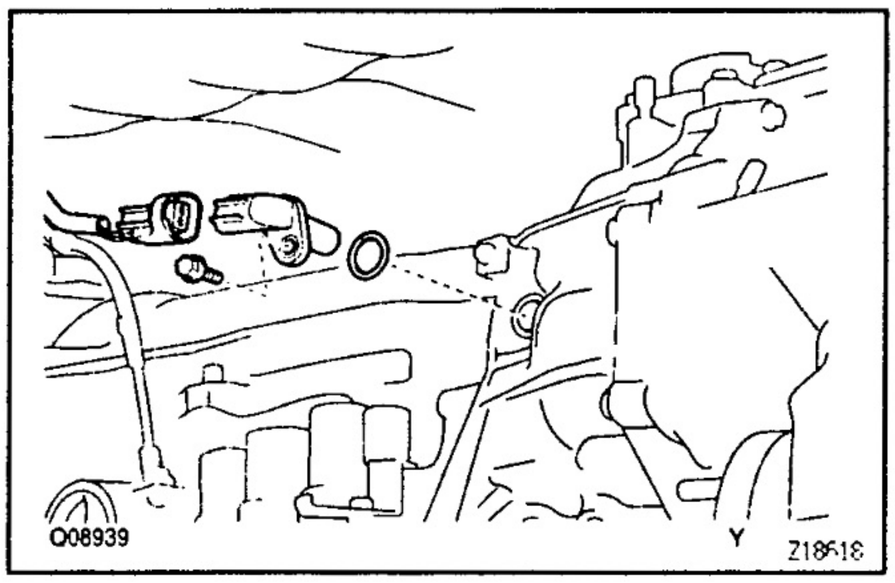

ON–VEHICLE REPAIR

NO.2 SPEED SENSOR REPLACEMENT

AT0L1–0N

1. DISCONNECT NO.2 SPEED SENSOR CONNECTOR

2. REMOVE NO.2 SPEED SENSOR

(a) Remove the bolt and No.2 speed sensor.

(b) Remove the O–ring from the No.2 speed sensor.

3. INSTALL NO.2 SPEED SENSOR

(a) Coat a new O–ring with ATF and install it to the No.2 speed sensor.

(b) Install the No.2 speed sensor to the transfer adaptor and torque the bolt.

Torque: 5.4 N·m (55 kgf·cm, 48 in.·lbf)

4. CONNECT NO.2 SPEED SENSOR CONNECTOR

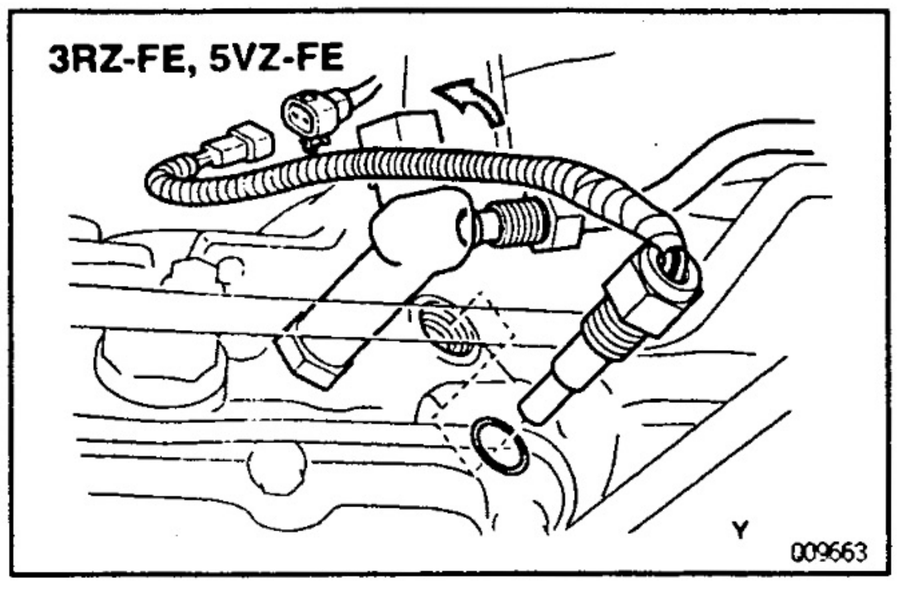

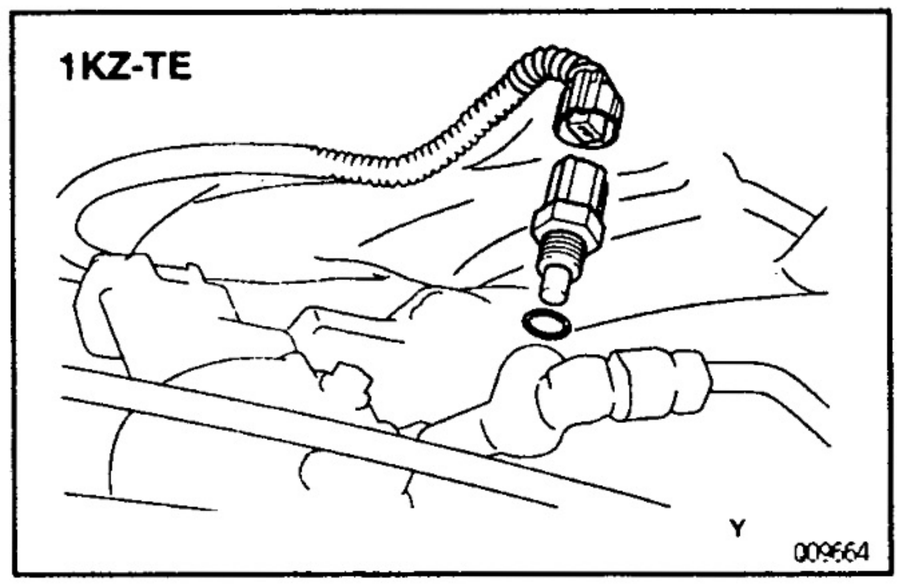

AT160-01

ATF TEMPERATURE SENSOR REPLACEMENT

1. **DISCONNECT ATF TEMPERATURE SENSOR CONNECTOR**
2. **3RZ–FE, 5VZ–FE: DISCONNECT OIL COOLER PIPE**

(a) Remove the 3 bolts and oil cooler pipe clamps.
(b) Disconnect the front oil cooler pipe.
(c) Loosen the elbow.

3. **REMOVE ATF TEMPERATURE SENSOR**

(a) Remove the ATF temperature sensor.
(b) Remove the O – ring from the ATF temperature sensor.

4. **INSTALL ATF TEMPERATURE SENSOR**

(a) Coat a new O–ring with ATF and install it to the ATF temperature sensor.
(b) Install the ATF temperature sensor.
Torque: 15 N·m (150 kgf·cm, 11 ft·lbf)

5. **3RZ–FE, 5VZ–FE: CONNECT OIL COOLER PIPE**

(a) Tighten the elbow.
Torque: 29 N·m (300 kgf·cm, 22 ft·lbf)
(b) Connect the front oil cooler pipe.
Torque: 34 N·m (350 kgf·cm, 25 ft·lbf)
(c) Install the 3 oil cooler pipe clamps and bolts.
Torque:
10 mm head bolt: 5.0 N·m (51 kgf·cm, 44 in.·lbf)
12 mm head bolt: 12 N·m (120 kgf·cm, 9 ft·lbf)

6. **CONNECT ATF TEMPERATURE SENSOR CONNECTOR**

INSTALLATION NOTICE: Be careful not to twist the wire harness.

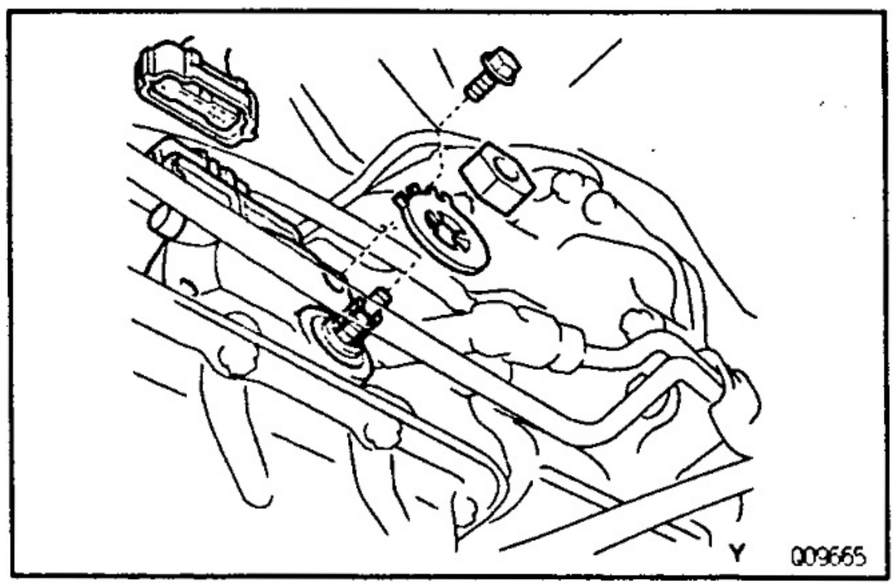

ATGL3-00

NEUTRAL START SWITCH REPLACEMENT

1. **DISCONNECT NEUTRAL START SWITCH CONNECTOR**
2. **REMOVE NEUTRAL START SWITCH**

(a) Pry off the lock washer and remove the nut.
(b) Remove the bolt and neutral start switch.

3. **INSTALL NEUTRAL START SWITCH**

(a) Install the neutral start switch with bolt.

Torque: 13 N·m (130 kgf·cm, 9 ft·lbf)

(b) Install a new lock plate and the nut.
Torque: 3.9 N·m (40 kgf·cm, 35 in.·lbf)

(c) Stake the nut with the lock plate.

(d) Adjust the neutral start switch.
(See page AT–29)

4. CONNECT NEUTRAL START SWITCH CONNECTOR

AT126–03

THROTTLE CABLE REMOVAL

1. DISCONNECT THROTTLE CABLE

(a) Disconnect the cable from the throttle linkage.

(b) Disconnect the cable from the cable clamps in the engine compartment.

(c) 3RZ–FE:
Remove the front exhaust pipe. (See page AT–9)

(d) 1KZ–TE:
Lower the transmission rear side, and remove the cable clamp bolt. (See page AT–11)

(e) Remove the bolt and disconnect the cable clamp from the torque converter housing.

2. REMOVE VALVE BODY (See page AT–7)

3. REMOVE THROTTLE CABLE
Remove the retaining bolt and pull out the throttle cable.

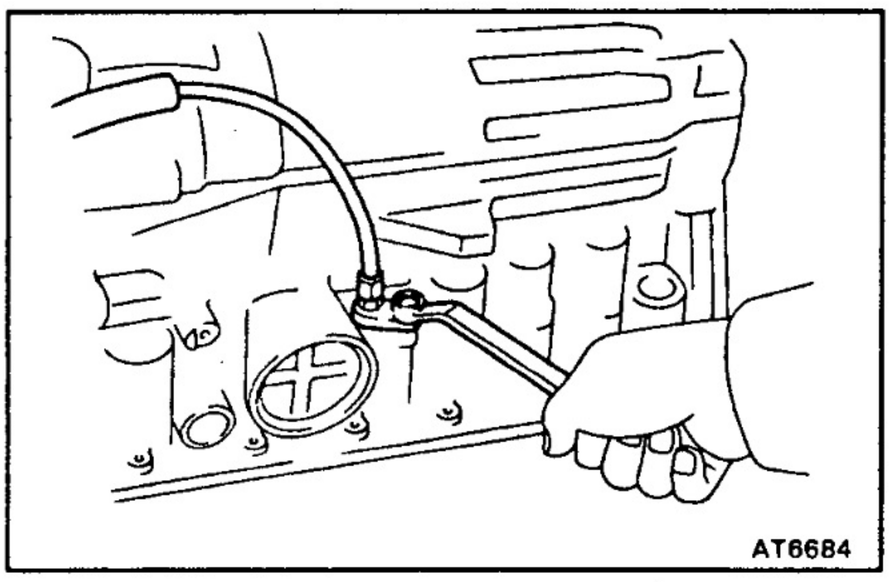
AT6684

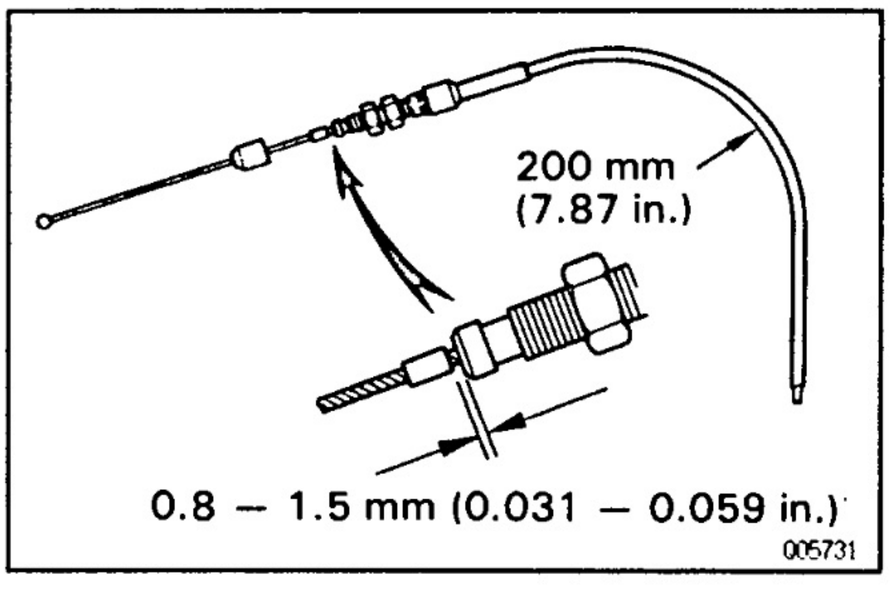

005731

AT0XV–03

THROTTLE CABLE INSTALLATION

Installation is in the reverse order of removal.
INSTALLATION HINT:

- If throttle cable is new, stake the stopper on the inner cable.

(a) Bend the cable so there is a radius of about 200 mm (7.87 in.).

(b) Pull the inner cable lightly until slight resistance is felt, and hold it there.

(c) Stake the stopper, 0.8–1.5 mm (0.031–0.059 in.) from the end of the outer cable.

- After installation, fill ATF and check the fluid level. (See page AT–27)
- Adjust the throttle cable. (See page AT–28)

AT0WU—05

VALVE BODY REMOVAL

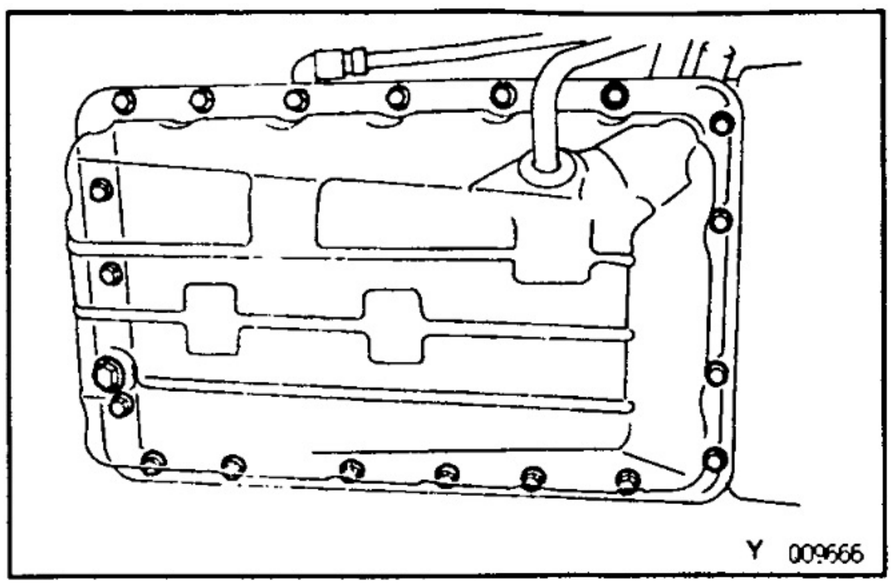

1. DRAIN ATF

Torque: 20 N·m (205 kgf·cm, 15 ft·lbf)

2. REMOVE OIL PAN

REMOVAL NOTICE: Some fluid will remain in the oil pan.

(a) Remove the 19 bolts.

Torque: 7.4 N·m (75 kgf·cm, 65 in.·lbf)

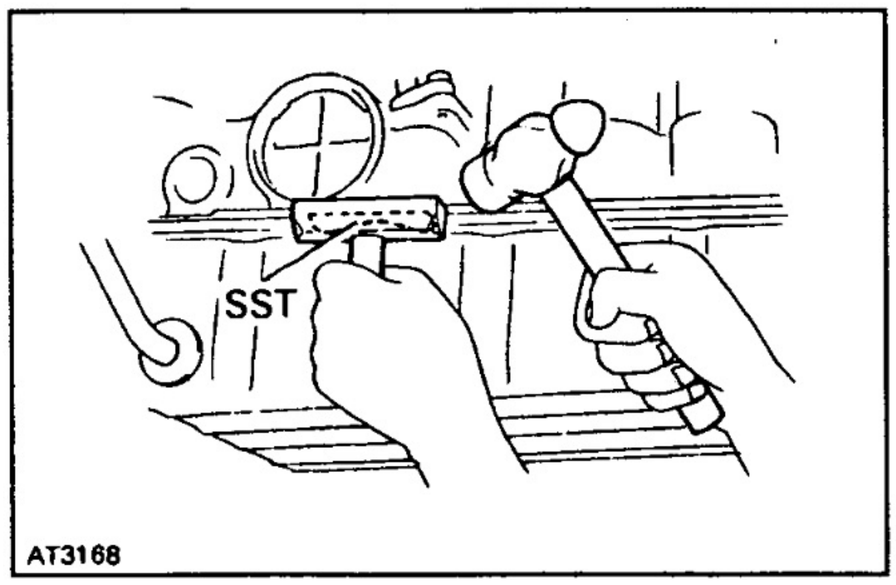

(b) Install the blade of SST between the transmission case and oil pan, cut off applied sealer, and remove the oil pan.

SST 09032—00100

REMOVAL NOTICE: When removing the oil pan, be careful not to damage the oil pan flange.

AT

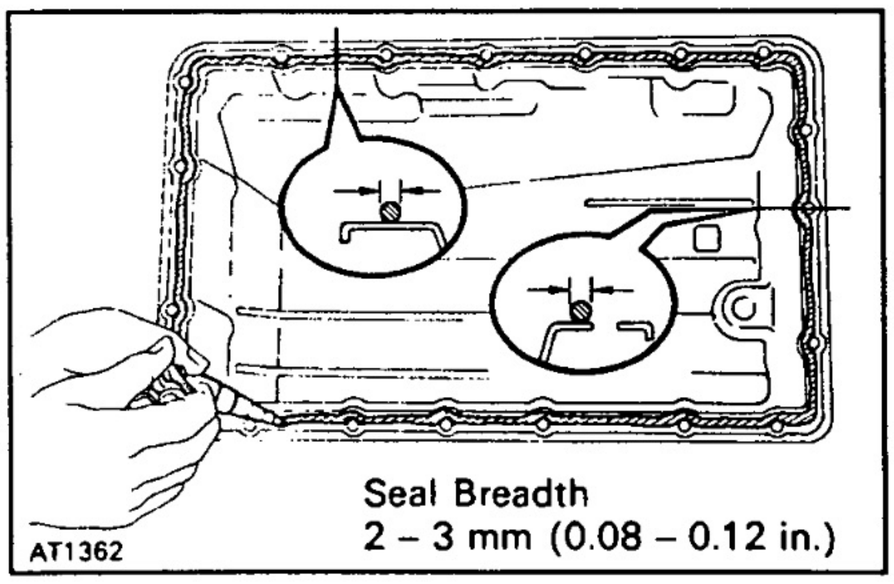

INSTALLATION HINT: Apply FIPG to the oil pan, as shown in the illustration.

FIPG: Part No. 08826—00090, THREE BOND 1281 or equivalent

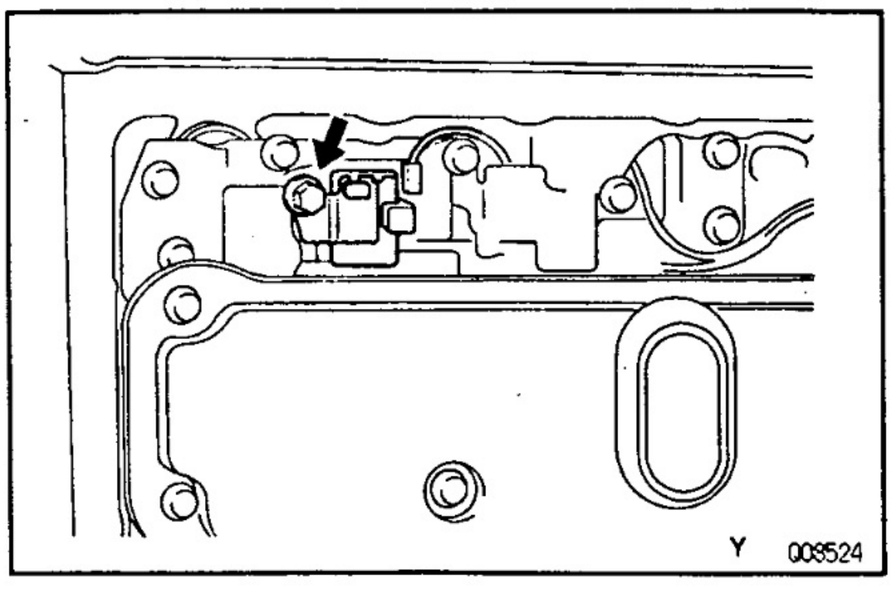

3. WHEN REPLACING 3 SOLENOID VALVES

(a) Disconnect the connectors from the solenoid valves.

(b) Remove the 3 solenoid valve mounting bolts.

Torque: 10 N·m (100 kgf·cm, 7 ft·lbf)

(c) Remove the 3 solenoid valves.

INSTALLATION HINT: Replace the used O — rings with new ones.

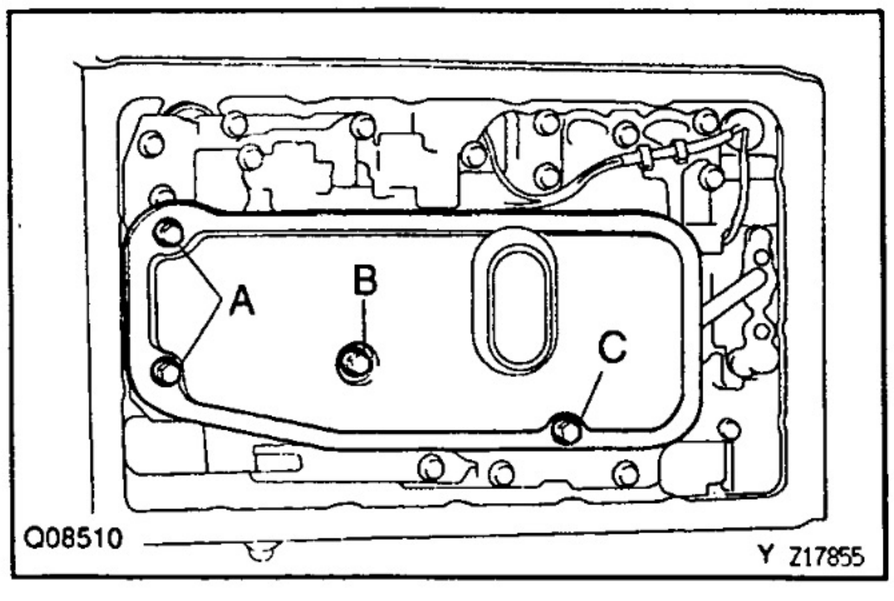

4. REMOVE OIL STRAINER

Remove the 4 bolts, oil strainer and gaskets.

Torque: 10 N·m (100 kgf·cm, 7 ft·lbf)

NOTICE: Be careful as some fluid will come out with the oil strainer.

Bolt length:

Bolt A: 16 mm (0.63 in.)

Bolt B: 20 mm (0.79 in.)

Bolt C: 28 mm (1.10 in.)

INSTALLATION HINT: Replace the used gaskets with new ones.

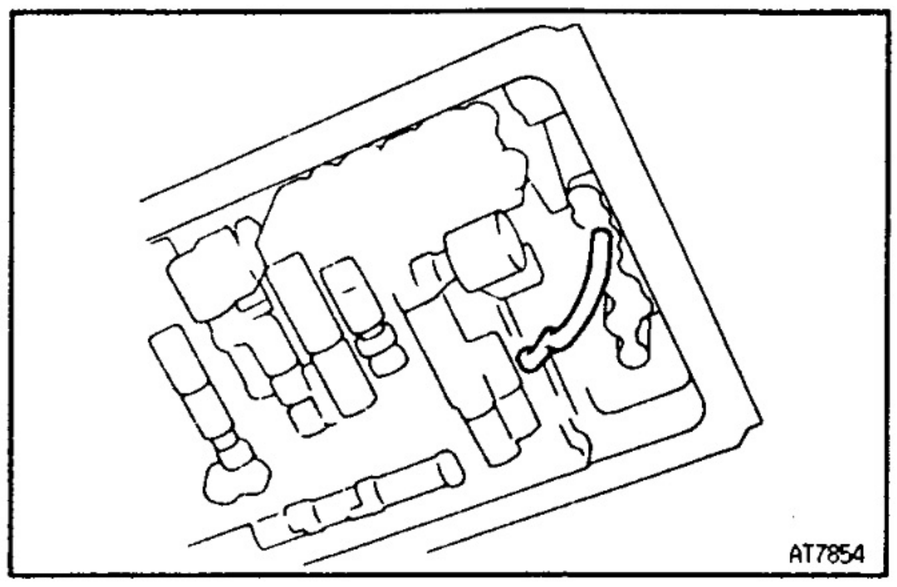

5. REMOVE OIL PIPE

Pry up both pipe ends with a large screwdriver and remove the pipe.

INSTALLATION NOTICE: Make sure that the oil pipe or the magnet do not interfere with the oil pan.

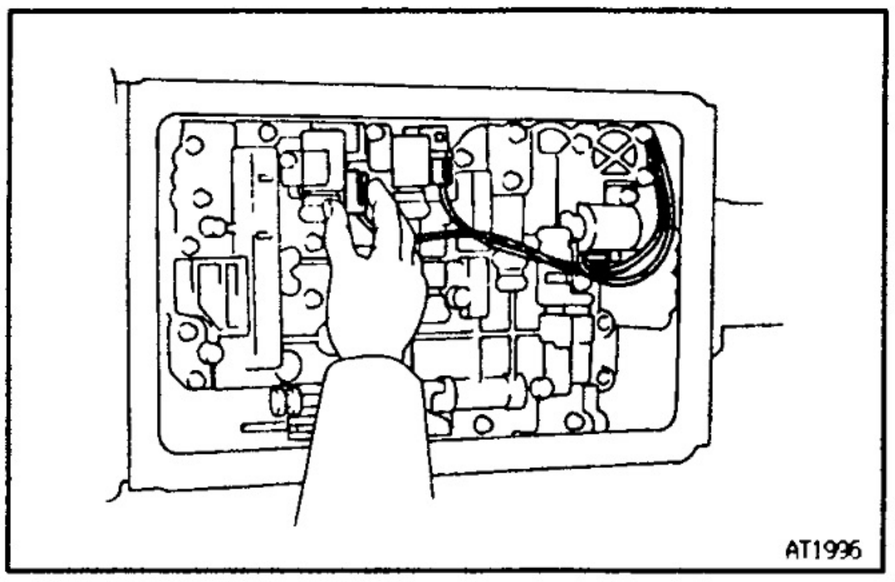

6. DISCONNECT CONNECTOR FROM EACH SOLENOID VALVE

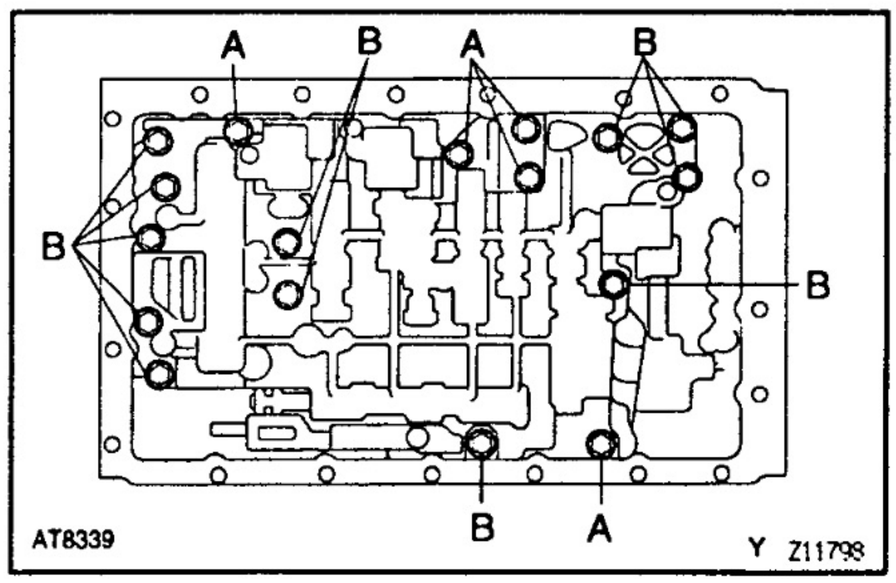

7. REMOVE VALVE BODY

(a) Remove the 17 bolts.

Torque: 10 N·m (100 kgf·cm, 7 ft·lbf)

Bolt length:

Bolt A: 23 mm (0.91 in.)

Bolt B: 32 mm (1.26 in.)

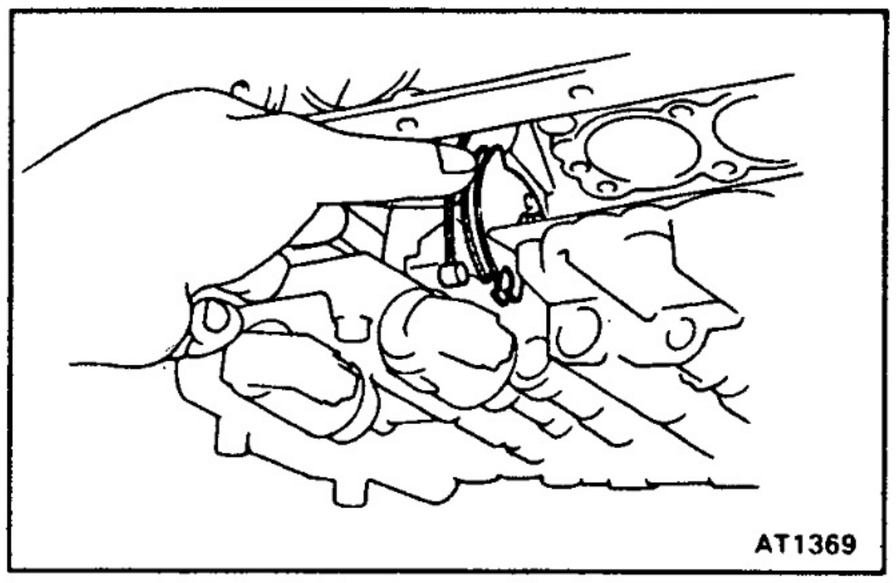

(b) Disconnect the throttle cable from the cam.

(c) Remove the valve body.

REMOVAL NOTICE: Be careful not to drop the check ball body and spring.

INSTALLATION HINT:

- Install the body together with the check ball body and spring.
- Align the groove of the manual valve to the pin of the lever.

VALVE BODY INSTALLATION

AT0XR—03

Installation is in the reverse order of removal.

INSTALLATION HINT: After installation, fill ATF and check the fluid level. (See page AT—27)

ASSEMBLY REMOVAL AND INSTALLATION

COMPONENTS

AT18R-01

3RZ-FE

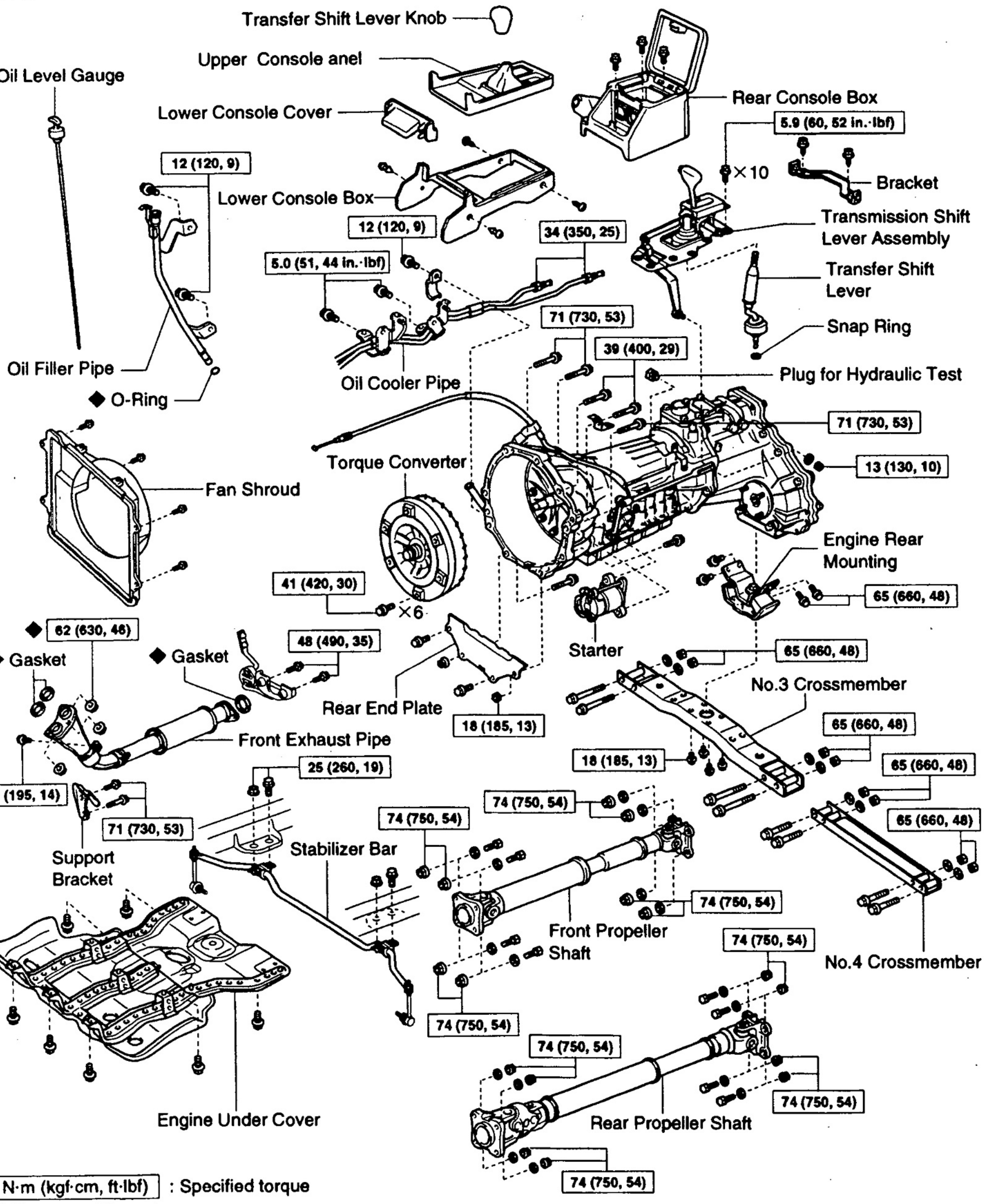

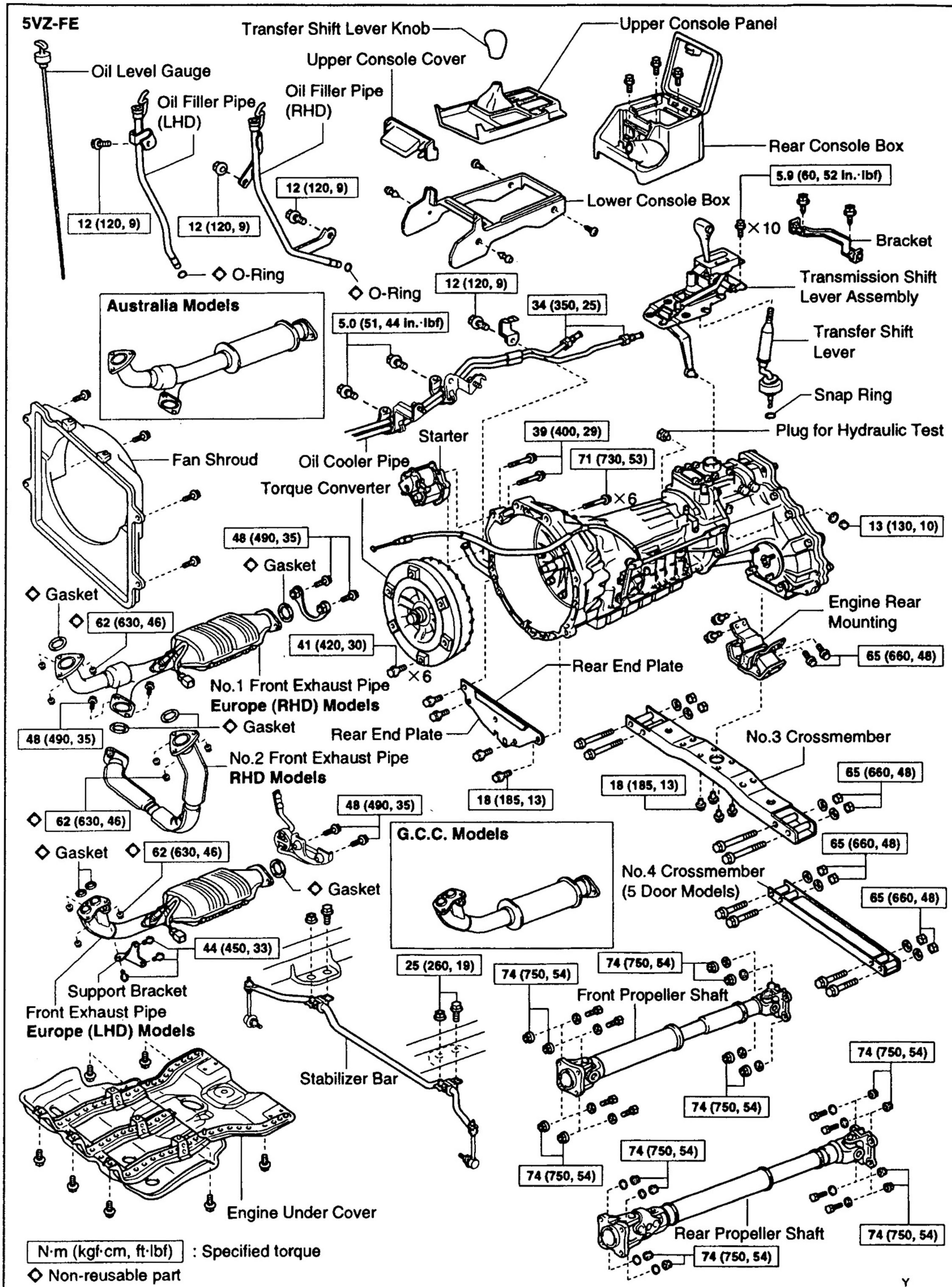
5VZ-FE
Transfer Shift Lever Knob
Upper Console Panel
Upper Console Cover
Oil Level Gauge
Oil Filler Pipe (LHD)
Oil Filler Pipe (RHD)
Rear Console Box
12 (120, 9)
12 (120, 9)
12 (120, 9)
Lower Console Box
5.9 (60, 52 in.·lbf)
×10
Bracket
◇ O-Ring
◇ O-Ring
12 (120, 9)
Transmission Shift Lever Assembly
Australia Models
5.0 (51, 44 in.·lbf)
34 (350, 25)
Transfer Shift Lever
Snap Ring
Plug for Hydraulic Test
Starter
39 (400, 29)
Fan Shroud
Oil Cooler Pipe
71 (730, 53)
Torque Converter
×6
13 (130, 10)
48 (490, 35)
◇ Gasket
◇ Gasket
◇ Gasket
62 (630, 46)
Engine Rear Mounting
41 (420, 30)
65 (660, 48)
×6
No.1 Front Exhaust Pipe
Europe (RHD) Models
Rear End Plate
Rear End Plate
◇ Gasket
48 (490, 35)
No.2 Front Exhaust Pipe
RHD Models
18 (185, 13)
18 (185, 13)
No.3 Crossmember
65 (660, 48)
48 (490, 35)
◇ Gasket
◇ 62 (630, 46)
G.C.C. Models
No.4 Crossmember
(5 Door Models)
65 (660, 48)
65 (660, 48)
◇ Gasket
44 (450, 33)
25 (260, 19)
74 (750, 54)
74 (750, 54)
Front Propeller Shaft
Support Bracket
Front Exhaust Pipe
Europe (LHD) Models
Stabilizer Bar
74 (750, 54)
74 (750, 54)
74 (750, 54)
74 (750, 54)
Rear Propeller Shaft
74 (750, 54)
74 (750, 54)
Engine Under Cover
N·m (kgf·cm, ft·lbf) : Specified torque
◇ Non-reusable part
Y
009668

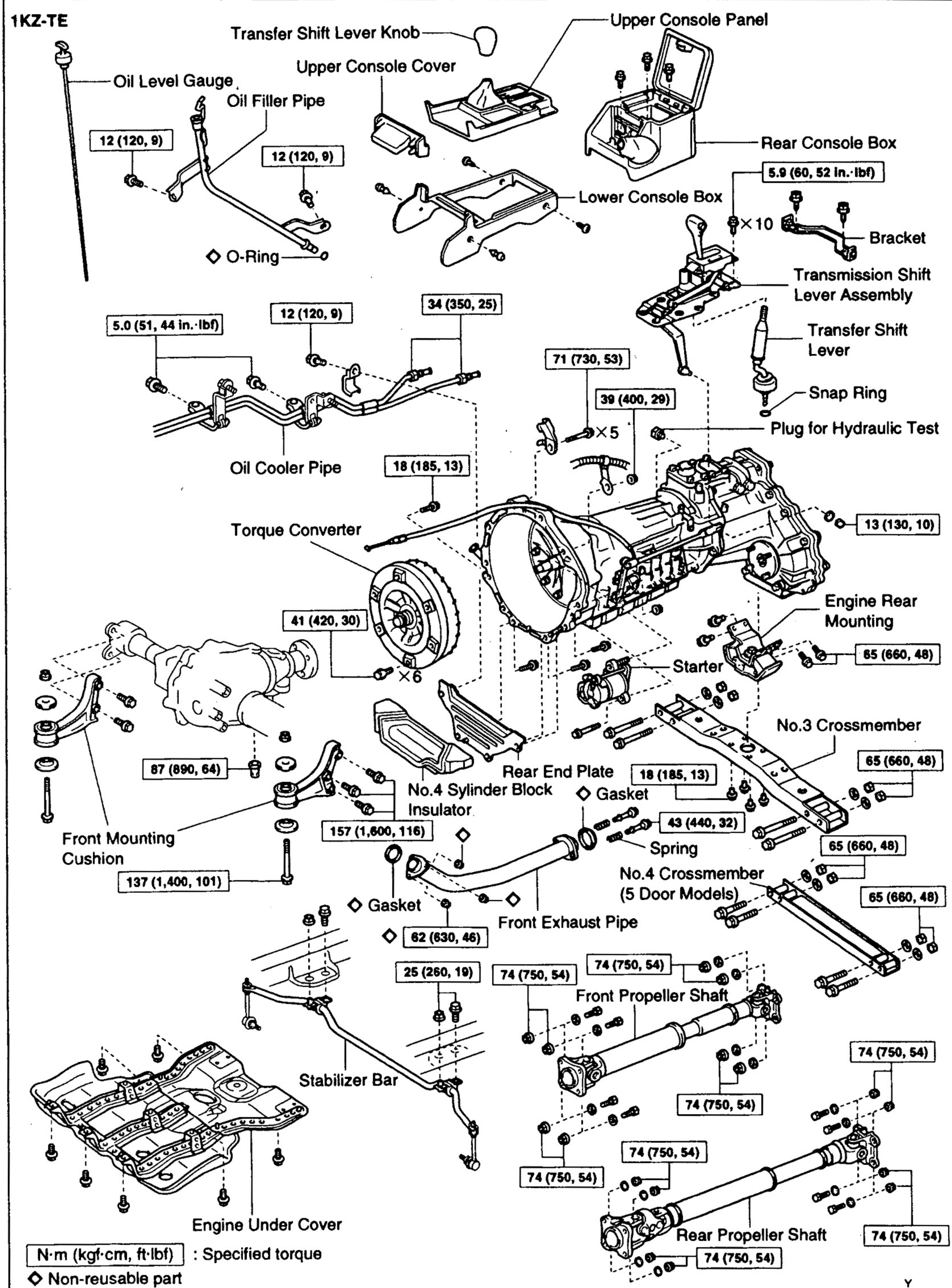
1KZ-TE
Transfer Shift Lever Knob
Upper Console Panel
Upper Console Cover
Oil Level Gauge
Oil Filler Pipe
12 (120, 9)
12 (120, 9)
◇ O-Ring
Rear Console Box
5.9 (60, 52 in.·lbf)
Lower Console Box
×10
Bracket
Transmission Shift Lever Assembly
Transfer Shift Lever
Snap Ring
Plug for Hydraulic Test
71 (730, 53)
39 (400, 29)
×5
5.0 (51, 44 in.·lbf)
12 (120, 9)
34 (350, 25)
Oil Cooler Pipe
18 (185, 13)
Torque Converter
13 (130, 10)
41 (420, 30)
×6
Engine Rear Mounting
65 (660, 48)
Starter
No.3 Crossmember
65 (660, 48)
87 (890, 64)
Rear End Plate
18 (185, 13)
No.4 Sylinder Block Insulator
◇ Gasket
157 (1,600, 116)
43 (440, 32)
Spring
Front Mounting Cushion
137 (1,400, 101)
65 (660, 48)
No.4 Crossmember (5 Door Models)
65 (660, 48)
◇ Gasket
62 (630, 46)
Front Exhaust Pipe
25 (260, 19)
74 (750, 54)
74 (750, 54)
Front Propeller Shaft
74 (750, 54)
74 (750, 54)
74 (750, 54)
74 (750, 54)
Stabilizer Bar
Rear Propeller Shaft
74 (750, 54)
74 (750, 54)
Engine Under Cover
N·m (kgf·cm, ft·lbf) : Specified torque
◇ Non-reusable part
Y
009669

AT168-01

TRANSMISSION REMOVAL

1. DISCONNECT THROTTLE CABLE

(a) Loosen the 2 nuts and disconnect the throttle cable.

(b) Disconnect the throttle cable from cable clamps in the engine compartment.

2. 3RZ–FE, 5VZ–FE:
REMOVE 4 FAN SHROUD SET BOLTS

HINT: Removing the fan shroud from the vehicle is not necessary.

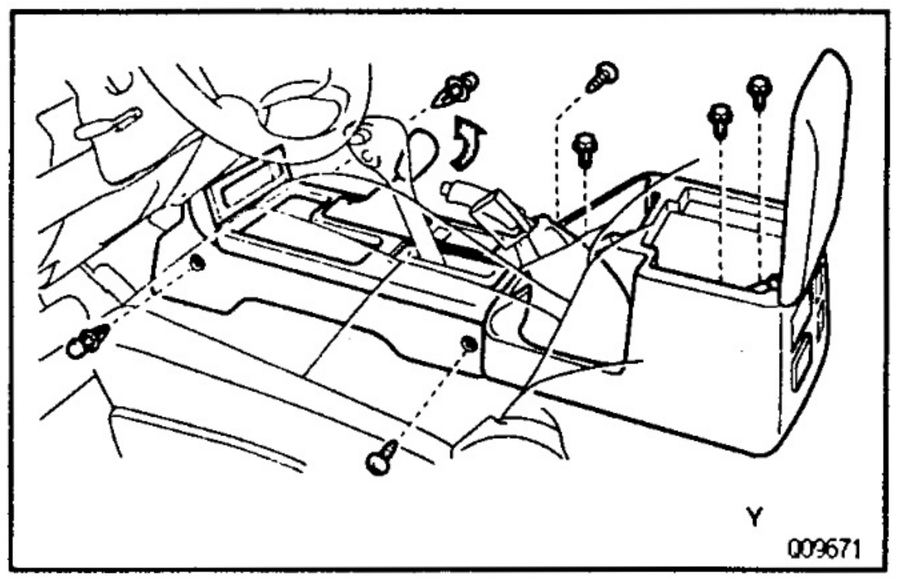

3. REMOVE TRANSMISSION SHIFT LEVER ASSEMBLY AND TRANSFER SHIFT LEVER

(a) Remove the transfer shift lever knob.

(b) Remove the 3 bolts and rear console box and disconnect the connectors.

(c) Remove the upper console panel and disconnect the connectors.

(d) Remove the upper console cover.

(e) Remove the 2 clips, screws and lower console box.

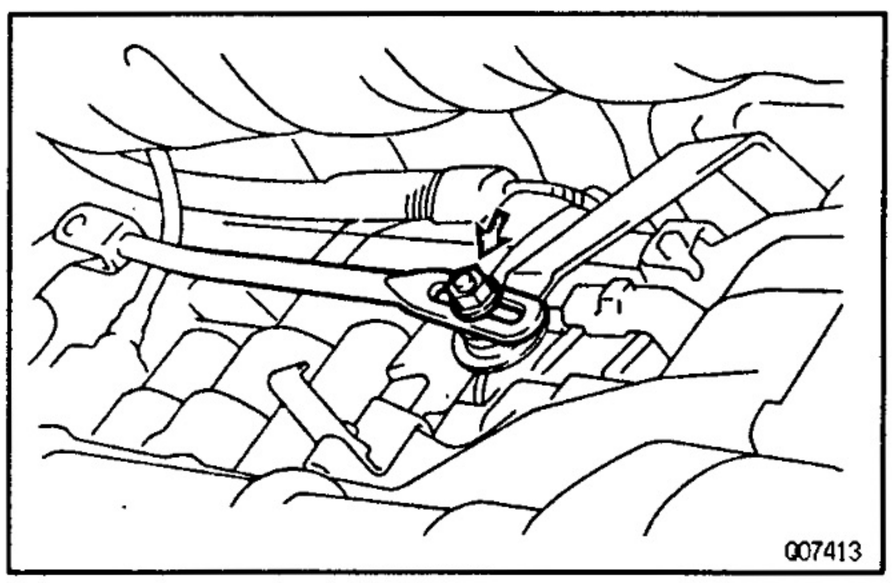

(f) Remove the nut and washer, and disconnect the shift control rod.
Torque: 13 N·m (130 kgf·cm, 10 ft·lbf)

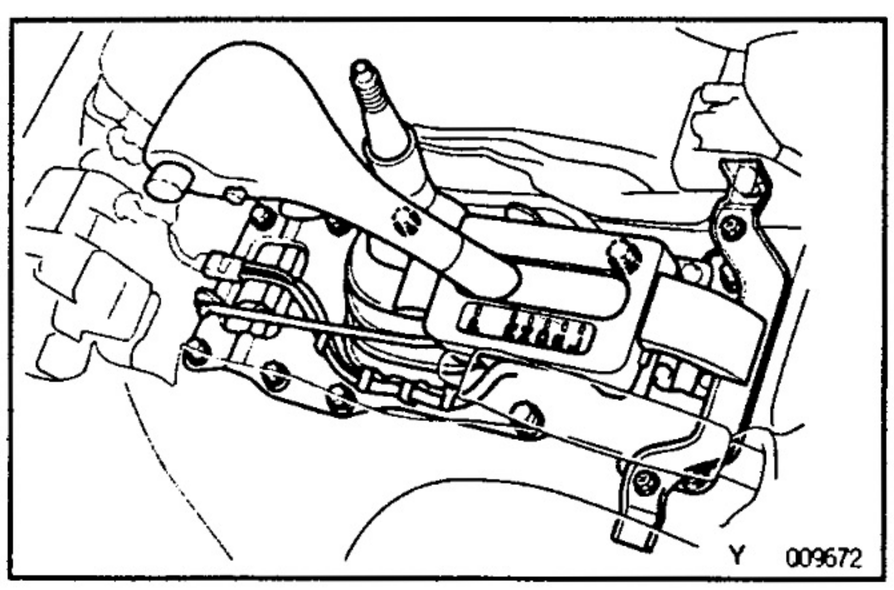

(g) Remove the 2 screws and bracket.

(h) Disconnect the connector and remove the 10 screws and transmission shift lever assembly.
Torque: 5.9 N·m (60 kgf·cm, 52 in.·lbf)

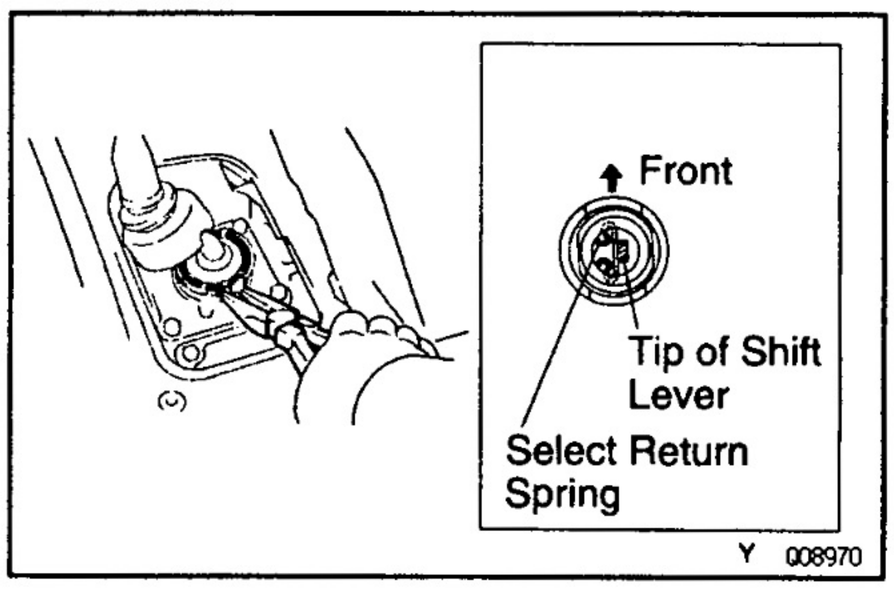

(I) Using pliers, remove the snap ring and pull out the shift lever from the transfer.
INSTALLATION HINT: Apply MP grease to the transfer shift lever.

4. REMOVE ATF LEVEL GAUGE

5. REMOVE OIL FILLER PIPE WITH O–RING
Torque: 12 N·m (120 kgf·cm, 9 ft·lbf)
INSTALLATION HINT: Replace the used O–ring with a new one.

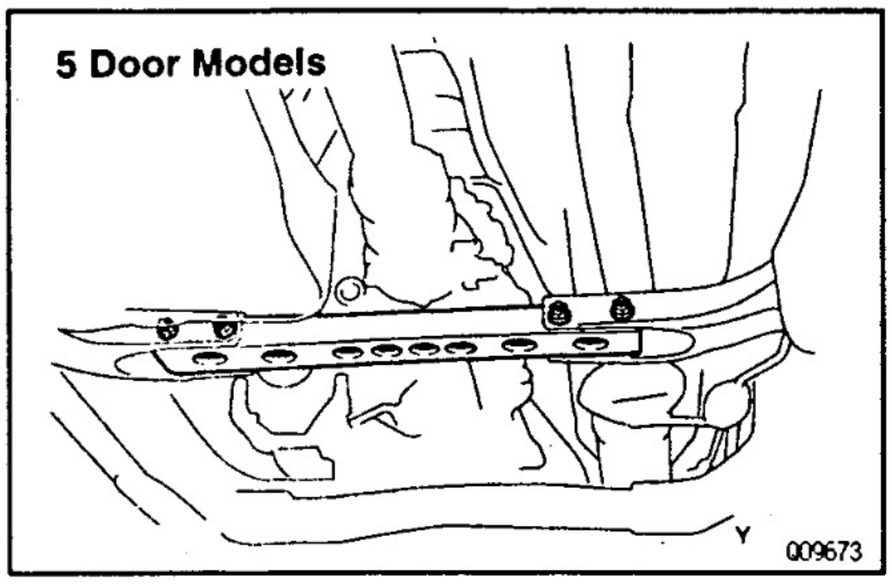

6. **REMOVE ENGINE UNDER COVER**
7. **REMOVE FRONT AND REAR PROPELLER SHAFT**
   (See page PR–3)
8. **DISCONNECT STABILIZER BAR**
   (See page SA–60)
9. **5 DOOR MODELS:**
   REMOVE NO.4 CROSSMEMBER
   Torque: 65 N·m (660 kgf·cm, 48 ft·lbf)



10. **REMOVE FRONT EXHAUST PIPE**
    3RZ–FE:
    (a) Remove the 2 bolts.
    Torque: 48 N·m (490 kgf·cm, 35 ft·lbf)
    (b) Loosen the clamp bolt and disconnect the clamp from the support bracket.
    Torque: 19 N·m (195 kgf·cm, 14 ft·lbf)
    (c) Remove the 2 bolts and support bracket.
    Torque: 71 N·m (730 kgf·cm, 53 ft·lbf)
    (d) Remove the 3 nuts, front exhaust pipe and 3 gaskets.
    Torque: 62 N·m (630 kgf·cm, 40 ft·lbf)
    INSTALLATION HINT: Replace the used nuts and gaskets with new ones.

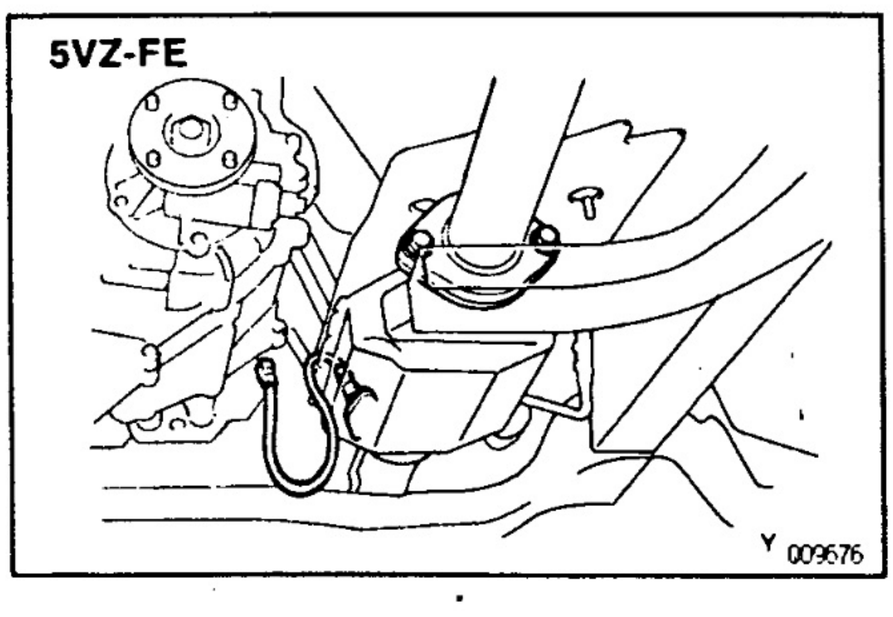

5VZ–FE:
(a) Europe models:
Disconnect the oxygen sensor connector.
(b) Remove the 2 bolts and retainer.
Torque: 48 N·m (490 kgf·cm, 35 ft·lbf)

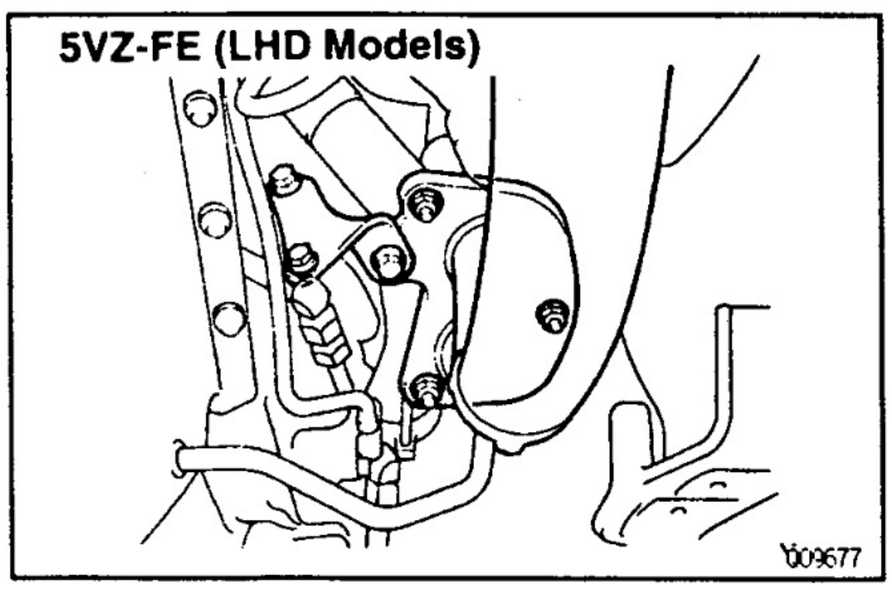

LHD models:
(a) Remove the 3 bolts and support bracket.
Torque: 44 N·m (450 kgf·cm, 33 ft·lbf)
(b) Remove the 3 nuts, front exhaust pipe and 3 gaskets.
Torque: 62 N·m (630 kgf·cm, 40 ft·lbf)
INSTALLATION HINT: Replace the used nuts and gaskets with new ones.

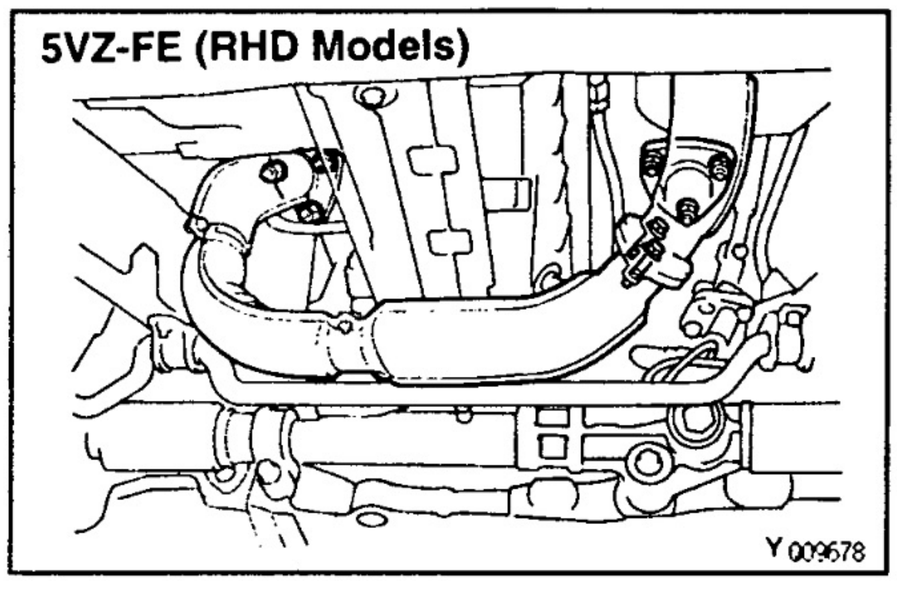

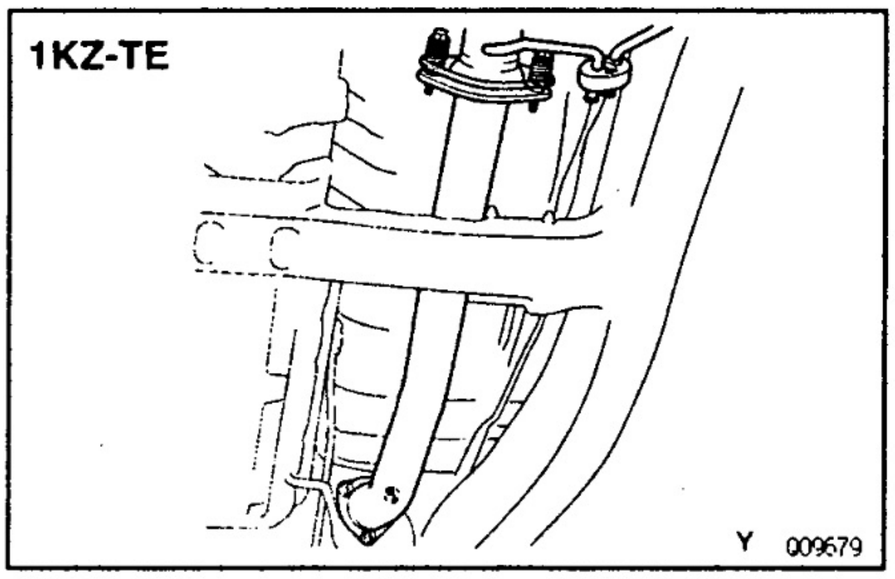

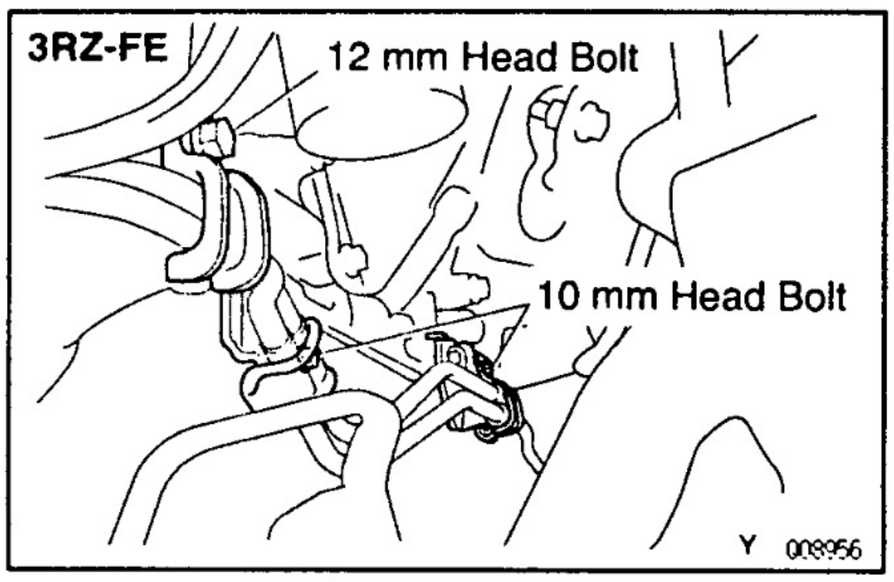

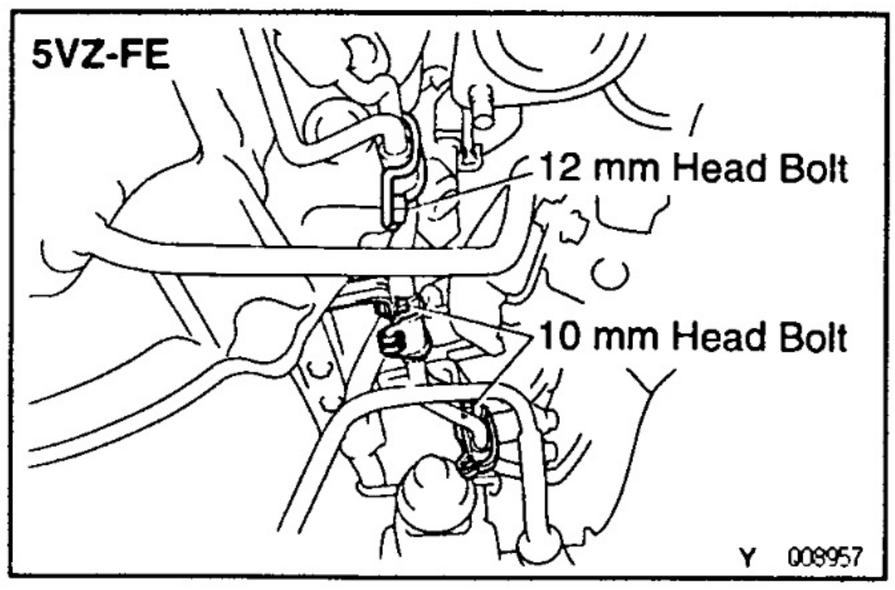

RHD models:

(a) Remove the 3 nuts, 2 bolts, No.2 front exhaust pipe and 2 gaskets.
Torque:
Nut: 62 N·m (630 kgf·cm, 40 ft·lbf)
Bolt: 48 N·m (490 kgf·cm, 35 ft·lbf)
INSTALLATION HINT: Replace the used nuts and gaskets with new ones.

(b) Remove the 3 nuts, No.1 front exhaust pipe and 2 gaskets.
Torque: 62 N·m (630 kgf·cm, 40 ft·lbf)
INSTALLATION HINT: Replace the used nuts and gaskets with new ones.

1KZ–TE:

(a) Remove the 2 bolts and springs.
Torque: 43 N·m (440 kgf·cm, 32 ft·lbf)

(b) Remove the 3 nuts, front exhaust pipe and 2 gaskets.
Torque: 62 N·m (630 kgf·cm, 40 ft·lbf)
INSTALLATION HINT: Replace the used nuts and gaskets with new ones.

DISCONNECT FOLLOWING CONNECTOR FROM TRANSMISSION

- Solenoid connector
- ATF temperature sensor connector
- Neutral start switch connector
- No.2 speed sensor connector

12. DISCONNECT FOLLOWING CONNECTOR FROM TRANSFER

- No.1 speed sensor connector
- LOW position switch connector
- Transfer neutral position switch connector
- Center differential lock indicator switch connector

13. SEPARATE WIRE HARNESS FROM TRANSMISSION AND TRANSFER

14. DISCONNECT 2 OIL COOLER PIPES

(a) Remove the 3 bolts and oil cooler pipe clamps.
Torque:
10 mm head bolt: 5.0 N·m (51 kgf·cm, 44 in.·lbf)
12 mm head bolt: 12 N·m (120 kgf·cm, 9 ft·lbf)

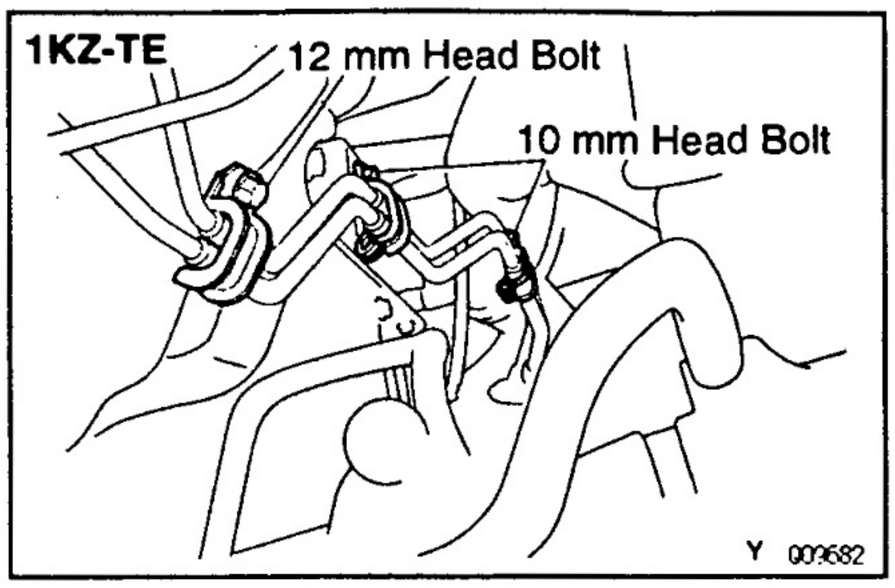

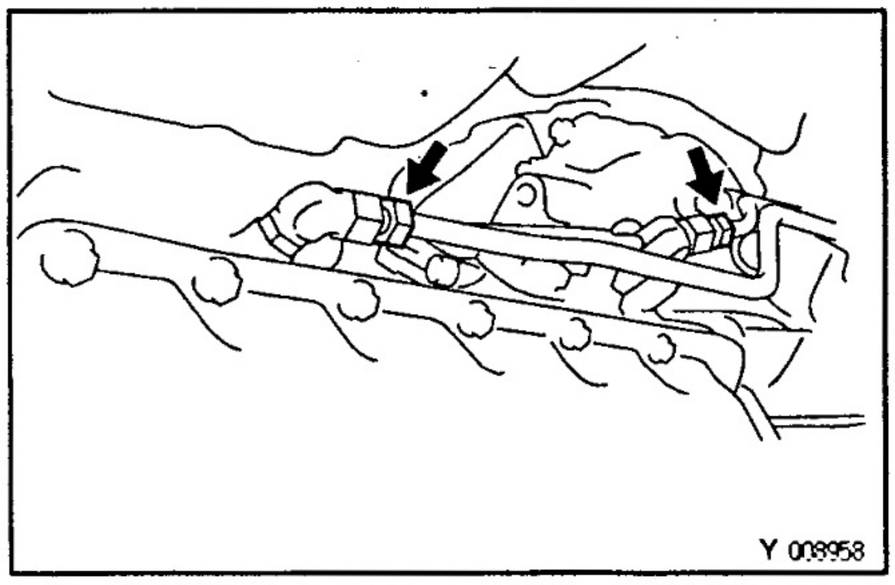

(b) Disconnect the 2 oil cooler pipes.
Torque: 34 N·m (350 kgf·cm, 25 ft·lbf)

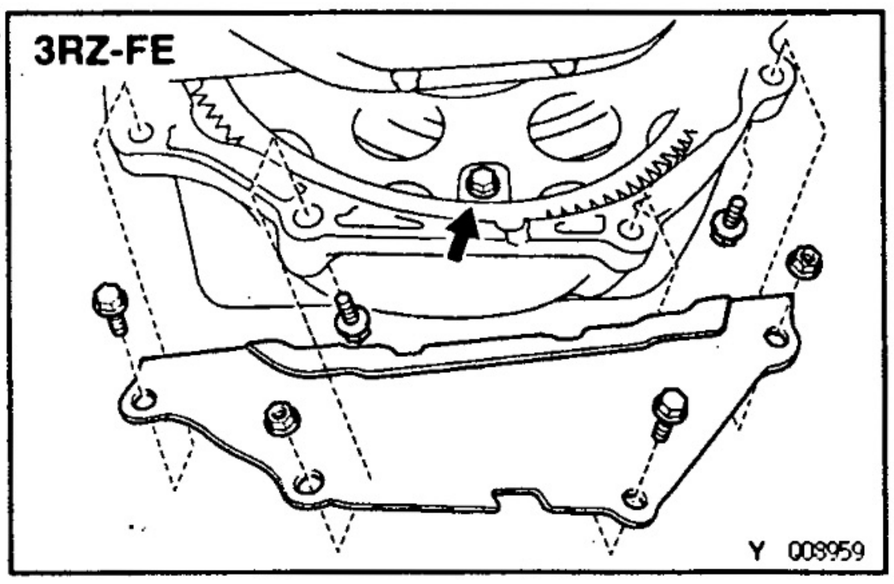

15. REMOVE REAR END PLATE AND TORQUE CONVERTER MOUNTING BOLT

(a) Remove the 4 bolts (and 2 nuts).
Torque: 18 N·m (185 kgf·cm, 13 ft·lbf)

(b) 1KZ–TE:
Remove the No.4 cylinder block insulator.

(c) Remove the rear end plate.

(d) Turn the crankshaft to gain access and remove the 6 bolts with holding the crankshaft pulley set bolt by a wrench.
Torque: 41 N·m (420 kgf·cm, 30 ft·lbf)
INSTALLATION HINT: First install green colored bolt and 5 other bolts.

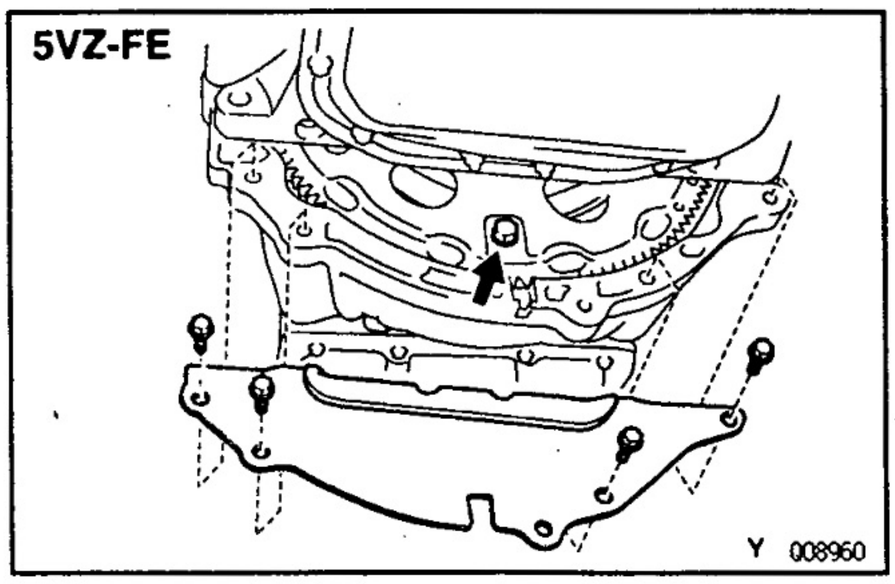

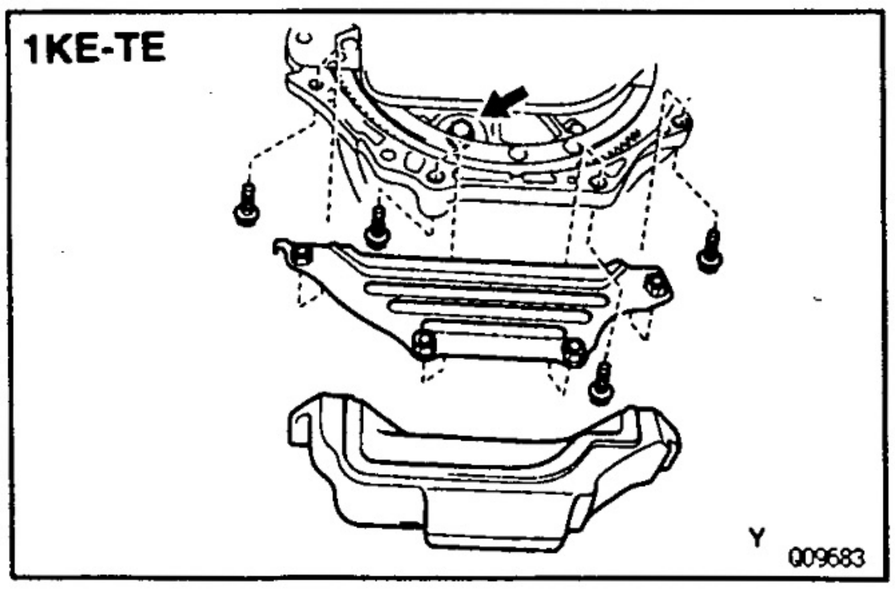

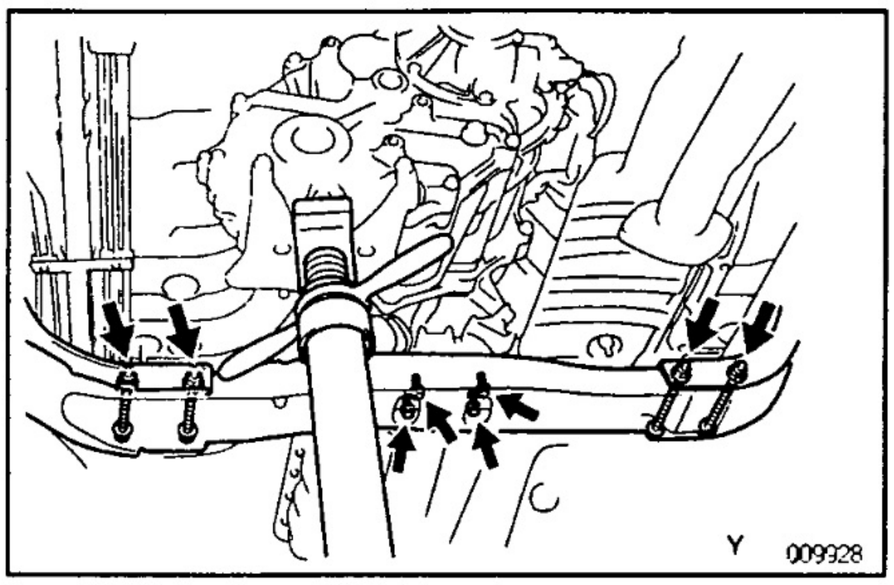

16. REMOVE NO.3 CROSSMEMBER

(a) Support the transmission rear side with a support stand.

(b) Remove the 4 engine rear mounting bolts.
Torque: 18 N·m (185 kgf·cm, 13 ft·lbf)

(c) Remove the 4 nuts, bolts and No.3 crossmember.
Torque: 65 N·m (660 kgf·cm, 48 ft·lbf)

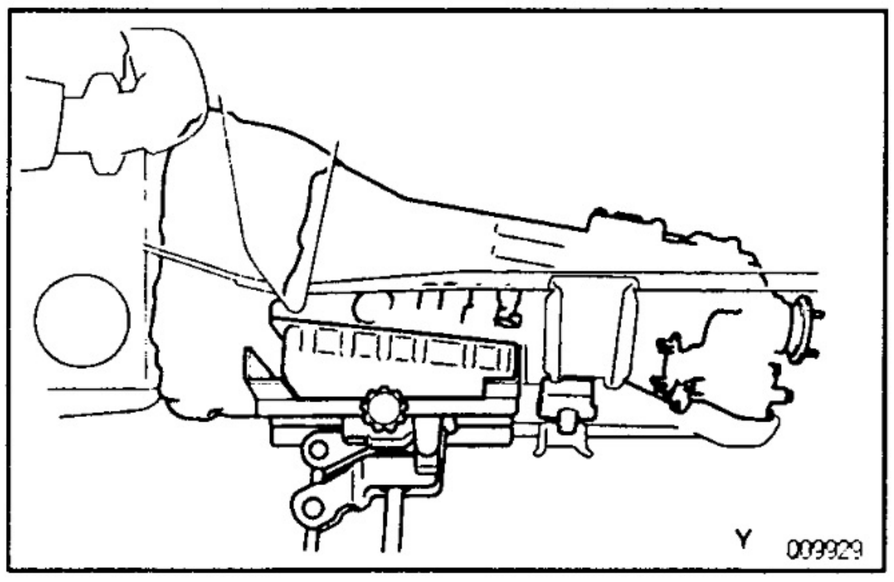

(d) Support the transmission with a transmission jack.

(e) Remove a support stand from the transmission rear side.

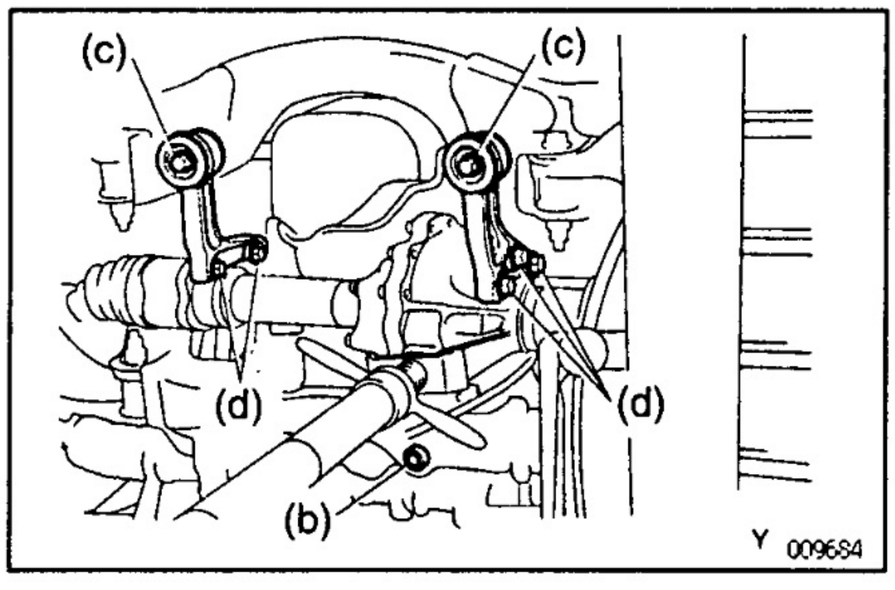

17. 1KZ–TE:
REMOVE FRONT DIFFERENTIAL MOUNTING BOLT

(a) Support the front differential with a support stand.

(b) Using a hexagon wrench (12 mm), loosen the rear mounting nut.
Torque: 87 N·m (890 kgf·cm, 64 ft·lbf)

(c) Remove the 2 front mounting bolts and nuts.
Torque: 137 N·m (1,400 kgf·cm, 101 ft·lbf)

(d) Remove the 5 bolts and 2 front mounting cushions.
Torque: 157 N·m (1,600 kgf·cm, 116 ft·lbf)

18. REMOVE STARTER

(a) Remove the nut and disconnect the starter wire and connector.

(b) Lower the transmission rear side.
NOTICE: Be careful not to touch the front differential and engine oil pan.

(c) Remove the 2 bolts (or 2 nuts and bolt) and starter.
Torque: 39 N·m (400 kgf·cm, 29 ft·lbf)

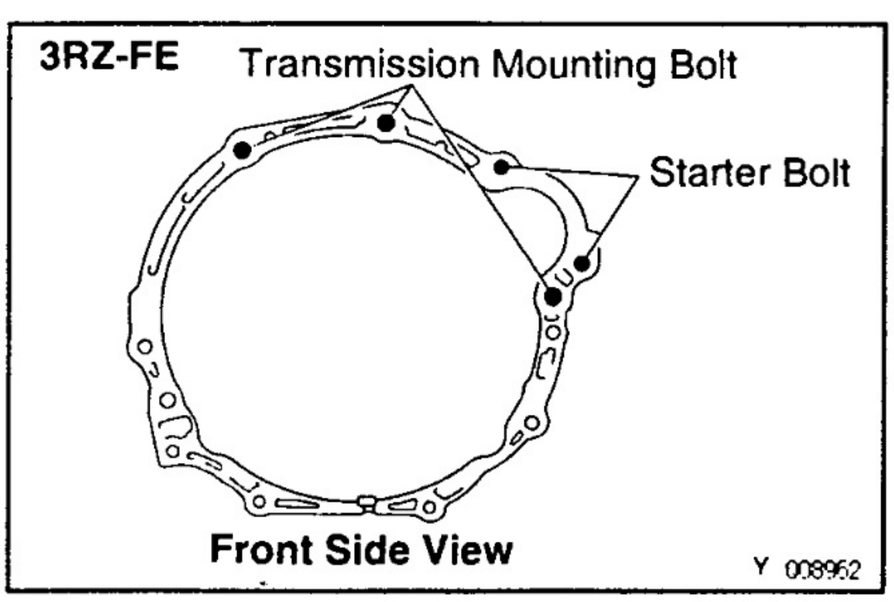

19. REMOVE TRANSMISSION
3RZ–FE:

(a) Remove the 3 bolts.
Torque: 71 N·m (730 kgf·cm, 53 ft·lbf)

(b) Pull out the transmission toward the rear.

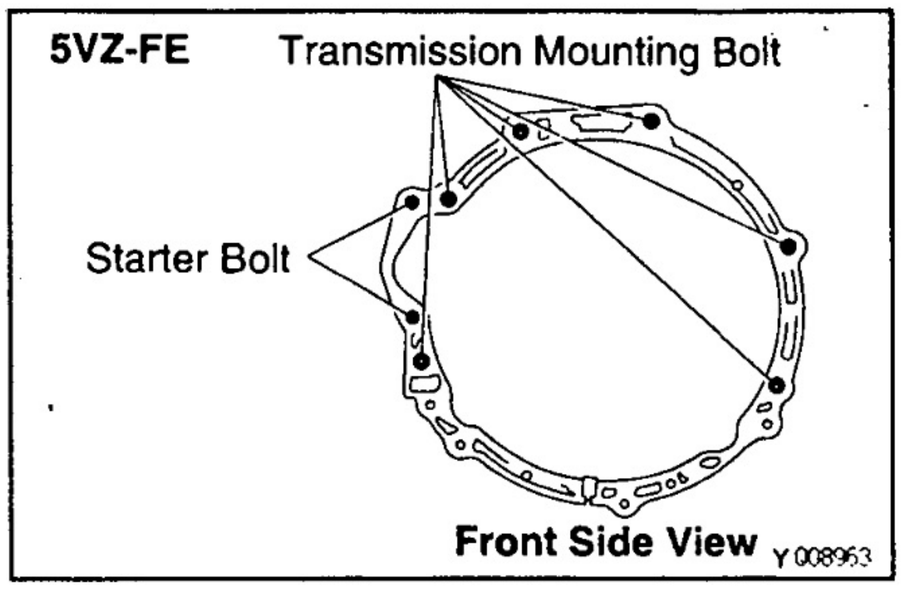

5VZ–FE:

(a) Remove the 6 bolts.
Torque: 71 N·m (730 kgf·cm, 53 ft·lbf)

(b) Pull out the transmission toward the rear.

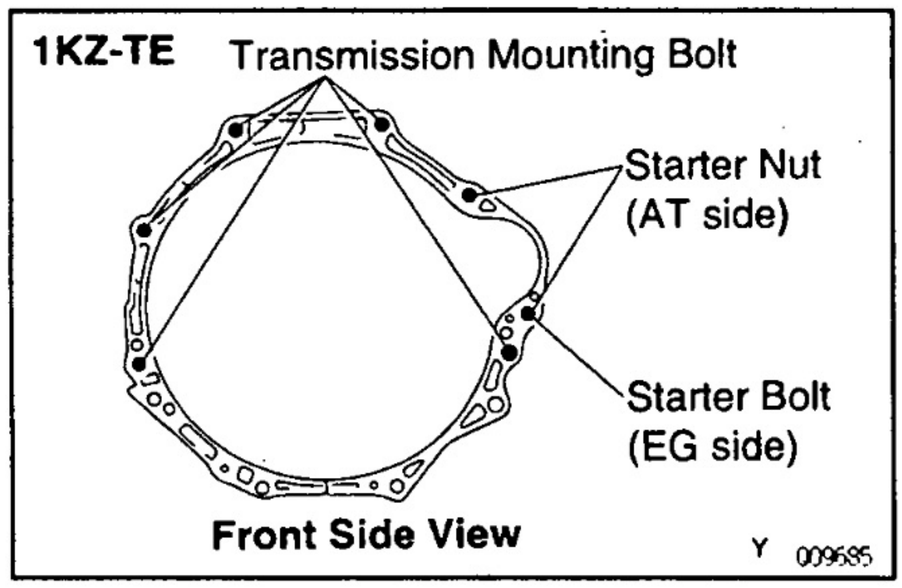

1KZ–TE:

(a) Remove the 5 bolts.
Torque: 71 N·m (730 kgf·cm, 53 ft·lbf)

(b) Slid the front differential being careful not to touch the front differential companion flange with the torque converter housing.

(c) Pull out the transmission toward the rear.

AT

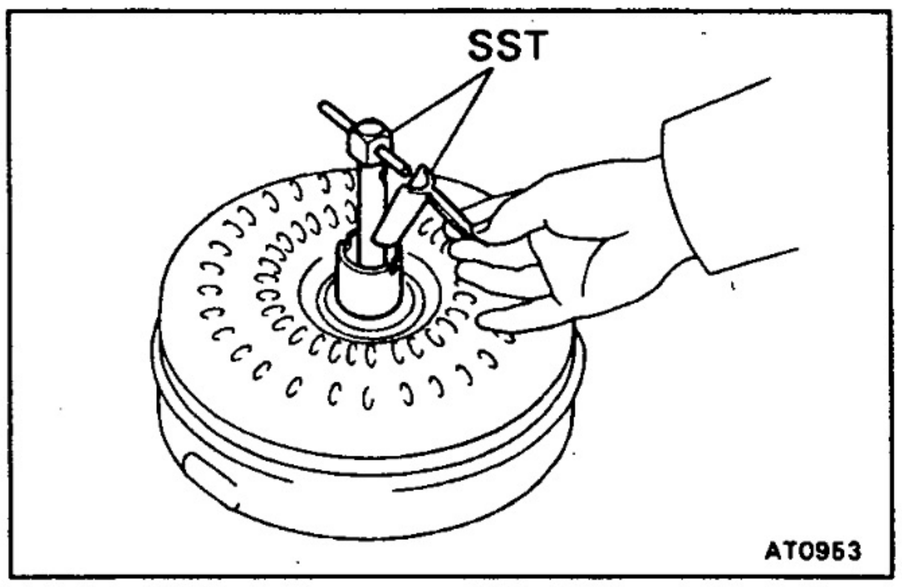

TORQUE CONVERTER AND DRIVE PLATE INSPECTION AT129-03

1. INSPECT ONE–WAY CLUTCH

(a) Install SST in the inner race of one–way clutch.
SST 09350–30020 (09351–32010)

(b) Install SST so that it fits in the notch of the converter hub and outer race of the one–way clutch.
SST 09350–30020 (09351–32020)

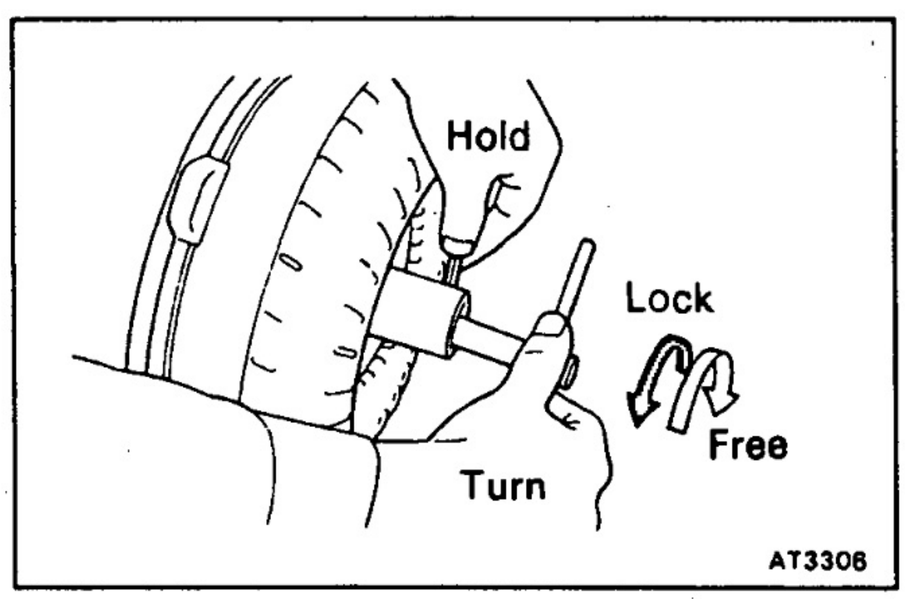

(c) With the torque converter standing on its side, the clutch locks when turned counterclockwise, and rotate freely and smoothly clockwise.
If necessary, clean the converter and retest the clutch.
Replace the converter if the clutch still fails the test.

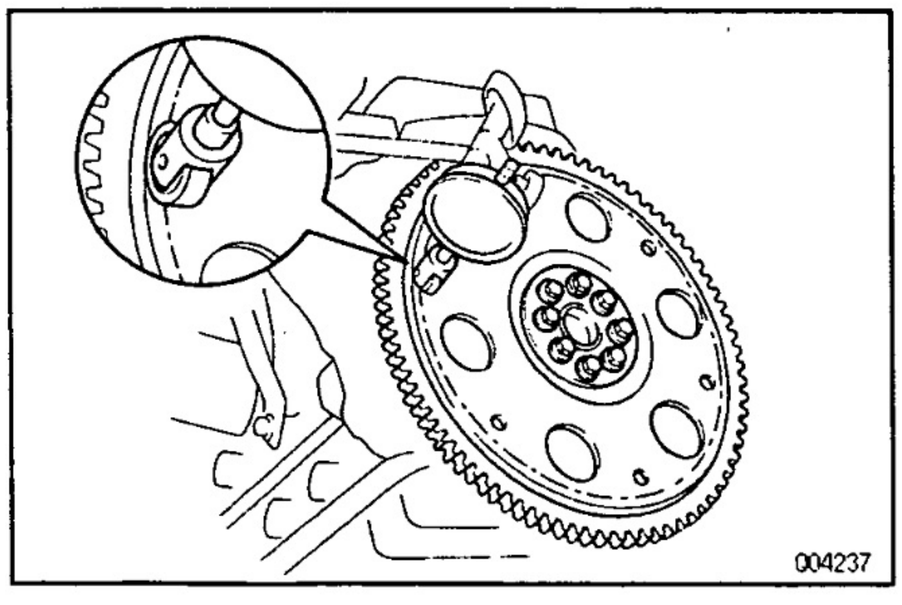

2. MEASURE DRIVE PLATE RUNOUT AND INSPECT RING GEAR

Set up a dial indicator, measure the drive plate runout.
Maximum runout: 0.20 mm (0.0079 in.)
If the runout is not within the specification, replace the drive plate. If installing a new drive plate, note the orientation of spacers and tighten the bolts.
Torque:

3RZ–FE: 74 N·m (750 kgf·cm, 54 ft·lbf)
5VZ–FE: 83 N·m (850 kgf·cm, 62 ft·lbf)
1KZ–TE: 178 N·m (1,820 kgf·cm, 132 ft·lbf)

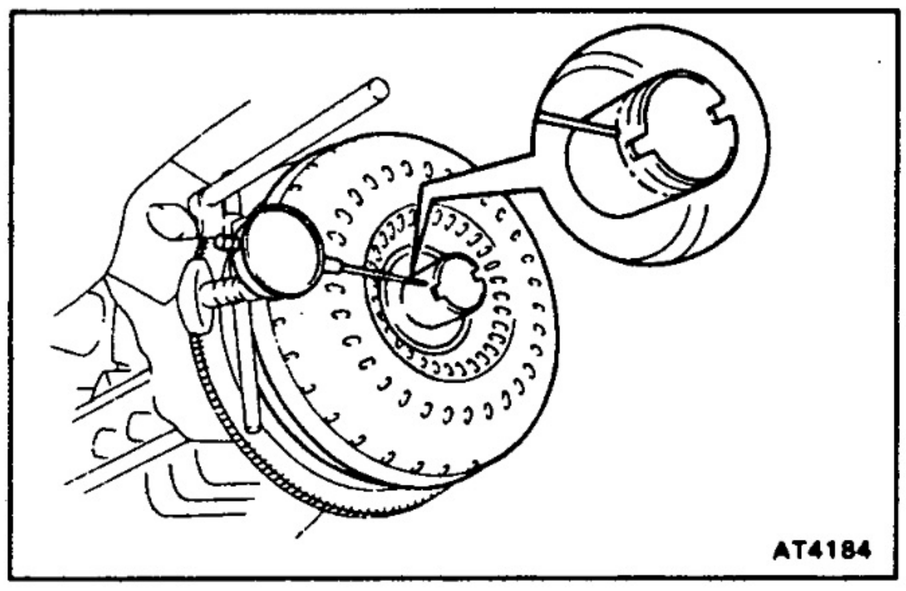

3. MEASURE TORQUE CONVERTER SLEEVE RUNOUT

(a) Temporarily mount the torque converter to the drive plate. Set up a dial indicator.
Maximum runout: 0.30 mm (0.0118 in.)
If the runout is not within the specification, try to correct by reorienting the installation of the converter.
If the excessive runout cannot be corrected, replace the torque converter.
HINT: Mark the position of the converter to ensure the correct installation.

(b) Remove the torque converter.

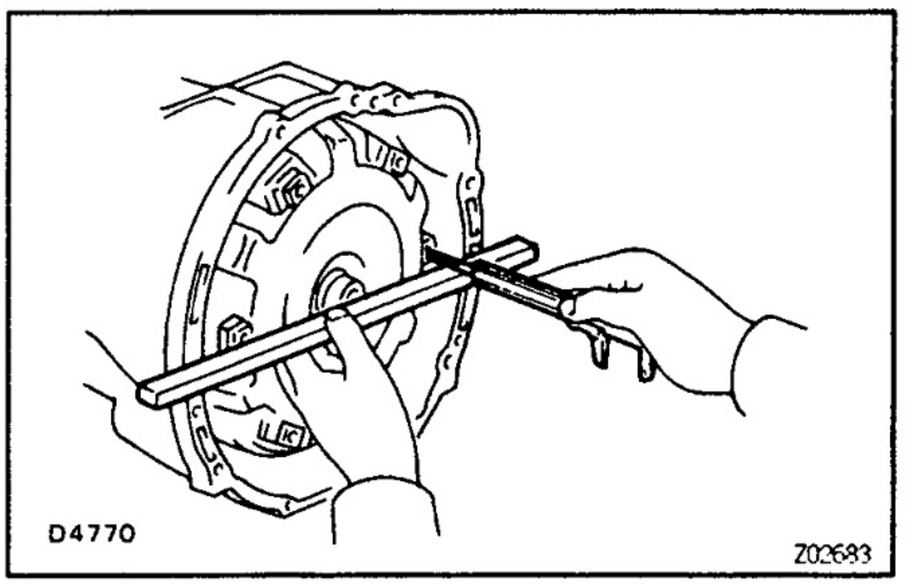

TORQUE CONVERTER INSTALLATION

AT0TL-04

CHECK TORQUE CONVERTER INSTALLATION

Using calipers and a straight edge, measure the distance from the installed surface of the transmission housing.
Correct distance:

3RZ–FE: More than 31.75 mm (1.2500 in.)
5VZ–FE: More than 17.95 mm (0.7067 in.)
1KZ–TE: More than 44.67 mm (1.7587 in.)

TRANSMISSION INSTALLATION

AT0Y2-06

Installation is in the reverse order of removal.
INSTALLATION HINT:

- Adjust the shift lever range.
  (See page AT–28)
- Fill ATF and check the fluid level.
  (See page AT–27)
- Adjust the throttle cable.
  (See page AT–28)
- Test drive the vehicle.

TROUBLESHOOTING

HOW TO PROCEED WITH TROUBLESHOOTING ····· AT—20
CUSTOMER PROBLEM ANALYSIS ····· AT—21
DIAGNOSIS SYSTEM ····· AT—22
O/D OFF INDICATOR INSPECTION ····· AT—22
DTC CHECK ····· AT—22
CANCELING DTC ····· AT—23
ENGINE & ECT ECU TERMINALS STANDARD VALUE ····· AT—23
CHECK TERMINAL TT OUTPUT VOLTAGE ····· AT—24
DTC CHART ····· AT—25
PROBLEM SYMPTOM CONFERMATION ····· AT—26
ROAD TEST ····· AT—26
PRELIMINARY CHECK ····· AT—27
MECHANICAL SYSTEM TEST ····· AT—30
HYDRAULIC TEST ····· AT—31
MANUAL SHIFTING TEST ····· AT—33
ELECTRONIC CONTROL CONPONENTS ····· AT—34
STANDARD VALUE OF ECM TERMINAL ····· AT—35
MATRIX CHART OF PROBLEM SYMPTOMS ····· AT—39
CIRCUIT INSPECTION
- DTC 38 ATF Temperature Sensor Circuit Malfunction ····· AT—44
- DTC 42 No.1 Speed Sensor Circuit (Back-up Sensor) Malfunction ····· AT—46
- DTC 61 No.2 Speed Sensor Circuit Malfunction ····· AT—49
- DTC 62, 63 No.1 and No.2 Solenoid Valve Circuit Malfunction ····· AT—52
- DTC 64 Lock-up Solenoid Valve Circuit Malfunction ····· AT—56
- Neutral Start Switch Circuit Malfunction ····· AT—60
- O/D Cancel Signal Circuit (5VZ-TE Only) ····· AT—63
- O/D Main Switch & O/D OFF Indicator Light Circuit ····· AT—65
- Pattern Select Switch Circuit (Power Mode Switch) ····· AT—69
- Pattern Select Switch Circuit (2nd Start Switch) & 2nd Start Indicator Light Circuit ····· AT—72
- Stop Light Switch Circuit ····· AT—75
- Throttle Position Sensor Circuit ····· AT—78
- Water Temperature Sensor Circuit ····· AT—81
- A/T.P. (Automatic Transmission Parking) Indicator Circuit ····· AT—84
- TE1 Terminal Circuit ····· AT—86
- TT Terminal Circuit ····· AT—88

AT

HOW TO PROCEED WITH TROUBLESHOOTING

AXCW6-03

Troubleshoot in accordance with the procedure on the following pages.

Items inside ▱ are titles of pages in this manual, with the page number indicated in the bottom portion. See the indicated pages for detailed explanations.

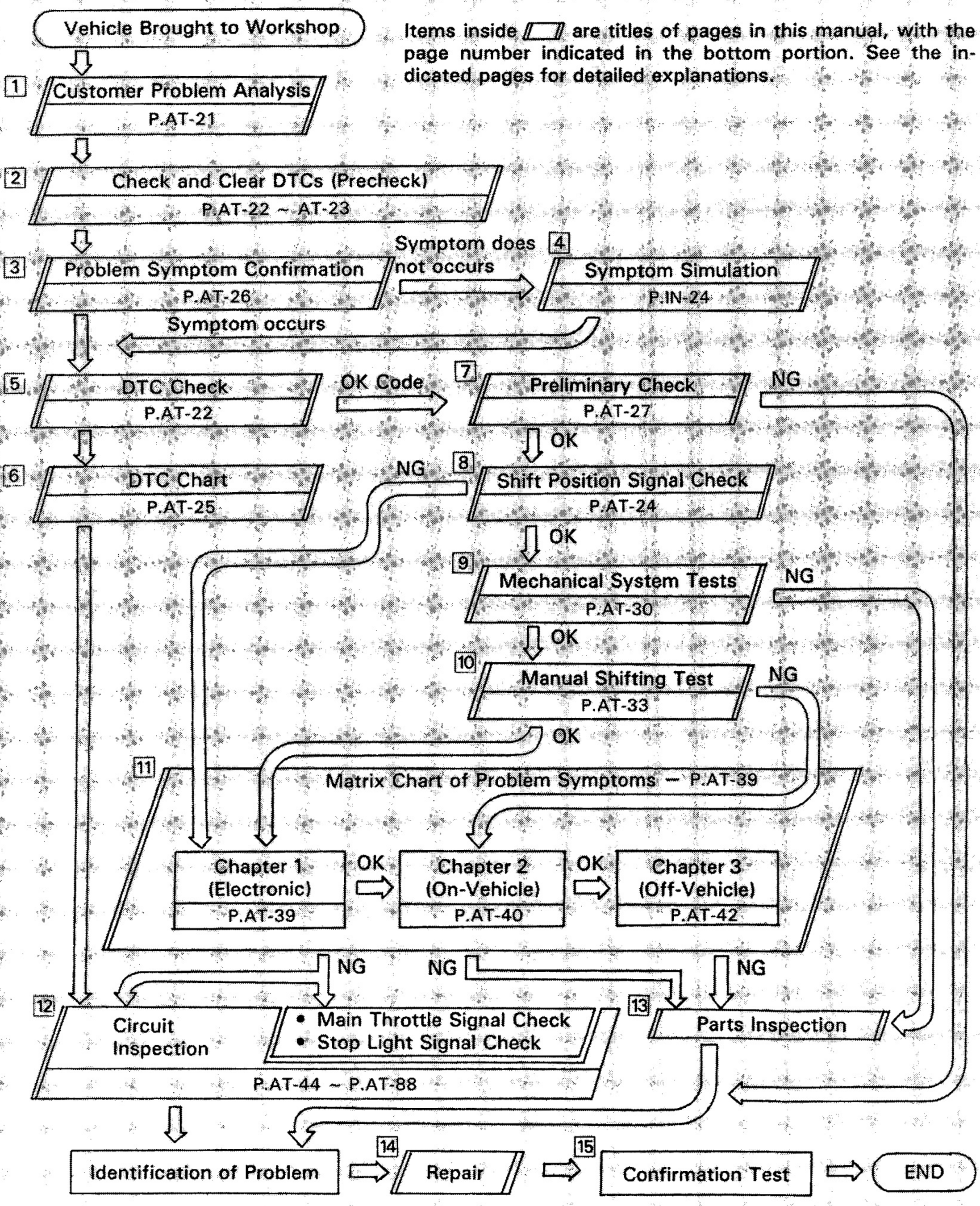

AX09Q-1P

CUSTOMER PROBLEM ANALYSIS

Electronically-Controlled Automatic Transmission Check Sheet	Inspector's Name

Customer's Name		**Registration No.**	
		Registration Year	/ /
		Frame No.	
Date Vehicle Brought In	/ /	**Odometer Reading**	km mile

Date Problem Occurred	/ /
How Often does Problem Occur	☐ Continuous ☐ Intermittent (times a day)

Symptoms	☐ Vehicle does not move. (☐ Any range ☐ Paticular range)
	☐ No up-shift (☐ 1st → 2nd ☐ 2nd → 3rd ☐ 3rd → O/D)
	☐ No down-shift (☐ O/D → 3rd ☐ 3rd → 2nd ☐ 2nd → 1st)
	☐ Lock-up malfunction
	☐ Shift point too high or too low.
	☐ Harsh engagement (☐ N → D ☐ Lock-up ☐ Any drive range)
	☐ Slip or shudder
	☐ No Kick-down
	☐ Others ( )

Check Item	**Condition of MIL**	☐ Normal ☐ Remains ON

DTC Check (O/D OFF Indicator Light)	**1st Time**	☐ Normal Code ☐ Malfunction Code (Code)
	2nd Time	☐ Normal Code ☐ Malfunction Code (Code)

V08010

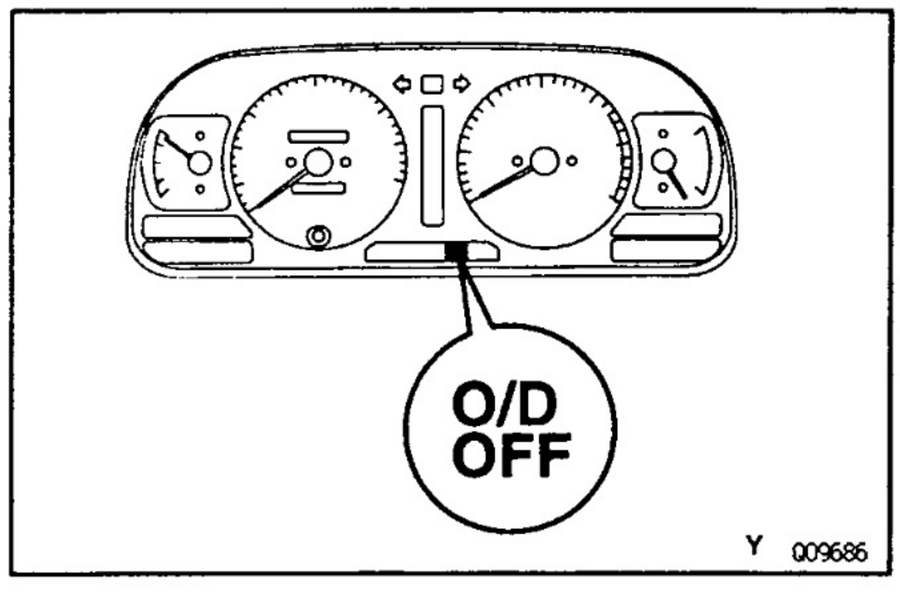

DIAGNOSIS SYSTEM

AX08R-0R

The automatic transmission has built—in self—diagnostic functions. If a malfunction occurs in the system, the ECM stores the trouble code in memory and the O/D OFF indicator light blinks to inform the driver. The DTC stored in memory can be read out by the following procedure.
HINT: Warning and DTC can be read only when the O/D main switch is ON. If OFF, the O/D OFF indicator light will light up continuous and will not blink.

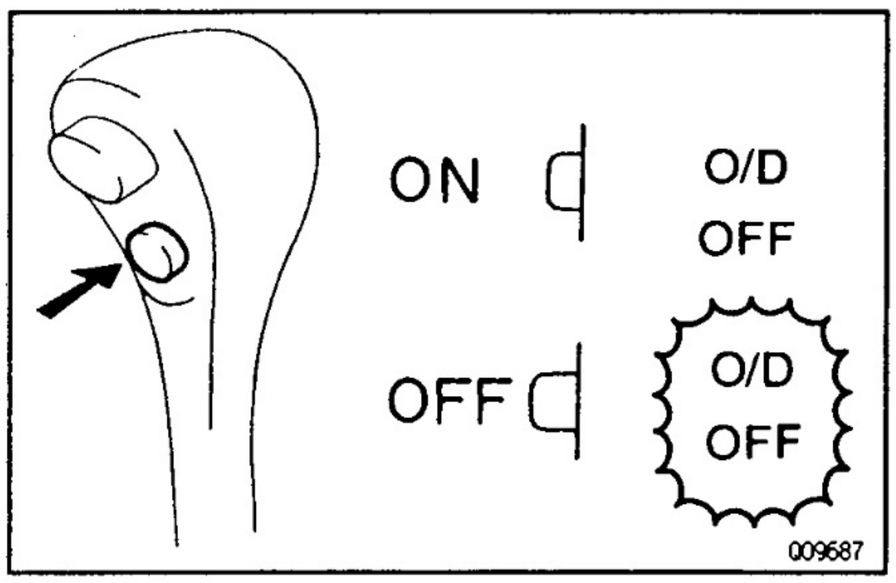

O/D OFF INDICATOR LIGHT INSPECTION

AX08S-0R

1. Turn the ignition switch ON.
2. Check if the O/D OFF indicator light lights up when the O/D main switch is pushed out to OFF and goes off when the O/D main switch is pushed in to ON.
   HINT: If the O/D OFF indicator light does not light up or stay on all the time, carry out the check for "O/D OFF Indicator Light Circuit" on page AT—66.

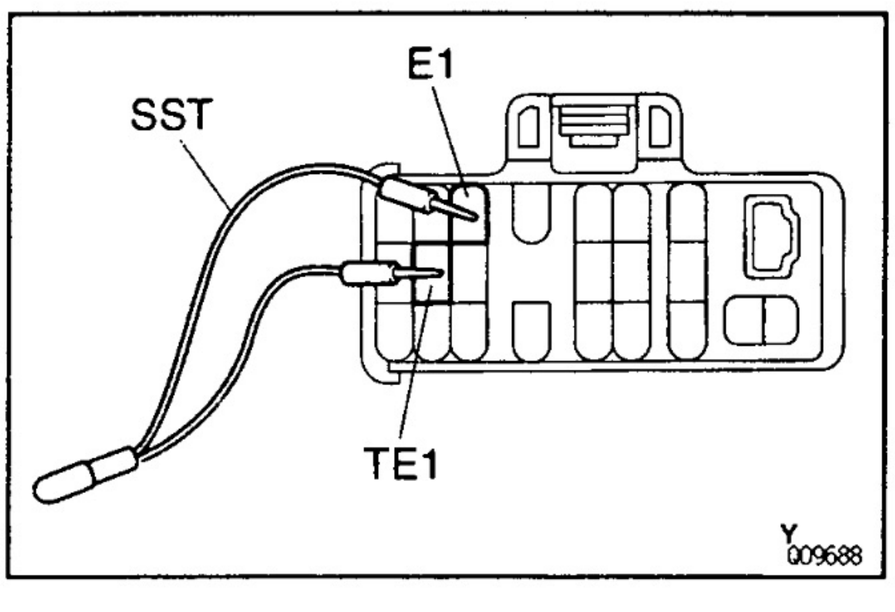

DTC CHECK

AX0AS-0R

1. Turn the ignition switch ON, but do not start the engine.
2. Push in the O/D main switch to ON.
   HINT: Warning and DTCs can be read only when the O/D main switch is ON. If it is OFF, the O/D OFF indicator light up will light continuously and will not blink.
3. Using SST, connect terminals TE1 and E1 of the check connector.
   SST 09843—18020
4. Read the DTC indicated by the number of times the O/D OFF indicator light blinks.
   HINT: If the system is operating normally, the light will blink 2 times per second.

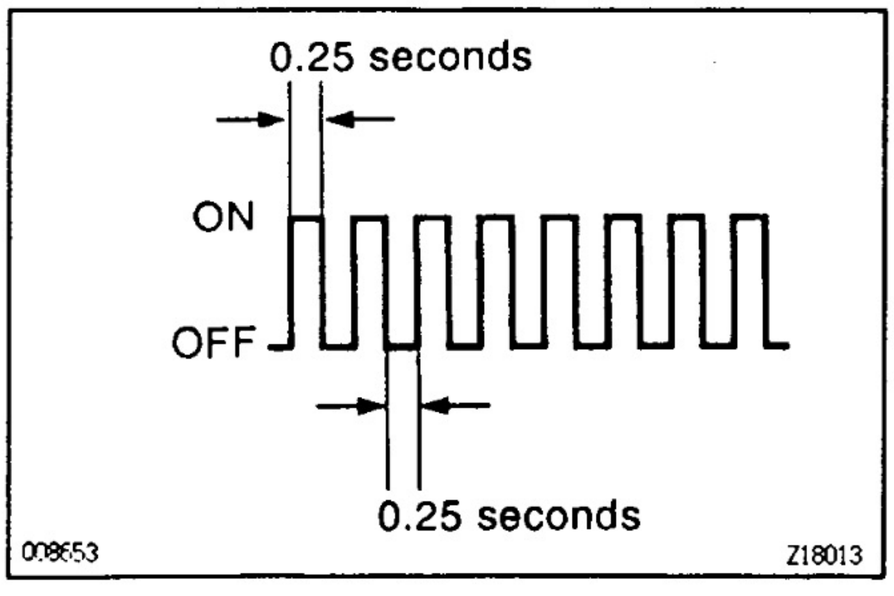

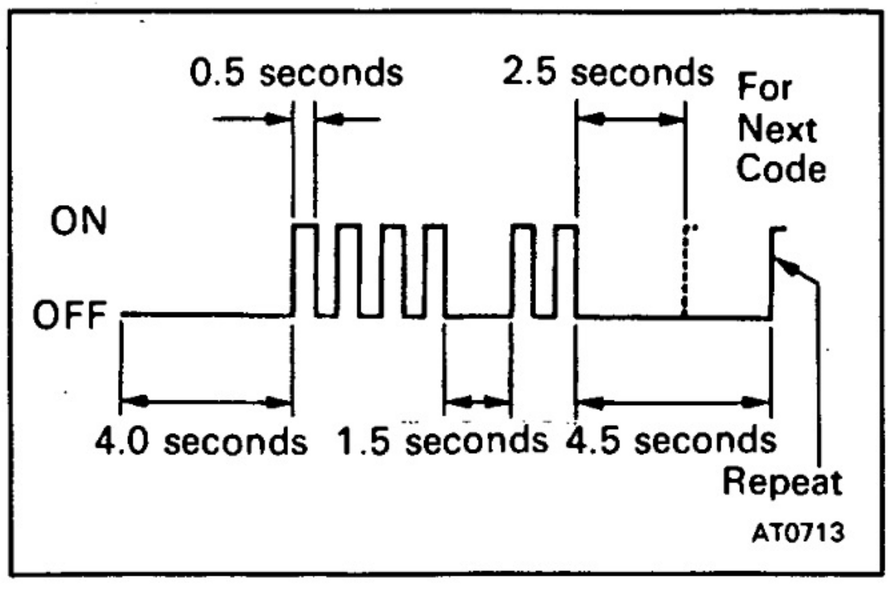

The DTC is indicated as shown in the illustration at left (DTC "42" is shown as an example).
HINT: When 2 or more DTCs are stored in memory, the lower—numbered code is displayed first.
If no DTC is output, or if a DTC is output even though no DTC output operation is performed, check the TE1 terminal circuit on page AT—89.

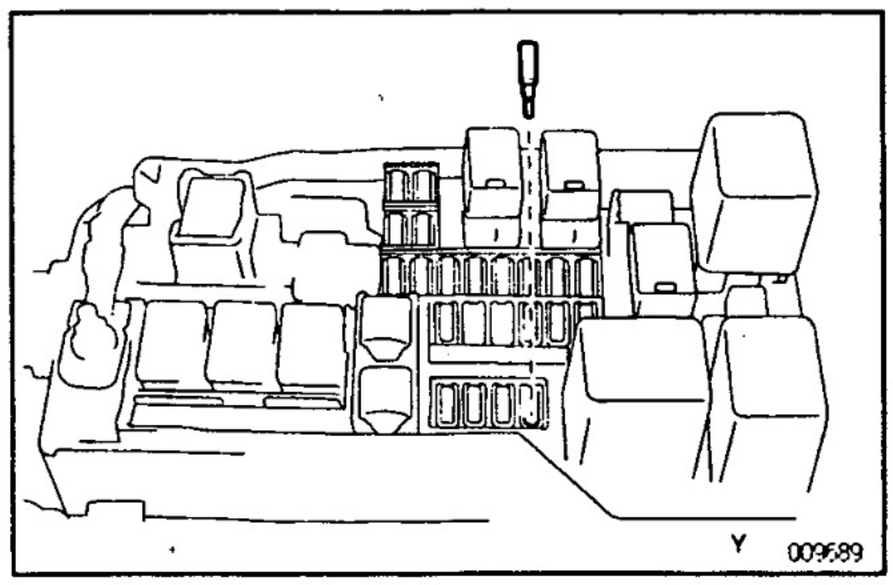

AX09T—00

CANCELING DTC

After repairing of the trouble area, the DTC retained in the ECM memory must be canceled out by removing the EFI fuse (3RZ—FE, 5VZ—FE) or ECD fuse (1KZ—TE) for 10 seconds or more, with the ignition switch OFF.
Check that the normal code is output after connecting the fuse.

AT

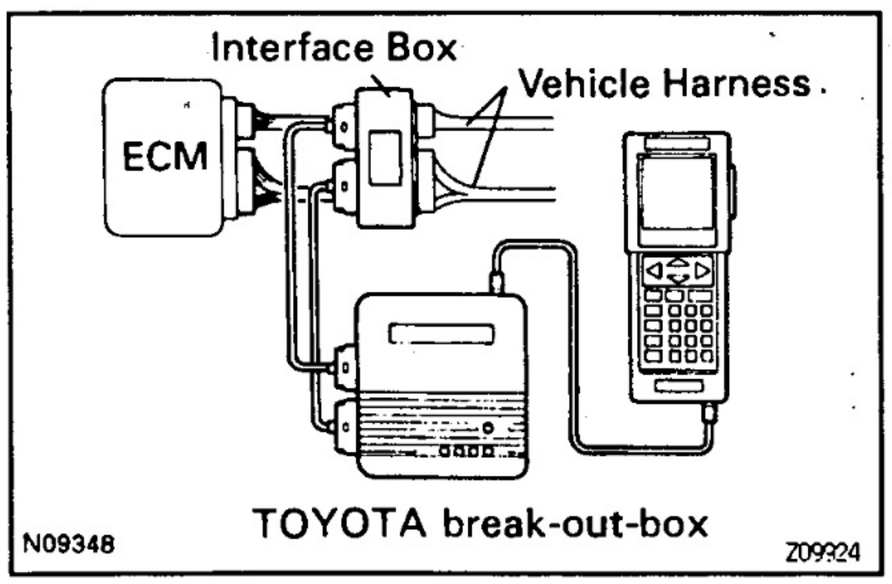

AX16M—02

ENGINE & ECT ECU TERMINALS STANDARD VALUE

ENGINE & ECT ECU TERMINAL VALUES MEASUREMENT BY USING BREAK — OUT — BOX AND HAND—HELD TESTER

1. Hook up the brake—out—box and hand—held tester to the vehicle.
2. Read the Engine & ECT ECU input/output values by following the prompts on the tester screen.
   HINT: hand—held tester has "Snapshot" function. This record the measured values and is effective in the diagnosis of intermittent problems.
   Please refer to the hand—held tester/break—out—box operator's manual for further details.

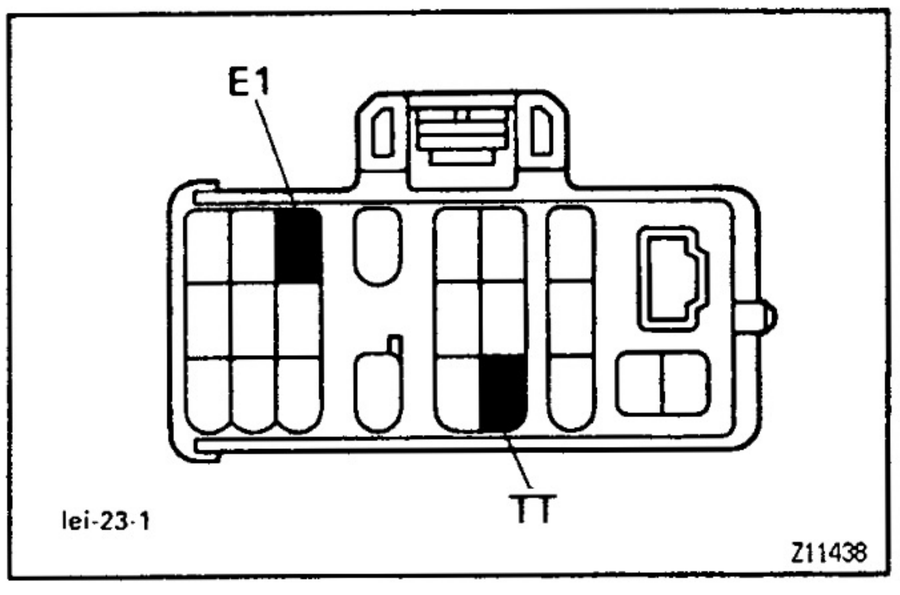

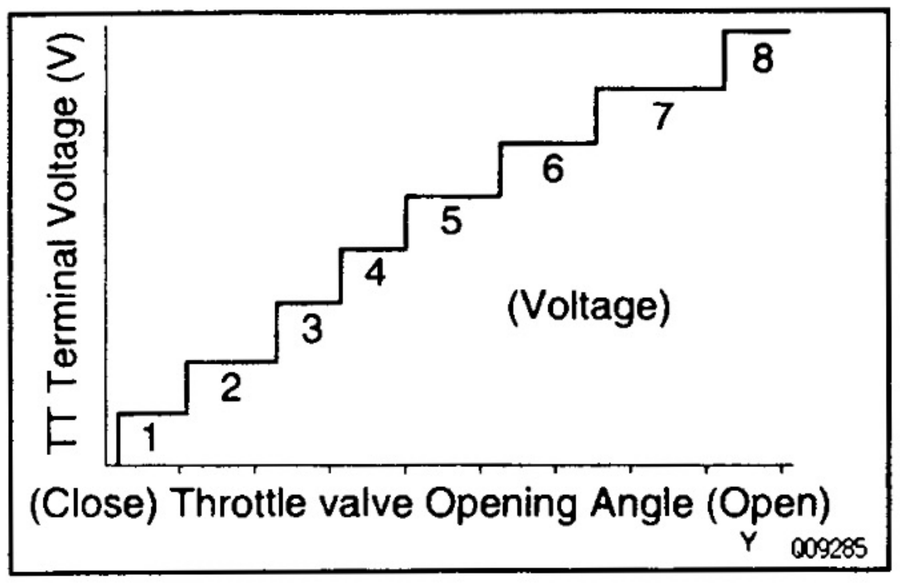

AT

CHECK TERMINAL TT OUTPUT VOLTAGE AT16T-01

When a voltmeter is connected to the check connector, the following items can be checked.

1. Throttle position sensor signal
2. Brake signal
3. Shift position signal

1. VOLTMETER CONNECTION

Connect the positive (+) probe of the voltmeter to terminal TT and the negative (−) probe to terminal E1 of the check connector.

HINT: If a voltmeter with small internal resistance is used, the correct voltage will not be indicated, so use a voltmeter with an internal resistance of at least 10 k Ω/V.

2. TURN IGNITION SWITCH TO ON (DO NOT START ENGINE)

3. CHECK THROTTLE POSITION SENSOR SIGNAL

Check if the voltage changes from approximately 0 V to approximately 8 V when the accelerator pedal is gradually depressed from the fully closed position.

4. CHECK BRAKE SIGNAL (LOCK−UP CUT SIGNAL)

(a) Open the throttle valve fully to apply approximately 8 V to terminal TT.

(b) In this condition, check terminal TT voltage when the brake pedal is depressed and released.

TT terminal voltage:

0 V (When brake pedal is depressed)

8 V (When brake pedal is released)

5. START ENGINE

6. CHECK SHIFT POSITION SIGNAL (VEHICLE SPEED ABOVE 60 KM/H OR 37 MPH)

Check up−shifting together with terminal TT voltage.

HINT: Check for light shocks from up−shifting and for changes in the tachometer.

Gear Position	TT Terminal Voltage (V)
1st	0
2nd	2
3rd	4
3rd Lock−up	5
O/D	6
O/D Lock−up	7

If terminal TT output voltage check cannot be done, check TT terminal circuit. (See page AT−88)

DTC CHART

AT10D-04

If a DTC is displayed during the DTC check, check the circuit listed for that code in the table below and proceed to the page given.

DTC No. (See page)	Detection Item	Trouble Area	O/D OFF Light Blinks	Memory
38 (AT-44)	ATF Temperature Sensor Circuit Malfunction	• Open or short in ATF temperature sensor circuit • ATF temperature sensor faulty • Engine & ECT ECU faulty	○	○
42 (AT-46)	No.1 Speed Sensor Circuit (Back-up Sensor) Malfunction	• Open or short in No.1 speed sensor circuit • No.1 speed sensor faulty • Combination meter faulty • Engine & ECT ECU faulty	○	○
61 (AT-49)	No.2 Speed Sensor Circuit Malfunction	• Open or short in No.2 speed sensor circuit • No.2 speed sensor (in ATM) faulty • Engine & ECT ECU faulty	○	○
62 (AT-52)	No.1 Solenoid Valve Circuit Malfunction	• Open or short in No.1 solenoid valve circuit • No.1 solenoid valve faulty • Engine & ECT ECU faulty	○	○
63 (AT-52)	No.2 Solenoid Valve Circuit Malfunction	• Open or short in No.2 solenoid valve circuit • No.2 solenoid valve faulty • Engine & ECT ECU faulty	○	○
64 (AT-56)	Lock-up Solenoid Valve Circuit Malfunction	• Open or short in lock-up solenoid valve circuit • Lock-up solenoid valve faulty • Engine & ECT ECU faulty	×	○

AT

V08011

AX00U–12

PROBLEM SYMPTOM CONFIRMATION

Taking into consideration the results of the customer problem analysis, try to reproduce the symptoms of the trouble. If the problem is that the transmission does not up–shift, does not down–shift, or the shift point is too high or too low, conduct the following road test referring to the automatic shift schedule and simulate the problem symptoms.

AT10Z–02

ROAD TEST

NOTICE: Do the test at normal ATF operating temperature 50 – 80 °C (122 – 176 °F).

1. D RANGE TEST (NORM AND PWR PATTERN)

Shift into the D range and fully depress the accelerator pedal and check the following points:

HINT: When the 2nd start switch is on, there is no 1→2 up–shift and 2→1 down–shift.

(a) Check to see that the 1→2, 2→3 and 3→O/D up–shift take place at the shift point shown in the automatic shift schedule. (See page AT–90)

AT

HINT:

(1) O/D Gear Up–shift Prohibition Control
- O/D main switch is OFF (During O/D OFF indicator light lights up.)
- Water temperature (3RZ–FE, 5VZ–FE only)
  3RZ–FE: 55°C (131°F) or less
  5VZ–FE: 75°C (167°F) or less
- Vehicle speed (3RZ–FE, 5VZ–FE only)
  3RZ–FE, 5VZ–FE: 80km/h (50 mph) or less
- Throttle valve opening (5VZ–FE only)
  5VZ–FE: 30 % or less

(2) O/D Gear Lock–up Prohibition Control
- Throttle valve fully opened.
- Brake light switch ON.

(3) 3rd Gear Up–shift Prohibition Control (5VZ–FE only)
- Water temperature is 60 °C (140 °F) or less, and vehicle speed is 40 km/h (25 mph) or less.

(b) Check for shift shock and slip.
Check for shock and slip at the 1→2, 2→3 and 3→O/D up–shifts.

(c) Check for abnormal noises and vibration.
Run at the D position lock–up or O/D gear and check for abnormal noises and vibration.
HINT: The check for the cause of abnormal noises and vibration must be done very thoroughly as it could also be due to loss of balance in the differential and torque converter, etc.

(d) Check kick–down operation.
While running in the D position, 2nd, 3rd and O/D gears, check to see that the possible kick–down vehicle speed limits for 2→1, 3→2 and O/D→3 kick–downs conform to those indicated on the automatic shift schedule. (See page AT–90)

(e) Check abnormal shock and slip at kick–down.

(f) Check the lock–up mechanism.
(1) Drive in O/D gear of the D position, at a steady speed (lock–up ON) of about 60 km/h (37 mph).
(2) Lightly depress the accelerator pedal and check that the engine speed does not change abruptly.
If there is a big jump in engine speed, there is no lock–up.

2. 2 RANGE TEST

Shift into the 2 range, fully depress the accelerator pedal and check the following points:

HINT: When the 2nd start switch is on, there is no 1→2 up−shift and 2→1 down−shift.

(a) Check up−shift operation.
Check to see that the 1→2 up−shift takes place and that the shift point conforms to the automatic shift schedule. (See page AT−90)
HINT: There is no O/D up−shift and lock−up in the 2 range.

(b) Check engine braking.
While running in the 2 range and 2nd gear, release the accelerator pedal and check the engine braking effect.

(c) Check for abnormal noises during acceleration and deceleration, and for shock at up−shift and down−shift.

3. L RANGE TEST

Shift into the 2 range and fully depress the accelerator pedal and check the following points:

(a) Check no up−shift.
While running in the L range, check that there is no up−shift to 2nd gear.

(b) Check engine braking.
While running in the L range, release the accelerator pedal and check the engine braking effect.

(c) Check for abnormal noises during acceleration and deceleration.

4. R RANGE TEST

Shift into the R range and fully depress the accelerator pedal and check for slipping.
CAUTION: Before conducting this test, ensure that the test area is free from personnel and obstruction.

5. P RANGE TEST

Stop the vehicle on a gradient (more than 5°) and after shifting into the P range, release the parking brake.
Then, check to see that the parking lock pawl holds the vehicle in place.

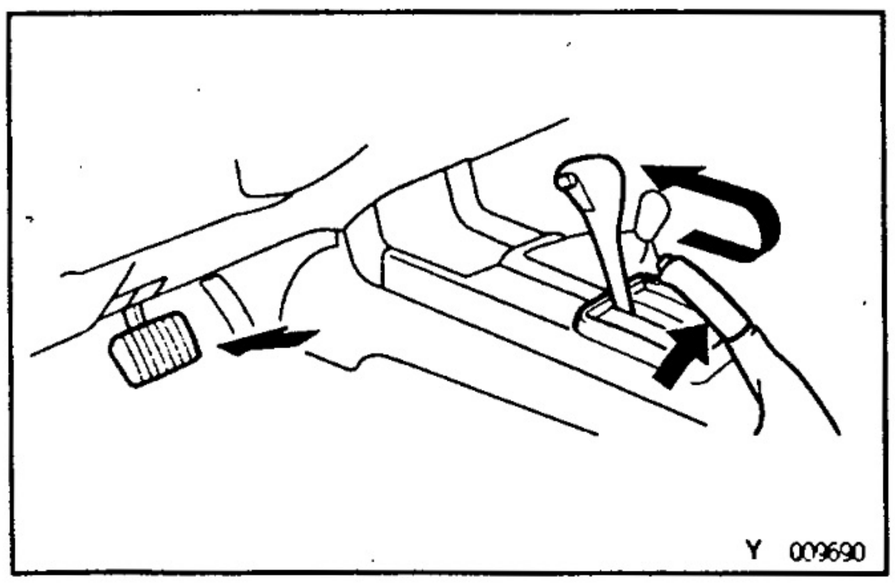

PRELIMINARY CHECK

AT16U−01

1. CHECK FLUID LEVEL

HINT: The vehicle must have been driven so that the engine and transmission are at normal operating temperature.
ATF temperature: 70 − 80 °C (158 − 176 °F)

(a) Park the vehicle on a flat surface, set the parking brake.

(b) With the engine idling, shift into each gear from P range to L range and return to P range.

(c) Pull out the transmission dipstick and wipe it clean.

(d) Push it back fully into the pipe.

(e) Pull it out and check that the fluid level is in the HOT range.
If the level is at the low side of the hot range, add new ATF.
Fluid type: ATF D−Ⅱ or DEXRON®Ⅲ (DEXRON®Ⅱ)
NOTICE: Do not overfill.

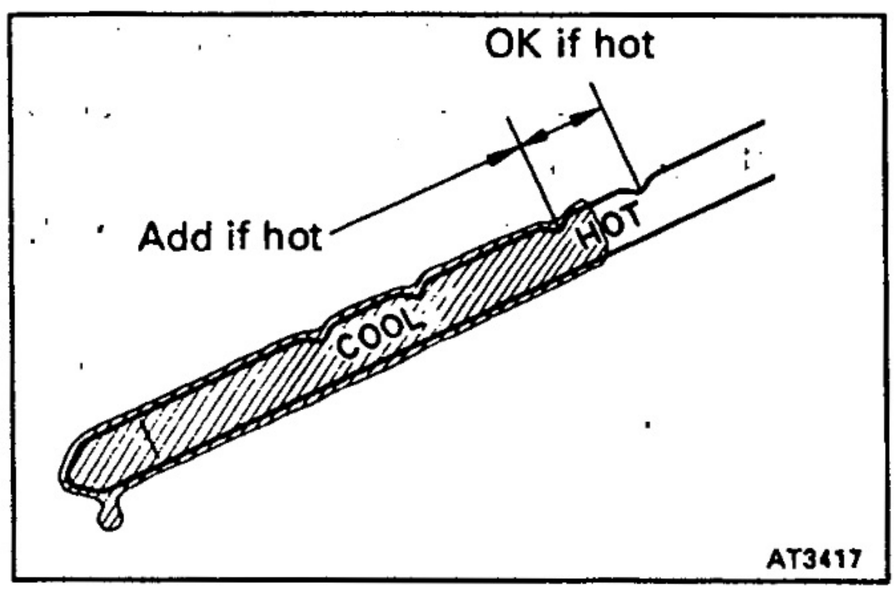

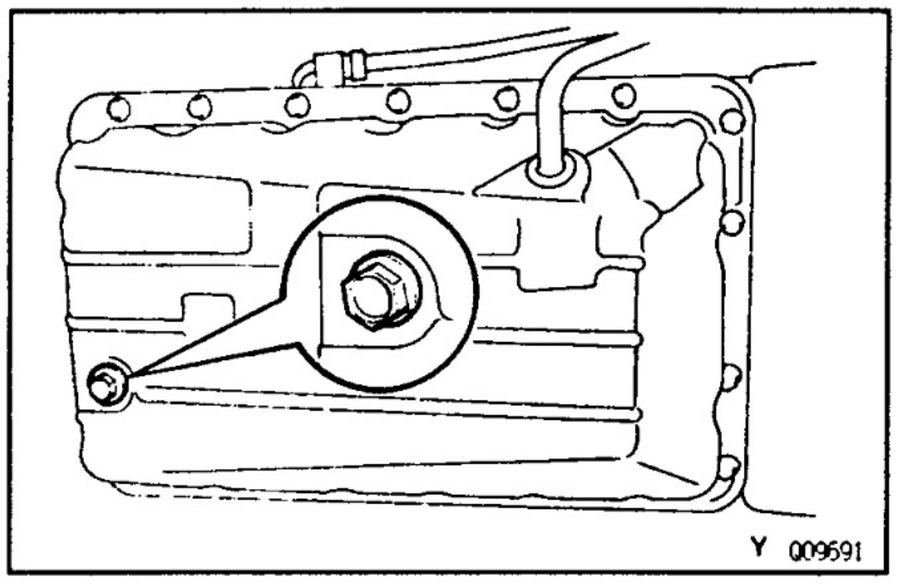

2. CHECK FLUID CONDITION

If the fluid smells burnt or is black, replace it.

3. REPLACE ATF

NOTICE: Do not overfill.

(a) Remove the drain plug, the gasket and drain the ATF.

(b) Install a new gasket the drain plug securely.

(c) Add new ATF through the filler pipe.

Fluid type: ATF D—II or DEXRON®III (DEXRON®II)

Capacity:

Drain and refill: 2.0 liters (2.1 US qts, 1.8 Imp.qts)

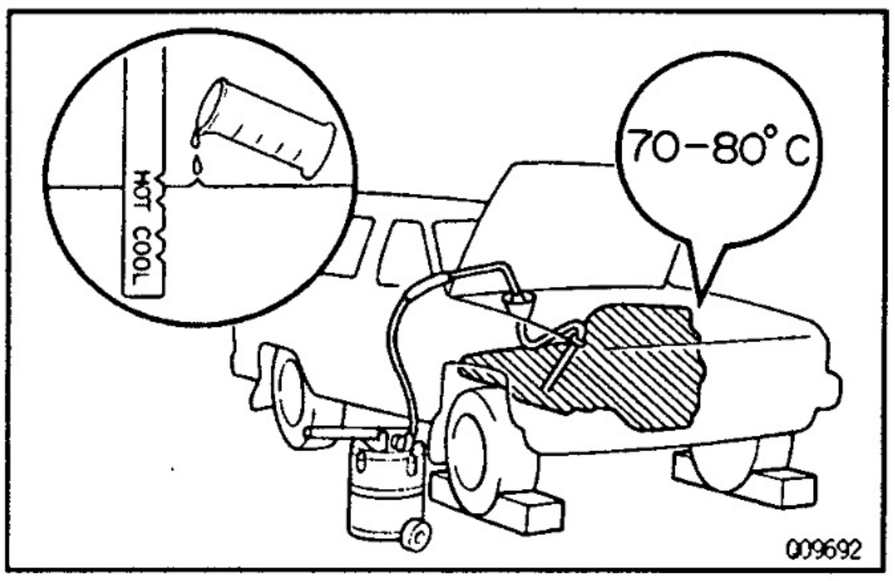

AT

(d) Start the engine and shift into all ranges from P through L and then shift into P.

(e) With the engine idling, check the fluid level. Add fluid up to the COOL level on the dipstick.

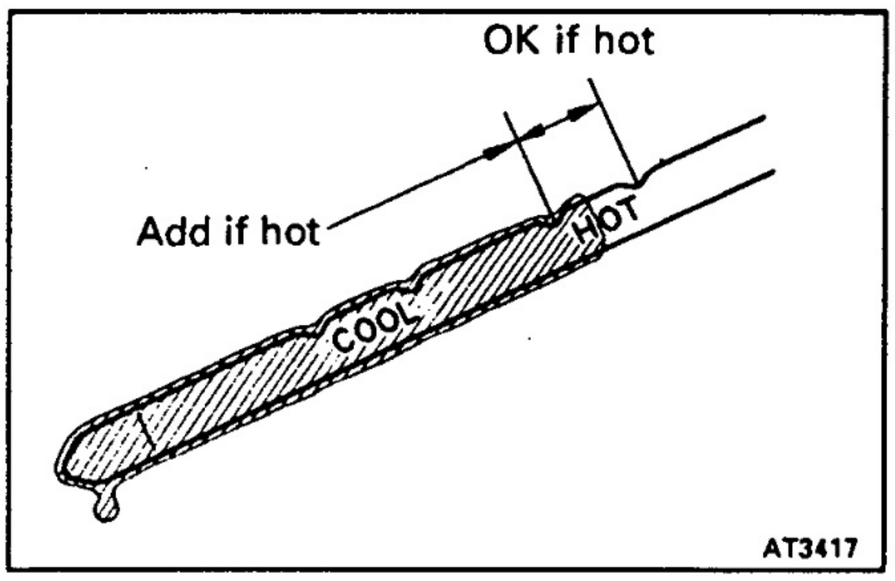

(f) Check the fluid level with the normal ATF temperature 70 — 80 °C (158 — 176 °F) and add as necessary.

NOTICE: Do not overfill.

(g) Do the road test.

(h) Recheck the fluid level and add as necessary.

4. CHECK FLUID LEAKS

Check for leaks in the transmission.

If there are leaks, it is necessary to replace O—ring, FIPG, oil seals, plugs or other parts.

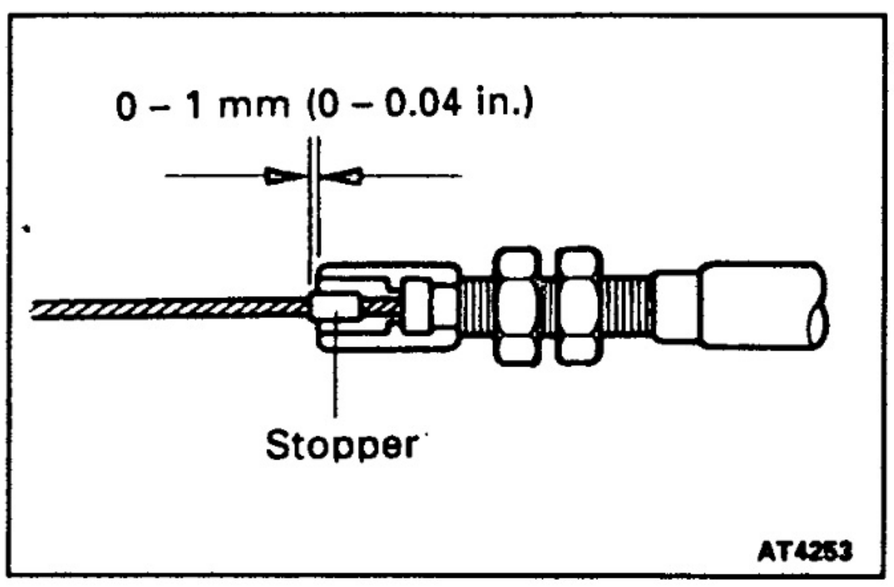

5. INSPECT AND ADJUST THROTTLE CABLE

(a) Check that the accelerator pedal is fully released.

(b) Check that the inner cable is not slack.

(c) Measure the distance between the outer cable end and stopper on the cable.

Standard distance: 0 — 1 mm (0 — 0.04 in.)

If the distance is not within the standard, adjust the cable by the adjusting nuts.

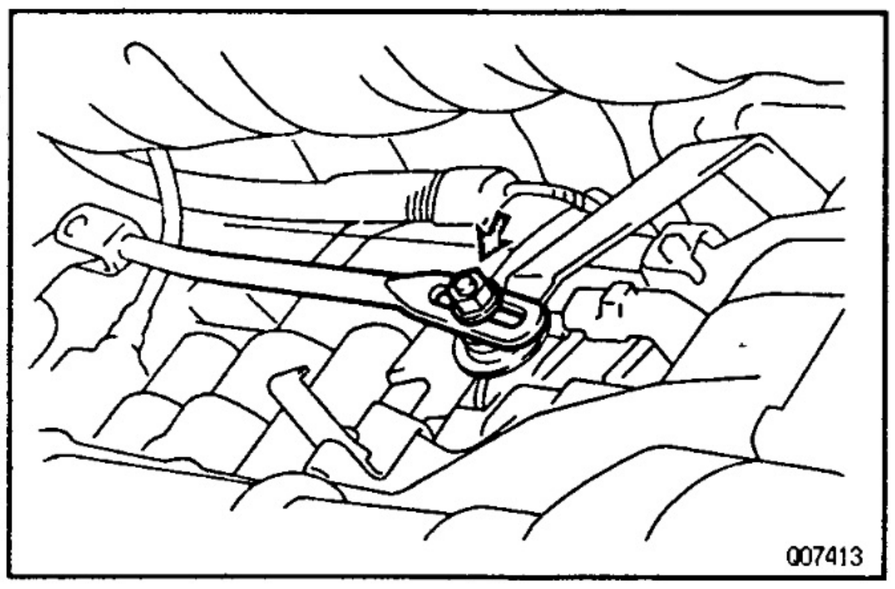

6. INSPECT AND ADJUST SHIFT LEVER POSITION

When shifting the shift lever from the N range to other ranges, check that the lever can be shifted smoothly and accurately to each range and that the range indicator correctly indicates the range.

If the indicator is not aligned with the correct position, carry out the following adjustment procedures.

(a) Loosen the swivel nut on the manual shift lever.

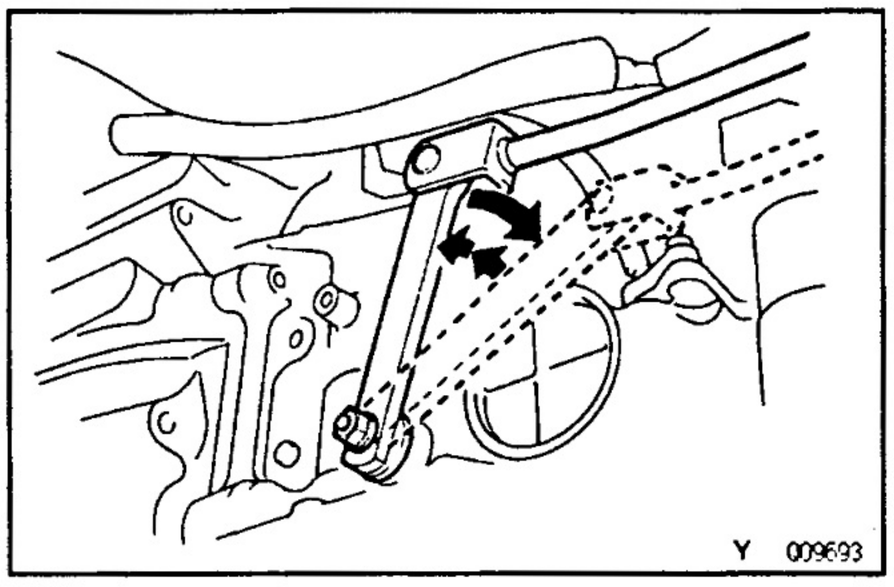

(b) Push the manual lever fully toward the right side of the vehicle.
(c) Return the lever 2 notches to the N range.
(d) Set the shift lever to the N range.
(e) While holding the shift lever lightly toward the R range side, tighten the swivel nut.
Torque: 13 N·m (130 kgf·cm, 9 ft·lbf)
(f) Start the engine and make sure that the vehicle moves forward when shifting the lever from the N to D range and reverse when shifting it to the R range.

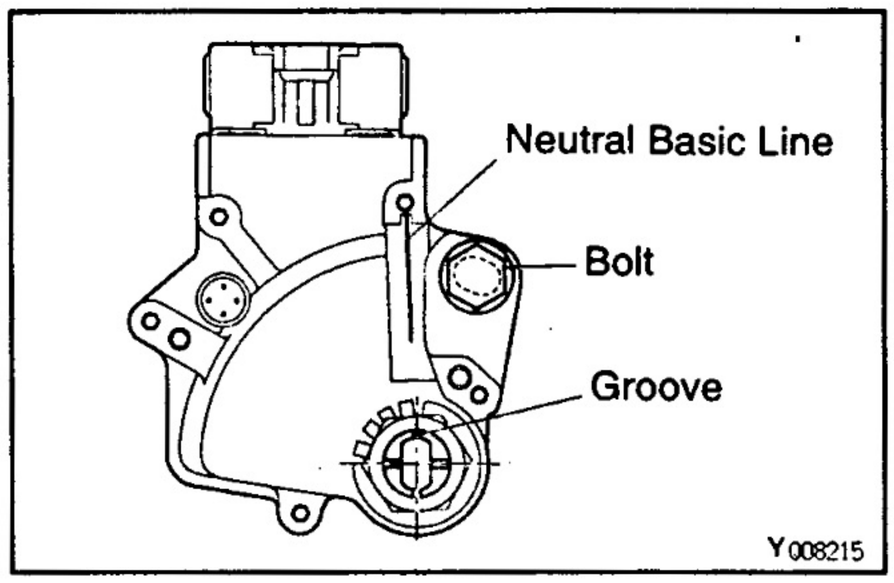

7. INSPECT AND ADJUST NEUTRAL START SWITCH
Check that the engine can be started with the shift lever only in the N or P range, but not in other ranges. If not as stated above, carry out the following adjustment procedure.
(a) Loosen the neutral start switch bolt and set the shift lever to the N range.
(b) Align the groove and neutral basic line.
(c) Hold in range and tighten the bolt.
Torque: 13 N·m (130 kgf·cm, 9 ft·lbf)

8. INSPECT IDLE SPEED
Idle speed (3RZ–FE, 5VZ–FE, 1KZ–TE):
700 ± 50 rpm (In N range and A/C OFF)

AT

AT16V-01

MECHANICAL SYSTEM TESTS

STALL TEST

The object of this test is to check the overall performance of the transmission and engine by measuring the stall speeds in the D and R ranges.

NOTICE:

- **Do the test at normal operating ATF temperature 50 — 80 °C (122 — 176 °F).**
- **Do not continue running this test longer than 5 seconds.**
- **To ensure safety, conduct this test in a wide, clear, level area which provides good traction.**
- **The stall test should always be carried out in pairs. One technician should observe the conditions of the wheels or wheel stoppers outside the vehicle while the other is doing the test.**

MEASURE STALL SPEED

(a) Chock the 4 wheels.

AT

(b) Connect a tachometer to the engine.

(c) Fully apply the parking brake.

(d) Keep your left foot pressed firmly on the brake pedal.

(e) Start the engine.

(f) Shift into the D range. Press all the way down on the accelerator pedal with your right foot. Quickly read the stall speed.

Stall speed:

3RZ—FE: 2,000 ± 150 rpm
5VZ—FE: 2,250 ± 150 rpm
1KZ—TE: 2,350 ± 150 rpm

(g) Do the same test in the R range.

Quickly read the stall speed.

Stall speed:

3RZ—FE: 2,000 ± 150 rpm
5VZ—FE: 2,250 ± 150 rpm
1KZ—TE: 2,350 ± 150 rpm

EVALUATION

Problem	Possible cause
(a) Stall speed low in D and R ranges	• Engine output may be insufficient • Stator one—way clutch is operating properly HINT: If more than 600 rpm below the specified value, the torque converter could be faulty.
(b) Stall speed high in D range	• Line pressure too low • Forward clutch slipping • No.2 one—way clutch not operating properly • O/D one—way clutch not operating properly
(c) Stall speed high in R range	• Line pressure too low • Direct clutch slipping • 1st and reverse brake slipping • O/D one—way clutch not operating properly
(d) Stall speed high in D and R ranges	• Line pressure too low • Improper fluid level • O/D one—way clutch not operating properly

TIME LAG TEST

When the shift lever is shifted while the engine is idling, there will be a certain time lapse or lag before the shock can be felt. This is used for checking the condition of the O/D direct clutch, forward clutch, direct clutch, and 1st and reverse brake.

NOTICE:

- **Do the test at normal operating ATF temperature 50 — 80 °C (122 — 176 °F).**
- **Be sure to allow 1 minute interval between tests.**
- **Take 3 measurements and take the average value.**

MEASURE TIME LAG

(a) Fully apply the parking brake.

(b) Start the engine and check idle speed.

Idle speed (3RZ—FE, 5VZ—FE, 1KZ—TE):

700 ± 50 rpm (In N range and A/C OFF)

(c) Shift the shift lever from the N to D range. Using a stop watch, measure the time it takes from shifting the lever until the shock is felt.

Time lag: N → D Less than 1.2 seconds

In the same way, measure the time lag for N → R.

Time lag: N → R Less than 1.5 seconds

AT

EVALUATION

If N → D or N → R time lag is longer than specified:

Problem	Possible cause
N→D time lag is longer	• Line pressure too low • Forward clutch worn • O/D one—way clutch not operating properly
N→R time lag is longer	• Line pressure too low • Direct clutch worn • 1st and reverse brake worn • O/D one—way clutch not operating properly

HYDRAULIC TEST

MEASURE LINE PRESSURE

NOTICE:

- **Do the test at normal operating ATF temperature 50 — 80 °C (122 — 176 °F).**
- **The line pressure test should always be carried out in pairs. One technician should observe the conditions of the wheels or wheel stoppers outside the vehicle while the other is doing the test.**
- **Be careful to prevent SST's hose from interfering with the exhaust pipe.**

(a) Warm up the ATF.

(b) Remove the test plug on the transmission case left side and connect SST.
SST 09992—00094 (09992—00150, 09992—00270)
(See page AT—9, 10, 11 for the location to connect SST)

(c) Fully apply the parking brake and chock the 4 wheels.

(d) Start the engine and check idling speed.

(e) Keep your left foot pressed firmly on the brake pedal and shift into the D range.

(f) Measure the line pressure when the engine is idling.

(g) Press the accelerator pedal all the way down. Quickly read the highest line pressure when engine speed reaches stall speed.

(h) In the same way, do the test in the R range.

SPECIFIED LINE PRESSURE

3RZ—FE:

Line pressure	D range kPa (kgf/cm², psi)	R range kPa (kgf/cm², psi)
Idling	363—421 (3.7—4.3, 53—61)	609—706 (6.2—7.2, 88—102)
Stall	932—1,176 (9.5—12.0, 135—171)	1,570—1,912 (16.0—19.5, 228—277)

5VZ—FE:

Line pressure	D range kPa (kgf/cm², psi)	R range kPa (kgf/cm², psi)
Idling	363—421 (3.7—4.3, 53—61)	609—696 (6.2—7.1, 88—101)
Stall	903—1,147 (9.2—11.7, 131—166)	1,432—1,941 (14.6—19.8, 208—282)

1KZ—TE:

Line pressure	D range kPa (kgf/cm², psi)	R range kPa (kgf/cm², psi)
Idling	363—421 (3.7—4.3, 53—61)	609—696 (6.2—7.1, 88—101)
Stall	883—1,186 (9.0—12.1, 128—172)	1,442—1,951 (14.7—19.9, 209—283)

AT

If the measured pressures are not up to the specified values, recheck the throttle cable adjustment and do a retest.

EVALUATION

Problem	Possible cause
If the measured value at all ranges are higher.	• Throttle cable out of adjustment • Throttle valve defective • Regulator valve defective
If the measured value at all ranges are lower.	• Throttle cable out of adjustment • Throttle valve defective • Regulator valve defective • Oil pump defective • O/D direct clutch defective
If pressure is low only in the D range.	• D range circuit fluid leakage • Forward clutch defective
If pressure is low only in the R range.	• R range circuit fluid leakage • Direct clutch defective • 1st and reverse brake defective

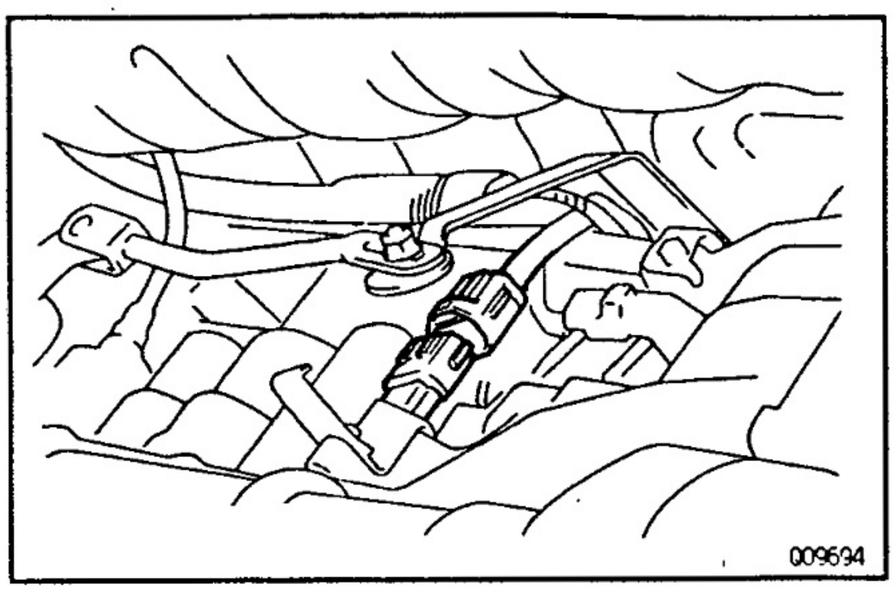

AT16W-01

MANUAL SHIFTING TEST

HINT: With this test, it can be determined whether the trouble is within the electrical circuit or is a mechanical problem in the transmission.

1. **DISCONNECT SOLENOID WIRE**
2. **INSPECT MANUAL DRIVING OPERATION**

Check that the shift and gear positions correspond with the table below.

Shift range	Gear position
D	O/D
2	3rd
L	1st
R	Reverse
P	Pawl Lock

HINT: If the L, 2 and D range gear positions are difficult to distinguish, do the following road test.

- While driving, shift through the L, 2 and D ranges.

  Check that the gear change corresponds to the shift range.

If any abnormality is found in the above test, the problem lies in transmission itself.

3. **CONNECT SOLENOID WIRE**
4. **CANCEL OUT DTC (See page AT−23)**

ELECTRONIC CONTROL COMPONENTS

AT18X-01

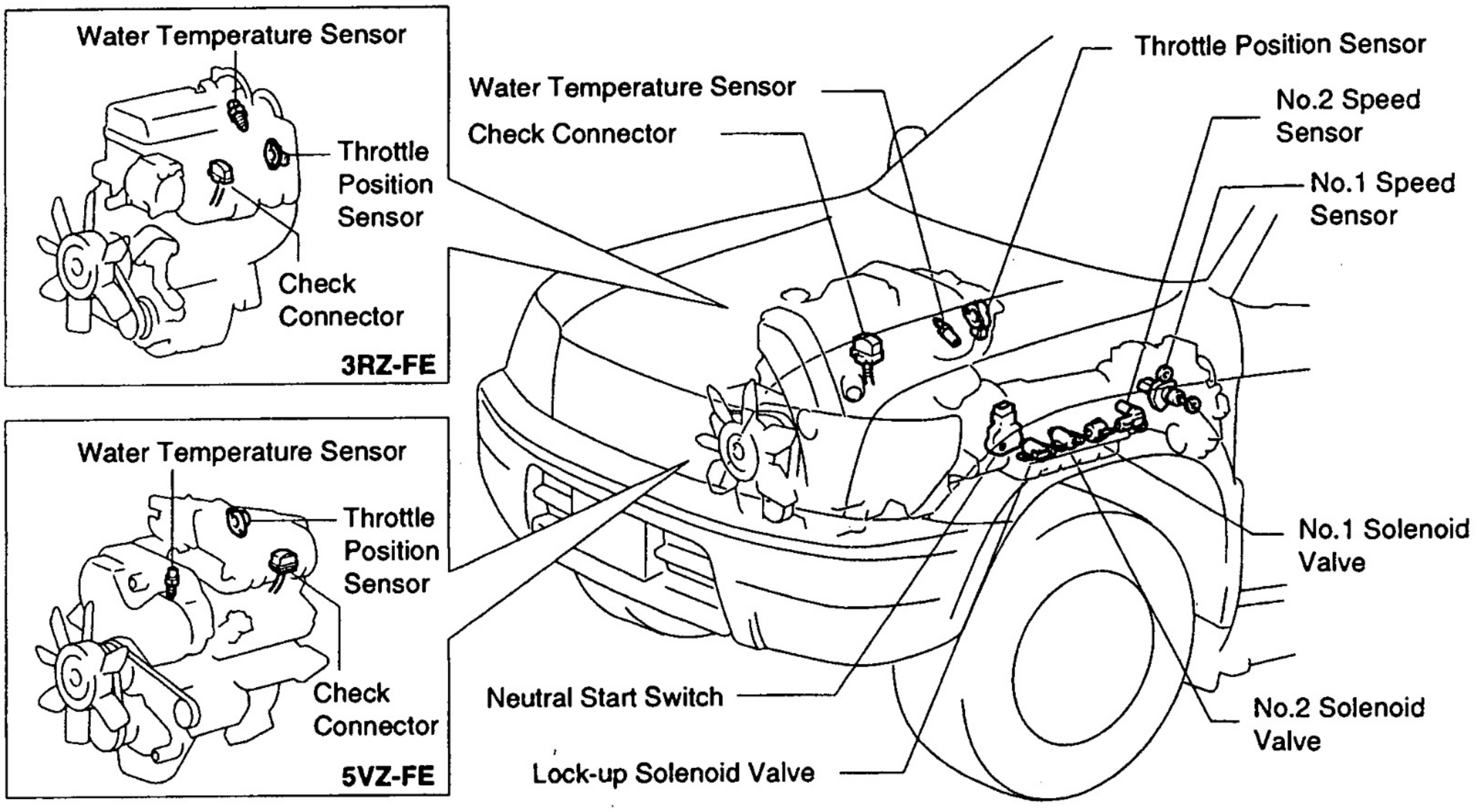

LHD:

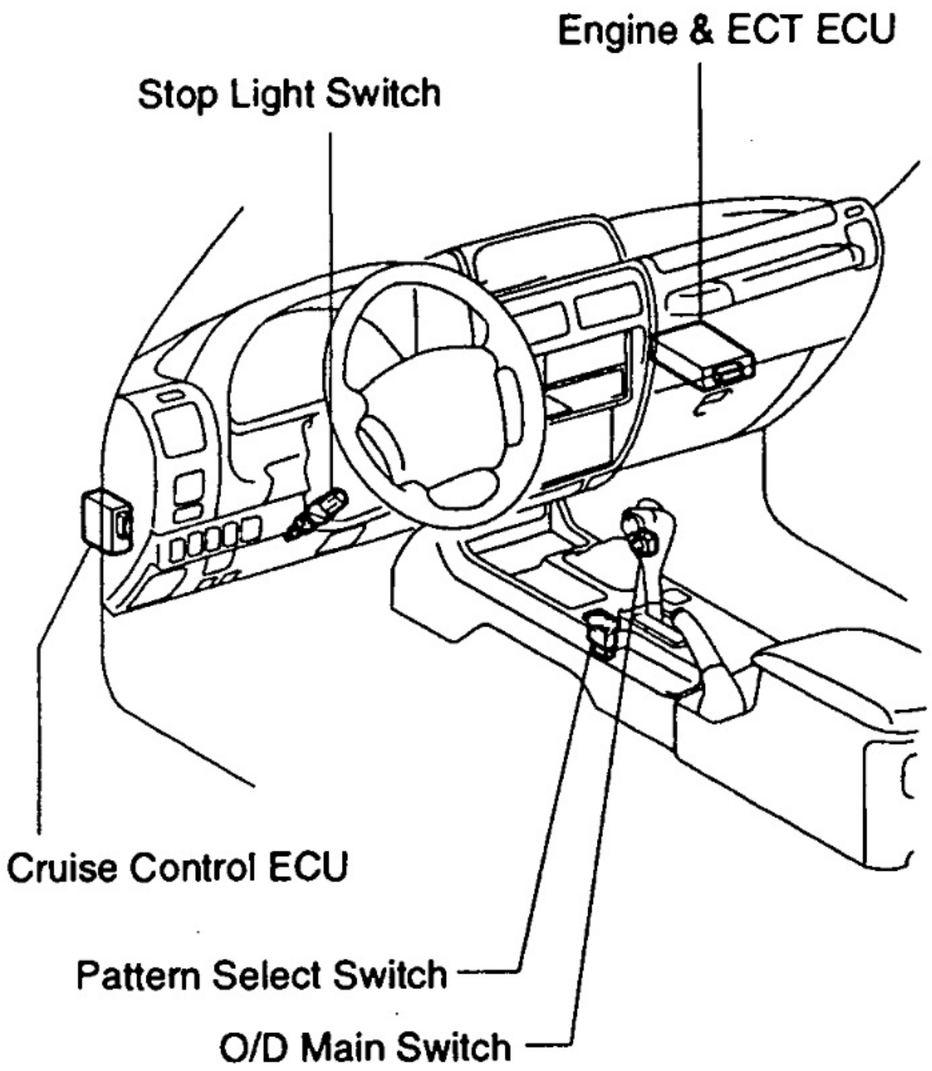

RHD:

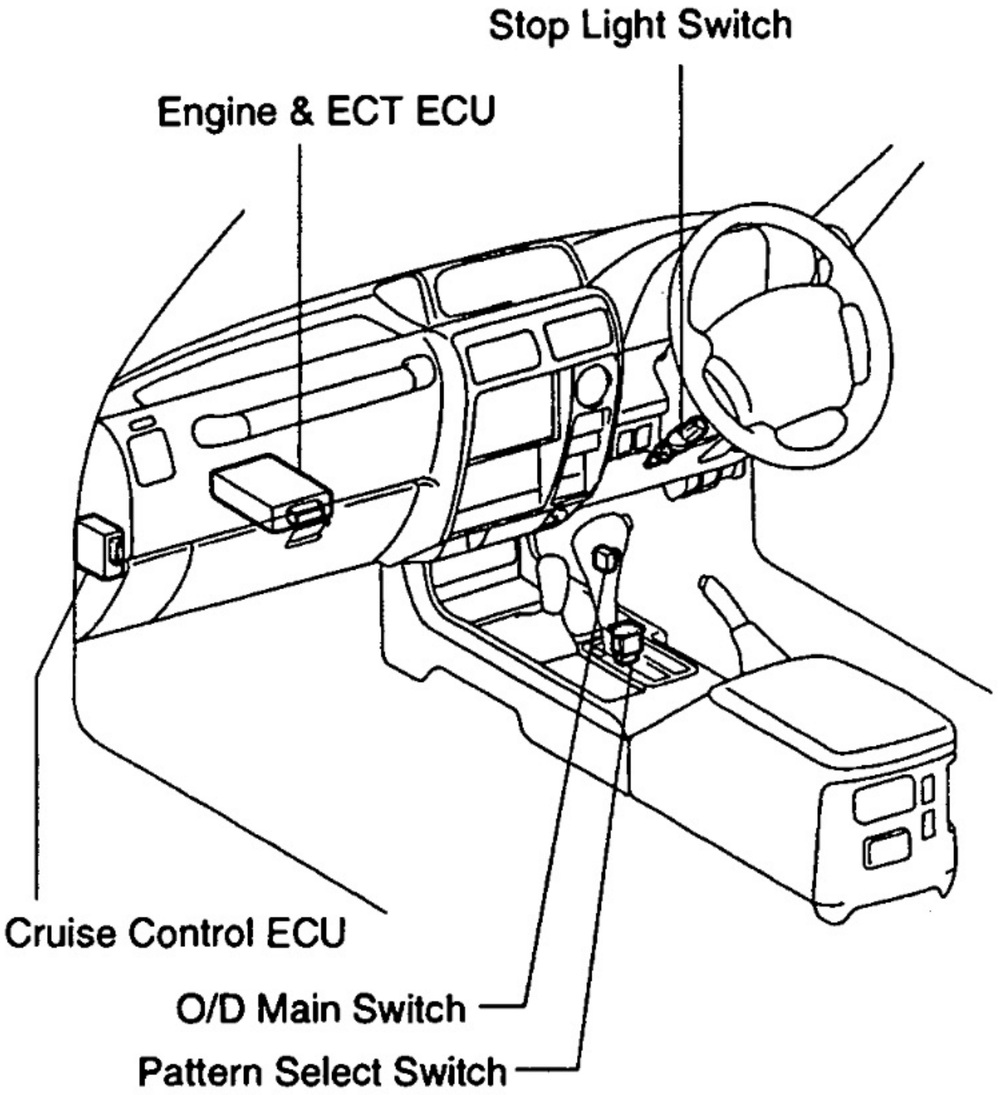

Y

009695

AT16Y-01

STANDARD VALUE OF ECM TERMINAL

3RZ-FE
Engine & ECT ECU Terminals

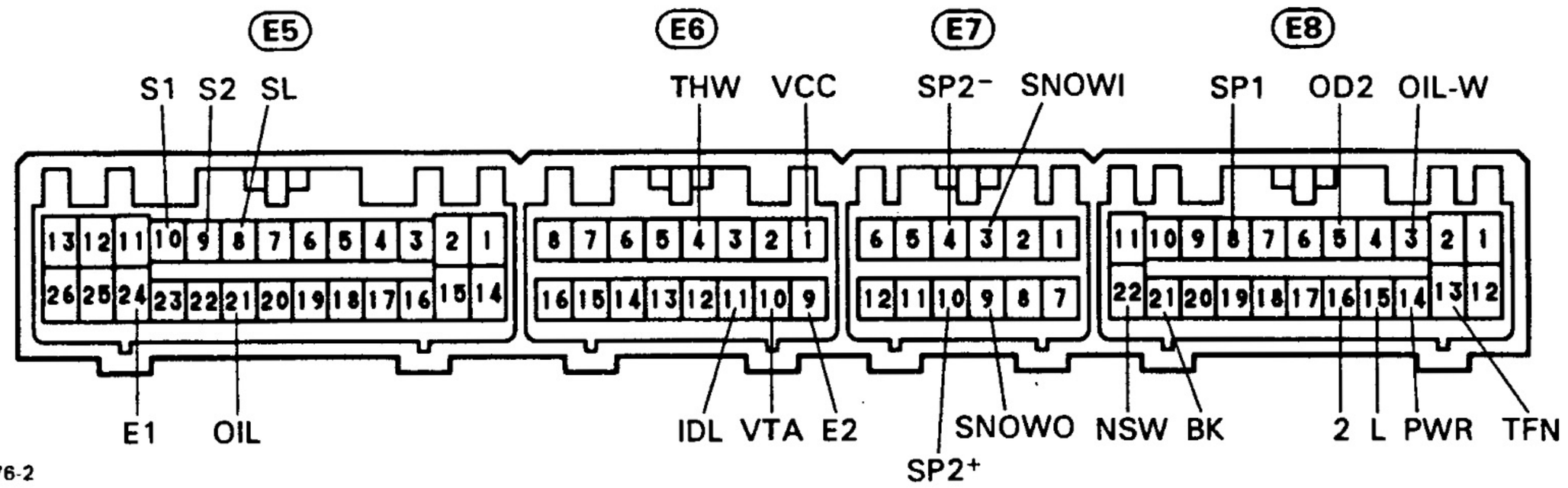

Vd-76-2

Z18341

Symbols	Condition	Standard Value
S1 — E1	IG ON	9 — 14 V
	1st and 2nd gear	9 — 14 V
	3rd and O/D gear	Below 1.5 V
S2 — E1	IG ON	Below 1.5 V
	2nd and 3rd gear	9 — 14 V
	1st and O/D gear	Below 1.5 V
SL — E1	IG ON	Below 1.5 V
	Vehicle driving under lock—up range	9 — 14 V
SP1 — E1	IG ON Stationary	Below 1.5 or 4 — 6 V
	IG ON Turn one rear wheel slowly	Pulse signal is output
		Below 1.5 ↔ 4 — 6 V
$SP2^+$ — $SP2^-$	Engine is running	Pulse signal is output
		Below 1.5 ↔ 4—6 V
OD2 — E1	IG ON O/D main switch ON (O/D ON)	9 — 14 V
	O/D main switch OFF (O/D OFF)	Below 3 V
L — E1	IG ON Shift lever L range	7.5 — 14 V
	Shift lever other than L range	Below 1.5 V
2 — E1	IG ON Shift lever 2 range	7.5 — 14 V
	Shift lever other than 2 range	Below 1.5 V
NSW — E1	IG ON Shift lever P and N range	Below 3 V
	Shift lever other than P and N range	9 — 14 V
TFN — E1	IG ON Transfer shift lever N range	Below 1.5 V
	Transfer shift lever other than N range	9 — 14 V
BK — E1	IG ON Brake pedal is depressed	7.5 — 14 V
	Brake pedal is released	Below 1.5 V
SNOWO — E1	IG ON "2nd STRT" indicator light lights up	Below 3 V
	"2nd STRT" indicator light goes off	9 — 14 V

AT

SNOWI – E1	IG ON	Pattern select switch "2nd" ON	Below 3 V
		Pattern select switch "2nd" OFF	9 – 14 V
PWR – E1	IG ON	Pattern select switch "PWR" ON	7.5 – 14 V
		Pattern select switch "PWR" OFF	Below 1.5 V
OIL–W – E1		IG ON	Below 1.5 V
		Engine is idling ("A/T OIL TEMP" indicator light goes off)	9 – 14 V
OIL – E2		Engine idling after warmed up	0.1 – 0.9 V
THW – E2	IG ON	Water temperature 80 °C (176 °F)	Below 1.5 V
VTA – E2	IG ON	Accel. pedal is released	Below 0.3 – 0.8 V
		Accel. pedal is depressed	3.2 – 4.9 V
IDL – E2	IG ON	Accel. pedal is released	Below 1.5 V
		Accel. pedal is depressed	9 – 14 V
VCC – E2	IG ON		4.5 – 5.5 V

AT

5VZ-FE
Engine & ECT ECU Terminals

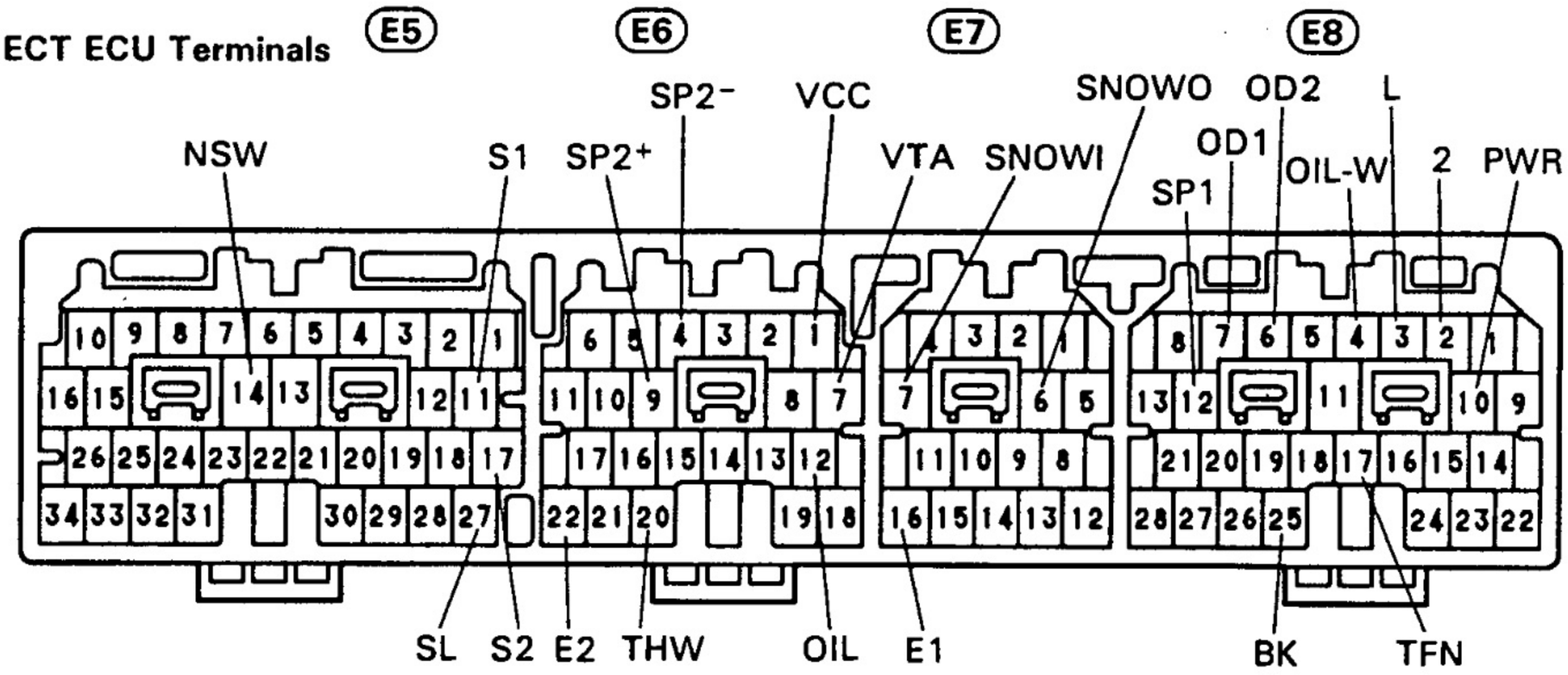

Symbols	Condition	Standard Value
S1 – E1	IG ON	9 – 14 V
	1st and 2nd gear	9 – 14 V
	3rd and O/D gear	Below 1.5 V
S2 – E1	IG ON	Below 1.5 V
	2nd and 3rd gear	9 – 14 V
	1st and O/D gear	Below 1.5 V
SL – E1	IG ON	Below 1.5 V
	Vehicle driving under lock–up range	9 – 14 V
SP1 – E1	IG ON Stationary	Below 1.5 or 4 – 6 V
	Turn one rear wheel slowly	Pulse signal is output
		Below 1.5 ↔ 4 – 6 V
$SP2^+$ – $SP2^-$	Engine is running	Pulse signal is output
		Below 1.5 ↔ 4–6 V
OD2 – E1	IG ON O/D main switch ON (O/D ON)	9 – 14 V
	O/D main switch OFF (O/D OFF)	Below 3 V
OD1 – E1	IG ON	9 – 14 V

L — E1	IG ON	Shift lever L range	7.5 — 14 V
		Shift lever other than L range	Below 1.5 V
2 — E1	IG ON	Shift lever 2 range	7.5 — 14 V
		Shift lever other than 2 range	Below 1.5 V
NSW — E1	IG ON	Shift lever P and N range	Below 3 V
		Shift lever other than P and N range	9 — 14 V
TFN — E1	IG ON	Transfer shift lever N range	Below 1.5 V
		Transfer shift lever other than N range	9 — 14 V
BK — E1	IG ON	Brake pedal is depressed	7.5 — 14 V
		Brake pedal is released	Below 1.5 V
SNOWO — E1	IG ON	"2nd STRT" indicator light lights up	Below 3 V
		"2nd STRT" indicator light goes off	9 — 14 V
SNOWI — E1	IG ON	Pattern select switch "2nd" ON	Below 3 V
		Pattern select switch "2nd" OFF	9 — 14 V
PWR — E1	IG ON	Pattern select switch "PWR" ON	7.5 — 14 V
		Pattern select switch "PWR" OFF	Below 1.5 V
OIL—W — E1		IG ON	Below 1.5 V
		Engine is idling ("A/T OIL TEMP" indicator light goes off)	9 — 14 V
OIL — E2		Engine idling after warmed up	0.1 — 0.9 V
THW — E2	IG ON	Water temperature 80 °C (176 °F)	Below 1.5 V
VTA — E2	IG ON	Accel. pedal is released	Below 0.3 — 0.8 V
		Accel. pedal is depressed	3.2 — 4.9 V
VCC — E2	IG ON		4.5 — 5.5 V

AT

1KZ-TE
Engine & ECT ECU Terminals

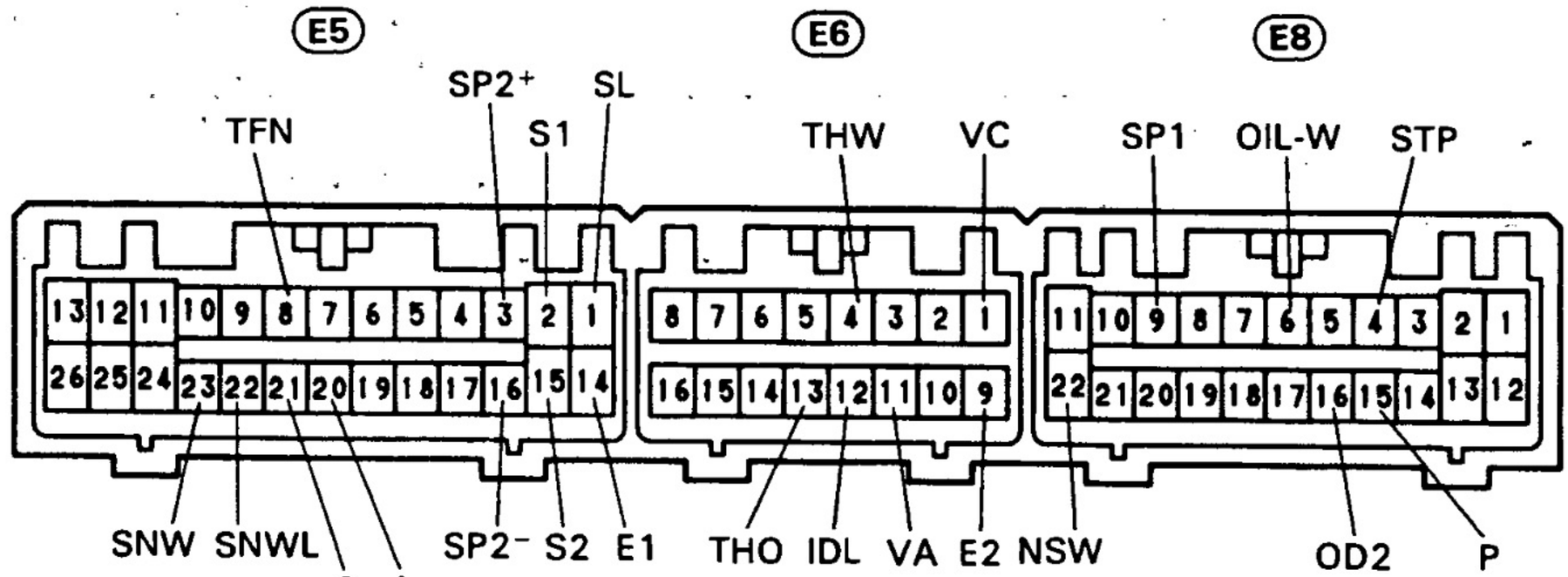

Vd-64-2

Z18343

Symbols	Condition	Standard Value
S1 — E1	IG ON	9 — 14 V
	1st and 2nd gear	9 — 14 V
	3rd and O/D gear	Below 1.5 V
S2 — E1	IG ON	Below 1.5 V
	2nd and 3rd gear	9 — 14 V
	1st and O/D gear	Below 1.5 V

SL — E1		IG ON	Below 1.5 V
		Vehicle driving under lock—up range	9 — 14 V
SP1 — E1	IG ON	Stationary	Below 1.5 or 4—6 V
		Turn one rear wheel slowly	Pulse signal is output
			Below 1.5 ↔ 4—6 V
$SP2^+$ — $SP2^-$		Engine is running	Pulse signal is output
			Below 1.5 ↔ 4—6 V
OD2 — E1		O/D main switch ON (O/D ON)	9 — 14 V
		O/D main switch OFF (O/D OFF)	Below 3 V
L — E1	IG ON	Shift lever L range	7.5 — 14 V
		Shift lever other than L range	Below 1.5 V
2 — E1	IG ON	Shift lever 2 range	7.5 — 14 V
		Shift lever other than 2 range	Below 1.5 V
NSW — E1	IG ON	Shift lever P and N range	Below 3 V
		Shift lever other than P and N range	9 — 14 V
TFN — E1	IG ON	Transfer shift lever N range	Below 1.5 V
		Transfer shift lever other than N range	9 — 14 V
STP — E1	IG ON	Brake pedal is depressed	7.5 — 14 V
		Brake pedal is released	Below 1.5 V
SNWI — E1	IG ON	"2nd STRT" indicator light lights up	Below 3 V
		"2nd STRT" indicator light goes off	9 — 14 V
SNW — E1	IG ON	Pattern select switch "2nd" ON	Below 3 V
		Pattern select switch "2nd" OFF	9 — 14 V
P — E1	IG ON	Pattern select switch "PWR" ON	7.5 — 14 V
		Pattern select switch "PWR" OFF	Below 1.5 V
OIL—W — E1		IG ON	Below 1.5 V
		Engine is idling ("A/T OIL TEMP" indicator light goes off)	9 — 14 V
THO — E2		Engine idling after warmed up	0.1 — 0.9 V
THW — E2	IG ON	Water temperature 80 °C (176 °F)	Below 1.5 V
VA — E2	IG ON	Accel. pedal is released	Below 0.3 — 0.8 V
		Accel. pedal is depressed	3.2 — 4.9 V
IDL — E2	IG ON	Accel. pedal is released	Below 1.5 V
		Accel. pedal is depressed	9 — 14 V
VC — E2	IG ON		4.5 — 5.5 V

AT164-02

MATRIX CHART OF PROBLEM SYMPTOMS

If a normal code is displayed during the DTC check but the trouble still occurs, check the circuits for each symptom in the order given in the charts on the following pages and proceed to the page given for troubleshooting.
The Matrix Chart is divided into 3 chapters.
Chapter 1: Electronic Circuit Matrix Chart
Chapter 2: On—Vehicle Repair Matrix Chart
Chapter 3: Off—Vehicle Repair Matrix Chart
When troubleshooting, check Chapter 1 first. If instructions are given in Chapter 1 to proceed to Chapter 2 or 3, proceed as instructed.

1. If the instruction "Proceed to next circuit inspection shown on matrix chart" is given in the flow chart for each circuit, proceed to the circuit with the next highest number in the table to continue the check.
2. If the trouble still occurs even though there are no abnormalities in any of the other circuits, then check or replace the ECM.

Chapter 1. Electronic Circuit

See Page / Suspect Area / Symptom		AT-60 Neutral start switch circuit	AT-63 O/D cancel signal circuit (5VZ-FE only)	AT-65 O/D main switch & O/D OFF indicator light circuit	AT-69 Pattern select switch circuit	AT-75 Stop light switch circuit	AT-78 Throttle position sensor circuit	AT-81 Water temperature sensor circuit	AT-35 ECM
No up-shift	A particular gear, from 1st to 3rd gear,is not up-shifted	1							2
	3rd → O/D			3			2	1	4
No down-shift	O/D → 3rd		2	1					3
	A particular gear,from 1st to 3rd gear, is not down-shifted	1							2
No lock-up						1			2
No lock-up off						1			2
Shift point too high or too low					1				2
Up-shift to O/D from 3rd while O/D main switch is OFF				1					2
Up-shift to O/D from 3rd while engine is cold								1	2
No kick-down									1
No pattern select					1				2
Engine stalls when starting off or stopping									1

V08012

Chapter 2. On—Vehicle Repair

☆ : A343F AUTOMATIC TRANSMISSION Repair Manual (Pub.No.RM528E)

See Page / Suspect Area / Symptom		Throttle cable	Transmission control rod	Oil strainer	Parking lock pawl	Manual valve	Throttle valve	1-2 shift valve	2-3 shift valve
		AT-28	AT-28	AT-7	☆	☆	☆	☆	☆
Vehicle does not move in any forward range and reverse range		1	2		5	3			
Vehicle does not move in R range									
Vehicle does not move in a particular range or ranges (except R range)									
No up-shift	1st → 2nd							1	
	2nd → 3rd								1
	3rd → O/D								
No down-shift	O/D → 3rd								
	3rd → 2nd								1
	2nd → 1st							1	
Lock-up does not engage or Lock-up does not disengage									
Harsh engagement	N → D								
	Lock-up								
	N → R								
	N → L								
	1st → 2nd (D range)								
	1st → 2nd (2 range)								
	1st → 2nd → 3rd → O/D						1		
	2nd → 3rd								
	3rd → O/D								
	O/D → 3rd								
Slip or Shudder	Forward and Reverse	1	2	3					
	Particular range	1	2						
No engine braking	1st								
	2nd								
No kick-down								1	2

V08013

★	★	★	★	★	★	★	★	★	★	★	AT-42
3-4 shift valve	Primary regulator valve	Lock-up relay valve	Accumulator control valve	C_2 accumulator	Low coast modulator valve	B_2 accumulator	2nd coast modulator valve	B_0 accumulator	C_0 accumulator	Pressure relief valve	Off-vehicle repair matrix chart
	4										6
											1
											1
											2
											2
1											2
1											
											2
		1									2
			1								2
		1									2
			1	2							3
					1						
			1			2					
			1			2					
			2								
			1	2							3
			1					2			3
			1						2		3
										4	5
											3
					1						2
							1				2

AT

V08014

Chapter 3. Off—Vehicle Repair

★ : A343F AUTOMATIC TRANSMISSION Repair Manual (Pub.No.RM528E)

Suspect Area / Symptom		See Page	★	★	★	★	AT-17	★
			O/D one-way clutch (F_0)	O/D brake (B_0)	O/D direct clutch (C_0)	O/D planetary gear unit	Torque converter	1st and reverse brake (B_3)
Vehicle does not move in any forward range and reverse range			1	2	3	4	5	
Vehicle does not move in R range					5			4
Vehicle does not move in	D, 2 and L ranges							
	D and 2 ranges							
	2 range							1
	L range							
No up-shift	1st → 2nd							
	2nd → 3rd							
	3rd → O/D			1				
No down-shift	2nd → 1st							
Lock-up does not engage or Lock-up does not disengage							1	
Harsh engagement	N → D							
	N → R							2
	2nd → 3rd							
	3rd → O/D			2	1	3		
	O/D → 3rd			1				
	Lock-up						1	
Slip or Shudder	Forward and Reverse (After warm-up)		2		3		1	
	Forward and Reverse (Just after engine starts)						1	
	R range							2
	1st							
	2nd							
	3rd							
	O/D			1				
No engine braking	1st ~ 3rd				1			
	1st							1
	2nd							
Poor acceleration	All ranges						1	
	O/D				1	2		
	Other than O/D			1				
	Other than 2nd							
	1st and 2nd							
	L and R ranges							1
	R range							
Engine stalls when starting off or stopping							1	

V08015

2nd coast brake (B_1)	Direct clutch (C_2)	Front and rear planetary gear unit	Forward clutch (C_1)	No. 2 one-way clutch (F_2)	2nd brake (B_2)	No. 1 one-way clutch (F_1)
★	★	★	★	★	★	★
1	3	2				
			1			
				1		
2	3				1	
					1	2
	1					
1					2	
			1			
	1					
1						
	1					
			1	2		
2					1	3
	1					
1						
1					2	
	1					
			1			

AT

V08016

DTC	38	ATF Temperature Sensor Circuit Malfunction

CIRCUIT DESCRIPTION

The ATF temperature sensor converts fluid temperature into a resistance value which is input into the Engine & ECT ECU.

DTC No.	DTC Detecting Condition	Trouble Area
38	Either a) or b) is detected for 0.5 sec. or more. a) Temp. sensor resistance is less than 79 Ω b) After the engine has been operating for 15 minutes or more, the resistance at the temp. sensor is more than 156 kΩ	• Open or short in ATF temperature sensor circuit • ATF temperature sensor • Engine & ECT ECU

AT

WIRING DIAGRAM

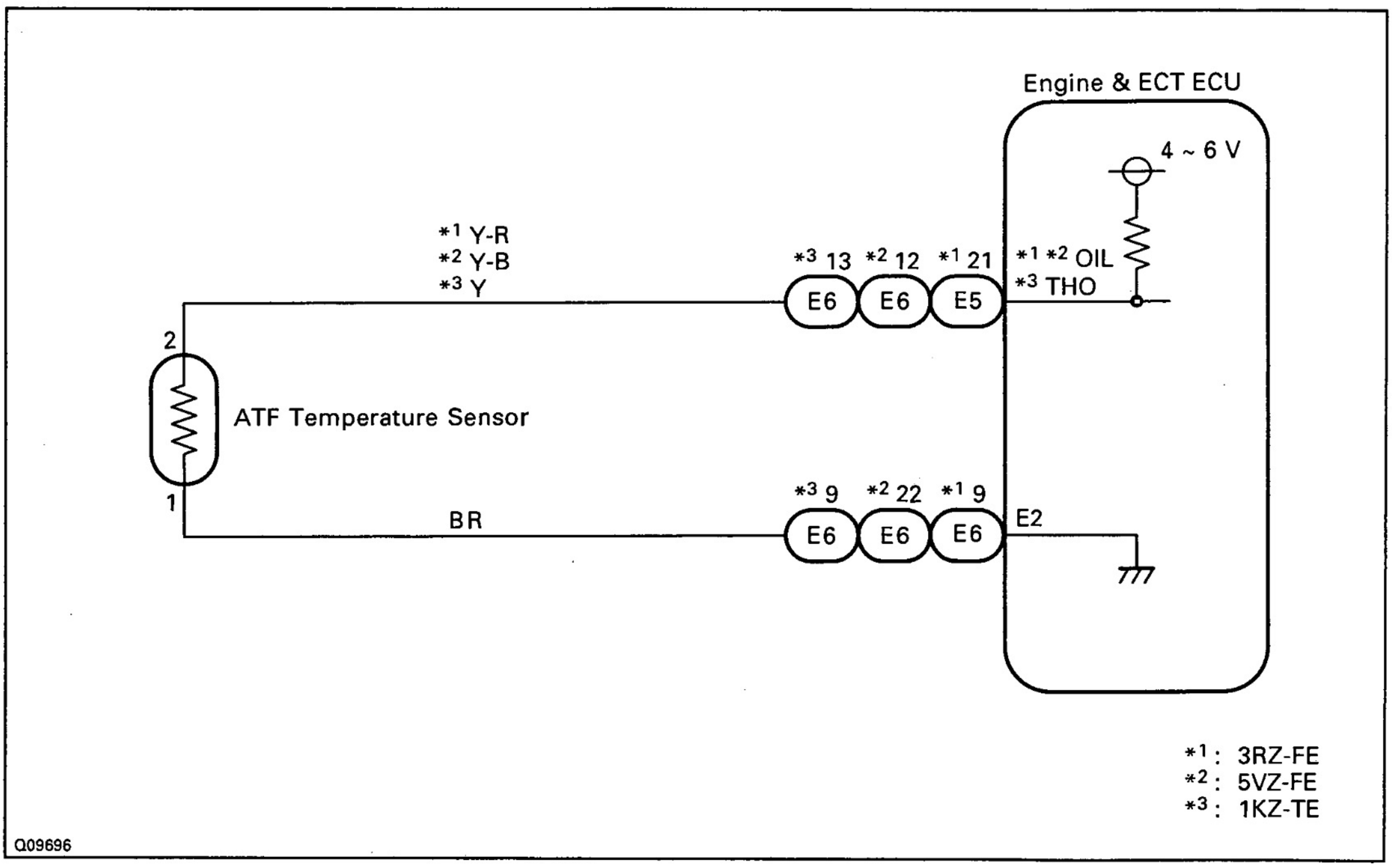

INSPECTION PROCEDURE

1	Check ATF Temperature Sensor.

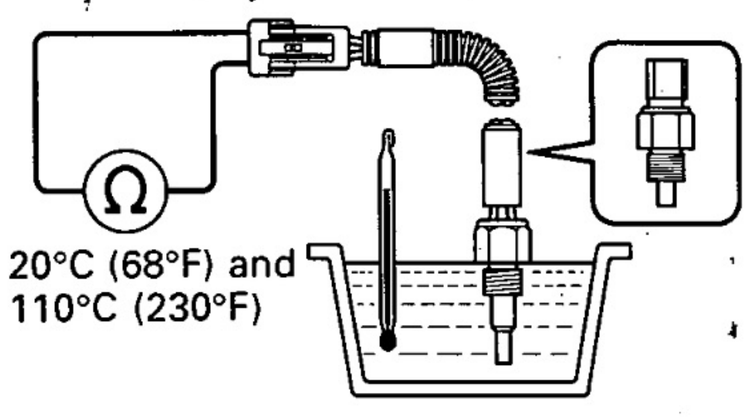

PREPARATION:
Remove the ATF temperature sensor.

CHECK:
Measure resistance between terminals of ATF temperature sensor at 20°C (68°F) and 110°C (230°F).

OK:
Resistance (Approx.):
20°C (68°F): 12 kΩ
110°C (230°F): 770 Ω

AT

OK

NG → **Replace the ATF temperature sensor.**

2	Check harness and connector between ATF temperature sensor and Engine & ECT ECU (See page IN-30).

OK

NG → **Repair or replace the harness or connector.**

Check and replace the Engine & ECT ECU.

DTC	42	No. 1 Speed Sensor Circuit (Back-up Sensor) Malfunction

CIRCUIT DESCRIPTION

The No. 1 speed sensor outputs a 4-pulse signal for every revolution of the transmission output shaft. After this signal is converted into a more precise rectangular waveform by the waveform shaping circuit inside the combination meter, it is then transmitted to the Engine & ECT ECU.

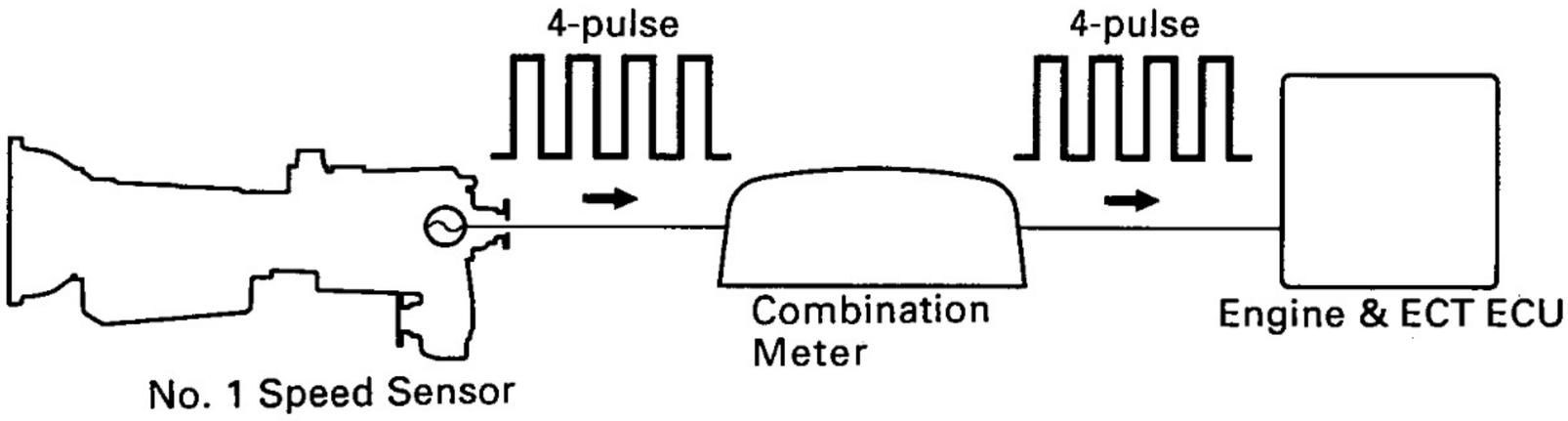

Q09697

DTC No.	DTC Detecting Condition	Trouble Area
42	All conditions below are detected 500 times or more continuously. (2 trip detection logic) a) No signal from No. 1 speed sensor is input to ECM while 16 pulses of No. 2 speed sensor signal is sent. b) Vehicle speed: 5 km/h (3.1 mph) or more for as least 4 seconds c) Neutral start switch: OFF (Other than P or N) d) Transfer range: Other than N range	• Open or short in No. 1 speed sensor circuit • No. 1 speed sensor • Combination meter • Engine & ECT ECU

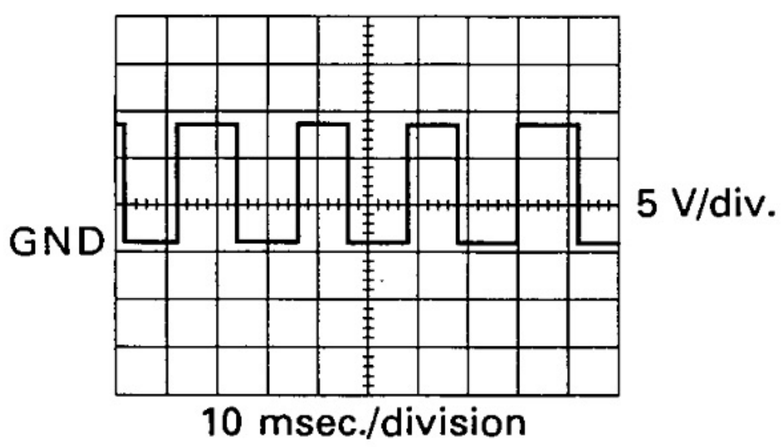

Q09346

Reference

Wave from between terminals SP1 and E1 when vehicle speed is approx. 60 km/h (37 mph).

HINT: The faster the vehicle speed, the greater the number of No. 1 speed sensor signals produced.

WIRING DIAGRAM

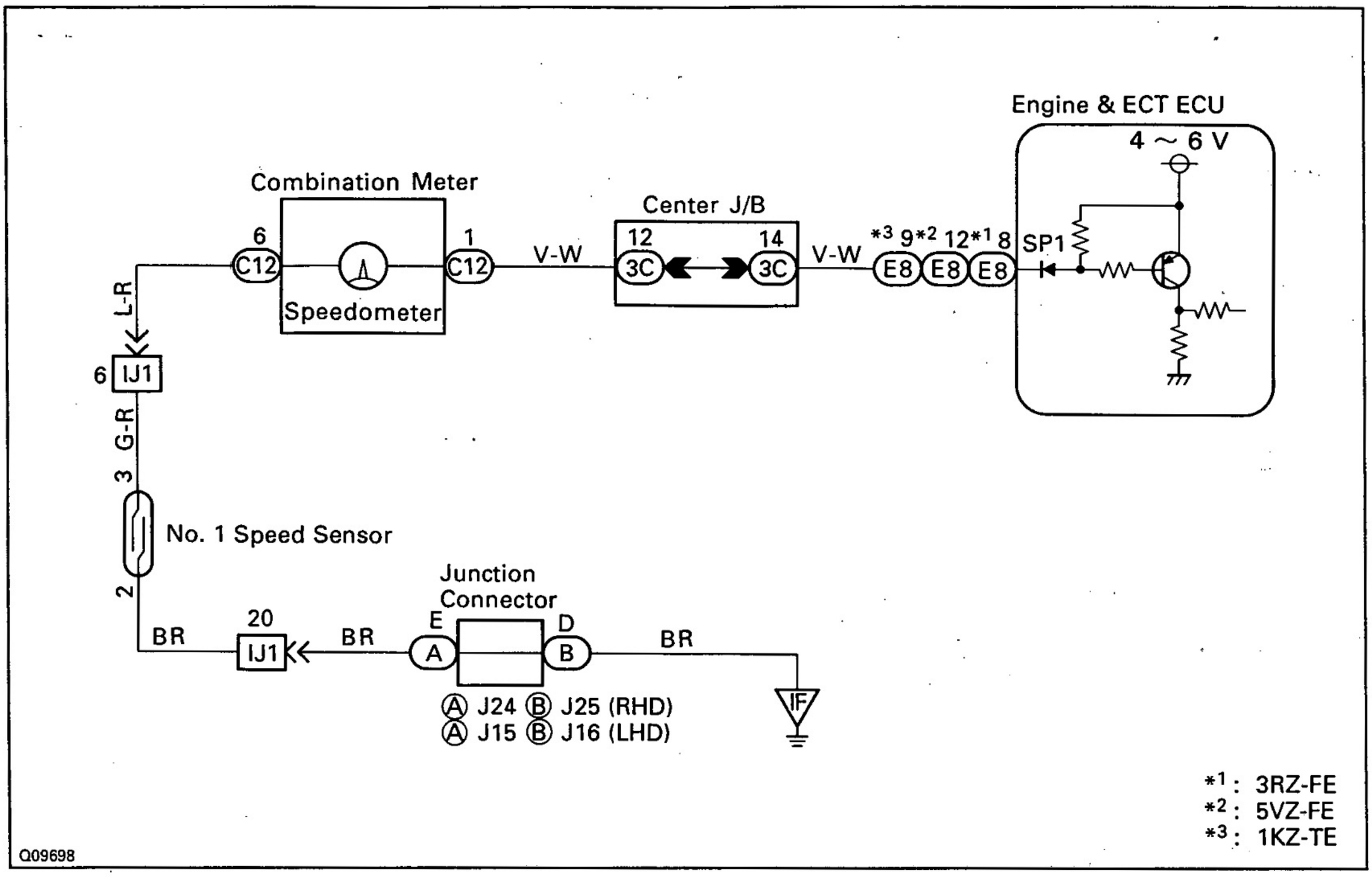

AT

INSPECTION PROCEDURE

1	Check operation of speedometer.

CHECK:
Drive the vehicle and check if the operation of the speedometer in the combination meter is normal.
HINT: The No. 1 speed sensor is operating normally if the speedometer display is normal.

OK

NG → **Check the speedometer circuit (BE-48).**

2	Check voltage between terminal SP1 of Engine & ECT ECU and body ground.

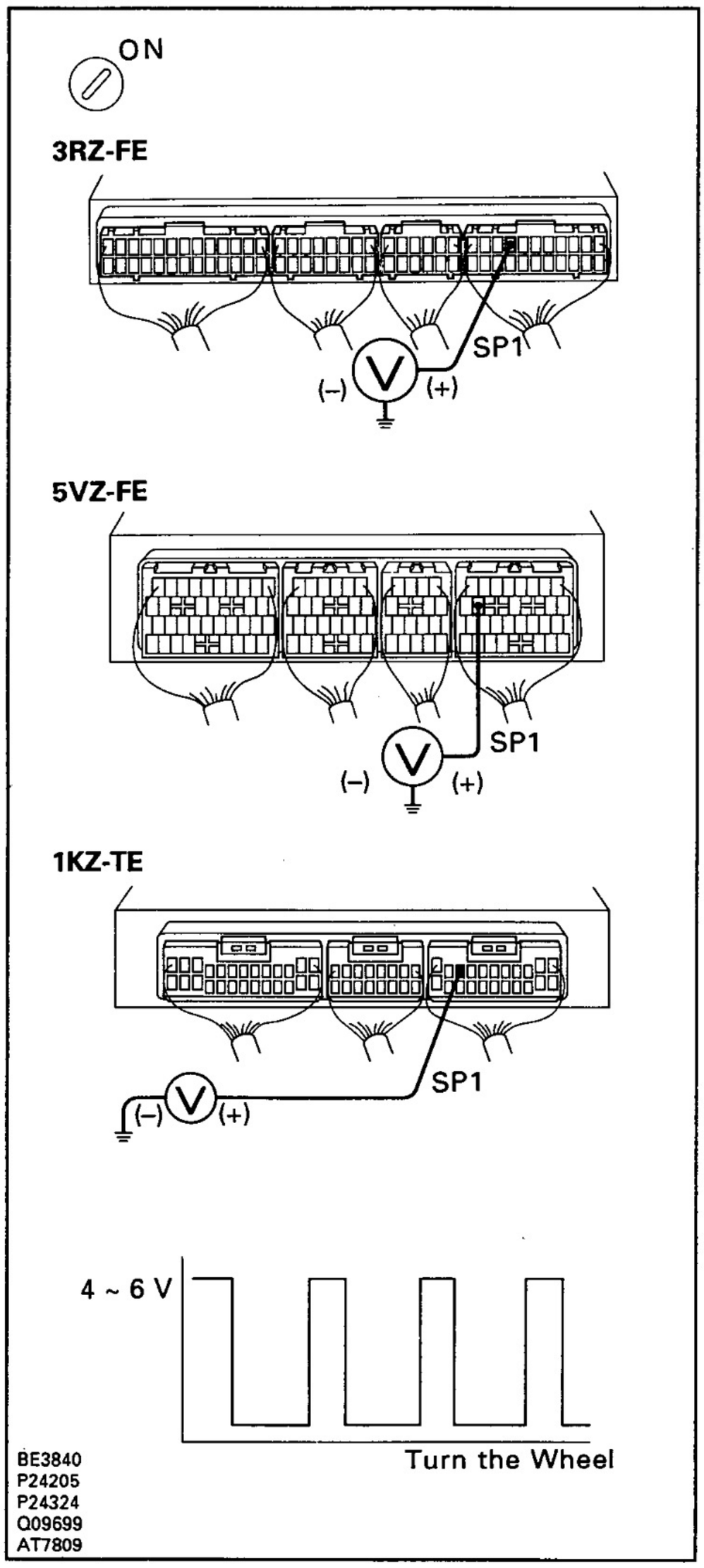

PREPARATION:
(a) Remove the glove compartment.
(b) Disconnect the cruise control ECU connector.
(c) Shift the shift lever to the N range.
(d) Jack up a rear wheels on one side.
(e) Turn the ignition switch ON.

CHECK:
Measure voltage between terminal SP1 of Engine & ECT ECU and body ground when the wheel is turned slowly.

OK:
Voltage is generated intermittently.

OK

Check and replace the Engine & ECT ECU.

NG

Check and repair the harness and connector between combination meter and Engine & ECT ECU (See page IN-30).

DTC	61	No. 2 Speed Sensor Circuit Malfunction

CIRCUIT DESCRIPTION

The No. 2 speed sensor detects the rotation speed of the transmission output shaft and sends signals to the Engine & ECT ECU. The Engine & ECT ECU determines the vehicle speed based on these signals.
An AC voltage is generated in the No. 2 speed sensor coil as the rotor mounted on the output shaft rotates, and this voltage is sent to the Engine & ECT ECU.
The gear shift point and lock-up timing are controlled by the Engine & ECT ECU based on the signals from this speed sensor and the throttle position sensor signal.
If the No. 2 speed sensor malfunctions, the Engine & ECT ECU uses input signals from the No. 1 speed sensor as a back-up signal.

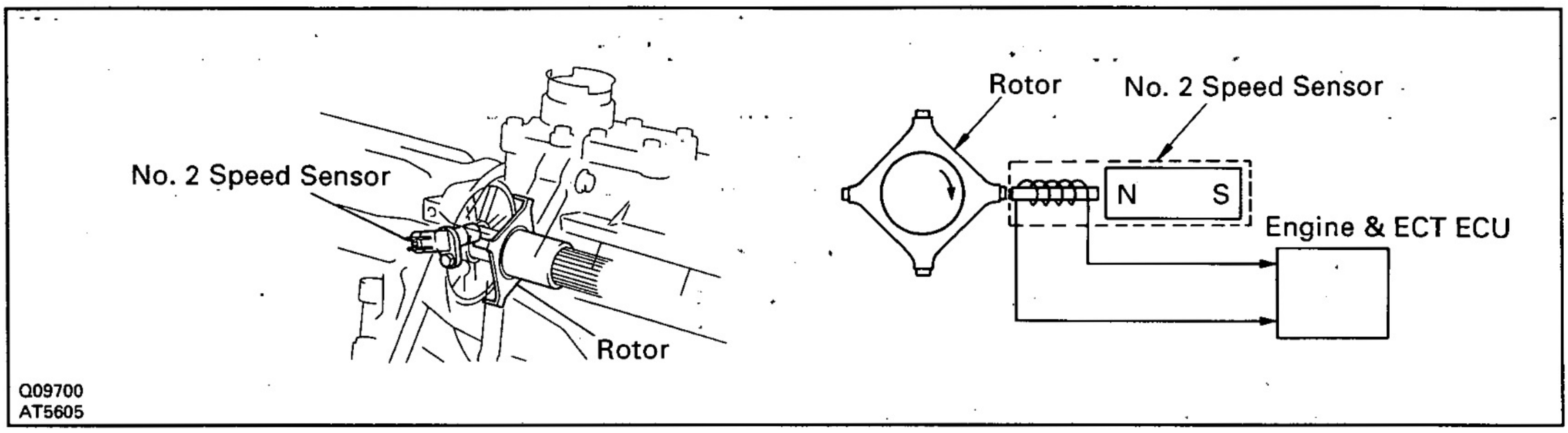

DTC No.	DTC Detecting Condition	Trouble Area
61	All conditions below are detected 500 times or more continuously. (2 trip detection logic) a) No signal from No. 2 speed sensor is input to ECM while 4 pulses of No. 1 speed sensor signal is sent. b) Vehicle speed: 5 km/h (3.1 mph) or more for as least 4 seconds c) Neutral start switch: OFF (Other than P or N) d) Transfer range: Other than N range	• Open or short in No. 2 speed sensor circuit • No. 2 speed sensor • Engine & ECT ECU

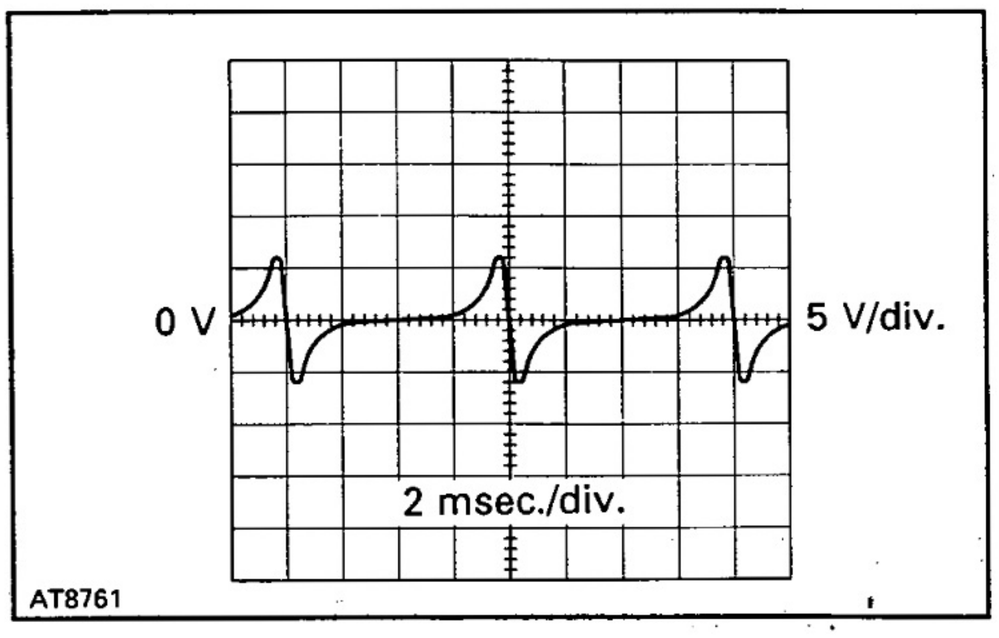

Reference
Wave from between terminals SP2+ and SP2− when vehicle speed is approx. 60 km/h (37 mph).

WIRING DIAGRAM

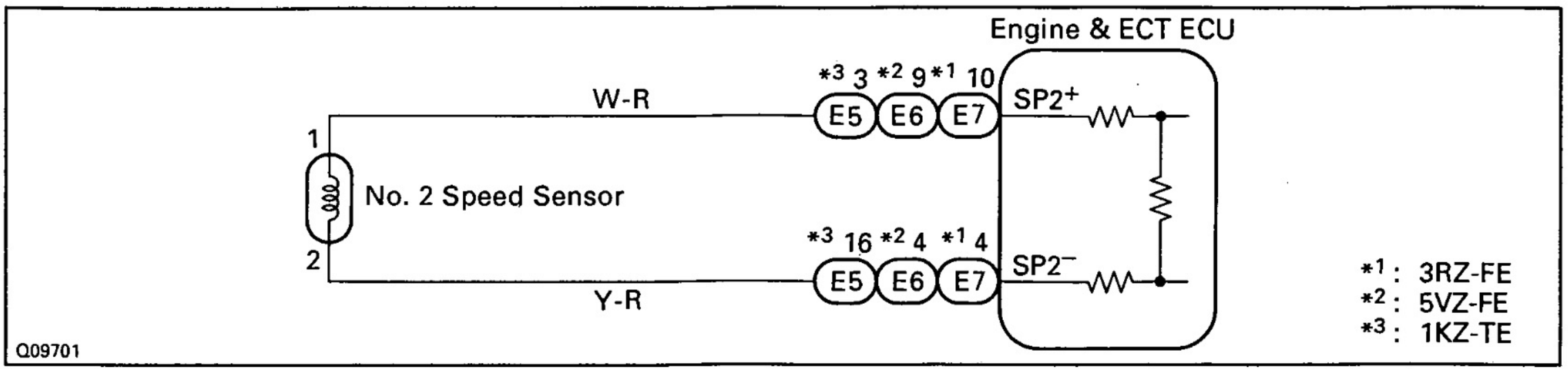

INSPECTION PROCEDURE

AT

1 **Check resistance between terminals SP2+ and SP2− of Engine & ECT ECU.**

3RZ-FE

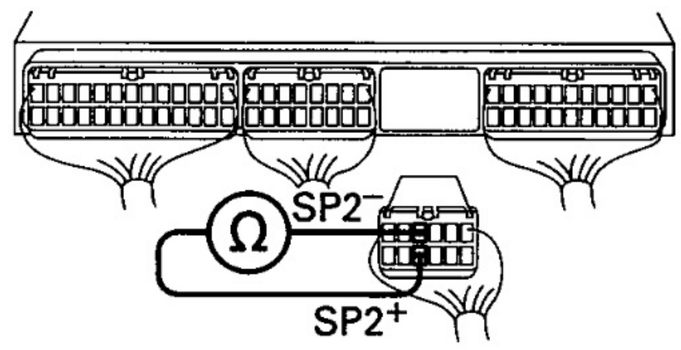

5VZ-FE

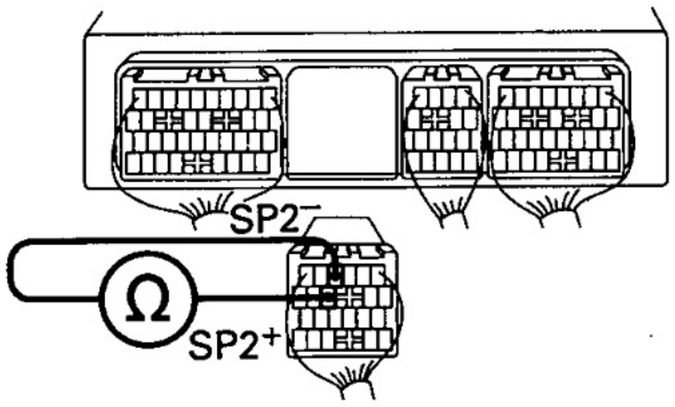

1KZ-TE

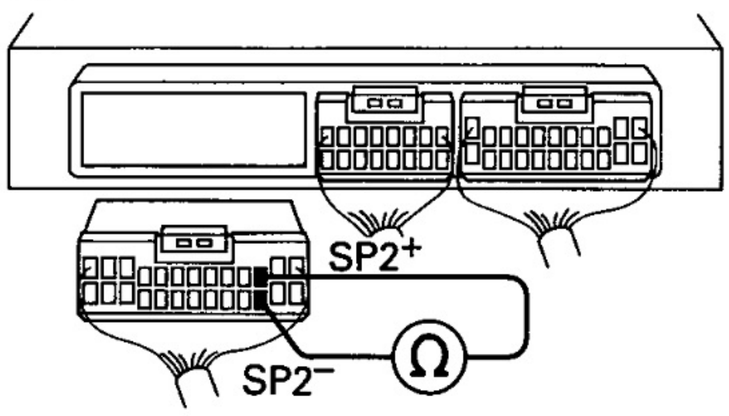

Q08458
Q08457
Q09702

PREPARATION:
Disconnect the connector from Engine & ECT ECU.

CHECK:
Check resistance between terminals SP2+ and SP2− of Engine & ECT ECU.

OK:
Resistance: 560 ~ 680 Ω

NG

OK → **Check and replace the Engine & ECT ECU.**

2 Check No. 2 speed sensor.

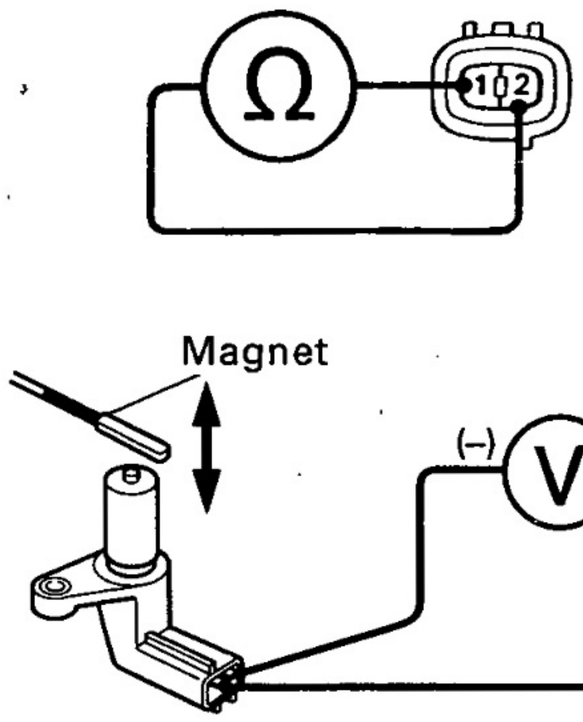

Q08218
Q08292

PREPARATION:
Remove the No. 2 speed sensor from the transmission.

CHECK:
(a) Measure resistance between terminals 1 and 2 of speed sensor.
(b) Check voltage between terminals 1 and 2 of No. 2 speed sensor when a magnet is put close to the front end of No. 2 vehicle speed sensor then taken away quickly.

OK:
(a) Resistance: 560 ~ 680 Ω
(b) Voltage is generated intermittently.
HINT: The voltage generated is extremely low.

AT

OK

Check and repair the harness and connector between Engine & ECT ECU and No. 2 speed sensor (See page IN-24).

NG → **Replace the No. 2 speed sensor.**

DTC	62, 63	No.1, No.2 Solenoid Valve Circuit Malfunction

CIRCUIT DESCRIPTION

Shifting from 1st to O/D is performed in combination with ON and OFF of the No. 1 and No. 2 solenoid valves controlled by Engine & ECT ECU. If an open or short circuit occurs in either of the solenoid valves, the Engine & ECT ECU controls the remaining normal solenoid valve to allow the vehicle to be operated smoothly (Fail safe function).
Fail Safe Function:
If either of the shift solenoid valve circuits develops an open or short, the Engine & ECT ECU turns the other solenoid ON and OFF to shift to the gear positions shown in the table below. The Engine & ECT ECU also turns the Lock-up solenoid valve OFF at the same time. If both solenoids are malfunction, hydraulic control cannot be performed electronically and must be done manually.
Manual shifting as shown in the following table must be done (In the case of a short circuit, the Engine & ECT ECU stops sending current to the short circuited solenoid).

AT

Range	NORMAL			NO. 1 SOLENOID MALFUNCTIONING			NO. 2 SOLENOID MALFUNCTIONING			BOTH SOLENOIDS MALFUNCTIONING
	Solenoid valve		Gear	Solenoid valve		Gear	Solenoid valve		Gear	Gear when shift selector is manually operated
	No. 1	No. 2		No. 1	No. 2		No. 1	No. 2		
D	ON	OFF	1st	X	ON	3rd	ON	X	1st	O/D
	ON	ON	2nd	X	ON	3rd	OFF	X	O/D	O/D
	OFF	ON	3rd	X	ON	3rd	OFF	X	O/D	O/D
	OFF	OFF	O/D	X	OFF	O/D	OFF	X	O/D	O/D
2	ON	OFF	1st	X	ON	3rd	ON	X	1st	3rd
	ON	ON	2nd	X	ON	3rd	OFF	X	3rd	3rd
	OFF	ON	3rd	X	ON	3rd	OFF	X	3rd	3rd
L	ON	OFF	1st	X	OFF	1st	ON	X	1st	1st
	ON	ON	2nd	X	ON	2nd	ON	X	1st	1st

X: Malfunctions

Check the No. 1 solenoid valve when DTC 62 is output and check the No. 2 solenoid valve when DTC 63 is output.

DTC No.	DTC Detecting Condition	Trouble Area
62, 63	The Engine & ECT ECU checks for an open or short circuit in the No. 1 and No. 2 solenoid valves circuit when it changes. The Engine & ECT ECU records DTC 62 or 63 if condition a) or b) is detected once, but it does not blink the O/D OFF indicator light. After Engine & ECT ECU detects condition a) or b) continuously 8 times or more in one-trip, it causes the O/D OFF indicator light to blink until condition a) or b) disappears. After that, if the Engine & ECT ECU detects condition a) or b) once, it starts blinking the O/D OFF indicator light again. a) Solenoid resistance is 8 Ω or less (short circuit) when the solenoid is energized. b) Solenoid resistance is 100 kΩ or more (open circuit) when the solenoid is not energized.	• Open or short in No. 1/ No. 2 solenoid valve circuit • No. 1/No. 2 solenoid valve • Engine & ECT ECU

WIRING DIAGRAM

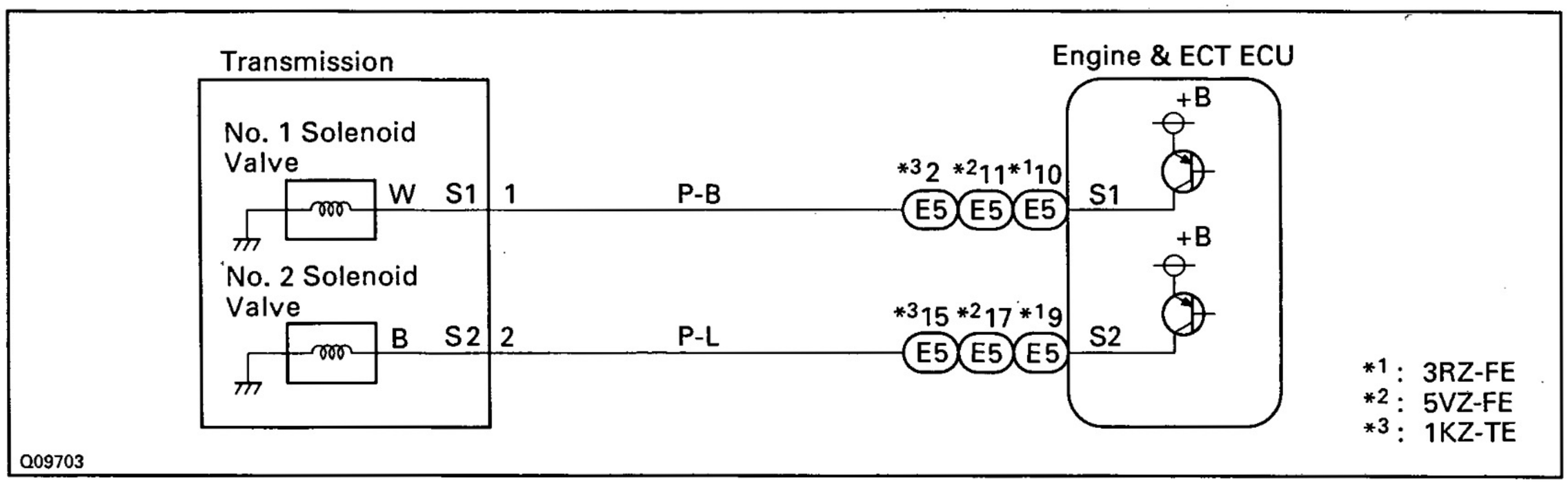

INSPECTION PROCEDURE

AT

1 **Measure resistance between terminal S1 or S2 of Engine & ECT ECU and body ground.**

3RZ-FE

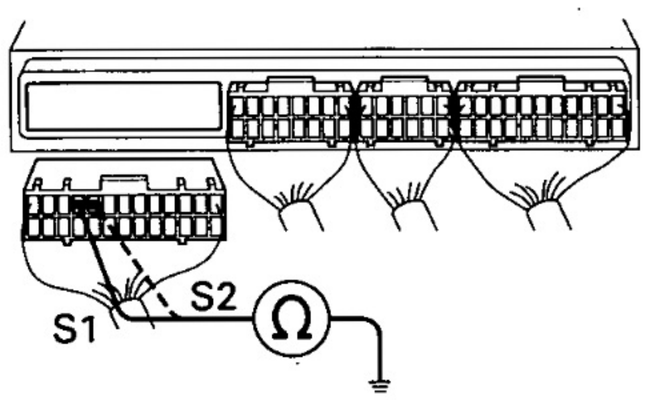

5VZ-FE

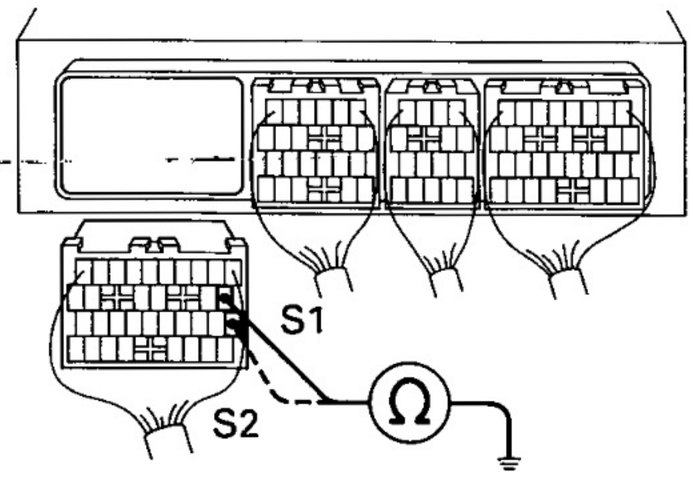

1KZ-TE

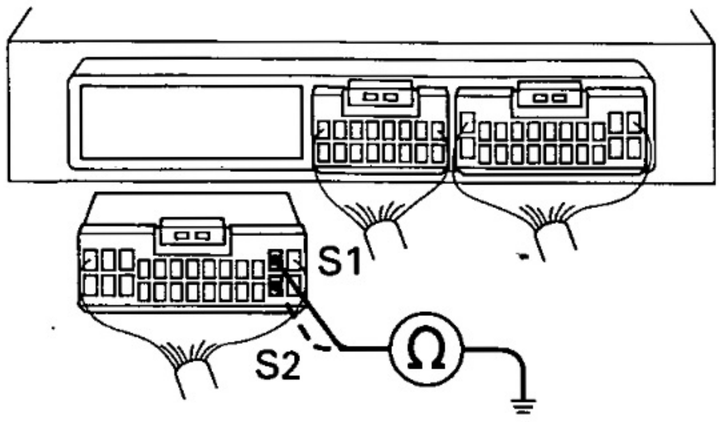

Q07641
Q07642
Q09704

PREPARATION:
Disconnect the connector from Engine & ECT ECU.

CHECK:
Measure resistance between terminal S1 or S2 of Engine & ECT ECU and body ground.

OK:
Resistance: 11 ~ 15 Ω

NG

OK → **Check and replace the Engine & ECT ECU.**

2	Check harness and connector between Engine & ECT ECU and automatic transmission solenoid connector.

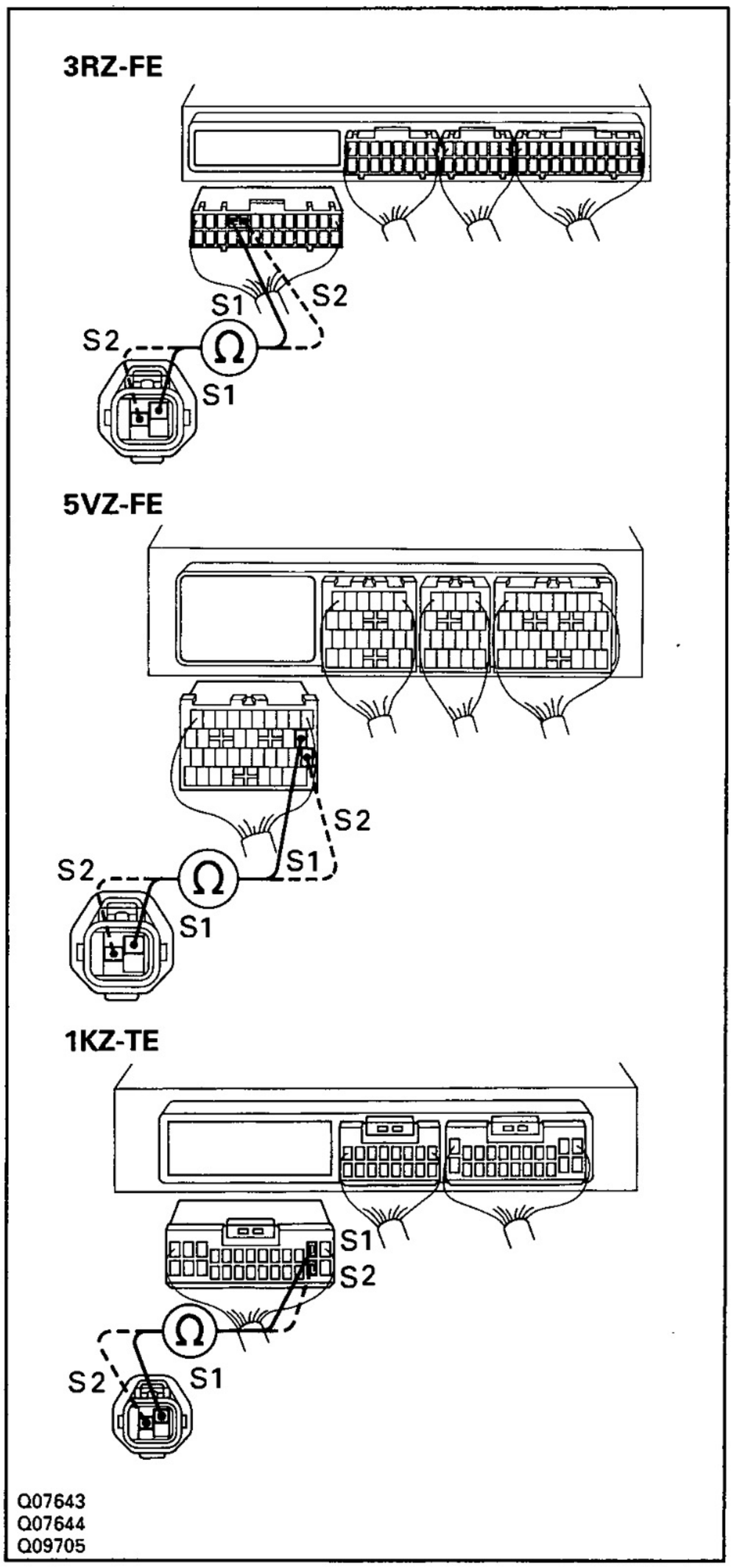

PREPARATION:
Disconnect the solenoid connector on the automatic transmission.

CHECK:
Check harness and connector between terminal S1 or S2 of Engine & ECT ECU and terminal S1 or S2 of solenoid connector.

OK:
There is no open and no short circuit.

OK

NG → **Repair or replace the harness or connector.**

3 Check No. 1 or No. 2 solenoid valve.

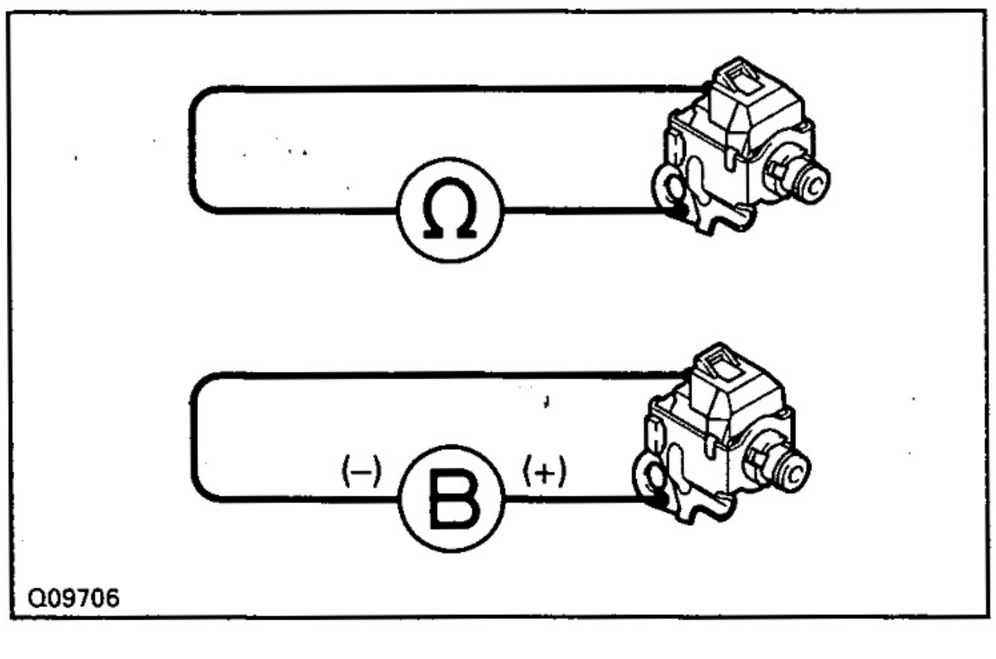

Q09706

PREPARATION:
(a) Jack up the vehicle.
(b) Remove the oil pan.
(c) Disconnect the solenoid connector.
(d) Remove the No. 1 or No. 2 solenoid valve.

ELECTRICAL CHECK:
(a) Measure resistance between solenoid connector and solenoid body.
(b) Connect positive ⊕ lead to terminal of solenoid connector, negative ⊖ lead to solenoid body.

OK:
(a) Resistance: 11 ~ 15 Ω
(b) The solenoid makes an operating noise.

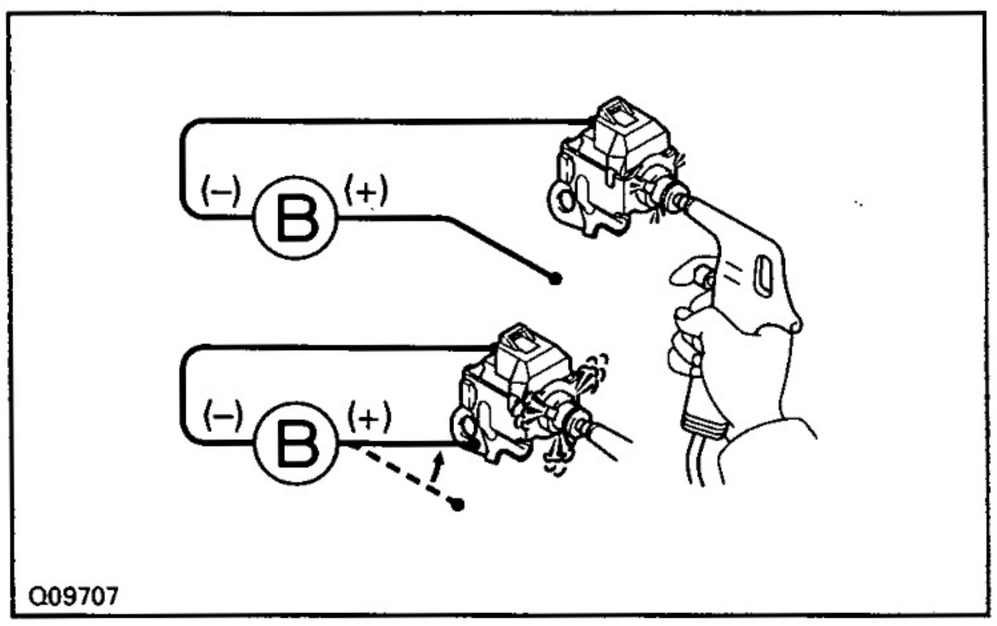

Q09707

MECHANICAL CHECK:
(a) Applying 490 kPa (5 kgf/cm², 71 psi) of compressed air, check that solenoid valve does not leak air.
(b) When battery positive voltage is supplied to solenoid valve, check that the solenoid valve opens.

AT

OK → **Repair or replace the solenoid wire.**

NG → **Replace the solenoid valve.**

DTC	64	Lock-up Solenoid Valve Circuit Malfunction

CIRCUIT DESCRIPTION

The lock-up solenoid valve is turned ON and OFF by signals from the Engine & ECT ECU to control the hydraulic pressure acting on the lock-up relay valve, which then controls operation of the lock-up clutch.
If a malfunction occurs in this circuit and DTC 64 is stored in memory, the O/D OFF indicator light does not blink.

Fail safe function

If the Engine & ECT ECU detects a malfunction, it turns the lock-up solenoid valve OFF.

DTC No.	DTC Detecting Condition	Trouble Area
64	The Engine & ECT ECU memorizes DTC 64, but Engine & ECT ECU does not start O/D OFF indicator light blinking. Either a) or b) is detected for 1 time. (2 trip detection logic) a) Solenoid resistance is 8 Ω or less (short circuit) when the solenoid is energized. b) Solenoid resistance is 100 kΩ or more (open circuit) when the solenoid is not energized.	• Open or short in Lock-up solenoid valve circuit • Lock-up solenoid valve • Engine & ECT ECU

AT

WIRING DIAGRAM

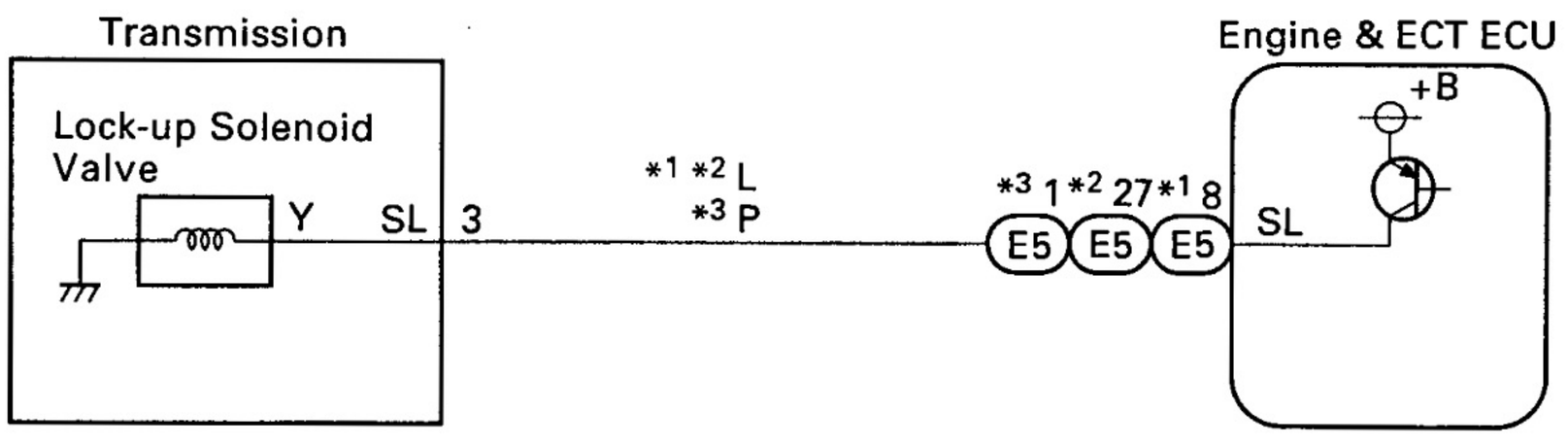

Q09708

INSPECTION PROCEDURE

1	Measure resistance between terminal SL of Engine & ECT ECU and body ground.

3RZ-FE

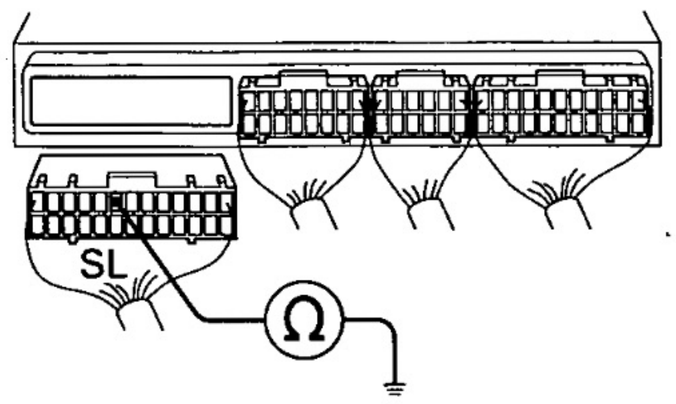

5VZ-FE

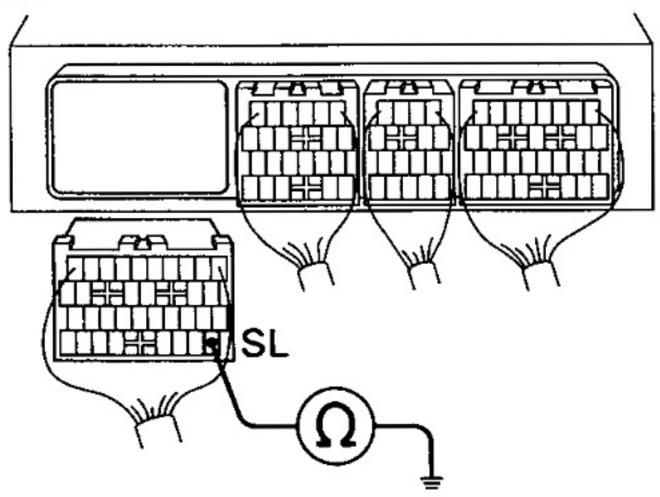

1KZ-TE

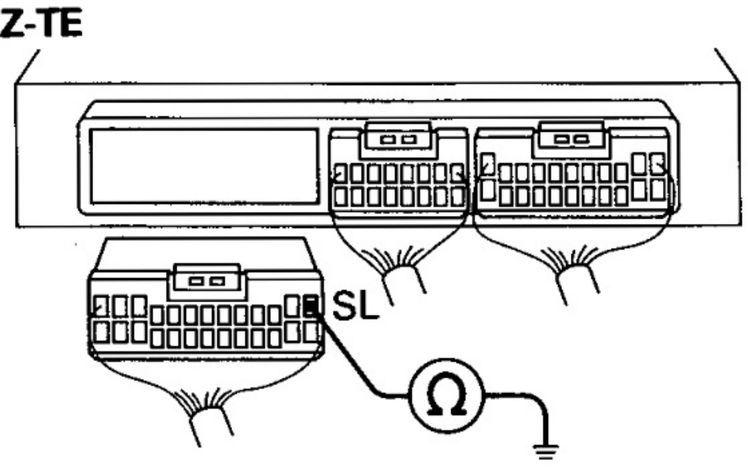

Q07647
Q07648
Q09709

PREPARATION:
Disconnect the connector from Engine & ECT ECU.

CHECK:
Measure resistance between terminal SL of Engine & ECT ECU and body ground.

OK:
Resistance: 11 ~ 15 Ω

AT

NG

OK → **Check and replace the Engine & ECT ECU.**

2	**Check harness and connector between Engine & ECT ECU and automatic transmission solenoid connector (See page IN-30).**

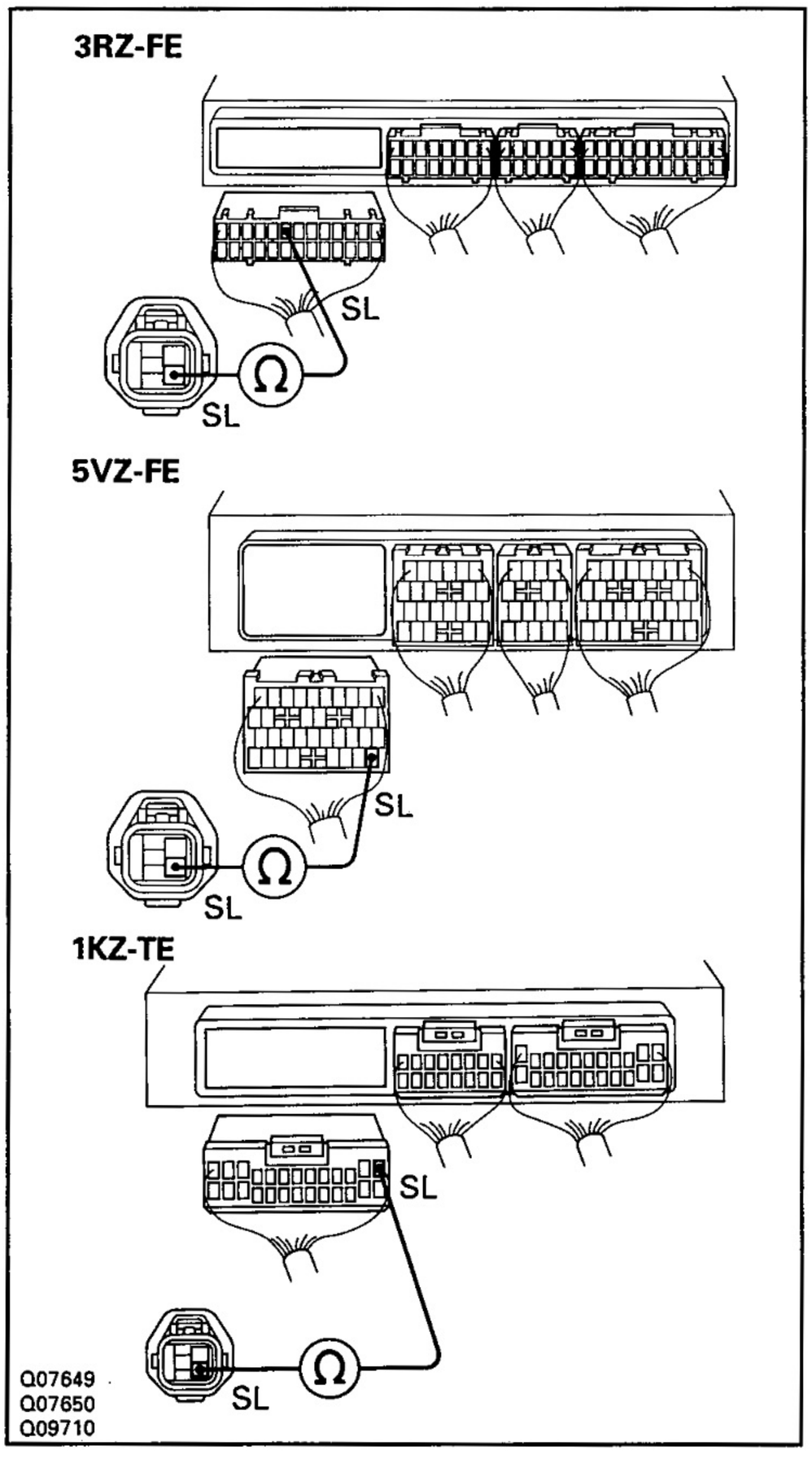

PREPARATION:
Disconnect the solenoid connector from the transmission.

CHECK:
Check harness between terminal SL of Engine & ECT ECU and terminal SL of transmission solenoid connector.

OK:
There is no open or short circuit.

AT

OK

NG → **Repair or replace the harness or connector.**

3 Check lock-up solenoid valve.

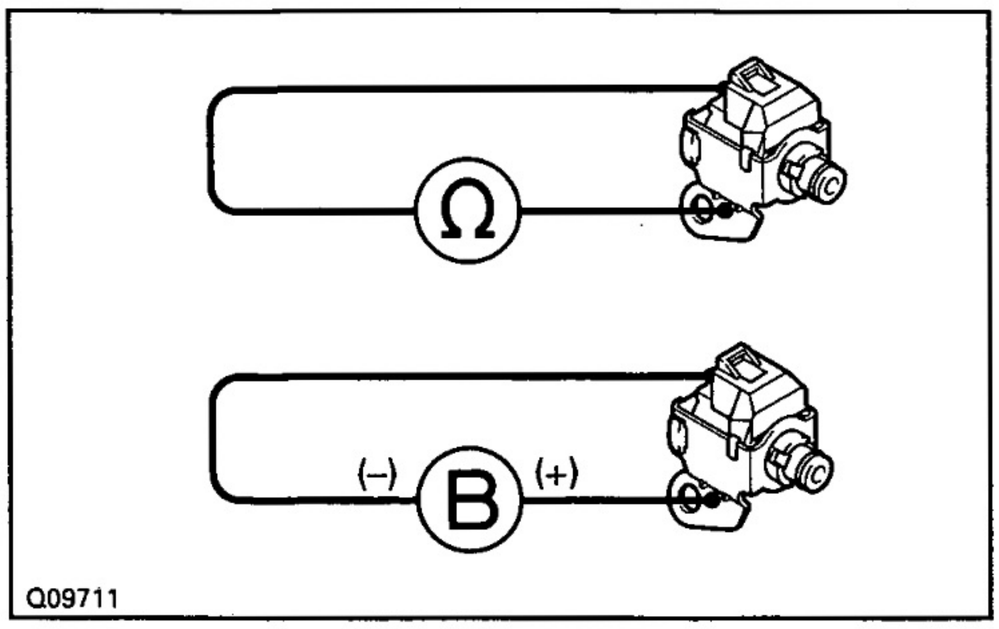

PREPARATION:
(a) Jack up the vehicle.
(b) Remove the oil pan.
(c) Disconnect the lock-up solenoid valve connector.
(d) Remove the lock-up solenoid valve.

ELECTRICAL CHECK:
(a) Measure resistance between solenoid connector and solenoid body.
(b) Connect positive ⊕ lead to terminal of solenoid connector, negative ⊖ lead to solenoid body.

OK:
(a) Resistance: 11 ~ 15 Ω
(b) The solenoid makes an operating noise.

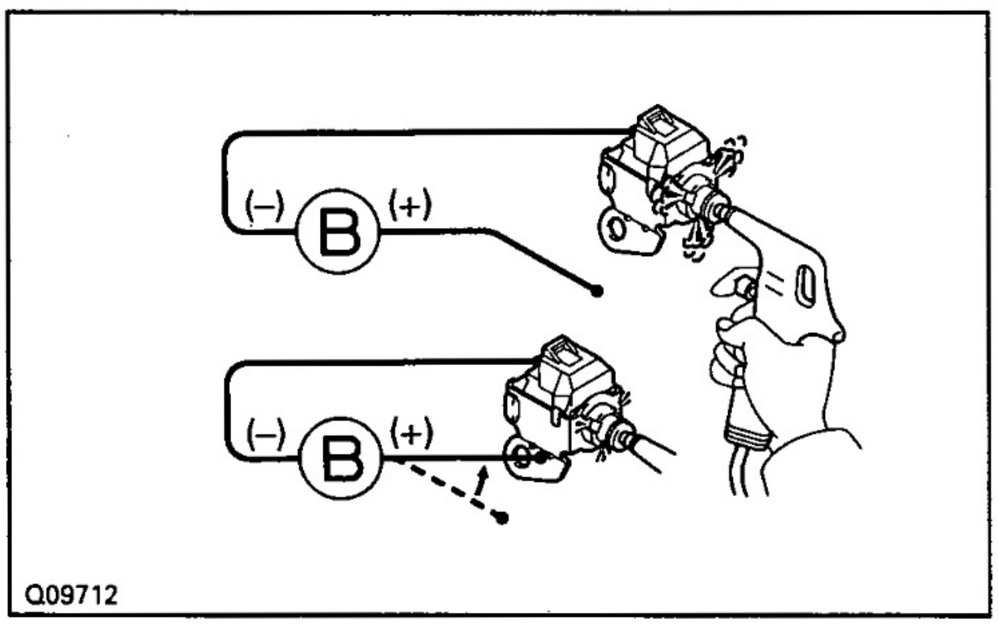

MECHANICAL CHECK:
(a) Applying 490 kPa (5 kgf/cm², 71 psi) of compressed air, check that solenoid valve opens.
(b) When battery positive voltage is supplied to the solenoid valve, check that solenoid valve does not leak air.

OK → **Repair or replace the solenoid wire.**

NG → **Replace the solenoid valve.**

Neutral Start Switch Circuit

CIRCUIT DESCRIPTION

The neutral start switch detects the shift lever position and sends signals to the Engine & ECT ECU.
The Engine & ECT ECU receives signals (NSW, 2 and L) from the neutral start switch. When the signal is not sent to the Engine & ECT ECU from the neutral start switch, the Engine & ECT ECU judges that the shift lever is in D range.

WIRING DIAGRAM

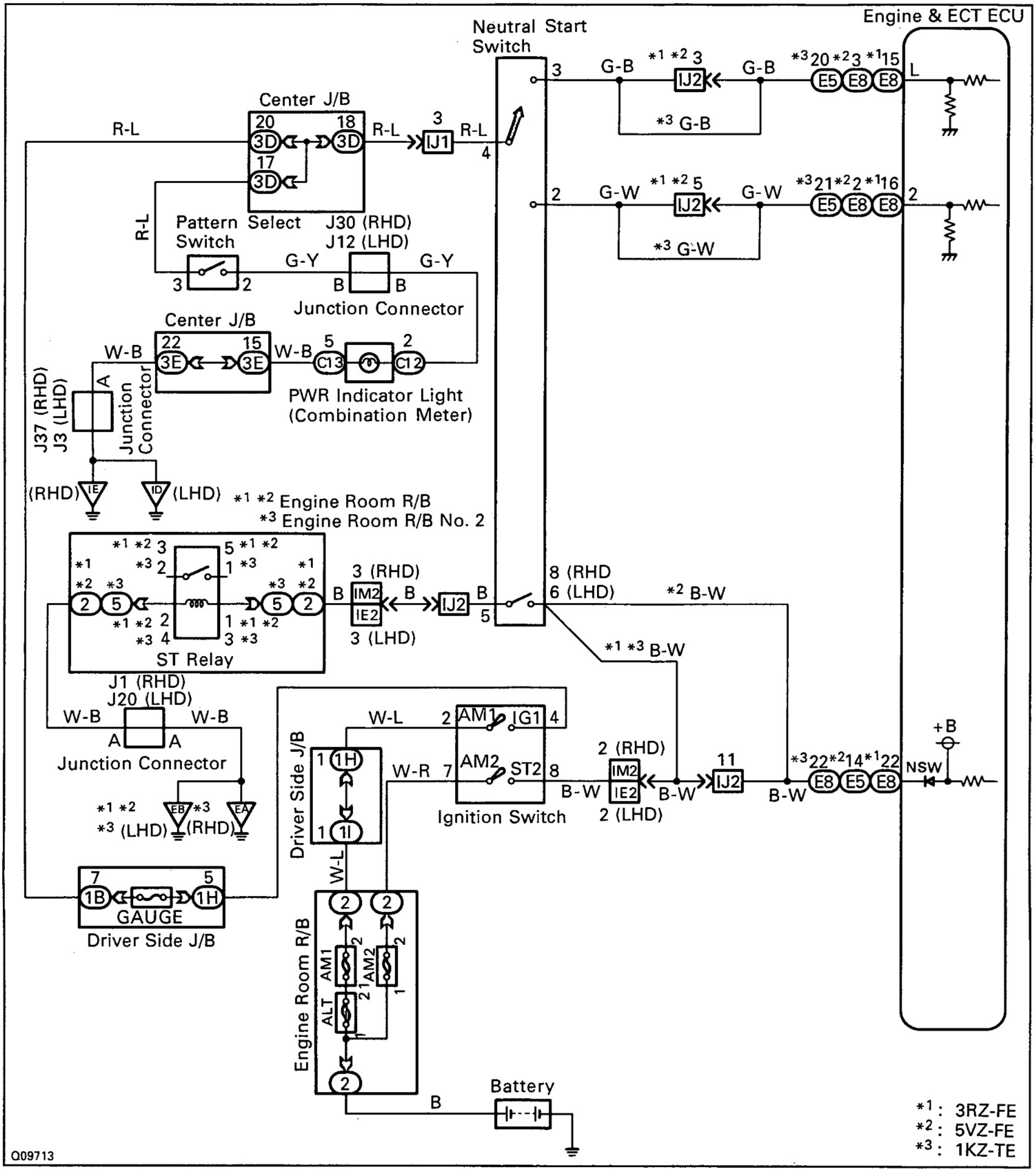

INSPECTION PROCEDURE

1	Check voltage between terminals NSW, 2, L of Engine & ECT ECU and body ground.

ON

3RZ-FE

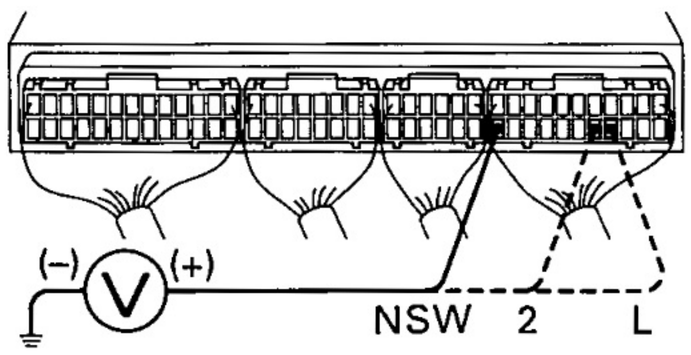

5VZ-FE

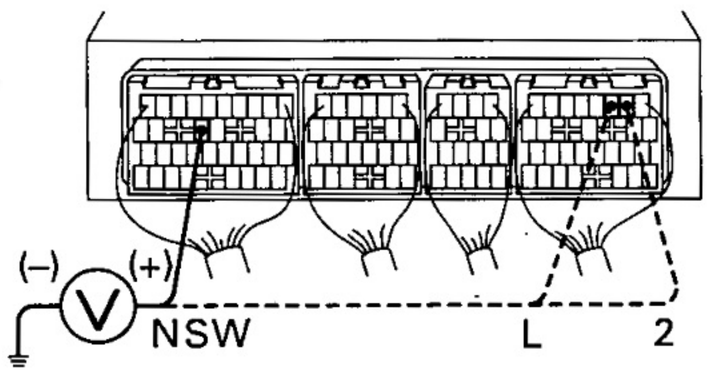

1KZ-TE

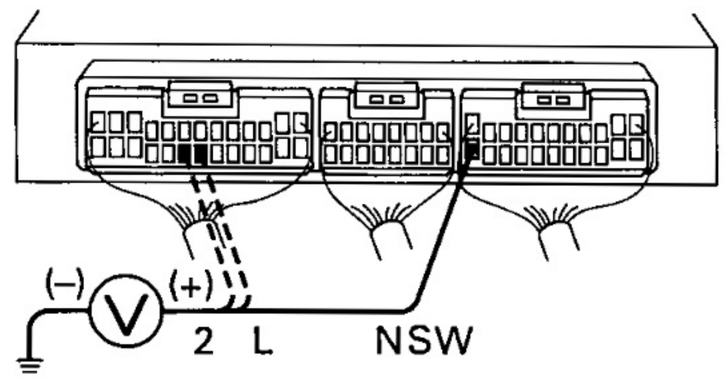

BE3840
Q09714
Q09715
Q09716

NG

PREPARATION:
Turn the ignition switch ON.

CHECK:
Measure voltage between terminals NSW, 2, and L of Engine & ECT ECU and body ground when the shift lever is shifted to the following ranges.

OK:

Range	NSW-Body ground	2-Body ground	L-Body ground
P, N	0 V	0 V	0 V
R	9 ~ 14 V*	0 V	0 V
D	9 ~ 14 V	0 V	0 V
2	9 ~ 14 V	7.5 ~ 14 V	0 V
L	9 ~ 14 V	0 V	7.5 ~ 14 V

HINT*: The voltage will drop slightly due to lighting up of the back up light.

AT

2	Check neutral start switch.

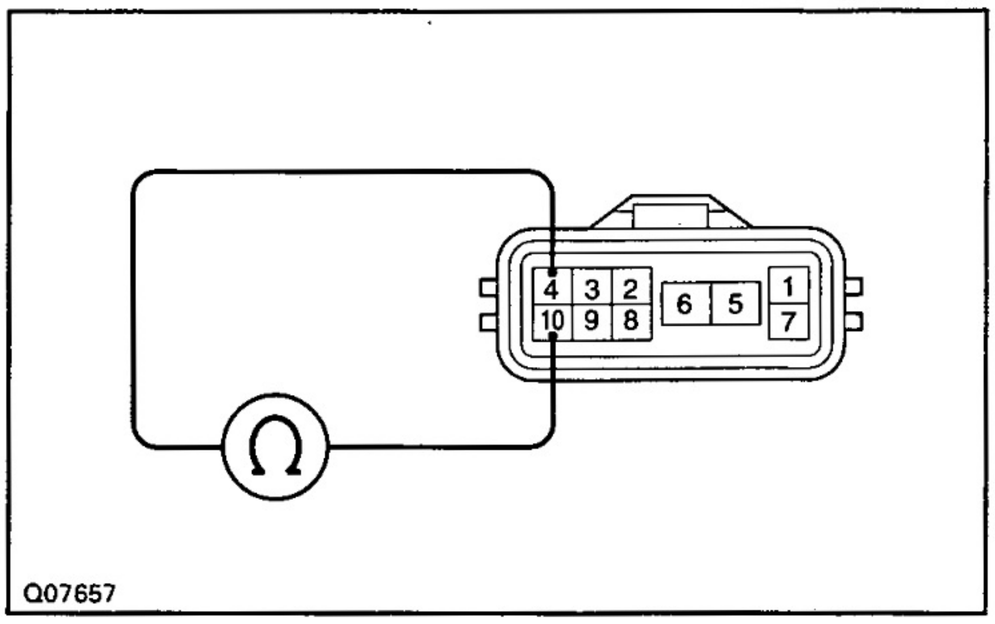

PREPARATION:
(a) Jack up the vehicle.
(b) Disconnect the neutral start switch connector.

CHECK:
Check continuity between each terminal shown below when the shift lever is moved to each range.

Shift Range	Terminal No. to continuity	
P	4 – 7	5 – 6
R	4 – 8	–
N	4 – 10	5 – 6
D	4 – 9	–
2	4 – 2	–
L	4 – 3	–

AT

OK

NG → **Replace the neutral start switch.**

3	Check harness and connector between battery and neutral start switch, neutral start switch and Engine & ECT ECU (See page IN-30).

OK

NG → **Repair or replace the harness or connector.**

Check and replace the Engine & ECT ECU.

O/D Cancel Signal Circuit (5VZ-FE Only)

CIRCUIT DESCRIPTION

While driving uphill with cruise control activated, in order to minimize gear shifting and provide smooth cruising overdrive may be prohibited temporarily under some condition.
The cruise control ECU sends O/D cut signals to the Engine & ECT ECU as necessary and the Engine & ECT ECU cancels O/D shifting until these signals are discontinued.

WIRING DIAGRAM

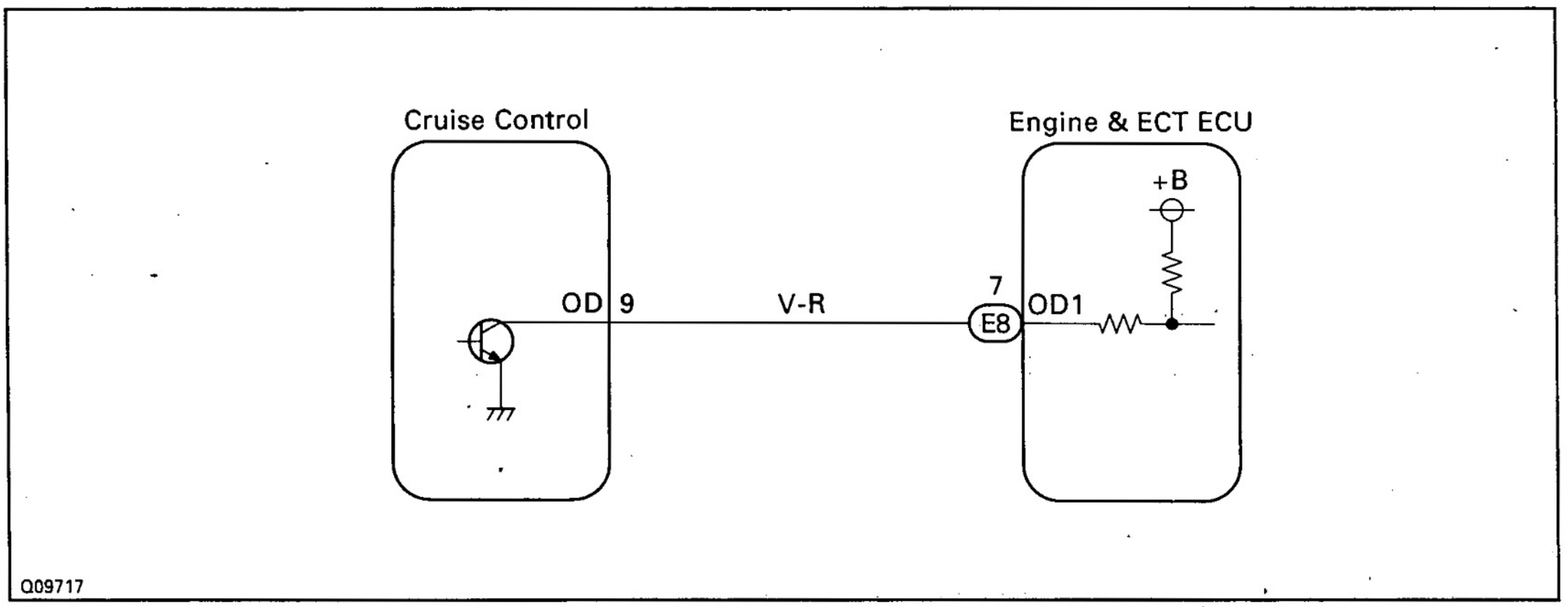

INSPECTION PROCEDURE

1	**Check voltage between terminal OD1 of Engine & ECT ECU and body ground.**

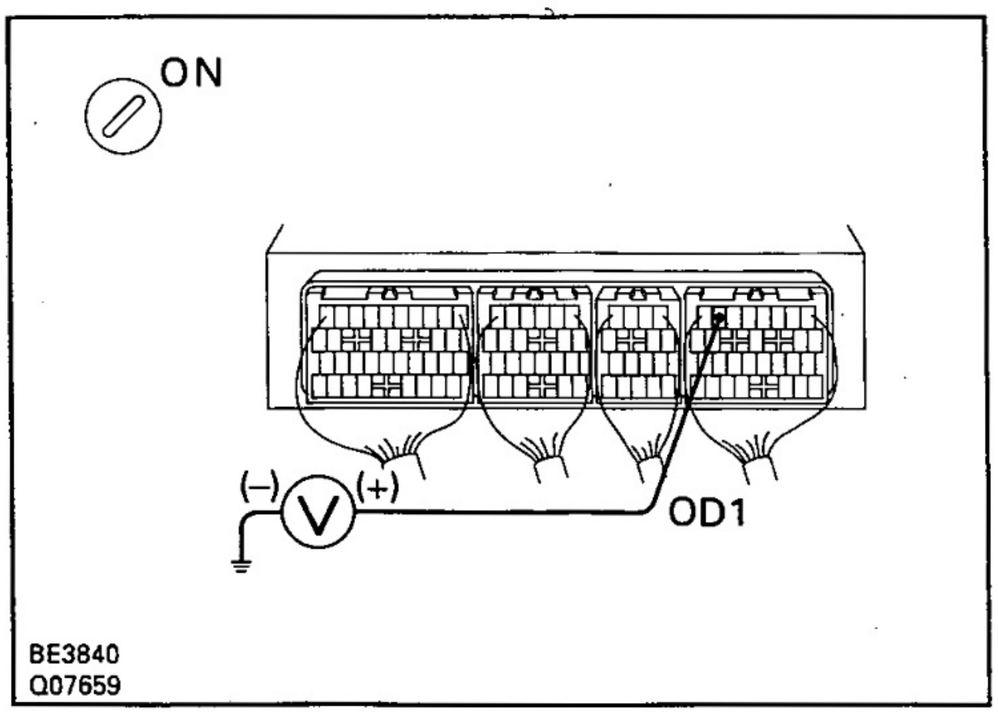

PREPARATION:
Turn the ignition switch ON.

CHECK:
Measure voltage between terminal OD1 of Engine & ECT ECU and body ground.

OK:
Voltage: 9 ~ 14 V

NG

OK → **Proceed to next circuit inspection shown on matrix chart (See page AT-39).**

2	Check voltage between terminal OD of cruise control ECU harness side connector and body ground.

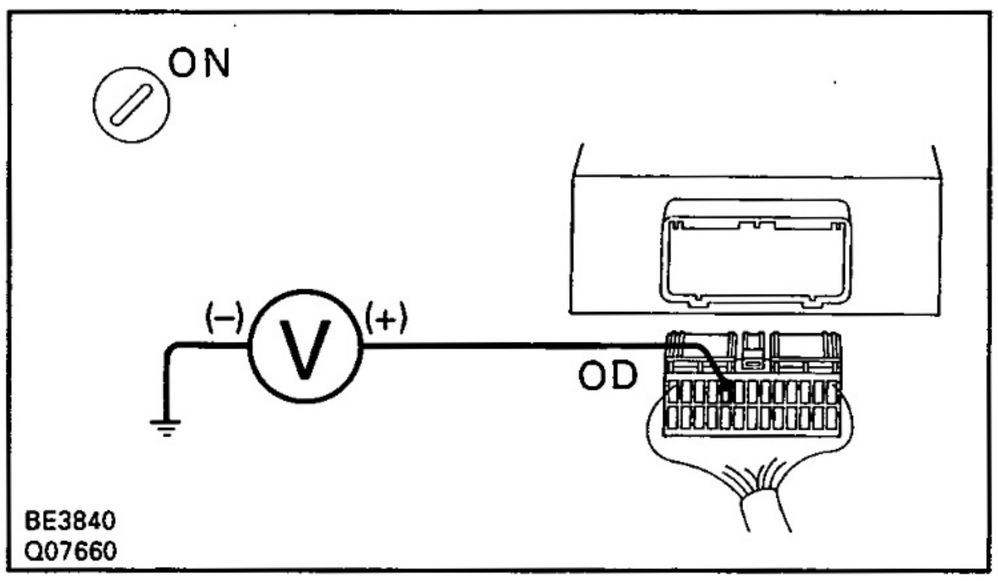

PREPARATION:
(a) Disconnect the cruise control ECU connector.
(b) Turn the ignition switch ON.

CHECK:
Measure voltage between terminal OD of cruise control ECU harness side connector and body ground.

OK:
Voltage: 9 ~ 14 V

AT

NG

OK → Check and replace the cruise control ECU.

3	Check harness and connector between cruise control ECU and Engine & ECT ECU (See page IN-30).

OK

NG → Repair or replace the harness or connector.

Check and replace the Engine & ECT ECU.

O/D Main Switch & O/D OFF Indicator Light Circuit

CIRCUIT DESCRIPTION

The O/D main switch contacts go open when the switch is pushed in and go closed when it is pushed out. In O/D main switch at OFF position, the O/D OFF indicator light lights up, and the Engine & ECT ECU prohibits shifting O/D.

WIRING DIAGRAM

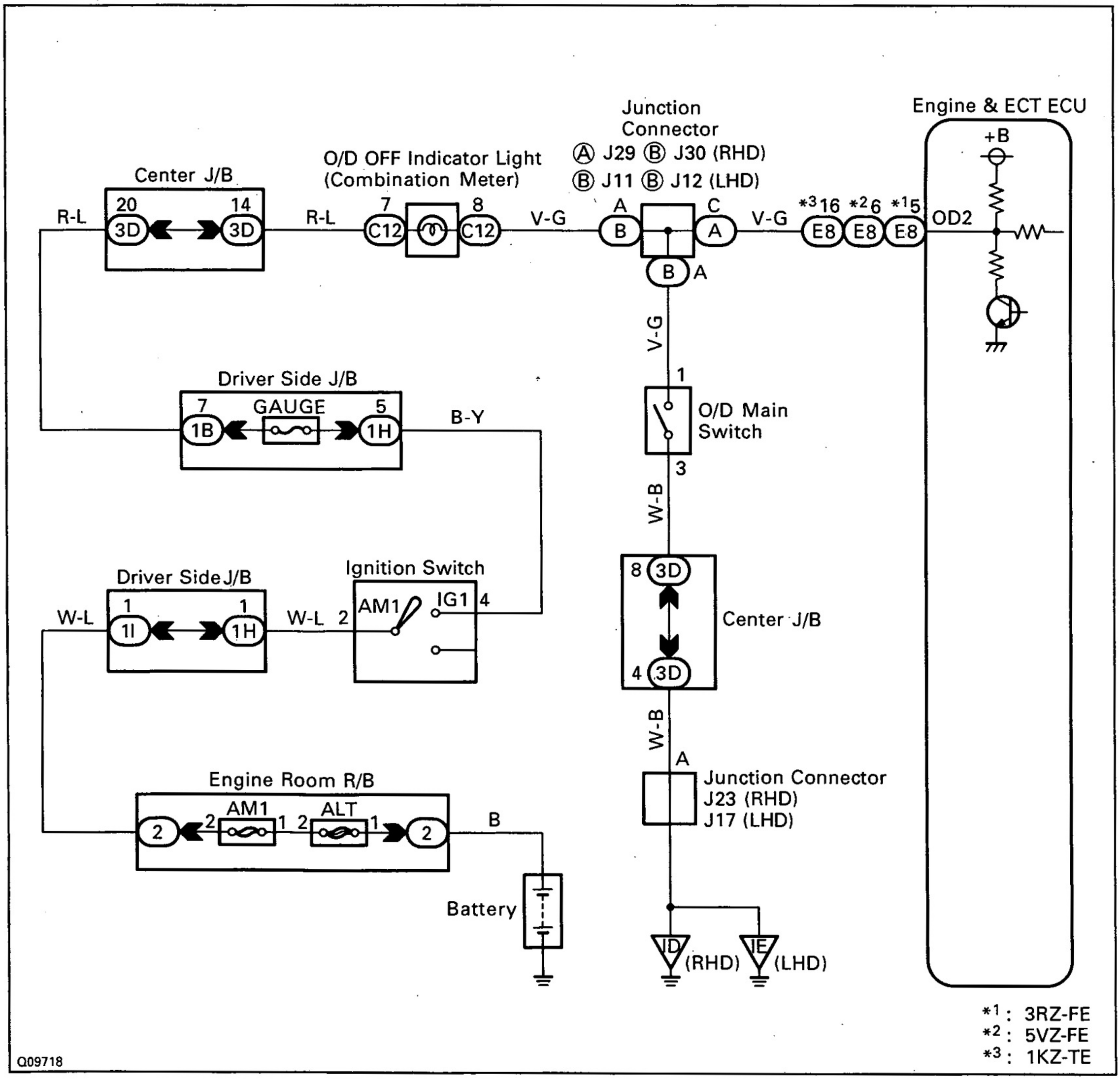

INSPECTION PROCEDURE
O/D OFF indicator light does not light up

1	Check operation of O/D main switch.

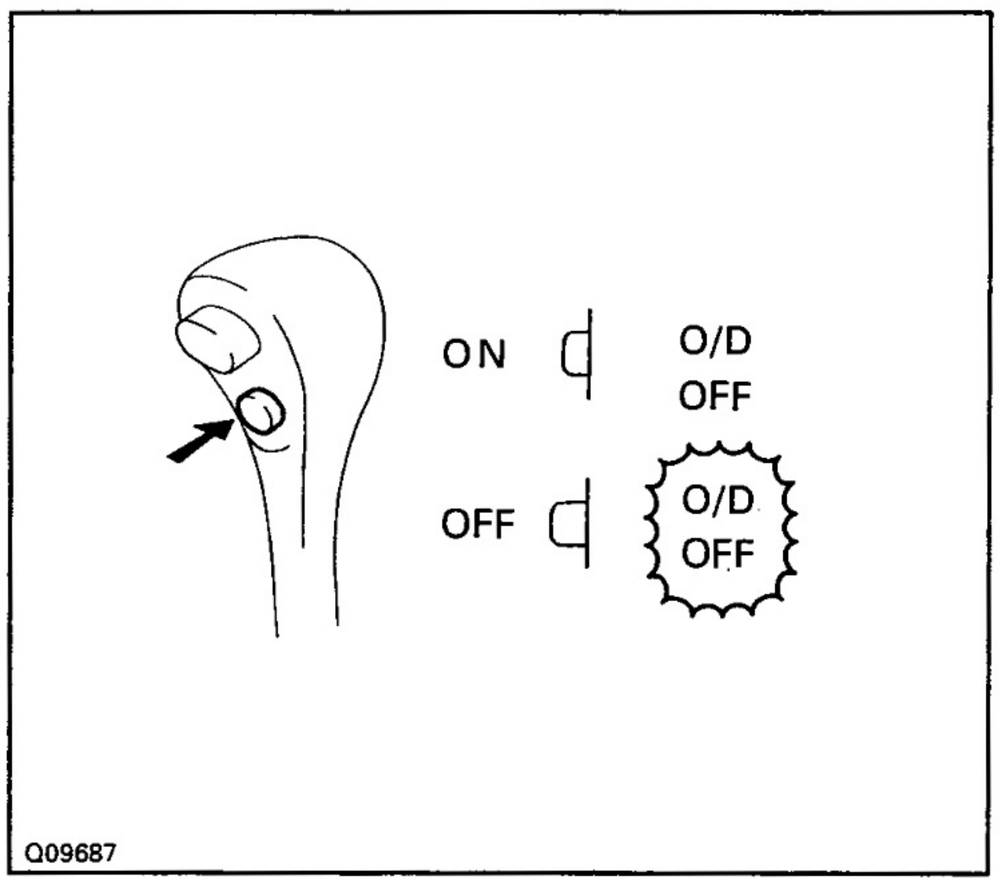

PREPARATION:
Turn the ignition switch ON.

CHECK:
(a) Check the O/D OFF indicator light when O/D main switch is pushed in to ON.
(b) Check the O/D OFF indicator light when O/D main switch is pushed again to OFF.

OK:
(a) O/D OFF indicator light goes off.
(b) O/D OFF indicator light lights up.

AT

OK

NG → **Go to step 4.**

2 Check voltage between terminal OD2 of Engine & ECT ECU and body ground.

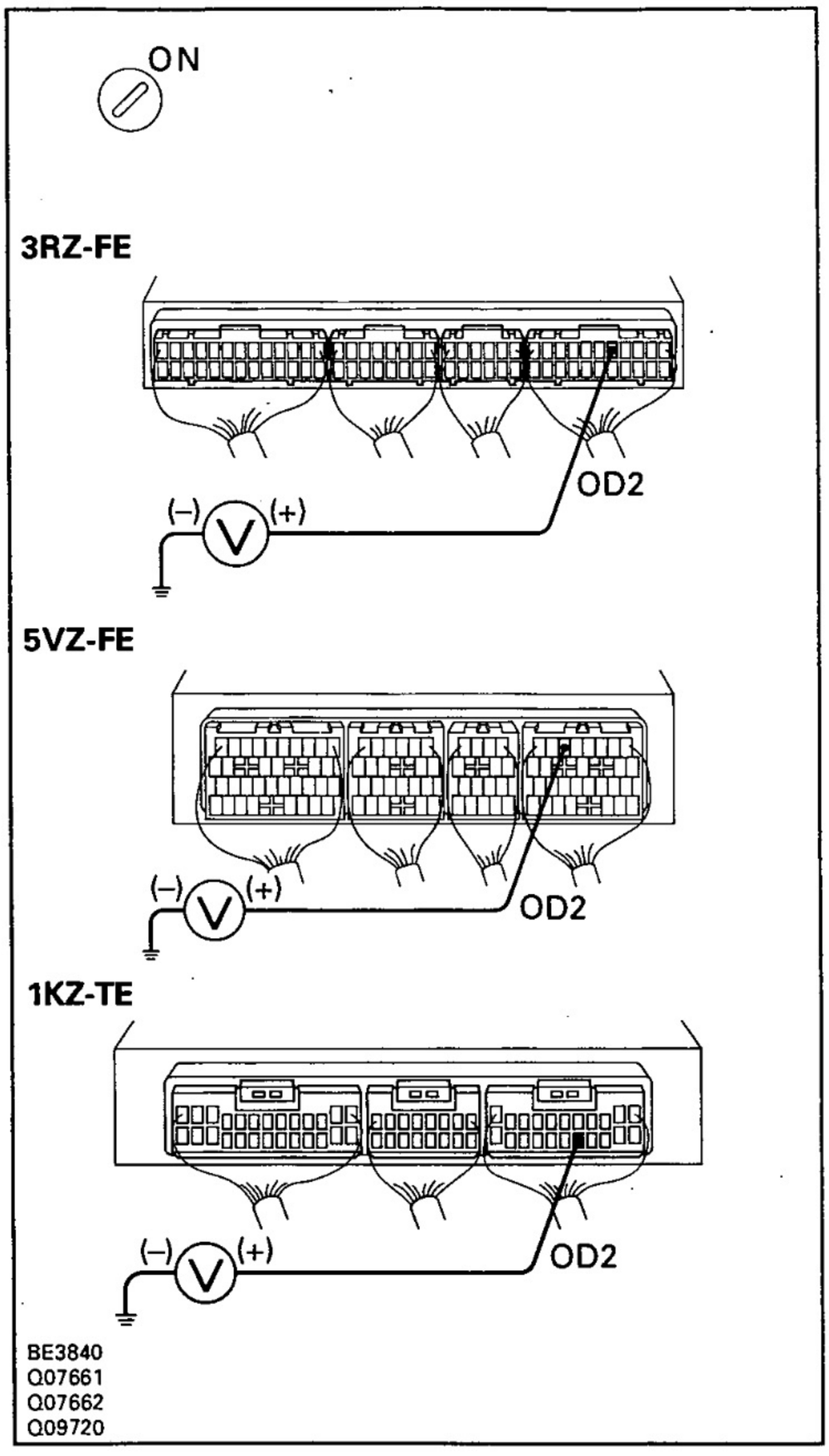

PREPARATION:
Turn the ignition switch ON.

CHECK:
Check voltage between terminal OD2 of Engine & ECT ECU and body ground.

OK:

O/D main switch	Voltage
OFF	Below 1.5 V
ON	9 ~ 14 V

AT

NG

OK → **Proceed to next circuit inspection shown on matrix chart (See page AT-39).**

3 Check harness and connector between O/D OFF indicator light and Engine & ECT ECU (See page IN-30).

OK

NG → **Repair or replace the harness or connector.**

4	Check O/D main switch.

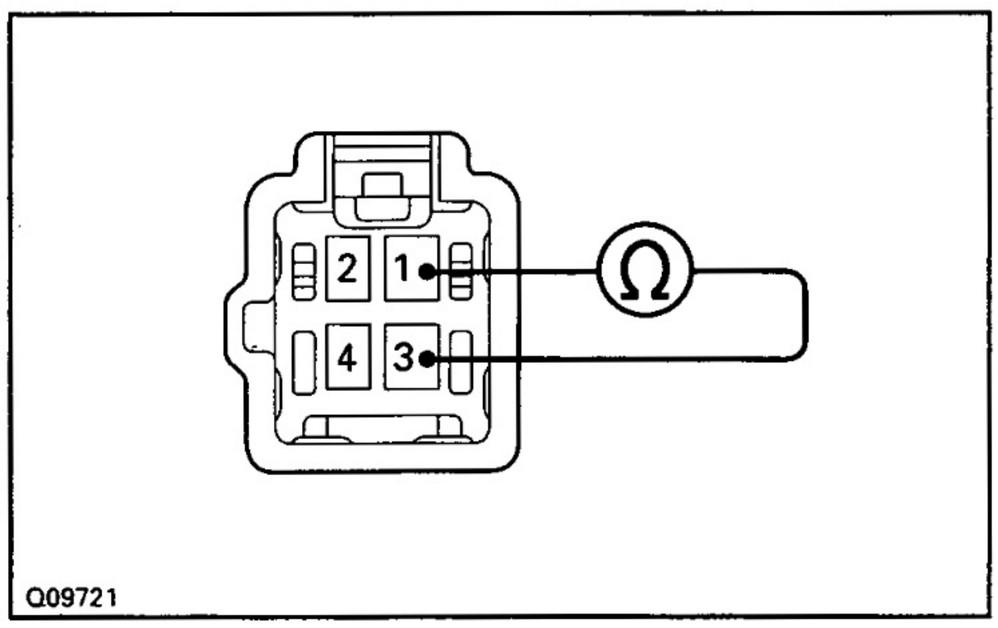

PREPARATION:
Disconnect the O/D main switch connector.

CHECK:
Check continuity between terminals 1 and 3 of O/D main switch connector.

OK:

O/D main switch	Specified condition
ON	No continuity
OFF	Continuity

AT

OK

NG → **Replace the O/D main switch.**

Check and replace the combination meter (See page BE-50).

O/D OFF indicator light remains ON

1	Check O/D main switch.

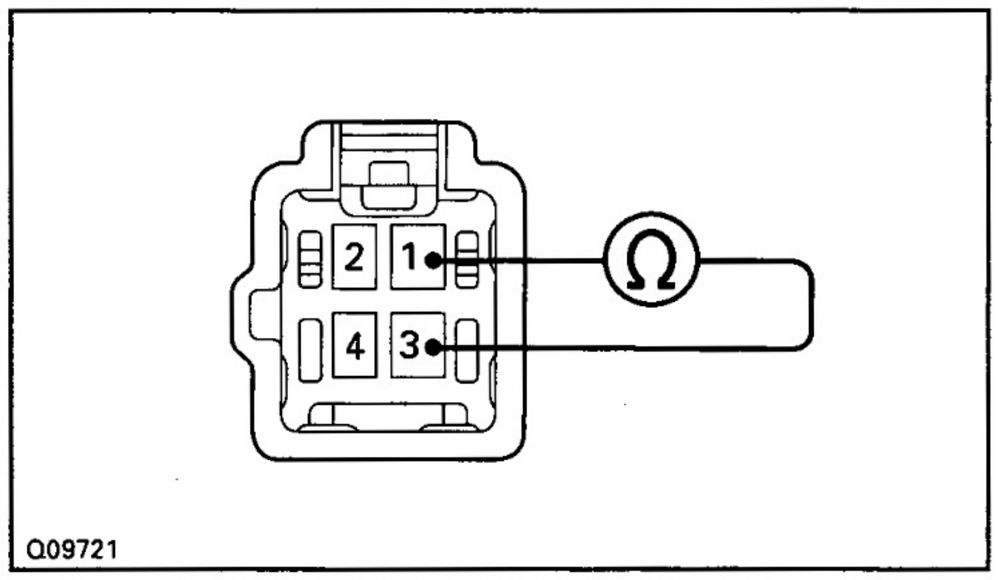

PREPARATION:
Disconnect the O/D main switch connector.

CHECK:
Check continuity between terminals 1 and 3 of O/D main switch connector.

OK:

O/D main switch	Specified condition
ON	No continuity
OFF	Continuity

OK

NG → **Replace the O/D main switch.**

2	Check harness and connector between O/D OFF indicator light and O/D main switch, O/D OFF indicator light and Engine & ECT ECU (See page IN-30).

OK

NG → **Repair or replace the harness or connector.**

Check and replace the Engine & ECT ECU.

Pattern Select Switch Circuit (Power Mode Switch)

CIRCUIT DESCRIPTION

The Engine & ECT ECU memory contains the shift programs for the NORMAL and POWER patterns, 2 range, L range and the lock-up patterns. Following the programs corresponding to the signals from the pattern select switch, the neutral start switch and other various sensors, the Engine & ECT ECU switches the solenoid valves ON and OFF, and controls the transmission gear change and the lock-up clutch operation.

WIRING DIAGRAM

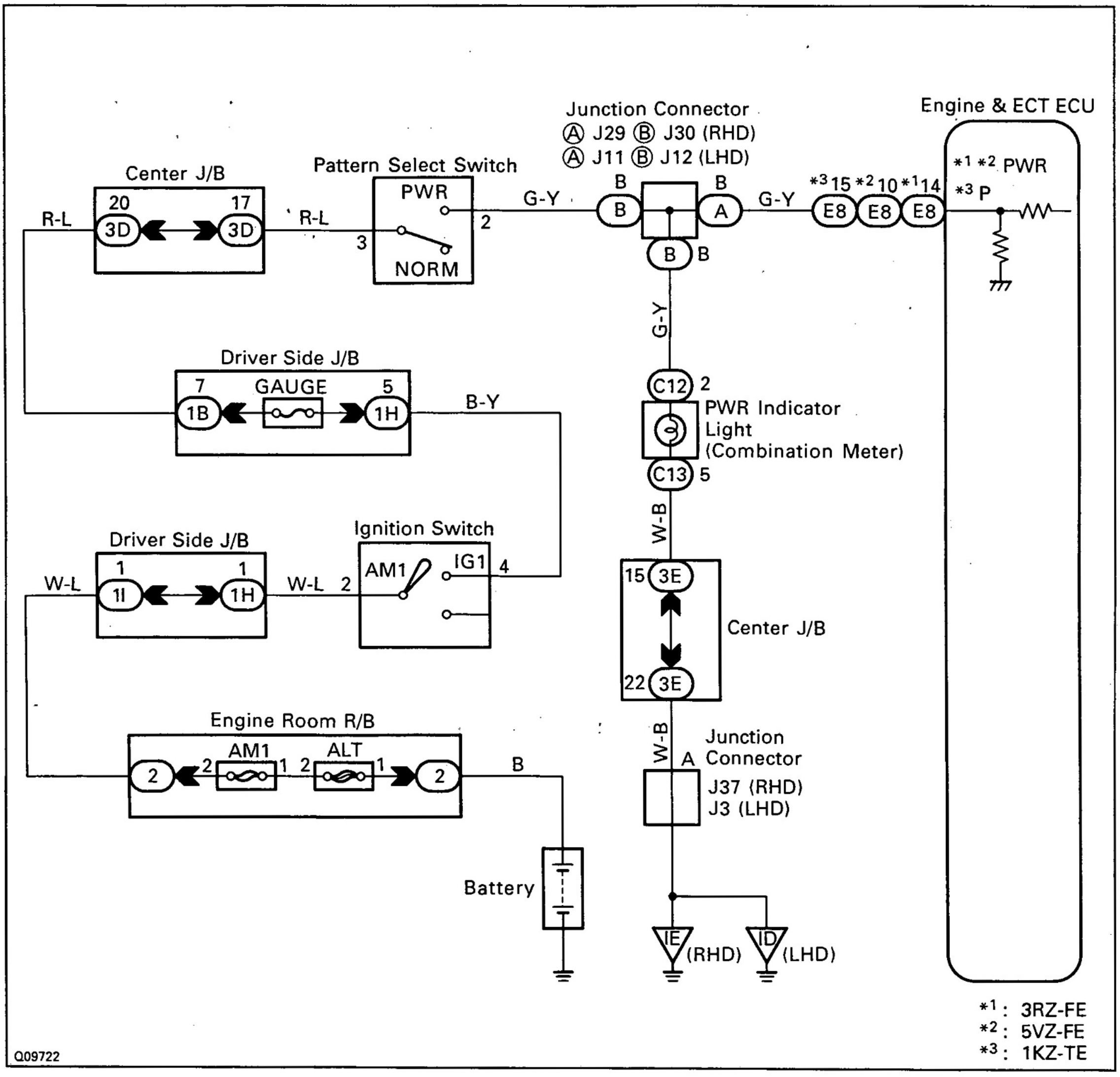

INSPECTION PROCEDURE

1	**Check voltage between terminal PWR or P of Engine & ECT ECU and body ground.**

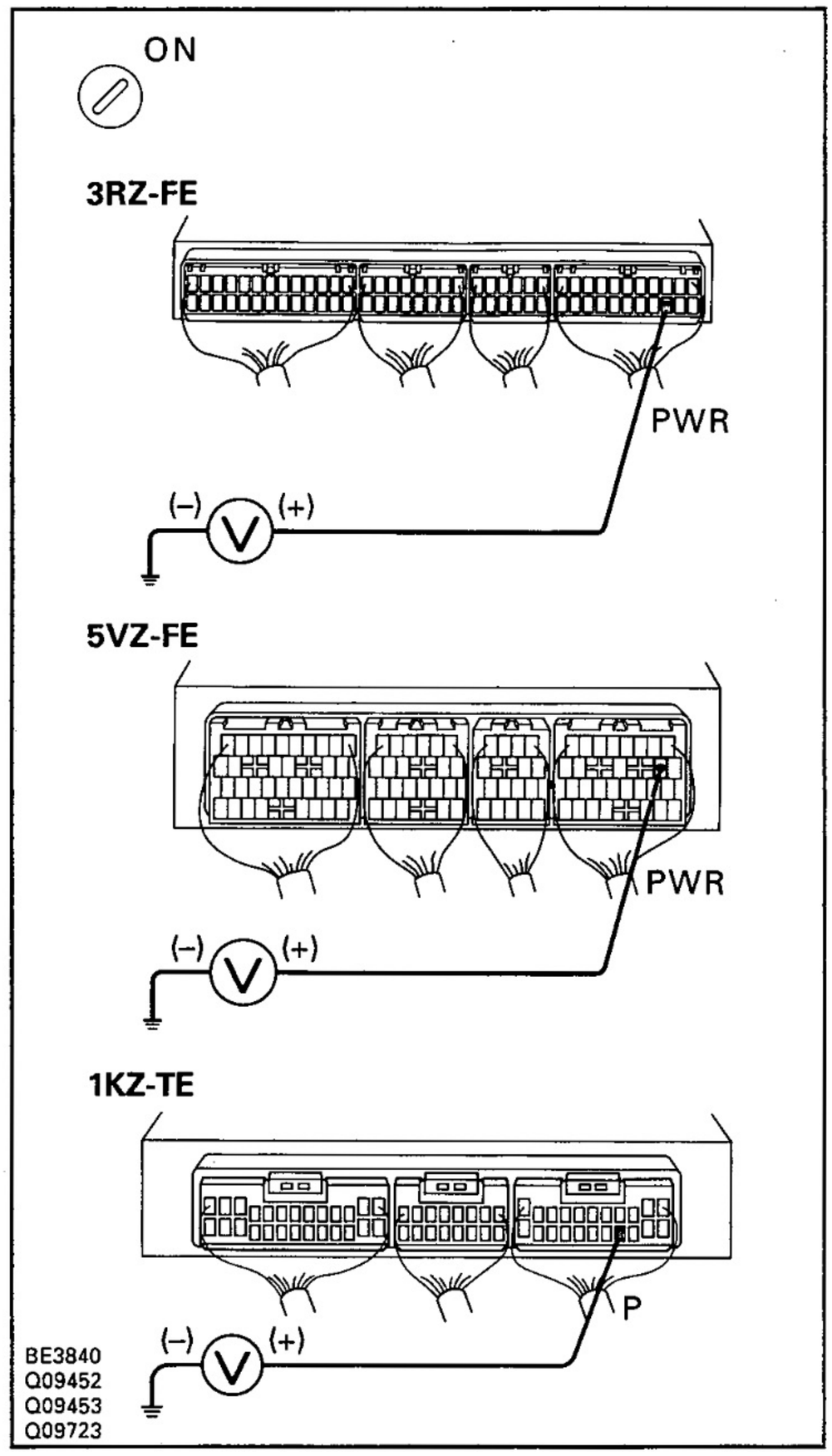

PREPARATION:
Turn the ignition switch ON.

CHECK:
Measure voltage between terminal PWR or P of Engine & ECT ECU and body ground when the pattern select switch set to the PWR (POWER) position and NORM (NORMAL) position.

OK:

Pattern select switch	Voltage
PWR	7.5 ~ 14 V
NORM	Below 1.5 V

HINT: The Engine & ECT ECU uses the normal pattern signal if the PWR signal is not input.

NG

OK → **Proceed to next circuit inspection shown on matrix chart (See page AT-39).**

2	Check pattern select switch.

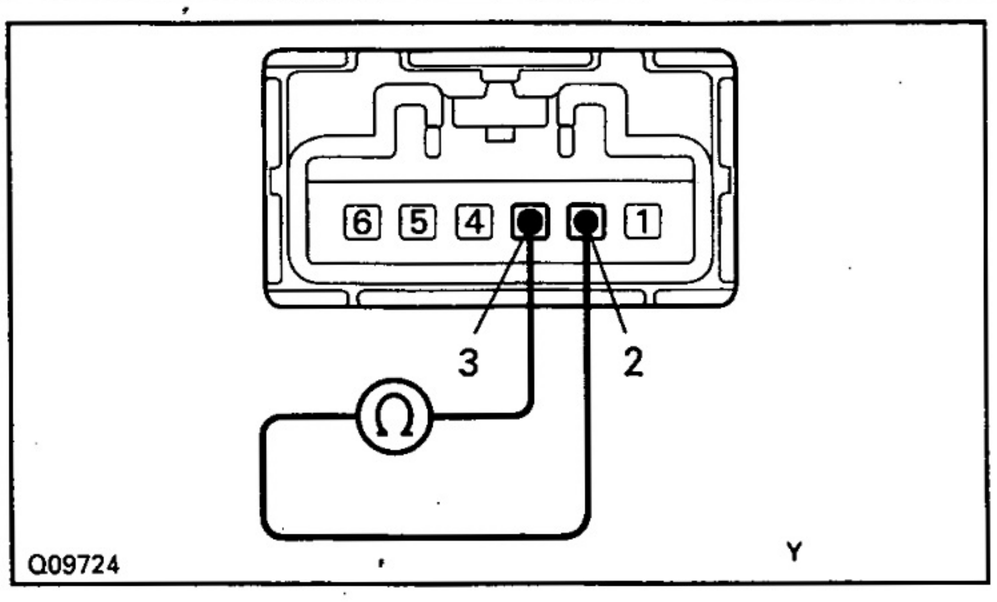

PREPARATION:
Disconnect the pattern select switch connector.

CHECK:
Check continuity between terminals 2 and 3 of pattern select switch connector when pattern select switch is set to PWR and NORM positions.

OK:

Pattern select switch	Specified condition
PWR	Continuity
NORM	No continuity

AT

OK

NG → Replace the pattern select switch.

3	Check harness and connector between battery and pattern select switch, pattern select switch and Engine & ECT ECU (See page IN-30).

OK

NG → Repair or replace harness or connector.

Check and replace the Engine & ECT ECU.

Pattern Select Switch Circuit (2nd Start Switch) & 2nd Start Indicator Light Circuit

CIRCUIT DESCRIPTION

When 2nd start mode is selected with the pattern select switch, the Engine & ECT ECU controls the solenoid valves and the transmission starts from 2nd gear.
In D range, the transmission automatically shifts up through 3rd to O/D as usual.
In 2 range, the transmission is held in 2nd gear.

WIRING DIAGRAM

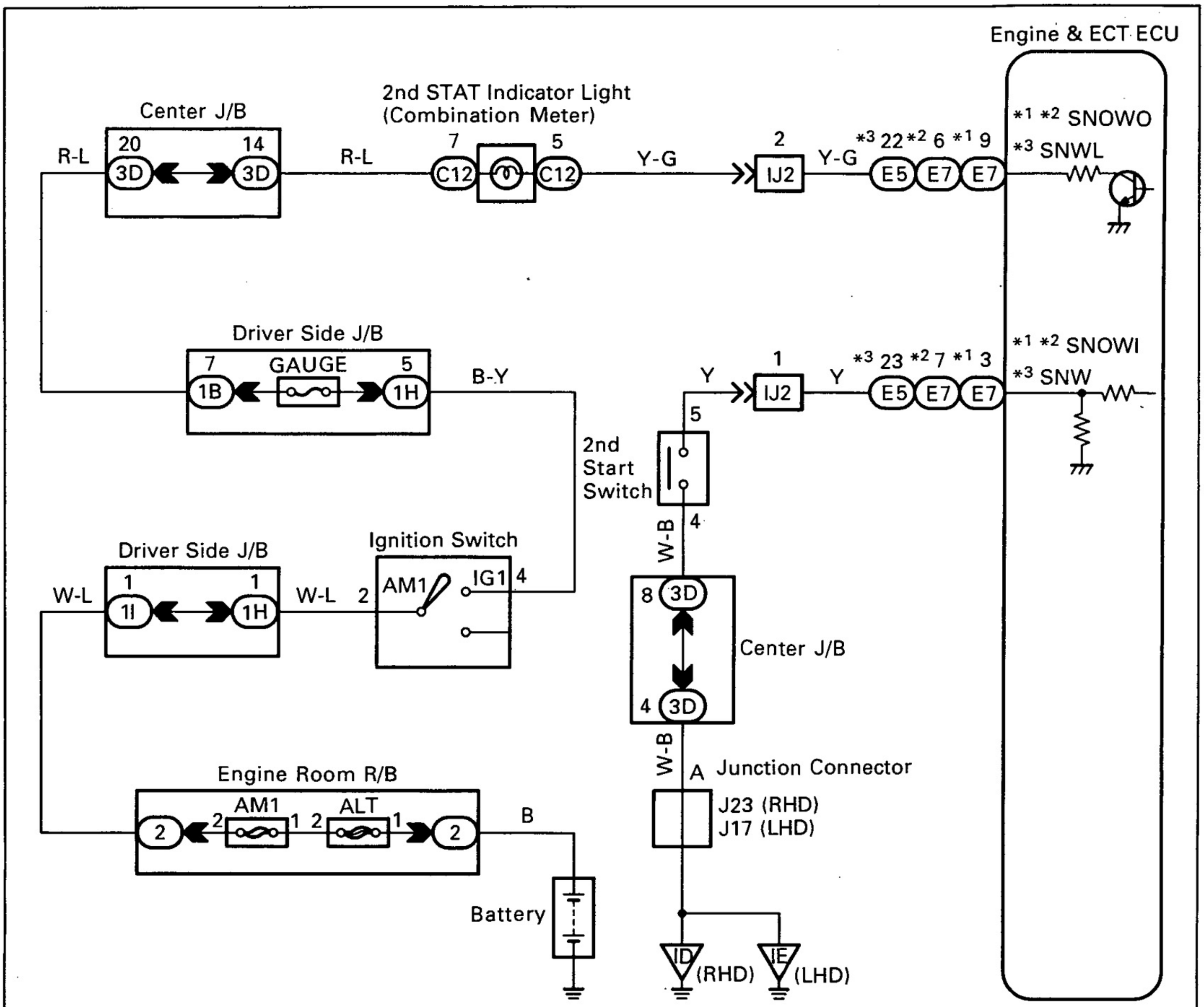

*1 : 3RZ-FE
*2 : 5VZ-FE
*3 : 1KZ-TE

(*) Pattern Select Switch (2nd Start Switch)
When the 2nd start switch is pushed, the switch is contacted and the 2nd start mode is selected.
To cancel the 2nd start, push the 2nd start switch once again. The 2nd start is automatically cancelled out when the ignition switch is turned OFF.

Q09725

INSPECTION PROCEDURE

1	**Check voltage between terminal SNOWI or SNW of Engine & ECT ECU and body ground, SNOWO or SNWL of Engine & ECT ECU and body ground.**

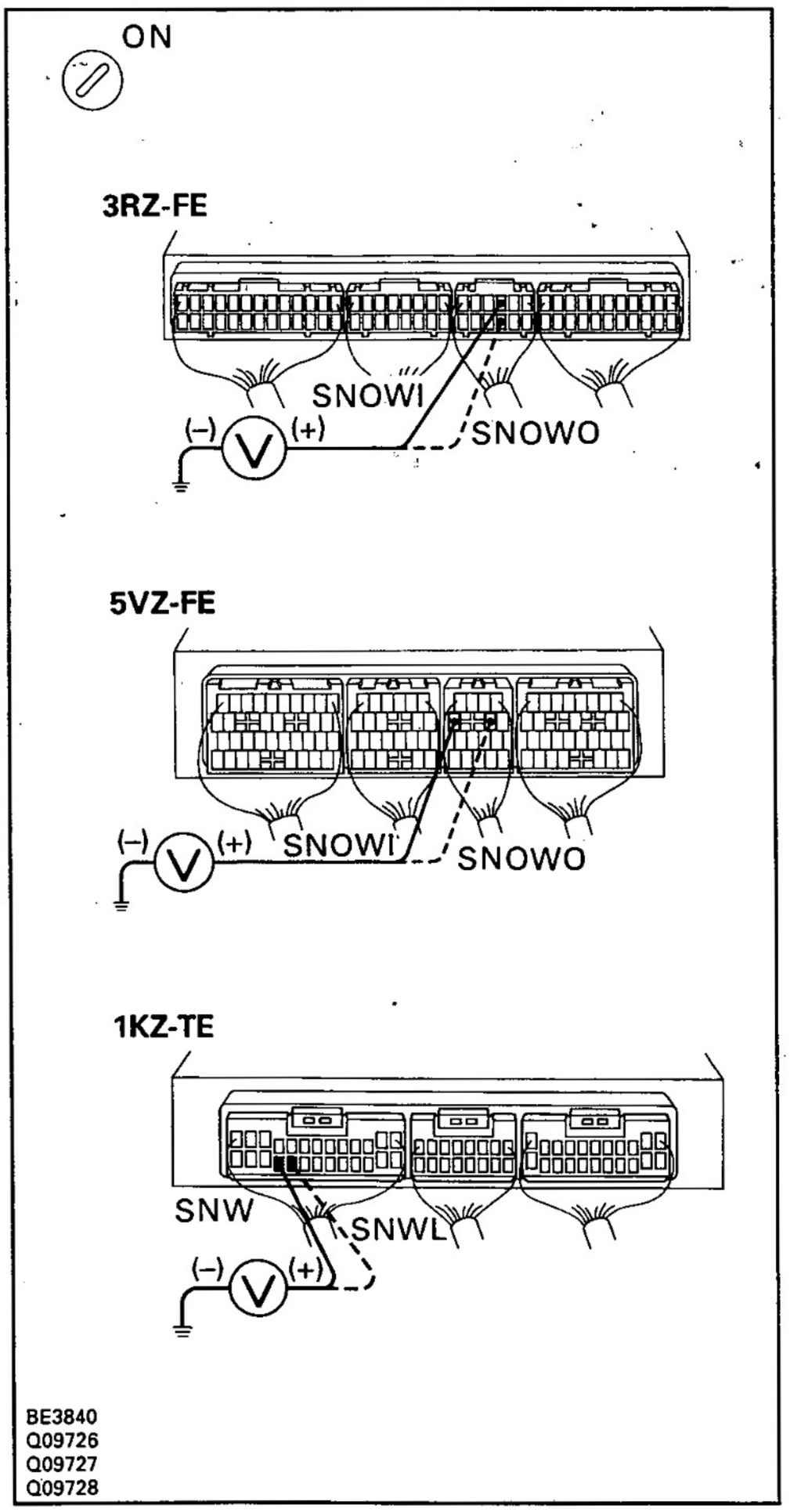

BE3840
Q09726
Q09727
Q09728

PREPARATION:
Turn the ignition switch ON.

CHECK:
(a) Measure voltage between terminal SNOWI or SNW of ECM and body ground when the pattern select switch is pushed.
(b) Measure voltage between terminal SNOWO or SNWL of Engine & ECT ECU and body ground when the "2nd STRT" indicator light light up and goes off.

OK:
(a)

Pattern select switch	Voltage
Press continuously "2nd" switch	Below 3 V
"NORM" switch not pushed	9 ~ 14 V

(b)

"2nd STRT" indicator light	Voltage
Light up	Below 3 V
Goes off	9 ~ 14 V

NG

OK → **Proceed to next circuit inspection shown on matrix chart (See page AT-39).**

2 Check pattern select switch.

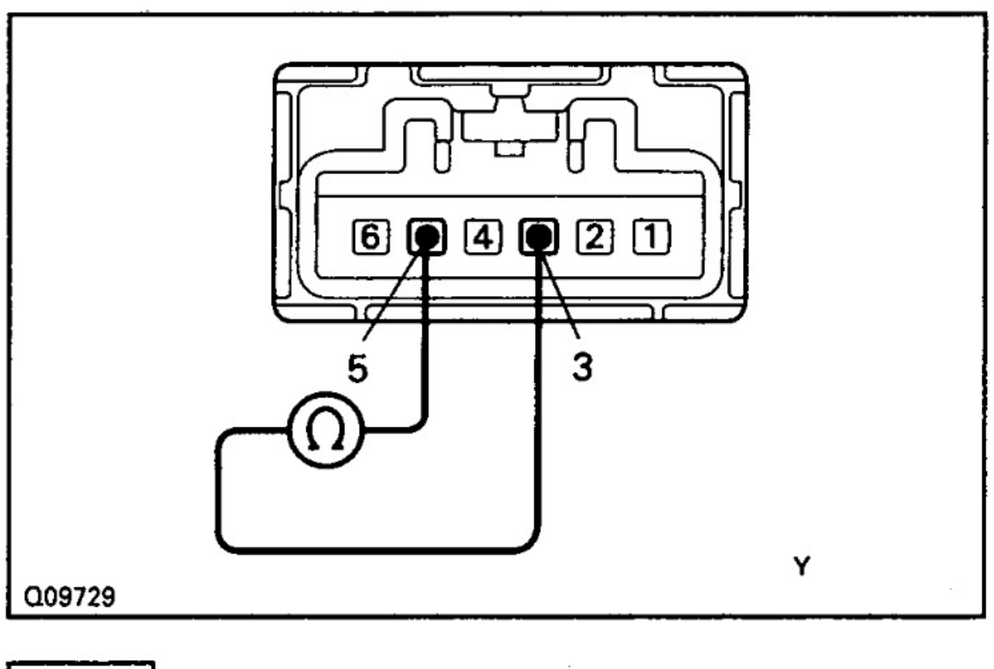

PREPARATION:
Disconnect the pattern select switch connector.

CHECK:
Check continuity between terminals 3 and 5 of pattern select switch connector when pattern select switch is set to 2nd and NORM positions.

Pattern select switch	Specified condition
Press continuously "2nd" switch	Continuity
Release "2nd" switch	No continuity

AT

OK → **Check and replace the Engine & ECT ECU.**

NG → **Replace the pattern select switch.**

Stop Light Switch Circuit

CIRCUIT DESCRIPTION

The purpose of this circuit is to prevent the engine from stalling, while driving in lock-up condition, when brakes are suddenly applied.
When the brake pedal is operated, this switch sends a signals to Engine & ECT ECU. Then the Engine & ECT ECU cancels operation of the lock-up clutch while braking is in progress.

WIRING DIAGRAM

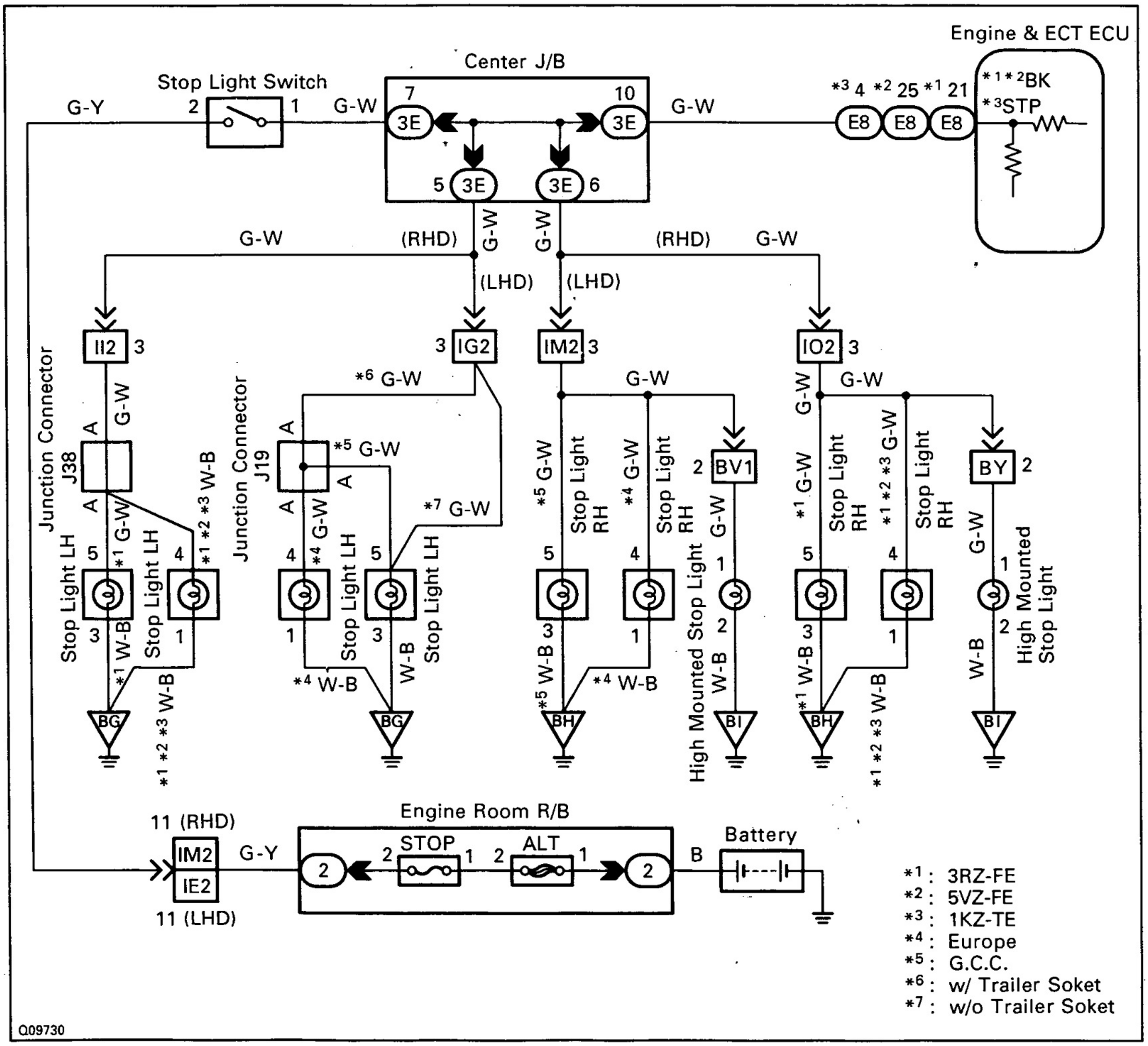

Q09730

INSPECTION PROCEDURE

1	Check operation of stop light.

CHECK:
Check if the stop lights go on and off normally when the brake pedal is operated and released.

OK

NG → **Check and repair the stop light circuit.**

2	Check voltage between terminal BK or STP and body ground.

AT

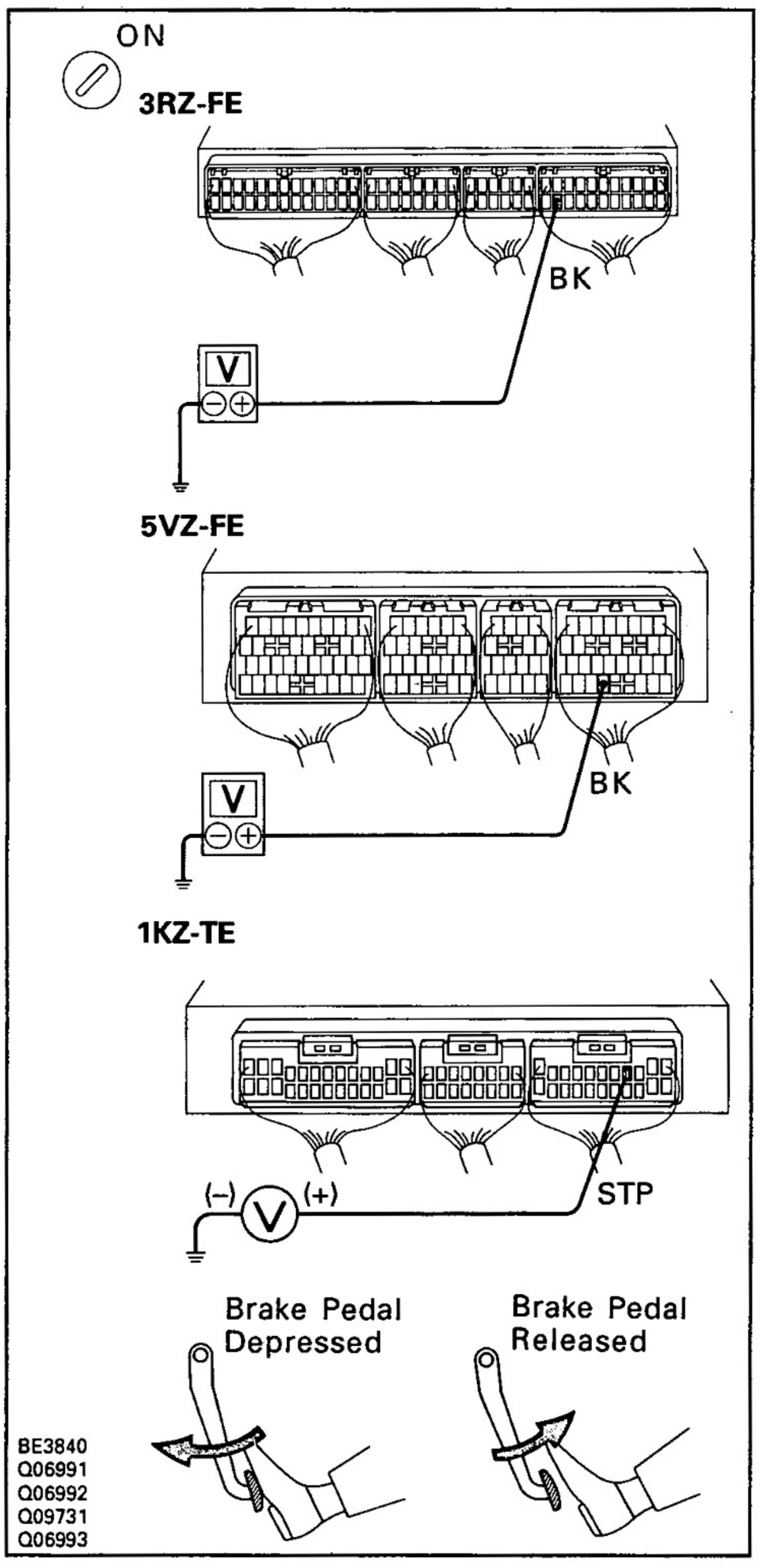

PREPARATION:
Turn the ignition switch ON.

CHECK:
Check voltage between terminal BK or STP of Engine & ECT ECU and body ground.

OK:

Brake pedal	Voltage
Depressed	7.5 ~ 14 V
Released	Below 1.5 V

NG

OK → **Proceed to next circuit inspection shown on matrix chart (See page AT-39).**

3	Check harness and connector between stop light switch and Engine & ECT ECU (See page IN-30).

OK

NG → Repair or replace the harness or connector.

Check and replace the Engine & ECT ECU.

Throttle Position Sensor Circuit

CIRCUIT DESCRIPTION

The throttle position sensor detects the throttle valve opening angle and sends signals to Engine & ECT ECU.

WIRING DIAGRAM

3RZ-FE, 1KZ-TE

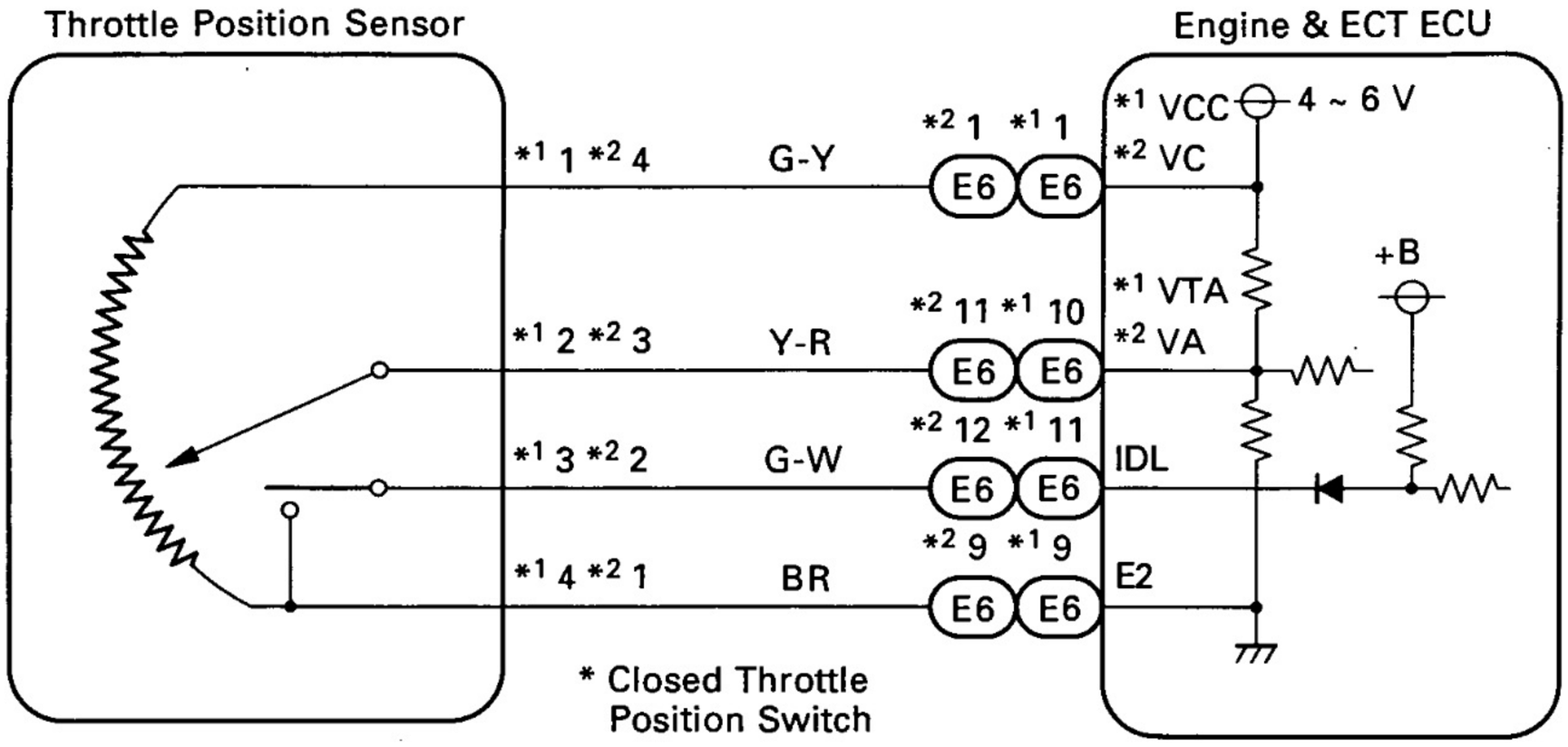

*1 : 3RZ-FE
*2 : 1KZ-TE

5VZ-FE

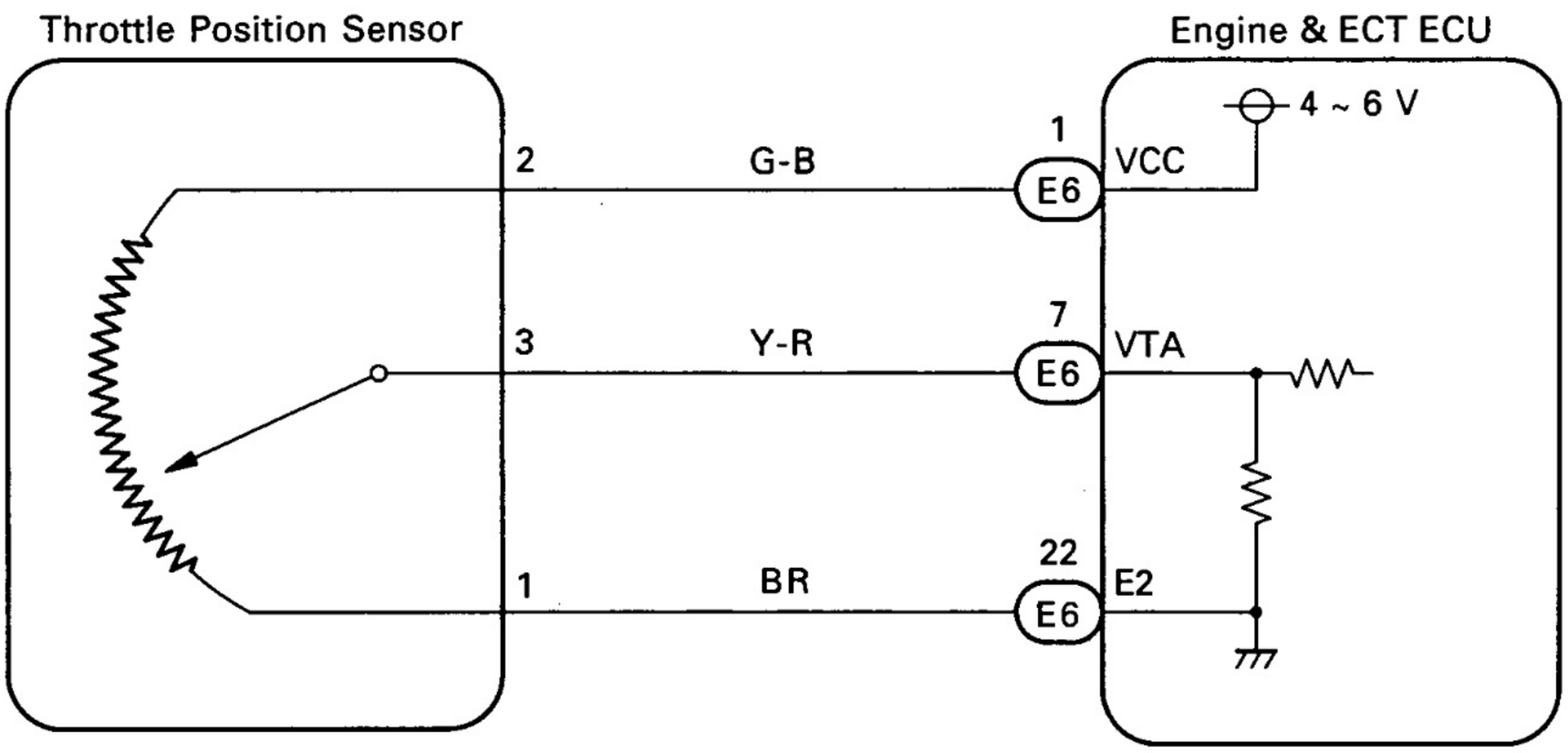

Q09732
Q09806

INSPECTION PROCEDURE

1 Check throttle position signal.

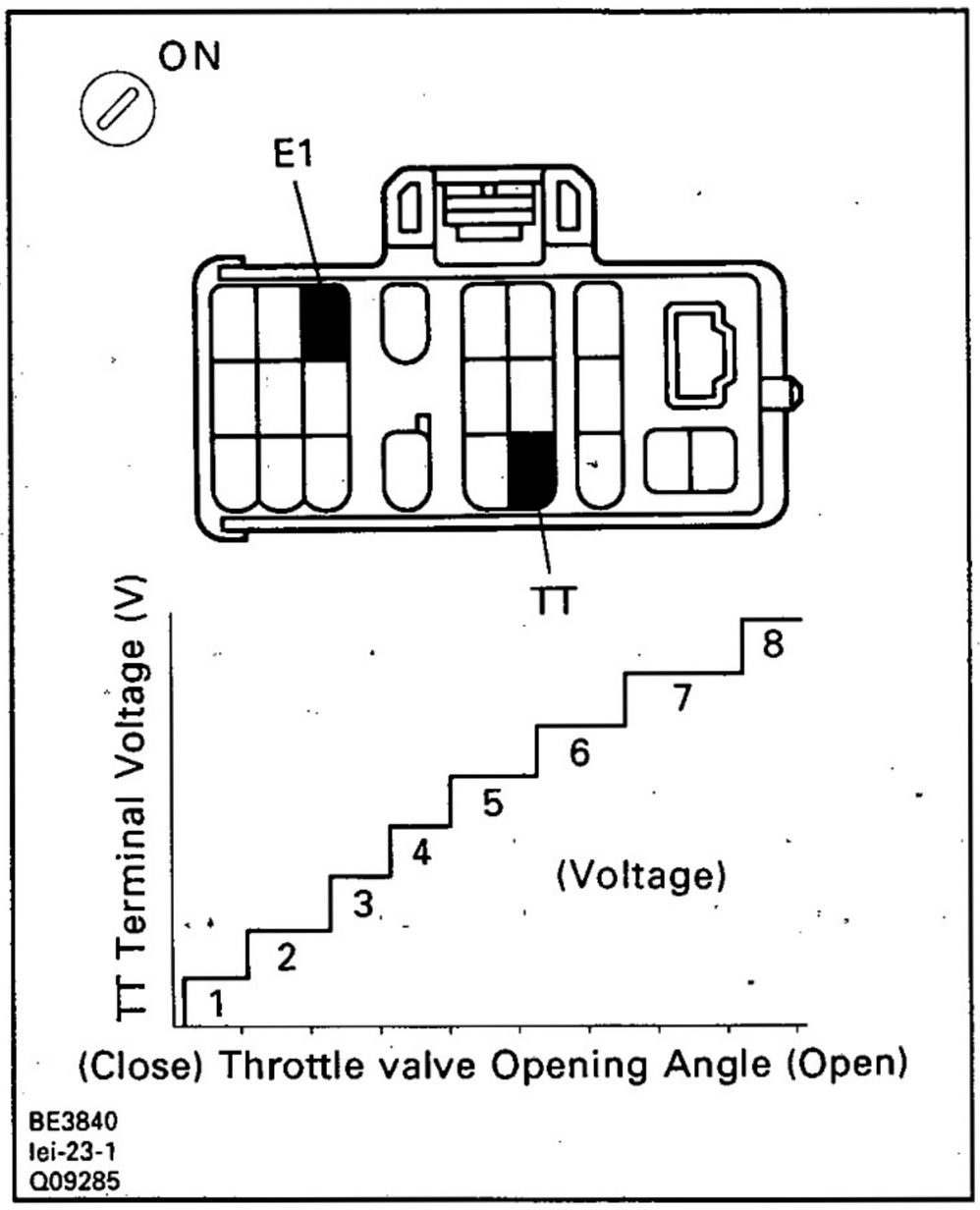

PREPARATION:
Turn the ignition switch ON.

CHECK:
Check voltage at the terminal TT of the check connector while gradually depressing the accelerator pedal from the fully closed position to the fully opened position.

OK:
Voltage changes from 0 V to 8 V by stages.

HINT: Do not depress the brake pedal during this test. The voltage will stay at 0 V if depressed.

AT

NG

OK → **Proceed to next circuit inspection shown on matrix chart (See page AT-39).**

2 Check throttle position sensor.

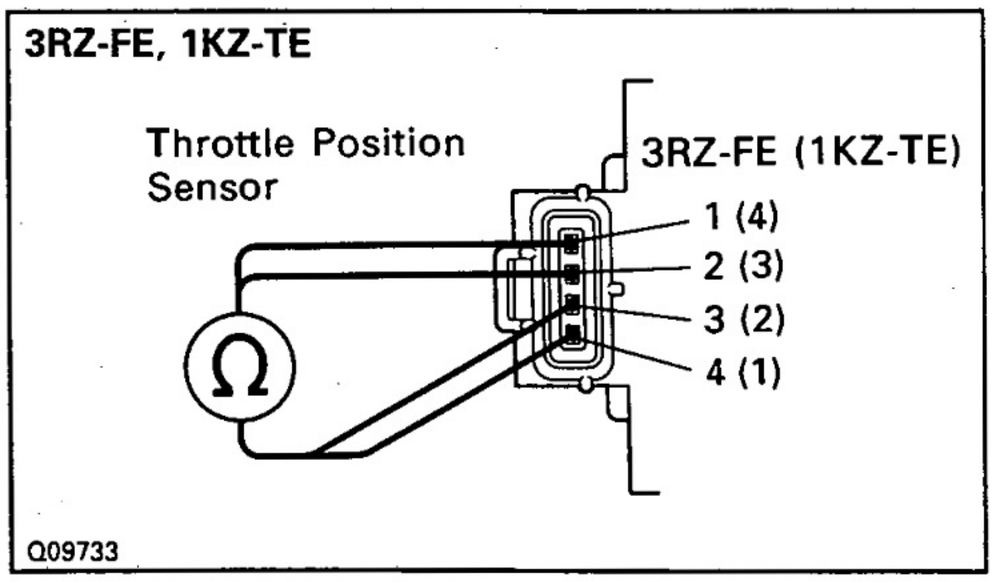

PREPARATION:
Disconnect the throttle position sensor connector.

CHECK:
Measure resistance and continuity between terminals 1, 2 3 and 4 of throttle position sensor.

OK:

Terminals 3RZ-FE (1KZ-TE)	Throttle valve	Resistance
1 - 4 (1 - 4)	—	2.5 ~ 5.9 kΩ
2 - 4 (1 - 3)	Fully closed	0.2 ~ 5.7 kΩ
	Fully opened	2.0 ~ 10.2 kΩ

Terminals 3RZ-FE (1KZ-TE)	Throttle valve	Specified condition
3 - 4 (1 - 2)	Fully closed	Continuity
	Fully opened	No continuity

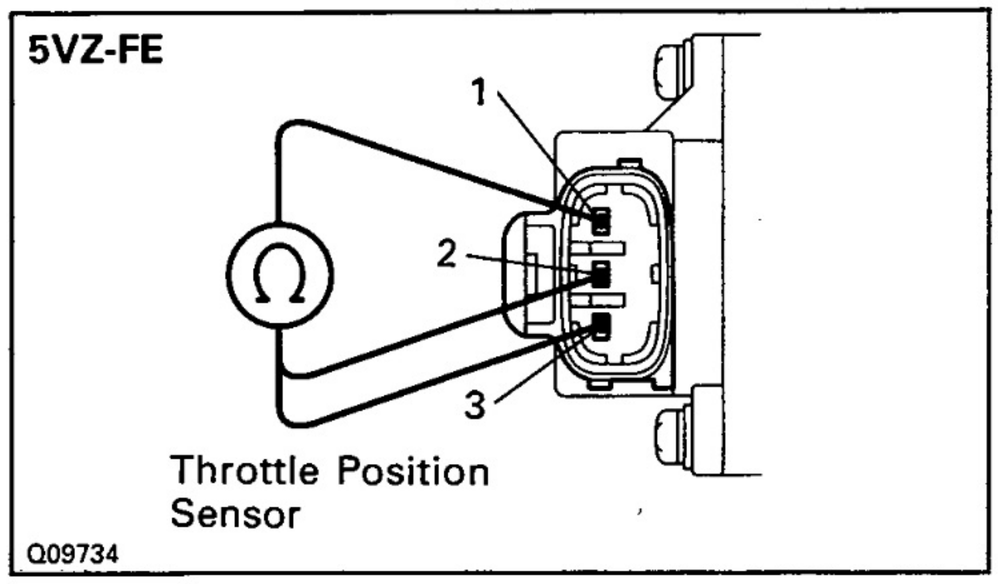

PREPARATION:
Disconnect the throttle position sensor connector.

CHECK:
Measure resistance between terminals 1, 2 and 3 of throttle position sensor.

OK:

Terminals	Throttle valve	Resistance
1 – 2	—	2.5 ~ 5.9 kΩ
1 – 3	Fully closed	0.2 ~ 5.7 kΩ
	Fully open	2.0 ~ 10.2 kΩ

OK

NG → Replace the throttle position sensor.

AT

3 Check harness and connector between ECM and throttle position sensor (See page IN-30).

OK

NG → Repair or replace the harness or connector.

Check and replace the Engine & ECT ECU.

Water Temperature Sensor Circuit

CIRCUIT DESCRIPTION

A thermistor built in the water temperature sensor changes the resistance value according to the engine coolant temperature.
The Engine & ECT ECU senses the engine coolant temperature by the resistance value. When the temperature is low, the Engine & ECT ECU controls that the automatic transmission does not up-shift to the O/D gear or does not lock-up.

WIRING DIAGRAM

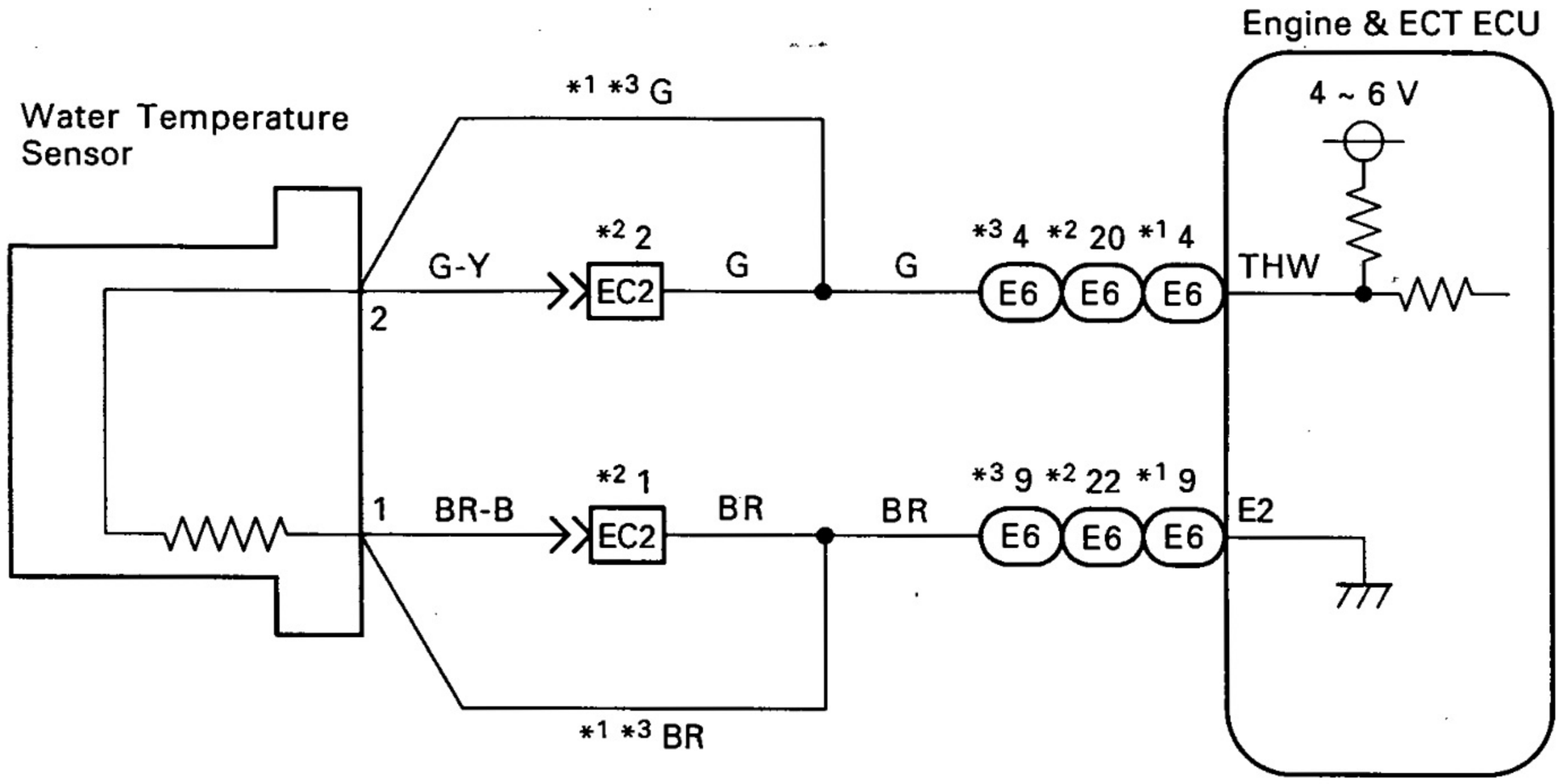

AT

1 Check voltage between terminals THW and E2 of Engine & ECT ECU connector.

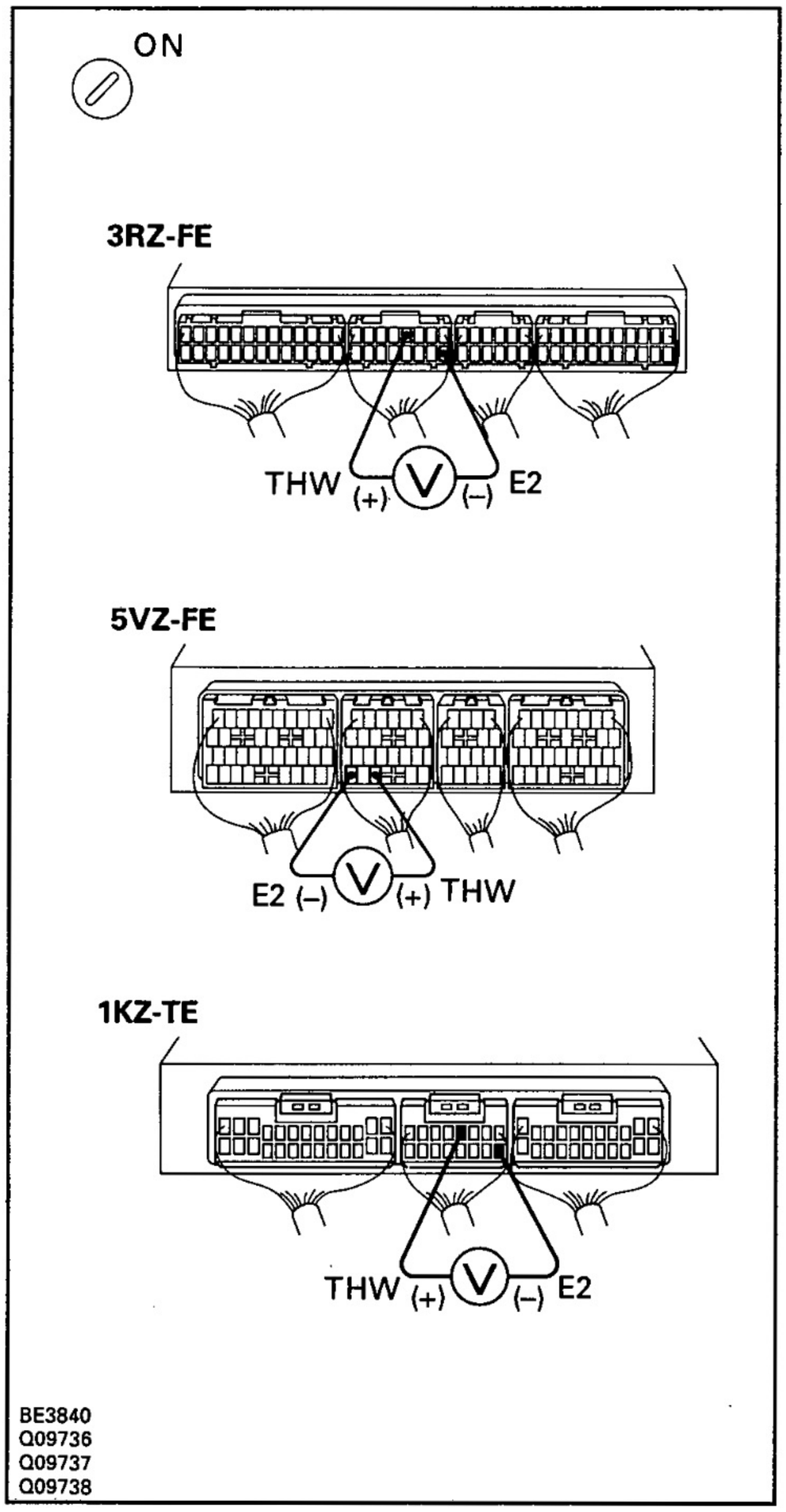

PREPARATION:
Turn the ignition switch ON.

CHECK:
Measure voltage between terminals THW and E2 of Engine & ECT ECU.

OK:

Water temperature °C (°F)	Voltage
Engine is cool 20 (68)	0.5 – 3.4 V
Engine is hot 80 (176)	0.2 – 1.5 V

OK → **Proceed to next circuit inspection shown on matrix chart (See page AT-39).**

2	Check water temperature sensor.

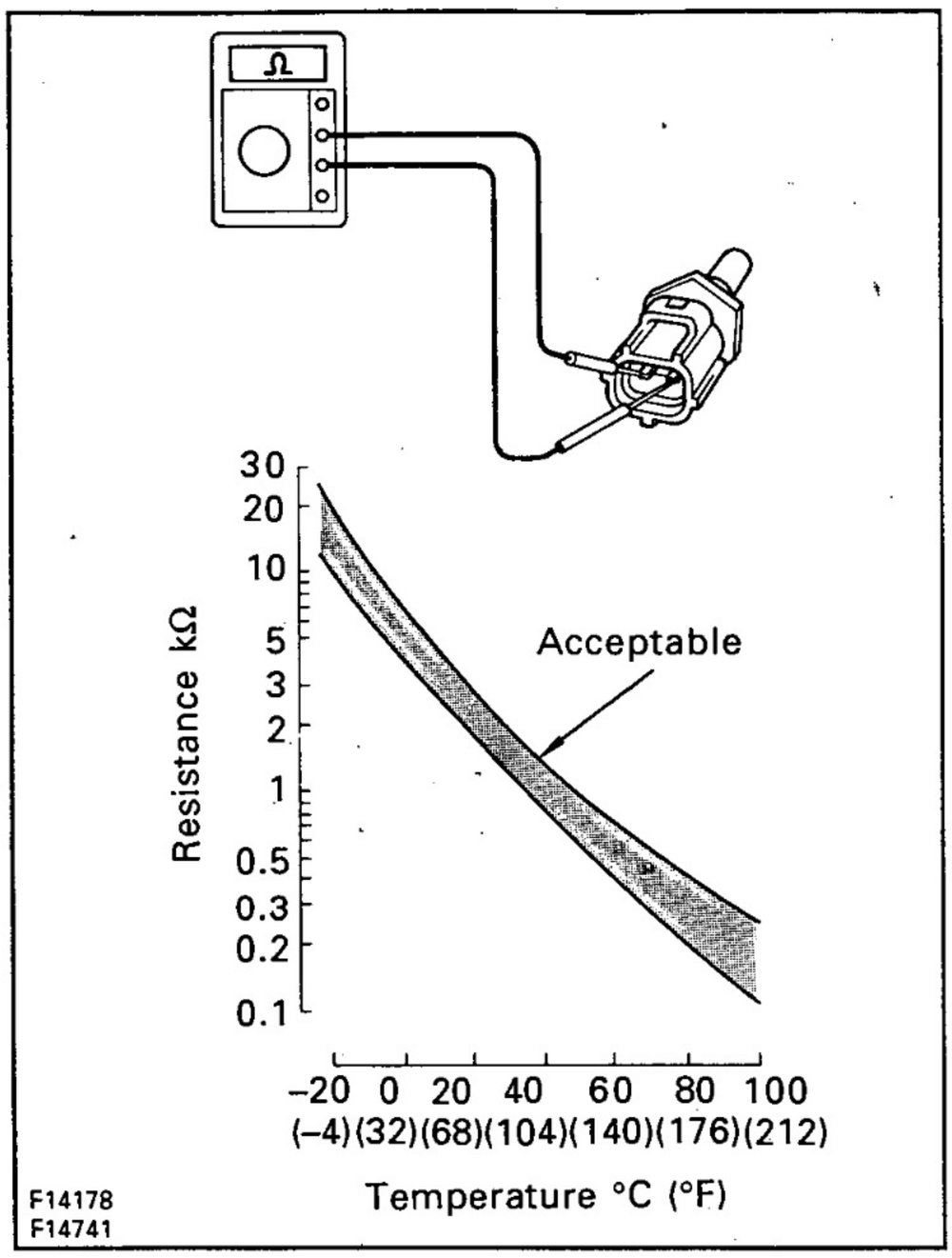

PREPARATION:
Disconnect the water temperature sensor connector.

CHECK:
Measure resistance between terminals.

OK:
Resistance is within Acceptable Zone on chart.

AT

OK

NG → **Replace the water temperature sensor.**

3	Check harness and connector between water temperature and Engine & ECT ECU (See page IN-30).

OK

NG → **Repair or replace the harness or connector.**

Check and replace the Engine & ECT ECU.

A/T.P. (Automatic Transmission Parking) Indicator Circuit

CIRCUIT DESCRIPTION

The propeller shaft and wheels are free even when the transmission shift lever is set to P as long as the transfer shift lever is in Neutral range. The A/T.P. indicator light lights up to warn the drive that the propeller shaft and wheels are not locked.
If the A/T.P. indicator light goes on, the transfer shift lever should be shifted out of N range.

WIRING DIAGRAM

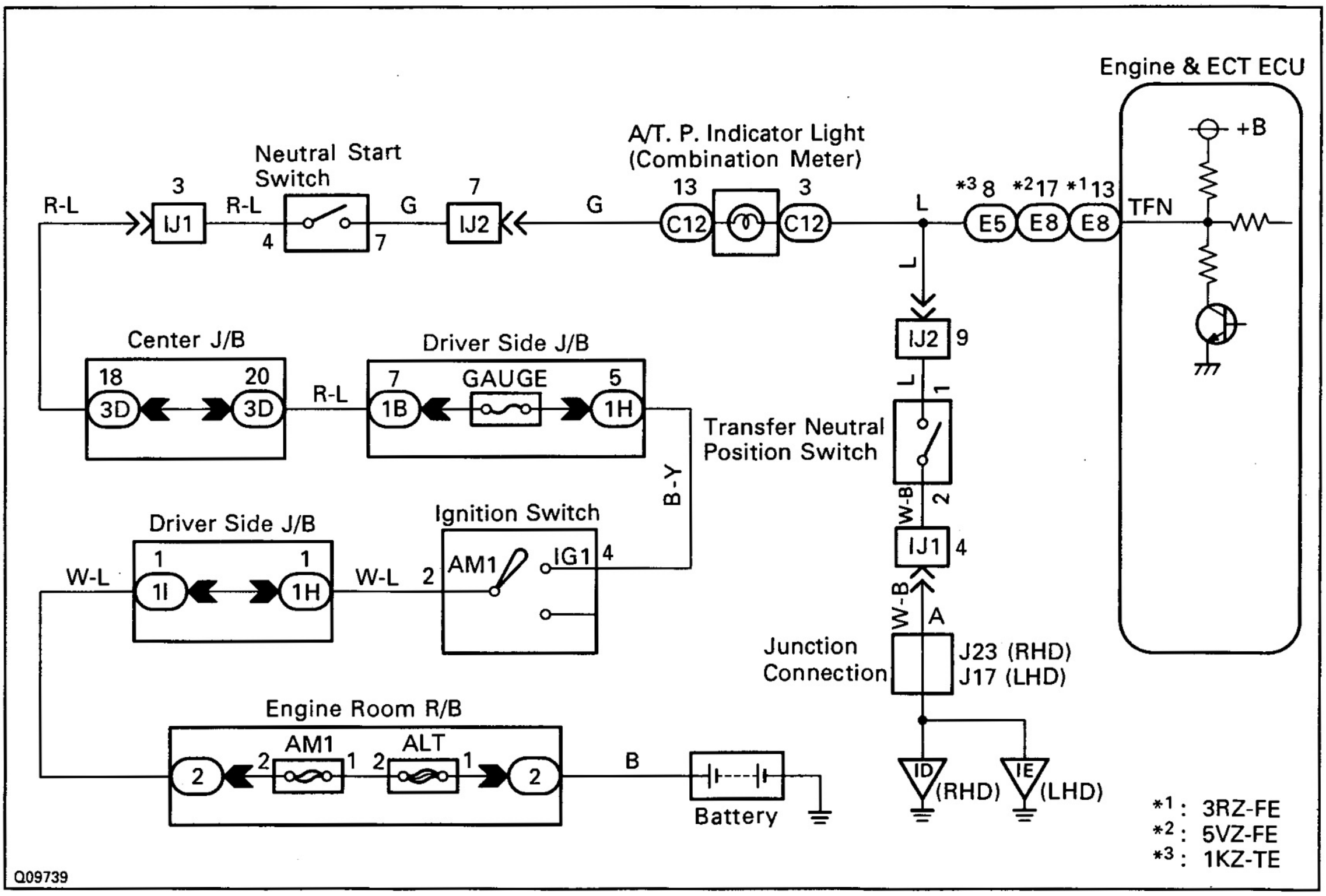

INSPECTION PROCEDURE

1	**Check neutral start switch (See page AT-60).**

OK

NG → **Replace the neutral start switch.**

2	Check transfer neutral position switch (See page TR-55).

NG

OK → Replace the transfer neutral position switch.

3	Check combination meter (See page BE-5).

OK

NG → Repair or replace the combination meter.

Check and replace the harness and connector (See page IN-30).

TE1 Terminal Circuit

CIRCUIT DESCRIPTION

The Engine & ECT ECU displays DTCs using the O/D OFF indicator light when terminals TE1 and E1 of the check connector are connected.

WIRING DIAGRAM

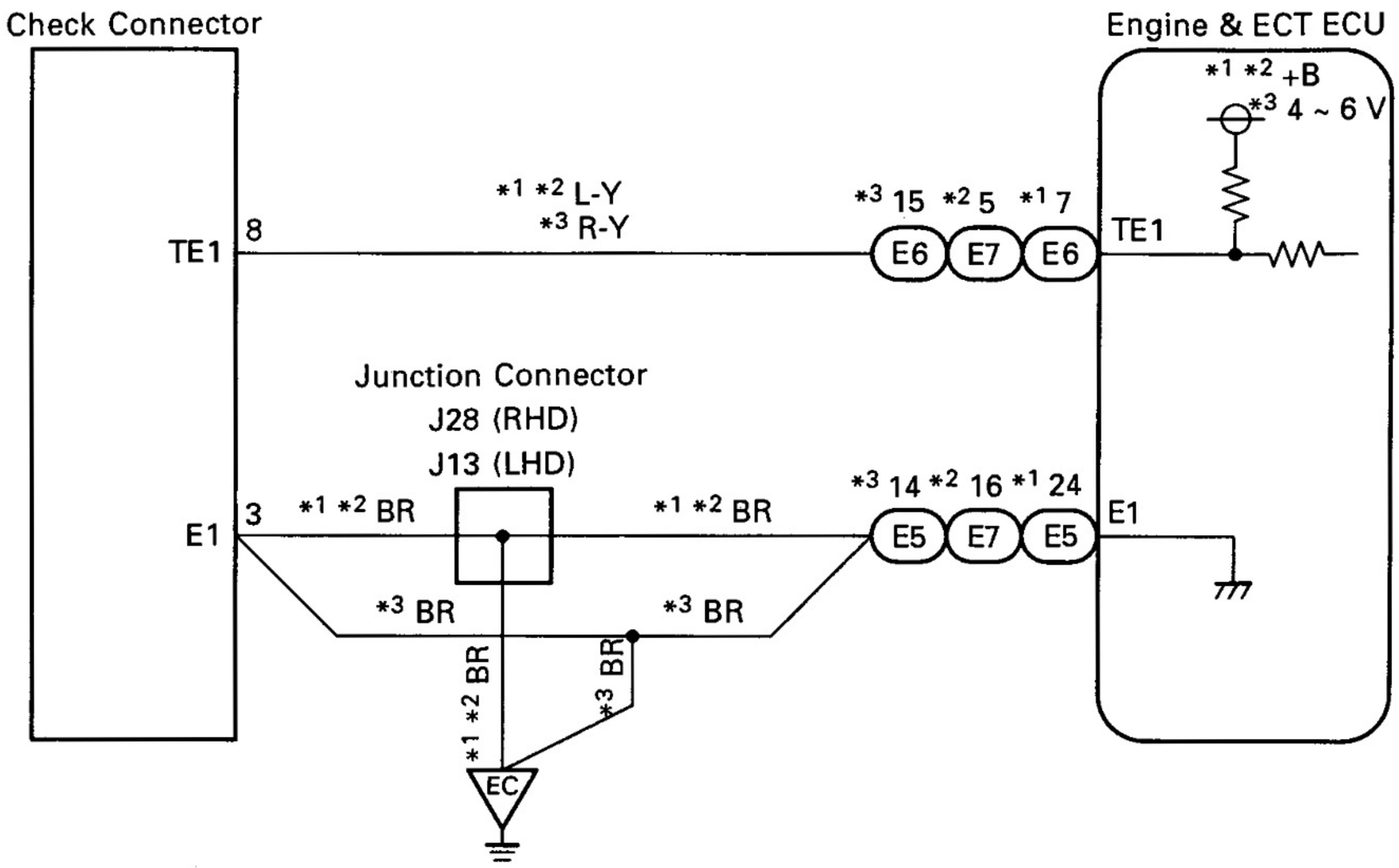

INSPECTION PROCEDURE

1	Check voltage between terminals TE1 and E1 of check connector.

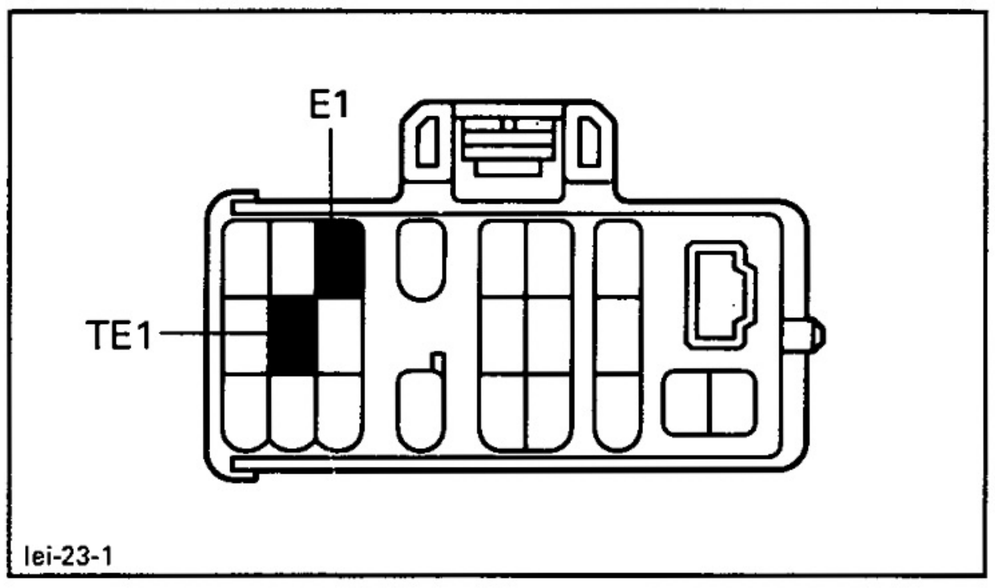

CHECK:

(a) Turn the ignition switch ON.
(b) Measure voltage between terminals TE1 and E1 of check connector.

OK:

Voltage: 3RZ-FE, 5VZ-FE: 9 ~ 14 V
1KZ-TE: 4 ~ 6 V

NG

OK → **Proceed to next circuit inspection shown on matrix chart (See page AT-39).**

2	Check harness and connector between body ground and check connector, check connector and Engine & ECT ECU (See page IN-30).

OK

Check and replace the Engine & ECT ECU.

NG

Repair or replace the harness or connector.

TT Terminal Circuit

CIRCUIT DESCRIPTION

Checks of Engine & ECT ECU input and output signals related to the throttle position sensor, brakes, shift range and other circuits can be done by measuring the voltages at terminal TT of the check connector.

WIRING DIAGRAM

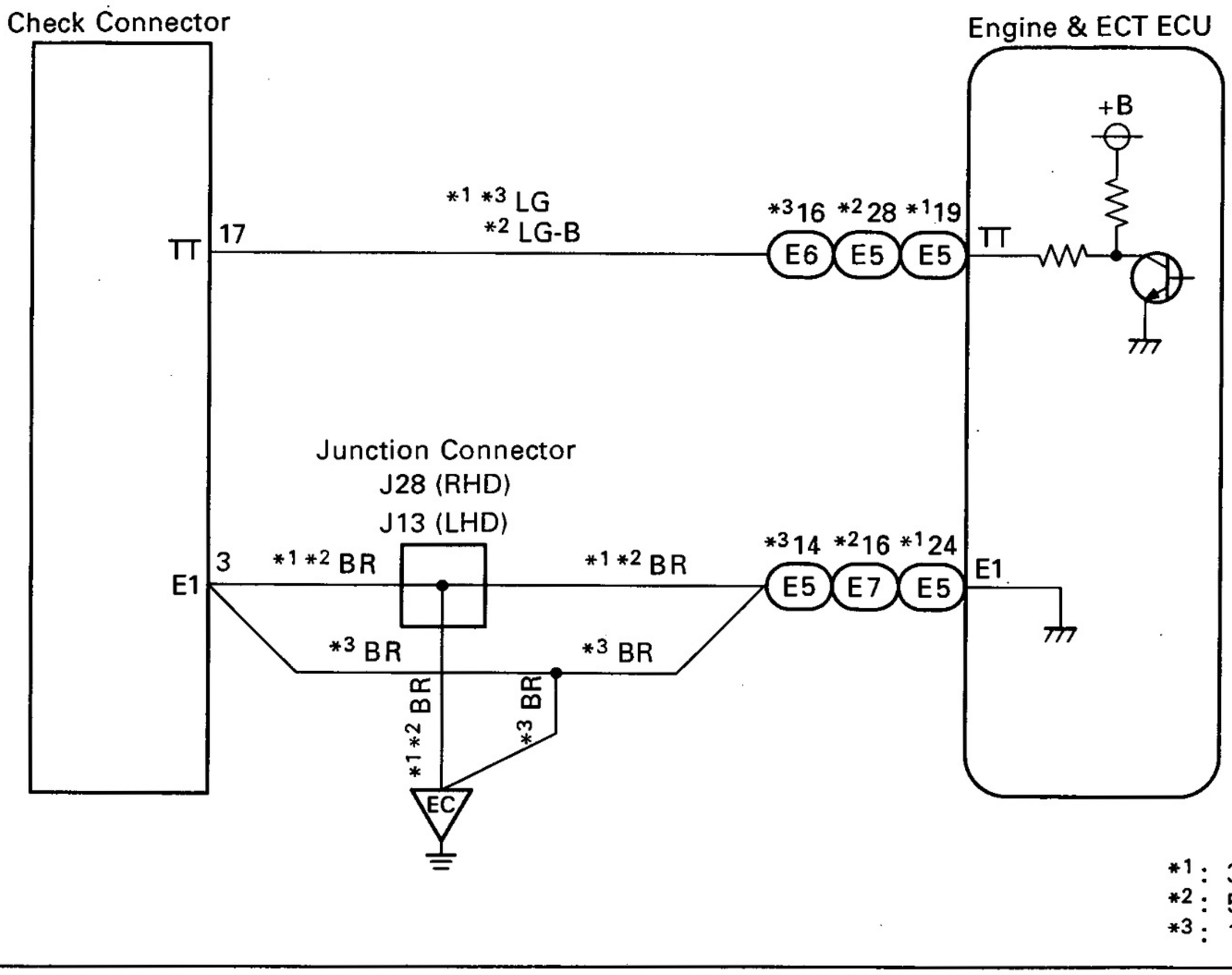

Q09741

INSPECTION PROCEDURE

1	**Check harness and connector between body ground and check connector, check connector and Engine & ECT ECU (See page IN-30).**

OK

Check and replace the Engine & ECT ECU.

NG

Repair or replace the harness or connector.

SERVICE SPECIFICATIONS

SERVICE DATA

AX0A5-0Y

Line pressure (wheel locked)	3RZ-FE:			
	Engine idling			
	D range	363-421 kPa	3.7-4.3 kgf/cm²	53-61 psi
	R range	609-706 kPa	6.2-7.2 kgf/cm²	88-102 psi
	AT stall (Throttle valve fully opened)			
	D range	932-1,176 kPa	9.5-12.0 kgf/cm²	135-171 psi
	R range	1,570-1,912 kPa	16.0-19.5 kgf/cm²	228-277 psi
	5VZ-FE:			
	Engine idling			
	D range	363-421 kPa	3.7-4.3 kgf/cm²	53-61 psi
	R range	609-696 kPa	6.2-7.1 kgf/cm²	88-101 psi
	AT stall (Throttle valve fully opened)			
	D range	903-1,147 kPa	9.2-11.7 kgf/cm²	131-166 psi
	R range	1,432-1,941 kPa	14.6-19.8 kgf/cm²	208-282 psi
	1KZ-TE:			
	Engine idling			
	D range	363-421 kPa	3.7-4.3 kgf/cm²	53-61 psi
	R range	609-696 kPa	6.2-7.1 kgf/cm²	88-101 psi
	AT stall (Throttle valve fully opened)			
	D range	883-1,186 kPa	9.0-12.1 kgf/cm²	128-172 psi
	R range	1,442-1,951 kPa	14.7-19.9 kgf/cm²	209-283 psi
Engine stall revolution	3RZ-FE	2,000±150 rpm		
	5VZ-FE	2,250±150 rpm		
	1KZ-TE	2,350±150 rpm		
Time lag	N → D range	Less than 1.2 seconds		
	N → R range	Less than 1.5 seconds		
Engine idle speed (In N range and A/C OFF)	3RZ-FE, 5VZ-FE, 1KZ-TE	700±50 rpm		
Throttle cable adjustment (Throttle valve fully closed)		Between boot and face and inner cable stopper		
		0-1 mm	0-0.04 in.	
Drive plate runout	Max.	0.20 mm	0.0079 in.	
Torque converter runout	Max.	0.30 mm	0.0118 in.	
Torque converter correct distance	3RZ-FE	More than 31.75 mm	More than 1.2500 in.	
	5VZ-FE	More than 17.95 mm	More than 0.7067 in.	
	1KZ-TE	More than 44.67 mm	More than 1.7587 in.	

AT

3RZ—FE:

SHIFT POINT (NORM and PWR pattern)

Shift range	Shifting point		Vehicle speed km/h (mph)
D	Throttle valve fully opened	1→2	55—59 (34—37)
		2→3	101—108 (63—67)
		3→O/D	133—141 (83—88)
		O/D→3	127—135 (79—84)
		3→2	93—100 (58—62)
		2→1	42—46 (26—29)
	Throttle valve fully closed	3→O/D	32—36 (20—22)
		O/D→3	24—28 (15—17)
2	Throttle valve fully opened	1→2	55—59 (34—37)
		3→2	*105—113 (65—70)
		2→1	42—46 (26—29)
L	Throttle valve fully opened	2→1	*51—55 (32—34)

* Constant regardless of the throttle opening angle.

LOCK—UP POINT (NORM and PWR Pattern)

D range Throttle valve opening 5%	Lock—up ON km/h (mph)	Lock—up OFF km/h (mph)
O/D Gear	77—82 (48—51)	71—75 (44—47)

5VZ—FE:

SHIFT POINT (NORM and PWR pattern)

Shift range	Shifting point		Vehicle speed km/h (mph)
D	Throttle valve fully opened	1→2	58—62 (36—39)
		2→3	106—114 (66—71)
		3→O/D	141—149 (88—93)
		O/D→3	134—142 (83—88)
		3→2	98—106 (61—66)
		2→1	41—45 (25—28)
	Throttle valve fully closed	3→O/D	41—45 (25—28)
		O/D→3	21—26 (13—16)
2	Throttle valve fully opened	1→2	58—62 (36—39)
		3→2	*111—119 (69—74)
		2→1	41—45 (25—28)
L	Throttle valve fully opened	2→1	*54—58 (34—36)

* Constant regardless of the throttle opening angle.

LOCK—UP POINT (NORM and PWR Pattern)

D range Throttle valve opening 5%	Lock—up ON km/h (mph)	Lock—up OFF km/h (mph)
O/D Gear	57—61 (35—38)	50—55 (31—34)

1KZ—TE:

SHIFT POINT (NORM and PWR pattern)

Shift range	Shifting point		Vehicle speed km/h (mph)
D	Throttle valve fully opened	1→2	44—48 (27—30)
		2→3	83—88 (52—55)
		3→O/D	122—130 (76—81)
		O/D→3	115—123 (71—76)
		3→2	73—84 (45—52)
		2→1	32—37 (20—23)
	Throttle valve fully closed	3→O/D	NORM: 42—46 (26—29) PWR: 47—52 (29—32)
		O/D→3	31—35 (19—22)
2	Throttle valve fully opened	1→2	44—48 (27—30)
		3→2	*90—94 (56—58)
		2→1	32—37 (20—23)
L	Throttle valve fully opened	2→1	*52—57 (32—35)

* Constant regardless of the throttle opening angle.

LOCK—UP POINT (NORM and PWR Pattern)

D range Throttle valve opening 5%	Lock—up ON km/h (mph)	Lock—up OFF km/h (mph)
O/D Gear (NORM Pattern)	77—81 (48—50)	70—75 (43—47)
O/D Gear (PWR Pattern)	90—94 (56—58)	83—88 (52—55)

AT

AX0SC-0W

TORQUE SPECIFICATIONS

Part tightened		N·m	kgf·cm	ft·lbf
Solenoid valve x Valve body		10	100	7
Valve body x Transmission case		10	100	7
Oil strainer x Valve body		10	100	7
Oil pan		7.4	75	65 in.·lbf
Drain plug		20	205	15
Transmission shift lever assembly		5.9	60	52 in.·lbf
Transmission control rod x Shift lever		13	130	10
Rear mounting insulator x Transfer adapter		65	660	48
Rear mounting insulator x No.3 crossmember		18	185	13
Frame x No.3 crossmember		65	660	48
Frame x No.4 crossmember (5 door models)		65	660	48
Drive plate x Crankshaft (3RZ—FE)		74	750	54
Drive plate x Crankshaft (5VZ—FE)		83	850	61
Drive plate x Crankshaft (1KZ—TE)		178	1,820	132
Torque converter x Drive plate		41	420	30
Oil filler pipe		12	120	9
Oil cooler pipe clamp	10 mm head bolt	5.0	51	44 in.·lbf
	12 mm head bolt	12	120	9
Oil cooler pipe union nut		34	350	25
Transmission x Elbow		29	300	22
Transmission x Engine		71	730	53
Transmission x Starter		39	400	29
Rear end plate x Transmission		18	185	13
Front exhaust pipe x Exhaust manifold		62	630	46
Front exhaust pipe x Tail pipe (3RZ—FE, 5VZ—FE)		48	490	35
Front exhaust pipe x Tail pipe (1KZ—TE)		43	440	32
No.1 front exhaust pipe x No.2 front exhaust pipe (5VZ—FE RHD models)		48	490	35
Stabilizer bar bracket x Frame		25	260	19
Exhaust pipe clamp (3RZ—FE)		19	195	14
Exhaust pipe support bracket x Transmission (3RZ—FE)		71	730	53
Exhaust pipe support bracket x Transmission (5VZ—FE)		44	450	33
Exhaust pipe support bracket x Exhaust pipe (5VZ—FE)		44	450	33
Front differential x Front propeller shaft		74	750	54
Front propeller shaft x Transfer		74	750	54
Propeller shaft x Rear differential		74	750	54
Propeller shaft x Transfer		74	750	54
Differential front mounting cushion x Frame		137	1,400	101
Differential rear mounting cushion x Frame		87	890	64
Differential front mounting cushion x Differential		157	1,600	116
Neutral start switch	Nut	3.9	40	35 in.·lbf
	Bolt	13	130	9
No.2 speed sensor		5.4	55	48 in.·lbf
ATF temperature sensor		15	150	11

AT

TRANSFER

(VF2A) ..... TR– 2
PRECAUTION ..... TR– 2
PREPARATION ..... TR– 2
TROUBLESHOOTING ..... TR– 5
ASSEMBLY REMOVAL AND INSTALLATION ..... TR– 6
COMPONENT PARTS REMOVAL AND INSTALLATION ..... TR– 9
OIL PUMP BODY ..... TR– 18
DRIVEN SPROCKET ..... TR– 20
REAR OUTPUT SHAFT ..... TR– 22
INPUT SHAFT ..... TR– 26
PLANETARY GEAR ..... TR– 28
OIL SEALS ..... TR– 30
SERVICE SPECIFICATIONS ..... TR– 32
(VF3B) ..... TR– 35
PRECAUTION ..... TR– 35
PREPARATION ..... TR– 35
TROUBLESHOOTING ..... TR– 38
ASSEMBLY REMOVAL AND INSTALLATION ..... TR– 39
COMPONENT PARTS REMOVAL AND INSTALLATION ..... TR– 43
OIL PUMP BODY ..... TR– 56
DRIVEN SPROCKET ..... TR– 58
REAR OUTPUT SHAFT ..... TR– 60
CENTER DIFFERENTIAL ..... TR– 64
INPUT SHAFT ..... TR– 66
PLANETARY GEAR ..... TR– 68
OIL SEALS ..... TR– 70
SERVICE SPECIFICATIONS ..... TR– 72

(VF2A)

PRECAUTION

TR00P–0G

When working with FIPG material, you must observe the following.

- **Using a razor blade and gasket scraper, remove all the old FIPG material from the gasket surfaces.**
- **Thoroughly clean all components to remove all the loose material.**
- **Clean both sealing surfaces with a non–residue solvent.**
- **Apply FIPG in approx. 1 mm (0.04 in.) wide bead along the sealing surface.**
- **Parts must be assembled within 10 minutes of application. Otherwise, the FIPG material must be removed and reapplied.**

If the vehicle is equipped with a mobile communication system, refer to the precautions in the IN section.

TR

PREPARATION

SST (SPECIAL SERVICE TOOLS)

TR035–07

	09223–15020	Oil Seal & Bearing Replacer	Planetary gear outer bearing
	09304–12012	Input Shaft Front Bearing Replacer	Shift fork shaft oil seal
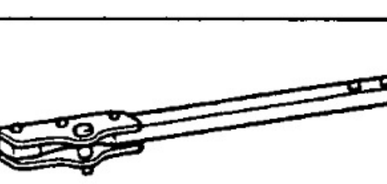	09316–60011	Transmission & Transfer Bearing Replacer	
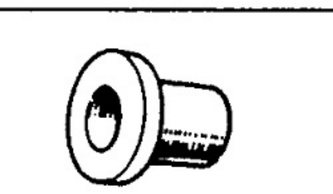	(09316–00011)	Replacer Pipe	High and low clutch hub Rear output shaft bearing Front case oil seal
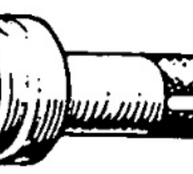	(09316–00021)	Replacer "A"	Driven sprocket front and rear be aring
	(09316–00071)	Replacer "F"	Rear output shaft bearing
	09330–00021	Companion Flange Holding Tool	Companion flange
	09515–30010	Rear Wheel Bearing Replacer	Planetary gear outer bearing
	09554–22010	Differential Oil Seal Replacer	Extension housing oil seal

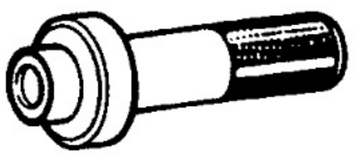	09554–30011	Differential Oil Seal Replacer	Planetary gear outer bearing
	09555–55010	Differential Drive Pinion Bearing Replacer	Driven sprocket rear bearing Rear output shaft bearing Planetary gear outer bearing
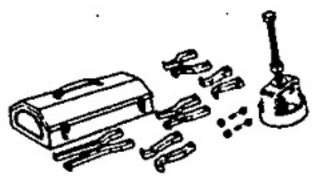	09612–65014	Steering Worm Bearing Puller	
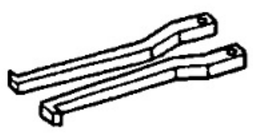	(09612–01030)	Claw "C"	Planetary gear inner bearing
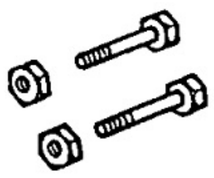	(09612–01050)	Hanger Pin with Nut	Planetary gear inner bearing
	09950–40010	Puller B Set	
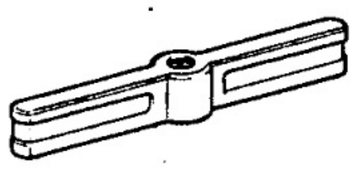	(09951–04020)	Hanger 200	Companion flange
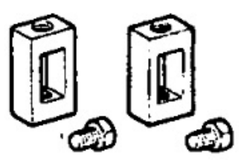	(09952–04010)	Slide Arm	Companion flange
	(09953–04030)	Center Bolt 200	Companion flange
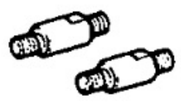	(09954–04010)	Arm 25	Companion flange
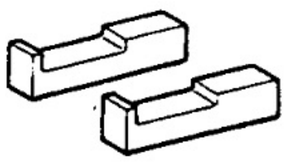	(09955–04050)	Claw No.5	Companion flange
	(09957–04010)	Attachment	Companion flange
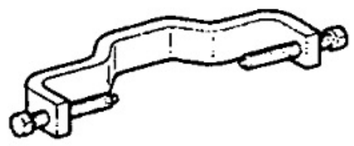	(09958–04010)	Holder	Companion flange
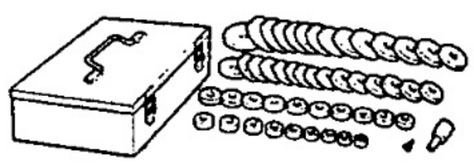	09950–60010	Replacer Set	

TR

	(09951–00220) Replacer 22	Companion flange oil seal
	(09951–00350) Replacer 35	Companion flange oil seal
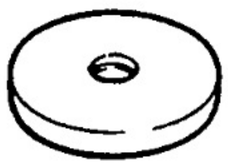	(09951–00570) Replacer 57	Planetary gear inner bearing
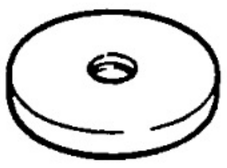	(09951–00590) Replacer 59	Front bearing retainer oil seal
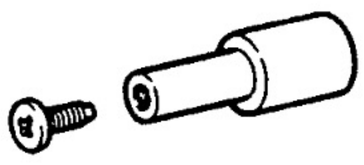	(09952–06010) Adapter	Companion flange oil seal
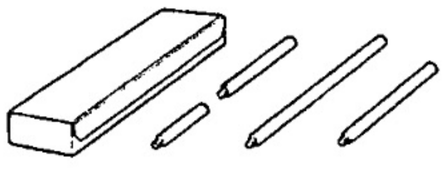	09950–70010 Handle Set	
	(09951–07100) Handle 100	Front bearing retainer oil seal Planetary gear outer bearing Planetary gear inner bearing Companion flange oil seal

TR

MT013–OP

RECOMMENDED TOOLS

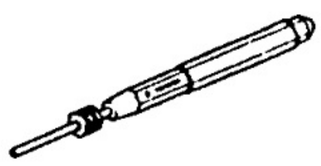	09031–00030 Pin Punch .	
	09905–00012 Snap Ring No.1 Expander .	

MX027–1E

EQUIPMENT

Calipers
Dial indicator
Micrometer
Torque wrench
Feeler gauge
Steel straight edge

MX028–1E

LUBRICANT

Item	Capacity	Classification
Transfer oil	1.0 liter (1.1 US qts, 0.9 Imp.qts)	API GL–4 or GL–5 SAE 75W–90

MX029–10

SSM (SPECIAL SERVICE MATERIALS)

08826–00090	Seal Packing 1281, THREE BOND 1281 or equivalent (FIPG)	Front case x Rear case Rear companion flange Extension housing x Rear case Front retainer x Front case
08833–00080	Adhesive 1344, THREE BOND 1344, LOCTITE 242 or equivalent	Straight screw plug Extension housing set bolt Front retainer set bolt

TROUBLESHOOTING

TR003–07

Use the table below to help you find the cause of the problem. The numbers indicate the priority of the likely cause of the problem. Check each part in order. If necessary, replace these parts.

TR

See Page / Parts Name / Trouble	TR-9 Transfer faulty	TR-4 Wrong oil grade	TR-4 Oil lever low	TR-4 Oil level too high	TR-30 Oil seal, O-ring or gasket worn or damaged	TR-9 Center differential or transfer faulty
Noise	3	2	1			
Oil leakage				1	2	
Tight corner braking						1

V06800

ASSEMBLY REMOVAL AND INSTALLATION

COMPONENTS

TR062–01

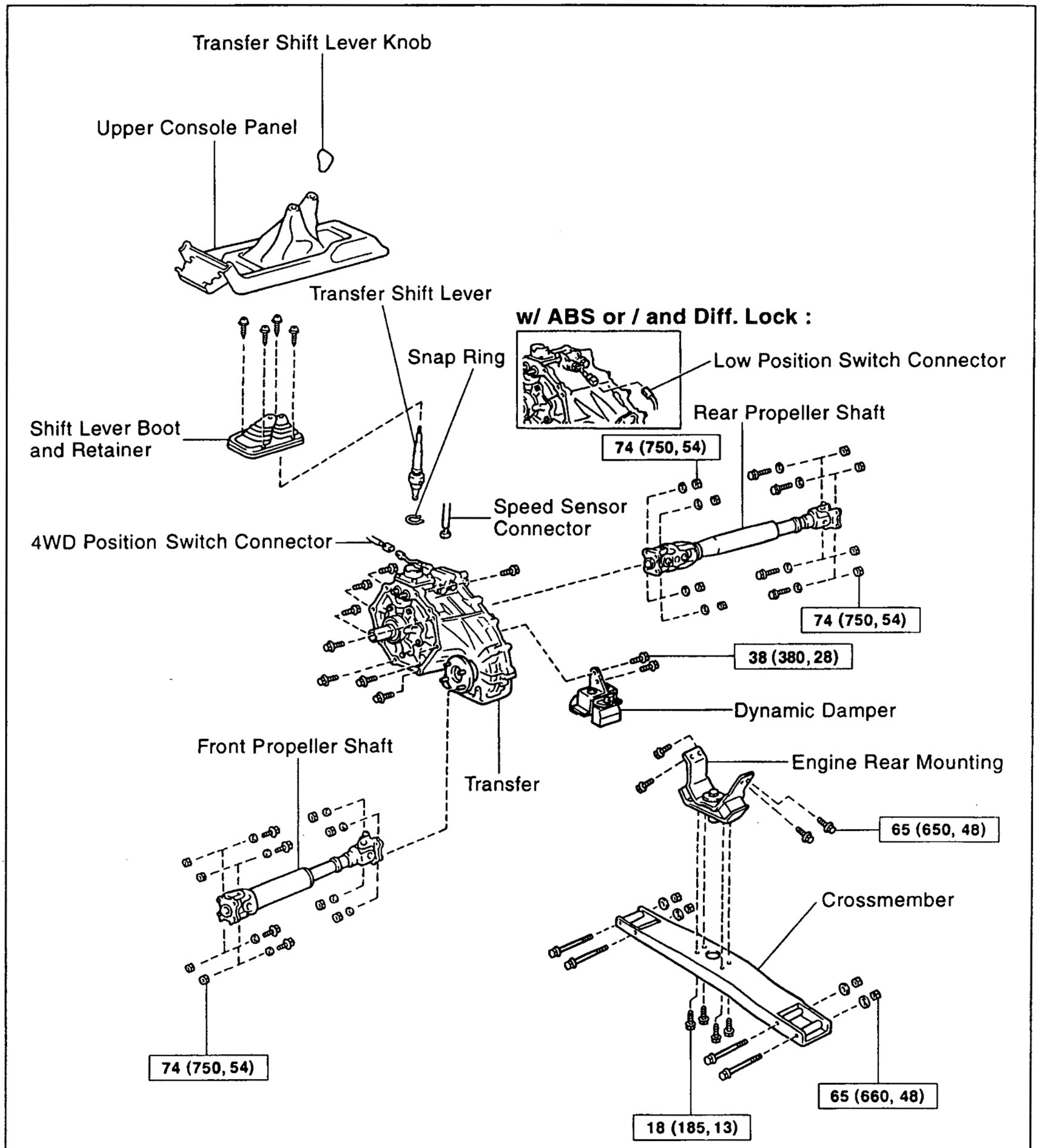

N·m (kgf·cm, ft·lbf) : Specified torque

009955

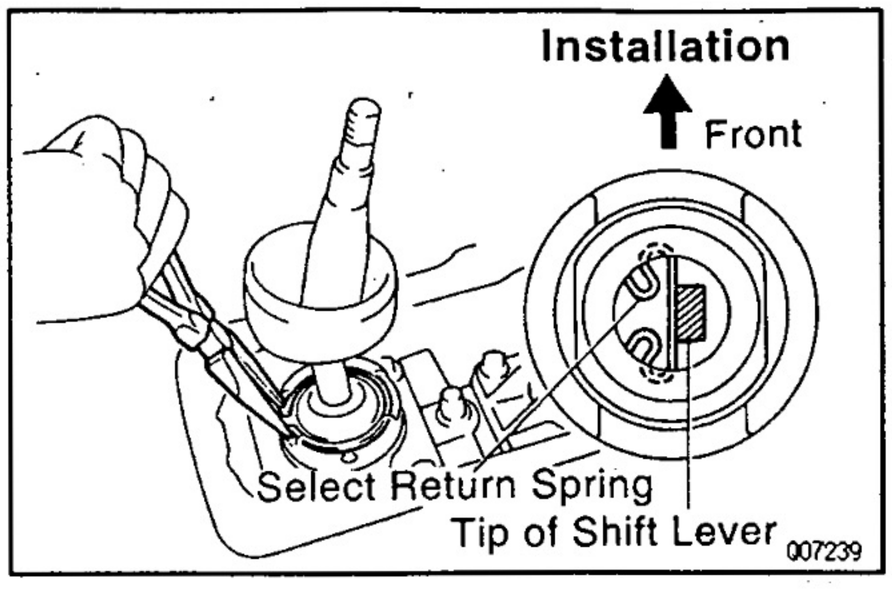

TR063–01

TRANSFER REMOVAL

1. REMOVE TRANSFER SHIFT LEVER

(a) Remove the front console box.

(b) Remove the 4 screws, shift lever boot and retainer.

(c) Using pliers, remove the snap ring and pull out the shift lever.

HINT:

- Apply MP grease to the transfer adaptor oil seal.
- Shift the 2 shift fork shafts to the high–4 position.
- After installation, road test the vehicle.

INSTALLATION HINT: Apply MP grease to the tip of the shift lever.

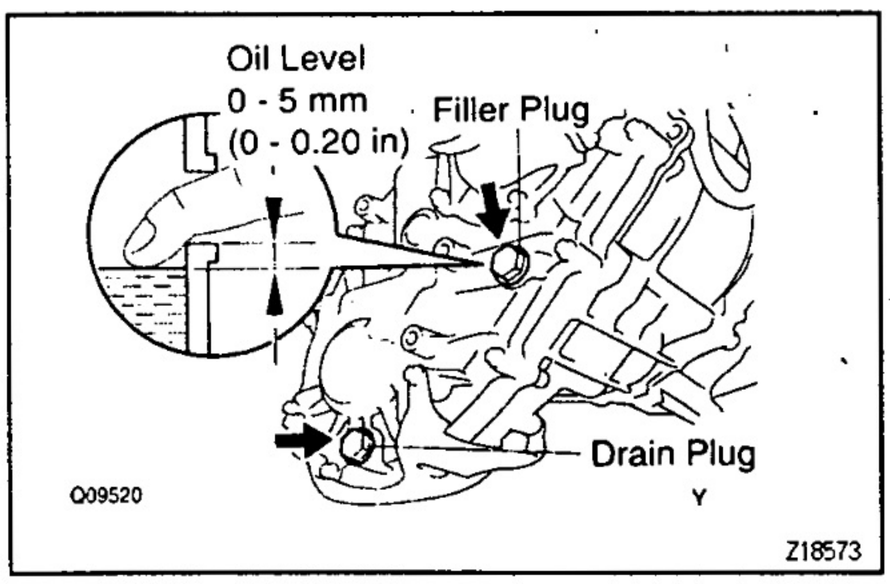

2. REMOVE BREATHER HOSE

Disconnect the breather hose from transfer upper cover and transmission control retainer.

Hose depth: 13 mm (0.51 in.) or more

3. RAISE VEHICLE AND DRAIN TRANSFER OIL

Oil grade: API GL–4 or GL–5

Viscosity: SAE 75W–90

Capacity: 1.0 liter (1.1 US qts, 0.9 Imp.qts)

4. REMOVE FRONT AND REAR PROPELLER SHAFT

(See page PR–3)

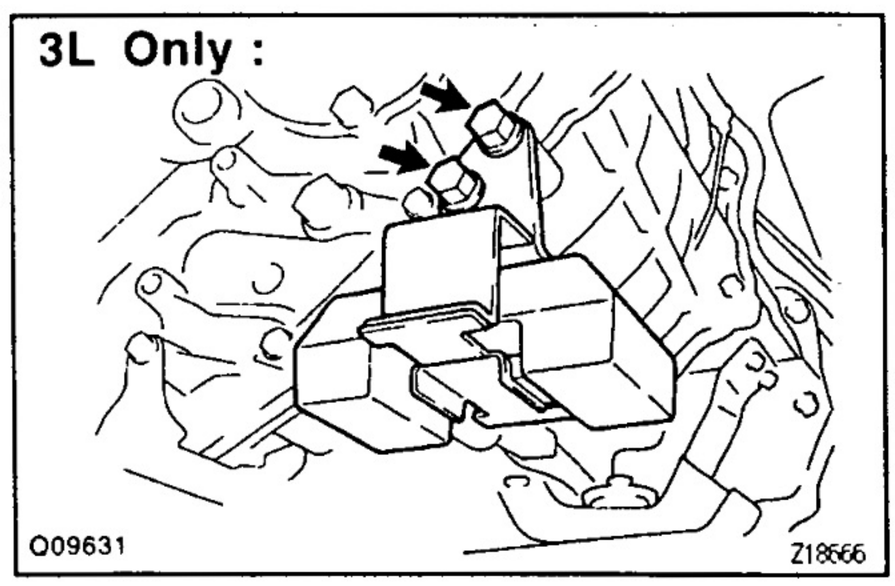

5. 3L Only:

REMOVE DYNAMIC DAMPER

Remove the 2 bolts and dynamic damper.

Torque: 38 N·m (380 kgf·cm, 28 ft·lbf)

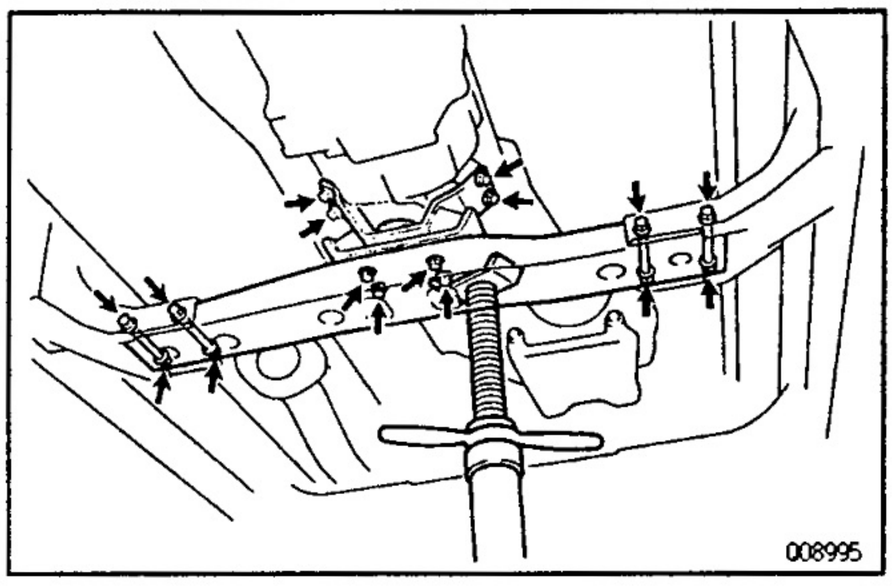

6. REMOVE CROSSMEMBER

(a) Support the transmission rear side with a jack.

(b) Remove the 4 set bolts of the engine rear mounting.
Torque: 19 N·m (190 kgf·cm, 14 ft·lbf)

(c) Remove the 4 bolts, nuts and crossmember.
Torque: 65 N·m (660 kgf·cm, 48 ft·lbf)

7. REMOVE ENGINE REAR MOUNTING

Remove the 4 bolts and engine rear mounting from the transmission.
Torque: 65 N·m (650 kgf·cm, 48 ft·lbf)

8. DISCONNECT VEHICLE SPEED SENSOR AND TRANSFER INDICATOR SWITCH CONNECTORS

TR

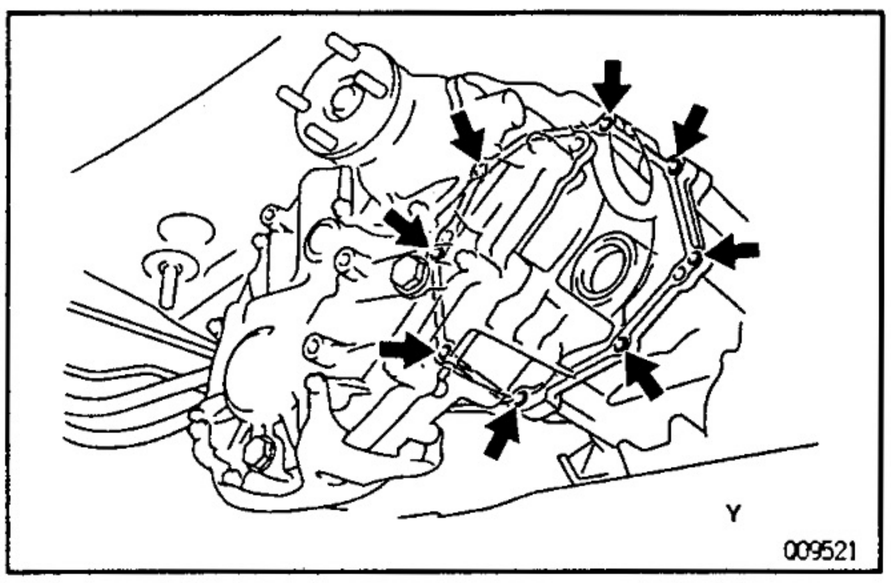

9. REMOVE TRANSFER FROM TRANSMISSION

(a) Remove the 8 bolts of the transfer adaptor mounting.
Torque: 24 N·m (240 kgf·cm, 17 ft·lbf)

(b) Pull out the transfer down and toward the rear.
HINT: Be careful not to damage the adaptor rear oil seal with the transfer input gear spline.

TRANSFER INSTALLATION

TR0BO-03

Installation is in the reverse order of removal.

COMPONENT PARTS REMOVAL AND INSTALLATION

COMPONENTS

TR064-01

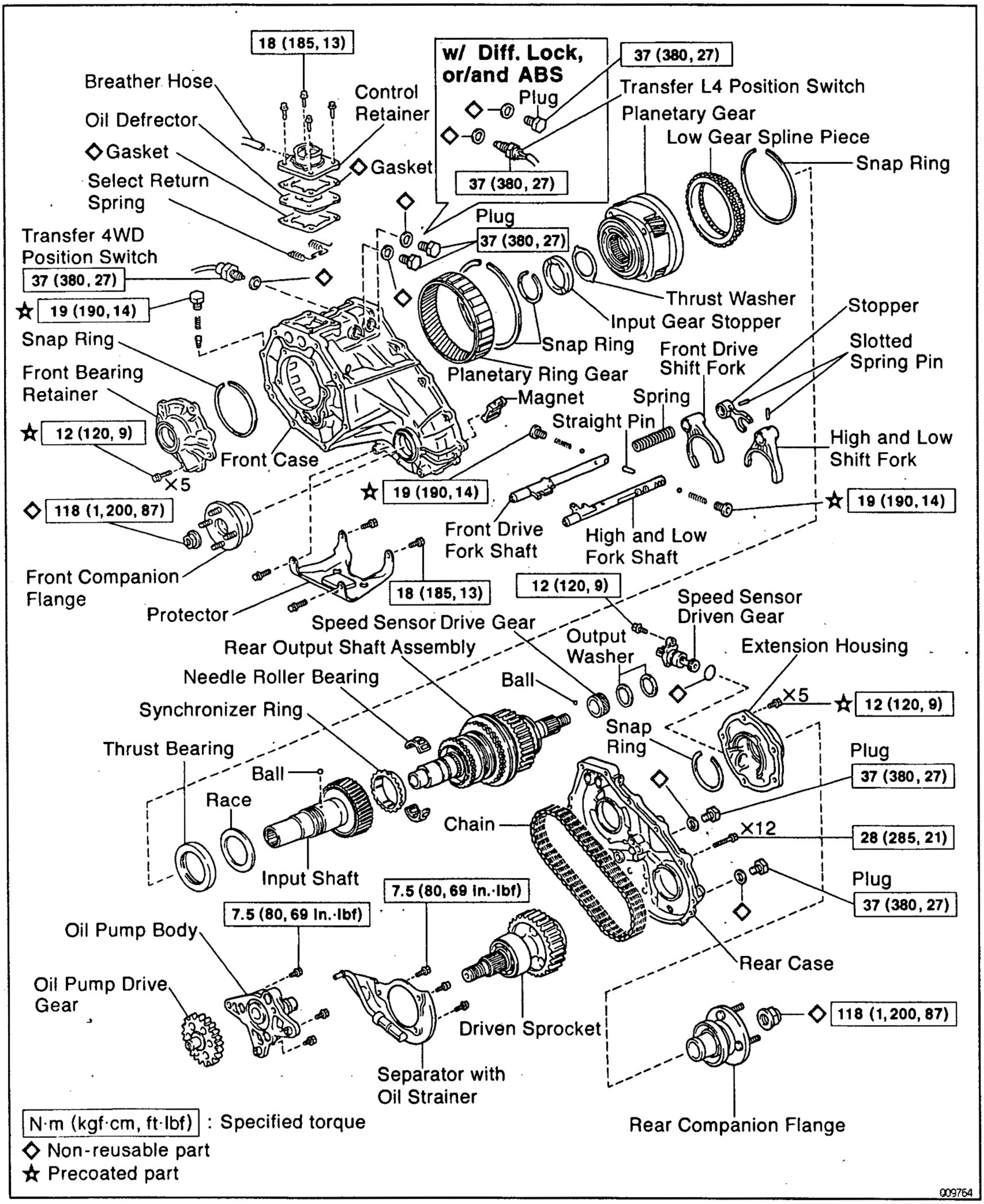

TR065-01

COMPONENT PARTS REMOVAL

1. REMOVE SPEED SENSOR DRIVEN GEAR
Torque: 12 N·m (120 kgf·cm, 9 ft·lbf)

2. w/ Diff. Lock or/and ABS
REMOVE L4 POSITION SWITCH
Torque: 37 N·m (380 kgf·cm, 27 ft·lbf)

3. REMOVE 4WD POSITION SWITCH
Torque: 37 N·m (380 kgf·cm, 27 ft·lbf)

4. REMOVE PLUGS OF FRONT CASE
Torque: 37 N·m (380 kgf·cm, 27 ft·lbf)
INSTALLATION HINT: Check the following items.
- The input and output shafts rotate smoothly.
- Shifting can be made smoothly to all positions.

5. REMOVE PROTECTOR
Remove the 4 bolts.
Torque: 18 N·m (185 kgf·cm, 13 ft·lbf)

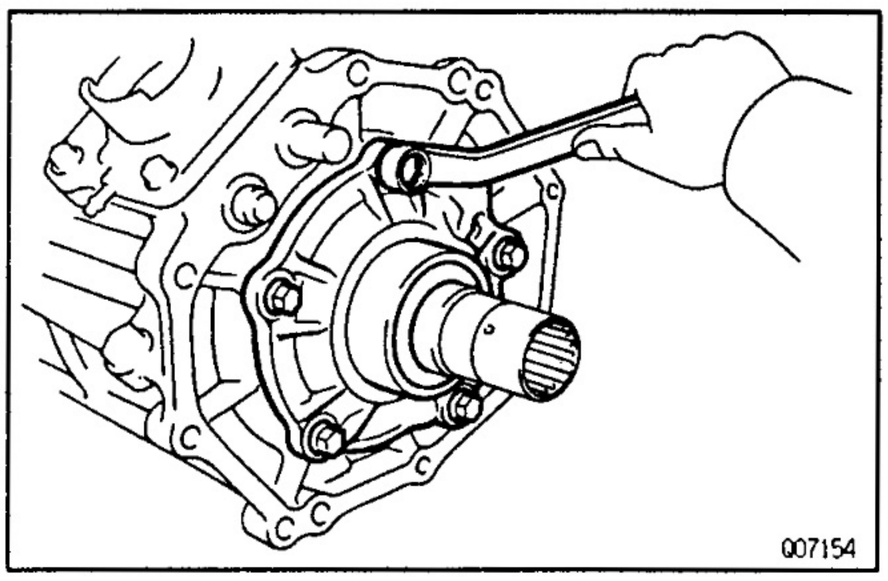

Q07154

6. REMOVE FRONT BEARING RETAINER
(a) Remove the 5 bolts.
Torque: 12 N·m (120 kgf·cm, 9 ft·lbf)
INSTALLATION HINT: Apply liquid sealer to the bolts.
Sealant: Part No. 08833 – 00080, THREE BOND 1344, LOCTITE 242 or equivalent

(b) Using a plastic hammer, tap the front bearing retainer and remove it.

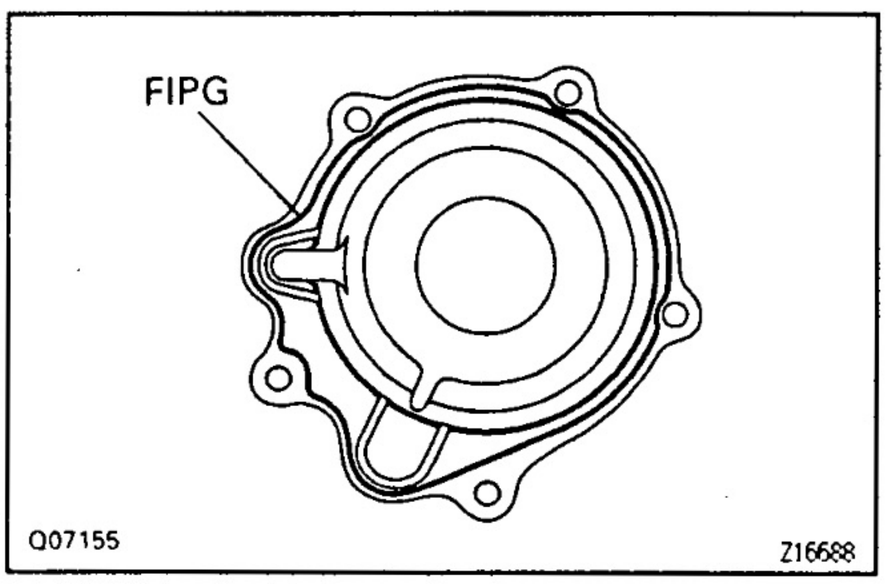

Q07155 Z16688

INSTALLATION HINT:
- Remove any FIPG material and be careful not to drop oil on the contacting surfaces of the front bearing retainer.
- Apply FIPG to the front bearing retainer, as shown.

FIPG: Part No. 08826–00090, THREE BOND 1281 or equivalent

7. REMOVE CONTROL RETAINER AND OIL DEFLECTOR
(a) Remove the 4 bolts, control retainer and oil deflector.
Torque: 18 N·m (185 kgf·cm, 13 ft·lbf)
INSTALLATION HINT: Install 2 new gaskets and control retainer.

(b) Remove the select return spring from the control retainer.

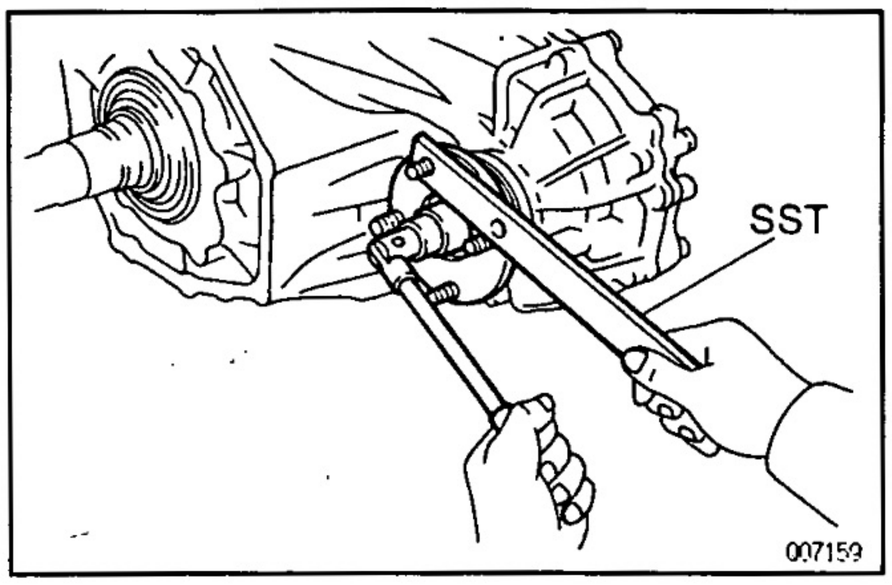

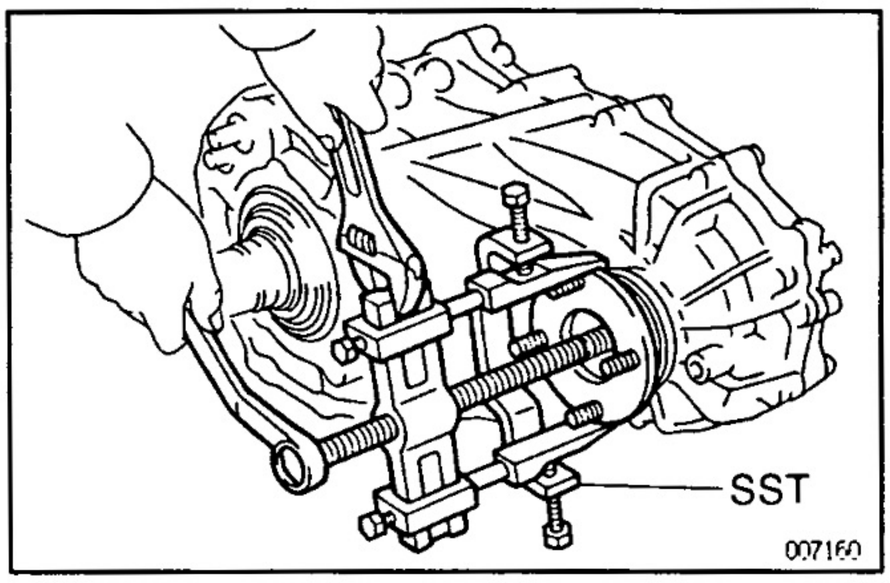

8. REMOVE FRONT COMPANION FLANGE

(a) Using a chisel and hammer, loosen the staked part of the nut.

INSTALLATION HINT: Stake a new lock nut.

(b) Using SST to hold the flange, remove the companion flange lock nut.

SST 09330–00021

Torque: 118 N·m (1,200 kgf·cm, 87 ft·lbf)

(c) Using SST, remove the companion flange.

SST 09950–40010 (09951–04020, 09952–04010, 09953–04030, 09954–04010, 09955–04050, 09958–04010)

INSTALLATION HINT: The diameter of the front companion flange is smaller than that of the rear companion flange.

9. REMOVE REAR COMPANION FLANGE

Remove the rear companion flange in the same way as the front companion flange.

10. REMOVE EXTENSION HOUSING

(a) Remove the 5 bolts.

Torque: 12 N·m (120 kgf·cm, 9 ft·lbf)

INSTALLATION HINT: Apply liquid sealer to the bolts.

Sealant: Part No. 08833 – 00080, THREE BOND 1344, LOCTITE 242 or equivalent

(b) Using a plastic hammer, tap the extension housing and remove it.

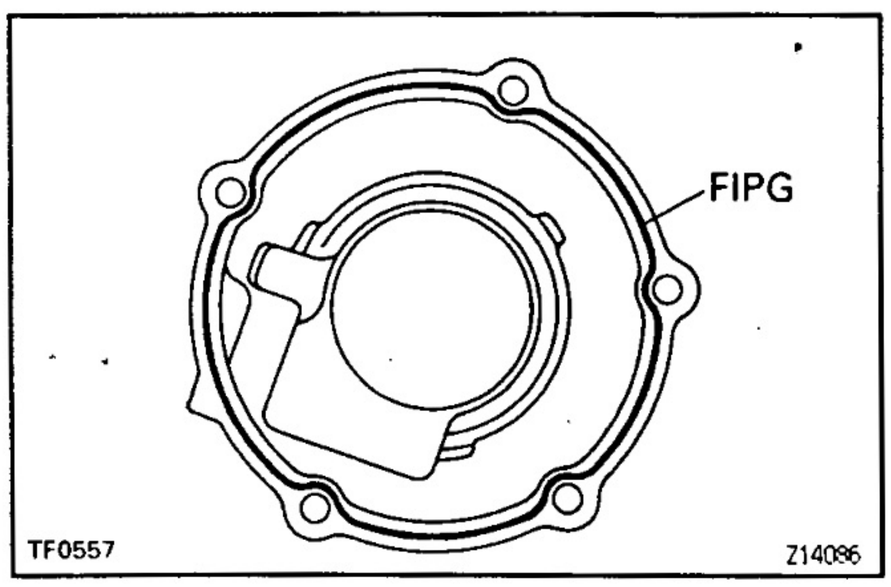

INSTALLATION HINT:

- Remove any FIPG material and be careful not to drop oil on the contacting surfaces of the extension housing.
- Apply FIPG to the extension housing, as shown.

FIPG: Part No. 08826–00090, THREE BOND 1281 or equivalent

11. REMOVE SPEED SENSOR DRIVE GEAR

(a) Remove the 2 output washers and speed sensor drive gear.
INSTALLATION HINT: Make sure to install the speed sensor drive gear in the correct direction.

(b) Using a magnetic finger, remove the ball from the rear output shaft.

12. SEPARATE FRONT CASE AND REAR CASE

(a) Remove the 12 bolts.
Torque: 28 N·m (285 kgf·cm, 21 ft·lbf)

(b) Using a screwdriver, separate the front case and rear case.

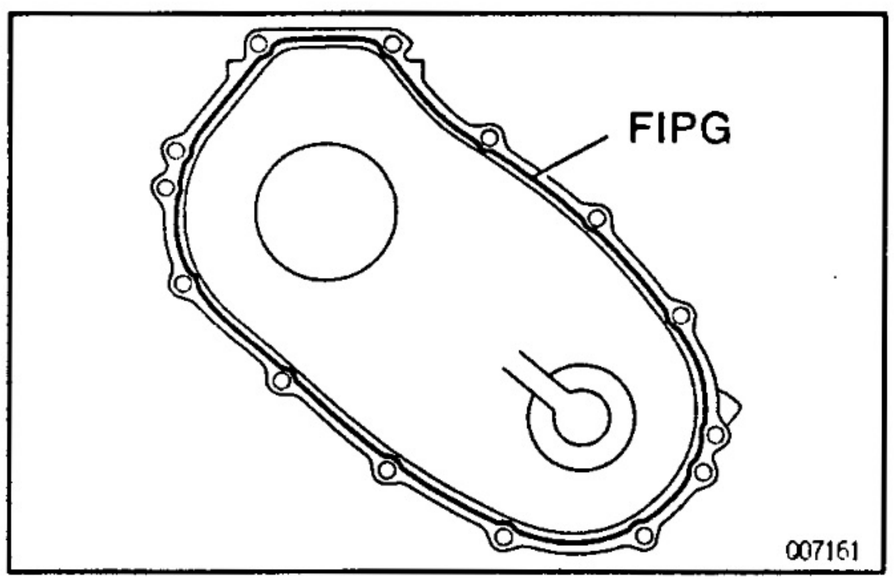

INSTALLATION HINT:
- Shift the high and low clutch sleeve to low side (rear side) and assemble the front case and rear case.
- Remove any FIPG material and be careful not to drop oil on the contacting surfaces of the rear case.
- Apply FIPG to the rear case, as shown.

FIPG: Part No.08826–00090, THREE BOND 1281 or equivalent

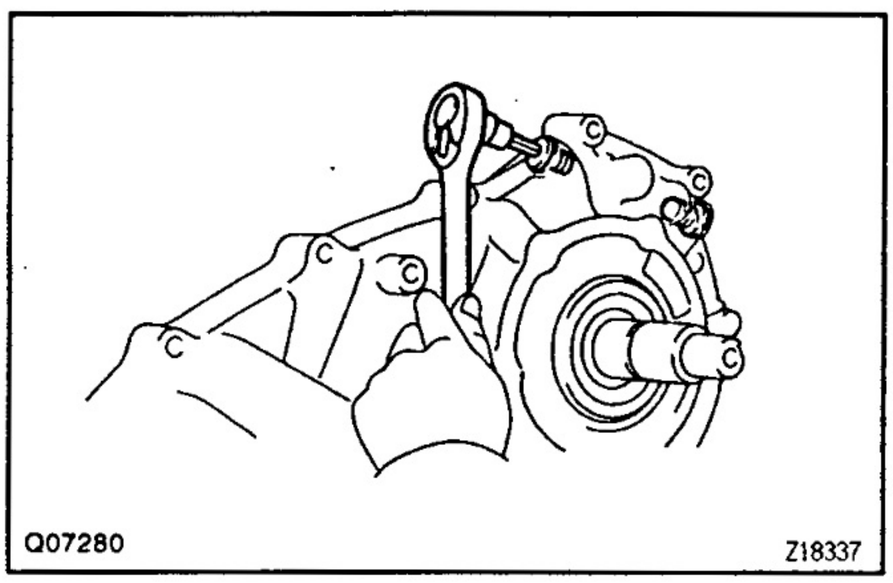

13. REMOVE STRAIGHT SCREW PLUG, SPRING AND LOCKING BALL

(a) Using a hexagon wrench, remove the screw.
Torque: 19 N·m (190 kgf·cm, 14 ft·lbf)
INSTALLATION HINT: Apply liquid sealer to the plugs.
Sealant: Part No. 08833 – 00080, THREE BOND 1344, LOCTITE 242 or equivalent

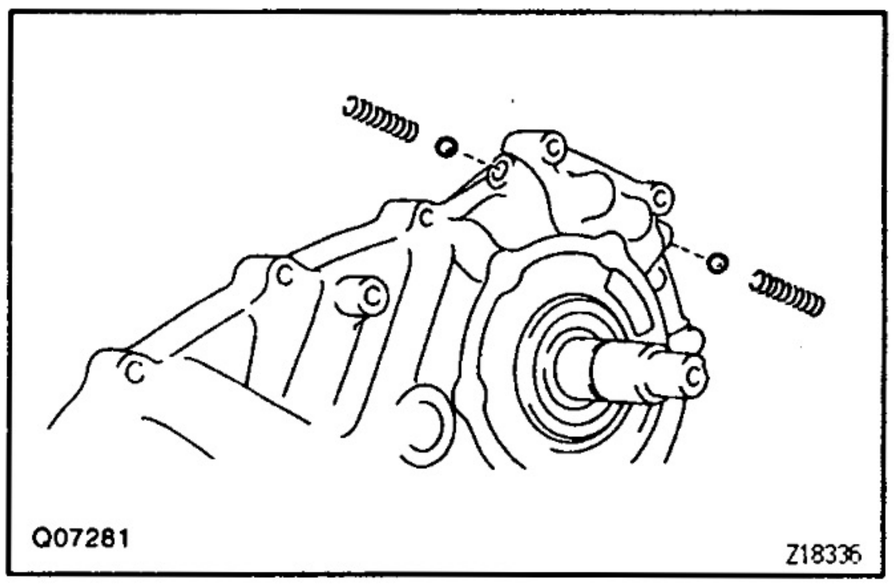

(b) Using a magnetic finger, remove the spring and ball from the both hole.

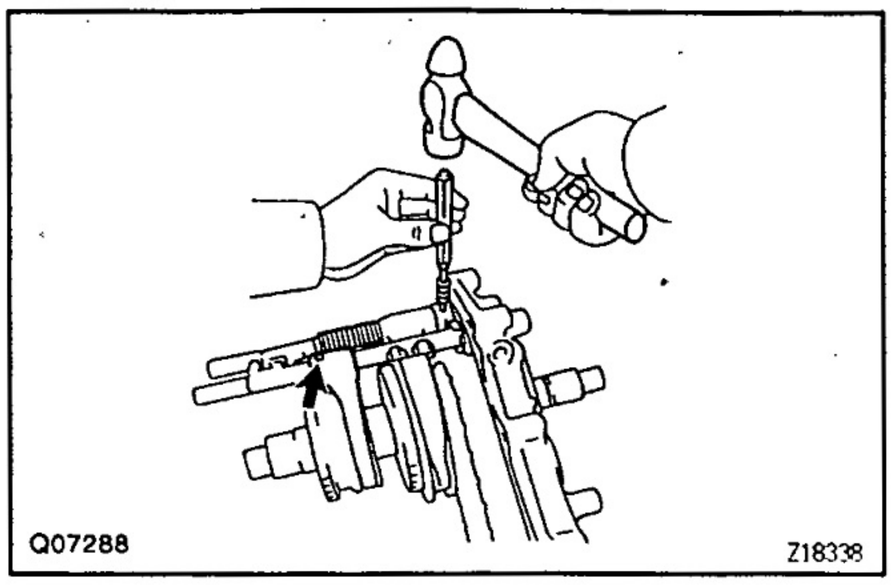

14. REMOVE FRONT DRIVE FORK SHAFT, SHIFT FORK, SPRING AND STOPPER

(a) Mount the rear case in a vise.
NOTICE: Be careful not to damage the sealing surface.

(b) Using a pin punch and hammer, drive out the 2 slotted spring pins.
HINT: Keep the pin punch inserted in the shaft hole so that the shaft will not spring loose when the pin is removed from the front drive fork shaft.

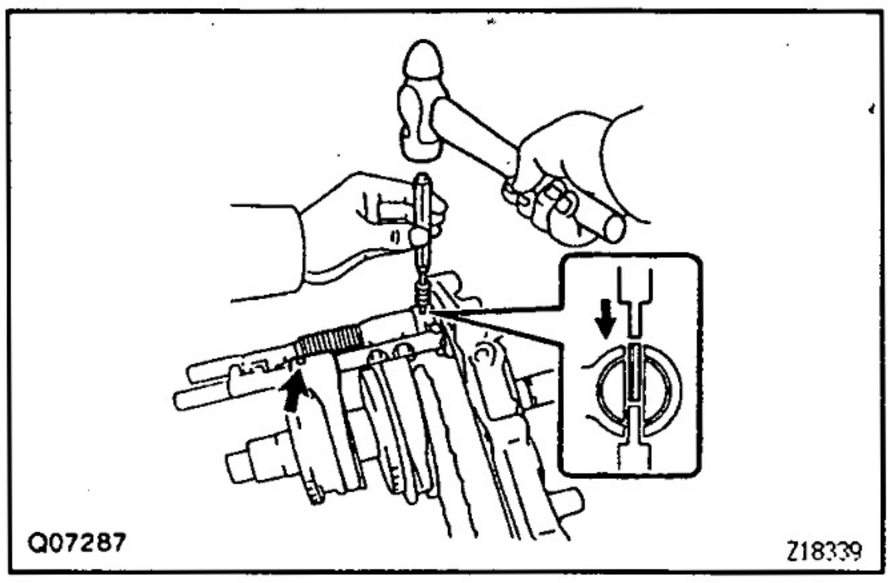

INSTALLATION HINT: When installing the pin in the front drive fork shaft, push the shaft towards the rear case and install the pin while the spring is compressed.

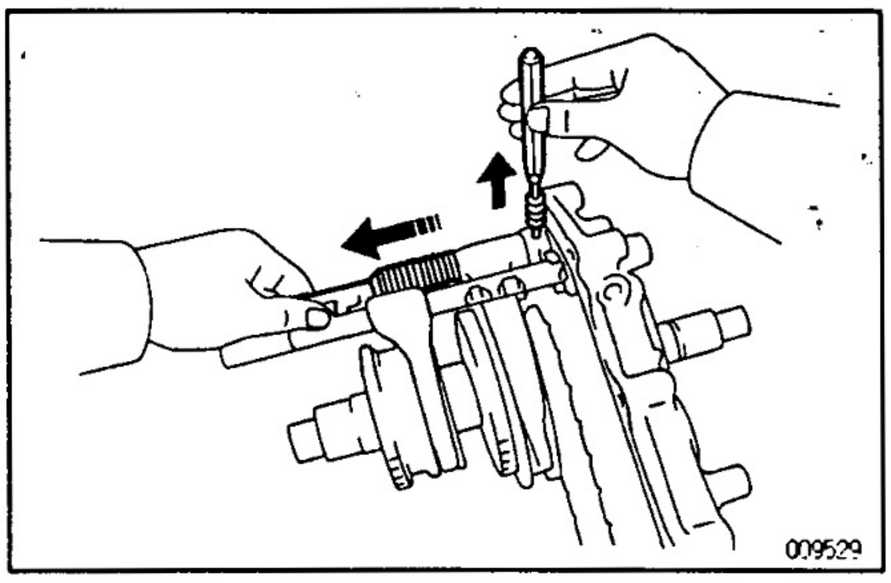

(c) Hold the front drive fork shaft in place by hand, when removing the pin punch.

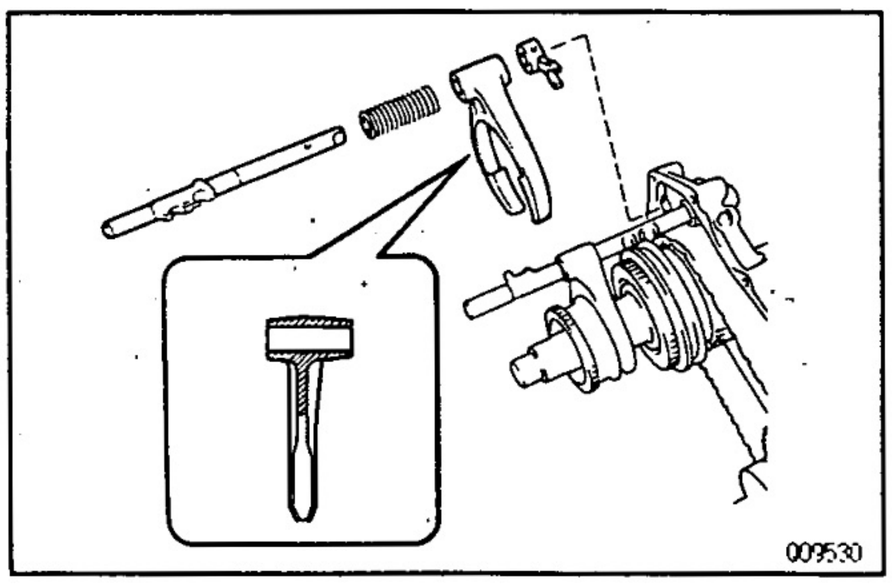

(d) Remove the front drive fork shaft, shift fork, spring and stopper.
INSTALLATION HINT:
- Place the front drive shift fork into the groove of the clutch sleeve.
- Make sure to install the shift fork and stopper in the correct direction.

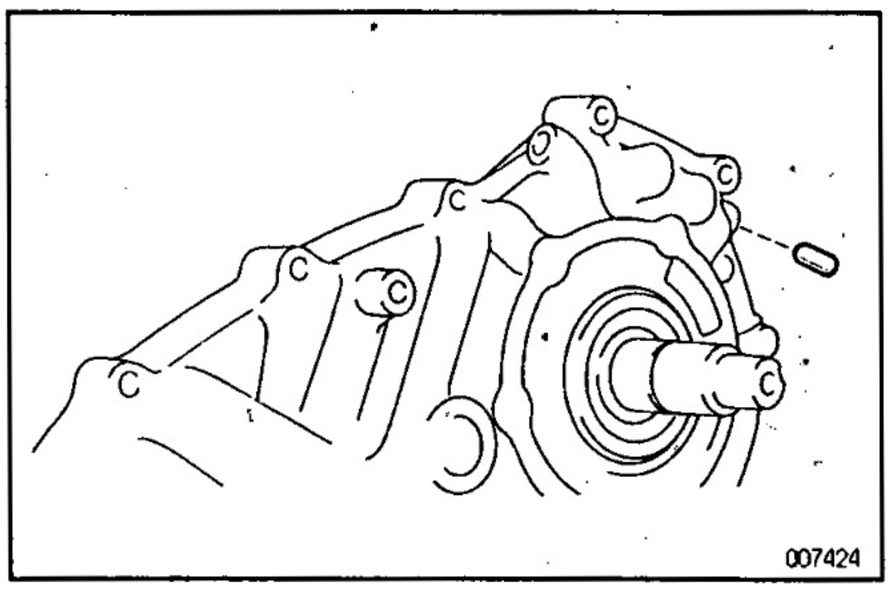

(e) Using a magnetic finger, remove the straight pin.
INSTALLATION HINT: Apply gear oil to the straight pin and insert it into the case hole.

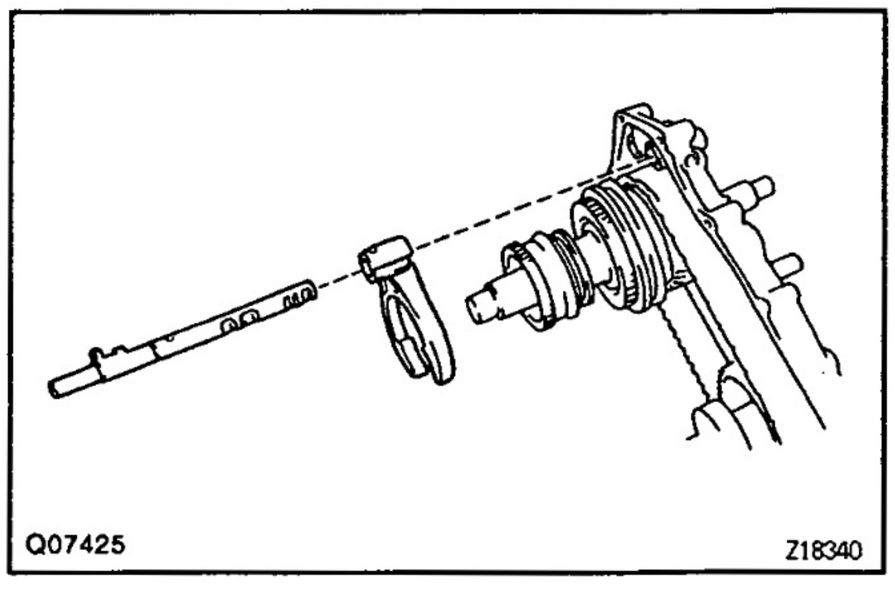

15. REMOVE HIGH AND LOW FORK SHAFT AND SHIFT FORK

INSTALLATION HINT:

- Place the high and low shift fork into the groove of the clutch sleeve.
- Make sure to install the shift fork in the correct direction.

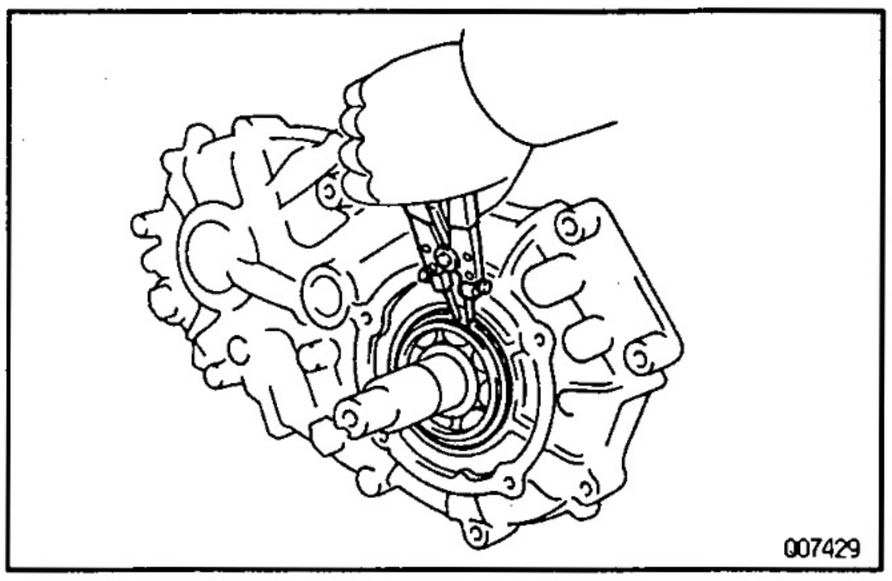

16. REMOVE REAR OUTPUT SHAFT, DRIVEN SPROCKET AND CHAIN

(a) Using a snap ring expander, remove the snap ring.

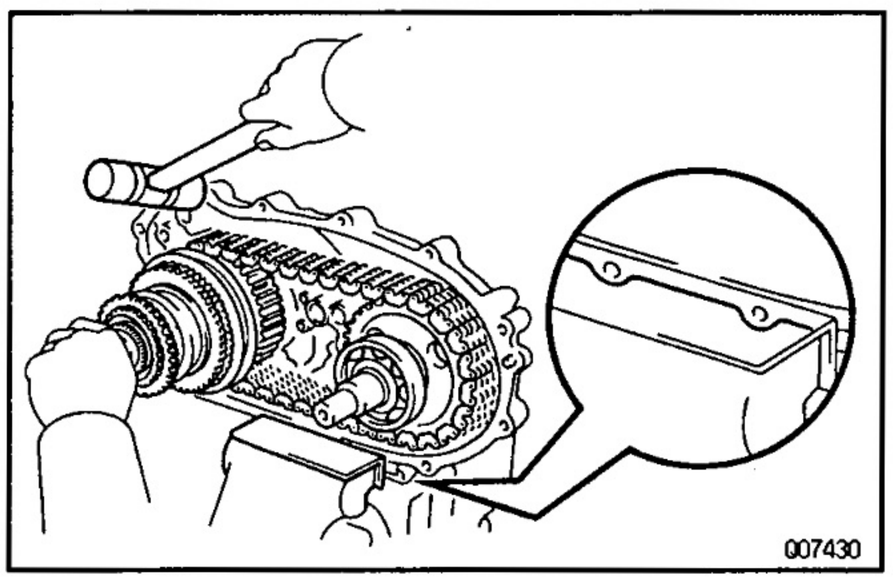

(b) Using a plastic hammer, tap the rear case with pulling the rear output shaft and driven sprocket.
INSTALLATION HINT: If necessary, heat the rear case to about 50 – 80 °C (122 – 176 °F).

(c) Remove the chain.

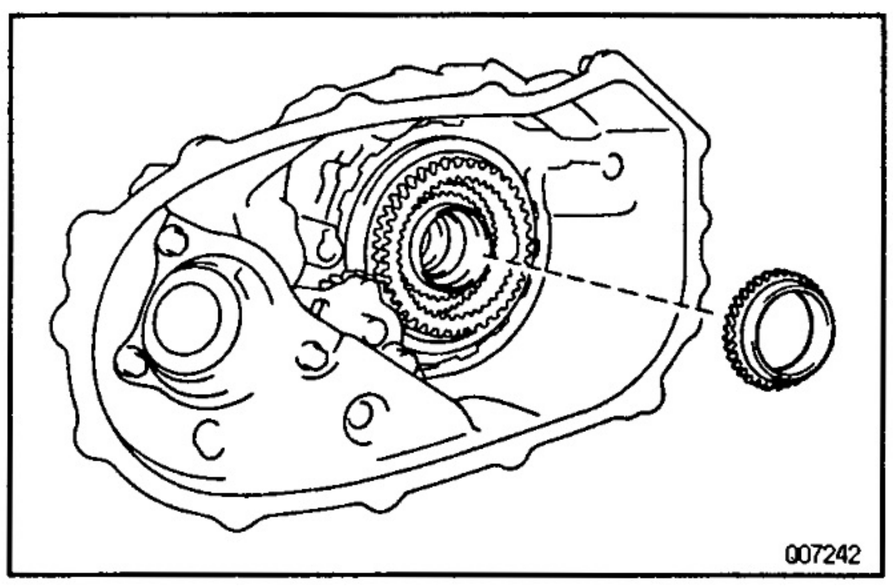

17. REMOVE SYNCHRONIZER RING FROM INPUT SHAFT

INSTALLATION HINT:

- Apply gear oil to the synchronizer ring.
- Align the synchronizer ring slots with the shifting keys, and install it on the high and low clutch hub.

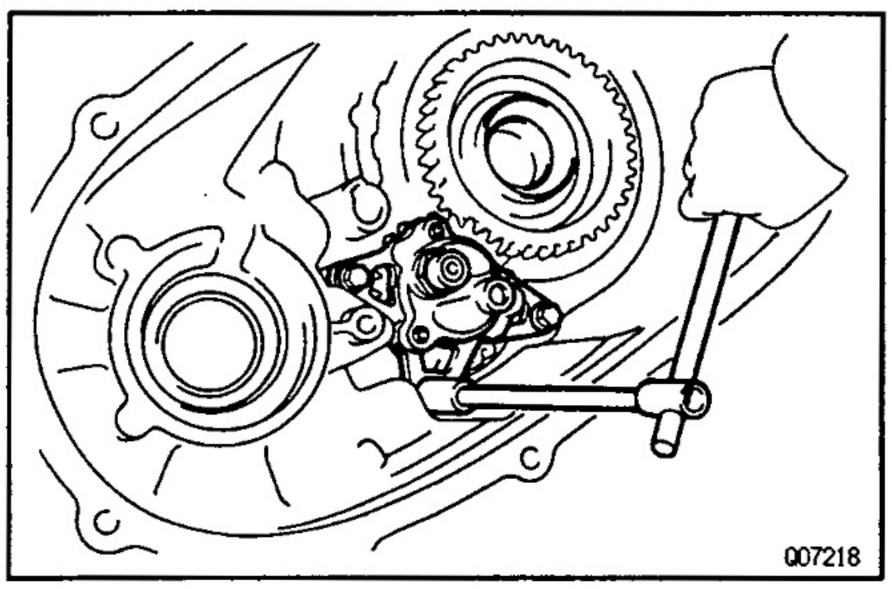

18. REMOVE SEPARATOR WITH OIL STRAINER AND MAGNET

Remove the 3 bolts and the separator with the oil strainer and magnet.

Torque: 7.5 N·m (80 kgf·cm, 69 in.lbf)

19. REMOVE OIL PUMP BODY ASSEMBLY

Remove the 3 bolts and the oil pump body assembly.

Torque: 7.5 N·m (80 kgf·cm, 69 in.lbf)

20. REMOVE OIL PUMP DRIVE GEAR

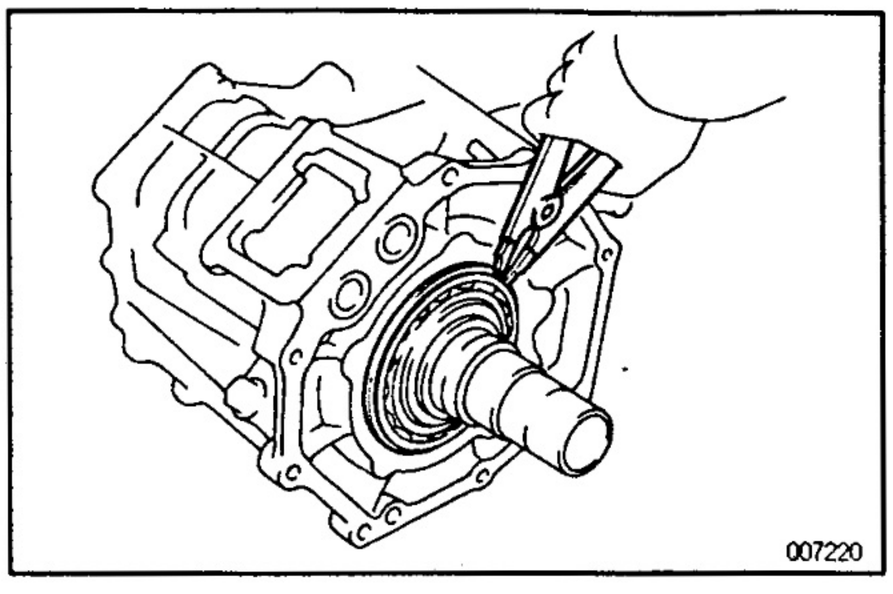

21. REMOVE PLANETARY GEAR ASSEMBLY WITH INPUT SHAFT

(a) Using a snap ring expander, remove the snap ring.

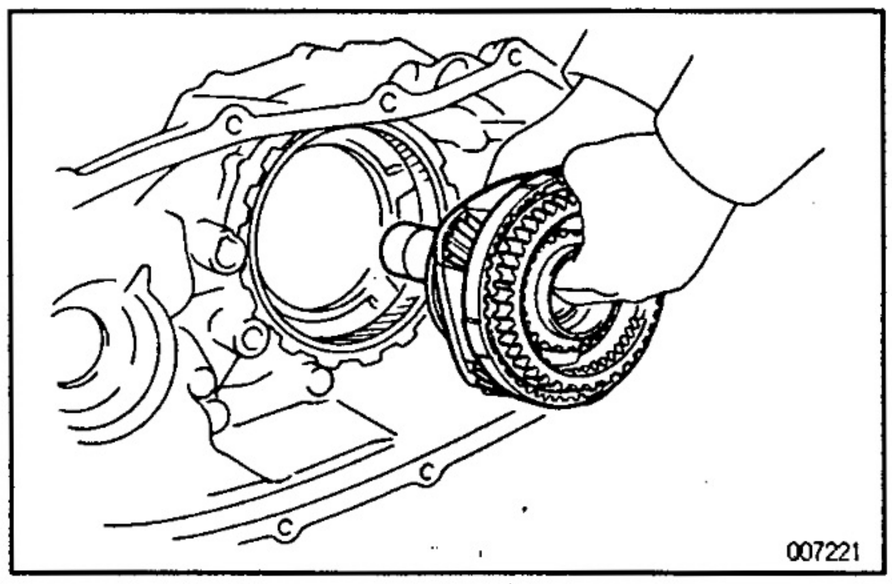

(b) Pull out the planetary gear assembly with the input shaft.

INSTALLATION HINT: If necessary, heat the front case to about 50 – 80 °C (122 – 176 °F).

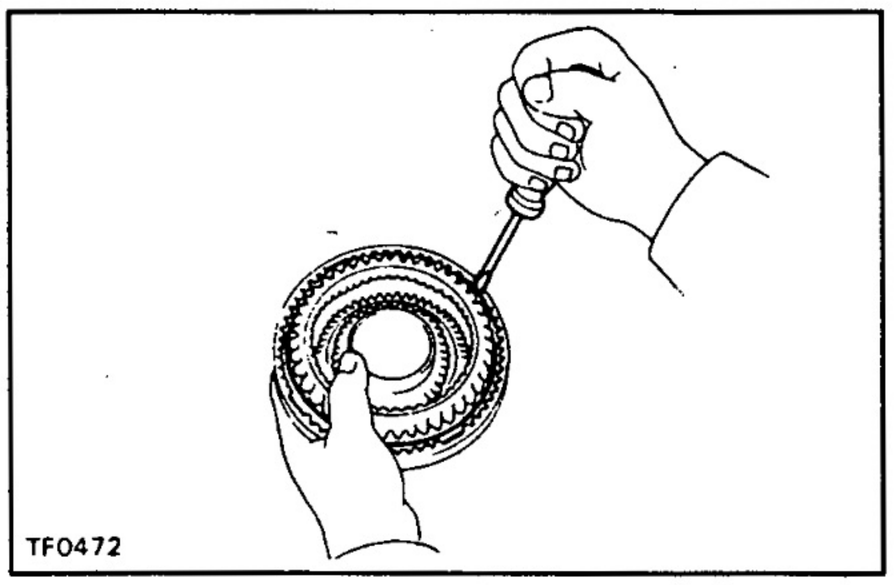

22. REMOVE LOW GEAR SPLINE PIECE

(a) Using a screwdriver, remove the snap ring.

INSTALLATION HINT: Make sure the end gap of the snap ring is not aligned with cutout portion of the planetary carrier.

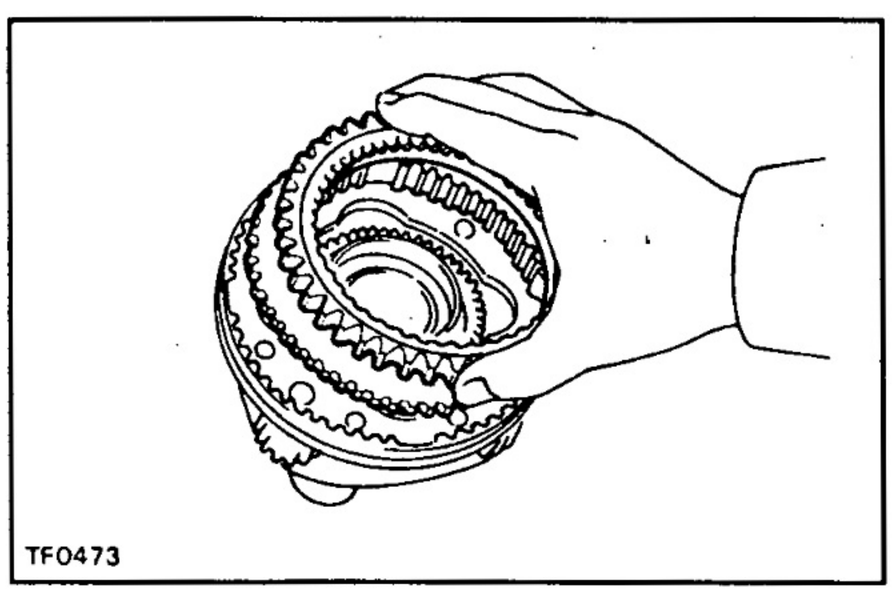

(b) Remove the low gear spline piece.

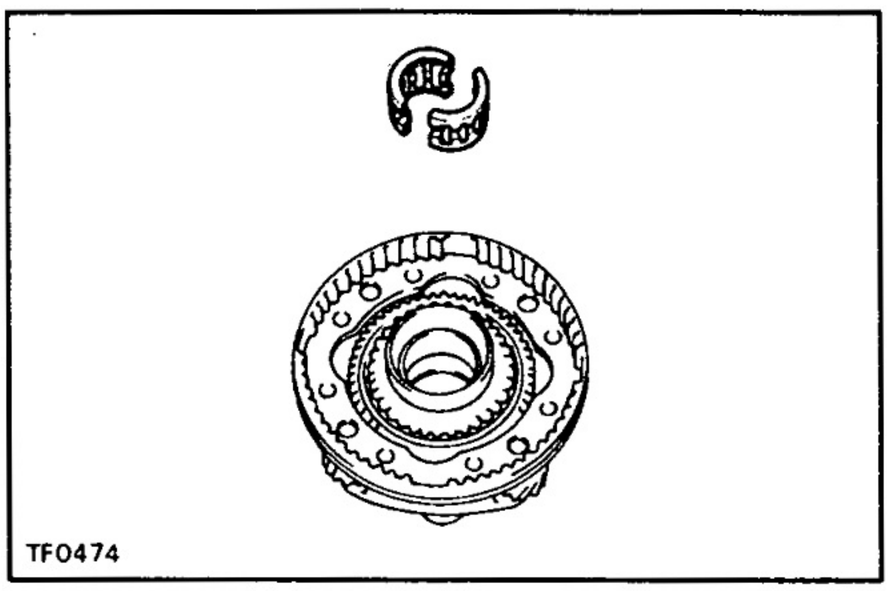

23. REMOVE NEEDLE ROLLER BEARING FROM INPUT SHAFT

INSTALLATION HINT: Apply gear oil to the needle roller bearing.

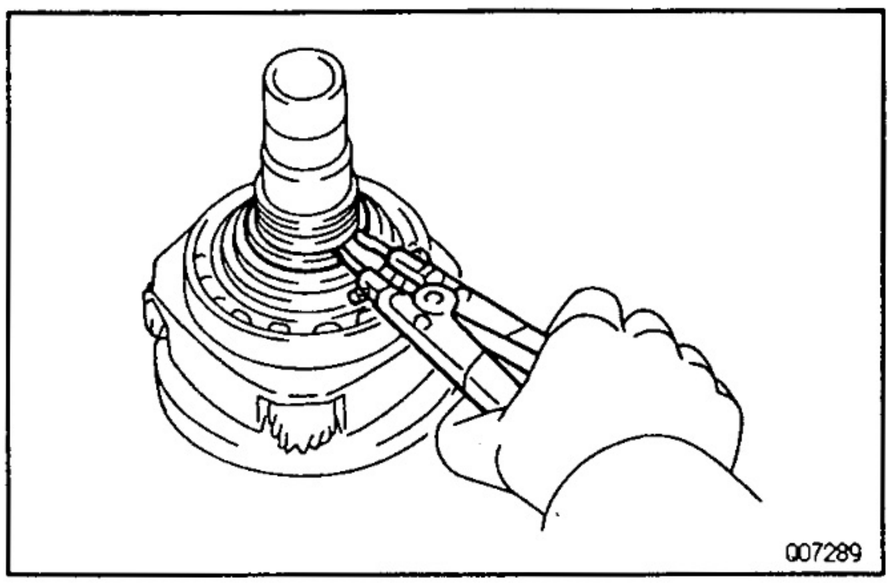

24. REMOVE INPUT SHAFT STOPPER AND THRUST BEARING

(a) Using a snap ring expander, remove the snap ring.
INSTALLATION HINT: Select a snap ring that will allow 0.05–0.15 mm (0.0020–0.0059 in.) axial play.

Mark	Thickness mm (in.)
A	2.10 – 2.15 (0.0827 – 0.0846)
B	2.15 – 2.20 (0.0846 – 0.0866)
C	2.20 – 2.25 (0.0866 – 0.0886)
D	2.25 – 2.30 (0.0886 – 0.0906)
E	2.30 – 2.35 (0.0906 – 0.0925)
F	2.35 – 2.40 (0.0925 – 0.0945)
G	2.40 – 2.45 (0.0945 – 0.0965)
H	2.45 – 2.50 (0.0965 – 0.0984)
J	2.50 – 2.55 (0.0984 – 0.1004)
K	2.55 – 2.60 (0.1004 – 0.1024)
L	2.60 – 2.65 (0.1024 – 0.1043)
M	2.65 – 2.70 (0.1043 – 0.1063)
N	2.70 – 2.75 (0.1063 – 0.1083)
P	2.75 – 2.80 (0.1083 – 0.1102)
Q	2.80 – 2.85 (0.1102 – 0.1122)
R	2.85 – 2.90 (0.1122 – 0.1142)
S	2.90 – 2.95 (0.1142 – 0.1161)
T	2.95 – 3.00 (0.1161 – 0.1181)
U	3.00 – 3.05 (0.1181 – 0.1201)

TR

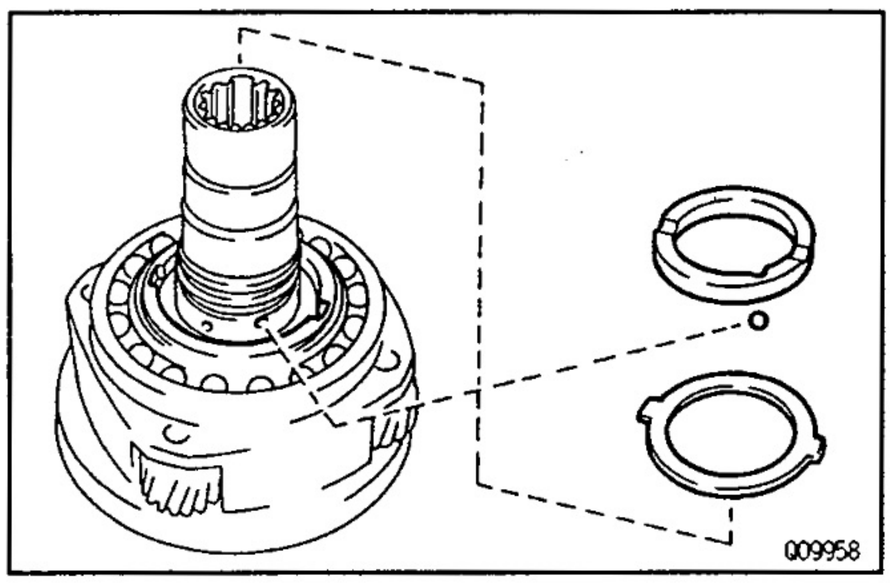

(b) Remove the input gear stopper, thrust washer and ball.
INSTALLATION HINT: Apply gear oil to the input gear stopper and thrust washer.

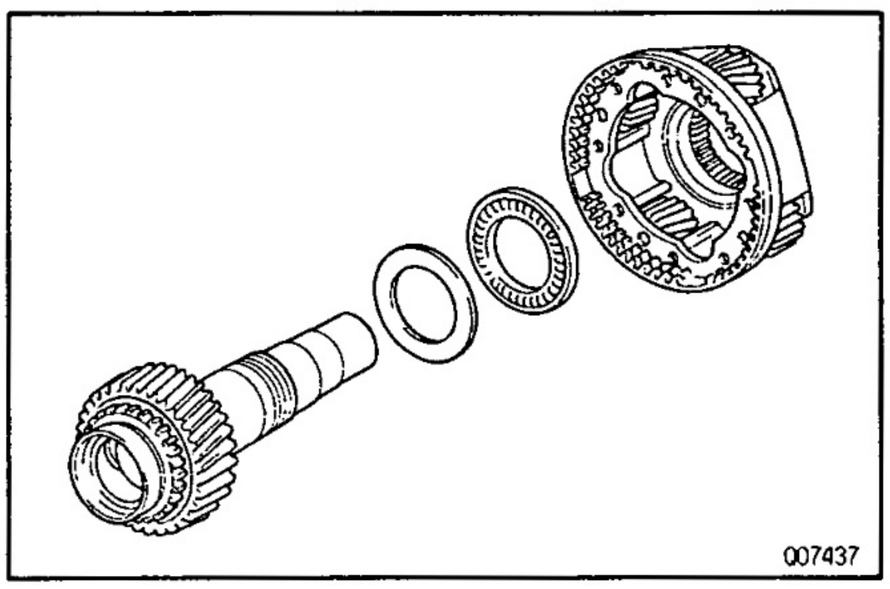

25. REMOVE INPUT SHAFT, THRUST RACE AND THRUST BEARING

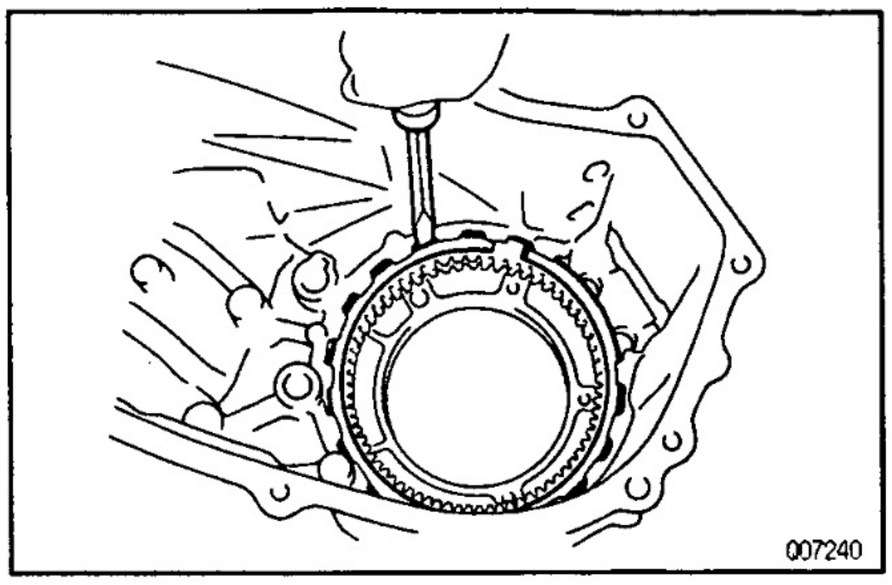

26. REMOVE PLANETARY RING GEAR

(a) Using a screwdriver, remove the snap ring.
INSTALLATION HINT: Make sure the end gap of the snap ring is not aligned with the upper side of the case.

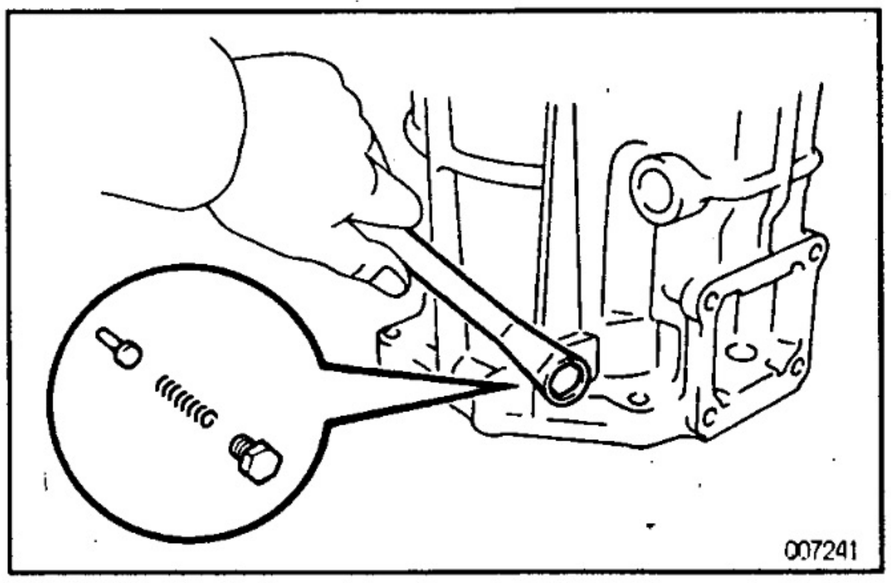

(b) Remove the plug, spring and pin.
Torque: 19 N·m (190 kgf·cm, 14 ft·lbf)
INSTALLATION HINT: Apply liquid sealer to the plug.
Sealant: Part No. 08833 – 00080, THREE BOND 1344, LOCTITE 242 or equivalent

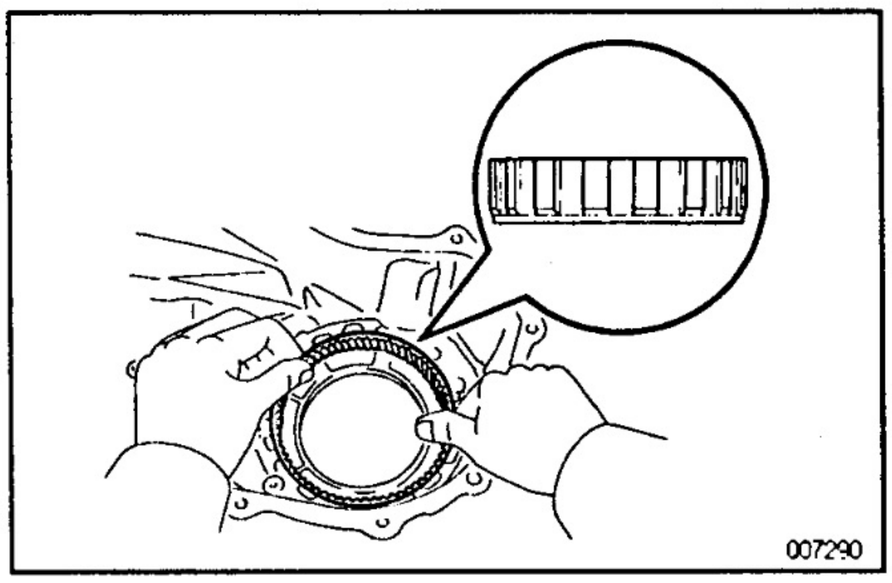

(c) Remove the planetary ring gear.
INSTALLATION HINT: Make sure to install the ring gear in the correct direction.

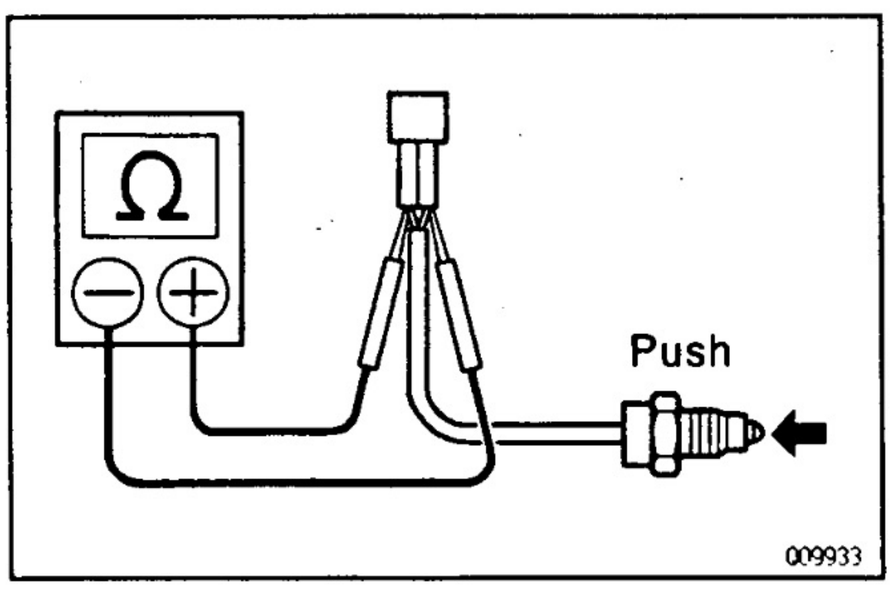

27. INSPECT SWITCHES

Check that there is continuity between terminals as shown.

Switch Position	Specified Condition
Push	Continuity (0Ω)
Free	No continuity (∞Ω)

If continuity is not as specified, replace the switch.

COMPONENT PARTS INSTALLATION

TR066-01

Installation is in the reverse order of removal.
HINT: Coat all of the sliding and rotating surfaces with gear oil before assembly.

OIL PUMP BODY
COMPONENTS

TR00V-07

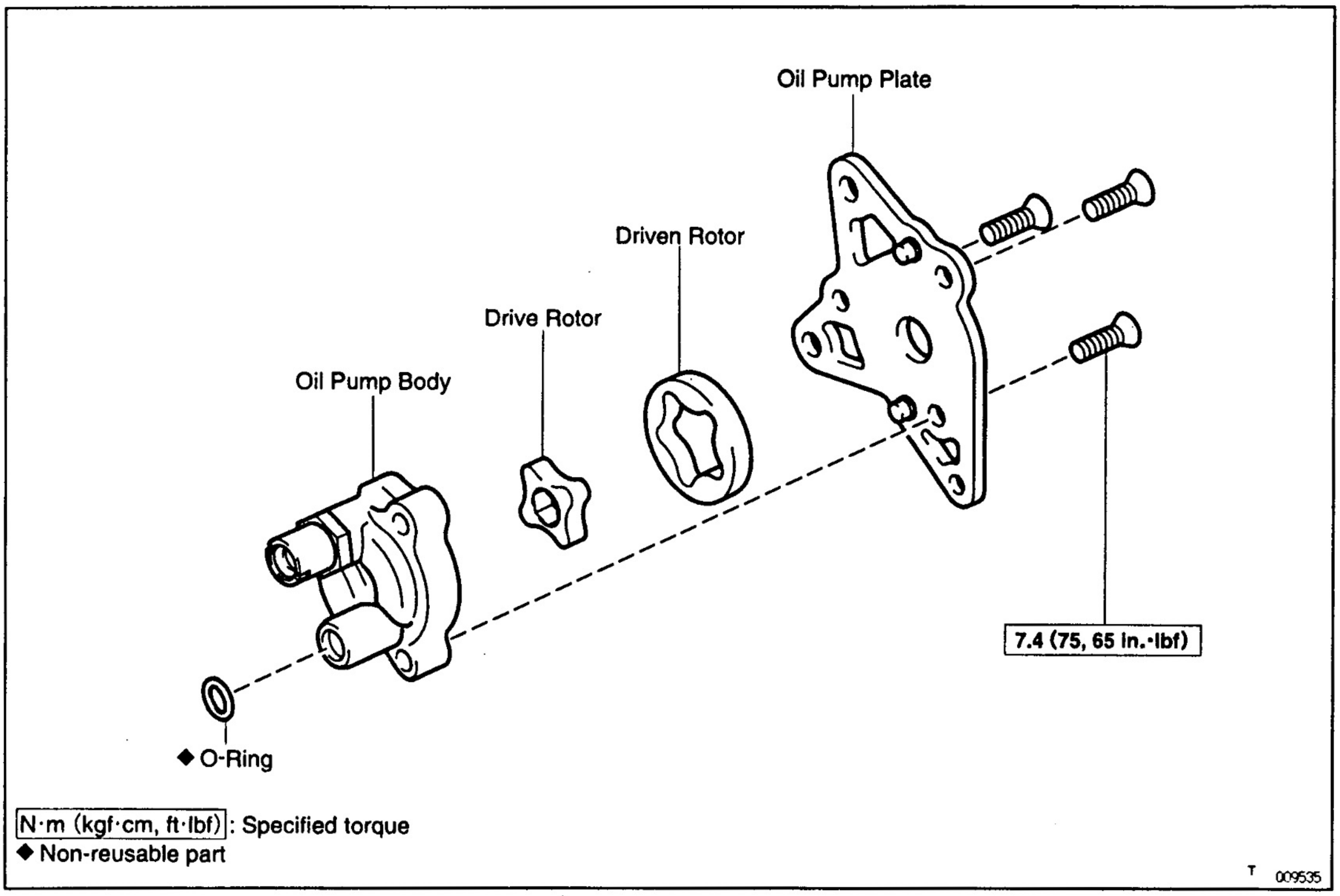

N·m (kgf·cm, ft·lbf): Specified torque
◆ Non-reusable part

T 009535

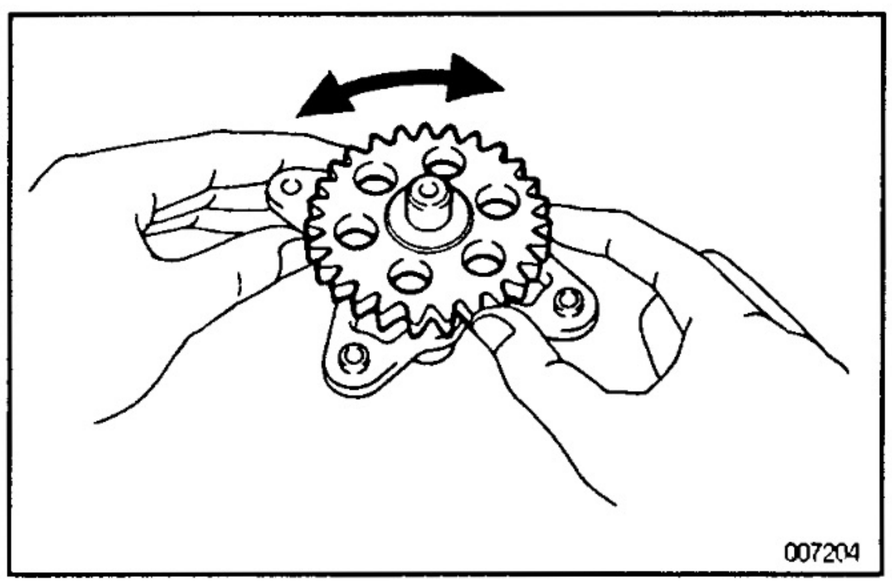

007204

TR067-01

OIL PUMP BODY DISASSEMBLY

1. **CHECK OIL PUMP OPERATION**
   Install the oil pump drive gear to the drive rotor and check that the drive rotor turns smoothly.

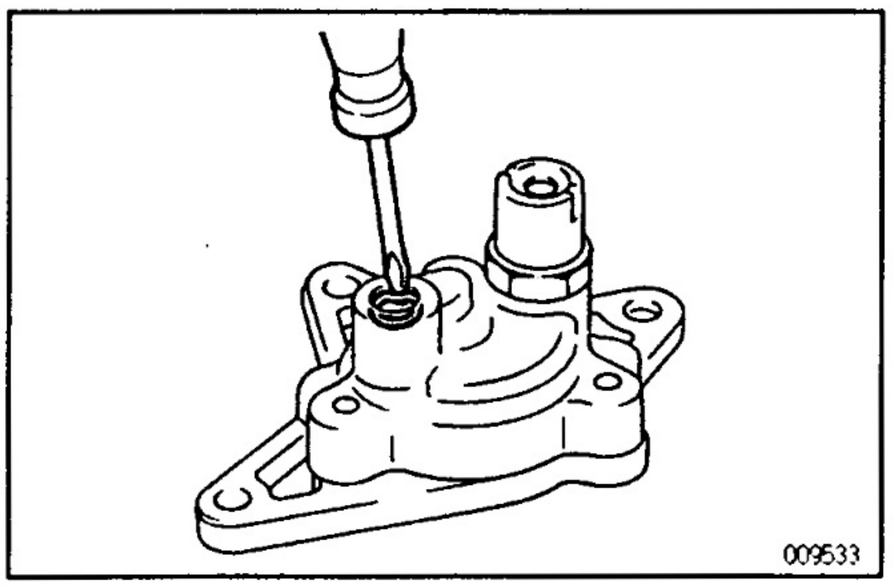

009533

2. **REMOVE O–RING**
   Remove the O–ring from the oil pump body.
   INSTALLATION HINT: Coat a new O–ring with gear oil and install it to the oil pump body.

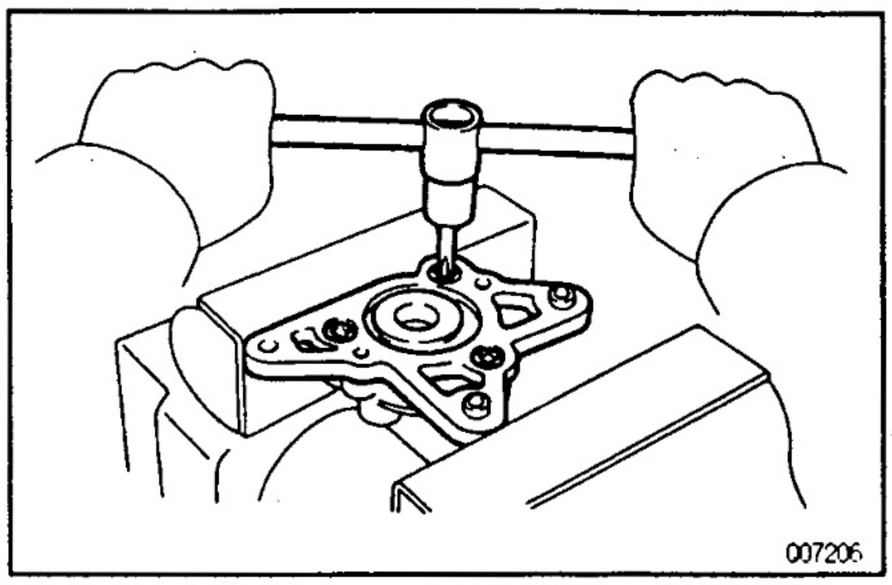

3. REMOVE OIL PUMP PLATE

(a) Using a torx socket wrench T30, remove the 3 torx screws.
Torque: 7.4 N·m (75 kgf·cm, 65 in.lbf)

(b) Remove the oil pump plate.

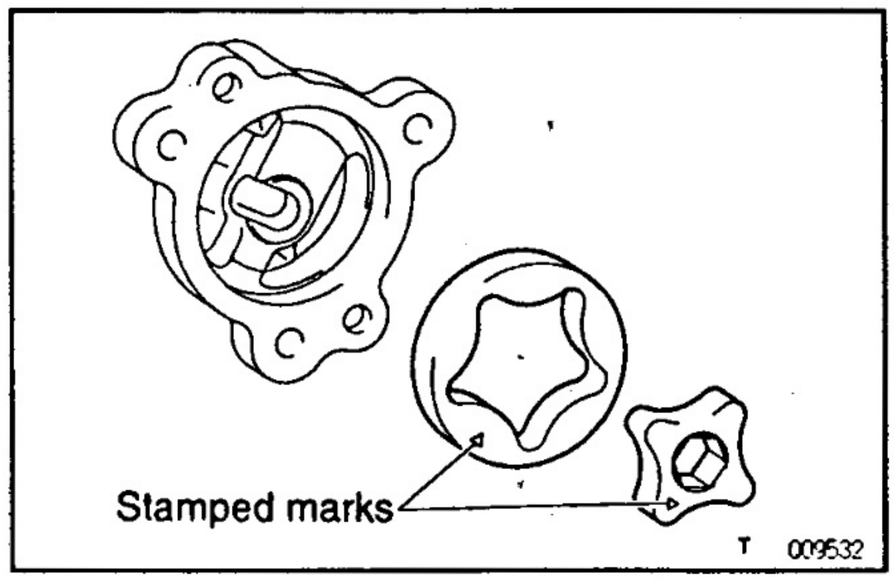

4. REMOVE DRIVE ROTOR AND DRIVEN ROTOR

INSTALLATION HINT:

- Apply gear oil to the both rotors.
- Align the stamped marks facing them upward.

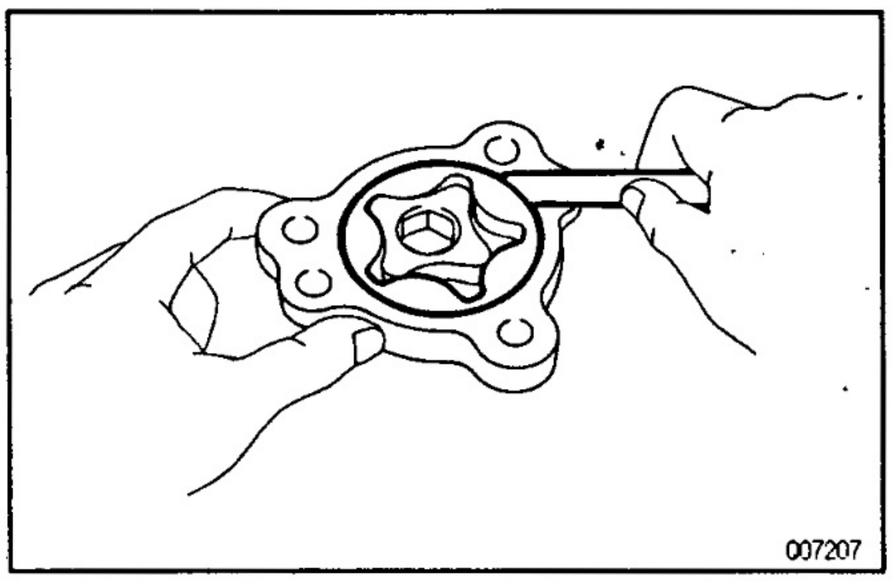

OIL PUMP BODY INSPECTION

TR00X–0C

1. INSPECT DRIVEN ROTOR BODY CLEARANCE

Push the driven rotor to one side of the body.
Using a feeler gauge, measure the clearance.
Standard clearance:

0.09 – 0.16 mm (0.0035 – 0.0063 in.)

Maximum clearance: 0.16 mm (0.0063 in.)

If the clearance exceeds the maximum, replace the drive rotor, driven rotor or pump body.

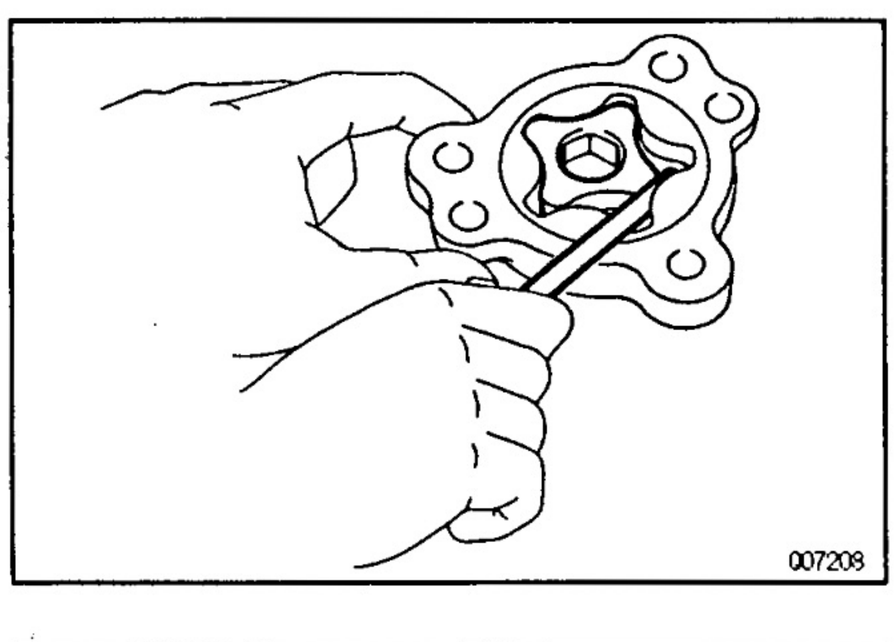

2. INSPECT BOTH ROTOR TIPS CLEARANCE

Using a feeler gauge, measure the clearance between both rotor tips.
Standard clearance:

0.05 – 0.15 mm (0.0020 – 0.0059 in.)

Maximum clearance: 0.15 mm (0.0059 in.)

If the clearance exceeds the maximum, replace the drive rotor, driven rotor or pump body.

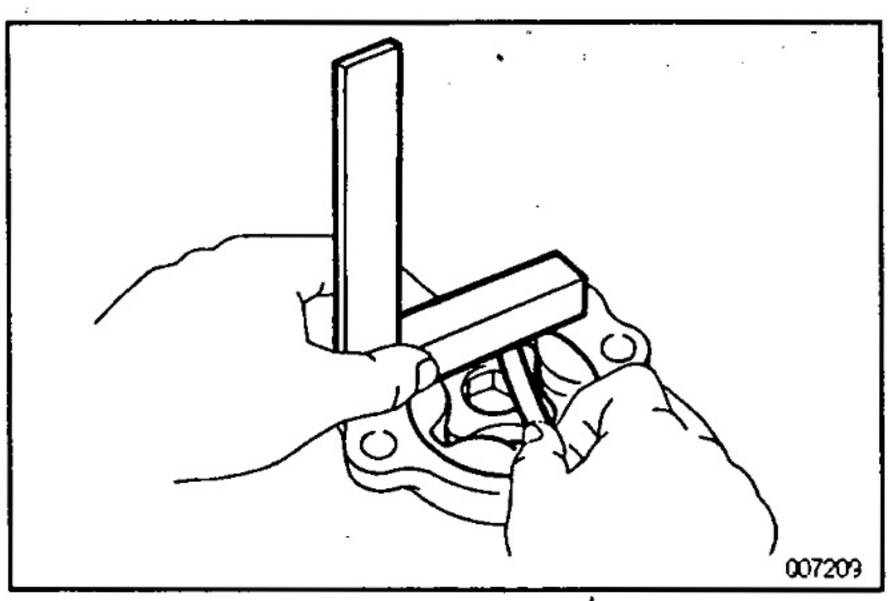

3. INSPECT BOTH ROTORS SIDE CLEARANCE

Using a steel straight edge and feeler gauge, measure the clearance between the rotors and straight edge.
Standard clearance:

0.03 – 0.10 mm (0.0012 – 0.0039 in.)

Maximum clearance: 0.10 mm (0.0039 in.)

If the clearance exceeds the maximum, replace the drive rotor, driven rotor or pump body.

TR05Q–03

OIL PUMP BODY ASSEMBLY

Assembly is in the reverse order of disassembly.

DRIVEN SPROCKET COMPONENTS

TR00Z–08

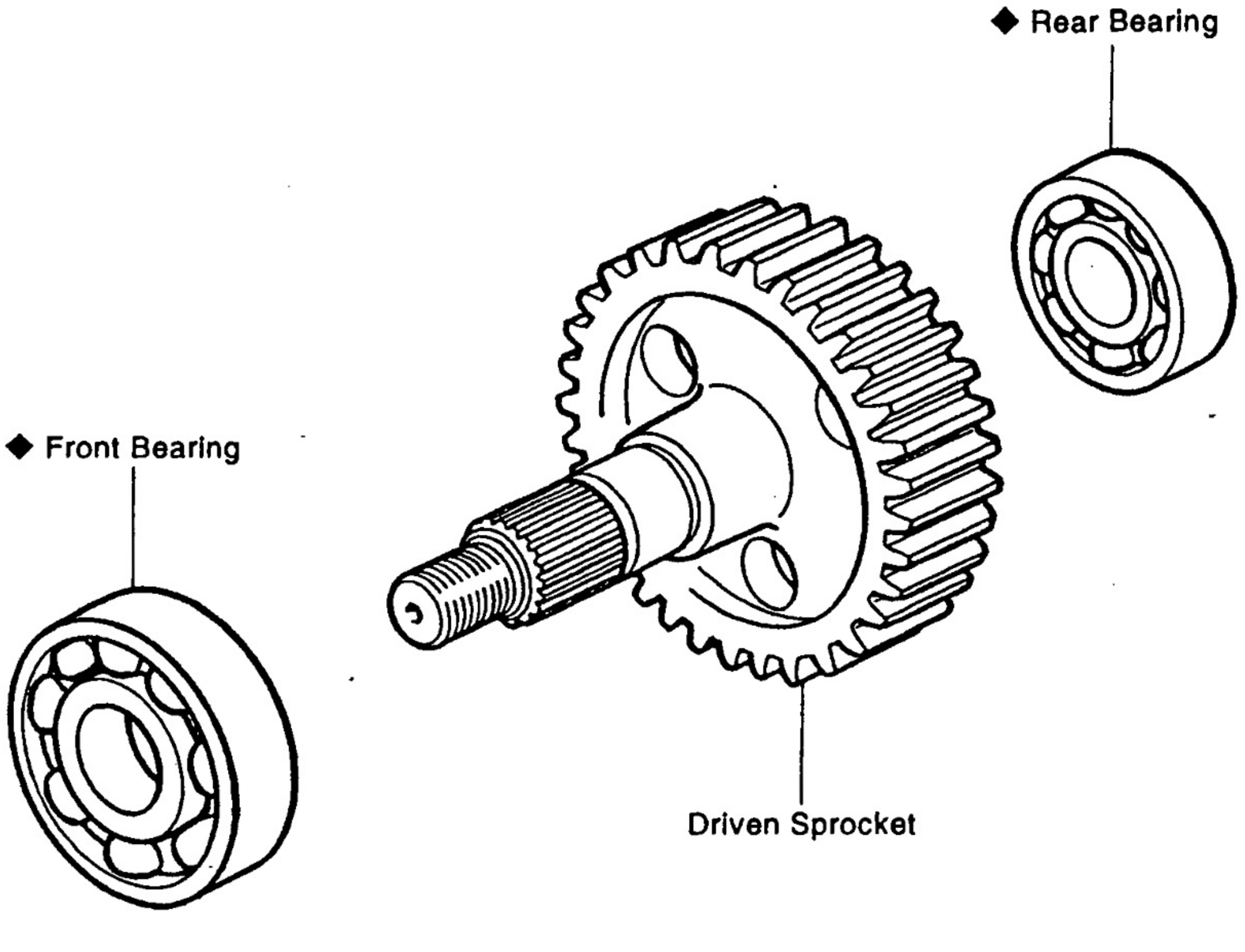

◆ Non-reusable part

007499

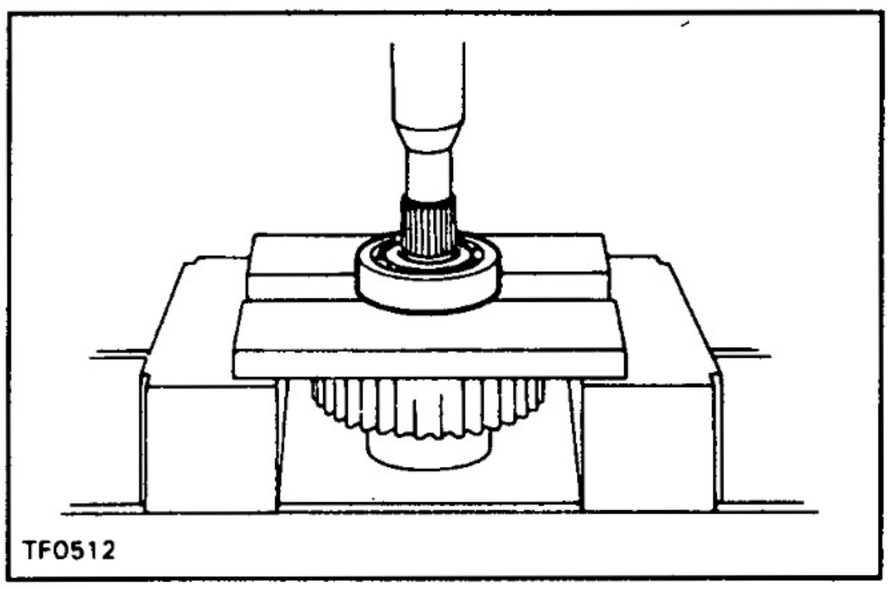

DRIVEN SPROCKET DISASSEMBLY

TR010–08

1. REMOVE FRONT BEARING

Using a press, remove the front bearing.

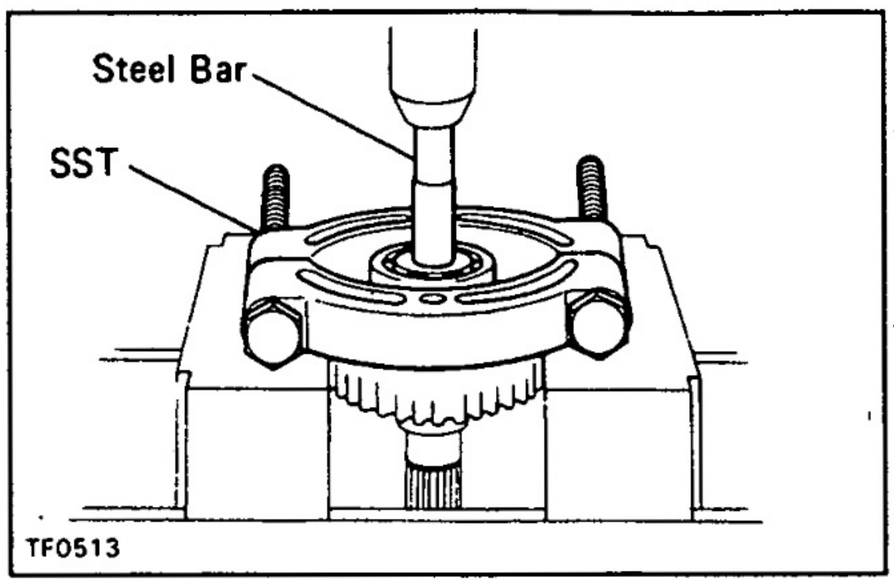

2. REMOVE REAR BEARING

Using SST and a press, remove the rear bearing.
SST 09555–55010

TR011–09

DRIVEN SPROCKET ASSEMBLY

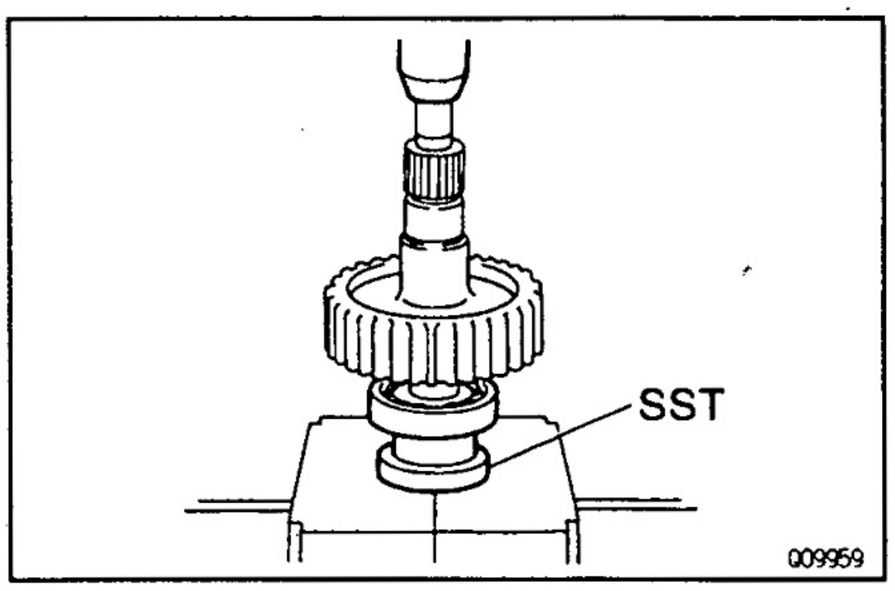

1. INSTALL REAR BEARING

Using SST and a press, install a new rear bearing.
SST 09316–00021

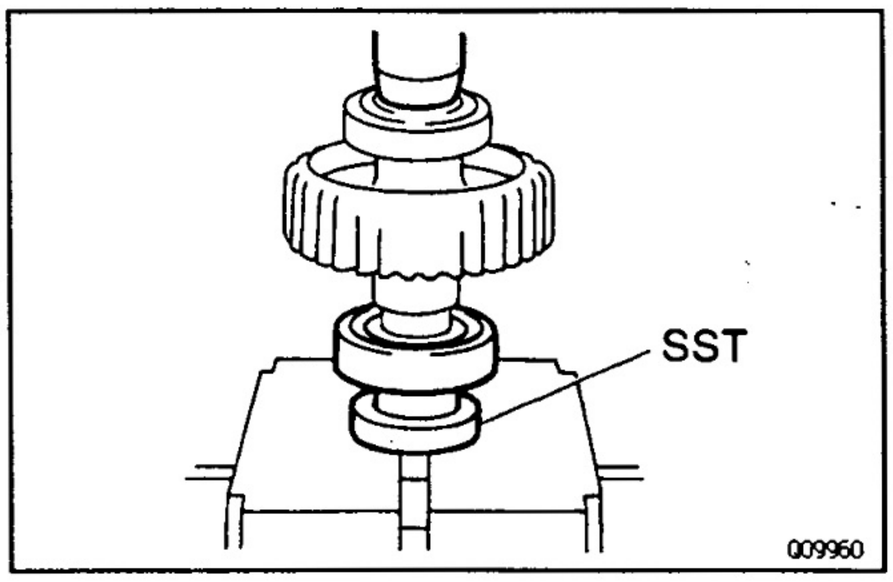

2. INSTALL FRONT BEARING

Using SST and a press, install a new front bearing.
SST 09316–00021

TR

REAR OUTPUT SHAFT
COMPONENTS

TR068-01

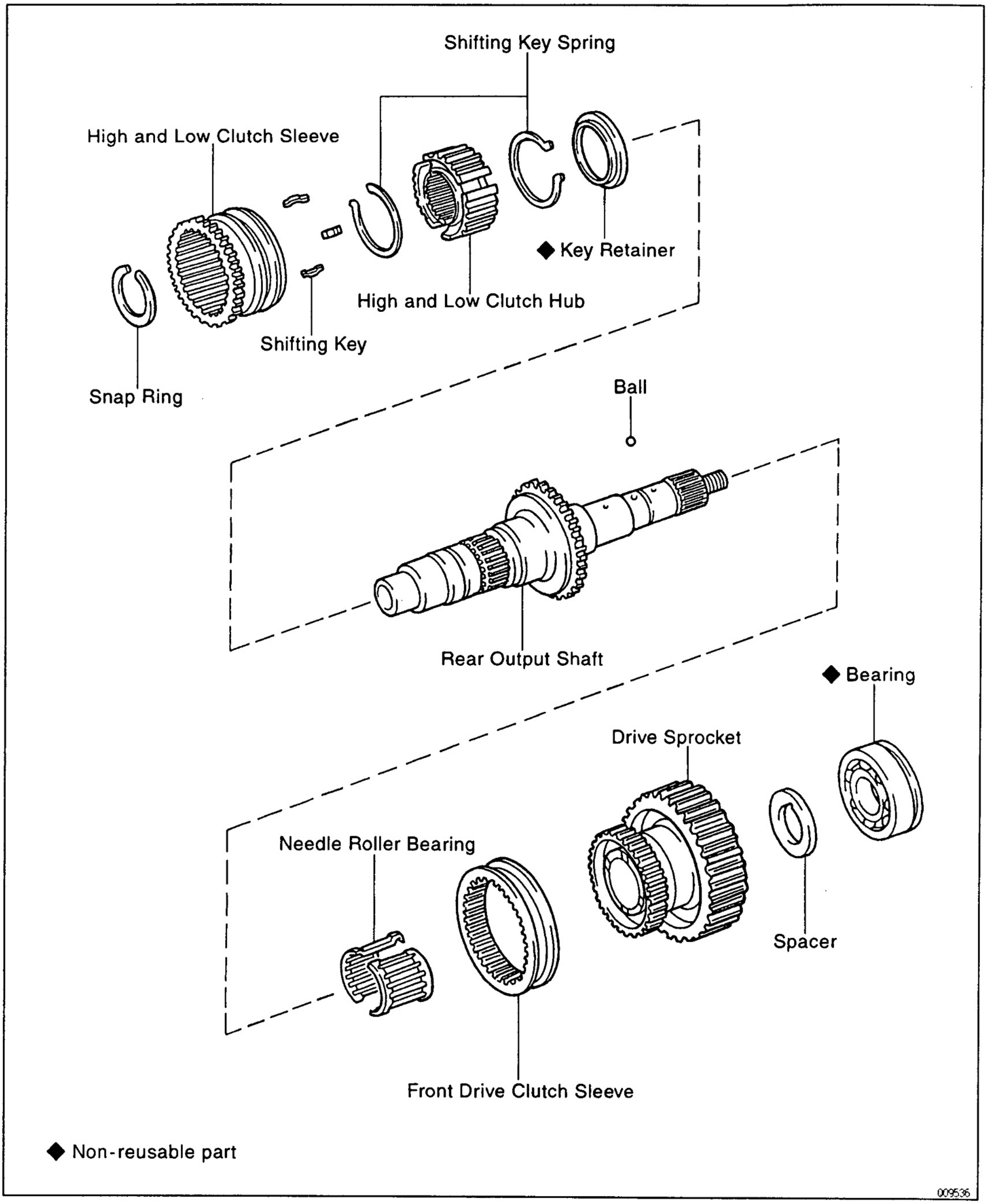

◆ Non-reusable part

009536

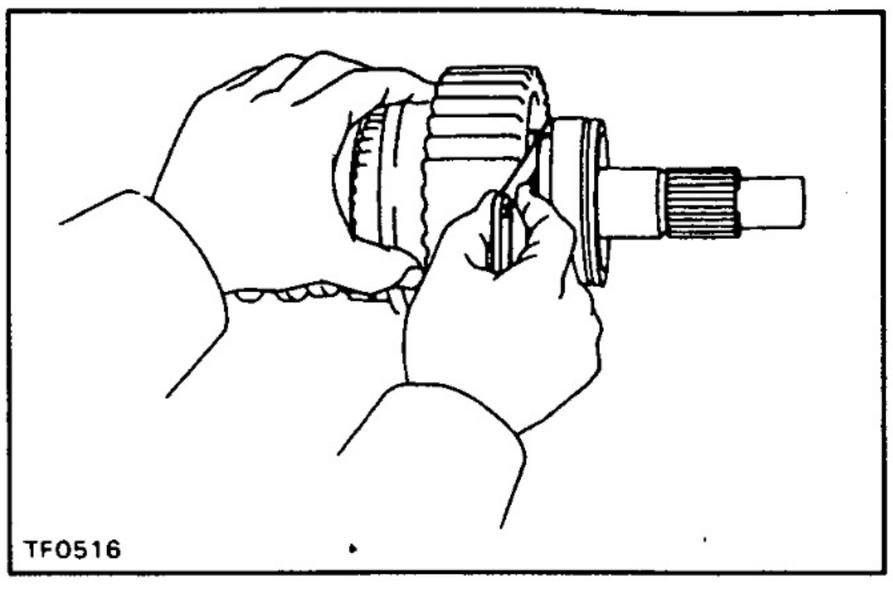
TF0516

REAR OUTPUT SHAFT DISASSEMBLY

TR069–01

1. INSPECT DRIVE SPROCKET THRUST CLEARANCE

Using a feeler gauge, measure the drive sprocket thrust clearance.

Standard clearance:

0.10 – 0.25 mm (0.0039 – 0.0098 in.)

Maximum clearance: 0.25 mm (0.0098 in.)

If the clearance exceeds the maximum, replace the drive sprocket.

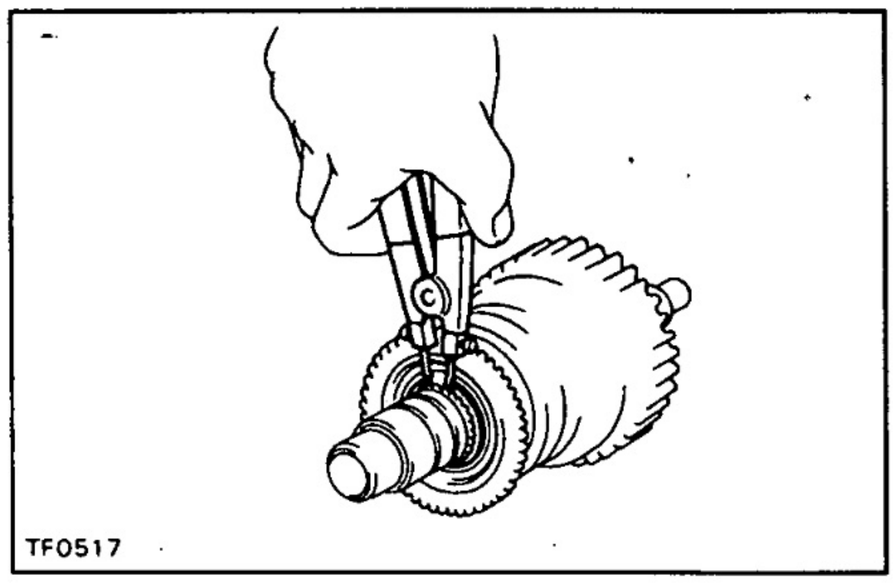
TF0517

2. REMOVE HIGH AND LOW CLUTCH SLEEVE ASSEMBLY

(a) Using a snap ring expander, remove the snap ring.

(b) Remove the clutch sleeve and 3 shifting keys.

(c) Using a press, remove the clutch hub, 2 key springs and key retainer.

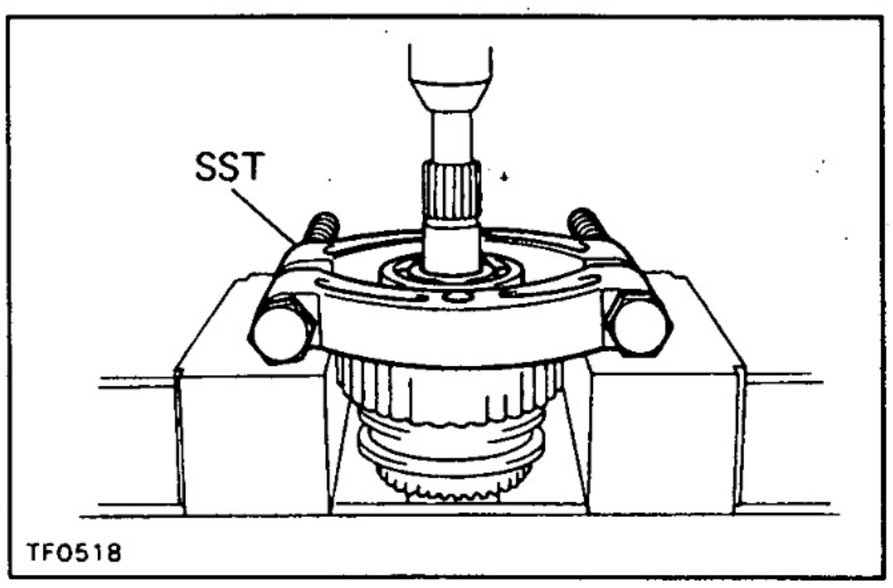

TF0518

3. REMOVE BEARING, SPACER AND DRIVE SPROCKET WITH FRONT DRIVE CLUTCH SLEEVE

(a) Using SST and a press, remove the bearing.
SST 09555–55010

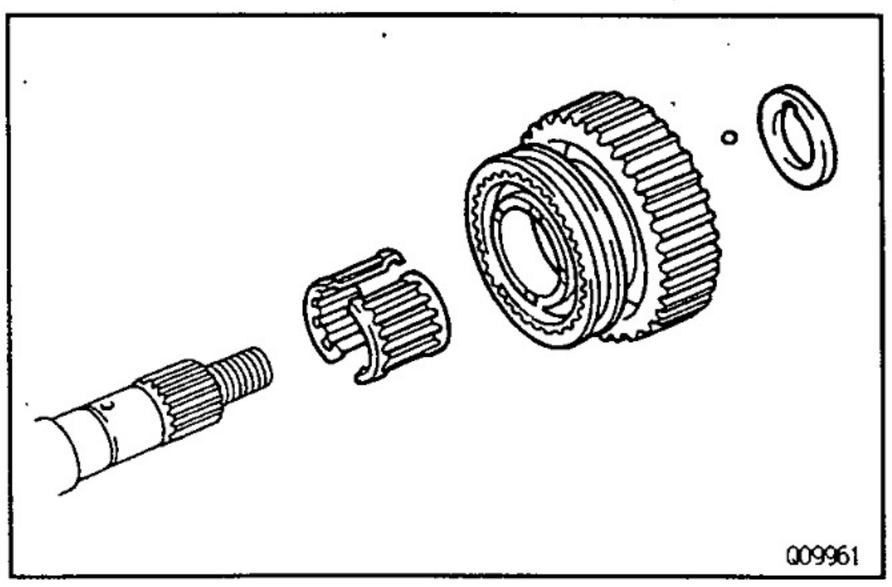
Q09961

(b) Remove these parts.
- Spacer and ball
- Drive sprocket with front drive clutch sleeve
- Needle roller bearing

(c) Remove the front drive clutch sleeve from the drive sprocket.

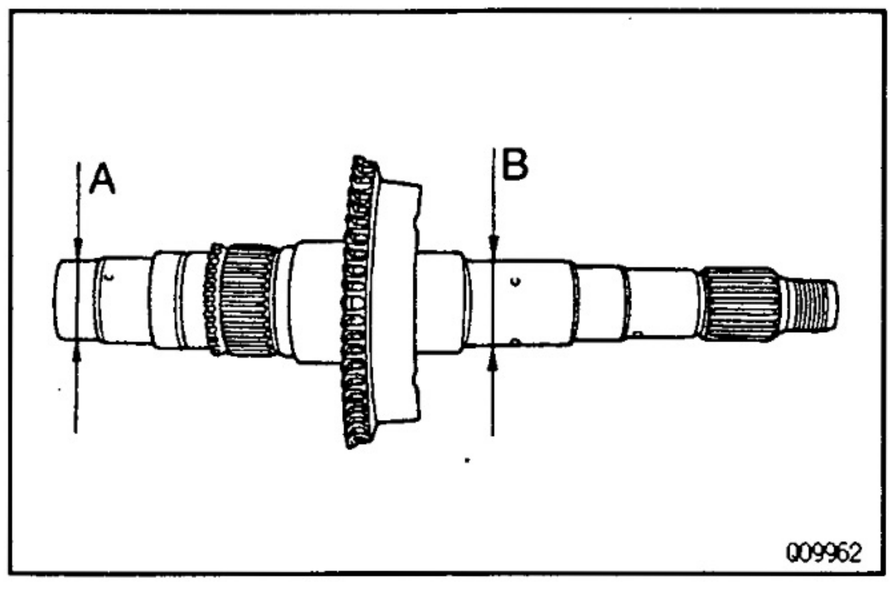

TR014–0C

REAR OUTPUT SHAFT INSPECTION

1. INSPECT REAR OUTPUT SHAFT

Using a micrometer, measure the outer diameter of the rear output shaft journal surface.

Minimum diameter:

Part A: 27.98 mm (1.1016 in.)

Part B: 36.98 mm (1.4561 in.)

If the clearance exceeds the minimum, replace the rear output shaft.

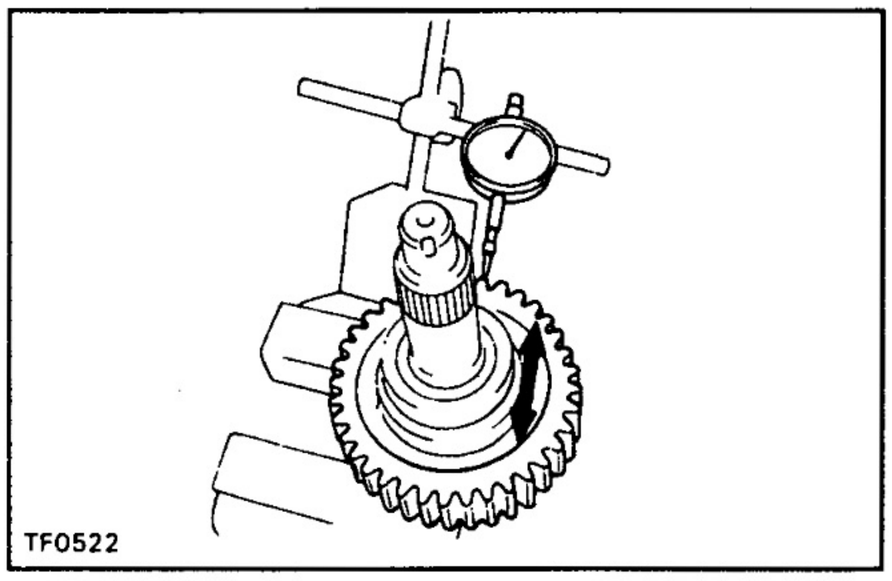

2. INSPECT DRIVE SPROCKET RADIAL CLEARANCE

Using a dial indicator, measure the radial clearance between the sprocket and shaft with the needle roller bearing installed.

Standard clearance:

0.010 – 0.055 mm (0.0004 – 0.0022 in.)

Maximum clearance: 0.055 mm (0.0022 in.)

If the clearance exceeds the maximum, replace the drive sprocket, rear output shaft or needle roller bearing.

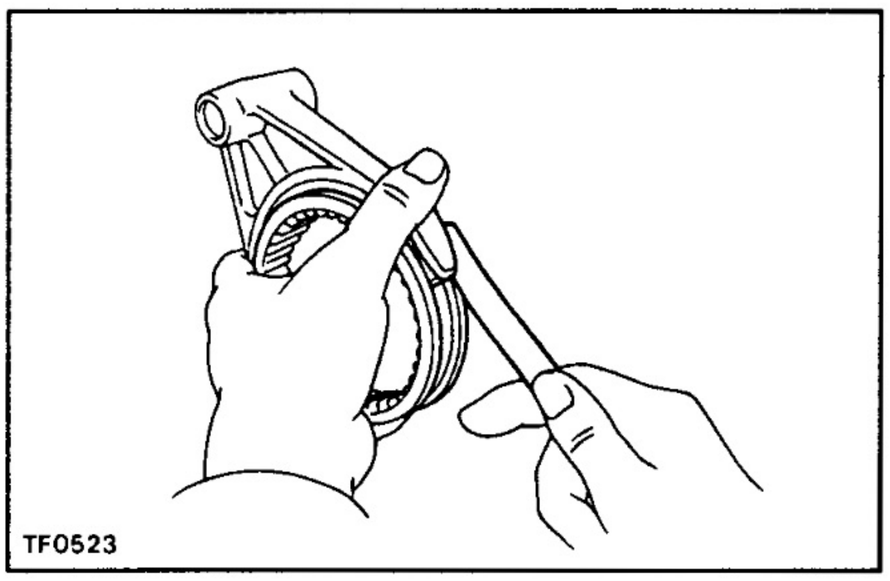

3. INSPECT FRONT DRIVE SHIFT FORK AND CLUTCH SLEEVE CLEARANCE

Using a feeler gauge, measure the clearance between the front drive shift fork and clutch sleeve.

Maximum clearance: 1.0 mm (0.039 in.)

If the clearance exceeds the maximum, replace the shift fork or clutch sleeve.

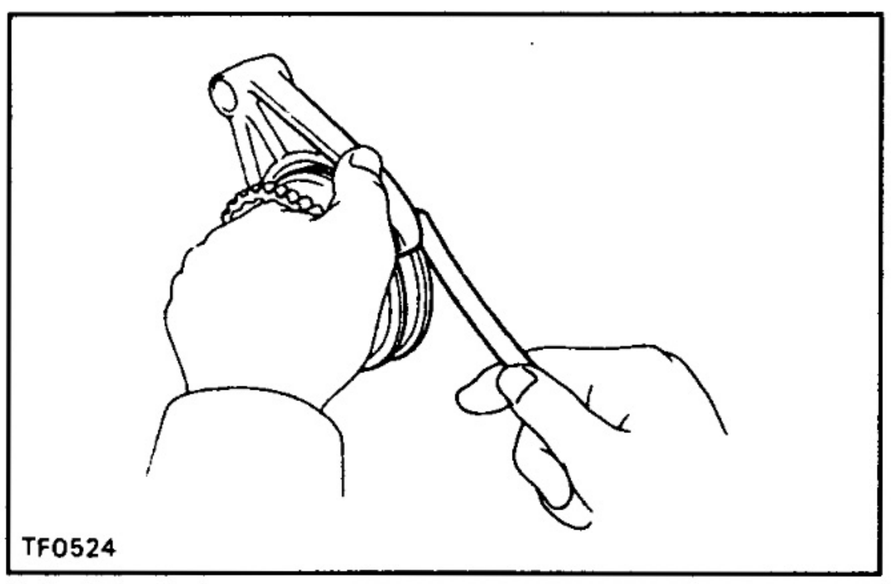

4. INSPECT HIGH AND LOW SHIFT FORK AND CLUTCH SLEEVE CLEARANCE

Using a feeler gauge, measure the clearance between the high and low shift fork and clutch sleeve.

Maximum clearance: 1.0 mm (0.039 in.)

If the clearance exceeds the maximum, replace the shift fork or clutch sleeve.

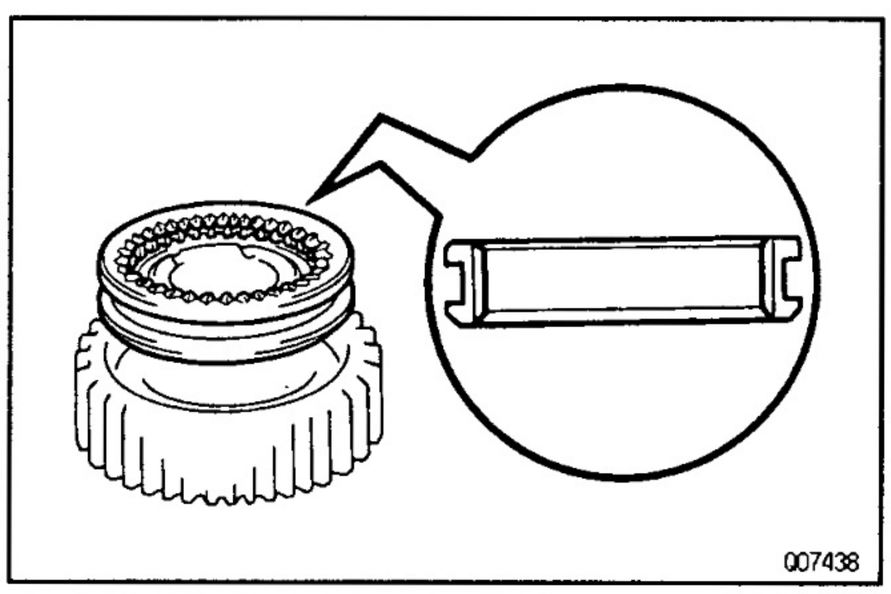

TR06A–01

REAR OUTPUT SHAFT ASSEMBLY

1. INSTALL FRONT DRIVE CLUTCH SLEEVE ONTO DRIVE SPROCKET

Install the front drive clutch sleeve onto the drive sprocket.

HINT: Make sure to install the clutch sleeve in the correct direction.

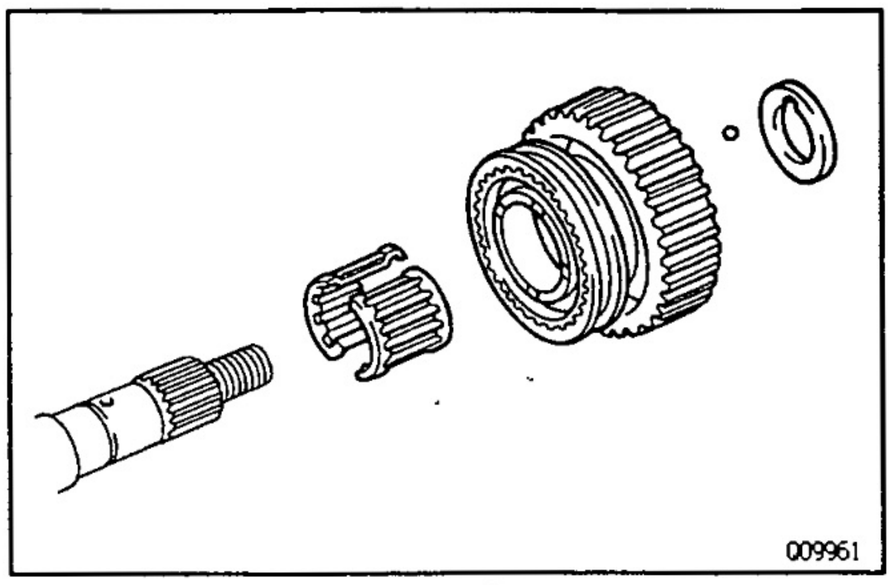

2. INSTALL DRIVE SPROCKET WITH FRONT DRIVE CLUTCH SLEEVE, SPACER AND BEARING

(a) Apply gear oil to the shaft and needle roller bearing.
(b) Install the needle roller bearing in the drive sprocket.
(c) Install the drive sprocket with the front drive clutch sleeve assembly.

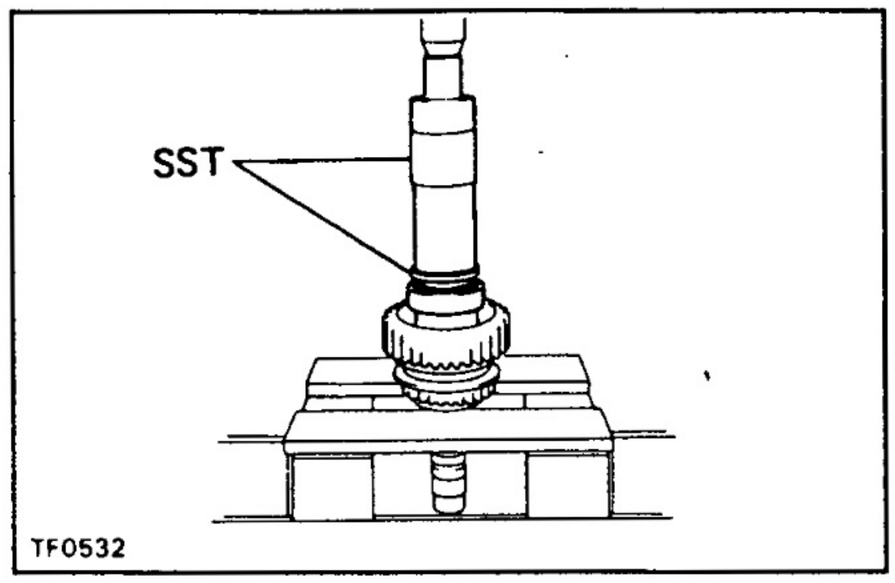

(d) Install the spacer to align it with the ball.
(e) Using SST and a press, install a new bearing with the outer race snap ring groove toward the rear.
SST 09316–60011 (09316–00011,09316–00071)

TR

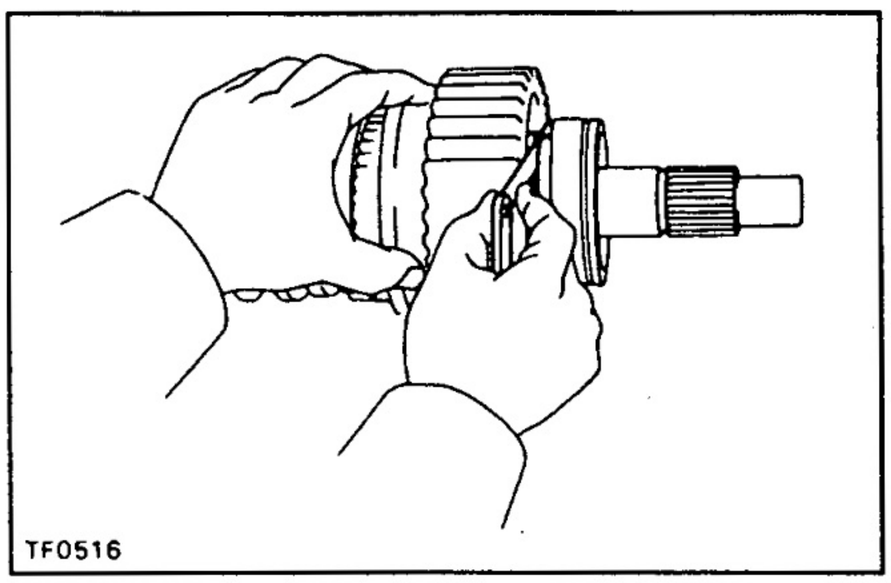

3. INSPECT DRIVE SPROCKET THRUST CLEARANCE

Using a feeler gauge, measure the drive sprocket thrust clearance.

Standard clearance:

0.10 – 0.25 mm (0.0039 – 0.0098 in.)

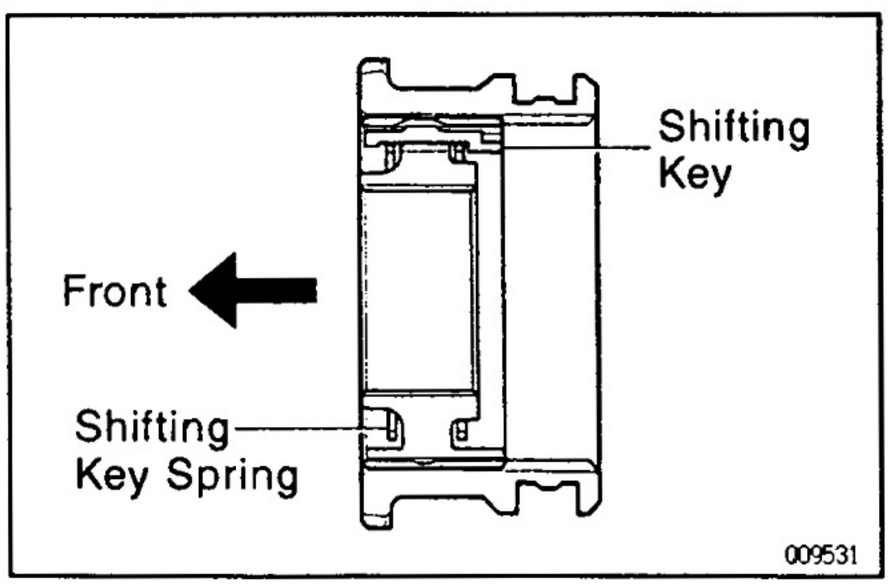

4. INSERT HIGH AND LOW CLUTCH HUB ONTO CLUTCH SLEEVE

(a) Install the clutch hub and 3 shifting keys onto the clutch sleeve.
(b) Install the shifting 2 key springs under the shifting keys.

NOTICE: Install the key springs positioned so that their end gaps are not in line.

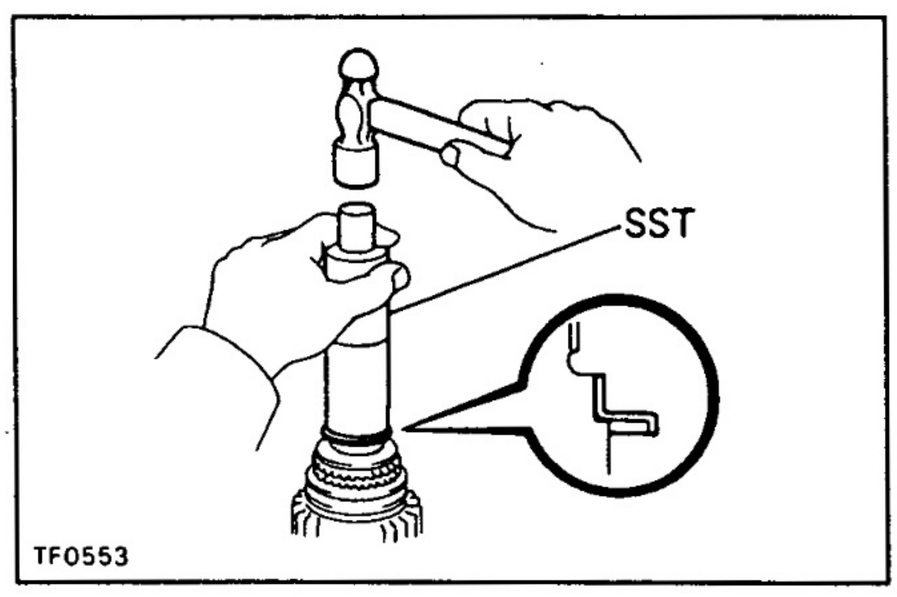

5. INSTALL HIGH AND LOW CLUTCH HUB ASSEMBLY

(a) Using SST and a hammer, drive in a new key retainer.
SST 09316–60011 (09316–00011)

NOTICE: Be careful not to deform or damage the key retainer.

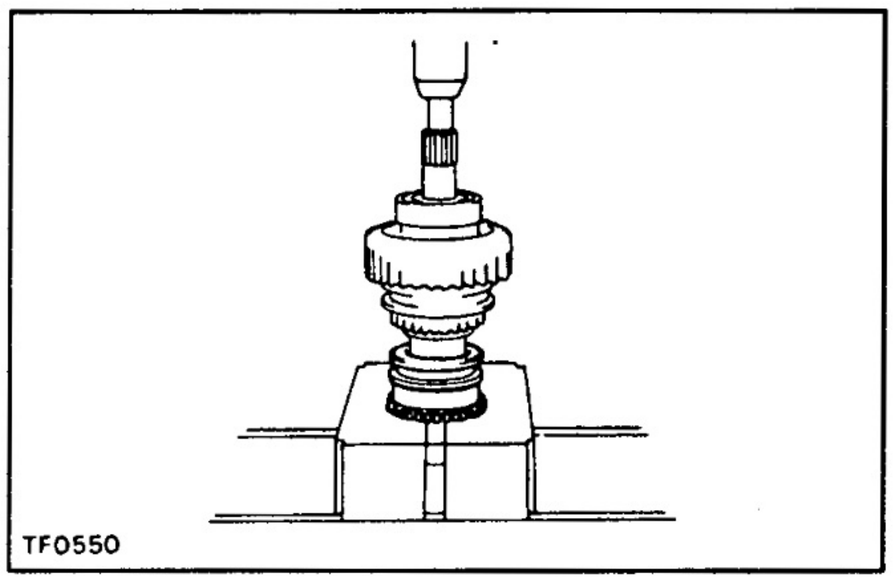
TF0550

(b) Using a press, install the high and low clutch hub assembly.

6. INSTALL SNAP RING

Select a snap ring that will allow minimum axial play and install it to the shaft.

Mark	Thickness mm (in.)
A	2.10 – 2.15 (0.0827 – 0.0846)
B	2.15 – 2.20 (0.0846 – 0.0866)
C	2.20 – 2.25 (0.0866 – 0.0886)
D	2.25 – 2.30 (0.0886 – 0.0906)
E	2.30 – 2.35 (0.0906 – 0.0925)
F	2.35 – 2.40 (0.0925 – 0.0945)
G	2.40 – 2.45 (0.0945 – 0.0965)
H	2.45 – 2.50 (0.0965 – 0.0984)
J	2.50 – 2.55 (0.0984 – 0.1004)
K	2.00 – 2.05 (0.0787 – 0.0807)
L	2.05 – 2.10 (0.0807 – 0.0827)

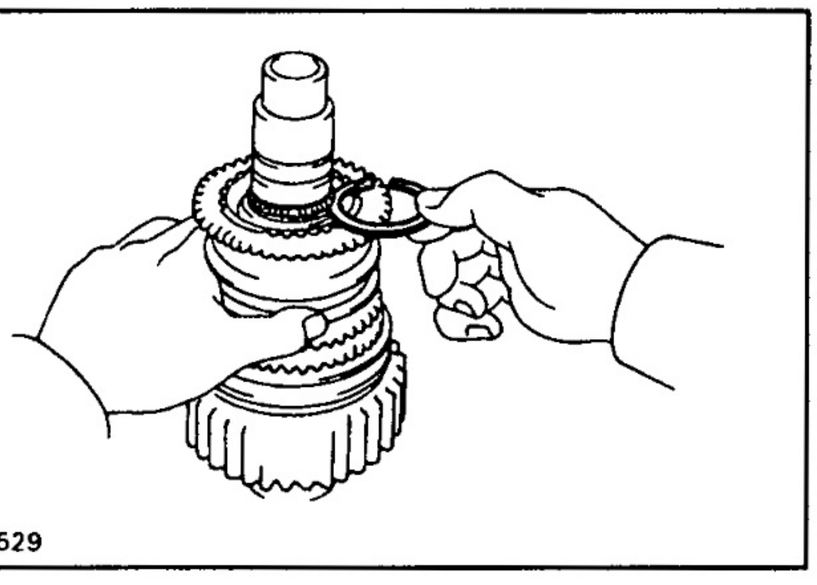
TF0529

TR

INPUT SHAFT
COMPONENTS

TR016–07

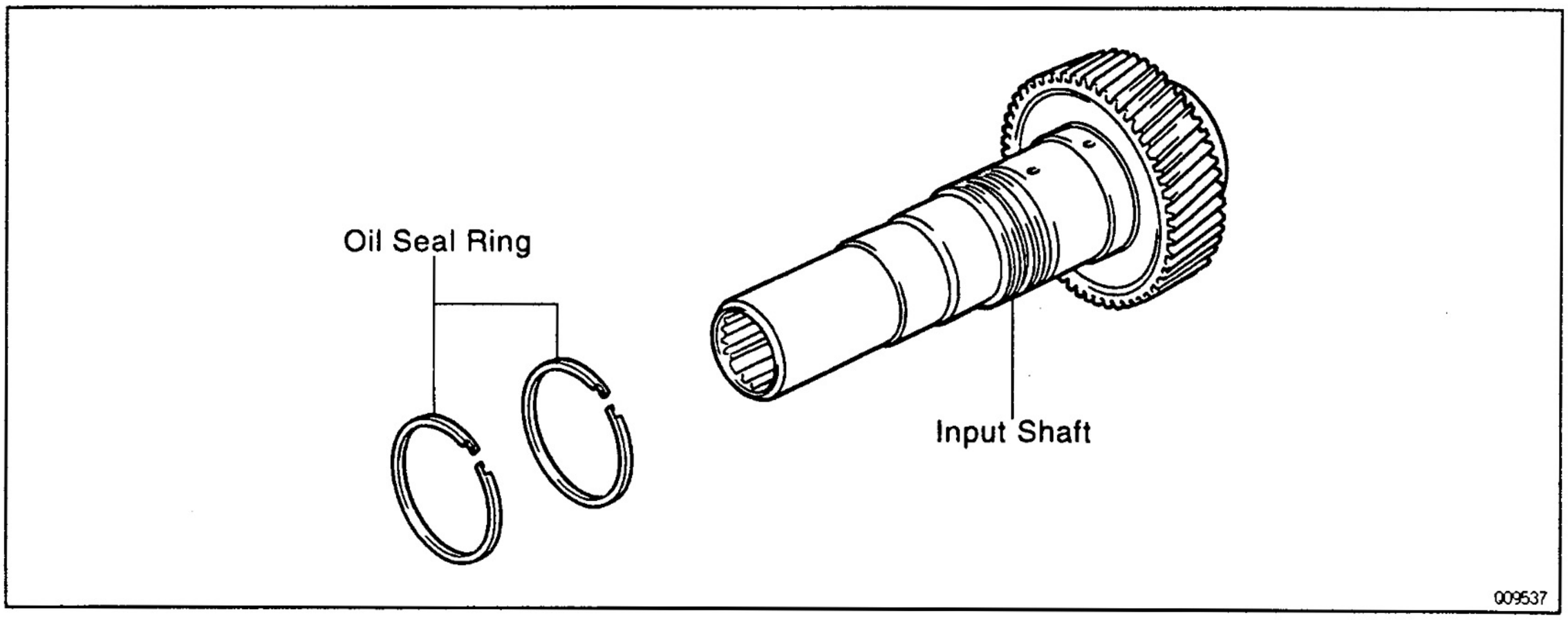

009537

TR04L–04

INPUT SHAFT DISASSEMBLY

REMOVE OIL SEAL RINGS

Remove the 2 oil seal rings.

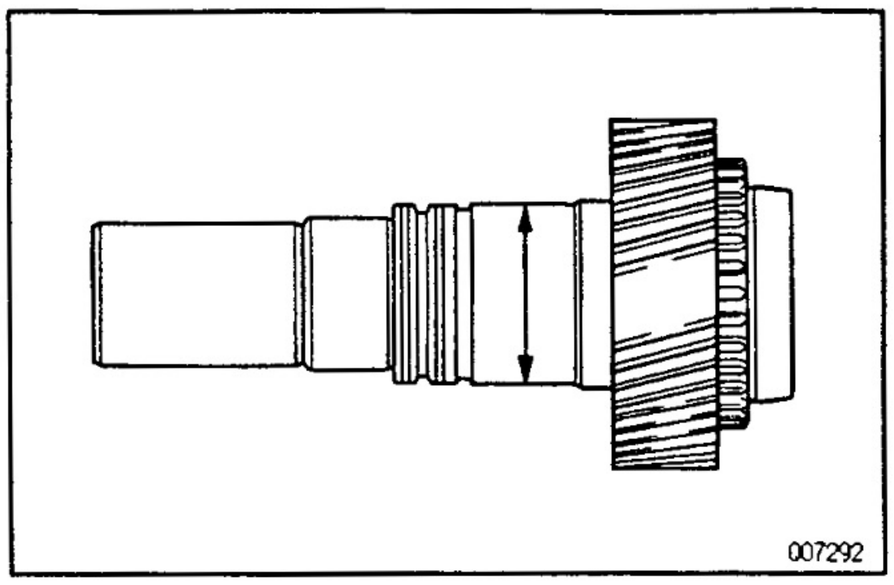

TR018–08

INPUT SHAFT INSPECTION

1. INSPECT INPUT SHAFT

(a) Using a micrometer, measure the outer diameter of the input shaft journal surface.
Minimum diameter: 47.59 mm (1.8736 in.)

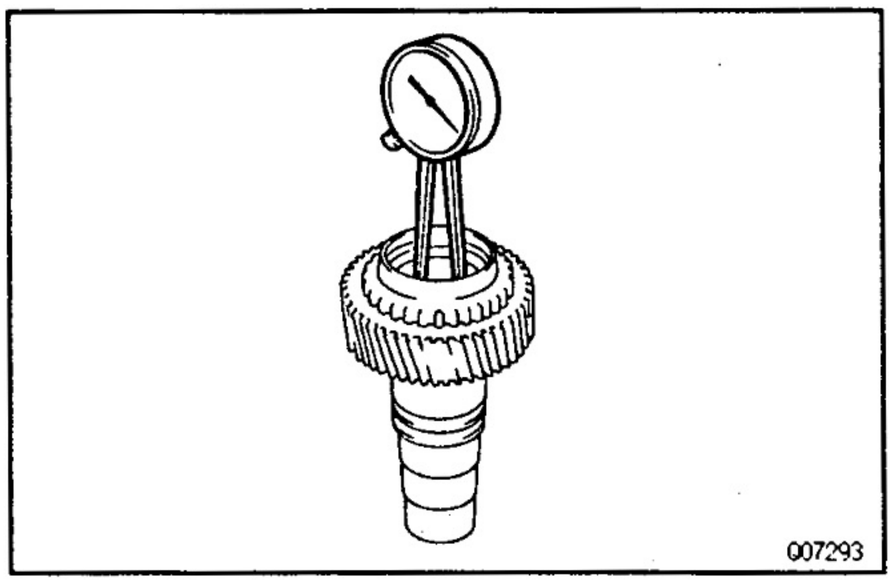

(b) Using a dial indicator, measure the inside diameter of the input shaft bushing.
Maximum inside diameter:
39.14 mm (1.5409 in.)
If the inside or outer diameter exceeds the maximum, replace the input shaft.

TR

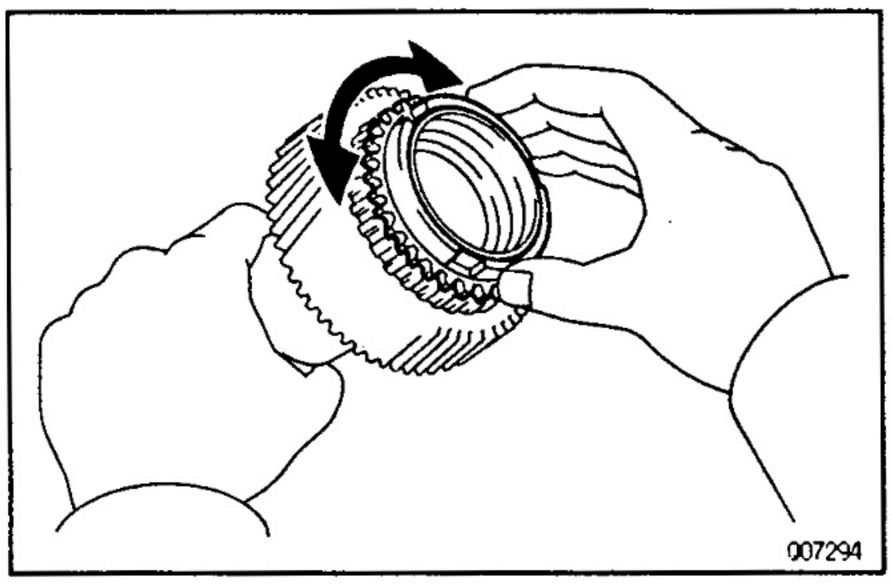

2. INSPECT SYNCHRONIZER RING

(a) Turn the ring and push it in to check the braking action.

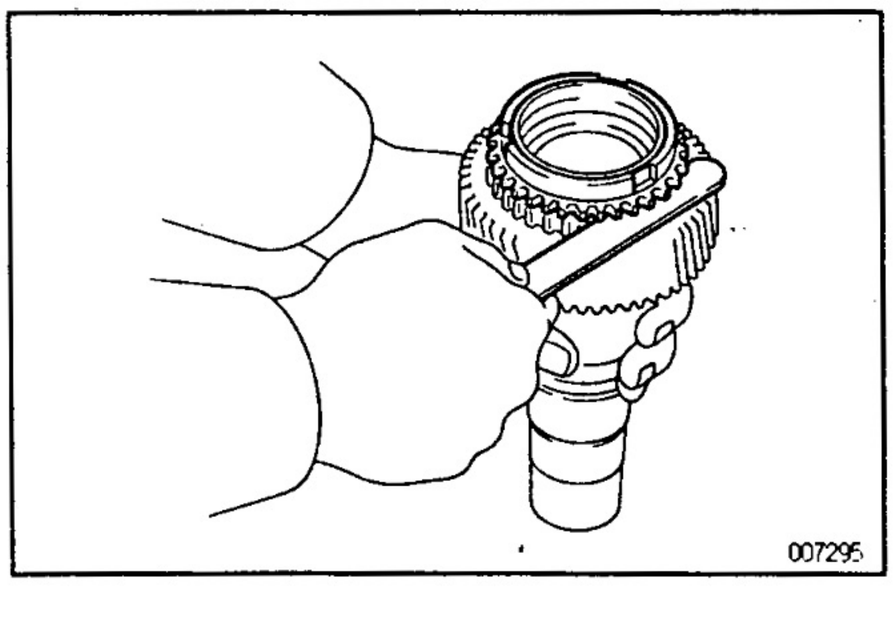

(b) Measure the clearance between the synchronizer ring back and the input shaft spline end.
Standard clearance:
1.15 – 1.85 mm (0.0453 – 0.0728 in.)
Minimum clearance: 0.80 mm (0.0315 in.)
If the clearance is less than the minimum, replace the synchronizer ring.

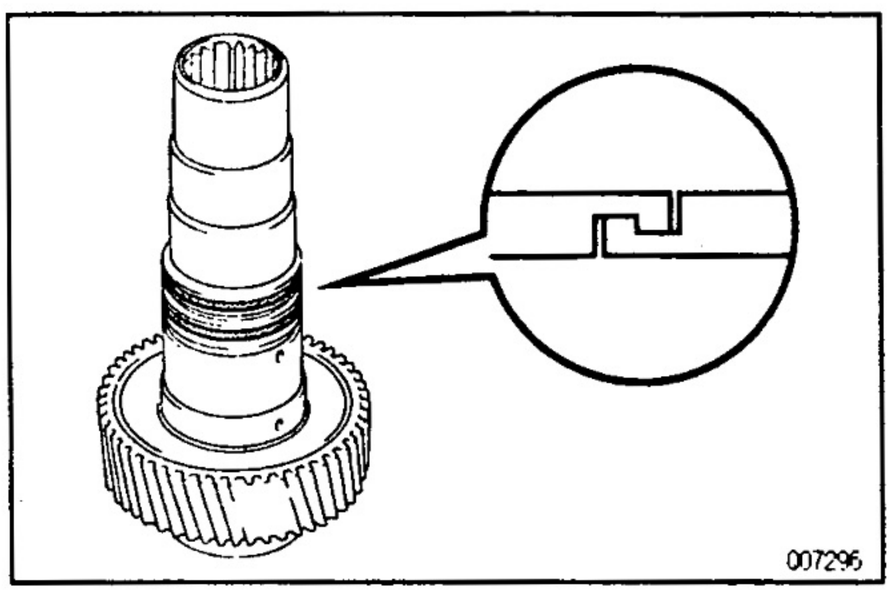

TR04M–04

INPUT SHAFT ASSEMBLY

INSTALL OIL SEAL RINGS

Install the 2 oil seal rings.
HINT:

- Apply gear oil to the oil seal ring.
- Hang securely to eliminate clearance.

PLANETARY GEAR
COMPONENTS

TR01A–07

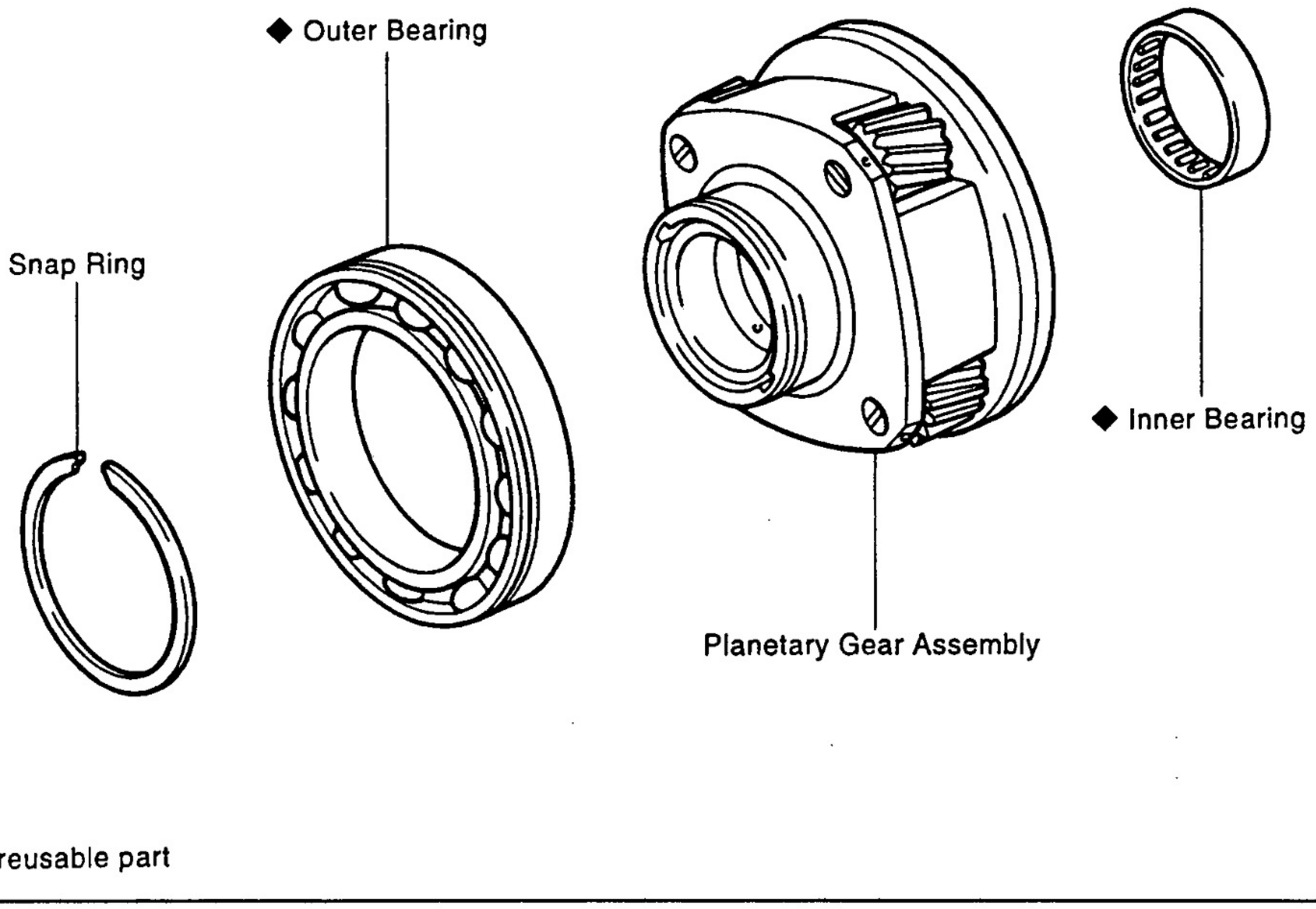

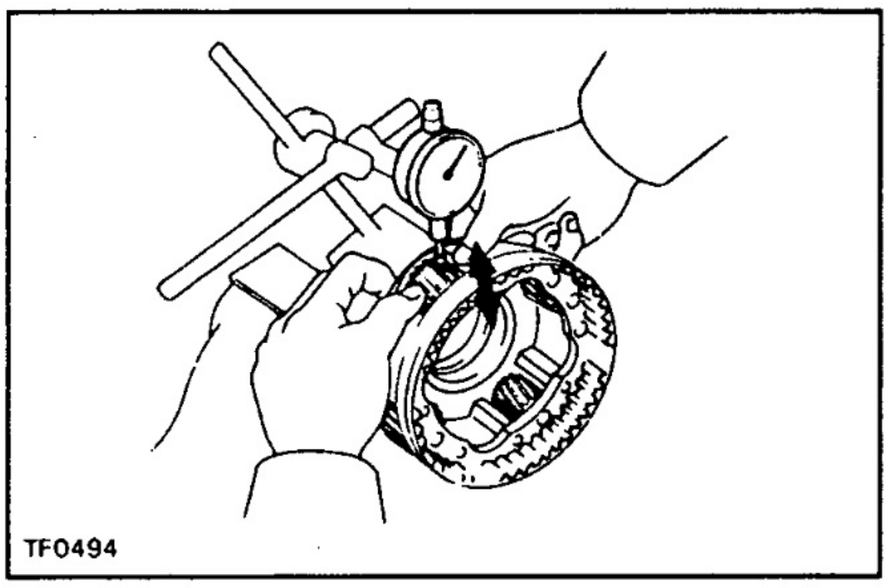

TR05H–03

PLANETARY GEAR INSPECTION

1. INSPECT PINION GEAR THRUST CLEARANCE

Using a feeler gauge, measure the planetary pinion gear thrust clearance.

Standard clearance:

0.11 – 0.84 mm (0.0043 – 0.0331 in.)

Maximum clearance: 0.84 mm (0.0331 in.)

If the clearance exceeds the maximum, replace the planetary gear assembly

2. INSPECT PLANETARY PINION GEAR RADIAL CLEARANCE

Using a dial indicator, measure the radial clearance of the planetary pinion gear.

Standard clearance:

0.009 – 0.038 mm (0.0004 – 0.0015 in.)

Maximum clearance: 0.038 mm (0.0015 in.)

If the clearance exceeds the maximum, replace the planetary gear assembly.

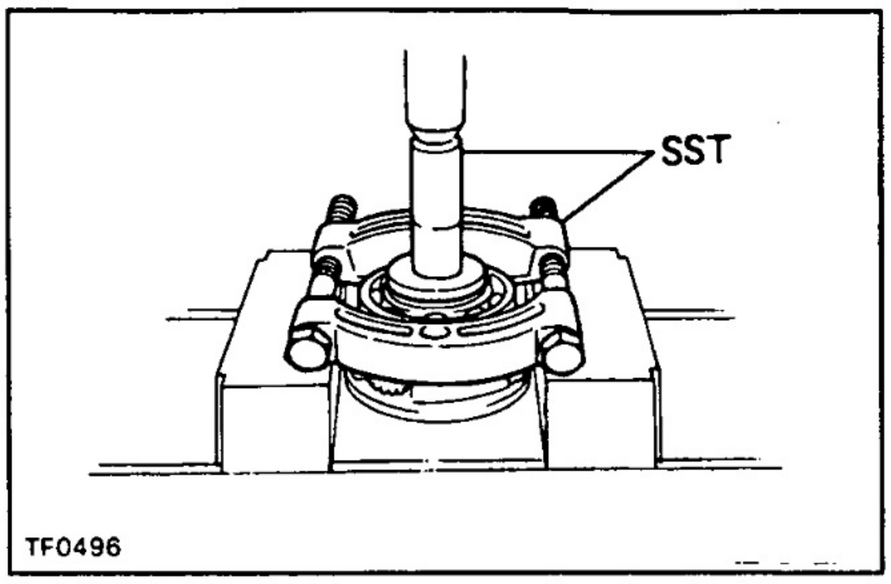

3. IF NECESSARY, REPLACE PLANETARY GEAR OUTER BEARING

(a) Using a snap ring expander, remove the snap ring.

(b) Using SST and a press, remove the outer bearing.
SST 09554–30011, 09555–55010

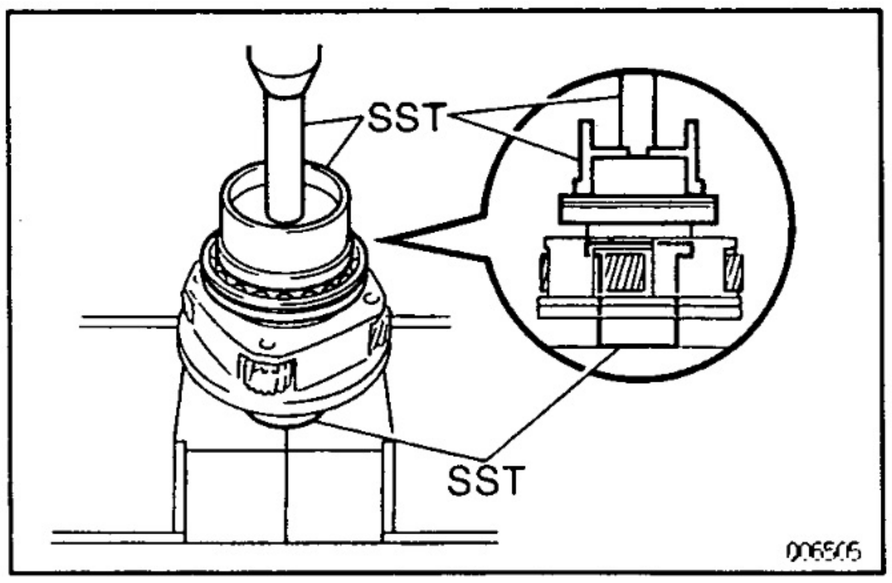

(c) Using SST and a press, install a new bearing with the groove faced forward..
SST 09223–15020, 09515–30010, 09950–70010
(09951–07100)

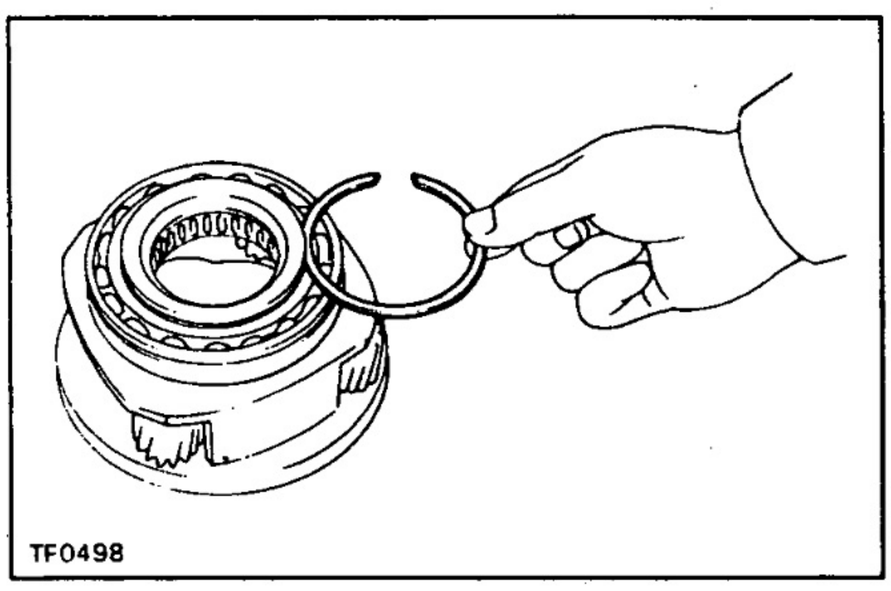

(d) Select a snap ring that will allow minimum axial play.

Mark	Thickness mm (in.)
1	1.45 – 1.50 (0.0571 – 0.0591)
2	1.50 – 1.55 (0.0591 – 0.0610)
3	1.55 – 1.60 (0.0610 – 0.0630)
4	1.60 – 1.65 (0.0630 – 0.0650)
5	1.65 – 1.70 (0.0650 – 0.0669)

(e) Using a snap ring expander, install the snap ring.

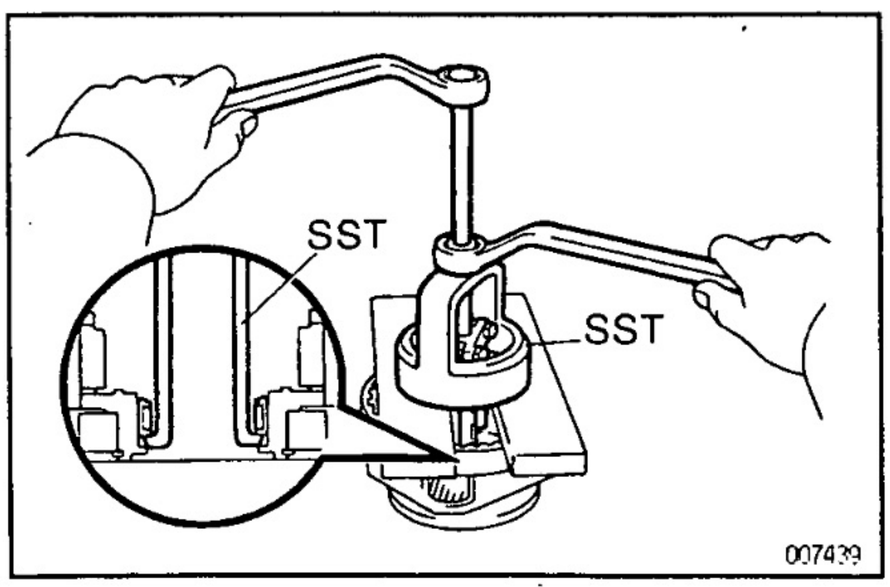

4. IF NECESSARY, REPLACE PLANETARY GEAR THRUST INNER BEARING

(a) Using SST and a press, remove the inner bearing.
SST 09612–65014 (09612–01030, 09612–01050)
NOTICE: Hang the SST securely to the clearance between the thrust inner bearing and planetary gear.

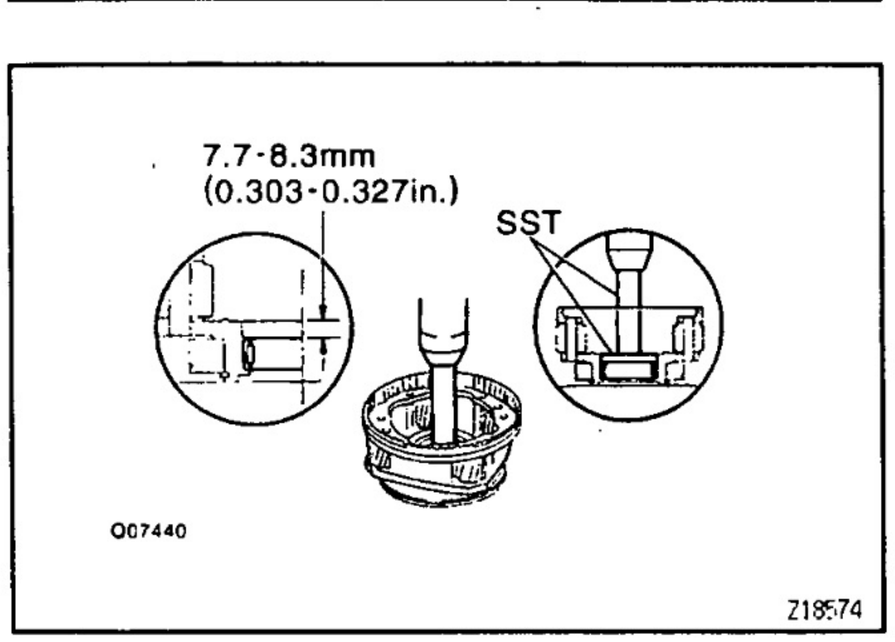

(b) Using SST and a press, install a new bearing.
SST 09950–60010 (09951–00570),
09950–70010 (09951–07100)
Bearing depth:7.7 – 8.3 mm (0.303 – 0.327 in.)

OIL SEALS
COMPONENTS

TR01C–07

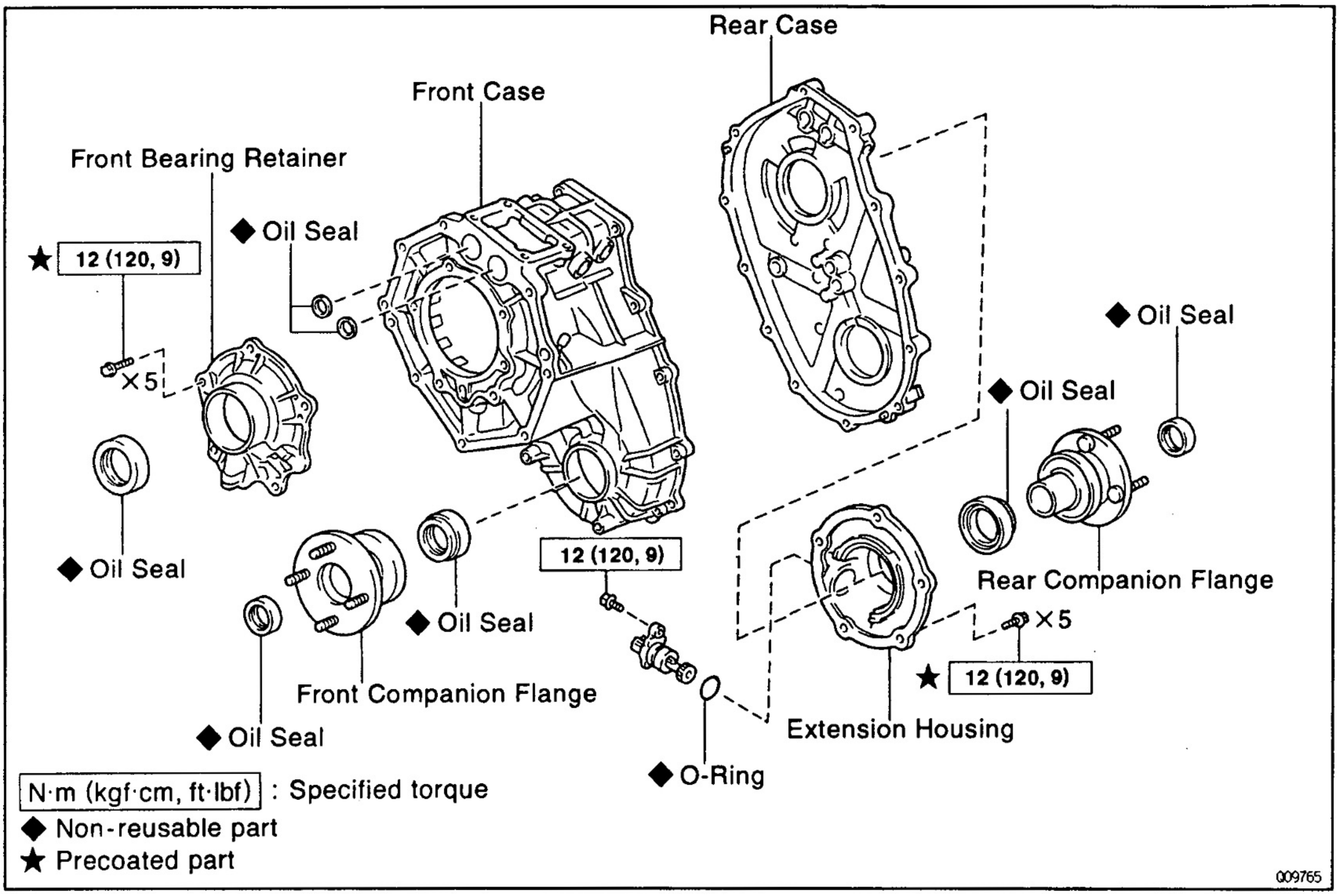

009765

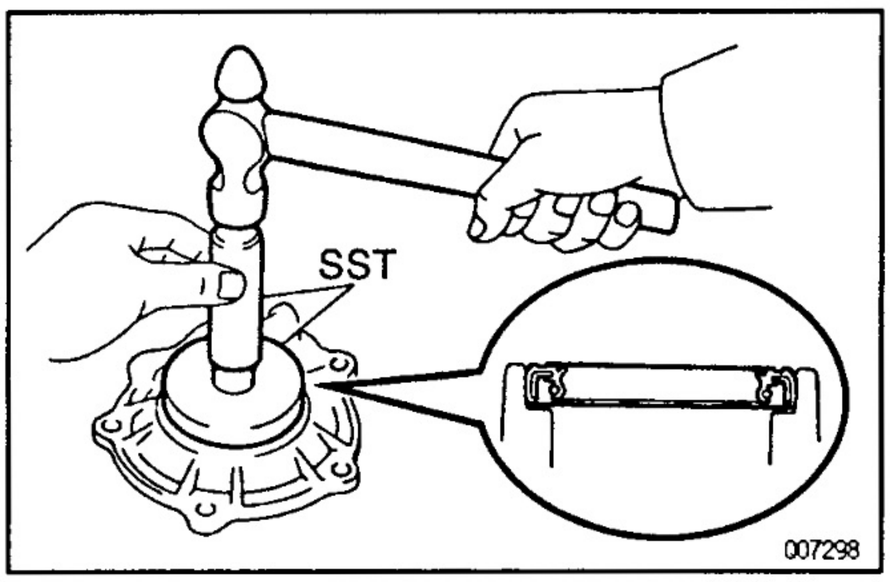

007298

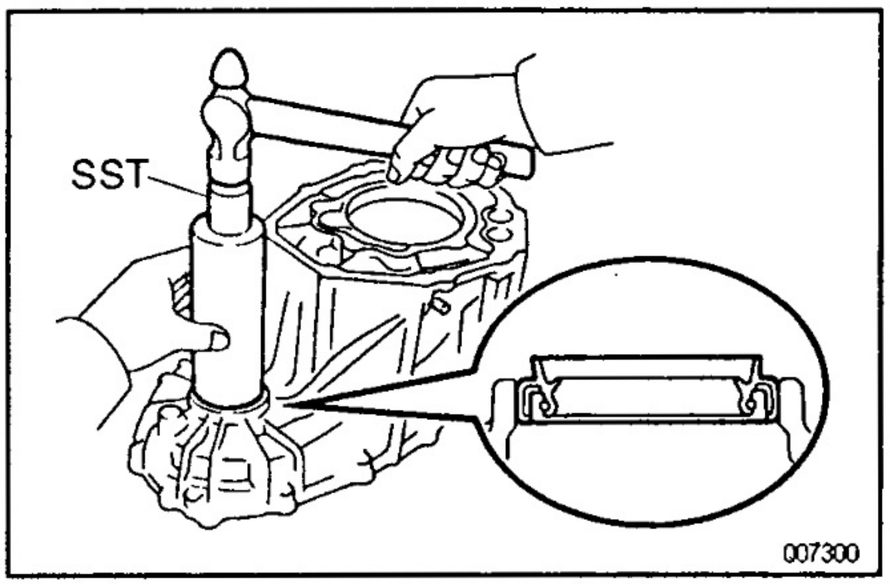

007300

TR068–01

OIL SEALS REPLACEMENT

1. REPLACE FRONT BEARING RETAINER OIL SEAL

(a) Using a screwdriver and hammer, drive out the oil seal.

(b) Using SST and a hammer, drive in a new oil seal until its surface is flush with the retainer upper surface.
SST 09950–60010 (09951–00590),
09950–70010 (09951–07100)

(c) Coat the lip of the oil seal with MP grease.

2. REPLACE FRONT CASE OIL SEAL

(a) Using a screwdriver and hammer, drive out the oil seal.

(b) Using SST and a hammer, drive in a new oil seal until its surface is flush with the case upper surface.
SST 09316–60011 (09316–00011)

(c) Coat the lip of the oil seal with MP grease.

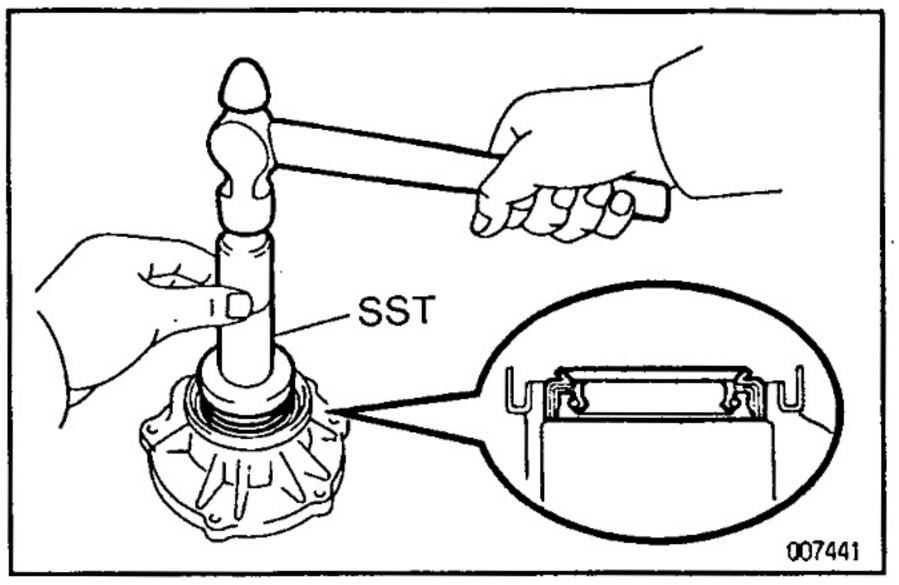

3. REPLACE EXTENSION HOUSING OIL SEAL

(a) Using a screwdriver and hammer, drive out the oil seal.

(b) Using SST and a hammer, drive in a new oil seal until its surface is flush with the housing upper surface.
SST 09554–22010

(c) Coat the lip of the oil seal with MP grease.

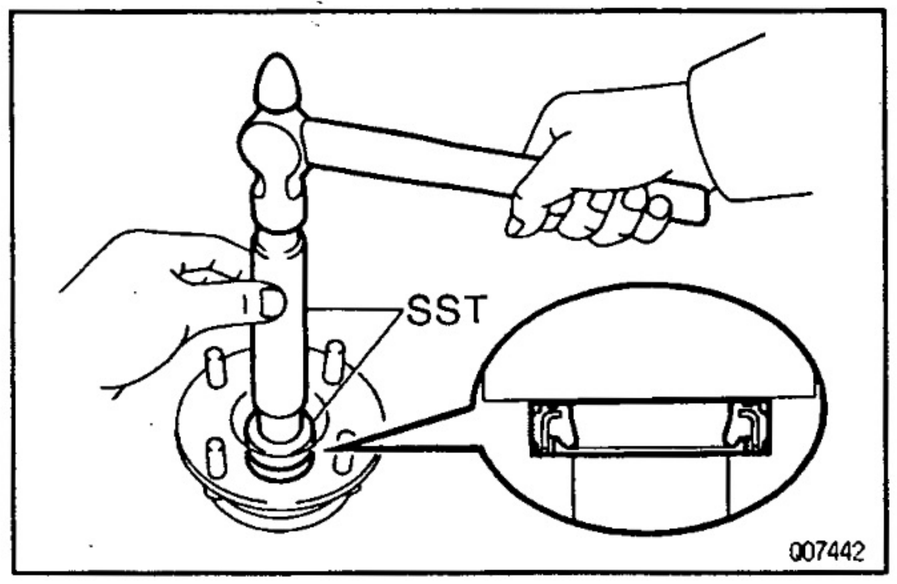

4. REPLACE FRONT AND REAR COMPANION FLANGE OIL SEALS

(a) Using a screwdriver and hammer, drive out the oil seals from the 2 flanges.

(b) Using SST and a hammer, drive in a new oil seal.
SST 09950–60010 (09951–00220, 09951–00350, 09952–06010), 09950–70010 (09951–07100)

(c) Coat the lip of the oil seal with MP grease.

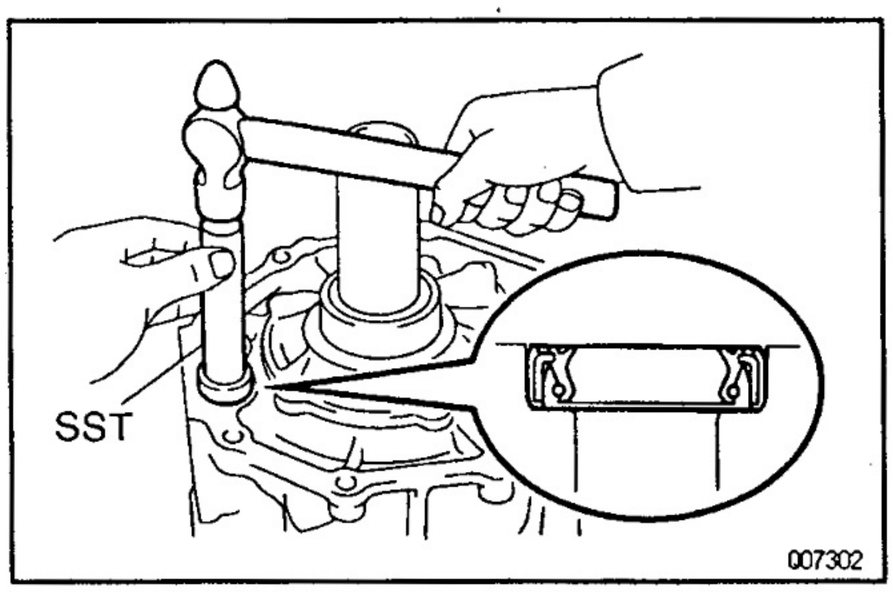

5. REPLACE SHIFT FORK SHAFT OIL SEALS

(a) Using a screwdriver, pry out the oil seal.

(b) Using SST and a hammer, drive in a new oil seal.
SST 09304–12012

Oil seal depth:

–0.5 ~ 0.5 mm (–0.020 ~ 0.020 in.)

SERVICE SPECIFICATIONS

SERVICE DATA

TR01F–08

Breather hose	Hose depth		13 mm	0.51 in.
Oil pump body	Body clearance	STD	0.09 – 0.16 mm	0.0035 – 0.0063 in.
		Max	0.16 mm	0.0063 in.
	Tip clearance	STD	0.05 – 0.15 mm	0.0020 – 0.0059 in.
		Max	0.15 mm	0.0059 in.
	Side clearance	STD	0.03 – 0.10 mm	0.0012 – 0.0039 in.
		Max	0.10 mm	0.0039 in.
Rear output shaft assembly	Drive sprocket thrust clearance	STD	0.10 – 0.25 mm	0.0039 – 0.0098 in.
		Max	0.25 mm	0.0098 in.
	Rear output shaft journal diameter			
	Part A	Min	27.98 mm	1.1016 in.
	Part B	Min	36.98 mm	1.4561 in.
	Drive sprocket radial clearance	STD	0.010 – 0.055 mm	0.0004 – 0.0022 in.
		Max	0.055 mm	0.0022 in.
	Front drive shift fork to clutch sleeve clearance	Max	1.0 mm	0.039 in.
	High and low shift fork to sleeve clearance	Max	1.0 mm	0.039 in.
	Rear output shaft snap ring thickness			
		Mark		
		A	2.10 – 2.15 mm	0.0827 – 0.0846 in.
		B	2.15 – 2.20 mm	0.0846 – 0.0866 in.
		C	2.20 – 2.25 mm	0.0866 – 0.0886 in.
		D	2.25 – 2.30 mm	0.0886 – 0.0906 in.
		E	2.30 – 2.35 mm	0.0906 – 0.0925 in.
		F	2.35 – 2.40 mm	0.0925 – 0.0945 in.
		G	2.40 – 2.45 mm	0.0945 – 0.0965 in.
		H	2.45 – 2.50 mm	0.0965 – 0.0984 in.
		J	2.50 – 2.55 mm	0.0984 – 0.1004 in.
		K	2.00 – 2.05 mm	0.0787 – 0.0807 in.
		L	2.05 – 2.10 mm	0.0807 – 0.0827 in.

Input shaft	Input shaft journal outer diameter			
		Min	47.59 mm	1.8736 in.
	Input shaft bushing diameter	Max	39.14 mm	1.5409 in.
	Synchronizer ring to sprocket clearance			
		STD	1.15 — 1.85 mm	0.0453 — 0.0728 in.
		Min	0.80 mm	0.0315 in.
	Input shaft snap ring thickness	Mark		
		A	2.10 — 2.15 mm	0.0827 — 0.0846 in.
		B	2.15 — 2.20 mm	0.0846 — 0.0866 in.
		C	2.20 — 2.25 mm	0.0866 — 0.0886 in.
		D	2.25 — 2.30 mm	0.0886 — 0.0906 in.
		E	2.30 — 2.35 mm	0.0906 — 0.0925 in.
		F	2.35 — 2.40 mm	0.0925 — 0.0945 in.
		G	2.40 — 2.45 mm	0.0945 — 0.0965 in.
		H	2.45 — 2.50 mm	0.0965 — 0.0984 in.
		J	2.50 — 2.55 mm	0.0984 — 0.1004 in.
		K	2.55 — 2.60 mm	0.1004 — 0.1024 in.
		L	2.60 — 2.65 mm	0.1024 — 0.1043 in.
		M	2.65 — 2.70 mm	0.1043 — 0.1063 in.
		N	2.70 — 2.75 mm	0.1063 — 0.1083 in.
		P	2.75 — 2.80 mm	0.1083 — 0.1102 in.
		Q	2.80 — 2.85 mm	0.1102 — 0.1122 in.
		R	2.85 — 2.90 mm	0.1122 — 0.1142 in.
		S	2.90 — 2.95 mm	0.1142 — 0.1161 in.
		T	2.95 — 3.00 mm	0.1161 — 0.1181 in.
		U	3.00 — 3.05 mm	0.1181 — 0.1201 in.
Planetary gear	Pinion gear thrust clearance	STD	0.11 — 0.84 mm	0.0043 — 0.0331 in.
		Max	0.84 mm	0.0331 in.
	Pinion gear radial clearance	STD	0.009 — 0.038 mm	0.0004 — 0.0015 in.
		Max	0.038 mm	0.0015 in.
	Outer bearing snap ring thickness			
		Mark		
		1	1.45 — 1.50 mm	0.0571 — 0.0591 in.
		2	1.50 — 1.55 mm	0.0591 — 0.0610 in.
		3	1.55 — 1.60 mm	0.0610 — 0.0630 in.
		4	1.60 — 1.65 mm	0.0630 — 0.0650 in.
		5	1.65 — 1.70 mm	0.0650 — 0.0669 in.
	Thrust inner bearing depth		7.7 — 8.3 mm	0.303 — 0.327 in.
Oil seal	Shift fork shaft oil seal depth		−0.5 ~ 0.5 mm	−0.020 ~ 0.020 in.

TORQUE SPECIFICATIONS

Part tightened	N·m	kgf·cm	ft·lbf
Crossmember x Engine rear mounting	19	190	14
Crossmember x Frame	65	660	48
Transfer adaptor x Transfer	24	240	17
Speed sensor driven gear set bolt	12	120	9
4WD position switch	37	380	27
L4 position switch	37	380	27
Plug of front case	37	380	27
Protector	18	185	13
Front bearing retainer	12	120	9
Control retainer	18	185	13
Companion flange lock nut	118	1,200	87
Extension housing	12	120	9
Front case x Rear case	28	285	21
Straight screw plug for shift fork shaft	19	190	14
Separator with oil strainer x Front case	7.5	80	69 in.·lbf
Oil pump body x Front case	7.5	80	69 in.·lbf
Straight screw plug for ring gear	19	190	14
Oil pump plate x Oil pump body	7.4	75	65 in.·lbf

(VF3B)

PRECAUTION

TROOP–0H

When working with FIPG material, you must observe the following.

- **Using a razor blade and gasket scraper, remove all the old FIPG material from the gasket surfaces.**
- **Thoroughly clean all components to remove all the loose material.**
- **Clean both sealing surfaces with a non–residue solvent.**
- **Apply FIPG in approx. 1 mm (0.04 in.) wide bead along the sealing surface.**
- **Parts must be assembled within 10 minutes of application. Otherwise, the FIPG material must be removed and reapplied.**

If the vehicle is equipped with a mobile communication system, refer to the precautions in the IN section.

PREPARATION

SST (SPECIAL SERVICE TOOLS)

TR035–08

	09223–15020	Oil Seal & Bearing Replacer	Planetary gear outer bearing
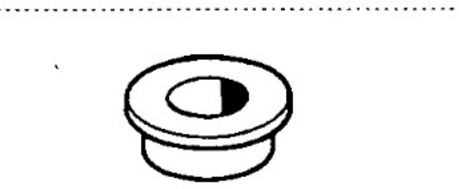	09304–12012	Input Shaft Front Bearing Replacer	Shift fork shaft oil seal
	09316–20011	Transfer Bearing Replacer	Rear output shaft bearing
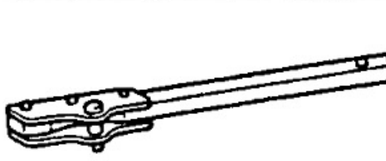	09316–60011	Transmission & Transfer Bearing Replacer	
	(09316–00011)	Replacer Pipe	Rear output shaft bearing Front case oil seal
	(09316–00021)	Replacer "A"	Driven sprocket front and rear be aring
	(09316–00071)	Replacer "F"	Rear output shaft bearing
	09330–00021	Companion Flange Holding Tool	Companion flange
	09515–30010	Rear Wheel Bearing Replacer	Planetary gear outer bearing

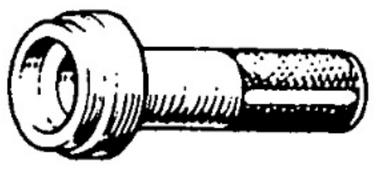	09554–22010	Differential Oil Seal Replacer	Extension housing oil seal
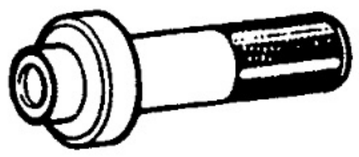	09554–30011	Differential Oil Seal Replacer	Planetary gear outer bearing
	09555–55010	Differential Drive Pinion Bearing Replacer	Driven sprocket rear bearing Rear output shaft bearing Planetary gear outer bearing
	09612–65014	Steering Worm Bearing Puller	
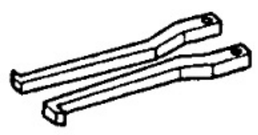	(09612–01030)	Claw "C"	Planetary gear inner bearing
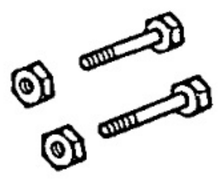	(09612–01050)	Hanger Pin with Nut	Planetary gear inner bearing
	09950–40010	Puller B Set	
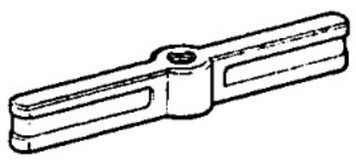	(09951–04020)	Hanger 200	Companion flange
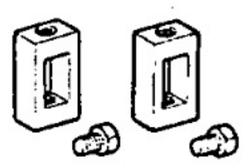	(09952–04010)	Slide Arm	Companion flange
	(09953–04030)	Center Bolt 200	Companion flange
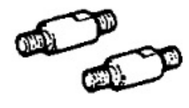	(09954–04010)	Arm 25	Companion flange
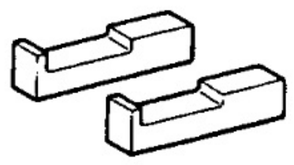	(09955–04050)	Claw No.5	Companion flange
	(09957–04010)	Attachment	Companion flange
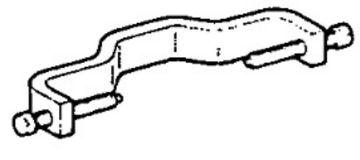	(09958–04010)	Holder	Companion flange

TR

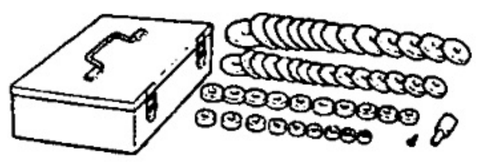	09950–60010 Replacer Set	
	(09951–00220) Replacer 22	Companion flange oil seal
	(09951–00350) Replacer 35	Companion flange oil seal
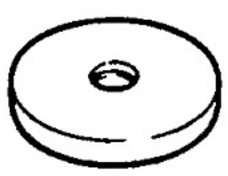	(09951–00570) Replacer 57	Planetary gear inner bearing
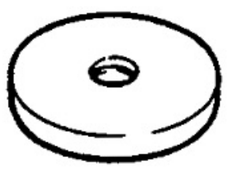	(09951–00590) Replacer 59	Front bearing retainer oil seal
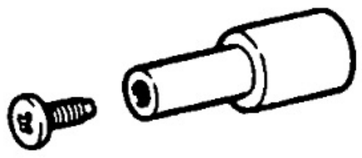	(09952–06010) Adapter	Companion flange oil seal
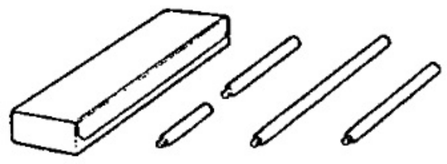	09950–70010 Handle Set	
	(09951–07100) Handle 100	Front bearing retainer oil seal Planetary gear outer bearing Planetary gear inner bearing Companion flange oil seal

MT013–00

RECOMMENDED TOOLS

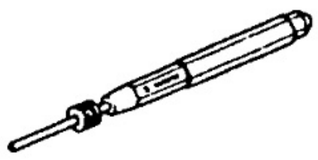	09031–00030 Pin Punch .	
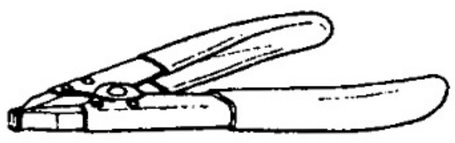	09905–00012 Snap Ring No.1 Expander .	

MX027–16

EQUIPMENT

Calipers	
Dial indicator	
Micrometer	
Torque wrench	
Feeler gauge	
Steel straight edge	

MX028–1F

LUBRICANT

Item	Capacity	Classification
Transfer oil	1.2 liter (1.3 US qts, 1.1 Imp.qts)	API GL–4 or GL–5 SAE 75W–90

MX029–11

SSM (SPECIAL SERVICE MATERIALS)

08826–00090	Seal Packing 1281, THREE BOND 1281 or equivalent (FIPG)	Front case x Rear case Rear companion flange Extension housing x Rear case Front retainer x Front case
08833–00080	Adhesive 1344, THREE BOND 1344, LOCTITE 242 or equivalent	Straight screw plug Extension housing set bolt Front retainer set bolt

TR

TROUBLESHOOTING

TR003–08

Use the table below to help you find the cause of the problem. The numbers indicate the priority of the likely cause of the problem. Check each part in order. If necessary, replace these parts.

See Page / Parts Name / Trouble	TR-43,44 Transfer faulty	TR-38 Wrong oil grade	TR-38 Oil lever low	TR-38 Oil level too high	TR-70 Oil seal, O-ring or gasket worn or damaged	TR-43,44 Center differential or transfer faulty
Noise	3	2	1			
Oil leakage				1	2	
Tight corner braking						1

V06800

ASSEMBLY REMOVAL AND INSTALLATION

COMPONENTS

TR06C–01

M/T

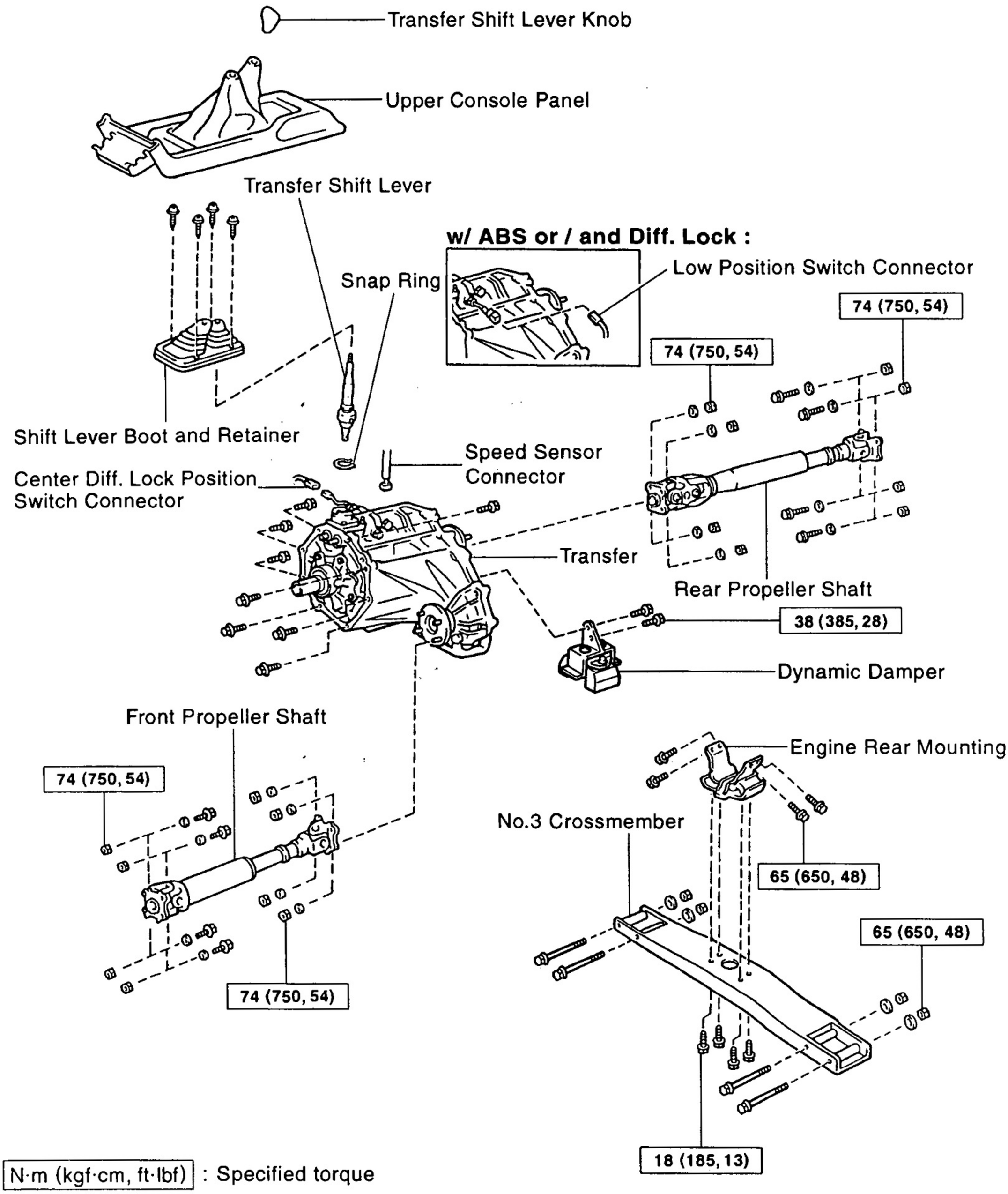

N·m (kgf·cm, ft·lbf) : Specified torque

009956

A/T

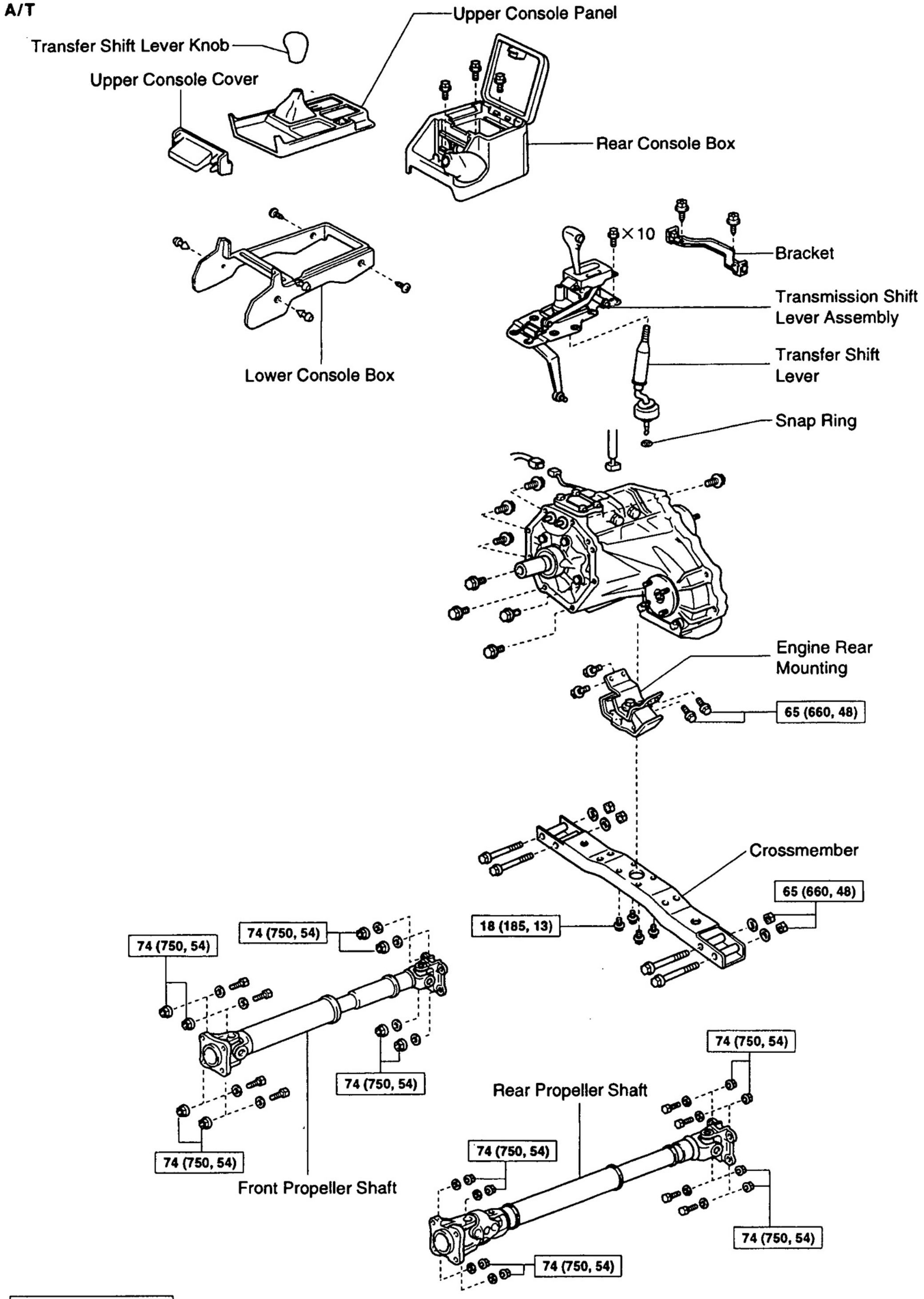

N·m (kgf·cm, ft·lbf) : Specified torque

Y

009957

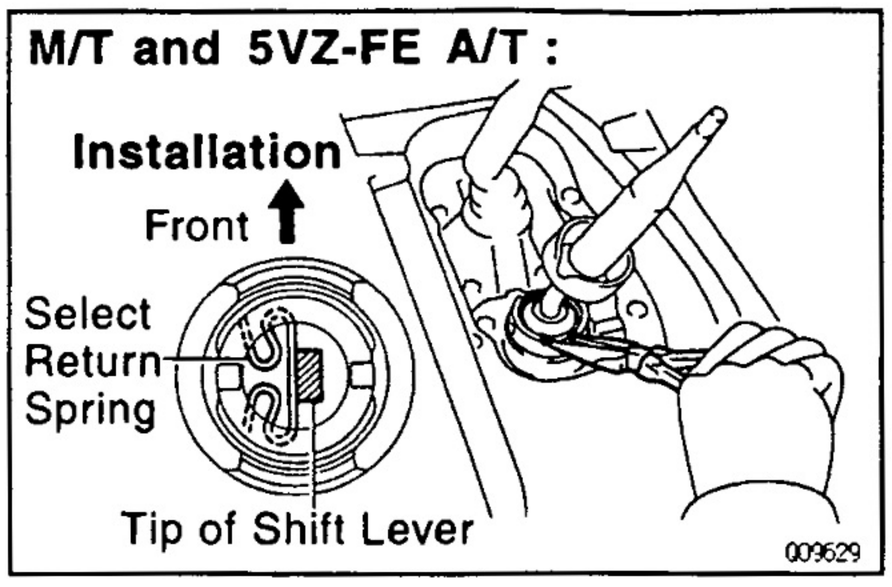

TR06T-01

TRANSFER REMOVAL

1. REMOVE TRANSFER SHIFT LEVER

M/T and 5VZ–FE A/T:

(a) Remove the front console box.

(b) Remove the 4 screws, shift lever boot and retainer.

(c) Using pliers, remove the snap ring and pull out the shift lever.

HINT:

- Apply MP grease to the transfer adaptor oil seal.
- Shift the 2 shift fork shafts to the HL position.
- After installation, road test the vehicle.

INSTALLATION HINT: Apply MP grease to the tip of the shift lever.

Except M/T and 5VZ–FE A/T:

(a) Remove the 3 bolts and rear console box and disconnect the connectors.

(b) Remove the upper console panel and disconnect the connectors.

(c) Remove the upper console cover.

(d) Remove the 2 clips, screws and lower console box.

(e) Remove the nut and washer and disconnect the shift control rod.

Torque: 13 N·m (130 kgf·cm, 10 ft·lbf)

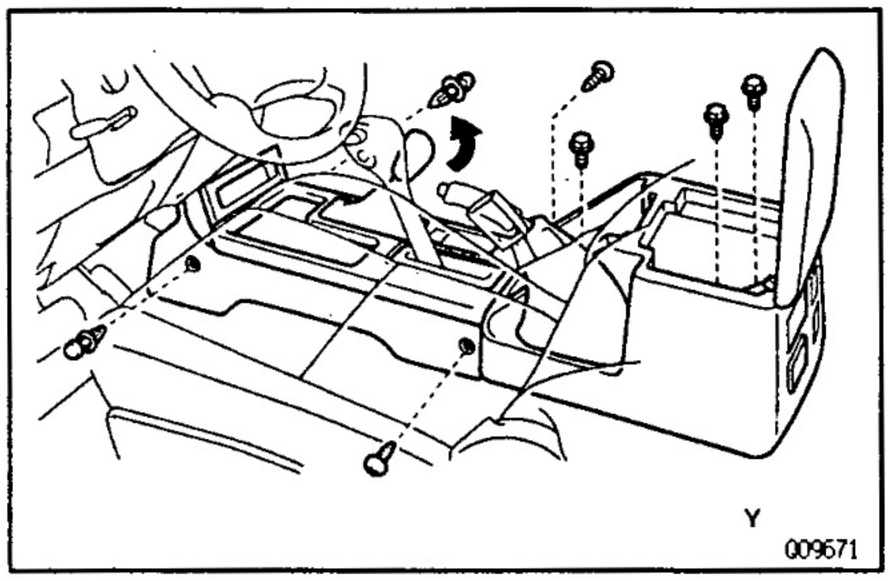

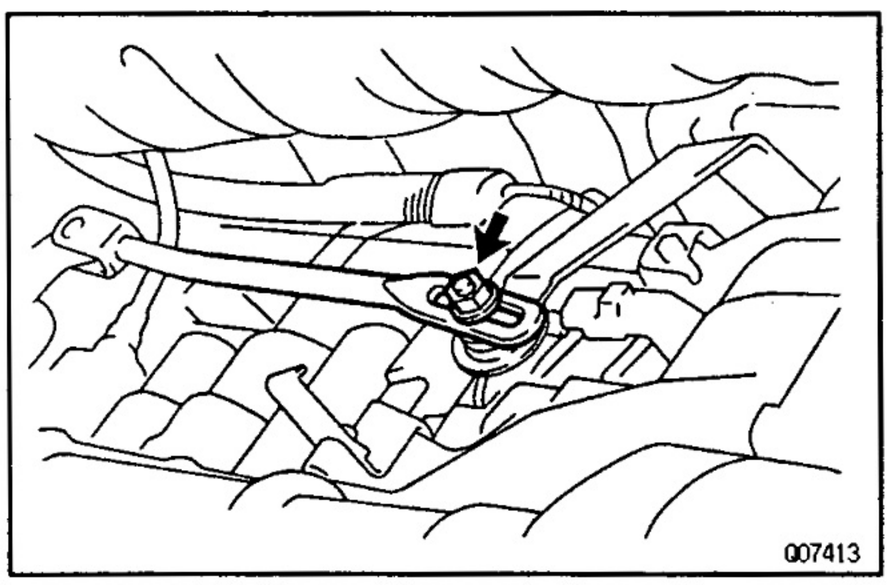

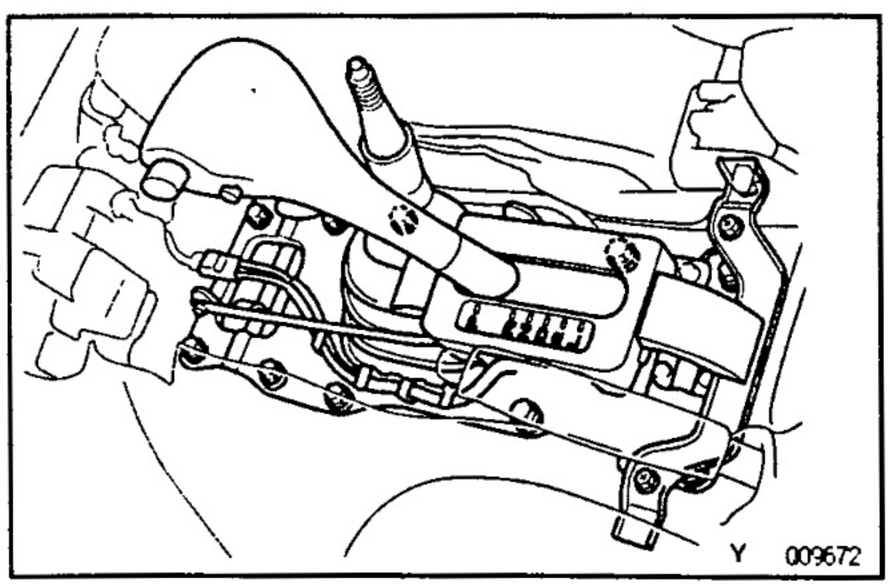

(f) Remove the 2 screw and bracket.

(g) Disconnect the connector and remove the 10 screws and transmission shift lever assembly.

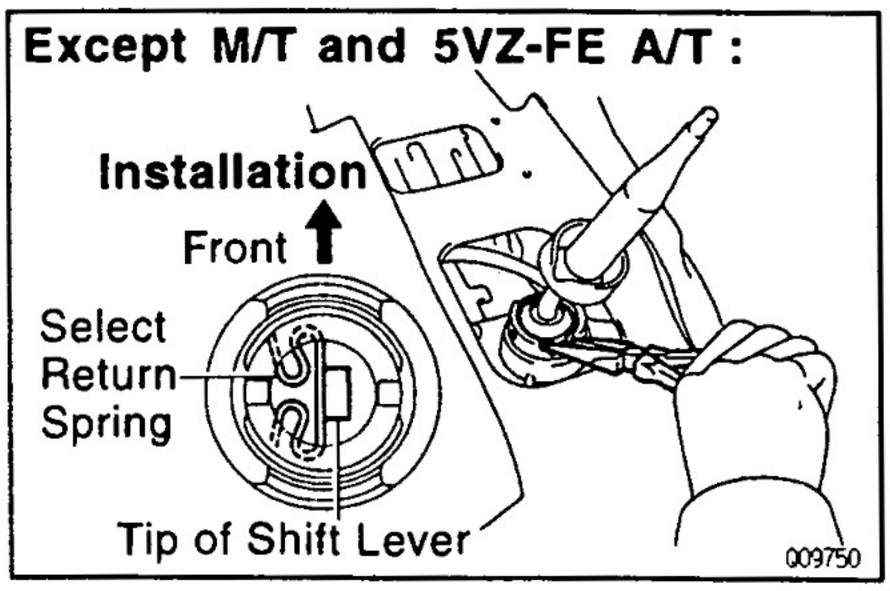

(h) Using pliers, remove the snap ring and pull out the shift lever.

INSTALLATION HINT: Apply MP grease to the tip of the shift lever.

2. REMOVE BREATHER HOSE

Disconnect the breather hose from transfer upper cover and transmission control retainer.

Hose depth:

13 mm (0.51 in.) or more

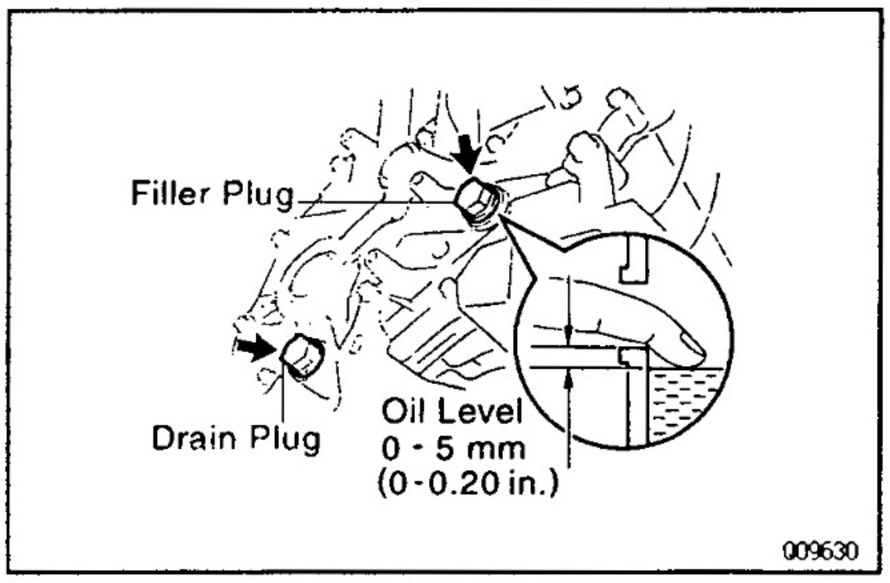

3. RAISE VEHICLE AND DRAIN TRANSFER OIL

Oil grade: API GL–4 or GL–5

Viscosity: SAE 75W–90

Capacity: 1.2 liter (1.3 US qts, 1.1 Imp.qts)

4. REMOVE FRONT AND REAR PROPELLER SHAFT

(See page PR–3)

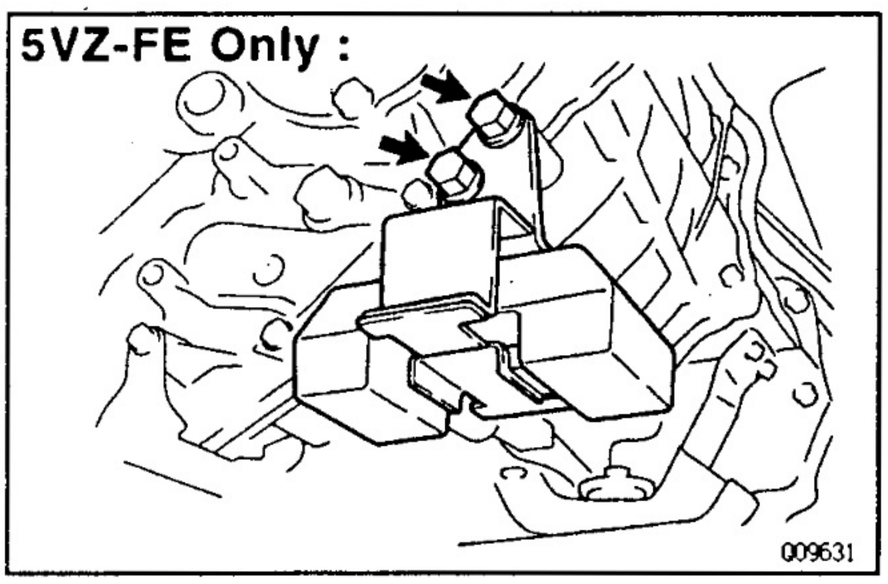

5. 5VZ–FE Only:

REMOVE DYNAMIC DAMPER

Remove the 2 bolts and dynamic damper.

Torque: 38 N·m (385 kgf·cm, 28 ft·lbf)

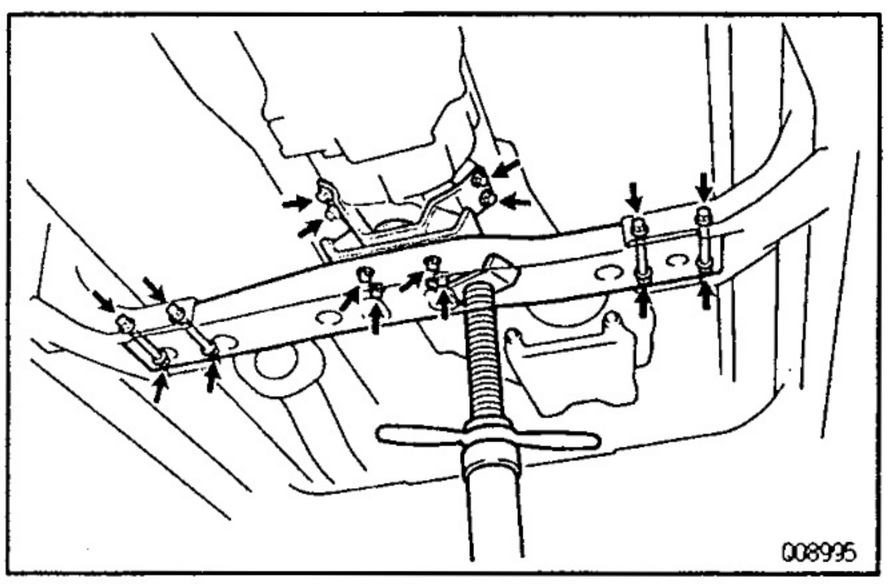

6. REMOVE CROSSMEMBER

(a) Support the transmission rear side with a jack.

(b) Remove the 4 set bolts of the engine rear mounting.

Torque: 19 N·m (190 kgf·cm, 14 ft·lbf)

(c) Remove the 4 bolts, nuts and crossmember.

Torque: 65 N·m (660 kgf·cm, 48 ft·lbf)

7. REMOVE ENGINE REAR MOUNTING

Remove the 4 bolts and engine rear mounting from the transmission.

Torque: 65 N·m (650 kgf·cm, 48 ft·lbf)

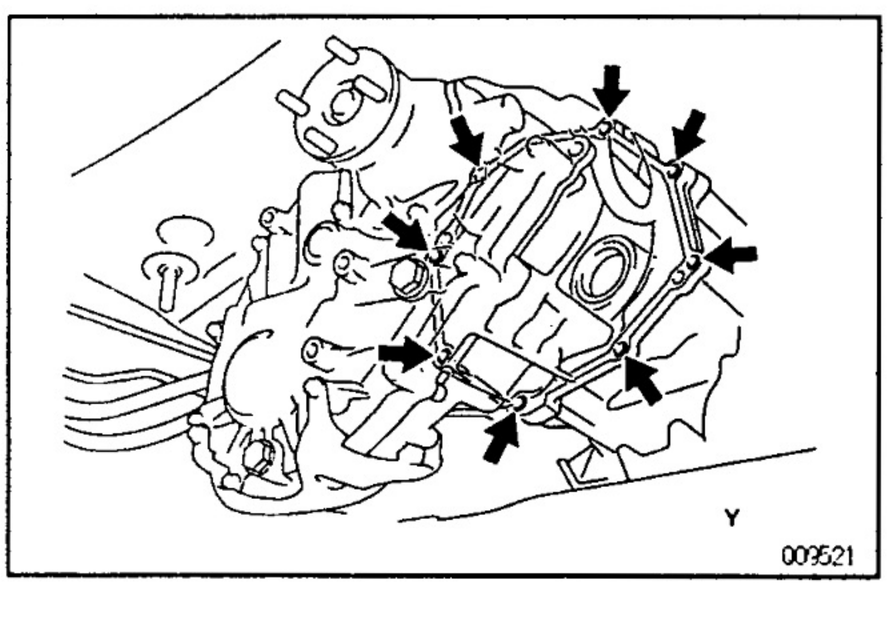

8. DISCONNECT VEHICLE SPEED SENSOR AND TRANSFER INDICATOR SWITCH CONNECTORS

9. REMOVE TRANSFER FROM TRANSMISSION

(a) Remove the 8 bolts of the transfer adaptor mounting.

Torque: 24 N·m (240 kgf·cm, 17 ft·lbf)

(b) Pull out the transfer down and toward the rear.

HINT: Be careful not to damage the adaptor rear oil seal with the transfer input gear spline.

TRANSFER INSTALLATION

TR05D–04

Installation is in the reverse order of removal.

COMPONENT PARTS REMOVAL AND INSTALLATION

COMPONENTS

TR06E-01

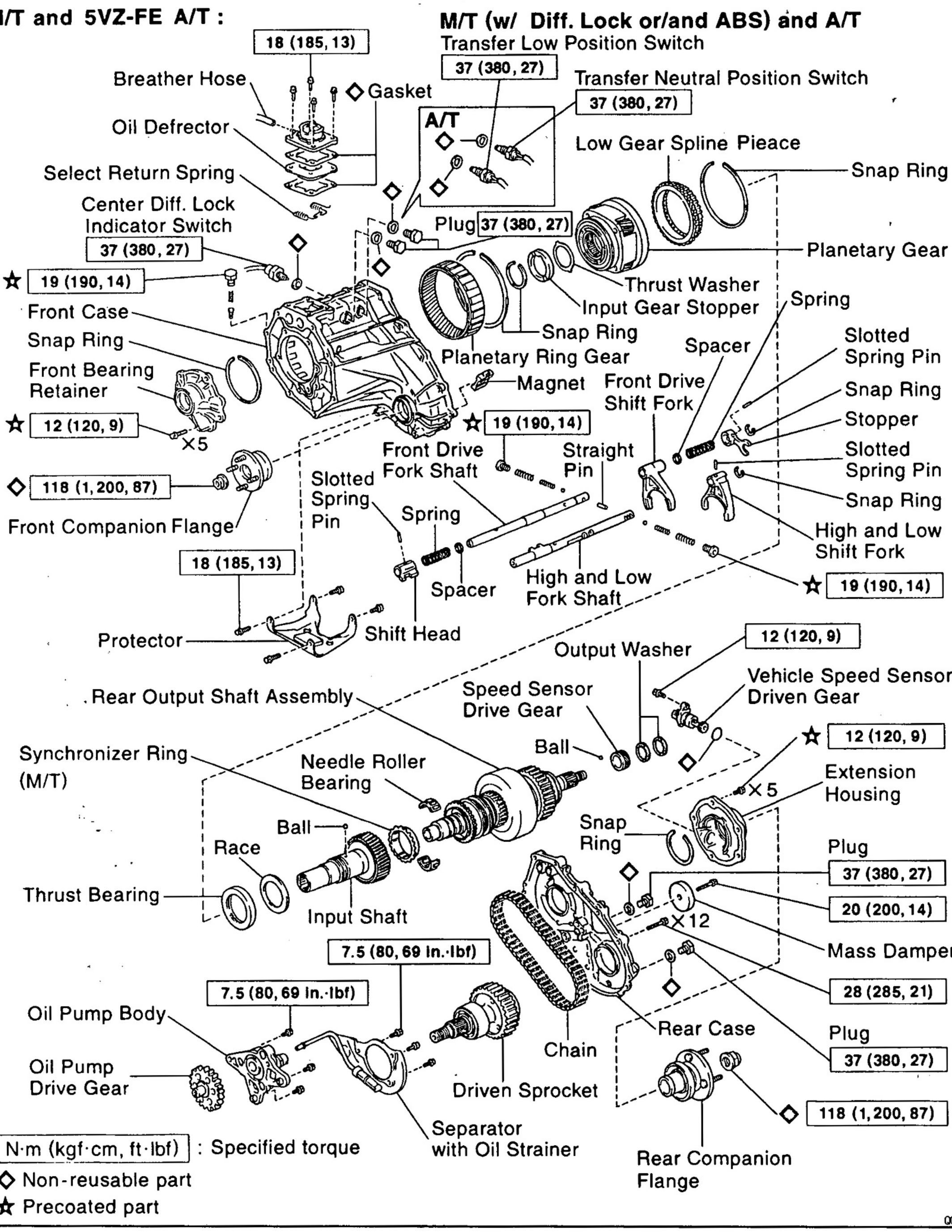

Except M/T and 5VZ-FE A/T :

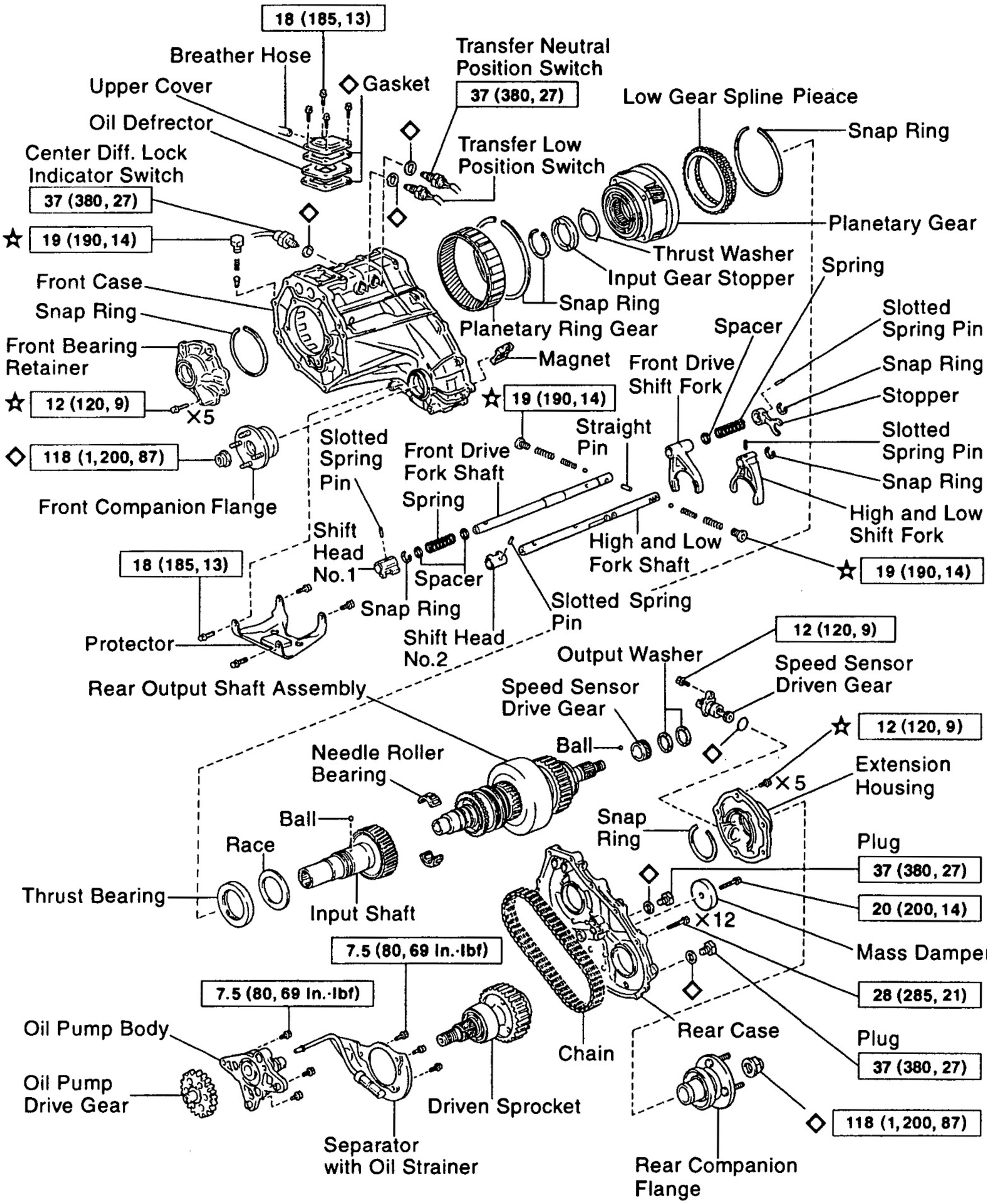

N·m (kgf·cm, ft·lbf) : Specified torque

◇ Non-reusable part

☆ Precoated part

009827

TR06F–01

COMPONENT PARTS REMOVAL

1. **REMOVE SPEED SENSOR DRIVEN GEAR**
   Torque: 12 N·m (120 kgf·cm, 9 ft·lbf)
2. **REMOVE CENTER DIFF. LOCK INDICATOR SWITCH**
   Torque: 37 N·m (380 kgf·cm, 27 ft·lbf)
3. **M/T (w/ Diff. Lock or/and ABS) and A/T:**
   REMOVE LOW POSITION SWITCH
   Torque: 37 N·m (380 kgf·cm, 27 ft·lbf)
4. **A/T:**
   REMOVE NEUTRAL POSITION SWITCH
   Torque: 37 N·m (380 kgf·cm, 27 ft·lbf)
5. **REMOVE PLUGS OF FRONT CASE**
   Torque: 37 N·m (380 kgf·cm, 27 ft·lbf)
   INSTALLATION HINT: Check the following items.
   - The input and output shafts rotate smoothly.
   - Shifting can be made smoothly to all positions.
6. **REMOVE PROTECTOR**
   Remove the 4 bolts.
   Torque: 18 N·m (185 kgf·cm, 13 ft·lbf)
7. **REMOVE MASS DAMPER**
   Remove the bolt.
   Torque: 20 N·m (200 kgf·cm, 14 ft·lbf)

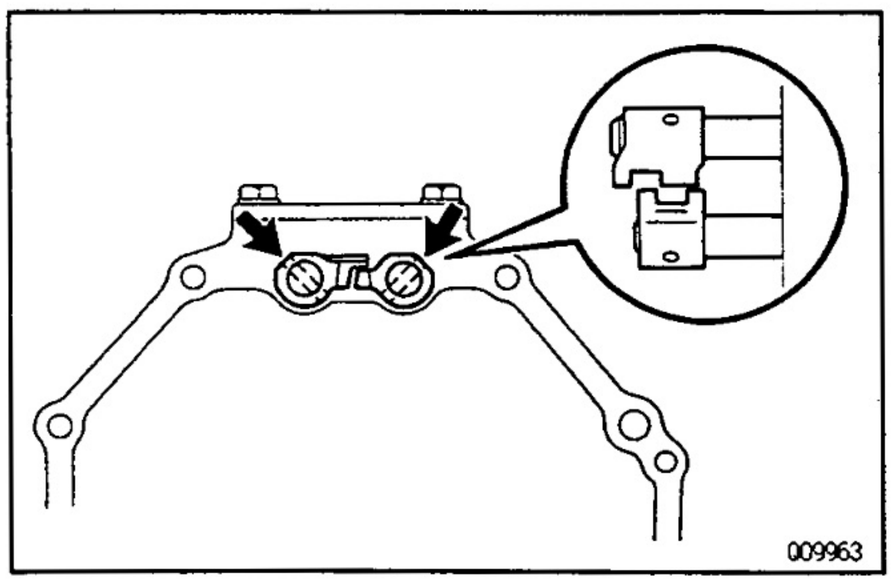

8. **Except M/T and 5VZ–FE A/T:**
   REMOVE SHIFT GEAR HEAD NO.1 AND NO.2
(a) Using a pin punch and hammer, drive out the 2 slotted spring pins.
(b) Remove the 2 shift gear heads.

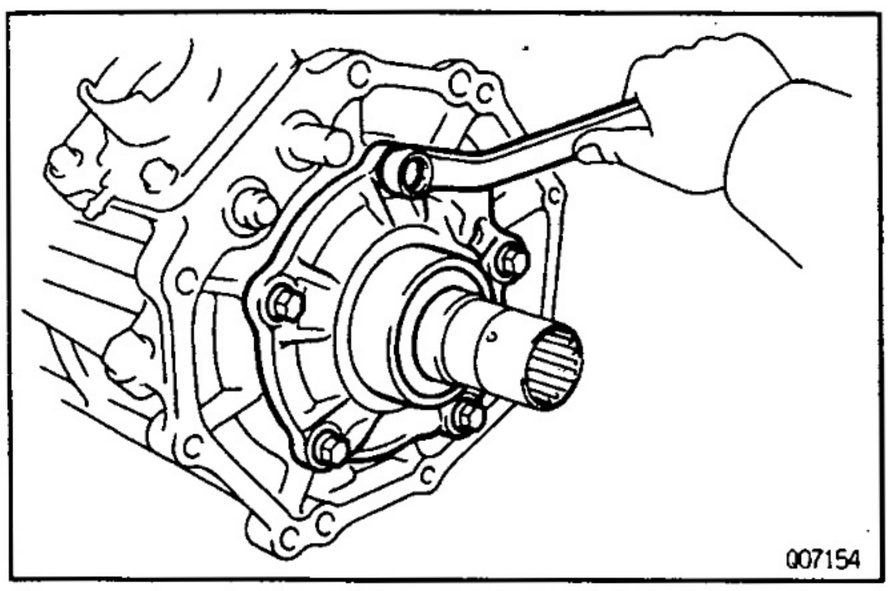

9. **REMOVE FRONT BEARING RETAINER**
(a) Remove the 5 bolts.
   Torque: 12 N·m (120 kgf·cm, 9 ft·lbf)
   INSTALLATION HINT: Apply liquid sealer to the bolts.
   Sealant: Part No. 08833 – 00080, THREE BOND 1344, LOCTITE 242 or equivalent
(b) Using a plastic hammer, tap the front bearing retainer and remove it.

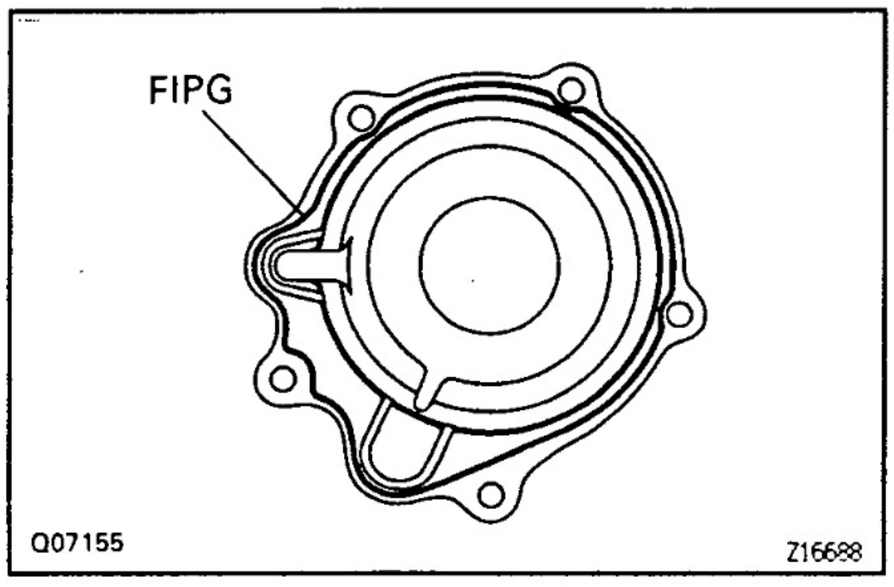

INSTALLATION HINT:

- Remove any FIPG material and be careful not to drop oil on the contacting surfaces of the front bearing retainer.
- Apply FIPG to the front bearing retainer, as shown.

FIPG: Part No. 08826–00090, THREE BOND 1281 or equivalent

10. **Except M/T and 5VZ–FE A/T:**
REMOVE UPPER COVER AND OIL DEFLECTOR
Remove the 4 bolts, upper cover and oil deflector.
Torque: 18 N·m (185 kgf·cm, 13 ft·lbf)
INSTALLATION HINT: Install 2 new gasket and oil deflector.
11. **M/T and 5VZ–FE A/T:**
REMOVE CONTROL RETAINER AND OIL DEFLECTOR
(a) Remove the 4 bolts, control retainer and oil deflector.
Torque: 18 N·m (185 kgf·cm, 13 ft·lbf)
INSTALLATION HINT: Install 2 new gasket and control retainer.
(b) Remove the select return spring from the control retainer.

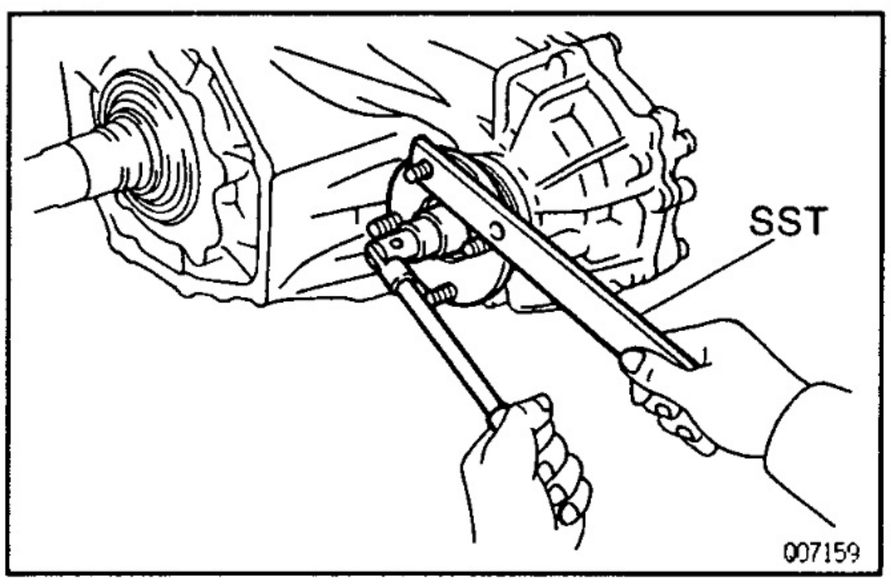

12. **REMOVE FRONT COMPANION FLANGE**
(a) Using a chisel and hammer, loosen the staked part of the nut.
INSTALLATION HINT: Stake a new lock nut.
(b) Using SST to hold the flange, remove the companion flange lock nut.
SST 09330–00021
Torque: 118 N·m (1,200 kgf·cm, 87 ft·lbf)
(c) Using SST, remove the companion flange.
SST 09950–40010 (09951–04020, 09952–04010, 09953–04030, 09954–04010, 09955–04050, 09958–04010)
INSTALLATION HINT: The diameter of the front companion flange is smaller than that of the rear companion flange.

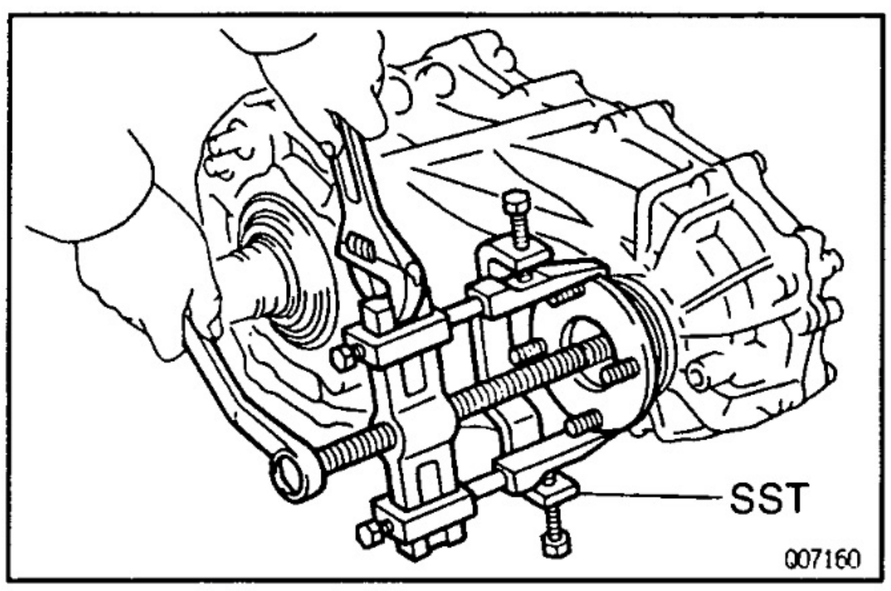

13. **REMOVE REAR COMPANION FLANGE**
Remove the rear companion flange in the same way as the front companion flange.

14. REMOVE EXTENSION HOUSING

(a) Remove the 5 bolts.
Torque: 12 N·m (120 kgf·cm, 9 ft·lbf)
INSTALLATION HINT: Apply liquid sealer to the bolts.
Sealant: Part No. 08833 – 00080, THREE BOND 1344, LOCTITE 242 or equivalent

(b) Using a plastic hammer, tap the extension housing and remove it.

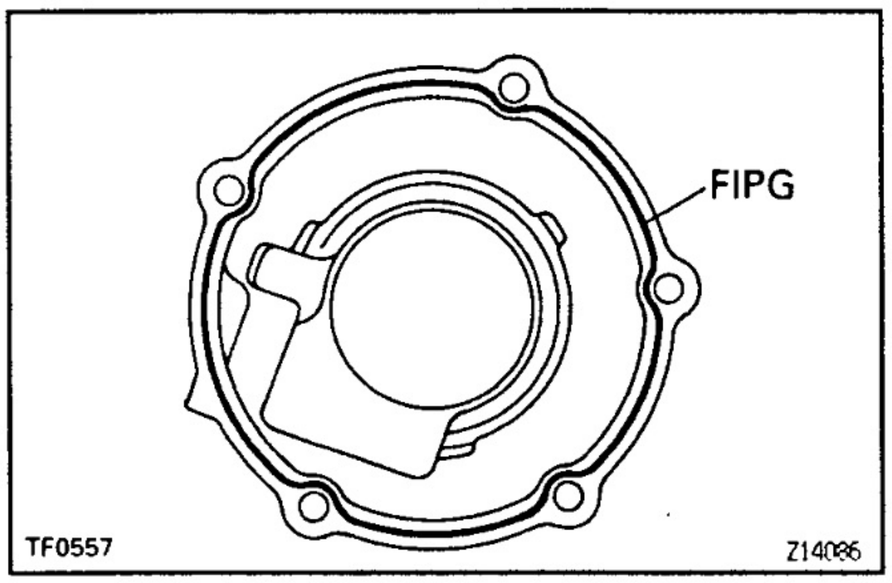

INSTALLATION HINT:
- Remove any FIPG material and be careful not to drop oil on the contacting surfaces of the extension housing.
- Apply FIPG to the extension housing, as shown.

FIPG: Part No.08826–00090, THREE BOND 1281 or equivalent

15. REMOVE SPEED SENSOR DRIVE GEAR

(a) Remove the 2 output washers and speed sensor drive gear.
INSTALLATION HINT: Make sure to install the speed sensor drive gear in the correct direction.

(b) Using a magnetic finger, remove the ball from the rear output shaft.

16. SEPARATE FRONT CASE AND REAR CASE

(a) Remove the 12 bolts.
Torque: 28 N·m (285 kgf·cm, 21 ft·lbf)

(b) Using a screwdriver, separate the front case and rear case.

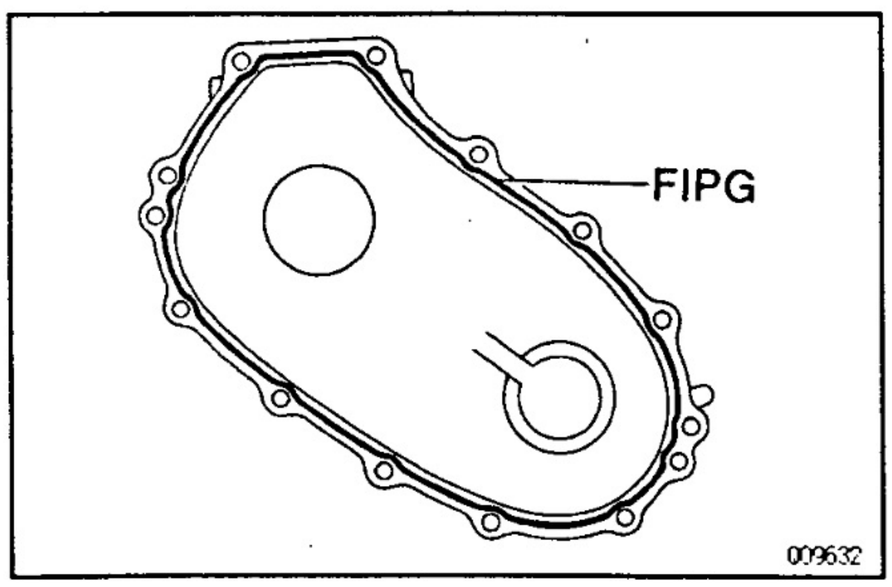

INSTALLATION HINT:
- Shift the high and low clutch sleeve to low side (rear side) and assemble the front case and rear case.
- Remove any FIPG material and be careful not to drop oil on the contacting surfaces of the rear case.
- Apply FIPG to the rear case, as shown.

FIPG: Part No.08826–00090, THREE BOND 1281 or equivalent

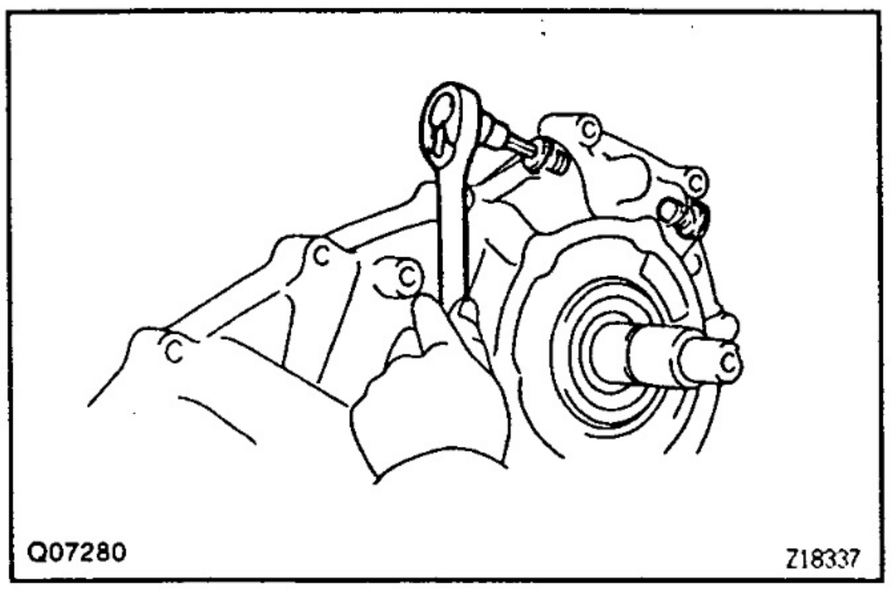

17. REMOVE STRAIGHT SCREW PLUG, SPRING AND LOCKING BALL

(a) Using a hexagon wrench, remove the 2 screws.
Torque: 19 N·m (190 kgf·cm, 14 ft·lbf)
INSTALLATION HINT: Apply liquid sealer to the plugs.
Sealant: Part No. 08833 – 00080, THREE BOND 1344, LOCTITE 242 or equivalent

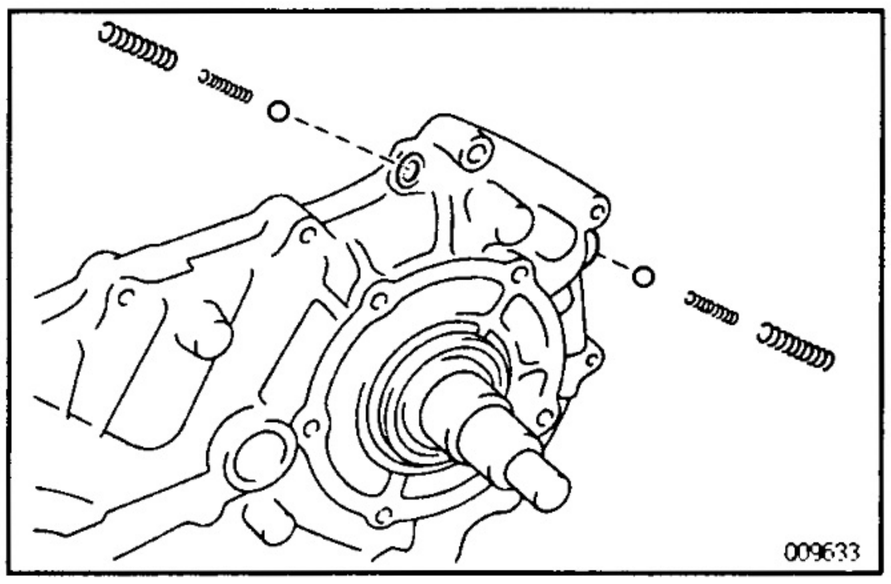

(b) Using a magnetic finger, remove the 4 springs and 2 balls from the 2 both holes.

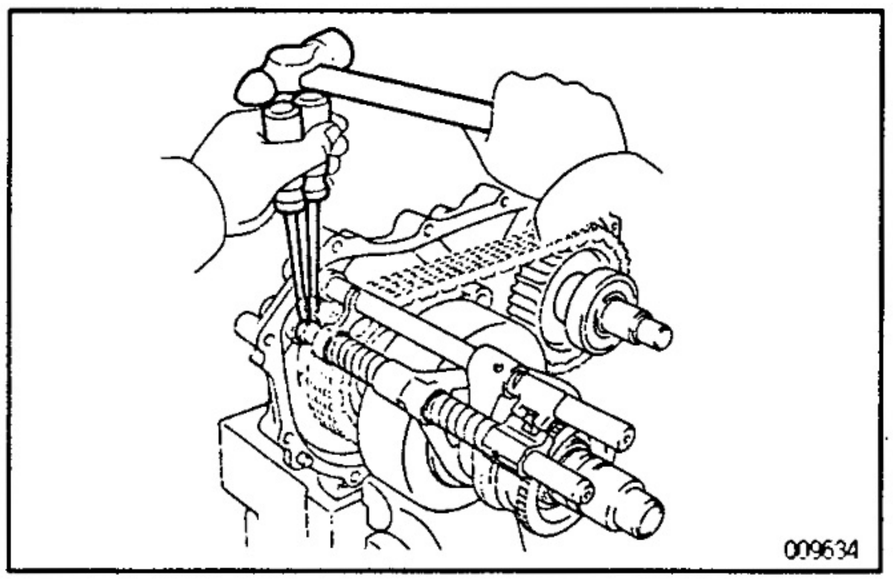

18. M/T and 5VZ–FE A/T:
REMOVE FRONT DRIVE FORK SHAFT, SHIFT HEAD, SHIFT FORK, 2 SPRINGS, STOPPER AND 2 SPACERS

(a) Mount the rear case in a vise.
NOTICE: Be careful not to damage the sealing surface.

(b) Using 2 screwdrivers and a hammer, remove the snap ring.

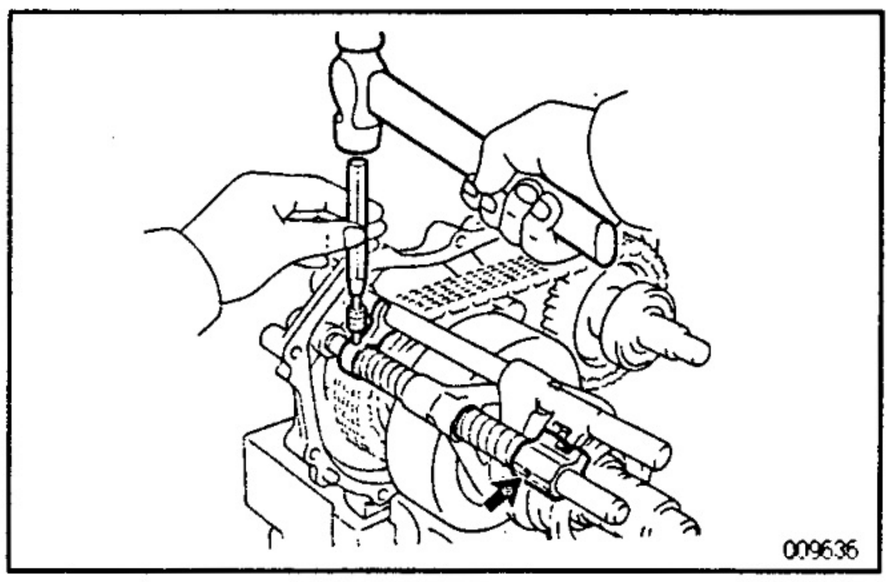

(c) Using a pin punch and hammer, drive out the 2 slotted spring pins.
HINT: Keep the pin punch inserted in the shaft hole so that the shaft will not spring loose when the pin is removed from the front drive fork shaft.

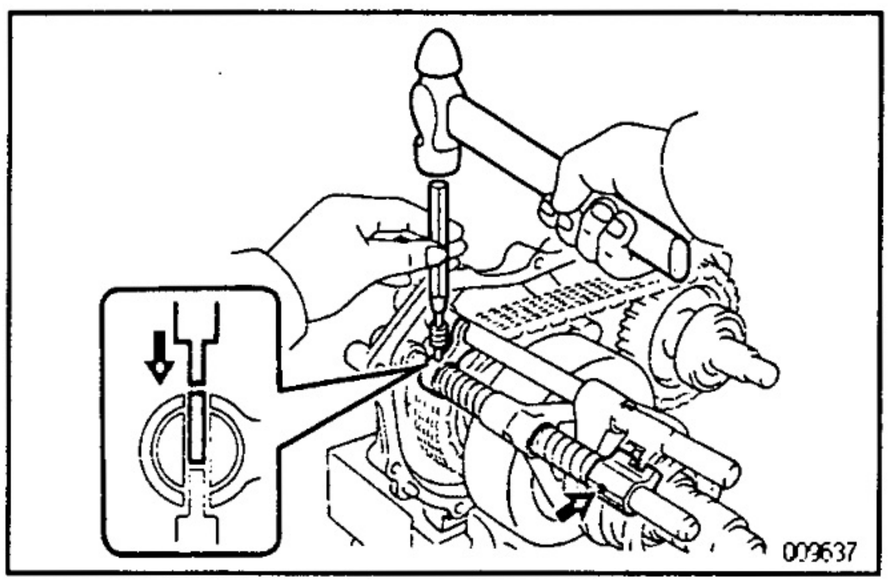

INSTALLATION HINT: When installing the pin in the front drive fork shaft, push the shaft towards the rear case and install the pin while the spring is compressed.

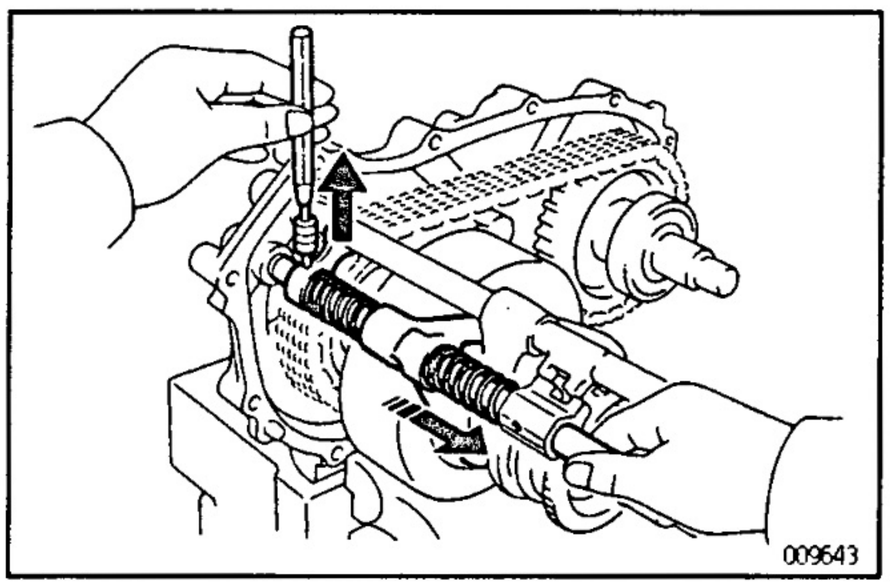

(d) Hold the front drive fork shaft in place by hand, when removing the pin punch.

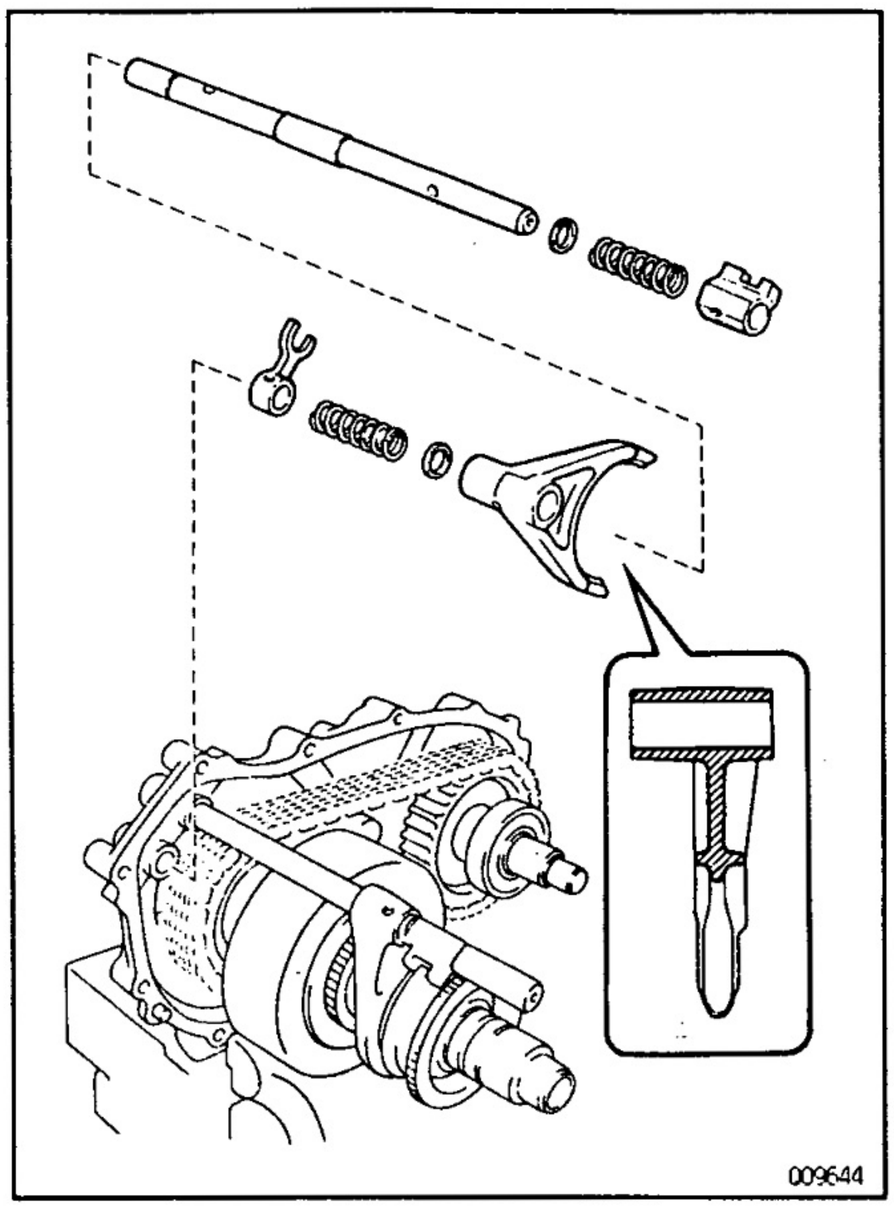

(e) Remove the front drive fork shaft, shift head, shift fork, 2 springs, stopper and 2 spacers.
INSTALLATION HINT:
- Place the front drive shift fork into the groove of the diff. lock sleeve.
- Make sure to install the shift fork, shift head and stopper in the correct direction.

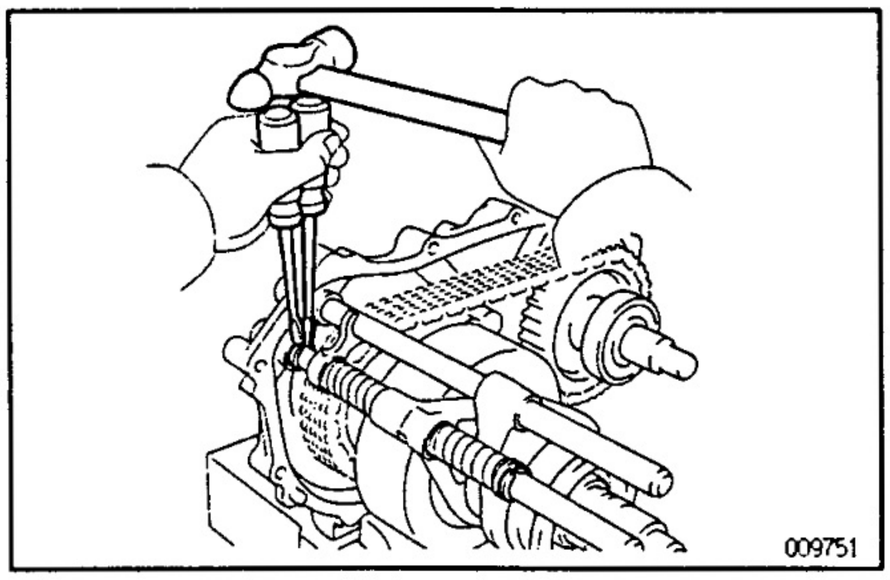

Except M/T and 5VZ–FE A/T:
REMOVE FRONT DRIVE FORK SHAFT, SHIFT FORK, 2 SPRINGS, STOPPER AND 3 SPACERS

(a) Mount the rear case in a vise.
NOTICE: Be careful not to damage the sealing surface.

(b) Using 2 screwdrivers and a hammer, remove the 2 snap rings.

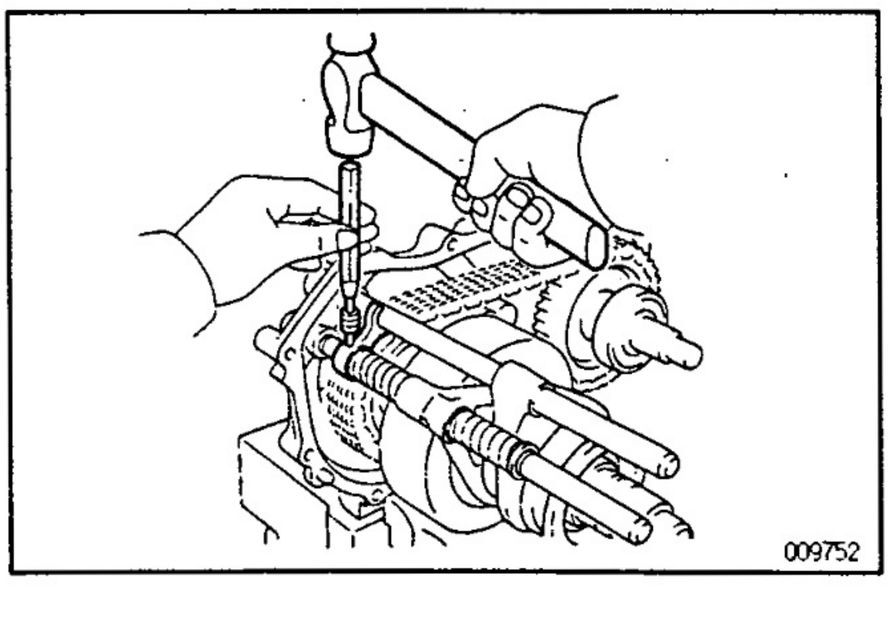

(c) Using a pin punch and hammer, drive out the slotted spring pin.
HINT: Keep the pin punch inserted in the shaft hole so that the shaft will not spring loose when the pin is removed from the front drive fork shaft.

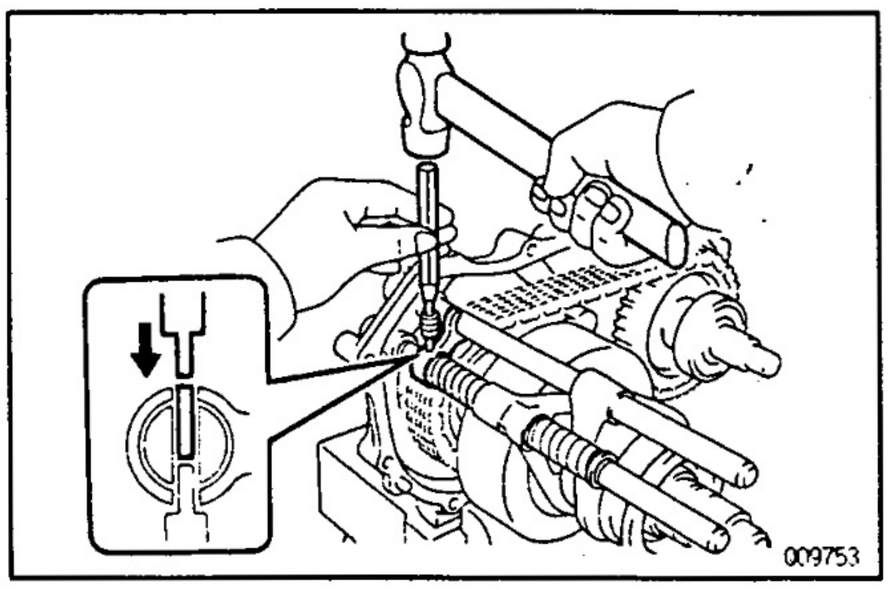

INSTALLATION HINT: When installing the pin in the front drive fork shaft, push the shaft towards the rear case and install the pin while the spring is compressed.

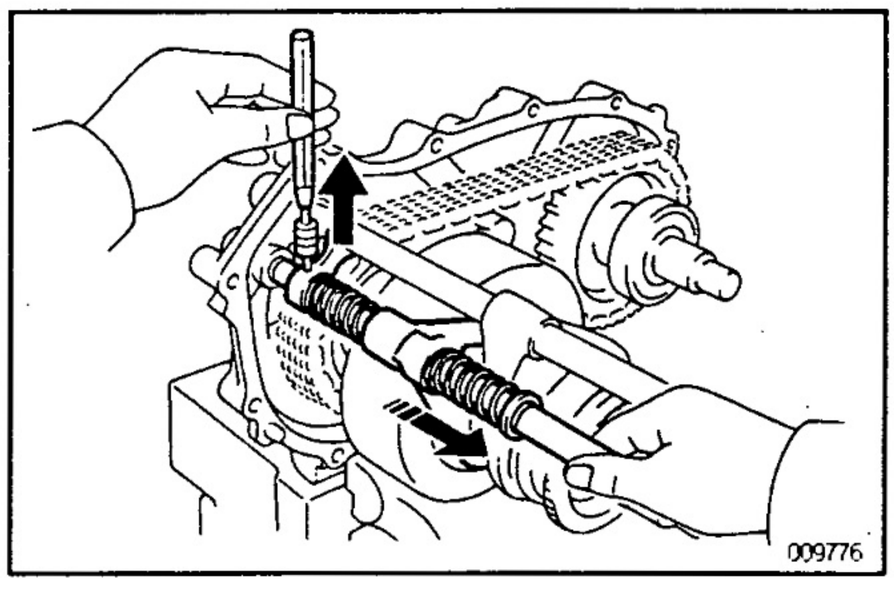

(d) Hold the front drive fork shaft in place by hand, when removing the pin punch.

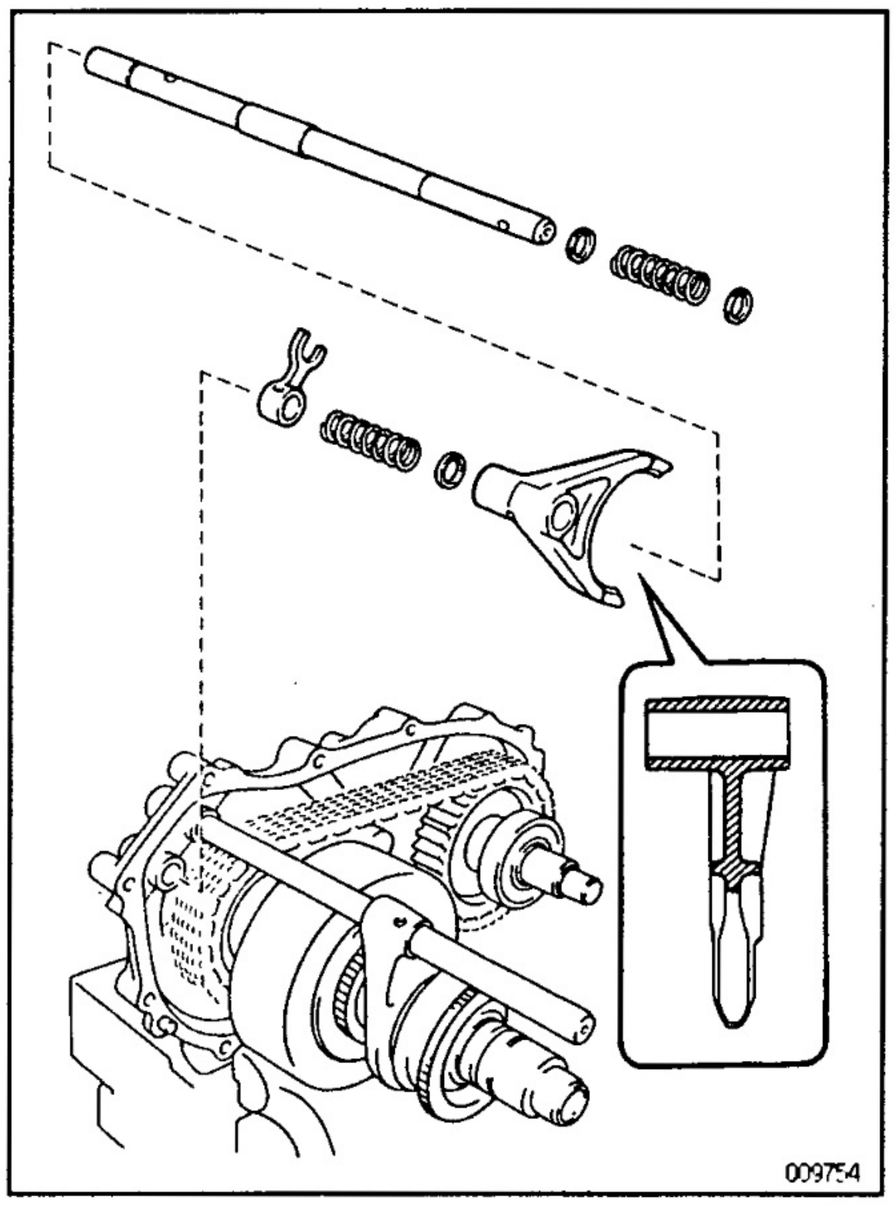

(e) Remove the front drive fork shaft, shift fork, 2 springs, stopper and 3 spacers.
INSTALLATION HINT:
- Place the front drive shift fork into the groove of the diff. lock sleeve.
- Make sure to install the shift fork and stopper in the correct direction.

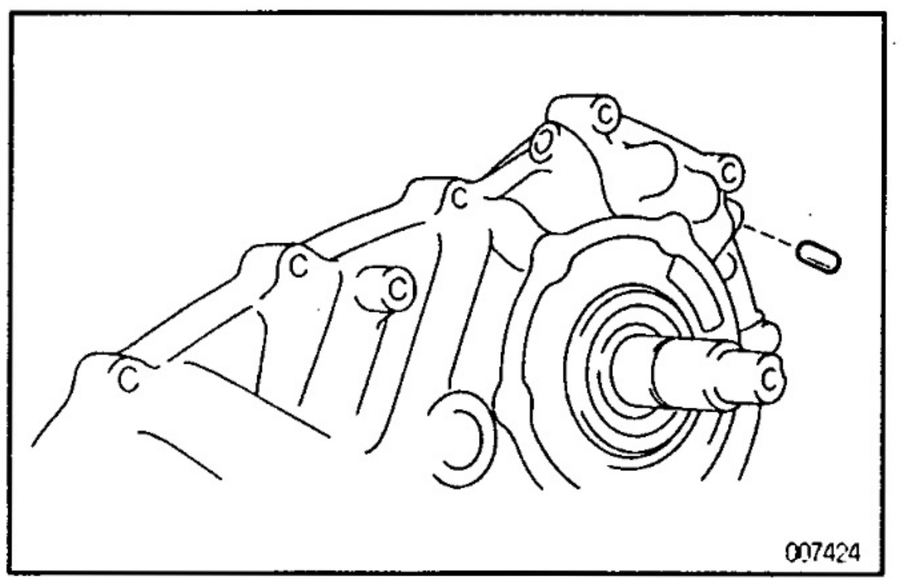

19. REMOVE STRAIGHT PIN

Using a magnetic finger, remove the straight pin.
INSTALLATION HINT: Apply gear oil to the straight pin and insert it into the case hole.

M/T and 5VZ-FE A/T :

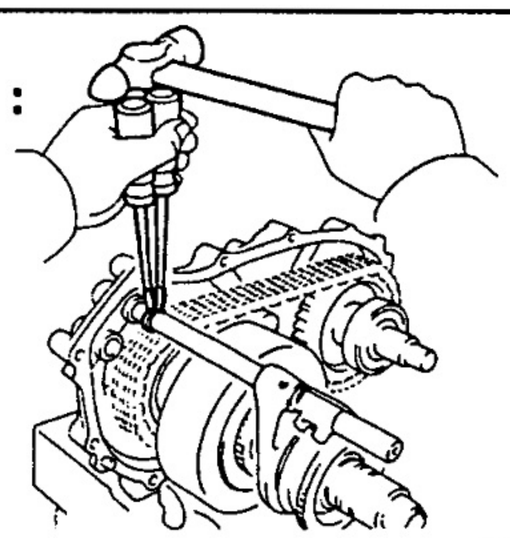

20. REMOVE HIGH AND LOW FORK SHAFT AND SHIFT FORK

(a) Using 2 screwdrivers and a hammer, remove the snap ring.

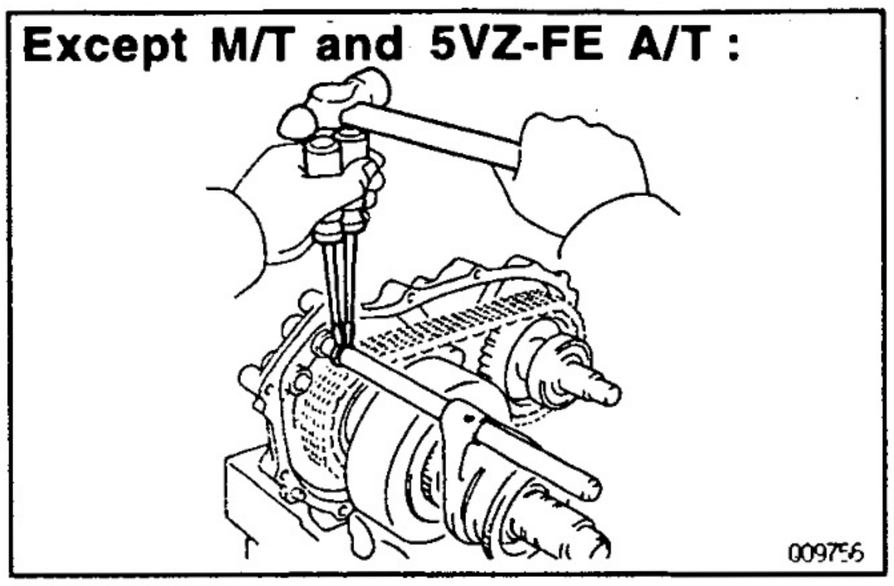

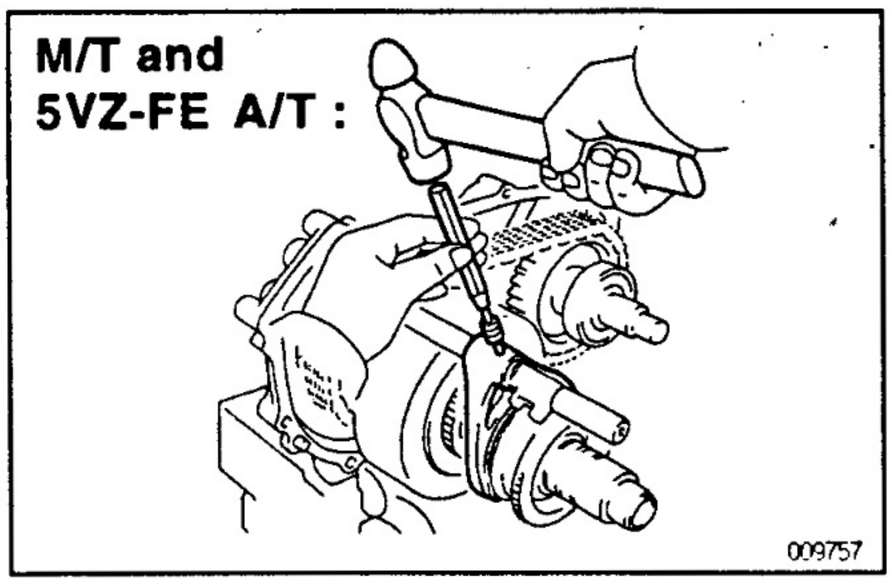

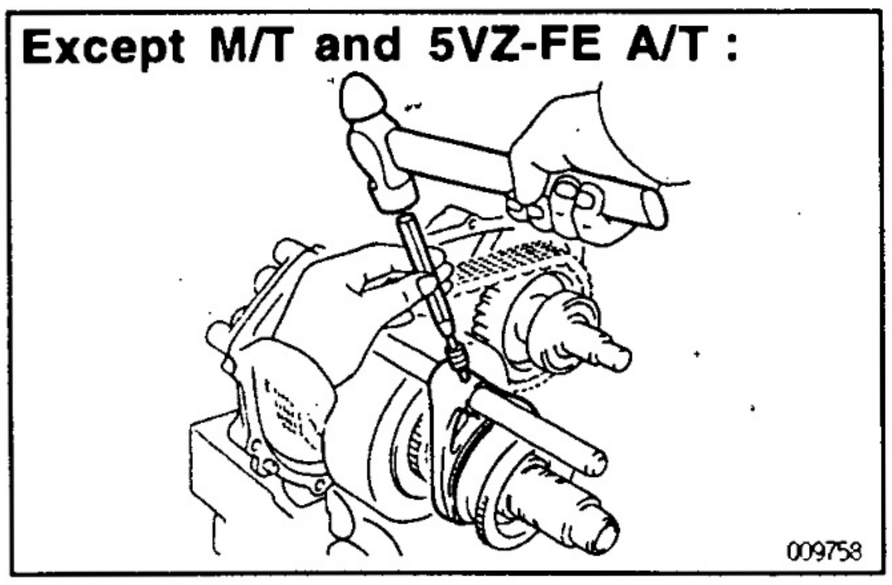

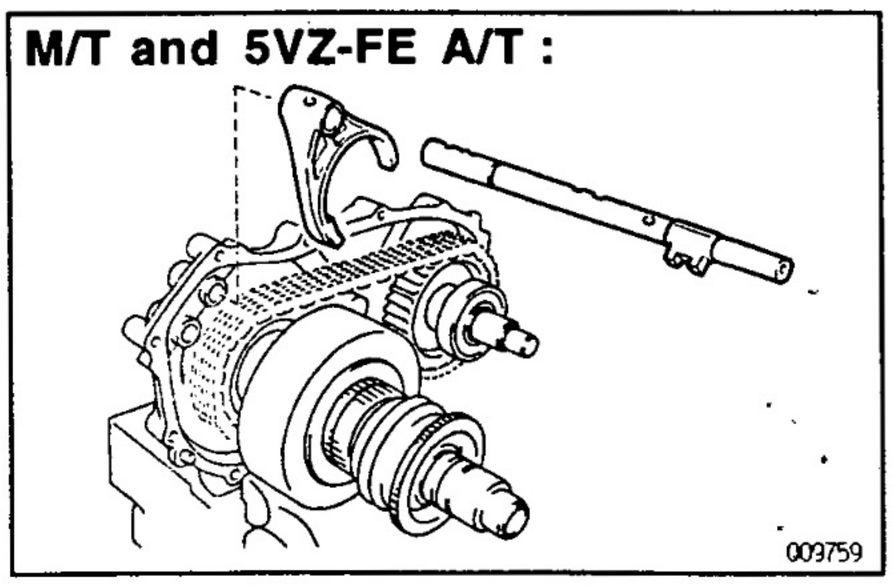

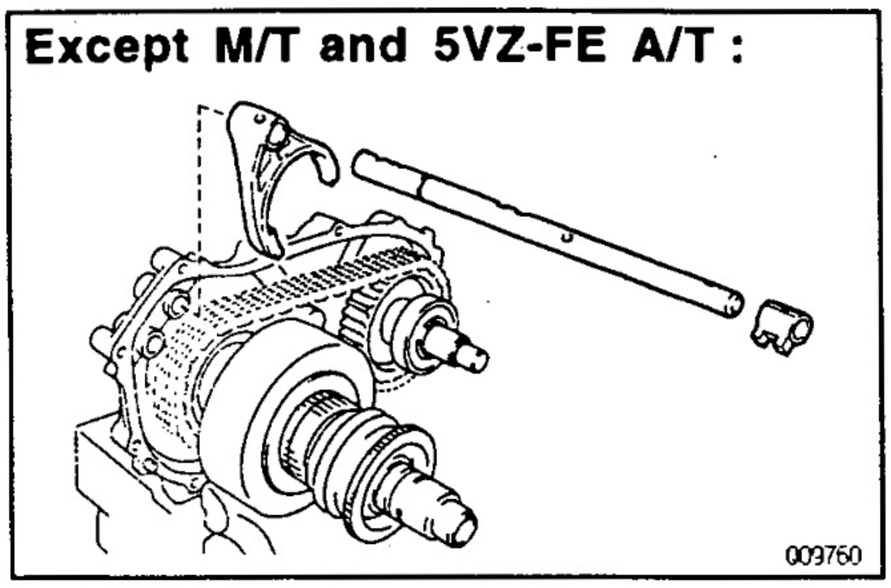

(b) Using a pin punch and hammer, drive out the slotted spring pin.

INSTALLATION HINT:

- Place the high and low shift fork into the groove of the clutch sleeve.
- Make sure to install the shift fork in the correct direction.

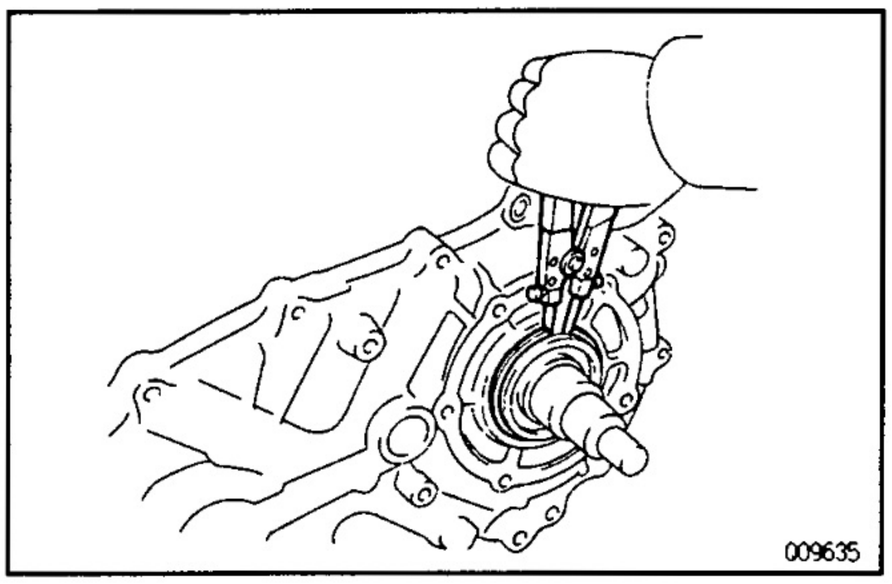

21. REMOVE REAR OUTPUT SHAFT, DRIVEN SPROCKET AND CHAIN

(a) Using a snap ring expander, remove the snap ring.

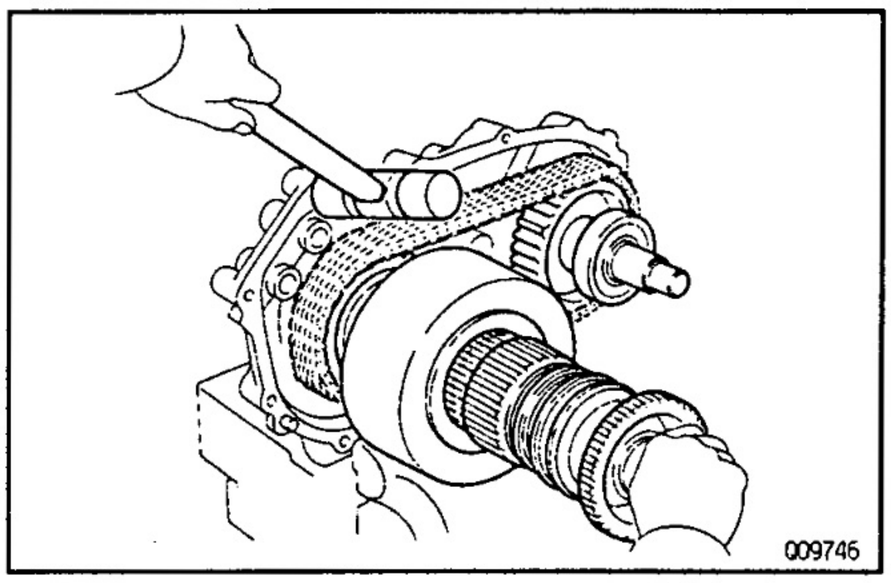

(b) Using a plastic hammer, tap the rear case with pulling the rear output shaft and driven sprocket.
INSTALLATION HINT: If necessary, heat the rear case to about 50 – 80 °C (122 – 176 °F).

(c) Remove the chain.

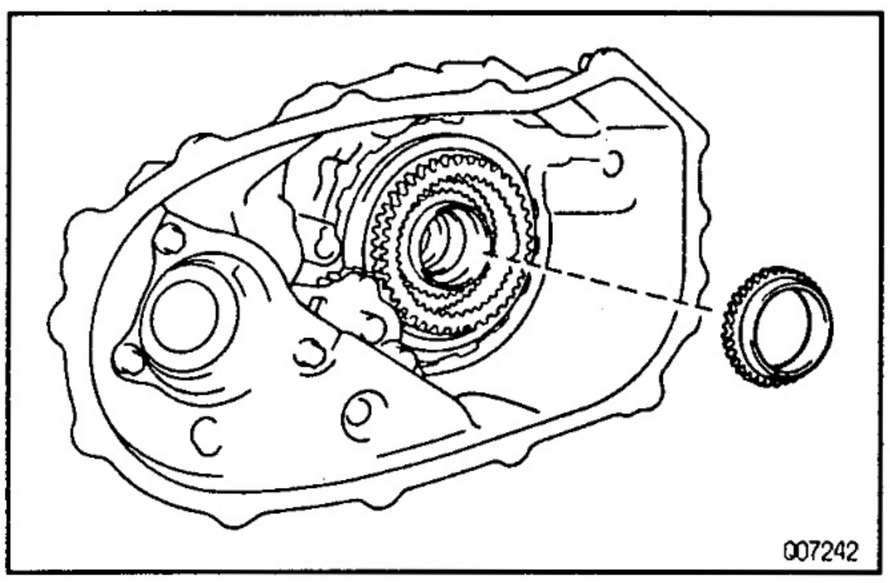

22. M/T:
REMOVE SYNCHRONIZER RING FROM INPUT SHAFT
INSTALLATION HINT:

- Apply MP grease to the synchronizer ring.
- Align the synchronizer ring slots with the shifting keys, and install it on the high and low clutch hub.

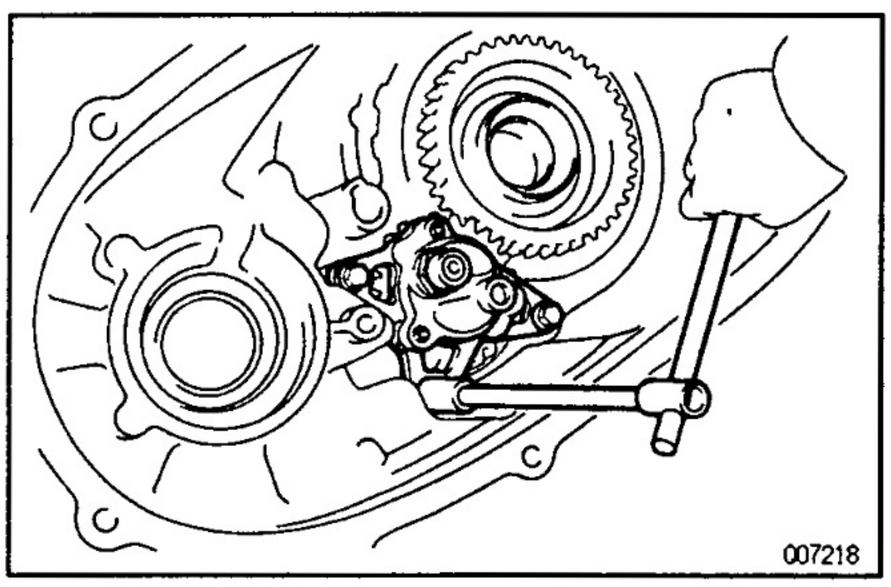

23. REMOVE SEPARATOR WITH OIL STRAINER AND MAGNET
Remove the 3 bolts and separator with the oil strainer and magnet.
Torque: 7.5 N·m (80 kgf·cm, 69 in.lbf)

24. REMOVE OIL PUMP BODY ASSEMBLY
Remove the 3 bolts and the oil pump body assembly.
Torque: 7.5 N·m (80 kgf·cm, 69 in.lbf)

25. REMOVE OIL PUMP DRIVE GEAR

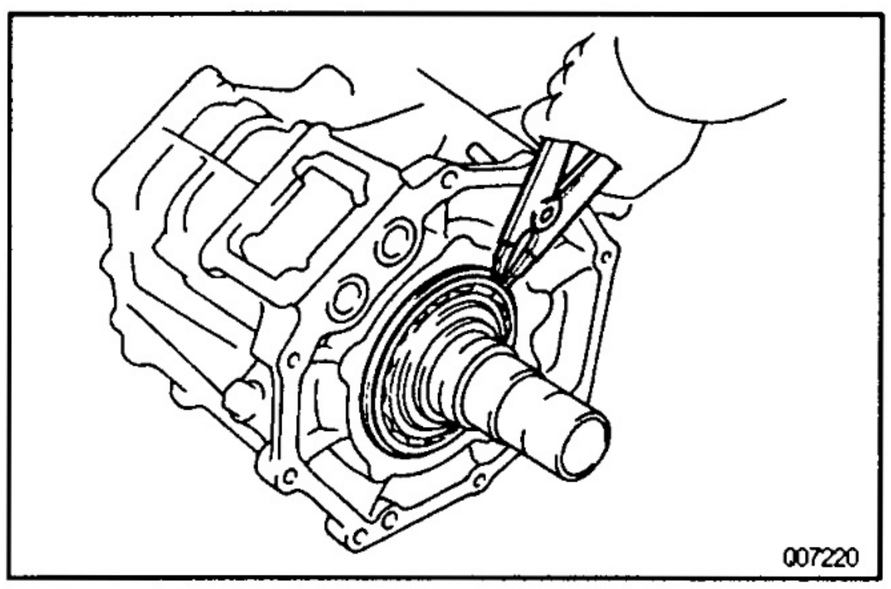

26. REMOVE PLANETARY GEAR ASSEMBLY WITH INPUT SHAFT

(a) Using a snap ring expander, remove the snap ring.

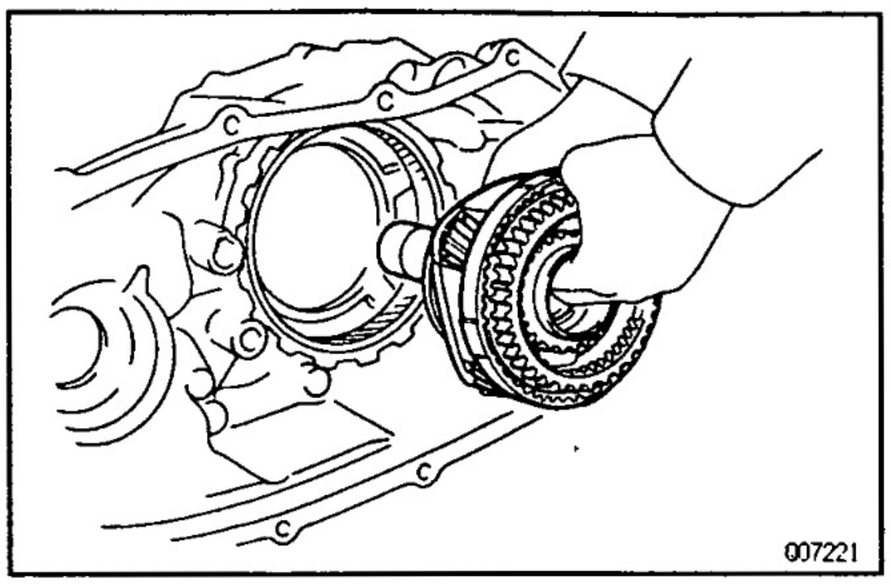

(b) Pull out the planetary gear assembly with the input shaft.
INSTALLATION HINT: If necessary, heat the front case to about 50 – 80 °C (122 – 176 °F).

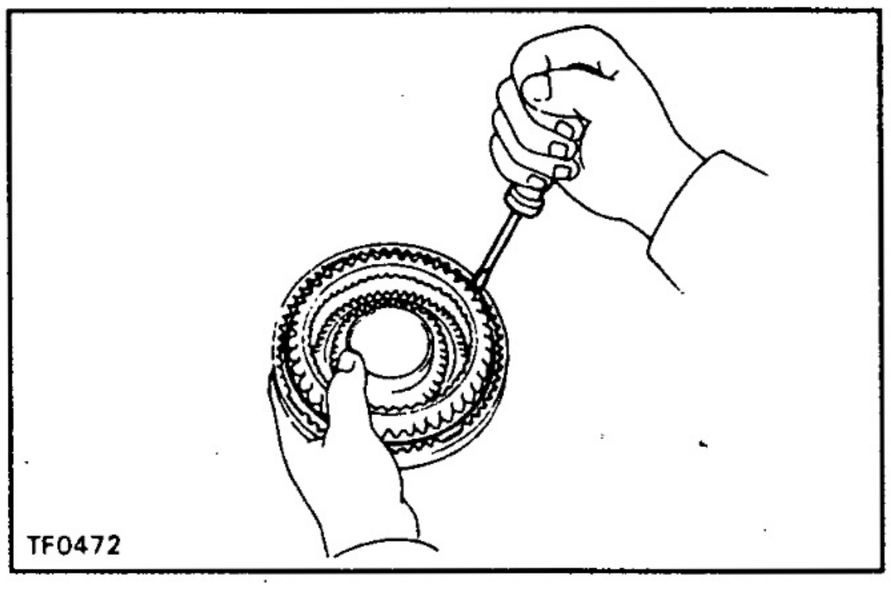

27. REMOVE LOW GEAR SPLINE PIECE

(a) Using a screwdriver, remove the snap ring.
INSTALLATION HINT: Make sure the end gap of the snap ring is not aligned with cutout portion of the planetary carrier.

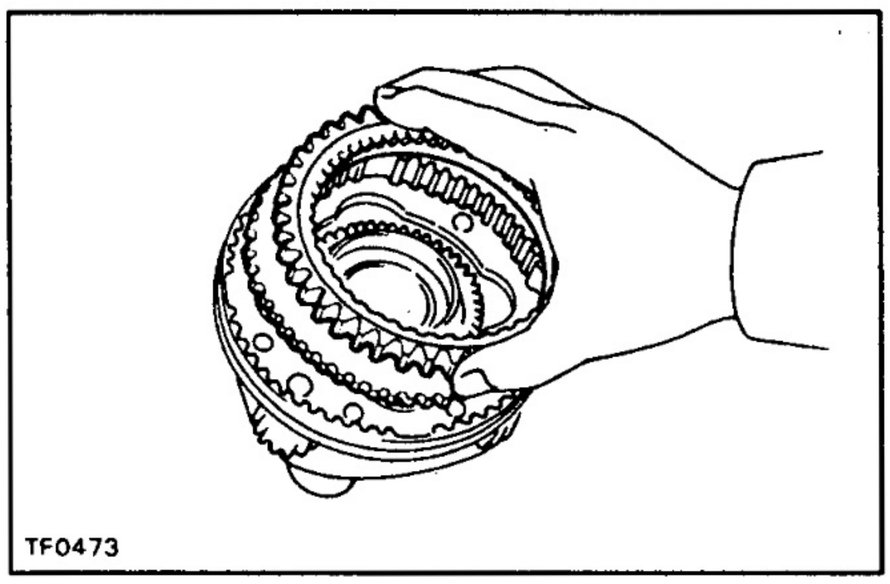

(b) Remove the low gear spline piece.

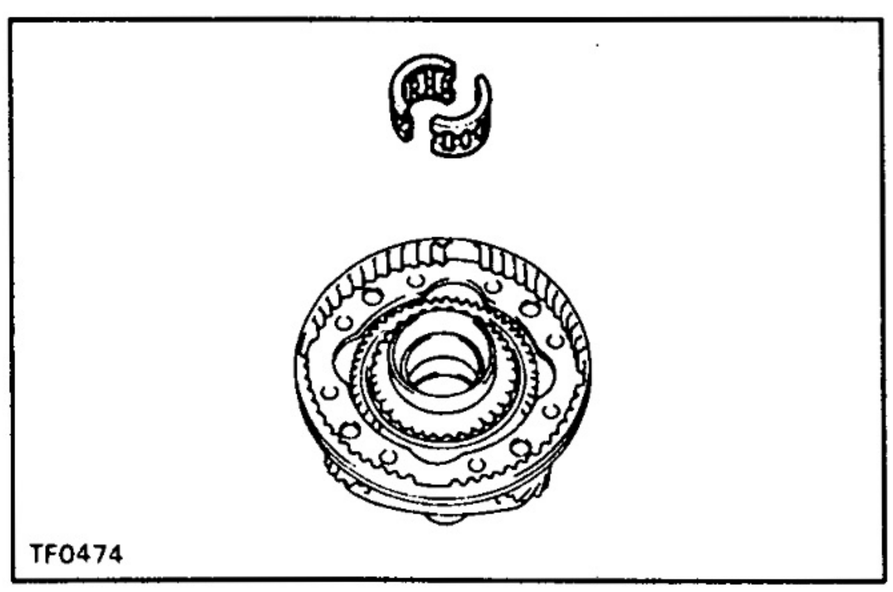

28. REMOVE NEEDLE ROLLER BEARING FROM INPUT SHAFT

INSTALLATION HINT: Apply gear oil to the needle roller bearing.

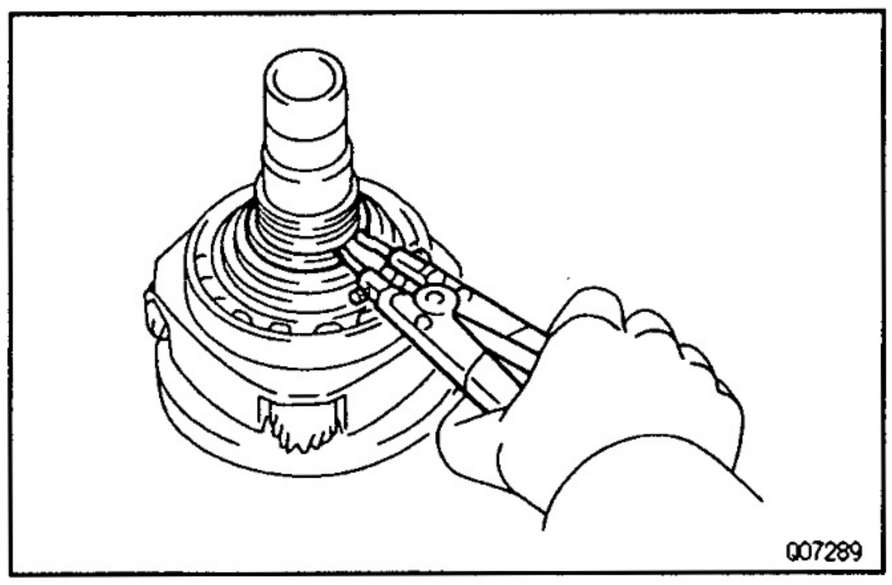

29. REMOVE INPUT SHAFT STOPPER AND THRUST BEARING

(a) Using a snap ring expander, remove the snap ring.
INSTALLATION HINT: Select a snap ring that will allow 0.05–0.15 mm (0.0020–0.0059 in.) axial play.

Mark	Thickness mm (in.)
A	2.10 – 2.15 (0.0827 – 0.0846)
B	2.15 – 2.20 (0.0846 – 0.0866)
C	2.20 – 2.25 (0.0866 – 0.0886)
D	2.25 – 2.30 (0.0886 – 0.0906)
E	2.30 – 2.35 (0.0906 – 0.0925)
F	2.35 – 2.40 (0.0925 – 0.0945)
G	2.40 – 2.45 (0.0945 – 0.0965)
H	2.45 – 2.50 (0.0965 – 0.0984)
J	2.50 – 2.55 (0.0984 – 0.1004)
K	2.55 – 2.60 (0.1004 – 0.1024)
L	2.60 – 2.65 (0.1024 – 0.1043)
M	2.65 – 2.70 (0.1043 – 0.1063)
N	2.70 – 2.75 (0.1063 – 0.1083)
P	2.75 – 2.80 (0.1083 – 0.1102)
Q	2.80 – 2.85 (0.1102 – 0.1122)
R	2.85 – 2.90 (0.1122 – 0.1142)
S	2.90 – 2.95 (0.1142 – 0.1161)
T	2.95 – 3.00 (0.1161 – 0.1181)
U	3.00 – 3.05 (0.1181 – 0.1201)

TR

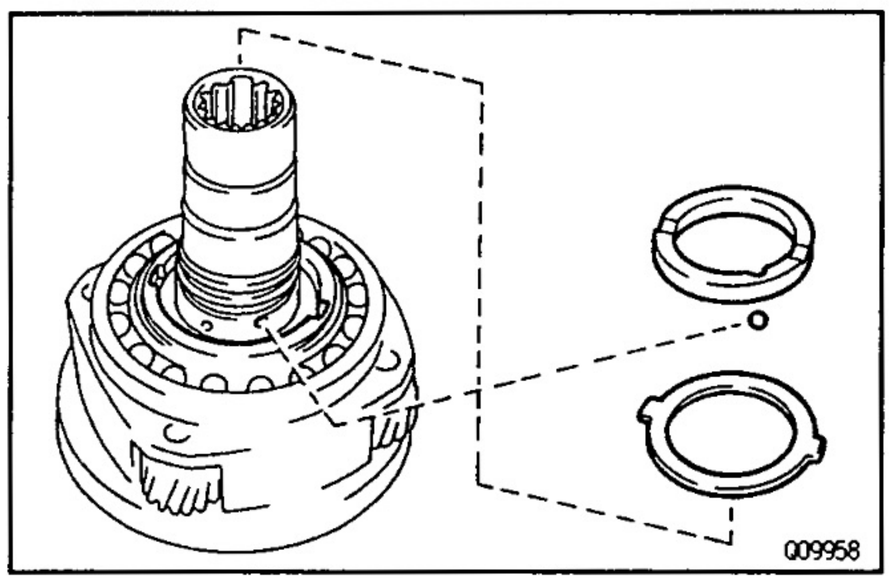

(b) Remove the input gear stopper, thrust washer and ball.
INSTALLATION HINT: Apply gear oil to the input gear stopper and thrust washer.

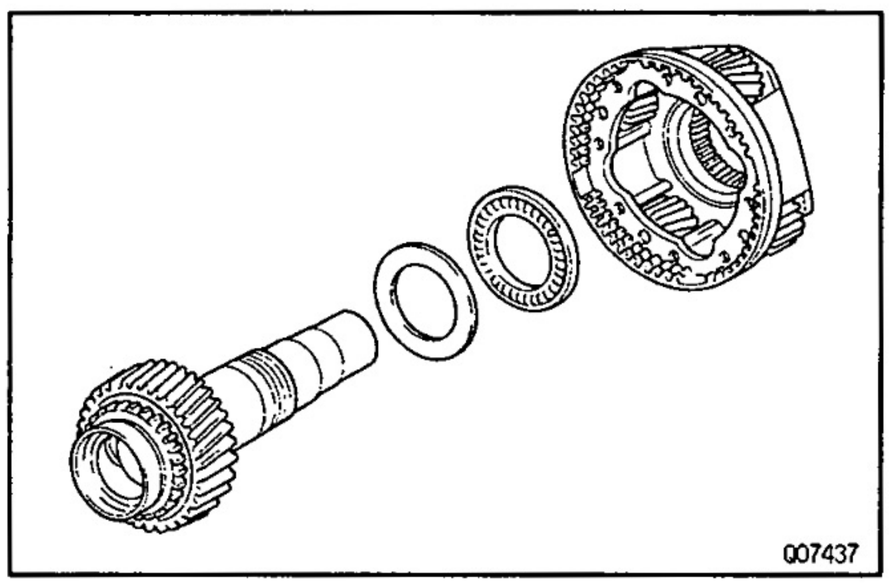

30. REMOVE INPUT SHAFT, THRUST RACE AND THRUST BEARING

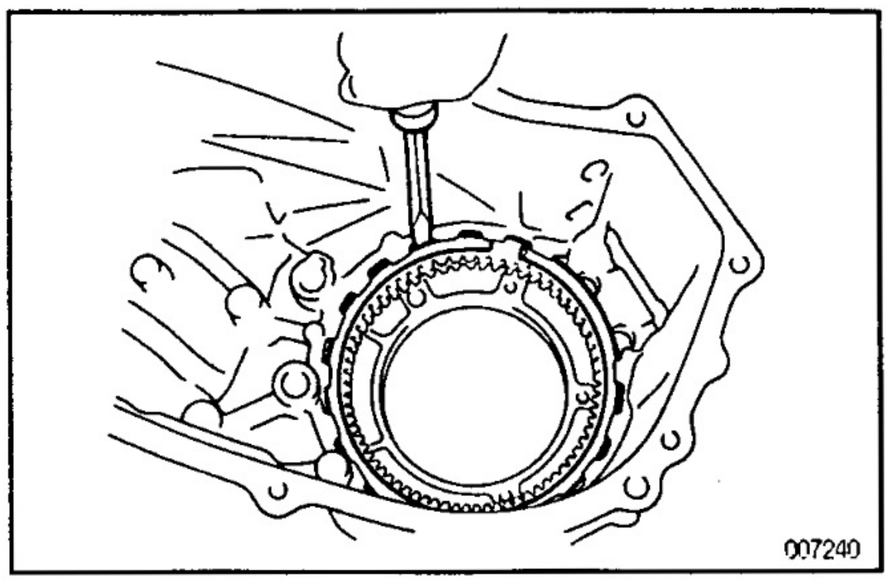

31. REMOVE PLANETARY RING GEAR

(a) Using a screwdriver, remove the snap ring.
INSTALLATION HINT: Make sure the end gap of the snap ring is not aligned with the upper side of the case.

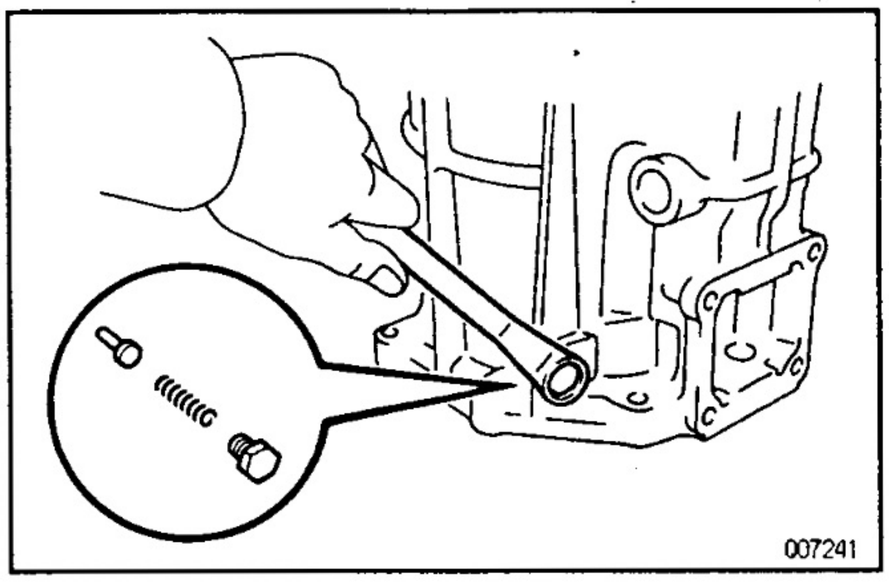

(b) Remove the plug, spring and pin.
Torque: 19N·m (190 kgf·cm, 14 ft·lbf)
INSTALLATION HINT: Apply liquid sealer to the plug.
Sealant: Part No. 08833 – 00080, THREE BOND 1344, LOCTITE 242 or equivalent

TR

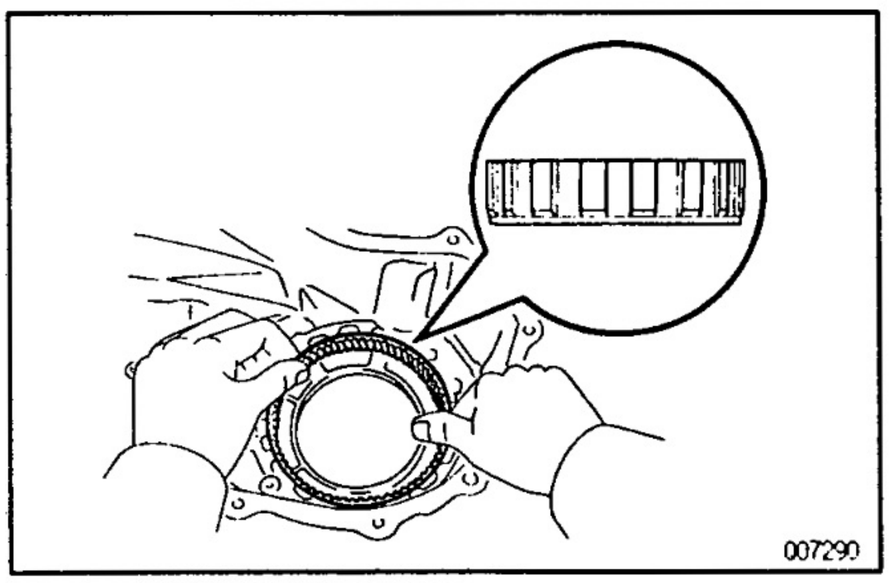

(c) Remove the planetary ring gear.
INSTALLATION HINT: Make sure to install the ring gear in the correct direction.

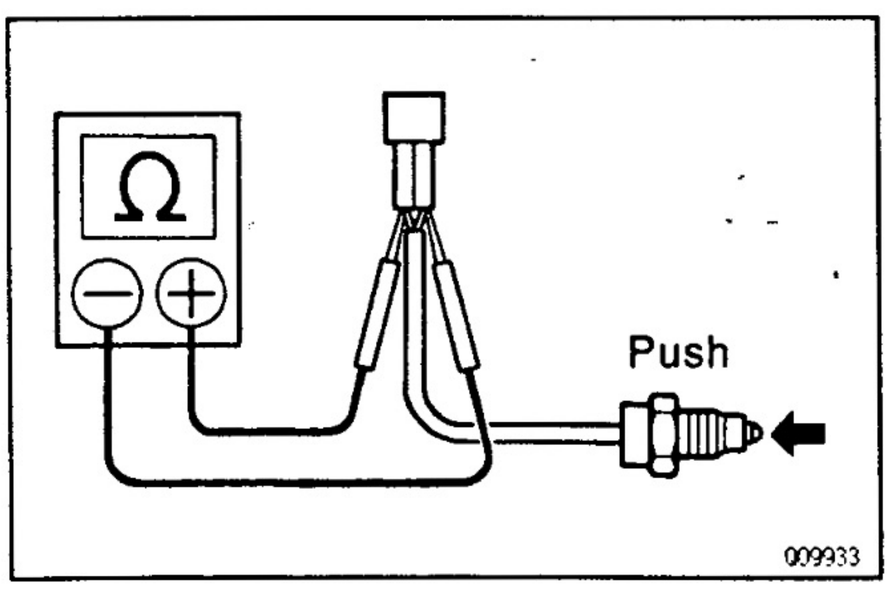

32. INSPECT SWITCHES

Check that there is continuity between terminals as shown.

Switch Position	Specified Condition
Push	Continuity (0Ω)
Free	No continuity (∞Ω)

If continuity is not as specified, replace the switch.

COMPONENT PARTS INSTALLATION

TR06Q-01

Installation is in the reverse order of removal.
HINT: Coat all of the sliding and rotating surfaces with gear oil before assembly.

OIL PUMP BODY
COMPONENTS

TR00V–08

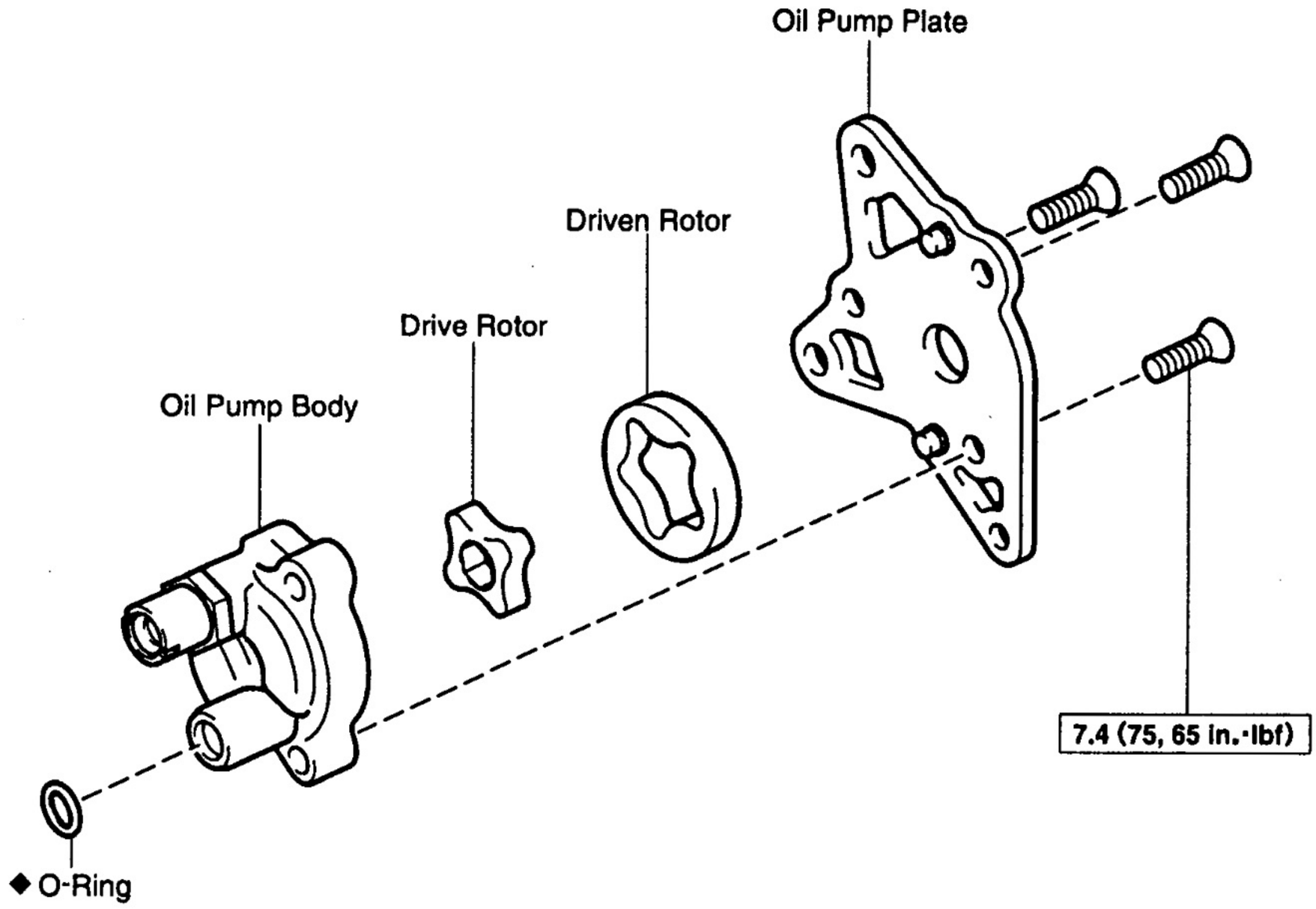

N·m (kgf·cm, ft·lbf): Specified torque
◆ Non-reusable part

T 009535

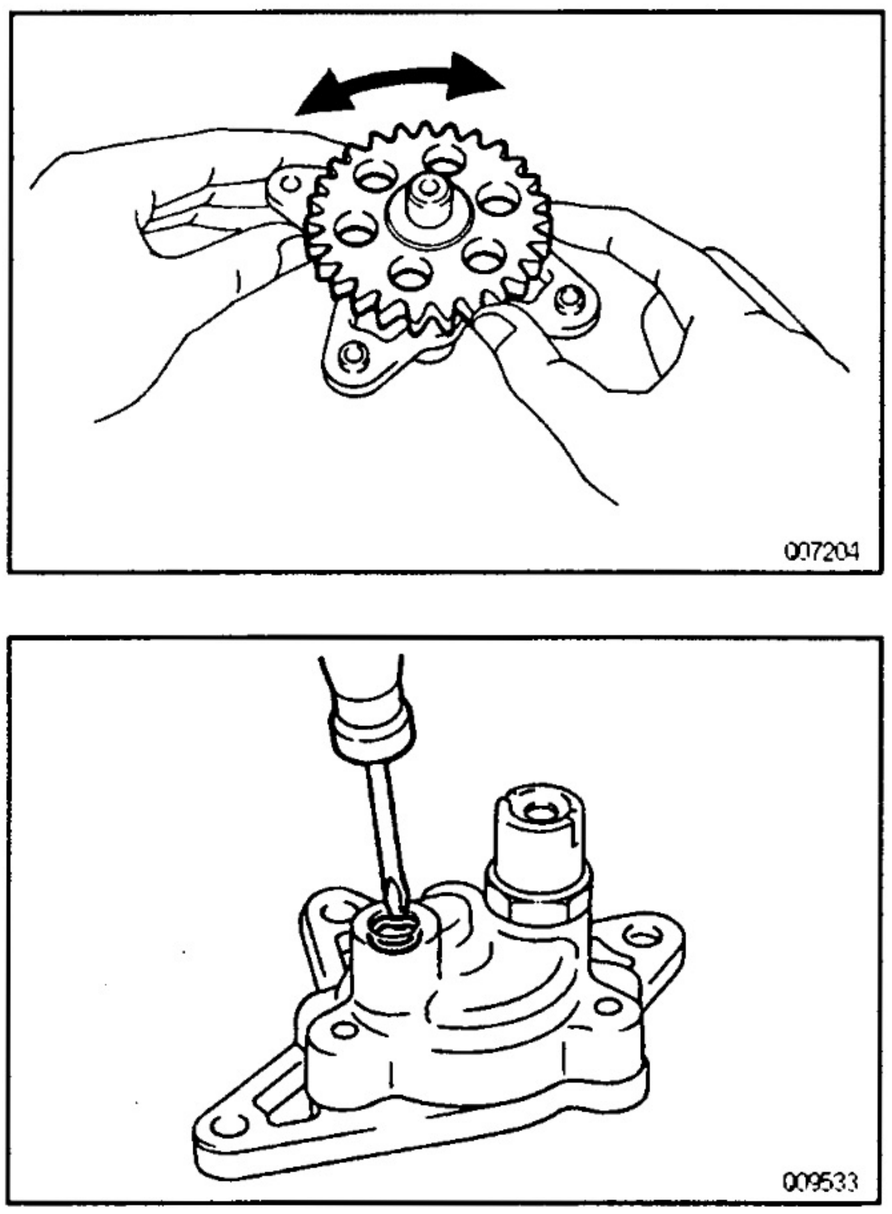
007204

TR08H–01

OIL PUMP BODY DISASSEMBLY

1. CHECK OIL PUMP OPERATION
Install the oil pump drive gear to the drive rotor and check that the drive rotor turns smoothly.

009533

2. REMOVE O–RING
Remove the O–ring from the oil pump body.
INSTALLATION HINT: Coat a new O–ring with gear oil and install it to the oil pump body.

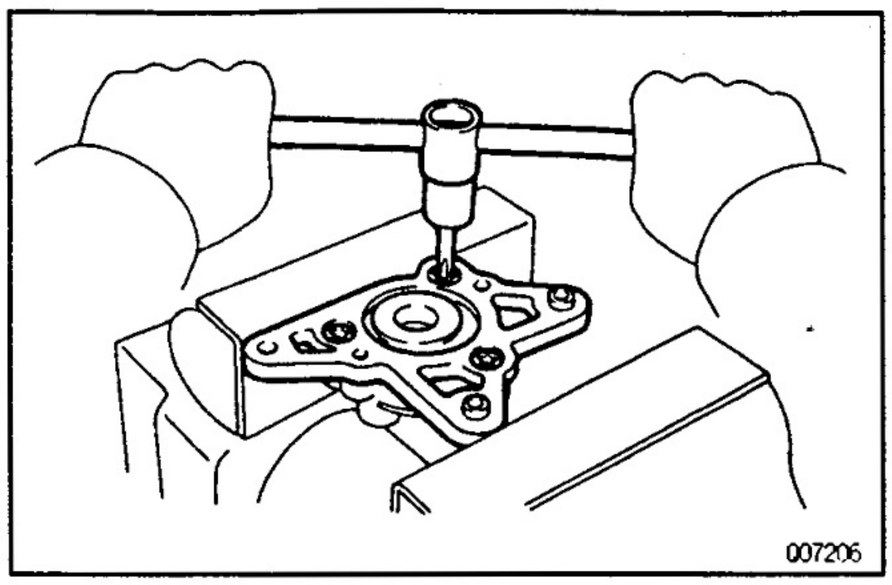

3. REMOVE OIL PUMP PLATE

(a) Using a torx socket wrench T30, remove the 3 torx screws.
Torque: 7.4 N·m (75 kgf·cm, 65 in.lbf)

(b) Remove the oil pump plate.

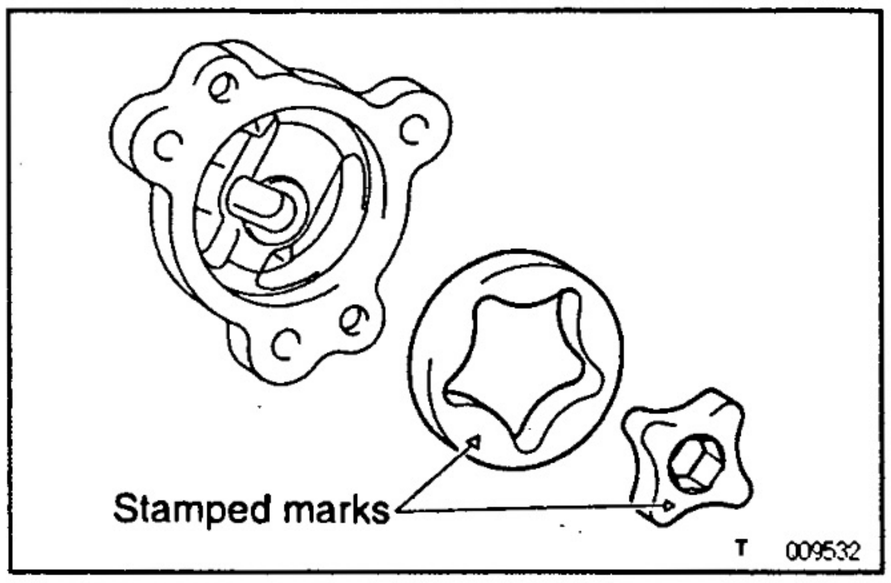

4. REMOVE DRIVE ROTOR AND DRIVEN ROTOR

INSTALLATION HINT:

- Apply gear oil to both rotors.
- Align the stamped marks facing them upward.

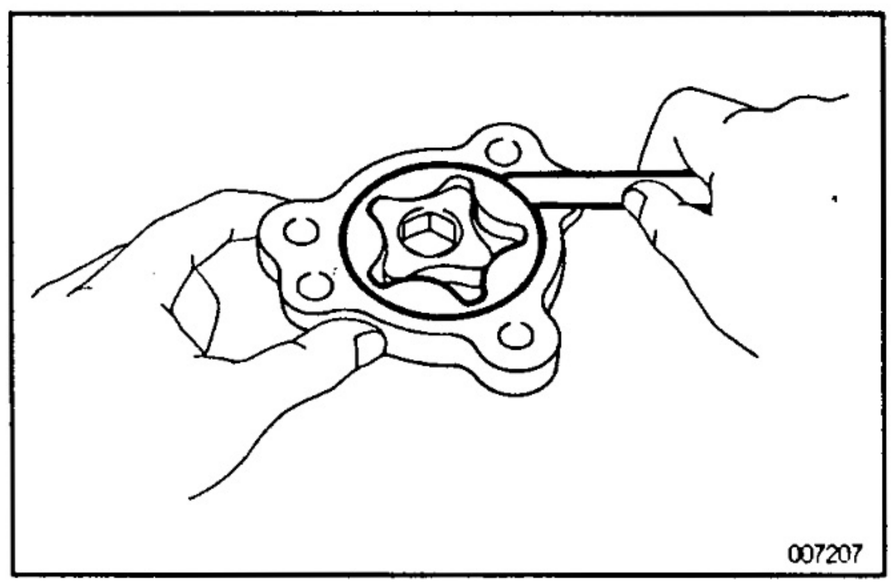

OIL PUMP BODY INSPECTION

TR00X–00

1. INSPECT DRIVEN ROTOR BODY CLEARANCE

Push the driven rotor to one side of the body.
Using a feeler gauge, measure the clearance.
Standard clearance:

0.09 – 0.16 mm (0.0035 – 0.0063 in.)

Maximum clearance: 0.16 mm(0.0063 in.)

If the clearance exceeds the maximum, replace the drive rotor, driven rotor or pump body.

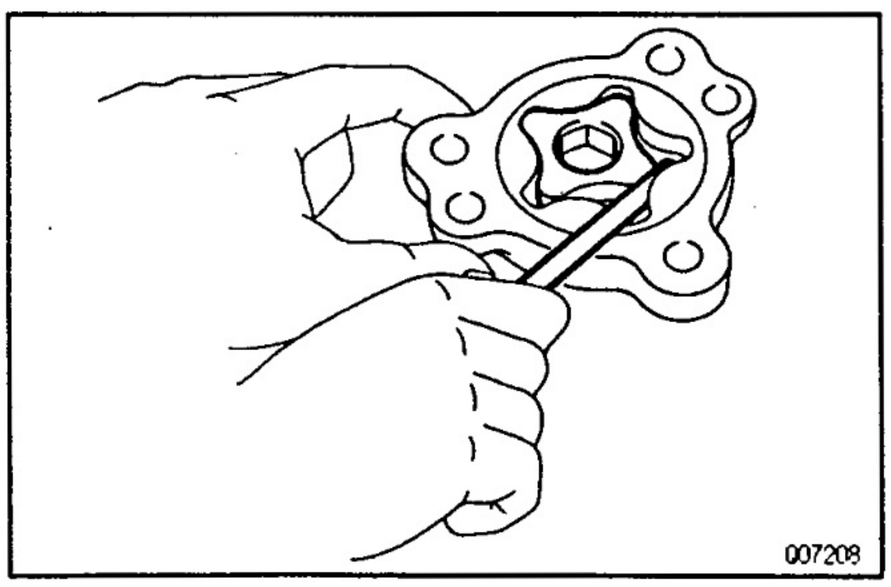

2. INSPECT BOTH ROTOR TIPS CLEARANCE

Using a feeler gauge, measure the clearance between both rotor tips.
Standard clearance:

0.05 – 0.15 mm (0.0020 – 0.0059 in.)

Maximum clearance: 0.15 mm (0.0059 in.)

If the clearance exceeds the maximum, replace the drive rotor, driven rotor or pump body.

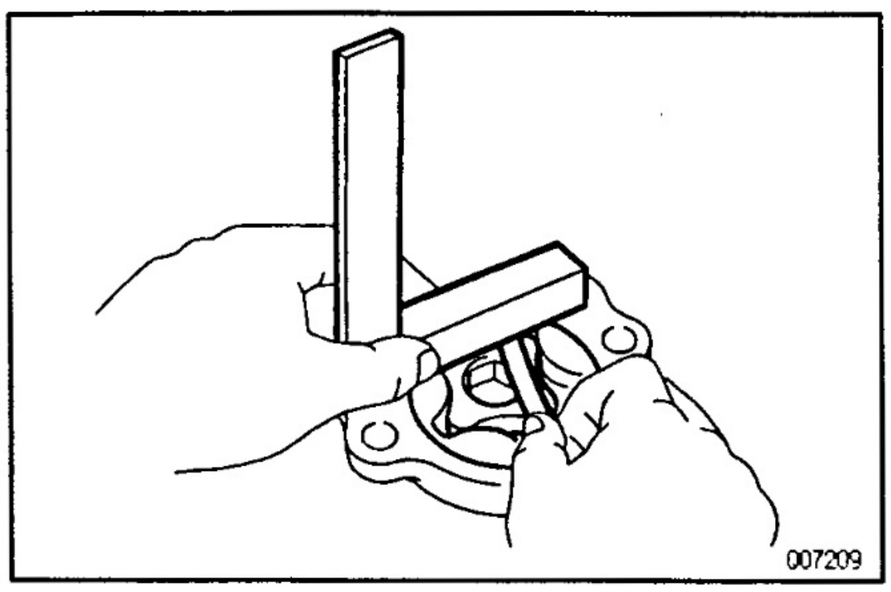

3. INSPECT BOTH ROTORS SIDE CLEARANCE

Using a steel straight edge and feeler gauge, measure the clearance between the rotors and straight edge.
Standard clearance:

0.03 – 0.10 mm (0.0012 – 0.0039 in.)

Maximum clearance: 0.10 mm (0.0039 in.)

If the clearance exceeds the maximum, replace the drive rotor, driven rotor or pump body.

TR05Q-04

OIL PUMP BODY ASSEMBLY

Assembly is in the reverse order of disassembly.

DRIVEN SPROCKET
COMPONENTS

TR00Z-09

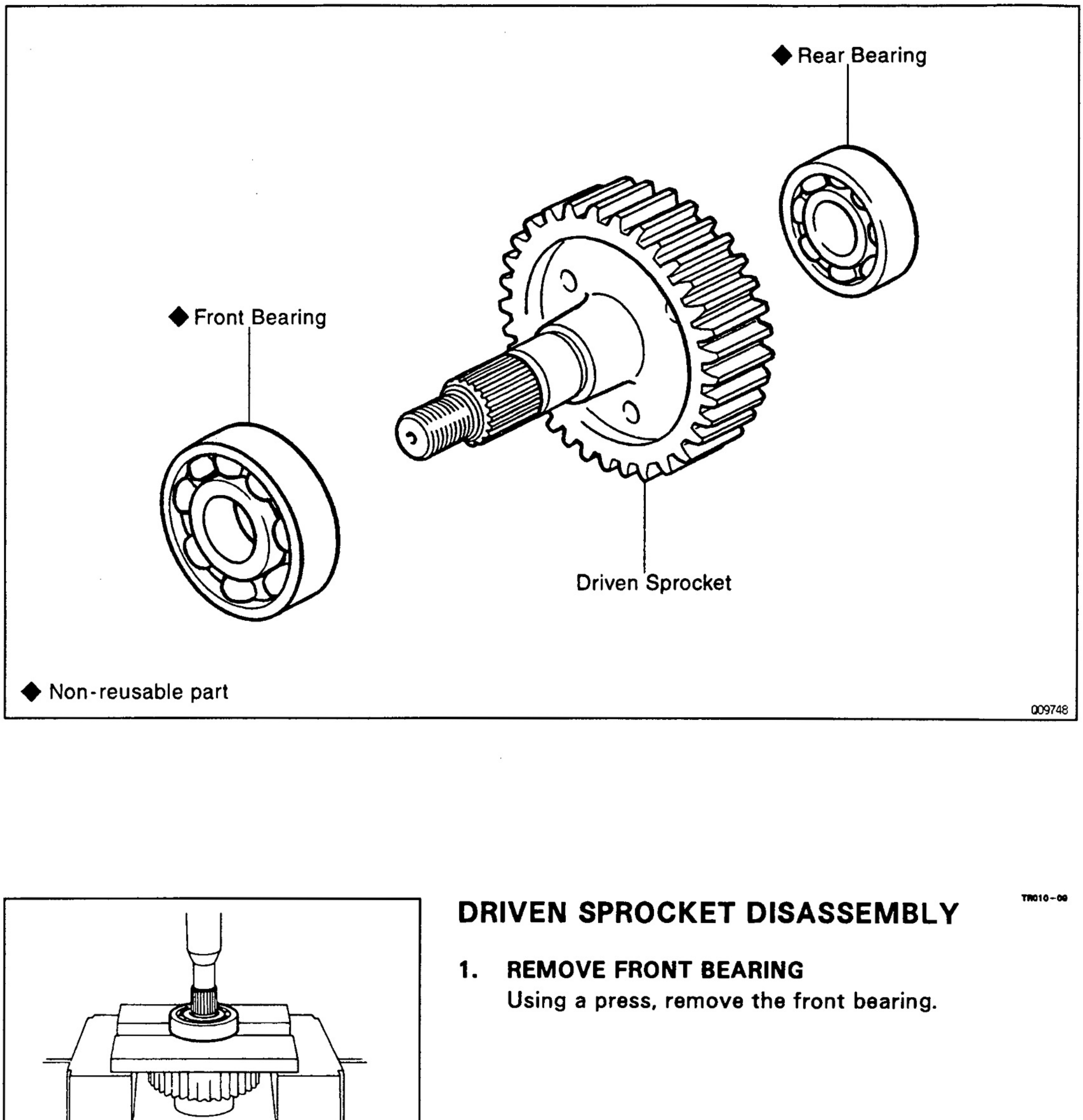

TR010-09

DRIVEN SPROCKET DISASSEMBLY

1. REMOVE FRONT BEARING

Using a press, remove the front bearing.

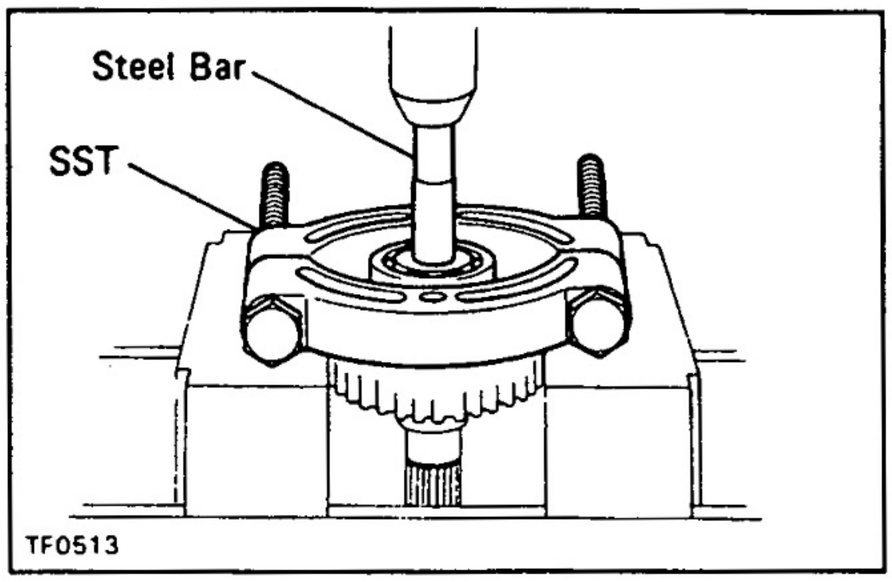

2. REMOVE REAR BEARING

Using SST and a press, remove the rear bearing.
SST 09555–55010

TR011–0A

DRIVEN SPROCKET ASSEMBLY

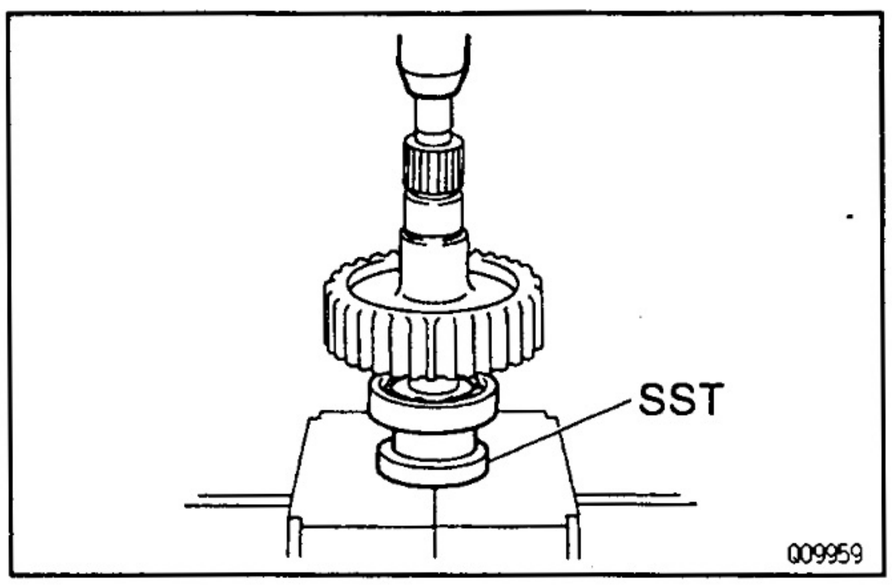

1. INSTALL REAR BEARING

Using SST and a press, install a new rear bearing.
SST 09316–00021

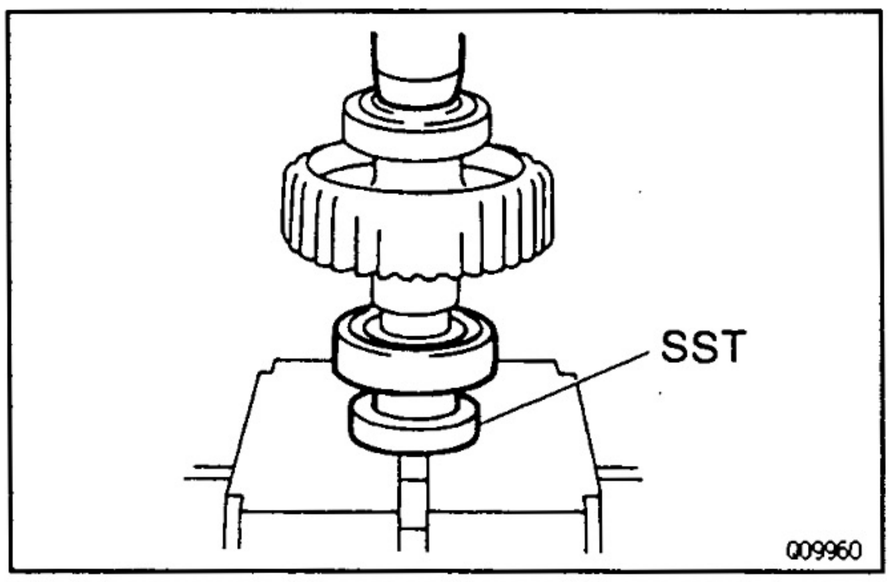

2. INSTALL FRONT BEARING

Using SST and a press, install a new front bearing.
SST 09316–00021

TR

REAR OUTPUT SHAFT
COMPONENTS

TR06J-01

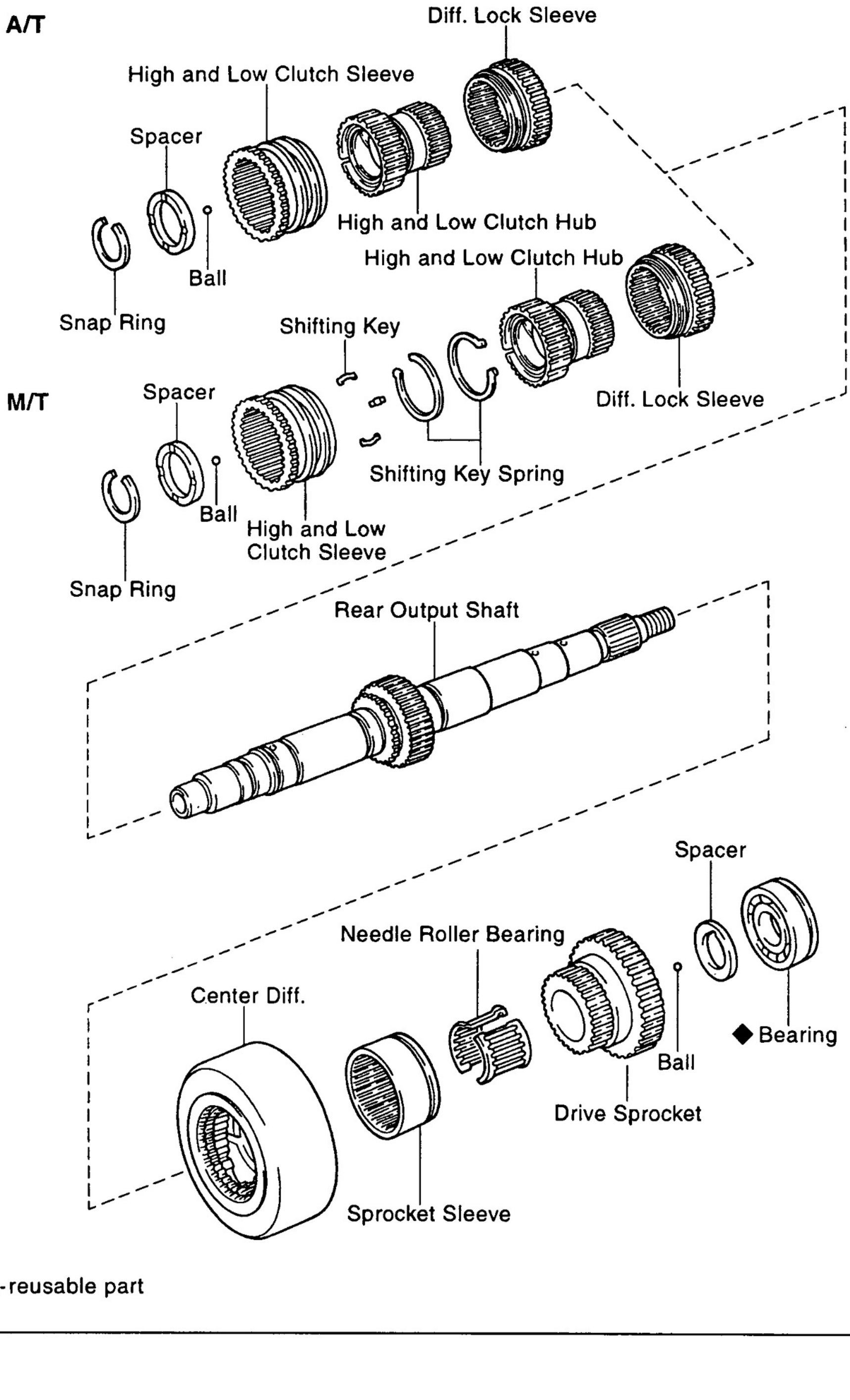

009823

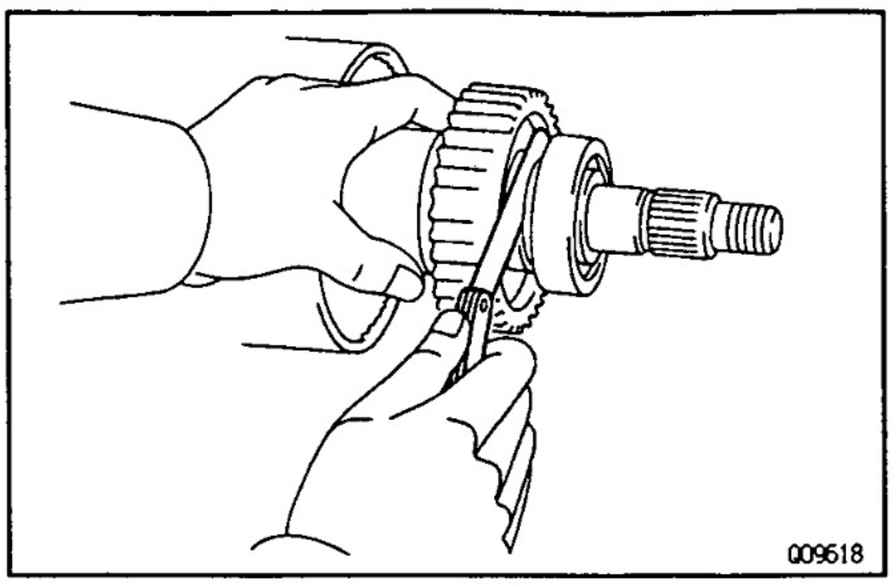

REAR OUTPUT SHAFT DISASSEMBLY

TR06K-01

1. INSPECT DRIVE SPROCKET THRUST CLEARANCE

Using a feeler gauge, measure the drive sprocket thrust clearance.

Standard clearance:

0.10 – 0.25 mm (0.0039 – 0.0098 in.)

Maximum clearance: 0.25 mm (0.0098 in.)

If the clearance exceeds the maximum, replace the drive sprocket.

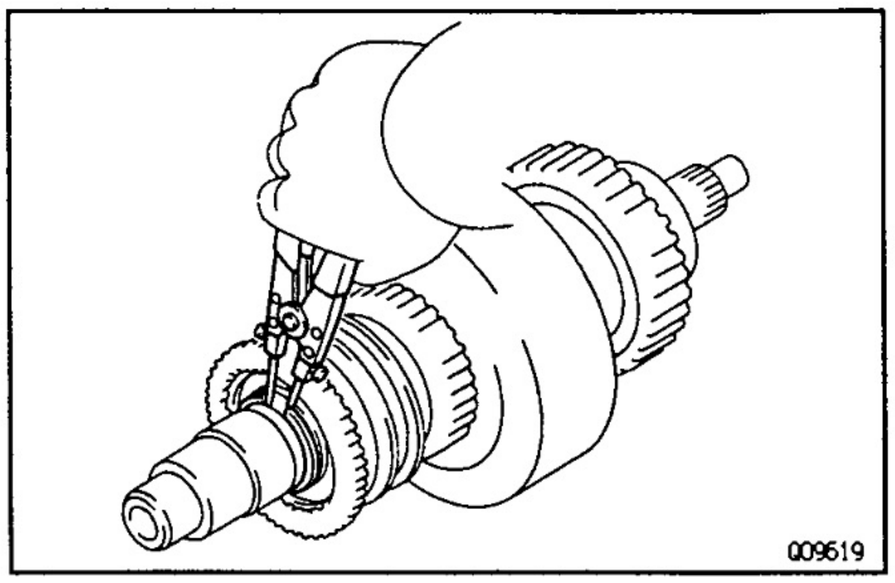

2. REMOVE HIGH AND LOW CLUTCH SLEEVE, CLUTCH HUB AND DIFF. LOCK SLEEVE

(a) Using a snap ring expander, remove the snap ring.

(b) M/T:

Remove the clutch sleeve, 2 key springs and 3 shifting keys.

A/T:

Remove the clutch sleeve.

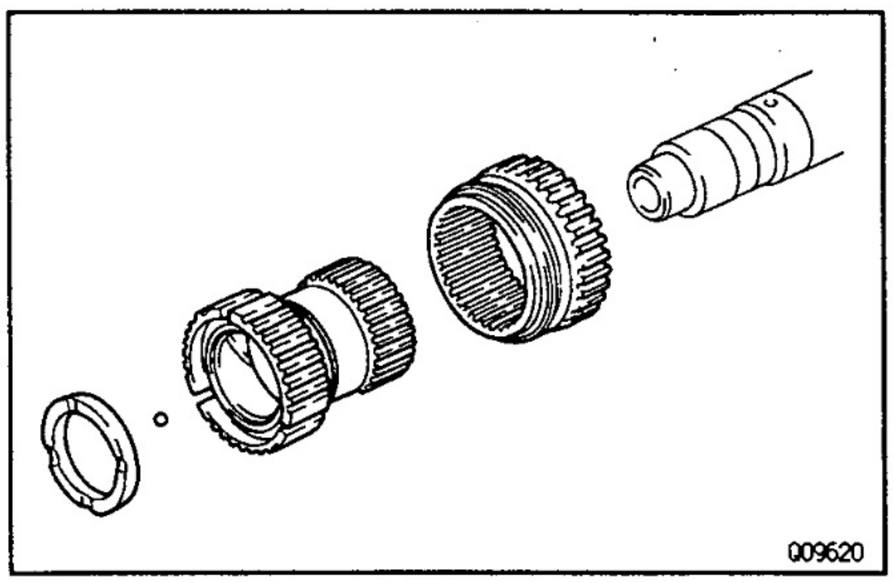

(c) Remove there parts.

- Spacer and ball.
- Clutch hub and diff. lock sleeve.

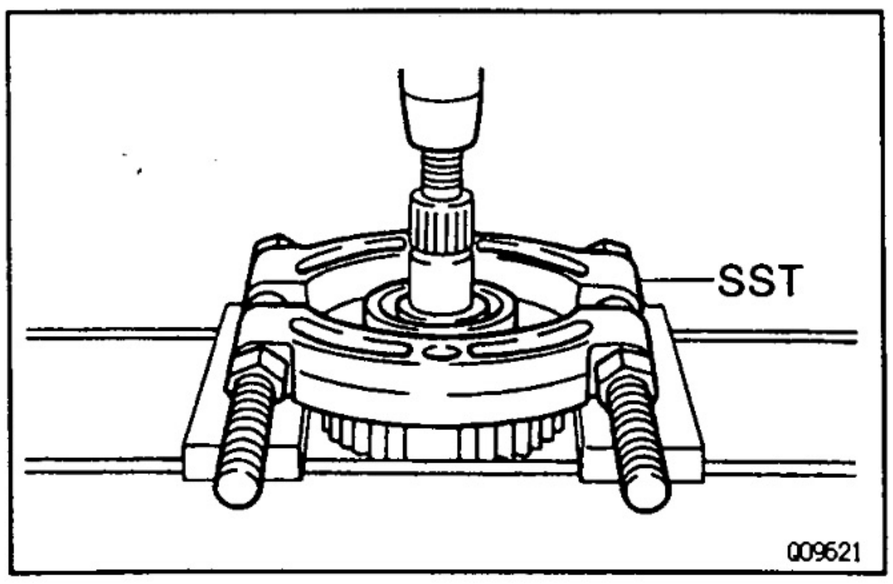

3. REMOVE BEARING, SPACER, DRIVE SPROCKET, SPROCKET SLEEVE AND CENTER DIFF.

(a) Using SST and a press, remove the bearing.

SST 09555–55010

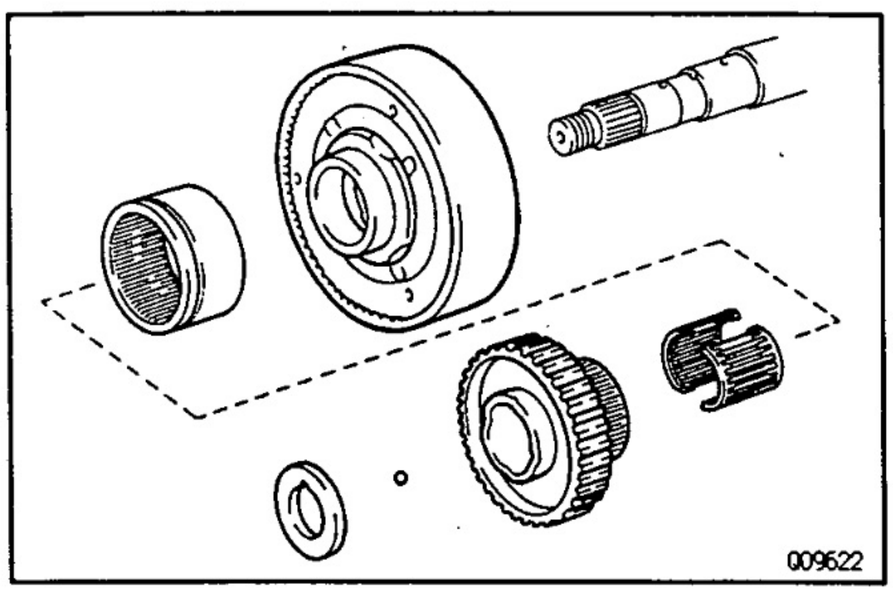

(b) Remove there parts.

- Spacer and ball
- Drive sprocket and needle roller bearing
- Sprocket sleeve and center diff.

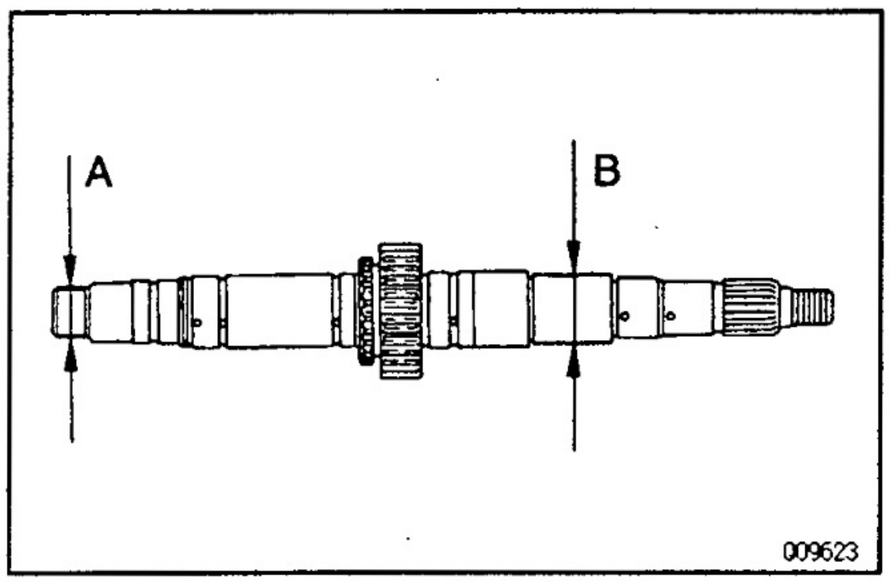

TR014–0D

REAR OUTPUT SHAFT INSPECTION

1. INSPECT REAR OUTPUT SHAFT

Using a micrometer, measure the outer diameter of the rear output shaft journal surface.

Minimum diameter:

Part A: 27.98 mm (1.1016 in.)

Part B: 36.98 mm (1.4561 in.)

If the clearance exceeds the minimum, replace the rear output shaft.

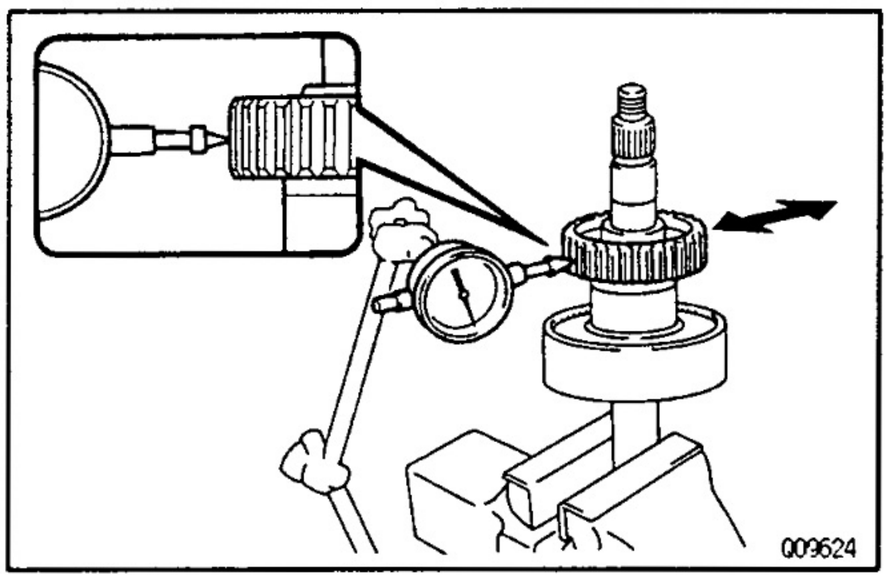

2. INSPECT DRIVE SPROCKET RADIAL CLEARANCE

Using a dial indicator, measure the radial clearance between the center diff., sprocket sleeve, drive sprocket and shaft with the needle roller bearing installed.

Standard clearance:

0.010 – 0.055 mm (0.0004 – 0.0022 in.)

Maximum clearance: 0.055 mm (0.0022 in.)

If the clearance exceeds the maximum, replace the drive sprocket, rear output shaft or needle roller bearing.

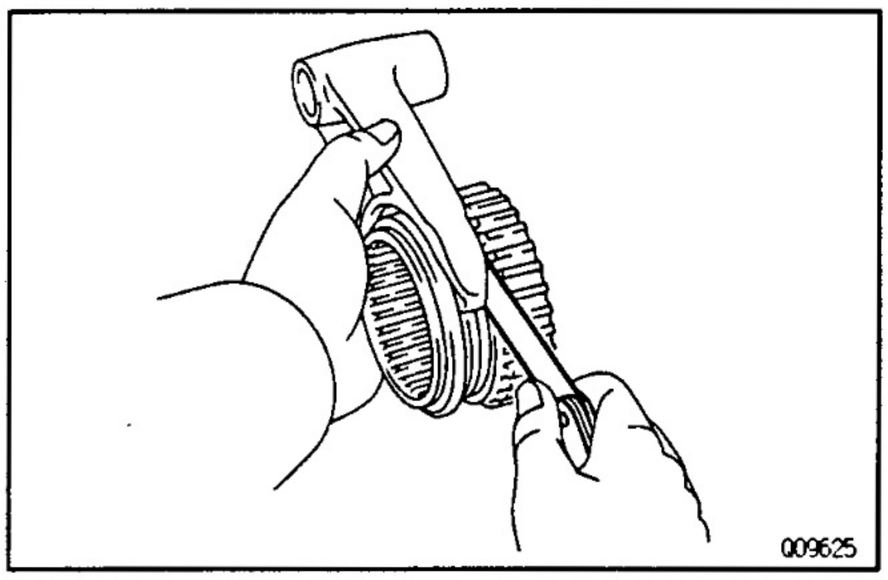

3. INSPECT FRONT DRIVE SHIFT FORK AND DIFF. LOCK SLEEVE CLEARANCE

Using a feeler gauge, measure the clearance between the front drive shift fork and diff. lock sleeve.

Maximum clearance: 1.0 mm (0.039 in.)

If the clearance exceeds the maximum, replace the shift fork or diff. lock sleeve.

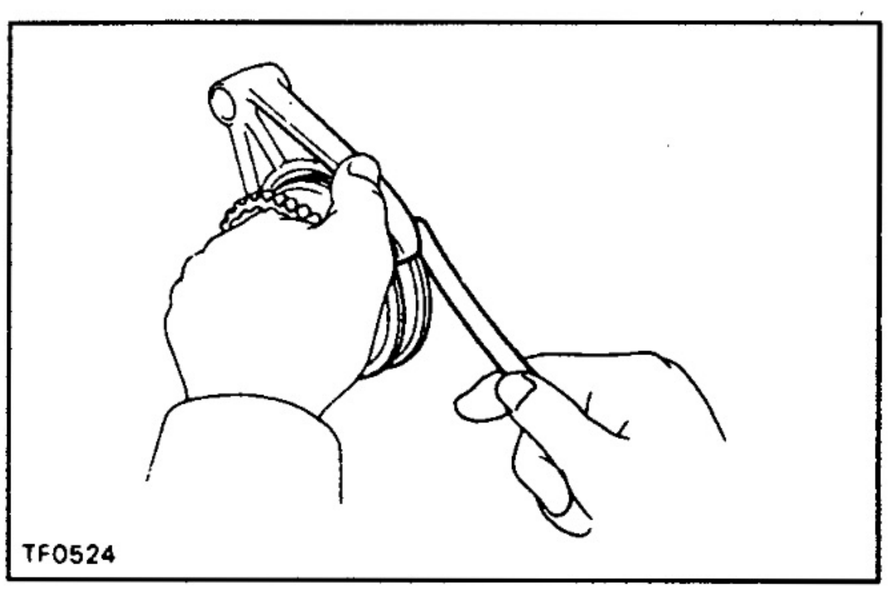

4. INSPECT HIGH AND LOW SHIFT FORK AND CLUTCH SLEEVE CLEARANCE

Using a feeler gauge, measure the clearance between the high and low shift fork and clutch sleeve.

Maximum clearance: 1.0 mm (0.039 in.)

If the clearance exceeds the maximum, replace the shift fork or clutch sleeve.

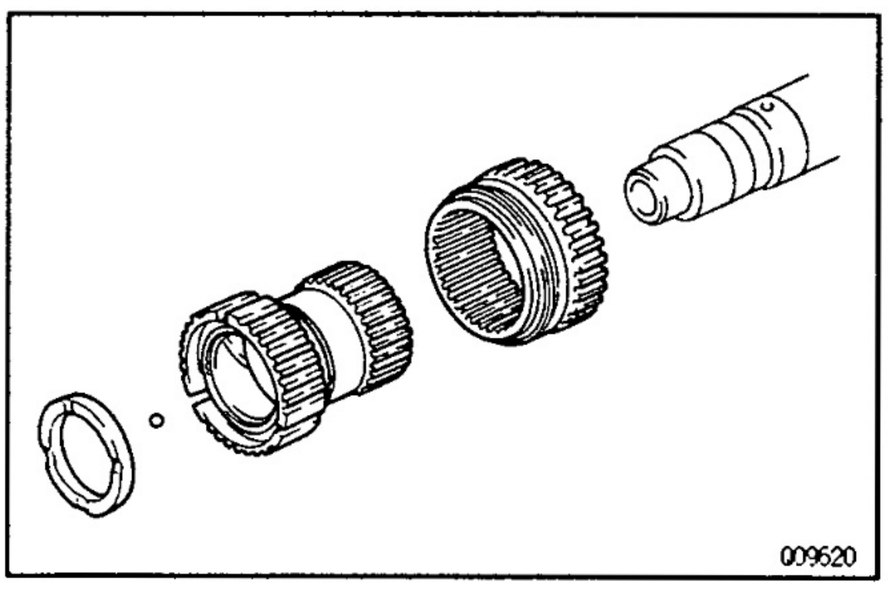

TR06L–01

REAR OUTPUT SHAFT ASSEMBLY

1. INSTALL DIFF. LOCK SLEEVE, CLUTCH HUB, SPACER AND BALL

(a) Install the diff. lock sleeve, clutch hub.

(b) Install the spacer and ball.

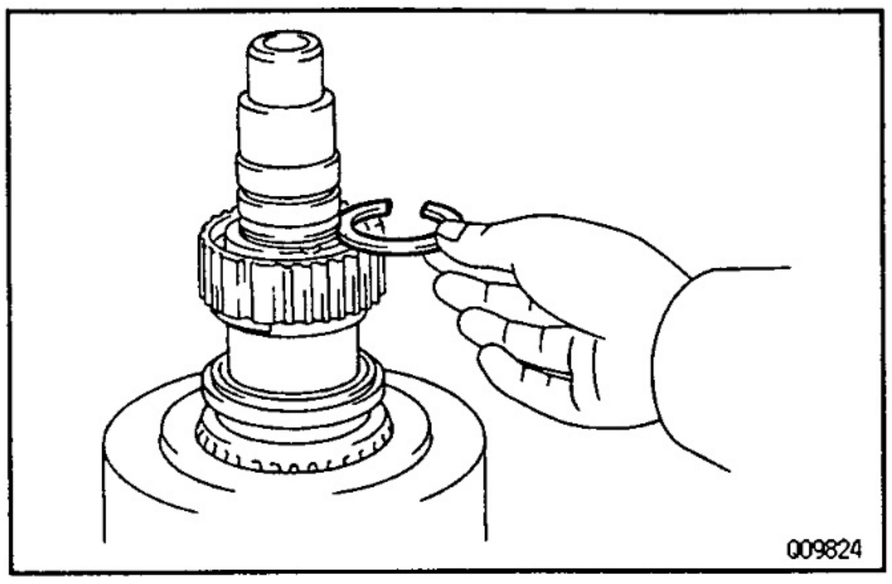

2. INSTALL SNAP RING

Select a snap ring that will allow minimum axial play and install it to the shaft.

Mark	Thickness mm (in.)
A	2.10 – 2.15 (0.0827 – 0.0846)
B	2.15 – 2.20 (0.0846 – 0.0866)
C	2.20 – 2.25 (0.0866 – 0.0886)
D	2.25 – 2.30 (0.0886 – 0.0906)
E	2.30 – 2.35 (0.0906 – 0.0925)
F	2.35 – 2.40 (0.0925 – 0.0945)
G	2.40 – 2.45 (0.0945 – 0.0965)
H	2.45 – 2.50 (0.0965 – 0.0984)
J	2.50 – 2.55 (0.0984 – 0.1004)
K	2.00 – 2.05 (0.0787 – 0.0807)
L	2.05 – 2.10 (0.0807 – 0.0827)

TR

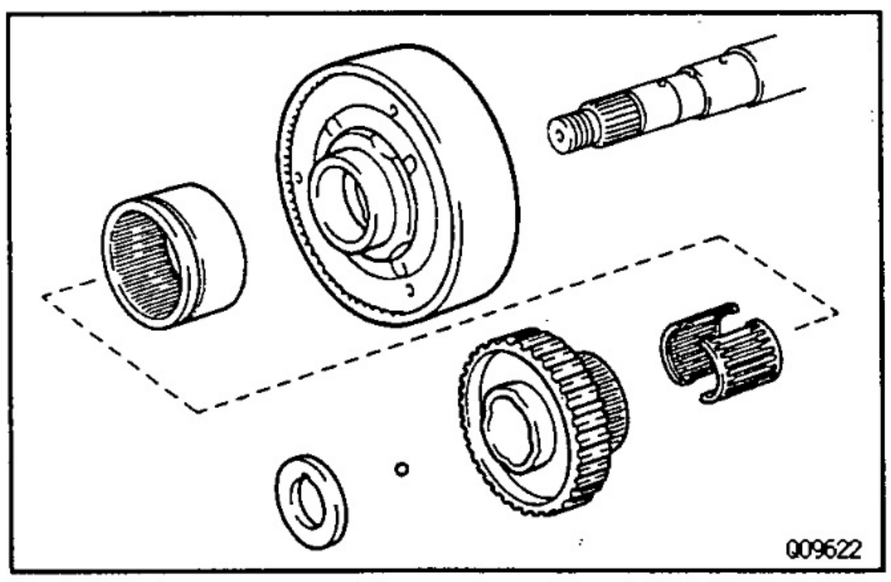

3. INSTALL CENTER DIFF., SPROCKET SLEEVE, DRIVE SPROCKET, SPACER AND BEARING

(a) Apply gear oil to the shaft and needle roller bearing.
(b) Install the center diff. and sprocket sleeve.
(c) Install the needle roller bearing in the drive sprocket.
(d) Install the drive sprocket, ball and spacer.

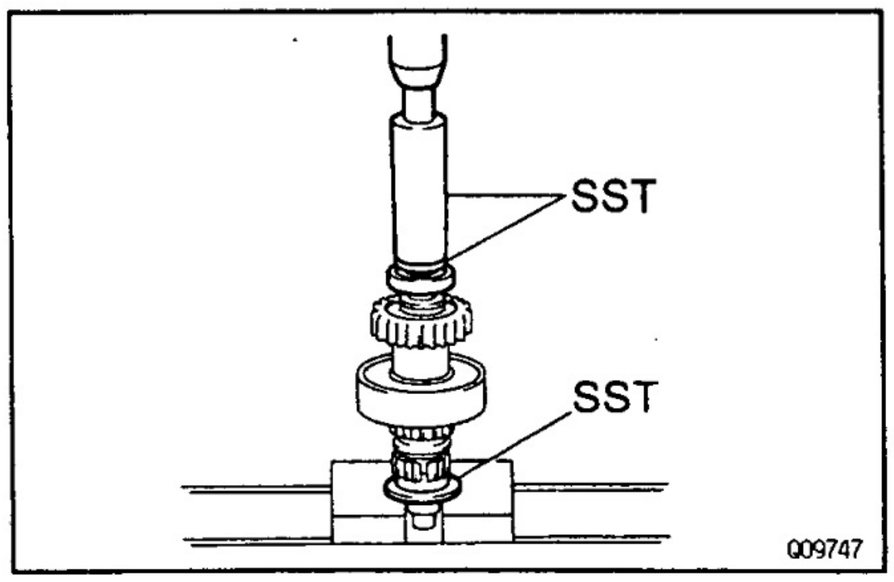

(e) Using SST and a press, install a new bearing with the outer race snap ring groove toward the rear.
SST 09316–60010 (09316–00011, 09316–00071, 09316–20011)

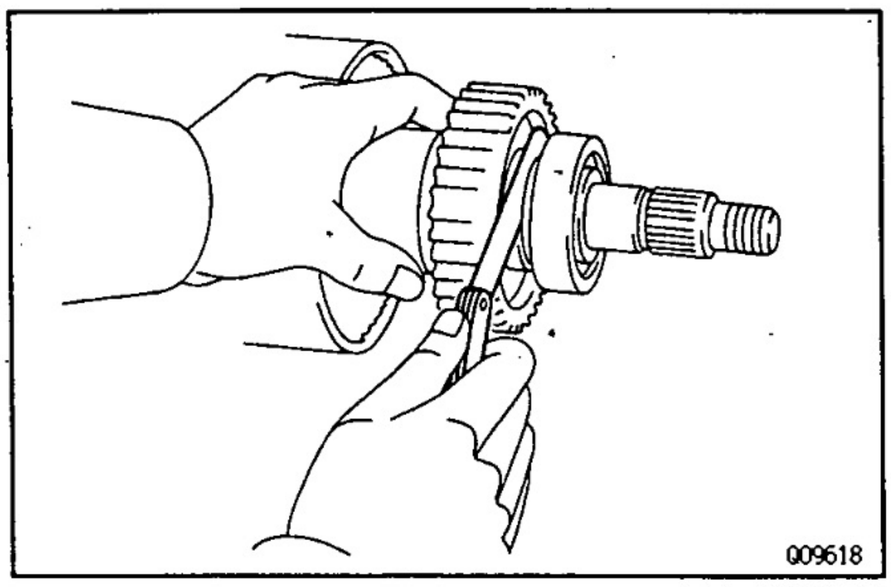

4. INSPECT DRIVE SPROCKET THRUST CLEARANCE

Using a feeler gauge, measure the drive sprocket thrust clearance.

Standard clearance:

0.10 – 0.25 mm (0.0039 – 0.0098 in.)

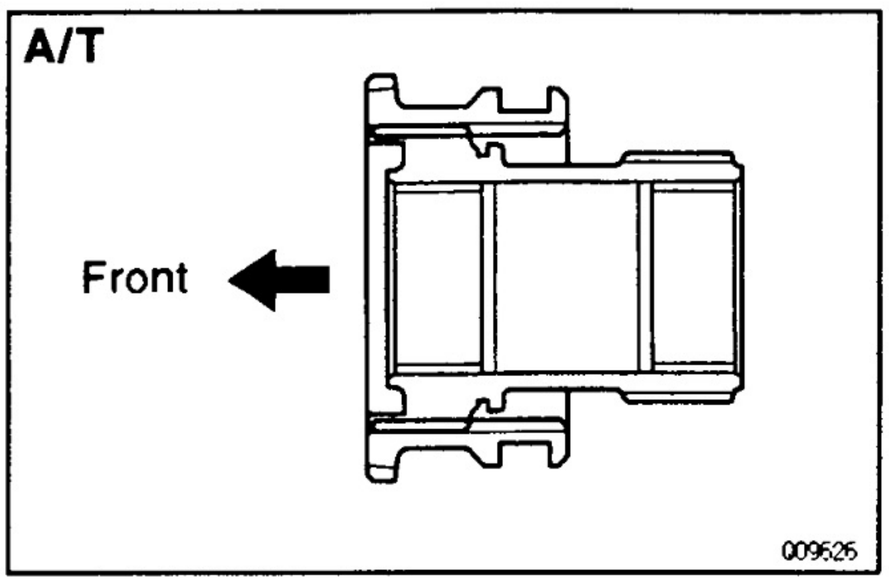

5. INSTALL CLUTCH HUB ONTO HIGH AND LOW CLUTCH SLEEVE

A/T:

Install the clutch hub onto the high and low clutch sleeve.

HINT: Make sure to install the clutch sleeve in the correct direction.

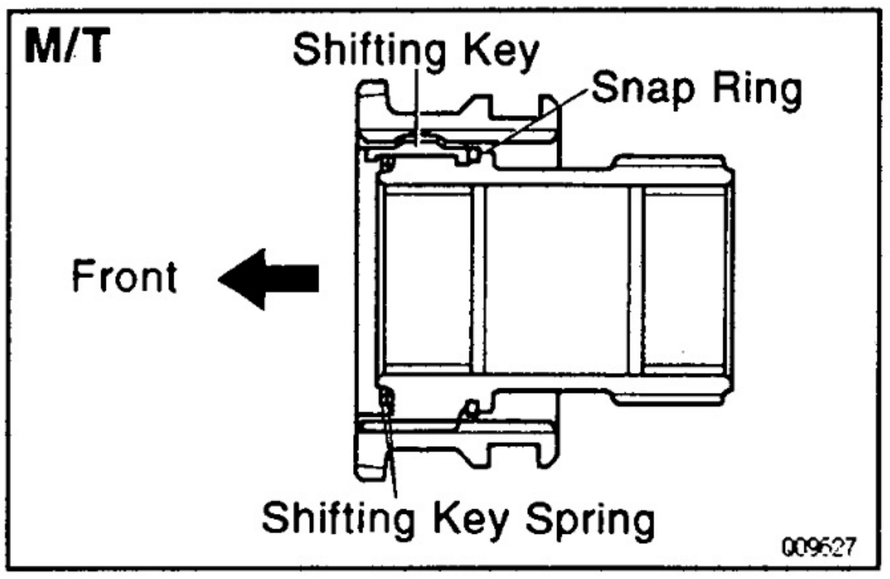

(a) M/T:

Install the clutch hub onto the high and low clutch sleeve.

HINT: Make sure to install the clutch sleeve in the correct direction.

(b) Install the 2 shifting key springs under the 3 shifting keys.

NOTICE: Install the key springs positioned so that their end gaps are not in line.

TR

CENTER DIFFERENTIAL COMPONENTS

TR06M–01

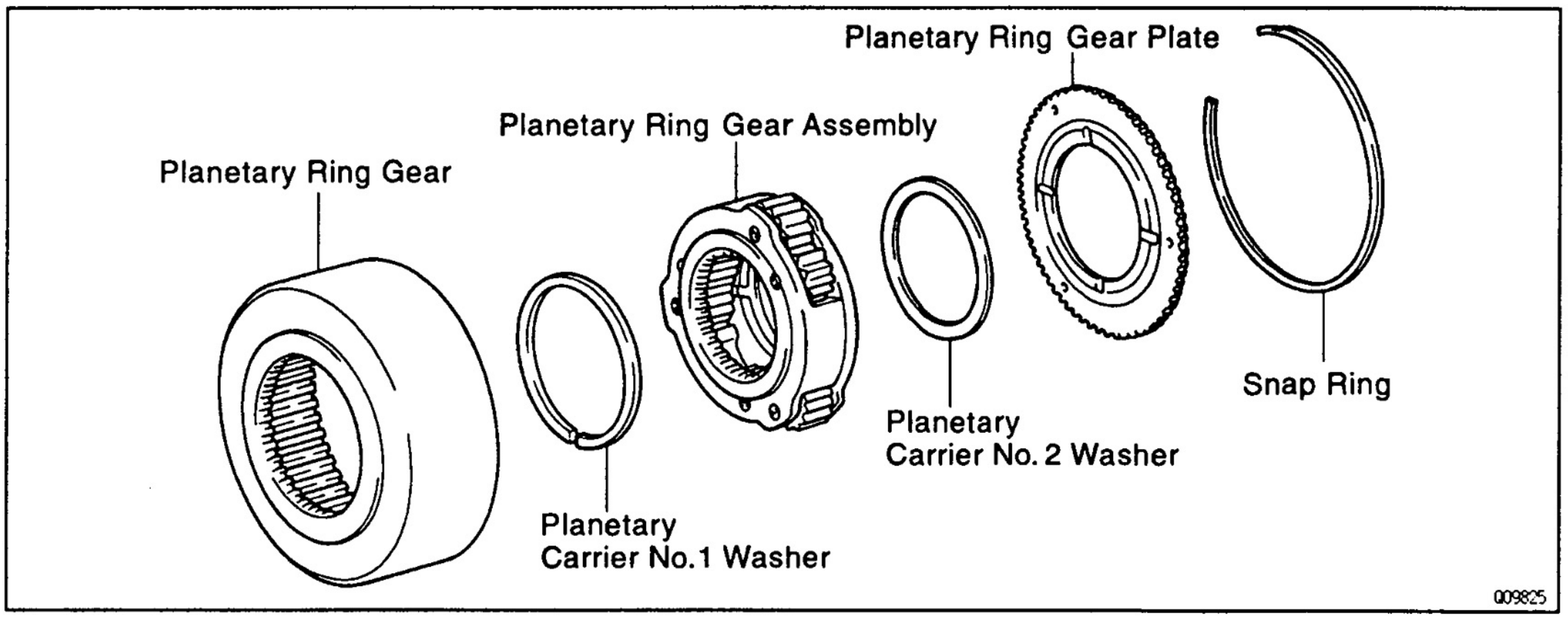

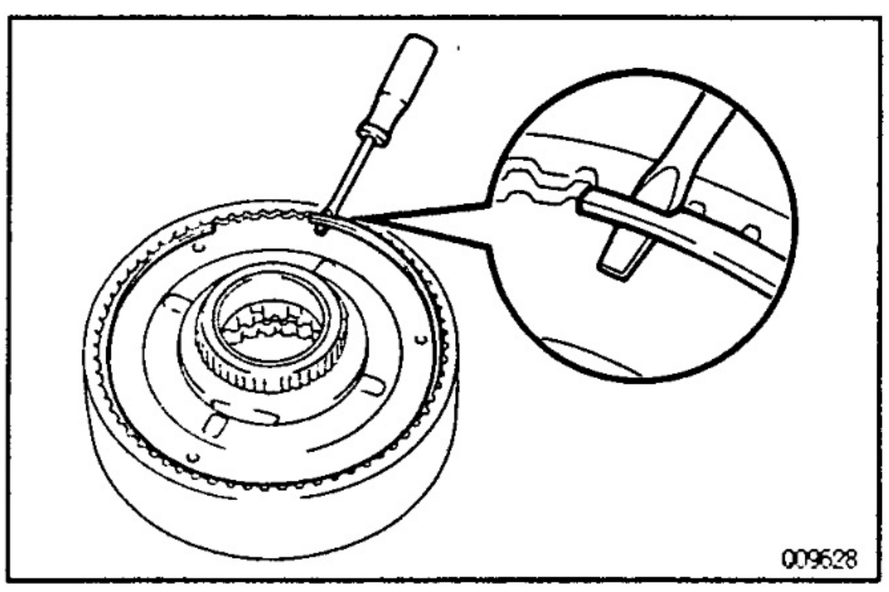

CENTER DIFFERENTIAL DISASSEMBLY

TR06N–01

1. REMOVE PLANETARY RING GEAR PLATE

Using a screwdriver, remove the snap ring and ring gear plate.

2. SEPARATE PLANETARY GEAR ASSEMBLY, RING GEAR, CARRIER NO.1 AND NO.2 WASHER

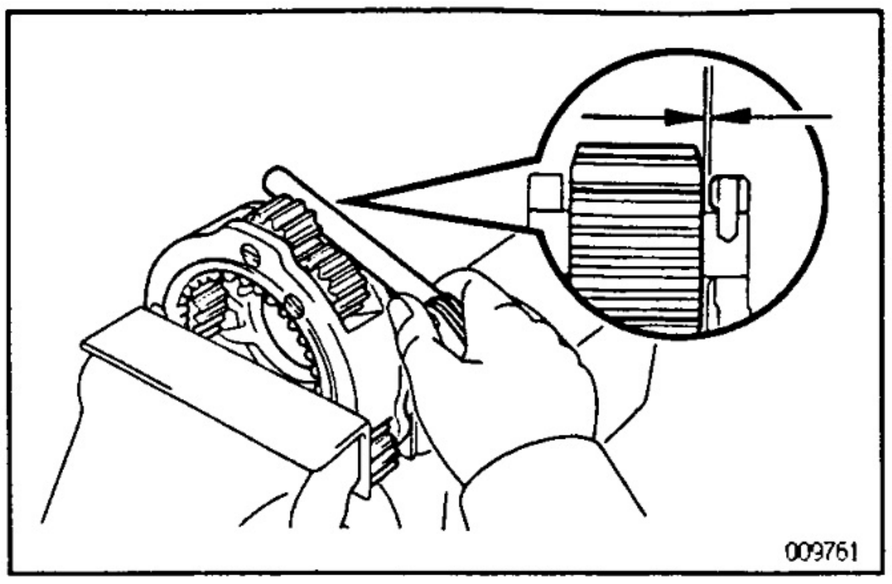

CENTER DIFFERENTIAL INSPECTION

TR06P–01

1. **INSPECT PLANETARY GEAR ASSEMBLY THRUST CLEARANCE**

Using a feeler gauge, measure the planetary gear thrust clearance.

Standard clearance:

0.15 – 0.70 mm (0.0059 – 0.0276 in.)

Maximum clearance:

0.70 mm (0.0276 in.)

If the clearance exceeds the maximum, replace the planetary gear assembly.

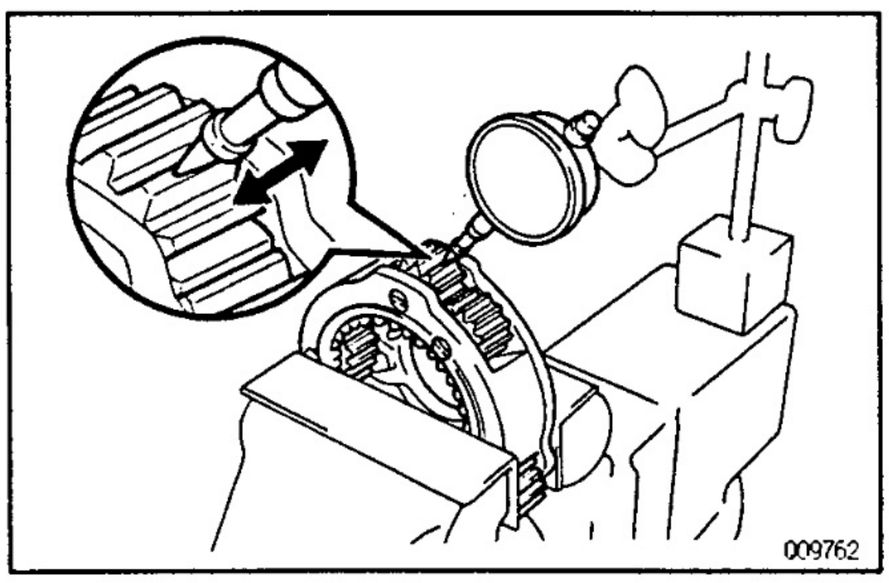

2. **INSPECT PLANETARY GEAR ASSEMBLY RADIAL CLEARANCE**

Using a dial indicator, measure the planetary gear radial clearance.

Standard clearance:

0.009 – 0.038 mm (0.0004 – 0.0015 in.)

Maximum clearance:

0.038 mm (0.0015 in.)

If the clearance exceeds the maximum, replace the planetary gear.

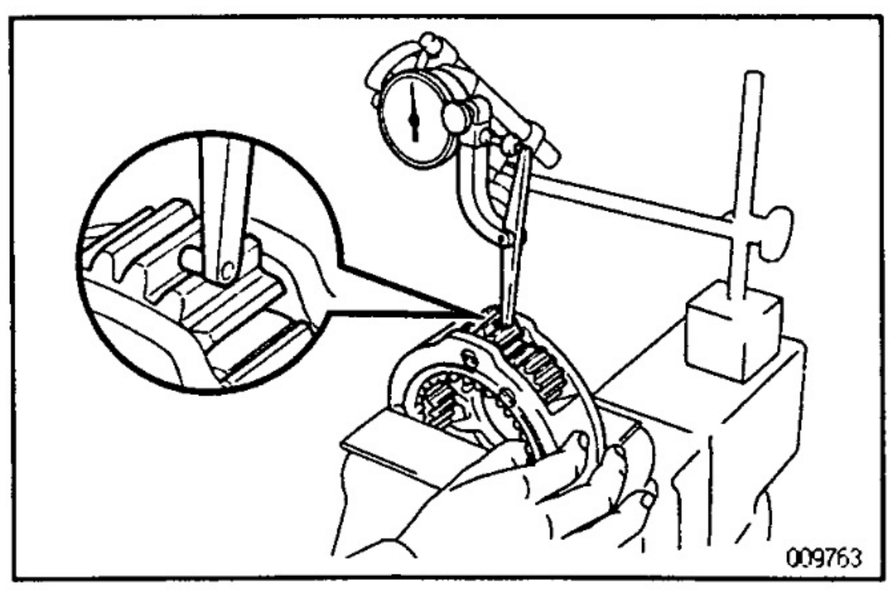

3. **INSPECT PLANETARY GEAR ASSEMBLY BACKLASH**

Using a dial indicator, measure the planetary gear backlash.

HINT: Push the pinion gear inner.

Standard clearance:

0.15 – 0.70 mm (0.0059 – 0.0276 in.)

Maximum clearance:

0.70 mm (0.0276 in.)

If the backlash exceeds the maximum, replace the planetary gear.

CENTER DIFFERENTIAL ASSEMBLY

TR06Q–01

Assembly is in the reverse order of disassembly.

INPUT SHAFT
COMPONENTS

TR018–06

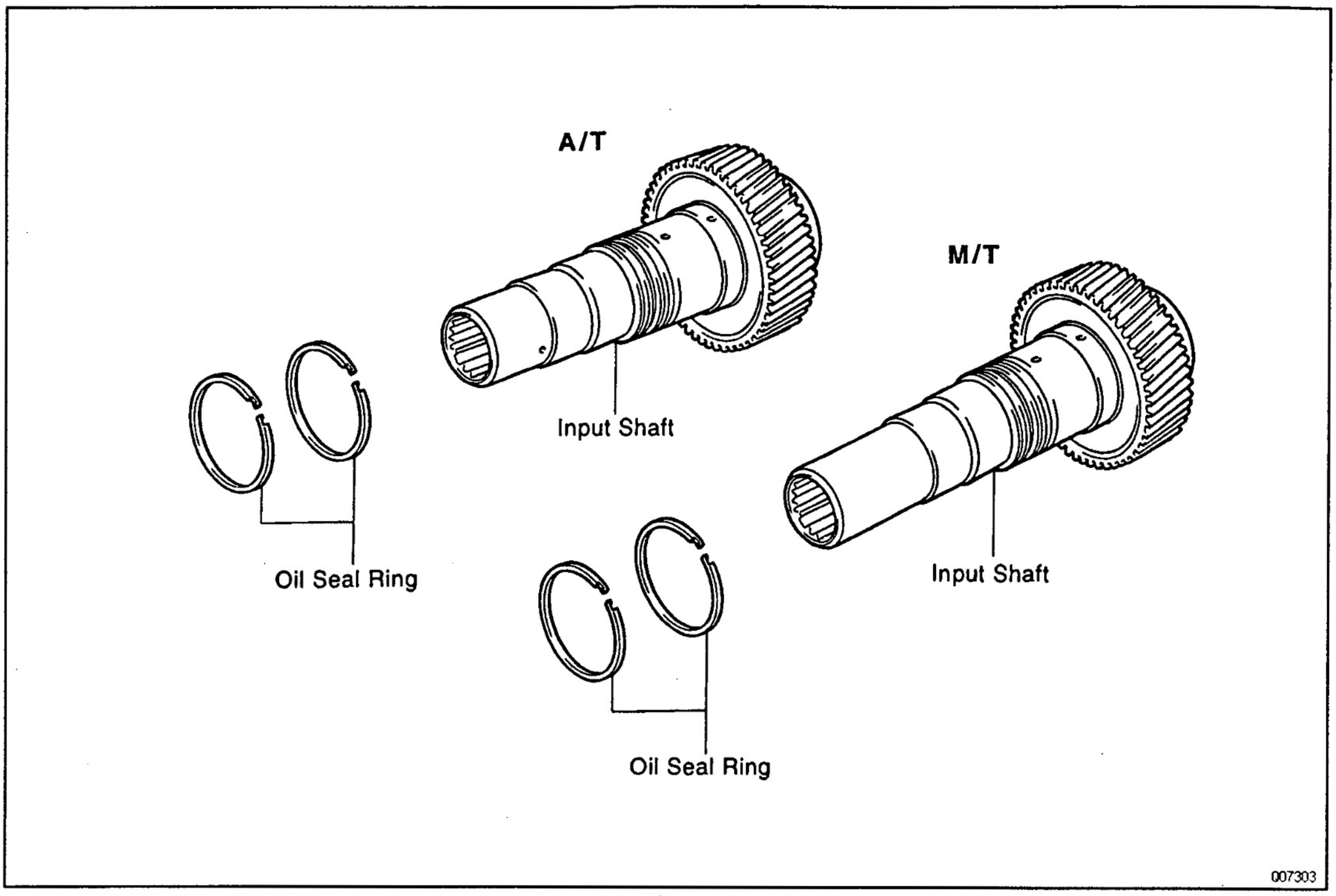

TR04L–05

INPUT SHAFT DISASSEMBLY

REMOVE OIL SEAL RINGS

Remove the 2 oil seal rings.

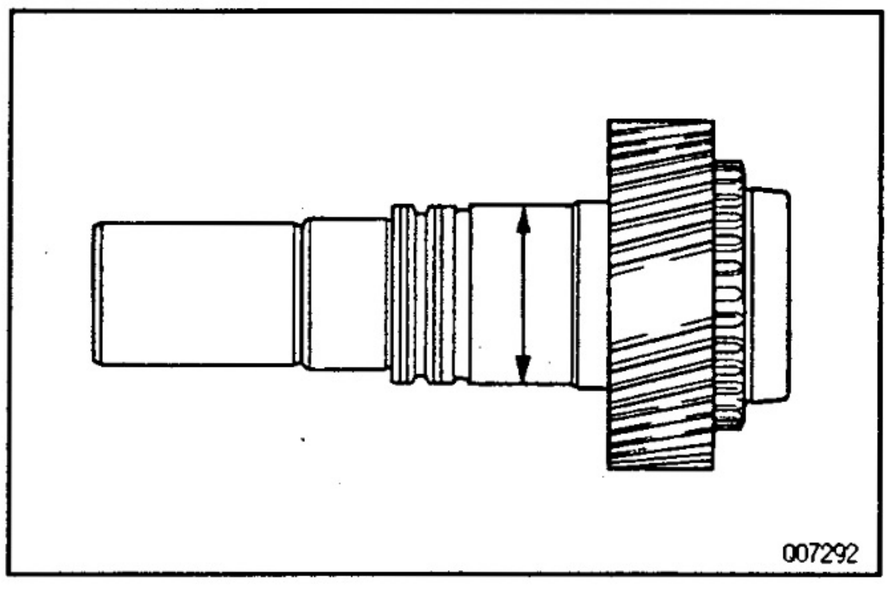

TR018–09

INPUT SHAFT INSPECTION

1. INSPECT INPUT SHAFT

(a) Using a micrometer, measure the outer diameter of the input shaft journal surface.

Minimum diameter: 47.59 mm (1.8736 in.)

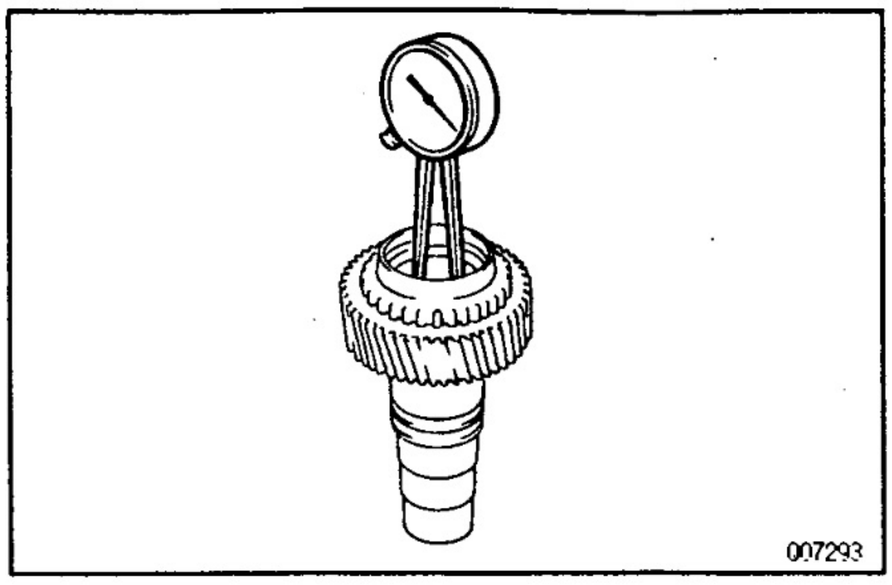

(b) Using a dial indicator, measure the inside diameter of the input shaft bushing.
Maximum inside diameter: 39.14 mm (1.5409 in.)
If the inside diameter exceeds the maximum, replace the input shaft.

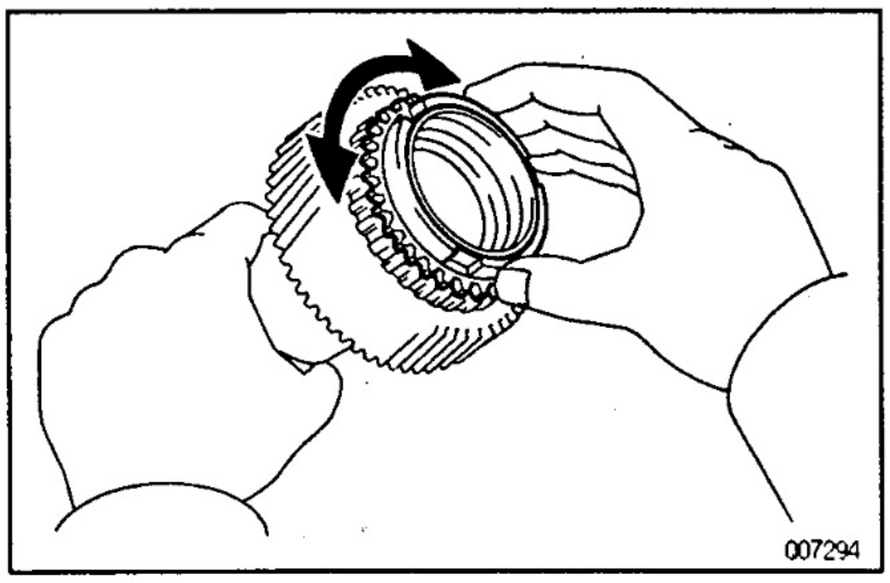

2. M/T:
INSPECT SYNCHRONIZER RING
(a) Turn the ring and push it in to check the braking action.

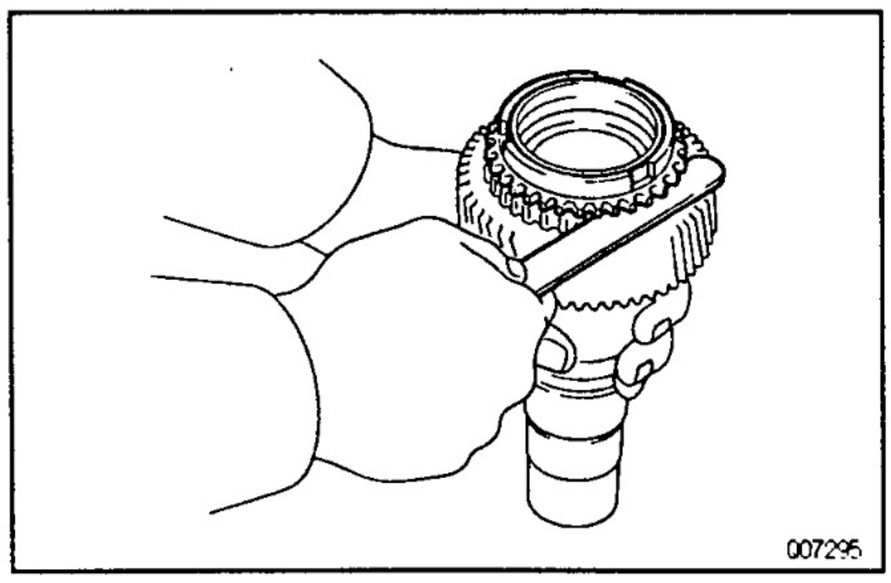

(b) Measure the clearance between the synchronizer ring back and the input shaft spline end.
Standard clearance:
1.05 – 1.85 mm (0.0413 – 0.0728 in.)
Minimum clearance: 0.80 mm (0.0315 in.)
If the clearance is less than the minimum, replace the synchronizer ring.

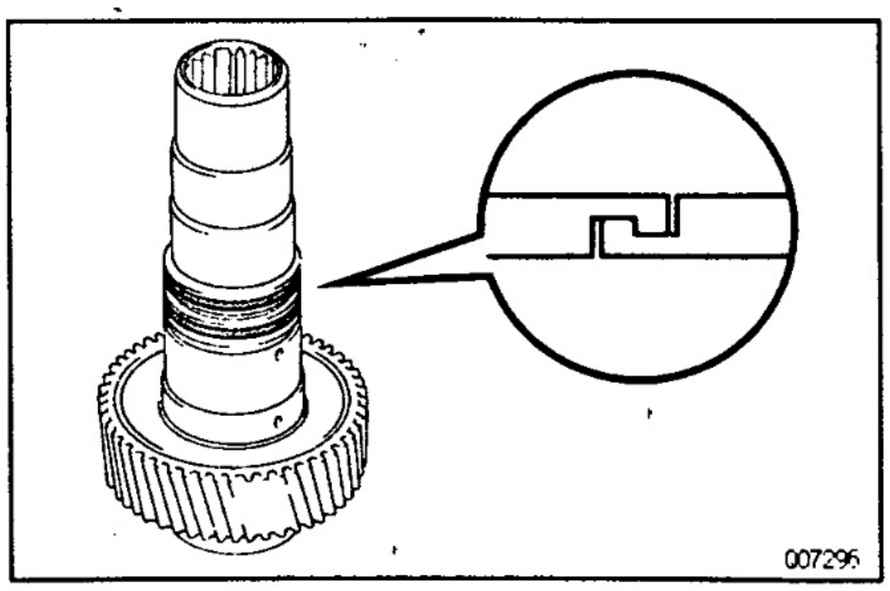

INPUT SHAFT ASSEMBLY

TR04M–05

INSTALL OIL SEAL RINGS
Install the 2 oil seal rings.
HINT:
- Apply gear oil to the oil seal ring.
- Hang securely to eliminate clearance.

PLANETARY GEAR
COMPONENTS

TR01A–04

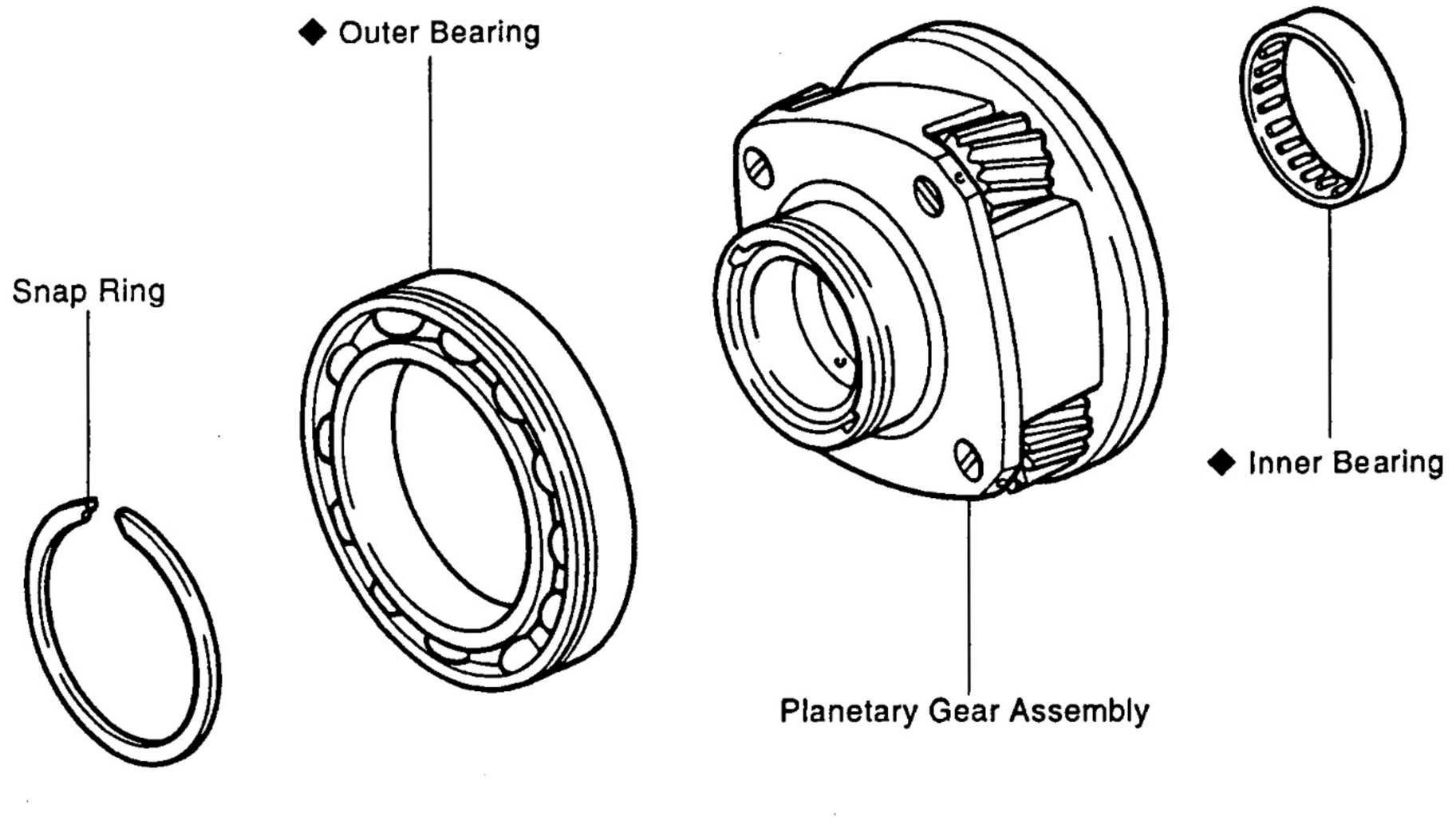

◆ Non-reusable part

007455

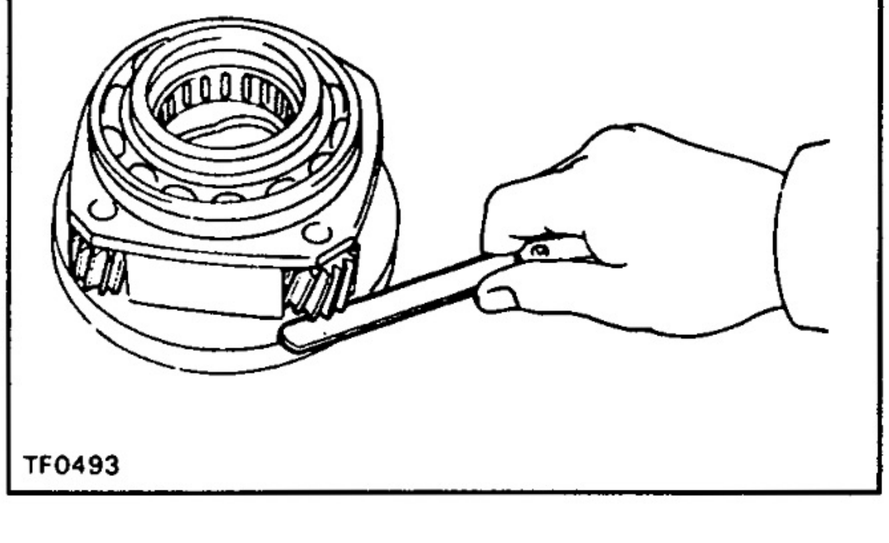

TF0493

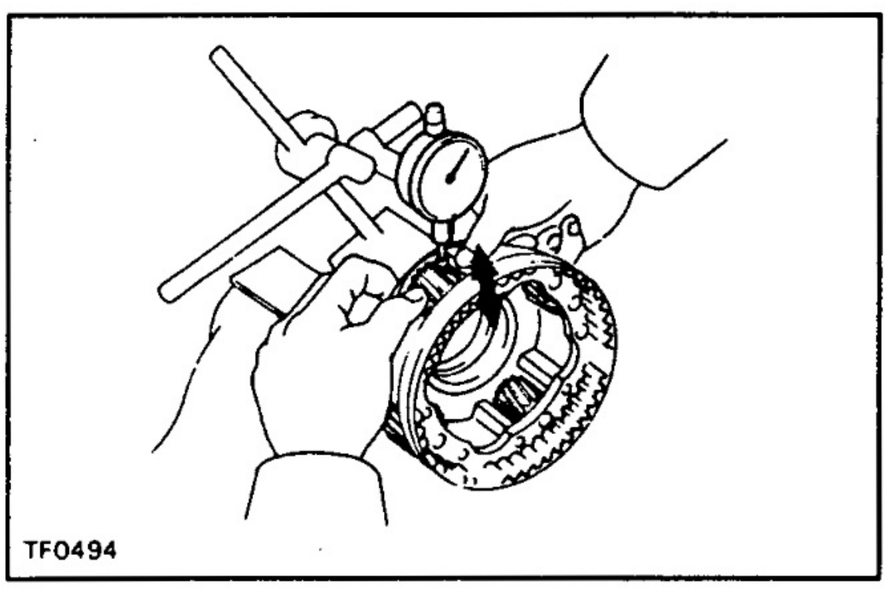

TF0494

TR05H–04

PLANETARY GEAR INSPECTION

1. INSPECT PINION GEAR THRUST CLEARANCE

Using a feeler gauge, measure the planetary pinion gear thrust clearance.

Standard clearance:

0.11 – 0.84 mm (0.0043 – 0.0331 in.)

Maximum clearance: 0.84 mm (0.0331 in.)

If the clearance exceeds the maximum, replace the planetary gear assembly

2. INSPECT PLANETARY PINION GEAR RADIAL CLEARANCE

Using a dial indicator, measure the radial clearance of the planetary pinion gear.

Standard clearance:

0.009 – 0.038 mm (0.0004 – 0.0015 in.)

Maximum clearance: 0.038 mm (0.0015 in.)

If the clearance exceeds the maximum, replace the planetary gear assembly.

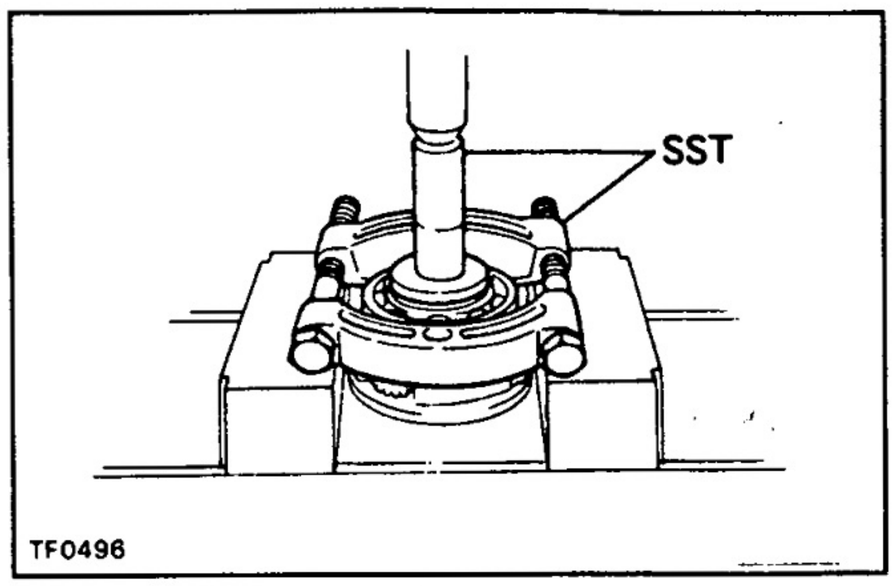

3. IF NECESSARY, REPLACE PLANETARY GEAR OUTER BEARING

(a) Using a snap ring expander, remove the snap ring.

(b) Using SST and a press, remove the outer bearing.
SST 09554–30011, 09555–55010

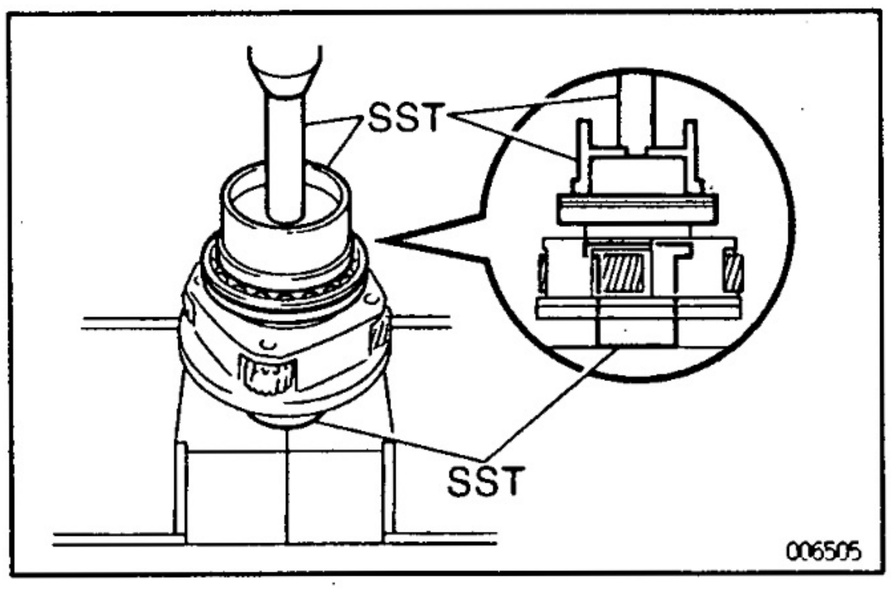

(c) Using SST and a press, install a new bearing with the groove faced forward.
SST 09223–15020, 09515–30010, 09950–70010
(09951–07100)

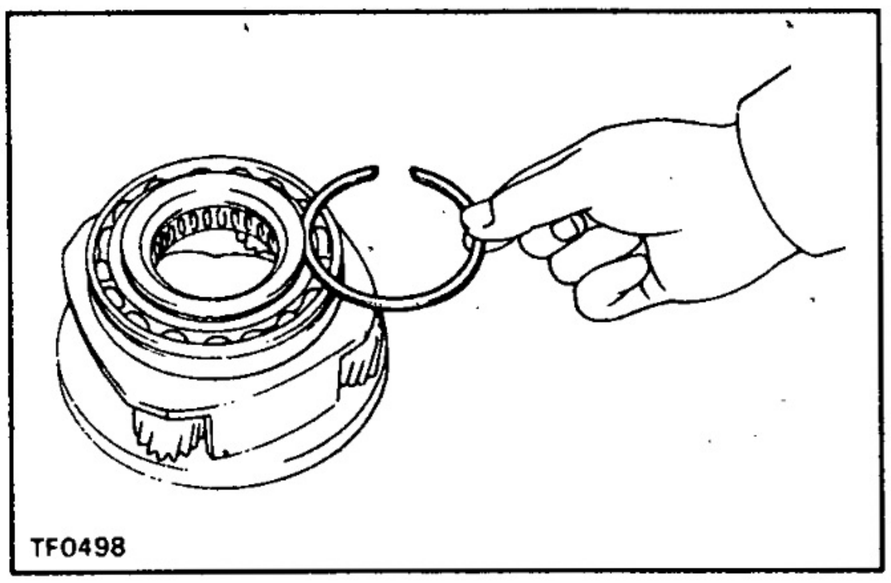

(d) Select a snap ring that will allow minimum axial play.

Mark	Thickness mm (in.)
1	1.45 – 1.50 (0.0571 – 0.0591)
2	1.50 – 1.55 (0.0591 – 0.0610)
3	1.55 – 1.60 (0.0610 – 0.0630)
4	1.60 – 1.65 (0.0630 – 0.0650)
5	1.65 – 1.70 (0.0650 – 0.0669)

(e) Using a snap ring expander, install the snap ring.

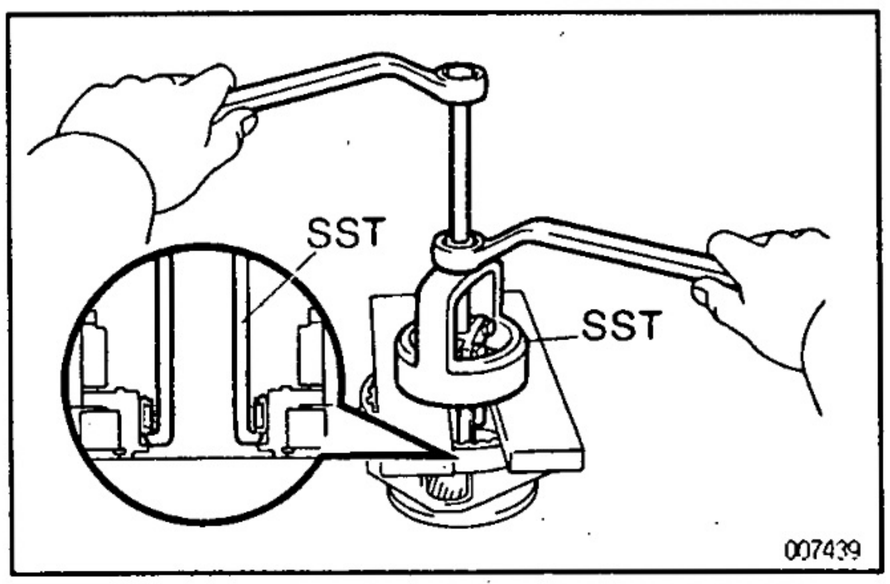

4. IF NECESSARY, REPLACE PLANETARY GEAR THRUST INNER BEARING

(a) Using SST and a press, remove the inner bearing.
SST 09612–65014 (09612–01030, 09612–01050)
NOTICE: Hang the SST securely to the clearance between the thrust inner bearing and planetary gear.

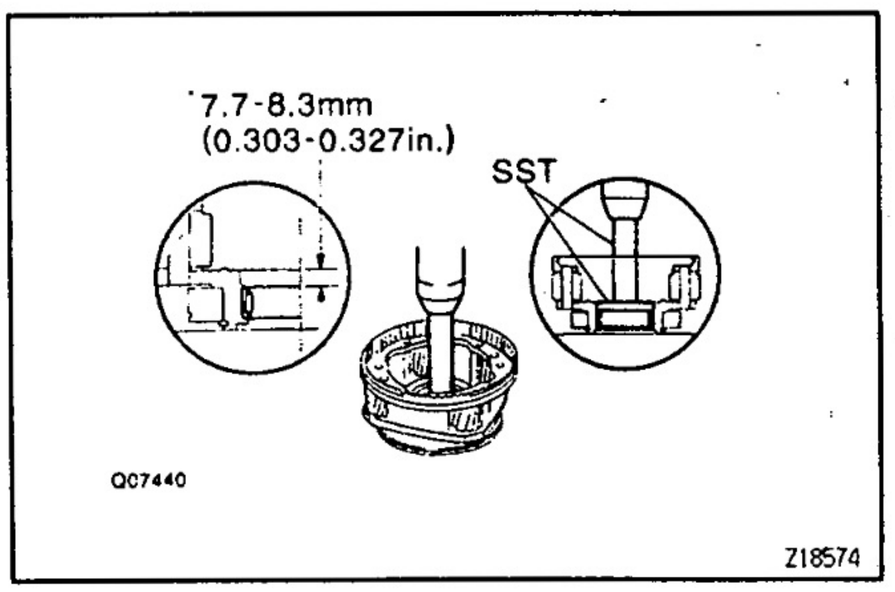

(b) Using SST and a press, install a new bearing.
SST 09950–60010 (09951–00570),
09950–70010 (09951–07100)
Bearing depth: 7.7 – 8.3 mm (0.303 – 0.327 in.)

OIL SEALS
COMPONENTS

TR01C–08

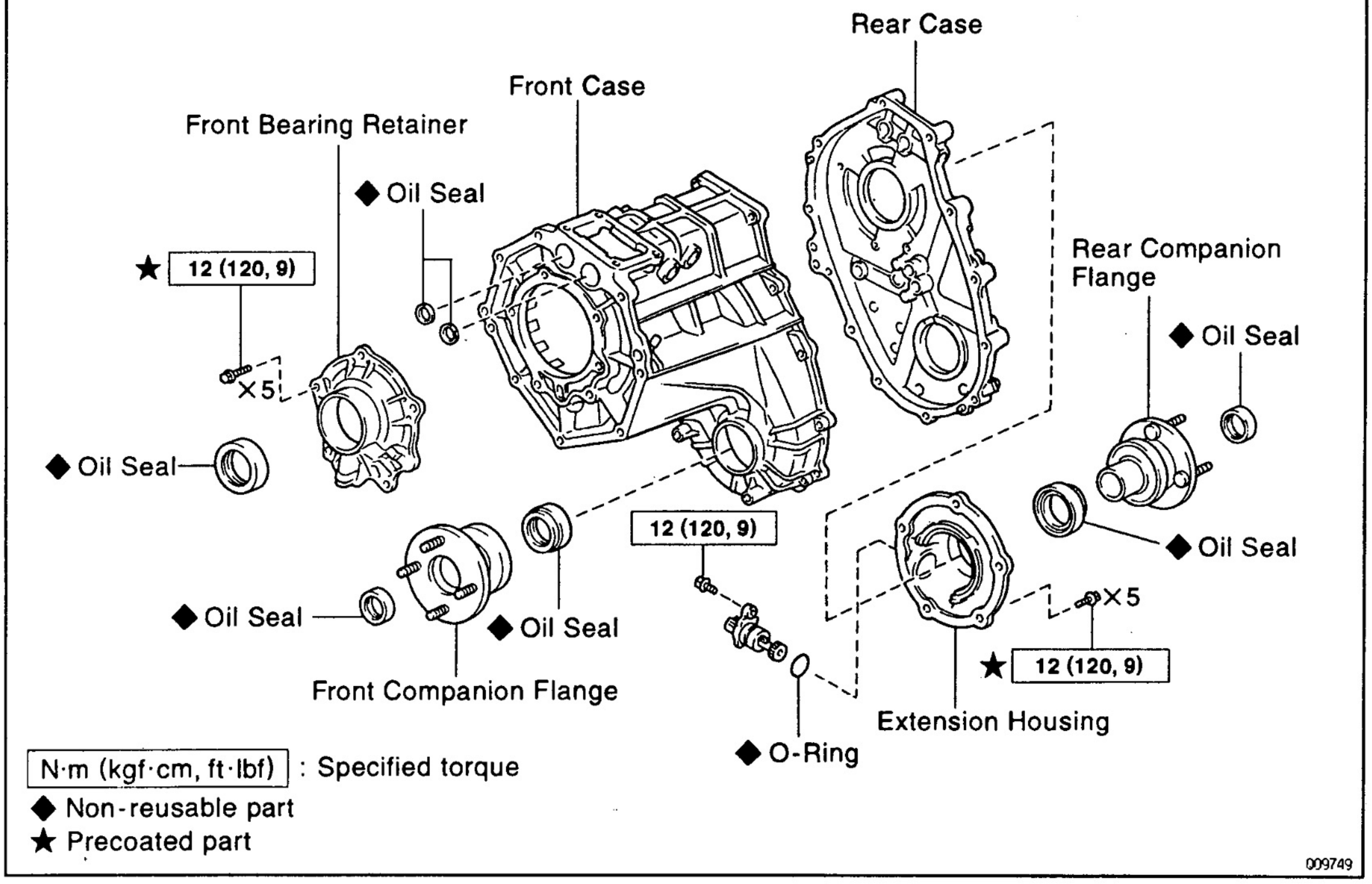

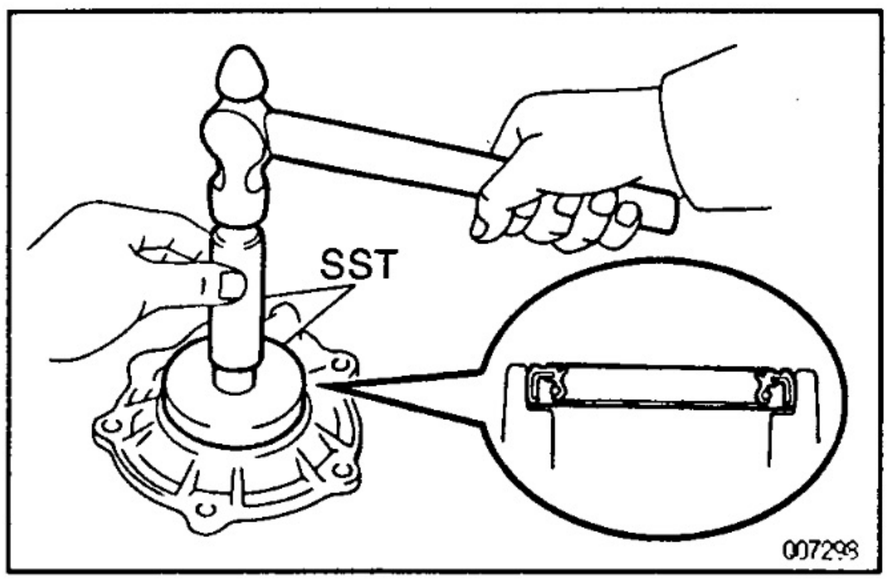

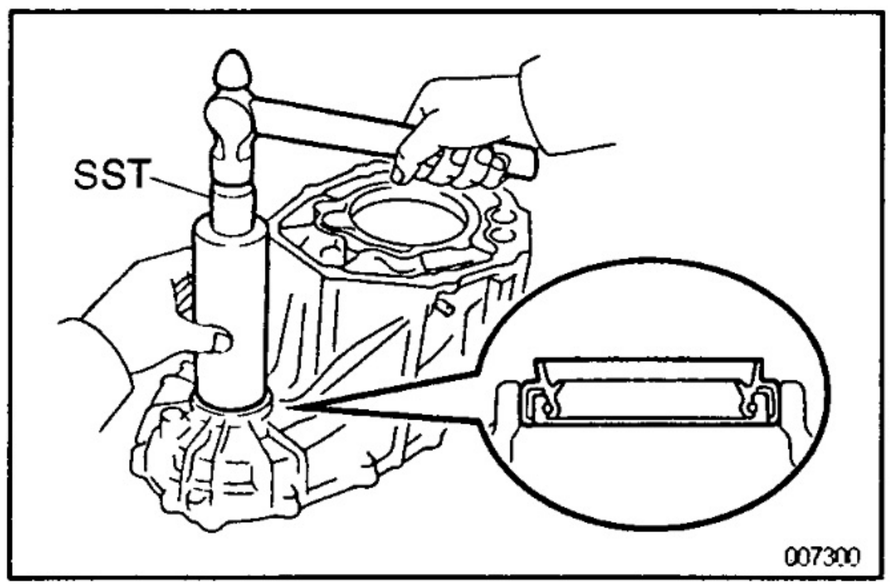

TR06R–01

OIL SEALS REPLACEMENT

1. REPLACE FRONT BEARING RETAINER OIL SEAL

(a) Using a screwdriver and hammer, drive out the oil seal.

(b) Using SST and a hammer, drive in a new oil seal until its surface is flush with the retainer upper surface.
SST 09950–60010 (09951–00590),
09950–70010 (09951–07100)

(c) Coat the lip of the oil seal with MP grease.

2. REPLACE FRONT CASE OIL SEAL

(a) Using a screwdriver and hammer, drive out the oil seal.

(b) Using SST and a hammer, drive in a new oil seal until its surface is flush with the case upper surface.
SST 09316–60011 (09316–00011)

(c) Coat the lip of the oil seal with MP grease.

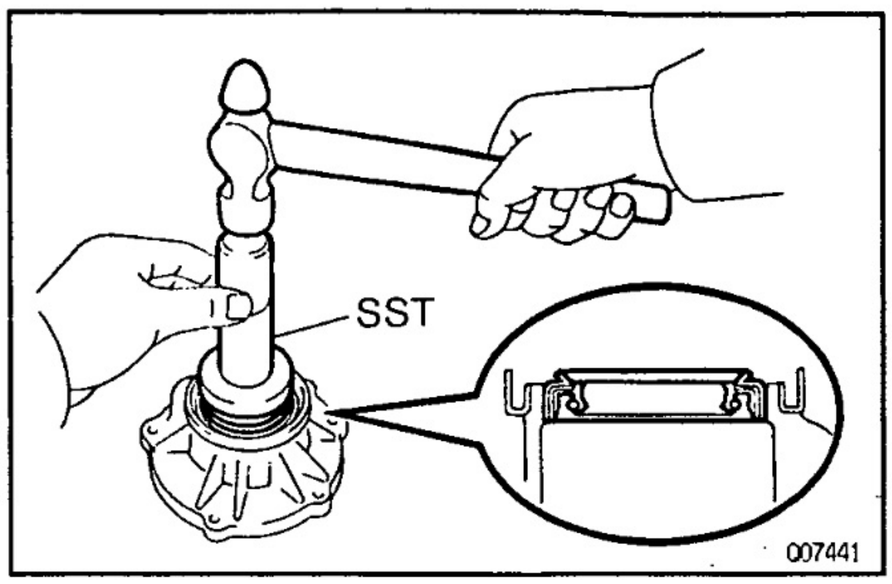

3. REPLACE EXTENSION HOUSING OIL SEAL

(a) Using a screwdriver and hammer, drive out the oil seal.

(b) Using SST and a hammer, drive in a new oil seal until its surface is flush with the housing upper surface.
SST 09554–22010

(c) Coat the lip of the oil seal with MP grease.

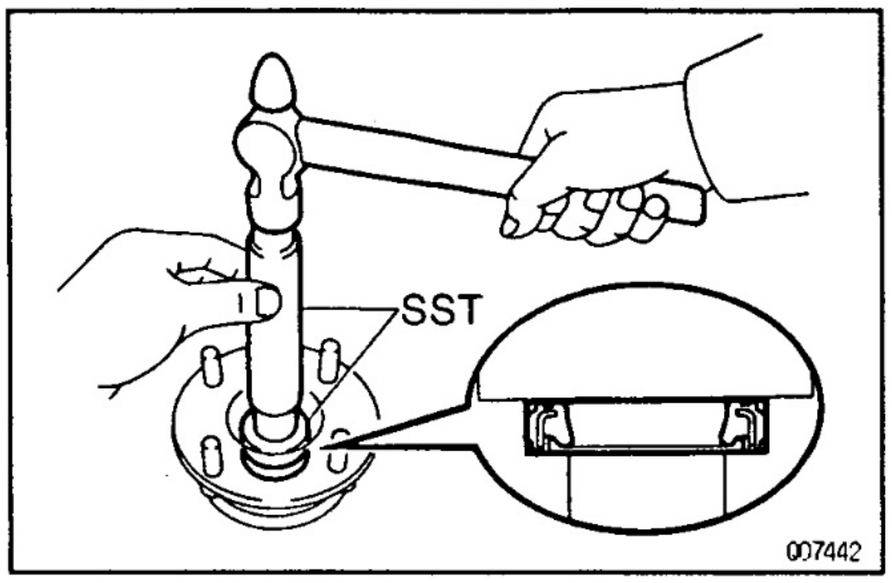

4. REPLACE FRONT AND REAR COMPANION FLANGE OIL SEALS

(a) Using a screwdriver and hammer, drive out the oil seals from the 2 flanges.

(b) Using SST and a hammer, drive in a new oil seal.
SST 09950–60010 (09951–00220, 09951–00350, 09952–06010), 09950–70010 (09951–07100)

(c) Coat the lip of the oil seal with MP grease.

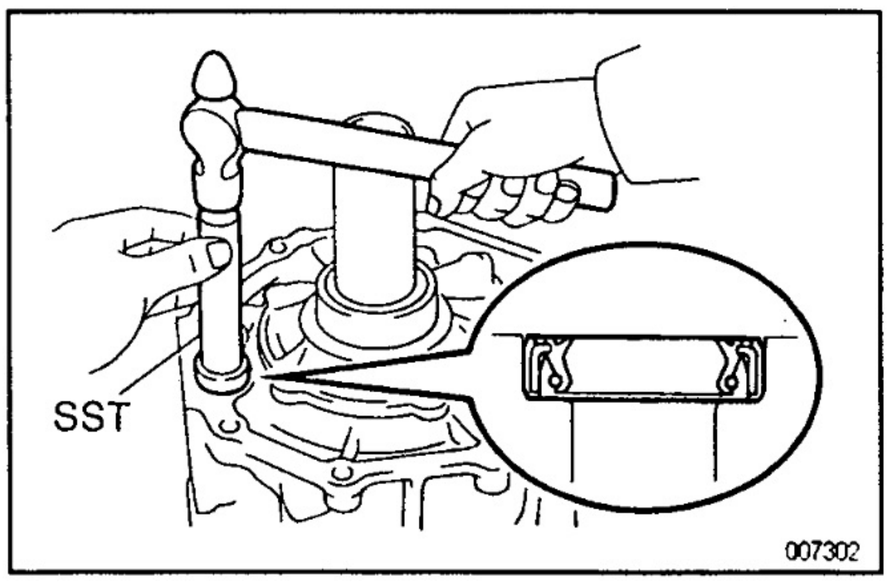

5. REPLACE SHIFT FORK SHAFT OIL SEALS

(a) Using a screwdriver, pry out the oil seal.

(b) Using SST and a hammer, drive in a new oil seal.
SST 09304–12012

Oil seal depth:

–0.5 ~ 0.5 mm (–0.020 ~ 0.020 in.)

SERVICE SPECIFICATIONS

SERVICE DATA

TR01F–0C

Breather hose	Hose depth		13 mm	0.51 in.
Oil pump body	Body clearance	STD	0.09 – 0.16 mm	0.0035 – 0.0063 in.
		Max	0.16 mm	0.0063 in.
	Tip clearance	STD	0.05 – 0.15 mm	0.0020 – 0.0059 in.
		Max	0.15 mm	0.0059 in.
	Side clearance	STD	0.03 – 0.10 mm	0.0012 – 0.0039 in.
		Max	0.10 mm	0.0039 in.
Rear output shaft assembly	Drive sprocket thrust clearance	STD	0.10 – 0.25 mm	0.0039 – 0.0098 in.
		Max	0.25 mm	0.0098 in.
	Rear output shaft journal diameter			
	Part A	Min	27.98 mm	1.1016 in.
	Part B	Min	36.98 mm	1.4561 in.
	Drive sprocket radial clearance	STD	0.010 – 0.055 mm	0.0004 – 0.0022 in.
		Max	0.055 mm	0.0022 in.
	Front drive shift fork to center diff. lock sleeve clearance	Max	1.0 mm	0.039 in.
	High and low shift fork to sleeve clearance	Max	1.0 mm	0.039 in.
	Rear output shaft snap ring thickness			
		Mark		
		A	2.10 – 2.15 mm	0.0827 – 0.0846 in.
		B	2.15 – 2.20 mm	0.0846 – 0.0866 in.
		C	2.20 – 2.25 mm	0.0866 – 0.0886 in.
		D	2.25 – 2.30 mm	0.0886 – 0.0906 in.
		E	2.30 – 2.35 mm	0.0906 – 0.0925 in.
		F	2.35 – 2.40 mm	0.0925 – 0.0945 in.
		G	2.40 – 2.45 mm	0.0945 – 0.0965 in.
		H	2.45 – 2.50 mm	0.0965 – 0.0984 in.
		J	2.50 – 2.55 mm	0.0984 – 0.1004 in.
		K	2.00 – 2.05 mm	0.0787 – 0.0807 in.
		L	2.05 – 2.10 mm	0.0807 – 0.0827 in.
Center differential	Planetary gear assembly thrust clearance	STD	0.15 – 0.70 mm	0.0059 – 0.0276 in.
		Max	0.70 mm	0.0276 in.
	Planetary gear assembly radial clearance	STD	0.009 – 0.038 mm	0.0004 – 0.0015 in.
		Max	0.038 mm	0.0015 in.
	Planetary gear assembly backlash	STD	0.15 – 0.70 mm	0.0059 – 0.0276 in.
		Max	0.70 mm	0.0276 in.

TR

Input shaft	Input shaft journal outer diameter			
		Min	47.59 mm	1.8736 in.
	Input shaft bushing diameter	Max	39.14 mm	1.5409 in.
	Synchronizer ring to sprocket clearance			
		STD	1.05 – 1.85 mm	0.0413 – 0.0728 in.
		Min	0.80 mm	0.0315 in.
	Input shaft snap ring thickness	Mark		
		A	2.10 – 2.15 mm	0.0827 – 0.0846 in.
		B	2.15 – 2.20 mm	0.0846 – 0.0866 in.
		C	2.20 – 2.25 mm	0.0866 – 0.0886 in.
		D	2.25 – 2.30 mm	0.0886 – 0.0906 in.
		E	2.30 – 2.35 mm	0.0906 – 0.0925 in.
		F	2.35 – 2.40 mm	0.0925 – 0.0945 in.
		G	2.40 – 2.45 mm	0.0945 – 0.0965 in.
		H	2.45 – 2.50 mm	0.0965 – 0.0984 in.
		J	2.50 – 2.55 mm	0.0984 – 0.1004 in.
		K	2.55 – 2.60 mm	0.1004 – 0.1024 in.
		L	2.60 – 2.65 mm	0.1024 – 0.1043 in.
		M	2.65 – 2.70 mm	0.1043 – 0.1063 in.
		N	2.70 – 2.75 mm	0.1063 – 0.1083 in.
		P	2.75 – 2.80 mm	0.1083 – 0.1102 in.
		Q	2.80 – 2.85 mm	0.1102 – 0.1122 in.
		R	2.85 – 2.90 mm	0.1122 – 0.1142 in.
		S	2.90 – 2.95 mm	0.1142 – 0.1161 in.
		T	2.95 – 3.00 mm	0.1161 – 0.1181 in.
		U	3.00 – 3.05 mm	0.1181 – 0.1201 in.
Planetary gear	Pinion gear thrust clearance	STD	0.11 – 0.84 mm	0.0043 – 0.0331 in.
		Max	0.84 mm	0.0331 in.
	Pinion gear radial clearance	STD	0.009 – 0.038 mm	0.0004 – 0.0015 in.
		Max	0.038 mm	0.0015 in.
	Outer bearing snap ring thickness	Mark		
		1	1.45 – 1.50 mm	0.0571 – 0.0591 in.
		2	1.50 – 1.55 mm	0.0591 – 0.0610 in.
		3	1.55 – 1.60 mm	0.0610 – 0.0630 in.
		4	1.60 – 1.65 mm	0.0630 – 0.0650 in.
		5	1.65 – 1.70 mm	0.0650 – 0.0669 in.
	Thrust inner bearing depth		7.7 – 8.3 mm	0.303 – 0.327 in.
Oil seal	Shift fork shaft oil seal depth		−0.5 ~ 0.5 mm	−0.020 ~ 0.020 in.

TORQUE SPECIFICATIONS

Part tightened	N·m	kgf·cm	ft·lbf
Transmission control rod x Shift lever	13	130	10
Dynamic damper	38	385	28
Crossmember x Engine rear mounting	19	190	14
Crossmember x Frame	65	660	48
Transfer adaptor x Transfer	24	240	17
Speed sensor driven gear set bolt	12	120	9
Center diff. lock indicator switch	37	380	27
Low position switch	37	380	27
Neutral position switch	37	380	27
Plug x Front case	37	380	27
Protector	18	185	13
Mass damper	20	200	14
Front bearing retainer	12	120	9
Control retainer	18	185	13
Upper cover and oil deflector	18	185	13
Companion flange lock nut	118	1,200	87
Extension housing	12	120	9
Front case x Rear case	28	285	21
Straight screw plug for shift fork shaft	19	190	14
Separator with oil strainer x Front case	7.5	80	69 in.·lbf
Oil pump body x Front case	7.5	80	69 in.·lbf
Straight screw plug for ring gear	19	190	14
Oil pump plate x Oil pump body	7.4	75	65 in.·lbf

PROPELLER SHAFT

PRECAUTION ..... PR– 2
PREPARATION ..... PR– 2
TROUBLESHOOTING ..... PR– 2
PROPELLER SHAFT ..... PR– 3
SERVICE SPECIFICATIONS ..... PR– 8

PR

PRECAUTION

PR02L-05

Be careful not to grip the propeller shaft tube too tightly in the vise as this will cause deformation.

PREPARATION

SST (SPECIAL SERVICE TOOLS)

PR02A-03

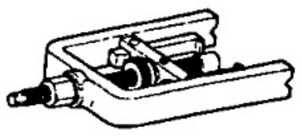	09332-25010	Universal Joint Bearing Remover & Replacer	Spider bearing replacement

EQUIPMENT

PR02B-05

Torque wrench	
Dial indicator	

PR

TROUBLESHOOTING

PR02M-04

Use the table below to help you find the cause of the problem. The numbers indicate the priority of the likely cause of the problem. Check each part in order. If necessary, replace these parts.

See Page / Parts Name / Trouble	PR-4	PR-4	—	PR-4	PR-4
	Sleeve yoke spline worn	Propeller shaft runout	Propeller shaft imbalance	Sleeve yoke spline stuck	Spider bearing worn or stuck
Noise	1				2
Vibration		2	3	1	

V04652

PROPELLER SHAFT
COMPONENTS

PR02C–06

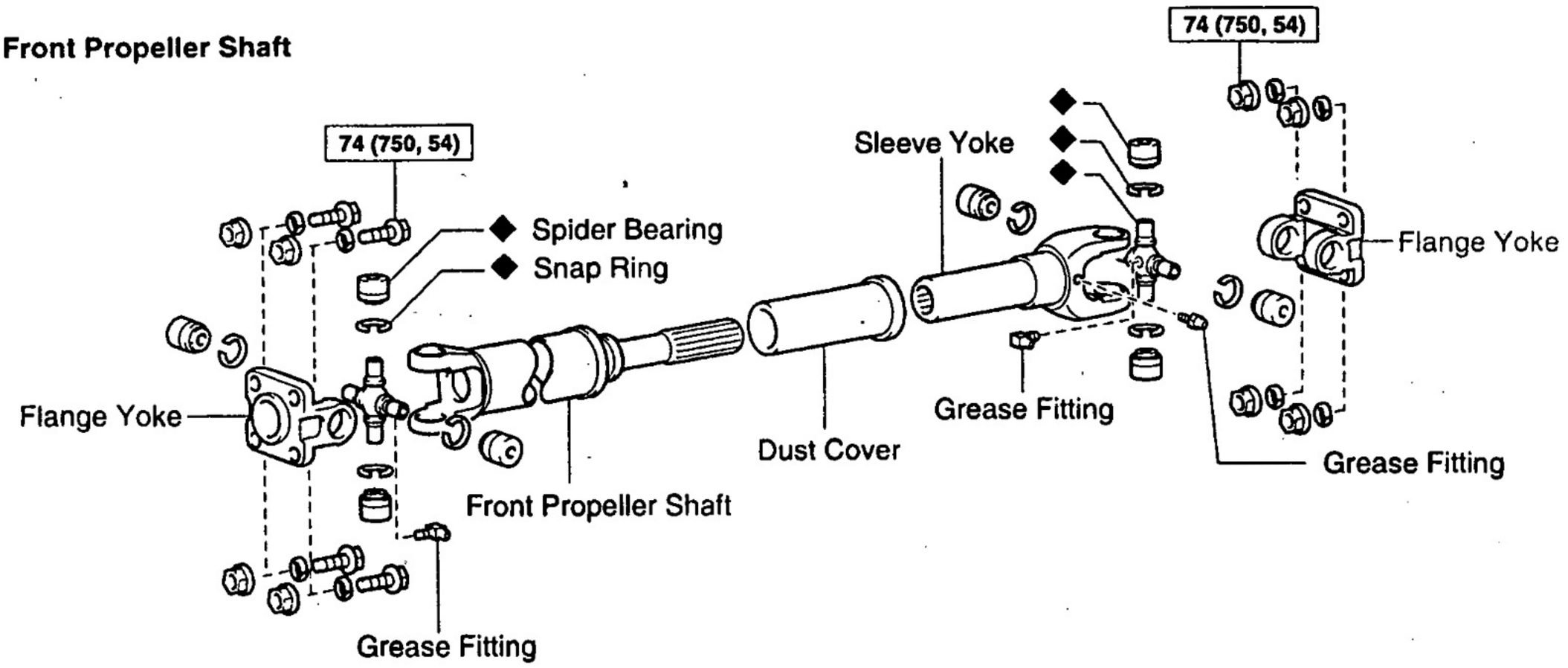

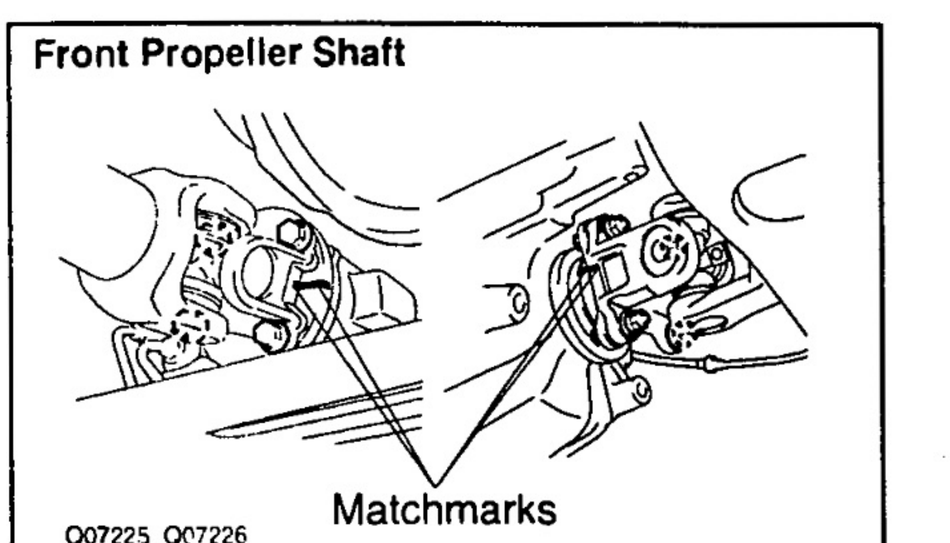

PR086–02

PROPELLER SHAFT REMOVAL

1. **DISCONNECT FRONT PROPELLER SHAFT FROM TRANSFER**

(a) Place matchmarks on the propeller shaft flange and transfer.

(b) Remove the 4 nuts and washers.
Torque: 74 N·m (750 kgf·cm, 54 ft·lbf)

2. DISCONNECT FRONT PROPELLER SHAFT FROM DIFFERENTIAL

(a) Place matchmarks on the propeller shaft flange and differential.

(b) Remove the 4 nuts, bolts and washers.
Torque: 74 N·m (750 kgf·cm, 54 ft·lbf)

(c) Remove the front propeller shaft.

3. DISCONNECT REAR PROPELLER SHAFT FROM TRANSFER

(a) Place matchmarks on the propeller shaft flange and transfer.

(b) Remove the 4 nuts and washers.
Torque: 74 N·m (750 kgf·cm, 54 ft·lbf)

4. DISCONNECT REAR PROPELLER SHAFT FROM DIFFERENTIAL

(a) Place matchmarks on the propeller shaft flange and differential.

(b) Remove the 4 nuts, bolts and washers.
Torque: 74 N·m (750 kgf·cm, 54 ft·lbf)

(c) Remove the rear propeller shaft.

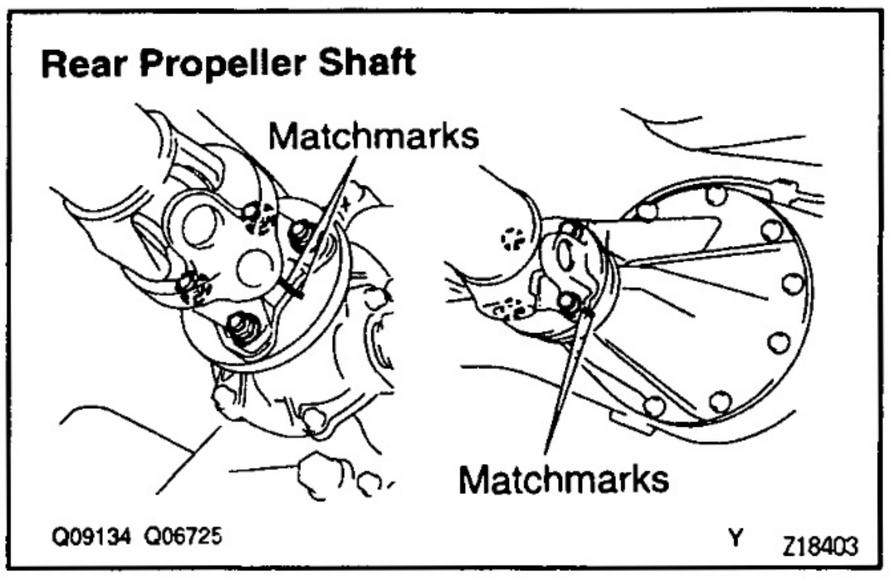

PR

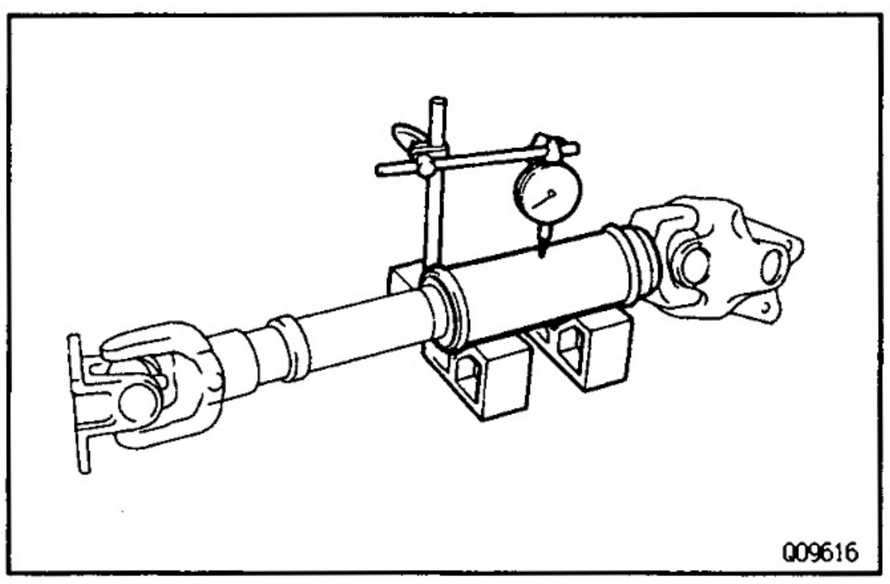
009616

PROPELLER SHAFT INSPECTION

PR02E-06

1. INSPECT FRONT AND REAR PROPELLER SHAFTS FOR DAMAGE OR RUNOUT

Using a dial indicator, check the run out of the shafts.
Maximum runout: 0.8 mm (0.031 in.)

If shaft runout is greater than maximum, replace the shaft.

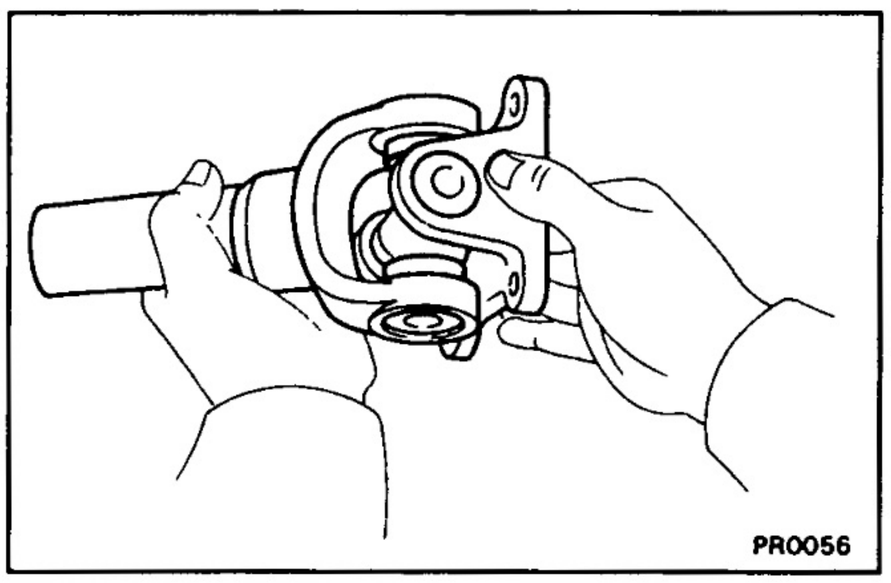
PR0056

2. INSPECT SPIDER BEARING

- Check the spider bearings for wear or damage.
- Check the spider bearing axial play by turning the yoke while holding the shaft tightly.

Maximum bearing axial play: 0.05 mm (0.0020 in.)

If necessary, replace the spider bearing.

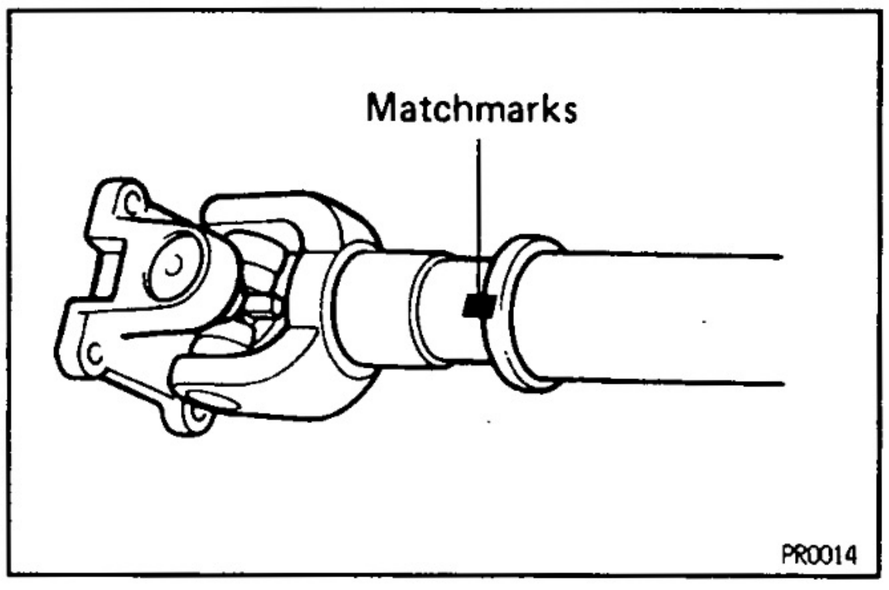

PR0014

PROPELLER SHAFT DISASSEMBLY

PR087-01

1. REMOVE SLEEVE YOKE FROM PROPELLER SHAFT

(a) Place matchmarks on the sleeve yoke and shaft.

(b) Pull out the sleeve yoke from the shaft.

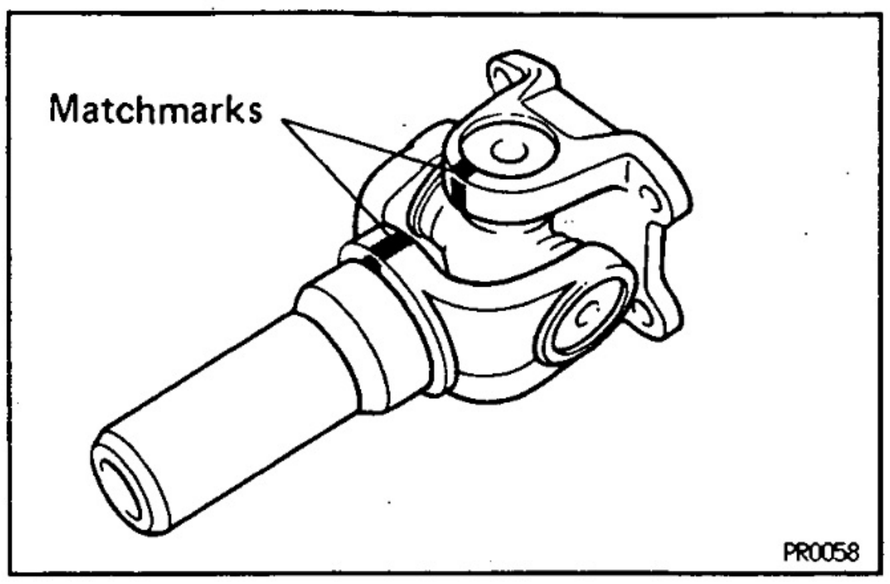

2. REMOVE SPIDER BEARING

(a) Place matchmarks on the sleeve yoke and flange.

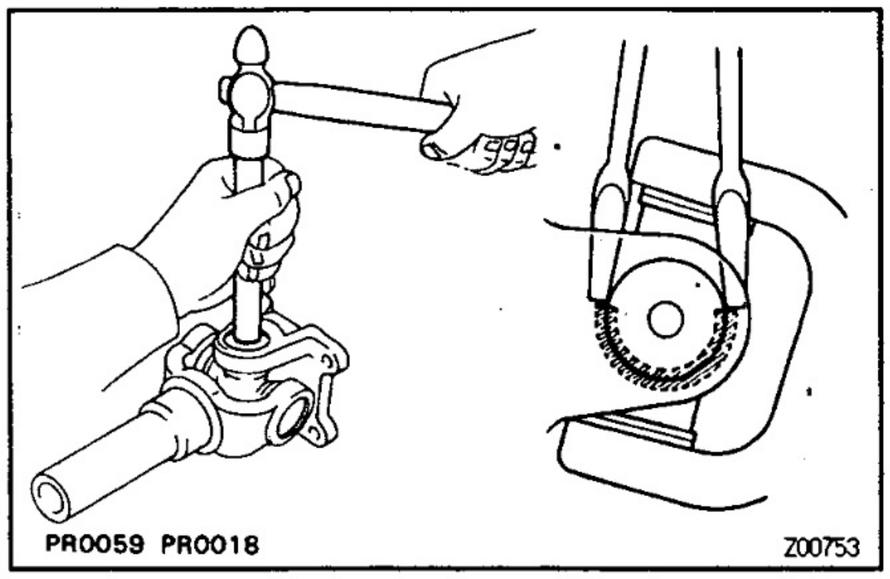

(b) Using a brass bar and hammer, slightly tap in the bearing outer races.

(c) Using 2 screwdrivers, remove the 4 snap rings from the grooves.

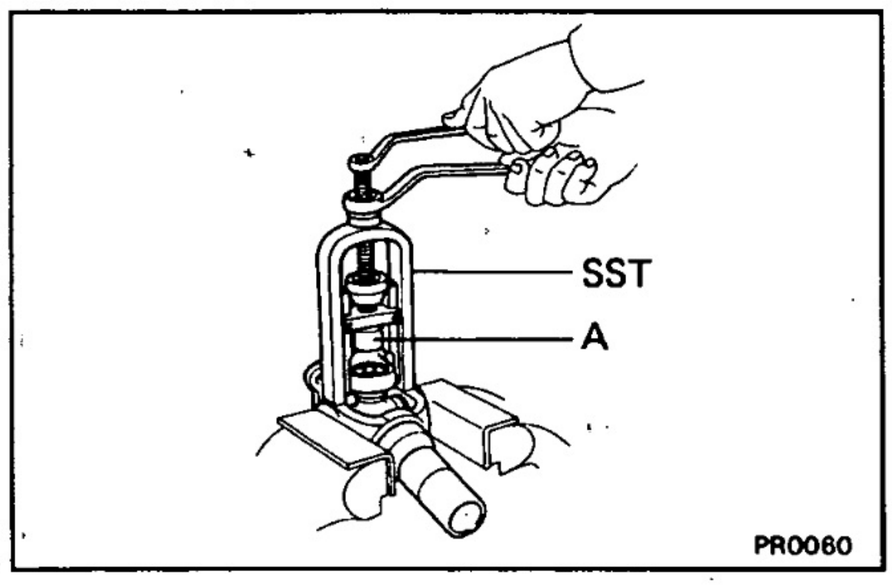

(d) Using SST, push out the bearing from the flange.
SST 09332—25010
HINT: Sufficiently raise the part indicated by A so that it does not come into contact with the bearing.

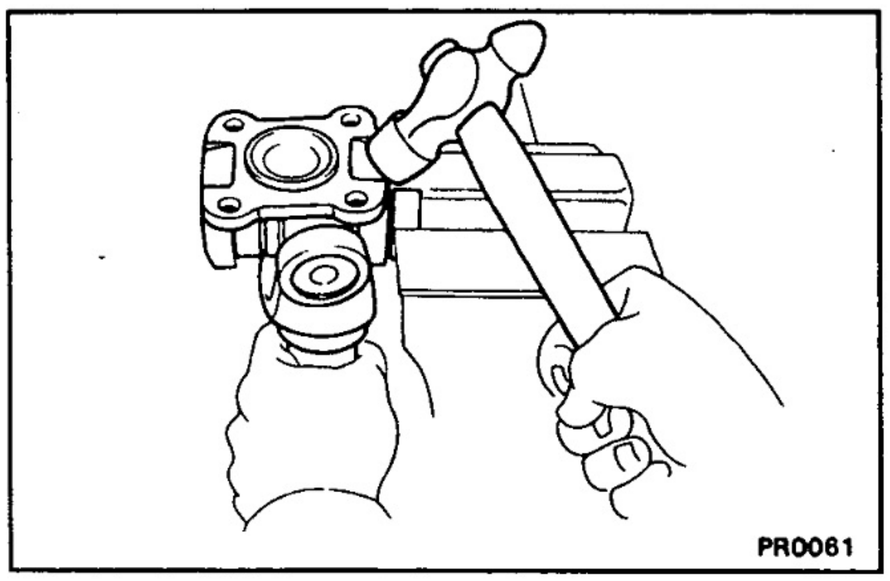

(e) Clamp the bearing outer race in a vise and tap off the flange with a hammer.
HINT: Remove the bearing on the opposite side by the same procedure.

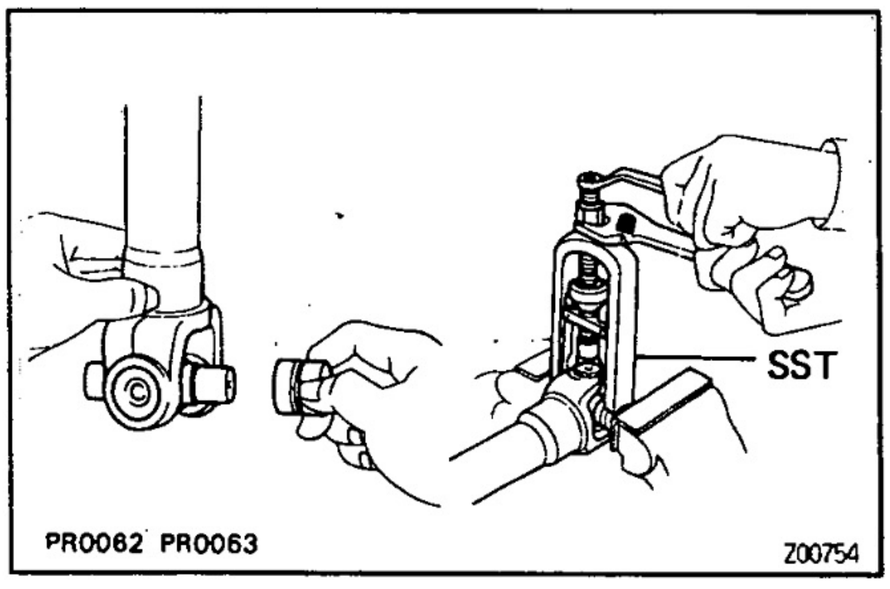

(f) Install the 2 removed bearing outer races to the spider.

(g) Using SST, push out the bearing from the yoke.
SST 09332—25010

(h) Clamp the outer bearing race in a vise and tap off the yoke with a hammer.
HINT: Remove the bearing on the opposite side in the same procedure.

PR09L-01

PROPELLER SHAFT ASSEMBLY

HINT: When replacing the spider, be sure that the grease fitting assembly hole is facing in the direction shown in the illustration.

SPIDER GREASE FITTING ASSEMBLY DIRECTION FOR FRONT PROPELLER SHAFT

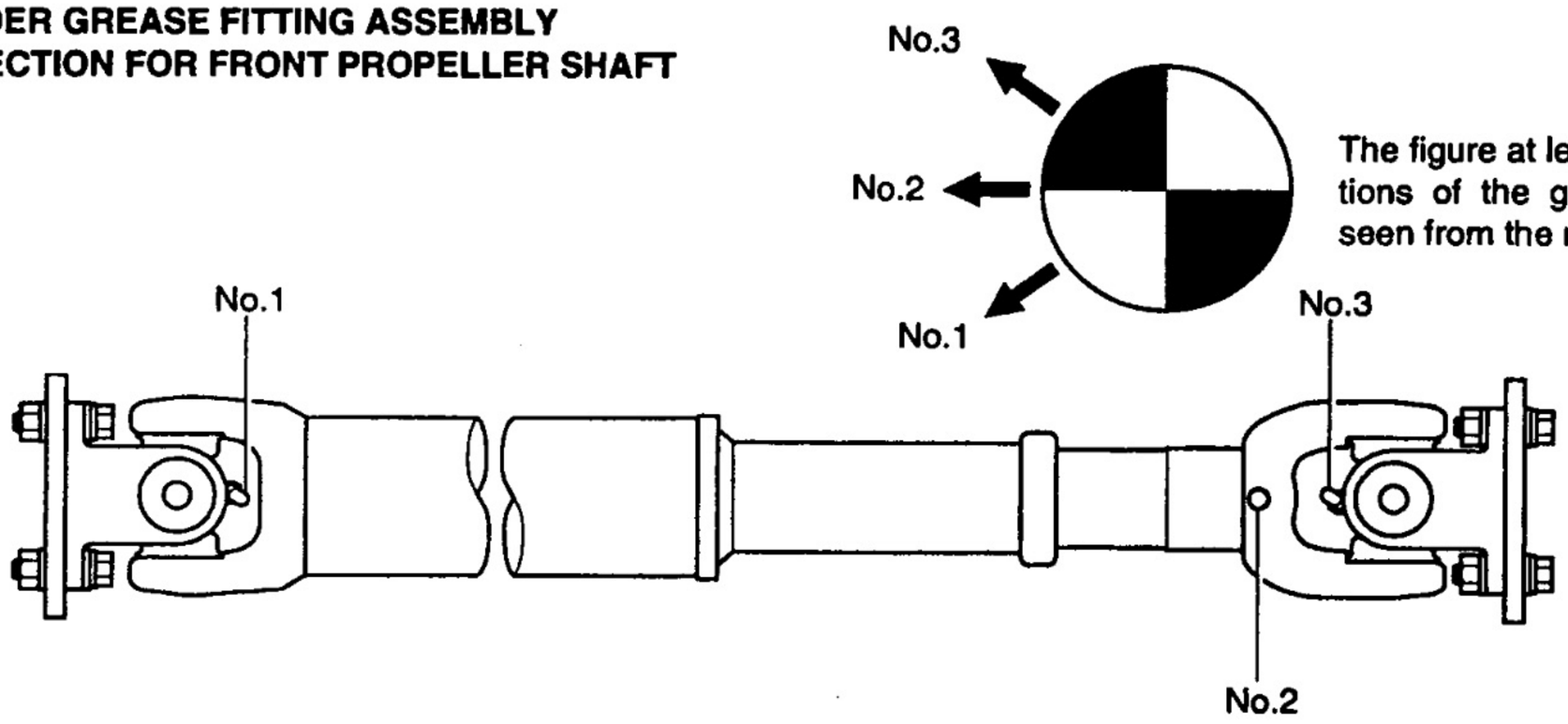

SPIDER GREASE FITTING ASSEMBLY DIRECTION FOR REAR PROPELLER SHAFT

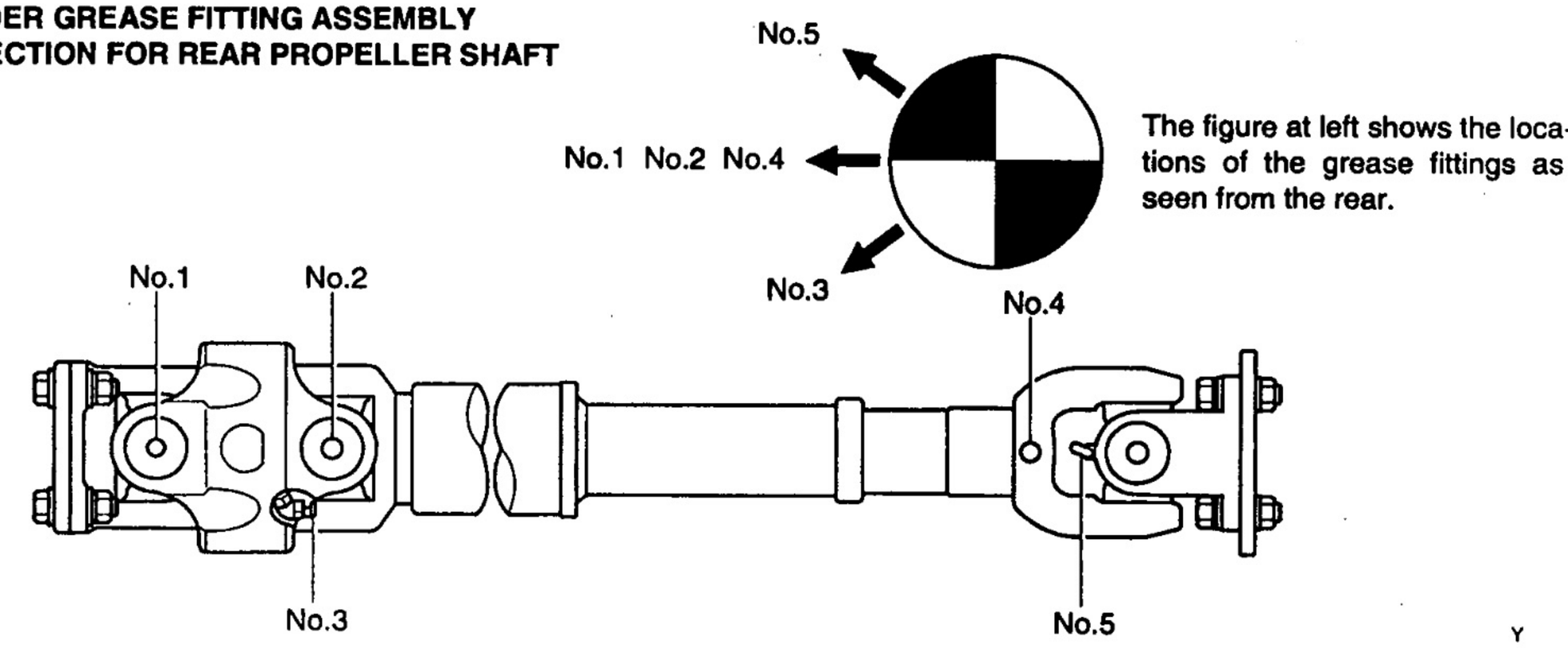

Y

Q08990

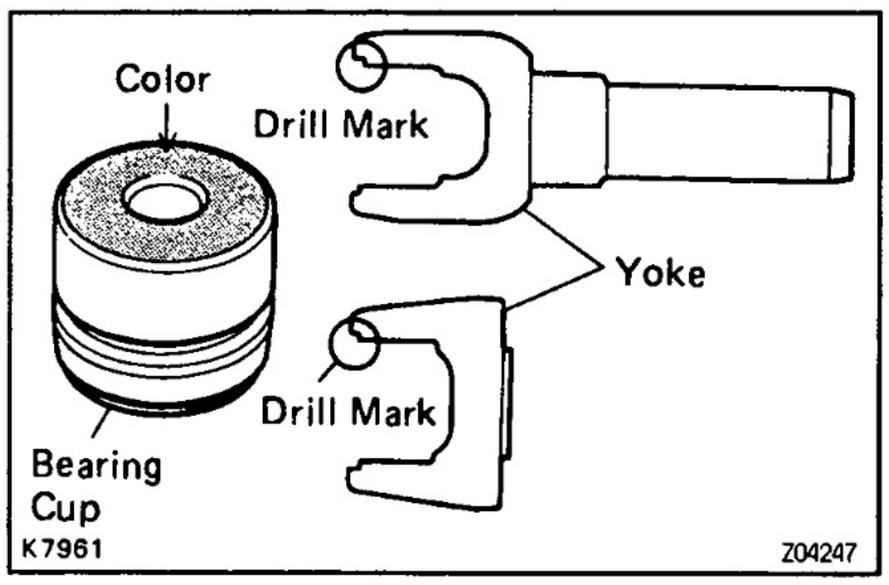

1. SELECT SPIDER BEARING

Select the bearing according to whether or not there is a drill mark on the yoke section.

Yoke	Bearing
With drill mark	With color mark (Red)
No drill mark	No color mark

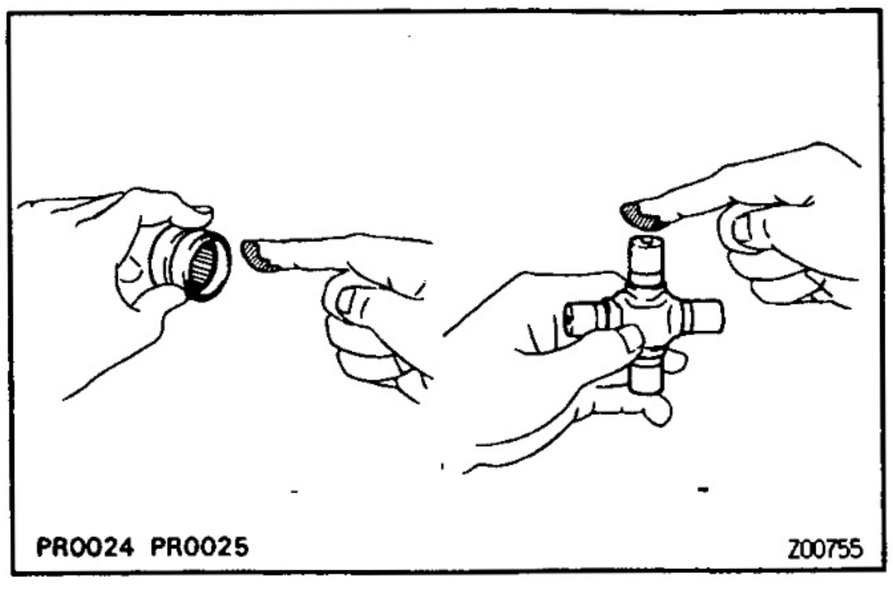

2. INSTALL SPIDER BEARING

(a) Apply MP grease to the a new spider and bearings.
NOTICE: Be careful not to apply too much grease.

(b) Align the matchmarks on the yoke and flange.

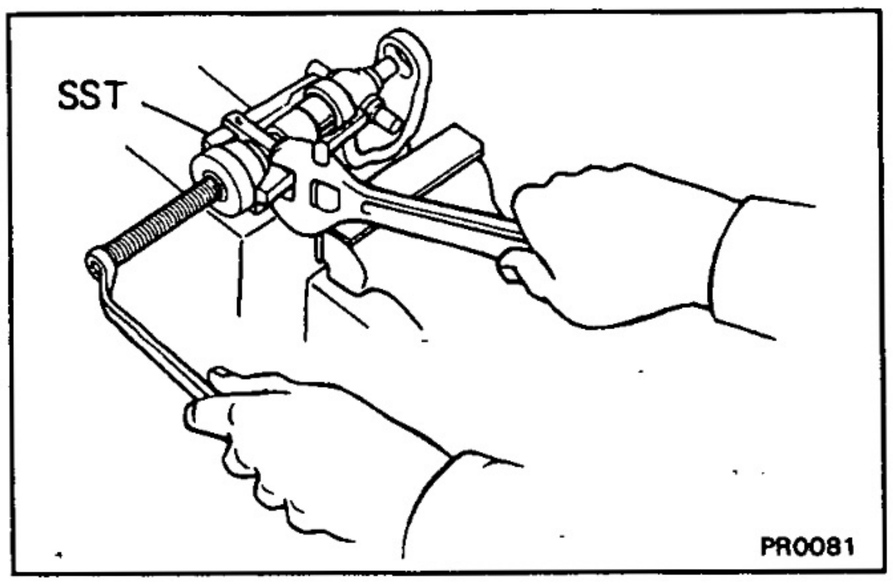

(c) Fit the spider into the yoke.

(d) Using SST, install the bearings on the spider.
SST 09332−25010

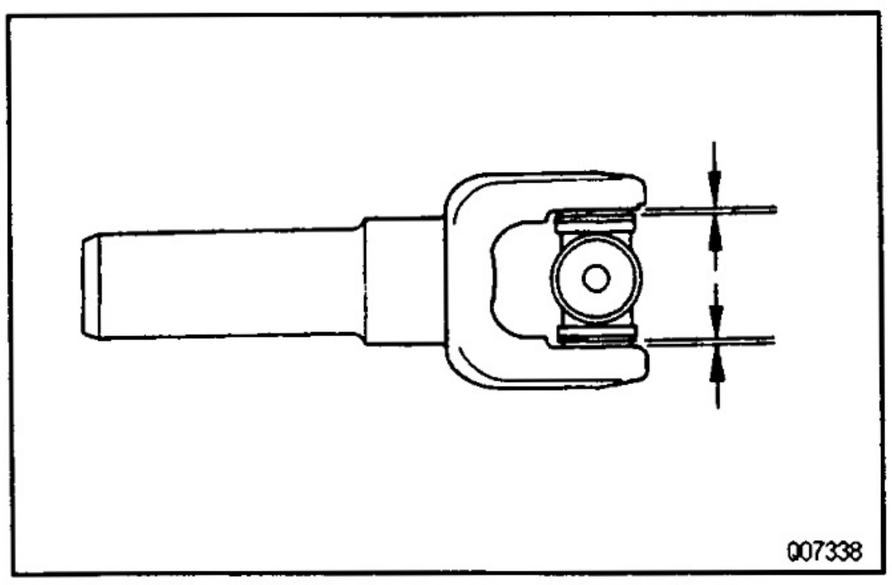

(e) Using SST, adjust both bearings so that the snap ring grooves are at maximum and equal widths.

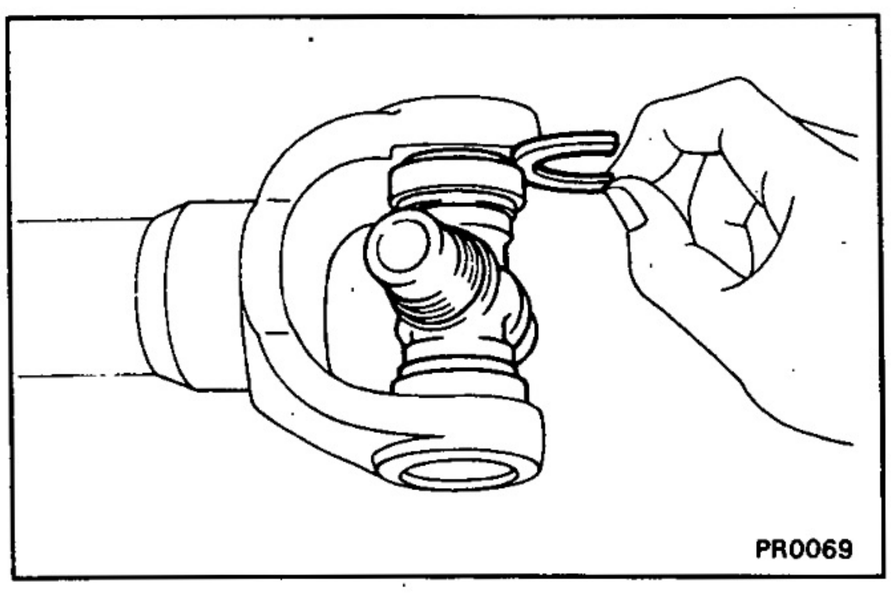

(f) Install 2 new snap rings of equal thickness which will allow 0−0.05 mm (0−0.0020 in.) axial play.
HINT: Do not reuse the snap rings.

Thickness of snap ring

Color	Mark	Thickness mm (in.)
—	1	2.100−2.150 (0.0827−0.0846)
—	2	2.150−2.200 (0.0846−0.0866)
—	3	2.200−2.250 (0.0866−0.0886)
Brown	—	2.250−2.300 (0.0886−0.0906)
Blue	—	2.300−2.350 (0.0906−0.0925)
—	6	2.350−2.400 (0.0925−0.0945)
—	7	2.400−2.450 (0.0945−0.0965)
—	8	2.450−2.500 (0.0965−0.0984)

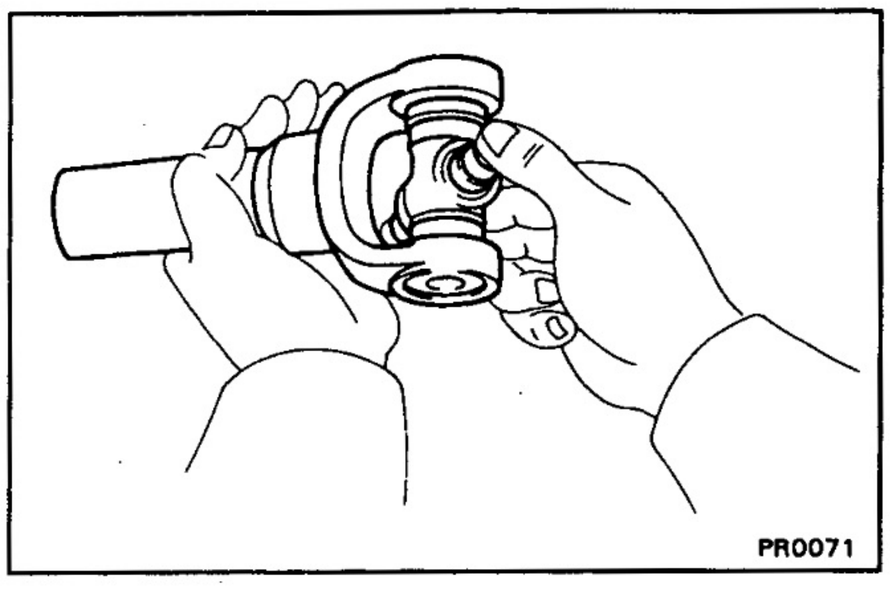

(g) Using a hammer, tap the yoke until there is no clearance between the bearing outer race and snap ring.
(h) Check that the spider bearing moves smoothly.
(i) Check the spider bearing axial play.
Maximum bearing axial play: 0.05 mm (0.0020 in.)
HINT: Install a new spider bearing on the flange side in the procedure described above.

3. INSERT SLEEVE YOKE INTO PROPELLER SHAFT

(a) Apply MP grease to the propeller shaft spline and sleeve yoke sliding surface.
(b) Align the matchmarks on the sleeve yoke propeller shaft.
(c) Install the propeller shaft into the sleeve yoke.

PROPELLER SHAFT INSTALLATION

PR089–02

Installation is in the reverse order of removal.
HINT: After installation, pump MP grease into each fitting with a grease gun until the grease begins to flow around the oil seal.

PR

SERVICE SPECIFICATIONS

SERVICE DATA

PR02J–05

Propeller shaft runout		Max.	0.8 mm (0.031 in.)
Spider bearing axial play		Max.	0.05 mm (0.0020 in.)
Snap ring thickness	Mark	Color	
	1	–	2.100 – 2.150 mm (0.0827 – 0.0846 in.)
	2	–	2.150 – 2.200 mm (0.0846 – 0.0866 in.)
	3	–	2.200 – 2.250 mm (0.0866 – 0.0886 in.)
	–	Brown	2.250 – 2.300 mm (0.0886 – 0.0906 in.)
	–	Blue	2.300 – 2.350 mm (0.0906 – 0.0925 in.)
	6	–	2.350 – 2.400 mm (0.0925 – 0.0945 in.)
	7	–	2.400 – 2.450 mm (0.0945 – 0.0965 in.)
	8	–	2.450 – 2.500 mm (0.0965 – 0.0984 in.)

TORQUE SPECIFICATIONS

PR02K–04

Part tightened	N·m	kgf·cm	ft·lbf
Front propeller shaft x Front differential	74	750	54
Front propeller shaft x Transfer	74	750	54
Rear propeller shaft x Rear differential	74	750	54
Rear propeller shaft x Transfer	74	750	54

SUSPENSION AND AXLE

TROUBLESHOOTING ..... SA– 2
GENERAL INSPECTION ..... SA– 3
WHEEL ALIGNMENT
  FRONT WHEEL ALIGNMENT ..... SA– 4
FRONT AXLE
  PREPARATION ..... SA– 9
  FRONT AXLE HUB SA–11
  FREE WHEEL HUB SA–16
FRONT DRIVE SHAFT
  PREPARATION SA–17
  FRONT DRIVE SHAFT SA–18
FRONT DIFFERENTIAL
  PREPARATION SA–23
  ON–VEHICLE REPAIR SA–27
  ASSEMBLY REMOVAL
    AND INSTALLATION SA–30
  DIFFERENTIAL CARRIER SA–32
FRONT SUSPENSION
  PREPARATION SA–46
  FRONT SHOCK ABSORBER SA–48
  UPPER SUSPENSION ARM SA–52
  LOWER SUSPENSION ARM SA–54
  UPPER BALL JOINT SA–57
  LOWER BALL JOINT SA–58
  STABILIZER BAR SA–60
REAR AXLE
  PREPARATION SA–62
  REAR AXLE SHAFT SA–64
REAR DIFFERENTIAL
  PREPARATION SA–70
  ON–VEHICLE REPAIR SA–73
  ASSEMBLY REMOVAL
    AND INSTALLATION SA–76
  DIFFERENTIAL CARRIER SA–78
  DIFFERENTIAL CASE
    (4 Pinion Type) SA–93
    (w/ Locking Differential) SA–96
    (LSD Type) SA–98
DIFFERENTIAL LOCKING SYSTEM SA–103
REAR SUSPENSION
  PREPARATION SA–109
  COIL SPRING AND SHOCK ABSORBER SA–109
  LATERAL CONTROL ROD SA–111
  UPPER AND LOWER CONTROL ARM SA–112
  STABILIZER BAR SA–112
SERVICE SPECIFICATIONS SA–114

TROUBLESHOOTING

Use the table below to help you find the cause of the problem. The numbers indicate the priority of the likely cause of the problem. Check each part in order. If necessary, replace these parts.

SA2PH-01

See Page / Parts Name / Trouble	SA-3 Tires	SA-3 Cold tire inflation pressure	SA-4 Wheel alignment	SA-48,109 Springs	SA-60,112 Stabilizer bar	SA-48,109 Shock absorber	SA-57,58 Ball joint	SA-11 Hub bearings	– Steering linkage	– Steering gear	SA-46,109 Suspension parts	– Overloaded	SA-3 Wheel balance
Wander/pulls	1		2					4	3	5	6		
Bottoming				2		3						1	
Sways/pitches	1				2	3							
Front wheel shimmy	1		4			3	5	6	7	8			2
Abnormal tire wear		1	2			4					3		

SA

V00313

GENERAL INSPECTION

SA2PJ-01

1. INSPECT TIRE

(a) Check the tires for wear and for the proper inflation pressure.

Cold tire inflation pressure

Tire size	Front kPa (kgf/cm², psi)	Rear kPa (kgf/cm², psi)
215/80R16	3 Door: 190 (1.9, 28) 5 Door: 180 (1.8, 26)	3 Door: 210 (2.1, 30)* 5 Door: 200 (2.0, 29)*
265/70R16	Europe: 200 (2.0, 29) Others: 180 (1.8, 26)	Europe: 200 (2.0, 29) Others: 180 (1.8, 26)

* When the vehicle is laden, rear tire pressure should be 240 kPa (2.4 kgf/cm², 35 psi).

(b) Check the tire runout.

Tire runout: 3.0 mm (0.118 in.) or less

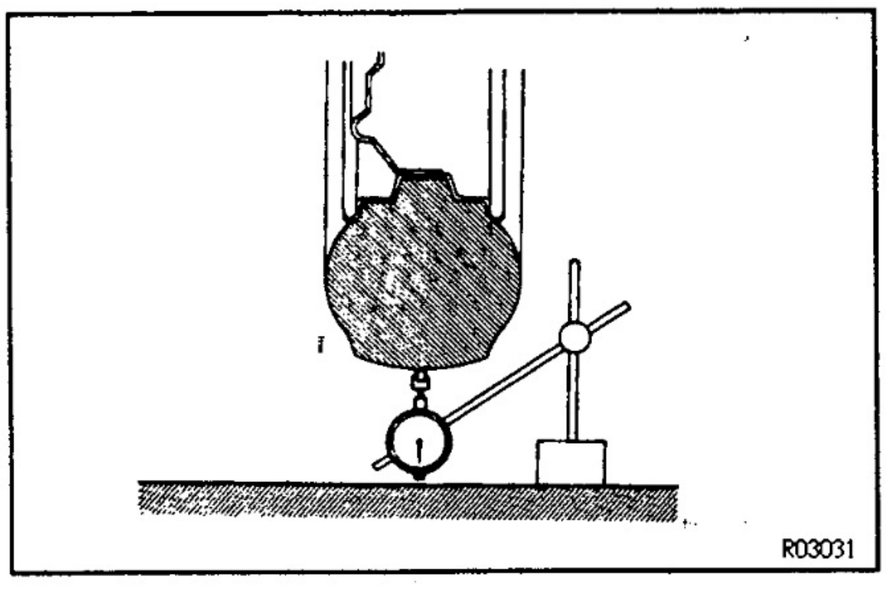

R03031

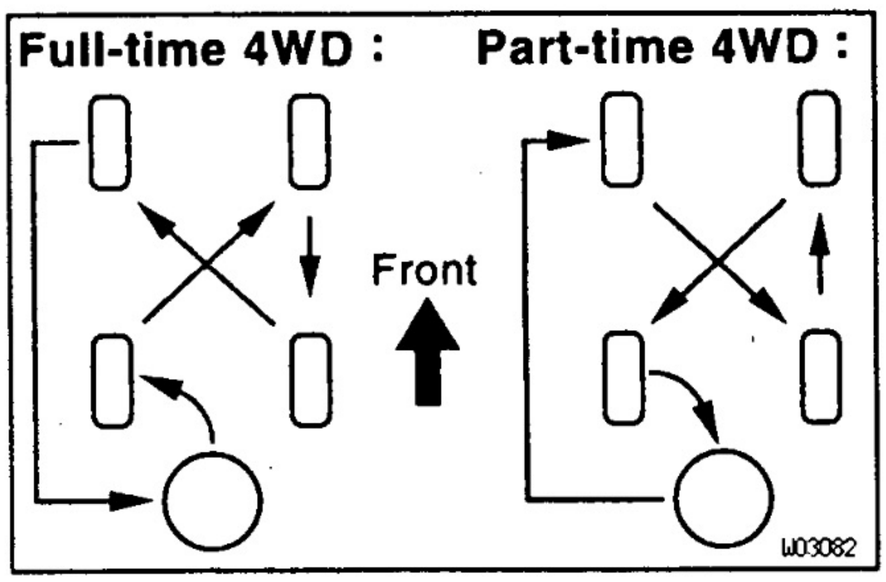

W03082

2. ROTATE TIRE

HINT: See the illustration for where to rotate each tire when you include the spare tire in rotation.

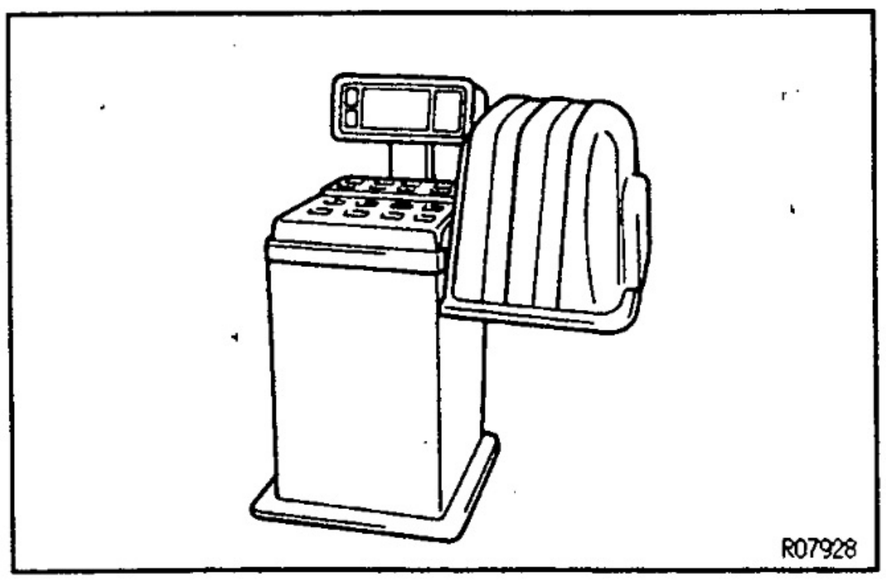

R07928

3. INSPECT WHEEL BALANCE

(a) Check and adjust the Off–the–car balance.

(b) If necessary, check and adjust the On–the–car balance.

Unbalance after adjustment:

14.0 g (0.031 lb) or less

4. CHECK FRONT SUSPENSION FOR LOOSENESS

5. CHECK STEERING LINKAGE FOR LOOSENESS

6. CHECK BALL JOINT FOR LOOSENESS

7. CHECK SHOCK ABSORBER WORKS PROPERLY

- Check for oil leak.
- Check the mounting bushings for wear.
- Bounce front and rear of the vehicle.

SA

WHEEL ALIGNMENT

FRONT WHEEL ALIGNMENT

8A2PK–01

1. MEASURE VEHICLE HEIGHT

Vehicle height:

3 Door:

Except longitudinal seat:

Front: A–B= 66.0 mm (2.598 in.)

Rear: C–D= 45.5 mm (1.791 in.)

w/ longitudinal seat:

Front: A–B= 68.5 mm (2.696 in.)

Rear: C–D= 36.5 mm (1.437 in.)

5 Door (Malaysia):

w/o Winch:

Front: A–B= 54.5 mm (2.145 in.)

Rear: C–D= 37.0 mm (1.456 in.)

5 Door (Other):

Front: A–B= 62.5 mm (2.460 in.)

Rear: C–D= 39.0 mm (1.535 in.)

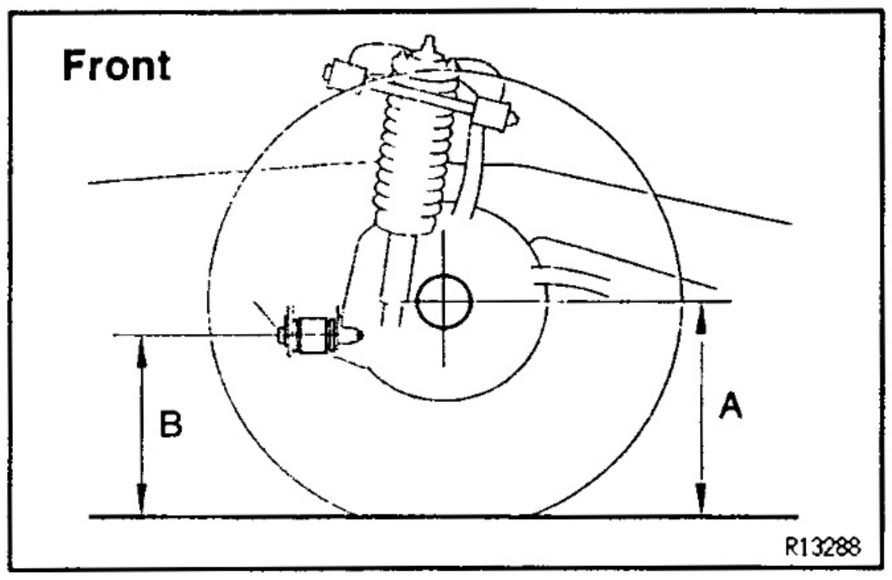

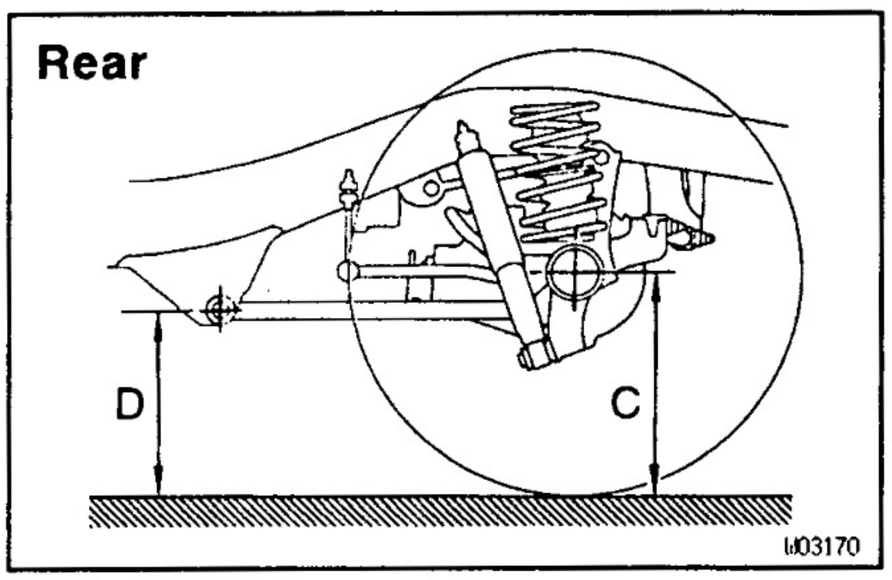

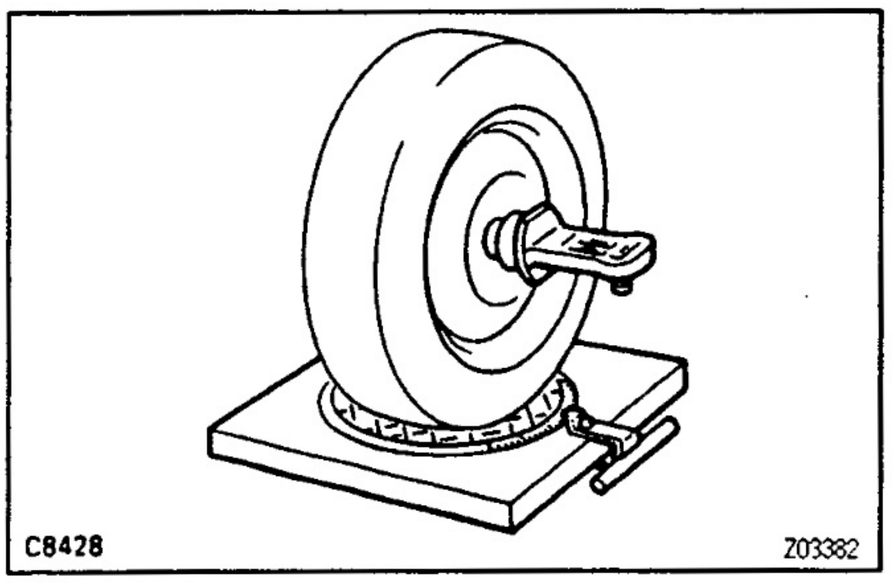

Measuring points:

A: Ground clearance of spindle center

B: Ground clearance of front adjusting cam bolt center

C: Ground clearance of rear axle shaft center

D: Ground clearance of lower control arm front bushing center

NOTICE: Before inspecting the wheel alignment, adjust the vehicle height to the specification.

If the vehicle height is not within the specification, try to adjust it by pushing down on or lifting the body.

2. INSTALL CAMBER–CASTER–KINGPIN GAUGE OR ONTO WHEEL ALIGNMENT TESTER

Follow the specific instructions of the equipment manufacturer.

3. INSPECT CAMBER, CASTER AND STEERING AXIS INCLINATION

3 Door: Except longitudinal seat

Camber	−0°10′ ± 45′ (−0.17° ± 0.75°)
Left–right error	30′ (0.5°) or less
Caster	2°55′ ± 45′ (2.91° ± 0.75°)
Left–right error	30′ (0.5°) or less
Steering axis inclination	10°55′ ± 45′ (10.91° ± 0.75°)
Left–right error	30′ (0.5°) or less

3 Door: w/ longitudinal seat

Camber	−0°10′ ± 45′ (−0.17° ± 0.75°)
Left−right error	30′ (0.5°) or less
Caster	2°40′ ± 45′ (2.67° ± 0.75°)
Left−right error	30′ (0.5°) or less
Steering axis inclination	10°55′ ± 45′ (10.91° ± 0.75°)
Left−right error	30′ (0.5°) or less

5 Door: Malaysia w/o Winch

Camber	0°05′ ± 45′ (0.08° ± 0.75°)
Left−right error	30′ (0.5°) or less
Caster	2°45′ ± 45′ (2.75° ± 0.75°)
Left−right error	30′ (0.5°) or less
Steering axis inclination	10°40′ ± 45′ (10.67° ± 0.75°)
Left−right error	30′ (0.5°) or less

5 Door: Others

Camber	−0°05′ ± 45′ (−0.08° ± 0.75°)
Left−right error	30′ (0.5°) or less
Caster	2°50′ ± 45′ (2.83° ± 0.75°)
Left−right error	30′ (0.5°) or less
Steering axis inclination	10°50′ ± 45′ (10.83° ± 0.75°)
Left−right error	30′ (0.5°) or less

If the steering axis inclination is not within the specification, after the camber and caster have correctly adjusted, recheck the steering knuckle front wheel for bearing or looseness.

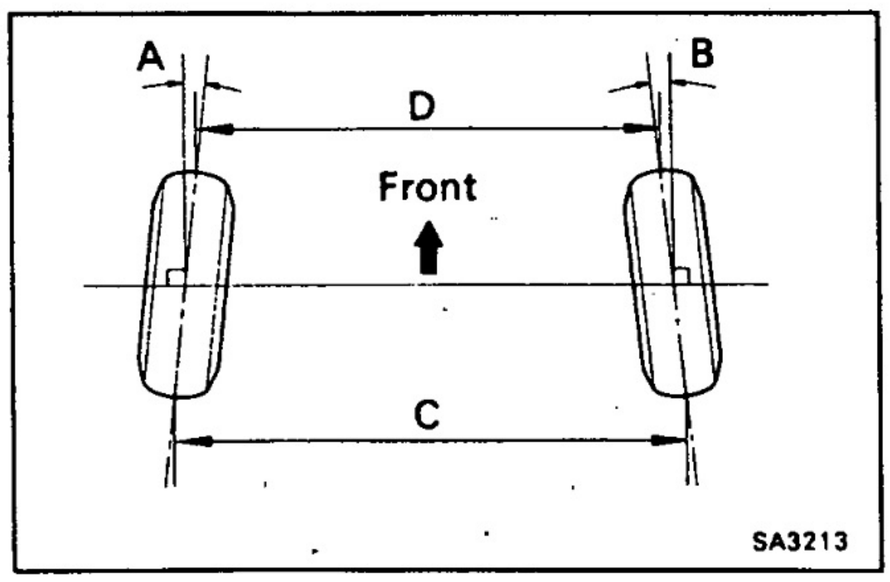

4. INSPECT TOE−IN

3 Door: Except longitudinal seat

Toe−in (total)	A+B: 0°11′ ± 12′ (0.18° ± 0.2°) C−D: 2 ± 2 mm (0.08 ± 0.08 in.)

3 Door: w/ longitudinal seat

Toe−in (total)	A+B: 0°09′ ± 12′ (0.15° ± 0.2°) C−D: 2 ± 2 mm (0.08 ± 0.08 in.)

5 Door: Malaysia w/o Winch

Toe−in (total)	A+B: 0°20′ ± 12′ (0.33° ± 0.2°) C−D: 4 ± 2 mm (0.16 ± 0.08 in.)

5 Door: Others

Toe−in (total)	A+B: 0°14′ ± 12′ (0.23° ± 0.2°) C−D: 3 ± 2 mm (0.12 ± 0.08 in.)

If the toe−in is not within the specification, adjust the rack ends.

SA

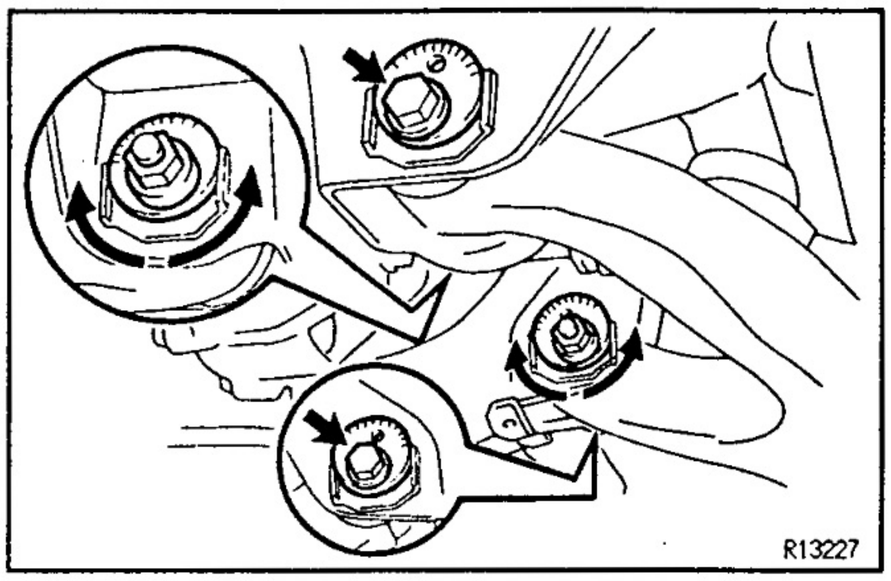

5. ADJUST CAMBER AND CASTER

NOTICE: After the camber has been adjusted, inspect the toe–in.

(a) Loosen the front and/or rear adjusting cam nuts.

(b) Adjust the camber and caster by front and/or rear adjusting cams. (See adjustment chart)
HINT: Try to adjust the camber and caster to the center value.

(c) Torque the front and/or rear adjusting cam nuts.
Torque: 130 N·m (1,325 kgf·cm, 96 ft·lbf)

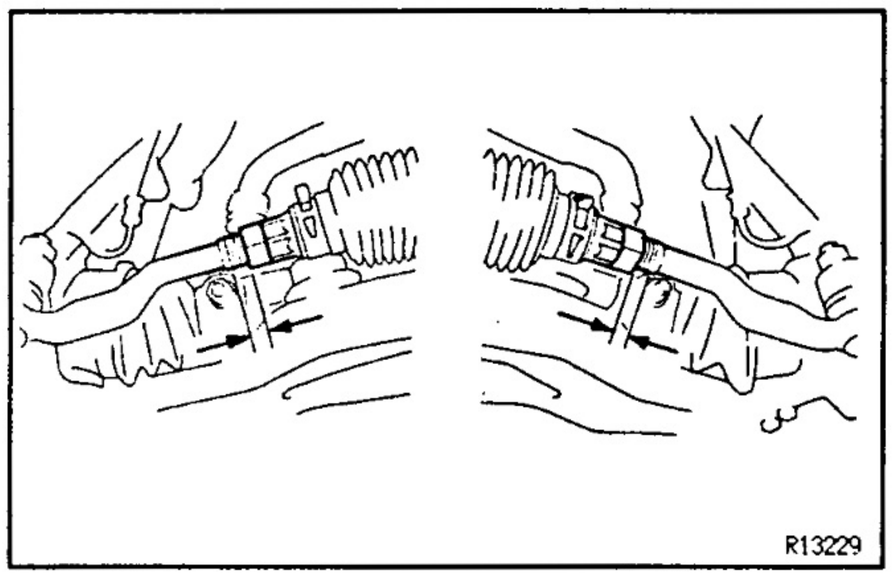

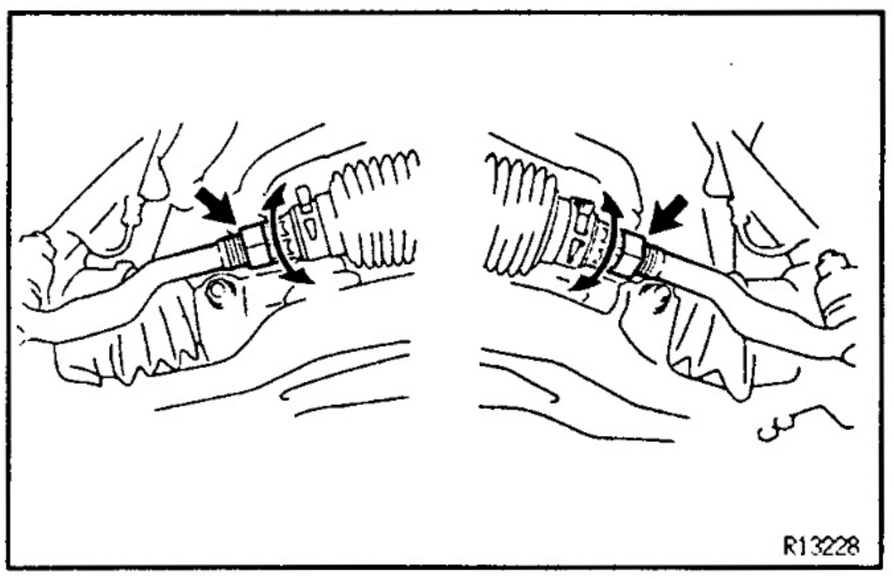

6. ADJUST TOE–IN AND WHEEL ANGLE

HINT: First, check or adjust the lengths of the tie rod ends, then adjust the toe–in.
Tie rod end length left–right error:
1.0 mm (0.039 in.) or less

(a) Remove the boot clamps.

(b) Loosen the rack end lock nuts.

(c) Turn the left and right rack ends an equal amount to adjust the toe–in.
HINT: Try to adjust the toe–in to the center value.

(d) Tighten the rack end lock nuts.
Torque: 55 N·m (560 kgf·cm, 41 ft·lbf)

(e) Place the boot on the seat and clip it.
HINT: Make sure that the boots are not twisted.

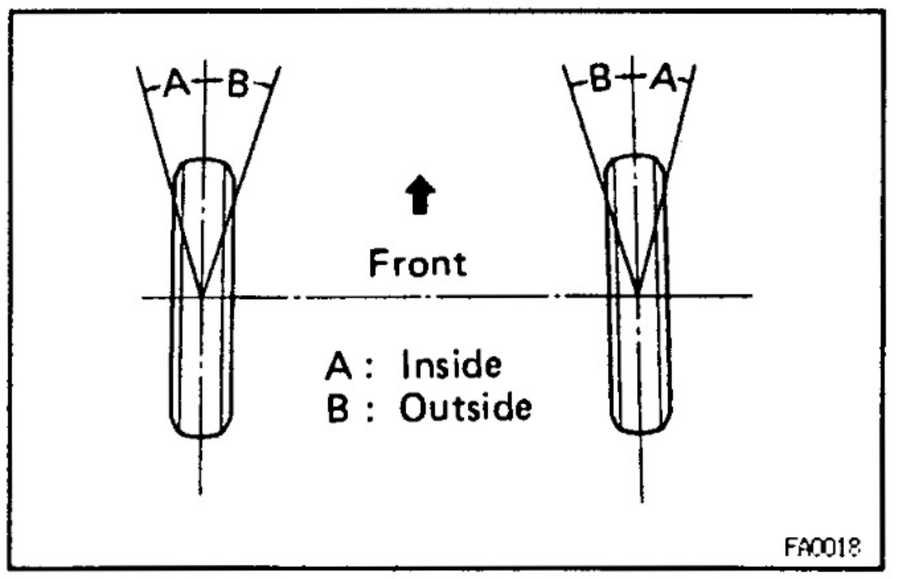

7. INSPECT WHEEL ANGLE

Turn the steering wheel fully, and measure the turning angle.

Inside wheel	35° (33° – 36°)
Outside wheel	31° (Reference)

If wheel angle deviates from the specifications, readjust the toe–in and wheel angle within the specifications. At this time, the lengths of the tie rod end may be within less than 1.5 mm (0.059 in.).

Example (5 Door : Except Malaysia w/o Winch)

● =Standard value point
○ =Measurement point

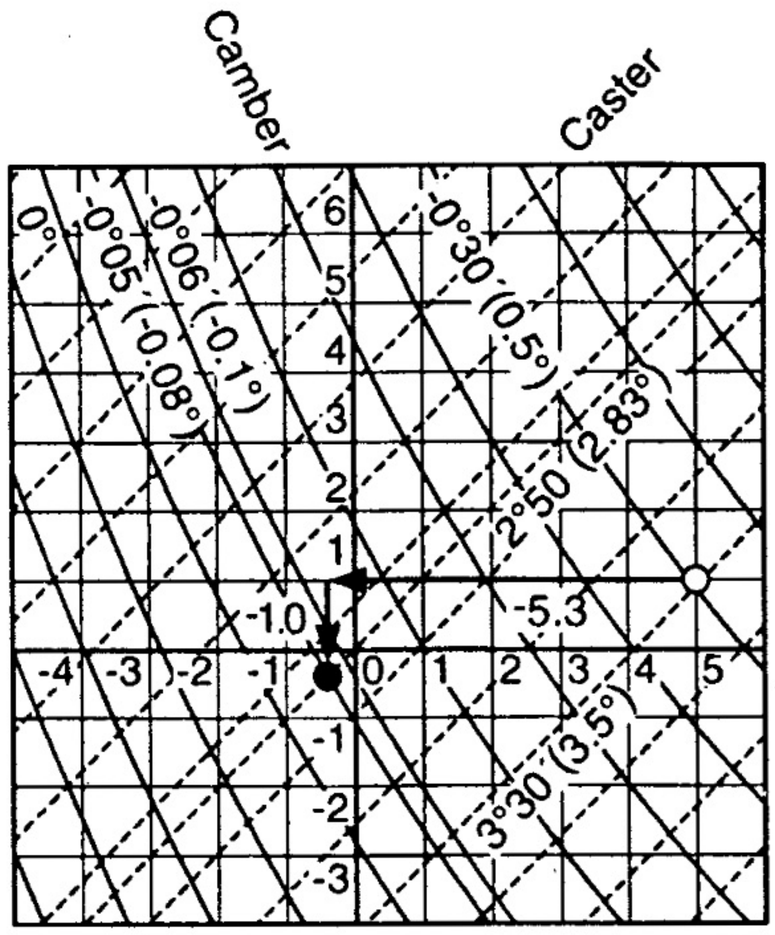

SA2PL-01

ADJUSTMENT CHART

HOW TO READ ADJUSTMENT CHART

(a) Find the wheel alignment standard value applicable for the tire size.

(b) Mark the selected standard value on the adjustment chart.

Example (5 Door: Except Malaysia)

Camber −0°05′ (−0.08°)
Caster 2°50′ (2.83°)

(c) Mark on the adjustment chart the alignment values measured at the standard vehicle height.

Example:

Camber −0°30′ (−0.5°)
Caster 3°30′ (3.5°)

(d) As shown in the illustration, read the distance from the standard value to the measured value, and adjust the front and/or rear adjusting cams accordingly.

Example:

Front cam −(Shorter) 5.3
Rear cam −(Shorter) 1.0

SA

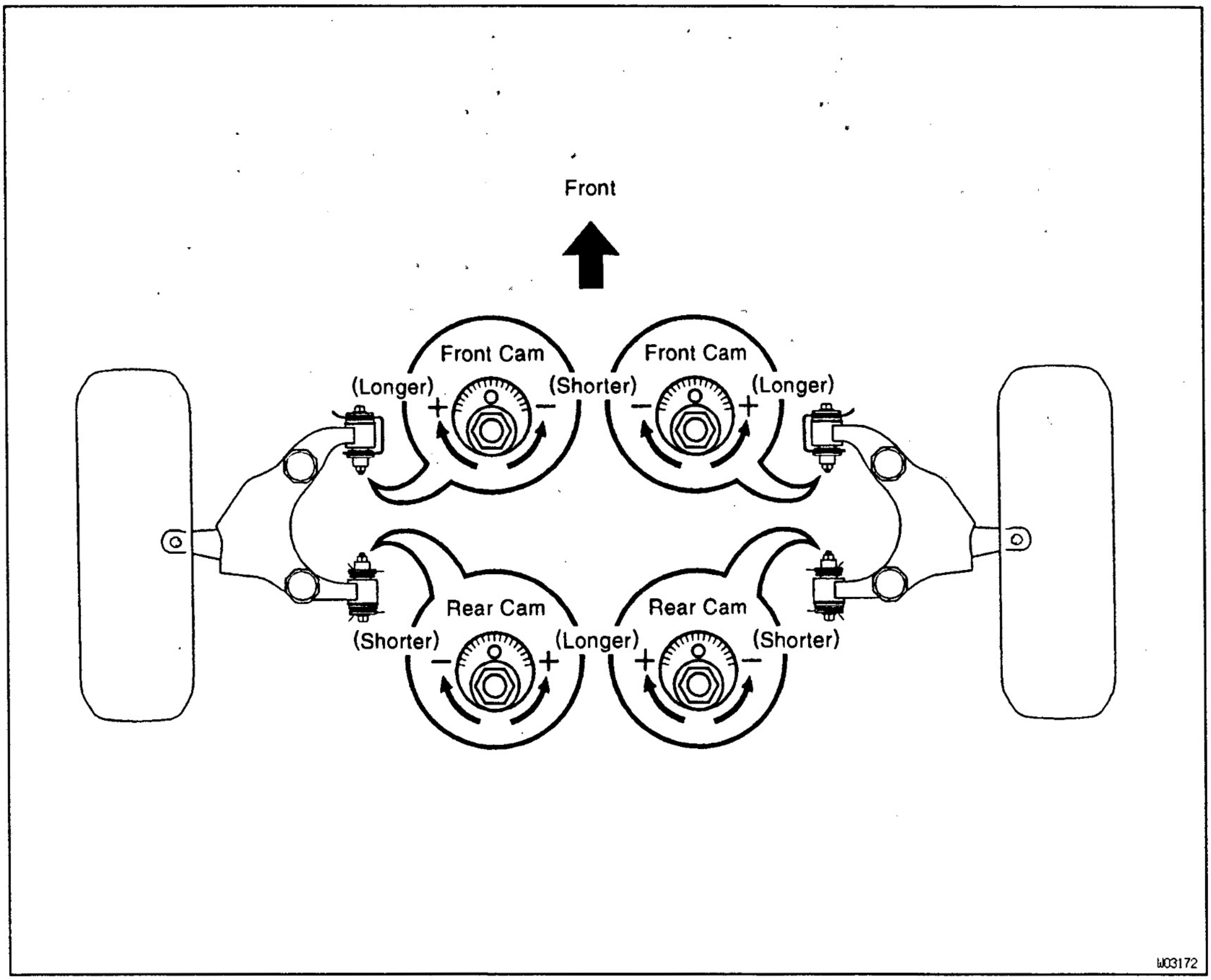

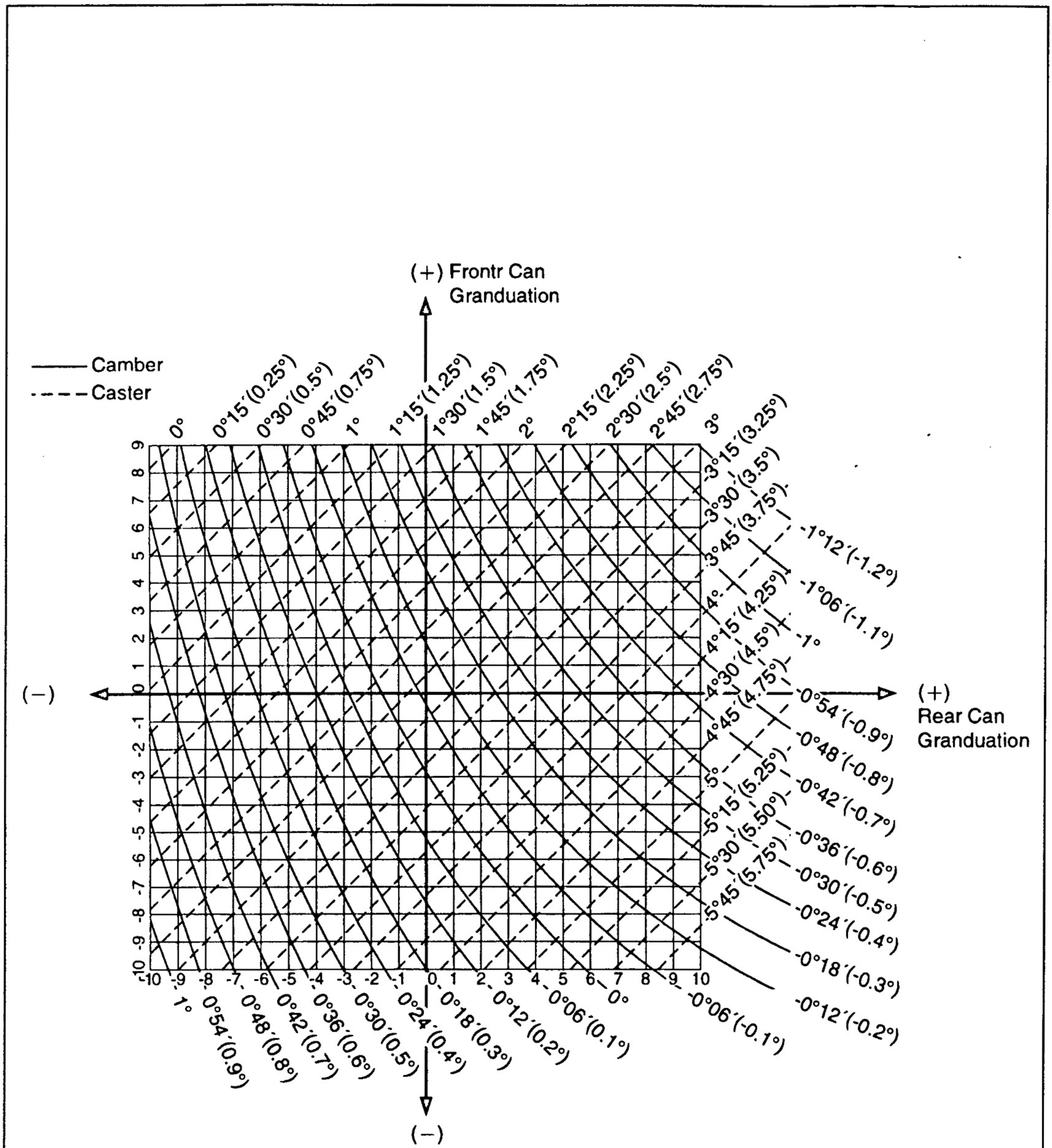
(+) Frontr Can Granduation
Camber
Caster
0°
0°15′(0.25°)
0°30′(0.5°)
0°45′(0.75°)
1°
1°15′(1.25°)
1°30′(1.5°)
1°45′(1.75°)
2°
2°15′(2.25°)
2°30′(2.5°)
2°45′(2.75°)
3°
-3°15′(3.25°)
-3°30′(3.5°)
-3°45′(3.75°)
-4°
-4°15′(4.25°)
-4°30′(4.5°)
-4°45′(4.75°)
-5°
-5°15′(5.25°)
-5°30′(5.50°)
-5°45′(5.75°)
-1°12′(-1.2°)
-1°06′(-1.1°)
-1°
-0°54′(-0.9°)
-0°48′(-0.8°)
-0°42′(-0.7°)
-0°36′(-0.6°)
-0°30′(-0.5°)
-0°24′(-0.4°)
-0°18′(-0.3°)
-0°12′(-0.2°)
-0°06′(-0.1°)
0°
0°06′(0.1°)
0°12′(0.2°)
0°18′(0.3°)
0°24′(0.4°)
0°30′(0.5°)
0°36′(0.6°)
0°42′(0.7°)
0°48′(0.8°)
0°54′(0.9°)
1°
(−)
(+) Rear Can Granduation
(−)

WD3171

FRONT AXLE

PREPARATION

SST (SPECIAL SERVICE TOOLS)

SA0N6–06

	09223–15030	Oil Seal & Bearing Replacer	Oil seal (outside)
	09318–12010	Transfer Bearing Adjusting Nut Wrench	w/ Free wheel hub: Hub lock nut
	09527–17011	Rear Axle Shaft Bearing Remover	Hub bearing Oil seals
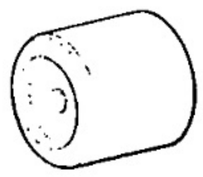	09649–17010	Steering Knuckle Tool	Axle hub
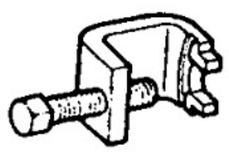	09650–17011	Hub Bolt Remover	Hub bolt
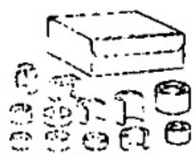	09710–30021	Suspension Bushing Tool Set	Axle hub
	(09710–03051)	Bushing Replacer	
	09950–40010	Puller B Set	Upper ball joint Axle hub
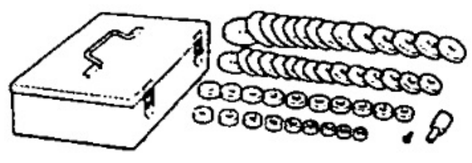	09950–60010	Replacer Set	w/o Free wheel hub: Bearing spacer
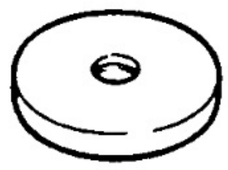	(09951–00650)	Replacer 65	
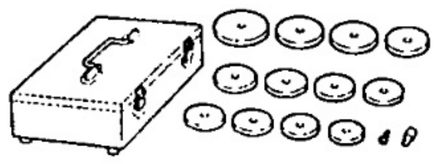	09950–60020	Replacer Set No.2	
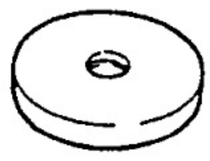	(09951–00810)	Replacer 81	Hub bearing

SA

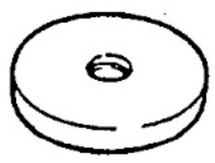	(09951–00910) Replacer 91	Hub bearing
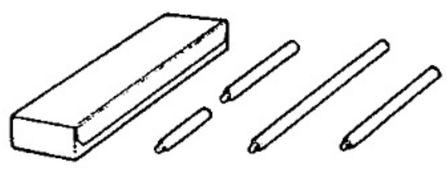	09950–70010 Handle Set	Hub bearing w/o Free wheel hub: Bearing spacer
	(09951–07150) Handle 150	

RECOMMENDED TOOLS

SA0N7–05

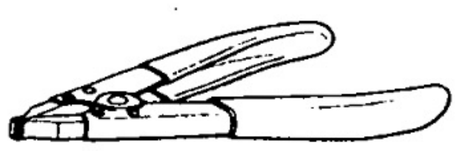	09905–00012 Snap Ring No.1 Expander .	
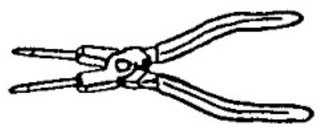	09905–00013 Snap Ring Pliers .	

SA

EQUIPMENT

SA0N8–06

Torque wrench	

FRONT AXLE HUB
COMPONENTS

8AGN9-07

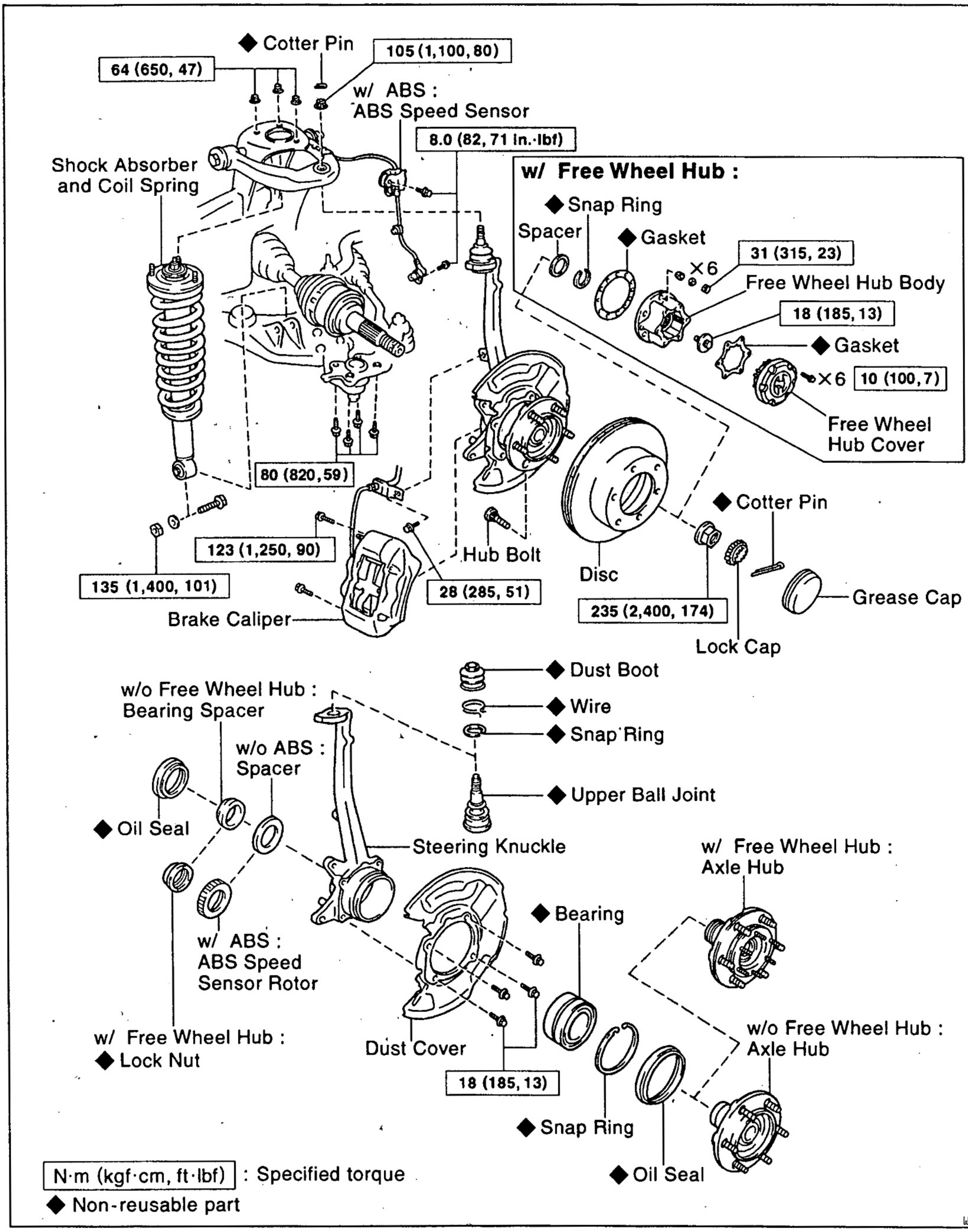

STEERING KNUCKLE WITH AXLE HUB REMOVAL

SA27H-03

1. **REMOVE FRONT WHEEL**
   Torque: 110 N·m (1,150 kgf·cm, 83 ft·lbf)
2. **REMOVE SHOCK ABSORBER**
   (See page SA—49)
3. **DISCONNECT DRIVE SHAFT**
   w/ Free wheel hub:

(a) Remove the free wheel hub.
(See page SA—16)
(b) Using a snap ring expander, remove the snap ring.
(c) Remove the spacer.

w/o Free wheel hub:

(a) Using a screwdriver, remove the grease cap.
(b) Remove the cotter pin and lock cap.
(c) With apply the brakes, remove the lock nut.
Torque: 235 N·m (2,400 kgf·cm, 174 ft·lbf)

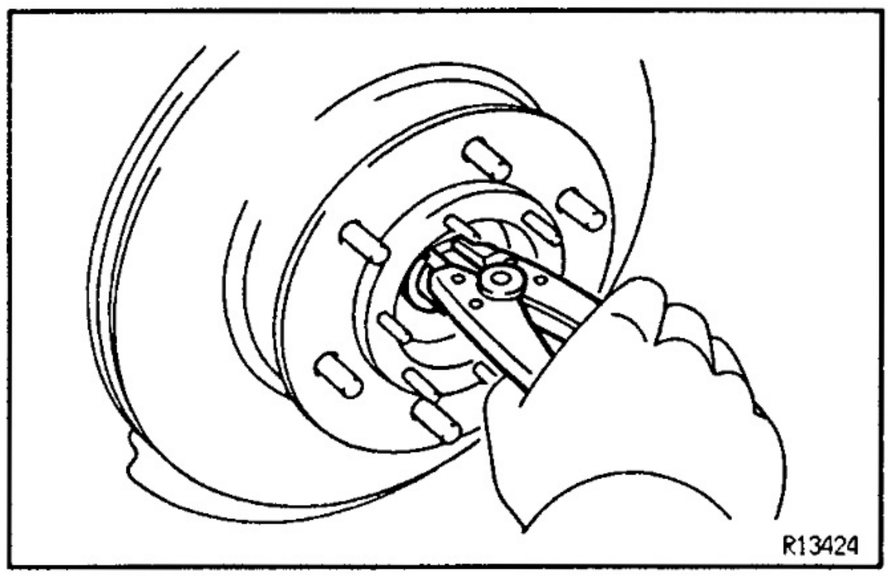

SA

4. **w/ABS:**
   REMOVE ABS SPEED SENSOR AND WIRE HARNESS CLAMP FROM STEERING KNUCKLE
   Torque: 8.0 N·m (82 kgf·cm, 71 in.·lbf)
5. **REMOVE BRAKE LINE BRACKET FROM STEERING KNUCKLE**
   Torque: 28 N·m (285 kgf·cm, 21 ft·lbf)
6. **REMOVE FRONT BRAKE CALIPER AND DISC**
   (See page BR—26)

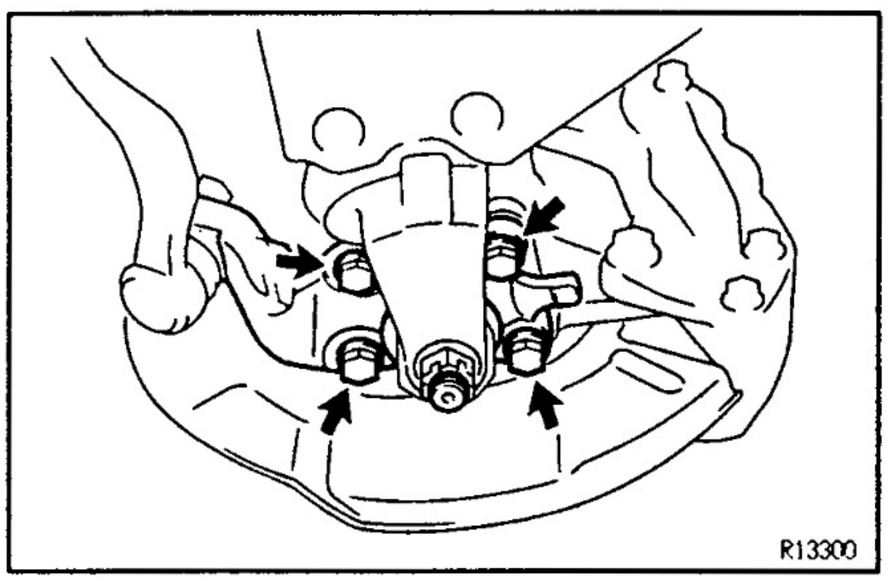

7. **DISCONNECT LOWER BALL JOINT**
   Remove the 4 bolts and disconnect the lower ball joint.
   Torque: 80 N·m (820 kgf·cm, 59 ft·lbf)

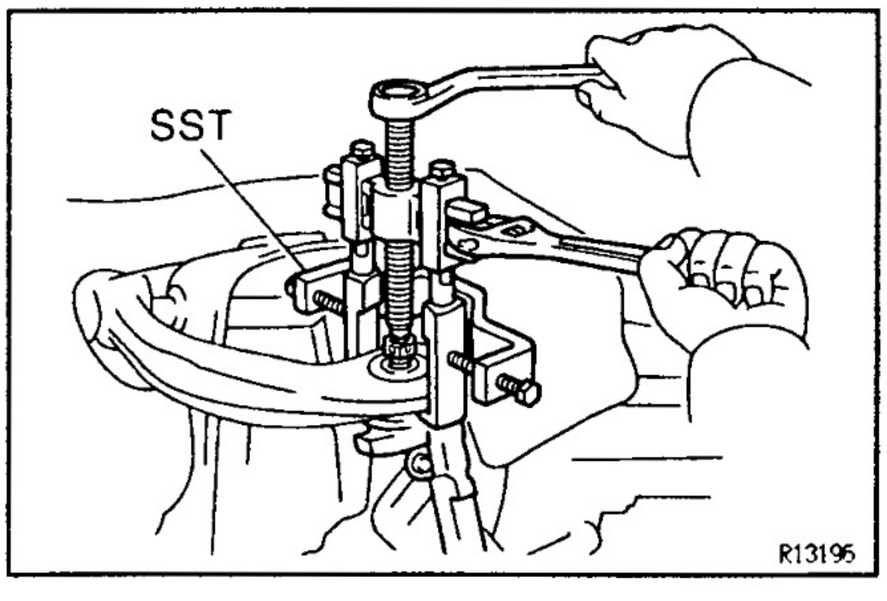

8. **REMOVE STEERING KNUCKLE**

(a) Remove the cotter pin and loosen the nut.
Torque: 105 N·m (1,100 kgf·cm, 80 ft·lbf)
(b) Using SST, disconnect the steering knuckle.
SST 09950—40010 (09951—04010, 09952—04010, 09553—04020, 09554—04010, 09955—04030, 09958—04010)
(c) Remove the nut and steering knuckle.
NOTICE: Be careful not to damage the oil seal and drive shaft boot.
REMOVAL HINT: When it is difficult to disconnect the drive shaft, tap the drive shaft with a plastic hammer.

SA1WN-03

FRONT AXLE HUB DISASSEMBLY

1. REMOVE OIL SEAL (INSIDE)

(a) Clamp the axle hub in a soft jaw vise.
HINT: Close vise until it holds hub bolts. Do not tighten further.

(b) Using a screwdriver, remove the oil seal (inside).

2. w/ Free wheel hub:

REMOVE LOCK NUT AND ABS SPEED SENSOR ROTOR/SPACER

(a) Using a chisel and hammer, loosen the staked part of the lock nut.
NOTICE: Be careful not to damage the bushing.

(b) Using SST, remove the lock nut.
SST 09318–12010

(c) Remove the ABS speed sensor rotor/spacer.
NOTICE: Take care not to scratch the serration of the speed sensor rotor.

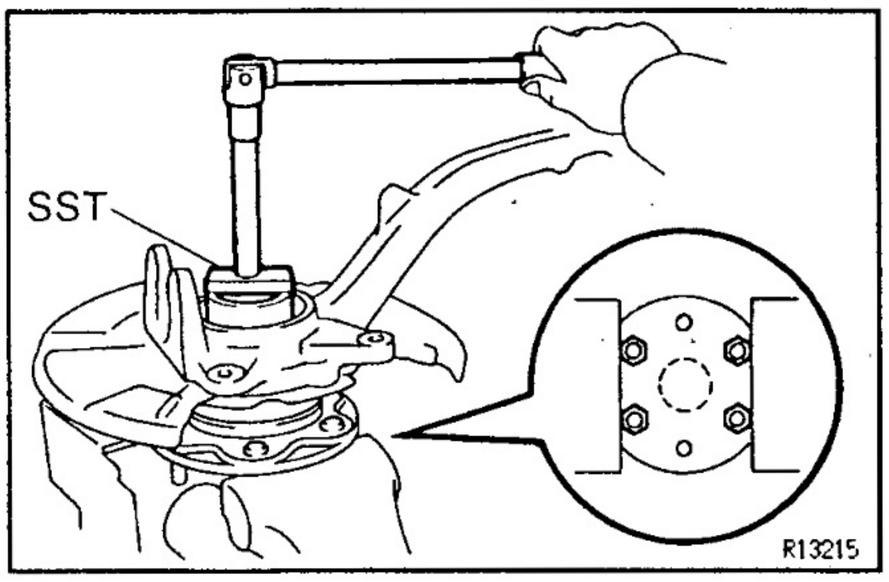

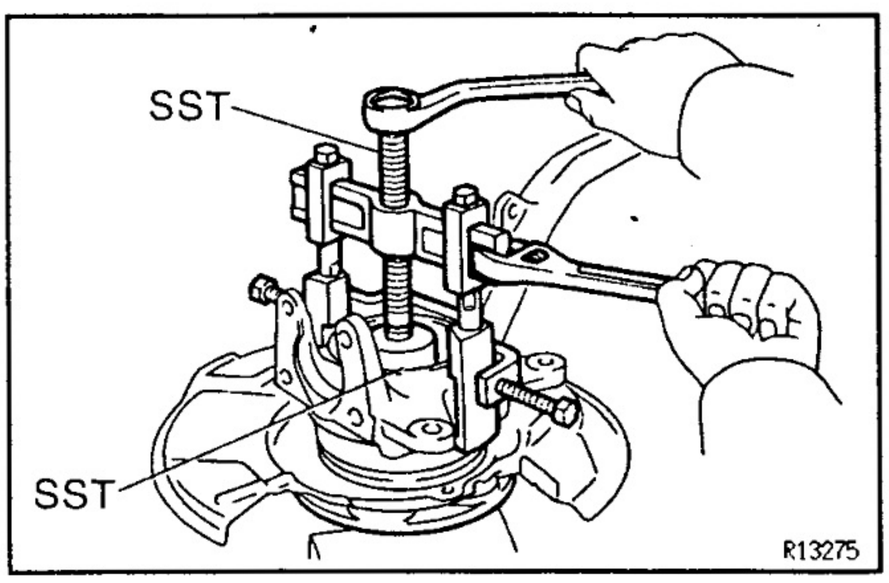

3. REMOVE AXLE HUB FROM STEERING KNUCKLE

(a) Remove the 4 bolts and shift the brake dust cover towards the hub side (outside).

(b) Using SST, remove the axle hub from the steering knuckle.
SST 09710–30020 (09710–03050),
09950–40010 (09951–04020, 09952–04010, 09953–04020, 09954–04010, 09955–04030, 09957–04010, 09958–04010)

(c) w/o Free wheel hub:
Remove the bearing spacer and ABS speed sensor rotor/spacer.

4. REMOVE OIL SEAL (OUTSIDE)

Using a screwdriver, remove the oil seal (outside) from the steering knuckle.

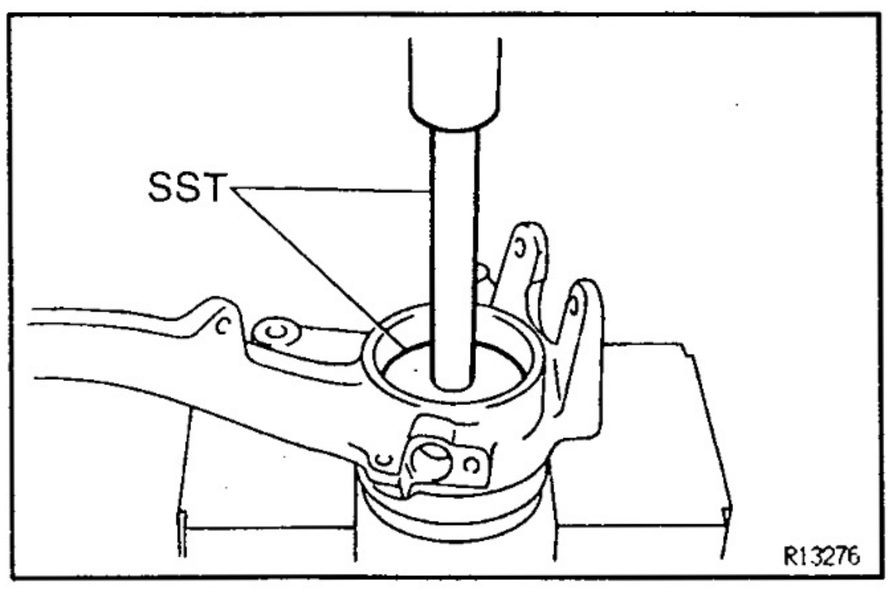

5. REMOVE BEARING FROM STEERING KNUCKLE

(a) Using snap ring pliers, remove the snap ring.

(b) Using SST and a press, remove the bearing from the steering knuckle.
SST 09950–60020 (09951–00810),
09950–70010 (09951–07150)

FRONT AXLE HUB ASSEMBLY

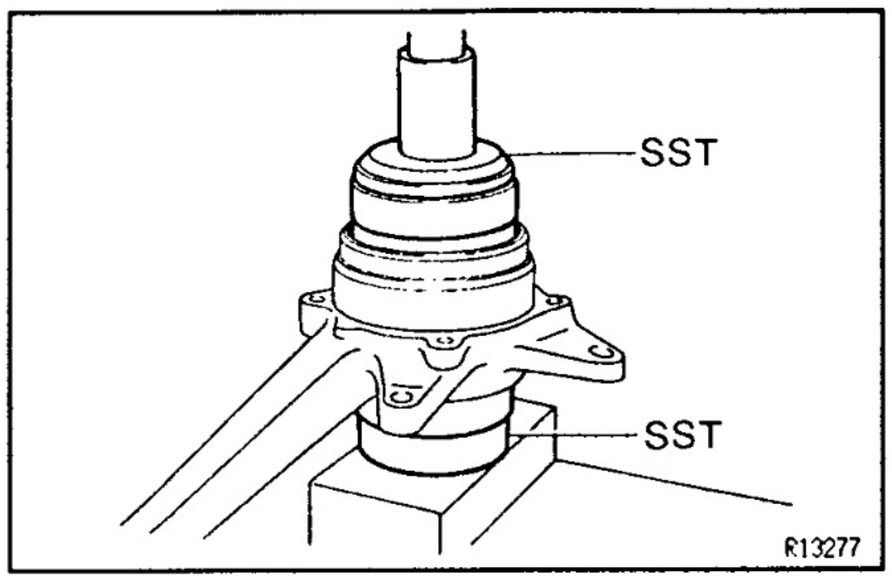

1. INSTALL NEW BEARING

(a) Using SST and a press, install a new bearing to the steering knuckle.
SST 09527–17011, 09950–60020 (09951–00910)

(b) Using snap ring pliers, install the snap ring.

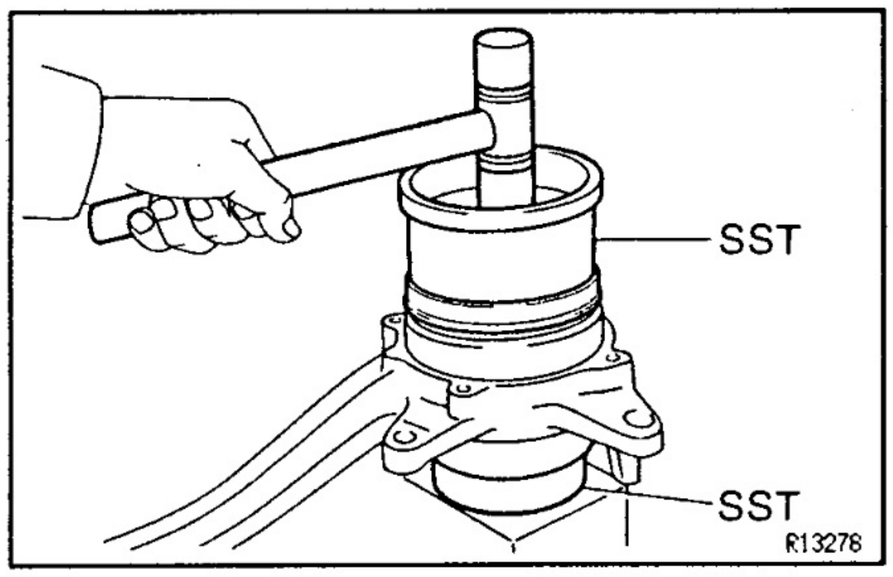

2. INSTALL NEW OIL SEAL (OUTSIDE)

(a) Using SST and a plastic hammer, install a new oil seal (outside).
SST 09223–15030, 09527–17011

(b) Coat MP grease to the oil seal lip.

3. INSTALL AXLE HUB TO STEERING KNUCKLE

(a) Install the brake dust cover to the steering knuckle with the 4 bolts.
Torque: 18 N·m (185 kgf·cm, 13 ft·lbf)

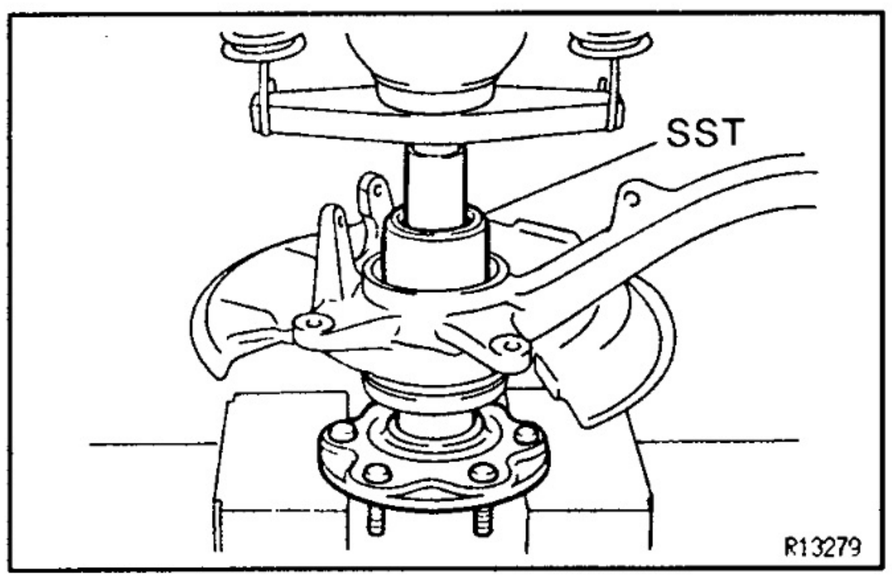

(b) Using SST and a press, install the axle hub to the steering knuckle.
SST 09649–17010

4. INSTALL ABS SPEED SENSOR ROTOR/SPACER

NOTICE: Do not scratch the serration of the speed sensor rotor.

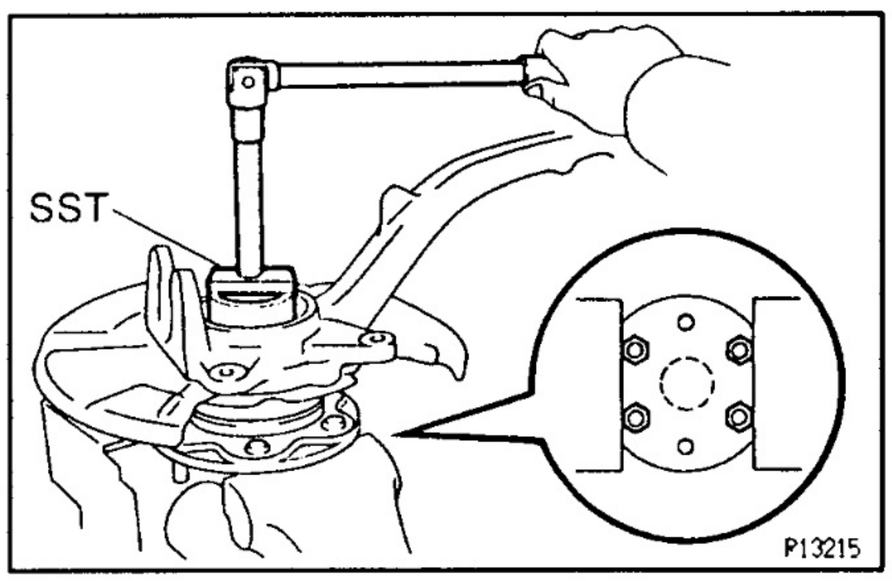

5. w/ Free wheel hub:
INSTALL NEW LOCK NUT

(a) Using SST, install and torque a new nut to the axle hub.
SST 09318–12010
Torque: 274 N·m (2,800 kgf·cm, 203 ft·lbf)

(b) Using a chisel and hammer, stake the nut.

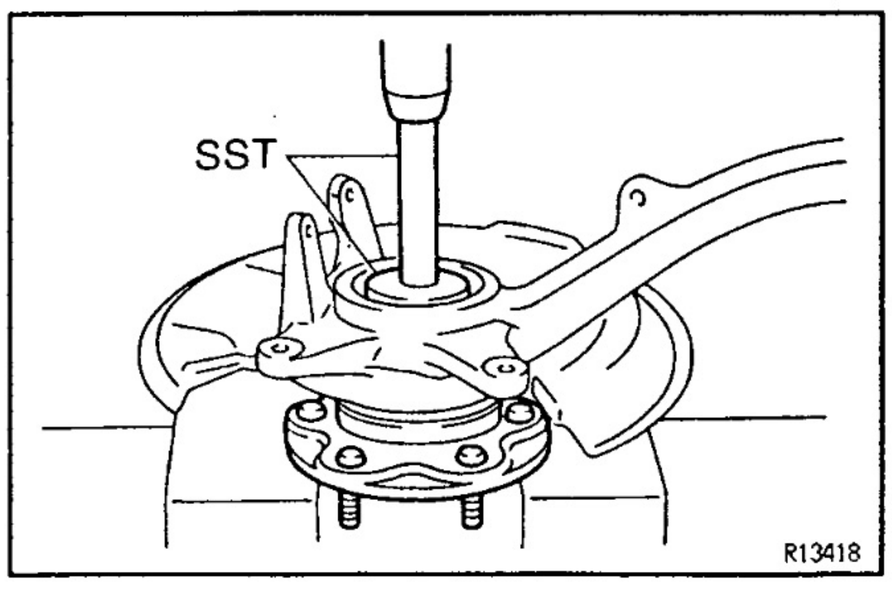

6. w/o Free wheel hub:
INSTALL BEARING SPACER

Using SST and a press, install the bearing spacer.
SST 09950–60010 (09951–00650),
09950–70010 (09951–07150)

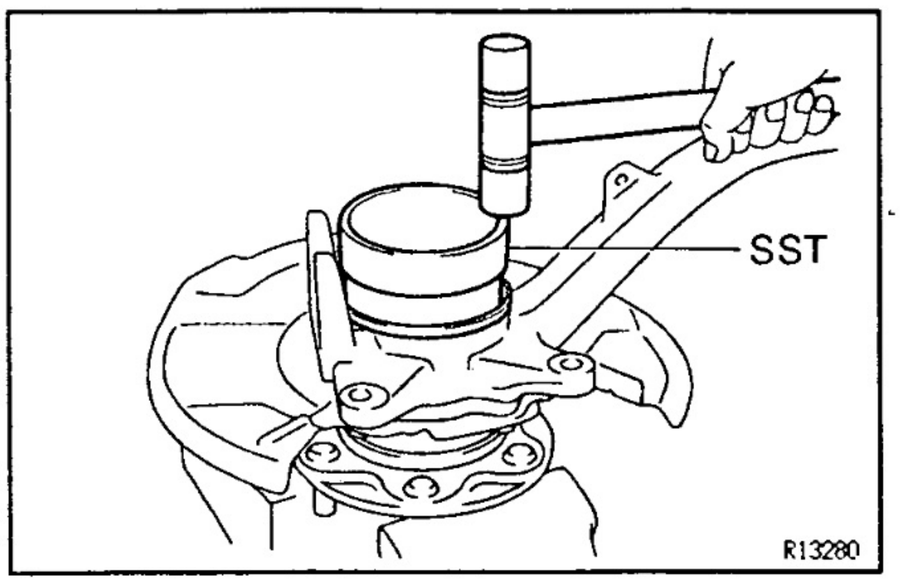

7. INSTALL NEW OIL SEAL (INSIDE)

(a) Using SST and a plastic hammer, install a new oil seal (inside).
SST 09527–17011
HINT: Strike the SST on its circumference evenly.

(b) Coat MP grease to the oil seal lip.

STEERING KNUCKLE WITH AXLE HUB

8A27J–03

INSTALLATION

Installation is in the reverse order of removal.
HINT: After installation, check ABS speed sensor signal and front wheel alignment.
(See page BR–59 and SA–4)

SA

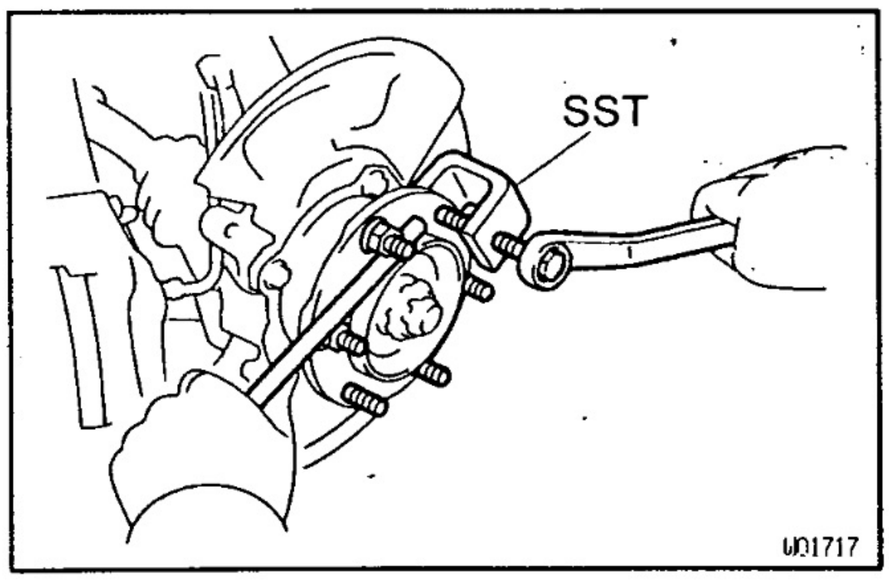

8A1BM–06

HUB BOLT REPLACEMENT

1. REMOVE FRONT WHEEL

2. REMOVE BRAKE CALIPER AND DISC
(See page BR–26)

3. REMOVE HUB BOLT
Using SST, remove hub bolt.
SST 09650–17011

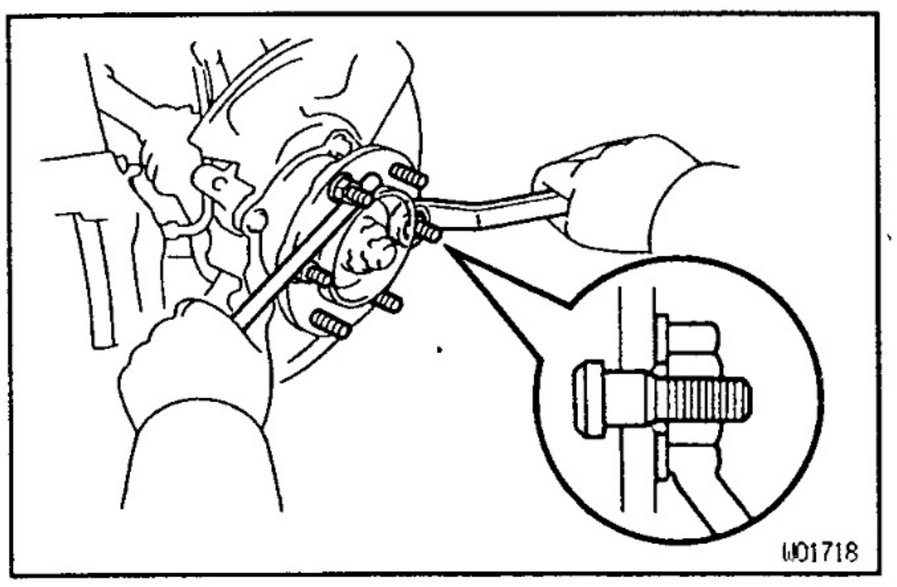

4. INSTALL HUB BOLT
Install a washer and nut to the hub bolt as shown in the illustration and install the hub bolt with torquing the nut.

5. INSTALL BRAKE DISC AND CALIPER
(See page BR–29)

6. INSTALL FRONT WHEEL
Torque: 110 N·m (1,150 kgf·cm, 83 ft·lbf)

FREE WHEEL HUB

COMPONENTS

8A27K-02

(See page SA–11)

FREE WHEEL HUB REMOVAL

8A1WQ-02

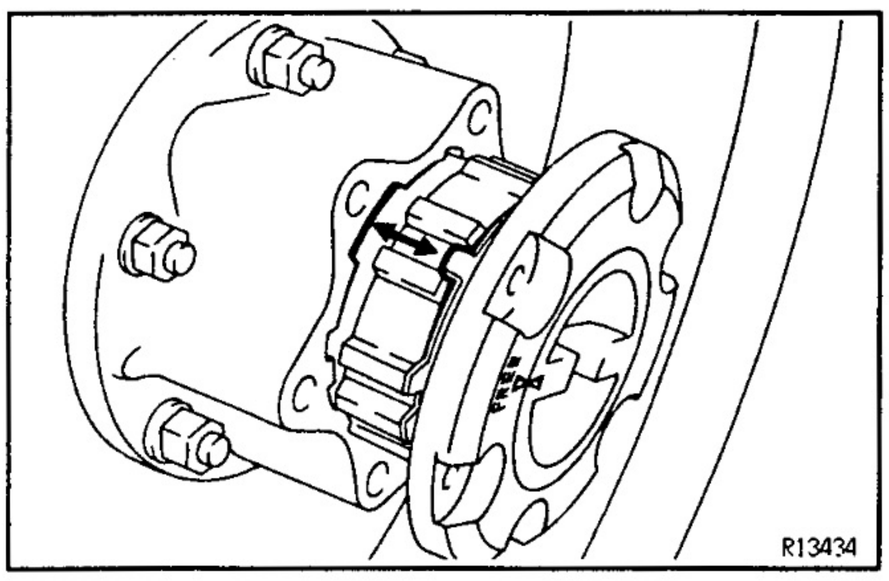

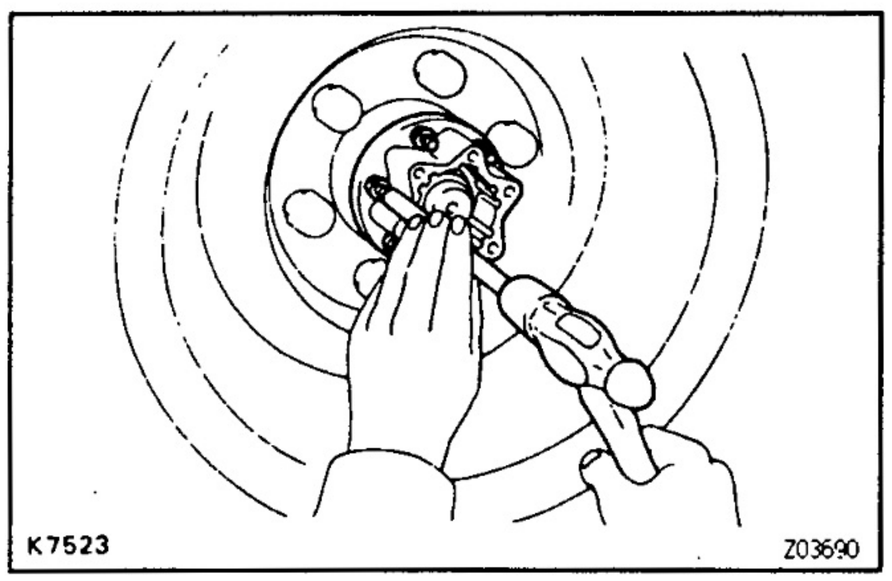

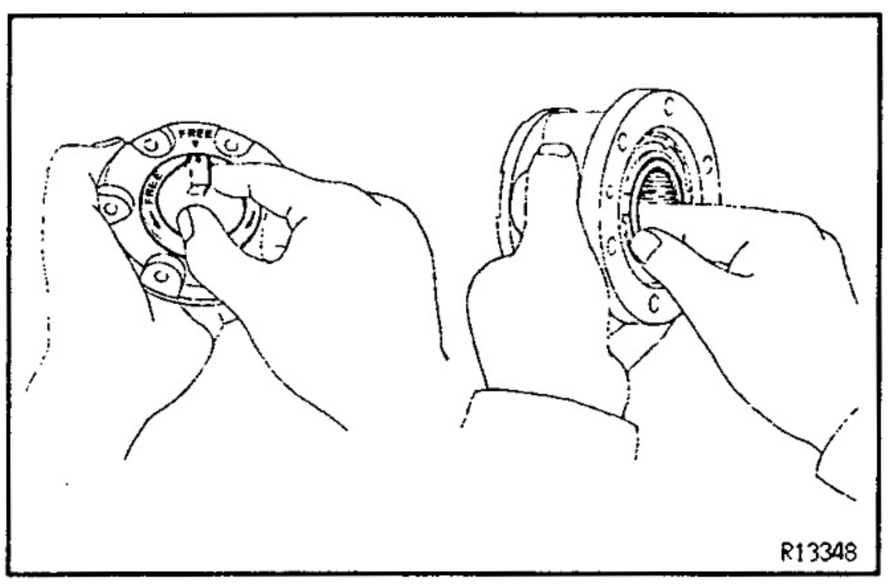

1. **REMOVE FREE WHEEL HUB COVER**

(a) Set the control handle to FREE.

(b) Remove the 6 cover mounting bolts and pull off the cover.

Torque: 10 N·m (100 kgf·cm, 7 ft·lbf)

INSTALLATION HINT: Before install the hub cover, apply MP grease to the clutch splines.

(c) Remove the gasket.

2. **REMOVE BOLT WITH WASHER**

Torque: 18 N·m (185 kgf·cm, 13 ft·lbf)

3. **REMOVE FREE WHEEL HUB BODY**

(a) Remove the 6 mounting nuts and washers.

Torque: 31 N·m (315 kgf·cm, 23 ft·lbf)

(b) Using a brass bar and hammer, tap on the bolts head and remove the cone washers.

(c) Pull off the free wheel hub body.

(d) Remove the gasket.

FREE WHEEL HUB INSPECTION

8AQJZ-06

1. **INSPECT COVER, HANDLE AND SEAL**

Check the handle moves smoothly.

2. **INSPECT INNER HUB**

Place the cover in the body and check that the inner hub turns smoothly.

FREE WHEEL HUB INSTALLATION

8A27L-02

Installation is in the reverse order of removal.

FRONT DRIVE SHAFT

PREPARATION

SST (SPECIAL SERVICE TOOLS)

SA1WR-03

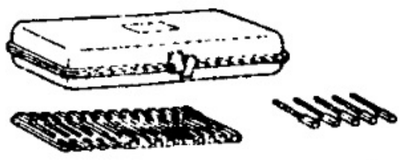	09240-00020	Wire Gauge Set	Boot clamp clearance adjustment
	09521-24010	Drive Shaft Boot Clamping Tool	Boot clamp
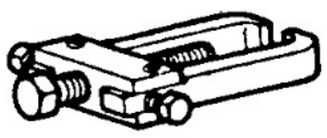	09628-62011	Ball Joint Puller	Lower ball joint
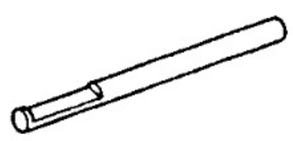	09631-10030	Oil Seal Remover	Drive shaft

SA

SA02F-0R

RECOMMENDED TOOLS

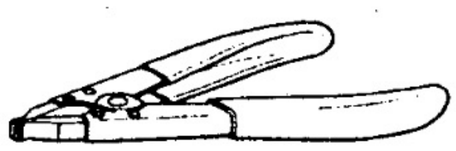	09905-00012	Snap Ring No.1 Expander .	

SA02G-0W

EQUIPMENT

Torque wrench	

SA02H-1E

LUBRICANT

Item	Capacity	Classification
Outboard joint grease	176-186 g (6.20-6.56 oz.)	
Inboard joint grease	255-265 g (8.99-9.34 oz.)	

FRONT DRIVE SHAFT
COMPONENTS

SAOKS-09

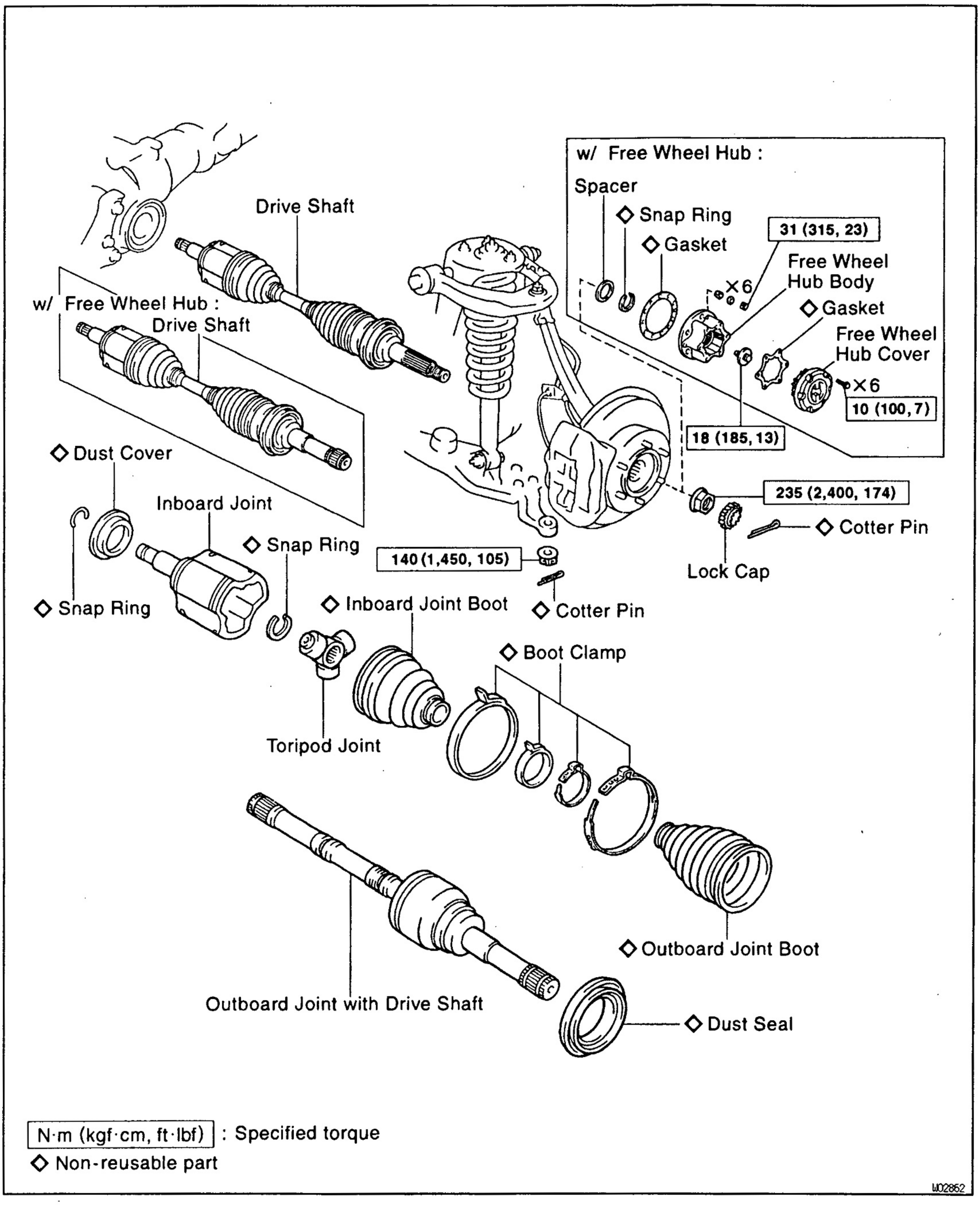

N·m (kgf·cm, ft·lbf) : Specified torque
◇ Non-reusable part

W02852

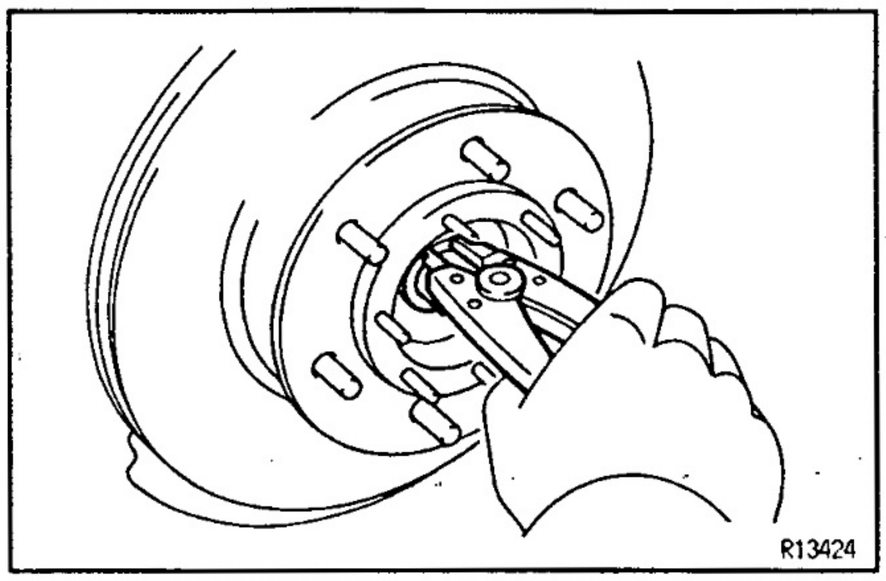

8A2PM-01

FRONT DRIVE SHAFT REMOVAL

1. REMOVE FRONT WHEEL
Torque: 110 N·m (1,150 kgf·cm, 83 ft·lbf)

2. DRAIN DIFFERENTIAL OIL

3. w/ FREE WHEEL HUB:
REMOVE FREE WHEEL HUB

(a) Remove the free wheel hub.
(See page SA–16)

(b) Using a snap ring expander, remove the snap ring.

(c) Remove the spacer.

4. w/o FREE WHEEL HUB:
REMOVE DRIVE SHAFT LOCK NUT

(a) Using a screwdriver, remove the grease cap.

(b) Remove the cotter pin and lock cap.

(c) With apply the brakes, remove the lock nut.
Torque: 235 N·m (2,400 kgf·cm, 174 ft·lbf)

SA

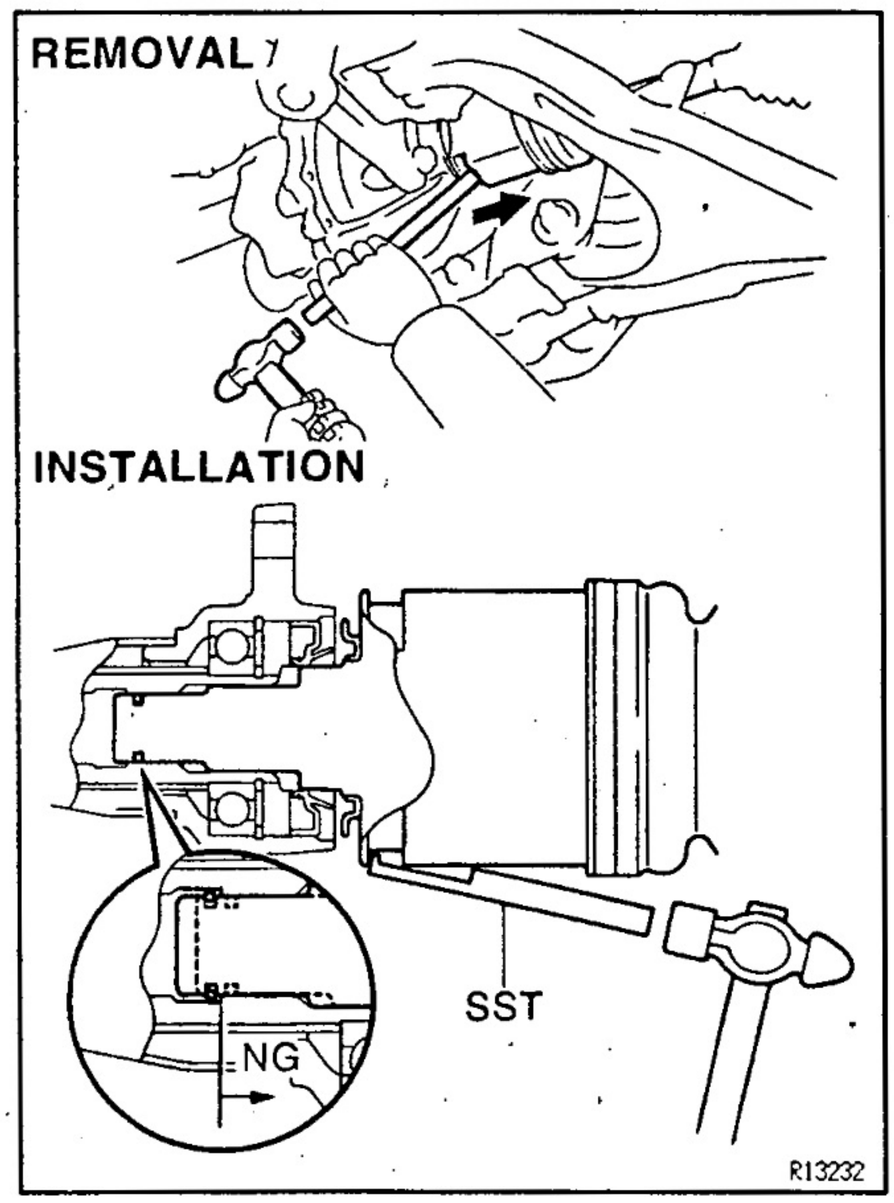

5. DISCONNECT DRIVE SHAFT

Using a brass bar and hammer, disconnect the drive shaft.

REMOVAL HINT: When it is difficult to disconnect the drive shaft, tap in a screwdriver between the differential tube/differential carrier and drive shaft.

INSTALLATION HINT:

- Before installation, set the snap ring opening side facing downward.
- Using SST and a hammer, strike the inboard joint into the differential. At that time, strike the snags evenly to avoid snags deformation.

SST 09631–10030

- After installation, check that the drive shaft cannot be pull out by hand.

NOTICE: Be careful not to damage the dust cover of the drive shaft.

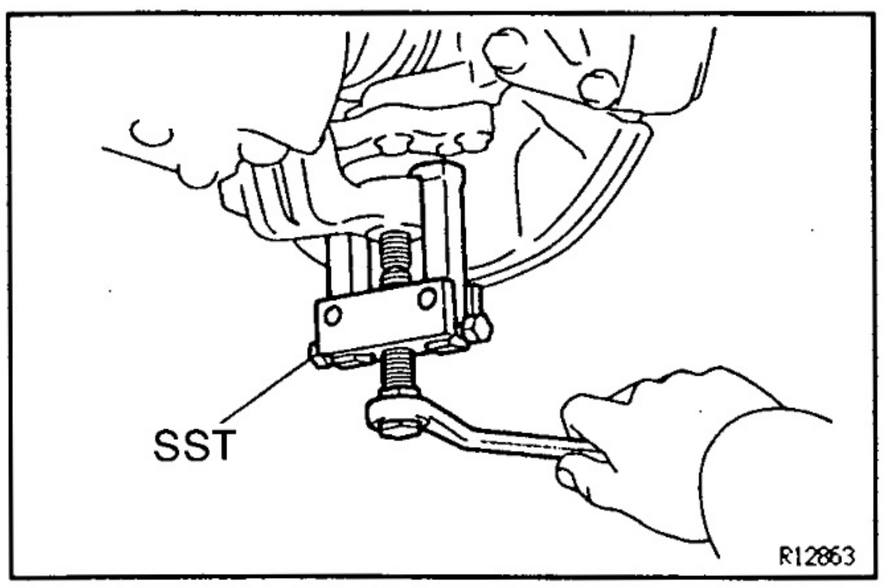

6. DISCONNECT LOWER SUSPENSION ARM

(a) Remove the cotter pin and nut.
Torque: 140 N·m (1,450 kgf·cm, 105 ft·lbf)

(b) Using SST, disconnect the lower suspension arm.
SST 09628–62011
INSTALLATION HINT: Face the cotter pin hole of the lower ball joint forward.

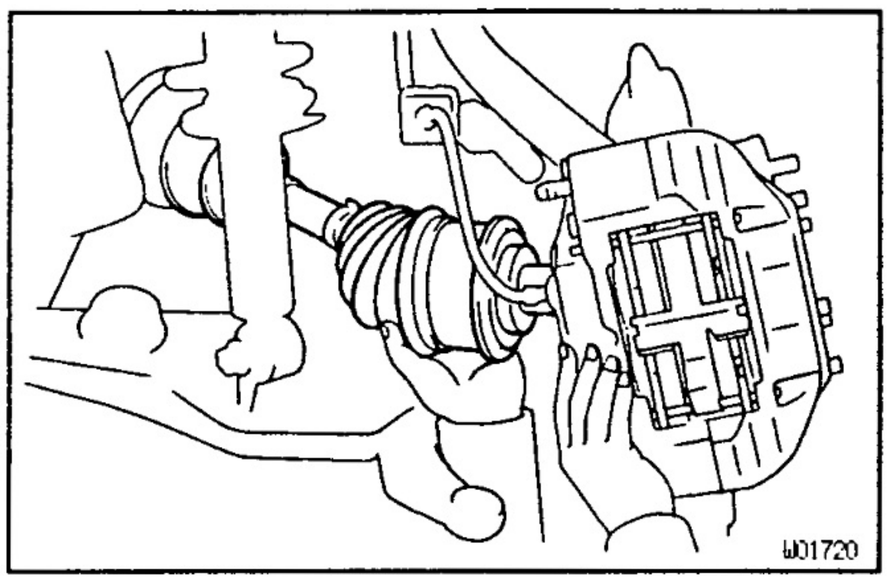

7. REMOVE DRIVE SHAFT

Push the steering knuckle outward and remove the drive shaft.

REMOVAL HINT: When it is difficult to disconnect the drive shaft, tap the drive shaft with a plastic hammer.

NOTICE: Be careful not to damage the oil seal, boots and dust seal.

8. REMOVE SNAP RING FROM INBOARD SHAFT

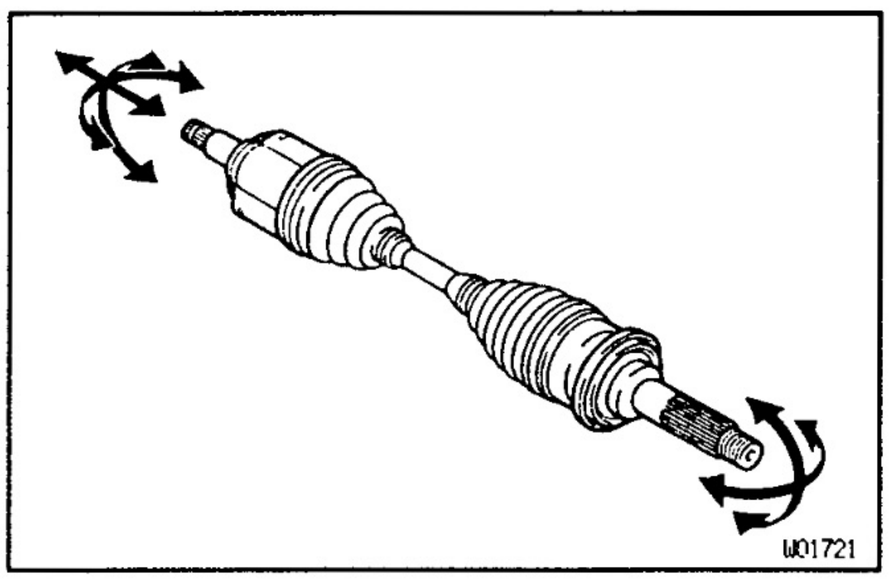

SA

FRONT DRIVE SHAFT DISASSEMBLY

SA2FN-01

1. CHECK DRIVE SHAFT

(a) Check to see that there is no play in the inboard and outboard joints.

(b) Check to see that the inboard joint slides smoothly in the thrust direction.

(c) Check to see that there is no significant play in the radial direction of the inboard joint.

(d) Check the boot for damage.

2. REMOVE INBOARD JOINT BOOT CLAMPS

(a) Using a screwdriver, remove the 2 inboard joint boot clamps.

(b) Slide the inboard joint boot toward the outboard joint.

3. REMOVE INBOARD JOINT TULIP

(a) Place matchmarks on the inboard joint and drive shaft.

(b) Remove the inboard joint tulip from the drive shaft.

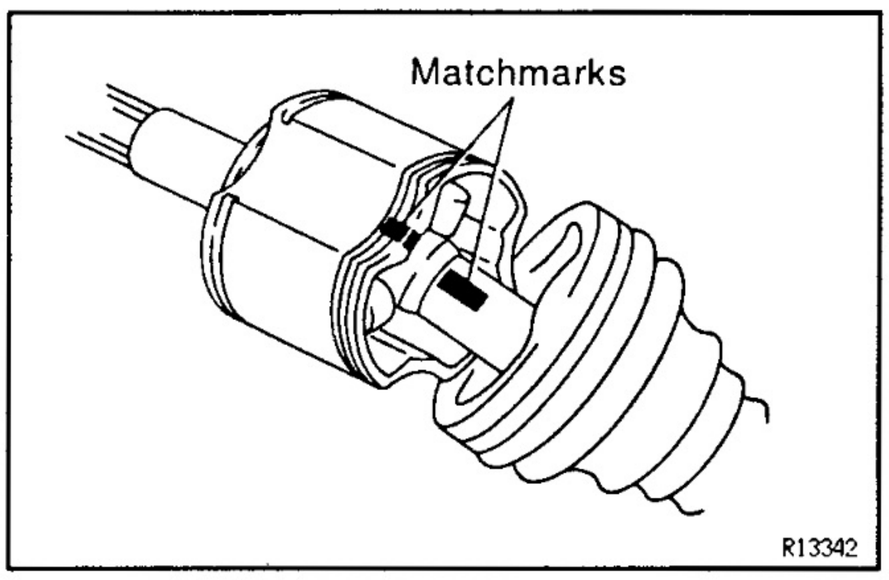

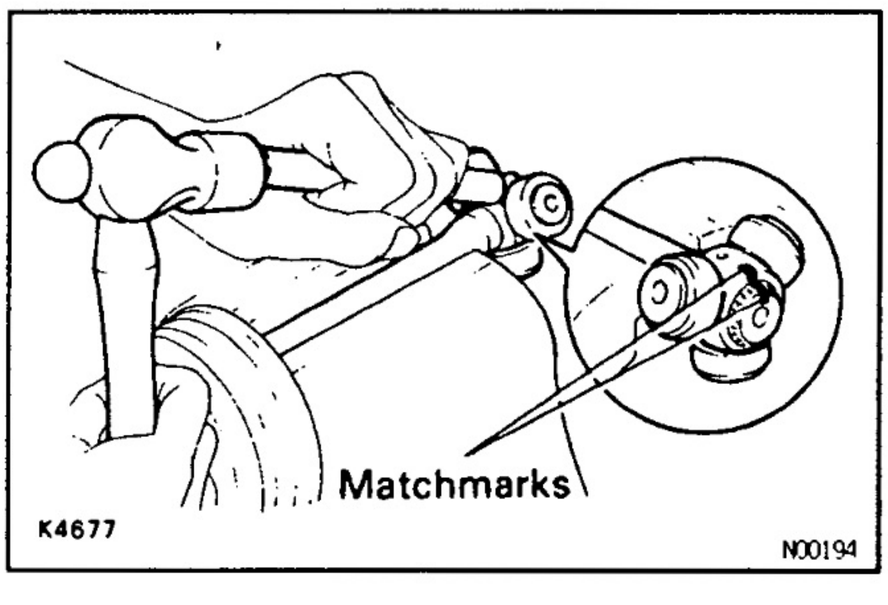

4. REMOVE TRIPOD FROM DRIVE SHAFT

(a) Using a snap ring expander, remove the snap ring.

(b) Place matchmarks on the shaft and tripod.

(c) Using a brass bar and hammer, remove the tripod joint.

NOTICE: Do not tap the roller.

5. REMOVE INBOARD AND OUTBOARD JOINT BOOTS

(a) Remove the inboard joint boot from the drive shaft.

(b) Using a side cutter, cut the outboard boot clamps.

(c) Remove the outboard joint boot from the drive shaft.

NOTICE: Do not disassemble the outboard joint.

6. REMOVE DUST COVER

Using a screwdriver, remove the dust cover from the inboard joint tulip.

7. REMOVE DUST SEAL

Using a screwdriver and hammer, remove the dust seal from the drive shaft.

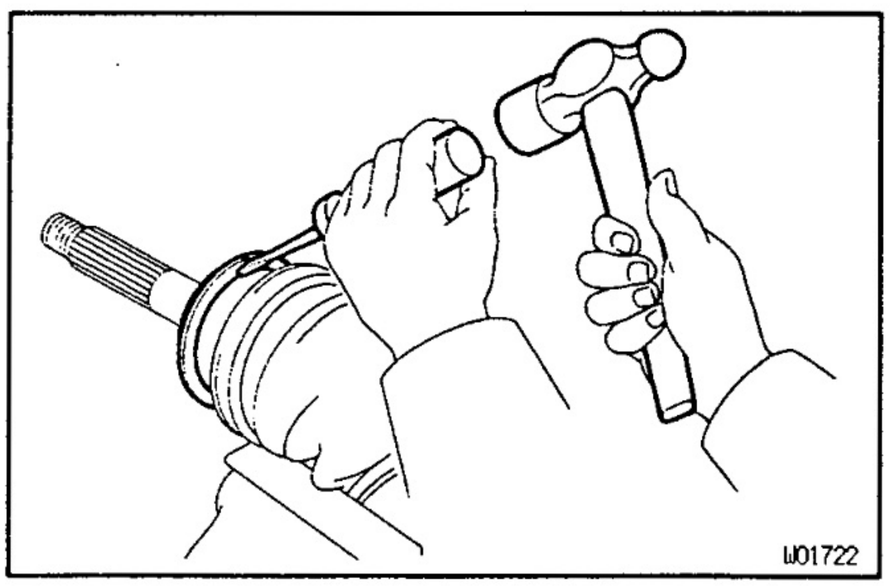

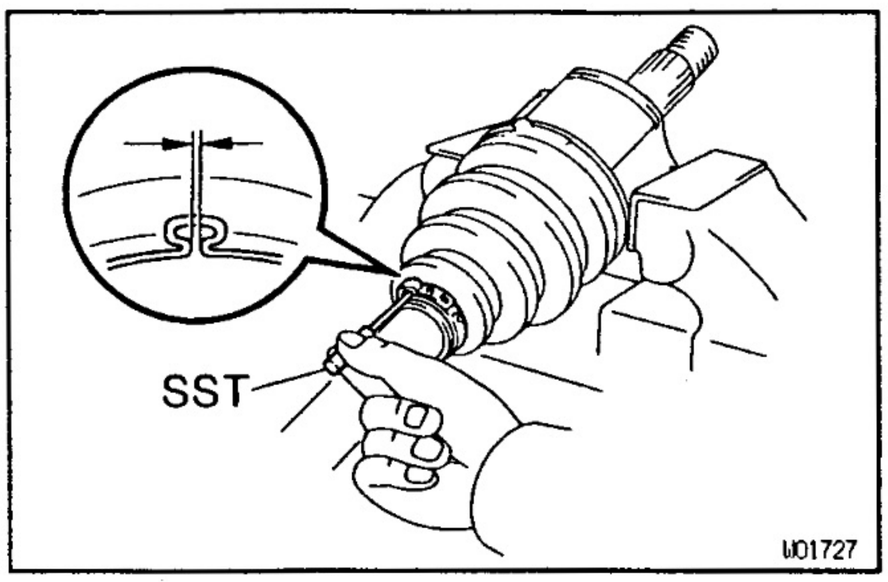

FRONT DRIVE SHAFT ASSEMBLY

SA2PP-01

1. INSTALL DUST COVER

Using a screwdriver and hammer, install a new dust cover.

2. INSTALL DUST SEAL

Using a screwdriver and hammer, install a new dust seal.

SST 09613–26010

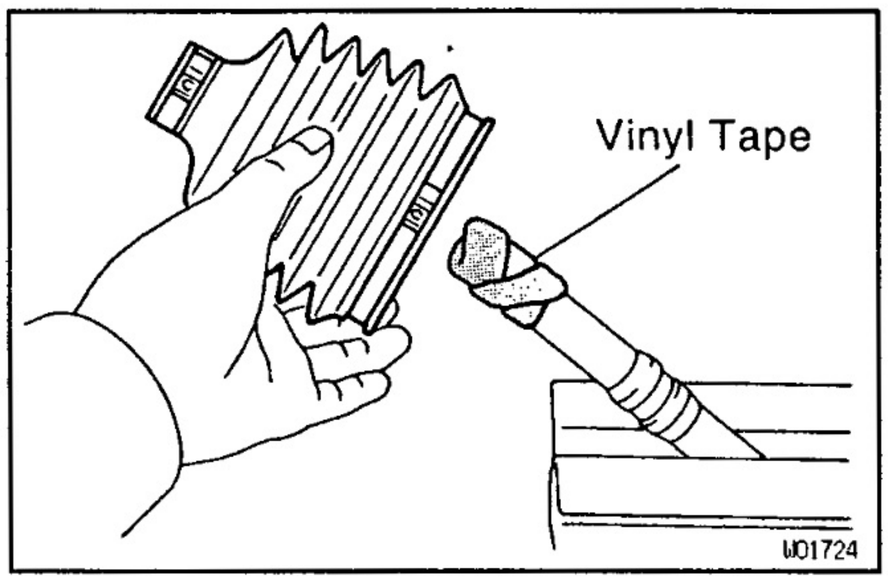

3. TEMPORARILY INSTALL NEW BOOTS TO DRIVE SHAFT

HINT:

- Before installing the 2 boots, wrap vinyl tape around the spline of the shaft to prevent the boots from damaging.
- Place 2 new clamps to the outboard joint boot and install them to the drive shaft.

4. INSTALL TRIPOD JOINT

(a) Place the beveled side of the tripod axial spline toward the outboard joint.

(b) Align the matchmarks placed before installation.

(c) Using a brass bar and hammer, install the tripod joint onto the drive shaft.

NOTICE: Do not tap the roller.

(d) Using a snap ring expander, install a new snap ring.

5. ASSEMBLE BOOT TO OUTBOARD JOINT

Before assembling the boot, pack the outboard joint and boot with grease in the boot kit.

6. ASSEMBLE BOOT AND INBOARD JOINT TULIP

(a) Pack the inboard joint and boot with grease in the boot kit.

(b) Align the matchmarks placed before assembly.

(c) Install the inboard joint tulip to the drive shaft.

(d) Temporarily install the boot to the inboard joint tulip.

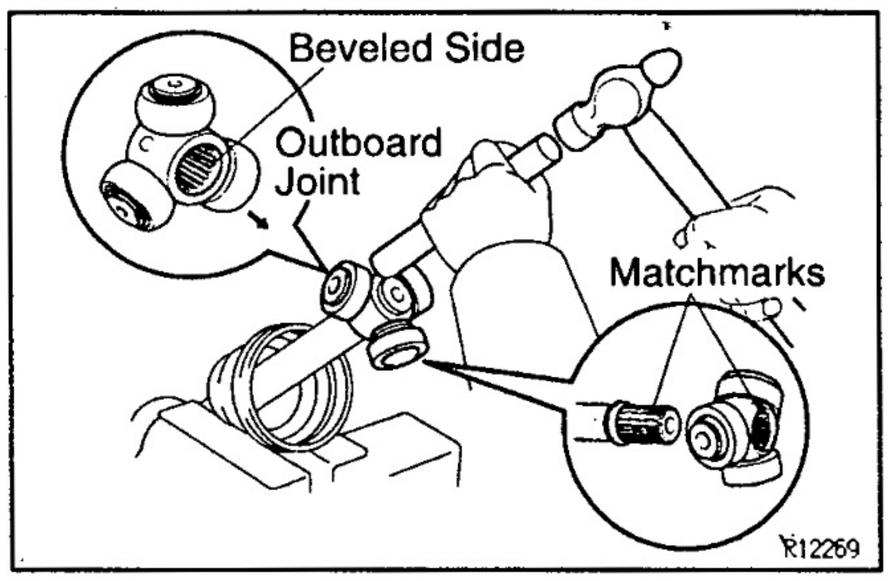

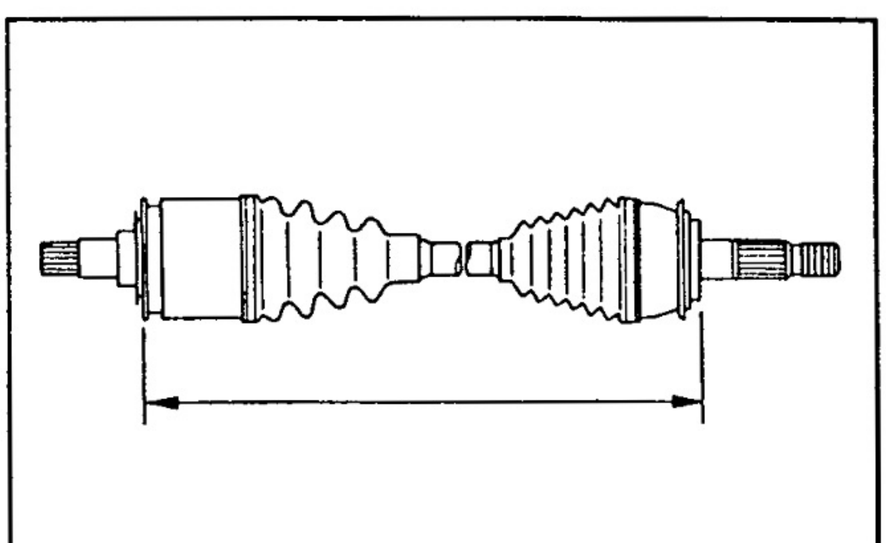

7. ASSEMBLE NEW INBOARD JOINT BOOT CLAMPS TO BOOT

(a) Make sure that the 2 boots are in the shaft groove.

(b) Make sure that the 2 boots are not stretched or contracted when the drive shaft is at the standard length.

Drive shaft standard length:

530.8 ± 5.0 mm (20.898 ± 0.197 in.)

(c) Place 2 new inboard joint large boot clamps.

(d) Bend the band and lock it with a screwdriver.

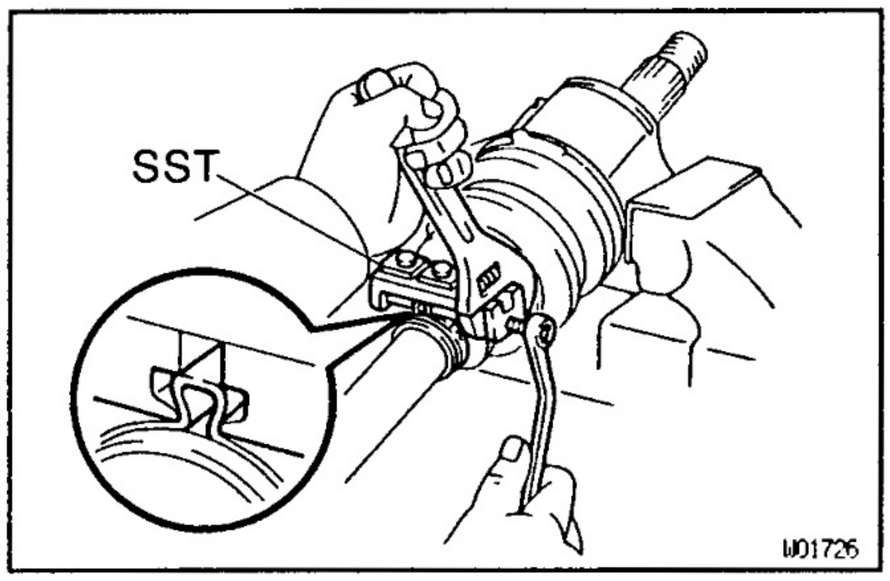

(e) To assemble the 2 outboard joint boot clamps, pinch the clamps and adjust clearance with SST.
NOTICE: Do not overtighten the SST.
SST 09521–24010
Clearance: 0.8 mm (0.031 in.)

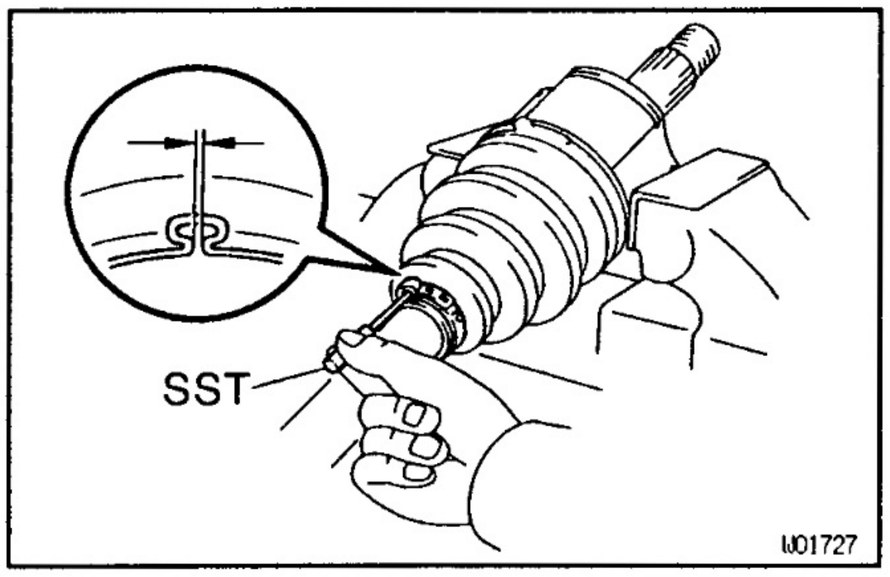

(f) Measure the clearance of the 2 outboard joint boot clamps with SST.
SST 09240–00020

8. CHECK DRIVE SHAFT
(See page SA–20)

SA

FRONT DRIVE SHAFT INSTALLATION

Installation is in the reverse order of removal.
HINT: After installation, fill differential with differential oil. (See page SA–29)

FRONT DIFFERENTIAL

PREPARATION

SST (SPECIAL SERVICE TOOLS)

SA08N-01

	09223-15020	Oil Seal & Bearing Replacer	Side gear shaft tube oil seal
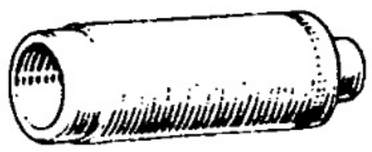	09226-10010	Crankshaft Front & Rear Bearing Replacer	Side bearing
	09308-00010	Oil Seal Puller	Side gear shaft tube oil seal Side oil seal
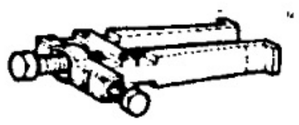	09308-10010	Oil Seal Puller	Rear oil seal
	09309-37010	Transmission Bearing Replacer	Side gear shaft bearing
	09330-00021	Companion Flange Holding Tool	Companion flange Rear bearing
	09350-20015	TOYOTA Automatic Transmission Tool Set	Intermediate shaft
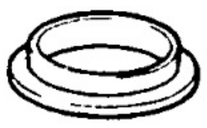	09502-12010	Differential Bearing Replacer	Rear bearing outer race
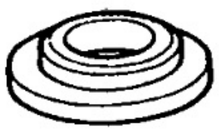	09506-30012	Differential Drive Pinion Rear Bearing Cone Replacer	Rear bearing
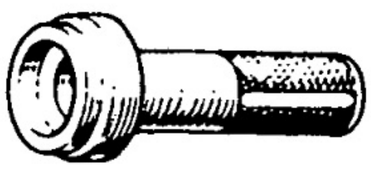	09554-22010	Differential Oil Seal Replacer	Rear oil seal
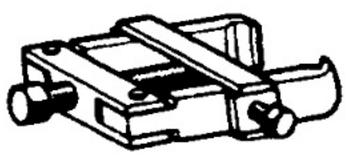	09556-22010	Drive Pinion Front Bearing Remover	Rear bearing
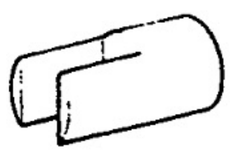	09564-32011	Differential Preload Adaptor	Ring gear backlash inspection

SA

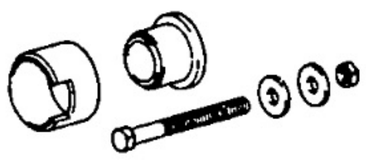	09570–22011	Differential Mounting Cushion Remover & Replacer	Drive pinion bearing race
	09608–32010	Steering Knuckle Oil Seal Replacer	Side oil seal
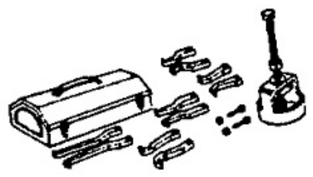	09612–65014	Steering Worm Bearing Puller	Rear bearing outer race
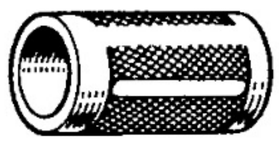	09636–20010	Upper Ball Joint Dust Cover Replacer	Dust deflector
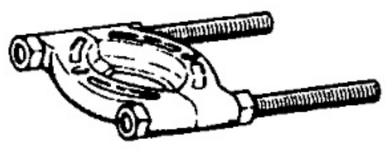	09950–00020	Bearing Remover	Front bearing Dust deflector
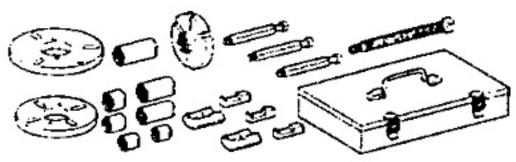	09950–30010	Puller A Set	Companion flange Front bearing
	09950–40010	Puller B Set	Side bearing Intermediate shaft
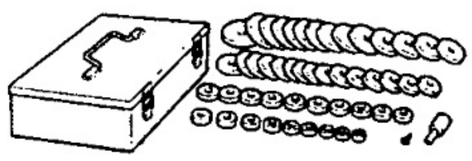	09950–60010	Replacer Set	
	(09951–00380)	Replacer 38	Needle bearing
	(09951–00480)	Replacer 48	Side bearing
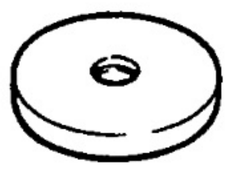	(09951–00540)	Replacer 54	Side bearing outer race (retainer side)
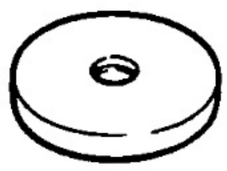	(09951–00600)	Replacer 60	Oil deflector
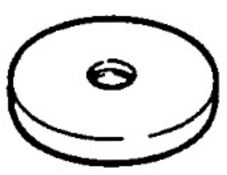	(09951–00650)	Replacer 65	Side bearing outer race (carrier side)
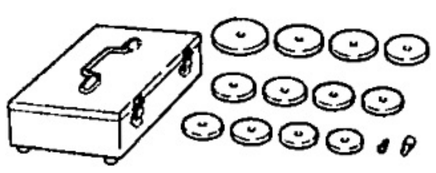	09950–60020	Replacer Set No.2	

SA

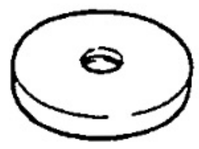	(09951–00710) Replacer 71	Oil deflector
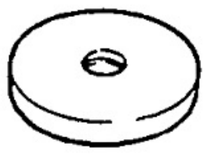	(09951–00790) Replacer 79	Side bearing outer race
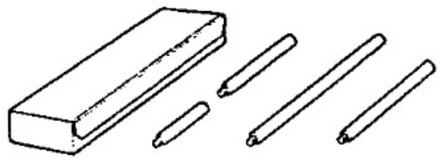	09950–70010 Handle Set	
	(09951–07150) Handle 150	

SA08P–0C

RECOMMENDED TOOLS

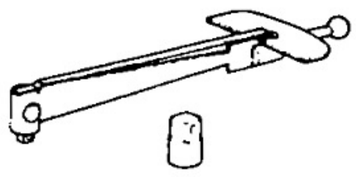	09025–00010 Torque Wrench (30 kgf·cm) .	
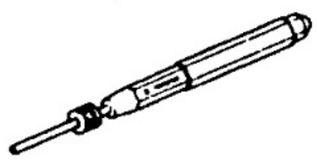	09031–00030 Pin Punch .	
	09044–00010 Torx Socket E14 .	
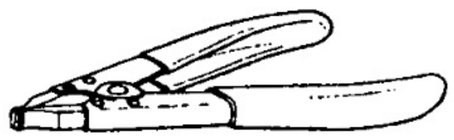	09905–00012 Snap Ring No.1 Expander .	
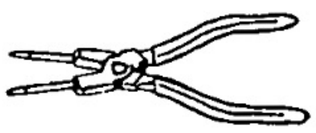	09905–00013 Snap Ring Pliers .	

SA08Q–0F

EQUIPMENT

Dial indicator or dial indicator with magnetic base	
Micrometer	
Torque wrench	

SA08R-0K

LUBRICANT

Item	Capacity	Classification
Differential oil	1.10 liters (1.16 US qts, 0.97 Imp.qts)	Hypoid gear oil API GL–5 SAE 90

SA09S-0Z

SSM (SPECIAL SERVICE MATERIALS)

08826–00090	Seal Packing 1281, THREE BOND 1281 or equivalent (FIPG)	Differential carrier x Side bearing retainer Side bearing retainer x Differential tube flange

ON–VEHICLE REPAIR

COMPONENTS

SA048–0C

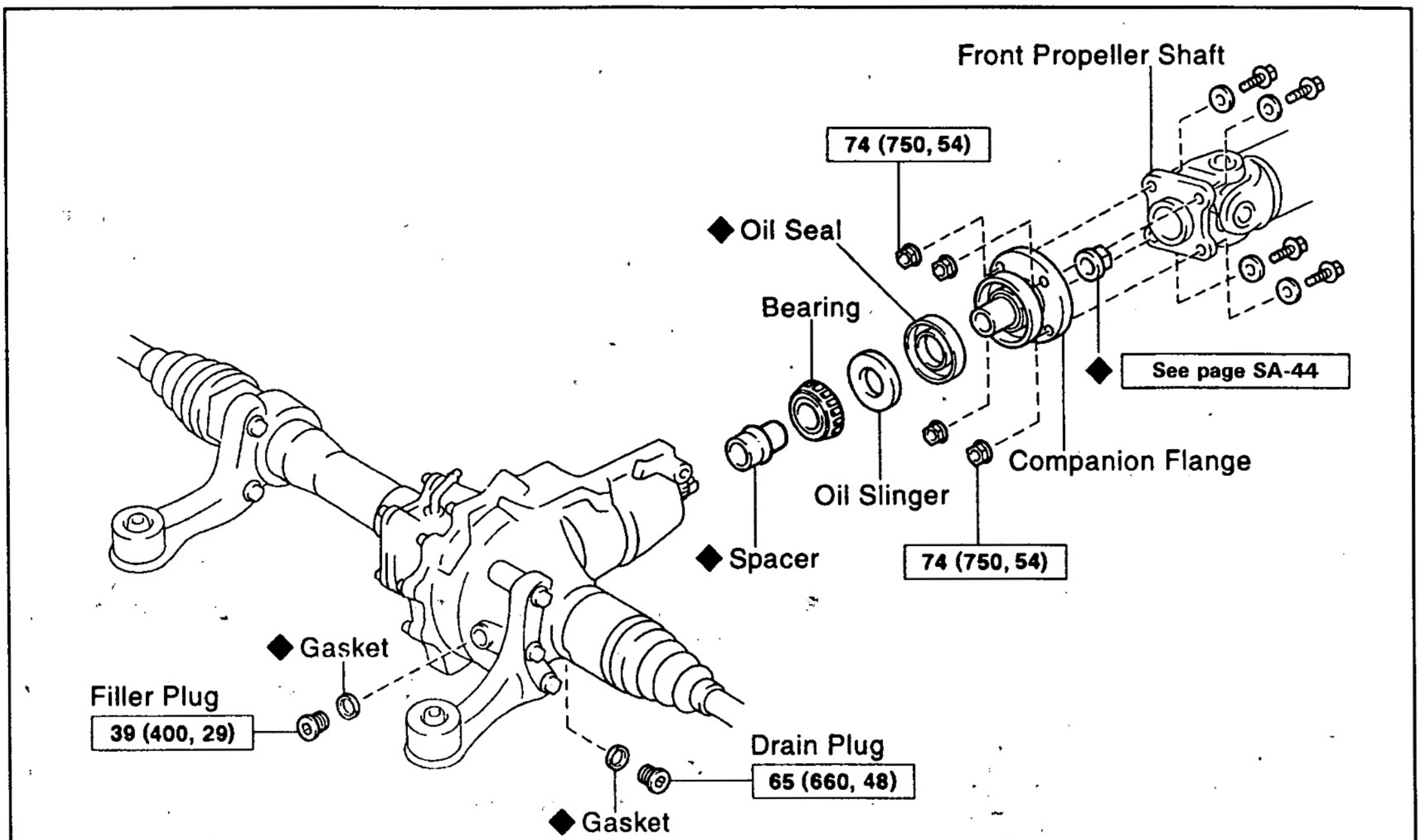

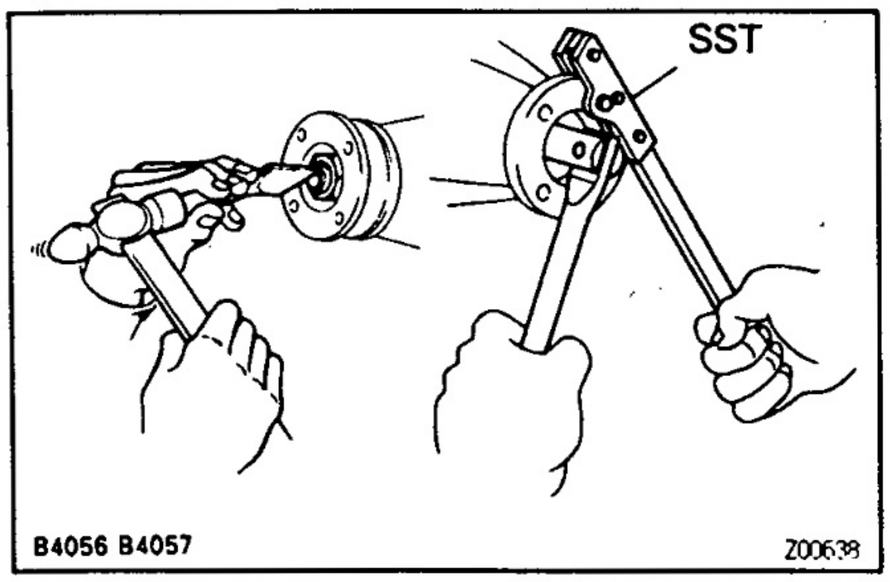

SA1X3–04

REAR OIL SEAL REPLACEMENT

1. **REMOVE ENGINE UNDER COVER**
2. **REMOVE FRONT PROPELLER SHAFT**
   (See page PR–3)
3. **REMOVE COMPANION FLANGE**

(a) Using a chisel and hammer, unstake the nut.

(b) Using SST to hold the flange, remove the nut.
SST 09330–00021

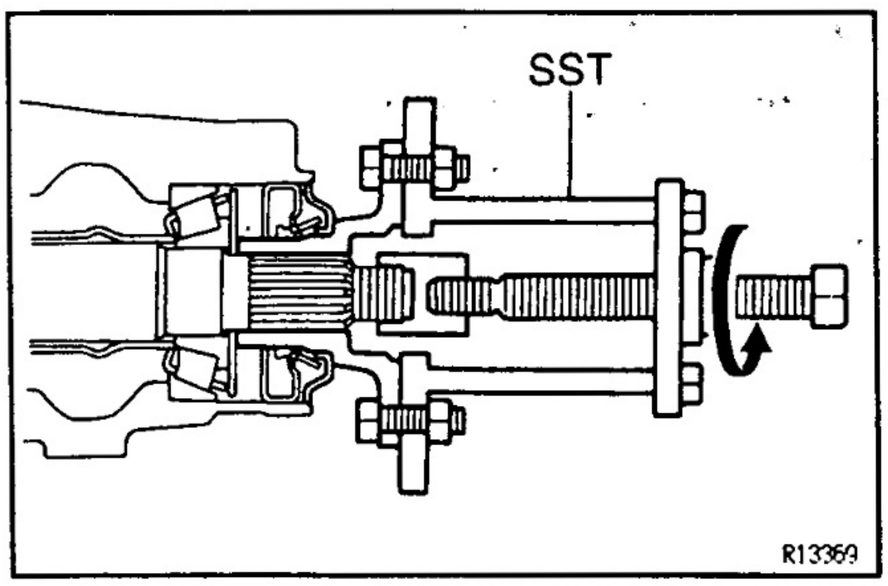

(c) Using SST, remove the companion flange.
SST 09950–30010 (09951–03010, 09953–03010, 09954–03010, 09955–03030, 09956–03020)

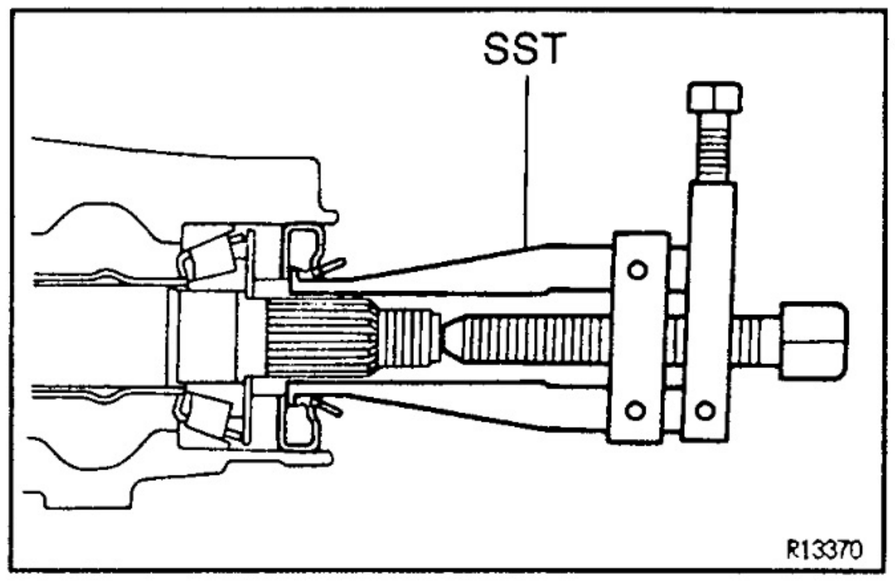

4. REMOVE OIL SEAL AND OIL SLINGER

(a) Using SST, remove the oil seal.
SST 09308–10010

(b) Remove the oil slinger.

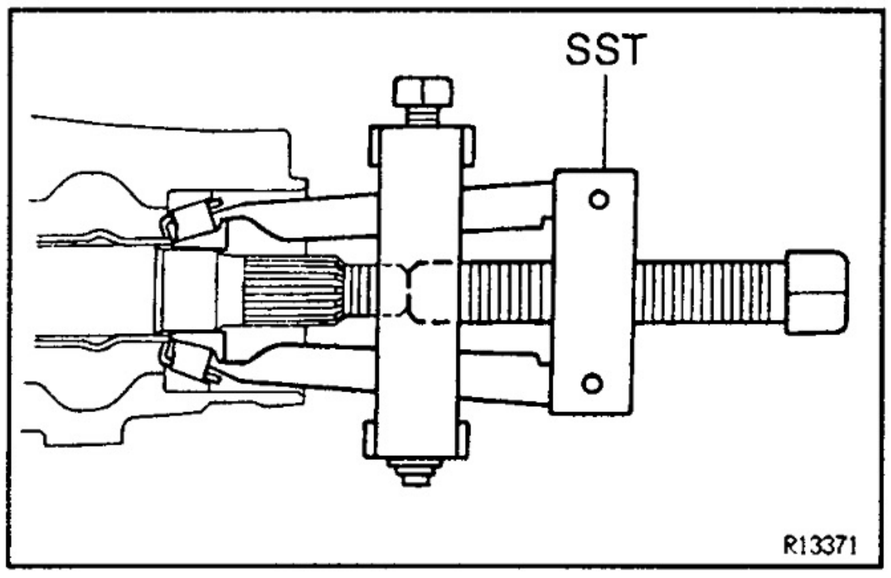

5. REMOVE REAR BEARING AND BEARING SPACER

(a) Using SST, remove the rear bearing from the drive pinion.
SST 09556–22010

(b) Remove the bearing spacer.

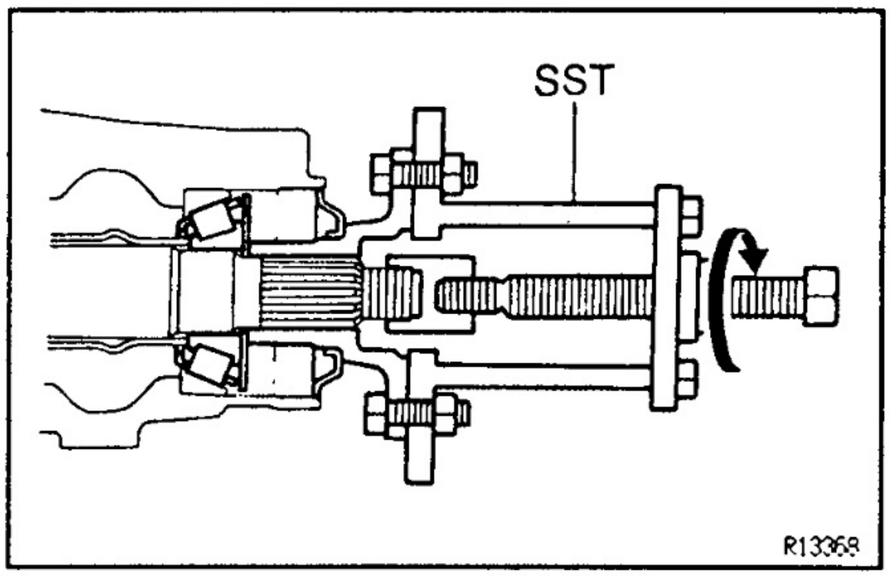

6. INSTALL BEARING SPACER, REAR BEARING AND OIL SLINGER

(a) Install a new bearing spacer, place the rear bearing and oil slinger.

(b) Using SST and the companion flange, install the rear bearing then remove the companion flange.
SST 09950–30010 (09951–03010, 09953–03010, 09954–03010, 09955–03030, 09956–03020)

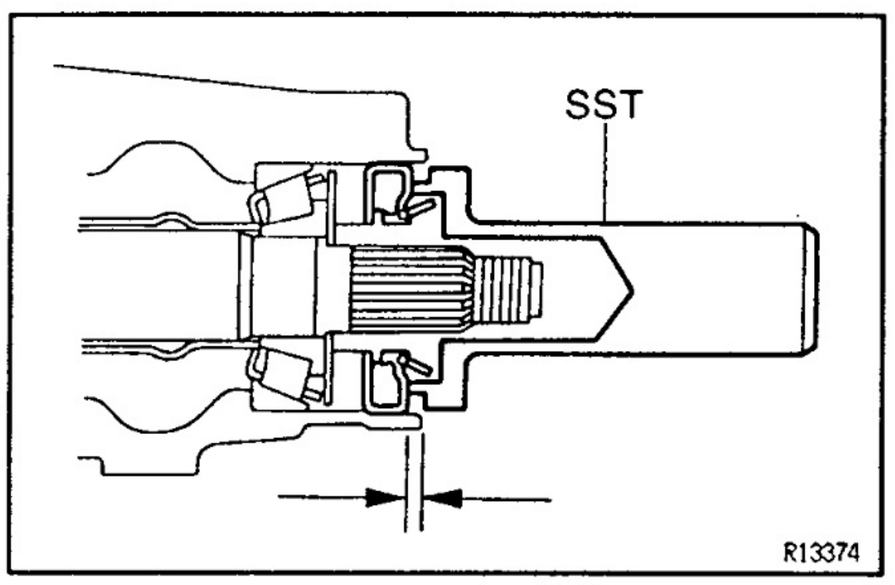

7. INSTALL NEW OIL SEAL

(a) Coat a new oil seal lip with MP grease.

(b) Using SST and a hammer, install the oil seal.
SST 09554–22010
Oil seal drive in depth: 4.5 mm (0.177 in.)

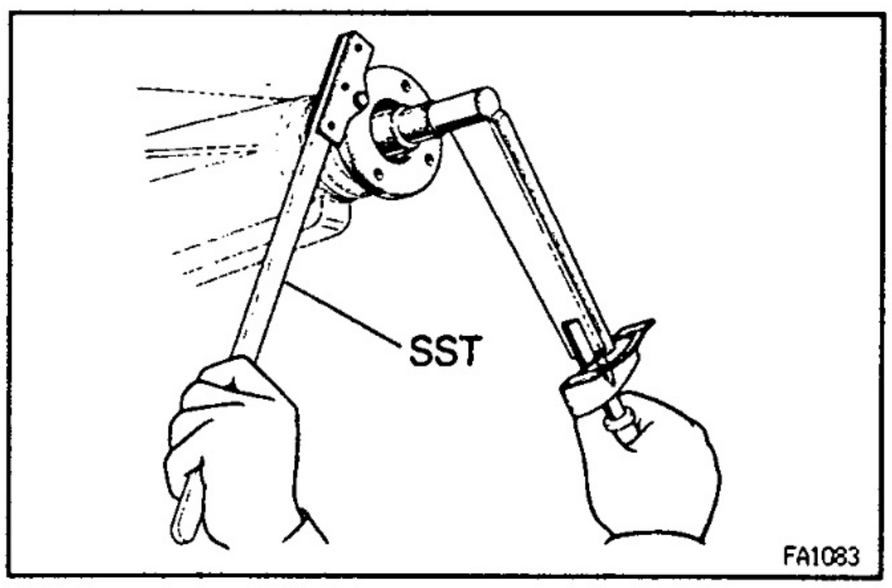

8. INSTALL COMPANION FLANGE

(a) Place the companion flange on the drive pinion.

(b) Coat the threads of a new nut with hypoid gear oil.

(c) Using SST to hold the flange, torque the nut.
SST 09330–00021
Torque: 108 N·m (1,100 kgf·cm, 80 ft·lbf)

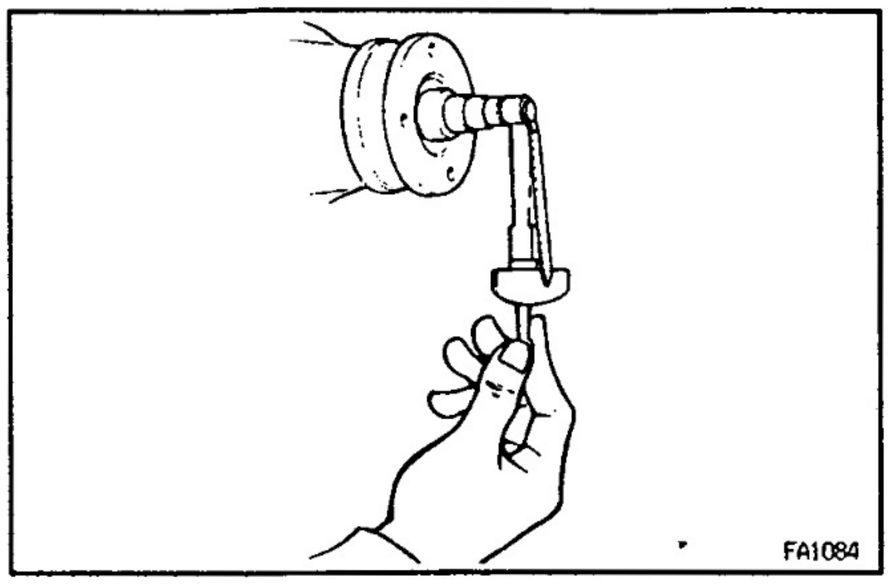

9. **ADJUST DRIVE PINION PRELOAD**
   (See page SA–44)
10. **STAKE DRIVE PINION NUT**
11. **INSTALL FRONT PROPELLER SHAFT**
    (See page PR–8)

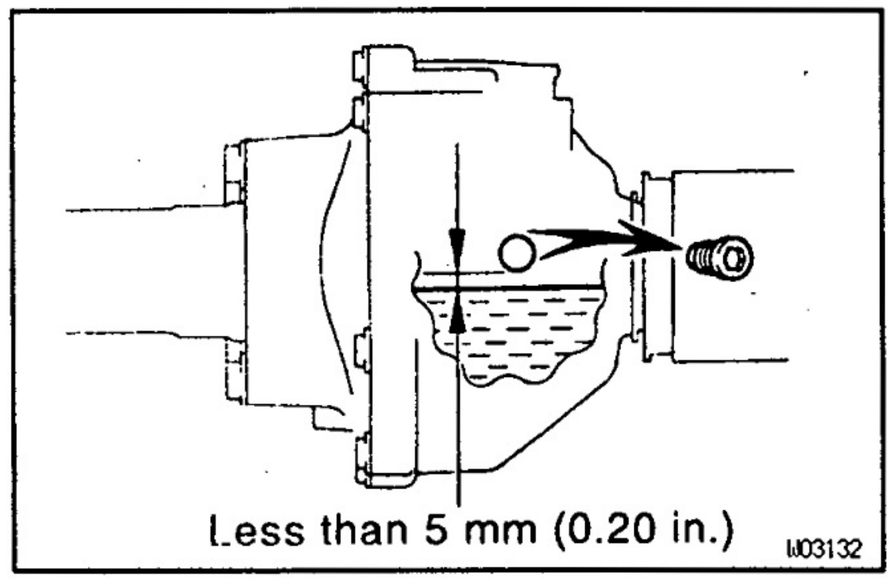

12. **FILL DIFFERENTIAL WITH DIFFERENTIAL OIL**
    Torque: 39 N·m (400 kgf·cm, 29 ft·lbf)
    Oil type: Hypoid gear oil API GL–5
    Recommended oil viscosity: SAE 90
    Capacity: 1.10 liters (1.16 US qts, 0.97 Imp.qts)
13. **INSTALL UNDER COVER**

ASSEMBLY REMOVAL AND INSTALLATION

COMPONENTS

SA04U-0C

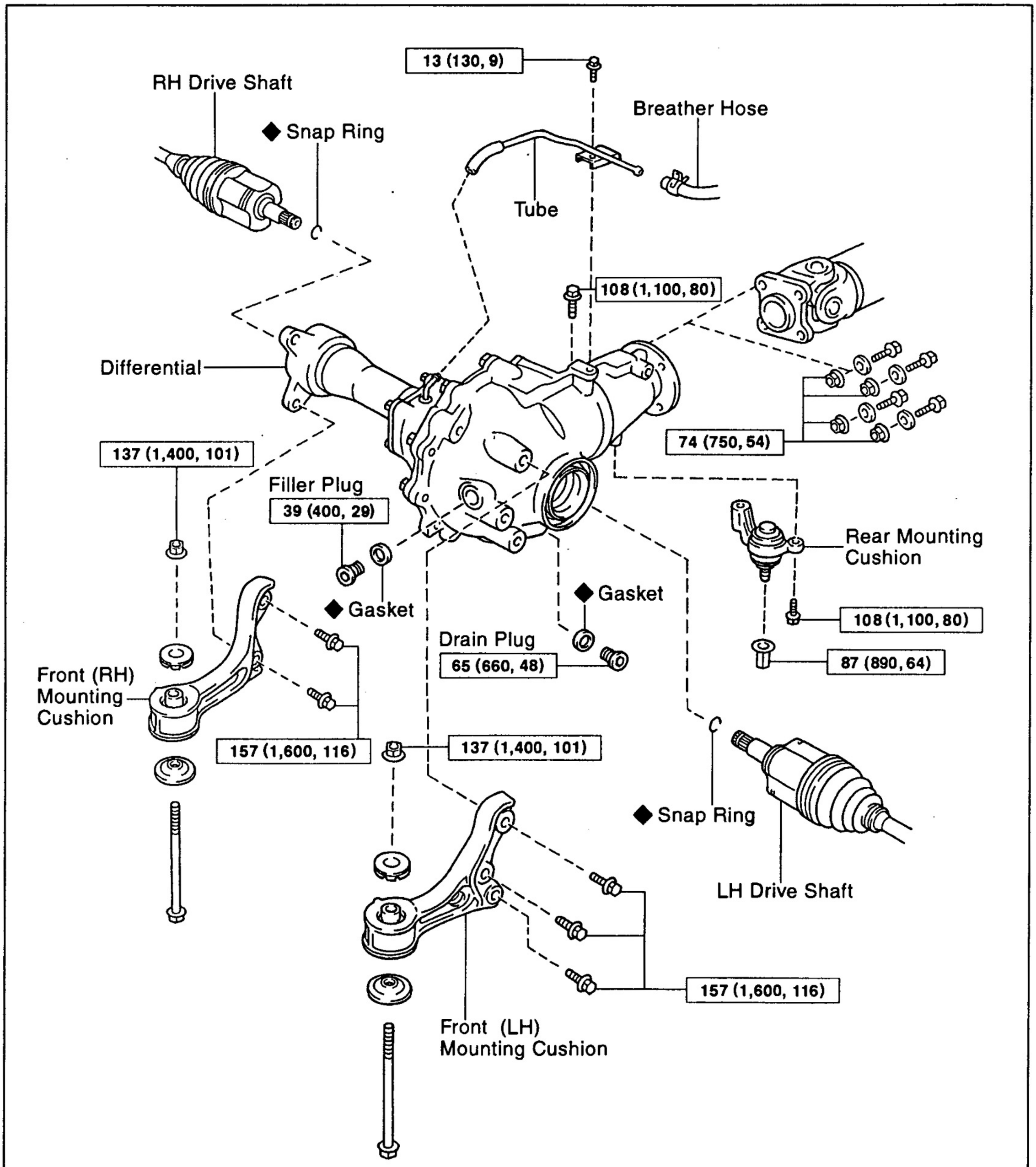

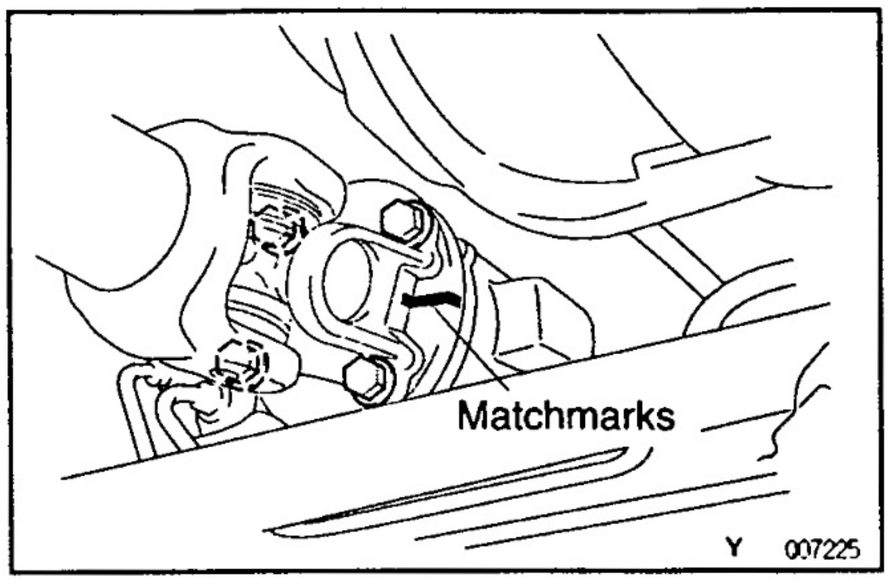

8A27P-02

FRONT DIFFERENTIAL REMOVAL

1. **REMOVE ENGINE UNDER COVER AND DRAIN DIFFERENTIAL OIL**
   Torque: 65 N·m (660 kgf·cm, 48 ft·lbf)
2. **REMOVE DRIVE SHAFTS**
   (See page SA–19)
3. **DISCONNECT FRONT PROPELLER SHAFT**
(a) Place matchmarks on the flanges.
(b) Remove the 4 nuts, washers and bolts, then disconnect the propeller shaft.
   Torque: 74 N·m (750 kgf·cm, 54 ft·lbf)
4. **REMOVE BREATHER TUBE FROM DIFFERENTIAL**
(a) Disconnect the breather hose.
(b) Remove the bolt and tube from the differential.
   Torque: 13 N·m (130 kgf·cm, 9 ft·lbf)

SA

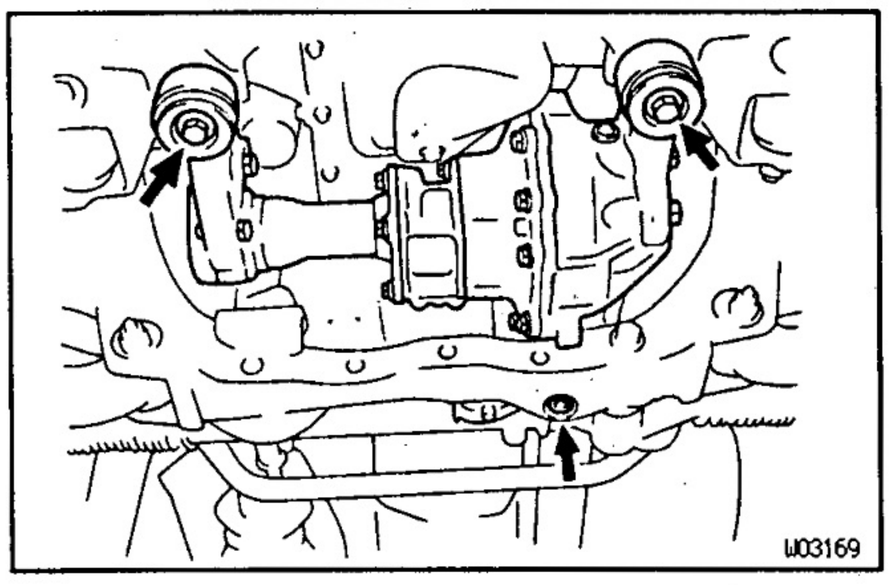

5. **REMOVE FRONT DIFFERENTIAL ASSEMBLY**
(a) Support the front differential with a jack.
(b) Remove the rear mounting nut.
   Torque: 87 N·m (890 kgf·cm, 64 ft·lbf)
(c) Remove the front mounting bolts.
   Torque: 137 N·m (1,400 kgf·cm, 101 ft·lbf)
(d) Lower the jack and remove the front differential assembly.
6. **REMOVE DIFFERENTIAL MOUNTING CUSHIONS**
(a) Remove the rear mounting cushion.
   Torque: 108 N·m (1,100 kgf·cm, 80 ft·lbf)
(b) Remove the front mounting cushions.
   Torque: 157 N·m (1,600 kgf·cm, 116 ft·lbf)

8A27Q-03

FRONT DIFFERENTIAL INSTALLATION

Installation is in the reverse order of removal.

HINT: After installation, fill differential with differential oil. (See page SA–29)

DIFFERENTIAL CARRIER
COMPONENTS

8A04X-0F

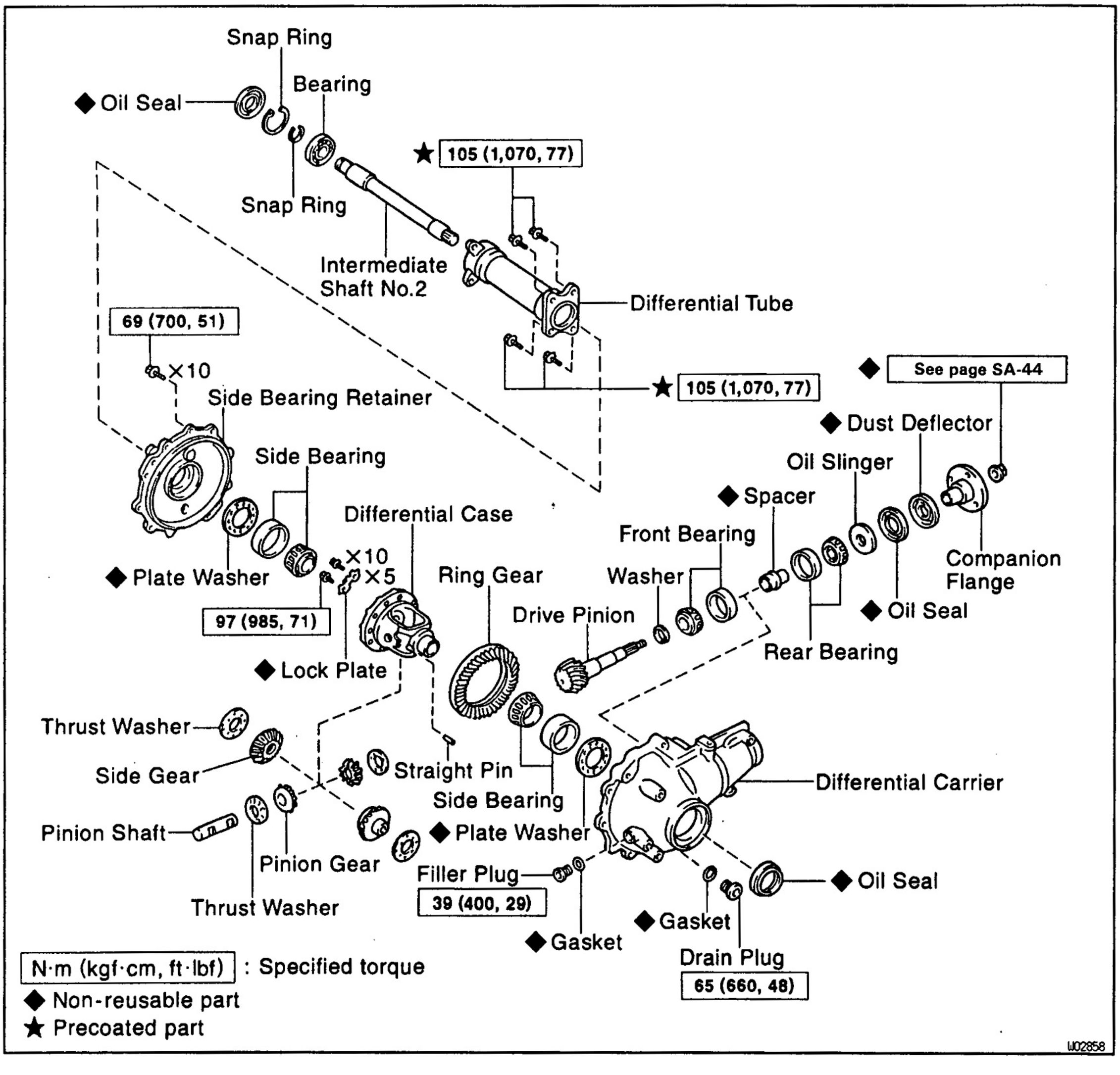

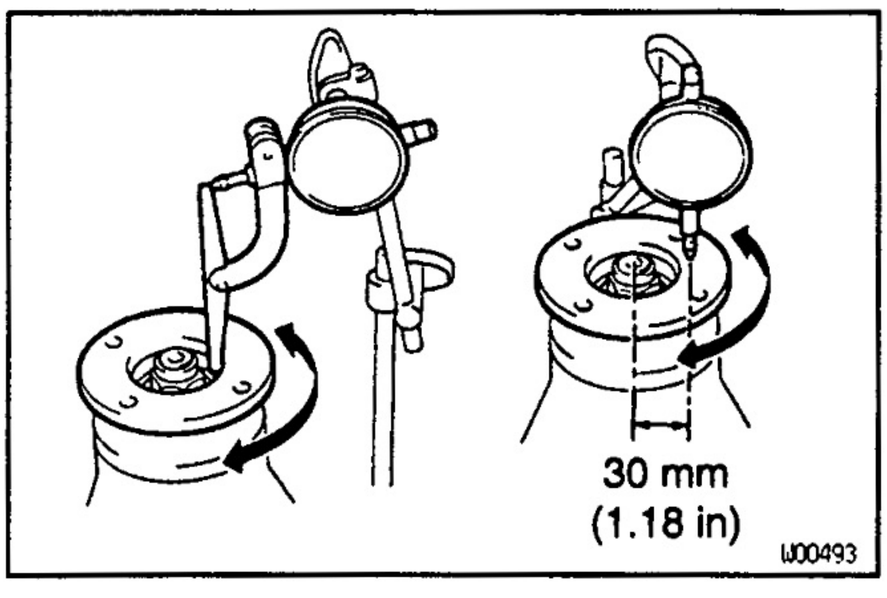

DIFFERENTIAL CARRIER INSPECTION

8A1X1-03

1. **CHECK RUNOUT OF COMPANION FLANGE**
   Using a dial indicator, measure the vertical and lateral runout of the companion flange.
   Maximum runout: 0.10 mm (0.0039 in.)
   If the runout is greater than the maximum, replace the companion flange.

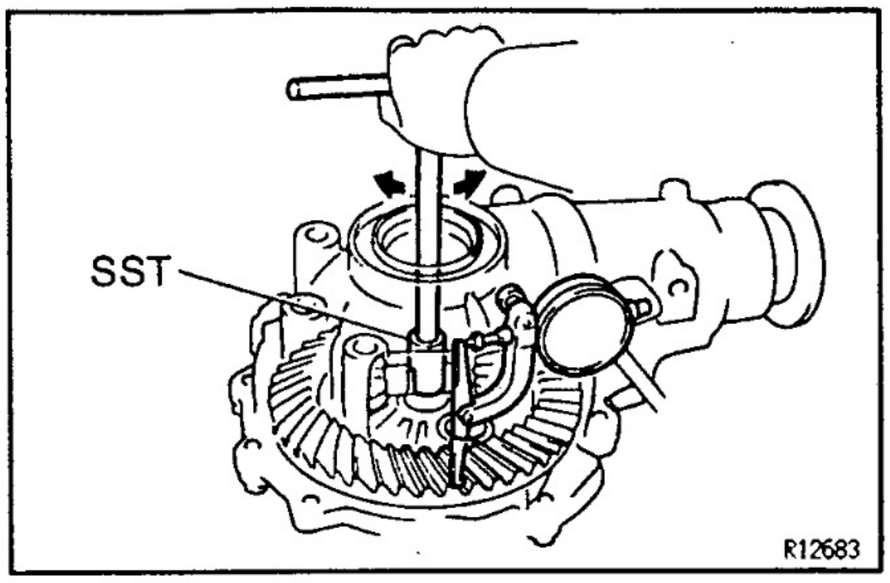

2. CHECK RING GEAR BACKLASH

Using SST and a dial indicator, measure the ring gear backlash.

SST 09564–32011

Backlash: 0.10–0.18 mm (0.0039–0.0071 in.)

If the backlash is not within the specification, adjust the side bearing preload or repair as necessary.

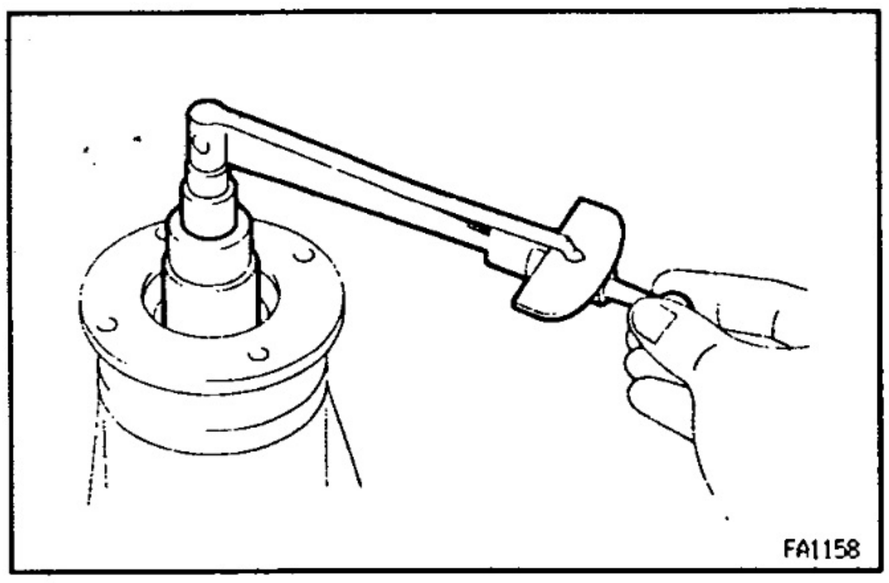

3. MEASURE DRIVE PINION PRELOAD

Using a torque wrench, measure the preload of backlash between the drive pinion and ring gear.

Preload (at starting):

0.6–1.0 N·m (6–10 kgf·cm, 5.2–8.7 in.·lbf)

4. CHECK TOTAL PRELOAD

Using a torque wrench, measure the preload with the teeth of the drive pinion and ring gear in contact.

Total preload (at starting):

Drive pinion preload plus

0.4–0.6 N·m (4–6 kgf·cm, 3.5–5.2 in.·lbf)

If necessary, disassemble and inspect the differential.

SA

DIFFERENTIAL CARRIER DISASSEMBLY SA2PG-01

1. REMOVE DIFFERENTIAL TUBE

(a) Remove the bolts.

(b) Using a plastic hammer, tap on the differential tube to remove it.

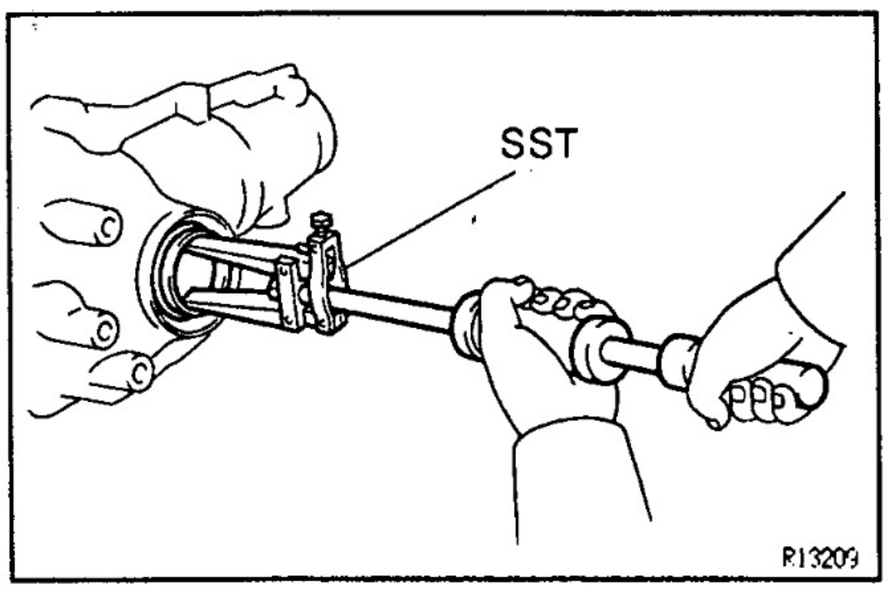

2. REMOVE SIDE OIL SEAL

Using SST, remove the side oil seal.

SST 09308–00010

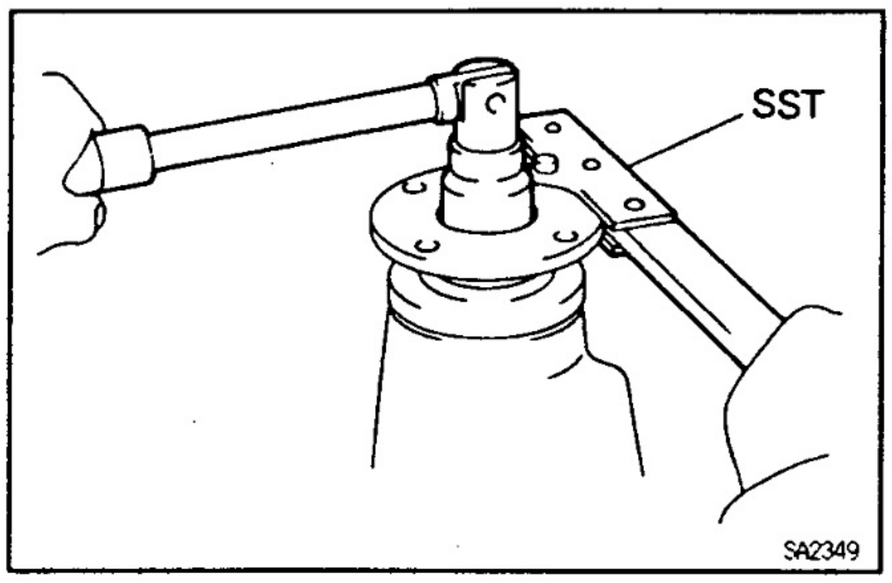

3. REMOVE COMPANION FLANGE

(a) Using a chisel and hammer, unstake the nut.

(b) Using SST to hold the flange, remove the nut.
SST 09330–00021

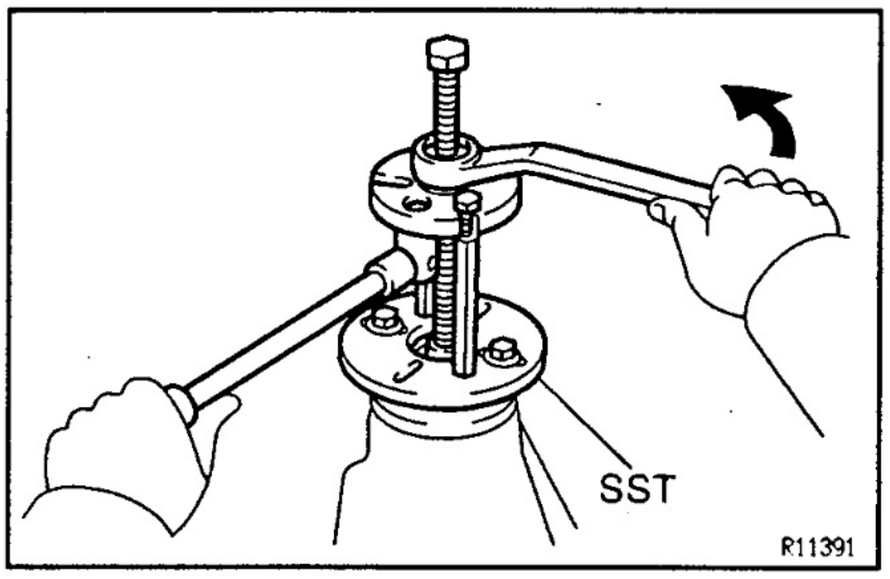

(c) Using SST, remove the companion flange.
SST 09950–30010 (09951–03010, 09953–03010, 09954–03010, 09955–03030, 09956–03020)

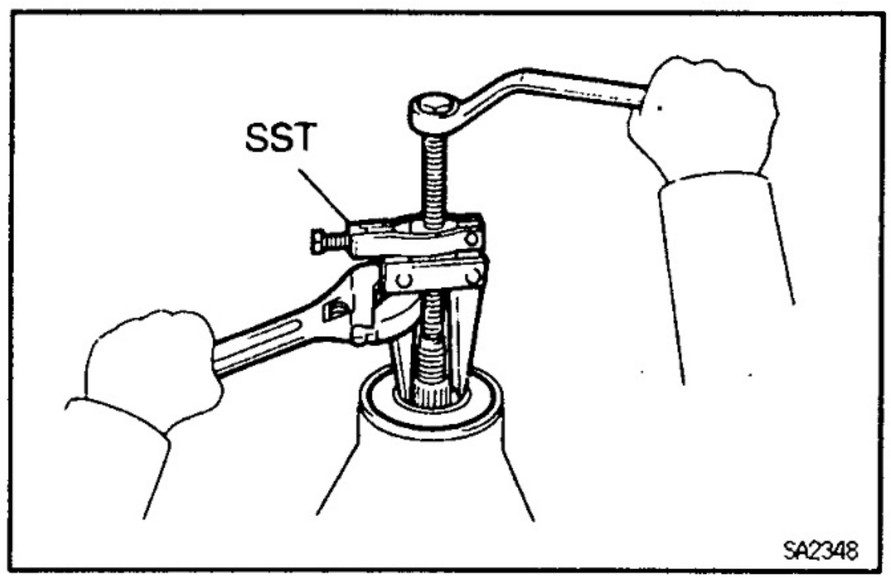

4. REMOVE OIL SEAL AND OIL SLINGER

(a) Using SST, remove the oil seal.
SST 09308–10010

(b) Remove the oil slinger.

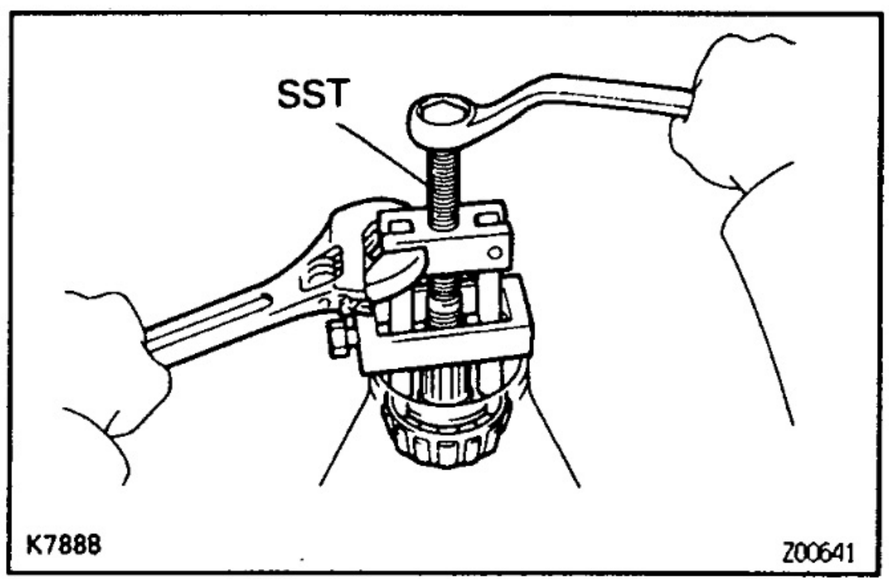

5. REMOVE REAR BEARING AND BEARING SPACER

(a) Using SST, remove the rear bearing from the drive pinion.
SST 09556–22010

(b) Remove the bearing spacer.

6. REMOVE SIDE BEARING RETAINER

Remove the 10 bolts and tap out the retainer with a plastic hammer.

7. REMOVE DIFFERENTIAL CASE ASSEMBLY

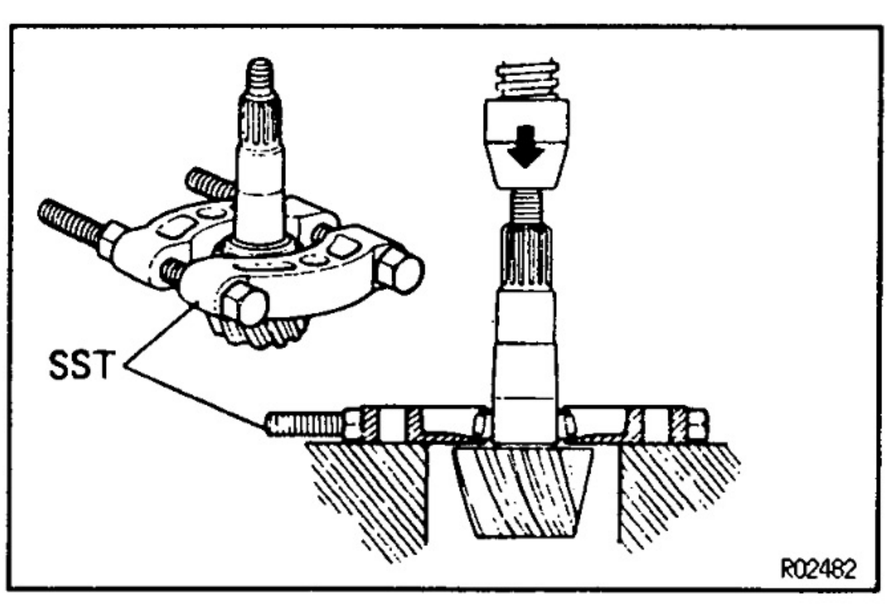

8. REMOVE DRIVE PINION FROM DIFFERENTIAL CARRIER

9. REMOVE DRIVE PINION FRONT BEARING

Using SST and a press, remove the bearing and washer from the drive pinion.
SST 09950–00020
HINT: If the drive pinion or ring gear are damaged, replace them as a set.

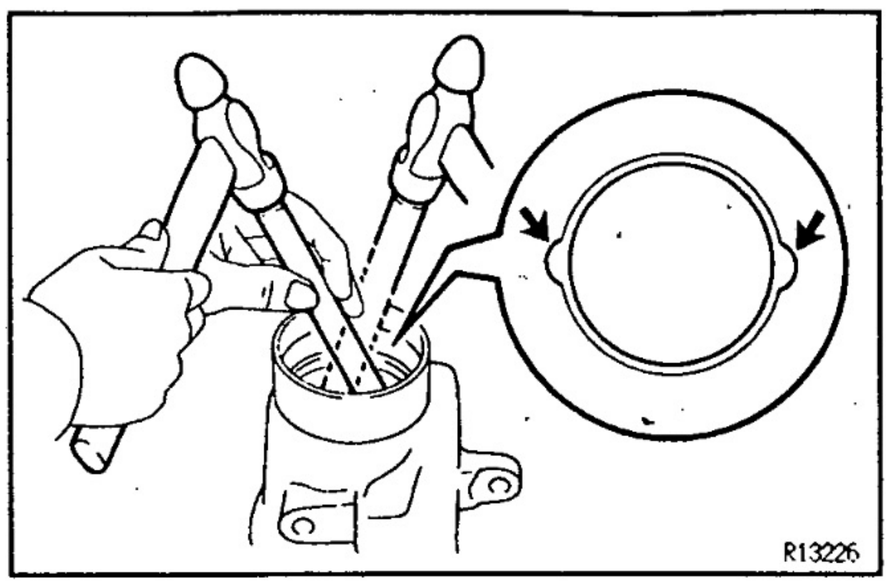

10. REMOVE DRIVE PINION BEARING OUTER RACES

(a) Using a brass bar and hammer, remove the front bearing outer race.

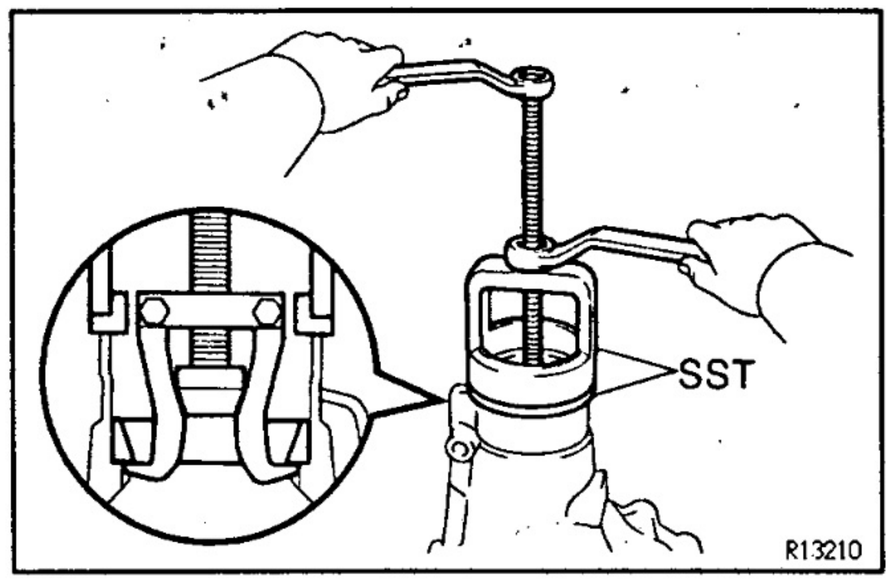

(b) Using SST, remove the rear bearing outer race.
SST 09502–12010, 09612–65014 (09612–01020, 09612–01050)

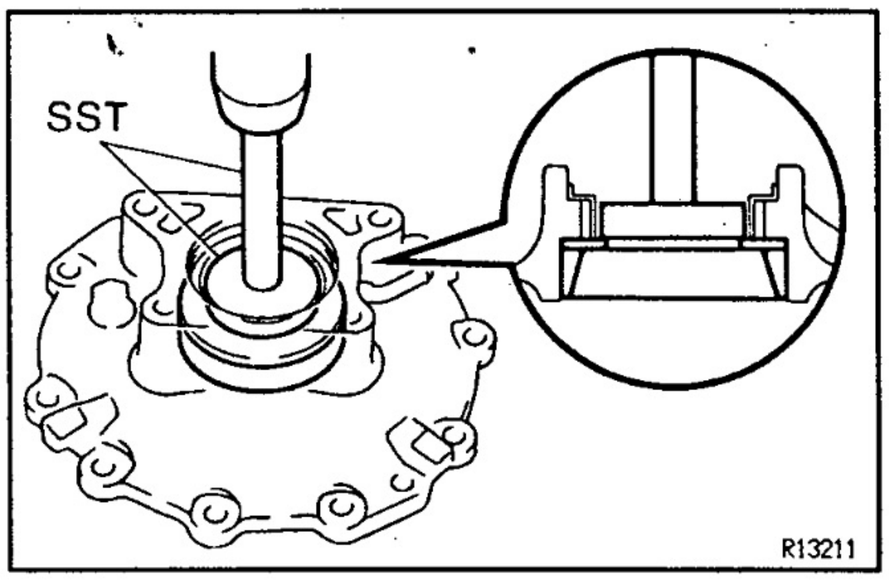

11. REMOVE SIDE BEARING OUTER RACES

HINT:

- Measure the plate washer and note the thickness.
- Tag the bearing outer races to show the location for reassembly.

(a) Using SST and a press, remove the plate washer and outer race from the bearing retainer.
SST 09950–60010 (09951–00540), 09550–70010 (09951–01500)

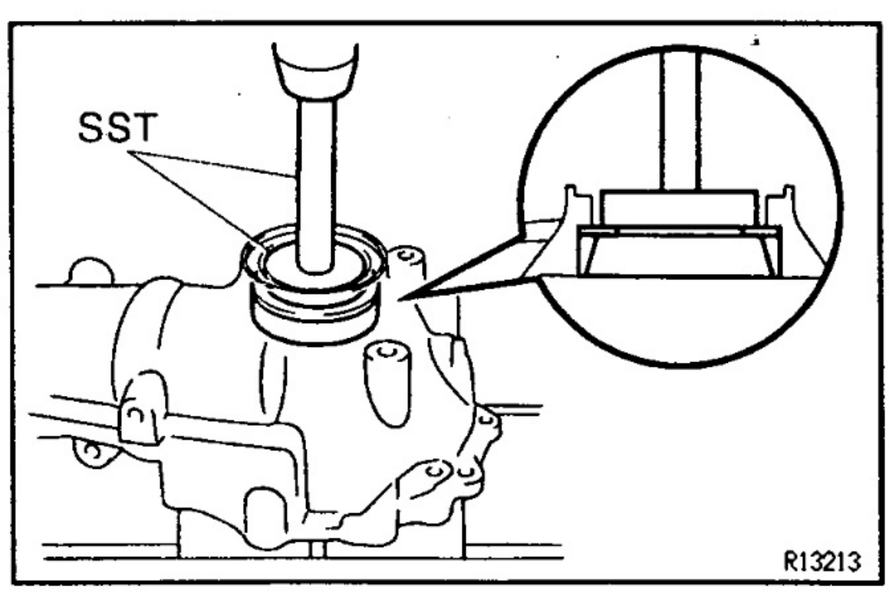

(b) Using SST and a press, remove the outer race and place washer from the differential carrier.
SST 09950–60010 (09951–00650), 09950–70010 (09951–07150)

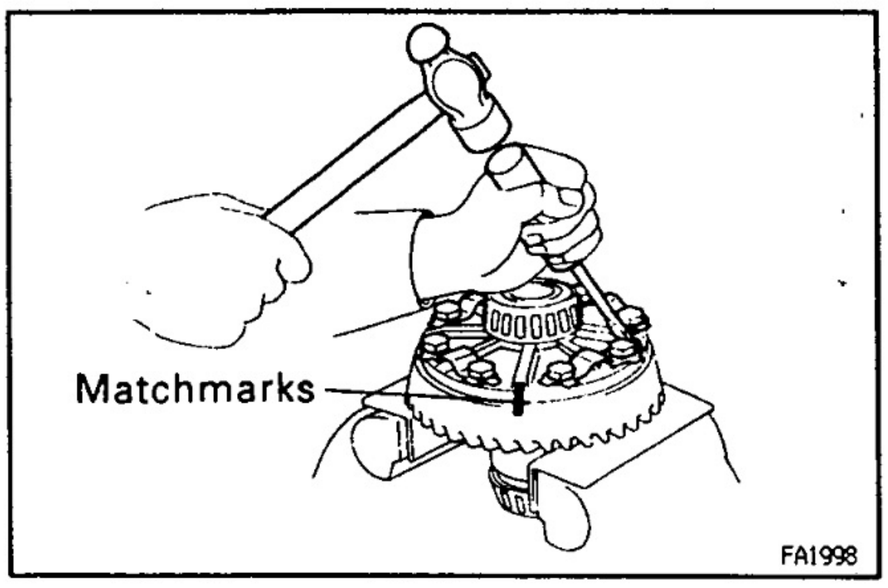

12. REMOVE RING GEAR

(a) Place matchmarks on the ring gear and differential case.
(b) Using a screwdriver, unstake the 5 lock plates.
(c) Remove the 10 bolts and 5 lock plates.
(d) Using a plastic hammer, tap on the ring gear to separate it from the differential case.

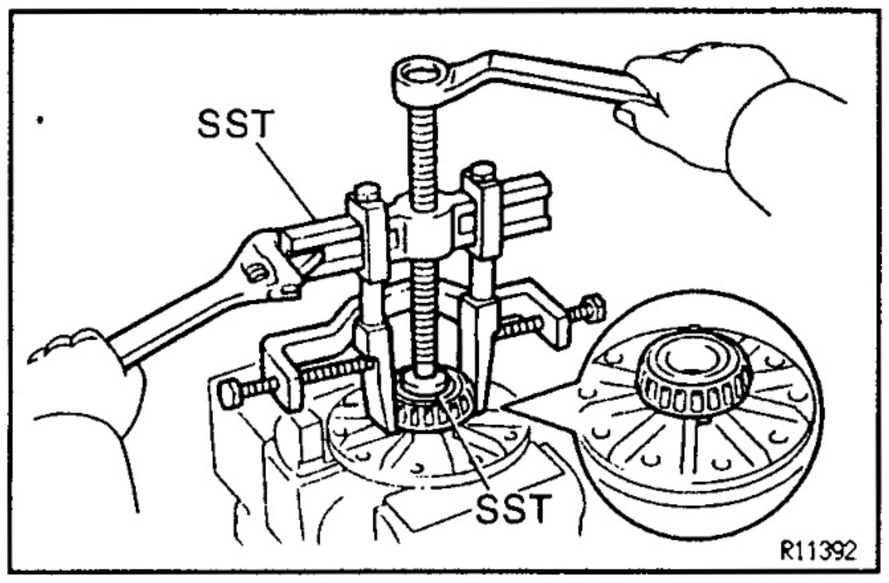

13. REMOVE SIDE BEARINGS

Using SST, remove the 2 side bearings from the differential case.

SST 09950–40010 (09951–04010, 09952–04010, 09953–04020, 09954–04010, 09954–04010, 09955–04060, 09957–04010, 09958–04010), 09950–60010 (09951–00480)

HINT: Fix the claws of SST to the notch in the differential case.

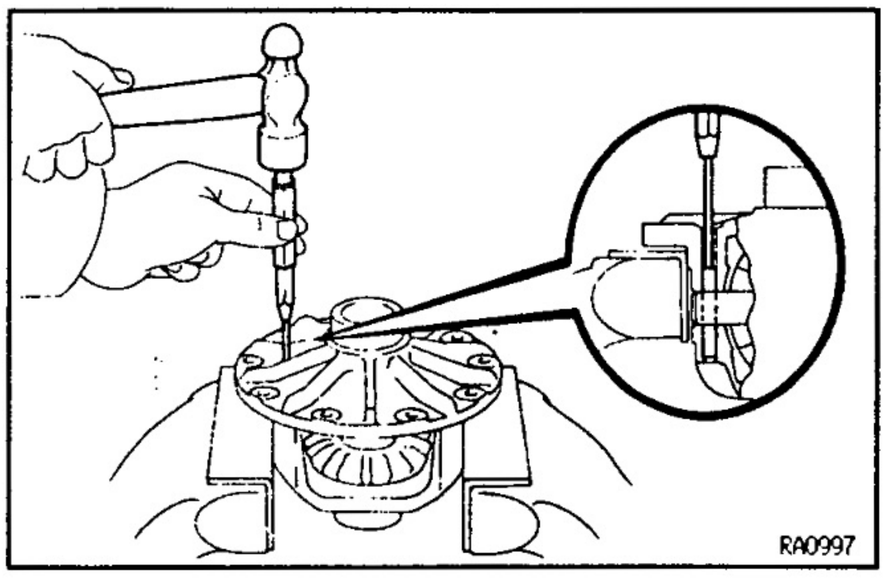

14. DISASSEMBLE DIFFERENTIAL CASE ASSEMBLY

(a) Using a pin punch and hammer, remove the straight pin.

(b) Remove these parts:
- 2 Pinion shafts
- 2 Pinion gears
- 2 Pinion gear thrust washers
- 2 Side gears
- 2 Side gear thrust washers

SA

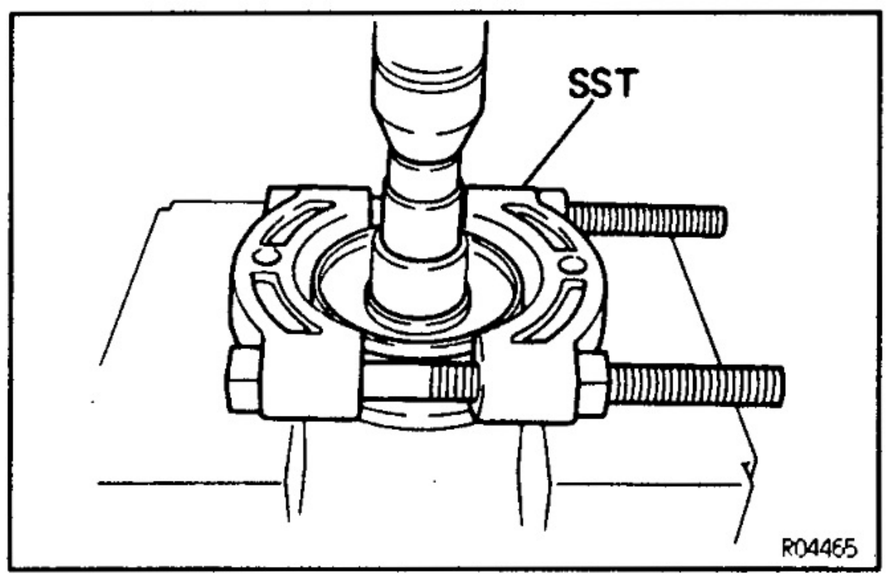

COMPANION FLANGE DUST DEFLECTOR REPLACEMENT

SA0KA–06

1. REMOVE DUST DEFLECTOR

Using SST and a press, remove the dust deflector.

SST 09950–00020

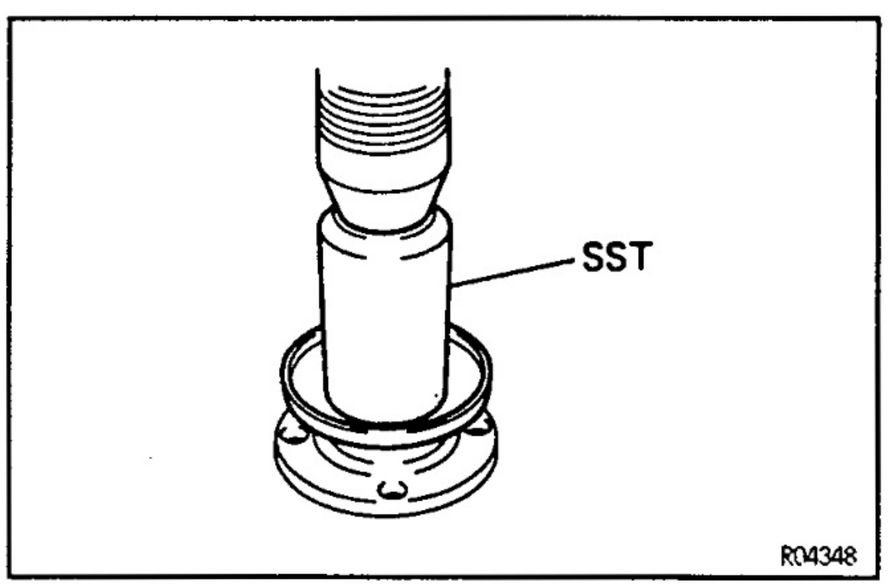

2. INSTALL NEW DUST DEFLECTOR

Using SST and a press, install a new dust deflector.

SST 09636–20010

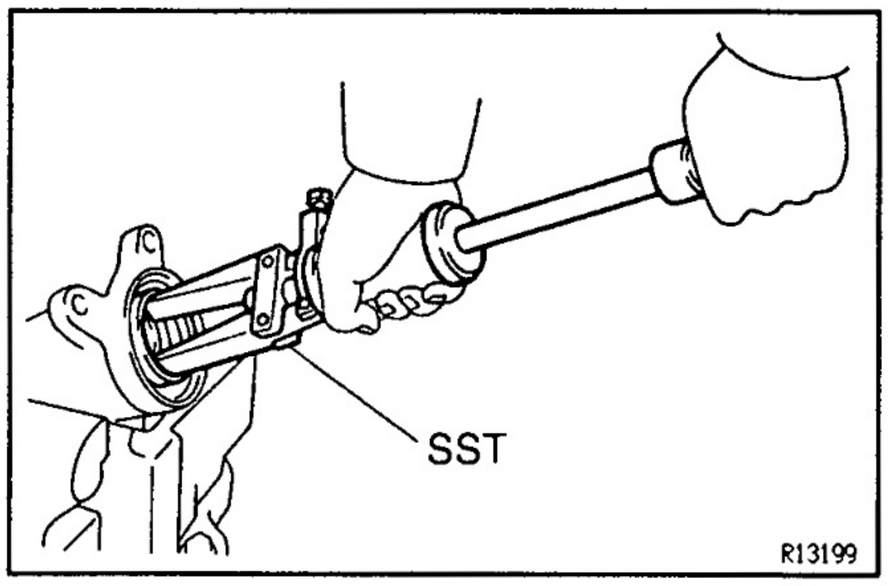

INTERMEDIATE SHAFT NO.2 REPLACEMENT

SA2PR–01

1. REMOVE OIL SEAL

Using SST, remove the oil seal from the differential tube.

SST 09308–00010

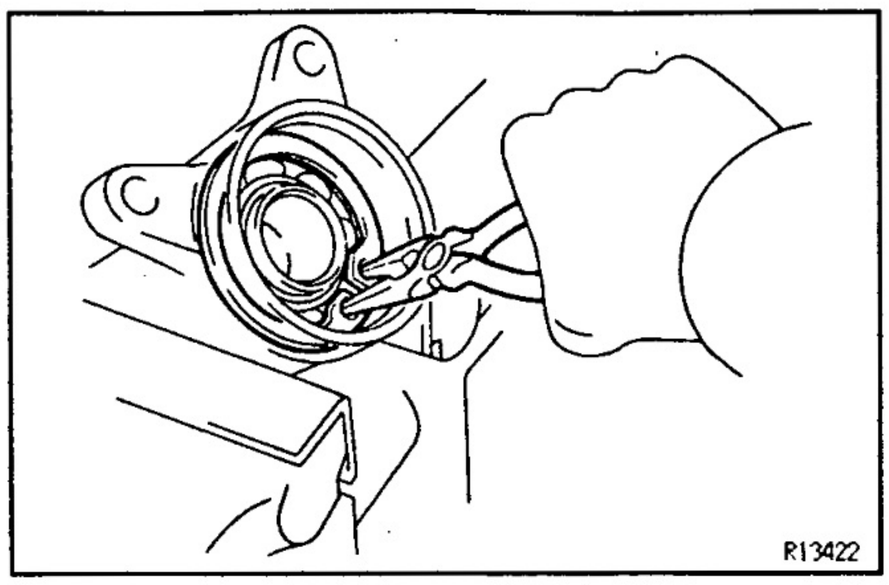

2. REMOVE INTERMEDIATE SHAFT NO.2 FROM DIFFERENTIAL TUBE

(a) Using needle nose pliers, remove the snap ring.

(b) Remove the shaft from the differential tube.

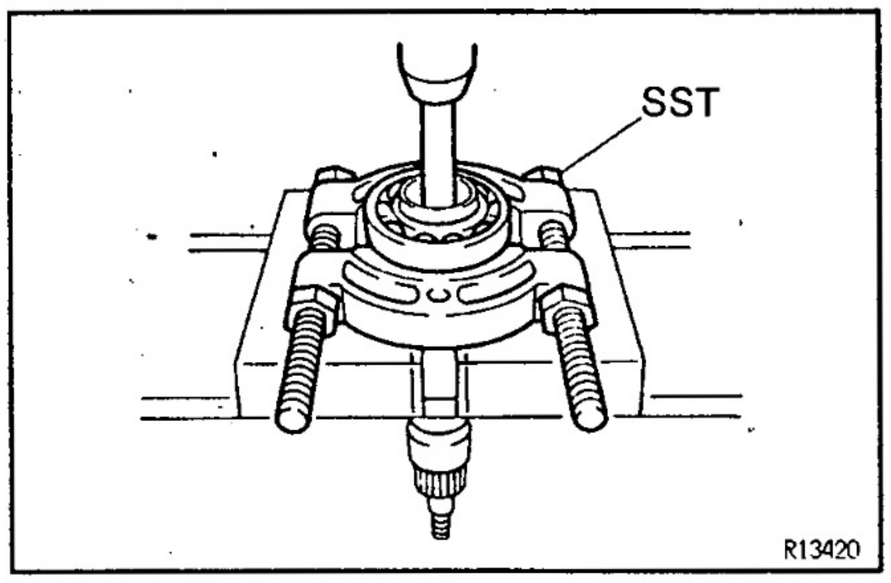

3. REMOVE INTERMEDIATE SHAFT NO.2 BEARING

(a) Using a snap ring expander, remove the snap ring.

(b) Using SST, a brass bar and press, remove the bearing.
SST 09950—00020

SA

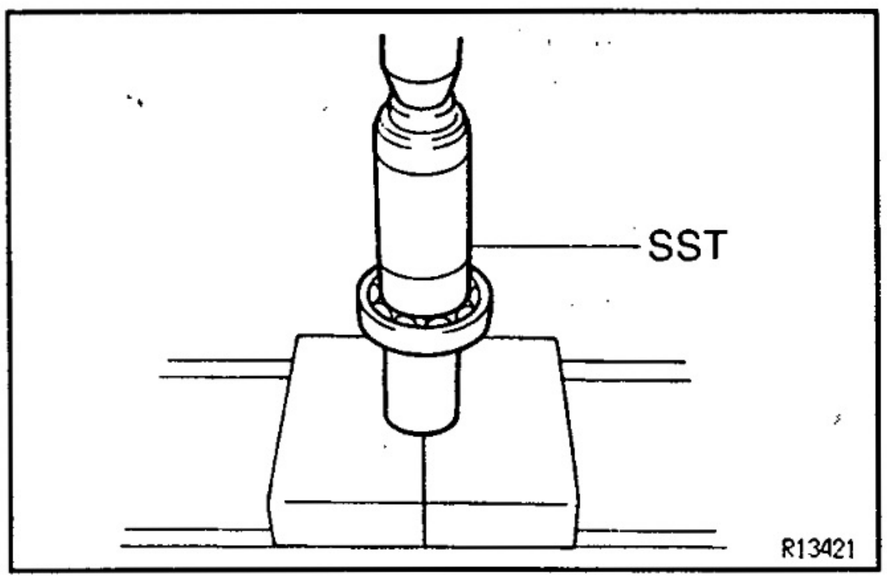

4. INSTALL NEW INTERMEDIATE SHAFT NO.2 BEARING

(a) Using SST and a press, install a new bearing.
SST 09309—37010

(b) Using a snap ring expander, install the snap ring.

5. INSTALL INTERMEDIATE SHAFT NO.2

(a) Install the shaft into the differential tube.

(b) Using needle nose pliers, install the snap ring.

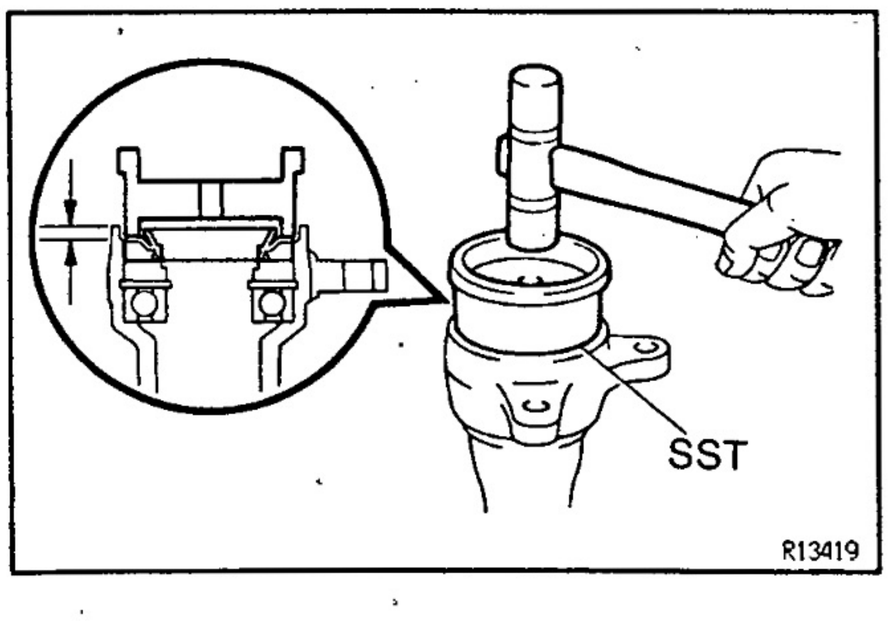

6. INSTALL NEW OIL SEAL

(a) Using SST, install a new oil seal.
SST 09223—15020
Oil seal drive in depth: 5.5 mm (0.217 in.)

(b) Coat the oil seal lip with MP grease.

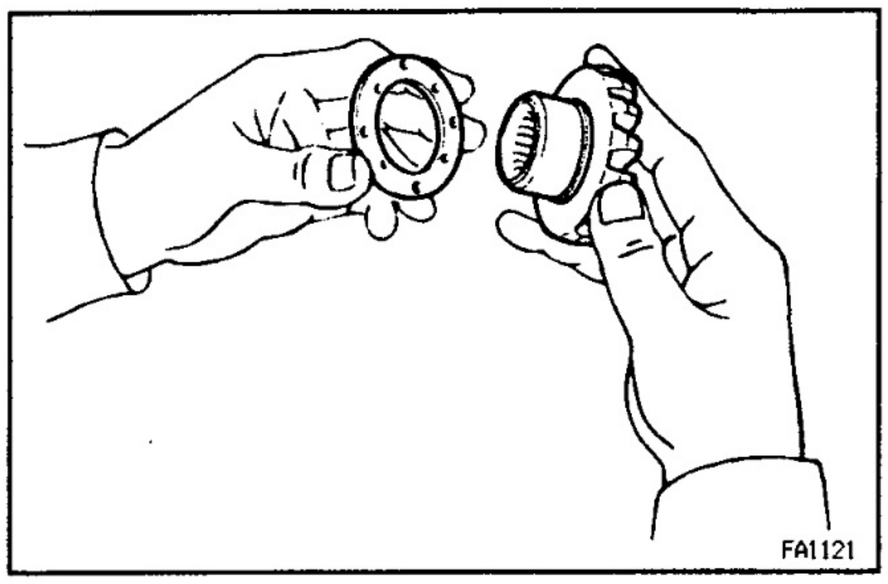
FA1121

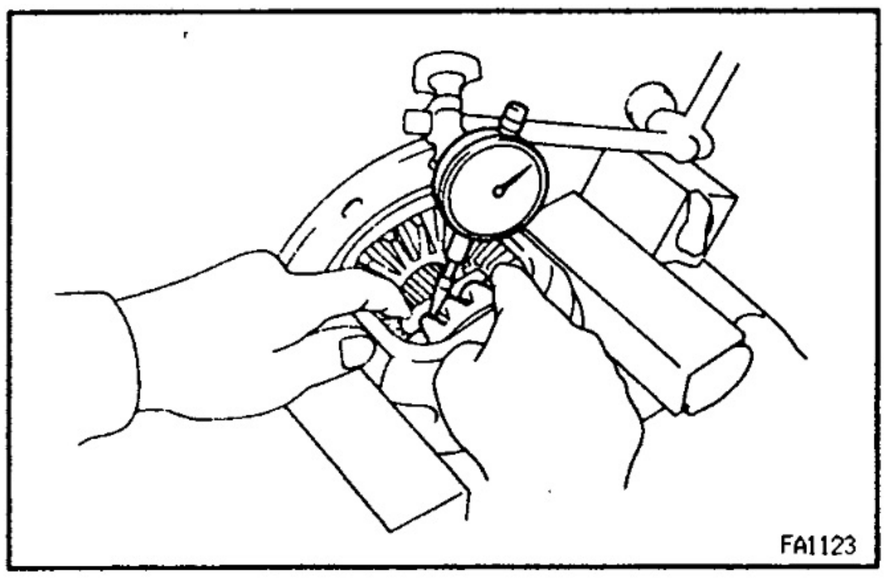
FA1123

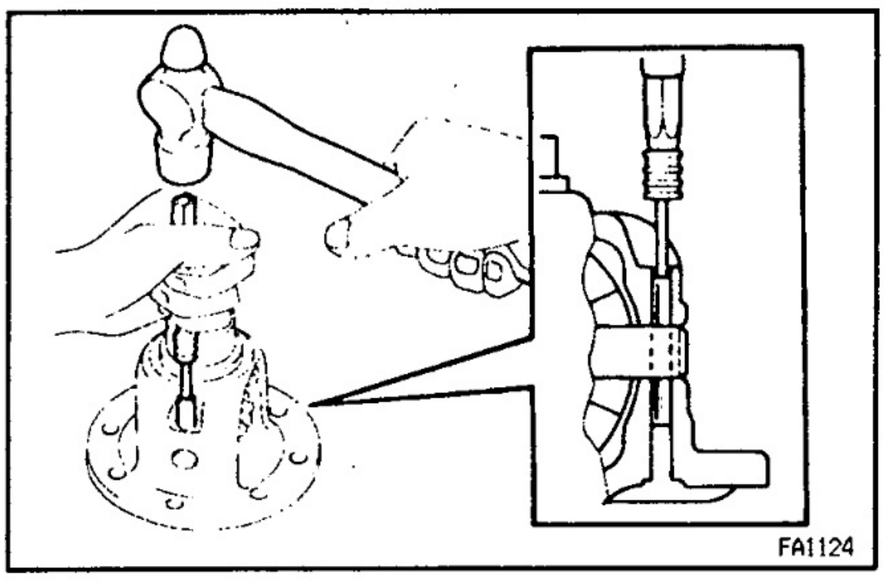
FA1124

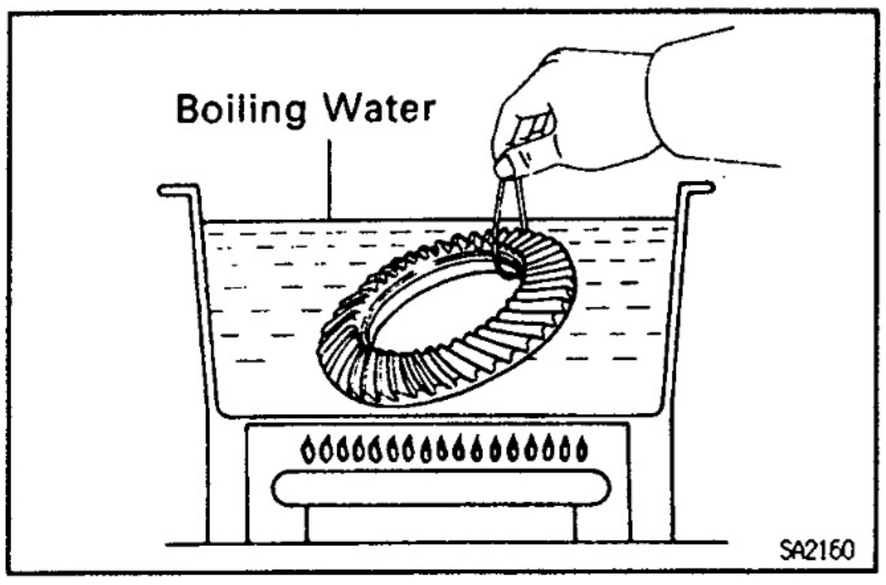

SA2160

SA

DIFFERENTIAL CARRIER ASSEMBLY

SA2P8-01

1. ASSEMBLE DIFFERENTIAL CASE

(a) Install the proper thrust washers on the side gears.
HINT: Using the table below, select thrust washers which will ensure that the backlash is within the specifications.
Washer thickness

Thickness mm (in.)	Thickness mm (in.)
0.96–1.04 (0.0378–0.0409)	1.16–1.24 (0.0457–0.0488)
1.06–1.14 (0.0417–0.0449)	1.26–1.34 (0.0496–0.0528)

(b) Install the side gears, pinion gears, pinion gear thrust washers and pinion shaft in the differential case.
HINT: Align the holes of the differential case and pinion shaft.

(c) Measure the side gear backlash with holding one pinion gear toward the differential case.
Backlash: 0–0.20 mm (0–0.0079 in.)
If the backlash is not within the specification, install 2 side gear thrust washers with different thicknesses.

2. INSTALL STRAIGHT PIN AND STAKE DIFFERENTIAL CASE

(a) Using a pin punch and hammer, install the straight pin through the differential case and hole of the pinion shaft.

(b) Stake the differential case.

3. INSTALL RING GEAR ON DIFFERENTIAL CASE

(a) Clean the contact surfaces of the differential case and ring gear.

(b) Heat the ring gear to about 100°C (212°F) in boiling water.

(c) Carefully remove the ring gear from the water.

(d) After the moisture on the ring gear has completely evaporated, quickly install the ring gear to the differential case.
HINT: Align the matchmarks on the ring gear and differential case.

(e) Temporarily install 5 new lock plates and 10 bolts so that the bolt holes in the ring gear and differential case are not misaligned.

(f) After the ring gear has cooled sufficiently, torque the ring gear set bolts.
Torque: 97 N·m (985 kgf·cm, 71 ft·lbf)

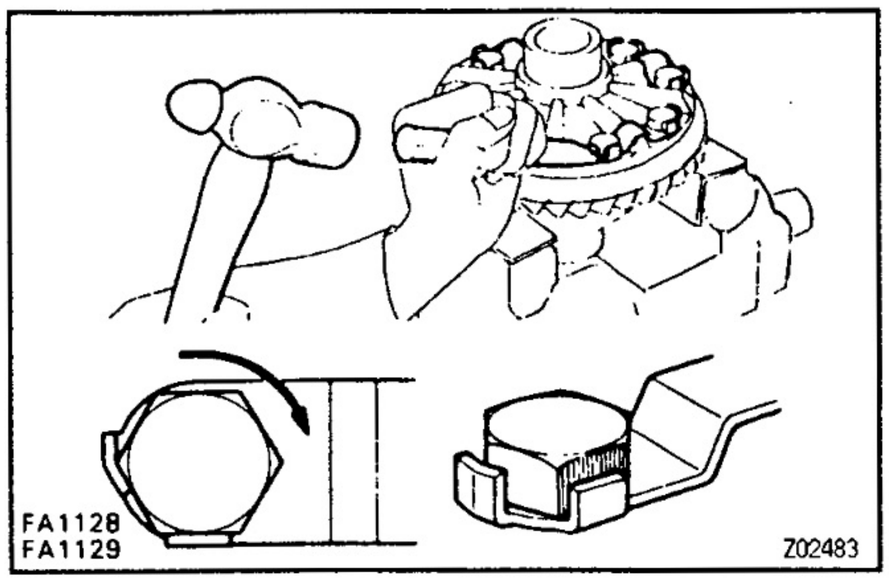

(g) Using a drift punch and hammer, stake the 5 lock plates.
HINT: Stake one claw flush with the flat surface of the bolt. For the claw contacting the protruding portion of the bolt, stake only the half portion of the tightening side.

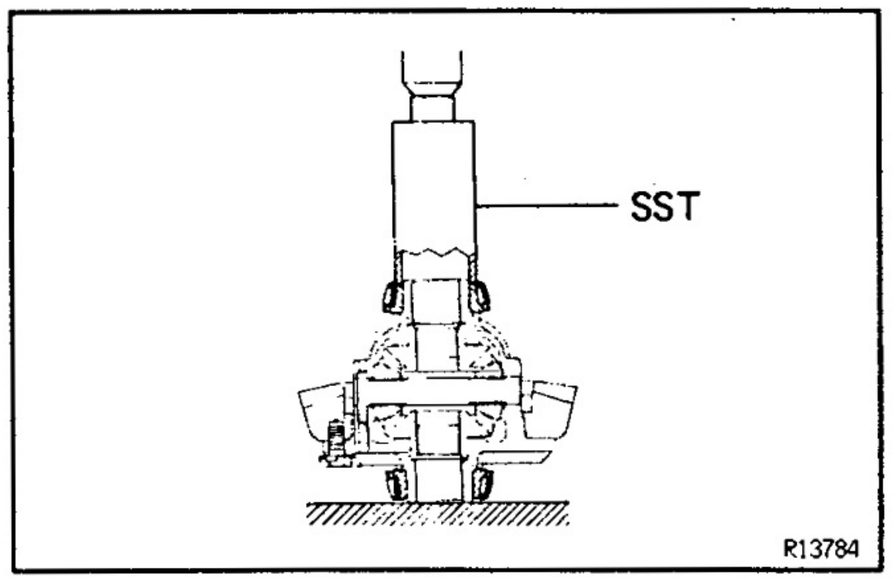

4. INSTALL SIDE BEARINGS

Using SST and a press, install the 2 bearings into the differential case.
SST 09226—10010

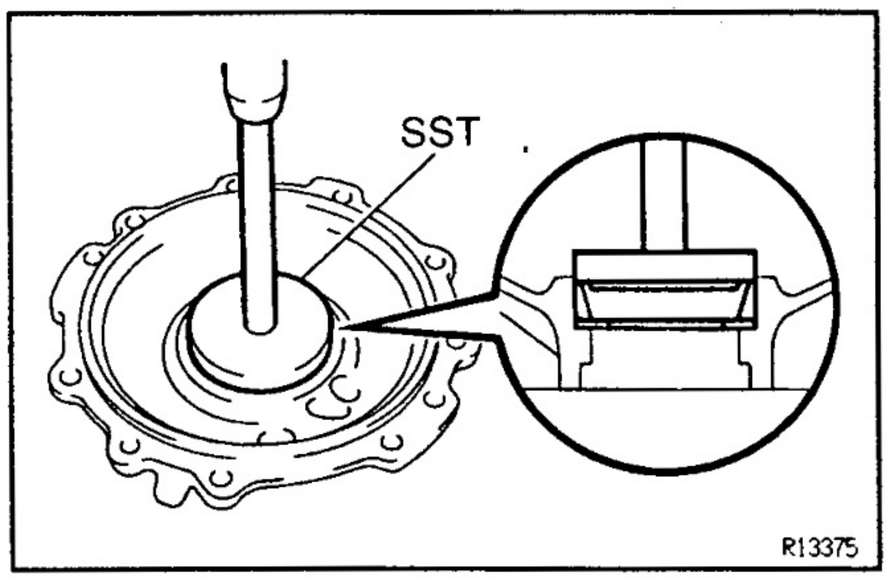

5. INSTALL SIDE BEARING OUTER RACES

HINT: When replacing the 2 side bearings, fit the thinnest washers to each bearing and when reusing the bearings, fit the washers with the same thickness as removed.

(a) Install a new plate washer to the bearing retainer.
(b) Using SST and a press, install the bearing outer race.
SST 09950—60020 (09951—00790),
09950—70010 (09951—07150)

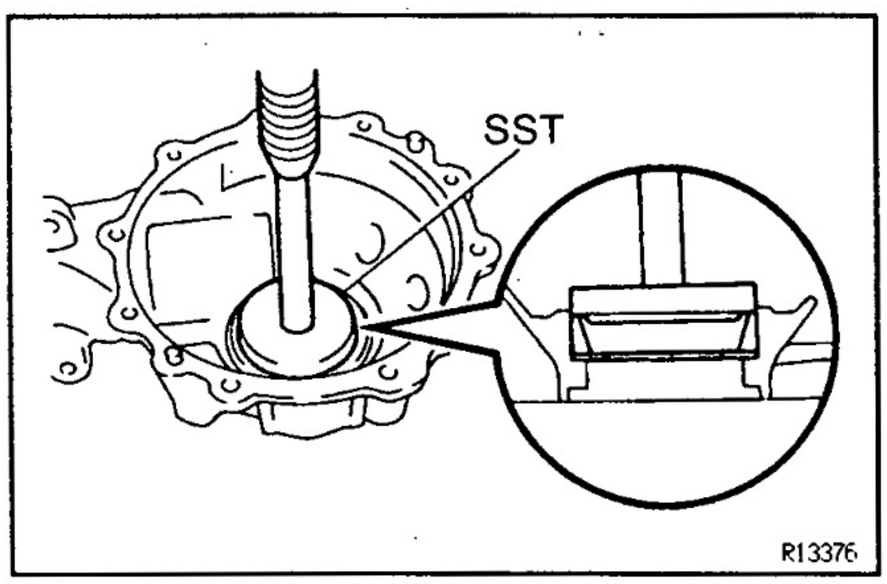

(c) Install a new plate washer to the differential carrier.
(d) Using SST and a press, install the bearing outer race.
SST 09950—60020 (09951—00790),
09950—70010 (09951—07150)

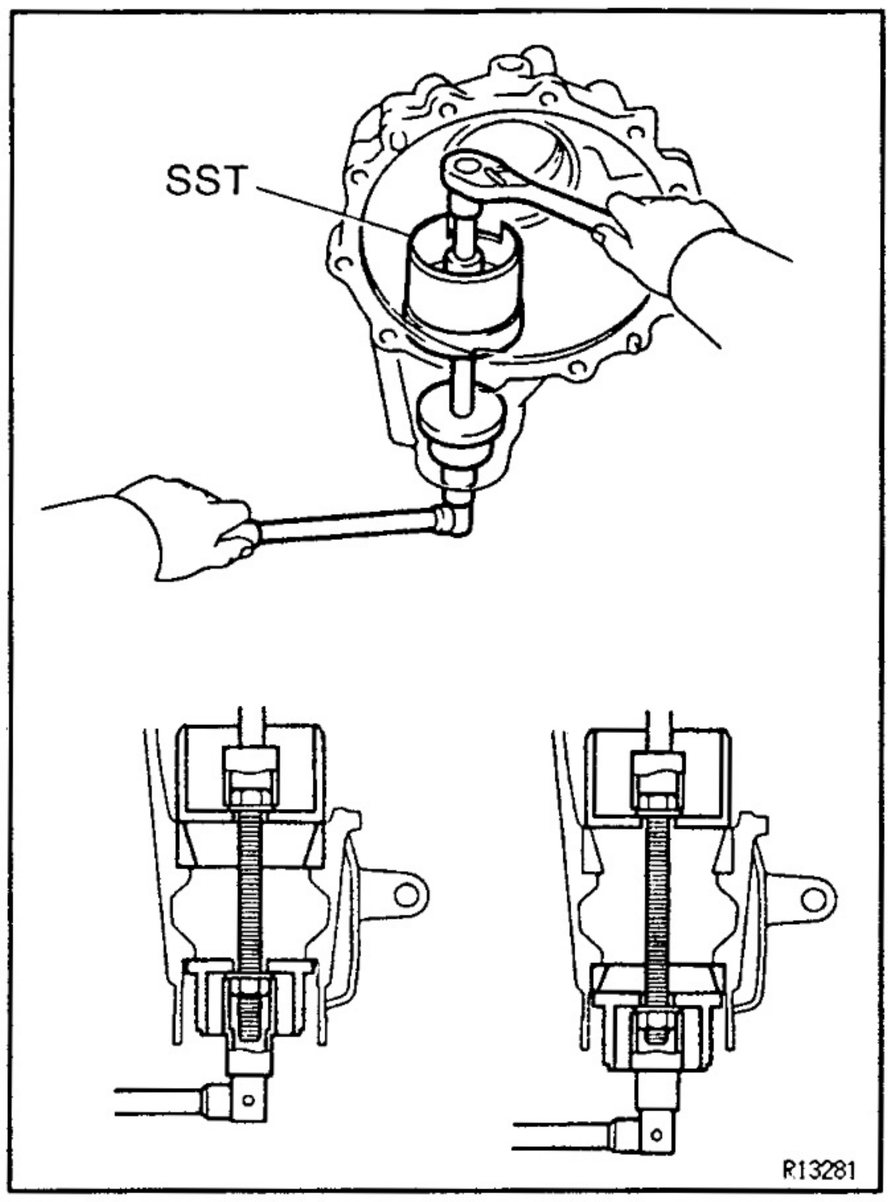

6. INSTALL DRIVE PINION FRONT AND REAR BEARING OUTER RACES

Using SST, install the 2 outer races.
SST 09570−22011

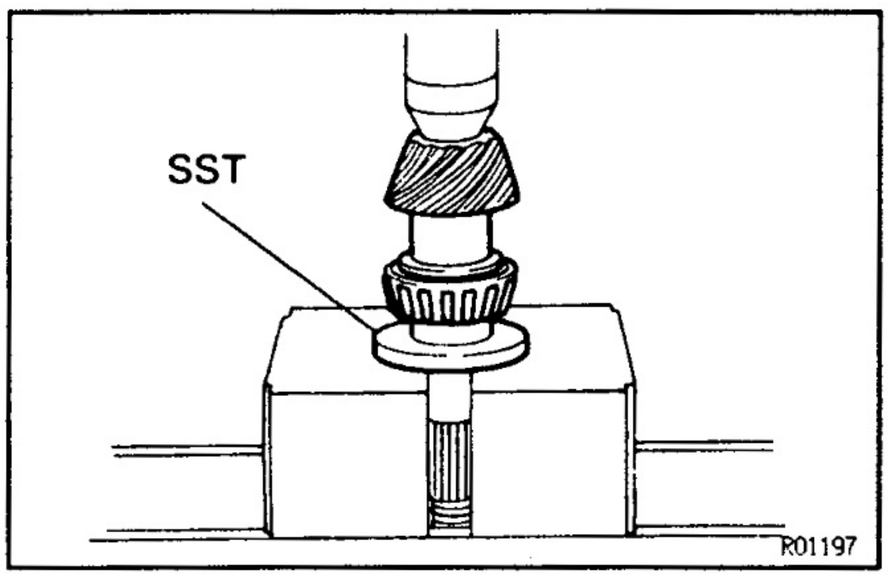

7. INSTALL DRIVE PINION FRONT BEARING

(a) Install the washer on the drive pinion.
HINT: First fit a washer with the same thickness with the removed washer, then after checking the tooth contact pattern, replace the washer with one of a different thickness if necessary.

(b) Using SST and a press, install the front bearing onto the drive pinion.
SST 09506−30012

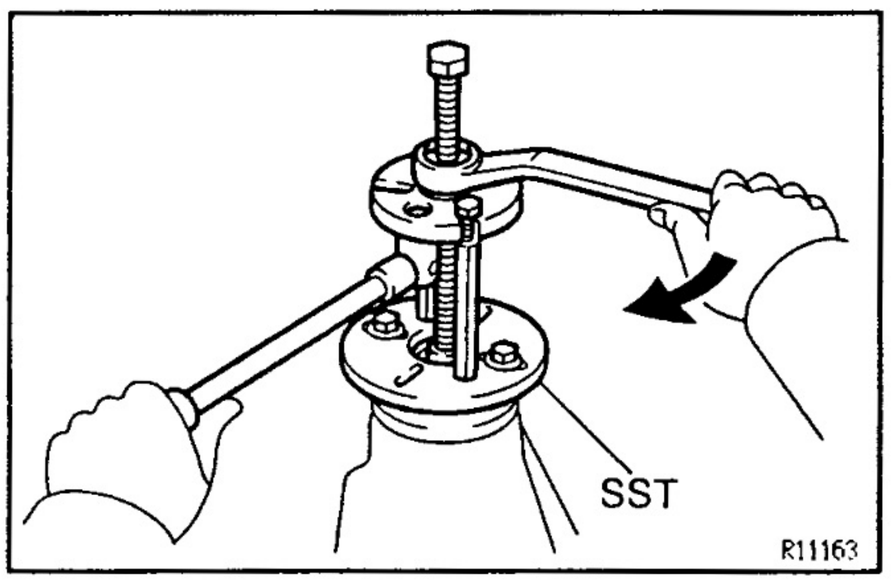

8. TEMPORARILY ADJUST DRIVE PINION PRELOAD

(a) Install the drive pinion and oil slinger.
HINT: Assemble the spacer and oil seal after adjusting the ring gear tooth contact pattern.

(b) Using SST, install the rear bearing, oil slinger and companion flange.
SST 09950−30010 (09951−03010, 09953−03010, 09954−03010, 09955−03030, 09956−03020)

(c) Coat the threads of the nut with hypoid gear oil.

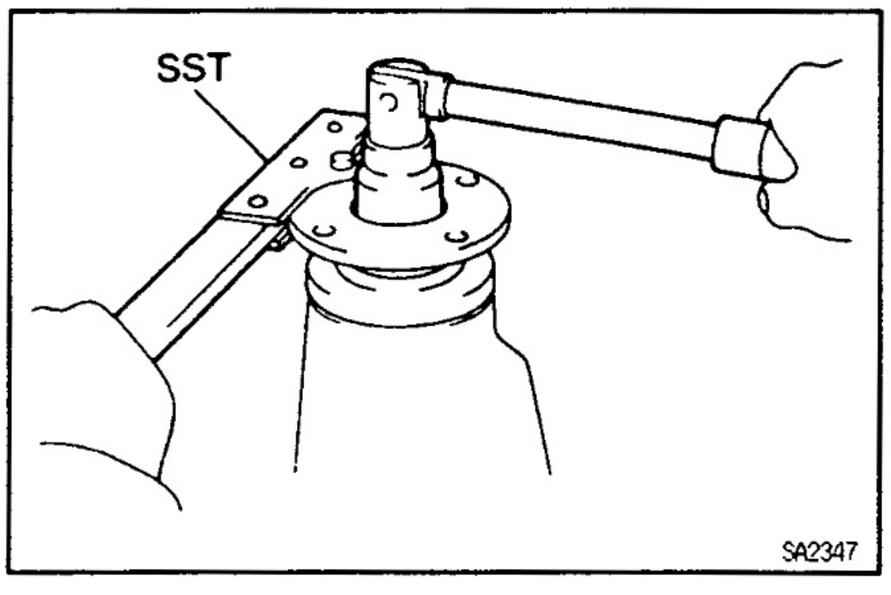

(d) Adjust the drive pinion preload by tightening the companion flange nut.
Using SST to hold the flange, tighten the nut.
SST 09330−00021
NOTICE: As there is no spacer, tighten the nut a little at a time, being careful not to overtighten it.

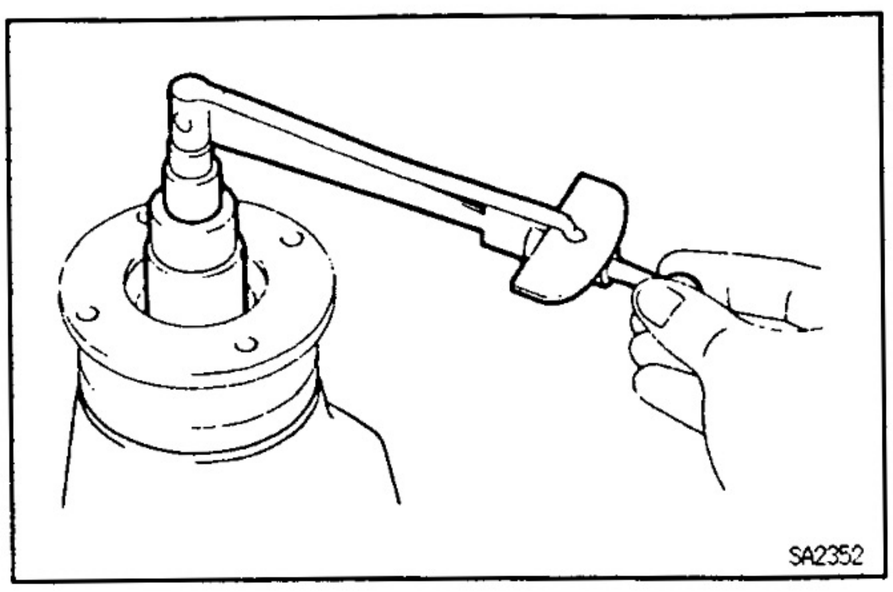

(e) Using a torque wrench, measure the preload.

New bearing preload (at starting):

1.2–1.9 N·m (12–19 kgf·cm, 10.4–16.5 in.·lbf)

Reused bearing preload (at starting):

0.6–1.0 N·m (6–10 kgf·cm, 5.2–8.7 in.·lbf)

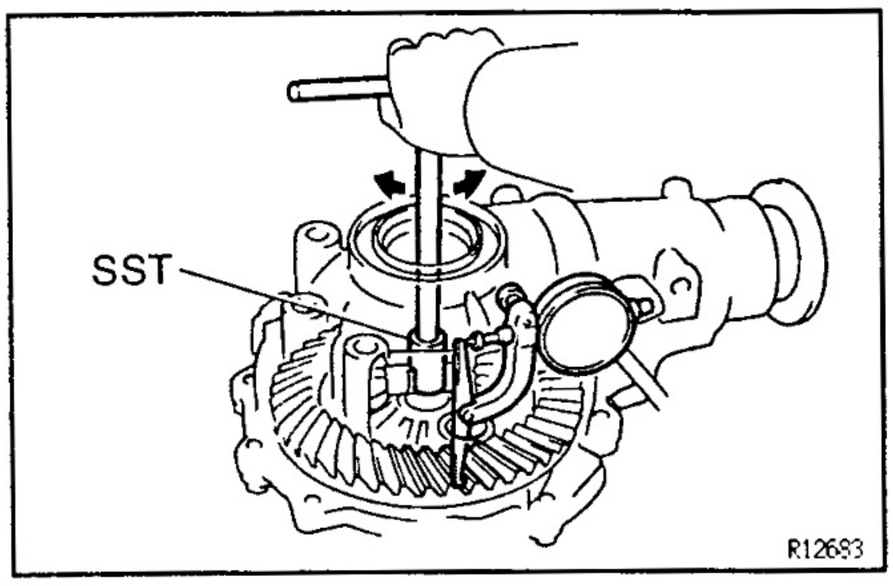

9. INSTALL DIFFERENTIAL CASE IN DIFFERENTIAL CARRIER

10. ADJUST RING GEAR BACKLASH

(a) Install the side bearing retainer with the 10 bolts.

Torque: 69 N·m (700 kgf·cm, 51 ft·lbf)

(b) Using SST and a dial indicator, measure the ring gear backlash.

SST 09564–32011

Backlash: 0.10–0.18 mm (0.0039–0.0070 in.)

(c) If it is not within the specification, adjust it by either in creasing or decreasing the washers on both sides by an equal amount.

HINT: There should be no clearance between the plate washer and case.

Make sure that there is ring gear backlash.

SA

Washer thickness

Thickness mm (in.)	Thickness mm (in.)	Thickness mm (in.)
2.00–2.02 (0.0787–0.0795)	2.27–2.29 (0.0894–0.0902)	2.54–2.56 (0.1000–0.1008)
2.03–2.05 (0.0799–0.0807)	2.30–2.32 (0.0906–0.0913)	2.57–2.59 (0.1012–0.1020)
2.06–2.08 (0.0811–0.0819)	2.33–2.35 (0.0917–0.0925)	2.60–2.62 (0.1024–0.1031)
2.09–2.11 (0.0823–0.0831)	2.36–2.38 (0.0929–0.0937)	2.63–2.65 (0.1035–0.1043)
2.12–2.14 (0.0835–0.0843)	2.39–2.41 (0.0941–0.0949)	2.66–2.68 (0.1047–0.1055)
2.15–2.17 (0.0846–0.0854)	2.42–2.44 (0.0953–0.0961)	2.69–2.71 (0.1059–0.1067)
2.18–2.20 (0.0858–0.0866)	2.45–2.47 (0.0965–0.0972)	2.72–2.74 (0.1071–0.1079)
2.21–2.23 (0.0870–0.0878)	2.48–2.50 (0.0976–0.0984)	2.75–2.77 (0.1083–0.1091)
2.24–2.26 (0.0882–0.0890)	2.51–2.53 (0.0988–0.0996)	2.78–2.80 (0.1094–0.1102)

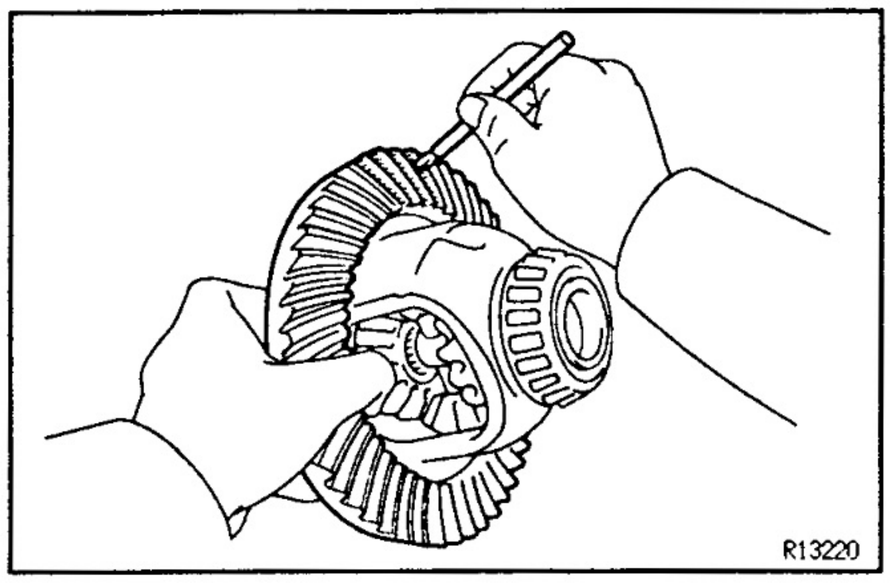

11. MEASURE TOTAL PRELOAD

Using a torque wrench, measure the preload with the teeth of the drive pinion and ring gear in contact.

Total preload (at starting):

Drive pinion preload plus

0.4–0.6 N·m (4–6 kgf·cm, 3.5–5.2 in.·lbf)

12. INSPECT TOOTH CONTACT BETWEEN RING GEAR AND DRIVE PINION

(a) Remove the side bearing retainer and differential case.

(b) Coat 3 or 4 teeth at 3 different positions on the ring gear with red lead.

(c) Install the differential case and side bearing retainer.
Torque: 69 N·m (700 kgf·cm, 51 ft·lbf)

(d) Hold the companion flange firmly and rotate the ring gear in both directions.

(e) Remove the side bearing retainer and differential case.

(f) Inspect the tooth contact pattern.

SA

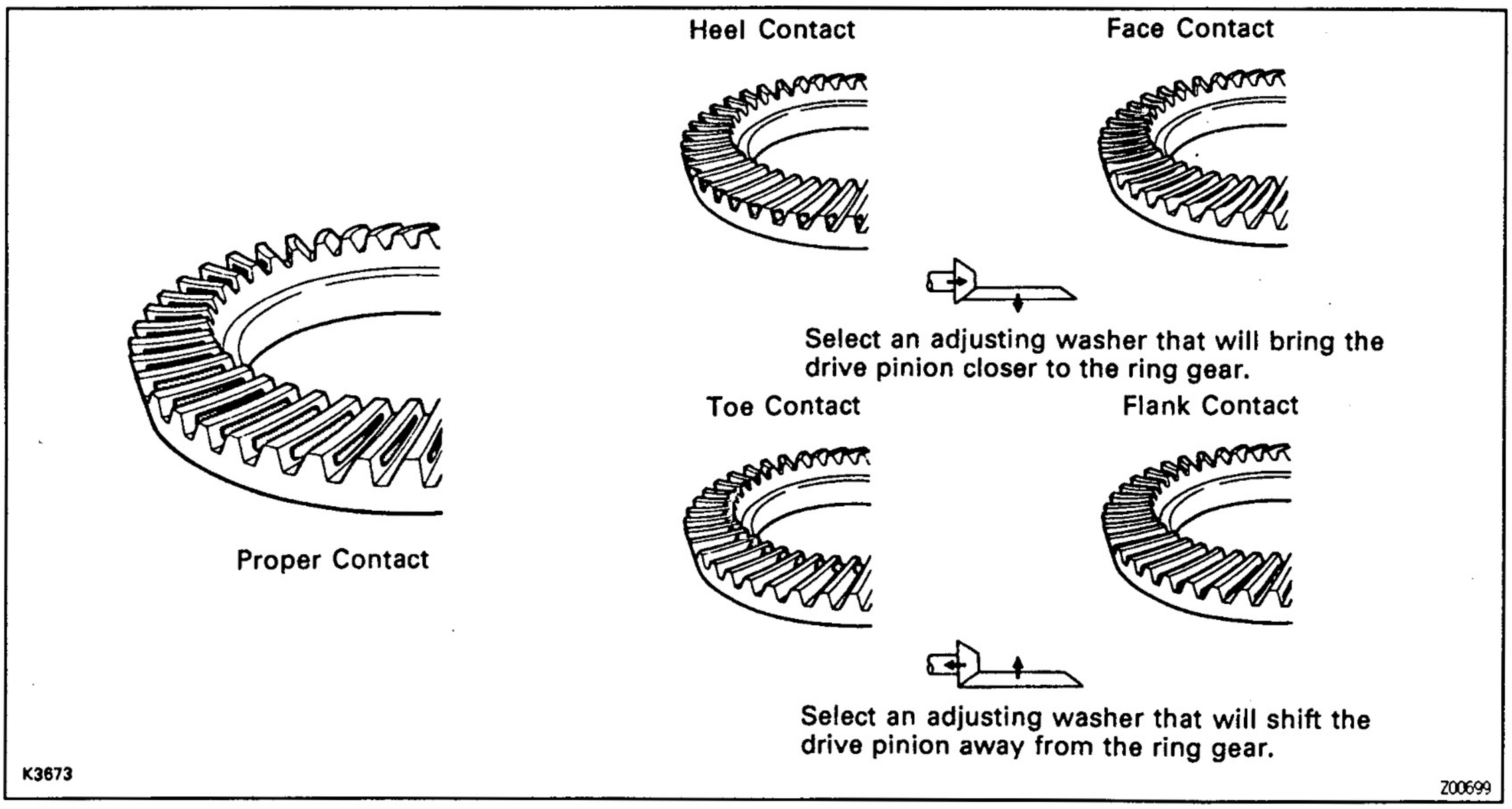

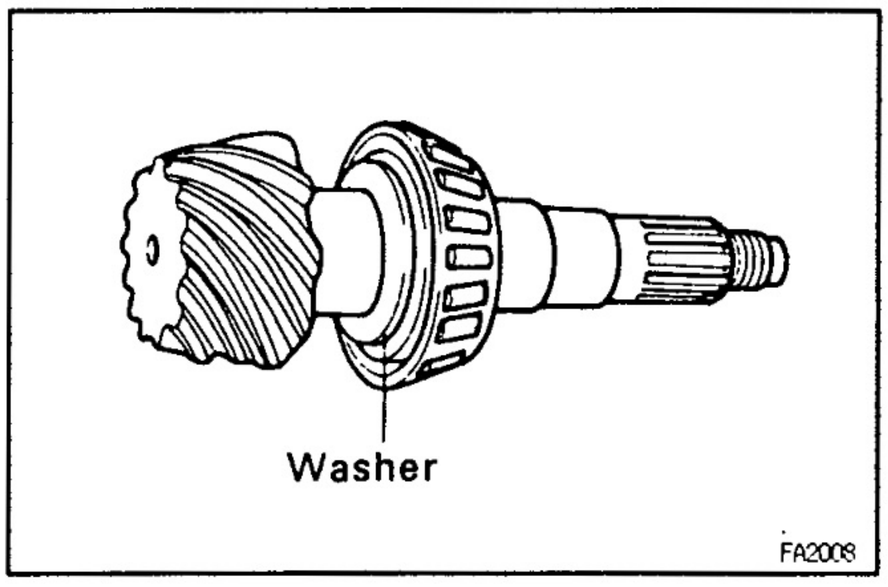

If the teeth are not contacting properly, use the following chart to select a proper washer for correction.

Washer thickness

Thickness mm (in.)	Thickness mm (in.)	Thickness mm (in.)
1.69–1.71 (0.0665–0.0673)	1.93–1.95 (0.0760–0.0768)	2.17–2.19 (0.0854–0.0862)
1.72–1.74 (0.0677–0.0685)	1.96–1.98 (0.0772–0.0780)	2.20–2.22 (0.0866–0.0874)
1.75–1.77 (0.0689–0.0697)	1.99–2.01 (0.0783–0.0791)	2.23–2.25 (0.0878–0.0886)
1.78–1.80 (0.0701–0.0709)	2.02–2.04 (0.0795–0.0803)	2.26–2.28 (0.0890–0.0898)
1.81–1.83 (0.0713–0.0720)	2.05–2.07 (0.0807–0.0815)	2.29–2.31 (0.0902–0.0909)
1.84–1.86 (0.0724–0.0732)	2.08–2.10 (0.0819–0.0827)	2.32–2.34 (0.0913–0.0921)
1.87–1.89 (0.0736–0.0744)	2.11–2.13 (0.0831–0.0839)	–
1.90–1.92 (0.0748–0.0756)	2.14–2.16 (0.0843–0.0850)	–

13. REMOVE COMPANION FLANGE AND OIL SLINGER
(See page SA–34)

14. REMOVE REAR BEARING
(See page SA–34)

SA

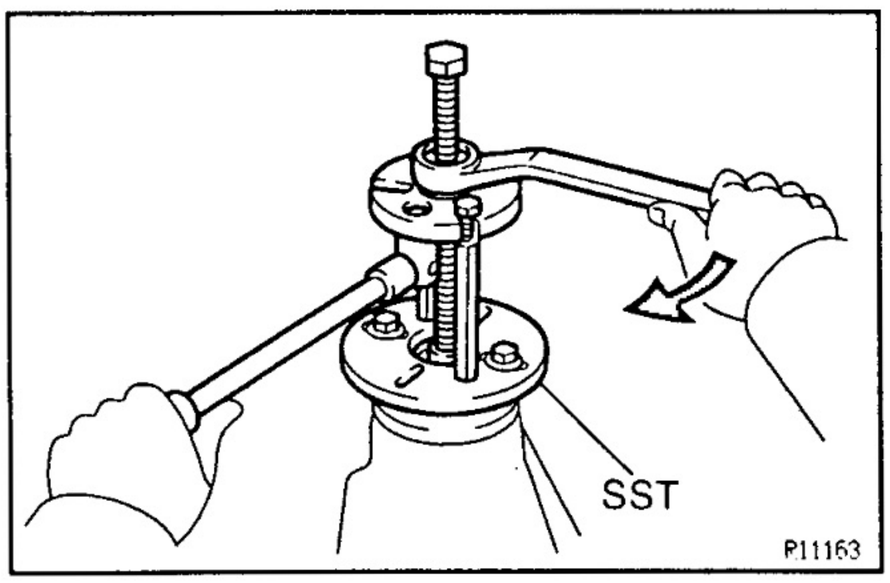

15. INSTALL NEW BEARING SPACER, REAR BEARING AND OIL SLINGER

(a) Install a new bearing spacer and place the rear bearing and oil slinger.

(b) Using SST and the companion flange, install the rear bearing then remove the companion flange.
SST 09950–30010 (09951–03010, 09953–03010, 09954–03010, 09955–03030, 09956–03020)

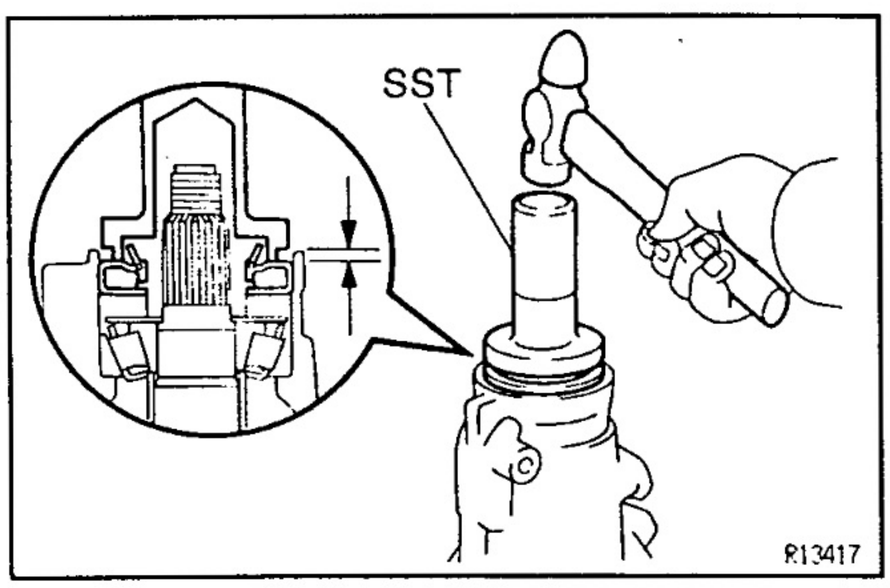

16. INSTALL OIL SEAL

(a) Coat a new oil seal lip with MP grease.

(b) Using SST and a hammer, install the oil seal.
SST 09554–22010
Oil seal drive in depth: 4.5 mm (0.177 in.)

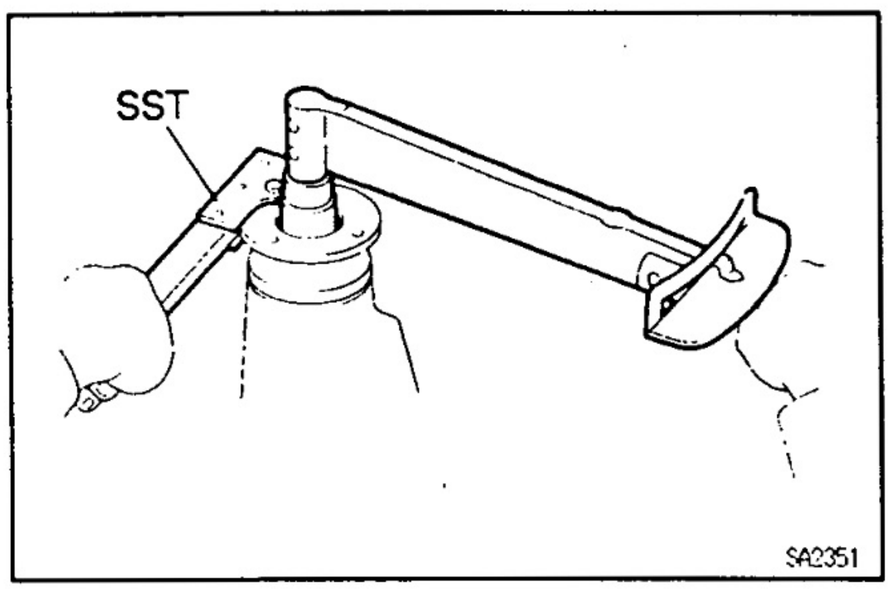

17. INSTALL COMPANION FLANGE

(a) Place the companion flange on the drive pinion.

(b) Coat the threads of a new nut with hypoid gear oil.

(c) Using SST to hold the flange, torque the nut.
SST 09330–00021
Torque: 108 N·m (1,100 kgf·cm, 80 ft·lbf)

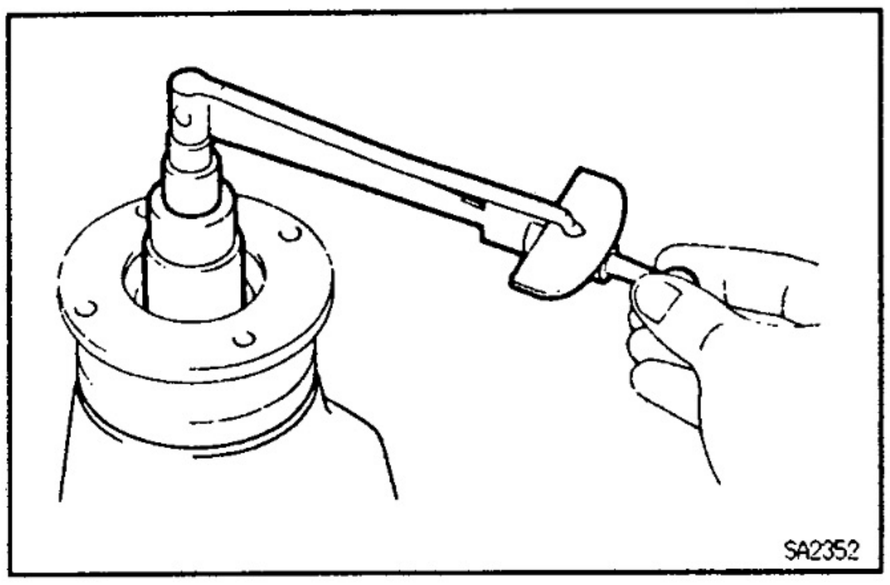

18. ADJUST DRIVE PINION PRELOAD

Using a torque wrench, measure the preload of the backlash between the drive pinion and ring gear.

New bearing preload (at starting):

1.2–1.9 N·m (12–19 kgf·cm, 10.4–16.5 in.·lbf)

Reused bearing preload (at starting):

0.6–1.0 N·m (6–10 kgf·cm, 5.2–8.7 in.·lbf)

If the preload is greater than the specification, replace the bearing spacer.

If the preload is less than the specification, retighten the nut 13 N·m (130 kgf·cm, 9 ft·lbf) a little at a time until the specified preload is reached.

Maximum torque: 223 N·m (2,275 kgf·cm, 165 ft·lbf)

If the maximum torque is exceeded with retightening the nut, replace the bearing spacer and repeat the preload procedure. Do not back off the nut to reduce the preload.

SA

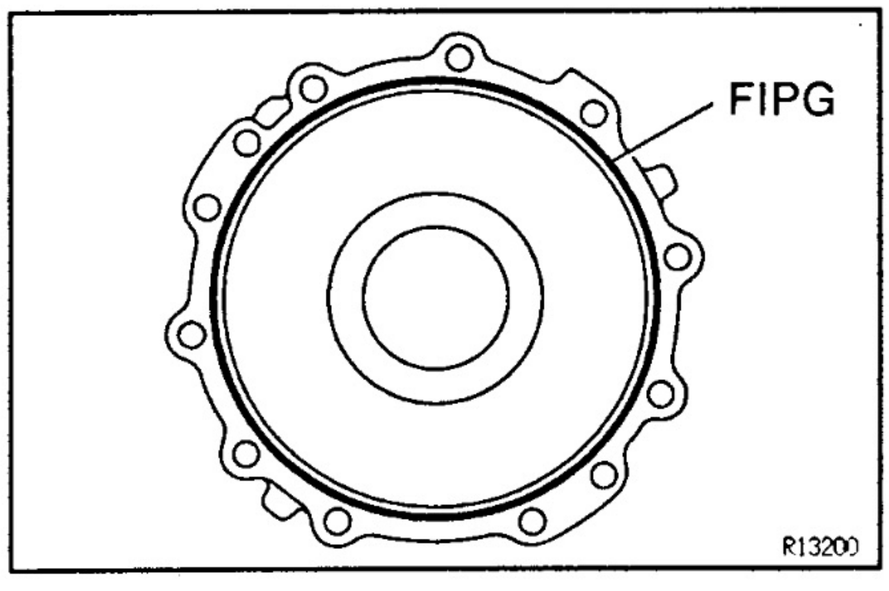

19. INSTALL DIFFERENTIAL CASE

20. INSTALL SIDE BEARING RETAINER

(a) Remove any old FIPG material and be careful not to drop oil on the contact surfaces of the differential carrier and side bearing retainer.

(b) Clean contacting surfaces of any residual FIPG material using gasoline or alcohol.

(c) Apply FIPG to the side bearing retainer, as shown.

FIPG: Part No. 08826–00090, THREE BOND 1281 or equivalent

HINT: Install the side bearing retainer within 10 minutes after applying FIPG.

(d) Install the side bearing retainer with the 10 bolts.

Torque: 69 N·m (700 kgf·cm, 51 ft·lbf)

21. CHECK TOTAL PRELOAD

22. RECHECK RING GEAR BACKLASH

(See page SA–33)

23. RECHECK TEETH CONTACT BETWEEN RING GEAR AND DRIVE PINION

(See page SA–42)

24. CHECK RUNOUT OF COMPANION FLANGE

(See page SA–32)

25. STAKE DRIVE PINION NUT

26. INSTALL SIDE OIL SEAL

(a) Using SST and a hammer, install a new oil seal until its surface is flush with the differential carrier end.

SST 09608–32010

(b) Coat the oil seal lip with MP grease.

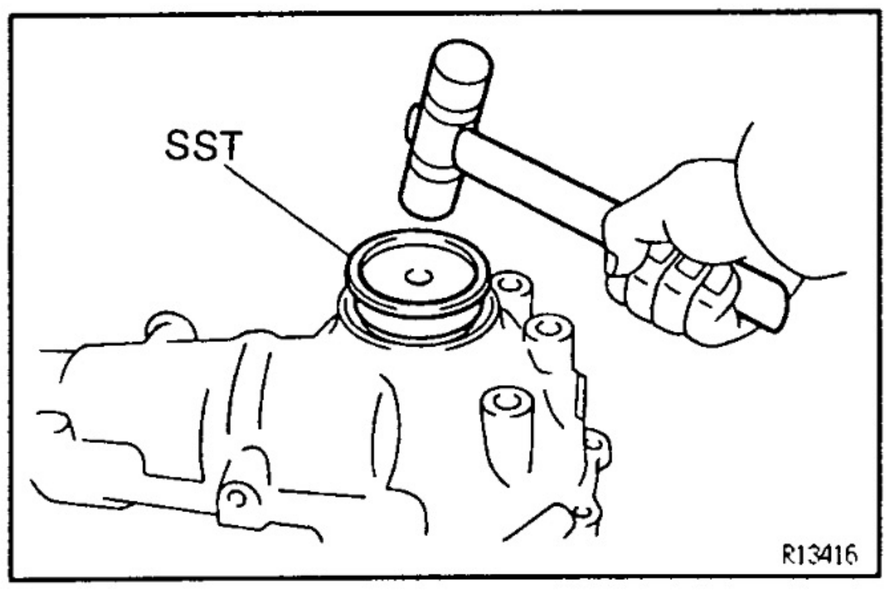

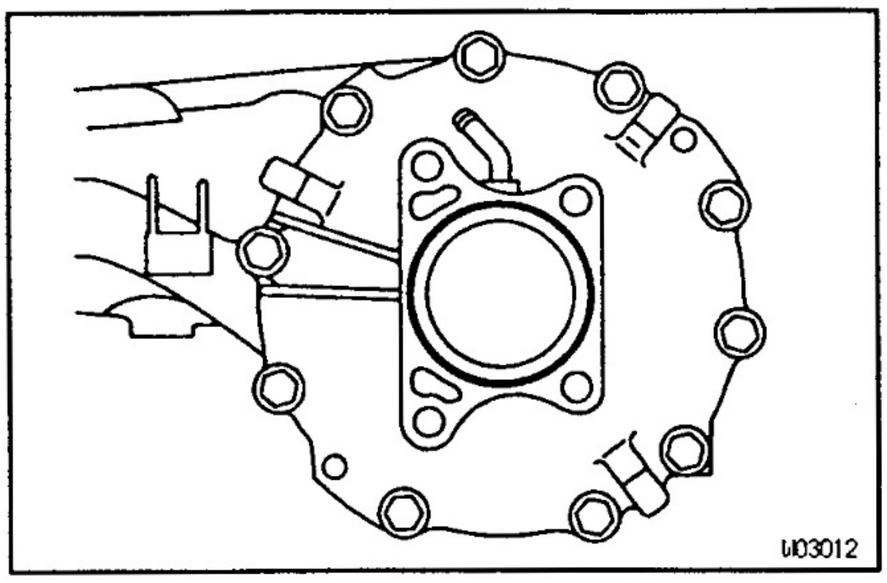

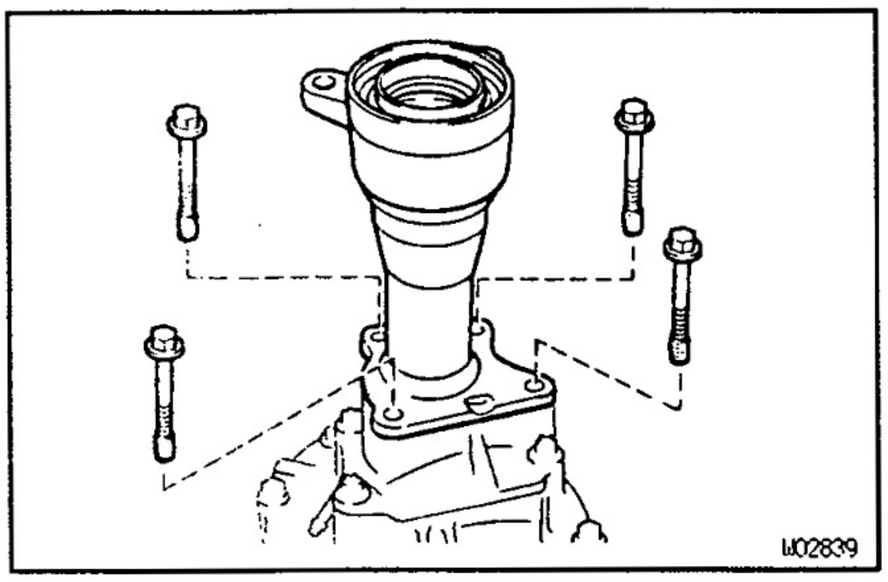

27. INSTALL DIFFERENTIAL TUBE TO DIFFERENTIAL

(a) Remove any old FIPG material and be careful not to drop oil on the contact surfaces of the differential and tube flange.

(b) Clean contacting surfaces of any residual FIPG material using gasoline or alcohol.

(c) Apply FIPG to the differential, as shown.
FIPG: Part No. 08826–00090, THREE BOND 1281 or equivalent
HINT: Install the differential tube within 10 minutes after applying FIPG.

(d) Install the differential tube to the differential.

(e) Clean the threads of the 4 bolts and retainer bolt holes with toluene or trichlorethylene.

(f) Apply adhesive to 2 or 3 threads of the bolts end.
FIPG: Part No. 08826–00070, THREE BOND 1324 or equivalent

(g) Torque the 4 bolts.
Torque: 105 N·m (1,070 kgf·cm, 77 ft·lbf)

SA

FRONT SUSPENSION

PREPARATION

SST (SPECIAL SERVICE TOOLS)

8A020-1P

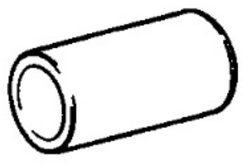	09223-00010 Cover & Seal Replacer	Upper suspension arm bushing
	09309-37010 Transmission Bearing Replacer	Upper ball joint
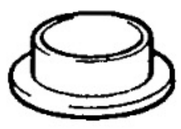	09316-20011 Transfer Bearing Replacer	Lower suspension arm bushing
	09506-35010 Differential Drive Pinion Rear Bearing Replacer	Shock absorber bushing
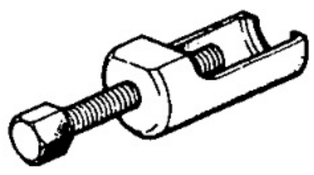	09610-20012 Pitman Arm Puller	Tie rod end
	09613-26010 Steering Worm Bearing Cone Remover	Upper and lower suspension arm bushing
	09628-62011 Ball Joint Puller	Lower ball joint
	09631-20060 Bearing Guide Nut Wrench	Upper suspension arm bushing
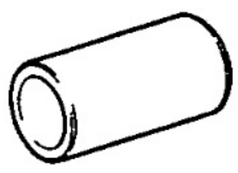	09632-36010 Steering Vane Pump Bearing Replacer	Shock absorber bushing
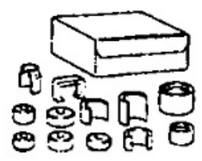	09710-30021 Suspension Bushing Tool Set	Lower suspension arm bushing
	(09710-03121) Bushing Remover Base	
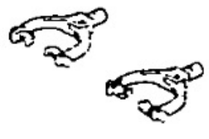	09727-00060 Arm Set "C"	Coil spring

	09727–30021	Coil Spring Compressor	Coil spring
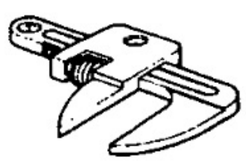	09922–10010	Variable Open Wrench	No.1 and No.2 spring bumper
	09950–40010	Puller B Set	Upper ball joint

8A06X–0E

RECOMMENDED TOOLS

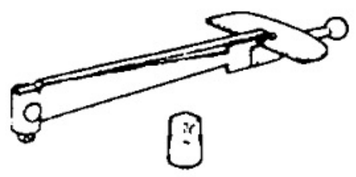	09025–00010	Torque Wrench (30 kgf·cm) .	
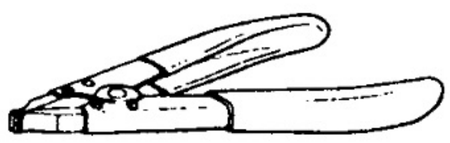	09905–00012	Snap Ring No.1 Expander .	

SA

8A02S–1E

EQUIPMENT

Torque wrench	

FRONT SHOCK ABSORBER
COMPONENTS

SAONJ-09

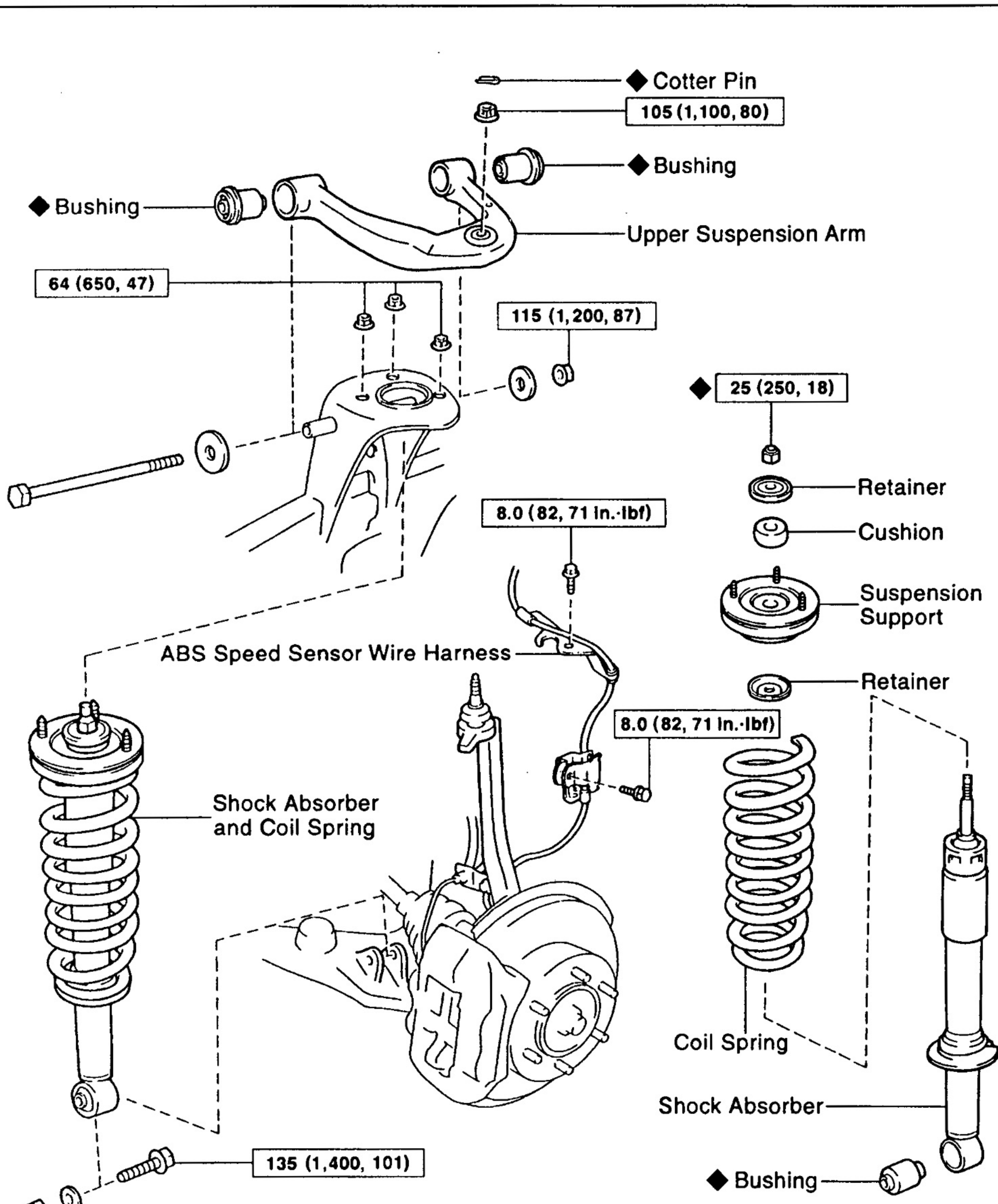

N·m (kgf·cm, ft·lbf) : Specified torque
◆ Non-reusable part

W02864

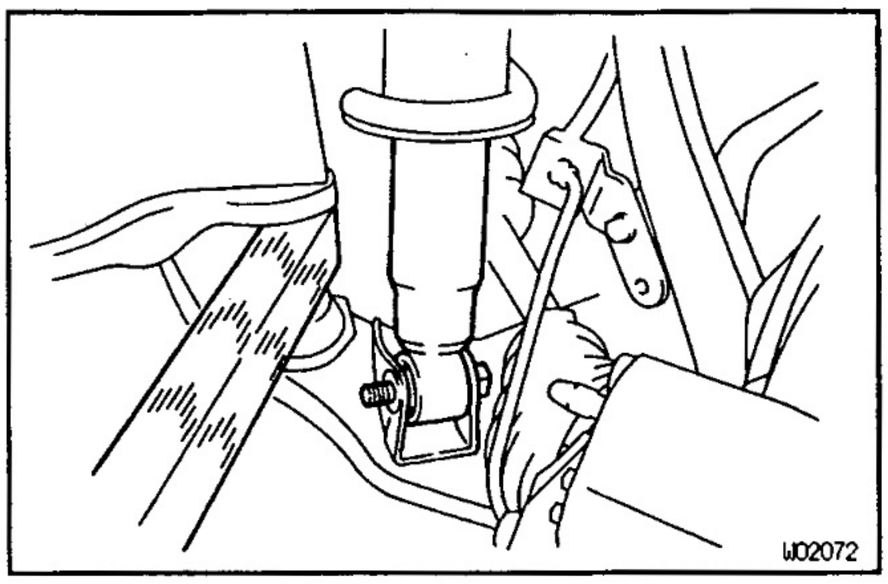

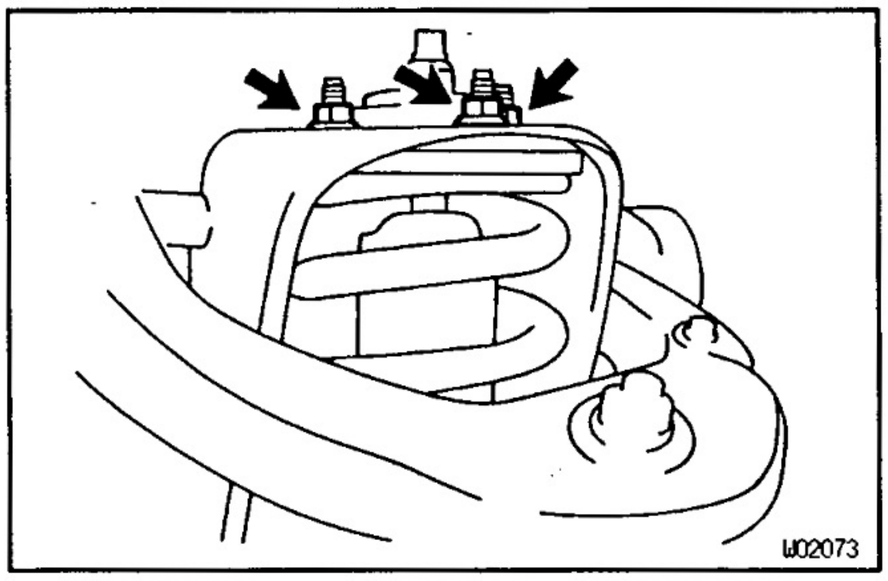

FRONT SHOCK ABSORBER REMOVAL

SA1WB-04

1. **REMOVE FRONT WHEEL**
   Torque: 110 N·m (1,150 kgf·cm, 83 ft·lbf)
2. **DISCONNECT SHOCK ABSORBER FROM LOWER SUSPENSION ARM**
   (a) Loosen the bolt and remove the shock absorber lower nut.
   Torque: 135 N·m (1,400 kgf·cm, 101 ft·lbf)
   INSTALLATION HINT: After stabilizing the suspension, torque the bolt.
   (b) With lowering the lower suspension arm, remove the bolt and disconnect the shock absorber.
3. **REMOVE SHOCK ABSORBER AND COIL SPRING**
   Remove the 3 nuts, shock absorber and coil spring.
   Torque: 64 N·m (650 kgf·cm, 47 ft·lbf)

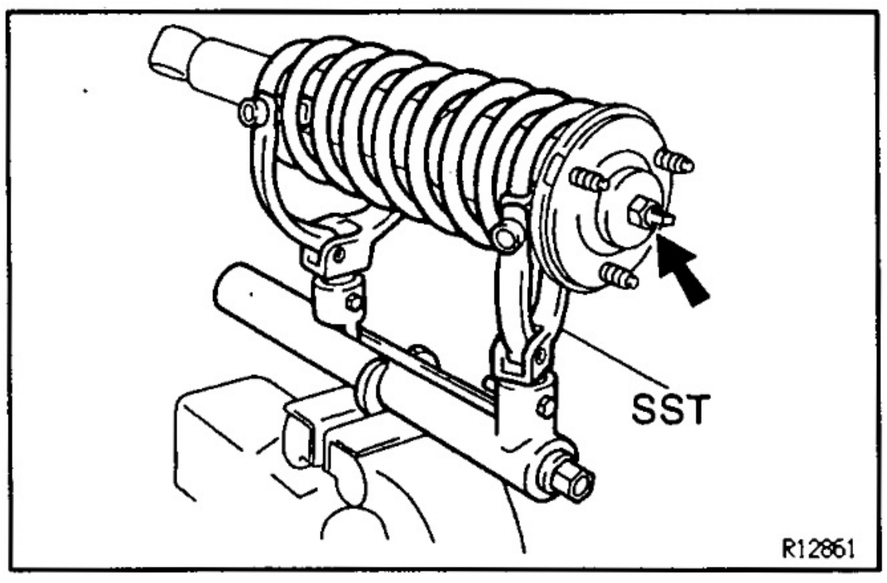

FRONT SHOCK ABSORBER DISASSEMBLY

SA1SP-05

REMOVE SUSPENSION SUPPORT AND COIL SPRING

(a) Using SST, compress the coil spring until there is a clearance on both ends.
SST 09727–00060, 09727–30021
NOTICE:
To avoid damage to SST:
- **Set SST arms to allow clearance to hold a 8–roll coil between them.**
- **Do not compress the coil spring more than necessary.**
- **Do not use an impact wrench.**

(b) Remove suspension support center nut.
(c) Remove these parts:
- Retainer
- Cushion
- Suspension support
- Coil spring

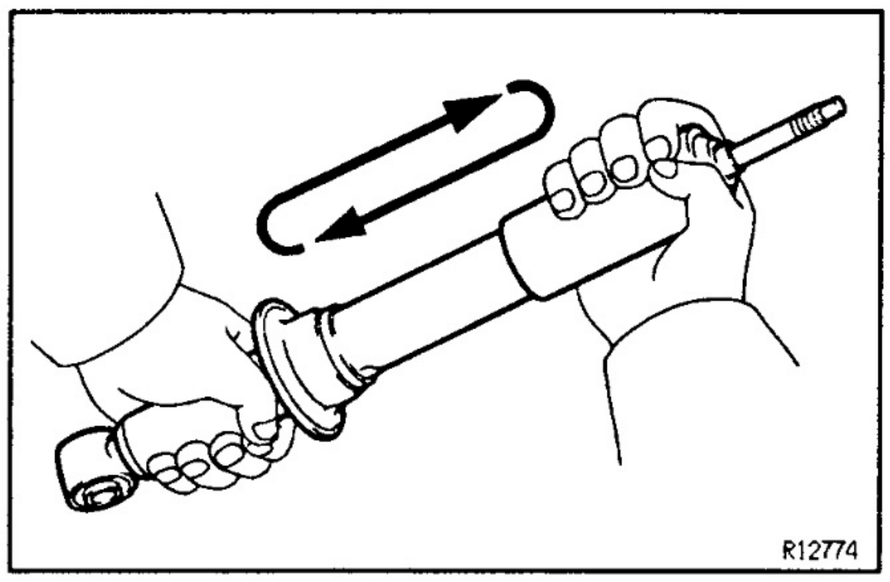

FRONT SHOCK ABSORBER INSPECTION

SA0NL-06

INSPECT SHOCK ABSORBER

Compress and extend the shock absorber rod and check that there is no abnormal resistance or unusual operation sounds.

If there is any abnormality, replace the shock absorber with a new one.

NOTICE: When discarding the shock absorber, use the following procedure.

FRONT SHOCK ABSORBER DISPOSAL

SA0NM-06

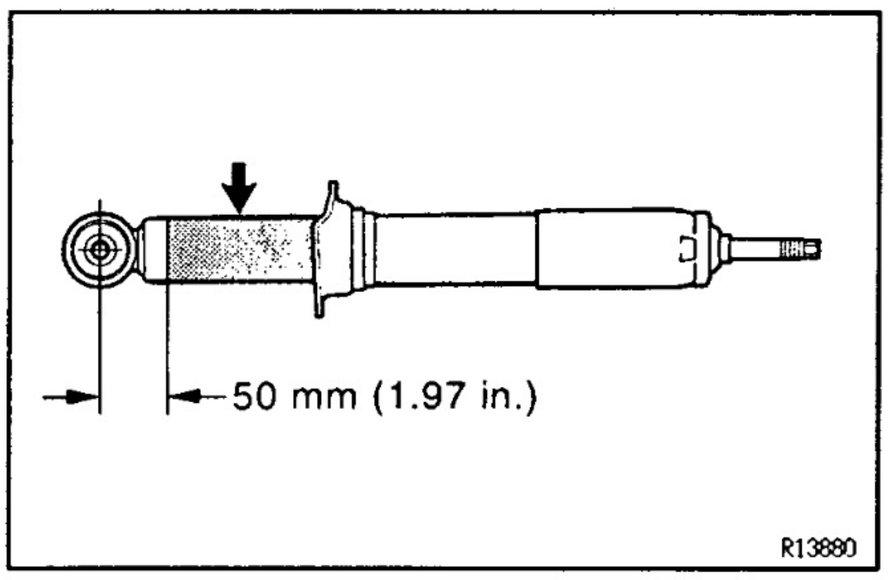

1. **FULLY EXTEND SHOCK ABSORBER ROD**
2. **DRILL HOLE TO REMOVE GAS FROM CYLINDER**
   Using a drill, make a hole in the cylinder as shown to remove the gas inside.
   CAUTION: The gas coming out is harmless, but be careful of chips which may fly up when drilling.

SA

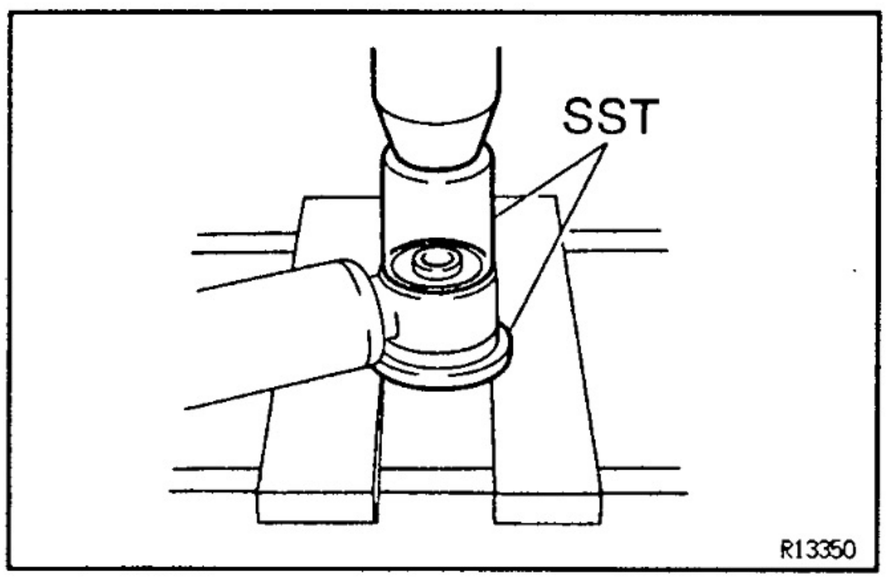

SHOCK ABSORBER BUSHING REPLACEMENT

SA1Q6-06

1. **REMOVE BUSHING**
   Using SST and a press, remove the bushing.
   SST 09506–35010, 09632–36010

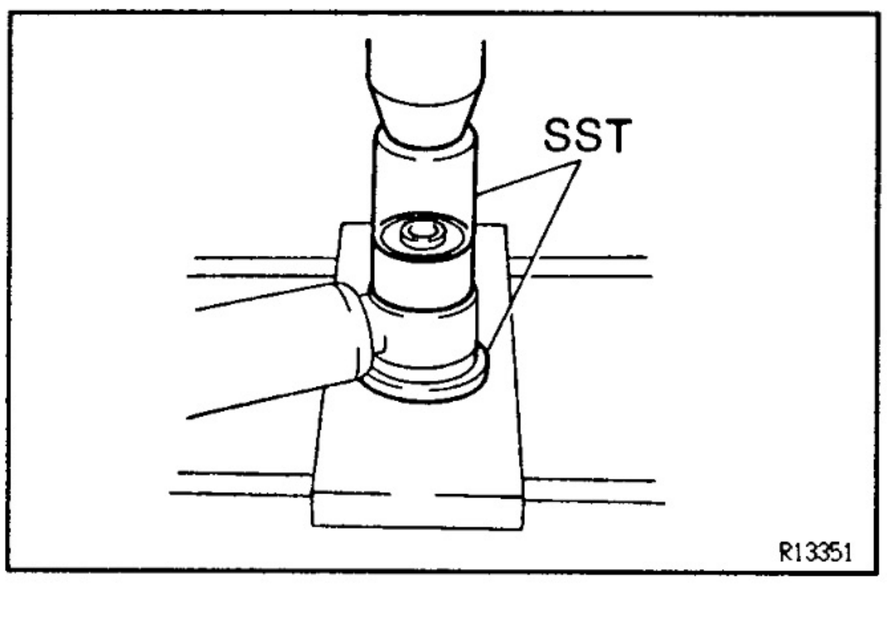

2. **INSTALL NEW BUSHING**
   Using SST and a press, install a new bushing.
   SST 09506–35010, 09632–36010
   HINT: Do not apply grease or oil to the bushing.

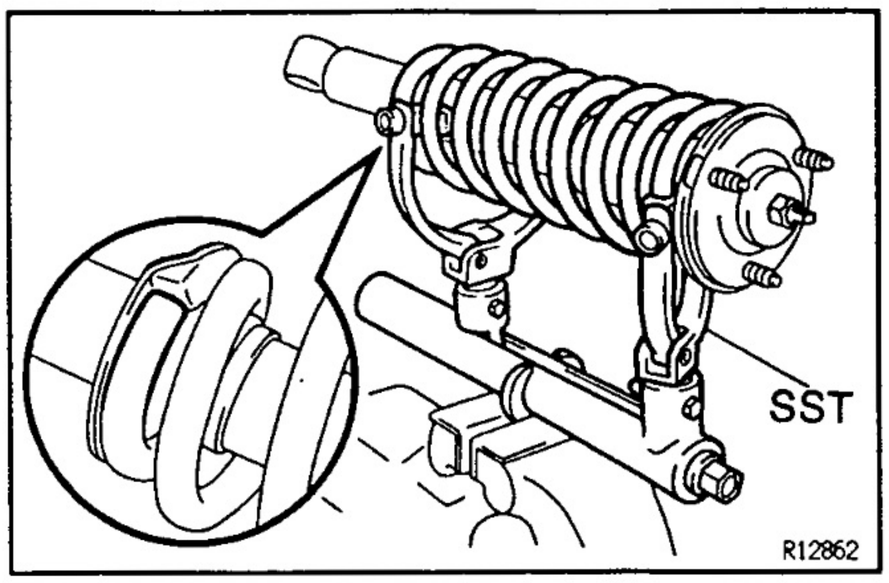

FRONT SHOCK ABSORBER ASSEMBLY SA2PT-01

1. INSTALL COIL SPRING TO SHOCK ABSORBER

(a) Using SST, compress the coil spring.
SST 09727–00060, 09727–30021
NOTICE:
To avoid damage to SST:
- **Set SST arms to allow clearance to hold a 8–roll coil between them.**
- **Do not compress the coil spring more than necessary.**
- **Do not use an impact wrench.**

(b) Install the coil spring to the shock absorber.
HINT: Fit the lower end of the coil spring into the gap of the spring seat of the shock absorber.

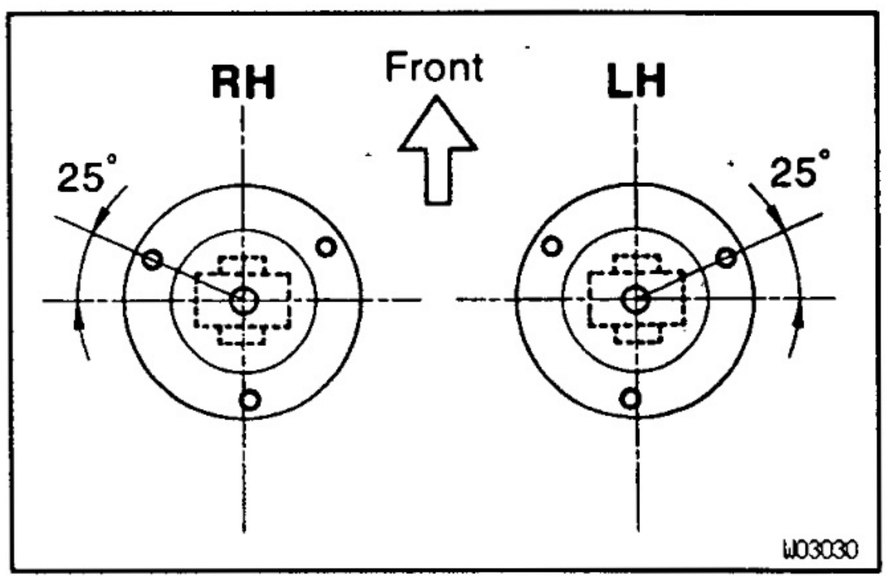

2. INSTALL SUSPENSION SUPPORT

(a) Install the retainer, suspension support, and cushion to the rod.
(b) Temporarily tighten a new suspension support center nut.
(c) Align the suspension support with the shock absorber lower bushing, as shown.
HINT: Face the lower end of the coil spring to the outside of the vehicle.
(d) Remove the SST.
HINT: After removing the SST, recheck the direction of the suspension support.
(e) Torque the suspension center nut.
Torque: 25 N·m (250 kgf·cm, 18 ft·lbf)

FRONT SHOCK ABSORBER INSTALLATION SA27Z-03

Installation is in the reverse order of removal.

UPPER SUSPENSION ARM COMPONENTS

SA280–03

(See page SA–48)

UPPER SUSPENSION ARM REMOVAL

SA1WD–04

1. **REMOVE SHOCK ABSORBER WITH COIL SPRING**
(See page SA–49)
2. **w/ ABS:**
DISCONNECT ABS SPEED SENSOR WIRE HARNESS CRAMP
Torque: 8.0 N·m (82 kgf·cm, 71 in.·lbf)

SA

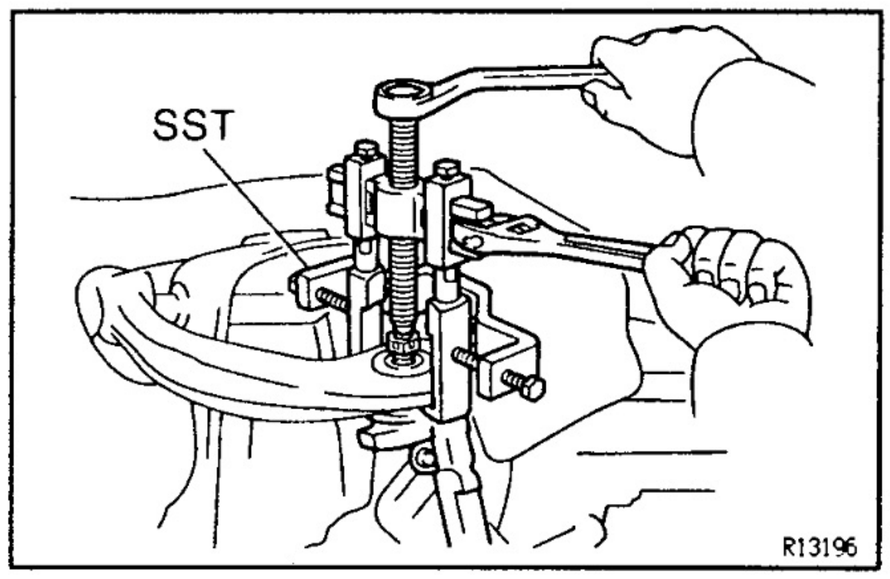

3. **DISCONNECT UPPER BALL JOINT**
(a) Remove the cotter pin and loosen the nut.
Torque: 105 N·m (1,100 kgf·cm, 80 ft·lbf)
(b) Using SST, disconnect the upper ball joint.
SST 09950–40010 (09951–04010, 09952–04010, 09953–04020, 09954–04010, 09955–04030, 09958–04010)
(c) Support the steering knuckle securely.
(d) Remove the nut.

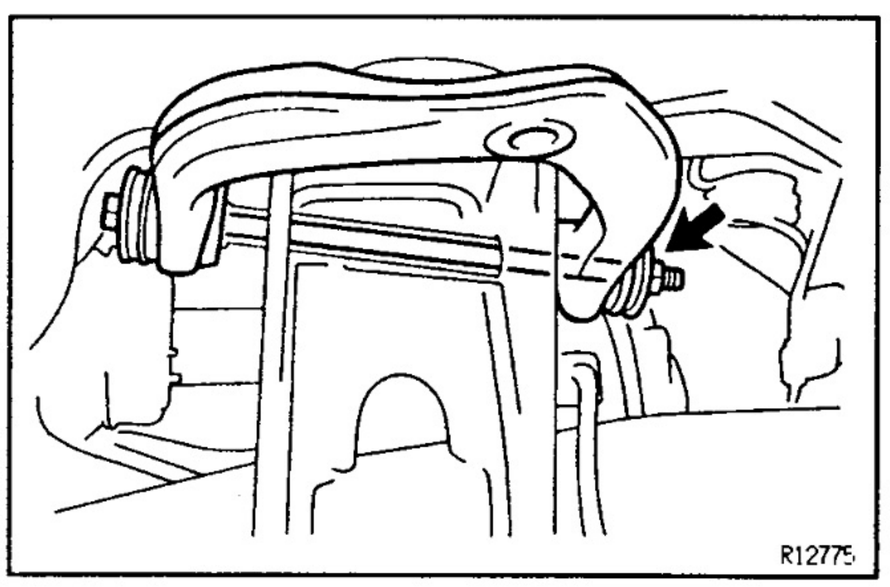

4. **REMOVE UPPER SUSPENSION ARM**
Remove the nut, bolt and upper suspension arm.
Torque: 115 N·m (1,200 kgf·cm, 87 ft·lbf)
INSTALLATION HINT: After stabilizing the suspension, torque the nut.

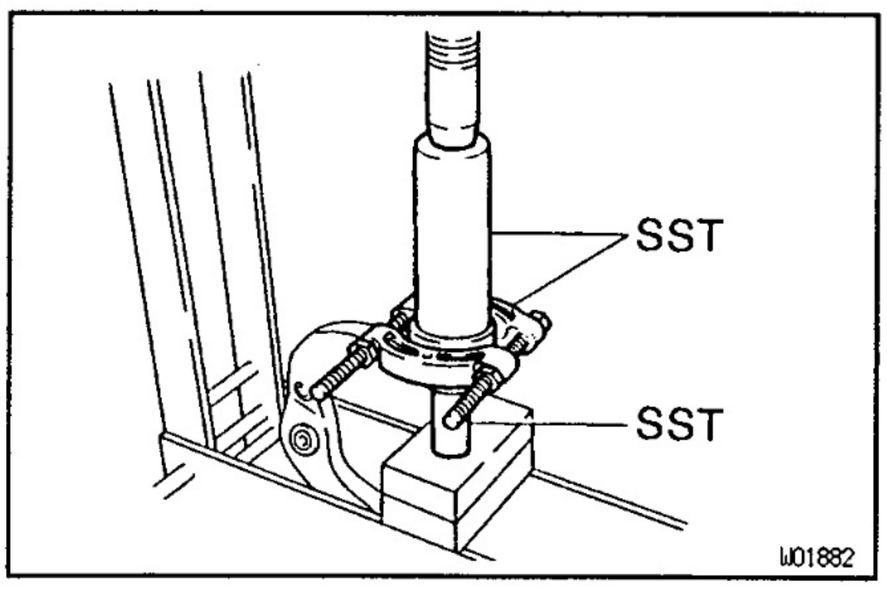

UPPER SUSPENSION ARM BUSHING REPLACEMENT

SA2PU–01

1. **REMOVE BUSHING**
(a) Using a chisel and hammer, pry up the flange of the bushing.
(b) Using SST and a press, remove the bushing.
SST: 09613–26010, 09631–20060, 09950–00020

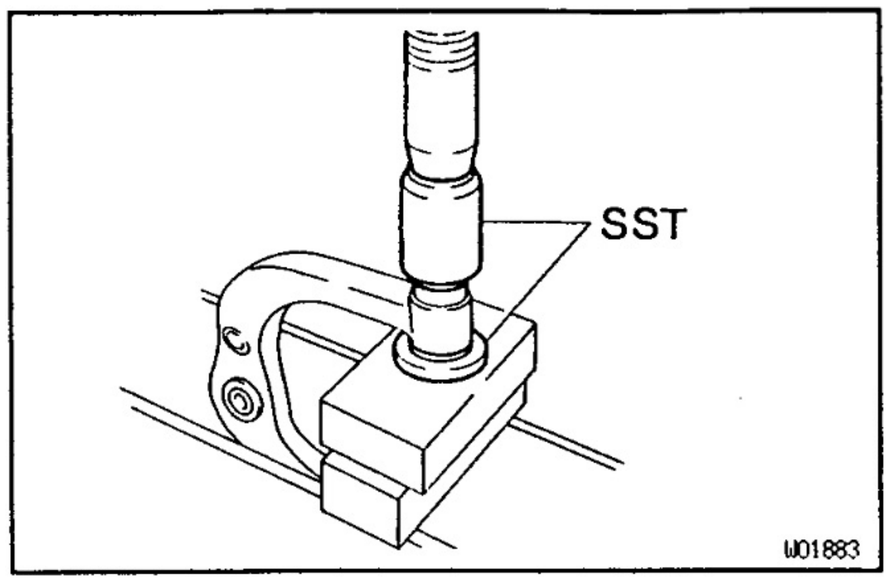

2. INSTALL NEW BEARING

Using SST and a press, install a new bushing.
SST: 09223–00010, 09506–35010

UPPER SUSPENSION ARM INSTALLATION SA281–03

Installation is in the reverse order of removal.
HINT: After installation, check front wheel alignment.
(See page SA–4)

LOWER SUSPENSION ARM
COMPONENTS

SAOP1-08

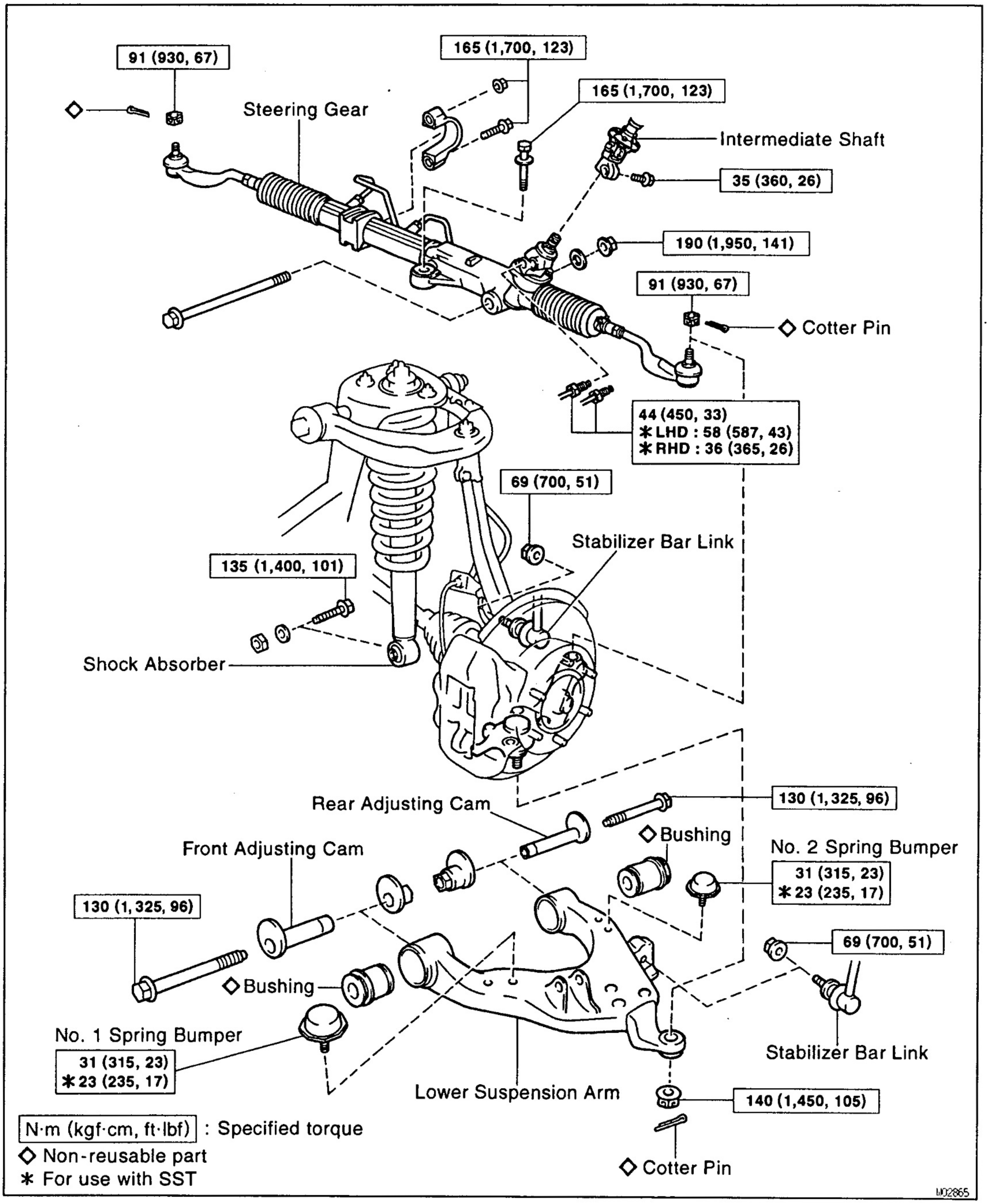

SA

LOWER SUSPENSION ARM REMOVAL

8A1WF-04

1. **REMOVE FRONT WHEEL**
   Torque: 110 N·m (1,150 kgf·cm, 83 ft·lbf)
2. **REMOVE STEERING GEAR ASSEMBLY**
   (See page SR–64)
3. **DISCONNECT STABILIZER BAR LINK**
   (See page SA–60)
4. **DISCONNECT SHOCK ABSORBER FROM LOWER SUSPENSION ARM**
   (See page SA–49)
5. **DISCONNECT LOWER BALL JOINT**

(a) Support the upper suspension arm and steering knuckle securely.

(b) Remove the cotter pin and nut from the lower ball joint.
Torque: 140 N·m (1,450 kgf·cm, 105 ft·lbf)

(c) Using SST, disconnect the lower ball joint from the lower suspension arm.
SST 09610–20012
NOTICE: Be careful not to damage the lower ball joint.
INSTALLATION HINT: Face the cotter pin hale of the lower ball joint forward.

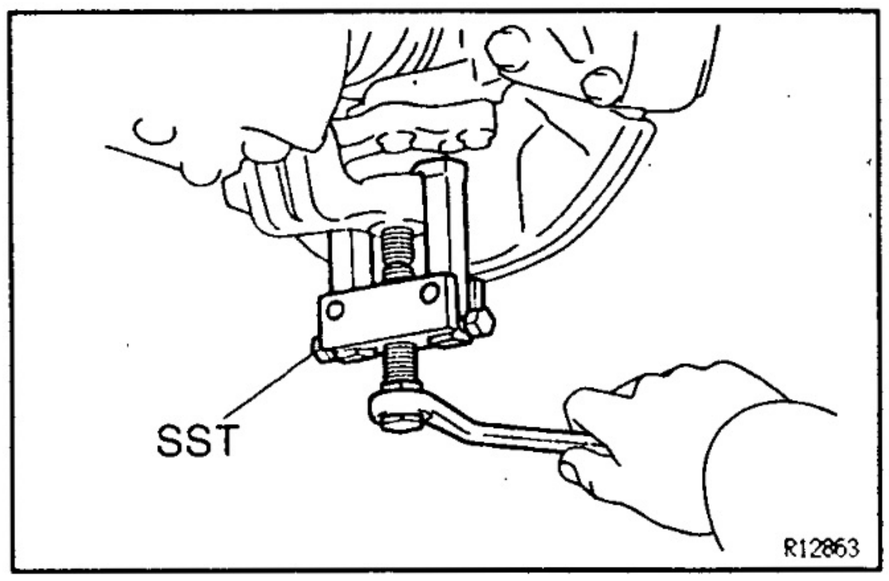

6. **REMOVE LOWER SUSPENSION ARM**

(a) Place matchmarks on the front and rear adjusting cams.

(b) Remove the nuts, adjusting cams and lower suspension arm.
Torque: 130 N·m (1,325 kgf·cm, 96 ft·lbf)

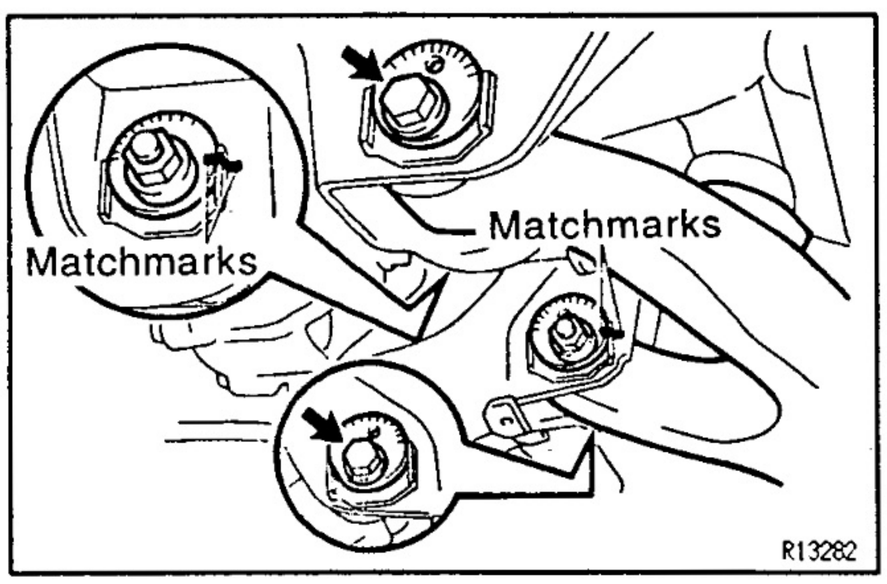

7. **REMOVE NO.1 AND NO.2 SPRING BUMPERS**
   Using SST, remove the No. 1 and No. 2 spring bumpers.
   SST 09922–10010
   Torque: 23 N·m (235 kgf·cm, 17 ft·lbf)
   INSTALLATION HINT: Use a torque wrench with a fulcrum length of 34.5 cm (13.6 in.).

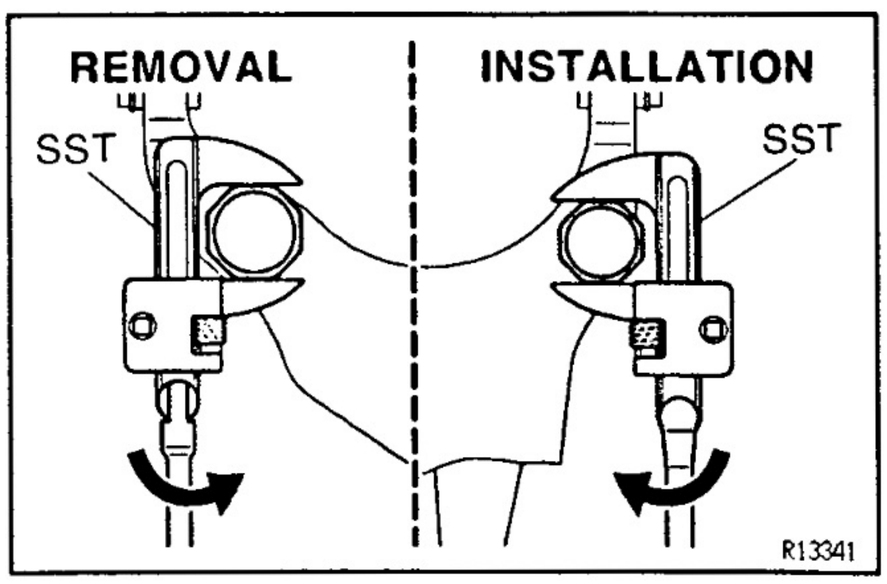

LOWER SUSPENSION ARM BUSHING REPLACEMENT

8A2PV-01

1. **REMOVE BUSHING**

(a) Using a chisel and hammer, pry up the flange of the bushing.

(b) Using SST and a press, remove the bushing.
SST 09613–26010, 09632–36010, 09950–00020

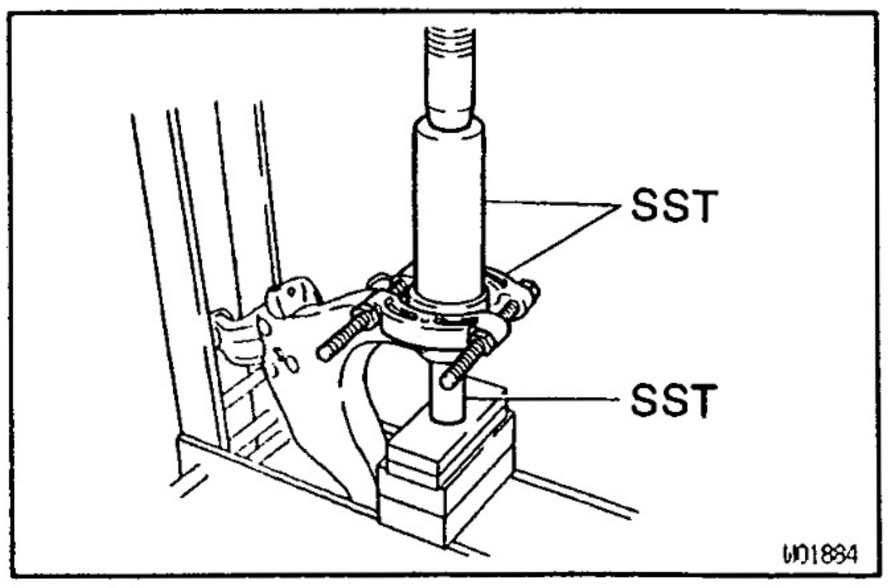

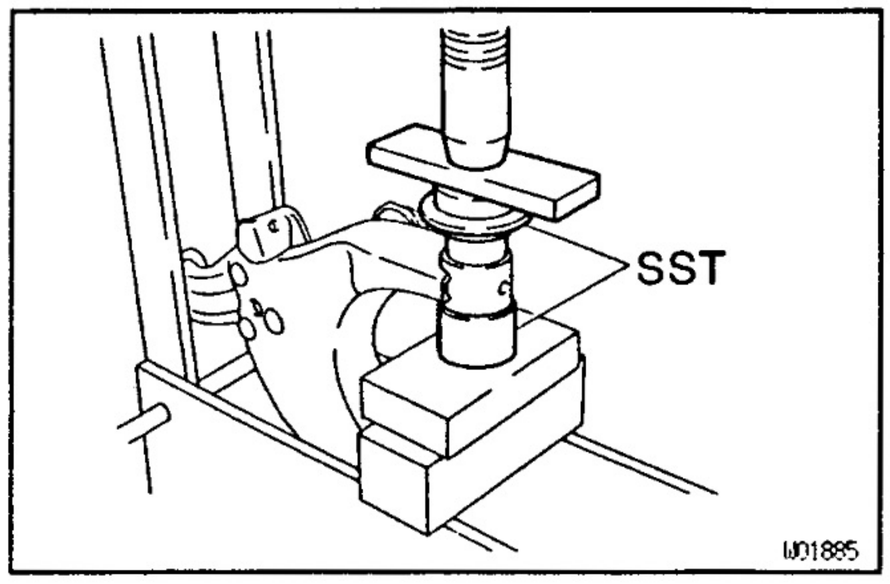

2. INSTALL NEW BUSHING

Using SST and a press, install a new bushing.
SST 09316–20011, 09710–30021 (09710–03121)

LOWER SUSPENSION ARM INSTALLATION SA282-03

Installation is in the reverse order of removal.
HINT: After installation, check front wheel alignment.
(See page SA–4)

UPPER BALL JOINT

COMPONENTS

8A2PW-01

(See page SA−11)

UPPER BALL JOINT REMOVAL

8A2PX-01

1. REMOVE STEERING KNUCKLE WITH AXLE HUB
(See page SA−12)

2. REMOVE UPPER BALL JOINT

(a) Remove the wire and boot.

(b) Using SST and a deep socket wrench, remove the upper ball joint.

SST 09950−40010 (09951−04010, 09952−04010, 09953−04020, 09954−04010, 09955−04030, 09957−04010, 09958−04010)

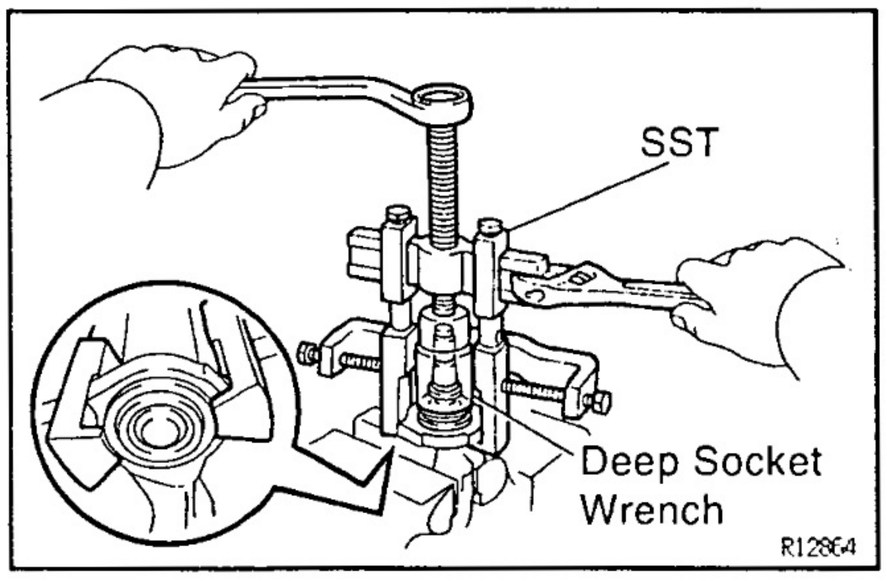

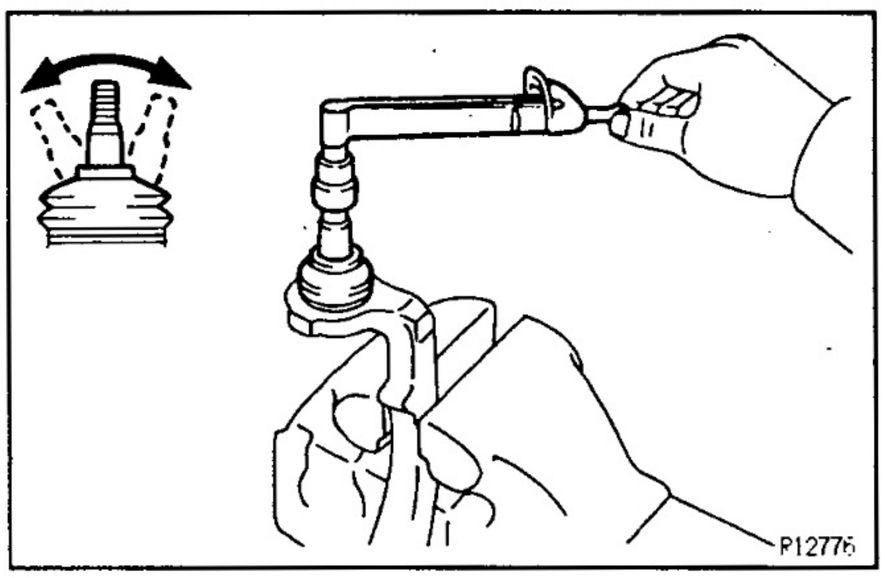

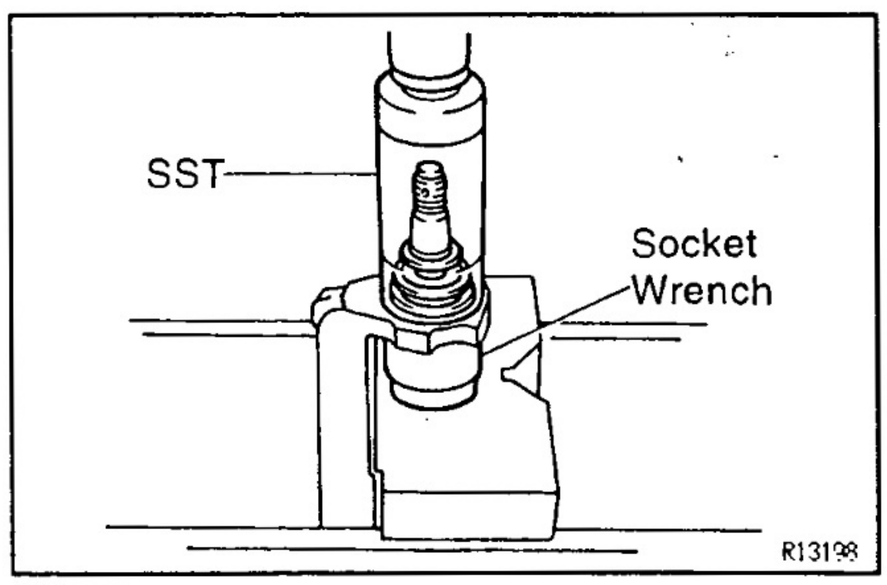

UPPER BALL JOINT INSPECTION

8A2PY-01

INSPECT BALL JOINT FOR ROTATION CONDITION

(a) As shown, flip the ball joint stud back and forth 5 times, before installing the nut.

(b) Using a torque wrench, turn the nut continuously one turn every 2−4 seconds and take the torque reading on the 5th turn.

Torque (turning):

0.7 − 4.4 N·m (7 − 45 kgf·cm, 6 − 39 in.·lbf)

UPPER BALL JOINT INSTALLATION

8A2PZ-01

1. INSTALL UPPER BALL JOINT

(a) Using SST and a socket wrench, install a new ball joint.

SST 09309−37010

(b) Using a snap ring expander, install a new snap ring.

(c) Install a new boot and fix it with a new wire.

HINT: Use the grease supplied in the kit.

2. INSTALL STEERING KNUCKLE WITH AXLE HUB
(See page SA−15)

SA

LOWER BALL JOINT
COMPONENTS

SA200-01

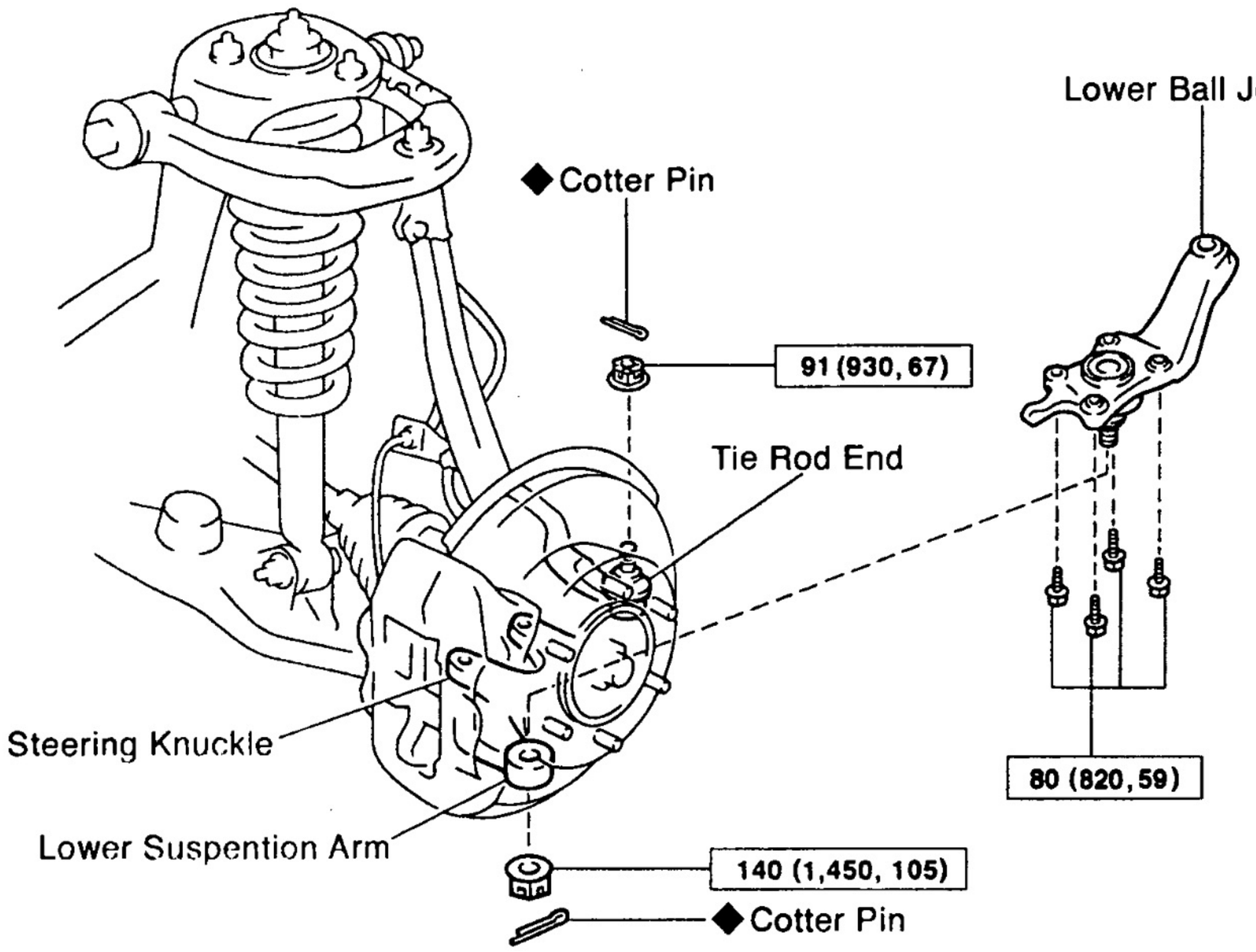

N·m (kgf·cm, ft·lbf) : Specified torque
◆ Non-reusable part

W02854

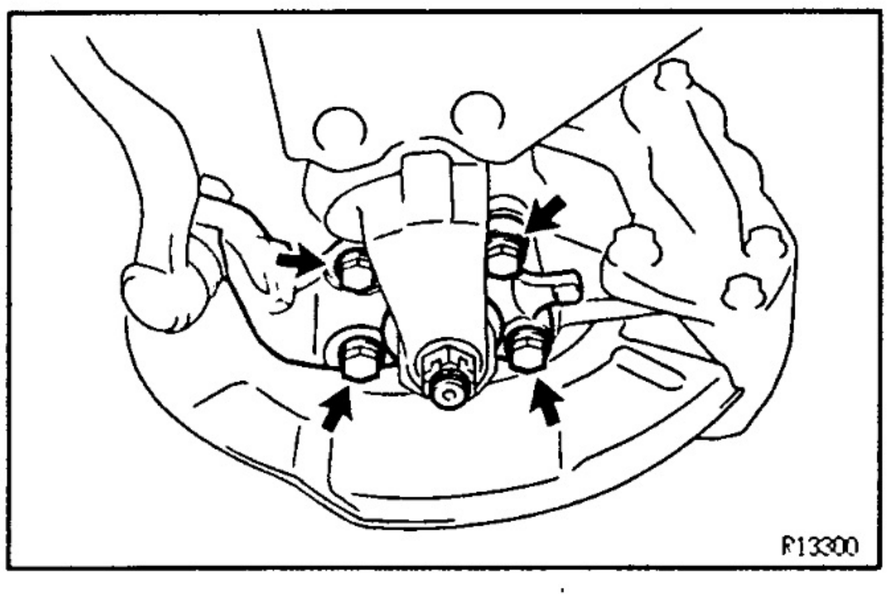

R13300

SA201-01

LOWER BALL JOINT REMOVAL

1. **REMOVE FRONT WHEEL**
   Torque: 110 N·m (1,150 kgf·cm, 83 ft·lbf)
2. **DISCONNECT TIE ROD END**

(a) Loosen the 4 bolts.
Torque: 80 N·m (820 kgf·cm, 59 ft·lbf)
REMOVAL HINT: Do not remove the bolts.

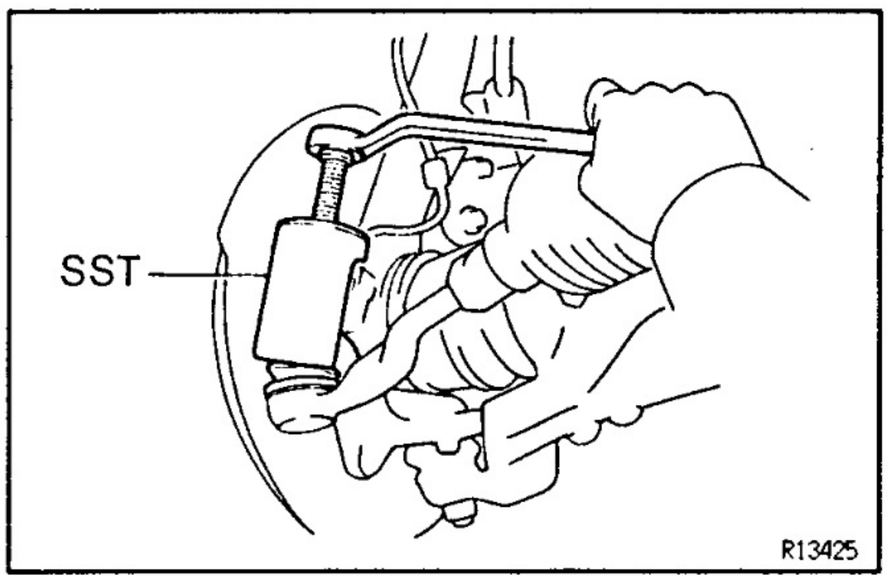

R13425

(b) Remove the cotter pin and nut from the tie rod end.
Torque: 91 N·m (930 kgf·cm, 67 ft·lbf)

(c) Using SST, disconnect the tie rod end from the steering knuckle.
SST 09610–20012

3. **REMOVE LOWER BALL JOINT**

(a) Remove the cotter pin and nut from the lower ball joint.
Torque: 140 N·m (1,450 kgf·cm, 105 ft·lbf)

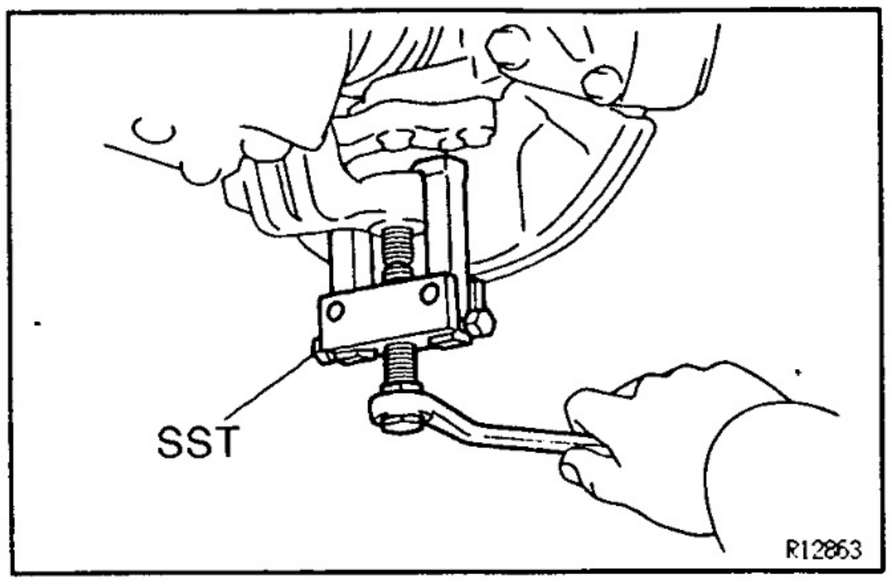

(b) Using SST, disconnect the lower ball joint from the lower suspension arm.
SST 09628–62011
INSTALLATION HINT: Face the cotter pin hole of the lower ball joint forward.
(c) Remove the 4 bolts.
(d) With lifting the upper suspension arm and steering knuckle, remove the lower ball joint.
REMOVAL HINT: After removing the lower ball joint, support the upper suspension arm and steering knuckle securely.

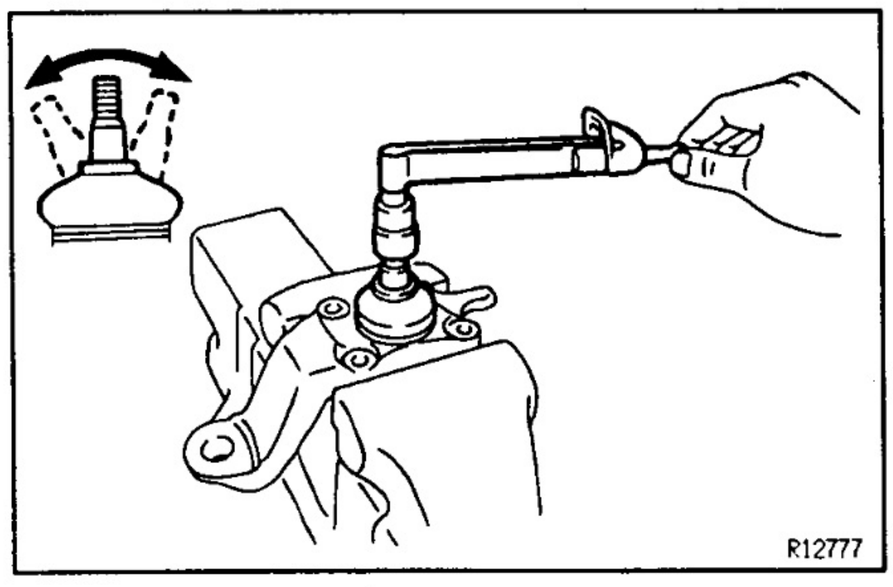

LOWER BALL JOINT INSPECTION

SA202-01

INSPECT BALL JOINT FOR ROTATION CONDITION

(a) As shown, flip the ball joint stud back and forth 5 times, before installing the nut.
(b) Using a torque wrench, turn the nut continuously one turn each 2 – 4 seconds and take the torque reading on the 5th turn.
Turning torque:
0.1 – 2.5 N·m (1 – 25 kgf·cm, 1 – 22 in.·lbf)

LOWER BALL JOINT INSTALLATION

SA203-01

Installation is in the reverse order of removal.
HINT: After installation, check front wheel alignment.
(See page SA–4)

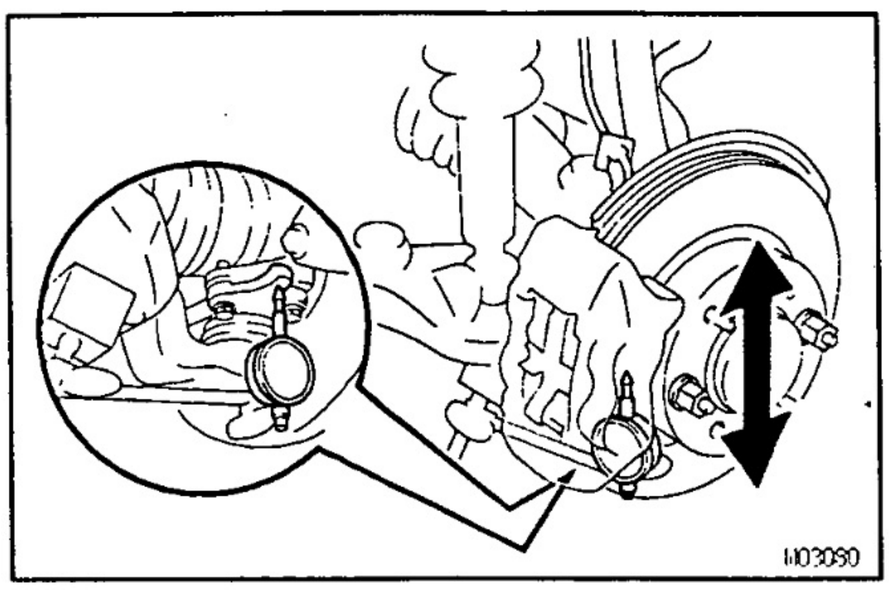

LOWER BALL JOINT EXCESSIVE PLAY ON –VEHICLE INSPECTION

SA204-01

(a) Remove the tire and install the hub nuts to the disc.
(b) Using a dial indicator, check the lower ball joint for excessive play when you push the hub nuts up and down with a force of 294 N (30 kgf, 66 lbf).
Maximum: 0.5 mm (0.020 in.)

STABILIZER BAR
COMPONENTS

8AOPA-08

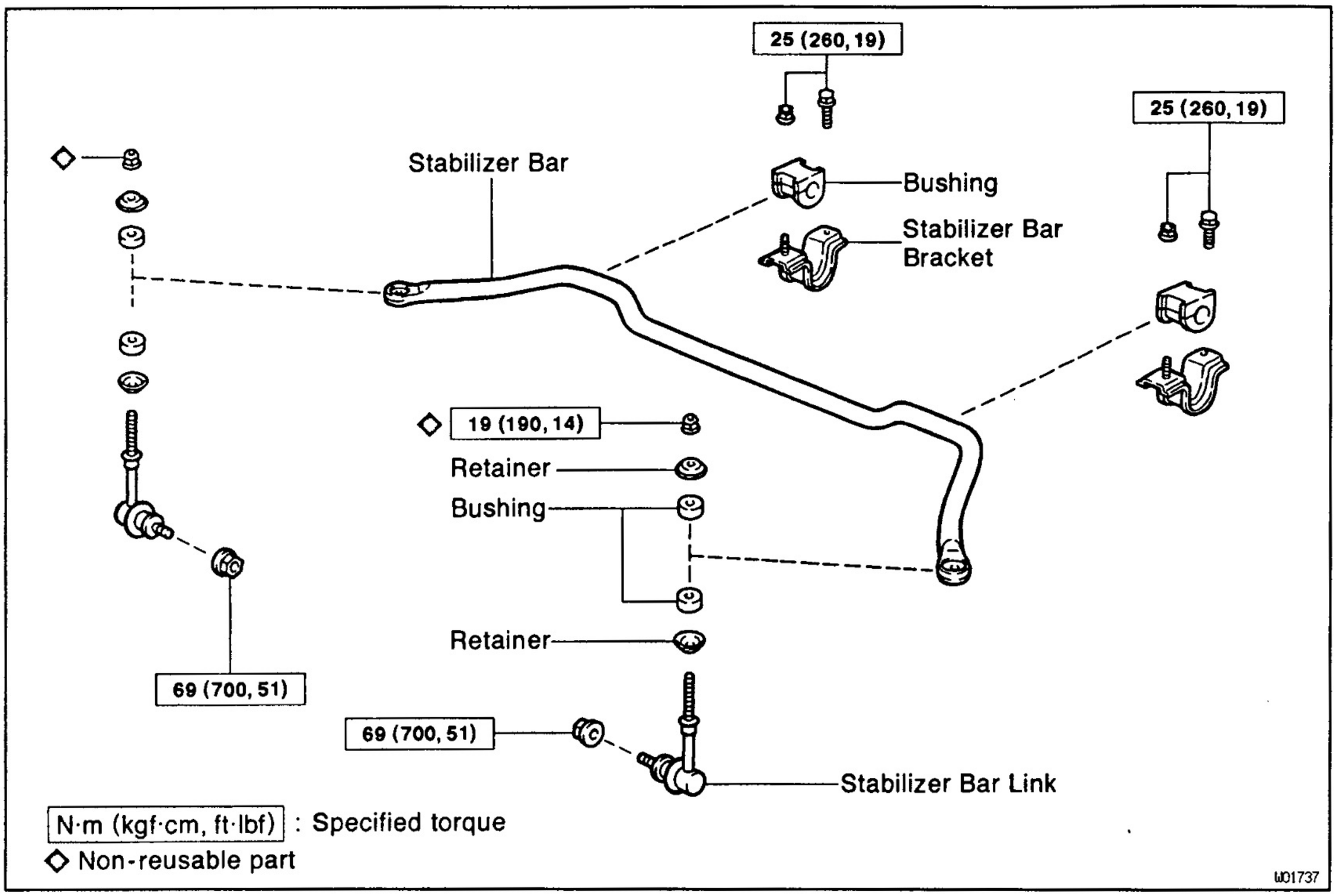

SA

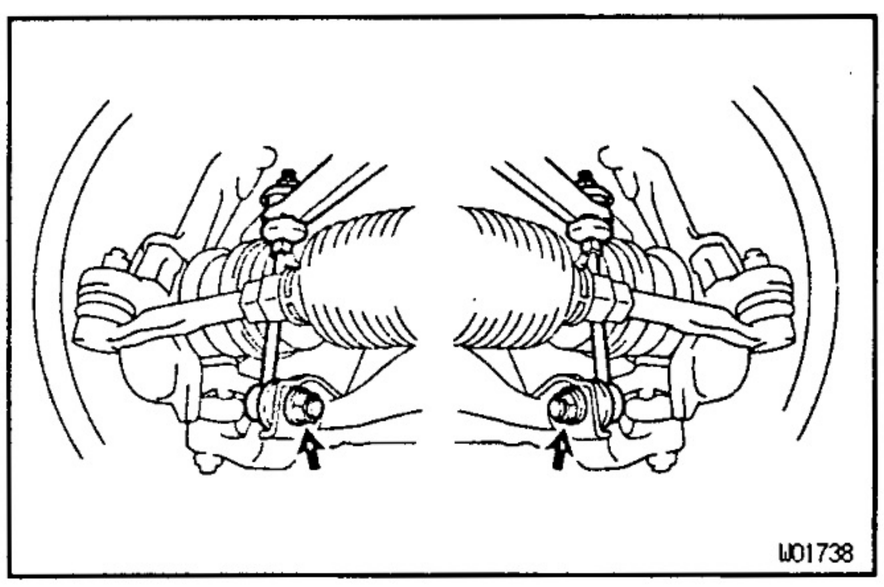

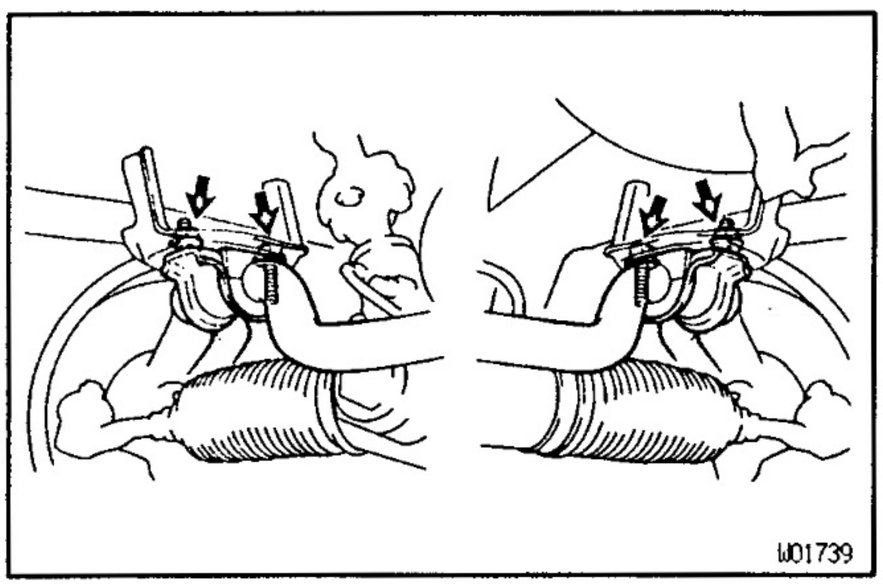

8A1WM-04

STABILIZER BAR REMOVAL

1. **REMOVE FRONT WHEELS**
   Torque: 110 N·m (1,150 kgf·cm, 83 ft·lbf)
2. **DISCONNECT STABILIZER BAR LINKS**
   Remove the 2 nuts and disconnect the stabilizer bar links from the lower suspension arm.
   Torque: 69 N·m (700 kgf·cm, 51 ft·lbf)
   HINT: If the ball joint stud turns together with the nut, use a hexagon wrench to hold the stud.
3. **REMOVE STABILIZER BAR**

(a) Remove the 2 bolts, nuts and stabilizer bar with the bushings and brackets.
Torque: 25 N·m (260 kgf·cm, 19 ft·lbf)

(b) Remove the 2 brackets and bushings from the stabilizer bar.
INSTALLATION HINT: Install the bushings to the stabilizer bar so that the cutout of the bushings faces the front of the vehicle.

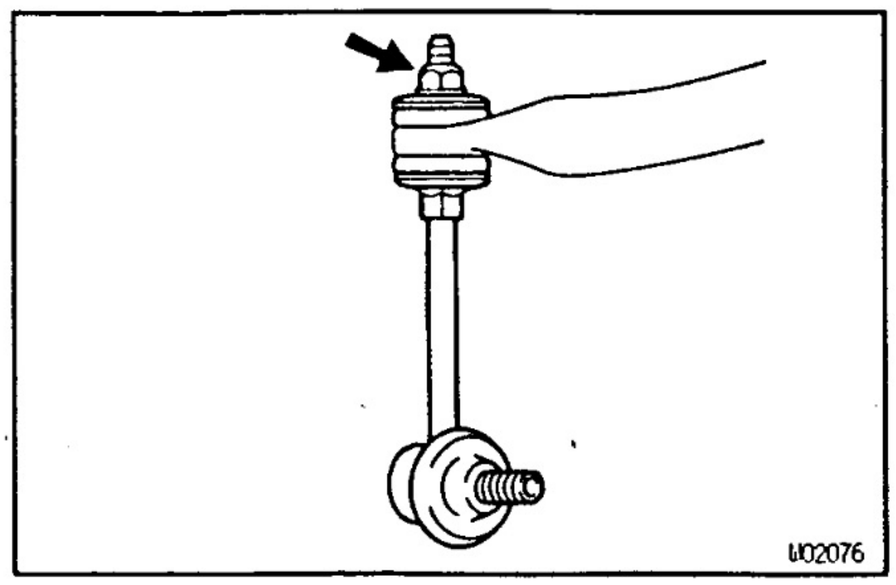

4. REMOVE STABILIZER BAR LINKS

Hold the stabilizer bar link, remove the nuts, retainers and bushings.

Torque: 19 N·m (190 kgf·cm, 14 ft·lbf)

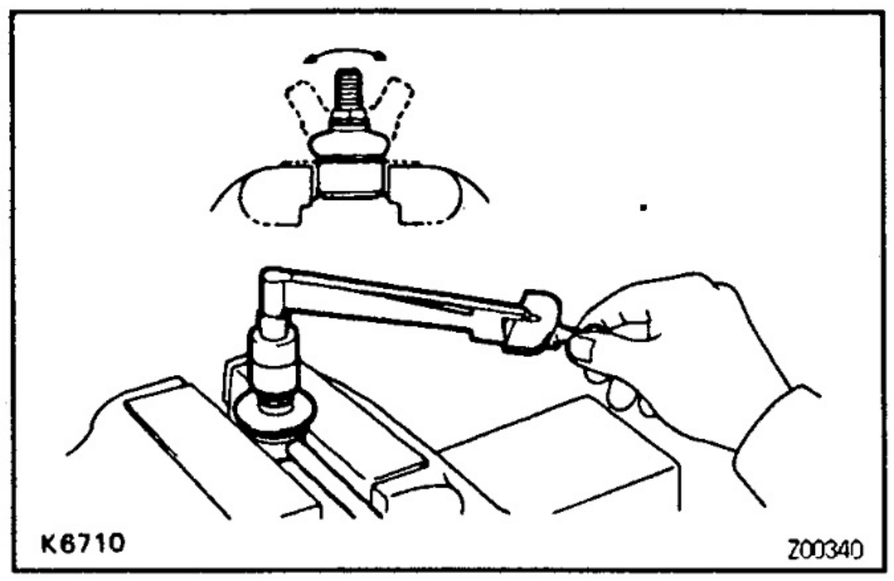

SA035-19

STABILIZER BAR LINK INSPECTION

INSPECT BALL JOINT FOR ROTATION CONDITION

(a) As shown, flip the ball joint stud back and forth 5 times before installing the nut.

(b) Using a torque wrench, turn the stud continuously one turn every 2 — 4 seconds and take the torque reading on the 5th turn.

Torque (turning):

0.05 — 2.0 N·m (0.5 — 20 kgf·cm, 0.4 — 17 in.·lbf)

SA287-03

STABILIZER BAR INSTALLATION

Installation is in the reverse order of removal.

SA

REAR AXLE

PREPARATION

SST (SPECIAL SERVICE TOOLS)

SA205–02

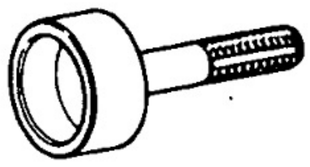	09223–56010	Crankshaft Rear Oil Seal Replacer	Rear axle bearing
	09308–00010	Oil Seal Puller	Oil seal
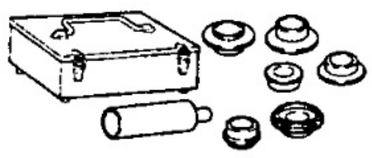	09316–60011	Transmission & Transfer Bearing Replacer	Axle shaft Bearing retainer
	(09316–00051)	Replacer "D"	
	09515–30010	Rear Wheel Bearing Replacer	Rear axle bearing
	09521–25011	Rear Axle Shaft Puller	Rear axle shaft
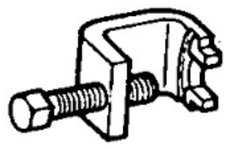	09650–17011	Hub Bolt Remover	Hub bolt
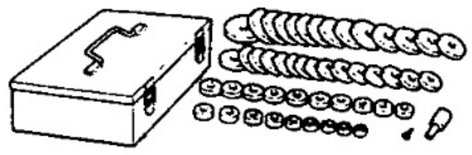	09950–60010	Replacer Set	Axle bearing
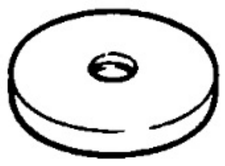	(09951–00560)	Replacer 56	
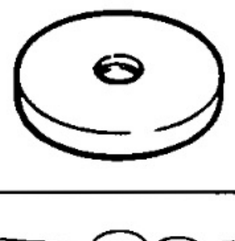	(09951–00610)	Replacer 61	Outer oil seal
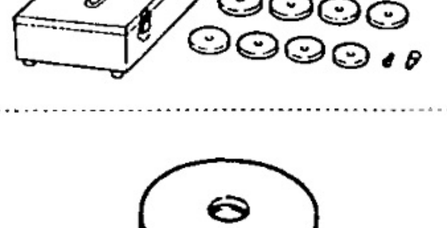	09950–60020	Replacer Set No.2	
	(09951–00710)	Replacer 71	Inner oil seal

SA

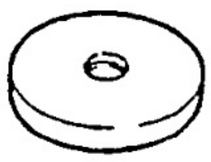	(09951–00890) Replacer 89	Axle bearing
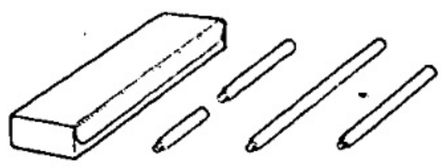	09950–70010 Handle Set	Inner and outer oil seal

8A206–01

EQUIPMENT

Dial indicator with magnetic base	
Torque wrench	

REAR AXLE SHAFT
COMPONENTS

8A207-01

Disc Brake :

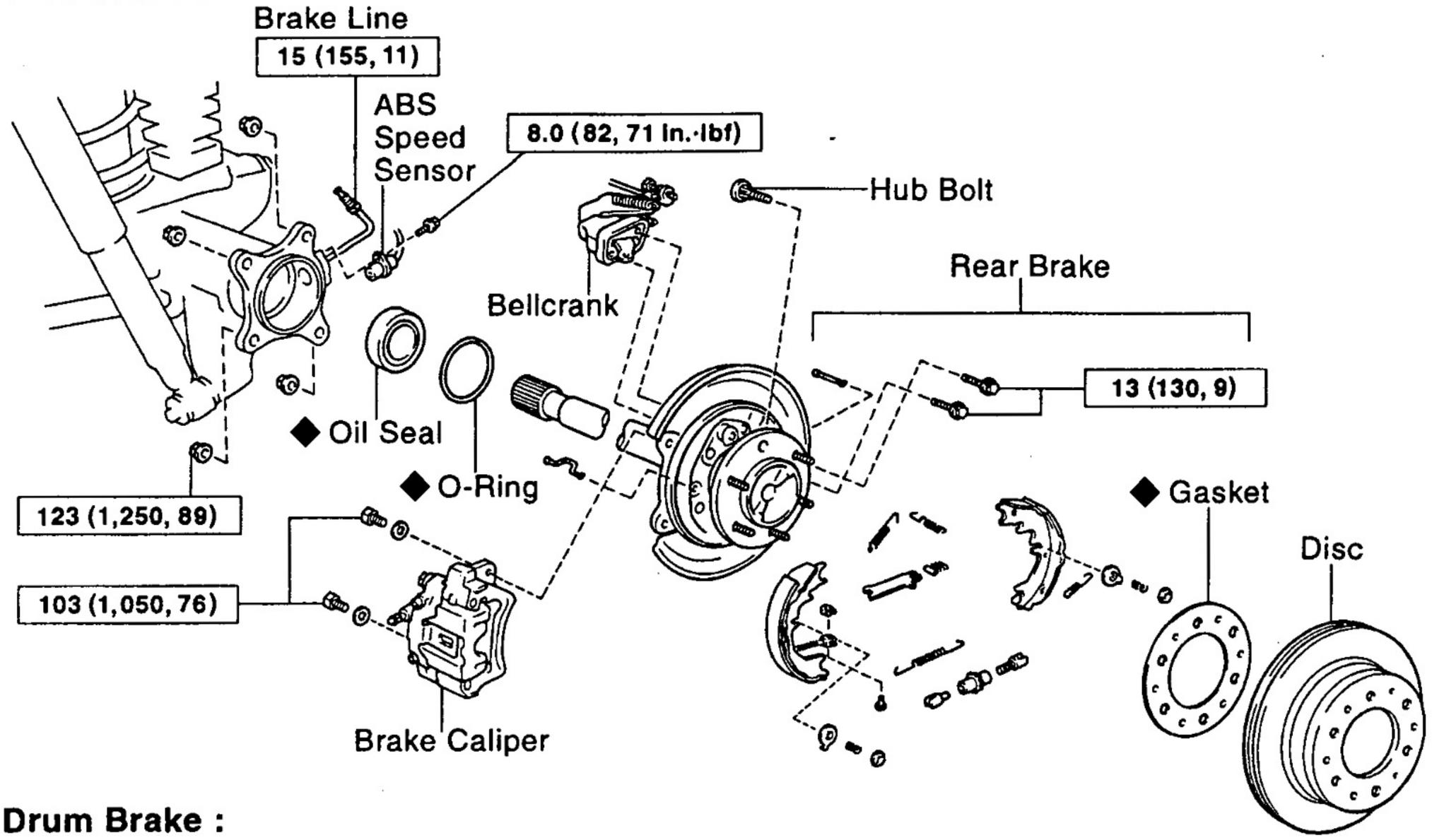

Drum Brake :

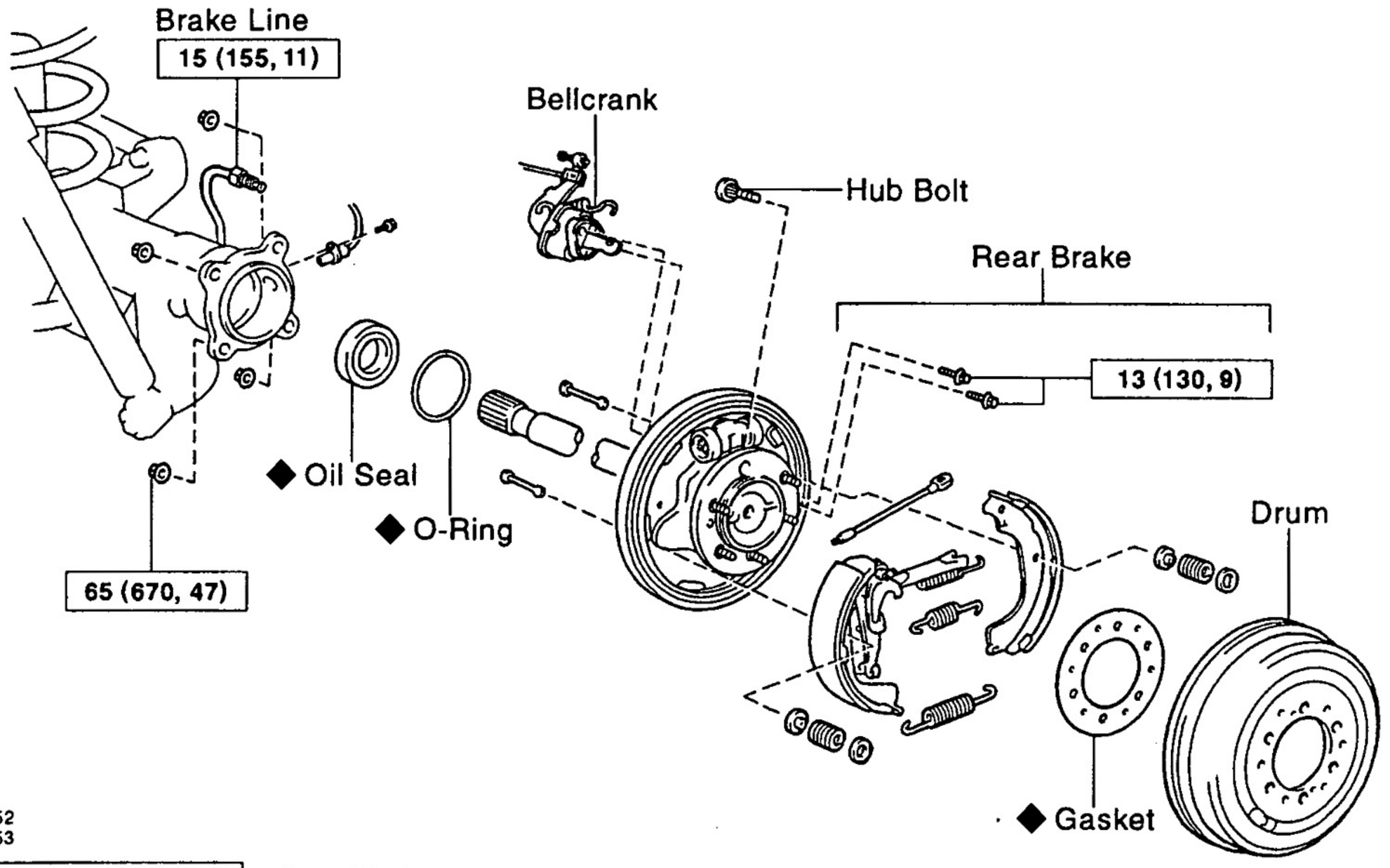

W02852
W02853

N·m (kgf·cm, ft·lbf) : Specified torque

◆ Non-reusable part

Z18617

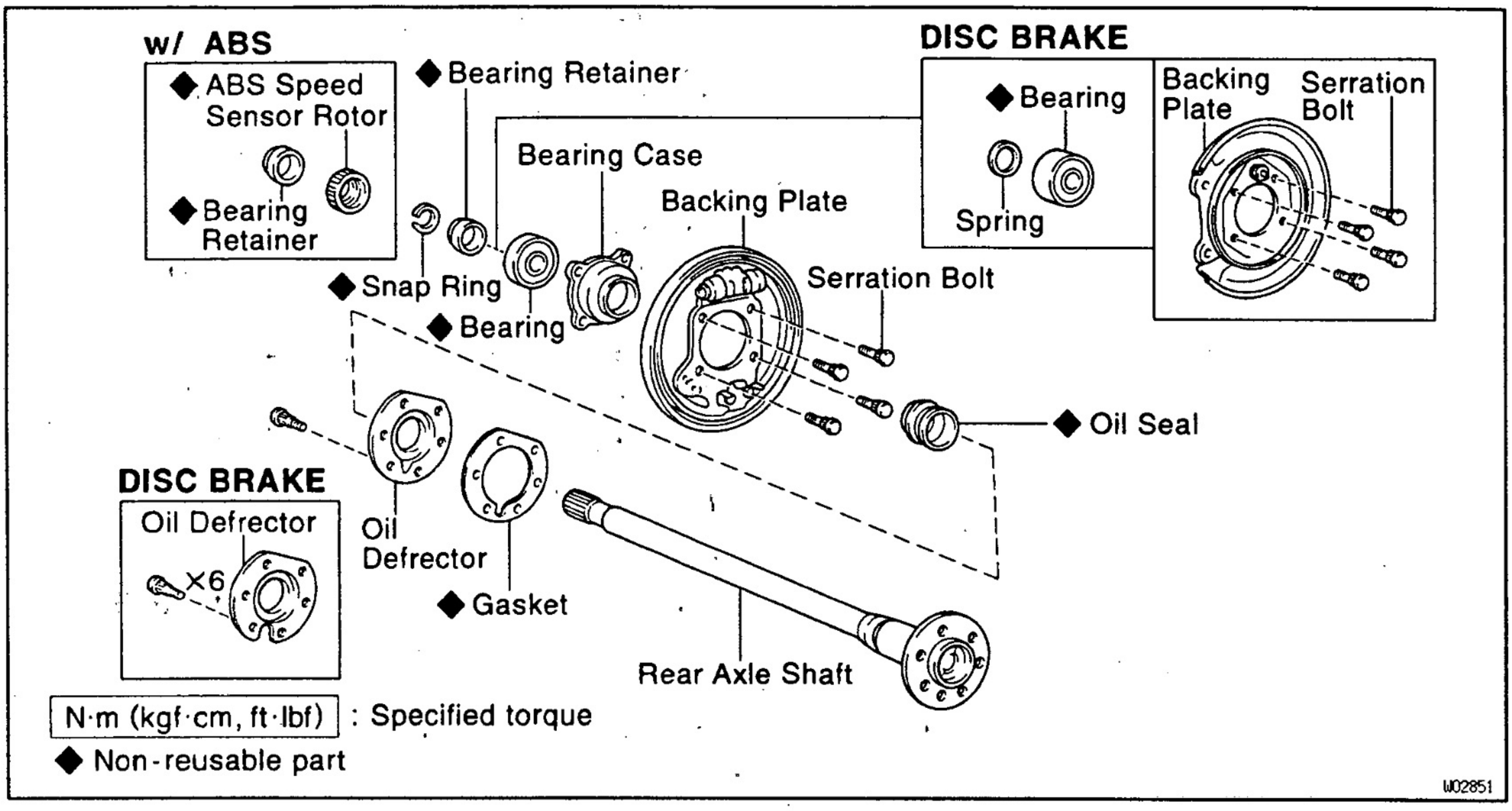

SA208-01

REAR AXLE SHAFT REMOVAL

1. **REMOVE REAR WHEEL**
   Torque: 110 N·m (1,150 kgf·cm, 83 ft·lbf)
2. **DRUM BRAKE:**
   REMOVE BRAKE DRUM
   DISC BRAKE:
   REMOVE CALIPER AND DISC
   (a) Remove the 2 bolts and brake caliper from the rear axle housing.
   Torque: 103 N·m (1,050 kgf·cm, 76 ft·lbf)
   (b) Support the brake caliper securely.
   (c) Remove the disc.
3. **CHECK BEARING BACKLASH AND AXLE SHAFT DEVIATION**
   (a) Using a dial indicator, check the backlash in the bearing shaft direction.
   Maximum: 0.7 mm (0.027 in.)
   If the backlash exceeds the maximum, replace the bearing.

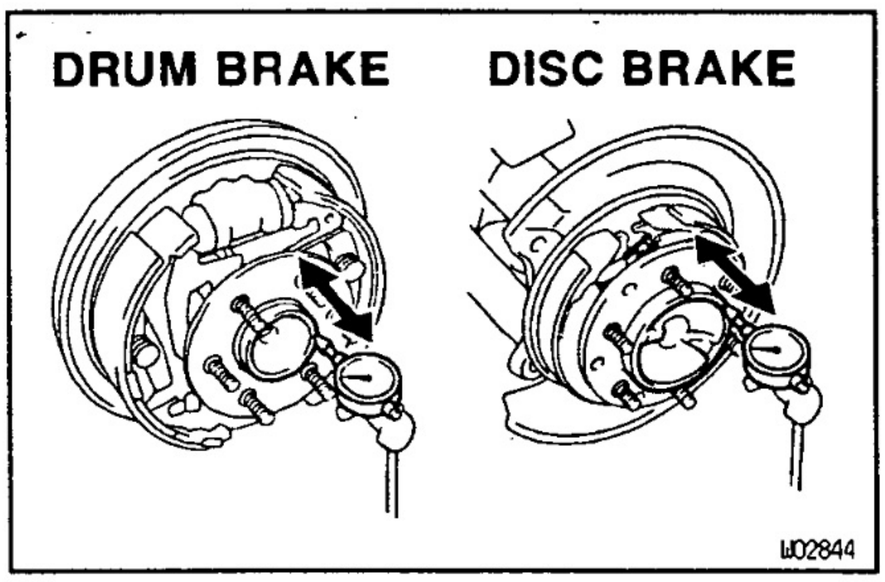

   (b) Using a dial indicator, check the deviation at the surface of the axle shaft outside the hub bolt.
   Maximum: 0.1 mm (0.0039 in.)
   If the deviation exceeds the maximum, replace the axle shaft.

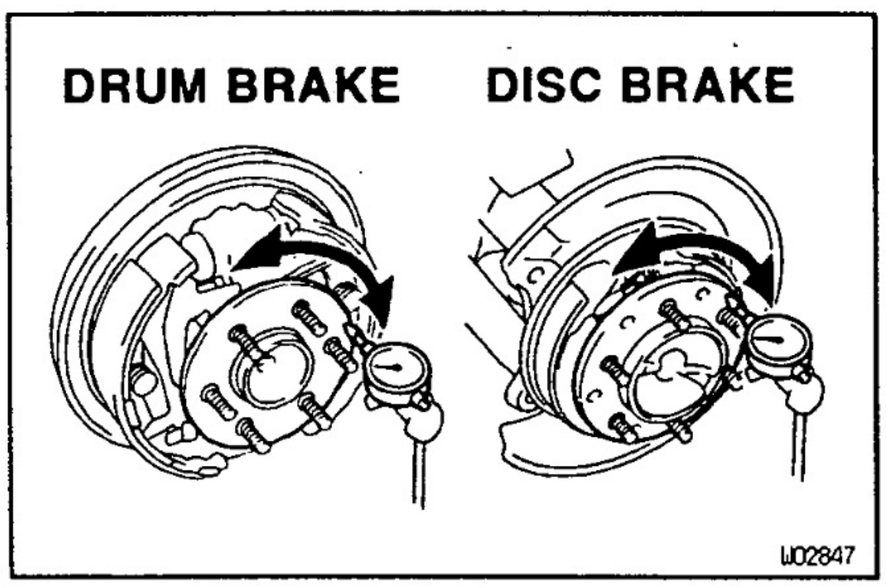

4. **w/ ABS:**
   REMOVE ABS SPEED SENSOR FROM REAR AXLE HOUSING
   Torque: 8.0 N·m (82 kgf·cm, 71 in.·lbf)

5. REMOVE REAR BRAKE ASSEMBLY
(See page BR–30 and 39)

6. REMOVE REAR AXLE SHAFT ASSEMBLY

(a) Remove the 4 backing plate mounting nuts.
Torque:
Drum brake: 65 (670 kgf·cm, 47 ft·lbf)
Disc brake: 123 (1,250 kgf·cm, 89 ft·lbf)

(b) Pull out the rear axle shaft assembly.
NOTICE: Be careful not to damage the oil seal.

7. REMOVE O–RING FROM REAR AXLE HOUSING

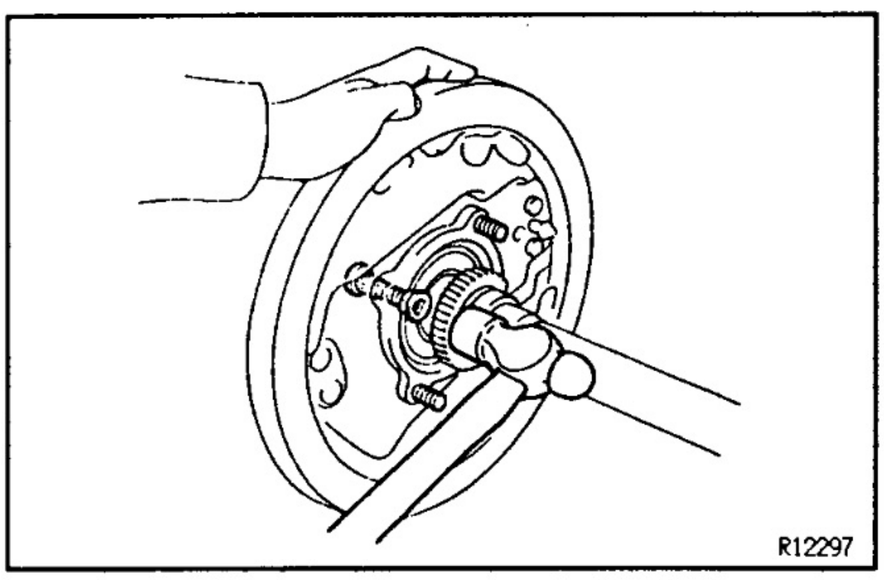
R12297

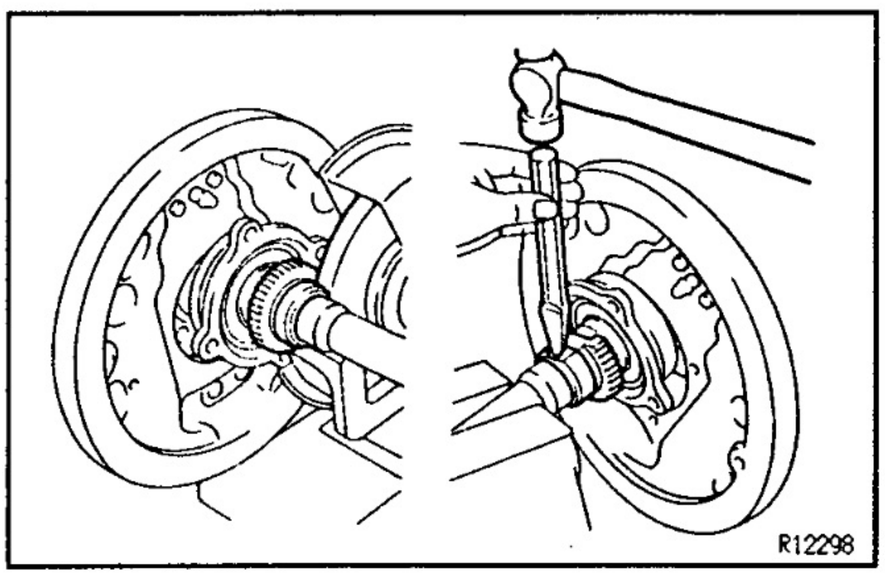
R12298

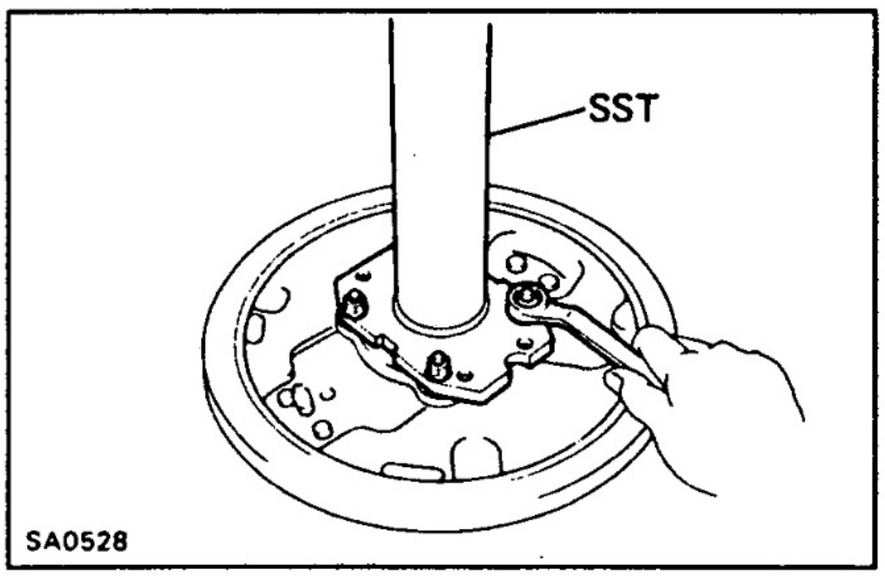

SA0528

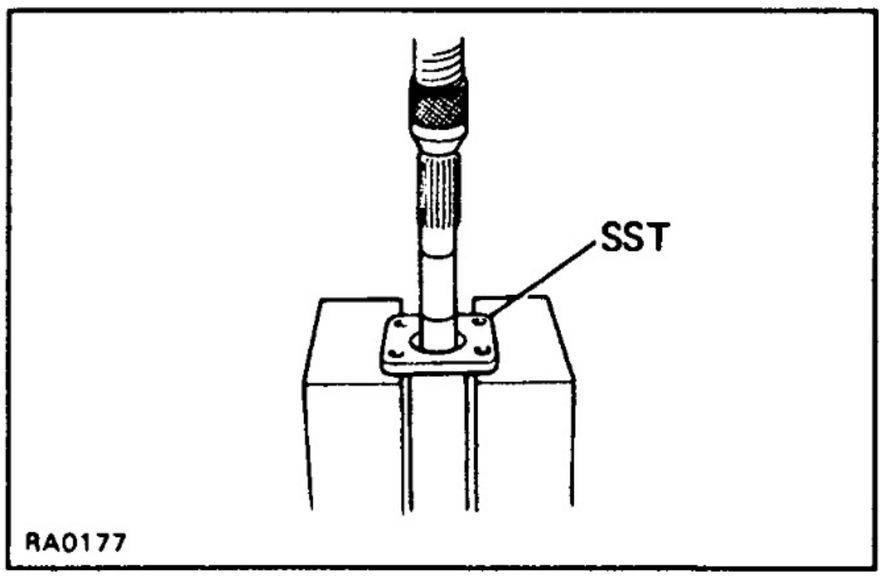

RA0177

SA

8A208–01

REAR AXLE SHAFT COMPONENTS INSPECTION AND REPAIR

1. w/ ABS:
REMOVE BEARING RETAINER (DIFFERENTIAL SIDE) AND ABS SPEED SENSOR ROTOR

(a) Attach 4 nuts to the serration bolts and remove the serration bolts from the backing plate using a hammer.
NOTICE: Do not reuse the nuts previously removed from the vehicle.

(b) Grind the retainer and sensor rotor surfaces using a grinder, then chisel them out with a chisel.

(c) Attach washers and nuts to the 4 serration bolts, then torque the nuts to install the serration bolts to the backing plate.

(d) Remove the 4 nuts from the serration bolts.

2. REMOVE SNAP RING FROM AXLE SHAFT
Using a snap ring expander, remove the snap ring.

3. REMOVE REAR AXLE SHAFT FROM BACKING PLATE

(a) Position SST on the backing plate with the 4 nuts.
SST 09521–25011

(b) Using a press, remove the rear axle shaft with the bearing retainer from the backing plate.

(c) Remove the SST.

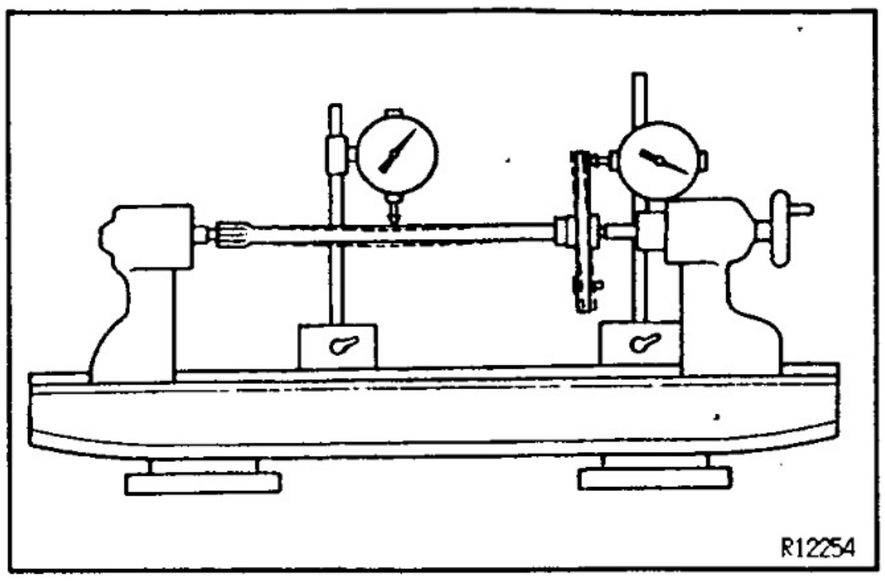

4. INSPECT AXLE SHAFT

Maximum runout:

Shaft runout: 2.0 mm (0.079 in.)

Flange runout: 0.1 mm (0.004 in.)

If the rear axle shaft or flange are damaged or worn, or if runout is greater than the maximum, replace the rear axle shaft.

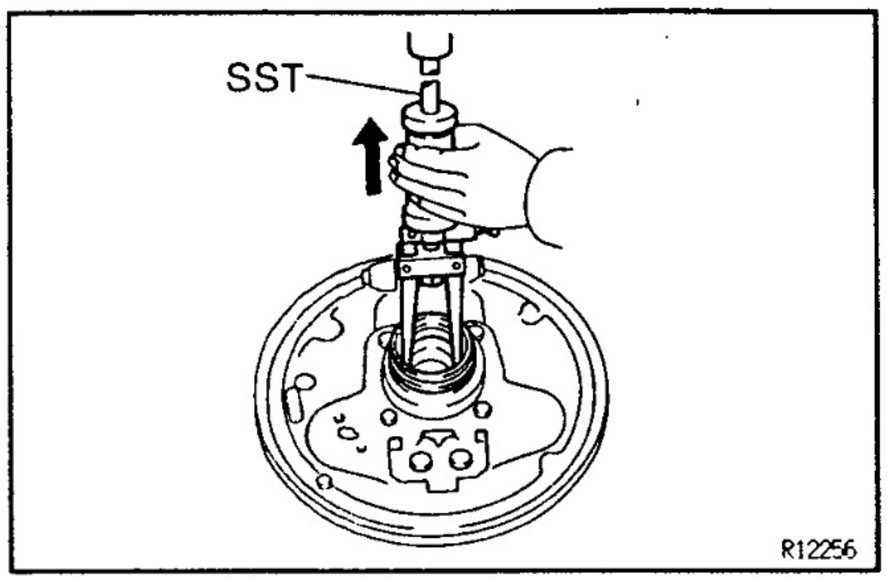

5. REMOVE OUTER OIL SEAL

Using SST, remove the oil seal.

SST 09308–00010

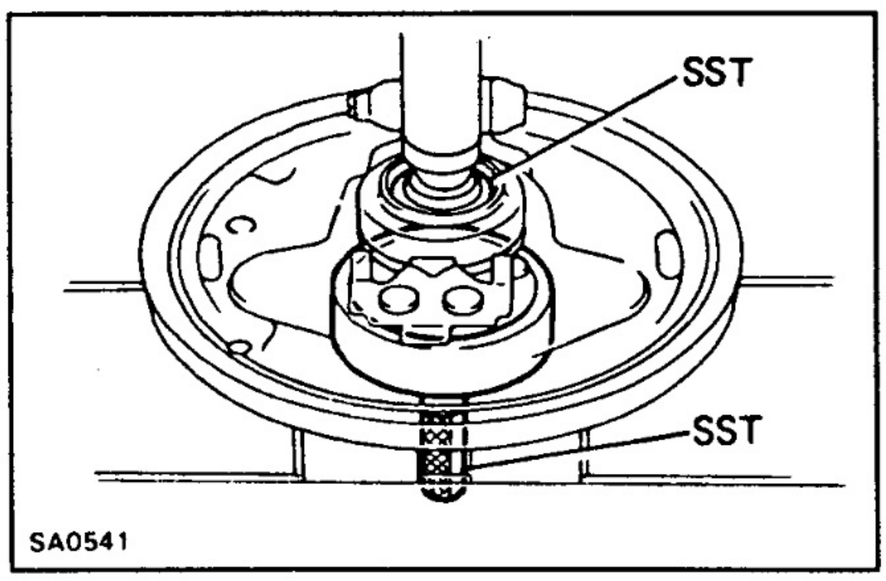

6. REPLACE REAR AXLE BEARING

(a) Using SST, remove the bearing.

SST 09223–56010, 09950–60010 (09951–00560)

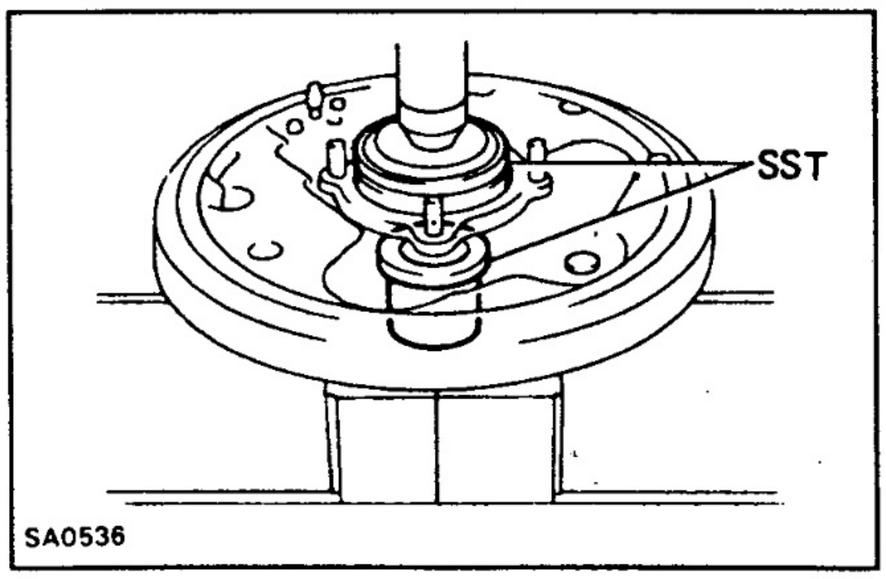

(b) Using SST, install a new bearing.

SST 09515–30010, 09950–60020 (09951–00890)

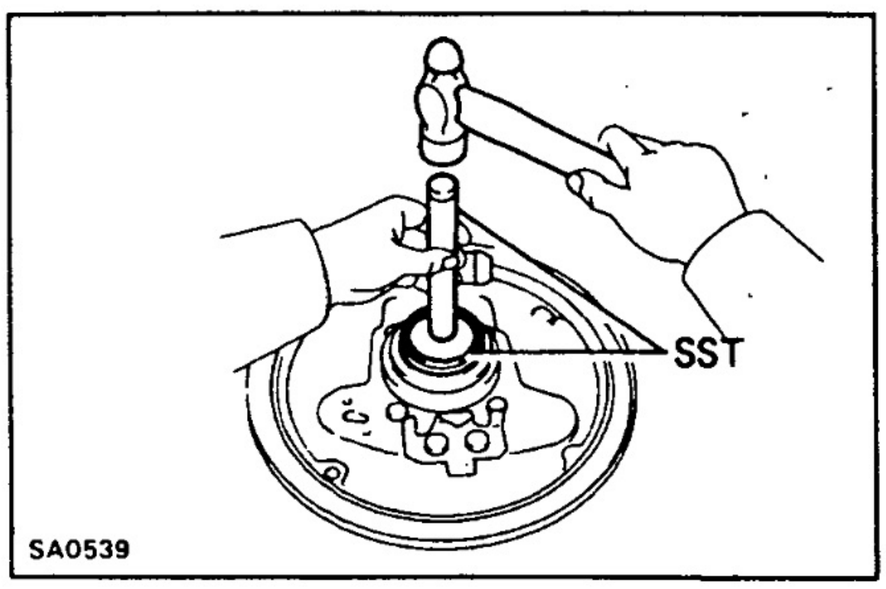

7. INSTALL NEW OUTER OIL SEAL

Using SST and a hammer, install a new oil seal.

SST 09950–60010 (09951–00610),
09950–70010 (09951–07150)

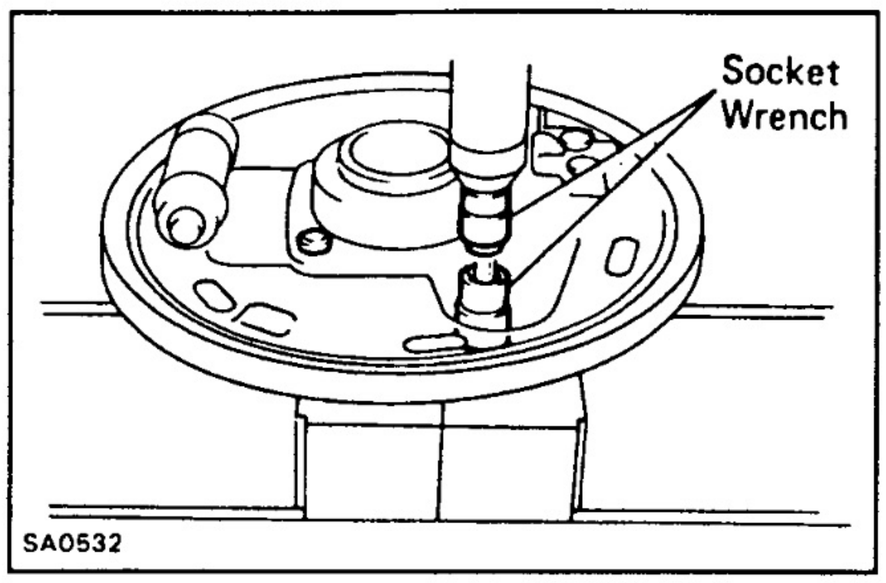

8. REPLACE BEARING CASE

(a) Remove the oil seal (outer side) and bearing.
(b) Install 4 nuts to the serration bolts.
(c) Using a hammer, remove the 4 serration bolts and remove the bearing case.
(d) Position the backing plate on a new bearing case and, using 2 socket wrenches, install the 4 serration bolts.
(e) Install a new bearing and oil seal (outer side).

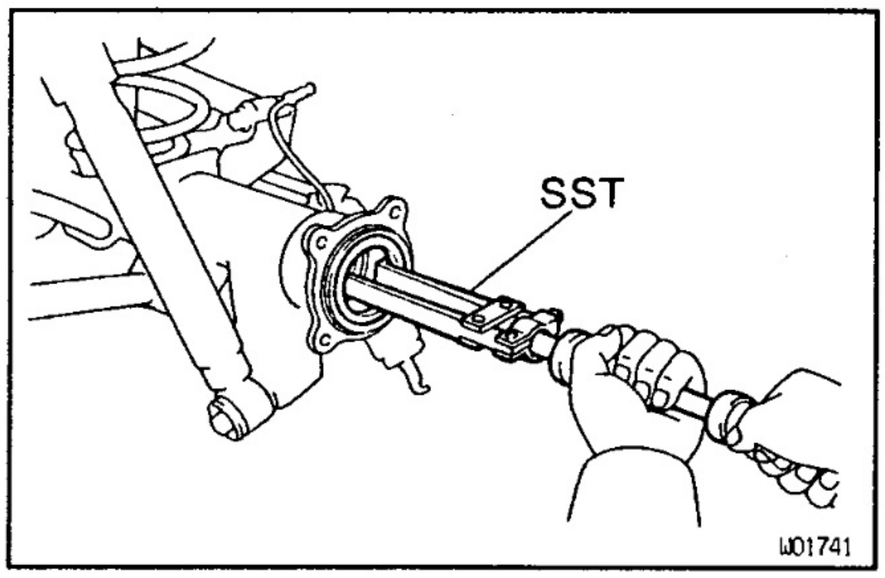

SA

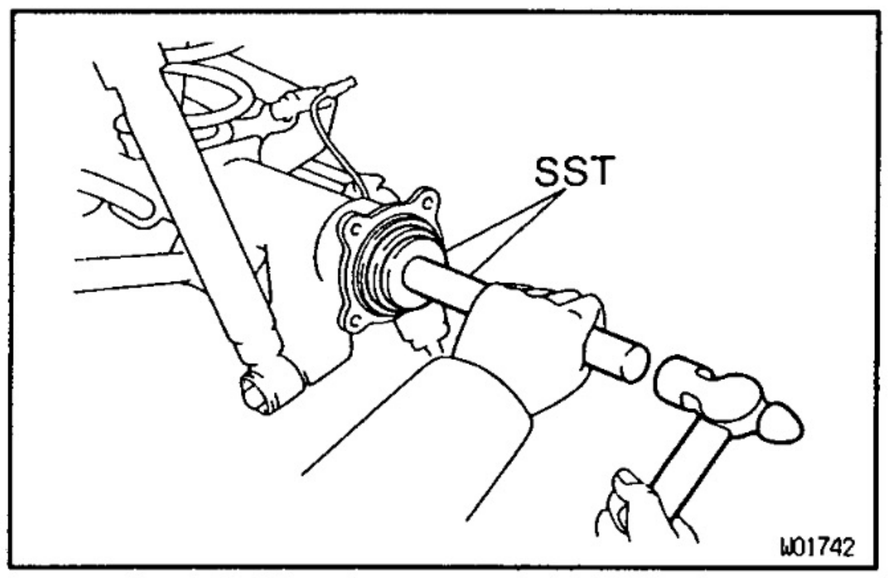

9. REPLACE OIL SEAL (INNER SIDE)

(a) Using SST, remove the oil seal.
SST 09308–00010

(b) Using SST and a hammer, install a new oil seal.
SST 09950–60020 (09951–00710),
09950–70010 (09951–07150)
(c) Apply MP grease to the oil seal lip.

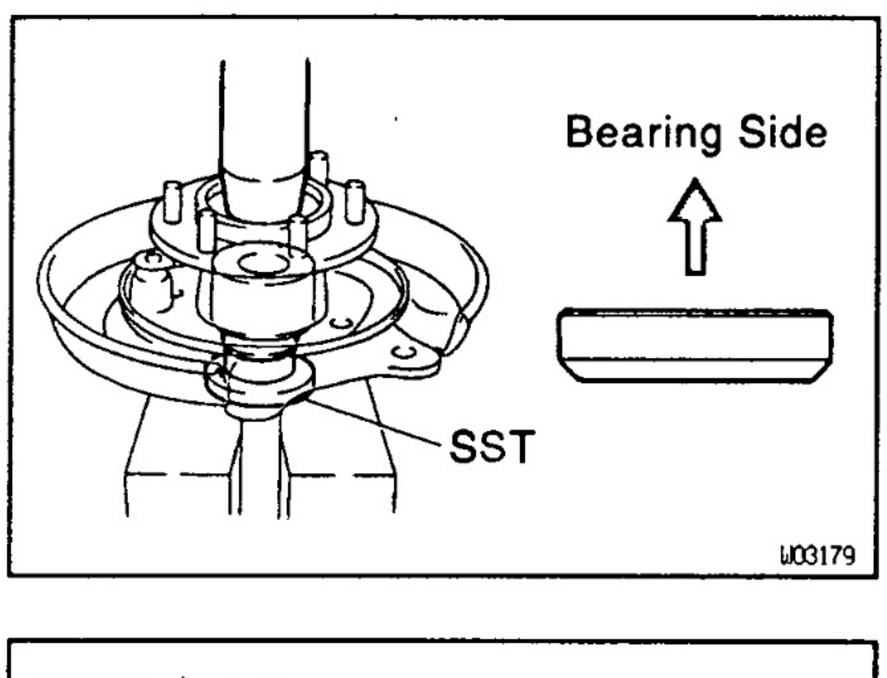

10. INSTALL REAR AXLE SHAFT IN BACKING PLATE

(a) Apply MP grease to the oil seal lip.
(b) Install the backing plate and bearing retainer on the rear axle shaft.
(c) Using SST and a press, install the rear axle shaft into the backing plate.
SST 09316–60010 (09316–00050)
(d) Using snap ring pliers, install a new snap ring.

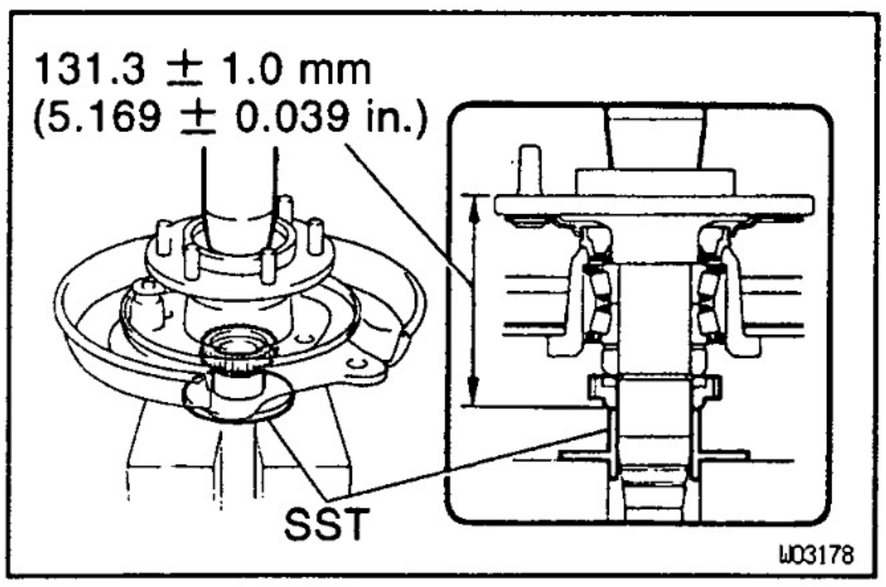

11. w/ ABS:
INSTALL ABS SPEED SENSOR ROTOR AND BEARING RETAINER (DIFFERENTIAL SIDE)

Using SST and a press, install a new sensor rotor and new bearing retainer to the axle shaft.
SST 09316–60010 (09316–00050)
Standard length:
131.3 ± 1.0 mm (5.169 ± 0.039 in.)

8A20A-01

REAR AXLE SHAFT INSTALLATION

Installation is in the reverse order of removal.
HINT: After installation, bleed brake system, check ABS speed sensor signal and for leaks.
(See page BR–6, 59)

8A20B-01

HUB BOLT REPLACEMENT

1. **REMOVE REAR WHEEL**
2. **DRUM BRAKE:**
   REMOVE BRAKE DRUM
   DISC BRAKE:
   REMOVE REAR BRAKE CALIPER AND DISC
   (See page SA–39)

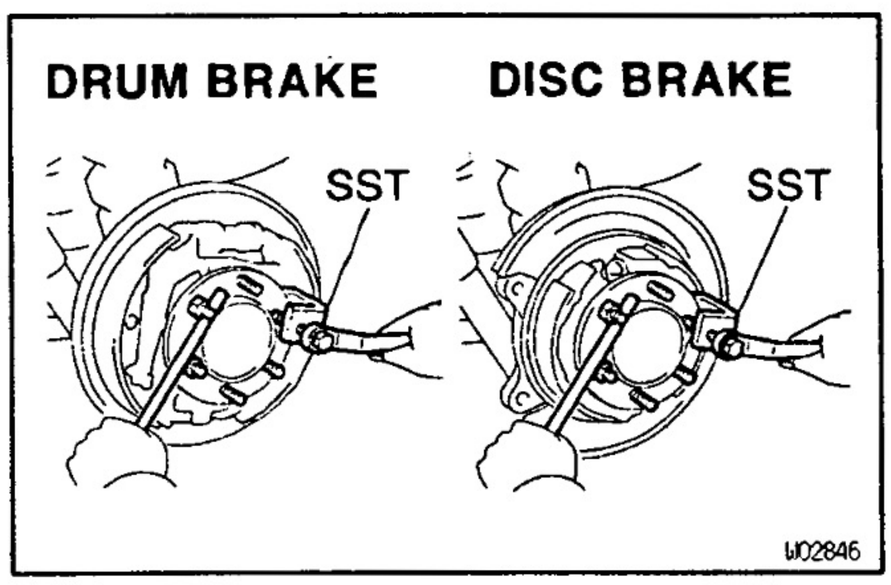

3. **REMOVE HUB BOLT**
   Using SST, remove the hub bolt.
   SST 09650–17011

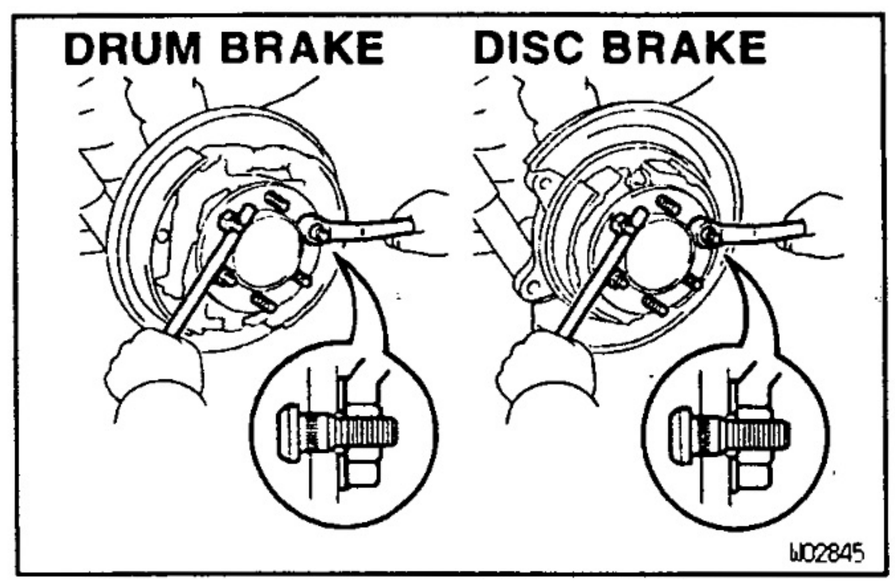

4. **INSTALL HUB BOLT**
   Install a washer and nut to a new hub bolt, as shown in the illustration, and install the hub bolt with torquing the nut.
5. **DRUM BRAKE:**
   INSTALL BRAKE DRUM
   DISC BRAKE:
   INSTALL DISC AND REAR BRAKE CALIPER
   (See page SA–42)
6. **INSTALL REAR WHEEL**
   Torque: 110 N·m (1,150 kgf·cm, 83 ft·lbf)

REAR DIFFERENTIAL

PREPARATION

SST (SPECIAL SERVICE TOOLS)

8A20C–01

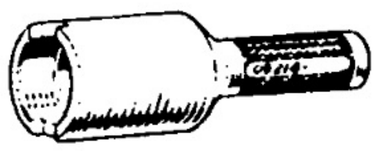	09214–76011	Crankshaft Pulley Replacer	Oil seal
	09223–15020	Oil Seal & Bearing Replacer	Side bearing
	09308–00010	Oil Seal Puller	Front bearing outer race
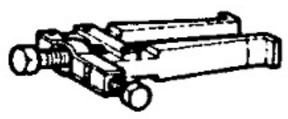	09308–10010	Oil Seal Puller	Oil seal
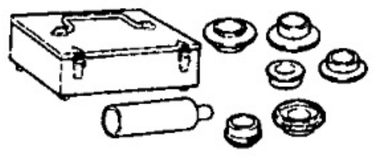	09316–60011	Transmission & Transfer Bearing Replacer	Bearing outer race w/ LSD Oil storage ring
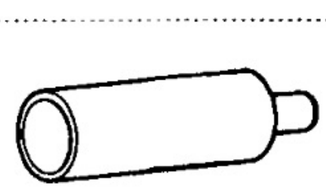	(09316–00011)	Replacer Pipe	
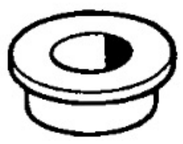	(09316–00021)	Replacer "A"	
	(09316–00051)	Replacer "D"	
	09330–00021	Companion Flange Holding Tool	Companion flange
	09504–00011	Differential Side Bearing Adjusting Nut Wrench	Side bearing
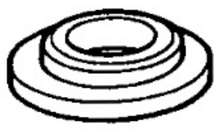	09506–30012	Differential Drive Pinion Rear Bearing Cone Replacer	Rear bearing
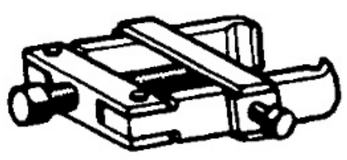	09556–22010	Drive Pinion Front Bearing Remover	Front bearing

	09726–40010	Lower Control Shaft Bearing Replacer	Dust deflector
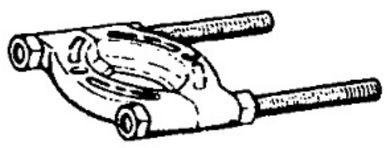	09950–00020	Bearing Remover	Dust deflector Rear bearing
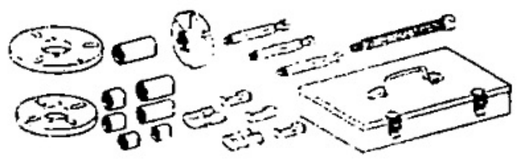	09950–30010	Puller A Set	Companion flange Front bearing
	09950–40010	Puller B Set	Side bearing
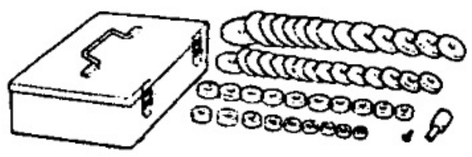	09950–60010	Replacer Set	Side bearing
	(09951–00480)	Replacer 48	
	(09951–00550)	Replacer 55	
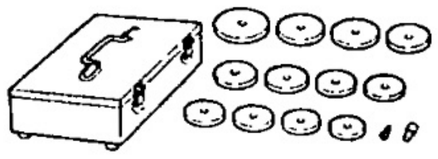	09950–60020	Replacer Set No.2	Side bearing
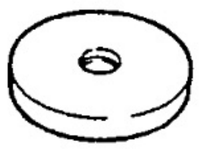	(09951–00730)	Replacer 73	
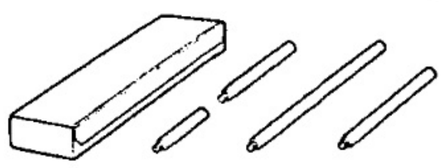	09950–70010	Handle Set	Side bearing
	09960–10010	Variable Pin Wrench Set	Adjusting nut

SA

RECOMMENDED TOOLS

SA20D–01

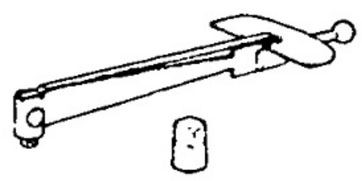	09025–00010	Torque Wrench (30 kgf·cm) .
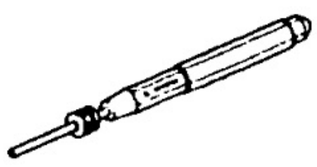	09031–00030	Pin Punch .

	09082–00040 TOYOTA Electrical Tester.	

8A20E–01

EQUIPMENT

Dial indicator with magnetic base	
Micrometer	
Torque wrench	

8A20F–01

LUBRICANT

Item	Capacity	Classification
Differential oil (w/o Diff.lock) 3 Door: 5 Door:	 2.3 liters (2.43 US qts, 2.02 Imp.qts) 2.6 liters (2.75 US qts, 2.29 Imp.qts)	Hypoid gear oil API GL–5 Above –18°C (0°F) SAE 90 Below –18°C (0°F) SAE 80W–90 or 80W
Differential oil (w/ Diff. lock) 3 Door: 5 Door:	 2.6 liters (2.75 US qts, 2.29 Imp.qts) 2.9 liters (3.06 US qts, 2.55 Imp.qts)	Hypoid gear oil API GL–5 Above –18°C (0°F) SAE 90 Below –18°C (0°F) SAE 80W–90 or 80W
Differential oil (w/ LSD) 3 Door: 5 Door:	 2.3 liters (2.43 US qts, 2.02 Imp.qts) 2.6 liters (2.75 US qts, 2.29 Imp.qts)	Hypoid gear oil LSD API GL–5 Above –18°C (0°F) SAE 90 Below –18°C (0°F) SAE 80W–90 or 80W

SA

8A20G–01

SSM (SPECIAL SERVICE MATERIALS)

08826–00090	Seal Packing 1281, THREE BOND 1281 or equivalent (FIPG)	Cover x Differential carrier Actuator x Differential carrier
08833–00080	Adhesive 1344, THREE BOND 1344, LOCTITE 242 or equivalent	Shift fork shaft set bolt Pinion shaft pin

ON–VEHICLE REPAIR

COMPONENTS

8A20H–01

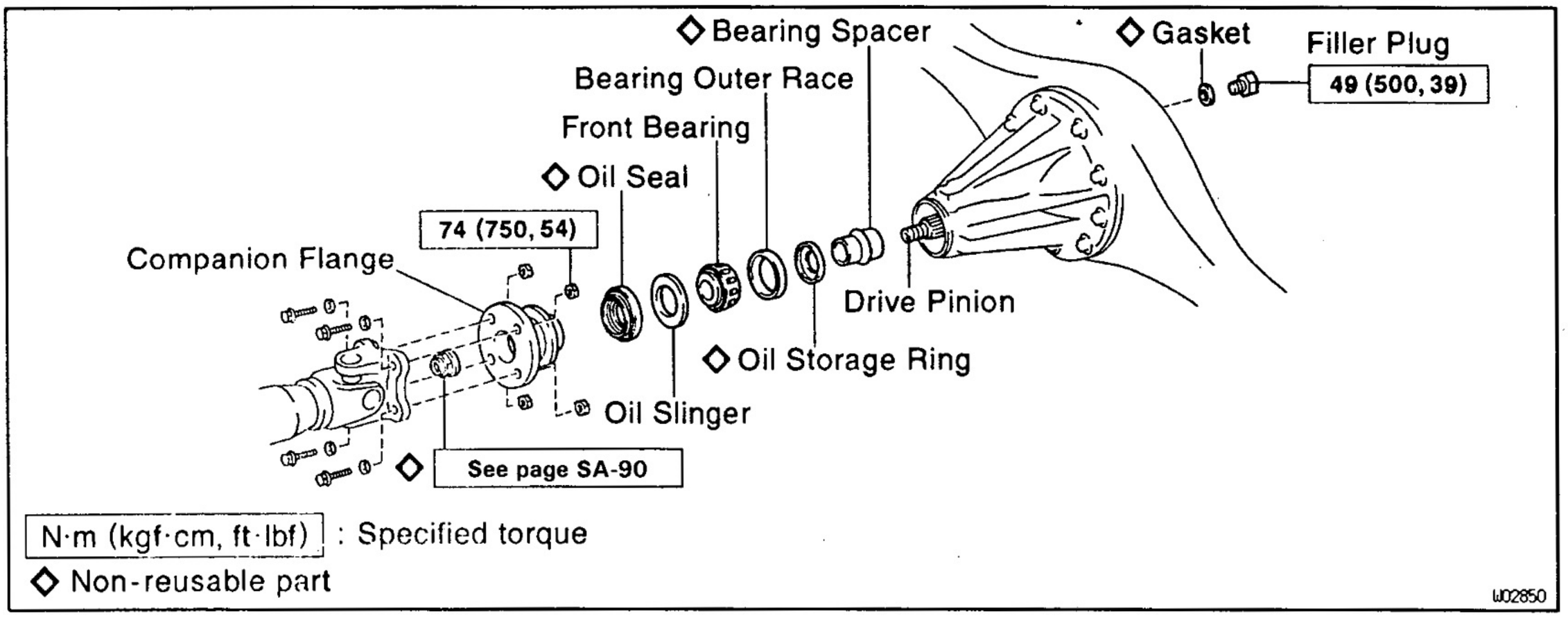

SA

8A20J–01

FRONT OIL SEAL REPLACEMENT

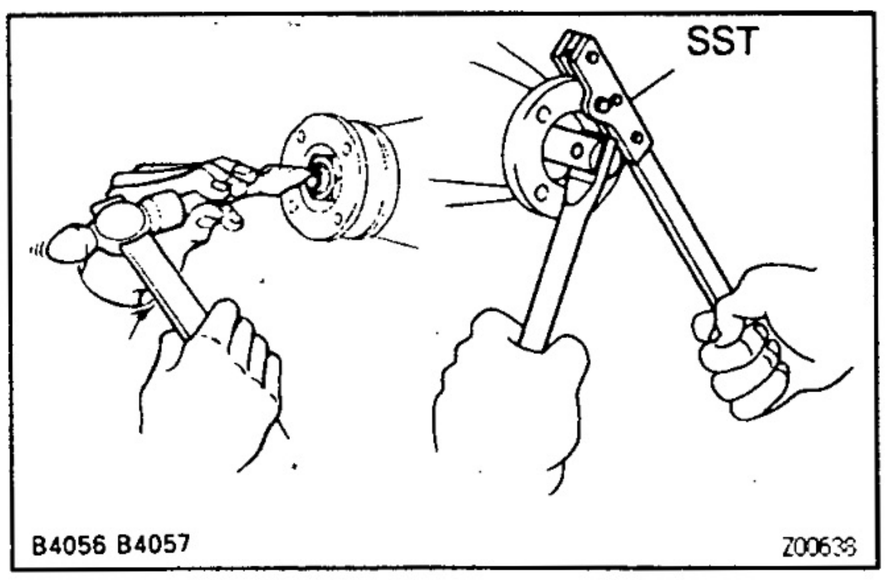

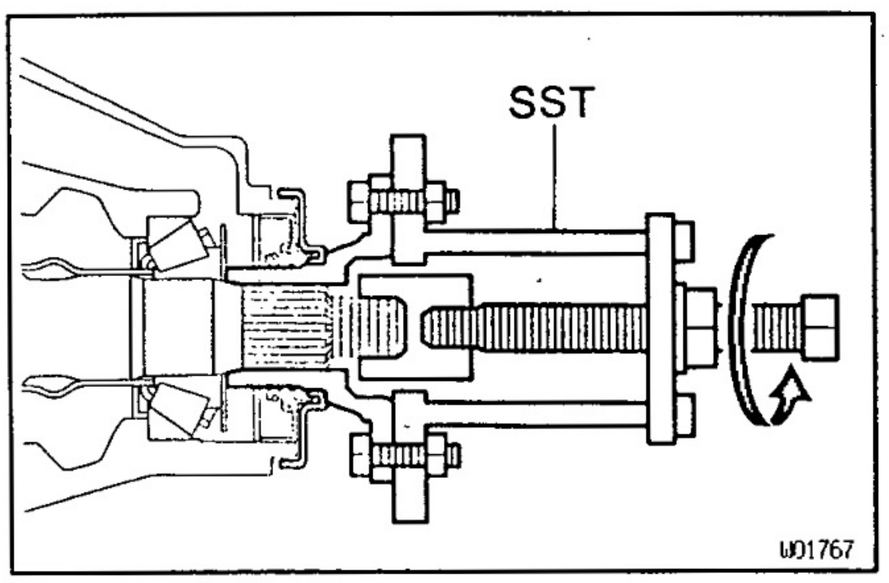

1. **DRAIN DIFFERENTIAL OIL**
2. **REMOVE REAR PROPELLER SHAFT**
   (See page PR-3)
3. **REMOVE COMPANION FLANGE**
   (a) Using a chisel and hammer, loosen the staked part of the nut.
   (b) Using SST to hold the flange, remove the nut.
   SST 09330–00021
   (c) Using SST, remove the companion flange.
   SST 09950–30010 (09951–03010, 09953–03010, 09954–03010, 09955–03030, 09956–03030)

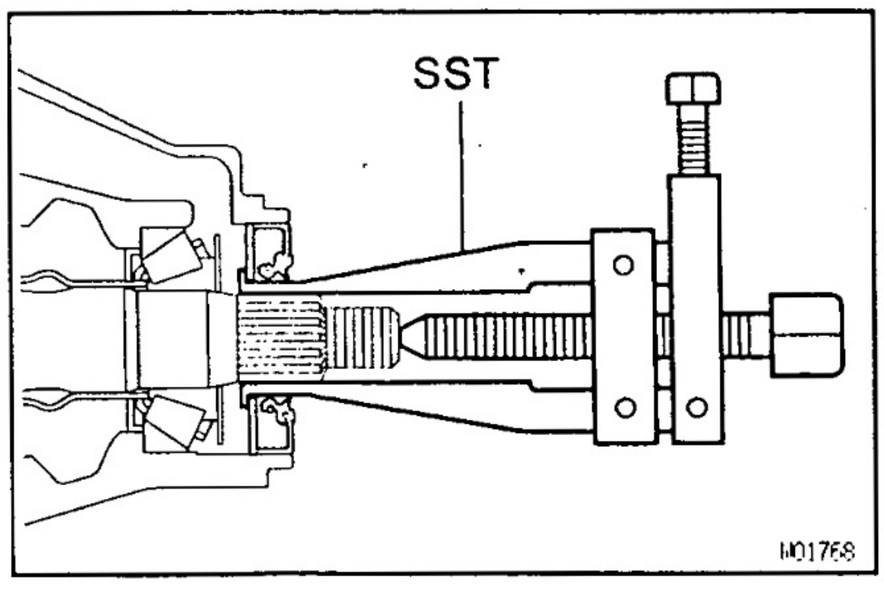

4. **REMOVE OIL SEAL**
   Using SST, remove the oil seal.
   SST 09308–10010
5. **REMOVE OIL SLINGER**

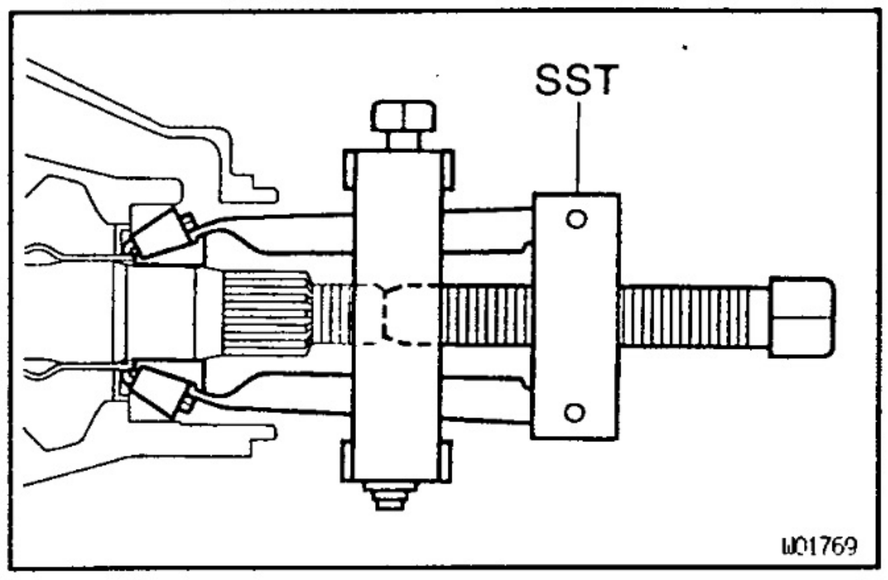

6. REMOVE FRONT BEARING

Using SST, remove the front bearing from the drive pinion.
SST 09556–22010

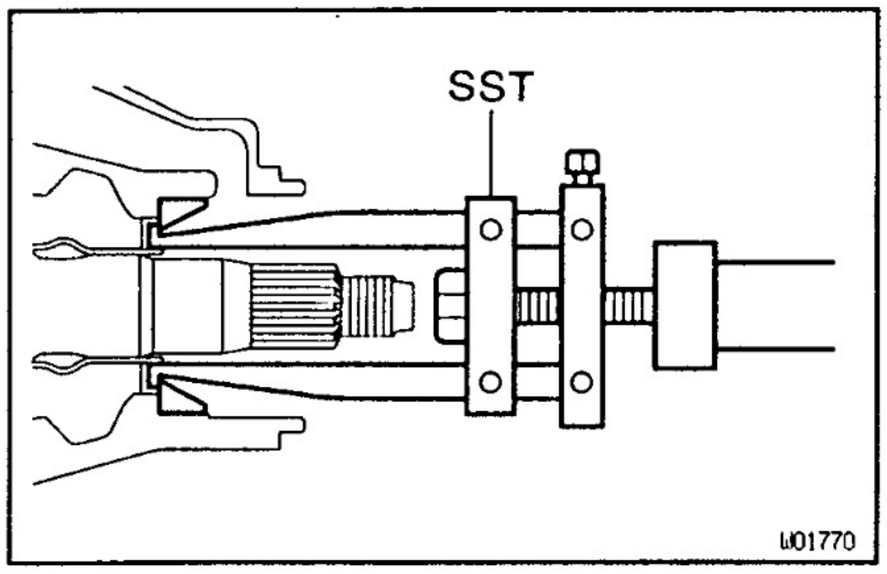

7. REMOVE FRONT BEARING OUTER RACE AND OIL STORAGE RING

(a) Using SST, remove the front bearing outer race.
SST 09308–00010

(b) Using a screwdriver, bend the oil storage ring and remove it.

8. REMOVE BEARING SPACER

9. INSTALL NEW BEARING SPACER

SA

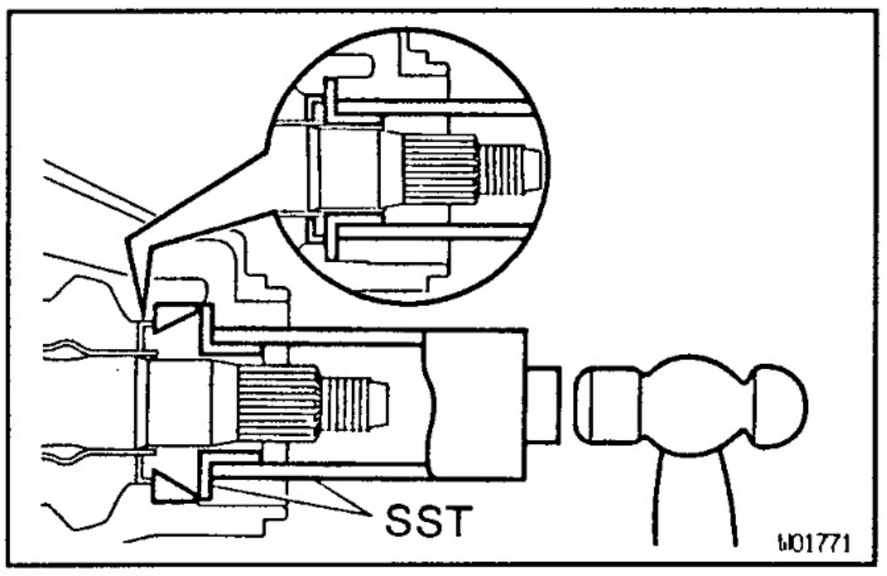

10. INSTALL OIL STORAGE RING AND FRONT BEARING OUTER RACE

(a) Using SST and a hammer, install a new oil storage ring.
SST 09316–60011 (09316–00011, 09316–00021)

(b) Using SST and a hammer, install the front bearing outer race.
SST 09316–60011 (09316–00011, 09316–00021)

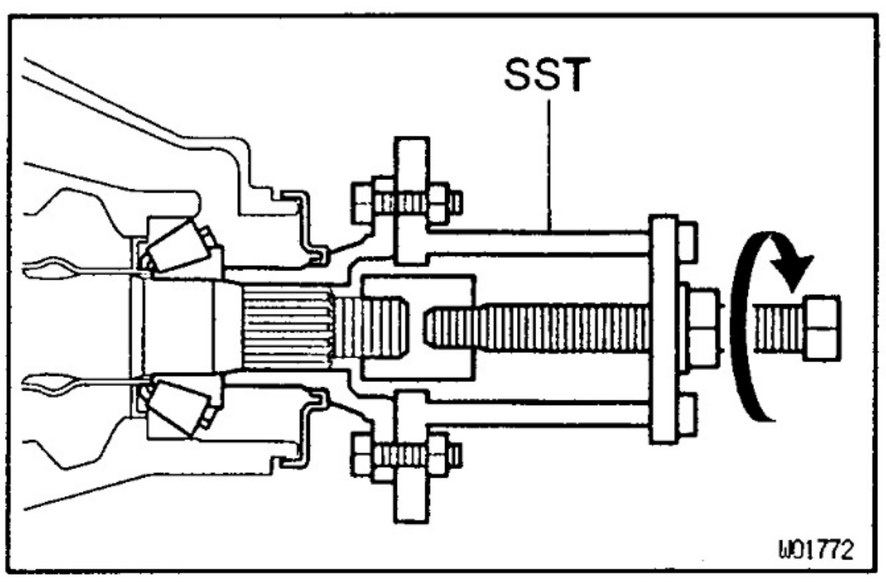

11. INSTALL FRONT BEARING

(a) Place the front bearing.

(b) Place the oil slinger.

(c) Using SST and companion flange, install the front bearing, then remove the companion flange.
SST 09950–30010 (09951–03010, 09953–03010, 09954–03010, 09955–03030, 09956–03030)

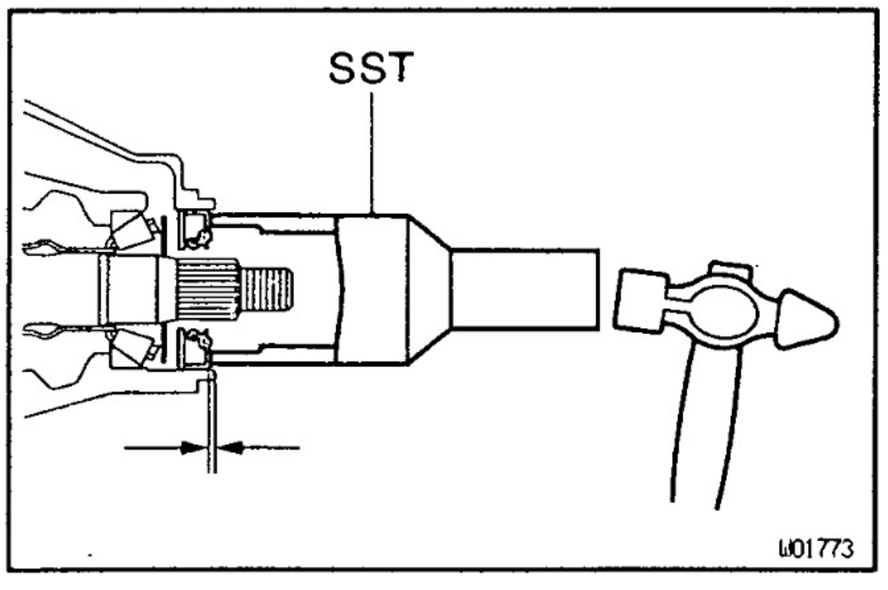

12. INSTALL NEW OIL SEAL

(a) Apply MP grease to a new oil seal.

(b) Using SST and a hammer, install the oil seal.
SST 09214–76011
Oil seal drive in depth: 1.0 mm (0.039 in.)

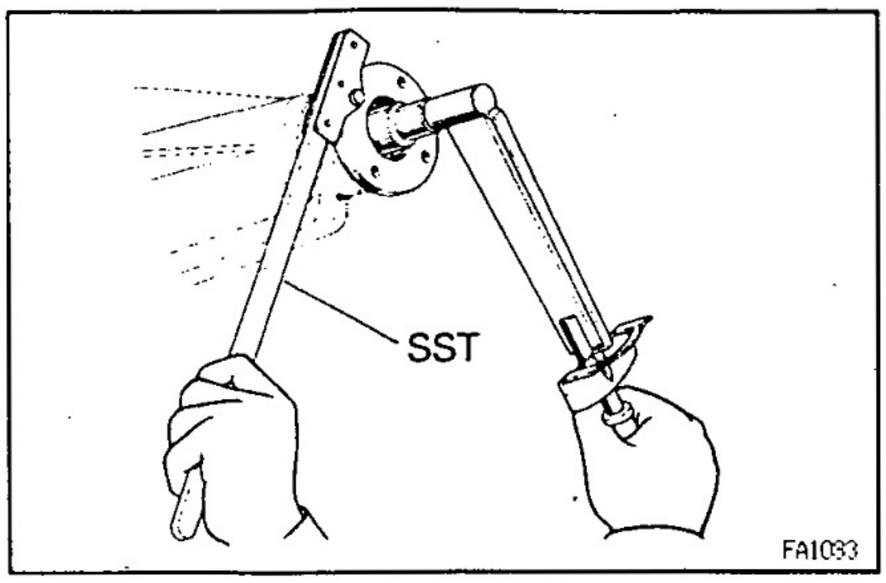

13. INSTALL COMPANION FLANGE

(a) Place the companion flange on the drive pinion.

(b) Apply light coat of hypoil gear oil on threads of a new companion flange nut.

(c) Using SST to hold the flange, torque the nut.
SST 09330–00021
Torque: 196 N·m (2,000 kgf·cm, 145 ft·lbf)

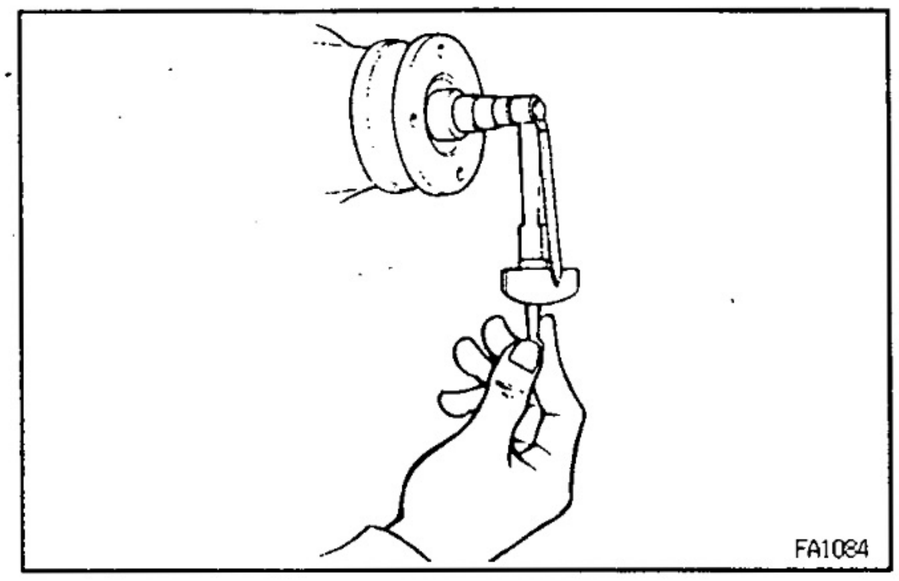

14. ADJUST DRIVE PINION PRELOAD
(See page SA–90)

15. STAKE DRIVE PINION NUT

16. INSTALL REAR PROPELLER SHAFT
(See page PR–8)

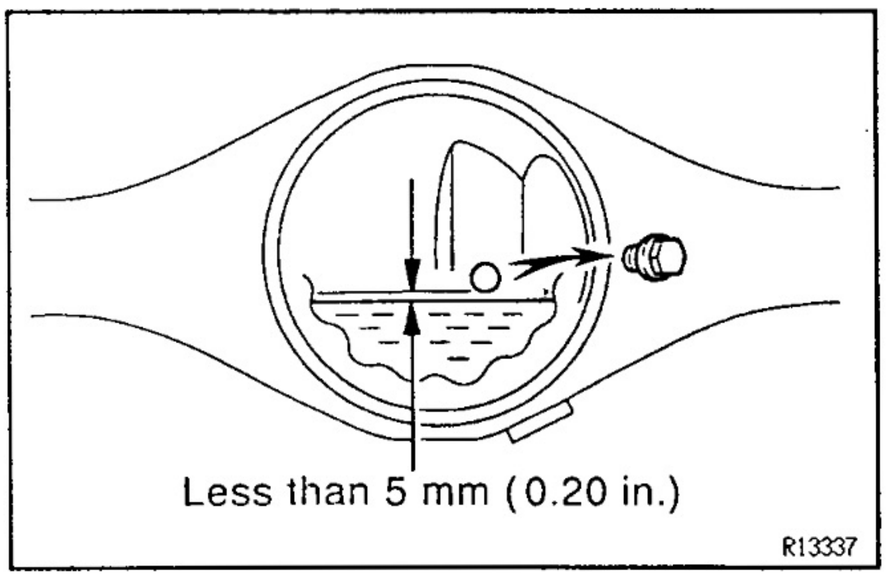

17. FILL DIFFERENTIAL WITH DIFFERENTIAL OIL
Torque: 49 N·m (500 kgf·cm, 39 ft·lbf)
Oil type:
w/ LSD: Hypoid gear oil LSD API GL–5
Others: Hypoid gear oil API GL–5
Recommended oil viscosity:
Above –18°C (0°F) SAE 90
Below –18°C (0°F) SAE 80W–90 or 80W
Capacity:
3 Door:
w/o Diff. lock: 2.3 liters (2.43 US qts, 2.02 Imp.qts)
w/ Diff. lock: 2.6 liters (2.75 US qts, 2.29 Imp.qts)
w/ LSD: 2.3 liters (2.43 US qts, 2.02 Imp.qts)
5 Door:
w/o Diff. lock: 2.6 liters (2.75 US qts, 2.29 Imp.qts)
w/ Diff. lock: 2.9 liters (3.06 US qts, 2.55 Imp.qts)
w/ LSD: 2.6 liters (2.75 US qts, 2.29 Imp.qts)

ASSEMBLY REMOVAL AND INSTALLATION

COMPONENTS

5A2QK-01

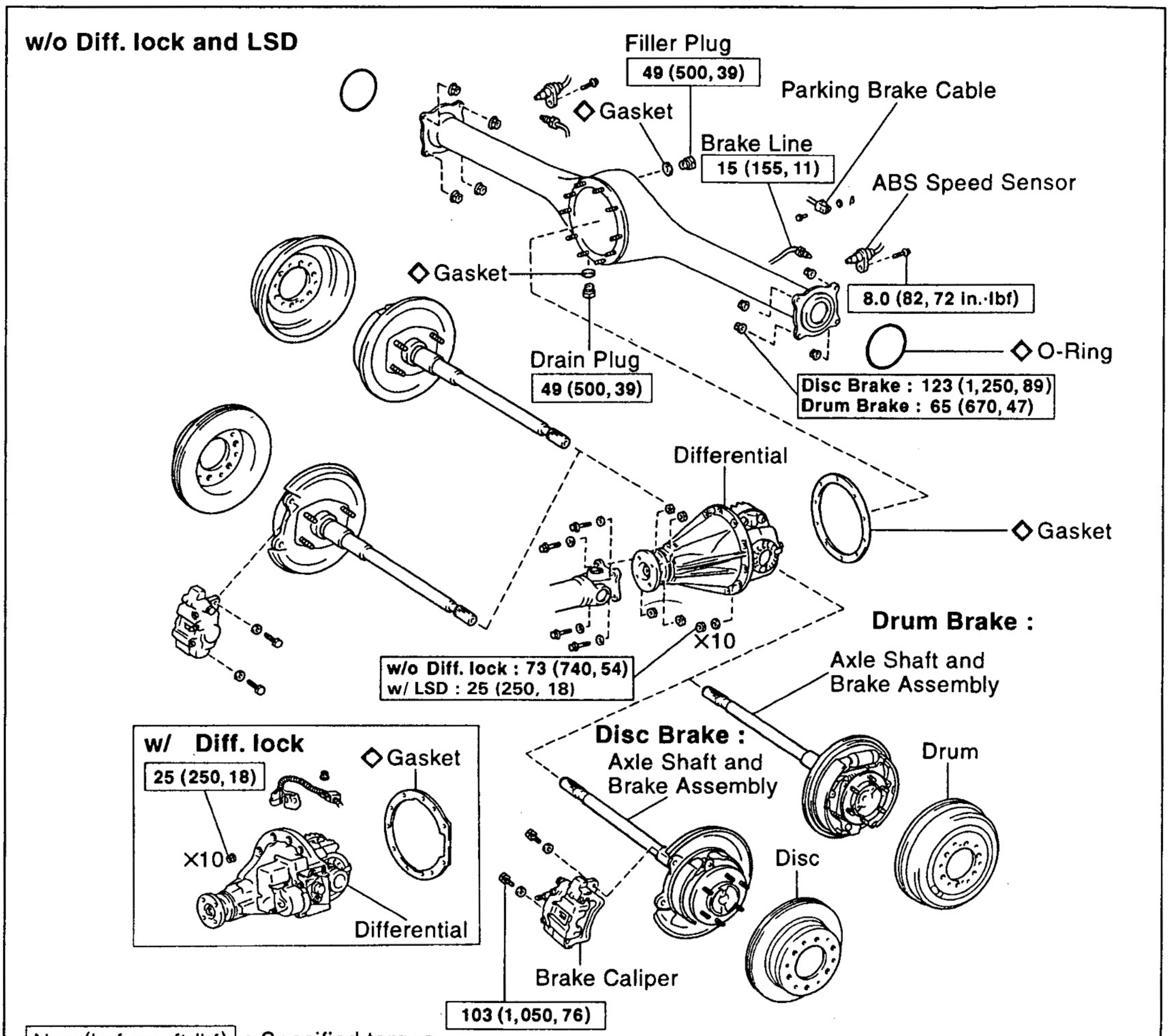

W02857

5A2QL-01

DIFFERENTIAL REMOVAL

1. **w/ DIFF. LOCK:**
   SHIFTING DIFF. LOCK POSITION

(a) Turn the ignition switch to the ON position.

(b) Push the differential lock control switch to the ON position and lock the rear differential.
HINT: Rotating the tires, check they are in the differential lock condition.

(c) Disconnect the cable from the negative terminal of the battery.

2. **DRAIN DIFFERENTIAL OIL**
Torque: 49 N·m (500 kgf·cm, 39 ft·lbf)

3. **REMOVE REAR AXLE SHAFTS**
(See page SA–65)

4. **REMOVE REAR PROPELLER SHAFT**
(See page PR–3)

5. **w/ DIFF. LOCK:**
DISCONNECT CONNECTORS AND TUBE
INSTALLATION HINT:
- When connecting the tube of the harness side to the hose of the actuator side, its depth of insertion is 15 mm (0.59 in.).
- Take care that water or equivalent dose not adhere to the connector and hose.

6. **REMOVE DIFFERENTIAL CARRIER ASSEMBLY**

(a) Remove the 10 nuts, washers and differential carrier assembly.
NOTICE: Be careful not to damage the installation surface.
Torque:
w/o Diff. lock: 73 N·m (740 kgf·cm, 54 ft·lbf)
w/ Diff. lock: 25 N·m (250 kgf·cm, 18 ft·lbf)
w/ LSD: 25 N·m (250 kgf·cm, 18 ft·lbf)

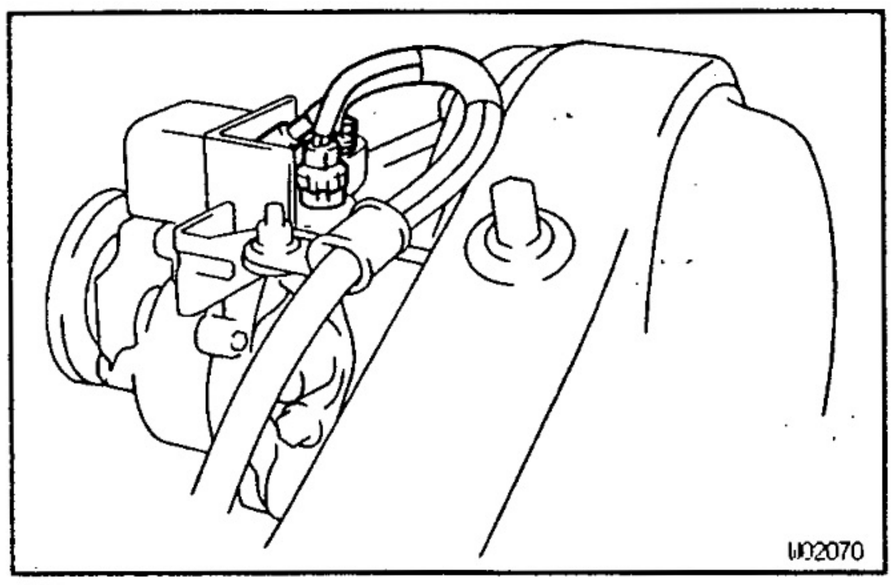
W02070

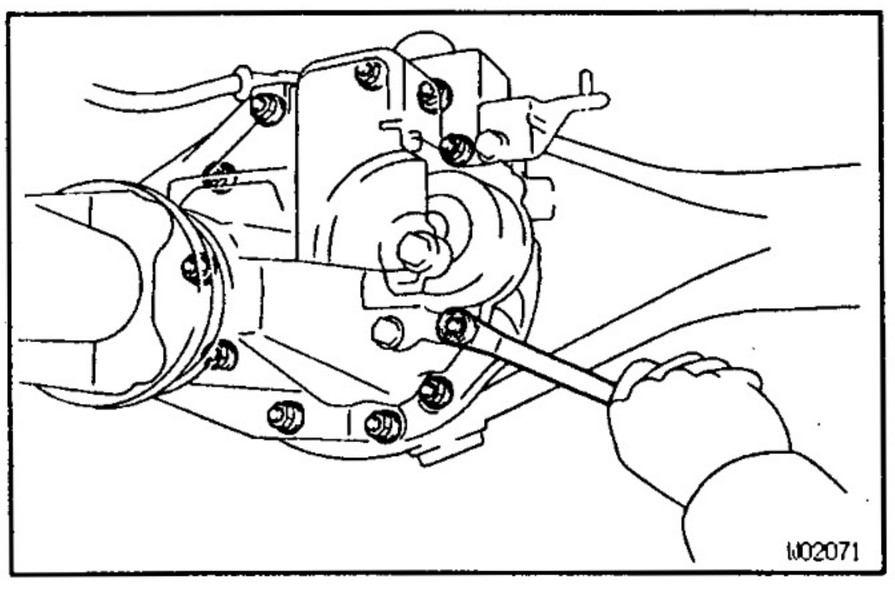
W02071

(b) Remove the gasket.
INSTALLATION HINT (w/ Diff. lock):
- Before installation, check differential lock operation connect the connector of the actuator to the connector of the vehicle side.
- Before installation, check that the sleeves on work with switching over the differential lock control switch.
After checking, lock the rear differential.

SA20M-01

DIFFERENTIAL INSTALLATION

Installation is in the reverse order of removal.

HINT:
- After installation, fill the differential with differential oil. (See page SA–75)
- w/ Diff. lock:
After installation, Check the diff. lock operation. (See page SA–105)
After installation, check that the breather plug at the end of the breather tube (inside of the LH frame) is not damaged or worn.

SA

DIFFERENTIAL CARRIER
COMPONENTS

SA2QN-01

w/o Diff. lock and LSD

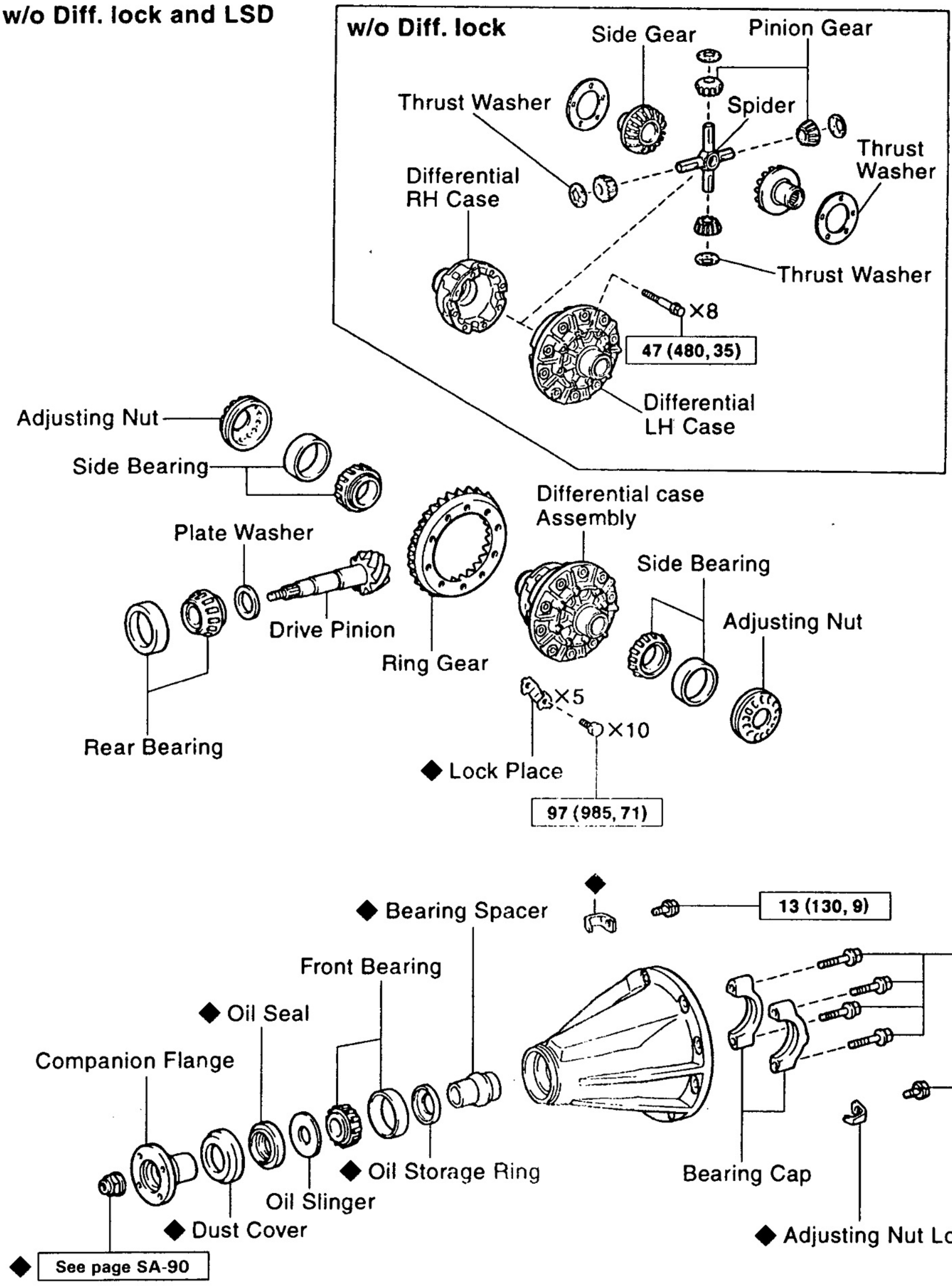

N·m (kgf·cm, ft·lbf) : Specified torque

◆ Non-reusable part

W02859

w/ Diff. lock

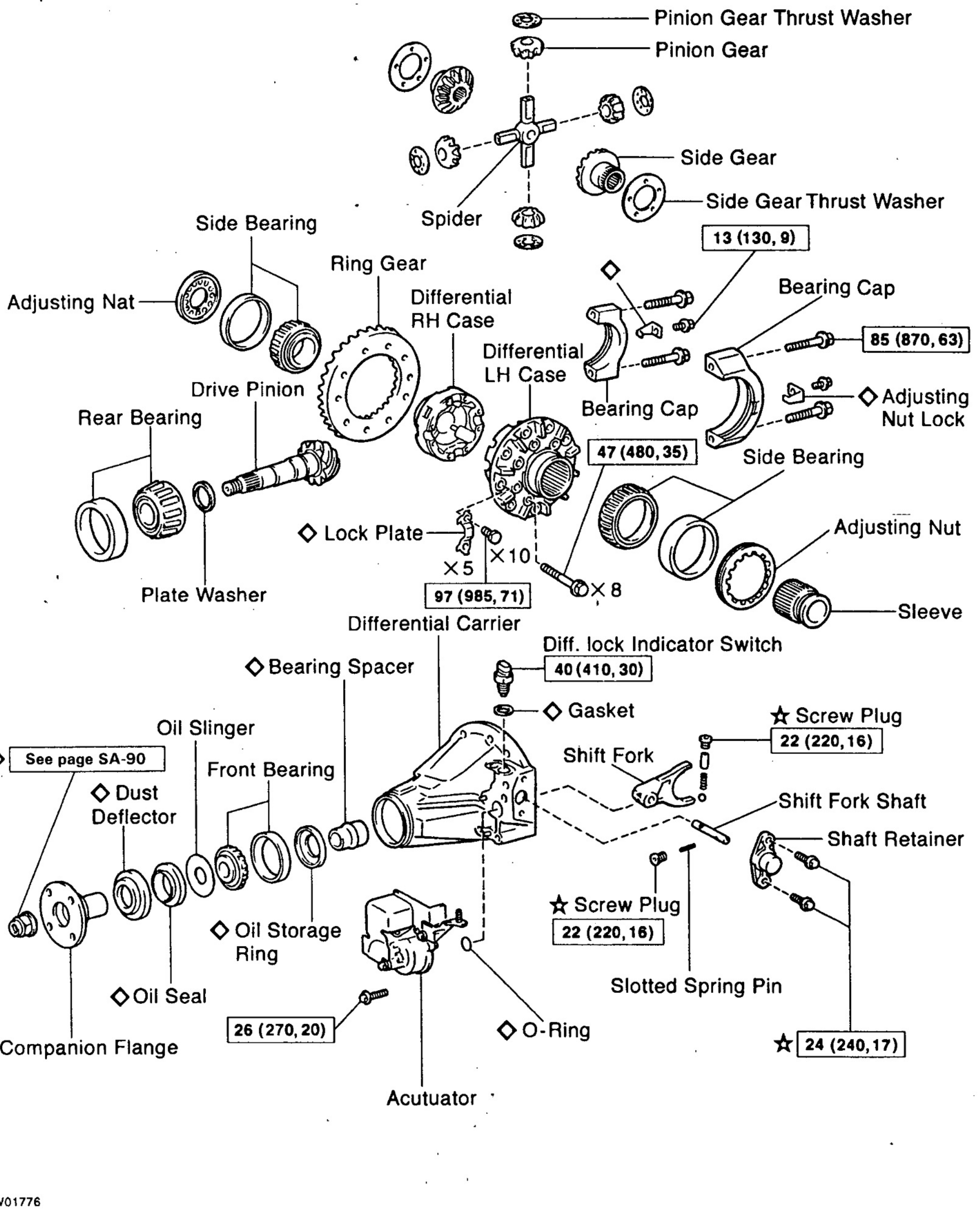

W01776

N·m (kgf·cm, ft·lbf) : Specified torque
◇ Non-reusable part
☆ Precoated part

Z18524

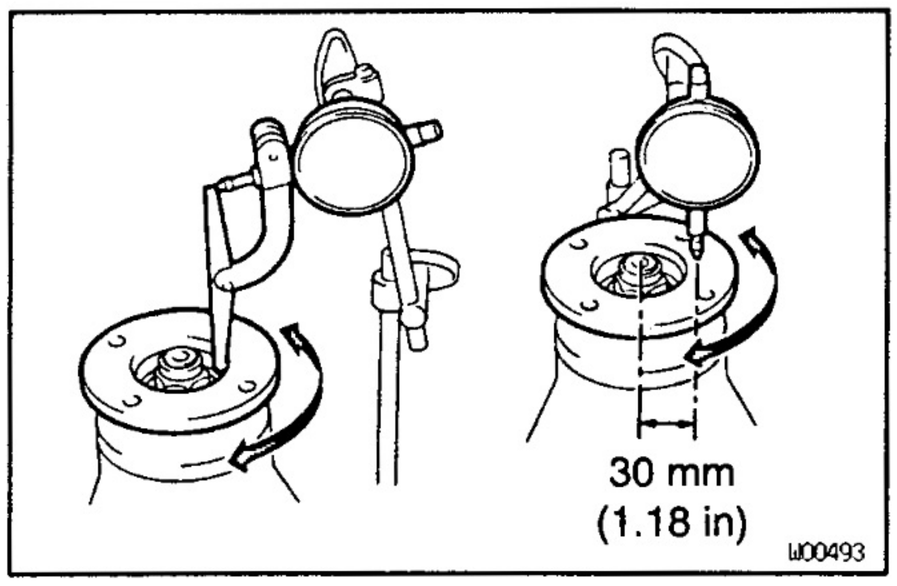

DIFFERENTIAL CARRIER INSPECTION

SA2QP-01

1. CHECK RUNOUT OF COMPANION FLANGE

Using a dial indicator, measure the vertical and lateral runout of the companion flange.

Maximum runout: 0.10 mm (0.0039 in.)

If the runout are not within the specification, replace the companion flange.

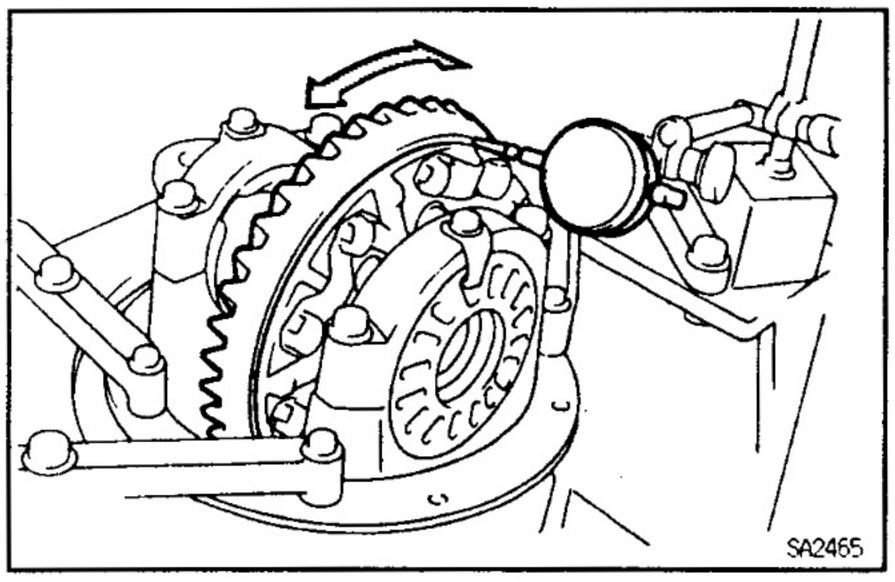

2. CHECK RING GEAR RUNOUT

Using a dial indicator, measure the ring gear runout.

Maximum runout: 0.07 mm (0.0028 in.)

If the runout is not within the specification, replace the ring gear.

SA

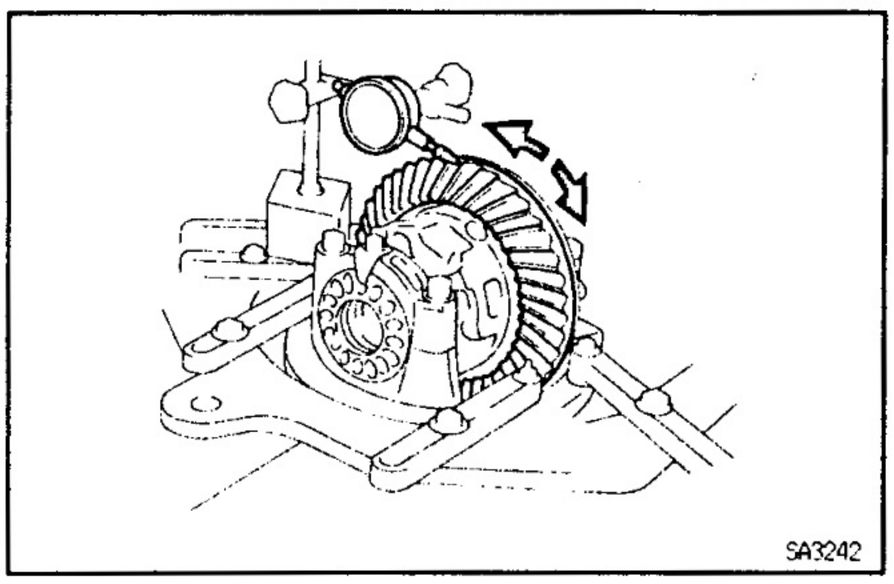

3. CHECK RING GEAR BACKLASH

Using a dial indicator, measure the ring gear backlash.

Backlash: 0.13 – 0.18 mm (0.0051 – 0.0071 in.)

If the backlash is not within the specification, adjust the side bearing preload or repair as necessary.

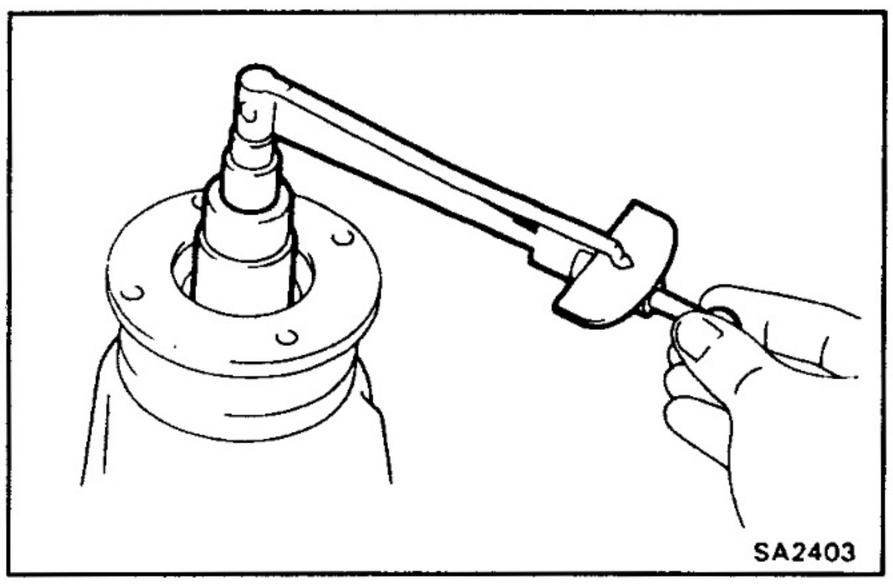

4. MEASURE DRIVE PINION PRELOAD

Using a torque wrench, measure the preload of backlash between the drive pinion and ring gear.

Preload (at starting):

0.5 – 0.8 N·m (5 – 8 kgf·cm, 4.3 – 6.9 in.·lbf)

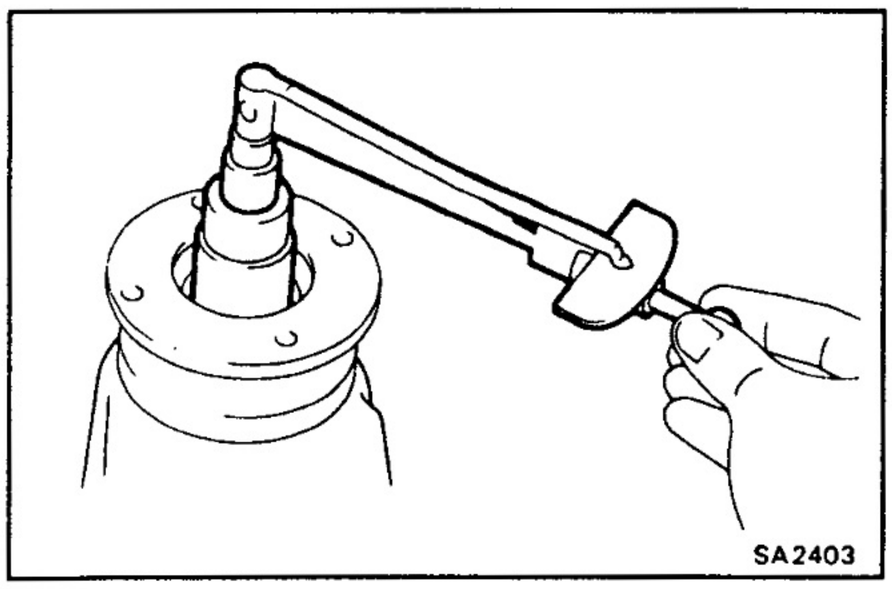

5. CHECK TOTAL PRELOAD

Using a torque wrench, measure the preload with the teeth of the drive pinion and ring gear in contact.

Total preload (at starting):

Drive pinion preload plus

0.4 – 0.6 N·m (4 – 6 kgf·cm, 3.5 – 5.2 in.·lbf)

If necessary, disassemble and inspect the differential.

6. CHECK TOOTH CONTACT BETWEEN RING GEAR AND DRIVE PINION **(See page SA–88)**

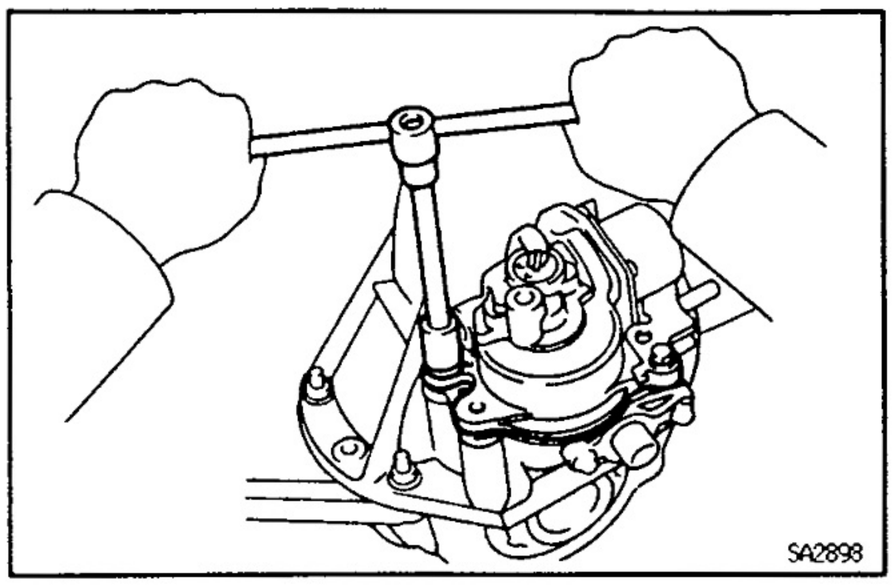

DIFFERENTIAL CARRIER DISASSEMBLY SA2QQ-01

1. w/ DIFF. LOCK:
REMOVE ACTUATOR

(a) Remove the bolt and actuator from the differential carrier.

(b) Remove the O—ring.

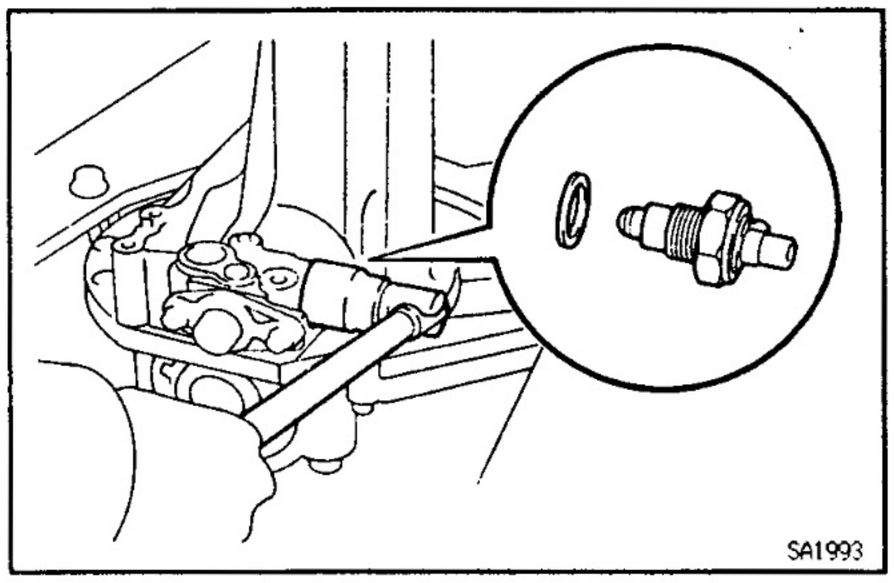

2. w/ DIFF. LOCK:
REMOVE INDICATOR SWITCH

Remove the indicator switch and gasket.

SA

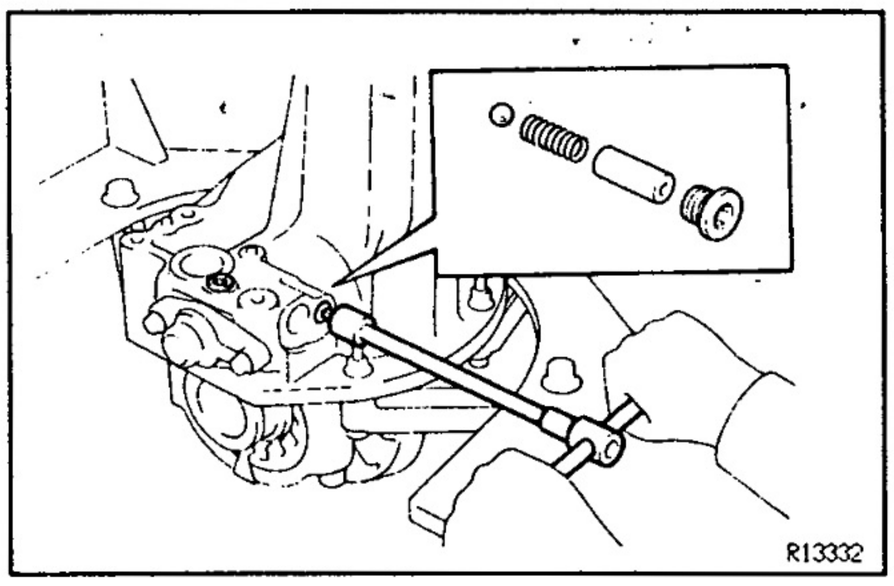

3. w/ DIFF. LOCK:
REMOVE SHIFT FORK SHAFT

(a) Using a hexagon wrench, remove the 2 straight screw plugs.

(b) Remove the spring seat, compression spring and ball.

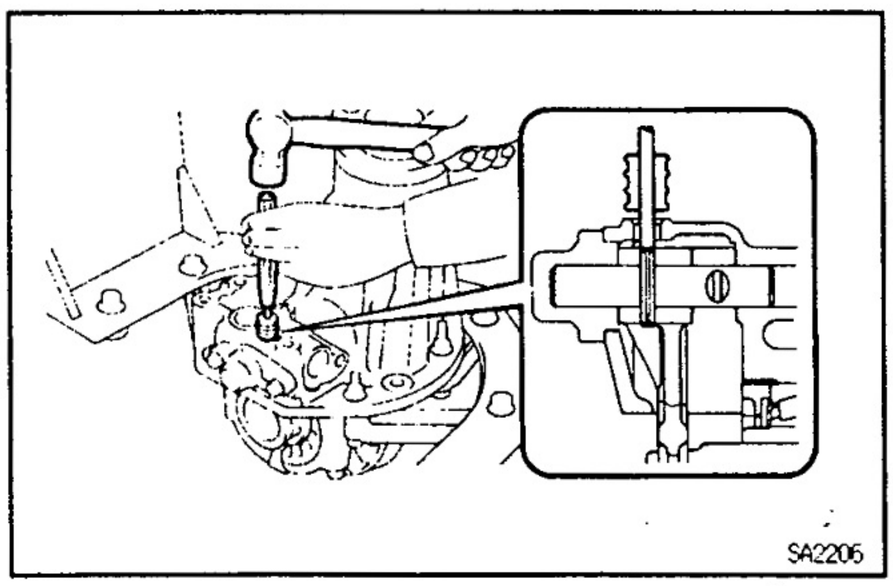

(c) Using a pin punch and hammer, remove the slotted spring pin.

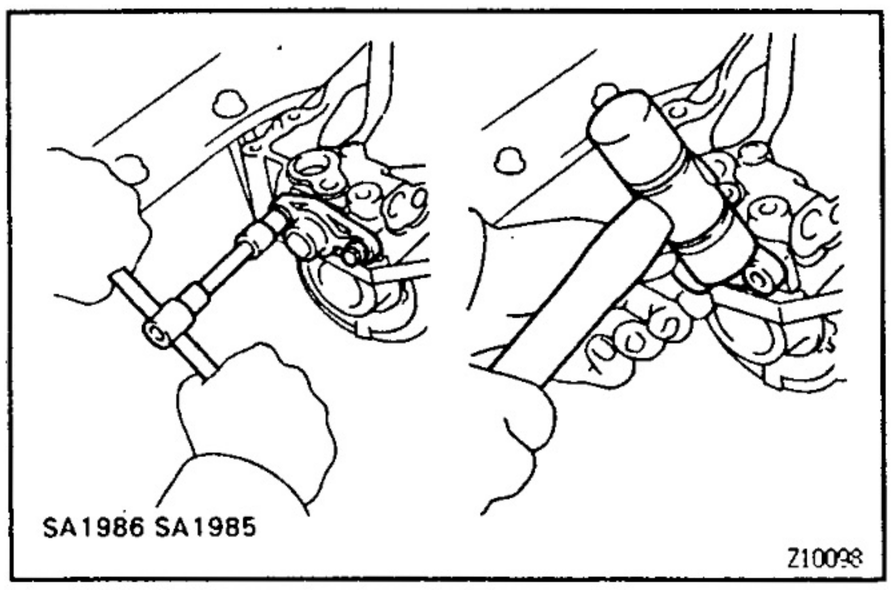

(d) Remove the 2 bolts from the shaft retainer.

(e) Using a plastic hammer, remove the shaft retainer.

(f) Remove the shift fork shaft.
HINT: Pull out the shift fork shaft with a screwdriver turned round.

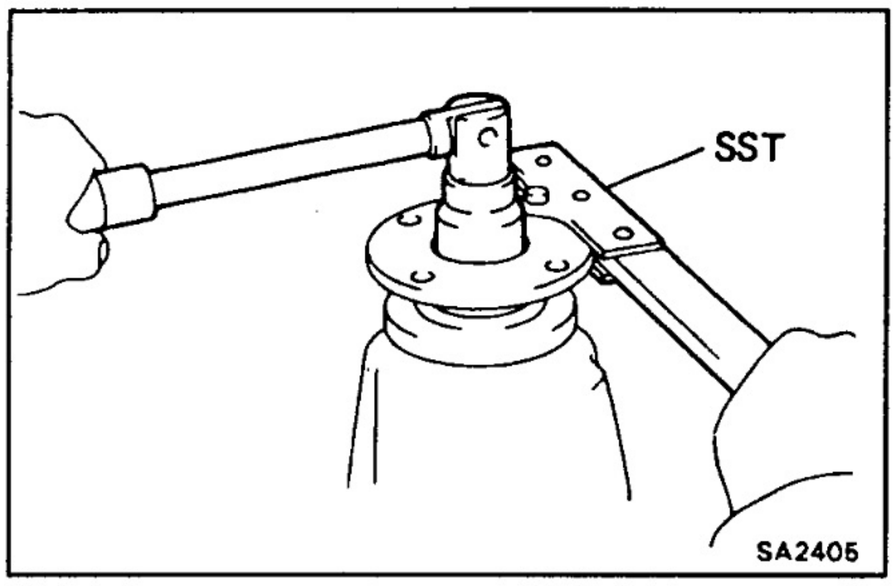

4. REMOVE COMPANION FLANGE

(a) Using a chisel and hammer, unstake the nut.

(b) Using SST to hold the flange, remove the nut.
SST 09330–00021

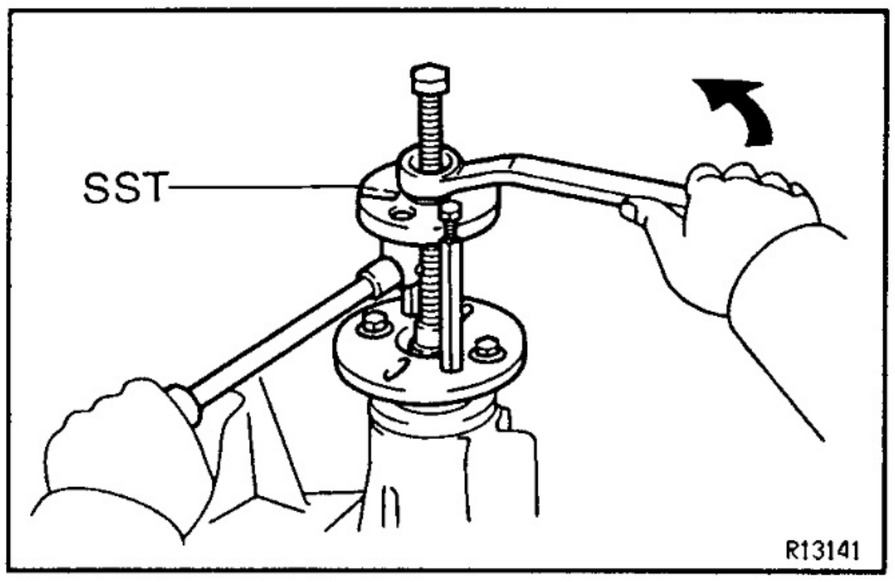

(c) Using SST, remove the companion flange.
SST 09950–30010 (09951–03010, 09953–03010, 09954–03010, 09955–03030, 09956–03030)

SA

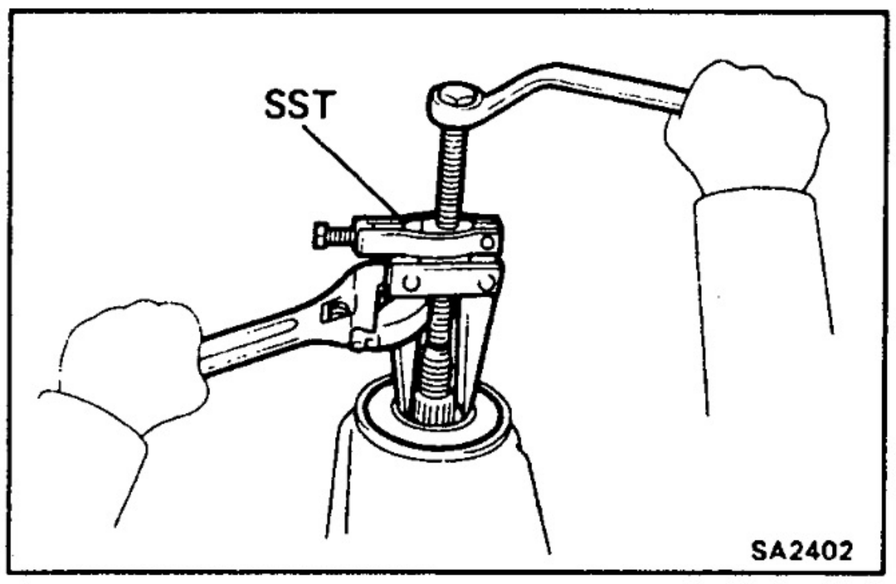

5. REMOVE OIL SEAL AND OIL SLINGER

(a) Using SST, remove the oil seal from the differential carrier.
SST 09308–10010

(b) Remove the oil slinger.

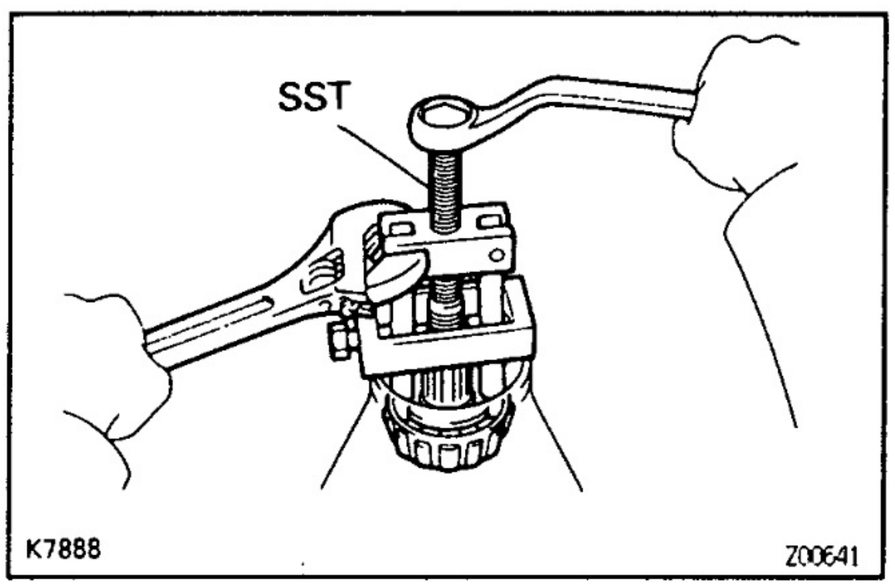

6. REMOVE FRONT BEARING

Using SST, remove the front bearing from the drive pinion.
SST 09556–22010

7. REMOVE DIFFERENTIAL CASE

w/o Diff. lock and LSD:

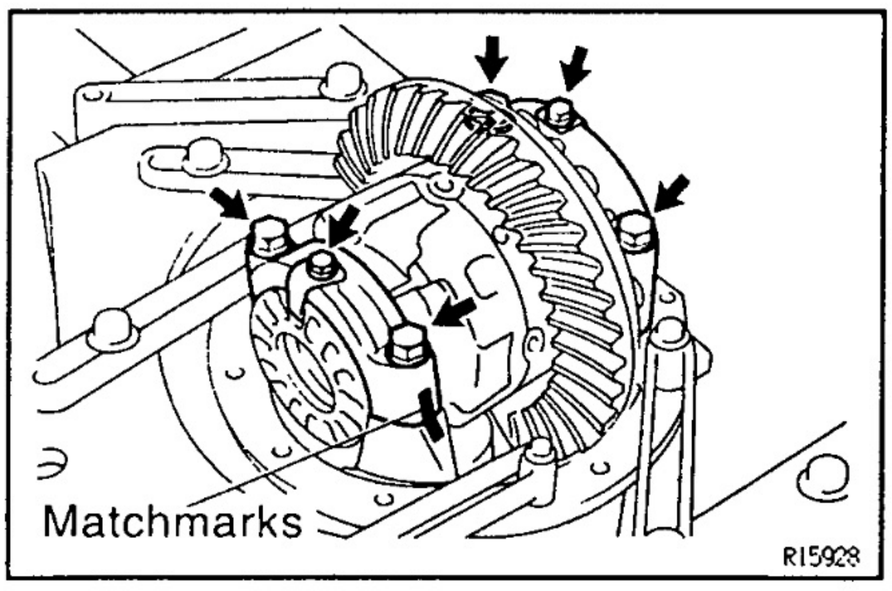

(a) Place matchmarks on the bearing cap and differential carrier.

(b) Remove the 2 adjusting nut locks.

(c) Remove the 4 bolts and 2 bearing caps.

(d) Remove the 2 adjusting nuts.

(e) Remove the differential case with the side bearing outer races from the differential carrier.
HINT: Tag the disassembled parts to show the location for reassembly.

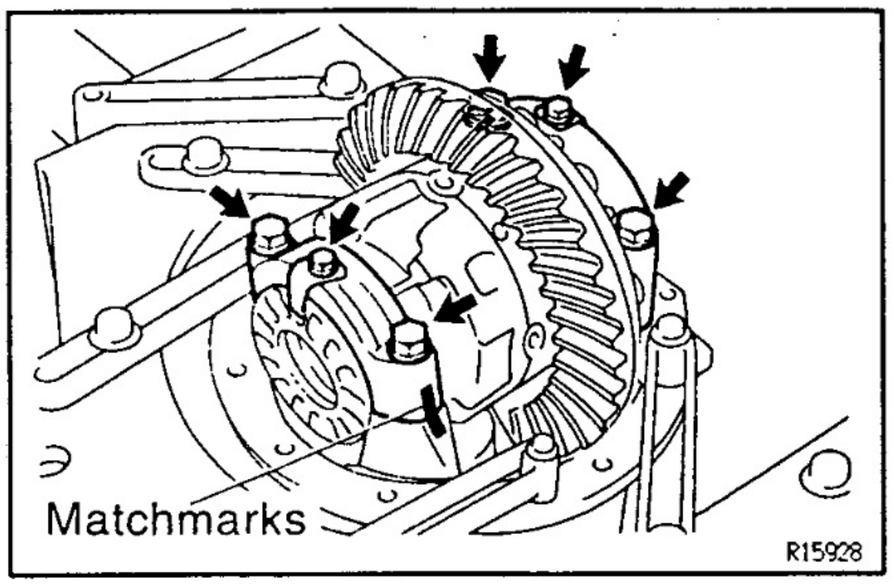

w/ Diff lock:

(a) Place matchmarks on the bearing cap and differential carrier.
(b) Remove the 2 adjusting nut locks.
(c) Remove the 4 bolts and 2 bearing caps.

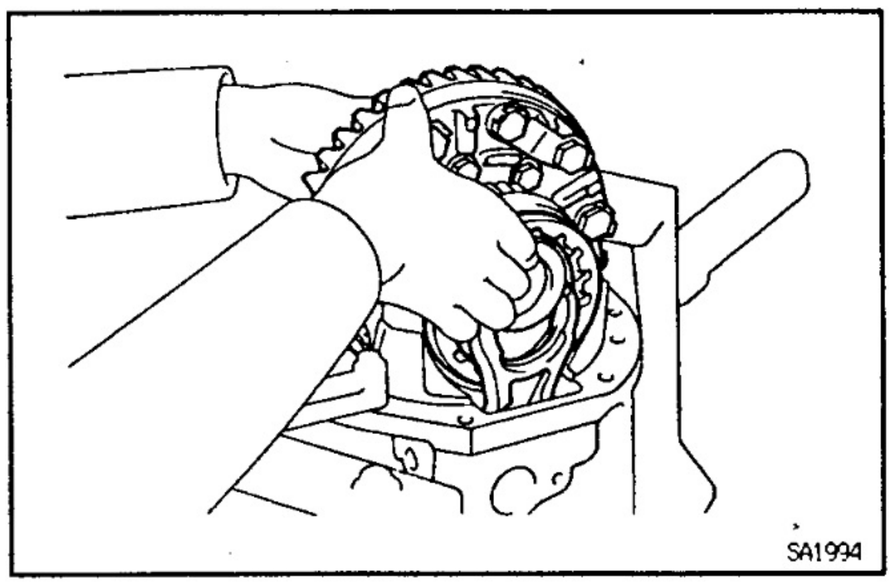

(d) Remove the differential case with side bearing outer races, adjusting nut and sleeve from the differential carrier.
(e) Remove the shift fork.

8. REMOVE DRIVE PINION AND BEARING SPACER

(a) Remove the drive pinion with the rear bearing.
(b) Remove the bearing spacer.

SA

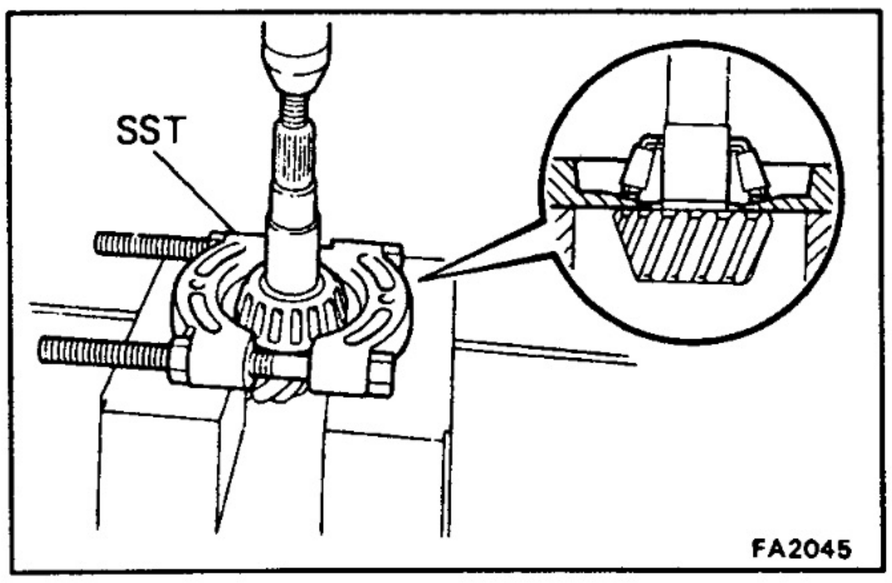

9. REMOVE DRIVE PINION REAR BEARING

(a) Using SST and a press, remove the bearing from the drive pinion.
SST 09950–00020
HINT: If the drive pinion or ring gear are damaged, replace them as a set.
(b) Remove the plate washer from the drive pinion.

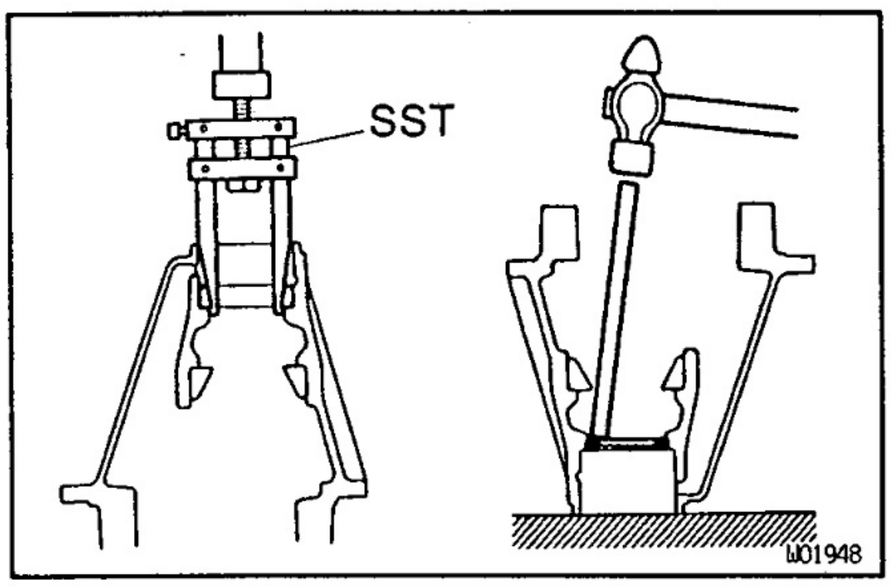

10. REMOVE FRONT AND REAR BEARING OUTER RACES AND OIL STORAGE RING

(a) Using SST, remove the front bearing outer race.
SST 09308–00010
(b) Using a brass bar and hammer, remove the oil storage ring.
(c) Using a brass bar and hammer, remove the rear bearing outer race.

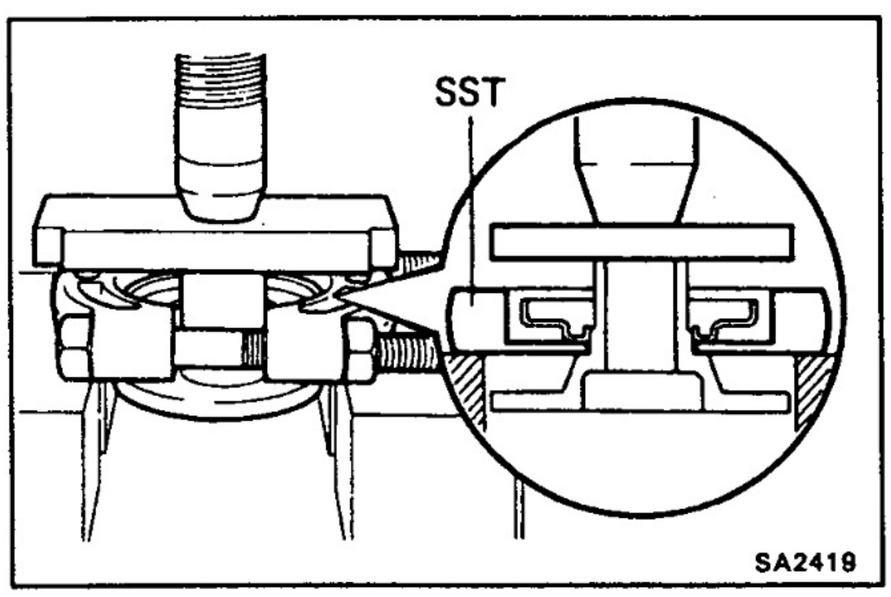

COMPANION FLANGE DUST DEFLECTOR REPLACEMENT SA20R-01

1. REMOVE DUST DEFLECTOR

Using SST and a press, remove the dust deflector.
SST 09950–00020

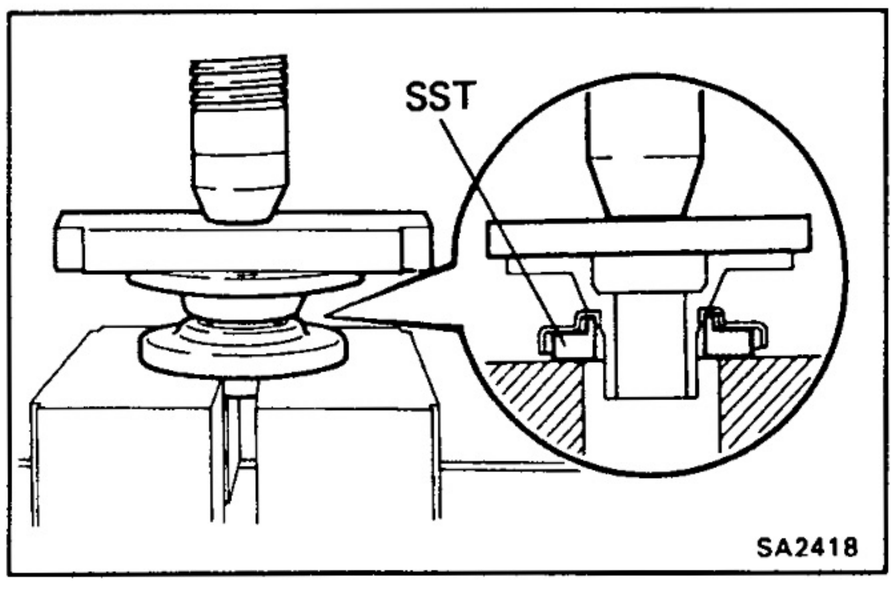

2. INSTALL NEW DUST DEFLECTOR

Using SST and a press, install a new dust deflector.
SST 09726–40010

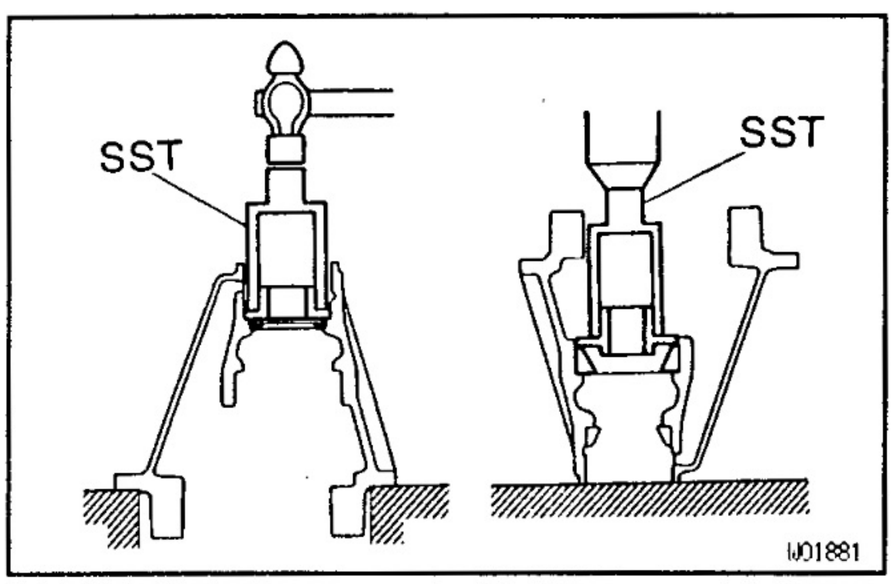

DIFFERENTIAL CARRIER ASSEMBLY

1. INSTALL NEW OIL STORAGE RING AND DRIVE PINION FRONT AND REAR BEARING OUTER RACES

(a) Using SST and a hammer, install a new oil storage ring.
SST 09316–60011 (09316–00011, 09316–00021)

(b) Using SST and a press, install the outer races.
SST 09316–60011 (09316–00011, 09316–00021, 09316–00051)

2. INSTALL DRIVE PINION REAR BEARING

(a) Install the plate washer on the drive pinion.

(b) Using SST and a press, install the rear bearing onto the drive pinion.
09506–30012

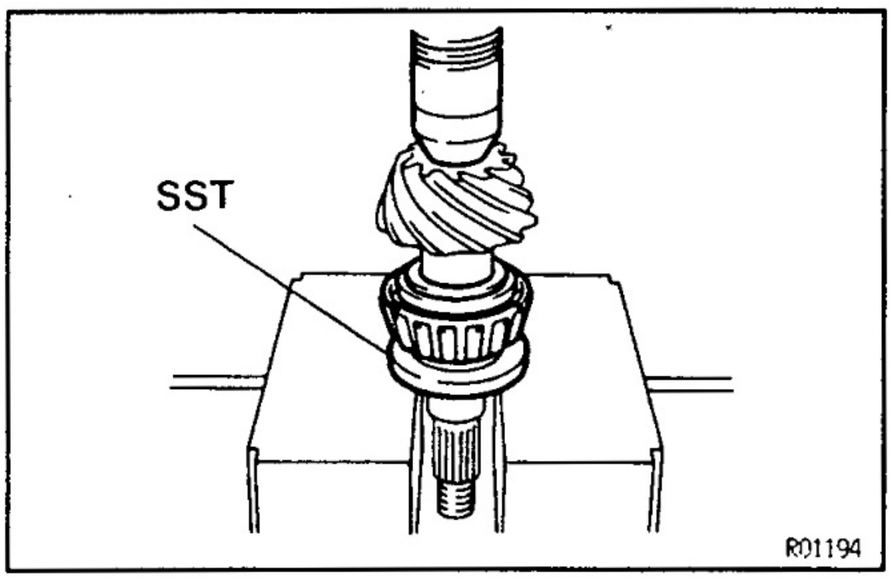

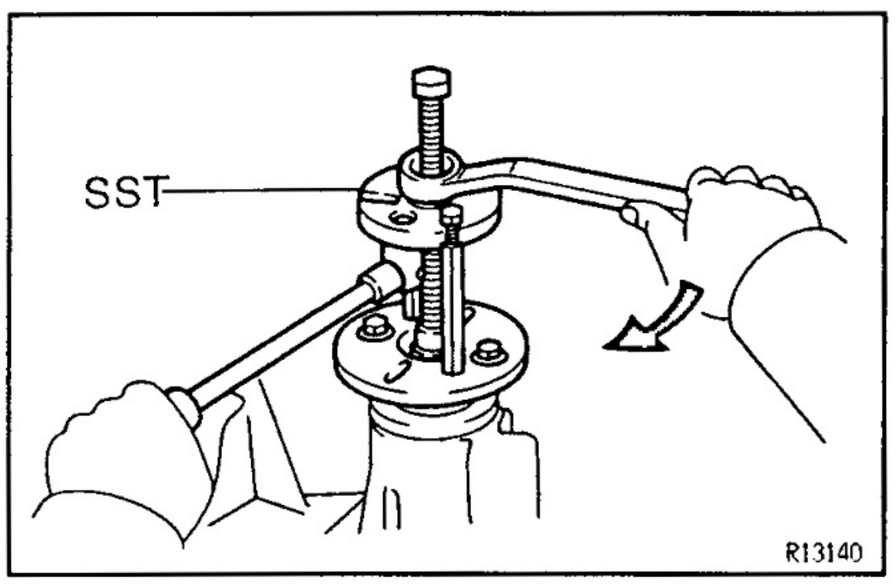

3. TEMPORARILY ADJUST DRIVE PINION PRELOAD

(a) Install the drive pinion, front bearing and oil slinger.
HINT: Assemble the spacer and oil seal after adjusting the gear contact pattern.

(b) Install the companion flange with SST.
SST 09950–30010 (09951–06010, 09953–03010, 09954–03010, 09955–03030, 09956–03030)

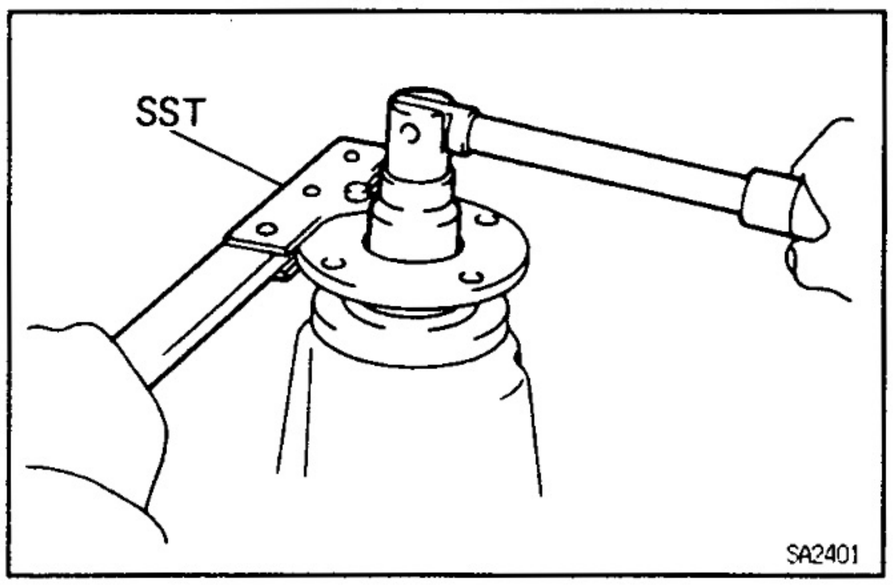

(c) Adjust the drive pinion preload by tightening the companion flange nut.
SST 09330–00021
NOTICE: As there is no spacer, tighten a little at a time, being careful not to overtighten.

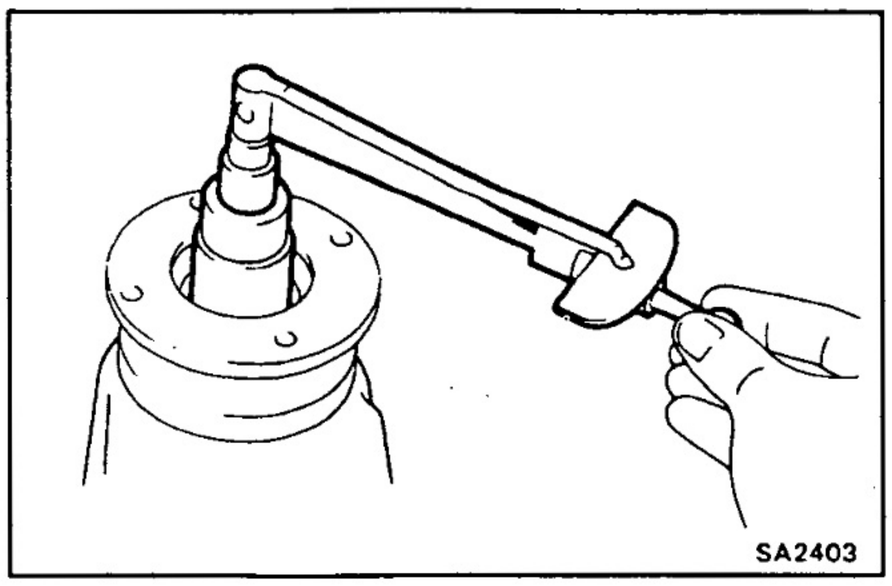

(d) Using a torque wrench, measure the proload.
Preload (at starting):
New bearing:
0.9–1.6 N·m (10–16 kgf·cm, 8.7–13.9 in.·lbf
Reused bearing:
0.5–0.8 N·m (5–8 kgf·cm, 4.3–6.9 in.·lbf)
HINT: Measure the total preload after first turning the bearing clockwise and counterclockwise several times to make the bearing smooth.

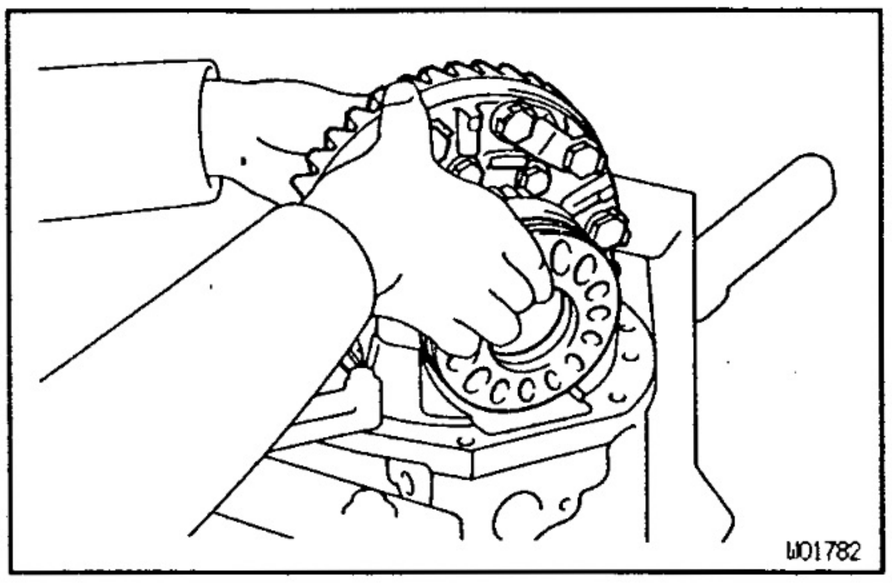

4. INSTALL DIFFERENTIAL CASE IN CARRIER
w/o Diff. lock and LSD:
(a) Place the bearing outer race on their respective bearings. Make sure that the left and right outer races are not interchanged.
(b) Install the case in the carrier.
HINT: Make sure that there is a backlash between the ring gear and drive pinion.
(c) Install the adjusting nuts on the carrier, making sure the nuts are threaded properly.

SA

w/ Diff. lock:
(a) Apply MP grease on the rack of the shift fork and connecting part of the indicator switch.
(b) Insert the shift fork into the differential carrier, as shown.

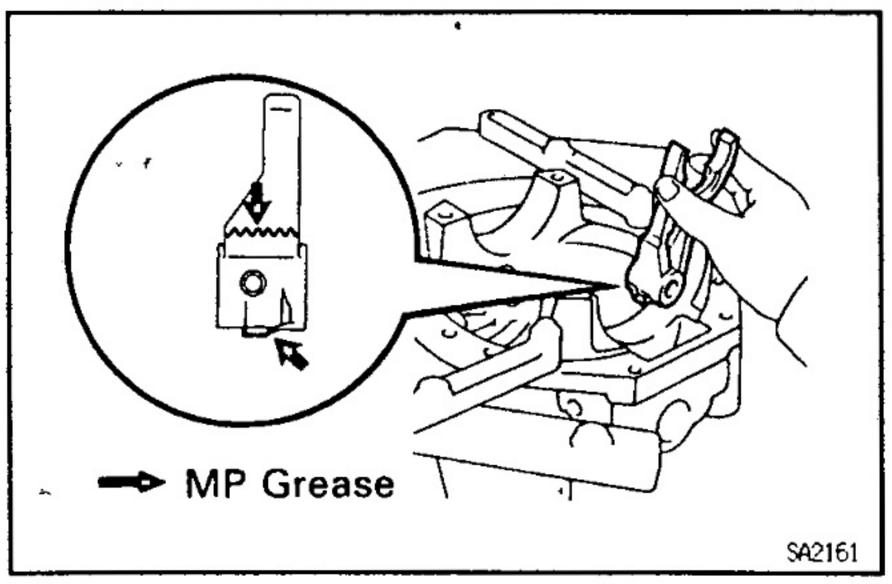

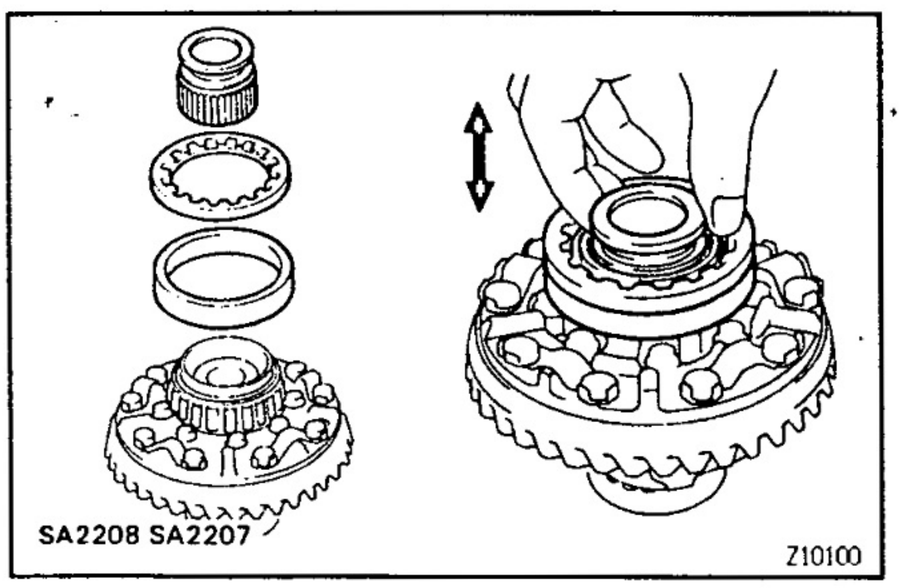

(c) Place the outer races, adjusting nut and left side to sleeve.
HINT: Check that the sleeve moves smoothly.

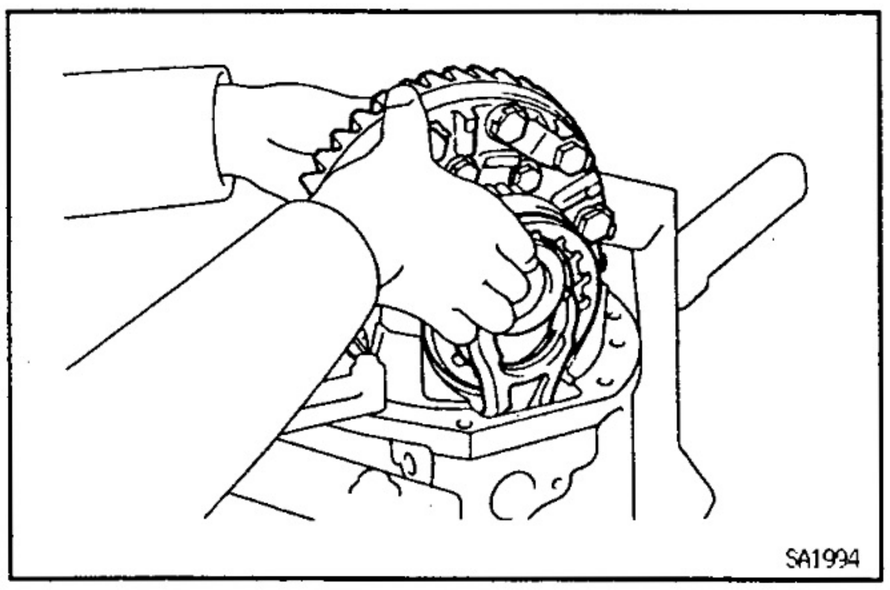

(d) Install the shift fork in the groove of the sleeve holding it by hand and install the case in the carrier.
HINT: Make sure that there is backlash between the ring gear and drive pinion.

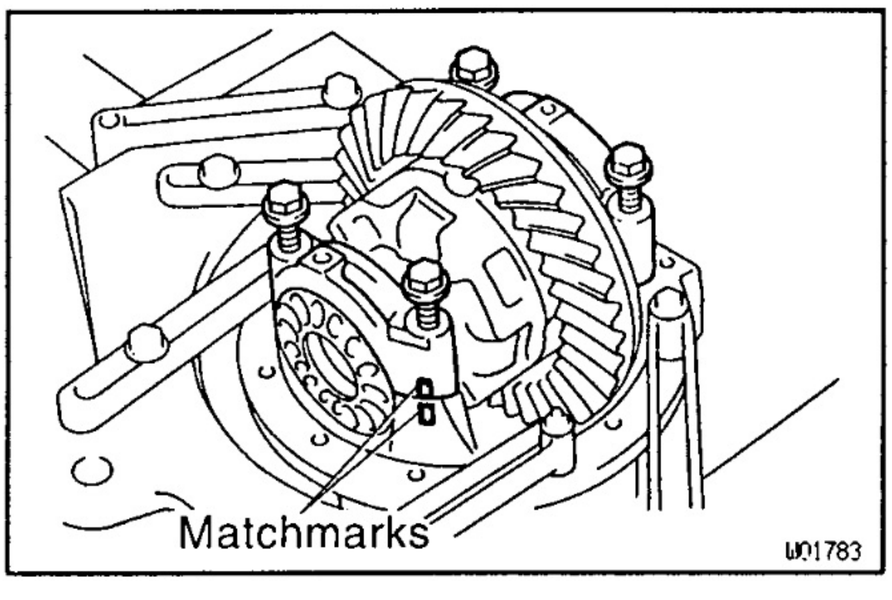

5. INSTALL BEARING CAPS

w/o Diff. lock and LSD:

Align the matchmarks on the cap and carrier. Screw in the 2 bearing cap bolts 2 or 3 turns and press down the bearing cap by hand.

HINT: If the bearing cap does not fit tightly on the carrier, the adjusting nuts are not threaded properly. Reinstall the adjusting nuts if necessary.

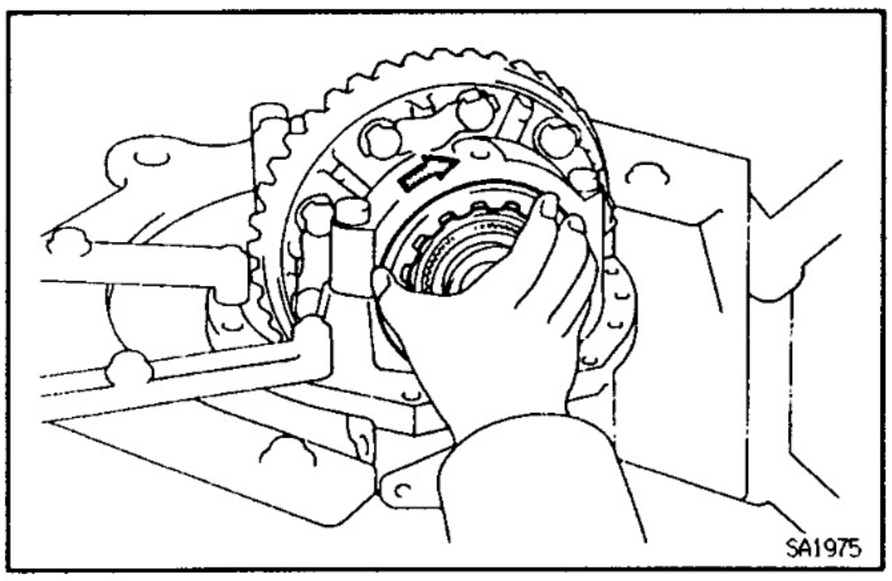

w/o Diff. lock:

Align the matchmarks on the cap and carrier. Screw in the 2 bearing cap bolts 2 or 3 turns and press down the bearing cap by hand.

HINT: If the bearing cap does not fit tightly on the carrier, the adjusting nuts are not threaded properly. Reinstall the adjusting nuts if necessary.

SA

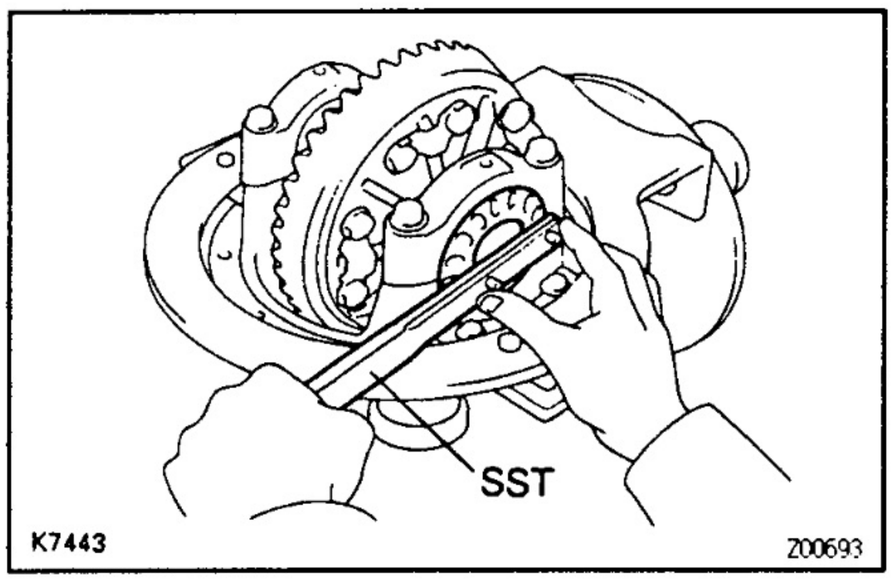

6. ADJUST SIDE BEARING PRELOAD

w/o Diff. lock and LSD:

(a) Tighten the 4 bearing cap bolts to the specified torque, and loosen them to the point where they can be turned by hand.
Torque: 85 N·m (870 kgf·cm, 63 ft·lbf)

(b) Fully tighten the 4 bearing cap bolts by hand.

(c) Using SST, tighten the adjusting nut on the ring gear back side until the ring gear has a backlash of about 0.2 mm (0.008 in.).
SST 09504–00011

(d) With turning the ring gear, use SST to fully tighten the adjusting nut on the ring gear teeth side.
After the bearings are settled, loosen the adjusting nut on the drive pinion side.
SST 09504–00011

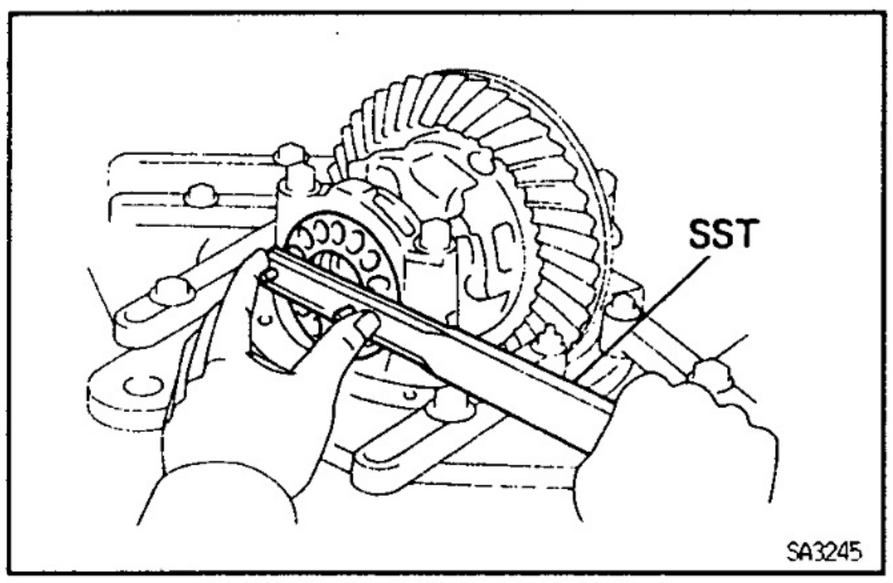

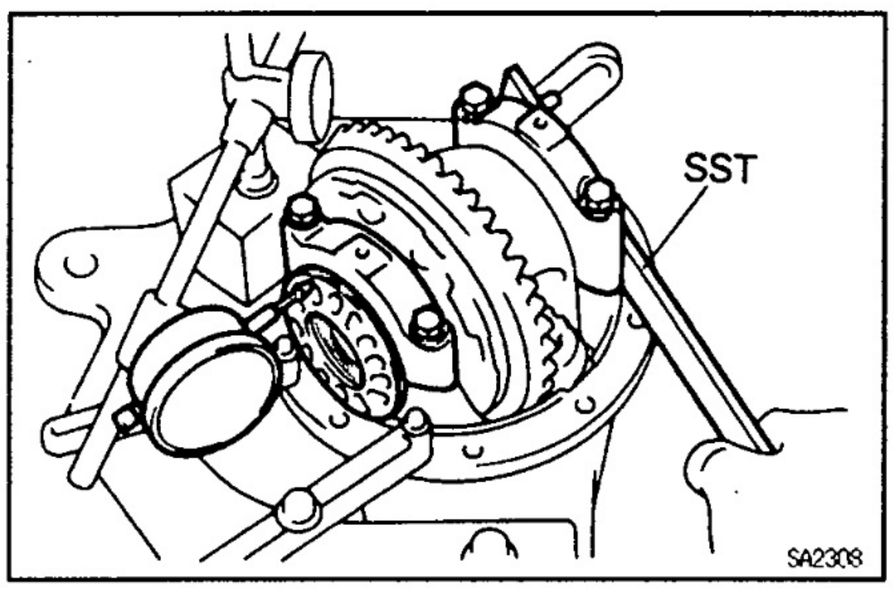

(e) Place a dial indicator on the top of the adjusting nut on the ring gear back side.

(f) Adjust the side bearing for zero preload by tightening the other adjusting nut until the pointer on the indicator bearings to move.

(g) Tighten the adjusting nut 1–1.5 notches from the zero preload position.

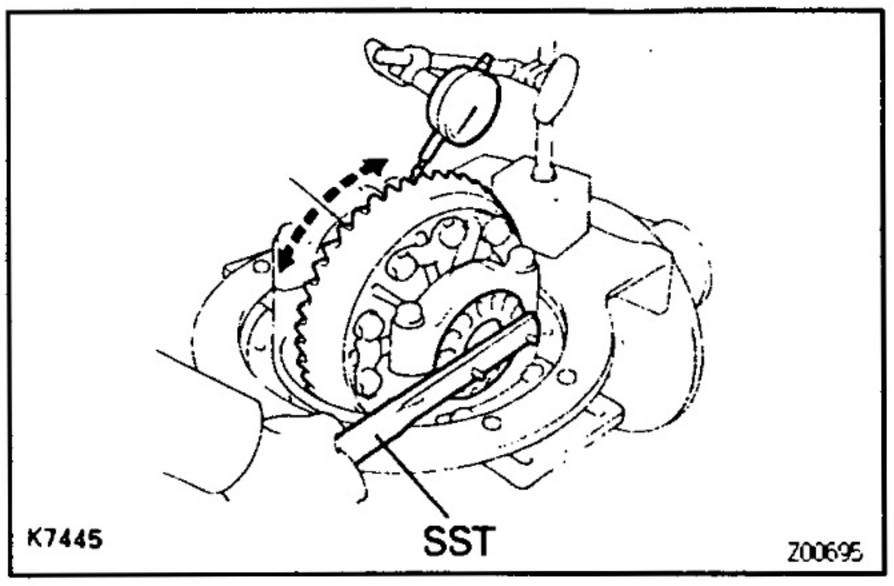

(h) Using a dial indicator, adjust the ring gear backlash until it is within the specification.
Backlash: 0.13—0.18 mm (0.0051—0.0071 in.)
HINT: The backlash is adjusted by turning the left and right adjusting nuts equal amounts. For example, loosen the nut of the left side one notch and tighten the nut on the right side one notch.

(i) Torque the bearing cap bolts.
Torque: 85 N·m (870 kgf·cm, 63 ft·lbf)

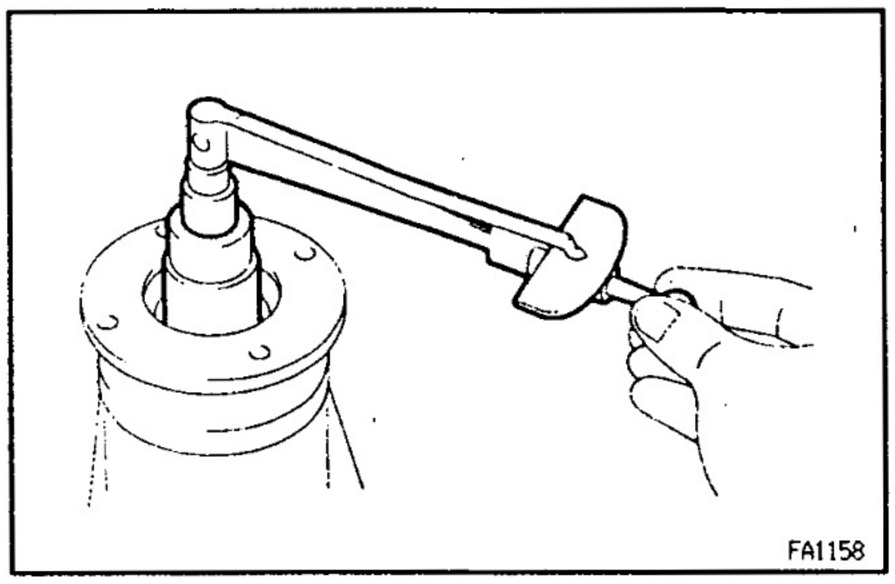

(j) Recheck the ring gear backlash.
Backlash: 0.13—0.18 mm (0.0051—0.0071 in.)

(k) Using a torque wrench, measure the preload with the teeth of the drive pinion and ring gear in contact.
Total preload (at starting):
Drive pinion preload plus
0.4—0.6 N·m (4—6 kgf·cm, 3.5—5.2 in.·lbf)

SA

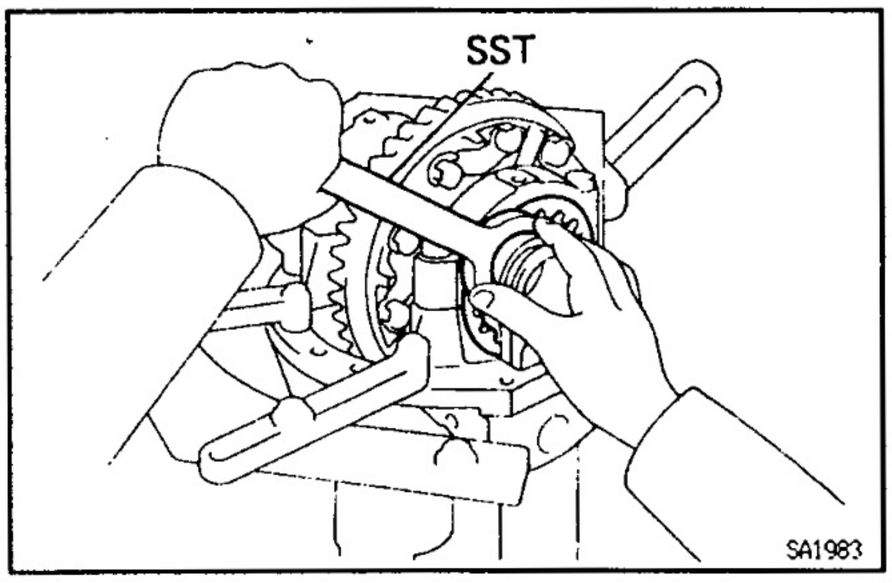

w/ Diff. lock:

(a) Torque the 4 bearing cap bolts to the specified torque, then loosen them to the point where the adjusting nut can be turned by hand.
Torque: 85 N·m (870 kgf·cm, 63 ft·lbf)

(b) Fully tighten the 4 bearing cap bolts by hand.

(c) Using SST, torque the adjusting nut on the ring gear side until the ring has a backlash of about 0.2 mm (0.008 in.).
SST 09960—10010

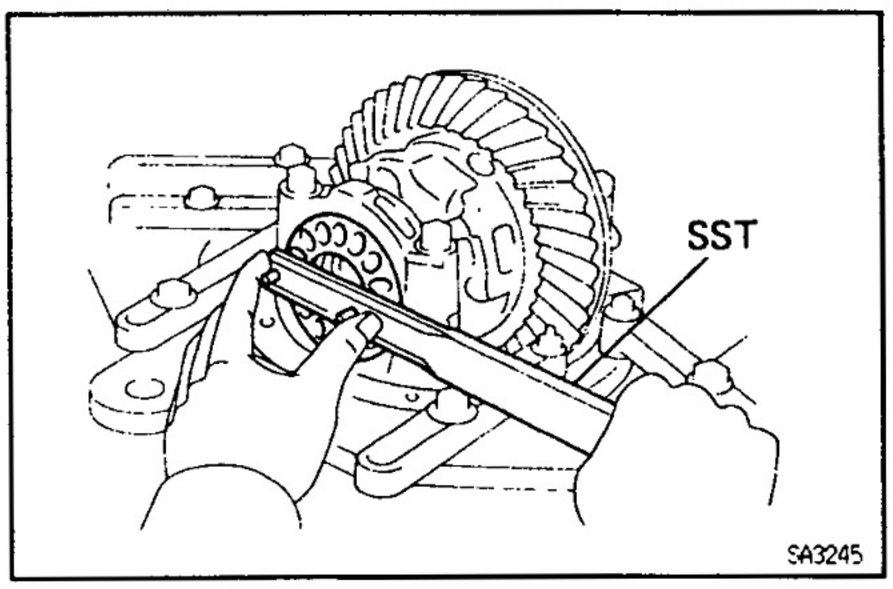

(d) With turning the ring gear, use SST to fully tighten the adjusting nut on the drive pinion side. After the bearings are settled, loosen the adjusting nut on the drive pinion side.
SST 09504—00011

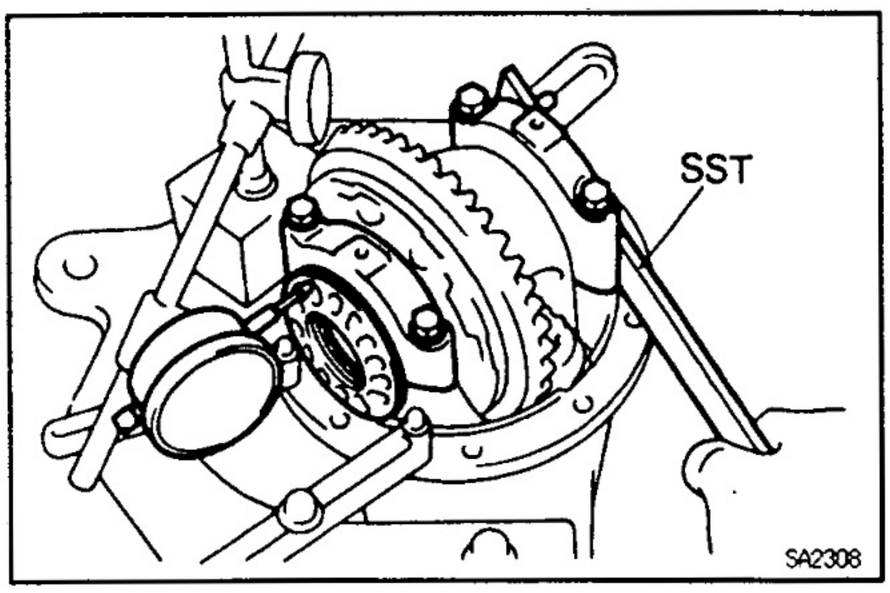

(e) Place a dial indicator on the top of the adjusting nut on the ring gear side.

(f) Adjust the side bearing for zero preload by tightening the other adjusting nut until the pointer on the indicator bearings to move.

(g) Torque the adjusting nut until 1—1.5 notches from the zero preload position.

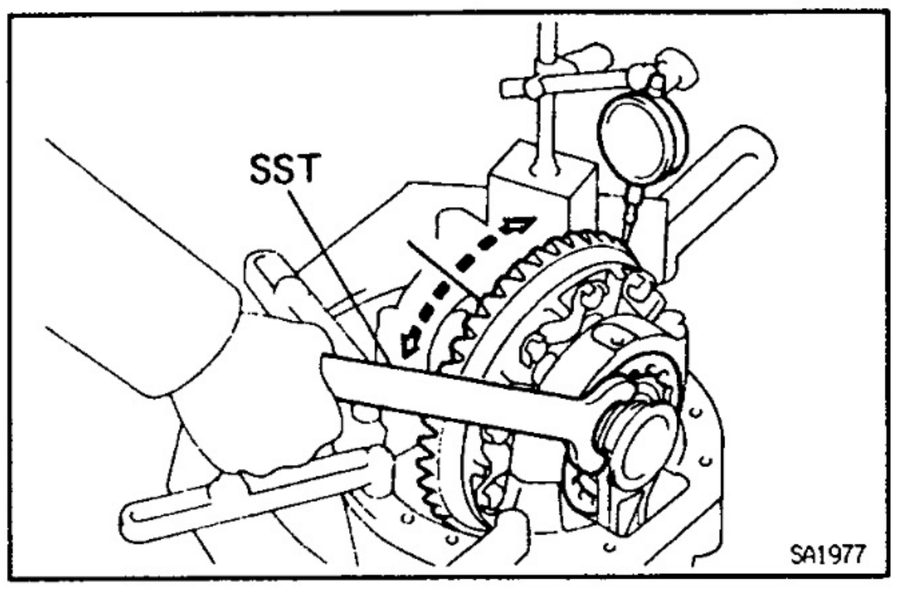

(h) Using a dial indicator, adjust the ring gear backlash until it is within the specification.
Backlash: 0.13 – 0.18 mm (0.0051 – 0.0071 in.)
HINT: The backlash is adjusted by turning the left and right side one notch.

(i) Torque the bearing cap bolts.
Torque: 85 N·m (870 kgf·cm, 63 ft·lbf)

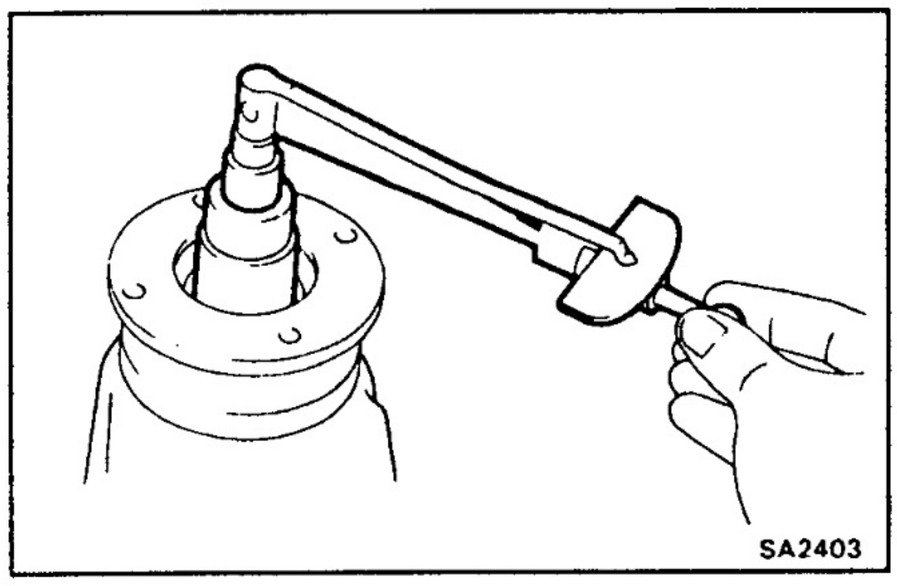

(j) Recheck the ring gear backlash.
Backlash: 0.13 – 0.18 mm (0.0051 – 0.0071 in.)

(k) Using a torque wrench, measure the preload with the teeth of the drive pinion and ring gear in contact.
Total preload (at starting):
Drive pinion preload plus
0.4 – 0.6 N·m (4 – 6 kgf·cm, 3.5 – 5.2 in.·lbf)

SA

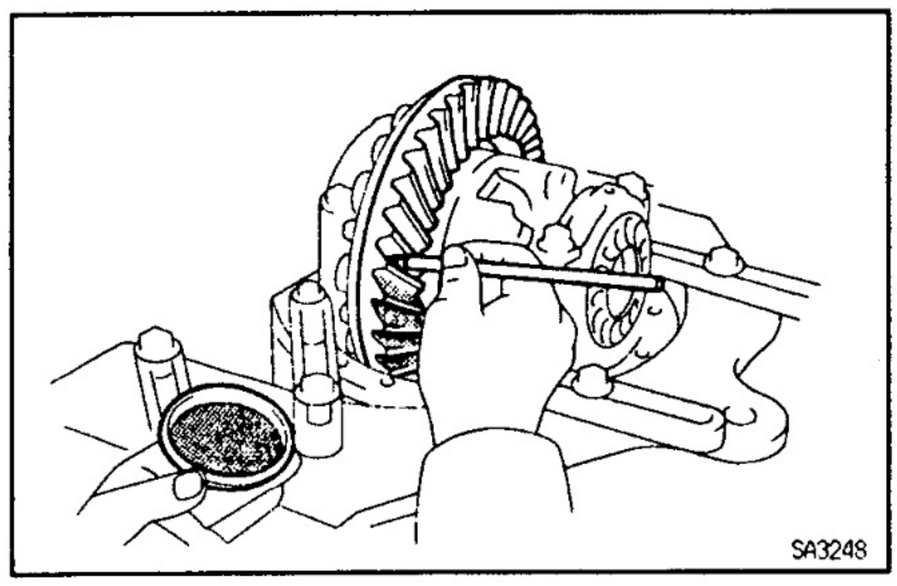

7. INSPECT TOOTH CONTACT BETWEEN RING GEAR AND DRIVE PINION

(a) Coat 3 or 4 teeth at the 3 different positions on the ring gear with red lead.

(b) Hold the companion flange firmly and rotate the ring gear in both directions.

(c) Inspect the tooth pattern.

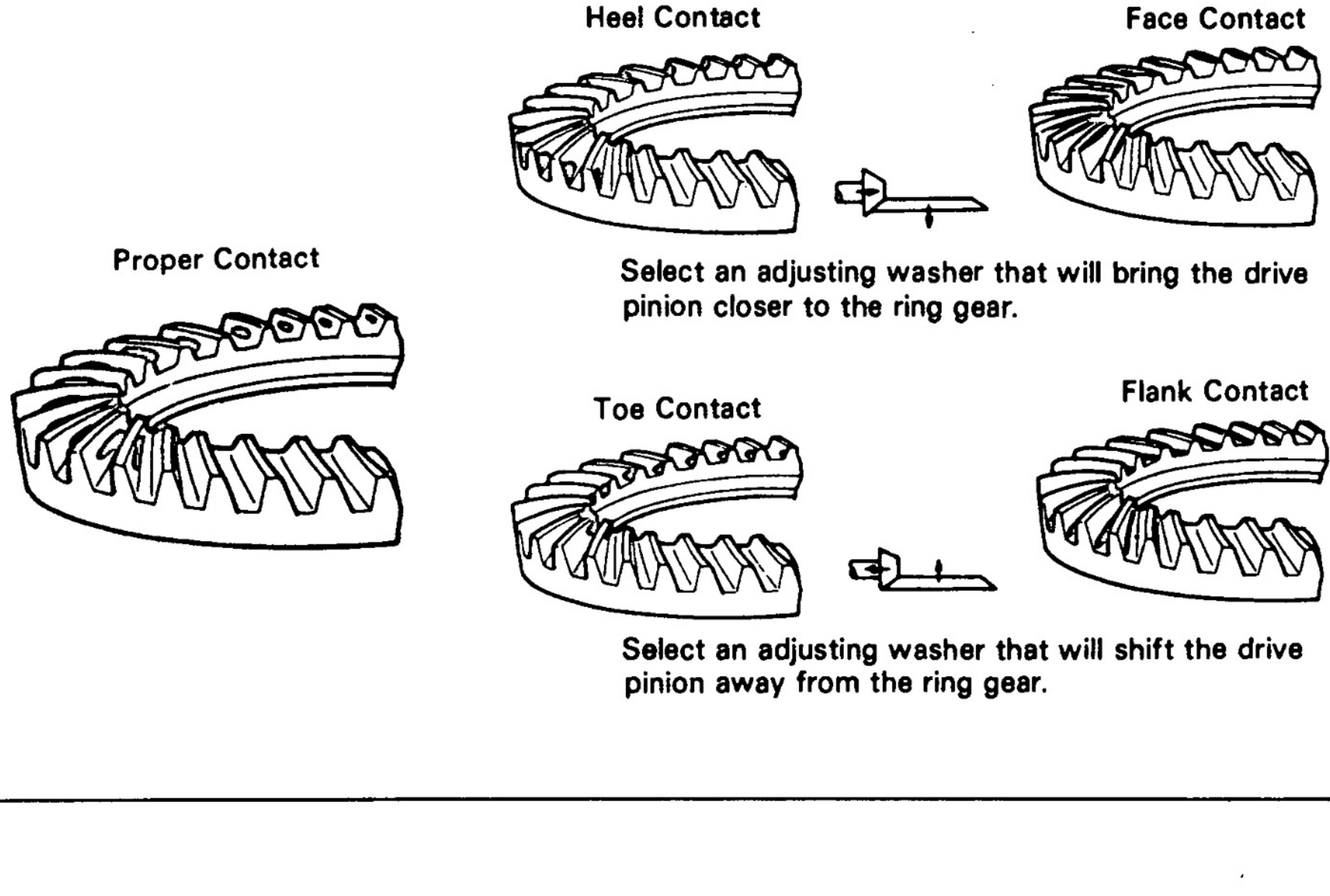

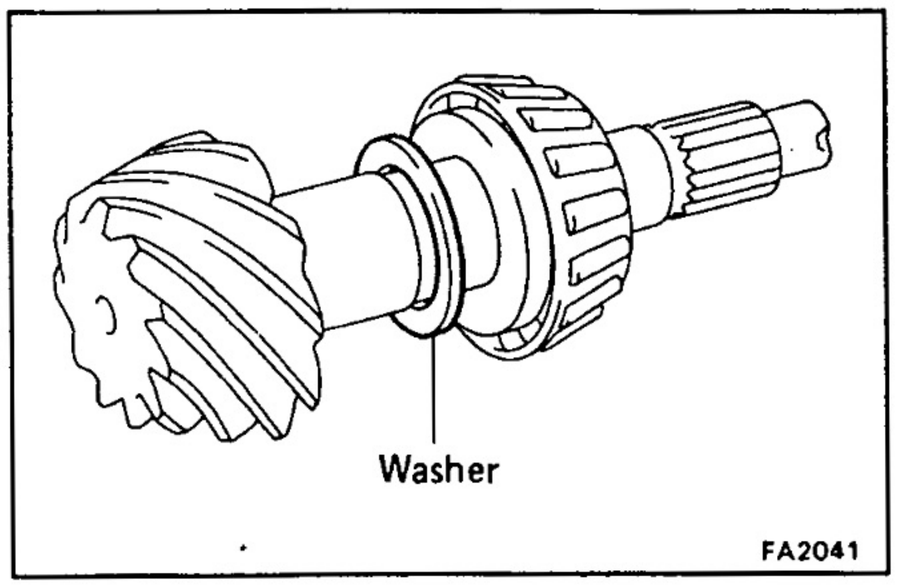

If the teeth are not contacting properly, use the following chart to select a proper washer for correction.

Thickness mm (in.)	Thickness mm (in.)
1.70 (0.0669)	2.03 (0.0799)
1.73 (0.0681)	2.06 (0.0811)
1.76 (0.0693)	2.09 (0.0823)
1.79 (0.0705)	2.12 (0.0835)
1.82 (0.0717)	2.15 (0.0846)
1.85 (0.0728)	2.18 (0.0858)
1.88 (0.0740)	2.21 (0.0870)
1.91 (0.0752)	2.24 (0.0882)
1.94 (0.0764)	2.27 (0.0894)
1.97 (0.0776)	2.30 (0.0906)
2.00 (0.0787)	2.33 (0.0917)

8. REMOVE COMPANION FLANGE
(See page SA–82)

9. REMOVE OIL SLINGER AND FRONT BEARING
(See page SA–82)

SA

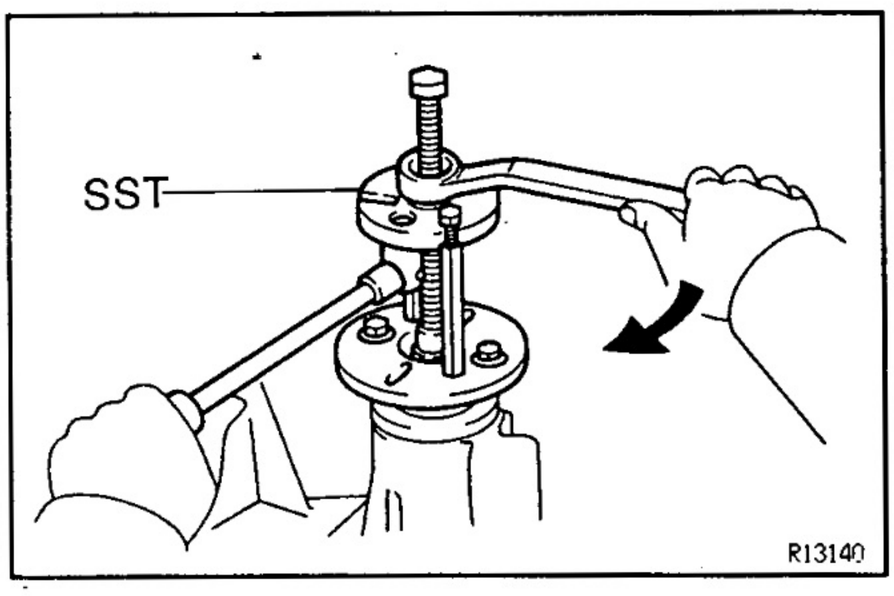

10. INSTALL BEARING SPACER AND FRONT BEARING

(a) Place a new bearing spacer on the shaft.

(b) Place the front bearing and oil slinger.

(c) Using SST and the companion flange, install the front bearing then remove the companion flange.
SST 09950–30010 (09951–06010, 09953–03010, 09954–03010, 09955–03030, 09956–03030)

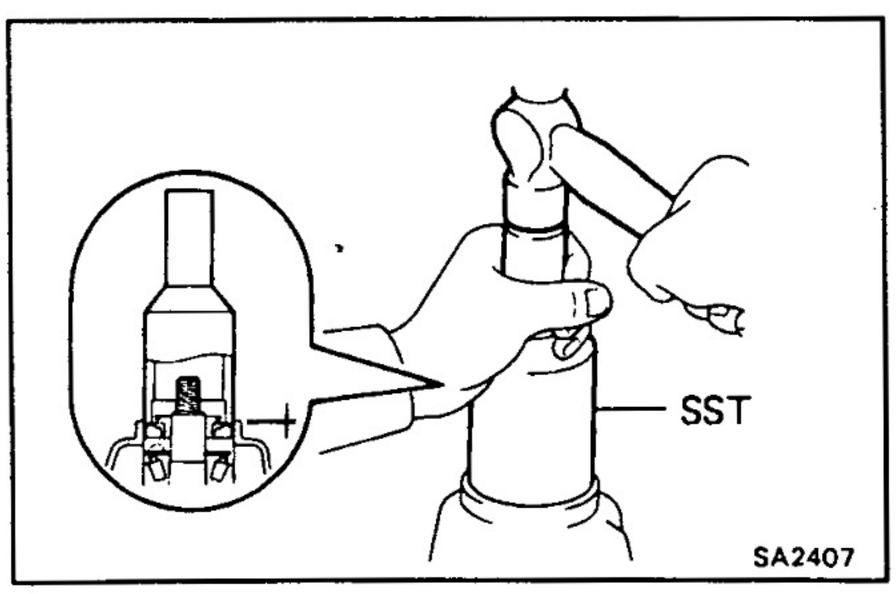

11. INSTALL OIL SEAL

(a) Apply MP grease to the oil seal lip.

(b) Using SST and a hammer, install a new oil seal.
SST 09214–76011
Oil seal drive in depth: 1.0 mm (0.039 in.)

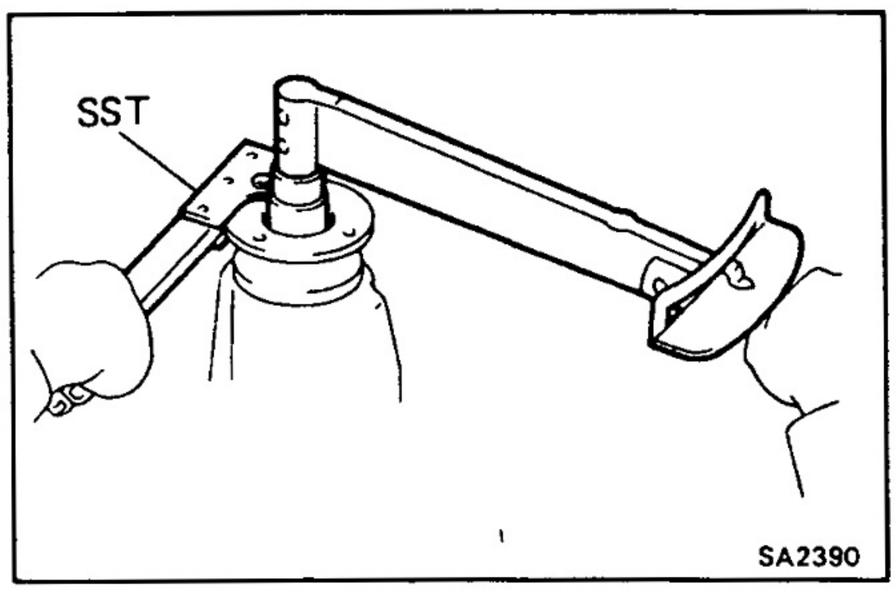

12. INSTALL COMPANION FLANGE

(a) Place the companion flange on the drive pinion.

(b) Install a new nut.
HINT: Coat the threads of a new nut with hypoid gear oil.

(c) Using SST to hold the flange, tighten the nut.
SST 09330–00021
Torque: 196 N·m (2,000 kgf·cm, 145 ft·lbf)

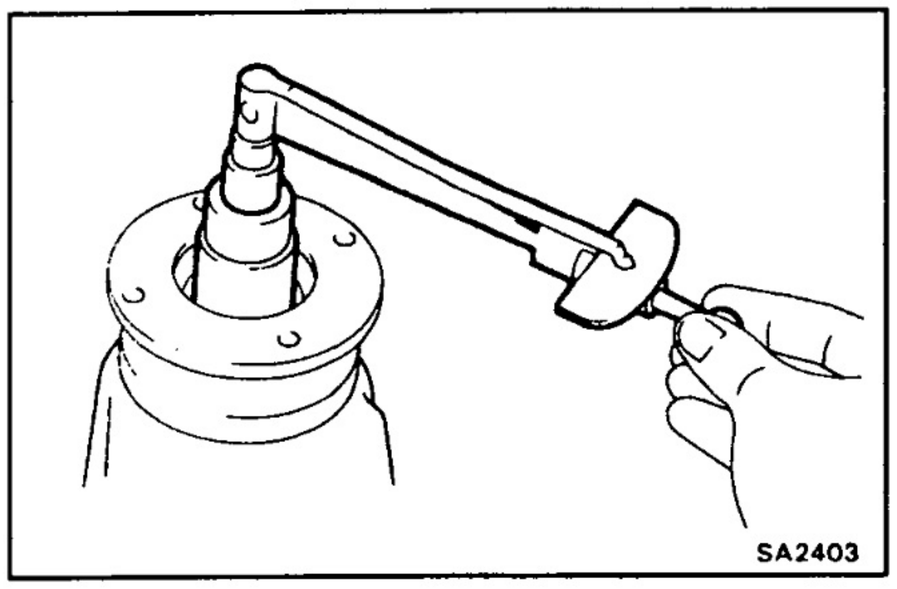

13. ADJUST DRIVE PINION PRELOAD

Using a torque wrench, measure the preload of the backlash between the drive pinion and ring gear.

Preload (at starting):

New bearing:

0.9—1.6 N·m (10—16 kgf·cm, 8.7—13.9 in.·lbf)

Reused bearing:

0.5—0.8 N·m (5—8 kgf·cm, 4.3—6.9 in.·lbf)

If preload is greater than the specification, replace the bearing spacer.

If preload is less than the specification, retighten the nut a little at a time with a torque of 13 N·m (130 kgf·cm, 9 ft·lbf) until the specified preload is reached.

Maximum torque: 343 N·m (3,500 kgf·cm, 253 ft·lbf)

If the maximum torque is exceeded with retightening the nut, replace the bearing spacer and repeat the preload procedure. Do not back off the pinion nut to reduce the preload.

14. RECHECK RING GEAR BACKLASH
(See page SA—80)

15. RECHECK TOOTH CONTACT BETWEEN RING GEAR AND DRIVE PINION
(See page SA—88)

16. CHECK RUNOUT OF COMPANION FLANGE
(See page SA—80)

17. STAKE DRIVE PINION NUT

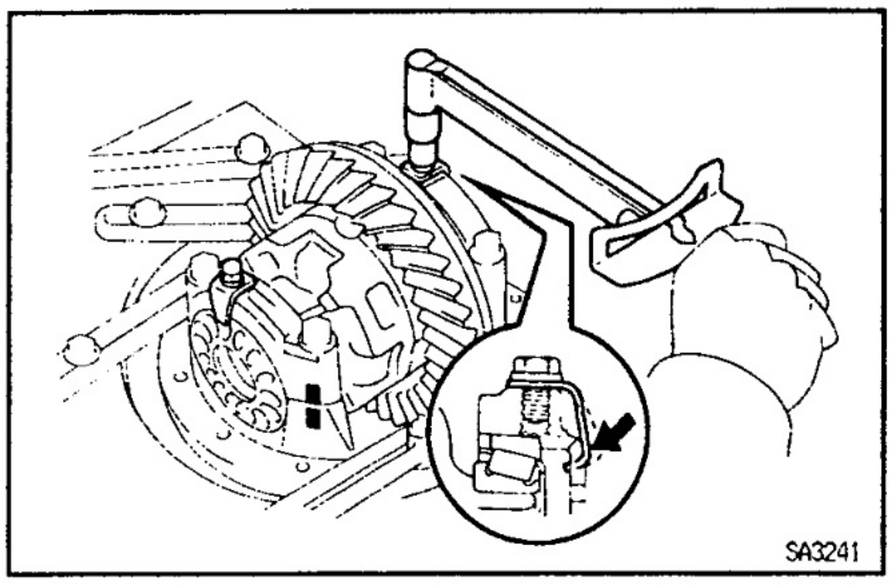

18. INSTALL ADJUSTING NUT LOCKS

(a) Install 2 new nut locks on the bearing caps.
Torque: 13 N·m (130 kgf·cm, 9 ft·lbf)

(b) After tightening bolts, bend the nut locks.

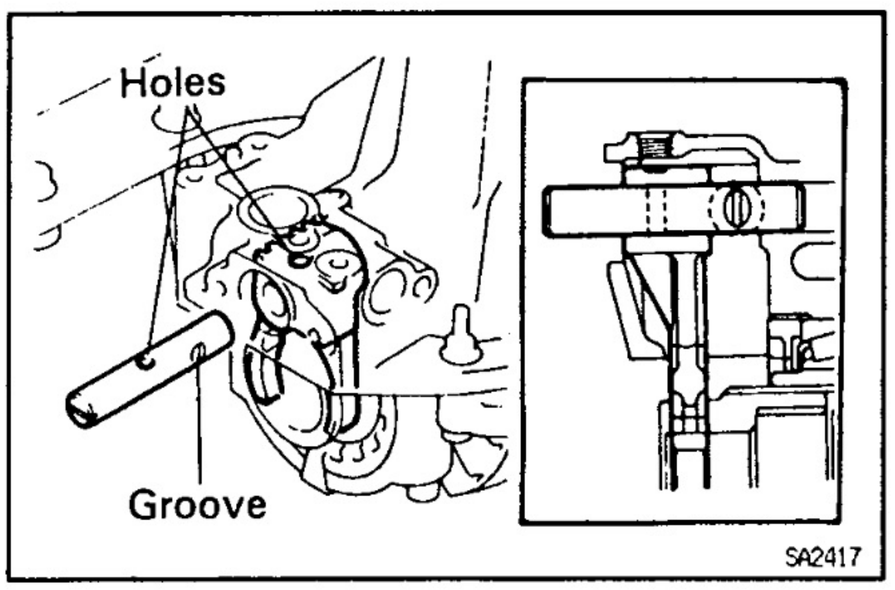

19. w/ DIFF. LOCK:
INSTALL SHIFT FORK SHAFT

(a) Apply MP grease onto the outer circuit of the fork shaft.

(b) Install the fork shaft to match the hole of the shift fork and that of the shift fork shaft.

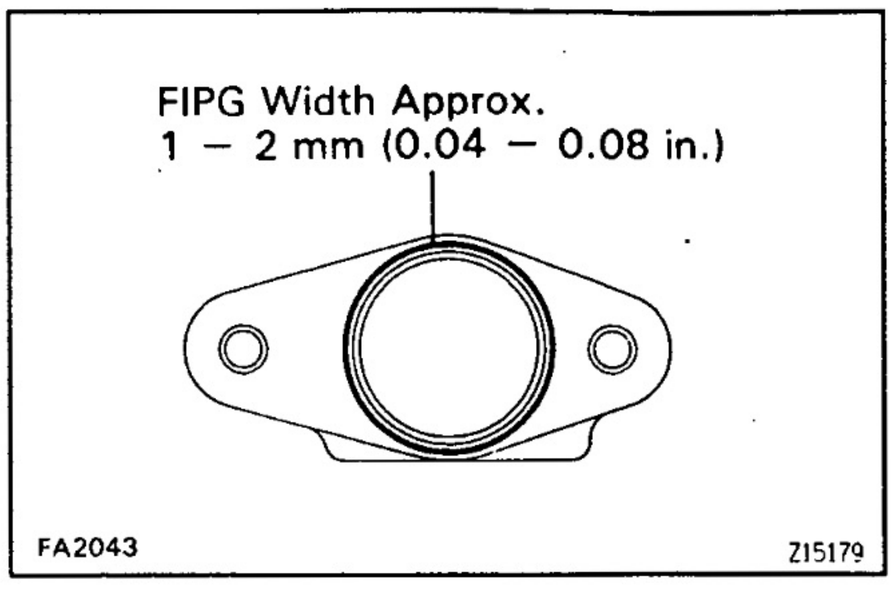

(c) Remove any FIPG material and be careful not to drop oil on the contacting surface of the differential carrier and shaft retainer.

(d) Apply FIPG to the carrier, as shown.
FIPG: Part No. 08826—00090, THREE BOND 1281 or equivalent
HINT: Install the shaft retainer within 10 minutes after applying FIPG.

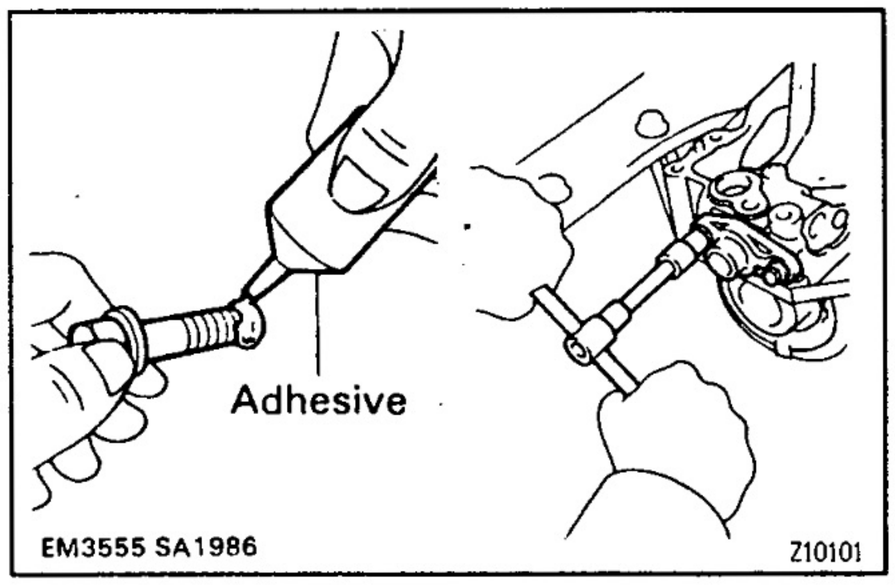

(e) Clean the threads of the bolts and retainer bolts holes with toluene or trichlorethylene.

(f) Apply adhesive to 2 or 3 threads of the mount bolt end.
Adhesive: Part No. 08833—00080, THREE BOND 1344, LOCTITE 242 or equivalent

(g) Tighten the shaft retainer with the 2 bolts.
Torque: 24 N·m (240 kgf·cm, 17 ft·lbf)

SA

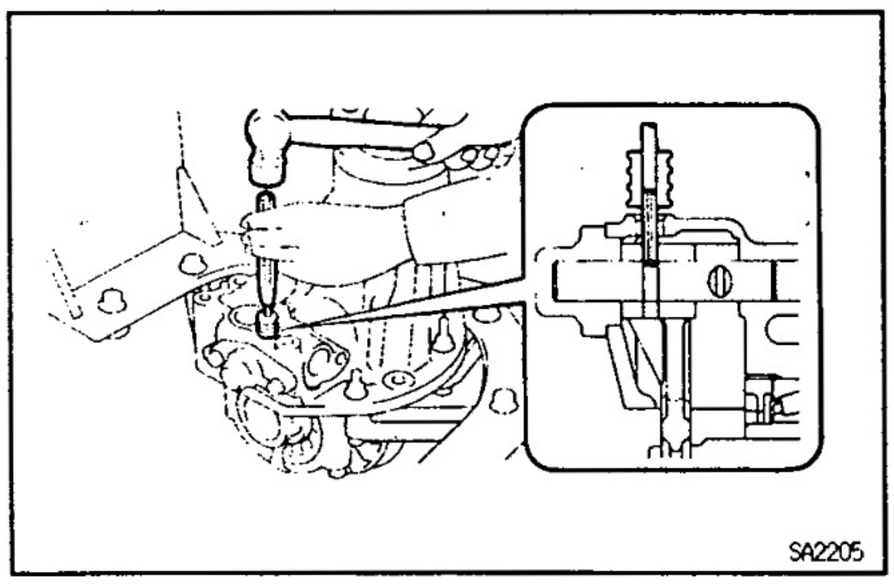

(h) Using a pin punch and hammer, install the slotted spring pin to shift fork.

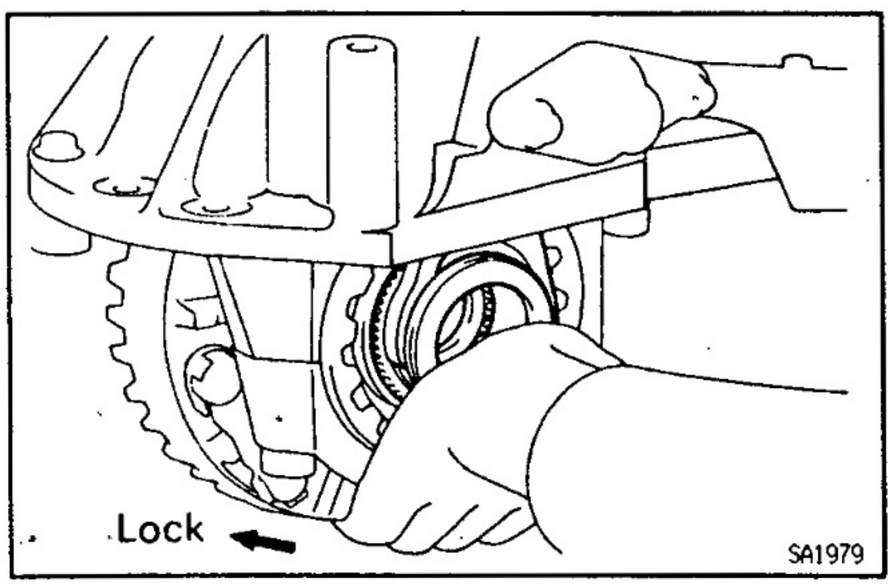

(i) Shift the fork deeply and keep the differential lock condition.

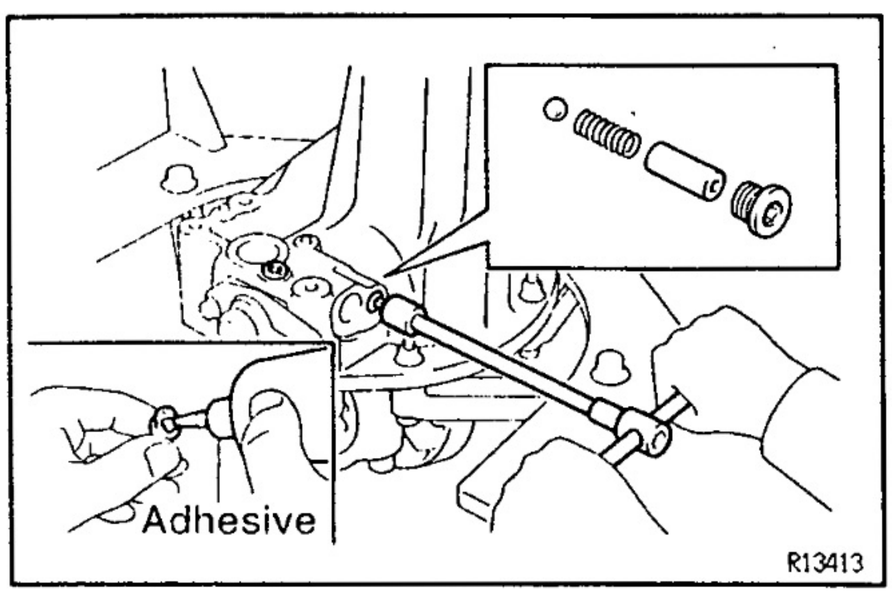

(j) Install the ball, compression spring and spring seat.

(k) Clean the threads of 2 plugs and plug holes with toluene or trichlorethylene.

(l) Apply adhesive to the plug threads.
Adhesive: Part No. 08833—00080, THREE BOND 1344, LOCTITE 242 or equivalent

(m) Using a hexagon wrench, install and tighten the screw plugs.
Torque: 22 N·m (220 kgf·cm, 16 ft·lbf)

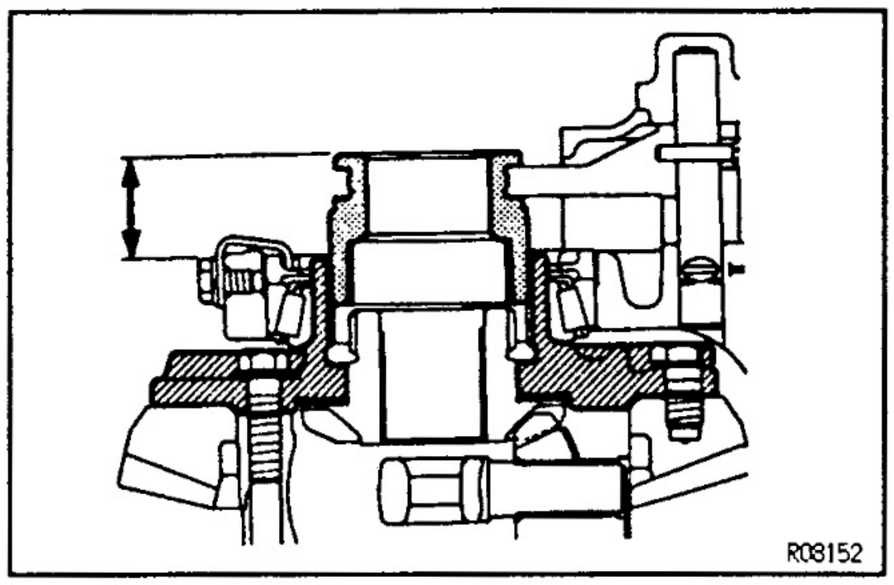

20. w/ DIFF. LOCK:
MEASURE DISTANCE BETWEEN SLEEVE AND DIFFERENTIAL CASE END SIDE
Measure distance between the sleeve and tip of the differential case when differential is free and locked.
Standard distance:
LOCK: 17.44–18.86 mm (0.6866–0.7425 in.)
FREE: 32.40–33.90 mm (1.2756–1.3346 in.)

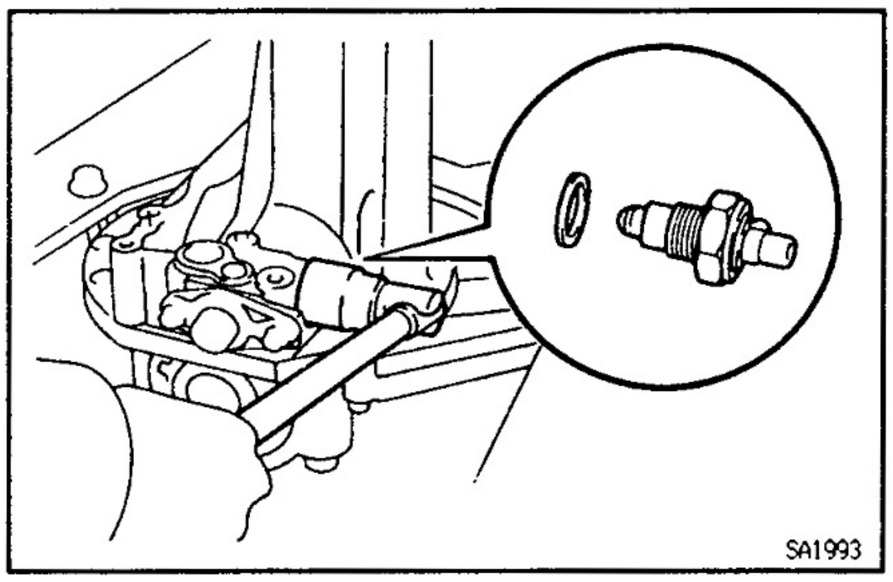

SA

21. w/ DIFF. LOCK
INSTALL INDICATOR SWITCH
Install the indicator switch with a new gasket.
Torque: 40 N·m (410 kgf·cm, 30 ft·lbf)

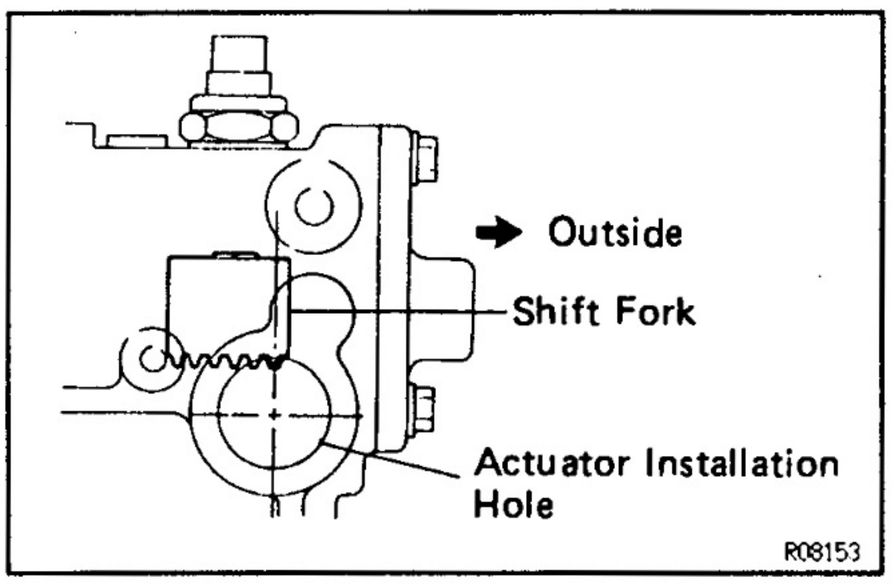

22. w/ DIFF. LOCK
INSTALL ACTUATOR
(a) Check that the outermost rack tooth of the shift fork is virtually above the center line of the actuator installation hole.

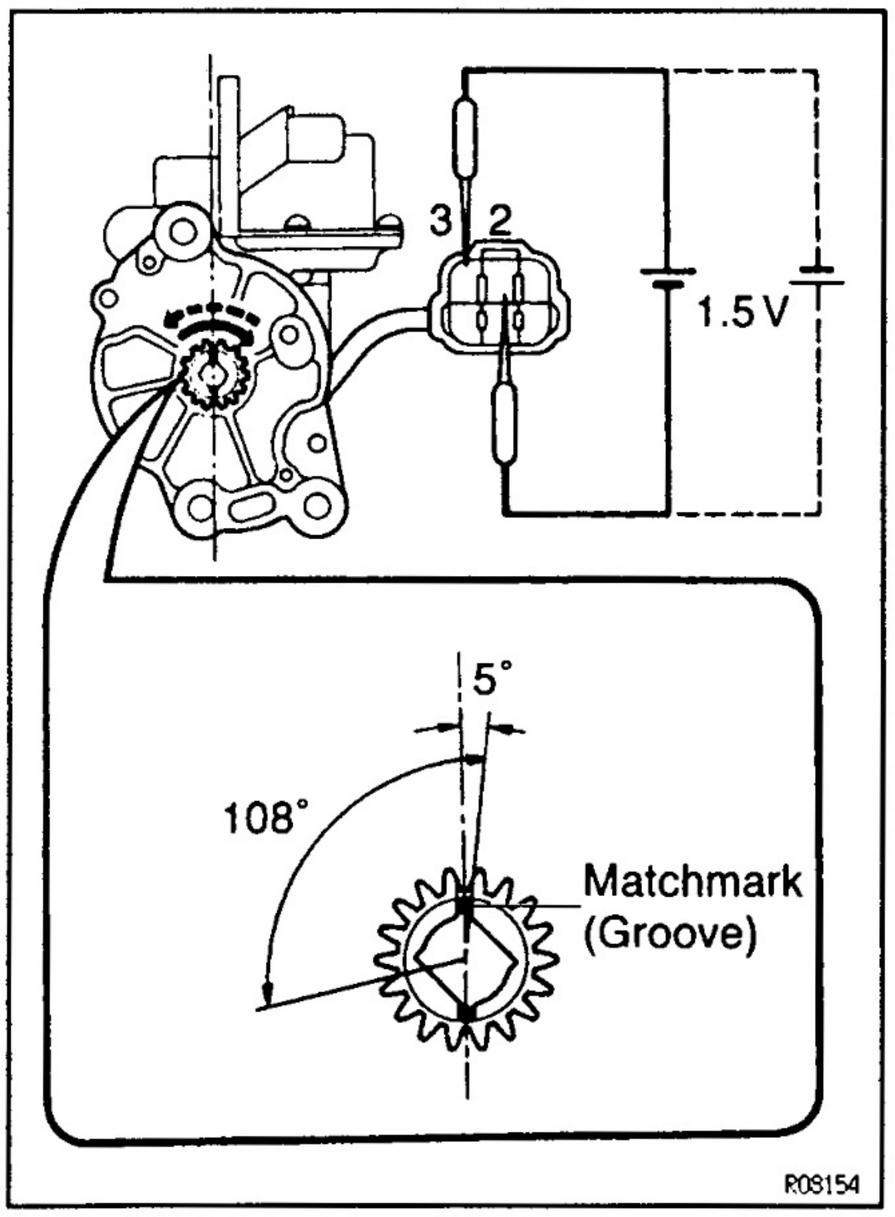

(b) Ensure that the matchmarks of the pinion of the actuator is in the extent between zero and 5 degrees clockwise above the center line of the actuator.
NOTICE:
- **If the matchmarks are not in this extent, rotate the pinion to be matched.**
- **Do not supply the battery positive voltage directly between terminals.**
- **If the matchmarks come to the extension limit of the rotation, do not electrify moreover.**

(c) Install a new O–ring to the actuator.
(d) Apply a light coat of gear oil on the O–ring.
(e) Apply MP grease to the gear part.

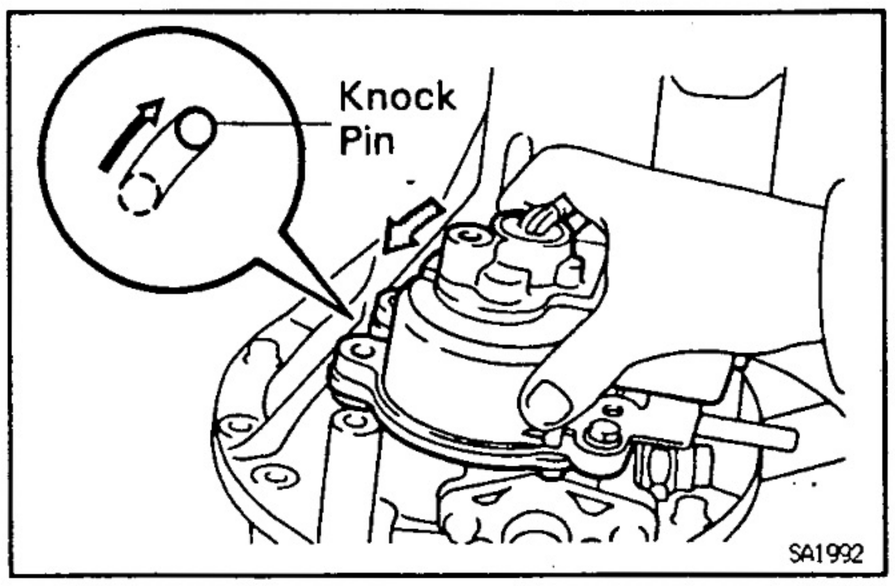

(f) Insert the actuator so that the long hole on the actuator side fits with the knock pin on the carrier side.
HINT: Do not damage the O–ring of the actuator.

(g) Align the actuator with the long hole and rotate the actuator counterclockwise when the knock pin reaches the right–hand side.

(h) Install the actuator to the differential carrier with the bolt so that the outermost rack tooth of the shift fork will fit the matchmarks of the pinion of the actuator.
Torque: 26 N·m (270 kgf·cm, 20 ft·lbf)

DIFFERENTIAL CASE
(4 Pinion Type)
COMPONENTS
(See page SA–78)

SA2QT–01

SA

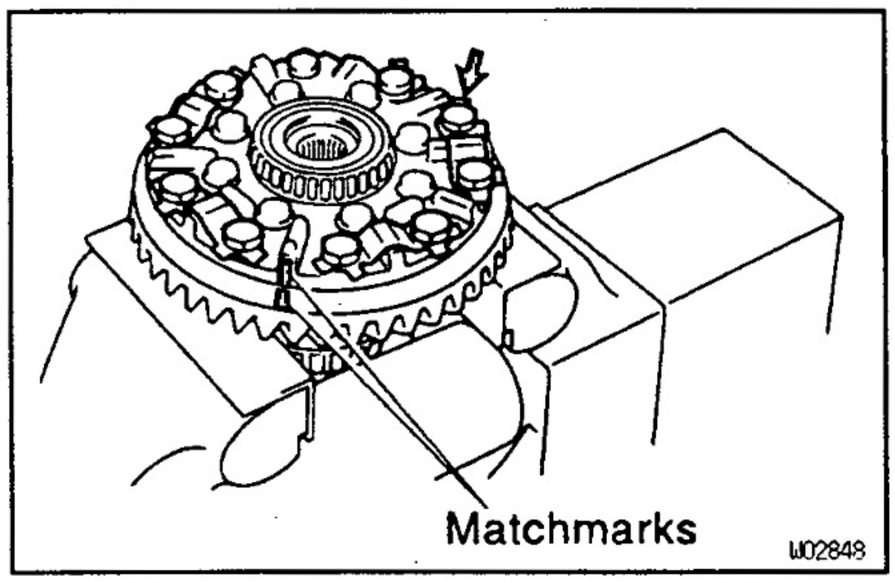

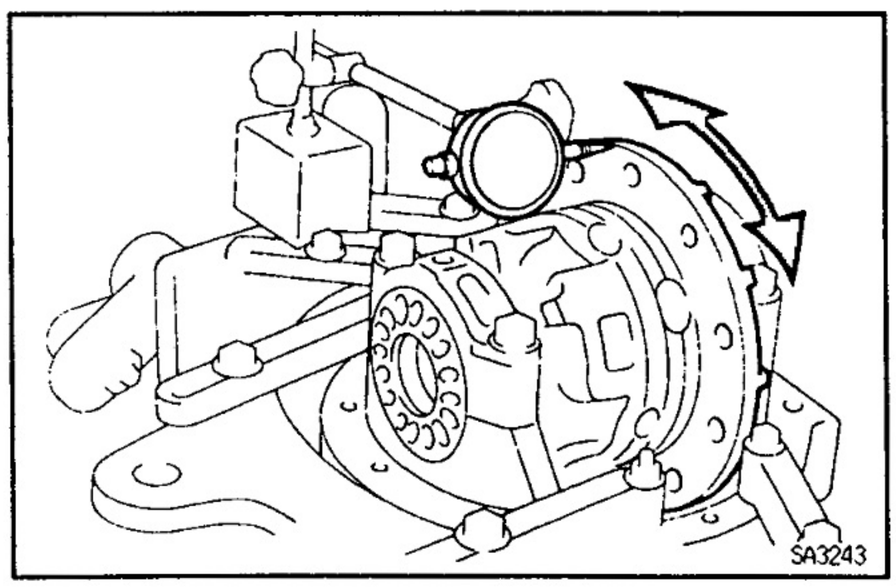

DIFFERENTIAL CASE DISASSEMBLY

SA2QU–01

1. REMOVE RING GEAR

(a) Place matchmarks on the ring gear and differential case.

(b) Using a screwdriver and hammer, unstake the 5 lock plates.

(c) Remove the 10 ring gear set bolts and 5 lock plates.

(d) Using a plastic hammer, tap on the ring gear to separate it from the differential case.

2. CHECK DIFFERENTIAL CASE RUNOUT

(a) Place the bearing outer races on their respective bearings. Check that the left and right outer races are not interchanged.

(b) Install the differential case in the differential carrier.

(c) When there is no play left in the side bearings, install the plate washers.

(d) Align the matchmarks on the bearing cap and differential carrier.

(e) Install and uniformly tighten the 4 bearing cap bolts in several passes.

(f) Using a dial indicator, measure the differential case runout.
Maximum runout: 0.07 mm (0.0028 in.)

(g) Remove the differential case.

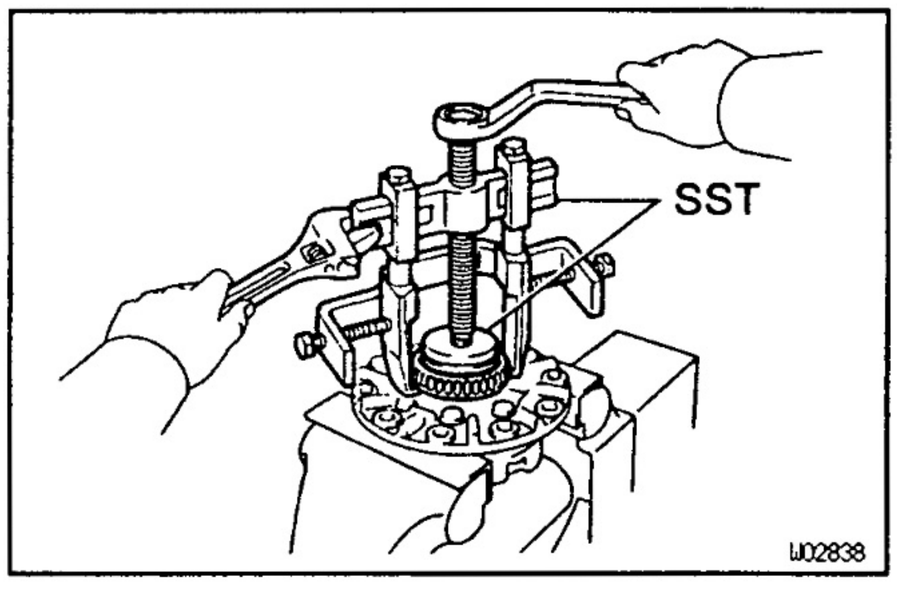

3. REMOVE SIDE BEARINGS FROM DIFFERENTIAL CASE

Using SST, remove the side bearings from the differential case.

SST 09950–40010 (09951–04010, 09952–04010, 09953–04020, 09954–04010, 09955–04060, 09957–04010, 09958–04010), 09950–60010 (09951–00480)

HINT: Fix the claws of SST to the notches in the differential case.

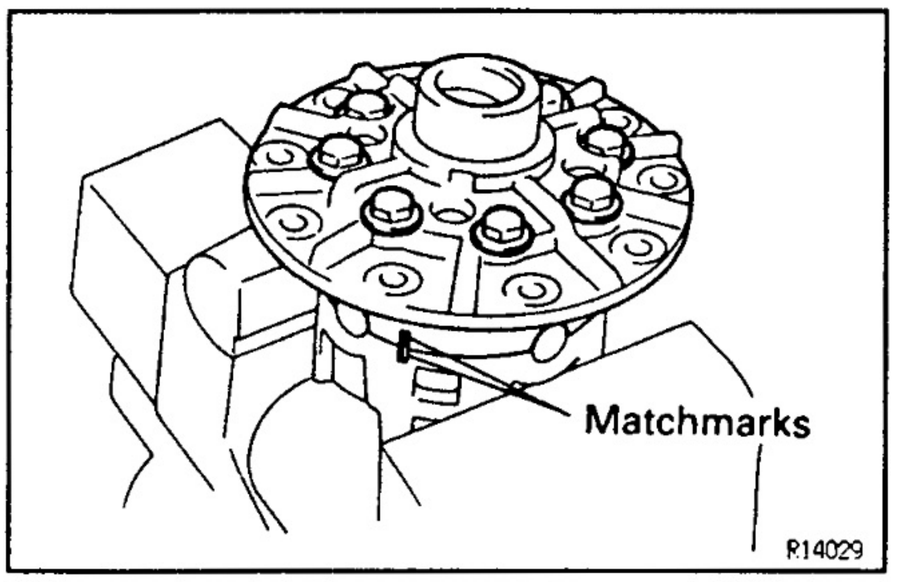

4. DISASSEMBLE DIFFERENTIAL CASE

(a) Place matchmarks on the LH and RH cases.
(b) Remove the 8 bolts uniformly, a little at a time.
(c) Using a plastic hammer, separate the LH and RH cases.
(d) Remove these parts:
- 2 Side gears
- 2 Side gear thrust washers
- 4 Spider and Pinion gears
- 4 Pinion gear thrust washers

SA

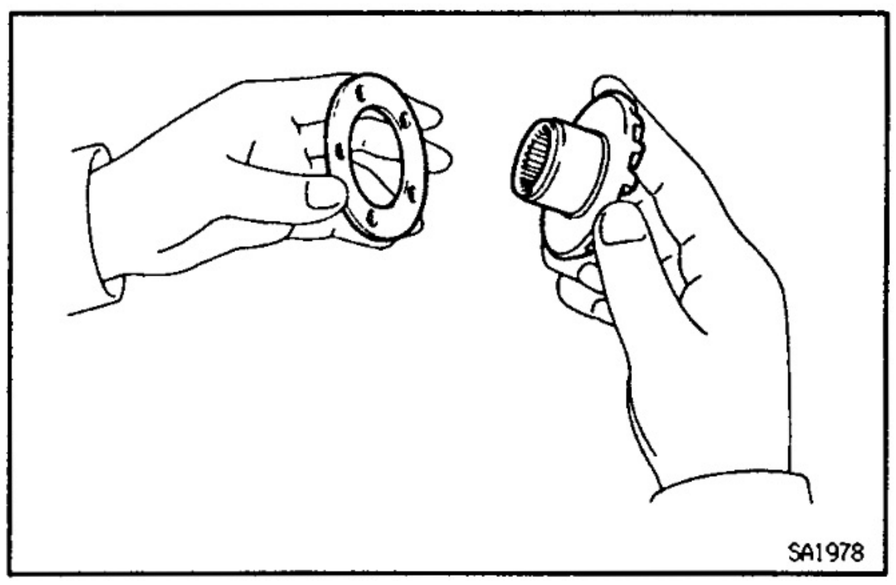

DIFFERENTIAL CASE ASSEMBLY

8A2QV-01

1. ASSEMBLE DIFFERENTIAL CASE

(a) Apply all of the sliding and rotating surfaces with gear oil.
(b) Install the side gear thrust washer to the side gear.
(c) Install the side gear to the RH case.

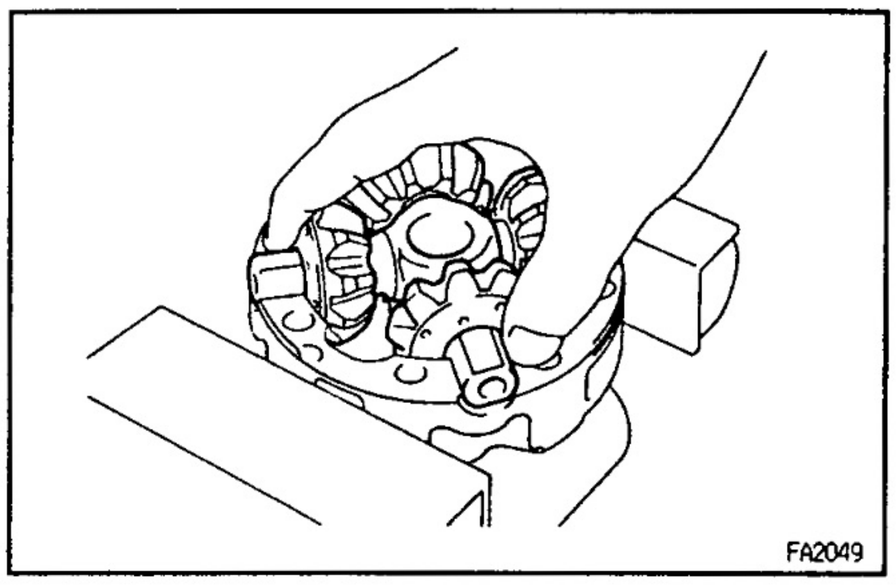

(d) Install the 4 pinion gears and pinion gear thrust washers to the spider.
(e) Install the 4 pinion gears with spider to the RH case.
(f) Using a dial indicator, measure the side gear backlash with holding the side gear and spider.

Standard backlash: 0.05–0.20 mm (0.0020–0.0079 in.)

HINT:
- Measure at all 4 locations.
- Measure the backlash at the RH case at the LH case.

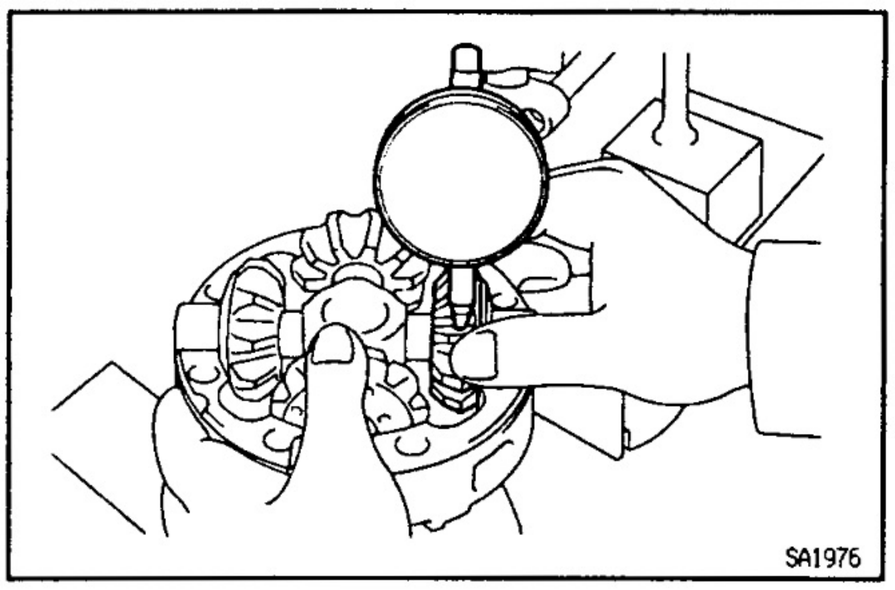

If the backlash is not within the specification, install a thrust washer of a different thickness.

Thrust washer thickness

Thickness mm (in.)	Thickness mm (in.)
0.9 (0.035)	1.2 (0.047)
1.0 (0.039)	1.3 (0.051)
1.1 (0.043)	–

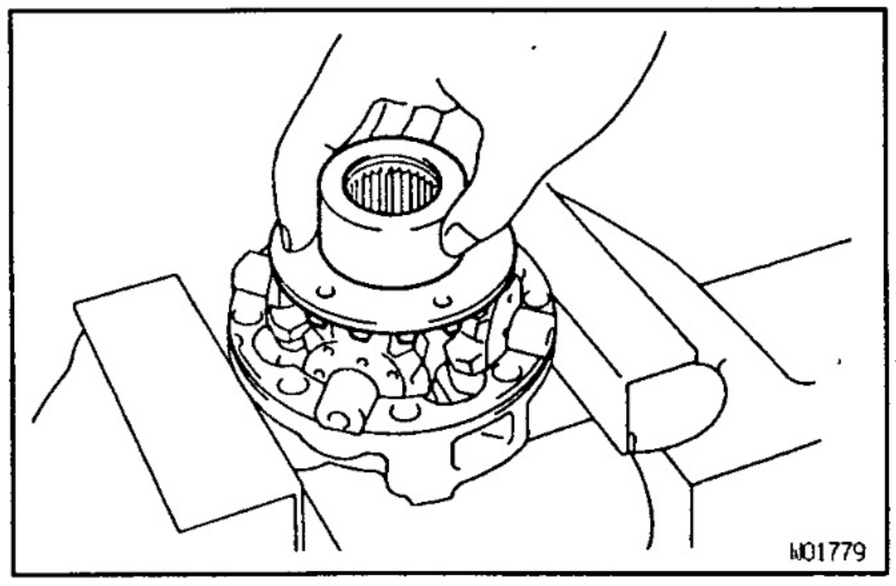

(g) Install the side gear and side gear thrust washer to the RH case.
(h) Install the pinion gears and spider to the RH case.
(i) Install the side gear and side gear thrust washer to the RH case.
(j) Align the matchmarks on the LH and RH cases.
(k) Torque the 8 bolts uniformly, a little at a time.
Torque: 47 N·m (480 kgf·cm, 35 ft·lbf)

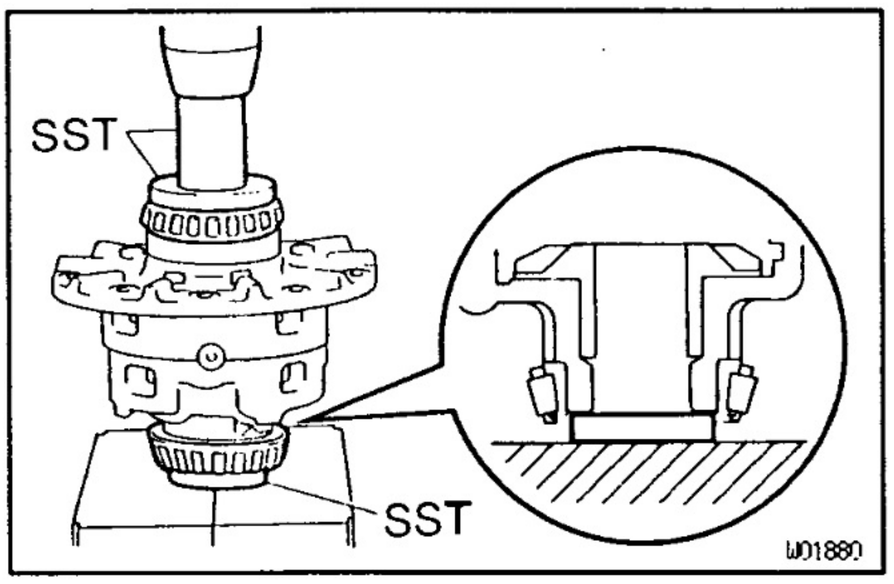

2. INSTALL SIDE BEARINGS

Using SST and a press, install the side bearings on the differential case.
SST 09950–60010 (09951–00480, 09951–00550), 09950–70010 (09951–07150)

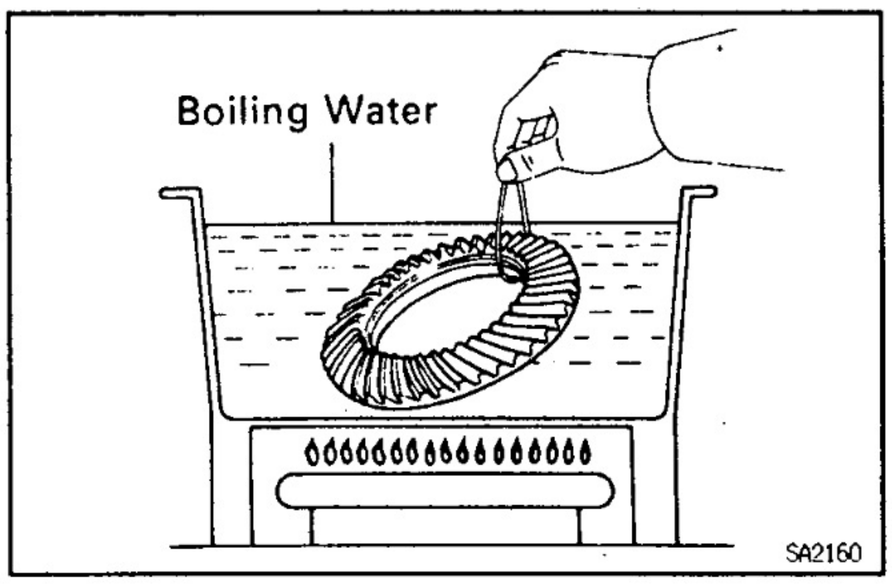

3. INSTALL RING GEAR ON DIFFERENTIAL CASE

(a) Clean the contact surfaces of the differential case and ring gear.
(b) Heat the ring gear to about 100°C (212°F) in boiling water.
(c) Carefully remove the ring gear from the boiling water.
(d) After the moisture on the ring gear has completely evaporated, quickly install the ring gear to the differential case.

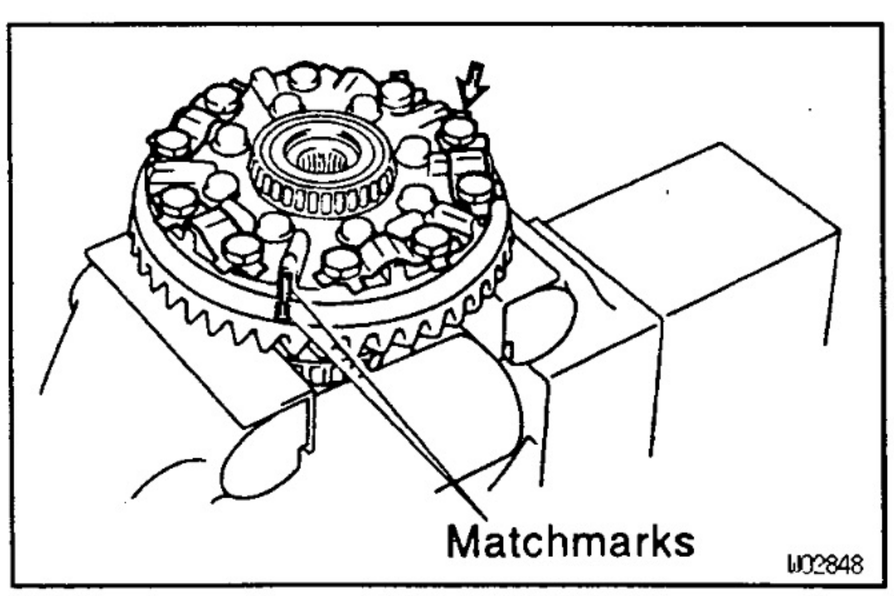

(e) Align the matchmarks on the ring gear and differential case.
(f) Temporarily install 5 new lock plates and 10 set bolts.
(g) After the ring gear cools down enough, tighten the set bolts uniformly and a little at a time.
Torque: 97 N·m (985 kgf·cm, 71 ft·lbf)

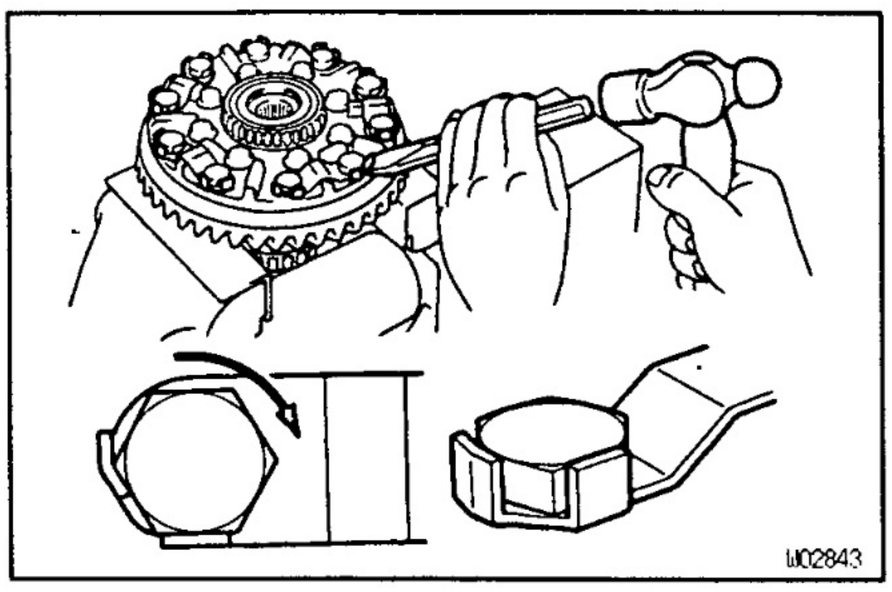

(h) Using a drift punch and hammer, stake the 10 lock plates.
HINT: Stake 1 claw flush with the flat surface of the bolt.
For the claw contacting the protruding portion of the bolt, stake the half on the tightening side.

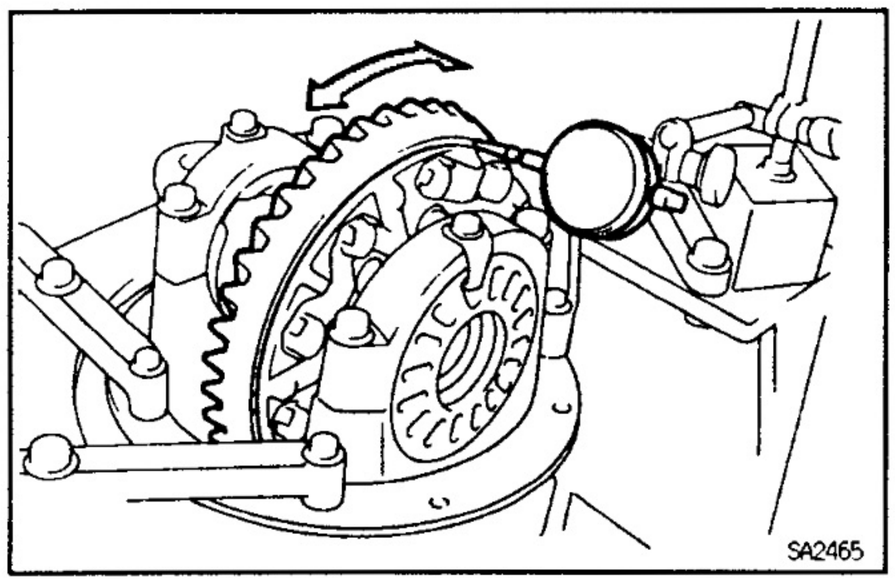

4. CHECK RING GEAR RUNOUT

(a) Install the differential case onto the carrier and tighten the adjusting nut just to where there is no play in the bearings.

(b) Using a dial indicator, check the ring gear runout.
Maximum runout: 0.10 mm (0.0039 in.)

(c) Remove the differential case from the carrier.

DIFFERENTIAL CASE (w/ Locking Differential)

SA2QW-01

COMPONENTS

(See page SA–79)

SA

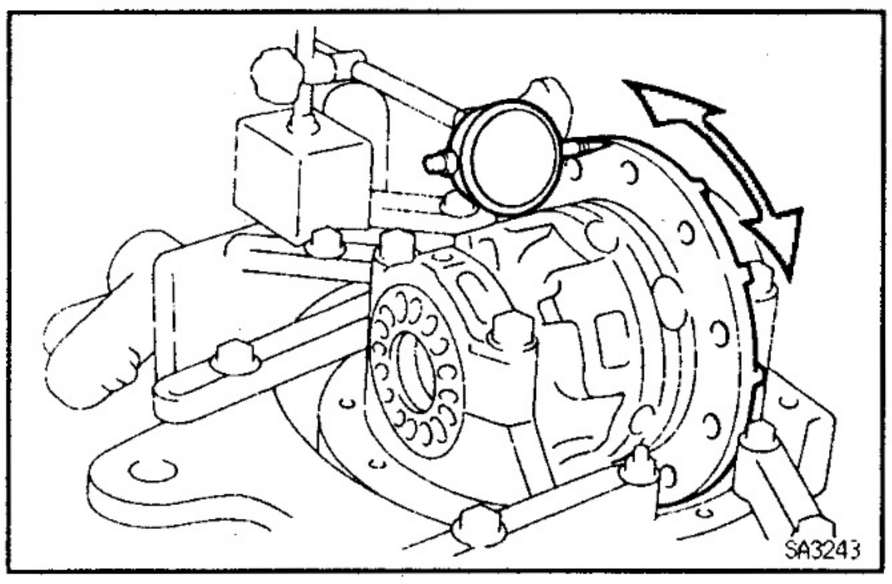

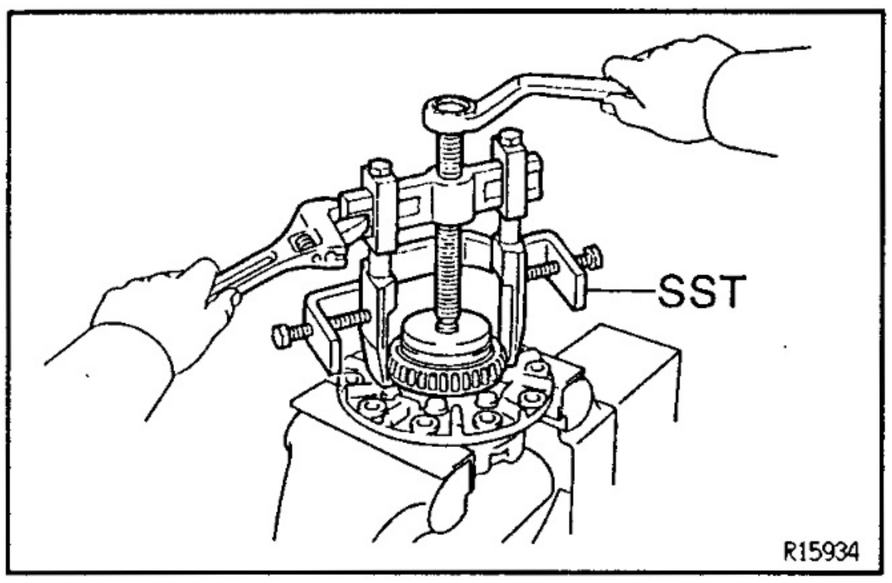

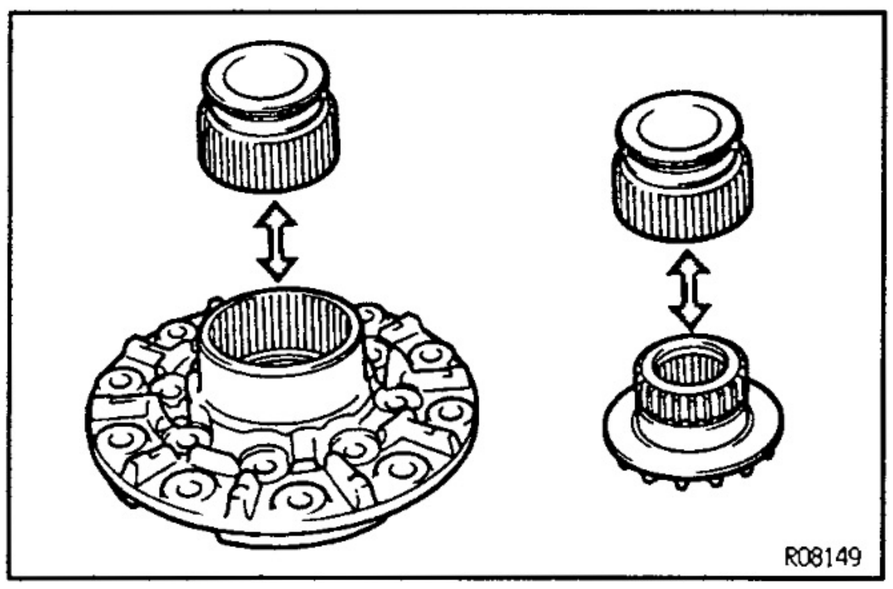

DIFFERENTIAL CASE DISASSEMBLY

SA2QX-01

1. REMOVE RING GEAR

(See page SA–93)

2. CHECK DIFFERENTIAL CASE RUNOUT

(a) Install the differential case in the differential carrier and tighten the adjusting nut just to where there is no play in the bearing.

(b) Using a dial indicator, measure the differential case runout.
Maximum runout: 0.07 mm (0.0028 in.)

(c) Remove the differential case.

3. REMOVE SIDE BEARINGS FROM DIFFERENTIAL CASE

Using SST, remove the side bearings from the differential case.

SST 09950–40010 (09951–04010, 09952–04010, 09953–04020, 09954–04010, 09955–04060, 09957–04010, 09958–04010), 09950–60020 (09951–00730)

4. DISASSEMBLE DIFFERENTIAL CASE

(See page SA–94)

5. INSPECT SLEEVE

(a) Install the sleeve to the differential case (LH) and check that it moves smoothly.

(b) Install the sleeve to the side gear and check it moves smoothly.

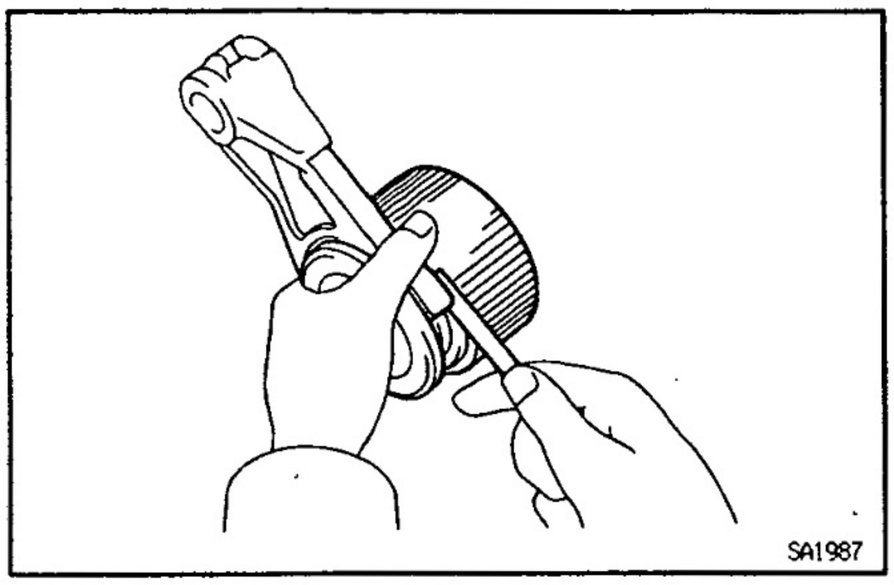

6. **MEASURE CLEARANCE OF SHIFT FORK AND SLEEVE**

Using a feeler gauge, measure the clearance between the shift fork and sleeve.

Clearance (Reference): 0.15–0.35 mm (0.006–0.014 in.)

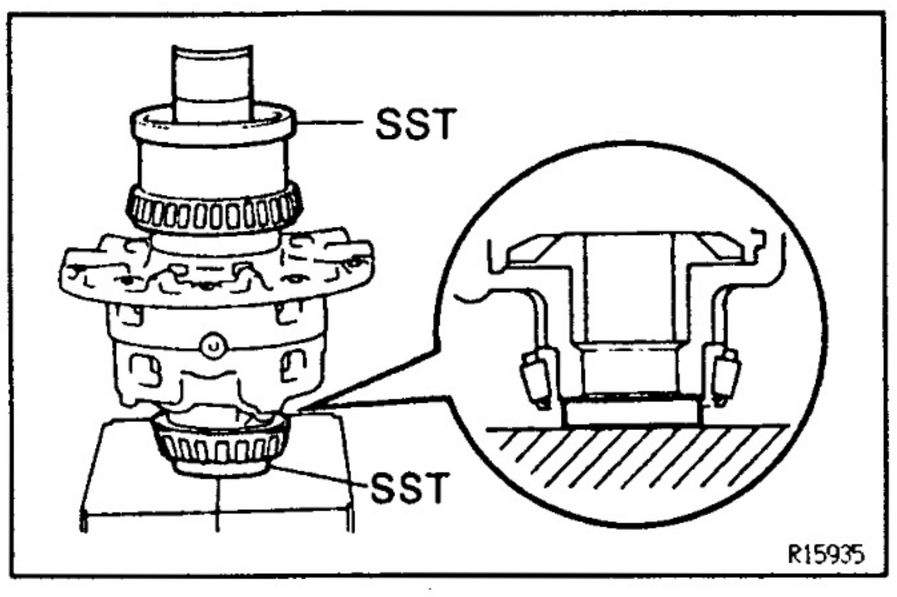

DIFFERENTIAL CASE ASSEMBLY

1. **ASSEMBLE DIFFERENTIAL CASE**
   (See page SA–94)
2. **INSTALL SIDE BEARINGS**
   Using SST and a press, install the side bearings on the differential case.
   SST 09223–15020, 09950–60010 (09951–00480, 09951–00550) 09950–60020 (09951–00730)
3. **INSTALL RING GEAR ON DIFFERENTIAL CASE**
   (See page SA–95)
4. **CHECK RING GEAR RUNOUT**
   (See page SA–96)

SA

DIFFERENTIAL CASE (LSD Type)

COMPONENTS

SA2QZ-01

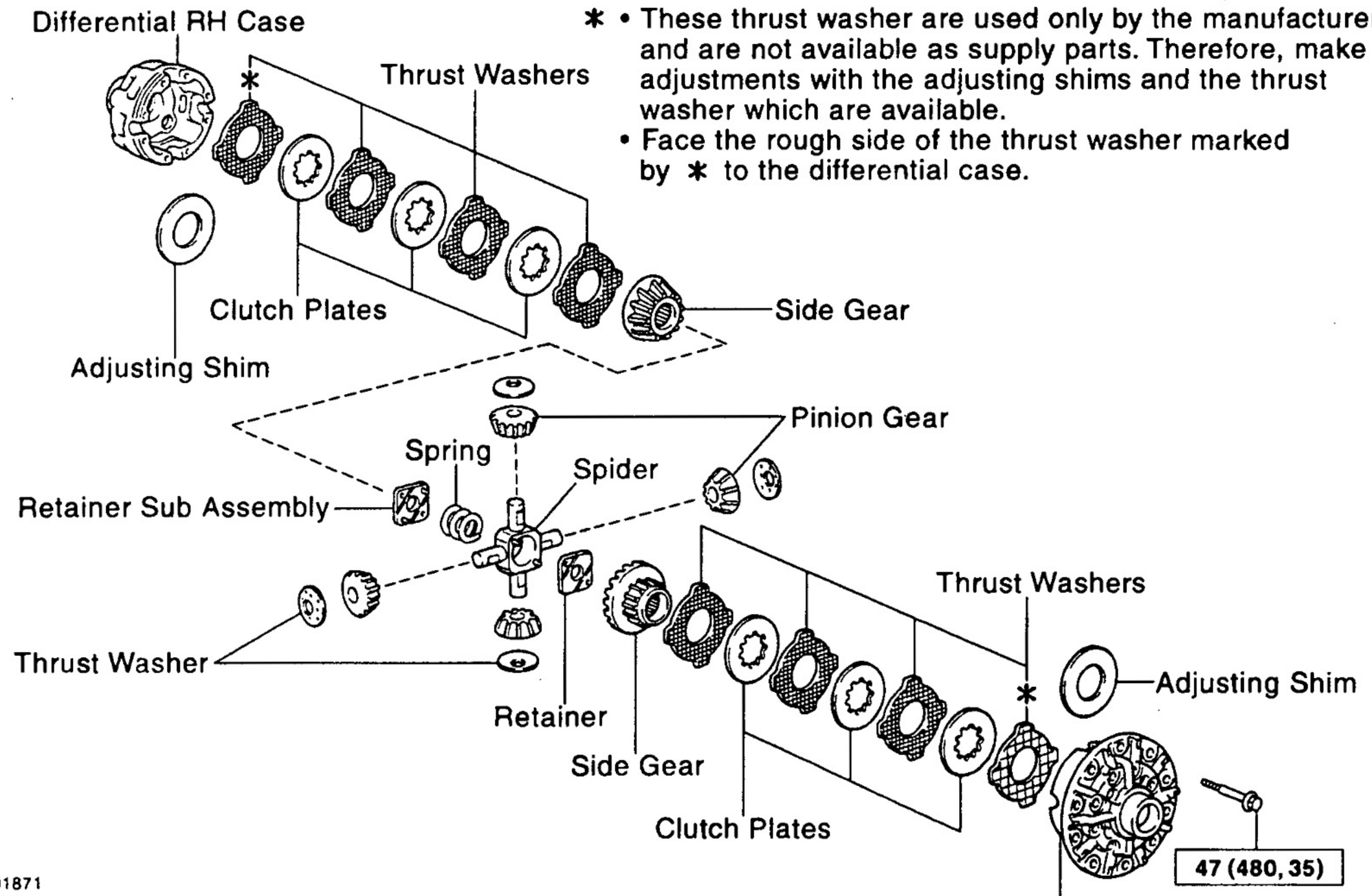

* • These thrust washer are used only by the manufacturer and are not available as supply parts. Therefore, make adjustments with the adjusting shims and the thrust washer which are available.
• Face the rough side of the thrust washer marked by * to the differential case.

N·m (kgf·cm, ft·lbf) : Specified torque

SA2R0-01

DIFFERENTIAL CASE DISASSEMBLY

1. **REMOVE RING GEAR**
   (See page SA–93)
2. **CHECK DIFFERENTIAL CASE RUNOUT**
   (See page SA–93)
3. **REMOVE SIDE BEARING FROM DIFFERENTIAL CASE (See page SA–94)**

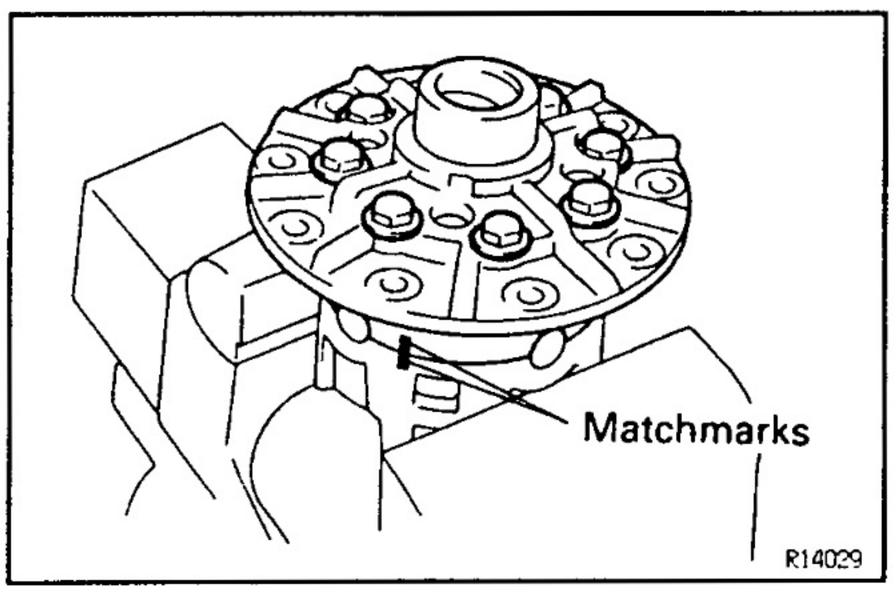

4. **DISASSEMBLE DIFFERENTIAL CASE**

(a) Place matchmarks on the LH and RH cases.
(b) Remove the 8 bolts uniformly, a little at a time.
(c) Using a plastic hammer, separate the LH and RH cases.

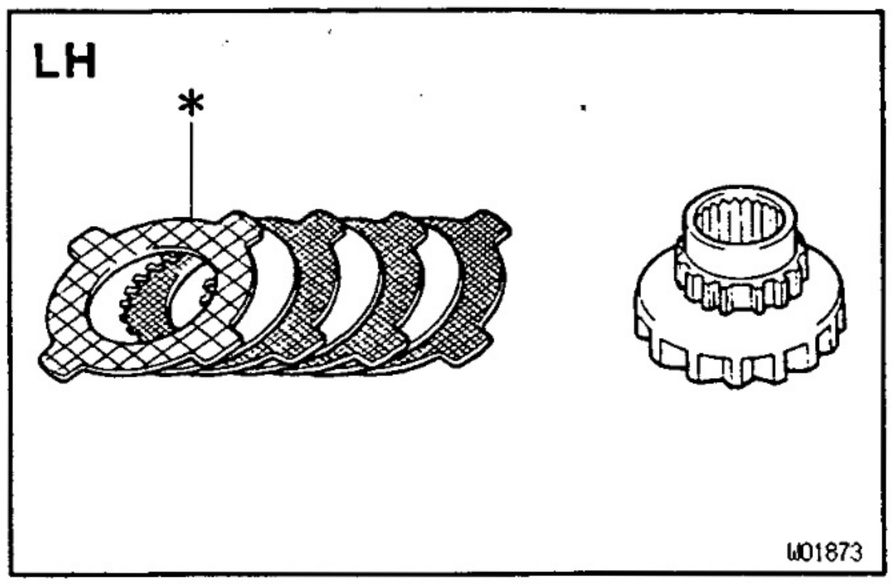

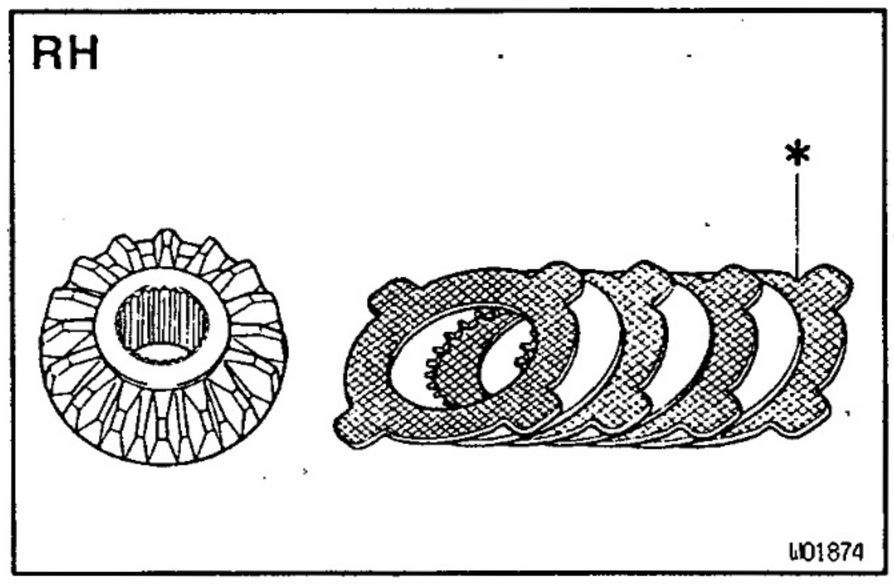

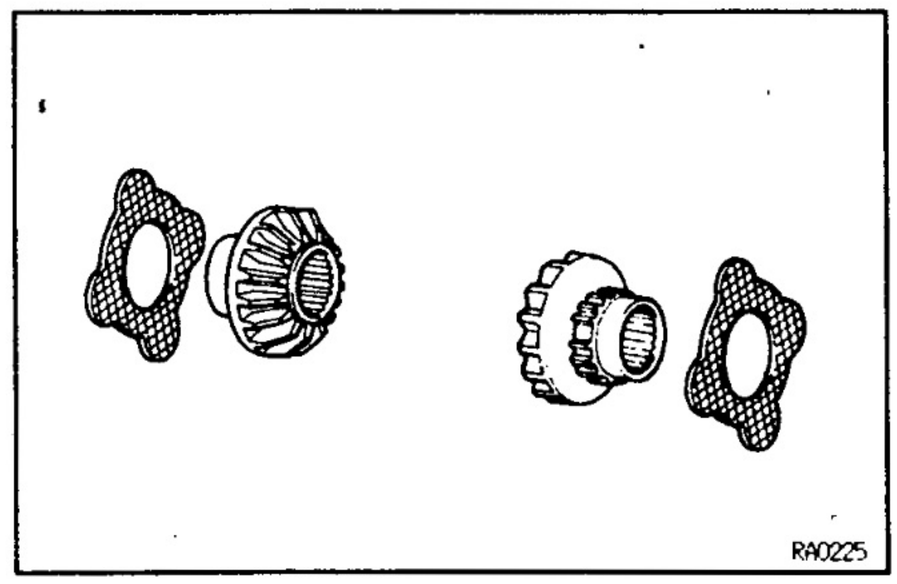

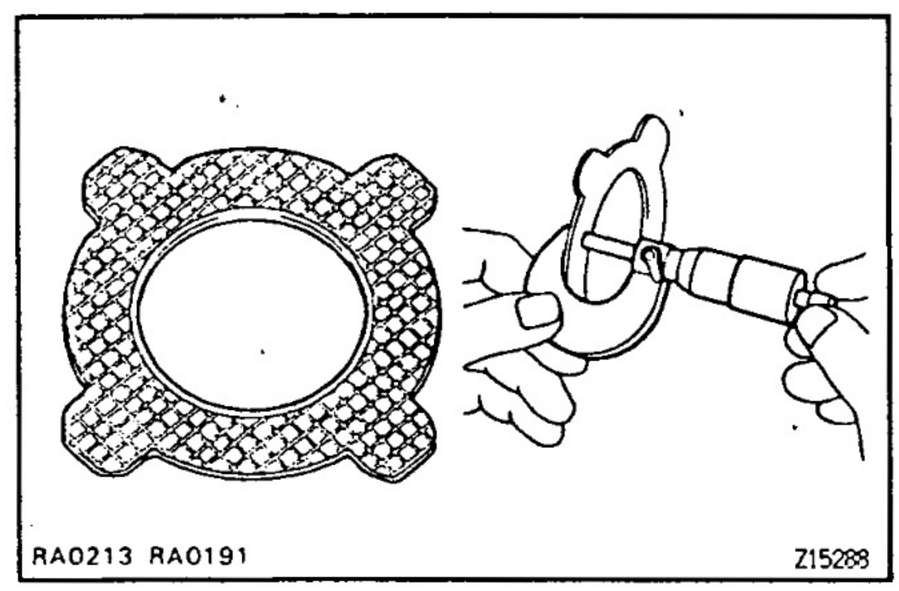

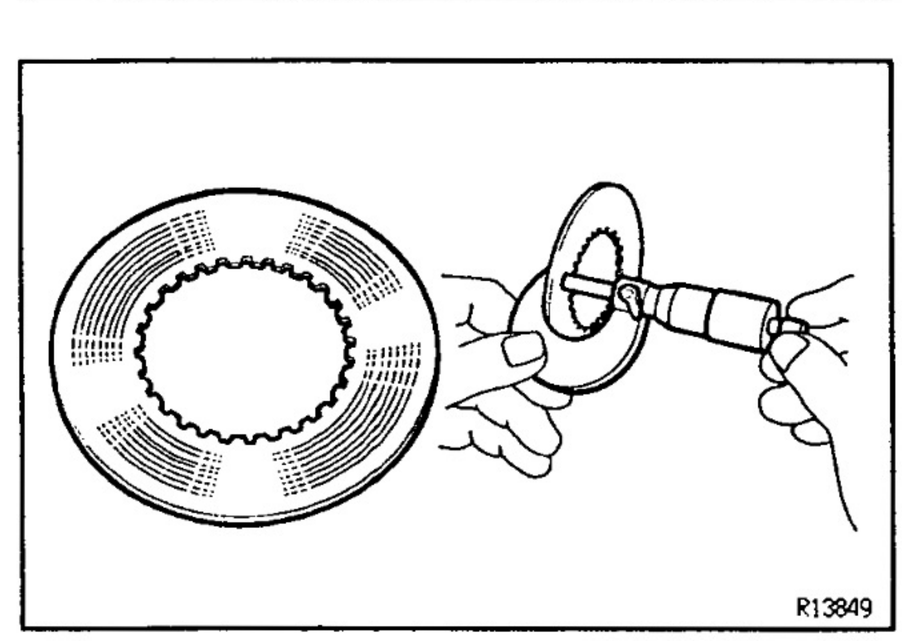

5. REMOVE THESE PARTS FROM DIFFERENTIAL LH AND RH CASES:

HINT: Keep the disassembled parts in order.

(a) Remove the these parts from the LH case:

HINT: Face the rough side of the thrust washer marked by "*" to the differential case.

- Side gear
- 4 Side gear thrust washers
- 3 Clutch plates

(b) Remove the these parts from the RH case:

HINT: Face the rough side of the thrust washer marked by "*" to the differential case.

- Spring retainer
- Compression spring
- Spider with pinion gear
- Spring retainer sub assembly
- Side gear
- 4 Side gear thrust washers
- 3 Clutch plates

SA

8A2R1-01

COMPONENTS INSPECTION

1. REPLACE PARTS THAT ARE DAMAGED OR WORN

HINT: If replacing the side gear, also replace the thrust washer that contacts with it.

2. INSPECT SIDE GEAR THRUST WASHERS FOR WEAR OR DAMAGE

Using a micrometer, measure that the contact surface of the thrust washer is even and check that no bare metal is showing.

Thickness (For reference):

1.77 – 1.86 mm (0.0697 – 0.0732 in.)

If necessary, replace the thrust washer.

HINT: If replacing the thrust washer, also replace the clutch plate that contacts with it.

3. INSPECT CLUTCH PLATE FOR WEAR OF DAMAGE

Using a micrometer, measure the contact surface of the clutch plate and check that there is no abnormal wear.

Thickness (For reference):

1.57 – 1.63 mm (0.0618 – 0.0642 in.)

If necessary, replace the clutch plate.

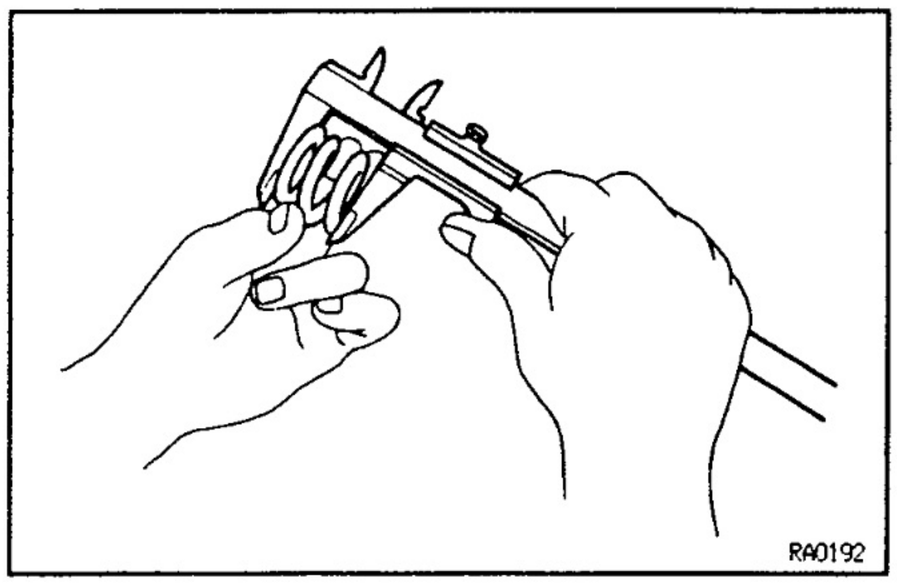

4. INSPECT COMPRESSION SPRING FREE LENGTH

Using vernier calipers, measure the free length of the spring.

Length (For reference): 27.0 mm (1.063 in.)

SA

DIFFERENTIAL CASE ASSEMBLY

SA282-01

HINT:

- When reusing the side gear, thrust washers and clutch plates, skip the STEP 1.
- Using a shop rag, clean off any foreign matter from the parts.
- Apply all of the sliding and rotating surfaces with LSD oil.

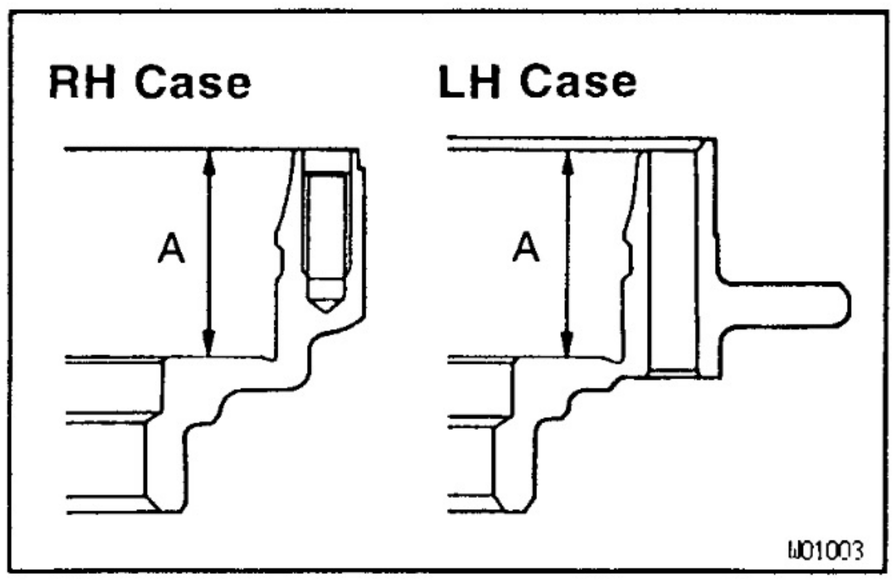

1. SELECT ADJUSTING SHIM(S)

(a) Measure the differential case dimension " A", as shown in the illustration.

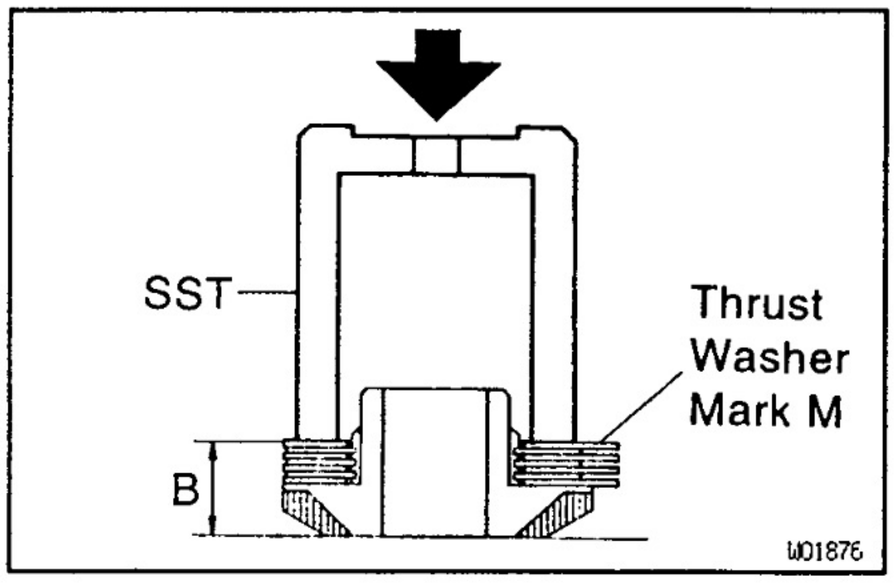

(b) Install the thrust washers (face their fine side to the side gear) and clutch plates on the side gear.
HINT: Install the new thrust washer (Mark M) instead of the thrust washers (Mark B–L) to the differential case side.

(c) Using SST to press down the thrust washers and clutch plates with about 10 kgf (22 lbf) of pressure, measure dimension "B", as shown in the illustration.
SST 09649–17010

(d) Referring to the following selection table, select the proper adjusting shim(s).

mm (in.)

B \ A	41.48 (1.6331)	41.50 (1.6339)	41.52 (1.6346)	41.54 (1.6354)	41.56 (1.6362)	41.58 (1.6370)	41.60 (1.6378)	41.62 (1.6386)	41.64 (1.6394)	41.66 (1.6402)	41.68 (1.6409)	41.70 (1.6417)	41.72 (1.6425)
24.66 (0.9709)												C + C + E	
24.68 (0.9717)													
24.70 (0.9724)													
24.72 (0.9732)													
24.74 (0.9740)												C + C + A	
24.76 (0.9748)											C + C + C		
24.78 (0.9756)													
24.80 (0.9764)													
24.82 (0.9772)											E + E		
24.84 (0.9780)										D + E			
24.86 (0.9787)													
24.88 (0.9795)													
24.90 (0.9803)										D + D			
24.92 (0.9811)									C + D				
24.94 (0.9819)													
24.96 (0.9827)													
24.98 (0.9835)									C + C				
25.00 (0.9843)													
25.02 (0.9850)													
25.04 (0.9858)									B + C				
25.06 (0.9866)													
25.08 (0.9874)									B + B				
25.10 (0.9882)													
25.12 (0.9890)								E					
25.14 (0.9898)													
25.16 (0.9905)							D						
25.18 (0.9913)	A		B			C							

Adjusting shim mark and thickness				
A 0.15 (0.0059)	B 0.20 (0.0079)	C 0.25 (0.0098)	D 0.30 (0.0118)	E 0.35 (0.0138)

Y V07768

2. CHECK SIDE GEAR BACKLASH

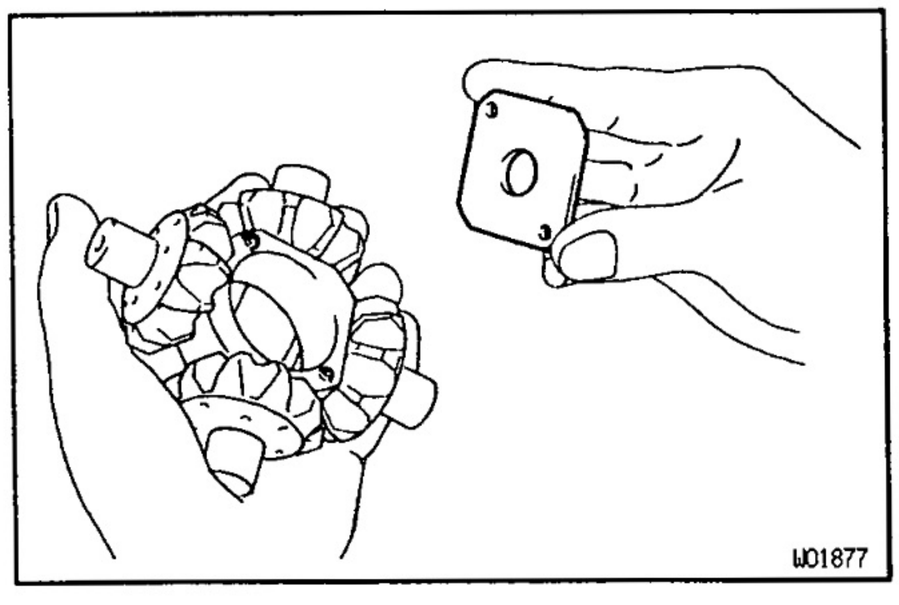

(a) Install the clutch plates, thrust washers and side gear to the LH and RH differential cases.
HINT: If necessary, install the adjusting shim(s).

(b) Install the 4 pinion gears and thrust washers to the spider.

(c) Align the spring LH retainer holes with the spider knock pins and install the LH retainer.

(d) Install the pinion gear and spider to the differential LH case.
HINT: Install the spider to the LH case tightly and do not move the spring retainer.

SA

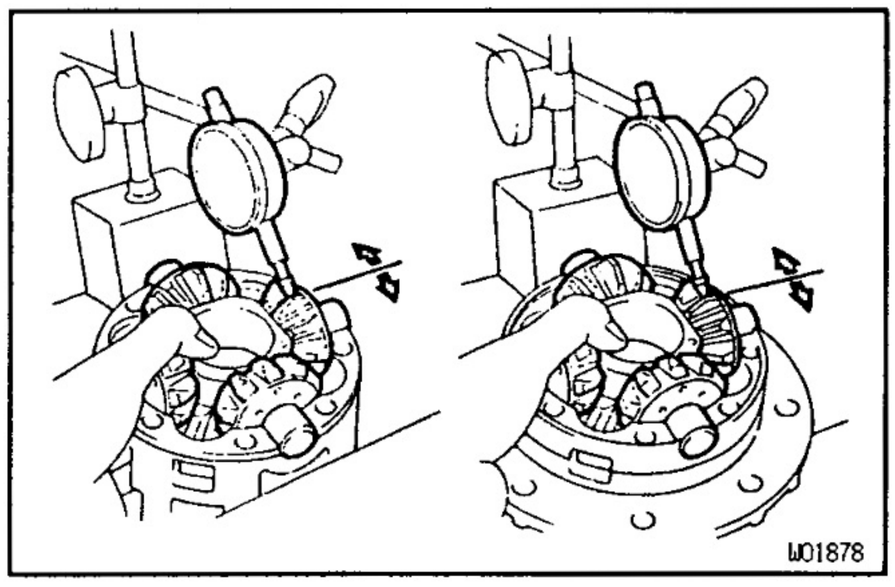

(e) Using a dial indicator, check the side gear backlash with holding the side gear and spider.
Backlash: 0.05 – 0.20 mm (0.0019 – 0.0079 in.)
HINT:
- Measure at all 4 locations.
- Measure the backlash at the LH case and at the RH case.

If the backlash is not within the specification, select the adjusting shim(s).

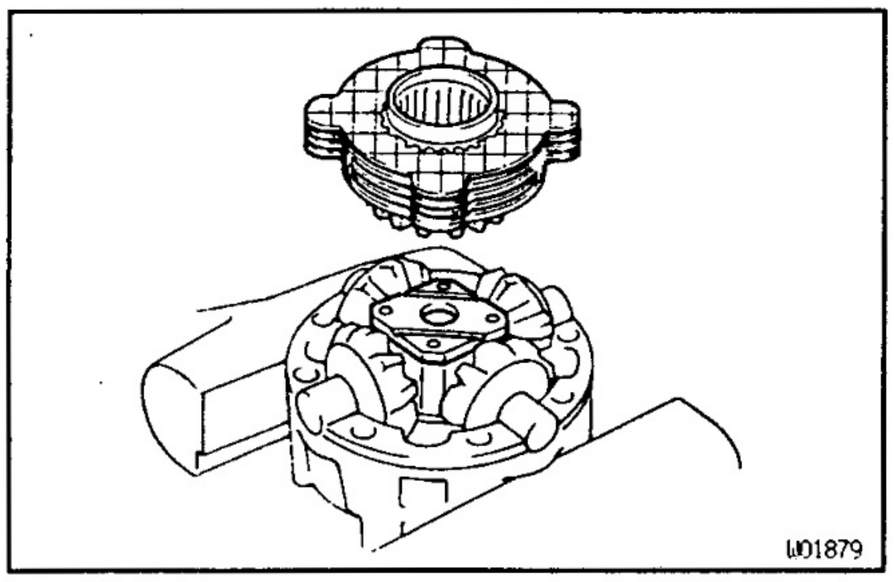

3. ASSEMBLE DIFFERENTIAL CASE

(a) Reinstall the spider and spring retainer to the differential RH case.
HINT: Install the spider to the RH case tightly and do not move the spring retainer.

(b) Install the compression spring and spring retainer sub assembly.

(c) Install the side gear, thrust washers and clutch plates.

(d) Align the matchmarks and assemble the RH and LH cases.
HINT: Be careful not to drop the side gear and check the pinion and side gear alignment.

(e) Tighten the 8 bolts uniformly, a little at a time.
Torque: 47 N·m (480 kgf·cm, 35 ft·lbf)

4. INSTALL SIDE BEARINGS
(See page SA–95)

5. INSTALL RING GEAR ON DIFFERENTIAL CASE
(See page SA–95)

6. CHECK RING GEAR RUNOUT
(See page SA–96)

SA

DIFFERENTIAL LOCKING SYSTEM

LOCATION

SA2R3-01

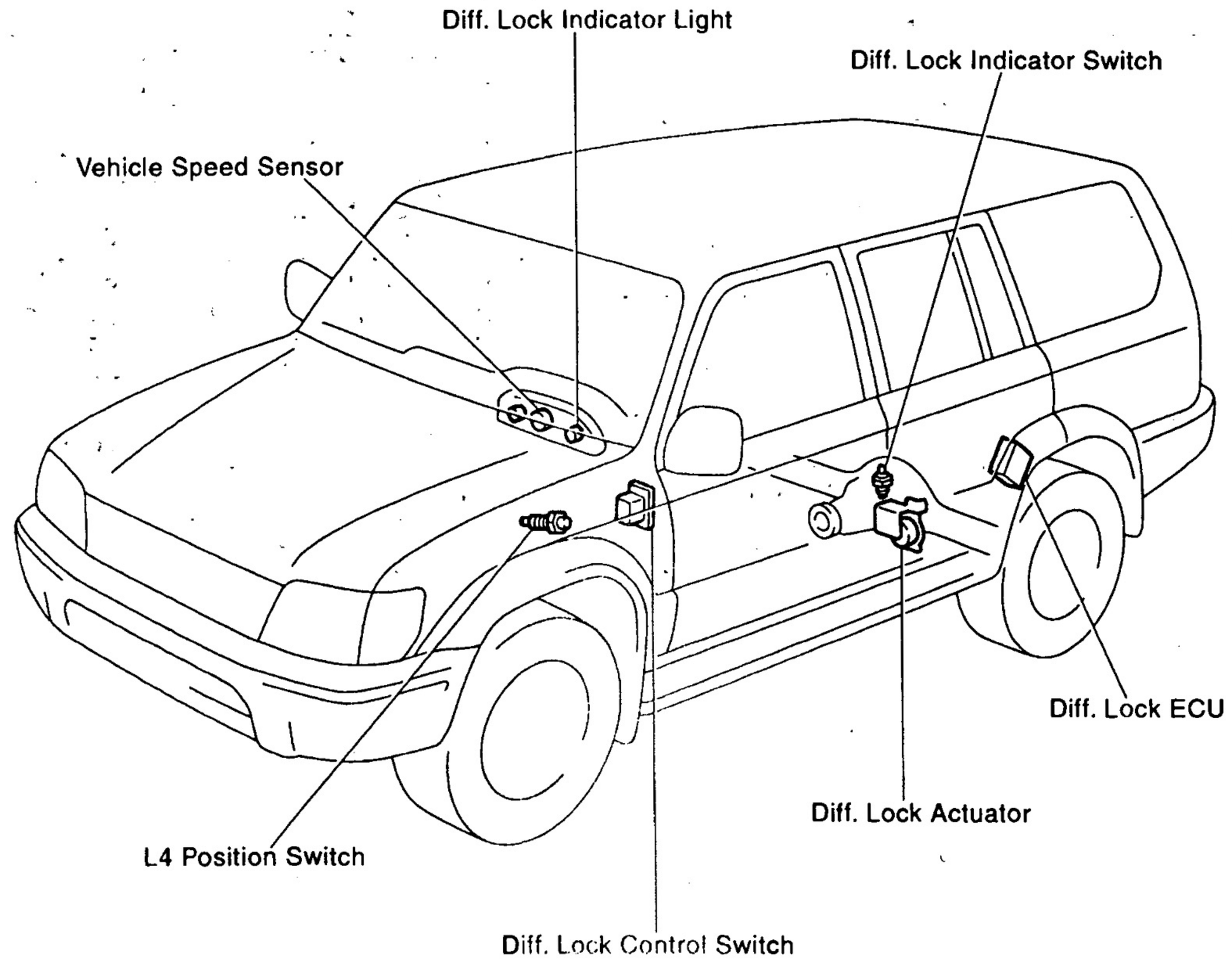

W02860

8A2R4-01

TROUBLESHOOTING

- **Check that the L4 mode is set.**
- **When switching differential Free↔Lock, the indicator lamp will blink if the gears of the differential lock sleeve are not meshed. If this occurs, when the tires are rotated to apply differential power to the differential, the differential locks and the indicator lamp light up.**

Problem	Possible cause	Remedy	Page
Indicator lights do not light up.	Fusible link blown	Replace fusible link	—
	GAUGE fuse blown	Replace fuse and check for short	—
	Bulb burned out	Replace bulb	—
	Wiring or ground faulty	Repair as necessary	—
Indicator lights do not light up (Differential lock control switch ON)	DIFF fuse blown	Replace fuse and check for short	—
	Differential lock control switch	Check switch	SA-107
	Diff. Lock ECU faulty	Check ECU	SA-106
	Wiring or ground faulty	Repair as necessary	—
DIFF LOCK does not operate	Differential lock indicator switch faulty	Check switch	SA-107
	Differential lock actuator faulty	Check actuator	SA-107
	Diff. Lock ECU faulty	Check ECU	SA-106
	Differential carrier faulty	Repair as necessary	SA-78
	Wiring or ground faulty	Repair as necessary	—
After DIFF LOCK, lock not released when vehicle speed higher than approx. 8 km/h (5 mph).	Speed sensor faulty	Check sensor	BE-56
	Diff. Lock ECU faulty	Check ECU	SA-106
	Wiring or ground faulty	Repair as necessary	—

V08108

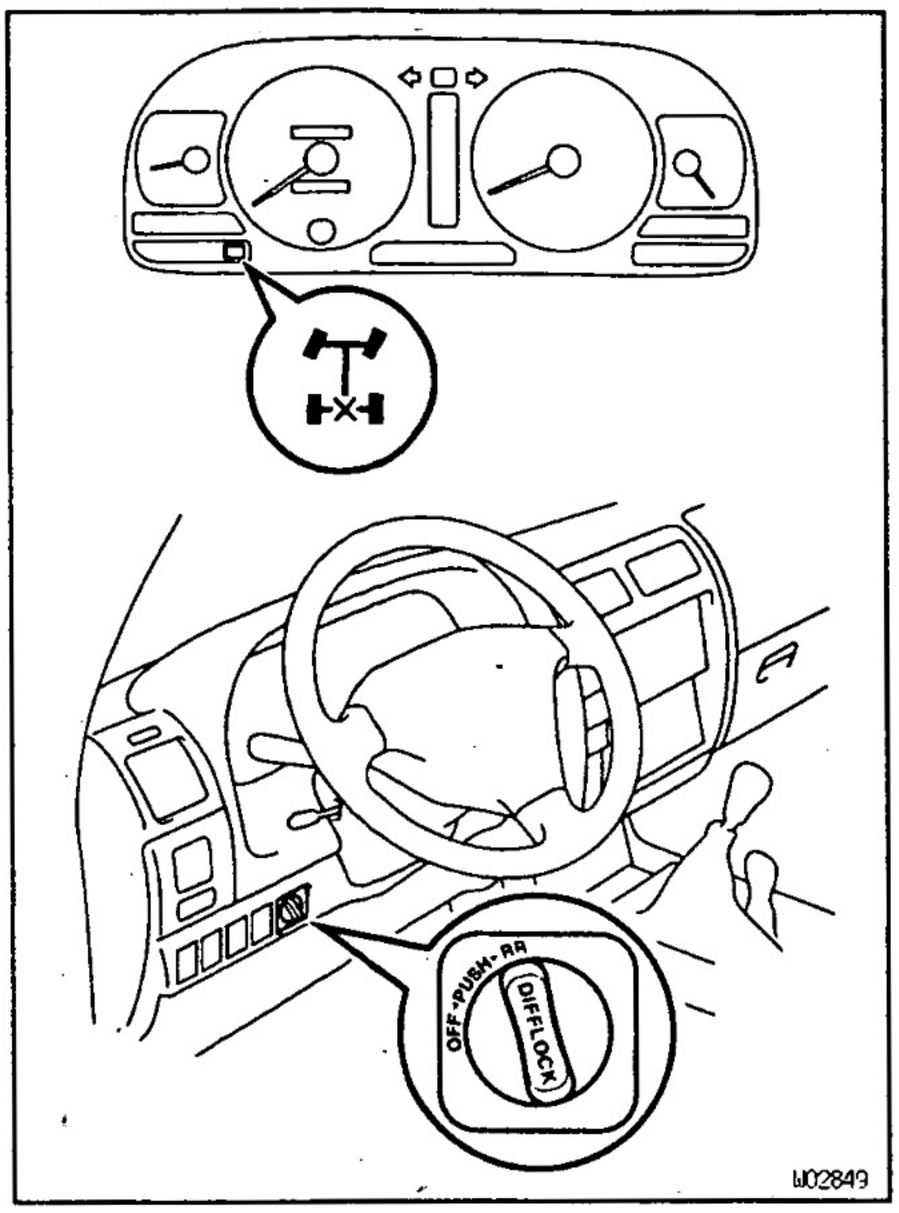

SA2R6-01

SYSTEM INSPECTION

1. INSPECT INDICATOR LIGHT

Check that the indicator lights light up for approx. 1 second when the ignition switch is turned ON.

2. INSPECT DIFFERENTIAL LOCK OPERATION

(a) Jack up the vehicle then start the engine.

(b) Shift the transfer shift lever to L4 position.

(c) When the Diff. lock control switch is set to ON position, the indicator light is turned on.
Differential lock is applied to the rear wheel at this time.
HINT: If the gears of the differential lock system are not meshed, the indicator light remains blinking, so rotate the tires to mesh the gear.

(d) When the Diff. lock control switch is at OFF position, the indicator light goes off.
Differential lock is released for the rear wheel at this time.

SA

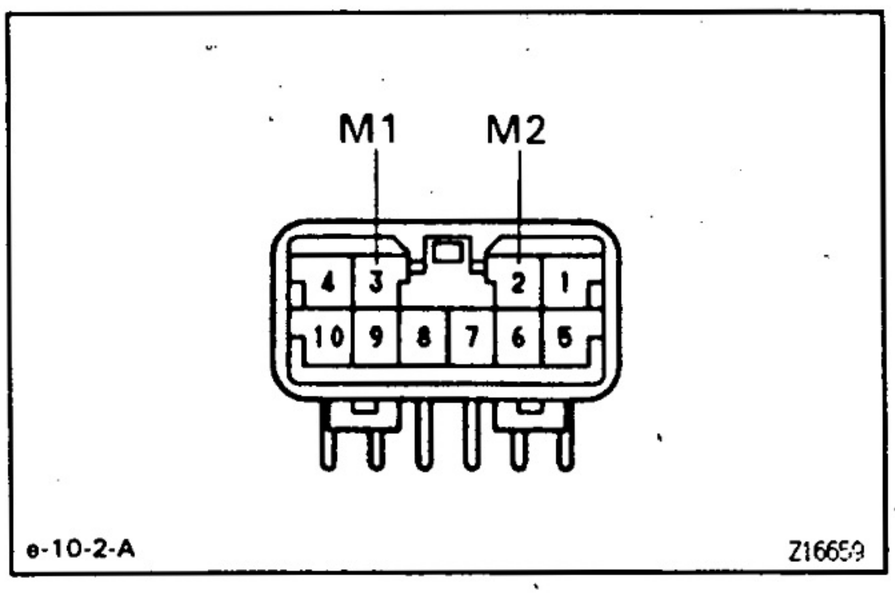

(e) Check the voltage between the terminals of the Diff. lock ECU when switching the Diff. lock control switch with the speedometer, registering approx. 8 km/h (5 mph) or more.

Switch position	Terminal	Specified value
ON	M1 – M2	0.5V or less (No change)

(f) Check that the indicator lights blink when 2WD mode is set.
Diff. lock is released for both the rear wheels at this time.

(g) Return the Diff. lock control switch to OFF.

(h) Stop the engine and lower the vehicle.

SA2R6-01

DIFF. LOCK SYSTEM CIRCUIT INSPECTION

1. INSPECT BATTERY POSITIVE VOLTAGE

Battery positive voltage: 10–14 V

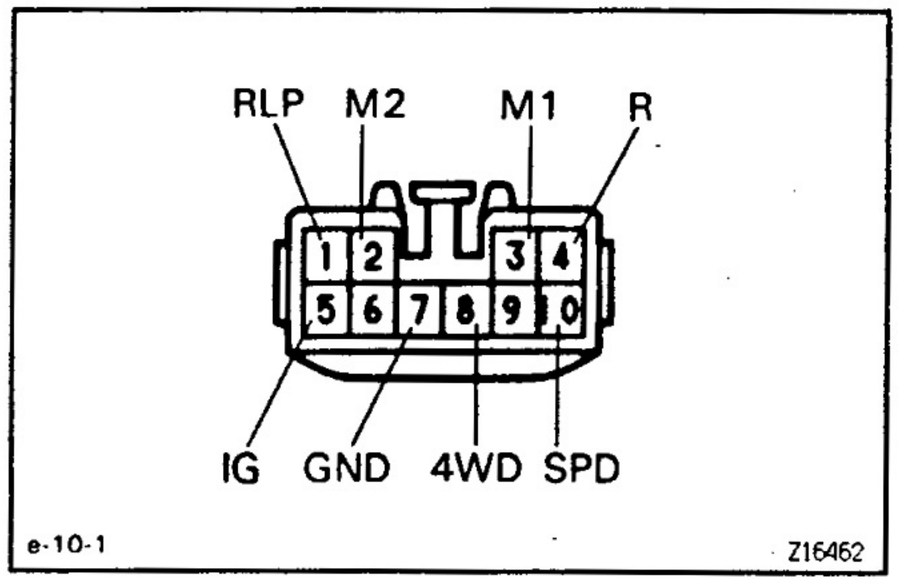

2. INSPECT SYSTEM CIRCUIT WITH CONNECTOR DISCONNECTED

Disconnect the connector from the 4WD control ECU and inspect the connector on the wire harness side, as shown in the chart.

Trouble Part	Tester Connection	Check Item	Condition		Specified Valve
RR Differential Lock Actuator	M1 – M2	Resistance	—		Less than 100 Ω
Body Ground	GND – Body ground	Continuity			Continuity
Speed Sensor	SPD – Body ground		Vehicle moves slowly		1 pulse each 40 cm (15.75 in.)
DIFF Fuse	IG – Body ground	Voltage	Ignition Switch ON	—	10 – 14 V
Rear Differential Lock Indicator Switch	RLP – Body ground			Indicator light ON	About 0 V
				Indicator light OFF	10 – 14 V
L4 Position Switch	4WD – Body ground			Indicator light ON	About 0 V
				Indicator light OFF	10 – 14 V
Differential Lock Control Switch	R – Body ground			Differential lock Control Switch OFF	10 – 14 V
				Differential lock Control Switch OFF	About 0 V

V08107

HINT: If the circuit is not as specified, check and repair or replace the trouble part shown in the table above.

3. INSPECT SYSTEM CIRCUIT WITH CONNECTOR CONNECTED

(a) Turn the ignition switch to ON position.
(b) Keep the center Diff. lock condition.
(c) Remove the Diff. lock ECU.
(d) Using a voltmeter, measure the voltage when the differential lock control switch is in the position, as shown below.

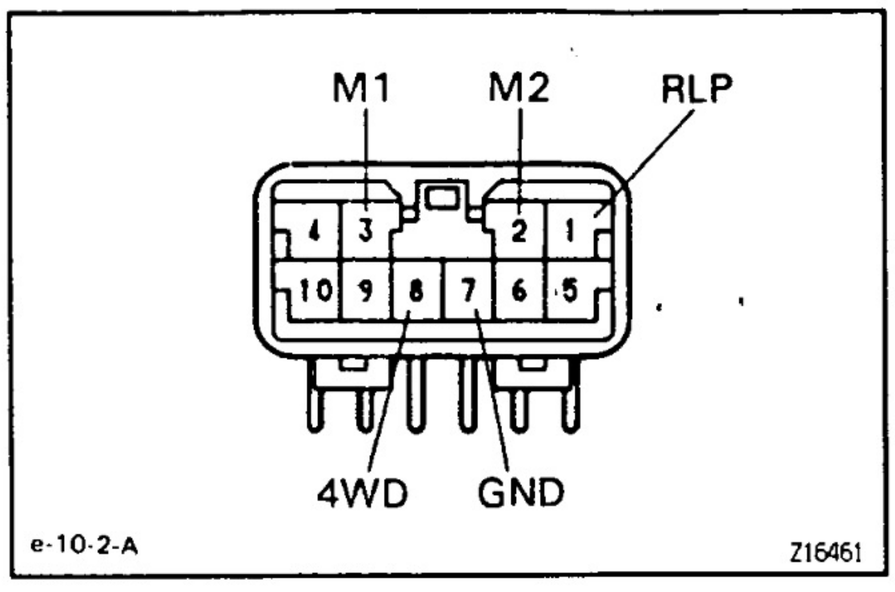

Tester Connection ⊕ – ⊖	Switch position	Specified valve
4WD – GND	–	0.5 V or less
RLP – GND	ON	0.5 V or less ↓ 10 – 14 V (Approx. 1 sec.) ↓ 0.5 V or less
M1 – M2	OFF – ON	
M2 – M1	ON – OFF	

V08002

If the circuit is not as specified, replace the ECU.

(e) Install the ECU in place.

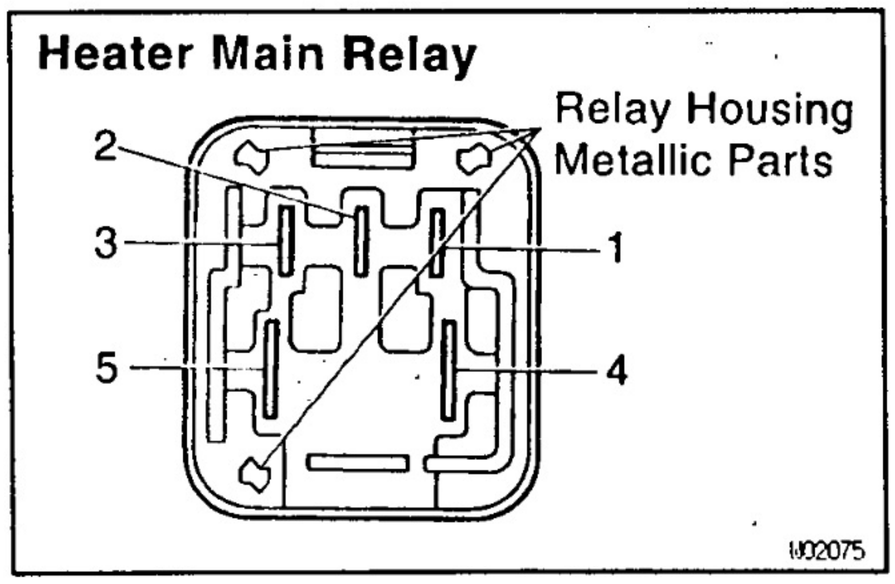

DIFF. LOCK COMPONENTS INSPECTION SA2R7-01

1. INSPECT ACTUATOR OPERATION

(a) Jack up the vehicle.

(b) Use the heater main relay and connect it, as shown below.

NOTICE: Connect the terminals being careful not to touch the neighboring terminals or metallic parts of relay housing.

(c) Rotate the tire and check that differential lock has occurred.

If operation is not as specified, replace the actuator.

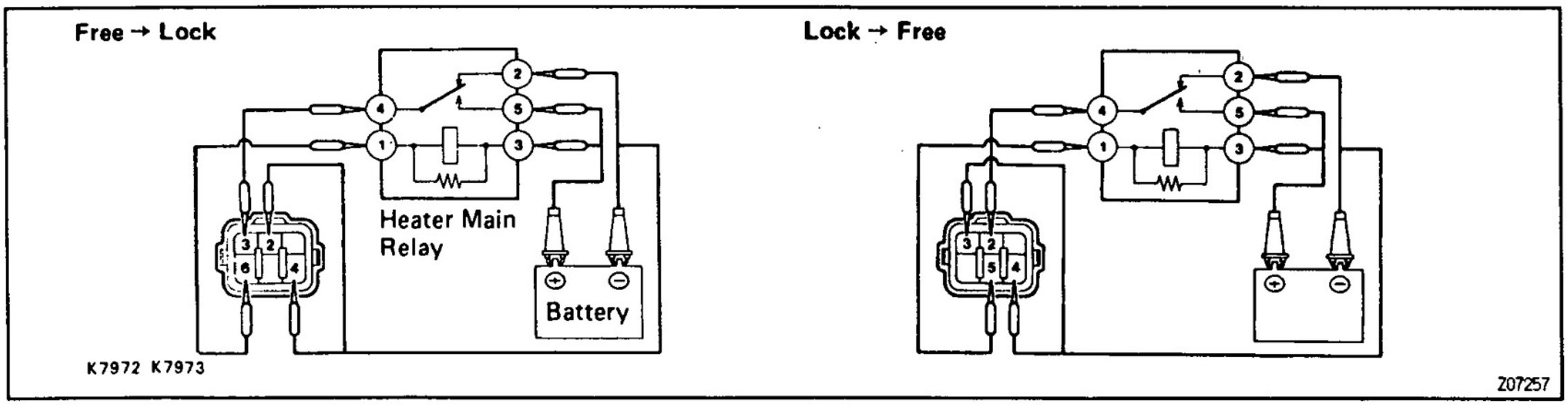

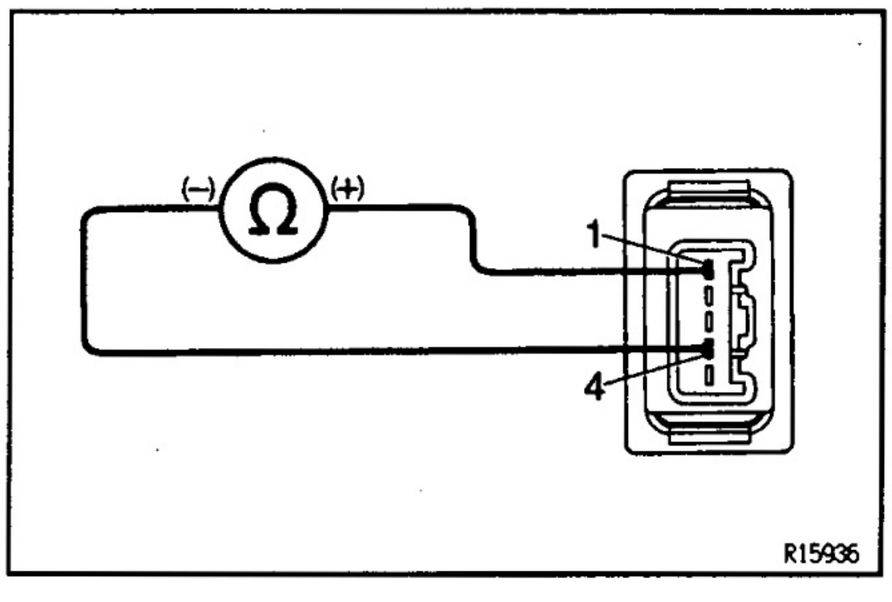

2. INSPECT DIFF. LOCK CONTROL SWITCH CONTINUITY

Inspect the switch continuity between terminal 1 to terminal 4.

HINT: If it is not continuity, replace the switch.

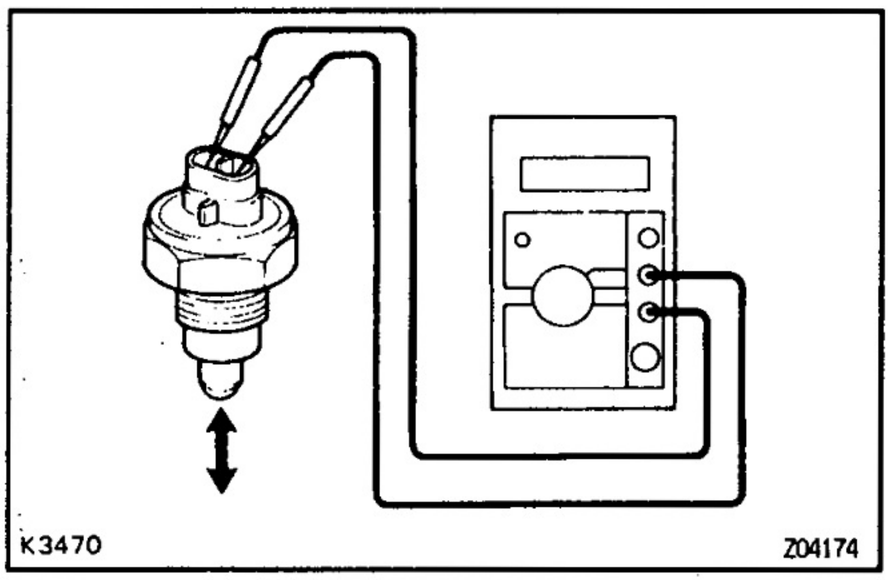

3. INSPECT DIFF. LOCK POSITION SWITCH

(a) Check that there is continuity between terminals when the switch is pushed (differential connected position).

(b) Check that there is no continuity when the switch is free (differential disconnected position).

HINT: If operation is not as specified, replace the switch.

4. INSPECT TRANSFER L4 SWITCH

(See page TR–17, 55)

5. INSPECT VEHICLE SPEED SENSOR

(See page BE–56)

SA

DIFF. LOCK ACTUATOR REMOVAL AND INSTALLATION SA2R8-01

(See page SA–81 and 92)

REAR SUSPENSION

PREPARATION

EQUIPMENT

SA2R9–01

Torque wrench	

COIL SPRING AND SHOCK ABSORBER

COMPONENTS

SA2RA–01

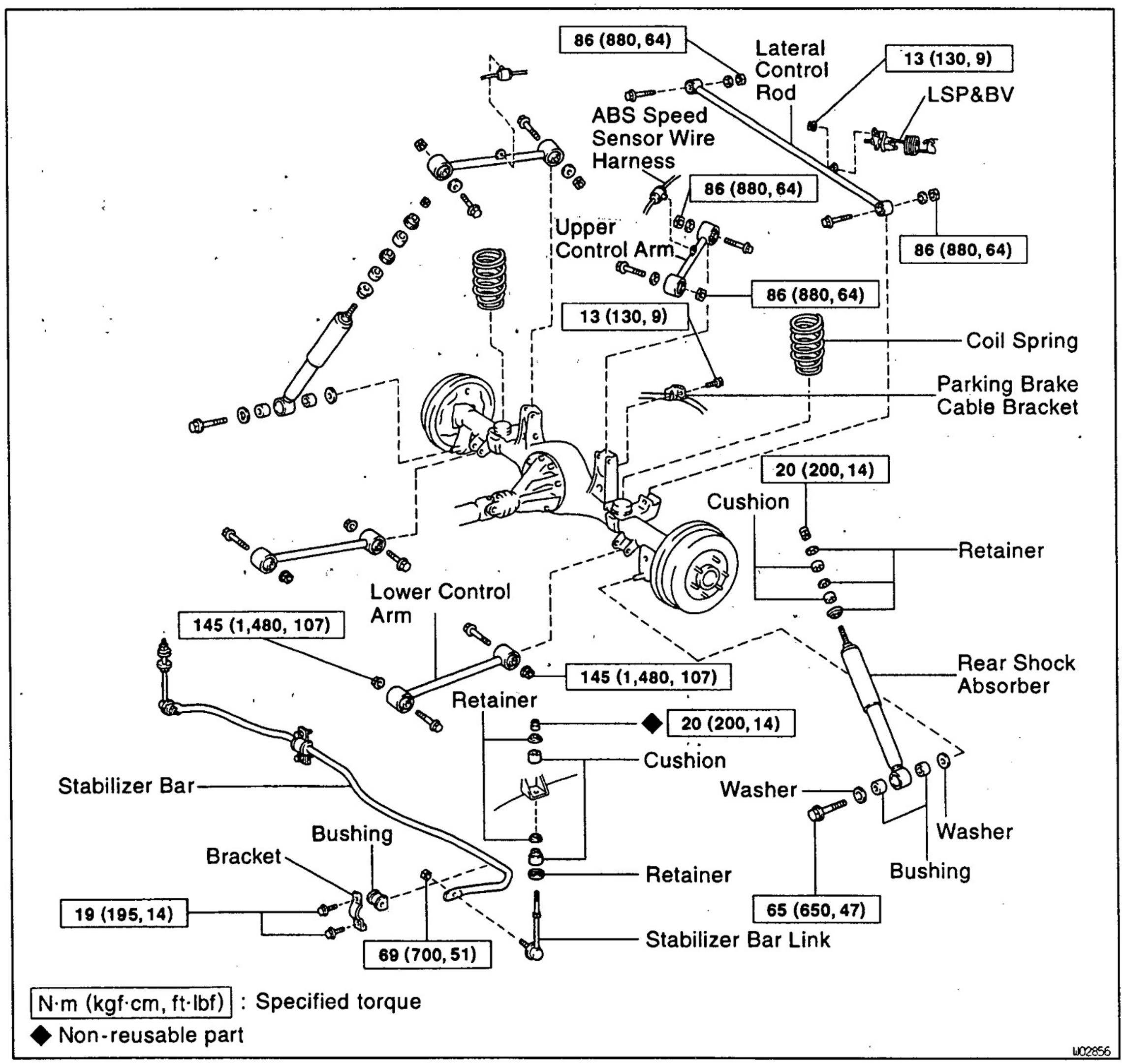

REAR SHOCK ABSORBER AND COIL

SA2518-01

1. **JACK UP AND SUPPORT VEHICLE**
   Jack up the rear axle housing and support the frame with stands. Hold the rear axle housing with a jack.
2. **REMOVE WHEEL**
   Torque: 110 N·m (1,150 kgf·cm, 83 ft·lbf)
3. **REMOVE PARKING BRAKE CABLE BRACKET FROM REAR AXLE HOUSING**
   Torque: 13 N·m (130 kgf·cm, 9 ft·lbf)

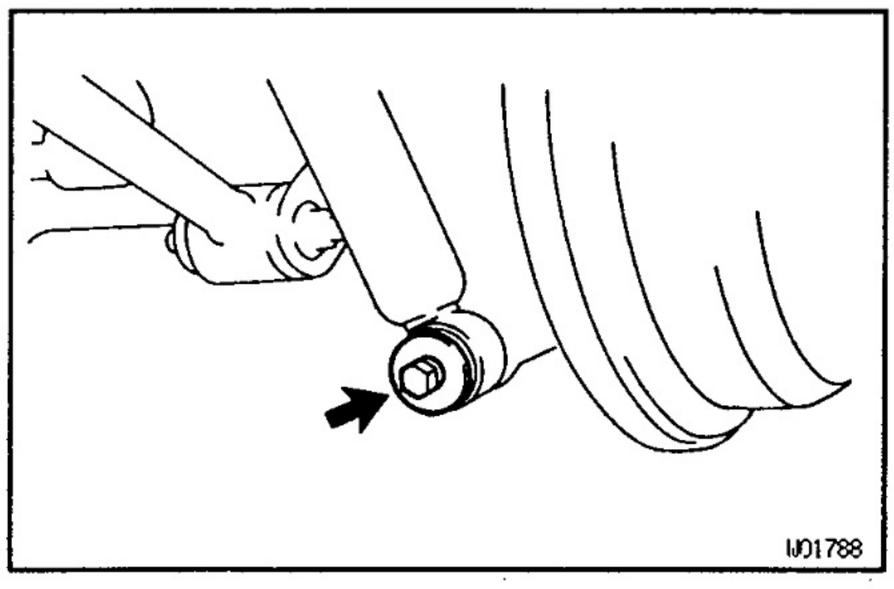

4. **DISCONNECT REAR SHOCK ABSORBER**
(a) Remove the bolt, washers and bushings, holding the shock absorber to the rear axle housing and disconnect the shock absorber.
Torque: 65 N·m (650 kgf·cm, 47 ft·lbf)

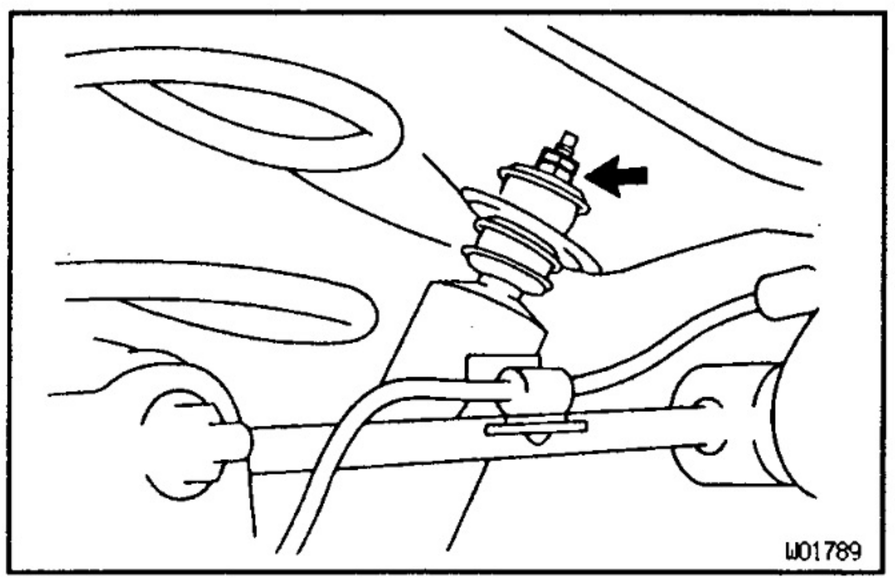

(b) Turn the shock absorber with holding the nut, and remove the retainers, cushion and shock absorber.
Torque: 20 N·m (200 kgf·cm, 14 ft·lbf)

5. **DISCONNECT STABILIZER BAR BRACKETS**
(See page SA–113)
6. **DISCONNECT LATERAL CONTROL ROD FROM FRAME**
(See page SA–111)

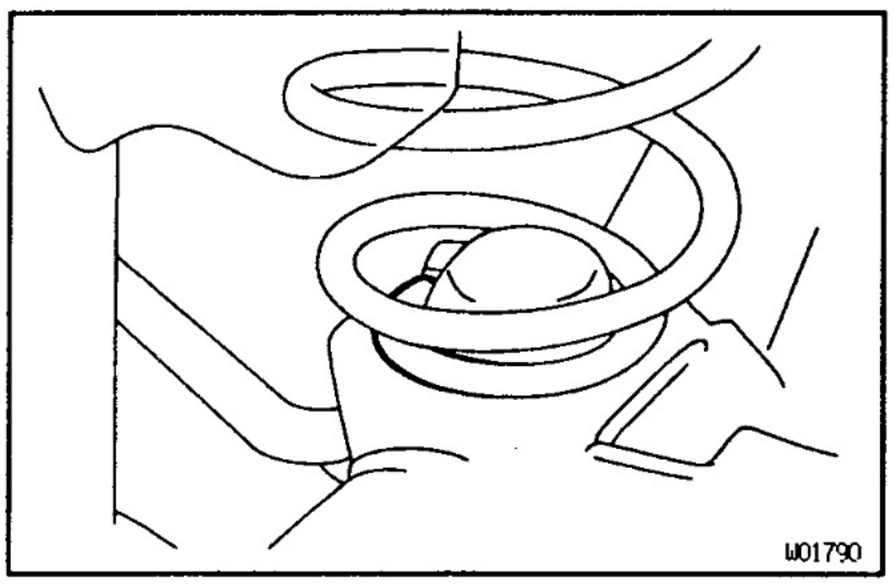

7. **REMOVE COIL SPRING**
(a) Lower the rear axle housing.
NOTICE: Be careful not to snag the brake line.
(b) With lowering the rear axle housing, remove the coil spring.
INSTALLATION HINT: Check that the coil spring end is installed correctly.
If the coil spring end is not in the correct position, reinstall the coil spring.

SA

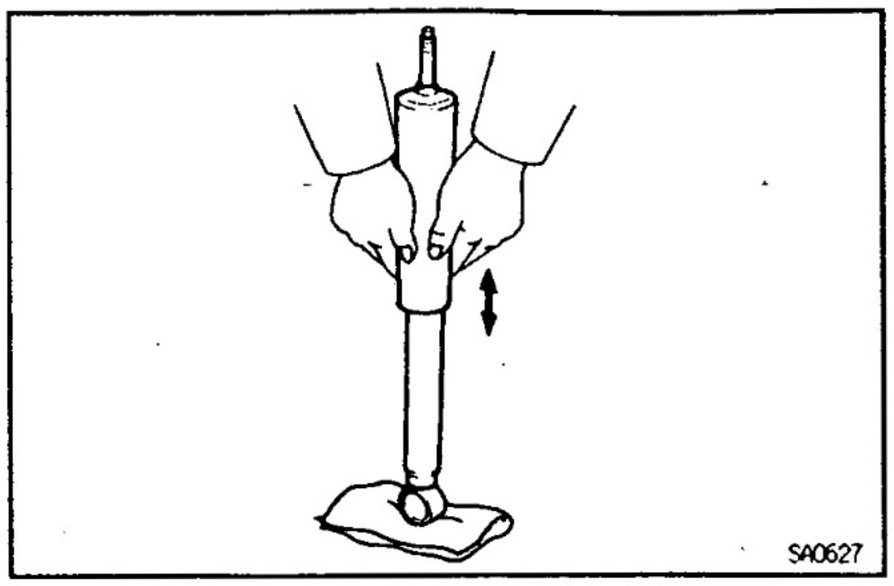

REAR SHOCK ABSORBER INSPECTION

SA2RC-01

1. **INSPECT SHOCK ABSORBER**
   Compress and extend the shock absorber rod and check that there is no abnormal resistance or unusual operation sounds.
   If there is any abnormality, replace the shock absorber with a new one.
   NOTICE: When discarding the shock absorber, use the following procedure.

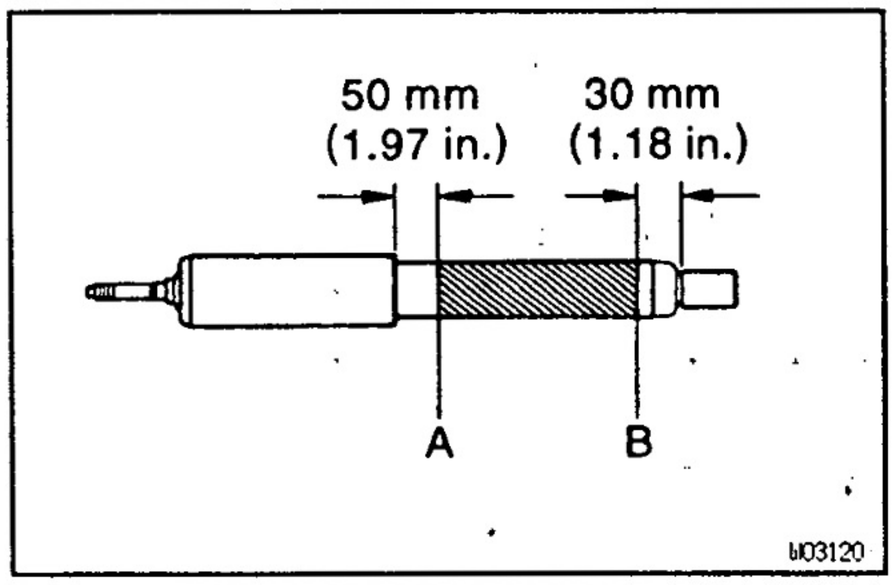

2. **GAS FILLED TYPE:**
   DISCARD SHOCK ABSORBER
   Before discarding the shock absorber, drill a hole 2 — 3 mm (0.079 — 0.118 in.) in diameter at the location shown in the illustration (A—B) to release the gas inside.
   NOTICE:
   - **When drilling, chips may fly out; work carefully.**
   - **The gas is colorless, odorless, and non—poisonous.**

SA

REAR SHOCK ABSORBER AND COIL SPRING INSTALLATION

SA2RD-01

Installation is in the reverse order of removal.

LATERAL CONTROL ROD COMPONENTS

SA2RE-01

(See page SA—109)

LATERAL CONTROL ROD REMOVAL

SA2RF-01

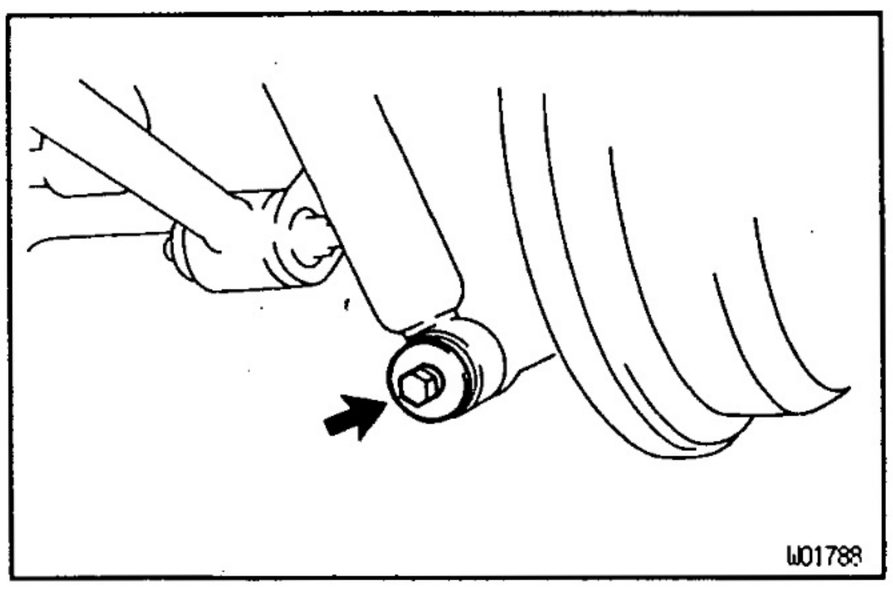

1. **JACK UP AND SUPPORT VEHICLE**
   Jack up the rear axle housing and support the frame with stands. Hold the rear axle housing with a jack.
2. **DISCONNECT RH SHOCK ABSORBER**
   Remove the bolt, washers and bushings, holding the RH shock absorber to the rear axle housing and disconnect the shock absorber.
   Torque: 65 N·m (650 kgf·cm, 47 ft·lbf)

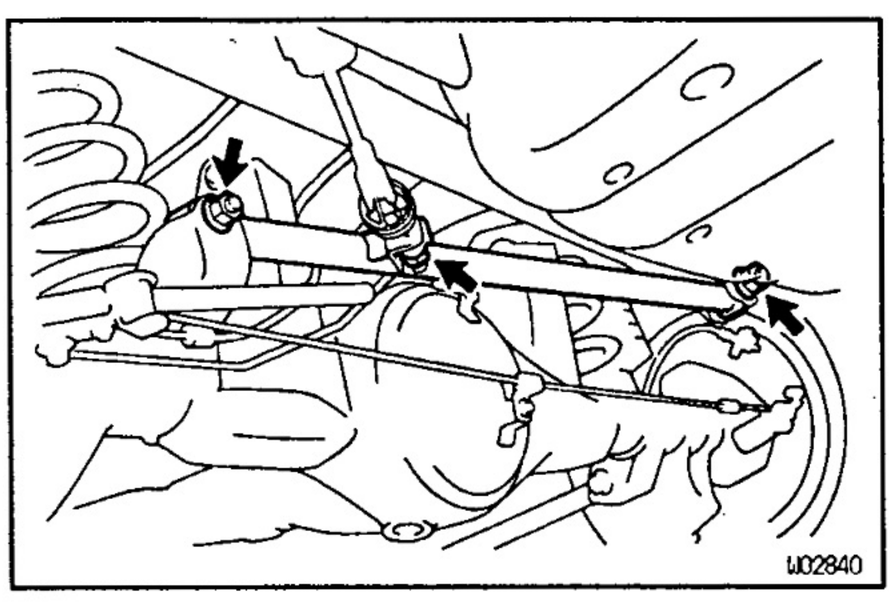

3. **REMOVE LATERAL CONTROL ROD**
   (a) w/ LSP & BV:
   Remove the bolt and disconnect the LSP & BV.
   Torque: 13 N·m (130 kgf·cm, 9 ft·lbf)
   (b) Remove the 2 nuts, washers and bolts and remove the lateral control rod.
   Torque: 86 N·m (880 kgf·cm, 64 ft·lbf)
   INSTALLATION HINT: After stabilizing the suspension, torque the nut.

LATERAL CONTROL ROD INSTALLATION SA2RG-01

Installation is in the reverse order of removal.

UPPER AND LOWER CONTROL ARM COMPONENTS SA2RH-01

(See page SA—109)

UPPER AND LOWER CONTROL ARM REMOVAL SA2RJ-01

1. **JACK UP AND SUPPORT VEHICLE**
   Jack up the rear axle housing and support the frame with stands. Hold the rear axle housing with a jack.
2. **w/ ABS:**
   DISCONNECT ABS SPEED SENSOR WIRE HARNESS FROM UPPER SUSPENSION ARM

SA

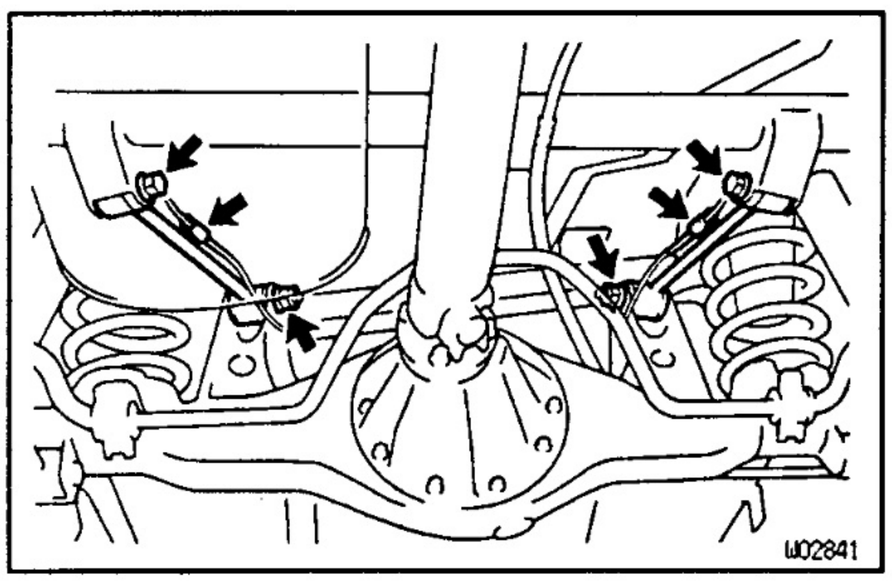

3. **REMOVE UPPER CONTROL ARM**
   Remove the 2 nuts, washers and bolts holding the upper control arm and remove the upper control arm.
   Torque: 86 N·m (880 kgf·cm, 64 ft·lbf)
   INSTALLATION HINT: After stabilizing the suspension, torque the nut.

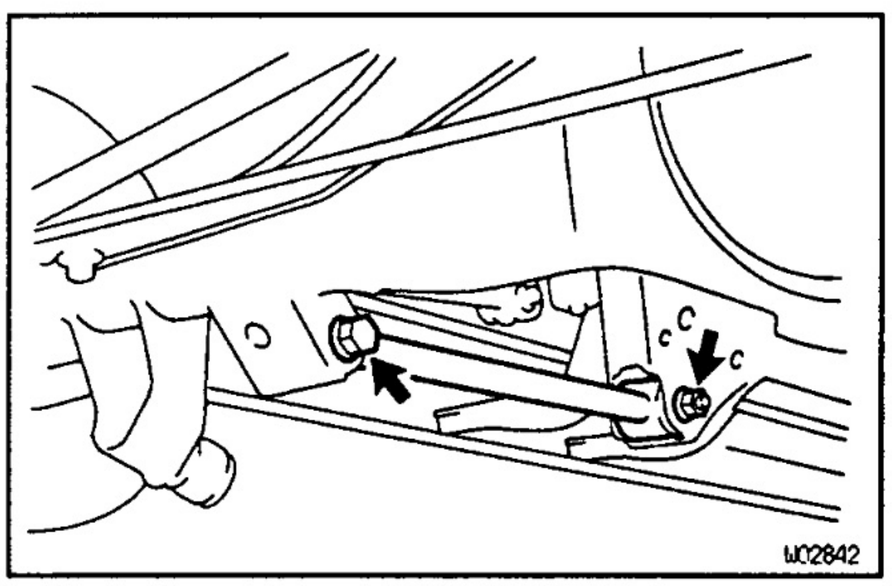

4. **REMOVE LOWER CONTROL ARM**
   Remove the 2 nuts and bolts holding the lower control arm and remove the lower control arm.
   Torque: 145 N·m (1,480 kgf·cm,107 ft·lbf)
   INSTALLATION HINT: After stabilizing the suspension, torque the nut.

UPPER AND LOWER CONTROL ARM INSTALLATION SA2RK-01

Installation is in the reverse order of removal.

STABILIZER BAR COMPONENTS SA2RL-01

(See page SA—109)

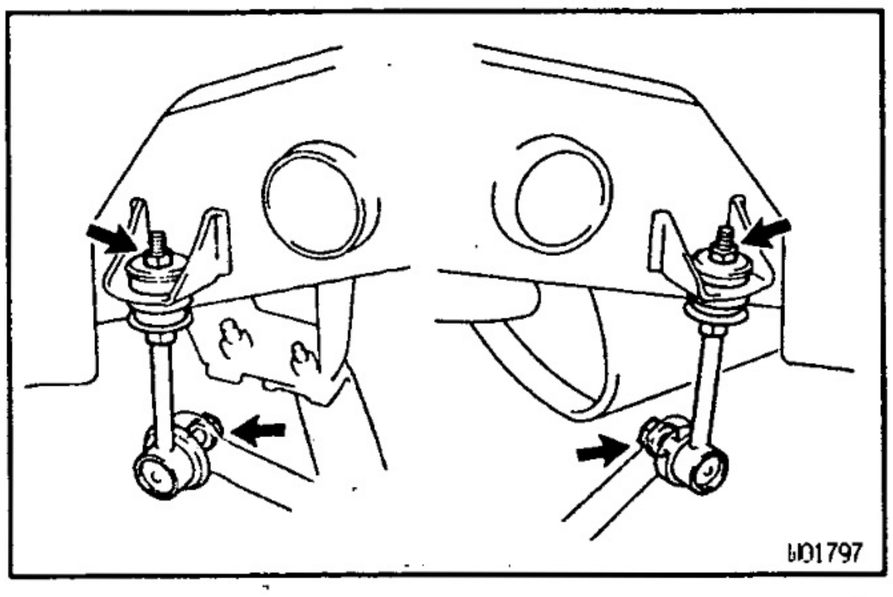

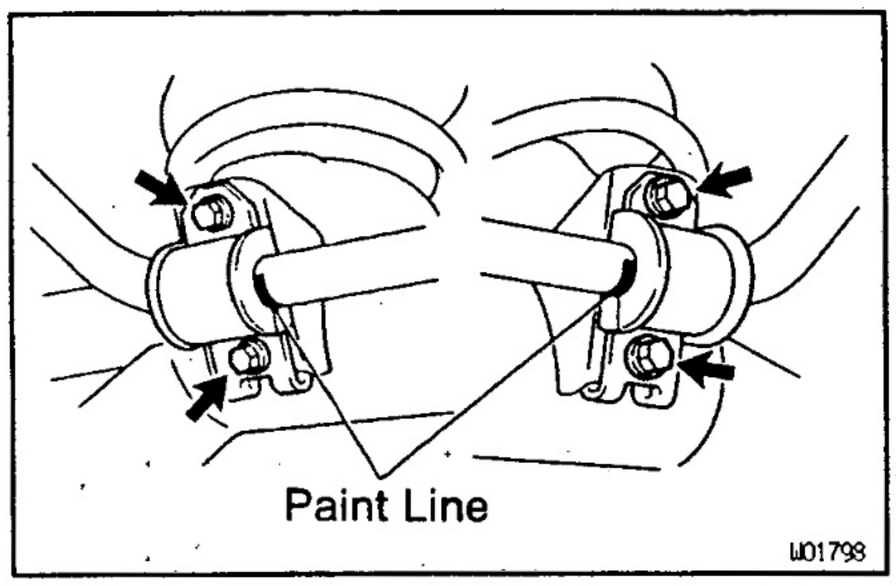

SA2RM-01

STABILIZER BAR REMOVAL

1. **JACK UP AND SUPPORT VEHICLE**
2. **REMOVE BOTH STABILIZER BAR LINKS**

(a) Remove the nuts and disconnect the stabilizer bar from the stabilizer bar links.
Torque: 69 N·m (700 kgf·cm, 51 ft·lbf)
HINT: If the ball joint stud turns together with the nut, use a hexagon wrench to hold the stud.

(b) Hold the stabilizer bar link with a wrench and remove the nuts, retainers, cushions and links.
Torque: 20 N·m (200 kgf·cm, 14 ft·lbf)

(c) Remove the retainers and cushions from the stabilizer bar links.

3. **REMOVE STABILIZER BAR FROM REAR AXLE HOUSING**
Remove the 4 bolts and stabilizer bar with bushings and brackets.
Torque: 19 N·m (195 kgf·cm, 14 ft·lbf)
INSTALLATION HINT:
- Install the bushing on the paint line on the stabilizer bar.
- Install the bushings to the stabilizer bar so that the cutout of the bushing face the under of the vehicle, as shown.

SA

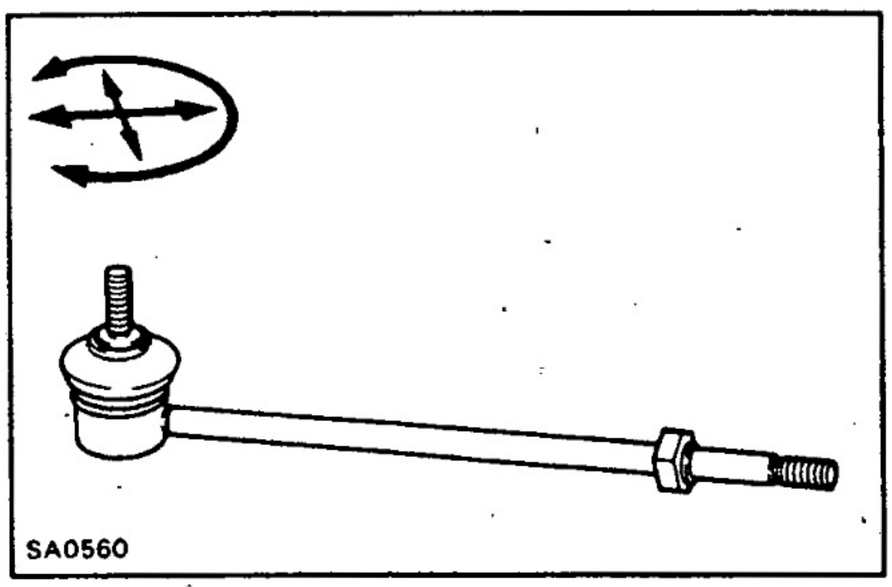

SA2RN-01

STABILIZER BAR LINK INSPECTION

INSPECT STABILIZER BAR LINK
Rotate the ball joint stud in all directions.
If the movement is not smooth and free, replace the stabilizer link.

SA2RP-01

STABILIZER BAR INSTALLATION

Installation is in the reverse order of removal.

SERVICE SPECIFICATIONS

SERVICE DATA

SA2RQ-01

Cold tire inflation pressure	Tire size		Pressure kPa (kgf/cm², psi)	
			Front	Rear
	215/80 R16	3 Door	190 (1.9, 28)	210 (2.1, 30)*
		5 Door	180 (1.8, 26)	200 (2.0, 29)*
	265/70 R16	Europe	200 (2.0, 29)	200 (2.0, 29)
		Others	180 (1.8, 26)	180 (1.8, 26)
	* When the vehicle is laden, rear tire pressure should be 240 kPa (2.4 kgf/cm², 35 psi)			

Wheel alignment	Vehicle height mm (in.) A : Ground clearance of spindle center B : Ground clearance of front adjusting cam bolt center C : Ground clearance of rear axle shaft center D : Ground clearance of lower control arm front bushing center		Model	Front A – B	Rear C – D
			3 Door Except longitudinal seat	66.0 (2.598)	45.5 (1.791)
			3 Door w/ longitudinal seat	68.5 (2.696)	36.5 (1.437)
			5 Door w/o Winch	54.5 (2.145)	37.0 (1.456)
			5 Door Others	62.5 (2.460)	39.0 (1.535)
	Camber	3 Door	Except longitudinal seat	–0°10' ± 45' (–0.17° ± 0.75°)	
			w/ longitudinal seat	–0°10' ± 45' (–0.17° ± 0.75°)	
			Left-right error	30' (0.5°) or less	
		5 Door	Malaysia w/o Winch	0°05' ± 45' (0.08° ± 0.75°)	
			Others	–0°05' ± 45' (–0.08° ± 0.75°)	
			Left-right error	30' (0.5°) or less	
	Caster	3 Door	Except longitudinal seat	2°55' ± 45' (2.91° ± 0.75°)	
			w/ longitudinal seat	2°40' ± 45' (2.67° ± 0.75°)	
			Left-right error	30' (0.5°) or less	
		5 Door	Malaysia w/o Winch	2°45' ± 45' (2.75° ± 0.75°)	
			Others	2°50' ± 45' (2.83° ± 0.75°)	
			Left-right error	30' (0.5°) or less	
	Steering axis inclination	3 Door	Except longitudinal seat	10°55' ± 45' (10.91° ± 0.75°)	
			w/ longitudinal seat	10°55' ± 45' (10.91° ± 0.75°)	
			Left-right error	30' (0.5°) or less	
		5 Door	Malaysia w/o Winch	10°40' ± 45' (10.67° ± 0.75°)	
			Others	10°50' ± 45' (10.83° ± 0.75°)	
			Left-right error	30' (0.5°) or less	
	Toe-in (total)	3 Door	Except longitudinal seat	0°11' ± 12' (0.18° ± 0.2°, 2 ± 2 mm, 0.08 ±0.08 in.)	
			w/ longitudinal seat	0°09' ± 12' (0.15° ± 0.2°, 2 ± 2 mm, 0.08 ±0.08 in.)	
		5 Door	Malaysia w/o Winch	0°20' ± 12' (0.33° ± 0.2°, 4 ± 2 mm, 0.16 ±0.08 in.)	
			Others	0°14' ± 12' (0.23° ± 0.2°, 3 ± 2 mm, 0.12 ±0.08 in.)	
	Wheel angle		Inside wheel	35° (33° – 36°)	
			Outside wheel	31° (Reference)	
Front drive shaft	Front drive shaft length			530.8 ± 5.0 mm (20.898 ± 0.197 in.)	
Front suspension	Upper ball joint turning torque			0.7 – 4.4 N·m (7 – 45 kgf·cm, 6 – 39 in.·lbf)	
	Lower ball joint turning torque			0.1 – 2.5 N·m (1 – 25 kgf·cm, 1 – 22 in.·lbf)	
Rear axle shaft	Shaft runout	Max.		2.0 mm (0.079 in.)	
	Flange runout	Max.		0.1 mm (0.004 in.)	

SA

Y

V08113

Front differential	Companion flange vertical runout	Max.	0.10 mm (0.0039 in.)
	Companion flange lateral runout	Max.	0.10 mm (0.0039 in.)
	Drive pinion preload (at starting)	New bearing	1.2 – 1.9 N·m (12 – 19 kgf·cm, 10.4 – 16.5 in.·lbf)
		Reused bearing	0.6 – 1.0 N·m (6 – 10 kgf·cm, 5.2 – 8.7 in.·lbf)
	Total preload (at starting)		Drive pinion preload plus 0.4 – 0.6 N·m (4 – 6 kgf·cm, 3.5 – 5.2 in.·lbf)
	Drive pinion to ring gear backlash		0.10 – 0.18 mm (0.0039 – 0.0071 in.)
	Side gear backlash		0 – 0.20 mm (0 – 0.0079 in.)
	Rear oil seal drive in depth		4.5 mm (0.177 in.)
	Side oil seal drive in depth		0 mm (0 in.)
	Side tube oil seal drive in depth		5.5 mm (0.217 in.)

Side gear thrust washer thickness mm (in.)	
0.96 – 1.04 (0.0378 – 0.0409)	1.16 – 1.24 (0.0457 – 0.0488)
1.06 – 1.14 (0.0417 – 0.0449)	1.26 – 1.34 (0.0496 – 0.0528)

Side bearing adjusting washer thickness mm (in.)		
2.00 – 2.02 (0.0787 – 0.0795)	2.27 – 2.29 (0.0894 – 0.0902)	2.54 – 2.56 (0.1000 – 0.1008)
2.03 – 2.05 (0.0799 – 0.0807)	2.30 – 2.32 (0.0906 – 0.0913)	2.57 – 2.59 (0.1012 – 0.1020)
2.06 – 2.08 (0.0811 – 0.0819)	2.33 – 2.35 (0.0917 – 0.0925)	2.60 – 2.62 (0.1024 – 0.1031)
2.09 – 2.11 (0.0823 – 0.0831)	2.36 – 2.38 (0.0929 – 0.0937)	2.63 – 2.65 (0.1035 – 0.1043)
2.12 – 2.14 (0.0835 – 0.0843)	2.39 – 2.41 (0.0941 – 0.0949)	2.66 – 2.68 (0.1047 – 0.1055)
2.15 – 2.17 (0.0846 – 0.0854)	2.42 – 2.44 (0.0953 – 0.0961)	2.69 – 2.71 (0.1059 – 0.1067)
2.18 – 2.20 (0.0858 – 0.0866)	2.45 – 2.47 (0.0965 – 0.0972)	2.72 – 2.74 (0.1071 – 0.1079)
2.21 – 2.23 (0.0870 – 0.0878)	2.48 – 2.50 (0.0976 – 0.0984)	2.75 – 2.77 (0.1083 – 0.1091)
2.24 – 2.26 (0.0882 – 0.0890)	2.51 – 2.53 (0.0988 – 0.0996)	2.78 – 2.80 (0.1094 – 0.1102)

Drive Pinion bearing adjusting washer thickness mm (in.)		
1.69 – 1.71 (0.0665 – 0.0673)	1.93 – 1.95 (0.0760 – 0.0768)	2.17 – 2.19 (0.0854 – 0.0862)
1.72 – 1.74 (0.0677 – 0.0685)	1.96 – 1.98 (0.0772 – 0.0780)	2.20 – 2.22 (0.0866 – 0.0874)
1.75 – 1.77 (0.0689 – 0.0697)	1.99 – 2.01 (0.0783 – 0.0791)	2.23 – 2.25 (0.0878 – 0.0886)
1.78 – 1.80 (0.0701 – 0.0709)	2.02 – 2.04 (0.0795 – 0.0803)	2.26 – 2.28 (0.0890 – 0.0898)
1.81 – 1.83 (0.0713 – 0.0720)	2.05 – 2.07 (0.0807 – 0.0815)	2.29 – 2.31 (0.0902 – 0.0909)
1.84 – 1.86 (0.0724 – 0.0732)	2.08 – 2.10 (0.0819 – 0.0827)	2.32 – 2.34 (0.0913 – 0.0921)
1.87 – 1.89 (0.0736 – 0.0744)	2.11 – 2.13 (0.0831 – 0.0839)	—
1.90 – 1.92 (0.0748 – 0.0756)	2.14 – 2.16 (0.0843 – 0.0850)	—

SA

V08114

Rear differential	Companion flange vertical runout	Max.	0.10 mm (0.0039 in.)
	Companion flange lateral runout	Max.	0.10 mm (0.0039 in.)
	Ring gear runout	Max.	0.07 mm (0.0028 in.)
	Differential case runout	Max.	0.07 mm (0.0028 in.)
	Drive pinion preload (at starting)	New bearing	0.9 – l .6 N·m (10 – 16 kgf·cm, 8.7 – 13.9 in.·lbf)
		Reused bearing	0.5 – 0.8 N·m (5 – 8 kgf·cm, 4.3 – 6.9 in.·lbf)
	Total preload (at starting)		Drive pinion preload plus 0.4 – 0.6 N·m (4 – 6 kgf·cm, 3.5 – 5.2 in.·lbf)
	Drive pinion to ring gear backlash		0.13 – 0.18 mm (0.0051 – 0.0071 in.)
	Side gear backlash		0.05 – 0.20 mm (0.0020 – 0.0080 in.)
	Shift frok to sleeve clearance		0.15 – 0.35 mm (0.006 – 0.0014 in.)
	Oil seal drive in depth		1 .0 mm (0.039 in.)

Side gear thrust washer thickness				mm (in.)
0.9 (0.035)	1.0 (0.039)	1.1 (0.043)	1.2 (0.047)	1.3 (0.051)

Drive pinion preload adjusting shim thickness			
1.70 (0.0669)	1.88 (0.0740)	2.06 (0.0811)	2.24 (0.0882)
1.73 (0,0681)	1.91 (0.0752)	2.09 (0.0823)	2.27 (0.0894)
1.76 (0.0693)	1.94 (0.0764)	2.12 (0.0835)	2.30 (0.0906)
1.79 (0.0705)	1.97 (0.0776)	2.15 (0.0846)	2.33 (0.0917)
1.82 (0.0717)	2.00 (0.0787)	2.18 (0.0858)	—
1.85 (0.0728)	2.03 (0.0799)	2.21 (0.0870)	—

Rear differential (LSD)	Companion flange vertical runout	Max.	0.10 mm (0.0039 in.)
	Companion flange lateral runout	Max.	0.10 mm (0.0039 in.)
	Ring gear runout	Max.	0.07 mm (0.0028 in.)
	Differential case runout	Max.	0.07 mm (0.0028 in.)
	Drive pinion to ring gear backlash		0.13 – 0.18 mm (0.0051 – 0.0071 in.)
	Side gear backlash		0.05 – 0.20 mm (0.0019 – 0.0079 in.)
	Drive pinion preload	New bearing	0.9 – 1.6 N·m (10 – 16 kgf·cm, 8.7 – 13.9 in.·lbf)
		Reused bearing	0.5 – 0.8 N·m (5 – 8 kgf·cm, 4.3 – 6.9 in.·lbf)
	Total preload (at starting)		Drive pinion preload plus 0.4 – 0.6 N·m (4 – 6 kgf·cm, 3.5 – 5.2 in.·lbf)
	Side gear thrust washer thickness (For reference)		1.77 – 1.86 mm (0.0697 – 0.0732 in.)
	Clutch plate thickness (For reference)		1.57 – 1.63 mm (0.0618 – 0.0642 in.)
	Compression spring free length (For reference)		22.35 mm (0.880 in.)

Side gear adjusting shim thickness		mm (in.)
0.15 (0.0059)	0.20 (0.0079)	0.25 (0.0098)
0.30 (0.0118)	0.35 (0.0138)	—

SA

SA2NR-01

TORQUE SPECIFICATION

FRONT:

Part tightened	N·m	kgf·cm	ft·lbf
Hub nut	110	1,150	83
Rack end lock nut	55	560	41
Steering knuckle x Lower ball joint	80	820	59
Tie rod end x Lower ball joint	91	930	67
Steering knuckle x Brake caliper	123	1,250	90
Steering knuckle x Bracket	28	285	21
Steering knuckle x Brake dust cover	18	185	13
Drive shaft lock nut	235	2,400	174
Upper suspension arm x Upper ball joint	105	1,100	80
Lower suspension arm x Frame	130	1,325	96
Upper suspension arm x Frame	115	1,200	87
Lower suspension arm x Lower ball joint	140	1,450	105
Lower suspension arm x No. 1, No. 2 spring bumper	23 (31)	235 (315)	17 (23)
Frame x Suspension support	64	650	47
Shock absorber x Suspension support	25	250	18
Lower suspension arm x Shock absorber	135	1,400	101
Lower suspension arm x Stabilizer bar link	69	700	51
Stabilizer bar x Stabilizer bar link	19	190	14
Stabilizer bar bracket x Frame	25	260	19
ABS speed sensor x Steering knuckle	8.0	82	71 in.·lbf
ABS speed sensor wire clamp x Steering knuckle	8.0	82	71 in.·lbf
ABS speed sensor wire clamp x Upper suspension arm	8.0	82	71 in.·lbf
Differential x Propeller shaft	74	750	54
Drive pinion nut	See page SA-44		
Differential front mounting cushion x Frame	137	1,400	101
Differential rear mounting cushion x Frame	87	890	64
Differential front mounting cushion x Differential	157	1,600	116
Differential rear mounting cushion x Differential	108	1,100	80
Ring gear x Differential case	97	985	71
Differential carrier x Differential tube	105	1,070	77
Differential carrier x Side bearing retainer	69	700	51
Drain plug	65	660	48
Filler plug	39	400	29

SA

( ): For use without SST

SUSPENSION AND AXLE – SERVICE SPECIFICATIONS

REAR:

Part tightened		N·m	kgf·cm	ft·lbf
Hub nut		110	1,150	83
Axle housing x Backing plate	Disc brake:	123	1,250	89
	Drum brake:	65	670	48
Brake line		15	155	11
Parking brake bellcrank bracket x Backing plate		13	130	9
Shock absorber x Axle housing		65	650	47
Piston rod set nut		20	200	14
Upper control arm x Frame		86	880	64
Upper control arm x Axle housing		86	880	64
Lower control arm x Frame		145	1,480	107
Lower control arm x Axle housing		145	1,480	107
Lateral control rod x Frame		86	880	64
Lateral control rod x Axle housing		86	880	64
Stabilizer bar x Stabilizer bar link		69	700	51
Stabilizer bar bracket x Axle housing		19	195	14
Stabilizer bar link x Frame		20	200	14
LSP & BV x Lateral control rod		13	130	9
Parking brake cable bracket x Axle housing		13	130	9
ABS speed sensor x Axle housing		8.0	82	71 in.·lbf
Differential x Propeller shaft		74	750	54
Drive pinion nut		See page SA-90		
Differential carrier x Axle housing	w/o Diff. lock:	73	740	54
	w/ Diff. lock and LSD:	25	250	18
Differential carrier x Bearing cap		85	870	63
Differential case x Ring gear		97	985	71
Adjusting nut lock x Bearing cap		13	130	9
Differential RH case x Differential LH case		47	480	35
Differential carrier x Diff. lock indicator switch		40	410	31
Differential carrier x Shaft retainer		24	240	17
Differential carrier x Screw plug		22	220	16
Differential carrier x Actuator		26	270	20
Drain plug and filler plug		49	500	36

BRAKE

GENERAL DESCRIPTION ..... BR– 2
PREPARATION ..... BR– 2
TROUBLESHOOTING ..... BR– 4
CHECK AND ADJUSTMENT ..... BR– 4
MASTER CYLINDER ..... BR– 8
BRAKE BOOSTER ..... BR– 14
VACUUM PUMP ..... BR– 16
(3L) ..... BR– 16
VACUUM PUMP ..... BR– 20
(1KZ–T, 1KZ–TE) ..... BR– 20
FRONT BRAKE ..... BR– 25
REAR BRAKE ..... BR– 30
(Drum Brake) ..... BR– 30
REAR BRAKE ..... BR– 35
(Disc Brake) ..... BR– 35
REAR BRAKE ..... BR– 39
(Parking Brake) ..... BR– 39
LOAD SENSING PROPORTIONING AND BY–PASS VALVE (LSP & BV) ..... BR– 44
ANTI–LOCK BRAKE SYSTEM (ABS) ..... BR– 47
ABS ACTUATOR ..... BR– 47
FRONT SPEED SENSOR ..... BR– 52
REAR SPEED SENSOR ..... BR– 53
TROUBLESHOOTING ..... BR– 55
SERVICE SPECIFICATIONS ..... BR– 103

GENERAL DESCRIPTION

1. Care must be taken to replace each part properly as it could affect the performance of the brake system and result in a driving hazard. Replace the parts with parts of the same part number or equivalent. BR012-0N
2. It is very important to keep parts and the area clean when repairing the brake system.
3. If the vehicle is equipped with a mobile communication system, refer to the precaution in the IN section.

PREPARATION

BR016-1F

SST (SPECIAL SERVICE TOOLS)

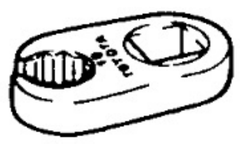	09023–00100	Union Nut Wrench 10 mm	
	09608–04031	Front Hub Inner Bearing Cone Replacer	1KZ–T and 1KZ–TE E/G
	09703–30010	Brake Shoe Return Spring Tool	
	09709–29017	LSPV Gauge Set	
	09718–00010	Shoe Hold Down Spring Driver	
	09718–20010	Brake Shoe Return Spring Replacer	
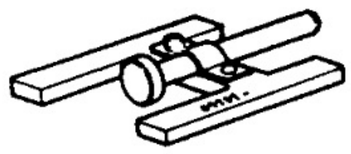	09737–00010	Brake Booster Push Rod Gauge	
	09843–18020	Diagnosis Check Wire	
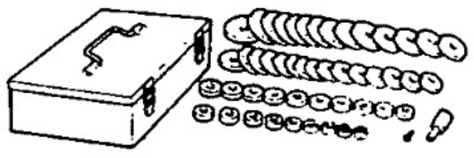	09950–60010	Replacer Set	3L E/G
	(09951–00400)	Replacer 40	3L E/G

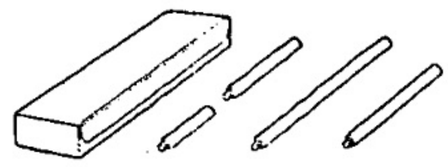	09950–70010	Handle Set	3L E/G
	(09951–07150)	Handle 150	3L E/G
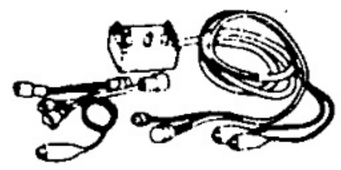	09990–00150	ABS Actuator Checker and Sub–harness	
	09990–00200	ABS Actuator Checker Sub–harness "C"	
	09990–00300	ABS Actuator Checker Sub–harness "I"	
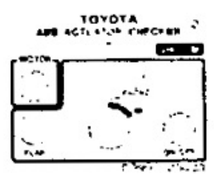	09990–00400	ABS Actuator Checker Sheet "M"	

BR

BR0FN–04

RECOMMENDED TOOLS

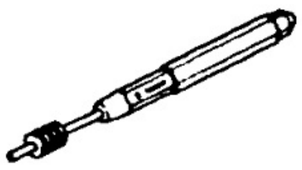	09031–00040	Pin Punch .	
	09082–00040	TOYOTA Electrical Tester.	
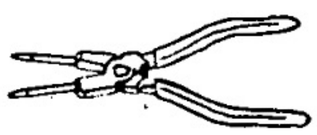	09905–00013	Snap Ring Pliers .	

BR017–1A

EQUIPMENT

Torque wrench	
Micrometer	Vacuum pump, Brake disc
Dial indicator	Brake disc
Vernier calipers	Brake disc, Brake drum

BR018–0R

LUBRICANT

Item	Capacity	Classification
Brake fluid	—	SAE J1703 or FMVSS No.116 DOT 3

TROUBLESHOOTING

BR019-13

Use the table below to help you find the cause of the problem. The numbers indicate the priority of the likely cause of the problem. Check each part in order. If necessary, replace these parts.

See page	—	—	BR-25,30,35	BR-25,35	BR-4	BR-8	BR-34,42	BR-7	—	BR-15	BR-30,39	BR-25,30,35	BR-25,30,35	BR-25,30,35	BR-25,30,35	BR-5	—	BR-25,35	BR-35	BR-25,35	BR-25,30,35	BR-25,30,35	BR-25,35	BR-30,39
Part Name / Trouble	Brake system (Fluid leaks)	Brake system (Air in)	Brake pad or lining (Worn)	Piston seal (Worn or damaged)	Brake pedal (Freeplay minimal)	Master cylinder (Faulty)	Rear brake (Shoe clearance out of adjustment)	Parking brake (Lever travel out of adjustment)	Parking brake wire (Sticking)	Booster push rod (Out of adjustment)	Anchor or return spring (Faulty)	Pad or lining (Cracked or distorted)	Piston (Stuck)	Pad or lining (Oily)	Piston (Frozen)	Booster system (Vacuum leaks)	Pad support plate (Loose)	Installation bolt (Loose)	Sliding pin (Worn)	Disc (Scored)	Pad or lining (Dirty)	Pad or lining (Glazed)	Anti-squeal shim (Damaged)	Hold-down spring (Damaged)
Low pedal or spongy pedal	1	2		3		5	4			6														
Brake drag					1	11	4	2	3	9	8	5	6		7	10								
Brake pull												5	1	2	3					4				
Hard pedal but brake inefficient	1	2	3				5			9		4		6		10				8		7		
Noise from brakes											8	1					4	2	5	3	6	7	9	10

V05570

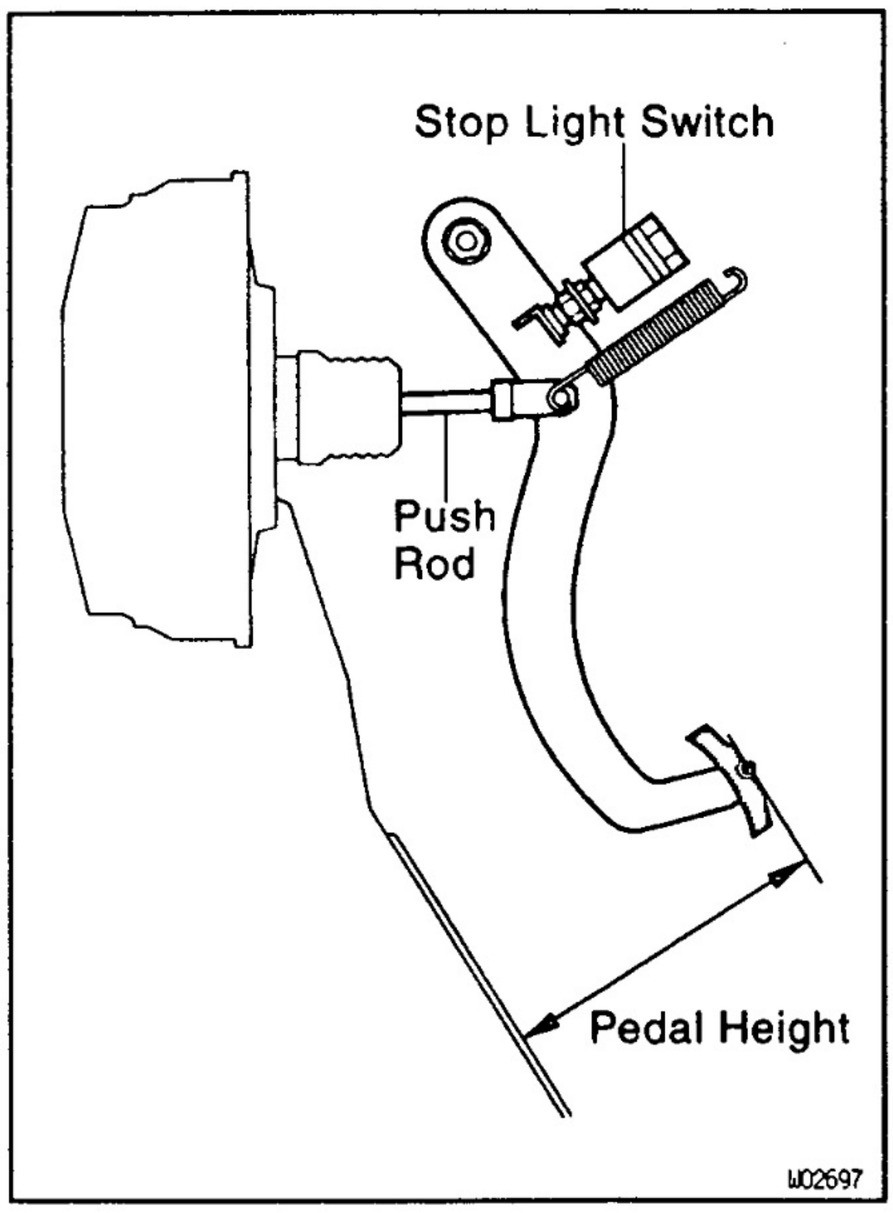

CHECK AND ADJUSTMENT

BRAKE PEDAL CHECK AND ADJUSTMENT

BR01A-0U

1. CHECK PEDAL HEIGHT

Pedal height from asphalt sheet:

LHD: 194.8—204.8 mm (7.669—8.063 in.)

RHD: 197.0—207.0 mm (7.756—8.150 in.)

If the pedal height is incorrect, adjust it.

2. IF NECESSARY, ADJUST PEDAL HEIGHT

(a) Disconnect the connector from the stop light switch.

(b) Loosen the stop light switch lock nut and remove the stop light switch.

(c) Loosen the push rod lock nut.

(d) Adjust the pedal height by turning the pedal push rod.

(e) Tighten the push rod lock nut.

Torque: 25 N·m (260 kgf·cm, 19 ft·lbf)

(f) Install the stop light switch and turn it until it lightly contacts the pedal stopper.

(g) Turn the stop light switch back one turn.

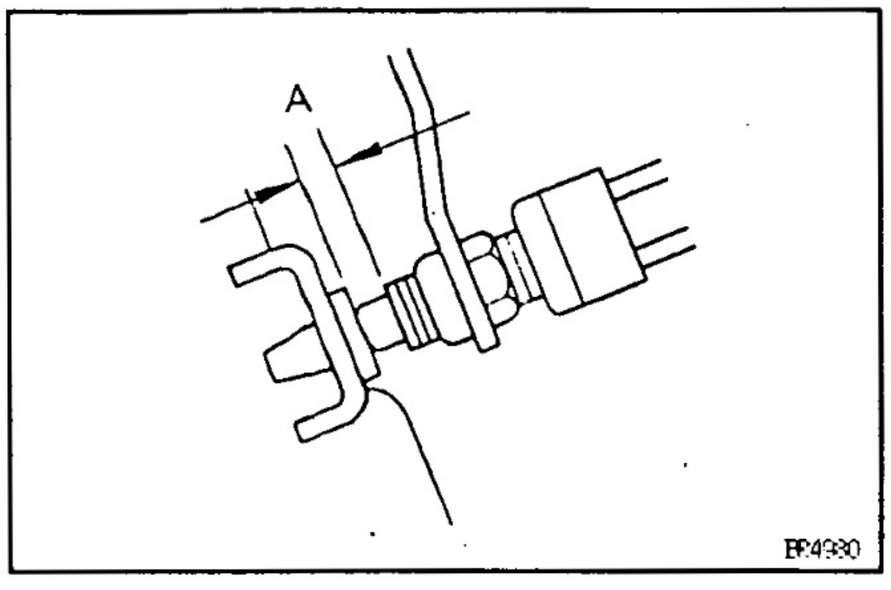

(h) Check the clearance (A) between stop light switch and pedal.

Clearance:

0.5–2.4 mm (0.020–0.094 in.)

(i) Tighten the stop light switch lock nut.

(j) Connect the connector to the stop light switch.

(k) Check that the stop lights come on when the brake pedal is depressed, and go off when the brake pedal is released.

(l) After adjusting the pedal height, check that pedal freeplay.

HINT: If clearance (A) between the stop light switch and the brake pedal stopper has been adjusted correctly, the pedal freeplay will meet the specifications.

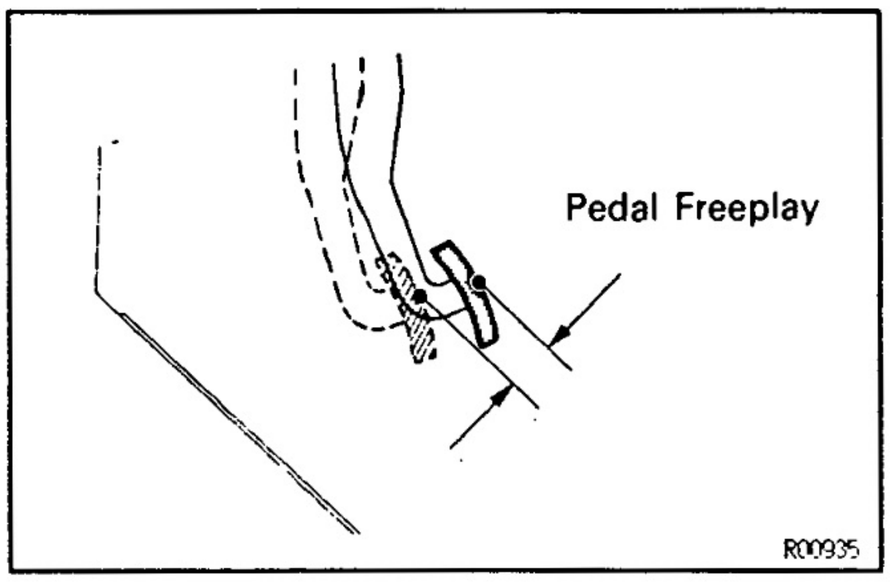

3. CHECK PEDAL FREEPLAY

(a) Stop the engine and depress the brake pedal several times until there is no more vacuum left in the booster.

(b) Push in the pedal by hand until the beginning of the resistance is felt, then measure the distance.

Pedal freeplay:

3–6 mm (0.12–0.24 in.)

HINT: The freeplay to the 1st point of resistance is due to the play between the clevis and pin. It is 1–3 mm (0.04–0.12 in.) on the pedal.

If incorrect, check the stop light switch clearance. If the clearance is OK, then troubleshoot the brake system.

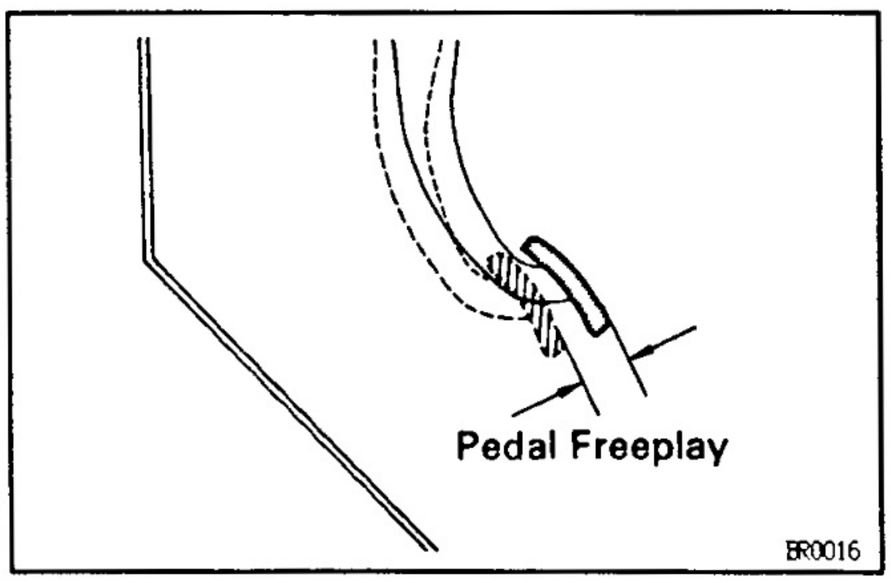

4. CHECK PEDAL RESERVE DISTANCE

Release the parking brake.

With the engine running, depress the pedal and measure the pedal reserve distance, as shown.

Pedal reserve distance from asphalt sheet at 490 N (50 kgf, 110.2 lbf):

Europe: More than 80 mm (3.15 in.)

Others: More than 95 mm (3.74 in.)

If the reserve distance is incorrect, troubleshoot the brake system.

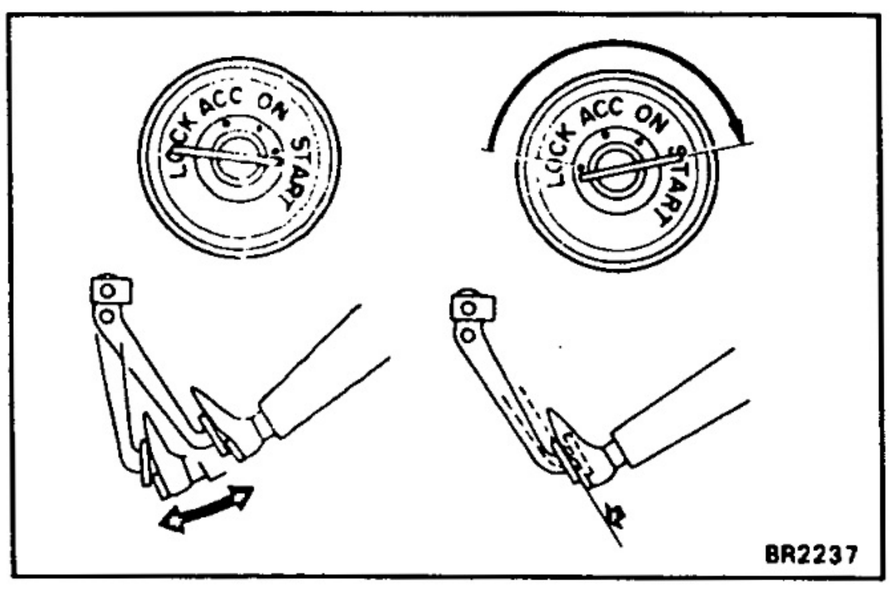

BRAKE BOOSTER OPERATIONAL TEST BR01B-01M

1. OPERATING CHECK

(a) Depress the brake pedal several times with the engine off and check that there is no change in the pedal reserve distance.

(b) Depress the brake pedal and start the engine. If the pedal goes down slightly, operation is normal.

BR

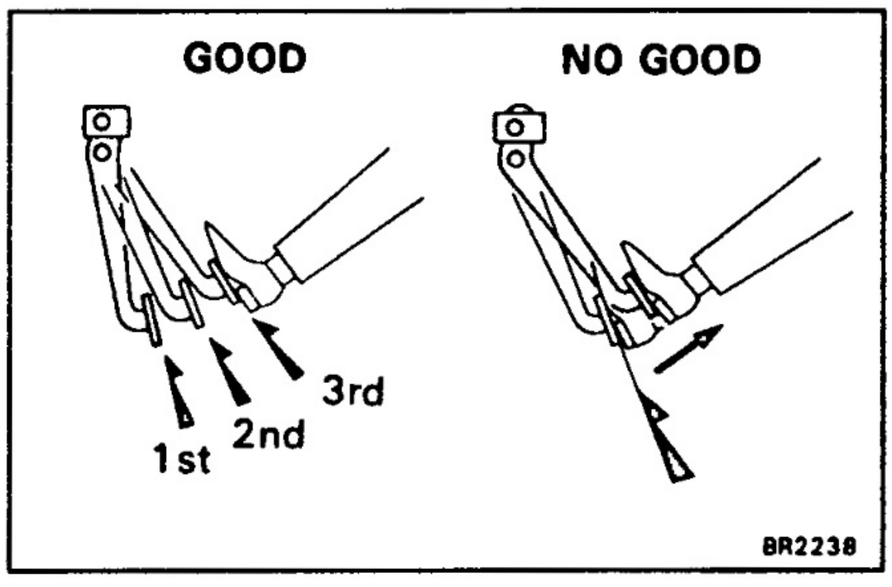

2. AIR TIGHTNESS CHECK

(a) Start the engine and stop it after 1 or 2 minutes. Depress the brake pedal several times slowly. If the pedal goes down farthest the 1st time, but gradually rises after the 2nd or 3rd time, the booster is air tight.

(b) Depress the brake pedal while the engine is running, and stop the engine with the pedal depressed. If there is no change in the pedal reserve travel after holding the pedal for 30 seconds, the booster is air tight.

BRAKE SYSTEM BLEEDING

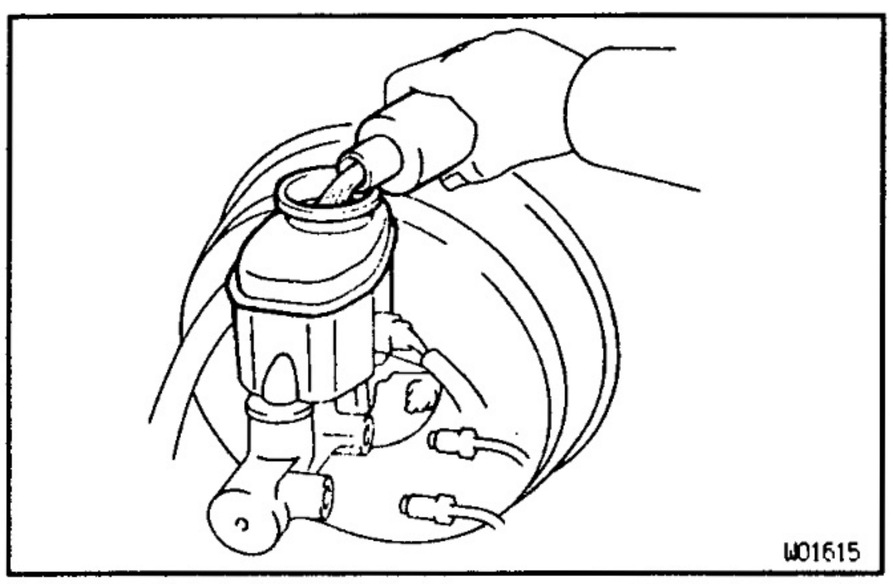

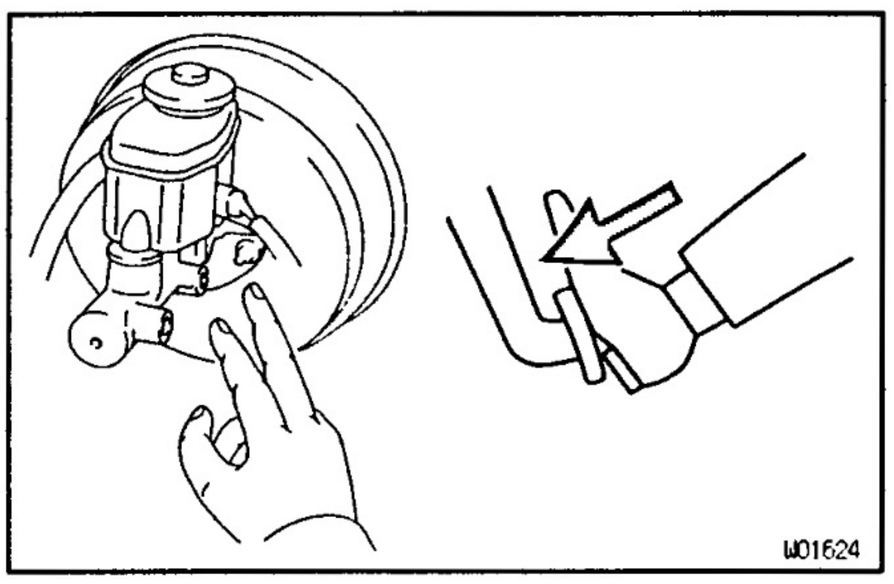

HINT: If any work is done on the brake system or if air in the brake lines is suspected, bleed the system of air.

NOTICE: Do not let brake fluid remain on a painted surface. Wash it off immediately.

1. FILL BRAKE RESERVOIR WITH BRAKE FLUID

Check the fluid level in the reservoir after bleeding each wheel. Add fluid, if necessary.

Fluid: SAE J1703 or FMVSS No.116 DOT3

2. BLEED MASTER CYLINDER

HINT: If the master cylinder has been disassembled or if the reservoir becomes empty, bleed the air from the master cylinder.

(a) Disconnect the brake lines from the master cylinder.

(b) Slowly depress the brake pedal and hold it.

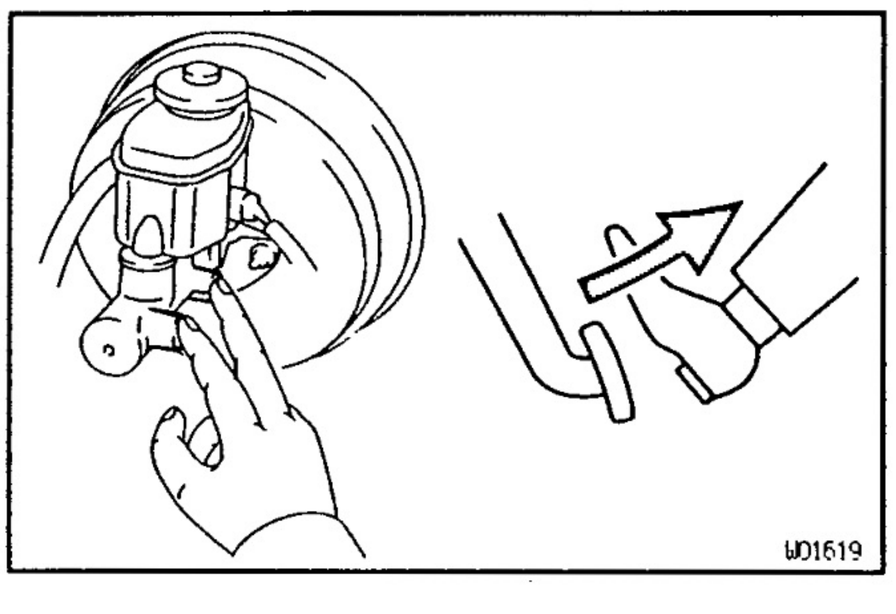

(c) Block off the outer holes with your fingers, and release the brake pedal.

(d) Repeat (b) and (c) 3 or 4 times.

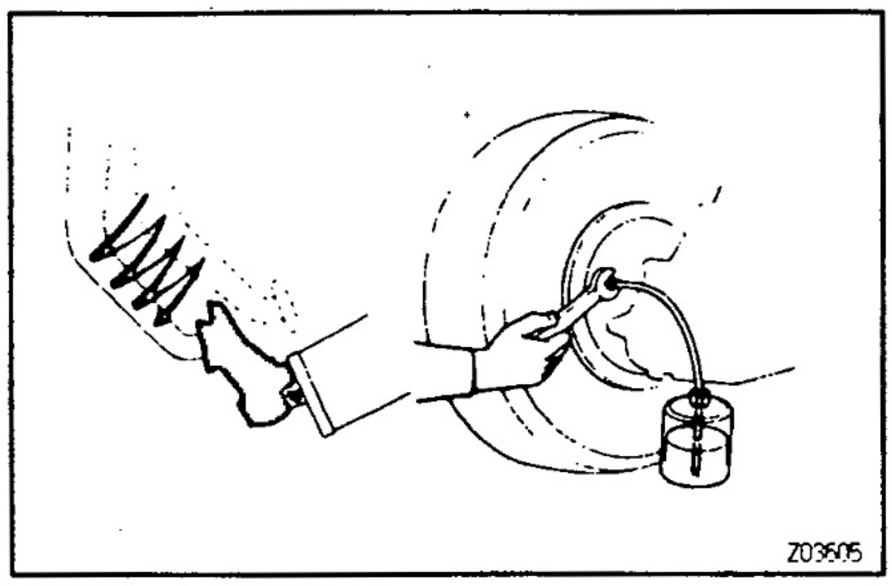

3. CONNECT VINYL TUBE TO BRAKE CALIPER OR WHEEL CYLINDER BLEEDER PLUG

Insert other end of the tube in a half – full container of brake fluid.

HINT: Begin air bleeding from the wheel cylinder with the longest hydraulic line.

4. BLEED BRAKE LINE

(a) Slowly depress the brake pedal several times.

(b) While an assistant depresses the pedal, loosen the bleeder plug until fluid starts to run out. Then tighten the bleeder plug.

(c) Repeat this procedure until there are no more air bubbles in the fluid.

Bleeder plug tightening torque:

11 N·m (110 kgf·cm, 8 ft·lbf)

5. REPEAT PROCEDURE FOR EACH WHEEL

6. BLEED LSP & BV

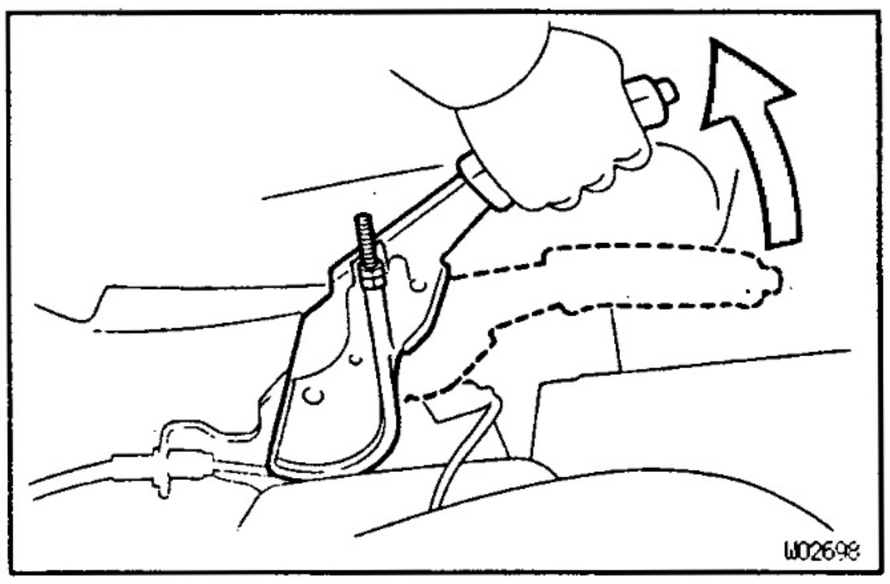

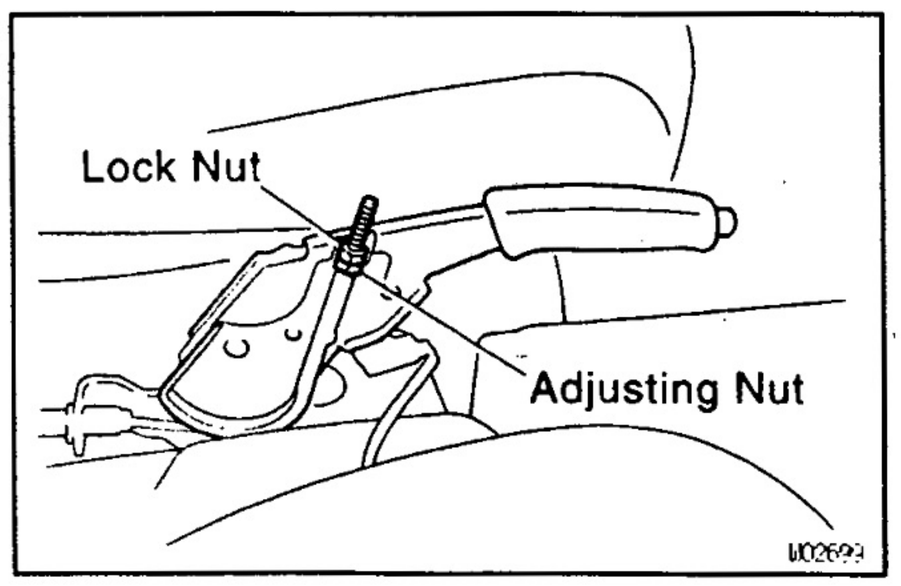

PARKING BRAKE CHECK AND ADJUSTMENT

BR01D-01

BR

1. CHECK PARKING BRAKE LEVER TRAVEL

Pull the parking brake lever all the way up, and count the number of clicks.

Parking brake lever travel at 196 N (20 kgf, 44 lbf):

6 – 8 clicks

If incorrect, adjust the parking brake lever travel.

2. IF NECESSARY, ADJUST PARKING BRAKE LEVER TRAVEL

HINT: Before adjusting the parking brake, make sure that the rear brake shoe clearance has been adjusted. For shoe clearance adjustment, see step 3 on page BR – 34 or see step 1 on page BR – 42.

(a) Remove the rear console box.

(b) Loosen the lock nut and turn the adjusting nut until the lever travel is correct.

(c) Tighten the lock nut.

Torque: 5.4 N·m (55 kgf·cm, 48 in.·lbf)

(d) Install the rear console box.

MASTER CYLINDER

MASTER CYLINDER REMOVAL

BR1LE-01

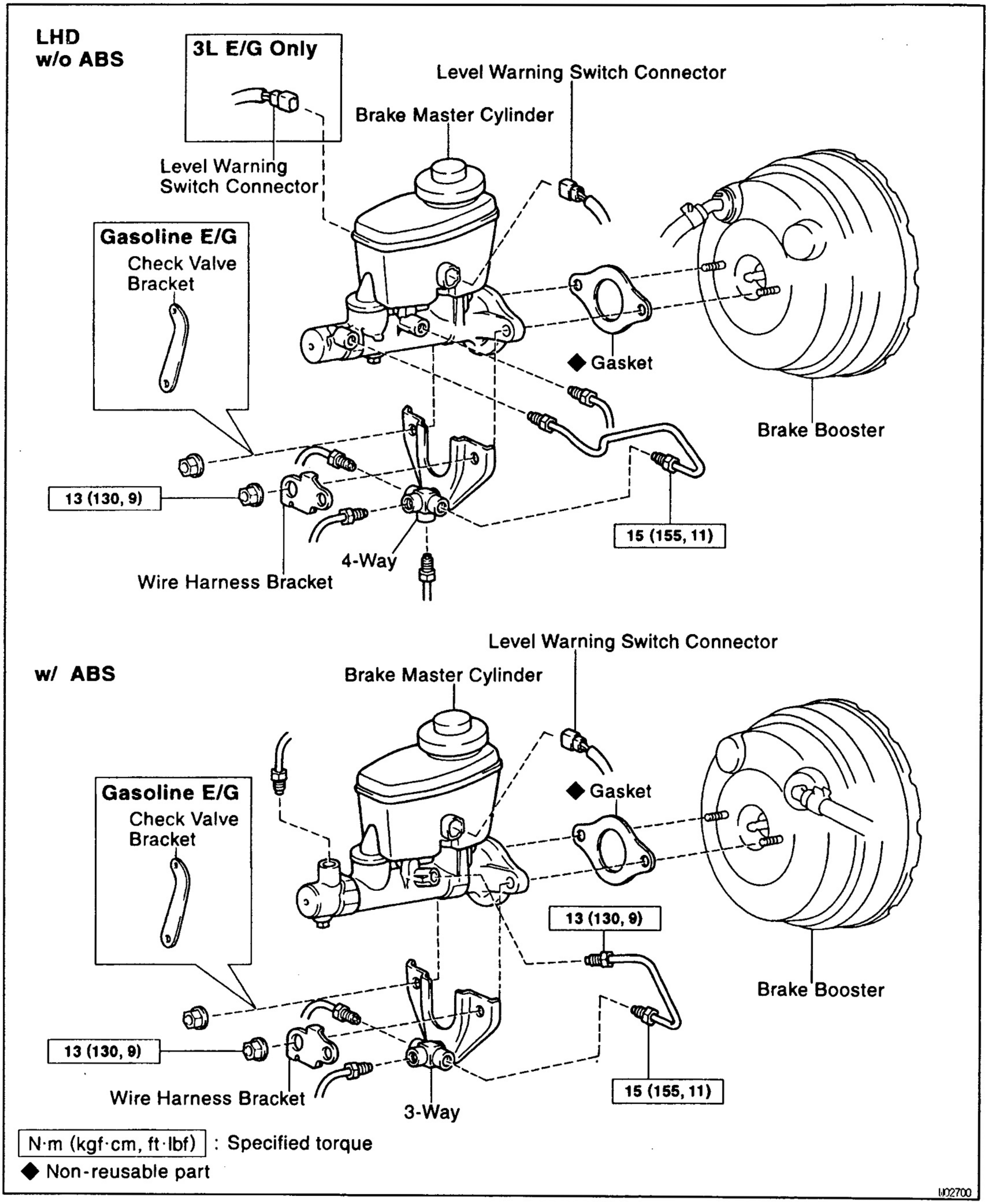

RHD
w/o ABS

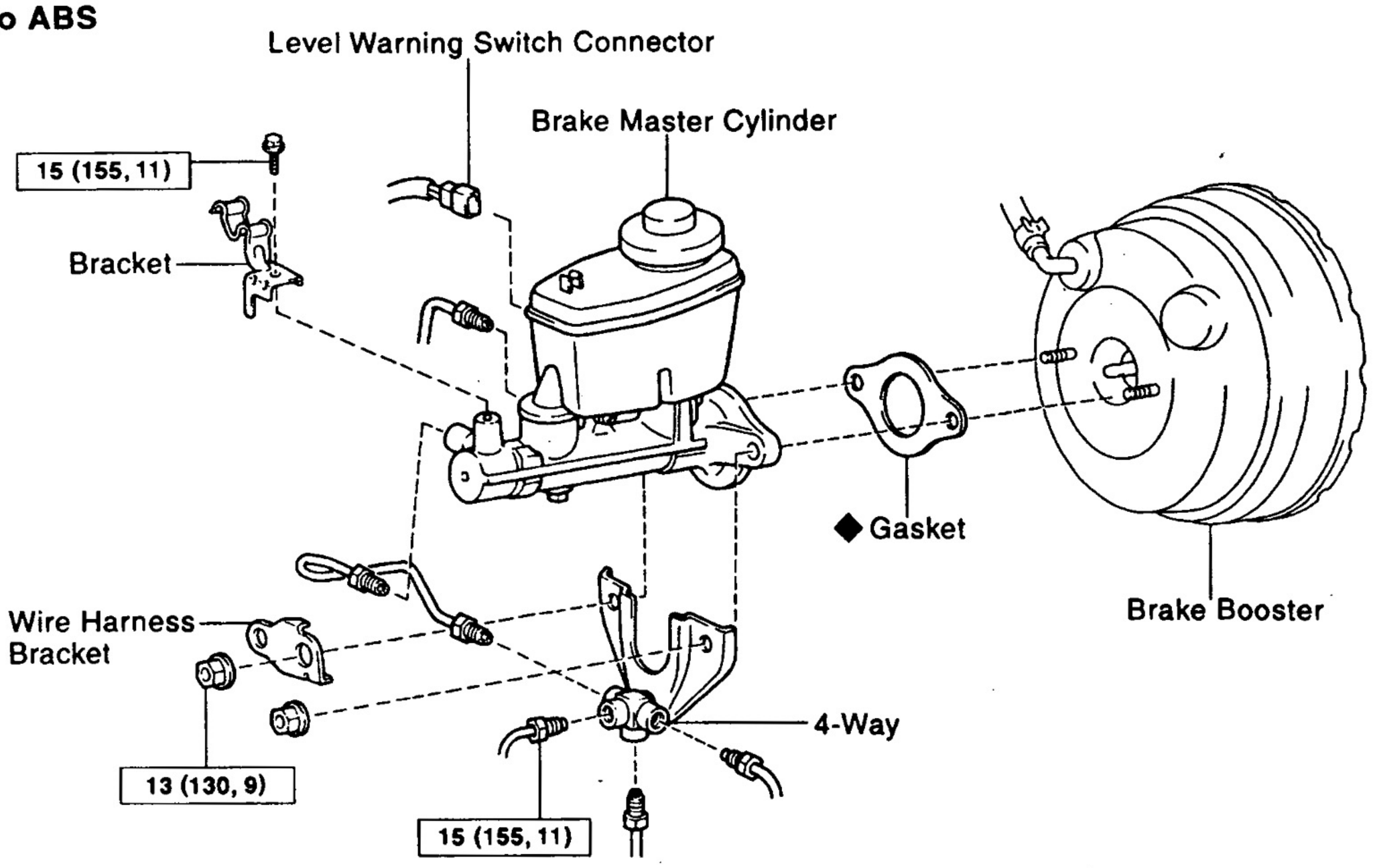

w/ ABS

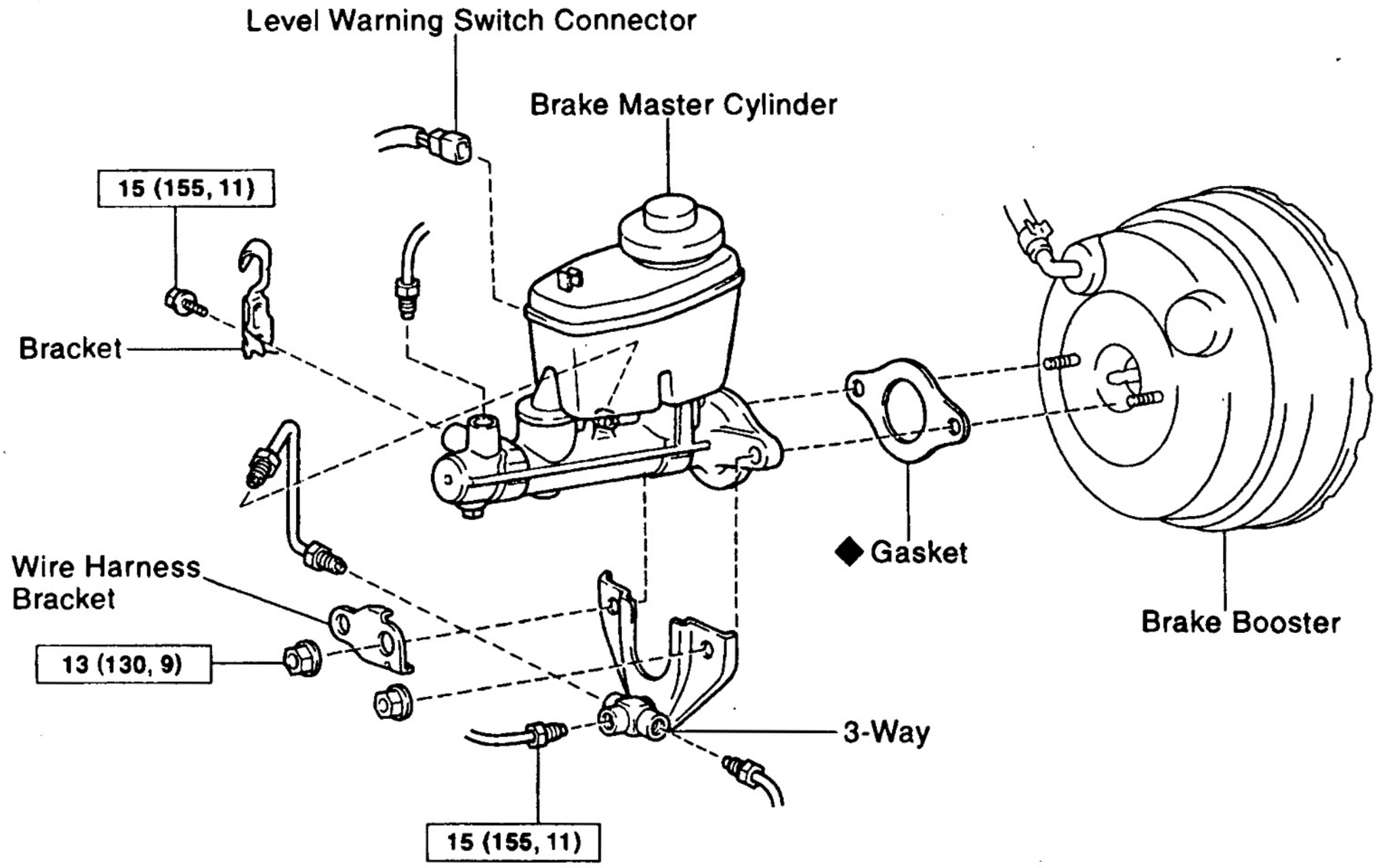

N·m (kgf·cm, ft·lbf) : Specified torque
◆ Non-reusable part

W02701

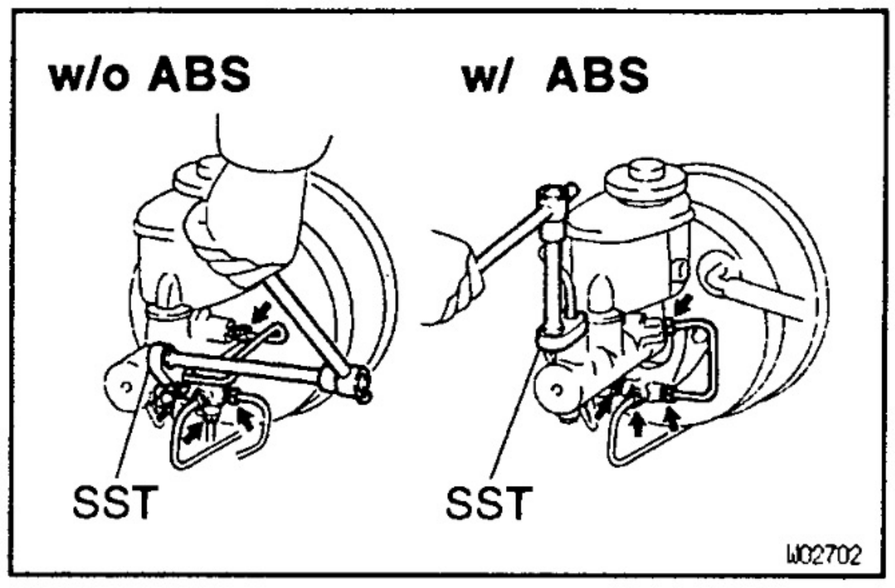

1. **DISCONNECT LEVEL WARNING SWITCH CONNECTOR**
2. **TAKE OUT FLUID WITH SYRINGE**
   NOTICE: Do not let brake fluid remain on a painted surface. Wash it off immediately.
3. **DISCONNECT BRAKE LINES**
   w/o ABS:
   Using SST, disconnect the 6 brake lines from the master cylinder and 4–way.
   w/ ABS:
   Using SST, disconnect the 5 brake lines from the master cylinder and 3–way.
   SST 09023–00100
   Torque: 15 N·m (155 kgf·cm, 11 ft·lbf)

BR

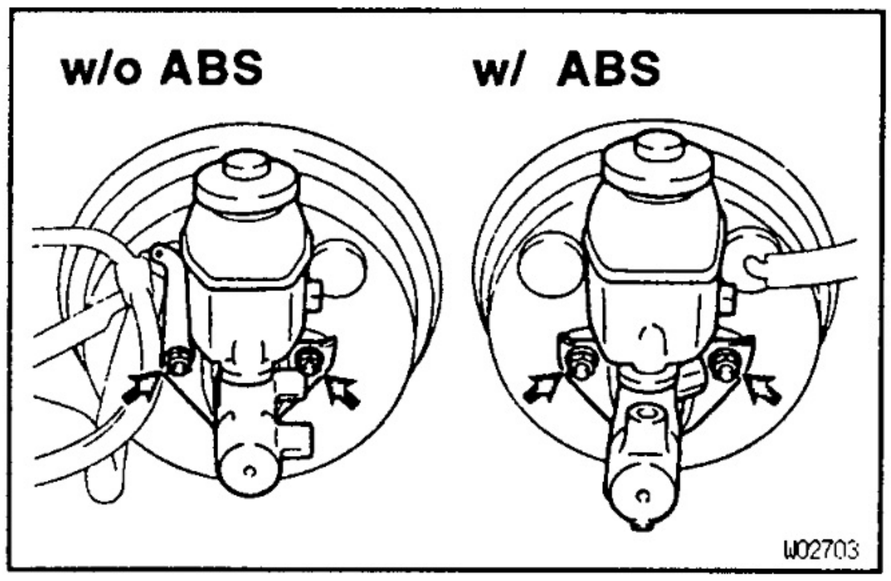

4. **REMOVE MASTER CYLINDER**
   LHD w/o ABS:
   Remove the 2 nuts, 4–way, wire harness bracket, and check valve bracket (Gasoline E/G), and pull out the master cylinder and gasket.
   LHD w/ ABS:
   Remove the 2 nuts, 3–way, wire harness bracket, and check valve bracket (Gasoline E/G), and pull out the master cylinder and gasket.
   RHD w/o ABS:
   Remove the 2 nuts, 4–way, wire harness bracket, bolt, and bracket, and pull out the master cylinder and gasket.
   RHD w/ ABS:
   Remove the 2 nuts, 3–way, wire harness bracket, bolt, and bracket, and pull out the master cylinder and gasket.
   Torque:
   Nut: 13 N·m (130 kgf·cm, 9 ft·lbf)
   Bolt: 15 N·m (155 kgf·cm, 11 ft·lbf)

BR1LF-01

COMPONENTS

LHD w/o ABS

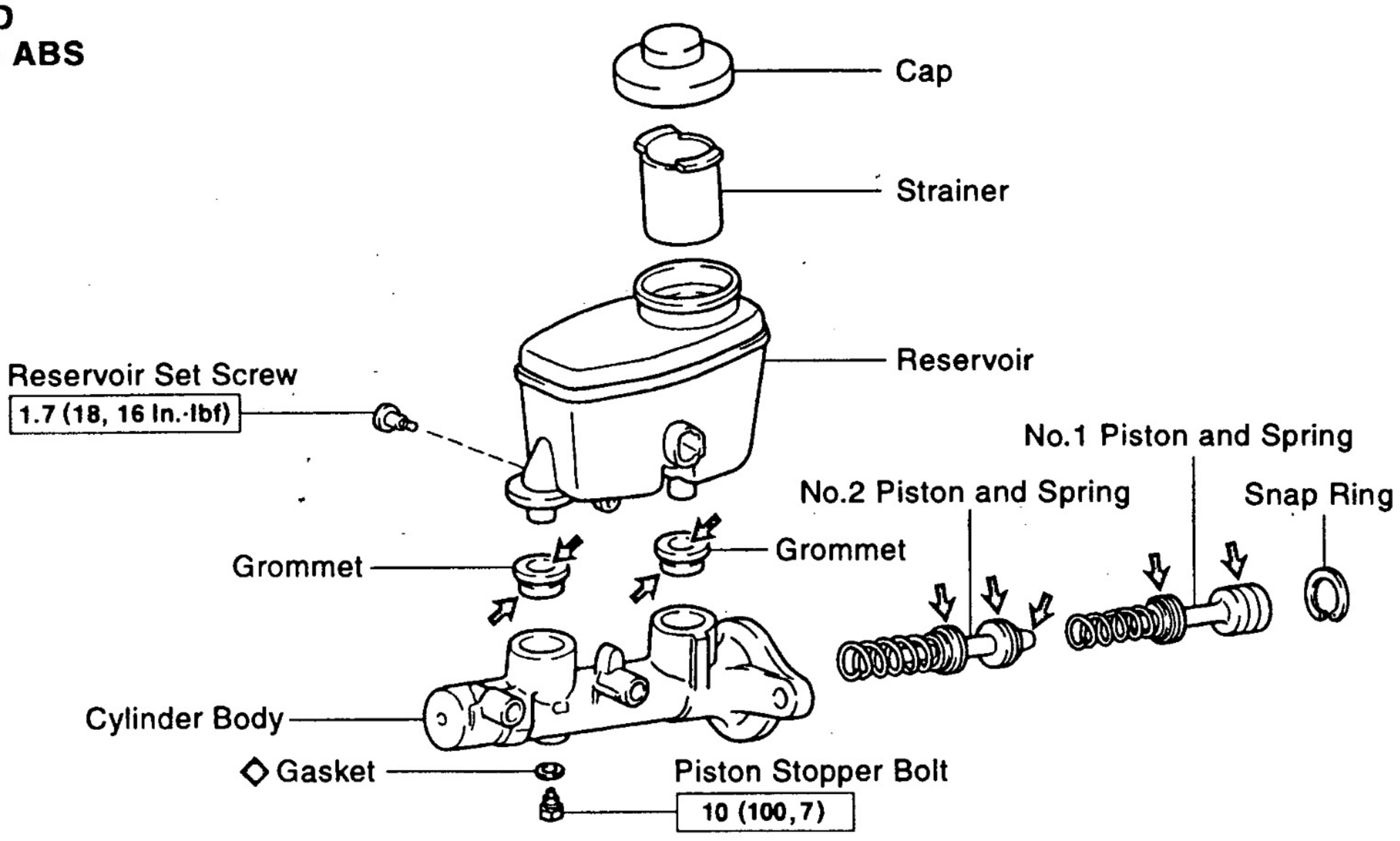

w/ ABS

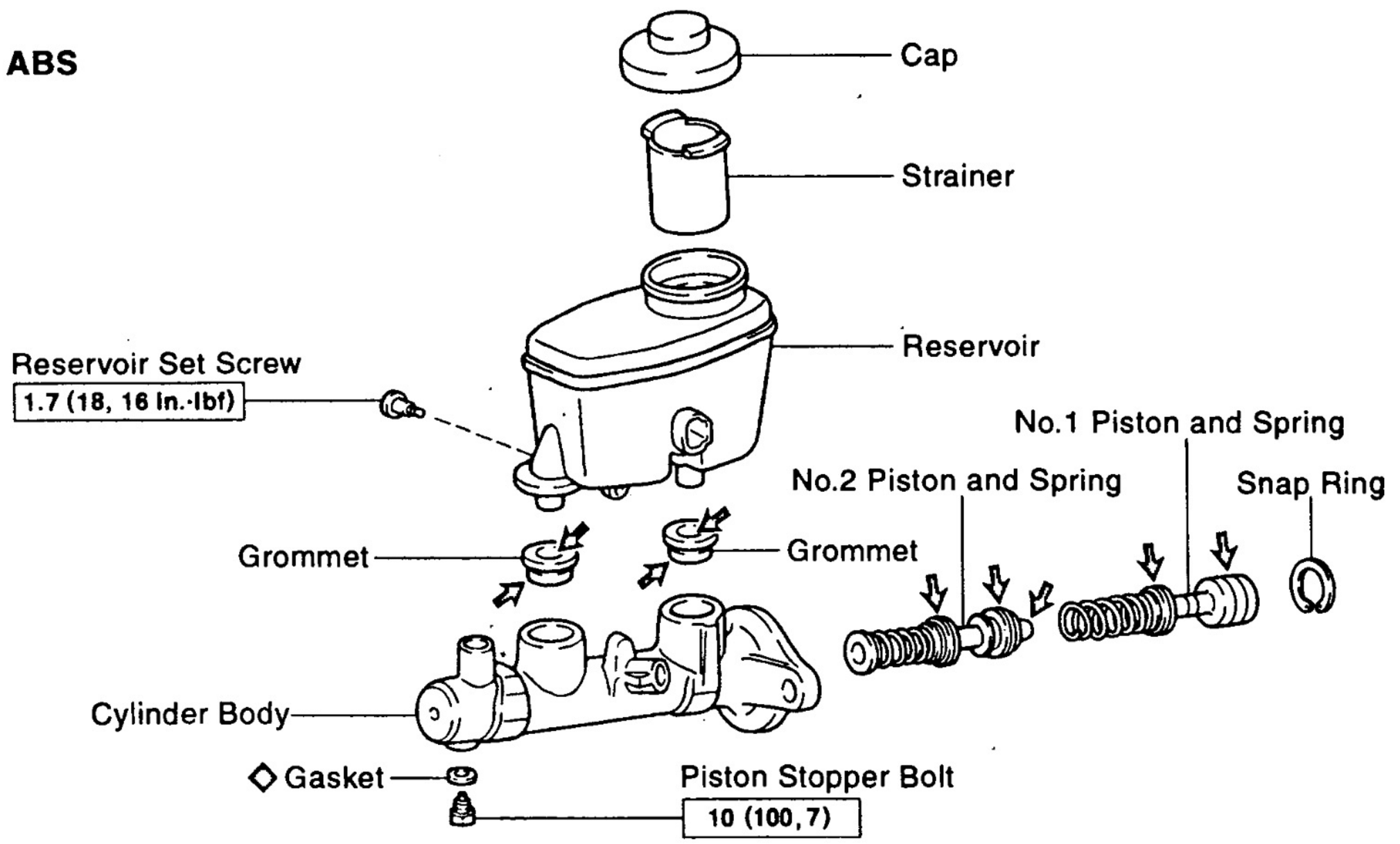

N·m (kgf·cm, ft·lbf) : Specified torque
◇ Non-reusable part
⇦ Lithium soap base glycol grease

W02754

BR

RHD
w/o ABS

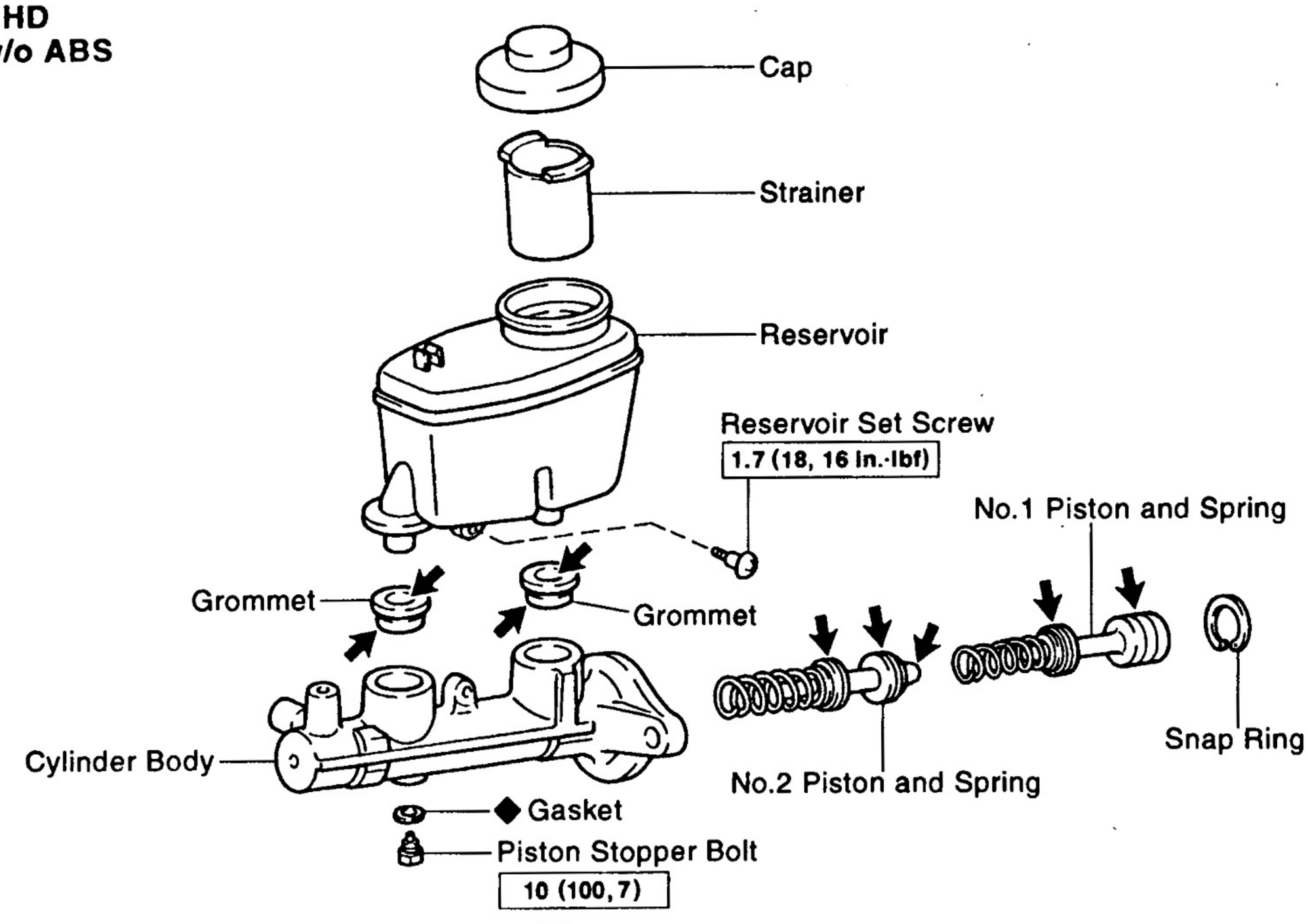

w/ ABS

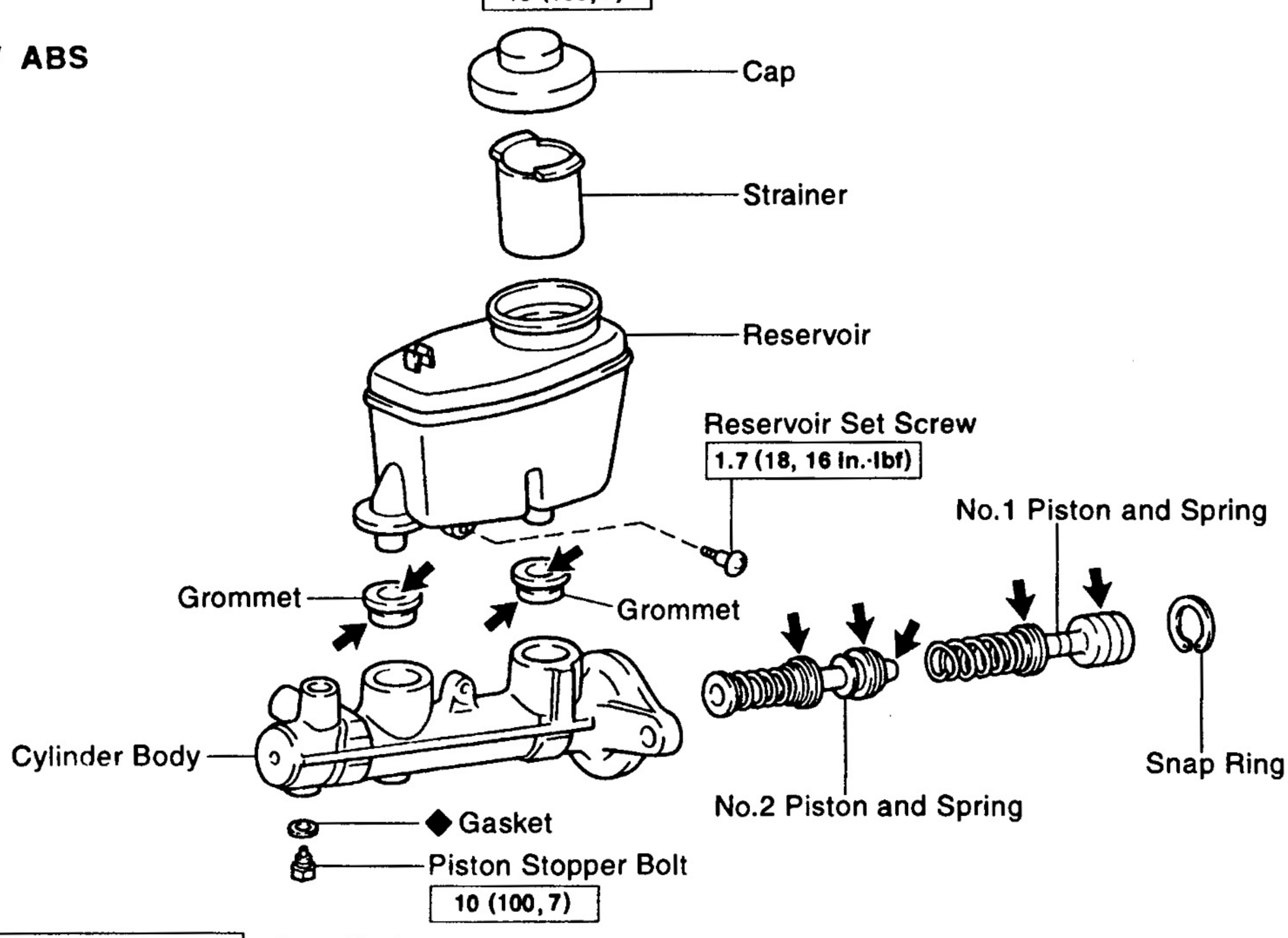

N·m (kgf·cm, ft·lbf) : Specified torque

◆ Non-reusable part

⬅ Lithium soap base glycol grease

W02705

BR1HT-02

MASTER CYLINDER DISASSEMBLY

1. **REMOVE RESERVOIR**

(a) Remove the set screw and pull out the reservoir.
Torque: 1.7 N·m (18 kgf·cm, 16 in.·lbf)

(b) Remove the cap and strainer from the reservoir.

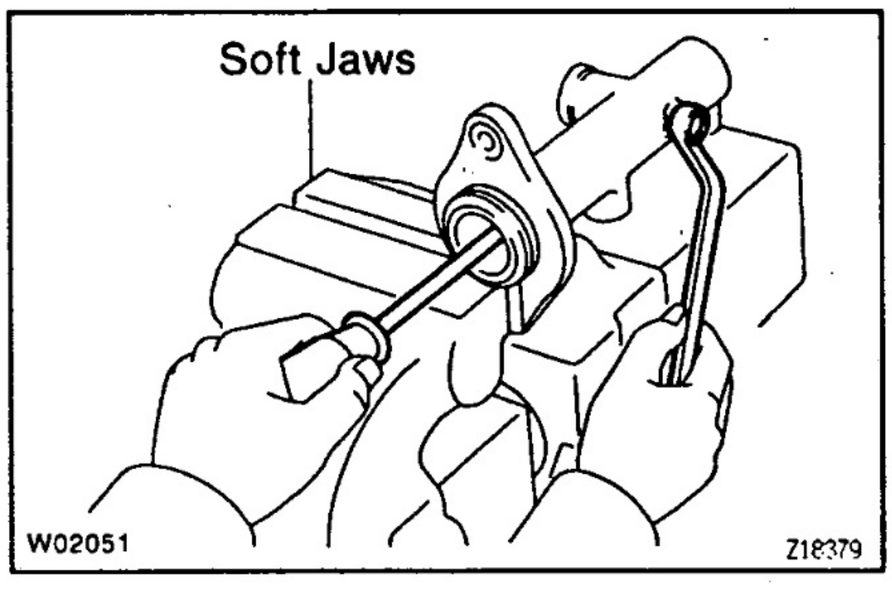

2. **REMOVE 2 GROMMETS**
3. **PLACE CYLINDER IN VISE**
4. **REMOVE PISTON STOPPER BOLT**

Using soft jaws on the vise and a screwdriver, push the pistons in all the way and remove the piston stopper bolt and gasket.
HINT: Tape the screwdriver tip before use.
Torque: 10 N·m (100 kgf·cm, 7 ft·lbf)

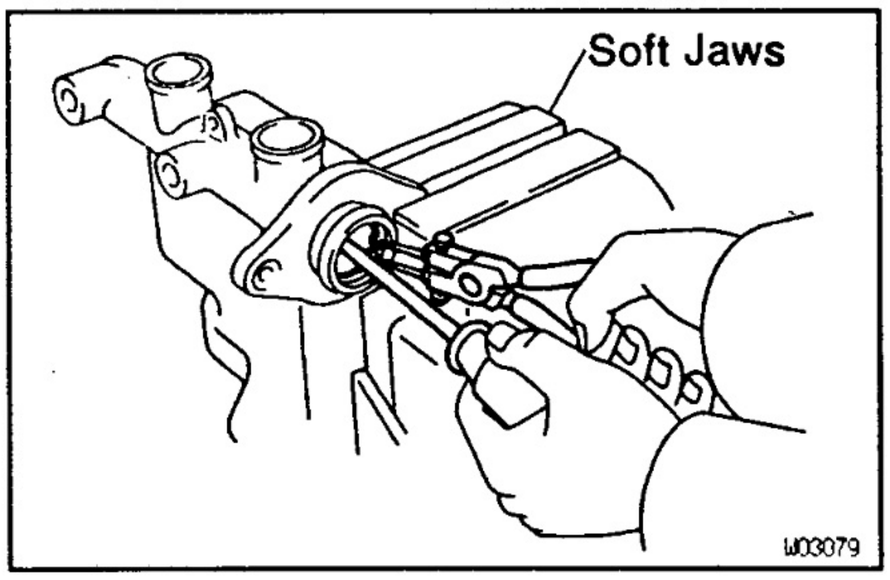

5. **REMOVE 2 PISTONS AND SPRINGS**

(a) Using soft jaws on the vise, push in the piston with a screwdriver and remove the snap ring with snap ring pliers.
HINT: Tape the screwdriver tip before use.

(b) Remove the No.1 piston and spring by hand, pulling straight out, not at an angle.
NOTICE: If pulled out and installed at an angle, there is a possibly that the cylinder bore could be damaged.
ASSEMBLY NOTICE: Be careful not to damage the rubber lips on the pistons.

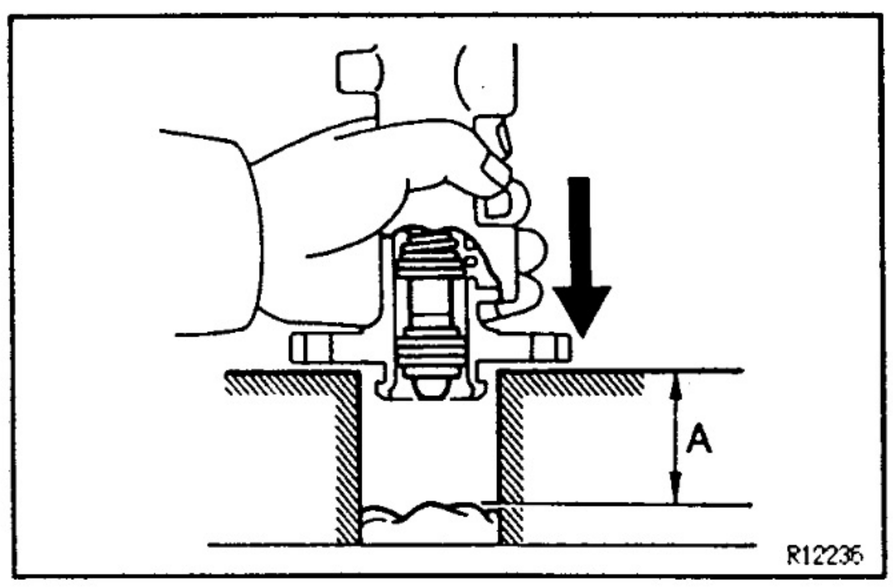

(c) Place a rag and 2 wooden blocks on the work table, and lightly tap the cylinder flange against the block edges until the No.2 piston drops out of the cylinder.
DISASSEMBLY HINT: Make sure that the distance (A) from the rag to the top of the blocks is at least 100 mm (3.94 in.).

BR

BR1HU-02

MASTER CYLINDER INSPECTION

HINT: Clean the disassembled parts with compressed air.

1. **INSPECT CYLINDER BORE FOR RUST OR SCORING**
2. **INSPECT CYLINDER FOR WEAR OR DAMAGE**

If necessary, clean or replace the cylinder.

MASTER CYLINDER ASSEMBLY

BR1A8-02

Assembly is in the reverse order of disassembly.
NOTICE: Apply lithium soap base glycol grease to the rubber parts indicated by arrows (See page BR–11 or 12).

MASTER CYLINDER INSTALLATION

BR1A8-02

Installation is in the reverse order of removal.
BEFORE INSTALLATION, ADJUST LENGTH OF BRAKE BOOSTER PUSH ROD (See page BR–15)
AFTER INSTALLATION, FILL BRAKE RESERVOIR WITH BRAKE FLUID, BLEED BRAKE SYSTEM (See page BR – 6), CHECK FOR LEAKS, CHECK AND ADJUST BRAKE PEDAL (See page BR–4)

BRAKE BOOSTER
BRAKE BOOSTER REMOVAL

BR111-04

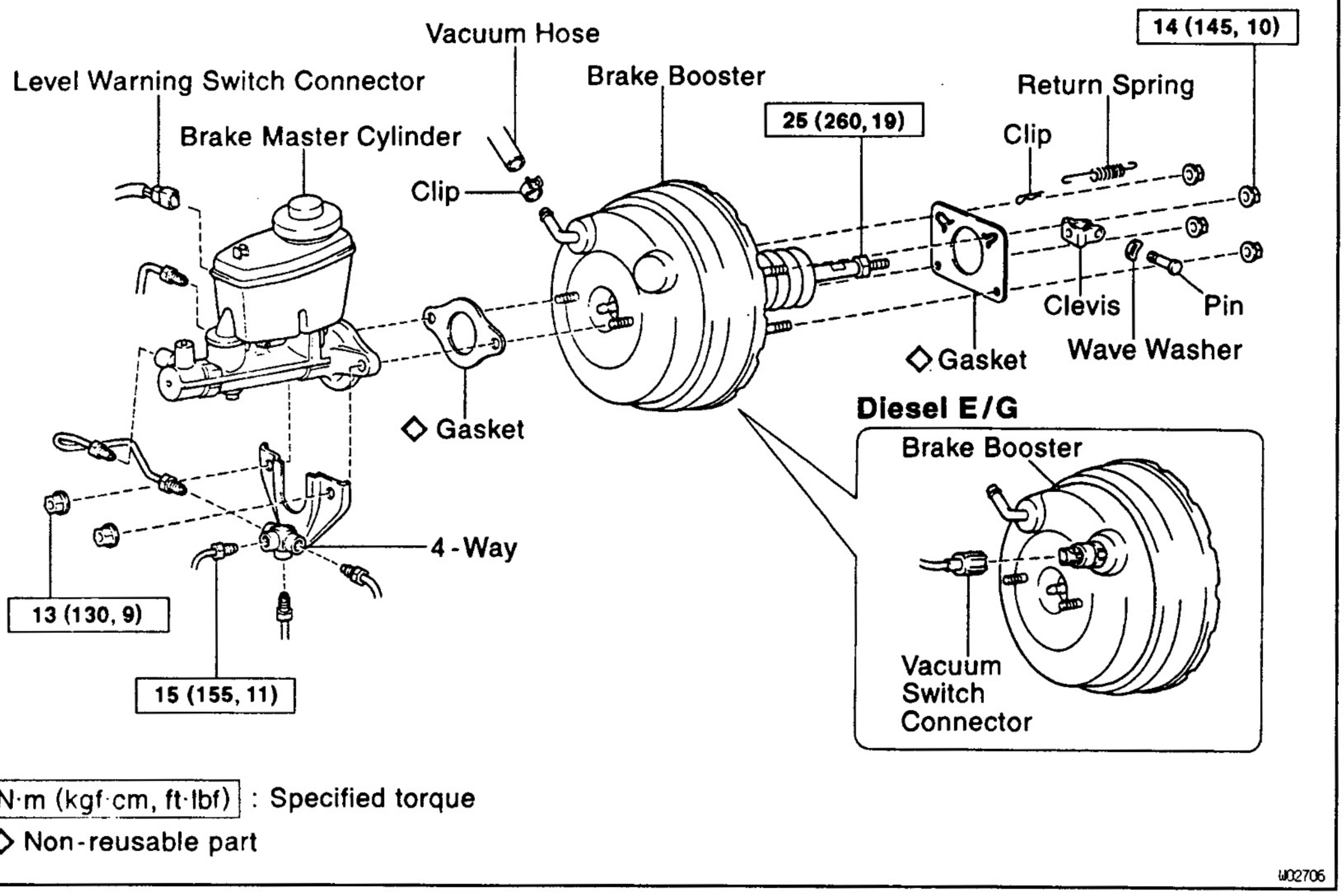

W02706

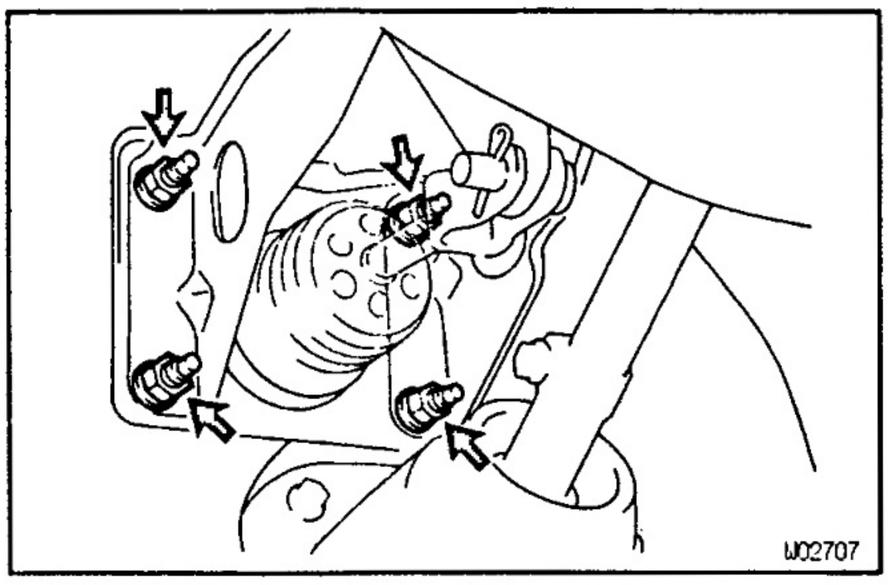

1. **REMOVE MASTER CYLINDER**
(See page BR–10)
2. **REMOVE THESE PARTS:**
   - Return spring
   - Clip, clevis pin and wave washer
3. **REMOVE BRAKE BOOSTER**

(a) Using pliers, remove the clip, and disconnect the vacuum hose.
(b) Remove the 4 booster instllation nuts and clevis.
(c) Remove the booster and gasket.

BROFR–06

BRAKE BOOSTER INSTALLATION

1. **INSTALL BRAKE BOOSTER**

(a) Install the clevis to the operating rod.
(b) Install the booster with a new gasket.
(c) Install and torque the 4 booster installation nuts.
Torque: 14 N·m (145 kgf·cm, 10 ft·lbf)
(d) Install the clevis pin into the wave washer, clevis and brake pedal, and install the clip to the clevis pin.
(e) Install the pedal return spring.

2. **ADJUST LENGTH OF BOOSTER PUSH ROD**

(a) Install the gasket on the master cylinder.
(b) Set the SST on the gasket, and lower the pin until its tip slightly touches the piston.
SST 09737–00010

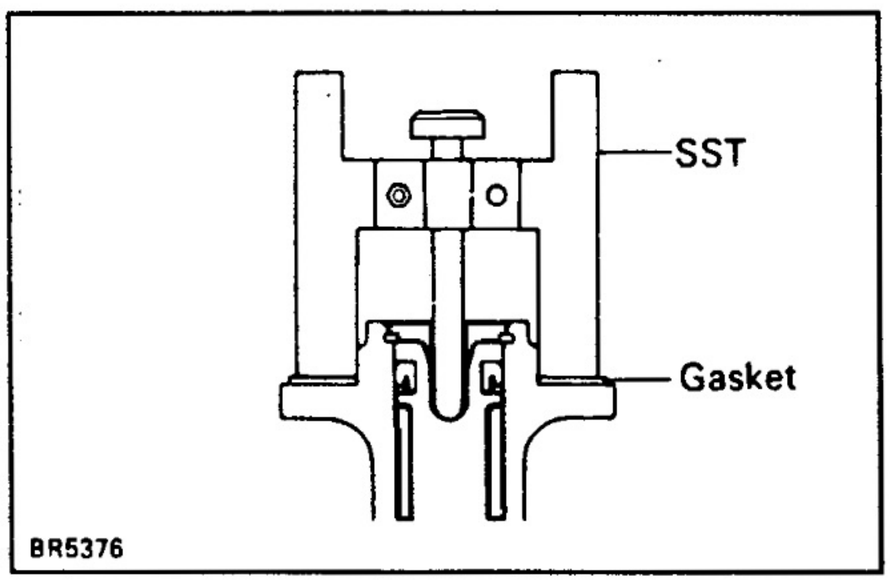

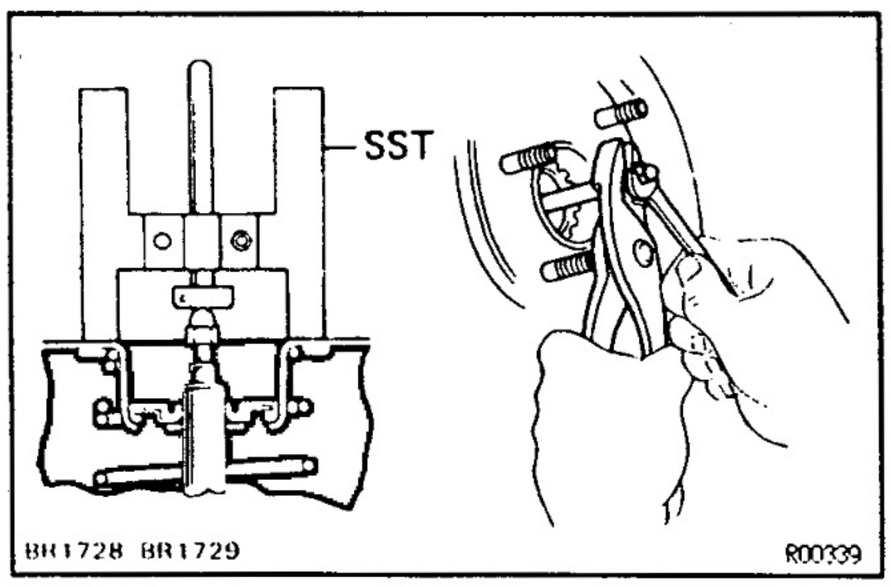

(c) Turn the SST upside down, and set it on the booster.
SST 09737–00010
(d) Measure the clearance between the booster push rod and pin head (SST).
Clearance:
0 mm (0 in.)
(e) Adjust the booster push rod length until the push rod slightly touches the pin head.
HINT: When adjusting the push rod, depress the brake pedal enough so that the push rod sticks out.

3. **INSTALL MASTER CYLINDER (See page BR–14)**
4. **FILL BRAKE RESERVOIR WITH BRAKE FLUID AND BLEED BRAKE SYSTEM**
(See page BR–6)
5. **CHECK FOR FLUID LEAKAGE**
6. **CHECK AND ADJUST BRAKE PEDAL**
(See page BR–4)
7. **DO OPERATIONAL CHECK**
(See page BR–5)

BR

VACUUM PUMP (3L)

COMPONENTS

BR04Y-05

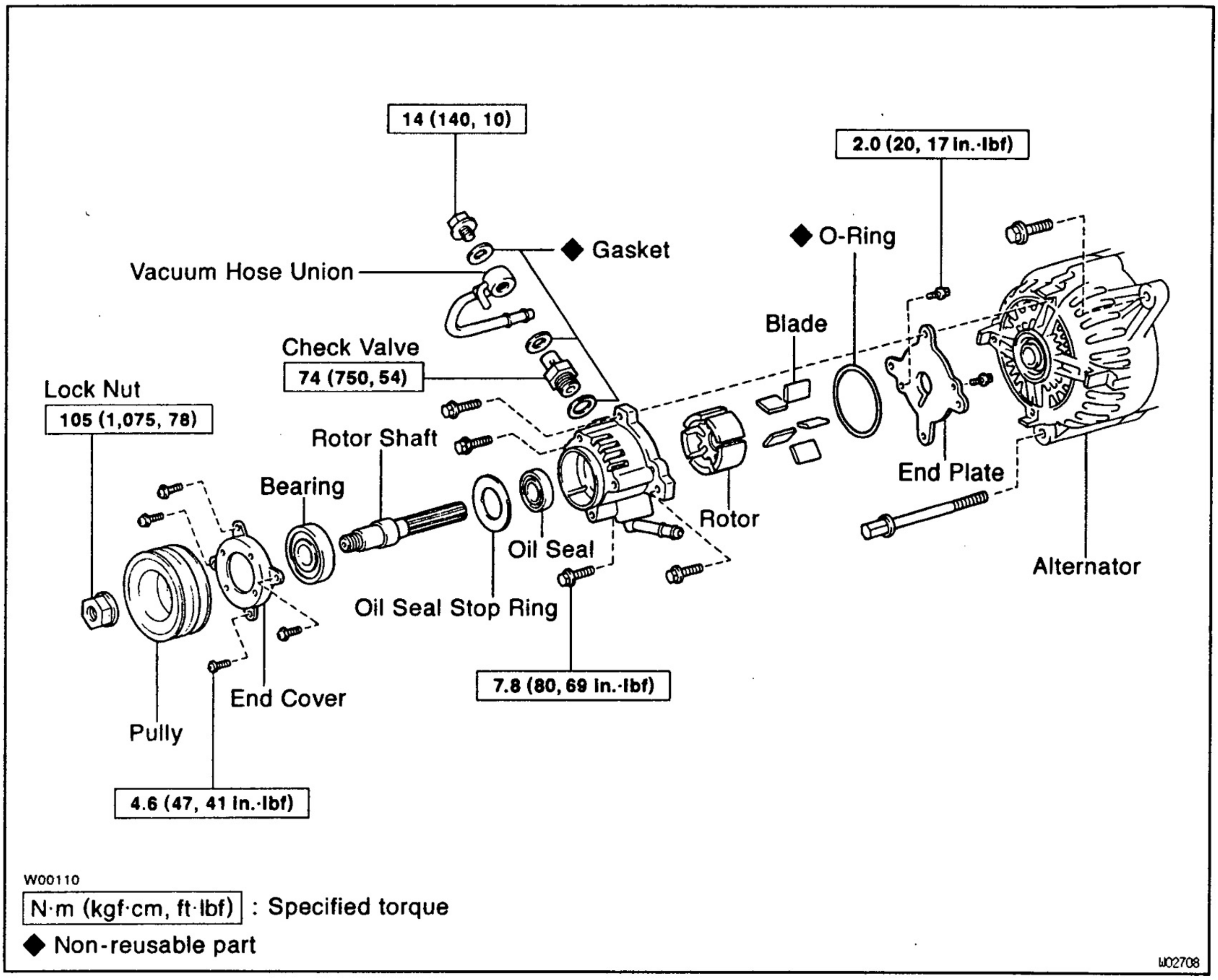

W00110

N·m (kgf·cm, ft·lbf) : Specified torque

◆ Non-reusable part

W02708

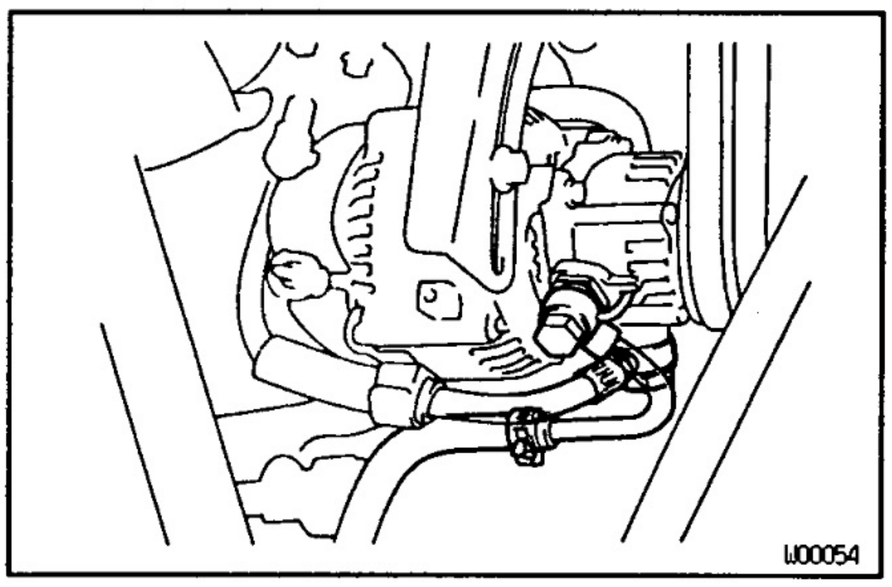

W00054

BR060-03

VACUUM PUMP REMOVAL

1. **DISCONNECT CONNECTORS AND VACUUM HOSES**

   Disconnect the 2 connectors, 2 vacuum hoses and oil inlet union from the alternator and vacuum pump.

   Torque: 14 N·m (140 kgf·cm, 10 ft·lbf)

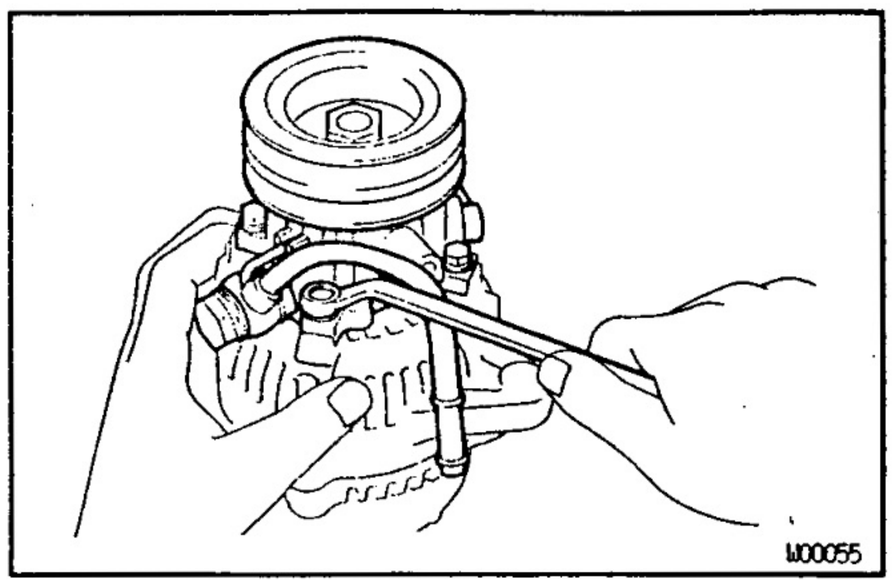

2. REMOVE ALTERNATOR WIRE

Remove the cover, nut, alternator wire, bolt and wire harness bracket from the alternator.

3. REMOVE ALTERNATOR

(a) Loosen the pivot and adjusting bolts, and remove the alternator drive belt.

(b) Remove the 2 bolts and alternator with vacuum pump.

4. REMOVE VACUUM PUMP FROM ALTERNATOR

Remove the 4 bolts and vacuum pump from the alternator.

Torque: 7.8 N·m (80 kgf·cm, 69 in.·lbf)

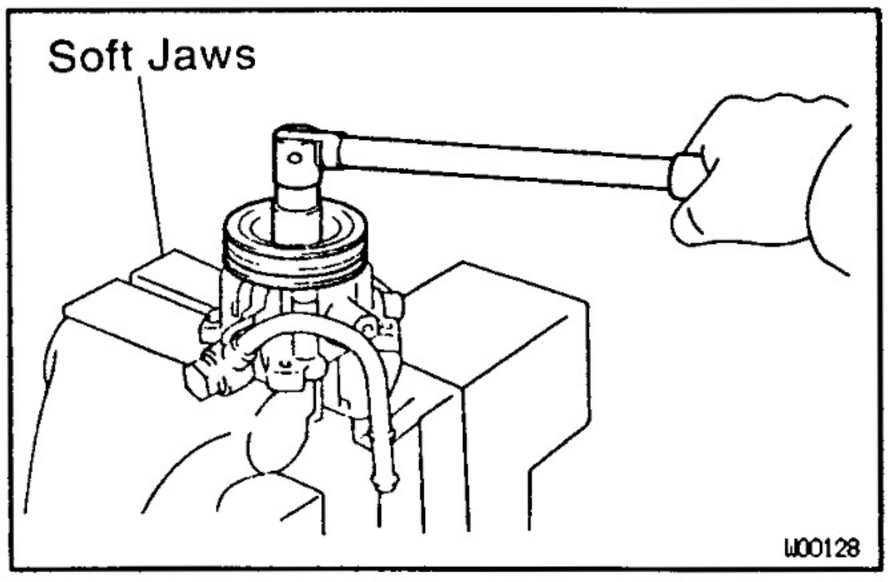

VACUUM PUMP DISASSEMBLY

BR1BA-02

BR

1. REMOVE PULLEY

Using soft jaws on the vise, remove the pulley lock nut and pulley.

Torque: 105 N·m (1,075 kgf·cm, 78 ft·lbf)

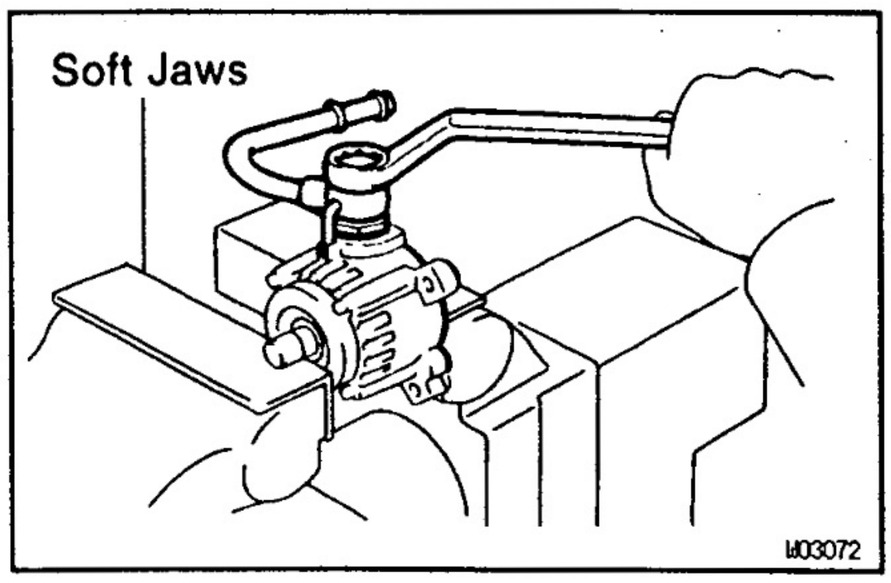

2. REMOVE VACUUM HOSE UNION

Using soft jaws on the vise, remove the union bolt, union and 2 gaskets.

Torque: 14 N·m (140 kgf·cm, 10 ft·lbf)

ASSEMBLY HINT: Align and insert the union pin into the matching hole of the casing.

3. REMOVE CHECK VALVE

Remove the check valve and gasket.

Torque: 74 N·m (750 kgf·cm, 54 ft·lbf)

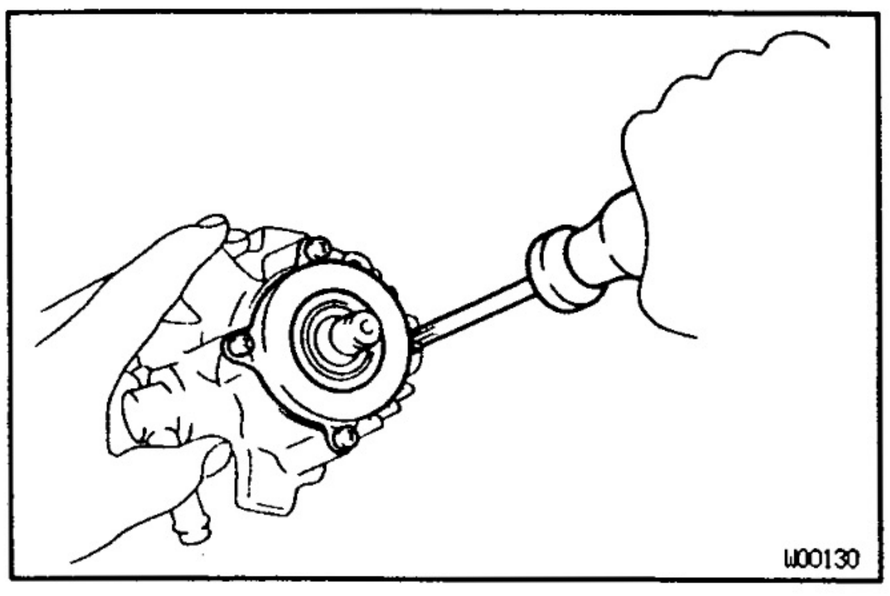

4. REMOVE END COVER

Remove the 4 screws and end cover.

Torque: 4.6 N·m (47 kgf·cm, 41 in.·lbf)

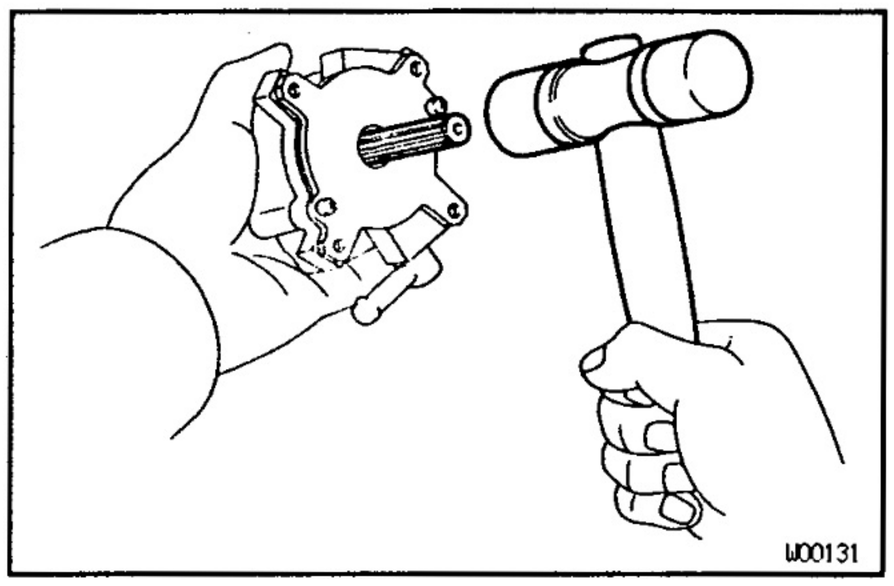

5. **REMOVE ROTOR SHAFT WITH BEARING**
   Using a plastic hammer, tap out the rotor shaft with bearing.
6. **REMOVE OIL SEAL STOP RING**
7. **REMOVE END PLATE**
   Remove the 2 screws and end plate.
   Torque: 2.0 N·m (20 kgf·cm, 17 in.·lbf)
8. **REMOVE O–RING**
9. **REMOVE ROTOR AND 5 BLADES**

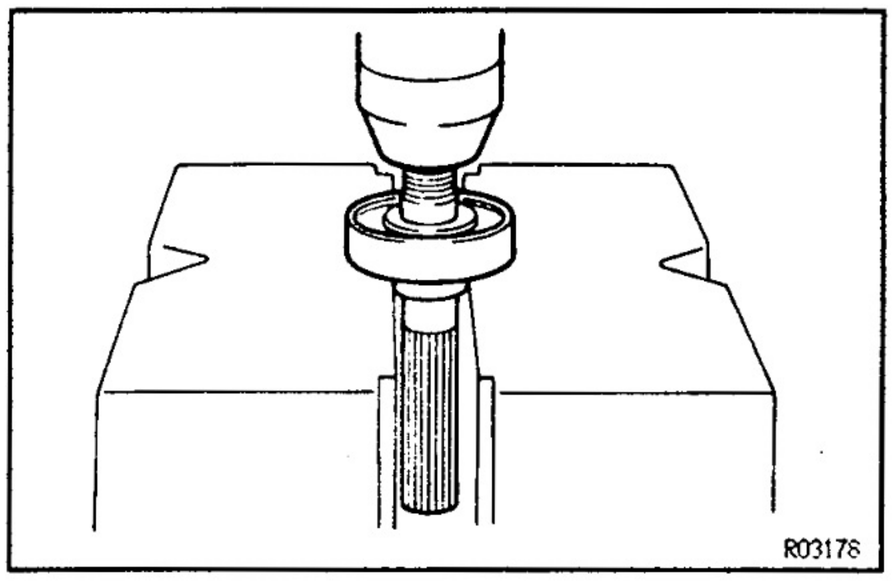

10. **IF NECESSARY, REMOVE BEARING**
    Using a press, remove the bearing from the rotor shaft.

BR

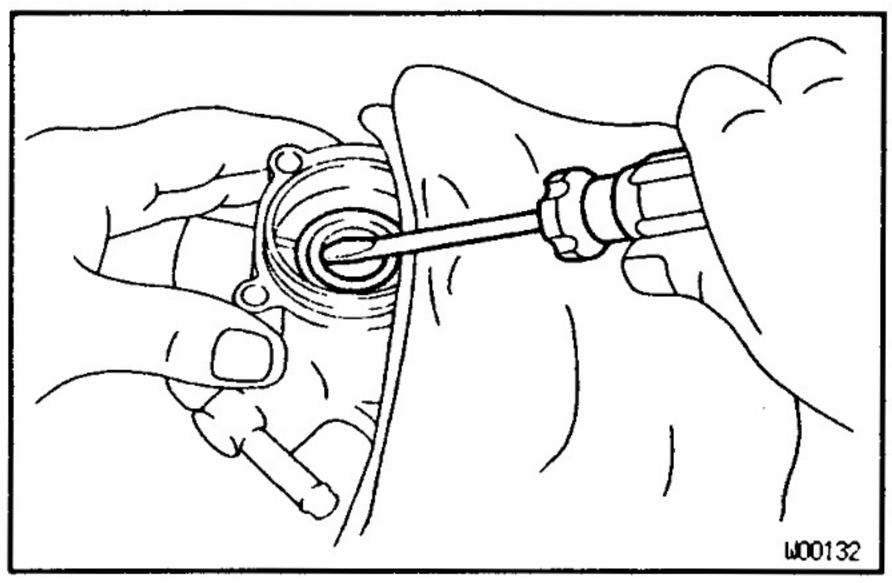

11. **REMOVE OIL SEAL**
    Using a screwdriver, remove the oil seal.

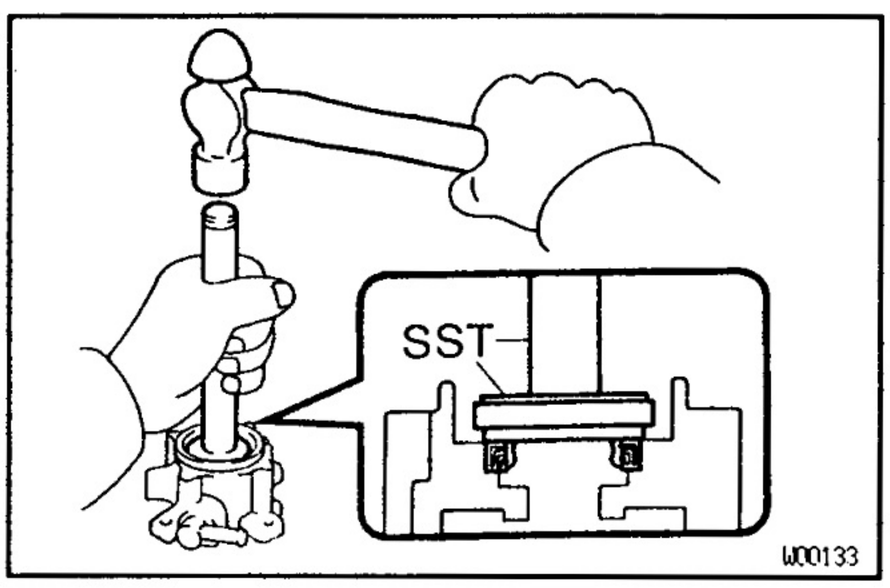

ASSEMBLY HINT: Use SST and a hammer, tap in the oil seal.
SST 09950–60010 (09951–00400),
09950–70010 (09951–07150)

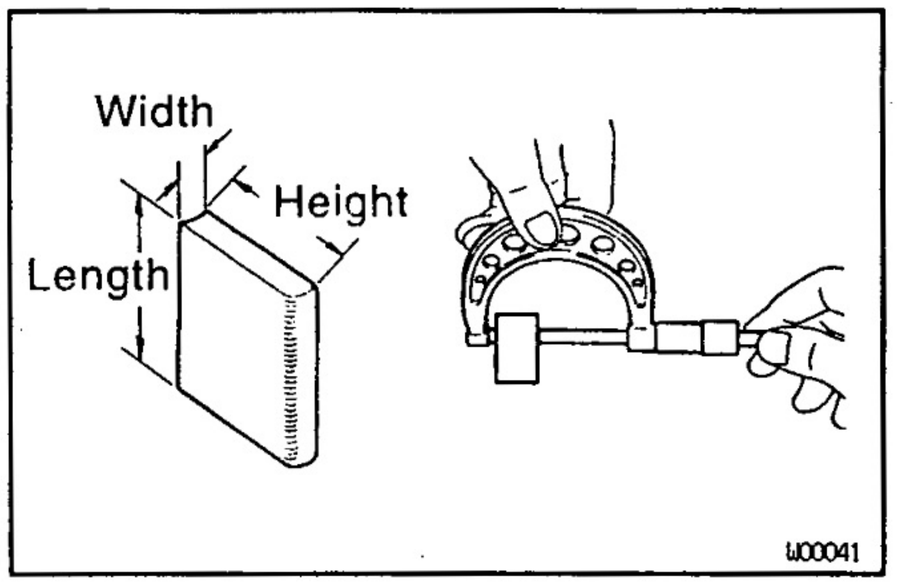

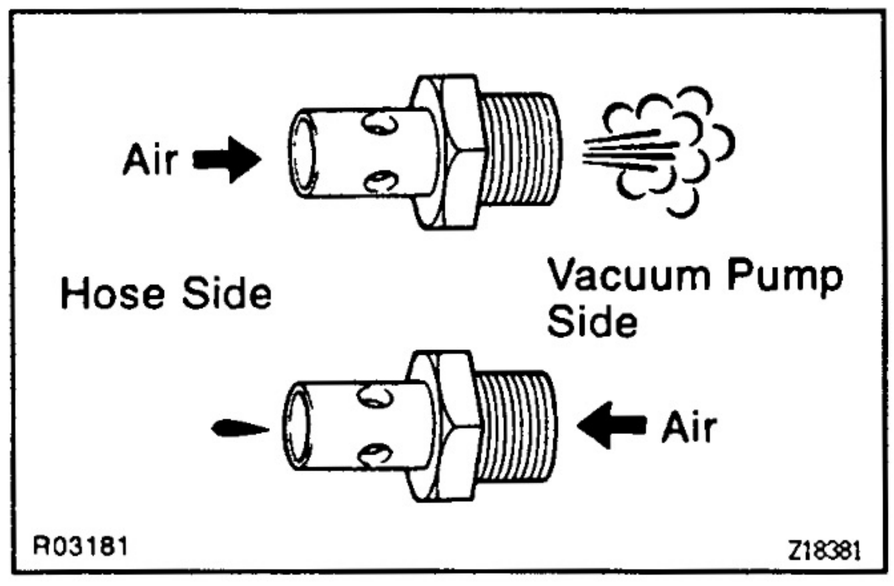

VACUUM PUMP INSPECTION

BR081-07

1. INSPECT BLADE

(a) Check the blades for wear or damage.

(b) Using a micrometer, measure the height, width and length of the blades.

Minimum height:

12.20 mm (0.4803 in.)

Minimum width:

4.95 mm (0.1949 in.)

Minimum length:

22.98 mm (0.4047 in.)

If necessary, replace the blade.

2. INSPECT CHECK VALVE OPERATION

(a) Check that air flows from the hose side to the pump side.

(b) Check that air does not flow from the pump side to the hose side.

If necessary, replace the check valve.

VACUUM PUMP ASSEMBLY

BR1BB-02

BR

Assembly is in the reverse order of disassembly.

VACUUM PUMP INSTALLATION

BR1BC-02

Installation is in the reverse order of removal.
AFTER INSTALLATION, ADJUST BELT TENSION

VACUUM PUMP (1KZ–T, 1KZ–TE)

COMPONENTS

BR0KU–04

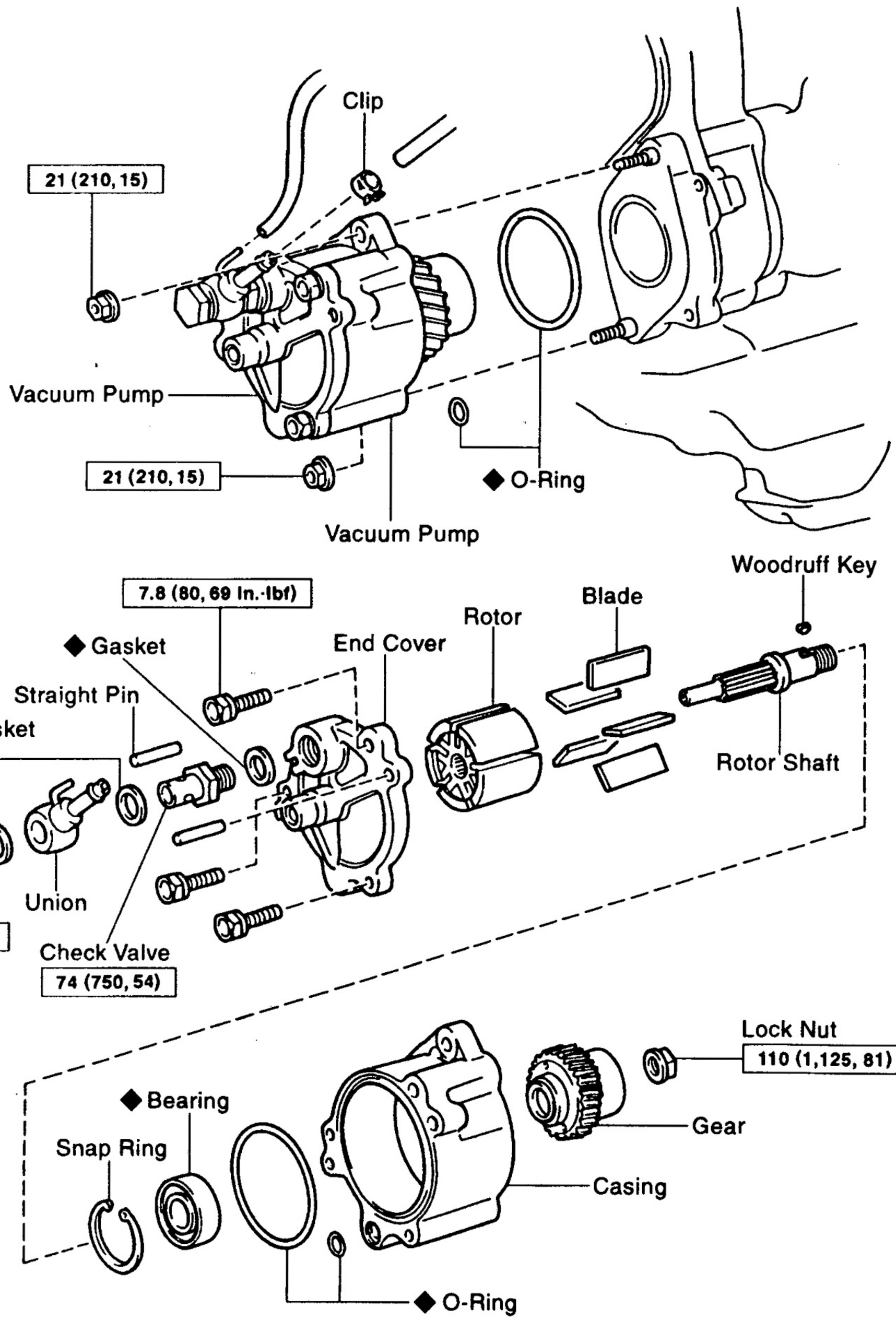

N·m (kgf·cm, in.·lbf) : Specified torque

◆ Non-reusable part

UI02709

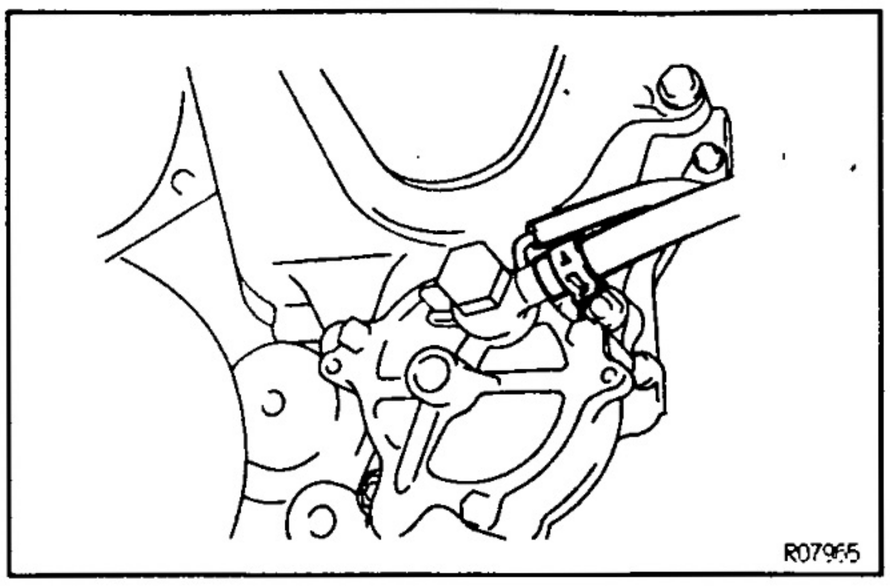

BR0NV-03

VACUUM PUMP REMOVAL

REMOVE VACUUM PUMP

(a) Disconnect the 2 hoses from the vacuum pump.

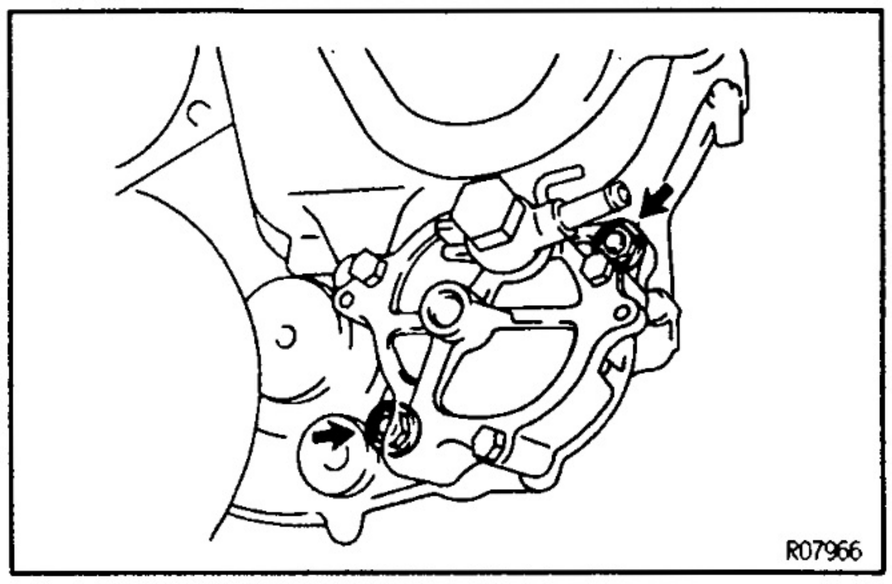

(b) Remove the 2 nuts and pump from the engine.
Torque: 21 N·m (210 kgf·cm, 15 ft·lbf)

(c) Remove the 2 O–rings.

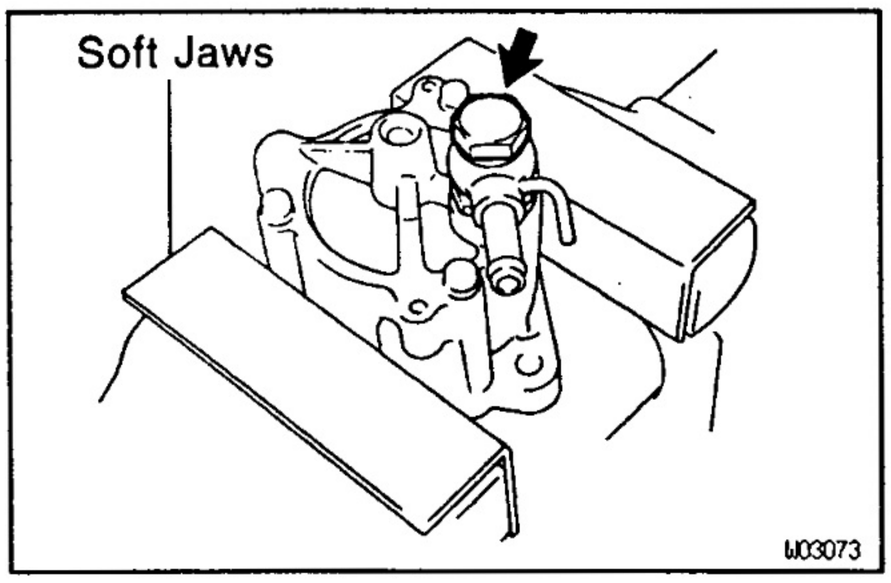

BR1LQ-01

VACUUM PUMP DISASSEMBLY

BR

1. REMOVE VACUUM HOSE UNION

Using soft jaws on the vise, remove the union bolt, union and 2 gaskets.
Torque: 14 N·m (140 kgf·cm, 10 ft·lbf)

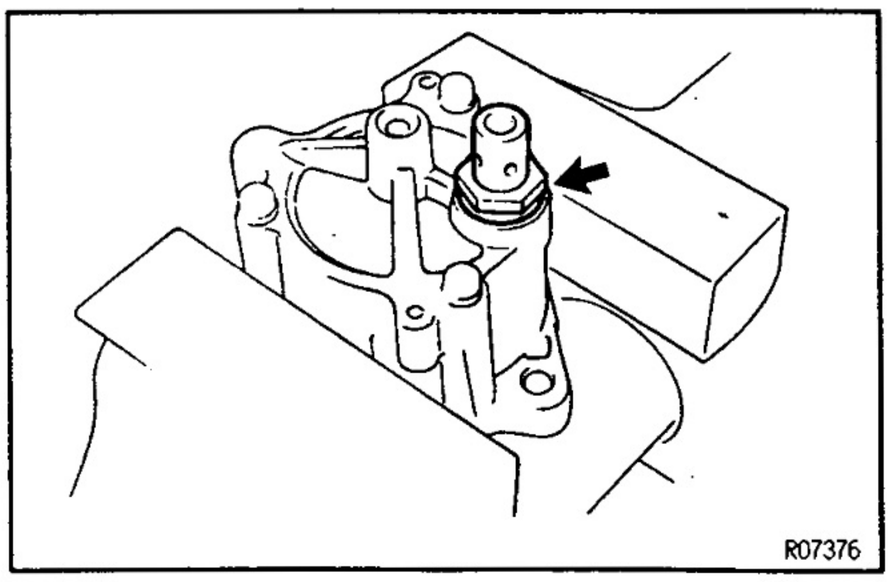

2. REMOVE CHECK VALVE

Remove the check valve and gasket.
Torque: 74 N·m (750 kgf·cm, 54 ft·lbf)

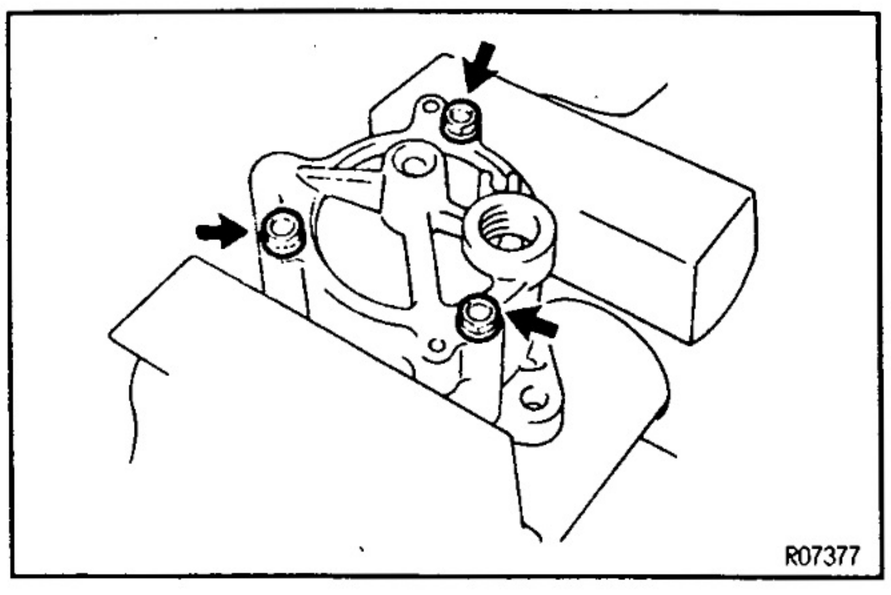

3. REMOVE END COVER

(a) Remove the 3 bolts.
Torque: 7.8 N·m (80 kgf·cm, 69 in.·lbf)

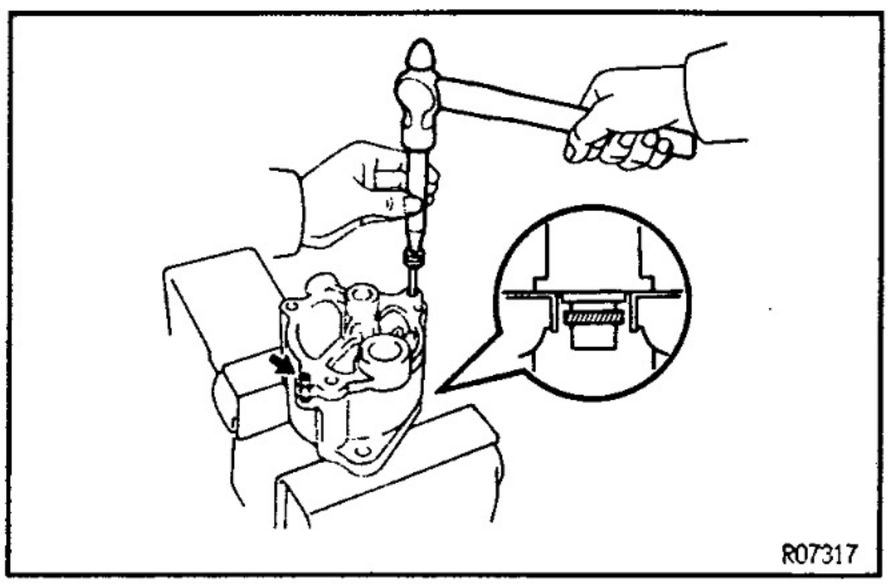

(b) Place the vacuum pump on vise.
NOTICE: Do not tighten the vise.
(c) Using a pin punch and hammer, drive out the 2 straight pins.
(d) Remove the end cover and 2 O–rings.

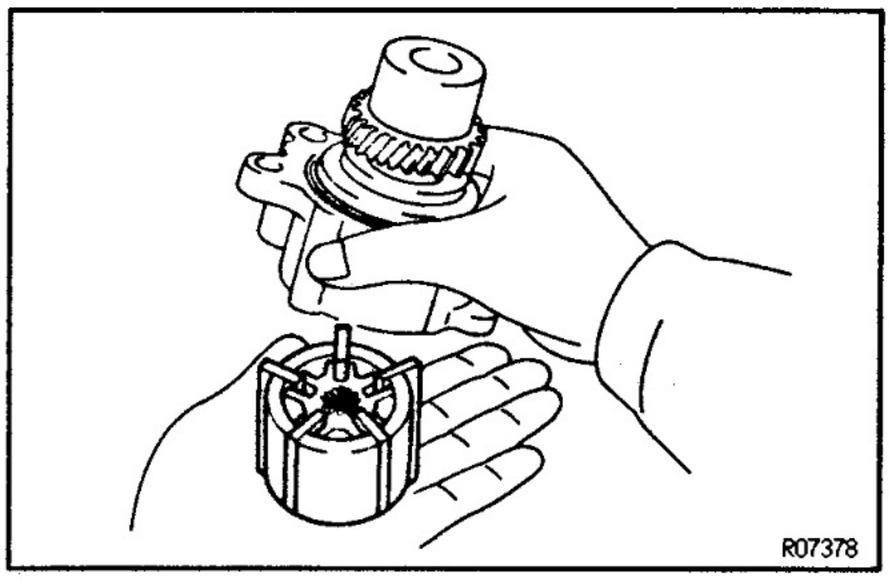

4. REMOVE ROTOR AND 5 BLADES
ASSEMBLY HINT: Before installation, apply engine oil to the rotor and blades.

BR

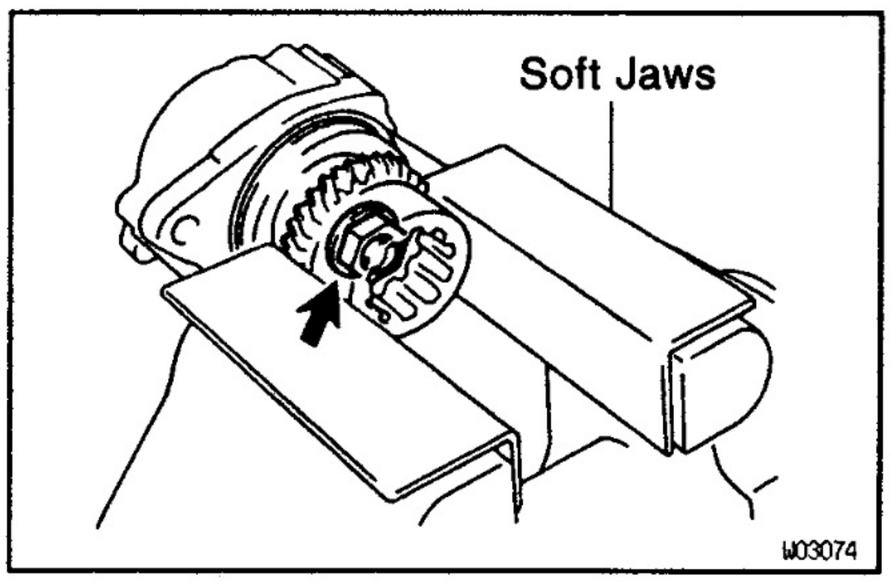

5. REMOVE GEAR
(a) Using soft jaws on the vise, clamp the gear in the vise.
(b) Remove the lock nut.
Torque: 110 N·m (1,125 kgf·cm, 81 ft·lbf)
(c) Remove the gear and woodruff key.

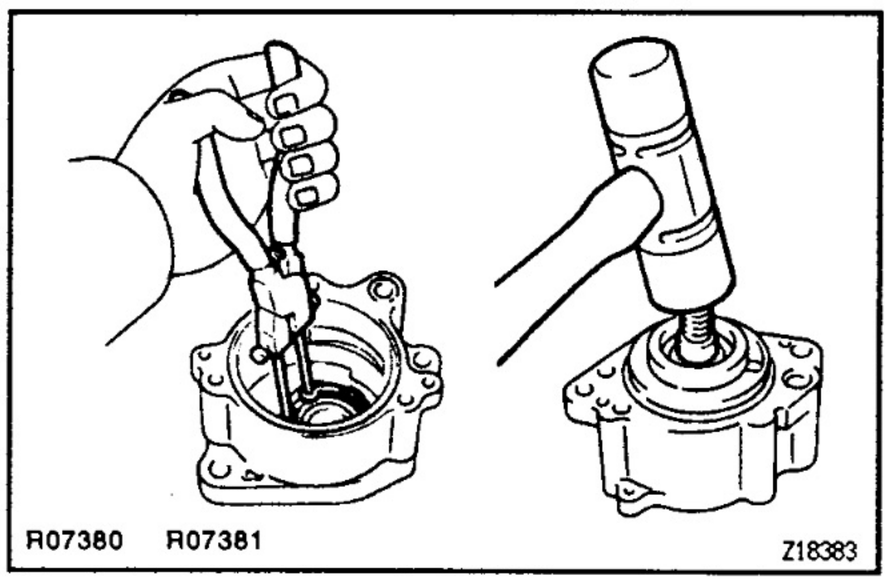

6. REMOVE SNAP RING
Using snap ring pliers, remove the snap ring.
7. REMOVE ROTOR SHAFT
Using a plastic hammer, tap out the rotor shaft.

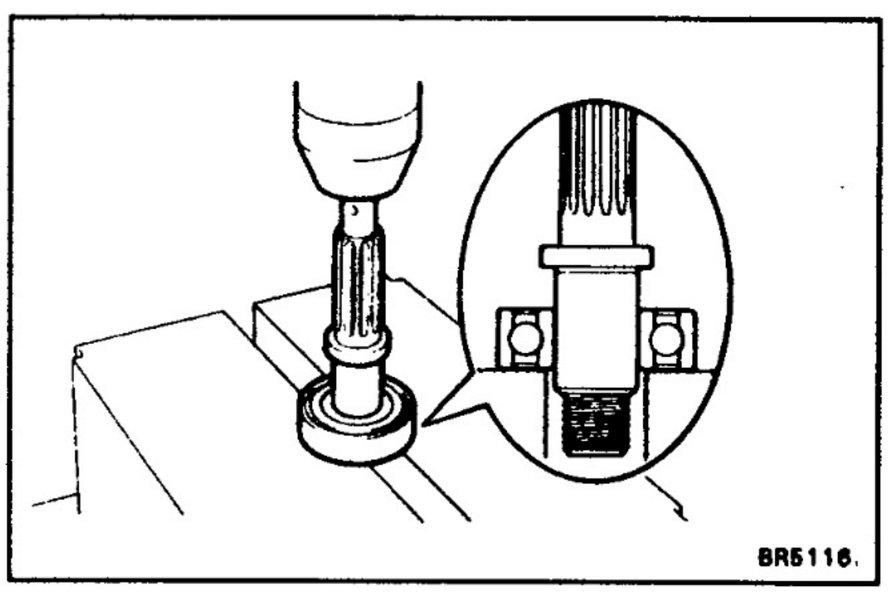

ASSEMBLY HINT: Use a press, install a new bearing to the rotor shaft.

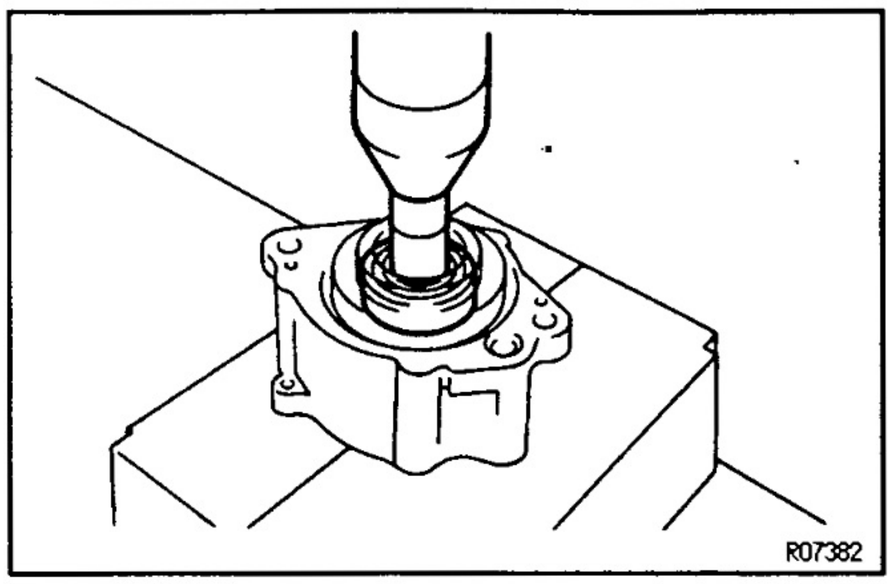

8. REMOVE BEARING

Using a press and 17 mm socket, press out the bearing.

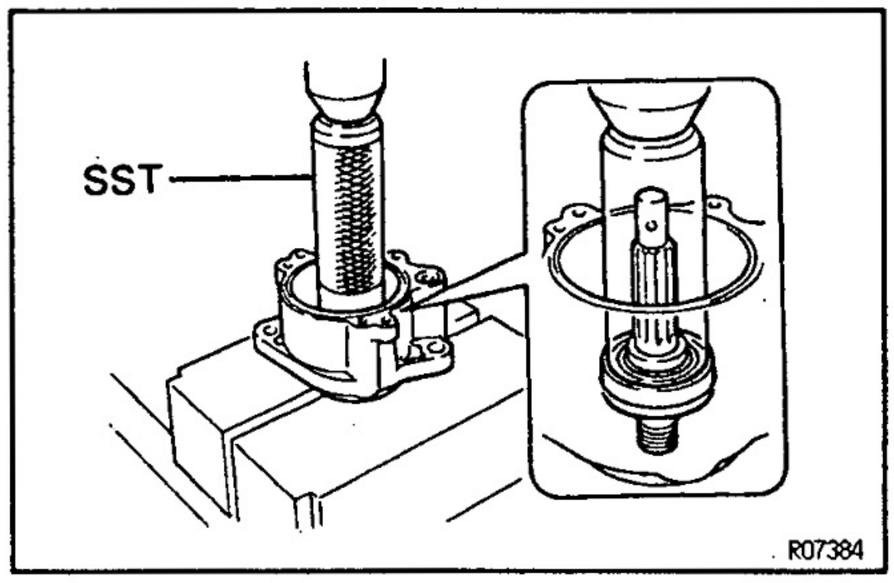

ASSEMBLY HINT: Use SST and a press, install the rotor shaft to the casing.
SST 09608–04031

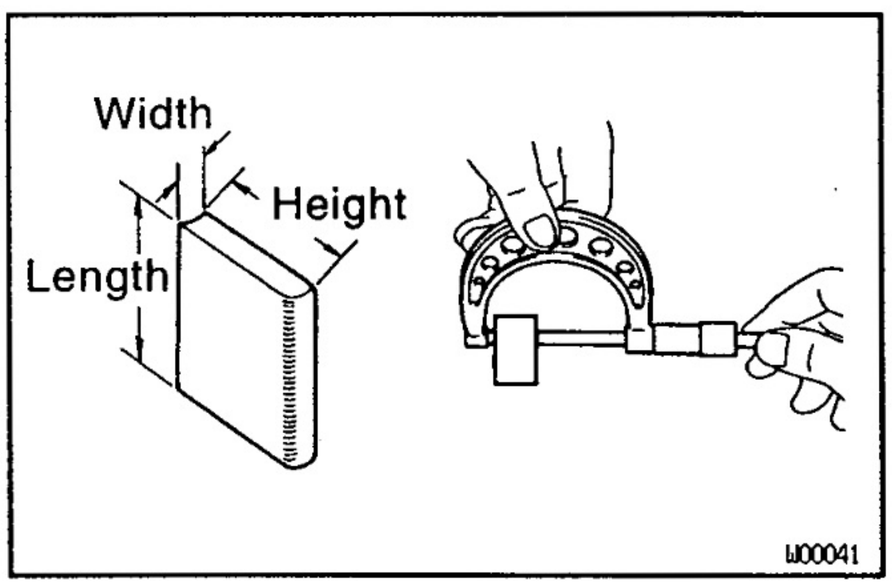

VACUUM PUMP INSPECTION

BR0KX–05

BR

1. INSPECT BLADES

(a) Check the blades for wear or damage.

(b) Using a micrometer, measure the height, width and length of the blades.

Minimum height:

16.50 mm (0.6496 in.)

Minimum width:

5.95 mm (0.2343 in.)

Minimum length:

44.96 mm (1.7701 in.)

If necessary, replace the blades.

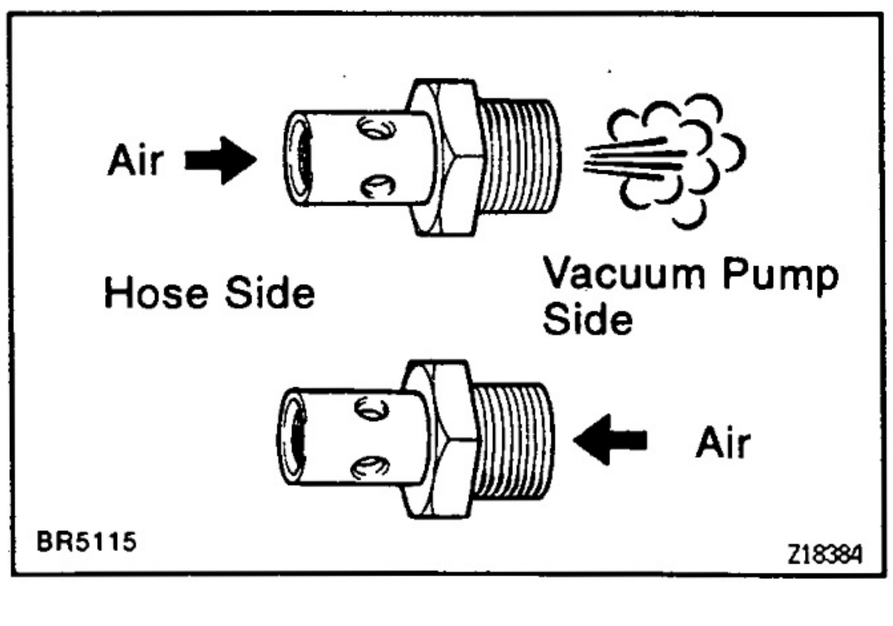

2. INSPECT CHECK VALVE OPERATION

(a) Check that air flows from the hose side to the pump side.

(b) Check that air does not flow from the pump side to the hose side.

If necessary, replace the check valve.

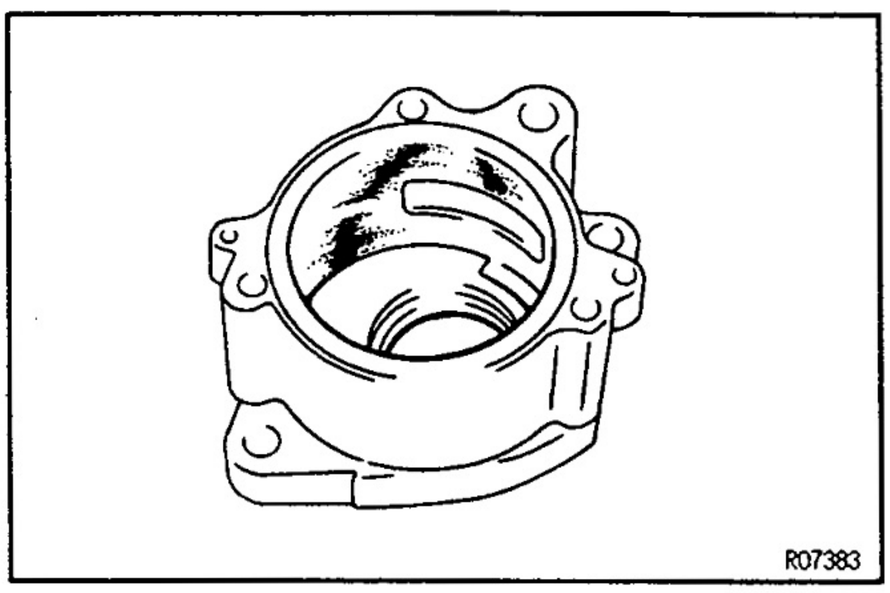

3. INSPECT INSIDE SURFACE OF CASING

Inspect the inside surface on the casing for scoring.

If necessary, replace the vacuum pump assembly.

BR1B6-03

VACUUM PUMP ASSEMBLY

Assembly is in the reverse order of disassembly.

BR1BC-03

VACUUM PUMP INSTALLATION

Installation is in the reverse order of removal.

FRONT BRAKE
COMPONENTS

BR1J2-02

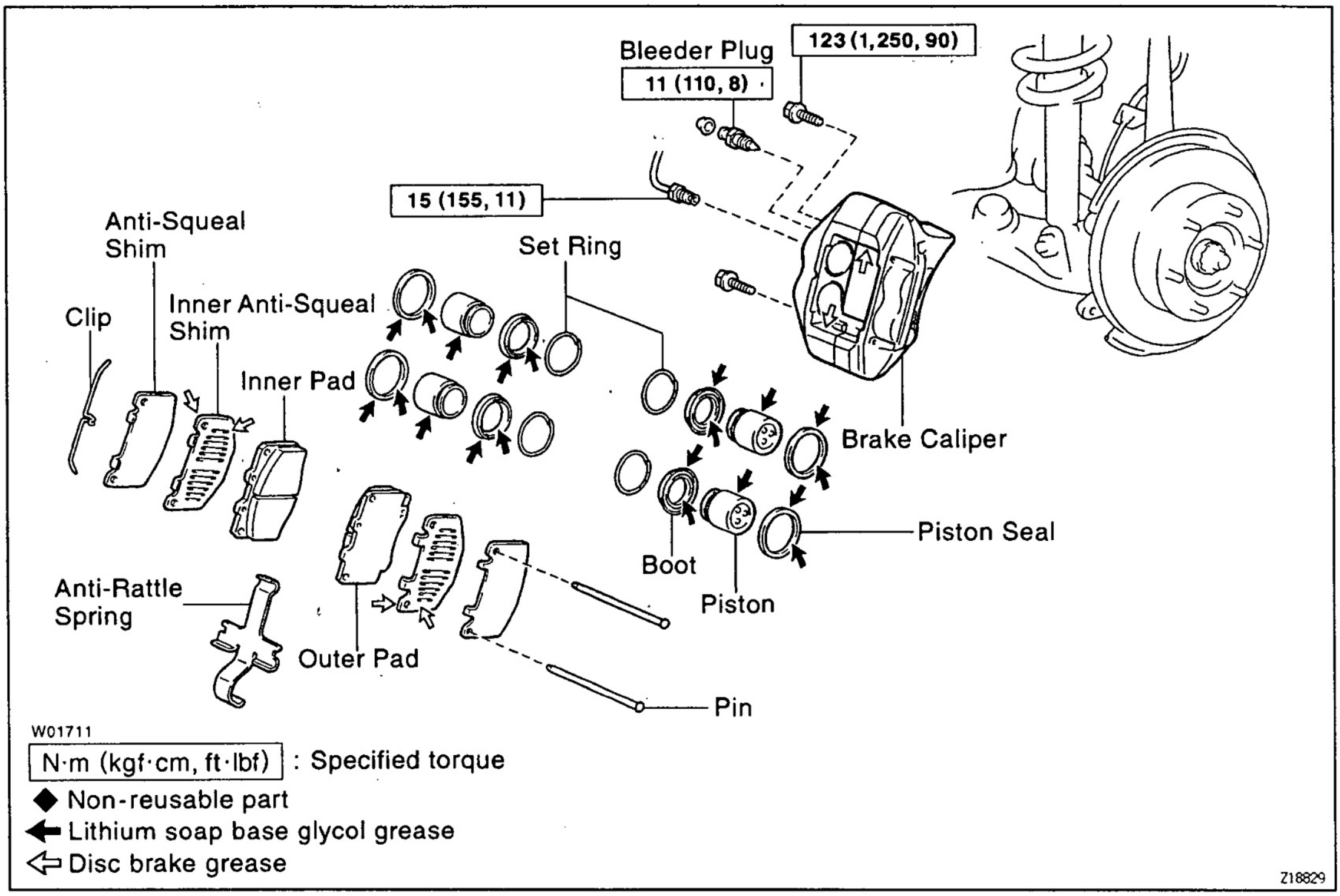

N·m (kgf·cm, ft·lbf) : Specified torque
◆ Non-reusable part
⬅ Lithium soap base glycol grease
⇦ Disc brake grease

Z18829

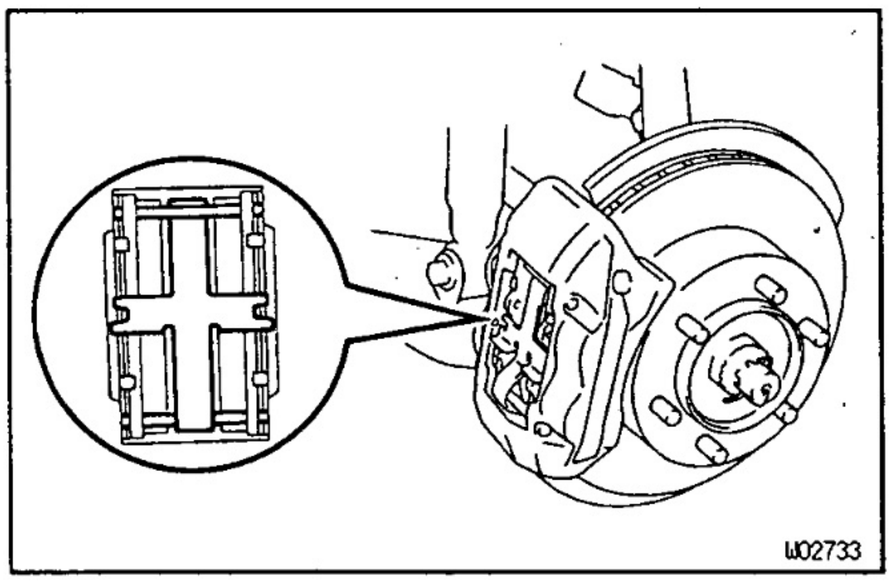

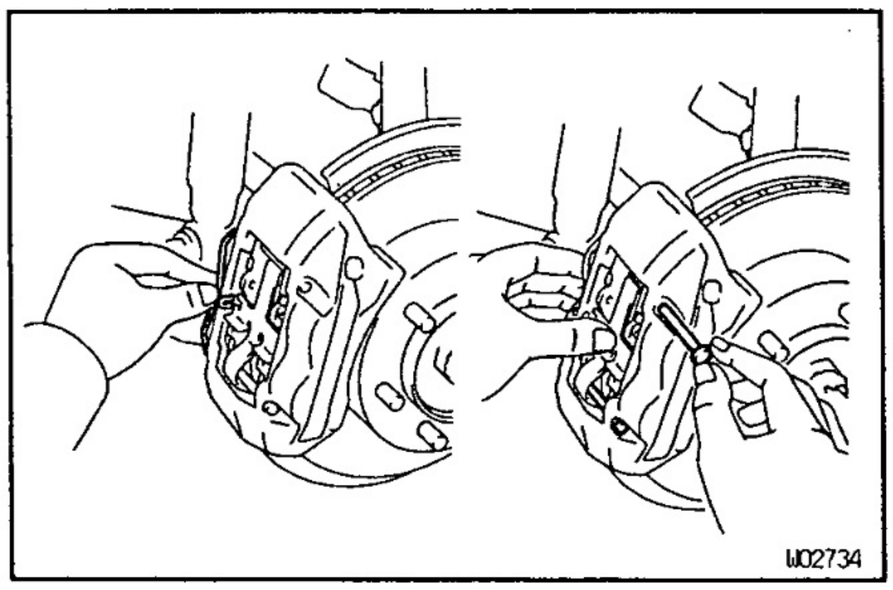

BR1J1-02

BRAKE PADS REPLACEMENT

1. **REMOVE FRONT WHEEL**
2. **INSPECT PAD LINING THICKNESS**
   Check the pad thickness and replace pads if not within the specification.
   Minimum thickness:
   1.0 mm (0.039 in.)
3. **REMOVE THESE PARTS:**
   - Clip
   - 2 pins
   - Anti−rattle spring
   - 2 pads
   - 4 anti−squeal shims

   NOTICE: The anti−rattle spring can be used again provided that they have sufficient rebound, no deformation, cracks or wear, and have had all rust, dirt and foreign particles cleaned off.

BR

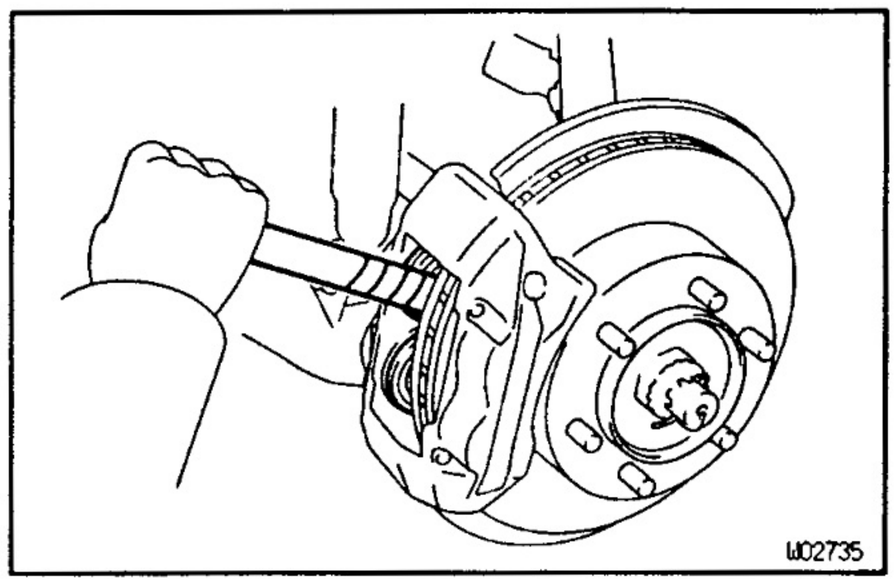

4. **CHECK DISC THICKNESS AND RUNOUT**
(See page BR–28)
5. **INSTALL NEW PADS**
NOTICE: When replacing worn pads, the anti–squeal shims must be replaced together with the pads.

(a) Draw out a small amount of brake fluid from the reservoir.

(b) Press in the pistons with a monkey wrench handle or an equivalent.
HINT:
- Tape the monkey wrench handle before use.
- Always change the pad on one wheel at a time as there is a possibility of the opposite piston flying out.
- If the piston is difficult to push in, loosen the bleeder plug and push in the piston while letting some brake fluid escape.

(c) Install the anti–squeal shims to 2 new pads.
HINT: Apply disc brake grease to both sides of the inner anti–squeal shims (See page BR–25).

(d) Install the 2 pads.
NOTICE: Do not allow oil or grease to get on the rubbing face.

6. **INSTALL ANTI–RATTLE SPRING AND 2 PINS**
7. **INSTALL CLIP**

BR

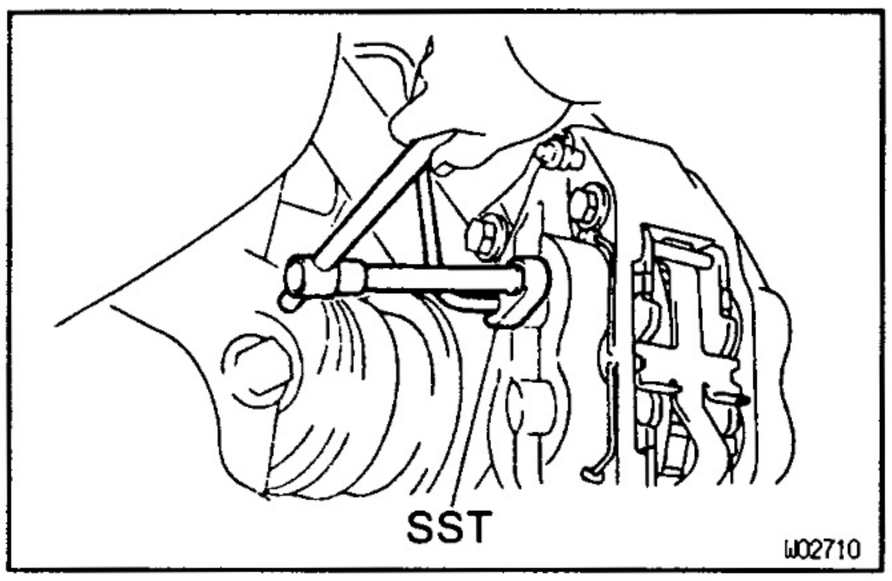

BR1J3–02

CALIPER REMOVAL

1. **REMOVE FRONT WHEEL**
2. **DISCONNECT BRAKE LINE**
Using SST, disconnect the brake line.
SST 09023–00100
Torque: 15 N·m (155 kgf·cm, 11 ft·lbf)

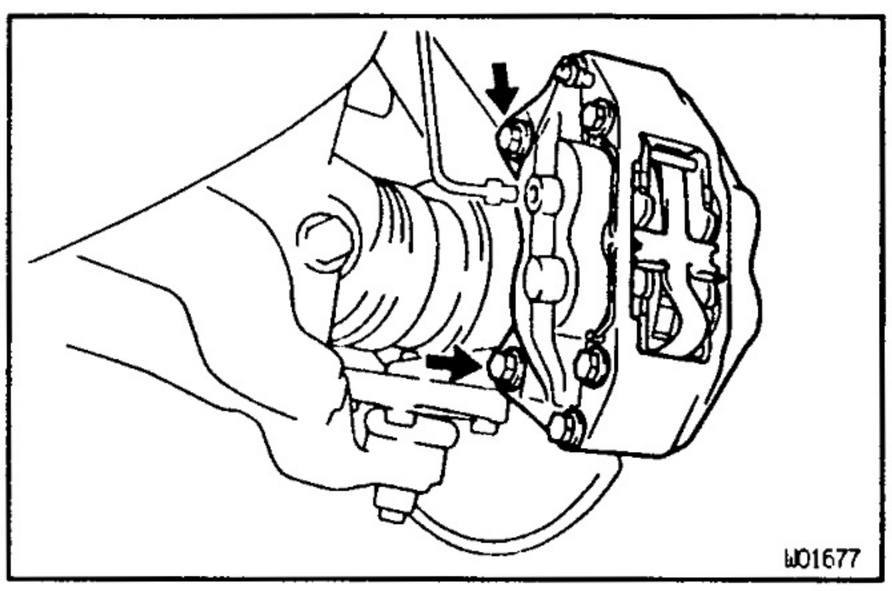

3. **REMOVE CALIPER**
Remove the 2 mounting bolts and caliper.
Torque: 123 N·m (1,250 kgf·cm, 90 ft·lbf)
4. **REMOVE THESE PARTS:**
- Clip
- 2 pins
- Anti–rattle spring
- 2 pads
- 4 anti–squeal shims

BR1J4-02

CALIPER DISASSEMBLY

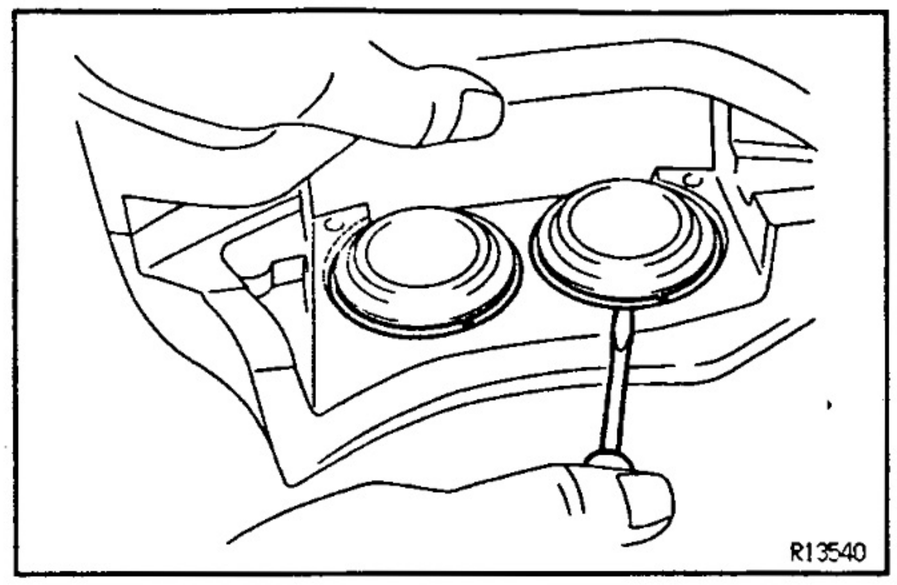

1. REMOVE CYLINDER BOOT SET RINGS AND BOOTS

Using a screwdriver, remove the 4 cylinder boot set rings and boots.

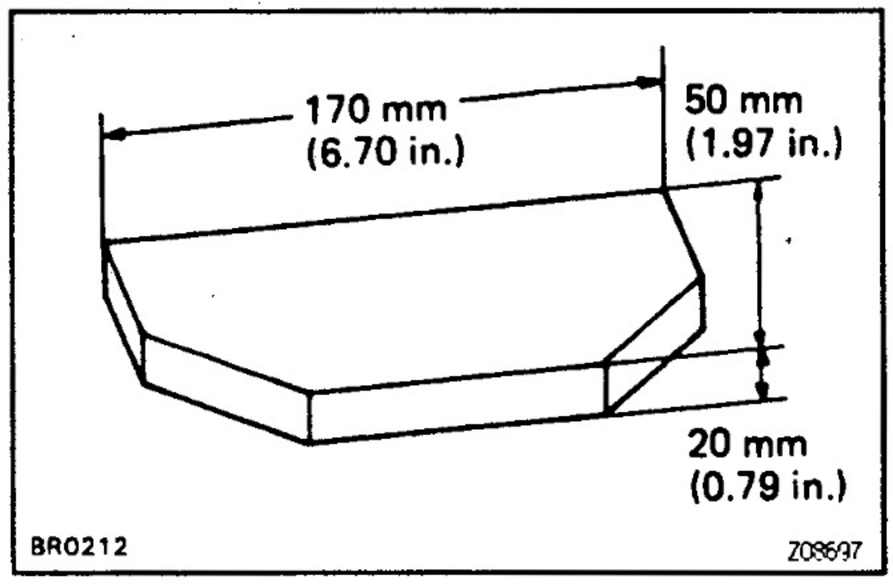

2. REMOVE PISTONS FROM CYLINDER

(a) Prepare the wooden plate to hold the pistons.

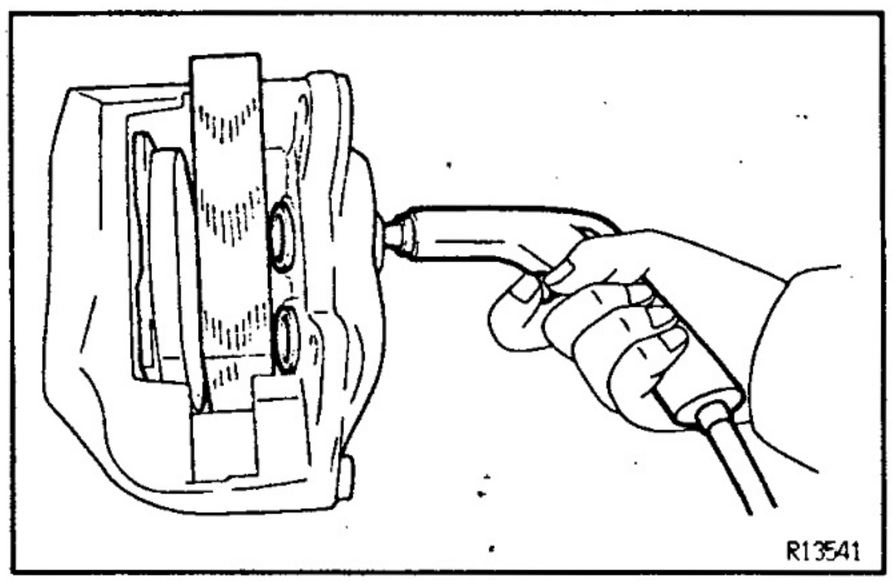

(b) Place the plate between the pistons and insert a pad at one side.

(c) Use compressed air to remove the pistons alternately from the cylinder.

DISASSEMBLY CAUTION: Do not place your fingers in front of the pistons when using compressed air.

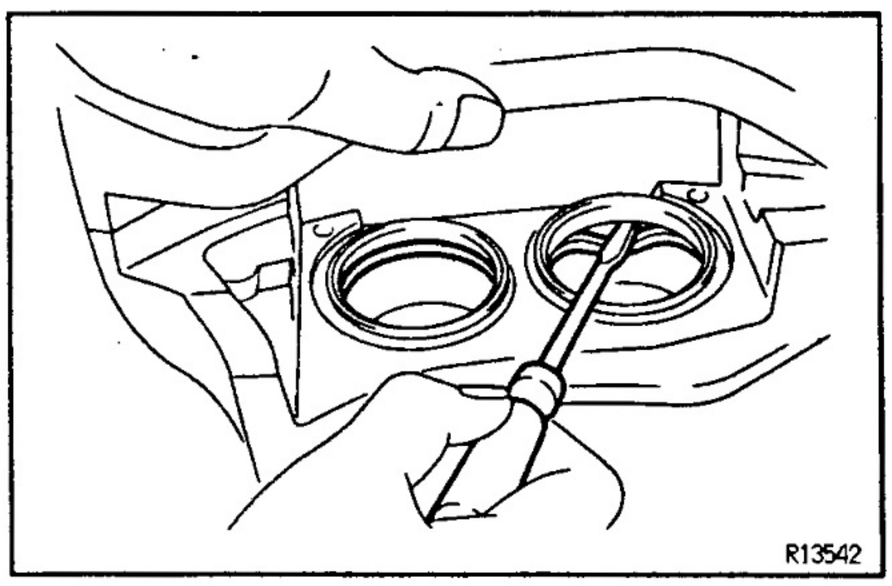

3. REMOVE PISTON SEALS

Using a screwdriver, remove the 4 piston seals from the cylinder.

BR1J6-02

CALIPER ASSEMBLY

Assembly is in the reverse order of disassembly.

NOTICE: Apply lithium soap base glycol grease to the parts indicated by the arrows (See page BR–25).

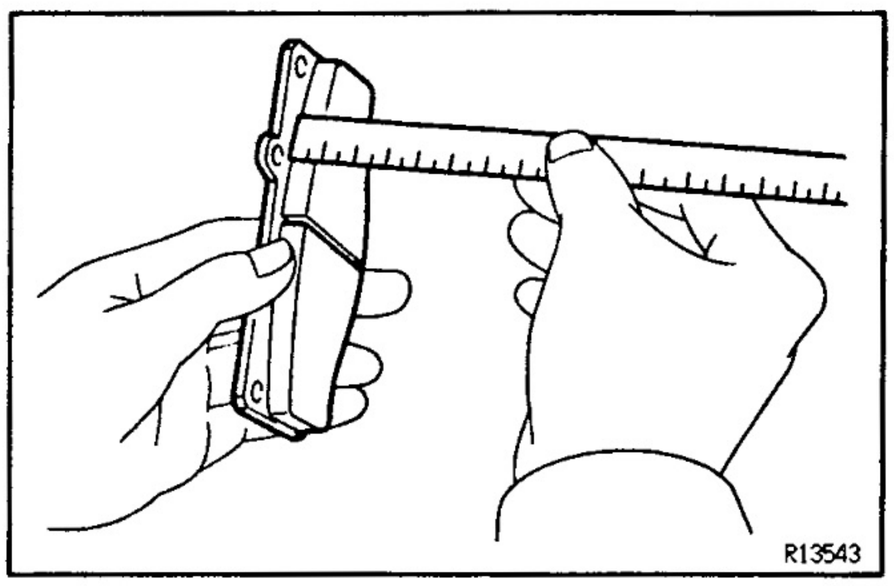

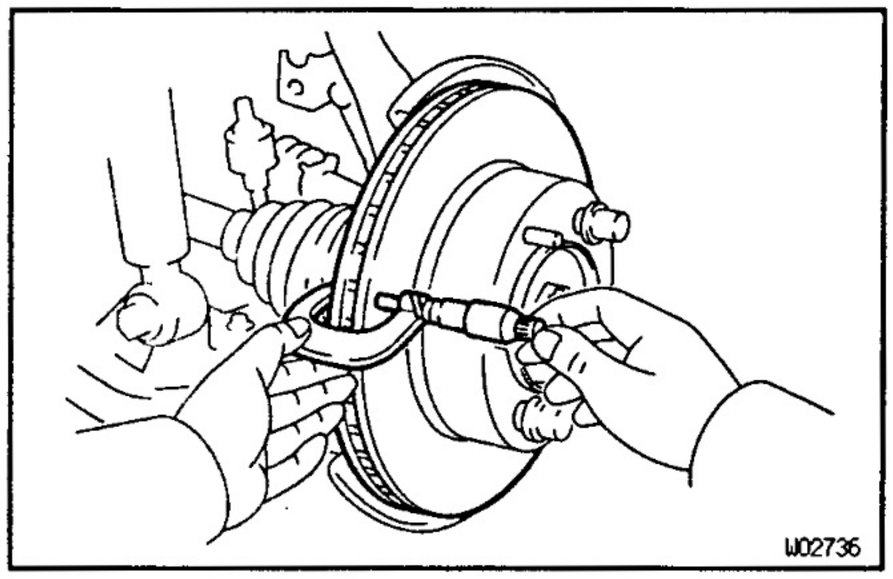

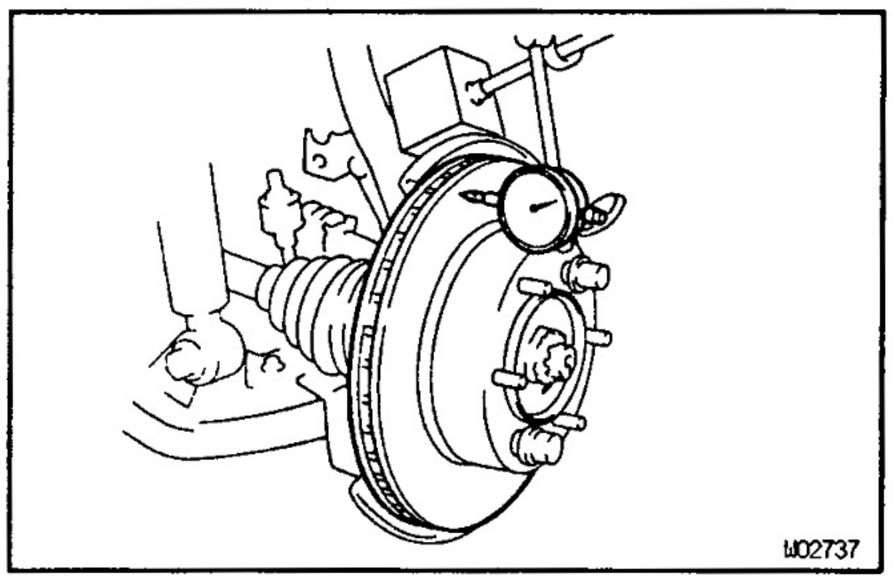

BR

BR1JW-02

FRONT BRAKE COMPONENTS INSPECTION AND REPAIR

1. MEASURE PAD LINING THICKNESS

Using a ruler, measure the pad lining thickness.

Standard thickness:

11.5 mm (0.453 in.)

Minimum thickness:

1.0 mm (0.039 in.)

Replace the pad if the thickness is less than the minimum (the 1.0 mm slit is no longer visible), or if it shows signs of uneven wear.

2. MEASURE DISC THICKNESS

Using a micrometer, measure the disc thickness.

Standard thickness:

22.0 mm (0.866 in.)

Minimum thickness:

20.0 mm (0.787 in.)

If the disc is scored or worn, or if its thickness is less than the minimum, repair or replace the disc.

3. MEASURE DISC RUNOUT

Using a dial indicator, measure the disc runout at a position 10 mm (0.39 in.) from the outside edge.

Maximum disc runout:

0.07 mm (0.0028 in.)

If the runout is greater than the maximum, replace the disc.

HINT: Before measuring the runout, confirm that the front hub bearing play is within the specification.

4. IF NECESSARY, ADJUST DISC RUNOUT

(a) Remove the hub nuts and disc. Reinstall the disc 1/6 of a turn round from its original position on the hub. Install and torque the hub nuts.

Remeasure the disc runout. Make a note of the runout and the disc's position on the hub.

(b) Repeat (a) until the disc has been installed on the 4 remaining hub position.

(c) If the minimum runout recorded in (a) and (b) is less than the maximum disc runout, install the disc in that position.

(d) If the minimum runout recorded in (a) and (b) is greater than the maximum disc runout, replace the disc and repeat step 3.

BR1J7–02

CALIPER INSTALLATION

Installation is in the reverse order of removal.
AFTER INSTALLATION, FILL BRAKE RESERVOIR WITH BRAKE FLUID, BLEED BRAKE SYSTEM (See page BR–6) AND CHECK FOR LEAKS

REAR BRAKE (Drum Brake)

COMPONENTS

BR1J8-02

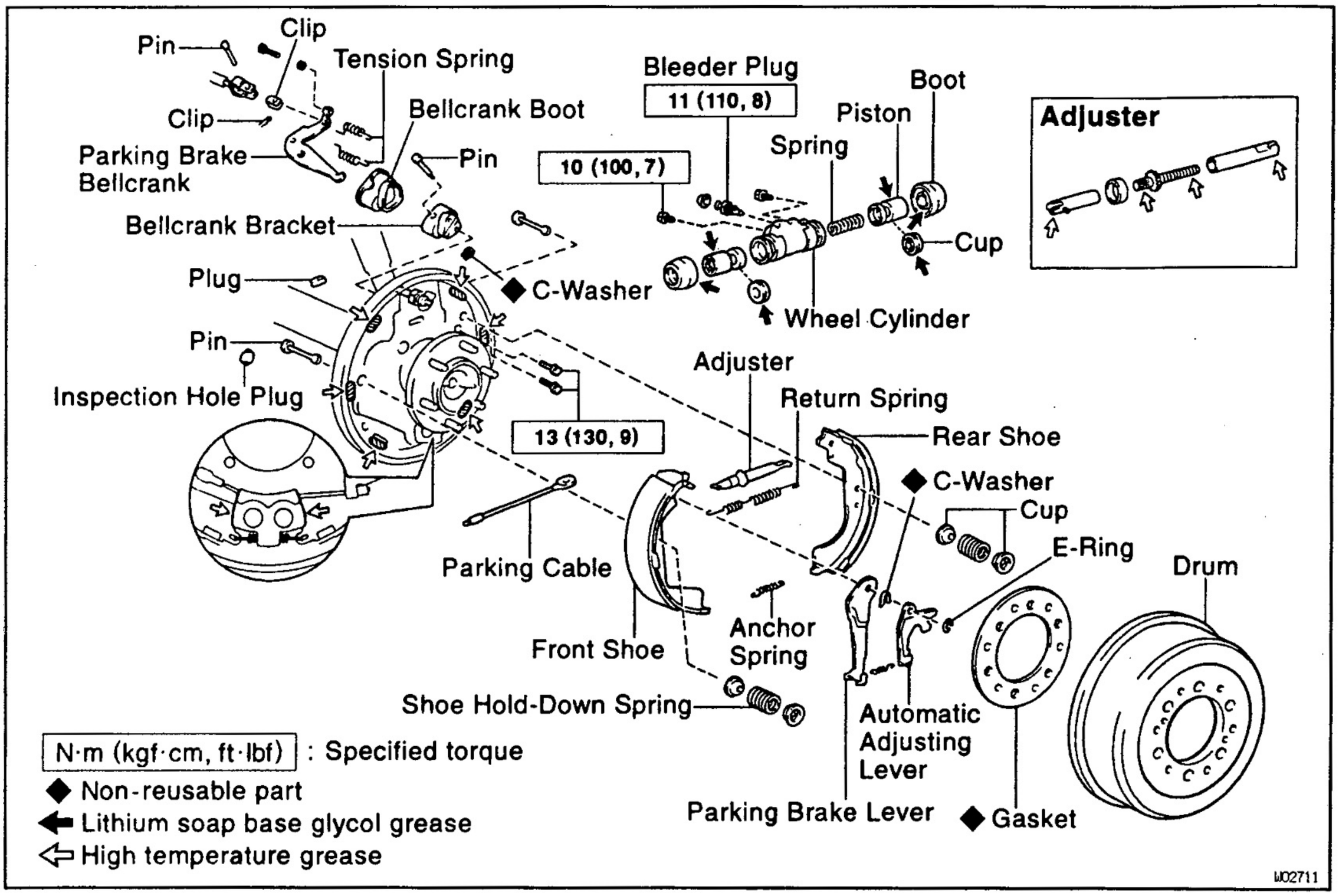

W02711

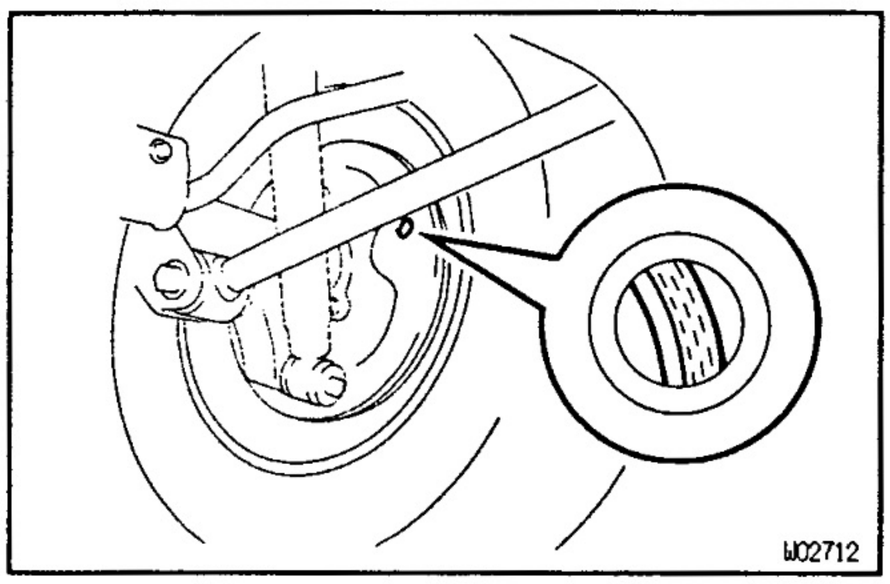

W02712

BR1J9-02

REAR BRAKE REMOVAL

1. INSPECT SHOE LINING THICKNESS

Remove the inspection hole plug, and check the shoe lining thickness through the hole.

If less than the minimum, replace the shoes.

Minimum thickness:

1.0 mm (0.039 in.)

2. REMOVE REAR WHEEL

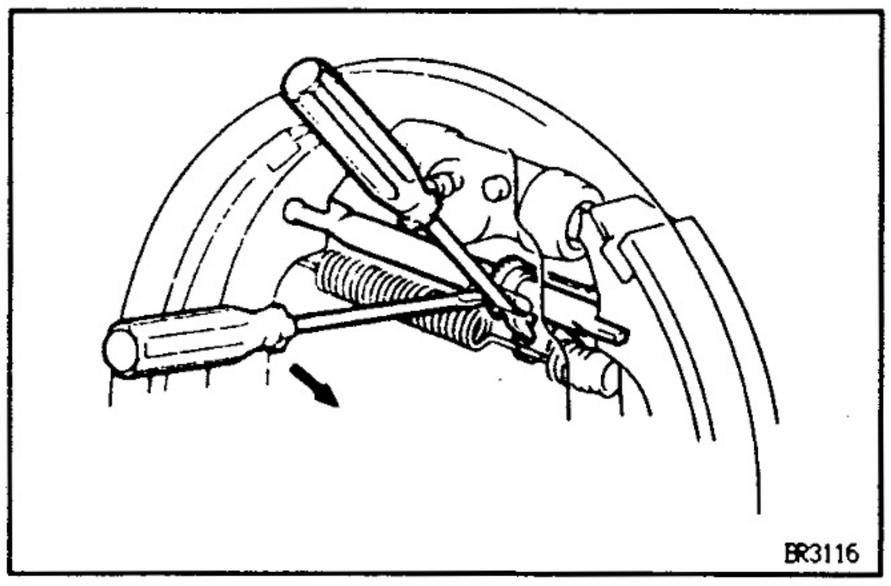

BR3116

3. REMOVE BRAKE DRUM

HINT: If the brake drum cannot be removed easily, do the following steps.

(a) Remove the adjusting hole plug in the backing plate.

(b) Insert a screwdriver through the hole in the backing plate, and hold the automatic adjusting lever away from the adjusting bolt.

(c) Using another screwdriver, reduce the brake shoe adjustment by turning the adjusting bolt.

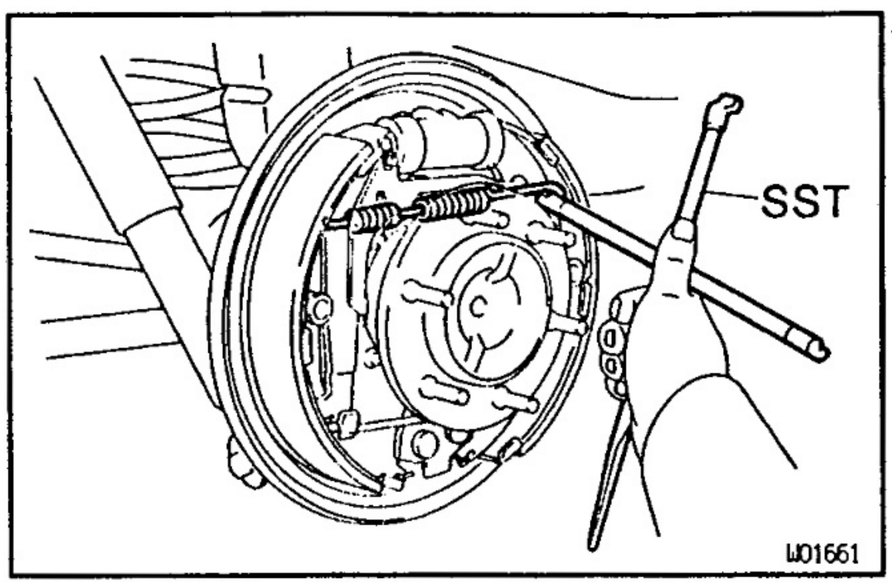

4. REMOVE REAR SHOE

(a) Using SST, disconnect the return spring..
SST 09703–30010

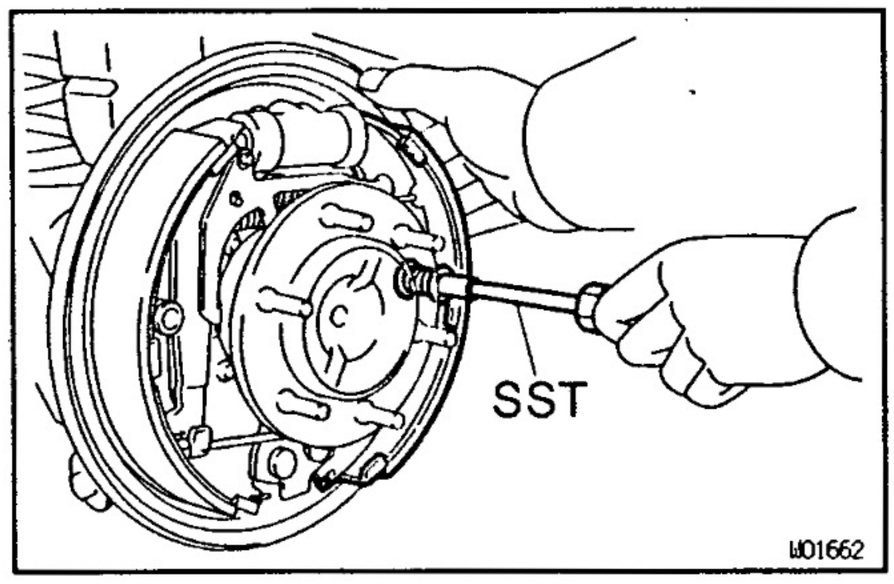

(b) Using SST, remove the shoe hold–down spring, cups and pin.
SST 09718–00010

(c) Disconnect the anchor spring from the rear shoe and remove the rear shoe.

(d) Remove the anchor spring from the front shoe.

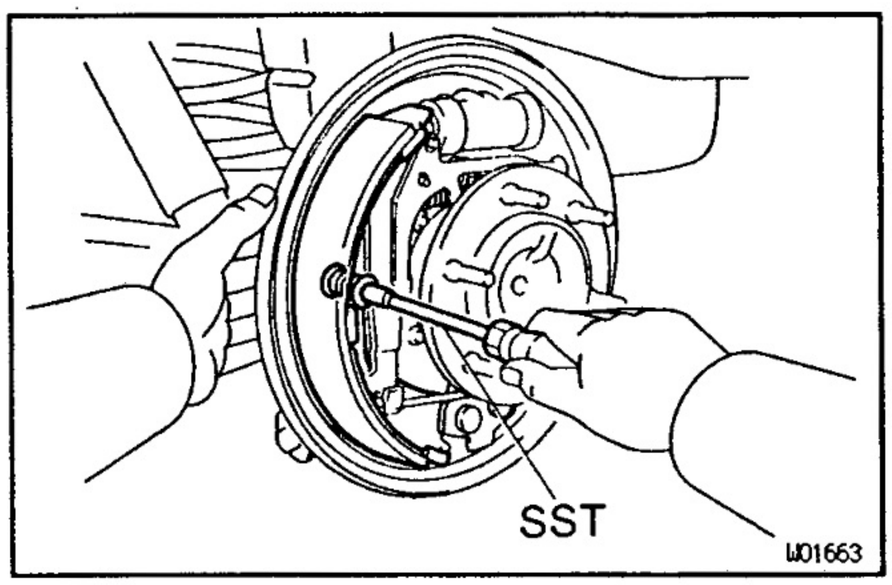

5. REMOVE FRONT SHOE

(a) Using SST, remove the shoe hold–down spring, cups and pin.
SST 09718–00010

(b) Remove the return spring from the front shoe.

(c) Remove the front shoe with the adjuster.

(d) Disconnect the parking brake cable from the front shoe.

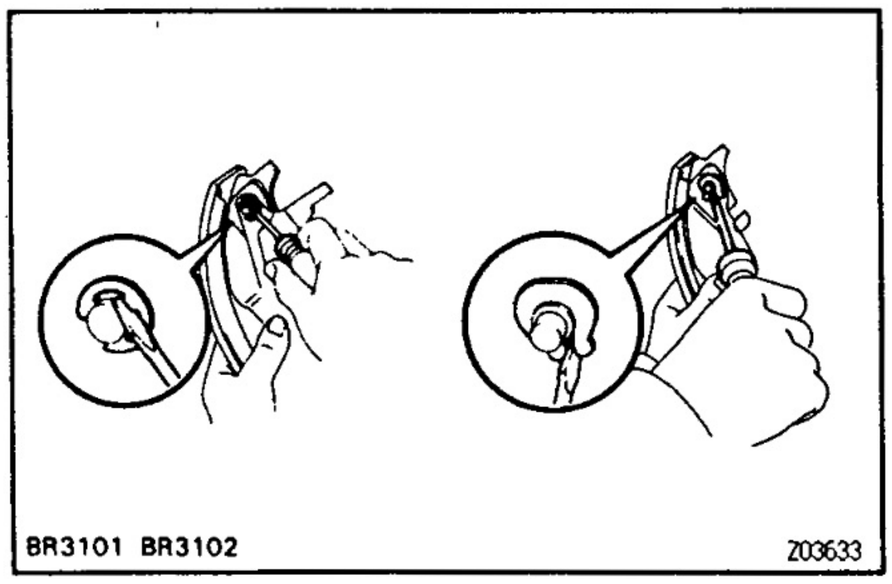

6. REMOVE ADJUSTER FROM FRONT SHOE

(a) Remove the adjusting lever spring.

(b) Remove the adjuster.

7. REMOVE AUTOMATIC ADJUSTING LEVER AND PARKING BRAKE LEVER

(a) Using a screwdriver, remove the E–ring.

(b) Remove the automatic adjusting lever.

(c) Using a screwdriver, remove the C–washer.

(d) Remove the parking brake lever.

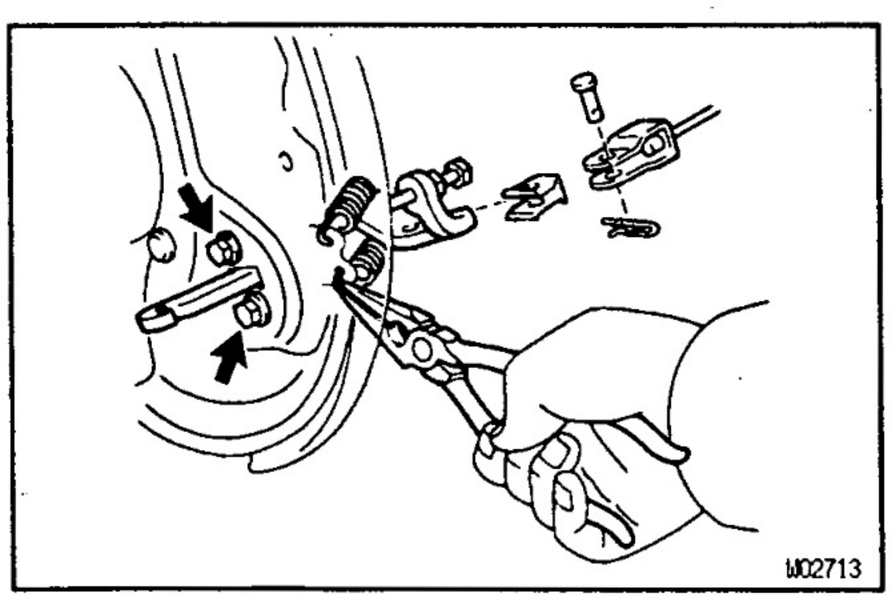

8. REMOVE AND DISASSEMBLE PARKING BRAKE BELLCRANK

(a) Using needle–nose pliers, remove the clip.

(b) Remove the clip and pin, and disconnect the parking brake cable.

(b) Using needle nose pliers, remove the 2 tension springs.

(d) Remove the 2 bolts and bellcrank.
Torque: 13 N·m (130 kgf·cm, 9 ft·lbf)

(e) Remove the bellcrank boot from the bellcrank bracket.

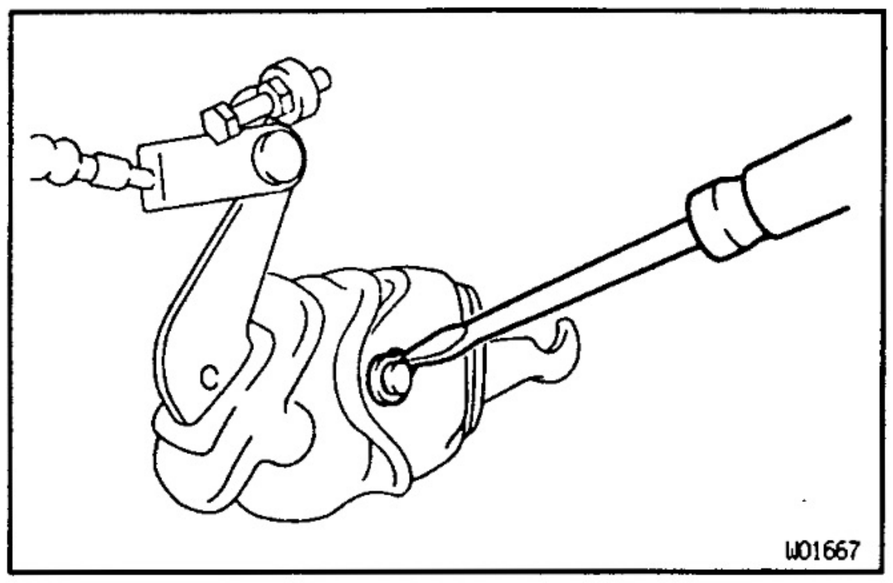

(f) Using a screwdriver, remove the C–washer and pin.
(g) Remove the parking brake bellcrank from the bellcrank bracket.

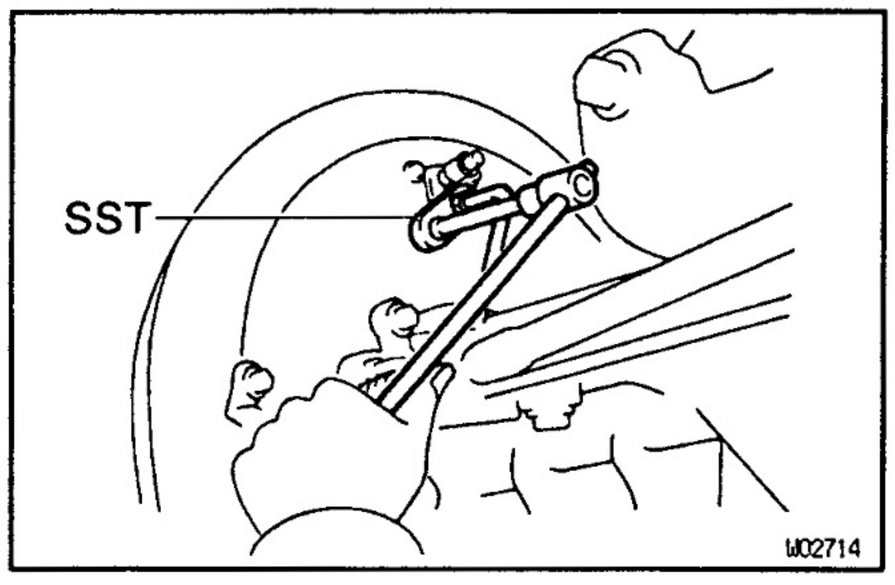

9. REMOVE WHEEL CYLINDER

(a) Using SST, disconnect the brake line. Use a container to catch the brake fluid.
Torque: 15 N·m (155 kgf·cm, 11 ft·lbf)
SST 09023–00100

(b) Remove the 2 bolts and wheel cylinder.
Torque: 10 N·m (100 kgf·cm, 7 ft·lbf)

10. DISASSEMBLE WHEEL CYLINDER

Remove the these parts from the wheel cylinder.
- 2 boots
- 2 pistons
- 2 piston cups
- Spring

BR

REAR BRAKE COMPONENTS INSPECTION AND REPAIR

BR1LH–01

1. INSPECT DISASSEMBLED PARTS

Inspect the disassembled parts for wear, rust or damage.

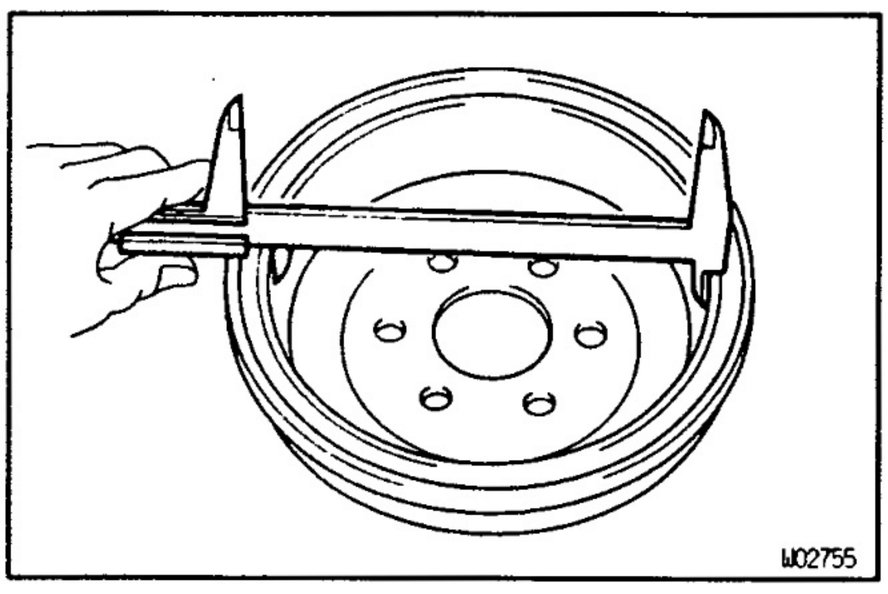

2. MEASURE BRAKE DRUM INSIDE DIAMETER

Using vernier calipers, measure the inside diameter of the drum.

Standard inside diameter:
295.0 mm (11.614 in.)

Maximum inside diameter:
297.0 mm (11.693 in.)

If the drum is scored or worn, the brake drum may be lathed to the maximum inside diameter.

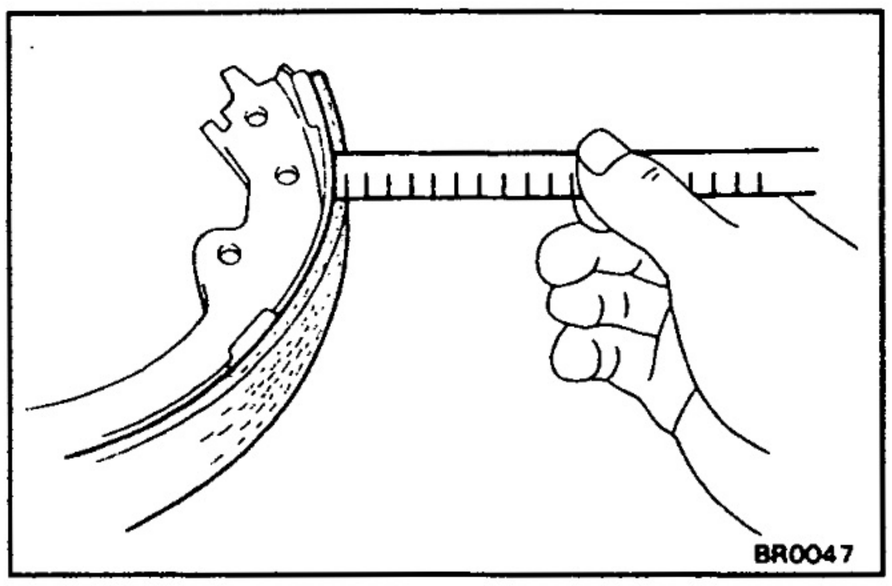

3. MEASURE BRAKE SHOE LINING THICKNESS

Using a ruler, measure the shoe lining thickness.

Standard thickness: 6.0 mm (0.236 in.)

Minimum thickness: 1.0 mm (0.039 in.)

If the shoe lining is less than the minimum, or shows signs of uneven wear, replace the brake shoes.

HINT: If any of the brake shoes have to be replaced, replace all of the rear brake shoes in order to maintain even braking.

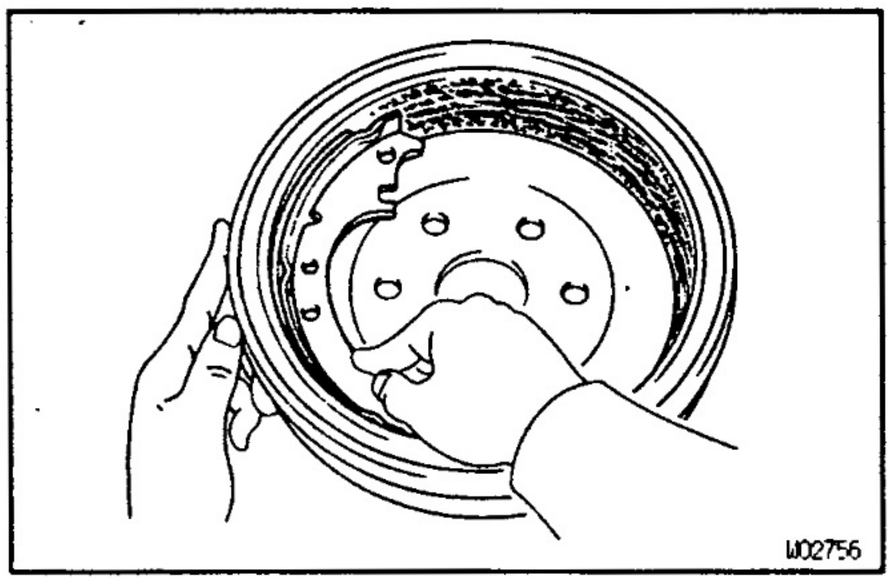

4. INSPECT BRAKE LINING AND DRUM FOR PROPER CONTACT

If the contact between the brake lining and drum is improper, repair the lining with a brake shoe grinder, or replace the brake shoe assembly.

REAR BRAKE INSTALLATION

BR1JB-02

BR

Installation is in the reverse order of removal.

AFTER INSTALLATION, FILL BRAKE RESERVOIR WITH BRAKE FLUID, BLEED BRAKE SYSTEM (See page BR–6) AND CHECK FOR LEAKS

NOTICE: Apply lithium soap base glycol grease and high temperature grease to the parts indicated by the arrows (See page BR–30).

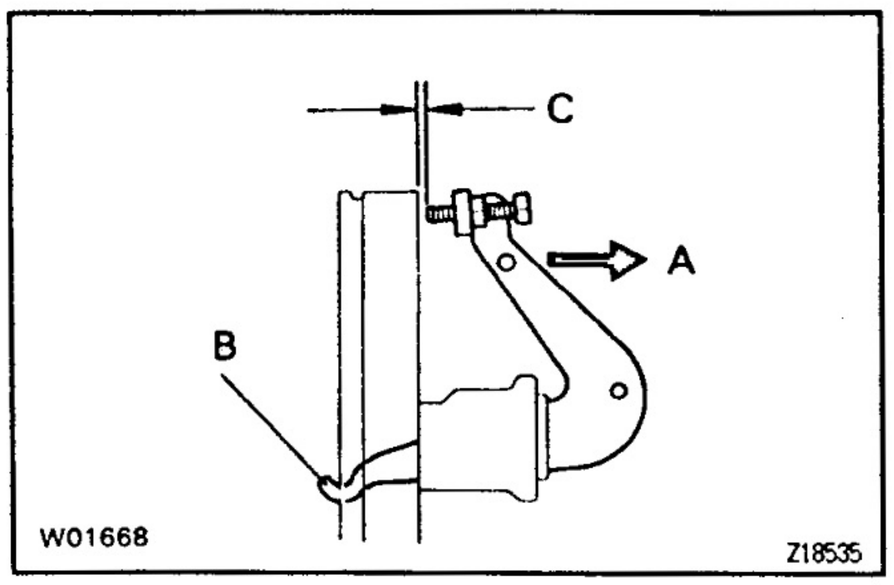

1. ADJUST BELLCRANK

(a) Lightly pull the bellcrank in direction A until there is no slack at part B.

(b) In this condition, turn the adjusting bolt so that dimension C will be 0.4–0.8 mm (0.016–0.031 in.).

(c) Lock the adjusting bolt with the lock nut.

(d) Connect the parking brake cable to the parking brake bellcrank and install the clip.

(e) Install the tension spring.

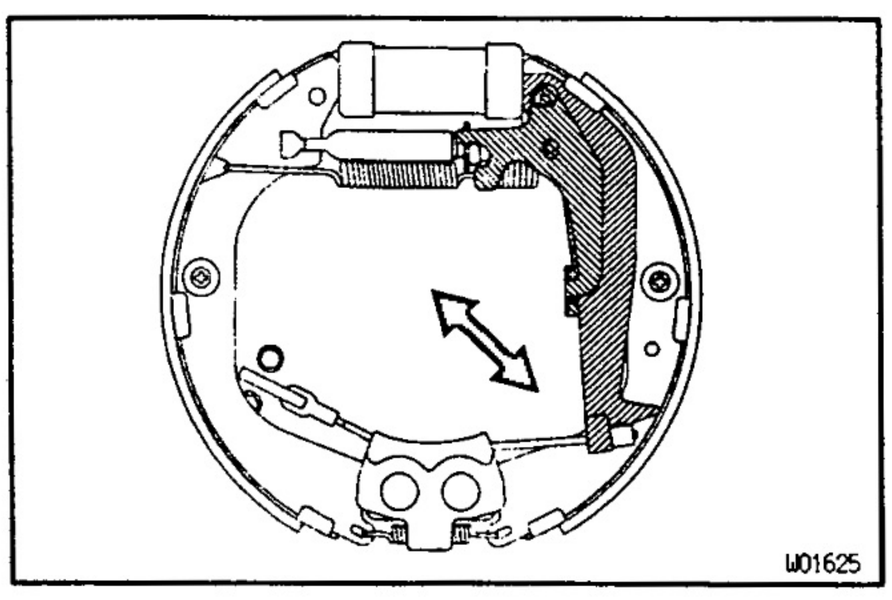

2. CHECK OPERATION OF AUTOMATIC ADJUSTING MECHANISM

(a) Move the parking brake lever of the rear shoe back and forth, as shown. Check that the adjusting bolt turns.

If it does not turn, check for incorrect installation of the rear brakes.

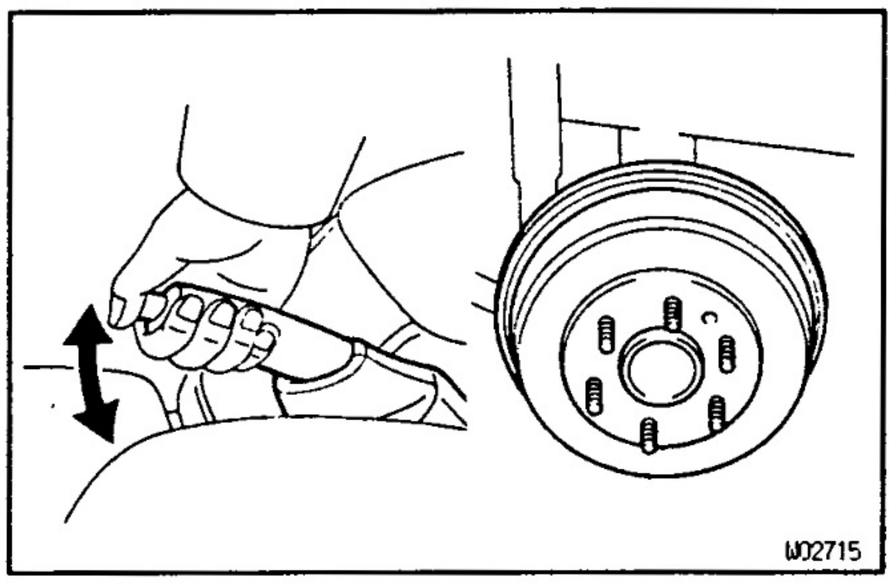

(b) Adjust the adjuster length to the shortest possible amount.
(c) Install the drum.
(d) Pull the parking brake lever all the way up until a clicking sound can no longer be heard.

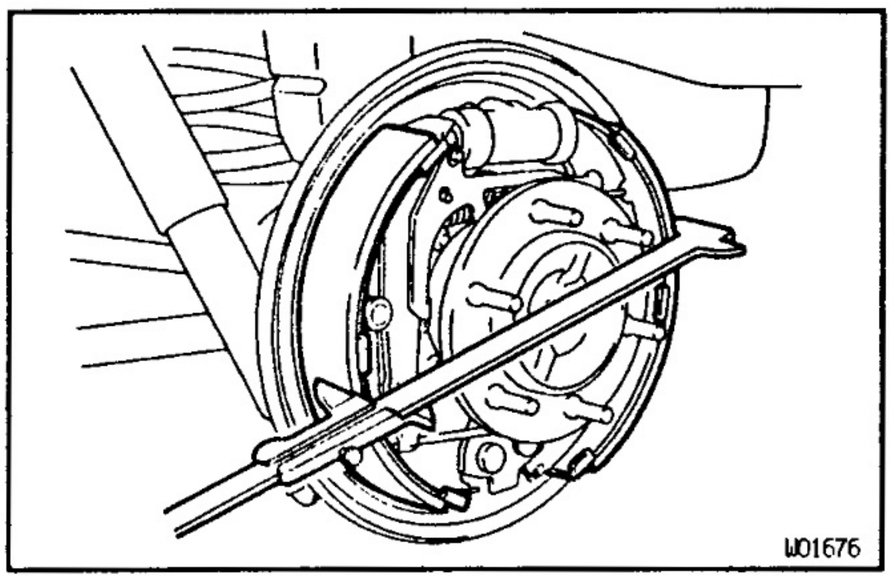

3. CHECK CLEARANCE BETWEEN BRAKE SHOES AND DRUM

(a) Remove the drum.
(b) Using vernier calipers, measure the brake drum inside diameter and diameter of the brake shoes. Check that the difference between the diameters is the correct shoe clearance.

Shoe clearance:

0.5 mm (0.020 in.)

If it is incorrect, check the parking brake system.

BR

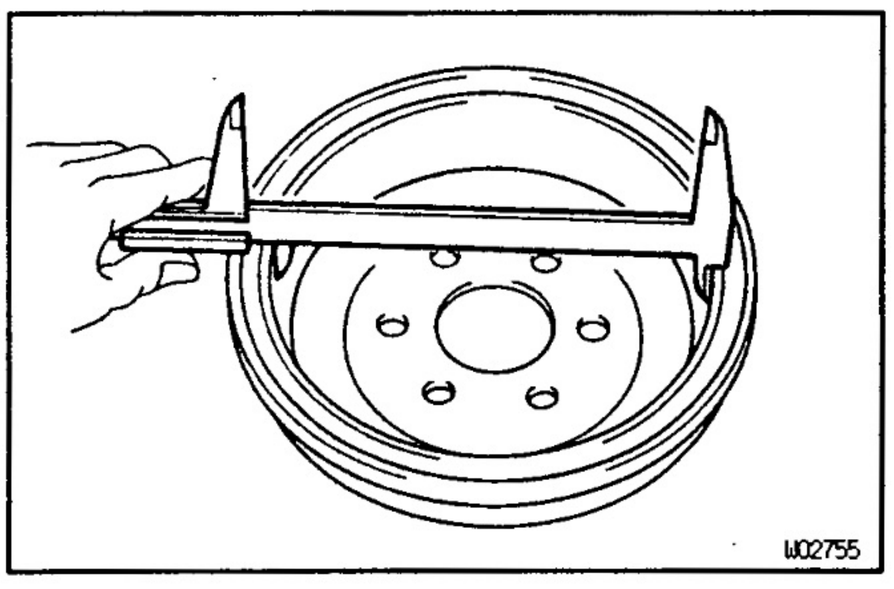

REAR BRAKE (Disc Brake)

COMPONENTS

BR020-02

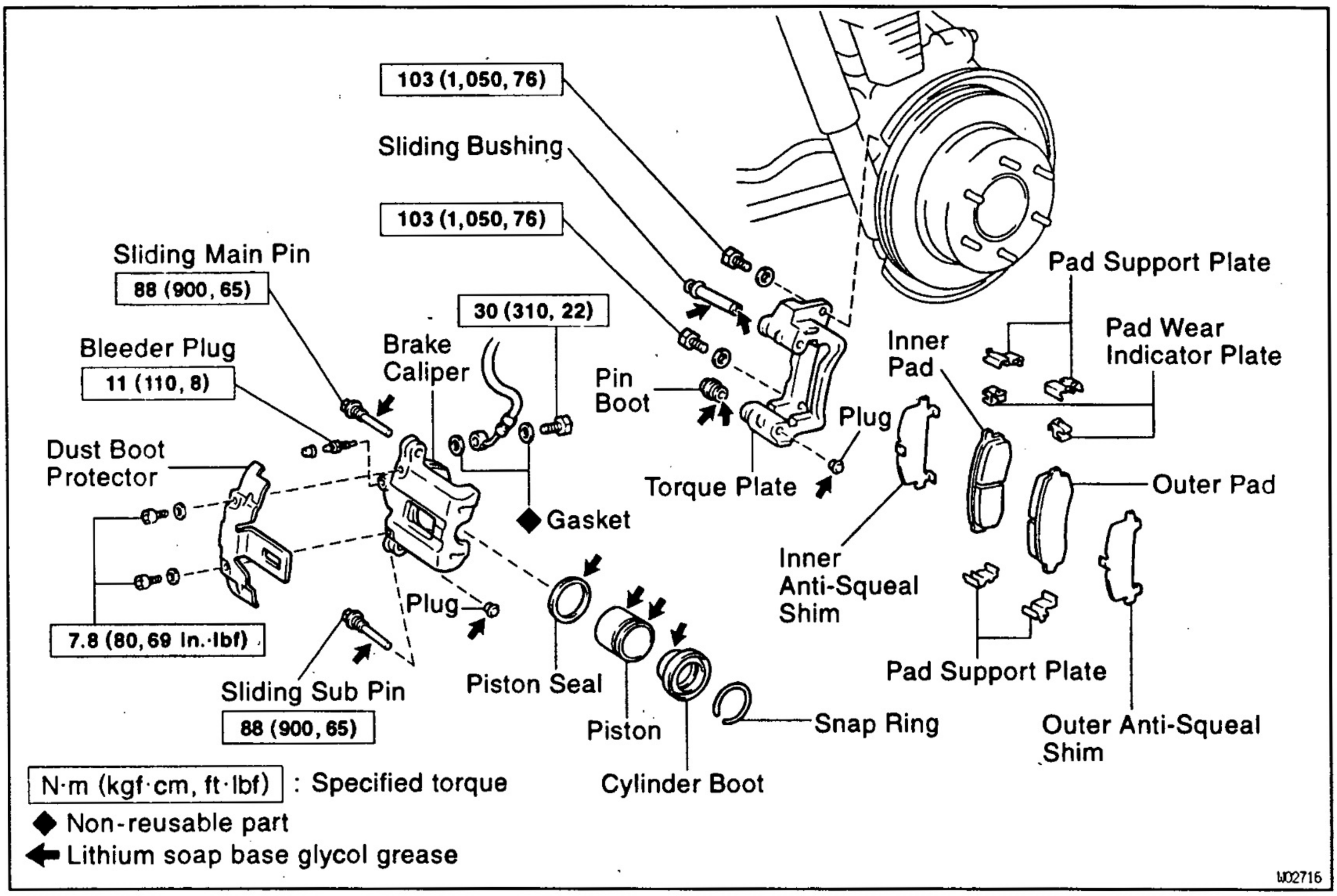

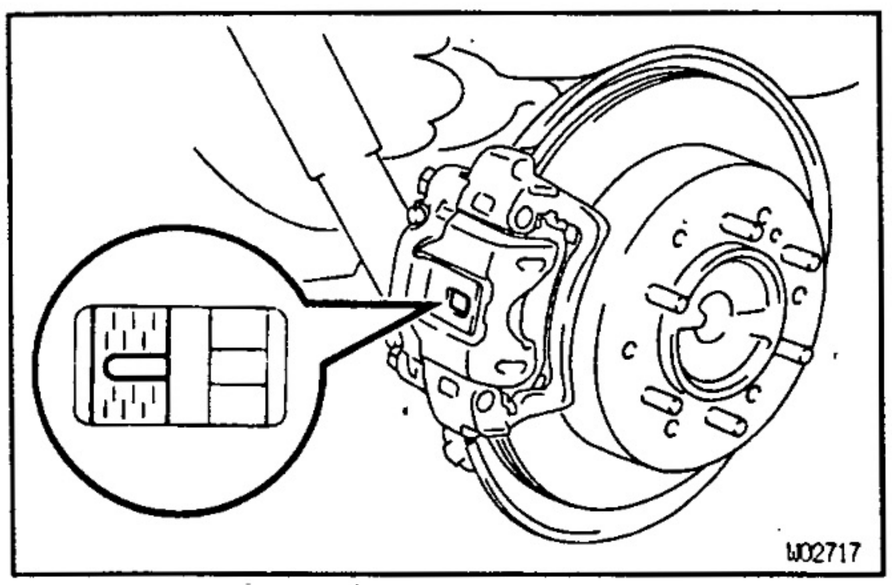

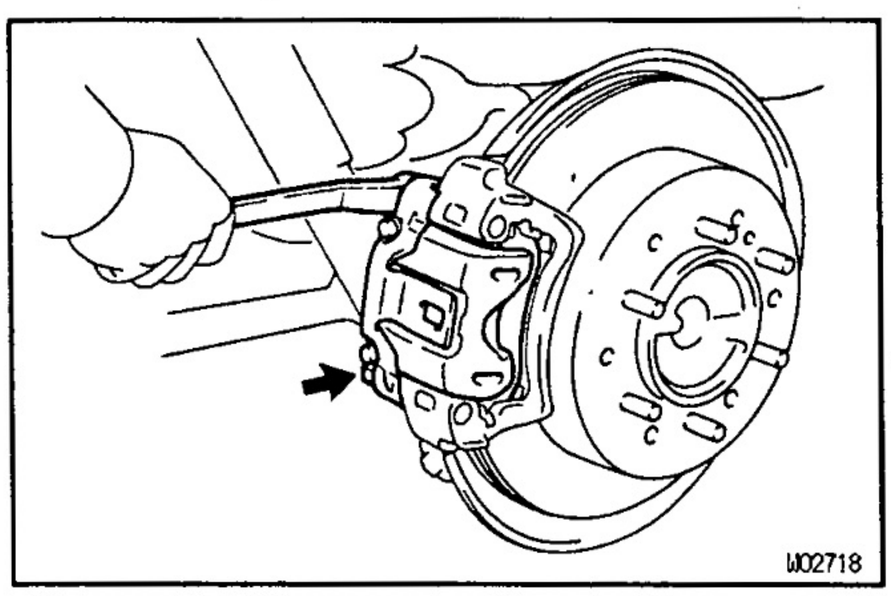

BR114-04

BRAKE PADS REPLACEMENT

1. **REMOVE REAR WHEEL**
   Remove the wheel and temporarily fasten the disc with the hub nuts.
2. **INSPECT PAD LINING THICKNESS**
   Check the pad thickness through the caliper inspection hole and replace pads if not within the specification.
   Minimum thickness: 1.0 mm (0.039 in.)
3. **REMOVE BRAKE CALIPER**
   (a) Remove the sliding main pin and sliding sub pin.
   (b) Remove the caliper and suspend it so the hose is not stretched.
   HINT: Do not disconnect the flexible hose.

4. **REMOVE THESE PARTS:**
   - 2 brake pads
   - 2 anti–squeal shims
   - 4 pad support plates
   - 2 pad wear indicator plates

   NOTICE: The pad support plates can be used again provided that they have sufficient rebound, no deformation, cracks or wear, and have had all rust, dirt and foreign particles cleaned off.
5. **CHECK DISC THICKNESS AND RUNOUT**
   (See page BR–38)
6. **INSTALL 4 PAD SUPPORT PLATES**
7. **INSTALL 2 NEW PADS**

   NOTICE: When replacing worn pads, the anti–squeal shims and wear indicator plates must be replaced together with the pads.

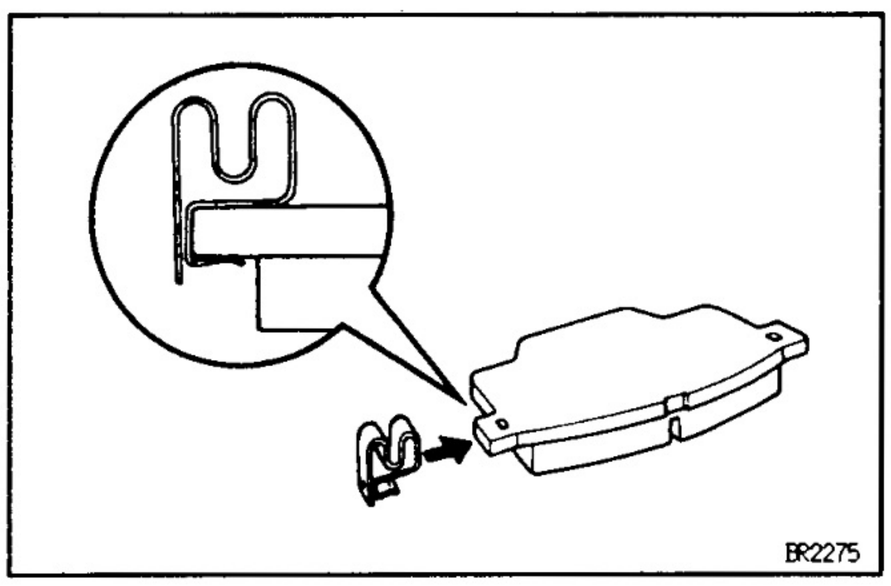
BR2275

(a) Install pad wear indicator plate to each pads.
(b) Install the 2 anti–squeal shims to the pads.
(c) Install the 2 pads so the wear indicator plate is facing upward.

   NOTICE: Do not allow oil or grease to get on the rubbing face.

8. **INSTALL CALIPER**

(a) Draw out a small amount of brake fluid from the reservoir.

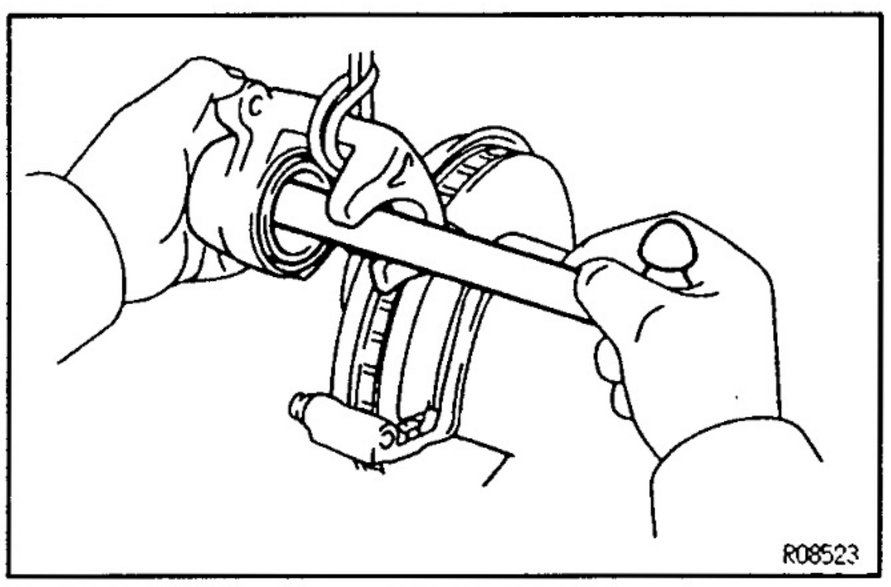
R08523

(b) Press in the piston with a hammer handle or an equivalent.

   HINT: Always change the pads on one wheel at a time as there is a possibility of the opposite piston flying out.

(c) Install the caliper carefully so the boot is not wedged.
(d) Install and torque the sliding main pin and sub pin.

   Torque: 88 N·m (900 kgf·cm, 65 ft·lbf)

9. **INSTALL REAR WHEEL**
10. **CHECK THAT FLUID LEVEL IS AT MAX LINE**

BR1A9–02

CALIPER REMOVAL

1. **DISCONNECT FLEXIBLE HOSE**

(a) Remove the union bolt and 2 gaskets from the caliper, then disconnect the flexible hose from the caliper.

   Torque: 30 N·m (310 kgf·cm, 22 ft·lbf)

(b) Use a container to catch the brake fluid as it drains out.

2. **REMOVE CALIPER**
Remove the 2 sliding pins and caliper.
Torque: 88 N·m (900 kgf·cm, 65 ft·lbf)

3. **REMOVE THESE PARTS:**
- 2 pads with anti–squeal shims
- 4 pad support plates

4. **REMOVE DUST BOOT PROTECTOR**
Using a 5 mm hexagon wrench, remove the 2 bolts and dust boot portector.
Torque: 7.8 N·m (80 kgf·cm, 69 in.·lbf)

BR1LJ-01

CALIPER DISASSEMBLY

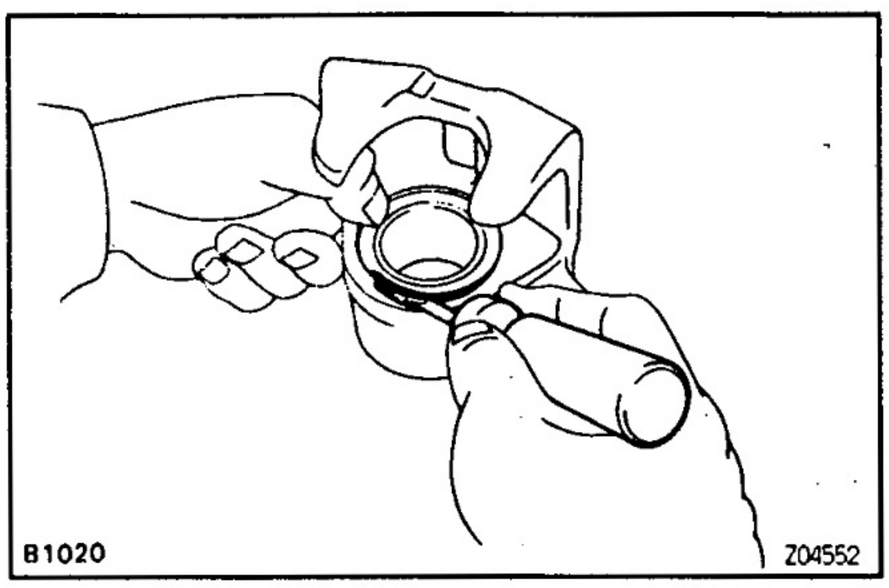

1. **REMOVE CYLINDER BOOT**
Using a screwdriver, remove the cylinder boot from the caliper.

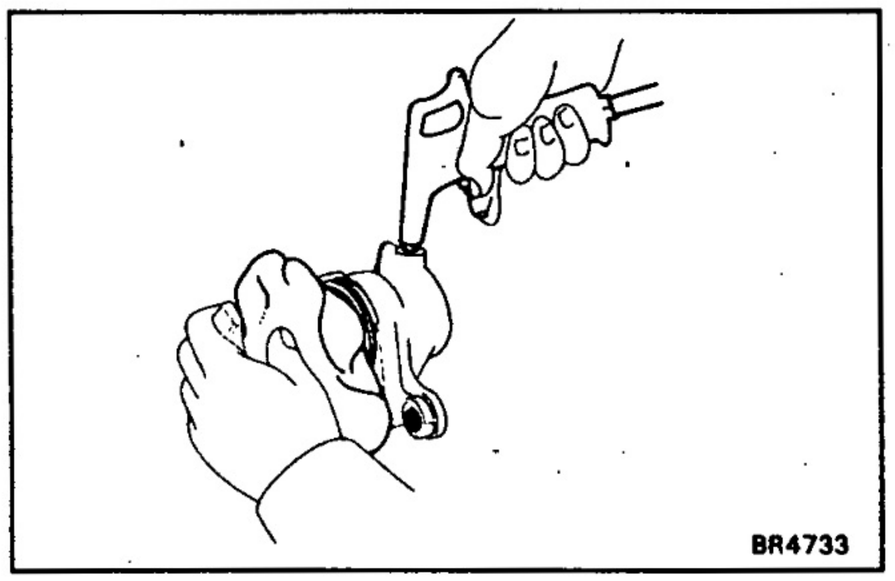

2. **REMOVE PISTON**
(a) Place a piece of cloth or a similar object between the piston and caliper.
(b) Use compressed air to remove the piston from the cylinder.
CAUTION: Do not place your fingers in front of the piston when using compressed air.

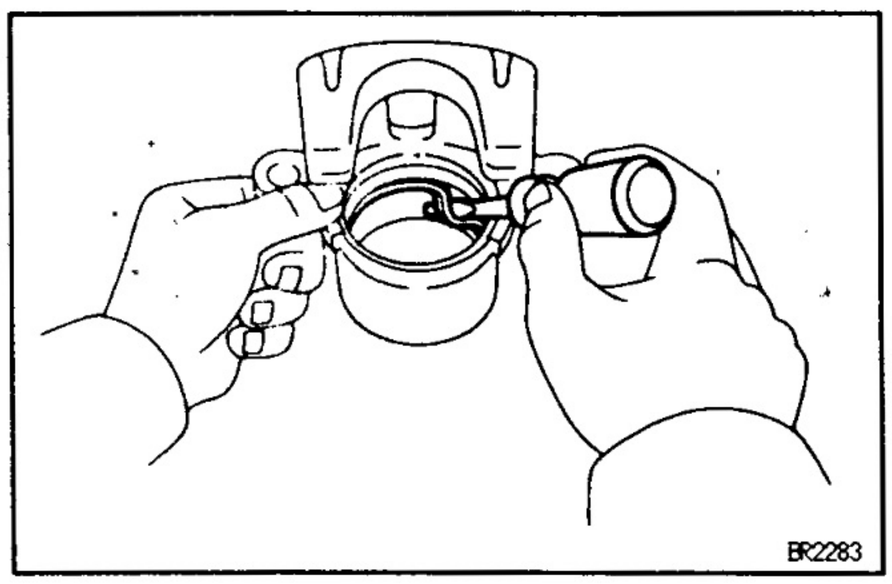

3. **REMOVE PISTON SEAL**
Using a screwdriver, remove the piston seal from the cylinder.

4. **REMOVE PIN BOOT AND SLIDING BUSHING**

BR1AA-02

CALIPER ASSEMBLY

Assembly is in the reverse order of disassembly.
NOTICE: Apply lithium soap base glycol grease to the parts indicated by the arrows (See page BR–35).

BR1LK-01

REAR DISC BRAKE COMPONENTS INSPECTION AND REPAIR

1. **MEASURE PAD LINING THICKNESS**
   (See step 1. on page BR–28)
   Standard thickness:
   10.0 mm (0.394 in.)
   Minimum thickness:
   1.0 mm (0.039 in.)
2. **MEASURE DISC THICKNESS**
   (See step 2. on page BR–28)
   Standard thickness:
   18.0 mm (0.709 in.)
   Minimum thickness:
   16.0 mm (0.630 in.)
3. **MEASURE DISC RUNOUT**
   (See step 3. on page BR–28)
   Maximum disc runout:
   0.15 mm (0.0059 in.)

BR

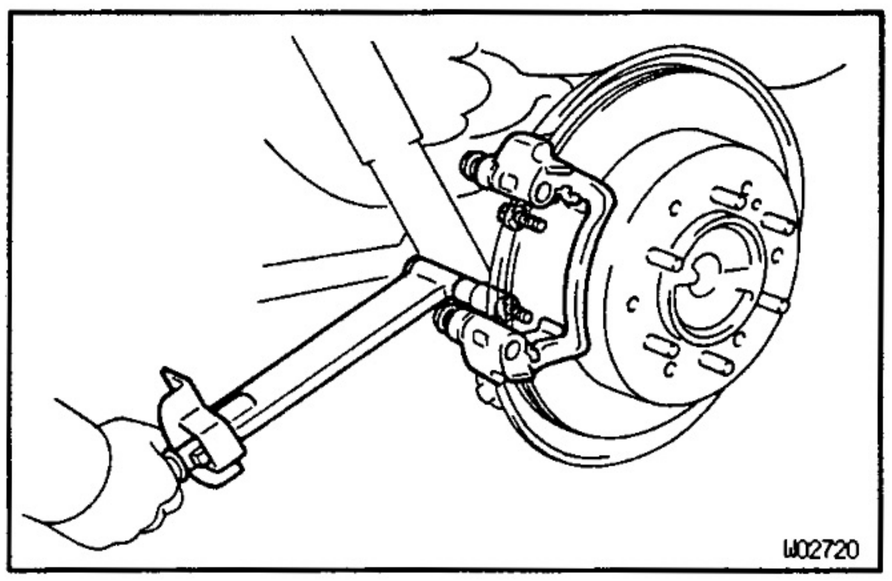
W02720

4. **IF NECESSARY, REPLACE DISC**

(a) Remove the torque plate.

(b) Remove the hub nuts of the temporarily installed disc and pull off the disc.

(c) Install a new disc and loosely install the hub nuts.

(d) Install the torque plate and tighten the mounting bolts.
Torque: 103 N·m (1,050 kgf·cm, 76 ft·lbf)

BR1AC-02

CALIPER INSTALLATION

Installation is in the reverse order of removal.
AFTER INSTALLATION, FILL BRAKE RESERVOIR WITH BRAKE FLUID, BLEED BRAKE SYSTEM (See page BR–6) AND CHECK FOR LEAKS

REAR BRAKE (Parking Brake) COMPONENTS

BR027-0F

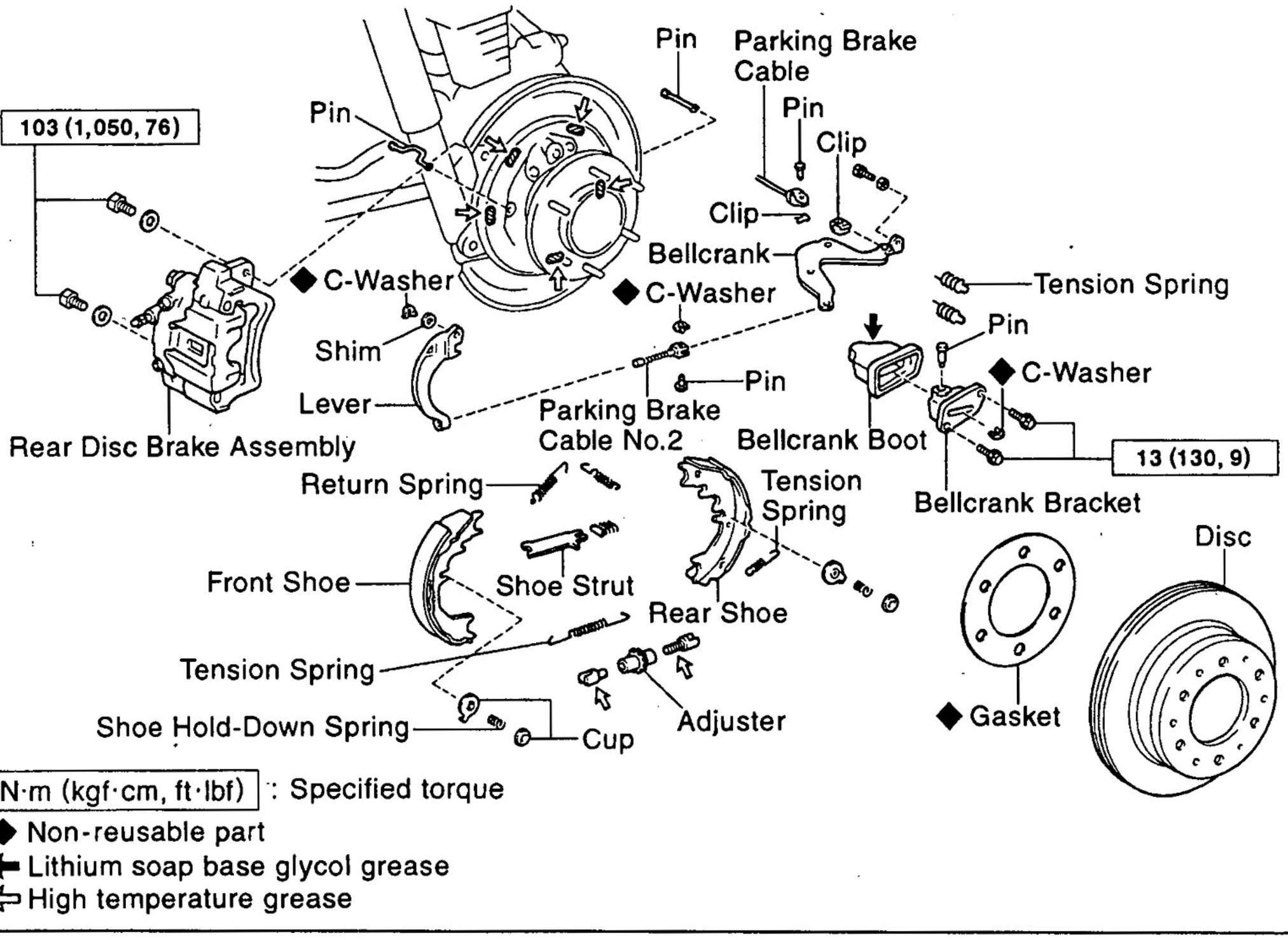

N·m (kgf·cm, ft·lbf) : Specified torque
◆ Non-reusable part
⬅ Lithium soap base glycol grease
⇦ High temperature grease

W02721

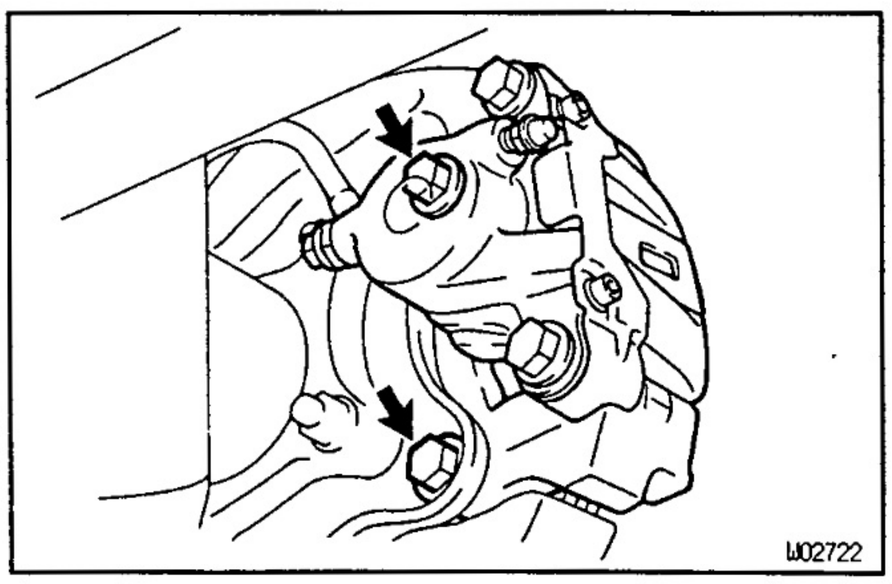

W02722

BR116-04

PARKING BRAKE DISASSEMBLY

1. **REMOVE REAR WHEEL**
2. **REMOVE REAR DISC BRAKE ASSEMBLY**

(a) Remove the 2 mounting bolts and remove the disc brake assembly.
Torque: 103 N·m (1,050 kgf·cm, 76 ft·lbf)

(b) Suspend the disc brake securely. Ensure that the hose is not stretched.

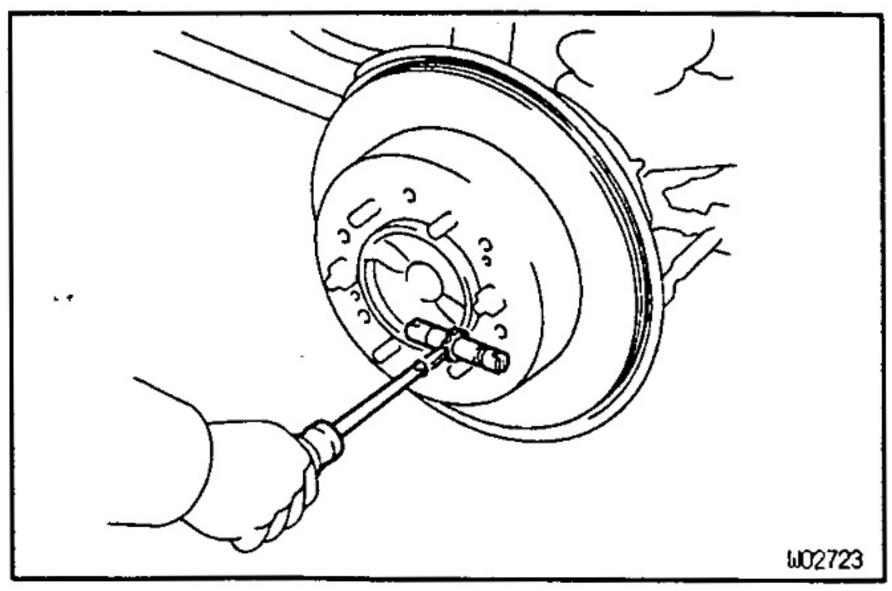

W02723

3. **REMOVE DISC**

Place a matchmarks on the disc and rear hub, and remove the disc.

HINT: If the disc cannot be removed easily, using a screwdriver, turn the shoe adjuster until the wheel turns freely.

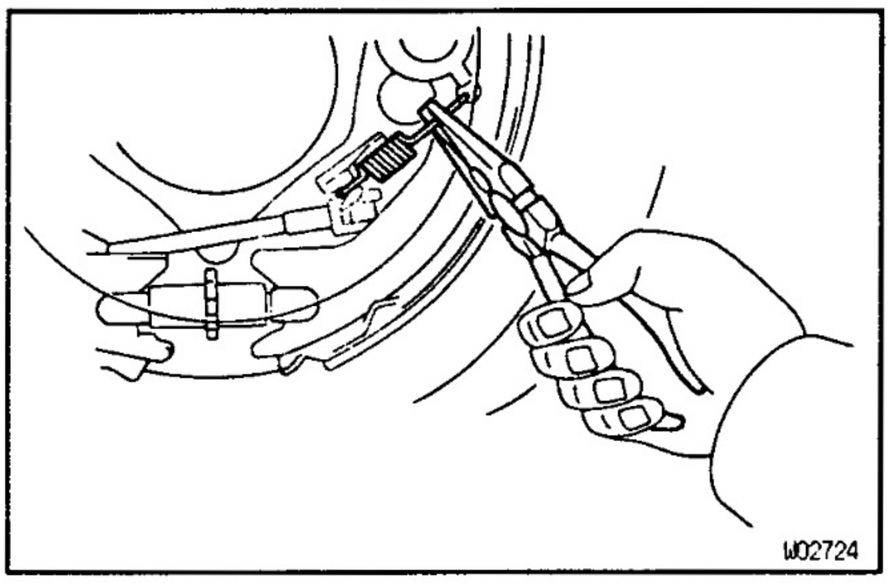

4. REMOVE TENSION SPRING

Using needle—nose pliers, remove the tension spring.

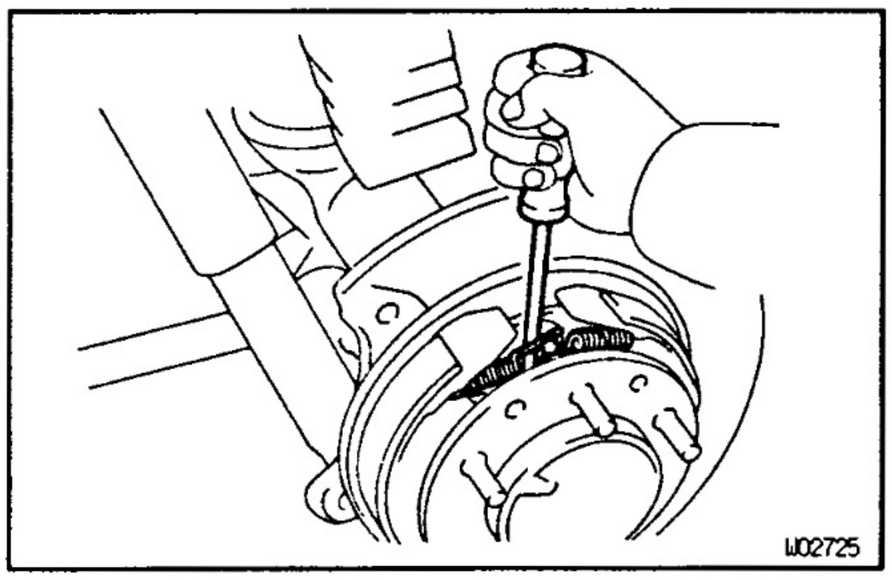

5. REMOVE SHOE RETURN SPRINGS

Using a screwdriver, remove the 2 shoe return springs.

INSTALLATION HINT: Use SST, install the front shoe return spring and then install the rear return spring.

SST 09718—20010

6. REMOVE SHOE STRUT WITH SPRING

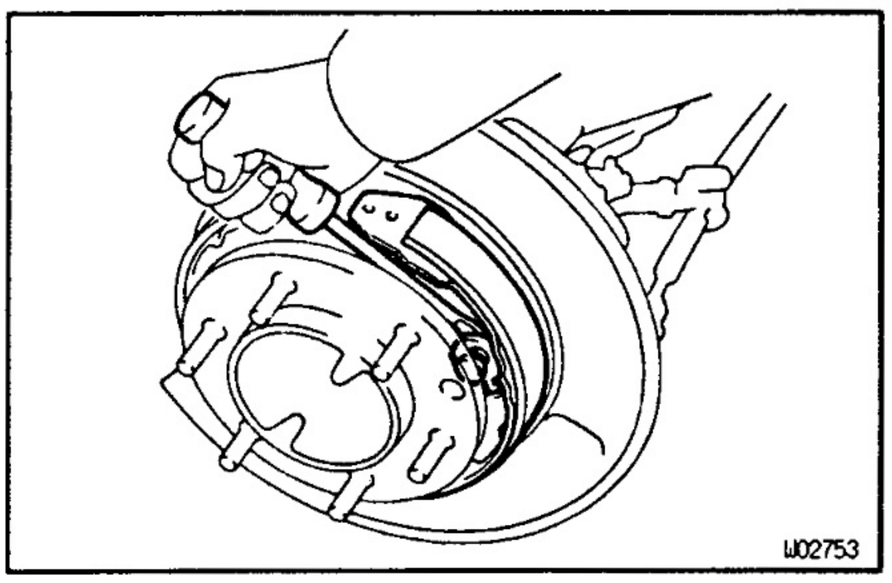

7. REMOVE REAR SHOE, ADJUSTER AND TENSION SPRING

(a) Using needle—nose pliers, remove the tension spring from the rear shoe.

(b) Using a screwdriver, slide out the rear shoe, and remove the rear shoe, adjuster, shoe strut and spring.

(c) Remove the lower side tension spring.

(d) Remove the shoe hold—down spring cups, spring and pin.

8. REMOVE FRONT SHOE

(a) Slide out the front shoe.

(b) Disconnect the parking brake cable from the parking brake shoe lever.

(c) Remove the shoe hold—down spring cups, spring and pin.

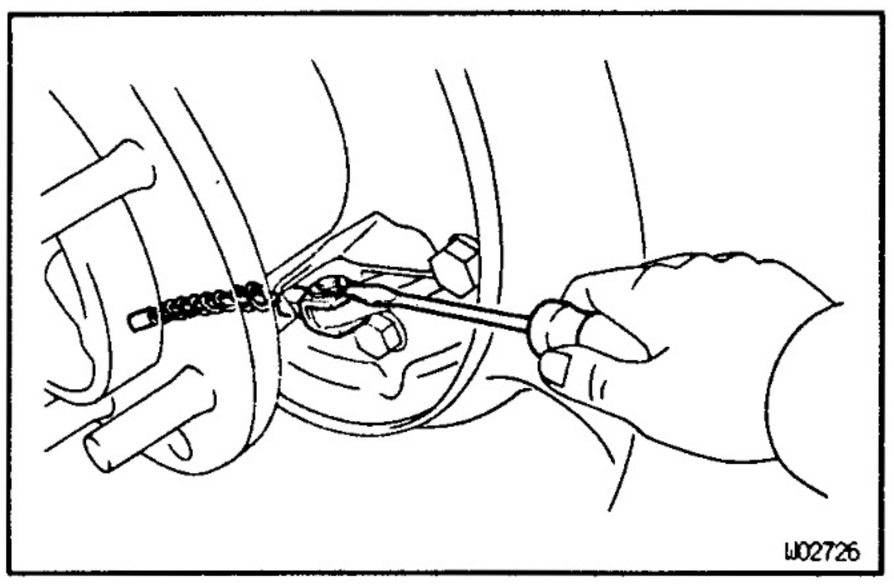

9. IF NECESSARY, REMOVE AND DISASSEMBLE PARKING BRAKE BELLCRANK ASSEMBLY

(a) Using a screwdriver, remove the C—washer.

(b) Remove the pin and disconnect the parking brake cable No.2 from the bellcrank.

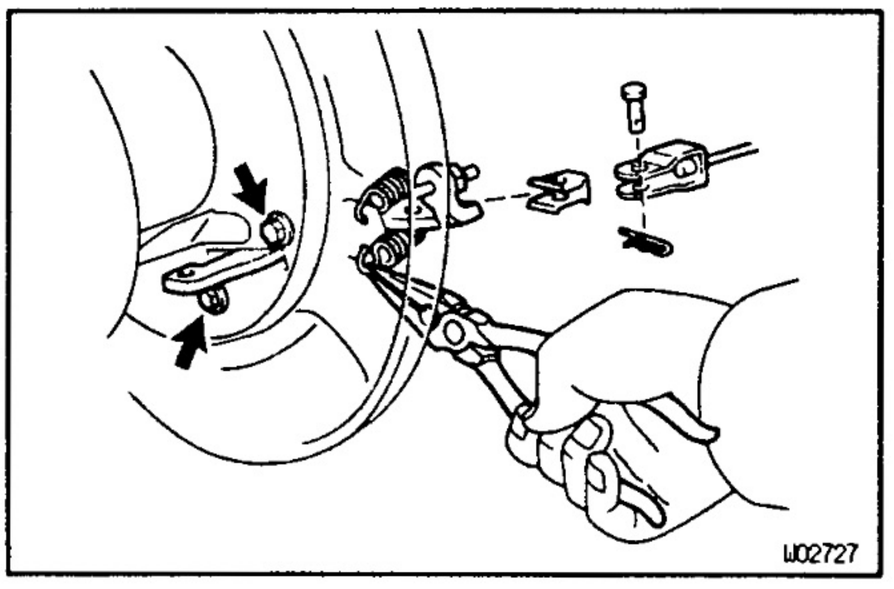

(c) Using needle nose pliers, remove the clip.

(d) Remove the pin and clip, then disconnect the parking brake cable.

(e) Using needle—nose pliers, remove the 2 tension springs.

(f) Remove the 2 bolts and parking brake bellcrank assembly.

Torque: 13 N·m (130 kgf·cm, 9 ft·lbf)

(g) Remove the boot from parking brake bellcrank bracket.

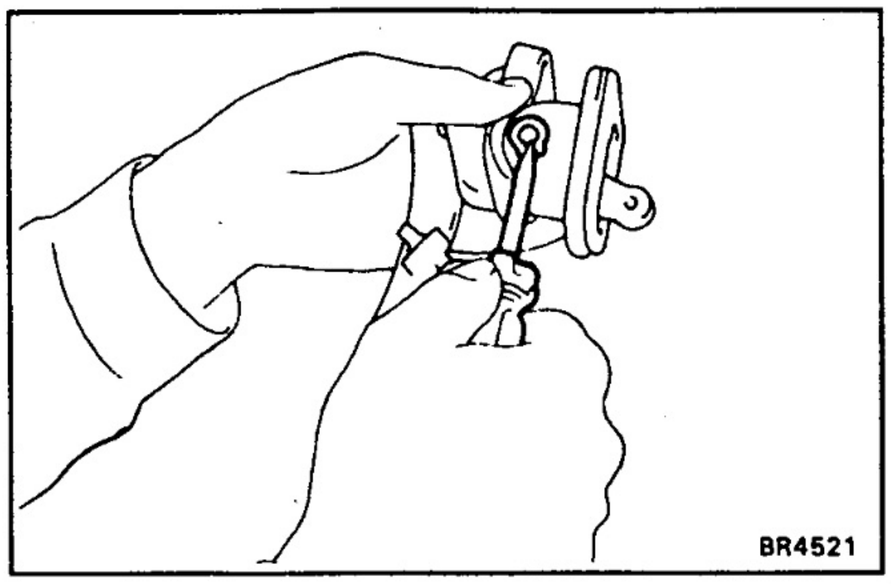

(h) Using a screwdriver, remove the C–washer and pin.
(i) Remove the parking brake bellcrank from the bell crank bracket.

BR1LL–01

PARKING BRAKE COMPONENTS

INSPECTION AND REPAIR

1. INSPECT DISASSEMBLED PARTS

Inspect the disassembled parts for wear, rust or damage.

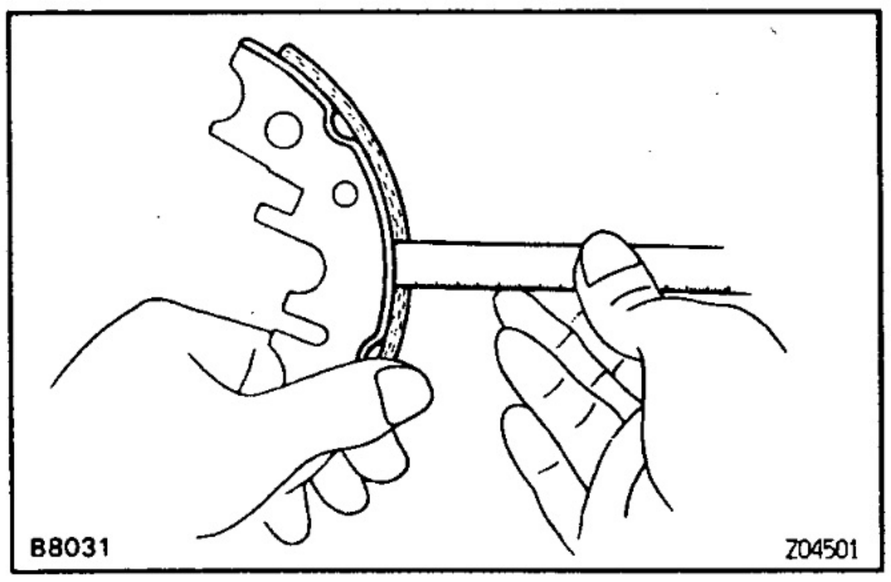

2. MEASURE BRAKE SHOE LINING THICKNESS

Using a ruler, measure the thickness of the shoe lining.

Standard thickness:

4.0 mm (0.157 in.)

Minimum thickness:

1.0 mm (0.039 in.)

If the lining thickness is at the minimum thickness or less, or if there is extremely uneven wear, replace the brake shoe.

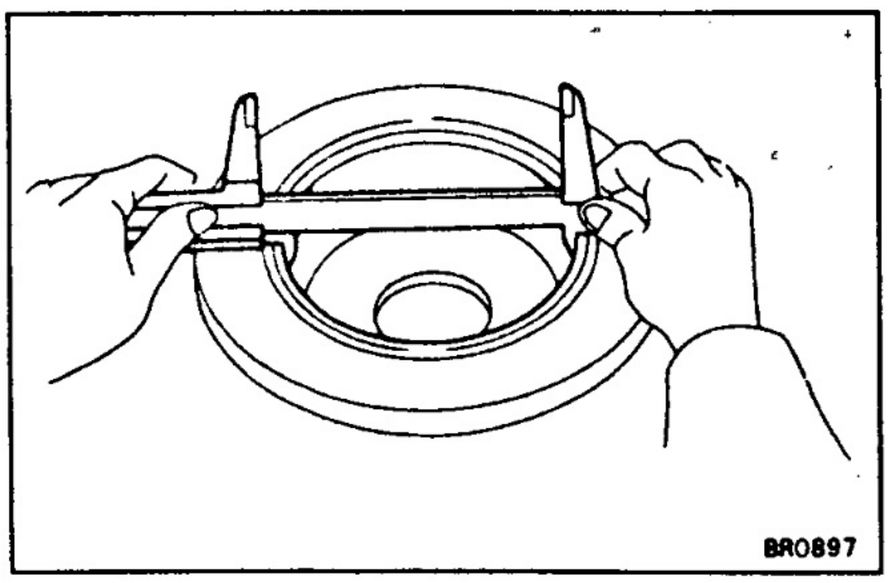

3. MEASURE BRAKE DISC INSIDE DIAMETER

Using a vernier calipers, measure the inside diameter of the disc.

Standard inside diameter:

210 mm (8.27 in.)

Maximum inside diameter:

211 mm (8.31 in.)

Replace the disc if the inside diameter is at the maximum value or more. Replace the disc or grind it with a lathe if the disc is scored or is worn unevenly.

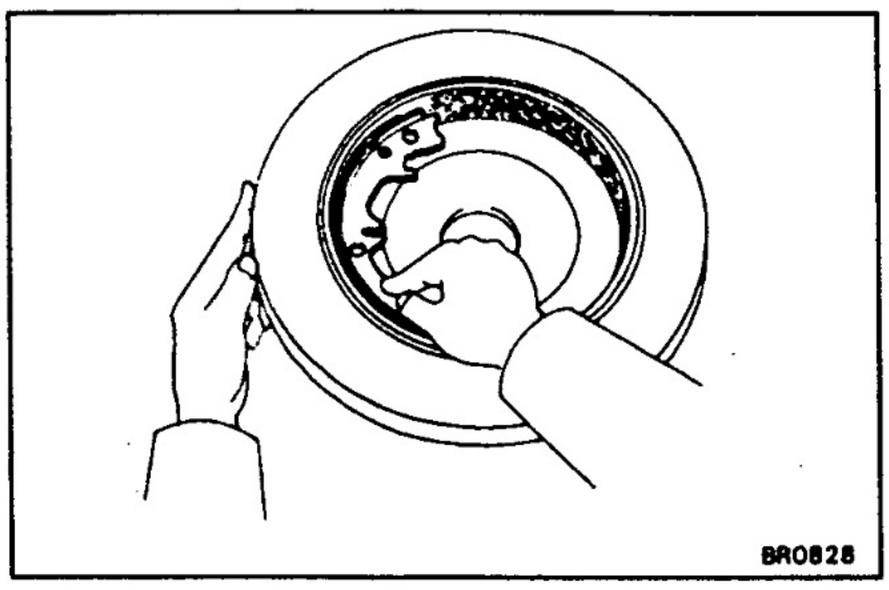

4. INSPECT PARKING BRAKE LINING AND DISC FOR PROPER CONTACT

Apply chalk to the inside surface of the disc, then grind down the brake shoe lining to fit. If the contact between the disc and brake shoe lining is improper, repair it using a brake shoe grinder or replace the brake shoe assembly.

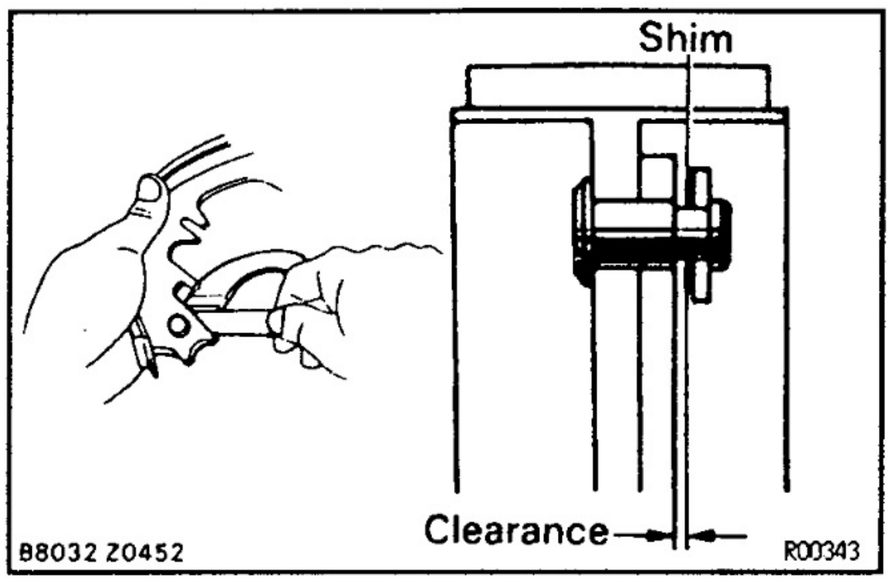

5. MEASURE CLEARANCE BETWEEN PARKING BRAKE SHOE AND LEVER

Using a feeler gauge, measure the clearance.

Standard clearance:

Less than 0.35 mm (0.0138 in.)

If the clearance is not within the specification, replace the shim with one of the correct size.

Shim Thickness	Shim Thickness
0.3 mm (0.012 in.)	0.9 mm (0.035 in.)
0.6 mm (0.024 in.)	–

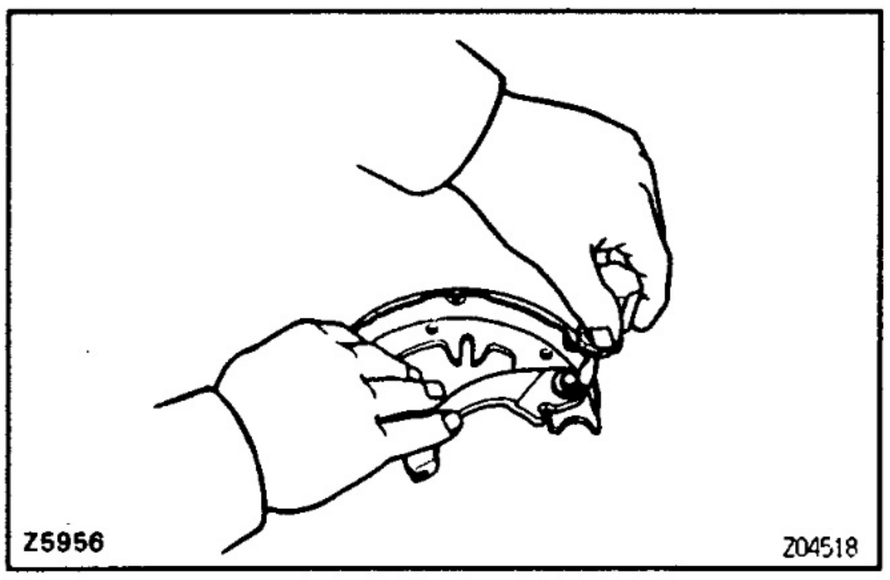

6. IF NECESSARY, REPLACE SHIM

(a) Using a screwdriver, remove the C–washer.

(b) Remove the parking brake shoe lever, and install the correct size shim.

BR

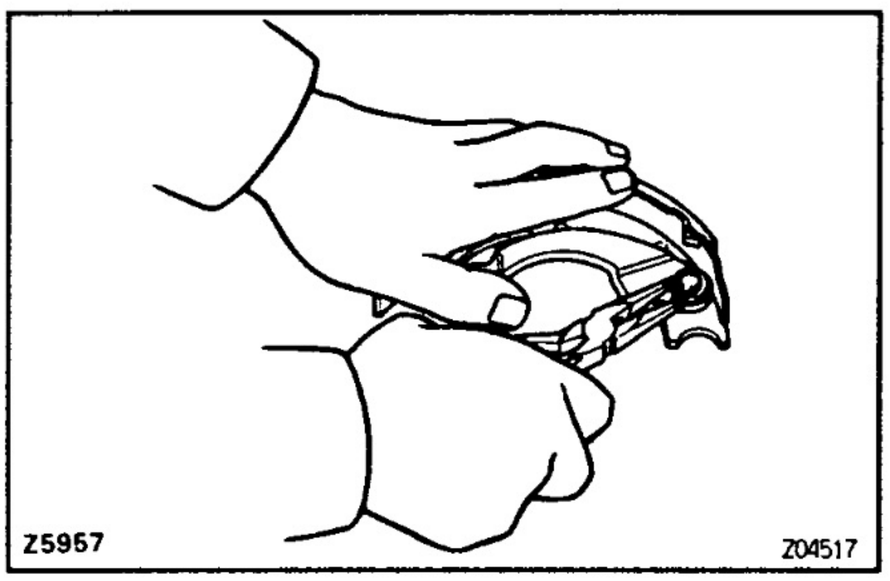

(c) Using needle nose pliers, install the parking brake shoe lever with a new C–washer.

(d) Remeasure the clearance.

PARKING BRAKE ASSEMBLY

BR1AD–02

Assembly is in the reverse order of disassembly.

NOTICE: Apply lithium soap base glycol grease and high temperature grease to the parts indicated by the arrows (See page BR–39)

1. ADJUST PARKING BRAKE SHOE CLEARANCE

(a) Temporarily install the hub nuts.

(b) Remove the hole plug.

(c) Turn the adjuster and expand the shoes until the disc locks.

(d) Return the adjuster 8 notches.

(e) Install the hole plug.

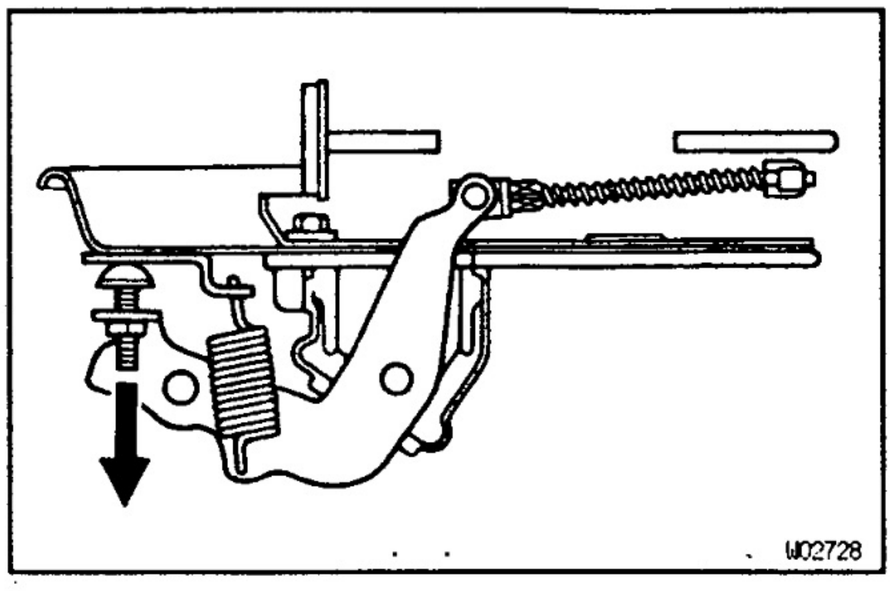

2. IF NECESSARY ADJUST BELLCRANK

(a) Pull the bellcrank until all play in the interior linkage is taken up.

(b) Screw in the bellcrank adjusting bolt to where it contacts on the dust seal.

(c) Loosen it one turn, and lock it at that position with the lock nut.

Torque: 5.4 N·m (55 kgf·cm, 48 in.·lbf)

(d) Install the bellcrank spring.

3. BEDDING DOWN PARKING BRAKE SHOES AND DISC

(a) Drive the vehicle at about 50 km/h (31 mph) on a safe, level and dry road.

(b) With the parking brake release button pushed in, pull on the lever with 88 N (9 kgf, 19.8 lbf) of force.

(c) Drive the vehicle for about 400 meters (0.25 mile) in this condition.

(d) Repeat this procedure 2 or 3 times.

4. RECHECK AND ADJUST PARKING BRAKE LEVER TRAVEL

LOAD SENSING PROPORTIONING AND BY–PASS VALVE (LSP & BV)

COMPONENTS

BR1JC–02

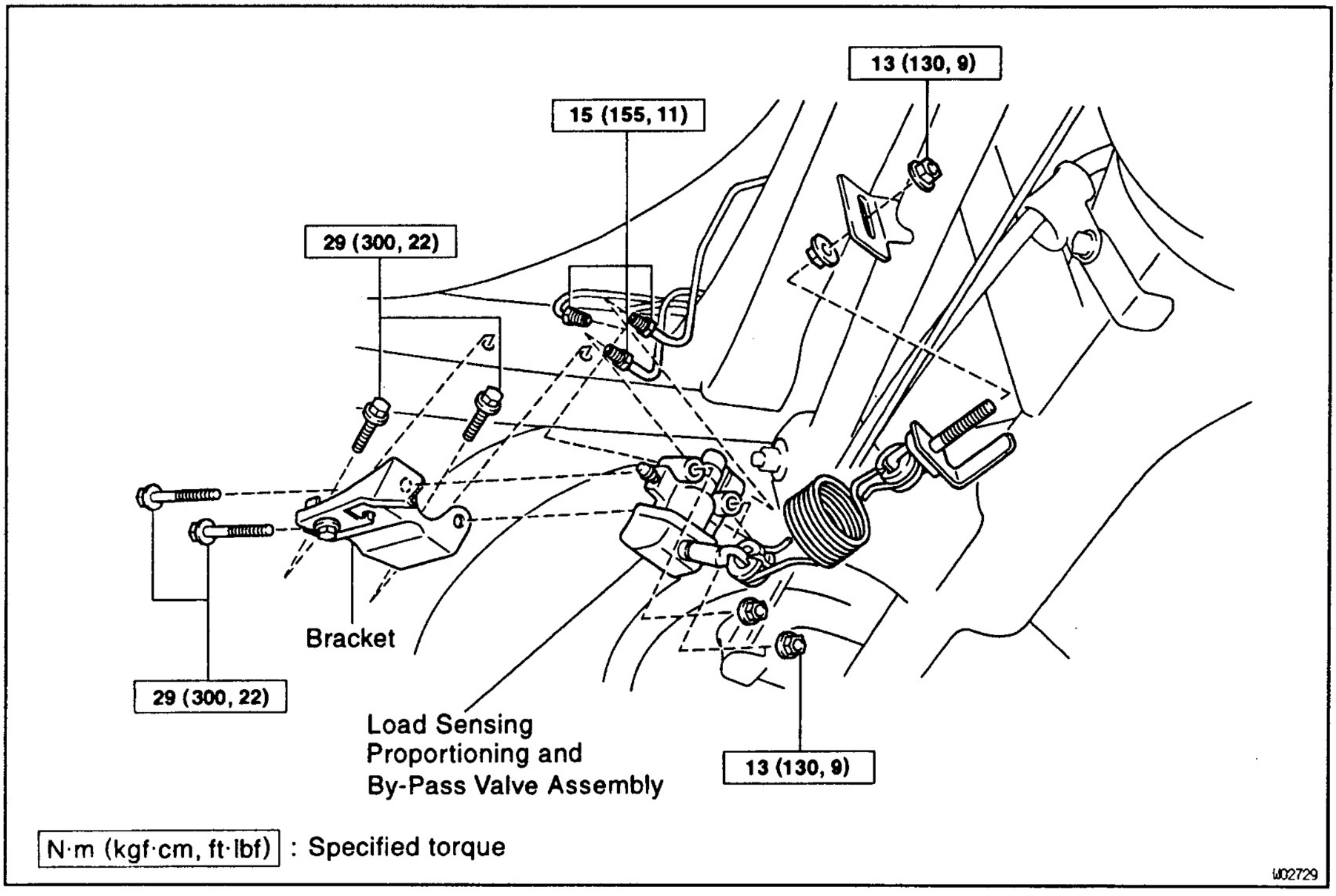

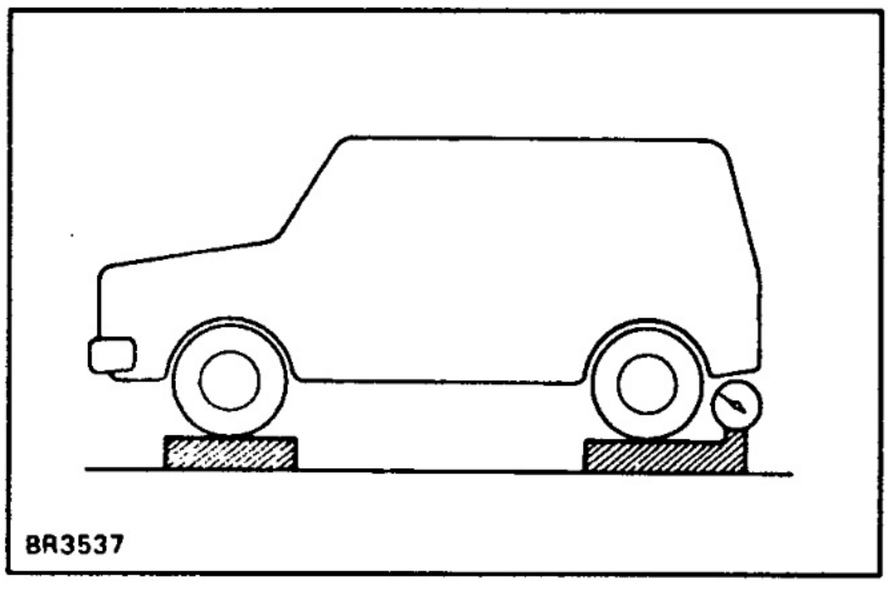

FLUID PRESSURE CHECK AND ADJUSTMENT

BR1JD–02

1. SET REAR AXLE LOAD

Rear axle load (includes vehicle weight):

Short model: 950 kg (2,094 lb)

Long model: 1,064 kg (2,346 lb)

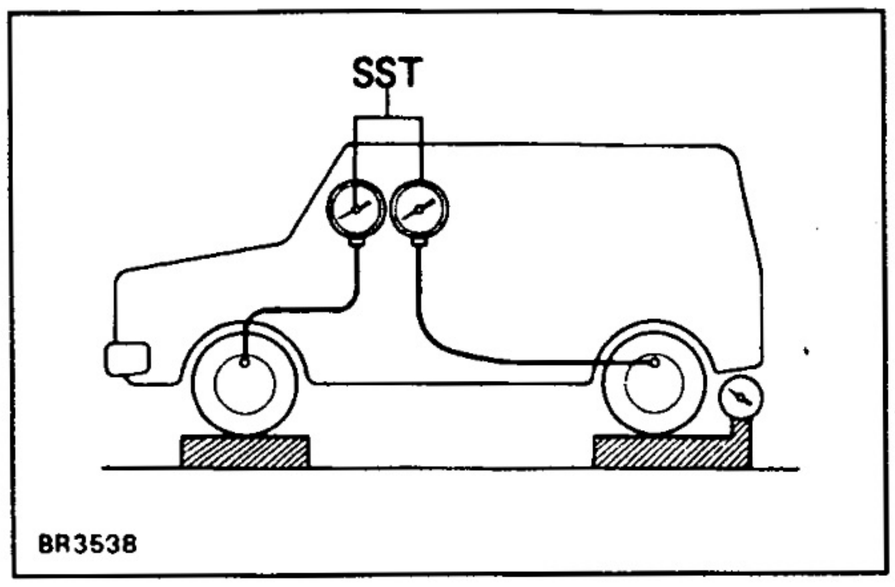

2. INSTALL LSPV GAUGE (SST) AND BLEED AIR
09709–29017

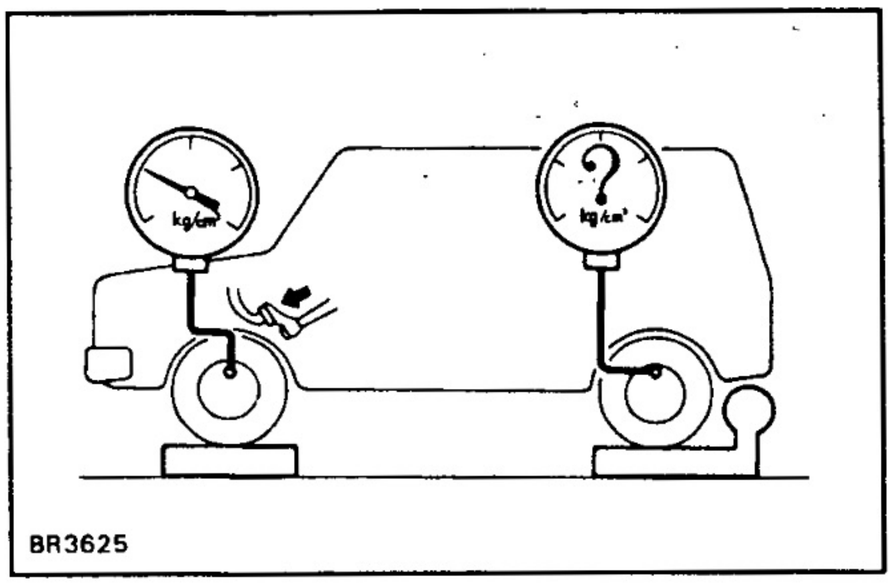

3. RAISE FRONT BRAKE FLUID PRESSURE TO FOLLOWING SPECIFICATION AND CHECK REAR BRAKE FLUID PRESSURE

Rear brake fluid pressure:

Model	Front brake fluid pressure kPa (kgf/cm², psi)	Rear brake fluid pressure kPa (kgf/cm², psi)
Short w/o ABS	8,826 (90, 1,280)	4,021 (41, 583)
Short w/ ABS	8,826 (90, 1,280)	5,296 (54, 768)
Long w/o ABS	8,826 (90, 1,280)	4,609 (47, 668)
Long w/ ABS	8,826 (90, 1,280)	6,963 (71, 1,010)

BR

HINT: The brake pedal should not be depressed twice and/or returned while setting to the specified pressure. Read the value of rear pressure 2 seconds after adjusting the specified fluid pressure.

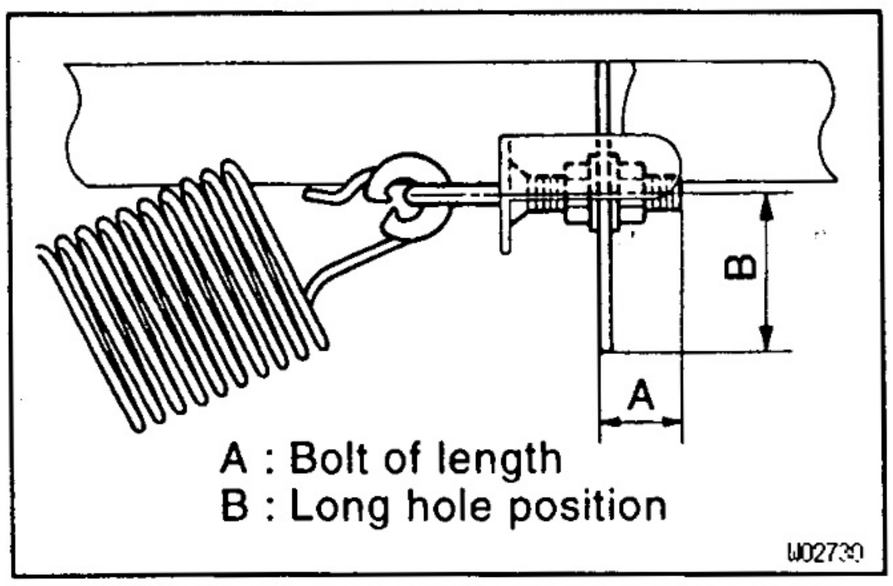

4. IF NECESSARY, ADJUST FLUID PRESSURE

(a) Adjust the fluid pressure by changing the A or B length.

Low pressure – Lengthen A, B

High pressure – Shorten A, B

HINT: One turn of the adjusting nut and 1 mm (0.04 in.) sliding of the adjusting bolt changes the fluid pressure, as shown in the table below.

Model	A kPa (kgf/cm², psi)	B kPa (kgf/cm², psi)
Short w/o ABS	177 (1.8, 26)	59 (0.6, 9)
Short w/ ABS	216 (2.2, 31)	69 (0.7, 10)
Long w/o ABS	157 (1.6, 23)	49 (0.5, 7)
Long w/ ABS	255 (2.6, 37)	88 (0.9, 13)

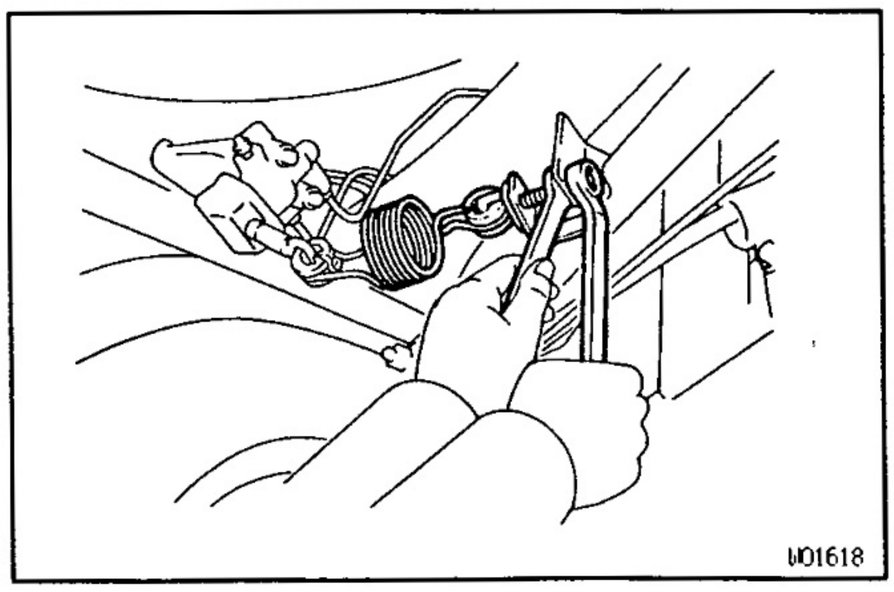

(b) Torque the lock nut.

Torque: 13 N·m (130 kgf·cm, 9 ft·lbf)

If it cannot be adjusted, replace the valve body.

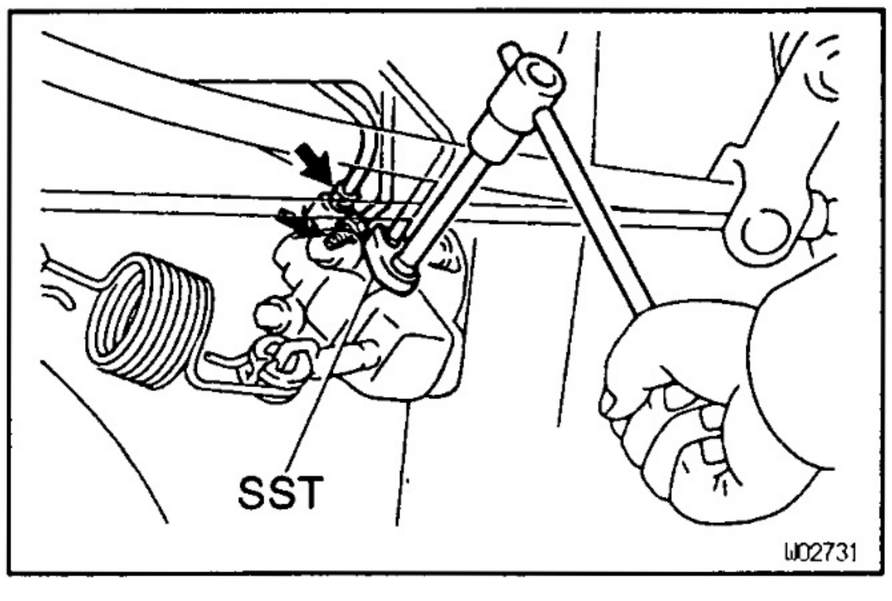

BR1LM–01

LSP & BV REMOVAL

1. DISCONNECT BRAKE LINES

Using SST, disconnect the 3 brake lines from the valve body.

SST 09023–00100

Torque: 15 N·m (155 kgf·cm, 11 ft·lbf)

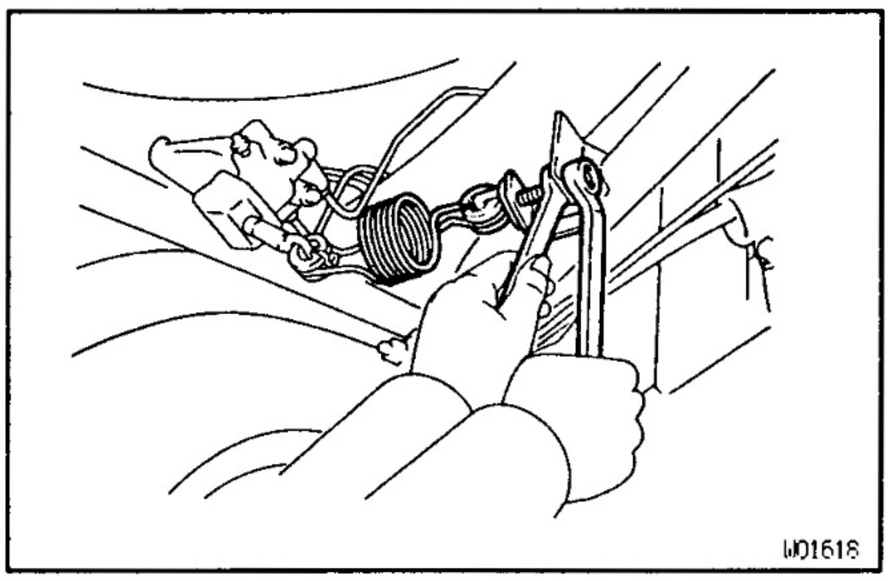

2. REMOVE LSP & BV ASSEMBLY

(a) Remove the lock nut and disconnect the adjusting bolt from the rear lateral control rod.

Torque: 13 N·m (130 kgf·cm, 9 ft·lbf)

BR

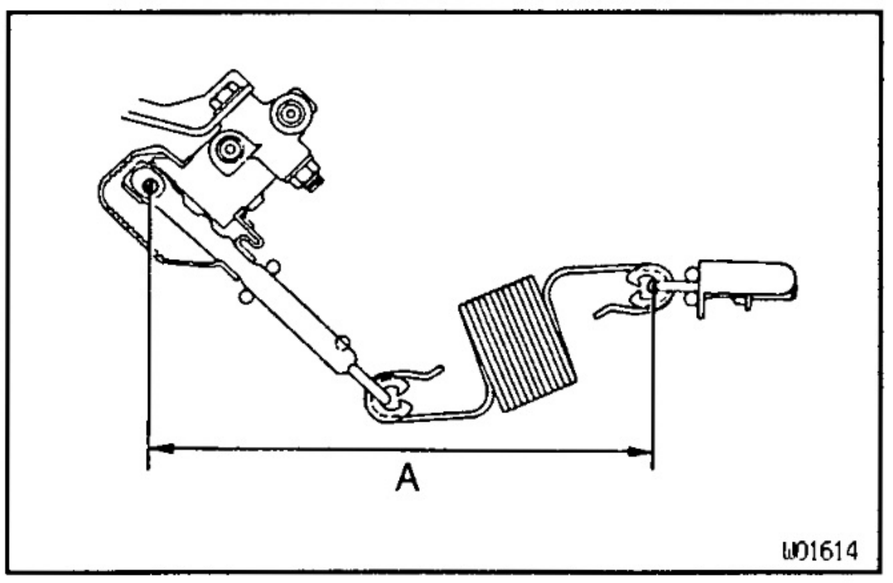

INSTALLATION NOTICE: Set spring length A to initial set length and temporariy tighten the lock nut.

Initial set length (Unladan):

Short model: 220 mm (8.66 in.)

Long model: 222 mm (8.74 in.)

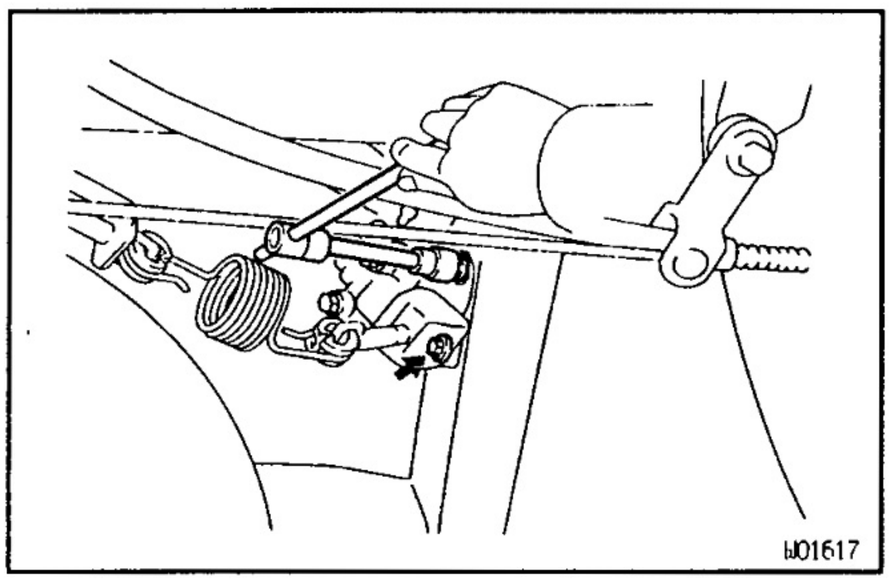

(b) Remove the 2 mounting bolts and nuts, and remove the LSP & BV assembly.

Torque: 13 N·m (130 kgf·cm, 9 ft·lbf)

(b) Remove the 2 bolts and bracket from the frame.

Torque: 29 N·m (300 kgf·cm, 22 ft·lbf)

BR1LN–01

LSPV & BV INSTALLATION

Installation is in the reverse order of removal.

AFTER INSTALLATION, FILL BRAKE RESERVOIR WITH BRAKE FLUID, BLEED BRAKE SYSTEM (See page BR–6), CHECK AND ADJUST FLUID PRESSURE (See page BR–44) AND CHECK FOR LEAKS

ANTI–LOCK BRAKE SYSTEM (ABS)

ABS ACTUATOR COMPONENTS

BR1LP–01

LHD

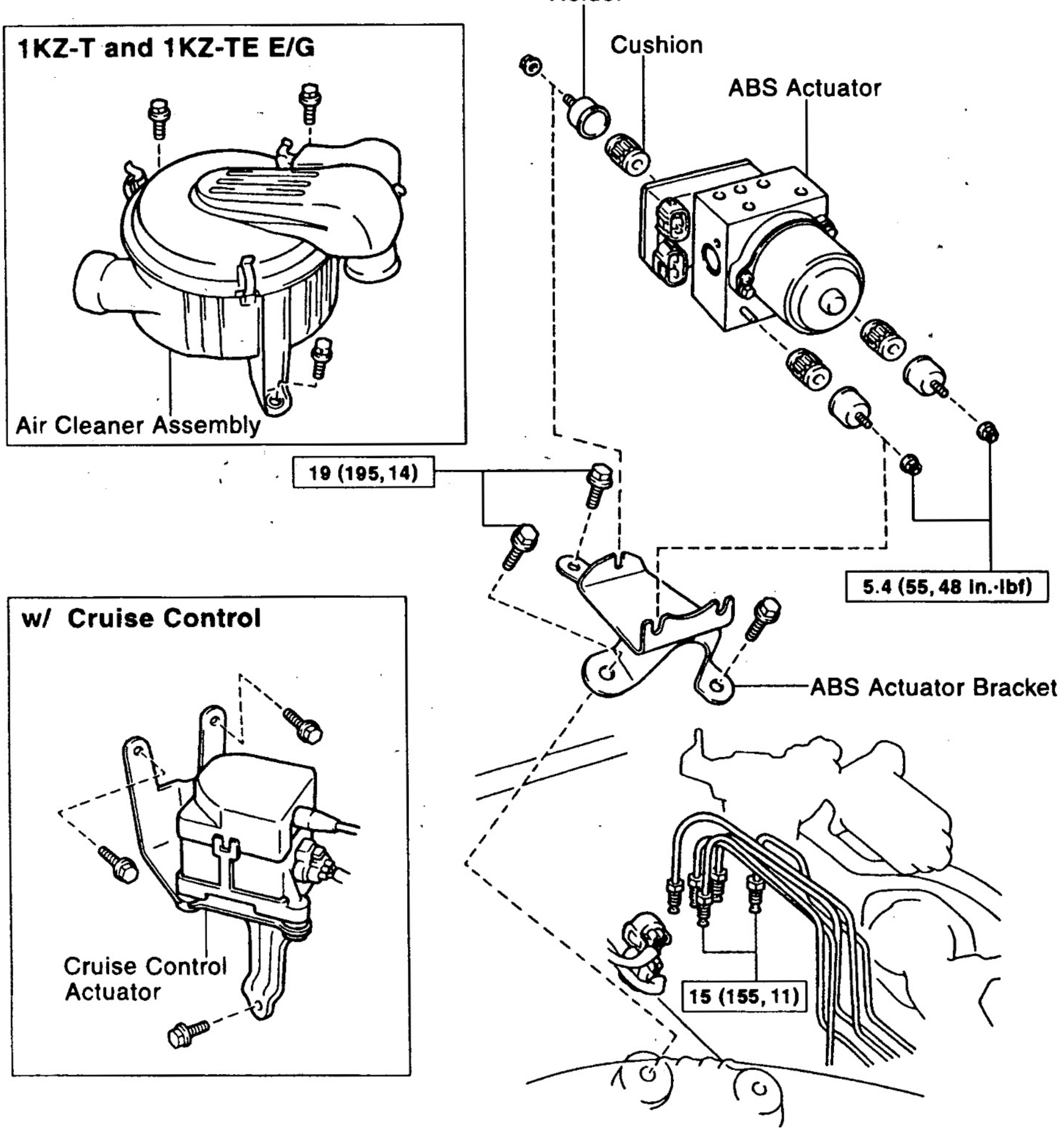

N·m (kgf·cm, in.·lbf) : Specified torque

W02738

RHD

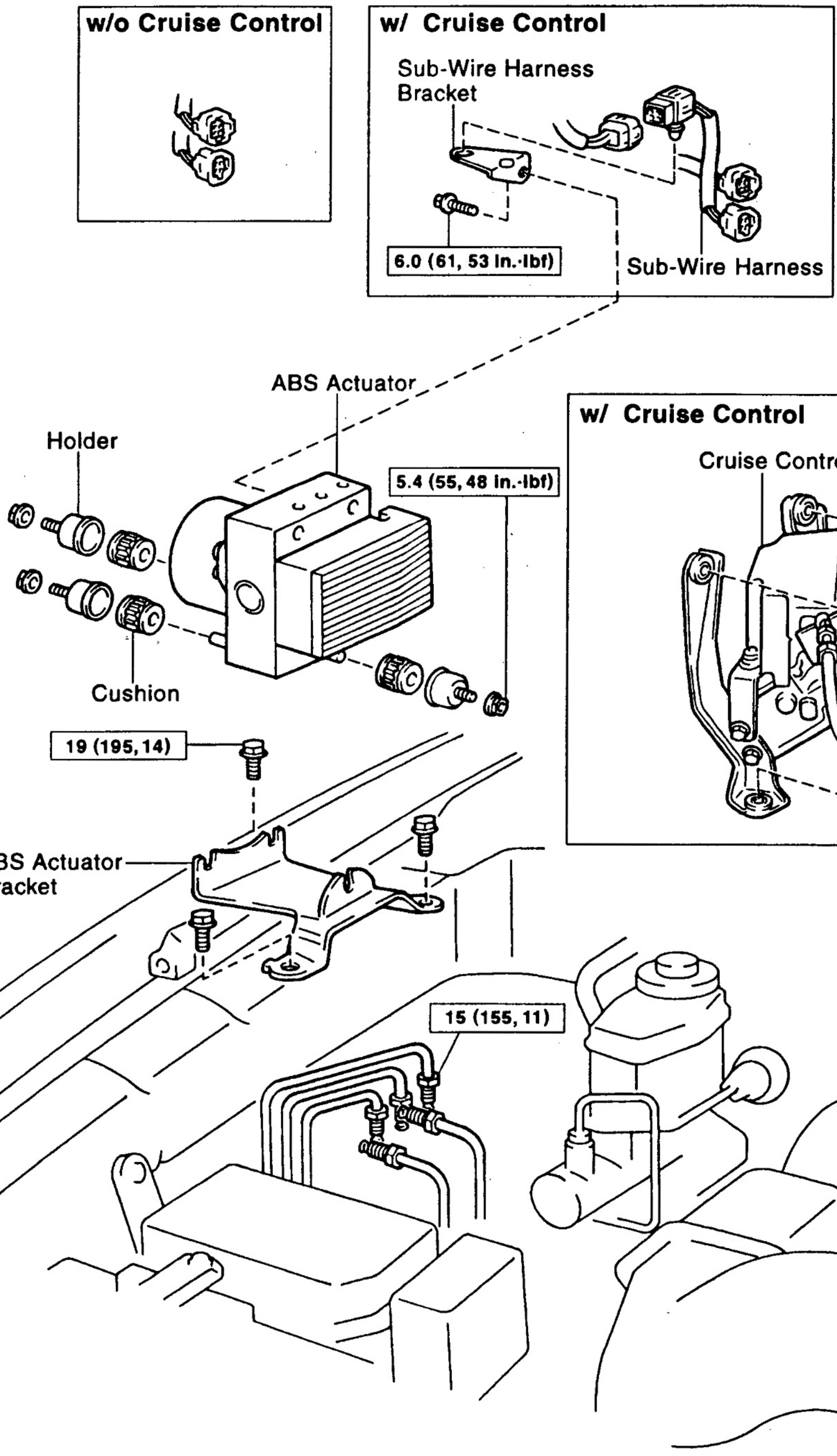

N·m (kgf·cm, in.·lbf) : Specified torque

W02739

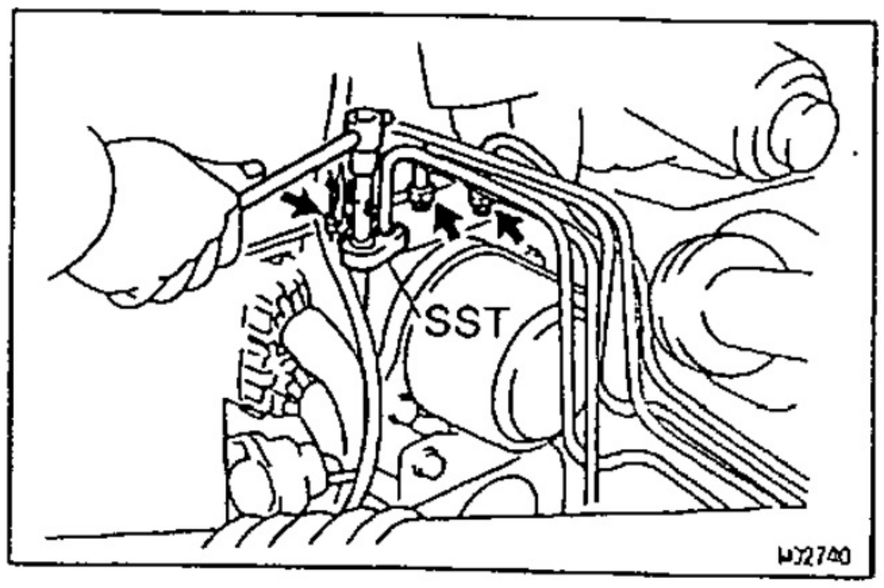

ABS ACTUATOR REMOVAL

1. w/ CRUISE CONTROL:
   REMOVE CRUISE CONTROL ACTUATOR
2. LHD 1KZ–T and 1KZ–TE E/G:
   REMOVE AIR CLEANER ASSEMBLY
3. DISCONNECT BRAKE LINES
   Using SST, disconnect the 5 brake lines from the ABS actuator.
   SST 09023–00100
   Torque: 15 N·m (155 kgf·cm, 11 ft·lbf)
4. DISCONNECT CONNECTORS
   Disconnect the 2 connectors from the actuator.
5. REMOVE ABS ACTUATOR

(a) RHD w/ Cruise control:
Remove the bolt and sub–wire harness bracket.
Torque: 6.0 N·m (61 kgf·cm, 53 in.·lbf)

(b) Remove the 3 bolts and ABS actuator assembly.
Torque: 19 N·m (195 kgf·cm, 14 ft·lbf)

(c) Remove the 3 nuts and ABS actuator from the actuator bracket.
Torque: 5.4 N·m (55 kgf·cm, 48 in.·lbf)

(d) Remove the 3 cushions and holders from the ABS actuator.

ABS ACTUATOR INSTALLATION

Installation is in the reverse order of removal.
AFTER INSTALLATION, FILL BRAKE RESERVOIR WITH BRAKE FLUID, BLEED BRAKE SYSTEM (See page BR–6) AND CHECK FOR LEAKS

ABS ACTUATOR INSPECTION

1. INSPECT BATTERY VOLTAGE
   Battery voltage:
   10–14 V

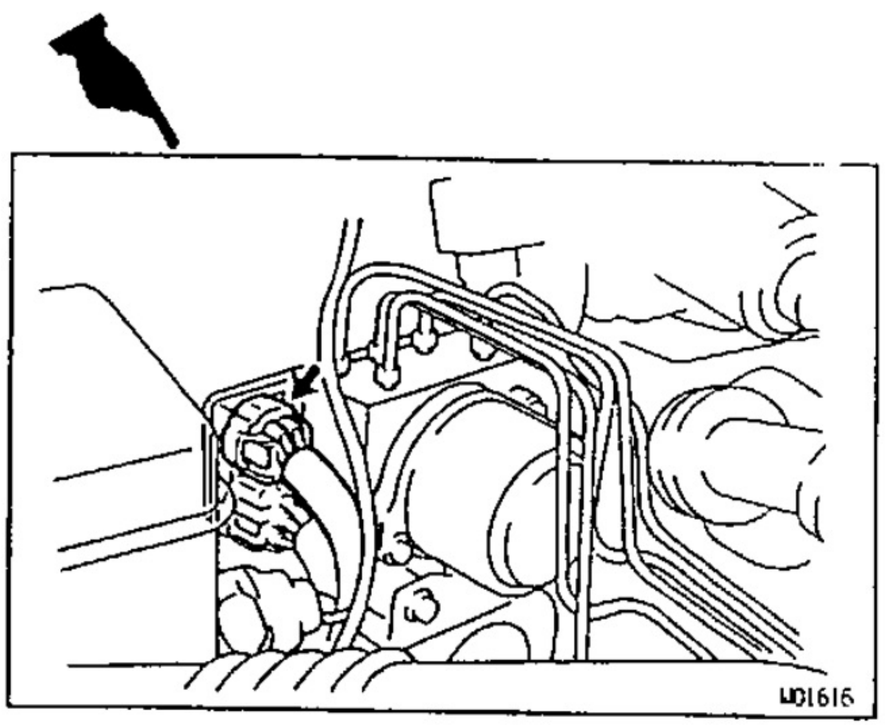

2. DISCONNECT CONNECTORS

(a) Disconnect the connector from the actuator.

(b) Disconnect the 2 connectors from the control relay.

3. CONNECT ACTUATOR CHECKER (SST) TO ACTUATOR

(a) Connect the actuator checker (SST) to the actuator, control relay and body side wire harness through the sub–wire harness C and I (SST) as shown.
SST 09990–00150, 09990–00200, 09990–00300

(b) Connect the red cable of the checker to the battery positive (+) terminal and black cable to the negative (–) terminal. Connect the black cable of the sub–wire harness to the battery negative (–) terminal or body ground.

(c) Place the "SHEET M" (SST) on the actuator checker.
SST 09990–00400

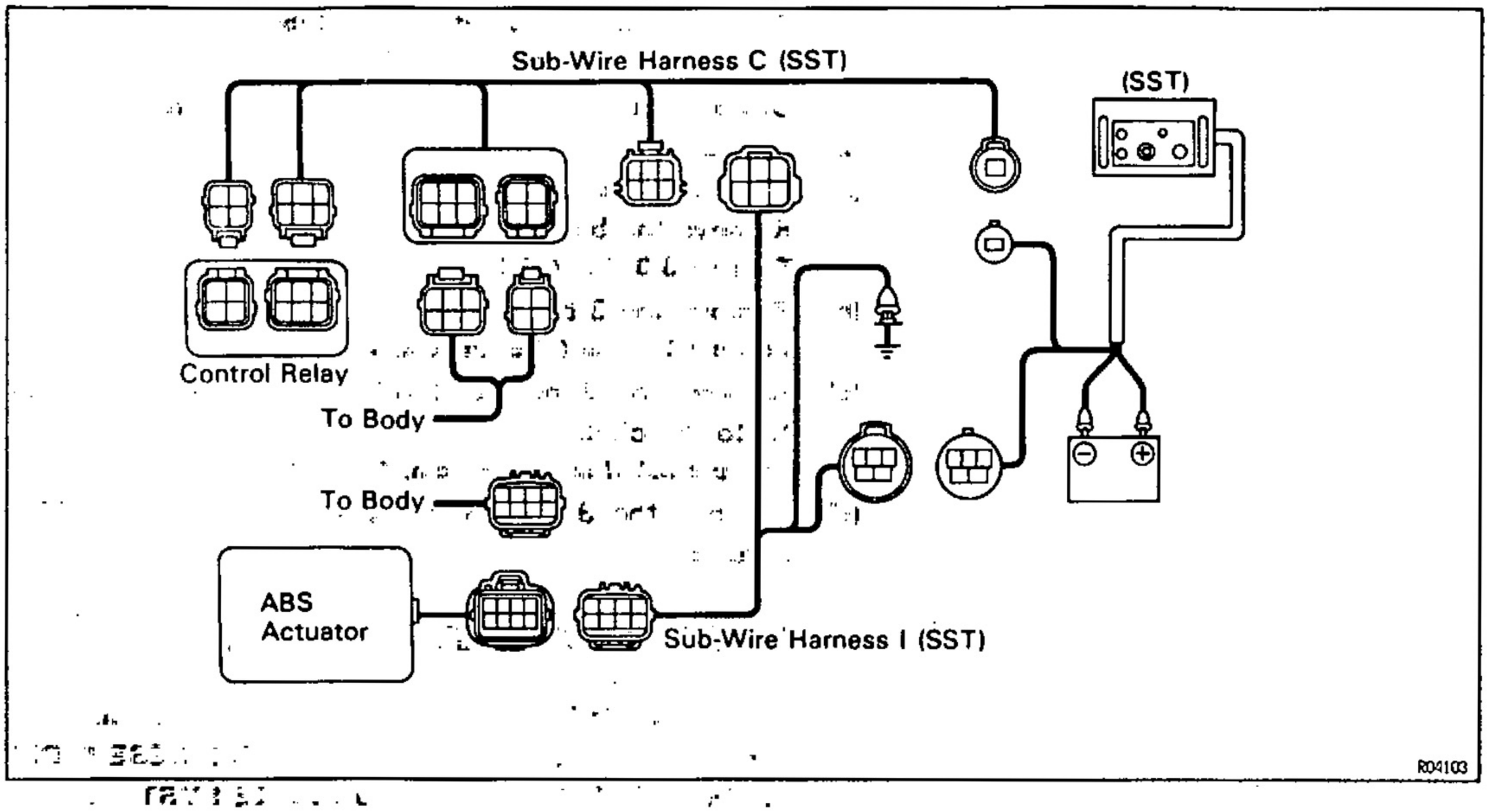

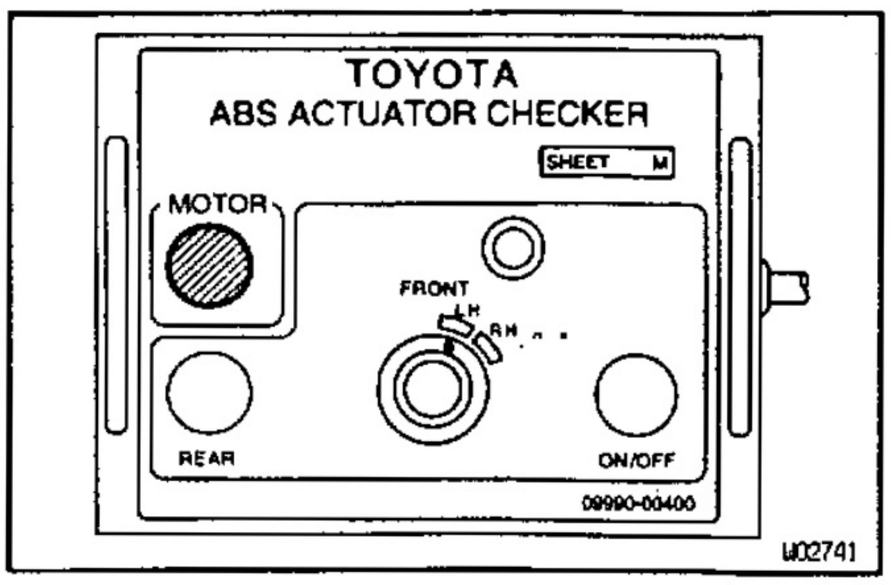

4. INSPECT BRAKE ACTUATOR OPERATION OF FRONT LH WHEEL

(a) Start the engine, and run it at idle.

(b) Turn the selector switch of the actuator checker to the "FRONT LH" position.

(c) Push and hold in the MOTOR switch for a few seconds. Make sure that you can hear the motor run.

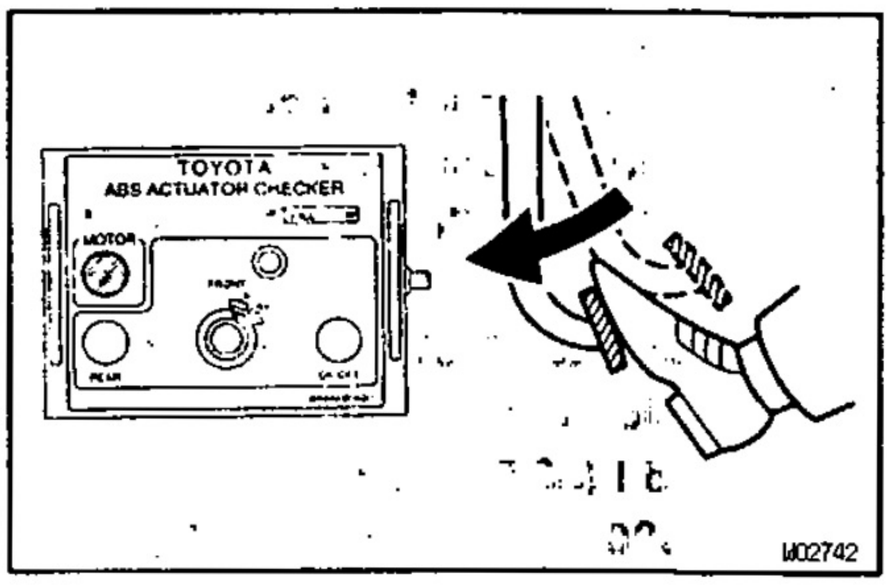

(d) Depress the brake pedal and hold it for about 15 seconds, and check that the pedal does not go down.

(e) With your foot still applied onto the brake pedal, push MOTOR switch and check that the brake pedal does not pulsate.

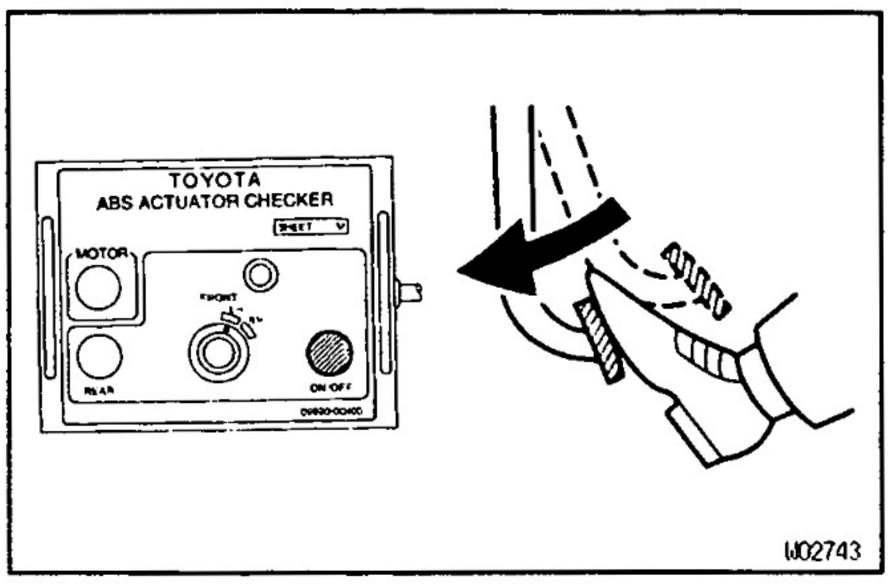

(f) Depress the brake pedal and hold it. As you hold the pedal down, push and hold in the POWER switch for a few seconds. Check that the pedal does not go down.
NOTICE: Do not keep the POWER switch pushed down for more than 10 seconds.

(g) With your foot still applied onto the brake pedal, release the POWER switch and check that the pedal goes down.

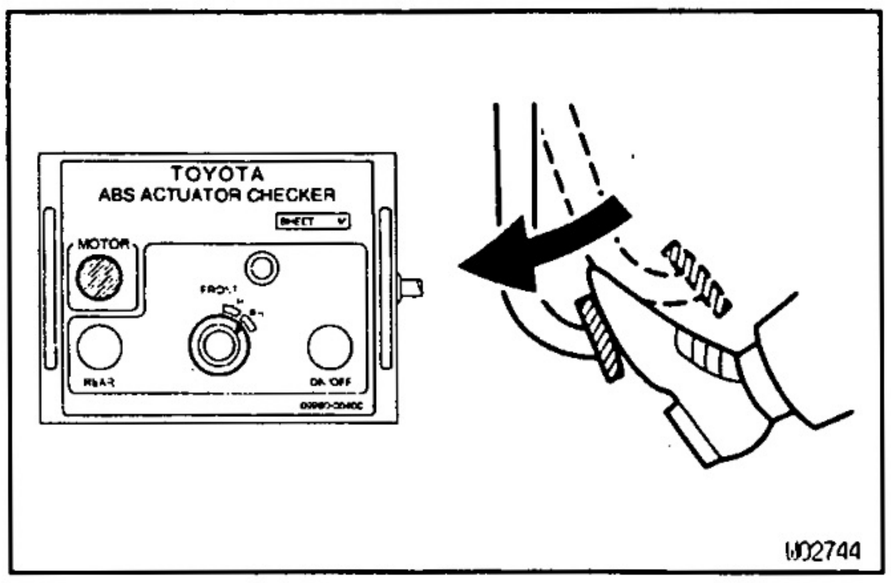

(h) With your foot still applied onto the brake pedal, push the MOTOR switch and check that the brake pedal returns.

(i) Release the brake pedal.

5. INSPECT FOR OTHER WHEELS

(a) Turn the selector switch to the "FRONT RH" position.

(b) Repeating (c) to (i) in the step 4, check the actuator operation similarly.

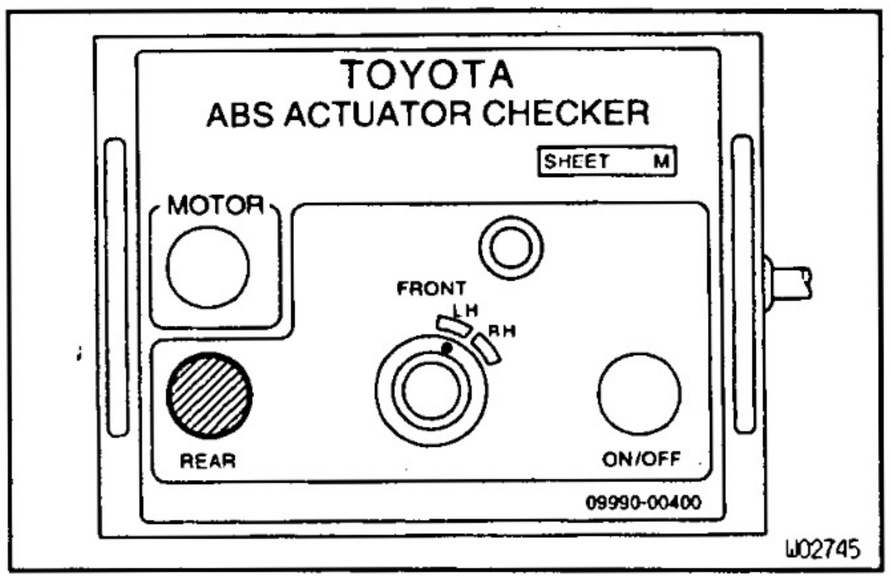

(c) Similary, inspect rear wheel.
HINT: Push the REAR switch instead of the POWER switch, and inspect it in any selector switch position.

6. PUSH MOTOR SWITCH

(a) Push and hold in the MOTOR switch for a few seconds.

(b) Stop the engine.

7. DISCONNECT ACTUATOR CHECKER (SST) FROM ACTUATOR

Remove the "SHEET M" (SST) and disconnect the actuator checker (SST) and sub–wire harness (SST) from the actuator, control relay and body side wire harness.

SST 09990–00150, 09990–00200, 09990–00300, 09990–00400

8. CONNECT CONNECTORS

(a) Connect the connector to the actuator.

(b) Connect the 2 connectors to the control relay.

9. CLEAR DTC (See page BR–59)

BR

FRONT SPEED SENSOR
COMPONENTS

BR1JL–02

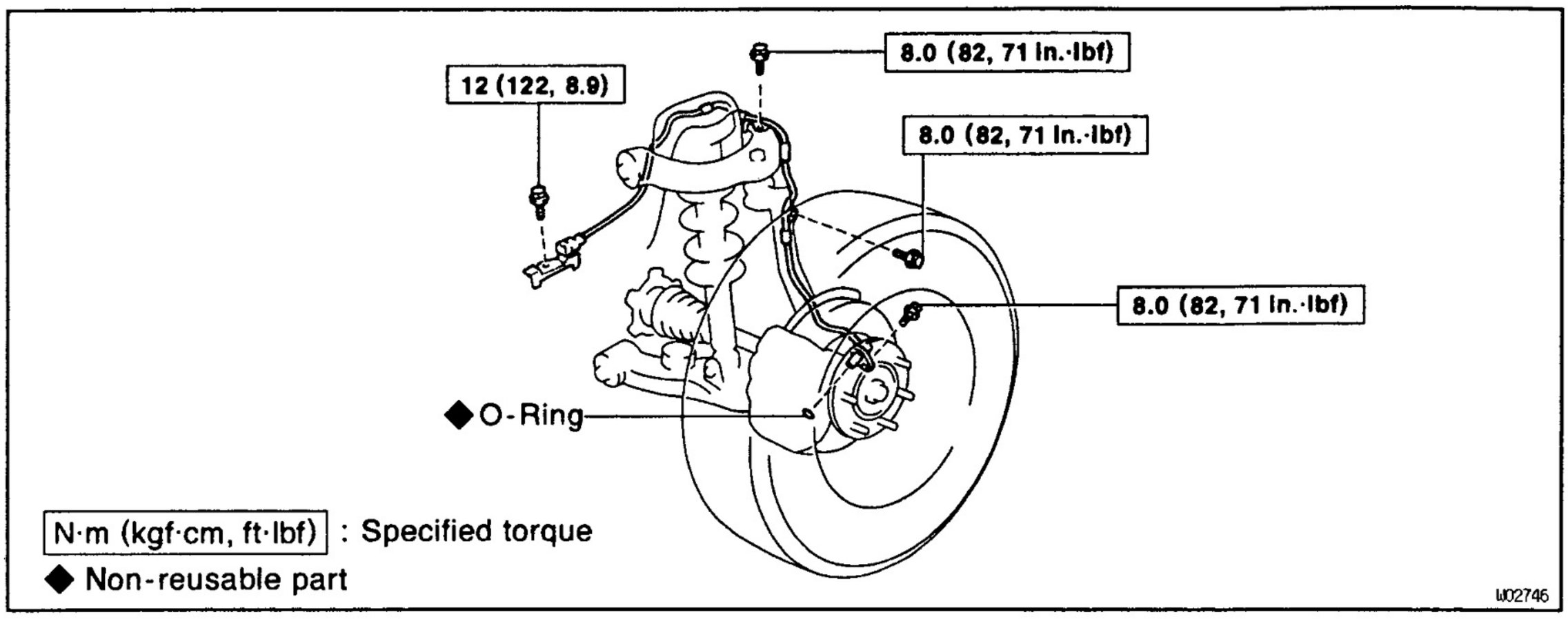

BR

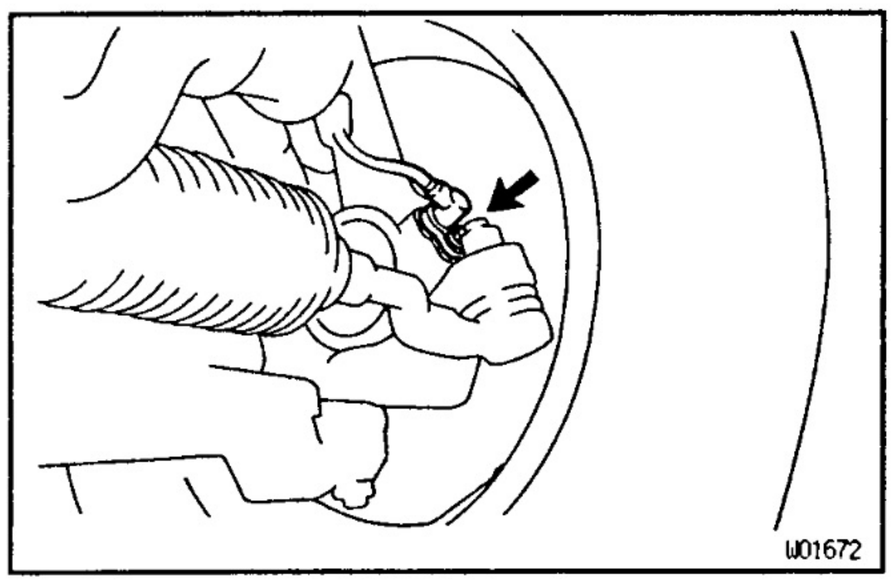

BR1JS–02

FRONT SPEED SENSOR REMOVAL

REMOVE SPEED SENSOR

(a) Disconnect the speed sensor connector.

(b) Remove the 4 resin clips and 4 clamp bolts holding the sensor harness from the steering knuckle, upper suspension arm and side rail.
Torque:
Side rail: 12 N·m (122 kgf·cm, 8.9 ft·lbf)
Others: 8.0 N·m (82 kgf·cm, 71 in.·lbf)

(c) Remove the mounting bolt and speed sensor.
Torque: 8.0 N·m (82 kgf·cm, 71 in.·lbf)

(d) Remove the O–ring.

BR1JW–02

REAR SPEED SENSOR INSTALLATION

Installation is in the reverse order of removal.

AFTER INSTALLATION, CHECK SPEED SENSOR SIGNAL (See page BR–59)

NOTICE: Make sure the followings:

- **There are no foreign objects on the sensor or the part of the knuckle to which the sensor is to be installed.**
- **The sensor is installed flat against the knuckle when you tighten the bolt.**
- **When installing the resin clips, use new ones.**

REAR SPEED SENSOR
COMPONENTS

BR1JP–02

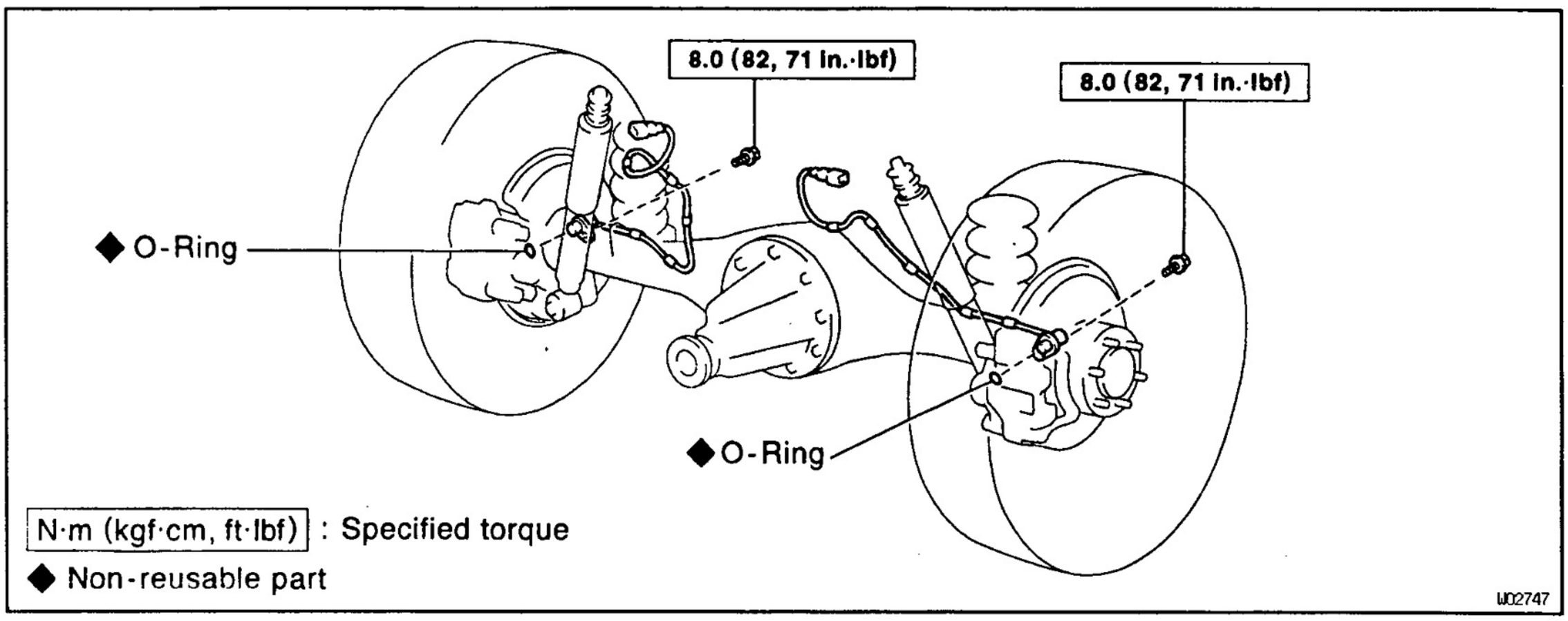

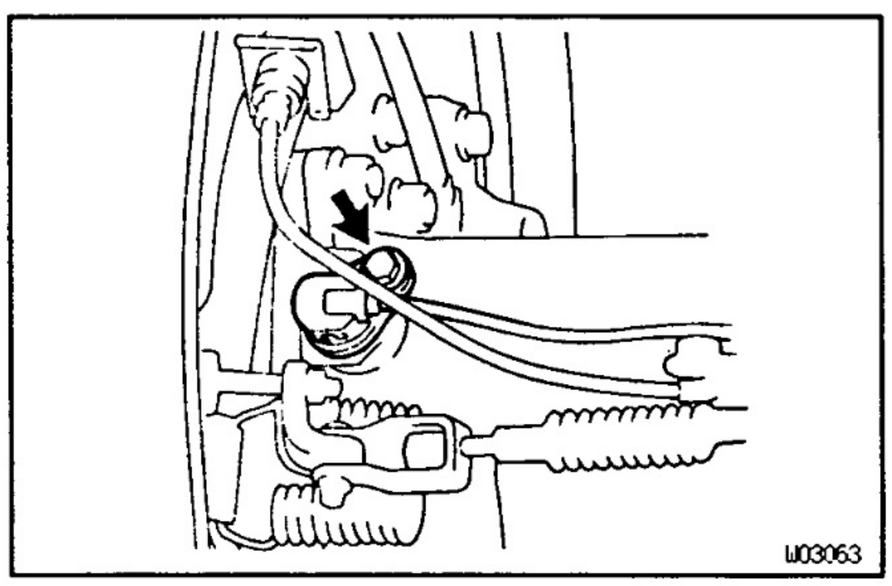

REAR SPEED SENSOR REMOVAL

BR1JT–02

BR

REMOVE SPEED SENSOR

(a) Disconnect the speed sensor connector, and pull out the sensor wire harness with grommet.
(b) Remove the 5 resin clips, holding the sensor wire harness from the frame, upper control arm and axle housing.
(c) Remove the mounting bolt and speed sensor.
Torque: 8.0 N·m (82 kgf·cm, 71 in.·lbf)
(d) Remove the O–ring.

REAR SPEED SENSOR INSTALLATION

BR1JR–02

Installation is in the reverse order of removal.

AFTER INSTALLATION, CHECK SPEED SENSOR SIGNAL (See page BR–59)

NOTICE: Make sure followings:

- **There are no foreign objects on the sensor or the part of the knuckle to which the sensor is to be installed.**
- **The sensor is installed flat against the knuckle when you tighten the bolt.**
- **When installing the resin clips, use new ones.**

– MEMO –

TROUBLESHOOTING

HOW TO PROCEED WITH
TROUBLESHOOTING ····· BR– 56
CUSTOMER PROBLEM ANALYSIS CHECK ·· BR– 57
PRE–CHECK ····· BR– 58
DIAGNOSTIC TROUBLE CODE CHART ····· BR– 63
PARTS LOCATION ····· BR– 65
TERMINALS OF ECU ····· BR– 66
PROBLEM SYMPTOMS TABLE ····· BR– 67
CIRCUIT INSPECTION
DTC11,12 ABS Control (Solenoid)
Relay Circuit ····· BR– 68
DTC 13,14 ABS Control (Motor)
Relay Circuit ····· BR– 71
DTC 21,22,23 ABS Actuator
Solenoid Circuit ····· BR– 74
DTC 31,32,33,34 Speed
Sensor Circuit ····· BR– 77
DTC 37 Neither Front Speed Sensor
Rotor Missing ····· BR– 81
DTC 37 Tires of Different Size ····· BR– 82
DTC 41 IG Power Source Circuit ····· BR– 83
DTC 43 Malfunction in Deceleration
Sensor ····· BR– 86
DTC 44 Deceleration Sensor Circuit ····· BR– 87
DTC 48 Rear Differential Lock Circuit
(w/ Rear Differential Lock) ····· BR– 89
DTC 49 Stop Light Switch Circuit ····· BR– 92
DTC 51 ABS Pump Motor Lock ····· BR– 94
ABS Warning Light Circuit ····· BR– 95
Tc Terminal Circuit ····· BR– 98
Ts Terminal Circuit ····· BR–100
Check for Fluid Leakage ····· BR–102

HOW TO PROCEED WITH TROUBLESHOOTING

Troubleshoooting in accordance with the procedure on the following pages.

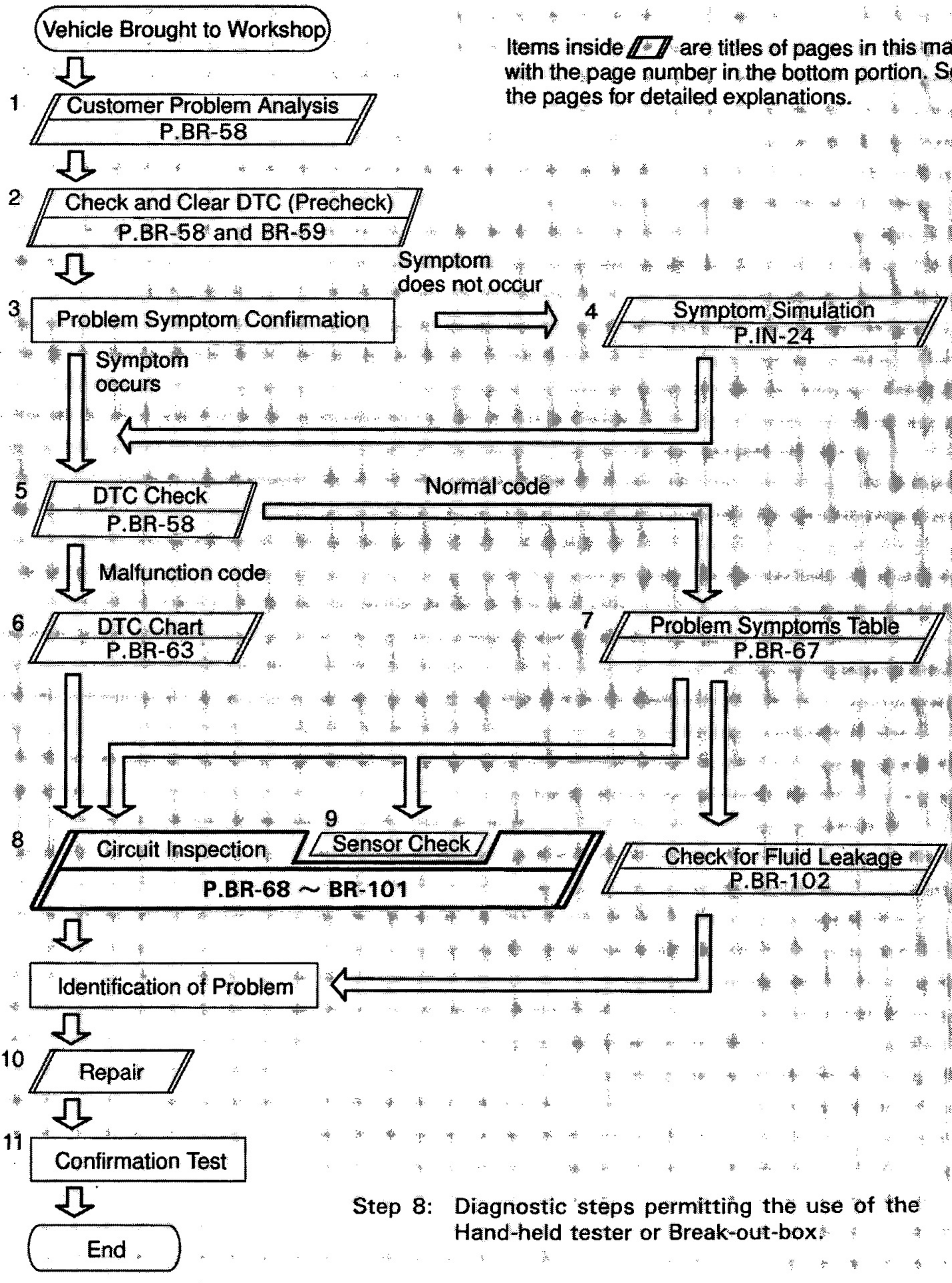

Items inside ▱ are titles of pages in this manual, with the page number in the bottom portion. See the pages for detailed explanations.

Step 8: Diagnostic steps permitting the use of the Hand-held tester or Break-out-box.

BR

CUSTOMER PROBLEM ANALYSIS CHECK

ABS Check Sheet

Inspector's Name :

Customer's Name		**Registration No.**	
		Registration Year	/ /
		Frame No.	
Date Vehicle Brought In	/ /	**Odometer Reading**	km miles

Date Problem First Occurred	/ /
Frequency Problem Occurs	☐ Continuous ☐ Intermittent (times a day)

Symptoms	☐ ABS does not operate.	
	☐ ABS does not operate efficiently.	
	ABS Warning Light Abnormal	☐ Remains ON ☐ Does not Light Up

DTC Check	**1st Time**	☐ Normal Code ☐ Malfunction Code (Code)
	2nd Time	☐ Normal Code ☐ Malfunction Code (Code)

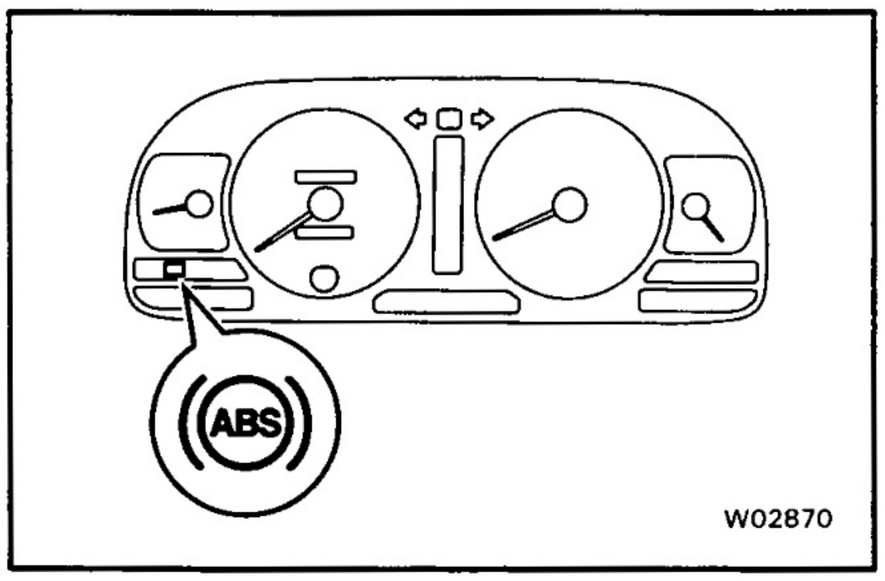

PRE–CHECK

1. DIAGNOSIS SYSTEM

(a) INDICATOR CHECK

When the ignition switch is turned ON, check that the ABS warning light goes on for 3 seconds.

HINT: If the indicator check result is not normal, proceed to troubleshooting for the ABS warning light circuit (See page BR-95).

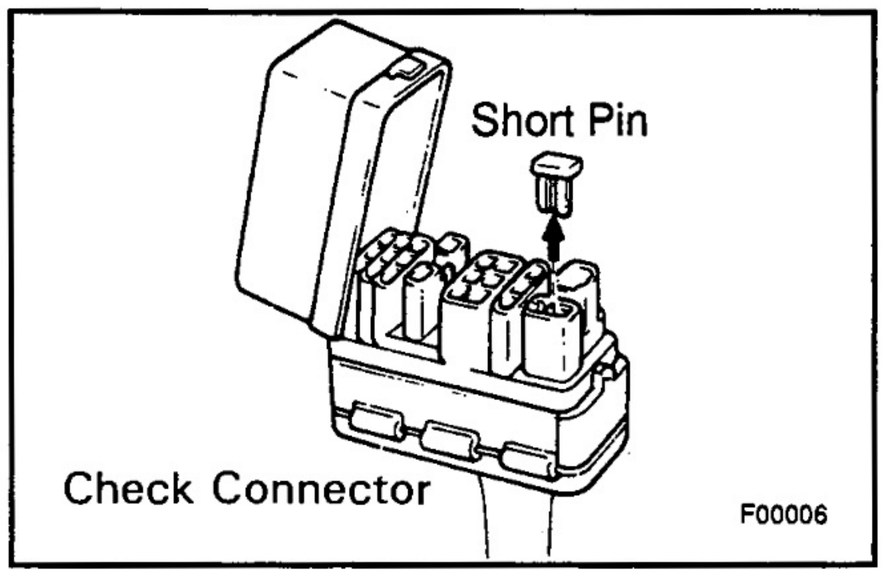

(b) DTC CHECK

(1) Turn the ignition switch ON.

(2) Disconnect the short pin from check connector.

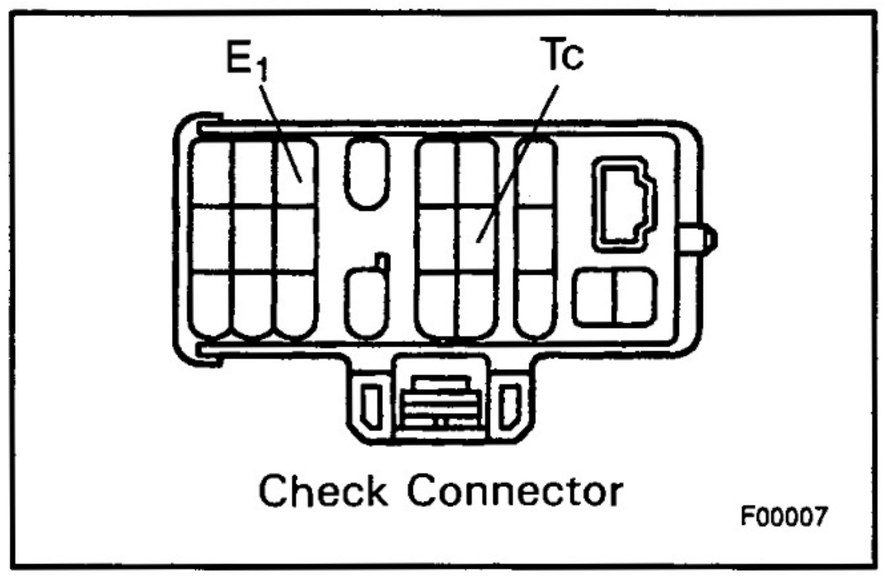

(3) Using SST, connect terminals Tc and E_1 of check connector.

SST 09843 – 18020

(4) Read the DTC from the ABS warning light on the combination meter.

HINT: If no code appears, inspect the diagnostic circuit or ABS warning light circuit (See page BR-98 or BR-95).

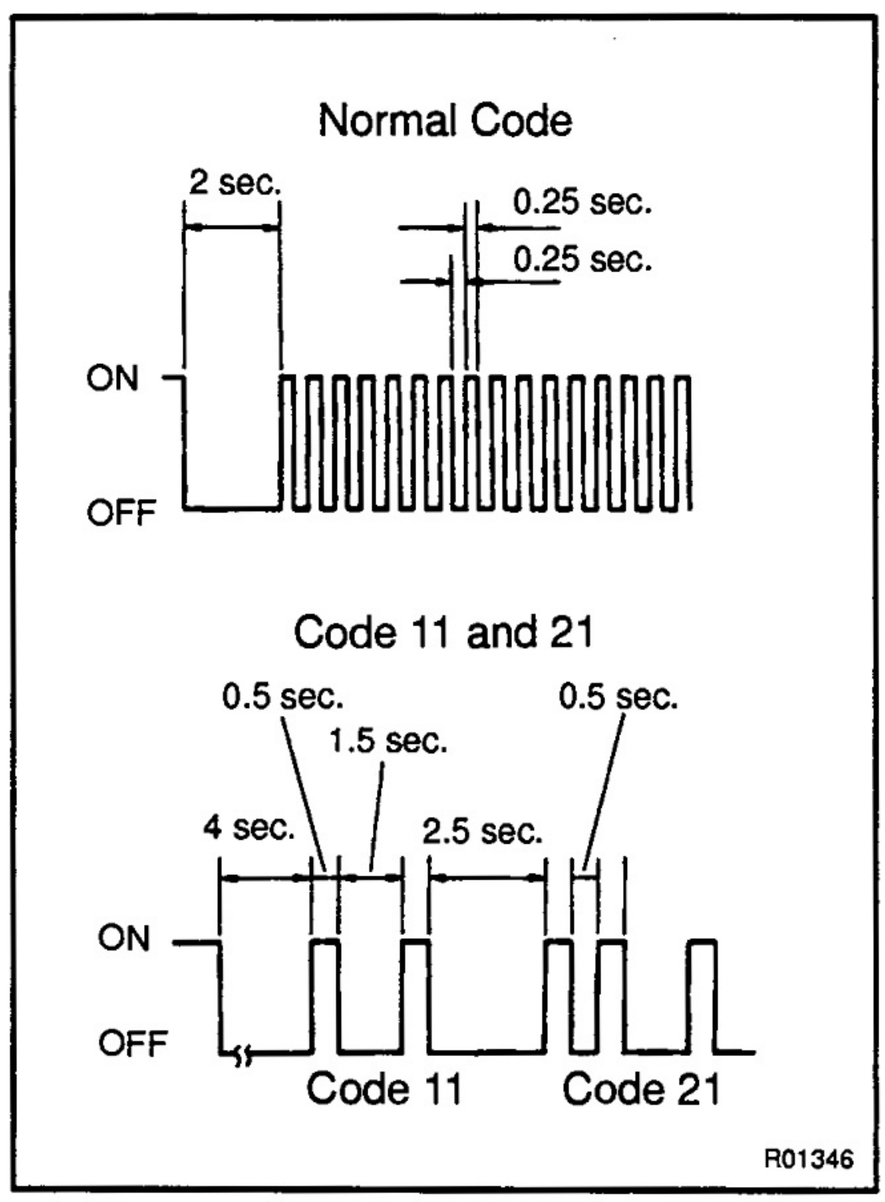

As an example, the blinking patterns for normal code and codes 11 and 21 are shown on the left.

(5) Code are explained in the code table on page BR-63.

(6) After completing the check, disconnect terminals Tc and E_1, and turn off the display.

If 2 or more malfunctions are indicated at the same time the lowest numbered DTC will be displayed 1st.

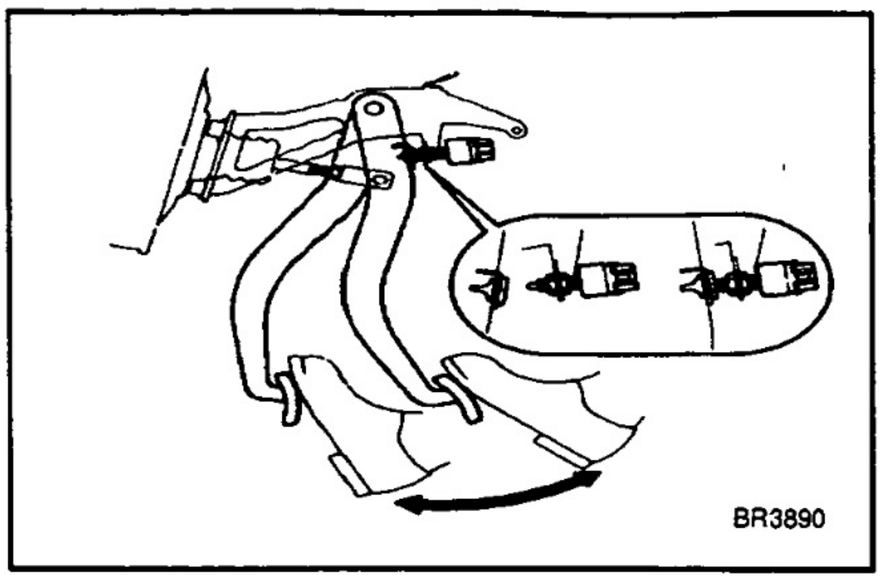

(c) DTC CLEARANCE

(1) Using SST, connect terminals Tc and E_1 of check connector and remove the short pin from check connector.

SST 09843 – 18020

(2) IG switch ON.

(3) Clear the DTC stored in ECU by depressing the brake pedal 8 or more times within 3 seconds.

(4) Check that the warning light shows the normal code.

(5) Remove the SST from the terminals of check connector.

SST 09843 – 18020

(6) Connect the short pin to check connector.

HINT: Cancellation can also be done by removing the ECU–B fuse, but in this case, other memory systems will also be cancelled out.

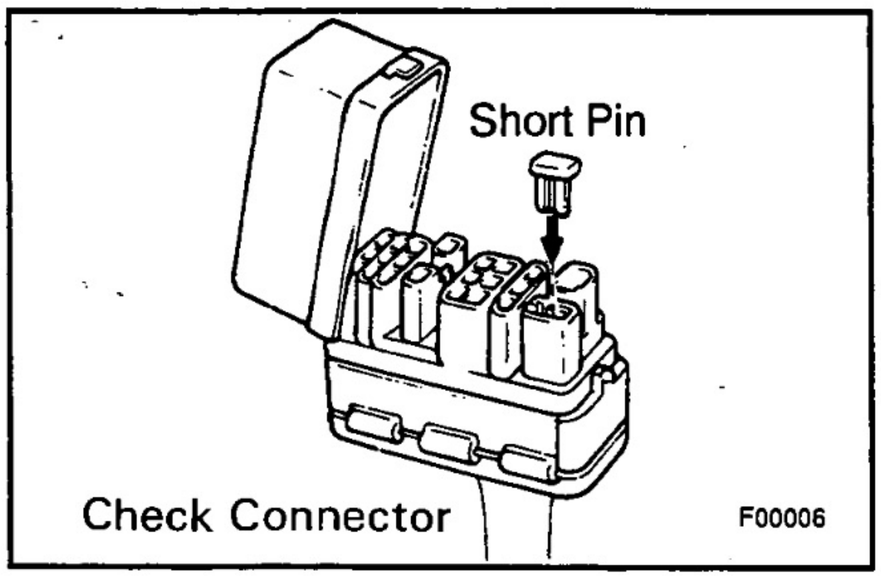

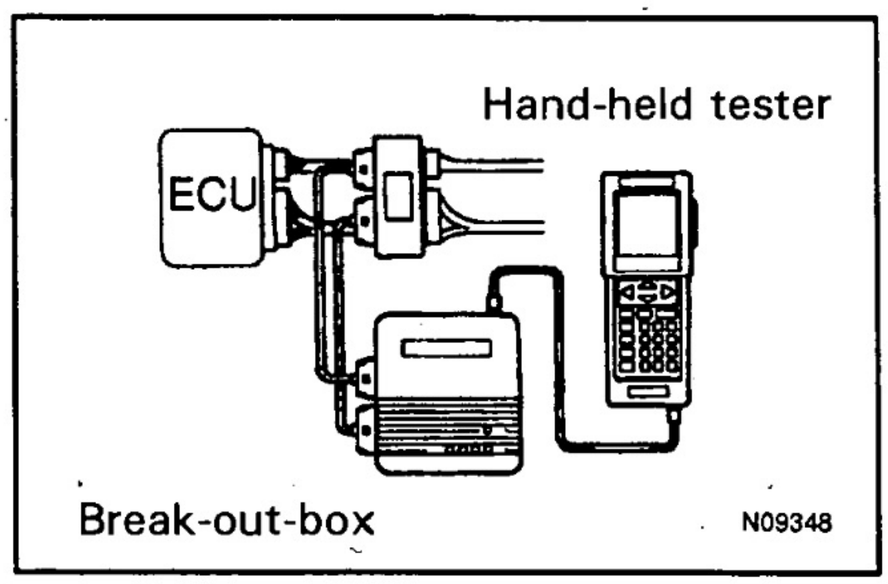

(d) ECU TERMINAL VALUES MEASUREMENT USING BREAK-OUT-BOX AND HAND-HELD TESTER

(1) Hook up the hand-held tester and break-out-box to the vehicle.

(2) Read the ECU input/output values by following the prompts on the tester screen.

HINT: Hand-held tester has a ''Snapshot'' function.
This records the measured values and is effective in the diagnosis of intermittent problems.
Please refer to the hand-held tester/break-out-box operator's manual for further details.

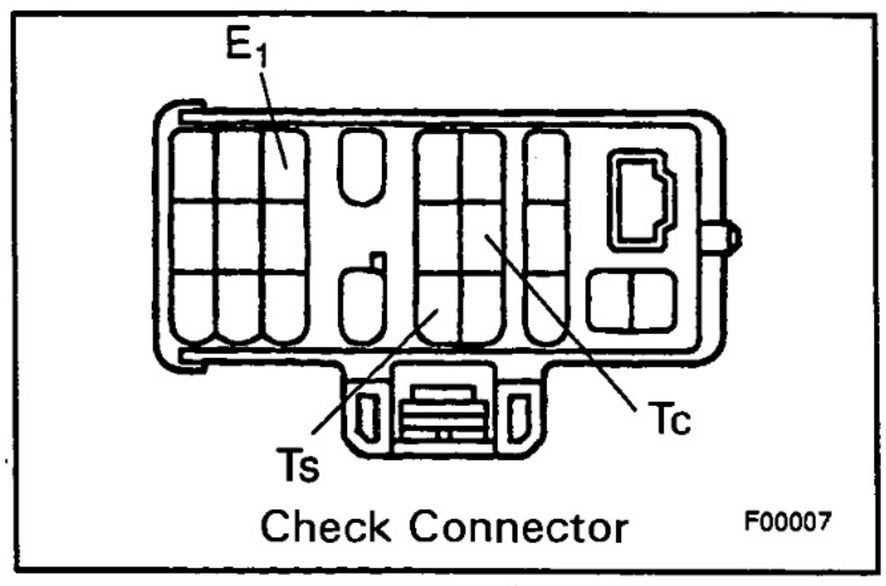

2. SPEED SENSOR SIGNAL AND DECELERATION SENSOR CHECK

(a) SPEED SENSOR SIGNAL CHECK

(1) Turn the ignition switch OFF.

(2) Using SST, connect terminals Ts and E_1 of check connector.

SST 09843 – 18020

(3) Start the engine.

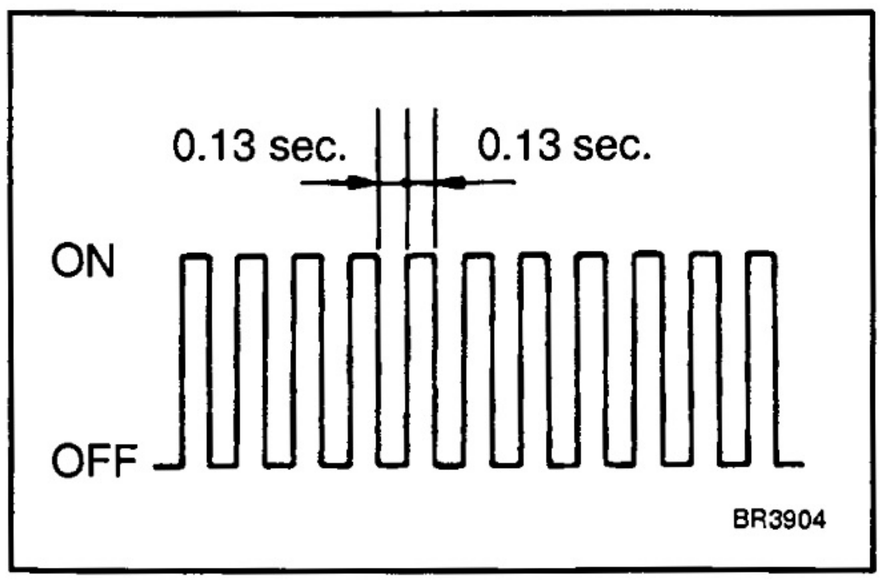

(4) Check that the ABS warning light blinks.

HINT: If the ABS warning light does not blink, inspect the ABS warning light circuit(See page BR-95).

(5) Drive vehicle straight forward.

HINT: Drive vehicle faster than 45 km/h (28 mph) for several seconds.

(6) Stop the vehicle.

(7) Using SST, connect terminals Tc and E_1 of check connector.

SST 09843 – 18020

(8) Read the number of blinks of the ABS warning light.

HINT: See the list of DTC on page BR-62.

If every sensor is normal, a normal code is output (A cycle of 0.25 sec. ON and 0.25 sec. OFF is repeated).

If 2 or more malfunction are indicated at the same time, the lowest numbered code will be displayed 1st.

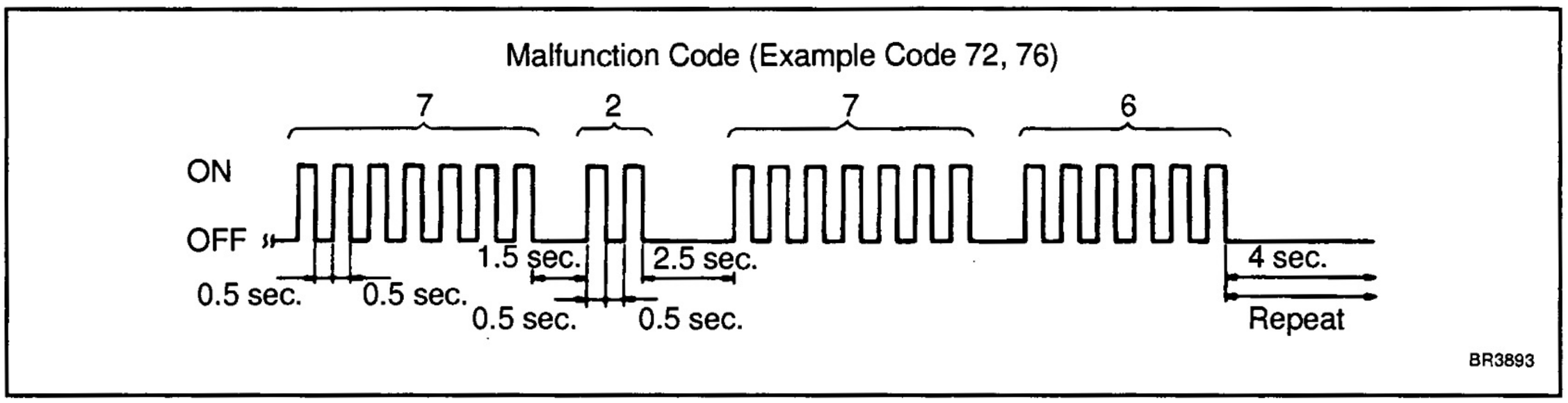

(9) After doing the check, disconnect terminals Ts and E_1, Tc and E_1 of check connector, and ignition switch turned OFF.

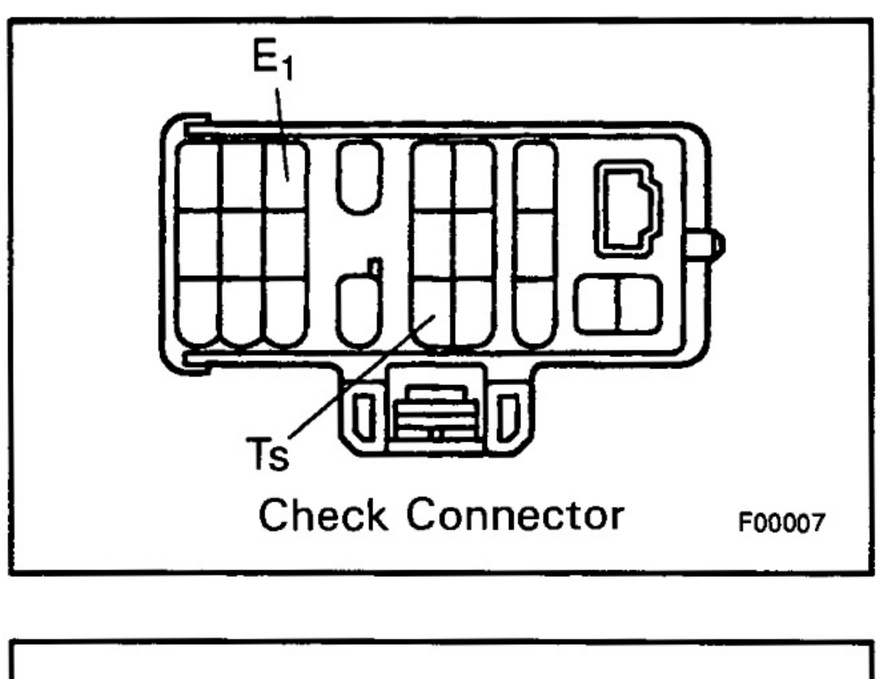

(b) DECELERATION SENSOR DETECTION POINT CHECK

(1) Turn the ignition switch OFF.

(2) Using SST, connect terminals Ts and E_1 of check connector.

SST 09843 – 18020

(3) Start the engine.

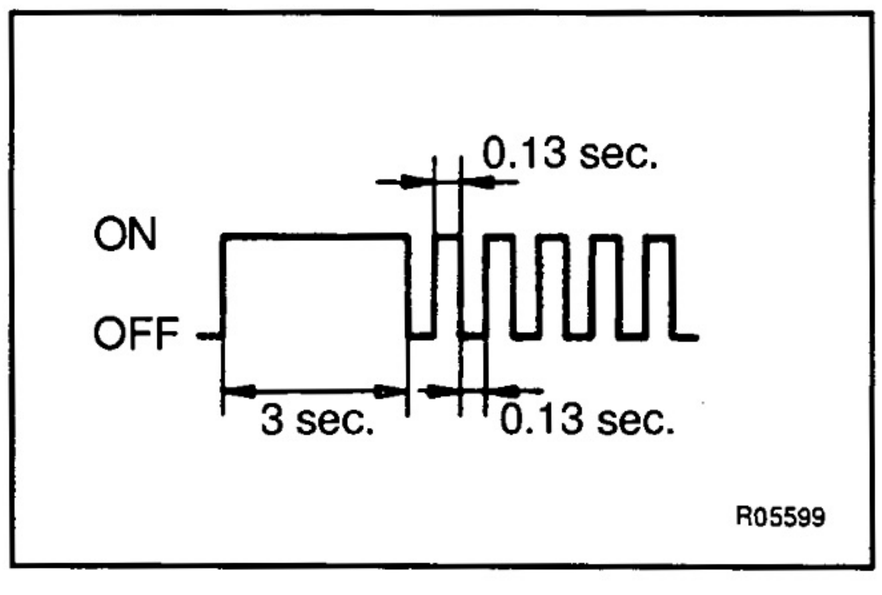

(4) Check that the ABS warning light blinks.

HINT: If the ABS warning light does not blink, inspect the ABS warning light circuit(See page BR-95).

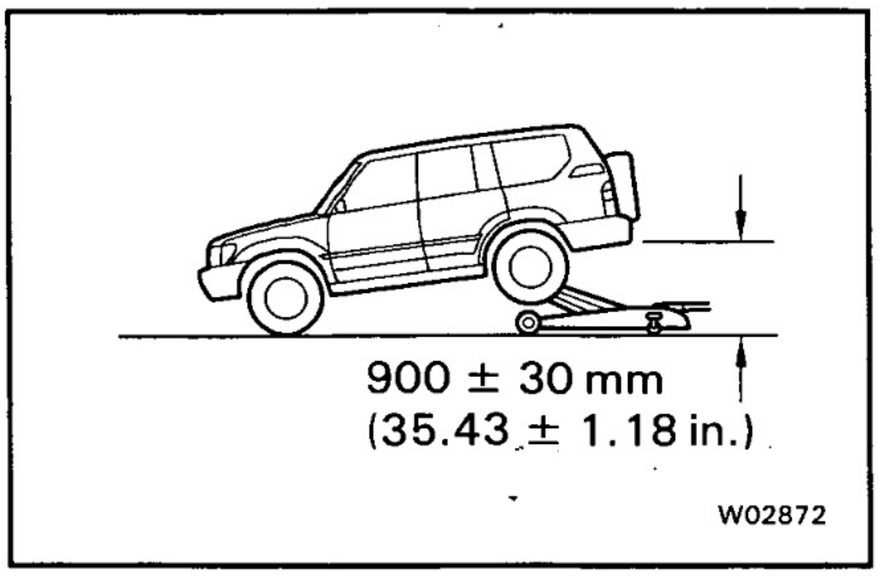

(5) Jack up the rear side of the vehicle slowly.

HINT: When measuring the height, measure at the center of the lower body of the vehicle.

(6) Check that the warning light blinks.
If the warning light turns on, inspect the deceleration sensor installation. If the sensor installation is OK, replace the deceleration sensor.

(7) Jack down the vehicle slowly.

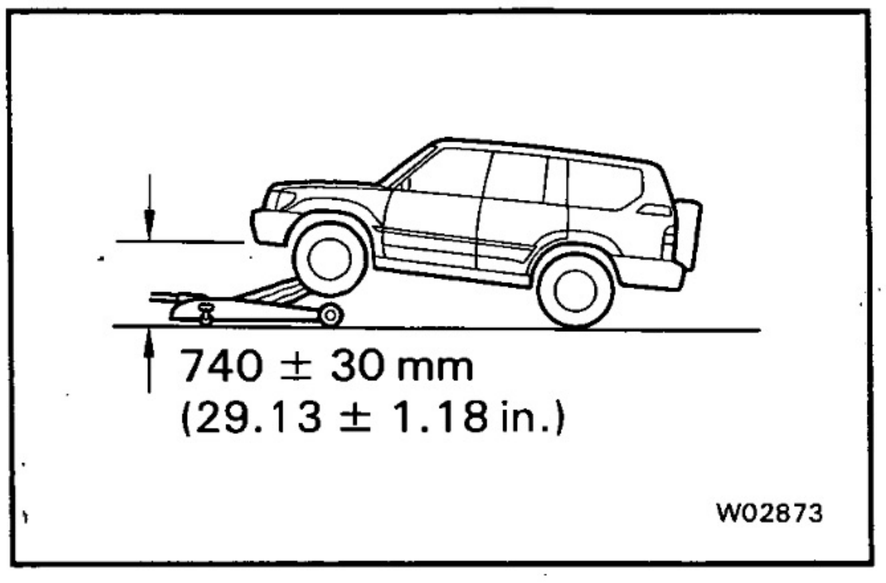

(8) Jack up the front side of the vehicle slowly, as shown.

HINT: When measuring the height, measure at the center of the lower body of the vehicle.

(9) Check that the warning light blinks.
If the warning light turns on, inspect the deceleration sensor installation. If the sensor installation is OK, replace the deceleration sensor.

(10) Jack down the vehicle slowly.

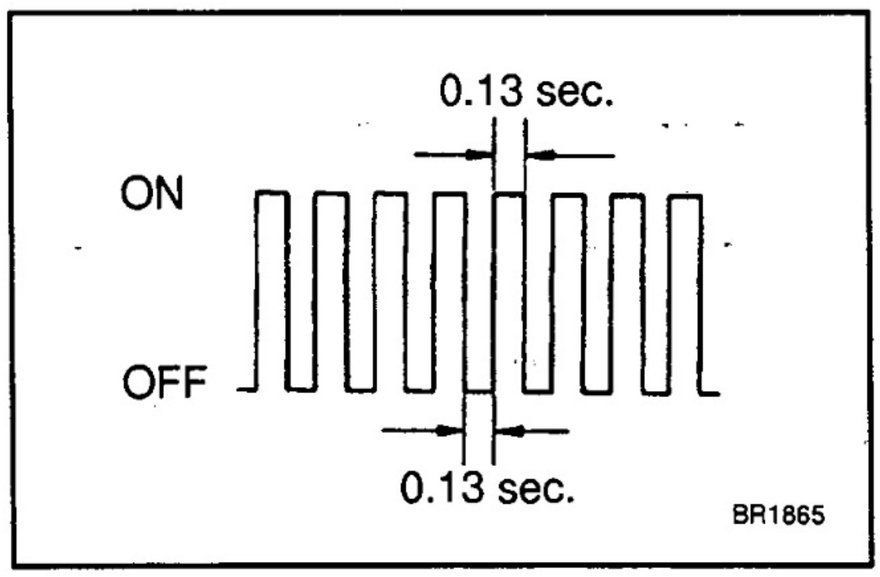

(c) DECELERATION SENSOR OPERATION CHECK

(1) Drive the vehicle straight ahead at about 20 km/h (12.4 mph) or more, lightly depress the brake pedal.

(2) Check that there is no change in the warning light pattern.

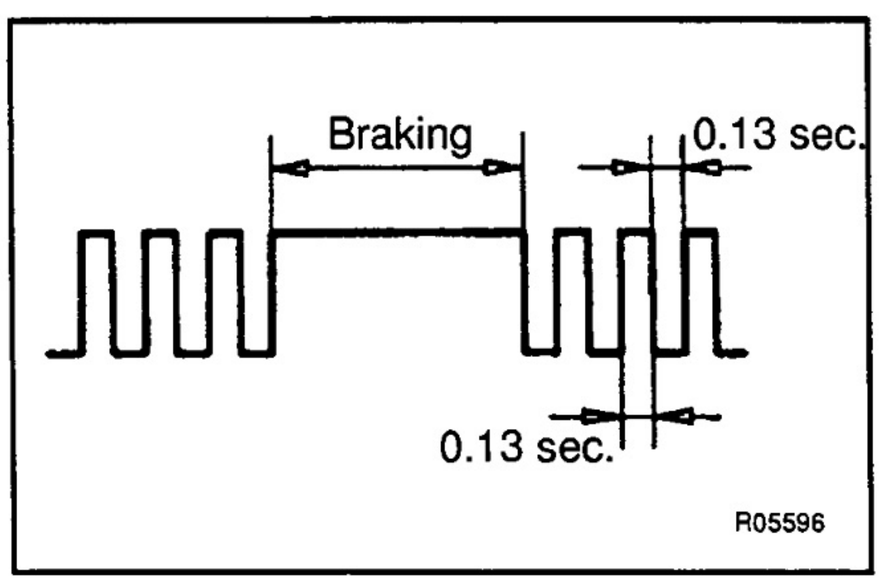

(3) Drive the vehicle straight ahead at about 20 km/h (12.4 mph) or more, and depress the brake pedal moderately.

(4) Check that the warning light turns on while braking.

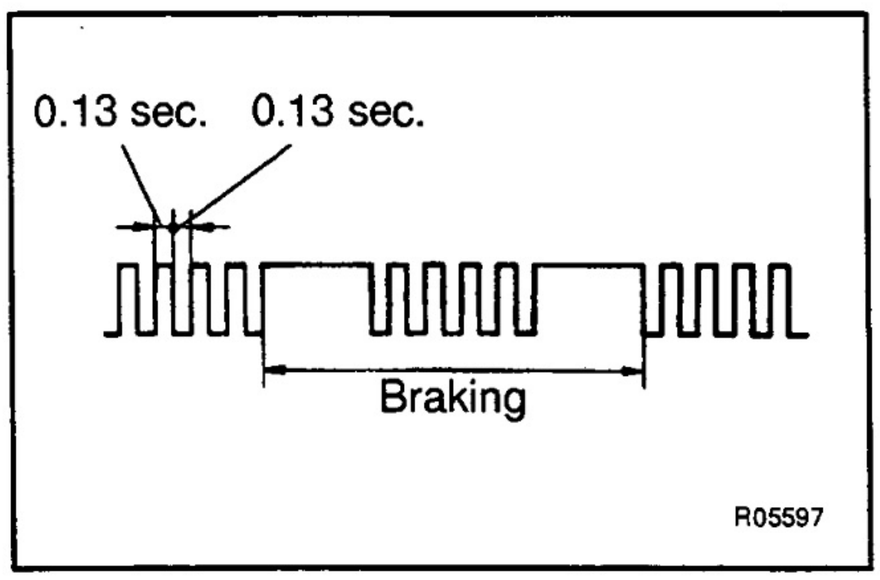

(5) Drive the vehicle straight ahead at about 20 km/h (12.4 mph) or more, and depress the brake pedal strongly.

(6) Check that the warning light pattern changes while braking, as shown.
If the operation is not as specified, inspect the deceleration sensor installation. If the sensor installation is OK, replace the deceleration sensor.

(7) Stop the vehicle and turn the ignition switch OFF.

(8) Remove SST from the terminals Ts and E_1 of the check connector.
SST 09843 – 18020

(d) DTC OF SPEED SENSOR CHECK FUNCTION

Code No.	Diagnosis	Trouble Area
71	Low output voltage of right front speed sensor	• Right front speed sensor • Sensor installation
72	Low output voltage of left front speed sensor	• Left front speed sensor • Sensor installation
73	Low output voltage of right rear speed sensor	• Right rear speed sensor • Sensor installation
74	Low output voltage of left rear speed sensor	• Left rear speed sensor • Sensor installation
75	Abnormal change in output voltage of right front speed sensor	• Right front speed sensor rotor
76	Abnormal change in output voltage of left front speed sensor	• Left front speed sensor rotor
77	Abnormal change in output voltage of right rear speed sensor	• Right rear speed sensor rotor
78	Abnormal change in output voltage of left rear speed sensor	• Left rear speed sensor rotor
79	Deceleration sensor is faulty	• Deceleration sensor • Sensor installation

DIAGNOSTIC TROUBLE CODE CHART

HINT: Using SST 09843 –18020, connect the terminals Tc and E_1, and remove the short pin.
If a malfunction code is displayed during the DTC check, check the circuit listed that the code. For details of each code, turn to the page referred to under the "See page" for respective "DTC No." in the DTC chart.

DTC No. (See Page)	Detection Item	Trouble Area
11 (BR-68)	Open circuit in ABS control (solenoid) relay circuit	• ABS control (solenoid) relay • Open or short in ABS control (solenoid) relay circuit • ECU
12 (BR-68)	Short circuit in ABS control (solenoid) relay circuit	• ABS control (solenoid) relay • B+ short in ABS control (solenoid) relay circuit • ECU
13 (BR-71)	Open circuit in ABS control (motor) relay circuit	• ABS control (motor) relay • Open or short in ABS control (motor) relay circuit • ECU
14 (BR-71)	Short circuit in ABS control (motor) relay circuit	• ABS control (motor) relay • B+ short in ABS control (motor) relay circuit • ECU
21 (BR-74)	Open or short circuit in 2–position solenoid circuit for right front wheel	• ABS actuator • Open or short in SFRR or SFRH circuit • ECU
22 (BR-74)	Open or short circuit in 2–position solenoid circuit for left front wheel	• ABS actuator • Open or short in SFLR or SFLH circuit • ECU
23 (BR-74)	Open or short circuit in 2–position solenoid circuit for rear wheel	• ABS actuator • Open or short in SRR or SRH circuit • ECU
31 (BR-77)	Right front wheel speed sensor signal malfunction	• Right front, left front, right rear and left rear speed sensor • Open or short in each speed sensor circuit • ECU
32 (BR-77)	Left front wheel speed sensor signal malfunction	
33 (BR-77)	Right rear wheel speed sensor signal malfunction	
34 (BR-77)	Left rear wheel speed sensor signal malfunction	
37 (BR-81)	Neither front speed sensor rotor missing	• Front axle hub • Right front, left front speed sensor • Wire harness for sensor system • ECU
37 (BR-82)	Some tires is different in size from the other tires	• Tire size • ECU
41 (BR-83)	Low battery voltage or abnormally high battery voltage	• Battery • IC regulator • Open or short in power source circuit • ECU
43 (BR-86)	Malfunction in deceleration sensor	• Deceleration sensor • Wire harness for deceleration sensor circuit • ECU
44 (BR-87)	Open or short in deceleration sensor circuit	• Deceleration sensor • Open or short in deceleration sensor circuit • ECU

48* (BR-89)	Open or short circuit in rear differential lock circuit Rear differential is locking	• Rear differential lock • ECU
49 (BR-92)	Open circuit in stop light switch	• Stop light switch • Open in stop light circuit
51 (BR-94)	Pump motor is locked Open in pump motor ground	• ABS pump motor
Always ON	Malfunction in ECU	• ECU

*: w/ Rear differential lock

PARTS LOCATION

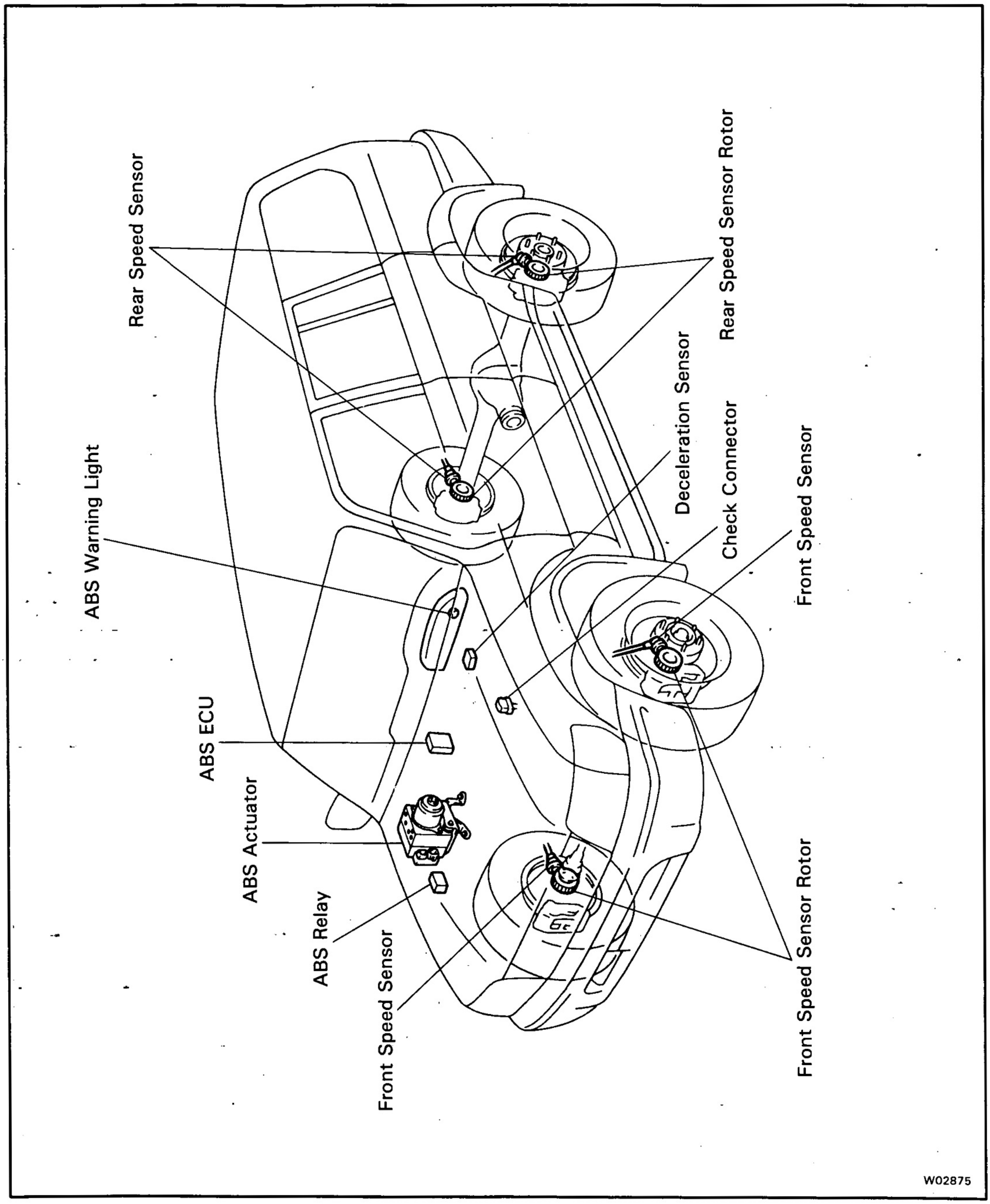

TERMINALS OF ECU

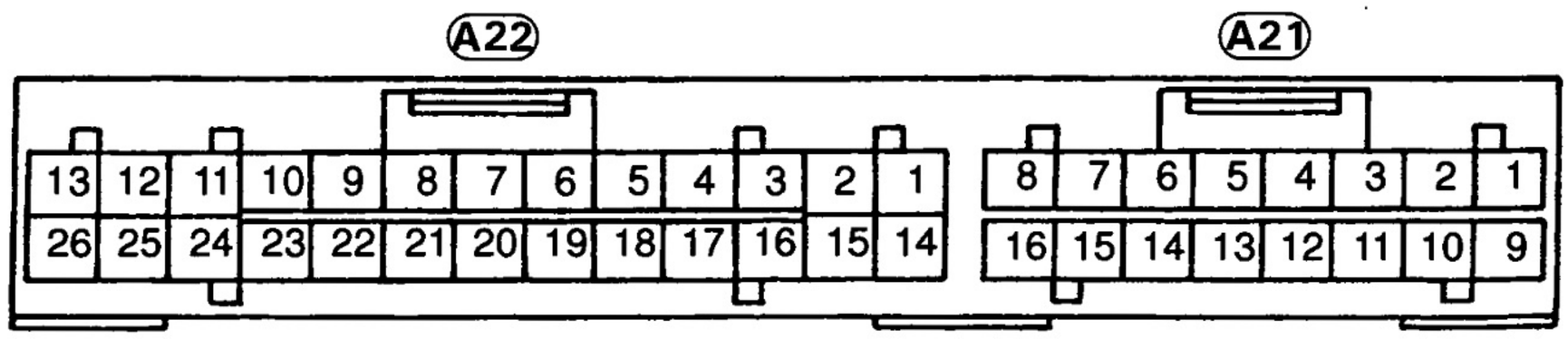

R00463

Symbols (Terminals No.)	STD Voltage (V)	Condition
BAT (A22 – 22) – GND (A22 – 11, 24)	10 – 14	Always
IG1 (A22 – 10) – GND (A22 – 11, 24)	10 – 14	IG switch ON
SR (A21 – 5) – R+ (A21 – 3)	9 – 14	IG switch ON, ABS warning light OFF
MR (A21 – 4) – R+ (A21 – 3)	Below 1.0	IG switch ON
SFRH (A21 – 8) – GND (A22 – 11, 24)	10 – 14	IG switch ON, ABS warning light OFF
SFRR (A21 – 16) – GND (A22 – 11, 24)	10 – 14	IG switch ON, ABS warning light OFF
SFLH (A21 – 1) – GND (A22 – 11, 24)	10 – 14	IG switch ON, ABS warning light OFF
SFLR (A21 – 2) – GND (A22 – 11, 24)	10 – 14	IG switch ON, ABS warning light OFF
SRR (A22 – 10) – GND (A22 – 11, 24)	10 – 14	IG switch ON, ABS warning light OFF
SRH (A22 – 9) – GND (A22 – 11, 24)	10 – 14	IG switch ON, ABS warning light OFF
AST (A21 – 11) – GND (A22 – 11, 24)	10 – 14	IG switch ON, ABS warning light OFF
WA (A22 – 25) – GND (A22 – 11, 24)	Below 2.0	IG switch ON, ABS warning light ON
	10 – 14	IG switch ON, ABS warning light OFF
STP (A22 – 21) – GND (A22 – 11, 24)	Below 1.5	Stop light switch OFF
	8 – 14	Stop light switch ON
Tc (A22 – 20) – GND (A22 – 11, 24)	10 – 14	IG switch ON
Ts (A22 – 6) – GND (A22 – 11, 24)	10 – 14	IG switch ON
FR+ (A21 – 6) – FR– (A21 – 7)	AC generation	IG switch ON Slowly turn right front wheel
FL+ (A21 – 13) – FL– (A21 – 14)	AC generation	IG switch ON Slowly turn left front wheel
RR+ (A22 – 15) – RR– (A22 – 16)	AC generation	IG switch ON Slowly turn right rear wheel
RL+ (A22 – 1) – RL– (A22 – 2)	AC generation	IG switch ON Slowly turn left rear wheel
GS1 (A22 – 19) – GND (A22 – 11, 24)	About 2 or 4	IG switch ON
GS2 (A22 – 7) – GND (A22 – 11, 24)	2	IG switch ON
EXI (A22 – 8) – GND (A22 – 11, 24)	Below 2.0	IG switch ON, center differential is locked
	10 – 14	IG switch ON, center differential is free
EXI2 (A22 – 4) – GND (A22 – 11, 24)	Below 2.0	IG switch ON, rear differential is locked (4WD)
	12 – 14	IG switch ON, rear differential is free (4WD)
	Below 2.0	Always (2WD)
EXI3 (A22 – 9) – GND (A22 – 11, 24)	Below 2.0	IG switch ON, transfer is in L4 position
	10 – 14	IG switch ON, transfer is in a position other than L4

PROBLEM SYMPTOMS TABLE

If a normal code is displayed during the DTC check but the problem still occurs, check the circuits for each problem symptom in the order given in the table below and proceed to the relevant troubleshooting page.

Symptoms	Inspection Circuit	See page
ABS does not operate.	Only when 1. ~ 4. are all normal and the problem is still occurring, replace the ABS ECU. 1. Check the DTC reconfirming that the normal code is output. 2. IG power source circuit. 3. Speed sensor circuit. 4. Check the ABS actuator with a checker. If abnormal, check the hydraulic circuit for leakage (See page BR-102).	 BR-58 BR-83 BR-77 BR-49
ABS does not operate efficiently.	Only when 1. ~ 4. are all normal and the problem is still occurring, replace the ABS ECU. 1. Check the DTC reconfirming that the normal code is output. 2. Speed sensor circuit. 3. Stop light switch circuit. 4. Check the ABS actuator with a checker. If abnormal, check the hydraulic circuit for leakage (See page BR-102).	 BR-58 BR-77 BR-92 BR-49
ABS warning light abnormal.	1. ABS warning light circuit. 2. ABS ECU.	BR-95
DTC check cannot be done.	Only when 1. and 2. are all normal and the problem is still occurring, replace the ABS ECU. 1. ABS warning light circuit. 2. Tc terminal circuit.	 BR-95 BR-98
Speed sensor signal check cannot be done.	1. Ts terminal circuit. 2. ABS ECU.	BR-100

CIRCUIT INSPECTION

DTC	11, 12	ABS Control (Solenoid) Relay Circuit

CIRCUIT DESCRIPTION

This relay supplies power to each ABS solenoid. After the ignition switch is turned ON, if the initial check is OK, the relay goes on.

DTC No.	DTC Detecting Condition	Trouble Area
11	Conditions (1) and (2) continue for 0.2 sec. or more: (1) ABS control (solenoid) relay terminal (SR) voltage: Battery voltage (2) ABS control (solenoid) relay monitor terminal (AST) voltage: 0 V	• ABS control (solenoid) relay • Open or short in ABS control (solenoid) relay circuit • ECU
12	Conditions (1) and (2) continue for 0.2 sec. or more: (1) ABS control (solenoid) relay terminal (SR) voltage: 0 V (2) ABS control (solenoid) relay monitor terminal (AST) voltage: Battery voltage	• ABS control (solenoid) relay • B+ short in ABS control (solenoid) relay circuit • ECU

BR

Fail safe function: If trouble in the ABS control (solenoid) relay circuit, the ECU cuts off current to the ABS control (solenoid) relay and prohibits ABS control.

WIRING DIAGRAM

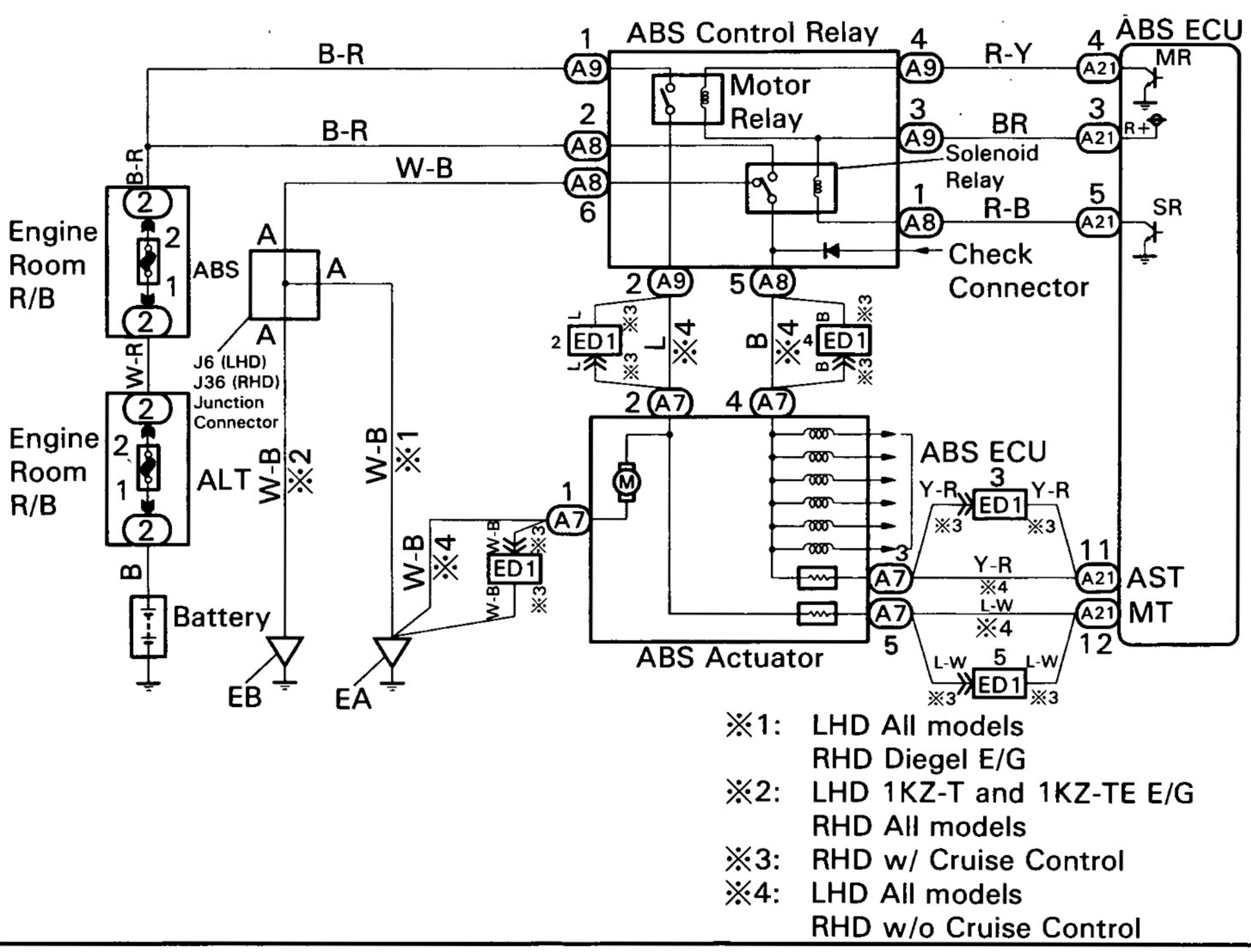

INSPECTION PROCEDURE

1	**Check voltage between terminals A8-2 and A8-6 of ABS control relay connector.**

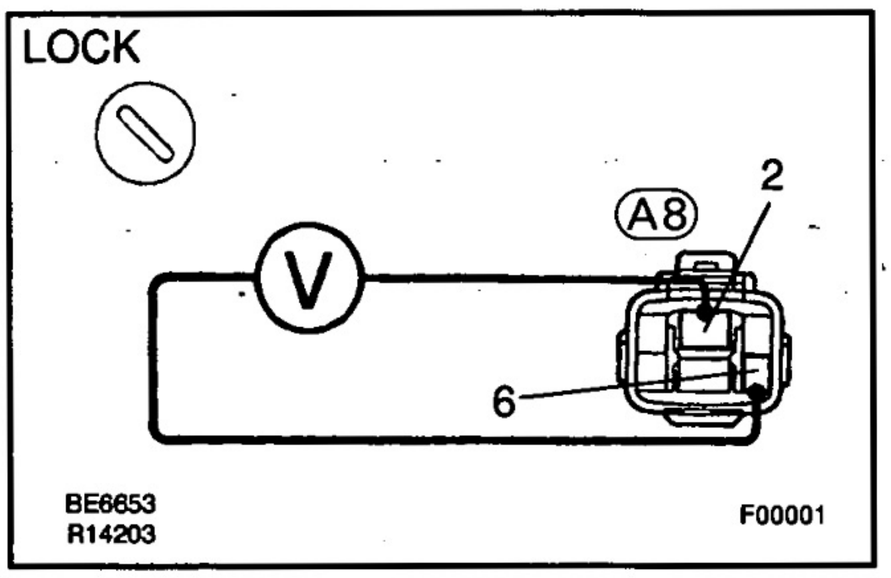

PREPARATION:
Disconnect the ABS control relay connector.
CHECK:
Measure the voltage between terminals A8-2 and A8-6 of ABS control relay harness side connector.
OK:
Voltage: 10 – 14 V

NG → **Check and repair harness or connector.**

OK

2	**Check continuity between terminals A8-5 and A7-4, A7-4 and A7-3, A7-3 and A21-11.**

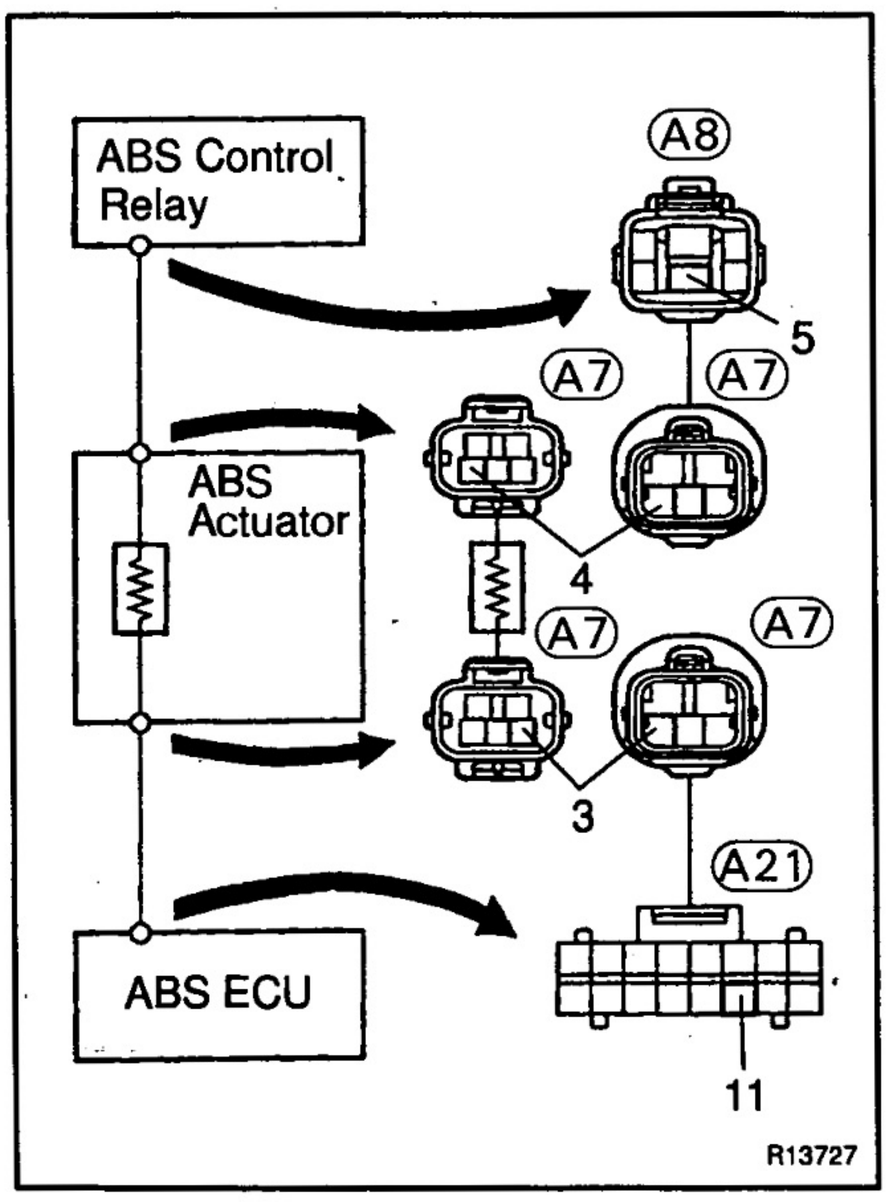

PREPARATION:
Disconnect the 2 connectors from ABS actuator.
CHECK:
Check continuity between terminals A8-5 and A7-4, A7-4 and A7-3, A7-2 and A21-11.
OK:
Continuity
HINT: There is a resistance of 26 ~ 40 Ω between terminals A7-4 and A7-3.

NG → **Repair or replace harness or ABS actuator.**

OK

3	**Check ABS control (solenoid) relay.**

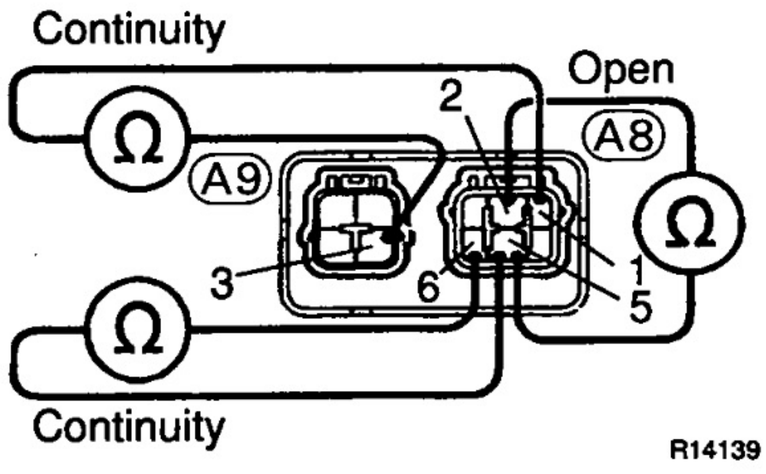

CHECK:

Check continuity between each terminal of ABS control (solenoid) relay.

OK:

Terminals A8-1 and A9-3	Continuity (Reference value 80 Ω)
Terminals A8-5 and A8-6	Continuity
Terminals A8-2 and A8-5	Open

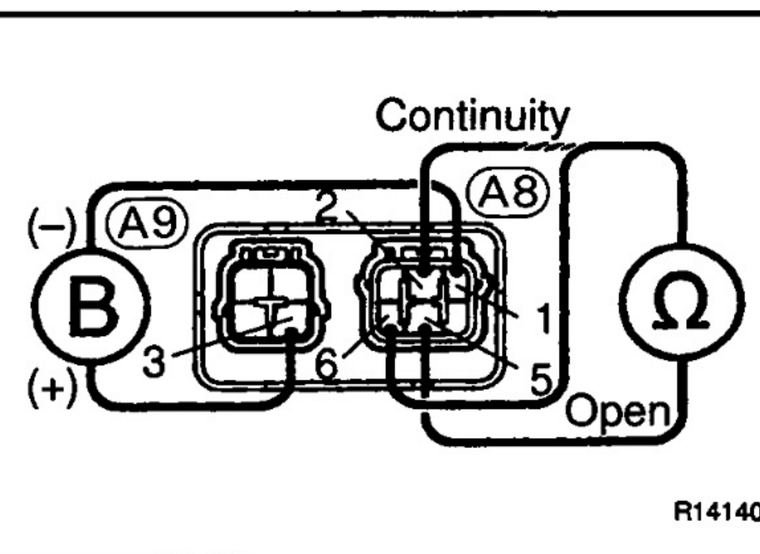

CHECK:

(a) Apply battery voltage between terminals A8-1 and A9-3.

(b) Check continuity between each terminal of ABS control (solenoid) relay.

OK:

Terminals A8-5 and A8-6	Open
Terminals A8-2 and A8-5	Continuity

BR

NG → **Replace ABS control relay.**

OK

4	**Check for open and short in harness and connector between ABS control relay and ABS ECU (See page IN-30).**

NG → **Repair or replace harness or connector.**

OK

If the same code is still output after the DTC is deleted, check the contact condition of each connection. If the connector are normal, the ECU may be defective.

DTC	13, 14	ABS Control (Motor) Relay Circuit

CIRCUIT DESCRIPTION

The ABS control (motor) relay supplies power to the ABS pump motor. While the ABS is activated, the ECU switches the ABS control (motor) relay ON and operates the ABS pump motor.

DTC No.	DTC Detecting Condition	Trouble Area
13	Conditions (1) and (2) continued for 0.2 sec. or more: (1) ABS control (motor) relay terminal (MR) voltage: Battery voltage (2) ABS control (motor) relay monitor terminal (MT) voltage: 0 V	• ABS control (motor) relay • Open or short in ABS control (motor) relay circuit • ECU
14	Conditions (1) and (2) continued for 2.5 sec. or more: (1) ABS control (motor) relay terminal (MR) voltage: 0 V (2) ABS control (motor) relay monitor terminal (MT) voltage: Battery voltage	• ABS control (motor) relay • B+ short in ABS control (motor) relay circuit • ECU

Fail safe function: If trouble occurs in the ABS control (motor) relay circuit, the ECU cuts off current to the ABS control (solenoid) relay and prohibits ABS control.

WIRING DIAGRAM

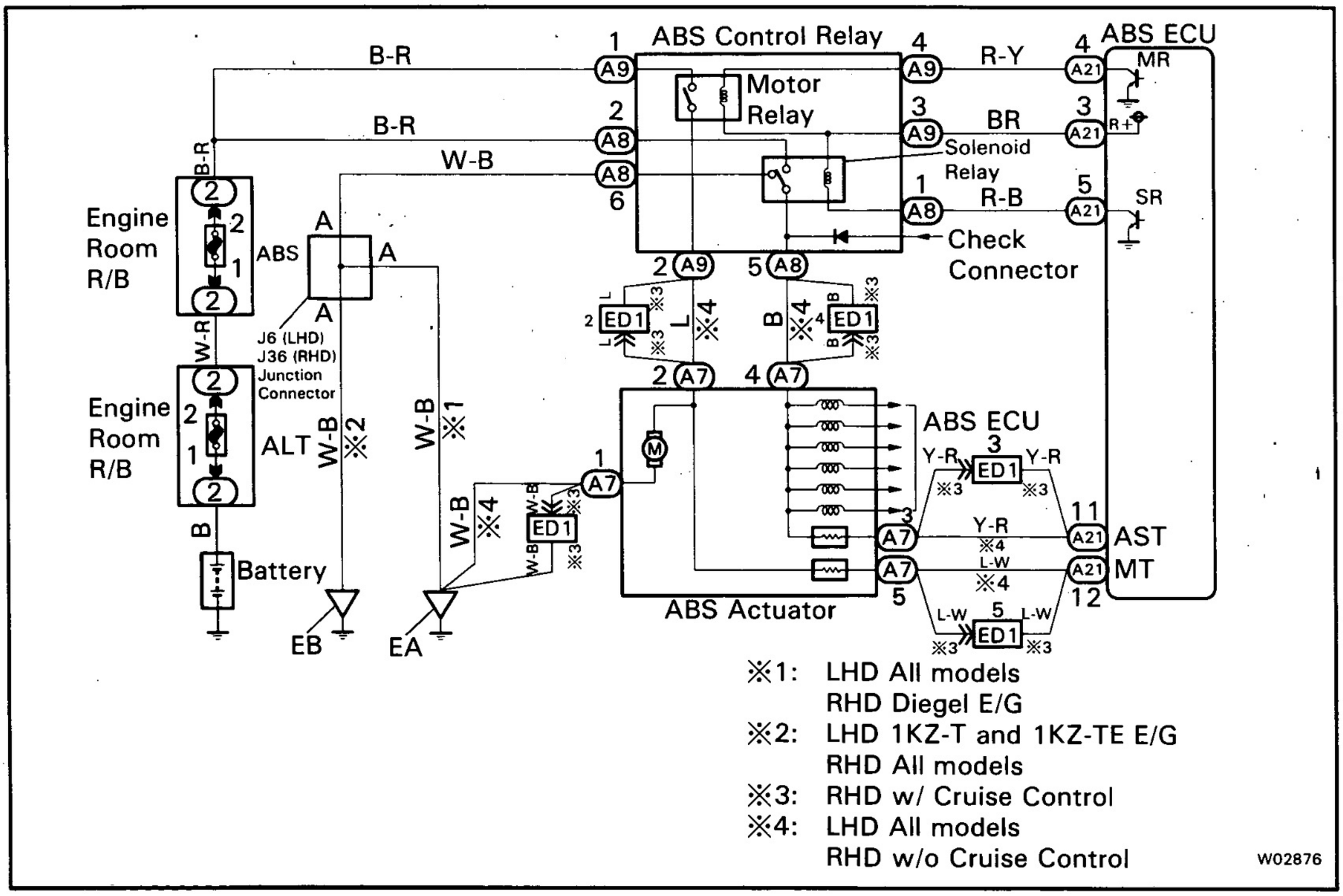

INSPECTION PROCEDURE

1	**Check voltage between terminal A9-1 of ABS control relay and body ground.**

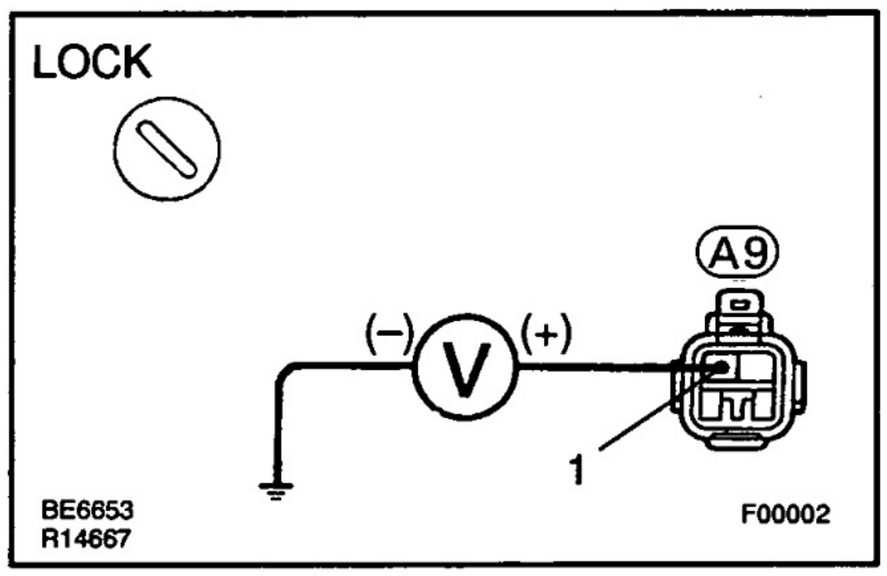

PREPARATION:
Disconnect the ABS control relay connector.
CHECK:
Measure voltage between terminal A9-1 of ABS control relay harness side connector and body ground.
OK:
Voltage: 10 – 14 V

NG → **Check and repair harness or connector.**

OK

BR

2	**Check continuity between terminals A9-2 and A7-2, A7-2 and A7-5, A7-5 and A21-12.**

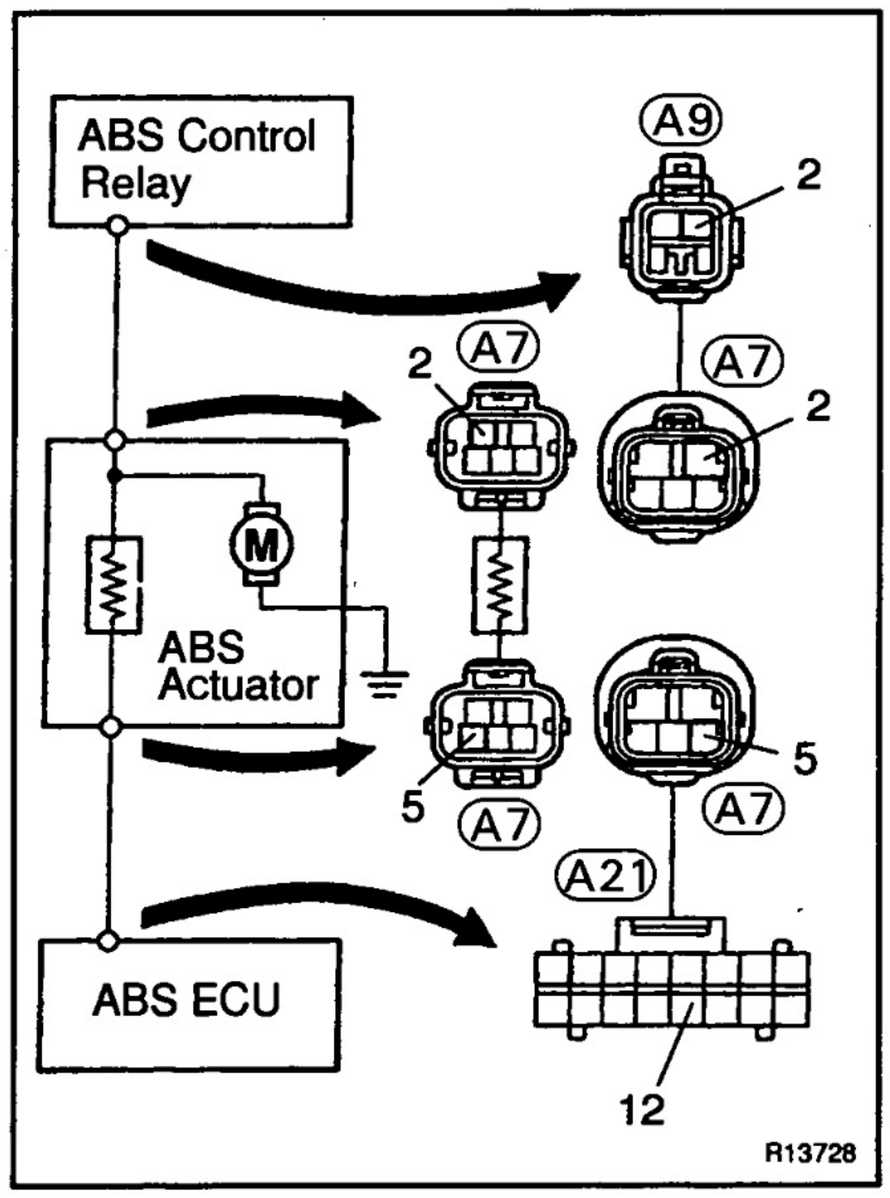

PREPARATION:
Disconnect the 2 connectors from ABS actuator.
CHECK:
Check continuity between terminals A9-2 and A7-2, A7-2 and A7-5, A7-5 and A21-12.
OK:
Continuity
HINT: There is a resistance of 26 ~ 40 Ω between terminals A7-2 and A7-5.

NG → **Repair or replace harness or ABS actuator.**

OK

3	**Check ABS control (motor) relay.**

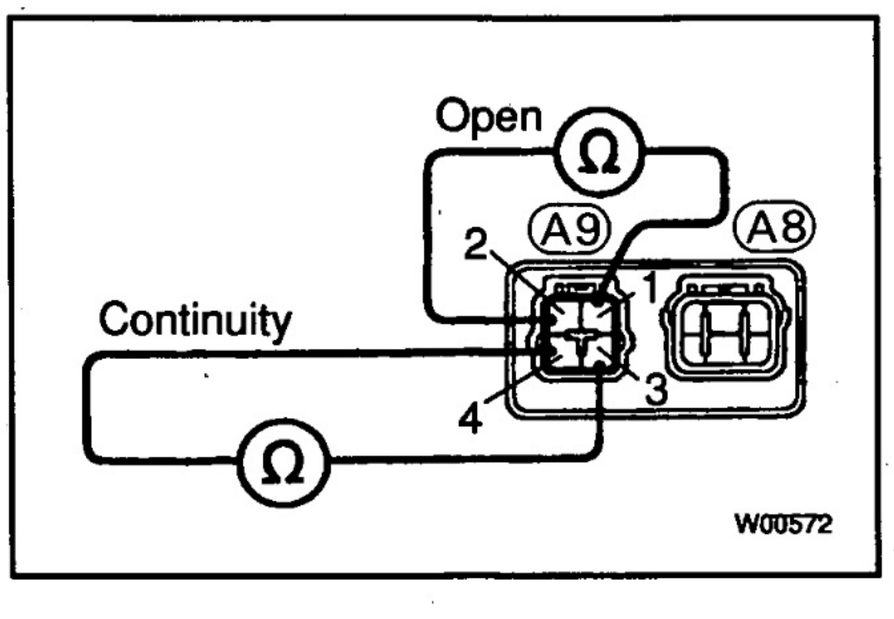

CHECK:

Check continuity between each terminal of ABS control (motor) relay.

OK:

Terminals A9-3 and A9-4	Continuity (Reference value 62 Ω)
Terminals A9-1 and A9-2	Open

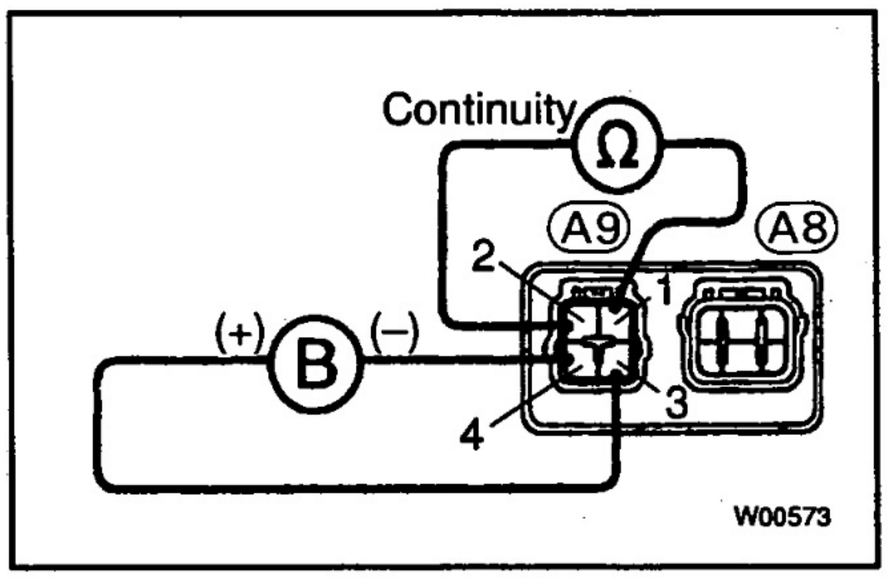

CHECK:

(a) Apply battery voltage between terminals A9-3 and A9-4.

(b) Check continuity between terminals of ABS control (motor) relay.

OK:

Terminals A9-1 and A9-2	Continuity

BR

NG → **Replace ABS control relay.**

OK

4	**Check for open and short in harness and connector between ABS control relay and ABS ECU (See page IN-30).**

NG → **Repair or replace harness or connector.**

OK

If the same code is still output after the DTC is deleted, check the contact condition of each connection. If the connections are normal, the ECU may be defective.

DTC	21, 22, 23	ABS Actuator Solenoid Circuit

CIRCUIT DESCRIPTION

This solenoid goes on when signals are received from the ECU and controls the pressure acting on the wheel cylinders thus controlling the braking force.

DTC No.	DTC Detecting Condition	Trouble Area
21	Conditions (1) through (3) continue for 0.02 sec. or more: (1) ABS control (solenoid) relay terminal (SR) voltage: Battery voltage (2) Voltage of ABS ECU terminal AST: Battery voltage (3) When power transistor of ECU is ON, voltage of terminal SFRR or SFRH is 0 V or battery voltage.	• ABS actuator • Open or short in SFRR or SFRH circuit • ECU
22	Conditions (1) through (3) continue for 0.02 sec. or more: (1) ABS control (solenoid) relay terminal (SR) voltage: Battery voltage (2) Voltage of ABS ECU terminal AST: Battery voltage (3) When power transistor of ECU is ON, voltage of terminal SFLR or SFLH is 0 V or battery voltage.	• ABS actuator • Open or short in SFLR or SFLH circuit • ECU
23	Conditions (1) through (3) continue for 0.02 sec. or more: (1) ABS control (solenoid) relay terminal (SR) voltage: Battery voltage (2) Voltage of ABS ECU terminal AST: Battery voltage (3) When power transistor of ECU is ON, voltage of terminal SRR or SRH is 0 V or battery voltage.	• ABS actuator • Open or short in SRR or SRH circuit • ECU

Fail safe function: If trouble occurs in the actuator solenoid circuit, the ECU cuts off current to the ABS control (solenoid) relay and prohibits ABS control.

WIRING DIAGRAM

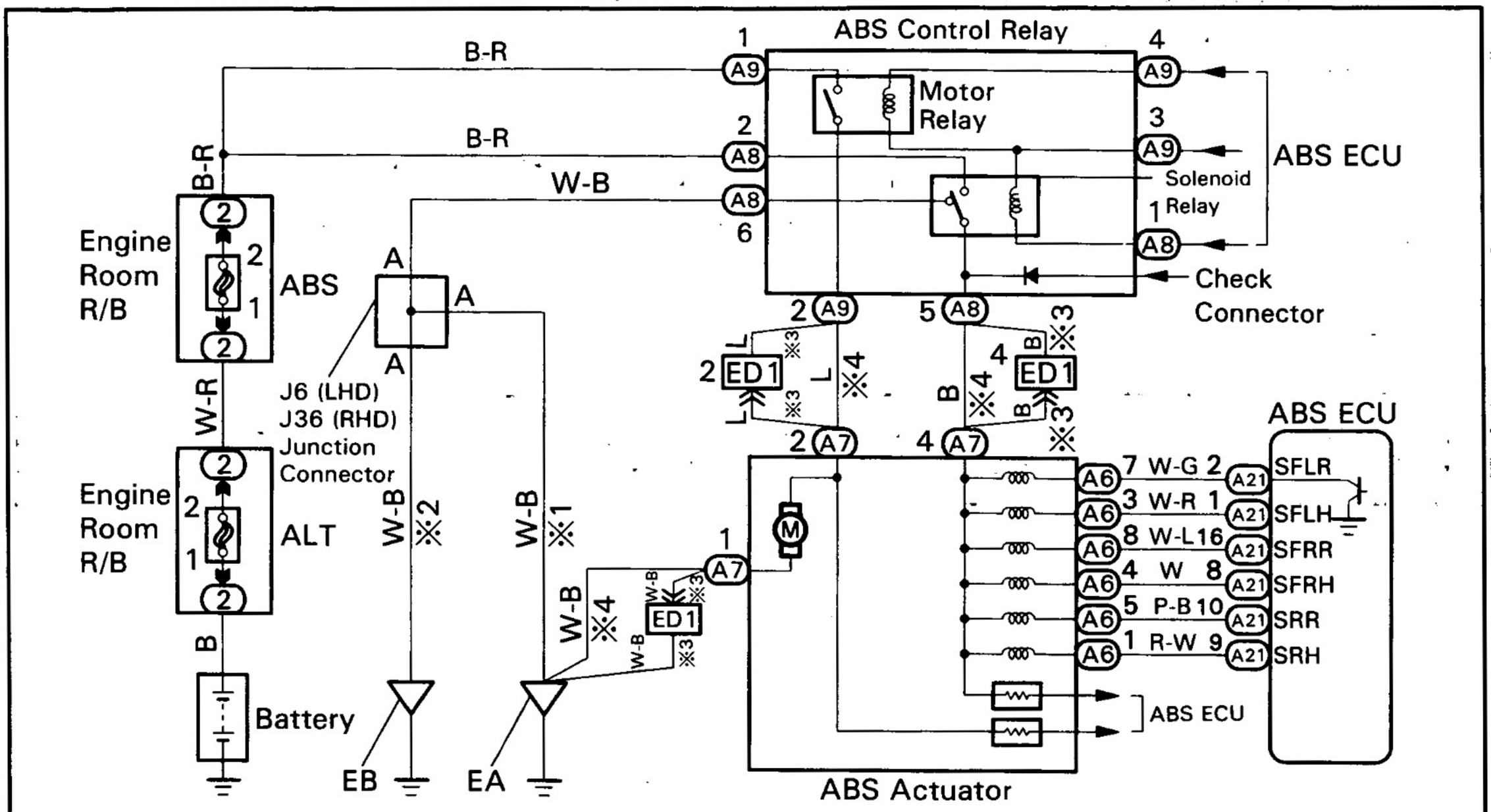

INSPECTION PROCEDURE

1	**Check ABS actuator solenoid.**

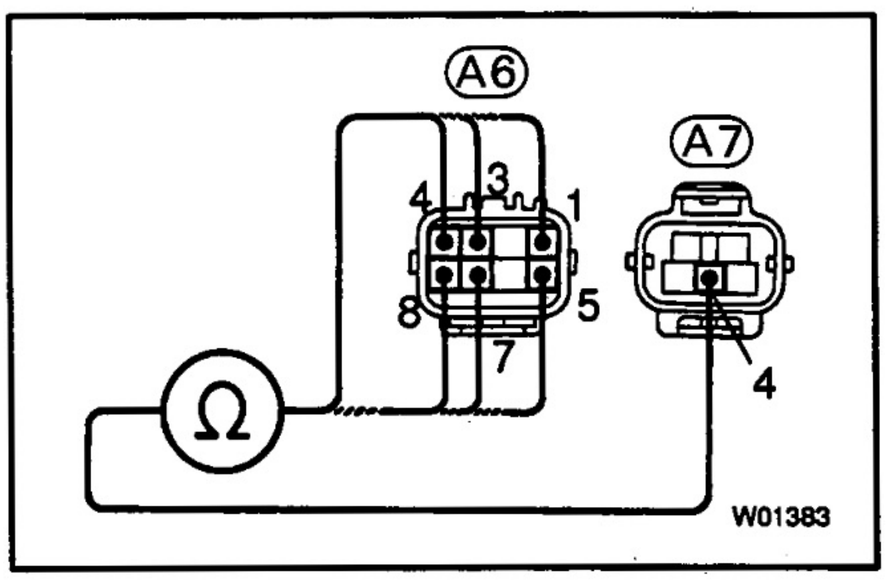

PREPARATION:

Disconnect the 2 connectors from ABS actuator.

CHECK:

Check continuity between terminals A7-4 and A6-1, 3, 4, 5, 7, 8 of ABS actuator connector.

OK:

Continuity

HINT: Resistance of each solenoid coil
SFRH, SFLH, SRH: 5.0 Ω
SFRR, SFLR, SRR: 2.2 Ω

NG → **Replace ABS actuator.**

OK

2	**Check for open and short in harness and connector between ABS ECU and actuator (See page IN-30).**

NG → **Repair or replace harness or connector.**

OK

If the same code is still output after the DTC is deleted, check the contact condition of each connection. If the connector are normal, the ECU may be defective.

DTC	31, 32, 33, 34	Speed Sensor Circuit

CIRCUIT DESCRIPTION

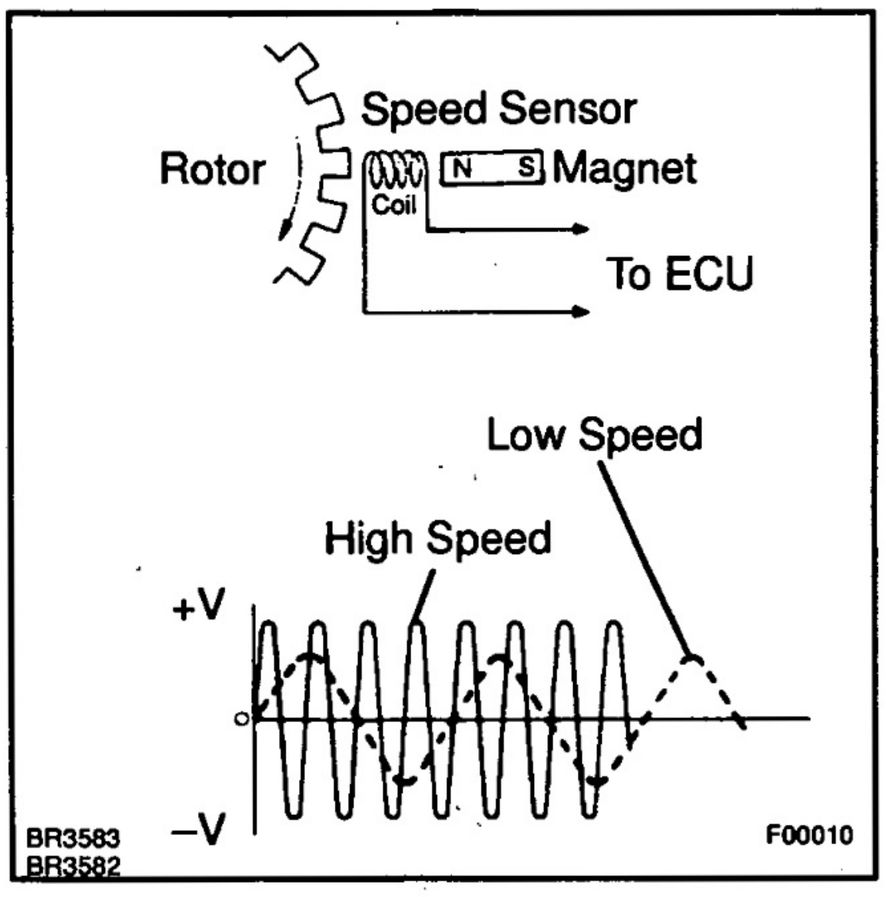

The speed sensor detects wheel speed and sends the appropriate signals to the ECU. These signals are used to control the ABS system. The front and rear rotors each have 48 serrations.

When the rotors rotate, the magnetic field emitted by the permanent magnet in the speed sensor generates an AC voltage. Since the frequency of this AC voltage changes in direct proportion to the speed of the rotor, the frequency is used by the ECU to detect the speed of each wheel.

DTC No.	DTC Detecting Condition	Trouble Area
31, 32, 33, 34	Detection of any of conditions (1) through (3): (1) At vehicle speed of 10 km/h (6 mph) or more, pulses are not input for 15 sec. (2) Momentary interruption of the speed sensor signal occurs at least 7 times in the time between switching the ignition switch ON and switching it OFF. (3) Abnormal fluctuation of speed sensor signals with the vehicle speed 20 km/h (12 mph) or more. (4) An open is detected in the speed sensor circuit for 0.6 sec.	• Right front, left front, right rear, left rear speed sensor • Open or short in each speed sensor circuit • ECU

HINT:

DTC No. 31 is for the right front speed sensor.
DTC No. 32 is for the left front speed sensor.
DTC No. 33 is for the right rear speed sensor.
DTC No. 34 is for the left rear speed sensor.

Fail safe function: If trouble occurs in the speed sensor circuit, the ECU cuts off current to the ABS control (solenoid) relay and prohibits ABS control.

WIRING DIAGRAM

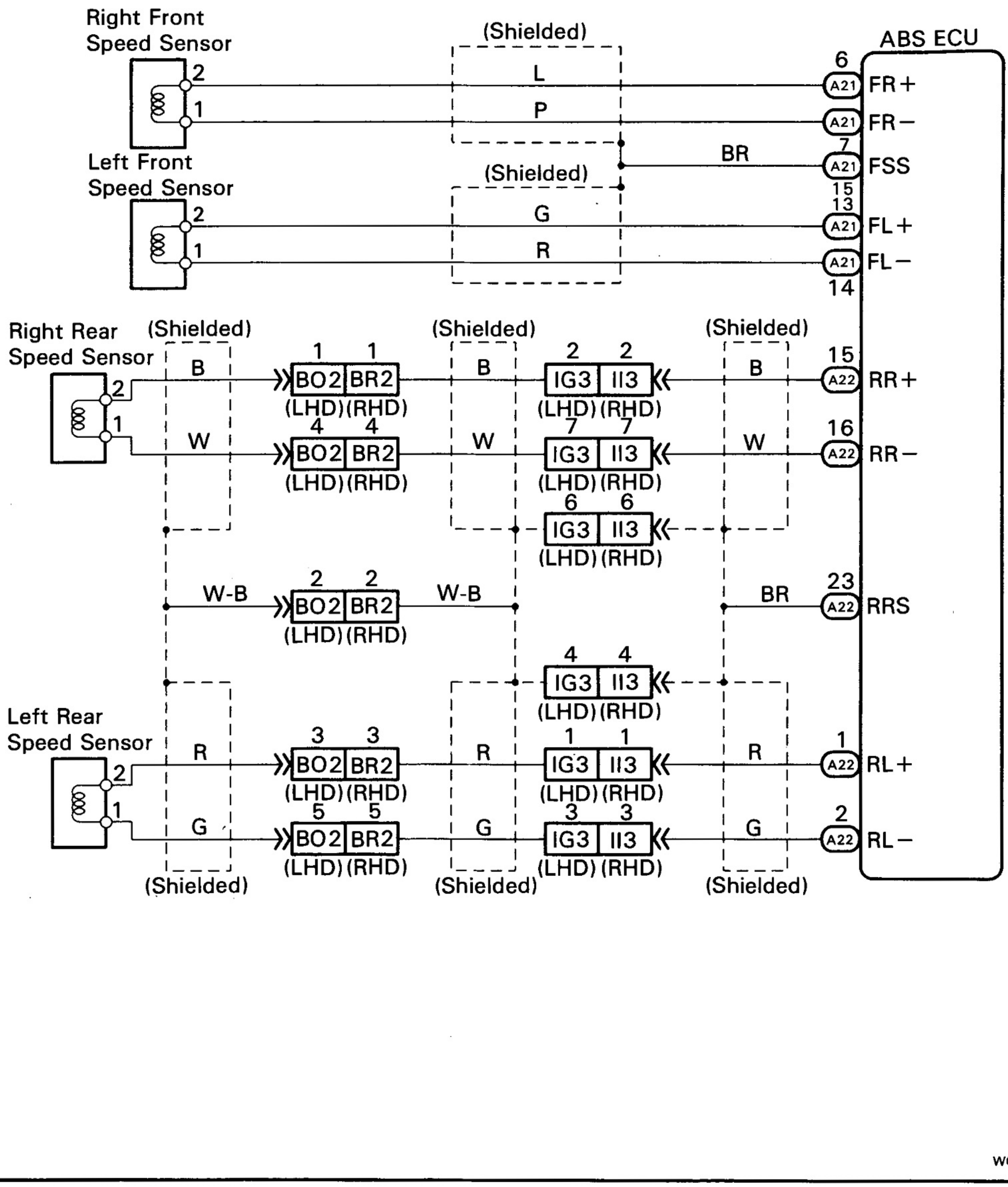

INSPECTION PROCEDURE

1	**Check speed sensor.**

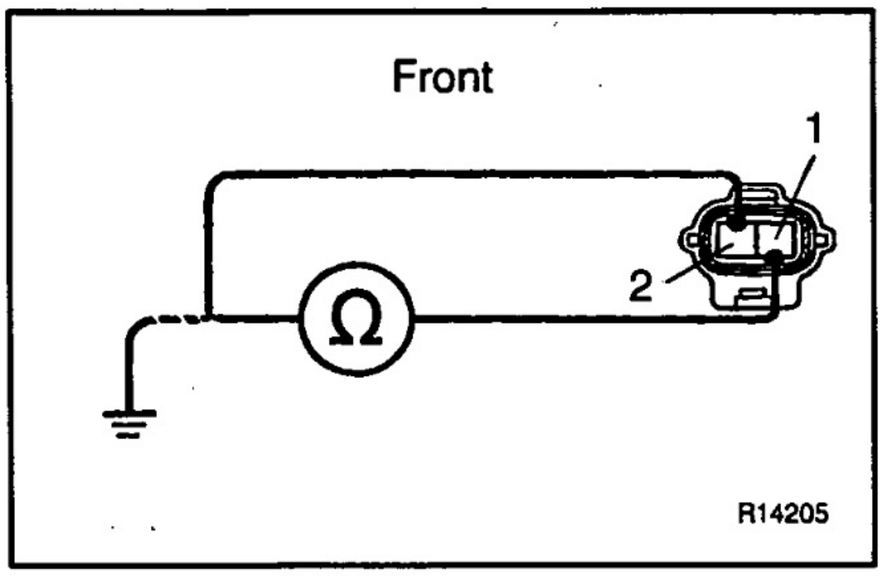

Front

PREPARATION:

Disconnect speed sensor connector.

CHECK:

Measure resistance between terminals 1 and 2 of speed sensor connector.

OK:

Resistance: 1.4 – 1.8 kΩ

CHECK:

Measure resistance between terminals 1 and 2 of speed sensor connector and body ground.

OK:

Resistance: 1 MΩ or higher

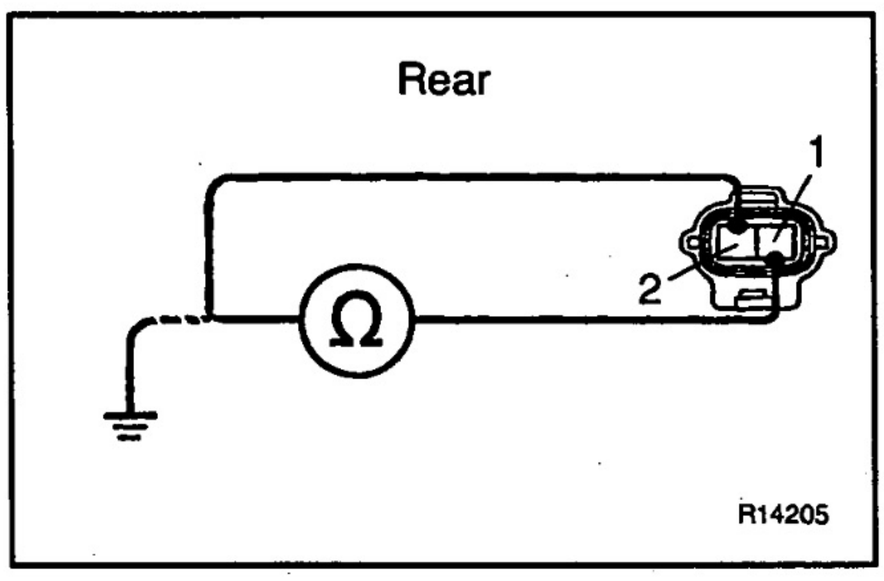

Rear

PREPARATION:

Disconnect speed sensor connector.

CHECK:

Measure resistance between terminals 1 and 2 of speed sensor connector.

OK:

Resistance: 1.0 – 1.4 kΩ

CHECK:

Measure resistance between terminals 1 and 2 of speed sensor connector and body ground.

OK:

Resistance: 1 MΩ or higher

NG	**Replace speed sensor.**

NOTICE: Check the speed sensor signal last (See page BR-59).

OK

2	**Check for open and short in harness and connector between each speed sensor and ECU (See page IN-30).**

NG	**Repair or replace harness or connector.**

OK

3	**Check sensor rotor and sensor installation.**

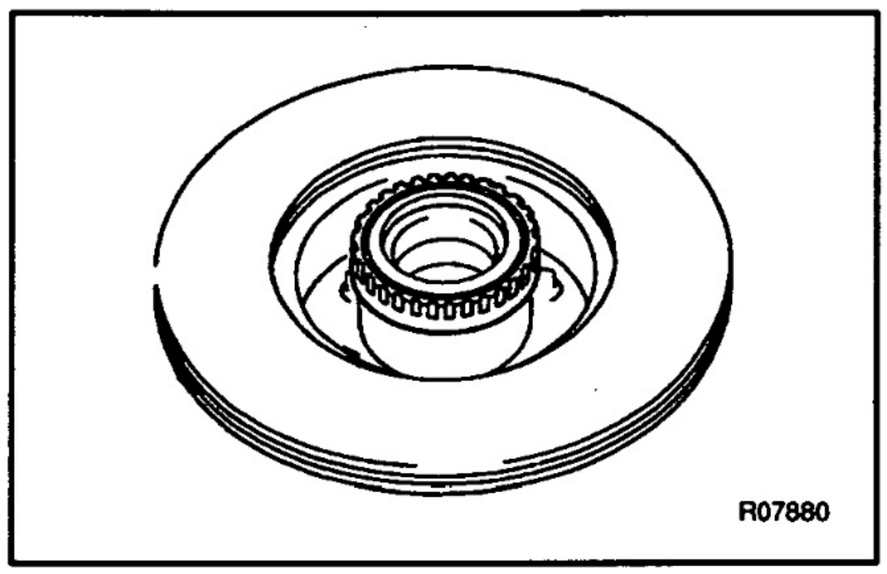

Front

PREPARATION:

Remove axle hub (See SA section).

CHECK:

Check sensor rotor serrations.

OK:

No scratches or missing teeth.

CHECK:

Check the sensor tip.

OK:

No scratches or foreign objects on the sensor tip.

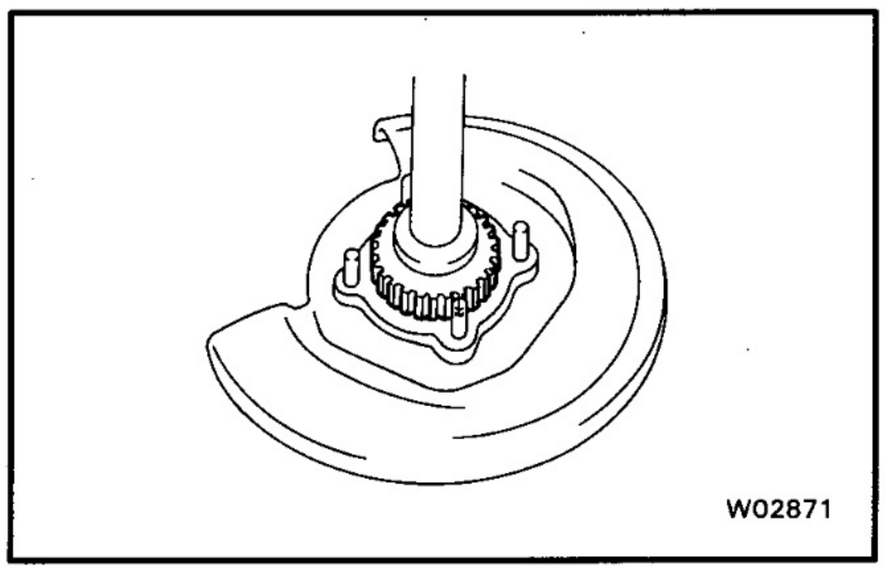

Rear

PREPARATION:

Remove the axle shaft (See SA section).

CHECK:

Check the sensor rotor serrations.

OK:

No scratches or missing teeth.

CHECK:

Check the sensor tip.

OK:

No scratches or foreign objects on the sensor tip.

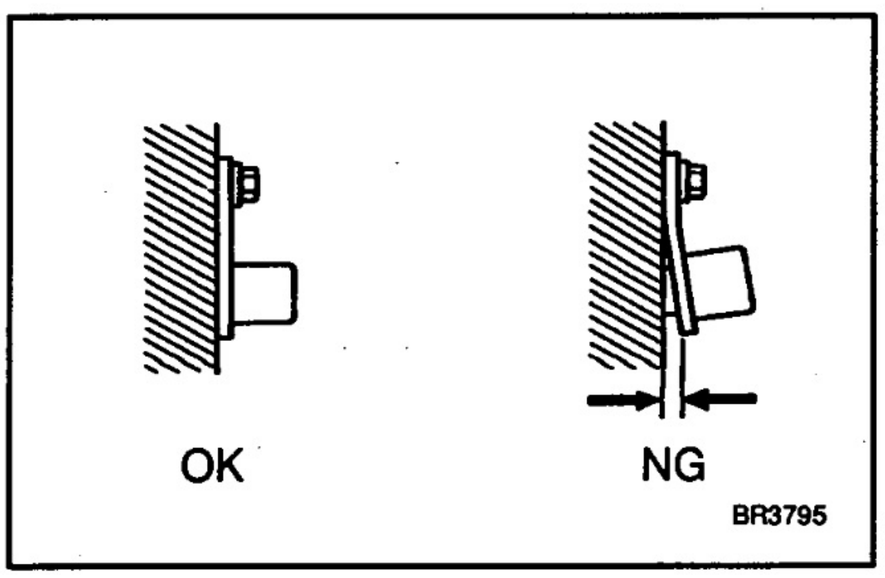

CHECK:

Check the speed sensor installation.

OK:

The installation bolt is tightened properly and there is no clearance between the sensor and steering knuckle or rear axle carrier.

NG → **Replace speed sensor or rotor.**

NOTICE: Check the speed sensor signal last (See page BR-59).

OK

Check and replace ABS ECU.

DTC	37	Neither Front Speed Sensor Rotor Missing

CIRCUIT DESCRIPTION

DTC No.	DTC Detecting Condition	Trouble Area
37	With the rear wheels stationary and front wheels rotating at 20+ km/h (12+ mph) for 10+ secs, turn ignition switch ON then OFF 8 times, in succession.	• Front axle hub • Right front, left front speed sensor • Wire harness for sensor system • ECU

INSPECTION PROCEDURE

1 Check front axle hub (See page SA-12).

NG → Replace front axle hub.

OK

2 Check front speed sensor (See page BR-79).

NG → Replace front speed sensor.

OK

3 Check for open or short in harness and connector between speed sensor and ECU (See page IN-30).

NG → Repair or replace harness and connector.

OK

Check and replace ABS ECU.

DTC	37	Tires of Different Size

CIRCUIT DESCRIPTION

DTC No.	DTC Detecting Condition	Trouble Area
37	Driving at more than 30 km/h (19 mph) for more than 60 seconds with 1 or 2 tires of different size.	• Tire size • ECU

INSPECTION PROCEDURE

1	Check tire size.

NG → Replace tires so that all 4 tires are of the same size.

OK

BR

Check and replace ABS ECU.

DTC	41	IG Power Source Circuit

CIRCUIT DESCRIPTION

This is the power source for the ECU, hence the actuators.

DTC No.	DTC Detecting Condition	Trouble Area
41	Vehicle speed is 3 km/h (1.9 mph) or more and voltage of ECU terminal IG1 remains at more than 17 V or below 9.5 V for more than 10 sec.	• Battery • IC regulator • Open or short in power source circuit • ECU

Fail safe function: If trouble occurs in the power source circuit, the ECU cuts off current to the ABS control (solenoid) relay and prohibits ABS control.

WIRING DIAGRAM

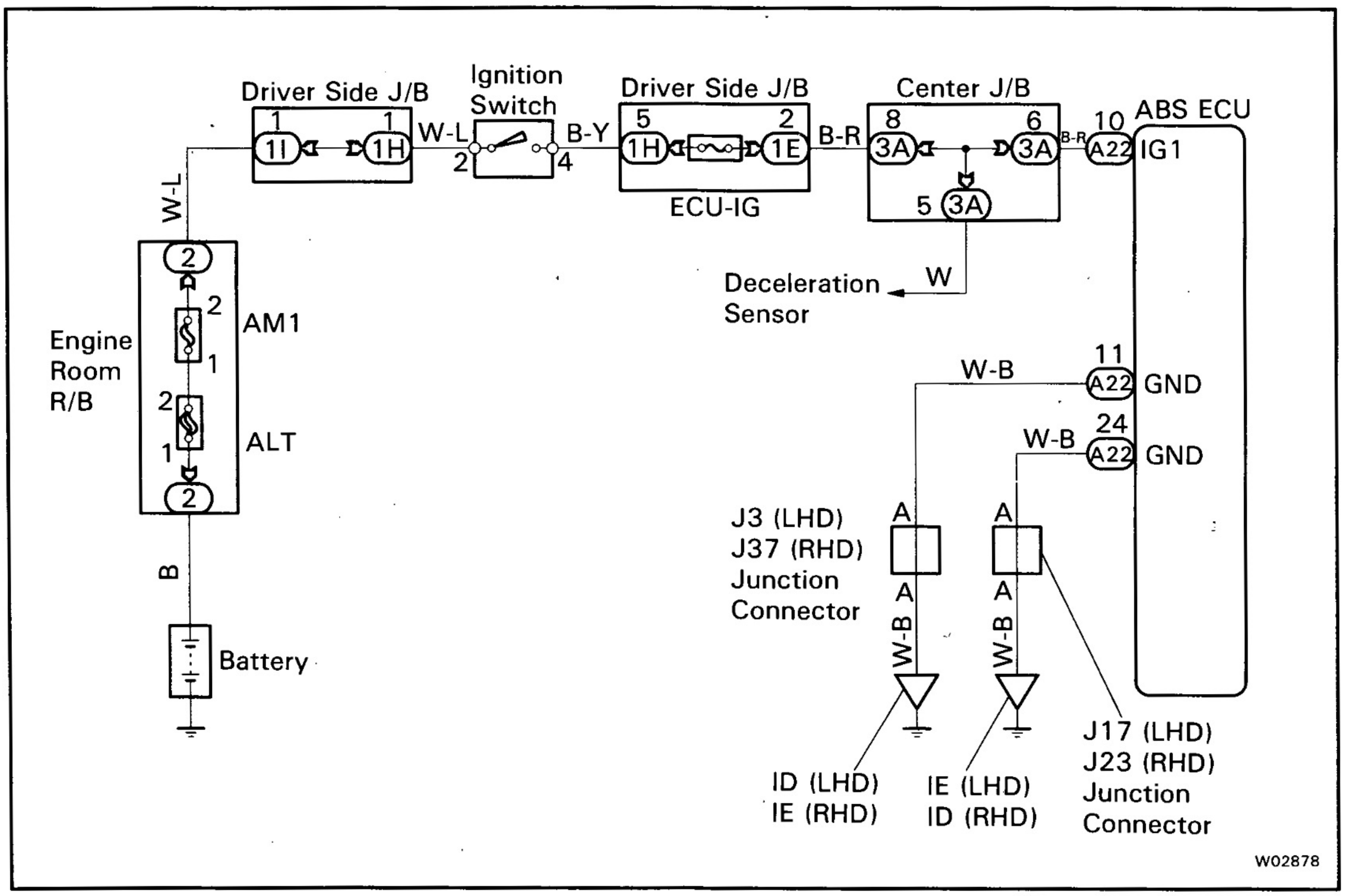

INSPECTION PROCEDURE

1	**Check battery voltage.**

OK:

Voltage: 10 – 14 V

NG → **Check and repair the charging system.**

OK

2	**Check voltage between terminals IG1 and GND of ABS ECU connector.**

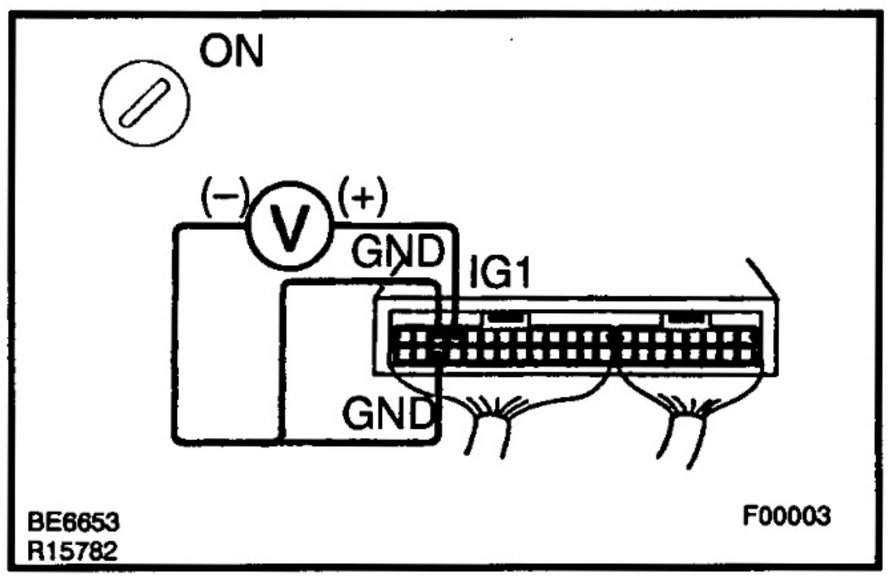

PREPARATION:

Remove ABS ECU with connectors still connected.

CHECK:

(a) Turn the ignition switch ON.

(b) Measure voltage between terminals IG1 and GND of ABS ECU connector.

OK:

Voltage: 10 – 14 V

OK → **Check and replace ABS ECU.**

NG

3	**Check continuity between terminals GND of ABS ECU connector and body ground.**

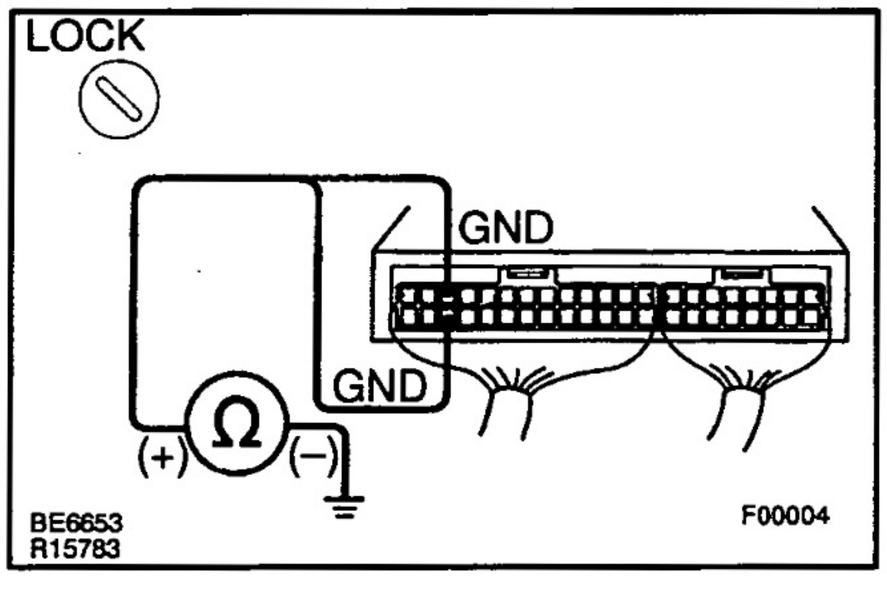

CHECK:

Measure resistance between terminals GND of ABS ECU connector and body ground.

OK:

Resistance: 1 Ω or less

NG → **Repair or replace harness or connector.**

OK

4	**Check ECU–IG fuse.**

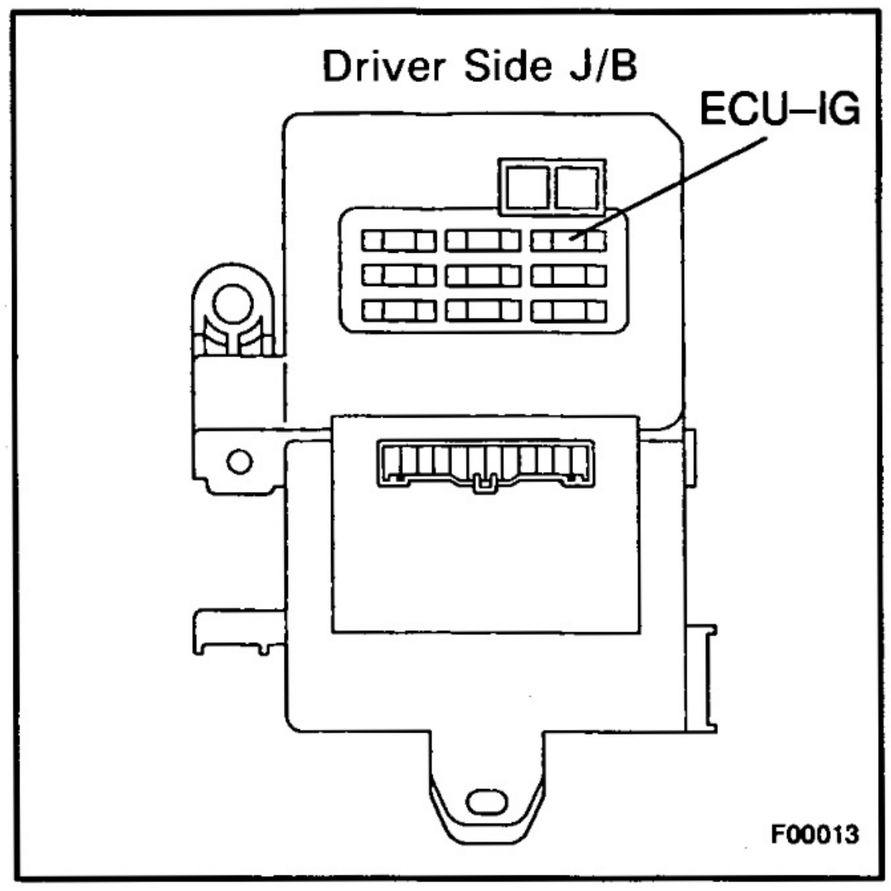

PREPARATION:

Remove ECU-IG fuse from Driver side J/B.

CHECK:

Check continuity of ECU–IG fuse.

OK:

Continuity

NG → **Check for short in all the harness and components connected to ECU–IG fuse (See attached wiring diagram).**

OK

Check for open in harness and connector between ABS ECU and battery (See page IN-30).

DTC	43	Malfunction in Deceleration Sensor

CIRCUIT DESCRIPTION

DTC No.	DTC Detecting Condition	Trouble Area
43	Either of the following (1) or (2) is detected: (1) After the battery terminal is connected, input from the deceleration sensor does not change at one cycle (0 km/h → more than 30 km/h → 0 km/h) for 16 times continuously. (2) When the brake pedal is not depressed at vehicle speed of 5 km/h or more, forward and backward G (more than 0.4 G) is detected for 30 seconds or more.	• Deceleration sensor • Wire harness for deceleration sensor system • ECU

INSPECTION PROCEDURE

1	Check deceleration sensor (See page BR-59).

NG → Replace deceleration sensor.

OK

2	Check for open or short in harness and connector between sensor and ECU (See page IN-30).

NG → Repair or replace harness and connector.

OK

Check and replace ABS ECU.

DTC	44	Deceleration Sensor Circuit

CIRCUIT DESCRIPTION

This sensor detects deceleration on the vehicle. The sensor signal is used in ABS control. If the sensor functions abnormally, the ABS warning light comes on but the ABS still operates.

DTC No.	DTC Detecting Condition	Trouble Area
44	Either of the following (1) or (2) is detected: (1) An open or short is detected in circuit GS1 or GS2 for 1sec. (2) After the ignition is turned ON, the test signal is output by GST. During this time, a trouble signal is detected for 0.5 sec.	• Deceleration sensor • Open or short in deceleration sensor circuit • ECU

WIRING DIAGRAM

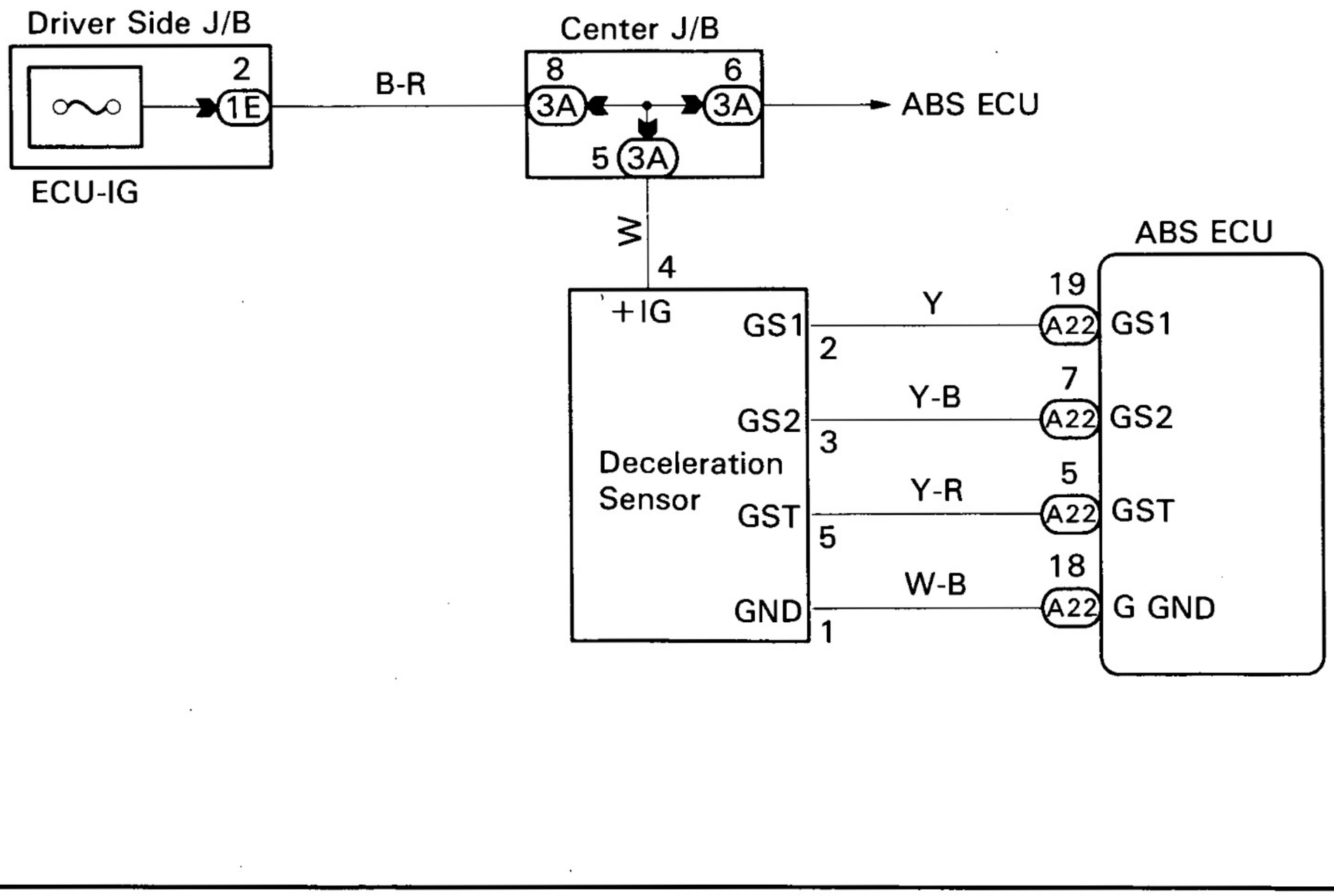

INSPECTION PROCEDURE

1	**Check for open and short in harness and connector between Deceleration sensor and ECU (See page IN-30).**

NG → **Repair or replace harness or connector.**

OK

2	**Check voltage between terminals GS1, GS2, GST of ABS ECU and body ground.**

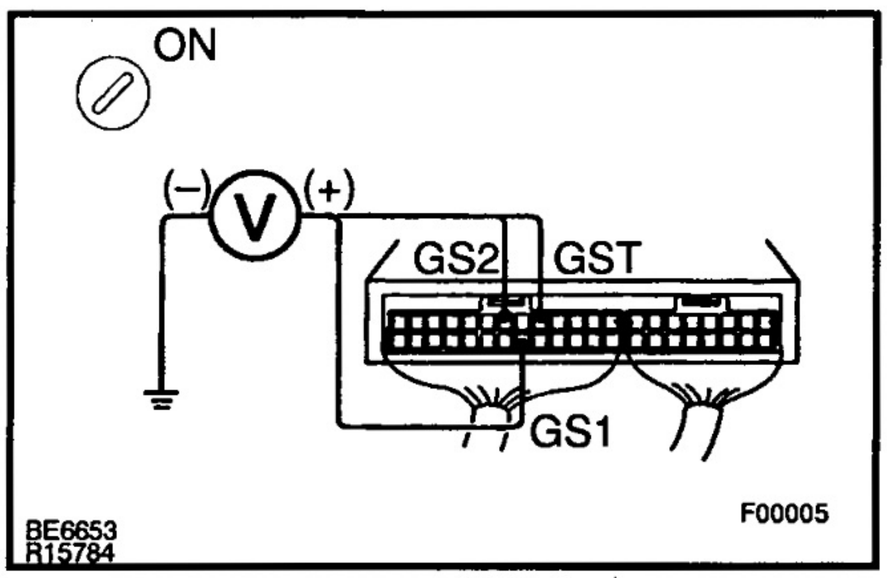

PREPARATION:

(a) Remove ABS ECU with connectors still connected.
(b) Disconnect deceleration sensor connector.
(c) Turn the ignition switch ON.

CHECK:

Measure voltage between terminals GS1, GS2, GST of ECU and Body ground.

OK:

Voltage:

GS1, GS2: About 5 V
GST: As shown below

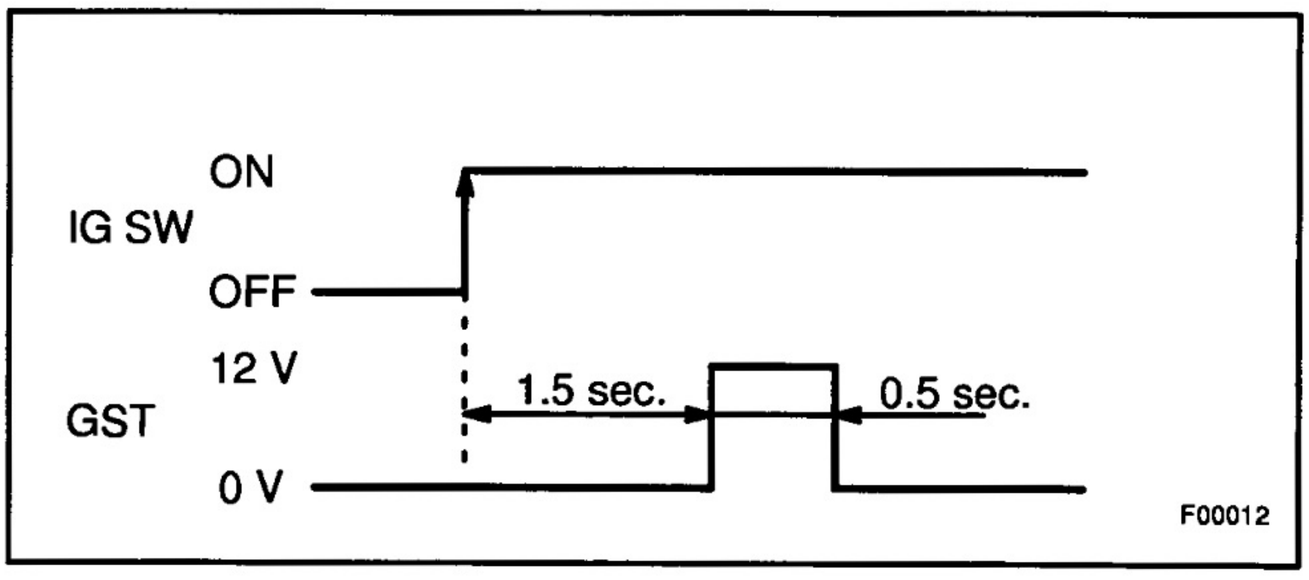

NG → **Check and replace ABS ECU.**

OK

Check and replace deceleration sensor.

DTC	48	Rear Differential Lock Circuit (w/Rear Differential Lock)

CIRCUIT DESCRIPTION

DTC No.	DTC Detecting Condition	Trouble Area
48	Open or short circuit in rear differential lock circuit. Rear differential is locking.	• Rear differential lock • ECU

WIRING DIAGRAM

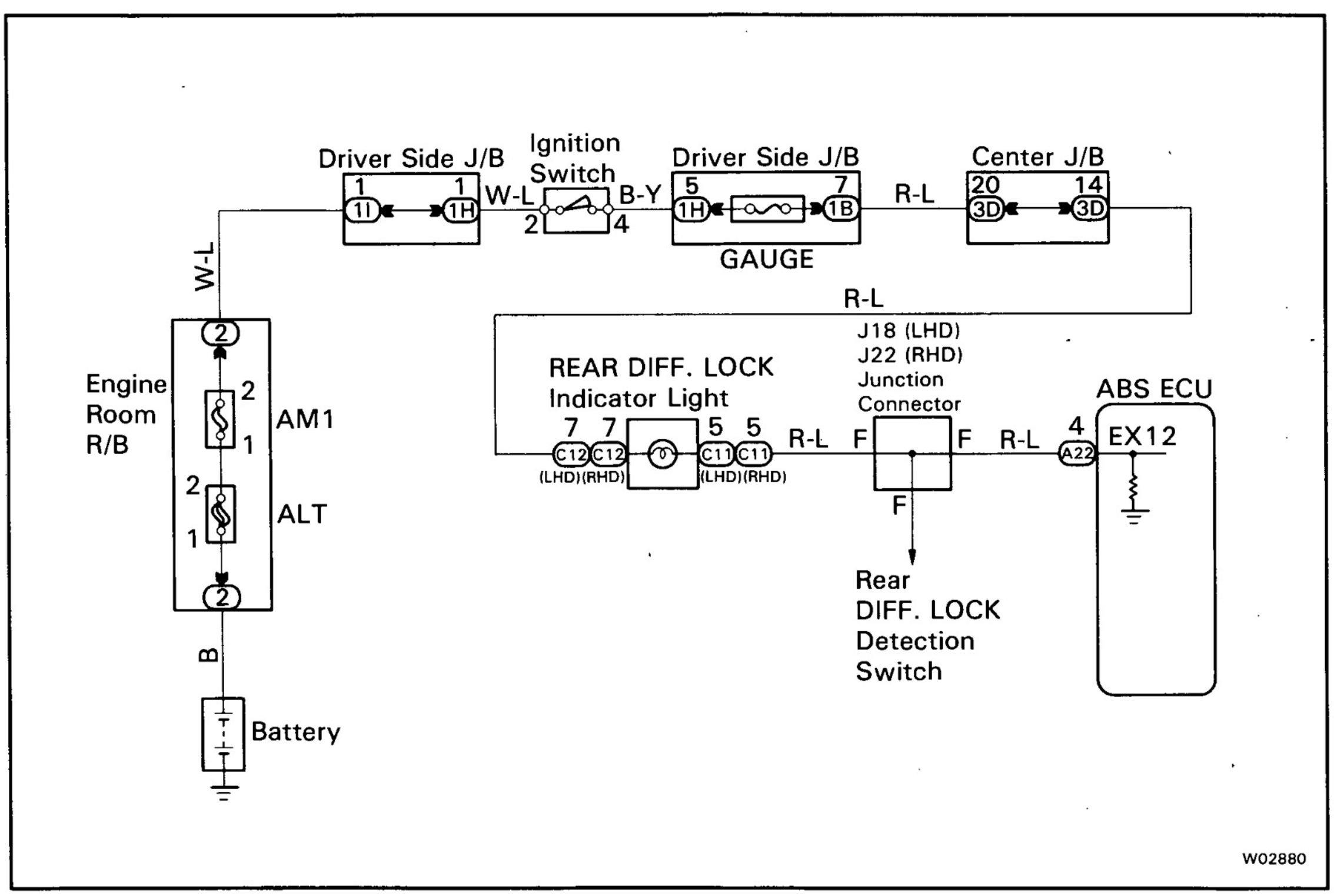

INSPECTION PROCEDURE

HINT: Rear differential lock switch is OFF.

1	Check the rear differential lock is free (See page SA-105).

NG → Repair the rear differential lock system.

OK

2	**Is DTC output?**

Check DTC on page BR-58.

NO → **Normal.**

YES

3	**Check that REAR DIFF. LOCK indicator light does not go off.**

NO → **Go to step 6.**

YES

4	**Check that bulb for REAR DIFF. LOCK indicator light is not burnt out.**

YES → **Replace indicator light.**

NO

5	**Check for open in harness and connector between battery and REAR DIFF. LOCK indicator light, REAR DIFF. LOCK indicator light and ABS ECU (See page IN-30).**

NG → **Repair or replace harness or connector.**

OK

6	**Check for short in harness and connector between REAR DIFF. LOCK indicator light and ABS ECU (See page IN-30).**

NG → **Repair or replace harness or connector.**

OK

Check and replace ABS ECU.

DTC	49	Stop Light Switch Circuit

CIRCUIT DESCRIPTION

This stop light switch senses whether the brake pedal is depressed or released, and sends the signal to the ECU.

DTC No.	DTC Detecting Condition	Trouble Area
49	1.2 V – 1.7 V of STP voltage is continued for 0.3 seconds or more.	• Stop light switch • Open in stop light circuit

WIRING DIAGRAM

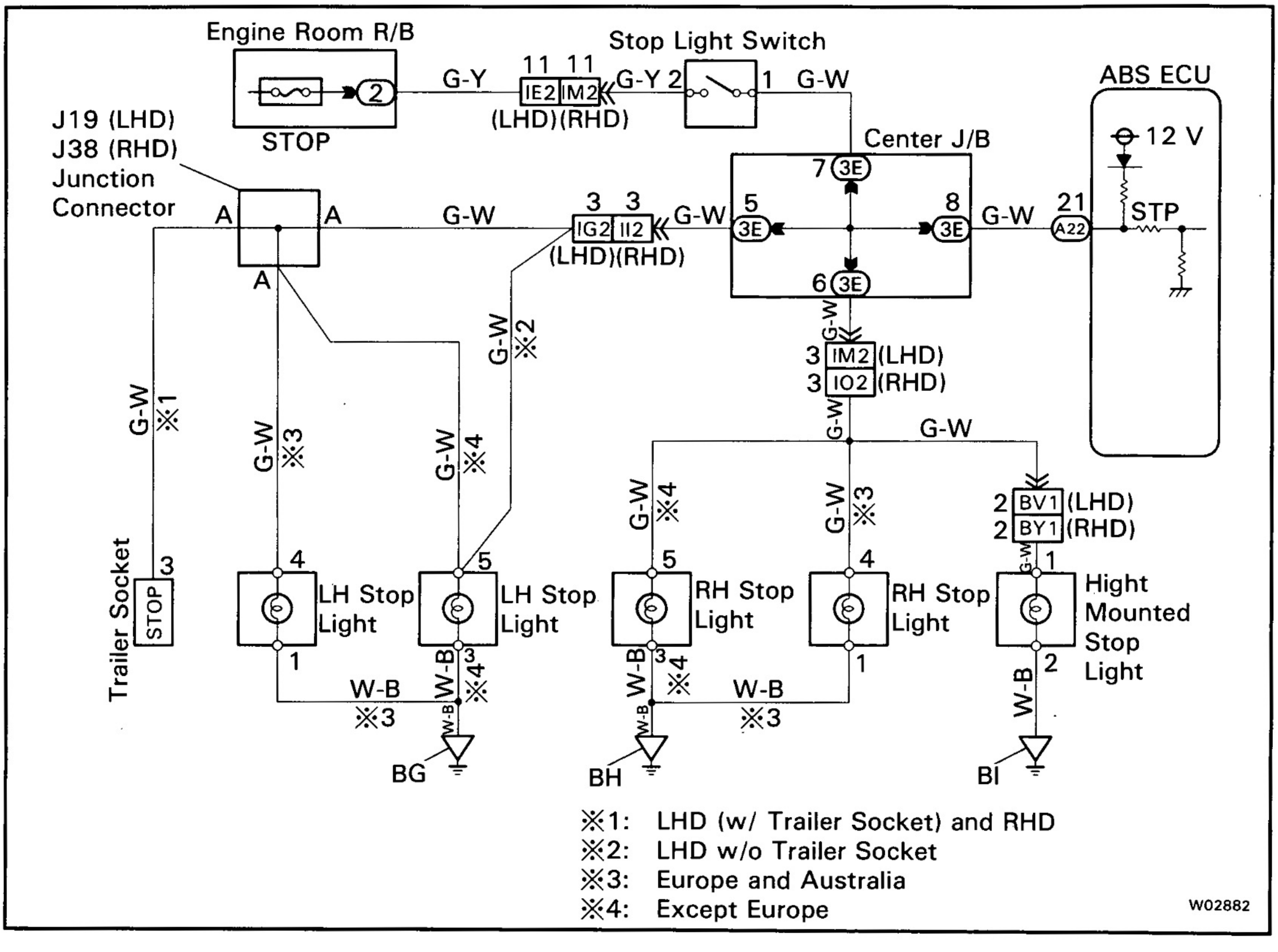

BR

INSPECTION PROCEDURE

1	**Check operation of stop light.**

CHECK:

Check that stop light lights up when brake pedal is depressed and turns off when brake pedal is released.

NG → **Repair stop light circuit (See page BE-33).**

OK

2	**Check voltage between terminal STP of ABS ECU and body ground.**

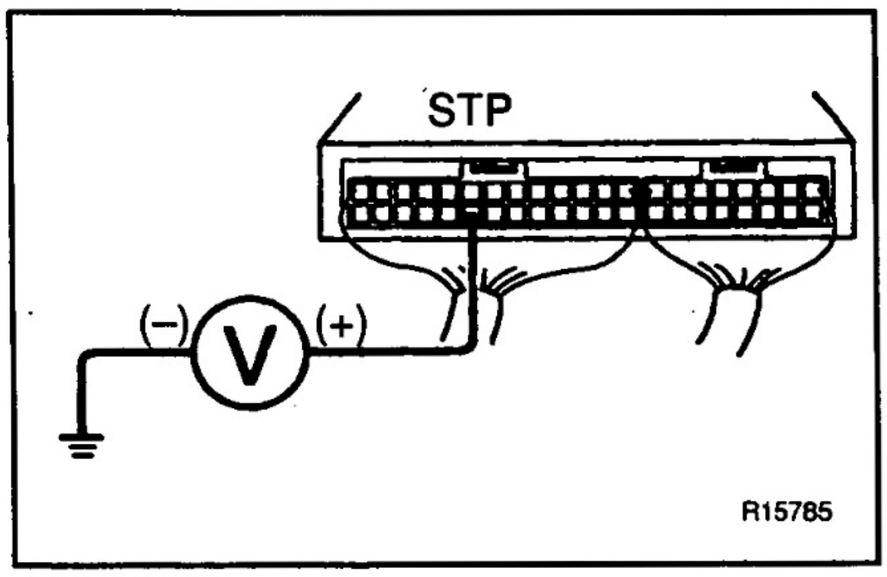

PREPARATION:

Remove ABS ECU with connectors still connected.

CHECK:

Measure voltage between terminal STP of ABS ECU and body ground when brake pedal is depressed.

OK:

Voltage: 8 – 14 V

OK → **Proceed to next circuit inspection shown on problem symptoms table (See page BR-67).**

NG

3	**Check for open in harness and connector between ABS ECU and stop light switch (See page IN-30).**

NG → **Repair or replace harness or connector.**

OK

Check and replace ABS ECU.

DTC	51	ABS Pump Motor Lock

CIRCUIT DESCRIPTION

DTC No.	DTC Detecting Condition	Trouble Area
51	Pump motor is not operating normally during initial check.	• ABS pump motor

Fail safe function: If trouble occurs in the ABS pump motor, the ECU cuts off current to the ABS control (solenoid) relay and prohibits ABS control.

WIRING DIAGRAM

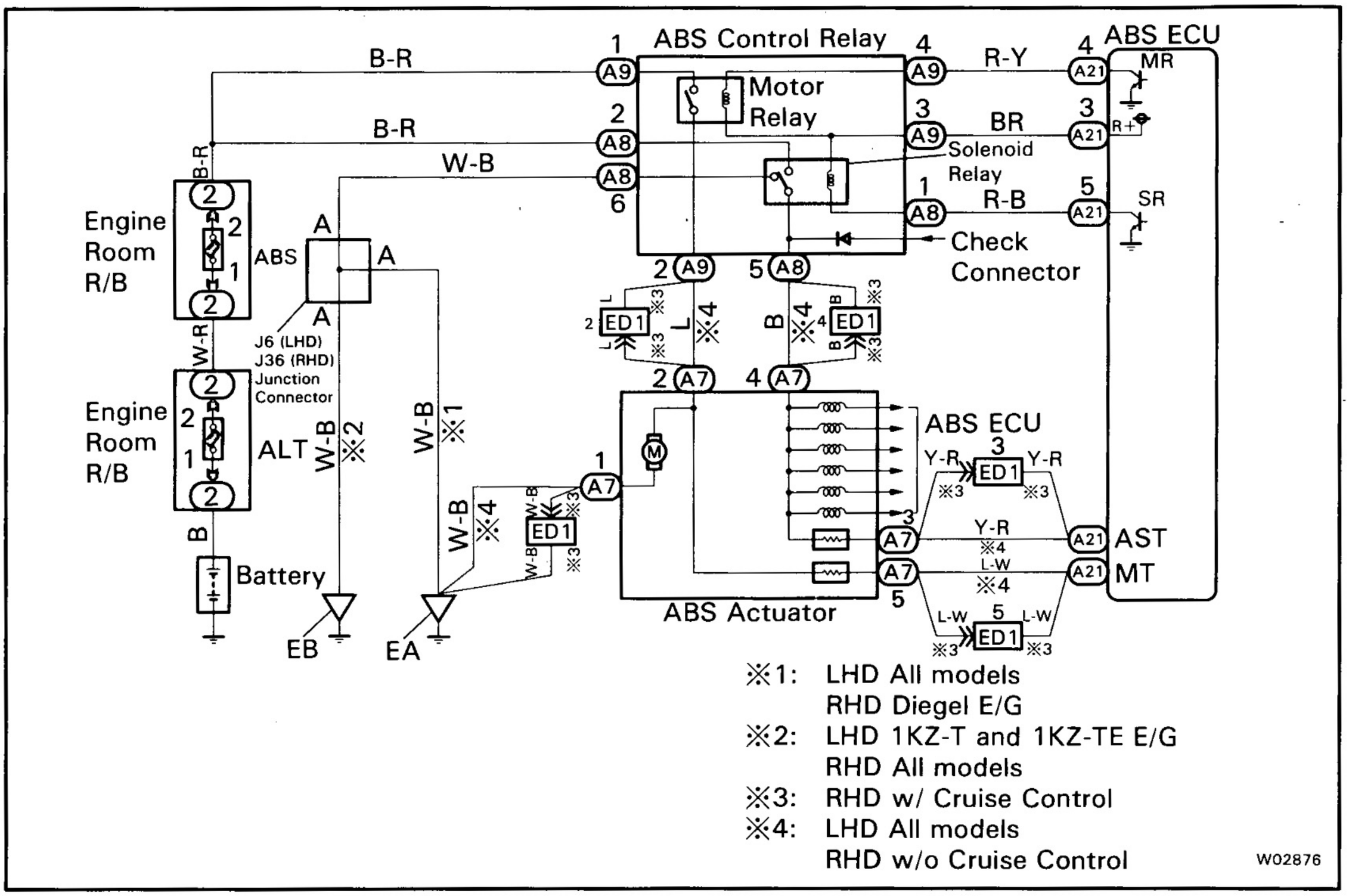

ABS Warning Light Circuit

CIRCUIT DESCRIPTION

If the ECU detects trouble, it lights the ABS warning light while at the same time prohibiting ABS control. At this time, the ECU records a DTC in memory.
After removing the short pin of the check connector, connect terminals Tc and E_1 of the check connector to make the ABS warning light blink and output the DTC.

WIRING DIAGRAM

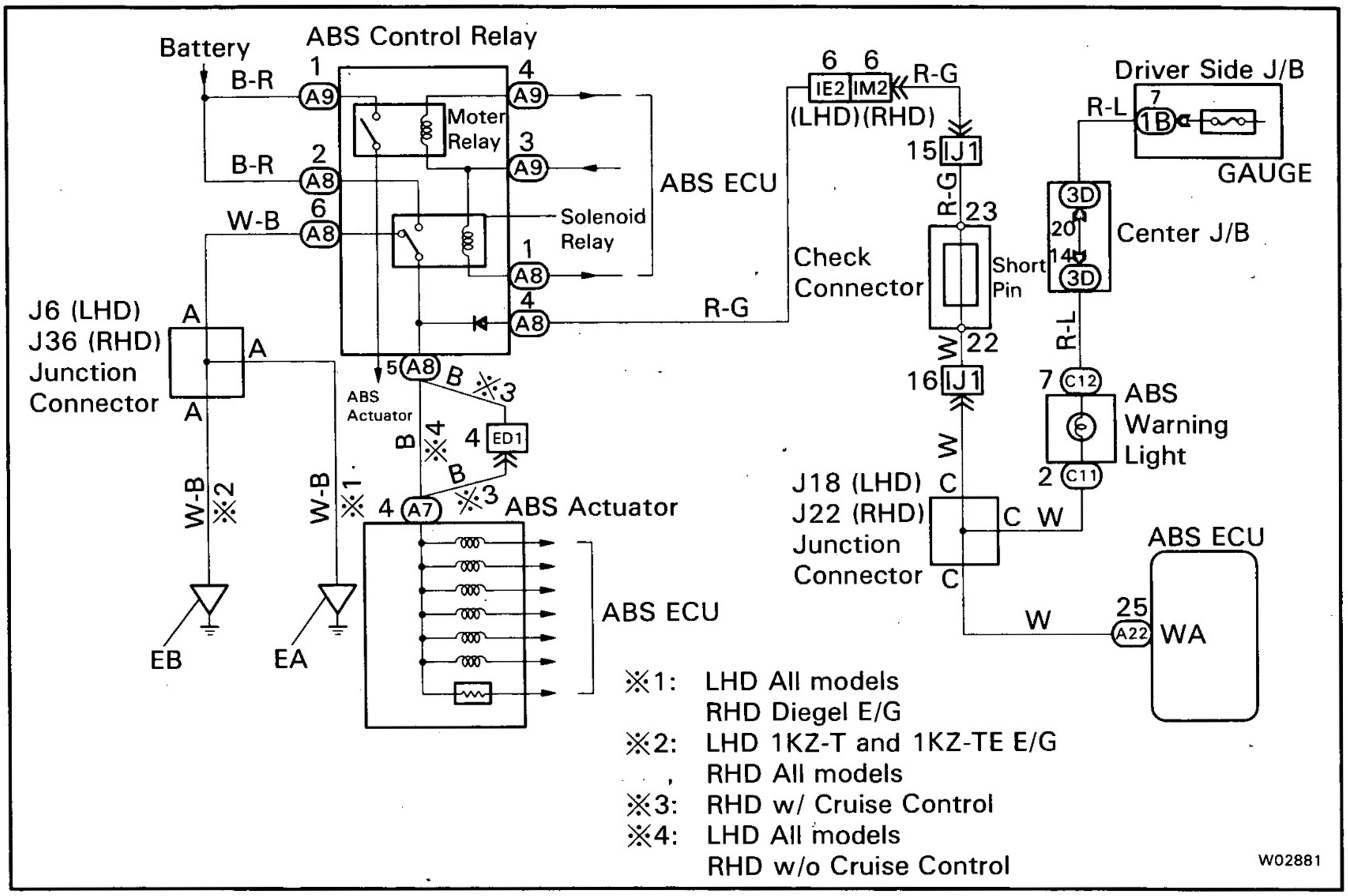

INSPECTION PROCEDURE

Troubleshooting in accordance with the chart below for each trouble symptom.

ABS warning light does not light up	Go to step 1
ABS warning light remains on	Go to step 3

1 Check ABS warning light.

See Combination Meter Troubleshooting on page BE-50.

NG → **Repair bulb or combination meter assembly.**

OK

2	**Check ABS control relay.**

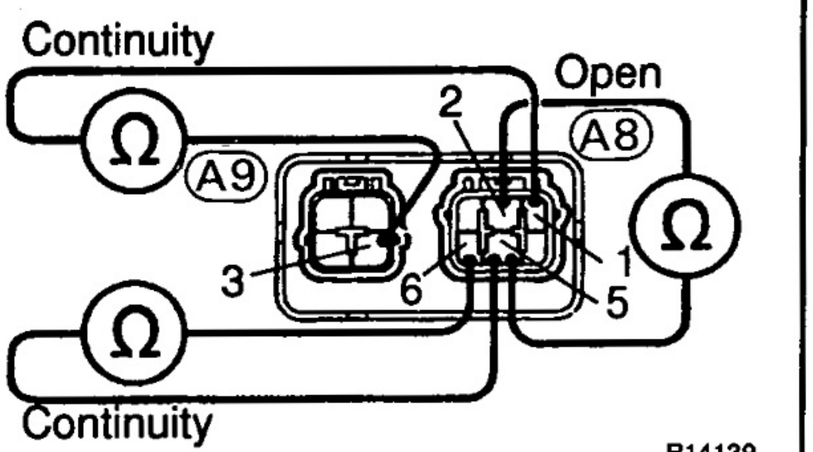

PREPARATION:

Disconnect the connectors from control relay.

CHECK:

Check continuity between each terminal of ABS control relay.

OK:

Terminals A8-1 and A9-3	Continuity (Reference value 80 Ω)
Terminals A8-5 and A8-6	Continuity
Terminals A8-2 and A8-5	Open

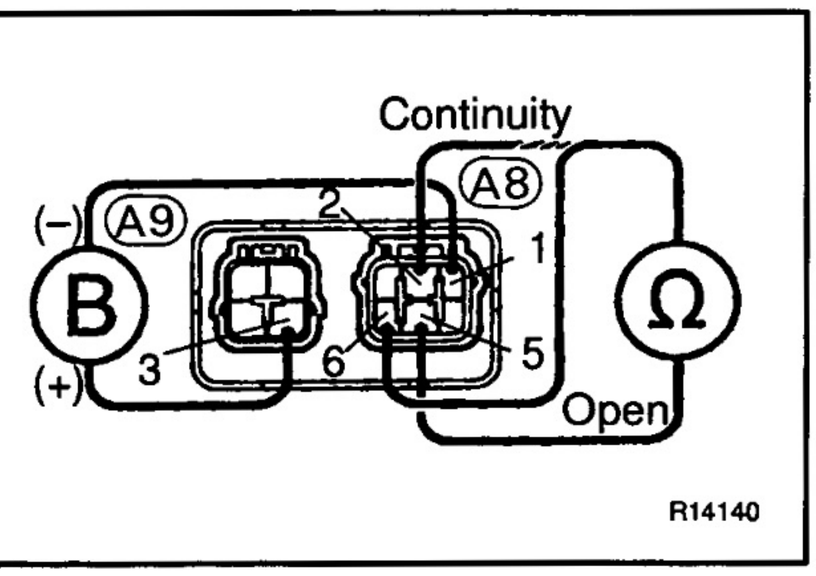

CHECK:

(a) Apply battery voltage between terminals A8-1 and A9-3.

(b) Check continuity between each terminal of ABS control relay.

OK:

Terminals A8-5 and A8-6	Open
Terminals A8-2 and A8-5	Continuity

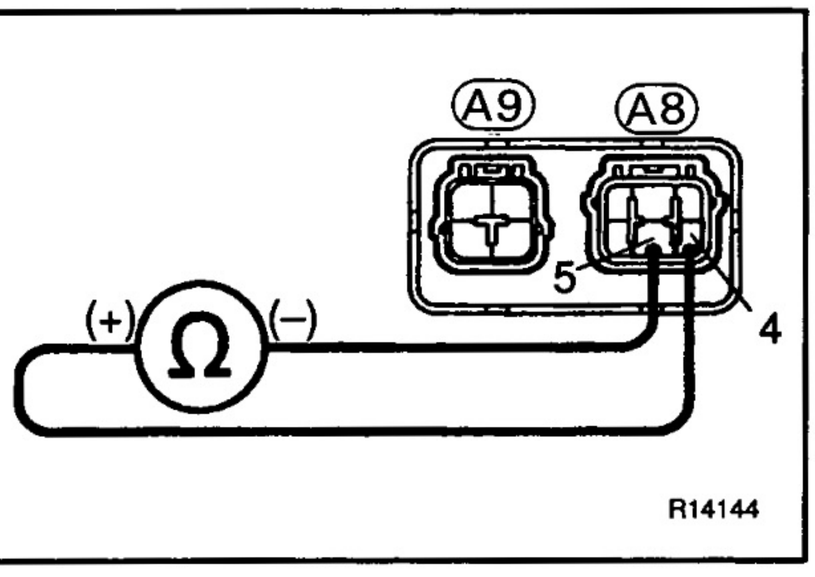

CHECK:

Connect the ⊕ test lead to terminal 4 of A8 and the ⊖ test lead to terminal 5 of A8. Check continuity between the terminals.

OK:

Continuity

If there is no continuity, connect the ⊖ test lead to terminal 4 of A8 and the ⊕ lead to terminal 5 of A8. Recheck continuity between terminals.

NG → **Replace ABS control relay.**

OK

Check for open in harness and connector between check connector and ABS control relay and body ground (See page IN-30).

3	**Is DTC output?**

Check DTC on page BR-58.

YES → **Repair circuit indicated by the code output.**

NO

4	**Does ABS warning light go off if short pin is removed?**

NO → **Check for short in harness and connector between warning light and check connector and ECU (See page IN-30).**

YES

5	**Check ABS control relay (See step 2).**

NG → **Replace ABS control relay.**

OK

Check for short in harness and connector between check connector and ABS control relay (See page IN-30).

Tc Terminal Circuit

CIRCUIT DESCRIPTION

Connecting terminals Tc and E_1 of the check connector causes the ECU to display the DTC by flashing the ABS warning light.

WIRING DIAGRAM

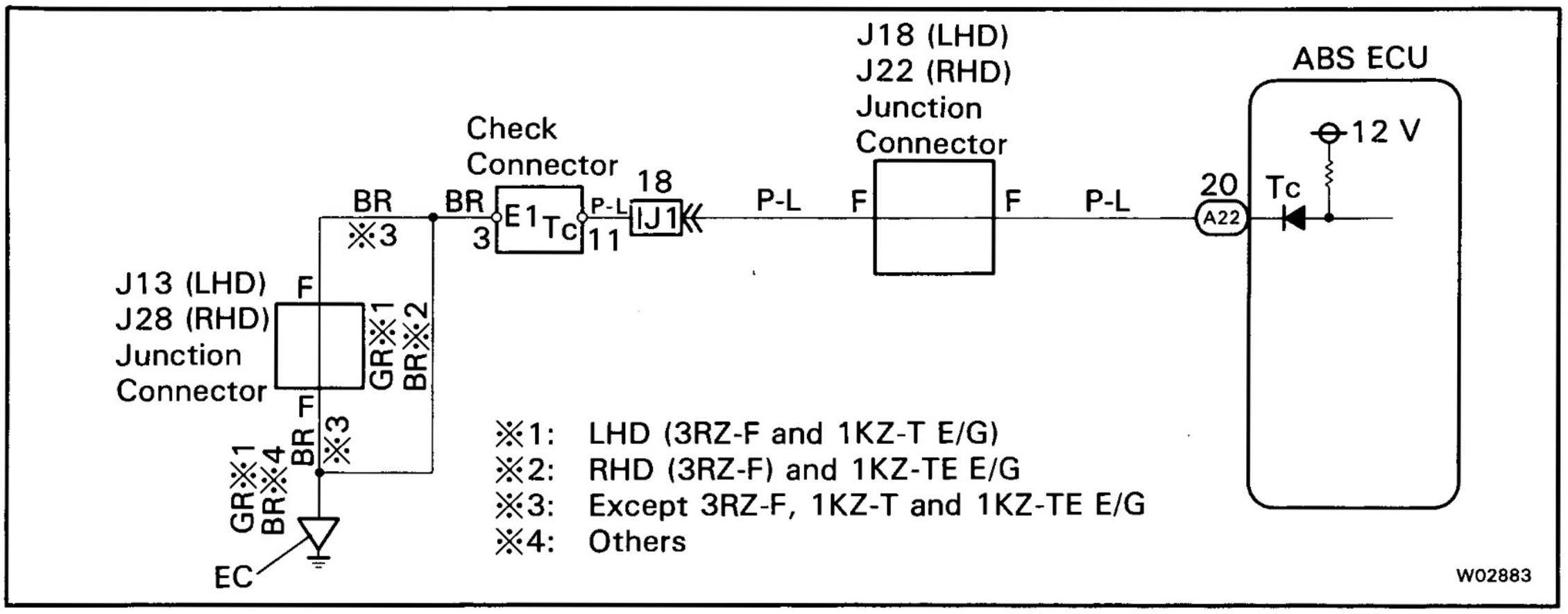

BR

INSPECTION PROCEDURE

1	**Check voltage between terminals Tc and E_1 of check connector.**

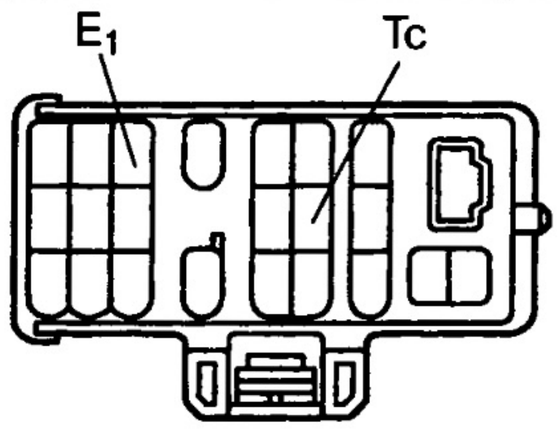

Check Connector F00007

CHECK:

(a) Turn the ignition switch ON.

(b) Measure voltage between terminals Tc and E_1 of check connector.

OK:

Voltage: 10 – 14 V

OK → **If ABS warning light does not blink even after Tc and E_1 are connected, the ECU may be defective.**

NG →

2	Check for open and short in harness and connector between ABS ECU and check connector, check connector and body ground (See page IN-30).

NG → Repair or replace harness or connector.

OK →

Check and replace ABS ECU.

Ts Terminal Circuit

CIRCUIT DESCRIPTION

The sensor check circuit detects abnormalities in the speed sensor signal which cannot be detected with the DTC check.
Connecting terminals Ts and E_1 of the check connector in the engine compartment starts the check.

WIRING DIAGRAM

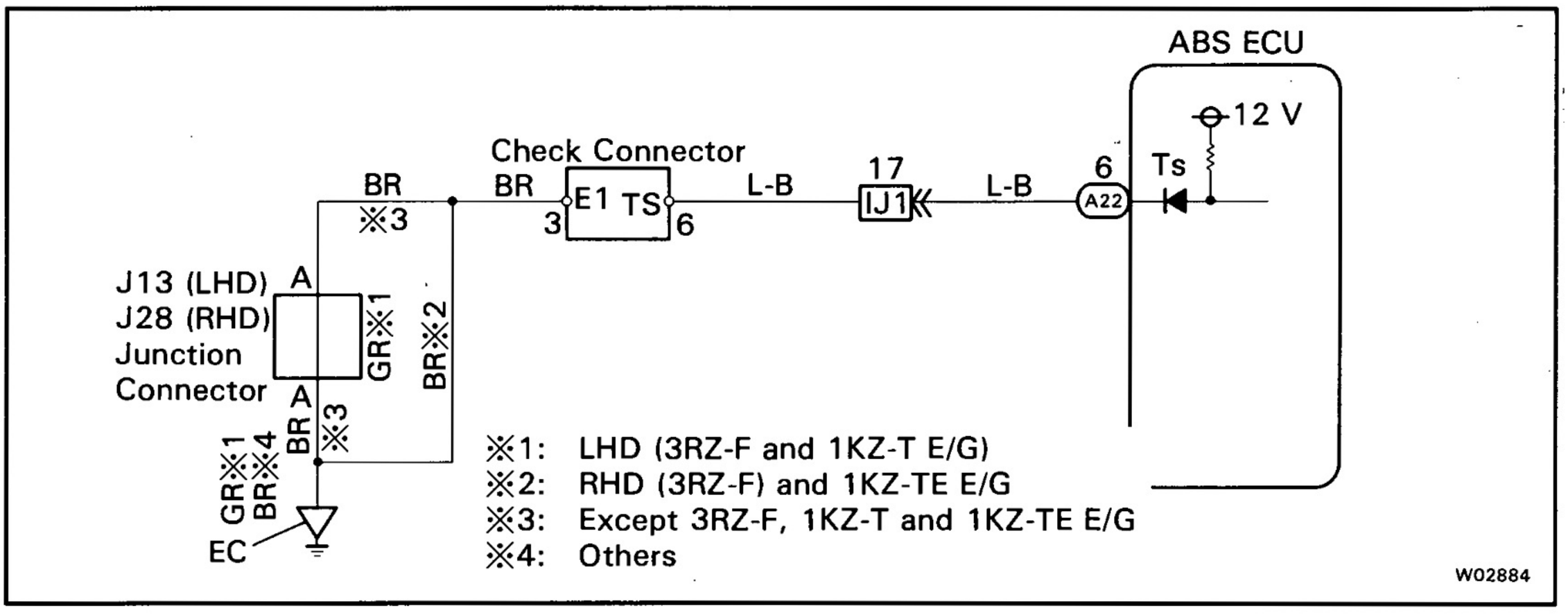

BR

INSPECTION PROCEDURE

1	**Check voltage between terminals Ts and E_1 of check connector.**

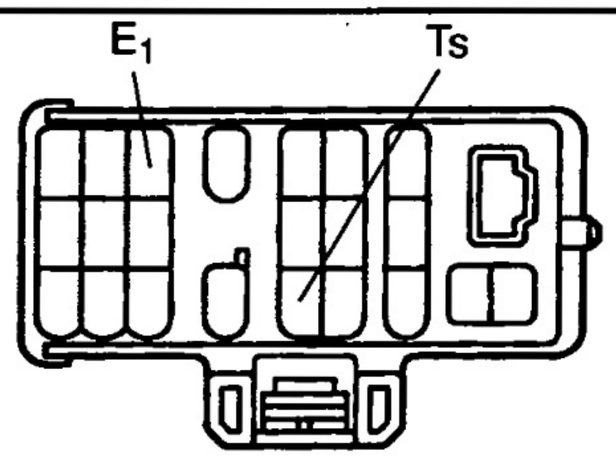

Check Connector F00007

CHECK:

(a) Turn the ignition switch ON.
(b) Measure voltage between terminals Ts and E_1 of check connector.

OK:

Voltage: 10 – 14 V

OK → **If ABS warning light does not blink even after Ts and E_1 are connected, the ECU may be defective.**

NG

2	**Check for open and short in harness and connector between ABS ECU and check connector, check connector and body ground (See page IN-30).**

NG → **Repair or replace harness or connector.**

OK

Check and replace ABS ECU.

Check for Fluid Leakage

Check for fluid leakage from actuator or hydraulic lines.

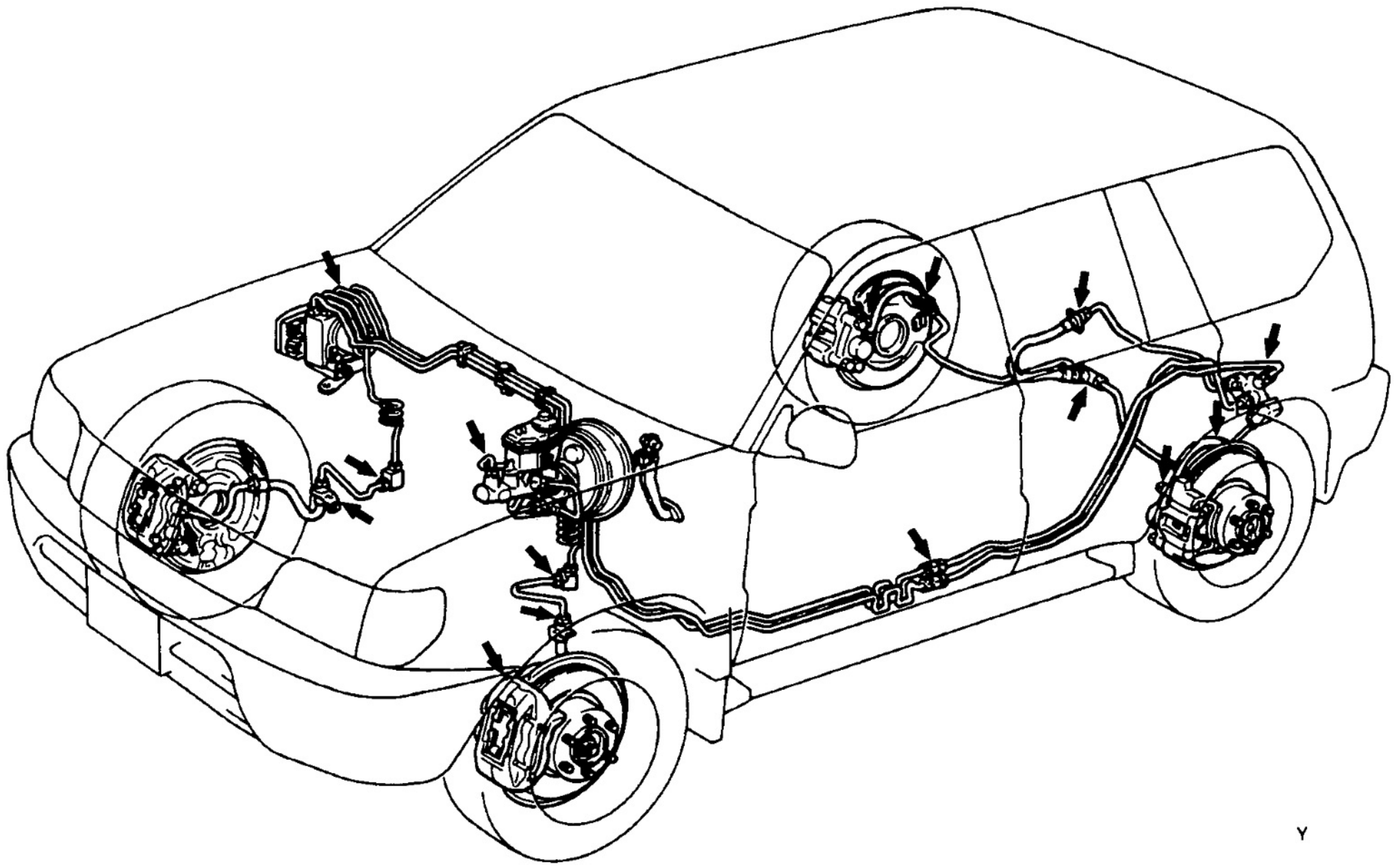

W02885

SERVICE SPECIFICATIONS

SERVICE DATA

BR028-02

Brake pedal height (from asphalt sheet)	(LHD)	194.8–204.8 (7.669–8.063 in.)
	(RHD)	197.0–207.0 (7.756–8.150 in.)
Brake pedal freeplay		3–6 mm (0.12–0.24 in.)
Brake pedal reserve distance at 490 N (50 kgf, 110.2 lbf)	(Europe)	More than 80 mm (3.15 in.)
	(Others)	More than 95 mm (3.74 in.)
Brake booster push rod to piston clearance (w/ SST)		0 mm (0 in.)
Vacuum pump blade height	(3L E/G) Minimum	12.20 mm (0.4803 in.)
	(1KZ–T and 1KZ–TE E/G) Minimum	16.50 mm (0.6496 in.)
Vacuum pump blade width	(3L E/G) Minimum	4.95 mm (0.1949 in.)
	(1KZ–T and 1KZ–TE E/G) Minimum	5.95 mm (0.2343 in.)
Vacuum pump blade lenght	(3L E/G) Minimum	22.98 mm (0.4047 in.)
	(1KZ–T and 1KZ–TE E/G) Minimum	44.96 mm (1.7701 in.)
Front brake pad thickness	STD	11.5 mm (0.453 in.)
	Minimum	1.0 mm (0.039 in.)
Front brake thickness	STD	22.0 mm (0.866 in.)
	Minimum	20.0 mm (0.787 in.)
Front brake runout	Maximum	0.07 mm (0.0028 in.)
Rear brake drum inside diameter	STD	295.0 mm (11.614 in.)
	Maximum	297.0 mm (11.693 in.)
Rear brake shoe lining thickness	STD	6.0 mm (0.236 in.)
	Minimum	1.0 mm (0.039 in.)
Rear brake drum to shoe clearance		0.5 mm (0.020 in.)
Rear disc brake pad thickness	STD	10.0 mm (0.394 in.)
	Minimum	1.0 mm (0.039 in.)
Rear brake disc thickness	STD	18.0 mm (0.709 in.)
	Minimum	16.0 mm (0.630 in.)
Rear brake disc runout	Maximum	0.15 mm (0.0059 in.)
Rear brake disc inside diameter	STD	210 mm (8.27 in.)
	Maximum	211 mm (8.31 in.)
Parking brake shoe lining thickness	STD	4.0 mm (0.157 in.)
	Minimum	1.0 mm (0.039 in.)
Parking brake lever travel at 196 N (20 kgf, 44 lbf)		6 – 8 clicks
Parking brake clearance between rear shoe and lever		Less than 0.35 mm (0.0138 in.)
Parking brake adjusting shim thickness		0.3 mm (0.012 in.) 0.6 mm (0.024 in.) 0.9 mm (0.035 in.)

BR

TORQUE SPECIFICATIONS

8902C–02

Part tightened		N·m	kgf·cm	ft·lbf
Master cylinder x Piston stopper bolt		10	100	7
Master cylinder x Reservoir		1.7	18	16 in.·lbf
Master cylinder x Brake booster		13	130	9
Brake line union nut		15	155	11
Brake booster clevis lock nut		25	260	19
Brake booster x Pedal bracket		14	145	10
Vacuum pump x Vacuum hose union bolt	(3L E/G)	14	140	10
Vacuum pump x Oil inlet union bolt	(3L E/G)	14	140	10
Vacuum pump x Alternator	(3L E/G)	7.8	80	69 in.·lbf
Vacuum pump x Check valve	(3L E/G)	74	750	54
Vacuum pump pully lock nut	(3L E/G)	105	1,075	78
Vacuum pump x Engine	(1KZ–T and 1KZ–TE E/G)	21	210	15
Vacuum pump x Vacuum hose union bolt	(1KZ–T and 1KZ–TE E/G)	14	140	10
Vacuum pump x Check valve	(1KZ–T and 1KZ–TE E/G)	74	750	54
Vacuum pump casing x End cover	(1KZ–T and 1KZ–TE E/G)	7.8	80	69 in.·lbf
Vacuum pump gear lock nut	(1KZ–T and 1KZ–TE E/G)	110	1,125	81
Bleeder plug		11	110	8
Front disc brake caliper x Steering knuckle		123	1,250	90
Front disc brake caliper x Brake line union nut		15	155	11
Rear drum brake wheel cylinder x Backing plate		10	100	7
Parking brake bellcrank bracket x Backing plate		13	130	9
Rear disc brake caliper x Sliding pin		88	900	65
Rear disc brake caliper x Flexible hose		30	310	22
Rear disc brake torque plate x knuckle		103	1,050	76
Rear disc brake caliper x Dust boot protector		7.8	80	69 in.·lbf
Parking brake bellcrank bracket x Backing plate		13	130	9
LSP & BV x LSP & BV bracket		13	130	9
LSP & BV bracket x Frame		29	300	22
ABS actuator x ABS actuator bracket		5.4	55	48 in.·lbf
ABS actuator bracket x Body		19	195	14
ABS actuator x Sub–wire harnees bracket	(RHD w/ cruise control)	6.0	61	53 in.·lbf
ABS speed sensor installation bolt		8.0	82	71 in.·lbf
ABS speed sensor clamp bolt	(Side rail)	12	122	8.9
	(Others)	8.0	82	71 in.·lbf

STEERING

PRECAUTION ..... SR– 2
PREPARATION ..... SR– 2
TROUBLESHOOTING ..... SR– 7
ON–VEHICLE INSPECTION ..... SR– 8
NON–TILT STEERING COLUMN ..... SR– 16
TILT STEERING COLUMN ..... SR– 25
POWER STEERING VANE PUMP (3L) ..... SR– 30
POWER STEERING VANE PUMP (3RZ–F, 3RZ–FE) ..... SR– 39
POWER STEERING VANE PUMP (5VZ–FE) ..... SR– 47
POWER STEERING VANE PUMP (1KZ–T, 1KZ–TE) ..... SR– 55
POWER STEERING GEAR ..... SR– 64
SERVICE SPECIFICATIONS ..... SR– 81

SR

PRECAUTION

SR15L-04

- **Care must be taken to replace parts properly because they could affect the performance of the steering system and result in a driving hazard.**
- **The LAND CRUISER 90 is equipped with SRS (Supplemental Restraint System) such as the driver airbag and front passenger airbag. Failure to carry out service operation in the correct sequence could cause the SRS to unexpectedly deployed during servicing, possibly leading to a serious accident. Before servicing (including removal or installation of parts, inspection or replacement), be sure to read the precautionary notices in the RS section.**

PREPARATION

PP04R-02

SST (SPECIAL SERVICE TOOLS)

	09608–04031	Front Hub Inner Bearing Cone Replacer	PS vane pump (3RZ–F, 3RZ–FE)
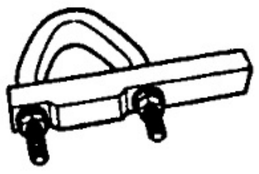	09612–00012	Rack & Pinion Steering Rack Housing Stand	PS gear
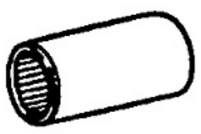	09616–00010	Steering Worm Bearing Adjusting Socket	PS gear
	09631–00350	Steering Rack Cover 35	PS gear
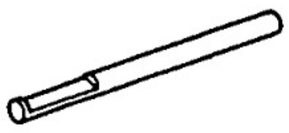	09631–10030	Oil Seal Remover	PS vane pump (3L, 3RZ–F, 3RZ–FE)
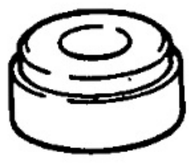	09631–12031	Oil Seal "A" Remover–	PS vane pump (1KZ–T, 1KZ–TE)
	09631–12071	Steering Rack Oil Seal Test Tool	PS gear
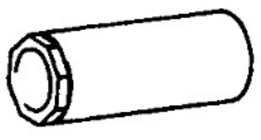	09631–20060	Bearing Guide Nut Wrench	PS gear
	09631–20081	Seal Ring Tool	PS gear
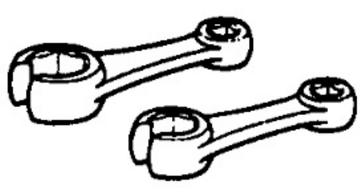	09631–22020	Power Steering Hose Nut 14 x 17 mm Wrench Set	PS vane pump (3L) PS gear

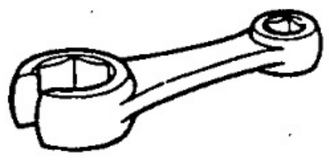	09633–00020 Power Steering Hose Nut Wrench	PS gear
	09640–10010 Power Steering Pressure Gauge Set	
	(09641–01010) Gauge Assy	On–vehicle inspection
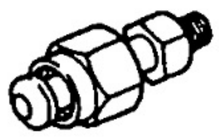	(09641–01020) Attachment A	On–vehicle inspection
	(09641–01030) Attachment B	On–vehicle inspection
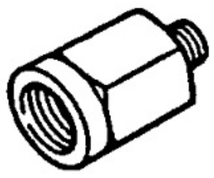	(09641–01040) Attachment C	On–vehicle inspection
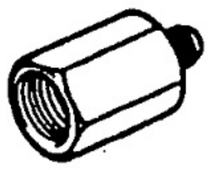	(09641–01060) Attachment E	On–vehicle inspection
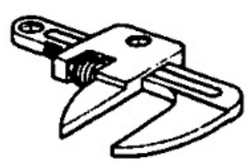	09922–10010 Variable Open Wrench	PS gear
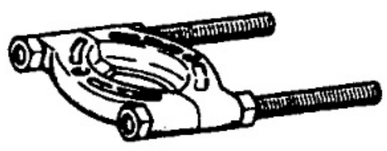	09950–00020 Bearing Remover	PS vane pump (1KZ–T, 1KZ–TE)
	09950–40010 Puller B Set	
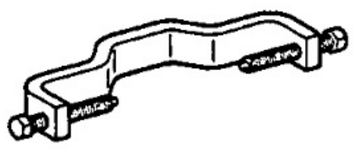	(09958–04010) Holder	Tilt steering column
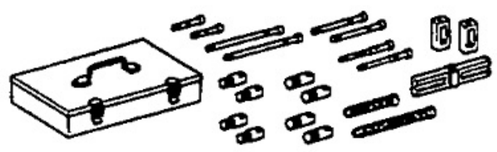	09950–50010 Puller C Set	
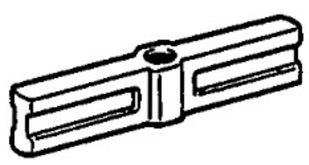	(09951–05010) Hanger 150	Non–tilt steering column Tilt steering column
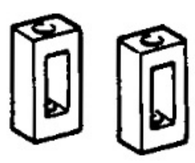	(09952–05010) Slide Arm	Non–tilt steering column Tilt steering column

	(09953–05020) Center Bolt 150	Non–tilt steering column Tilt steering column
	(09954–05020) Claw No.2	Non–tilt steering column Tilt steering column
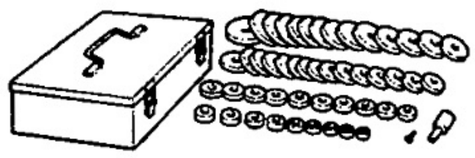	09950–60010 Replacer Set	
	(09951–00180) Replacer 18	PS gear
	(09951–00230) Replacer 23	PS vane pump (1KZ–T, 1KZ–TE)
	(09951–00250) Replacer 25	PS gear
	(09951–00280) Replacer 28	PS gear
	(09951–00310) Replacer 31	PS vane pump (3L)
	(09951–00320) Replacer 32	PS gear
	(09951–00330) Replacer 33	PS vane pump (3RZ–F, 3RZ–FE, 5VZ–FE) PS gear
	(09951–00360) Replacer 36	PS gear
	(09951–00490) Replacer 49	PS gear
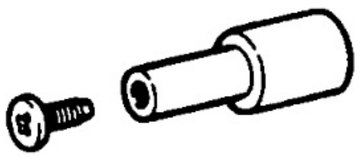	(09952–06010) Adapter	PS gear
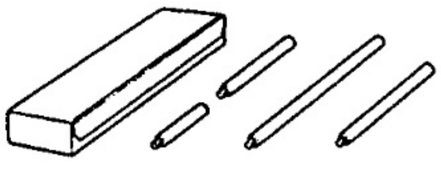	09950–70010 Handle Set	

	(09951–07100) Handle 100	PS vane pump (3L, 3RZ–F, 3RZ–FE, 5VZ–FE, 1KZ–T, 1KZ–TE) PS gear
	(09951–07150) Handle 150	PS gear
	(09951–07360) Handle 360	PS gear
	09960–10010 Variable Pin Wrench Set	
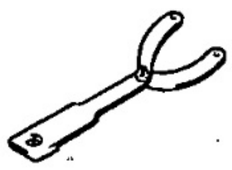	(09962–01000) Variable Pin Wrench Arm Assy	PS vane pump (3RZ–F, 3RZ–FE, 5VZ–FE)
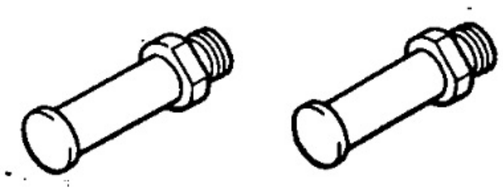	(09963–01000) Pin 10	PS vane pump (3RZ–F, 3RZ–FE, 5VZ–FE)

PP048–02

RECOMMENDED TOOLS

SF

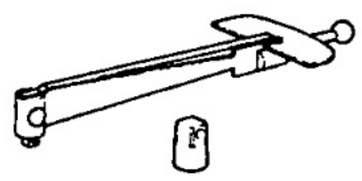	09025–00010 Torque Wrench (30 kgf·cm) .	PS vane pump (3RZ–F, 3RZ–FE, 5VZ–FE, 1KZ–T, 1KZ–TE) PS gear
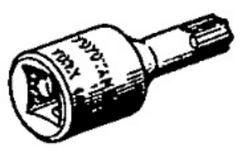	09042–00010 Torx Socket T30 .	Non–tilt steering column Tilt steering column
	09216–00021 Belt Tension Gauge .	On–vehicle inspection
	09904–00010 Expander Set .	
	(09904–00050) No. 4 Claw	
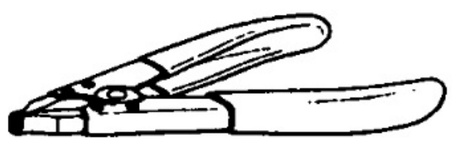	09905–00012 Snap Ring No.1 Expander .	
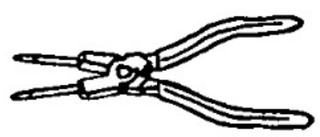	09905–00013 Snap Ring Pliers .	

EQUIPMENT

FP04T-02

Caliper gauge	PS vane pump (3RZ–F, 3RZ–FE, 5VZ–FE, 1KZ–T, 1KZ–TE)
Calipers	PS vane pump (3RZ–F, 3RZ–FE, 5VZ–FE, 1KZ–T, 1KZ–TE)
Dial indicator	PS gear
Feeler gauge	PS vane pump (3RZ–F, 3RZ–FE, 5VZ–FE, 1KZ–T, 1KZ–TE)
Micrometer	PS vane pump (3RZ–F, 3RZ–FE, 5VZ–FE, 1KZ–T, 1KZ–TE)
Torque wrench	

LUBRICANT

SR028–0W

Item	Capacity	Classification
Power steering fluid Total	0.8 liters (0.85 US qts, 0.70 Imp.qts)	ATF DEXRON® II or III

SSM (SPECIAL SERVICE MATERIALS)

SR018–0T

08833–00080	Adhesive 1344, THREE BOND 1344, LOCTITE 242 or equivalent	PS gear

SR

TROUBLESHOOTING

SR0XB-0C

Use the table below to help you find the cause of the problem. The numbers indicate the priority of the likely cause of the problem. Check each part in order. If necessary, repair or replace these parts.

See Page / Parts Name / Trouble	SA-3	SA-4	SR-10	SR-8	—	SA-57 SA-58	—	—	SR-64	SA-11
	Tires (improperly inflated)	Front wheel alignment (Incorrect)	PS fluid level (Low)	Drive belt (Loose)	Steering system joints (Worn)	Suspension arm Ball joints (Worn)	Steering column (Binding)	Universal Joint / Intermediate shaft / Sliding yoke (Worn)	Steering gear	Front wheel bearing (Worn)
Hard steering	1	4	2	3	5	6	7		8	
Poor return	1	2					3		4	
Excessive play					1	2		3	5	4
Abnormal noise			1		2				3	

ARA940604SR2N

V06104

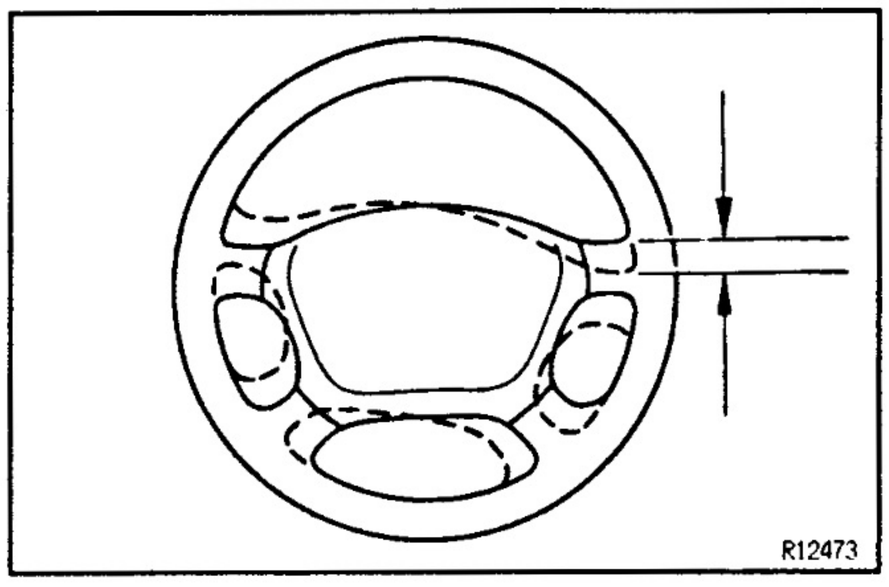

ON–VEHICLE INSPECTION

STEERING WHEEL FREEPLAY CHECK

SR1ST–08

With the vehicle stopped and tires pointed straight ahead, rock the steering wheel gently back and forth with light finger pressure.
Freeplay should not exceed the maximum.

	Freeplay mm (in.)
Maximum	30 (1.18)

DRIVE BELT TENSION ADJUSTMENT

SR1X3–02

CHECK DRIVE BELT TENSION

Measure the drive belt deflection.
Drive belt tension: at 98 N (10 kgf, 22 lbf)

3L Engine:

	Drive belt tension mm (in.)
New belt	8 – 10 (0.31 – 0.39)
Used belt	10 – 15 (0.39 – 0.59)

3RZ–F and 3RZ–FE Engines:

	Drive belt tension mm (in.)
New belt	4.5 – 5.5 (0.177 – 0.217)
Used belt	6 – 7.5 (0.236 – 0.295)

5VZ–FE Engine:

	Drive belt tension mm (in.)
New belt	6.5 – 7.5 (0.256 – 0.295)
Used belt	8.5 – 10.0 (0.335 – 0.393)

3L:

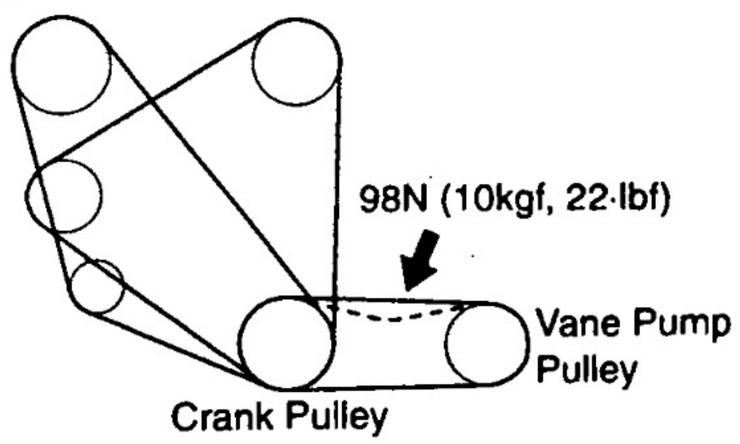

3RZ-F, 3RZ-FE:

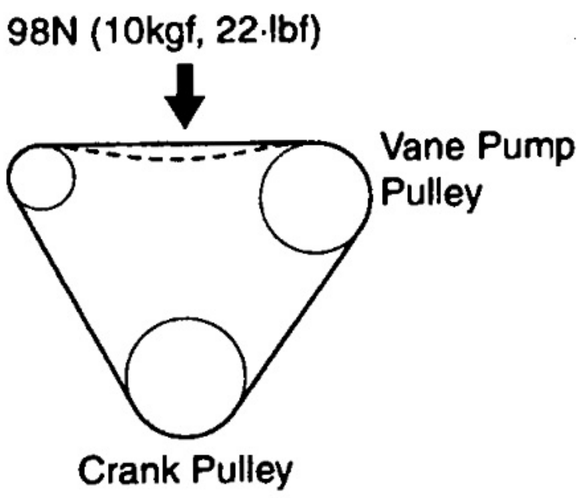

5VZ-FE:

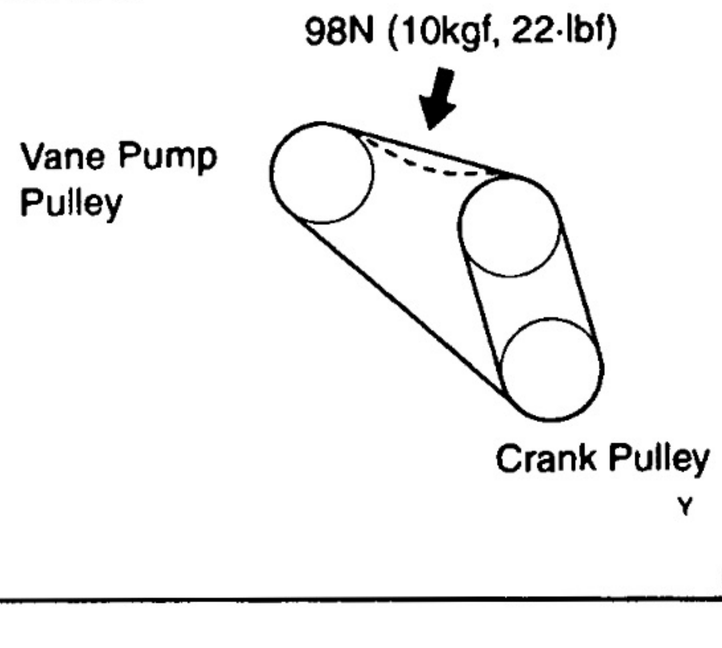

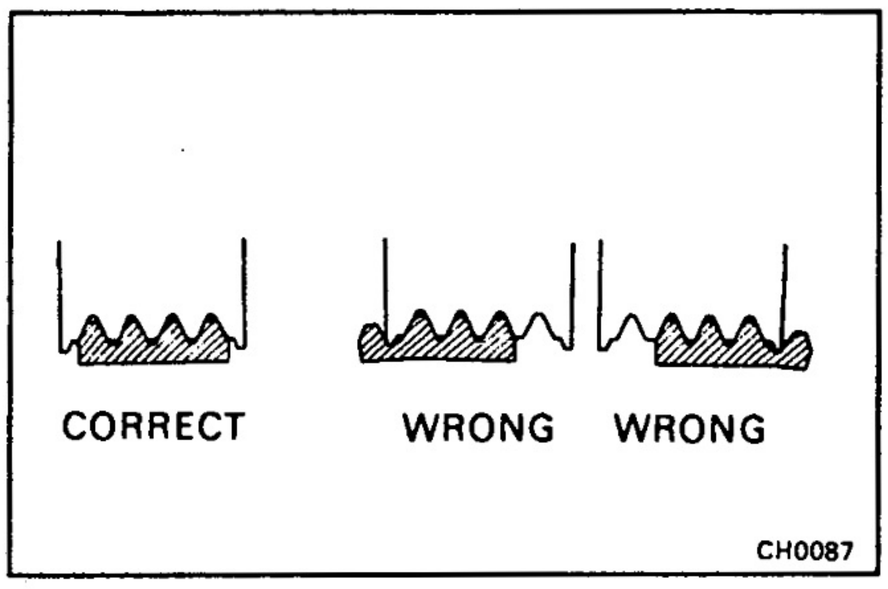

HINT:

- "New belt" refers to a belt which has been less than 5 minutes on a running engine.
- "Used belt" refers to a belt which has been used on a running engine for 5 minutes or more.
- After installing the drive belt, check that it fits properly in the ribbed grooves.

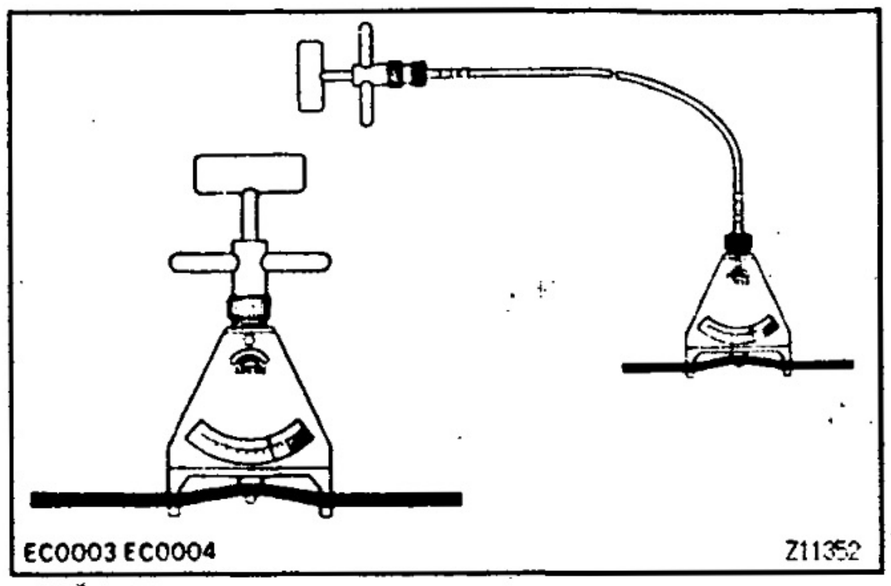

(Reference)

- Using a belt tension gauge, check the drive belt tension.

Drive belt tension:

3L Engine:

	Drive belt tension	N (kgf)
New belt	441 – 539 (45 – 55)	
Used belt	196 – 343 (20 – 35)	

3RZ–F, 3RZ–FE and 5VZ–FE Engines:

	Drive belt tension	N (kgf)
New belt	539 – 637 (55 – 65)	
Used belt	245 – 392 (25 – 40)	

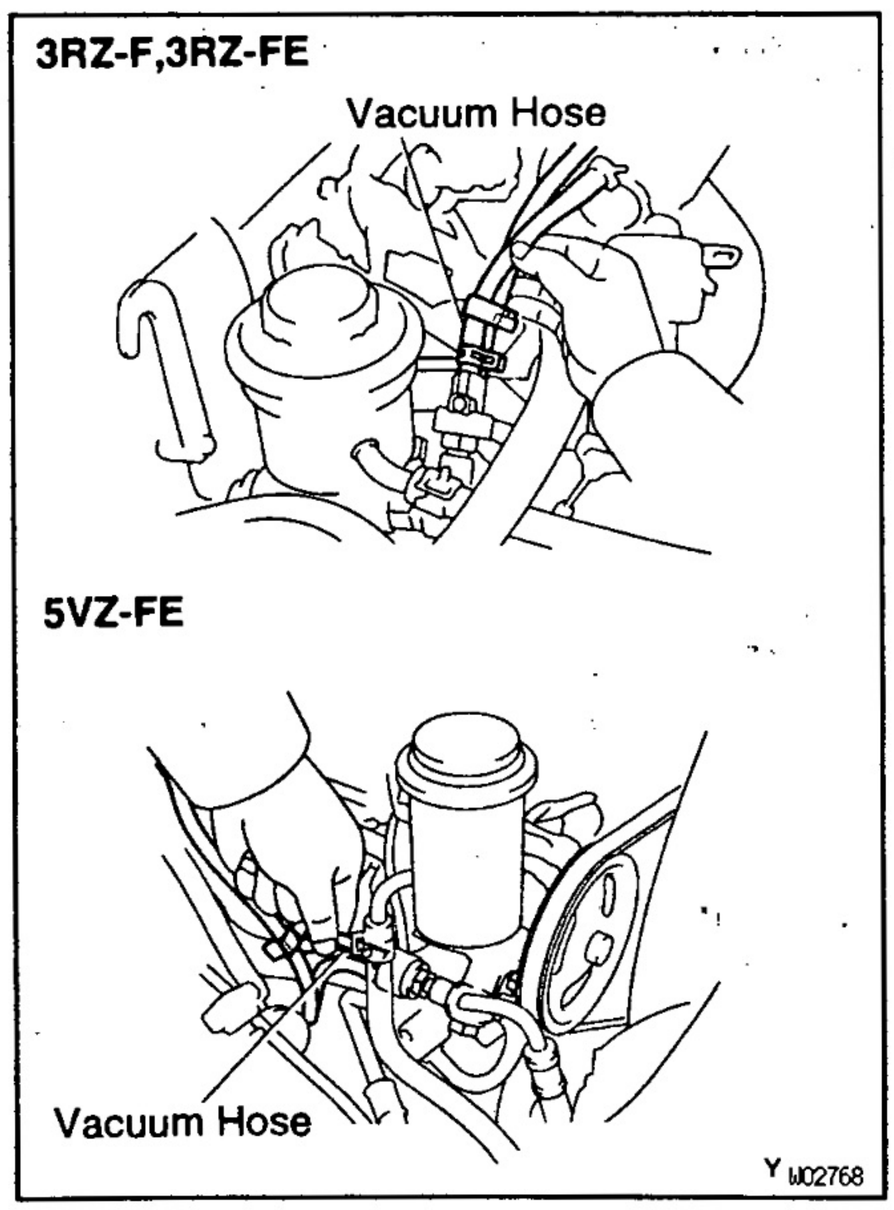

IDLE–UP CHECK

8R16V–05

1. **TURN AIR CONDITIONER SWITCH OFF**
2. **CHECK IDLE–UP**

(a) Start engine and run it at idle.
(b) Fully turn the steering wheel.
(c) Check that the engine rpm decreases when the vacuum hose of the air control valve is pinched.
(d) Check that the engine rpm increases when the hose is released.

SR

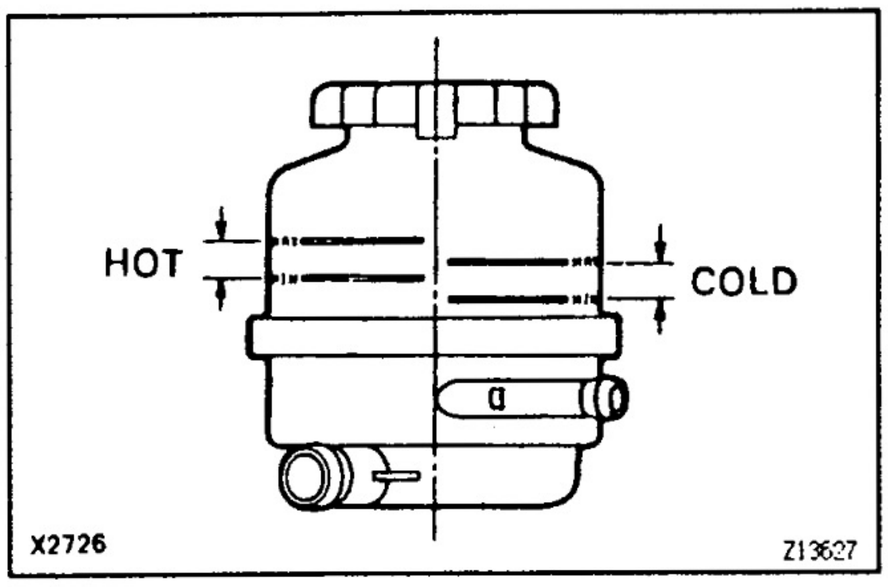

SR15W–00

FLUID LEVEL CHECK

1. KEEP VEHICLE LEVEL

2. CHECK FLUID LEVEL

With the engine stopped, check the fluid level in the oil reservoir.

If necessary, add fluid.

Fluid:

ATF DEXRON® II or III

HINT: Check that the fluid level is within the HOT LEVEL range on the reservoir. If the fluid is cold, check that it is within the COLD LEVEL range.

3. BOOST FLUID TEMPERATURE

(a) Start the engine and run it at idle.

(b) Turn the steering wheel from lock to lock several times to boost fluid temperature.

Fluid temperature:

80°C (176°F)

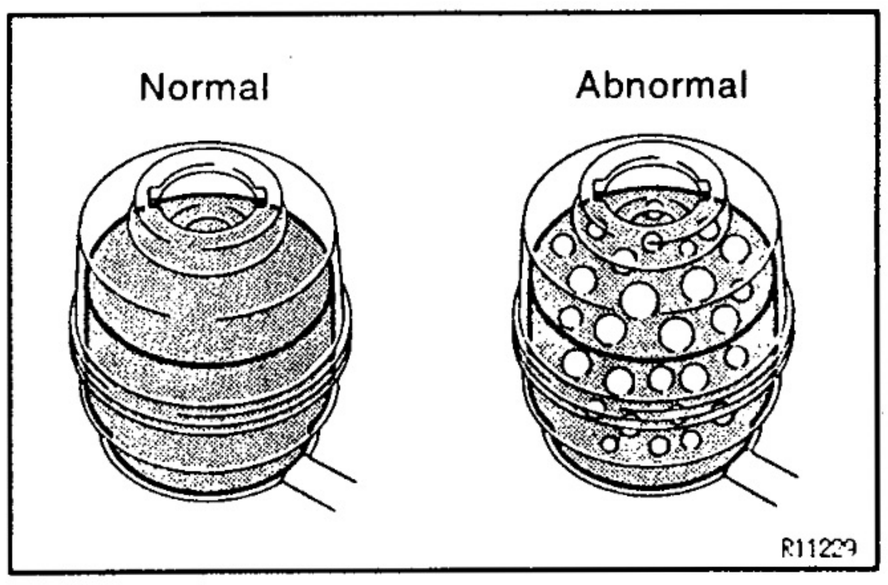

4. CHECK FOR FOAMING OR EMULSIFICATION

If there is foaming or emulsification, bleed power steering system.

(See page SR–11)

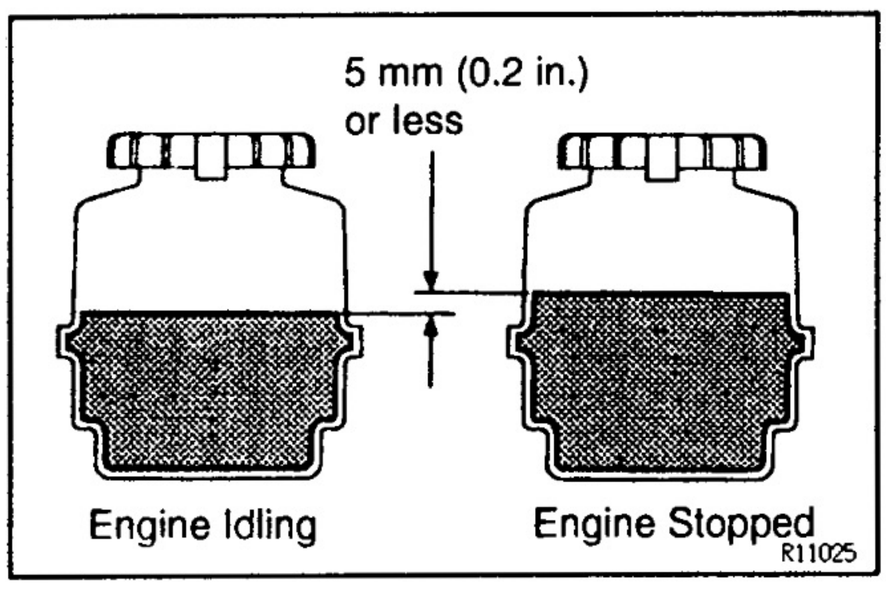

5. CHECK FLUID LEVEL RISE

(a) With the engine idling, measure the fluid level in the oil reservoir.

(b) Stop the engine.

(c) Wait a few minutes and remeasure the fluid level in the oil reservoir.

	Fluid level rise mm (in.)
Maximum	5 (0.20)

If a problem is found, bleed power steering system.

(See page SR–11)

6. CHECK FLUID LEVEL

POWER STEERING SYSTEM BLEEDING

SR1Y1-01

1. **CHECK FLUID LEVEL**
   (See page SR—10)
2. **JACK UP FRONT OF VEHICLE AND SUPPORT IT WITH STANDS**
3. **TURN STEERING WHEEL**
   With the engine stopped, turn the wheel slowly from lock to lock several times.
4. **LOWER VEHICLE**
5. **START ENGINE**
   Run the engine at idle for a few minutes.
6. **TURN STEERING WHEEL**

(a) With the engine idling, turn the wheel to left or right full lock and keep it there for 2—3 seconds, then turn the wheel to the opposite full lock and keep it there for 2—3 seconds.

(b) Repeat (a) several times.

7. **STOP ENGINE**
8. **CHECK FOR FOAMING OR EMULSIFICATION**
   If the system has to be bled twice specifically because of foaming or emulsification, check for fluid leaks in the system.
9. **CHECK FLUID LEVEL**
   (See page SR—10)

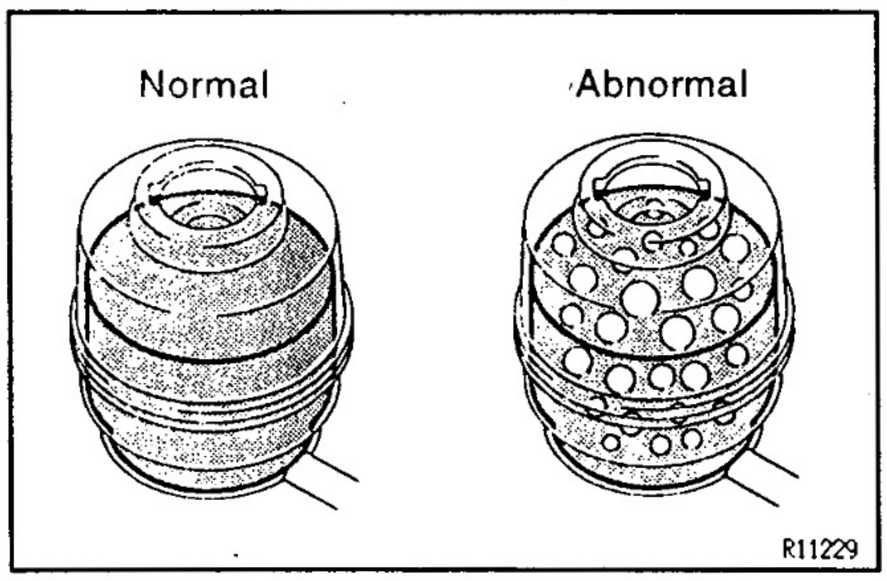

FLUID PRESSURE CHECK

SR1EZ-06

1. **CONNECT SST**

(a) 5VZ—FE Engine:
Remove the air cleaner assembly.
(See page SR—49)

(b) 1KZ—T and 1KZ—TE Engines:
Remove the front fender apron seal.
(See page SR—57)

(c) Disconnect the pressure feed tube from the PS vane pump.
3L Engine: (See page SR—32)
3RZ—F, 3RZ—FE Engines: (See page SR—41)
5VZ—FE Engine: (See page SR—49)
1KZ—T, 1KZ—TE Engines: (See page SR—57)

(d) Connect SST, as shown below.

3L Engine:

SST 09640–10010 (09641–01010, 09641–01020, 09641–01030)

3RZ–F, 3RZ–FE, 5VZ–FE Engines:

SST 09640–10010 (09641–01010, 09641–01030, 09641–01060)

1KZ–T, 1KZ–TE Engines:

SST 09640–10010 (09641–01010, 09641–01030, 09641–01040)

NOTICE: Check that the valve of the gauge is in the open position.

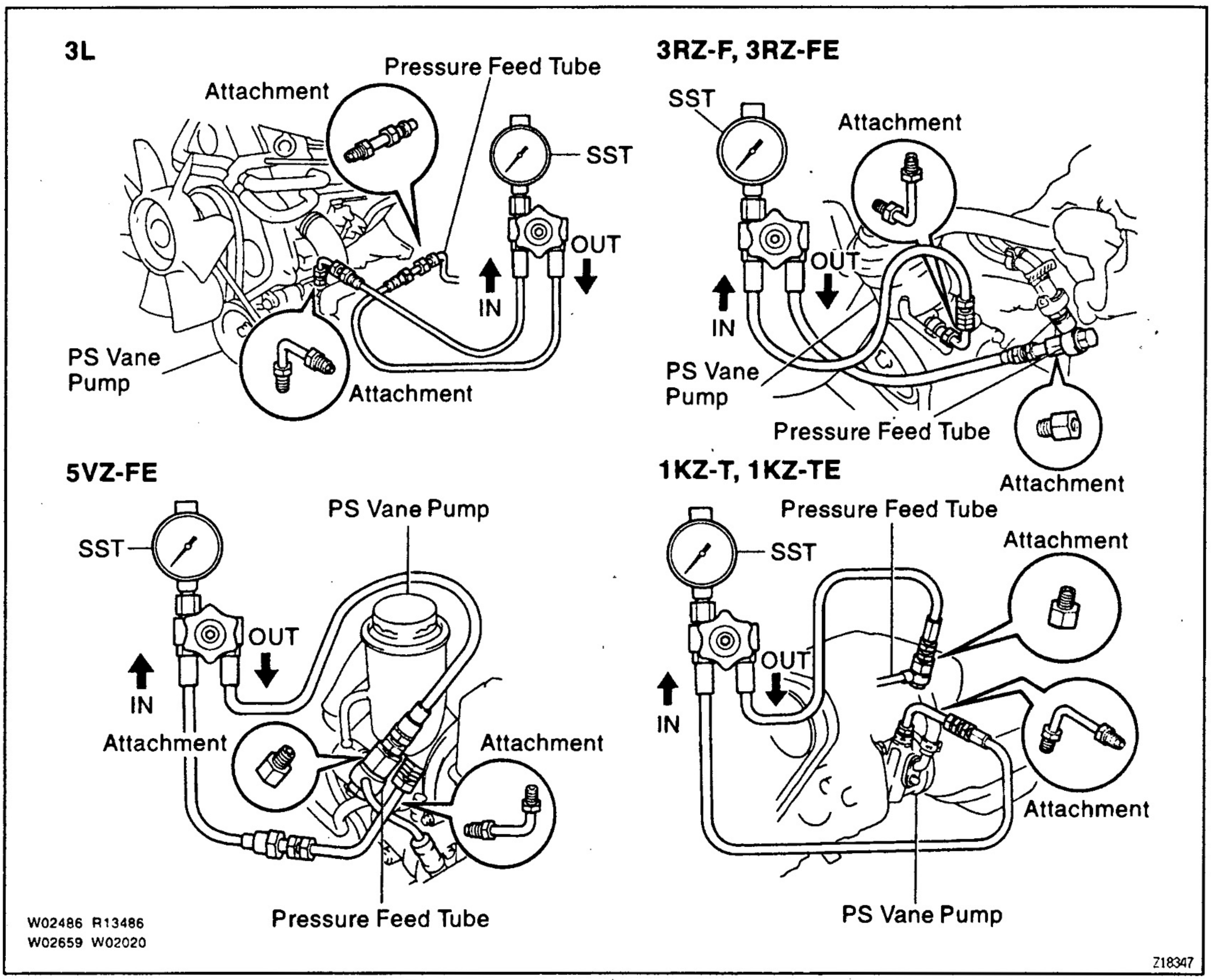

2. **BLEED POWER STEERING SYSTEM**
(See page SR–11)

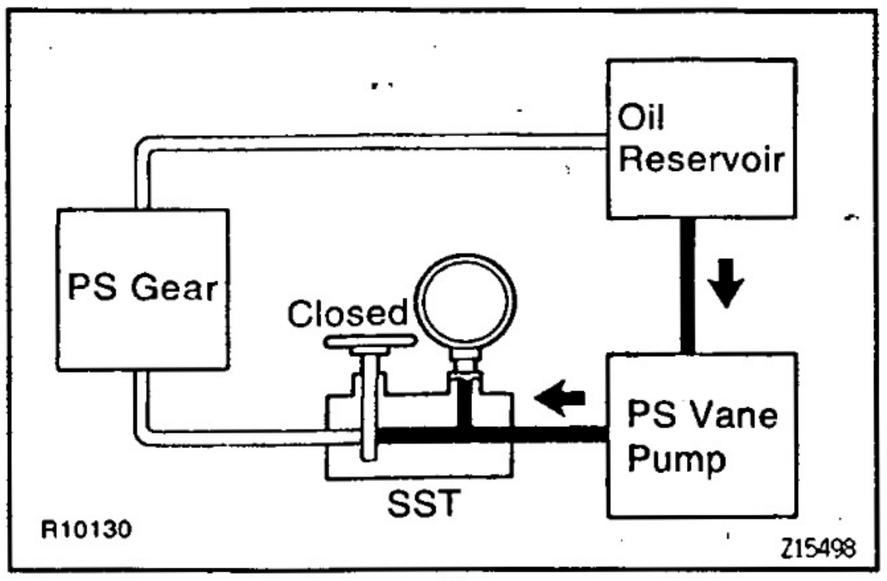

3. BOOST FLUID TEMPERATURE

(a) Start the engine and run it at idle.

(b) Turn the steering wheel from lock to lock several times to boost fluid temperature.

Fluid temperature: 80 °C (176 °F)

4. CHECK FLUID PRESSURE READING WITH VALVE CLOSED

With the engine idling, close the valve of the SST and observe the reading on the SST.

3L Engine:

	Fluid pressure kPa (kgf/cm², psi)
Minimum	7,355 (75, 1,067)

3RZ–F, 3RZ–FE and 5VZ–FE Engines:

	Fluid pressure kPa (kgf/cm², psi)
Minimum	8,335 (85, 1,209)

1KZ–T and 1KZ–TE Engines:

	Fluid pressure kPa (kgf/cm², psi)
Minimum	8,826 (90, 1,280)

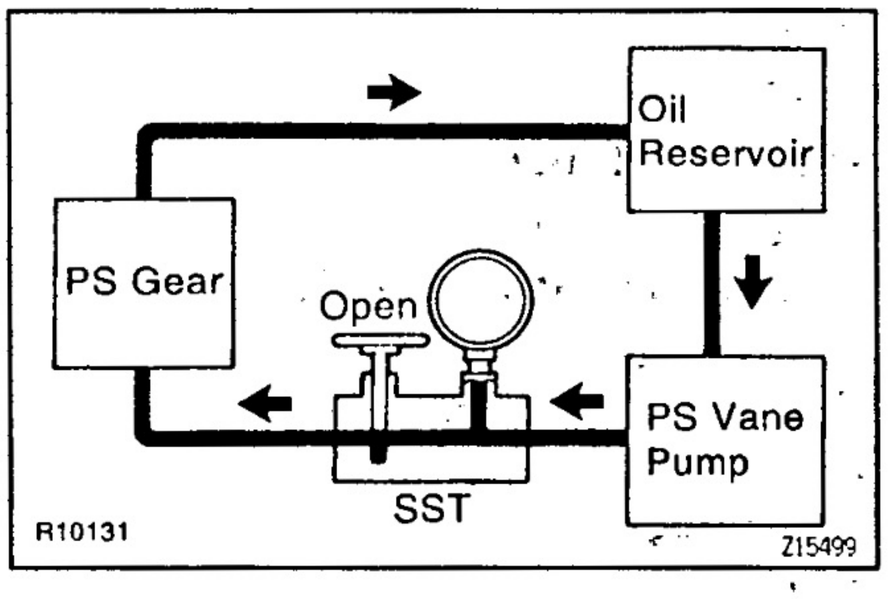

NOTICE:

- **Do not keep the valve closed for more than 10 seconds.**
- **Do not let the fluid temperature become too high.**

5. CHECK FLUID PRESSURE READING WITH VALVE OPENED

(a) With the engine idling, open the valve fully.

(b) Measure the fluid pressure at engine speeds of 1,000 rpm and 3,000 rpm.

	Fluid pressure kPa (kgf/cm², psi)
Difference	490 (5, 71) or less

NOTICE: Do not turn the steering wheel.

SR

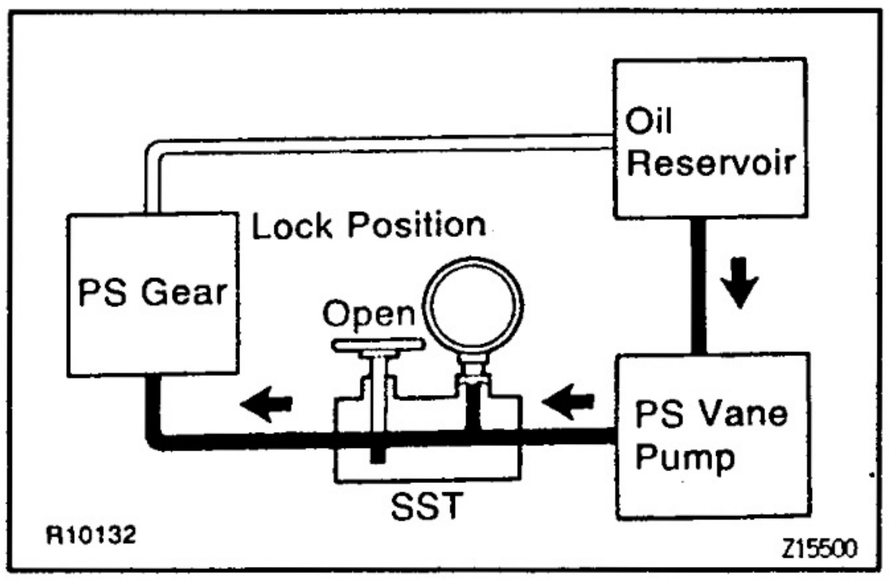

6. CHECK FLUID PRESSURE READING WITH STEERING WHEEL TURNED TO FULL LOCK

With the engine idling and valve fully opened, turn the wheel to full lock.

3L Engine:

	Fluid pressure kPa (kgf/cm², psi)
Minimum	7,355 (75, 1,067)

3RZ–F, 3RZ–FE and 5VZ–FE Engines:

	Fluid pressure kPa (kgf/cm², psi)
Minimum	8,335 (85, 1,209)

1KZ–T and 1KZ–TE Engines:

	Fluid pressure kPa (kgf/cm², psi)
Minimum	8,826 (90, 1,280)

NOTICE:

- **Do not maintain the valve in the lock position for more than 10 seconds.**
- **Do not let the fluid temperature become too high.**

7. DISCONNECT SST

(a) Disconnect the SST.

(b) Connect the pressure feed tube.
3L Engine: (See page SR–38)
3RZ–F, 3RZ–FE Engines: (See page SR–46)
5VZ–FE Engine: (See page SR–54)
1KZ–T, 1KZ–TE Engines: (See page SR–63)

(c) 5VZ–FE Engine:
Install the air cleaner assembly.
(See page SR–54)

(d) 1KZ–T and 1KZ–TE Engines:
Install the front fender apron seal.
(See page SR–63)

8. BLEED POWER STEERING SYSTEM
(See page SR–11)

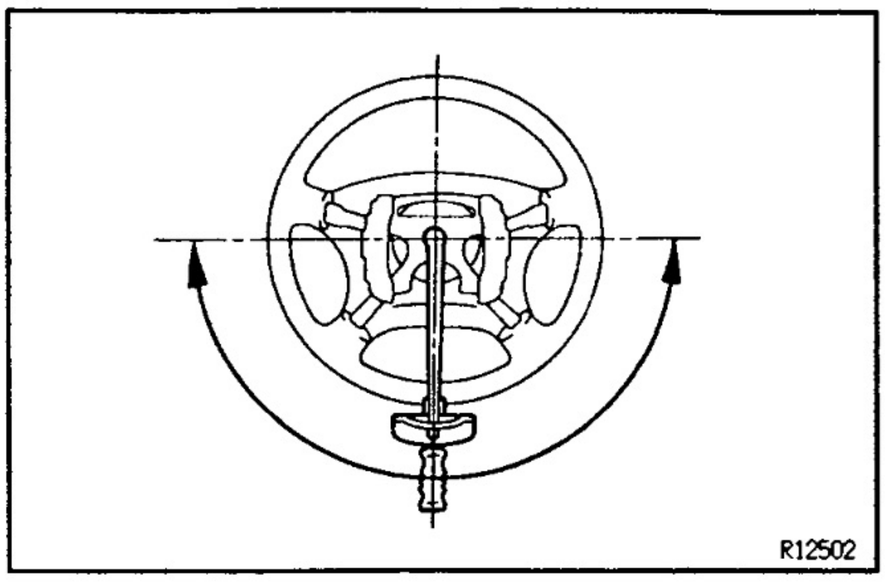

SR160–0A

STEERING EFFORT MEASUREMENT

1. **CENTER STEERING WHEEL**
2. **MEASURE STEERING EFFORT**

(a) Remove the steering wheel pad.
(See page SR–18)

(b) Start the engine and run it at idle.

(c) Measure the steering effort in both directions.
Reference:
7.8 N·m (80 kgf·cm, 69 in.·lbf)
HINT: Be sure to consider the tire type, pressure and contact surface before making your diagnosis.

(d) Torque the steering wheel set nut.
Torque: 35 N·m (360 kgf·cm, 26 ft·lbf)

(e) Install the steering wheel pad.
(See page SR–24)

NON–TILT STEERING COLUMN

COMPONENTS

8R1U2–02

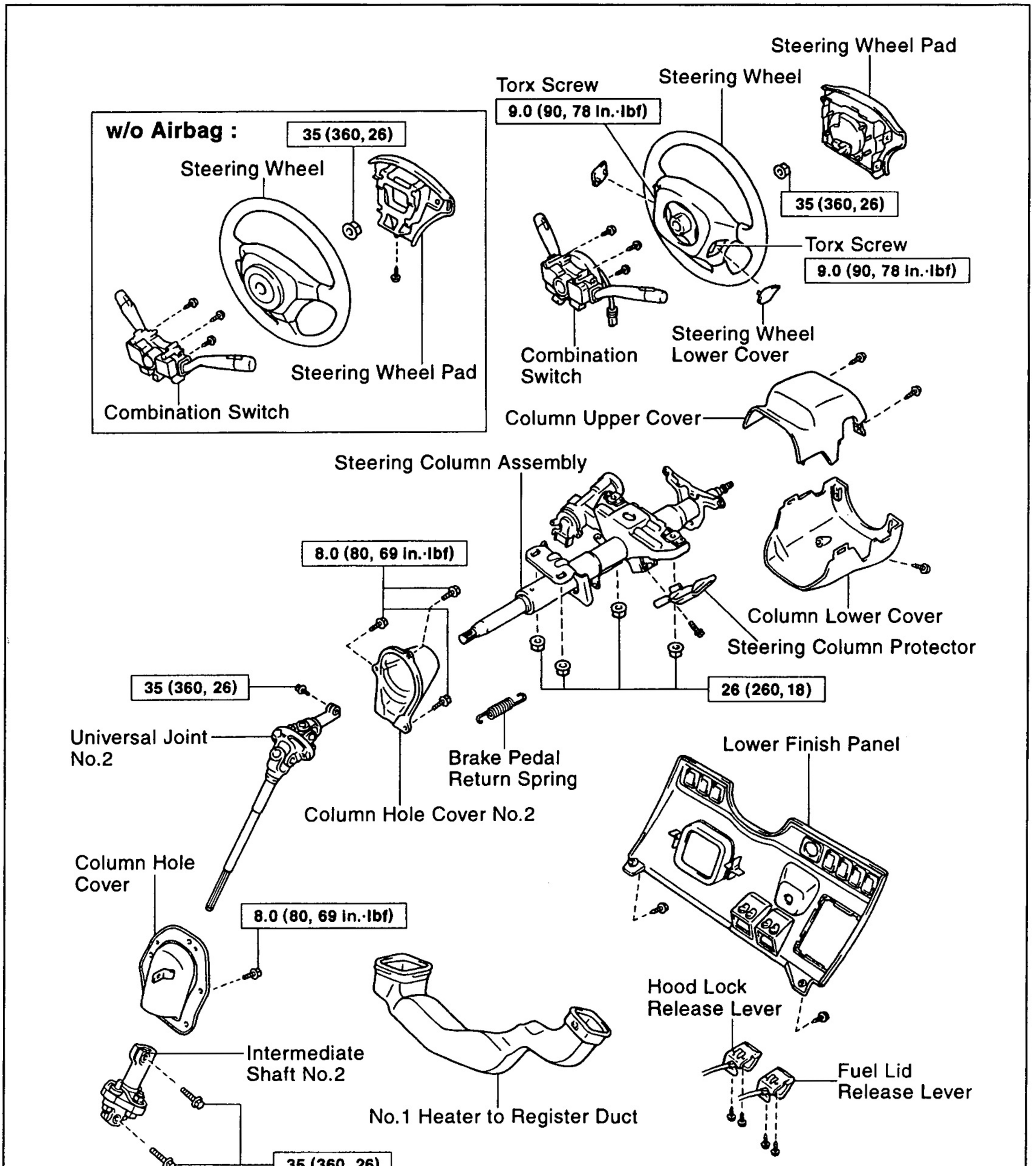

SR

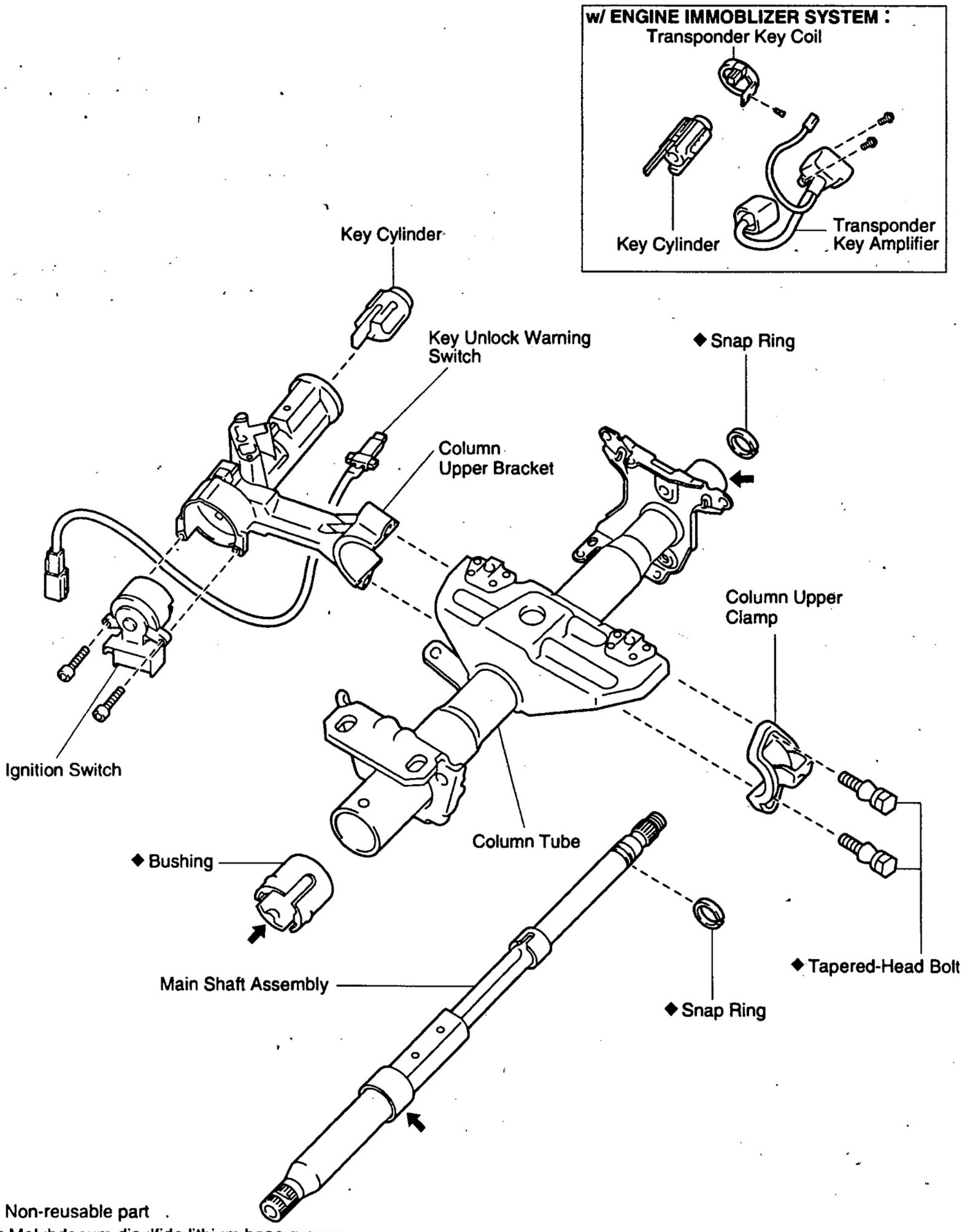
w/ ENGINE IMMOBLIZER SYSTEM :
Transponder Key Coil
Key Cylinder
Transponder Key Amplifier
Key Cylinder
Key Unlock Warning Switch
◆ Snap Ring
Column Upper Bracket
Column Upper Clamp
Ignition Switch
Column Tube
◆ Bushing
◆ Tapered-Head Bolt
Main Shaft Assembly
◆ Snap Ring
◆ Non-reusable part
⬅ Molybdenum disulfide lithium base grease

T

SR1Y2–01

NON–TILT STEERING COLUMN REMOVAL

1. REMOVE STEERING WHEEL PAD

w/ Airbag:

NOTICE:

- **If the airbag connector is disconnected with the ignition switch at ON or ACC, DTCs will be recorded.**
- **Never use airbag parts from another vehicle. When replacing parts, replace with new parts.**

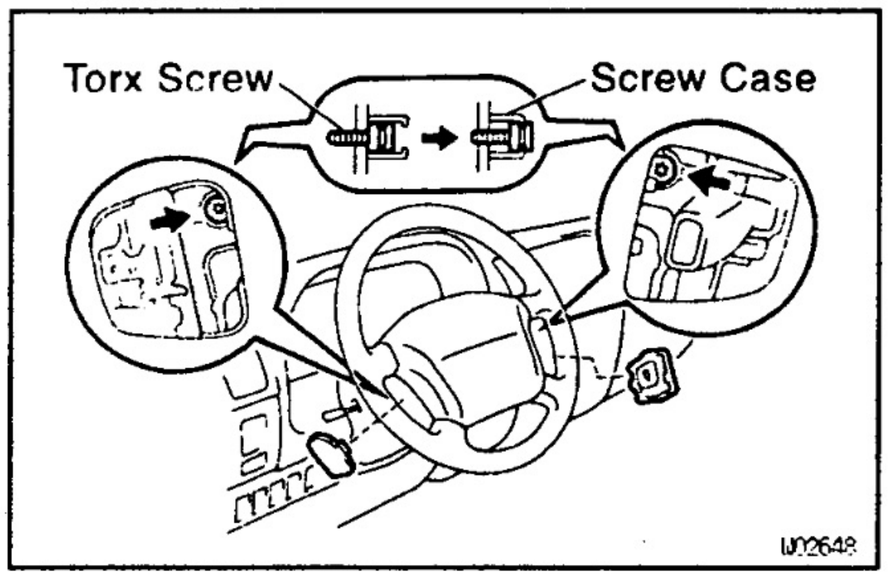

(a) Place the front wheels facing straight ahead.
(b) Remove the 2 steering wheel lower covers.
(c) Using a torx socket wrench, loosen the 2 torx screws.
HINT: Loosen the screw until the groove along the screw circumference catches on the screw case.

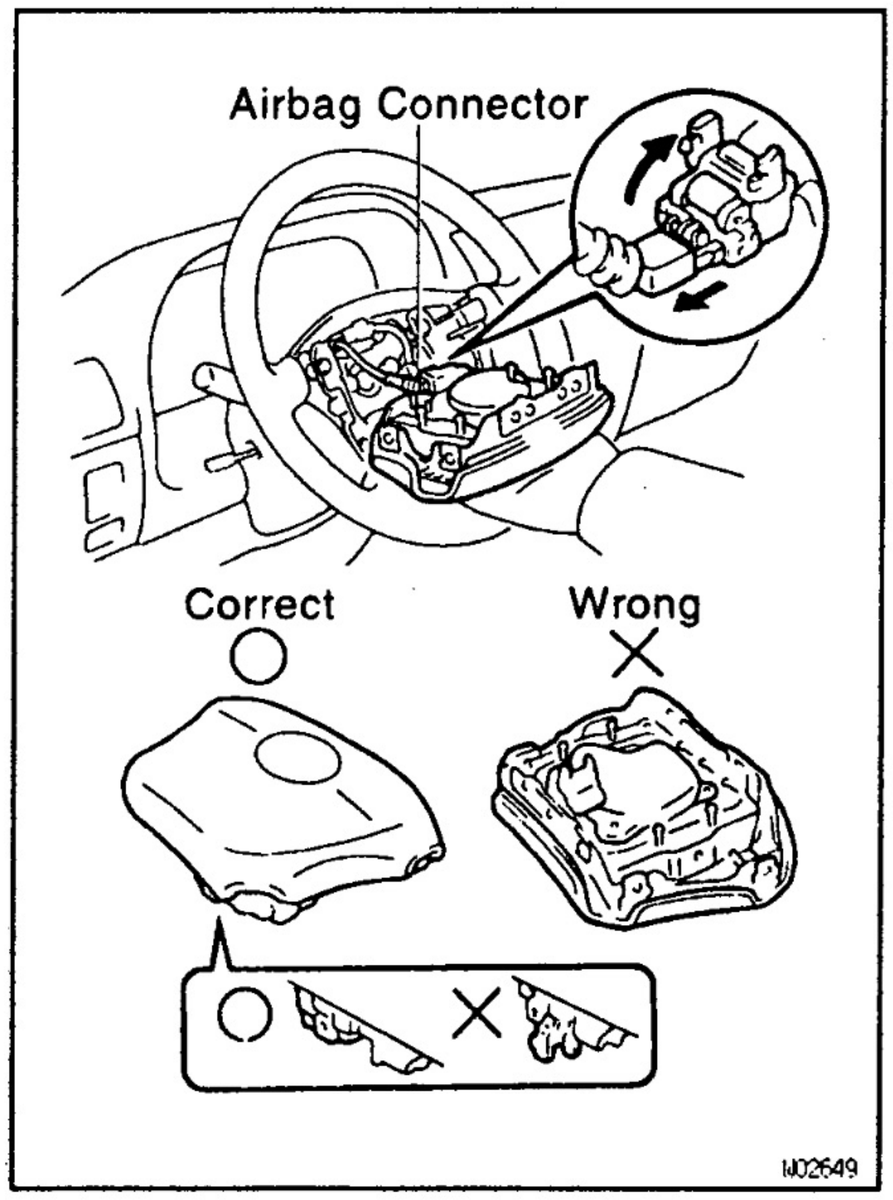

(d) Pull out the wheel pad from the steering wheel and disconnect the airbag connector.

CAUTION:

- **When storing the wheel pad, keep the upper surface of the pad facing upward.**
- **Never disassemble the wheel pad.**

NOTICE: When removing the wheel pad, take care not to pull the airbag wire harness.

w/o Airbag:

(a) Remove the screw.
(b) Remove the pad.
(c) Disconnect the terminal.

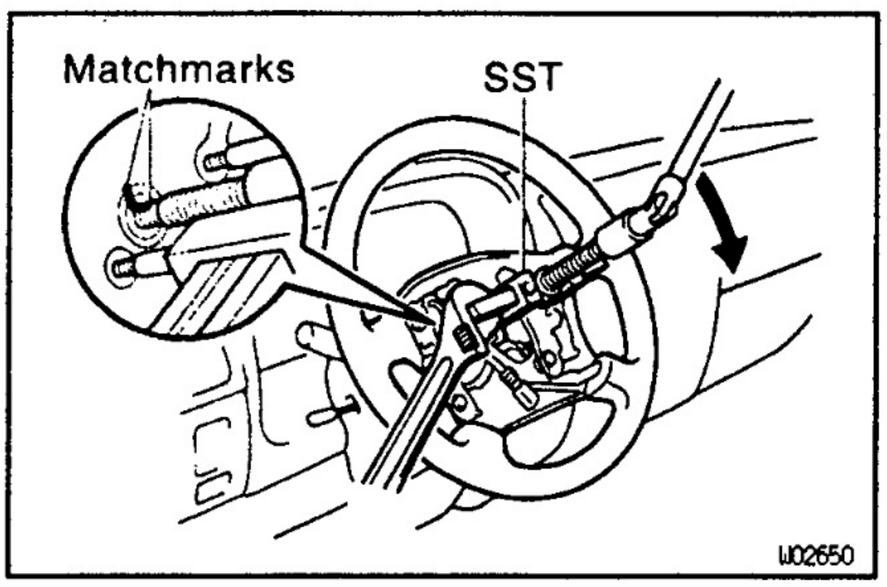

2. REMOVE STEERING WHEEL

(a) Disconnect the connector.
(b) Remove the steering wheel set nut.
(c) Place matchmarks on the steering wheel and main shaft assembly.
(d) Using SST, remove the wheel.
SST 09950–50010 (09951–05010, 09952–05010, 09953–05020, 09954–05020)

3. REMOVE UPPER AND LOWER COLUMN COVERS
Remove the 3 screws.

4. REMOVE LOWER FINISH PANEL

(a) Remove the 2 screws and disconnect the hood lock release lever from the panel.

(b) Remove the 2 screws and disconnect the fuel lid release lever from the panel.

(c) Remove the 2 panel set screws.

5. REMOVE STARTER SWITCH BEZEL

6. REMOVE NO.1 HEATER TO REGISTER DUCT

7. REMOVE COMBINATION SWITCH WITH SPIRAL CABLE

(a) Disconnect the 2 connectors.

(b) w/ Airbag:
Disconnect the airbag connector.

(c) Remove the 3 screws.

8. w/ Airbag:
REMOVE SPIRAL CABLE
(See page BE–15)
NOTICE: Do not disassemble the cable or apply oil to it.

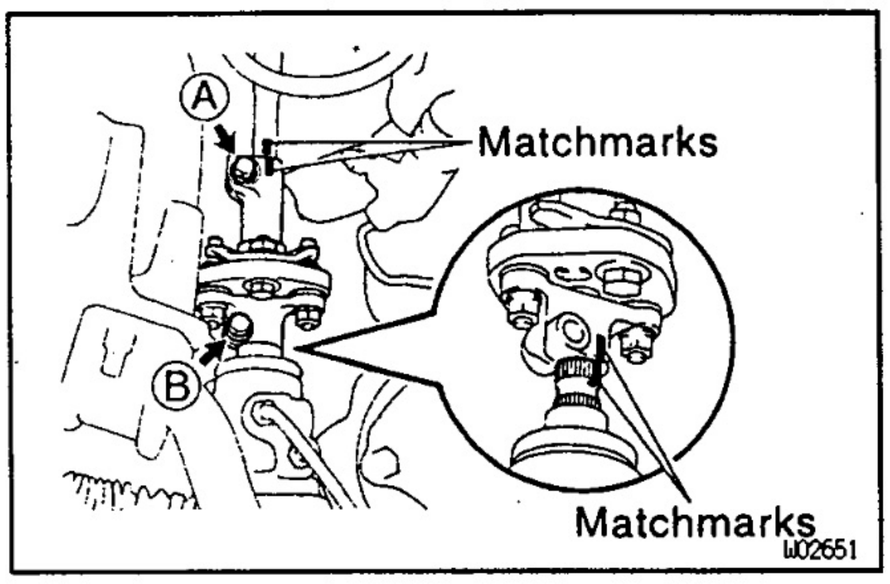

9. REMOVE BRAKE PEDAL RETURN SPRING

10. REMOVE INTERMEDIATE SHAFT NO.2

(a) Place matchmarks on the universal joint No.2 and intermediate shaft No.2.

(b) Remove the A bolt.

(c) Place matchmarks on the intermediate shaft No.2 and control valve shaft.

(d) Remove the B bolt.

(e) Slide the intermediate shaft No.2 and remove the intermediate shaft No.2.

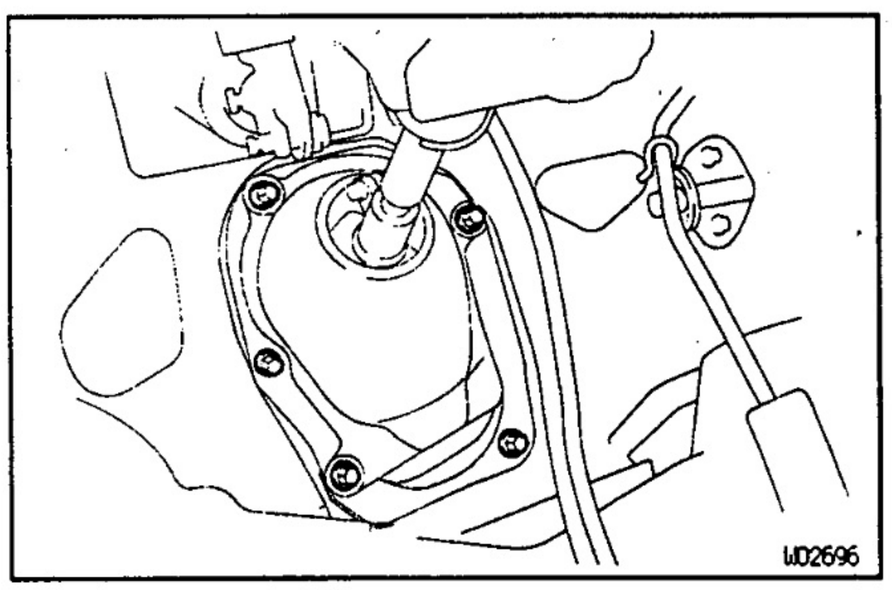

11. REMOVE COLUMN HOLE COVER AND COLUMN HOLE COVER NO.2
Remove the 5 bolts.

12. REMOVE STEERING COLUMN PROTECTOR
Remove the bolt.

13. REMOVE STEERING COLUMN ASSEMBLY WITH UNIVERSAL JOINT NO.2

(a) Disconnect the connectors.

(b) Remove 4 column assembly set nuts.

(c) Pull out the column assembly with universal joint No. 2.

14. DISCONNECT UNIVERSAL JOINT NO.2

(a) Place matchmarks on the column assembly and universal joint No.2.

(b) Remove the bolt.

(c) Remove the column hole cover and column hole cover No.2.

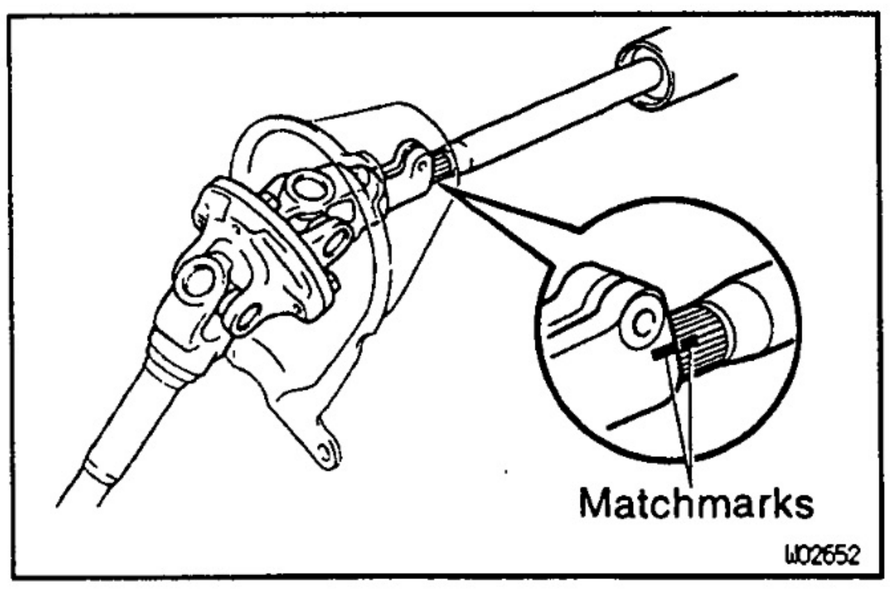

SR

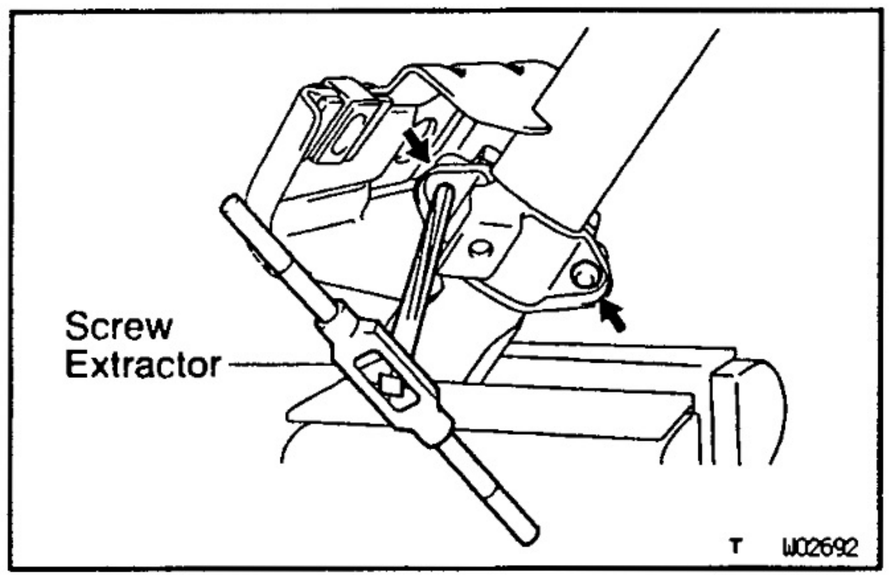

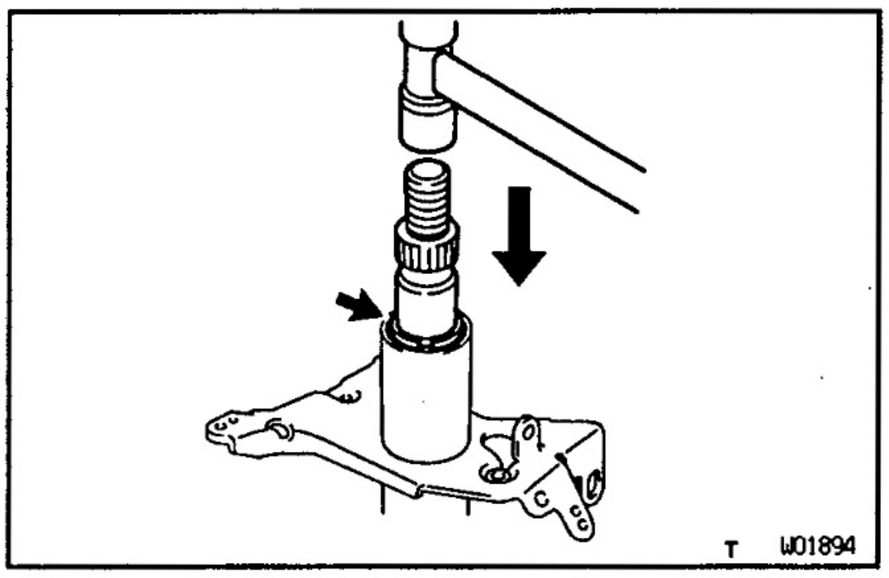

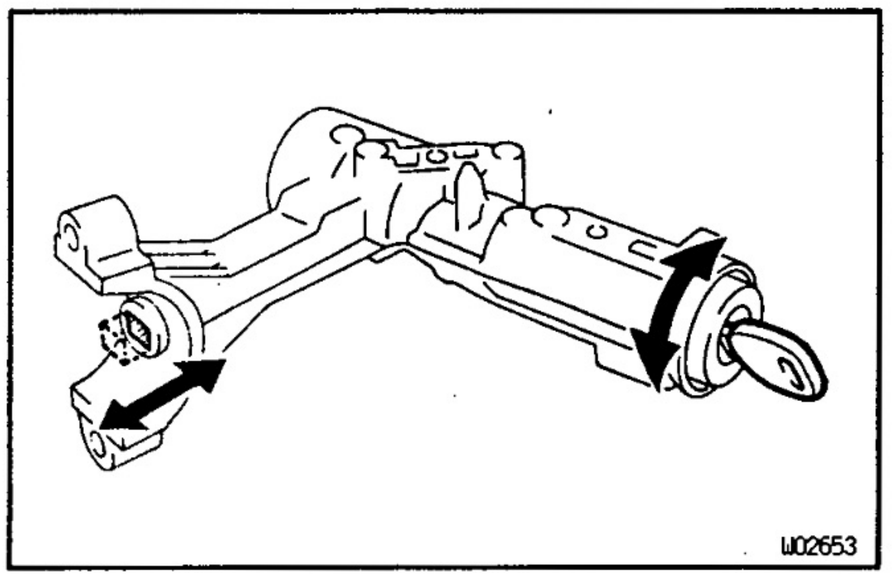

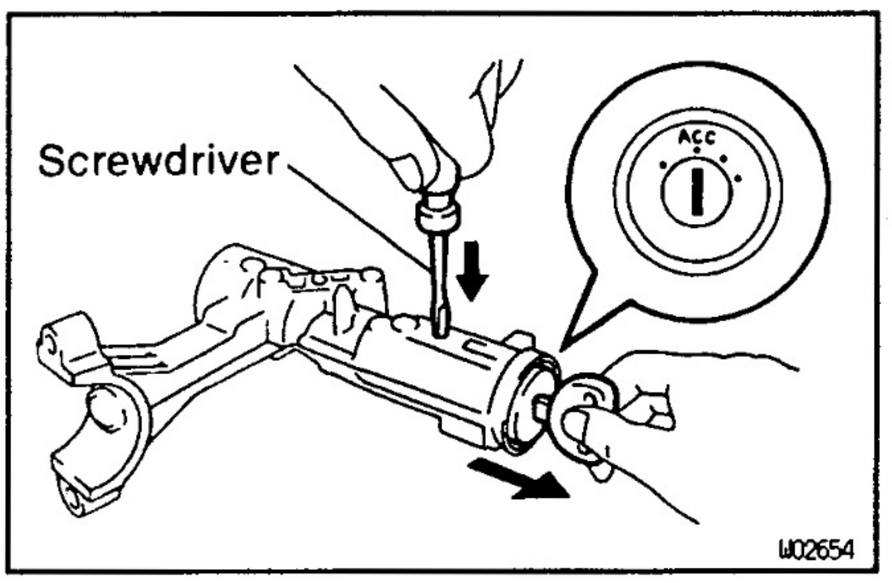

SR1U4-02

NON–TILT STEERING COLUMN DISASSEMBLY

NOTICE: When using a vise, do not overtighten it.

1. REMOVE COLUMN UPPER BRACKET AND COLUMN UPPER CLAMP

(a) Using a centering punch, mark the center of the 2 tapered–head bolts.

(b) Using a 3–4 mm (0.12–0.16 in.) drill, drill into the 2 bolts.

(c) Using a screw extractor, remove the 2 bolts.

2. REMOVE MAIN SHAFT ASSEMBLY

(a) Using a snap ring expander, remove the snap ring from the shaft assembly.

(b) Using a plastic hammer, tap out the shaft from the column tube.

(c) Using a snap ring expander, remove the snap ring from the shaft assembly.

SR1Y7-01

NON–TILT STEERING COLUMN INSPECTION AND REPLACEMENT

NOTICE: When using a vise, do not overtighten it.

1. INSPECT STEERING LOCK OPERATION

Check that the steering lock mechanism operates properly.

2. IF NECESSARY, REPLACE KEY CYLINDER

(a) Place the ignition key at the ACC position.

(b) Using a screwdriver, push down the stop pin of the cylinder, and pull out the key cylinder.

(c) Install a new cylinder.

HINT: Make sure the key is at the ACC position.

3. INSPECT IGNITION SWITCH
(See page BE—7)

4. IF NECESSARY, REPLACE IGNITION SWITCH

(a) Remove the 2 screws.

(b) Install a new switch with the 2 screws.

5. INSPECT KEY UNLOCK WARNING SWITCH
(See page BE—7)

6. IF NECESSARY, REPLACE KEY UNLOCK WARNING SWITCH

Install a new switch.

7. w/ ENGINE IMMOBILIZER SYSTEM:
INSPECT TRANSPONDER KEY COIL
(See page BE—92)

8. w/ ENGINE IMMOBILIZER SYSTEM:
IF NECESSARY, REPLACE TRANSPONDER KEY COIL

(a) Disconnect the connector.

(b) Remove the screw.

(c) Install a new key coil with the screw.

9. w/ ENGINE IMMOBILIZER SYSTEM:
IF NECESSARY, REPLACE TRANSPONDER KEY AMPLIFIER

(a) Remove the 2 screws.

(b) Install a new key amplifier with the 2 screws.

10. IF NECESSARY, REPLACE BUSHING

(a) Using a screwdriver, loosen the 3 projections of the bushing, and remove the bushing from the column tube.

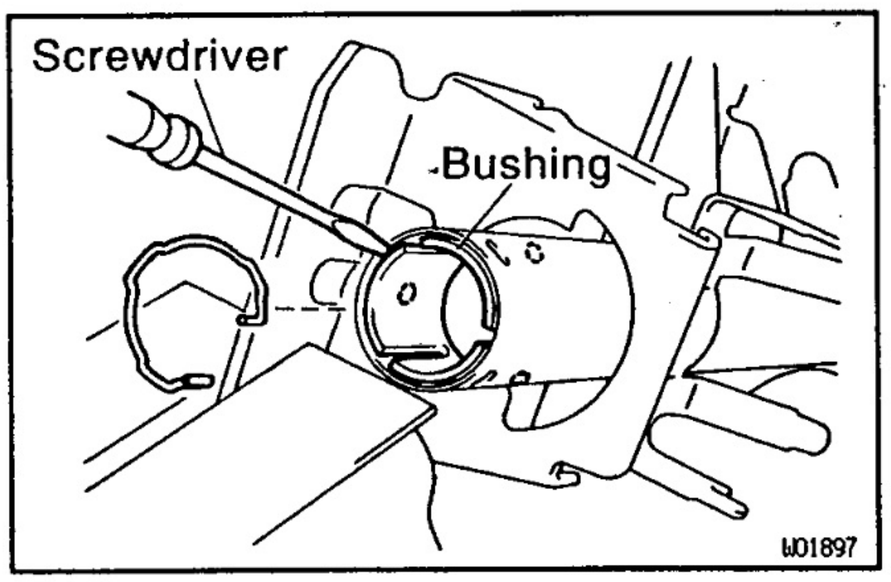

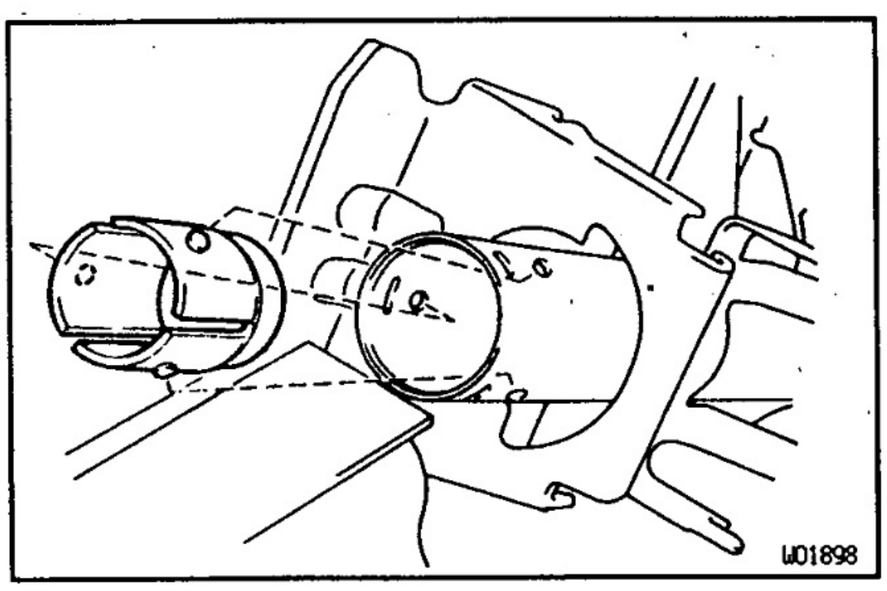

(b) Coat a new bushing with molybdenum disulfide lithium base grease.

(c) Align the projections on the bushing with the holes in the column tube, then install the bushing until the projections are firmly engaged in the holes.

SR

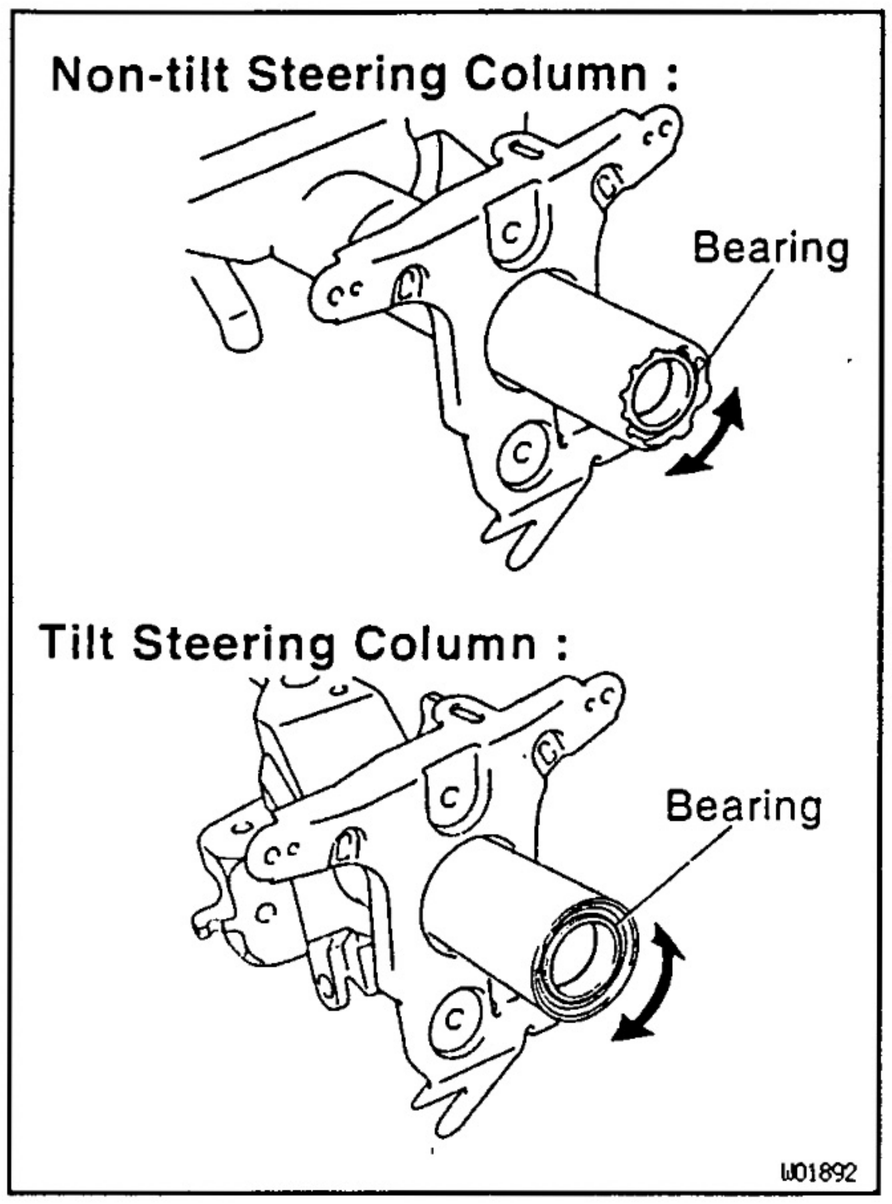

11. INSPECT BEARING

(a) Check the bearing rotation condition and check for abnormal noise.
If the bearing is worn or damaged, replace the column tube/column upper tube.

(b) Coat the bearing with molybdenum disulfide lithium base grease.

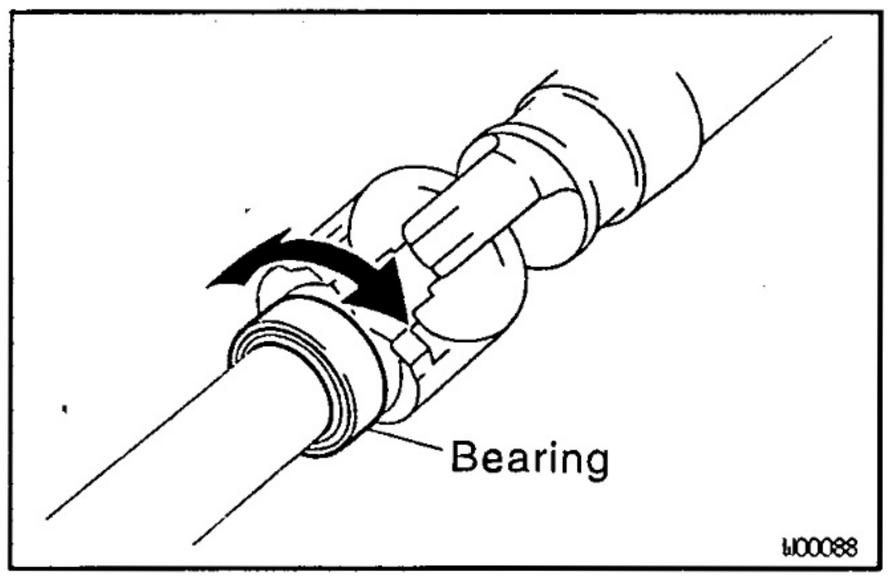

12. TILT STEERING COLUMN: INSPECT BEARING

(a) Check the bearing rotation condition of the main shaft assembly and check for abnormal noise.
If necessary, replace bearing.

(b) Coat the bearing with molybdenum disulfide lithium base grease.

SR

NON–TILT STEERING COLUMN ASSEMBLY

SR1U6-02

NOTICE: When using a vise, do not overtighten it.

1. COAT WITH MOLYBDENUM DISULFIDE LITHIUM BASE GREASE

(See page SR–17)

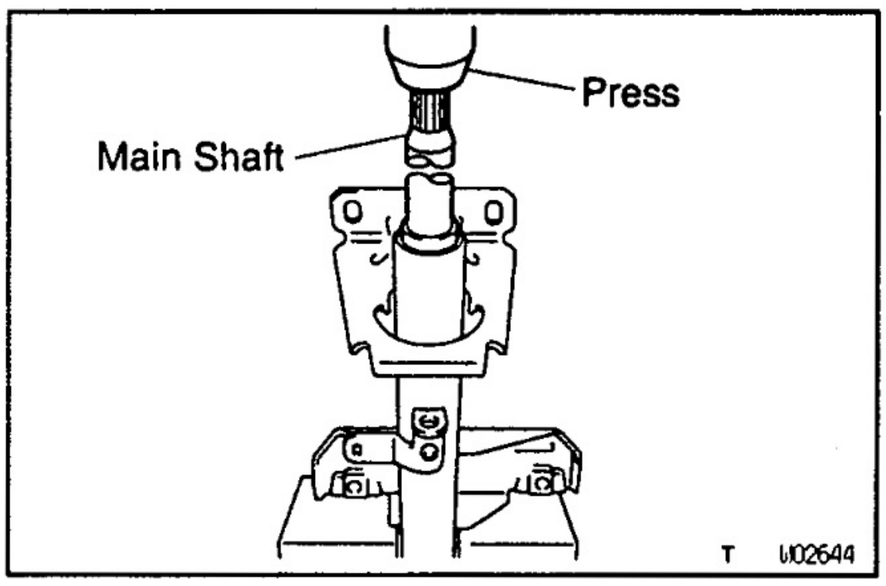

2. INSTALL MAIN SHAFT ASSEMBLY

(a) Using a snap ring expander, install a new snap ring to the shaft assembly.

(b) Install the main shaft assembly to the column tube.
If the shaft can not be installed by hand, use a press.
NOTICE: Do not apply too much pressure.

(c) Using a snap ring expander, install a new snap ring to the shaft assembly.

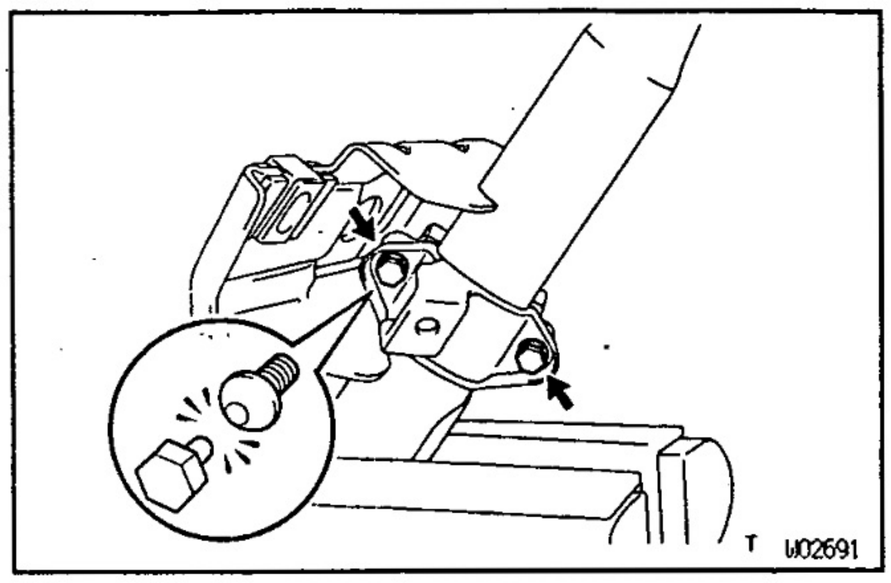

3. **INSTALL COLUMN UPPER BRACKET AND COLUMN UPPER CLAMP**

Tighten 2 new tapered–head bolts until the bolt head breaks off.

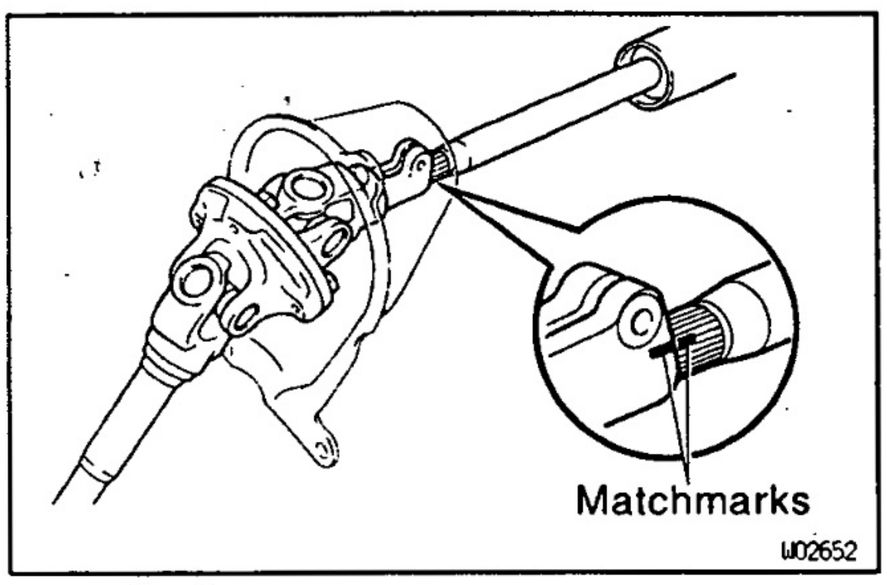

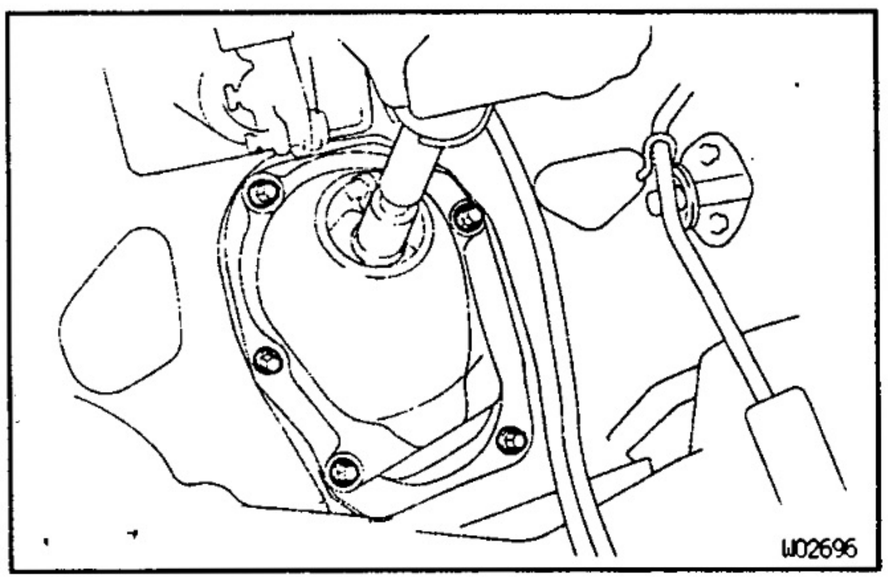

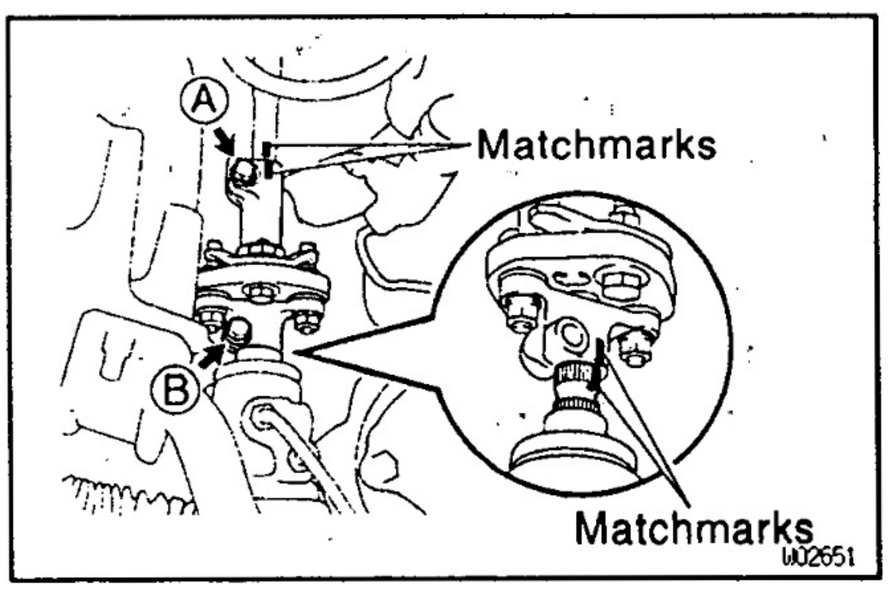

NON–TILT STEERING COLUMN INSTALLATION

1. **CONNECT UNIVERSAL JOINT NO.2**

(a) Insert the column hole cover and column hole cover No.2.

(b) Align the matchmarks on the column assembly and universal joint No.2.

(c) Torque the bolt.
Torque: 35 N·m (360 kgf·cm, 26 ft·lbf)

2. **INSTALL COLUMN ASSEMBLY WITH UNIVERSAL JOINT NO.2**

(a) Install the column assembly with universal joint No.2.

(b) Torque the 4 column assembly set nuts.
Torque: 26 N·m (260 kgf·cm, 18 ft·lbf)

(c) Connect the connectors.

3. **INSTALL STEERING COLUMN PROTECTOR**

Tighten the bolt.

4. **INSTALL COLUMN HOLE COVER AND COLUMN HOLE COVER NO.2**

Torque the 5 bolts.
Torque : 8.0 N·m (80 kgf·cm, 69 in.·lbf)

5. **INSTALL INTERMEDIATE SHAFT NO.2**

(a) Align the matchmarks on the universal joint No.2 and intermediate shaft No.2.

(b) Align the matchmarks on the control valve shaft and intermediate shaft No.2.

(c) Torque the A and B bolts.
Torque: 35 N·m (360 kgf·cm, 26 ft·lbf)

6. **INSTALL BRAKE PEDAL RETURN SPRING**

7. **w/ Airbag:**
INSTALL SPIRAL CABLE
(See page BE–15)

8. **INSTALL COMBINATION SWITCH WITH SPIRAL CABLE**

(a) Tighten the 3 screws.

(b) w/ Airbag:
Connect the airbag connector.

(c) Connect the 2 connectors.

SR

9. INSTALL STARTER SWITCH BEZEL

10. INSTALL LOWER FINISH PANEL

(a) Install the 2 panel set screws.

(b) Connect the hood lock release lever and fuel lid release lever with the 4 screws.

11. INSTALL UPPER AND LOWER COLUMN COVERS

Install the 3 screws.

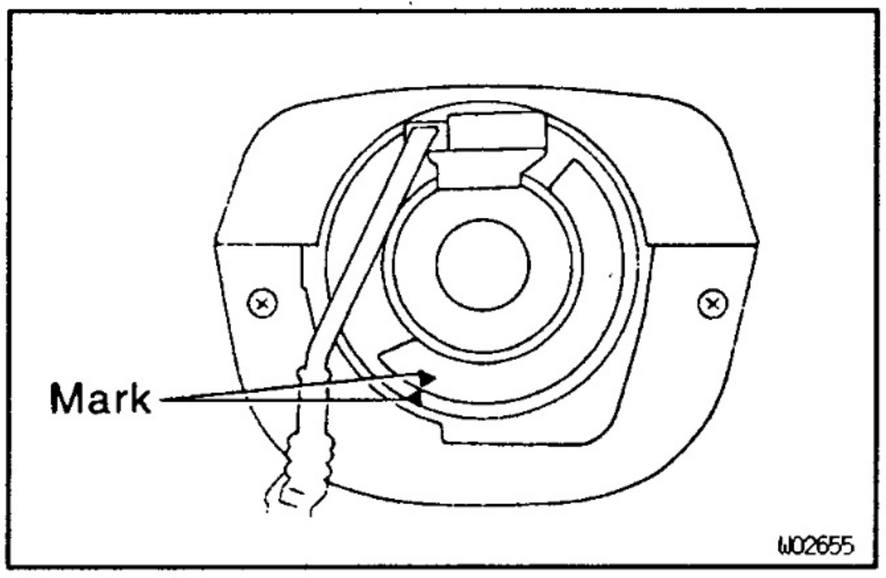

12. CENTER SPIRAL CABLE

(a) Check that the front wheels are facing straight ahead.

(b) Turn the cable counterclockwise by hand until it becomes harder to turn the cable.

(c) Then rotate the cable clockwise about 3 turns to align the mark.

HINT: The cable will rotate about 3 turns to either left or right of the center.

13. INSTALL STEERING WHEEL

(a) Align the matchmarks on the wheel and main shaft.

(b) Torque the wheel set nut.

Torque: 35 N·m (360 kgf·cm, 26 ft·lbf)

(c) Connect the connector.

14. INSTALL STEERING WHEEL PAD

w/ Airbag:

NOTICE:

- **Make sure the wheel pad is installed to the specified torque.**
- **If the wheel pad has been dropped, or there are cracks, dents or other defects in the case or connector, replace the wheel pad with a new one.**
- **When installing the wheel pad, take care that the wirings do not interfere with other parts and are not pinched between other parts.**

(a) Connect the airbag connector.

(b) Install the wheel pad after confirming that the circumference groove of the torx screw is caught on the screw case.

(c) Using a torx socket wrench, torque the 2 screws.

Torque: 9.0 N·m (90 kgf·cm, 78 in.·lbf)

(d) Install the 2 steering wheel lower covers.

w/o Airbag:

(a) Connect the terminal.

(b) Install the pad.

(c) Install the screw.

15. CHECK STEERING WHEEL CENTER POINT

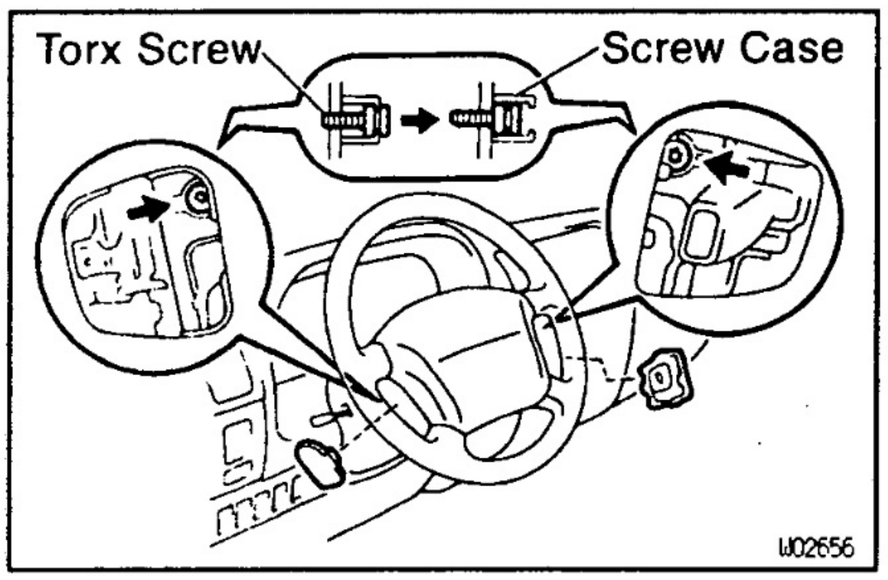

SR

TILT STEERING COLUMN
COMPONENTS

SR1U8-02

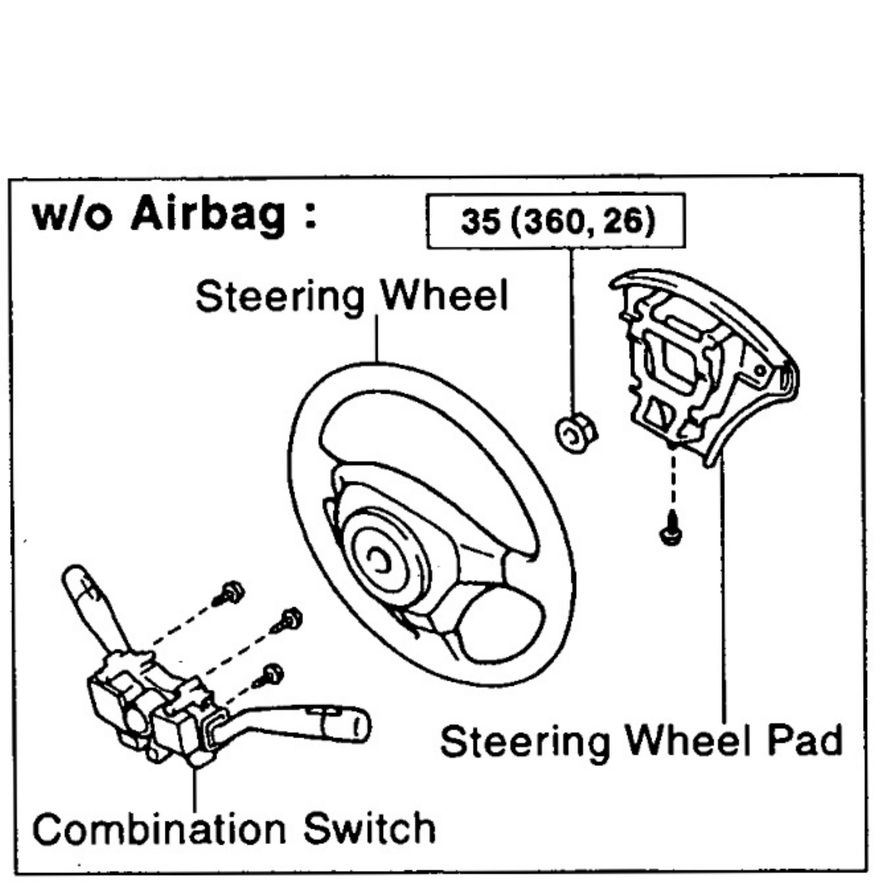

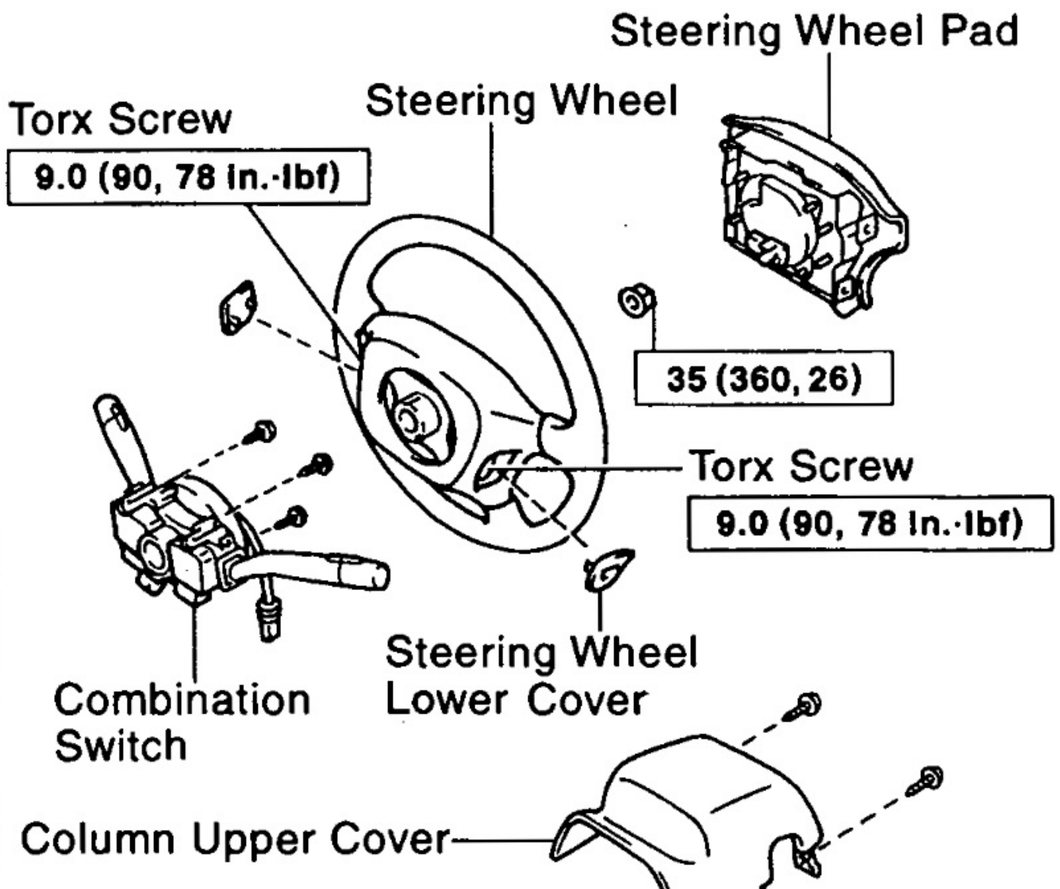

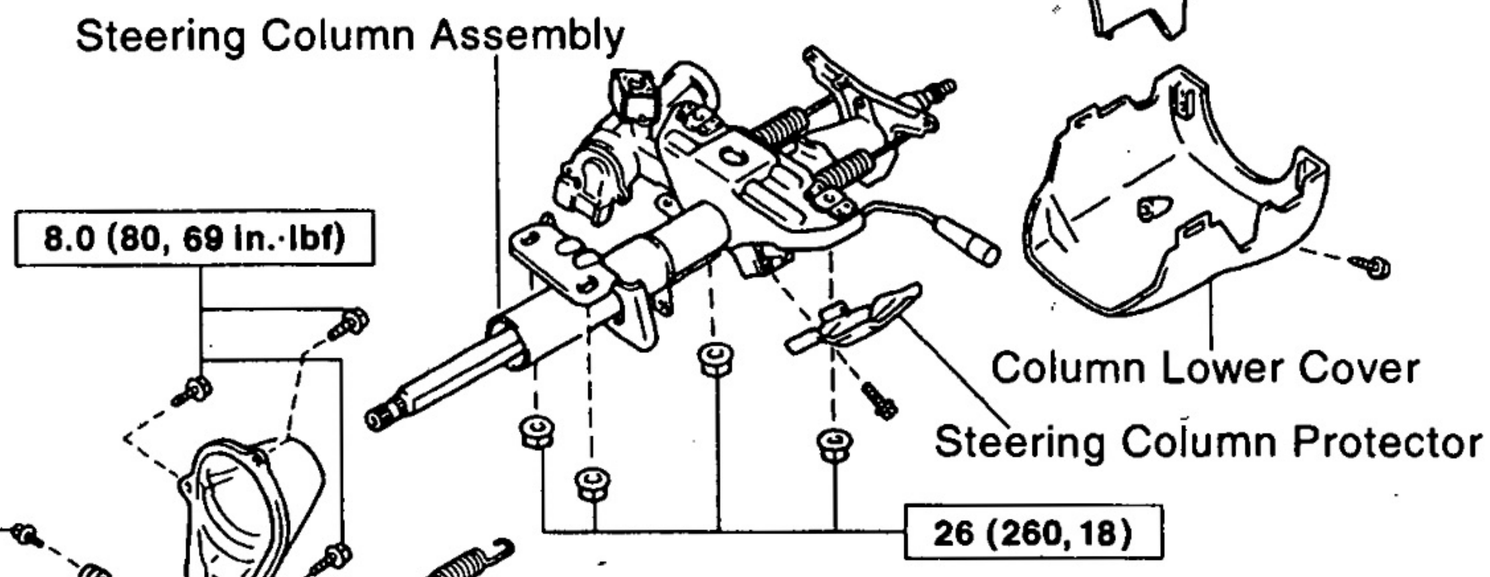

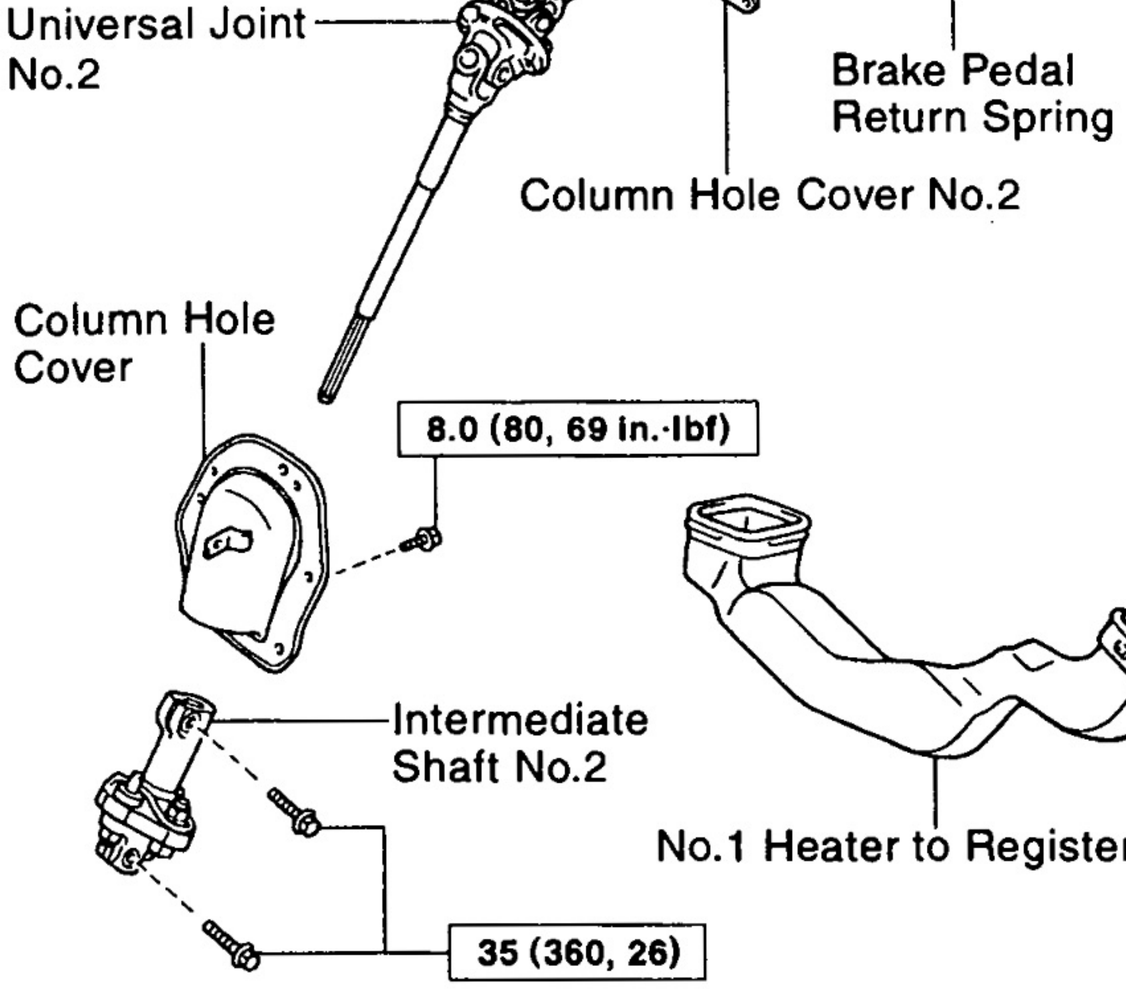

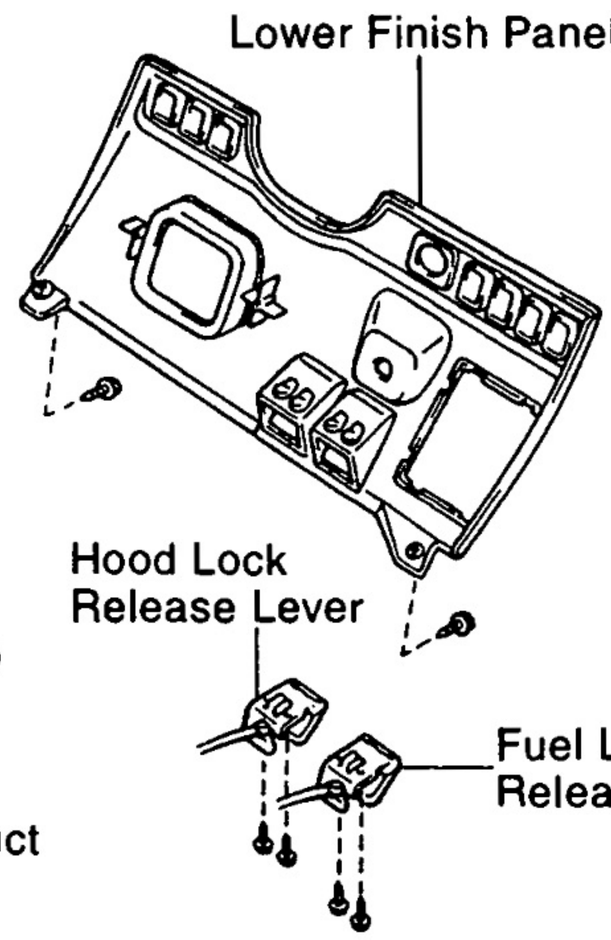

N·m (kgf·cm, ft·lbf) : Specified torque

W02689

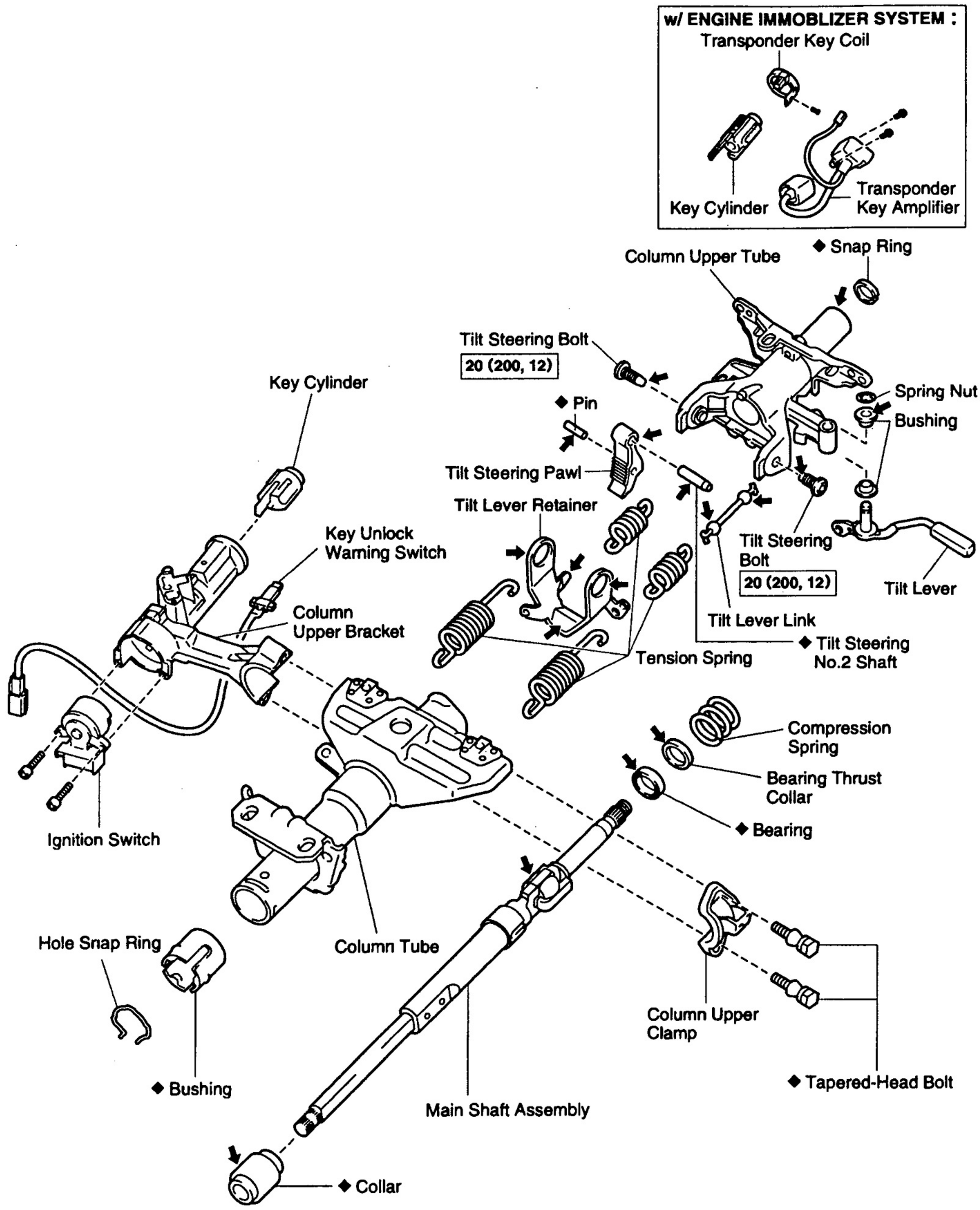

N·m (kgf·cm, ft·lbf): Specified torque
◆ Non-reusable part
⬅ Molybdenum disulfide lithium base grease

LI02695

TILT STEERING COLUMN REMOVAL

SR1U9-02

(See page SR–18)

TILT STEERING COLUMN DISASSEMBLY

SR1UA-02

NOTICE: When using a vise, do not overtighten it.

1. **REMOVE COLUMN UPPER BRACKET AND COLUMN UPPER CLAMP**
(See page SR–20)
2. **REMOVE 4 TENSION SPRINGS**
HINT: Remove the springs with the tilt function at maximum tilt up.

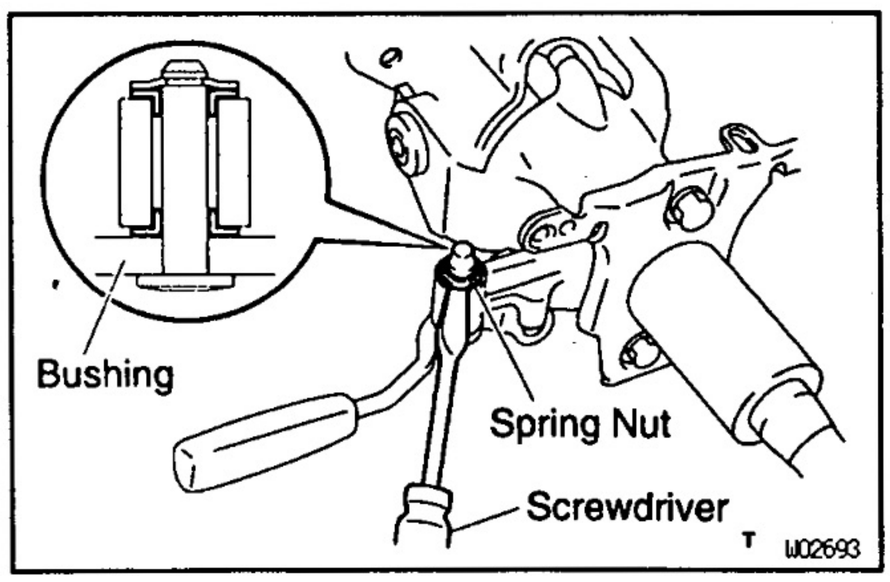

3. **REMOVE TILT LEVER**
(a) Using a screwdriver, remove the spring nut.
(b) Remove the lever.
(c) Remove the 2 bushings from the column upper tube.
4. **REMOVE TILT LEVER LINK**
5. **REMOVE COLUMN UPPER TUBE WITH MAIN SHAFT ASSEMBLY**
(a) Using a hexagon wrench, remove the 2 tilt steering bolts.
(b) Remove the upper tube with the shaft from the column tube.
6. **REMOVE TILT LEVER RETAINER**
7. **REMOVE MAIN SHAFT ASSEMBLY**
(a) Using SST, compress the compression spring.
SST 09950–40010 (09958–04010)
NOTICE: Do not bend the universal joint of the shaft more than 20°.

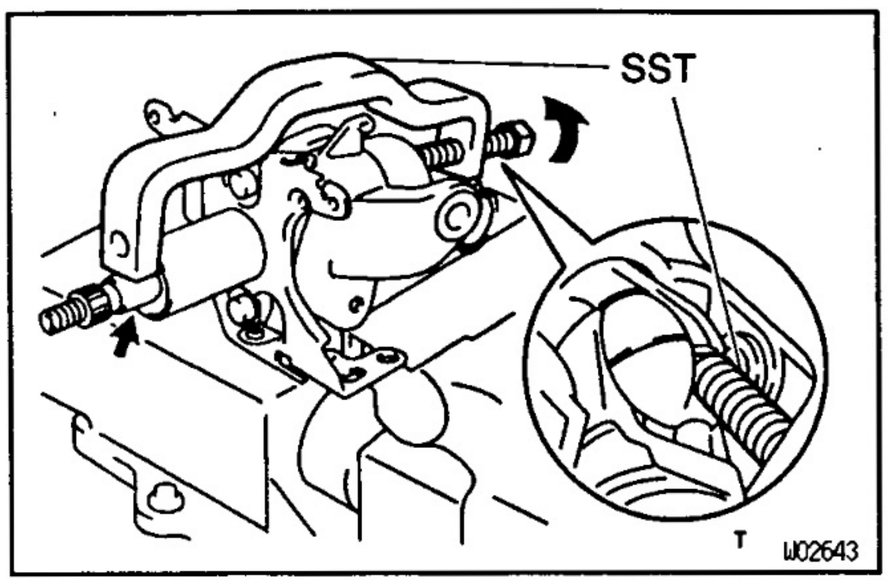

(b) Using a snap ring expander, remove the snap ring from the shaft assembly.
(c) Remove the shaft assembly from the column upper tube.
(d) Remove the compression spring and bearing thrust collar from the shaft assembly.
(e) Remove the collar from the shaft assembly.

SR

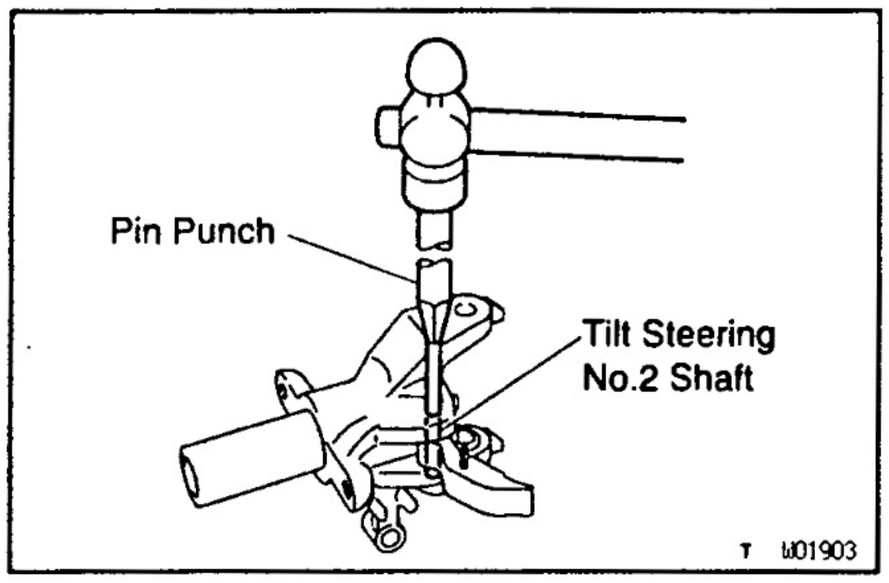

8. REMOVE TILT STEERING PAWL

Using a pin punch and hammer, tap out the tilt steering No.2 shaft.

TILT STEERING COLUMN INSPECTION AND REPLACEMENT (See page SR–20)

TILT STEERING COLUMN ASSEMBLY

NOTICE: When using a vise, do not overtighten it.

1. COAT WITH MOLYBDENUM DISULFIDE LITHIUM BASE GREASE

(See page SR–26)

2. INSTALL TILT STEERING PAWL

Using a plastic hammer, tap in a new tilt steering No. 2 shaft and install the pawl.

NOTICE: Tap the shaft completely into the steering column upper tube.

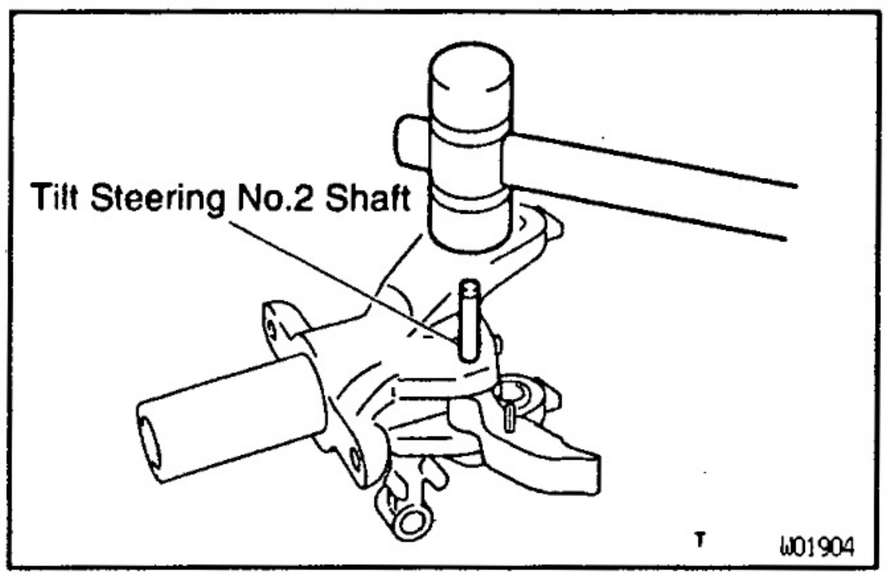

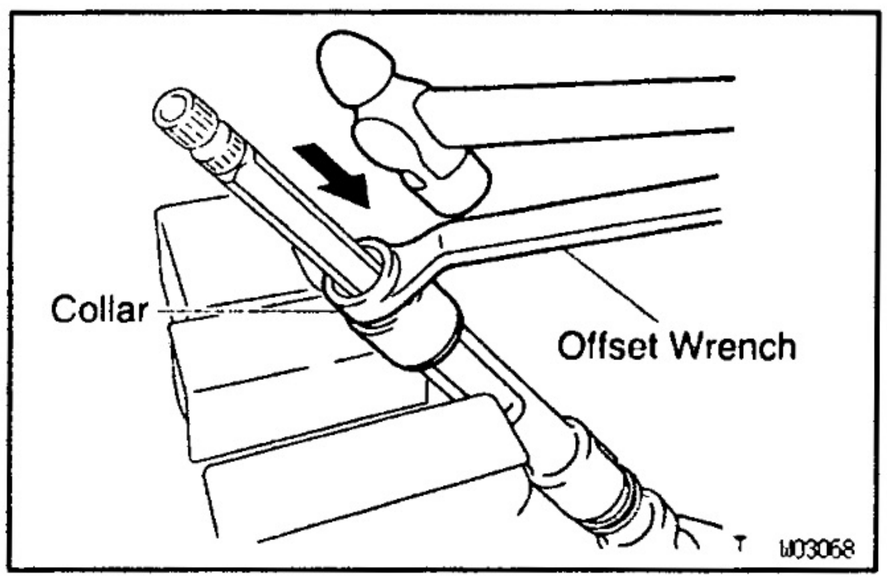

3. INSTALL MAIN SHAFT ASSEMBLY

(a) Using an offset wrench and hammer, drive in a new collar to the shaft assembly.

NOTICE: Be careful not to damage the collar.

(b) Install the bearing thrust collar and compression spring to the shaft assembly.

(c) Install the shaft assembly to the column upper tube.

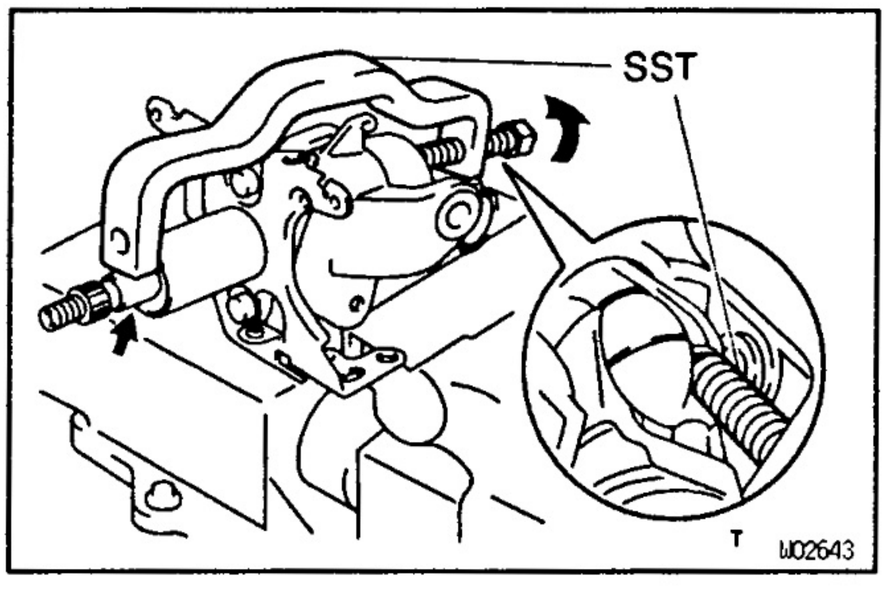

(d) Using SST, compress the compression spring.
SST 09950–40010 (09958–04010)

NOTICE: Do not bend the universal joint of the shaft more than 20°.

(e) Using a snap ring expander, install a new snap ring to the shaft assembly.

4. INSTALL TILT LEVER RETAINER

5. **INSTALL COLUMN UPPER TUBE WITH MAIN SHAFT ASSEMBLY**

(a) Install the upper tube with the shaft to the column tube.

(b) Using a hexagon wrench, torque the 2 tilt steering bolts.

Torque: 20 N·m (200 kgf·cm, 14 ft·lbf)

(c) Check that the upper tube turns smoothly.

6. **INSTALL TILT LEVER LINK**

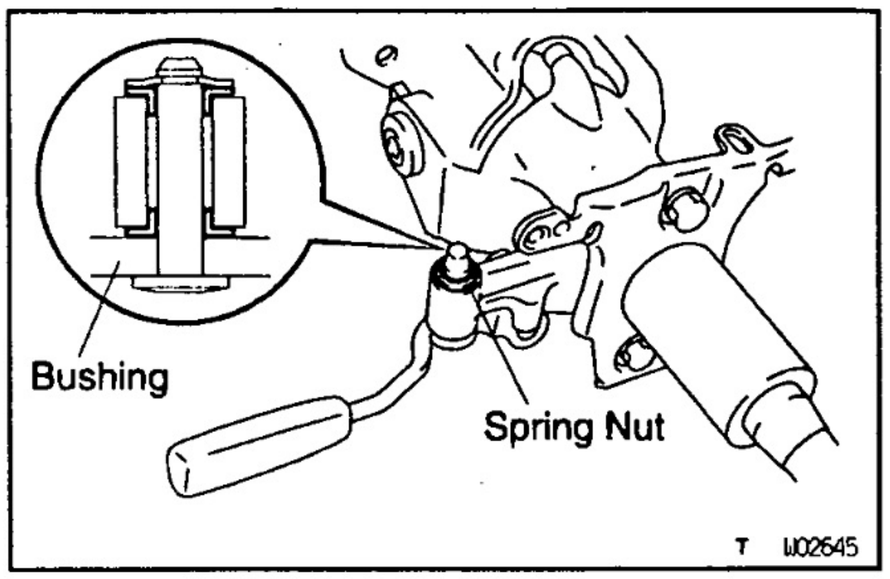

7. **INSTALL TILT LEVER**

(a) Install the 2 bushings to the column upper tube, as shown in the illustration.

(b) Install the lever, as shown in the illustration.

(c) Install a new spring nut to the lever.

8. **INSTALL 4 TENSION SPRINGS**

HINT: Install the springs with the tilt function at maximum tilt up.

9. **INSTALL COLUMN UPPER BRACKET AND COLUMN UPPER CLAMP**

(See page SR–23)

10. **CHECK TILT STEERING OPERATION**

(a) Check that there is no axial play at the end of the main shaft.

(b) With the main shaft in the neutral position, pull the tilt lever and check that the main shaft rises to the uppermost position.

(c) Lower the main shaft, and check that it locks in the lowermost position.

TILT STEERING COLUMN INSTALLATION

SR1UC-02

(See page SR–23)

POWER STEERING VANE PUMP (3L)

COMPONENTS

MR1XF–02

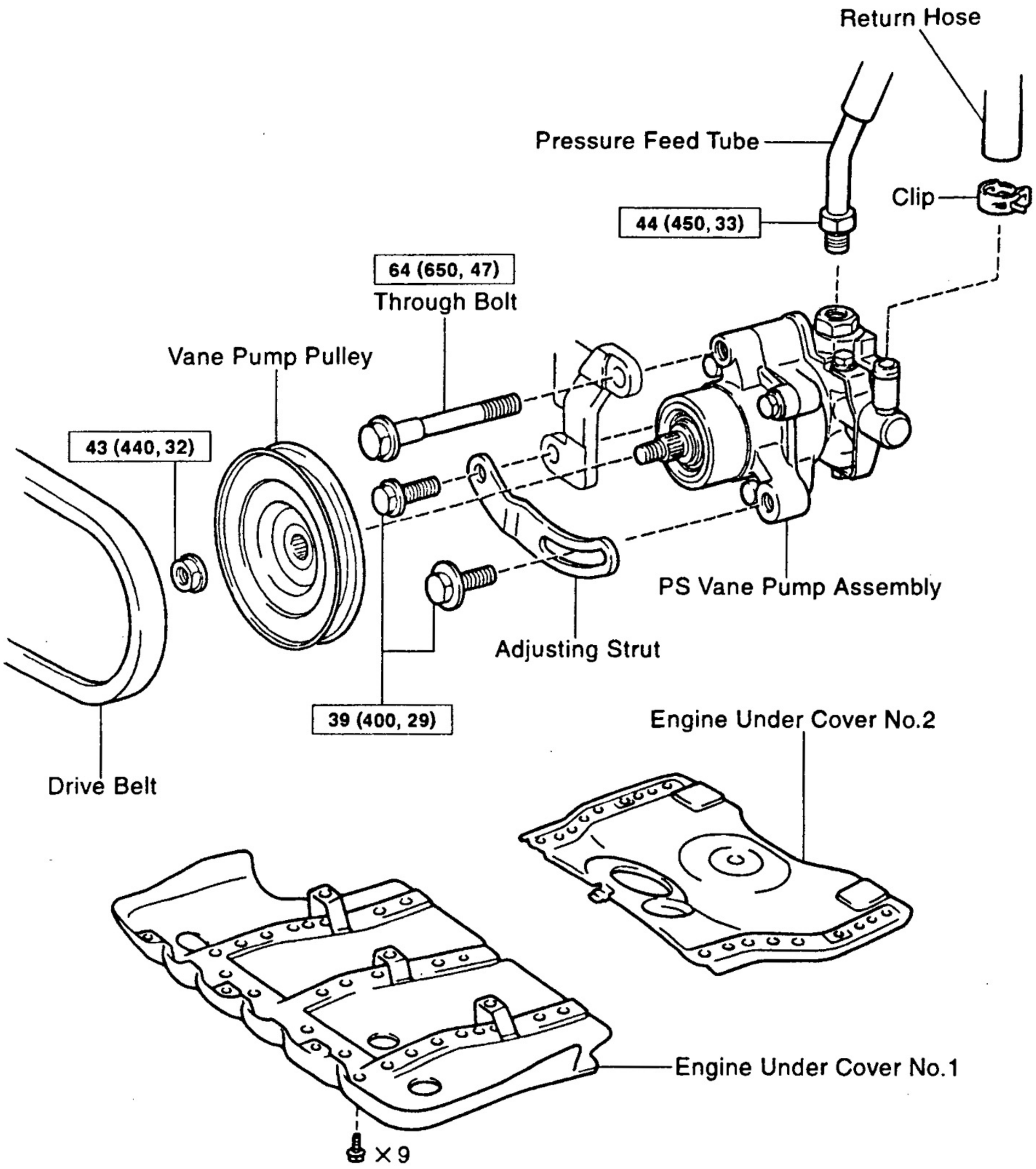

N·m (kgf·cm, ft·lbf) : Specified torque

I.02683

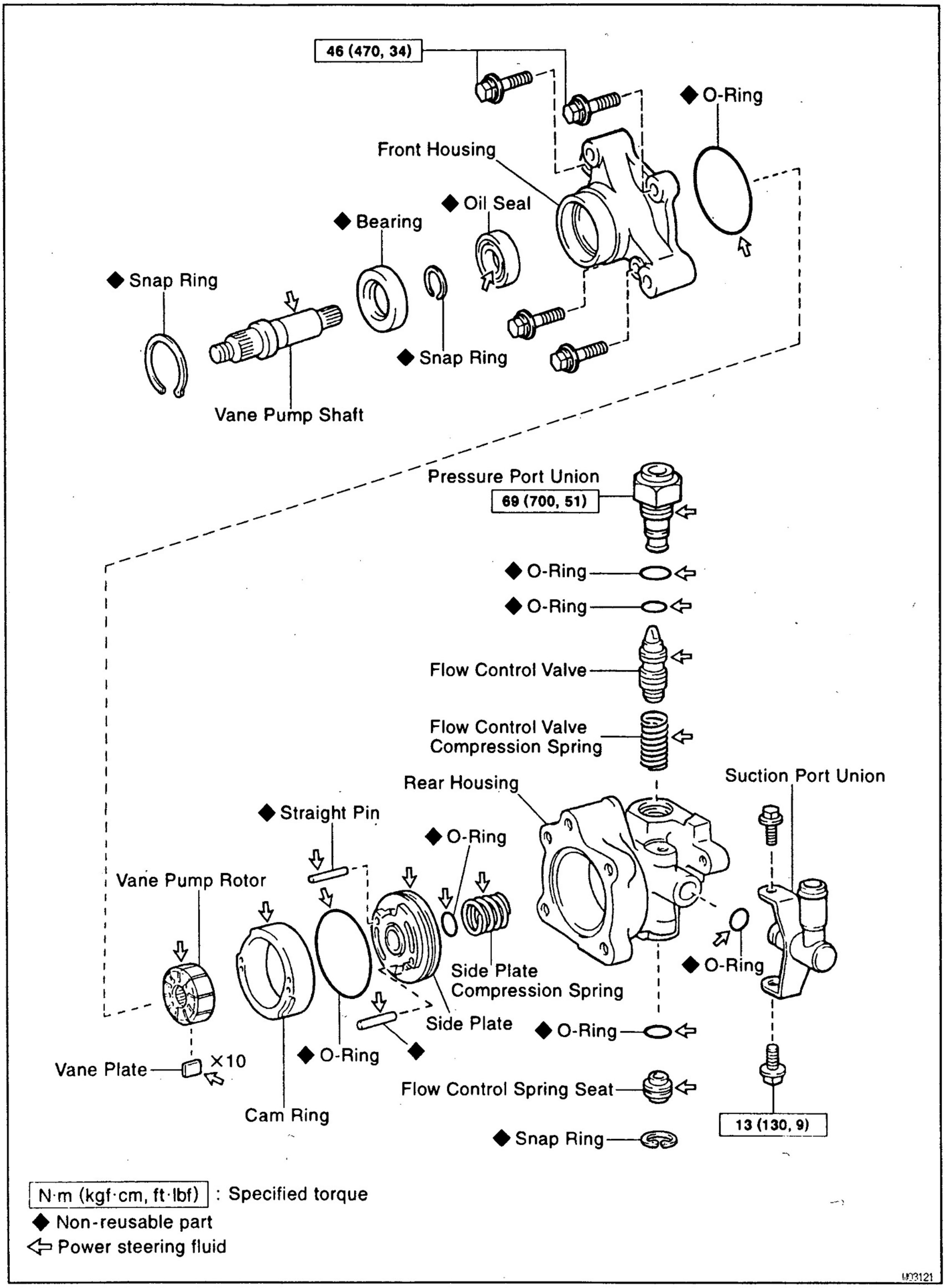
46 (470, 34)
◆ O-Ring
Front Housing
◆ Oil Seal
◆ Bearing
◆ Snap Ring
◆ Snap Ring
◆ Snap Ring
Vane Pump Shaft
Pressure Port Union
69 (700, 51)
◆ O-Ring
◆ O-Ring
Flow Control Valve
Flow Control Valve
Compression Spring
Rear Housing
Suction Port Union
◆ Straight Pin
◆ O-Ring
Vane Pump Rotor
Side Plate
Compression Spring
Side Plate
◆ O-Ring
◆ O-Ring
◆ O-Ring
Vane Plate
×10
Cam Ring
Flow Control Spring Seat
◆ Snap Ring
13 (130, 9)
N·m (kgf·cm, ft·lbf) : Specified torque
◆ Non-reusable part
⇦ Power steering fluid
U03121

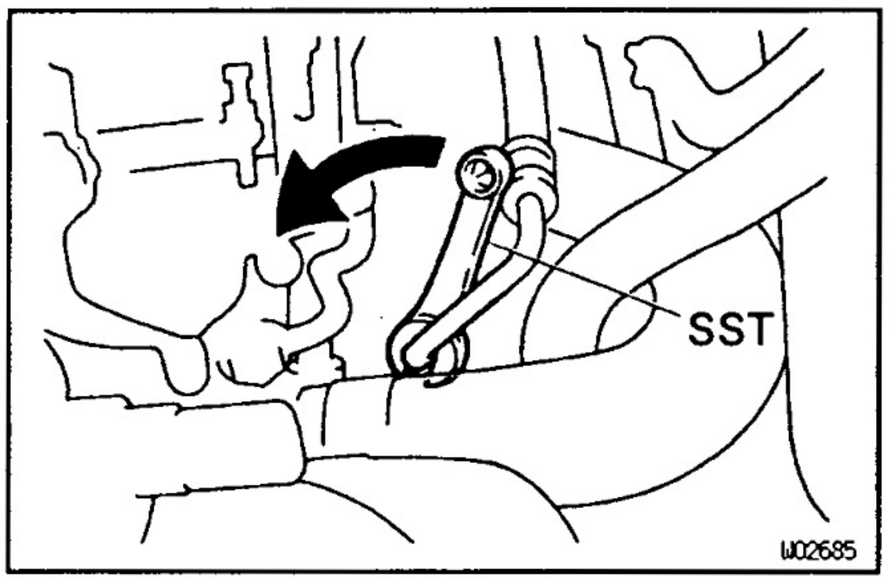

POWER STEERING VANE PUMP REMOVAL

SR1XG-02

1. **REMOVE ENGINE UNDER COVER NO. 1 AND ENGINE UNDER COVER NO.2**
   Remove the 9 bolts.
2. **DISCONNECT RETURN HOSE**
3. **DISCONNECT PRESSURE FEED TUBE**
   Using SST, disconnect the pressure feed tube.
   SST 09631–22020

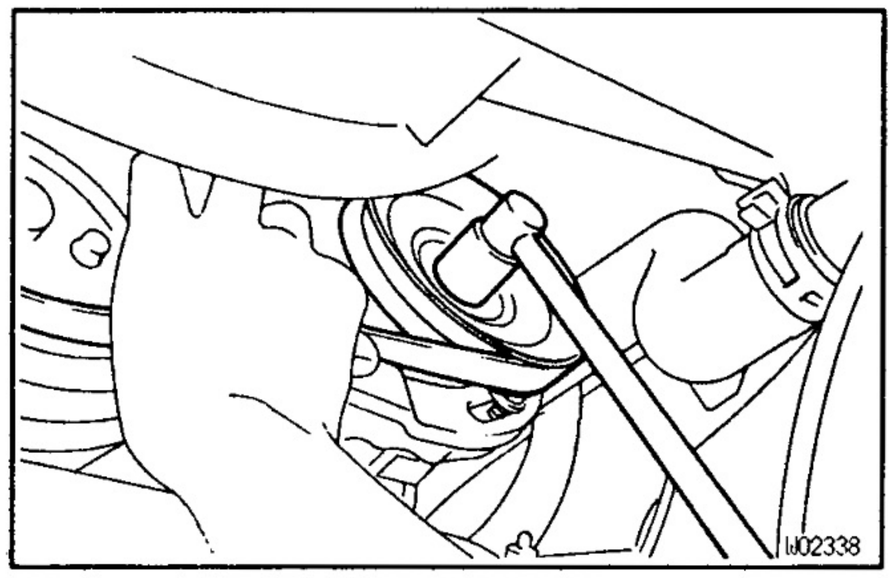

4. **REMOVE DRIVE BELT AND PS VANE PUMP ASSEMBLY**

(a) Push on the drive belt with your hand to stop the vane pump pulley rotating, loosen the pulley set nut.

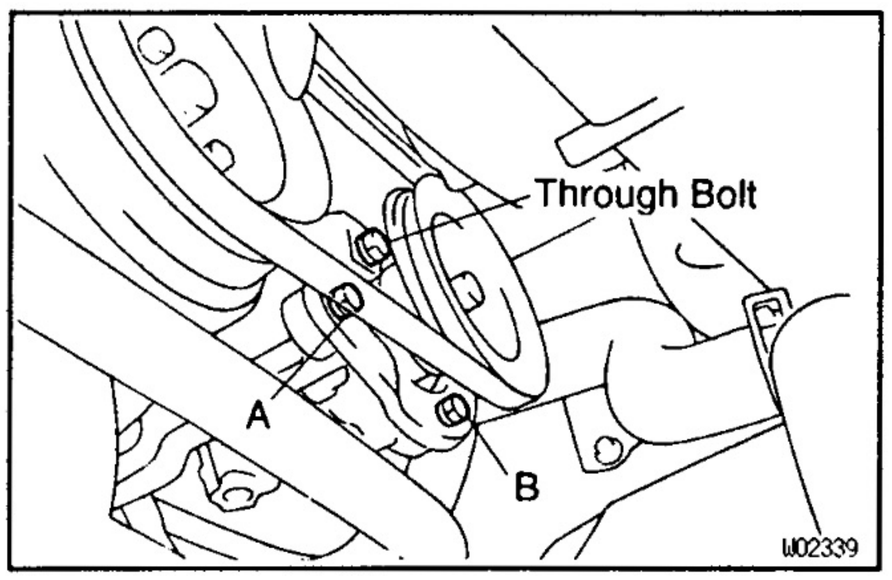

(b) Loosen the through bolt and bolt B, remove the drive belt.
(c) Remove the pulley set nut and vane pump pulley.
(d) Remove the A, B bolts and adjusting strut.
(e) Remove the through bolt and PS vane pump.

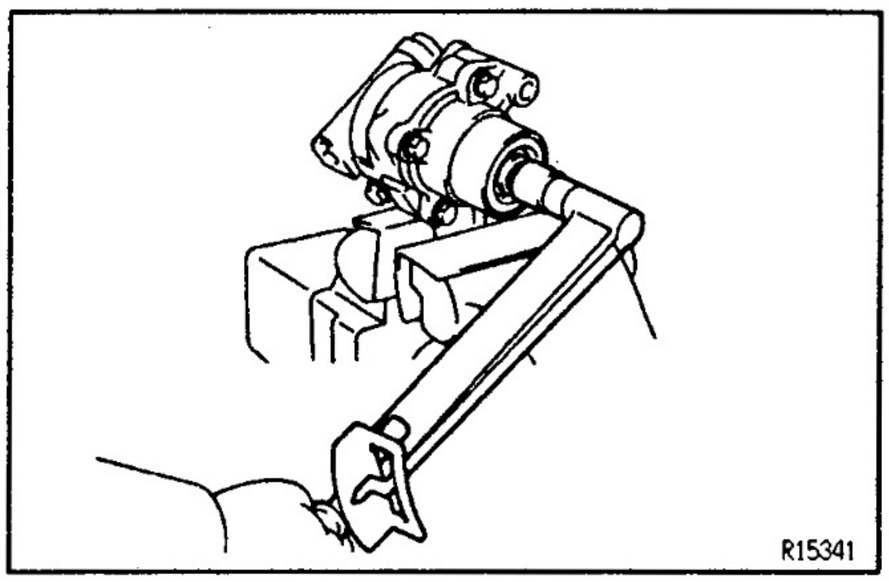

POWER STEERING VANE PUMP DISASSEMBLY

SR1XH-02

NOTICE: When using a vise, do not overtighten it.

1. **MEASURE PS VANE PUMP ROTATING TORQUE**

(a) Check that the pump rotates smoothly without abnormal noise.
(b) Temporarily install the vane pump pulley set nut.
(c) Using a torque wrench, check the pump rotating torque.
Rotating torque:
0.3 N·m (2.8 kgf·cm, 2.4 in.·lbf) or less

2. **REMOVE SUCTION PORT UNION**

(a) Remove the 2 bolts.
(b) Remove the O–ring from the suction port union.

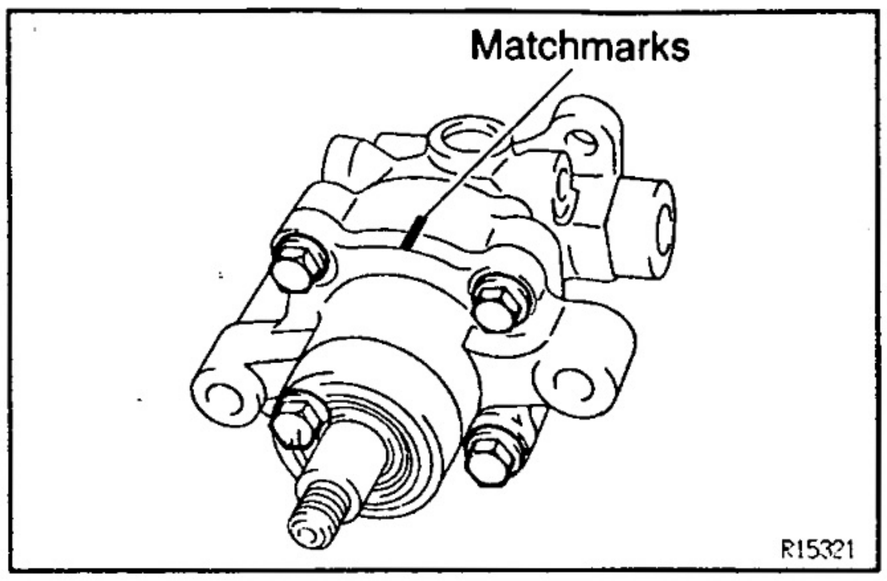

3. REMOVE REAR HOUSING

(a) Place matchmarks on the front and rear housing.

(b) Remove the 4 bolts.

NOTICE: When removing the rear housing, be careful that the vane plates, vane pump rotor and cam ring do not fall out.

(c) Remove the O–ring from the front housing.

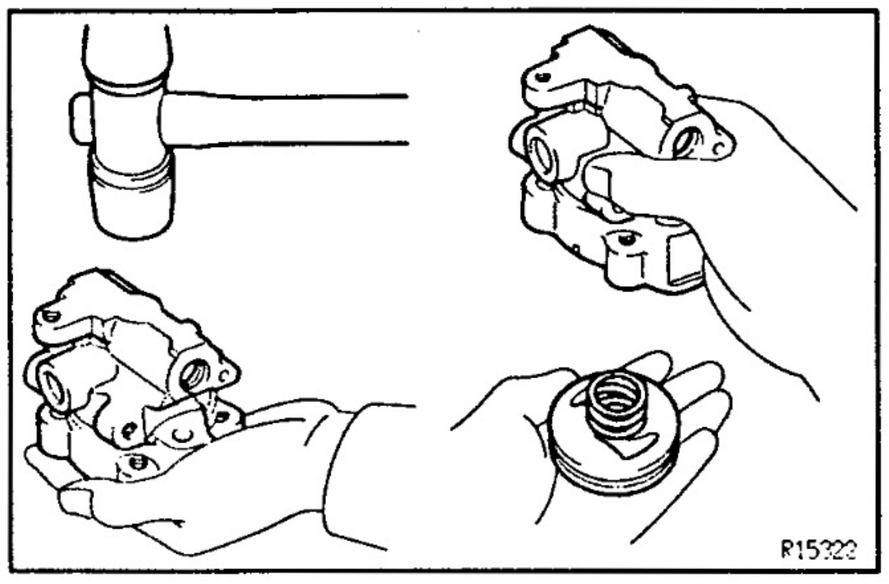

4. REMOVE SIDE PLATE

(a) Using a plastic hammer, tap out the side plate and side plate compression spring from the rear housing.

(b) Remove the 2 O–rings from the side plate.

5. REMOVE CAM RING, VANE PUMP ROTOR AND VANE PLATES

Remove the 10 plates.

NOTICE: Take care not to drop the plate.

6. REMOVE 2 STRAIGHT PINS

Using pliers, remove the 2 straight pins from the front housing.

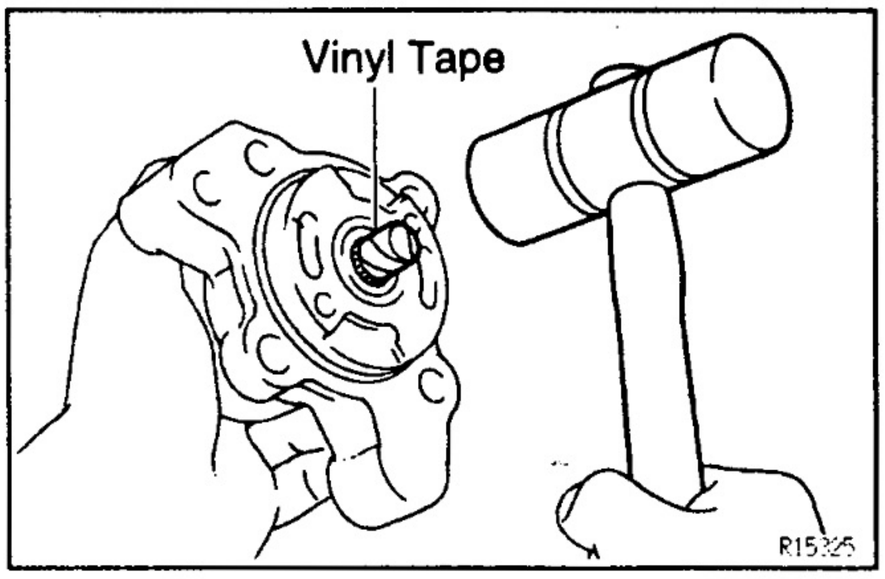

7. REMOVE VANE PUMP SHAFT WITH BEARING

(a) Using snap ring pliers, remove the snap ring from the front housing.

(b) Wind vinyl tape on the serrated part of the vane pump shaft.

(c) Using a plastic hammer, tap out the shaft with bearing.

8. REMOVE PRESSURE PORT UNION

(a) Remove the pressure port union.

(b) Remove the 2 O–rings from the pressure port union.

9. REMOVE FLOW CONTROL VALVE AND FLOW CONTROL VALVE COMPRESSION SPRING

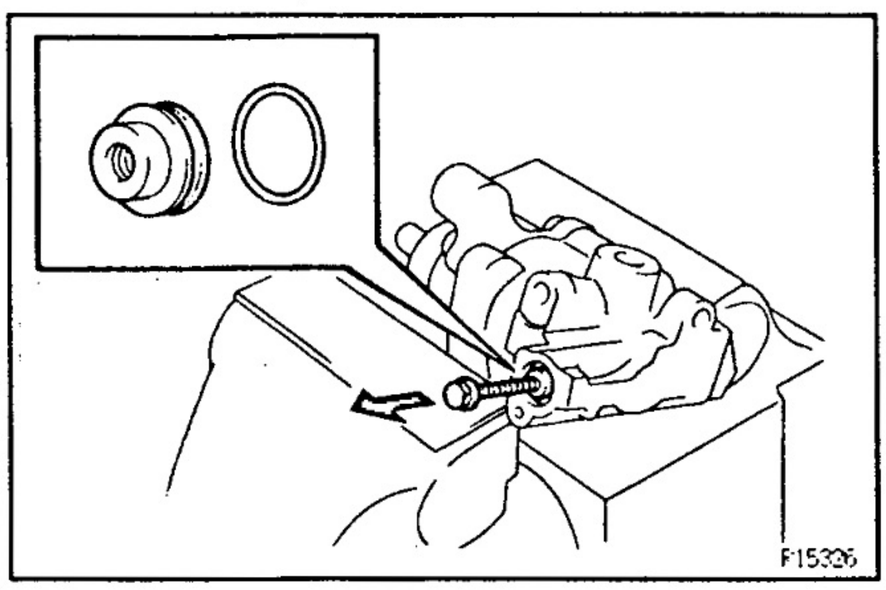

10. REMOVE FLOW CONTROL SPRING SEAT

(a) Using snap ring pliers, remove the snap ring from the rear housing.

(b) Install the 2 or 3 threads of a bolt (6 mm nominal diameter, 1.0 mm pitch, 50 mm length) to the flow control spring seat.

Reference

Bolt: 91651–60650

(c) Using pliers, remove the spring seat from the rear housing.

(d) Remove the O–ring from the flow control spring seat.

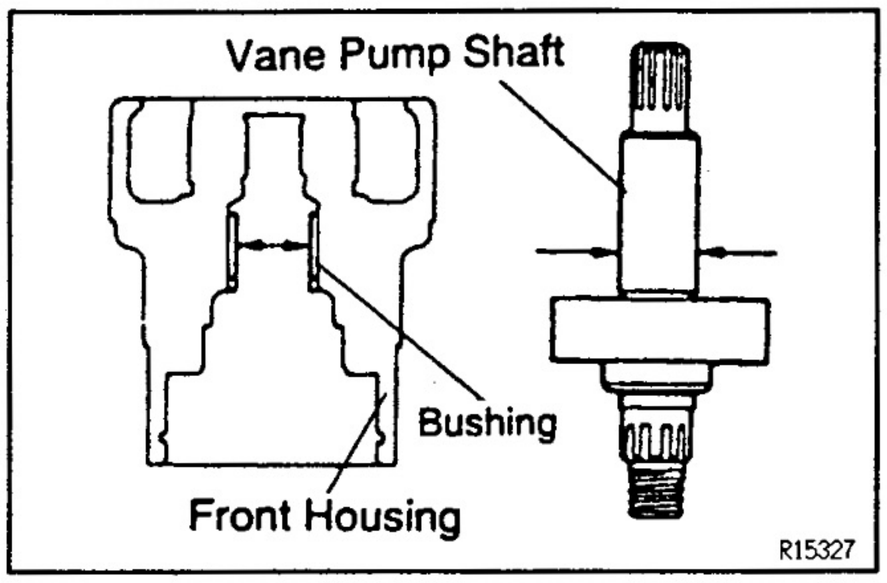

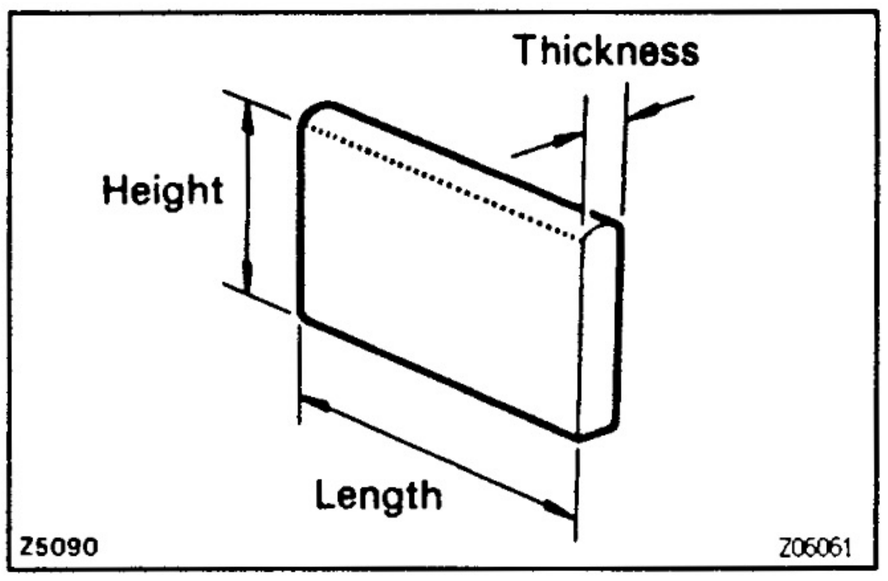

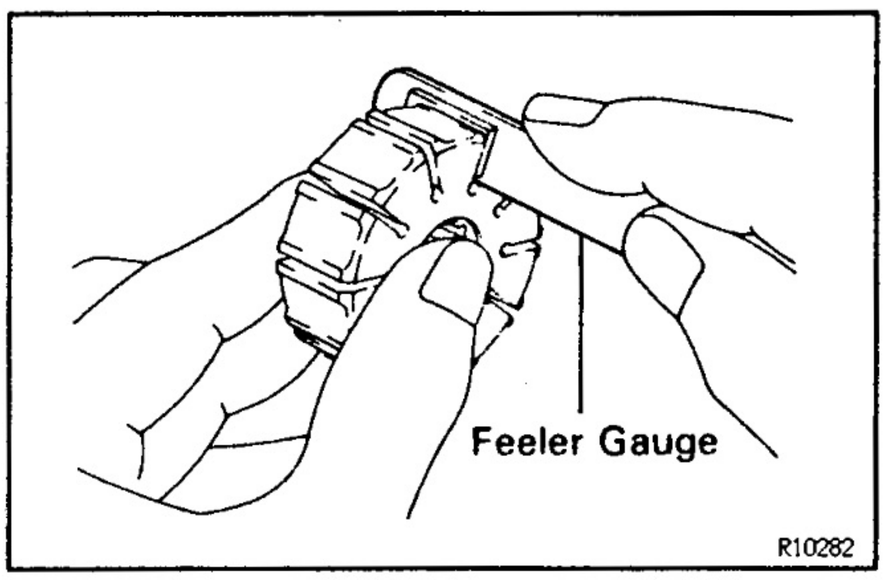

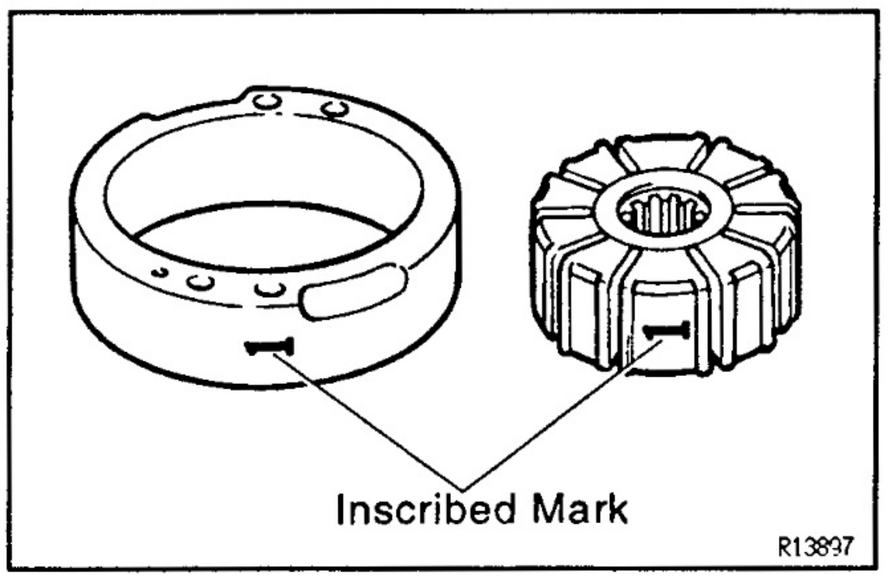

SR1GK-05

POWER STEERING VANE PUMP INSPECTION AND REPLACEMENT

NOTICE: When using a vise, do not overtighten it.

1. CHECK OIL CLEARANCE BETWEEN VANE PUMP SHAFT AND BUSHING

Using a micrometer and caliper gauge, measure the oil clearance.

	Clearance mm (in.)
Standard	0.03—0.05 (0.0012—0.0020)
Maximum	0.07 (0.0028)

If it is more than maximum, replace the front housing and vane pump shaft.

2. INSPECT VANE PUMP ROTOR AND VANE PLATES

(a) Using a micrometer, measure the height, thickness and length of the 10 plates.

	Minimum mm (in.)
Height	8.1 (0.319)
Thickness	1.797 (0.0708)
Length	14.988 (0.5901)

(b) Using a feeler gauge, measure the clearance between the rotor groove and plate.

	Oil clearance mm (in.)
Maximum	0.028 (0.0011)

If it is more than the maximum, replace the plate and/or rotor with one having the same mark stamped on the cam ring.

Inscribed mark:

1, 2, 3, 4 or None

HINT: There are 5 vane plate lengths with the following rotor and cam ring marks:

Rotor and cam ring mark	Vane plate part number	Vane plate length mm (in.)
None	44345—12010	14.996—14.998 (0.59039—0.59047)
1	44345—12020	14.994—14.996 (0.59031—0.59039)
2	44345—12030	14.992—14.994 (0.59023—0.59031)
3	44345—12040	14.990—14.992 (0.59016—0.59023)
4	44345—12050	14.988—14.990 (0.59007—0.59016)

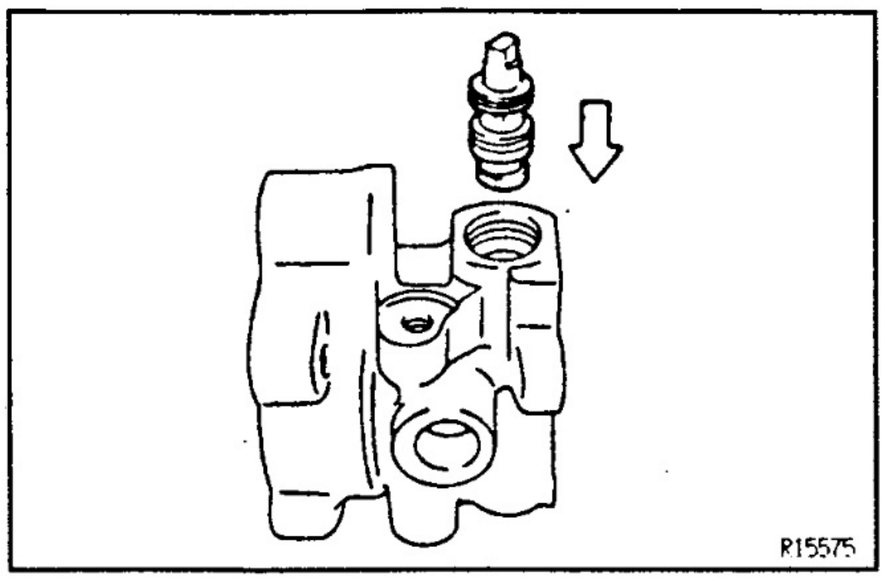

3. INSPECT FLOW CONTROL VALVE

(a) Coat the valve with power steering fluid and check that it falls smoothly into the valve hole by its own weight.

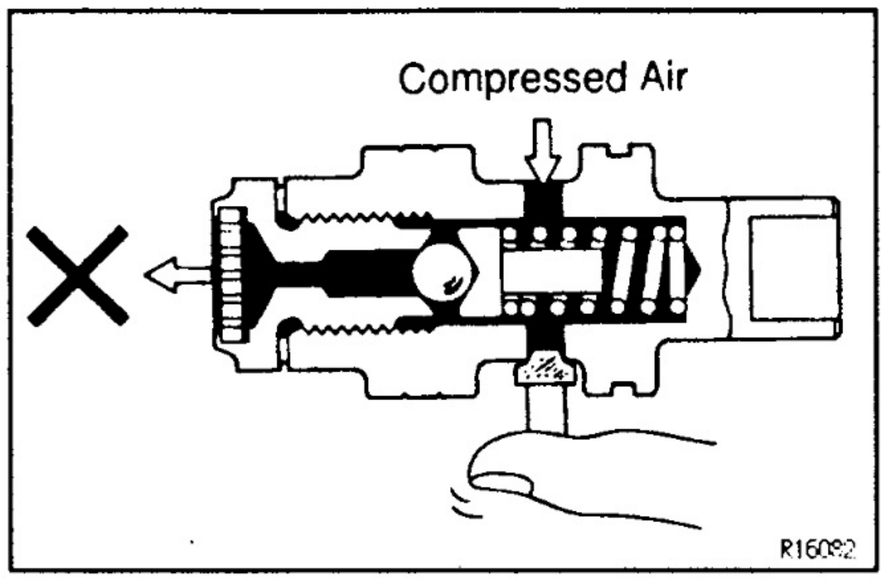

(b) Check the flow control valve for leakage.
Close one of the holes and apply compressed air 392 – 490 kPa (4 – 5 kgf/cm², 57 – 71 psi) into the opposite side, and confirm that air does not come out from the end hole.

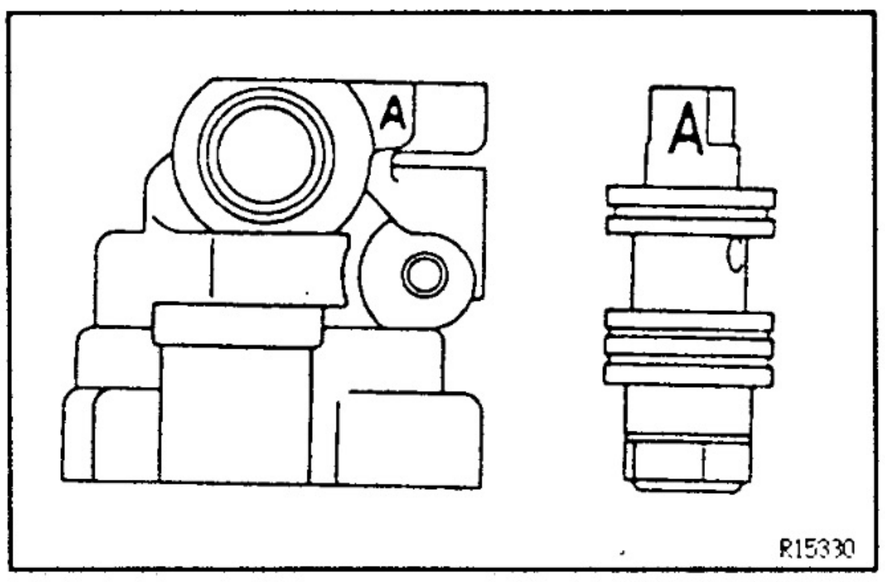

If necessary, replace the valve with one having the same letter as inscribed on the front housing.
Inscribed mark:

A, B, C, D, E or F

SR

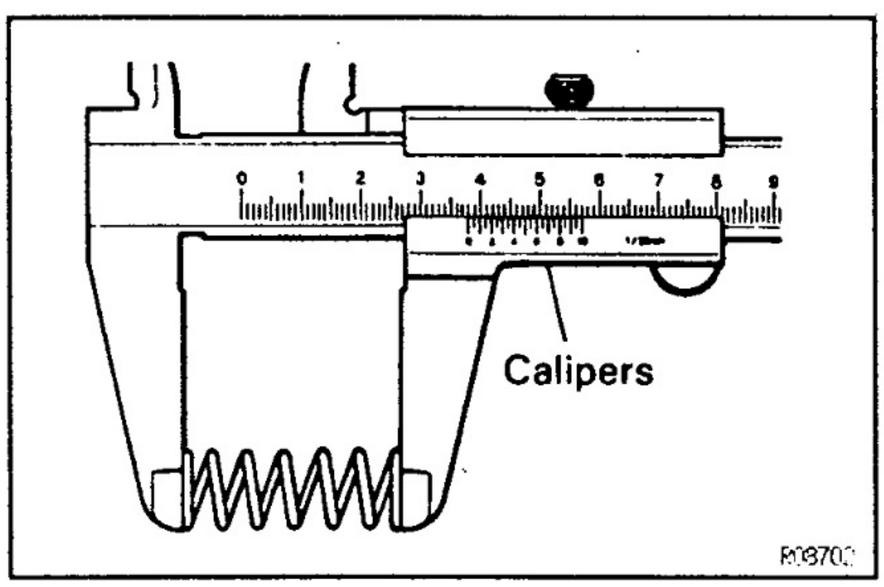

4. INSPECT FLOW CONTROL VALVE COMPRESSION SPRING

Using calipers, measure the free length of the spring.

	Free length	mm (in.)
Minimum	36.0 (1.417)	

If it is not within the specification, replace the spring.

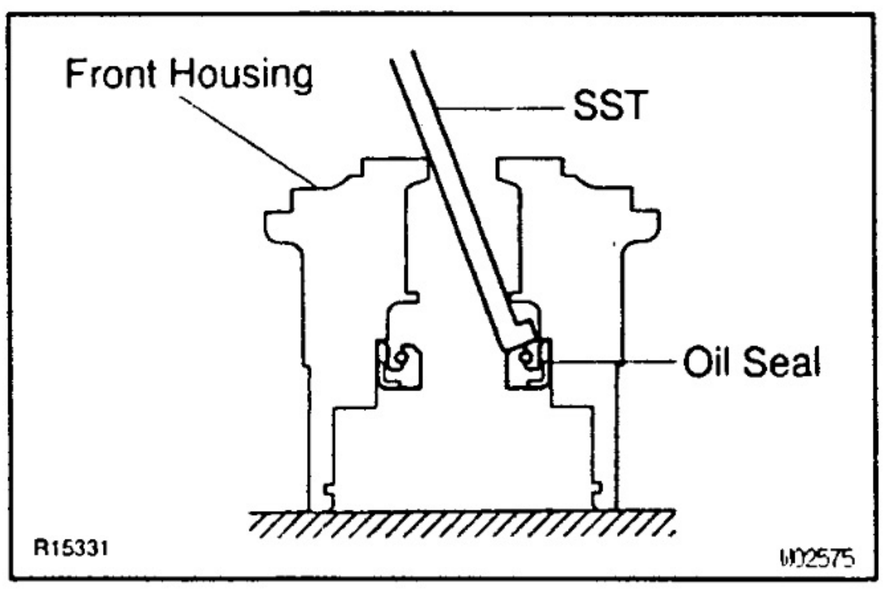

5. IF NECESSARY, REPLACE OIL SEAL

(a) Using SST and a hammer, tap out the oil seal from the front housing.
SST 09631 – 10030
NOTICE: Be careful not to damage the front housing.

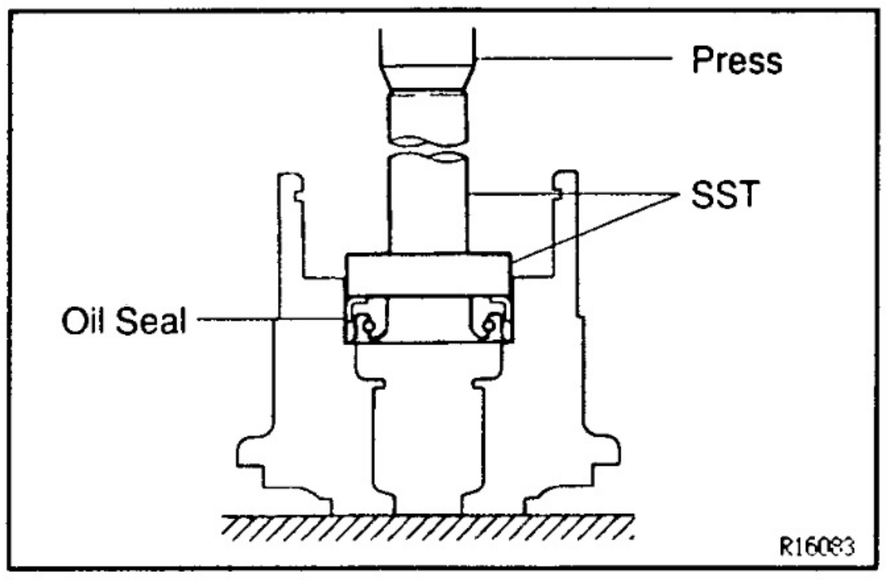

(b) Coat a new oil seal with power steering fluid.
(c) Using SST, press in the oil seal.
SST 09950–60010 (09951–00310),
09950–70010 (09951–07100)
NOTICE: Make sure to install the oil seal facing the correct direction.

6. IF NECESSARY, REPLACE BEARING

(a) Wind vinyl tape on the serrated part of the vane pump shaft.
(b) Using a snap ring expander, remove the snap ring from the shaft.
NOTICE: Be careful not to damage the shaft.
(c) Press out the bearing from the shaft.
(d) Coat a new bearing with power steering fluid.
(e) Using a press, press in the bearing to the shaft.
(f) Using a snap ring expander, install a new snap ring to the shaft.
NOTICE: Be careful not to damage the shaft.

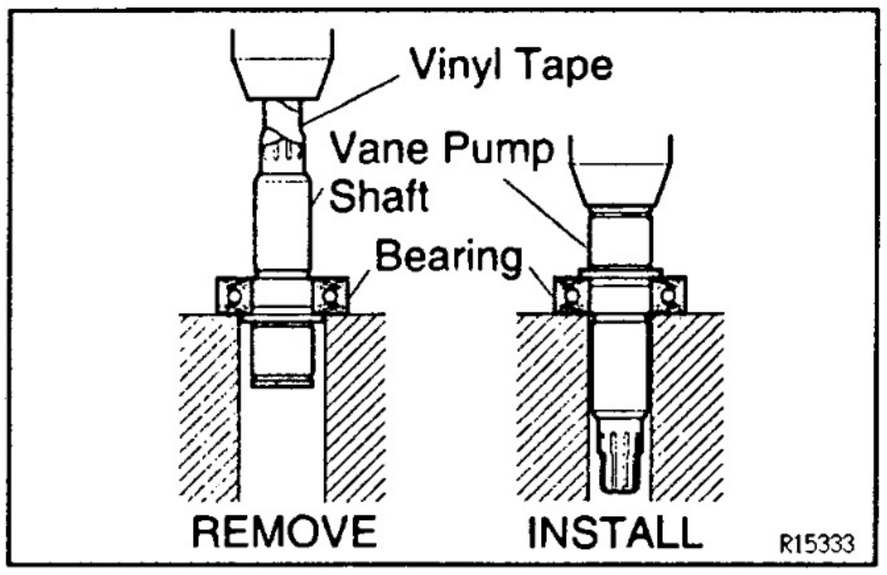

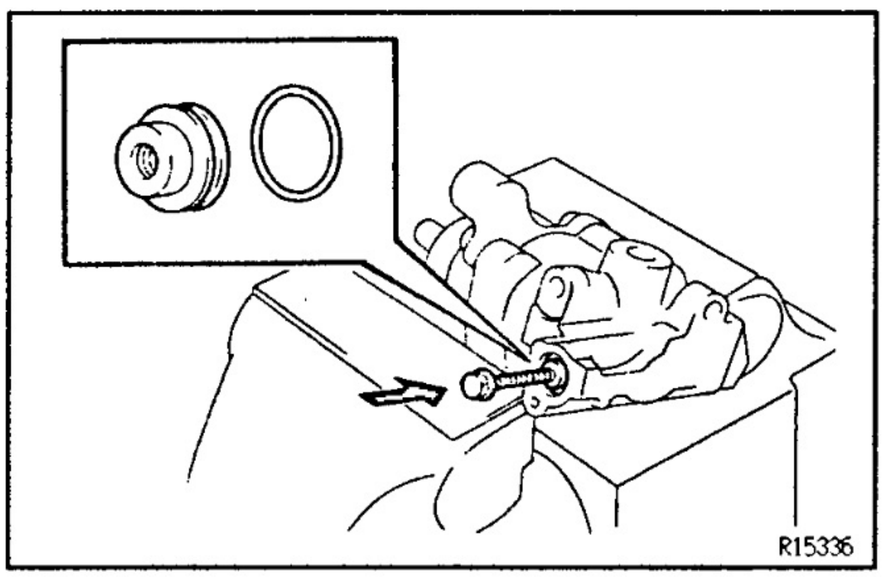

SR

POWER STEERING VANE PUMP ASSEMBLY

NOTICE: When using a vise, do not overtighten it.

1. COAT WITH POWER STEERING FLUID
(See page SR–31)

2. INSTALL FLOW CONTROL SPRING SEAT

(a) Coat a new O–ring with power steering fluid and install it to the flow control spring seat.
(b) Install the 2–3 threads of the bolt.
(c) Using pliers, install the spring seat to the rear housing.
NOTICE:
- **Be careful not to damage the O–ring.**
- **Make sure to install the seat facing the correct direction.**

(d) Using snap ring pliers, install a new snap ring.

3. INSTALL FLOW CONTROL VALVE COMPRESSION SPRING AND FLOW CONTROL VALVE

Install the valve facing the correct direction.
(See page SR–31)

4. INSTALL PRESSURE PORT UNION

(a) Coat 2 new O–rings with power steering fluid and install them to the pressure port union.
(b) Torque the pressure port union.
Torque: 69 N·m (700 kgf·cm, 51 ft·lbf)

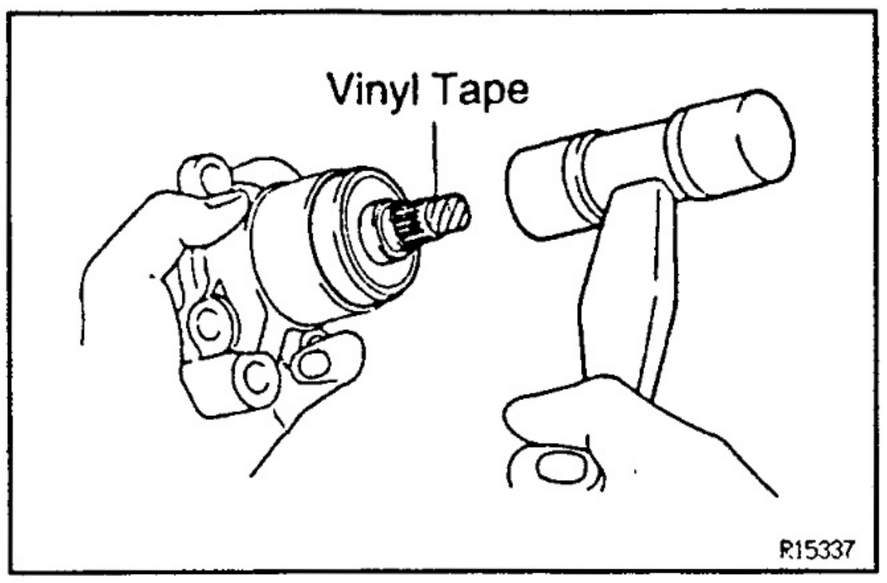

5. INSTALL VANE SHAFT WITH BEARING

(a) Wind vinyl tape on the serrated part of the vane pump shaft.

(b) Using a plastic hammer, tap in the shaft with the bearing to the front housing.

(c) Using snap ring pliers, install a new snap ring to the front housing.

6. INSTALL STRAIGHT PINS

Using a plastic hammer, tap in 2 new pins to the front housing.

NOTICE: Be careful not to damage the pins.

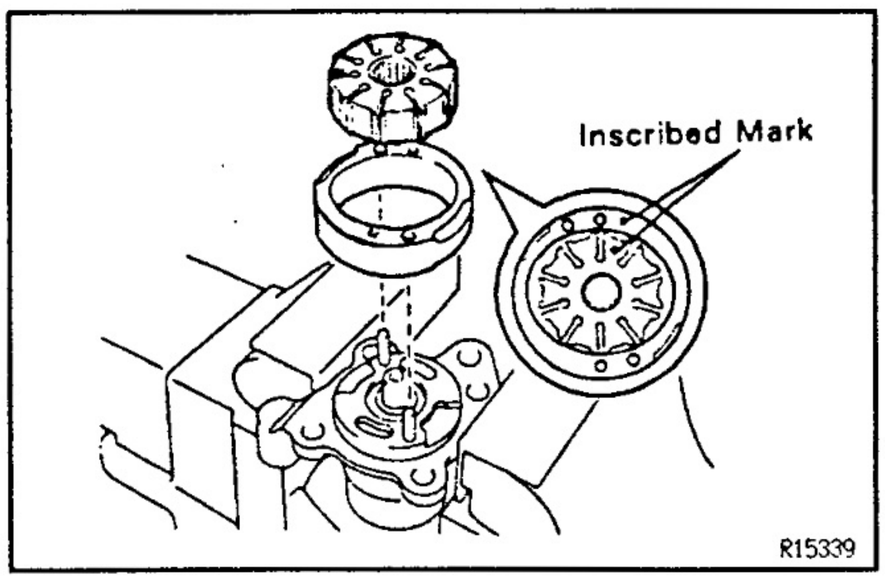

7. INSTALL CAM RING AND VANE PUMP ROTOR

Install the ring and rotor to the front housing with the inscribed mark facing outward.

HINT: Align the holes of the cam ring with the straight pins.

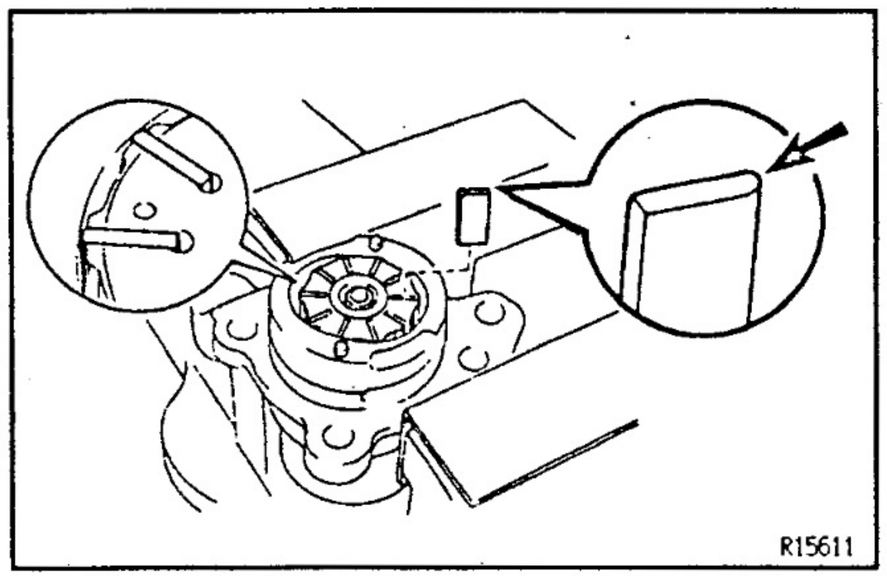

8. INSTALL VANE PLATES

Install the 10 plates with the round end facing outward.

9. INSTALL SIDE PLATE

(a) Coat 2 new O–rings with power steering fluid and install them to the side plate.

(b) Install the side plate and side plate compression spring.

HINT: Align the holes of the side plate with the straight pins.

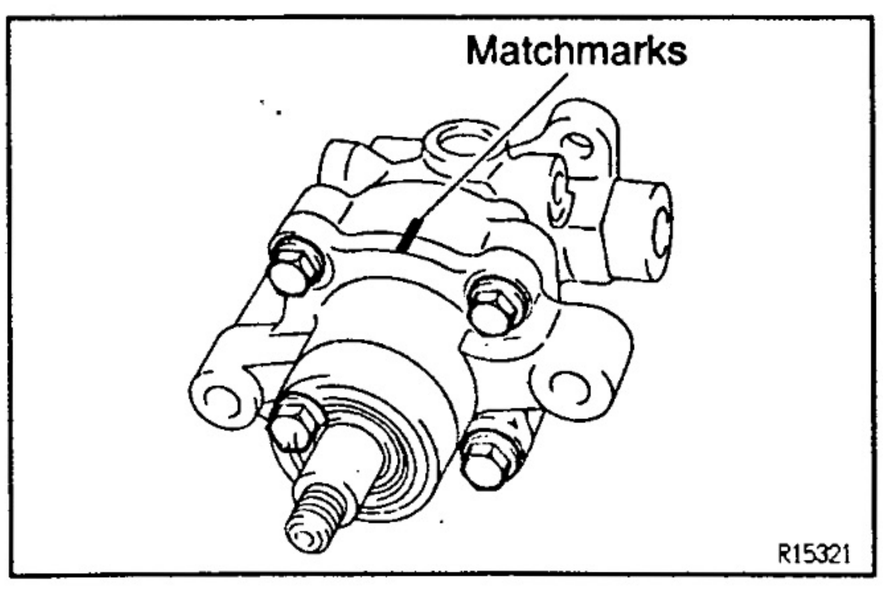

10. INSTALL REAR HOUSING

(a) Coat a new O–ring with power steering fluid and install it to the front housing.

(b) Align the matchmarks on the front housing and rear housing.

(c) Torque the 4 bolts.

Torque: 46 N·m (470 kgf·cm, 34 ft·lbf)

11. INSTALL SUCTION PORT UNION

(a) Coat a new O–ring with power steering fluid and install it to the suction port union.

(b) Torque the 2 bolts.

Torque: 13 N·m (130 kgf·cm, 9 ft·lbf)

12. MEASURE PS VANE PUMP ROTATING TORQUE

(See page SR–32)

SR1GM-05

POWER STEERING VANE PUMP INSTALLATION

1. INSTALL PS VANE PUMP ASSEMBLY

(a) Temporarily tighten the through bolt.

(b) Temporarily install the adjusting strut and 2 bolts.

2. INSTALL VANE PUMP PULLEY

Temporarily tighten the vane pump pulley set nut.

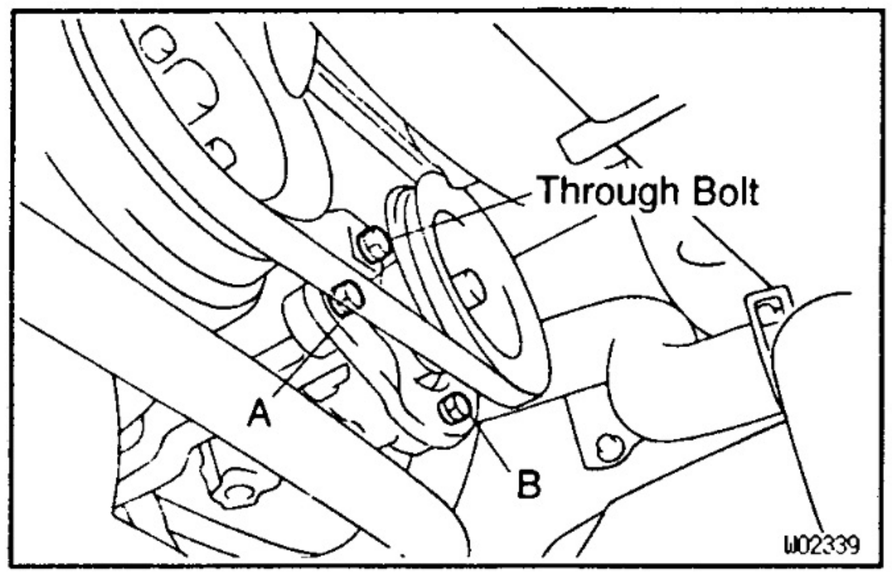

3. INSTALL DRIVE BELT

(a) Install the drive belt to the pulley.

(b) Adjust drive belt tension.
(See page SR–8)

(c) Torque the A bolt.
Torque: 39 N·m (400 kgf·cm, 29 ft·lbf)
Torque the through bolt.
Torque: 64 N·m (650 kgf·cm, 47 ft·lbf)
Torque the B bolt.
Torque: 39 N·m (400 kgf·cm, 29 ft·lbf)

(d) Push on the drive belt with your hand to stop the pulley rotating, torque the pulley set nut.
Torque: 43 N·m (440 kgf·cm, 32 ft·lbf)

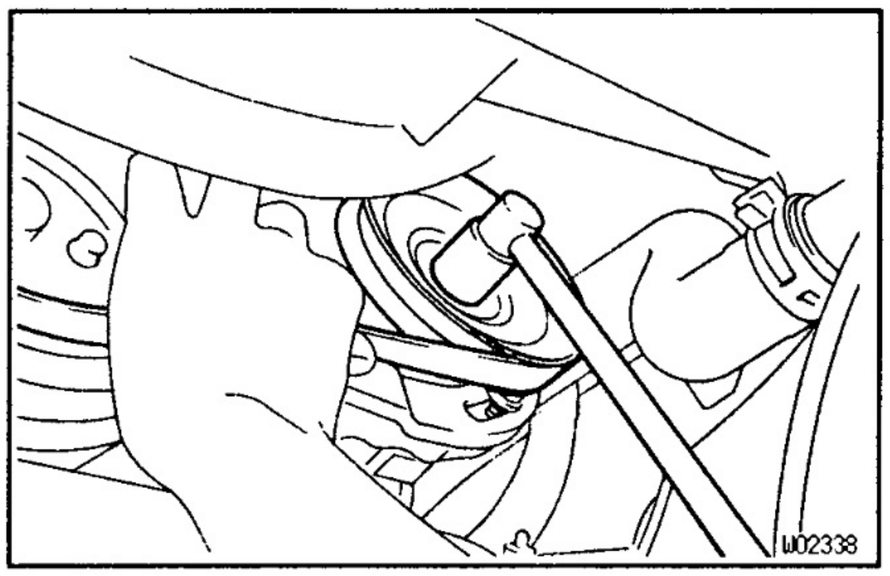

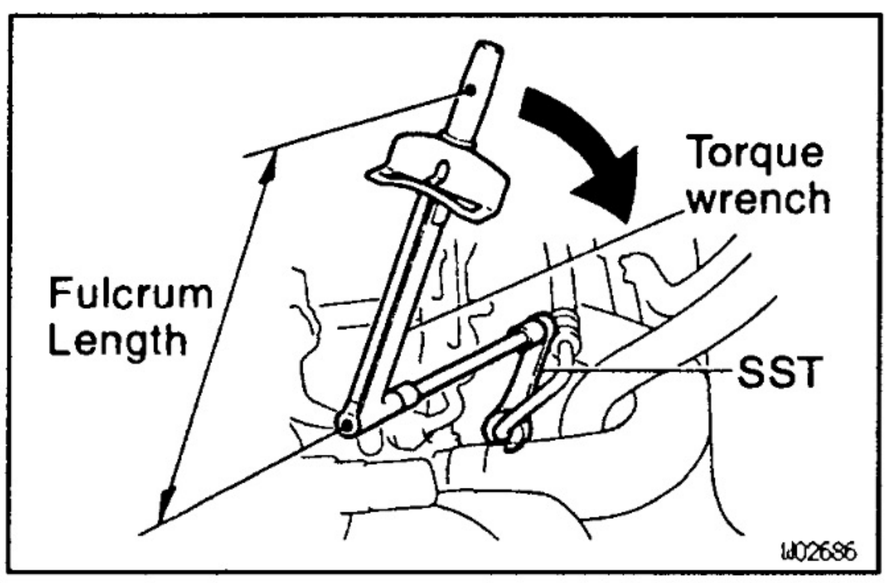

4. CONNECT PRESSURE FEED TUBE

Using SST, connect the pressure feed tube.
SST 09631–22020
Torque: 36 N·m (365 kgf·cm, 26 ft·lbf)
HINT:

- Use a torque wrench with a fulcrum length of 300 mm (11.81 in.)
- This torque value is effective in case that SST is parallel to a torque wrench.

5. CONNECT RETURN HOSE

6. INSTALL ENGINE UNDER COVER NO. 1 AND ENGINE UNDER COVER NO.2

Tighten the 9 bolts.

7. BLEED POWER STEERING SYSTEM

(See page SR–11)

SR

POWER STEERING VANE PUMP (3RZ–F, 3RZ–FE)

COMPONENTS

SR1TQ–02

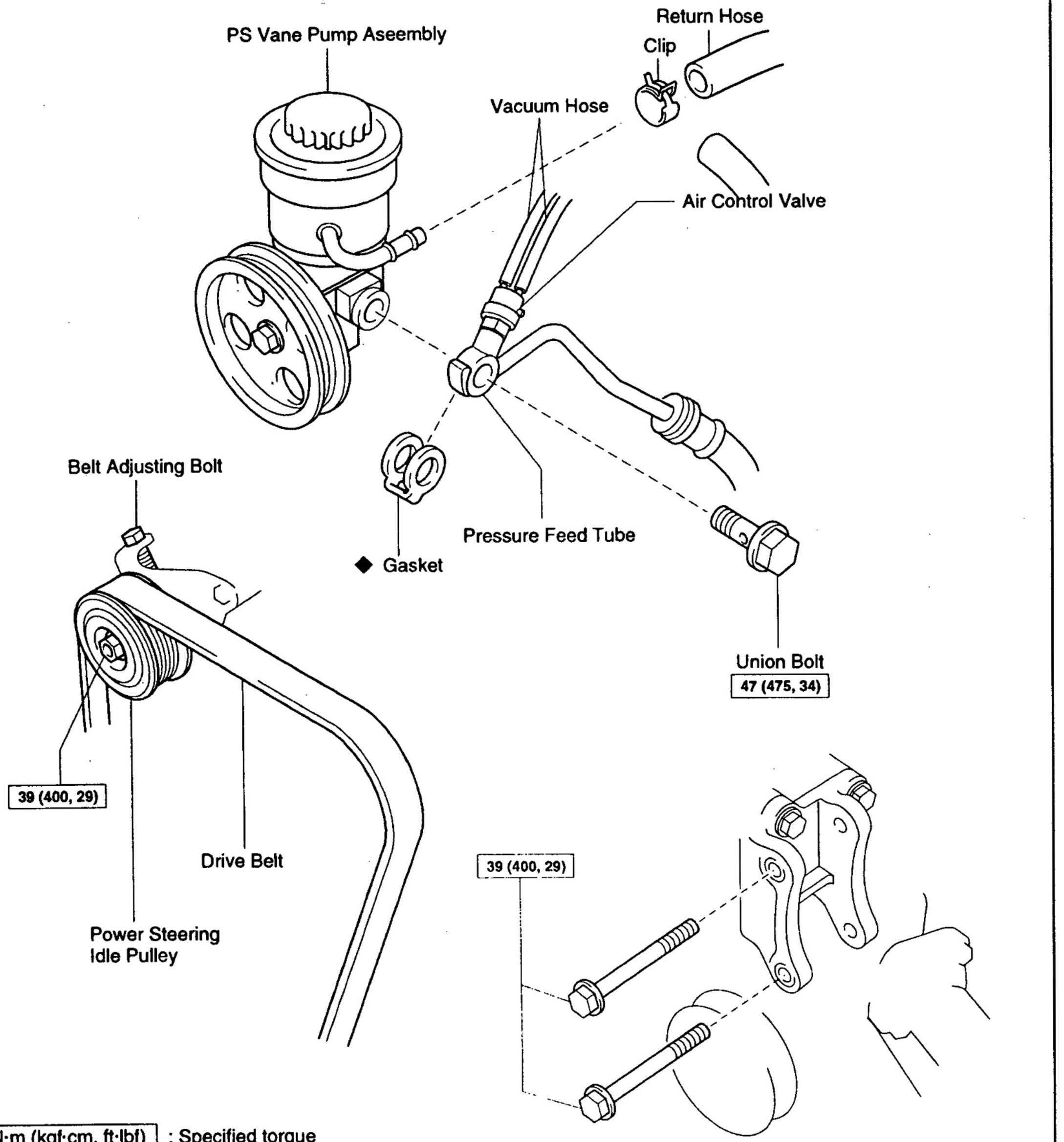

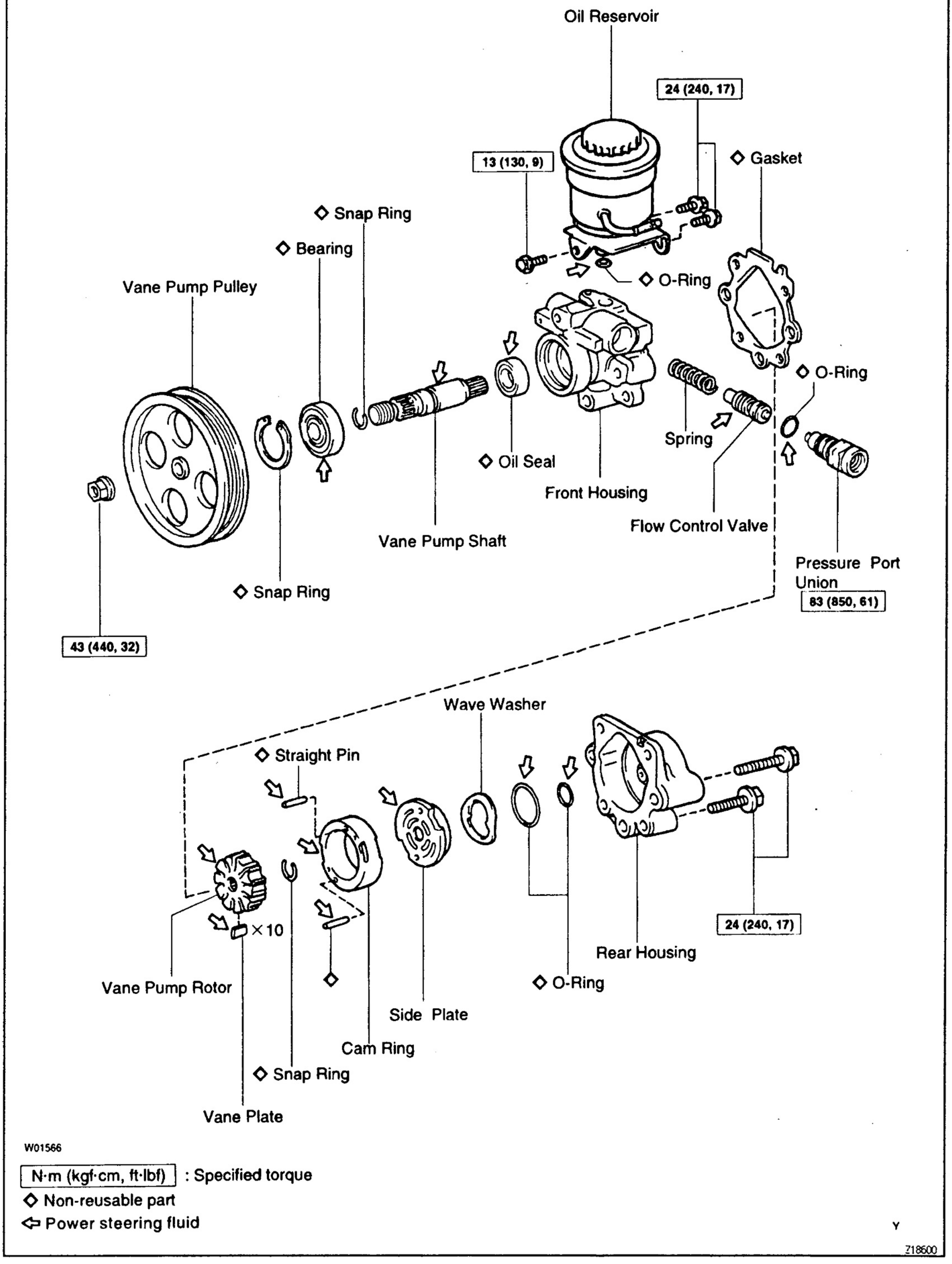
Oil Reservoir
24 (240, 17)
13 (130, 9)
◇ Gasket
◇ Snap Ring
◇ Bearing
◇ O-Ring
Vane Pump Pulley
◇ Oil Seal
Front Housing
Spring
◇ O-Ring
Flow Control Valve
Vane Pump Shaft
◇ Snap Ring
Pressure Port Union
83 (850, 61)
43 (440, 32)
Wave Washer
◇ Straight Pin
24 (240, 17)
×10
Rear Housing
Vane Pump Rotor
◇ O-Ring
Side Plate
Cam Ring
◇ Snap Ring
Vane Plate
W01566
N·m (kgf·cm, ft·lbf) : Specified torque
◇ Non-reusable part
⇦ Power steering fluid
Y
Z18600

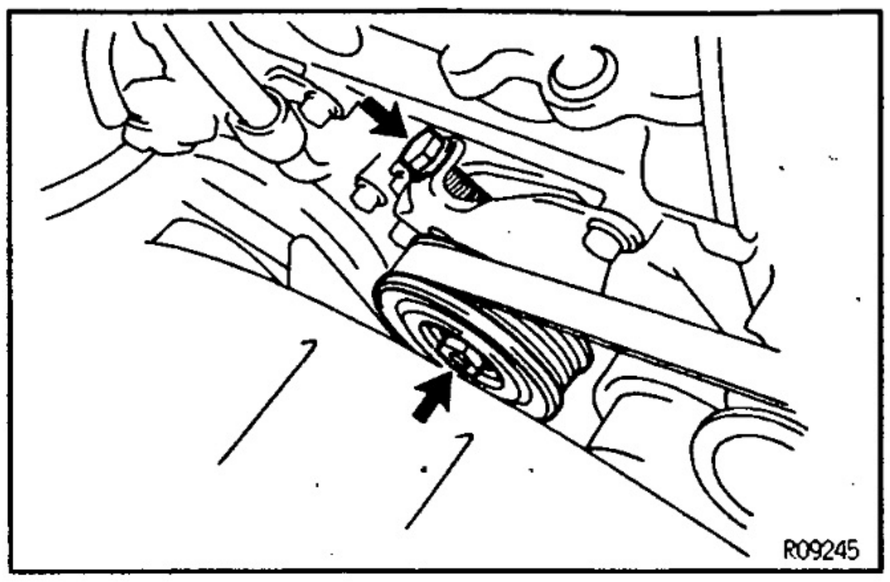

POWER STEERING VANE PUMP REMOVAL

SR1TR–02

1. REMOVE DRIVE BELT

(a) Loosen the power steering idle pulley set bolt.

(b) Loosen the belt adjusting bolt.

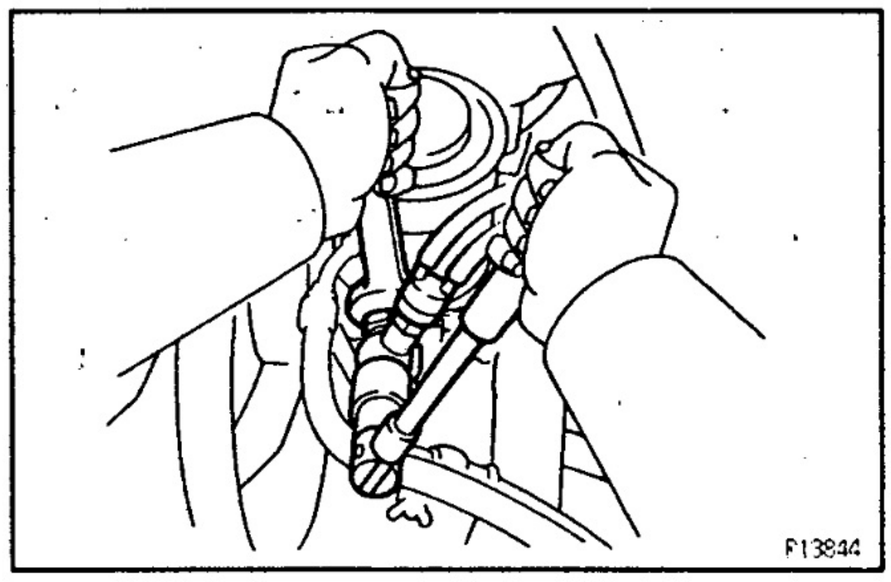

2. DISCONNECT PRESSURE FEED TUBE

Using a spanner (24 mm) to hold the pressure port union, remove the union bolt and 2 gaskets.

3. DISCONNECT RETURN HOSE

NOTICE: Take care not to spill fluid on the drive belt.

4. REMOVE PS VANE PUMP ASSEMBLY

Remove the 2 pump assembly set bolts.

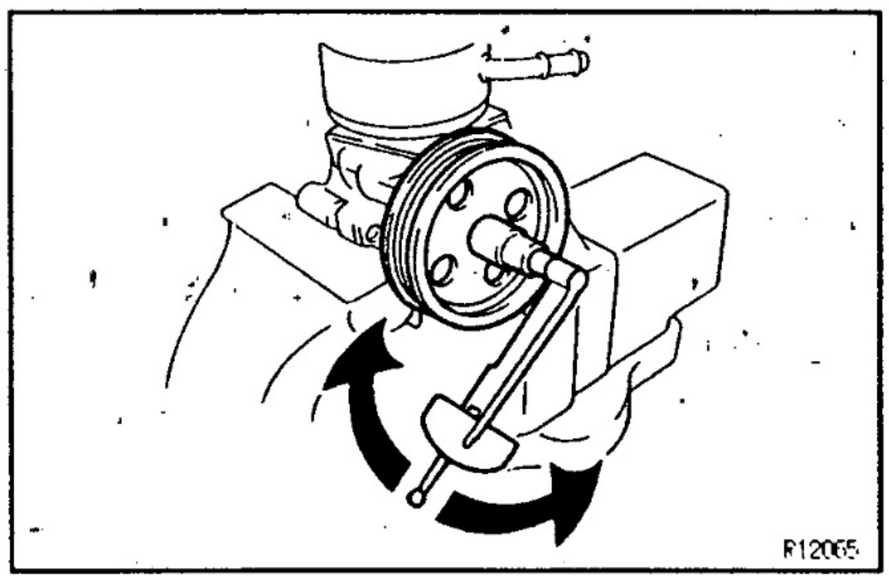

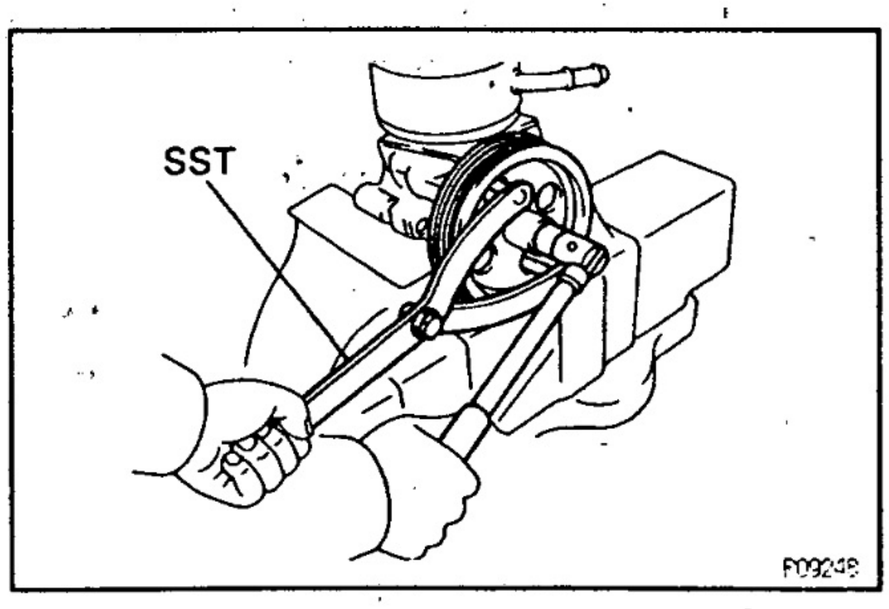

POWER STEERING VANE PUMP DISASSEMBLY

SR1TS–02

SR

NOTICE: When using a vise, do not overtighten it.

1. MEASURE PS VANE PUMP ROTATING TORQUE

(a) Check that the pump rotates smoothly without abnormal noise.

(b) Using a torque wrench, check the pump rotating torque.

Rotating torque:

0.25 N·m (2.5 kgf·cm, 2.2 in.·lbf) or less

2. REMOVE VANE PUMP PULLEY

Using SST to stop the pulley rotating, remove the pulley set nut.

SST 09960–10010 (09962–01000, 09963–01000)

3. REMOVE OIL RESERVOIR

(a) Remove the 3 bolts and oil reservoir.

(b) Remove the O–ring from the oil reservoir.

4. REMOVE PRESSURE PORT UNION, FLOW CONTROL VALVE AND SPRING

Remove the O–ring from the union.

5. REMOVE REAR HOUSING

(a) Remove the 2 bolts and rear housing.

(b) Remove the 2 O–rings from the housing.

6. REMOVE WAVE WASHER

7. REMOVE SIDE PLATE

8. REMOVE CAM RING, VANE PLATES AND VANE PUMP ROTOR

(a) Remove the 10 plates.

NOTICE: Take care not to drop the plate.

(b) Using a screwdriver, remove the snap ring from the vane pump shaft.

9. REMOVE STRAIGHT PINS

Remove the 2 pins from the front housing.

10. REMOVE GASKET

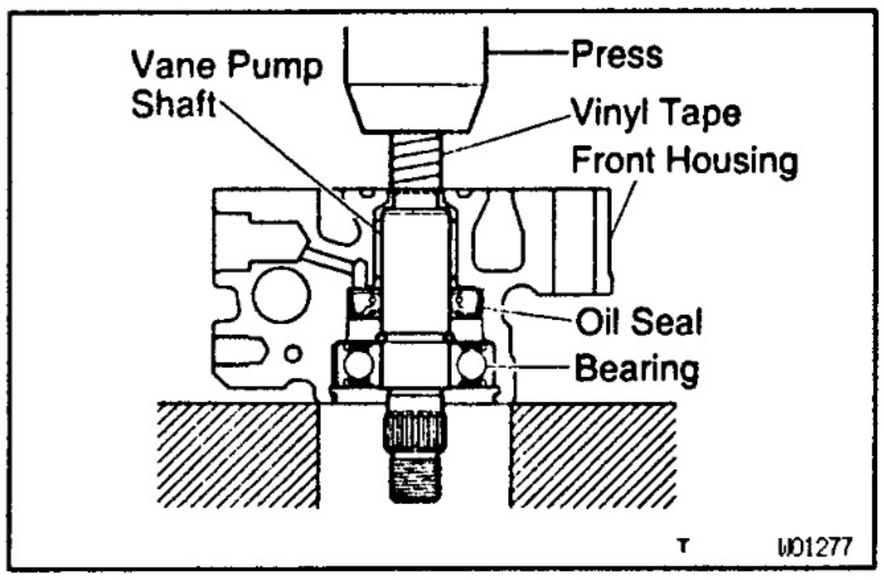

11. REMOVE VANE PUMP SHAFT WITH BEARING

(a) Using snap ring pliers, remove the snap ring from the front housing.

(b) Wind vinyl tape on the serrated part of the vane pump shaft.

(c) Using a press, press out the shaft with the bearing.

NOTICE: Be careful not to damage the oil seal lip.

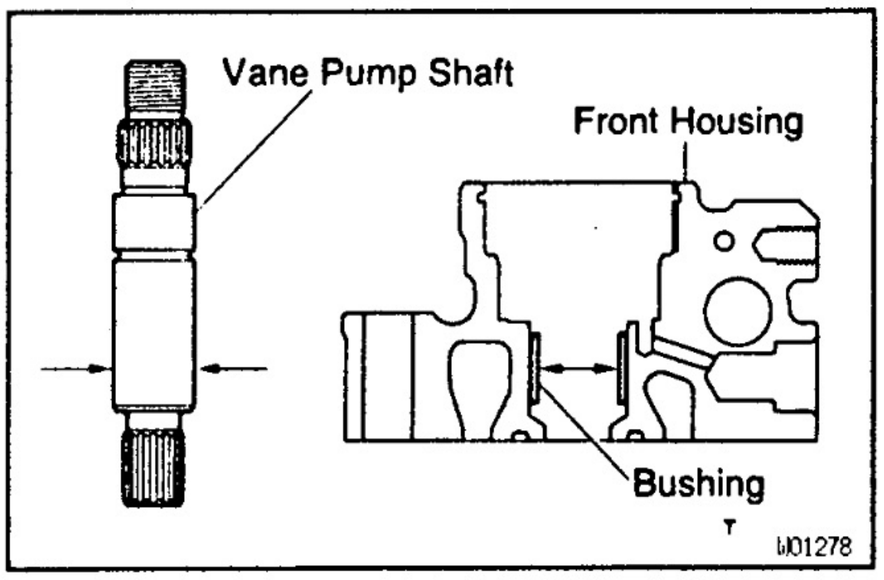

SR

POWER STEERING VANE PUMP INSPECTION AND REPLACEMENT

SR17T-02

NOTICE: When using a vise, do not overtighten it.

1. CHECK OIL CLEARANCE BETWEEN VANE PUMP SHAFT AND BUSHING

Using a micrometer and caliper gauge, measure the oil clearance.

	Clearance mm (in.)
Standard	0.03–0.05 (0.0012–0.0020)
Maximum	0.07 (0.0028)

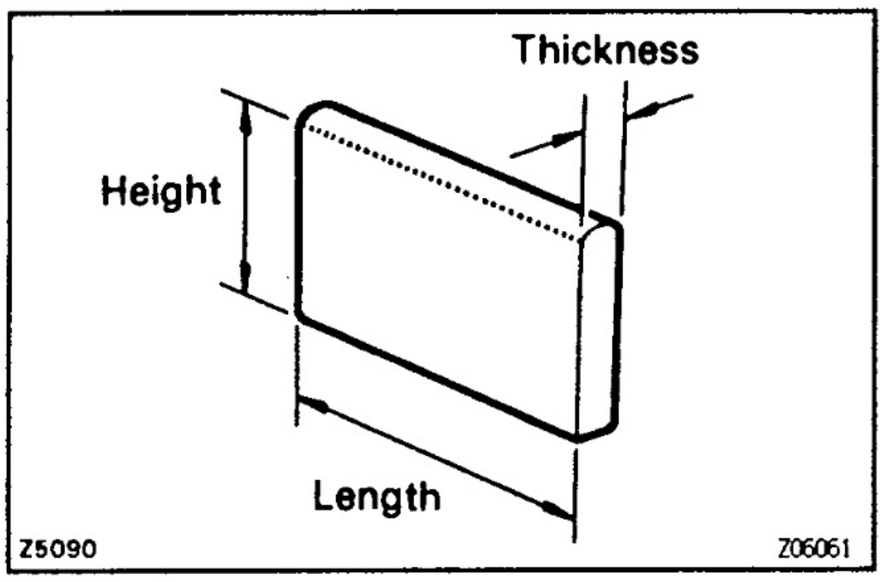

If it is more than maximum, replace the front housing and vane pump shaft.

2. INSPECT VANE PUMP ROTOR AND VANE PLATES

Using a micrometer, measure the height, thickness and length of the 10 plates.

	Minimum mm (in.)
Height	8.6 (0.339)
Thickness	1.397 (0.0550)
Length	14.991 (0.5902)

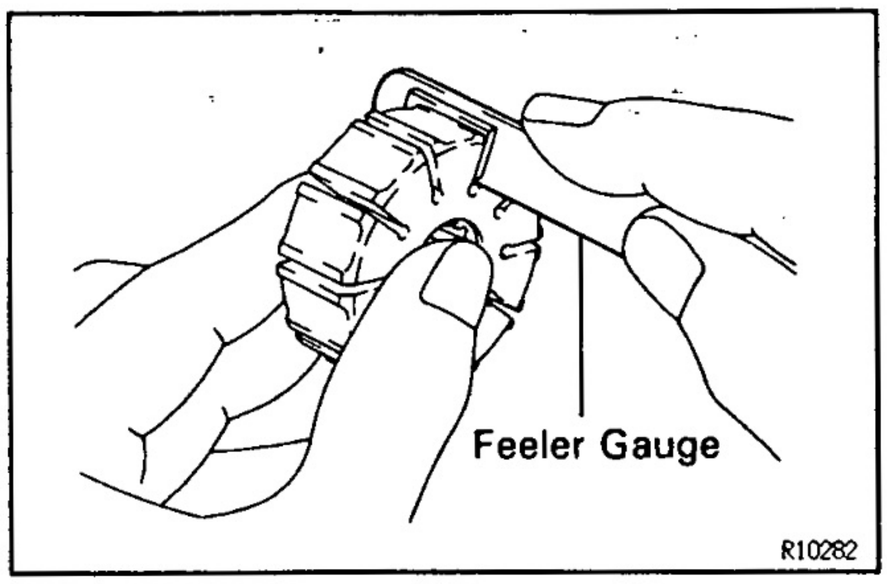

(b) Using a feeler gauge, measure the clearance between the rotor groove and plate.

	Clearance	mm (in.)
Maximum	0.035 (0.0014)	

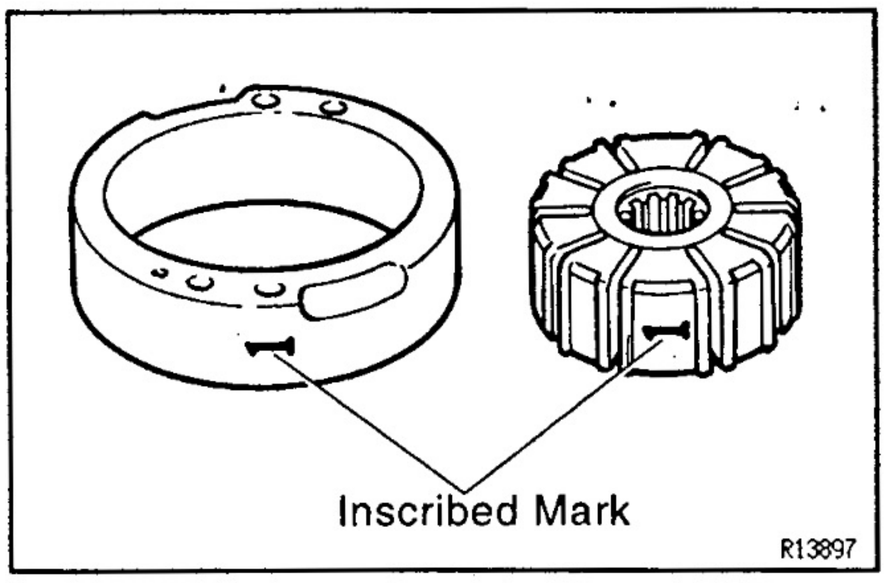

If it is more than the maximum, replace the plate and/or rotor with one having the same mark stamped on the cam ring.

Inscribed mark:

1, 2, 3, 4 or None

HINT: There are 5 vane plate lengths with the following rotor and cam ring marks:

Rotor and cam ring mark	Vane plate part number	Vane plate length mm (in.)
None	44345–26010	14.999–15.001 (0.59051–0.59059)
1	44345–26020	14.997–14.999 (0.59043–0.59051)
2	44345–26030	14.995–14.997 (0.59035–0.59043)
3	44345–26040	14.993–14.995 (0.59027–0.59035)
4	44345–26050	14.991–14.993 (0.59020–0.59027)

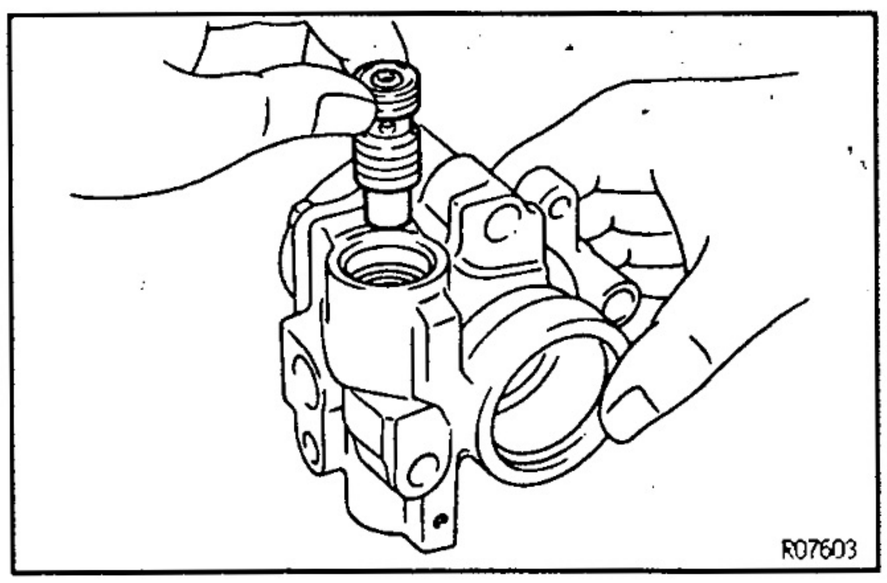

3. INSPECT FLOW CONTROL VALVE

(a) Coat the valve with power steering fluid and check that it falls smoothly into the valve hole by its own weight.

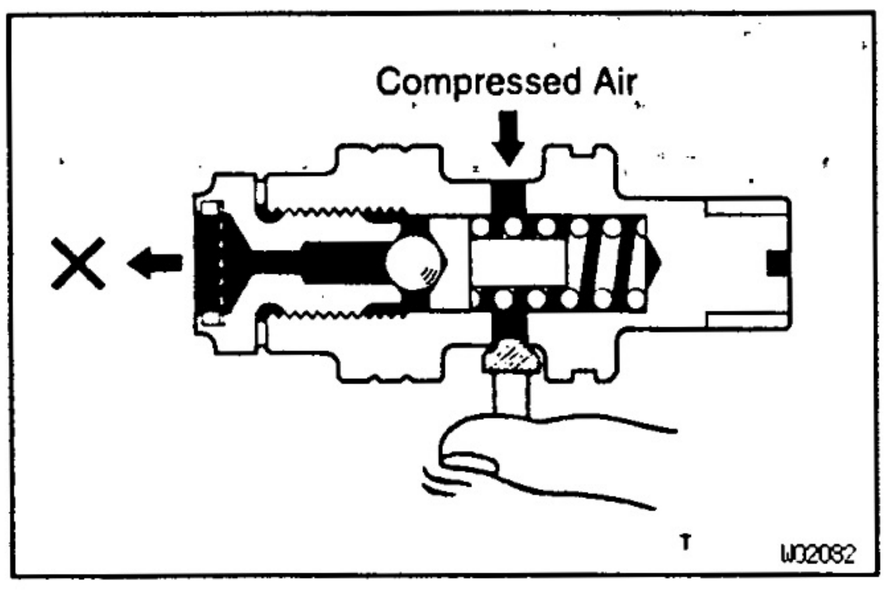

(b) Check the flow control valve for leakage.
Close one of the holes and apply compressed air 392–490 kPa (4–5 kgf/cm², 57–71 psi) into the opposite side, and confirm that air does not come out from the end hole.

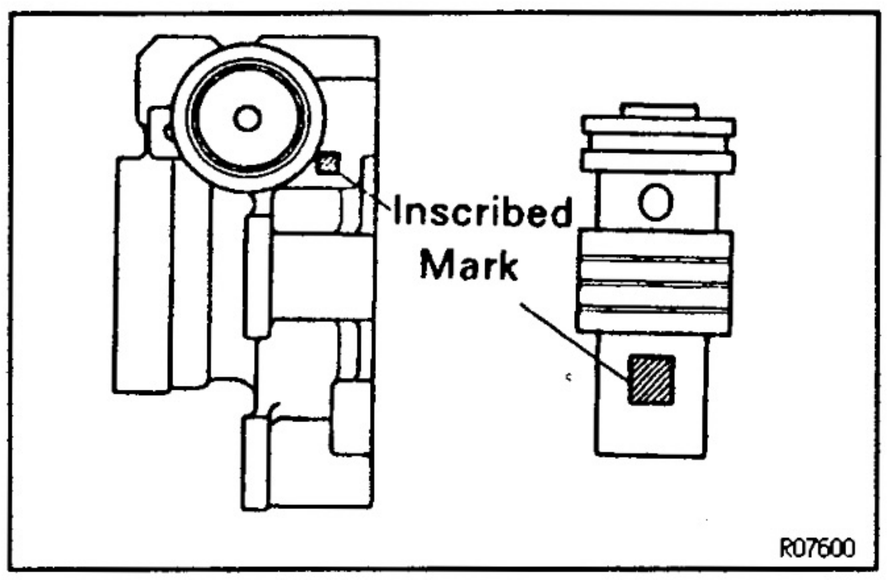

If necessary, replace the valve with one having the same letter as inscribed on the front housing.

Inscribed mark:

A, B, C, D, E or F

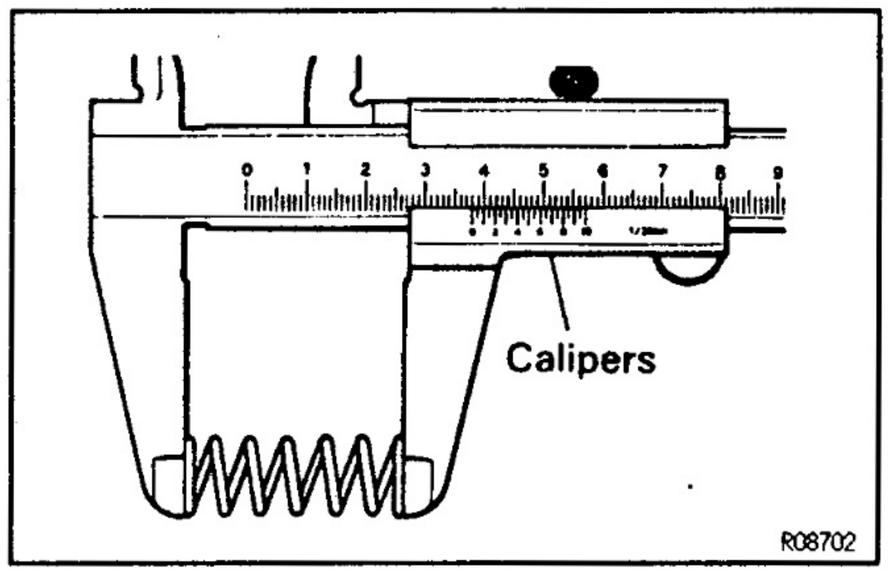

4. INSPECT SPRING

Using calipers, measure the free length of the spring.

	Free length	mm (in.)
Minimum	33.2 (1.307)	

If it is not within the specification, replace the spring.

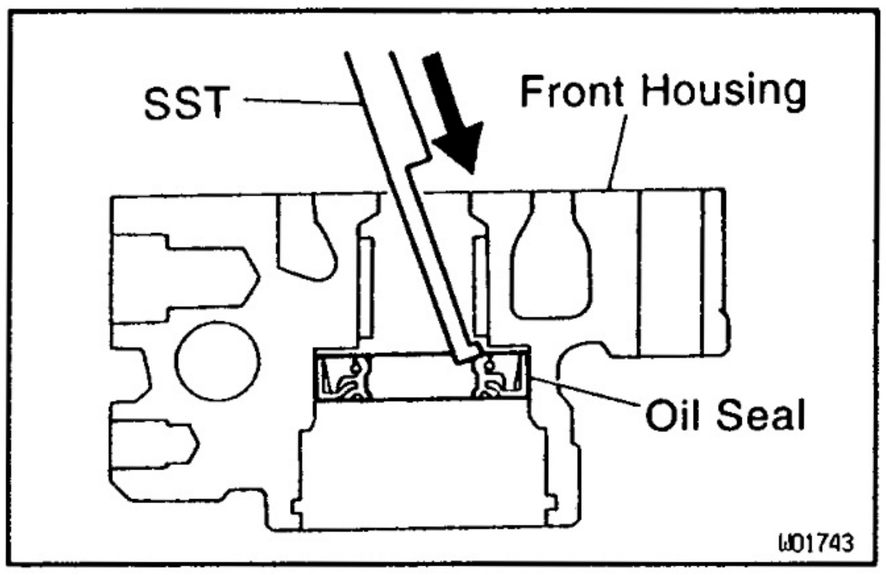

5. IF NECESSARY, REPLACE OIL SEAL

(a) Using SST, tap out the oil seal from the front housing.
SST 09631–10030

NOTICE: Be careful not to damage the bushing of the front housing.

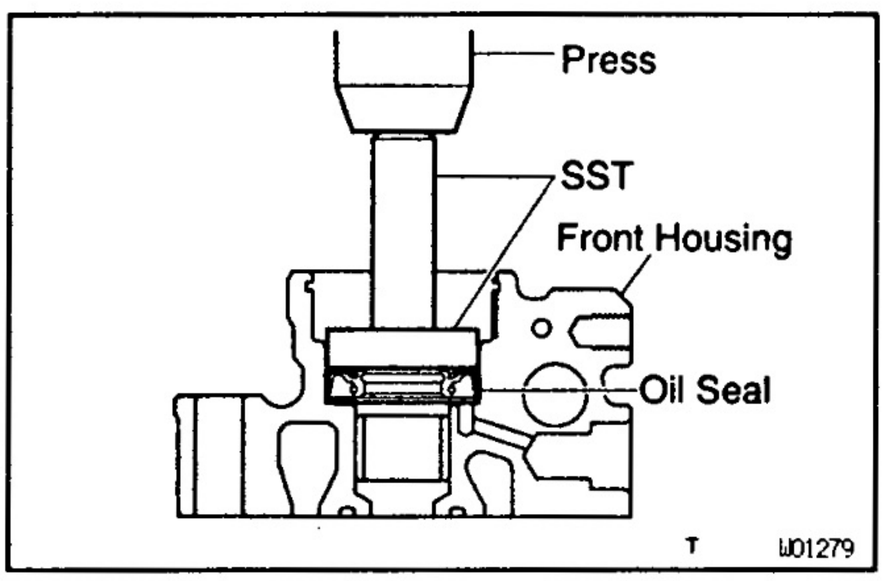

(b) Coat a new oil seal lip with power steering fluid.

(c) Using SST, press in the oil seal.
SST 09950–60010 (09951–00330),
09950–70010 (09951–07100)

NOTICE: Make sure to install the oil seal facing the correct direction.

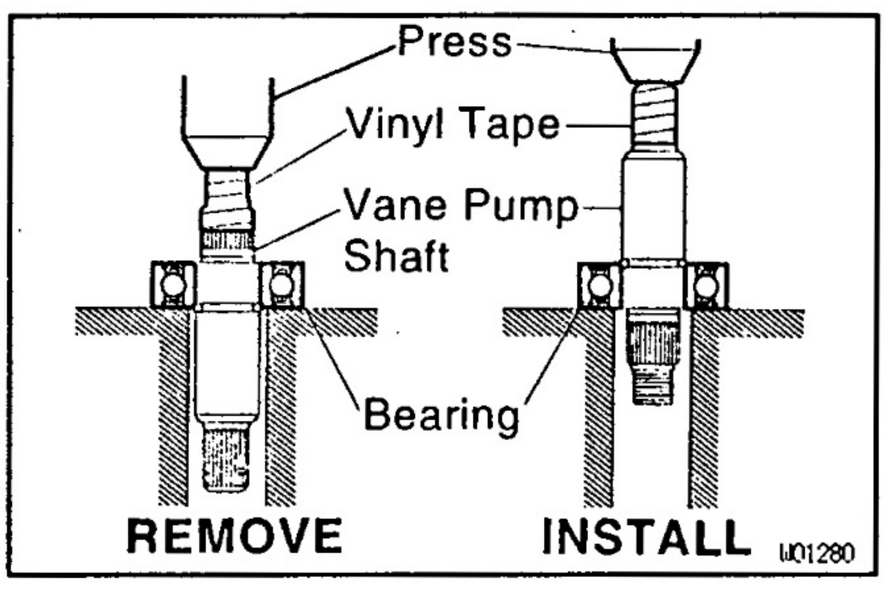

6. IF NECESSARY, REPLACE BEARING

(a) Press out the bearing from the shaft.

(b) Using a snap ring expander, replace the snap ring with a new one.

NOTICE: Be careful not to damage the shaft.

(c) Coat a new bearing with power steering fluid.

(d) Press in the bearing to the shaft.

SR1TU–02

POWER STEERING VANE PUMP ASSEMBLY

NOTICE: When using a vise, do not overtighten it.

1. COAT WITH POWER STEERING FLUID

(See page SR–40)

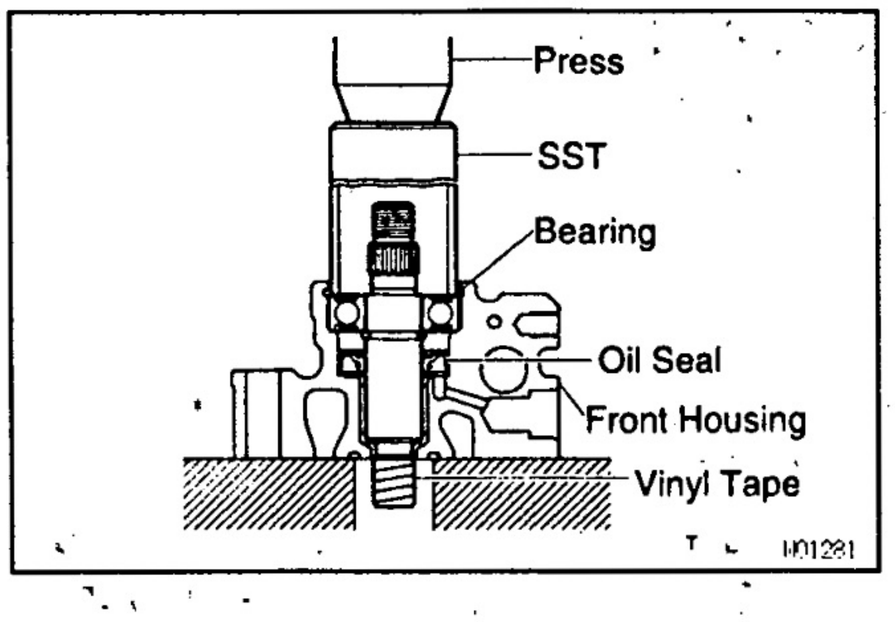

2. INSTALL VANE PUMP SHAFT WITH BEARING

(a) Wind vinyl tape on the serrated part of the vane pump shaft.

(b) Using SST, press in the shaft with the bearing.
SST 09608–04031
NOTICE: Be careful not to damage the oil seal.

(c) Using snap ring pliers, install a new snap ring to the front housing.

3. INSTALL STRAIGHT PINS

Using a plastic hammer, tap in 2 new pins to the front housing.
NOTICE: Be careful not to damage the pins.

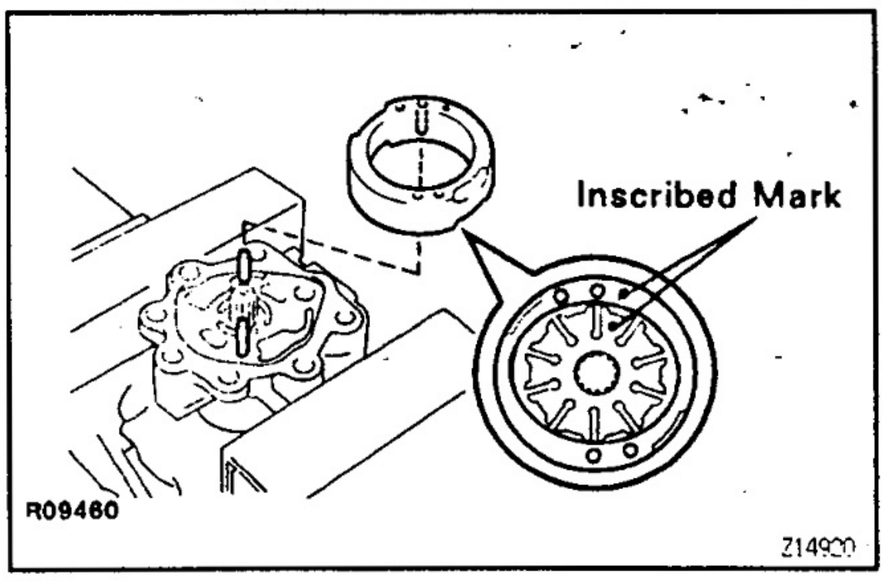

4. INSTALL CAM RING

Install the ring with the inscribed mark facing outward.
HINT: Align the holes of the cam ring with the straight pins.

5. INSTALL VANE PUMP ROTOR

(a) Install the rotor with the inscribed mark facing outward.

(b) Install a new snap ring to the vane pump shaft.

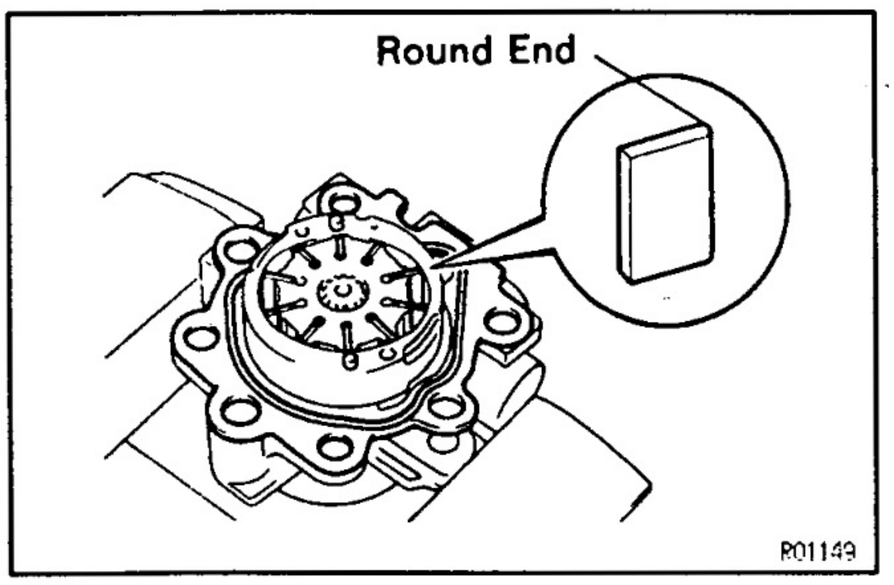

6. INSTALL VANE PLATES AND GASKET

(a) Install the 10 plates with the round end facing outward.

(b) Install a new gasket on the front housing.
NOTICE: Be careful the direction of the gasket.

7. INSTALL SIDE PLATE

Align the holes of the side plate and straight pins, and install the plate.

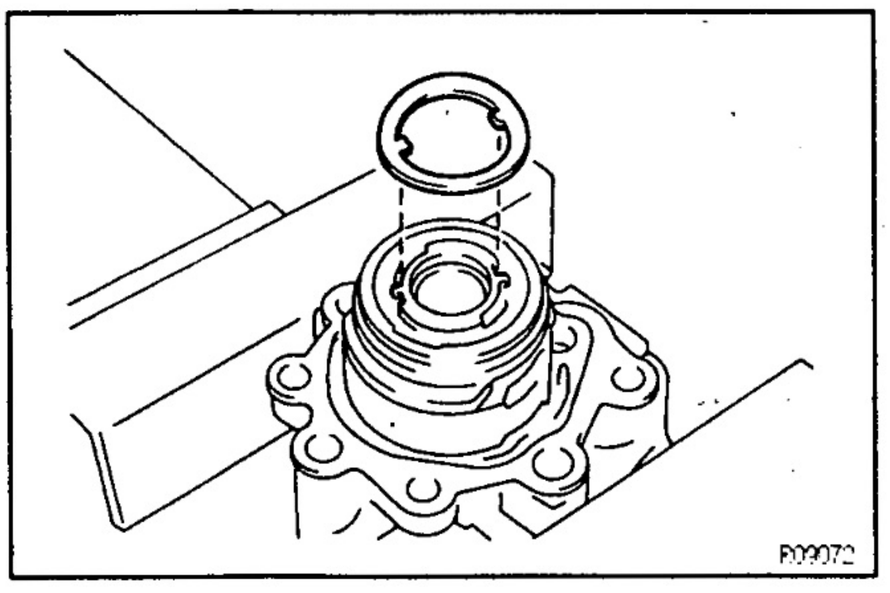

8. INSTALL WAVE WASHER

Install the wave washer so that its protrusions fit into the slots in the side rear plate.

9. INSTALL REAR HOUSING

(a) Coat 2 new O–rings with power steering fluid and install them to the housing.

(b) Torque the 2 bolts.
Torque: 24 N·m (240 kgf·cm, 17 ft·lbf)

SR

10. INSTALL SPRING, FLOW CONTROL VALVE AND PRESSURE PORT UNION

(a) Install the valve facing the correct direction.
(See page SR–40)

(b) Coat a new O–ring with power steering fluid and install it to the union.

(c) Torque the union.
Torque: 83 N·m (850 kgf·cm, 61 ft·lbf)

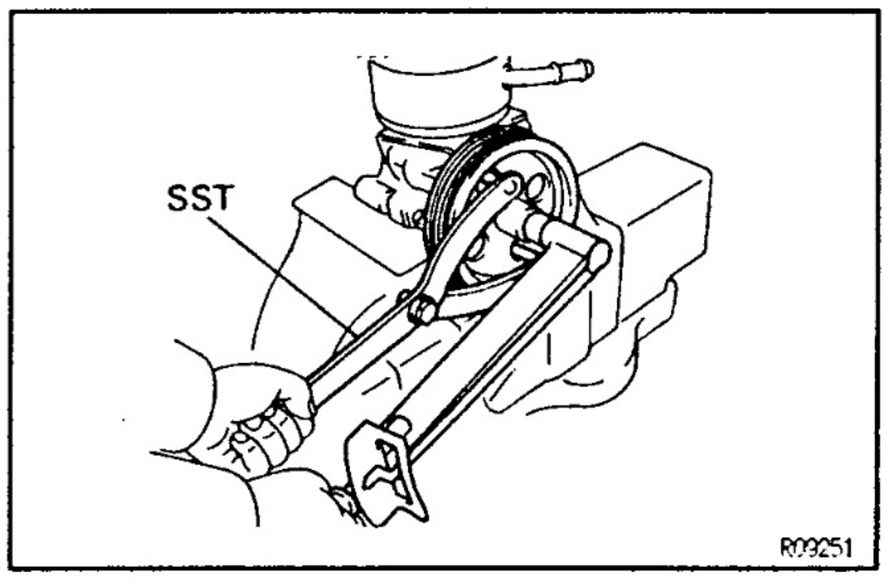

11. INSTALL OIL RESERVOIR

(a) Coat a new O–ring with power steering fluid and install it to the oil reservoir.

(b) Install the oil reservoir with the 3 bolts.
Torque:
Front side bolt: 13 N·m (130 kgf·cm, 9 ft·lbf)
Rear side bolts: 24 N·m (240 kgf·cm, 17 ft·lbf)

12. INSTALL VANE PUMP PULLEY

Using SST to stop the pulley rotating, torque the nut.
SST 09960–10010 (09962–01000, 09963–01000)
Torque: 43 N·m (440 kgf·cm, 32 ft·lbf)

13. MEASURE PS VANE PUMP ROTATING TORQUE
(See page SR–41)

SR

SR1TV–02

POWER STEERING VANE PUMP INSTALLATION

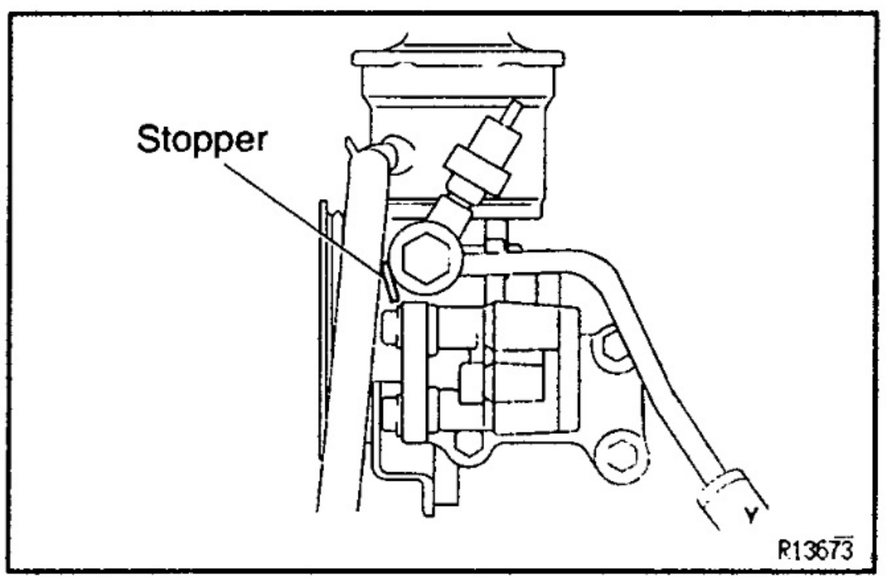

1. INSTALL PS VANE PUMP ASSEMBLY

Torque the 2 pump assembly set bolts.
Torque: 39 N·m (400 kgf·cm, 29 ft·lbf)

2. CONNECT RETURN HOSE

3. CONNECT PRESSURE FEED TUBE

Torque the union bolt with a new gasket.
Torque: 47 N·m (475 kgf·cm, 34 ft·lbf)

HINT: Make sure that the stopper of the tube is touching the PS pump body as shown, then torque the union bolt.

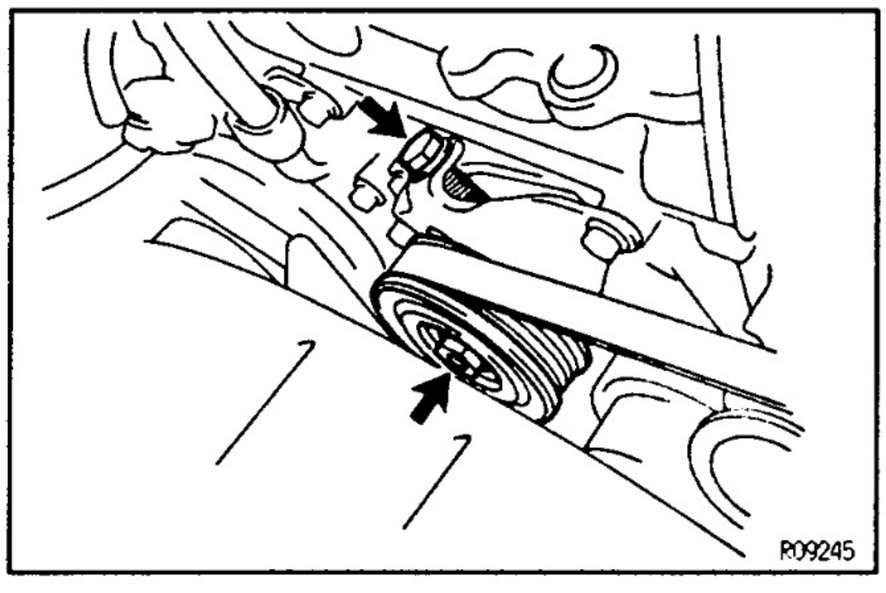

4. INSTALL DRIVE BELT

(a) Tightening the belt adjusting bolt and adjust drive belt tension.
(See page SR–8)

(b) Torque the power steering idle pulley set nut.
Torque: 39 N·m (400 kgf·cm, 29 ft·lbf)

5. BLEED POWER STEERING SYSTEM
(See page SR–11)

POWER STEERING VANE PUMP (5VZ–FE)

COMPONENTS

SR1TW–02

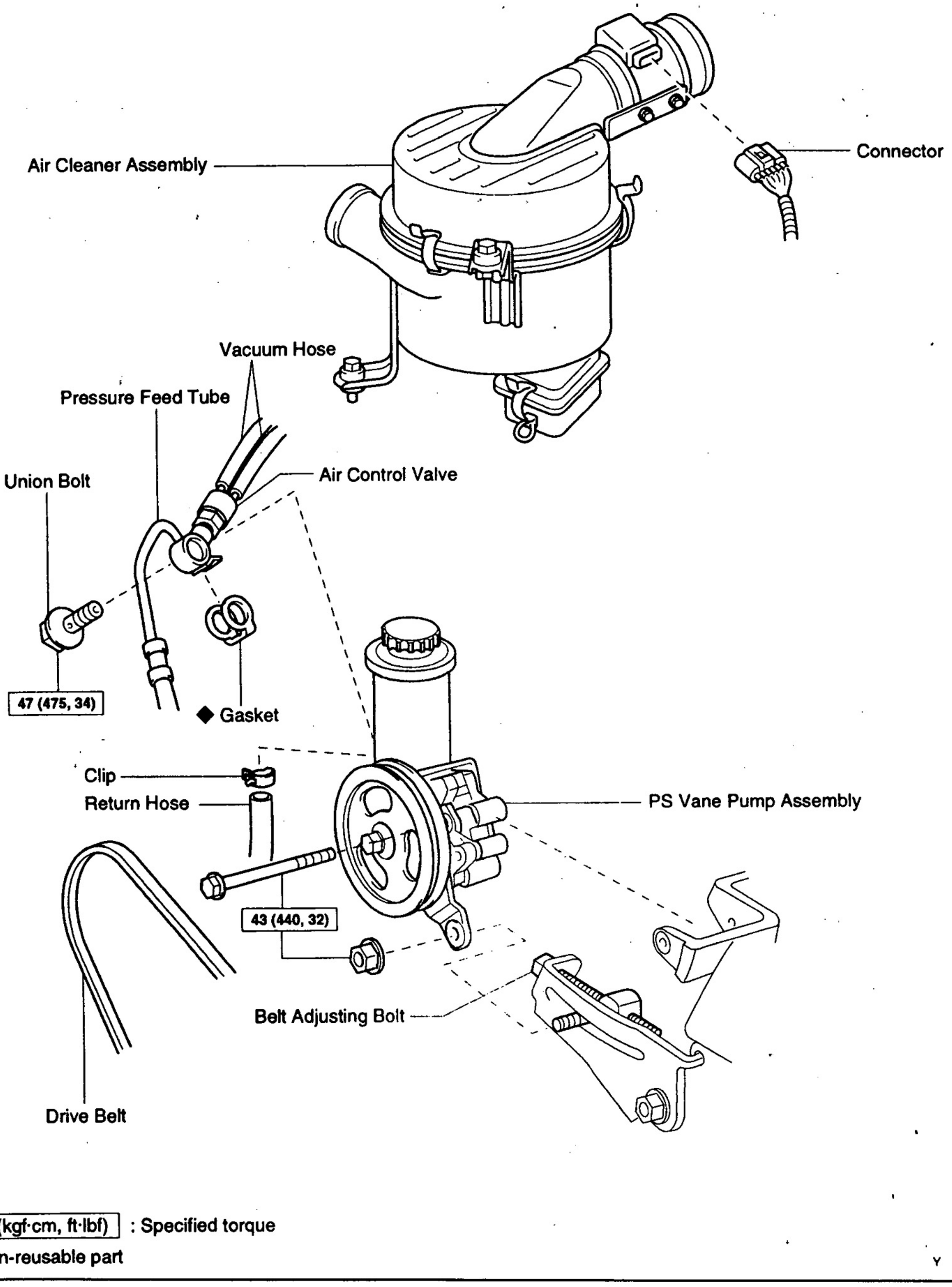

N·m (kgf·cm, ft·lbf) : Specified torque

◆ Non-reusable part

W02657

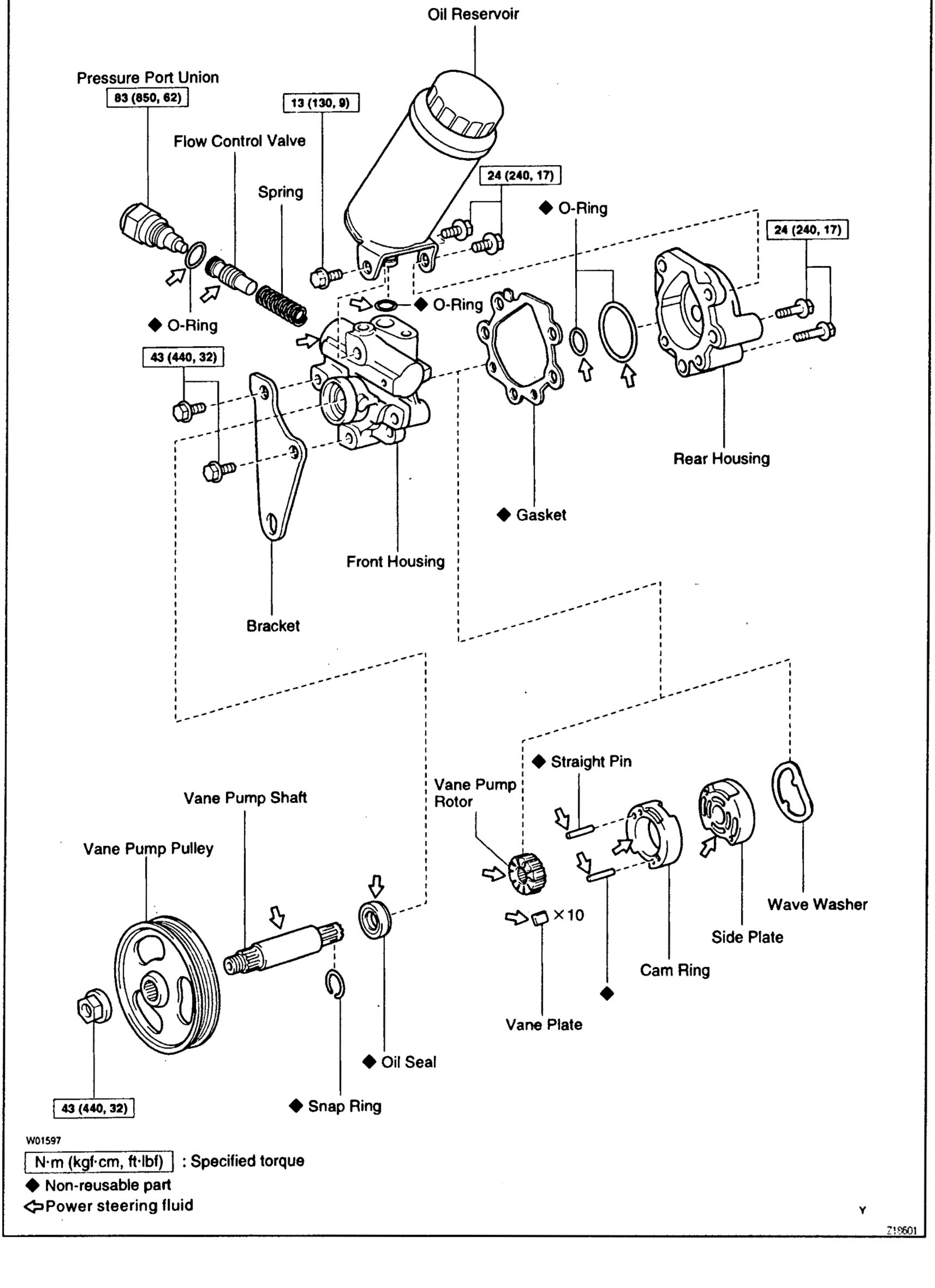

W01597

N·m (kgf·cm, ft·lbf) : Specified torque

◆ Non-reusable part

⇦ Power steering fluid

Y

Z19601

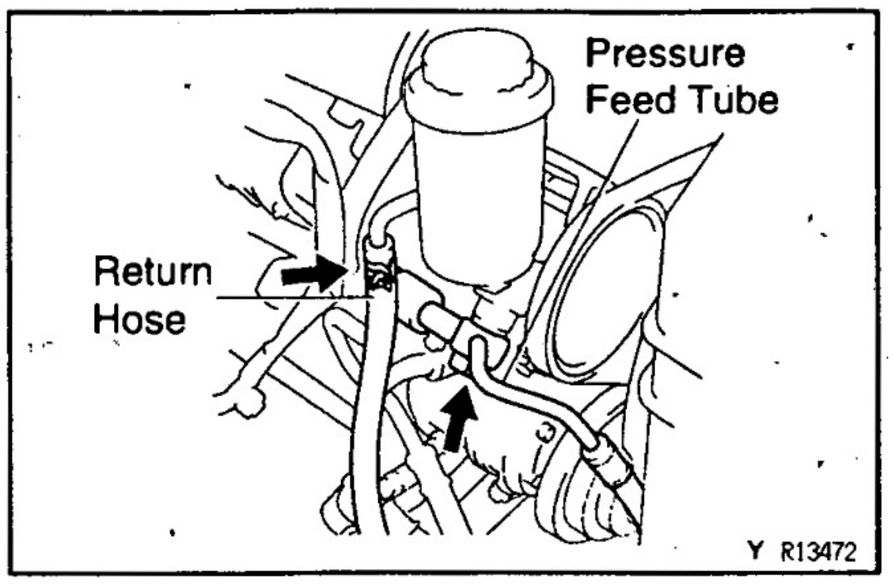

POWER STEERING VANE PUMP REMOVAL

SR1TX-02

1. **REMOVE AIR CLEANER ASSEMBLY**

(a) Disconnect the connector.

(b) Remove the 3 bolts.

2. **DISCONNECT RETURN HOSE**

NOTICE: Take care not to spill fluid on the drive belt.

3. **DISCONNECT PRESSURE FEED TUBE**

Remove the union bolt and gasket, and disconnect the tube from the PS vane pump assembly.

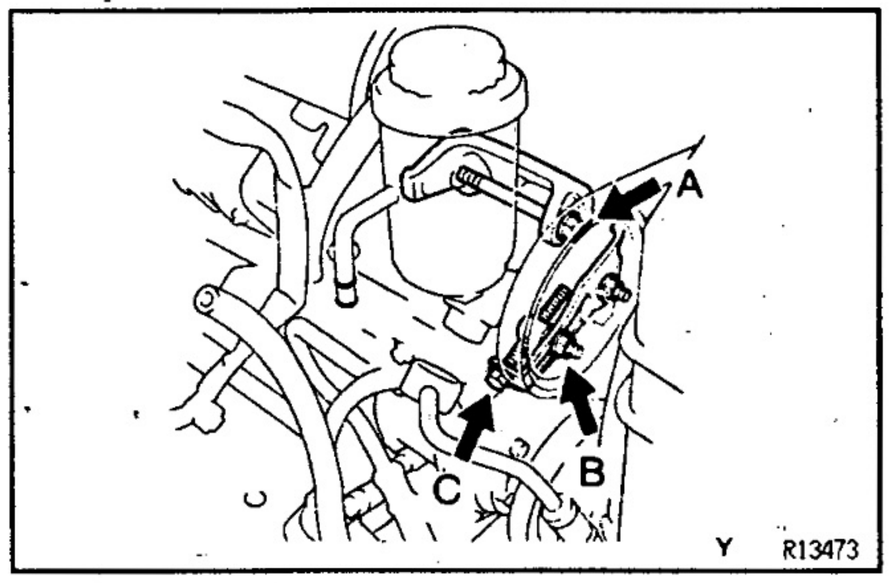

4. **REMOVE DRIVE BELT**

(a) Loosen the bolt A and nut B.

(b) Loosen the bolt C.

5. **REMOVE PS VANE PUMP ASSEMBLY**

Remove the bolt A and nut B.

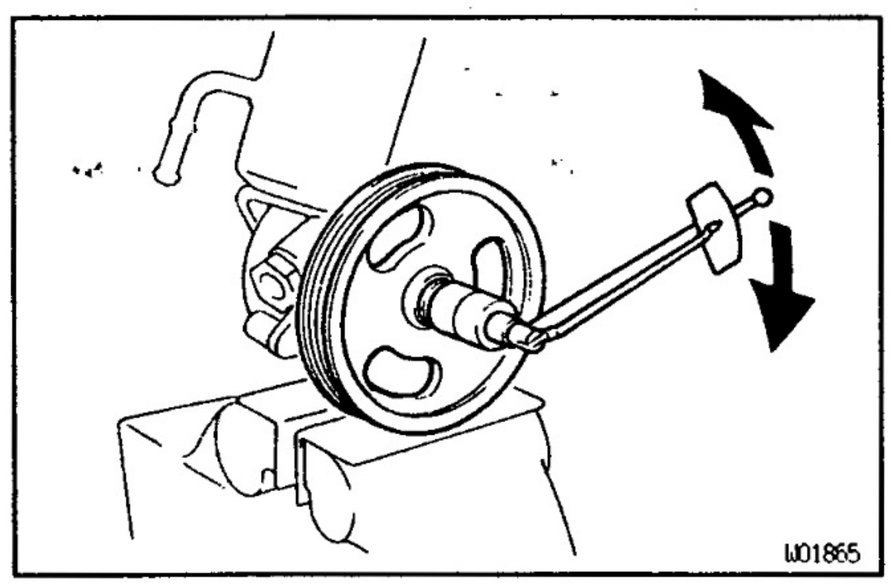

POWER STEERING VANE PUMP DISASSEMBLY

SR1TY-02

SR

NOTICE: When using a vise, do not overtighten it.

1. **MEASURE PS VANE PUMP ROTATING TORQUE**

(a) Check that the pump rotates smoothly without abnormal noise.

(b) Using a torque wrench, check the pump rotating torque.

Rotating torque:

0.27 N·m (2.8 kgf·cm, 2.4 in.·lbf) or less

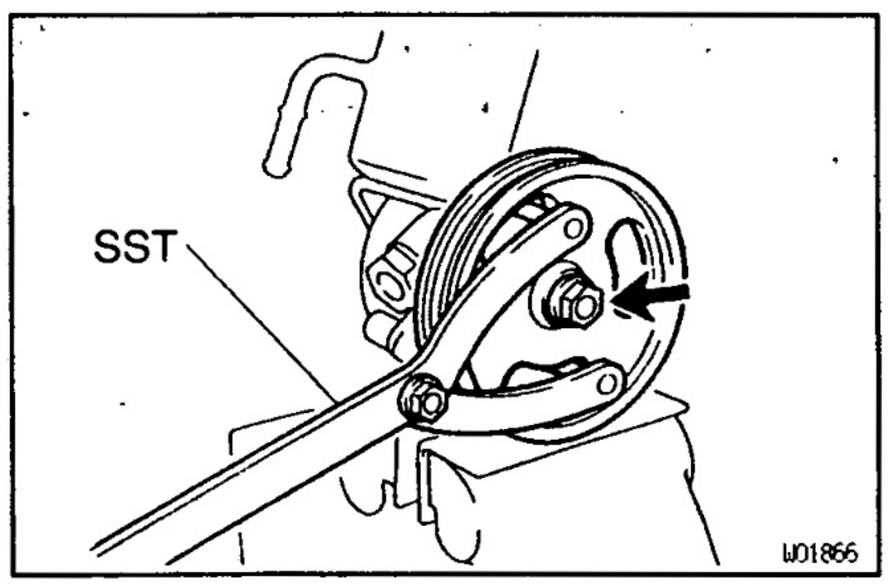

2. **REMOVE VANE PUMP PULLEY**

Using SST to stop the pulley rotating, remove the pulley set nut.

SST 09960–10010 (09962–01000, 09963–01000)

3. **REMOVE OIL RESERVOIR**

(a) Remove the 3 bolts and oil reservoir.

(b) Remove the O–ring from the oil reservoir.

4. **REMOVE PRESSURE PORT UNION, FLOW CONTROL VALVE AND SPRING**

Remove the O–ring from the union.

5. **REMOVE BRACKET**

Remove the 2 bolts.

6. **REMOVE REAR HOUSING**

(a) Remove the 2 bolts.

(b) Remove the 2 O–rings from the housing.

7. **REMOVE WAVE WASHER**

8. **REMOVE SIDE PLATE**

9. REMOVE GASKET

10. REMOVE CAM RING, VANE PLATES AND VANE PUMP ROTOR

(a) Remove the 10 plates.

NOTICE: Take care not to drop the plate.

(b) Using a screwdriver, remove the snap ring from the vane pump shaft.

11. REMOVE VANE PUMP SHAFT

12. REMOVE STRAIGHT PINS

Remove the 2 pins from the front housing.

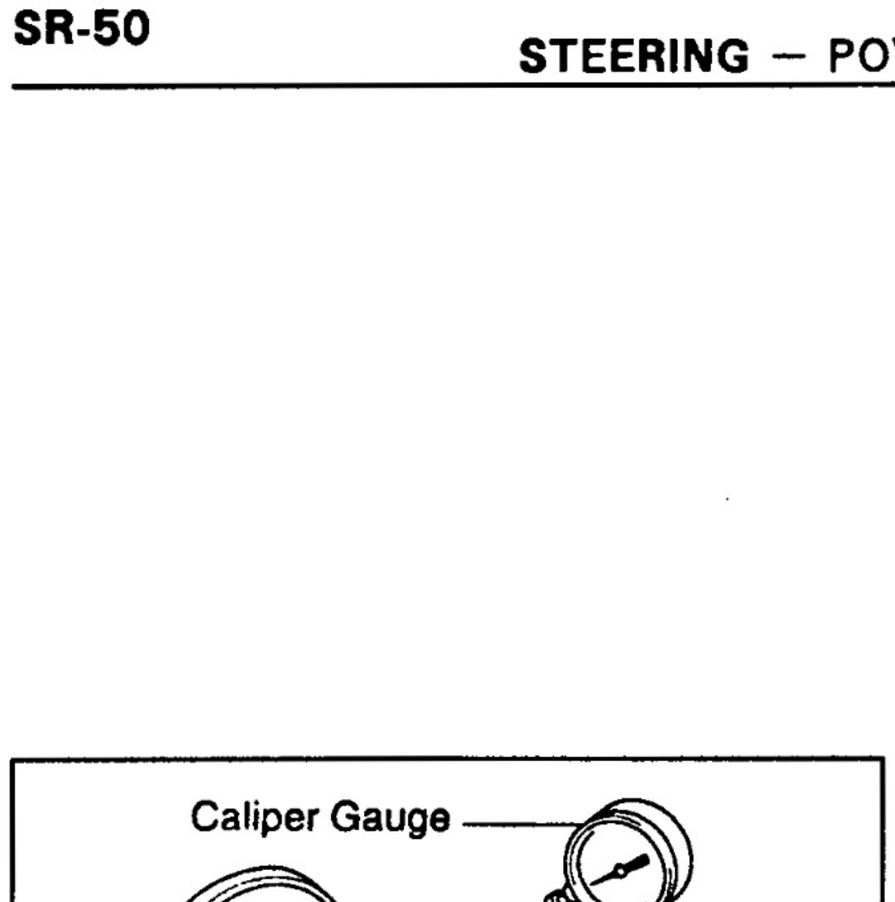

SR1TZ-02

POWER STEERING VANE PUMP INSPECTION AND REPLACEMENT

NOTICE: When using a vise, do not overtighten it.

1. CHECK OIL CLEARANCE BETWEEN VANE PUMP SHAFT AND BUSHING

Using a micrometer and caliper gauge, measure the oil clearance.

	Oil clearance mm (in.)
Standard	0.03–0.05 (0.0012–0.0020)
Maximum	0.07 (0.0028)

If it is more than maximum, replace the front housing and vane pump shaft.

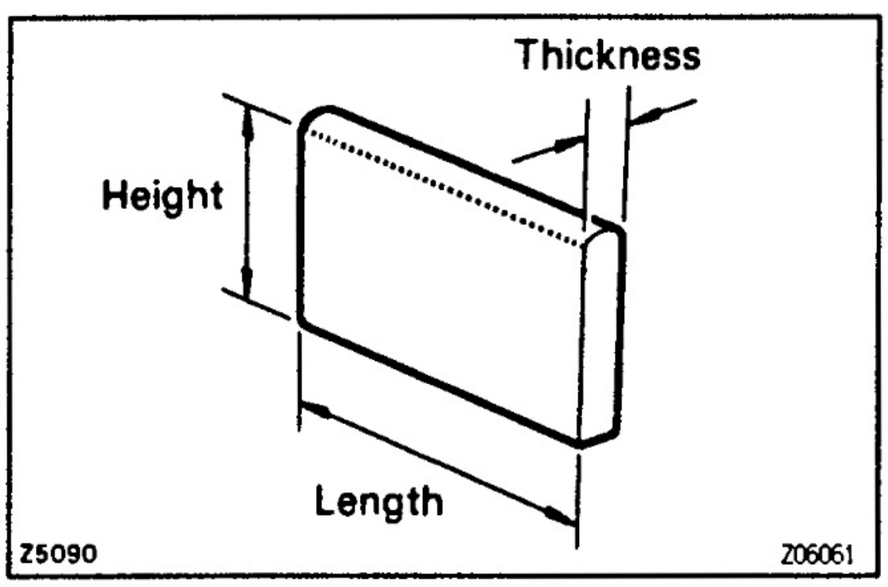

2. INSPECT VANE PUMP ROTOR AND VANE PLATES

(a) Using a micrometer, measure the height, thickness and length of the 10 plates.

	Minimum mm (in.)
Height	8.6 (0.339)
Thickness	1.397 (0.0550)
Length	14.991 (0.5902)

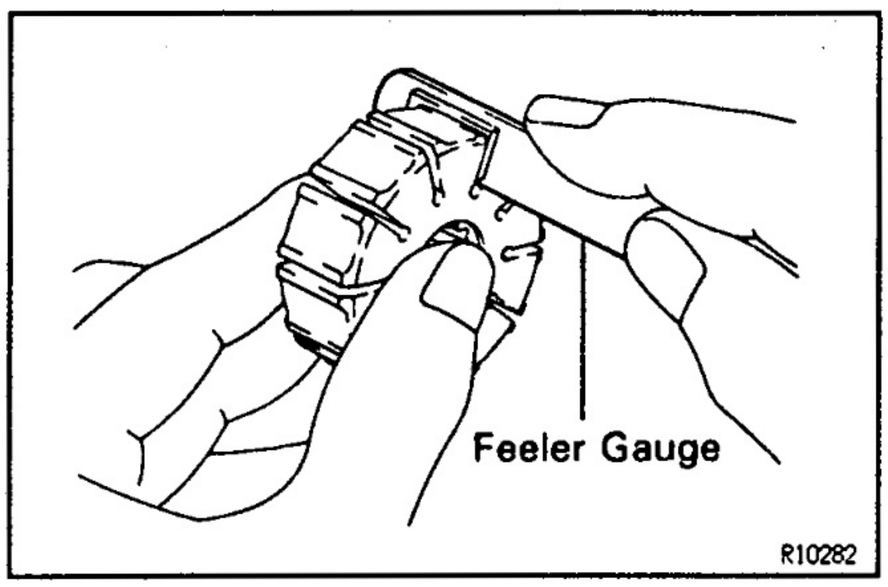

(b) Using a feeler gauge, measure the clearance between the rotor groove and plate.

	Clearance mm (in.)
Maximum	0.035 (0.0014)

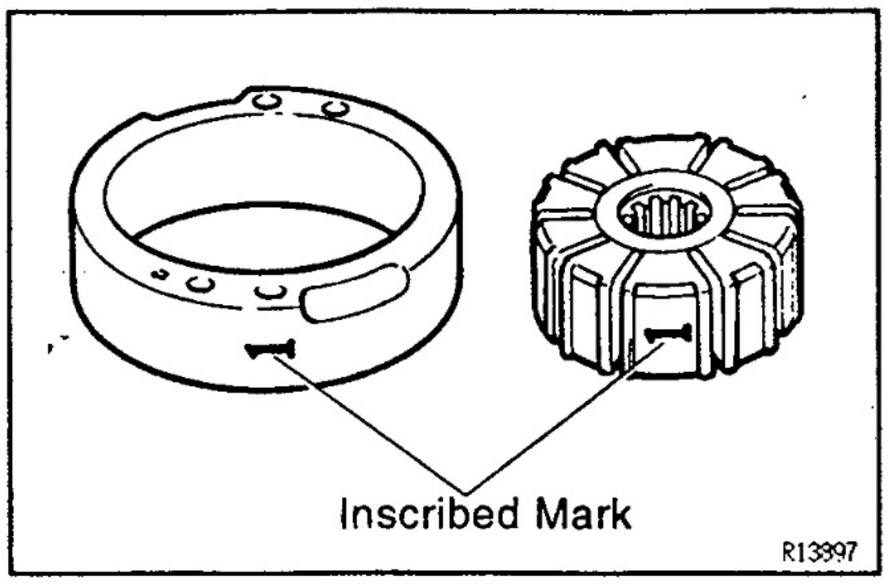

If it is more than the maximum, replace the plate and/or rotor with one having the same mark stamped on the cam ring.

Inscribed mark:

1, 2, 3, 4 or None

HINT: There are 5 vane plate lengths with the following rotor and cam ring marks:

Rotor and cam ring mark	Vane plate part number	Vane plate length mm (in.)
None	44345–26010	14.999–15.001 (0.59051–0.59059)
1	44345–26020	14.997–14.999 (0.59043–0.59051)
2	44345–26030	14.995–14.997 (0.59035–0.59043)
3	44345–26040	14.993–14.995 (0.59027–0.59035)
4	44345–26050	14.991–14.993 (0.59020–0.59027)

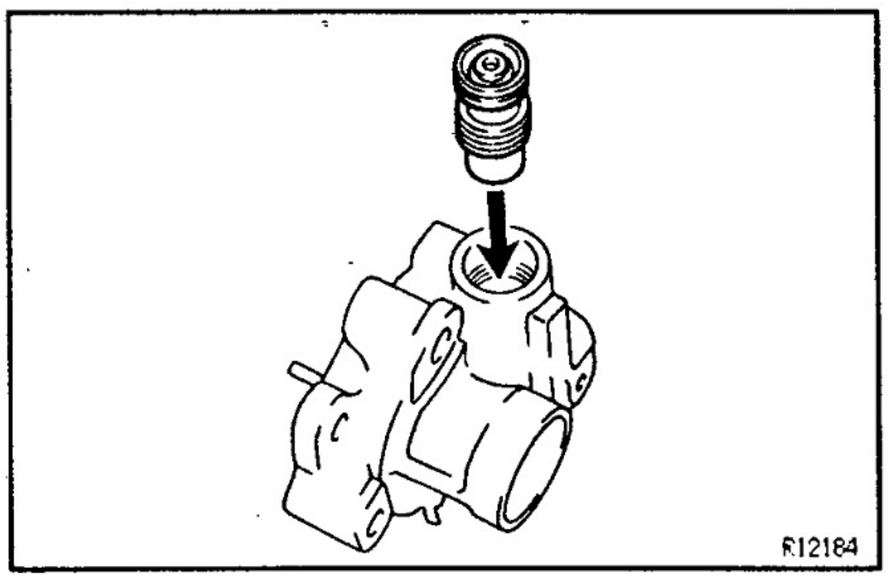

3. INSPECT FLOW CONTROL VALVE

(a) Coat the valve with power steering fluid and check that it falls smoothly into the valve hole by its own weight.

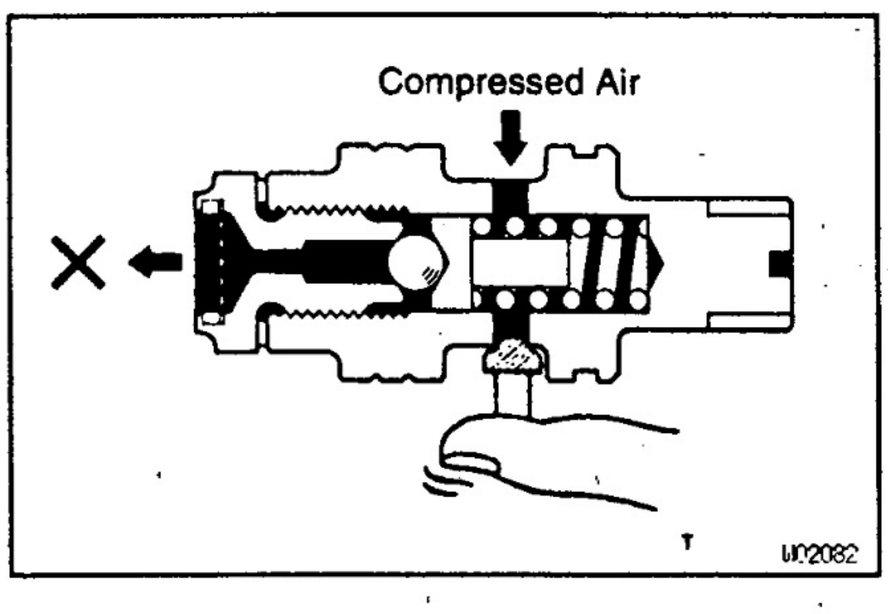

(b) Check the flow control valve for leakage.
Close one of the holes and apply compressed air 392 –490 kPa (4–5 kgf/cm², 57–71 psi) into the opposite side, and confirm that air does not come out from the end hole.

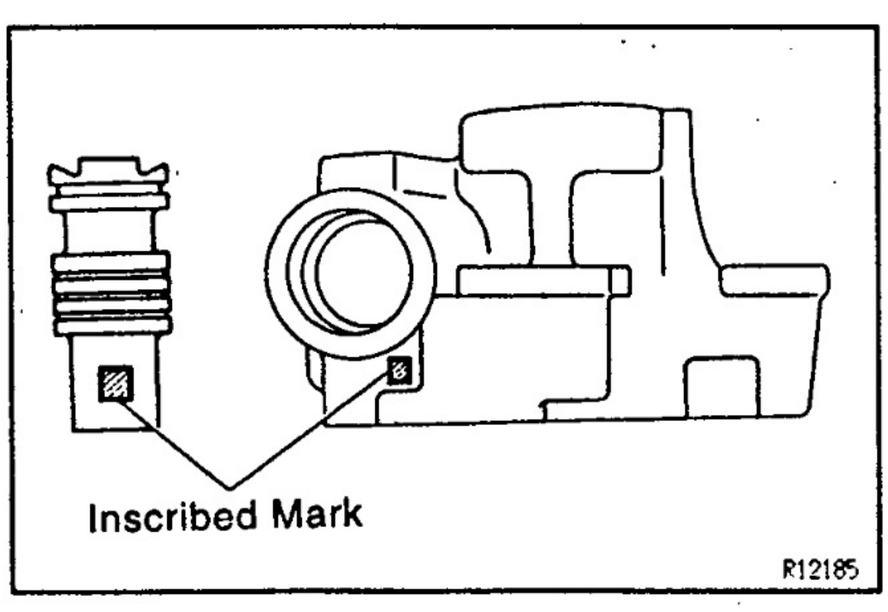

If necessary, replace the valve with one having the same letter as inscribed on the front housing.

Inscribed mark:

A, B, C, D, E or F

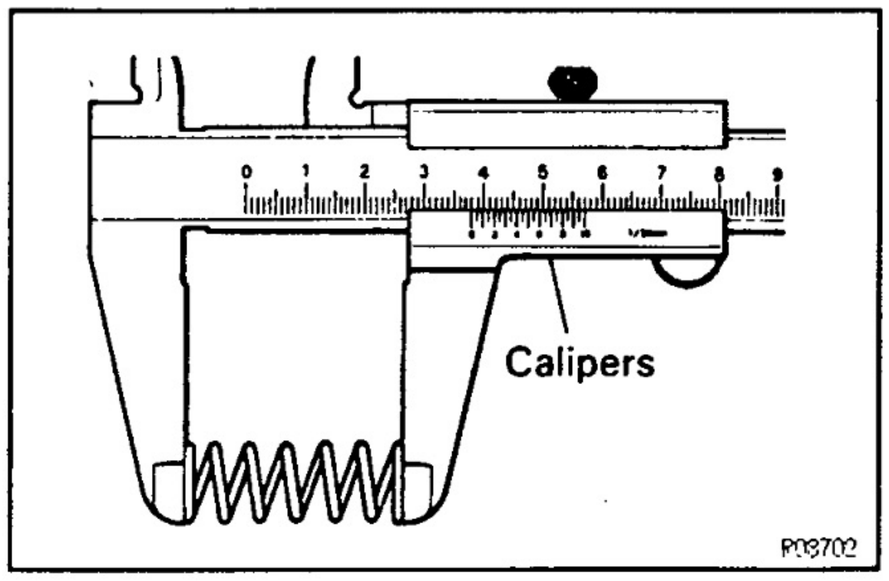

4. INSPECT SPRING

Using calipers, measure the free length of the spring.

	Free length	mm (in.)
Minimum	33.2 (1.307)	

If it is not within the specification, replace the spring.

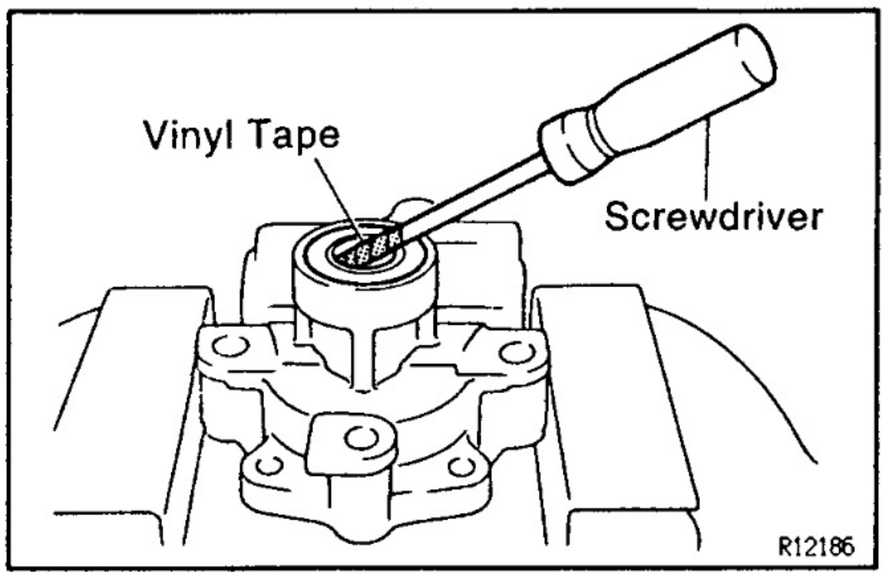

5. IF NECESSARY, REPLACE OIL SEAL

(a) Using a screwdriver with vinyl tape wound around its tip, remove the oil seal.

NOTICE: Be careful not to damage the bushing of the front housing.

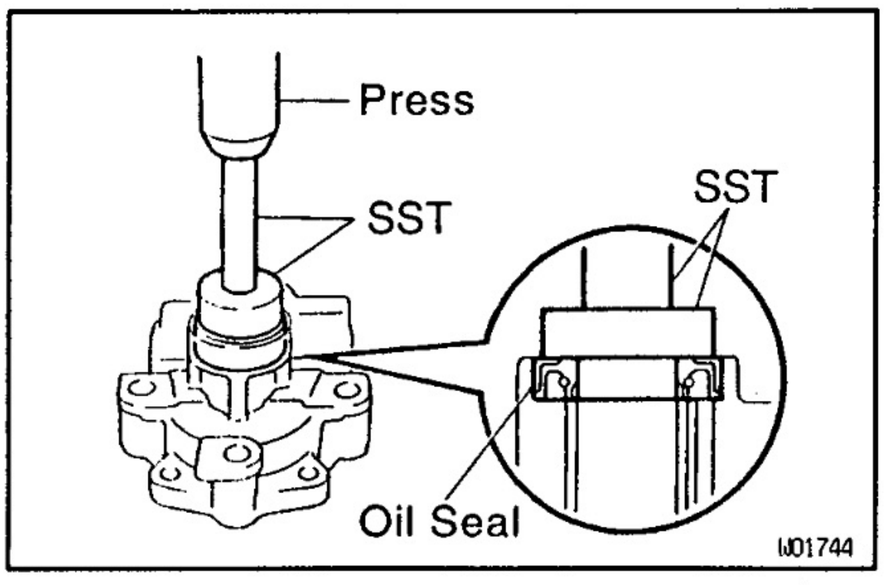

(b) Coat a new oil seal lip with power steering fluid.

(c) Using SST, press in the oil seal.

SST 09950–60010 (09951–00330),
09950–70010 (09951–07100)

NOTICE: Make sure to install the oil seal facing the correct direction.

SR

SR1U0-02

POWER STEERING VANE PUMP ASSEMBLY

NOTICE: When using a vise, do not overtighten it.

1. COAT WITH POWER STEERING FLUID

(See page SR–48)

2. INSTALL STRAIGHT PINS

Using a plastic hammer, tap in 2 new pins to the front housing.

NOTICE: Be careful not to damage the pins.

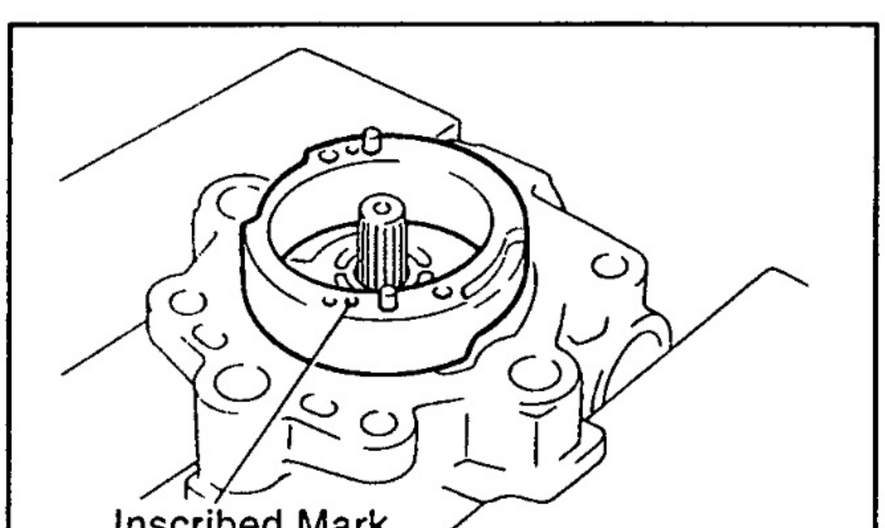

3. INSTALL VANE PUMP SHAFT

4. INSTALL CAM RING

Install the ring with the inscribed mark facing outward.

HINT: Align the holes of the cam ring with the straight pins.

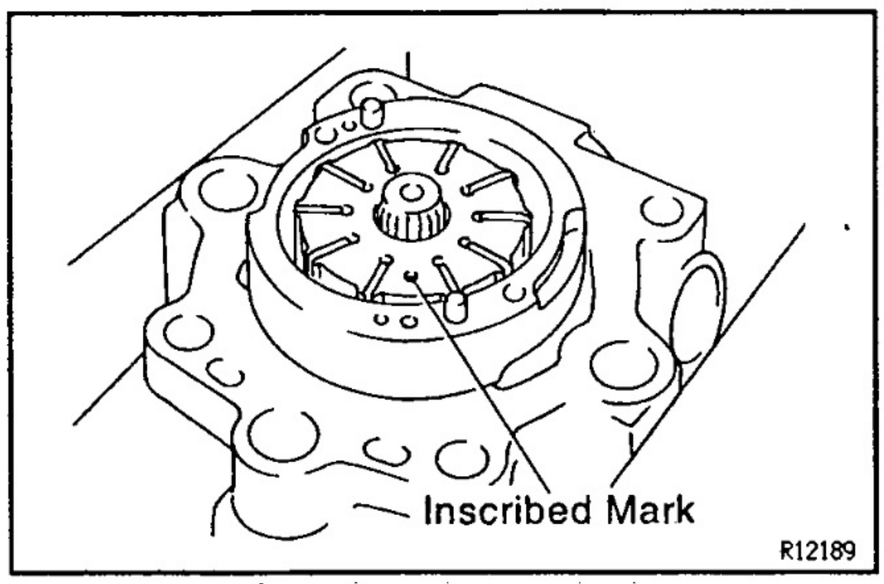

5. INSTALL VANE PUMP ROTOR

(a) Install the rotor with the inscribed mark facing outward.

(b) Install a new snap ring to the vane pump shaft.

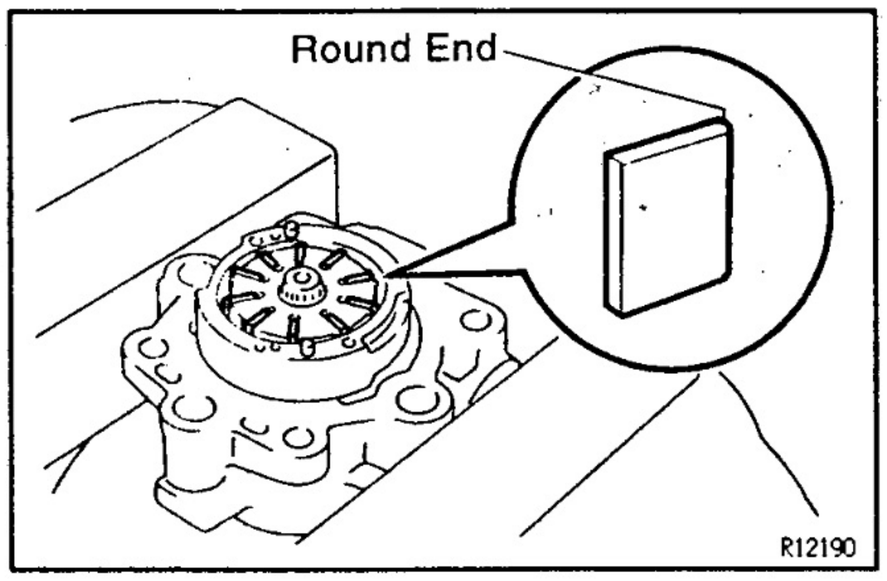

6. INSTALL VANE PLATES

Install the 10 plates with the round end facing outward.

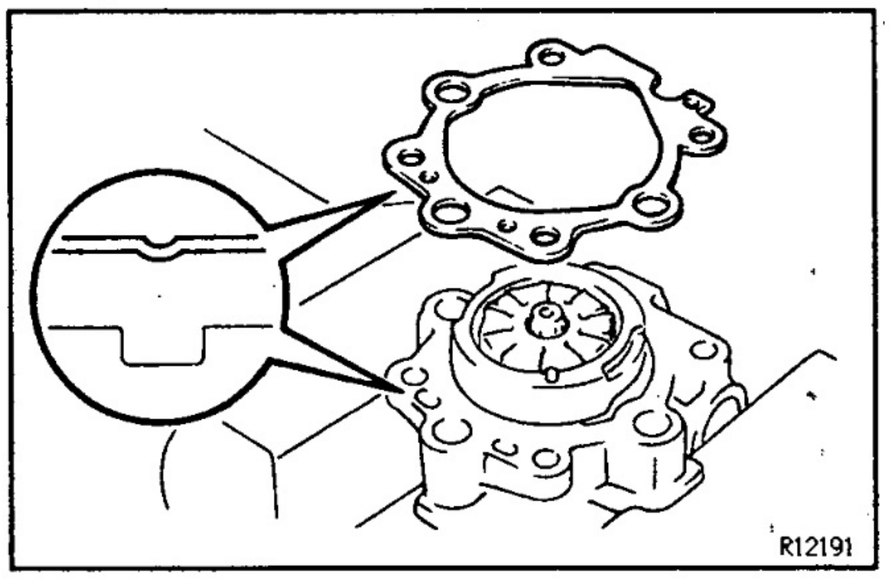

7. INSTALL GASKET

Install a new gasket on the front housing.

NOTICE: Be careful the direction of the gasket.

8. INSTALL SIDE PLATE

Align the 2 straight pins and holes of the plate.

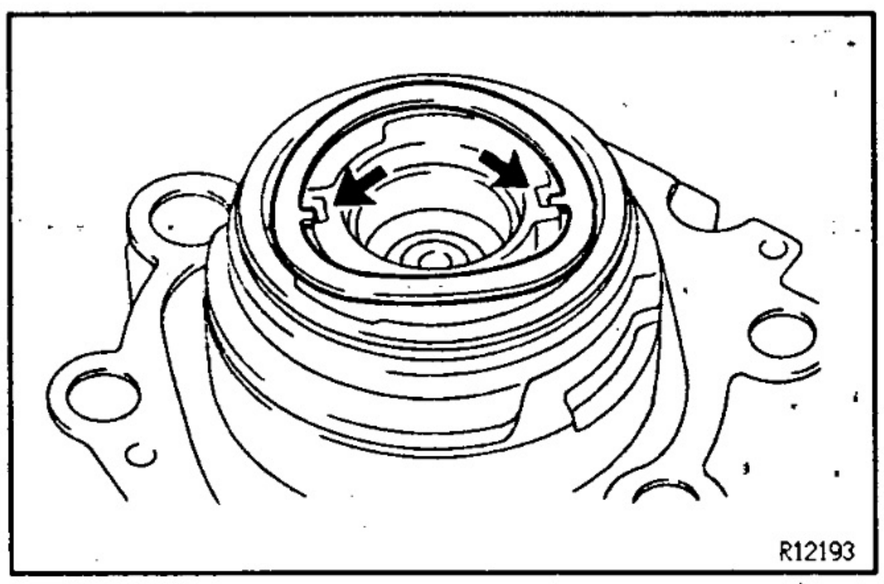

9. INSTALL WAVE WASHER

Install the washer so that its protrusions fit into the slots in the side plate.

10. INSTALL REAR HOUSING

(a) Coat 2 new O–rings with power steering fluid and install them to the housing.

(b) Torque the 2 bolts.

Torque: 24 N·m (240 kgf·cm, 17 ft·lbf)

11. INSTALL SPRING, FLOW CONTROL VALVE AND PRESSURE PORT UNION

(a) Install the valve facing the correct direction.
(See page SR–48)

(b) Coat a new O–ring with power steering fluid and install it to the union.

(c) Torque the union.

Torque: 83 N·m (850 kgf·cm, 62 ft·lbf)

12. INSTALL BRACKET

Torque the 2 bolts.

Torque: 43 N·m (440 kgf·cm, 32 ft·lbf)

13. INSTALL OIL RESERVOIR

(a) Coat a new O–ring with power steering fluid and install it to the oil reservoir.

(b) Install the oil reservoir with the 3 bolts.

Torque:

Front side bolt: 13 N·m (130 kgf·cm, 9 ft·lbf)

Rear side bolts: 24 N·m (240 kgf·cm, 17 ft·lbf)

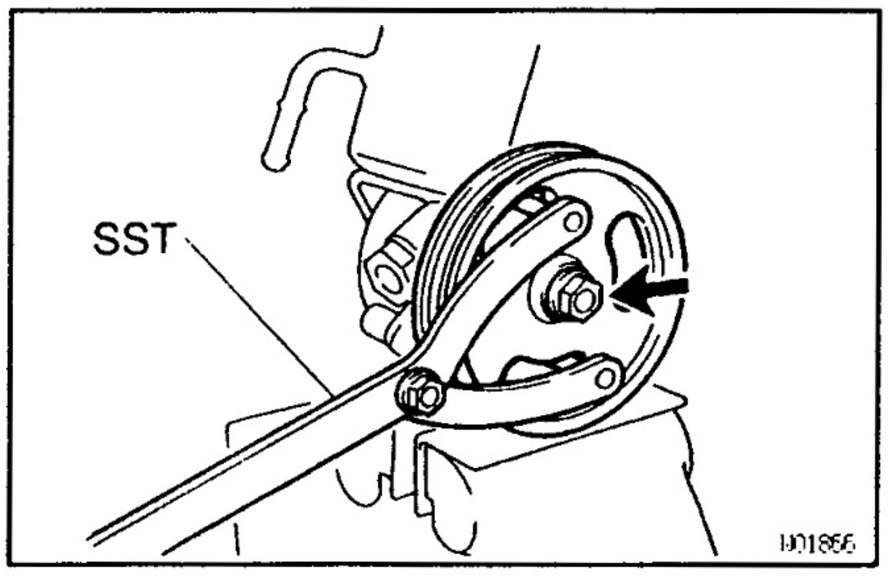

14. INSTALL VANE PUMP PULLEY

Using SST to stop the pulley rotating, torque the nut.

SST 09960–10010 (09962–01000, 09963–01000)

Torque: 43 N·m (440 kgf·cm, 32 ft·lbf)

15. MEASURE PS VANE PUMP ROTATING TORQUE

(See page SR–49)

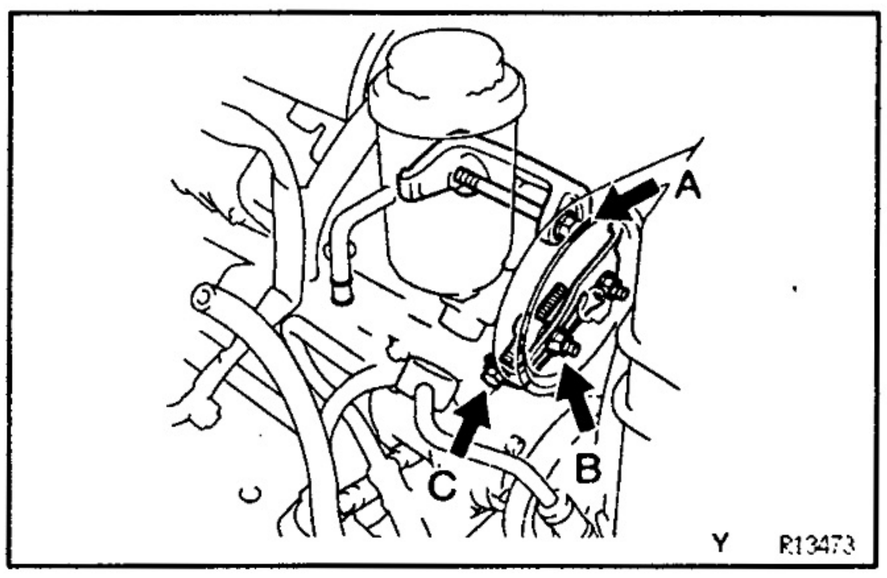

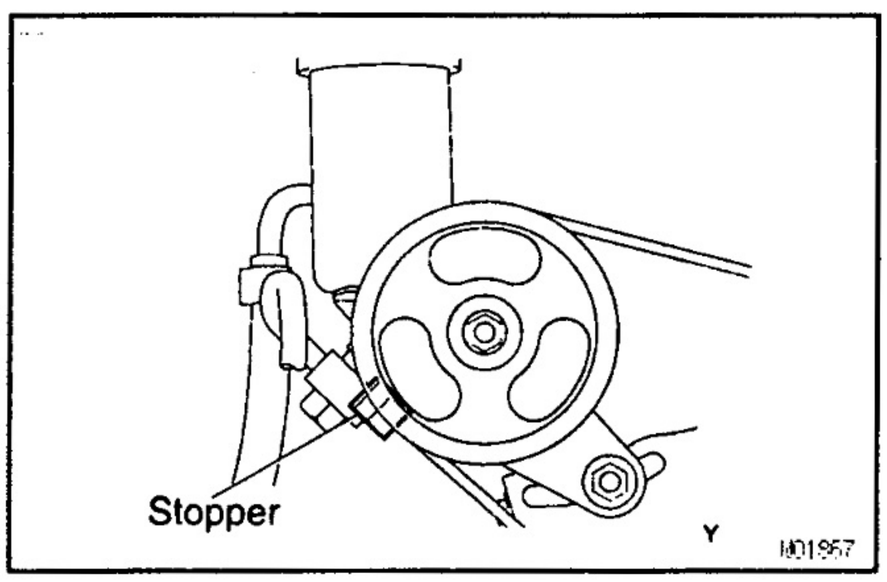

SR1U1–02

POWER STEERING VANE PUMP INSTALLATION

1. INSTALL PS VANE PUMP ASSEMBLY

Temporarily tighten the bolt A and nut B.

2. INSTALL DRIVE BELT

(a) Tightening the bolt C, adjust drive belt tension.

(See page SR–8)

(b) Torque the bolt A and nut B.

Torque: 43 N·m (440 kgf·cm, 32 ft·lbf)

3. CONNECT PRESSURE FEED TUBE

Torque the union bolt with a new gasket.

Torque: 47 N·m (475 kgf·cm, 34 ft·lbf)

HINT: Make sure that the stopper of the tube is touching the PS pump body as shown, then torque the union bolt.

4. CONNECT RETURN HOSE

5. INSTALL AIR CLEANER ASSEMBLY

(a) Tighten the 3 bolts.

(b) Connect the connector.

6. BLEED POWER STEERING SYSTEM

(See page SR–11)

POWER STEERING VANE PUMP (1KZ–T, 1KZ–TE)

COMPONENTS

SR1VF–02

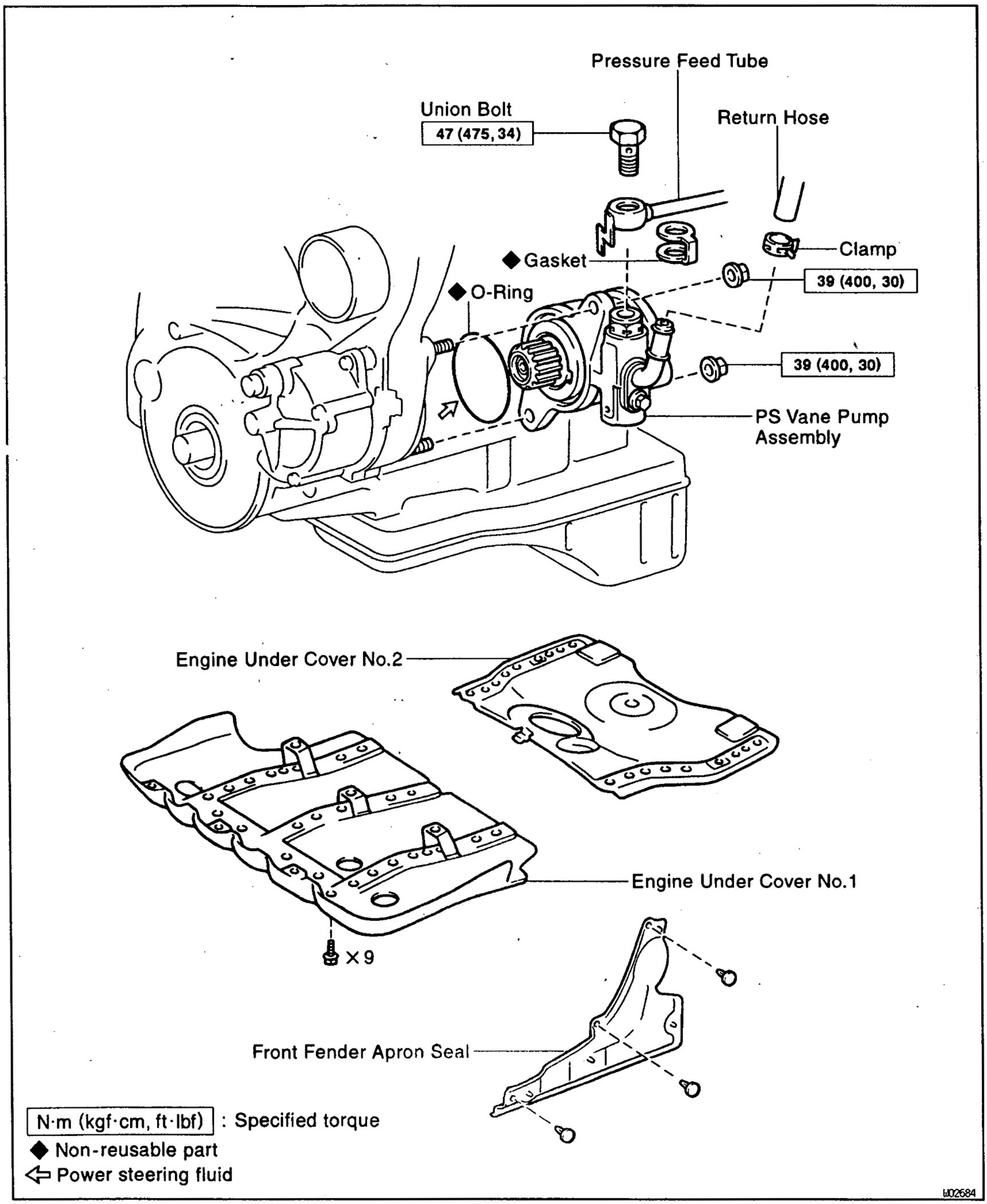

SR

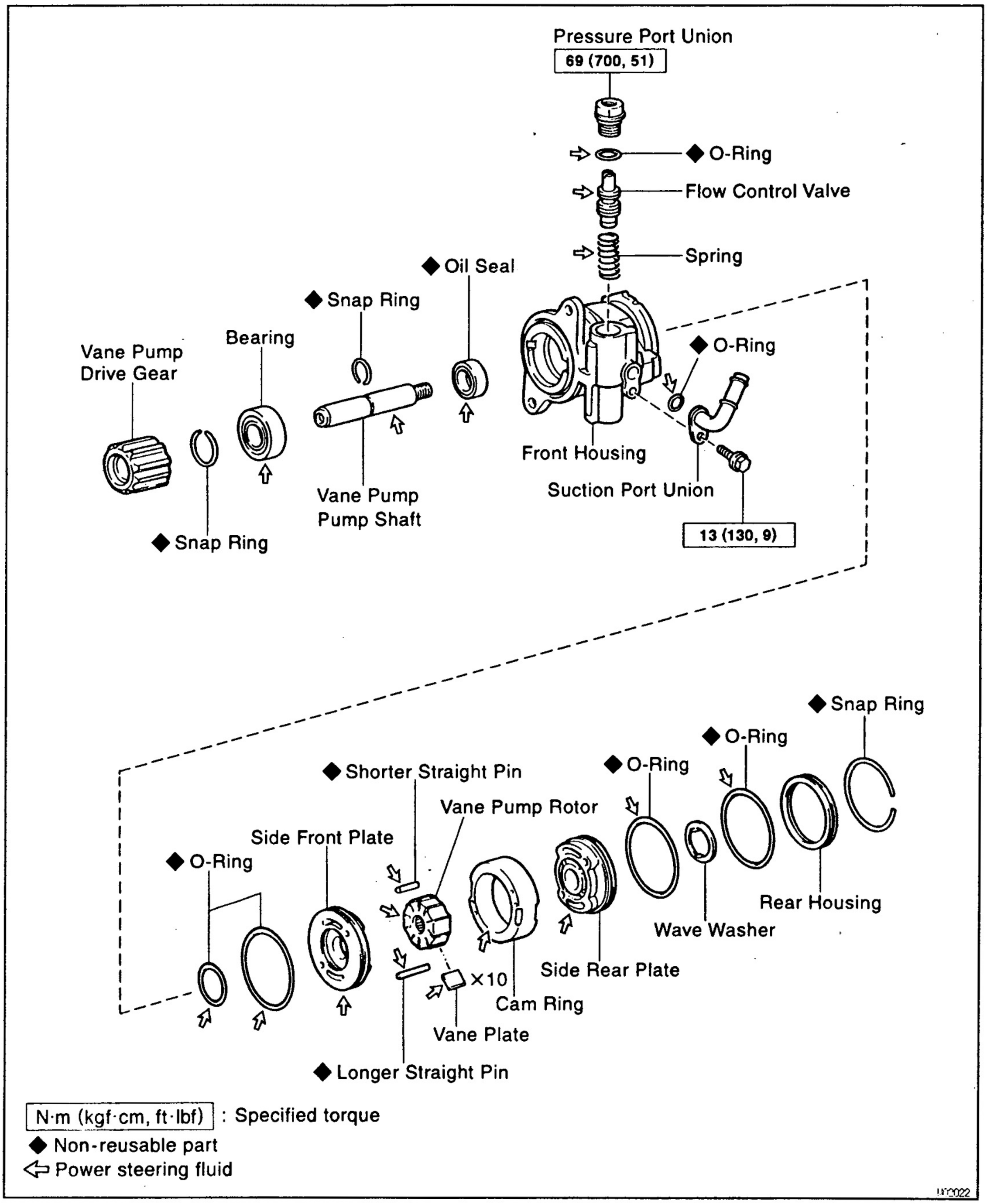
Pressure Port Union
69 (700, 51)
◆ O-Ring
Flow Control Valve
Spring
◆ Oil Seal
◆ Snap Ring
Bearing
Vane Pump
Drive Gear
◆ Snap Ring
Vane Pump
Pump Shaft
◆ O-Ring
Front Housing
Suction Port Union
13 (130, 9)
◆ Snap Ring
◆ O-Ring
◆ O-Ring
◆ Shorter Straight Pin
Vane Pump Rotor
Side Front Plate
◆ O-Ring
×10
Cam Ring
Side Rear Plate
Wave Washer
Rear Housing
Vane Plate
◆ Longer Straight Pin
N·m (kgf·cm, ft·lbf) : Specified torque
◆ Non-reusable part
⇦ Power steering fluid
UY0022

POWER STEERING VANE PUMP REMOVAL

SR1VG-02

1: **REMOVE ENGINE UNDER COVER NO. 1 AND ENGINE UNDER COVER NO.2**
Remove the 9 bolts.

2. **REMOVE FRONT FENDER APRON SEAL**
Remove the 3 clips.

3. **DISCONNECT RETURN HOSE**

4. **DISCONNECT PRESSURE FEED TUBE**
Remove the union bolt and gasket.

5. **REMOVE PS VANE PUMP ASSEMBLY**
(a) Remove the 2 nuts.
(b) Remove the O—ring from the vane pump assembly.

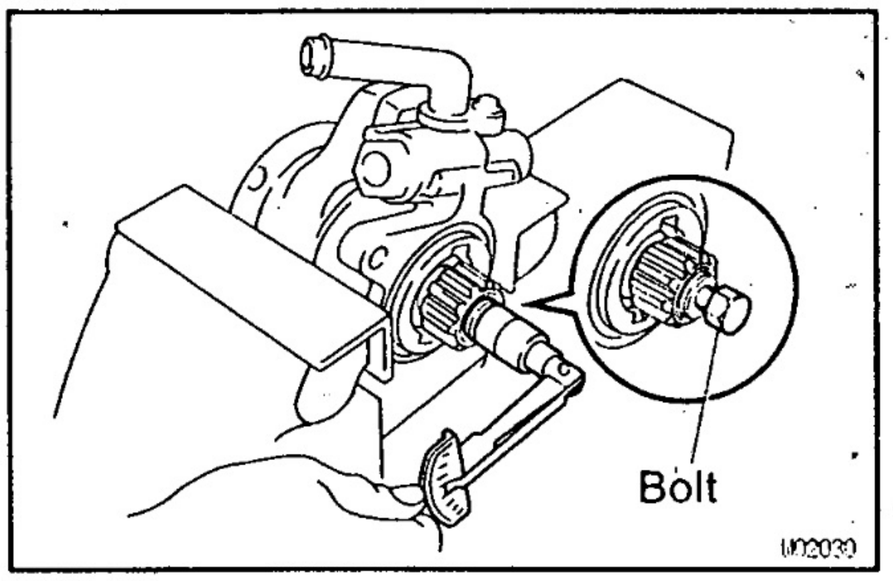

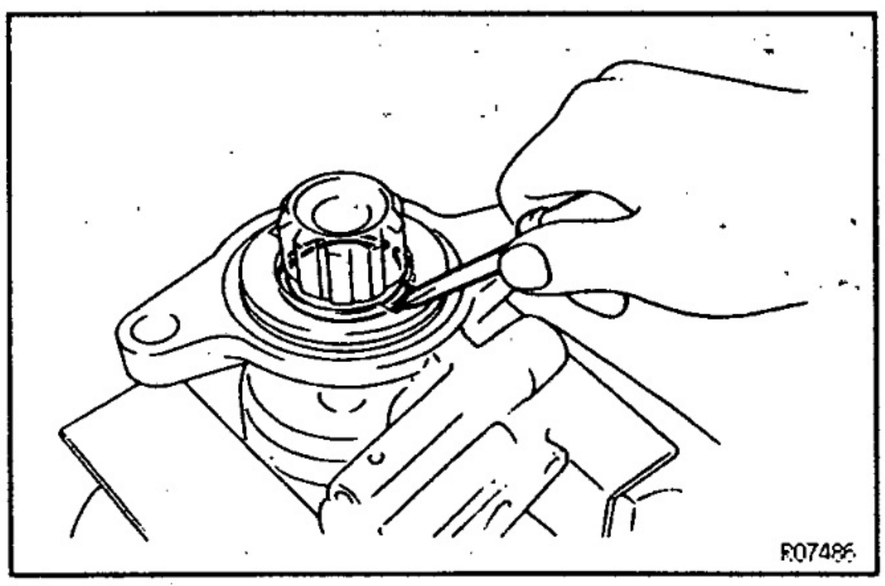

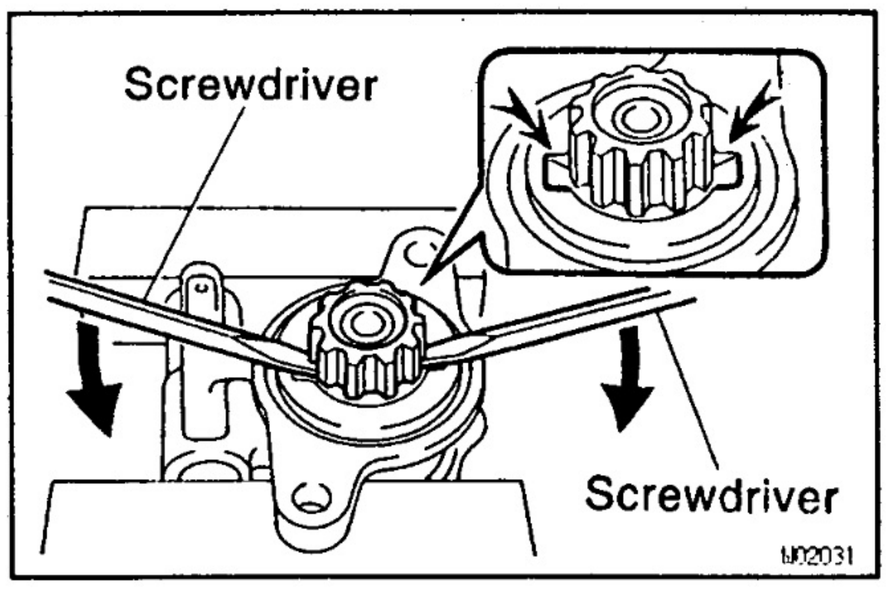

POWER STEERING VANE PUMP DISASSEMBLY

SR1VH-02

SR

NOTICE: When using a vise, do not overtighten it.

1. **MEASURE POWER STEERING VANE PUMP ROTATING TORQUE**
(a) Check that the pump rotates smoothly without abnormal noise.
(b) Temporarily install a bolt to the shaft.
(c) Check the pump rotating torque.
Reference
Bolt: 91111—51035
Rotating torque:
0.3 N·m (2.8 kgf·cm, 2.4 in.·lbf) or less

2. **REMOVE SUCTION PORT UNION**
(a) Remove the bolt.
(b) Remove the O—ring from the union.

3. **REMOVE VANE PUMP SHAFT AND VANE PUMP DRIVE GEAR WITH BEARING**
(a) Using a screwdriver, remove the snap ring.
(b) Using 2 screwdrivers, remove the shaft and the gear with the bearing.

4. **REMOVE PRESSURE PORT UNION, FLOW CONTROL VALVE AND SPRING**
Remove the O—ring from the union.

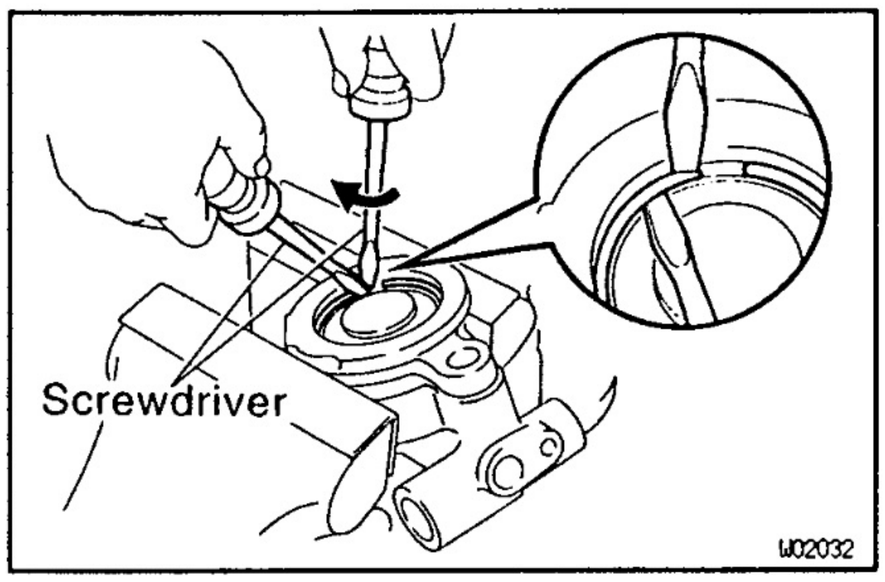

5. REMOVE REAR HOUSING AND WAVE WASHER

(a) Using 2 screwdrivers, remove the snap ring.
NOTICE: Take care not to damage the housing.

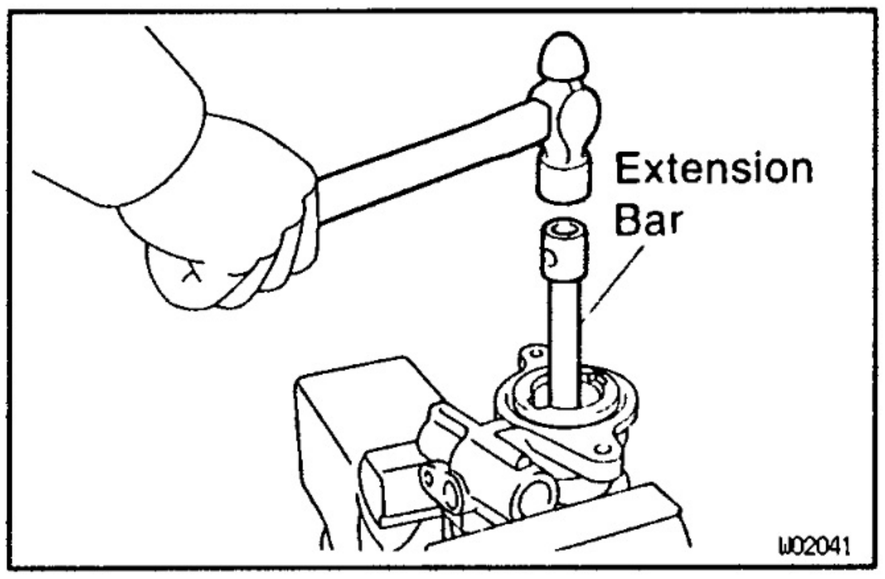

(b) Using a hammer and extension bar, tap out the housing.

(c) Remove the O–ring from the housing.

6. REMOVE SIDE REAR PLATE
Remove the O–ring from the plate.

7. REMOVE CAM RING, VANE PUMP ROTOR AND 10 VANE PLATES
NOTICE: Be careful not to drop the vane plate.

8. REMOVE SHORTER STRAIGHT PIN
Remove the pin from the side front plate.

9. REMOVE SIDE FRONT PLATE
Remove the 2 O–rings from the plate.

10. REMOVE LONGER STRAIGHT PIN
Using pliers, remove the pin from the front housing.

11. REMOVE VANE PUMP DRIVE GEAR FROM VANE PUMP SHAFT

(a) Place the socket wrench (12 mm) on the shaft.

(b) Using SST, press out the shaft.
SST 09950–00020

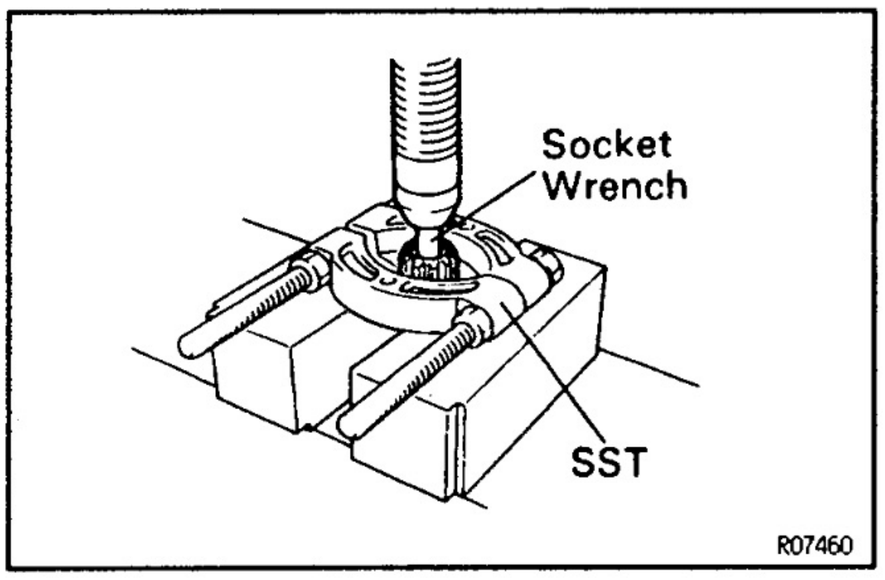

SR

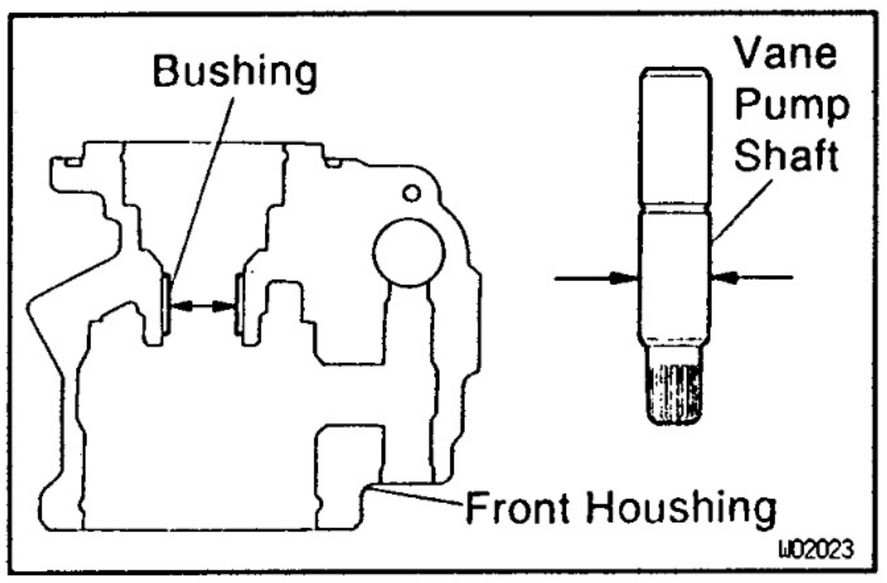

SR1YB–01

POWER STEERING VANE PUMP INSPECTION AND REPLACEMENT

1. MEASURE OIL CLEARANCE BETWEEN VANE PUMP SHAFT AND BUSHING
Using a micrometer and a caliper gauge, measure the oil clearance.

	Clearance mm (in.)
Standard	0.03 – 0.05 (0.0012 – 0.0020)
Maximum	0.07 (0.0028)

If it is more than maximum, replace the front housing and vane pump shaft.

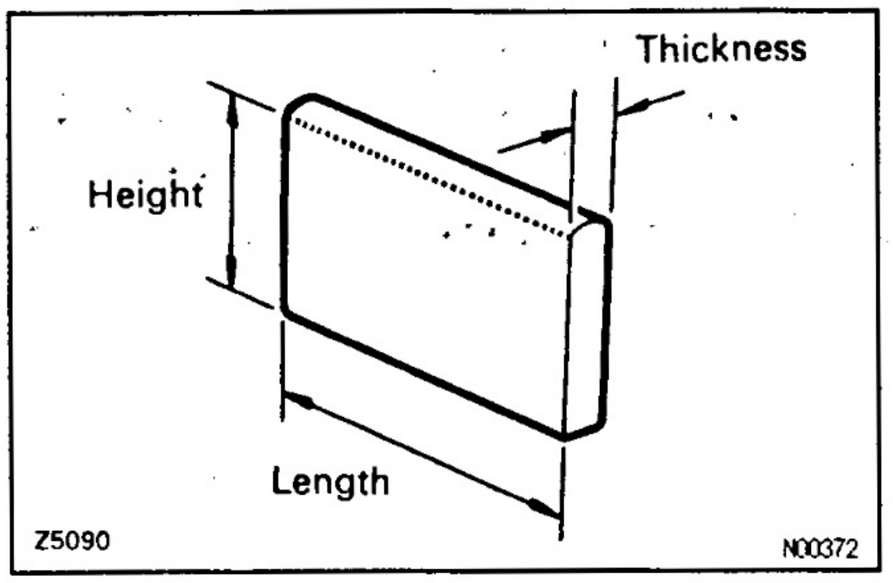

2. INSPECT VANE PUMP ROTOR AND 10 VANE PLATES

(a) Using a micrometer, measure the height, thickness and length of the plate.

	Minimum mm (in.)
Height	8.6 (0.339)
Thickness	1.397 (0.0550)
Length	14.991 (0.5902)

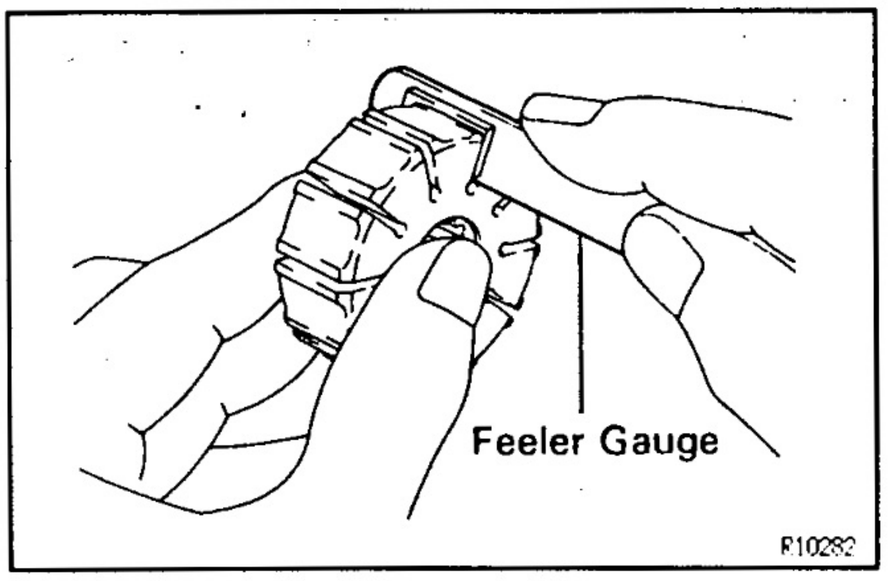

(b) Using a feeler gauge, measure the clearance between the rotor groove and plate.

	Clearance mm (in.)
Maximum	0.035 (0.0014)

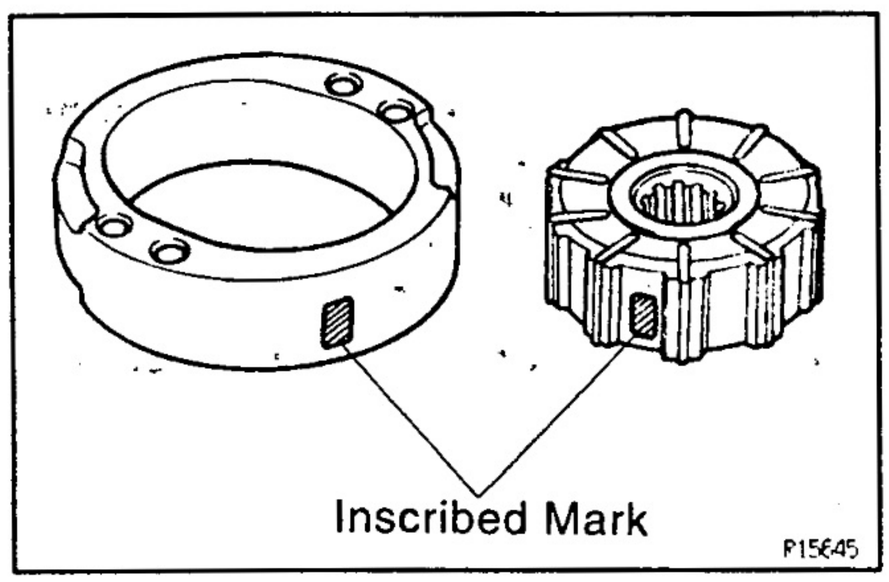

If it is more than the maximum, replace the plate and/or rotor with one having the same mark stamped on the cam ring.

Inscribed mark:

1, 2, 3, 4 or None

HINT: There are 5 vane plate lengths with the following rotor and cam ring marks:

Rotor and cam ring mark	Vane plate part number	Vane plate length mm (in.)
None	44345–26010	14.999–15.001 (0.59051–0.59059)
1	44345–26020	14.997–14.999 (0.59043–0.59051)
2	44345–26030	14.995–14.997 (0.59035–0.59043)
3	44345–26040	14.993–14.995 (0.59027–0.59035)
4	44345–26050	14.991–14.993 (0.59020–0.59027)

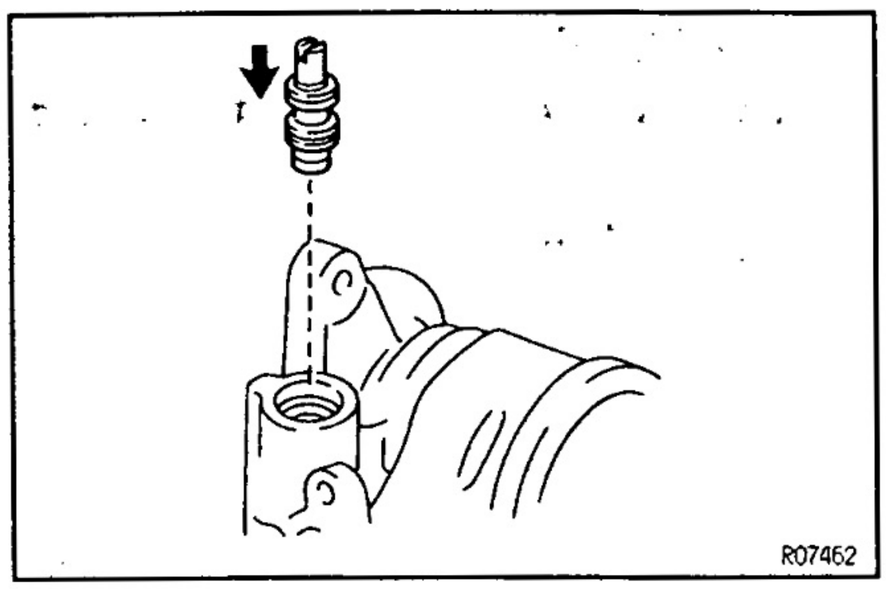

3. INSPECT FLOW CONTROL VALVE

(a) Coat the valve with power steering fluid and check that it falls smoothly into the valve hole by its own weight.

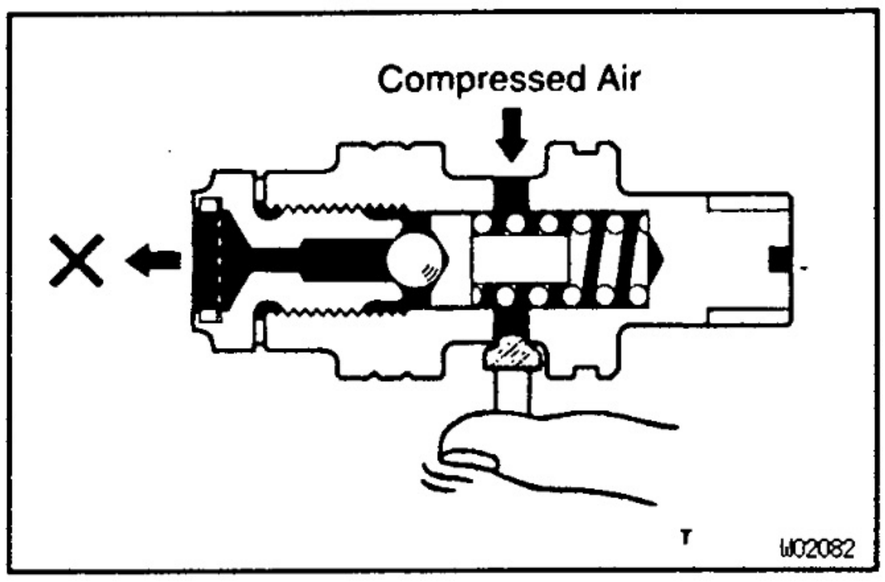

(b) Check the flow control valve for leakage.
Close one of the holes and apply compressed air 392 –490 kPa (4–5 kgf/cm², 57–71 psi) into the opposite side, and confirm that air does not come out from the end hole.

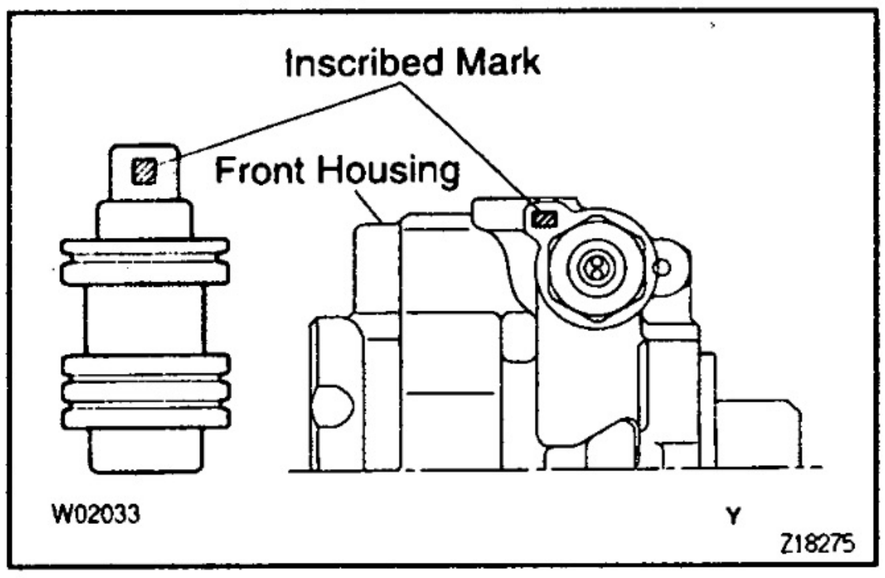

If necessary, replace the valve with one having the same letter as inscribed on the front housing.
Inscribed mark:
A, B, C, D, E or F

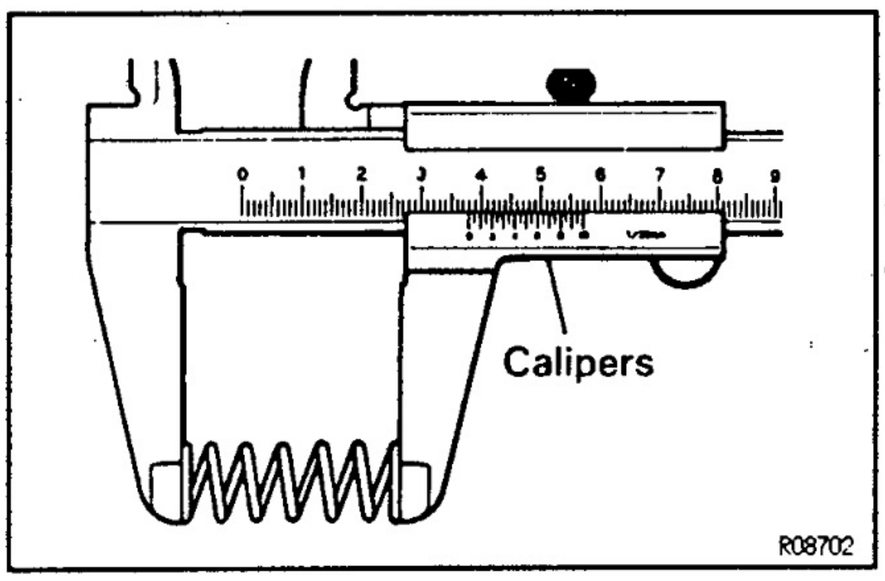

4. INSPECT SPRING

Using calipers, measure the free length of the spring.

	Free length mm (in.)
Standard	36.9 (1.453)

If it is not within the specification, replace the spring.

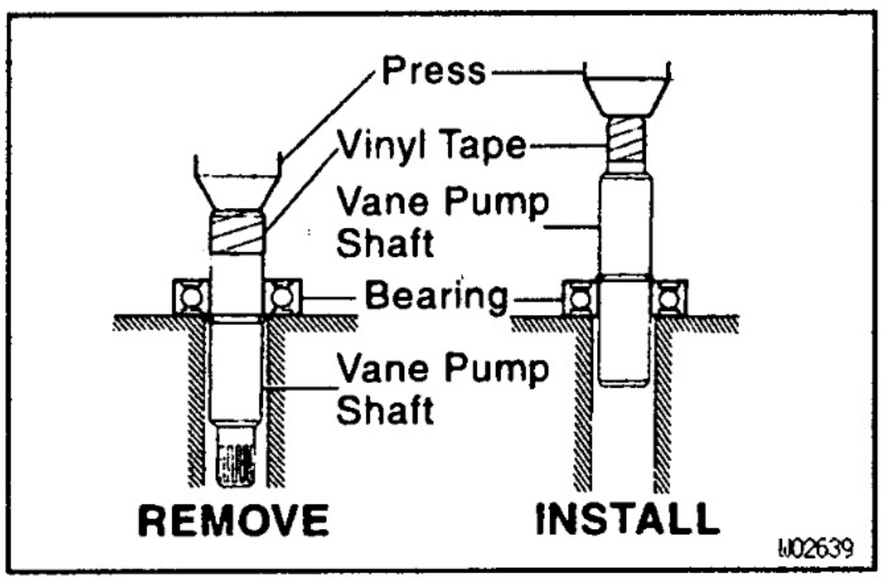

5. IF NECESSARY, REPLACE BEARING

(a) Press out the bearing from the shaft.
(b) Using a snap ring expander, replace the snap ring with a new one.
NOTICE: Be careful not to damage the shaft.
(c) Coat a new bearing with power steering fluid.
(d) Press in the bearing to the shaft.

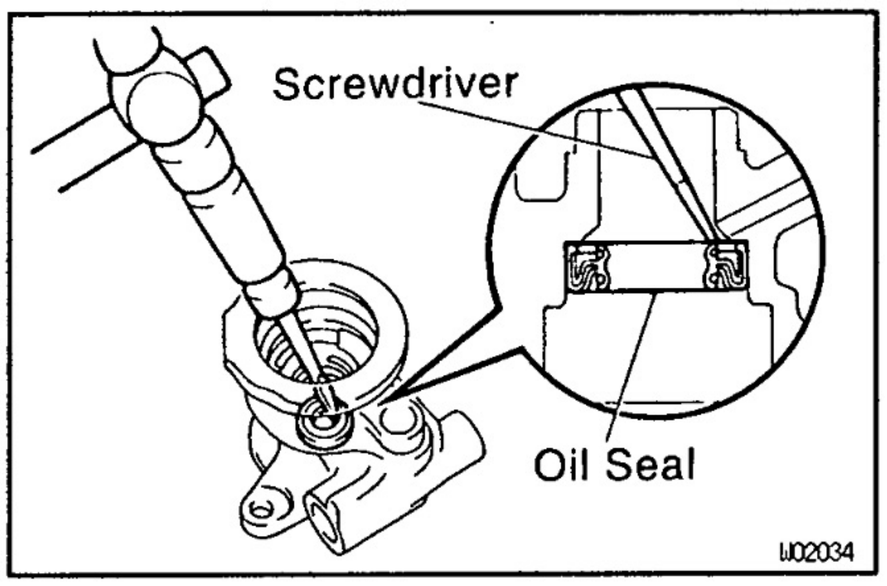

6. IF NECESSARY, REPLACE OIL SEAL

(a) Using a screwdriver and a hammer, tap out the oil seal from the front housing.
NOTICE: Be careful not to damage the housing.

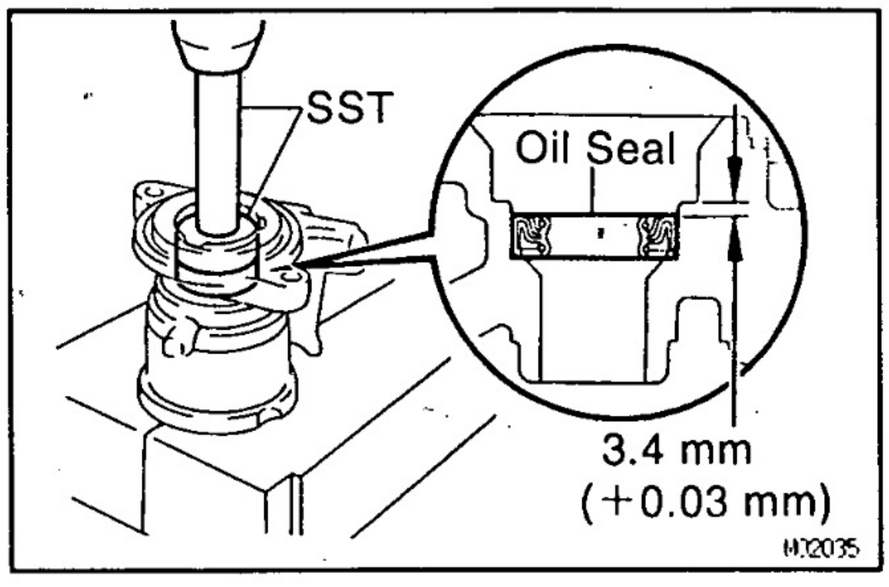

(b) Coat a new oil seal lip with power steering fluid.

(c) Using SST, press in the oil seal.
SST 09950–60010 (09951–00230),
09950–70010 (09951–07100)

NOTICE:

- **Make sure to install the oil seal facing the correct direction.**
- **Be careful not to damage the front housing.**

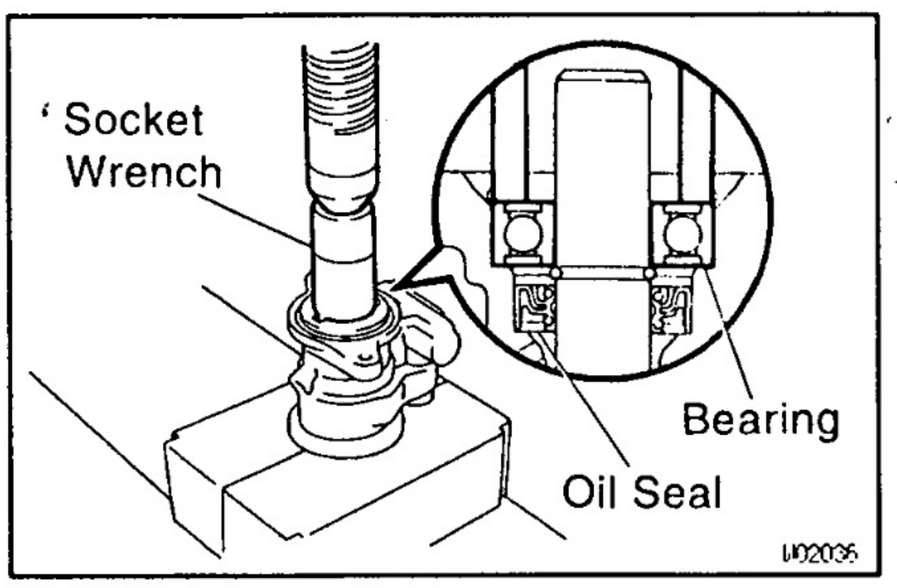

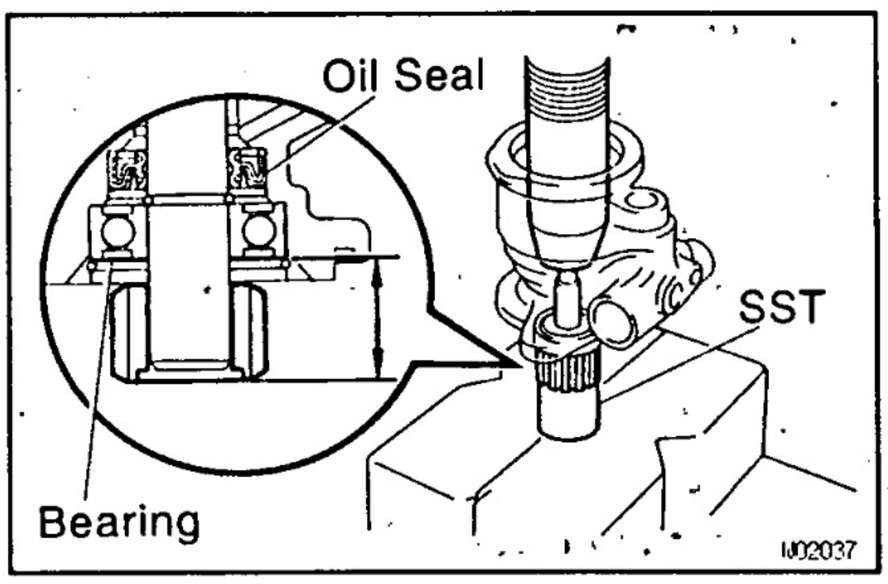

POWER STEERING VANE PUMP ASSEMBLY

NOTICE: When using a vise, do not overtighten it.

1. COAT WITH POWER STEERING FLUID
(See page SR–56)

2. INSTALL VANE PUMP SHAFT WITH BEARING

(a) Using a socket wrench (29 mm), press in the shaft with the bearing to the front housing.
NOTICE: Be careful not to damage the oil seal lip.

(b) Using a snap ring expander, install a new snap ring to the pump shaft.

3. INSTALL VANE PUMP DRIVE GEAR

Using SST, press in the drive gear.
SST 09631–12031
Standard length:
25.1–26.2 mm (0.99–1.03 in.)

4. INSTALL LONGER STRAIGHT PIN

Install a new pin to the front housing.
NOTICE: Be careful not to damage the pin.

5. INSTALL SIDE FRONT PLATE

(a) Coat 2 new O–rings with power steering fluid and install them to the plate.

(b) Align the hole of the plate and longer straight pin.
NOTICE: Make sure to install the plate facing the correct direction.
(See page SR–56)

6. INSTALL SHORTER STRAIGHT PIN

Install a new pin to the side front plate.
NOTICE: Be careful not to damage the pin.

7. INSTALL CAM RING AND VANE PUMP ROTOR

(a) Align the holes of the ring and straight pins, and install the ring with the inscribed mark facing outward.

(b) Install the rotor with the inscribed marks facing outward.

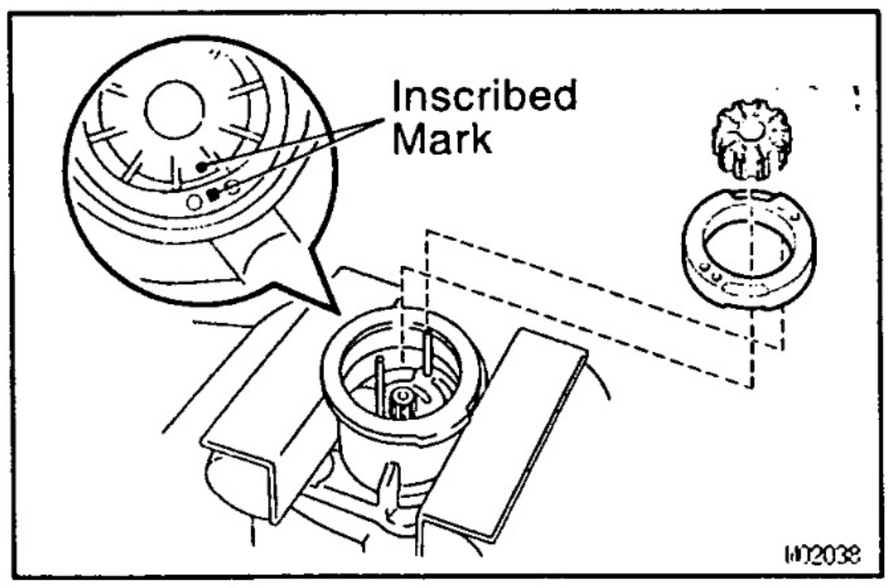

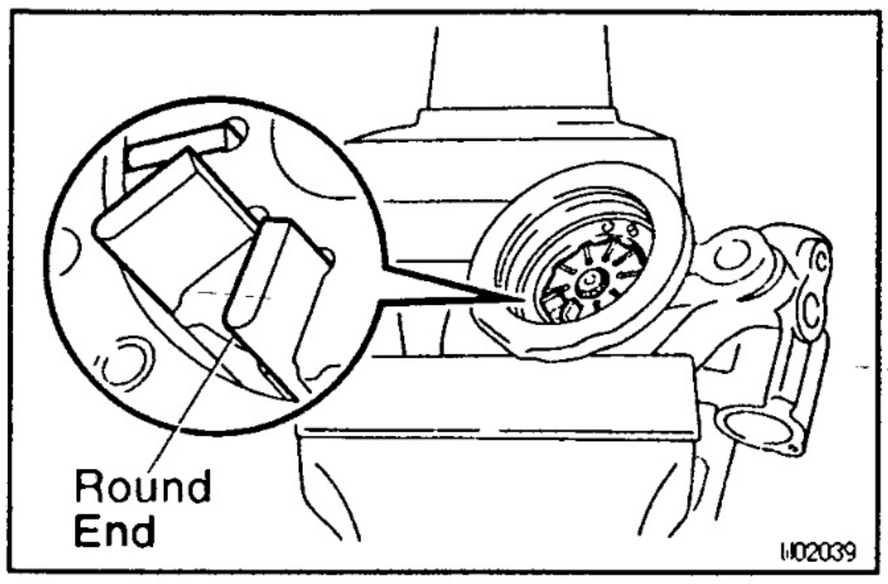

8. INSTALL VANE PLATES

Install the 10 plates with the round end facing outward.

9. INSTALL SIDE REAR PLATE

(a) Coat a new O–ring with power steering fluid and install it to the plate.

(b) Align the holes of the plate and the straight pins.

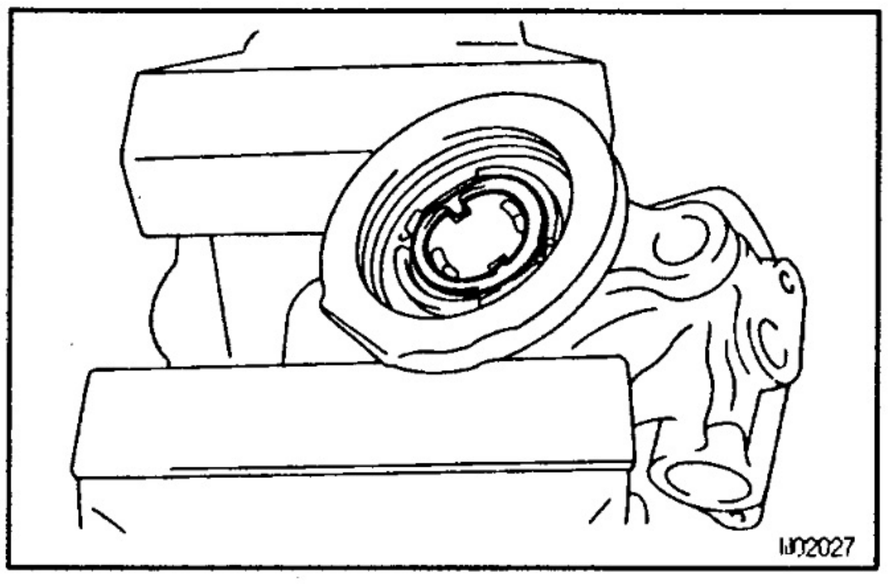

10. INSTALL WAVE WASHER

Install the washer so that its protrusions fit into the slots in the side rear plate.

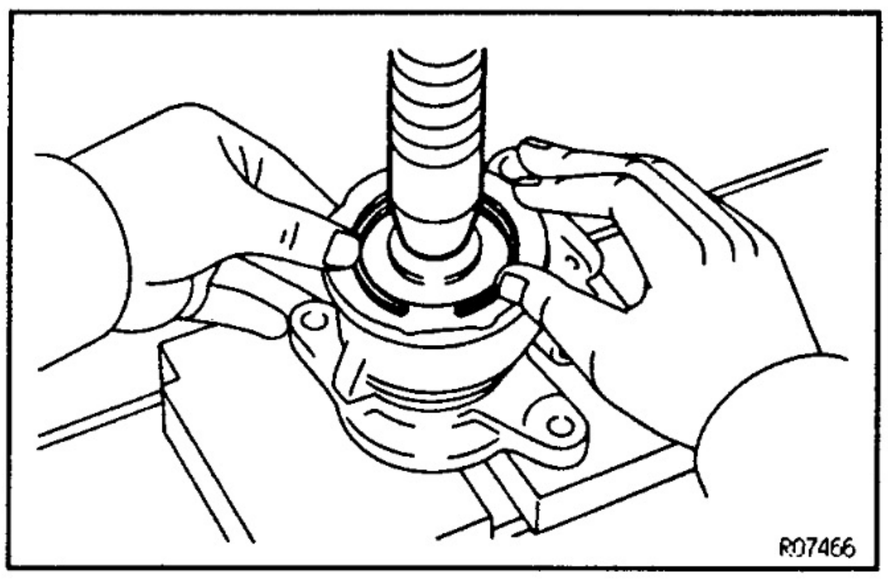

11. INSTALL REAR HOUSING

(a) Coat a new O–ring with power steering fluid and install it to the housing.

(b) Using a press, apply just enough pressure to compress the wave washer, and install a new snap ring to the front housing.

12. INSTALL SPRING, FLOW CONTROL VALVE AND PRESSURE PORT UNION

(a) Install the valve facing the correct direction.
(See page SR–56)

(b) Coat a new O–ring with power steering fluid and install it to the union.

(c) Torque the union.
Torque: 69 N·m (700 kgf·cm, 51 ft·lbf)

13. MEASURE POWER STEERING PUMP ROTATING TORQUE
(See page SR–57)

14. INSTALL SUCTION PORT UNION

(a) Coat a new O–ring with power steering fluid and install it to the union.

(b) Torque the bolt.
Torque: 13 N·m (130 kgf·cm, 9 ft·lbf)

SR

SR190–06

POWER STEERING VANE PUMP INSTALLATION

1. INSTALL PS VANE PUMP ASSEMBLY

(a) Coat a new O–ring with power steering fluid and install it to the vane pump assembly.

(b) Torque the 2 nuts.
Torque: 39 N·m (400 kgf·cm, 30 ft·lbf)

2. CONNECT PRESSURE FEED TUBE

Torque the union bolt with a new gasket.
Torque: 47 N·m (475 kgf·cm, 34 ft·lbf)

HINT: Make sure that the stopper of the tube is touching the PS pump body as shown, then torque the union bolt.

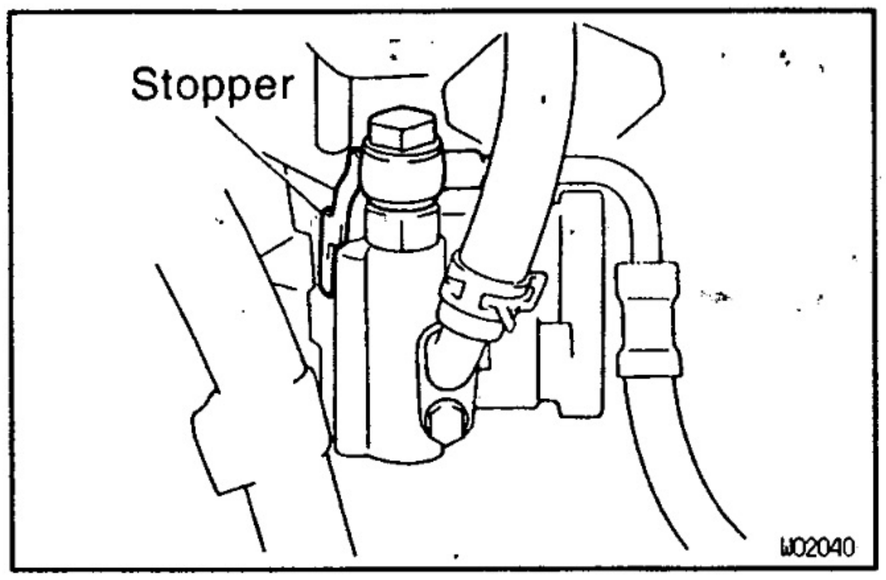

3. CONNECT RETURN HOSE

4. INSTALL FRONT FENDER APRON SEAL

Install the 3 clips.

5. INSTALL ENGINE UNDER COVER NO. 1 AND ENGINE UNDER COVER NO.2

Tighten the 9 bolts.

6. BLEED POWER STEERING SYSTEM

(See page SR–11)

POWER STEERING GEAR
COMPONENTS

SR1UE-02

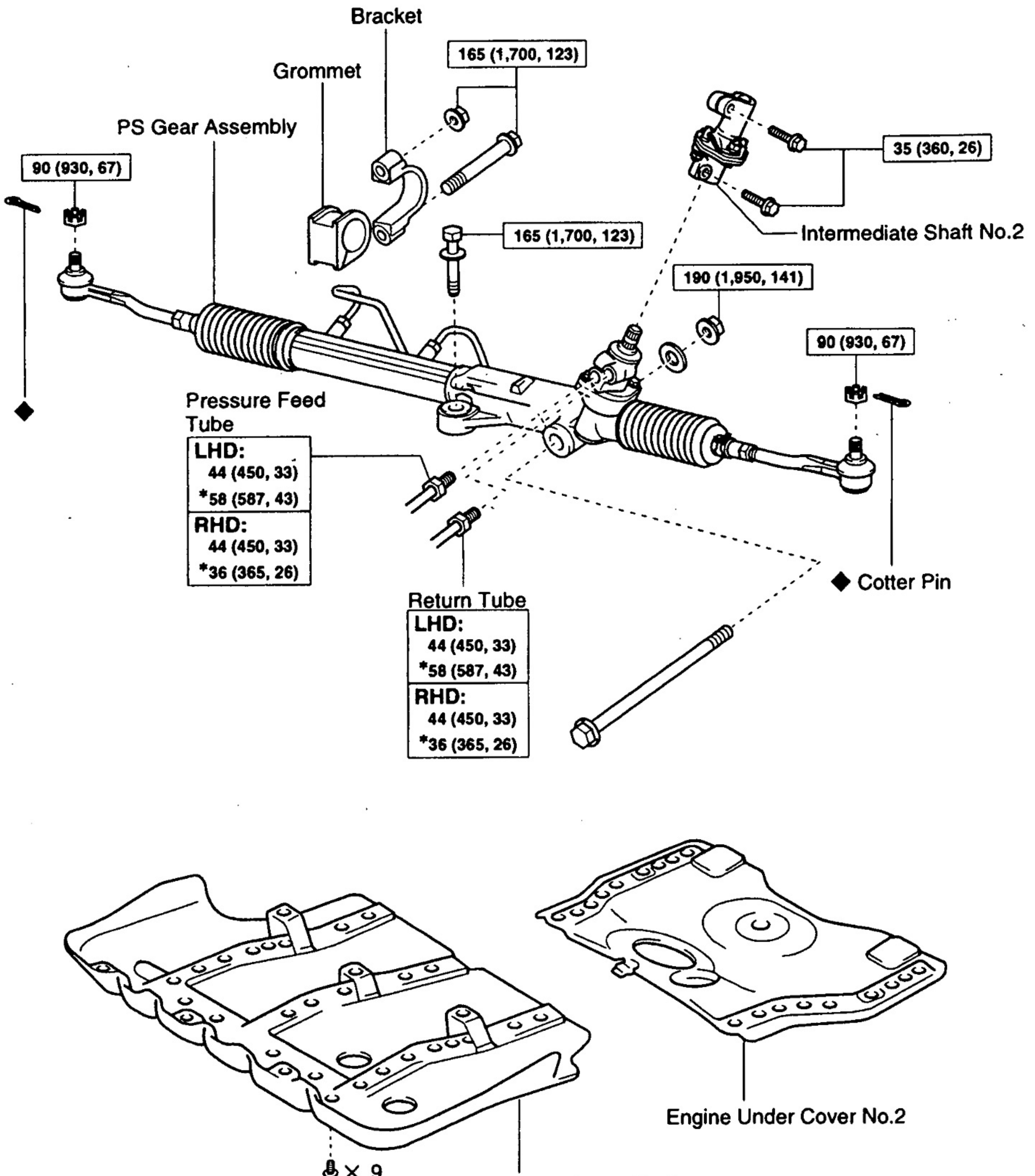

N·m (kgf·cm, ft·lbf) : Specified torque
◆ Non-reusable part
* For use with SST

Y

W02687

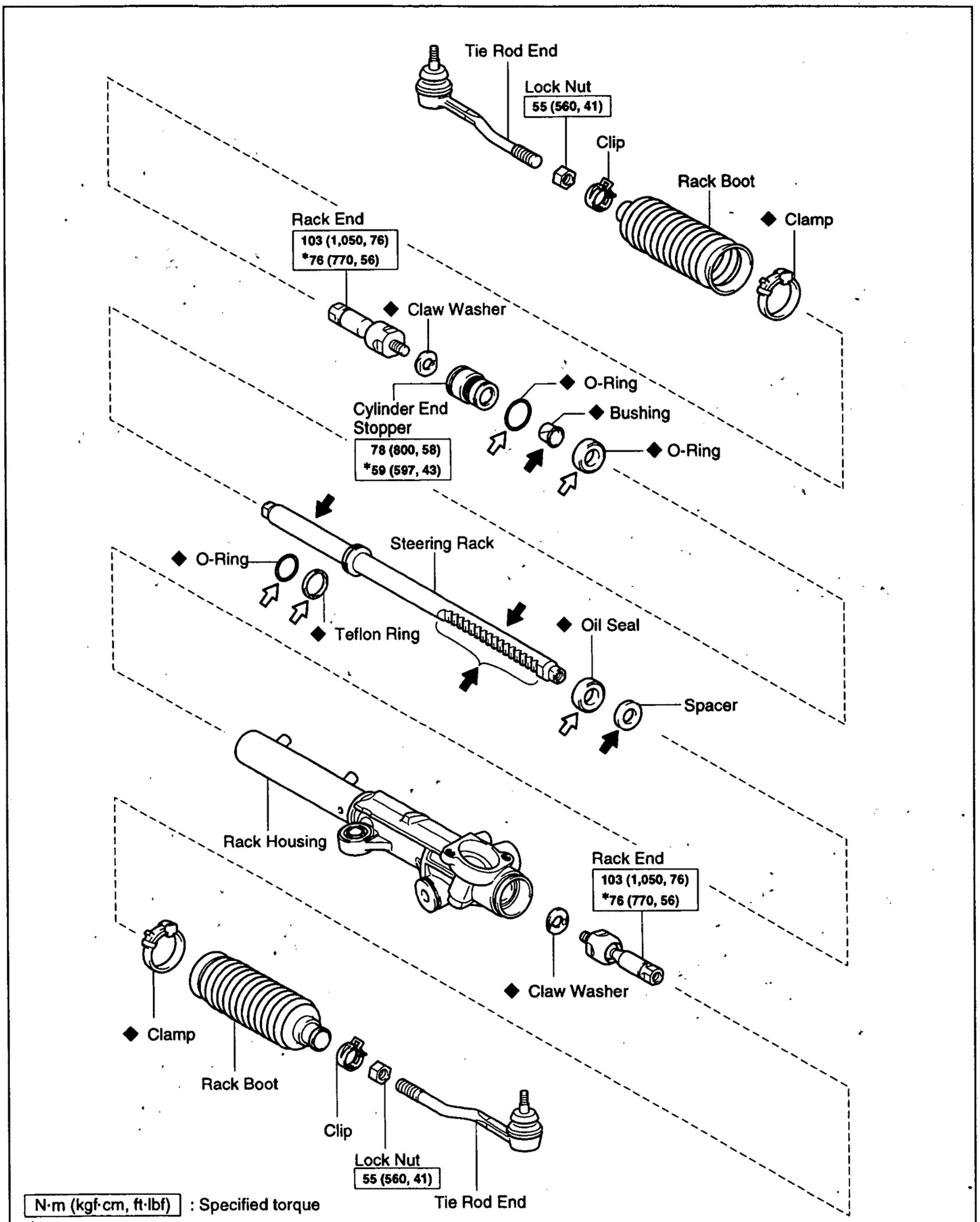
Tie Rod End
Lock Nut
55 (560, 41)
Clip
Rack Boot
◆ Clamp
Rack End
103 (1,050, 76)
*76 (770, 56)
◆ Claw Washer
◆ O-Ring
◆ Bushing
◆ O-Ring
Cylinder End
Stopper
78 (800, 58)
*59 (597, 43)
Steering Rack
◆ O-Ring
◆ Teflon Ring
◆ Oil Seal
Spacer
Rack Housing
Rack End
103 (1,050, 76)
*76 (770, 56)
◆ Claw Washer
◆ Clamp
Rack Boot
Clip
Lock Nut
55 (560, 41)
Tie Rod End
N·m (kgf·cm, ft·lbf) : Specified torque
◆ Non-reusable part
⬅ Molybdenum disulfide lithium base grease
⇦ Power steering fluid
* For use with SST
W03070

SR

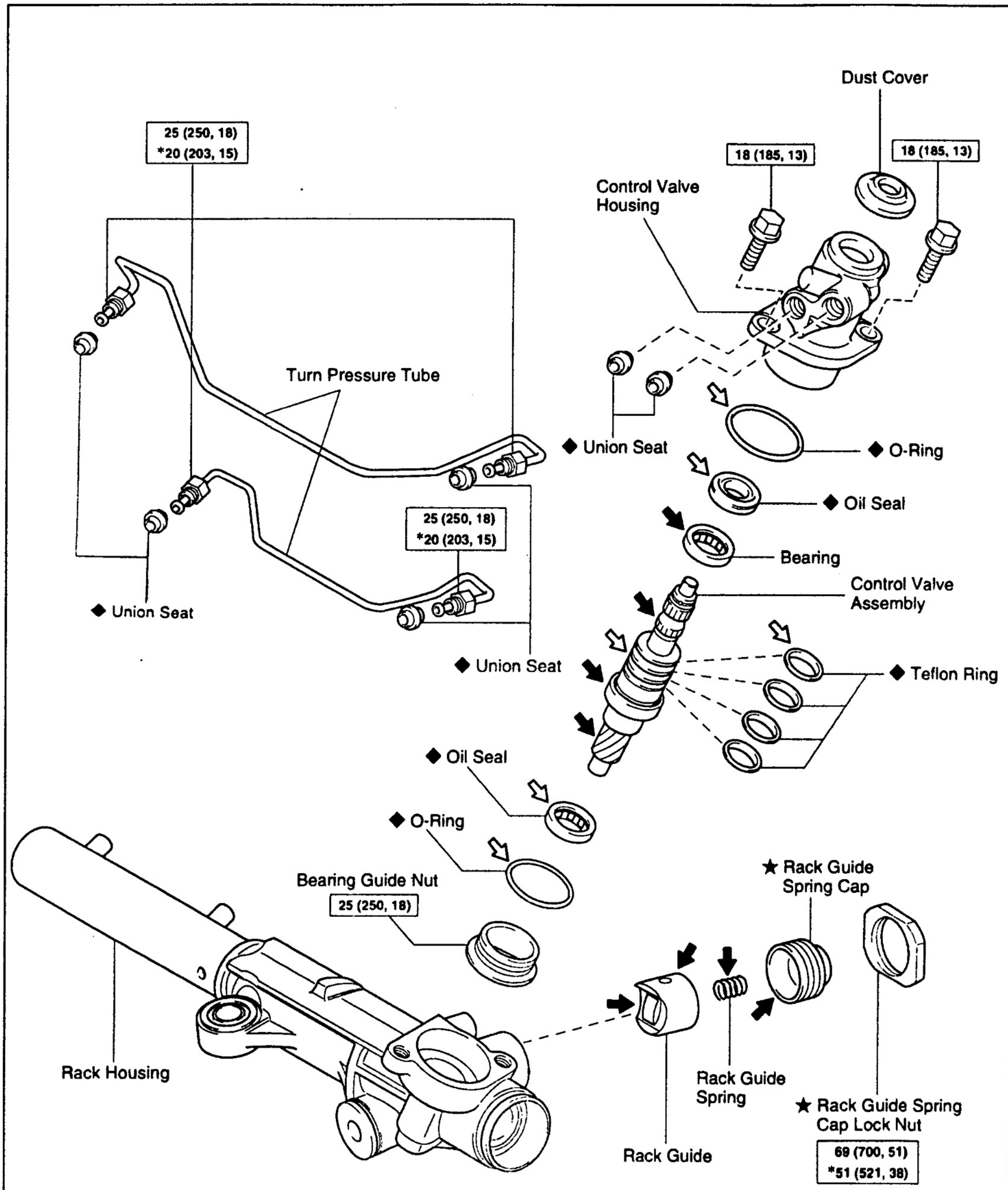

N·m (kgf·cm, ft·lbf) : Specified torque
◆ Non-reusable part
★ Precoated part
⬅ Molybdenum disulfide lithium base grease
⇦ Power steering fluid
* For use with SST

I01599

POWER STEERING GEAR REMOVAL

SR1UF-02

1. PLACE FRONT WHEELS FACING STRAIGHT AHEAD
2. w/ Airbag:
   REMOVE STEERING WHEEL PAD
   (See page SR–18)
3. w/ Airbag:
   REMOVE STEERING WHEEL
   (See page SR–18)
4. REMOVE ENGINE UNDER COVER NO. 1 AND ENGINE UNDER COVER NO.2
   Remove the 9 bolts.
5. DISCONNECT RH AND LH TIE ROD ENDS
   (See page SA–58)
6. REMOVE INTERMEDIATE SHAFT NO.2
   (See page SR–19)
7. DISCONNECT PRESSURE FEED AND RETURN TUBES
   Using SST, disconnect the tube.
   SST 09631–22020
8. REMOVE PS GEAR ASSEMBLY
(a) Remove the bolt and nut from the bracket.
(b) Remove the 2 set bolts and nut.
9. REMOVE BRACKET AND GROMMET

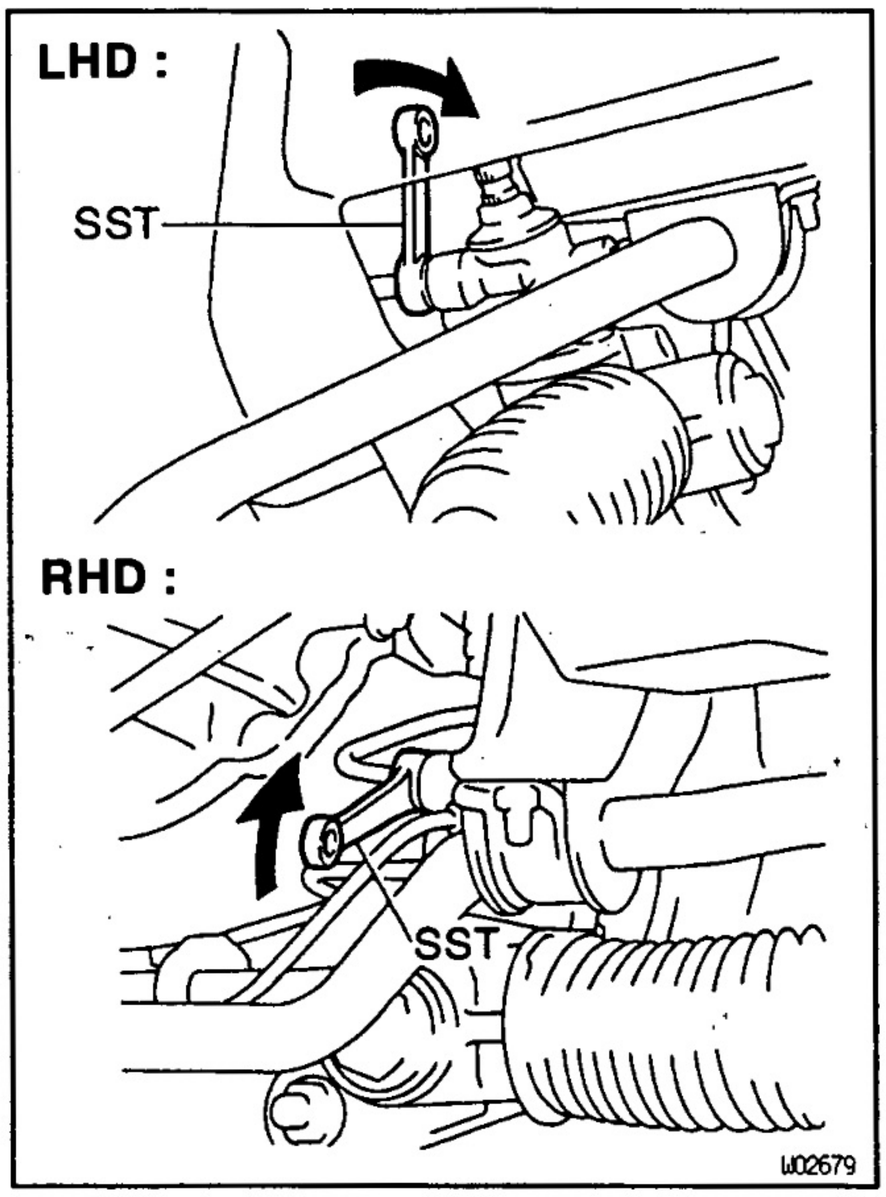

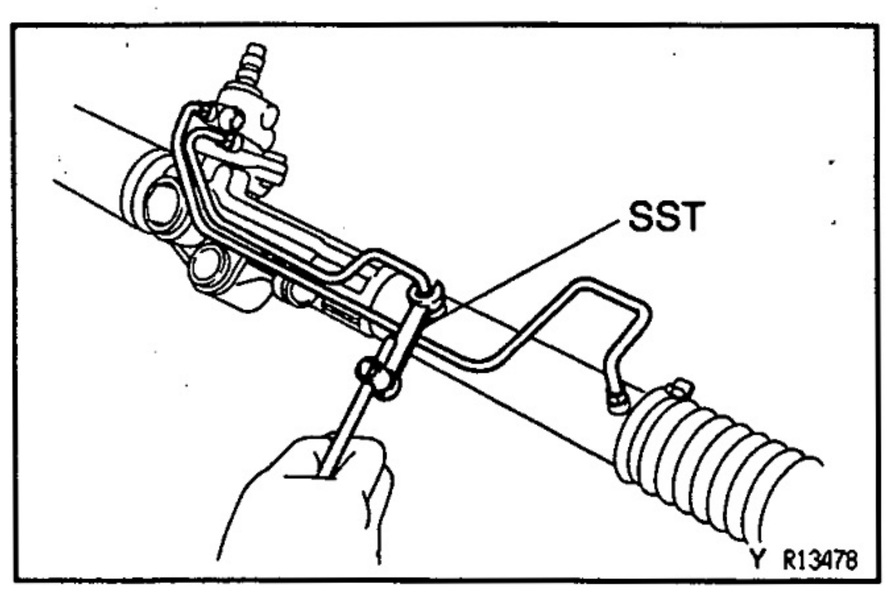

POWER STEERING GEAR DISASSEMBLY

SR1UG-02

NOTICE: When using a vise, do not overtighten it.

1. REMOVE 2 TURN PRESSURE TUBES
(a) Using SST, remove the tube.
   SST 09633–00020
(b) Remove the union seat from the rack housing and control valve housing.

SR

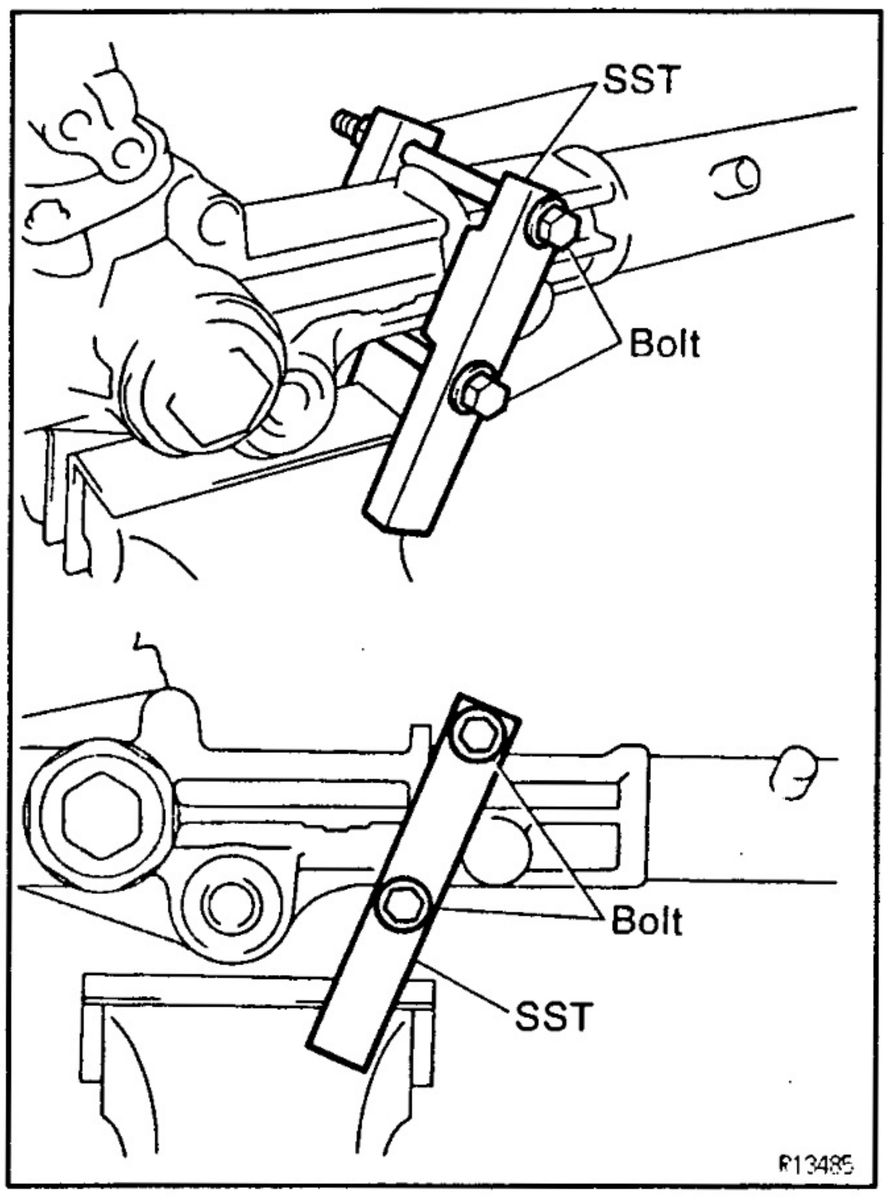

2. SECURE PS GEAR ASSEMBLY IN VISE

Using SST and 2 bolts, secure the gear assembly in a vise, as shown in the illustration.

SST 09612–00012

Reference:

Bolt: 90105–10346

Nut: 90170–10198

HINT: Use 2 of the same type of SST.

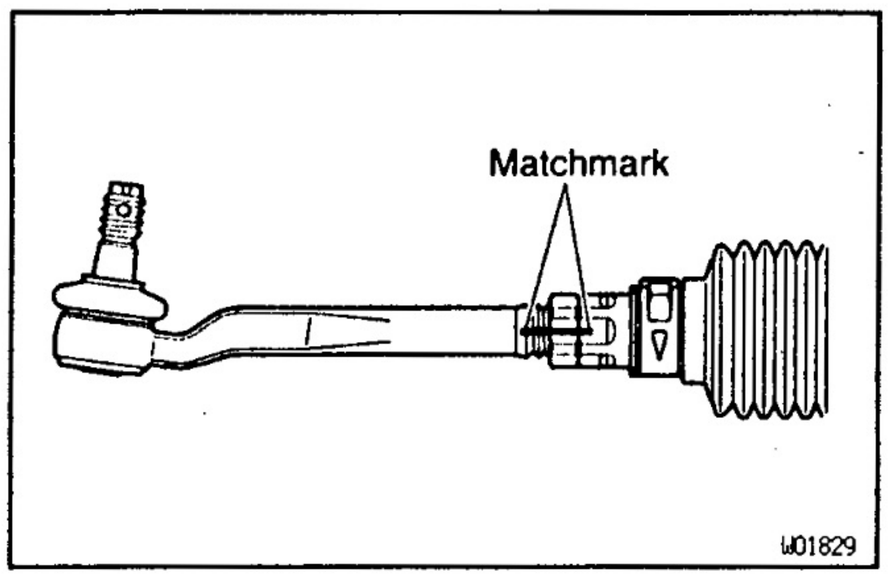

3. REMOVE RH AND LH TIE ROD ENDS AND LOCK NUTS

Place matchmarks on the tie rod end and rack end.

4. REMOVE RH AND LH CLIPS, RACK BOOTS AND CLAMPS

NOTICE:

- **Be careful not to damage the boot.**
- **Mark the RH and LH boots.**

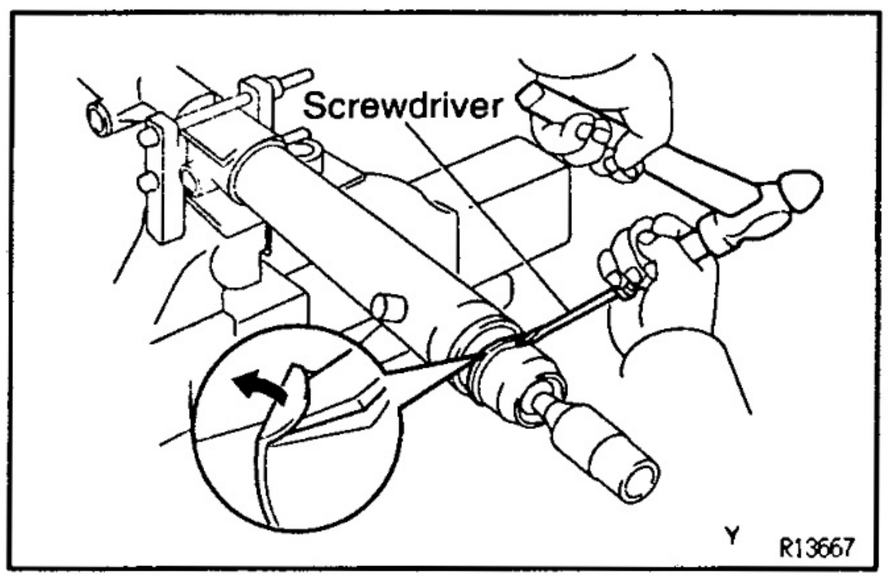

5. REMOVE RH AND LH RACK ENDS AND CLAW WASHERS

(a) Using a screwdriver and hammer, unstake the washer.

NOTICE: Avoid any impact to the steering rack.

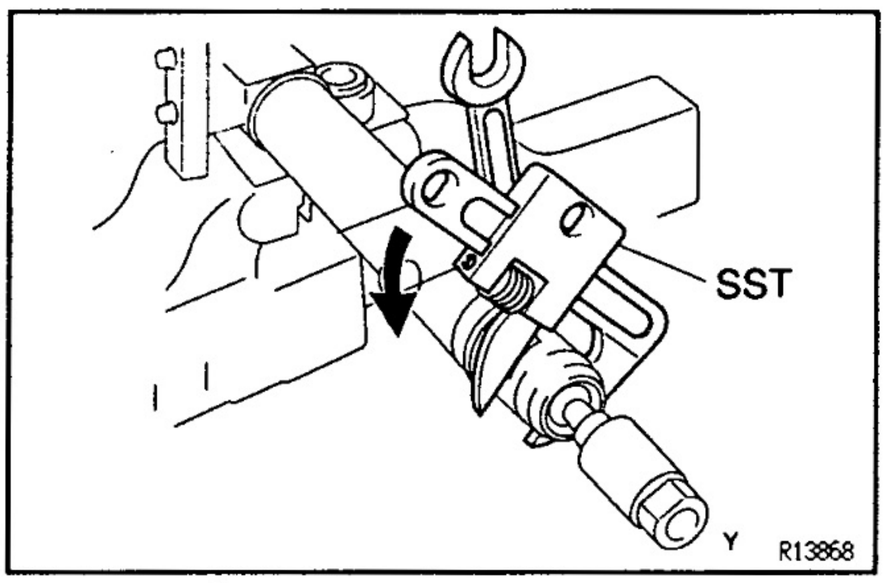

(b) Using a spanner to hold the steering rack steady, and using SST, remove the rack end.

SST 09922–10010

NOTICE:

- **Use SST 09922–10010 in the direction shown in the illustration.**
- **Mark the RH and LH rack ends.**

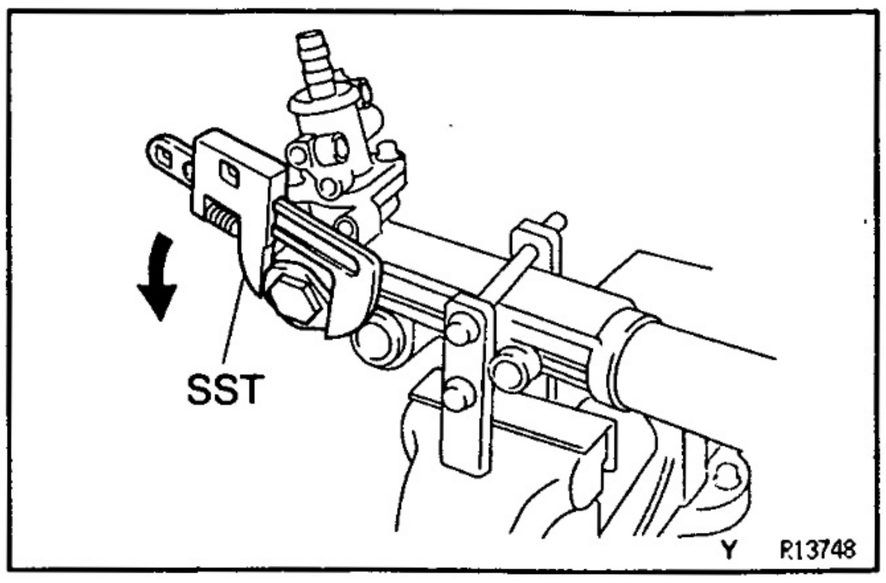

6. REMOVE RACK GUIDE SPRING CAP LOCK NUT

Using SST, remove the nut.

SST 09922–10010

NOTICE: Use SST 09922–10010 in the direction shown in the illustration.

7. REMOVE RACK GUIDE SPRING CAP

8. REMOVE RACK GUIDE SPRING AND RACK GUIDE

9. REMOVE DUST COVER

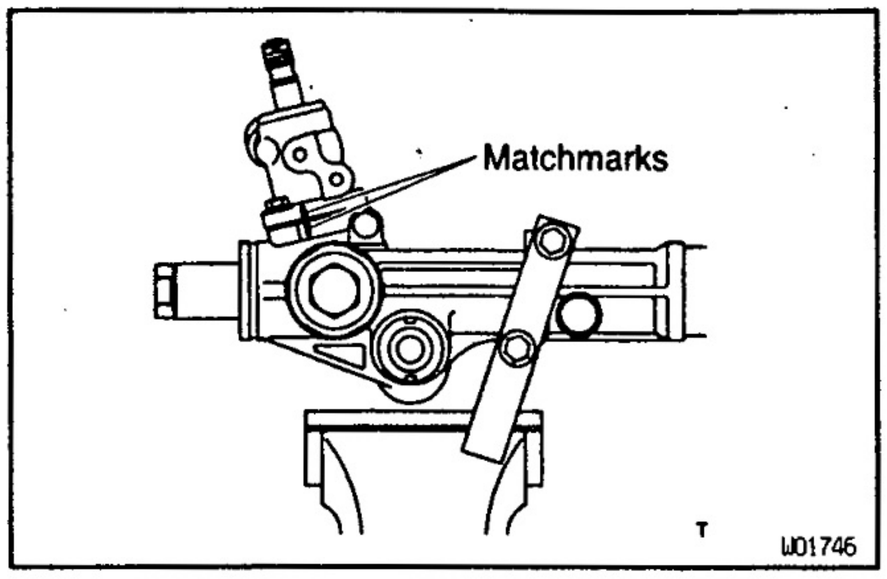

10. REMOVE CONTROL VALVE HOUSING WITH CONTROL VALVE ASSEMBLY

(a) Place matchmarks on the valve housing and rack housing.

(b) Remove the 2 bolts.

(c) Pull out the control valve assembly with the valve housing.

(d) Remove the O–ring from the rack housing.

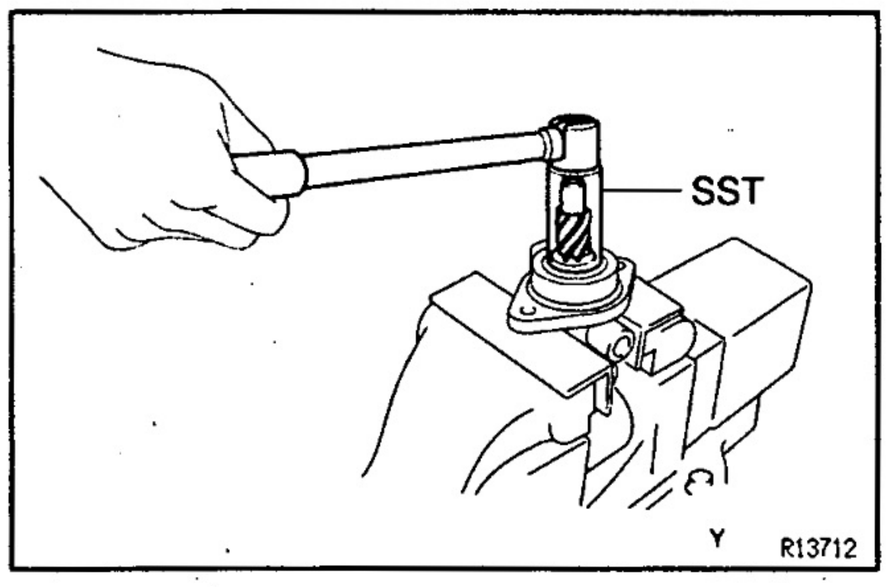

11. REMOVE CONTROL VALVE ASSEMBLY

(a) Using SST, loosen the bearing guide nut.

SST 09631–20060

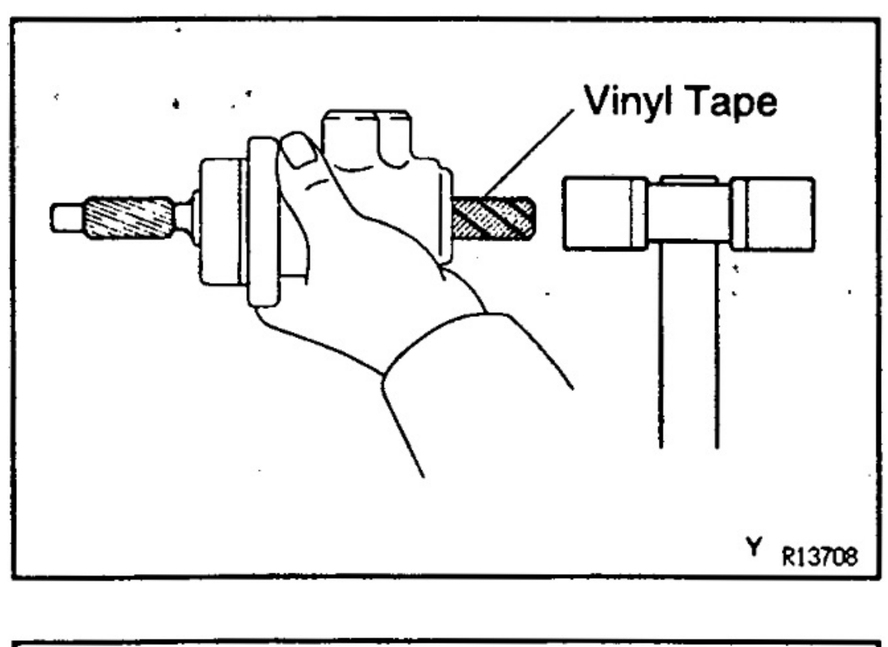

(b) Wind vinyl tape to the control valve shaft.

(c) Using a plastic hammer, tap out the valve assembly with the nut from the control valve housing.

NOTICE: Be careful not to damage the oil seal lip.

(d) Remove the nut from the valve assembly.

NOTICE: Be careful not to damage the oil seal lip.

(e) Remove the O–ring from the nut.

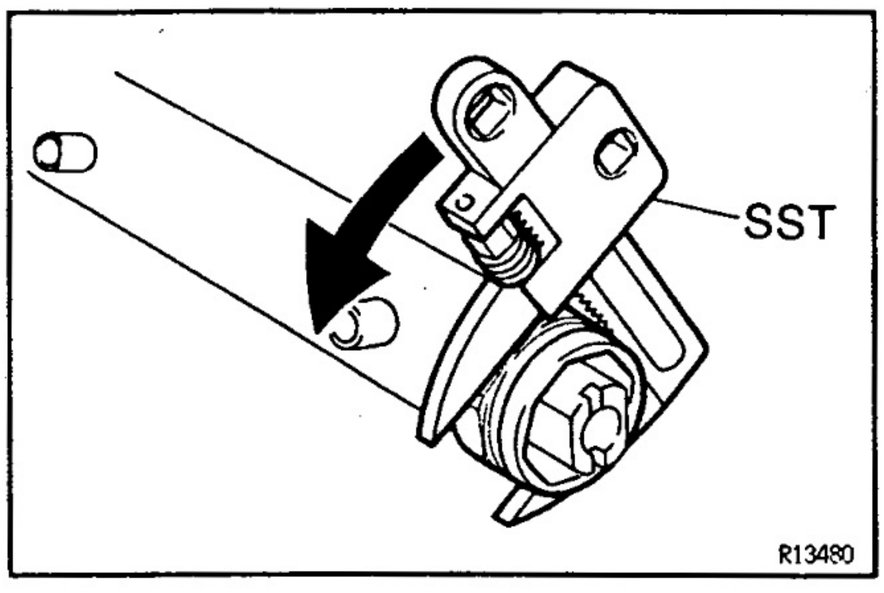

12. REMOVE CYLINDER END STOPPER

(a) Using SST, remove the stopper.

SST 09922–10010

NOTICE: Use SST 09922–10010 in the direction shown in the illustration.

(b) Remove the O–ring from the stopper.

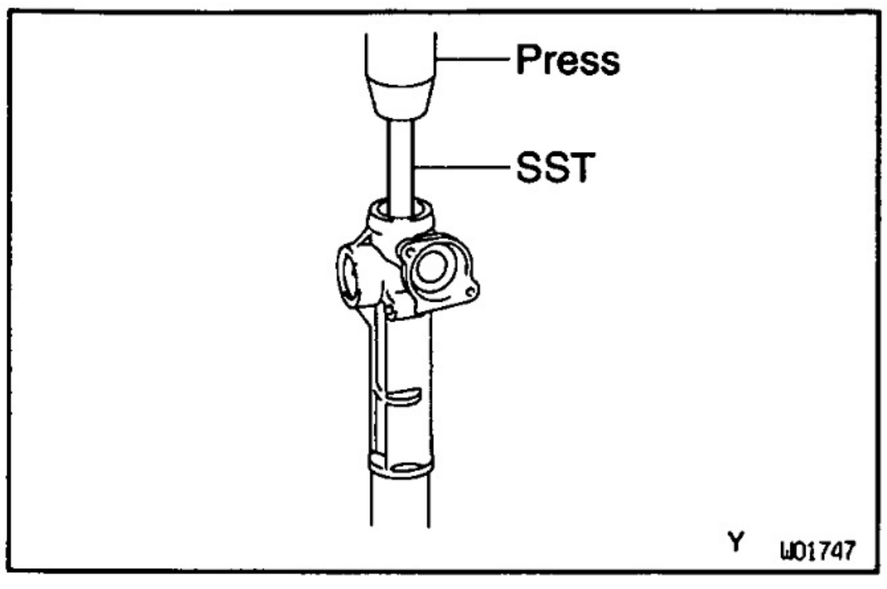

13. REMOVE STEERING RACK AND OIL SEAL

(a) Using SST, press out the rack and oil seal.
NOTICE: Take care not to drop the rack.
SST 09950–70010 (09951–07360)

(b) Remove the oil seal from the rack.

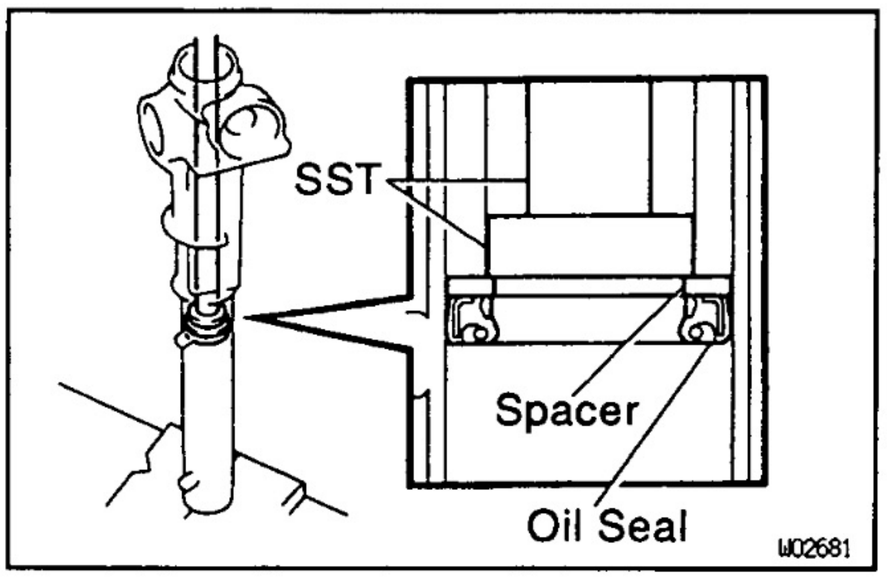

14. REMOVE OIL SEAL AND SPACER

Using SST, press out the oil seal and spacer.
SST 09950–60010 (09951–00360),
09950–70010 (09951–07360)

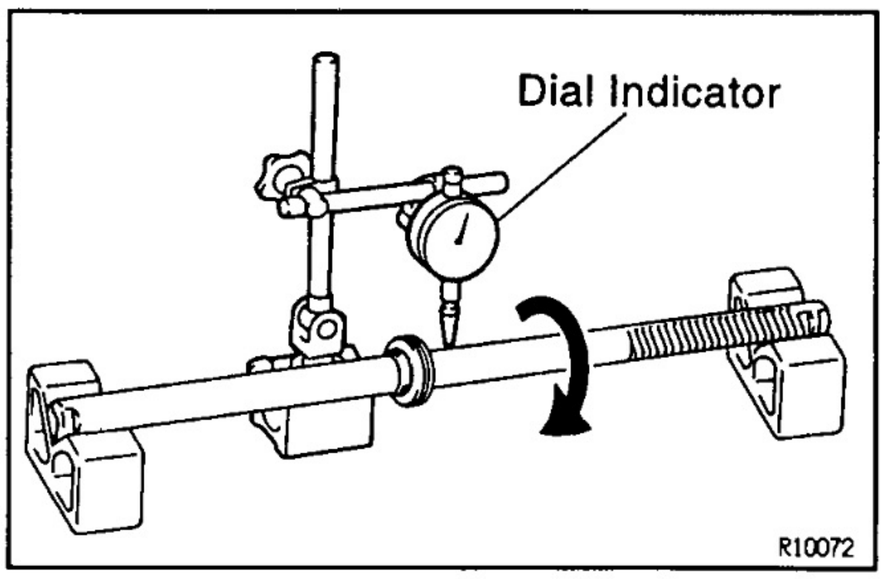

POWER STEERING GEAR INSPECTION AND REPLACEMENT

SR1UH–02

1. INSPECT STEERING RACK

(a) Using a dial indicator, check the rack for runout and for teeth wear and damage.

	Runout	mm (in.)
Maximum	0.03 (0.0012)	

(b) Check the back surface for wear and damage.

2. IF NECESSARY, REPLACE OIL SEAL AND BEARING

(a) Using SST, press out the oil seal and bearing from the control valve housing.
SST 09950–60010 (09951–00250),
09950–70010 (09951–07150)

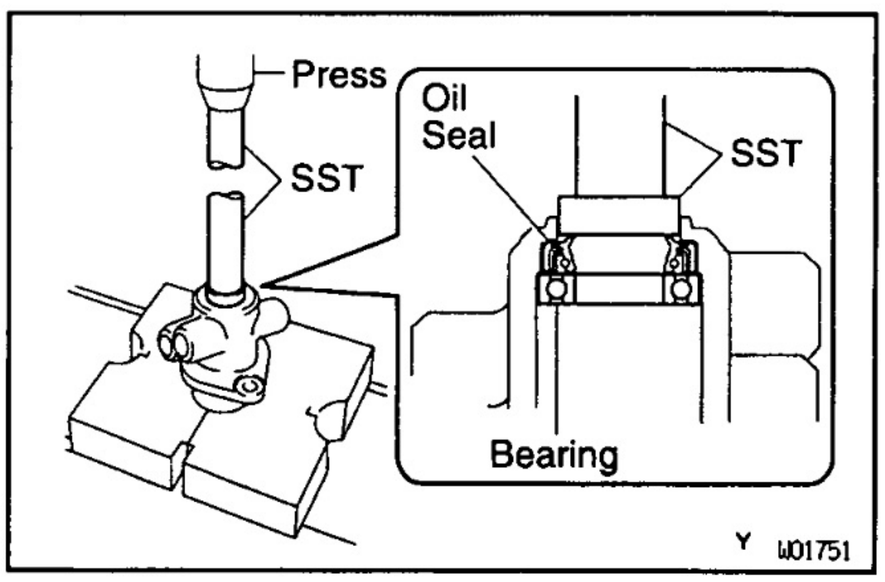

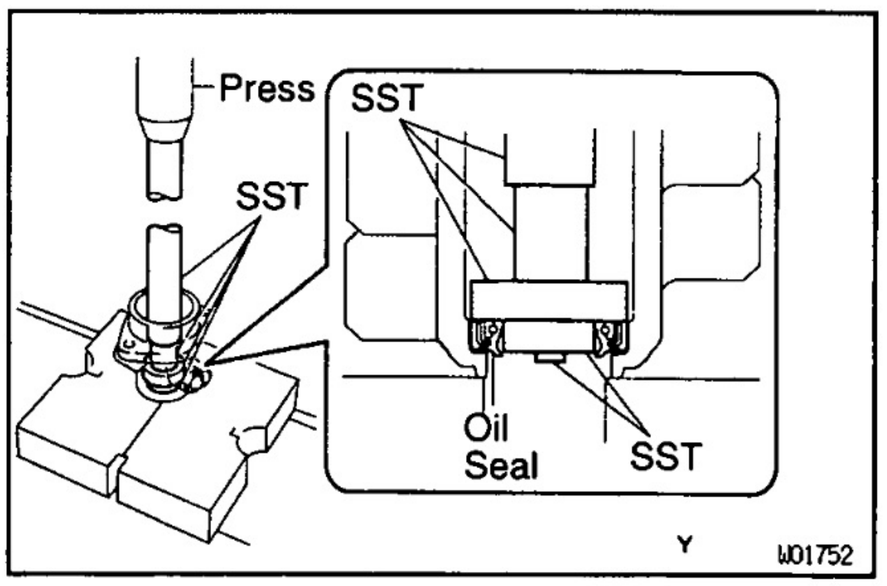

(b) Coat a new oil seal lip with power steering fluid.

(c) Using SST, press in the oil seal.
SST 09950–60010 (09951–00180, 09951–00320,
09952–06010),
09950–70010 (09951–07150)
NOTICE: Make sure to install the oil seal facing the correct direction.

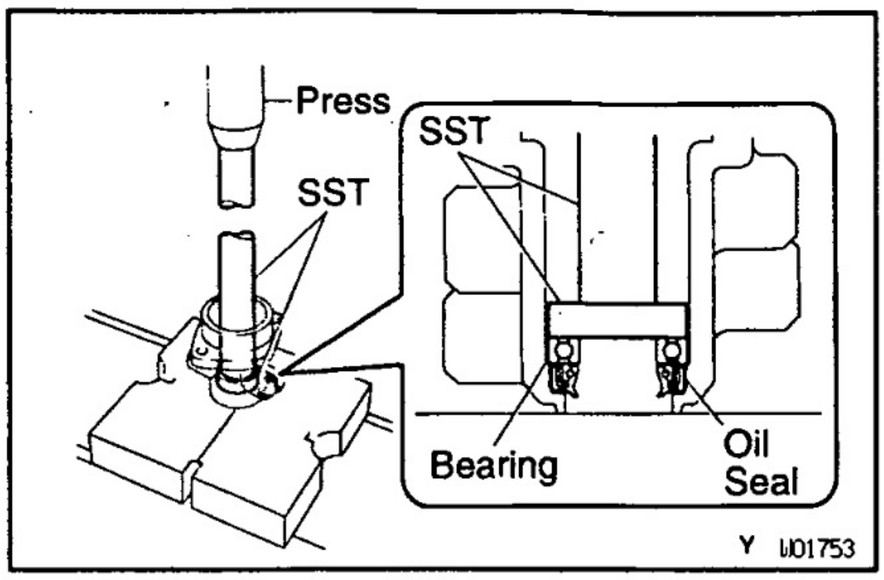

(d) Coat a new bearing with molybdenum disulfide lithium base grease.

(e) Using SST, press in the bearing.
SST 09950–60010 (09951–00330),
09950–70010 (09951–07150)

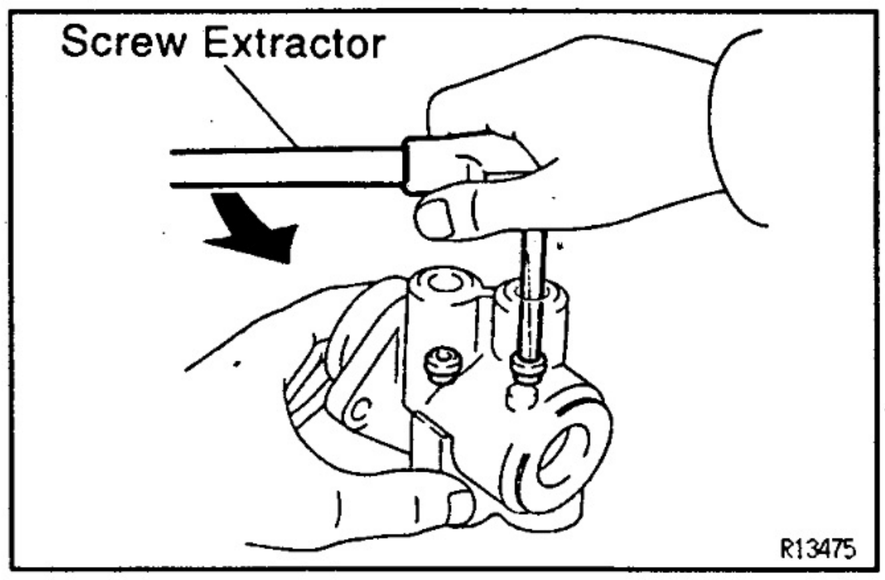

3. IF NECESSARY, REPLACE UNION SEATS

(a) Using a screw extractor, remove the 2 seats from the control valve housing.

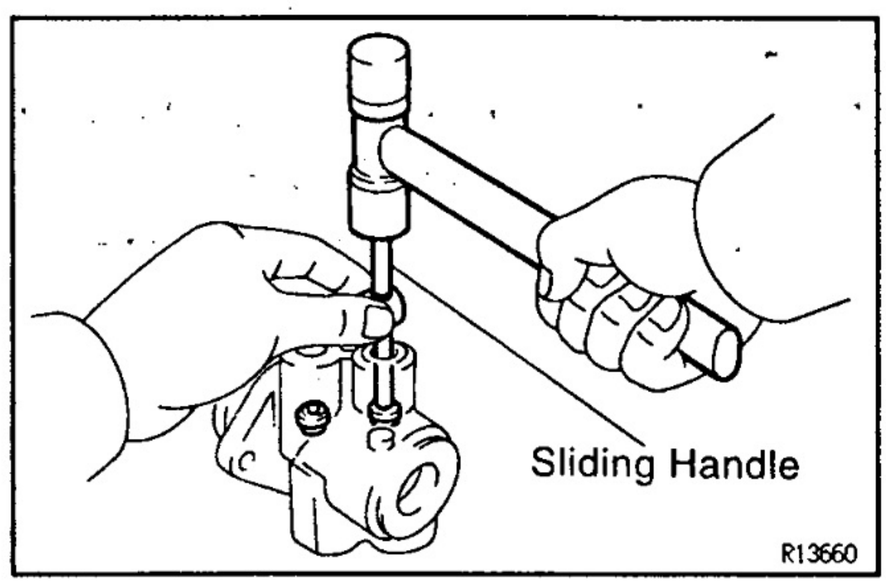

(b) Using a plastic hammer and sliding handle, lightly tap in 2 new seats.
NOTICE: Before installing the union seat, remove dust sticking to the control valve housing.

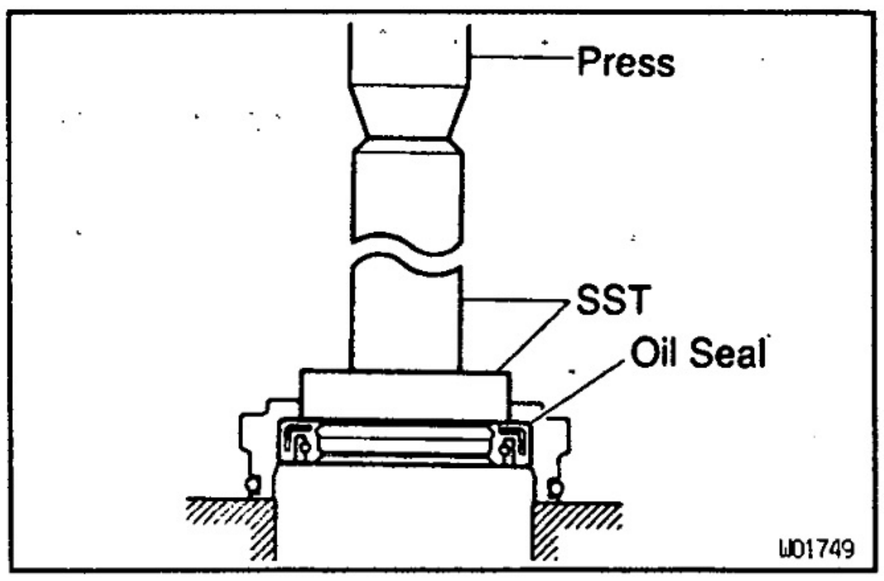

4. IF NECESSARY, REPLACE OIL SEAL

(a) Using SST, press in the oil seal from the bearing guide nut.
SST 09950–60010 (09951–00320),
09950–70010 (09951–07100)

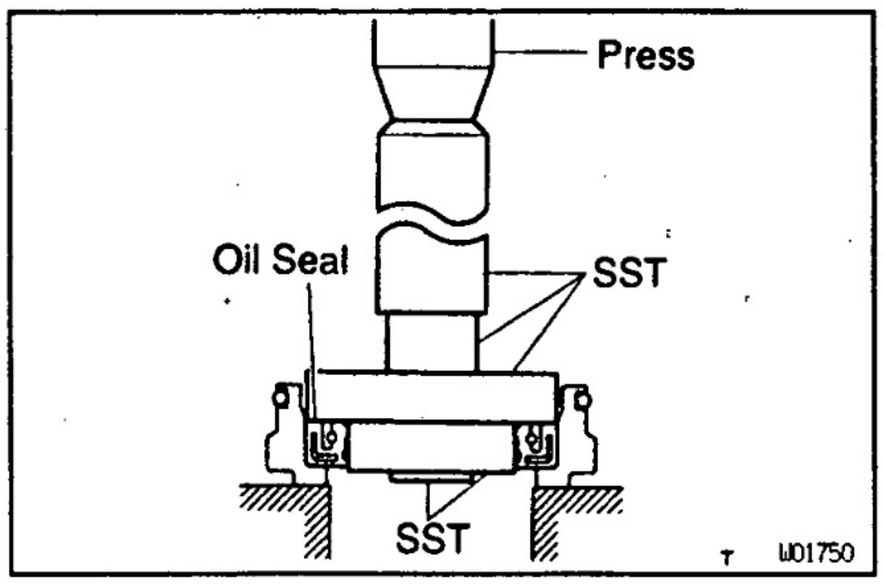

(b) Coat a new oil seal lip with power steering fluid.

(c) Using SST, press in the oil seal.
SST 09950–60010 (09951–00280, 09951–00360,
09952–06010),
09950–70010 (09951–07100)
NOTICE: Make sure to install the oil seal facing the correct direction.

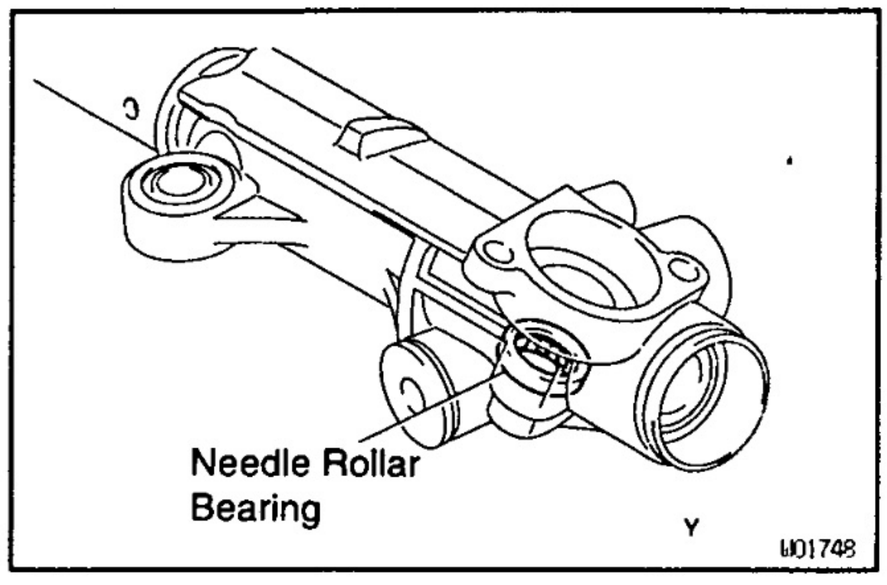

5. INSPECT BEARING

(a) Check the needle roller bearing of the rack housing for pitmarks or damage.
If faulty, replace the rack housing.

(b) Coat the inside of the bearing with molybdenum disulfide lithium base grease.

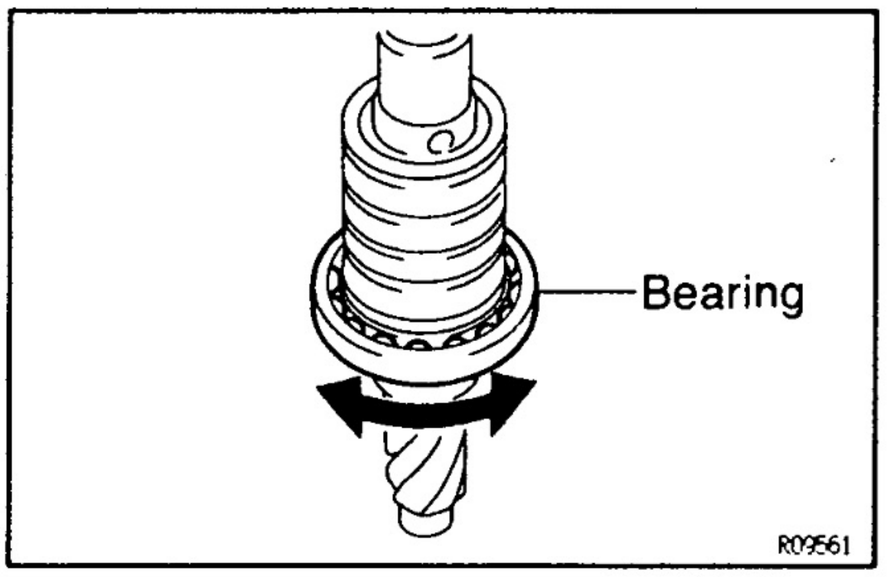

6. INSPECT BEARING

(a) Check the bearing rotation condition and check for abnormal noise.
If the bearing is worn or damaged, replace the control valve assembly.

(b) Coat the bearing with molybdenum disulfide lithium base grease.

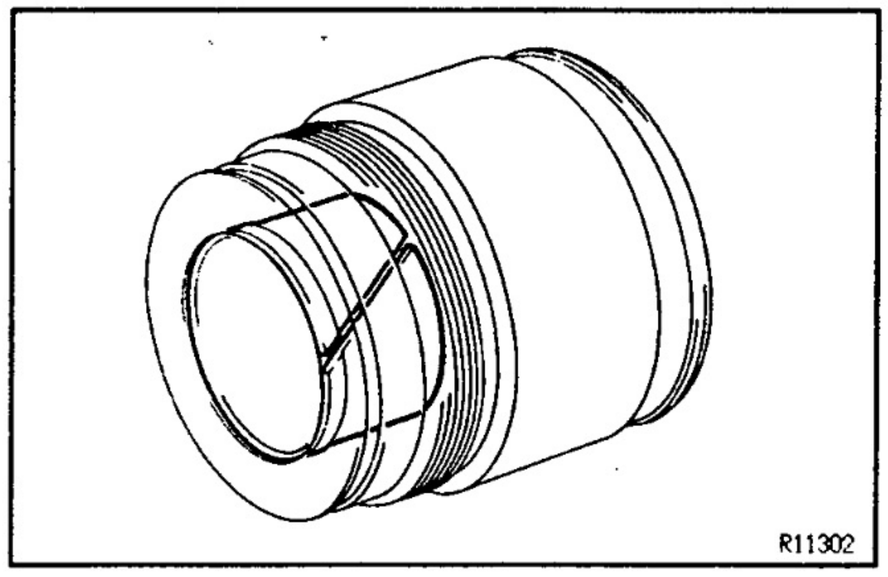

7. INSPECT BUSHING

(a) Check the inside of the bushing of the cylinder end stopper for cracks. If faulty, replace the bushing.

(b) Apply molybdenum disulfide lithium base grease to the inside of the bushing.

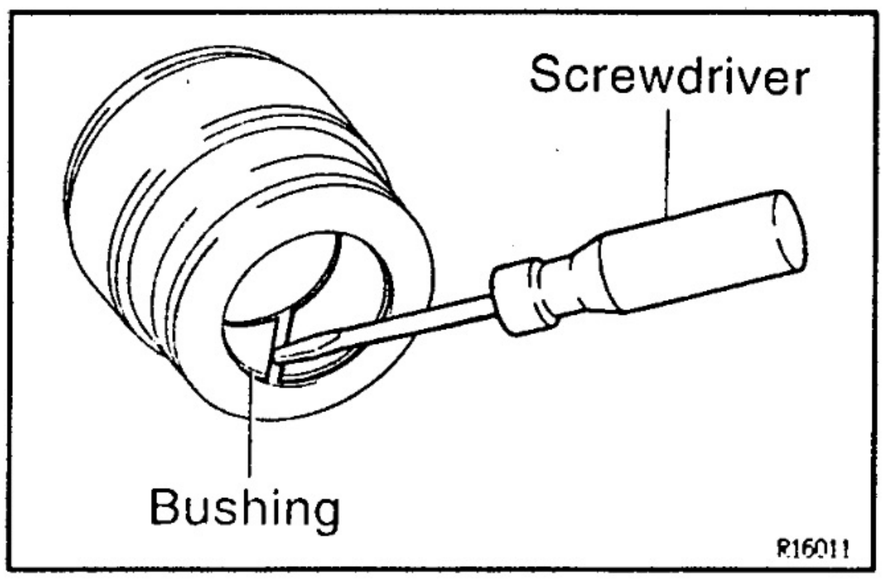

8. IF NECESSARY, REPLACE BUSHING

(a) Using a screwdriver, remove the bushing from the cylinder end stopper.
NOTICE: Be careful not to damage the cylinder end stopper.

(b) Coat the inside of a new bushing with molybdenum disulfide lithium base grease.

(c) Install the bushing.

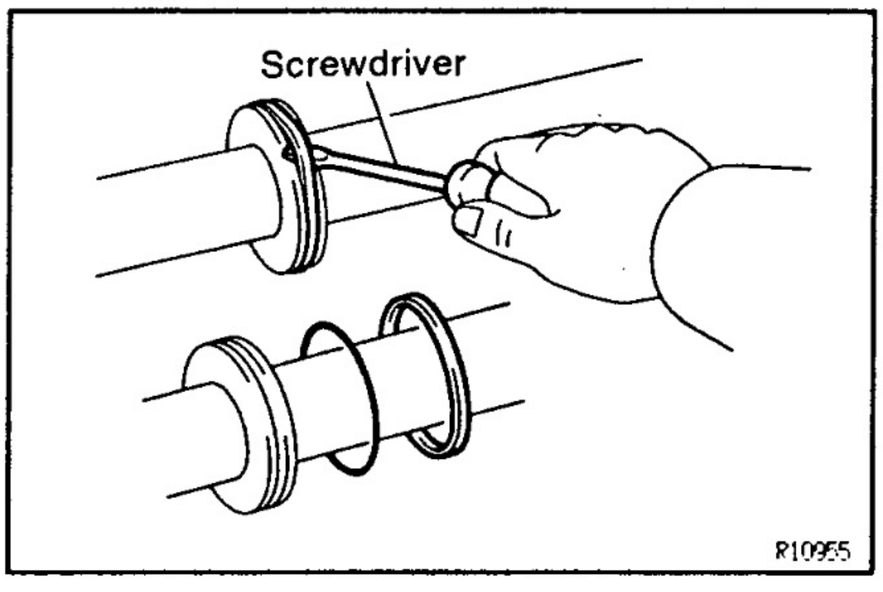

9. IF NECESSARY, REPLACE TEFLON RING AND O–RING

(a) Using a screwdriver, remove the teflon ring and O–ring from the steering rack.
NOTICE: Be careful not to damage the groove for the ring.

(b) Coat a new O–ring with power steering fluid and install it.

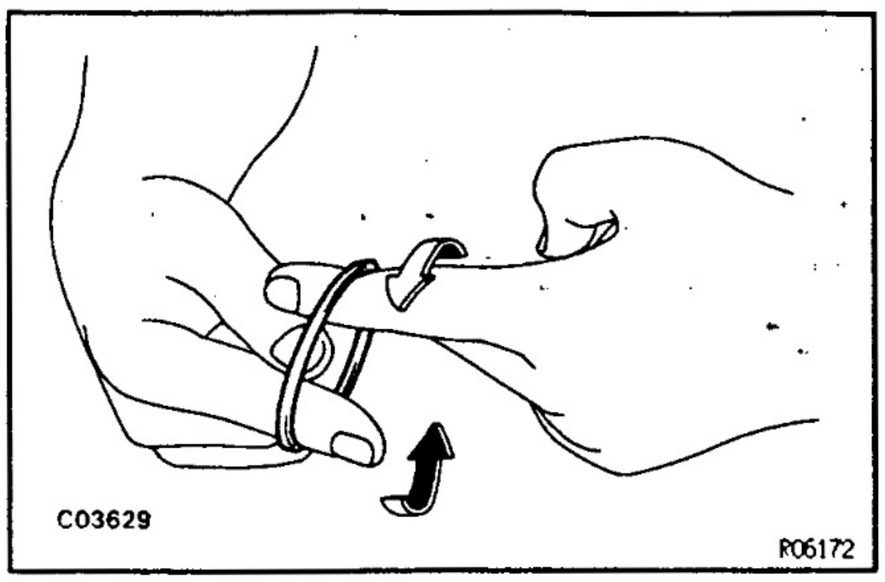

(c) Expand a new teflon ring with your fingers.
NOTICE: Be careful not to overexpand the ring.

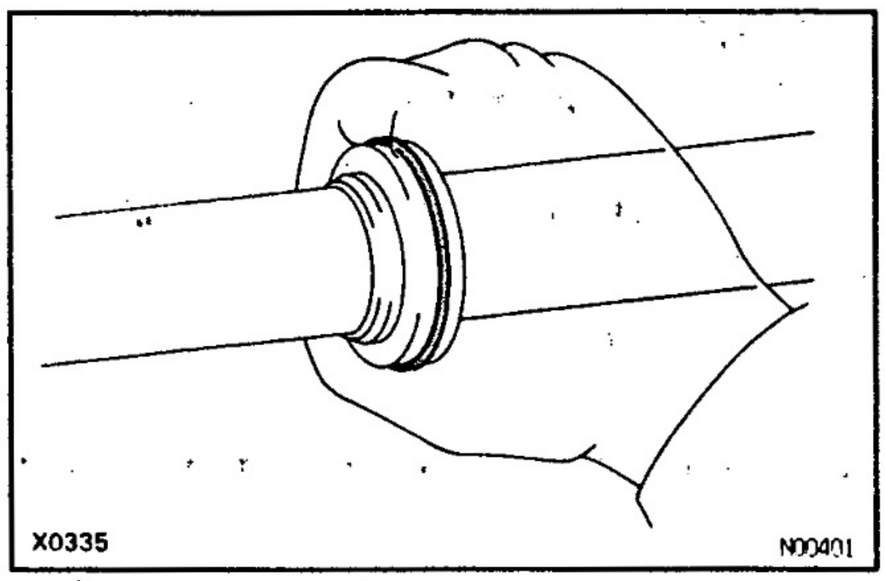

(d) Coat the ring with power steering fluid.
(e) Install the ring to the rack, and snug it down with your fingers.

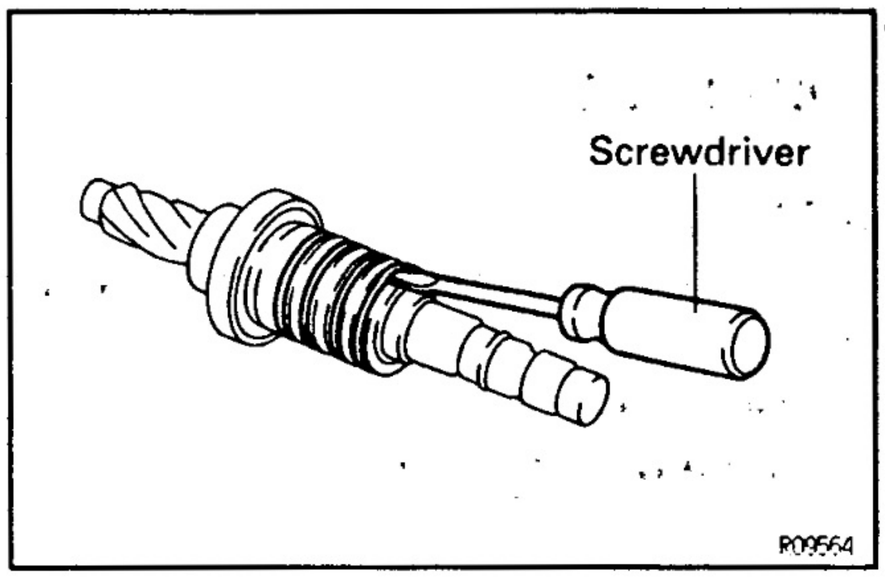

10. IF NECESSARY, REPLACE TEFLON RINGS

(a) Using a screwdriver, remove the 4 rings from the control valve assembly.
NOTICE: Be careful not to damage the grooves for the ring.

(b) Expand 4 new rings with your fingers.
NOTICE: Be careful not to overexpand the ring.

(c) Coat the rings with power steering fluid.

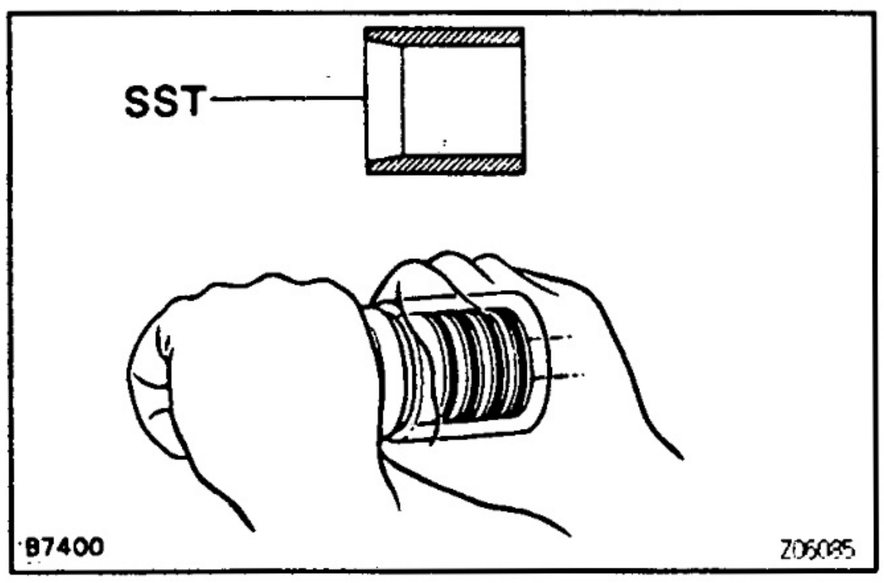

(d) Install the rings to the control valve assembly, and snug them down with your fingers.

(e) Carefully slide the tapered end of SST over the rings to seat them.
SST 09631–20081
NOTICE: Be careful not to damage the rings.

SR

POWER STEERING GEAR ASSEMBLY

SR1UJ-02

NOTICE: When using a vise, do not overtighten it.

1. COAT WITH POWER STEERING FLUID OR MOLYBDENUM DISULFIDE LITHIUM BASE GREASE
(See pages SR–65 and 66)

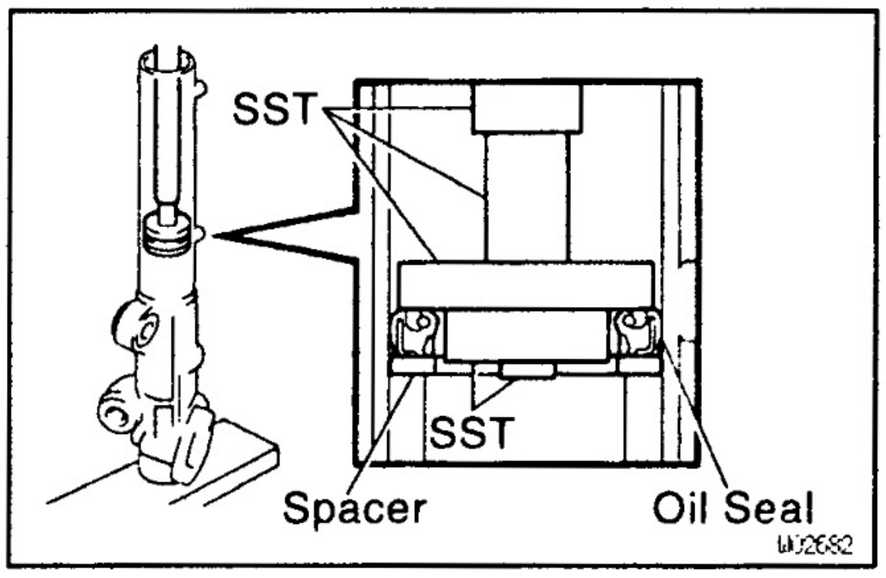

2. INSTALL SPACER AND OIL SEAL

(a) Coat a new oil seal lip with power steering fluid.

(b) Using SST, press in the oil seal and spacer.
SST 09951–60010 (09951–00330, 09951–00490, 09952–06010),
09950–70010 (09951–07360)

NOTICE:

- **Make sure to install the oil seal facing the correct direction.**
- **Take care that the oil seal does not get reversed as you install it.**

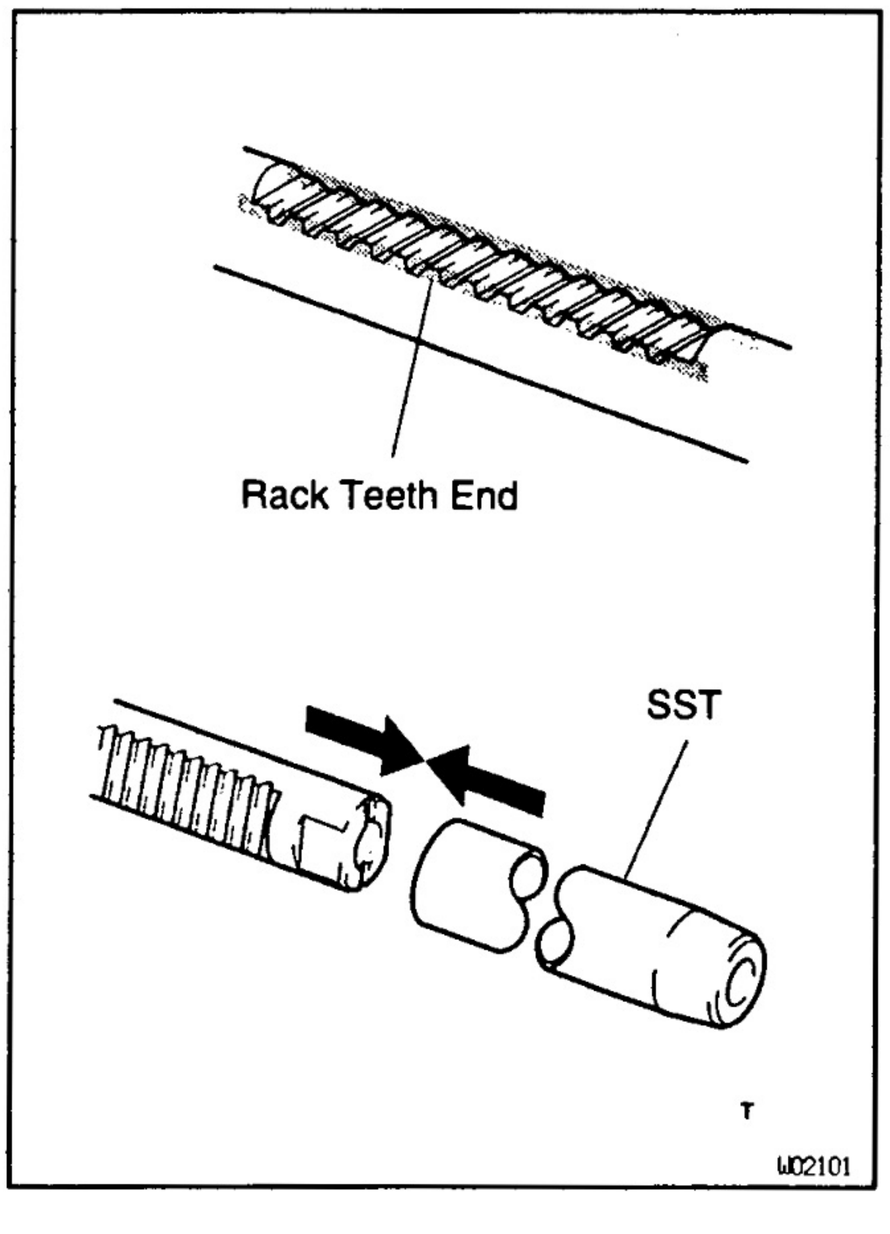

3. INSTALL STEERING RACK

(a) Install SST to the rack.
SST 09631–00350
HINT: If necessary, scrape the burrs off the rack teeth end and burnish.

(b) Coat SST with power steering fluid.

(c) Install the rack into the rack housing.

(d) Remove the SST.

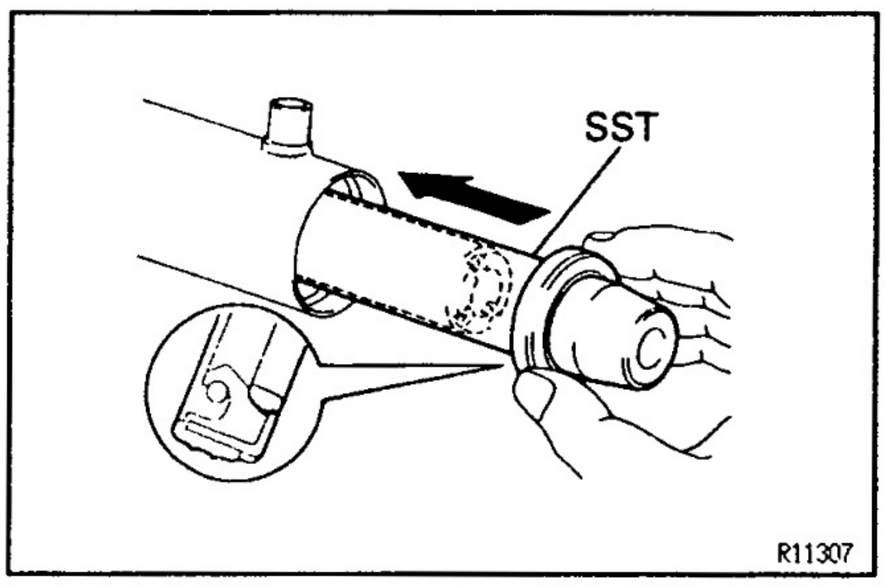

4. INSTALL OIL SEAL

(a) Install SST to the steering rack opposite end.
SST 09631–00350

(b) Coat SST with power steering fluid.

(c) Coat a new oil seal lip with power steering fluid.

(d) Install the oil seal by pushing it onto the SST without tilting.
NOTICE: Make sure to install the oil seal facing the correct direction.

(e) Remove the SST.

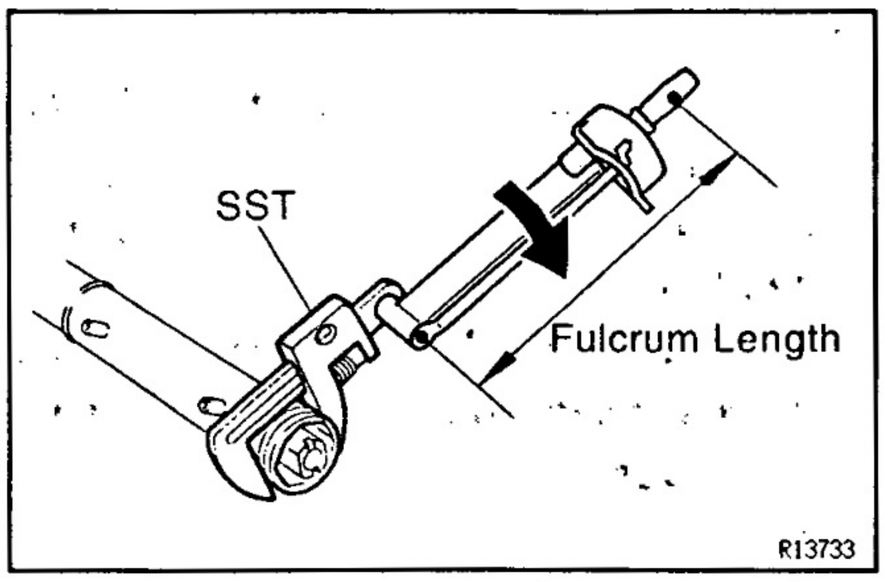

5. INSTALL CYLINDER END STOPPER

(a) Coat a new O–ring with power steering fluid, and install it to the stopper.

(b) Using SST, torque the stopper.
SST 09922–10010
Torque: 59 N·m (597 kgf·cm, 43 ft·lbf)
NOTICE: Use SST 09922–10010 in the direction shown in the illustration.
HINT: Use a torque wrench with a fulcrum length of 345 mm (13.58 in.).

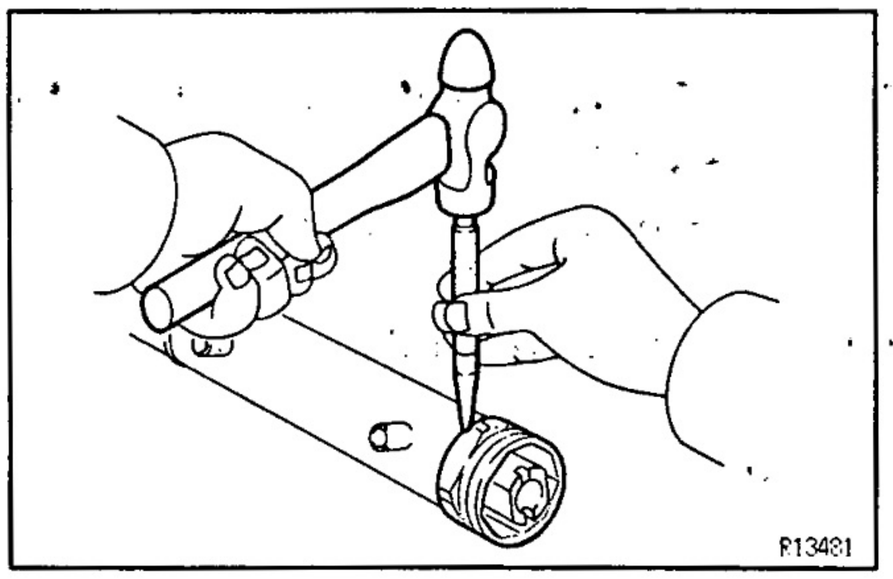

(c) Using a punch and hammer, stake the rack housing.

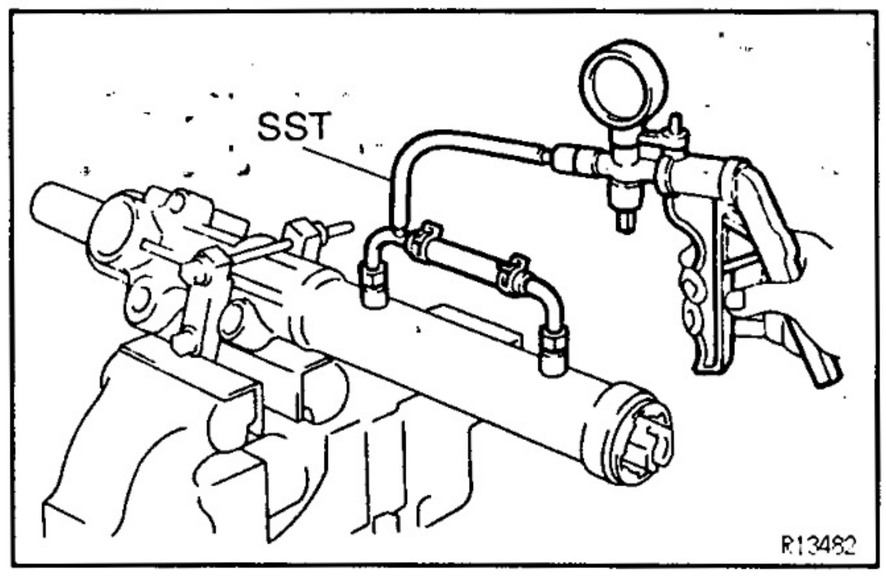

6. AIR TIGHTNESS TEST

(a) Install SST to the unions of the rack housing.
SST 09631–12071

(b) Apply 53 kPa (400 mmHg, 15.75 in.Hg) of vacuum for about 30 seconds.

(c) Check that there is no change in the vacuum.
If there is change in the vacuum, check the installation of the oil seals.

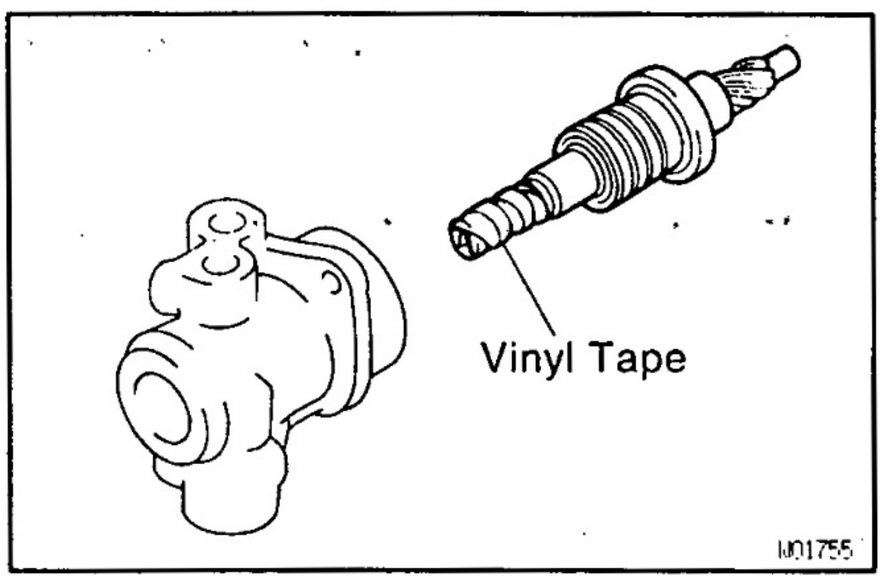

7. INSTALL CONTROL VALVE ASSEMBLY

(a) Coat the teflon rings with power steering fluid.

(b) To prevent oil seal lip damage, wind vinyl tape on the serrated part of the control valve shaft.

(c) Push the valve assembly into the control valve housing.
NOTICE: Be careful not to damage the teflon rings and oil seal lip.

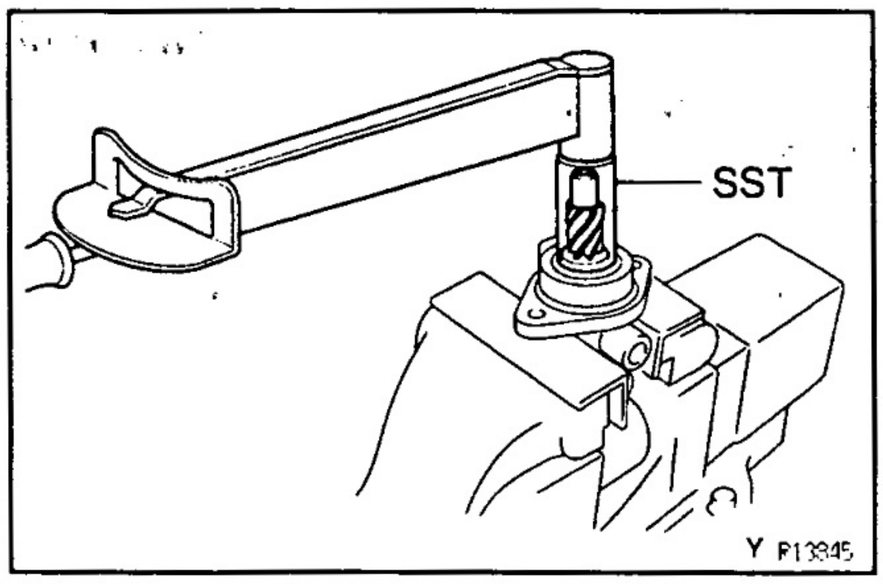

(d) Coat a new O–ring with power steering fluid, and install it to the bearing guide nut.

(e) Using SST, torque the nut.
SST 09631–20060
Torque: 25 N·m (250 kgf·cm, 18 ft·lbf)
NOTICE: Be careful not to damage the oil seal lip.

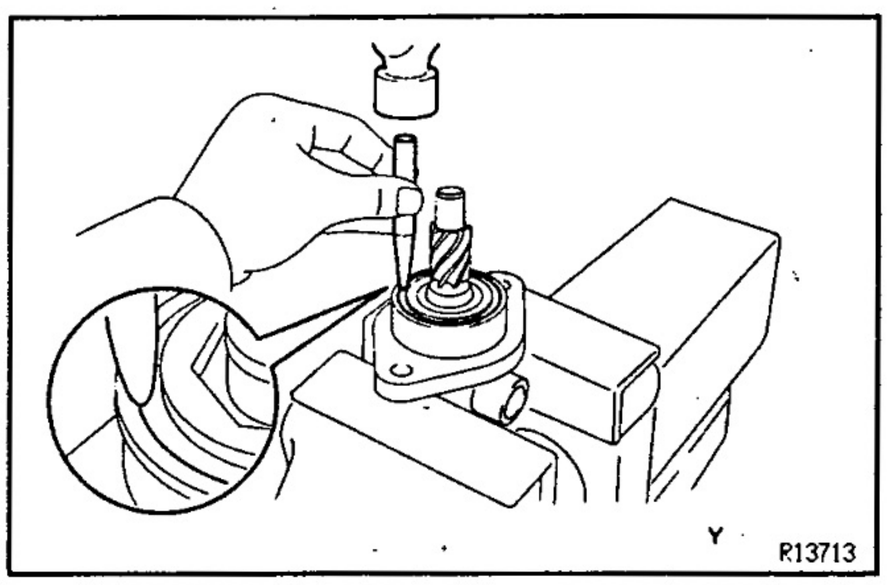

(f) Using a punch, stake the nut.

8. INSTALL CONTROL VALVE HOUSING WITH CONTROL VALVE ASSEMBLY

(a) Coat a new O—ring with power steering fluid, and install it to the valve housing.

(b) Align the matchmarks on the valve housing and rack housing, and install the valve housing with the valve assembly to the rack housing.

(c) Torque the 2 bolts.
Torque: 18 N·m (185 kgf·cm, 13 ft·lbf)

9. INSTALL DUST COVER

10. INSTALL RACK GUIDE, RACK GUIDE SPRING AND RACK GUIDE SPRING CAP

(a) Apply sealant to 2 or 3 threads of the cap.
Sealant:
Part No. 08833—00080, THREE BOND 1344, LOCTITE 242 or equivalent

(b) Temporarily install the cap.

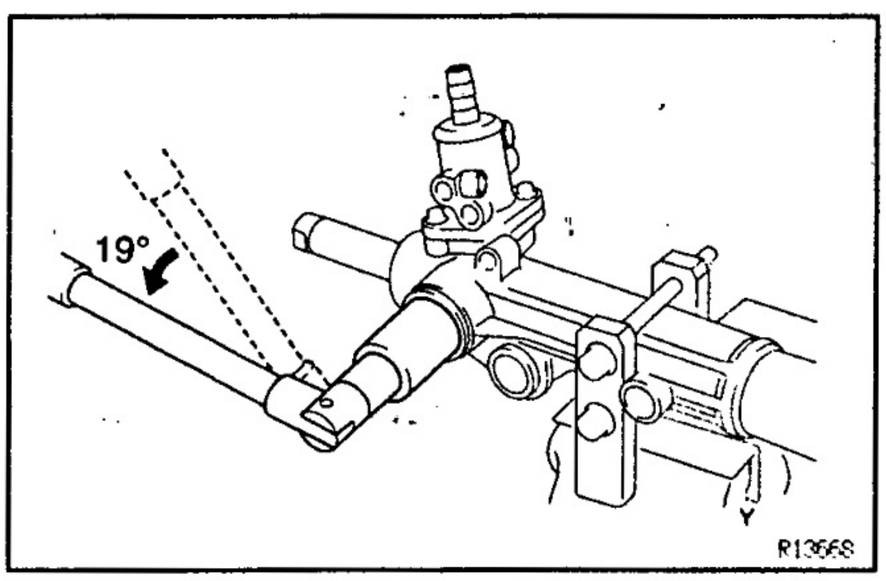

11. ADJUST TOTAL PRELOAD

(a) To prevent the steering rack teeth from damaging the oil seal lip, temporarily install the RH and LH rack ends.

(b) Torque the rack guide spring cap.
Torque: 25 N·m (250 kgf·cm, 18 ft·lbf)

(c) Return the cap 19°.

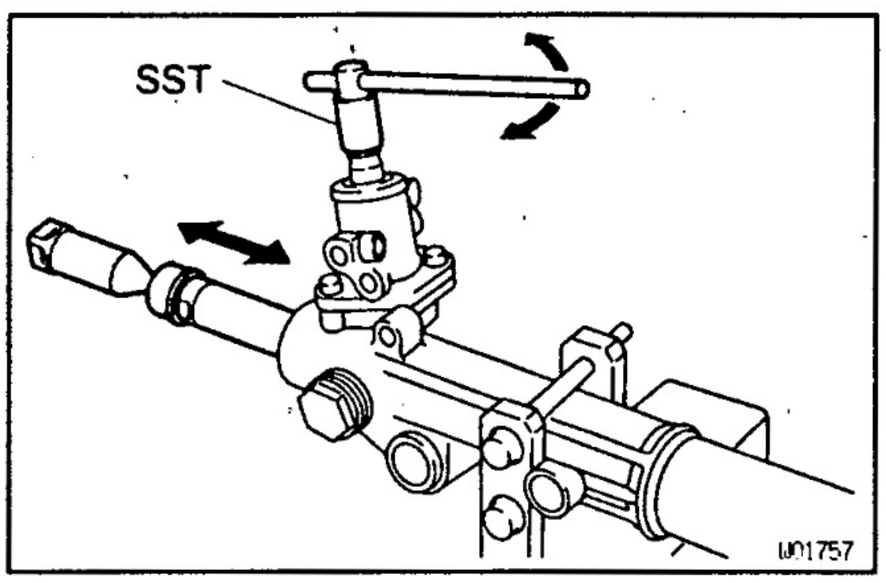

(d) Using SST, turn the control valve shaft right and left 1 or 2 times.
SST 09616—00010

(e) Loosen the cap until the rack guide spring is not functioning.

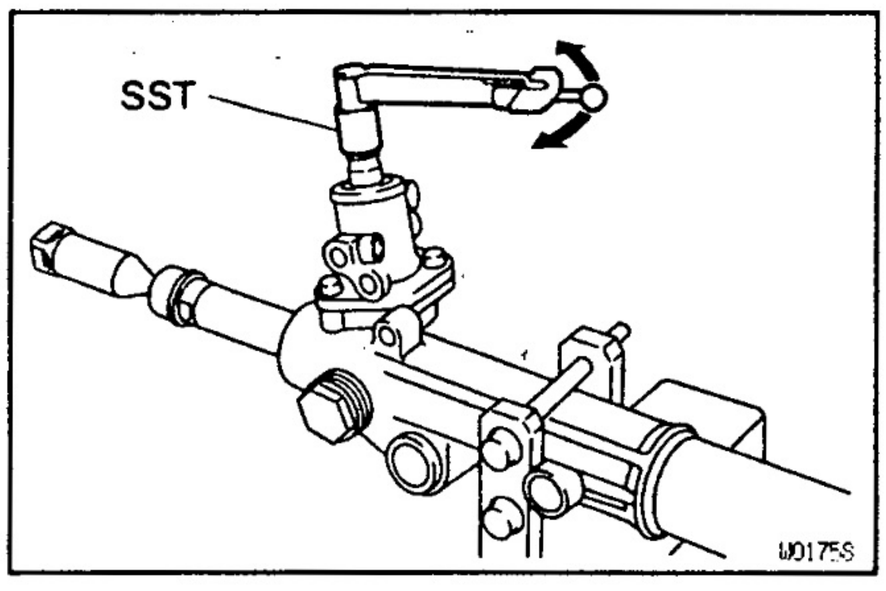

(f) Using SST and a torque wrench, tighten the cap until the preload is within specification.
SST 09616—00010
Preload (turning):
0.5—1.6 N·m (5—16.5 kgf·cm, 4.3—14.3 in.·lbf)

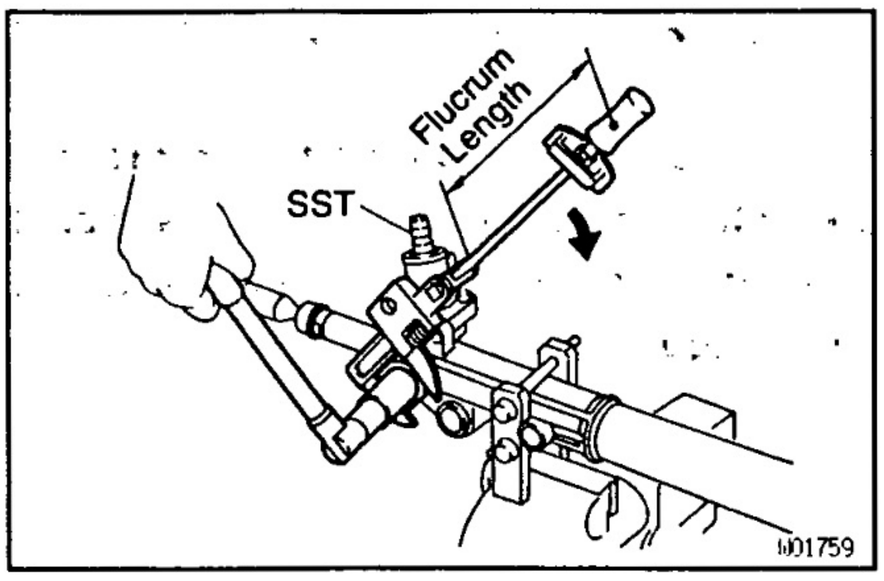

12. INSTALL RACK GUIDE SPRING CAP LOCK NUT

(a) Apply sealant to 2 or 3 threads of the nut.
Sealant:
Part No.08833–00080, THREE BOND 1344, LOCTITE 242 or equivalent

(b) Holding the rack guide spring cap rotating, and using SST, torque the nut.
SST 09922–10010
Torque: 51 N·m (521 kgf·cm, 38 ft·lbf)
NOTICE: Use SST 09922–10010 in the direction shown in the illustration.
HINT: Use a torque wrench with a fulcrum length of 345 mm (13.58 in.).

(c) Recheck the total preload.
Preload (turning):
0.5–1.6 N·m (5–16.5 kgf·cm, 4.3–14.3 in.·lbf)

(d) Remove the RH and LH rack ends.

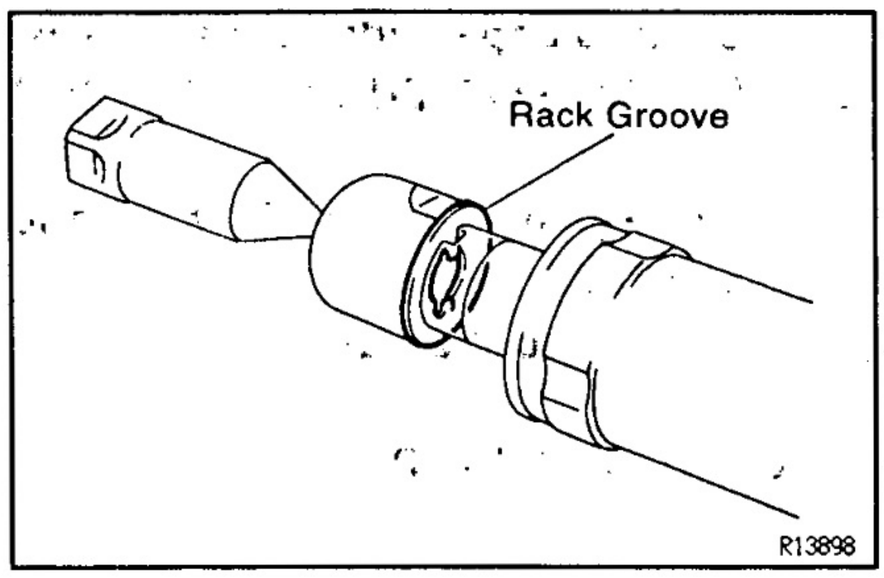

13. INSTALL RH AND LH CLAW WASHERS AND RACK ENDS

(a) Install a new washer, and temporarily tighten the rack end.
HINT: Align the claws of the washer with the steering rack grooves.

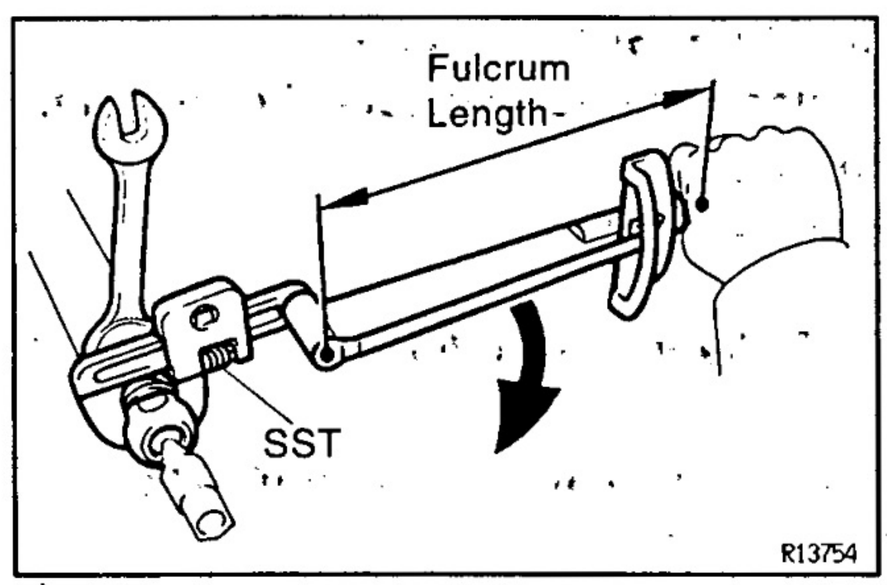

(b) Using a spanner to hold the steering rack steady, and using SST, torque the rack end.
SST 09922–10010
Torque: 76 N·m (770 kgf·cm, 56 ft·lbf)
NOTICE: Use SST 09922–10010 in the direction shown in the illustration.
HINT: Use a torque wrench with a fulcrum length of 345 mm (13.58 in.).

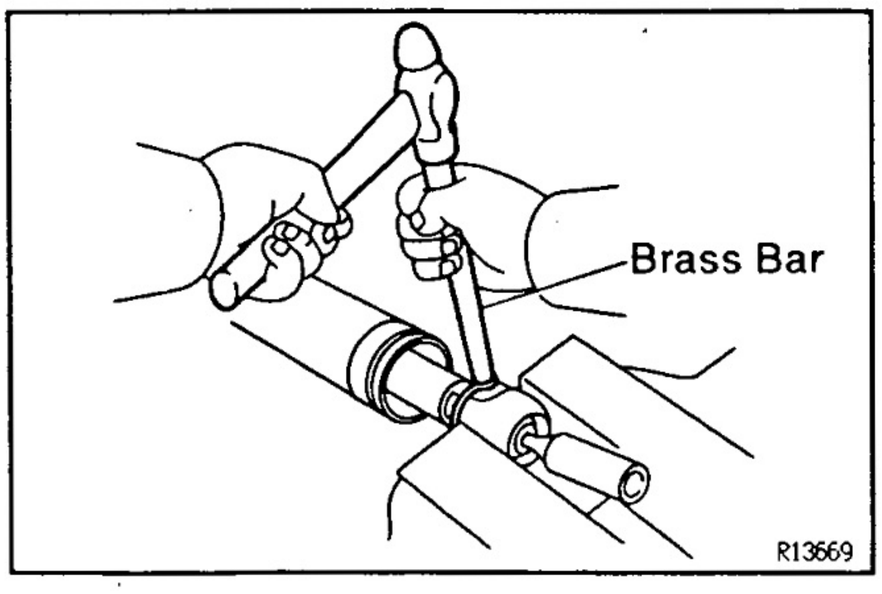

(c) Using a brass bar and hammer, stake the washer.
NOTICE: Avoid any impact to the rack.

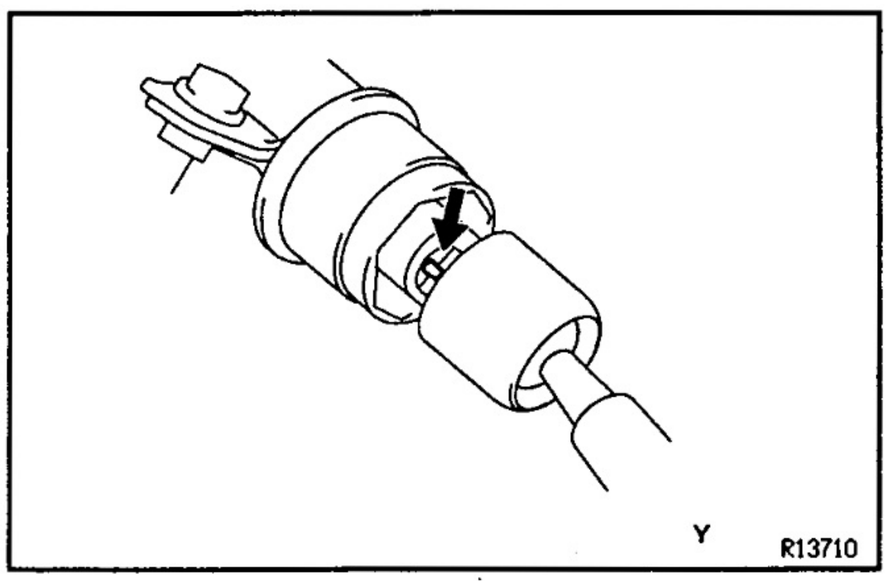

14. INSTALL RH AND LH RACK BOOTS, CLAMPS AND CLIPS

(a) Ensure that the tube hole is not clogged with grease.
HINT: If the tube hole is clogged, the pressure inside the boot will change after it is assembled and the steering wheel is turned.

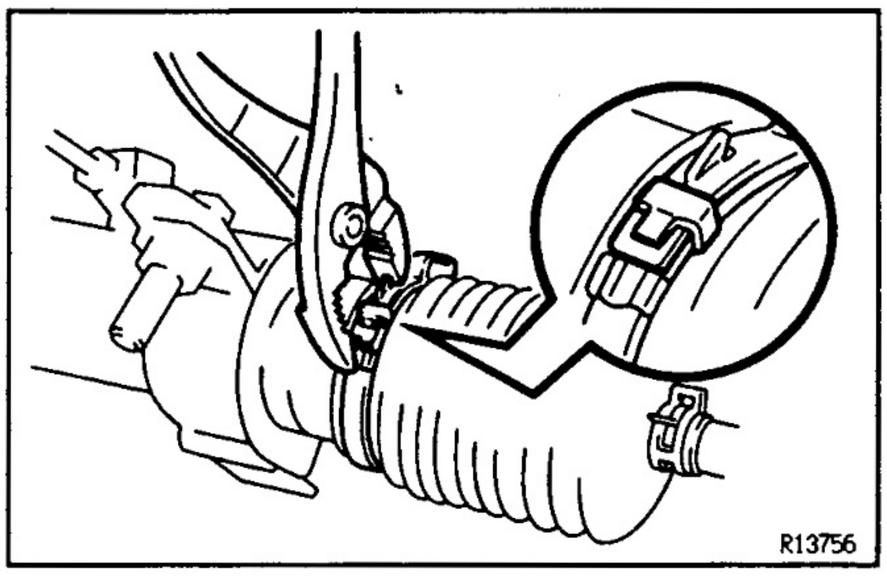

(b) Install the boot.
NOTICE: Be careful not to damage or twist the boot.

(c) Tighten a new clamp, as shown in the illustration.

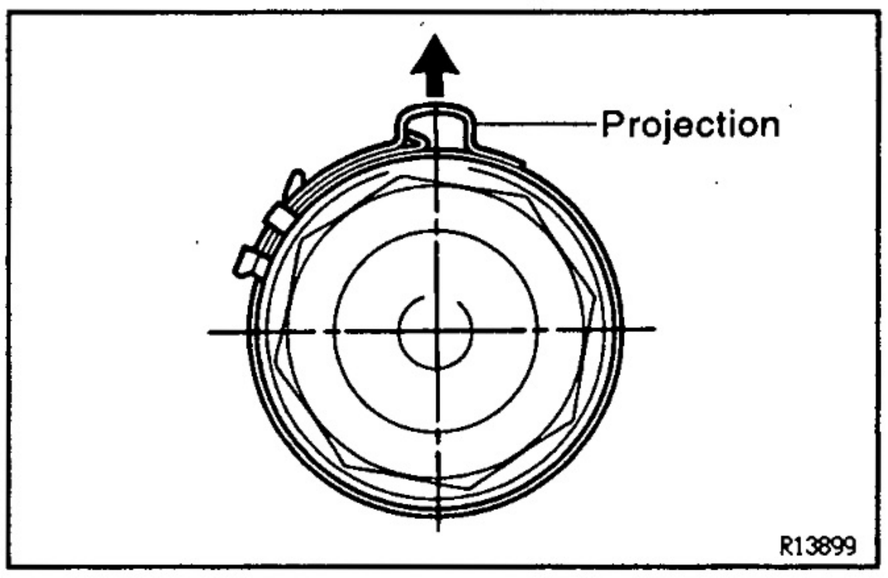

HINT: Face the projection to upper side of the vehicle.

15. INSTALL RH AND LH TIE ROD ENDS AND LOCK NUTS

(a) Screw the lock nut and tie rod end onto the rack end until the matchmarks are aligned.

(b) After adjusting toe–in, torque the nut.
(See page SA–6)
Torque: 55 N·m (560 kgf·cm, 41 ft·lbf)

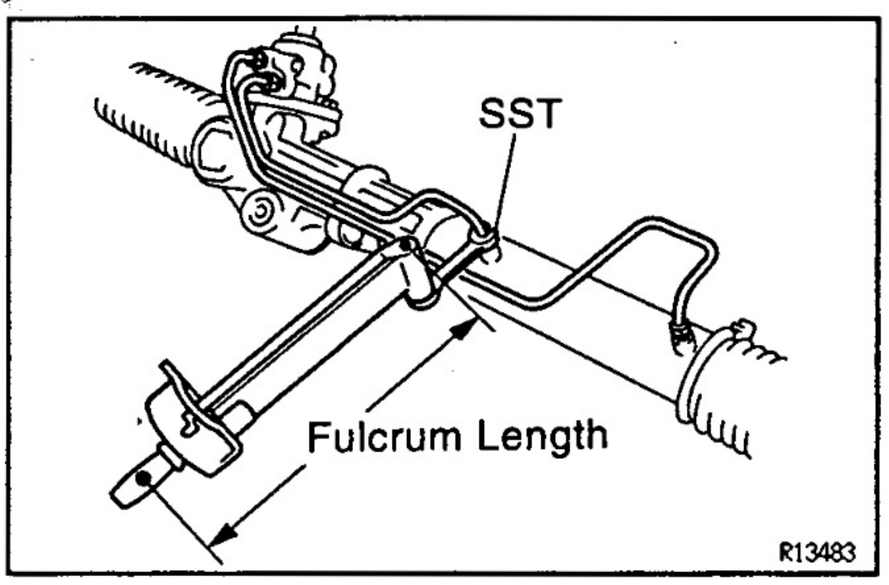

16. INSTALL 2 TURN PRESSURE TUBES

(a) Install a new union seat to the rack housing and control valve housing.

(b) Using SST, install the tube.
SST 09633–00020
Torque: 20 N·m (203 kgf·cm, 15 ft·lbf)
HINT:
- Use a torque wrench with a fulcrum length of 300 mm (11.81 in.).
- This torque value is effective in case that SST is parallel to a torque wrench.

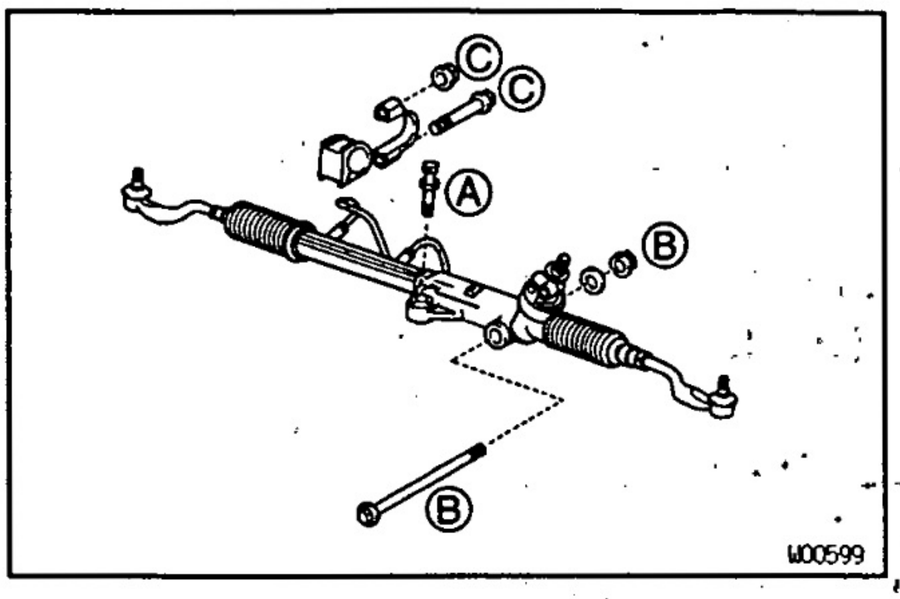

POWER STEERING GEAR INSTALLATION

SR1UK-02

1. INSTALL GROMMET AND BRACKET

2. INSTALL PS GEAR ASSEMBLY

(a) Torque the gear assembly set bolt.
Bolt A: Torque: 165 N·m (1,700 kgf·cm, 123 ft·lbf)

(b) Torque the gear assembly set bolt and nut.
Bolt B: Torque: 190 N·m (1,950 kgf·cm, 141 ft·lbf)

(c) Torque the bolt and nut to the bracket.
Bolt C: Torque: 165 N·m (1,700 kgf·cm, 123 ft·lbf)

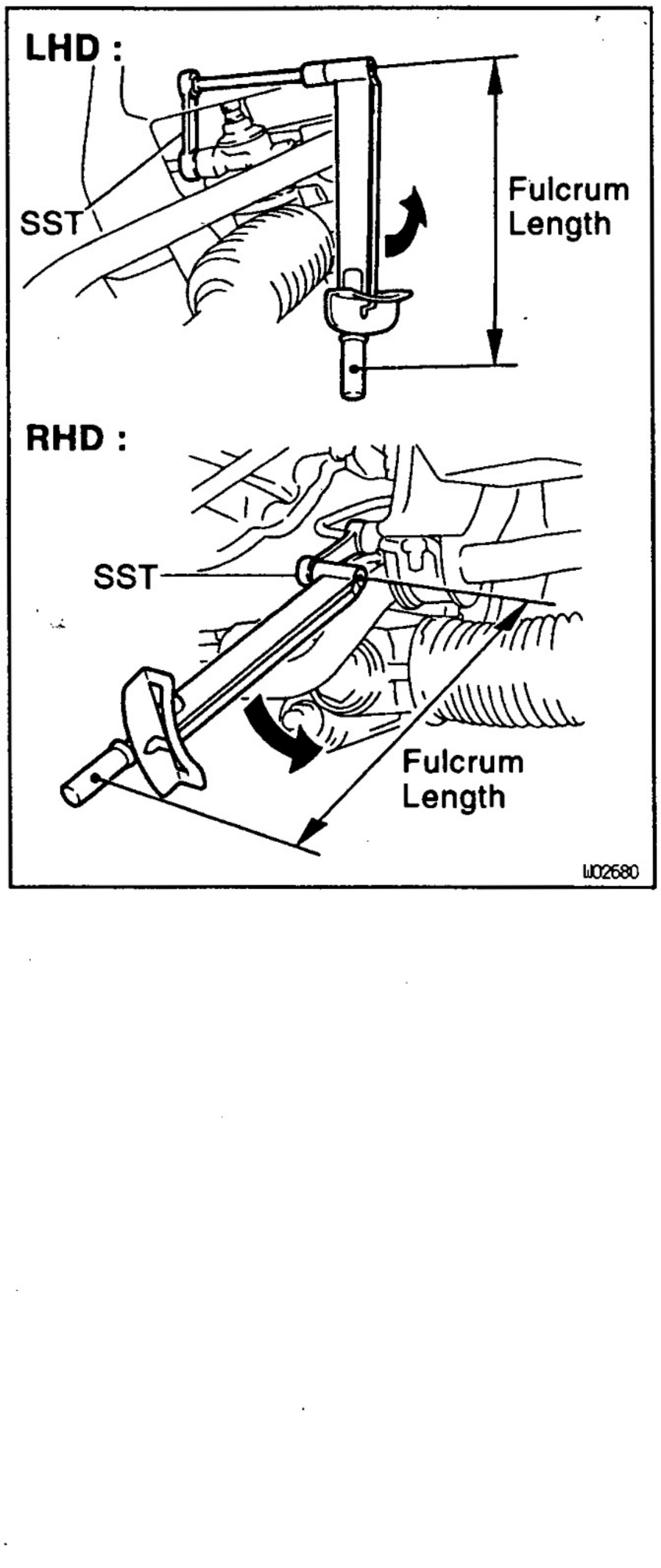

3. CONNECT PRESSURE FEED AND RETURN TUBES

Using SST, connect the tube.
SST 09631−22020
Torque:
LHD: 58 N·m (587 kgf·cm, 43 ft·lbf)
RHD: 36 N·m (365 kgf·cm, 26 ft·lbf)

HINT:
- Use a torque wrench with a fulcrum length of 300 mm (11.81 in.).
- This torque value is effective in case that SST is parallel to a torque wrench.

4. INSTALL INTERMEDIATE SHAFT NO.2
(See page SR−23)

5. CONNECT RH AND LH TIE ROD ENDS
(See page SA−58)

6. INSTALL ENGINE UNDER COVER NO. 1 AND ENGINE UNDER COVER NO.2
Tighten the 9 bolts.

7. w/ Airbag:
POSITION FRONT WHEEL FACING STRAIGHT AHEAD
HINT: Do it with the front of the vehicle jacked up.

8. w/ Airbag:
CENTER SPIRAL CABLE
(See page SR−24)

9. w/ Airbag:
INSTALL STEERING WHEEL

(a) Align the matchmarks on the wheel and steering column main shaft.

(b) Temporarily tighten the wheel set nut.

(c) Connect the connector.

10. **BLEED POWER STEERING SYSTEM**
    (See page SR–11)
11. **CHECK STEERING WHEEL CENTER POINT**
12. **w/ Airbag:**
    TORQUE STEERING WHEEL SET NUT
    Torque: 35 N·m (360 kgf·cm, 26 ft·lbf)
13. **w/ Airbag:**
    INSTALL STEERING WHEEL PAD
    (See page SR–24)
14. **CHECK FRONT WHEEL ALIGNMENT**
    (See page SA–4)

SERVICE SPECIFICATIONS

SERVICE DATA

SR1XX-03

ON–VEHICLE INSPECTION		
Steering wheel freeplay	Maximum	30 mm (1.18 in.)
3L Engine:		
Drive belt tension at 98 N (10 kgf, 22 lbf)	New belt	8–10 mm (0.31–0.39 in.)
Drive belt tension at 98 N (10 kgf, 22 lbf)	Used belt	10–15 mm (0.39–0.59 in.)
3RZ–F and 3RZ–FE Engines:		
Drive belt tension at 98 N (10 kgf, 22 lbf)	New belt	4.5–5.5 mm (0.177–0.217 in.)
Drive belt tension at 98 N (10 kgf, 22 lbf)	Used belt	6–7.5 mm (0.236–0.295 in.)
5VZ–FE Engine:		
Drive belt tension at 98 N (10 kgf, 22 lbf)	New belt	6.5–7.5 mm (0.256–0.295 in.)
Drive belt tension at 98 N (10 kgf, 22 lbf)	Used belt	8.5–10.0 mm (0.335–0.393 in.)
3L Engine:		
*Drive belt tension	New belt	441–539 N (45–55 kgf)
*Drive belt tension	Used belt	196–343 N (20–35 kgf)
3RZ–F, 3RZ–FE and 5VZ–FE Engines:		
*Drive belt tension	New belt	539–637 N (55–62 kgf)
*Drive belt tension	Used belt	245–392 N (25–40 kgf)
Fluid level rise	Maximum	Below 5 mm (0.20 in.)
3L Engine:		
Oil pressure at idle speed with valve closed	Minimum	7,355 kPa (75 kgf/cm², 1,067 psi)
3RZ–F, 3RZ–FE and 5VZ–FE Engines:		
Oil pressure at idle speed with valve closed	Minimum	8,335 kPa (85 kgf/cm², 1,209 psi)
1KZ–T and 1KZ–TE Engines:		
Oil pressure at idle speed with valve closed	Minimum	8,826 kPa (90 kgf/cm², 1,280 psi)
Steering effort at idle speed	Maximum	7.8 N·m (80 kgf·cm, 69 in.·lbf)
PS VANE PUMP		
3L Engine:		
Vane pump rotating torque	Maximum	0.3 N·m (2.8 kgf·cm, 2.4 in.·lbf)
Pump shaft and front housing bushing oil clearance	STD	0.03–0.05 mm (0.0012–0.0020 in.)
Pump shaft and front housing bushing oil clearance	Maximum	0.07 mm (0.0028 in.)
Vane plate height	Minimum	8.1 mm (0.319 in.)
Vane plate thickness	Minimum	1.797 mm (0.0708 in.)
Vane plate length	Minimum	14.988 mm (0.5901 in.)
Vane plate and pump rotor groove clearance	Maximum	0.028 mm (0.0011 in.)
Vane plate length	Pump rotor and cam ring mark	
	None	14.996–14.998 mm (0.59039–0.59047 in.)
	1	14.994–14.996 mm (0.59031–0.59039 in.)
	2	14.992–14.994 mm (0.59023–0.59031 in.)
	3	14.990–14.992 mm (0.59016–0.59023 in.)
	4	14.998–14.990 mm (0.59007–0.59016 in.)
Flow control valve compression spring length	Minimum	36.0 mm (1.417 in.)

*: For use with belt tension gauge

SR

3RZ–F, 3RZ–FE and 5VZ–FE Engines:		
Vane pump rotating torque	3RZ–F, 3RZ–FE: Maximum	0.25 N·m (2.5 kgf·cm, 2.2 in.·lbf) or less
Vane pump rotating torque	5VZ–FE: Maximum	0.27 N·m (2.8 kgf·cm, 2.4 in.·lbf) or less
Pump shaft and front housing bushing oil clearance	STD	0.03–0.05 mm (0.0012–0.0020 in.)
Pump shaft and front housing bushing oil clearance	Maximum	0.07 mm (0.0028 in.)
Vane plate height	Minimum	8.6 mm (0.339 in.)
Vane plate thickness	Minimum	1.397 mm (0.0550 in.)
Vane plate length	Minimum	14.991 mm (0.5902 in.)
Vane plate and pump rotor groove clearance	Maximum	0.035 mm (0.0014 in.)
Vane plate length	Pump rotor and cam ring mark	
	None	14.999–15.001 mm (0.59051–0.59059 in.)
	1	14.997–14.999 mm (0.59043–0.59051 in.)
	2	14.995–14.997 mm (0.59035–0.59043 in.)
	3	14.993–14.995 mm (0.59027–0.59035 in.)
	4	14.991–14.993 mm (0.59020–0.59027 in.)
Flow control valve spring length	Minimum	33.2 mm (1.307 in.)
1KZ–T, 1KZ–TE Engines:		
Vane pump rotating torque	Maximum	0.3 N·m (2.8 kgf·cm, 2.4 in.·lbf) or less
Pump shaft and front housing bushing oil clearance	STD	0.03–0.05 mm (0.0012–0.0020 in.)
Pump shaft and front housing bushing oil clearance	Maximum	0.07 mm (0.0028 in.)
Vane plate height	Minimum	8.6 mm (0.339 in.)
Vane plate thickness	Minimum	1.397 mm (0.0550 in.)
Vane plate length	Minimum	14.991 mm (0.5902 in.)
Vane plate to rotor groove clearance	Maximum	0.035 mm (0.0014 in.)
Vane plate length	Pump rotor and cam ring mark	
	None	14.999–15.001 mm (0.59051–0.59059 in.)
	1	14.997–14.999 mm (0.59043–0.59051 in.)
	2	14.995–14.997 mm (0.59035–0.59043 in.)
	3	14.993–14.995 mm (0.59027–0.59035 in.)
	4	14.991–14.993 mm (0.59020–0.59027 in.)
Flow control valve spring length		36.9 mm (1.453 in.)
PS GEAR		
Steering rack runout	Maximum	0.03 mm (0.0012 in.)
Total preload	Turning	0.5–1.6 N·m (5–16.5 kgf·cm, 4.3–14.3 in.·lbf)

SR1XL-02

TORQUE SPECIFICATIONS

Part tightened		N·m	kgf·cm	ft·lbf
NON–TILT AND TILT STEERING COLUMN:				
Steering wheel set nut		35	360	26
Steering wheel pad set screw (Torx screw)		9.0	90	78 in.·lbf
Steering column assembly set nut		26	260	18
Main shaft assembly x Universal joint No.2		35	360	26
Universal joint No.2 x Intermediate shaft No.2		35	360	26
Control valve shaft x Intermediate shaft No.2		35	360	26
Column hole cover No.2 x Column hole cover x Body		8.0	80	69 in.·lbf.
Tilt lever retainer set bolt	Tilt steering column	20	200	14
PS VANE PUMP				
3L Engine:				
Pressure feed tube x PS vane pump assembly		36 (44)	365 (450)	26 (33)
Pulley set nut		43	440	32
Adjusting strut set bolt		39	400	29
Through bolt		64	650	47
Suction port union set bolt		13	130	9
Front housing x Rear housing		46	470	34
Pressure port union		69	700	51
3RZ–FE, 3RZ–FE Engines:				
Idle pulley set nut		39	400	29
Union bolt x Pressure feed tube		47	475	34
Vane pump assembly set bolt		39	400	29
Vane pump pulley set nut		43	440	32
Oil reservoir set bolt	Front	13	130	9
	Rear	24	240	17
Pressure port union x Pump housing		83	850	61
Front housing x Rear housing		24	240	17
5VZ–FE Engine:				
Union bolt x Pressure feed tube		47	475	34
Vane pump assembly with bracket set bolt and nut		43	440	32
Vane pump pulley set nut		43	440	32
Oil reservoir set bolt	Front	13	130	9
	Rear	24	240	17
Bracket x Pump assembly		43	440	32
Pressure port union x Pump housing		83	850	61
Front housing x Rear housing		24	240	17
1KZ–T, 1KZ–TE Engines:				
Union bolt x Pressure feed tube		47	475	34
PS vane pump assembly set nut		39	400	30
Suction port union set bolt		13	130	9
Pressure port union		69	700	51

( ): For use without SST

STEERING – SERVICE SPECIFICATIONS

Part tightened		N·m	kgf·cm	ft·lbf
PS GEAR				
Cylinder end stopper		59 (78)	597 (800)	43 (58)
Bearing guide nut		25	250	18
Control valve housing set bolt		18	185	13
Rack guide spring cap lock nut		51 (60)	521 (700)	38 (51)
Rack x Rack end		76 (103)	770 (1,050)	56 (76)
Tie rod end lock nut		55	560	41
Turn pressure tube union nut		20 (25)	203 (250)	15 (18)
PS gear assembly set bolt		165	1,700	123
PS gear assembly set bolt and nut		190	1,950	141
Bracket x Body		165	1,700	123
Pressure feed and return tubes x Control valve housing	LHD	58 (44)	587 (450)	43 (33)
Pressure feed and return tubes x Control valve housing	RHD	36 (44)	365 (450)	26 (33)
Universal joint No.2 x Intermediate No.2 shaft		35	360	26
Control valve shaft x Intermediate No.2 shaft		35	360	26
Steering wheel set nut		35	360	26
Tie rod end x Lower arm		90	912	66

( ): For use without SST

SUPPLEMENTAL RESTRAINT SYSTEM

GENERAL DESCRIPTION ..... RS– 2
OPERATION ..... RS– 3
PREPARATION ..... RS– 8
STEERING WHEEL PAD/FRONT PASSENGER AIRBAG ASSEMBLY ..... RS– 9
AIRBAG SENSOR ASSEMBLY ..... RS– 23
WIRE HARNESS AND CONNECTOR ..... RS– 26
TROUBLESHOOTING ..... RS– 29
SERVICE SPECIFICATIONS ..... RS– 70

RS

GENERAL DESCRIPTION

The LAND CRUISER/LAND CRUISER PRADO is equipped with an SRS (Supplemental Restraint System), which comprises a driver airbag and front passenger airbag. Failure to carry out service operations in the correct sequence could cause the SRS to unexpectedly deploy during servicing, possibly leading to a serious accident. Further, if a mistake is made in servicing the SRS, it is possible the SRS may fail to operate when required. Before performing servicing (including removal or installation of parts, inspection or replacement), be sure to read the following items carefully, then follow the correct procedure described in the repair manual. R601T-1E

1. Malfunction symptoms of the SRS are difficult to confirm, so the DTCs become the most important source of information when troubleshooting. When troubleshooting the SRS, always inspect the DTCs before disconnecting the battery.
(See page RS−32)
2. **Work must be started after 90 seconds from when the ignition switch is turned to the "LOCK" position and the negative (−) terminal cable is disconnected from the battery. (The SRS is equipped with a back−up power source so that if work is started within 90 seconds of disconnecting the negative (−) terminal cable of the battery, the SRS may deploy.)**
When the negative (−) terminal cable is disconnected from the battery, the memory of the clock and audio system will be canceled. So before starting work, make a record of the contents memorized by the audio memory system. When work is finished, reset the audio systems as before and adjust the clock. To avoid erasing the memory of each memory system, never use a back−up power supply from outside the vehicle.
3. Even in cases of a minor collision where the SRS does not deploy, the steering wheel pad, front passenger airbag assembly and airbag sensor assembly should be inspected.
(See pages RS−9 and 23)
4. Never use SRS parts from another vehicle. When replacing parts, replace them with new parts.
5. Before repairs, remove the airbag sensor if shocks are likely to be applied to the sensor during repairs.
6. Never disassemble and repair the steering wheel pad, front passenger airbag assembly or airbag sensor assembly in order to reuse it.
7. If the steering wheel pad, front passenger airbag assembly or airbag sensor assembly have been dropped or if there are cracks, dents or other defects in the case, bracket or connector, replace them with new ones.
8. Do not expose the steering wheel pad, front passenger airbag assembly or airbag sensor assembly directly to hot air or flames.
9. Use a volt/ohmmeter with high impedance (10 kΩ/V minimum) for troubleshooting the system's electrical circuits.
10. Information labels are attached to the periphery of the SRS components. Follow the instructions on the notices.
11. After work on the SRS is completed, check the SRS warning light.
(See page RS−32)
12. If the vehicle is equipped with a mobile communication system, refer to the precaution in the IN section.

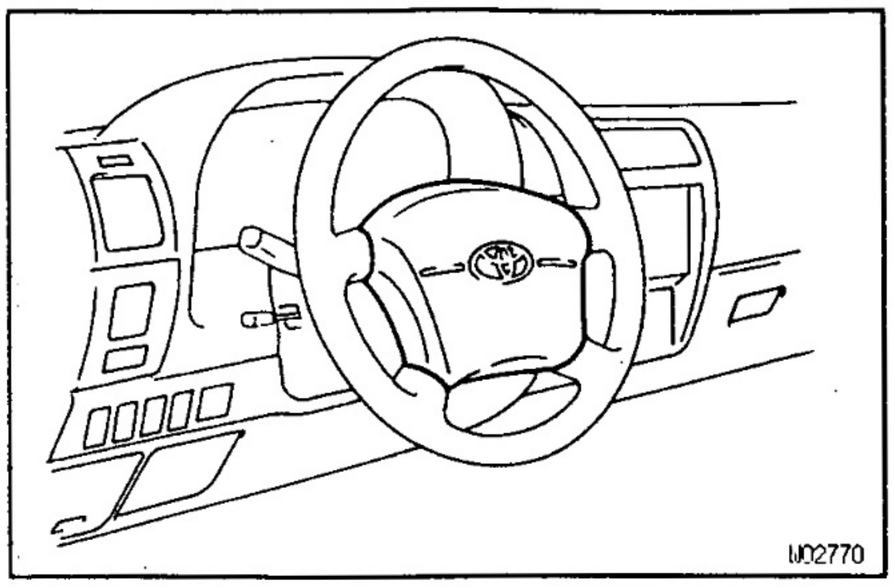

OPERATION

FUNCTION OF COMPONENTS

RSOSS-OA

1. STEERING WHEEL PAD (with AIRBAG)

The inflater and bag of the SRS are stored in the steering wheel pad and cannot be disassembled. The inflater contains a squib, igniter charge, gas generant, etc., and inflates the bag when instructed by the airbag sensor assembly.

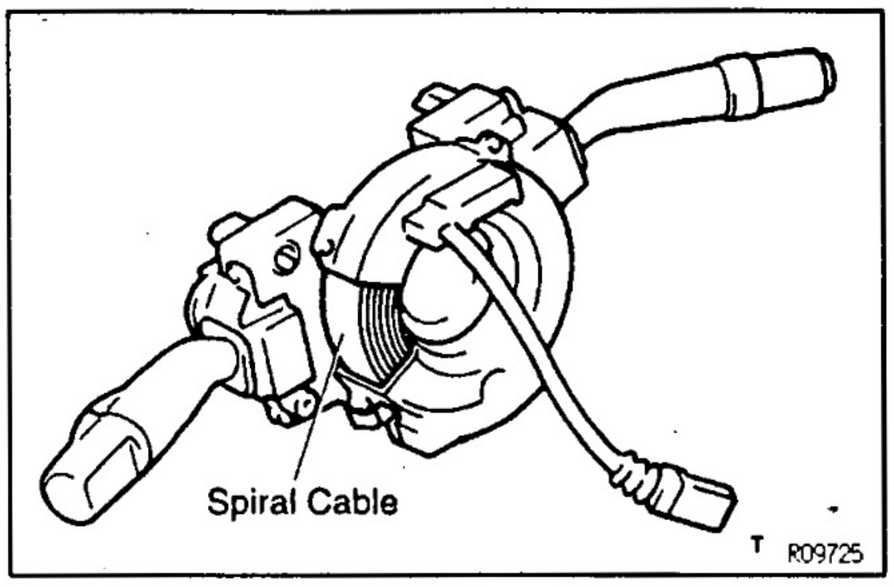

2. SPIRAL CABLE (in COMBINATION SWITCH)

A spiral cable is used as an electrical joint from the vehicle body side to the steering wheel.

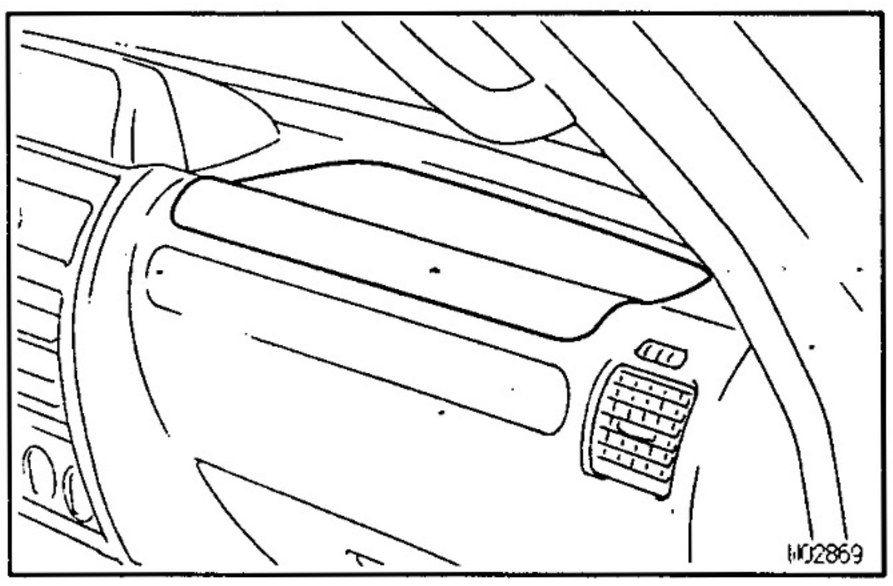

3. FRONT PASSENGER AIRBAG ASSEMBLY

The inflater and bag of the SRS are stored in the front passenger airbag assembly and cannot be disassembled. The inflater contains a squib, igniter charge, gas generant, etc., and inflates the bag when instructed by the center airbag sensor assembly.

RS

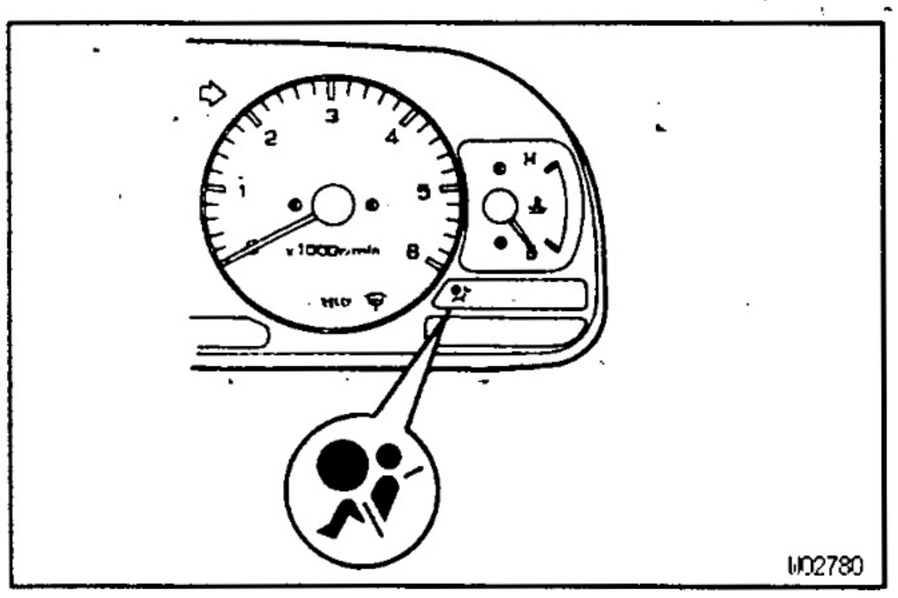

4. SRS WARNING LIGHT

The SRS warning light is located on the combination meter. It goes on to alert the driver of trouble in the system when a malfunction is detected in the airbag sensor assembly. In normal operating condition when the ignition switch is turned to the ACC or ON position, the light goes on for about 6 seconds and then goes off.

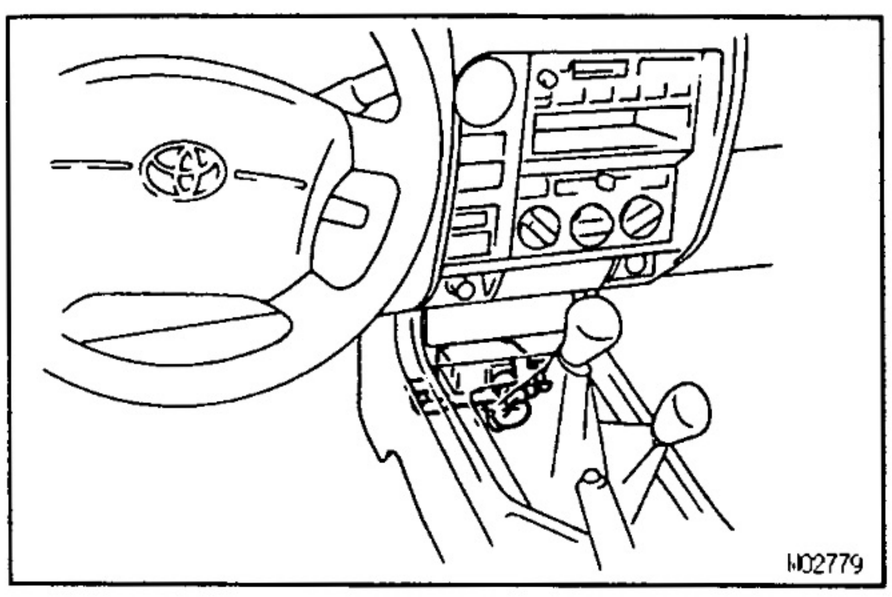

5. AIRBAG SENSOR ASSEMBLY

The airbag sensor assembly is mounted on the floor inside the lower console box. The airbag sensor assembly consists of an airbag sensor, safing sensor, diagnosis circuit and ignition control, drive circuit, etc. It receives signals from the airbag sensor and judges whether the SRS must be activated or not.

6. SRS CONNECTORS

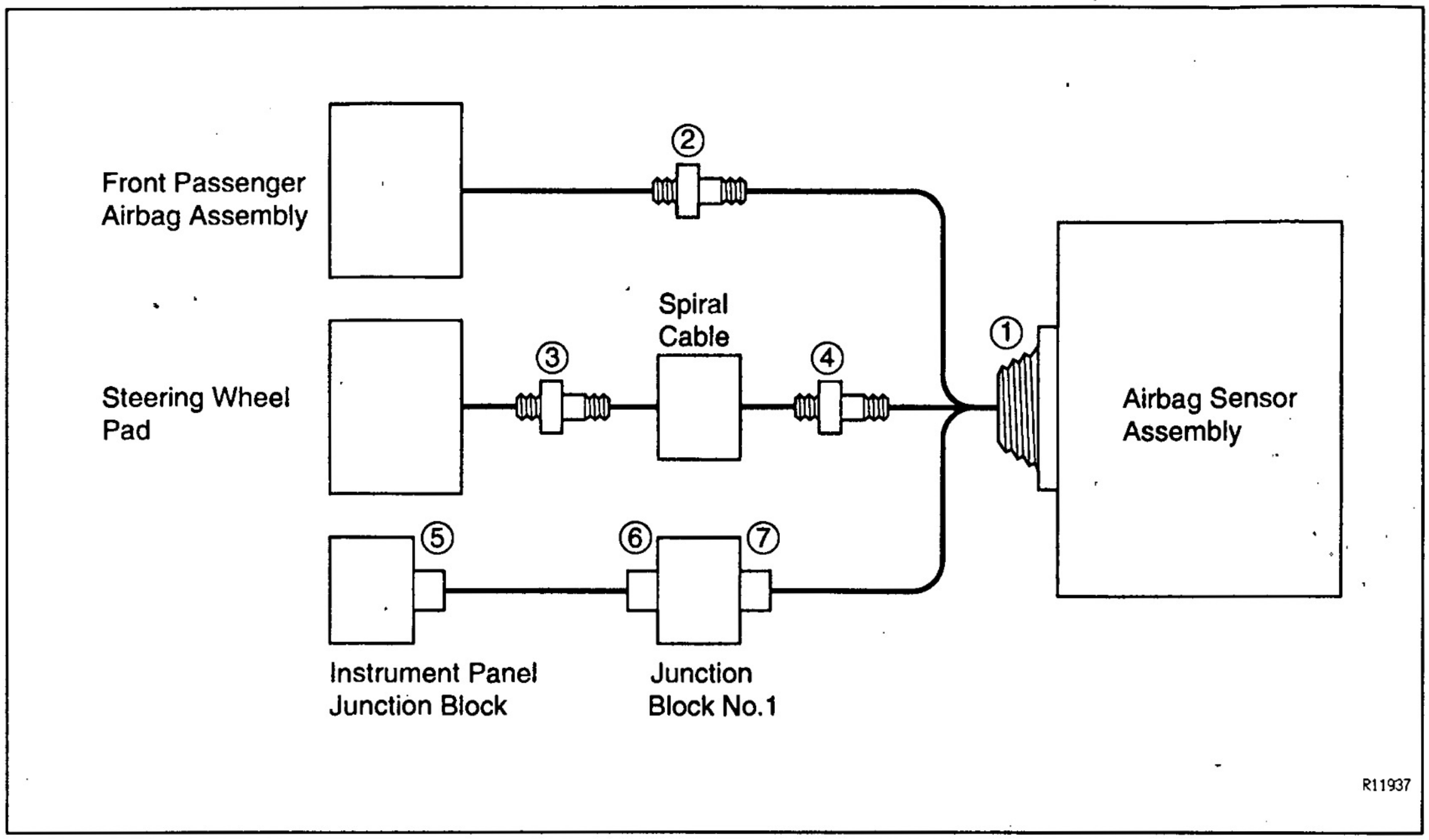

No.	Item	Application
(1)	Terminal Twin–Lock Mechanism	Connectors ①, ②, ③, ④, ⑤, ⑥, ⑦
(2)	Airbag Activation Prevention Mechanism	Connectors ②, ③, ④
(3)	Electrical Connection Check Mechanism	Connectors ①
(4)	Connector Twin–Lock Mechanism	Connectors ②, ③, ④

All connectors in the SRS are colored yellow to distinguish them from other connectors. Connectors having special functions and specifically designed for the SRS are used in the locations shown above to ensure high reliability. These connectors use durable gold–plated terminals.

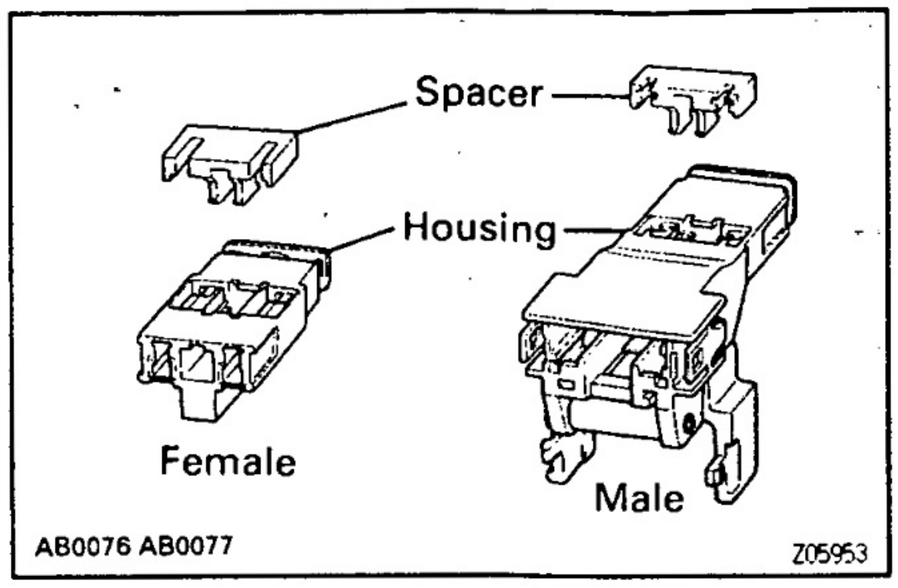

(1) Terminal Twin–Lock Mechanism
Each connector has a two–piece construction consisting of a housing and a spacer. This design secures the locking of the terminal by two locking devices (the retainer and the lance) to prevent terminals from coming out.

(2) Airbag Activation Prevention Mechanism
Each connector contains a short spring plate. When the connector is disconnected, the short spring plate automatically connects the power source and grounding terminals of the squib.

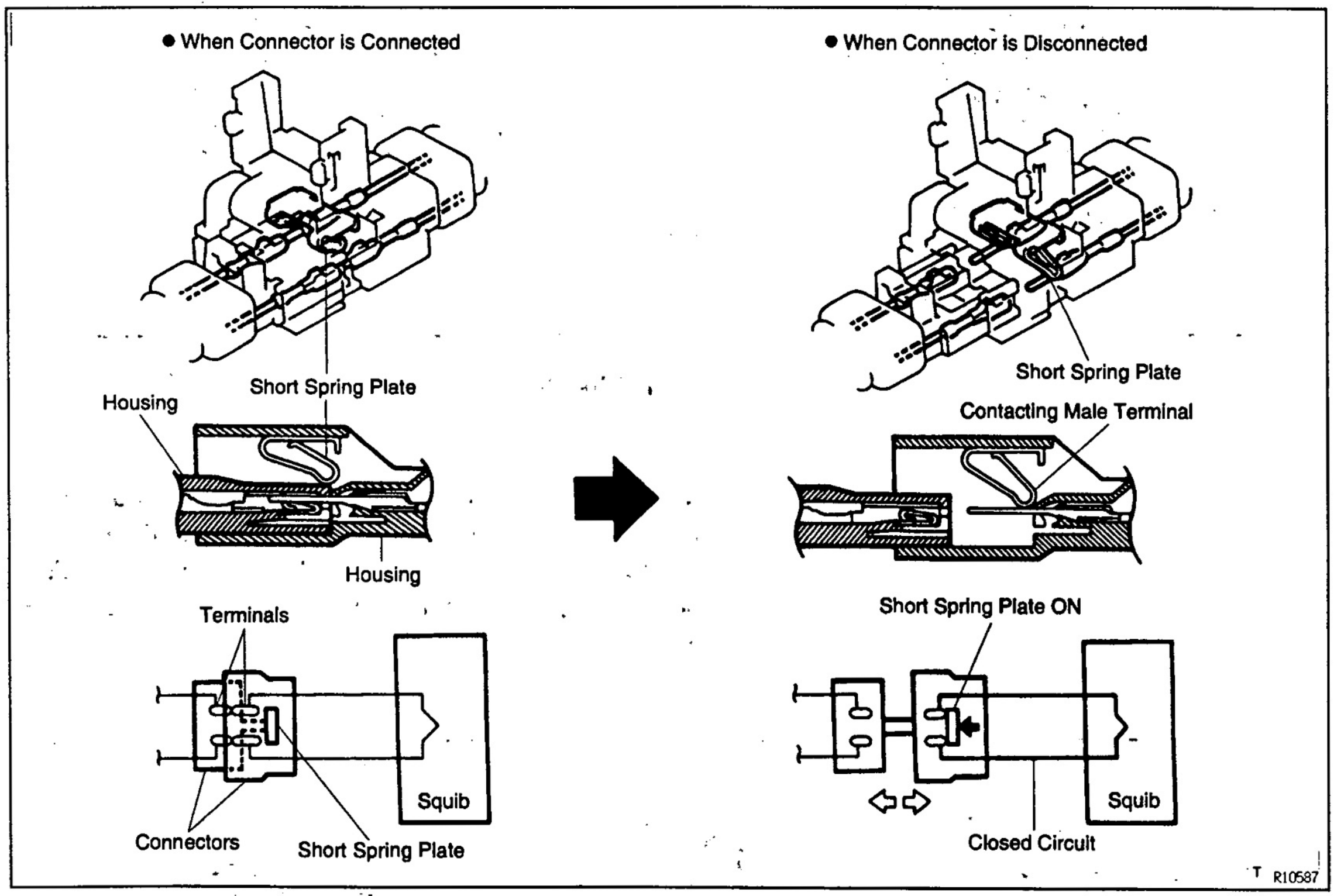

HINT: The type of connector shown above is used for connectors ②, ③, and ④, in the diagram on the previous page.

(3) Electrical Connection Check Mechanism
This mechanism electrically checks if connectors are connected correctly and completely. The electrical connection check mechanism is designed so that the disconnection detection pin connects with the diagnosis terminals when the connector housing lock is locked.

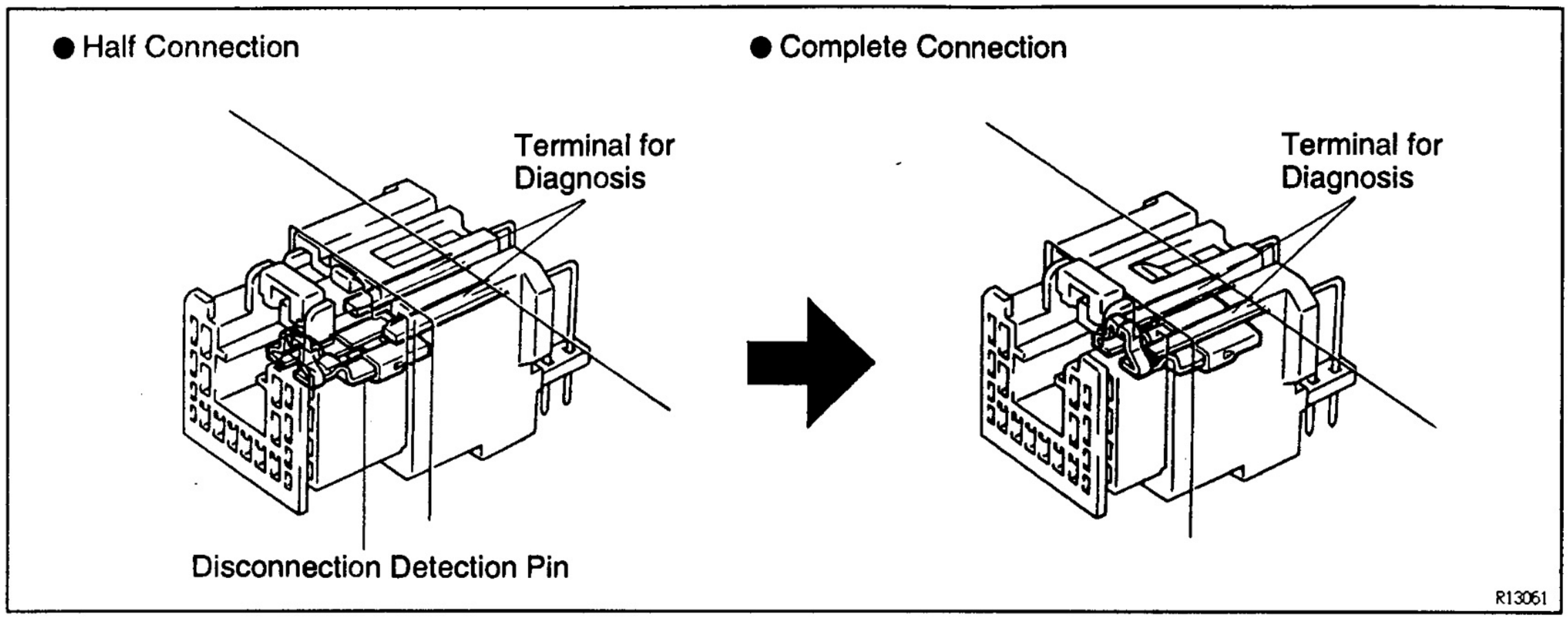

HINT: The illustration shows connector ①.

(4) Connector Twin–Lock Mechanism
With this mechanism connectors (male and female connectors) are locked by 2 locking devices to increase connection reliability. If the primary lock is incomplete, ribs interfere and prevent the secondary lock.

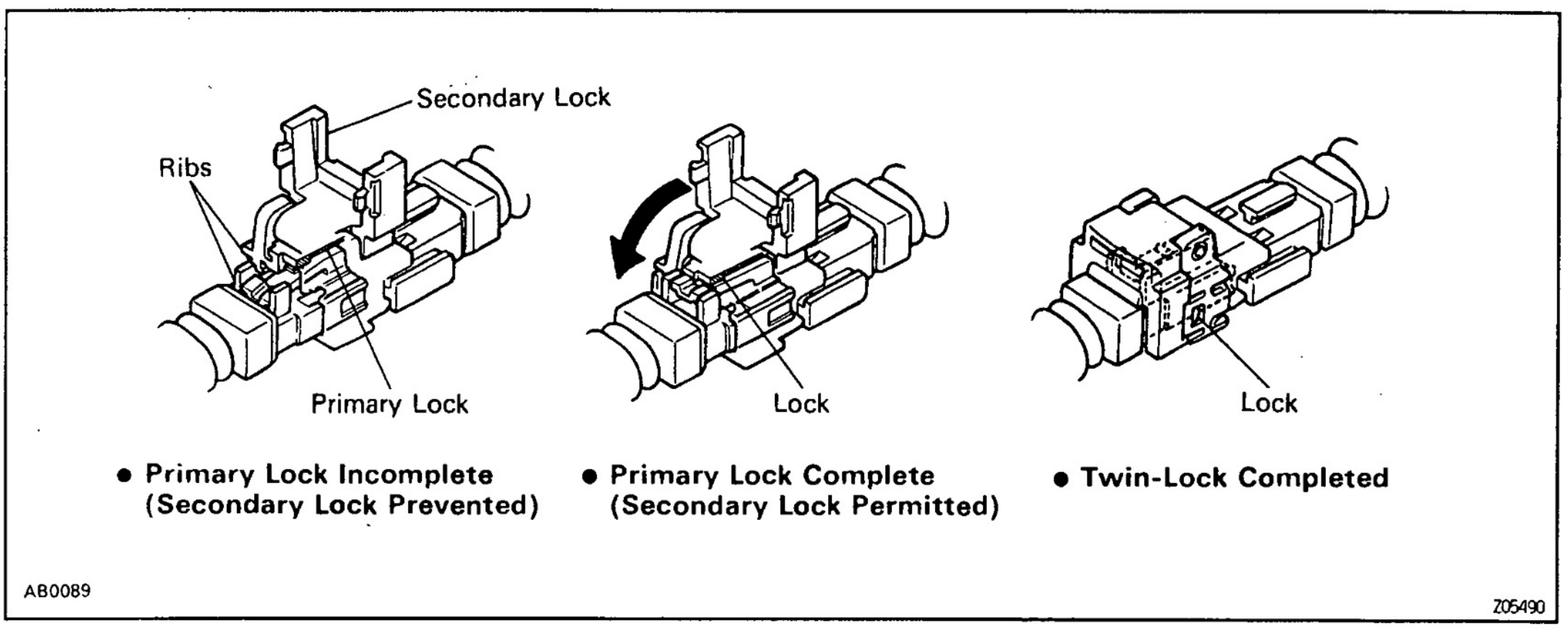

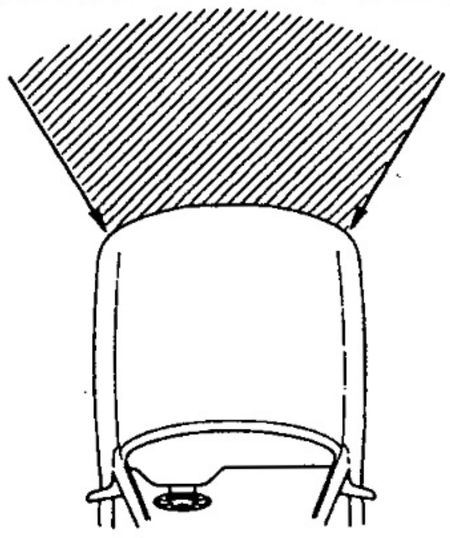

Fig. 1

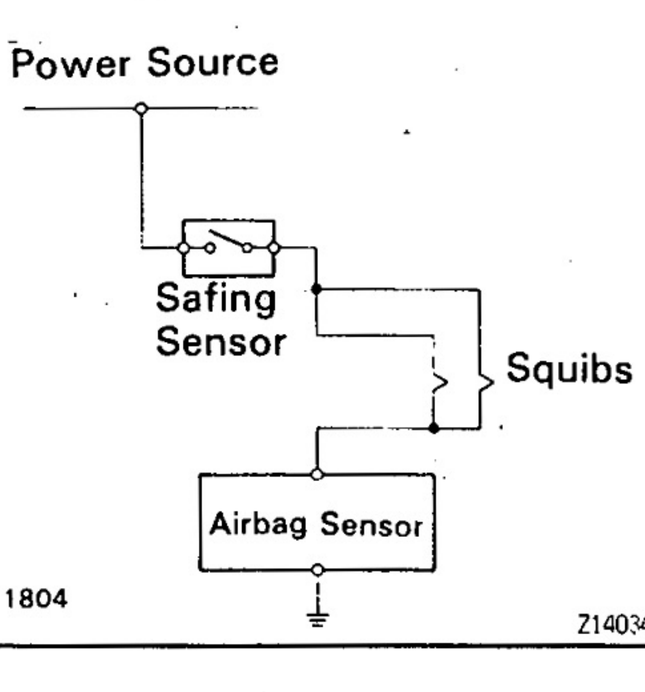

Fig. 2

R10618 R11804 Z14034

When the vehicle is involved in a frontal collision in the hatched area (Fig. 1) and the shock is larger than a predetermined level, the SRS is activated automatically. A safing sensor is designed to go on at a smaller deceleration rate than the airbag sensor. As illustrated in Fig. 2, ignition is caused when current flows to the squib, which happens when a safing sensor and the airbag sensor go on simultaneously. When a deceleration force acts on the sensors, 2 squibs in the driver airbag and front passenger airbag ignite and generate gas. The gas discharging into the driver airbag and front passenger airbag rapidly increases the pressure inside the bags, breaking open the steering wheel pad and instrument panel door.

Bag inflation then ends, and the bags deflate as the gas is discharged through discharge holes at the bag's rear or side.

PREPARATION

SST (SPECIAL SERVICE TOOLS)

RS00X–0N

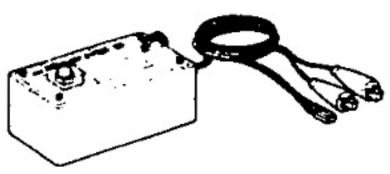	09082–00700 SRS Airbag Deployment Tool	
	09843–18020 Diagnosis Check Wire	

RECOMMENDED TOOLS

RS00Y–14

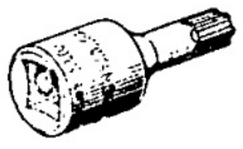	09042–00020 Torx Socket T40 .	Airbag sensor assembly
	09082–00040 TOYOTA Electrical Tester.	

RS0CU–01

EQUIPMENT

RS

Torque wrench	
Bolt: Length: 35 mm (1.38 in.) Pitch: 1.0 mm (0.039 in.) Diam.: 6.0 mm (0.236 in.)	Airbag disposal
Tire Width: 185 mm (7.28 in.) Inner diam.: 360mm (14.17 in.)	Airbag disposal
Tire with disc wheel Width: 185 mm (7.28 in.) Inner diam.: 360 mm (14.17 in.)	Airbag disposal
Vinyl bag	Airbag disposal

STEERING WHEEL PAD/FRONT PASSENGER AIRBAG ASSEMBLY

RS0AL-04

INSPECTION ITEMS

1. VEHICLES NOT INVOLVED IN COLLISION

(a) Do a diagnostic system check. (See page RS−32)

(b) With the steering wheel pad and/or front passenger airbag assembly installed in the vehicle, do a visual check which includes the following items.

- Check for cuts, minute cracks or marked discoloration of the steering wheel pad top surface, grooved portion and front passenger airbag assembly.

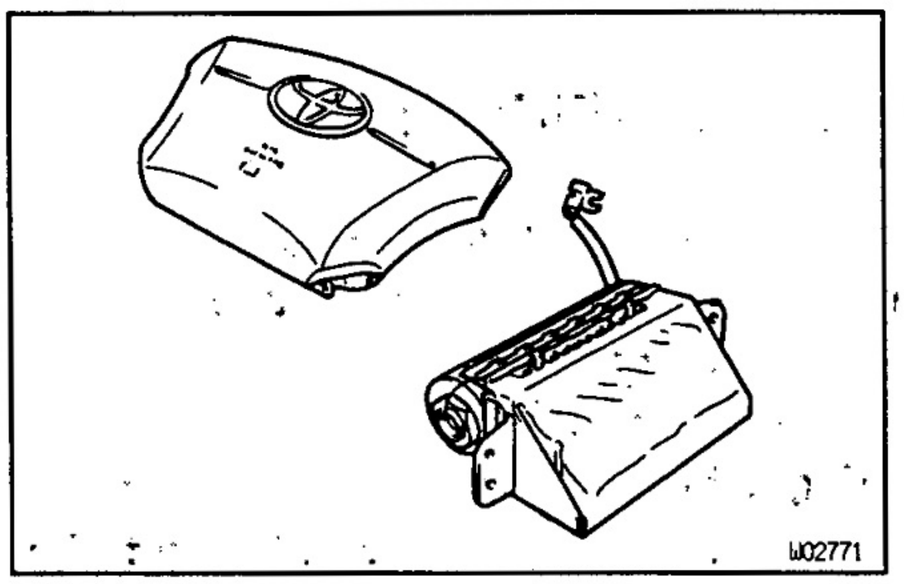

W02771

2. VEHICLES INVOLVED IN COLLISION

(a) Do a diagnostic system check. (See page RS−32)

(b) Do a visual check.

IF AIRBAG IS NOT DEPLOYED:

With the steering wheel pad and/or front passenger airbag assembly removed from the vehicle, do a visual check which includes the following items.

- Check for cuts and cracks in, or marked discoloration of, the steering wheel pad top surface, its grooved portion and front passenger airbag assembly.
- Check for cuts and cracks in wire harnesses, and for chipping in connectors.
- Check for deformation of the horn button contact plate of the steering wheel, instrument panel and instrument panel reinforcement.

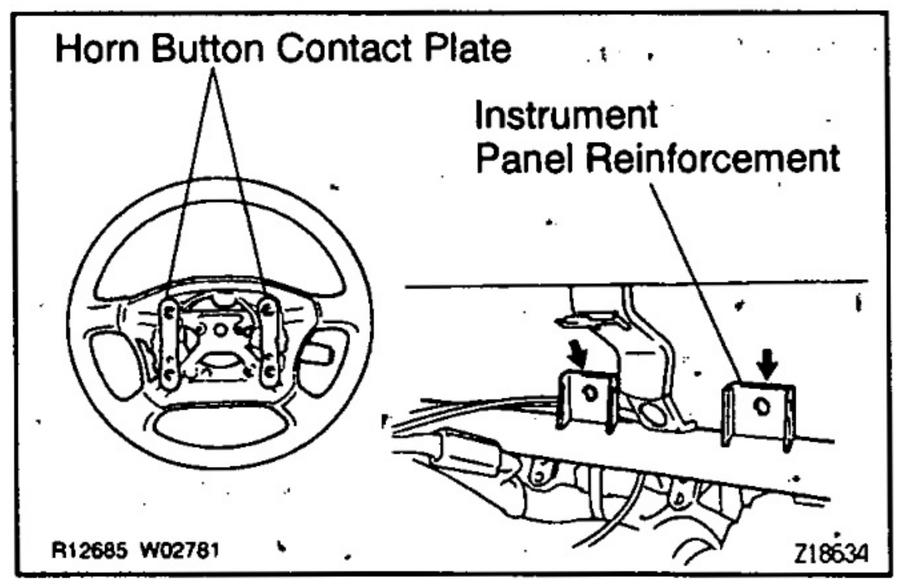

IF AIRBAG IS DEPLOYED:

With the steering wheel pad and/or front passenger airbag assembly removed from the vehicle, do a visual check which includes the following items.

- Check for deformation of the horn button contact plate of the steering wheel, instrument panel, instrument panel reinforcement.
- Check for damage to the connector and wire harness.

RS

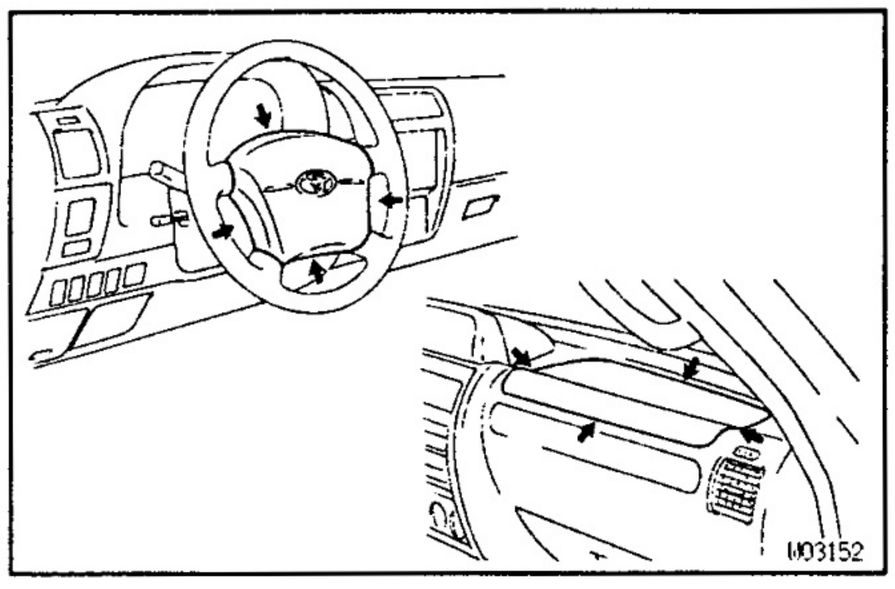

HINT:

- If the horn button contact plate, instrument panel or instrument panel reinforcement is deformed, never repair. Always replace them with new ones.
- There should be no interference between the steering wheel pad and steering wheel or the instrument panel and airbag door.
- The clearance should be uniform all the way around when the new steering wheel pad is installed on the steering wheel and when the new airbag assembly is installed on the instrument panel.

CAUTION: For removal and installation of the steering wheel pad and/or front passenger airbag assembly, see the SR section and page RS–12 respectively.
Be sure to follow the correct procedure.

REPLACEMENT REQUIREMENTS

RS011–14

In the following cases, replace the steering wheel pad, steering wheel, spiral cable, instrument panel and instrument panel reinforcement.

- If the airbag has been deployed.
- If the steering wheel pad, spiral cable or front passenger airbag assembly has been found to be faulty in troubleshooting.
- If the steering wheel pad, steering wheel, spiral cable, instrument panel or instrument panel reinforcement has been found to be faulty during the check in items 1–(b) or 2–(b).
- If the steering wheel pad or front passenger airbag assembly has been dropped.

CAUTION: For removal and installation of the steering wheel pad and/or front passenger airbag assembly, see the SR section and page RS–12 respectively.
Be sure to follow the correct procedure.

RS

RS07N-0C

COMPONENTS

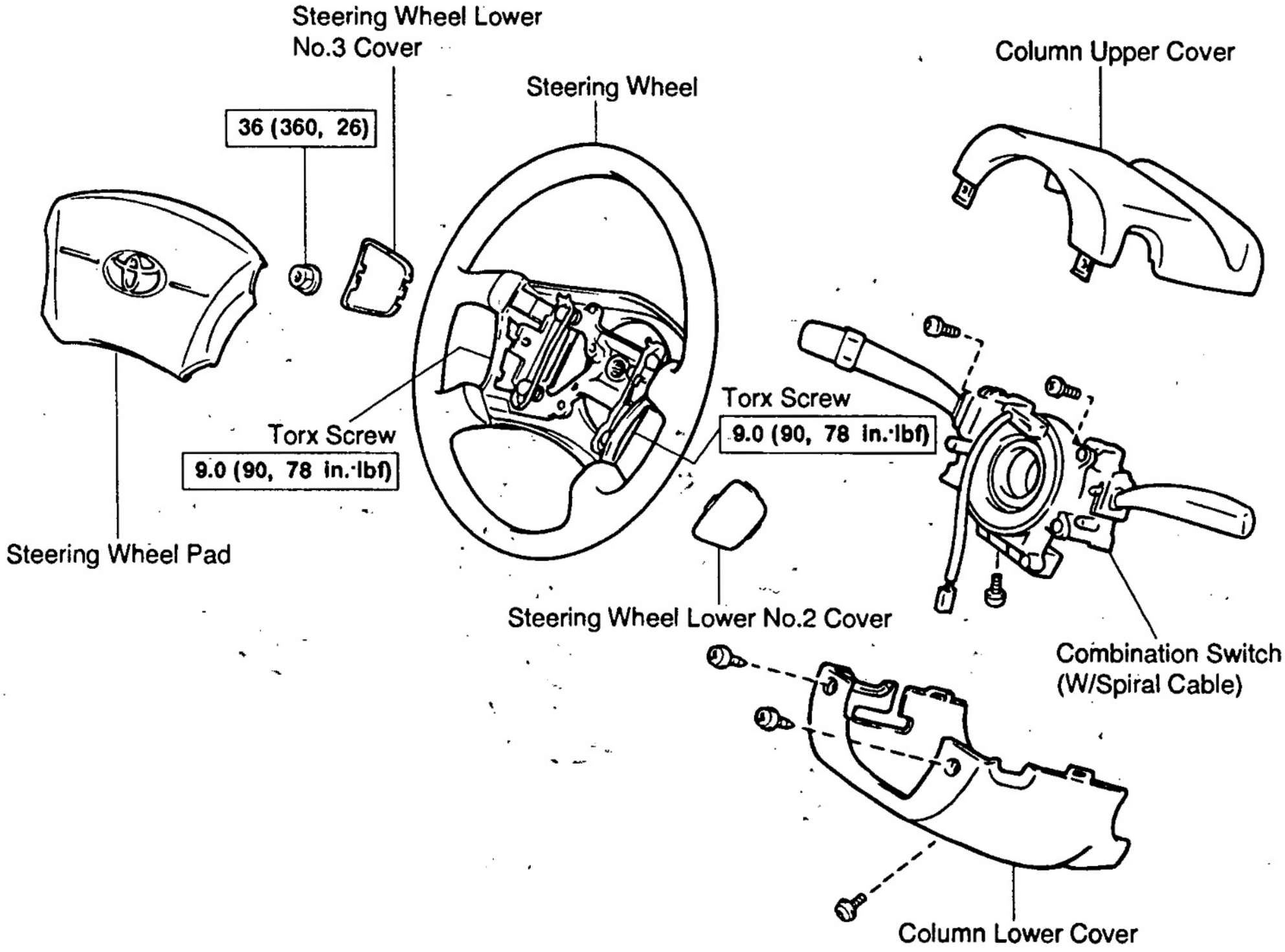

N·m (kgf·cm, ft·lbf) : Specified torque

W02783

RS07P-04

STEERING WHEEL PAD AND SPIRAL CABLE REMOVAL AND INSTALLATION

(See SR section)

R807Q-08

COMPONENTS

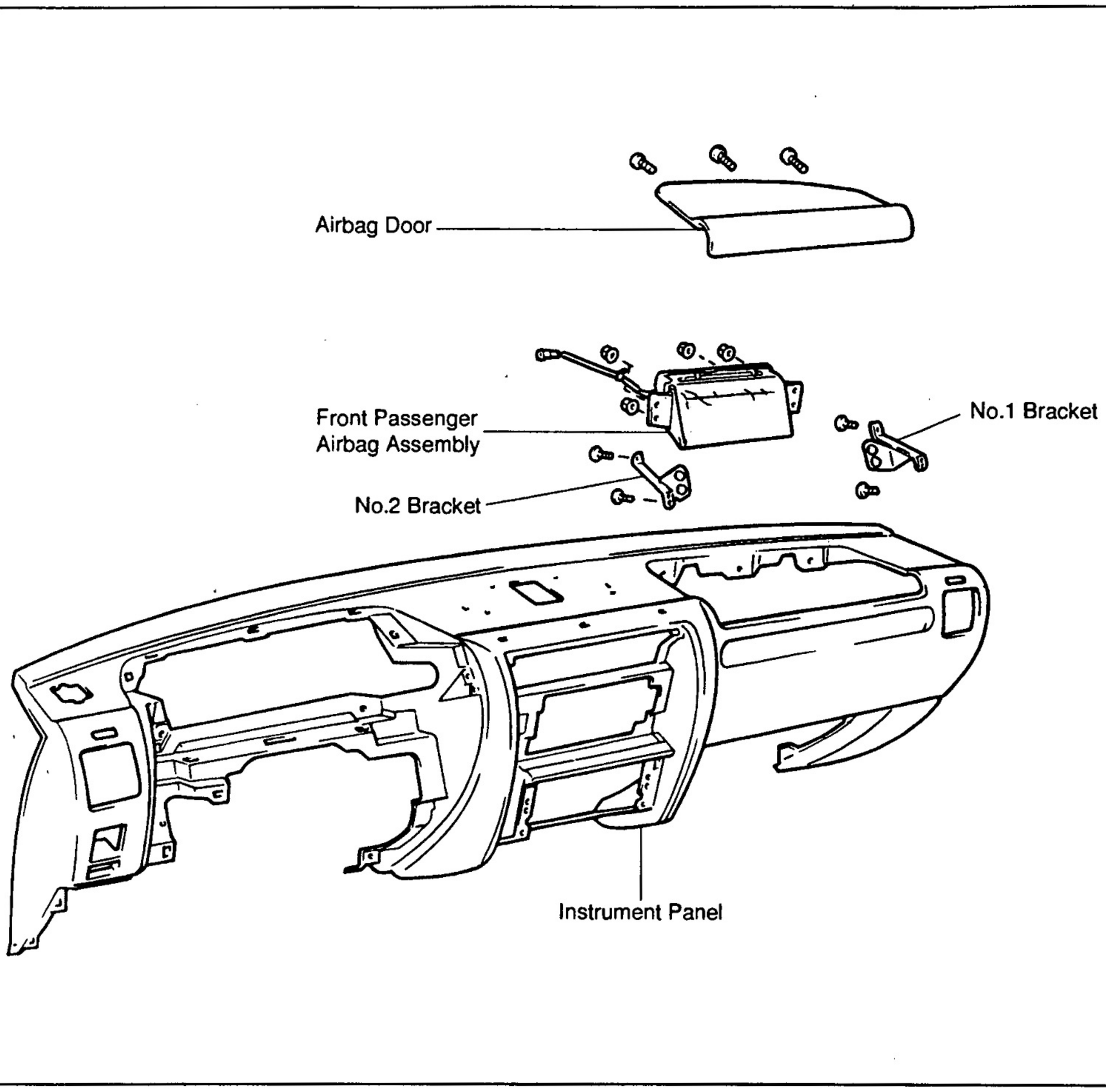

W02784

FRONT PASSENGER AIRBAG ASSEMBLY REMOVAL AND INSTALLATION

R80C8-01

NOTICE:

- **If the wiring connector of the SRS is disconnected with the ignition switch at ON or ACC, DTCs will be recorded.**
- **Never use airbag parts from another vehicle. When replacing parts, replace with new parts.**

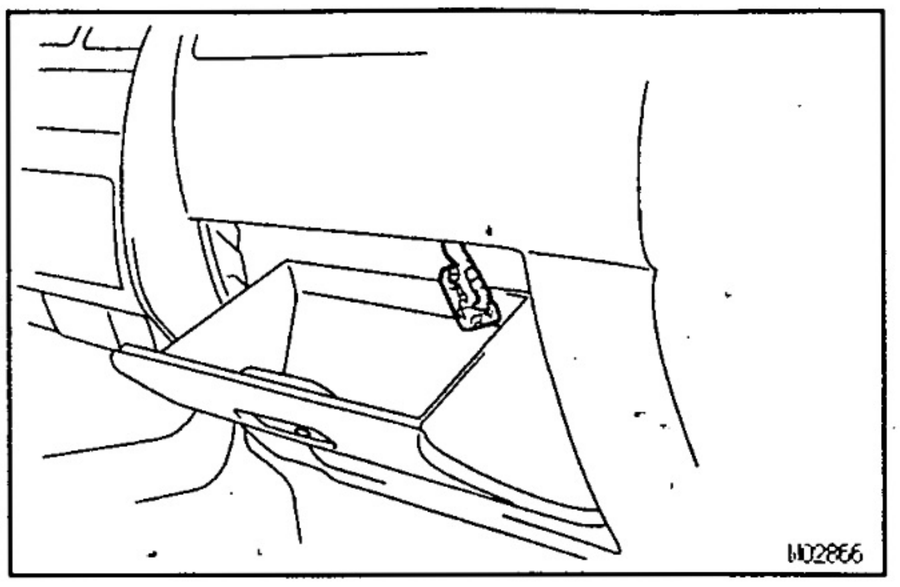

1. DISCONNECT AIRBAG CONNECTOR

(a) Remove the No.1 under cover inside the glove compartment door.

NOTICE: When handling the airbag connector, take care not to damage the airbag wire harness.

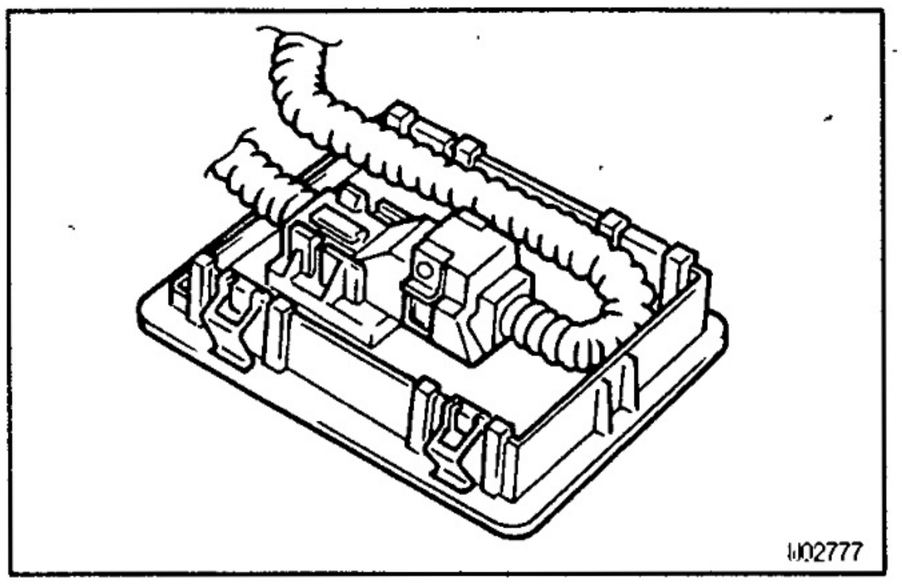

(b) Pull up the connector.

(c) Disconnect the airbag connector.

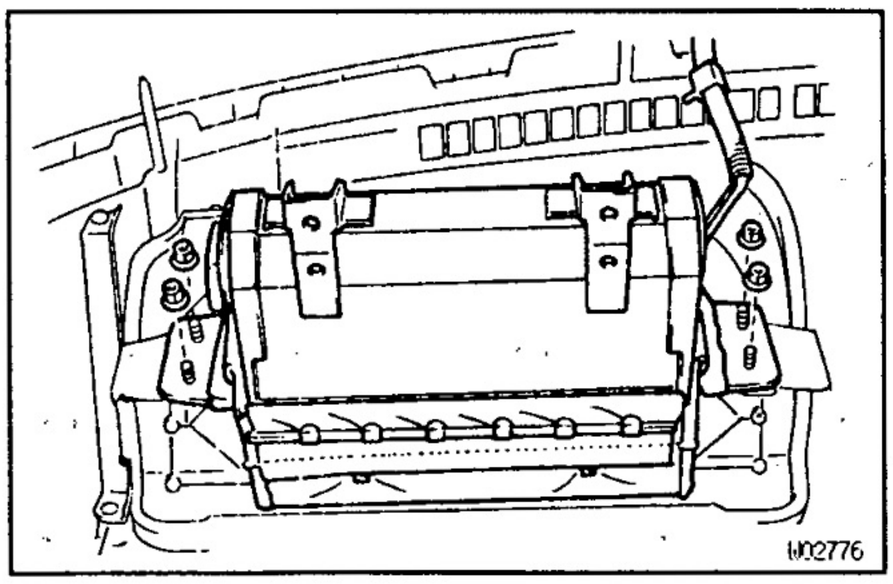

2. REMOVE INSTRUMENT PANEL
(See pages BO–55)

3. REMOVE AND INSTALL FRONT PASSENGER AIRBAG ASSEMBLY

(a) Remove the 4 nuts and front passenger airbag assembly.

(b) Remove the 4 screws, No.1 and No.2 brackets.

(c) Remove the 3 screws and airbag door.

CAUTION:

- **Do not store the front passenger airbag assembly with the airbag deployment direction facing down.**
- **Never disassemble the front passenger airbag assembly.**

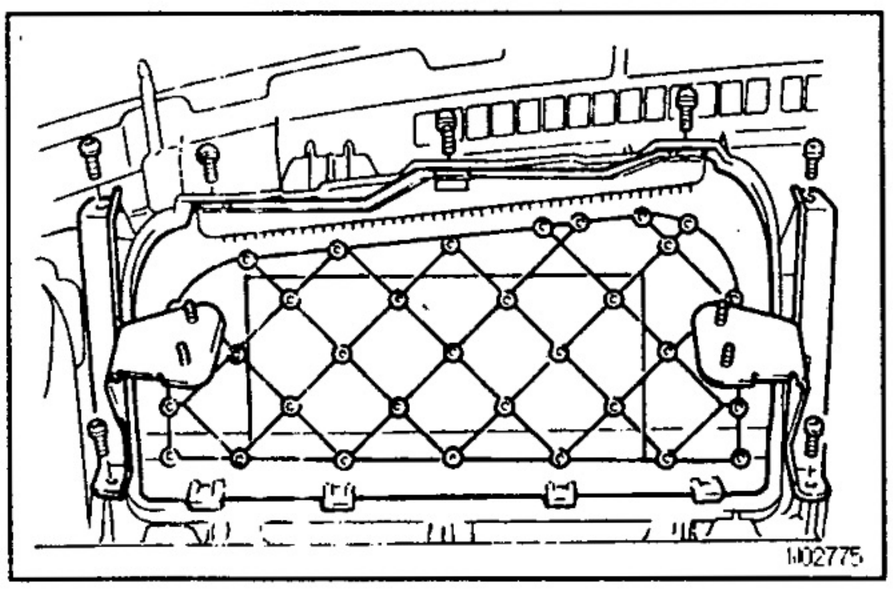

(d) Install the airbag door, No.1 bracket, No.2 bracket and front passenger airbag assembly to the instrument panel.

CAUTION:

- **Make sure that no foreign objects are trapped between the airbag door and bag, and within the module.**
- **Do not damage the strap when installing the module.**
- **If the airbag door is cracked or its surface is peeling, always replace it with a new one.**

NOTICE: If the front passenger airbag assembly has been dropped, or there are cracks, dents or other defects in the case or connector, replace the front passenger airbag assembly with a new one.

RS

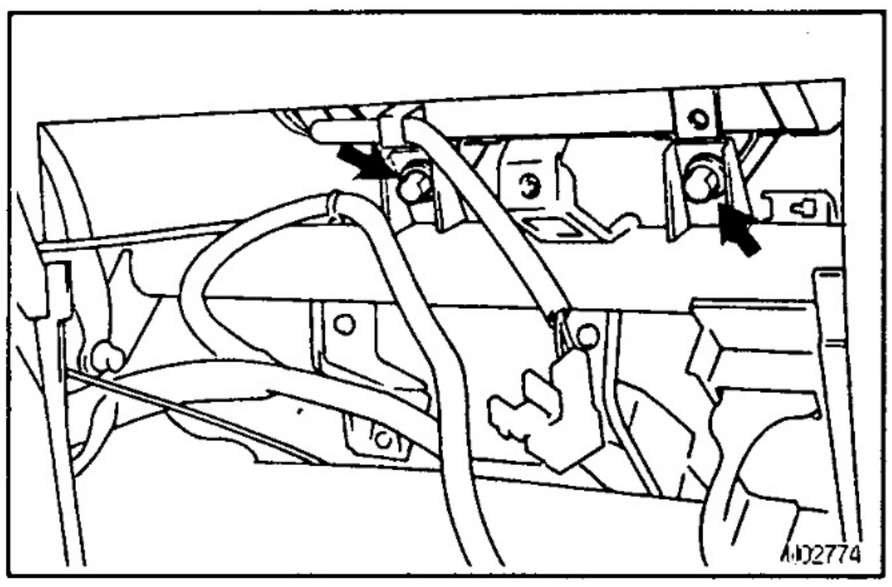

4. INSTALL INSTRUMENT PANEL

(See page BO–55)

Install the 2 bolts to instrument panel reinforcement.

Torque: 18 N·m (184 kgf·cm, 13 ft·lbf)

NOTICE:

- **Make sure that the front passenger airbag assembly is installed to the specified torque.**
- **When installing the instrument panel, take care that the airbag wire harness does not interfere with other parts and is not pinched between other parts.**

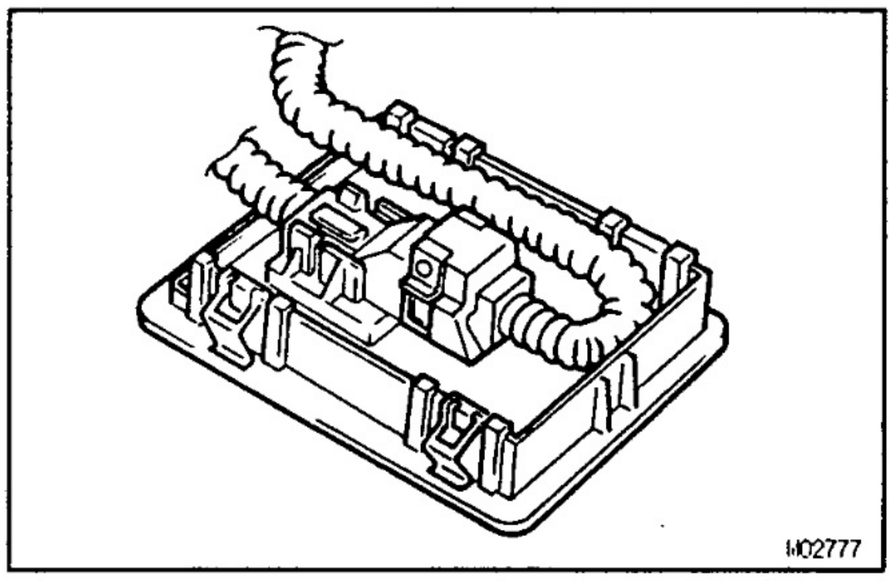

5. CONNECT AIRBAG CONNECTOR

(a) Connect the airbag connector.

(b) Put the connector on the No.1 under cover.

(c) Install the No.1 under cover to the glove compartment door.

RS

DISPOSAL PROCEDURE

RSOCT–01

When scrapping vehicles equipped with an SRS or disposing of a steering wheel pad or front passenger airbag assembly, always first deploy the airbag in accordance with the procedure described below.

If any abnormality occurs with the airbag deployment, contact the SERVICE DEPT. of the DISTRIBUTOR.

Never dispose of a steering wheel pad or front passenger airbag assembly which has an undeployed airbag.

When disposing of a steering wheel pad or front passenger airbag assembly with an airbag deployed in a collision, follow the same procedure given under "When scrapping vehicle, step 5. DISPOSAL OF STEERING WHEEL PAD/FRONT PASSENGER AIRBAG ASSEMBLY" (See page RS–16)

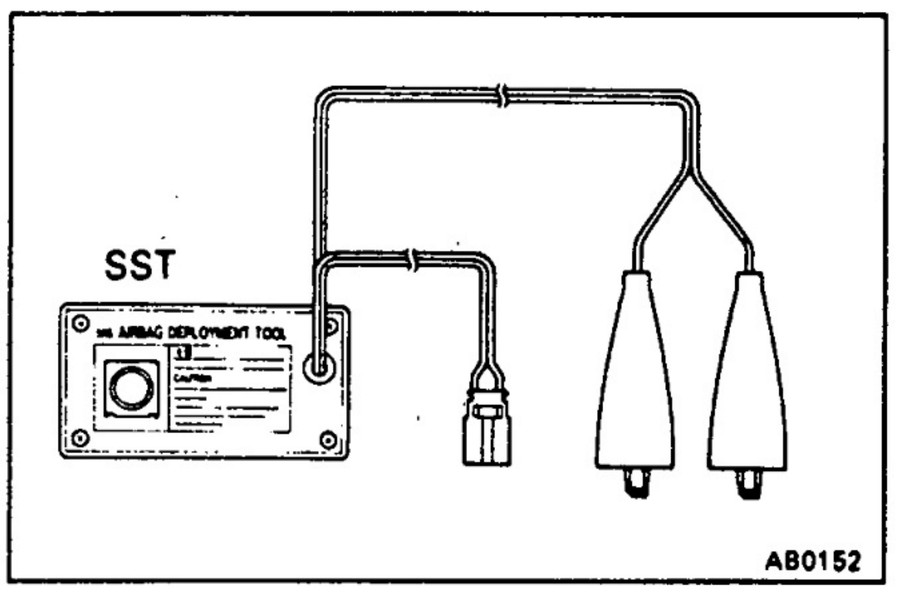

PRECAUTIONS FOR AIRBAG DEPLOYMENT

- The airbag produces a sizeable exploding sound when it deploys, so do the operation out–of–doors and where it will not create a nuisance to nearby residents.
- When deploying the airbag, always use the specified SST; SRS AIRBAG DEPLOYMENT TOOL (SST 09082–00700). Do the operation in a place away from electrical noise.

- When deploying an airbag, do the operation from at least 10 m (33 ft) away from the airbag assembly.
- The airbag assembly is very hot when the airbag is deployed, so leave it alone for at least 30 minutes after deployment.
- Use gloves and safety glasses when handling a steering wheel pad/front passenger airbag assembly with deployed airbag.
- Do not apply water etc. to a airbag assembly with deployed airbag.
- Always wash your hands with water after completing the operation.

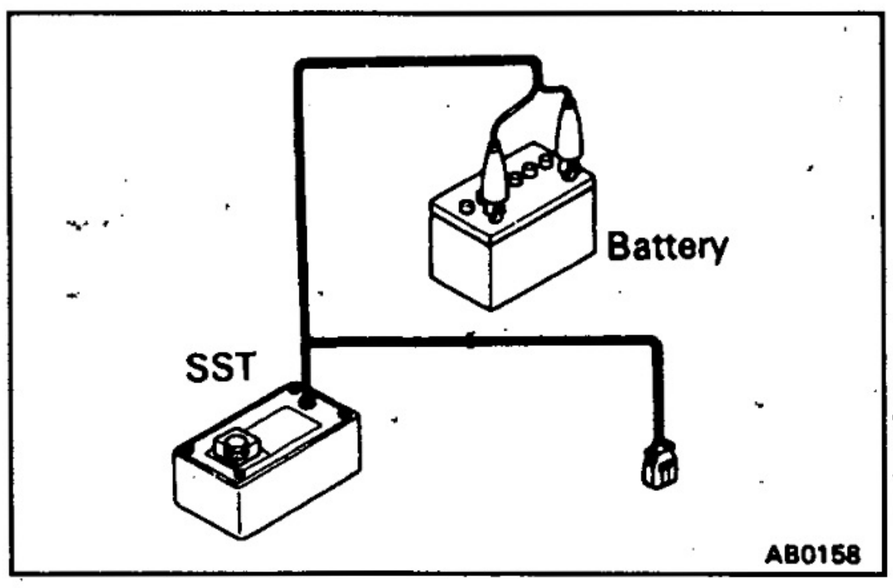

When scrapping vehicle

HINT: Have a battery ready as the power source to deploy the airbag.

1. **CONFIRM FUNCTIONING OF SST**
(See page RS–22)
SST 09082–00700

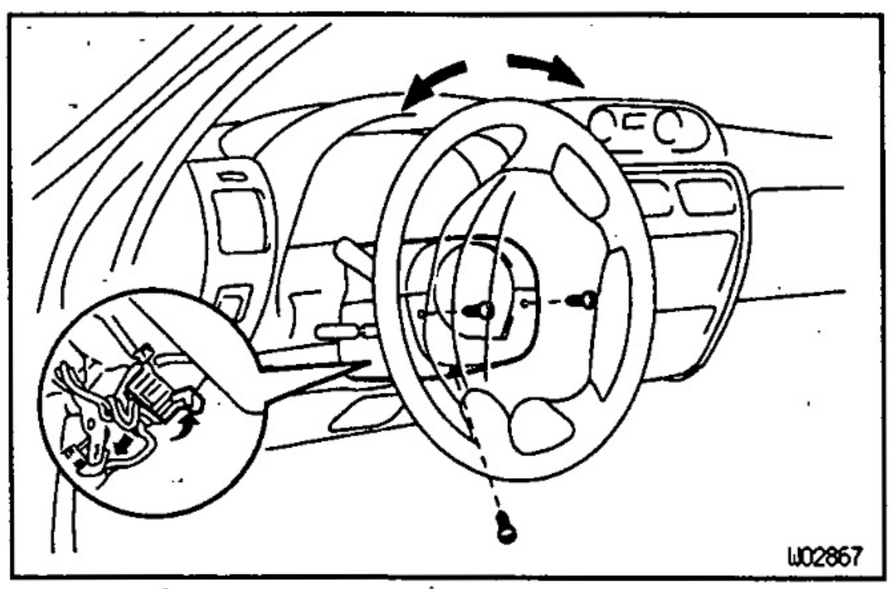

2. **DISCONNECT AIRBAG CONNECTOR**
Driver side:
CAUTION: Check that there is no looseness in the steering wheel and steering wheel pad.

(a) Remove the lower column cover.
HINT: Remove the 3 screws of steering column lower cover as shown.

(b) Disconnect the airbag connector of the spiral cable.

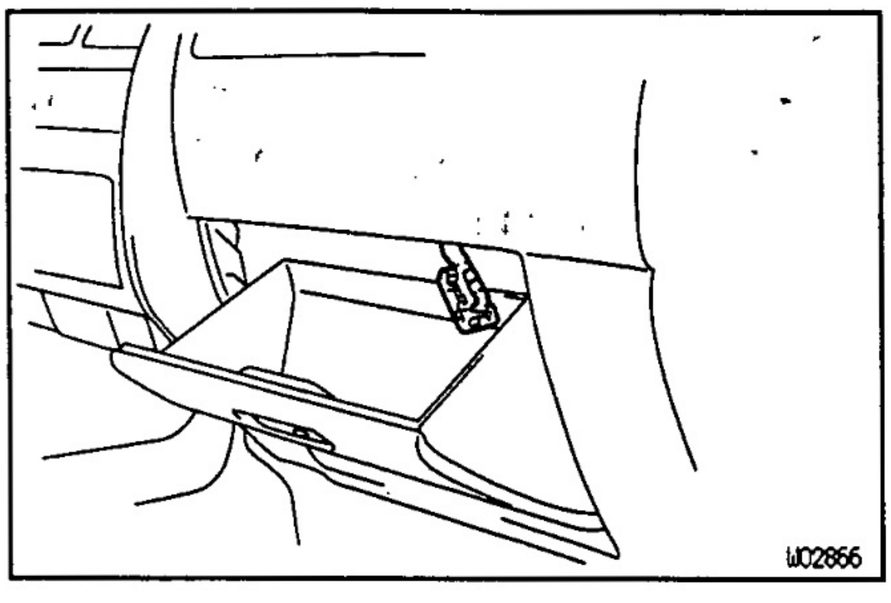

Passenger side:
CAUTION: Check that there is no looseness in the front passenger airbag assembly.

(a) Remove the glove compartment door finish plate inside the glove compartment door.
NOTICE: When handling the airbag connector, take care not to damage the airbag wire harness.

(b) Pull up the connector.

(c) Disconnect the airbag connector.

RS

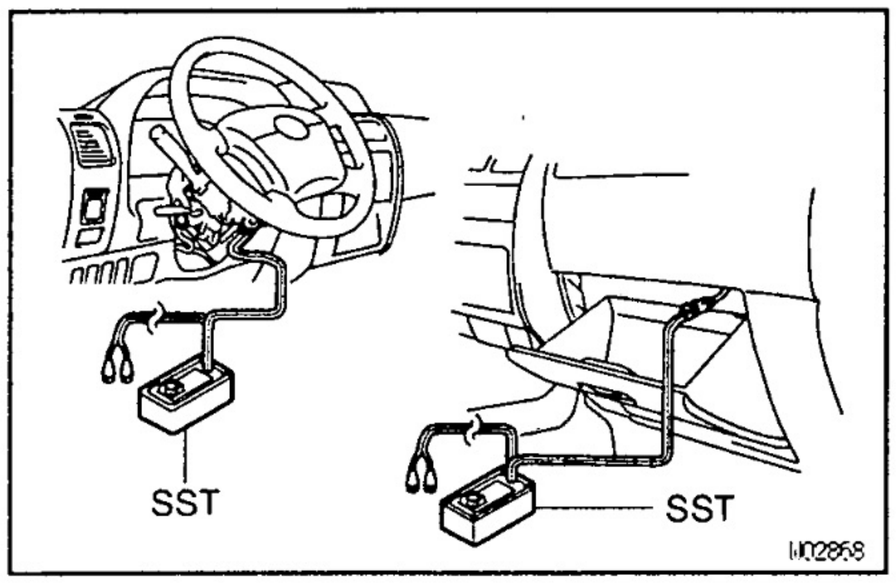

3. INSTALL SST

(a) Connect the SST connector to the airbag connector.
SST 09082–00700
NOTICE: To avoid damaging the SST connector and wire harness, do not lock the secondary lock of the twin lock.

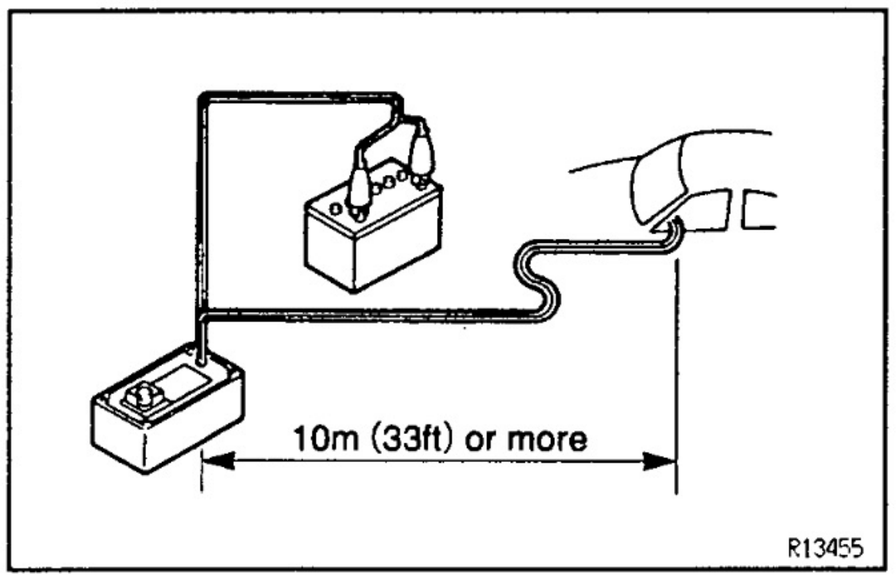

(b) Move the SST to at least 10 m (33 ft) from the front of the vehicle.

(c) Close all the doors and windows of the vehicle.
NOTICE: Take care not to damage the SST wire harness.

(d) Connect the SST red clip to the battery positive (+) terminal and the black clip to the battery negative (–) terminal.

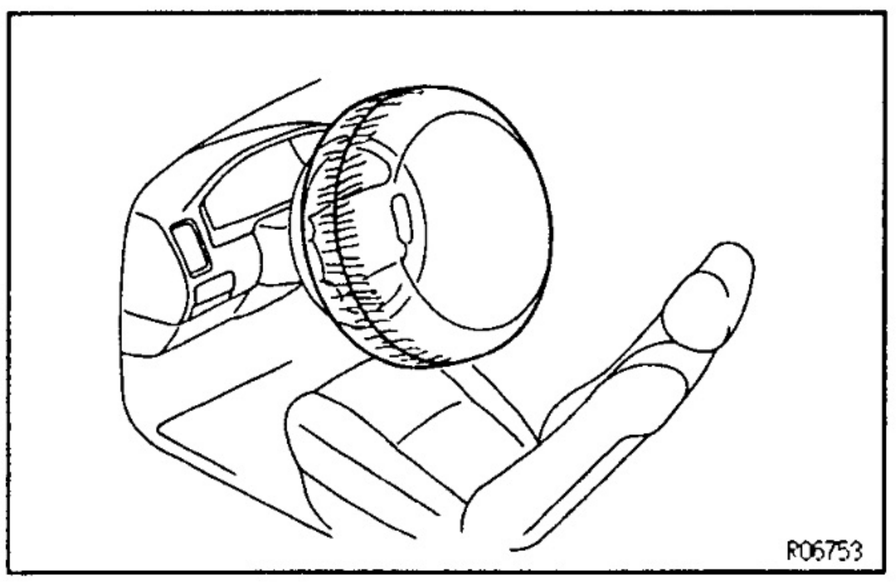

4. DEPLOY AIRBAG

(a) Confirm that no one is inside the vehicle or within 10 m (33 ft) of the vehicle.

(b) Press the SST activation switch and deploy the airbag.
HINT: The airbag deploys simultaneously as the LED of the SST activation switch lights up.

5. DISPOSAL OF STEERING WHEEL PAD / FRONT PASSENGER AIRBAG ASSEMBLY

CAUTION:

- **The steering wheel pad/front passenger airbag assembly is very hot when the airbag is deployed, so leave it alone for at least 30 minutes after deployment.**
- **Use gloves and safety glasses when handling a steering wheel pad/front passenger airbag assembly with deployed airbag.**
- **Do not apply water etc. to a steering wheel pad/front passenger airbag assembly with deployed airbag.**
- **Always wash your hands with water after completing the operation.**

When scrapping a vehicle, deploy the airbag and scrap the vehicle with the steering wheel pad/front passenger airbag assembly still installed.

When disposing of steering wheel pad/ front passenger airbag assembly only

When disposing of the steering wheel pad/front passenger airbag assembly only, never use the customer's vehicle to deploy the airbag.

Remove the steering wheel pad / front passenger airbag assembly from the vehicle and be sure to follow the procedure given below when deploying the airbag.
HINT: Have a battery ready as the power source to deploy the airbag.

1. REMOVE STEERING WHEEL PAD/FRONT PASSENGER AIRBAG ASSEMBLY

When storing the steering wheel pad/front passenger airbag assembly, keep the deployment direction facing up.

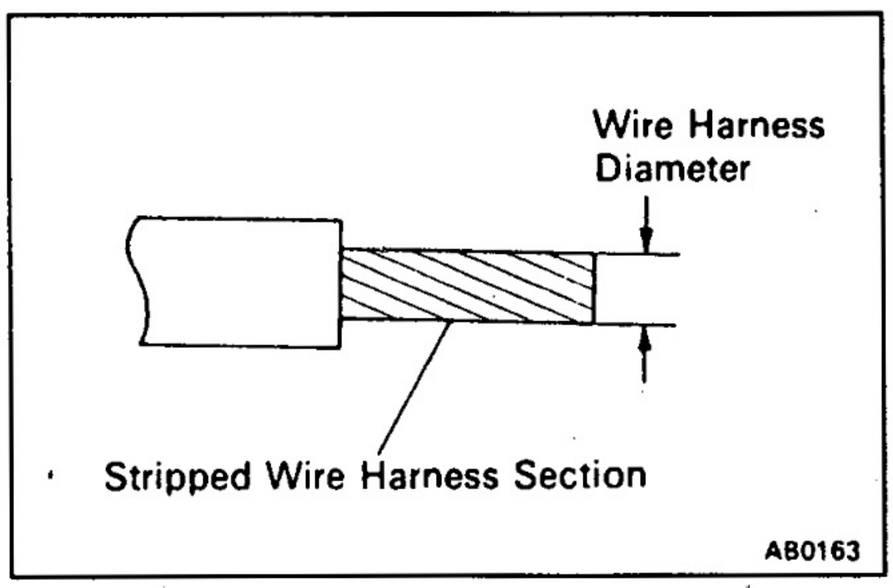

2. FIX STEERING WHEEL PAD/FRONT PASSENGER AIRBAG ASSEMBLY

Using a service–purpose wire harness for the vehicle tie down the steering wheel pad / front passenger airbag assembly.

Wire harness: Stripped wire harness section
1.25 mm² or more (0.0019 in² or more)

HINT: To calculate the square of the stripped wire harness section–

Square = 3.14 x (Diameter)² divided by 4

CAUTION: If a wire harness which is too thin or some other thing is used to tie down the steering wheel pad/ front passenger airbag assembly,it may be snapped by the shock when the airbag is deployed. This is highly dangerous. Always use a wire harness for vehicle which is at least 1.25 mm² (0.0019 in².).

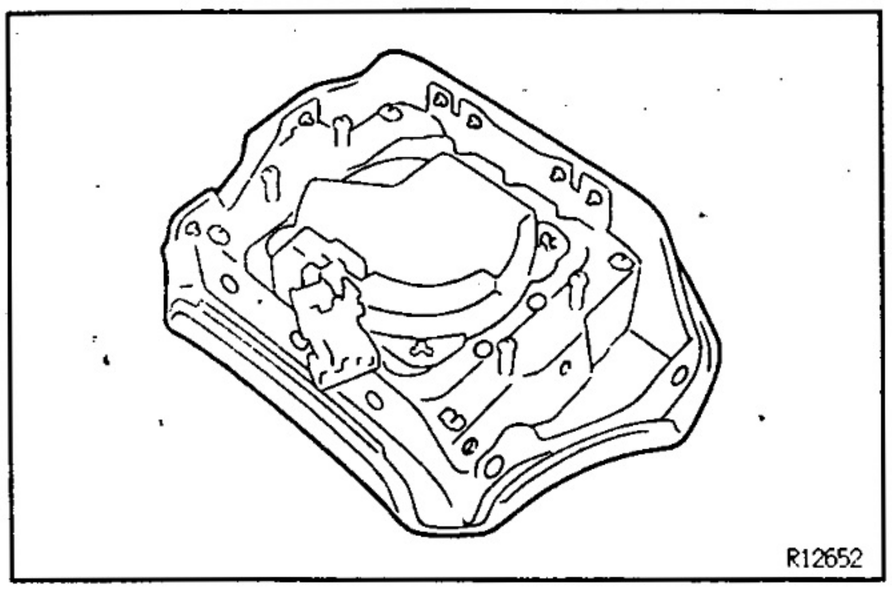

Steering wheel pad:

(a) Remove the connector on the steering wheel pad rear surface from the inflator cover.

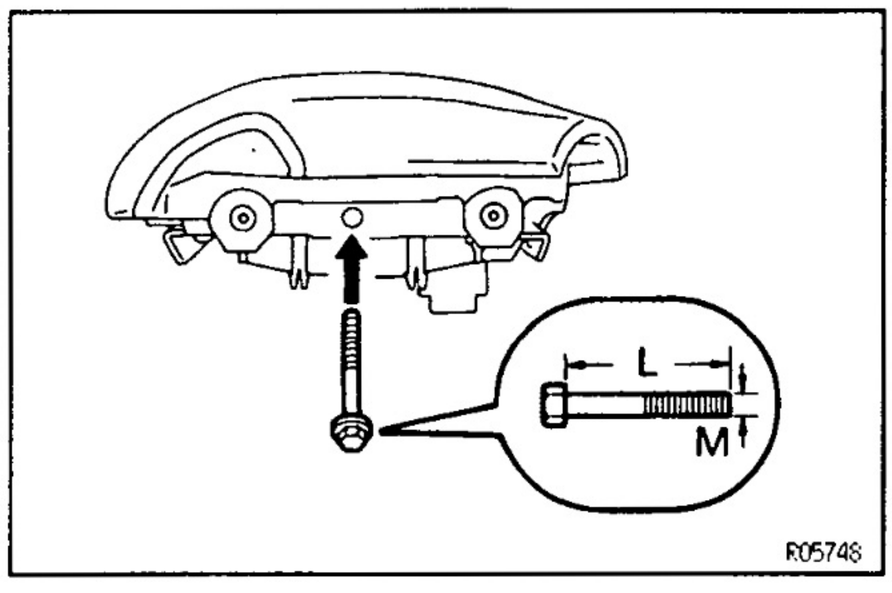

(b) Install the 2 bolts with washer in the 2 bolts holes of the steering wheel pad.
Bolt:
L 35.0 mm (1.378 in.)
M 6.0 mm (0.236 in.)
Pitch 1.0 mm (0.039 in.)
NOTICE:
- **Tighten the bolts by hand until the bolts become difficult to turn.**
- **Do not tighten the bolt too much.**

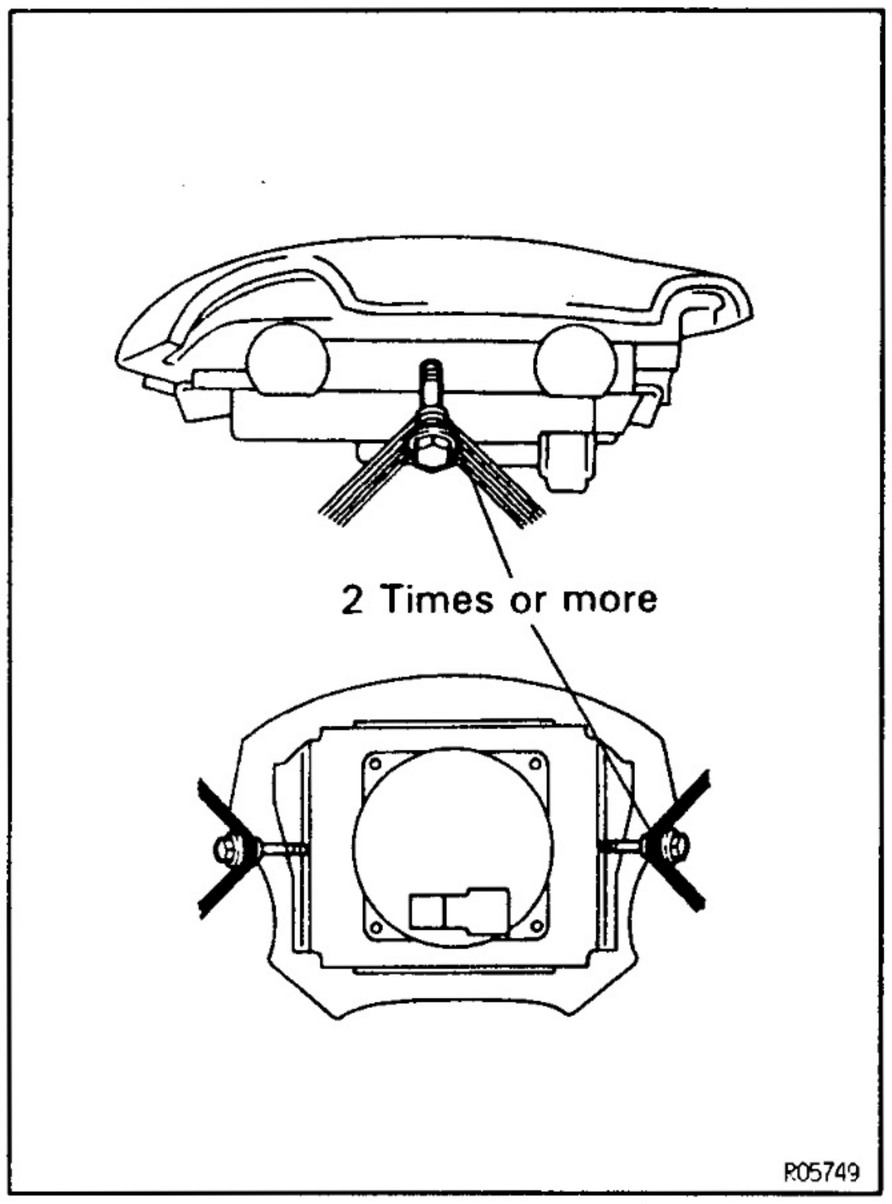

(c) Using 3 wire harnesses, wrap the wire harnesses at least 2 times each around the bolts installed on the left and right sides of the steering wheel pad.
CAUTION:
- **Tightly wind the wire harness around the bolts so that there is no slack.**
- **If there is slackness in the wire harness, the steering wheel pad may come loose due to the shock when the airbag is deployed. This is highly dangerous.**

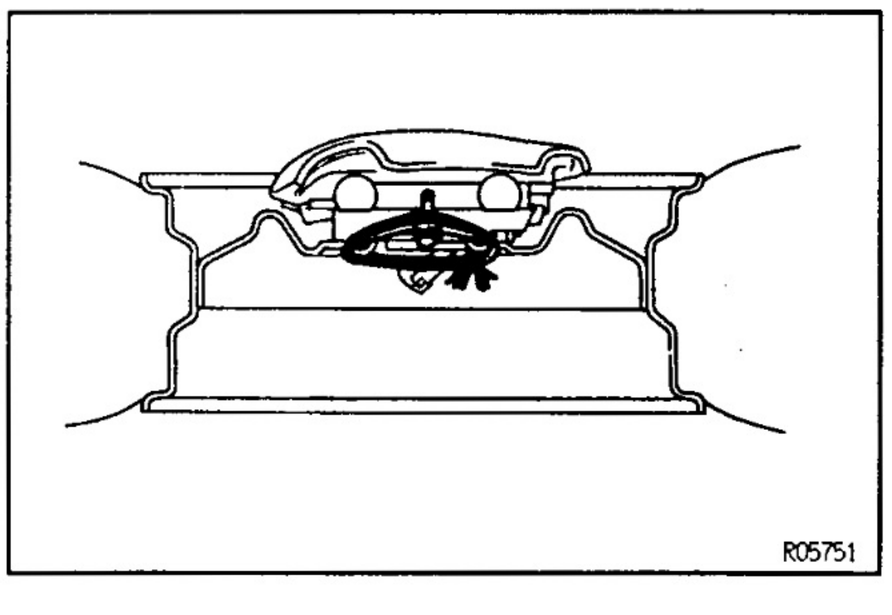

(d) Face the upper surface of the steering wheel pad upward.
Separately tie the left and right sides of the steering wheel pad to the disc wheel through the hub nut holes.
Position the steering wheel pad connector so that it hangs downward through a hub hole in the disc wheel.
CAUTION:
- Make sure that the wire harness is tight. It is very dangerous if looseness in the wire harness results in the steering wheel pad coming free through the shock of the airbag deploying.
- Always tie down the steering wheel pad with the pad side facing upward. It is very dangerous if the steering wheel pad is tied down with the metal surface facing upward as the wire harness will be cut by the shock of the airbag deploying and the steering wheel pad will be thrown into the air.

HINT: The disc wheel will be marked by airbag deployment, so use a redundant disc wheel.

RS

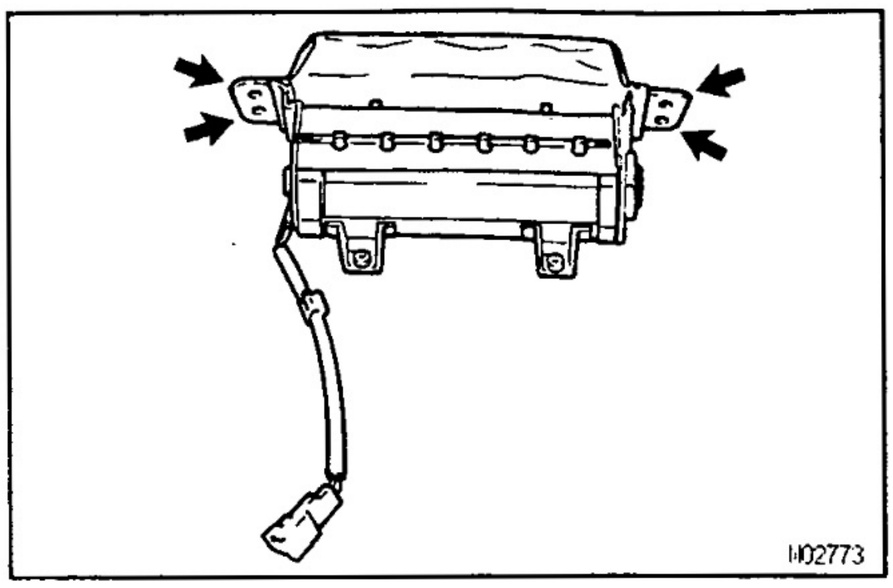

Front passenger airbag assembly:

(a) Wrap the wire harness around the tire, passing the wire harness through the installation holes indicated by arrows in the illustration.

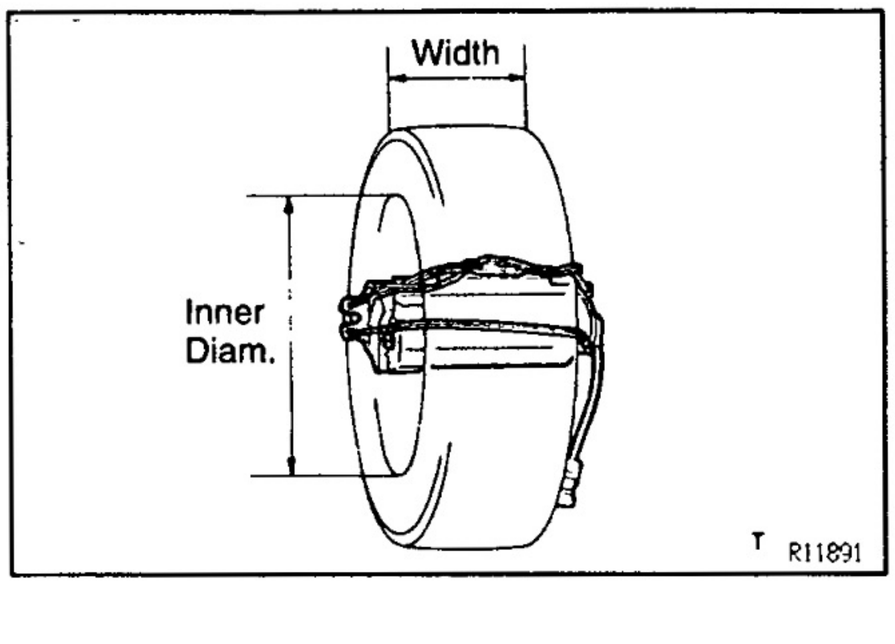

(b) Position the front passenger airbag assembly inside the tire with the airbag deployment direction facing inside.

Tire size: Must exceed the following dimensions :–

Width	**185 mm (7.28 in.)**
Inner diameter	**360 mm (14.17 in.)**

CAUTION:

- **Make sure that the wire harness is tight. It is very dangerous if a loose wire harness results in the front passenger airbag assembly coming free due to the shock of the airbag deploying.**
- **Always tie down the front passenger airbag assembly with the airbag door facing inside.**

NOTICE: The tire will be marked by the airbag deployment, so use a redundant tire.

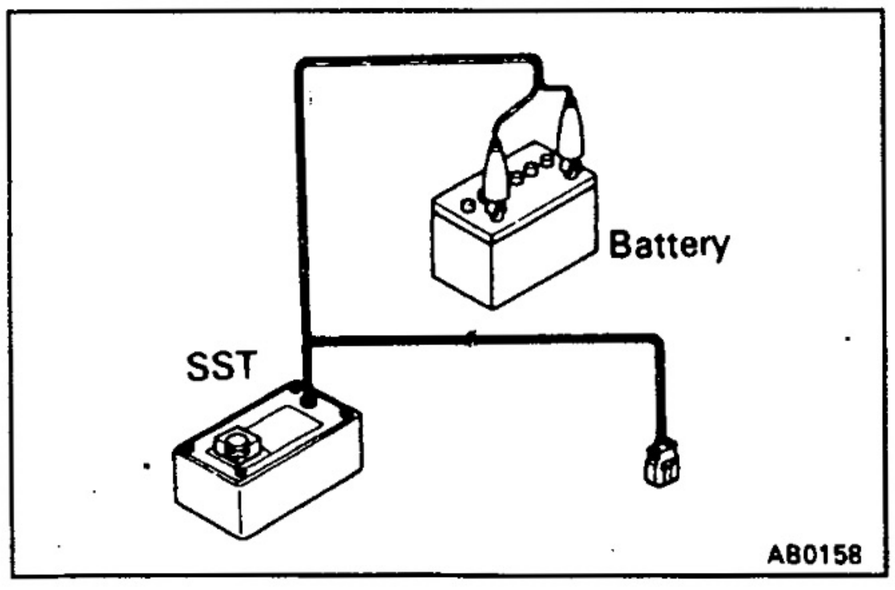

3. CONFIRM FUNCTIONING OF SST

(See page RS–22)

SST 09082–00700

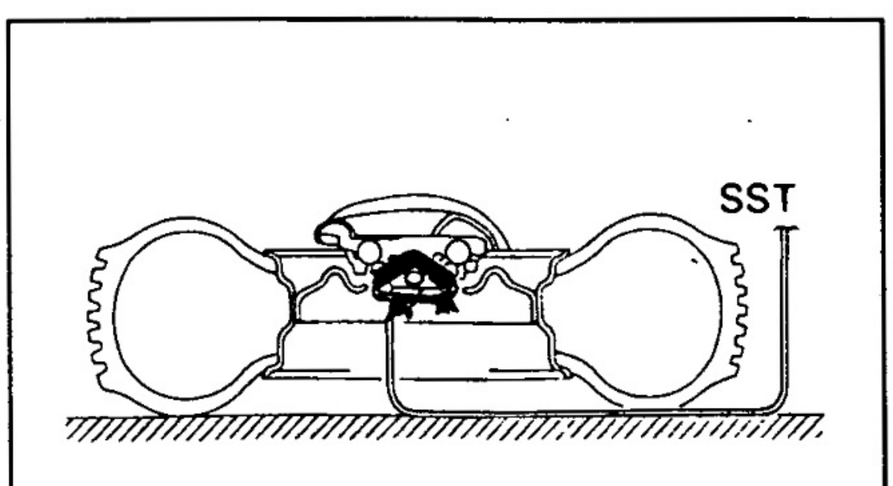

4. INSTALL SST AND COVER STEERING WHEEL PAD/ FRONT PASSENGER AIRBAG ASSEMBLY

Steering wheel pad:

CAUTION: Place the disc wheel on level ground.

(a) Connect the SST connector to the steering wheel pad connector.

SST 09082–00700

NOTICE: To avoid damaging the SST connector and wire harness, do not lock the secondary lock of the twin lock. Also, provide some slack for the SST wire harness inside the disc wheel.

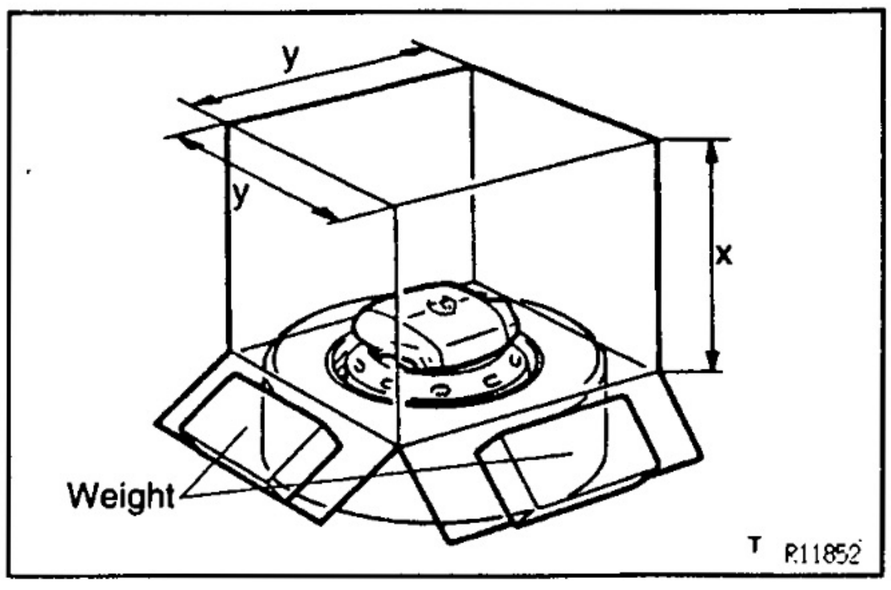

(b) Cover steering wheel pad with cardboard box or tires.

Covering Method Using Cardboard Box:

Cover the steering wheel pad with the cardboard box and weigh the cardboard box down in 4 places with at least 196 N (20 kg, 44 lb).

Size of cardboard box:

Must exceed the following dimensions–

x= 460 mm (18.11 in.)

When dimension y of the cardboard box exceeds the diameter of the disc wheel with tire the steering wheel pad is tied to –

x = 460 mm (18.11 in.) + width of tire

y = 650 mm (25.59 in.)

NOTICE: If a cardboard box which is smaller than the size specified is used, the cardboard box will be broken by the shock of the airbag deployment.

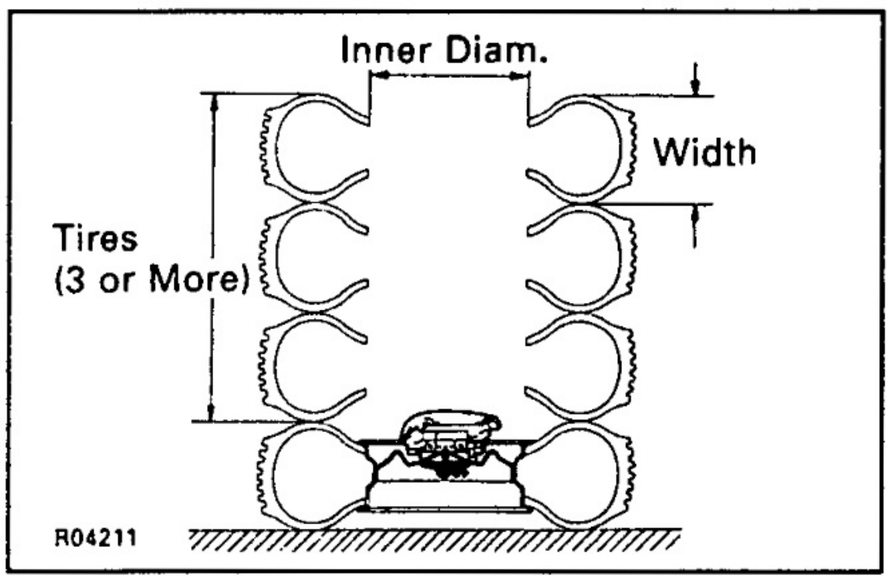

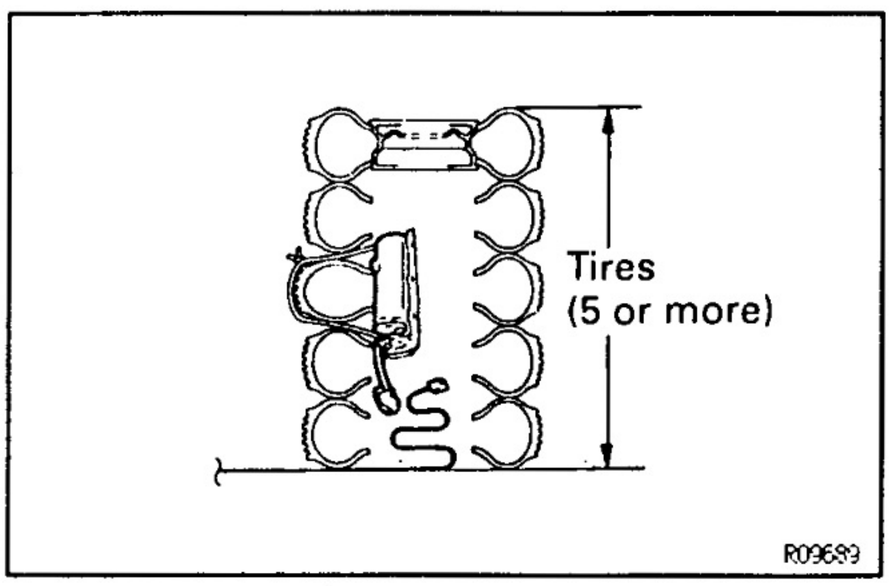

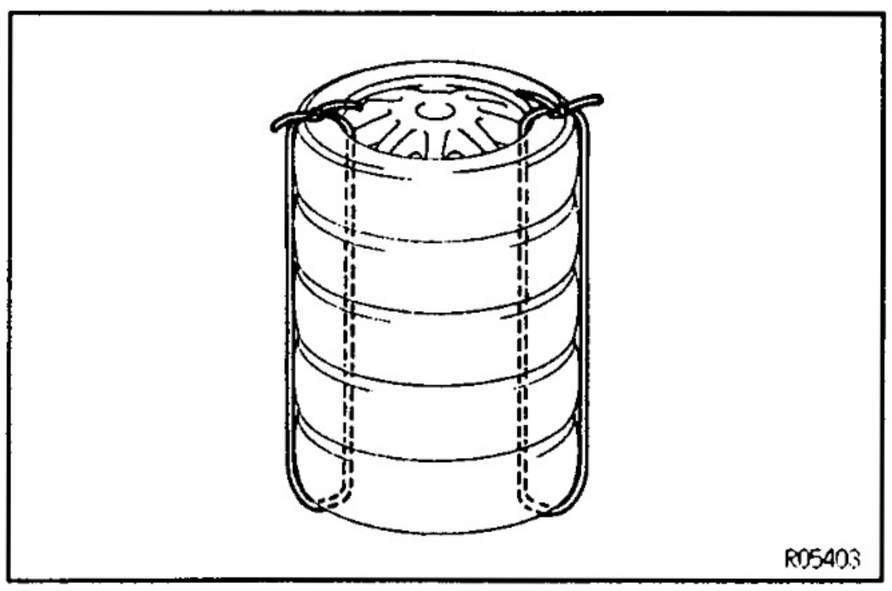

Covering Method Using Tires:

Place at least 3 tires without disc wheel on top of the disc wheel with tire to which the steering wheel pad is tied.

Tire size: Must exceed the following dimensions–

Width	**185 mm (7.28 in.)**
Inner diam	**360 mm (14.17 in.)**

CAUTION: Do not use tires with disc wheels.

NOTICE: The tires may be marked by the airbag deployment, so use redundant tires.

Front passenger airbag assembly:

(a) Place at least 2 tires under the tire to which the front passenger airbag assembly is tied.

(b) Place at least 2 tires over the tire to which the front passenger airbag assembly is tied. The top tire should have the wheel installed.

(c) Tie the tires together by 2 wire harnesses.

CAUTION: Make sure that the wire harnesses are tight. It is very dangerous if loose wire harnesses result in the tires coming free due to the shock of the airbag deploying.

HINT: Place the SST connector and wire harness inside tires. Provide at least 1 m (3 ft) of slack for the wire harness.

RS

(d) Connect the SST connector to the front passenger airbag assembly connector.
SST 09082–00700
NOTICE: To avoid damaging the SST connector and wire harness, do not lock the secondary lock of the twin lock.

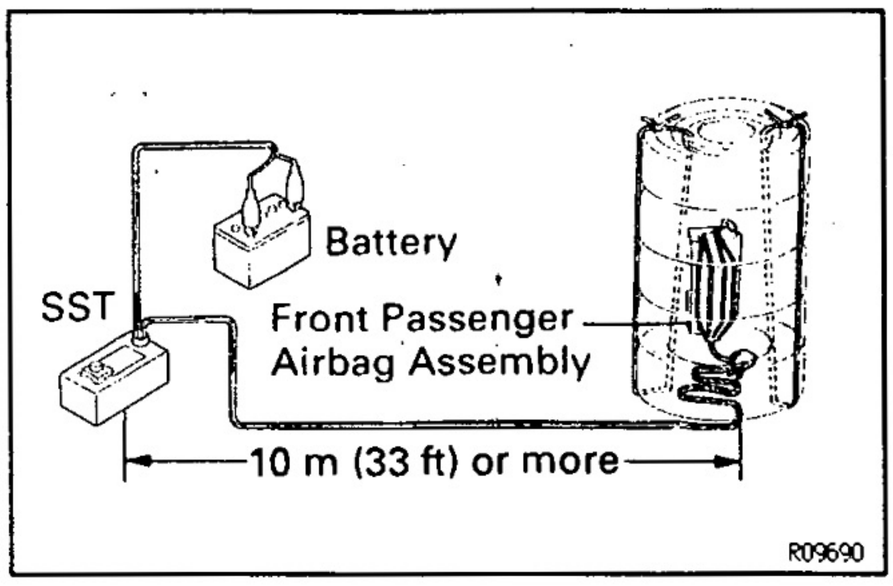



5. AIRBAG DEPLOYMENT

(a) Connect the SST red clip to the battery positive (+) terminal and the black clip to the battery negative (–) terminal.

(b) Confirm that no one is within 10 m (33 ft) of the tire the steering wheel pad/front passenger airbag assembly is tied to.

(c) Press the SST activation switch and deploy the airbag.
HINT: The airbag deploys simultaneously as the LED of the SST activation switch lights up.

6. DISPOSAL OF STEERING WHEEL PAD / FRONT PASSENGER AIRBAG ASSEMBLY

CAUTION:

- **The steering wheel pad/front passenger airbag assembly is very hot when the airbag is deployed, so leave it alone for at least 30 minutes after deployment.**
- **Use gloves and safety glasses when handling a steering wheel pad/front passenger airbag assembly with deployed airbag.**
- **Do not apply water etc. to a steering wheel pad/front passenger airbag assembly with deployed airbag.**
- **Always wash your hands with water after completing the operation.**

(a) Remove the steering wheel pad / front passenger airbag assembly from the tire.

(b) Place the steering wheel pad/front passenger airbag assembly in a vinyl bag, tie the end tightly and dispose of it the same way as other general parts.

RS014–0W

CONFIRM FUNCTIONING OF SST

When deploying the airbag, always use the specified SST: SRS AIRBAG DEPLOYMENT TOOL.
SST 09082–00700

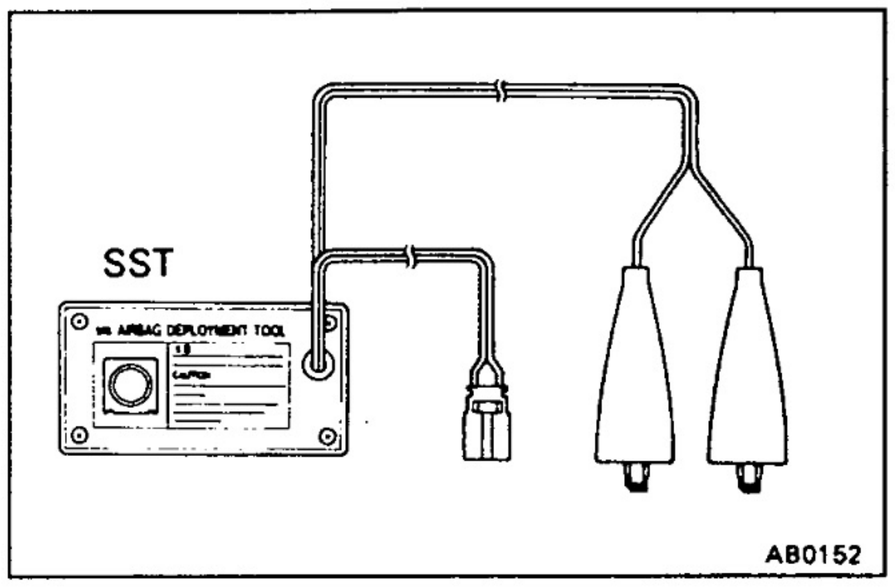

1. CONNECT SST TO BATTERY

Connect the red clip of the SST to the battery positive (+) terminal and the black clip to the battery negative (–) terminal.
HINT: Do not connect the yellow connector which connects with the supplemental restraint system.

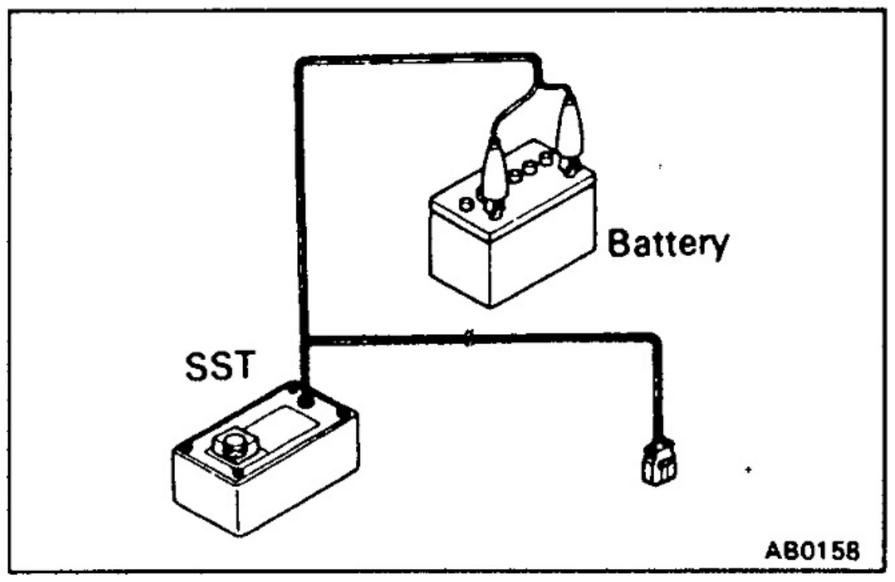

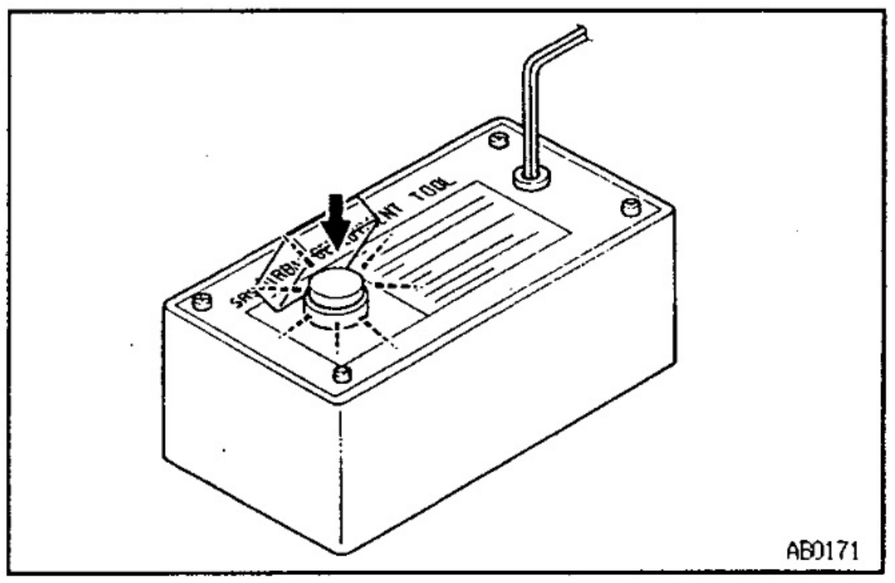

2. CONFIRM FUNCTIONING OF SST

Press the SST activation switch, and confirm the LED of the SST activation switch lights up.
CAUTION: If the LED lights up when the activation switch is not being pressed, SST malfunction is probable, so definitely do not use the SST.

RS

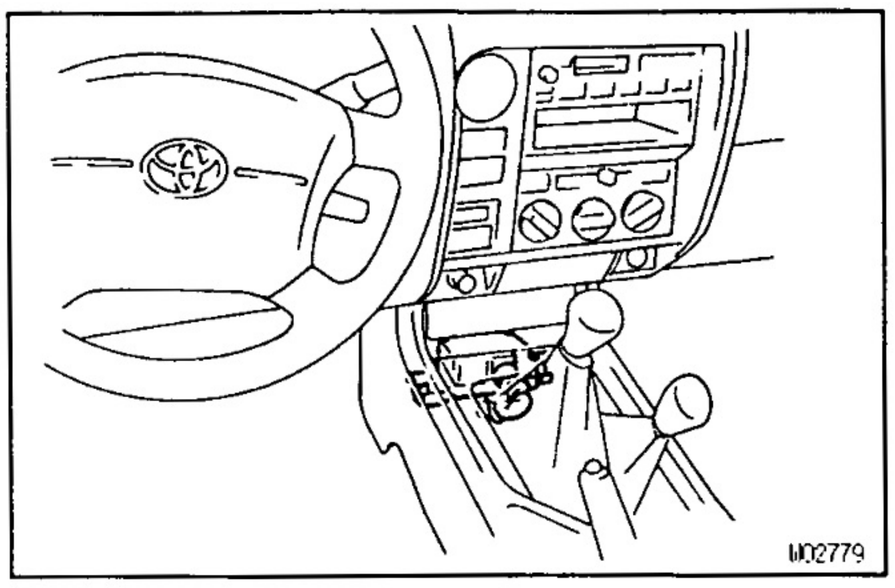

AIRBAG SENSOR ASSEMBLY

RS07T–0A

INSPECTION ITEMS

1. **VEHICLES NOT INVOLVED IN COLLISION**
   Do a diagnostic system check.
   (See page RS–32)
2. **VEHICLES INVOLVED IN COLLISION**
   IF SRS IS NOT DEPLOYED
   Do a diagnostic system check.
   (See page RS–32)
   IF SRS IS DEPLOYED
   Replace the airbag sensor assembly.

REPLACEMENT REQUIREMENTS

RS07U–09

In the following cases, replace the airbag sensor assembly.

- If the SRS has been deployed in a collision.
- If the airbag sensor assembly has been found to be faulty in troubleshooting.
- If the airbag sensor assembly has been dropped.

NOTICE: For replacement of the airbag sensor assembly, see page RS–24,"AIRBAG SENSOR ASSEMBLY REMOVAL AND INSTALLATION" and be sure to follow the correct procedure.

RS0S6-05

COMPONENTS

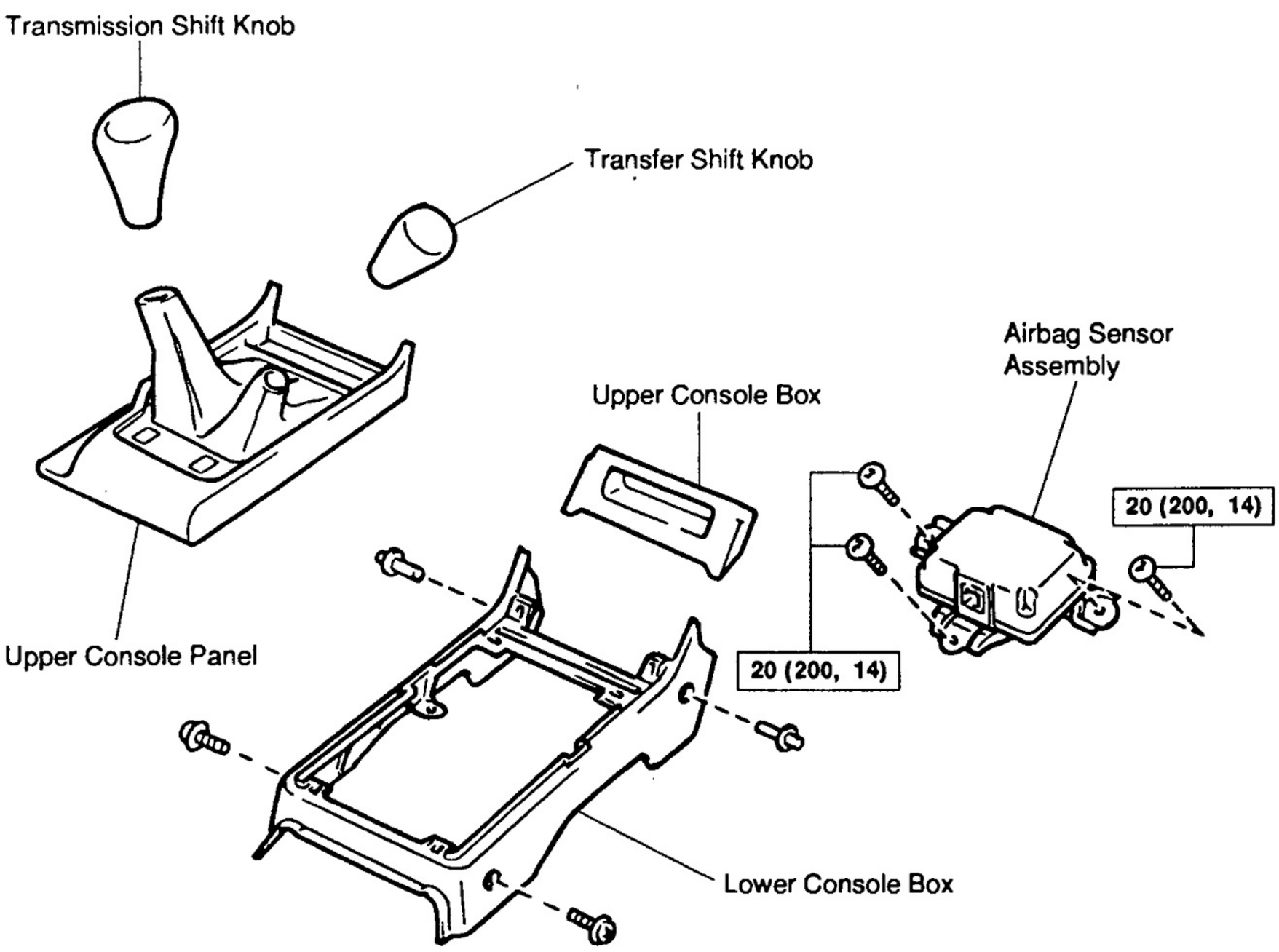

N·m (kgf·cm, ft·lbf) : Specified torque

W02785

RS0ST-05

AIRBAG SENSOR ASSEMBLY REMOVAL AND INSTALLATION

NOTICE:

- **Do not open the cover or the case of the ECU and various computers unless absolutely necessary. (If the IC terminals are touched, the IC may be destroyed by static electricity.)**
- **Never use SRS parts from another vehicle. When replacing parts, replace with new parts.**
- **Never reuse the airbag sensor assembly involved in a collision when the airbag has deployed.**
- **Never repair a sensor in order to reuse it.**

1. REMOVE THESE PARTS:

(a) Transfer shirt knob and transmission shift knob
(b) Upper console cover
(c) Upper console panel
(d) Lower console box

RS

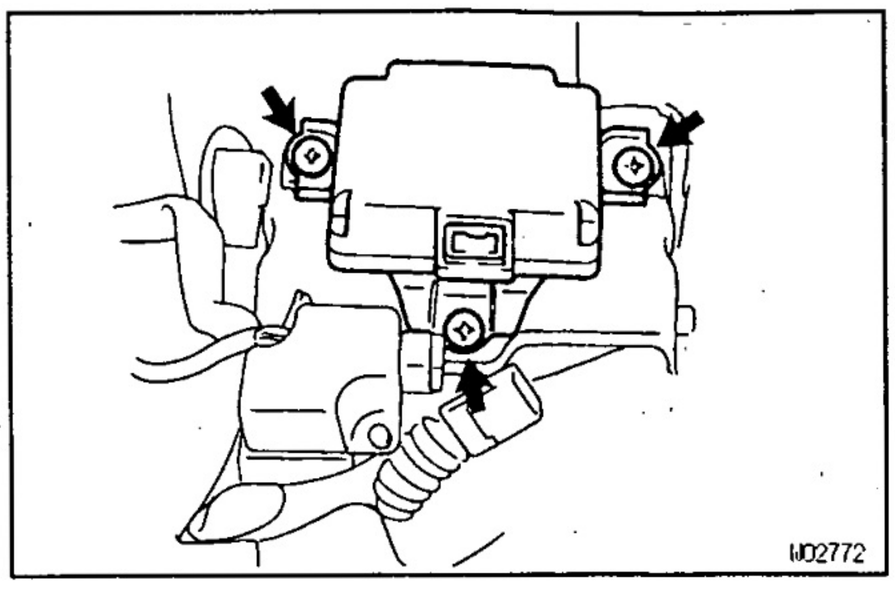

2. REMOVE AIRBAG SENSOR ASSEMBLY

(a) Disconnect the connector.
NOTICE: Remove the connector with the sensor assembly installed.

(b) Using a torx wrench, remove the 3 screws and airbag sensor assembly.
Torx wrench: T40 (Part No. 09042–00020 or locally manufactured tool)

3. INSTALL AIRBAG SENSOR ASSEMBLY

(a) Using a torx wrench, install the airbag sensor assembly with the 3 screws.
Torx wrench: T40 (Part No. 09042–00020 or locally manufactured tool)
Torque: 20 N.m (200 kgf.cm, 14 ft.lbf)

(b) Connect the connector.
NOTICE:

- **Installation of the connector is done with the sensor assembly installed.**
- **Make sure that the sensor assembly is installed to the specified torque.**
- **If the sensor assembly has been dropped, or there are cracks, dents or other defects in the case, bracket or connector, replace the sensor assembly with a new one.**
- **When installing the sensor assembly, take care that the SRS wiring does not interfere with other parts and is not pinched between other parts.**
- **After installation, shake the sensor assembly to check that there is no looseness.**

4. INSTALL REMOVED PARTS

WIRE HARNESS AND CONNECTOR

RS01B-15

HINT: The SRS wire harness is integrated with the cowl wire harness assembly and floor wire harness assembly.
The wires for the SRS wire harness are encased in a black corrugated tube and all the connectors in the system are a standard yellow color.

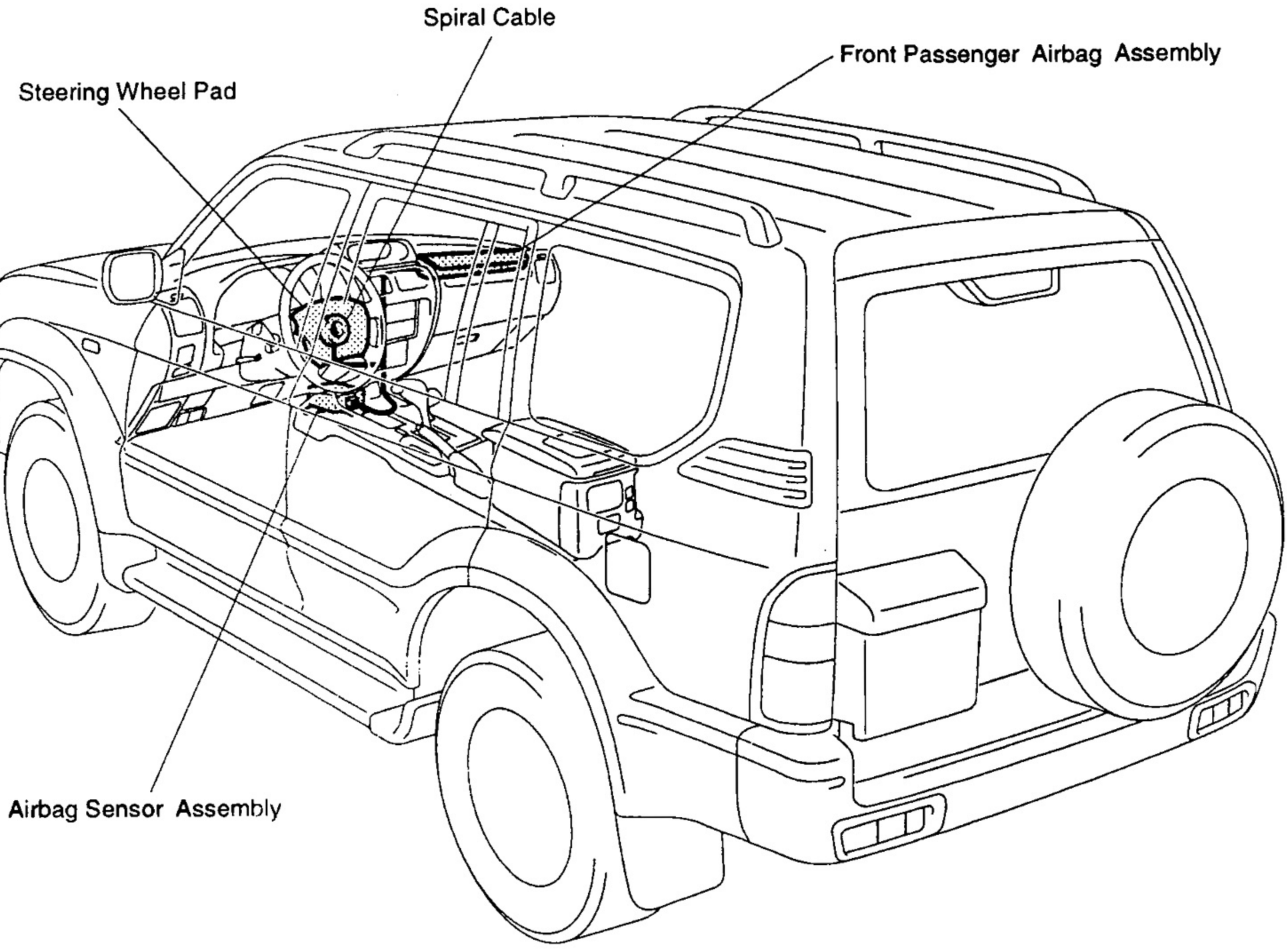

RS

RS01C-0X

INSPECTION ITEMS

1. **VEHICLES NOT INVOLVED IN COLLISION**
   Do a diagnostic system check.
   (See page RS–32)
2. **VEHICLES INVOLVED IN COLLISION**

(a) Do a diagnostic system check.
(See page RS–32)

(b) Check for breaks in all wires of the SRS wire harness, and for exposed conductors.
(c) Check to see if the SRS wire harness connectors are cracked or chipped.

REPLACEMENT REQUIREMENTS

RS01D–0W

In the following cases, replace the wire harness or connector.

- If any part of the SRS wire harness or any connector has been found to be faulty in troubleshooting.
- If any part of the SRS wire harness or any connector has been found to be faulty during the check in items 2–(b) or (c).

NOTICE:

- **If the wire harness used in the SRS is damaged, replace the whole wire harness assembly.**
- **When the connector to the front airbag sensors can be repaired alone (when there is no damage to the wire harness), use the repair wire specially designed for the purpose.**

– MEMO –

TROUBLESHOOTING

HOW TO PROCEED WITH
TROUBLESHOOTING ····· RS–30
CUSTOMER PROBLEM ANALYSIS
CHECK ····· RS–31
PRE-CHECK ····· RS–32
DIAGNOSTIC TROUBLE CODE CHART ····· RS–34
PARTS LOCATION ····· RS–35
TERMINAL OF ECU ····· RS–36
PROBLEM SYMPTOMS TABLE ····· RS–36
CIRCUIT INSPECTION
DTC(Normal) ····· RS–37
DTC 11 ····· RS–40
DTC 12 ····· RS–46
DTC 14 ····· RS–52
DTC 31 ····· RS–56
DTC 54 ····· RS–58
SRS Warning Light Circuit Malfunction
(Always lit up, when ignition switch
is in LOCK position.) ····· RS–61
SRS Warning Light Circuit Malfunction
(Does not light up, when ignition
switch is turned to ACC or ON.) ····· RS–63
Tc Terminal Circuit ····· RS–66

RS

HOW TO PROCEED WITH TROUBLESHOOTING

Perform troubleshooting in accordance with the procedure on the following pages.

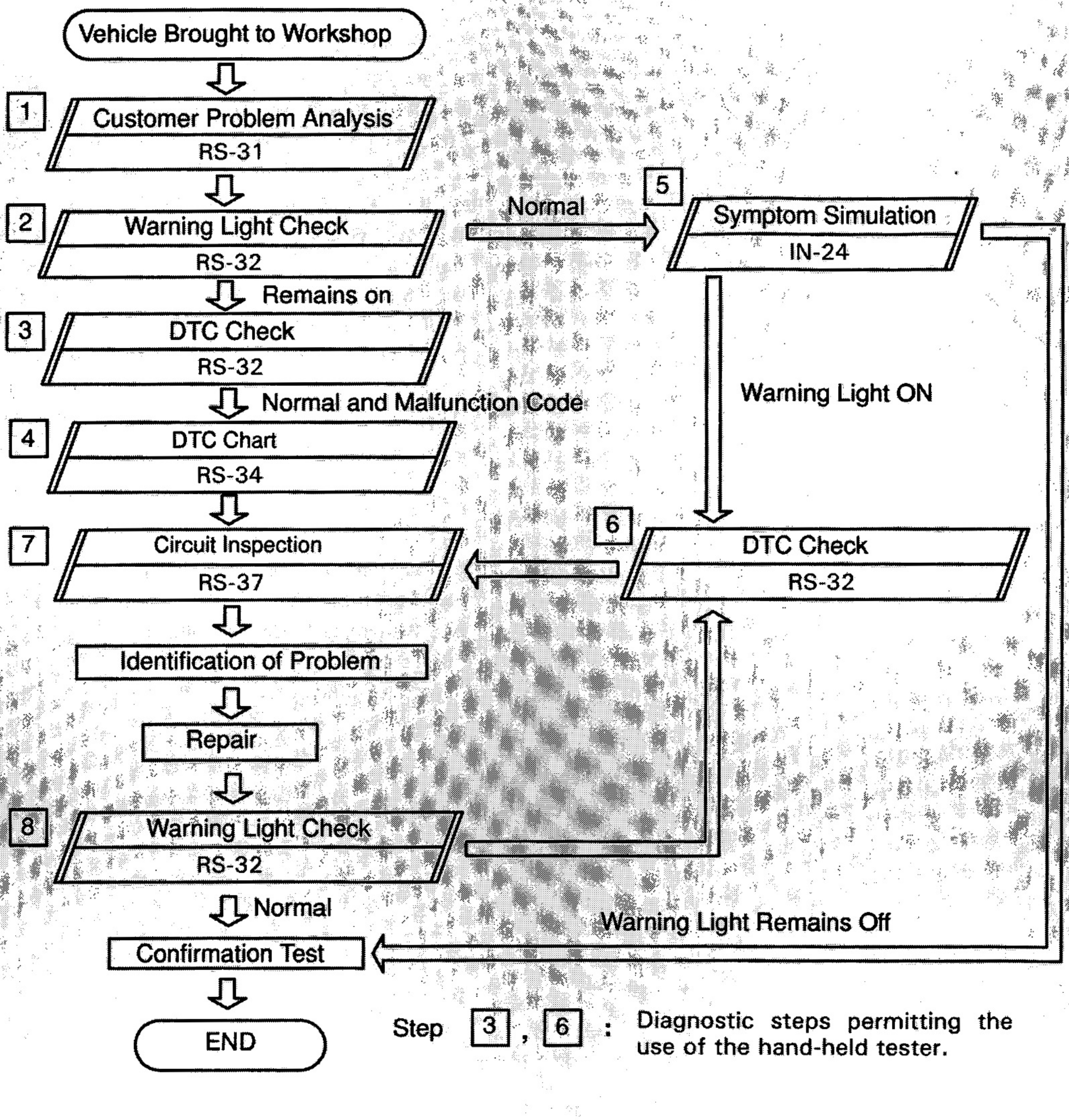

Step 3 , 6 : Diagnostic steps permitting the use of the hand-held tester.

RS

CUSTOMER PROBLEM ANALYSIS CHECK

Supplemental Restraint System Check Sheet

Inspector's Name _____

Customer's Name		**Registration No.**	
		Registration Year	/ /
		Frame No.	
Date Vehicle Brought In	/ /	**Odometer Reading**	km Miles

Date Problem Dist Occurred	/ /
Weather	☐ Fine ☐ Cloudy ☐ Rainy ☐ Snowy ☐ Other
Temperature	**Approx.**

Vehicle Operation	☐ Starting ☐ Idling ☐ Driving [☐ Constant speed ☐ Acceleration ☐ Deceleration ☐ Other]
Road Conditions	
Details Of Problem	

Vehicle Inspection, Repair History Prior to Occurrence of Malfunction(Including Supplemental Restraint System)	

Diagnosis System Inspection

SRS Warning Light Inspection	**1st Time**	☐ Remains ON ☐ Sometimes Light Up ☐ Does Not Light Up
	2nd Time	☐ Remains ON ☐ Sometimes Light Up ☐ Does Not Light Up
DTC Inspection	**1st Time**	☐ Normal Code ☐ Malfunction Code [Code.]
	2nd Time	☐ Normal Code ☐ Malfunction Code [Code.]

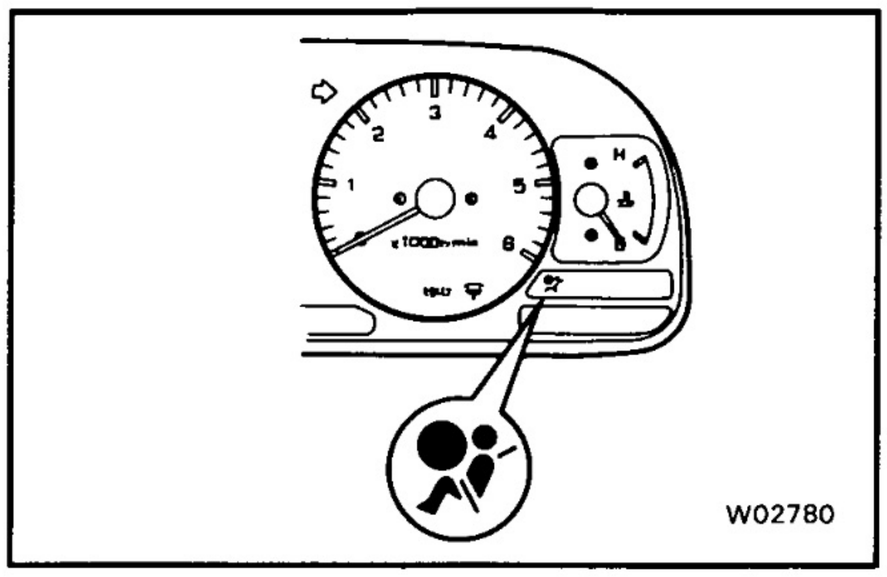

PRE–CHECK

1. SRS warning light check

(a) Turn the ignition switch to ACC or ON and check that the SRS warning light lights up.

(b) Check that the SRS warning light goes out after approx. 6 seconds.

HINT:

- When the ignition switch is at ACC or ON and the SRS warning light remains on or flashes, the airbag sensor assembly has detected a malfunction code.
- If, after approx. 6 seconds have elapsed, the SRS warning light sometimes lights up or the SRS warning light lights up even when the ignition switch is OFF, a short in the SRS warning light circuit can be considered likely. Proceed to ''SRS warning light circuit malfunction'' on page RS – 61, 63.

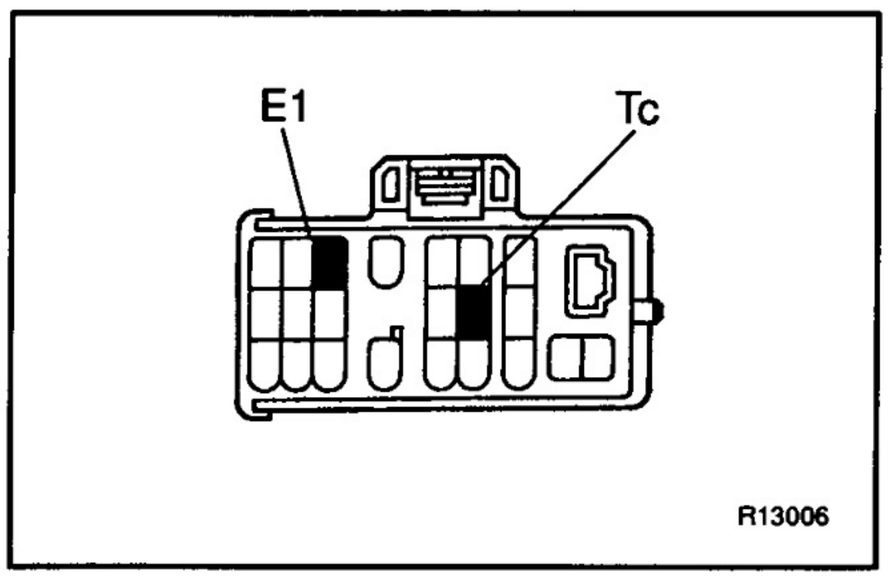

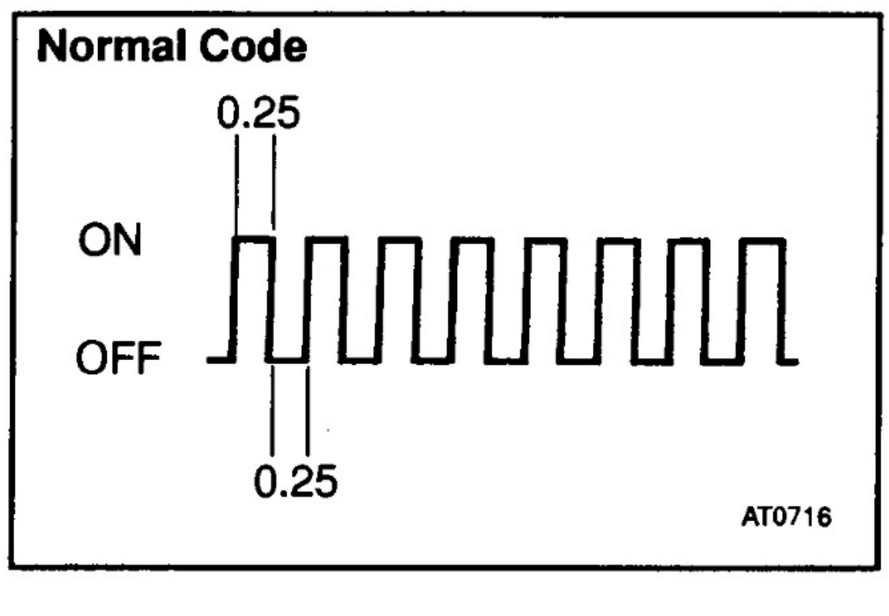

2. DTC check (Using diagnosis check wire)

(a) OUTPUT DTC

(1) Turn the ignition switch to the ACC or ON position and wait approx. 20 seconds.

(2) Using SST, connect terminals Tc and E1 of the check connector.
SST 09843 – 18020

NOTICE: Never make a mistake with the terminal connecting position as this will cause a malfunction.

(b) READ DTC

Read the 2–digit DTC as indicated by the number of times the SRS warning light blinks. As an example, the blinking patterns, normal, 11 and 31 are as shown on the illustration.

- Normal code indication
The light will blink 2 times per second.
- Malfunction code indication
The first blinking output indicates the first digit of a 2–digit DTC. After a 1.5 second pause, the second blinking output will indicate the second digit.

RS

Code 11 and 31

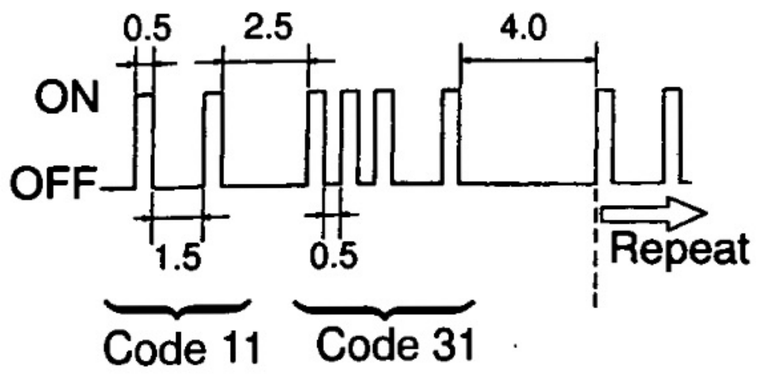

If there are 2 or more codes, there will be a 2.5 second pause between each code. After all the codes have been output, there will be a 4.0 second pause and they will all be repeated.

HINT:

- In the event of a number of trouble codes, indication will start from the smallest numbered code.
- If it does not output a DTC or outputs a DTC without terminal connection, proceed to the Tc terminal circuit inspection on page RS – 66.

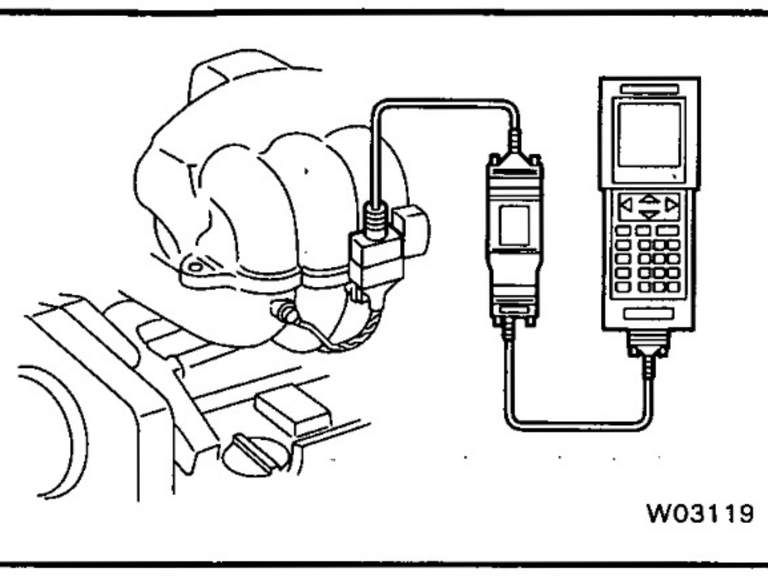

3. DTC check (Using hand – held tester)

(a) Hook up the hand – held tester to the check connector.

(b) Read the DTCs by following the prompts on the tester screen.

HINT: Please refer to the hand – held tester operator's manual, for further details.

4. DTC clearance

When the ignition switch is turned off, the DTC is cleared.

RS

DIAGNOSTIC TROUBLE CODE CHART

If a malfunction code is displayed during the DTC check, check the circuit listed for that code in the table below (Proceed to the page given for that circuit.).

DTC No. (See Page)	Detection Item	Trouble Area	SRS Warning Light
Normal (RS-37)	• System normal	–	OFF
	• Source voltage drop	• Battery • Airbag sensor assembly	ON
11 (RS-40)	• Short in squib circuit (to ground)	• Steering wheel pad (D squib) • Front passenger airbag assembly (P squib) • Spiral cable • Airbag sensor assembly • Wire harness	ON
12 (RS-46)	• Short in squib circuit (to B+)	• Steering wheel pad (D squib) • Front passenger airbag assembly (P squib) • Spiral cable • Airbag sensor assembly • Wire harness	ON
14 (RS-52)	• Open in D squib circuit	• Steering wheel pad (D squib) • Spiral cable • Airbag sensor assembly • Wire harness	ON
31 (RS-56)	• Airbag sensor assembly malfunction	• Airbag sensor assembly	ON
54 (RS-58)	• Open in P squib circuit	• Front passenger airbag assembly (P squib) • Airbag sensor assembly • Wire harness	ON

HINT:

- When the SRS warning light remains lit up and the DTC is the normal code, this means a source voltage drops.
  This malfunction is not stored in memory by the airbag sensor assembly and if the power source voltage returns to normal, the SRS warning light will automatically go out.
- When 2 or more codes are indicated, the codes will be displayed in numeral order starting from the lowest numbered code.
- If a code not listed on the chart is displayed, the airbag sensor assembly is faulty.

PARTS LOCATION

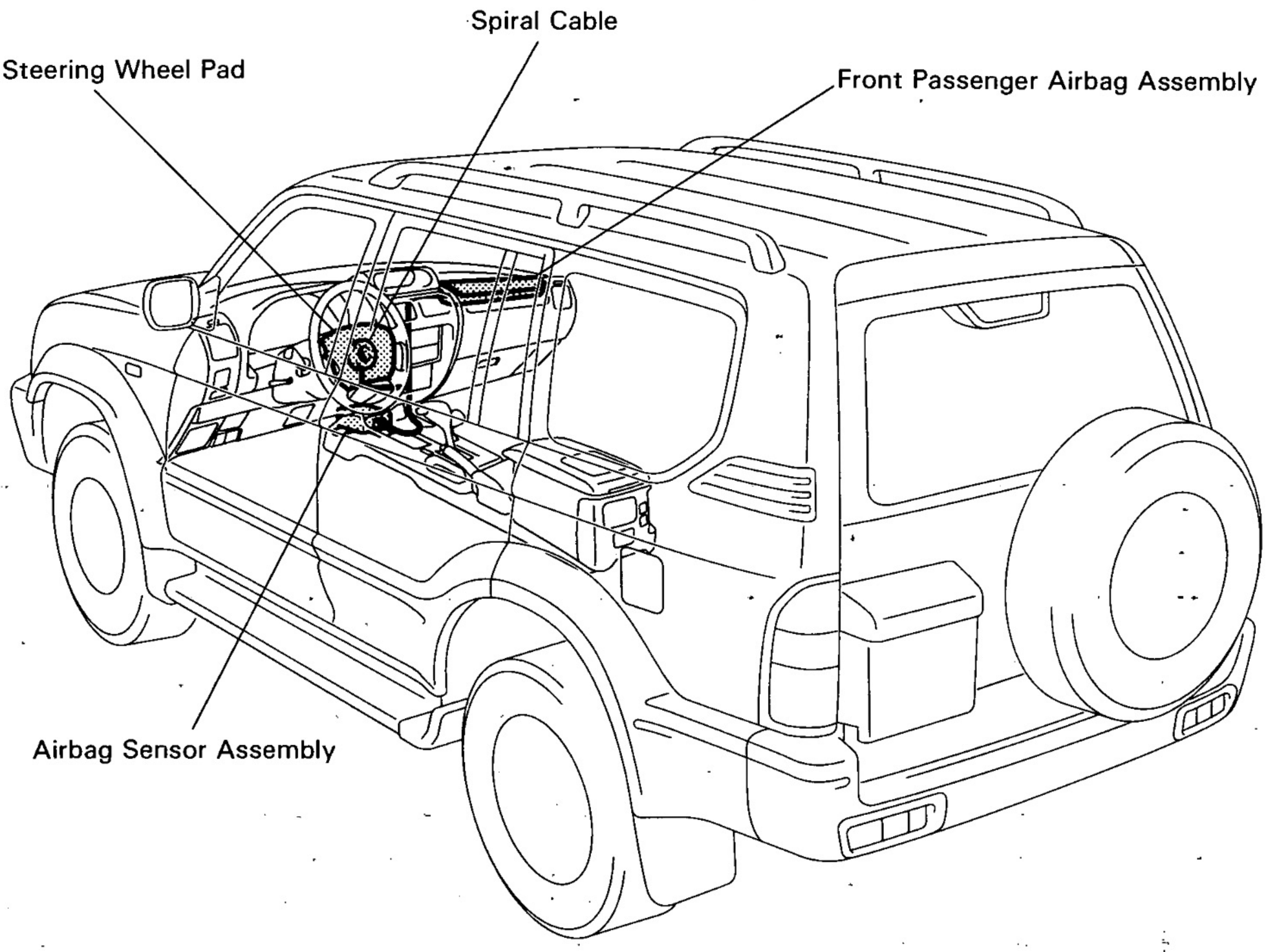

TERMINALS OF ECU

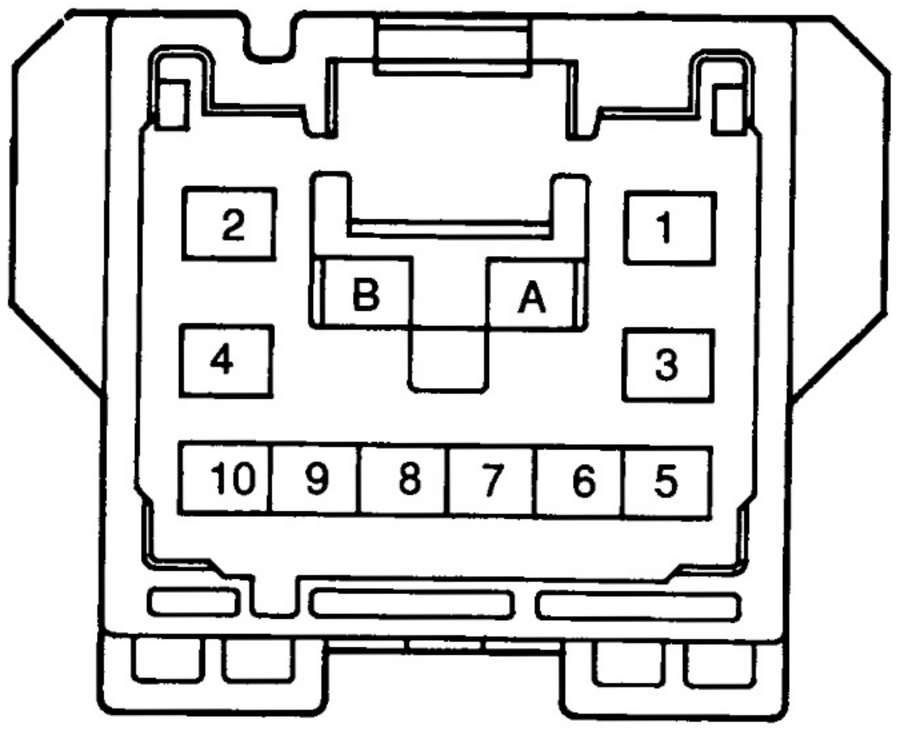

W02056

No.	Symbol	Terminal Name
A	–	Electrical Connection Check Mechanism
B	–	Electrical Connection Check Mechanism
1	P–	Squib ⊖ (Passenger)
2	P+	Squib ⊕ (Passenger)
3	D–	Squib ⊖ (Driver)
4	D+	Squib ⊕ (Driver)
5	E1	Ground
6	E2	Ground
7	Tc	Diagnosis
8	LA	SRS Warning Light
9	IG2	Power Source (IGN Fuse)
10	ACC	Power Source (CIG Fuse)

PROBLEM SYMPTOMS TABLE

Proceed with troubleshooting of each circuit in the table below.

Symptom	Suspect Area	See page
• With the ignition switch at ACC or ON, the SRS warning light sometimes lights up after approx. 6 seconds have elapsed. • SRS warning light is always lit up even when ignition switch is in the LOCK position.	• SRS warning light circuit (Always lights up when ignition switch is in LOCK position.)	RS-61
• With the ignition switch at ACC or ON, the SRS warning lights does not light up.	• SRS warning light circuit (Does not light up when ignition switch is turned to ACC or ON.)	RS-63
• DTC not displayed. • SRS warning light is always lit up a DTC check procedure. • DTC displayed without Tc and E1 terminal connection.	• Tc terminal circuit	RS-66

RS

CIRCUIT INSPECTION

DTC	Normal	Source Voltage Drop

CIRCUIT DESCRIPTION

The SRS is equipped with a voltage–increase circuit (DC–DC converter) in the airbag sensor assembly in case the source voltage drops.
When the battery voltage drops, the voltage–increase circuit (DC–DC converter) functions to increase the voltage of the SRS to normal voltage.
The diagnosis system malfunction display for this circuit is different to other circuits–when the SRS warning light remains lit up and the DTC is a normal code, source voltage drop is indicated.
Malfunction in this circuit is not recorded in the airbag sensor assembly, and the source voltage returns to normal, the SRS warning light automatically goes off.

DTC No.	Diagnosis
(Normal)	Source voltage drop.

WIRING DIAGRAM

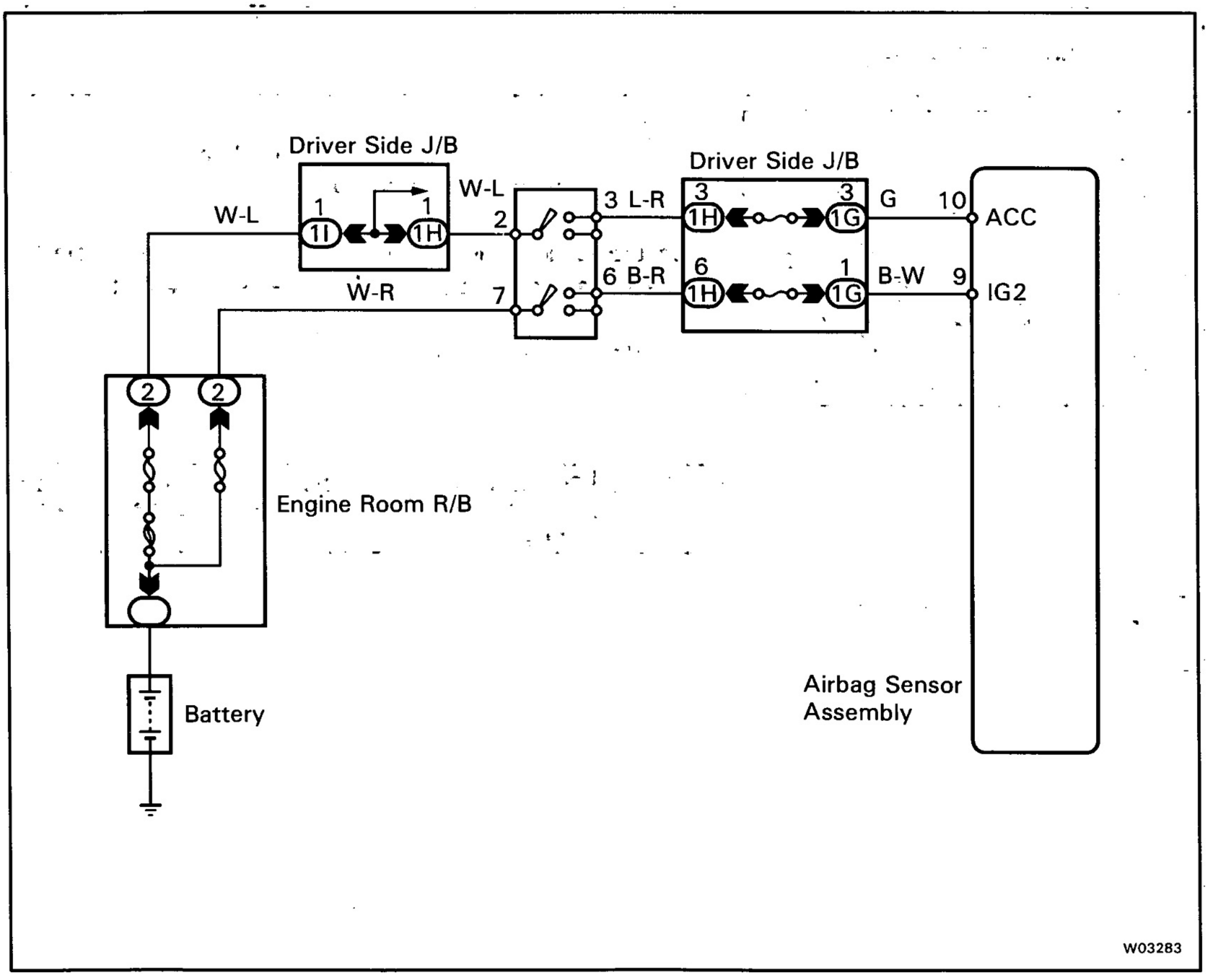

INSPECTION PROCEDURE

1	**Preparation.**

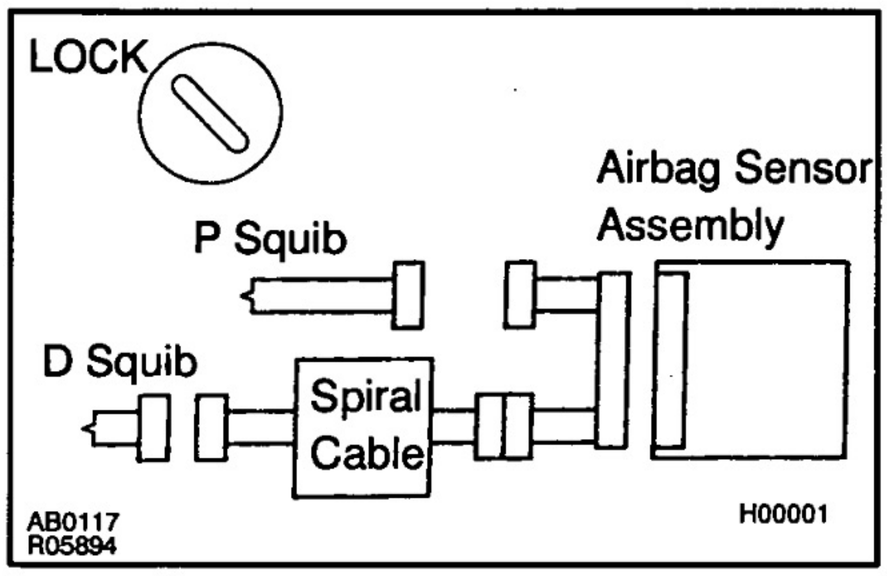

PREPARATION:

(a) Disconnect the negative (–) terminal cable from the battery, and wait at least 90 seconds.
(b) Remove the steering wheel pad. (See SR section)
(c) Disconnect the connector of front passenger airbag assembly. (See page RS – 13)
(d) Disconnect the connector of airbag sensor assembly. (See page RS – 25)

CAUTION:

Store the steering wheel pad with the front surface facing upward.

2	**Check source voltage.**

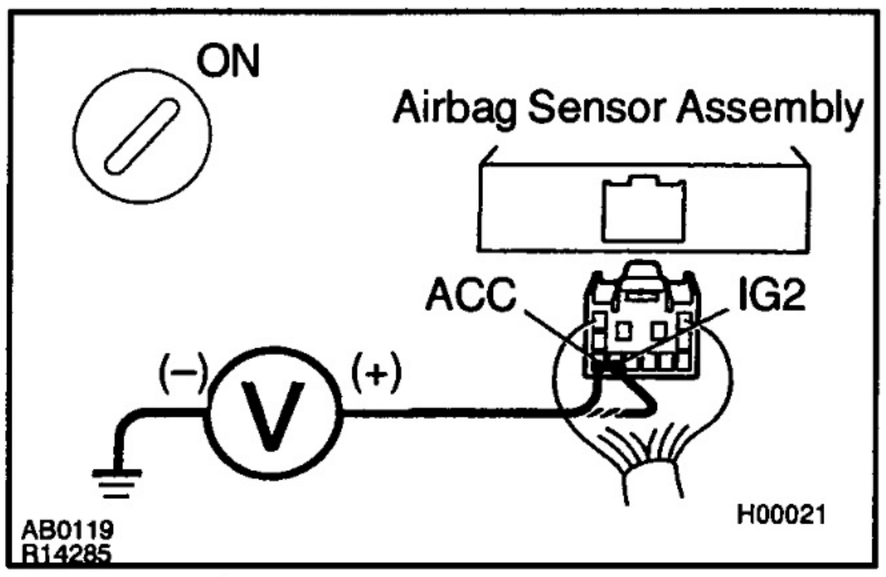

PREPARATION:

(a) Connect the negative (–) terminal cable to battery.
(b) Turn the ignition switch ON.

CHECK:

Measure voltage at IG2 or ACC on sensor and operate electric system. (defogger, wiper, headlight, heater blower, etc.)

OK:

Voltage: 10 – 14V

NG → **Check the harness between battery and airbag sensor assembly, and check the battery and charging system.**

OK

3	Does SRS warning light turn off?

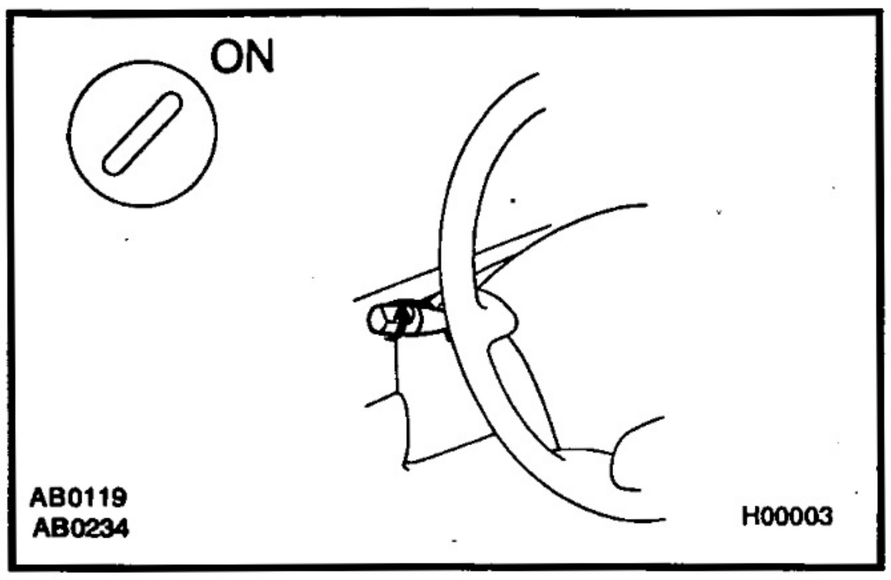

PREPARATION:

(a) Turn the ignition switch to LOCK.
(b) Connect the steering wheel pad connector.
(c) Connect the front passenger airbag assembly connector.
(d) Connect the airbag sensor assembly connector.
(e) Turn the ignition switch ON.

CHECK:

Operate electric system (defogger, wiper, headlight, heater blower, etc.) and check that SRS warning light goes off.

NO → **Check for DTCs. If a DTC is output, perform troubleshooting for the DTC. If a normal code is output, replace airbag sensor assembly.**

YES

From the results of the above inspection, the malfunctioning part can now be considered normal. To make sure of this, use the simulation method to check.

DTC	11	Short in Squib Circuit (to Ground)

CIRCUIT DESCRIPTION

The squib circuit consists of the airbag sensor assembly, spiral cable, steering wheel pad and front passenger airbag assembly. If causes the SRS to deploy when the SRS deployment conditions are satisfied.
For details of the function of each component, see FUNCTION OF COMPONENTS on page RS-4.
DTC 11 is recorded when ground short is detected in the squib circuit.

DTC No.	DTC Detecting Condition	Trouble Area
11	• Short circuit in squib wire harness (to ground) • Squib malfunction • Spiral cable malfunction • Airbag sensor assembly malfunction	• Steering wheel pad (D squib) • Front passenger airbag assembly (P squib) • Spiral cable • Airbag sensor assembly • Wire harness

WIRING DIAGRAM

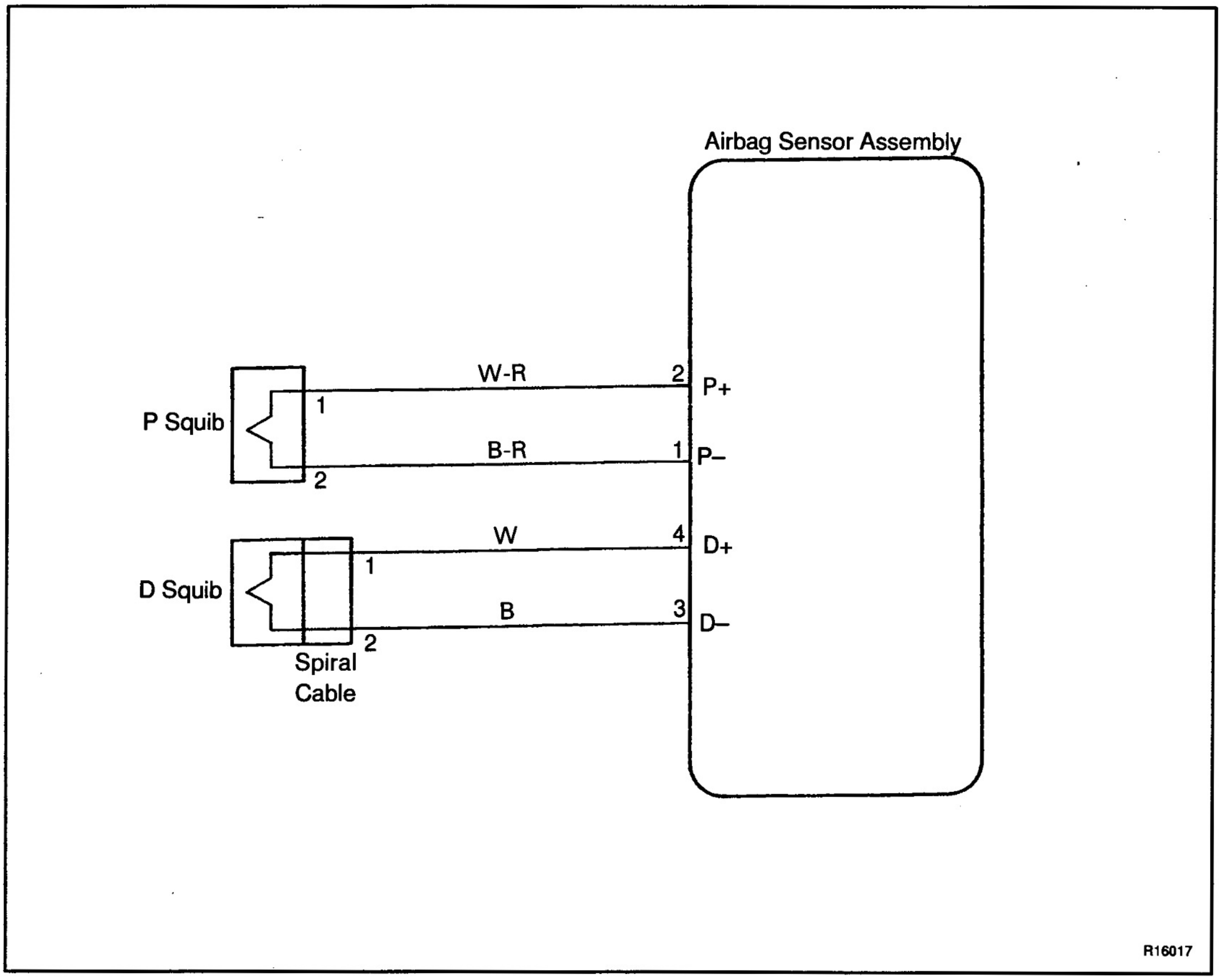

INSPECTION PROCEDURE

1	**Preparation. (See step "1" on page RS-38)**

2	**Check D squib circuit.**

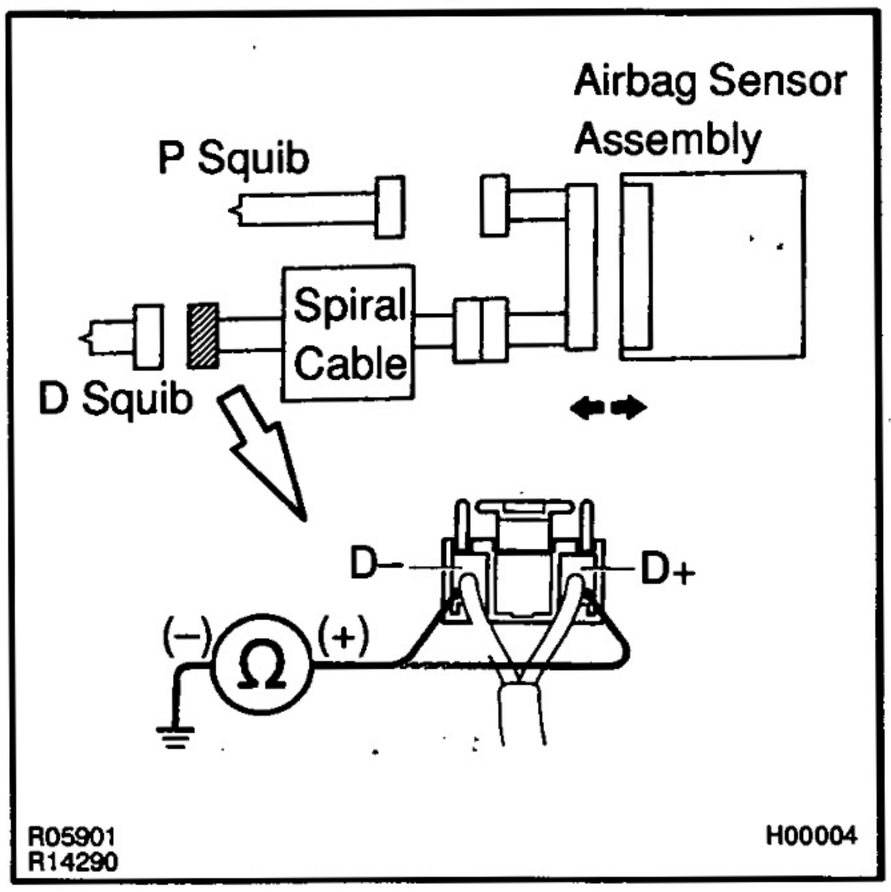

CHECK:

For the connector (on the spiral cable side) between the spiral cable and steering wheel pad, measure the resistance between D+, D– and body ground.

OK:

Resistance: 1MΩ or Higher

RS

NG → **Go to step " 7 ".**

OK

3	**Check P squib circuit.**

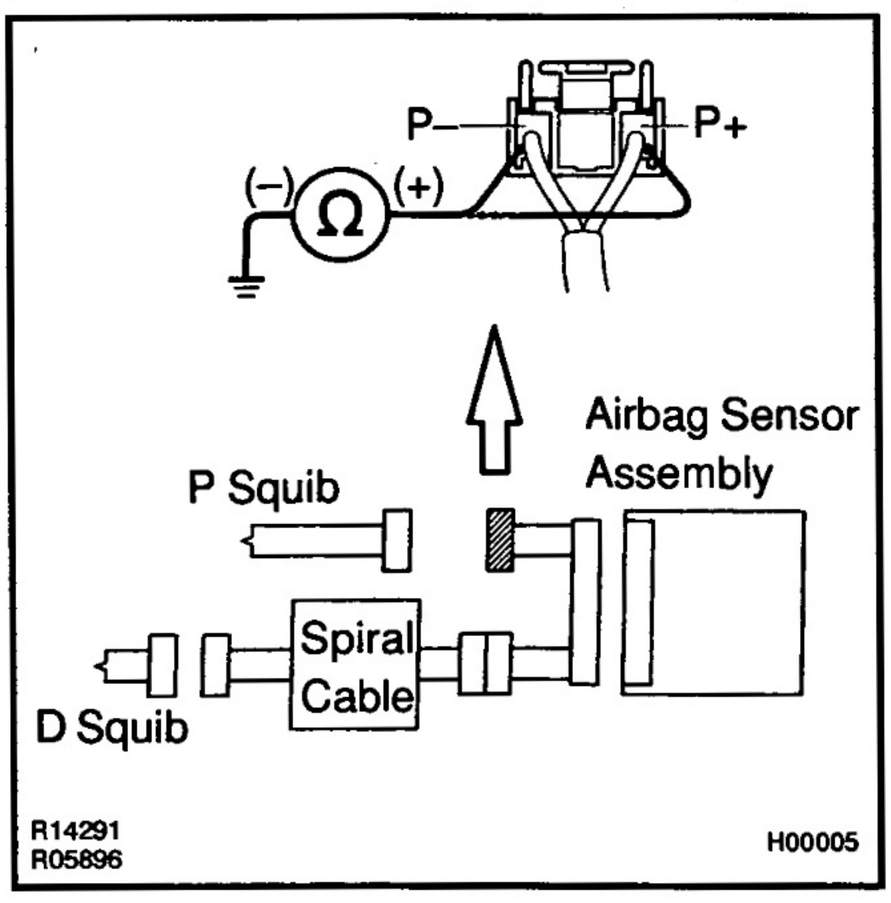

CHECK:

For the connector (on the airbag sensor assembly side) between the airbag sensor assembly and front passenger airbag assembly, measure the resistance between P+, P– and body ground.

OK:

Resistance: 1MΩ or Higher

NG → **Repair or replace harness or connector between the airbag sensor assembly and front passenger airbag assembly.**

OK

4	**Check airbag sensor assembly.**

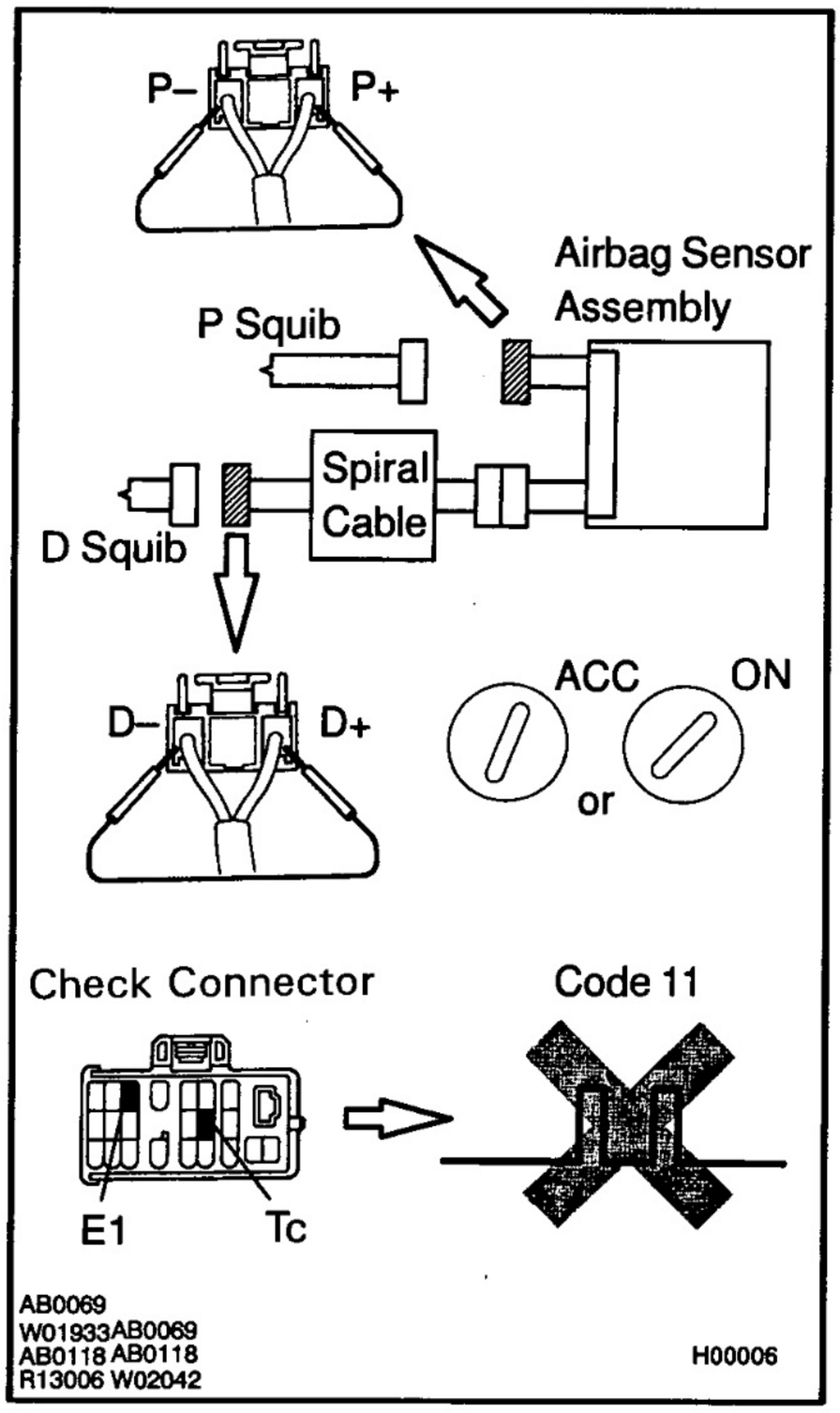

PREPARATION:

(a) Connect the connector to airbag sensor assembly.

(b) Using a service wire connect D_+ and D_- on spiral cable side of the connector between the spiral cable and steering wheel pad.

(c) Using a service wire, connect P_+ and P_- on airbag sensor assembly side of the connector between the airbag sensor assembly and front passenger airbag assembly.

(d) Connect negative (–) terminal cable to battery, and wait at least 2 seconds.

CHECK:

(a) Turn the ignition switch to ACC or ON and wait at least 20 seconds.

(b) Clear malfunction code stored in memory.
(See page RS-33)

(c) Turn the ignition switch to LOCK, and wait at least 20 seconds.

(d) Turn the ignition switch to ACC or ON, and wait at least 20 seconds.

(e) Using SST, connect terminals Tc and E1 of check connector.
SST 09843 – 18020

(f) Check DTC

OK:

DTC 11 is not output.

HINT:

Codes other than code 11 may be output at this time, but they are not relevant to this check.

NG → **Replace airbag sensor assembly.**

OK

RS

5	**Check D squib.**

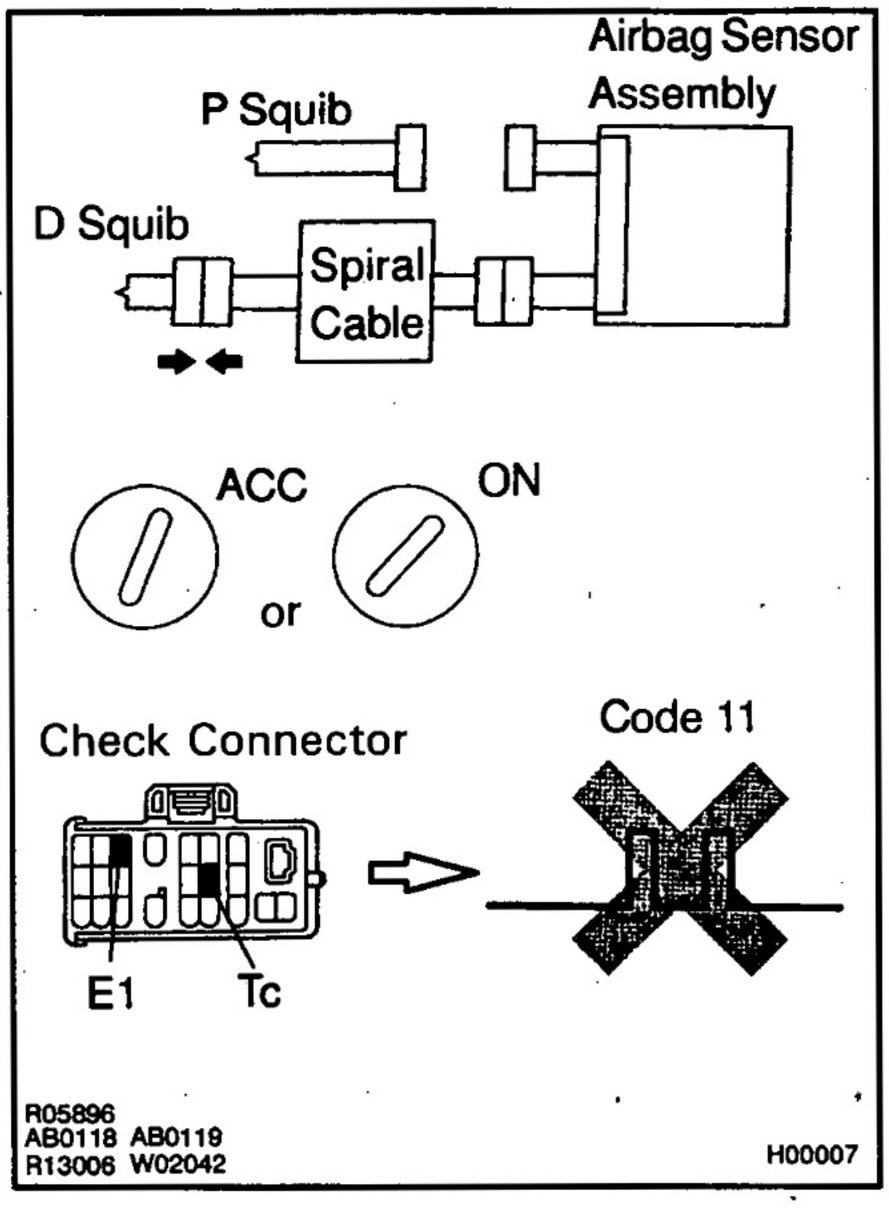

PREPARATION:

(a) Turn the ignition switch to LOCK.
(b) Disconnect the negative (–) terminal cable from the battery, and wait at least 90 seconds.
(c) Connect the steering wheel pad connector.
(d) Connect the negative (–) terminal cable to the battery, and wait at least 2 seconds.

CHECK:

(a) Turn the ignition switch to ACC or ON, and wait at least 20 seconds.
(b) Clear malfunction code stored in memory.
(See page RS-33)
(c) Turn the ignition switch to LOCK, and wait at least 20 seconds.
(d) Turn the ignition switch to ACC or ON, and wait at least 20 seconds.
(e) Using SST, connect terminals Tc and E1 of check connector.
SST 09843 – 18020
(f) Check DTC.

OK:

DTC 11 is not output.

HINT:
Codes other than code 11 may be output at this time, but they are not relevant to this check.

NG → **Replace steering wheel pad.**

OK

6	**Check P squib.**

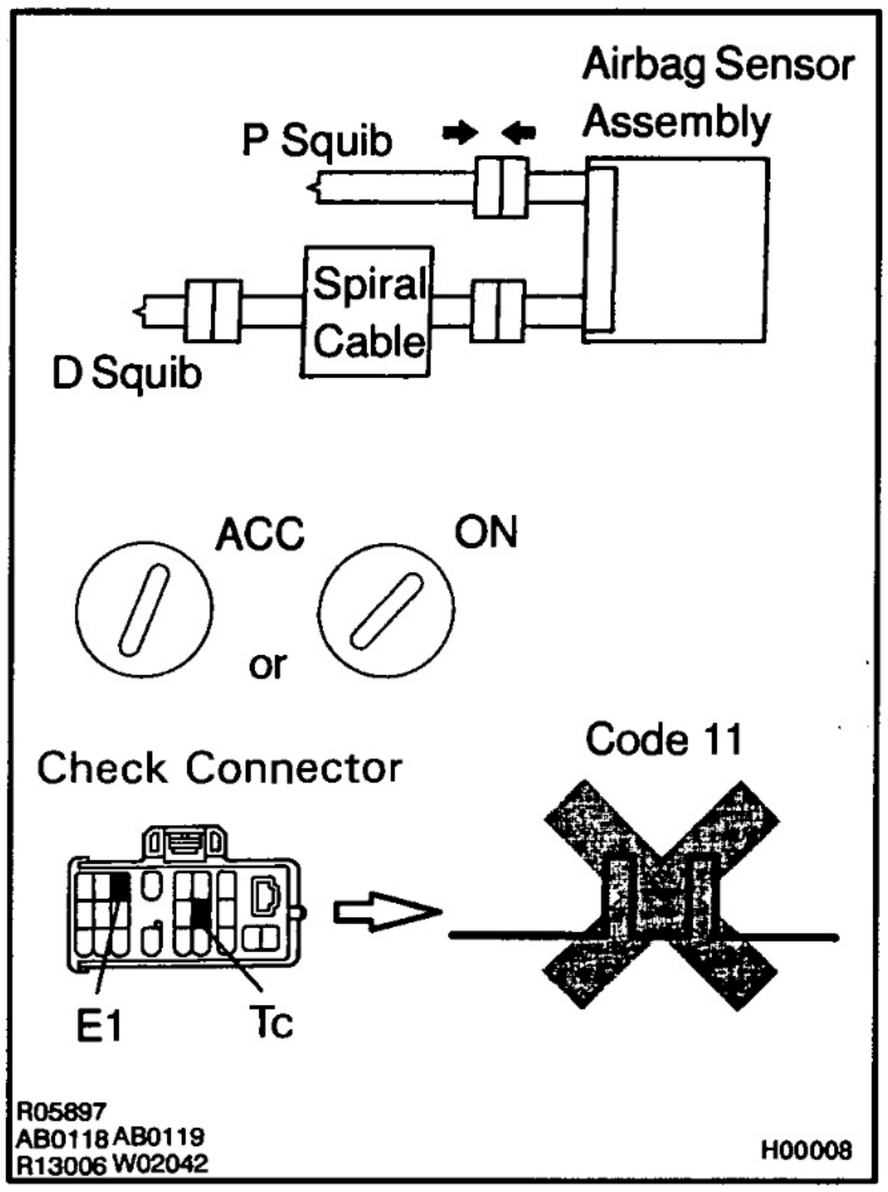

PREPARATION:

(a) Turn the ignition switch to LOCK.
(b) Disconnect the negative (−) terminal cable from the battery, and wait at least 90 seconds.
(c) Connect the front passenger airbag assembly connector.
(d) Connect the negative (−) terminal cable to the battery, and wait at least 2 seconds.

CHECK:

(a) Turn the ignition switch to ACC or ON, and wait at least 20 seconds.
(b) Clear malfunction code stored in memory. (See page RS-33)
(c) Turn the ignition switch to LOCK, and wait at least 20 seconds.
(d) Turn the ignition switch to ACC or ON, and wait at least 20 seconds.
(e) Using SST, connect terminals Tc and E1 of check connector.
SST 09843 – 18020
(f) Check DTC.

OK:

DTC 11 is not output.

HINT:
Codes other than code 11 may be output at this time, but they are not relevant to this check.

NG → **Replace front passenger airbag assembly.**

OK

From the results of the above inspection, the malfunctioning part can now be considered normal. To make sure of this, use the simulation method to check. If the malfunctioning part can not be detected by the simulation method, replace all SRS components including the wire harness.

RS

7	**Check spiral cable.**

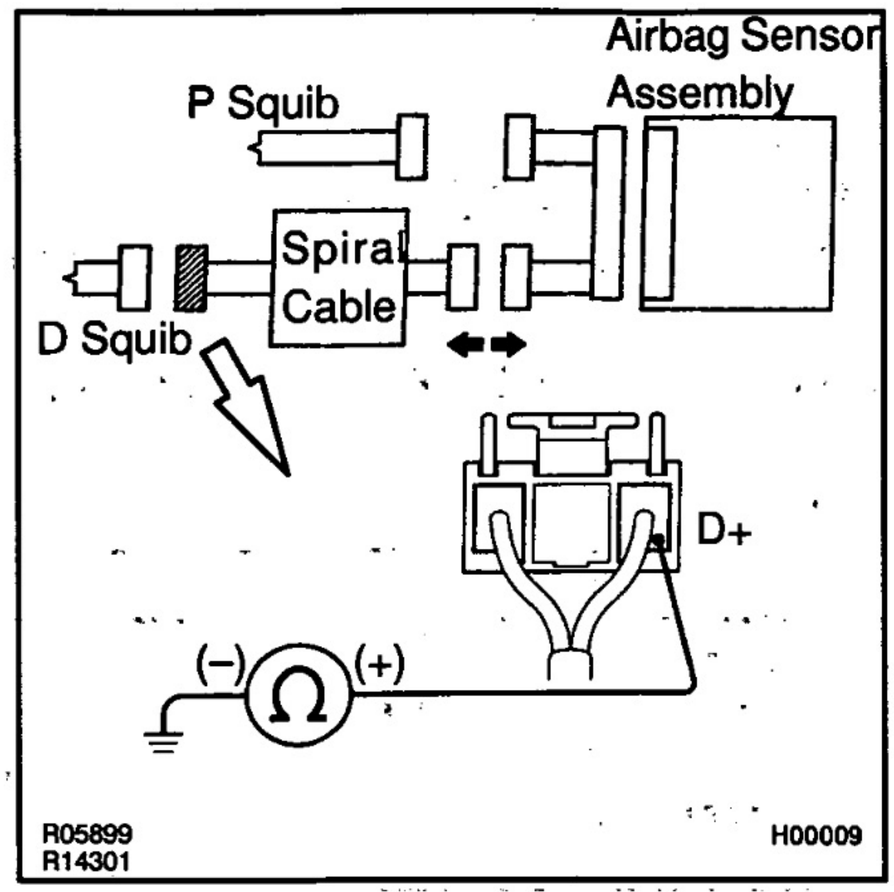

PREPARATION:

Disconnect the connector between the airbag sensor assembly and spiral cable.

CHECK:

Measure resistance between D+ on spiral cable side of connector between spiral cable and steering wheel pad and body ground.

OK:

Resistance: 1MΩ or Higher

NG → **Repair or replace spiral cable.**

OK

Repair or replace harness or connector between airbag sensor assembly and spiral cable.

DTC	12	Short in Squib Circuit (to B+)

CIRCUIT DESCRIPTION

The squib circuit consists of the airbag sensor assembly, spiral cable, steering wheel pad and front passenger airbag assembly. It causes the SRS to deploy when the SRS deployment conditions are satisfied.

For details of the function of each components, see page FUNCTION OF COMPONENTS on page RS – 4.

DTC 12 is recorded when a B+ short is detected in the squib circuit.

DTC No.	DTC Detecting Condition	Trouble Area
12	• Short circuit in squib wire harness (to B+) • Squib malfunction • Spiral cable malfunction • Airbag sensor assembly malfunction	• Steering wheel pad (D squib) • Front passenger airbag assembly (P squib) • Spiral cable • Airbag sensor assembly • Wire harness

WIRING DIAGRAM

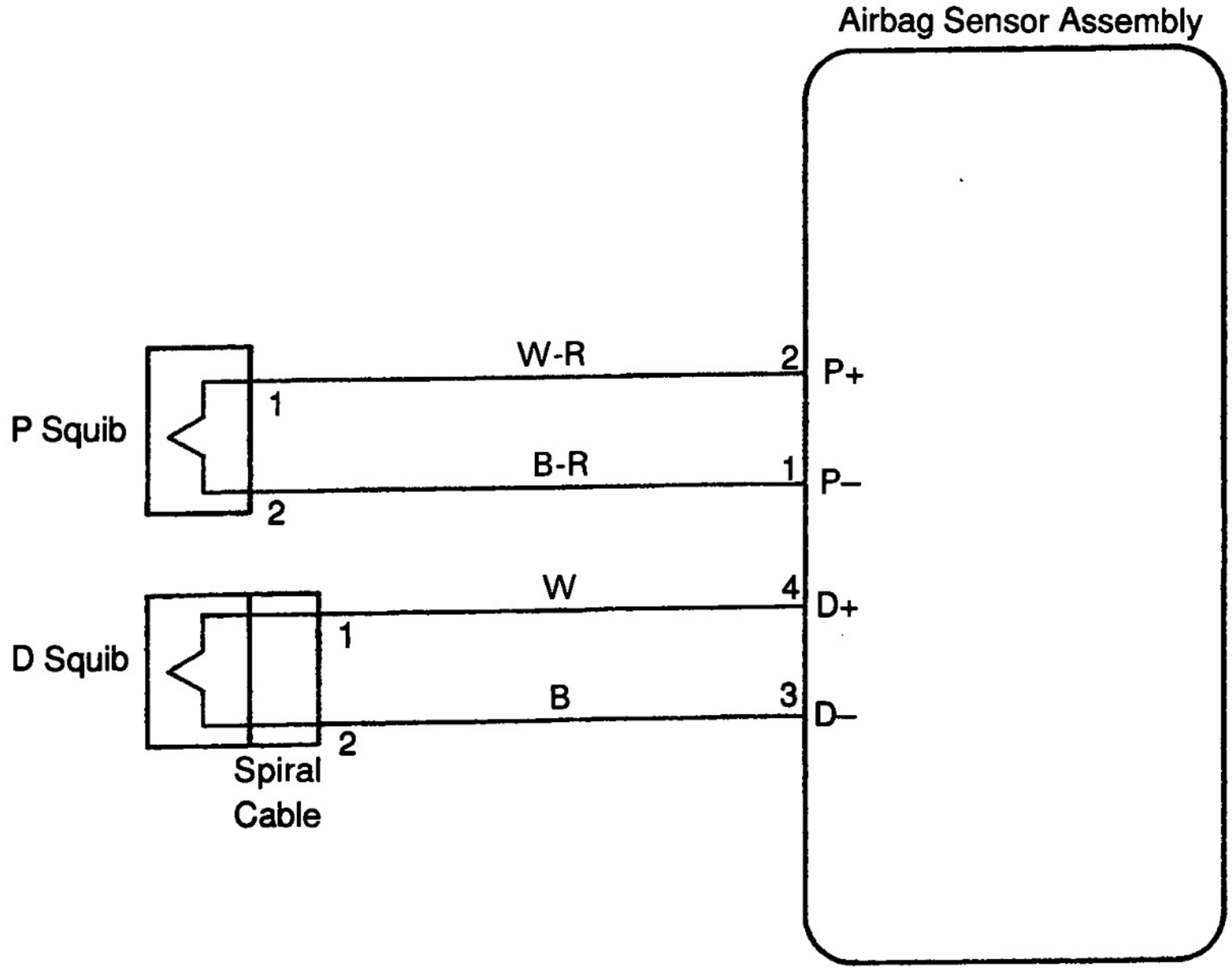

INSPECTION PROCEDURE

1	**Preparation. (See step "1" on page RS-38)**

2	**Check D squib circuit.**

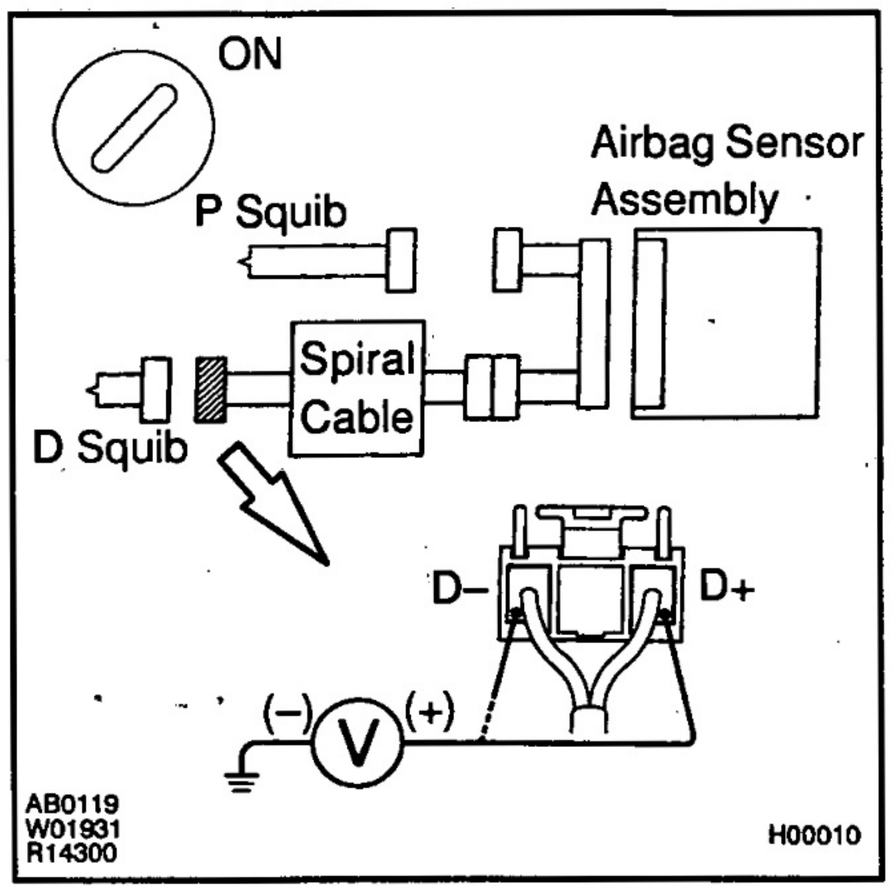

CHECK:

For the connector (on the spiral cable side) between the spiral cable and steering wheel pad, measure the voltage between D+, D– and body ground.

OK:

Voltage: 0 V

RS

NG → **Go to step " 7 ".**

OK

3	**Check P squib circuit.**

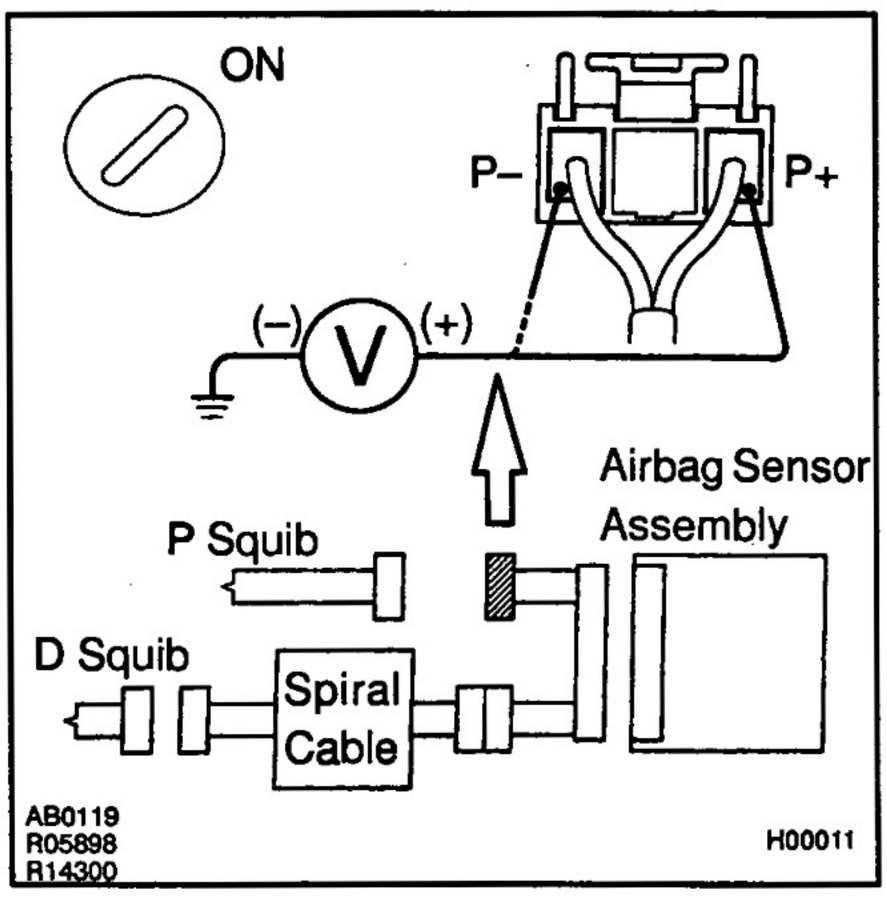

CHECK:

For the connector (on the airbag sensor assembly side) between airbag sensor assembly and front passenger airbag assembly, measure the voltage between P+, P– and body ground.

OK:

Voltage: 0V

NG → **Repair or replace harness or connector between the airbag sensor assembly and front passenger airbag assembly.**

OK

4	**Check airbag sensor assembly.**

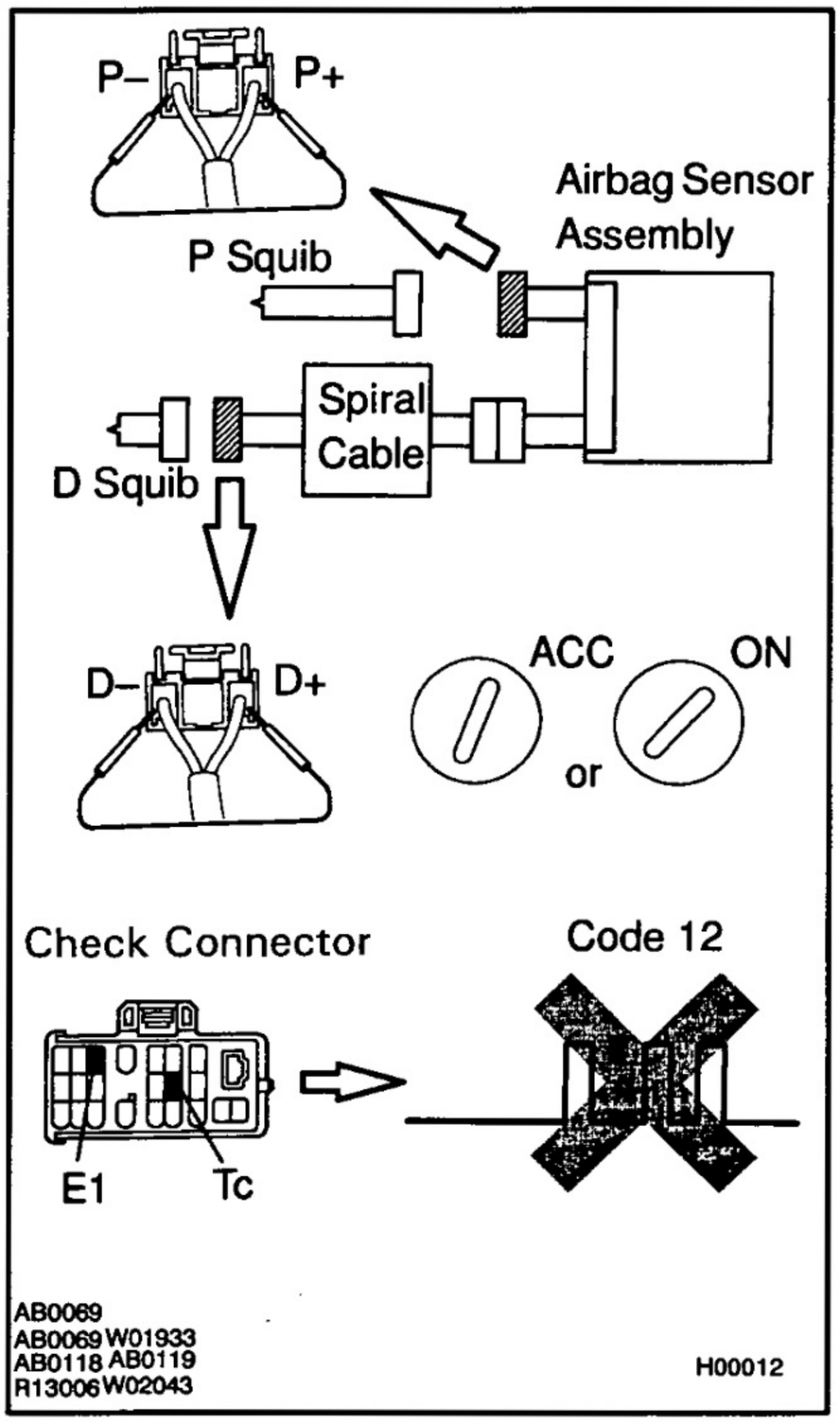

PREPARATION:

(a) Connect the connector to the airbag sensor assembly.
(b) Using a service wire, connect D_+, and D_- on spiral cable side of the connector between the spiral cable and steering wheel pad.
(c) Using a service wire, connect P_+, and P_- on airbag sensor assembly side of the connector between the airbag sensor assembly and front passenger airbag assembly.
(d) Connect negative (–) terminal cable to battery, and wait at least 2 seconds.

CHECK:

(a) Turn the ignition switch to ACC or ON and wait at least 20 seconds.
(b) Clear malfunction code stored in memory.
(See page RS-33)
(c) Turn the ignition switch to LOCK, and wait at least 20 seconds.
(d) Turn the ignition switch to ACC or ON, and wait at least 20 seconds.
(e) Using SST, connect terminals Tc and E1 of check connector.
SST 09843 – 18020
(f) Check DTC.

OK:

DTC 12 is not output.

HINT: Codes other than code 12 may be output at this time, but they are not relevant to this check.

NG → **Replace airbag sensor assembly.**

OK

5	**Check D squib.**

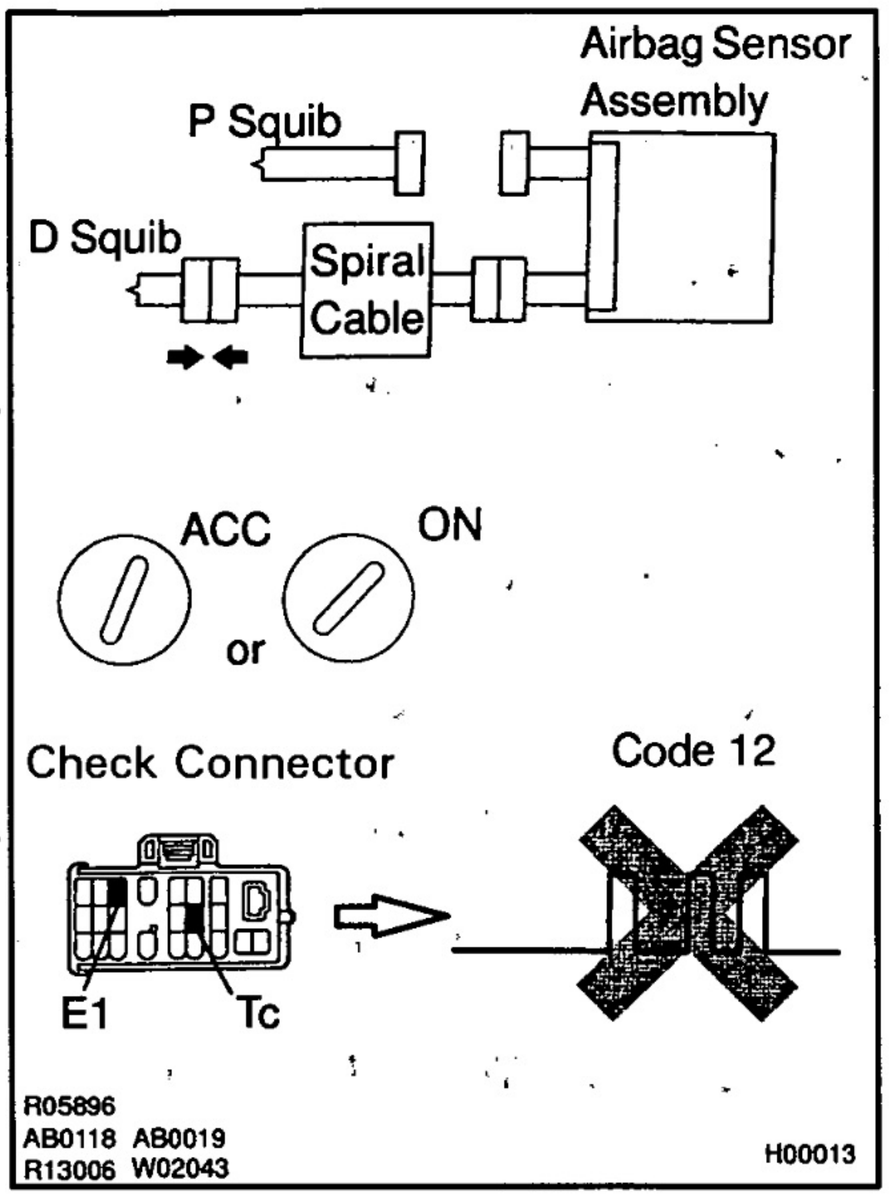

PREPARATION:

(a) Turn the ignition switch to LOCK.
(b) Disconnect the negative (−) terminal cable from the battery, and wait at least 90 seconds.
(c) Connect the steering wheel pad connector.
(d) Connect the negative (−) terminal cable to the battery, and wait at least 2 seconds.

CHECK:

(a) Turn the ignition switch to ACC or ON, and wait at least 20 seconds.
(b) Clear malfunction code stored in memory.
(See page RS-33)
(c) Turn the ignition switch to LOCK, and wait at least 20 seconds.
(d) Turn the ignition switch to ACC or ON, and wait at least 20 seconds.
(e) Using SST, connect terminals Tc and E1 of check connector.
SST 09843−18020
(f) Check DTC.

OK:

DTC 12 is not output.

HINT: Codes other than code 12 may be output at this time, but they are not relevant to this check.

NG → **Replace steering wheel pad.**

OK

RS

6	**Check P squib.**

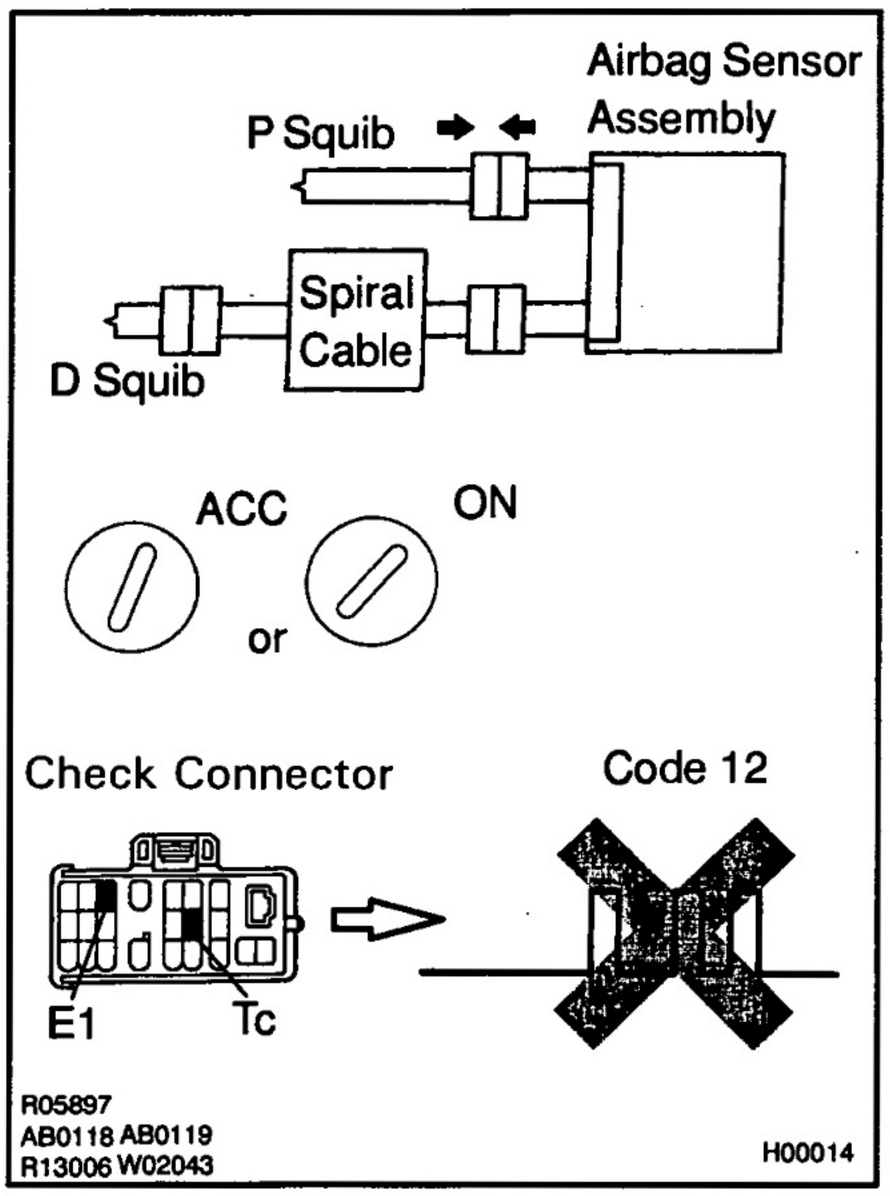

PREPARATION:

(a) Turn the ignition switch to LOCK.
(b) Disconnect the negative (−) terminal cable from the battery, and wait at least 90 seconds.
(c) Connect the front passenger airbag assembly connector.
(d) Connect the negative (−) terminal cable to the battery, and wait at least 2 seconds.

CHECK:

(a) Turn the ignition switch to ACC or ON, and wait at least 20 seconds.
(b) Clear malfunction code stored in memory.
(See page RS-33)
(c) Turn the ignition switch to LOCK, and wait at least 20 seconds.
(d) Turn the ignition switch to ACC or ON, and wait at least 20 seconds.
(e) Using SST, connect terminals Tc and E1 of check connector.
SST 09843 – 18020
(f) Check DTC.

OK:

DTC 12 is not output.

HINT: Codes other than code 12 may be output at this time, but they are not relevant to this check.

NG → **Replace front passenger airbag assembly.**

OK

From the results of the above inspection, the malfunctioning part can now be considered normal. To make sure of this, use the simulation method to check.

7	**Check spiral cable.**

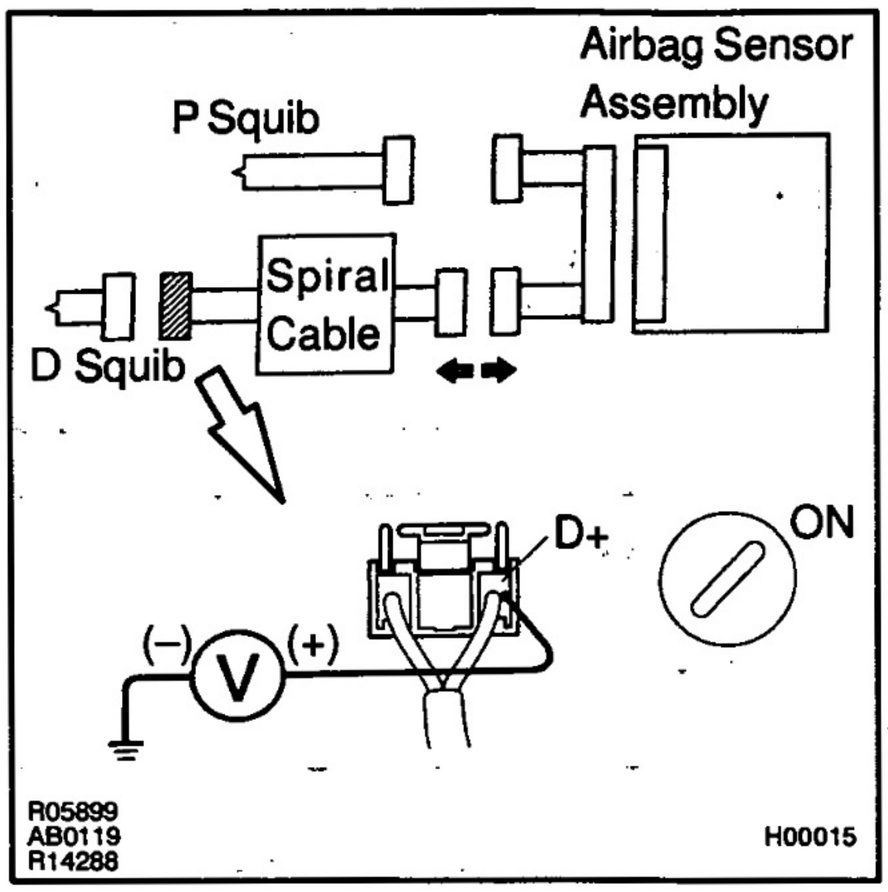

PREPARATION:

(a) Turn the ignition switch to LOCK.

(b) Disconnect the connector between the airbag sensor assembly and spiral cable.

(c) Turn the ignition switch ON.

CHECK:

Measure voltage at D+ on spiral cable side of connector between spiral cable and steering wheel pad and body ground.

OK:

Voltage: 0 V

NG → **Repair or replace spiral cable.**

OK

Repair or replace harness or connector between airbag sensor assembly and spiral cable.

DTC	14	Open in D Squib Circuit

CIRCUIT DESCRIPTION

The D squib circuit consists of the airbag sensor assembly, spiral cable and steering wheel pad. It causes the airbag to deploy when the airbag deployment conditions are satisfied.
For details of the function of each components, see FUNCTION OF COMPONENTS on page RS-4.
DTC 14 is recorded when an open is detected in the D squib circuit.

DTC No.	DTC Detecting Condition	Trouble Area
14	• Open circuit in D+ wire harness or D– wire harness of squib • D squib malfunction • Spiral cable malfunction • Airbag sensor assembly malfunction	• Steering wheel pad (D squib) • Spiral cable • Airbag sensor assembly • Wire harness

WIRING DIAGRAM

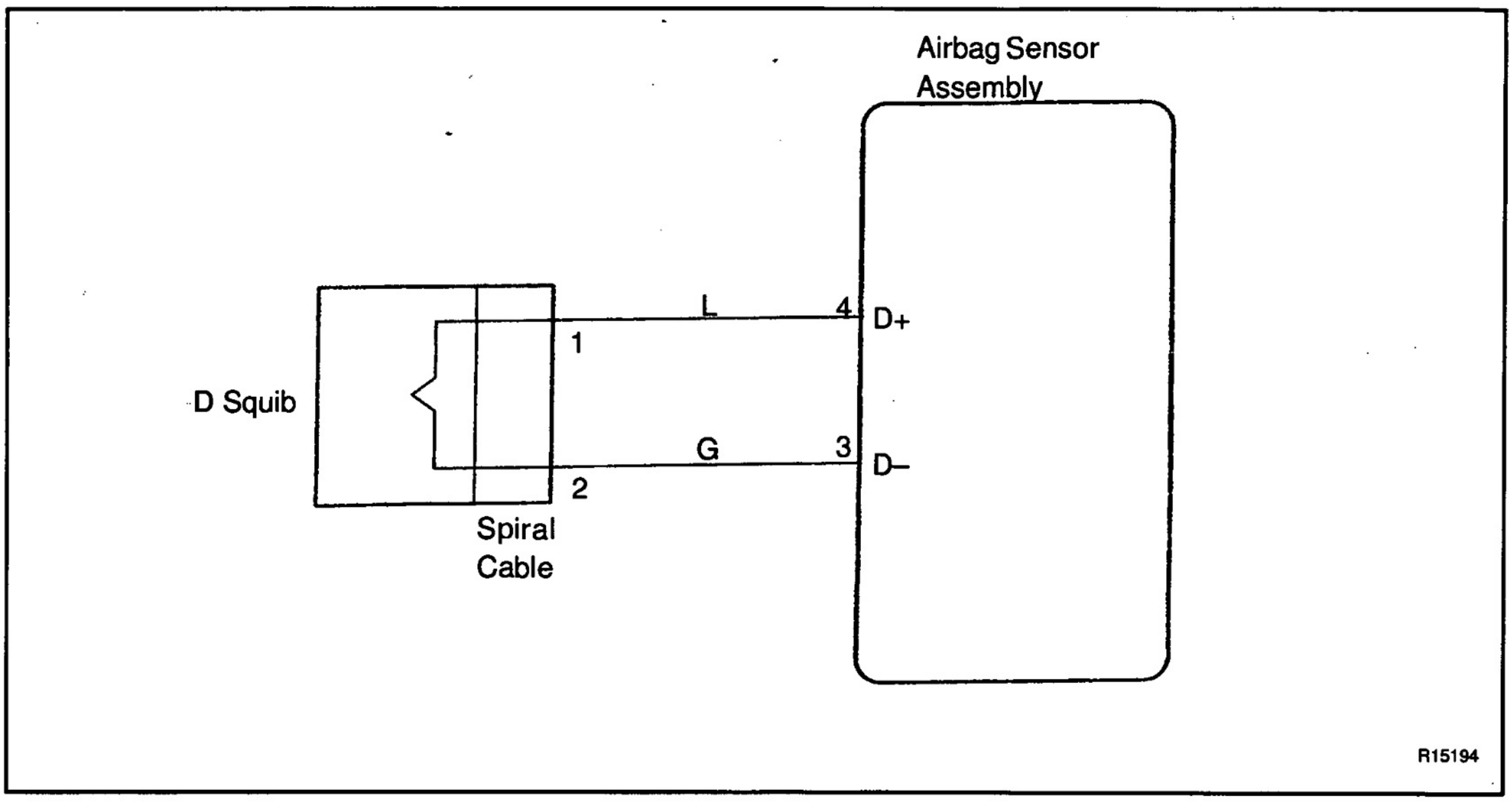

RS

INSPECTION PROCEDURE

1	Preparation. (See step "1" on page RS-38)

2	**Check D squib circuit.**

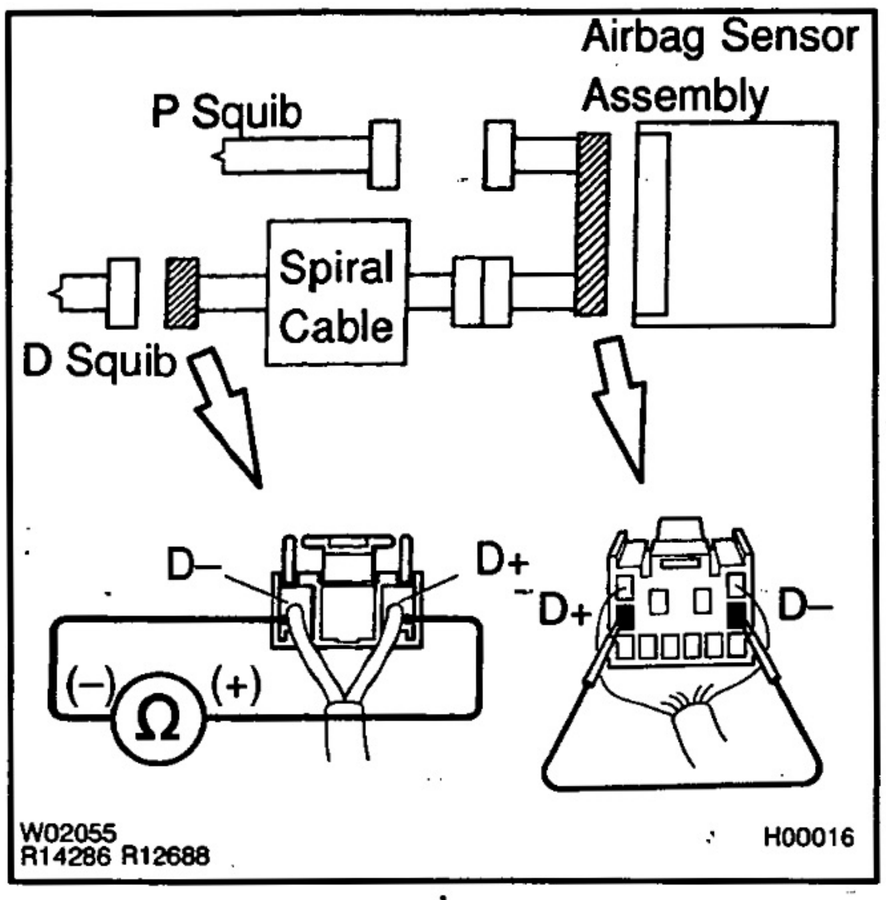

PREPARATION:

Using a service wire, connect D+ and D– on airbag sensor assembly connector.

CHECK:

For the connector (on the spiral cable side) between the spiral cable and steering wheel pad, measure the resistance between D+ and D–.

OK:

Resistance: Below 1 Ω

NG → **Go to step " 5 ".**

OK

3	**Check airbag sensor assembly.**

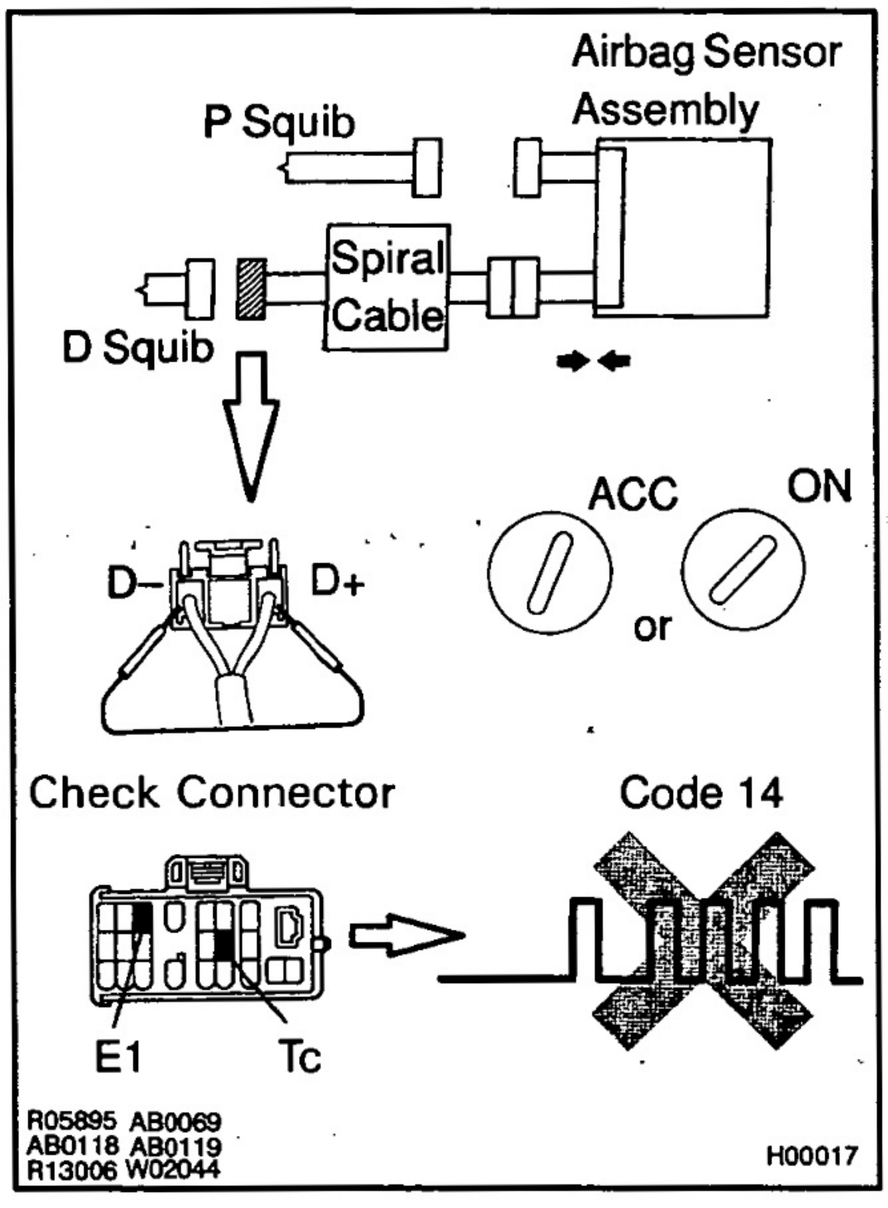

PREPARATION:

(a) Connect the connector to the airbag sensor assembly.

(b) Using a service wire, connect D_+ and D_- on spiral cable side of the connector between the spiral cable and steering wheel pad.

(c) Connect the negative (–) terminal cable to the battery, and wait at least 2 seconds.

CHECK:

(a) Turn the ignition switch to ACC or ON and wait at least 20 seconds.

(b) Clear malfunction code stored in memory.
(See page RS-33)

(c) Turn the ignition switch to LOCK, and wait at least 20 seconds.

(d) Turn the ignition switch to ACC or ON, and wait at least 20 seconds.

(e) Using SST, connect terminals Tc and E1 of check connector.
SST 09843 – 18020

(f) Check DTC.

OK:

DTC 14 is not output.

HINT:
Codes other than code 14 may be output at this time, but they are not relevant to this check.

NG → **Replace airbag sensor assembly.**

OK

4	**Check D squib.**

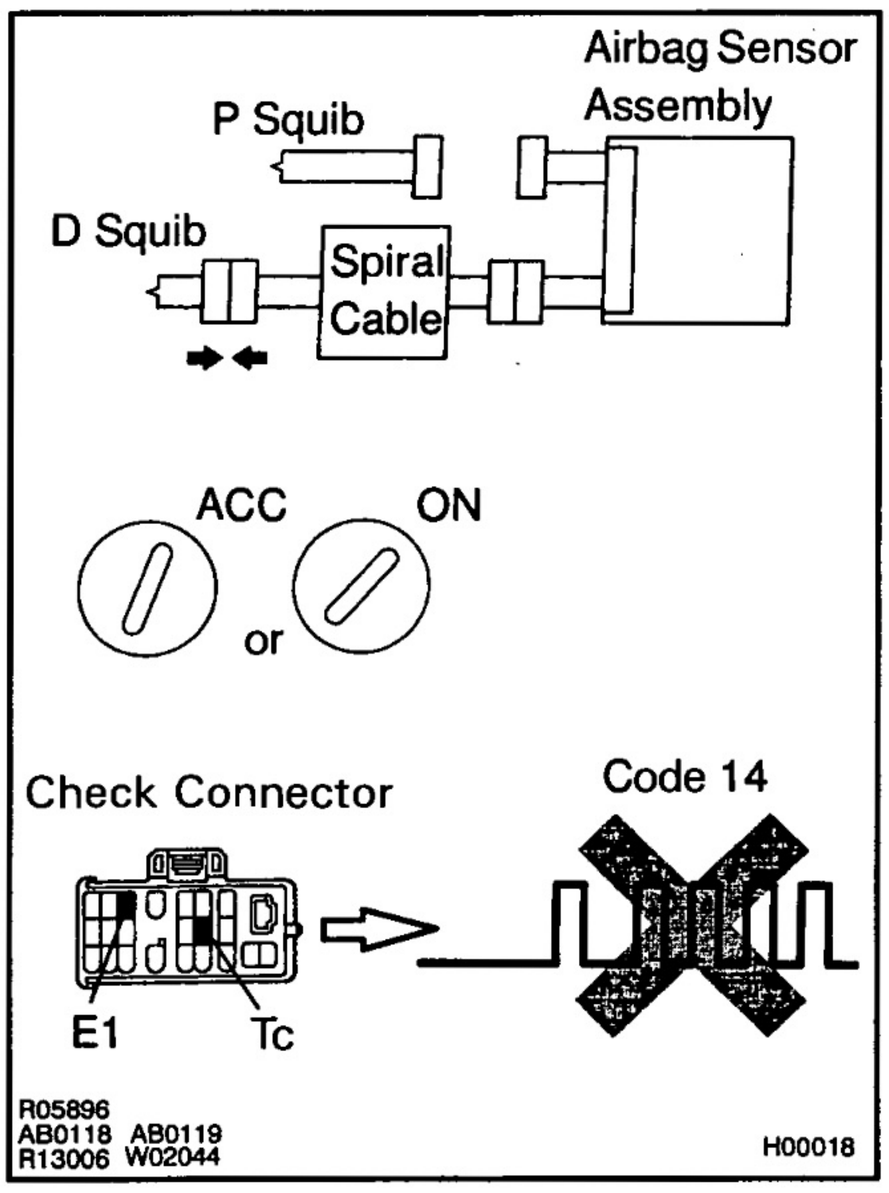

PREPARATION:

(a) Turn the ignition switch to LOCK.
(b) Disconnect the negative (–) terminal cable from the battery, and wait at least 90 seconds.
(c) Connect the steering wheel pad connector.
(d) Connect the negative (–) terminal cable to the battery, and wait at least 2 seconds.

CHECK:

(a) Turn the ignition switch to ACC or ON, and wait at least 20 seconds.
(b) Clear malfunction code stored in memory.
(See page RS-33)
(c) Turn the ignition switch to LOCK, and wait at least 20 seconds.
(d) Turn the ignition switch to ACC or ON, and wait at least 20 seconds.
(e) Using SST, connect terminals Tc and E1 of check connector.
SST 09843 – 18020
(f) Check DTC.

OK:

DTC 14 is not output.

HINT:
Codes other than code 14 may be output at this time, but they are not relevant to this check.

NG → **Replace steering wheel pad.**

OK

From the results of the above inspection, the malfunctioning part can now be considered normal. To make sure of this, use the simulation method to check.

5	Check spiral cable.

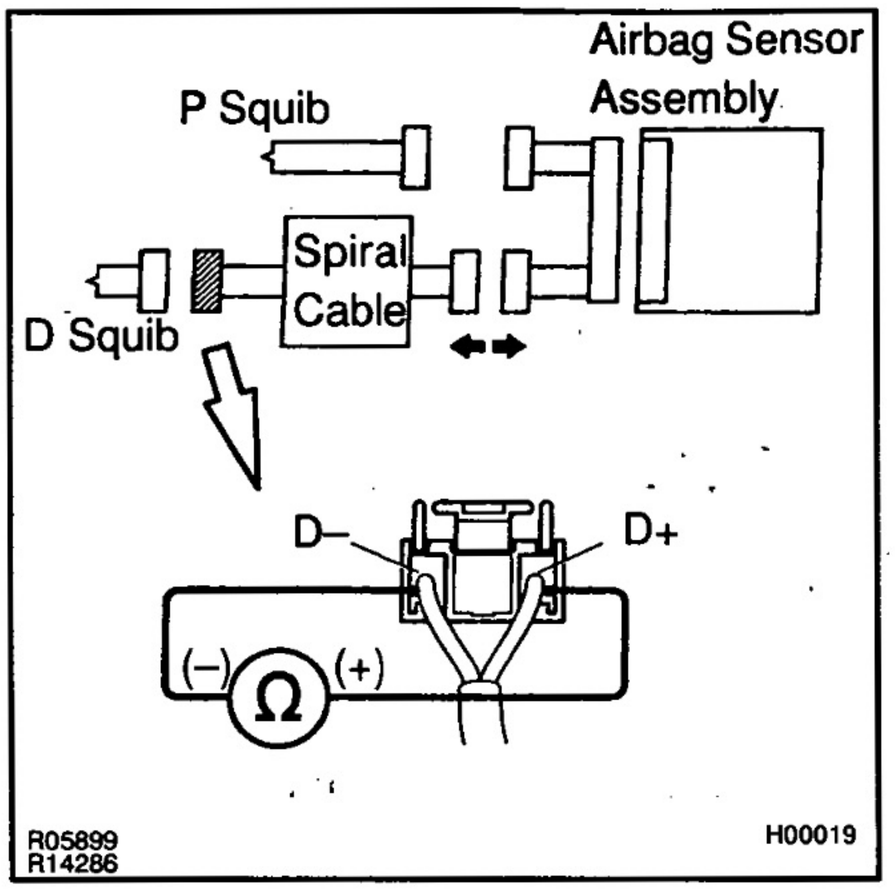

PREPARATION:

Disconnect connector between airbag sensor assembly and spiral cable.

CHECK:

For the connector (on the spiral cable side) between the spiral cable and steering wheel pad, measure the resistance between D_+ and D_-.

OK:

Resistance: Below 1 Ω

NG → **Repair or replace spiral cable.**

OK

6	Check harness between airbag sensor assembly and spiral cable.

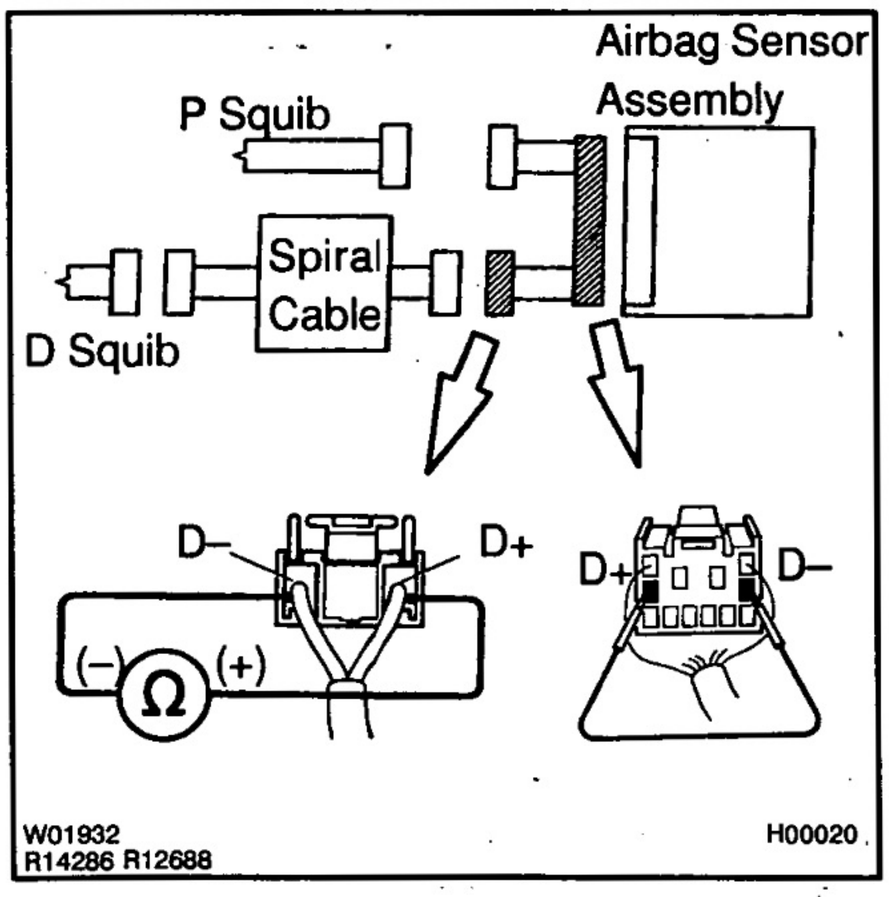

PREPARATION:

Using a service wire, connect D_+ and D_- on the airbag sensor assembly connector.

CHECK:

For the connector (on the airbag sensor assembly side) between the airbag sensor assembly and spiral cable, measure the resistance D+ and D–.

OK:

Resistance: Below 1 Ω

NG → **Repair or replace harness or connector between airbag sensor assembly and spiral cable.**

OK

From the results of the above inspection, the malfunctioning part can now be considered normal. To make sure of this, use the simulation method to check.

DTC	31	Airbag Sensor Assembly Malfunction

CIRCUIT DESCRIPTION

The airbag sensor assembly consists of a airbag sensor, safing sensor, drive circuit, diagnosis circuit and ignition control, etc.
It receives signals from the airbag sensors, judges whether or not the SRS must be activated, and diagnosis system malfunction.
DTC 31 is recorded when occurrence of a malfunction in the airbag sensor assembly is detected.

DTC No.	DTC Detecting Condition	Trouble Area
31	• Airbag sensor assembly malfunction	• Airbag sensor assembly

INSPECTION PROCEDURE

HINT: When a malfunction code other than code 31 is displayed at the same time, first repair the malfunction indicated by the malfunction code other than code 31.

1	**Preparation. (See step "1" on page RS-38)**

RS

2	**Check voltage at IG2 and ACC of airbag sensor assembly**

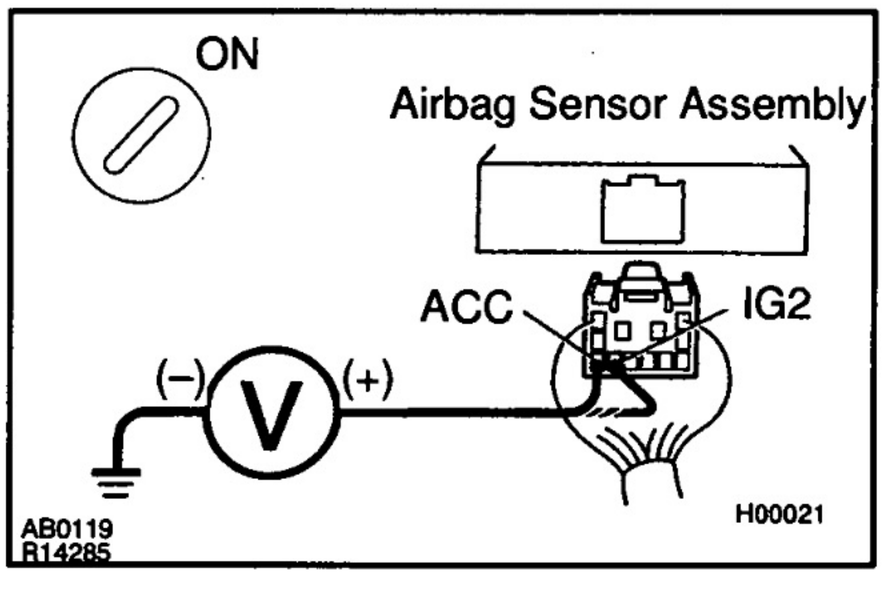

PREPARATION:
Turn the ignition switch ON.
CHECK:
Measure voltage between the terminals IG2 and ACC of airbag sensor assembly and body ground.
OK:

Voltage: Below 16 V

NG → **Check battery and charging system. (See charging system section)**

OK

3	Is DTC 31 output again?

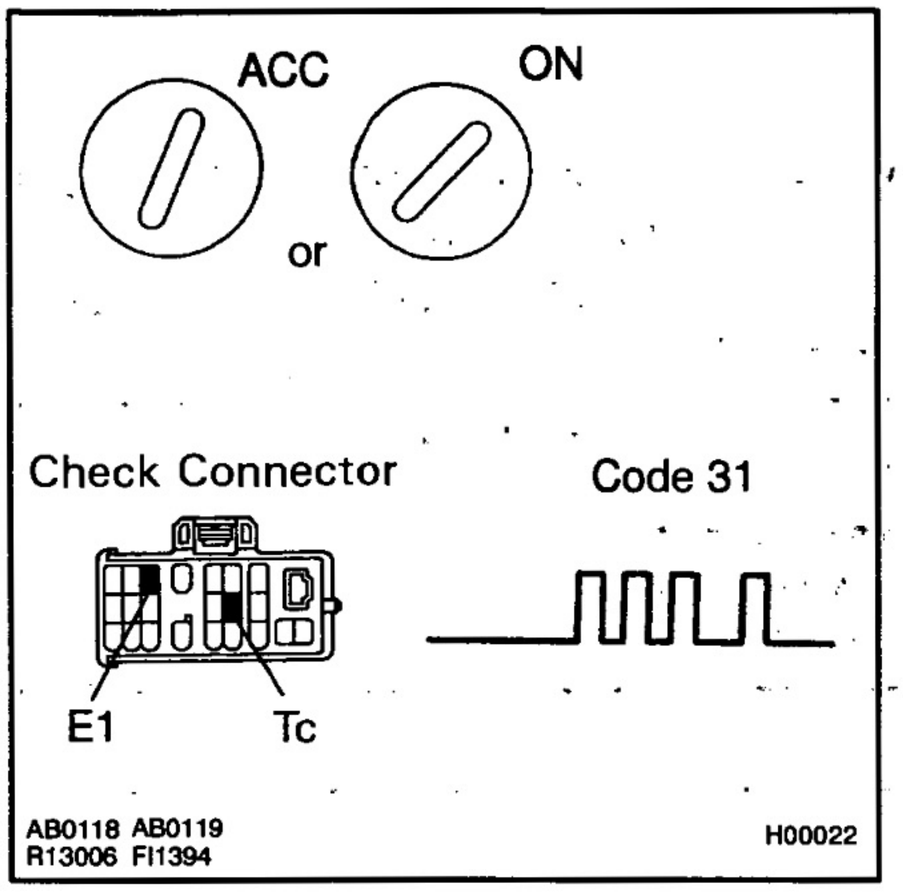

PREPARATION:

Clear malfunction code.

CHECK:

(a) Turn the ignition switch to LOCK; and wait at least 20 seconds.

(b) Turn the ignition switch to ACC or ON, and wait at least 20 seconds.

(c) Repeat operation in step (a) and (b) at least 5 times.

(d) Using SST, connect terminals Tc and E1 of check connector.
SST 09843 – 18020

(e) Check DTC.

NO → **Using simulation method, reproduce malfunction symptoms (See page IN-24)**

YES

Replace airbag sensor assembly.

RS

DTC	54	Open in P Squib Circuit

CIRCUIT DESCRIPTION

The P squib circuit consists of the airbag sensor assembly and front passenger airbag assembly. It causes the airbag to deploy when the airbag deployment conditions are satisfied.
For details of the function of each components, see FUNCTION OF COMPONENTS on page RS-4.
DTC 54 is recorded when an open is detected in the P squib circuit.

DTC No.	DTC Detecting Condition	Trouble Area
54	• Open circuit in P+ wire harness or P– wire harness of squib • P squib malfunction • Airbag sensor assembly malfunction	• Front passenger airbag assembly (P squib) • Airbag sensor assembly • Wire harness

WIRING DIAGRAM

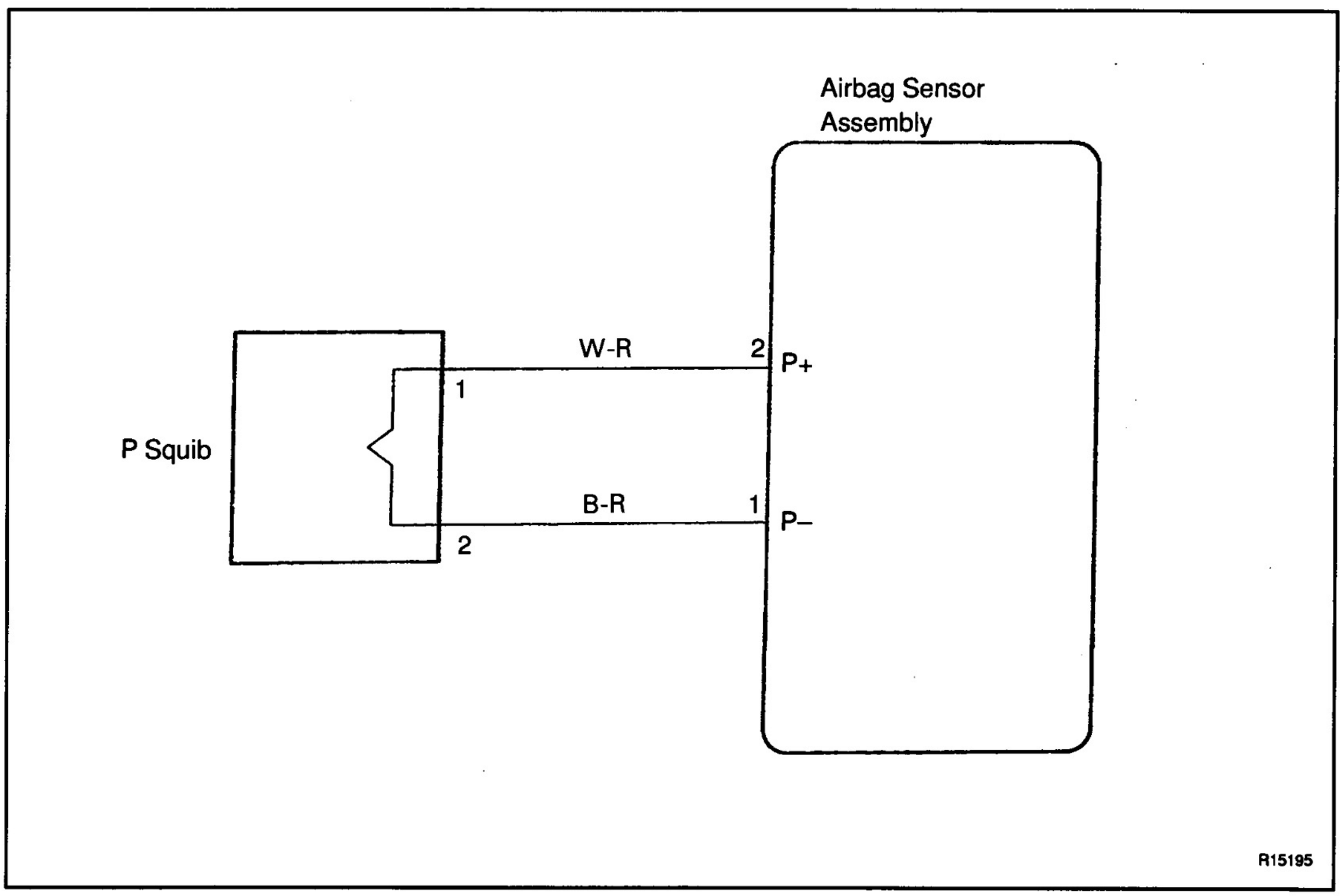

RS

INSPECTION PROCEDURE

1	Preparation. (See step ''1'' on page RS-38)

2	Check P squib circuit.

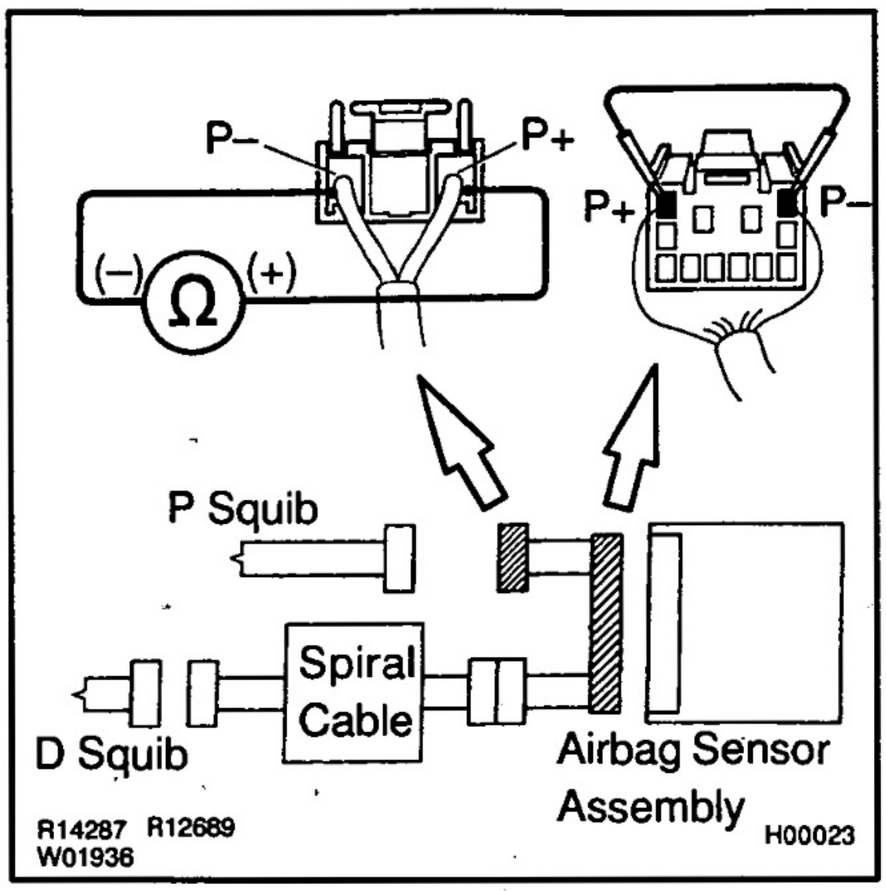

PREPARATION:

Using a service wire, connect P+ and P– on airbag sensor assembly connector.

CHECK:

For the connector (on the airbag sensor assembly side) between the airbag sensor assembly and front passenger airbag assembly measure the resistance between P+ and P–.

OK:

Resistance: Below 1 Ω

NG → **Repair or replace harness or connector between airbag sensor assembly and front passenger airbag assembly.**

OK

3	Check airbag sensor assembly.

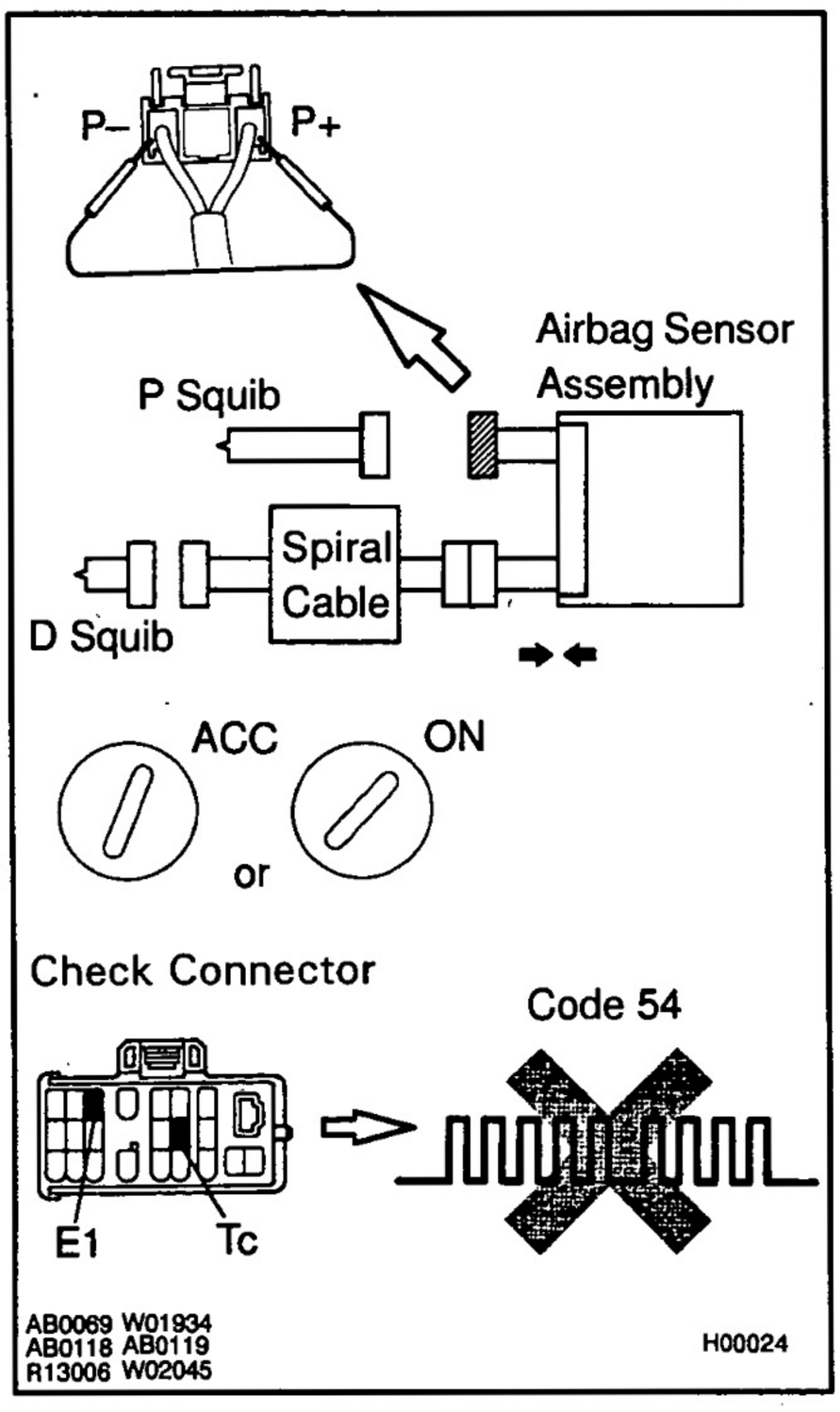

PREPARATION:

(a) Connect the connector to the airbag sensor assembly.
(b) Using a service wire, connect P_+ and P_- on airbag sensor assembly side of the connector between the airbag sensor assembly and front passenger airbag assembly.
(c) Connect negative (–) terminal cable to battery, and wait at least 2 seconds.

CHECK:

(a) Turn the ignition switch to ACC or ON and wait at least 20 seconds.
(b) Clear malfunction code stored in memory. (See page RS-33)
(c) Turn the ignition switch to LOCK, and wait at least 20 seconds.
(d) Turn the ignition switch to ACC or ON, and wait at least 20 seconds.
(e) Using SST, connect terminals Tc and E1 of check connector.
SST 09843 – 18020
(f) Check DTC.

OK:

DTC 54 is not output.

HINT:
Codes other than code 54 may be output at this time, but they are not relevant to this check.

NG → **Replace airbag sensor assembly.**

OK

4	**Check P squib.**

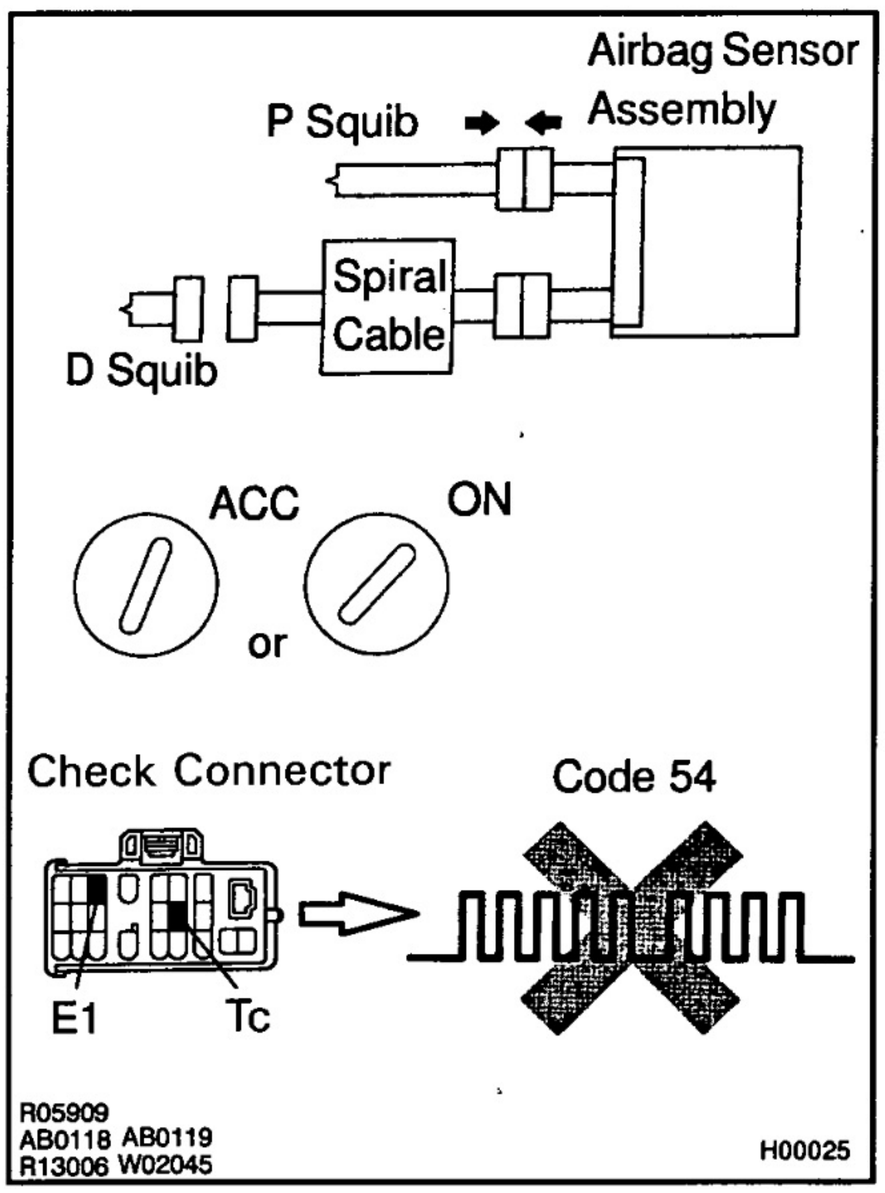

PREPARATION:

(a) Turn the ignition switch to LOCK.
(b) Disconnect the negative (−) terminal cable from the battery, and wait at least 90 seconds.
(c) Connect the front passenger airbag assembly connector.
(d) Connect the negative (−) terminal cable to the battery, and wait at least 2 seconds.

CHECK:

(a) Turn the ignition switch to ACC or ON and wait at least 20 seconds.
(b) Clear malfunction code stored in memory.
(See page RS-33)
(c) Turn the ignition switch to LOCK, and wait at least 20 seconds.
(d) Turn the ignition switch to ACC or ON, and wait at least 20 seconds.
(e) Using SST, connect terminals Tc and E1 of check connector.
SST 09843 – 18020
(f) Check DTC.

OK:

DTC 54 is not output.

HINT:
Codes other than code 54 may be output at this time, but they are not relevant to this check.

NG → **Replace front passenger airbag assembly.**

OK

From the results of the above inspection, the malfunctioning part can now be considered normal. To make sure of this, use the simulation method to check.

RS

SRS Warning Light Circuit Malfunction (Always lit up, when ignition switch is in LOCK position.)

CIRCUIT DESCRIPTION

The SRS warning light is located on the combination meter.
When the SRS is normal, the SRS warning light lights up for approx. 6 seconds after the ignition switch is turned from the LOCK position to ACC or ON position, and then turns off automatically.
If there is a malfunction in the SRS, the SRS warning light lights up to inform the driver of the abnormality.
When terminals Tc and E1 of the check connector are connected, the DTC is displayed by the blinking of the SRS warning light.

WIRING DIAGRAM

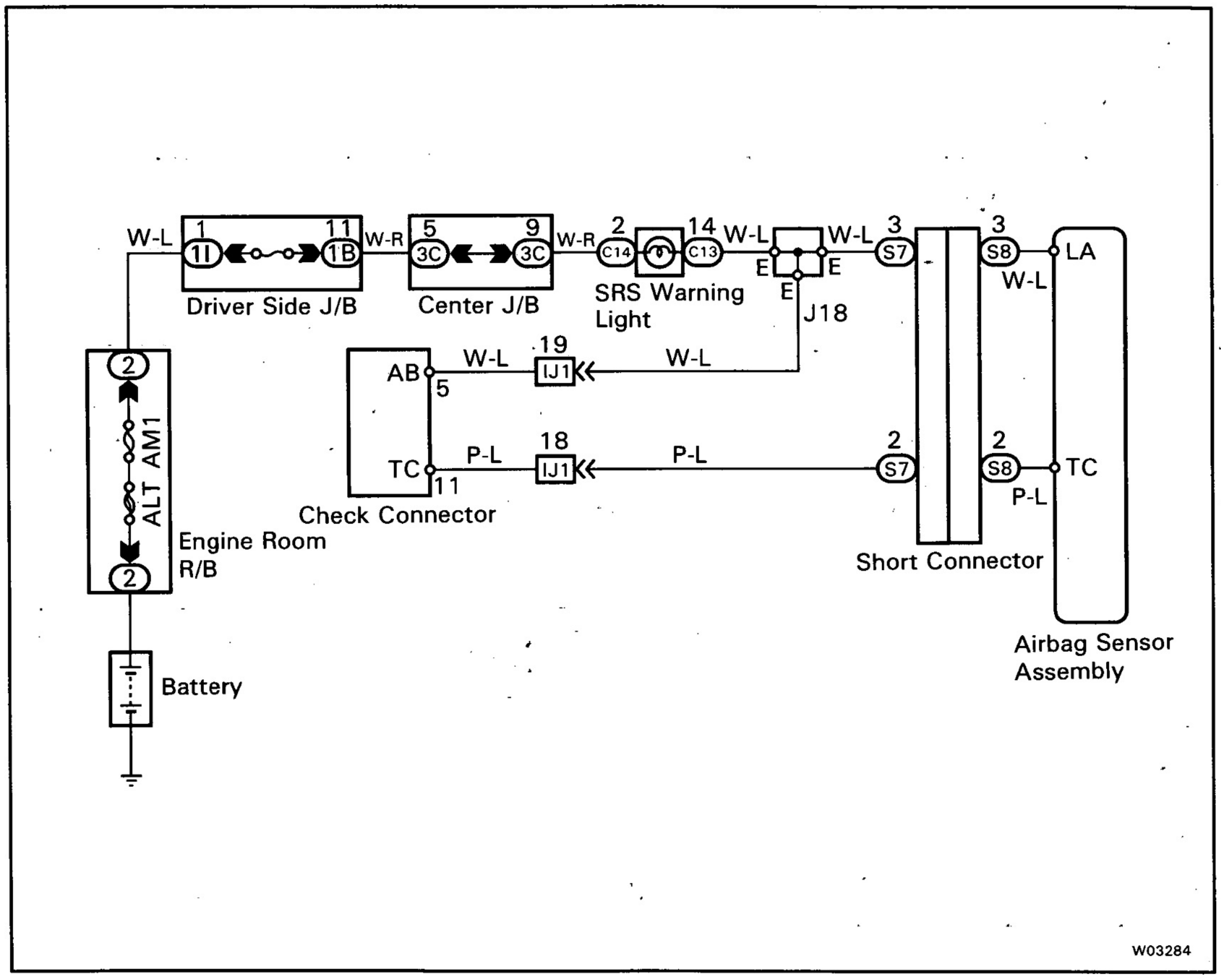

RS

INSPECTION PROCEDURE

1	**Preparation.**

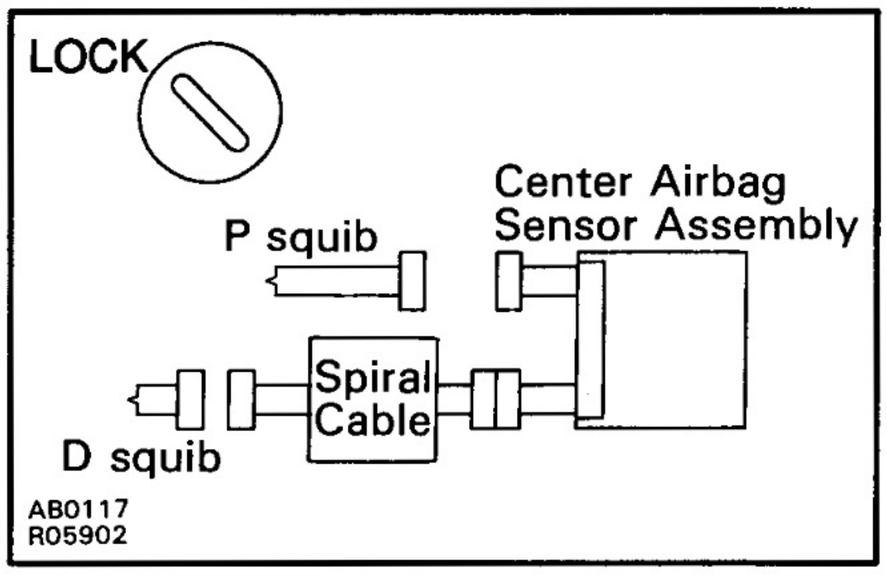

PREPARATION:

(a) Disconnect the negative (−) terminal cable from the battery, and wait at least 90 seconds.
(b) Remove steering wheel pad. (See SR section)
(c) Disconnect the connector of front passenger airbag assembly. (See page RS-13)

CAUTION:

Store the steering wheel pad with the front surface facing upward.

2	**Does SRS warning light turn off?**

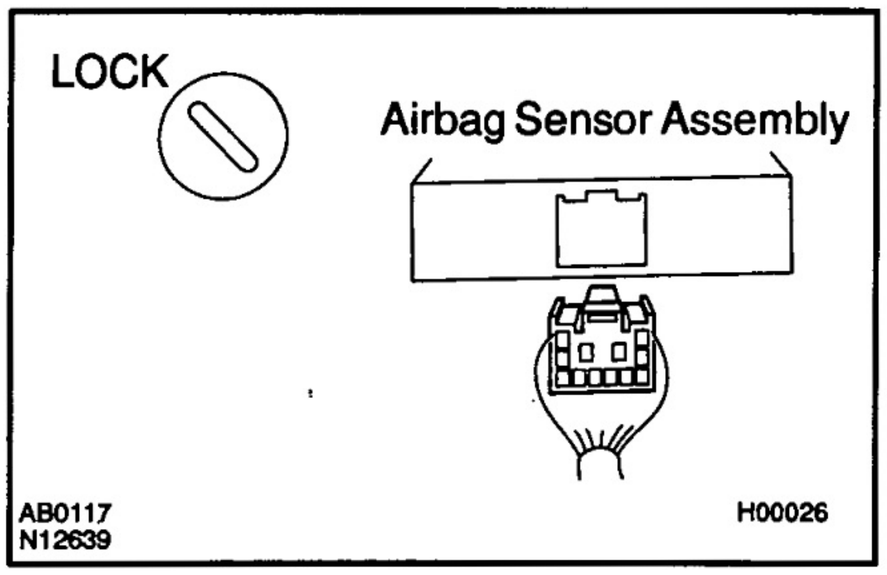

PREPARATION:

(a) Turn the ignition switch to LOCK.
(b) Disconnect the negative (−) terminal cable from the battery, and wait at least 90 seconds.
(c) Disconnect the airbag sensor assembly connector.
(d) Connect the negative (−) terminal cable to battery.

CHECK:

Check operation of SRS warning light.

NO → **Check SRS warning light circuit or terminal AB circuit of check connector.**

YES

Replace airbag sensor assembly.

SRS Warning Light Circuit Malfunction (Does not light up, when ignition switch is turned to ACC or ON.)

CIRCUIT DESCRIPTION

The SRS warning light is located on the combination meter.
When the SRS is normal, the SRS warning light lights up for approx. 6 seconds after the ignition switch is turned from LOCK position to ACC or ON position, and then turns off automatically.
If there is a malfunction in the SRS, the SRS warning light lights up to inform the driver of the abnormality
When terminals Tc and E1 of the check connector are connected, the DTC is displayed by the blinking of the SRS warning light.

WIRING DIAGRAM

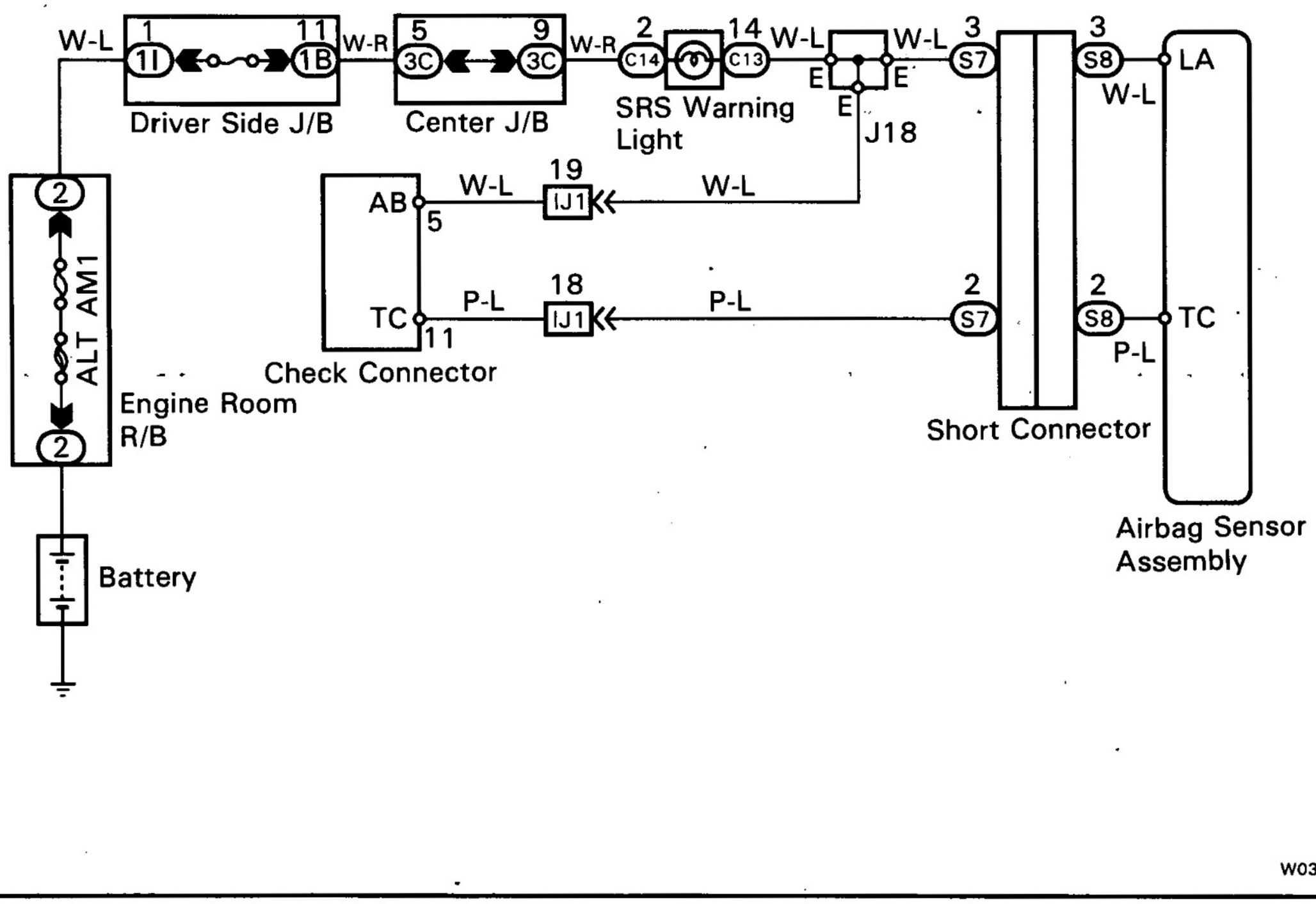

RS

INSPECTION PROCEDURE

1	**Check ECU–B Fuse.**

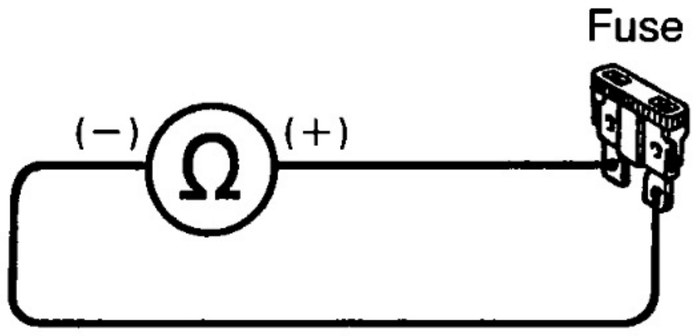

PREPARATION:
Remove ECU–B fuse.
CHECK:
Check continuity of ECU–B fuse.
OK:
Continuity
HINT:

- Fuse may be burnt out even if it appears to be OK during visual inspection.
- If fuse is OK, install it.

NG → **Go to step " 5 ".**

OK

2	**Preparation. (See step ''1'' on page RS-38)**

3	**Check SRS warning light circuit.**

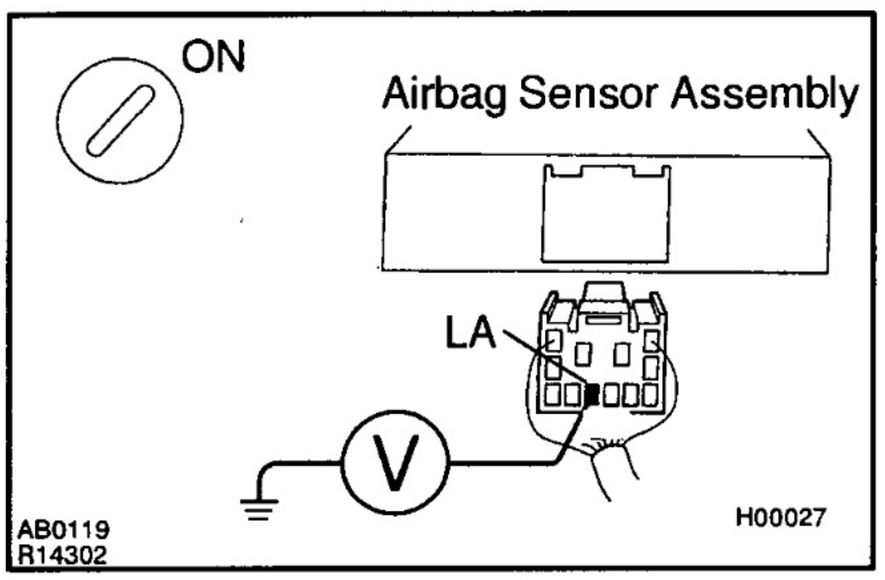

PREPARATION:
(a) Connect the negative (–) terminal cable to the battery.
(b) Turn the ignition switch to ACC or ON.
CHECK:
Measure voltage LA terminal of harness side connector of air-bag sensor assembly.
OK:
Voltage: 10 – 14 V

NG → **Check SRS warning light bulb / repair SRS warning light circuit.**

OK

4	Does SRS warning light come on?

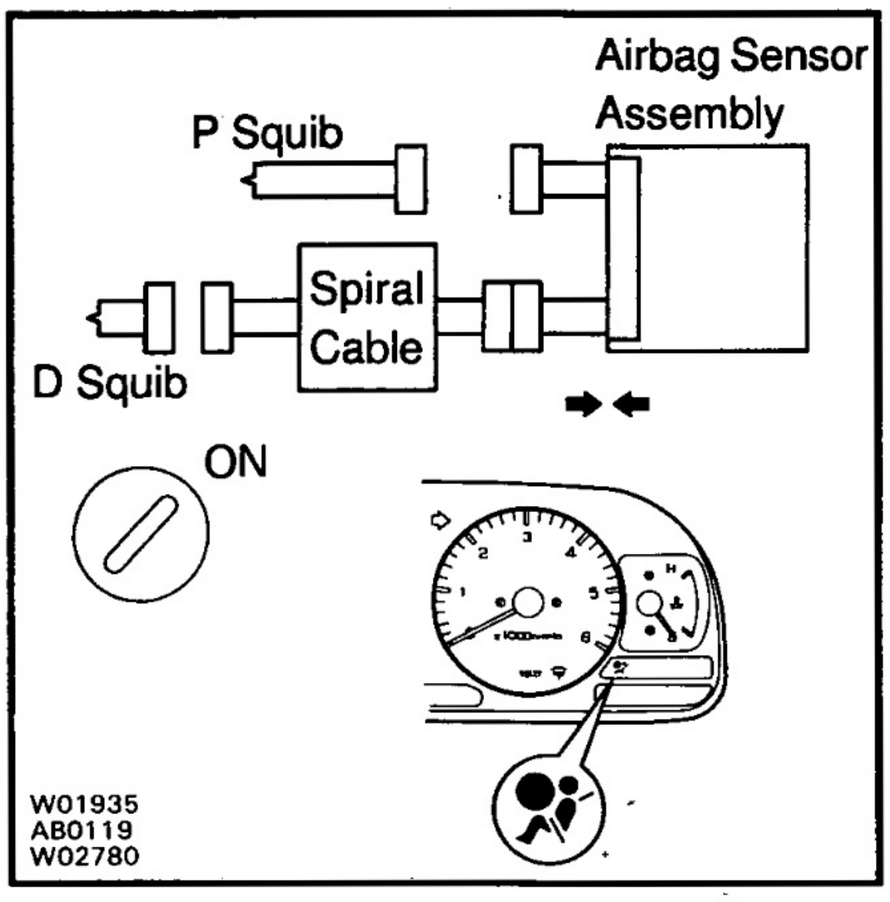

PREPARATION:

(a) Disconnect the negative (−) terminal cable from the battery.
(b) Connect the airbag sensor assembly connector.
(c) Connect the negative (−) terminal cable to the battery, and wait at least 2 seconds.
(d) Turn the ignition switch to ACC or ON.

CHECK:

Check operation of SRS warning light.

NO → **Check terminal LA of airbag sensor assembly. If normal, replace airbag sensor assembly.**

YES

From the results of the above inspection, the malfunctioning part can now be considered normal. To make sure of this, use simulation method to check.

5	Is new ECU–B fuse burnt out again?

NO → **Using simulation method, reproduce malfunction symptoms. (See page IN-24)**

YES

Check harness between ECU–B fuse and SRS warning light.

Tc Terminal Circuit

CIRCUIT DESCRIPTION

By connecting terminals Tc and E1 of the check connector the airbag sensor assembly is set in the DTC output mode. The DTCs are displayed by the blinking of the SRS warning light.

WIRING DIAGRAM

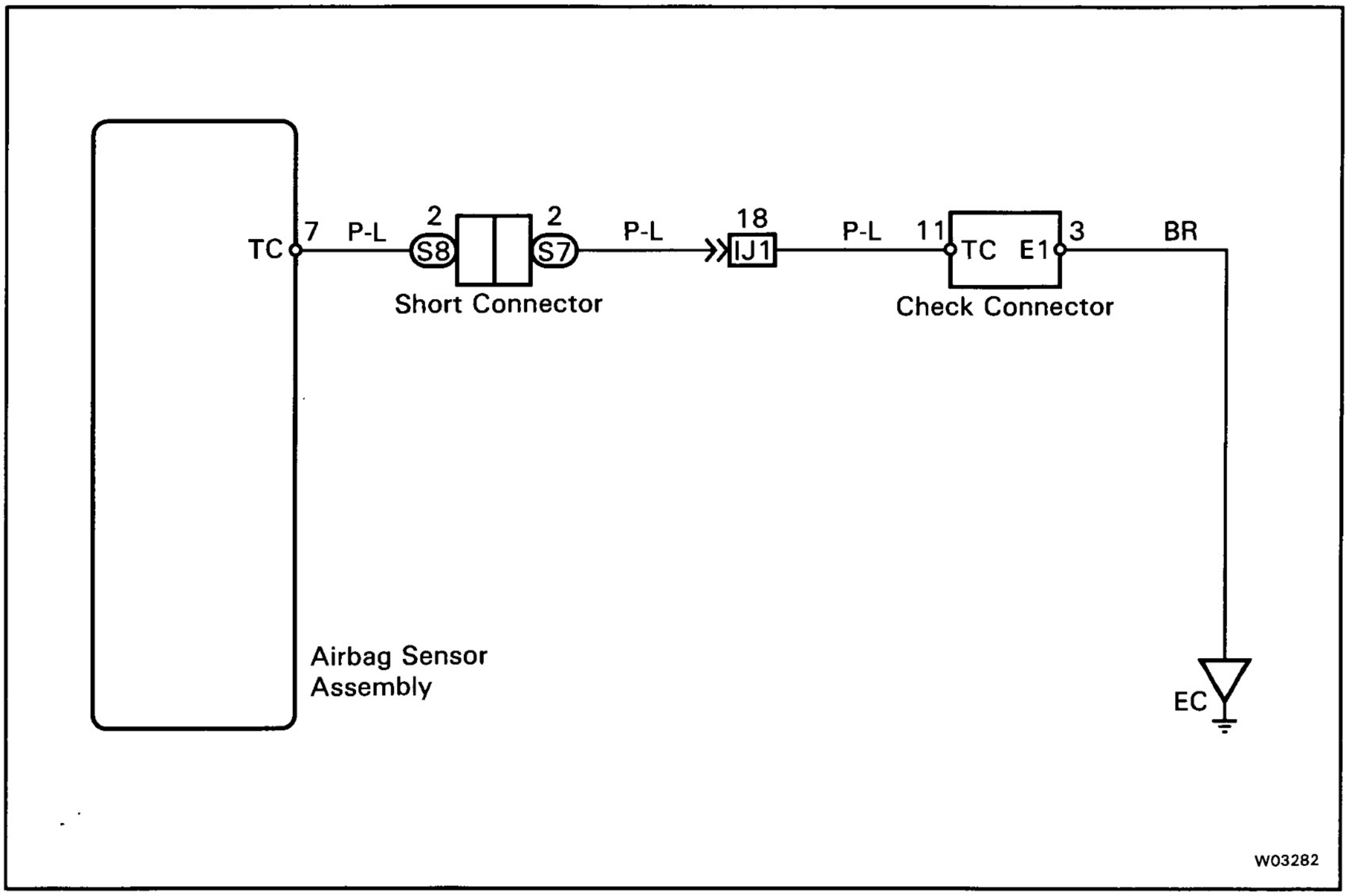

INSPECTION PROCEDURE

If the DTC is not displayed, do the following troubleshooting.

1	**Does SRS warning light up for approx. 6 seconds?**

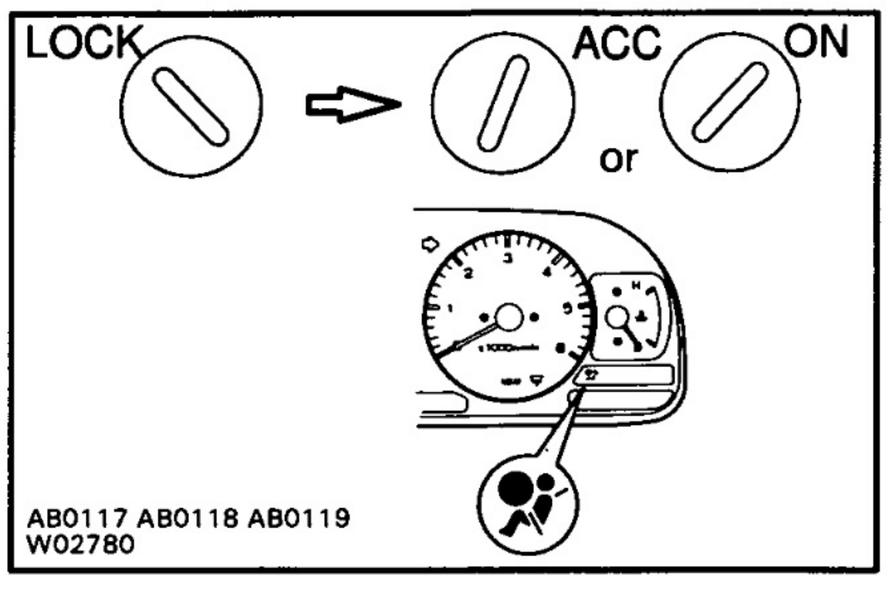

PREPARATION:

Check operation of SRS warning light after the ignition switch is turned from the LOCK position to ACC or ON position.

NO → Check SRS warning light system. (See page RS-32)

YES

2	Check voltage between terminals Tc and E1 of check connector.

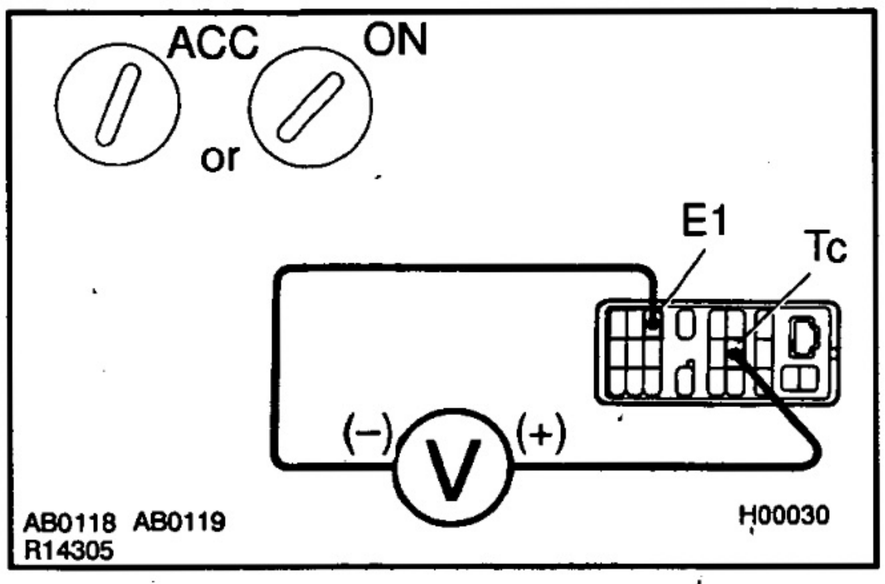

PREPARATION:

Turn the ignition switch to ACC or ON.

CHECK:

Measure voltage between terminals Tc and E1 of check connector.

OK:

Voltage; 10 – 14 V

OK → Go to step " 4 ".

NG

RS

3	Check voltage between terminals Tc of check connector and body ground.

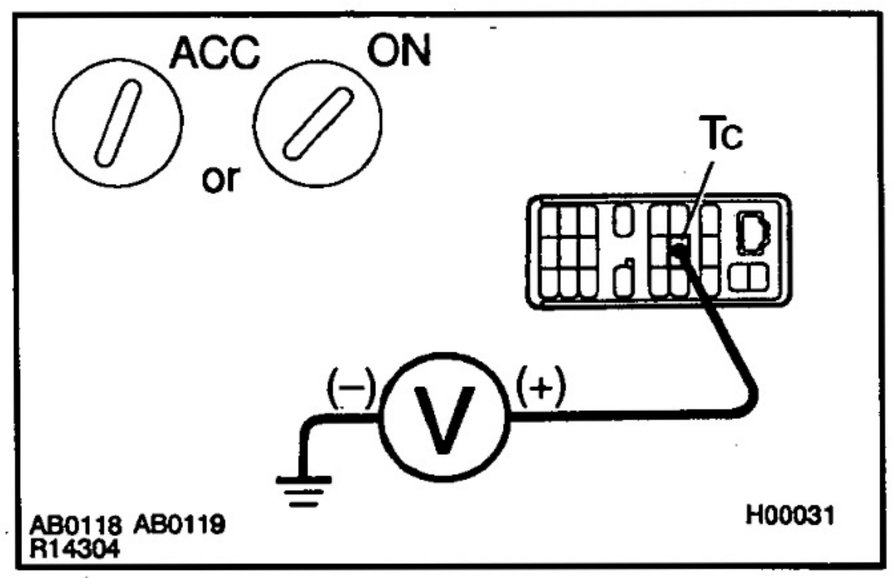

CHECK:

Measure voltage between terminal Tc of check connector and body ground.

OK:

Voltage: 10 – 14 V

OK → Check harness between terminal E1 of check connector and body ground.

NG

4	**Check airbag sensor assembly.**

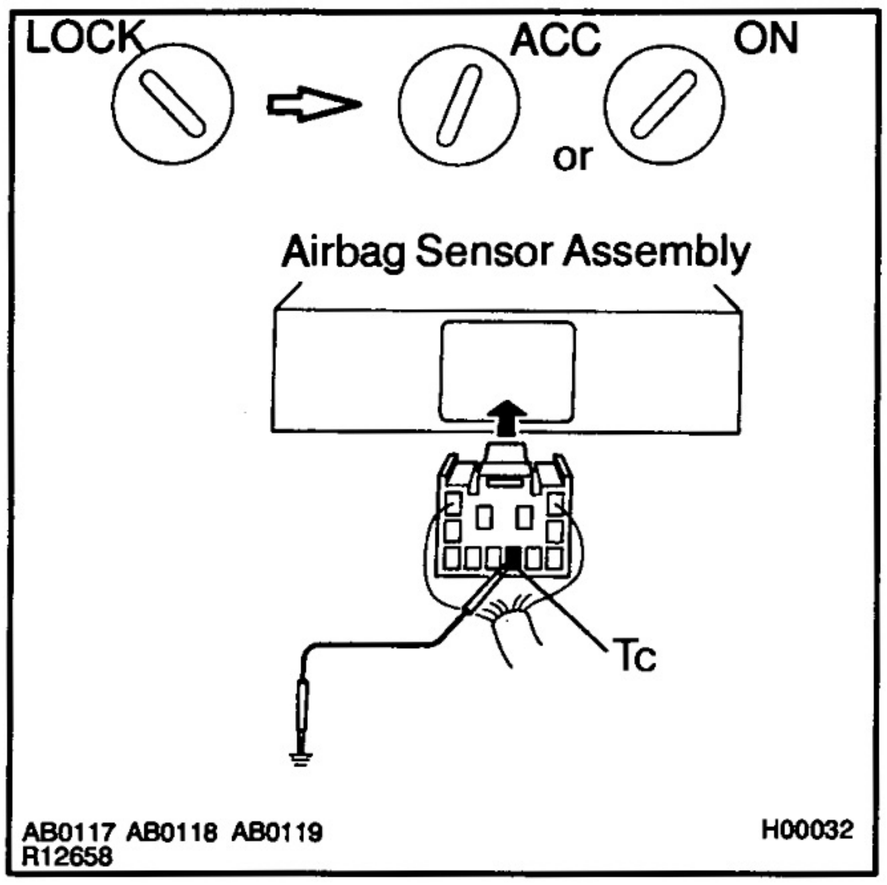

PREPARATION:

(a) Turn the ignition switch to LOCK.
(b) Disconnect negative (−) terminal cable from the battery, and wait at least 90 seconds.
(c) Remove steering wheel pad. (See SR section)
(d) Disconnect the connector of front passenger airbag assembly. (See page RS-13)
(e) Disconnect the airbag sensor assembly connector. (See page RS-25)
(f) Insert service wire into terminal Tc from back side as shown.
(g) Connect airbag sensor assembly connector with service wire.
(h) Connect the negative (−) terminal cable to battery.
(i) Turn the ignition switch to ACC or ON and wait at least 20 seconds.
(j) Connect service wire of terminal Tc to body ground.

CHECK:

Check operation of SRS warning light.

OK:

SRS waning light comes on.

NOTICE:

Never make a mistake with the terminal connection position as this will cause a malfunction.

OK → **Check harness between airbag sensor assembly and check connector.**

NG

Replace airbag sensor assembly.

RS

If the DTC is displayed without a DTC check procedure, do the following troubleshooting.

1	**Check resistance between terminal Tc of airbag sensor assembly and body ground.**

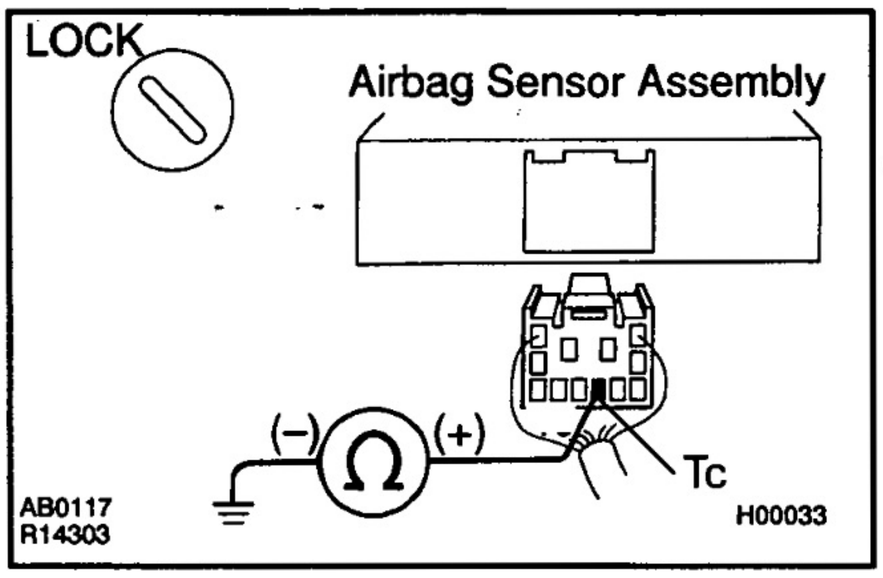

PREPARATION:

(a) Turn the ignition switch to LOCK.
(b) Disconnect negative (–) terminal cable from the battery, and wait at least 90 seconds.
(c) Disconnect airbag sensor assembly connector.

CHECK:

Check resistance between terminal Tc of airbag sensor assembly connector and body ground.

OK:

Resistance: 1MΩ or Higher

NG → **Repair or replace harness or connector.**

OK

Replace airbag sensor assembly.

RS

SERVICE SPECIFICATIONS

TORQUE SPECIFICATIONS

RS03T-1C

Part tightened	N·m	kgf·cm	ft·lbf
Steering wheel	36	360	26
Steering wheel pad	9.0	90	80 in.·lbf
Front passenger airbag assembly x Instrument panel reinforcement	18	184	13
Airbag sensor assembly	20	200	14

BODY ELECTRICAL

PRECAUTION ..... BE– 2
PREPARATION ..... BE– 2
POWER SOURCE ..... BE– 3
POWER OUTLET ..... BE– 4
IGNITION SWITCH ..... BE– 6
HEADLIGHT AND TAILLIGHT SYSTEM ..... BE– 10
HEADLIGHT BEAM LEVEL CONTROL SYSTEM ..... BE– 19
REAR FOG LIGHT SYSTEM ..... BE– 22
TURN SIGNAL AND HAZARD WARNING SYSTEM ..... BE– 24
INTERIOR LIGHT SYSTEM ..... BE– 27
BACK–UP LIGHT SYSTEM ..... BE– 31
STOP LIGHT SYSTEM ..... BE– 33
HEADLIGHT CLEANER SYSTEM ..... BE– 36
WIPER AND WASHER SYSTEM ..... BE– 39
COMBINATION METER ..... BE– 46
ACCESSORY METER ..... BE– 66
DEFOGGER SYSTEM ..... BE– 70
POWER WINDOW CONTROL SYSTEM ... BE– 73
POWER DOOR LOCK CONTROL SYSTEM ... BE– 81
ENGINE IMMOBILISER SYSTEM ..... BE– 86
SLIDING ROOF SYSTEM ..... BE– 98
POWER SEAT CONTROL SYSTEM BE–102
SEAT HEATER SYSTEM BE–109
POWER MIRROR CONTROL SYSTEM BE–113
MIRROR HEATER SYSTEM BE–115
SUB FUEL TANK SYSTEM BE–117
AUDIO SYSTEM BE–120
CLOCK BE–151
WIRELESS DOOR LOCK CONTROL SYSTEM BE–155
CRUISE CONTROL SYSTEM BE–189
SERVICE SPECIFICATIONS BE–247

PRECAUTION

BE1CL-11

Take care to observe the doing precautions when performing inspections or removal and replacement of body electrical related parts.

BE3B0-01

HEADLIGHT SYSTEM

- Halogen bulbs have pressurized gas inside and require special handling. They can burst if scratched or dropped. Hold a bulb only by its plastic or metal case.
  Don't touch the glass part of a bulb with bare hands.

BE1CM-11

SRS (SUPPLEMENTAL RESTRAINT SYSTEM)

The LAND CRUISER / LAND CRUISER PRADO is equipped with an SRS (Supplemental Restraint System) such as the driver airbag and front passenger airbag. Failure to carry out service operation in the correct sequence could cause the SRS to unexpectedly deploy during servicing, possibly leading to a serious accident. Before servicing (including removal or installation of parts, inspection or replacement), be sure to read the precautionary notices in the RS section.

BE1CN-0W

AUDIO SYSTEM

If the negative (−) terminal cable is disconnected from the battery, the preset AM, FM 1 and FM 2 stations stored in memory are erased, so be sure to note the stations and reset them after the battery terminal is reconnected.

BE1CP-0U

MOBILE COMMUNICATION SYSTEM

If the vehicle is equipped with a mobile communication system, refer to precautions in the IN section.

BE

PREPARATION

BE0SG-0E

SST (SPECIAL SERVICE TOOLS)

	09843−18020 Diagnosis Check Wire	
	09992−00241 Turbocharger Pressure Gauge	

BE0SH-0X

RECOMMENDED TOOLS

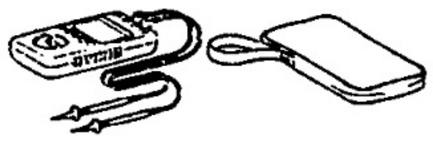	09082−00040 TOYOTA Electrical Tester.	

BE03J–0Y

EQUIPMENT

Voltmeter	
Ammeter	
Ohmmeter	
Test lead	
Syphon	Brake fluid level warning switch
Bulb (3.4 W)	Fuel sender gauge, Seat belt warning relay
Bulb (21 W)	Turn signal flasher relay
Dry cell battery	Fuel sender gauge
Torque wrench	
Masking tape	Rear window defogger wire
Tin foil	Rear window defogger wire

BE10M–0E

SSM (SPECIAL SERVICE MATERIAL)

08888–88888	DuPont Paste No. 4817 or equivalent	Rear window defogger

BE2P4–02

POWER SOURCE PARTS LOCATION

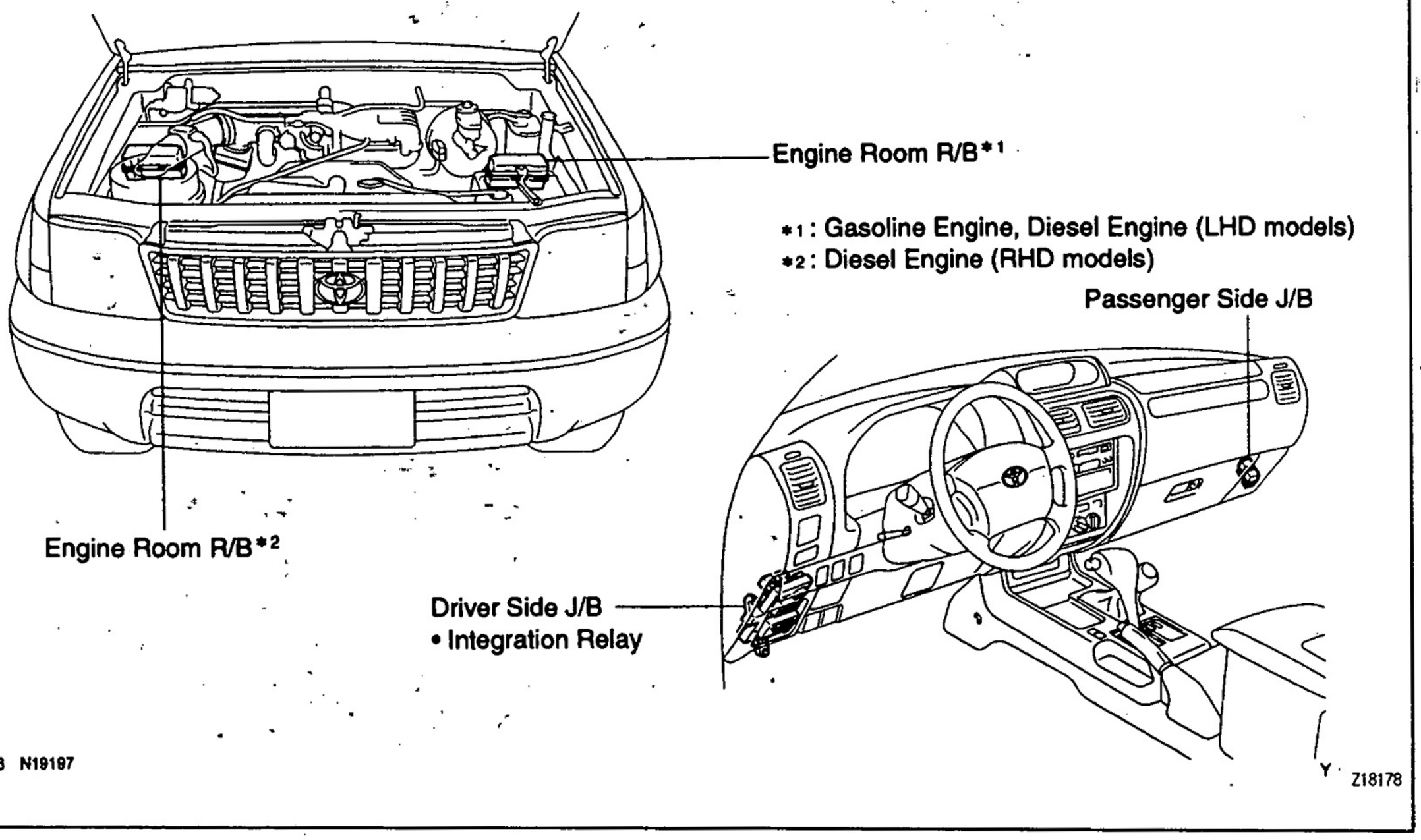

POWER OUTLET
PARTS LOCATION

BE38Q-01

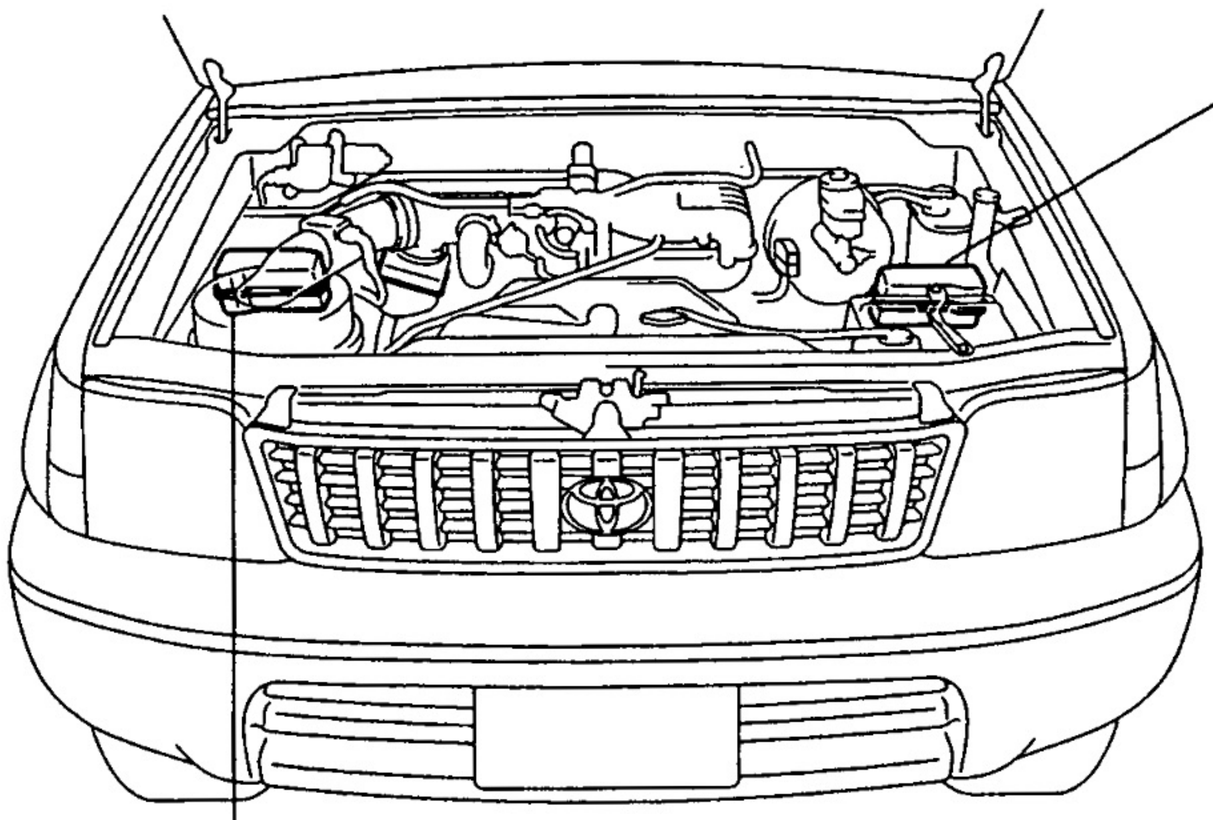

Engine Room R/B*1
- Power Outlet Relay
- PWR OUTLET (FR) Fuse
- PWR OUTLET (RR) Fuse*3

*1 : Gasoline Engine, Diesel Engine (LHD models)
*2 : Diesel Engine (RHD models)
*3 : 5 Door models

Engine Room R/B*2
- Power Outlet Relay
- PWR OUTLET (FR) Fuse
- PWR OUTLET (RR) Fuse*3

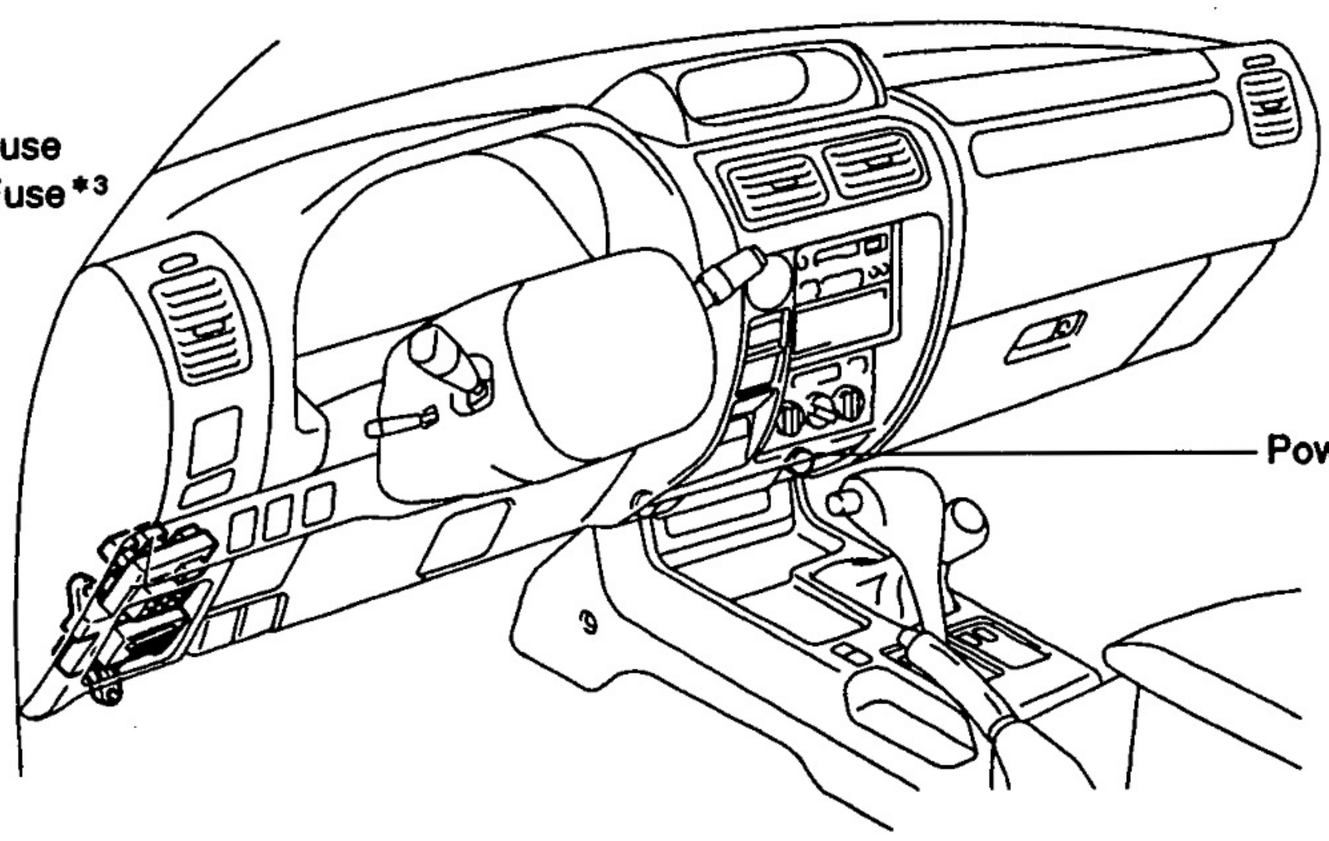

Power Outlet

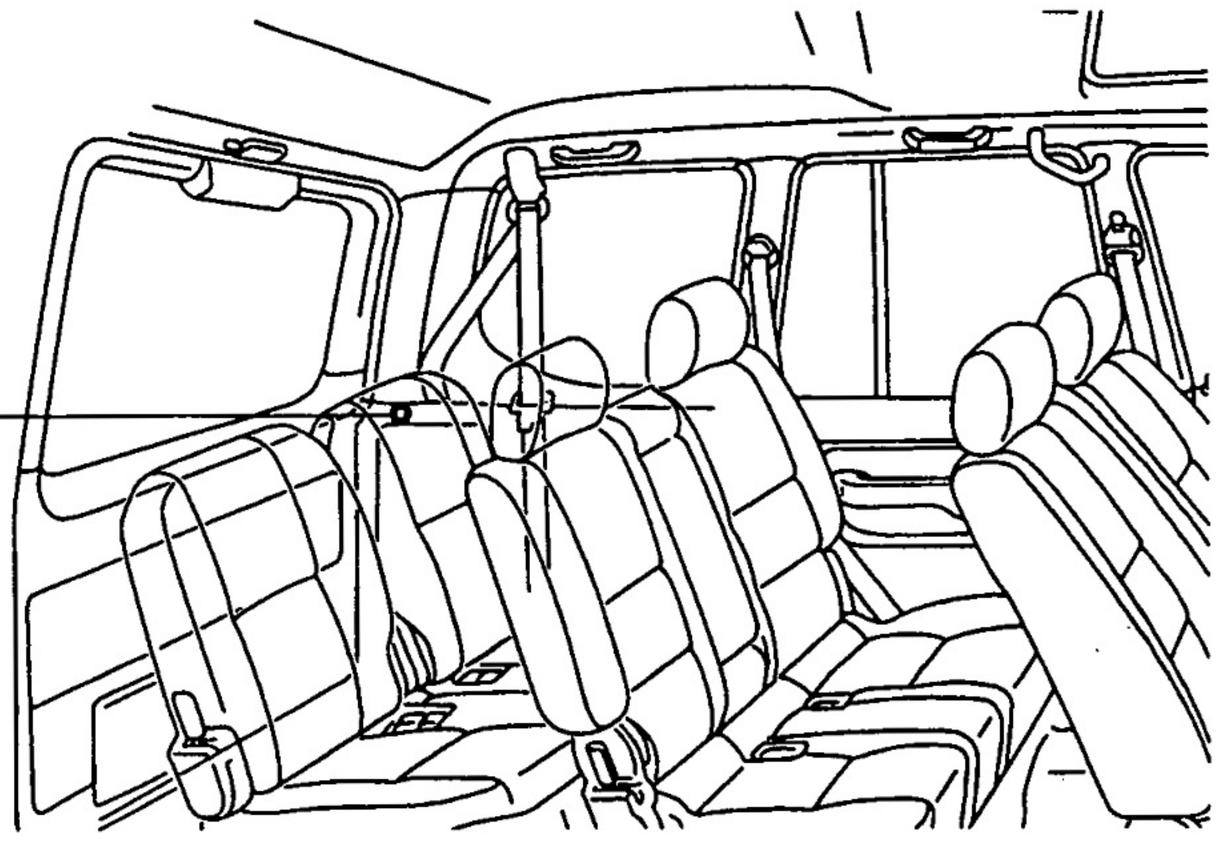

Power Outlet*3

N19196
N19198
N19199

Z18179

BE36R–01

TROUBLESHOOTING

The table below will be useful for you in troubleshooting these electrical problems. The most likely causes of the malfunction are shown in the order of their probability. Inspect each part in the order shown, and replace the part when it is found to be faulty.

Trouble	Parts name	(See page)
Electric power source cannot be taken out of the power outlet.	1. Battery 2. Power Outlet Relay 3. PWR OUTLET (FR) Fuse (Engine Room R/B) 4. 5 door models: PWR OUTLET (RR) Fuse (Engine Room R/B) 5. Wire Harness	(BE–5)
Electric power source cannot be taken out of the front power outlet.	1. Battery 2. Power Outlet Relay 3. PWR OUTLET (FR) Fuse (Engine Room R/B) 4. Wire Harness	(BE–5)
5 door models only: Electric power source cannot be taken out of the rear power outlet.	1. Battery 2. Power Outlet Relay 3. 5 door models: PWR OUTLET (RR) Fuse (Engine Room R/B) 4. Wire Harness	(BE–5)

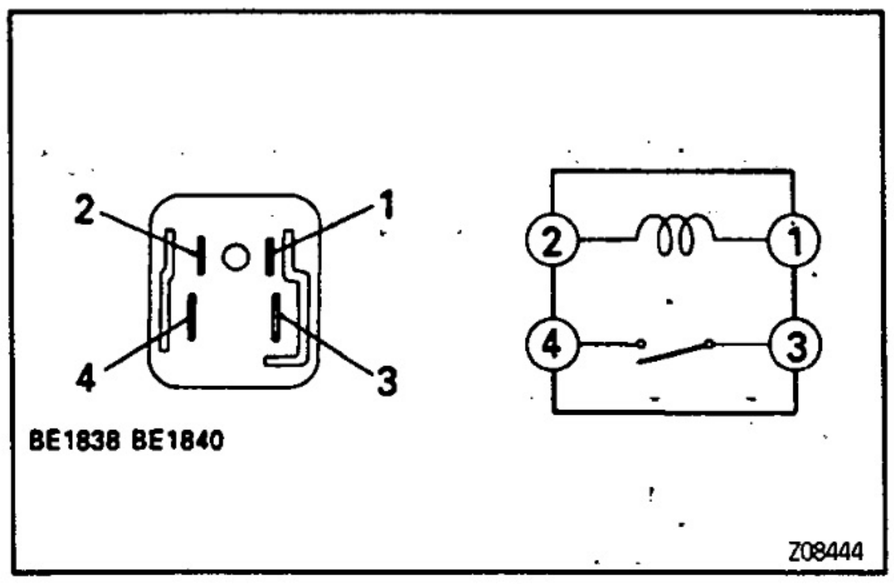

POWER OUTLET RELAY INSPECTION

BE36T–01

INSPECT RELAY CONTINUITY

Condition	Tester connection	Specified condition
Constant	1 – 2	Continuity
Apply B+ between terminals 1 and 2.	3 – 4	Continuity

If continuity is not as specified, replace the relay.

IGNITION SWITCH

PARTS LOCATION

BE03W–08

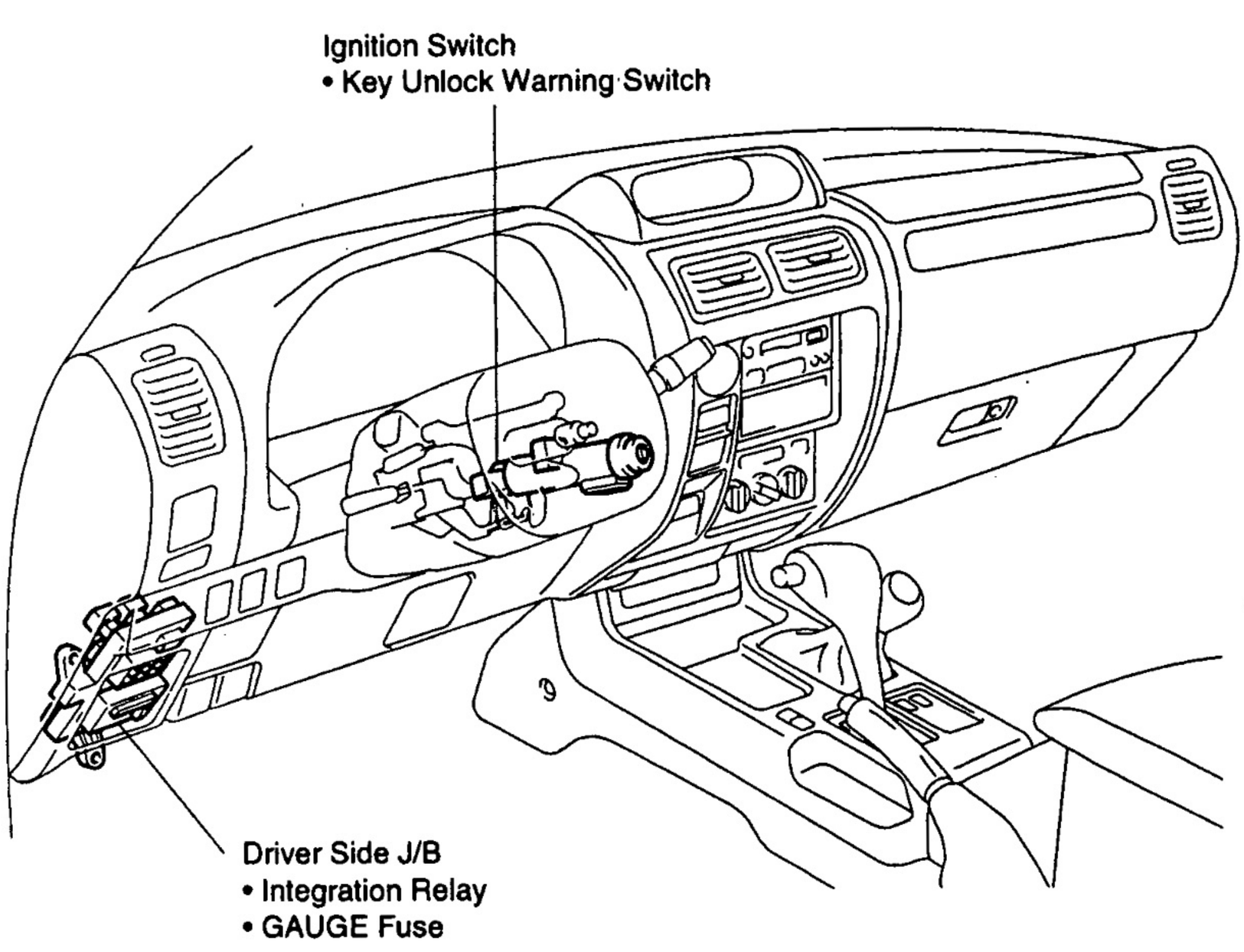

N19200

TROUBLESHOOTING

BE1UB–08

The table below will be useful for you in troubleshooting these electrical problems. The most likely causes of the malfunction are shown in the order of their probability. Inspect each part in the order shown, and replace the part when it is found to be faulty.

Trouble	Parts name	(See page)
Ignition switch is not set to each position.	1. Ignition Switch	(BE–7)
	2. Power Source Circuit	
"Key unlock warning system" does not operate.	1. GAUGE Fuse (Driver Side J/B)	
	2. Key Unlock Warning Switch	(BE–7)
	3. Door Courtesy Switch	(BE–30)
	4. Wire Harness	

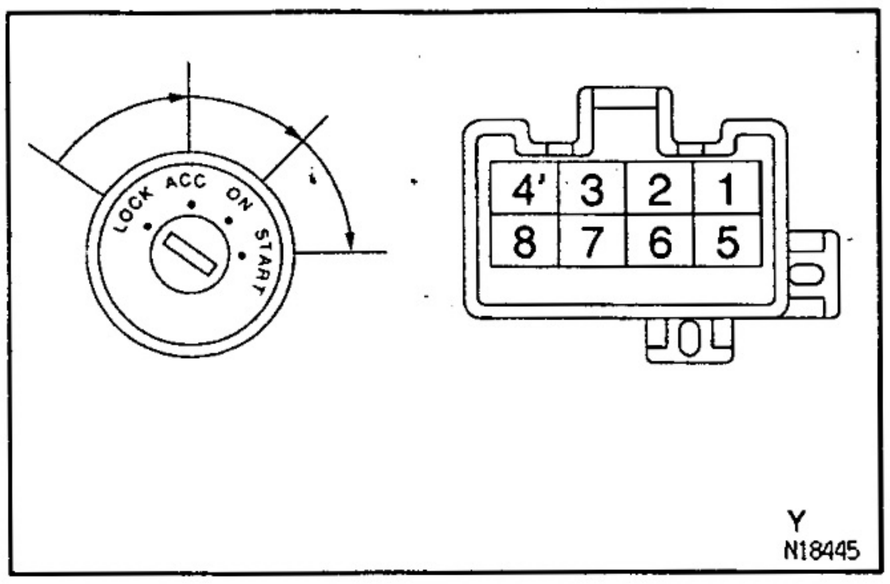

BE1CQ-0H

IGNITION SWITCH INSPECTION

INSPECT SWITCH CONTINUITY

Switch position	Tester connection	Specified condition
LOCK	—	No continuity
ACC	2 — 3	Continuity
ON	2 — 3 — 4 6 — 7	Continuity
START	1 — 2 — 4 6 — 7 — 8	Continuity

If continuity is not as specified, replace the switch.

BE269-0D

KEY UNLOCK WARNING SWITCH INSPECTION

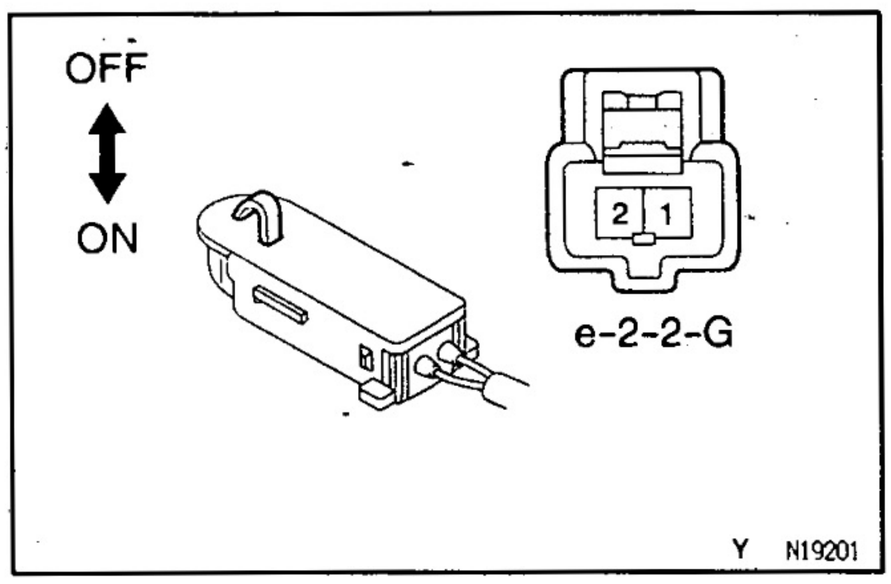

INSPECT SWITCH CONTINUITY

Switch position	Tester connection	Specified condition
OFF (Key removed)	—	No continuity
ON (Key set)	1 — 2	Continuity

If continuity is not as specified, replace the switch.

BE2AX-05

KEY UNLOCK WARNING SYSTEM INSPECTION

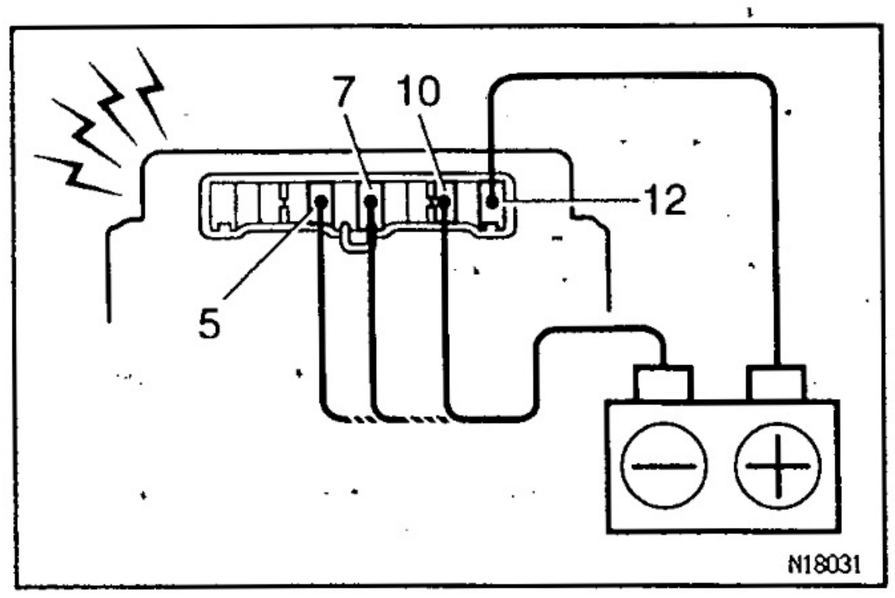

1. INSPECT INTEGRATION RELAY OPERATION

(a) Connect the positive (+) lead from the battery to terminal 12.

(b) Connect the negative (−) lead from the battery to terminals 5, 7 and 10.

(c) Check that the chime sounds.

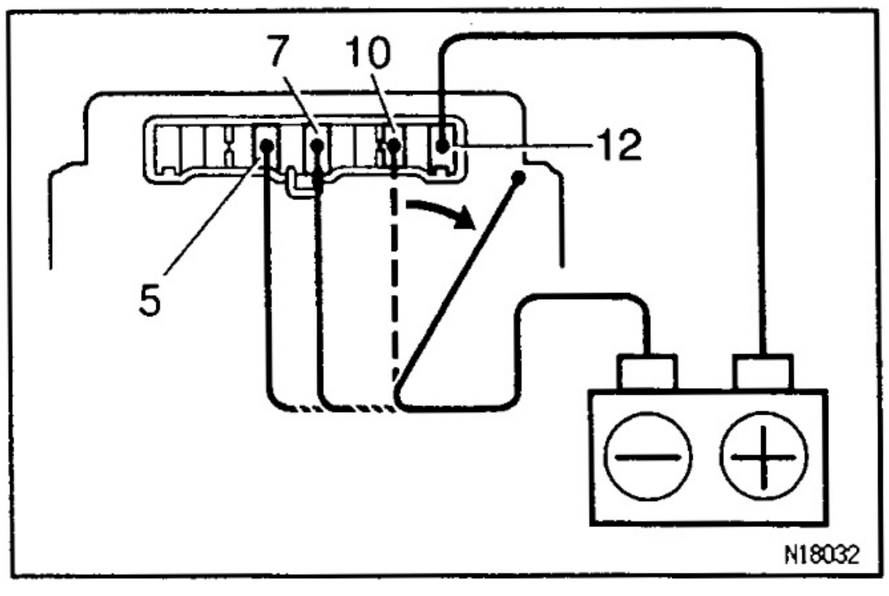

(d) Disconnect the negative (−) lead from the battery to terminal 10.

(e) Check that the chime stops sounding.

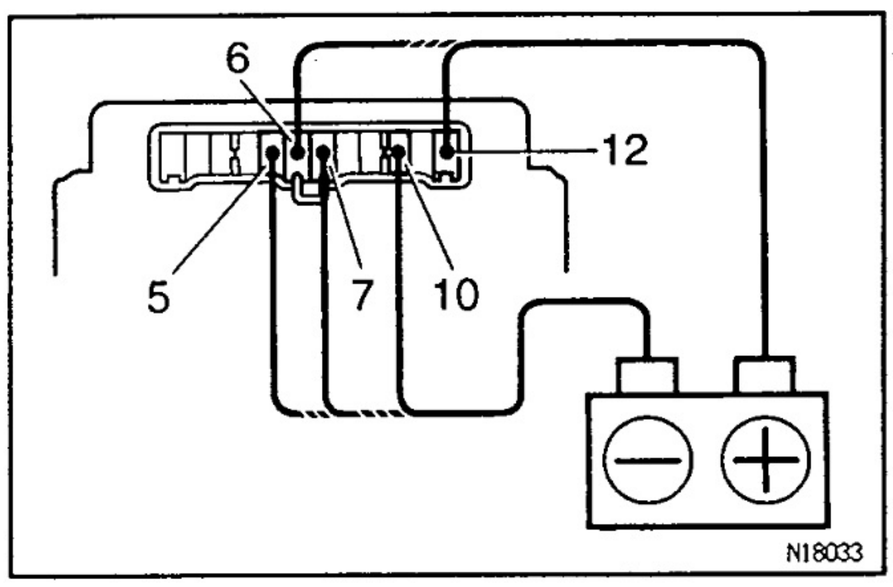

(f) Connect the negative (−) lead from the battery to terminal 10.
(g) Connect the positive (+) lead from the battery to terminal 6.
(h) Check that the chime stops sounding.
If operation is not as specified, replace the relay.

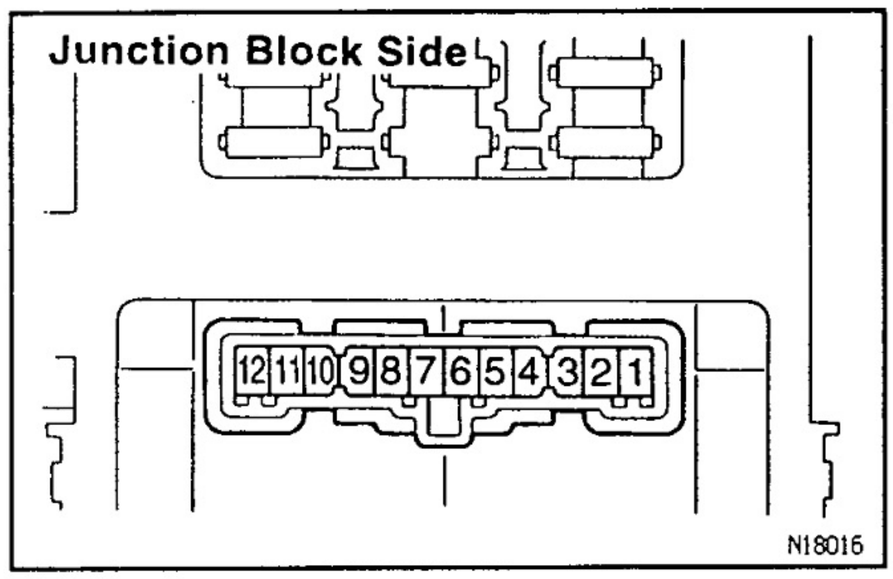

2. INSPECT INTEGRATION RELAY CIRCUIT

(a) Remove the relay from the Driver Side J/B and inspect the connectors on the J/B side.

Tester connection	Condition	Specified condition
7 – Ground	Constant	Continuity
9 – Ground	Passenger's door courtesy switch OFF (Room light switch OFF)	Continuity
9 – Ground	Passenger's door courtesy switch ON (Room light switch OFF)	No continuity
4 – Ground	Light control switch OFF	No voltage
4 – Ground	Light control switch TAIL or HEAD	Battery voltage
6 – Ground	Ignition switch LOCK or ACC	No voltage
6 – Ground	Ignition switch ON	Battery voltage
8 – Ground	Ignition switch LOCK	No voltage
8 – Ground	Ignition switch ACC or ON	Battery voltage
11 – Ground	Constant	Battery positive voltage
12 – Ground	Constant	Battery positive voltage

If circuit is as specified, try replacing the relay with a new one.
If circuit is not as specified, inspect the circuits connected to other parts.

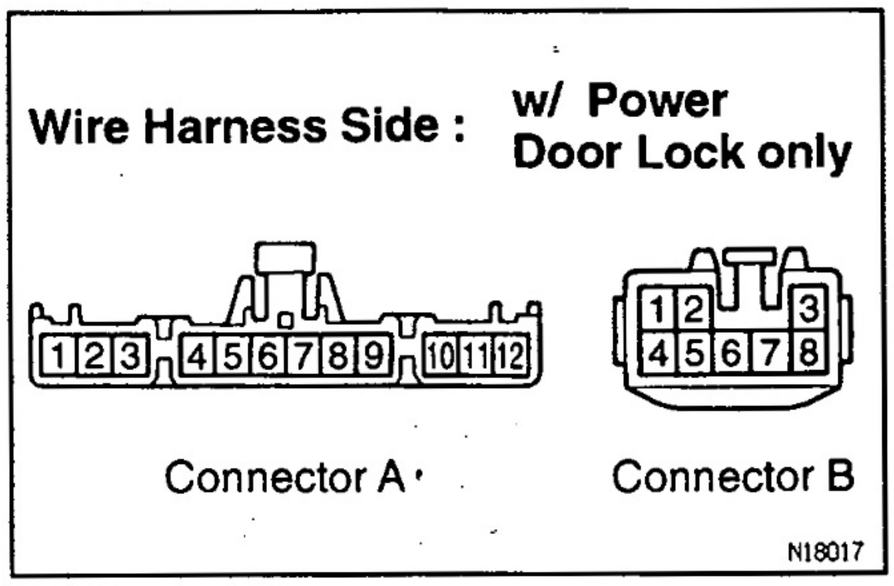

(b) Disconnect the connector from the integration relay and inspect the connectors on the wire harness side.

Tester connection	Condition	Specified condition
A3 – Ground	Driver's buckle switch OFF	No continuity
A3 – Ground	Driver's buckle switch ON	Continuity
A5 – Ground	Driver's door courtesy switch OFF	Continuity
A5 – Ground	Driver's door courtesy switch ON	No continuity
A10 – Ground	Key unlock warning switch OFF	No continuity
A10 – Ground	Key unlock warning switch ON	Continuity
B1 – Ground	Constant	Continuity
B4 – Ground	Driver's door key lock and unlock switch OFF	No continuity
B4 – Ground	Driver's door key lock and unlock switch UNLOCK	Continuity
B5 – Ground	Door lock control switch OFF and driver's and passenger's door key lock and unlock switch OFF	No continuity
B5 – Ground	Door lock control switch LOCK or driver's or passenger's door key lock and unlock switch LOCK	Continuity
B6 – Ground	Door lock control switch OFF and passenger's door key lock and unlock switch OFF	No continuity
B6 – Ground	Door lock control switch UNLOCK or passenger's door key lock and unlock switch UNLOCK	Continuity
B7 – Ground	Passenger's door unlock detection switch OFF	No continuity
B7 – Ground	Passenger's door unlock detection switch ON	Continuity
B8 – Ground	Driver's door unlock detection switch OFF	No continuity
B8 – Ground	Driver's door unlock detection switch ON	Continuity
A1 – Ground	Constant	Battery voltage

If circuit is as specified, try replacing the relay with a new one.
If circuit is not as specified, inspect the circuits connected to other parts.

HEADLIGHT AND TAILLIGHT SYSTEM

PARTS LOCATION

BE34W-01

3 Door Models

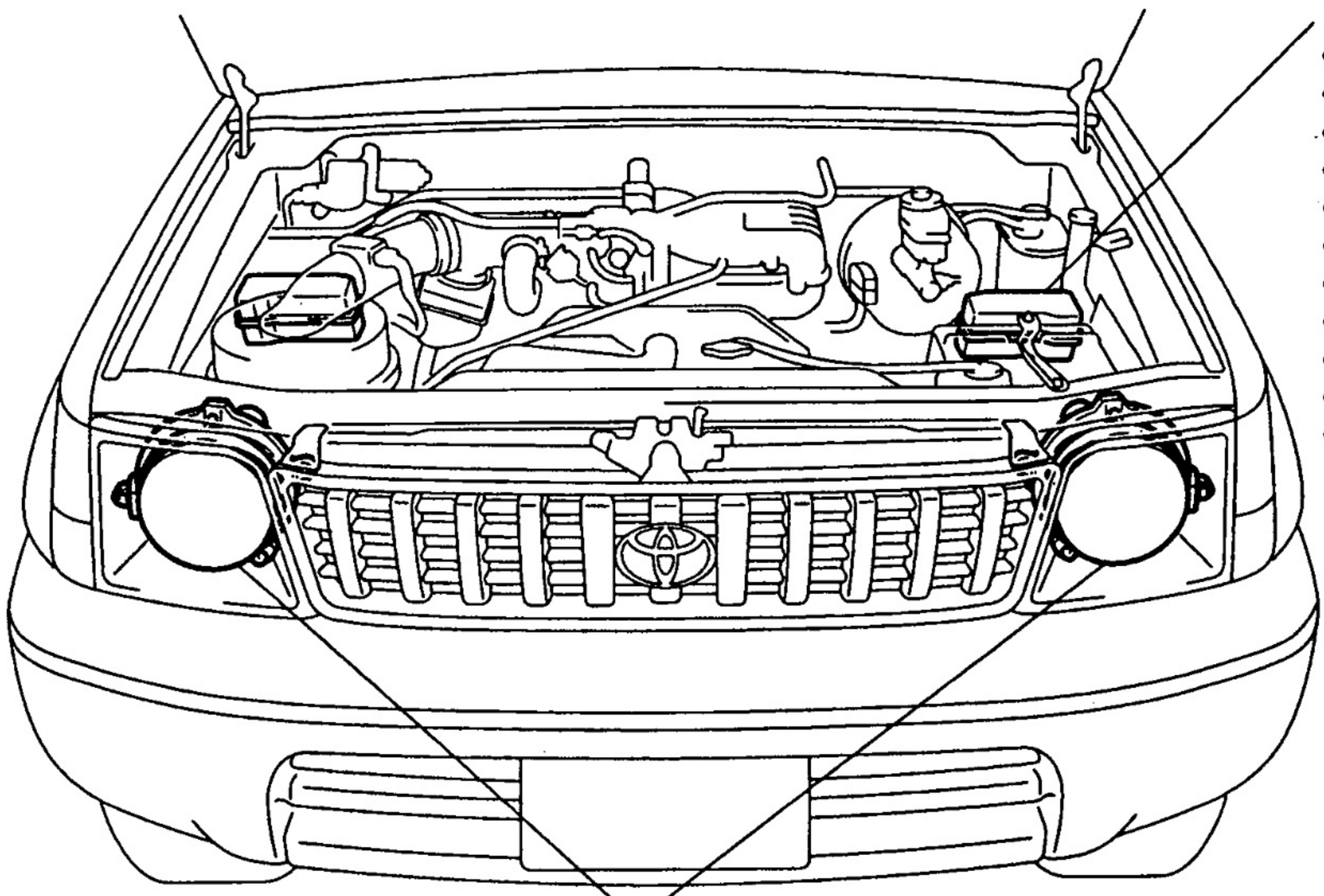

*1: w/ Daytime Running Light System (Vehicles sold in Norway)
*2: Gasoline Engine, Diesel Engine (LHD models)
*3: Diesel Engine (RHD models)

5 Door Models

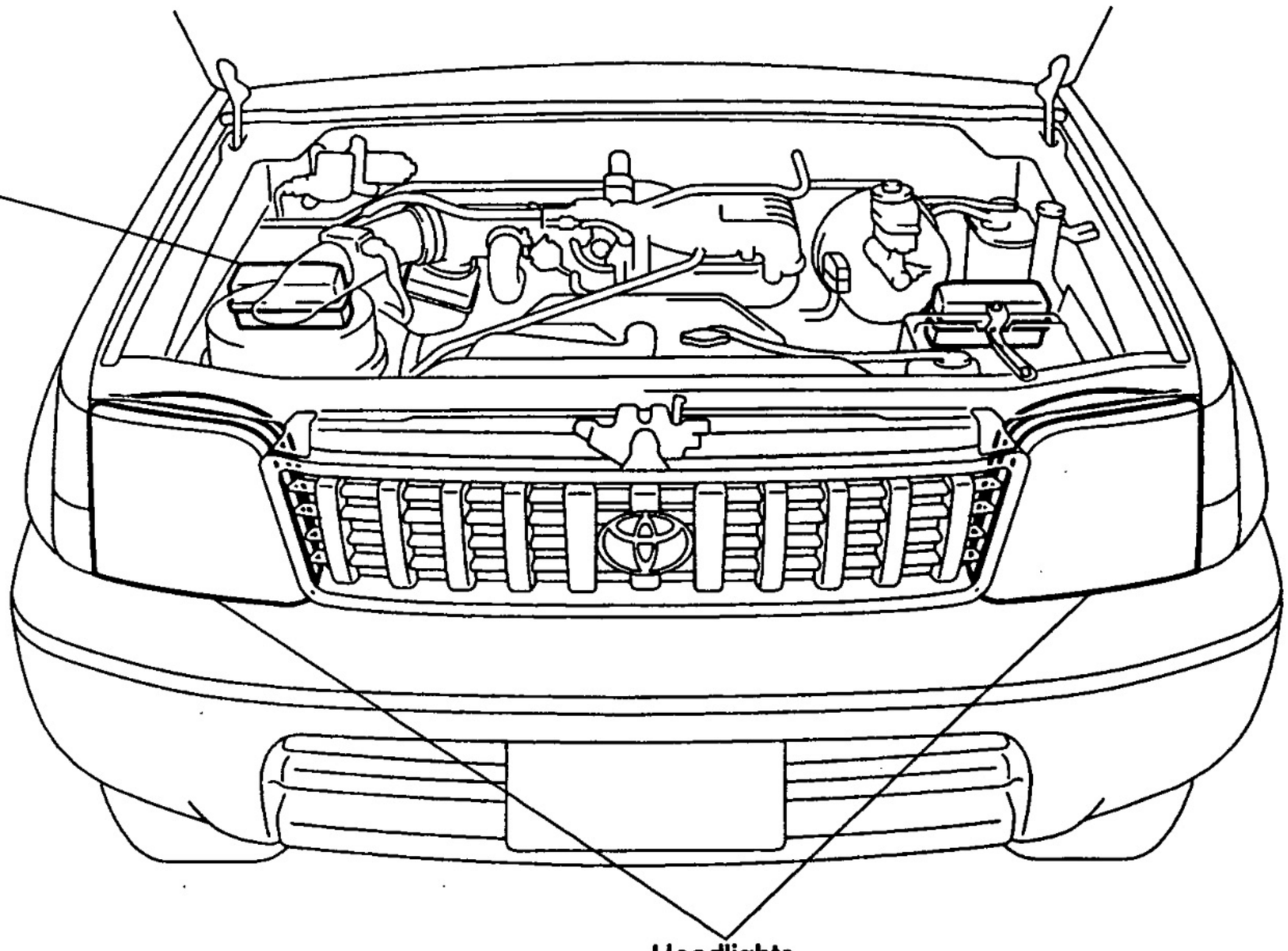

N19202
N19203

Y Z18180

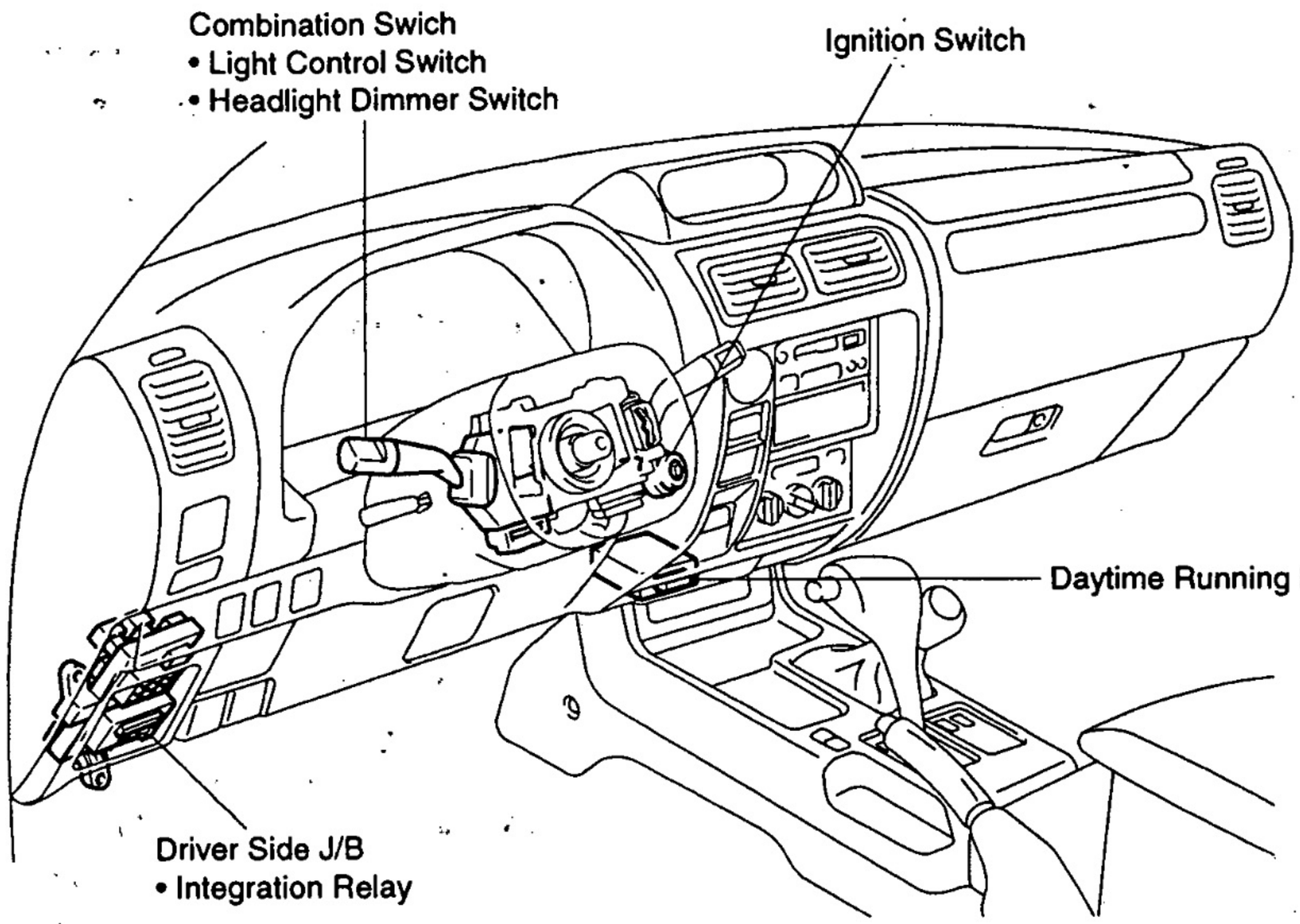

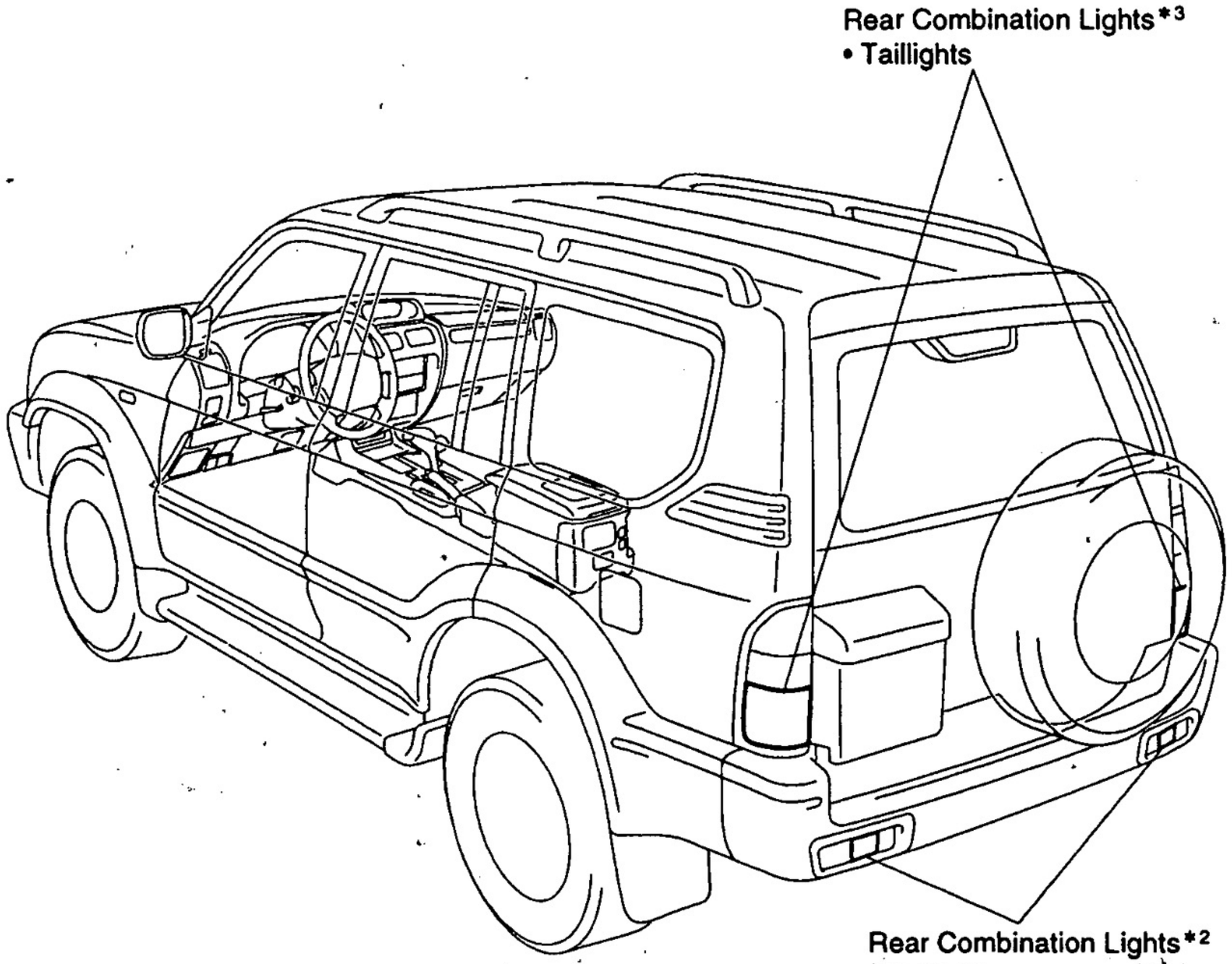

*1 : Vehicles sold in Norway
*2 : Vehicles sold in Europe and Australia.
*3 : Except for vehicles sold in Europe and Australia.

N19204
N19205

Z18181

BE093-17

TROUBLESHOOTING

The table below will be useful for you in troubleshooting these electrical problems. The most likely causes of the malfunction are shown in the order of their probability. Inspect each part in the order shown, in the replace the part when it is found to be faulty.

Trouble	Parts name	(See page)
Headlight does not light (Taillight is normal)	1. Headlight Relay	(BE–16)
	2. Headlight Dimmer Relay	(BE–16)
	3. D.R.L. Relay *	(BE–17)
	4. Light Control Switch	(BE–16)
	5. Headlight Bulb	
	6. Wire Harness	
Headlight does not light (Taillight does not light up)	1. Light Control Switch	(BE–16)
	2. D.R.L. Relay *	(BE–17)
	3. Headlight and Taillight Bulb	
	4. Wire Harness	
Only one side headlight does not light	1. HEAD (LH) Fuse (Engine Room R/B)	
	2. HEAD (RH) Fuse (Engine Room R/B)	
	3. HEAD (LO LH) Fuse (Engine Room R/B) *	
	4. HEAD (LO RH) Fuse (Engine Room R/B) *	
	5. Headlight Bulb	
	6. Wire Harness	
"Lo–Beam" does not light (ALL)	1. Headlight Dimmer Switch	(BE–16)
	2. Headlight Dimmer Relay	(BE–16)
	3. D.R.L. Relay *	(BE–17)
	4. Wire Harness	
"Lo–Beam" does not light (ONE SIDE)	1. HEAD (LH) Fuse (Engine Room R/B)	
	2. HEAD (RH) Fuse (Engine Room R/B)	
	3. HEAD (LO LH) Fuse (Engine Room R/B) *	
	4. HEAD (LO RH) Fuse (Engine Room R/B) *	
	5. Headlight Bulb	
	6. Wire Harness	
"Hi–Beam" does not light (ALL)	1. Headlight Dimmer Switch	(BE–16)
	2. Headlight Dimmer Relay	(BE–16)
	3. D.R.L. Relay *	(BE–17)
	4. Wire Harness	
"Hi–Beam" does not light (ONE SIDE)	1. HEAD (LH) Fuse (Engine Room R/B)	
	2. HEAD (RH) Fuse (Engine Room R/B)	
	3. HEAD (HI LH) Fuse (Engine Room R/B) *	
	4. HEAD (HI RH) Fuse (Engine Room R/B) *	
	5. Headlight Bulb	
	6. Wire Harness	

* : w/ Daytime Running Light System (Vehicle sold in Norway)

Trouble	Parts name	(See page)
"Flash" does not light	1. Headlight Dimmer Switch	(BE–16)
	2. Headlight Dimmer Relay	(BE–16)
	3. D.R.L. Relay *	(BE–17)
	4. Wire Harness	
"Light Reminder System" does not operate	1. Integration Relay (Driver Side J/B)	(BE–7)
	2. ECU–B Fuse (Driver Side J/B)	
	3. TAIL Fuse (Engine Room R/B)	
	4. GAUGE Fuse (Driver Side J/B)	
	5. DOME Fuse (Engine Room R/B)	
	6. CIG Fuse (Driver Side J/B)	
	7. Ignition Switch	(BE–7)
	8. D.R.L. Relay *	(BE–17)
	9. Door Courtesy Switch	(BE–30)
	10. Wire Harness	
Headlight does not light with light control switch in HEAD.	1. Light Control Switch	(BE–16)
	2. D.R.L. Relay *	(BE–17)
	3. Wire Harness	
Headlight does not go out with light control switch in OFF	1. Headlight Relay	(BE–16)
	2. D.R.L. Relay *	(BE–17)
	3. Wire Harness	
Headlight and Taillight do not and light with engine running light control switch in OFF	1. GAUGE Fuse (Driver Side J/B)	
	2. DOME Fuse (Engine Room R/B)	
	3. D.R.L. Relay *	(BE–17)
	4. Alternator L Terminal	
	5. Wire Harness	
Taillight does not light with light control switch in TAIL	1. Taillight Relay	(BE–16)
	2. TAIL Fuse (Engine Room R/B)	
	3. D.R.L. Relay *	(BE–17)
	4. Wire Harness	
Taillight does not go out with light control switch in OFF	1. Taillight Relay	(BE–16)
	2. D.R.L. Relay *	(BE–17)
	3. Light Control switch	(BE–16)
	4. Wire Harness	
Taillight does not light (Headlight is normal)	1. Taillight Bulb	
	2. TAIL Fuse (Engine Room R/B)	
	3. Light Control Switch	(BE–16)
	4. Taillight Relay	(BE–16)
	5. Wire Harness	
Taillight does not light (Headlight does not light up)	1. Taillight Bulb	
	2. TAIL Fuse (Engine Room R/B)	
	3. Light Control Switch	(BE–16)
	4. Wire Harness	

* : w/ Daytime Running Light System (Vehicle sold in Norway)

HEADLIGHT AIMING ADJUSTMENT

B82AY-04

5 Door Models:

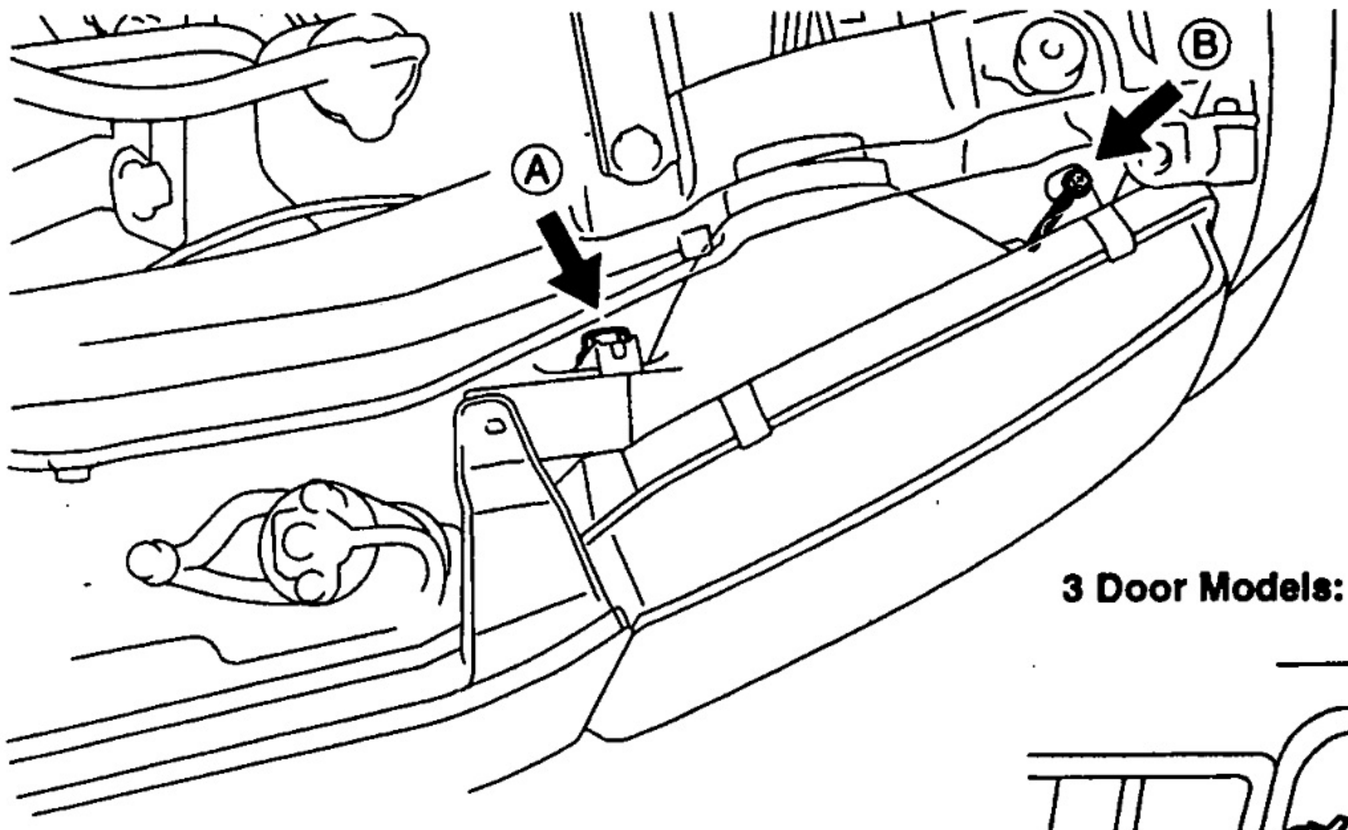

3 Door Models:

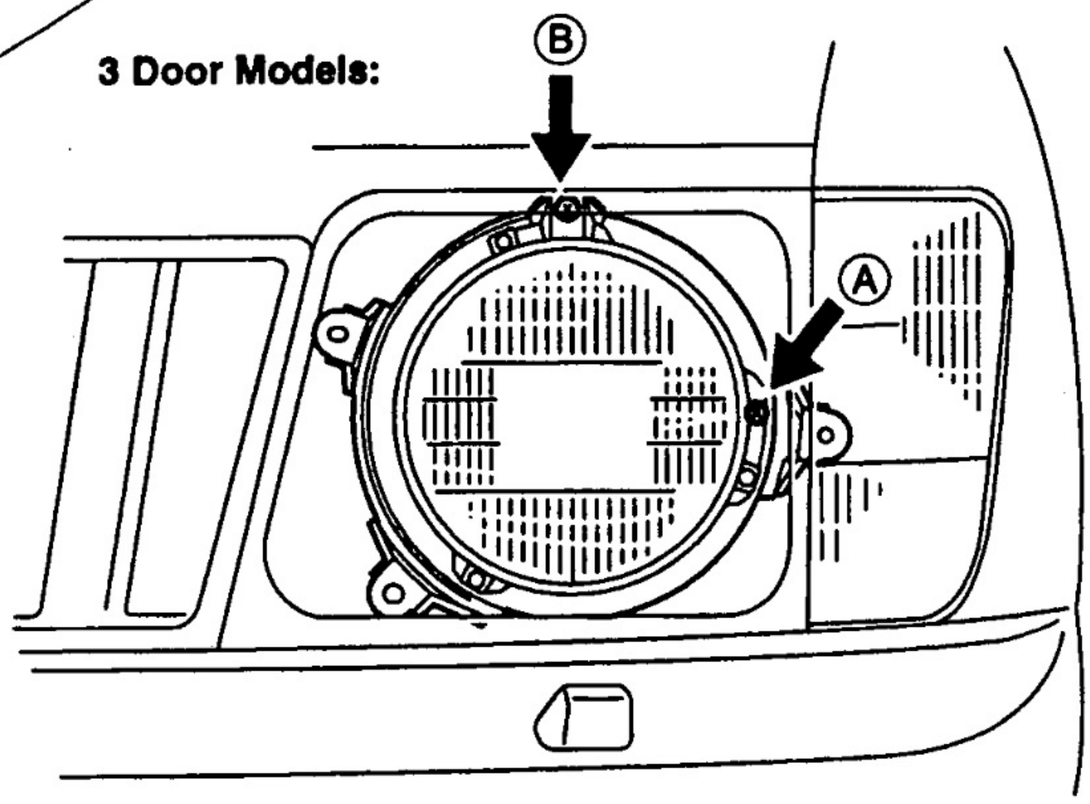

Ⓐ : For adjustment in horizontal direction
Ⓑ : For adjustment in vertical direction

N19206
N19207

Y Z18182

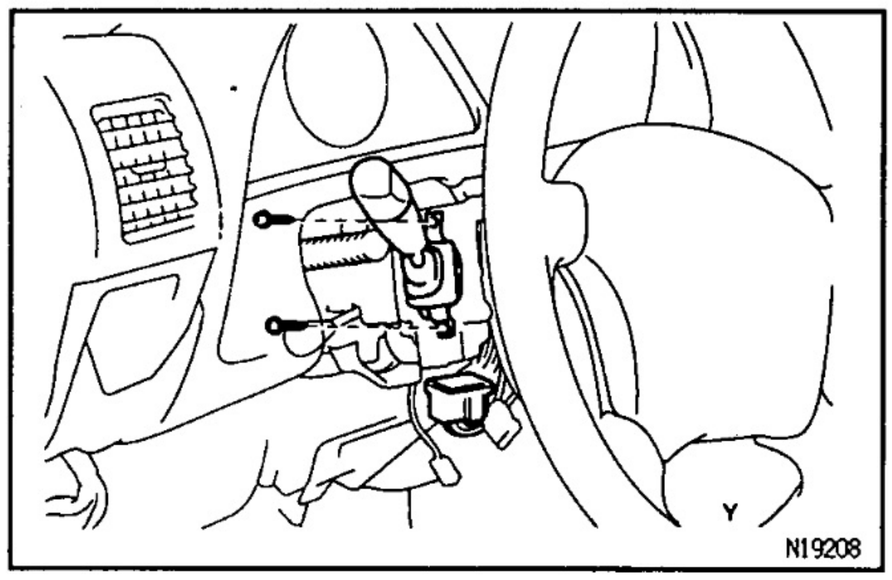

LIGHT CONTROL SWITCH AND WIPER AND WASHER SWITCH REMOVAL

B82AZ-04

1. **REMOVE UPPER AND LOWER COLUMN COVERS** **(See page SR–16)**
2. **REMOVE LIGHT CONTROL SWITCH**

(a) Disconnect the connector.
(b) Remove the 2 screws.
(c) Remove the switch.

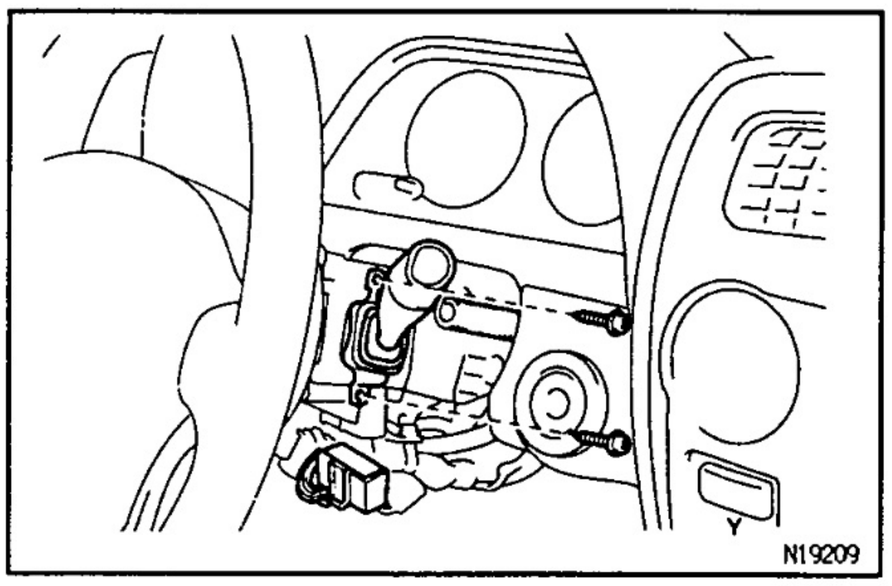

3. **REMOVE WIPER AND WASHER SWITCH**

(a) Disconnect the connector.
(b) Remove the 2 screws.
(c) Remove the switch.

LIGHT CONTROL SWITCH AND WIPER AND WASHER SWITCH INSTALLATION BE38Y-01

Installation is in the reverse order of removal.

COMBINATION SWITCH DISASSEMBLY BE1CT-0G

LHD models (Include RHD models for Europe) :

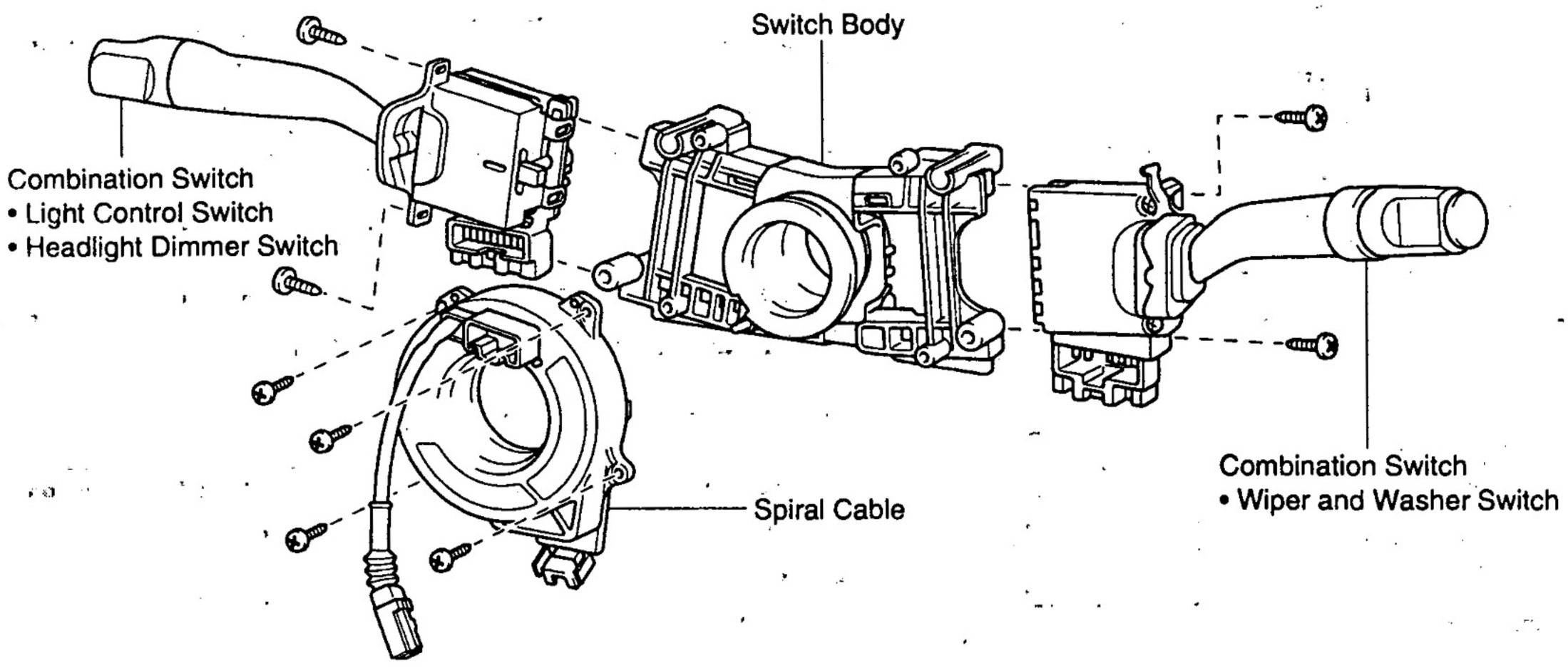

RHD models (Except RHD models for Europe) :

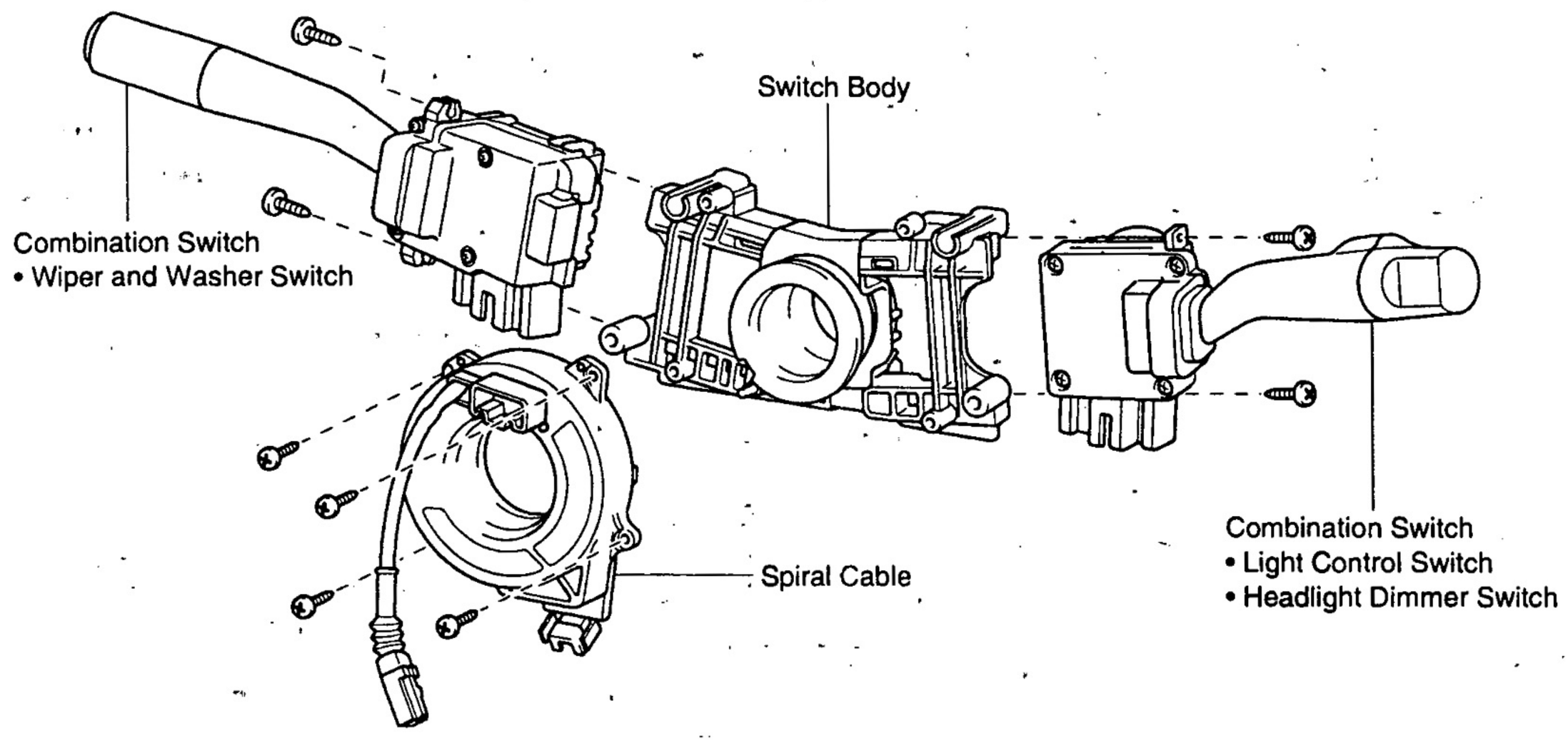

N16946

BE

LHD models
(Include RHD models for Europe) :

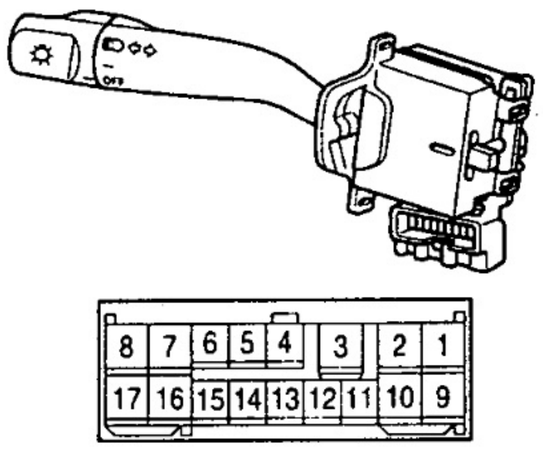

RHD models
(Except RHD models for Europe) :

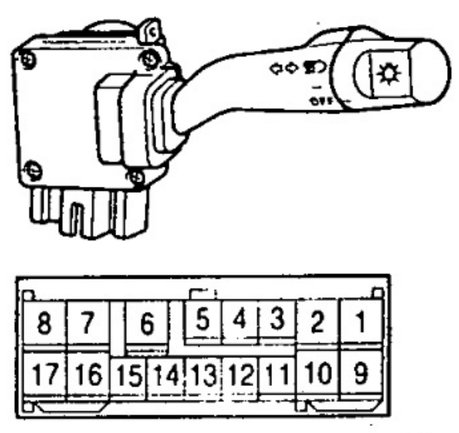

N15853

COMBINATION SWITCH INSPECTION

BE392-01

1. INSPECT LIGHT CONTROL SWITCH

( ): RHD Models (Except RHD models for Europe)

Switch position	Tester connection	Specified condition
OFF	–	No continuity
TAIL	14 – 16 (9 – 15)	Continuity
HEAD	13 – 14 – 16 (9 – 14 – 15)	Continuity

If continuity is not as specified, replace the switch.

2. INSPECT HEADLIGHT DIMMER SWITCH

( ): RHD Models (Except RHD models for Europe)

Switch position	Tester connection	Specified condition
Flash	7 – 8 – 16 (1 – 2 – 9)	Continuity
Low beam	16 – 17 (9 – 10)	Continuity
Hi beam	7 – 16 (2 – 9)	Continuity

If continuity is not as specified, replace the switch.

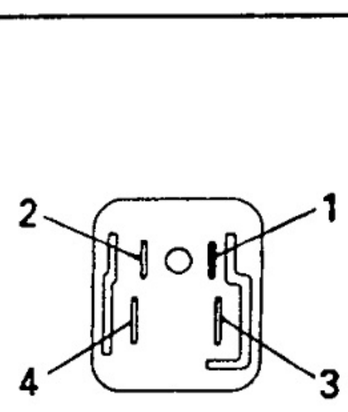

BE1838 BE1840

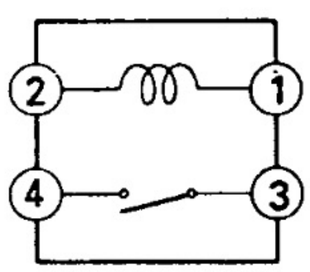

Z08444

HEADLIGHT RELAY INSPECTION

BE1CW-OK

INSPECT RELAY CONTINUITY

Condition	Tester connection	Specified condition
Constant	1 – 2	Continuity
Apply B+ between terminals 1 and 2.	3 – 4	Continuity

If continuity is not as specified, replace the relay.

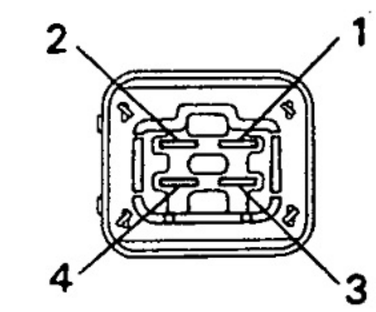

BE1839 BE1842

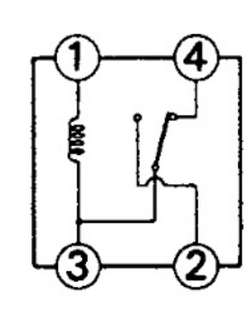

Z13559

HEADLIGHT DIMMER RELAY INSPECTION

BE1CW-OL

INSPECT RELAY CONTINUITY

Condition	Tester connection	Specified condition
Constant	1 – 3, 3 – 4	Continuity
Apply B+ between terminals 1 and 2.	2 – 3	Continuity

If continuity is not as specified, replace the relay.

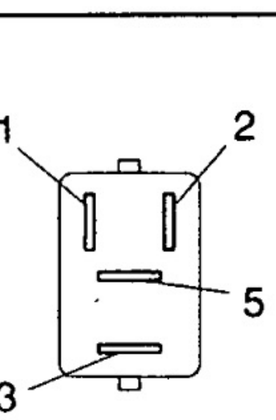

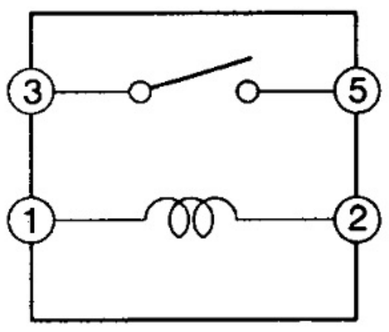

Y N14863

TAILLIGHT RELAY INSPECTION

BE396-01

INSPECT RELAY CONTINUITY

Condition	Tester connection	Specified condition
Constant	1 – 2	Continuity
Apply B+ between terminals 1 and 2.	3 – 5	Continuity

If continuity is not as specified, replace the relay.

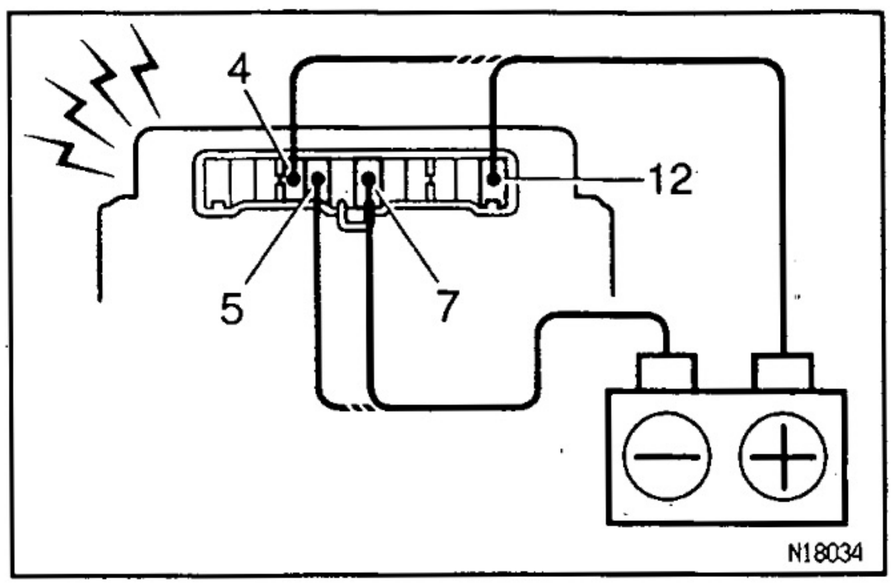

BE398-01

LIGHT–ON WARNING SYSTEM

INSPECTION

1. **INSPECT FRONT DOOR COURTESY SWITCH**
   (See page BE–30)
2. **INSPECT LIGHT REMAINDER RELAY OPERATION**

(a) Connect the positive (+) lead from the battery to terminal 5 and the negative (–) lead to terminal 6.

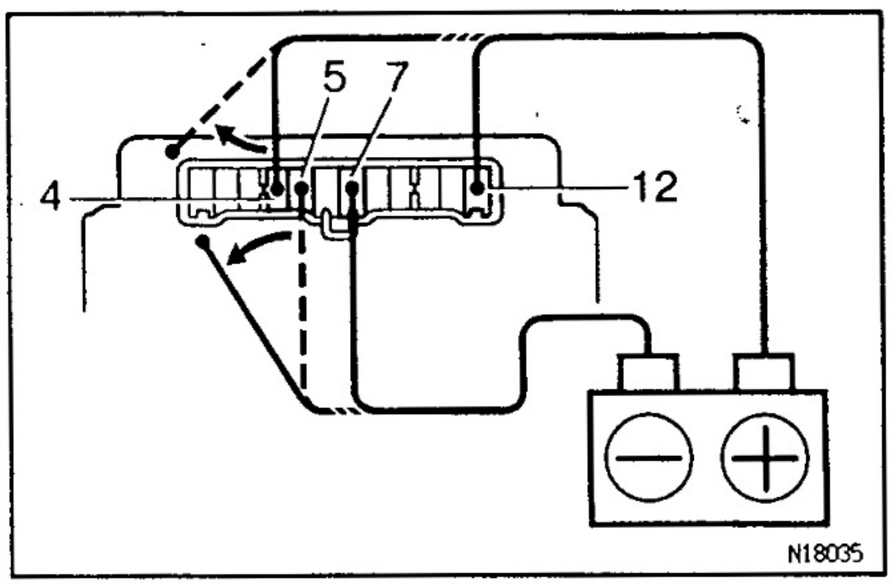

(b) Check that the buzzer does not sound when is terminal 3 or 4 connected to the positive (+) lead.

(c) Check that the buzzer sounds when disconnecting terminal 3 or 4 from the positive (+) lead.
If operation is not as specified, replace the relay.

3. **INSPECT INTEGRATION RELAY CIRCUIT**
   (See page BE–8)

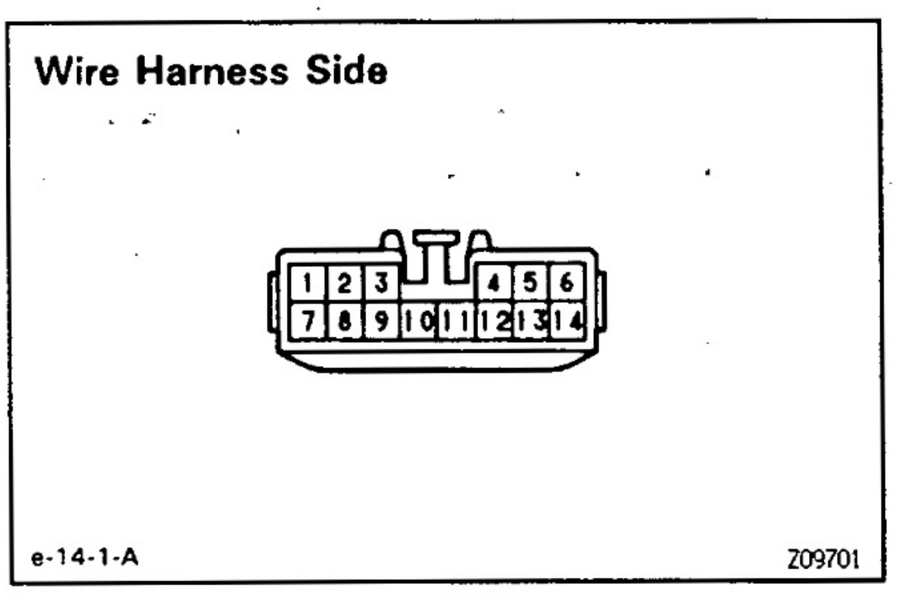

BE399-01

w/ D.R.L. System

D.R.L. RELAY INSPECTION

INSPECT RELAY CIRCUIT
Connector Disconnected
Disconnect the connector from relay and inspect the connector on wire harness side, as shown.

Tester connection	Condition	Specified condition
1 – Ground	Headlight dimmer switch position Low beam or High beam	No continuity
1 – Ground	Headlight dimmer switch position Flash	Continuity
3 – Ground	Light control switch position OFF or TAIL	No continuity
3 – Ground	Light control switch position HEAD	Continuity
5 – Ground	Light control switch position OFF	No continuity
5 – Ground	Light control switch position TAIL or HEAD	Continuity
8 – Ground	Light control switch position Low beam	No continuity
8 – Ground	Light control switch position Flash or High beam	Continuity
10 – Ground 11 – Ground 12 – Ground	Constant	Continuity
13 – Ground	Engine condition STOP	No continuity
13 – Ground	Engine condition RUNNING	Continuity
14 – Ground	Constant	Continuity

BE

Tester connection	Condition	Specified condition
2 – Ground 4 – Ground	Constant	Battery voltage
6 – Ground	Ignition switch position LOCK or ACC	No voltage
6 – Ground	Ignition switch position ON	Battery voltage
9 – Ground	Constant	Battery voltage

If circuit is as specified, try replacing the relay with a new one. If the circuit is not as specified, inspect the circuits connected to other parts.

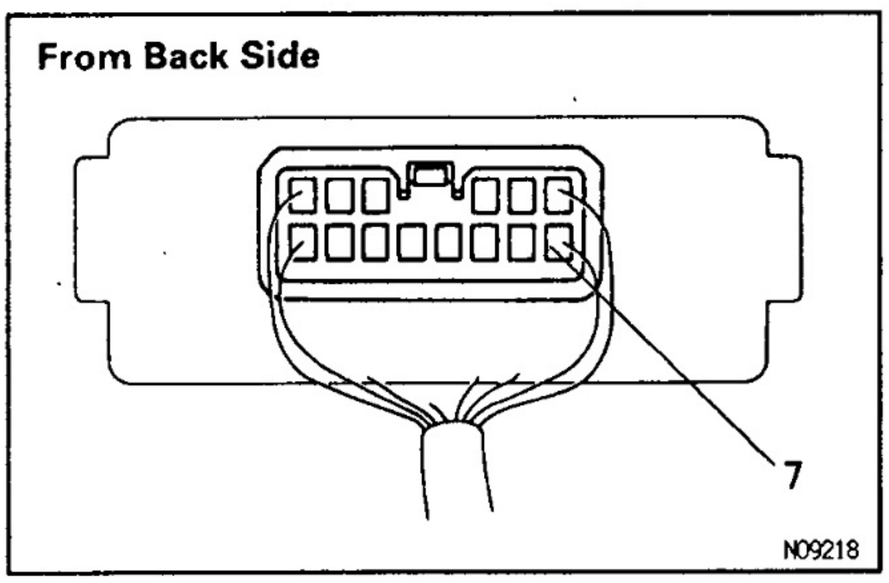

2. Connector Connected

Connect the wire harness side connector to the relay and inspect wire harness side connector from the back side, as shown.

Tester connection	Condition	Specified condition
7 – Ground	*Headlight dimmer switch position Low beam	No voltage
7 – Ground	*Headlight dimmer switch position High or Flash	Battery voltage

*: With light control switch turned to HEAD.
If circuit is as specified, try replacing the relay with a new one.
If circuit is not as specified, inspect the circuits connected to other parts.

HEADLIGHT BEAM LEVEL CONTROL SYSTEM

BE33X-02

Europe Only:

PARTS LOCATION

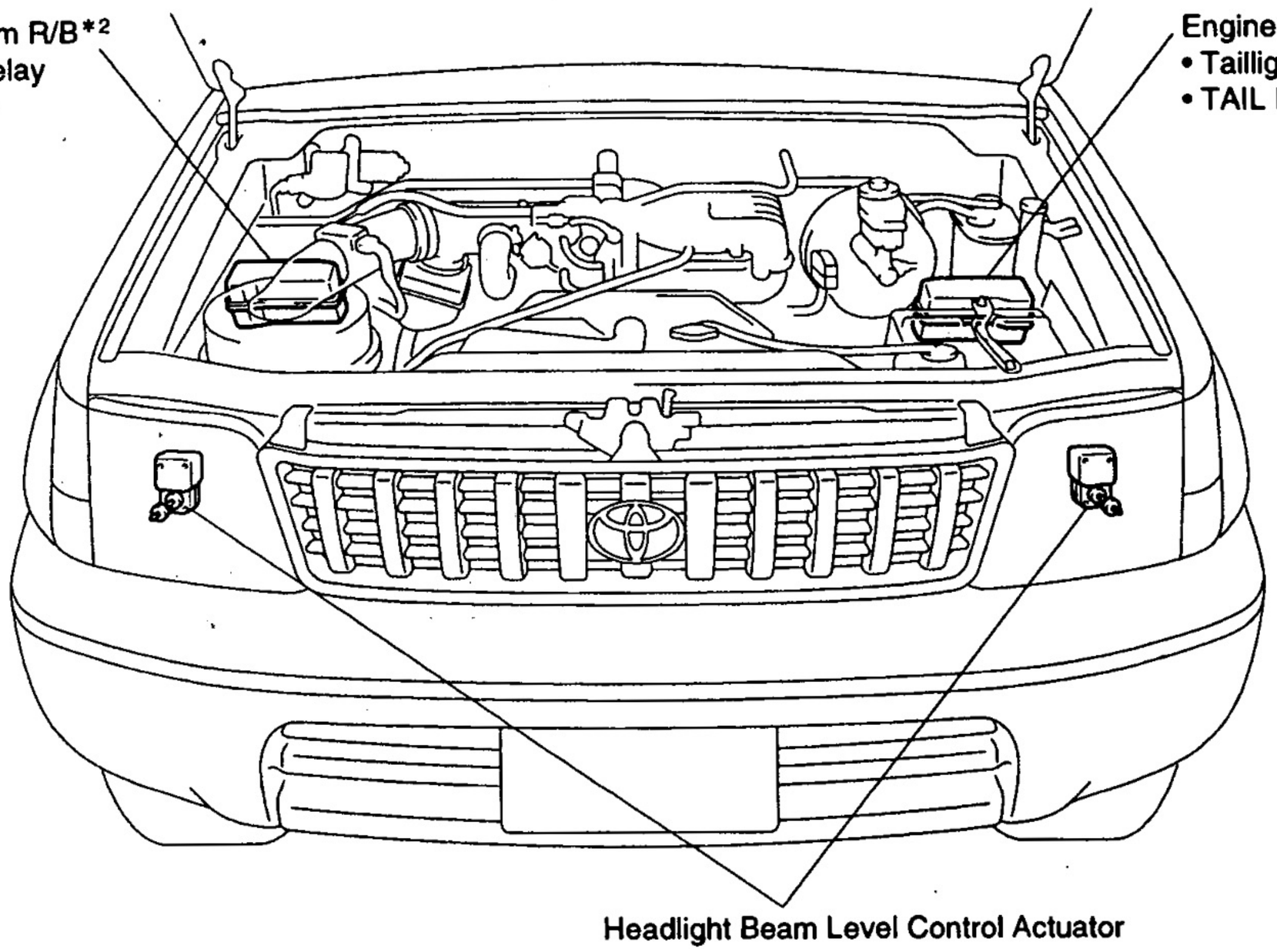

*1: Gasoline Engine, Diesel Engine (LHD models)
*2: Diesel Engine (RHD models)

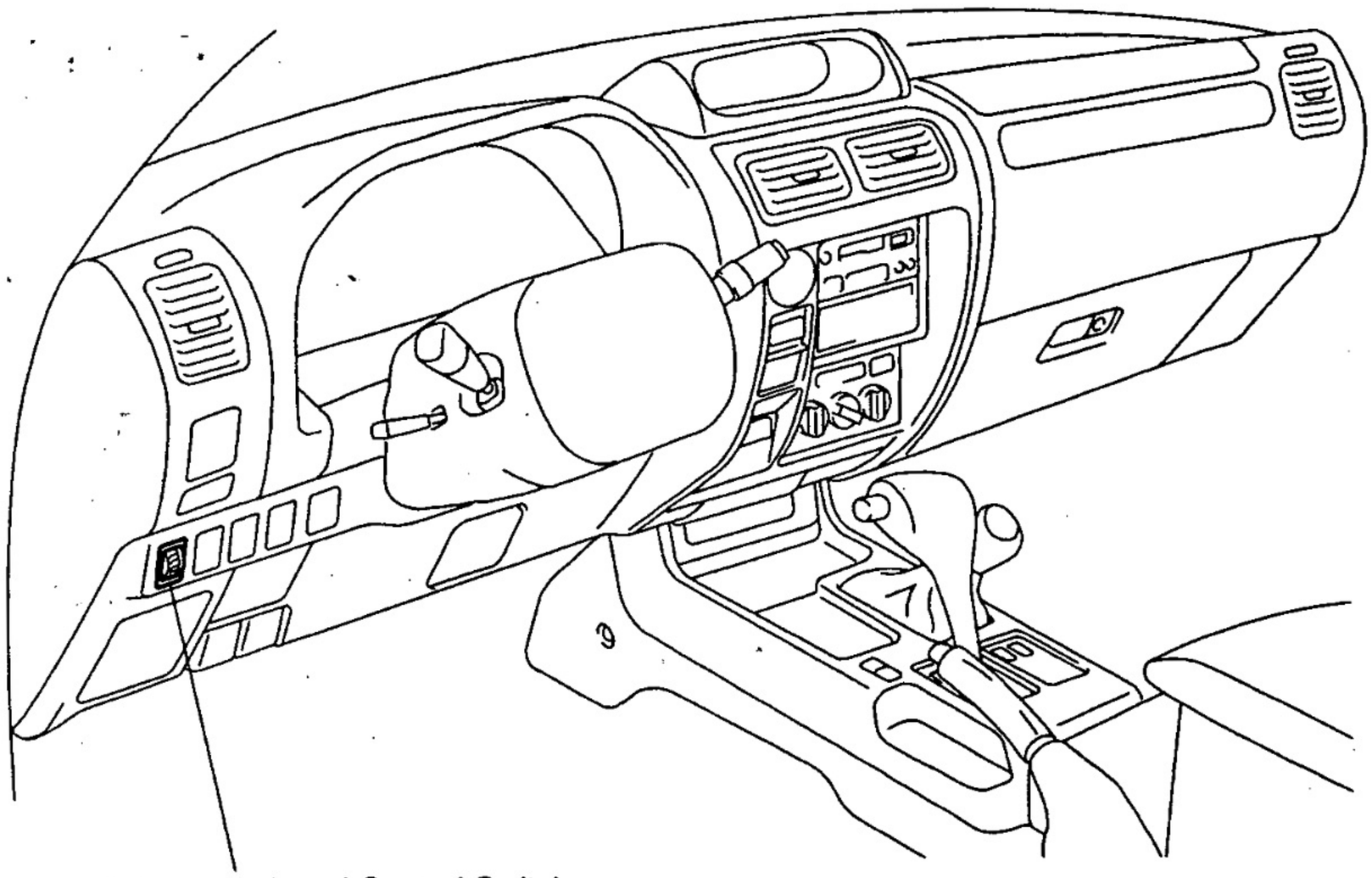

N19210
N19211

Z18183

BE

BE33Y-02

TROUBLESHOOTING

The table below will be useful for you in troubleshooting these electrical problems. The most likely causes of the malfunction are shown in the order of their probability. Inspect each part in the order shown, and replace the part when it is found to be faulty.

Trouble	Parts name	(See page)
Headlight beam level control system does not operate (All).	1. TAIL Fuse (Engine Room R/B)	
	2. Taillight Relay (Engine Room R/B)	(BE–16)
	3. Headlight Beam Level Control Switch	(BE–20)
	4. Headlight Beam Level Control Actuator	(BE–21)
	5. Wire Harness	
Headlight beam level control system does not operate (One side).	1. Headlight Beam Level Control Switch	(BE–20)
	2. Headlight Beam Level Control Actuator	(BE–21)
	3. Wire Harness	
Abnormal operation (All).	1. Headlight Beam Level Control Switch	(BE–20)
	2. Headlight Beam Level Control Actuator	(BE–21)
	3. Wire Harness	
Abnormal operation (One side).	1. Headlight Beam Level Control Switch	(BE–20)
	2. Headlight Beam Level Control Actuator	(BE–21)
	3. Wire Harness	

BE

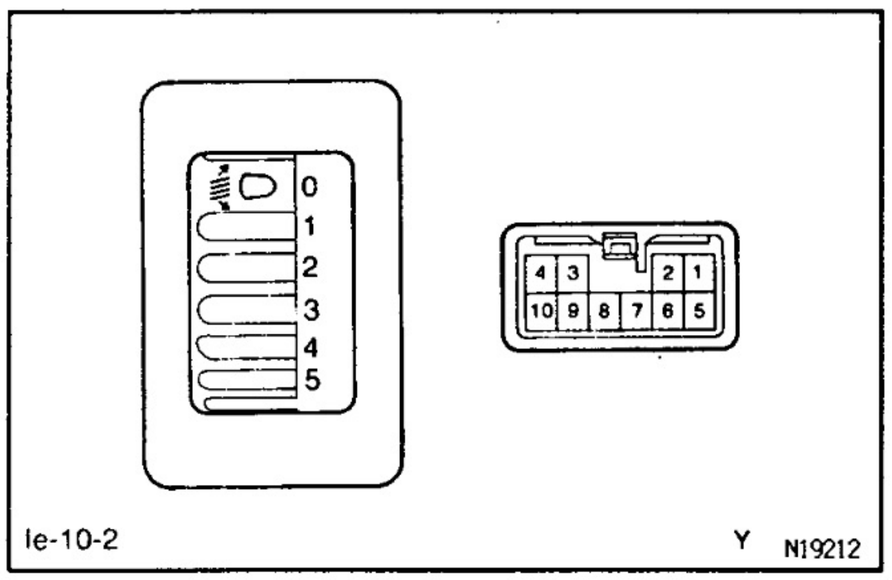

BE33Z-02

HEADLIGHT BEAM LEVEL CONTROL SWITCH INSPECTION

INSPECT SWITCH CONTINUITY

Switch position	Tester connection	Specified condition
0	4 – 10	Continuity
1	4 – 9	Continuity
2	4 – 8	Continuity
3	4 – 7	Continuity
4	4 – 6	Continuity
5	4 – 5	Continuity
Illumination circuit	2 – 3	Continuity

If continuity is not as specified, replace the switch.

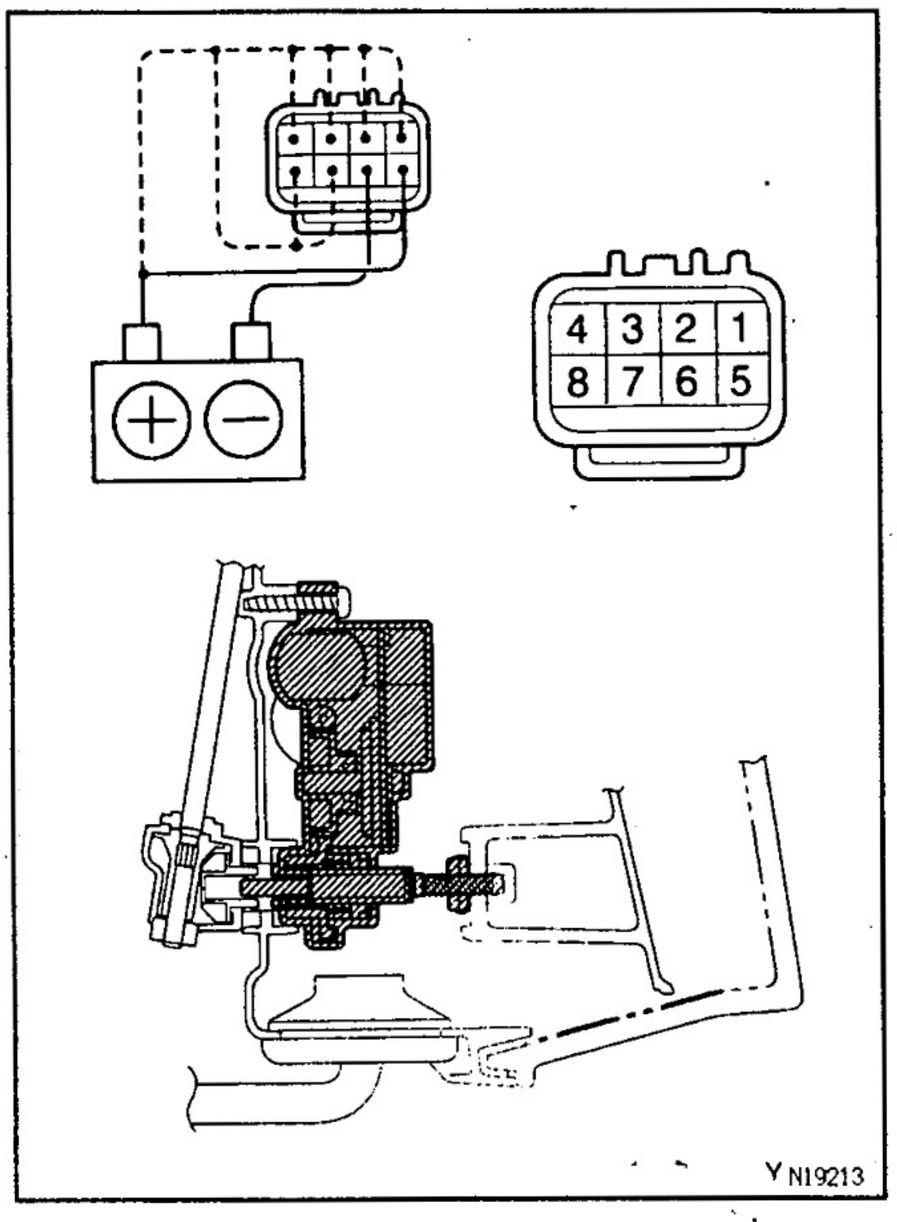

BE340-02

HEADLIGHT BEAM LEVEL CONTROL ACTUATOR INSPECTION

INSPECT ACTUATOR OPERATION

(a) Connect the positive (+) lead from the battery to terminal 6 and the negative (−) lead to terminal 5.

(b) Ground each terminal and check that each mode operates, as shown in the chart and illustration.

Terminal	Headlight Beam Level
1 – Ground	"0"
2 – Ground	"1"
3 – Ground	"2"
4 – Ground	"3"
7 – Ground	"4"
8 – Ground	"5"

If operation is not as specified, replace the actuator.

REAR FOG LIGHT SYSTEM

BE10Z–0A

Europe only:

PARTS LOCATION

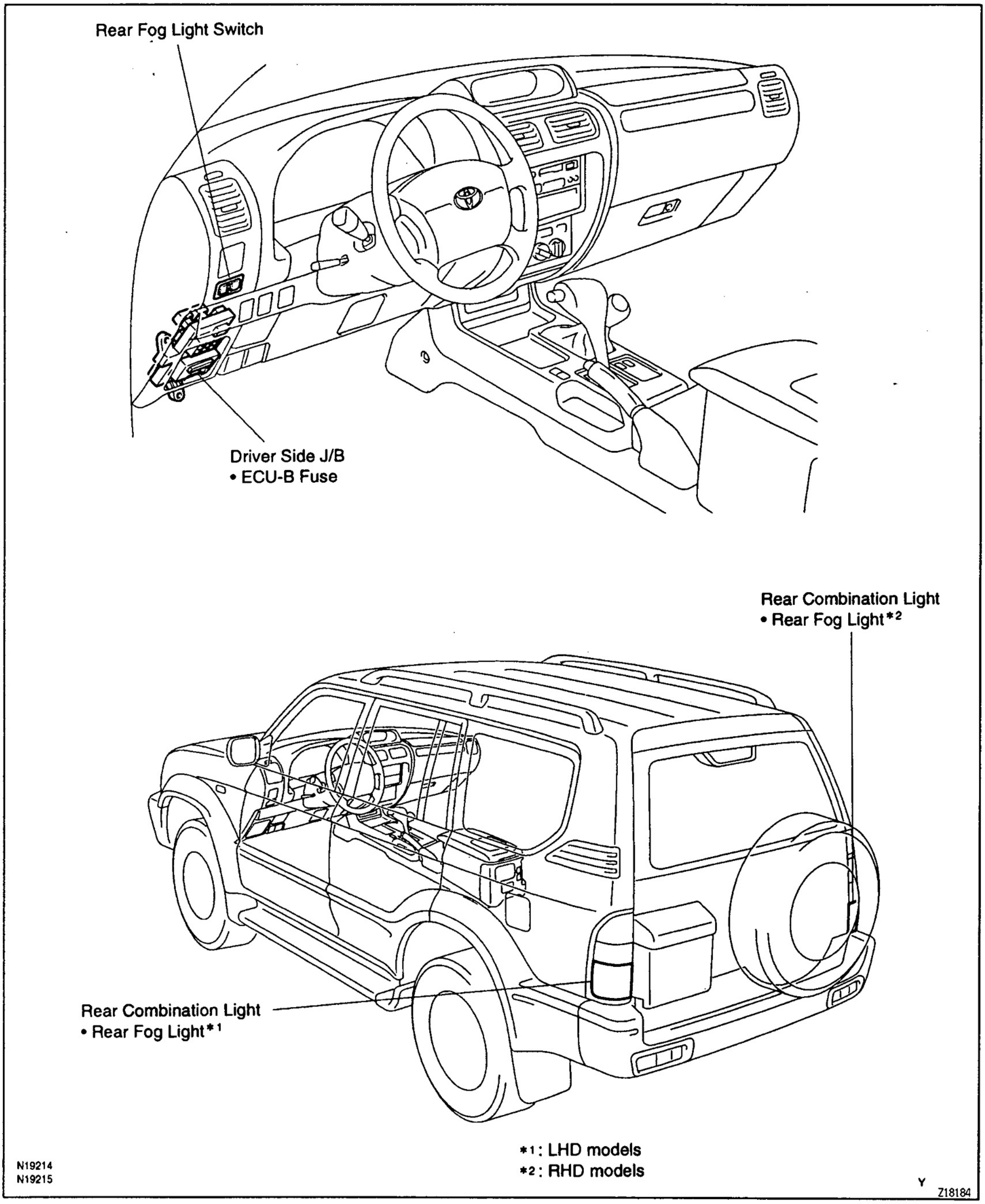

N19214
N19215

Y
Z18184

BE110-0G

TROUBLESHOOTING

The table below will be useful for you in troubleshooting these electrical problems. The most likely causes of the malfunction are shown in the order of their probability. Inspect each part in the order shown, and replace the part when it is found to be faulty.

Trouble	Parts name	(See page)
Rear fog light does not light with light control switch HEAD. (Headlight is normal.)	1. Bulb 2. ECU–B Fuse (Driver Side J/B) 3. Rear Fog Light Switch 4. Wire Harness	(BE–23)
Rear fog light does not light with light control switch HEAD. (Headlight does not light.)	1. Headlight and Taillight System 2. Wire Harness	(BE–10)
Only one light does not light	1. Bulb 2. Wire Harness	

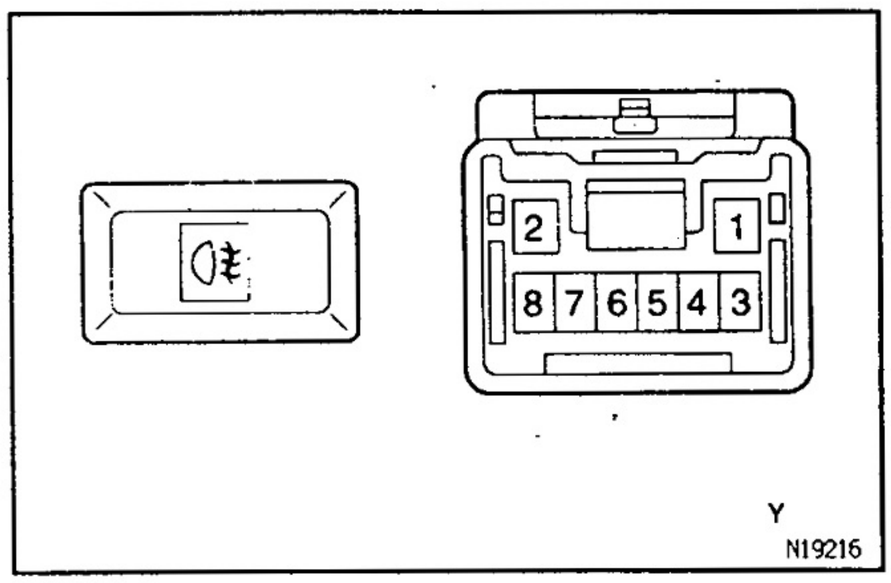

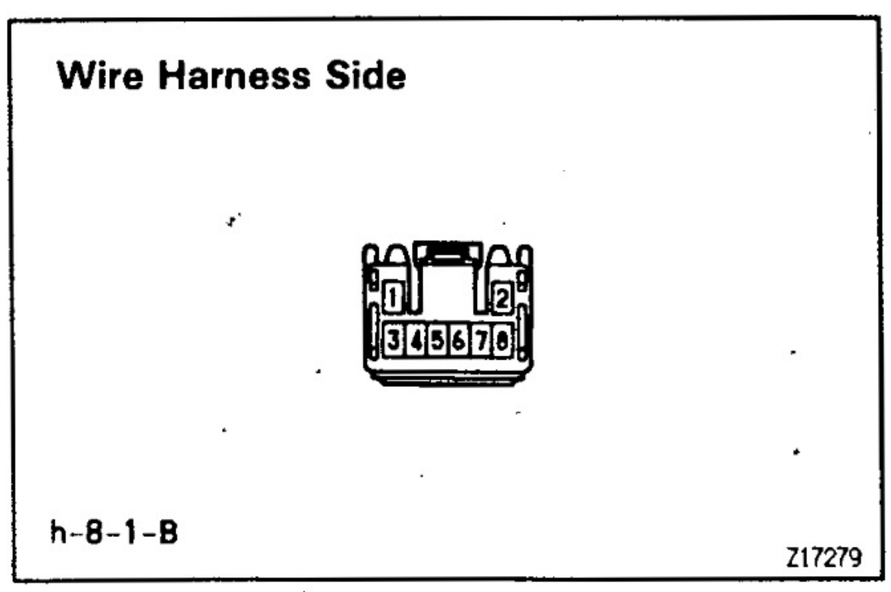

REAR FOG LIGHT SWITCH INSPECTION

BE30W-02

1. INSPECT SWITCH CONTINUITY

Switch position	Tester connection	Specified condition
OFF	–	No continuity
ON	2 – 5	Continuity
Illumination circuit	2 – 8	Continuity

If continuity is not as specified, replace the switch.

2. INSPECT SWITCH CIRCUIT

Disconnect the actuator connector from the switch, and inspect the connector on the wire harness side.

*: There is resistance because this circuit is grounded through the bulb.

If the circuit is not as specified, inspect the circuits connected to other pars.

Tester connection	Condition	Specified condition
1 – Ground	Constant	* Continuity
4 – Ground	Constant	Continuity
5 – Ground	Light control switch HEAD	Continuity
7 – Ground	Constant	Continuity
8 – Ground	Constant	Continuity
2 – Ground	Light control switch TAIL or HEAD	Battery voltage
3 – Ground	Constant	Battery voltage

TURN SIGNAL AND HAZARD WARNING SYSTEM

PARTS LOCATION

BE04N–00

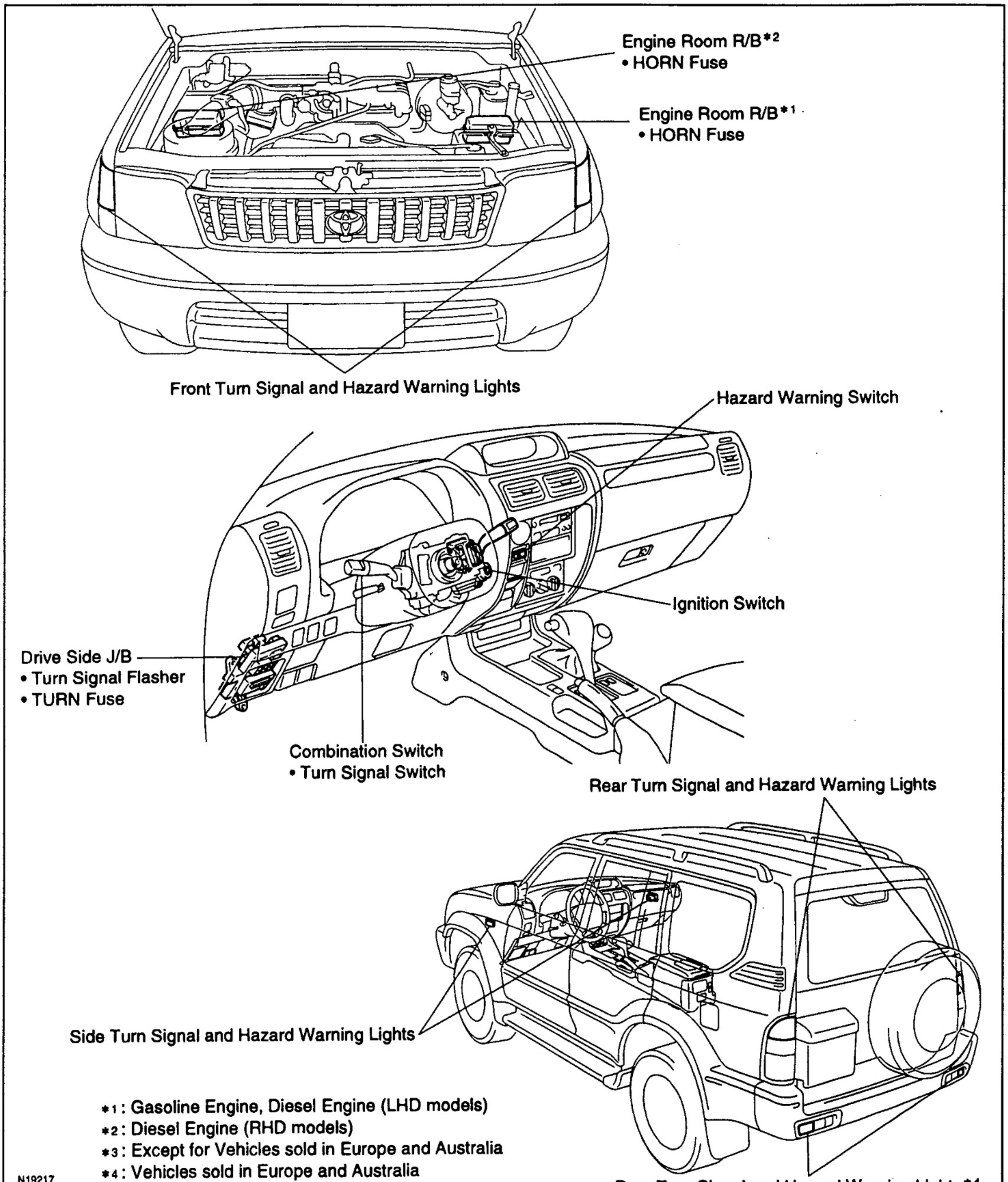

*1 : Gasoline Engine, Diesel Engine (LHD models)
*2 : Diesel Engine (RHD models)
*3 : Except for Vehicles sold in Europe and Australia
*4 : Vehicles sold in Europe and Australia

N19217
N19218
N19219

Y

Z18185

BE04Q-12

TROUBLESHOOTING

The table below will be useful for you in troubleshooting these electrical problems. The most likely causes of the malfunction are shown in the order of their probability. Inspect each part in the order shown, and replace the part when it is found to be faulty.

Trouble	Parts name	(See page)
"Hazard" and "Turn" do not light up.	1. Hazard Warning Switch 2. Turn Signal Flasher 3. Wire Harness	(BE–26) (BE–26)
The flashing frequency is abnormal.	1. Bulb 2. Turn Signal Flasher 3. Wire Harness	 (BE–26)
Hazard warning light does not light up. (Turn is normal)	1. HORN Fuse (Engine Room R/B) 2. Wire Harness	
Hazard warning light does not light up in one direction.	1. Hazard Warning Switch 2. Wire Harness	(BE–26)
Turn signal does not light up. (Combination meter, wiper and washer do not operate.)	1. Ignition Switch 2. TURN Fuse (Driver Side J/B) 3. Turn Signal Switch 4. Wire Harness	(BE–7) (BE–26)
Turn signal does not light up. (Combination meter, wiper and washer are normal.)	1. TURN Fuse (Driver Side J/B) 2. Turn Signal Switch 3. Wire Harness	 (BE–26)
Turn signal does not light up in one direction.	1. Turn Signal Switch 2. Wire Harness	(BE–26)
Only one bulb does not light up.	1. Bulb 2. Wire Harness	

BE

LHD models
(Include RHD models for Europe) :

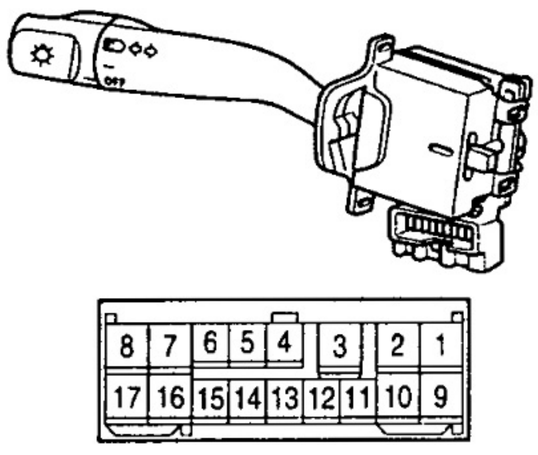

RHD models
(Except RHD models for Europe) :

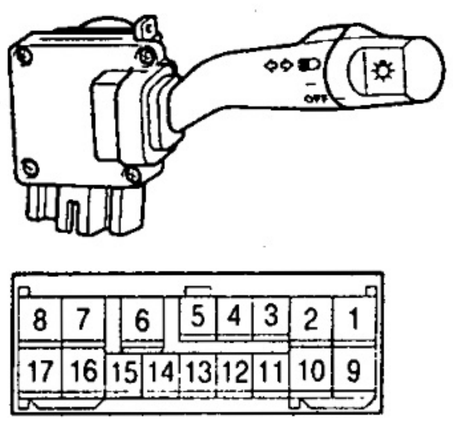

N15855

TURN SIGNAL SWITCH INSPECTION

BE38U–01

INSPECT SWITCH CONTINUITY

( ): RHD models (Except RHD models for Europe)

Switch position	Tester connection	Specified condition
Left turn	1 – 2 (6 – 7)	Continuity
Neutral	–	No continuity
Right turn	2 – 3 (7 – 8)	Continuity

If continuity is not as specified, replace the switch.

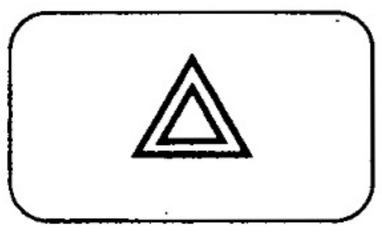

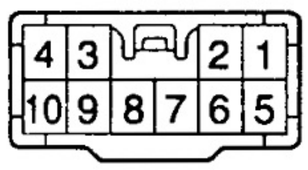

N15872

HAZARD WARNING SWITCH INSPECTION

BE1CZ–0E

INSPECT SWITCH CONTINUITY

Switch position	Tester connection	Specified condition
OFF	5 – 7	Continuity
ON	1 – 2 – 3 – 4 5 – 6	Continuity
Illumination circuit	2 – 3	Continuity

If continuity is not as specified, replace the switch.

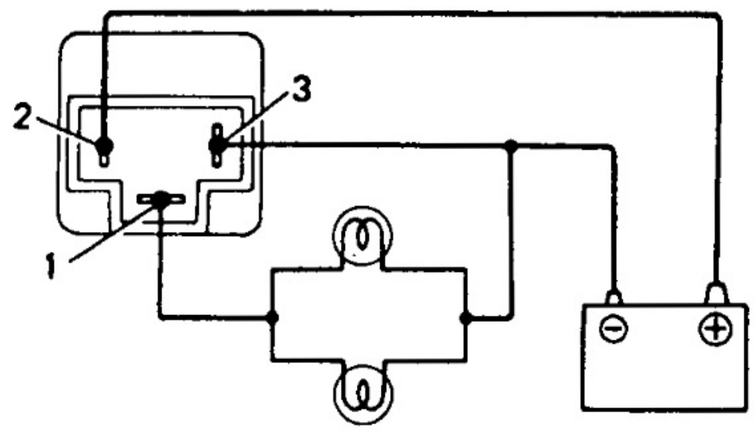

Turn Signal Light Bulbs (21W)

BE1843

TURN SIGNAL FLASHER INSPECTION

BE04U–0W

INSPECT FLASHER OPERATION

(a) Connect the positive (+) lead from the battery to terminal 2 and the negative (–) lead to terminal 3.
(b) Connect the 2 turn signal light bulbs parallel to each other to terminals 1 and 3, check that the bulbs flash.
HINT: The turn signal lights should flash 60 or 120 times per minute.
If one of the front or rear turn signal lights has an open circuit, the number of flashers will be more than 140 per minute.
If operation is not as specified, replace the flasher.

BE

INTERIOR LIGHT SYSTEM
PARTS LOCATION

BE113-0A

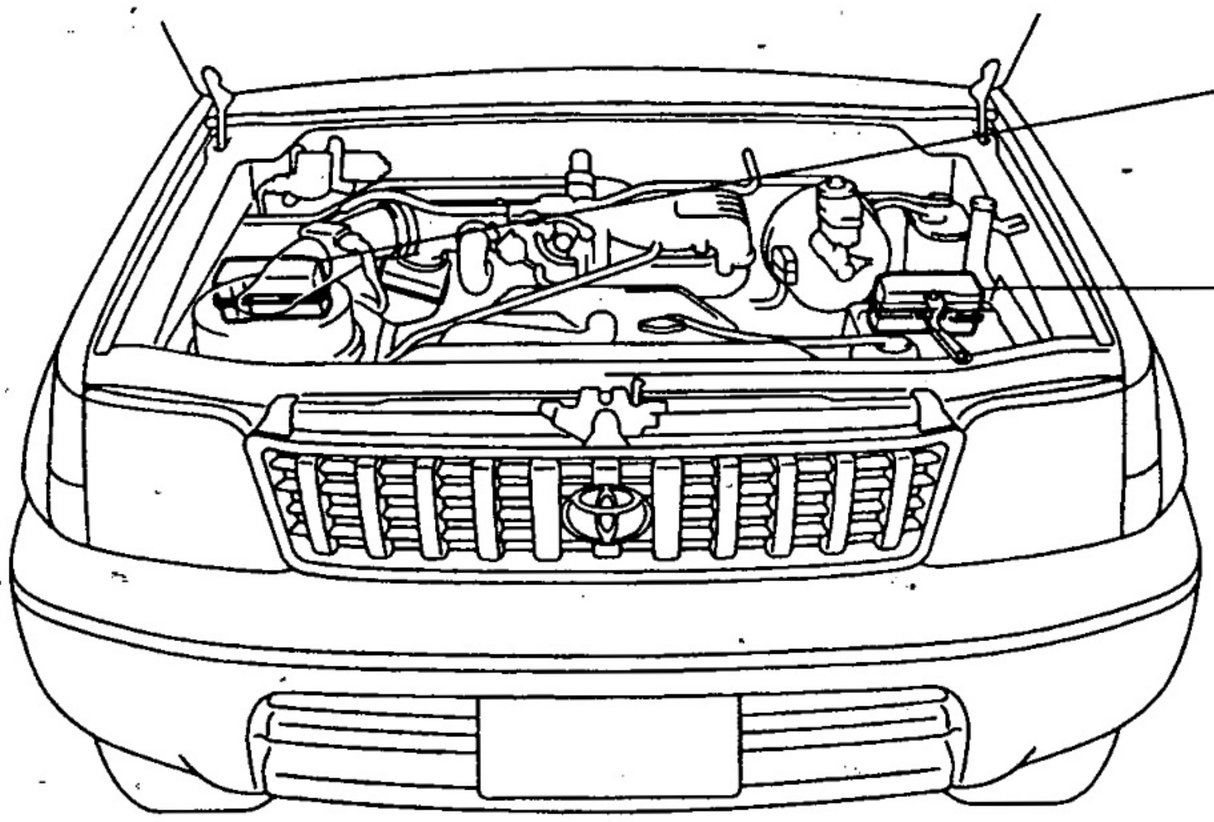

*1: Gasoline Engine, Diesel Engine (LHD models)
*2: Diesel Engine (RHD models)

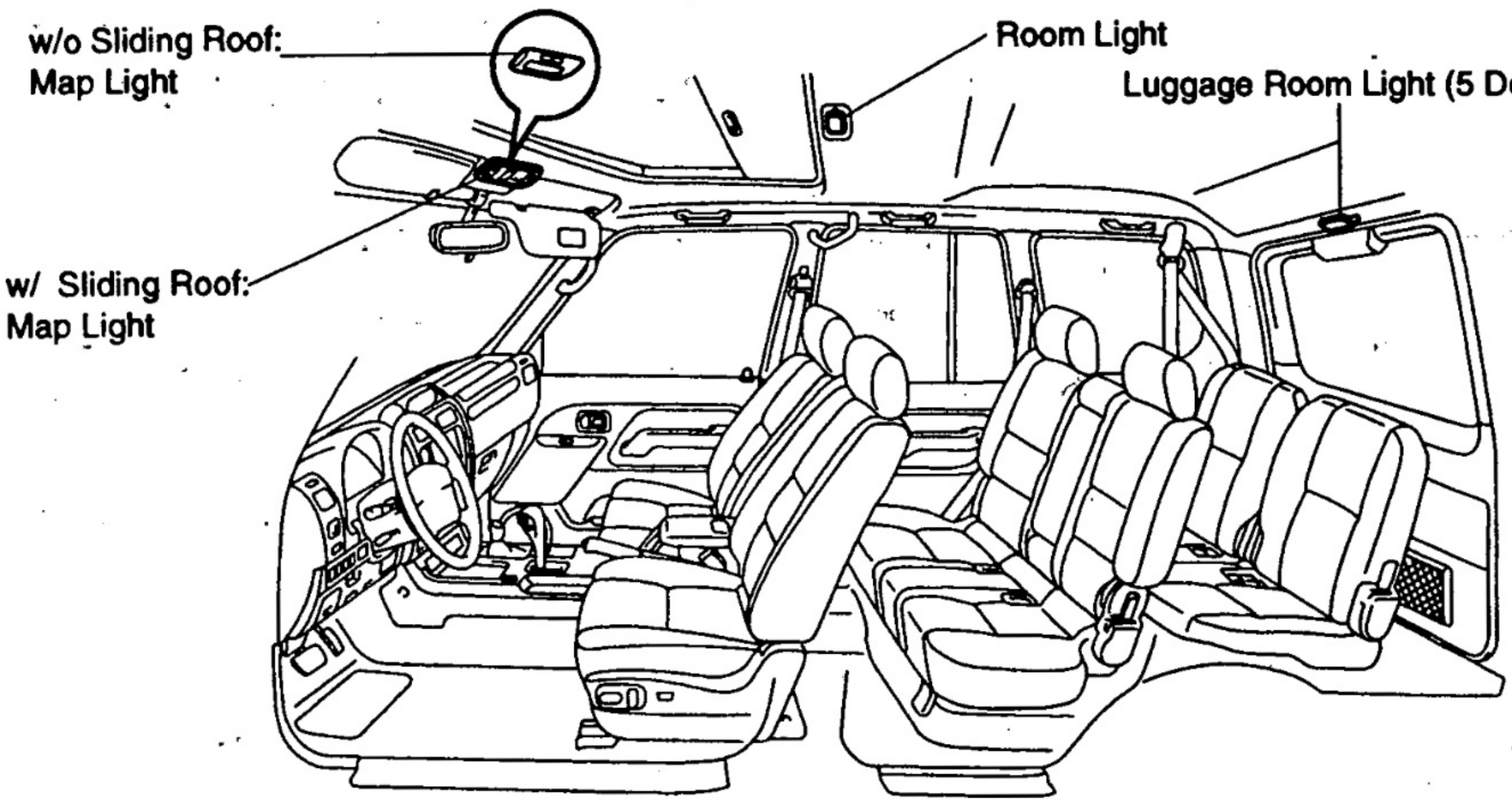

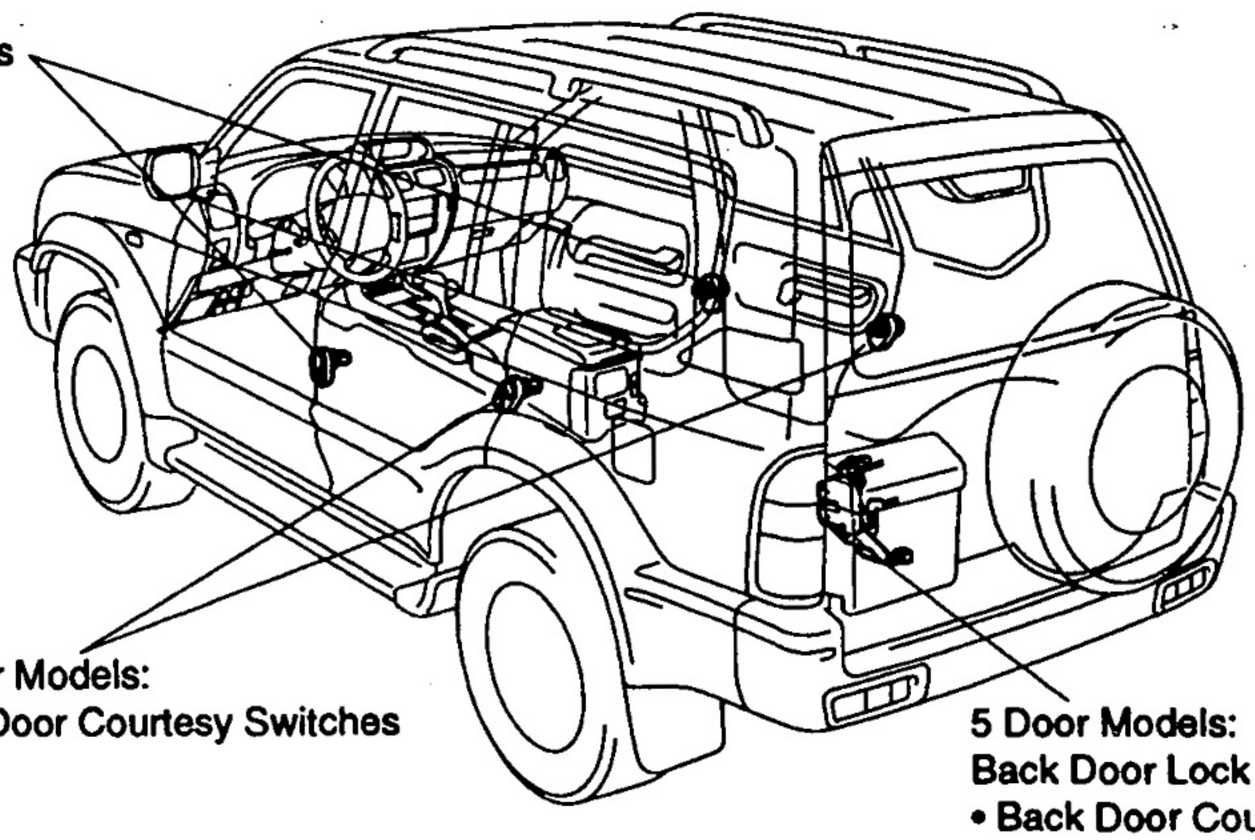

N19196
N19220
N19221

Z18186

BE06L-13

TROUBLESHOOTING

The table below will be useful for you in troubleshooting these electrical problems. The most likely causes of the malfunction are shown in the order of their probability. Inspect each part in the order shown, and replace the part when it is found to be faulty.

Trouble	Parts name	(See page)
Only one light does not light up.	1. Bulb 2. Wire Harness	
Interior light does not light up (All).	1. DOME Fuse (Driver's side R/B) 2. Wire Harness	
Interior light does not light up (in front map light).	1. Bulb 2. Map Light Assembly 3. Wire Harness	(BE–28)
Room light does not light up.	1. Bulb 2. Room Light Assembly 3. Wire Harness	(BE–29)
Luggage room light does not light up.	1. Bulb 2. Luggage Room Light Assembly 3. Wire Harness	(BE–29)

w / Sliding Roof

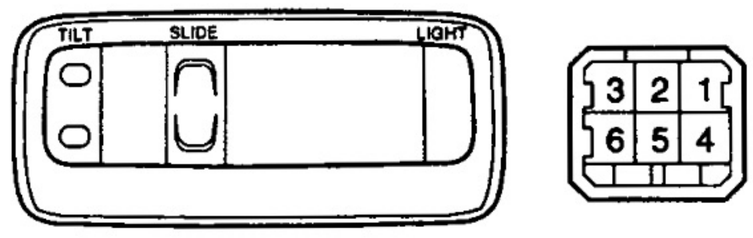

S-b-2-B Y N19222

w/o Sliding Roof

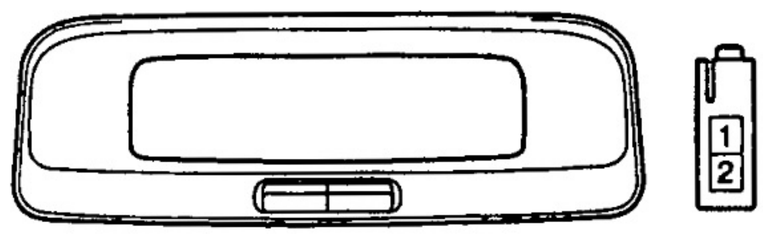

GA-2-1-B Y N19223

BE38O-01

MAP LIGHT ASSEMBLY INSPECTION

w/ Sliding Roof System:

1. INSPECT LIGHT CONTINUITY

Switch position	Tester connection	Specified condition
ON	1 – 4	Continuity
OFF	–	No continuity

If continuity is not as specified, replace the light assembly assembly or bulb.

w/o Sliding Roof System:

2. INSPECT LIGHT CONTINUITY

Switch position	Tester connection	Specified condition
ON	1 – 2	Continuity
OFF	–	No continuity

If continuity is not as specified, replace the light assembly assembly or bulb.

BE

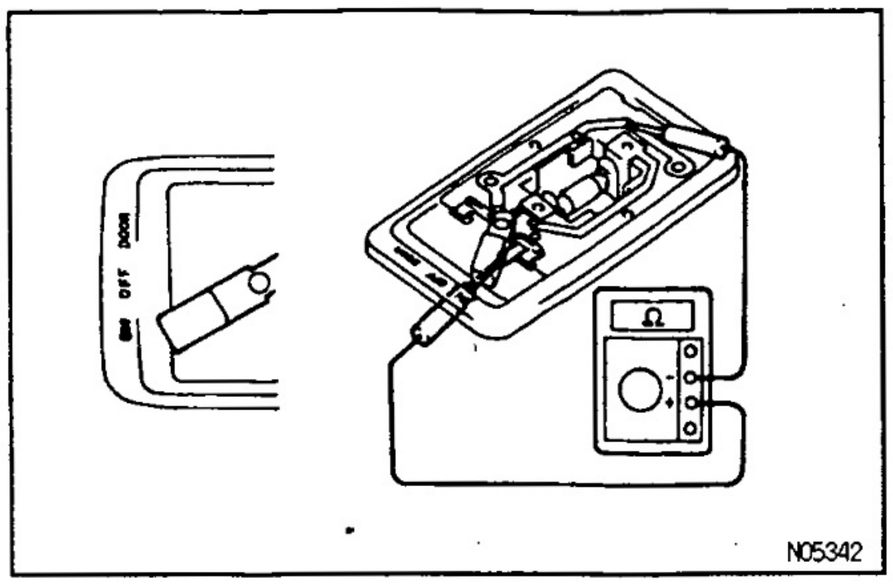

ROOM LIGHT ASSEMBLY INSPECTION BE36F-01

INSPECT ASSEMBLY CONTINUITY

(a) Disconnect the connector from the room light assembly.

(b) Turn the between room light switch ON, check that there is terminal 2 and the body ground.

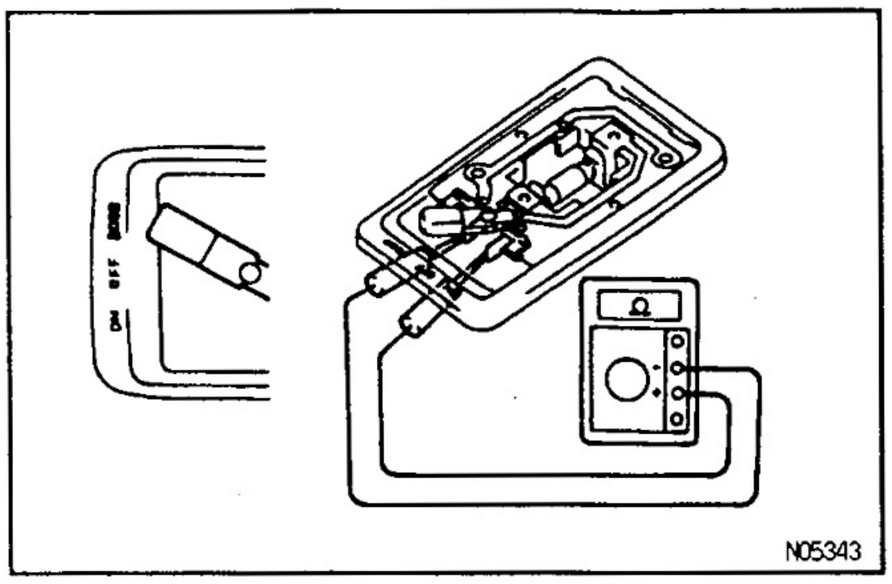

(c) Turn the room light switch DOOR, check that there is continuity between the terminals.
If operation is not as specified, replace the switch.

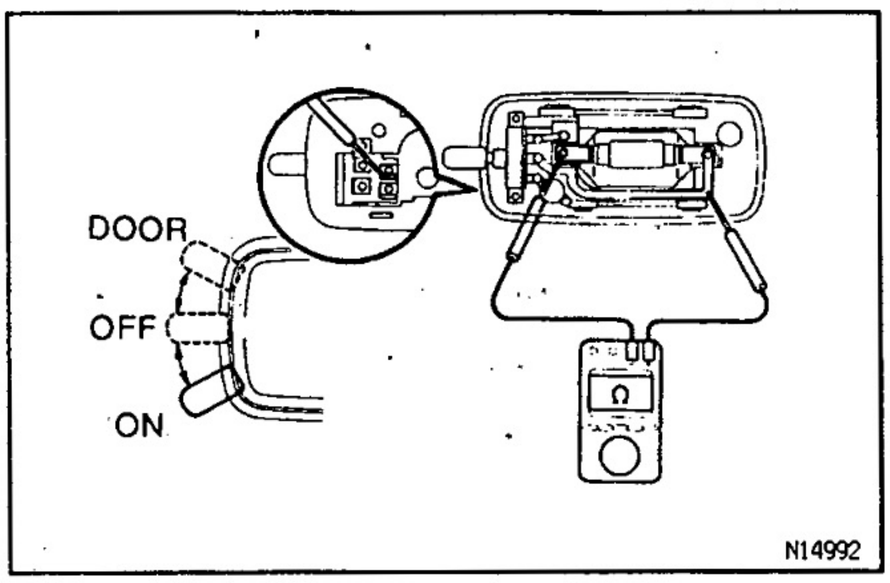

LUGGAGE ROOM LIGHT ASSEMBLY INSPECTION BE36H-01

5 door models only:

INSPECT ROOM LIGHT SWITCH CONTINUITY

(a) Disconnect the connector from room light assembly.

(b) Turn the room light switch ON, and check that there is continuity between terminal 2 and body ground.

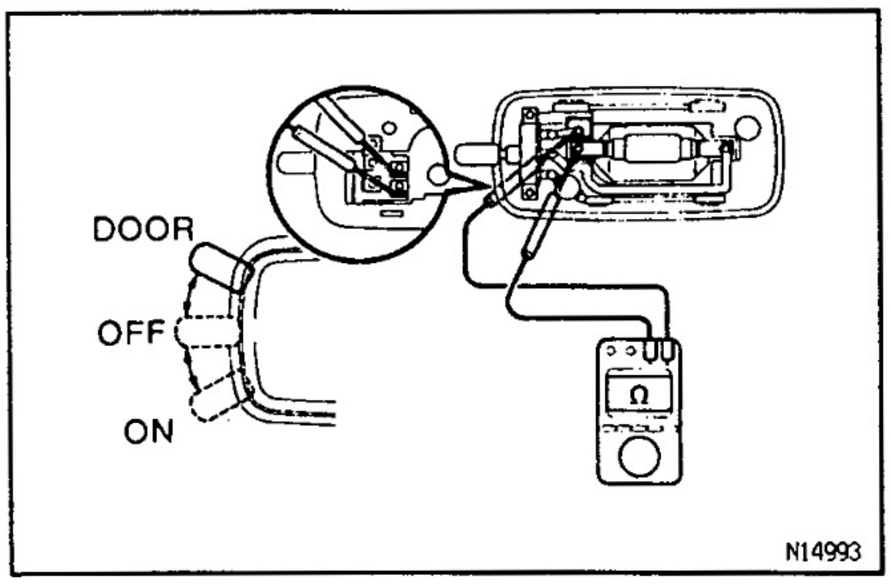

(c) Turn the room light switch DOOR, and check that there is continuity between terminals 1 and 2.
If operation is not as specified, replace the light assembly.

BE

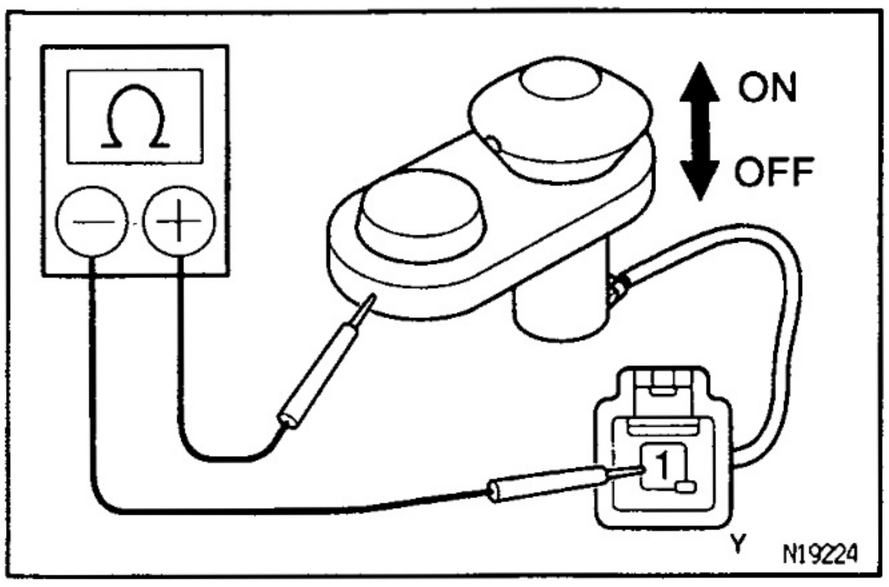

DOOR COURTESY SWITCH INSPECTION

BE38J-01

1. INSPECT FRONT AND REAR DOOR COURTESY SWITCH CONTINUITY

(a) Check that there is continuity between terminal and the switch body with the switch ON (switch pin released : opened door).

(b) Check that there is no continuity between terminal and the switch body with the switch OFF (switch pin pushed in : closed door).

If continuity is not as specified, replace the switch.

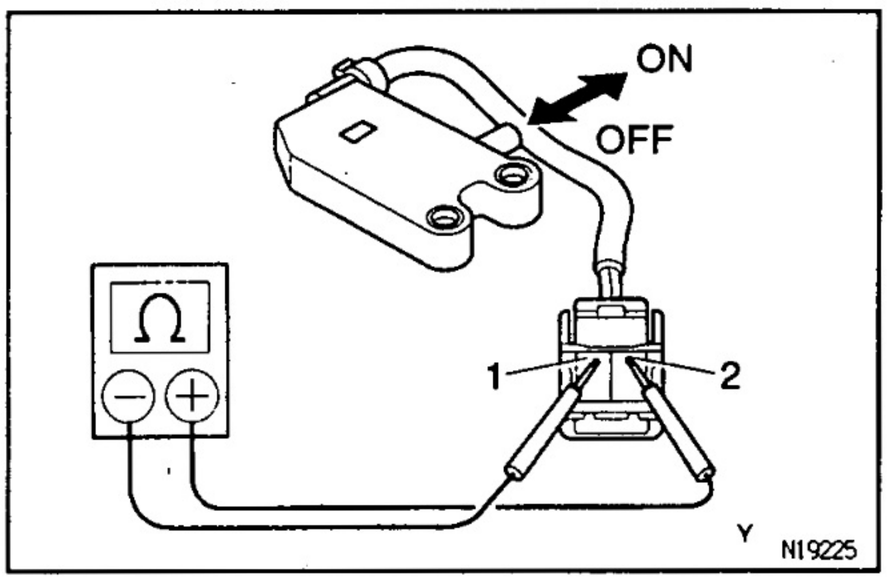

2. INSPECT BACK DOOR COURTESY SWITCH CONTINUITY

(a) Check that there is continuity between terminals 1 and 2 with the switch ON (switch pin pushed).

(b) Check that there is no continuity between terminals 1 and 2 with the switch OFF (switch pin pushed).

If continuity is not as specified, replace the switch.

BACK–UP LIGHT SYSTEM

BE012–ON

PARTS LOCATION

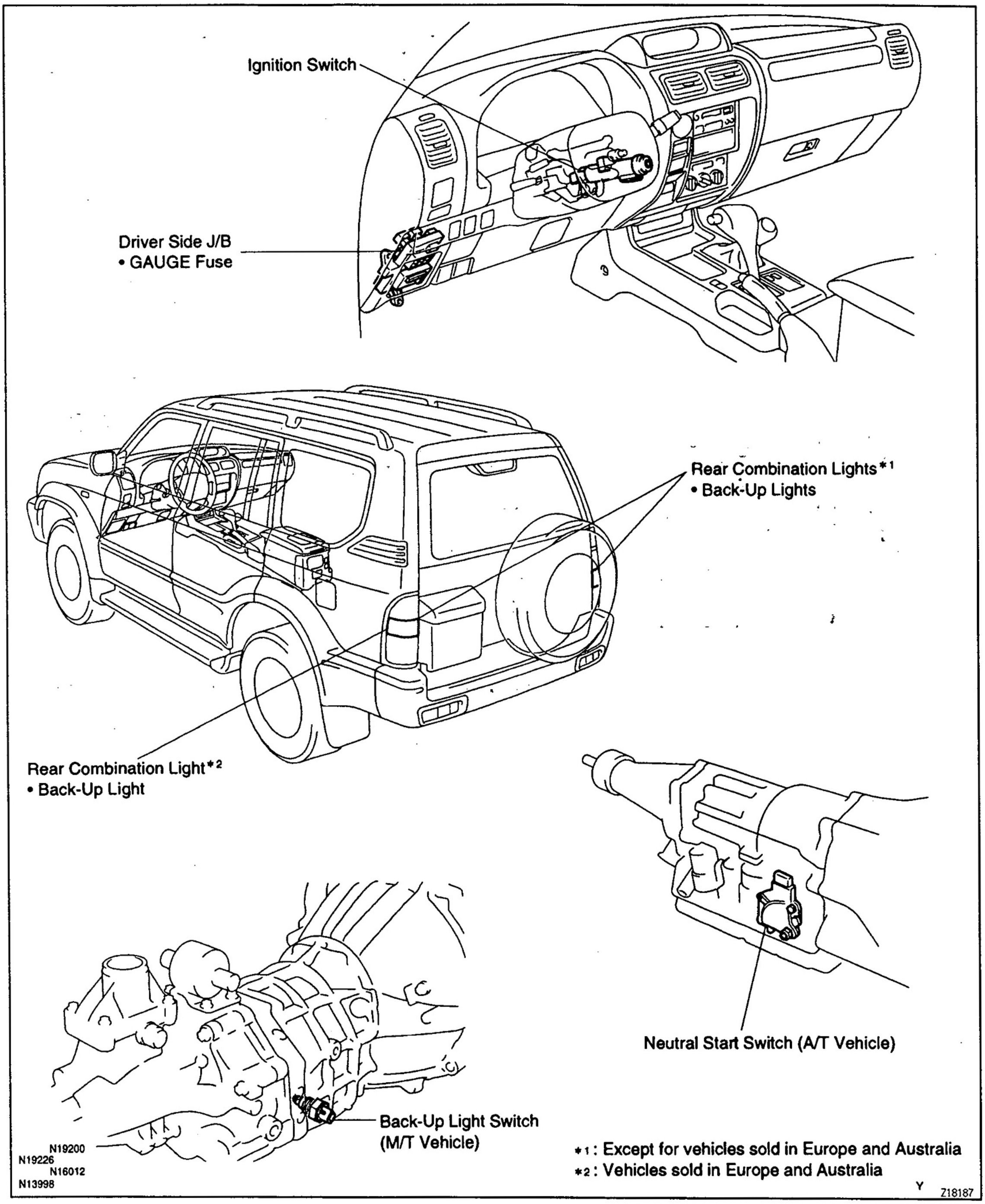

*1 : Except for vehicles sold in Europe and Australia
*2 : Vehicles sold in Europe and Australia

Y

Z18187

BE

BE013–11

TROUBLESHOOTING

The table below will be useful for you in troubleshooting these electrical problems. The most likely causes of the malfunction are shown in the order of their probability. Inspect each part in the order shown, and replace the part when it is found to be faulty.

Trouble	Parts name	(See page)
Back Up Light does not light up.	1. GAUGE Fuse (Driver Side J/B) 2. Ignition Switch 3. Back–up Light Switch 4. Neutral Start Switch 5. Bulb 6. Wire Harness	 (BE–7) (BE–32) (AT–60)
Back Up Light remains always on.	1. Wire Harness	
Only one light does not light up.	1. Bulb 2. Wire Harness	

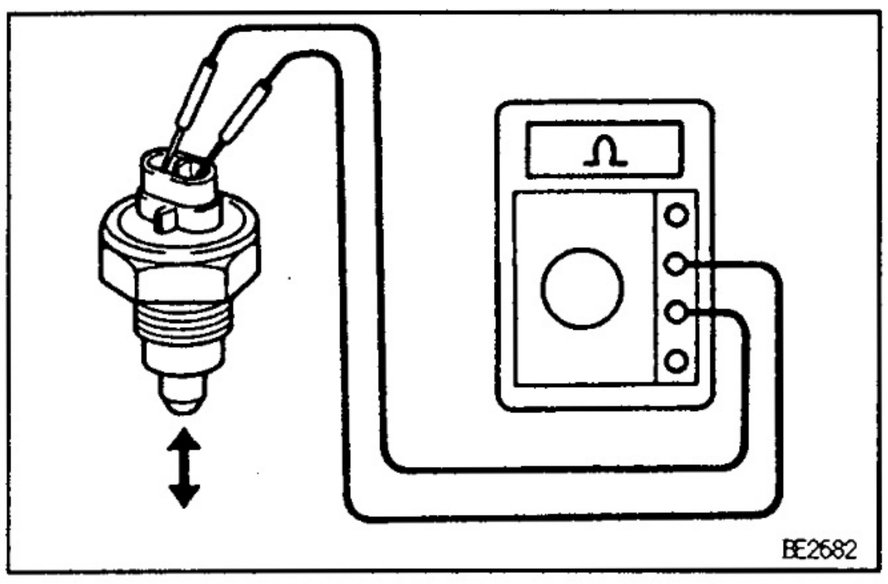

BE

BACK–UP LIGHT SWITCH INSPECTION

BE014–0W

INSPECT SWITCH CONTINUITY

Switch position	Tester connection	Specified condition
Free	–	No continuity
Push	1 – 2	Continuity

If continuity is not as specified, replace the switch.

NEUTRAL START SWITCH INSPECTION

BE1D6–0A

See page AT–60

STOP LIGHT SYSTEM
PARTS LOCATION

BE31P–02

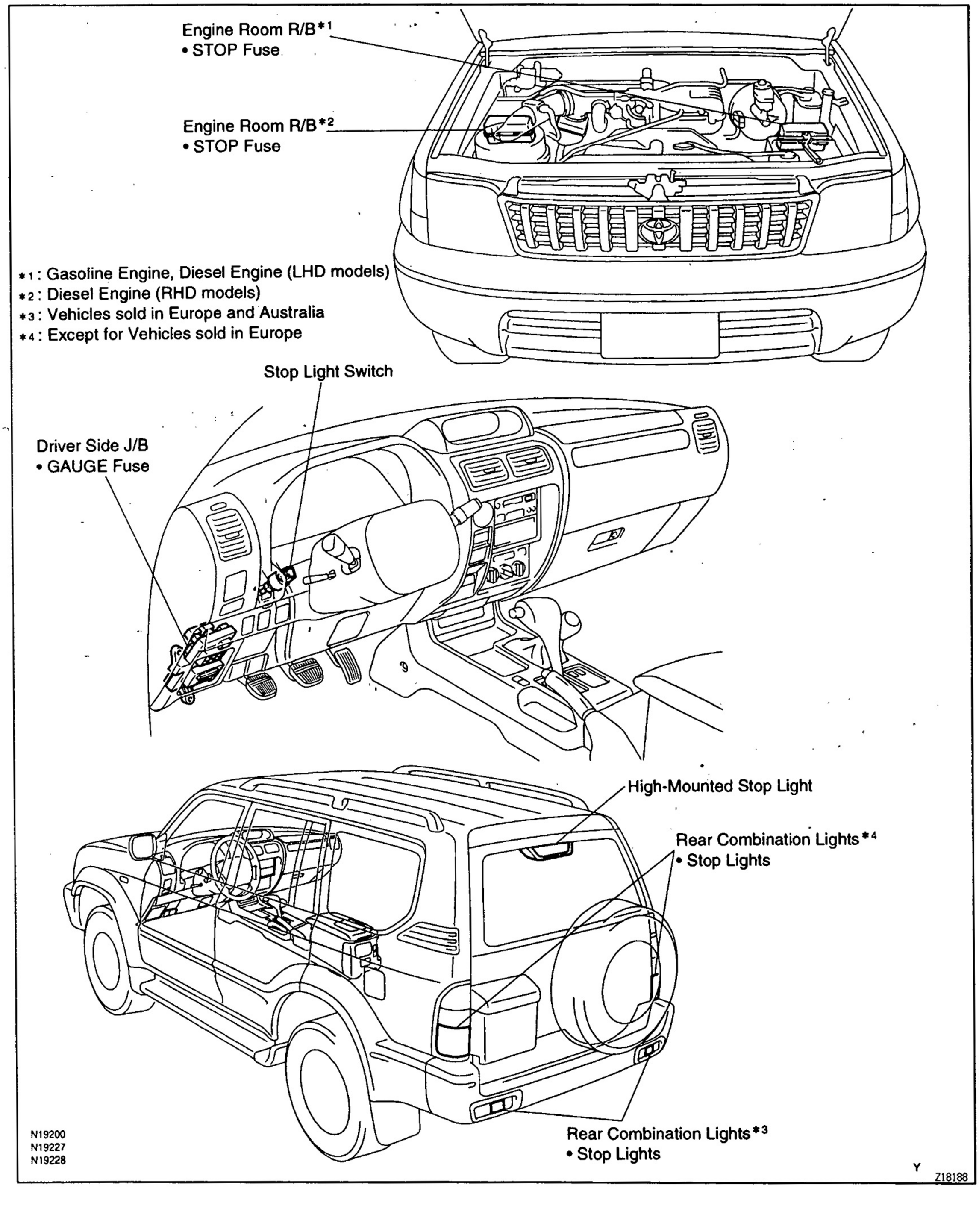

BE016-11

TROUBLESHOOTING

The table below will be useful for you in troubleshooting these electrical problems. The most likely causes of the malfunction are shown in the order of their probability. Inspect each part in the order shown, and replace the part when it is found to be faulty.

Trouble	Parts name	(See page)
Stop light does not light up.	1. STOP Fuse (Driver Side J/B) 2. GAUGE Fuse (Driver Side J/B) 3. Stop Light Switch 4. Bulb 5. Wire Harness	(BE–34 and 35)
Stop light remains always on.	1. Stop Light Switch 2. Wire Harness	(BE–34 and 35)
Only one light does not light up.	1. Bulb 2. Wire Harness	

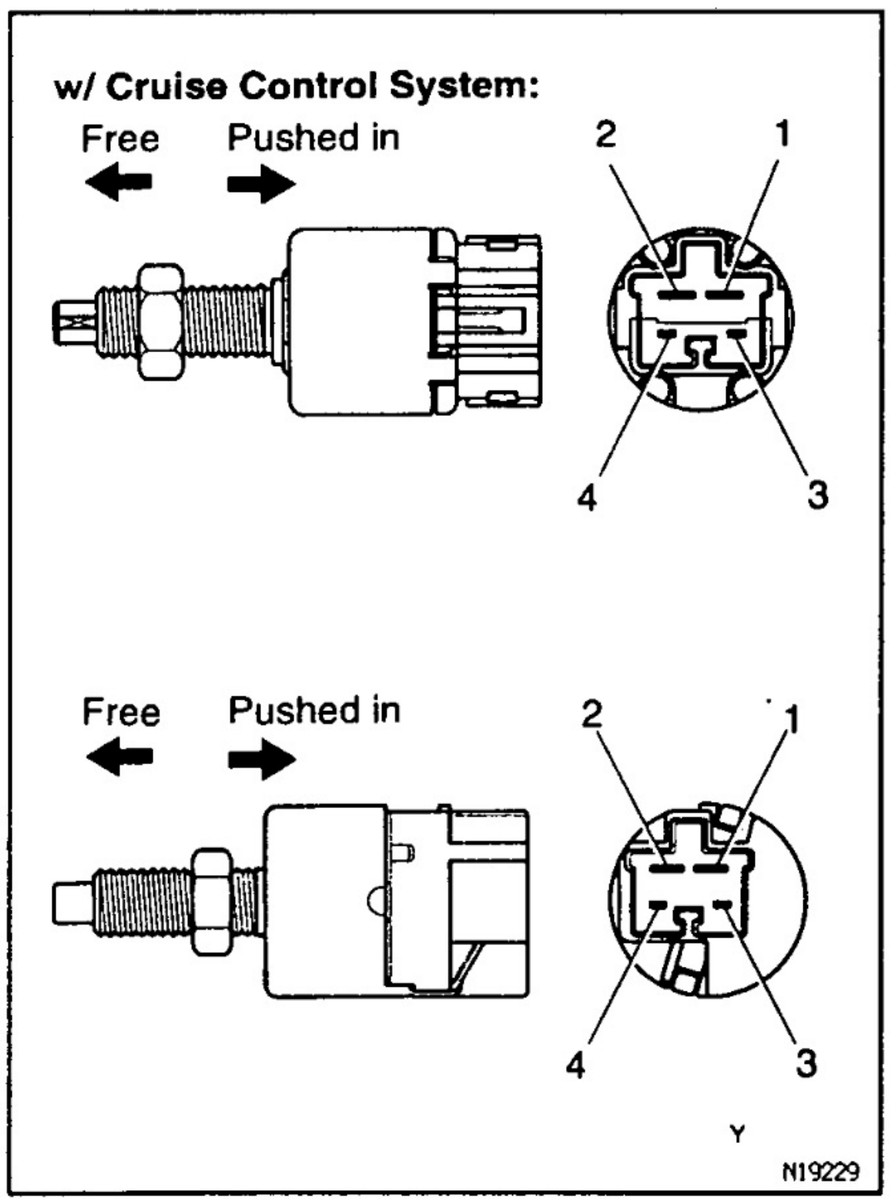

BE388-01

STOP LIGHT SWITCH INSPECTION

w/ Cruise Control System:

1. INSPECT SWITCH CONTINUITY

Switch position	Tester connection	Specified condition
Switch pin pushed in (Pedal released)	–	No continuity
Switch pin free (Pedal depressed)	1 – 2	Continuity

If continuity is not as specified, replace the switch.

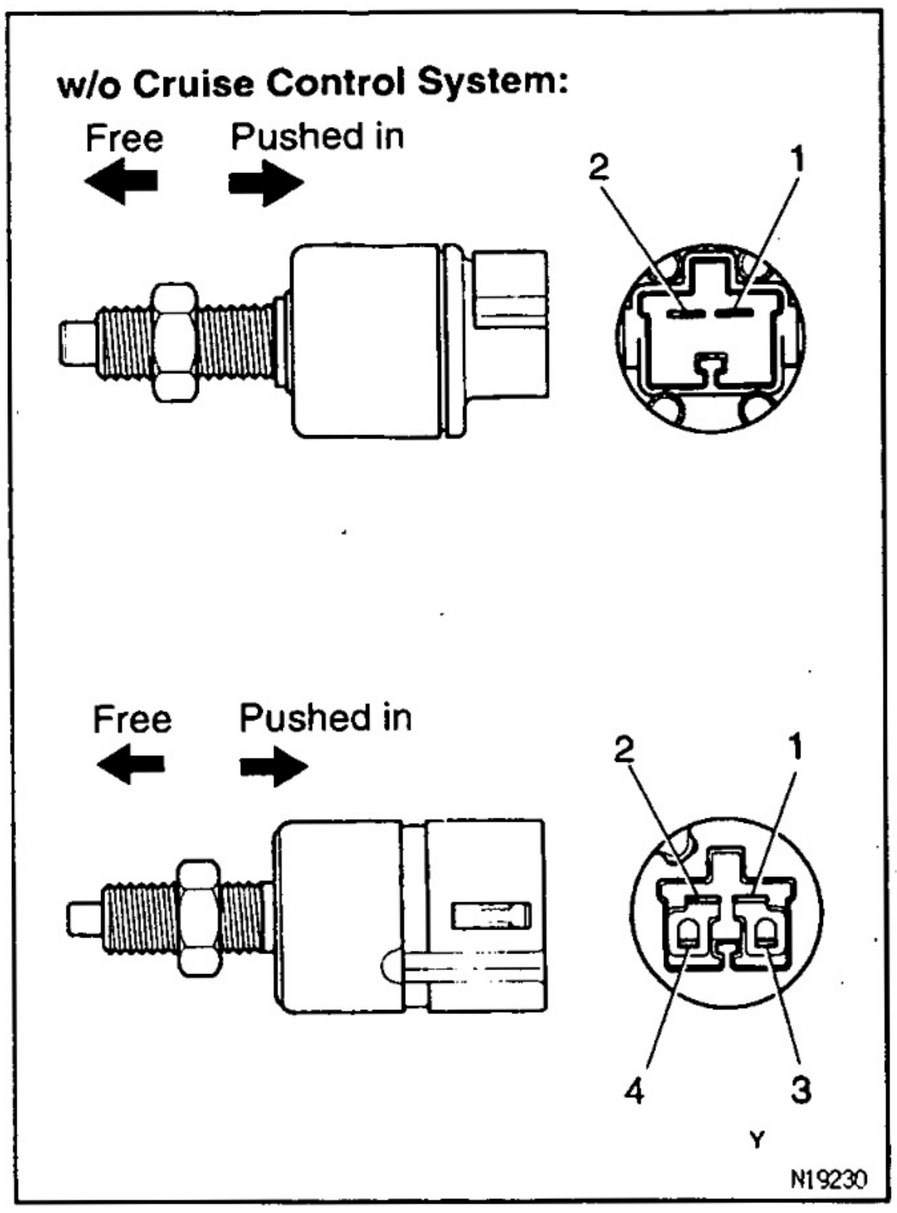

w/o Cruise Control System:

2. INSPECT SWITCH CONTINUITY

Switch position	Tester connection	Specified condition
Switch pin pushed in (Pedal released)	–	No continuity
Switch pin free (Pedal depressed)	1 – 2	Continuity

If continuity is not as specified, replace the switch.

HEADLIGHT CLEANER SYSTEM

PARTS LOCATION

BE28D-03

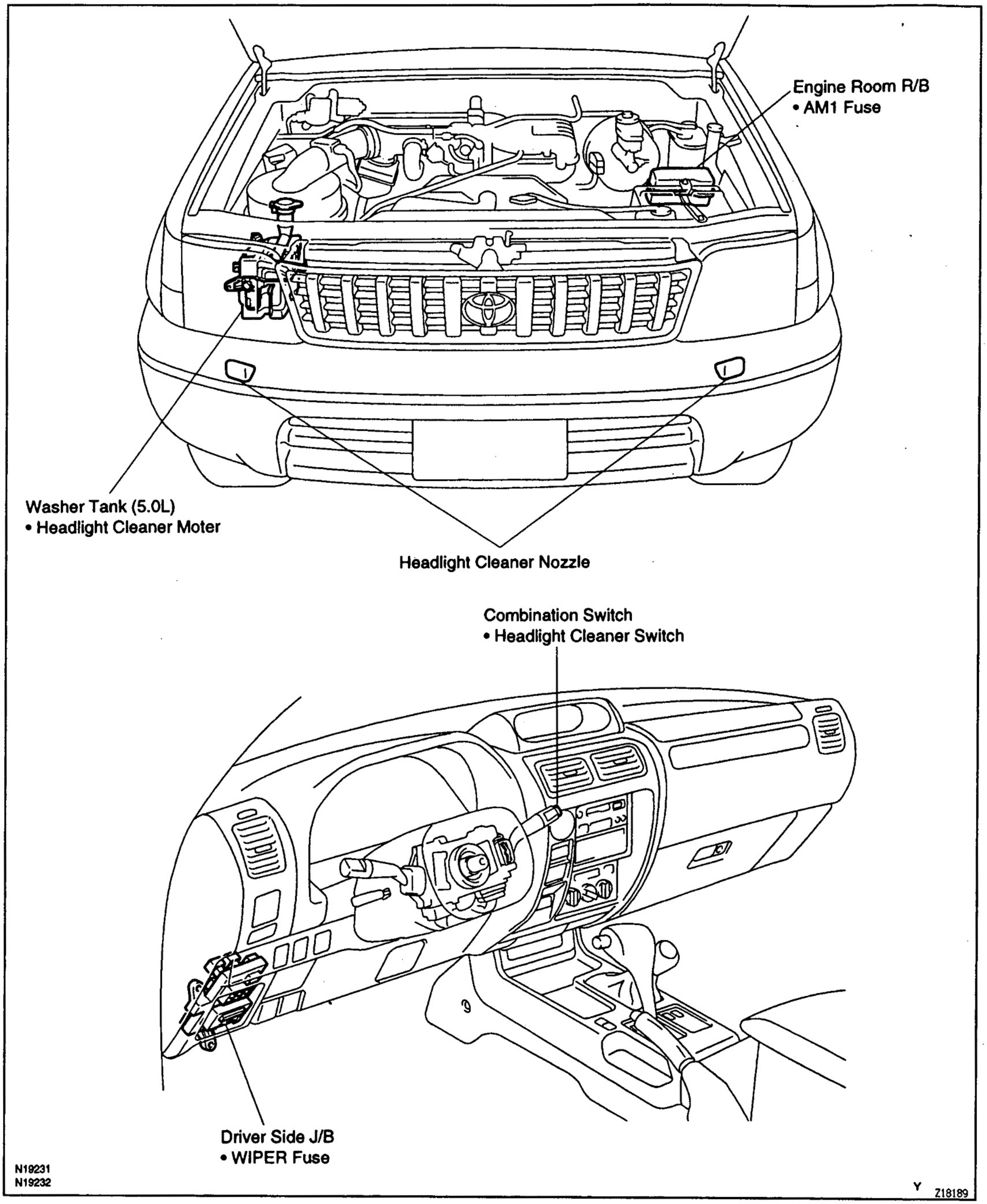

N19231
N19232

Y Z18189

BE1PA-04

TROUBLESHOOTING

The table below will be useful for you in troubleshooting these electrical problems. The most likely causes of the malfunction are shown in the order of their probability. Inspect each part in the order shown, and replace the part when it is found to be faulty.

Trouble	Parts name	(See page)
"Headlight Cleaner System" does not operate. (Using light control switch)	1. Light Control Switch 2. Wire Harness	(BE–16)
"Headlight Cleaner System" does not operate. (All)	1. AM1 Fuse (Engine Room R/B) 2. WIPER Fuse (Driver Side J/B) 3. Headlight Cleaner Switch 4. Headlight Cleaner Relay 5. Headlight Cleaner Motor 6. Headlight Cleaner Nozzle and Hose 7. Wire Harness	(BE–37) (BE–38) (BE–38)
Washer fluid does not spray.	1. Headlight Cleaner Nozzle and Hose	

LHD models
(Include RHD models for Europe) :

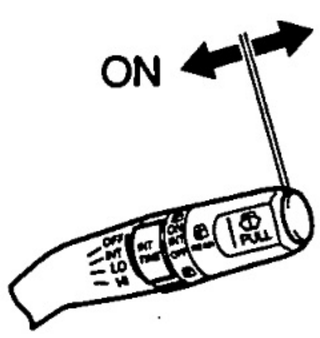

RHD models
(Except RHD models for Europe) :

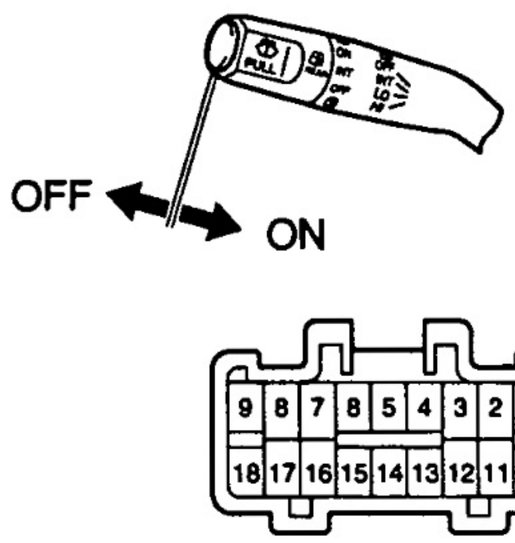

Y N19662

BE26E-04

HEADLIGHT CLEANER SWITCH INSPECTION

INSPECT SWITCH CONTINUITY

( ): RHD models (Except RHD models for Europe)

Switch position	Tester connection	Specified condition
OFF	–	No continuity
ON	3 – 15 (7 – 13)	Continuity

If continuity is not as specified, replace the switch.

BE

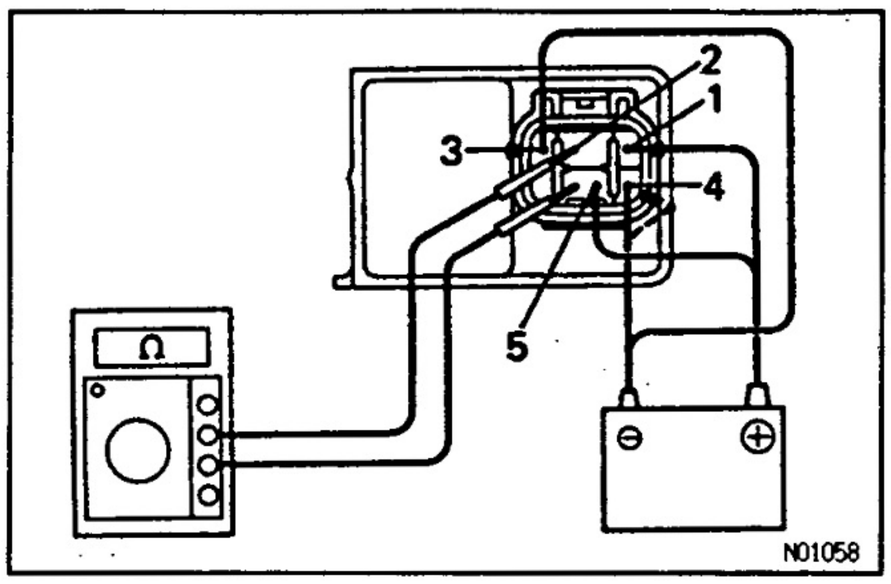

BE28F-03

HEADLIGHT CLEANER RELAY INSPECTION

INSPECT RELAY OPERATION

(a) Check that there is no continuity between terminals 2 and 5.

(b) Connect the positive (+) lead from the battery to terminals 1 and 5, and the negative (−) lead to terminal 3.

(c) Connect the negative (−) lead from the battery to terminal 4, and check that there is continuity between terminals 2 and 5 for 0.4 – 0.6 seconds and that there is no more continuity after that.

If operation is not as specified, replace the relay.

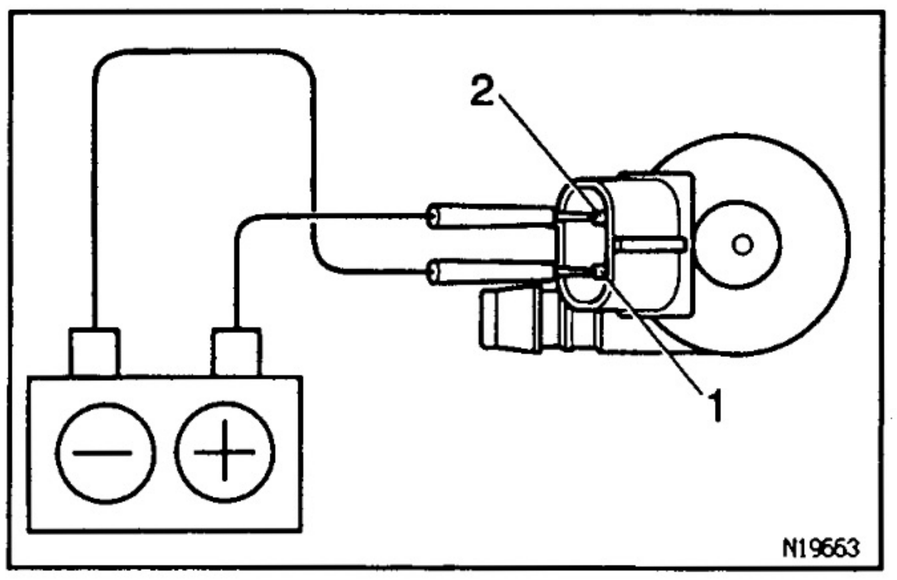

BE28G-03

HEADLIGHT CLEANER MOTOR INSPECTION

INSPECT MOTOR OPERATION

Connect the positive (+) lead from the battery to terminal 2 and the negative (−) lead to terminal 1, check that the motor operates.

NOTICE: These tests must be performed quickly (within 20 seconds) to prevent the coil from burning out.

If operation is not as specified, replace the motor.

WIPER AND WASHER SYSTEM

BE283-06

PARTS LOCATION

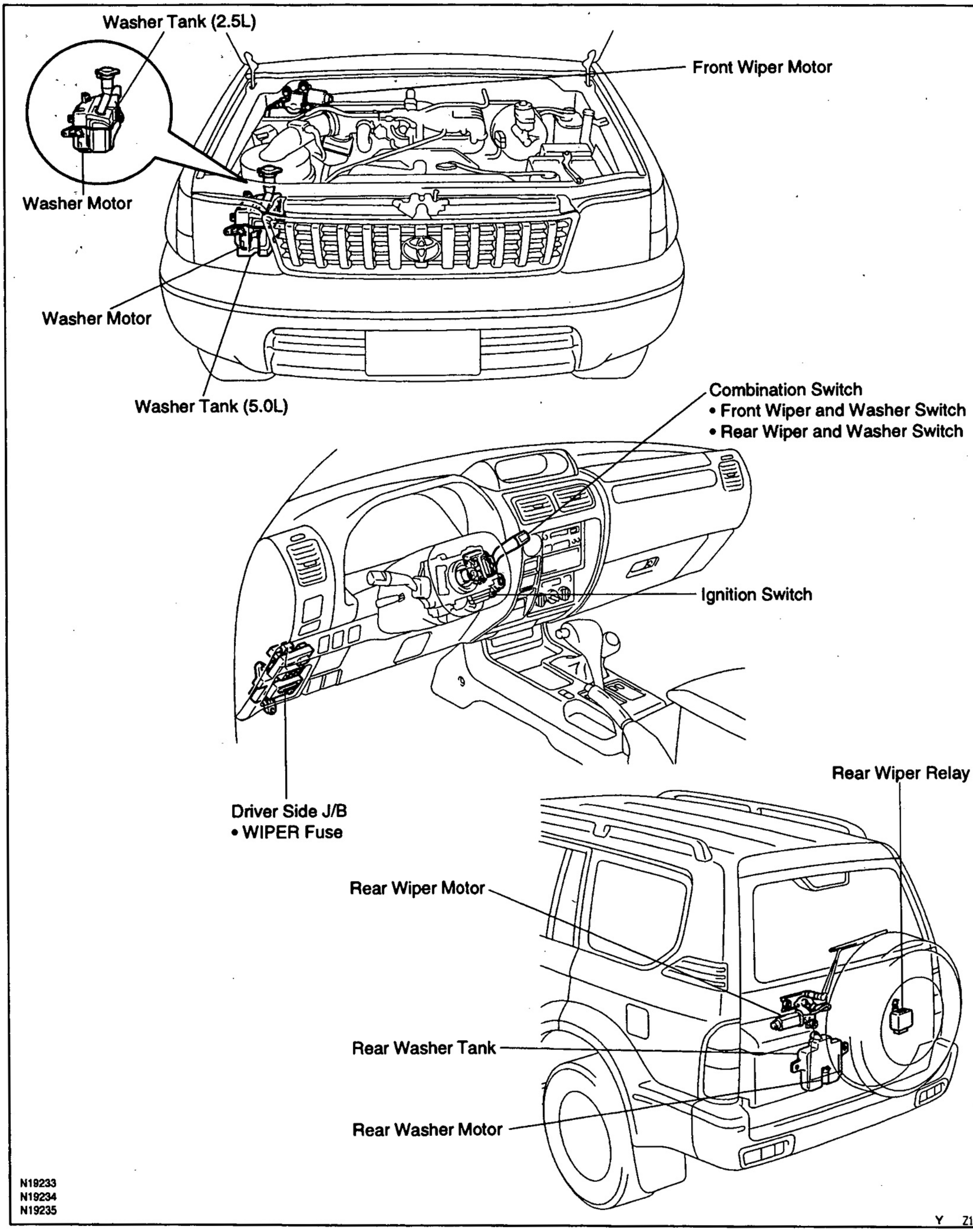

N19233
N19234
N19235

Y Z18190

BE

BE0A7-17

TROUBLESHOOTING

The table below will be useful for you in troubleshooting these electrical problems. The most likely causes of the malfunction are shown in the order of their probability. Inspect each part in the order shown, and replace the part when it is found to be faulty.

Trouble	Parts name	(See page)
Wipers and washers do not operate.	1. WIPER Fuse (Driver Side J/B) 2. Ignition Switch 3. Wiper and Washer Switch 4. Wire Harness	 (BE–7) (BE–41 and 42)
Front wiper does not operate.	1. Front Wiper and Washer Switch 2. Front Wiper Motor 3. Wire Harness	(BE–41) (BE–43)
Rear wiper does not operate.	1. Rear Wiper and Washer Switch 2. Rear Wiper Motor and Relay 3. Wire Harness	(BE–42) (BE–45)
Front washer does not operate.	1. Front Wiper and Washer Switch 2. Washer Motor 3. Wire Harness	(BE–41) (BE–45)
Rear washer does not operate.	1. Rear Wiper and Washer Switch 2. Washer Motor 3. Wire Harness	(BE–42) (BE–45)

COMBINATION SWITCH INSPECTION

BE2VJ-02

1. INSPECT FRONT WIPER SWITCH CONTINUITY

( ): RHD Models (Except RHD models for Europe)

Switch position	Tester connection	Specified condition
OFF	7 – 16 (3 – 12)	Continuity
INT	7 – 12 (3 – 12)	Continuity
LO	7 – 17 (3 – 11)	Continuity
HI	8 – 17 (2 – 11)	Continuity

If continuity is not as specified, replace the switch.

2. INSPECT FRONT WASHER SWITCH CONTINUITY

( ): RHD Models (Except RHD models for Europe)

Switch position	Tester connection	Specified condition
OFF	–	No continuity
ON	2 – 11 (8 – 17)	Continuity

If continuity is not as specified, replace the switch.

LHD models
(Include RHD models for Europe) :

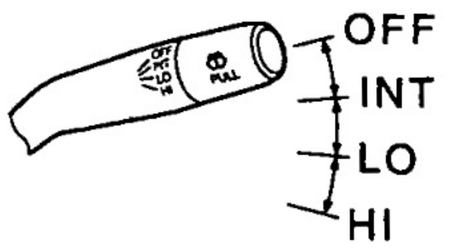

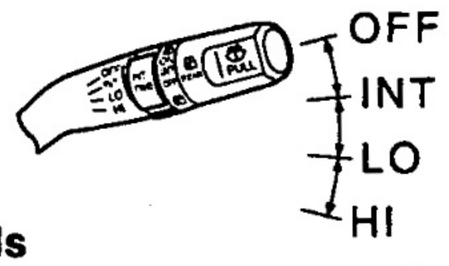

RHD models
(Except RHD models for Europe) :

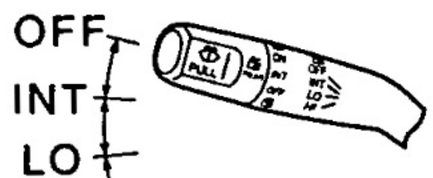

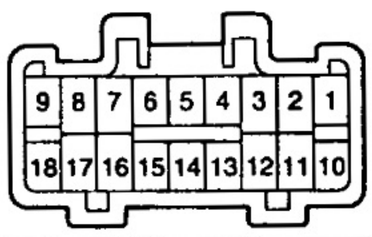

N15857

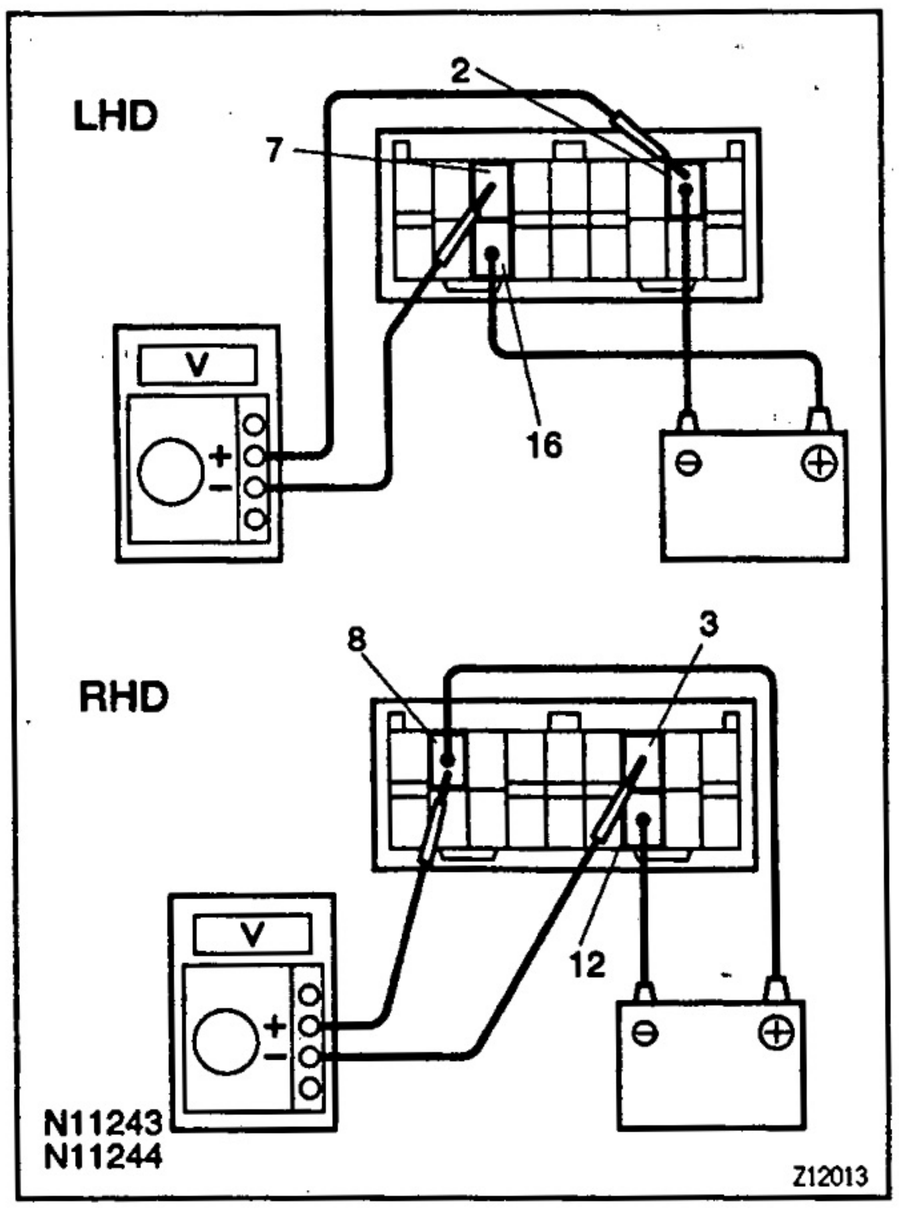

Z12013

3. INSPECT INTERMITTENT OPERATION

( ): RHD Models (Except RHD models for Europe)

(a) Turn the wiper switch the to the INT position.

(b) Turn the intermittent time control switch to the FAST position.

(c) Connect the positive (+) lead from the battery to terminal 16(12) and the negative (–) lead to terminal 2(8).

(d) Connect the positive (+) lead from the voltmeter to terminal 7(3) and the negative (–) lead to terminal 2 (8), and check that the meter needle indicates battery voltage.

INT time control switch position	Voltage
FAST	Approx. 1–3 sec. Battery voltage 0 volt
SLOW	Approx. 10–15 sec. Battery voltage 0 volt

V04134

If operation is not as specified, replace the wiper and washer switch.

BE

LHD models
(Include RHD models for Europe) :

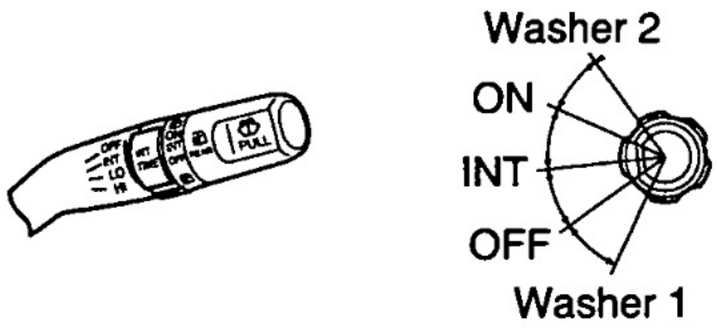

RHD models
(Except RHD models for Europe) :

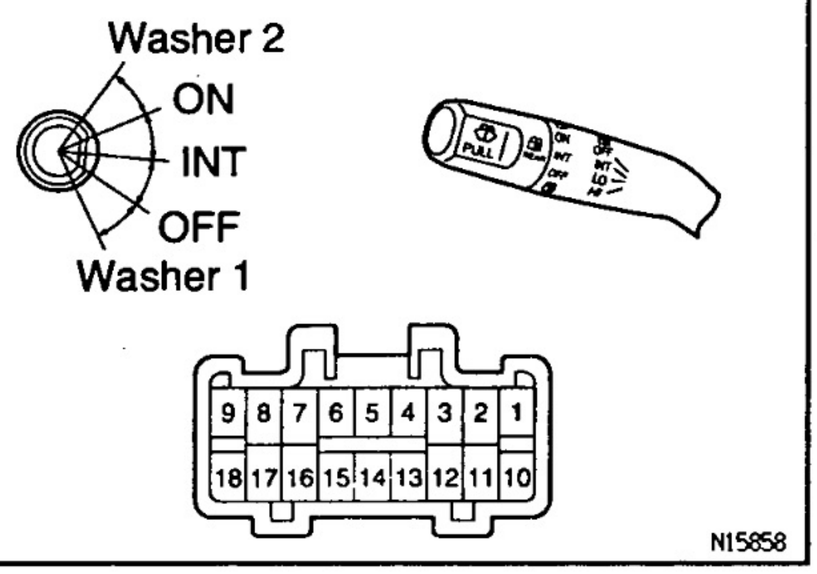

4. INSPECT REAR WIPER AND WASHER SWITCH CONTINUITY

( ): RHD Models (Except RHD models for Europe)

Switch position	Tester connection	Specified condition
Washer 1	2 – 12 (8 – 16)	Continuity
Wiper OFF	–	No continuity
Wiper INT	2 – 13 (8 – 15)	Continuity
Wiper ON	2 – 10 (8 – 18)	Continuity
Washer 2	2 – 10 – 12 (8 – 16 – 18)	Continuity

If continuity is not as specified, replace the switch.

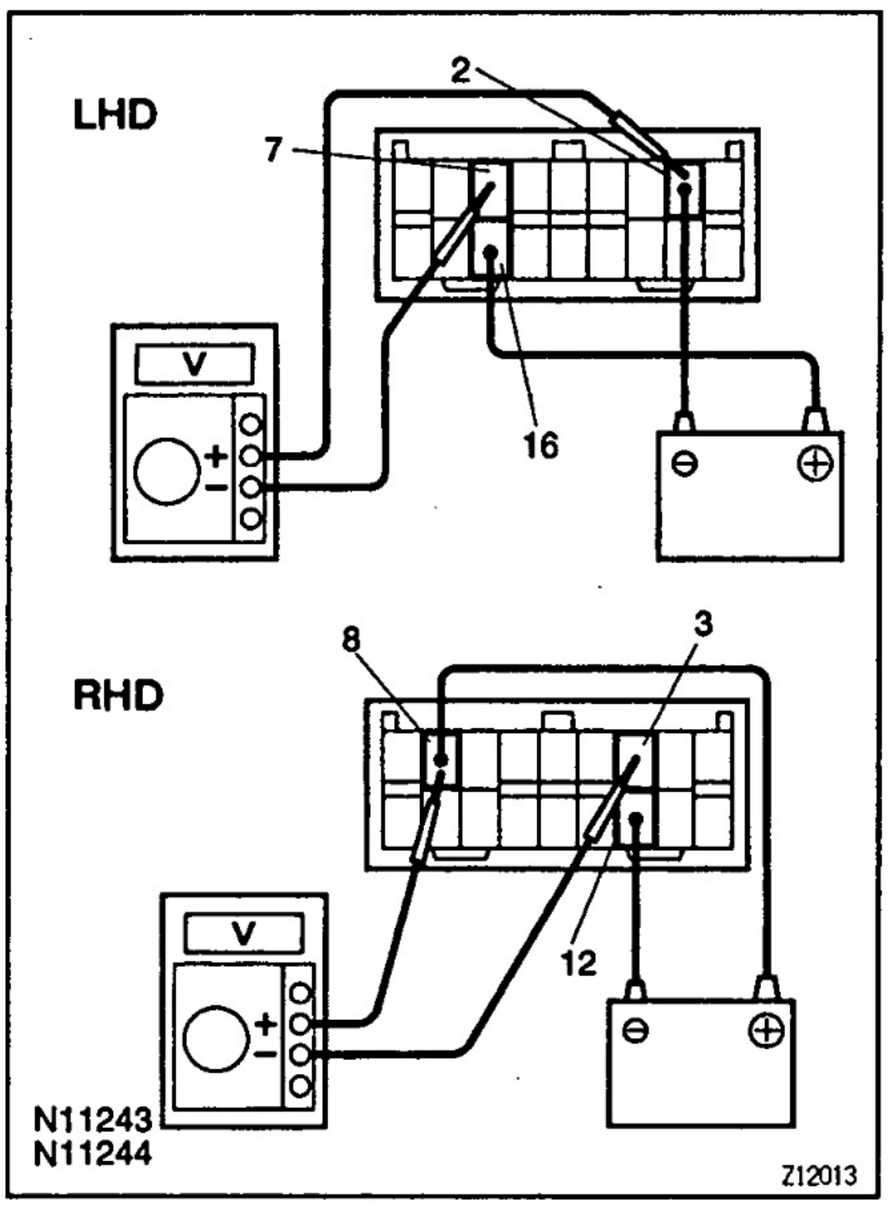

5. INSPECT WASHER LINKED OPERATION

( ): RHD Models (Except RHD models for Europe)

(a) Connect the positive (+) lead from the battery to terminal 16(12) and the negative (–) lead to terminal 2(8).

(b) Connect the positive (+) lead from the voltmeter to terminal 7(3) and the negative (–) lead to terminal 2 (8).

(c) Push in the washer switch, and check that the voltage changes as shown in the table.

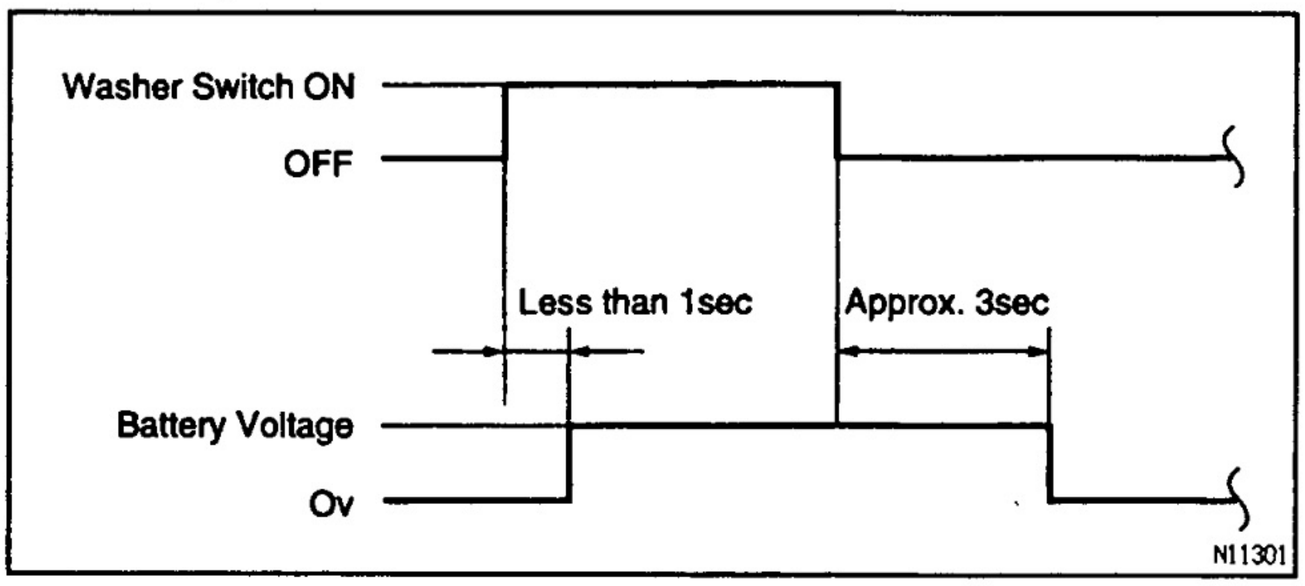

If operation is not as specified, replace the wiper and washer switch.

FRONT WIPER MOTOR INSPECTION

8E38X-01

INSPECT MOTOR OPERATION

( ): RHD models

Low speed operation:

Connect the positive (+) lead from the battery to terminal 1 (5) and the negative (−) lead to terminal 5 (4), and check that the motor operates at low speed. If operation is not as specified, replace the motor.

High speed operation:

Connect the positive (+) lead from the battery to terminal 4 (3) and the negative (−) lead to terminal 5 (4), and check that the motor operates at high speed. If operation is not as specified, replace the motor.

Low speed:

LHD models:

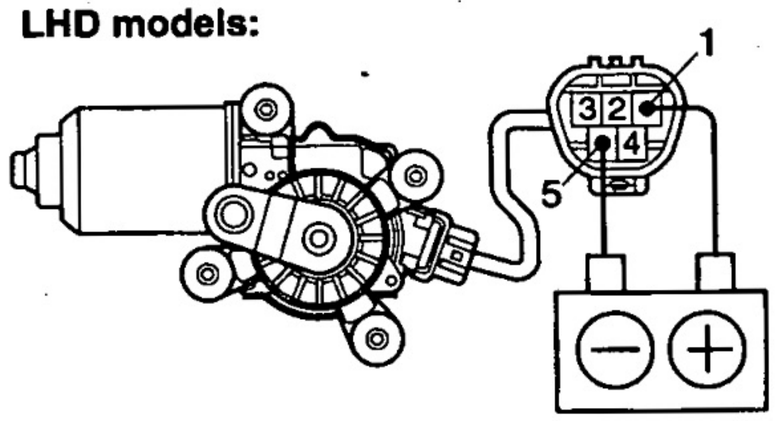

RHD models:

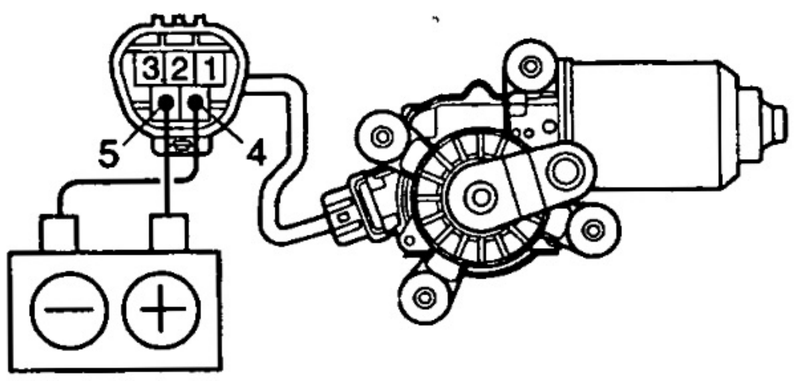

Y

N19236

High speed:

LHD models:

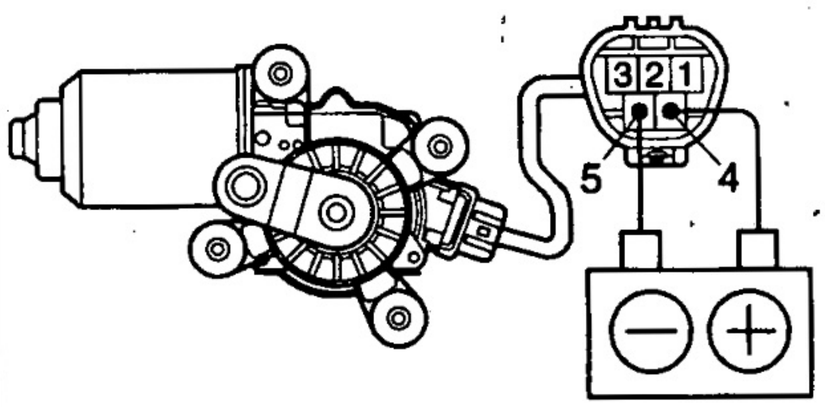

RHD models:

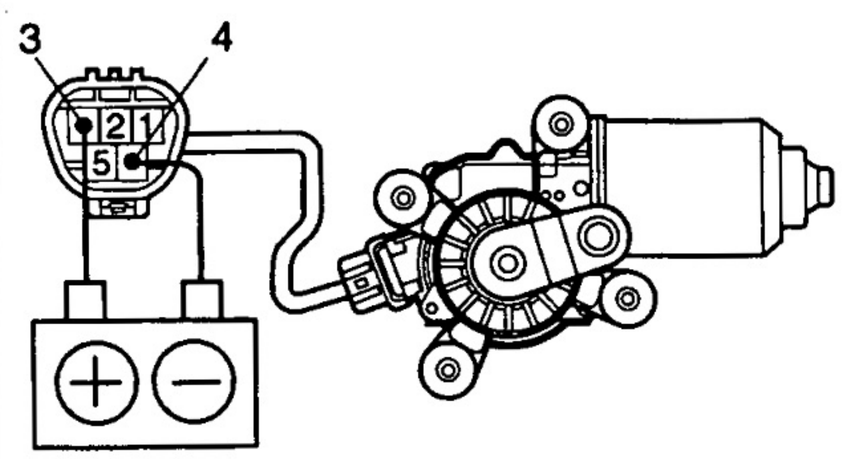

Y N19237

BE

Stopping at stop position:
LHD models:

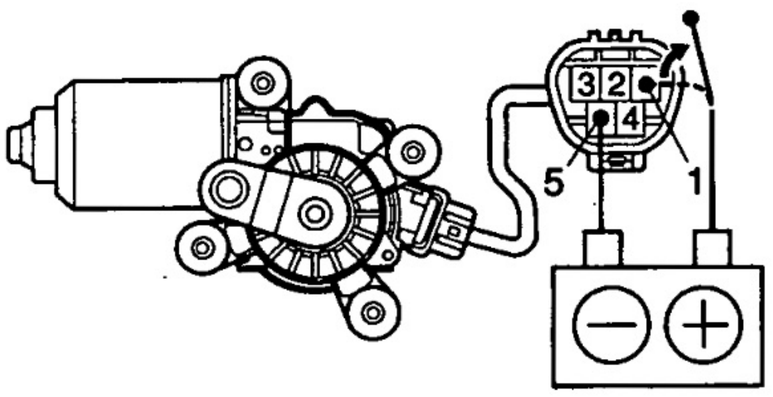

RHD models:

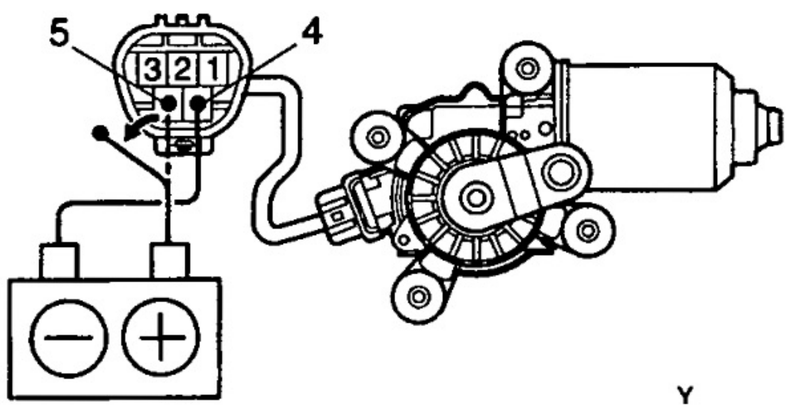

Y
N19238

LHD models:

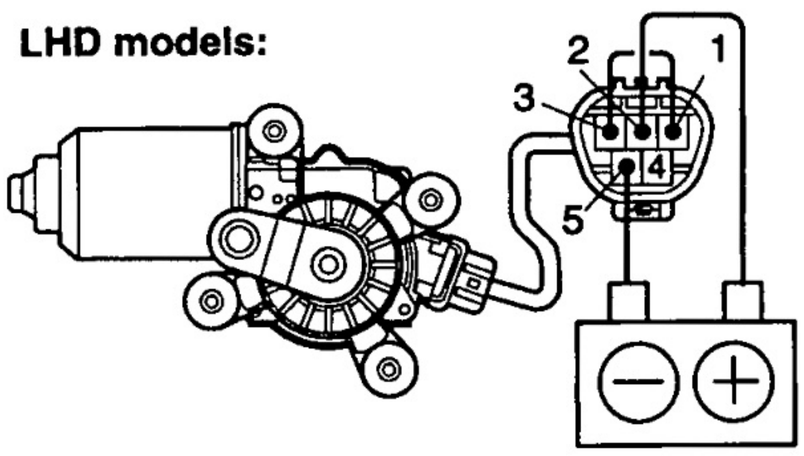

RHD models:

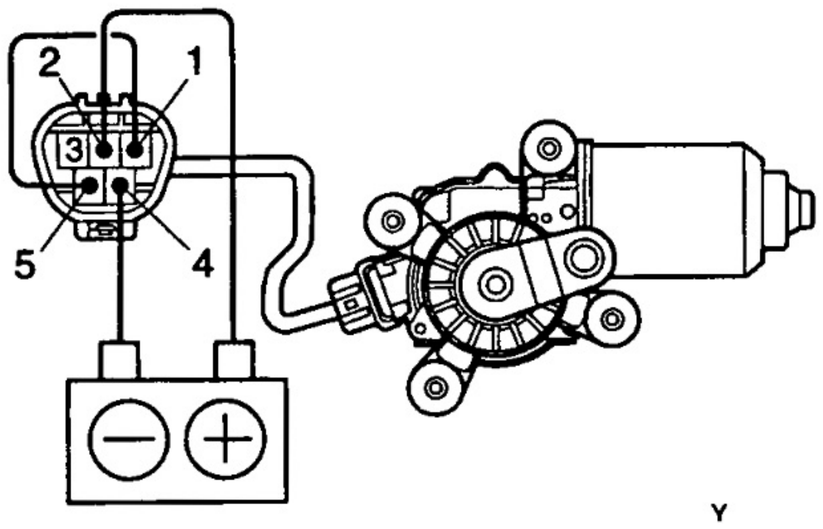

Y
N19239

Stopping at stop position operation:

(a) Operate the motor at low speed and stop the motor operates anywhere by disconnecting positive (+) lead from terminal 1 (5).

(b) Connect terminals 1 (1) and 3 (5).

(c) Connect the positive (+) lead from the battery to terminal 2 (2) and negative (−) lead to terminal 5 (4), and check that the motor stops running at the stop position after the motor operates again.
If operation is not as specified, replace the motor.

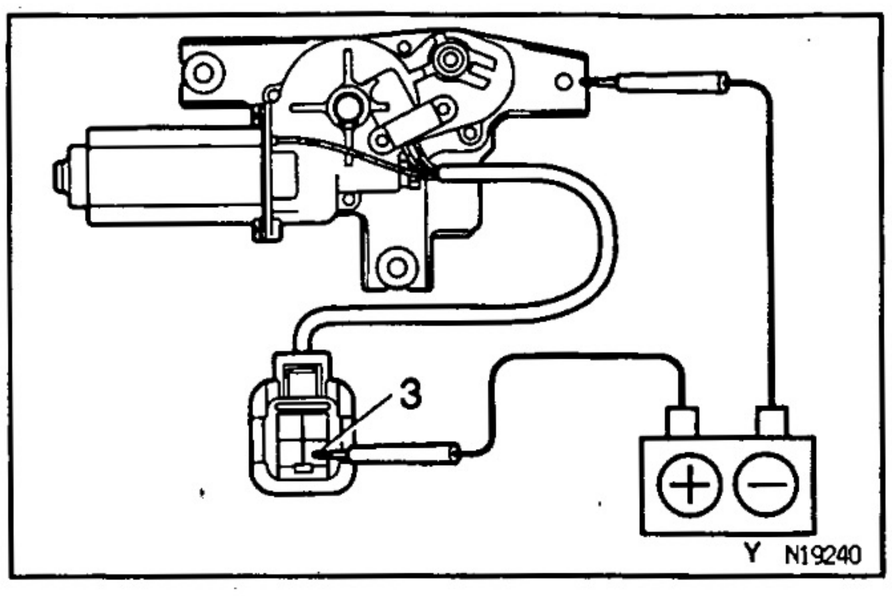

REAR WIPER MOTOR INSPECTION

BE382-01

INSPECT MOTOR AND RELAY OPERATION

Operating:

Connect the positive (+) lead from the battery to terminal 4, and the negative (−) lead to the motor body, and check that the motor operates.

If operation is not as specified, replace the motor with the relay.

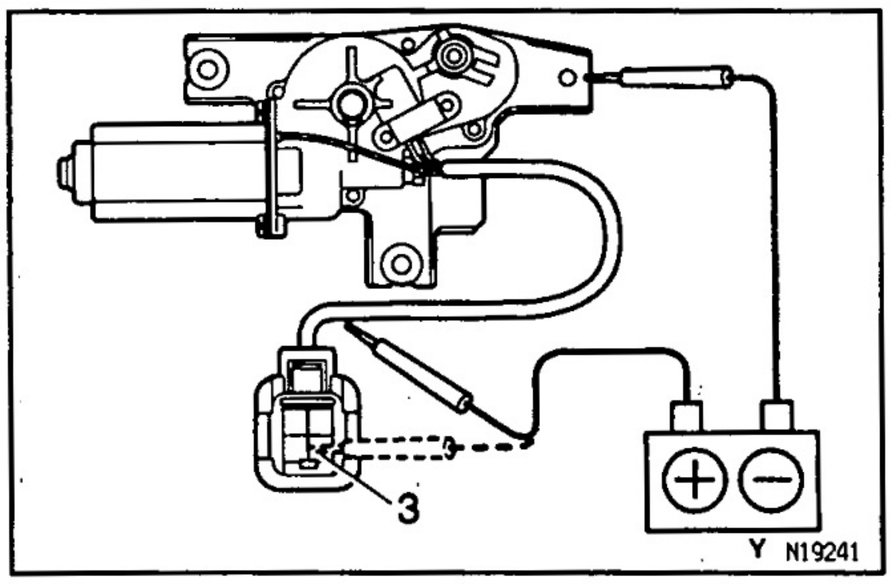

Stopping at stop position:

Operate the motor and stop the motor operation anywhere except at the stop position by disconnecting the positive (+) lead from terminal 4, and the negative (−) lead to the motor body.

If operation is not as specified, replace the motor with the relay.

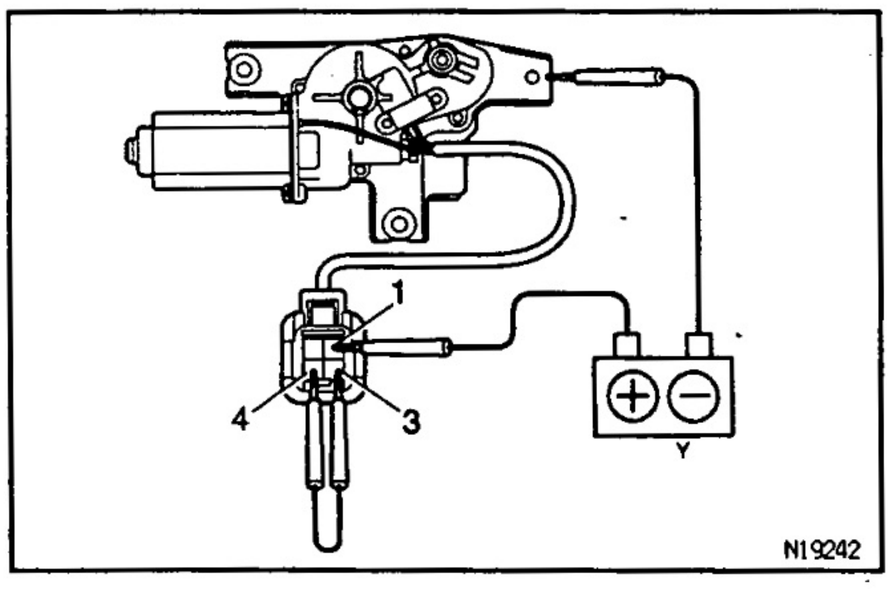

Intermittent operation:

Connect the positive (+) lead from the battery to terminal 1 and the negative (−) lead to the motor body, and check that the motor operates intermittently for 9 — 15 seconds.

If operation is not as specified, replace the motor with the relay.

BE

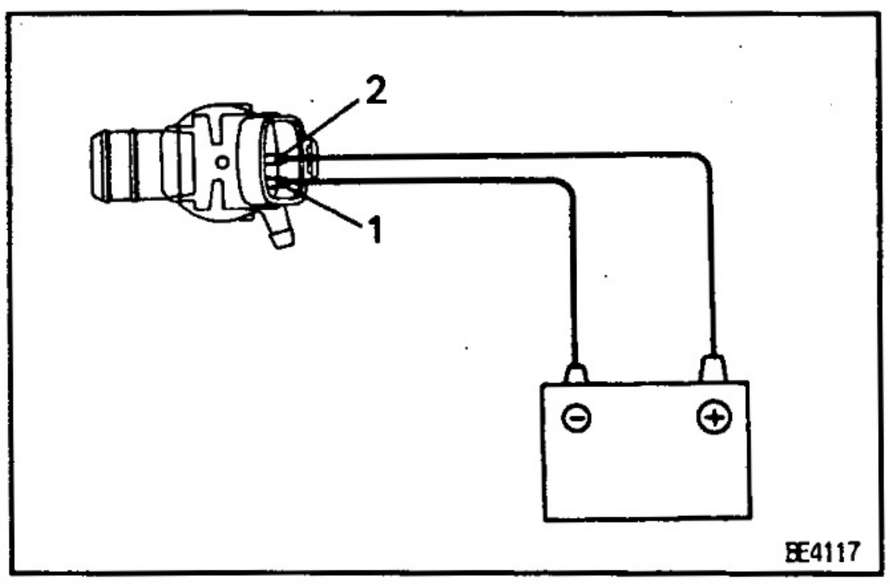

WASHER MOTOR INSPECTION

BE391-01

INSPECT MOTOR OPERATION

Connect the positive (+) lead from the battery to terminal 2 and the negative (−) lead to terminal 1, and check that the motor operates.

NOTICE: These tests must be performed quickly (within 20 seconds) to prevent the coil from burning out.

If operation is not as specified, replace the motor.

COMBINATION METER
PARTS LOCATION

BE2BE–02

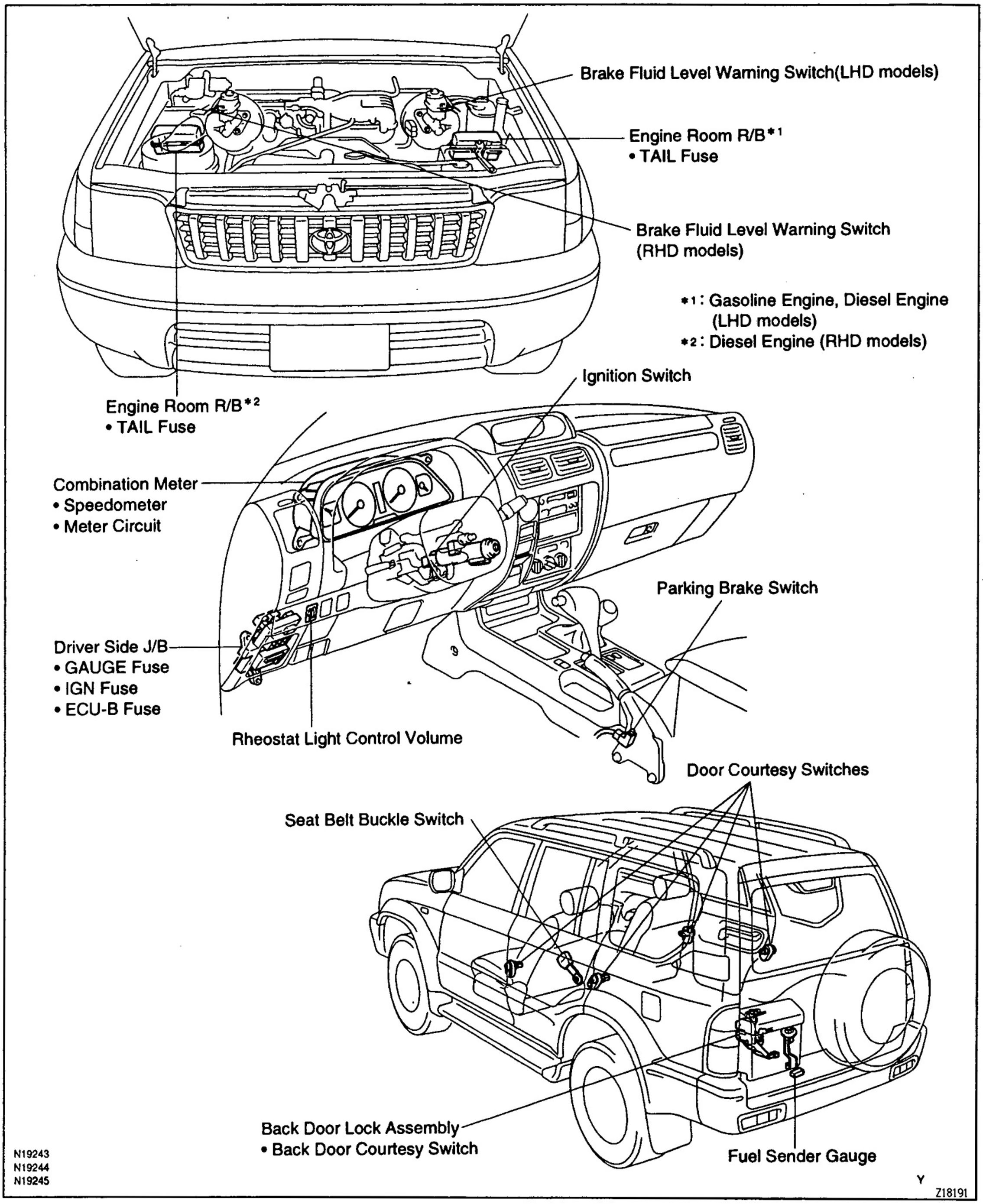

N19243
N19244
N19245

Y

Z18191

• VZ Series Engine

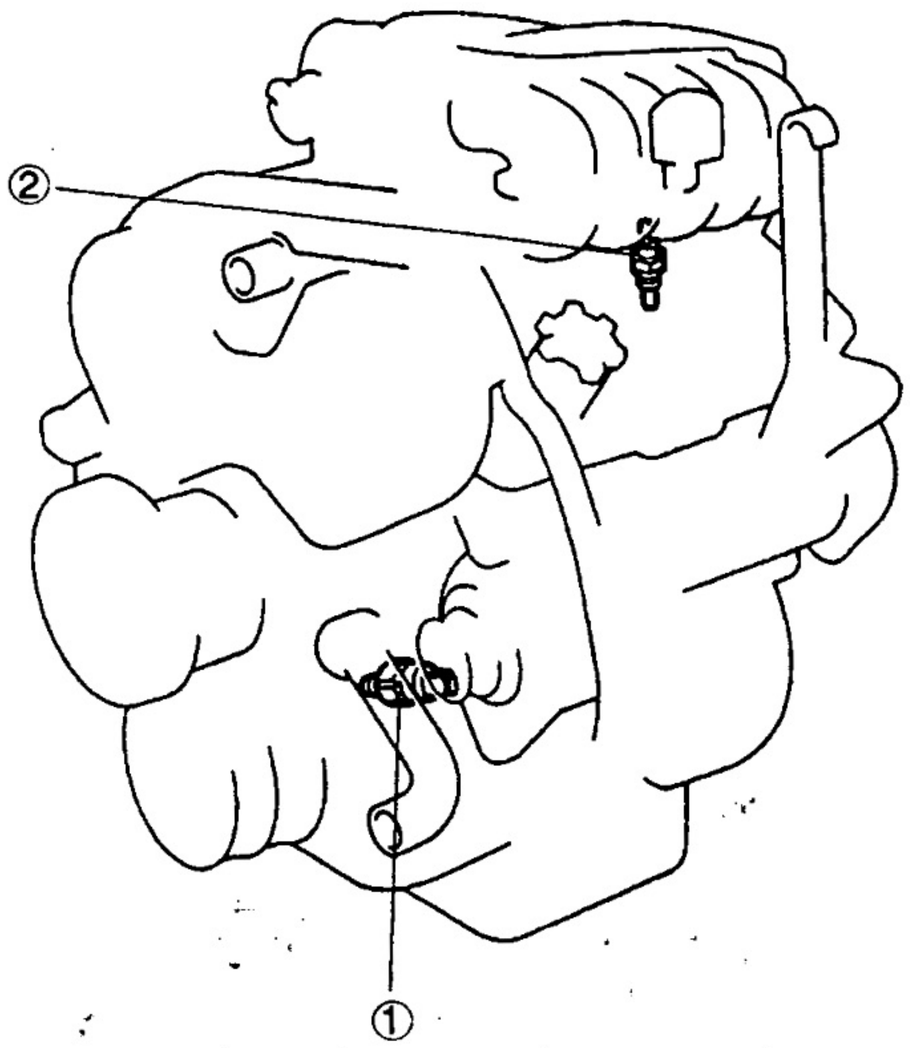

• KZ Series Engine

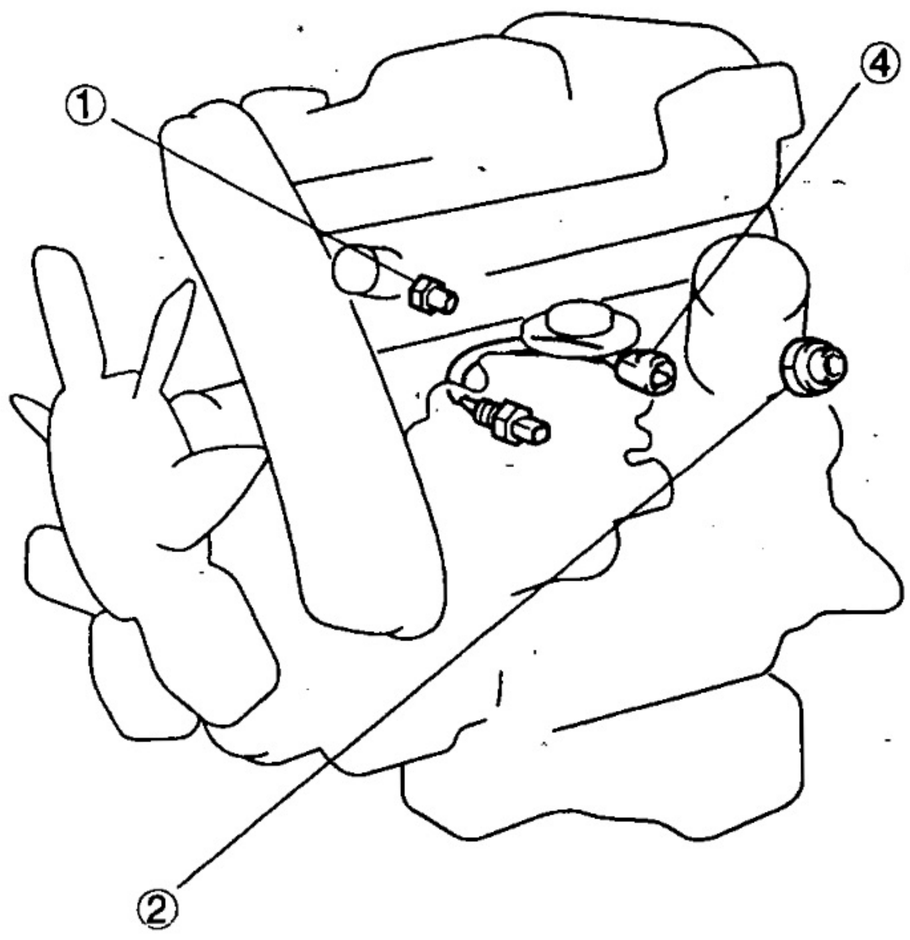

• RZ Series Engine

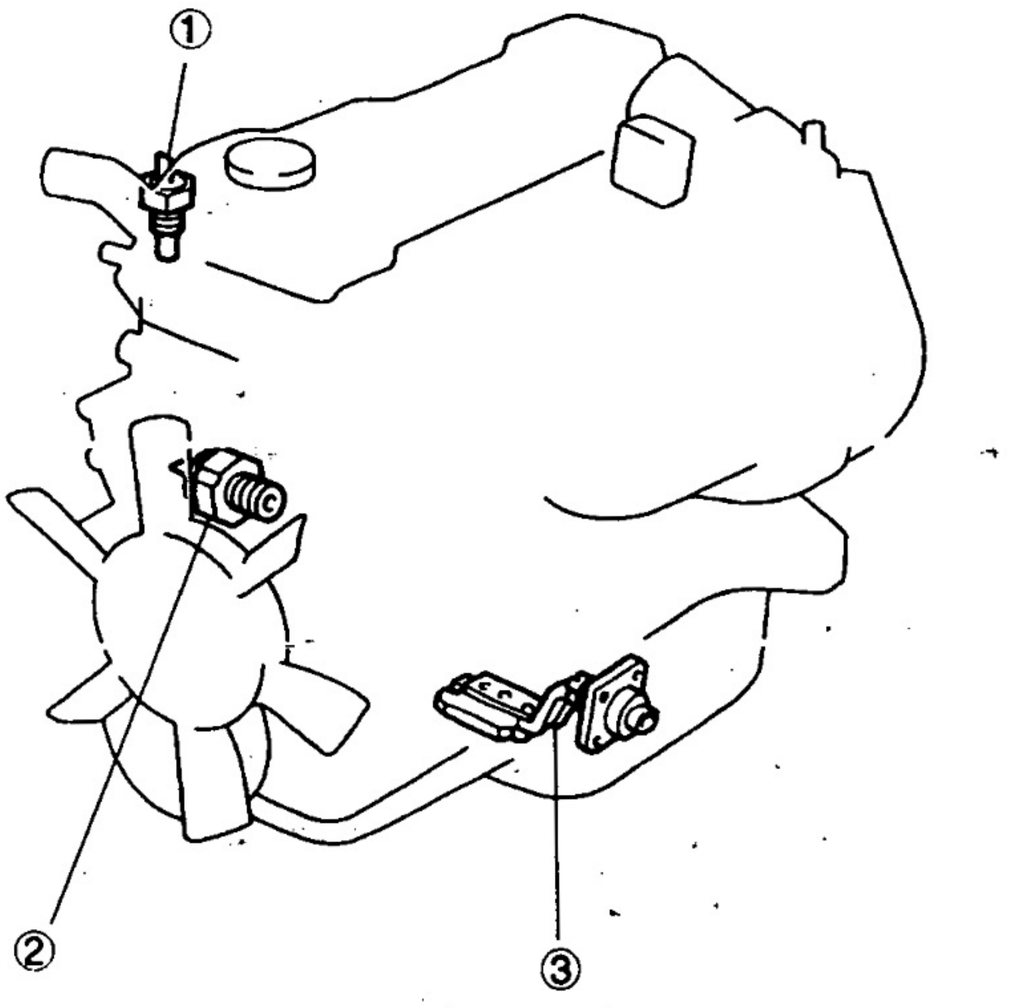

• L Series Engine

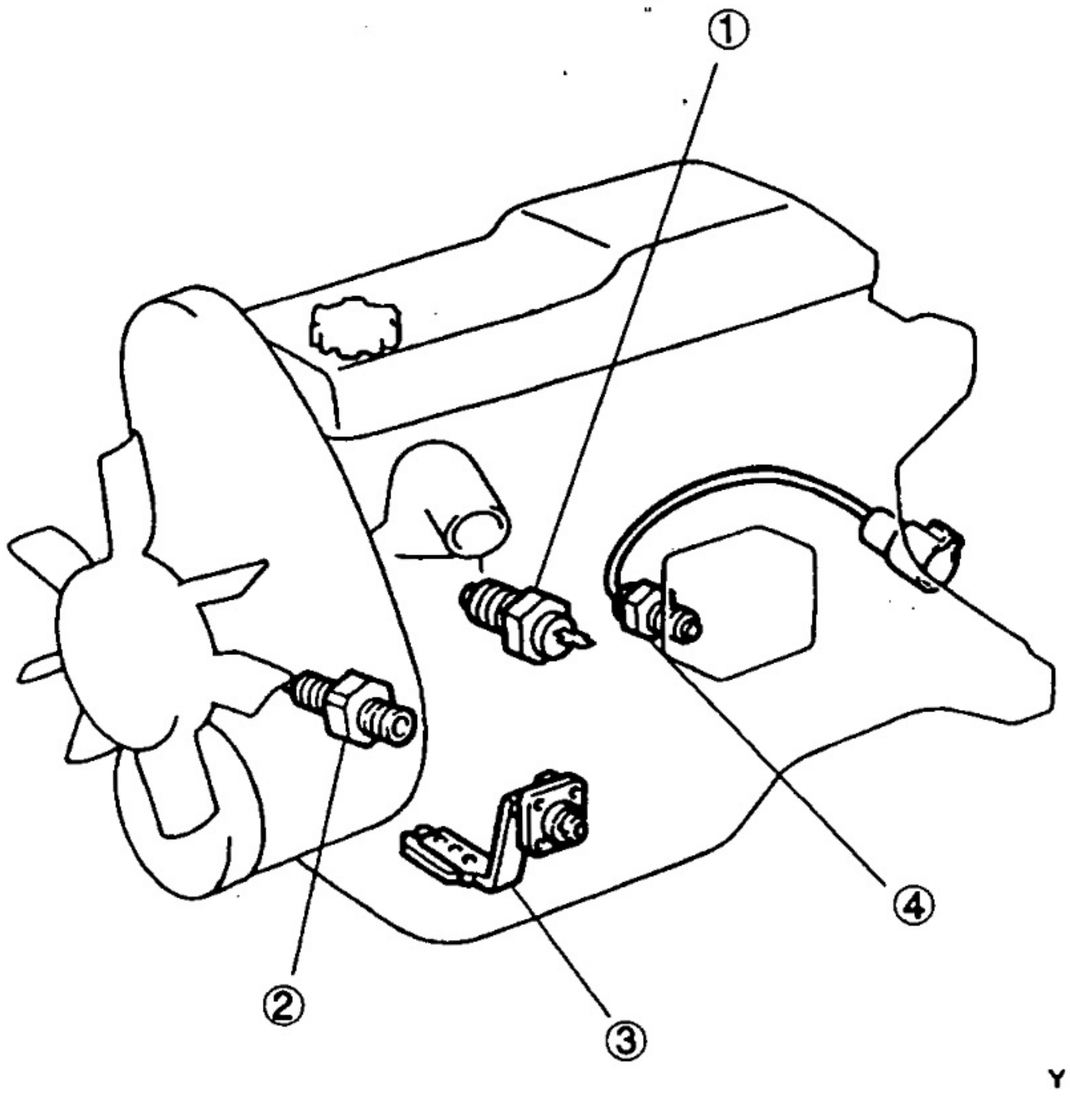

①: Water Temperature Sender Gauge
②: Low Oil Pressure Warning Switch
③: Engine Oil Level Warning Sensor
④: Pick-up Sensor

N19246
N16245
N19247
N16246

Y
Z18192

METER CIRCUIT

8E2BF-02

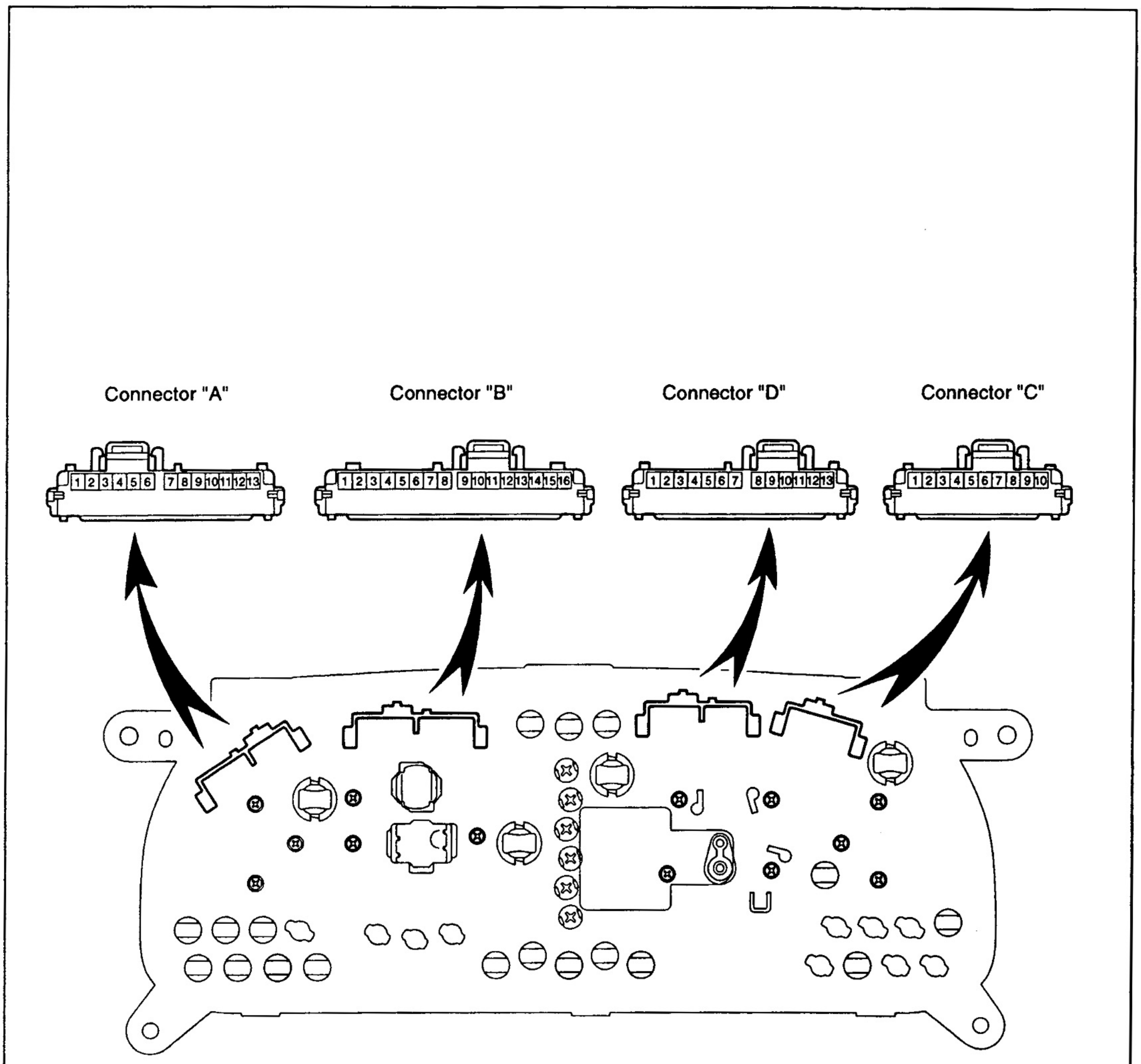

N19248

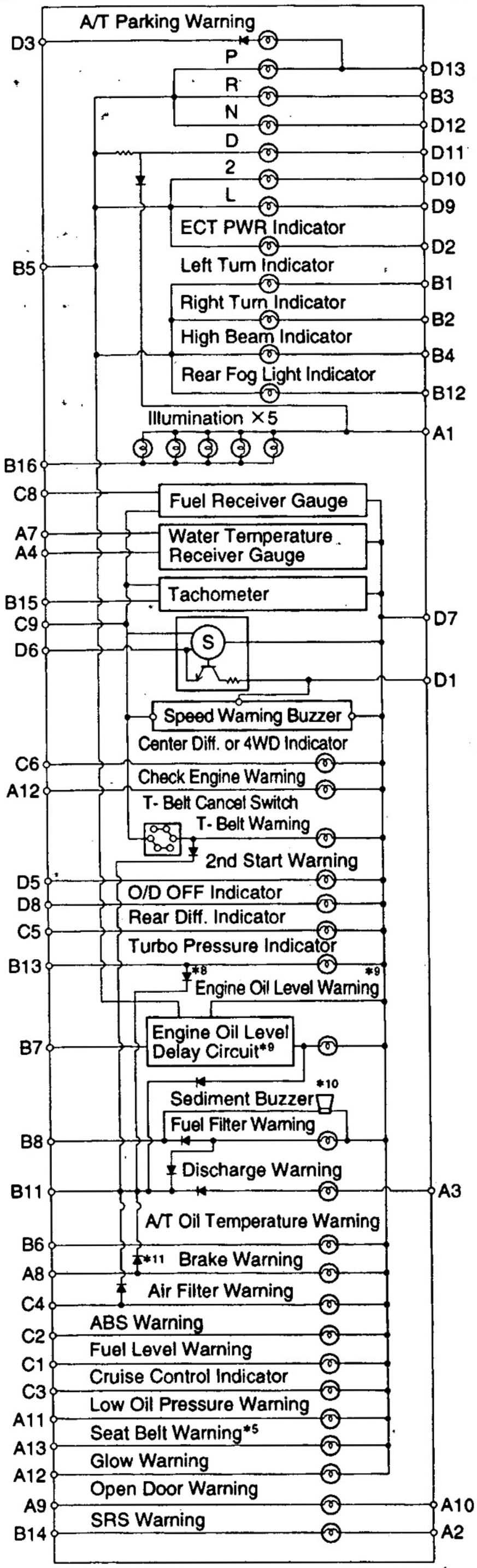

N19249

No.		Wiring Connector Side
A	1	TAIL Fuse
	2	ECU-B Fuse
	3	IGN Fuse
	4	Water Temperature Sender Gauge
	7	Ground (Water Temperature Sender Gauge)
	8	Brake Fluid Level Warning Switch and Parking Brake Switch, Vacuum Switch*1
	9	Door Courtesy Switch
	10	DOME Fuse
	11	Low Oil Pressure Warning Switch
	12	Glow Plug Timer*1, EFI ECU*4
	13	Seat Belt Buckle Switch*5
B	1	Turn Signal Switch (Left)
	2	Turn Signal Switch (Right)
	3	Neutral Start Switch (R)*3
	4	Headlight Dimmer Switch
	5	Ground (General)
	6	A/T Fluid Temperature Sensor*3
	7	Engine Oil Level Sensor
	8	Fuel Filter Warning Switch*1
	11	Alternator L Terminal
	12	Rear Fog Light Switch*2
	13	Turbo Pressure Switch*6
	14	Airbag Sensor Assembly
	15	Pick-Up Sensor*14, Igniter*4, ECT ECU*15, ECD ECU*9
	16	Rheostat Light Control Volume or Ground
C	1	Fuel Level Warning Switch
	2	ABS ECU
	3	Cruise Control ECU
	4	Air Filter Warning Switch*7
	5	Rear Differential Lock Control Switch
	6	Center Differential Lock Control Switch*12 Transfer 4WD Position Switch*13
	8	Fuel Sender Gauge
	9	Ground
D	1	Vehicle Speed Sensor
	2	Pattern Select Switch*3
	3	Transfer Neutral Position Switch*3
	5	ECM
	6	Speed Control Unit
	7	GAUGE Fuse
	8	O/D OFF Switch*3
	9	Neutral Start Switch (L)*3
	10	Neutral Start Switch (2)*3
	11	Neutral Start Switch (D)*3
	12	Neutral Start Switch (N)*3
	13	Neutral Start Switch (P)*3

*1 : Diesel Engine
*2 : Vehicles sold in Europe.
*3 : A/T Vehicles
*4 : Gasoline Engine
*5 : G.C.C. Countries
*6 : Turbo Vehicles
*7 : General and Australia
*8 : General (1KZ-T Engine)
*9 : Europe (1KZ-TE Engine)
*10 : General (Diesel Engine)
*11 : Europe and Australia
*12 : Full Time 4WD Vehicles
*13 : Part Time 4WD Vehicles
*14 : 3L, 1KZ-T Engine
*15 : Diesel engined vehicle with A/T except 1KZ-TE engine.

Y

Z18428

BE1DL-0W

TROUBLESHOOTING

The table below will be useful for you in troubleshooting these electrical problems. The most likely causes of the malfunction are shown in the order of their probability. Inspect each part in the order shown, and replace the part when it is found to be faulty.

METER, GAUGES AND ILLUMINATION

Trouble	Parts name	(See page)
Tachometer, fuel gauge and water temperature gauge do not operate.	1. GAUGE Fuse (Driver Side J/B) 2. Meter Circuit 3. Wire Harness	 (BE–48 and 49)
Speedometer does not operate.	1. Vehicle Speed Sensor 2. Meter Circuit 3. Wire Harness	(BE–56) (BE–48 and 49)
Tachometer does not operate.	1. Meter Circuit 2. Igniter (Gasoline Engine) 3. Tacho Pick–up Sensor (3L, 1KZ–T Engine) 4. ECT ECU (Diesel engines vehicle with A/T except 1KZ–TE engine.) 5. ECD ECU (1KZ–TE Engine) 6. Wire Harness	(BE–48 and 49) (BE–57)
Fuel gauge does not operate or abnormal operation.	1. Fuel Receiver Gauge 2. Fuel Sender Gauge 3. Meter Circuit 4. Wire Harness	(BE–59) (BE–59) (BE–48 and 49)
Water temperature gauge does not operate or abnormal operation.	1. Water Temperature Receiver Gauge 2. Water Temperature Sender Gauge 3. Meter Circuit 4. Wire Harness	(BE–59) (BE–59) (BE–48 and 49)
All illumination lights do not light up.	1. TAIL Fuse (Engine Room R/B) 2. Light Control Rheostat 3. Meter Circuit 4. Wire Harness	 (BE–65) (BE–48 and 49)
Only one illumination light does not light up.	1. Bulb 2. Meter Circuit 3. Wire Harness	 (BE–48 and 49)

BE

WARNING LIGHTS

Trouble	Parts name	(See page)
Warning lights do not light up. (Except discharge, SRS and open door)	1. Bulb 2. GAUGE Fuse (Driver Side J/B) 3. Ignition Switch 4. Meter Circuit 5. Wire Harness	 (BE–7) (BE–48 and 49)
Timing belt warning light does not light up.	1. Bulb 2. Speedometer 3. Wire Harness	 (BE–55)

Discharge warning light does not light up.	1. Bulb 2. IGN Fuse (Driver Side J/B) 3. Alternator 4. Wire Harness
Brake warning light does not light up.	1. Bulb 2. Brake Fluid Level Warning Switch (BE–61) 3. Parking Brake Switch (BE–61) 4. Meter Circuit (BE–48 and 49) 5. Wire Harness
Engine oil level warning light does not light up.	1. Bulb 2. Meter Circuit (BE–48 and 49) 3. Engine Oil Level Sensor (BE–63) 4. Wire Harness
Low oil pressure warning light does not light up.	1. Bulb 2. Low Oil Pressure Warning Switch (BE–60) 3. Meter Circuit (BE–48 and 49) 4. Wire Harness
Fuel filter warning light does not light up.	1. Bulb 2. Meter Circuit (BE–48 and 49) 3. Fuel Filter Warning Switch (BE–60) 4. Wire Harness
Air filter warning light does not light up.	1. Bulb 2. Meter Circuit (BE–48 and 49) 3. Air Filter Warning Switch (BE–65) 4. Wire Harness
Turbo warning light does not light up.	1. Bulb 2. Meter Circuit (BE–48 and 49) 3. Turbo Pressure Switch (BE–64) 4. Wire Harness
Seat belt warning light does not light up.	1. Bulb 2. Seat Belt Buckle Switch (BE–62) 3. Meter Circuit (BE–48 and 49) 4. Wire Harness
Fuel level warning light does not light up.	1. Bulb 2. Fuel Level Warning Switch (BE–58) 3. Meter Circuit (BE–48 and 49) 4. Wire Harness
Open door warning light does not light up.	1. Bulb 2. DOME Fuse (Engine Room R/B) 3. Door Courtesy Switch (BE–30) 4. Meter Circuit (BE–48 and 49) 5. Wire Harness
SRS warning light does not light up.	1. Bulb 2. ECU–B Fuse (Engine Room R/B) 3. Airbag Sensor Assembly 4. Meter Circuit (BE–48 and 49) 5. Wire Harness

A/T parking warning light does not light up.	1. Bulb 2. Neutral Start Switch 3. Transfer Neutral Position Switch 4. Meter Circuit 5. Wire Harness	 (AT–60) (TR–17 and 55) (BE–48 and 49)
A/T oil temperature warning light does not light up.	1. Bulb 2. A/T Fluid Temperature Sensor 3. Meter Circuit 4. Wire Harness	 (AT–44) (BE–48 and 49)

INDICATOR LIGHTS

Trouble	Parts name	(See page)
ABS indicator light does not light up.	1. Bulb 2. ABS ECU 3. Meter Circuit 4. Wire Harness	 (BR–66) (BE–48 and 49)
Center differential lock or 4WD indicator light does not light up.	1. Bulb 2. Center Differential Lock Control Switch 3. Meter Circuit 4. Wire Harness	 (TR–17 and 55) (BE–48 and 49)
Rear differential lock indicator light does not light up.	1. Bulb 2. Rear Differential Lock Control Switch 3. Meter Circuit 4. Wire Harness	 (SA–105) (BE–48 and 49)
Check engine indicator light does not light up.	1. Bulb 2. Meter Circuit 3. Wire Harness	 (BE–48 and 49)
A/T shift position indicator light does not light up.	1. Bulb 2. Neutral Start Switch 3. Light Control Rheostat 4. Meter Circuit 5. Wire Harness	 (AT–60) (BE–65) (BE–48 and 49)
O/D OFF indicator light does not light up.	1. Bulb 2. O/D Main Switch 3. Meter Circuit 4. Wire Harness	 (AT–66) (BE–48 and 49)
Turn indicator light does not light up.	1. Bulb 2. Turn Signal and Hazard Warning System 3. Meter Circuit 4. Wire Harness	 (BE–24) (BE–48 and 49)
High beam indicator light does not light up.	1. Bulb 2. Headlight and Taillight System 3. Meter Circuit 4. Wire Harness	 (BE–10) (BE–48 and 49)
CRUISE indicator light does not light up.	1. Bulb 2. Cruise Control System 3. Meter Circuit 4. Wire Harness	 (BE–189) (BE–48 and 49)

ECT PWR indicator light does not light up.	1. Bulb 2. ECT Pattern Select Switch 3. Meter Circuit 4. Wire Harness	 (AT–71 and 74) (BE–48 and 49)

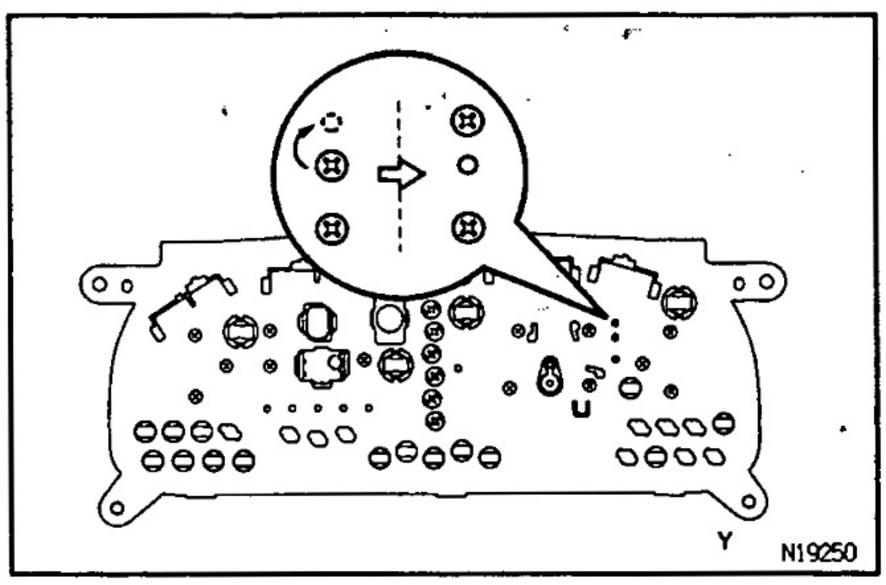

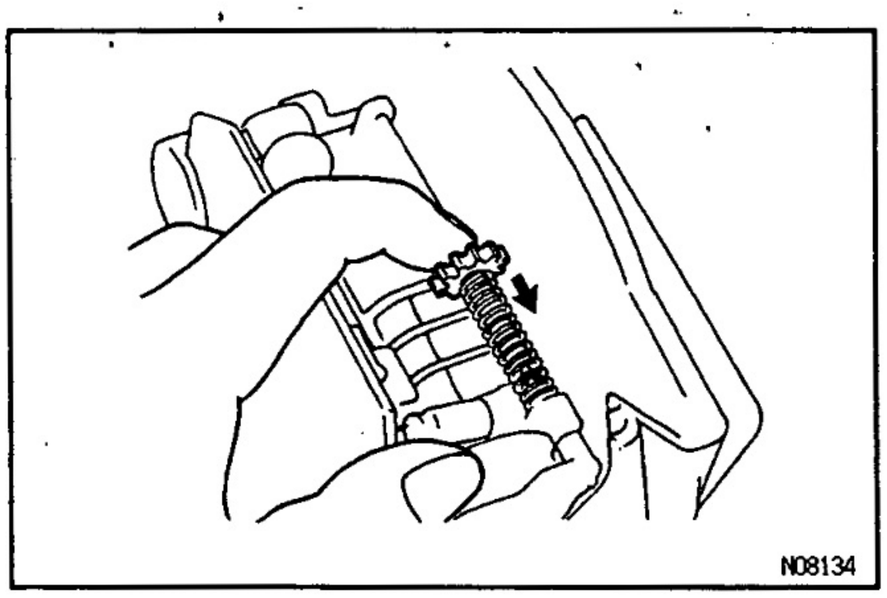

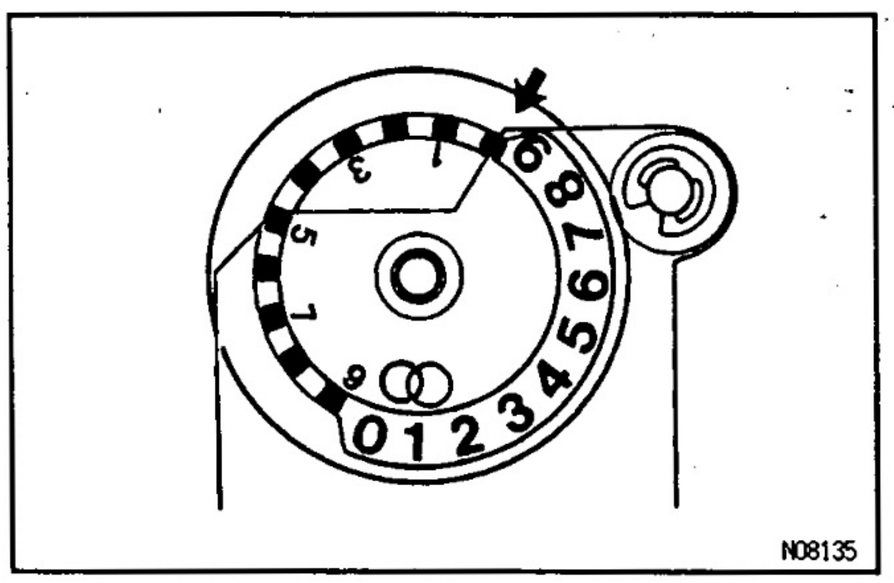

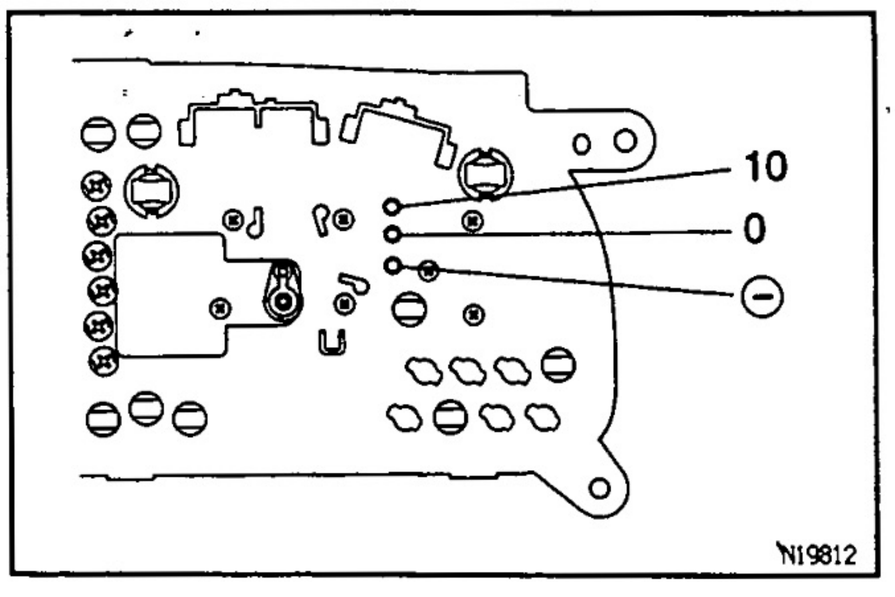

TIMING BELT WARNING INSPECTION

BE383-01

1. **RESET TIMING BELT WARNING**
   The timing belt warning light lights up when the vehicle has run 100,000 km. When the belt has been replace, remove the screw from the "0" position at the rear of the meter and reinstall it in the "10" position.
   HINT: When the warning light lights up after 200,000 km, remove the screw from the "10" position and reinstall it at the "0" position. After 300,000 km, install the screw back at the "10" position.
2. **IF REPLACING TIMING BELT BEFORE WARNING LIGHT LIGHTS UP**
   (a) Remove the speedometer unit from the combination meter.
   (b) Disengage the gear on top of the odometer, and adjust the cam location as shown in the illustration.

BE

   HINT: Install the screw at the "0" and "⊖" position.
   (c) Install the speedometer in the combination meter and install the combination meter in the vehicle.

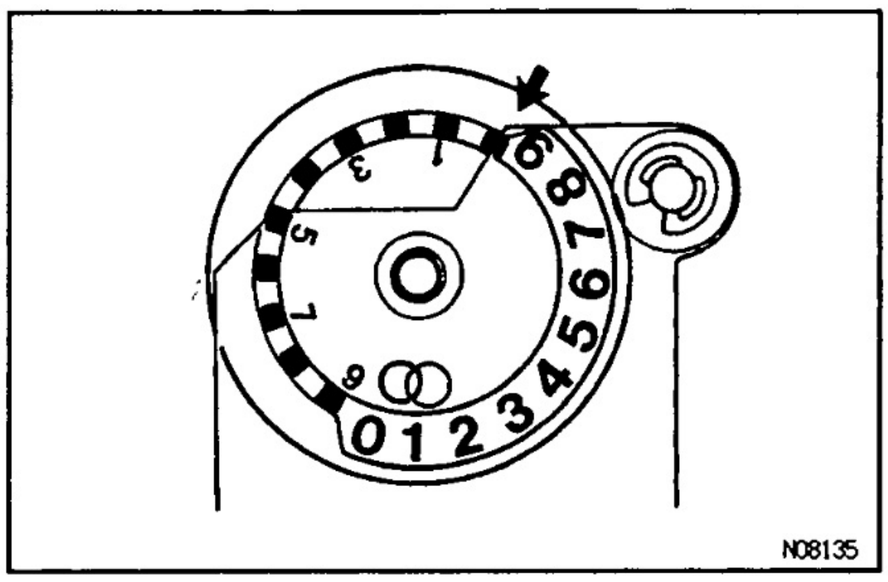

3. INSPECT TIMING BELT WARNING MICRO SWITCH

(a) Remove the speedometer unit from the combination meter.

(b) Read the number indicated by the timing belt microswitch in the speedometer.

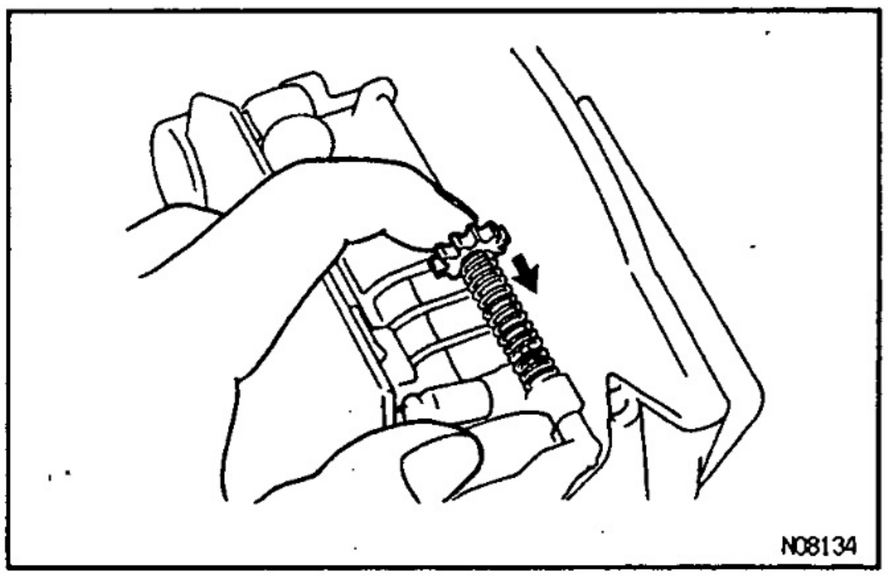

(c) Disengage the gear on top of the odometer and check the continuity between the terminals when the cam for the microswitch is rotated.

Position "A"

Condition	Tester connection	Specified value
Constant	0 – ⊖	No continuity
Constant	10 – ⊖	Continuity

Position "B"

Condition	Tester connection	Specified value
Constant	0 – ⊖	Continuity
Constant	10 – ⊖	No continuity

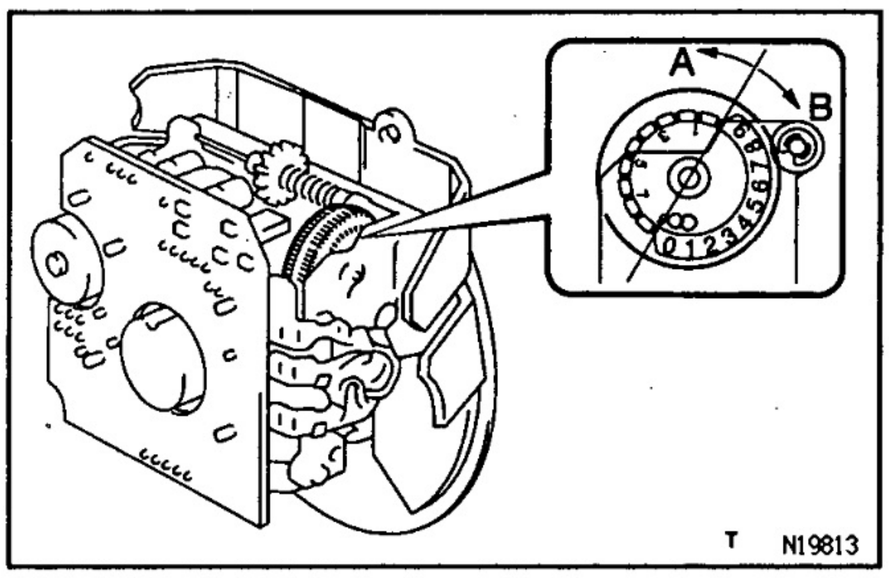

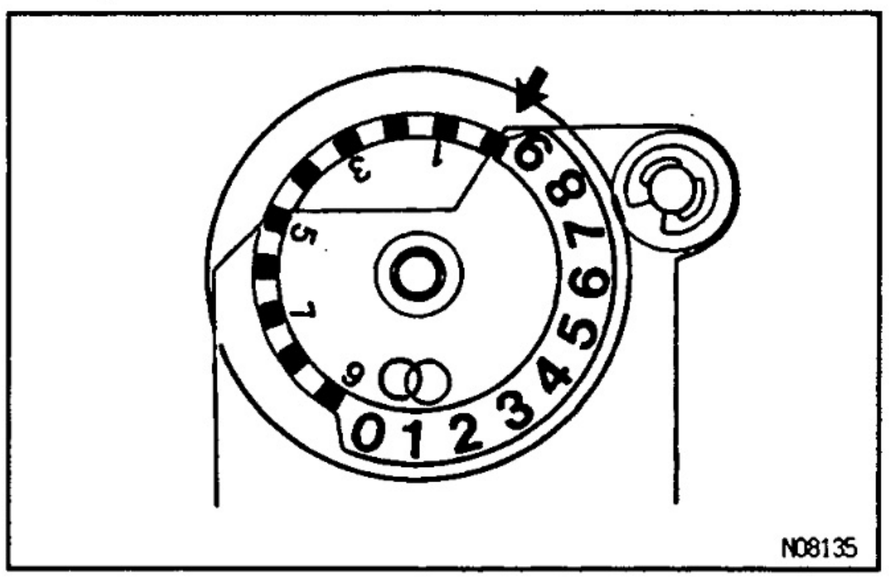

4. REPLACE SPEEDOMETER

(a) Remove the speedometer unit from the combination meter.

(b) Read the number indicated by the timing belt microswitch in the speedometer.

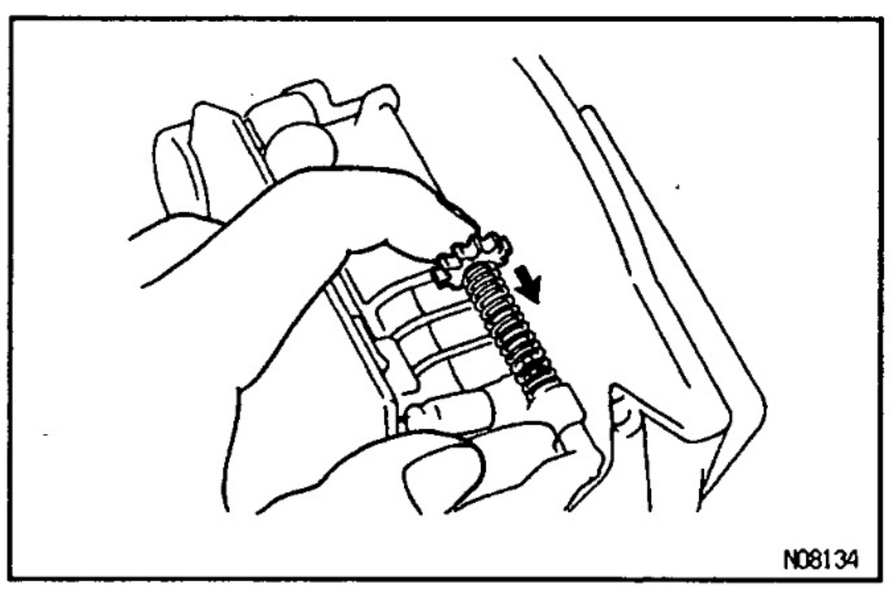

(c) Disengage the gear on top of the odometer, reset the timing belt microswitch to the reading in (b) above, then engage the gear.

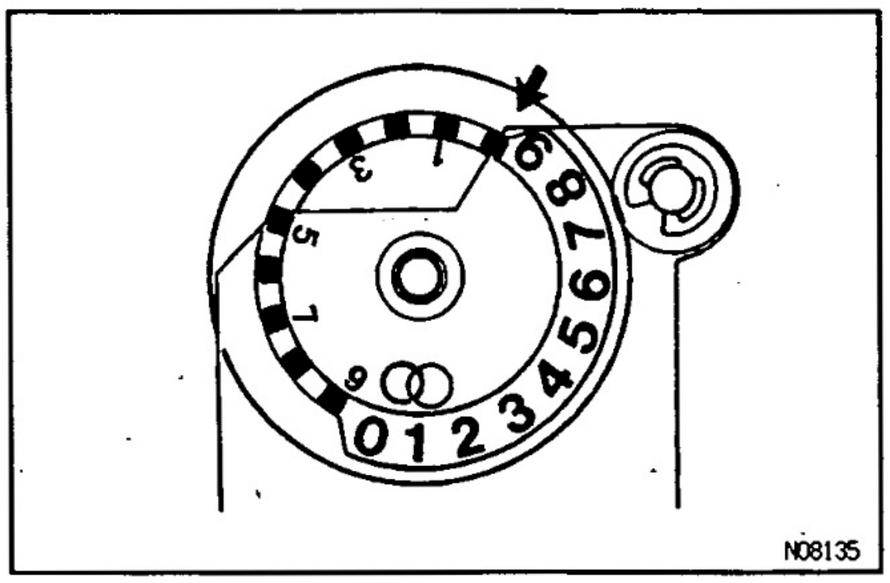

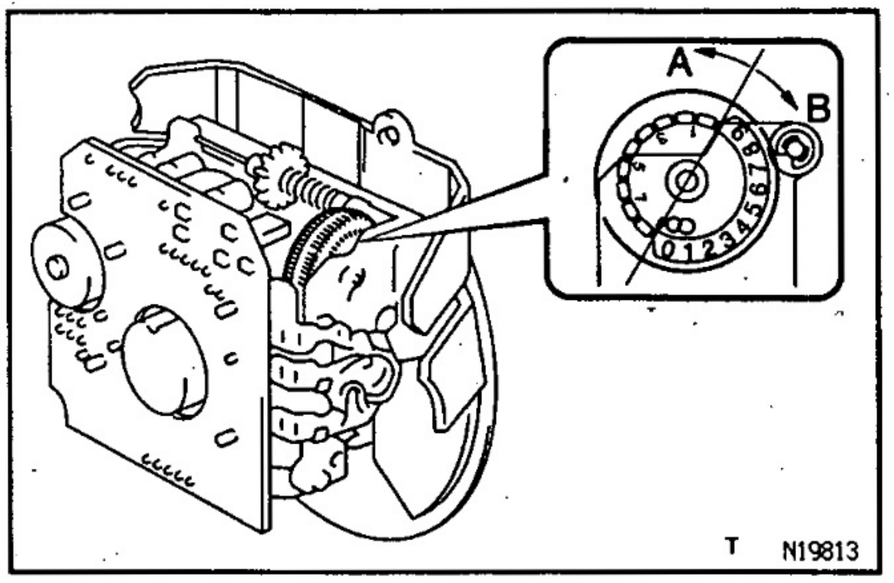

(d) When the arrow in the illustration indicates the A side, install the screws at "0" and the "⊖" positions. For the B side, install the screws at the "10" and "⊖" position.

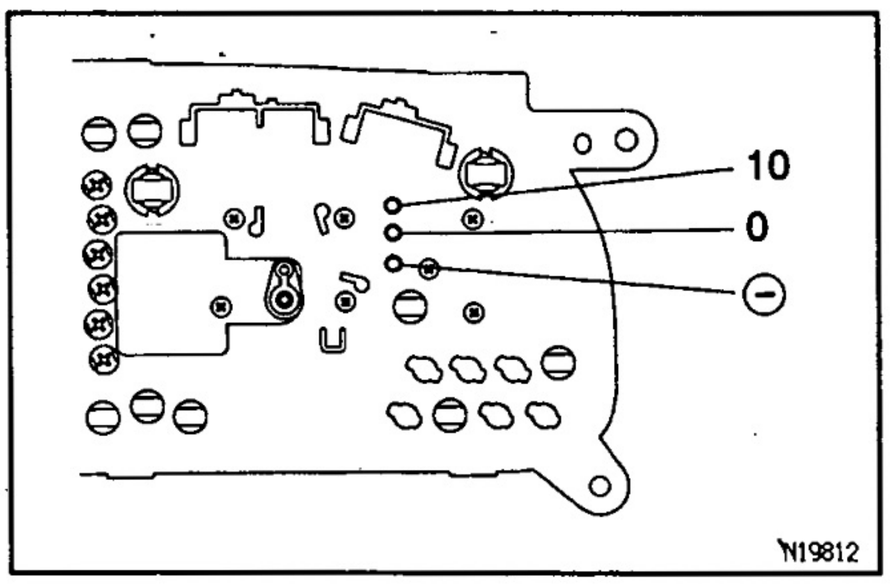

BE31V-02

SPEEDOMETER

1. INSPECT SPEEDOMETER ON VEHICLE

(a) Using a speedometer tester, inspect the speedometer for allowable indication error and check the operation of the odometer.
HINT: Tire wear and tire over or under inflation will increase the indication error.
If an error is excessive, replace the speedometer.

(b) Check the speedometer for pointer vibration and abnormal noise.

Europe (km/h and mph) and G.C.C. countries (km/h)

Standard indication (km/h)	Allowable range (km/h)	Standard indication (mph)	Allowable range (mph)
20	20 – 26	20	20 – 24.5
40	40 – 48	40	40 – 46.5
60	60 – 70	60	60 – 68.5
80	80 – 92	80	80 – 90.5
100	100 – 114	100	100 – 112.5
120	120 – 136	–	
140	140 – 158	–	
160	160 – 180	–	

Australia (km/h) and General (km/h and mph)

Standard indication (km/h)	Allowable range (km/h)	Standard indication (mph)	Allowable range (mph)
–		20	18 – 24
40	36 – 44	40	38 – 44
60	54 – 66	60	58 – 66
80	72 – 88	80	78 – 88
100	90 – 110	100	98 – 110
120	108 – 132	120	118 – 132
140	126 – 154	–	
160	144 – 176	–	

BE

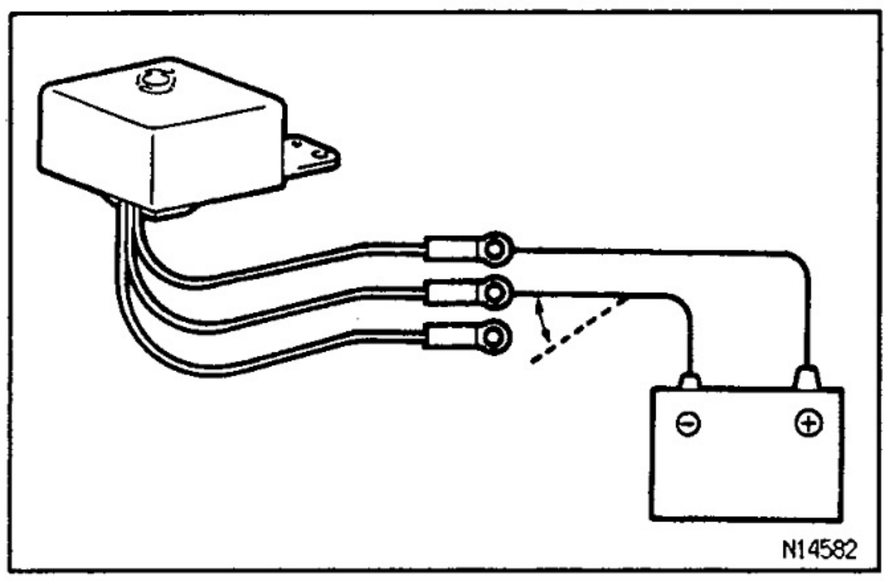

2. INSPECT SPEED WARNING BUZZER

Apply battery voltage intermittently between terminals of the buzzer and check that the buzzer sound.
HINT: The sound will be distorted if the buzzer is tilted.
If operation is not as specified, replace the buzzer.

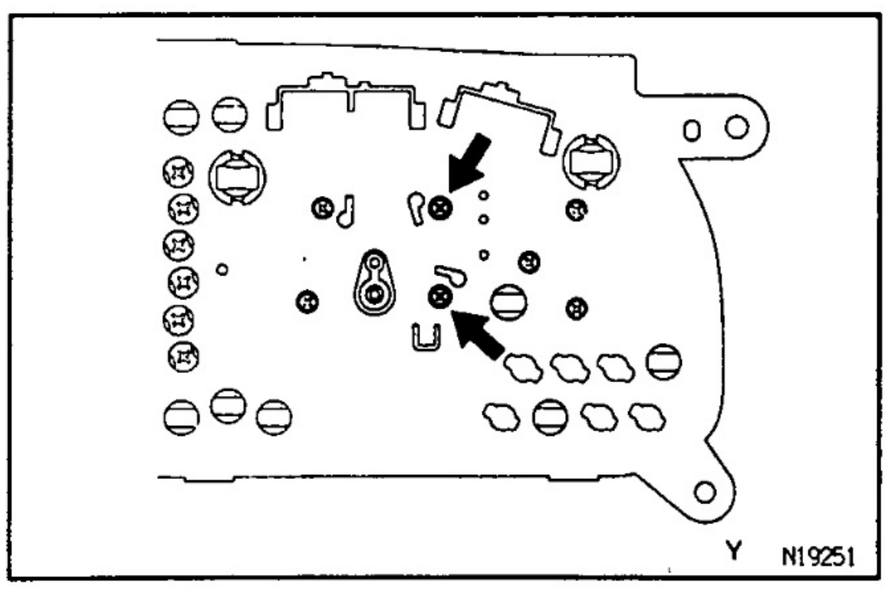

VEHICLE SPEED SENSOR INSPECTION

8E1DP-0J

INSPECT VEHICLE SPEED SENSOR

Check that there is continuity between terminals A and B 4 times for every revolution of the speedometer shaft.
If operation is not as specified, replace the speedometer.

BE39A–01

TACHOMETER INSPECTION

1. INSPECT TACHOMETER ON–VEHICLE

(a) Connect a tune–up test tachometer, and start the engine.

NOTICE: Reversing the connection of the tachometer will damage the transistors and diodes inside.

(b) Compare the tester and tachometer indications.
If an error is excessive, replace the tachometer.
RPM (DC 13.5 V, 25 °C (77°F))

Standard indication (rpm)	Allowable range (rpm)
700	630 – 770
1,000	(900 – 1,100)
2,000	(1,875 – 2,125)
3,000	2,850 – 3,150
4,000	(3,850 – 4,150)
5,000	4,850 – 5,150
6,000	(5,820 – 6,180)
7,000	(6,790 – 7,210)

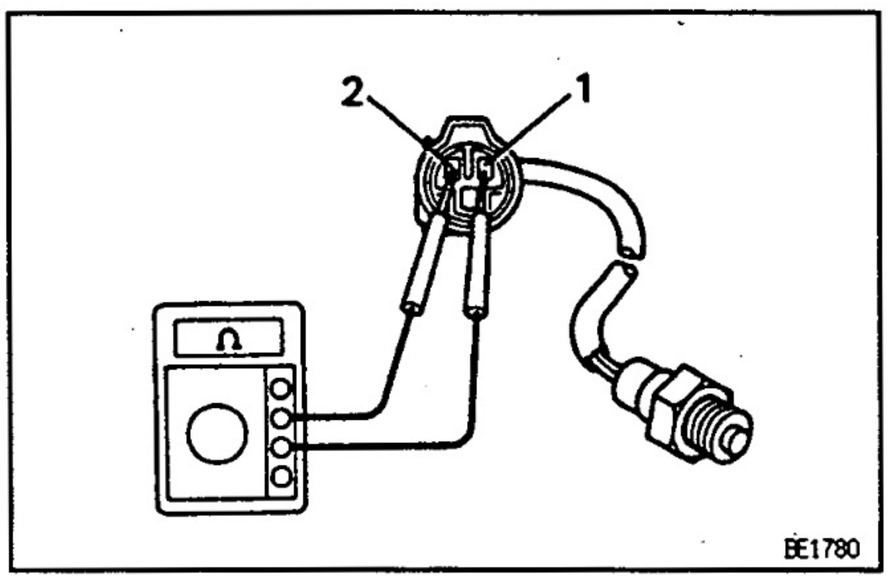

2. INSPECT PICK–UP SENSOR (Diesel engine)

Measure the resistance between terminals 1 and 2.
Resistance: Approx. 730 Ω

If resistanse value is not as specified, replace the sensor.

BE

BE39B–01

FUEL GAUGE INSPECTION

1. INSPECT RECEIVER GAUGE OPERATION

(a) Disconnect the connector from the sender gauge assembly.

(b) Turn the ignition switch ON, check that the receiver gauge needle indicates EMPTY.

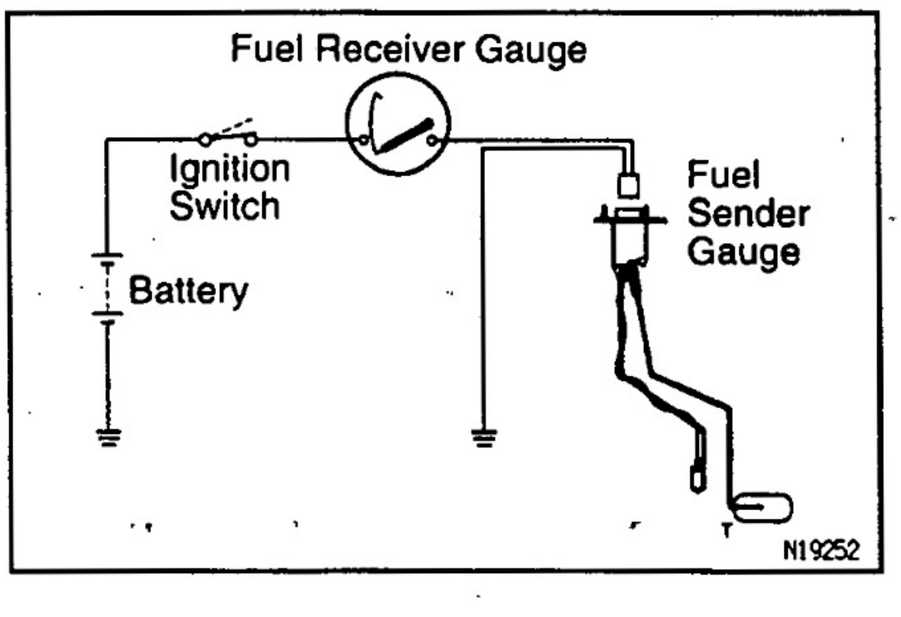

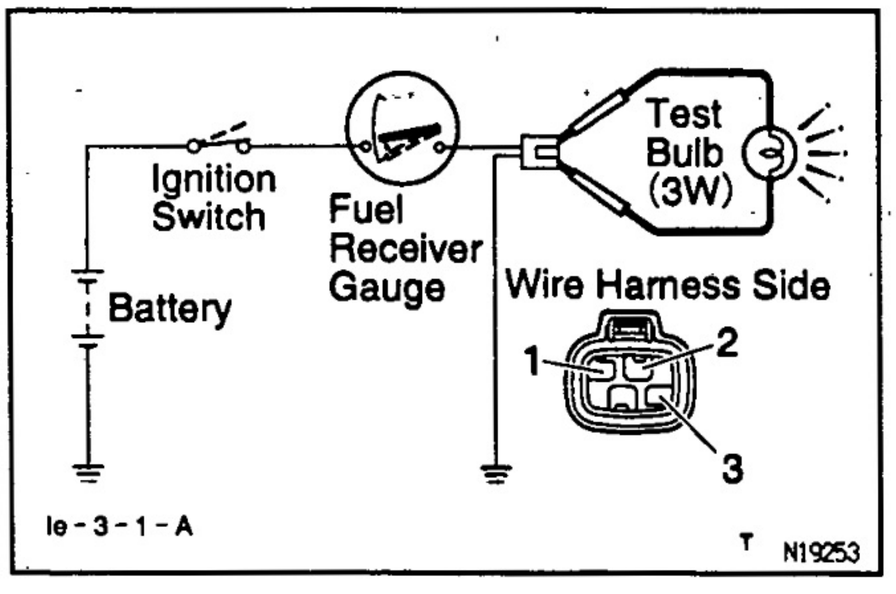

(c) Connect terminals 1 and 2 on the wire harness side connector through a 3.4 W test bulb.

(d) Turn the ignition switch ON, check that the bulb lights up and the receiver gauge needle moves toward the full side.
HINT: Because of the silicon oil in the gauge, it will take a short time for the needle to stabilize.
If operation is not as specified, inspect the receiver gauge resistance.

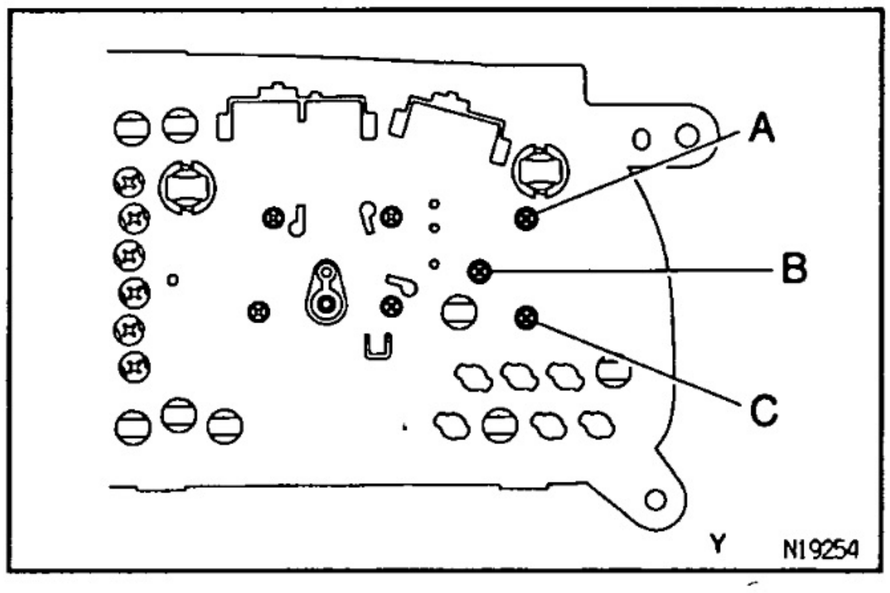

2. INSPECT RECEIVER GAUGE RESISTANCE

Measure the resistance between terminals.

Between terminals	Resistance (Ω)
A – B	Approx. 125.0
A – C	Approx. 228.0
B – C	Approx. 103.0

If resistance value is not as specified, replace the fuel receiver gauge.

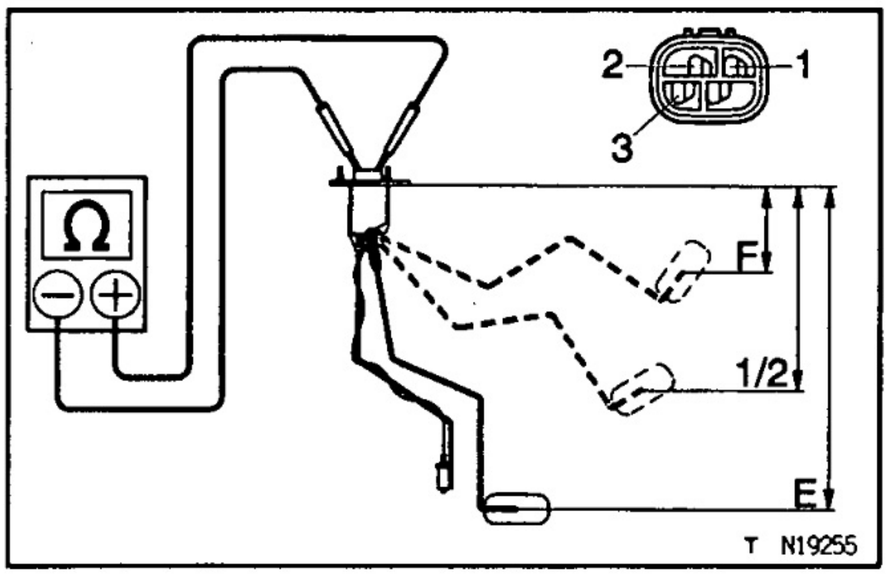

3. INSPECT SENDER GAUGE RESISTANCE

Measure the resistance between terminals 1 and 2 for each float position.

Float position : mm (in.)	Resistance (Ω)
F: Approx. 78.9 (3.106) ~ 83.9 (3.303)	Approx. 3.0 ± 0.6
1/2: Approx. 192.9 (7.594)	Approx. 32.5 ± 1.5
E: Approx. 303.0 (11.929) ~ 308.0 (12.126)	Approx. 110.0 ± 2.5

If resistance value is not as specified, replace the sender gauge.

BE

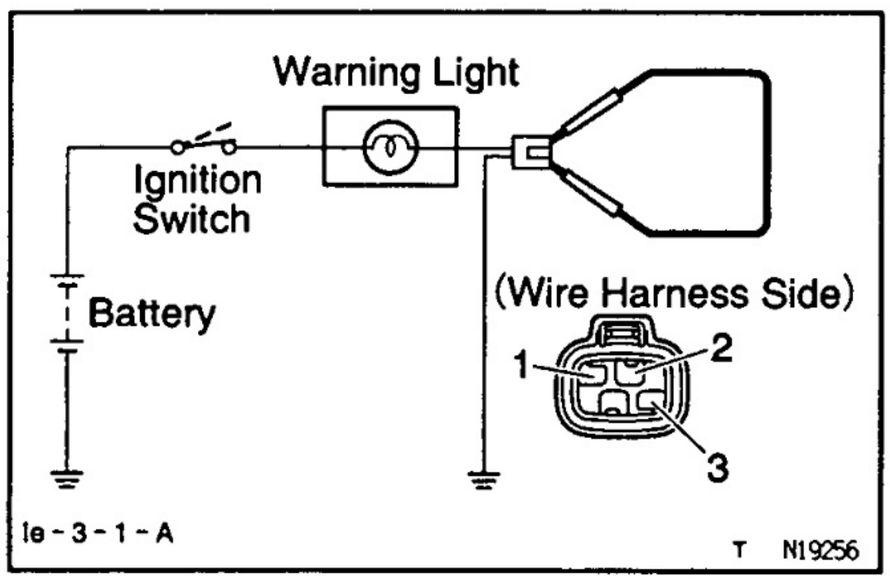

FUEL LEVEL WARNING INSPECTION

BE25W-01

1. INSPECT WARNING LIGHT

(a) Disconnect the connector from the sender gauge.

(b) Connect terminals 1 and 3 on the wire harness side connector.

(c) Turn the ignition switch ON, check that the warning light lights up.

If the warning light does not light up, test the bulb or inspect wire harness.

2. INSPECT SWITCH OPERATION

(a) Connect the positive (+) lead from battery to terminal 3 through a 3.4 W test bulb and the negative (–) lead to terminal 1, and check that the bulb lights up.

HINT: It will take a short time for the bulb to light up.

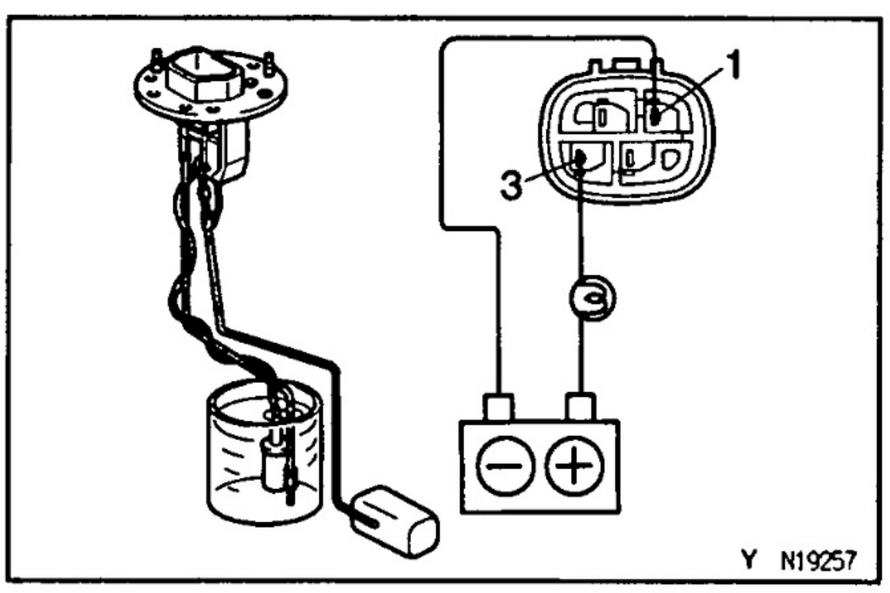

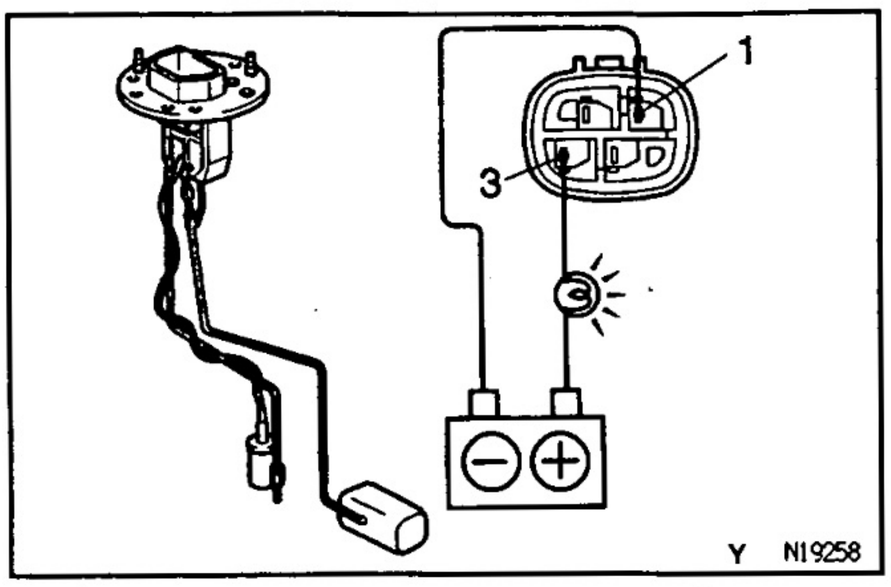

(b) Submerge the switch in fuel, check that the bulb goes out.
If operation is not as specified, replace the sender gauge.

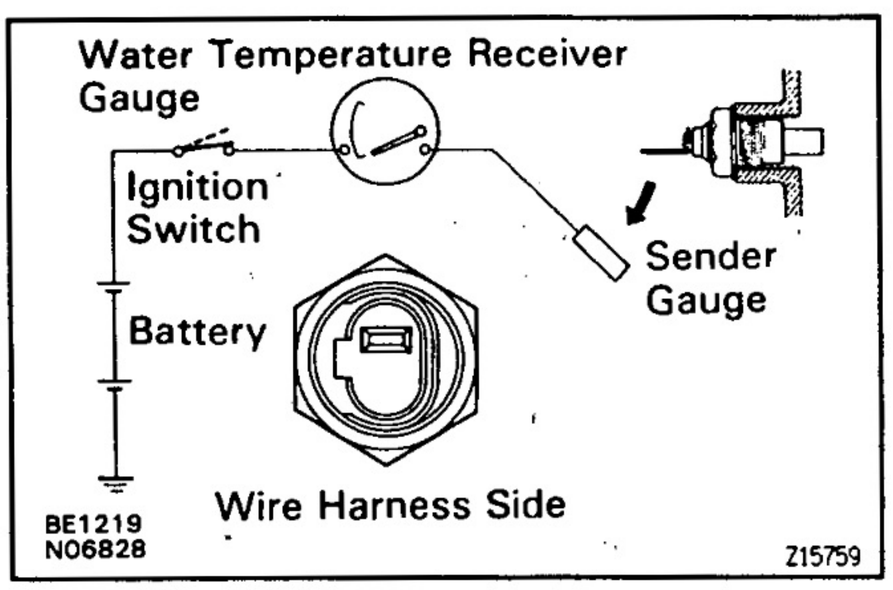

WATER TEMPERATURE GAUGE INSPECTION

1. INSPECT RECEIVER GAUGE OPERATION

(a) Disconnect the connector from the sender gauge.
(b) Turn the ignition switch ON, check that the receiver gauge needle indicates COOL.

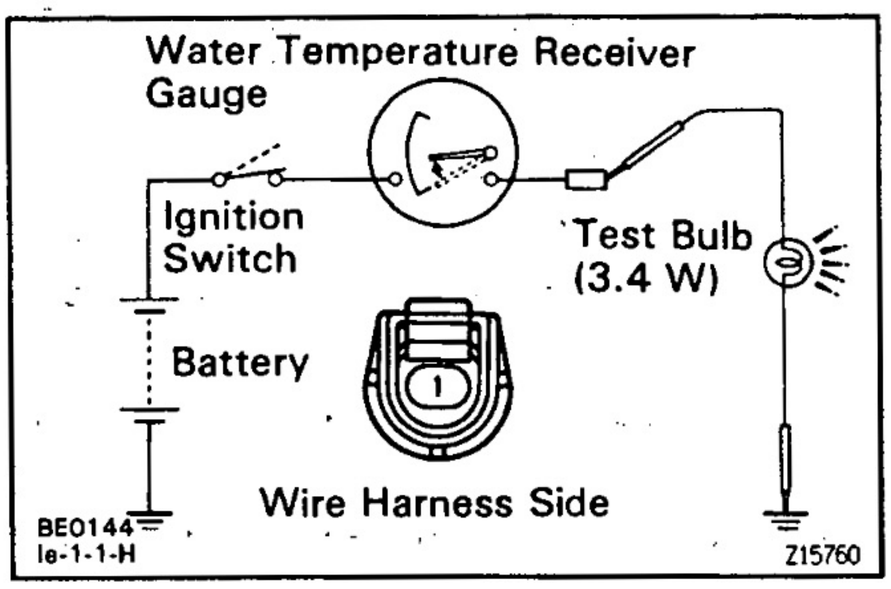

(c) Ground terminal on the wire harness side connector through a 3.4 W test bulb.
(d) Turn the ignition switch ON, check that the bulb lights up and the receiver gauge needle moves toward the hot side.
If operation is as specified, replace the sender gauge. then recheck the system.
If operation is not as specified, measure the receiver gauge resistance.

2. INSPECT RECEIVER GAUGE RESISTANCE

Measure the resistance between the terminals.
HINT: Connect the test leads so that the current from the ohmmeter can flow according to the chart order.

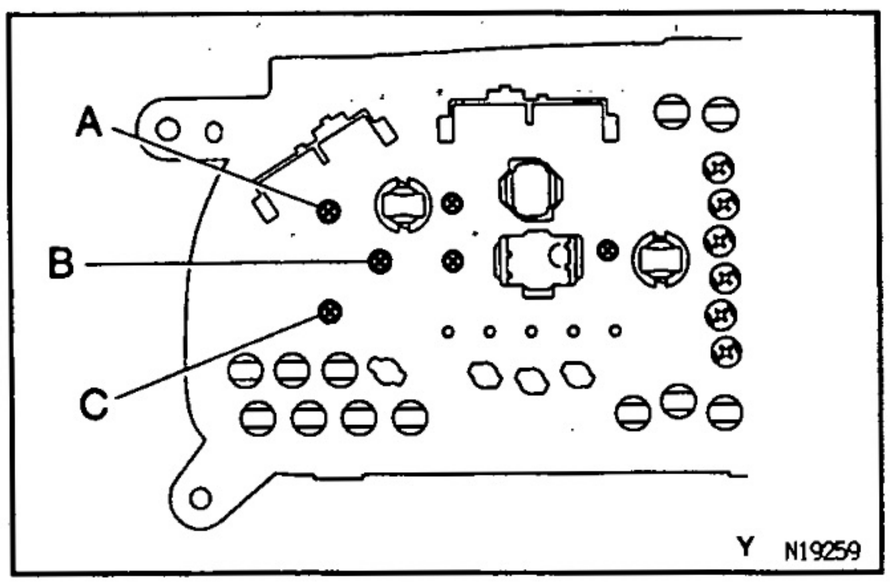

Between terminals	Resistance (Ω)
A – B	Approx. 235.0
A – C	Approx. 175.0
B – C	Approx. 90.0

If resistance value is not as specified, replace the water temperature receiver gauge.

3. INSPECT SENDER GAUGE RESISTANCE

Measure the resistance between the terminal and gauge body.

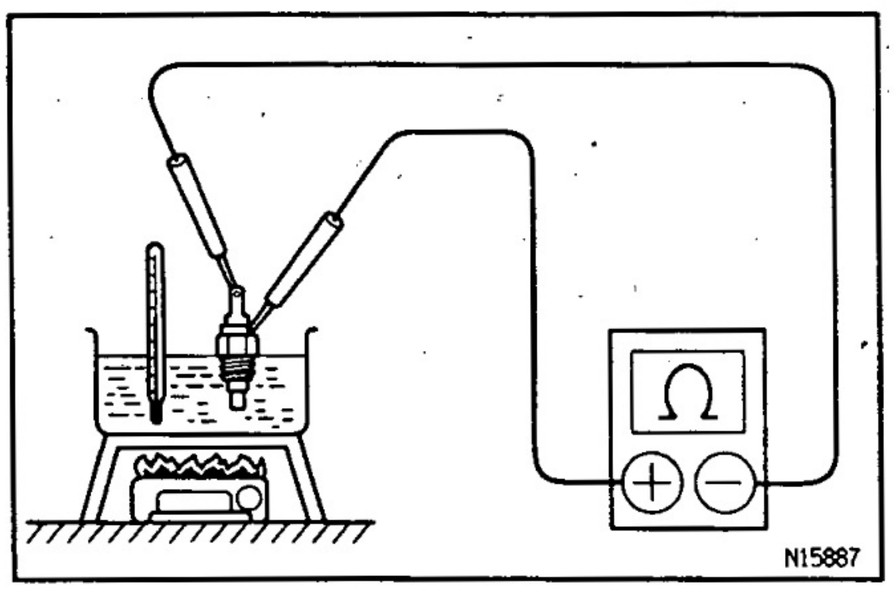

Temperature °C (°F)	Resistance (Ω)
50 (122.0)	160 ~ 240
120 (248.0)	17.1 ~ 21.2

If resistance value is not as specified, replace the water temperature sender gauge.

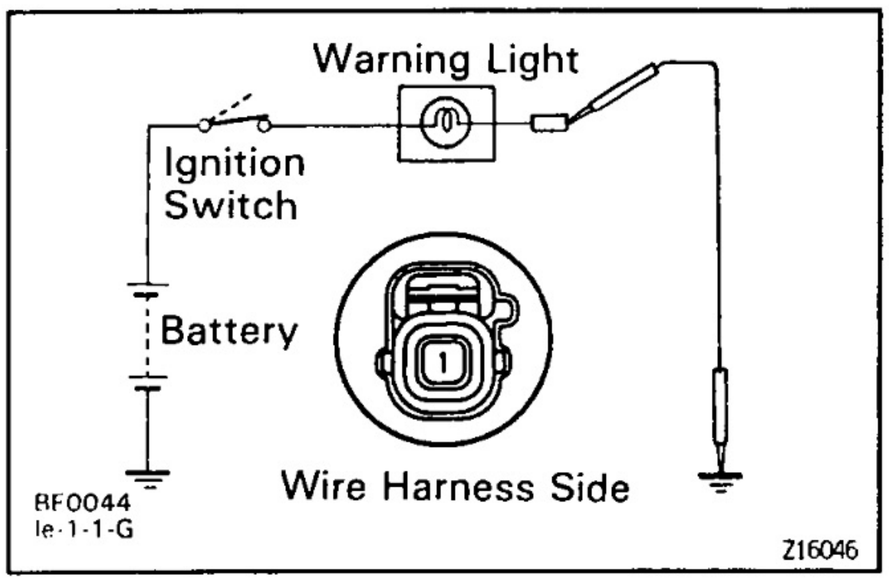

BE0C4-0X

LOW OIL PRESSURE WARNING INSPECTION

1. INSPECT WARNING LIGHT

(a) Disconnect the connector from the warning switch and ground terminal on the wire harness side connector.

(b) Turn the ignition switch ON, check that the warning light lights up.
If the warning light does not light up, test the bulb or inspect wire harness.

2. INSPECT SWITCH CONTINUITY

(a) Check that there is continuity between the terminal and with ground the engine stopped.

(b) Check that there is no continuity between the terminal and ground with the engine running.
HINT: Oil pressure should be over 34 kPa (0.35 kgf/cm², 4.98 psi)
If operation is not as specified, replace the switch.

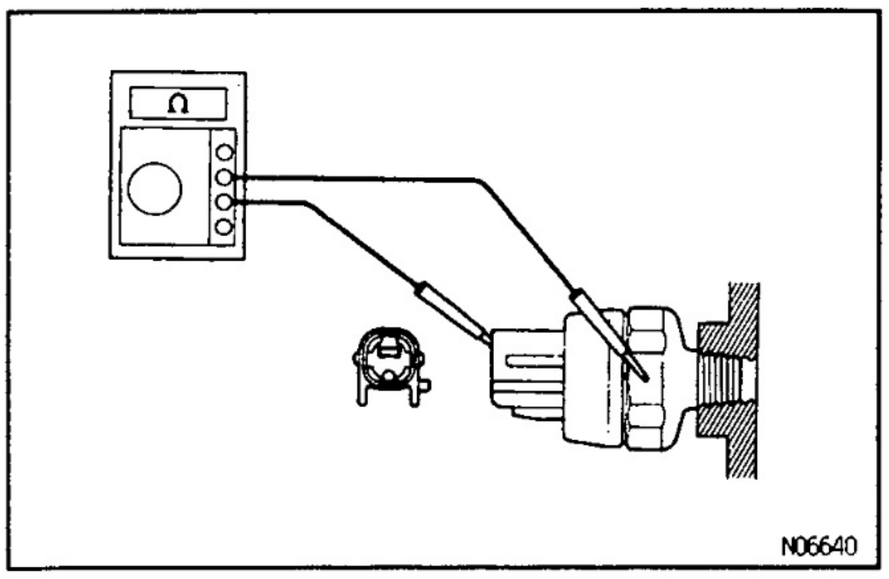

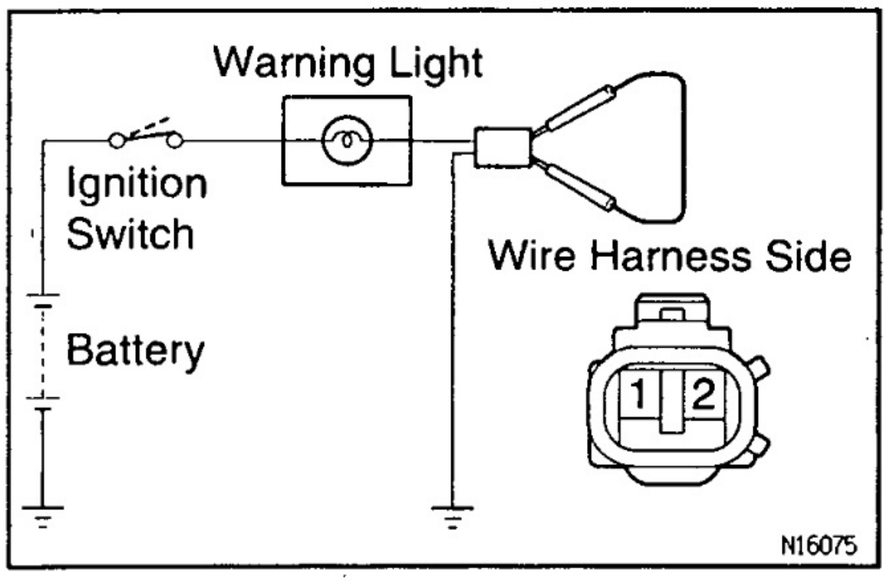

BE30L-01

FUEL FILTER WARNING INSPECTION

1. INSPECT WARNING LIGHT

(a) Disconnect the connector from the warning switch and connect terminals on the wire harness side connector.

(b) Remove the CHARGE fuse and turn the ignition switch ON.

(c) Check that the warning light lights up and the warning buzzer sounds.

2. INSPECT FUEL SEDIMENTER BUZZER OPERATION
Apply battery voltage between terminals, check that the buzzer sound.
If buzzer does not sound, replace the buzzer.

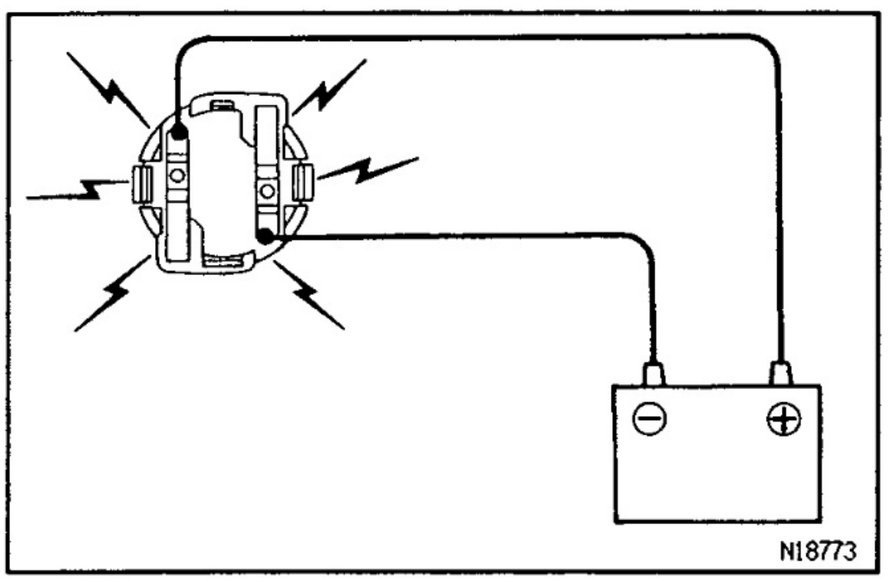

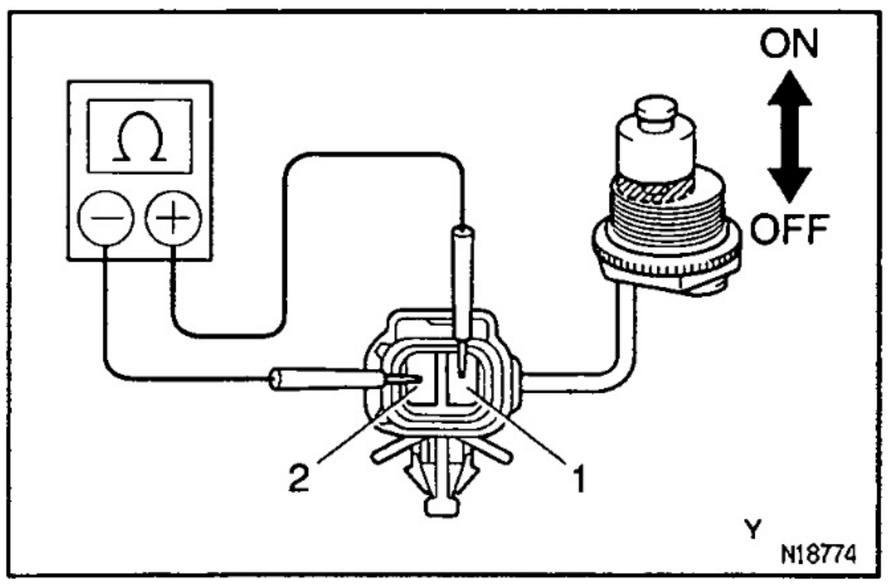

3. INSPECT WARNING SWITCH CONTINUITY

(a) Check that there is no continuity between terminals with the warning switch OFF (float down).

(b) Check that there is continuity between terminals with the warning switch ON (float up).
If operation is not as specified, replace the switch.

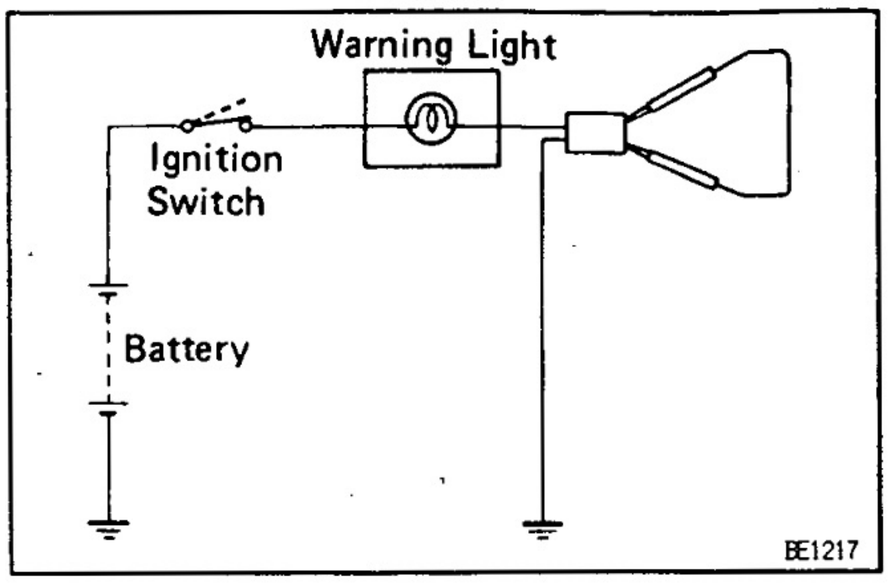

BE39D-01

BRAKE WARNING INSPECTION

Gasoline engine:

1. INSPECT WARNING LIGHT

(a) Disconnect the connector from the brake fluid level warning switch and parking brake switch.

(b) Connect terminals on the wire harness side of the brake fluid level warning switch connector.

(c) Start the engine, and check that the warning light lights up.

If the warning light does not light up, test the bulb or wire harness.

2. INSPECT BRAKE FLUID LEVEL WARNING SWITCH OPERATION

(a) Check that there is no continuity between terminals with the switch OFF (float up).

(b) Check that there is continuity between terminals with the switch ON (float down).

If operation is not as specified, replace the switch.

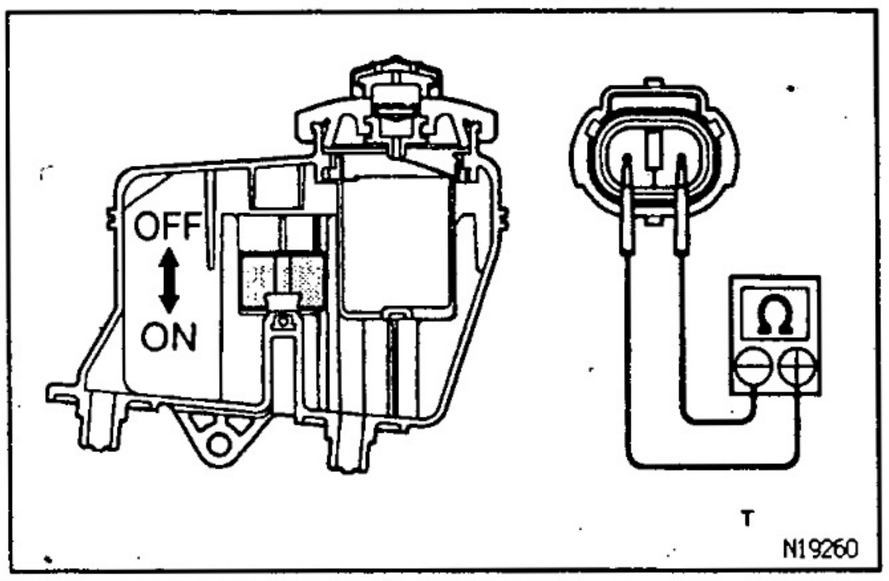

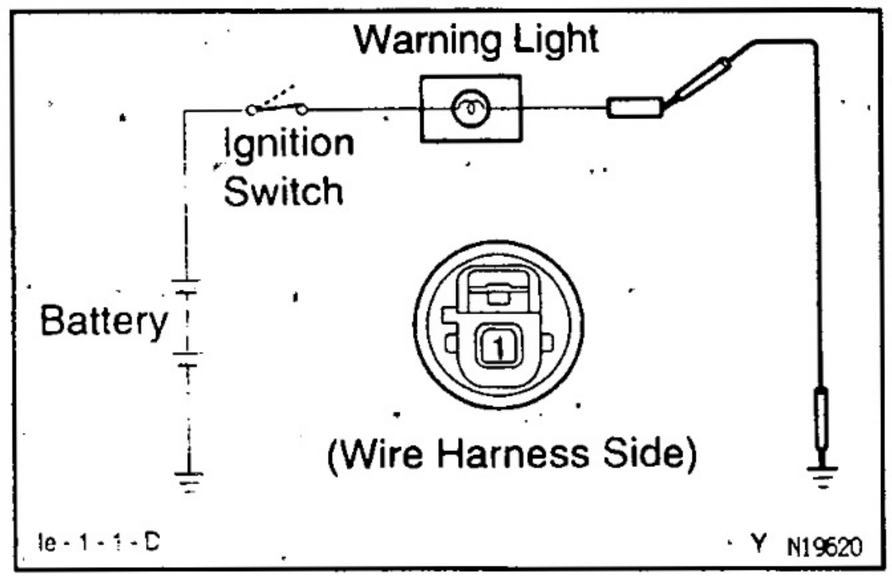

Diesel engine:

1. INSPECT WARNING LIGHT

(a) Disconnect the connector from the vacuum warning switch and ground germinal on the wire harness side connector.

(b) Turn the ignition switch ON, and check that the warning light lights up.

If the warning light does not light up, test the bulb or wire harness.

2. INSPECT VACUUM SWITCH OPERATION

(a) Check that there is continuity between terminal and ground with the engine stopped.

(b) Check that there is no continuity between terminal and ground with the engine running.

HINT: Oil pressure should be over 26.7 kPa (200 mmHg, 7.88 in.Hg)

If operation is not as specified, replace the switch.

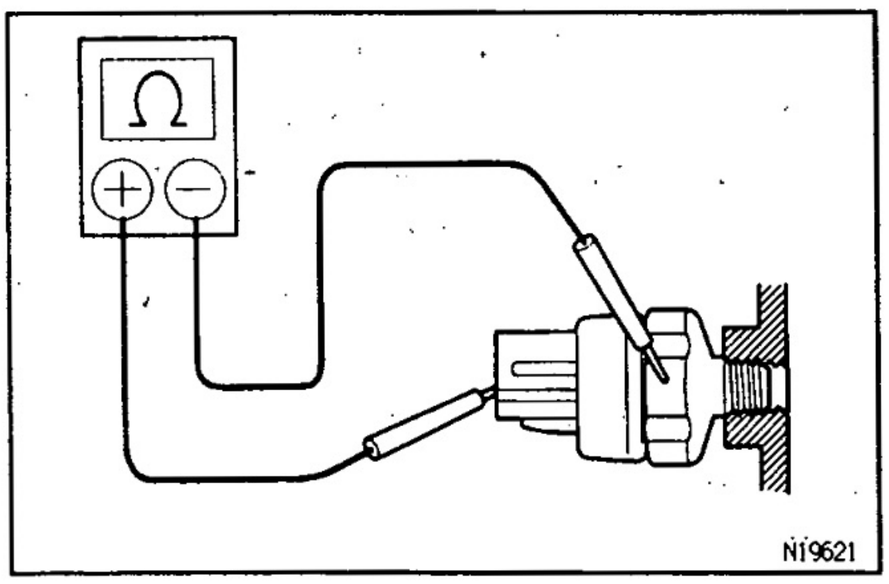

INSPECT PARKING BRAKE SWITCH CONTINUITY

(a) Check that there is continuity between the terminal and switch body with the switch ON (switch pin released)

(b) Check that there is no continuity between the terminal and switch body with the switch OFF (switch pin pushed in).

If operation is not as specified, replace the switch or inspect ground point.

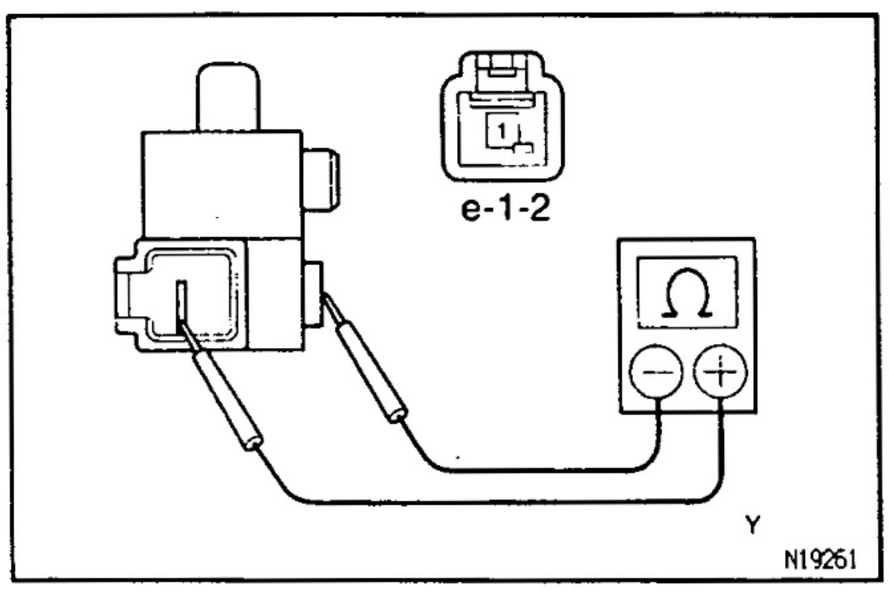

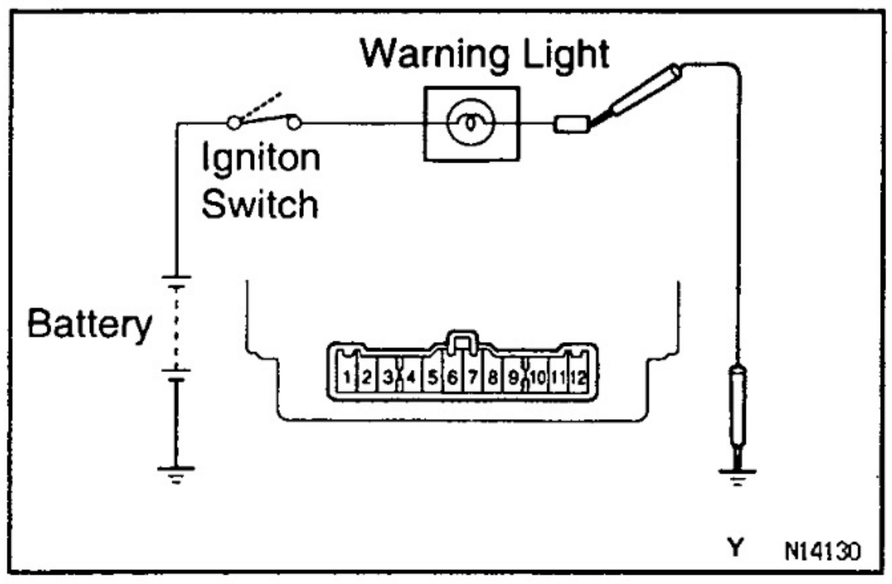

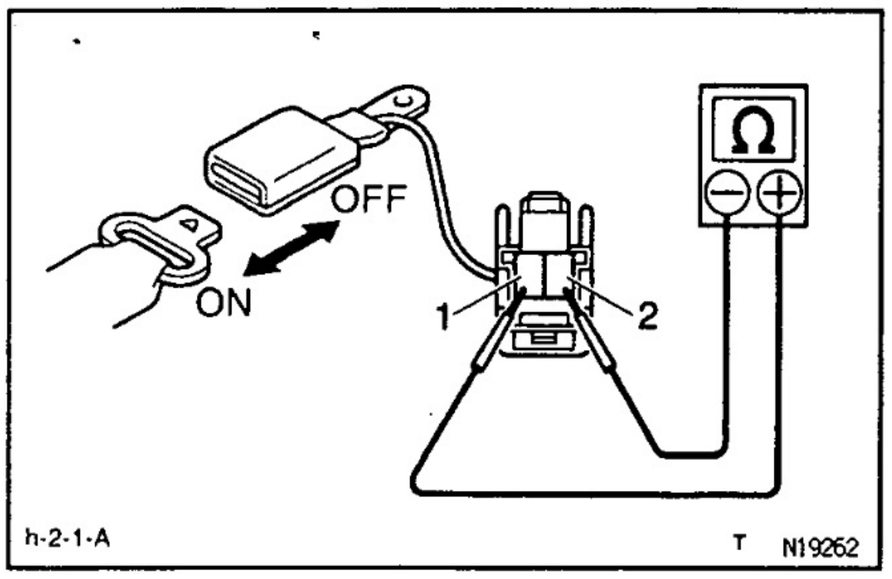

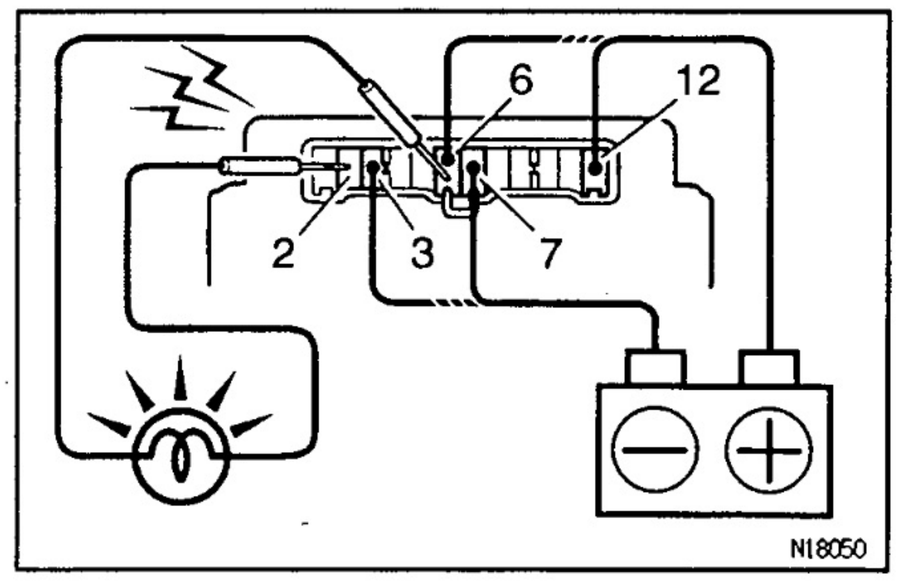

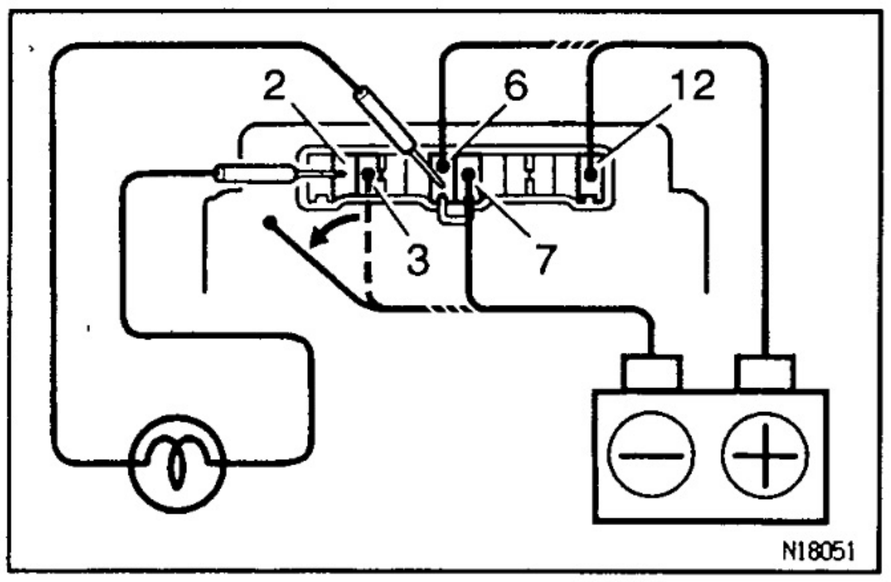

SEAT BELT WARNING INSPECTION

BE39G-01

1. INSPECT WARNING LIGHT

(a) Remove the integration relay from the Driver Side J/B.

(b) Ground terminal 9 on the junction block side connector.

(c) Turn the ignition switch ON and check that the warning light lights up.

If the warning light does not light up, inspect the bulb or wire harness.

2. INSPECT BUCKLE SWITCH CONTINUITY

(a) Check that there is continuity between terminals on the switch side connector with the switch ON (belt unfastened).

(b) Check that there is no continuity between terminals on the switch side connector with the switch OFF (belt fastened).

If operation is not as specified, replace the seat belt inner.

3. INSPECT INTEGRATION RELAY OPERATION

(a) Connect the positive (+) lead from the battery to terminal 12 the and negative (−) lead from the battery to terminal 7.

(b) Connect the terminal 2 to terminal 5 through the 3.4 W test bulb.

(c) Connect the negative (−) lead from the battery to terminal 3.

(d) Check that the bulb lights and the chime sounds for 4 − 8 seconds.

(e) Return to step (a) and operate the chime again.

(f) Check that the buzzer does not sounds when disconnecting terminal 3 from the negative (−) lead.

(g) Check that the chime stops sounding.

HINT: Check the chime within a period of 4 to 8 seconds.

If operation is not as specified, replace the relay.

4. INSPECT INTEGRATION RELAY CIRCUIT

See page BE−8

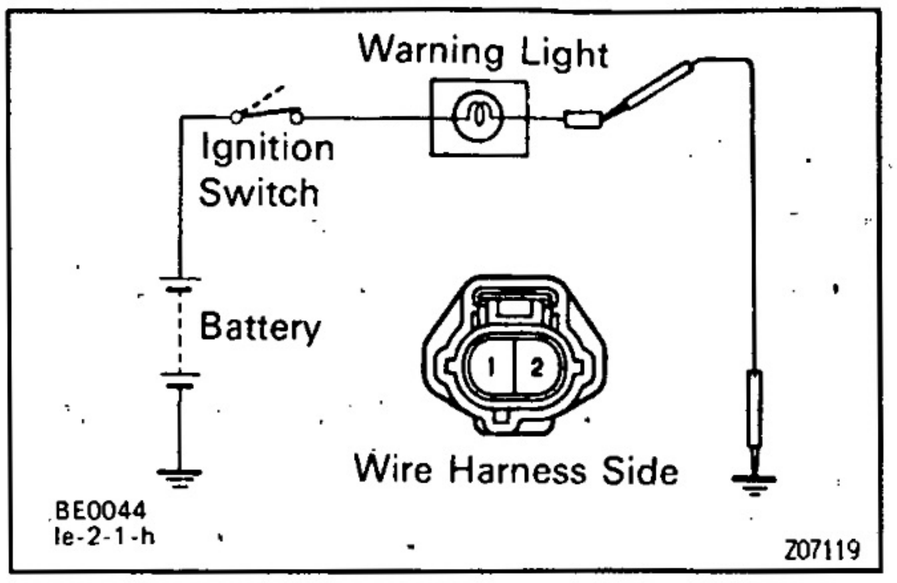

BE39H-01

ENGINE OIL LEVEL WARNING INSPECTION

1. INSPECT WARNING LIGHT

(a) Disconnect the connector from the switch.
(b) Ground terminal 1 on the wire harness connector.
(c) Turn the ignition switch ON, and check that the warning light lights up after approximately 40 seconds.
If the warning light does not light up, inspect bulb or wire harness.

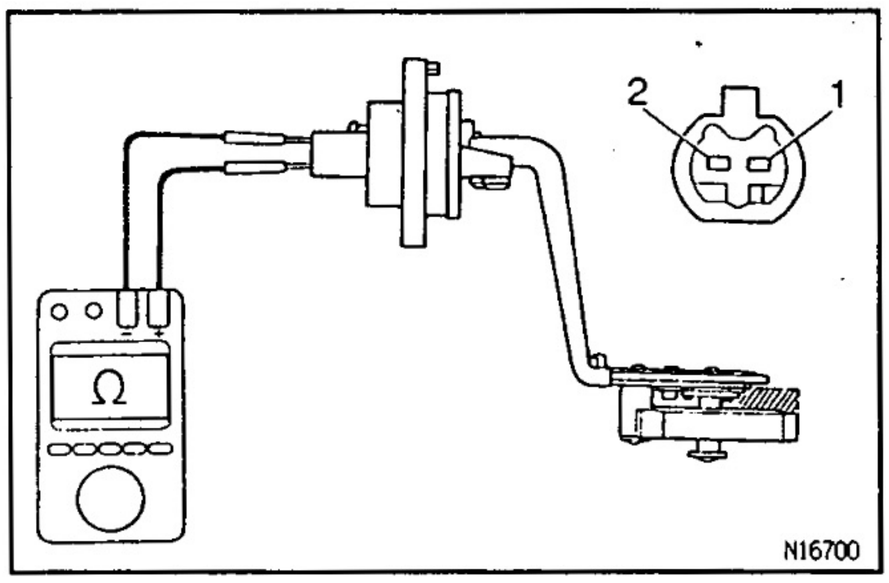

2. INSPECT SENSOR OPERATION

(a) Check that there is continuity between terminals with each switch position.
(b) Heat the switch to above 60°C (140°F) in an oil bath.
(c) Check that there is continuity between terminals with the switch ON (float up).
(d) Check that there is no continuity between terminals with the switch OFF (float down).
If operation is not as specified, replace the switch.

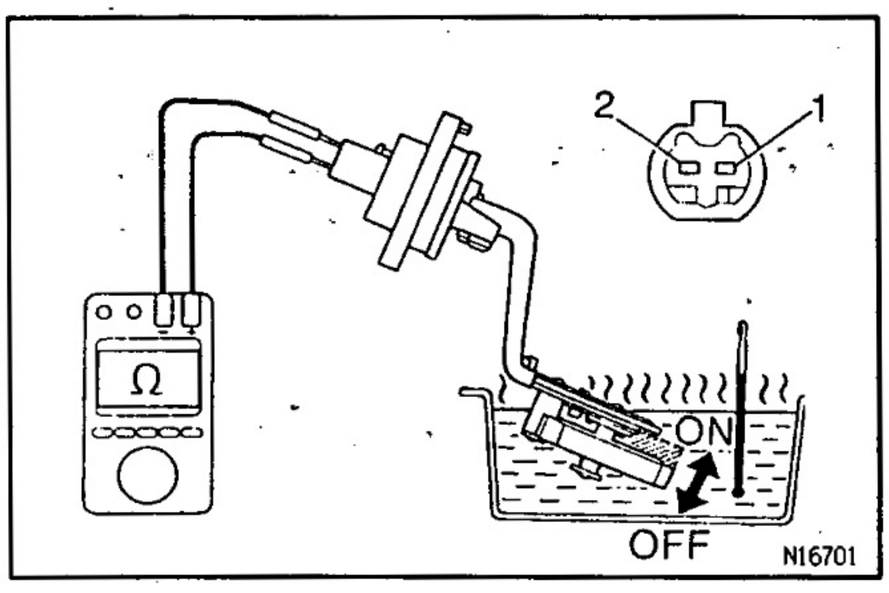

3. INSPECT SENSOR CIRCUIT

Disconnect the switch connector and inspect the connector on wire harness side, as shown.

Tester connection	Condition	Specified condition
2 — Ground	Constant	Continuity

If continuity is not as specified, inspect the wire harness or ground point.

BE

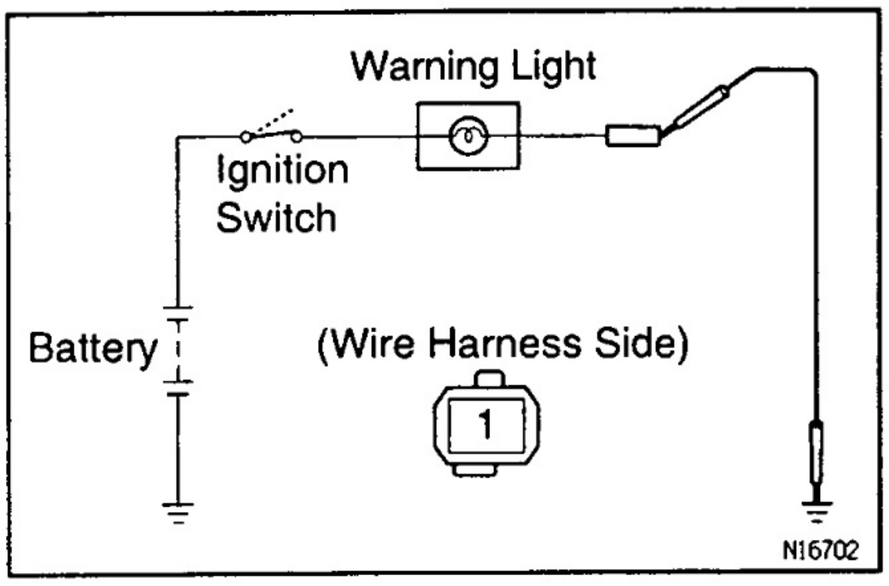

BE39J-01

OPEN DOOR WARNING INSPECTION

1. **INSPECT WARNING LIGHT**

(a) Disconnect the connectors from the door courtesy switch and ground terminal on the wire harness side connector.

(b) Turn the ignition switch ON, and check that the warning light lights up.
If the warning light does not light up, inspect the bulb or wire harness.

2. **INSPECT FRONT DOOR COURTESY SWITCH CONTINUITY**
See page BE–30

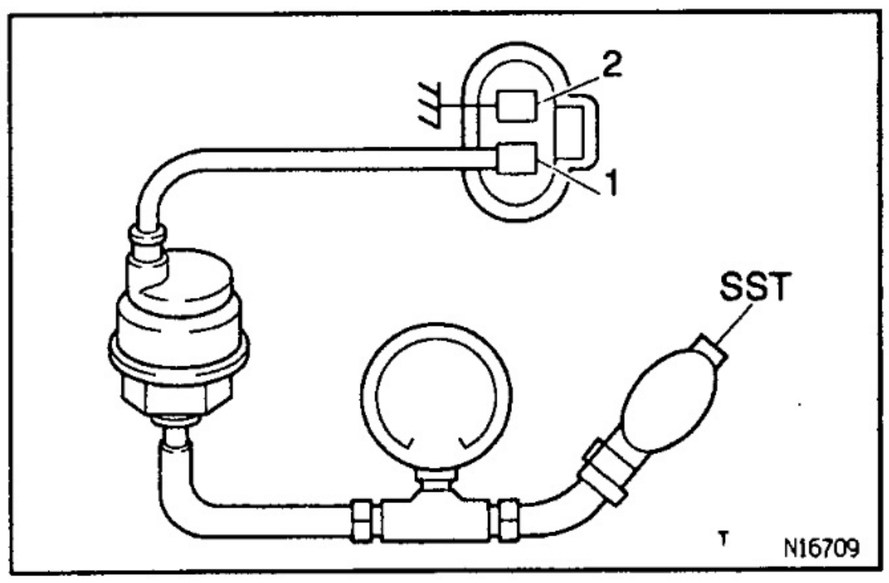

BE39K-01

TURBO WARNING INSPECTION

INSPECT TURBO PRESSURE SWITCH CONTINUITY

Check the continuity between the terminals 1 and 2, as shown in the chart.
SST: 09992–00241

Condition	Specified condition
No pressure	Continuity
Apply 1.0 kgf/cm² (14.2 psi, 98.1 kPa) of pressure.	No continuity

If operation is not as specified, replace the switch.

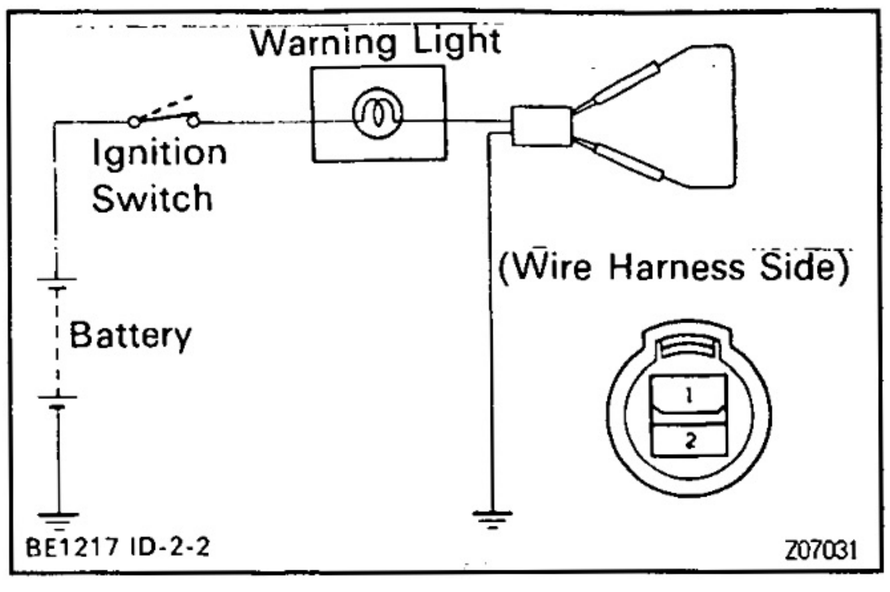

AIR CLEANER WARNING INSPECTION

BE89M-01

1. INSPECT WARNING LIGHT

(a) Disconnect the connector from the air filter warning switch. Connect the wire harness side connector terminals 1 and 2.

(b) Start the engine. Check that the bulb lights up.
If the warning light does not light up, replace the bulb.

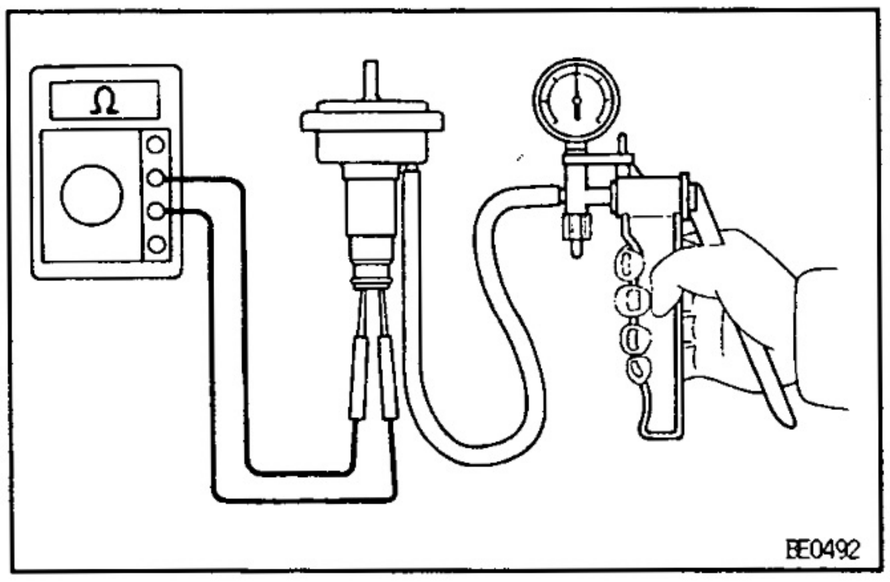

2. INSPECT VACUUM SENSOR OPERATION

(a) With a vacuum of 3.9 ± 0.5 kPa (29.4 ± 3.7 mmHg, 1.157 ± 0.146 in.Hg) or above, check that there is continuity between terminals.

(b) Check that there is not continuity between terminals with no vacuum.
If operation is not as specified, replace the sensor.

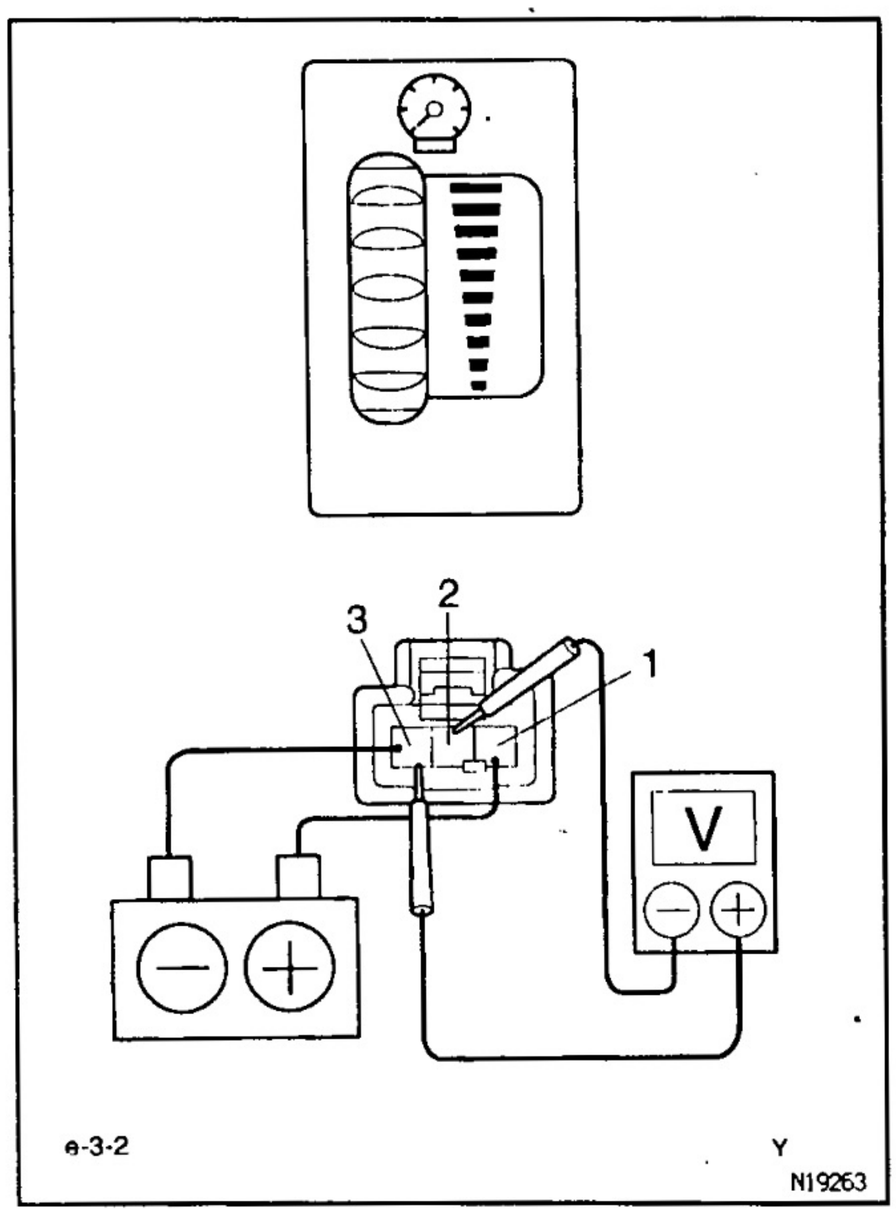

LIGHT CONTROL RHEOSTAT INSPECTION

BE31X-02

INSPECT LIGHT CONTROL RHEOSTAT

(a) Connect the positive (+) lead from the battery to terminal 1 and negative lead (−) to terminal 3.

(b) Connect the positive (+) lead from the voltmeter to terminal 2 and negative lead to terminal 3.

(c) Turn the rheostat knob and check that the voltage changes.

BE

ACCESSORY METER
PARTS LOCATION

BE0H0-06

*1: Gasoline Engine, Diesel Engine (LHD models)
*2: Diesel Engine (RHD models)

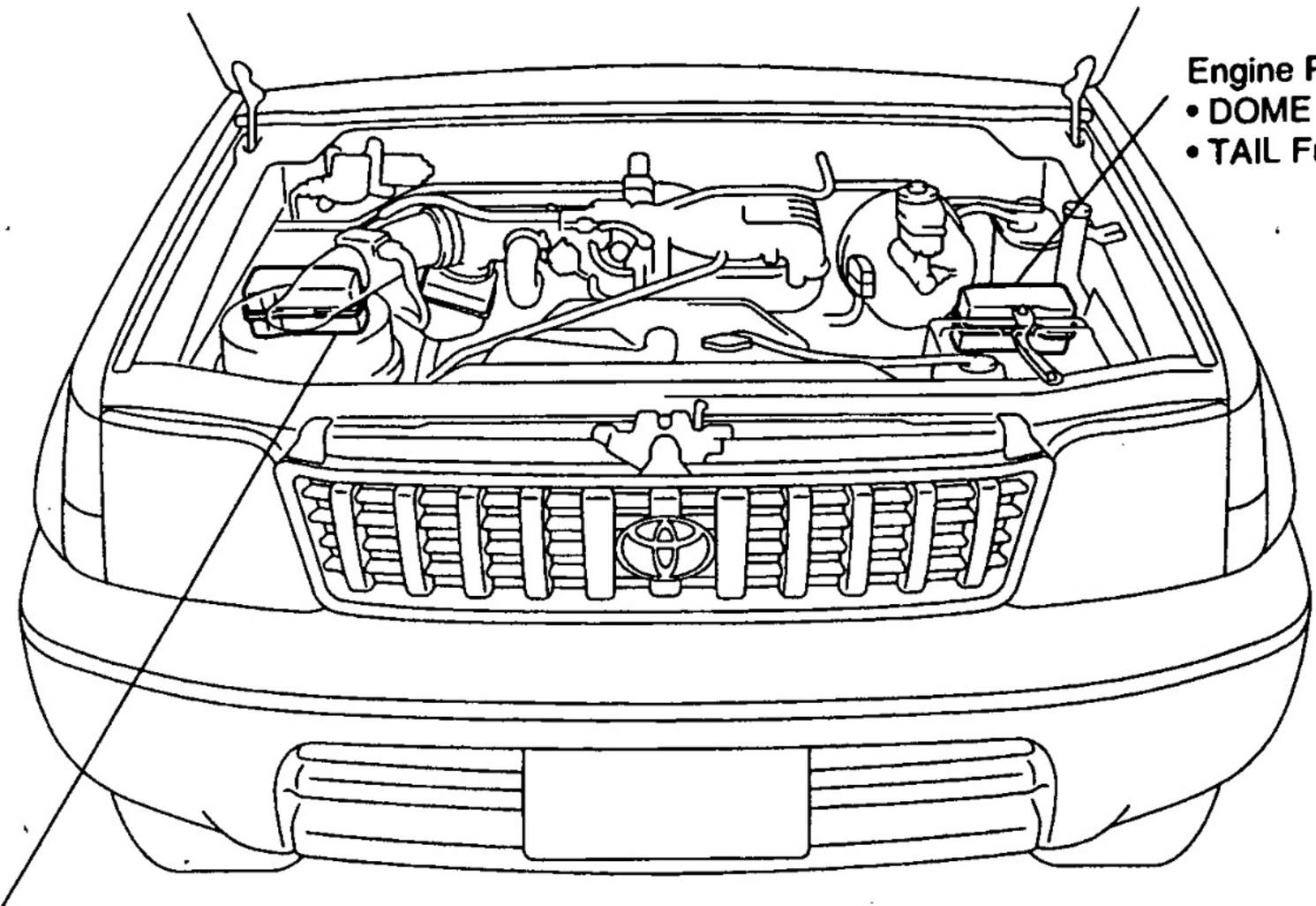

Engine Room R/B *1
• DOME Fuse
• TAIL Fuse

Engine Room R/B *2
• DOME Fuse
• TAIL Fuse

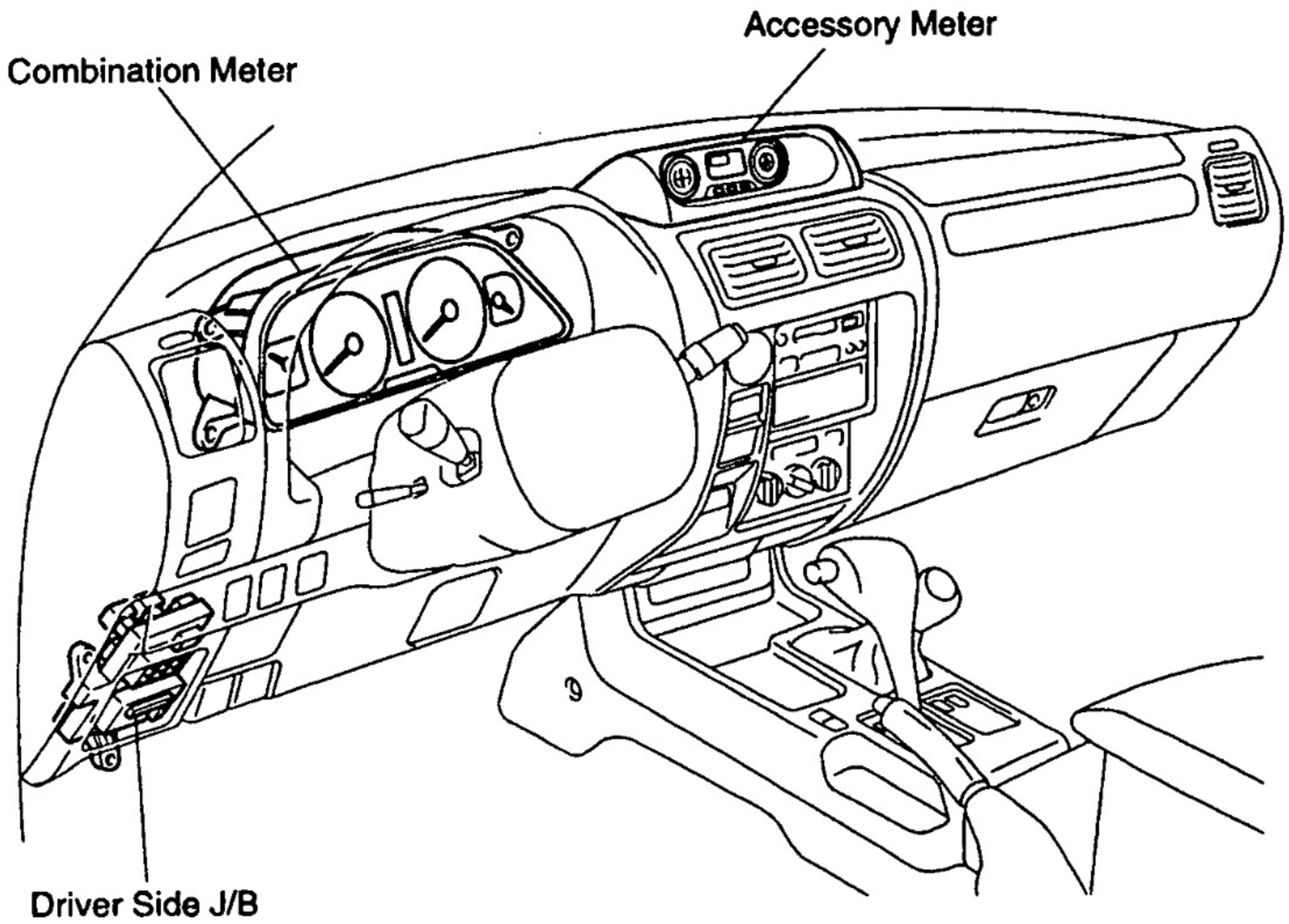

N19196
N19846

Y

Z18207

METER CIRCUIT

9E30C-01

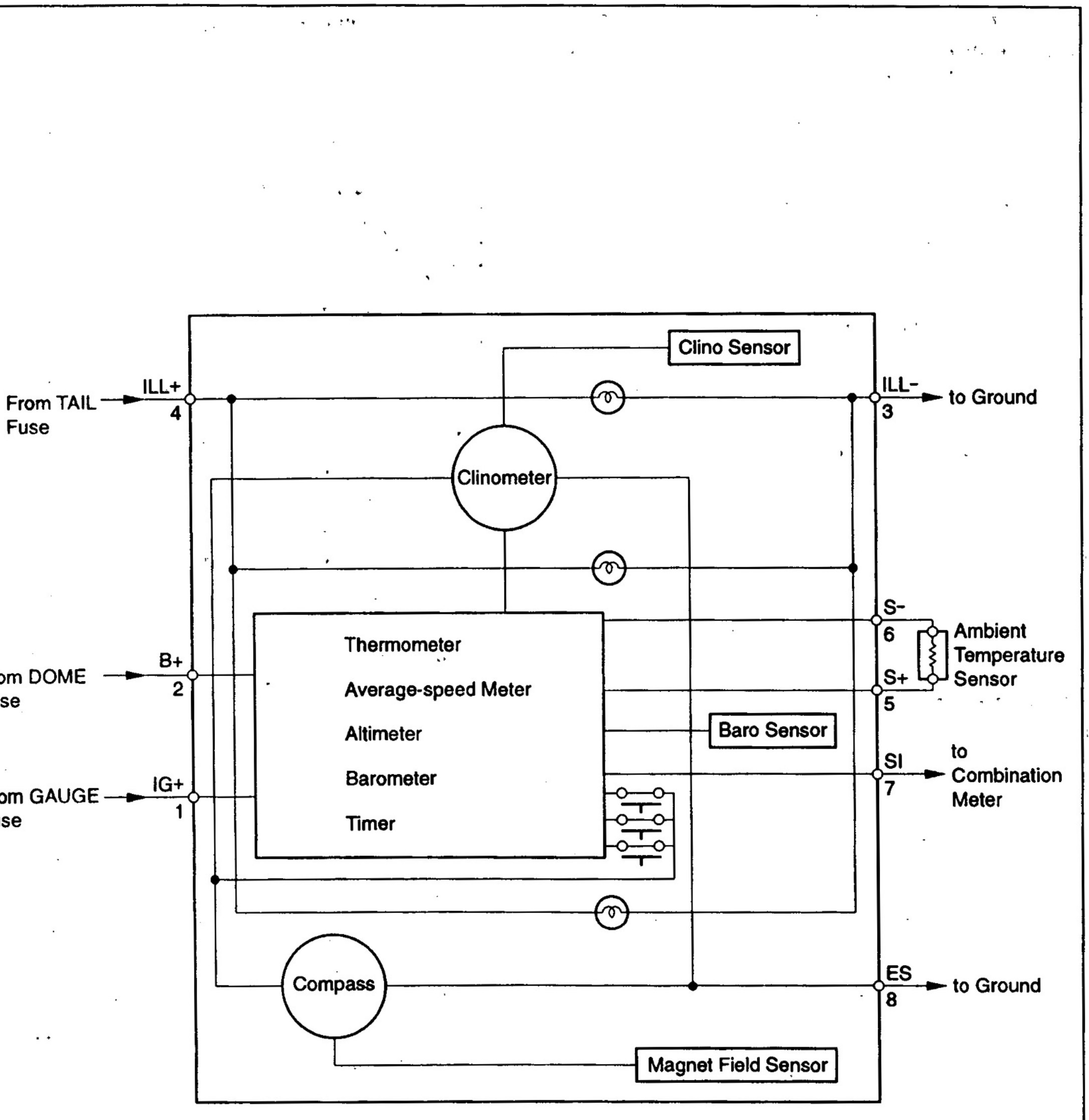

N19847

BE

BE0H2-0E

TROUBLESHOOTING

The table below will be useful for you in troubleshooting these electrical problems. The most likely causes of the malfunction are shown in the order of their probability. Inspect each part in the order shown, and replace the part when it is found to be faulty.

METER, GAUGES AND ILLUMINATION

Trouble	Parts name	(See page)
Timer does not operate.	1. DOME Fuse (Engine Room R/B) 2. GAUGE Fuse (Driver Side J/B) 3. Accessory Meter 4. Wire Harness	(BE–68)
Altimeter does not operate.	1. DOME Fuse (Engine Room R/B) 2. GAUGE Fuse (Driver Side J/B) 3. Accessory Meter 4. Wire Harness	(BE–68)
Clinometer does not operate.	1. DOME Fuse (Engine Room R/B) 2. GAUGE Fuse (Driver Side J/B) 3. Accessory Meter 4. Wire Harness	(BE–68)
Barometer does not operate.	1. DOME Fuse (Engine Room R/B) 2. GAUGE Fuse (Driver Side J/B) 3. Accessory Meter 4. Wire Harness	(BE–68)
Compass does not operate.	1. DOME Fuse (Engine Room R/B) 2. GAUGE Fuse (Driver Side J/B) 3. Accessory Meter 4. Wire Harness	(BE–68)
Average–speed meter does not operate.	1. DOME Fuse (Engine Room R/B) 2. GAUGE Fuse (Driver Side J/B) 3. Vehicle Speed Sensor 4. Accessory Meter 5. Wire Harness	(BE–56) (BE–68)
Thermostat does not operate.	1. DOME Fuse (Engine Room R/B) 2. GAUGE Fuse (Driver Side J/B) 3. Ambient Temperature Sensor 4. Accessory Meter 5. Wire Harness	(BE–68)

BE

Wire Harness Side

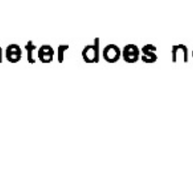

h-8-1-B

Z17279

ACCESSORY METER INSPECTION

BE353-02

INSPECT METER CIRCUIT

Connector disconnected:

Disconnect the connector from the accessory meter and inspect the connector on the wire harness side, as shown in the chart.

Tester connection	Condition	Specified condition
3 – Ground	Constant	Continuity
4 – Ground	Light control switch OFF	No voltage
4 – Ground	Light control switch TAIL or HEAD	Battery voltage
8 – Ground	Constant	Continuity
5 – 6	Constant	Approx. 1.7 kΩ at 25 °C (77 °F)
1 – Ground	Ignition switch LOCK or ACC	No voltage
1 – Ground	Ignition switch ON	Battery voltage
2 – Ground	Constant	Battery voltage

If the circuit is as specified, try replacing the accessory meter with a new one.
If the circuit is not as specified, inspect the wire harness.

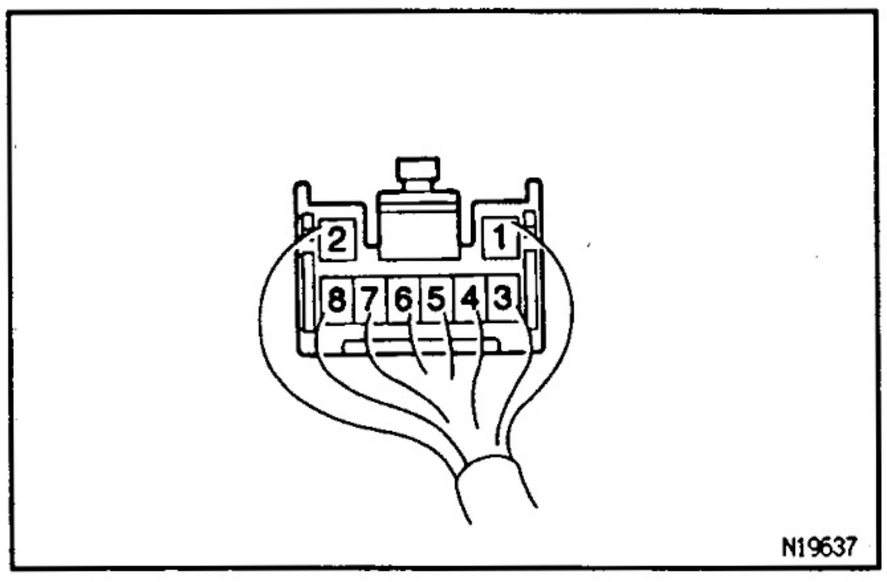

Connector connected
Connect the connector from the accessory meter and inspect the connector on the back side, as shown in the chart.

BE

Tester connection	Condition	Specified condition
7 – Ground	Engine start. Stop a vehicle.	4.5 ~ 5.5 V
7 – Ground	During driving	Repeatedly changes from below 1 V to 4.5 ~ 5.5 V

If the circuit is as specified, try replacing the relay with a new one.
If the circuit is not as specified, inspect the circuit connected to other parts.

DEFOGGER SYSTEM
PARTS LOCATION

BE124–ON

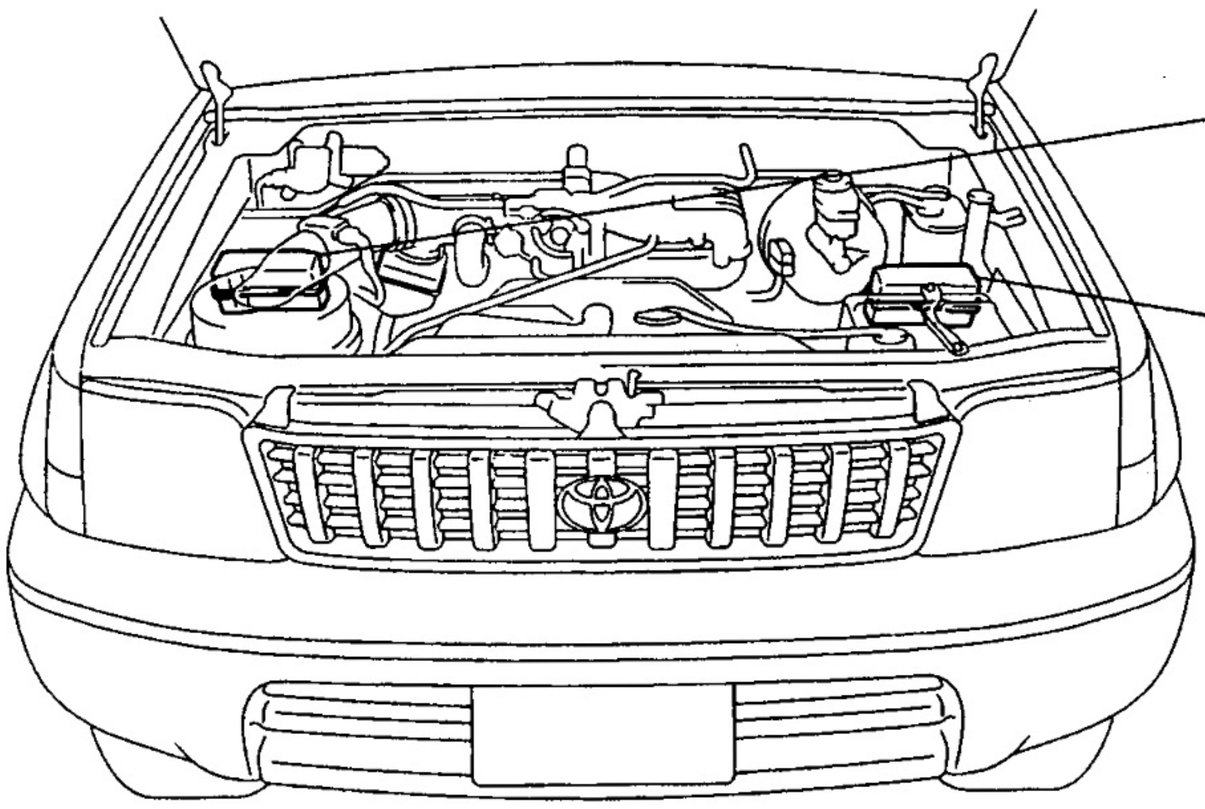

Engine Room R/B*2
• DEFOG Fuse

Engine Room R/B*1
• DEFOG Fuse

*1 : Gasoline Engine, Diesel Engine (LHD models)
*2 : Diesel Engine (RHD models)

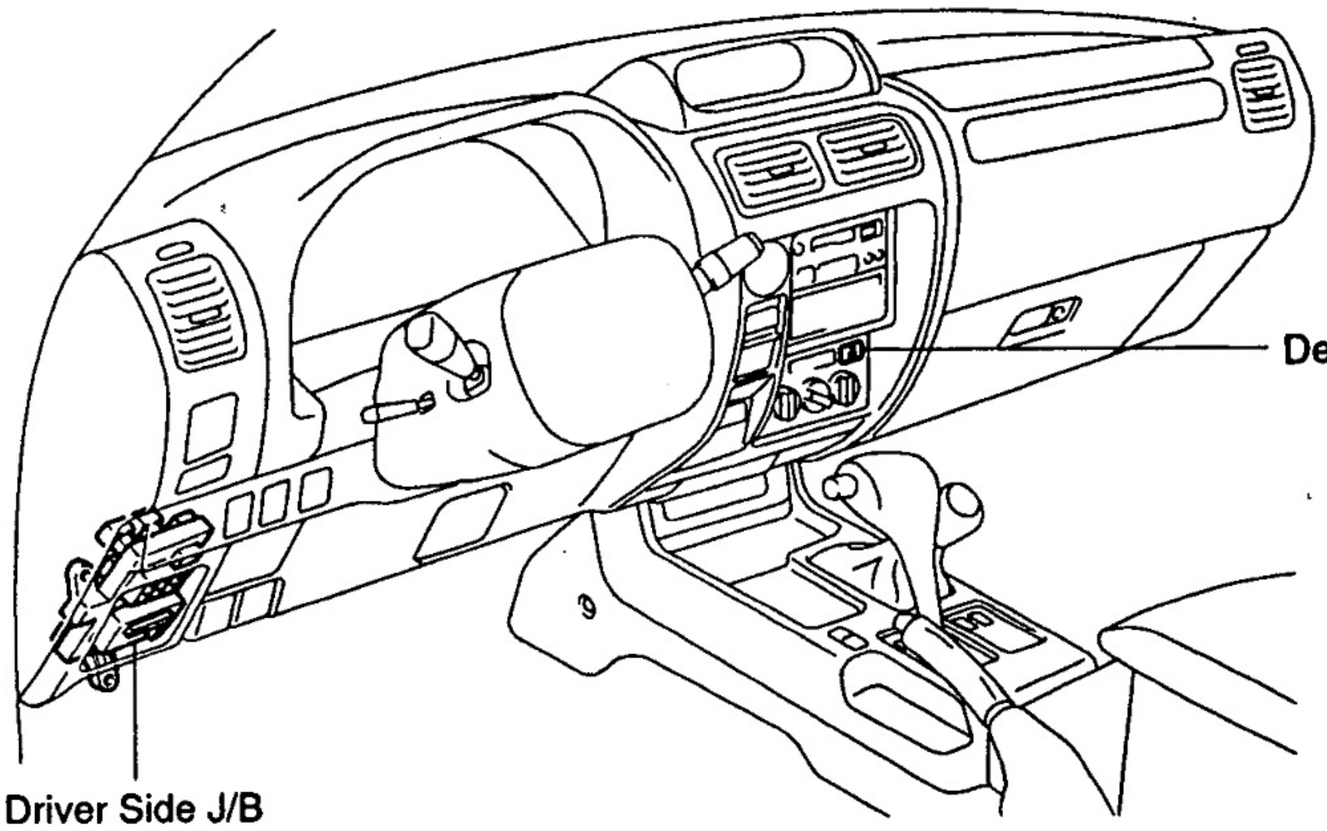

Defogger Switch

Driver Side J/B
• Defogger Relay
• GAUGE Fuse

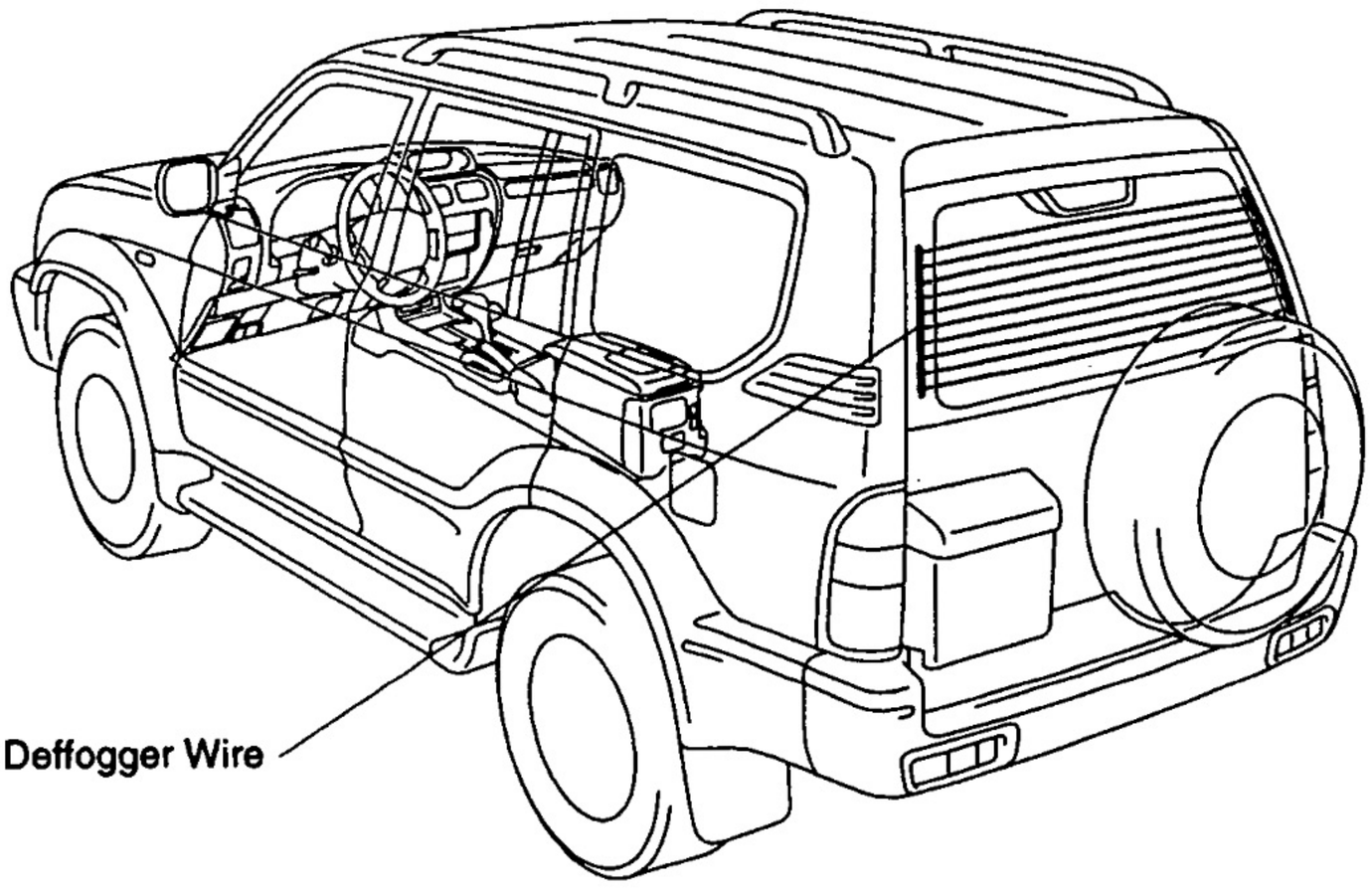

Deffogger Wire

N19196
N19264
N19265

Y

Z18193

TROUBLESHOOTING

BE06Q-1B

The table below will be useful for you in troubleshooting these electrical problems. The most likely causes of the malfunction are shown in the order of their probability. Inspect each part in the order shown, and replace the part when it is found to be faulty.

Trouble	Parts name	(See page)
All defogger systems do not operate.	1. DEFOG Fuse (Engine Room R/B) 2. GAUGE Fuse (Driver Side J/B) 3. Defogger Switch 4. Defogger Relay (Driver Side J/B) 5. Defogger Wire 6. Wire Harness	 (BE–71) (BE–71)
Rear window defogger does not operate.	1. Defogger Wire 2. Wire Harness	(BE–71)

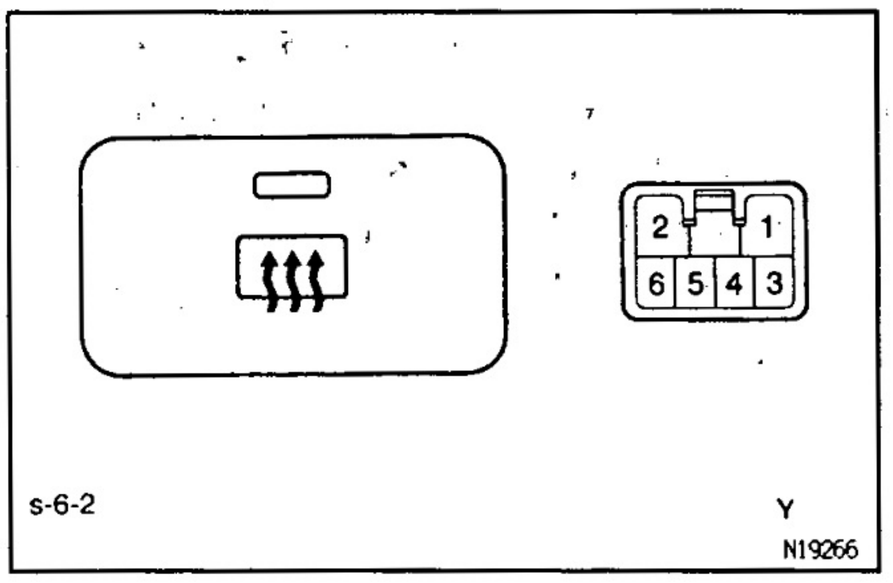

DEFOGGER SWITCH INSPECTION

BE305-01

INSPECT SWITCH OPERATION

Switch position	Tester connection	Specified condition
OFF	–	No continuity
ON	3 – 4 – 5	Continuity
Illumination circuit	2 – 6	Continuity

If continuity is not as specified, replace the switch.

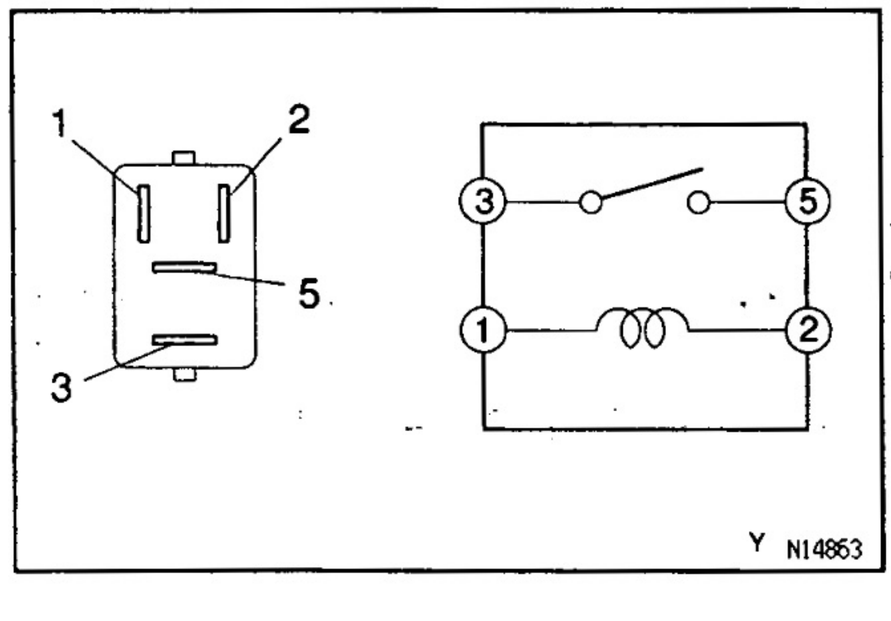

DEFOGGER RELAY INSPECTION

BE06T-1H

INSPECT RELAY CONTINUITY

Condition	Tester connection	Specified condition
Constant	1 – 2	Continuity
Apply B+ between terminals 1 and 2.	3 – 5	Continuity

If continuity is not as specified, replace the relay.

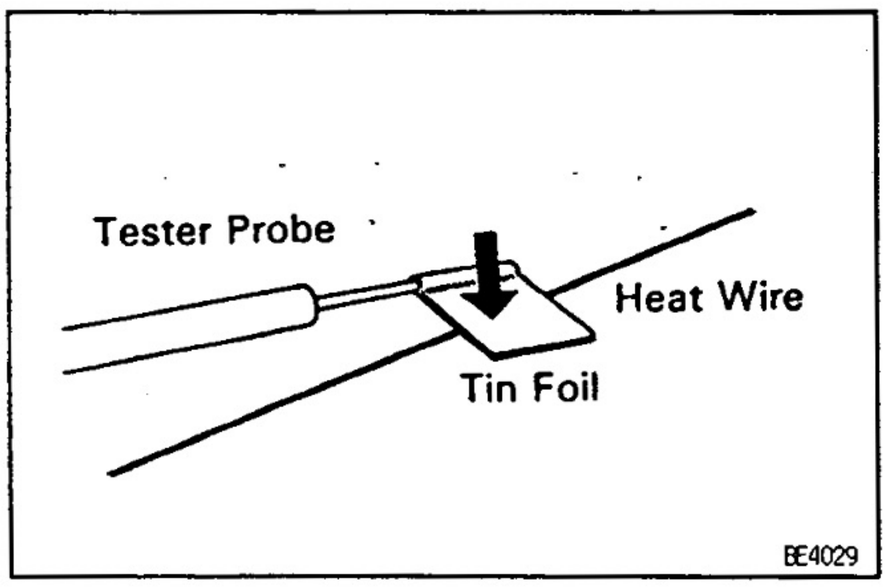

DEFOGGER WIRE INSPECTION

BE06U-0X

NOTICE:

- **When cleaning the glass, use a soft, dry cloth, and wipe the glass in the direction of the wire. Take care not to damage the wires.**
- **Do not use detergents or glass cleaners with abrasive ingredients.**

BE

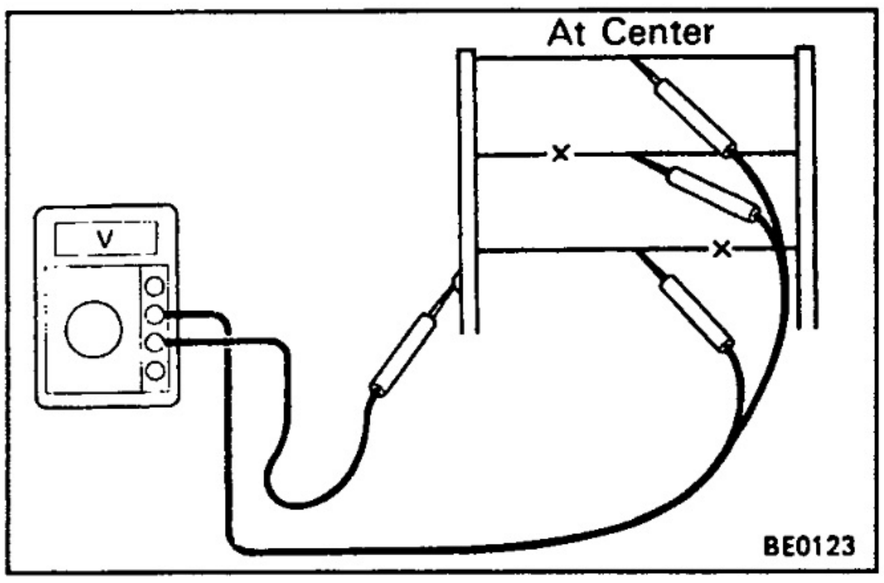

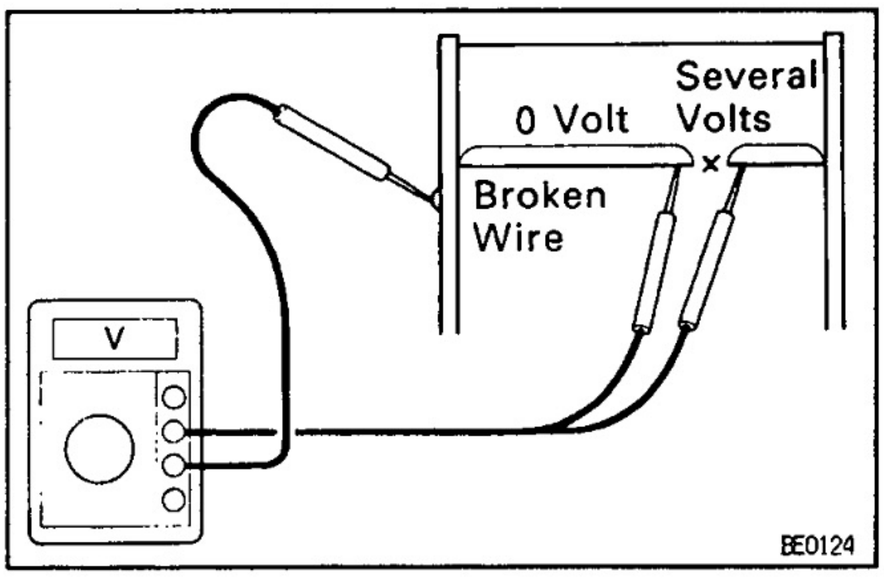

- **When measuring voltage, wind a piece of tin foil around the top of the negative probe and press the foil against the wire with your finger, as shown.**

(a) Turn the ignition switch ON.
(b) Turn the defogger switch ON.
(c) Inspect the voltage at the center of each heat wire, as shown.

Voltage	Criteria
Approx. 5V	Okay (No break in wire)
Approx. 10V or 0V	Broken wire

HINT: If there is approximately 10 V, the wire is broken between the center of the wire and the positive (+) end. If there is no voltage, the wire is broken between the center of the wire and ground.

(d) Place the voltmeter positive (+) lead against the defogger positive (+) terminal.
(e) Place the voltmeter negative (–) lead with the foil strip against the heat wire at the positive (+) terminal end and slide it toward the negative (–) terminal end.
(f) The point where the voltmeter deflects from zero to several V is the place where the heat wire is broken.
HINT: If the heat wire is not broken, the voltmeter indicates 0 V at the positive (+) end of the heat wire but gradually increases to about 12 V as the meter probe is moved to the other end.

BE

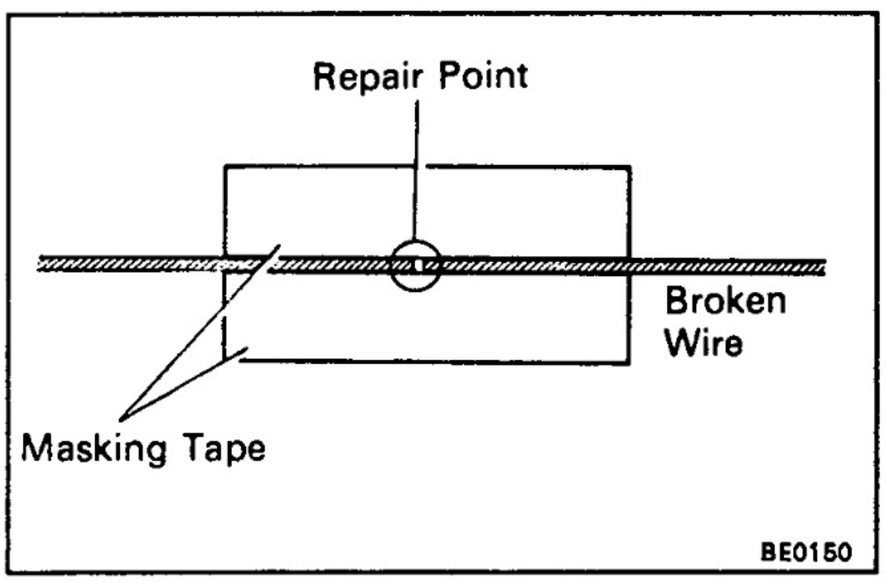

BE06V–0X

DEFOGGER WIRE REPAIR

(a) Clean the broken wire tips with a grease, wax and silicone remover.
(b) Place the masking tape along both sides of the wire to be repaired.
(c) Thoroughly mix the repair agent (Dupont paste No. 4817).

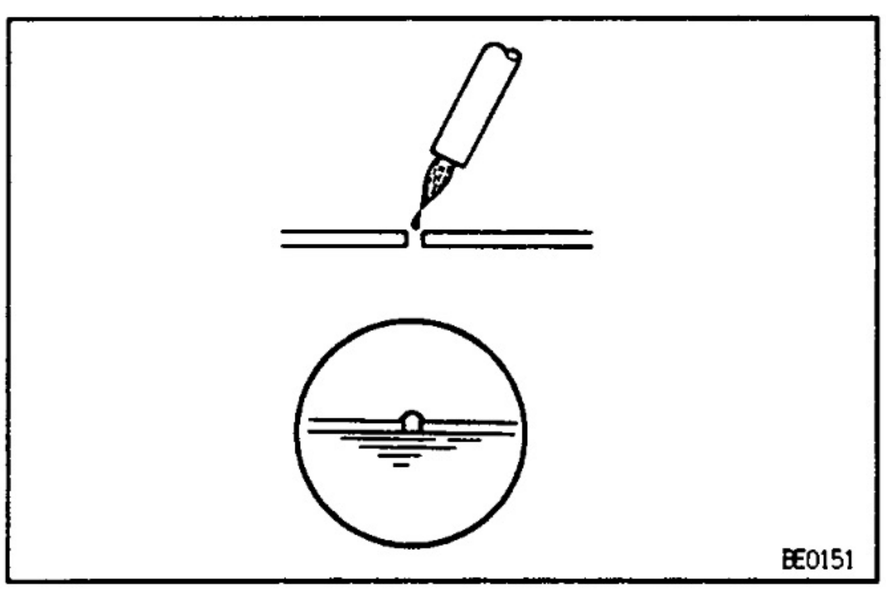

(d) Using a fine tip brush, apply a small amount to the wire.
(e) After a few minutes, remove the masking tape.
(f) Do not repair the defogger wire for at least 24 hours.

POWER WINDOW CONTROL SYSTEM

PARTS LOCATION

BE2Z1-03

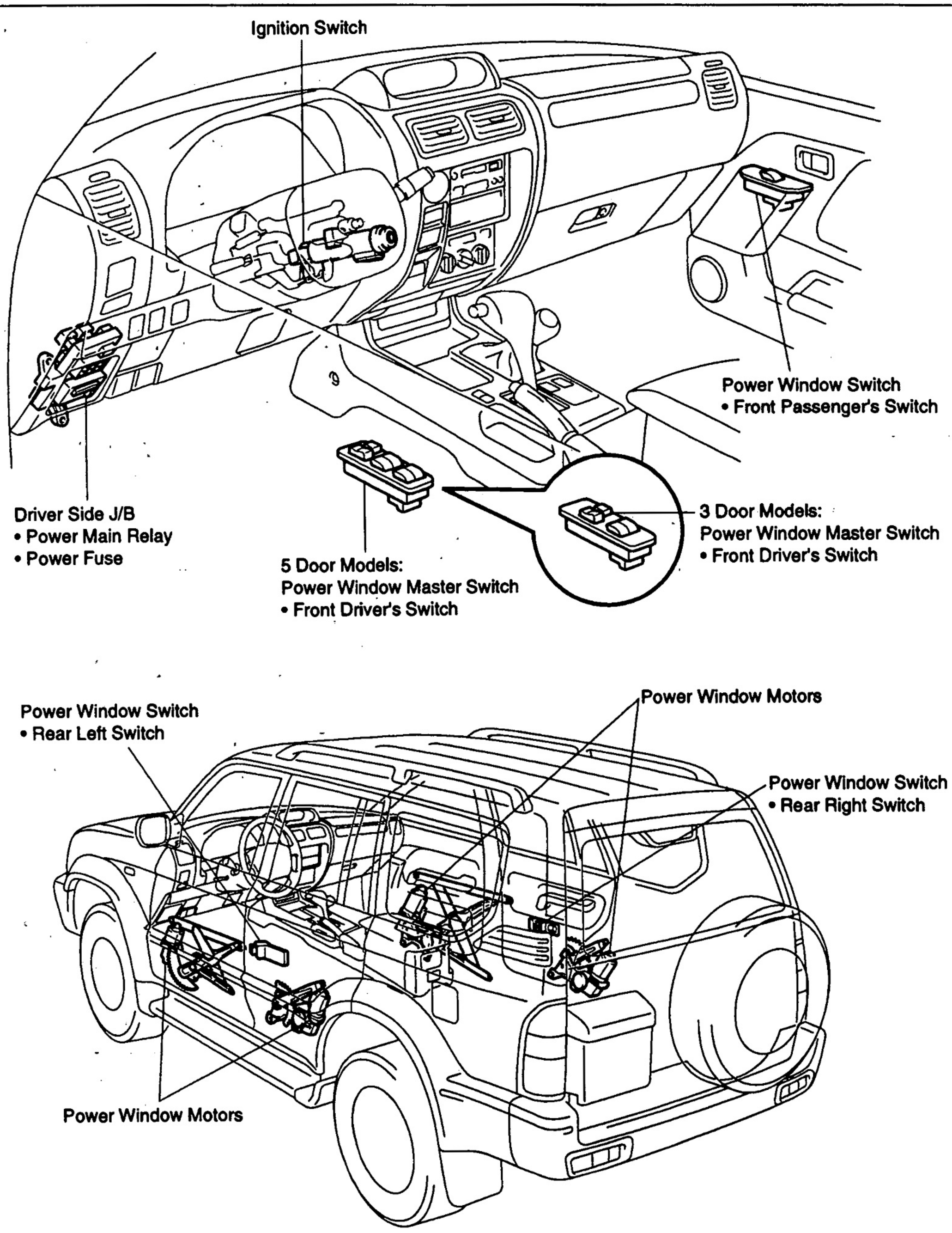

N19151
N19152

Y Z18194

BE2Z3-04

TROUBLESHOOTING

The table below will be useful for you in troubleshooting these electrical problems. The most likely causes of the malfunction are shown in the order of their probability. Inspect each part in the order shown, and replace the part when it is found to be faulty.

Trouble	Parts name	(See page)
Power Window does not operate.	1. POWER Fuse (Driver Side J/B)	
	2. Power Main Relay (Driver Side J/B)	(BE–80)
	3. Ignition Switch	(BE–7)
	4. Power Window Master Switch	(BE–74)
	5. Wire Harness	
"One Touch Power Window System" does not operate.	1. Power Window Master Switch	(BE–74)
Only one window glass does not move.	1. Power Window Master Switch	(BE–74)
	2. Power Window Switch	(BE–78)
	3. Power Window Motor	(BE–78)
	4. Wire Harness	
"Window lock System" does not operate.	1. Power Window Master Switch	(BE–74)

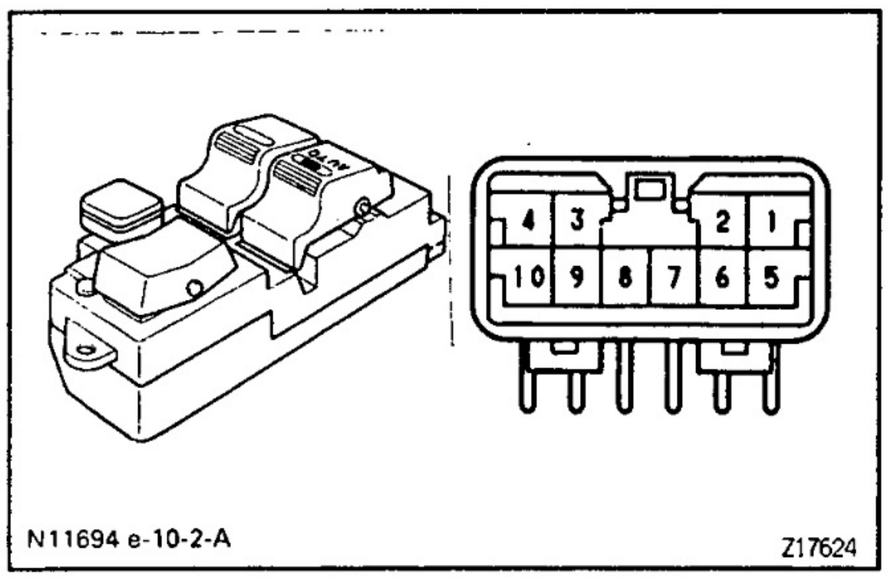

N11694 e-10-2-A Z17624

BE380-01

POWER WINDOW MASTER SWITCH INSPECTION

1. **3 door models:**
   INSPECT SWITCH CONTINUITY
   ( ): RHD models
   Driver's Switch

Switch position	Tester connection	Specified condition
UP	1 – 4 (1 – 4) 3 – 9 (2 – 6)	Continuity
OFF	1 – 3 (1 – 4) 1 – 4 (2 – 4)	Continuity
DOWN	1 – 3 (1 – 6) 4 – 9 (2 – 4)	Continuity

Passenger's Switch: Window unlock

Switch position	Tester connection	Specified condition
UP	1 – 10 (4 – 5) 8 – 9 (6 – 7)	Continuity
OFF	1 – 10 (4 – 5) 1 – 8 (4 – 7)	Continuity
DOWN	1 – 8 (4 – 7) 9 – 10 (5 – 6)	Continuity

Passenger's Switch: Window lock

Switch position	Tester connection	Specified condition
UP	8 – 9 (6 – 7)	Continuity
OFF	8 – 10 (5 – 7)	Continuity
DOWN	9 – 10 (5 – 6)	Continuity

If continuity is not as specified, replace the switch.

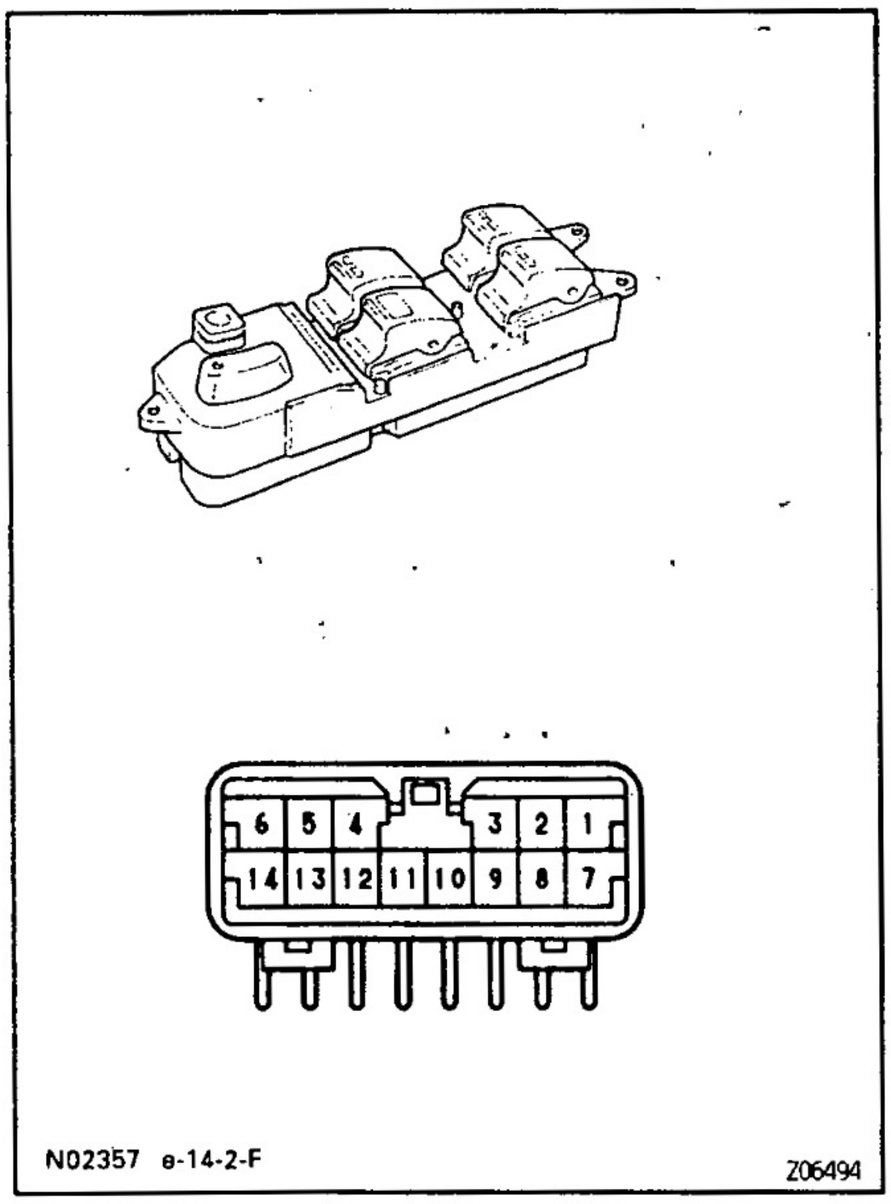

2. 5 door models:

INSPECT SWITCH CONTINUITY

( ): RHD models

Front Driver's Switch (Window unlock):

Switch position	Tester connection	Specified condition
UP	1(6)–10, 1(6)–11 3–5(2), 4–5(2)	Continuity
OFF	1(6)–3, 1(6)–4 3–5(2), 4–5(2)	Continuity
DOWN	5(2)–10, 5(2)–11 1(6)–3, 1(6)–4	Continuity
DOWN AUTO	5(2)–10, 5(2)–11 1(6)–3, 1(6)–4	Continuity

Front Passenger's Switch (Window unlock):

Switch position	Tester connection	Specified condition
UP	10–14(7), 11–14(7) 3–6(1), 4–6(1)	Continuity
OFF	3–14(7), 4–14(7) 3–6(1), 4–6(1)	Continuity
DOWN	6(1)–10, 6(1)–11 3–14(7), 4–14(7)	Continuity

Front Passenger's Switch (Window lock):

Switch position	Tester connection	Specified condition
UP	10–14(7), 11–14(7)	Continuity
OFF	6 – 14 (1 – 7)	Continuity
DOWN	6(1)–10, 6(1)–11	Continuity

Rear Left Switch (Window unlock):

Switch position	Tester connection	Specified condition
UP	9(13)–10, 9(13)–11 3–12(8), 4–12(8)	Continuity
OFF	3–9(13), 4–9(13) 3–12(8), 4–12(8)	Continuity
DOWN	10–12(8), 11–12(8) 3–9(13), 4–9(13)	Continuity

Rear Left Switch (Window lock):

Switch position	Tester connection	Specified condition
UP	9(13)–10, 9(13)–11	Continuity
OFF	9 – 12 (8 – 13)	Continuity
DOWN	10–12(8), 11–12(8)	Continuity

Rear Right Switch (Window unlock):

Switch position	Tester connection	Specified condition
UP	8(12)–10, 8(12)–11 3–13(9), 4–13(9)	Continuity
OFF	3–8(12), 4–8(12) 3–13(9), 4–13(9)	Continuity
DOWN	10–13(9), 11–13(9) 3–8(12), 4–8(12)	Continuity

Rear Right Switch (Window lock):

Switch position	Tester connection	Specified condition
UP	8(12)– 10, 8(11)–10	Continuity
OFF	8 – 13 (9 – 12)	Continuity
DOWN	10–13(9), 11–13(9)	Continuity

If continuity is not as specified, replace the master switch.

BE

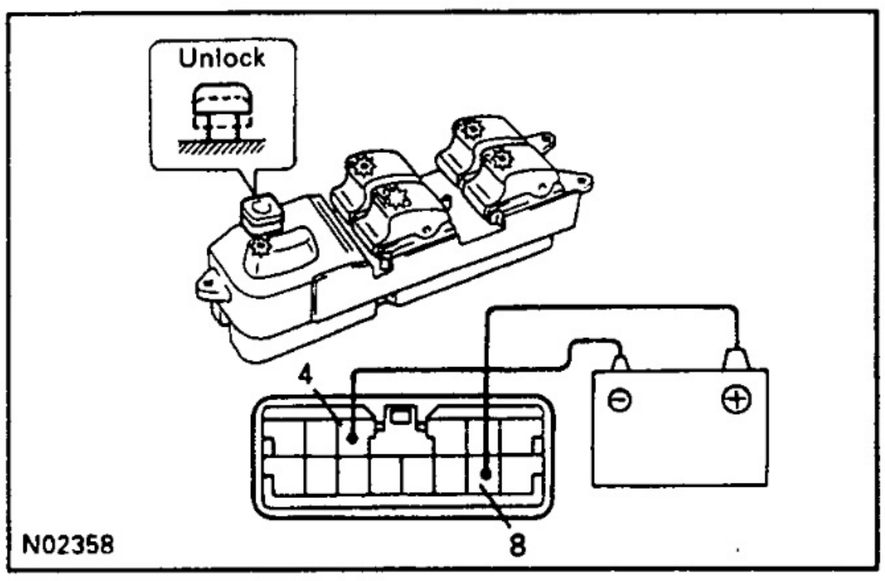

3. INSPECT POWER WINDOW MASTER SWITCH ILLUMINATION

(a) Set the window lock switch to the unlock position.

(b) Connect the positive (+) lead from the battery to terminal 8 and the negative (–) lead to terminal 4, and check that all the illuminations light up.

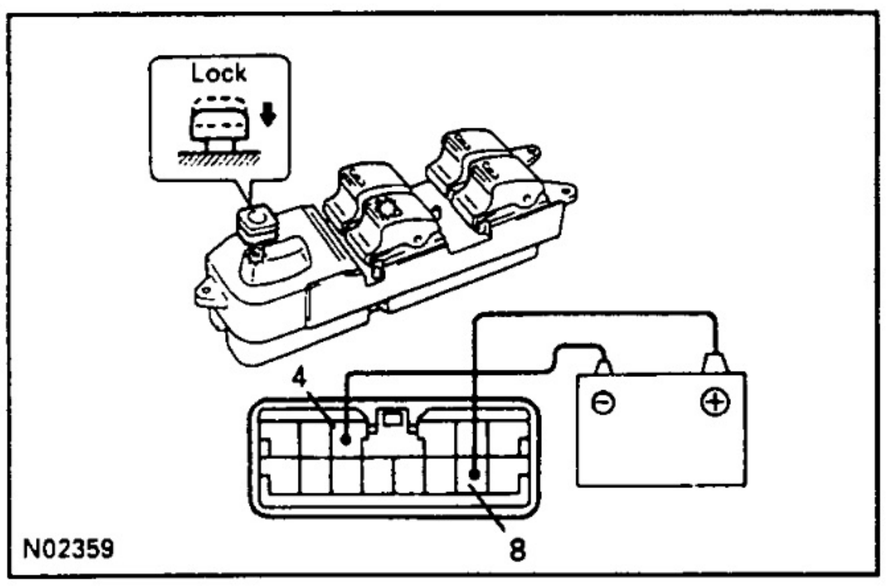

(c) Set the window lock switch to the lock position, check that all the passenger's power window switch illuminations go out.
If operation is not as specified, replace the master switch.

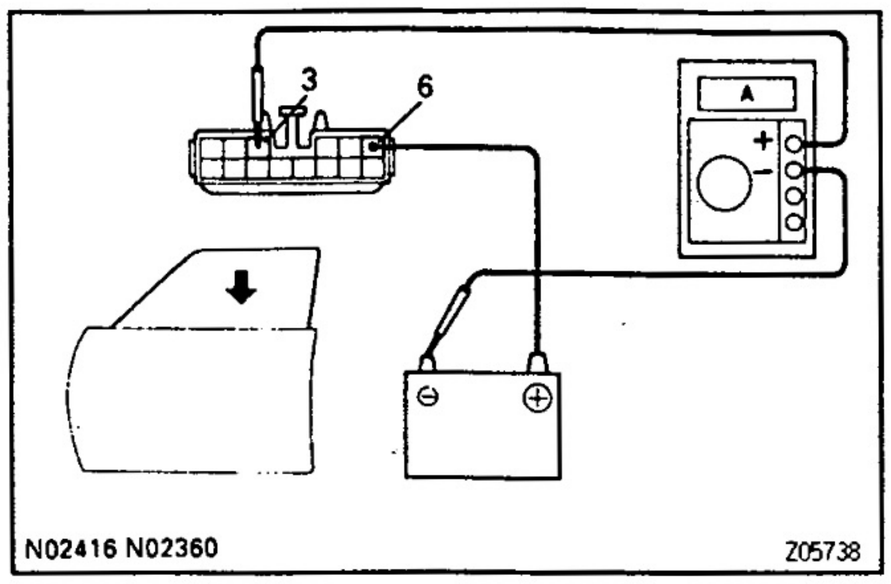

One touch power window / Current of circuit Inspection using an ammeter:

(a) Disconnect the connector from the master switch.

(b) Connect the positive (+) lead from the ammeter to terminal 3 on the wire harness side connector and the negative (–) lead to the negative terminal of the battery.

(c) Connect the positive (+) lead from the battery to terminal 6 on the wire harness side connector.

(d) As the window goes down, check that the current flow is approximately 7 A.

(e) Check that the current increases up to approximately 14.5 A or more when the window stops going down.
HINT: The circuit breaker opens some 4 – 40 seconds after the window stops going down, so that check must be made before the circuit breaker operates.
If the operation is as specified, replace the master switch.

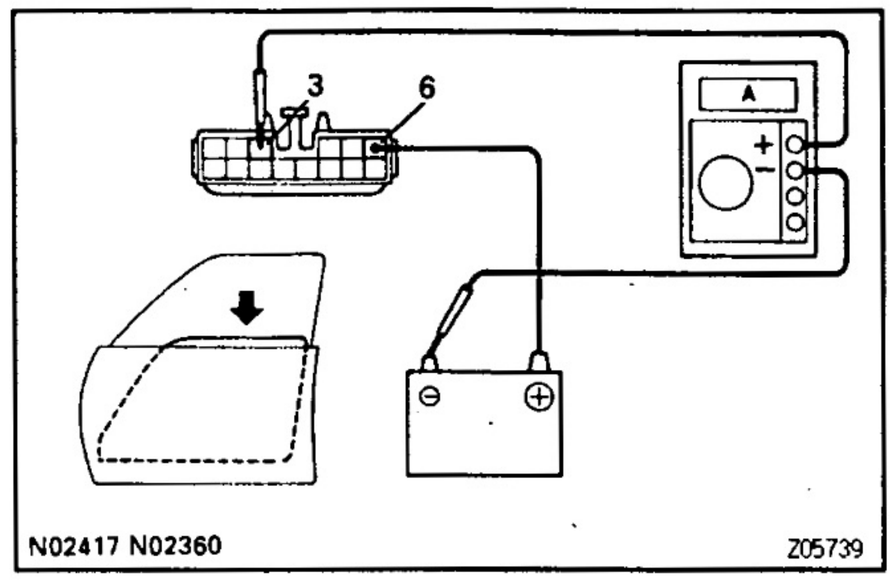

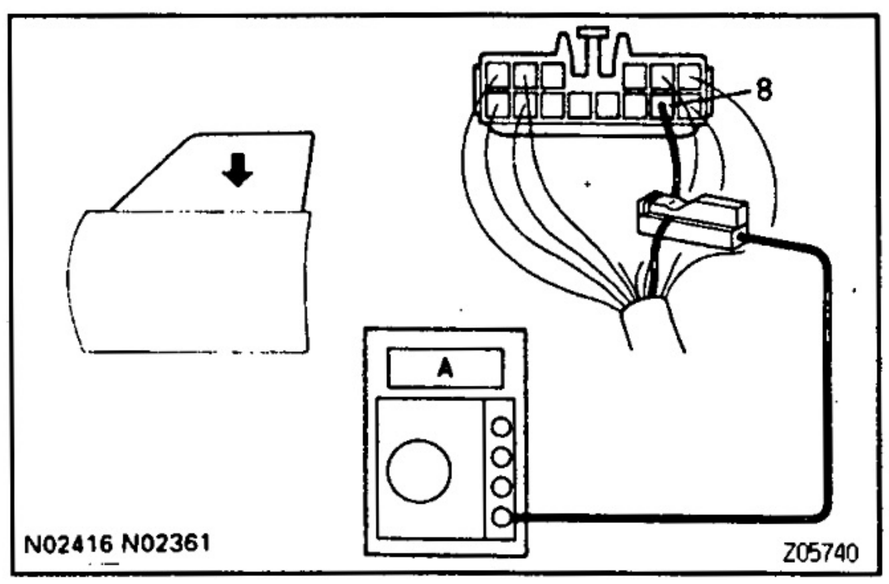

Inspection using an ammeter with a current – measuring probe:

(a) Remove the master switch with connector connected.

(b) Attach a current–measuring probe to terminal 8 of the wire harness.

(c) Turn the ignition switch ON and set the power window switch in the down position.

(d) As the window goes down, check that the current flow is approximately 7 A.

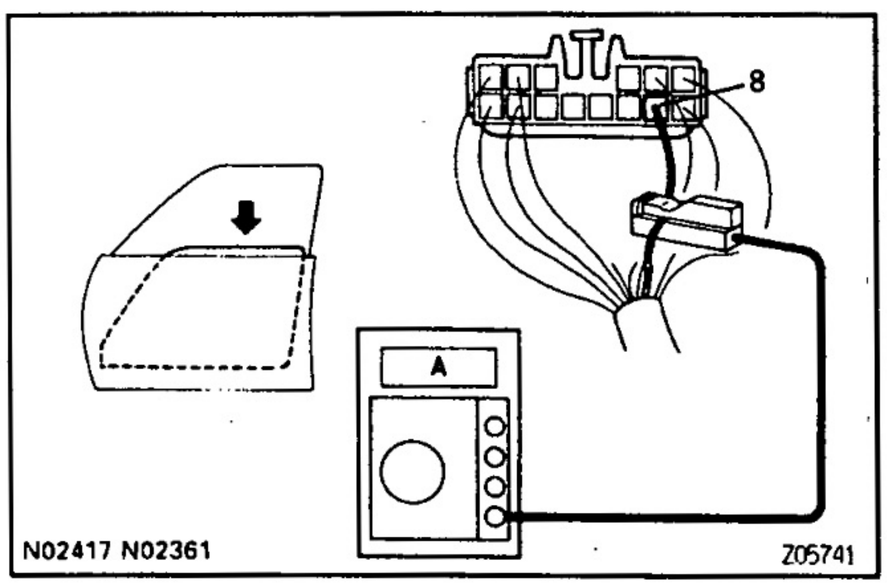

(e) Check that the current increases up to approximately 14.5 A or more when the window stops going down.
HINT: The circuit breaker opens some 4 – 40 seconds after the window stops going down, so that check must be made before the circuit breaker operates.
If operation is as specified, replace the master switch.

BE

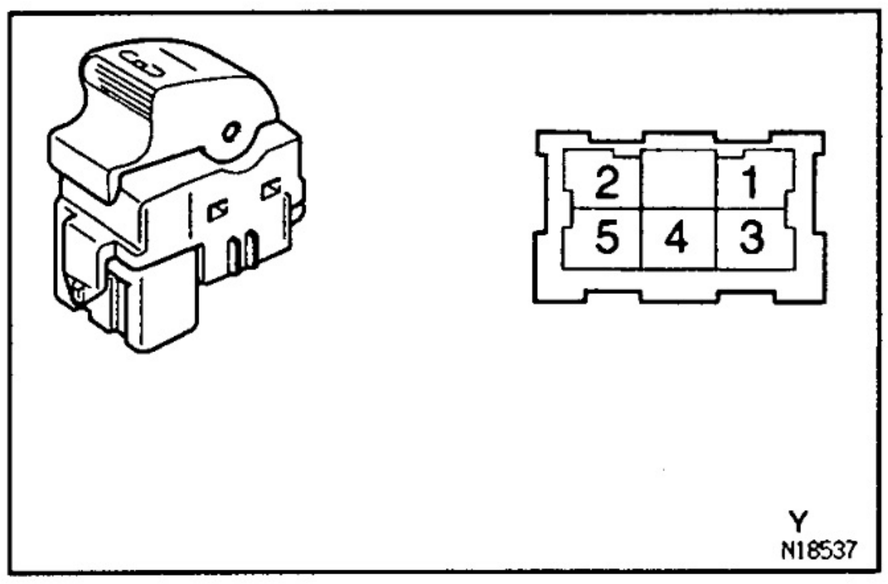

POWER WINDOW SWITCH INSPECTION BE381-01

INSPECT SWITCH CONTINUITY

Passenger's door:

Switch position	Tester connection	Specified condition
UP	1 – 5, 3 – 4	Continuity
OFF	1 – 2, 3 – 4	Continuity
DOWN	1 – 2, 4 – 5	Continuity

If continuity is not as specified, replace the switch.

Rear door:

Switch position	Tester connection	Specified condition
UP	1 – 4, 3 – 5	Continuity
OFF	1 – 2, 3 – 5	Continuity
DOWN	1 – 2, 3 – 4	Continuity

If continuity is not as specified, replace the switch.

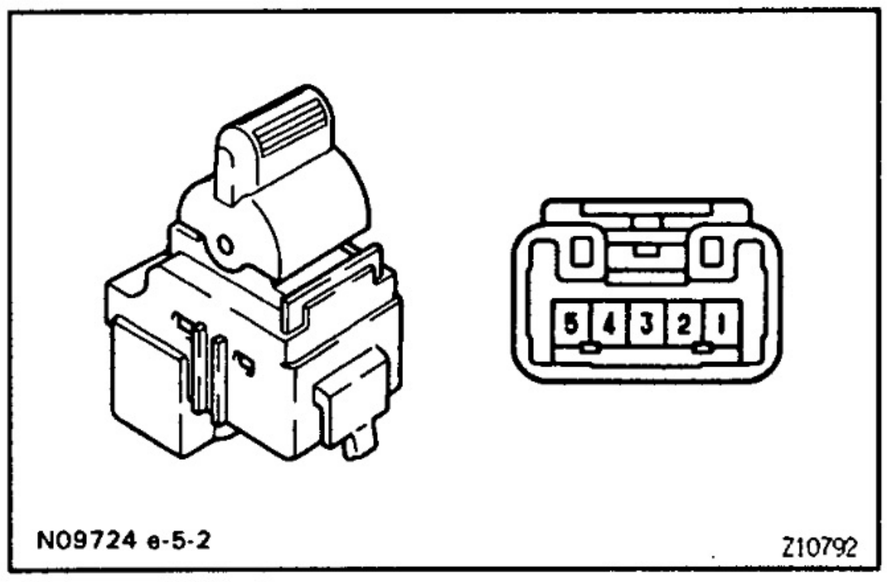

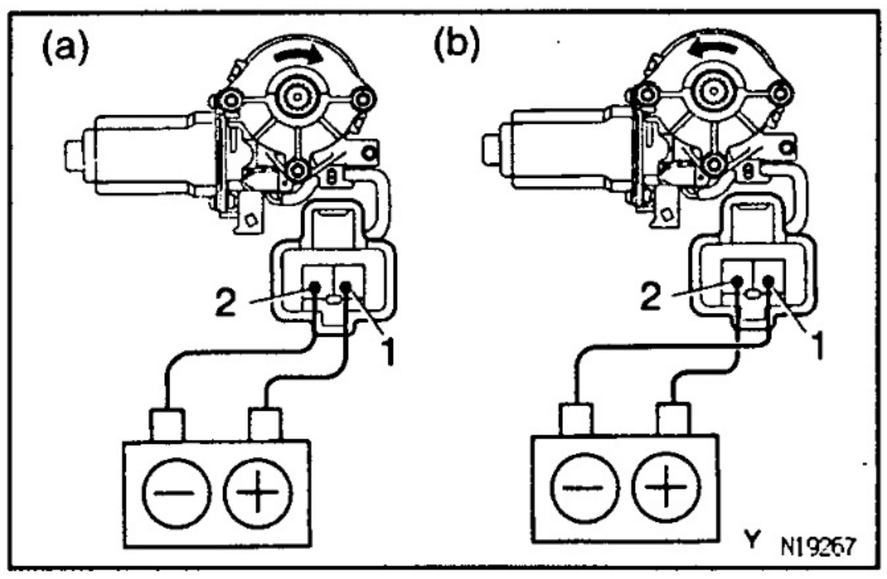

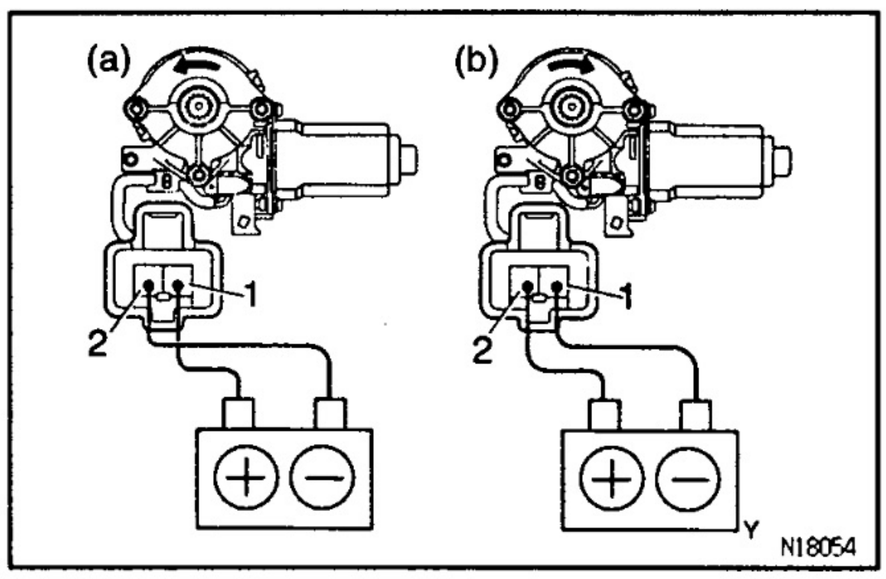

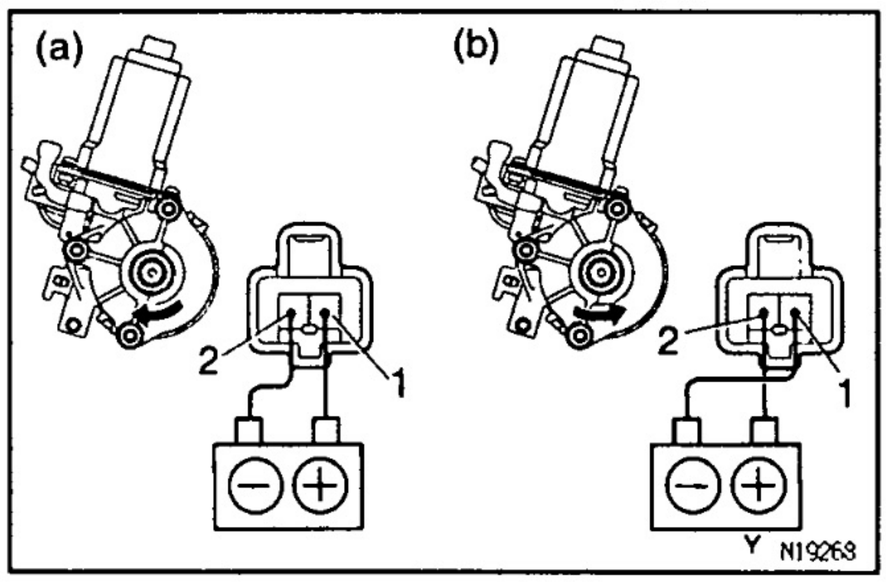

POWER WINDOW MOTOR INSPECTION BE34K-02

1. INSPECT MOTOR OPERATION

Driver's Door:

(a) Connect the positive (+) lead from the battery to 1 and the negative (–) lead to terminal 2, and check that the motor turns clockwise.

(b) Reverse the polarity, and check that the motor turns counterclockwise.

If operation is not as specified, replace the motor.

Front Passenger's Door:

(a) Connect the positive (+) lead from the battery to terminal 1 and the negative (–) lead to terminal 2, and check that the motor turns counterclockwise.

(b) Reverse the polarity, and check that the motor turns clockwise.

If operation is not as specified, replace the motor.

Rear Left Side Door:

(a) Connect the positive (+) lead from the battery to terminal 1 and the negative (–) lead to terminal 2, and check that the motor turns clockwise.

(b) Reverse the polarity, and check that the motor turns counterclockwise.

If operation is not as specified, replace the motor.

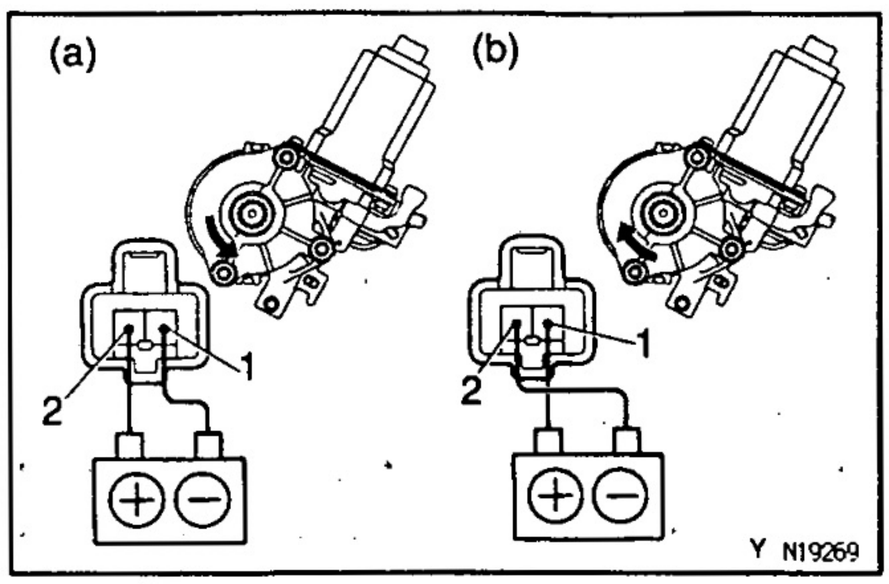

Rear Right Side Door:

(a) Connect the positive (+) lead from the battery to terminal 2 and the negative (–) lead to terminal 1, and check that the motor turns counterclockwise.

(b) Reverse the polarity, and check that the motor turns clockwise.

If operation is not as specified, replace the motor.

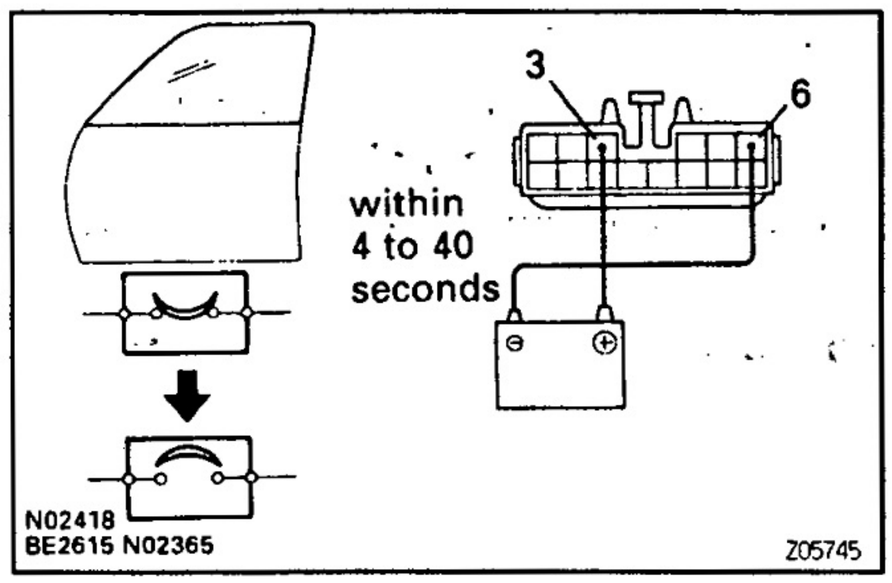

2. INSPECT CIRCUIT BREAKER OPERATION

Driver's door:

(a) Disconnect the connector from the power window switch.

(b) Connect the positive (+) lead from the battery to terminal 3 and the negative (–) lead to terminal 6 on the wire harness side connector, and raise the window to the fully closed position.

(c) Continue to apply voltage, and check that the current changes from approximately 14 A to less than 1 A within 4 to 40 seconds.

(d) Disconnect the leads from terminals.

(e) Approximately 60 seconds later, connect the positive (+) lead from the battery to terminal 6 and the negative (–) lead to terminal 3, and check that the window begins to descend.

If operation is not as specified, replace the motor.

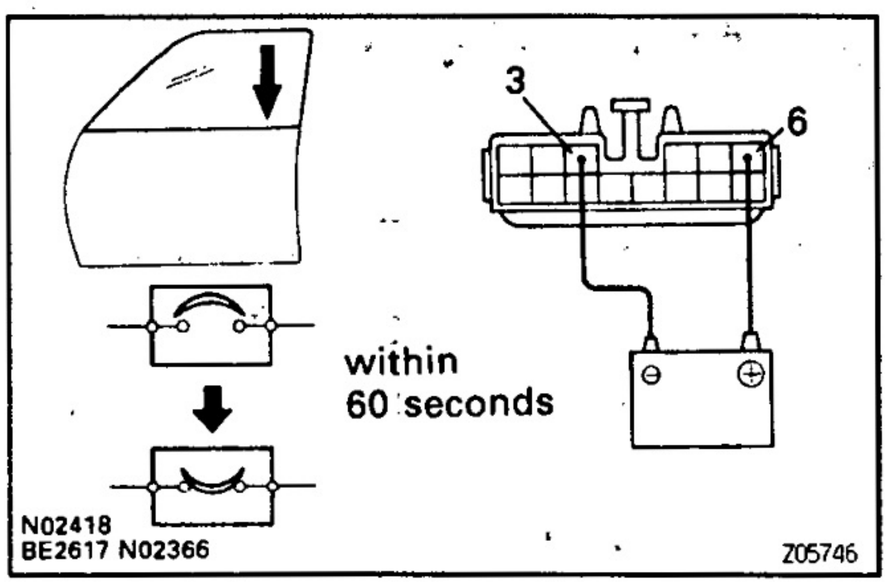

Front passenger's door:

(a) Disconnect the connector from the power window switch.

(b) Connect the positive (+) lead from the battery to terminal 2 and the negative (–) lead to terminal 1 on the wire harness side connector, and raise the window to the fully closed position.

(c) Continue to apply voltage, and check that the current changes from approximately 14 A to less than 1 A within 4 to 40 seconds.

(d) Disconnect the leads from terminals.

(e) Approximately 60 seconds later, connect the positive (+) lead from the battery to terminal 1 and negative (–) lead to terminal 2, and check that the window begins to descend.

If operation is not as specified, replace the motor.

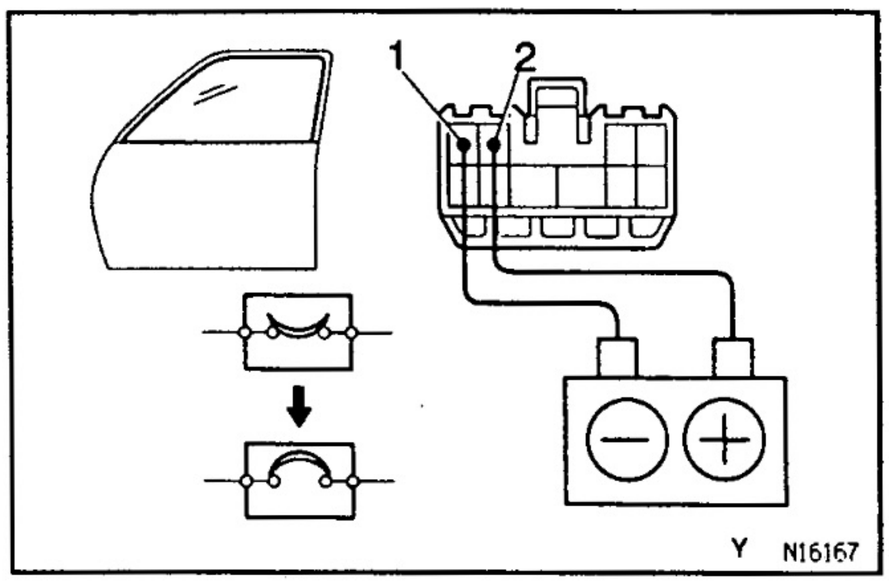

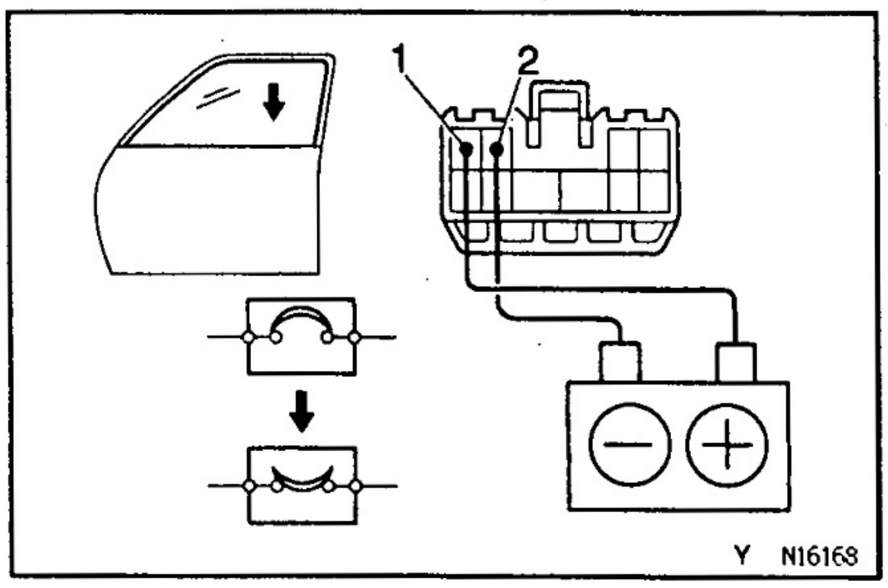

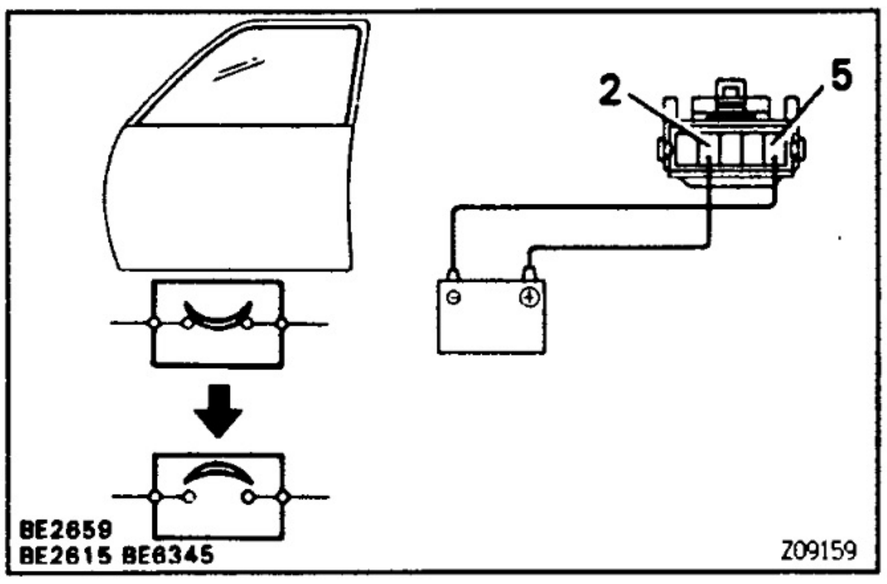

Rear door:

(a) Disconnect the connector from the power window switch.

(b) Connect the positive (+) lead from the battery to terminal 2 and the negative (−) lead to terminal 5 on the wire harness side connector, and raise the window to the fully closed position.

(c) Continue to apply voltage, check that the current changes from approximately 14 A to less than 1 A within 4 to 40 seconds.

(d) Disconnect the leads from terminals.

(e) Approximately 60 seconds later, connect the positive (+) lead from the battery to terminal 5 and negative (−) lead to terminal 2 and check that the window begins to descend.
If operation is not as specified, replace the motor.

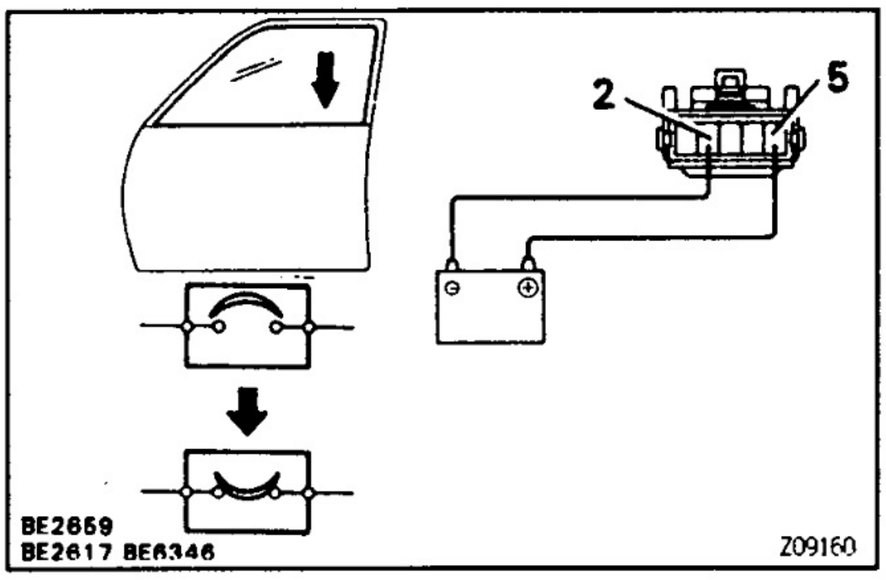

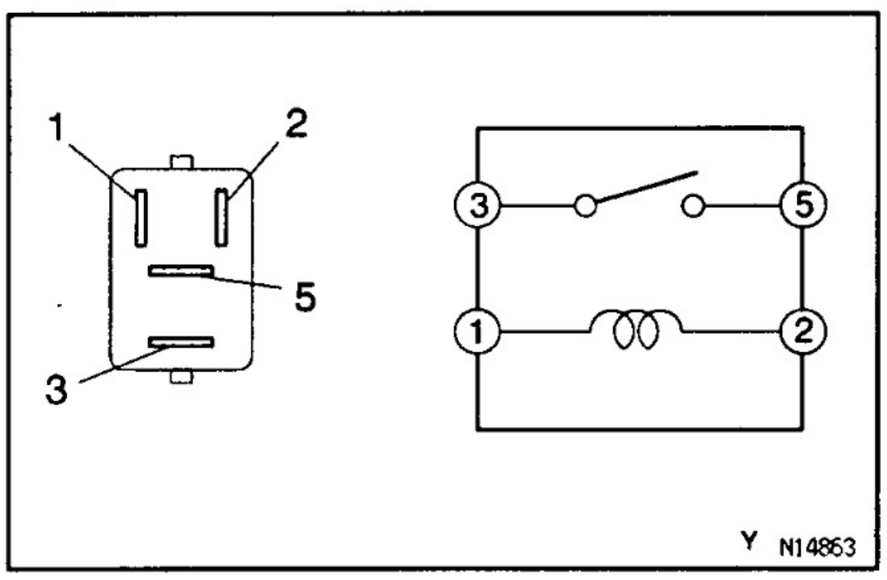

BE

POWER MAIN RELAY INSPECTION

BE2Z8-04

INSPECT RELAY CONTINUITY

Condition	Tester connection	Specified condition
Constant	1 – 2	Continuity
Apply B+ between terminals 1 and 2.	3 – 5	Continuity

If continuity is not as specified, replace the relay.

POWER DOOR LOCK CONTROL SYSTEM

PARTS LOCATION

8E2Z7-03

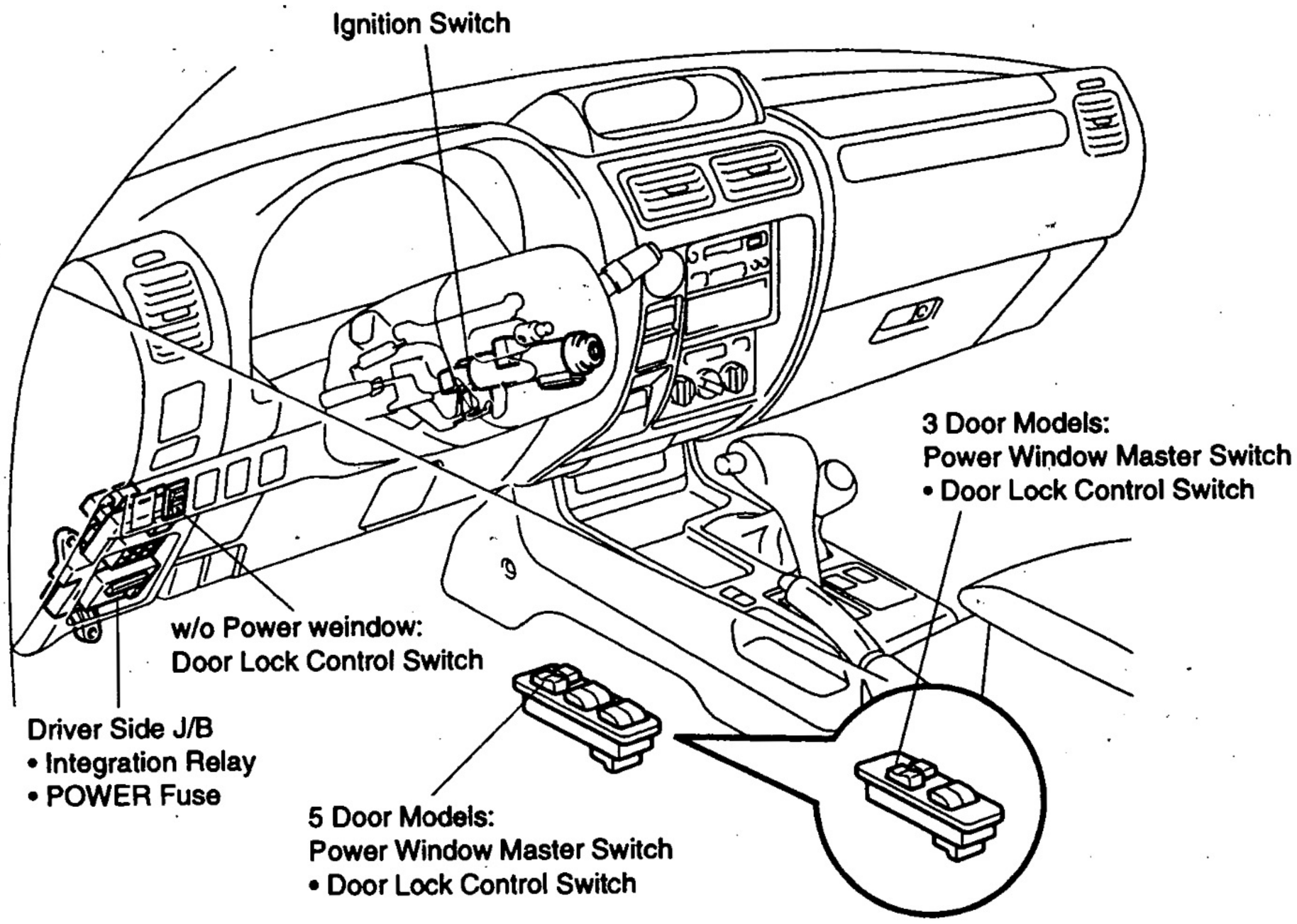

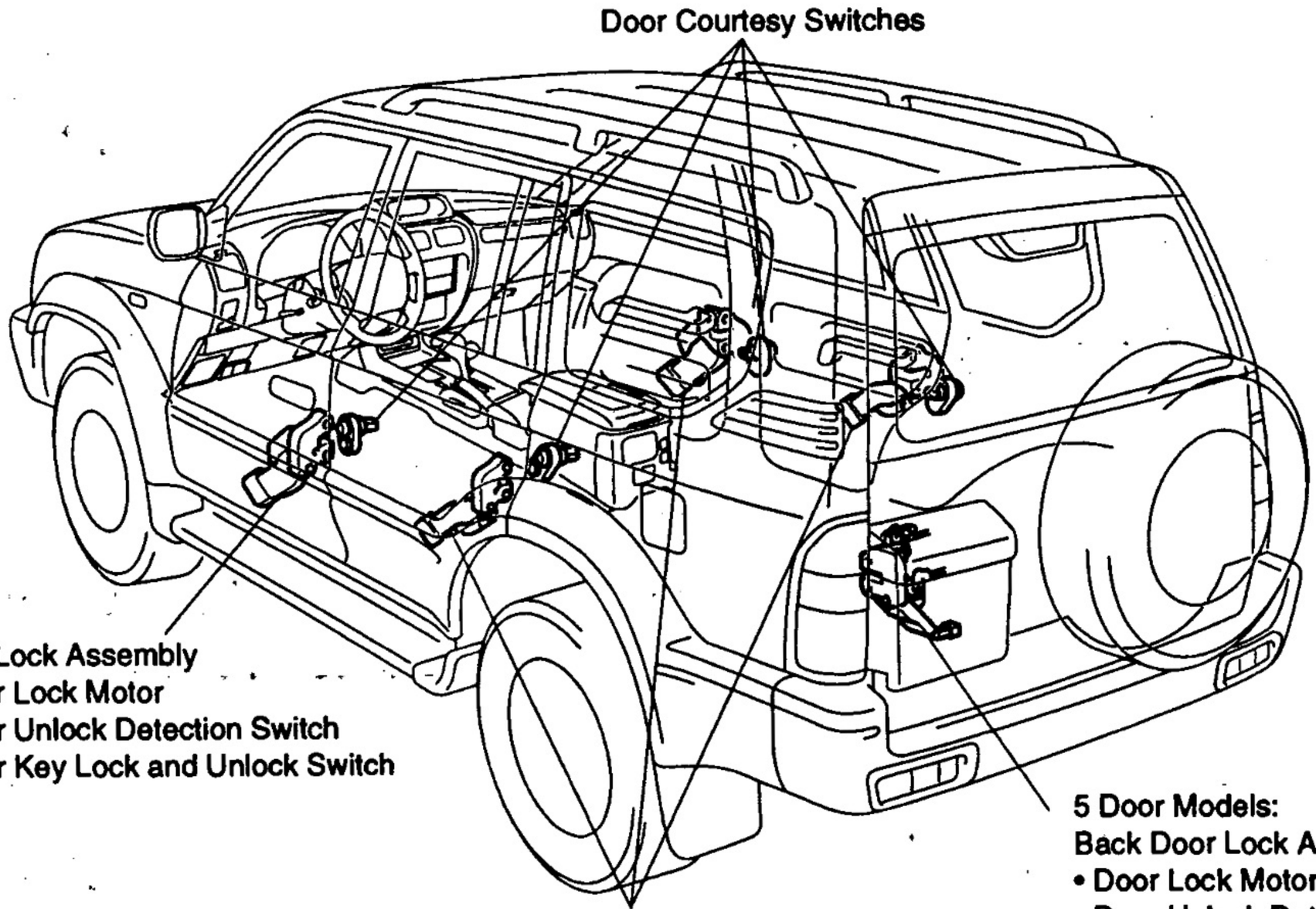

N19153
N19154

Z18195

BE22S-04

TROUBLESHOOTING

The table below will be useful for you in troubleshooting these electrical problems. The most likely causes of the malfunction are shown in the order of their probability. Inspect each part in the order shown, and replace the part when it is found to be faulty.

Trouble	Parts name	(See page)
"Door lock control system" does not operate (All).	1. Integration Relay (Driver Side J/B) 2. POWER Fuse (Driver Side J/B) 4. Wire Harness	(BE−8)
Malfunction in Door Lock / Unlock. (Using door manual switch)	1. Integration Relay (Driver Side J/B) 2. Door Lock Control Switch 3. Wire Harness	(BE−8) (BE−82)
Malfunction in Door Lock / Unlock. (Using door manual switch and key)	1. Wire Harness	
Malfunction in Door Lock / Unlock. (Using Key)	1. Integration Relay (Driver Side J/B) 2. Door Key Lock and Unlock Switch 3. Wire Harness	(BE−8) (BE−83)
Fault in key confine prevention operation.	1. Integration Relay (Driver Side J/B) 2. Door Lock Control Switch 3. Wire Harness	(BE−8) (BE−82)
Only one door lock does not operate.	1. Door Lock Motor 2. Wire Harness	(BE−83)

BE

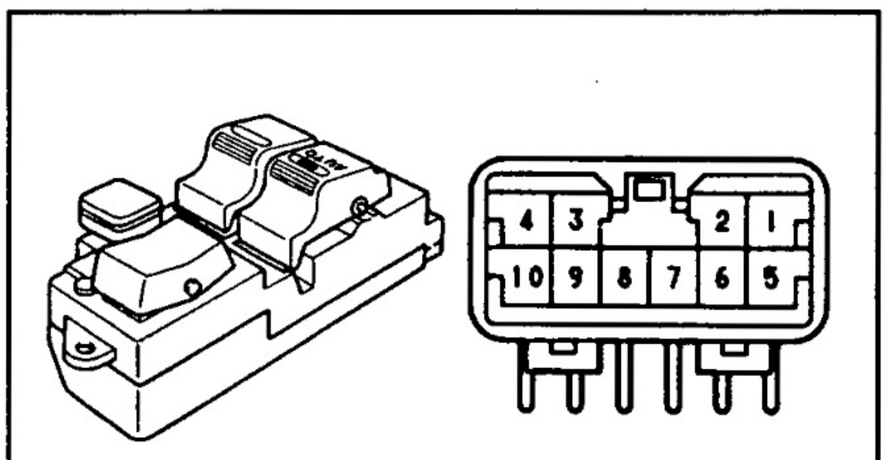

N11694 e-10-2-A Z17624

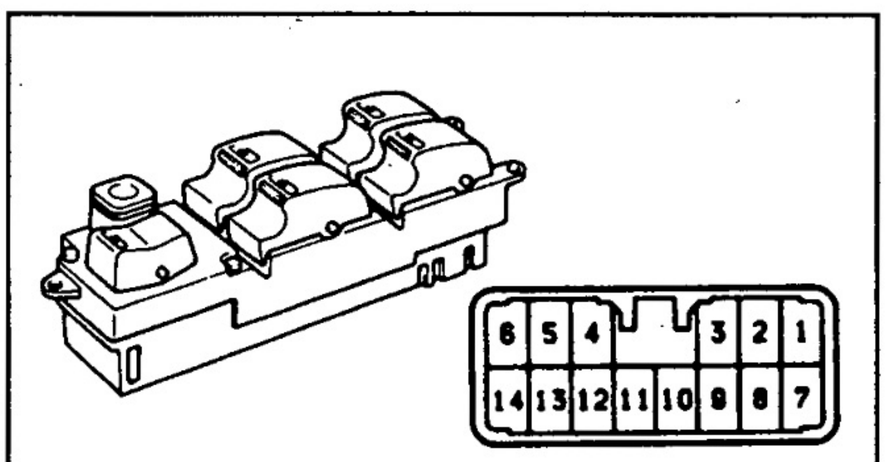

BE2594 S-14-2-B Z08634

BE382-01

DOOR LOCK CONTROL SWITCH INSPECTION

1. INSPECT SWITCH CONTINUITY

w/ Power Window ( ): RHD Models

3 Door models:

Switch position	Tester connection	Specified condition
LOCK	1 — 2 (3 — 4)	Continuity
OFF	—	No continuity
UNLOCK	1 — 5 (4 — 10)	Continuity

If continuity is not as specified, replace the switch.

5 Door models:

Switch position	Tester connection	Specified condition
LOCK	2 — 3 (3 — 5)	Continuity
OFF	—	No continuity
UNLOCK	3 — 7 (3 — 14)	Continuity

If continuity is not as specified, replace the switch.

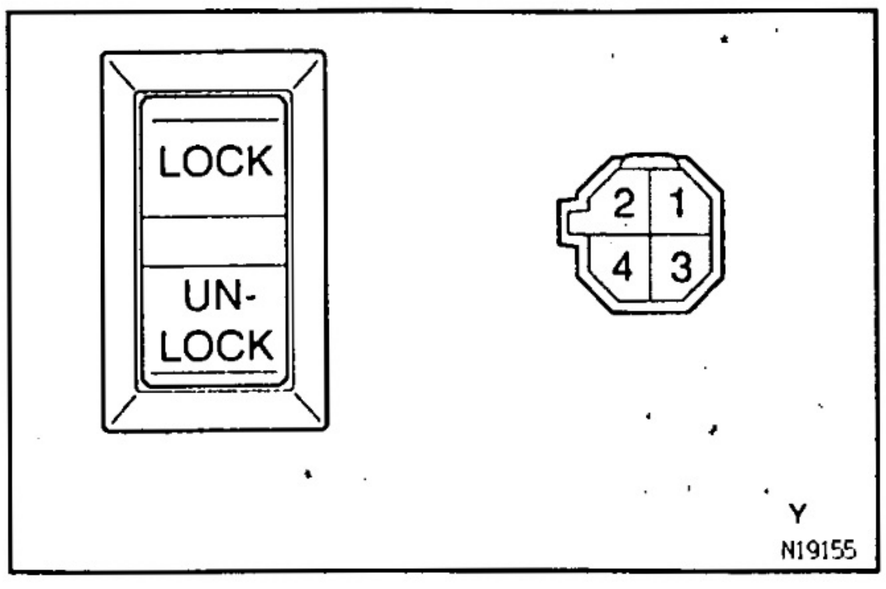

w/o Power Window:

Switch position	Tester connection	Specified condition
LOCK	1 – 4, 2 – 3	Continuity
OFF	–	No continuity
UNLOCK	1 – 3, 2 – 4	Continuity

If continuity is not as specified, replace the switch.

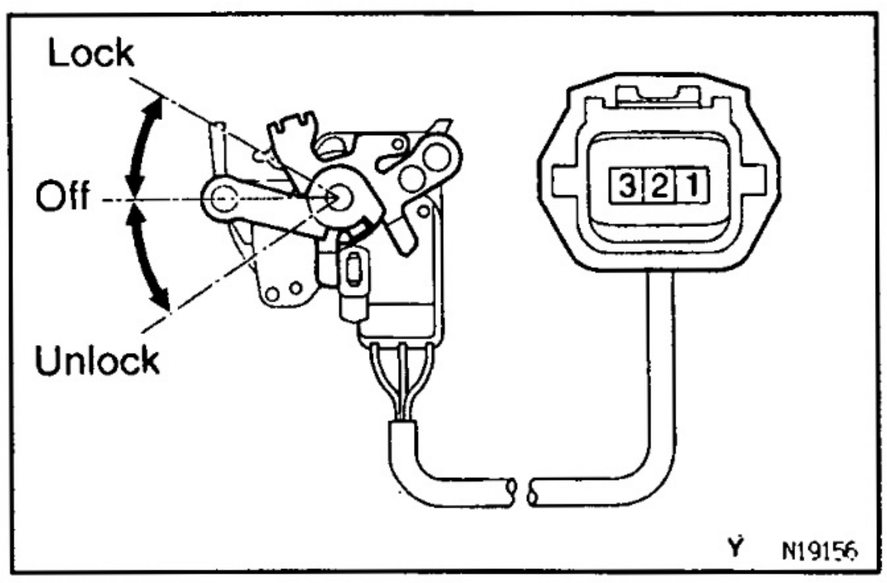

DOOR KEY LOCK AND UNLOCK SWITCH INSPECTION

8E22A-03

INSPECT SWITCH CONTINUITY

Switch position	Tester connection	Specified condition
LOCK	1 – 3	Continuity
OFF	–	No continuity
UNLOCK	1 – 2	Continuity

If continuity is not as specified, replace the switch.

DOOR LOCK MOTOR INSPECTION

8E383-01

Front Door:

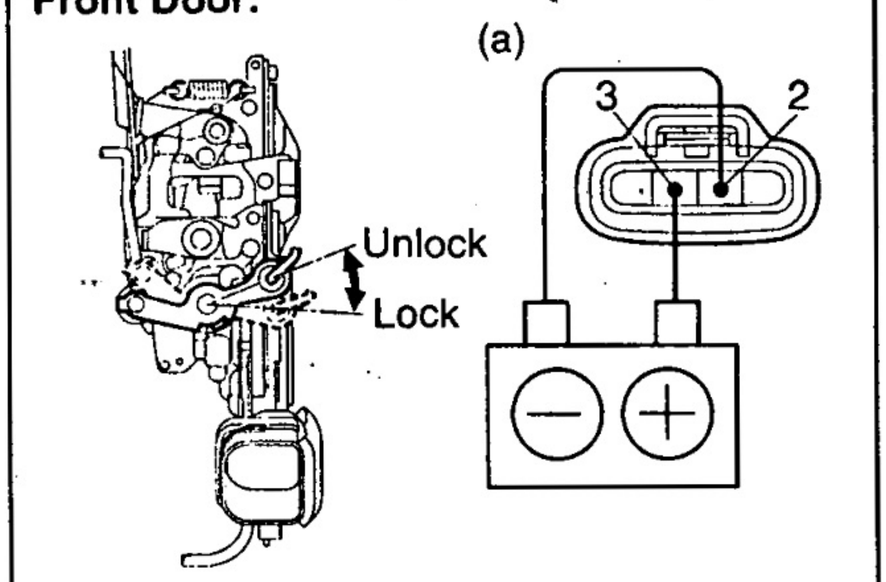

Rear Door:

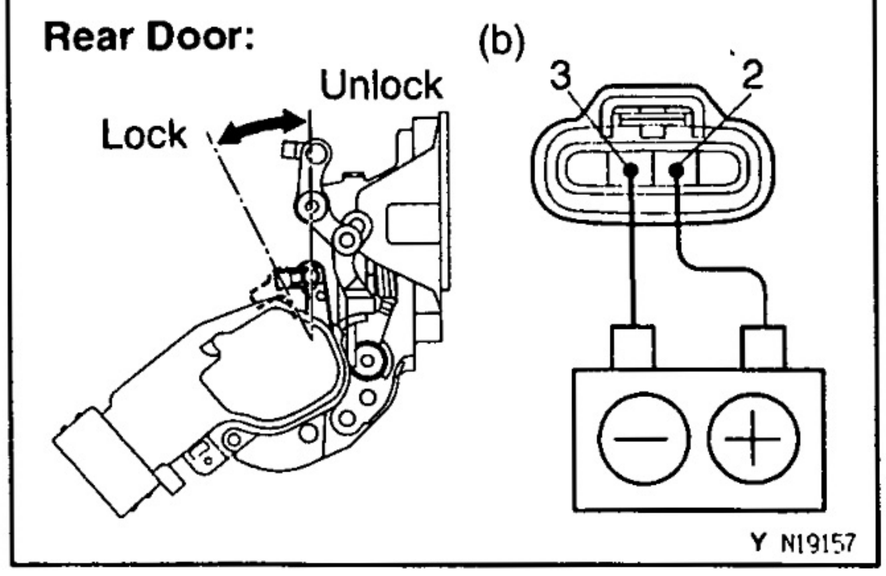

1. **INSPECT FRONT AND REAR DOOR LOCK MOTOR OPERATION**

(a) Connect the positive (+) lead from the battery to terminal 3 and the negative (–) lead to terminal 2, the check that the door lock link moves to the UNLOCK position.

(b) Reverse the polarity, and check that the door lock link moves to the LOCK position.
If operation is not as specified, replace the door lock assembly.

BE

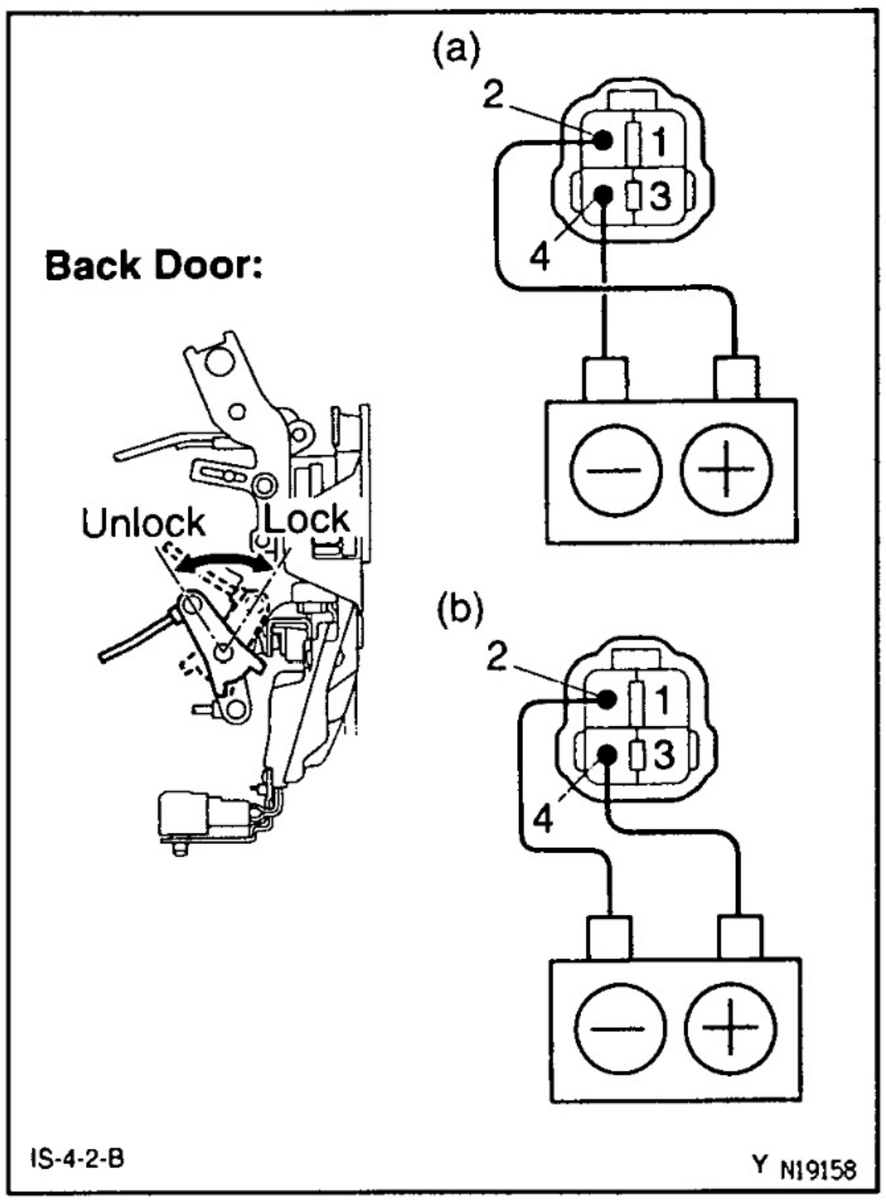

2. INSPECT BACK DOOR LOCK MOTOR OPERATION

(a) Connect the positive (+) lead from the battery to terminal 2 and the negative (–) lead to terminal 4, the check that the door lock link moves to the UNLOCK position.

(b) Reverse the polarity, and check that the door lock link moves to the LOCK position.

If operation is not as specified, replace the door lock assembly.

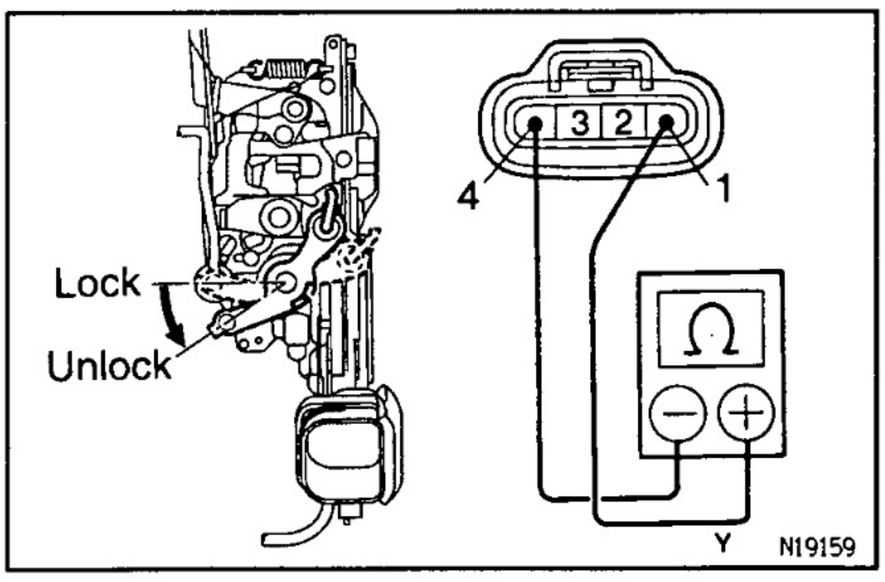

BE384-01

FRONT DOOR UNLOCK DETECTION SWITCH INSPECTION

INSPECT SWITCH CONTINUITY

Switch position	Condition	Specified condition
OFF (Door Lock set to LOCK)	–	No continuity
ON (Door Lock set to UNLOCK)	1 – 4	Continuity

If continuity is not as specified, replace the switch.

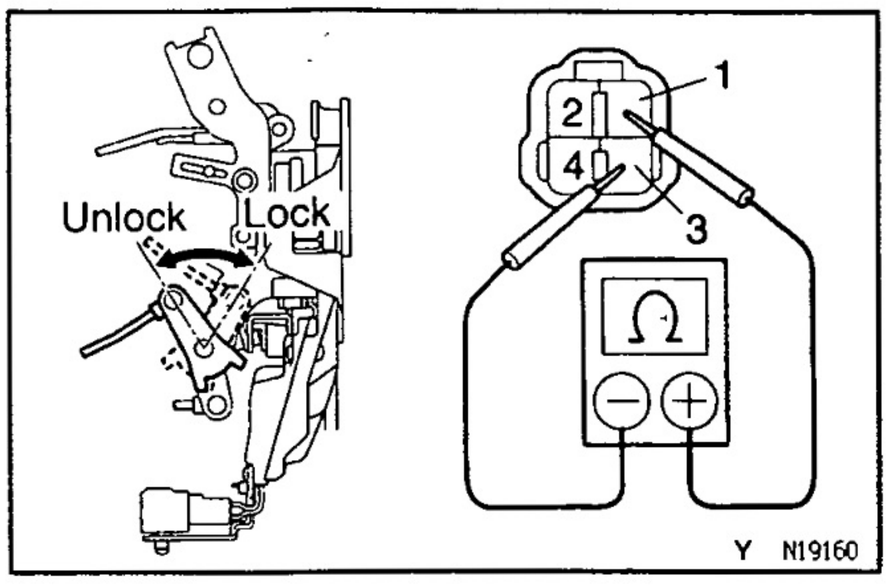

BE1J7-07

BACK DOOR UNLOCK DETECTION SWITCH INSPECTION

INSPECT SWITCH CONTINUITY

Switch position	Tester connection	Specified condition
OFF (Door Lock set to LOCK)	–	No continuity
ON (Door Lock set to UNLOCK)	1 – 3	Continuity

If continuity is not as specified, replace the switch.

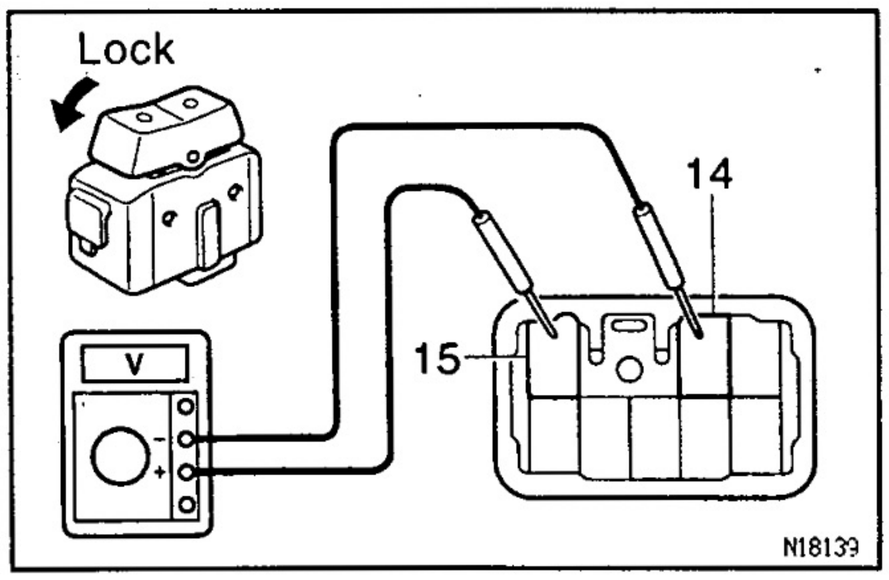

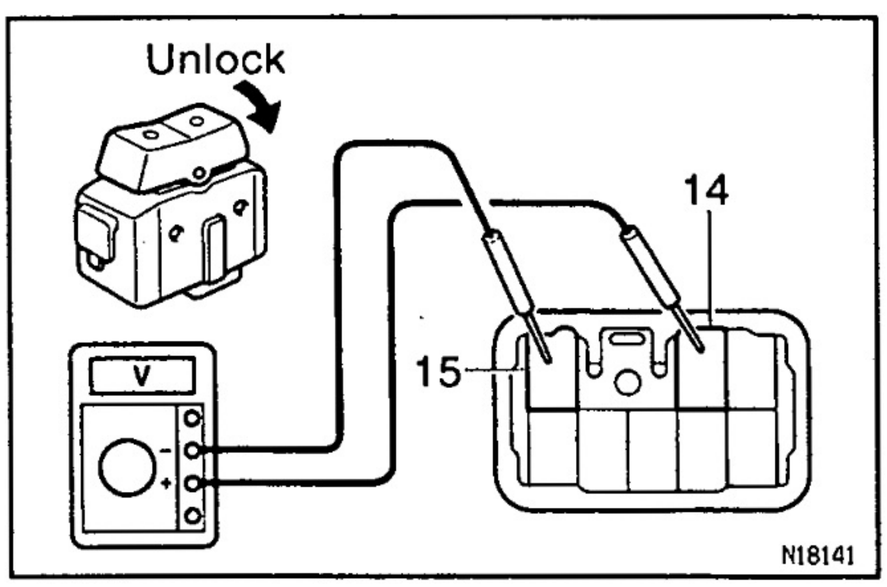

BE345-01

INTEGRATION RELAY INSPECTION

1. INSPECT RELAY OPERATION

Door lock signal:

HINT: When the relay circuit is as specified, inspect the door lock signal.

(a) Connect the positive (+) lead from the voltmeter to terminal 14 and the negative (–) lead to terminal 15.

(b) Set the door lock control switch to UNLOCK and check that the voltage rises from 0 V to battery voltage for approximately 0.2 seconds.

(c) Reverse the polarity of the voltmeter leads.

(d) Set the door lock control switch to LOCK and check that the voltage rises from 0 V to battery voltage for approximately 0.2 seconds.

2. INSPECT INTEGRATION RELAY CIRCUIT

See page BE–8

ENGINE IMMOBILISER SYSTEM
PARTS LOCATION

BE2HH–09

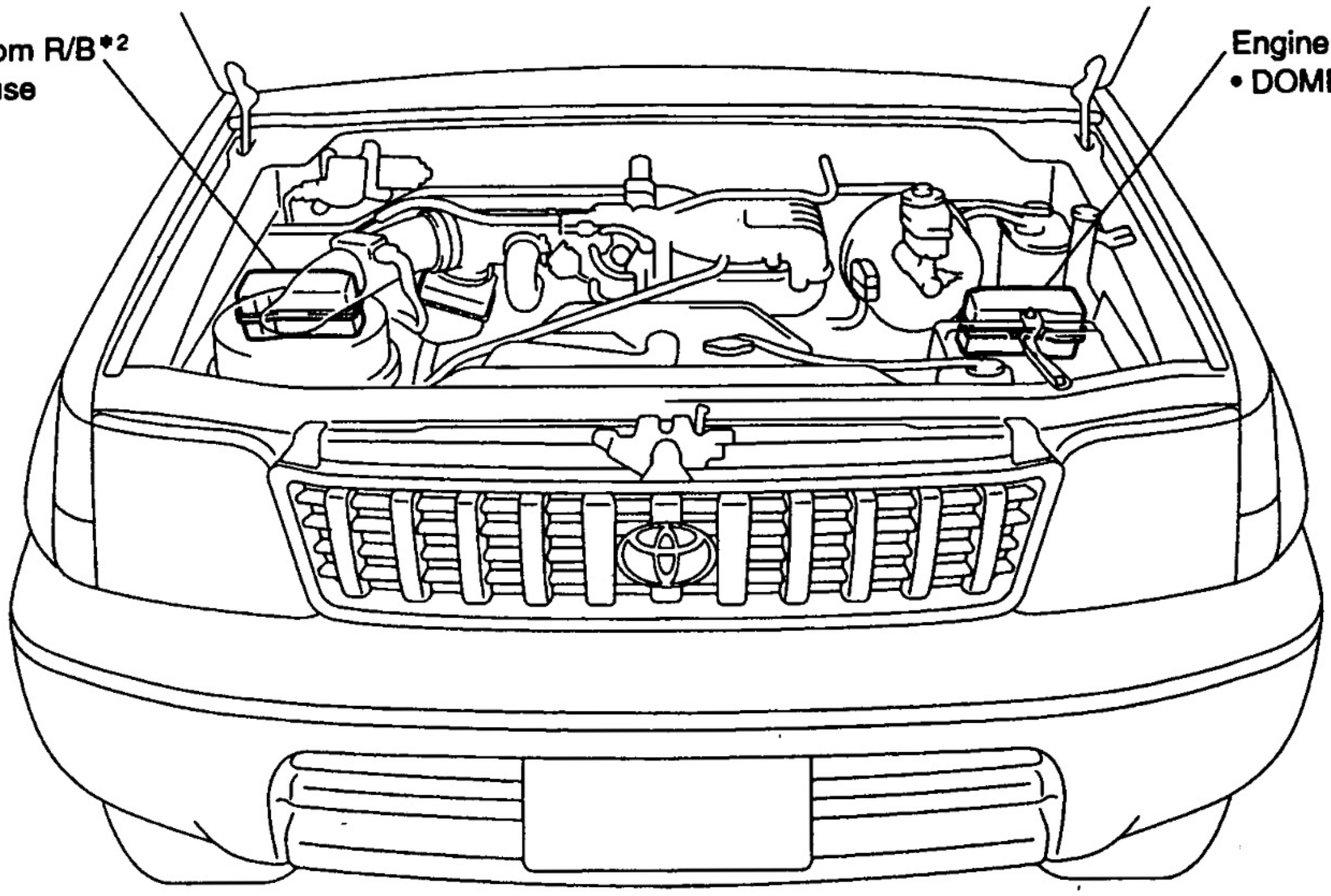

*1 : Gasoline Engine, Diesel Engine (LHD models)
*2 : Diesel Engine (RHD models)

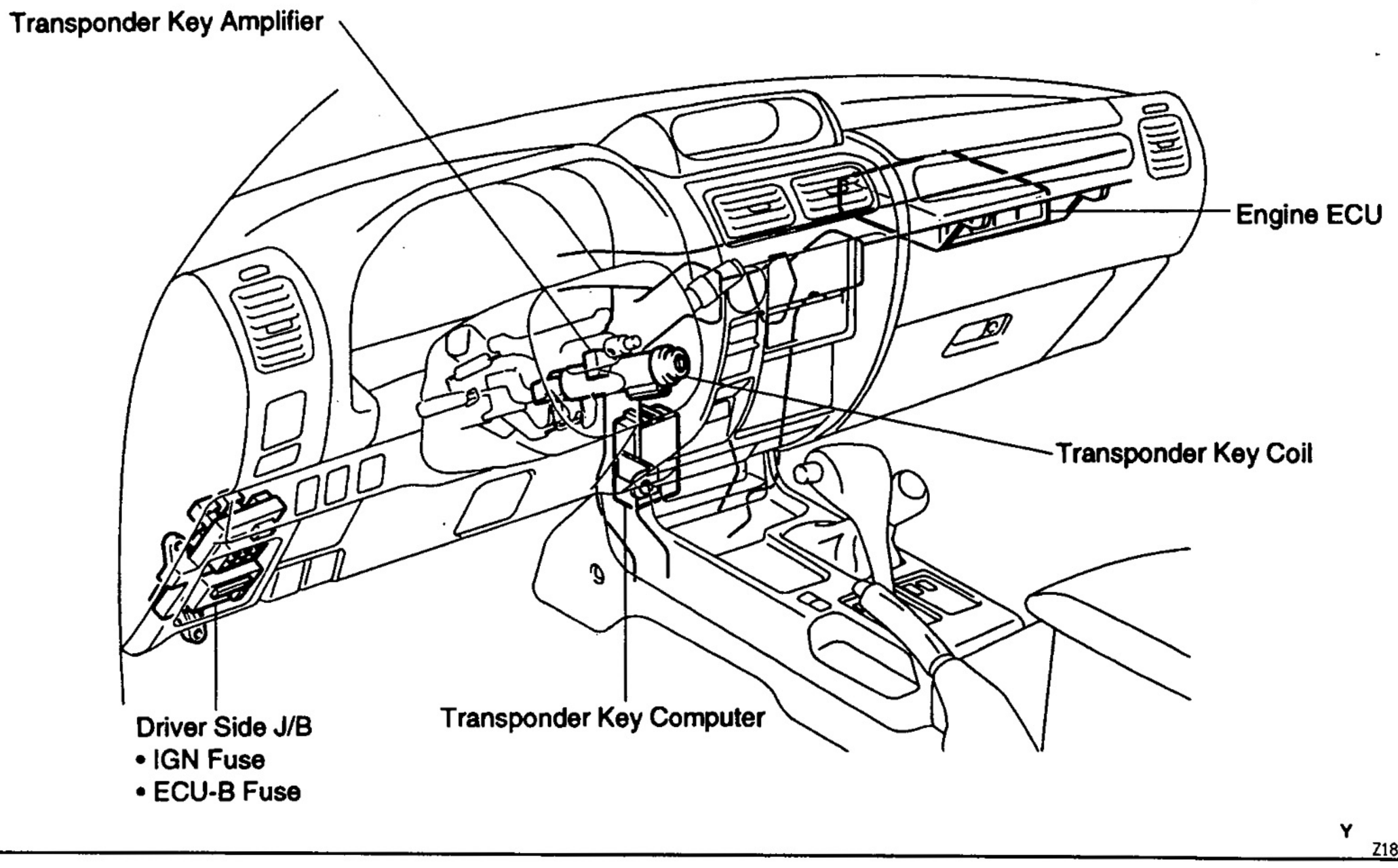

N19196
N19161

Z18196

8E3NJ-06

TROUBLESHOOTING

If a malfunction occurs in the engine immobiliser system, either of the following symptoms occurs:

1. Cranking occurs, but the engine does not start.
2. The engine starts, but stops after 5 seconds.

If either of these symptoms occurs, do troubleshooting to the following flow chart.

1. CRANKING OCCURS, BUT THE ENGINE DOES NOT START

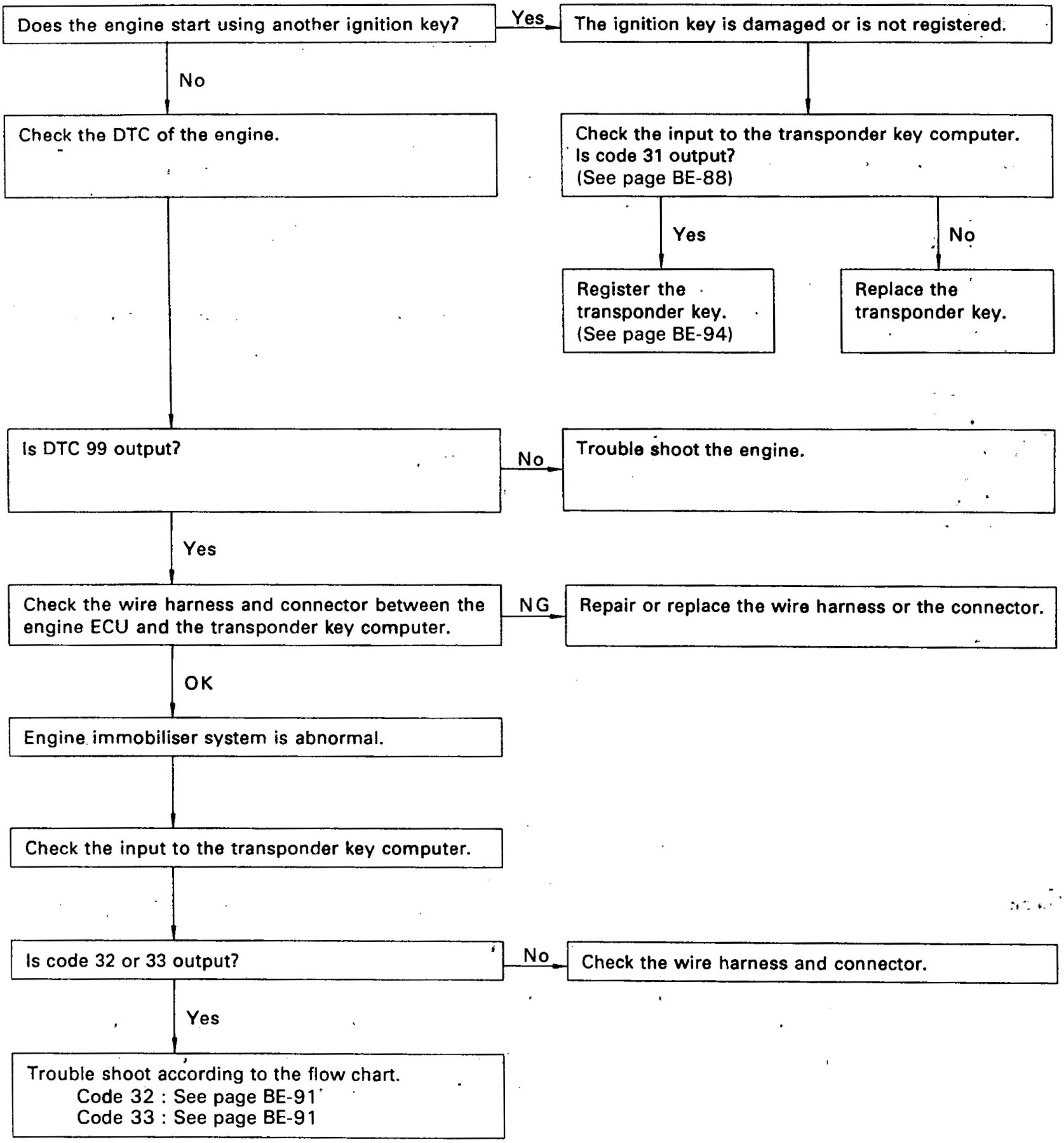

V06812

2. ENGINE STARTS, BUT STOPS AFTER 5 SECONDS

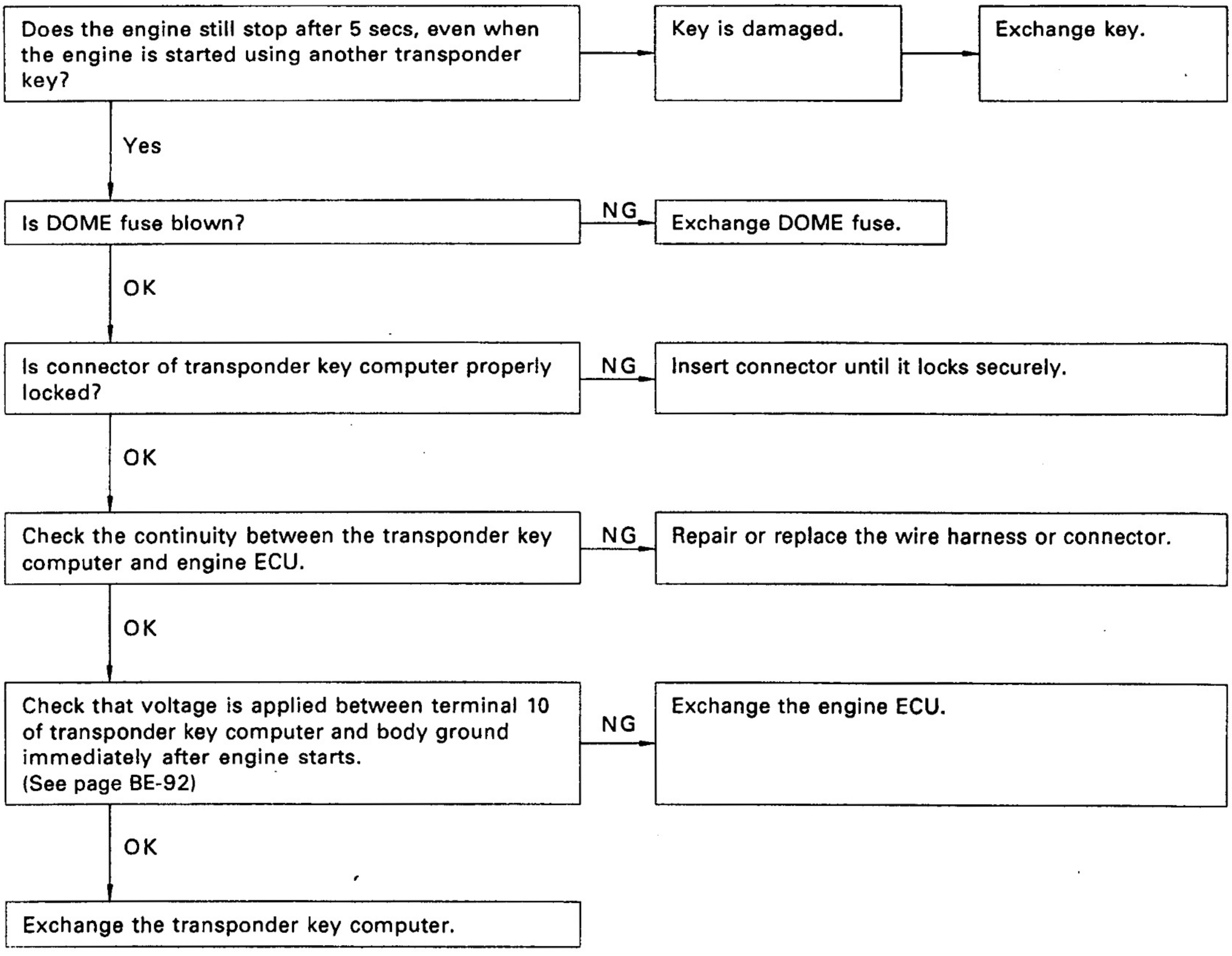

BE

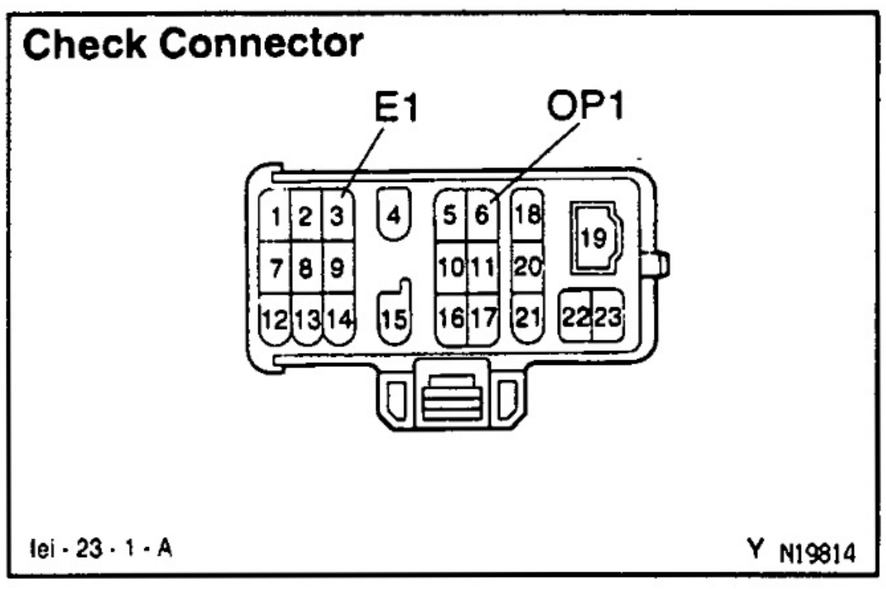

TRANSPONDER KEY COMPUTER INPUT CONDITION DISPLAY

SE2NK-08

1. READ CODE

(a) Connect the positive (+) lead from the volt meter (Analog Type) to OP1 of the check connector and the negative (−) lead to E1 of the check connector.

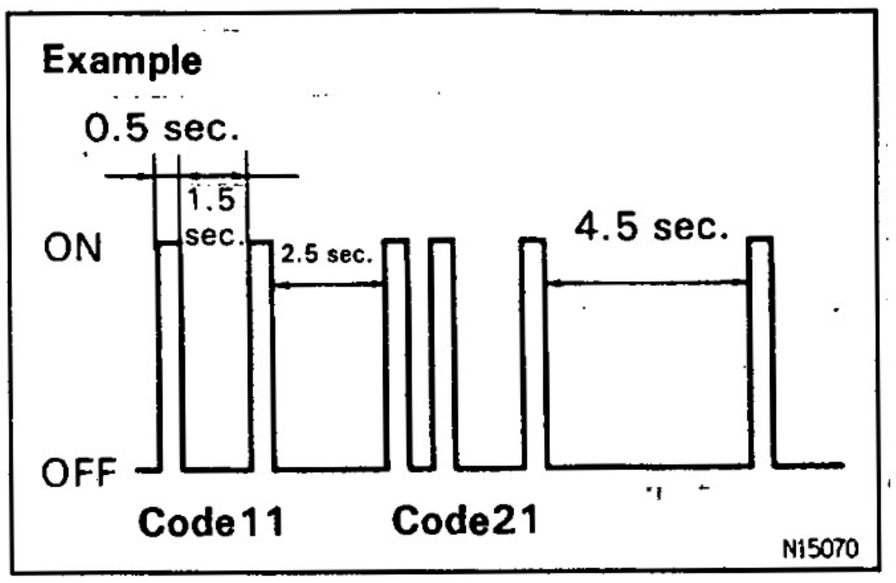

(b) Insert the ignition key in the key cylinder.

(c) Read the code from the movement of the tester needle.
If no code is output, turn the ignition switch on. If a code is now output, check if the DOME fuse is blown.

HINT:

- The code can be read using a luminous diode (Recommend activation current 10 ~ 20 mA) instead of a tester.
- A digital tester can also be used.

Display condition:

- When there are multiple codes, they are output in order starting from the lowest code.
- After all the codes are output, Lo is displayed for 4.5 sec., then all the code are output again starting from the lowest code.
- If the situation changes during code output, Lo is output for 4.5 seconds after output of the current code ceases, then the codes are output again starting from the lowest code.
E.g. While 11 (out of 11 and 21) is being output, conditions change and 12 is added. So after 11 is output, Lo is output for 4.5 sec., then 11, 12 and 21 are output.

BE

2. Code list

Code	Output condition
11	Key unlock warning switch ON (Ignition key inserted)
12	Any door is open. (Door courtesy switch ON)
13	Ignition switch at ON position
21	Master key is inserted in key and the immobiliser system is OFF.
22	Sub key is inserted in key cylinder and immobiliser system is OFF.
31	Key code recorded in transponder key computer differs from code of key inserted in key cylinder.
32	Transponder key code cannot be read.
33	Key code cannot be read because format of chip inside key is wrong.
34	Transponder key computer has no memory space to register key code.

3. Malfunction list

Symptom	Cause
No code is output.	1. DOME Fuse (Engine Room R/B) 2. Wire harness or connector 3. Transponder key computer
Even when key is inserted in key cylinder, Code 11 is not output.	1. Key unlock warning switch (BE–7) 2. Wire harness or connector 3. Transponder key computer
Code 12 is not output when the door is open.	1. Door courtesy switch (BE–30) 2. Wire harness or connector 3. Transponder key computer
Code 13 is not output when ignition switch ON.	1. IGN Fuse (Driver Side J/B) 2. Wire harness or connector 3. Transponder key computer
Code 31 is not output when key is inserted in key cylinder.	Key code is not registered.
Code 32 is output.	1. Transponder key coil 2. Transponder key amplifier 3. Wire harness or connector 4. Transponder key computer
Code 33 is output	1. Transponder key amplifier 2. Transponder key computer
Code 34 is output	Transponder key computer has no memory space to register key code.

If code 32 is output, troubleshoot according to this flow chart.

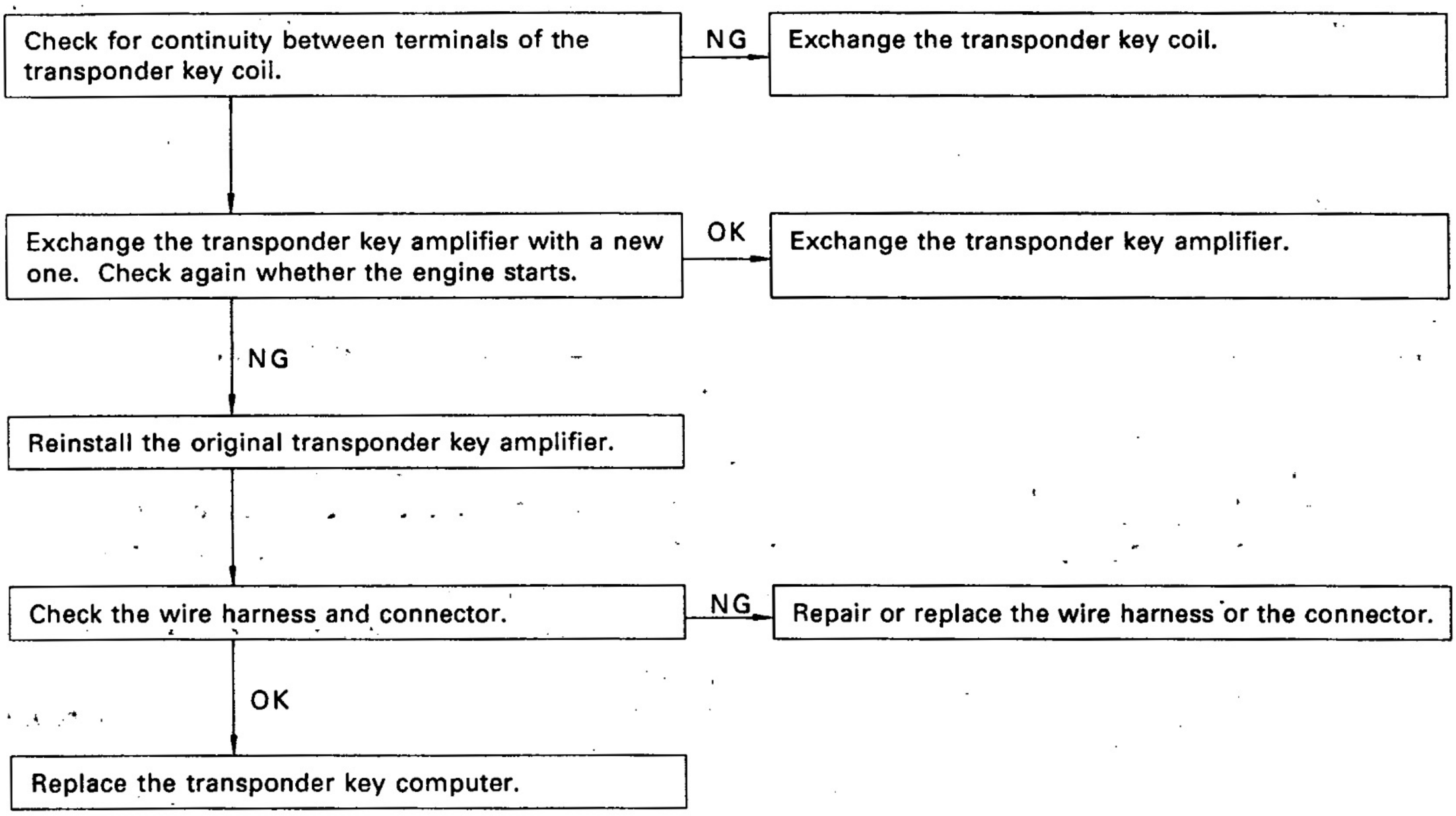

If code 33 is output, troubleshoot according to this flow chart.

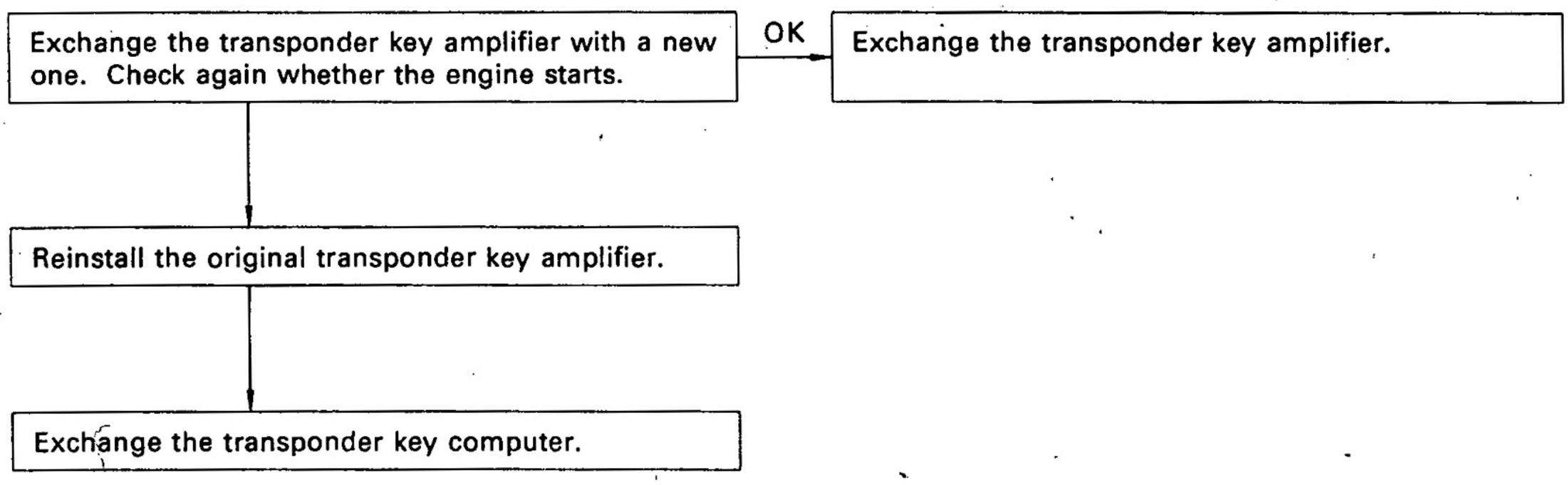

V06813

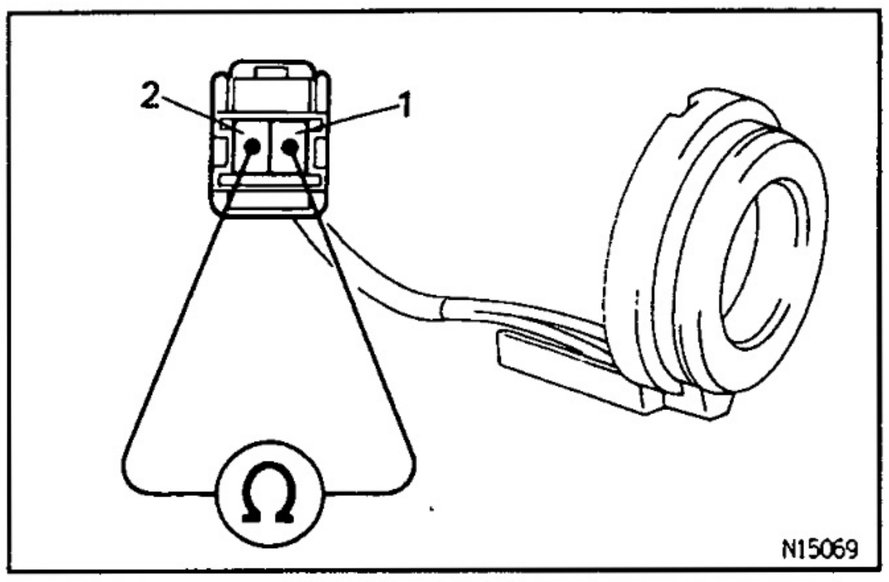

TRANSPONDER KEY COIL INSPECTION BE2NL-0A

INSPECT TRANSPONDER KEY COIL CONTINUITY

Check that there is continuity between terminals 1 and 2.

If continuity is not as specified, replace the coil.

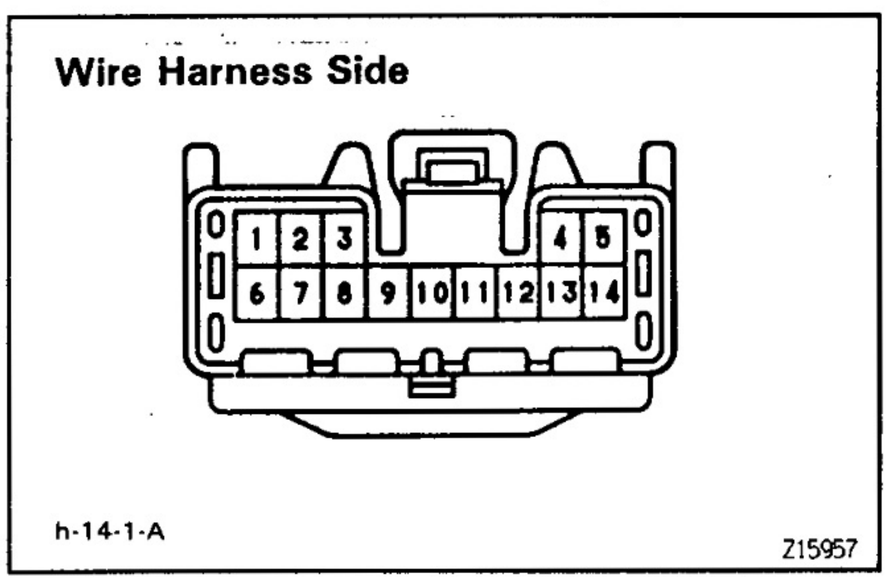

TRANSPONDER KEY COMPUTER INSPECTION BE2NU-0B

1. **INSPECT COMPUTER CIRCUIT**

Disconnect the connector from the computer and inspect the connector on the wire harness side, as shown in the table below.

If the circuit is not as specified, try replacing the computer with a new one.

If the circuit is not as specified, inspect the circuits connected to other parts.

BE

Tester connection	Condition	Specified condition
1 — Ground	Constant	Battery voltage
2 — Ground	Ignition switch ON	Battery voltage
8 — Ground	All doors closed	No continuity
8 — Ground	Any door open.	Continuity
9 — Ground	Key unlock warning switch ON (key inserted)	Continuity
9 — Ground	Key unlock warning switch OFF (key removed)	No continuity
14 — Ground	Constant	Continuity

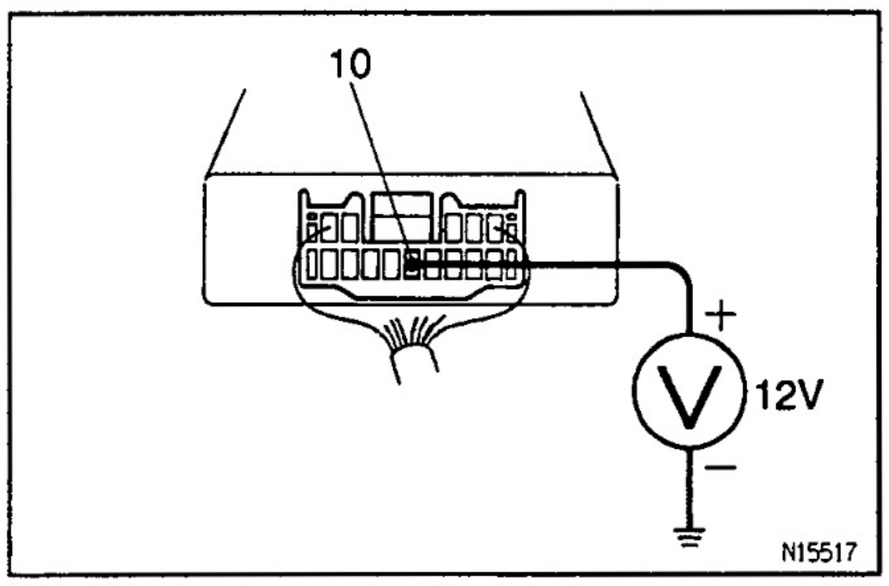

2. **INSPECT COMPUTER**

(a) With the connector connected, connect the positive (+) lead from the analog type tester to terminal 10 and the negative (—) lead to the body ground.

(b) Check that there is battery voltage when the ignition switch is turned ON.

(c) Check that the tester needle swings strongly for approx. 1 sec. when the engine is started using the ignition key.

BE2NN-08

RESISTING PROCEDURE

1. RESISTING A NEW TRANSPONDER KEY CODE

This must be done when you have install a new transponder key computer.

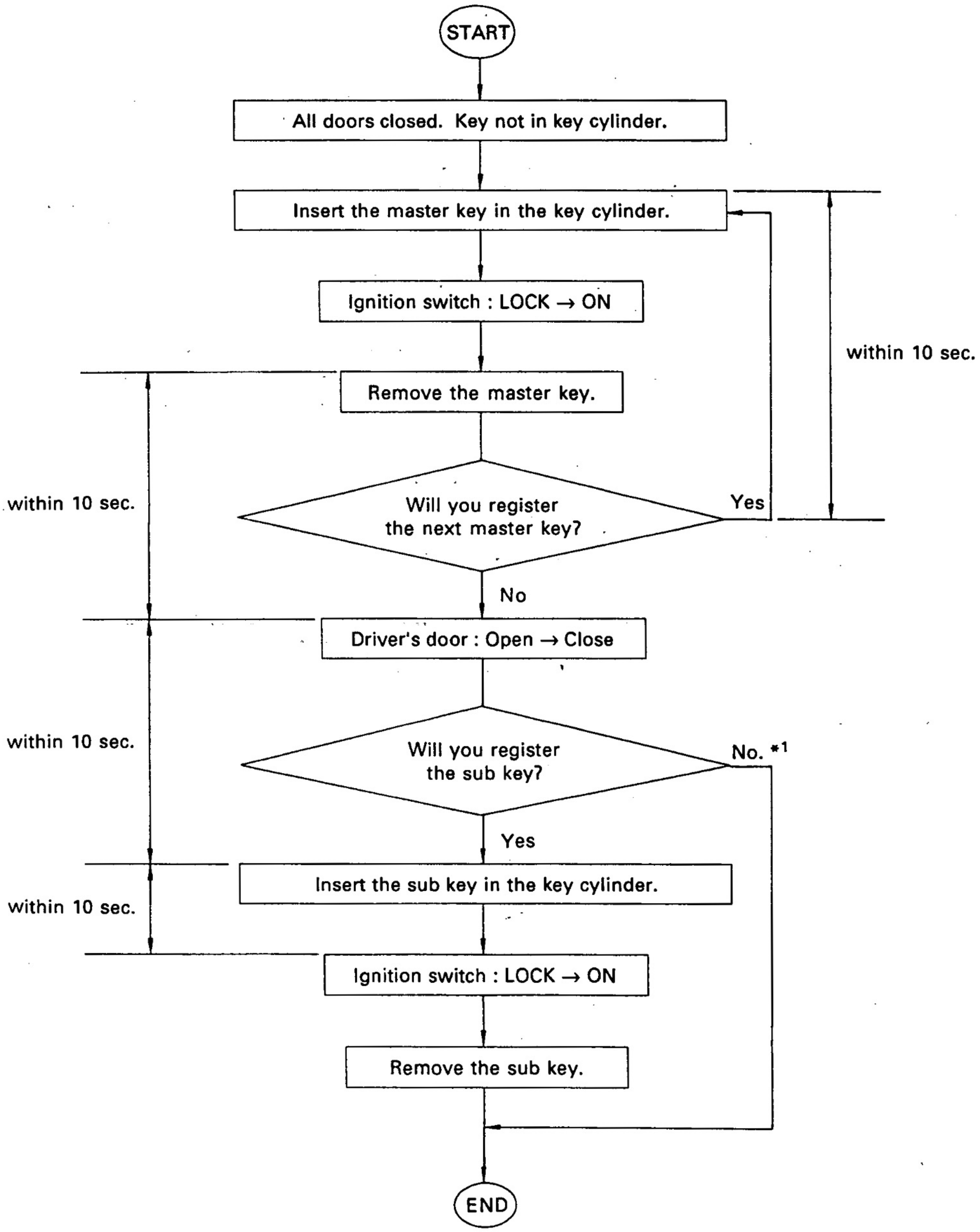

*1: When not resistering the sub key, resister the master key within 10 sec. of Driver's Door : Open → Close.

V06814

2. REGISTRATION OF ADDITIONAL MASTER KEY

Do this operation to register an additional master key.

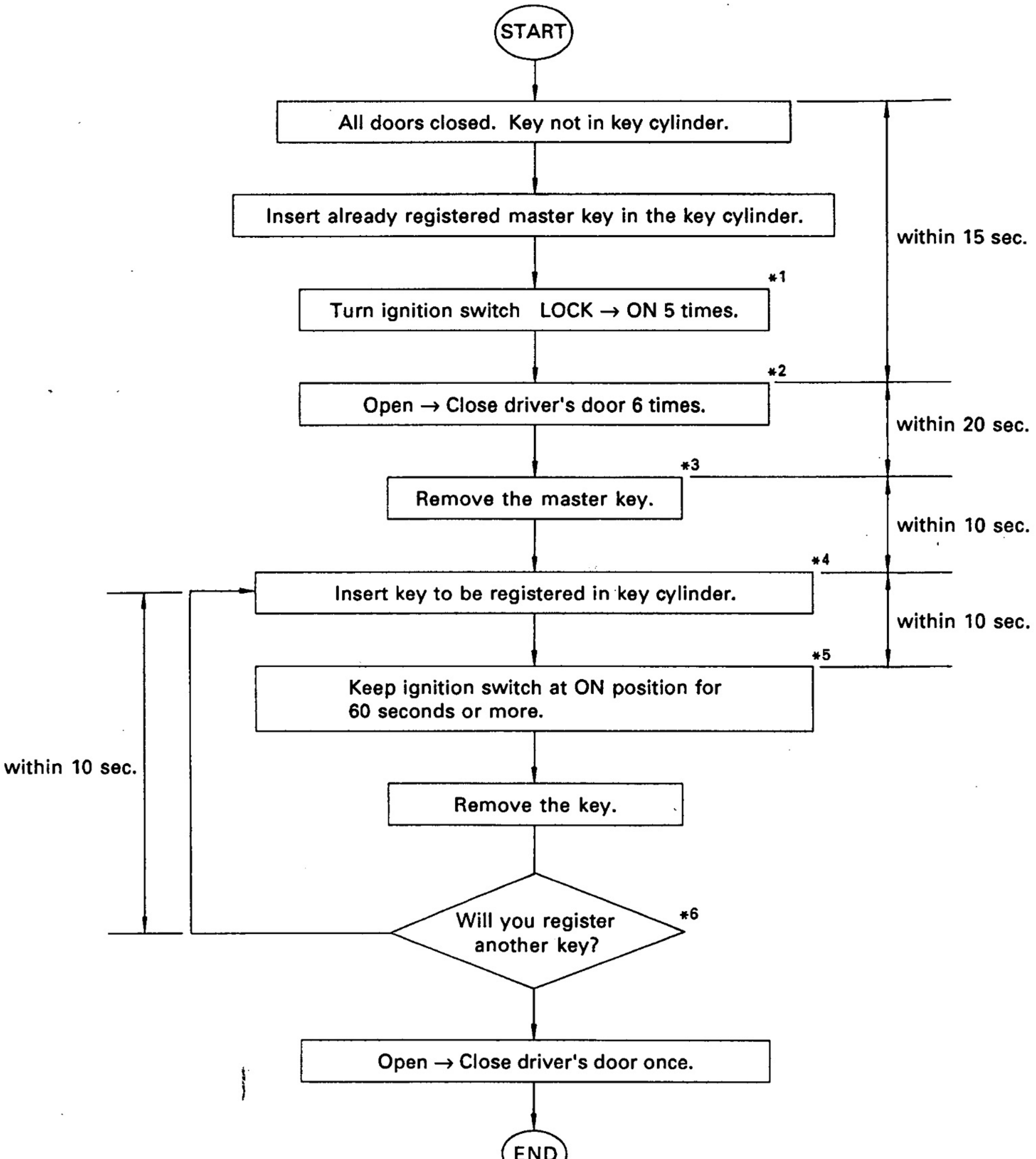

V06815

BE

*1: Turn the ignition switch LOCK → ON 5 times within 15 sec. of inserting the master key in the key cylinder.
*2: Open and close the driver's door the first time within 15 sec. of inserting the master key in the key cylinder. Then open and close the driver's door another 6 times within 20 sec. of closing the driver's door the first time.
*3: Remove the master key from the ignition switch within 20 sec. of closing the driver's door the first time.
*4: Insert the key to be registered in the key cylinder within 10 sec. of removing the master key.
*5: Turn the ignition switch LOCK → ON within 10 sec. of inserting the key.
*6: If you are to register another key, insert the next key within 10 sec. of removing the previous key.

3. ADDITIONAL REGISTRATION OF SUB KEY

Do this operation to register an additional sub key.

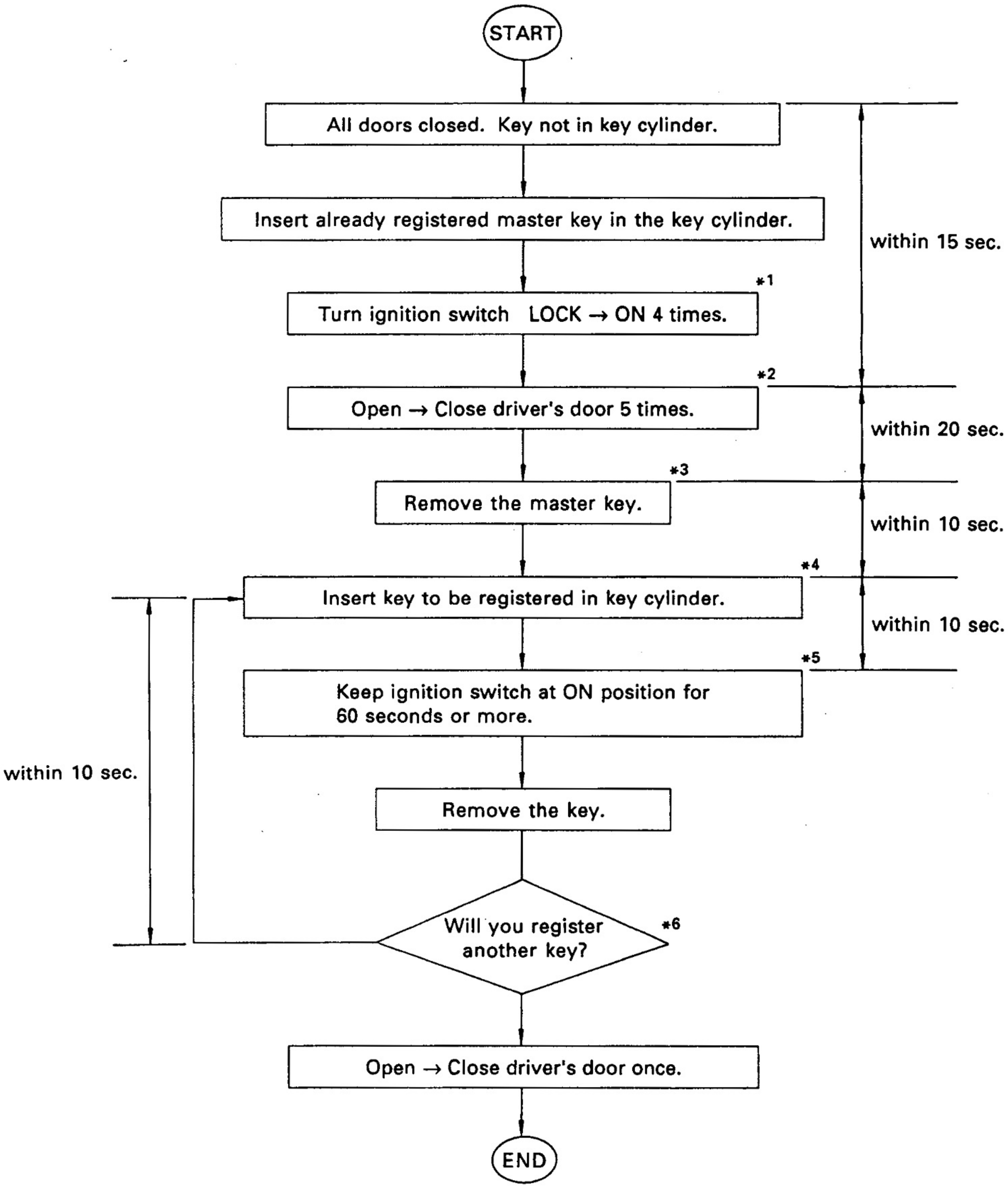

V06816

*1: Turn the ignition switch LOCK → ON 4 times within 15 sec. of inserting the master key in the key cylinder.
*2: Open and close the driver's door the first time within 15 sec. of inserting the master key in the key cylinder. Then open and close the driver's door another 5 times within 20 sec. of closing the driver's door the first time.
*3: Remove the master key from the ignition switch within 20 sec. of closing the driver's door the first time.
*4: Insert the key to be registered in the key cylinder within 10 sec. of removing the master key.
*5: Turn the ignition switch LOCK → ON within 10 sec. of inserting the key.
*6: If you are to register another key, insert the next key within 10 sec. of removing the previous key.

4. ERASURE OF TRANSPONDER KEY CODE

Do this operation to erase transponder key registration from the transponder key computer.

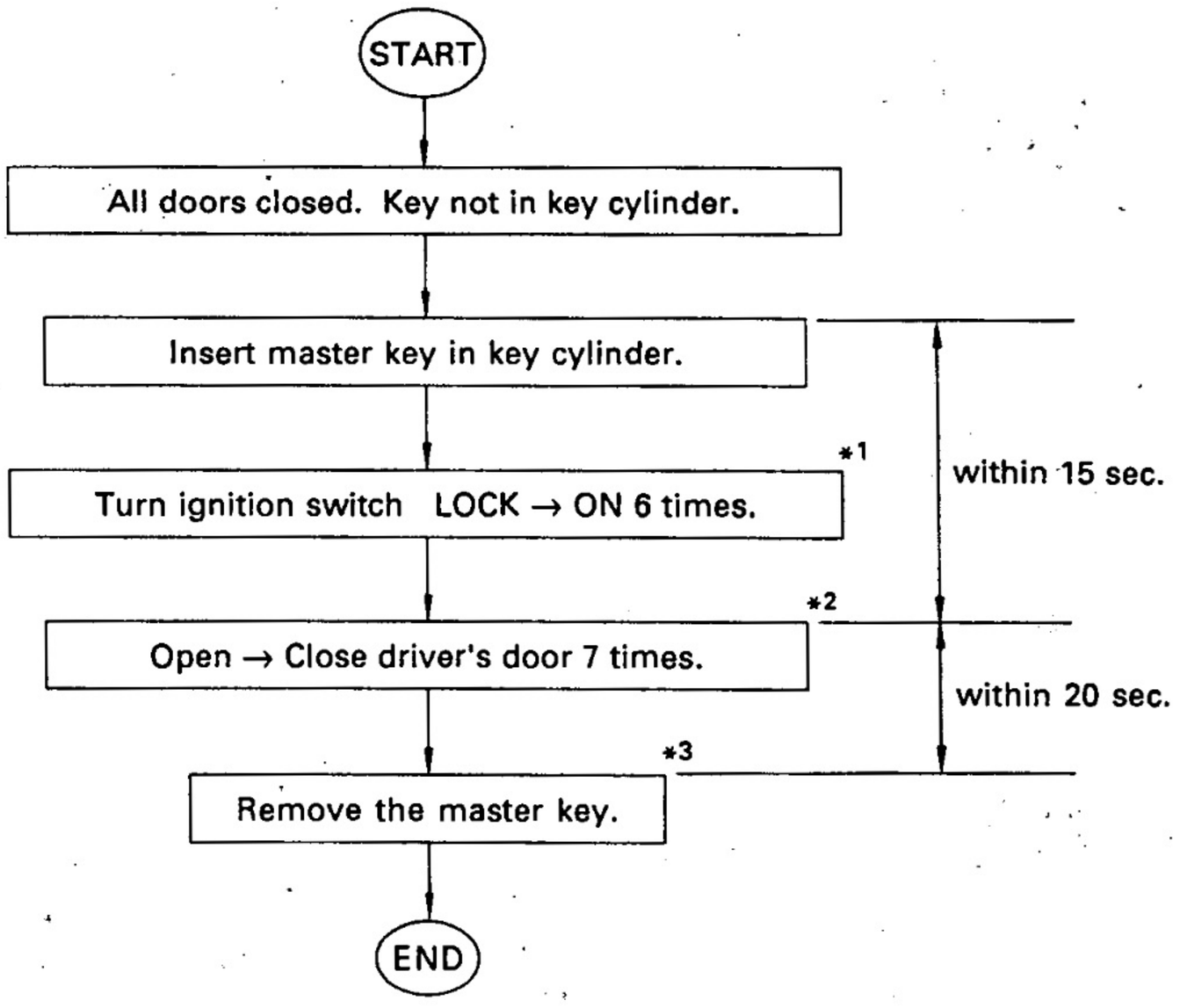

*1: Turn the ignition switch LOCK → ON 6 times within 15 sec. of inserting the master key in the key cylinder.
*2: Open and close the driver's door the first time within 15 sec. of inserting the master key in the key cylinder. Then open and close the driver's door another 6 times within 20 sec. of closing the driver's door the first time.
*3: Remove the master key from the ignition switch within 20 sec. of closing the driver's door the first time.

SLIDING ROOF SYSTEM
PARTS LOCATION

BE34M-02

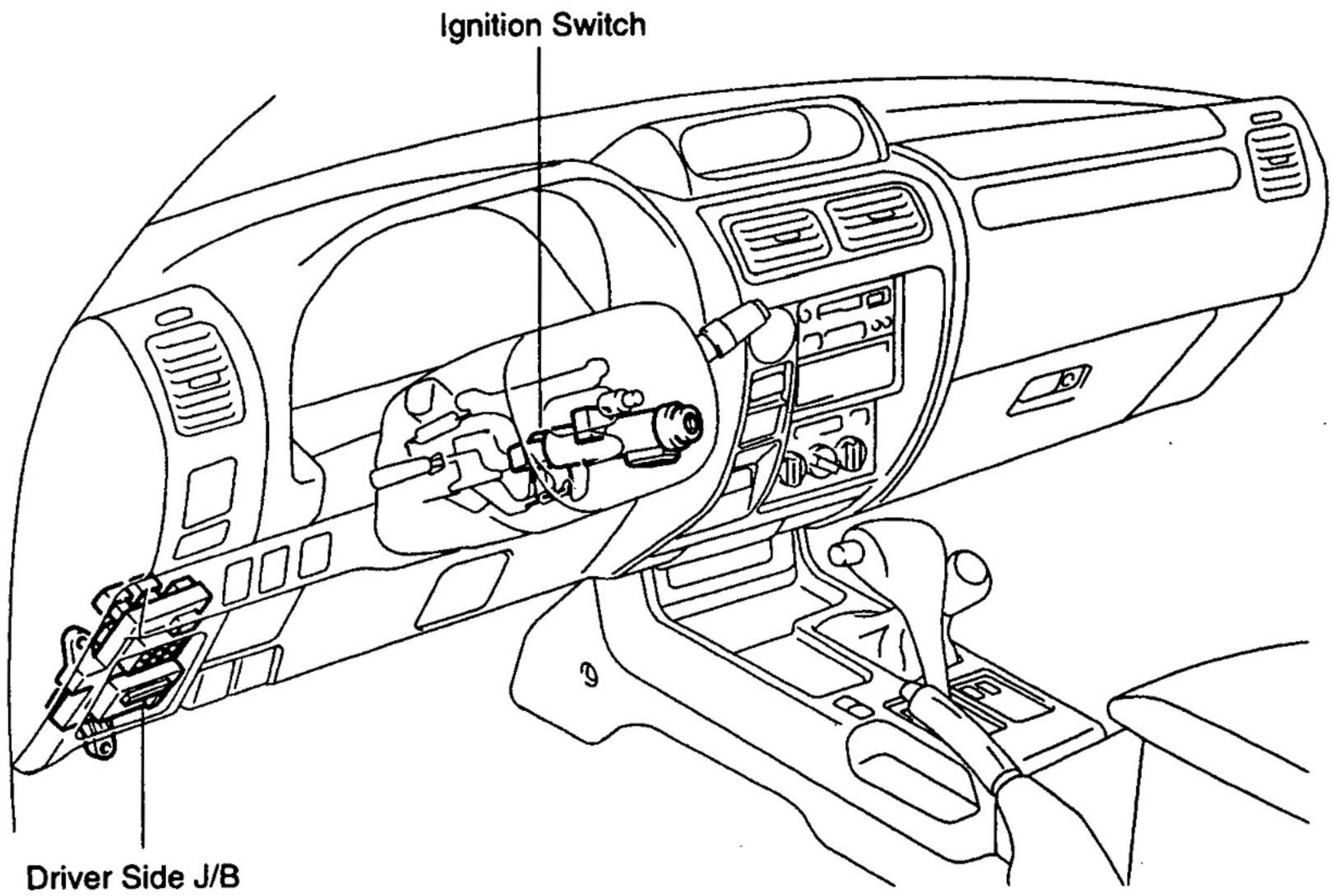

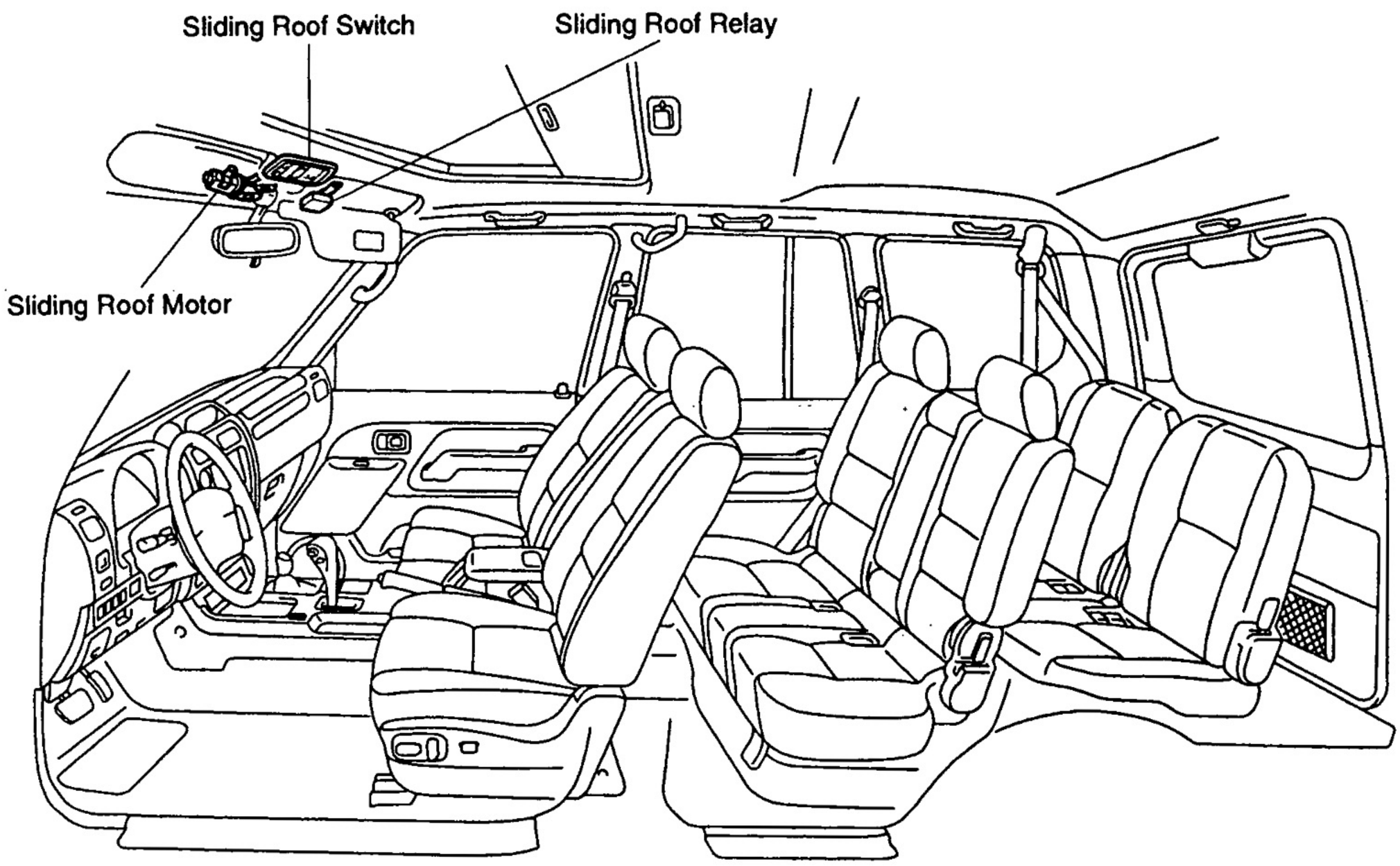

N19162
N19163

Z18197

TROUBLESHOOTING

BE84N-02

The table below will be useful for you in troubleshooting these electrical problems. The most likely causes of the malfunction are shown in the order of their probability. Inspect each part in the order shown, and replace the part when it is found to be faulty.

Trouble	Parts name	(See page)
Sliding roof system does not operate.	1. POWER Fuse (Driver side J/B)	
	2. Sliding Roof Relay	(BE–101)
	3. Power Main Relay	(BE–80)
	4. Sliding Roof Switch	(BE–99)
	5. Sliding Roof Motor	(BE–100)
	6. Wire Harness	
Sliding roof system operates abnormally.	1. Sliding Roof Switch	(BE–99)
	2. Wire Harness	
Sliding roof system stops operation half way.	1. Sliding Roof Switch	(BE–99)
	2. Sliding Roof Motor	(BE–100)
	(Stones to foreign material trapped in motor assembly)	
	3. Wire Harness	

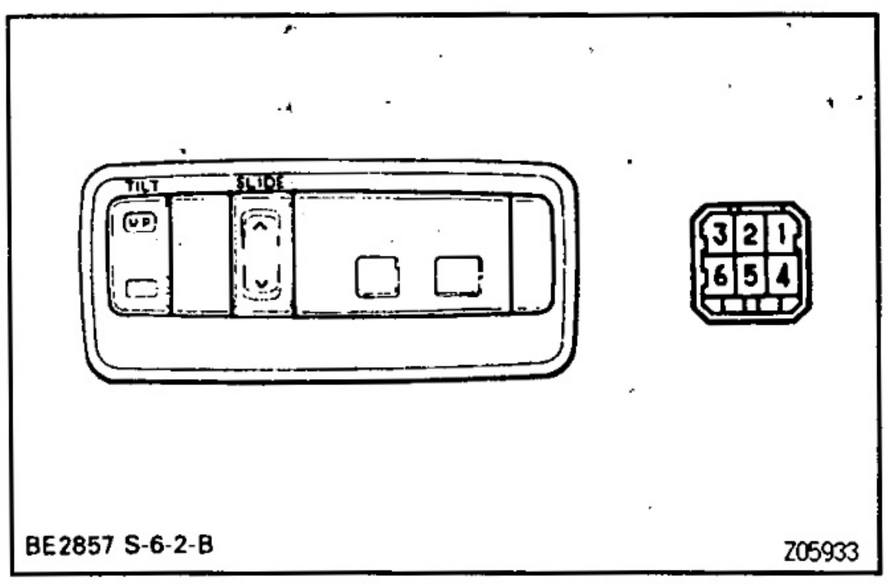

BE2857 S-6-2-B Z05933

SLIDING ROOF SWITCH INSPECTION

BE84P-02

INSPECT SWITCH CONTINUITY

Switch position	Tester connection	Specified condition
SLIDE OPEN	3 – 4	Continuity
SLIDE OFF	–	No continuity
SLIDE CLOSE	4 – 6	Continuity
TILT DOWN	2 – 4	Continuity
TILT OFF	–	No continuity
TILT UP	4 – 5	Continuity

If continuity is not as specified, replace the switch.

BE

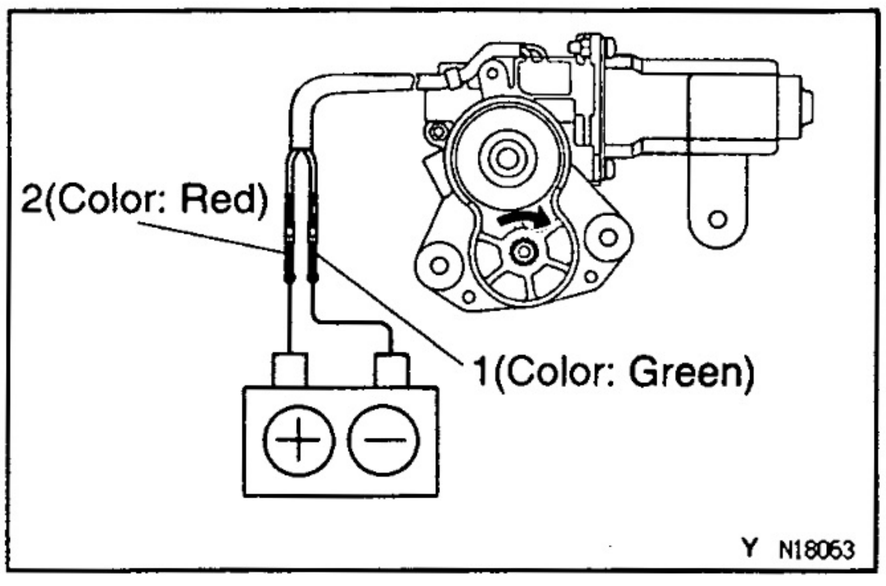

SLIDING ROOF MOTOR INSPECTION

BE388-01

1. INSPECT MOTOR OPERATION

(a) Connect the positive (+) lead from the battery to terminal 2 and the negative (−) lead to terminal 1, check that the motor turns to clockwise.

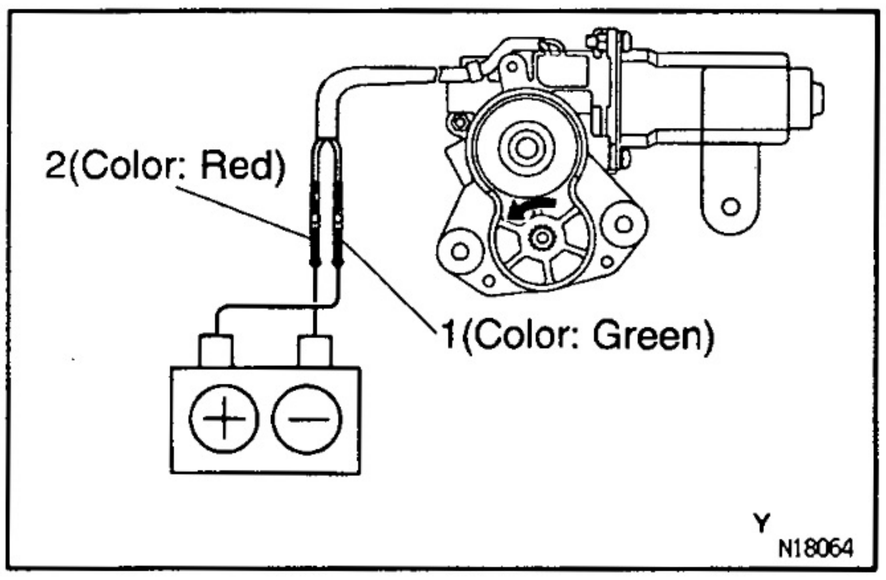

(b) Reverse the polarity, and check that the motor turns to counterclockwise.

2. INSPECT CIRCUIT BREAKER OPERATION

(a) With the sliding roof in the fully opened position, hold the sliding roof switch in the "OPEN" position and check that there is a circuit breaker operation noise within 10 to 60 seconds.

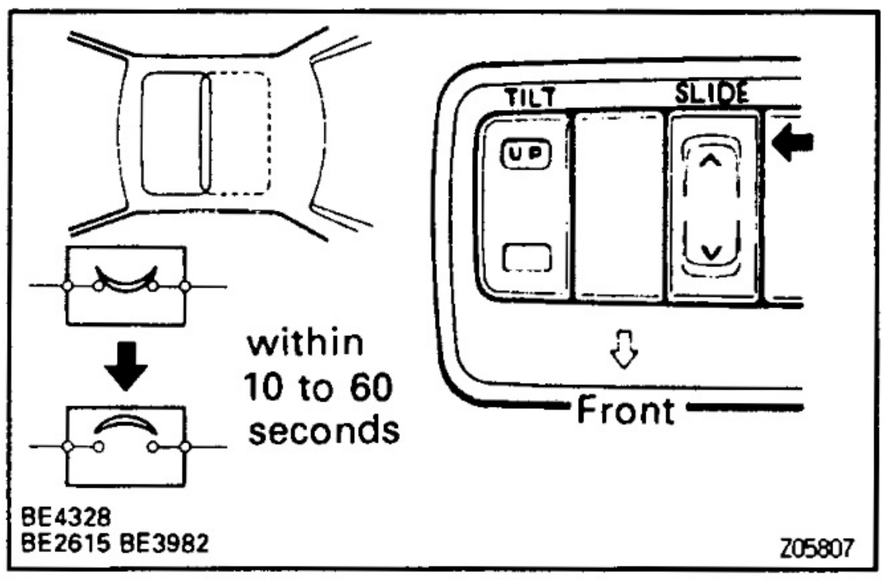

(b) With the sliding roof in fully opened position, hold the sliding roof switch in the "CLOSE" position and check that the sliding roof begins to close within 60 seconds.
If operation is not as specified, replace the motor.

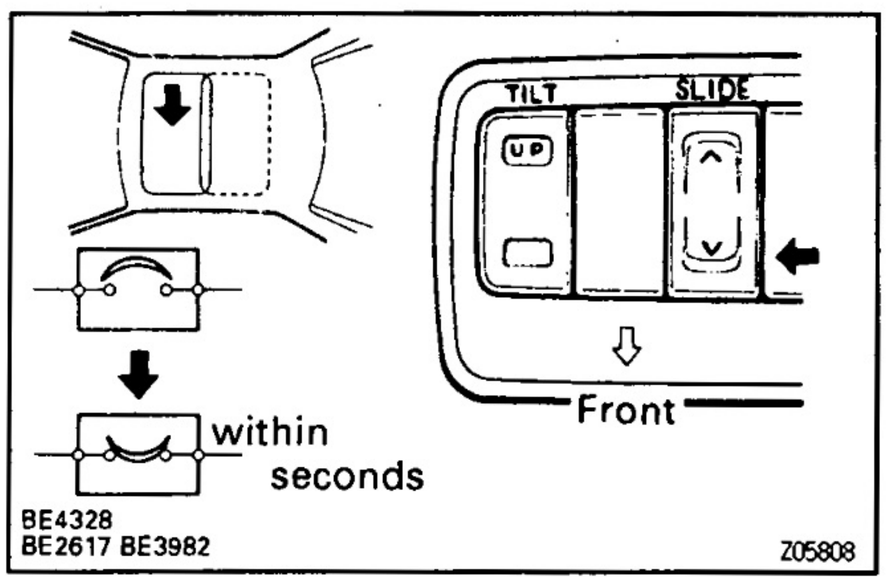

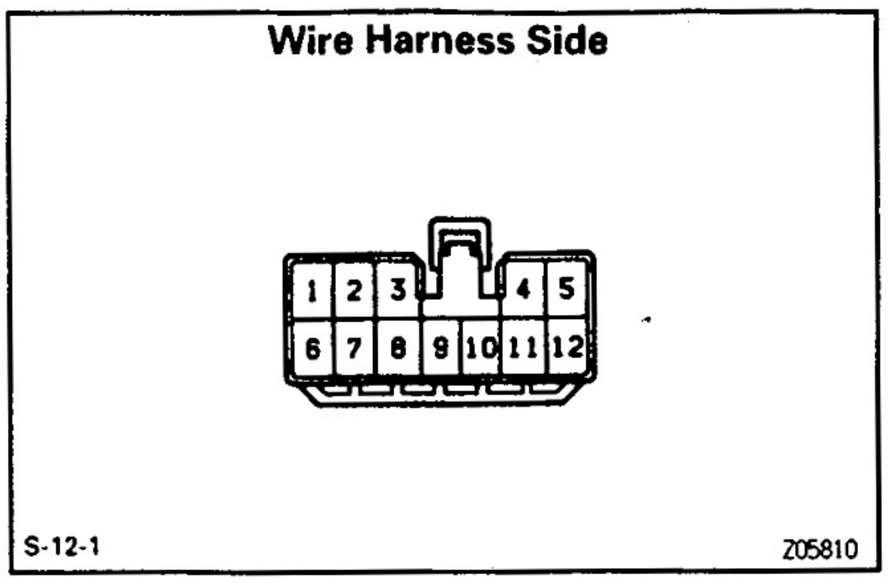

BE387-01

SLIDING ROOF CONTROL RELAY INSPECTION

INSPECT RELAY CIRCUIT

Disconnect the connector from the relay and inspect the connector on the wire harness side, as shown in the chart.

*: Exceptions: During 60 second after the ignition switch ON → OFF.

Tester connection	Condition	Specified condition
1 – Ground	Sliding roof SLIDE switch OPEN	Continuity
2 – Ground	Sliding roof SLIDE switch CLOSE	Continuity
3 – Ground	Sliding roof TILT switch UP	Continuity
4 – Ground	Constant	No continuity
4 – 5	Constant	Continuity
5 – Ground	Constant	No continuity
7 – Ground	Sliding roof TILT switch DOWN	Continuity
8 – Ground	No. 1 limit switch OFF (Sliding roof tilted up or open approx. 200 mm (7.87 in.))	No continuity
8 – Ground	No. 1 limit switch ON (Except for conditions mentioned above)	Continuity
9 – Ground	No.2 limit switch OFF (Sliding roof closed)	No continuity
9 – Ground	No.2 limit switch ON (Sliding roof opened)	Continuity
11 – Ground	Constant	Continuity
6 – Ground	Ignition switch LOCK or ACC	*No voltage
6 – Ground	Ignition switch ON	Battery voltage
12 – Ground	Constant	Battery voltage

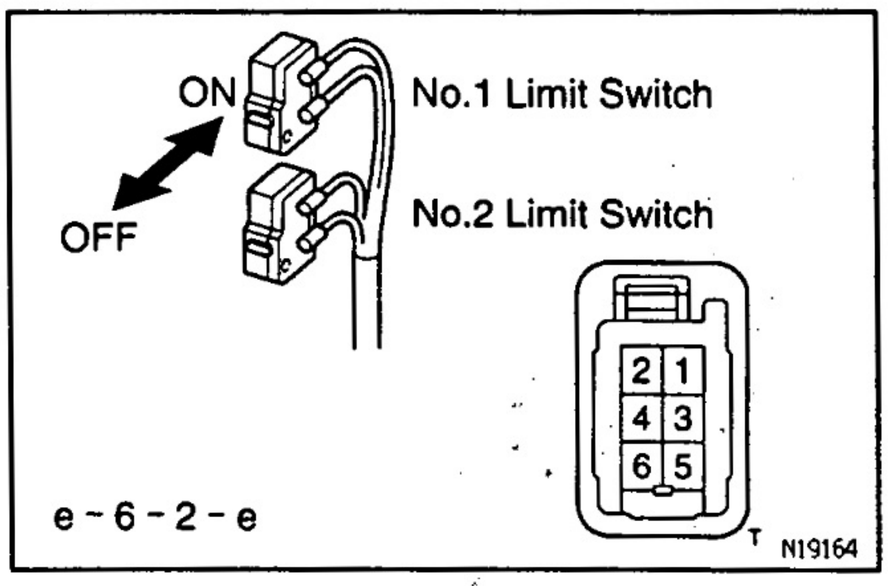

BE390-01

SLIDING ROOF LIMIT SWITCH INSPECTION

INSPECT SWITCH CONTINUITY

Switch position	Tester connection	Specified condition
No.1 limit switch ON (SW pin pushed in)	4 – 5	Continuity
No.2 limit switch ON (SW pin pushed in)	4 – 6	Continuity

If continuity is not as specified, replace the switch.

BE388-01

POWER MAIN RELAY INSPECTION

See page BE–80

POWER SEAT CONTROL SYSTEM

BE1DW–06

PARTS LOCATION

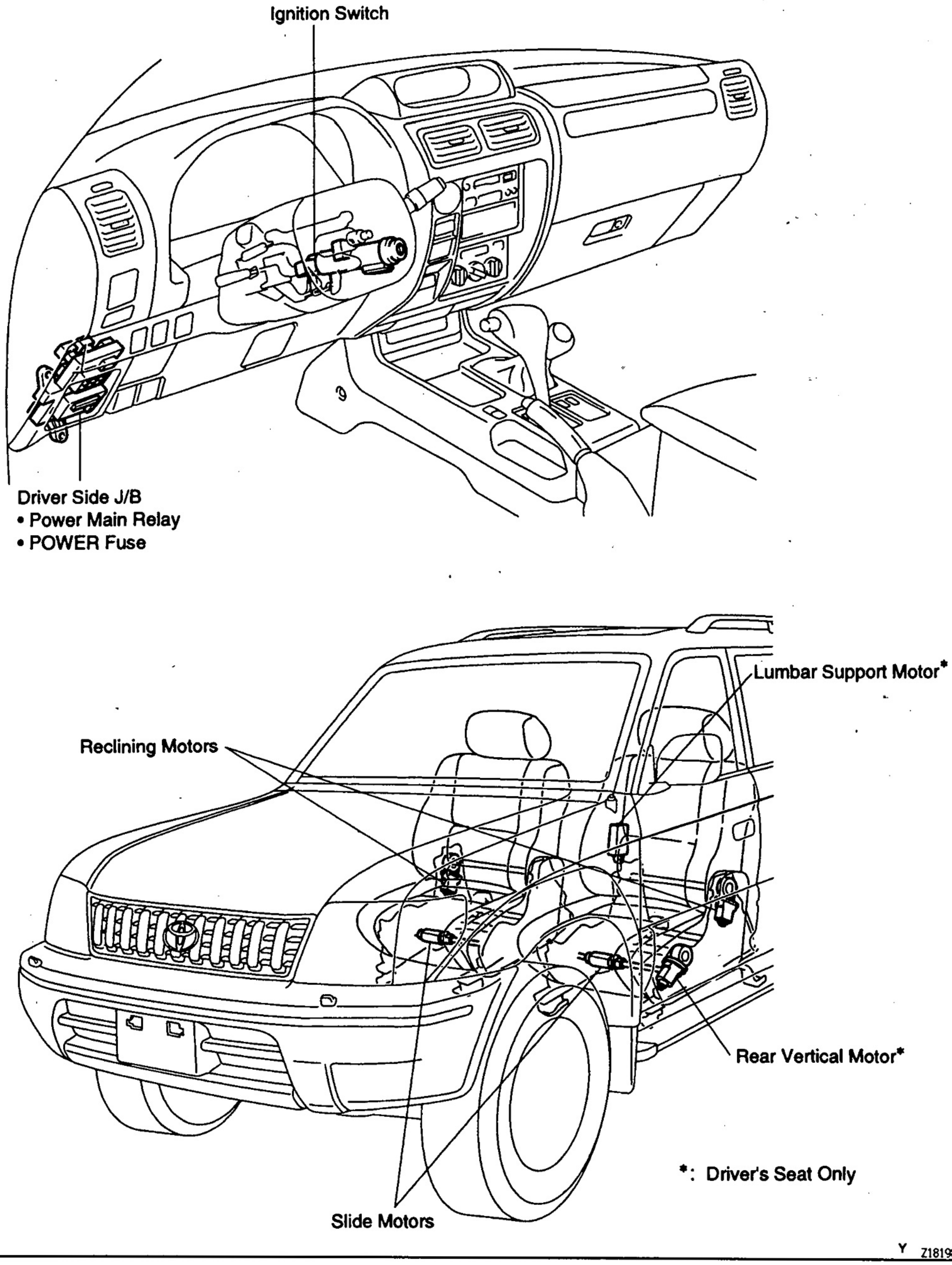

N19162
N19165

Y Z18198

BE1DX-0A

TROUBLESHOOTING

The table below will be useful for you in troubleshooting these electrical problems. The most likely causes of the malfunction are shown in the order of their probability. Inspect each part in the order shown, and replace the part when it is found to be faulty.

Trouble	Parts name	(See page)
Power seat does not operate.	1. POWER Fuse (Driver Side J/B) 2. Power Seat Switch 3. Wire Harness	 (BE–104)
Power seat "Slide operation" does not operate.	1. Power Seat Switch 2. Seat Slide Motor 3. Wire Harness	(BE–104) (BE–105)
Power seat "Rear vertical operation" does not operate.	1. Power Seat Switch 2. Rear Vertical Motor 3. Wire Harness	(BE–104) (BE–106)
Power seat "Reclining operation" does not operate	1. Power Seat Switch 2. Reclining Motor 3. Wire Harness	(BE–104) (BE–107)
Power seat "Lumbar support operation" does not operate	1. Power Seat Switch 2. Lumbar Support Motor 3. Wire Harness	(BE–104) (BE–108)

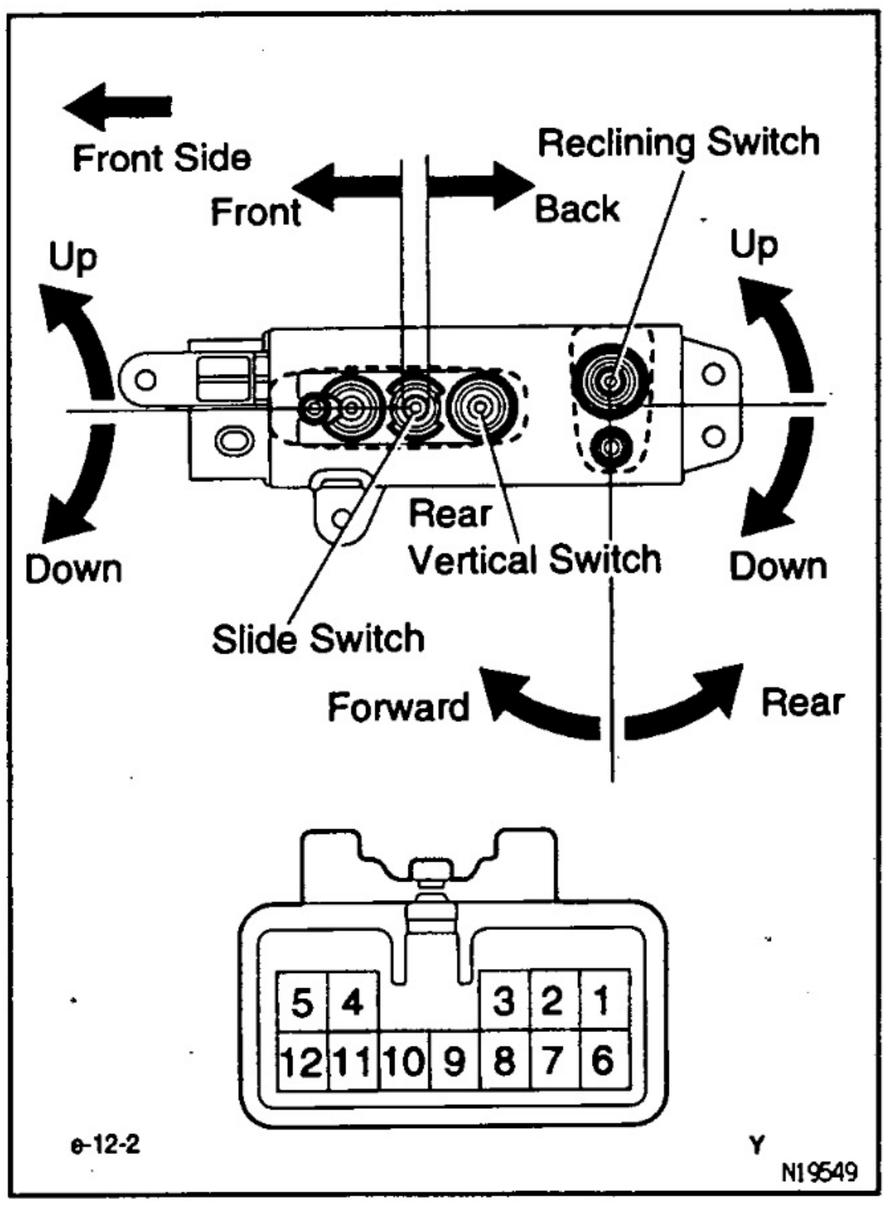

BE38A-01

POWER SEAT SWITCH INSPECTION

(Driver's side)

INSPECT SWITCH CONTINUITY

( ): RHD models

Slide switch:

Switch position	Tester connection	Specified condition
FRONT	4 – 6, 4 – 7 8 – 11, 8 – 12	Continuity
OFF	4 – 6, 4 – 7 6 – 8, 7 – 8	Continuity
BACK	6 – 8, 7 – 8 4 – 11, 4 – 12	Continuity

Rear vertical switch:

Switch position	Tester connection	Specified condition
UP	2(3)–11, 2(3)–12 3(2)–6, 3(2)–7	Continuity
OFF	2 – 6, 2 – 7 3 – 6, 3 – 7	Continuity
DOWN	2(3)–6, 2(3)–7 3(2)–11, 3(2)–12	Continuity

Reclining switch:

Switch position	Tester connection	Specified condition
FORWARD	1 – 11, 1 – 12 5 – 6, 5 – 7	Continuity
OFF	1 – 6, 1 – 7 5 – 6, 5 – 7	Continuity
REAR	1 – 6, 1 – 7 5 – 11, 5 – 12	Continuity

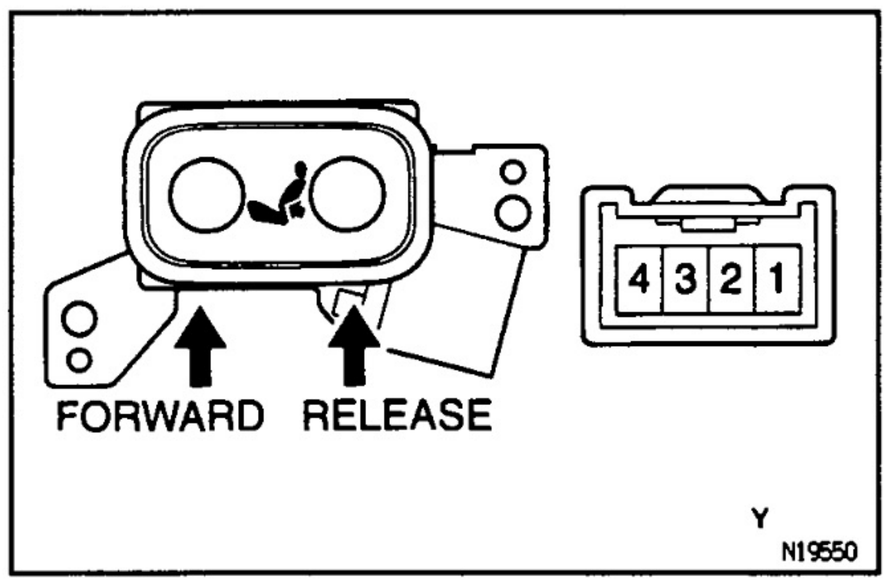

Lumber support switch:

Switch position	Tester connection	Specified condition
FORWARD	1 – 4, 2 – 3	Continuity
OFF	1 – 3, 2 – 3	Continuity
RELEASE	1 – 3, 2 – 4	Continuity

If continuity is not as specified, replace the switch.

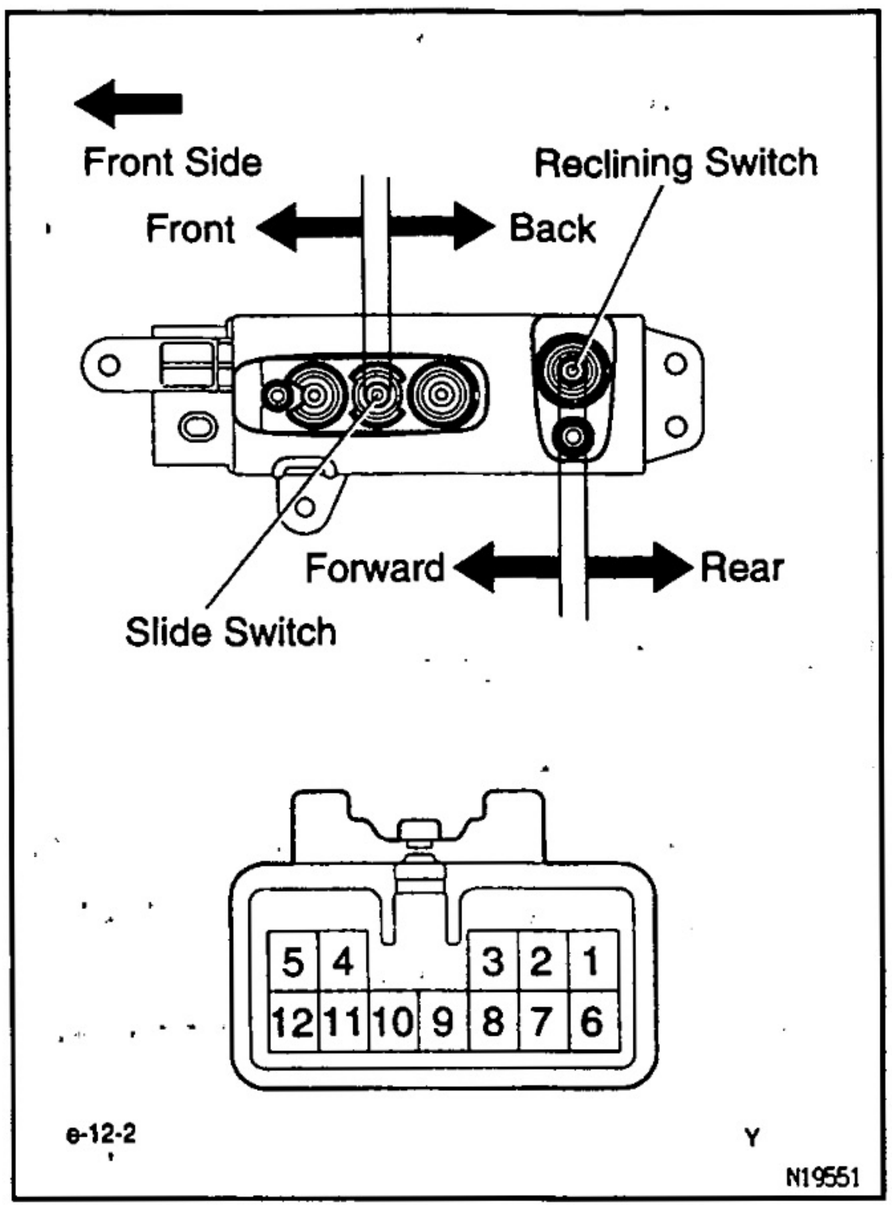

BE3SS-01

POWER SEAT SWITCH INSPECTION

(Passenger's side)

INSPECT SWITCH CONTINUITY

Slide switch:

Switch position	Tester connection	Specified condition
FRONT	4 – 6, 4 – 7 8 – 11, 8 – 12	Continuity
OFF	4 – 6, 4 – 7 6 – 8, 7 – 8	Continuity
BACK	6 – 8, 7 – 8 4 – 11, 4 – 12	Continuity

Reclining switch:

Switch position	Tester connection	Specified condition
FORWARD	4 – 6, 4 – 7 1 – 11, 1 – 12	Continuity
OFF	1 – 6, 1 – 7 5 – 6, 5 – 7	Continuity
REAR	1 – 6, 1 – 7 5 – 11, 5 – 12	Continuity

If continuity is not as specified, replace the switch.

BE

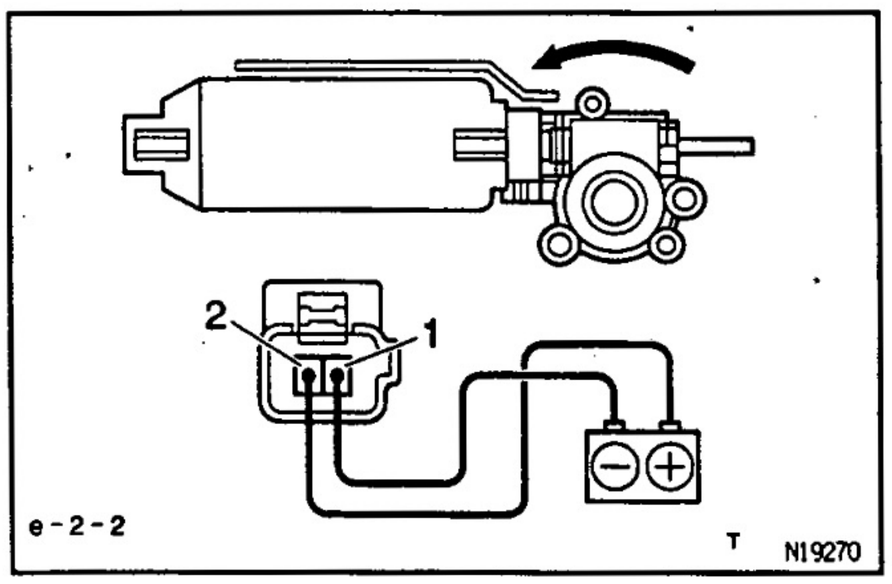

BE2UC-05

SEAT SLIDE MOTOR INSPECTION

1. **INSPECT MOTOR OPERATION**

(a) Connect the positive (+) lead from the battery to terminal 2 and the negative (–) lead to terminal 1, check that the motor turns counterclockwise.

(b) Reverse the polarity, check that the motor turns clockwise.

If operation is not as specified, replace the motor.

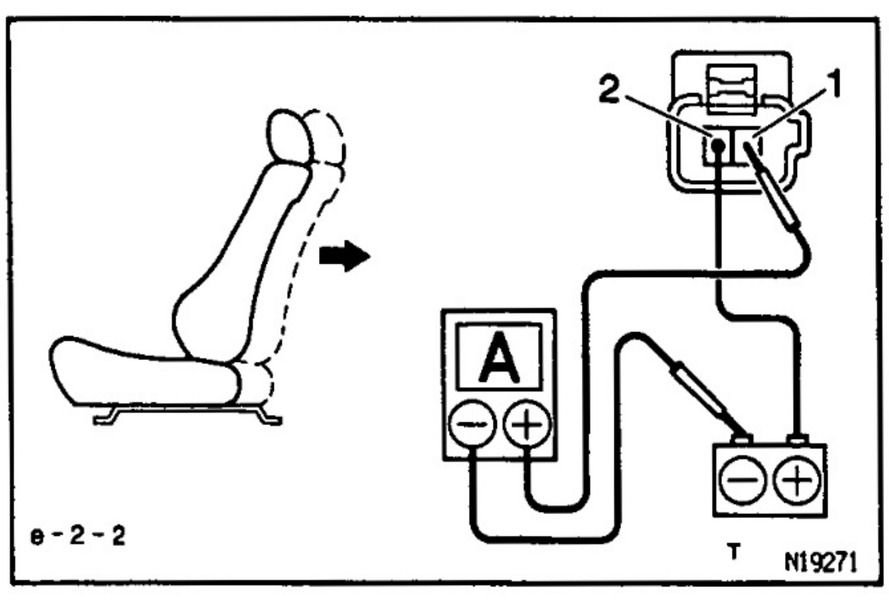

2. **INSPECT PTC THERMISTOR OPERATION**

Reference: Driver's seat (LHD models)

(a) Connect the positive (+) lead from the battery to terminal 2, the positive (+) lead from the ammeter to terminal 1, and the negative (–) lead to battery negative (–) terminal, and move the seat rear end position.

(b) Continue to apply voltage, check the current changes to less than 1 ampere within 4 to 90 seconds.

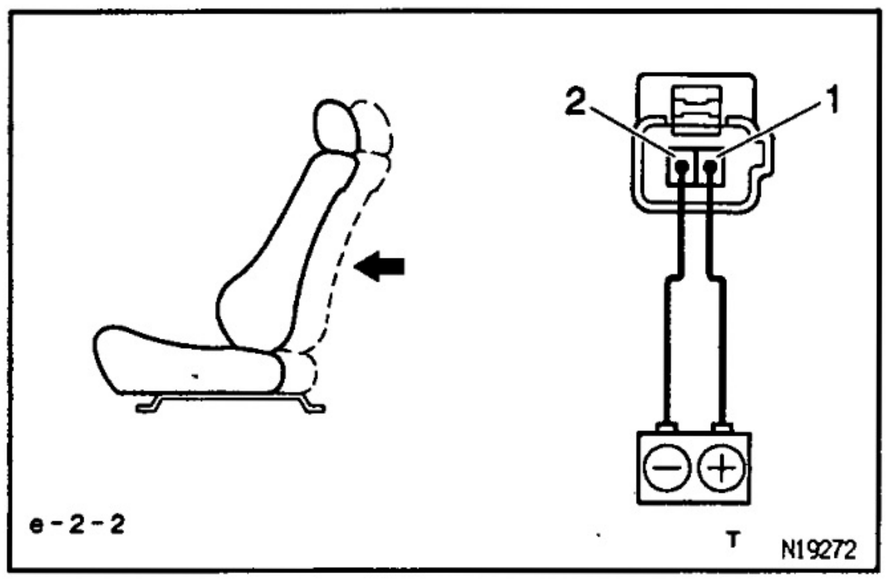

(c) Disconnect the lead from terminals.
(d) Approximately 60 seconds later , connect the positive (+) lead from battery to terminal 1 and the negative (−) lead to terminal 2, check that the seat begins to move forwards.
HINT: Operational for RHD models is in the reverse order.
If operation is not as specified, replace the motor.

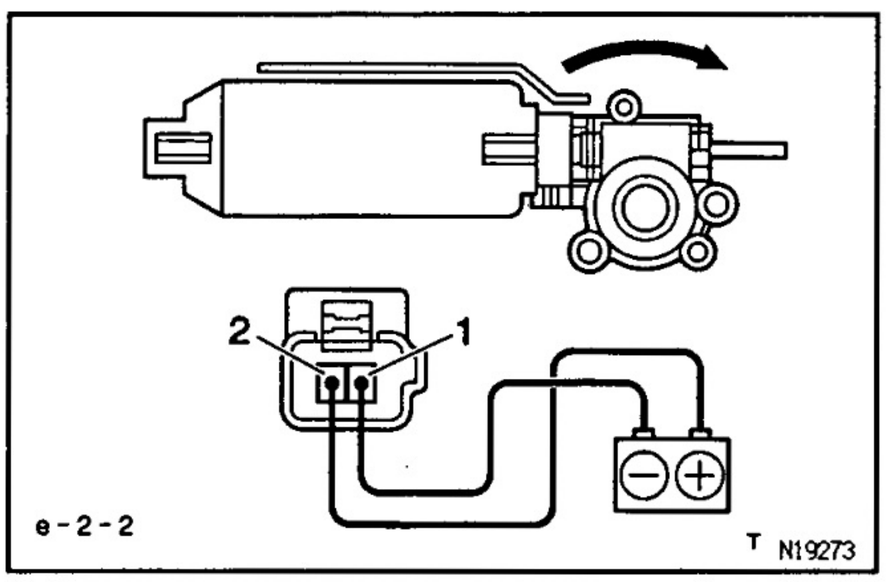

REAR VERTICAL MOTOR INSPECTION

BE2UE-04

1. INSPECT MOTOR OPERATION

(a) Connect the positive (+) lead from the battery to terminal 2 and the negative (−) lead to terminal 1, check that the motor turns clockwise.
(b) Reverse the polarity, check that the motor turns counterclockwise.
If operation is not as specified, replace the motor.

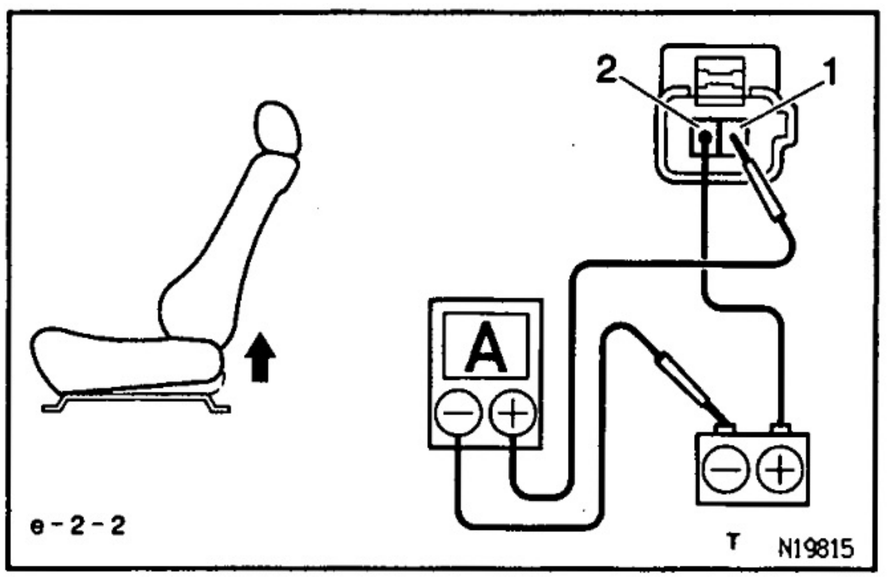

2. INSPECT PTC THERMISTOR OPERATION

Reference: Driver's seat (LHD models)

(a) Connect the positive (+) lead from the battery to terminal 2, the positive (+) lead from the ammeter to terminal 1 and the negative (−) lead to battery negative (−) terminal, and move the rear edge of seat cushion to the highest position.
(b) Continue to apply voltage, check the current changes to less than 1 ampere within 4 to 90 seconds.

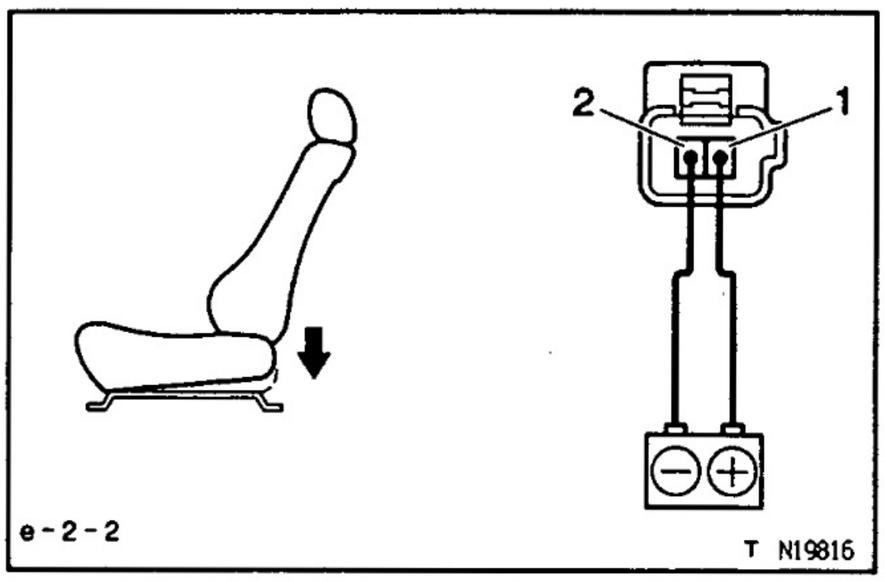

(c) Disconnect the leads from terminals.
(d) Approximately 60 seconds later, connect the positive (+) lead from battery to terminal 1 and the negative (−) lead to terminal 2, check that the seat cushion begins to descend.
HINT: Operational for RHD models is in the reverse order.
If operation is not as specified, replace the motor.

BE

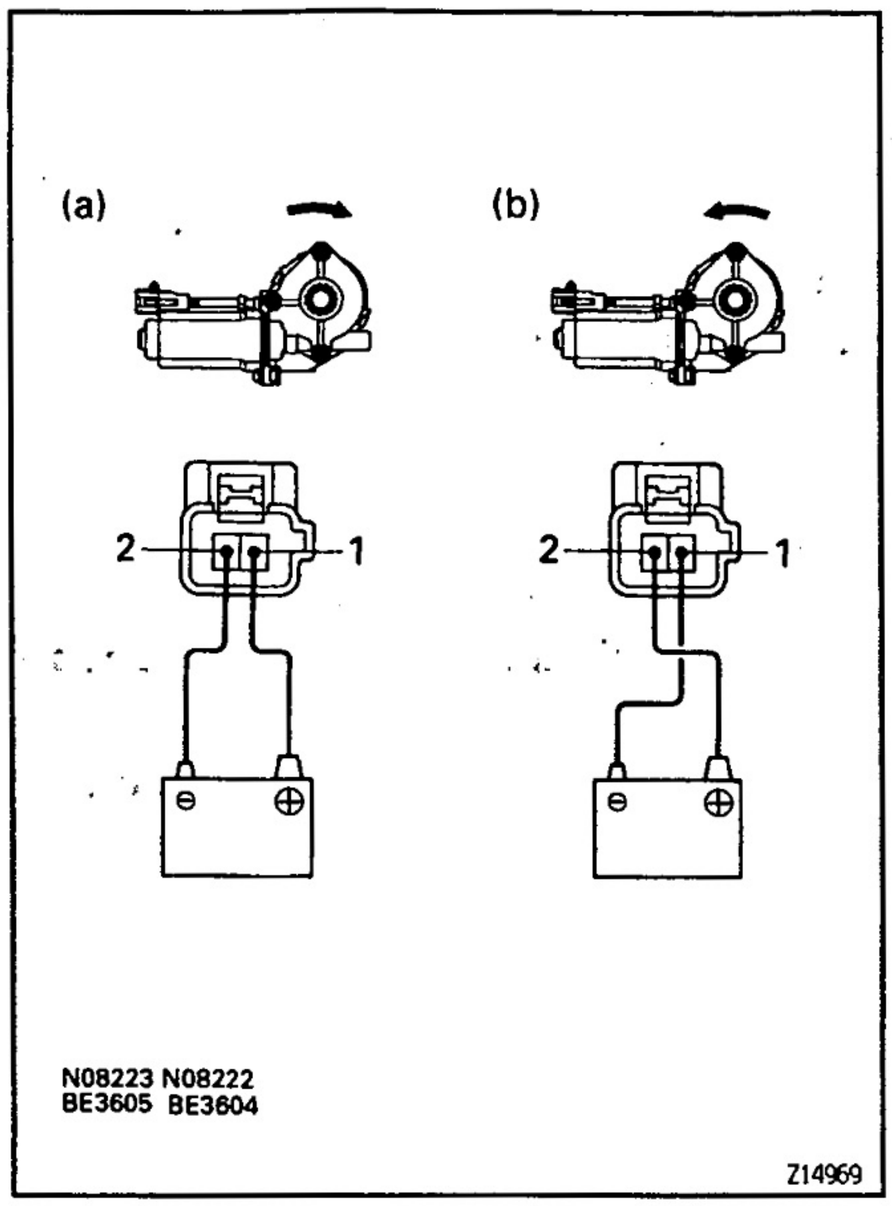

BE2UF-04

RECLINING MOTOR INSPECTION

1. INSPECT MOTOR OPERATION

Reference: Driver's Seat (LHD models)

(a) Connect the positive (+) lead from the battery to terminal 2 and negative (−) lead to terminal 1 and check that the motor turns counterclockwise.

(b) Reverse the polarity, check that the motor turns clockwise.

HINT: Oprational for RHD models is in the reverse order.

If operation is not as specified, replace the motor.

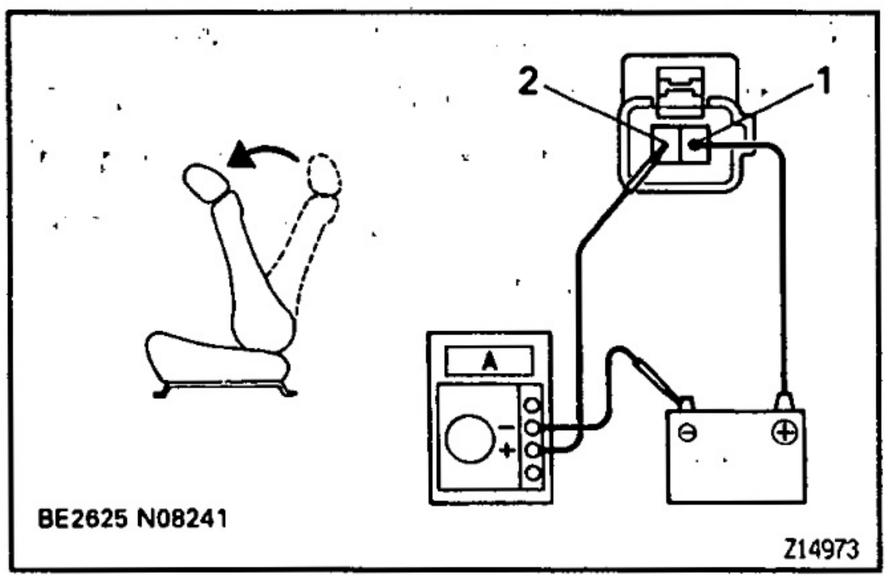

2. INSPECT PTC THERMISTOR OPERATION

Reference: Driver's Seat (RHD models)

(a) Connect the positive (+) lead from the battery to terminal 1, the positive (+) lead from the ammeter to terminal 2 and the negative (−) lead to battery negative (−) terminal, and recline the seat back to the most forward position.

(b) Continue to apply voltage , check the current changes to less than 1 ampere within 4 to 90 seconds.

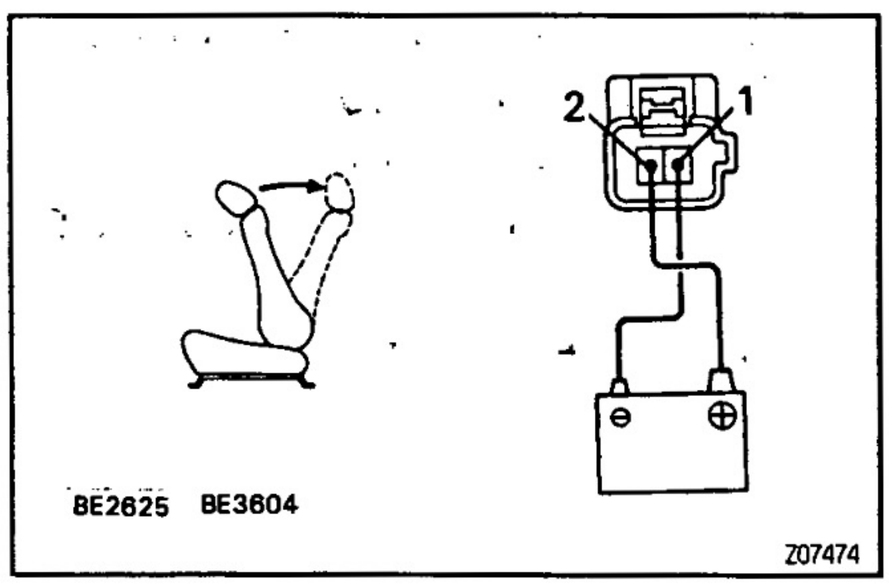

(c) Disconnect the lead from terminals.

(d) Approximately 60 seconds later, connect the positive (+) lead from battery to terminal 2 and the negative (−) lead to terminal 1, check that the seat back starts to fall backwards.

HINT: Operational for LHD models is in the reverse order.

If operation is not as specified, replace the motor.

BE

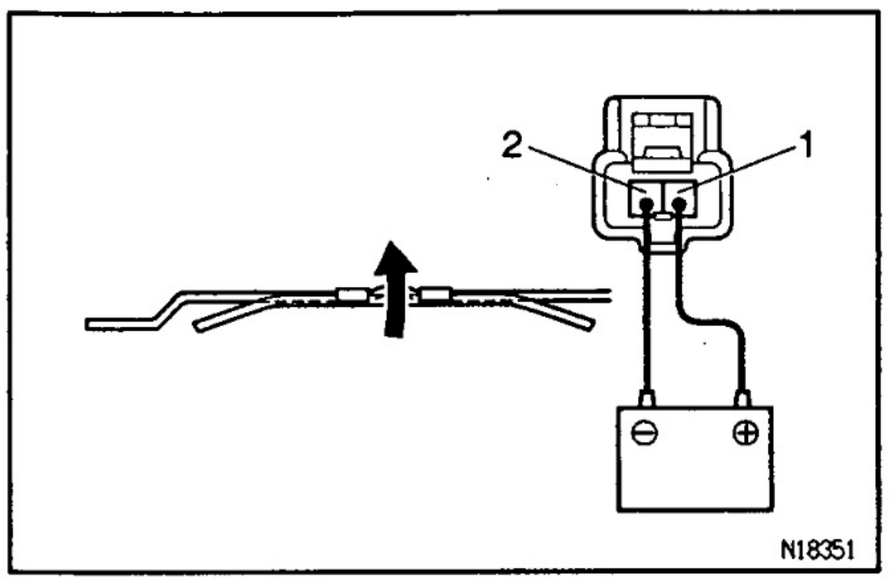

LUMBAR SUPPORT MOTOR INSPECTION BE2UQ-03

1. INSPECT MOTOR OPERATION

(a) Connect the positive (+) lead from the battery to terminal 1 and the negative (−) lead to the to terminal 2, check that the lumbar support moves release side.

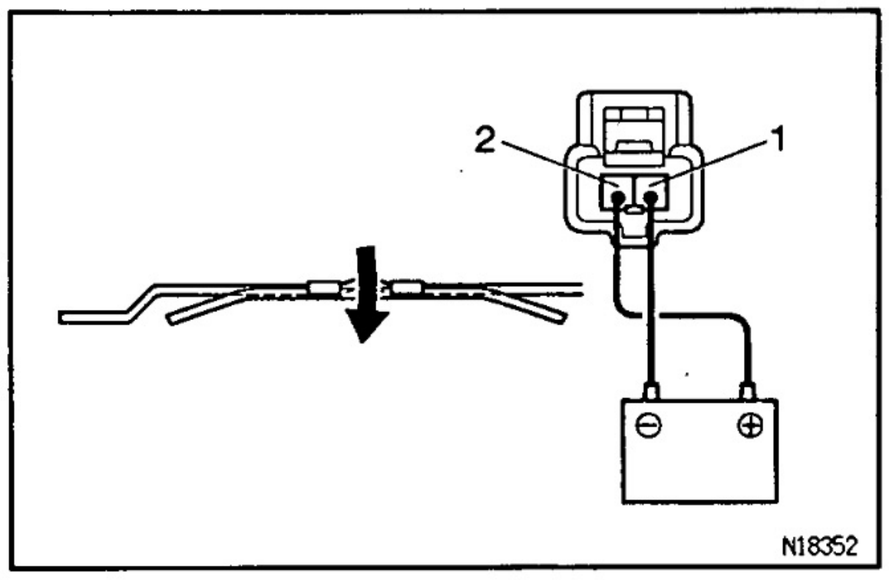

(b) Reverse the polarity, check that the lumbar support moves forward.
If operation is not as specified, replace the motor.

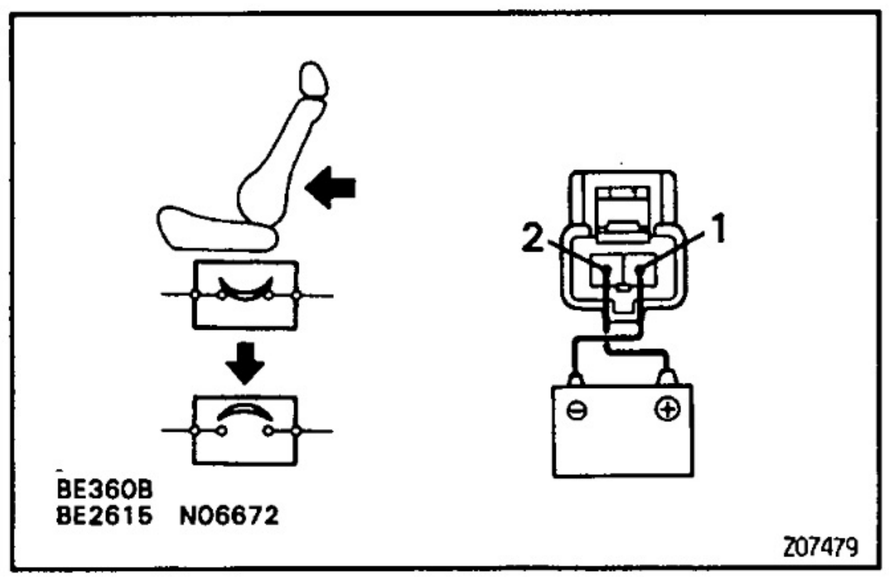

2. INSPECT MOTOR CIRCUIT BREAKER OPERATION

(a) Connect the positive (+) lead from the battery to terminal and the negative (−) lead to terminal on the lumbar support motor connector and move the lumbar support to the front end position.

Seat	Battery positive lead	Battery negative lead
Driver's	Terminal 2	Terminal 1

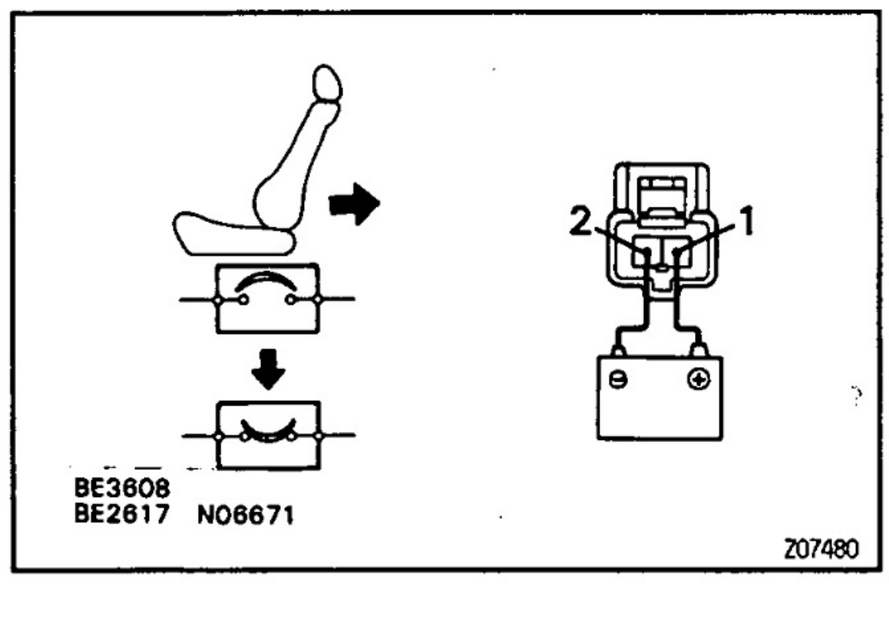

(b) Continue to apply voltage, check that there is a circuit breaker operation noise within 4 to 60 seconds.

(c) Reverse the polarity check that the lumbar support begins to move release side within approximately 60 seconds.
If operation is not as specified, replace the motor.

SEAT HEATER SYSTEM
PARTS LOCATION

BE11X-08

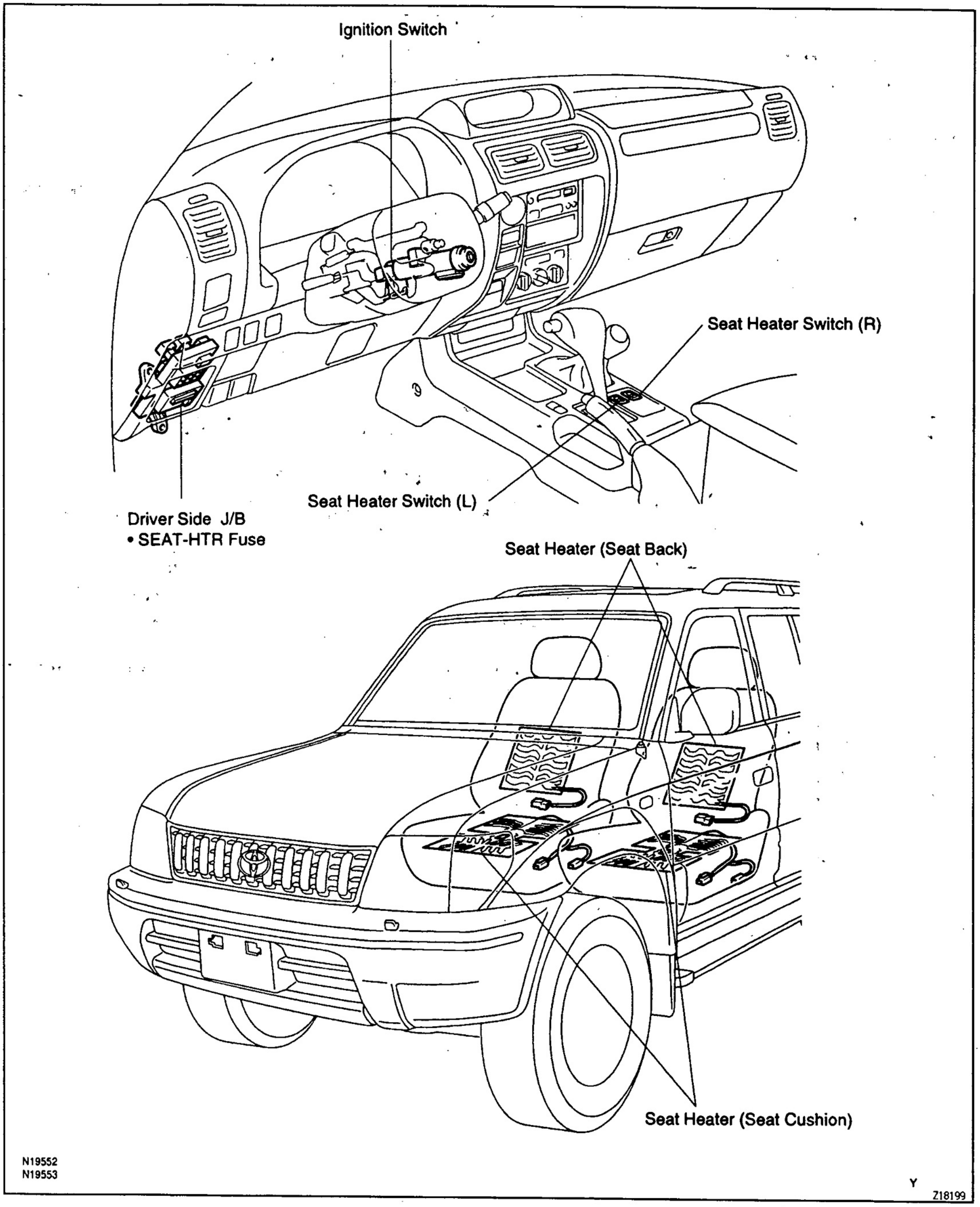

N19552
N19553

Y

Z18199

BE06Q-0H

TROUBLESHOOTING

The table below will be useful for you in troubleshooting these electrical problems. The most likely causes of the malfunction are shown in the order of their probability. Inspect each part in the order shown and replace the part when it is found to be faulty.

Trouble	Parts name	(See page)
Seat heaters do not operate. (Driver's and Passenger's)	1. SEAT–HTR Fuse (Driver Side J/B) 2. Wire Harness	
Driver's seat heater does not operate.	1. Seat Heater Switch (Driver's) 2. Seat Heater 3. Wire Harness	(BE–110) (BE–111)
Passenger's seat heater does not operate.	1. Seat Heater Switch (Passenger's) 2. Seat Heater 3. Wire Harness	(BE–110) (BE–111)
Seat heater temperature is too hot.	1. Seat Heater	(BE–111)

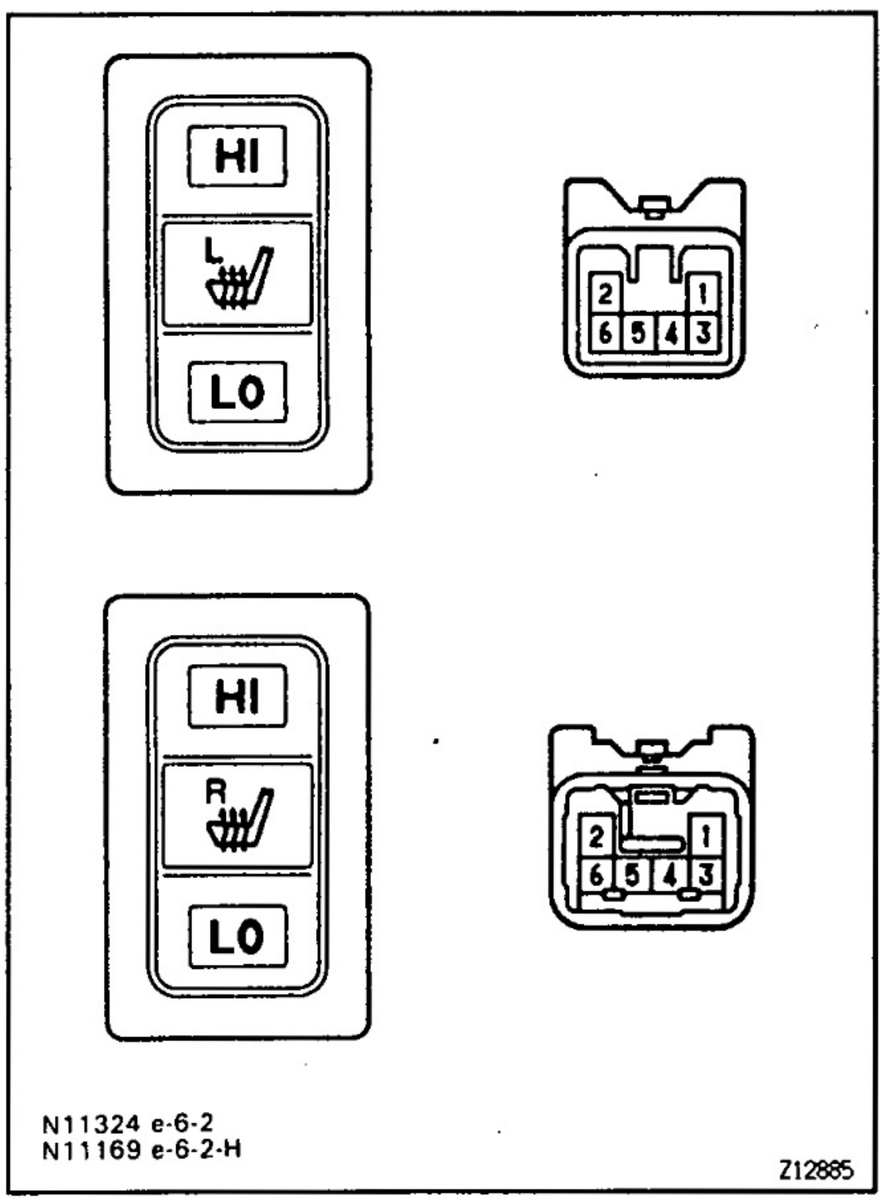

BE11Y-0E

SEAT HEATER SWITCH INSPECTION

1. INSPECT SWITCH CONTINUITY

Switch position	Tester connection	Specified condition
HI	2 – 4, 3 – 6	Continuity
OFF	–	No continuity
LO	3 – 4	Continuity
Illumination circuit	1 – 5	Continuity

If continuity is not as specified, replace the switch or the bulb.

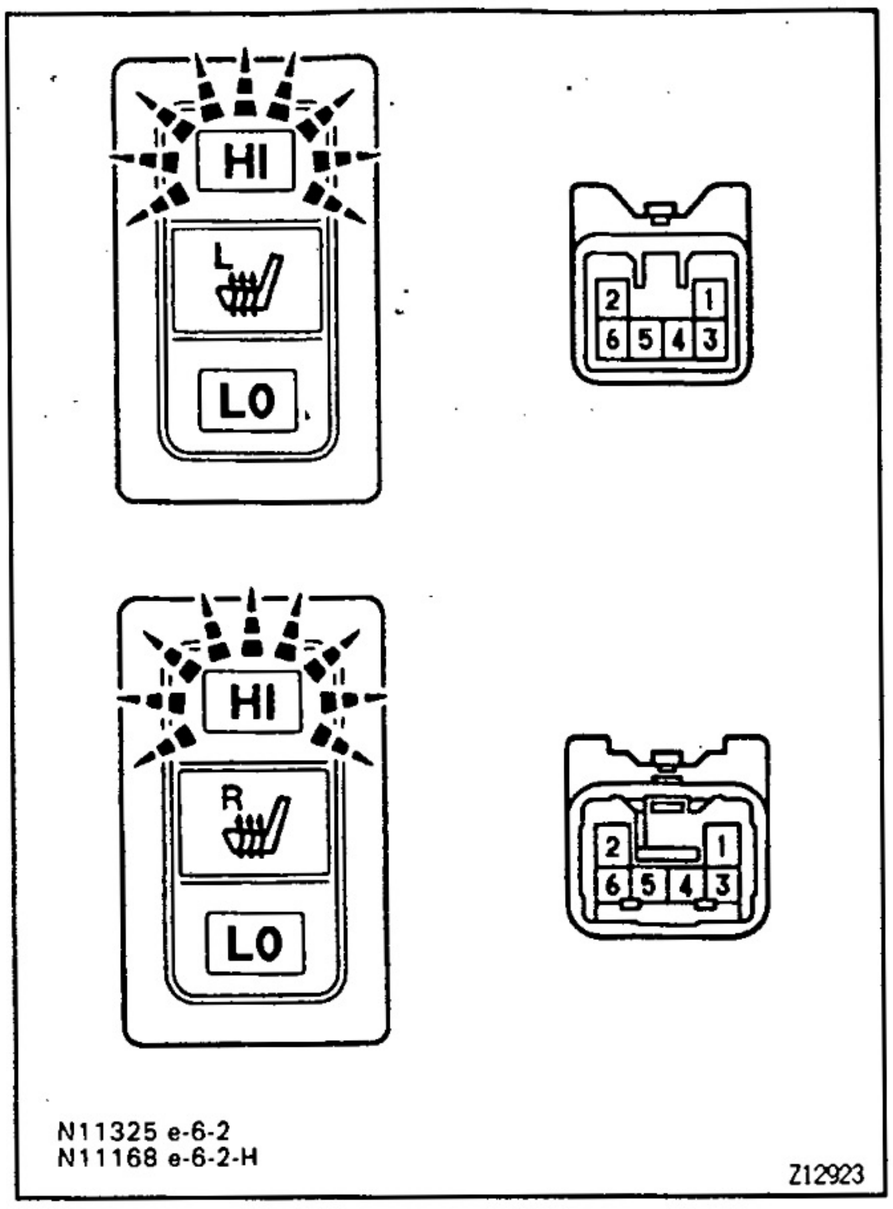

2. INSPECT SEAT HEATER INDICATOR LIGHT

(a) Connect the positive (+) lead from the battery to terminals 2 and 6, the negative (−) lead to terminal 1.

(b) Push the switches, check that the indicator light up.
If operation is not as specified, replace the switch and inspect the circuits connected to other parts.

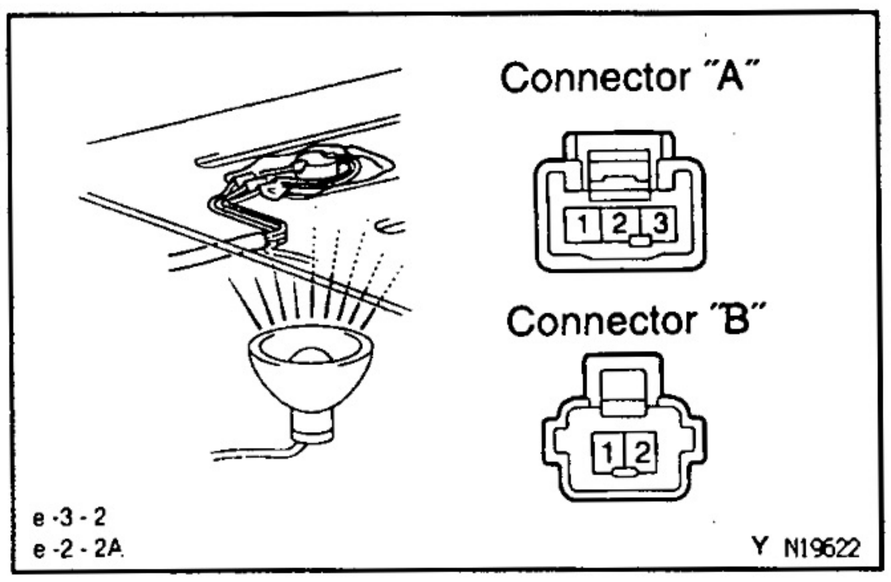

BE11Z-0F

SEAT HEATER INSPECTION

1. INSPECT SEAT CUSHION CONTINUITY

(a) Heat the thermostat with a light.

(b) Inspect the seat heater continuity between terminals as shown.
If continuity is not as specified, replace the seat cushion pad.

BE

Tester connection	Condition	Specified condition
A3 – B1	Constant	Continuity
A1 – A3	Seat heater temperature below 25°C(77°F)	Continuity
A1 – B2	Seat heater temperature below 25°C(77°F)	Continuity
A2 – B2	Seat heater temperature above 45°C(113°F)	Continuity
A1 – B2	Seat heater temperature above 45°C(113°F)	No continuity

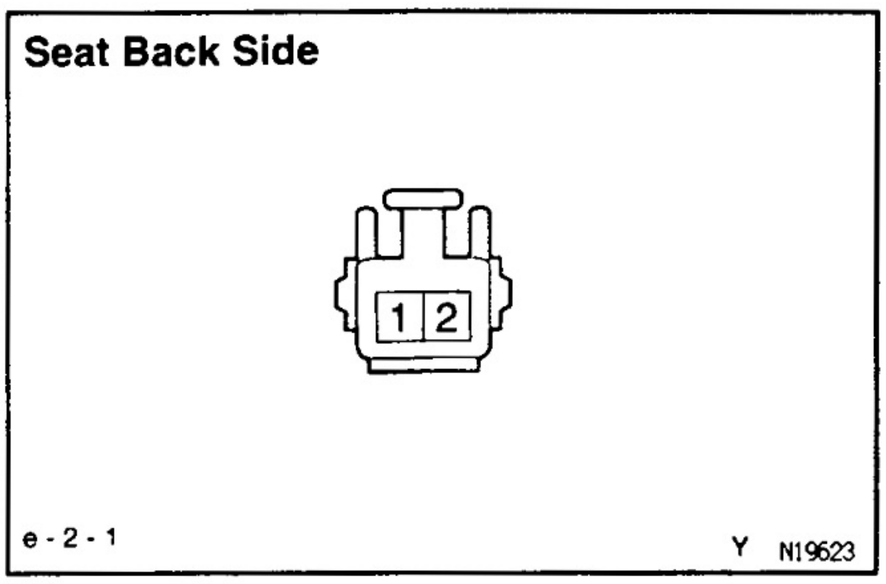

2. INSPECT SEAT BACK CONTINUITY

Inspect the seat heater continuity between terminals, as shown.

Tester connection	Condition	Specified condition
1 – 2	Constant	Continuity

If continuity is not as specified, replace the seat back pad.

POWER MIRROR CONTROL SYSTEM

BE128–0E

PARTS LOCATION

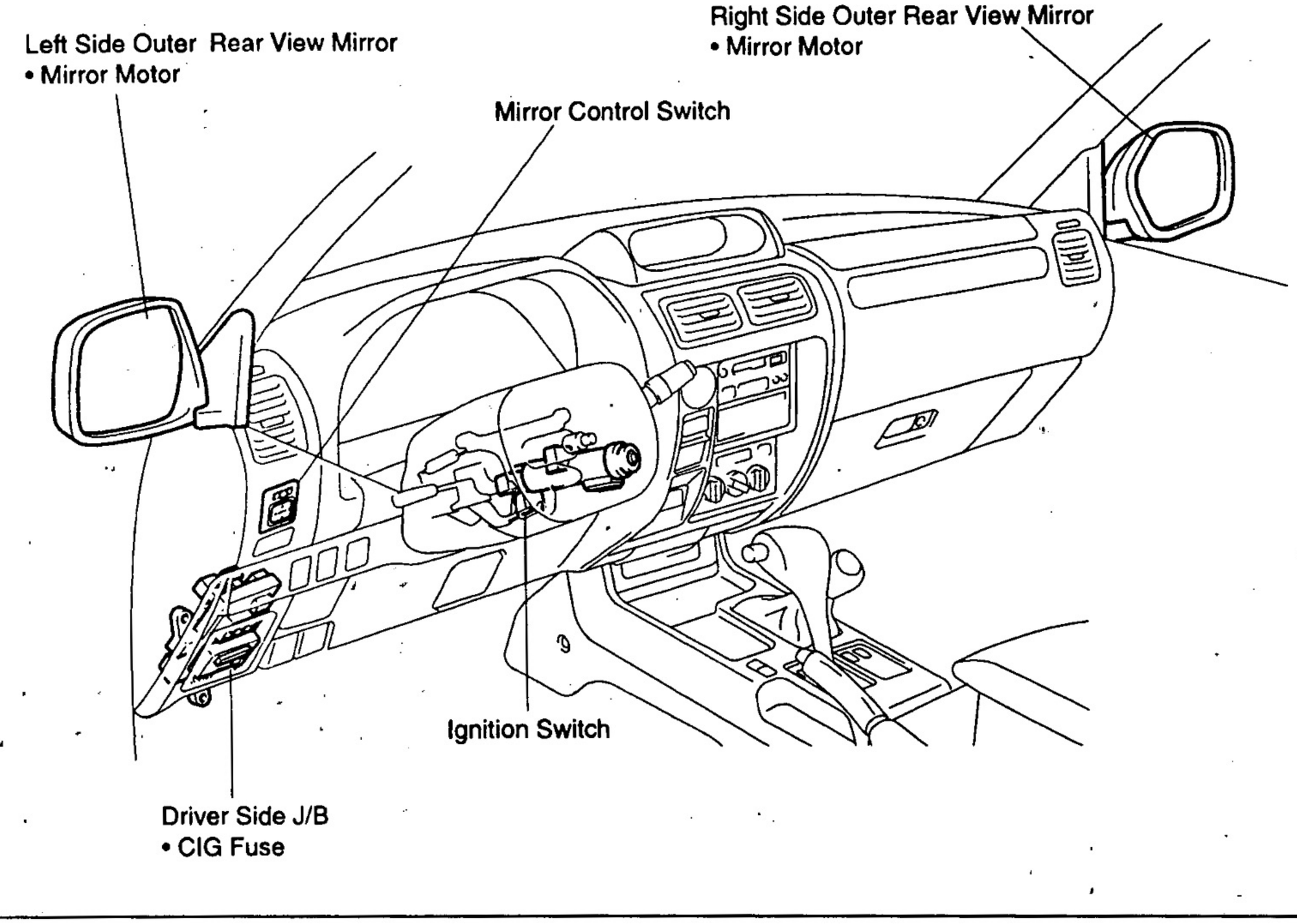

BE07E–12

TROUBLESHOOTING

The table below will be useful for you in troubleshooting these electrical problems. The most likely causes of the malfunction are shown in the order of their probability. Inspect each part in the order shown, and replace the part when it is found to be faulty.

Trouble	Parts name	(See page)
Mirror does not operate.	1. CIG Fuse (Driver Side J/B)	
	2. Ignition Switch	(BE–7)
	3. Mirror Switch	(BE–114)
	4. Mirror Motor	(BE–114)
	5. Wire Harness	
Mirror operates abnormally.	1. Mirror Switch	(BE–114)
	2. Mirror Motor	(BE–114)
	3. Wire Harness	

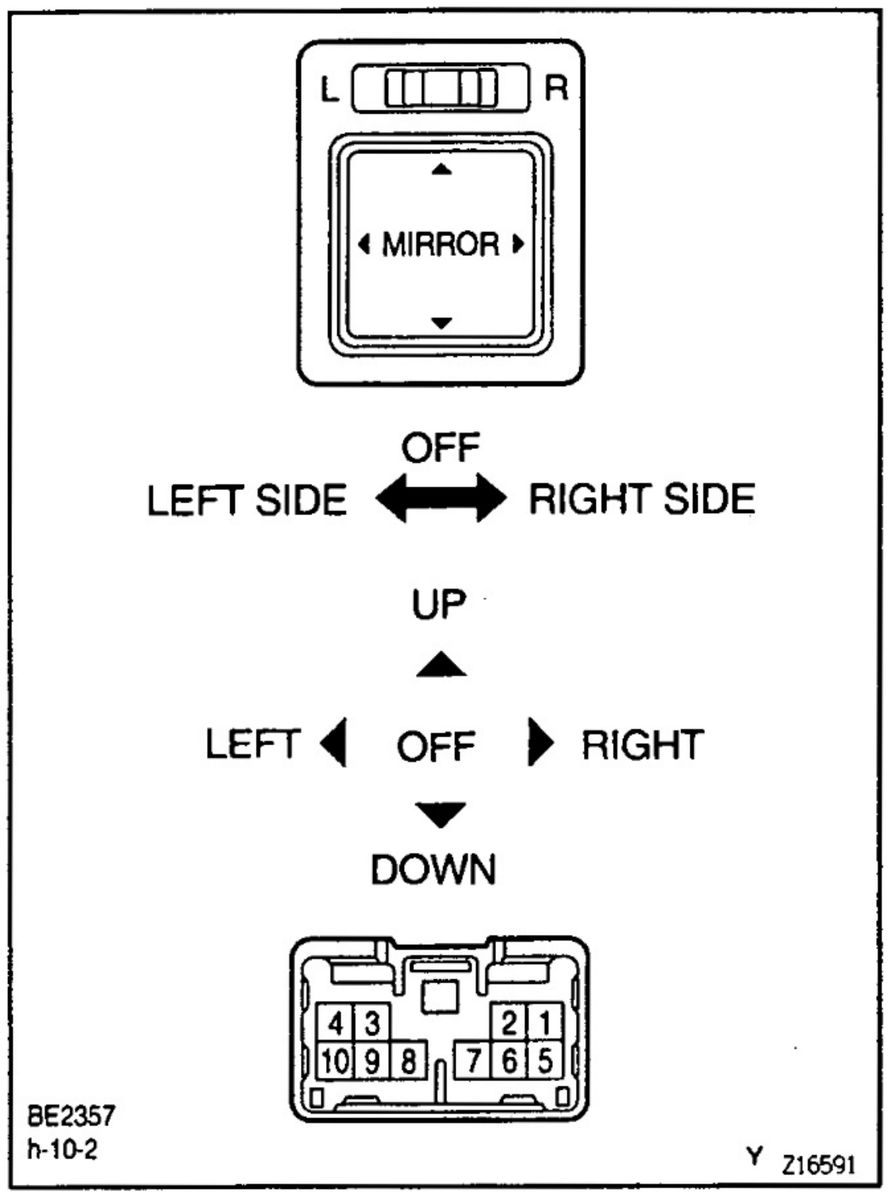

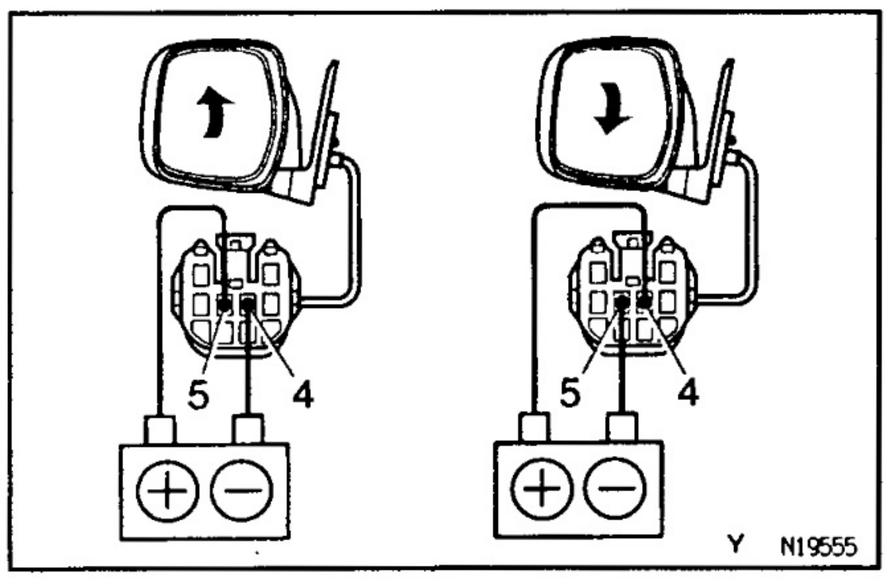

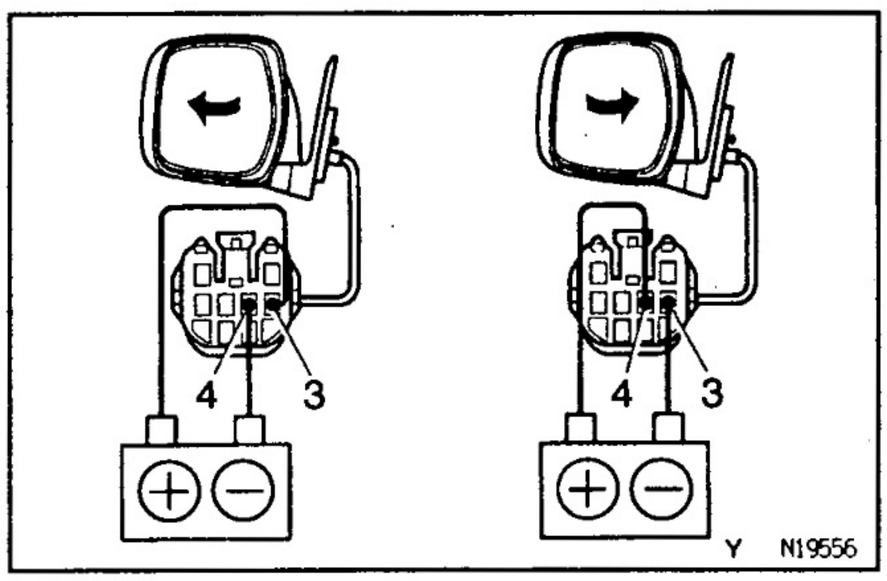

BE

MIRROR SWITCH INSPECTION

BE13A-0E

INSPECT SWITCH CONTINUITY

Left side:

Switch position	Tester connection	Specified condition
OFF	–	No continuity
UP	1 – 9, 6 – 10	Continuity
DOWN	1 – 10, 6 – 9	Continuity
LEFT	5 – 9, 6 – 10	Continuity
RIGHT	5 – 10, 6 – 9	Continuity

Right side:

Switch position	Tester connection	Specified condition
OFF	–	No continuity
UP	6 – 10, 7 – 9	Continuity
DOWN	6 – 9, 7 – 10	Continuity
LEFT	6 – 10, 8 – 9	Continuity
RIGHT	6 – 9, 8 – 10	Continuity

If continuity is not as specified, replace the switch.

BE38V-01

MIRROR MOTOR INSPECTION

INSPECT MOTOR OPERATION

(a) Connect the positive (+) lead from the battery to terminal 5 and the negative (–) lead to terminal 4, and check that the mirror turns upward.

(b) Reverse the polarity, and check that the mirror turns downward.

(c) Connect the positive (+) lead from the battery to terminal 3 and the negative (–) lead to terminal 4, and check that the mirror turns to the left side.

(d) Reverse the polarity, and check that the mirror turns to the right side.

If operation is not as specified, replace the mirror.

MIRROR HEATER SYSTEM
PARTS LOCATION

BE38L-01

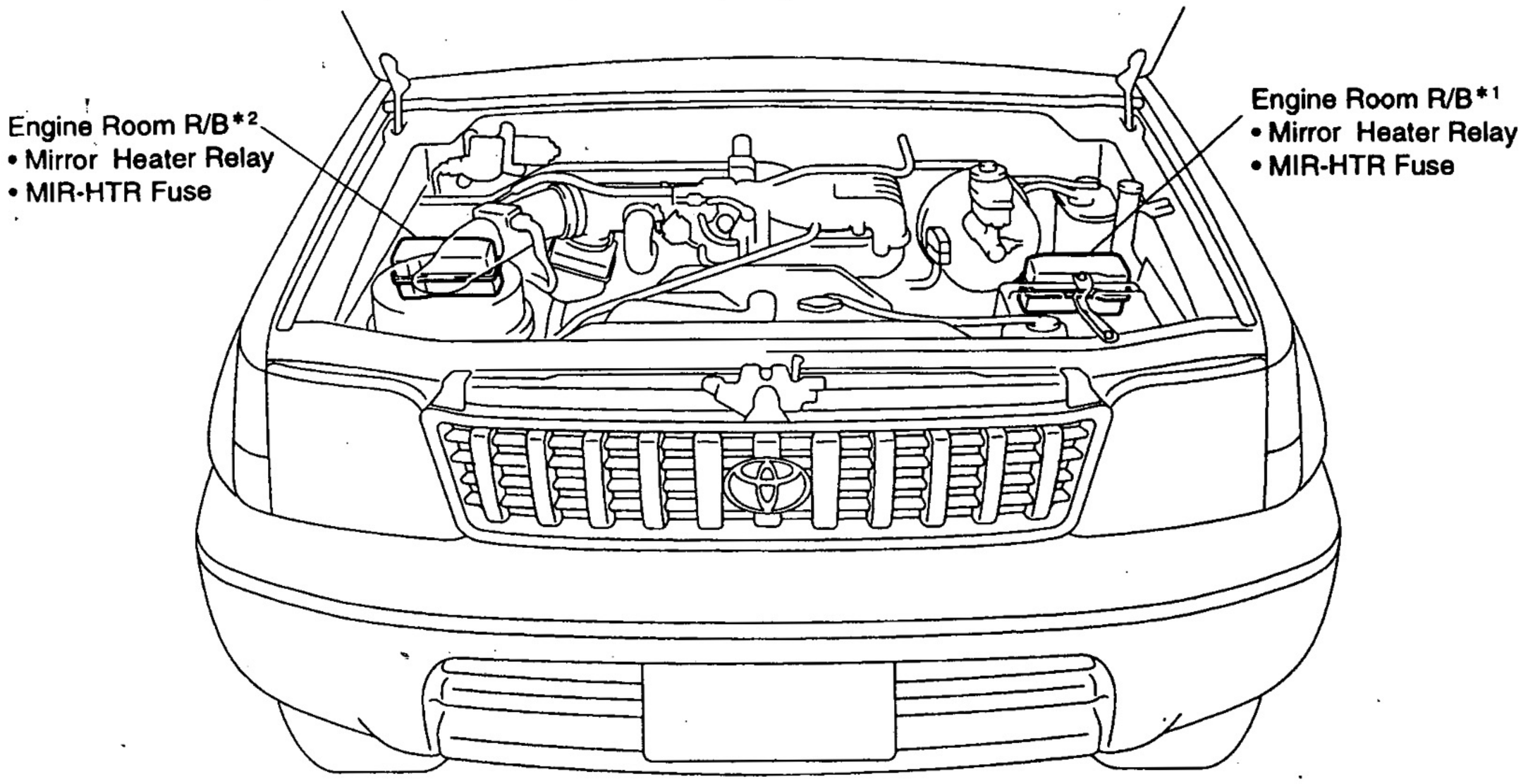

*1 : Gasoline Engine, Diesel Engine (LHD models)
*2 : Diesel Engine (RHD models)

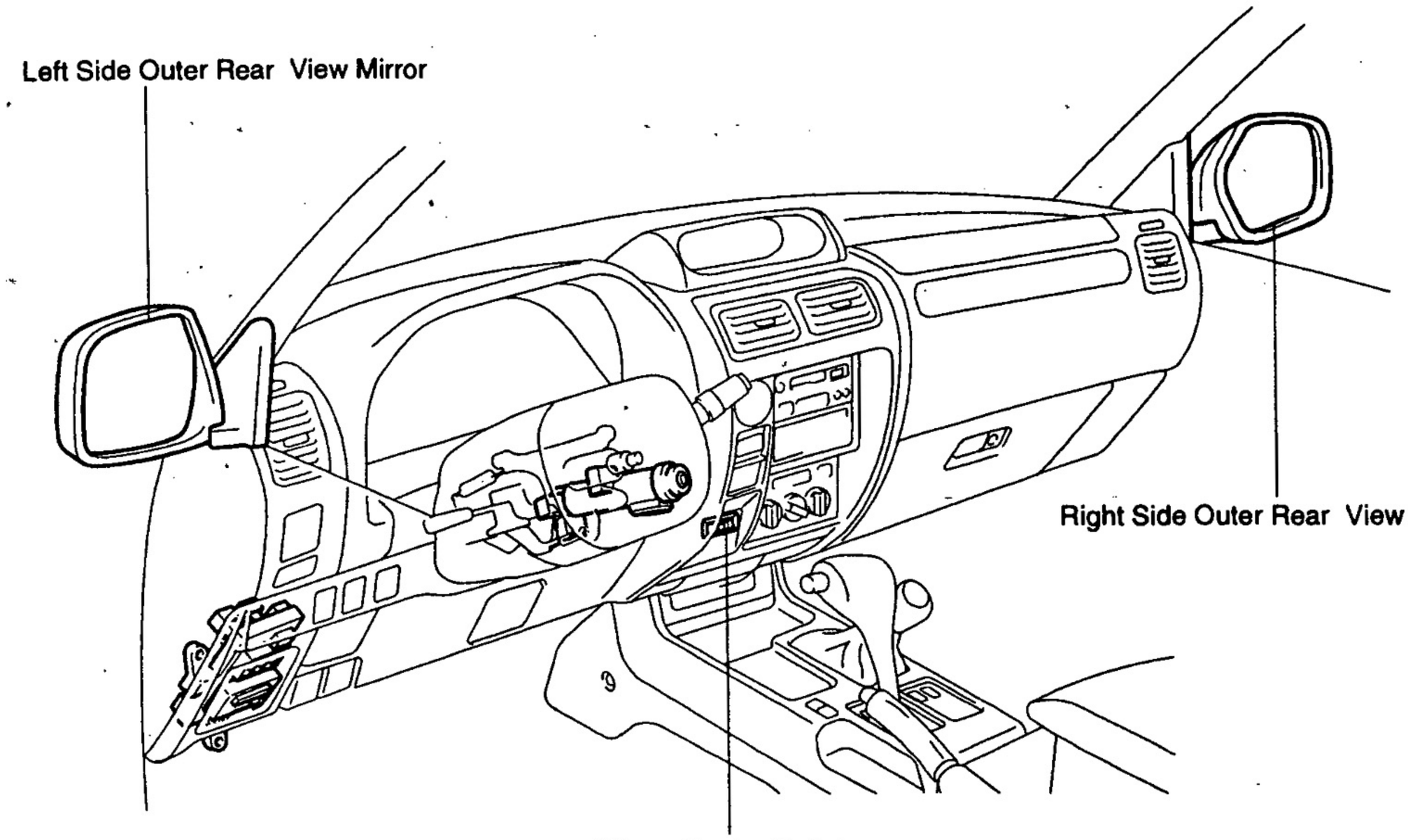

N19196
N19557

Y

Z18200

TROUBLESHOOTING

BE36M-01

The table below will be useful for you in troubleshooting these electrical problems. The most likely causes of the malfunction are shown in the order of their probability. Inspect each part in the order shown and replace the part when it is found to be faulty.

Trouble	Parts name	(See page)
Mirror heater does not operate.	1. MIR HTR Fuse (Engine Room R/B) 2. Ignition Switch 3. Mirror Heater Switch 4. Wire Harness	 (BE–7) (BE–116)
Mirror heater operates abnormally.	1. Mirror Heater Switch 2. Wire Harness	(BE–116)

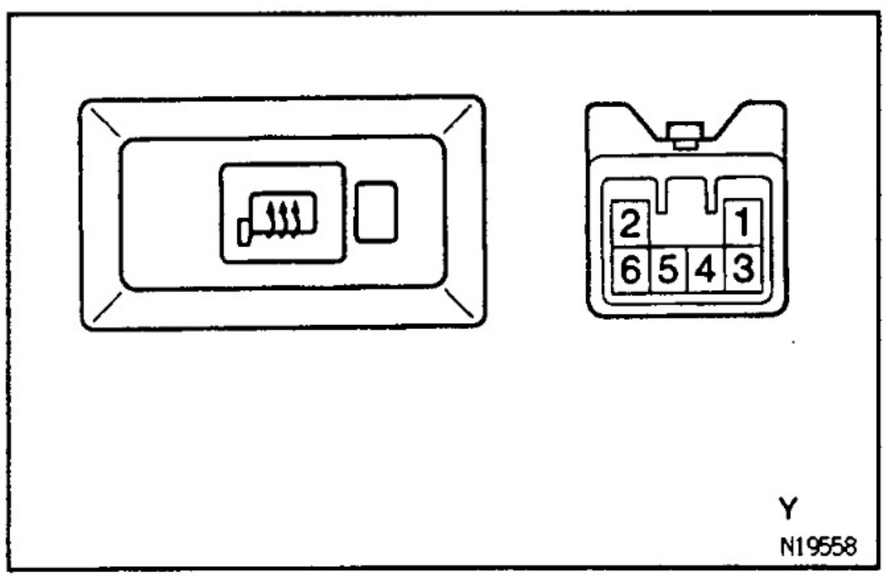

MIRROR HEATER SWITCH INSPECTION

BE38N-01

INSPECT SWITCH CONTINUITY

Switch position	Tester connection	Specified condition
OFF	–	No continuity
ON	2 – 3 – 6	Continuity
Illumination circuit	1 – 4	Continuity

If continuity is not as specified, replace the switch.

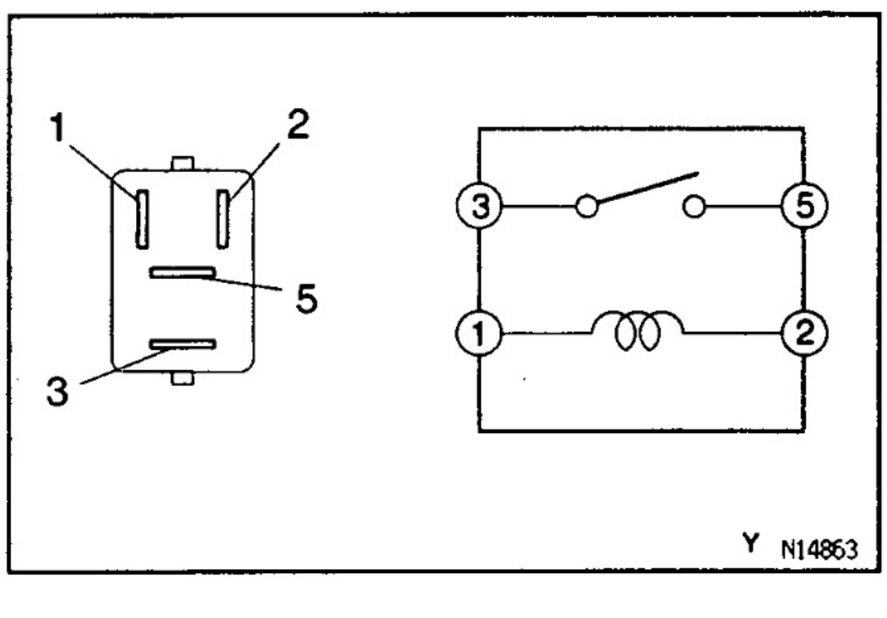

MIRROR HEATER RELAY INSPECTION

BE38P-01

INSPECT RELAY CONTINUITY

Condition	Tester connection	Specified condition
Constant	1 – 2	Continuity
Apply B+ between terminals 1 and 2.	3 – 5	Continuity

If continuity is not as specified, replace the relay.

SUB FUEL TANK SYSTEM
PARTS LOCATION

8E394–01

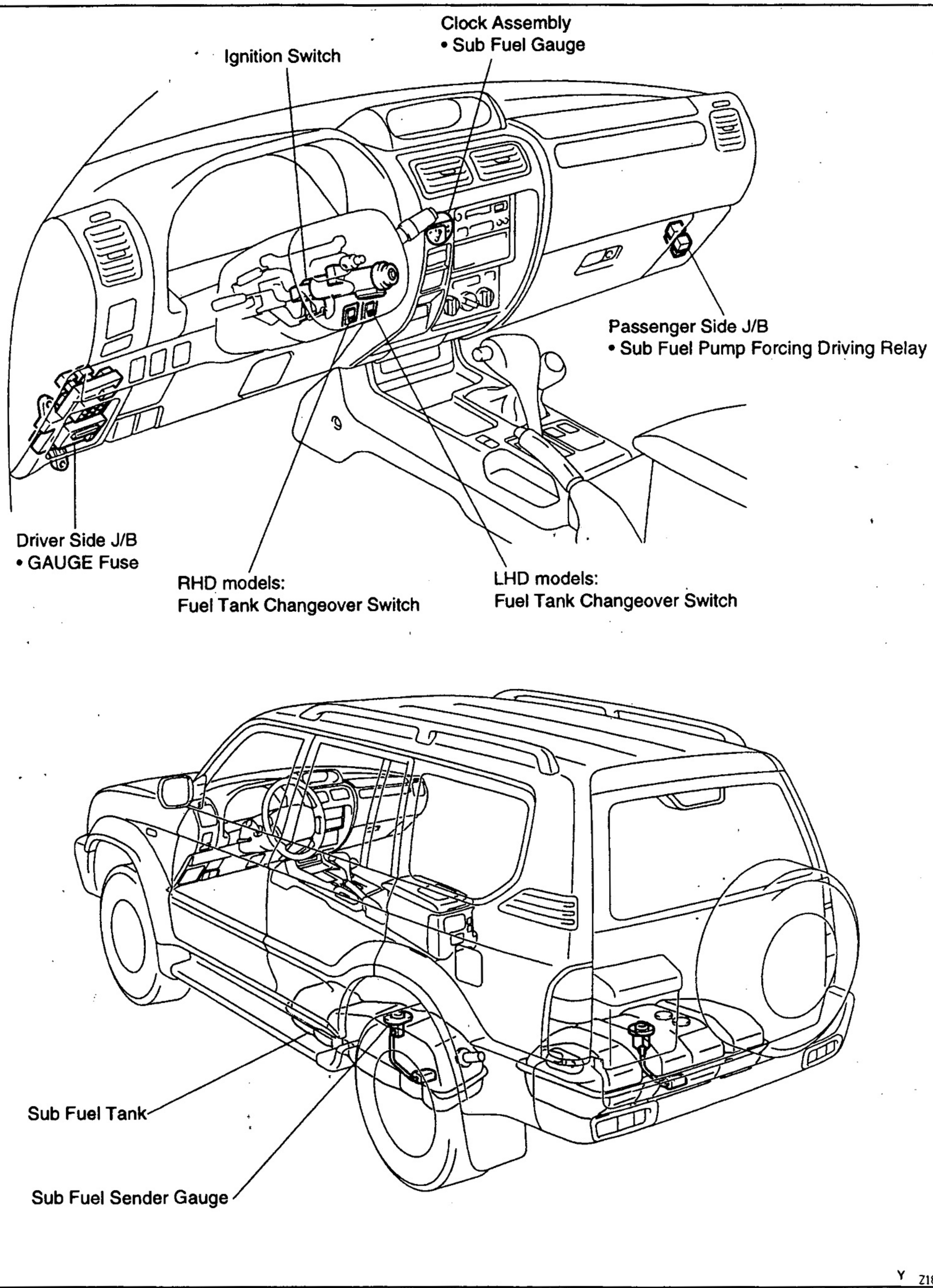

N19563
N19564

Y Z18201

BE

BE36C-01

TROUBLESHOOTING

The table below will be useful for you in troubleshooting these electrical problems. The most likely causes of the malfunction are shown in the order of their probability. Inspect each part in the order shown and replace the part when it is found to be faulty.

Trouble	Parts name	(See page)
Sub fuel tank system does not operate.	1. GAUGE Fuse (Driver Side J/B)	
	2. Sub Fuel Pump Forcing Driving Relay (Passenger Side J/B)	(BE−118)
	3. Fuel Pump	
	4. Fuel Tank Changeover Switch	(BE−118)
	5. Fuel Solenoid Valve	(BE−119)
	6. Fuel Sender Gauge (Sub Fuel Tank)	(BE−119)
	7. Wire Harness	
Illumination light does not light up.	1. Bulb	
	2. Wire Harness	

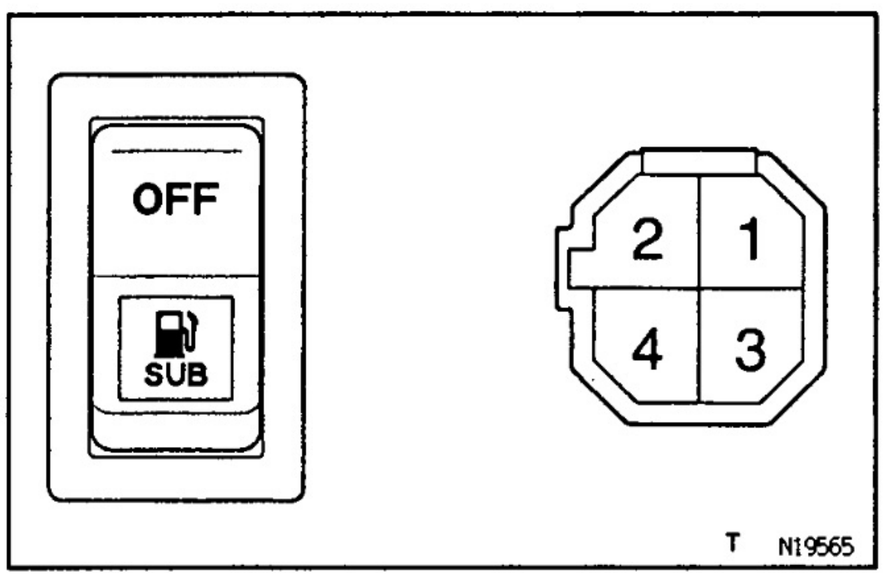

T N19565

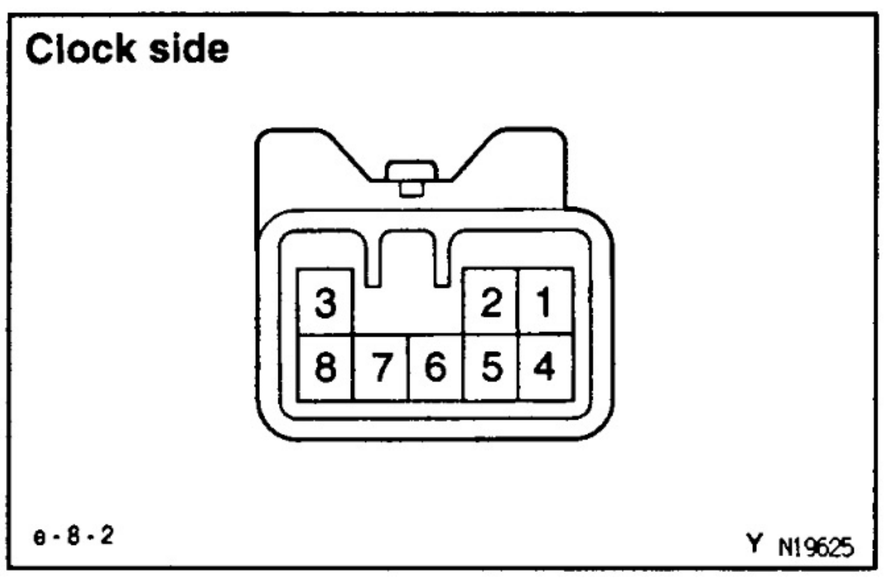

Y N19625

BE39N-01

FUEL TANK CHANGEOVER SWITCH INSPECTION

1. INSPECT SWITCH CONTINUITY

Switch position	Tester connection	Specified condition
OFF	—	No continuity
ON	1 — 3	Continuity
Illumination circuit	2 — 4	Continuity

If continuity is not as specified, replace the switch.

2. INSPECT INDICATOR LIGHT OPERATION

(a) Connect the positive (+) lead from the battery to terminal 1 and the negative (−) lead to terminal 7.

(b) Set the fuel tank changeover switch ON, check that the indicator light lights up.

If the indicator light does not light up, replace the clock assembly with sub fuel gauge.

BE39P-01

SUB FUEL PUMP FORCING DRIVING RELAY INSPECTION

INSPECT RELAY CONTINUITY

See page BE−71

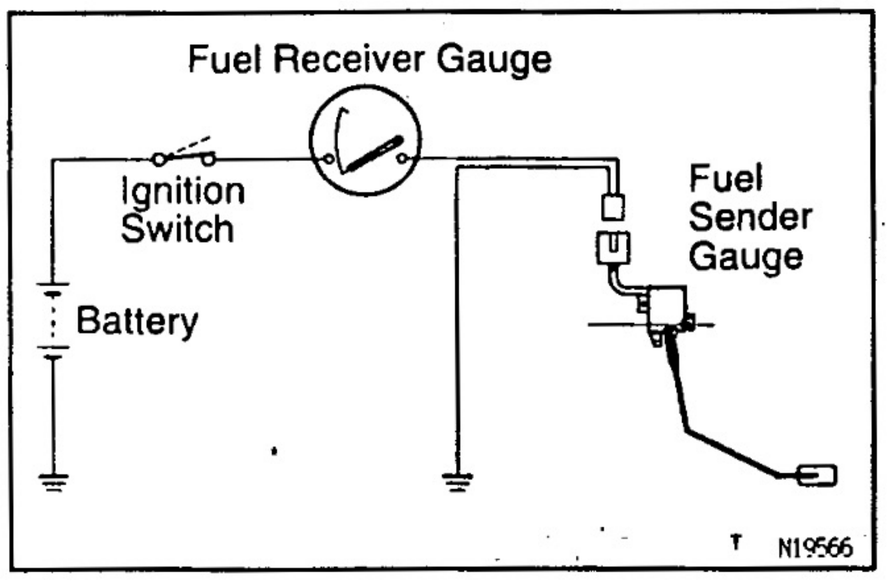

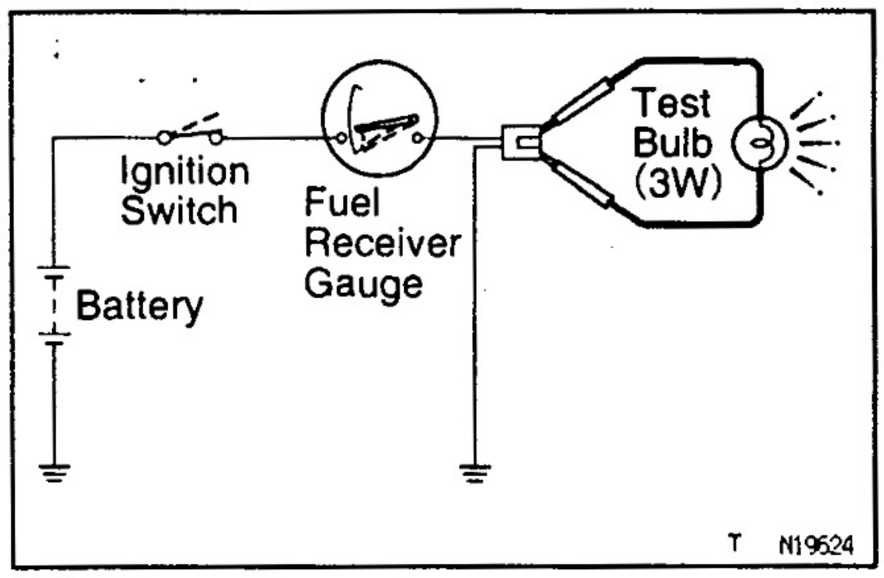

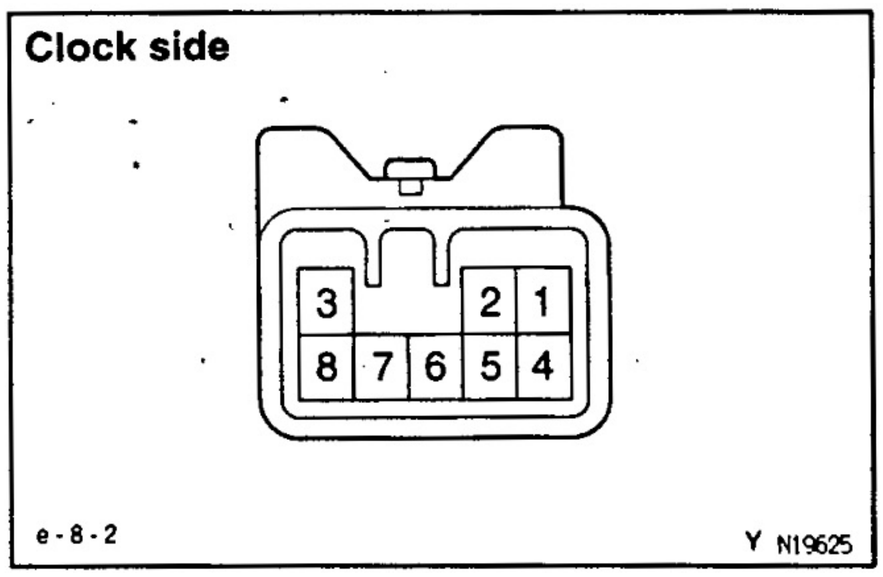

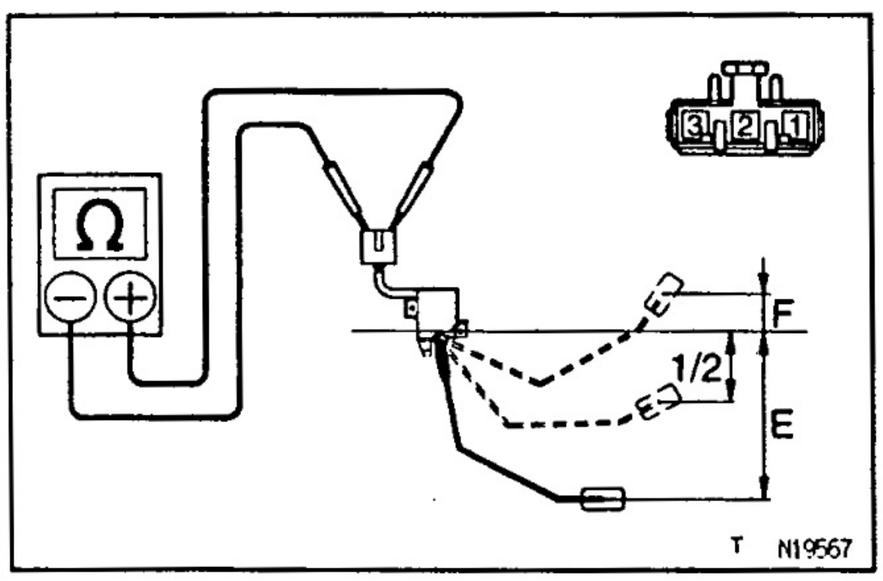

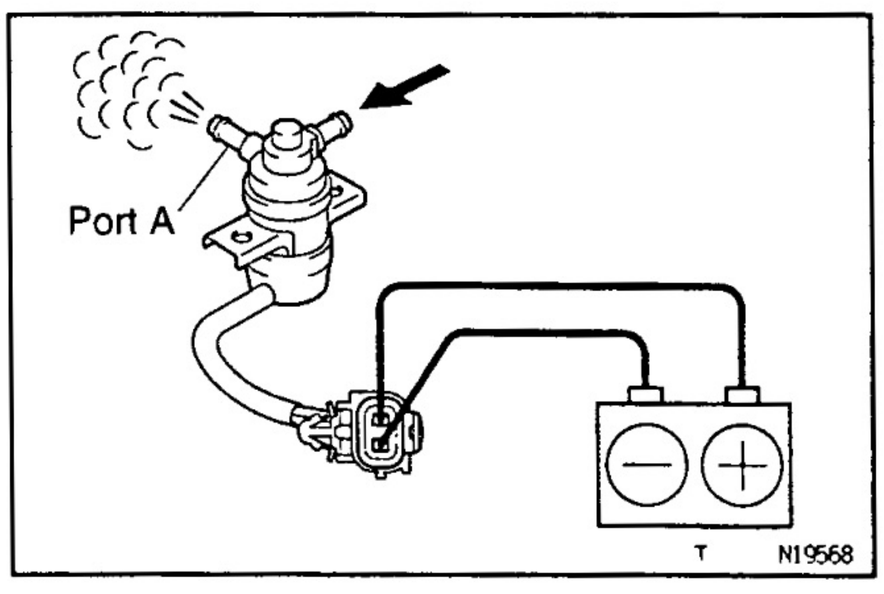

SUB FUEL GAUGE SYSTEM INSPECTION BE397-01

NOTICE: After removing the sub fuel tank, inspect the sub fuel gauge.

1. INSPECT RECEIVER GAUGE OPERATION

(a) Disconnect the connector from the sender gauge.

(b) Turn the ignition switch ON, and check that the receiver gauge needle indicates EMPTY.

(c) Connect terminals 1 and 2 on the wire harness side connector through a 3.4 W test bulb.

(d) Turn the ignition switch ON, and check that the bulb lights up and the receiver gauge needle moves towards the full side.

HINT: Because of the silicon oil in the gauge, it will take a short time for the needle to stabilize.

If operation is not as specified, inspect the receiver gauge resistance.

2. INSPECT RECEIVER GAUGE RESISTANCE

Measure the resistance between terminals.

Between terminals	Resistance (Ω)
3 – 5	Approx. 115.8
5 – 8	Approx. 177.2
3 – 8	Approx. 61.4

If resistance value is not as specified, replace the clock assembly with sub fuel gauge.

3. INSPECT SENDER GAUGE RESISTANCE

Measure the resistance between terminals 1 and 3.

Float position : mm (in.)	Resistance (Ω)
F: Approx. 33.3 ± 2.0 (1.311 ± 0.079)	3.0 ± 0.6
1/2: Approx. 62.6 (2.465)	32.5 ± 3.0
E: Approx. 148.9 ± 1.8 (5.862 ± 0.071)	110.0 ± 2.5

If resistance value is not as specified, replace the sender gauge.

FUEL SOLENOID VALVE INSPECTION BE38K-01

INSPECT VALVE

(a) Check that air flows out port A when battery voltage is applied across the terminals.

(b) Check that air does not flow out port A when battery voltage is not applied across the terminal.

Replace the valve if either test is not successful.

BE

AUDIO SYSTEM
SYSTEM DESCRIPTION

BE1M2–0F

1. RADIO WAVE BAND

The radio wave bands used in radio broadcasting are as follows:

Frequency	30kHz	300kHz	3MHz	30MHz	300MHz	
Designation		LF	MF	HF	VHF	
Radio wave		LW ←	AW (MW) ←	SW ←	FM (UKW) ←	
Modulation method		Amplitude modulation			Frequency modulation	

LF: Low Frequency MF: Medium Frequency HF: High Frequency VHF: Very High Frequency
HINT: In this section, the term "AM" includes LW, MW and SW, and the term "FM" includes UKW.

V04926

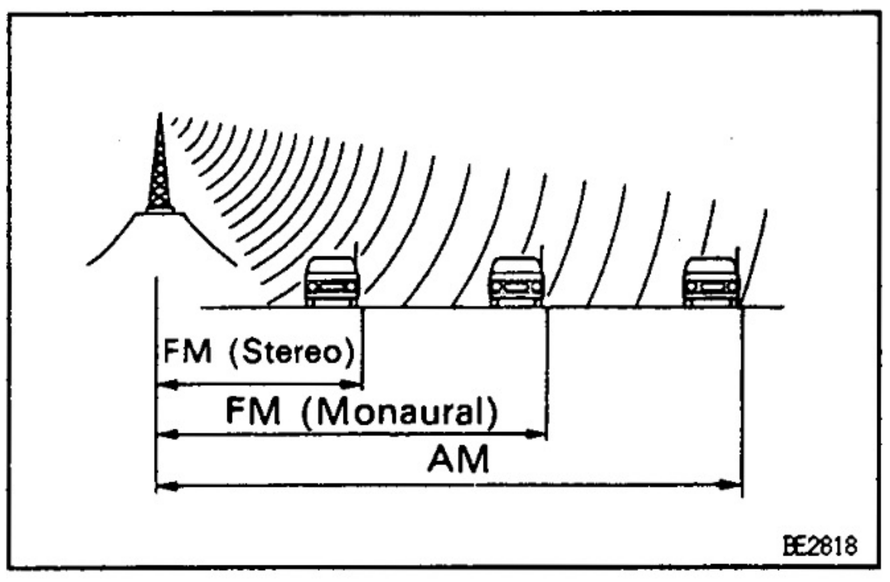

2. SERVICE AREA

There are great differences in the size of the service area for AM, FM monaural, and FM stereo broadcasts cannot be received even though AM comes in very clearly.

Not only does FM stereo have the smallest service area, but it also picks up static and other types of interference ("noise") easily.

3. RECEPTION PROBLEMS

Besides the problem of static, there are also the problems called "fading", "multipath" and "fade out". These problems are caused not by electrical noise but by the nature of the radio waves themselves.

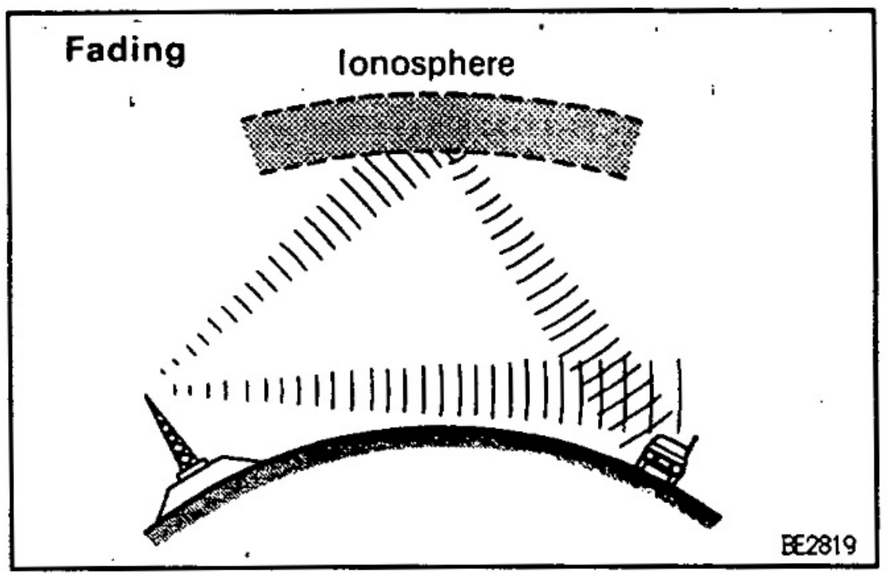

Fading

Besides electrical interference, AM broadcasts are also susceptible to other types of interference, especially at night. This is because AM radio waves bounce off the ionosphere at night. These radio waves then interfere with the signals from the same transmitter that reach the vehicle's antenna directly. This type of interference is called "fading".

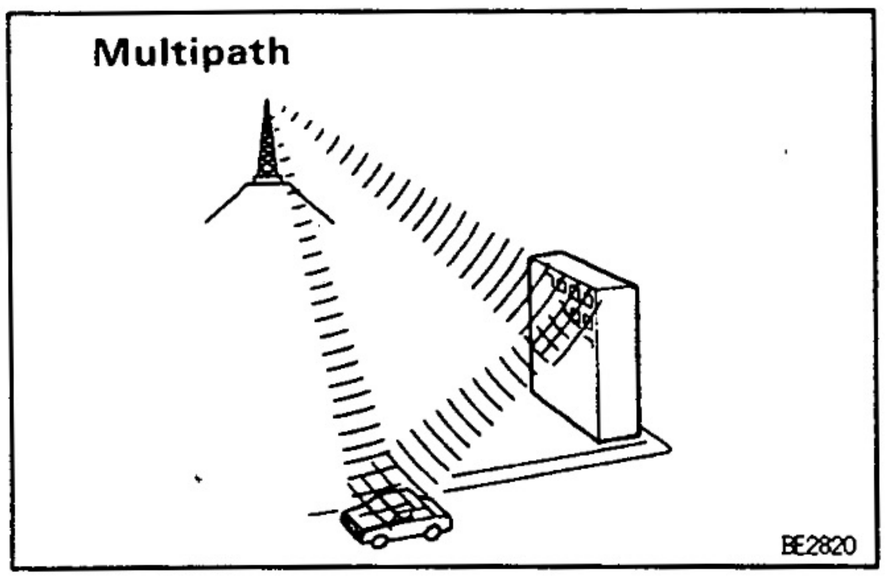

Multipath

One type of interference caused by the bouncing of radio waves off of obstructions is called "multipath". Multipath occurs when a signal from the broadcast transmitter antenna bounces off buildings and mountains and interferes with the signal that is received directly.

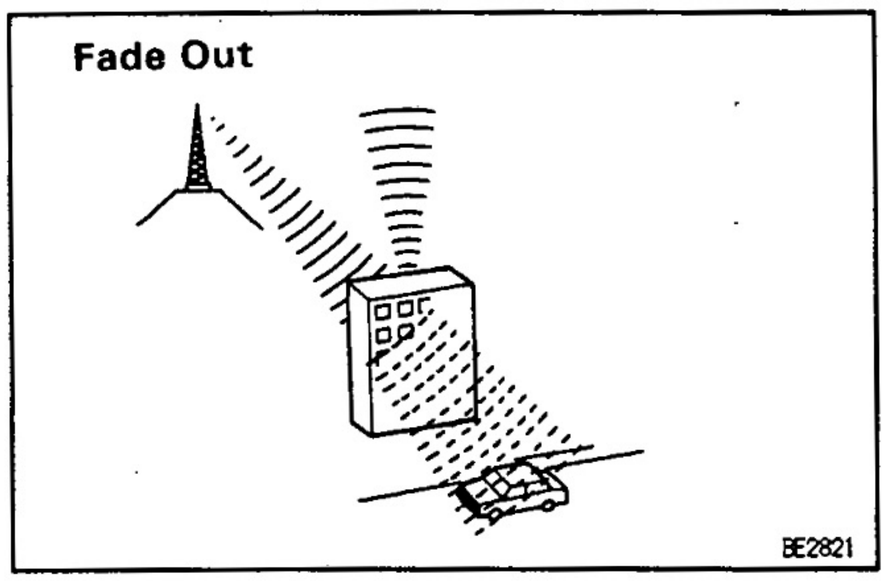

Fade Out

Because FM radio waves are of higher frequencies than AM radio waves, they bounce off buildings, mountains, and other obstructions. For this reason, FM signals often seem to gradually disappear or fade away as the vehicle goes behind a building or other obstruction. This is called "fade out".

4. COMPACT DISC PLAYER

Compact Disc (hereafter called "CD") Players use a laser beam pick–up to read the digital signals recorded on the CD and reproduce analog signals of the music, etc. There are 4.7 in. (12 cm) and 3.2 in. (8 cm) discs in the CD player.

HINT: Never attempt to disassemble or oil any part of the player unit. Do not insert any object other than a disc into the magazine.

NOTICE: CD players use an invisible laser beam which could cause hazardous radiation exposure if directed. Make sure to operate the player correctly as instructed.

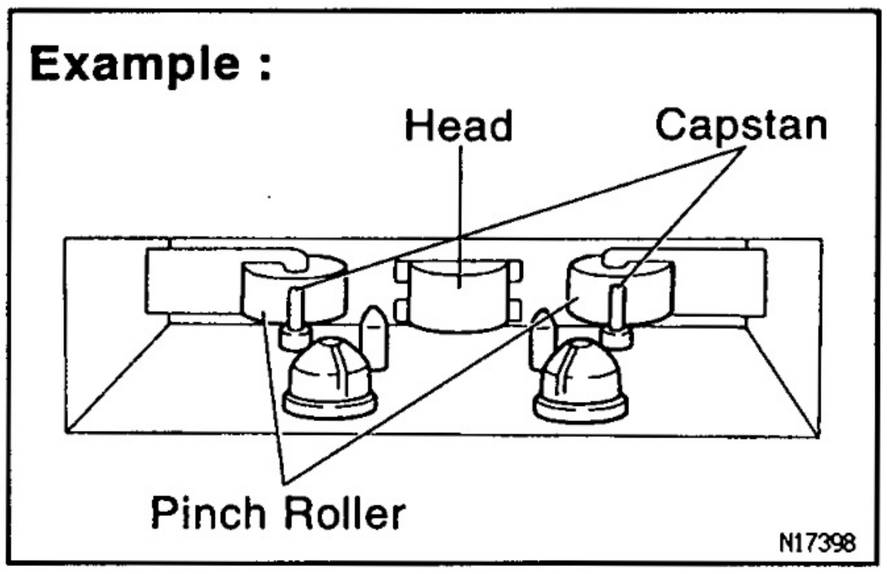

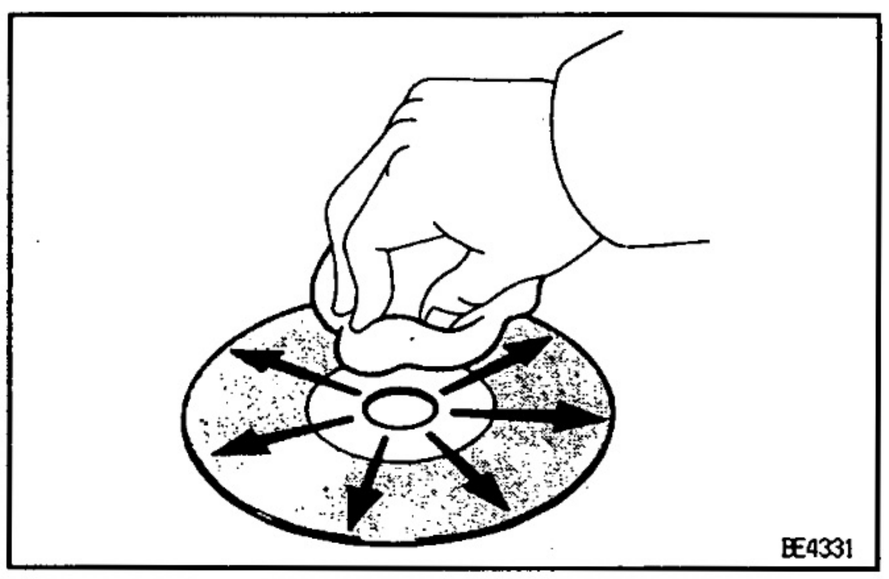

BE1DC–06

MAINTENANCE

Tape Player/Head Cleaning

(a) Raise the cassette door with your finger.
Next using a pencil or a similar object, push in the guide.

(b) Using a cleaning pen or cotton applicator soaked in cleaner, clean the head surface, pinch rollers and capstans.

CD Player/Disc Cleaning

If the disc gets dirty, clean the disc by wiping the surfaces from the center to outside in the radial directions with a soft cloth.

NOTICE: Do not use a conventional record cleaner or anti–static preservative.

BE

BE37T-01

PARTS LOCATION

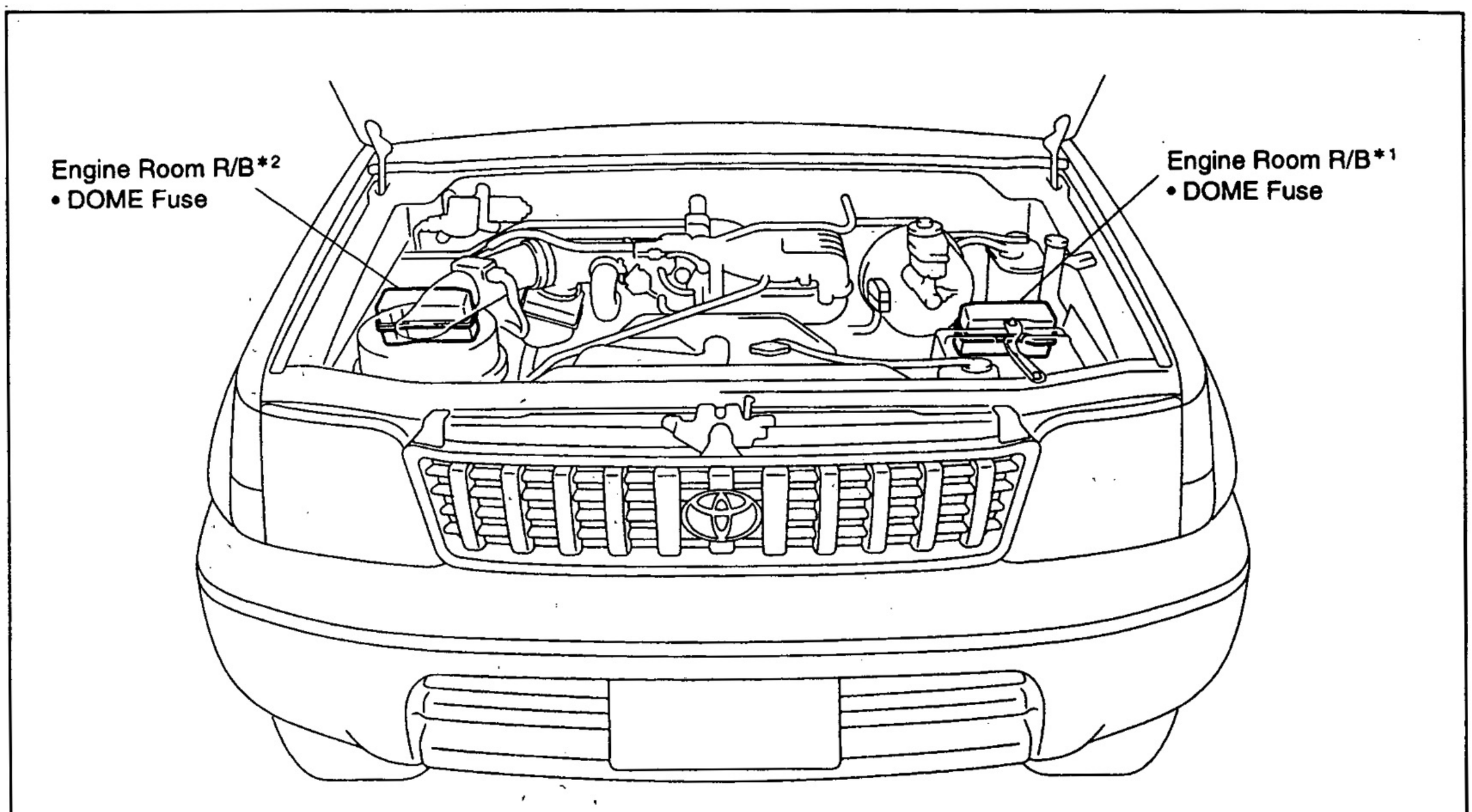

*1 : Gasoline Engine, Diesel Engine (LHD models)
*2 : Diesel Engine (RHD models)

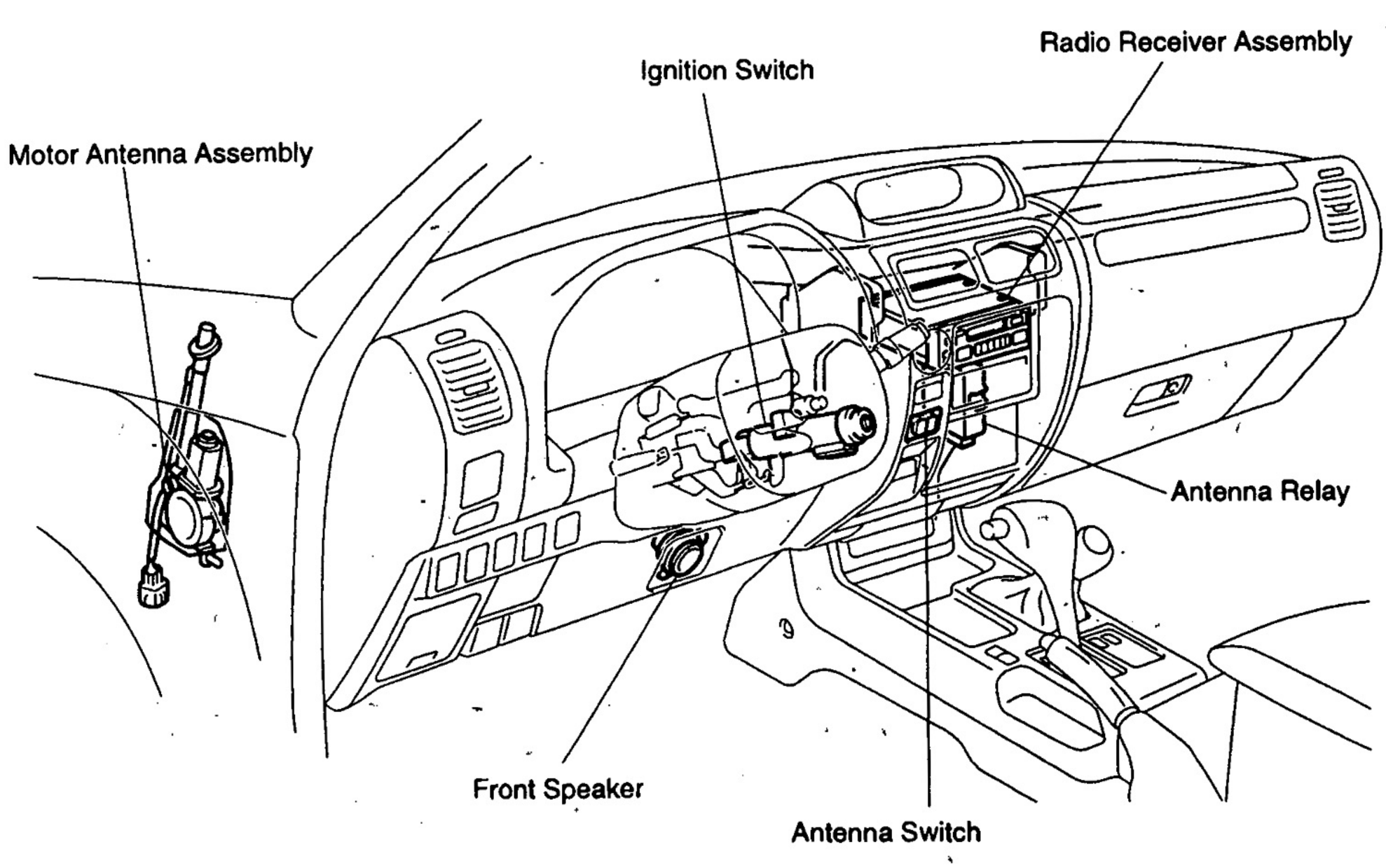

N19559
N19560

Z18202

3 Door Models:

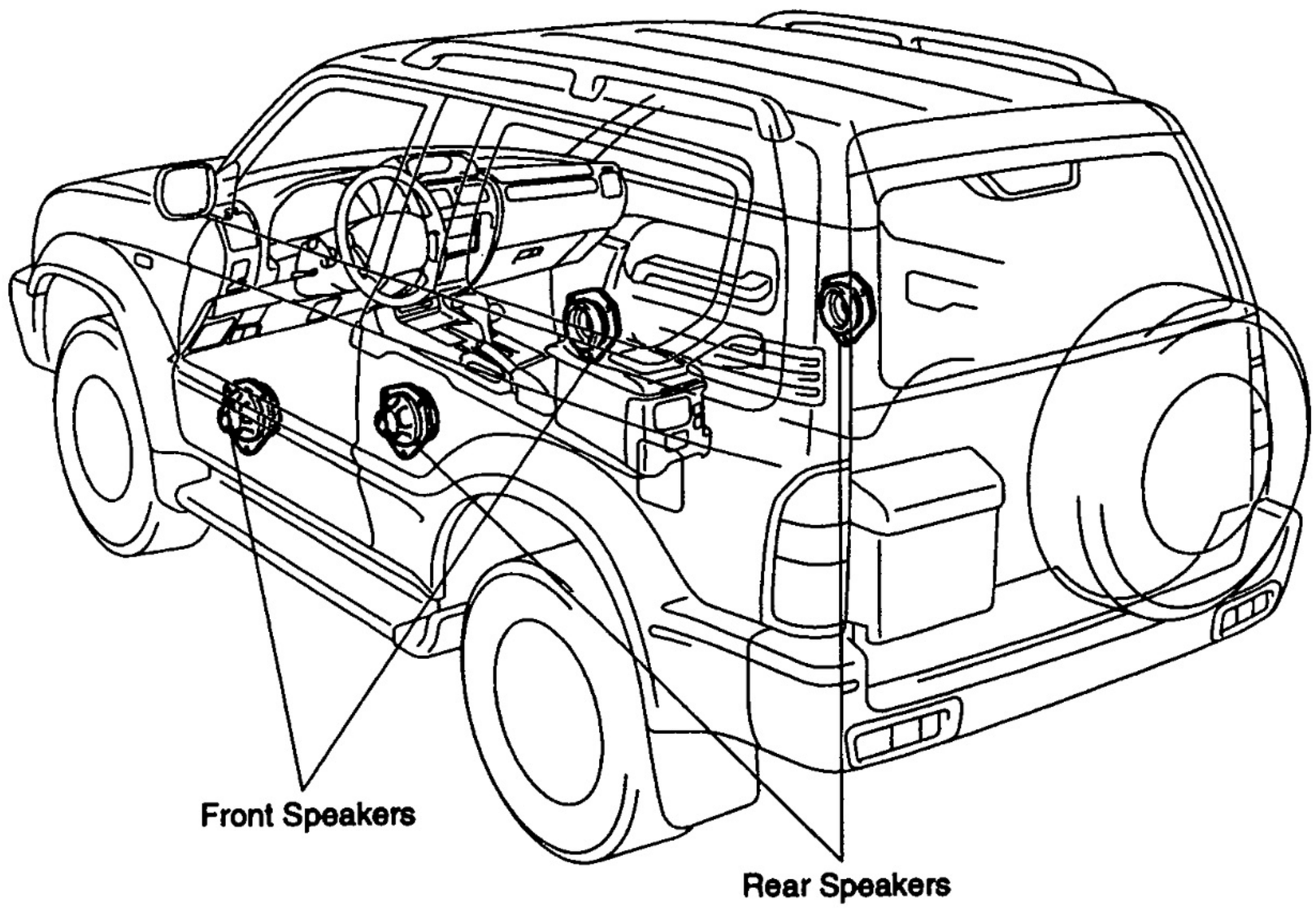

5 Door Models:

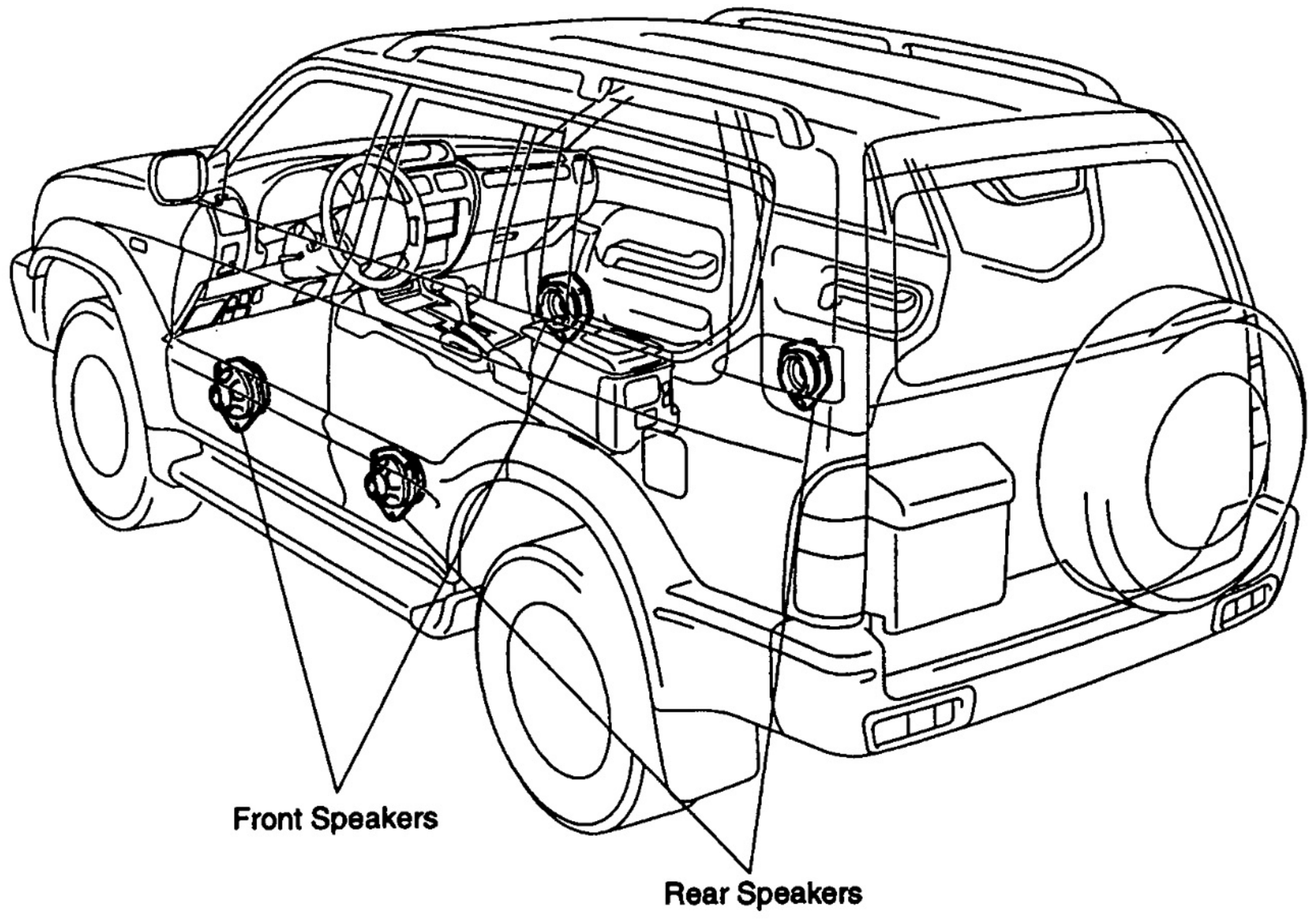

N19561
N19562

BE87U-01

TROUBLESHOOTING

NOTICE: When replacing the internal mechanism (ECU part) of the audio system, be careful that no part of your body or clothing comes in contact with the terminals of the leads from the IC, etc. of the replacement part (spare part).

HINT: This inspection procedure is a simple troubleshooting which should be carried out on the vehicle during system operation and was prepared on the assumption of system component troubles (except for the wires and connectors, etc.).

Always inspect the trouble taking the following items into consideration.

- Open or short circuit of the wire harness
- Connector or terminal connection fault

	Problem	No.
Radio	No power coming in.	*1
	Power coming in, but radio not operating.	*2
	Noise present, but AM – FM not operating.	3
	Either speaker does not work.	4
	Either AM or FM does not work.	5
	Reception poor (Volume faint).	5
	Few preset tuning bands.	5
	Sound quality poor.	6
	Cannot set station select button.	6
	Preset memory disappears.	7
Tape Player	Cassette tape cannot be inserted.	8
	Cassette tape inserts, but no power.	*9
	Power coming in, but tape player not operating.	10
	Either speaker does not work.	11
	Sound quality poor (Volume faint).	12
	Tape jammed, malfunction with tape speed or auto – reverse.	13
	APS, SKIP, RPT buttons not operating.	14
	Cassette tape will not eject.	*15
CD Player	CD cannot be inserted.	16
	CD inserts, but no power.	17
	Power coming in, but CD player not operating.	18
	Sound jumps.	19
	Sound quality poor (Volume faint).	20
	Either speaker does not work.	21
	CD will not eject.	22
Antenna	Antenna does not fully extend of fully retract.	23
	Antenna – related.	24
Noise	Noise produced by vibration or shock while driving.	25
	Noise produced when engine starts.	26

1	Radio	NO POWER COMING IN

R: Radio S: Radio + Tape Player U: Radio–Tape Player (Built-in Power Amplifier)
P: Radio–Tape–CD Player (Separate Power Amplifier)

S U P

Is tape player operating normally?
- Yes →

S		Radio faulty.
U	P	Radio assembly faulty.

No

R →

Check if RADIO fuse is OK.
- NG → Replace fuse.

OK

OK

P

R S U

Is ACC applied to power amplifier?
- No → ACC wire hareness faulty.

Yes

Is ACC for the radio assembly being output from the power amplifier?
- No → Power amplifier faulty.

Yes

Check if GND (wire harness side) to power amplifier is OK.
- NG → GND faulty.

OK

BE

R S U P

Is ACC applied to radio assembly?
- No → ACC wire harness faulty.

Yes

Check if GND (wire harness side) to radio is OK.
- NG →

P			Power Amplifier faulty.
R	S	U	GND wire harness faulty.

OK

R	S	Radio faulty.
U	P	Radio assembly faulty.

V03813

2 Radio — POWER COMING IN, BUT RADIO NOT OPERATING

R: Radio S: Radio + Tape Player U: Radio–Tape Player (Built-in Power Amplifier)
P: Radio–Tape–CD Player (Separate Power Amplifier)

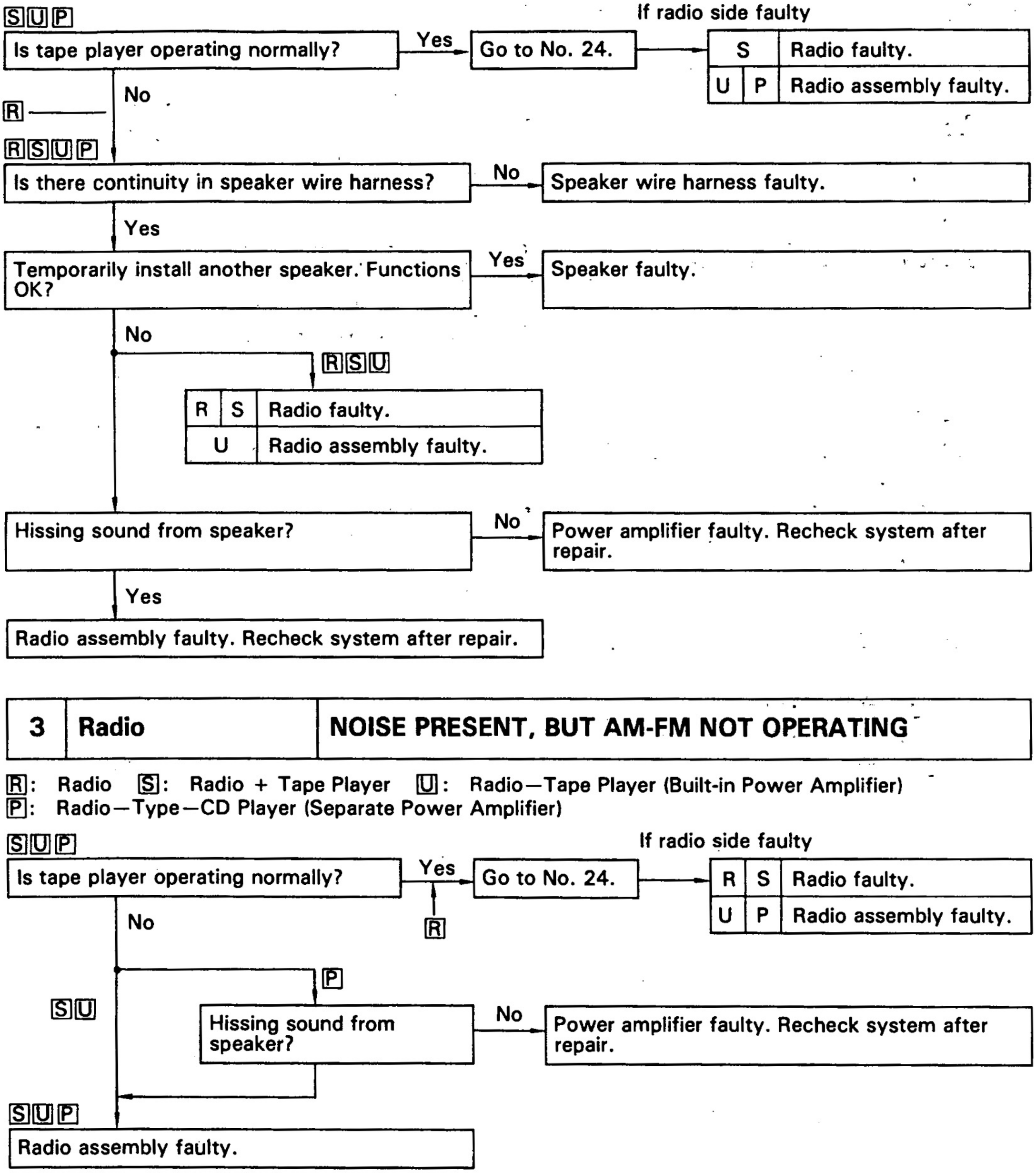

3 Radio — NOISE PRESENT, BUT AM-FM NOT OPERATING

R: Radio S: Radio + Tape Player U: Radio–Tape Player (Built-in Power Amplifier)
P: Radio–Type–CD Player (Separate Power Amplifier)

V03814

4	Radio	EITHER SPEAKER DOES NOT WORK

[R]: Radio [S]: Radio + Tape Player [U]: Radio – Tape Player (Built-in Power Amplifier)
[P]: Radio – Tape – CD Player (Separate Power Amplifier)

Is FADER or BALANCE knob in the normal position?
- No → Position the knob normally.
- Yes ↓

[S][U][P]

Is tape player operating normally?
- Yes →

S	Radio faulty.
U P	Radio assembly faulty.

- No ↓

[R] →

[R][S][U][P]

Is hiss produced by non-functioning speaker?
- Yes →

R S	Radio faulty.
U	Radio assembly faulty.
P	Radio assembly faulty. Recheck system after repair.

- No ↓

Is there continuity in speaker wire harness?
- No → Speaker wire harness faulty.
- Yes ↓

Temporarily install another speaker. Functions OK?
- Yes → Speaker faulty.
- No ↓

R S	Radio faulty.
U	Radio assembly faulty.
P	Radio assembly faulty. Recheck system after repair.

BE

Y

V07619

5	Radio	EITHER AM OR FM DOES NOT WORK, RECEPTION POOR (VOLUME FAINT), FEW PRESET TUNING BANDS

[R]: Radio [S]: Radio + Tape Player [U]: Radio—Tape Player (Built-in Power Amplifier)
[P]: Radio—Tape—CD Player (Separate Power Amplifier)

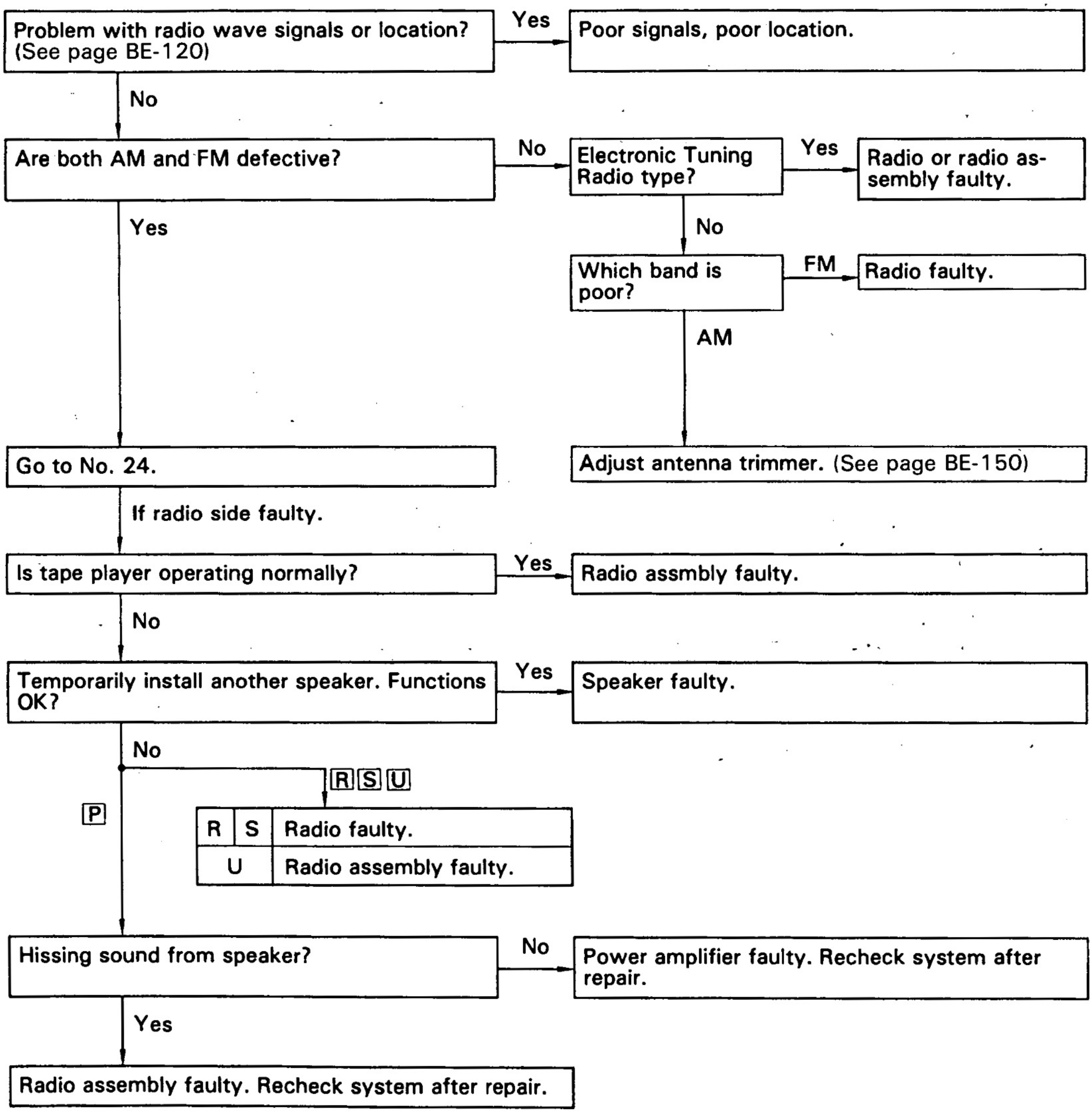

V03815

6	Radio	SOUND QUALITY POOR

[R]: Radio [S]: Radio + Tape Player [U]: Radio – Tape Player (Built-in Power Amplifier)
[P]: Radio – Tape – CD Player (Separate Power Amplifier)

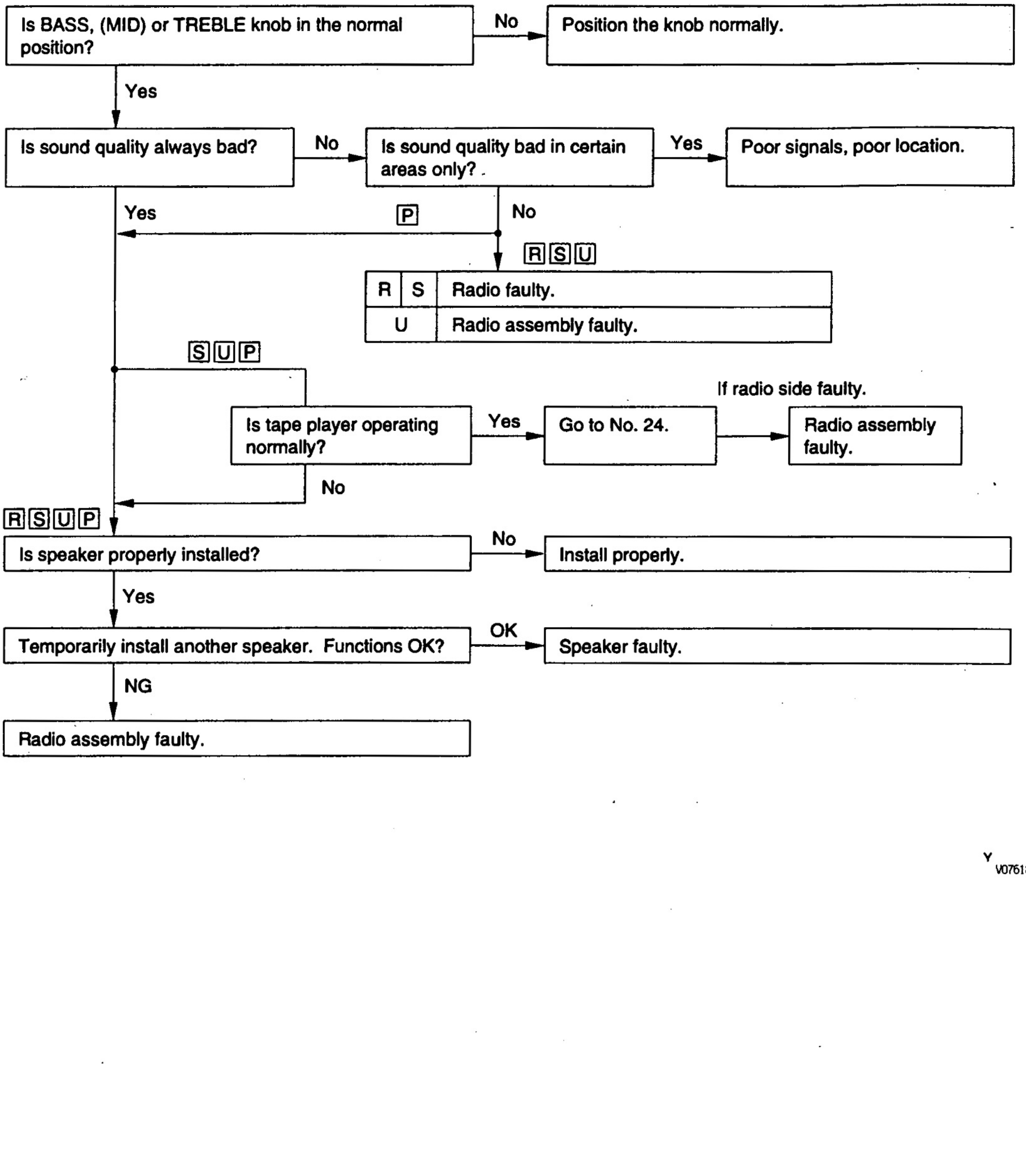

Y V07618

7	Radio	CANNOT SET STATION SELECT BUTTON, PRESET MEMORY DISAPPEARS

R: Radio S: Radio + Tape Player U: Radio–Tape Player (Built-in Power Amplifier)
P: Radio–Tape–CD Player (Separate Power Amplifier)

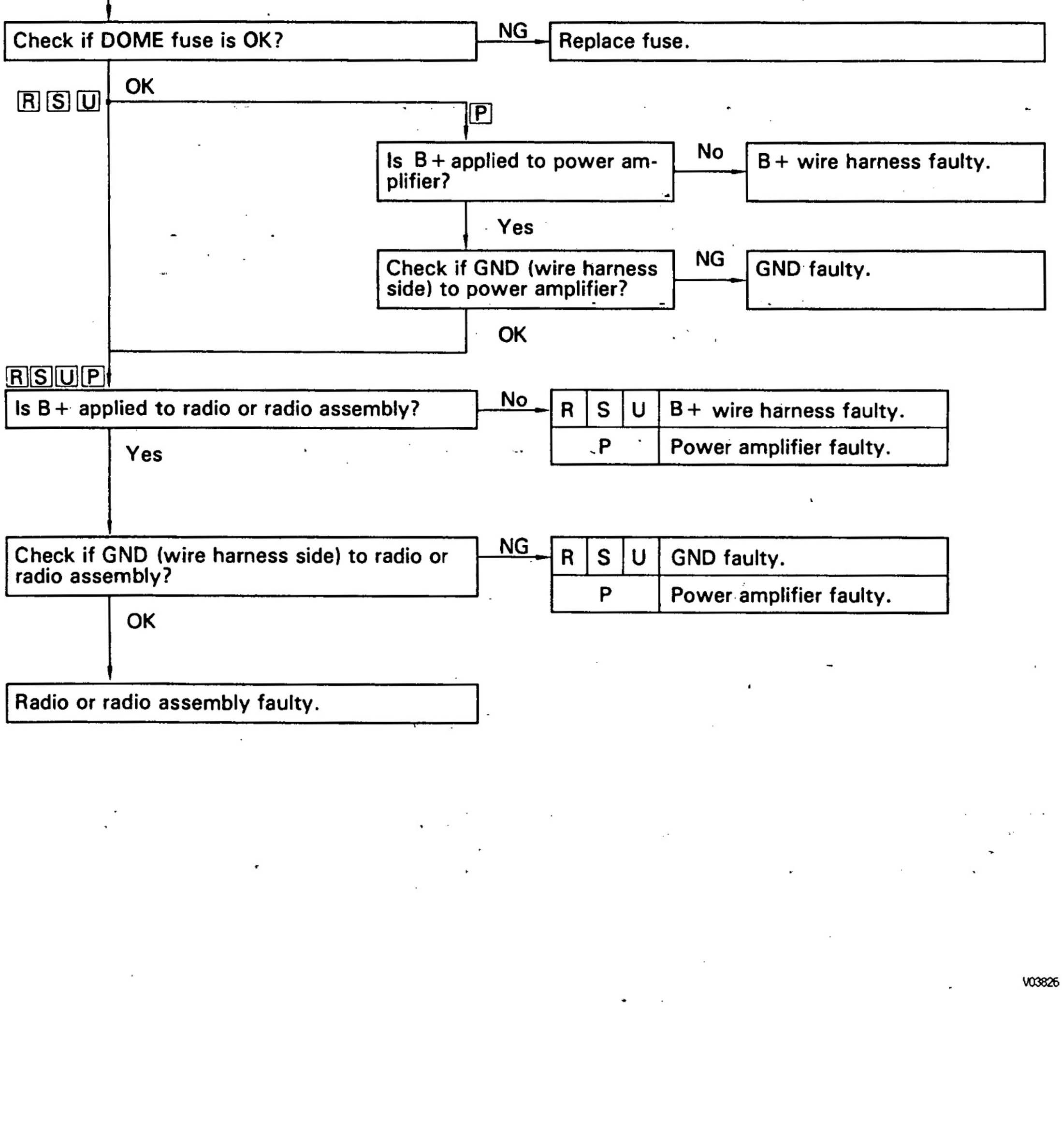

BE

V03826

8	Tape Player	CASSETTE TAPE CANNOT BE INSERTED

[S]: Radio + Tape Player [U]: Radio–Tape Player (Built-in Power Amplifier)
[P]: Radio–Tape–CD Player (Separate Power Amplifier)

[S] [U] [P]

Is there a foreign object inside tape player? — Yes → Remove foreign object.

No

Is radio operating normally? — Yes →

S		Tape player faulty.
U	P	Radio assembly faulty.

No

Check if DOME fuse is OK? — NG → Replace fuse.

OK

[U] → Is there a foreign object inside tape player? (above)

[S] [P]

S	Is B+ applied to tape player?	No → B+ wire harness faulty.
P	Is B+ applied to power amplified?	

Yes

S	Check if GND (wire harness side) to tape player is OK?	NG → GND faulty.
P	Check if GND (wire harness side) to power amplifier is OK?	

OK

[P] → Is B+ applied to radio assembly? (below)

[S]

Tape player faulty.

Is B+ applied to radio assembly? — No →

U	B+ wire harness faulty.
P	Power amplifier faulty.

Yes

Check if GND (wire harness side) to radio assembly is OK? — NG →

U	GND faulty.
P	Power amplifier faulty.

OK

Radio assembly faulty.

V03816

9	Tape Player	CASSETTE TAPE INSERTS, BUT NO POWER

[S]: Radio + Tape Player [U]: Radio–Tape Player (Built-in Power Amplifier)
[P]: Radio–Tape–CD Player (Separate Power Amplifier)

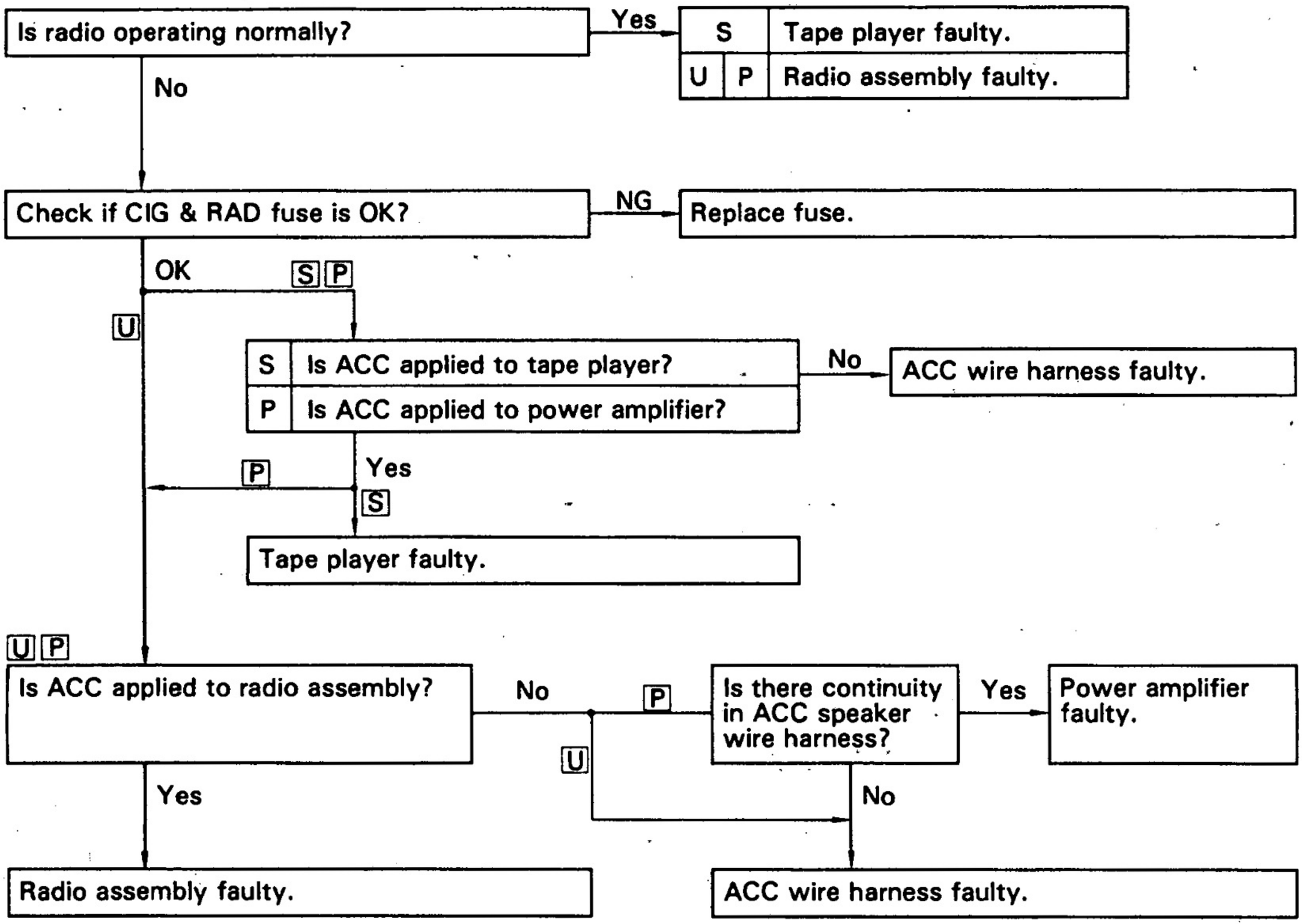

BE

V03830

10	Tape Player	POWER COMING IN, BUT TAPE PLAYER NOT OPERATING

S: Radio + Tape Player U: Radio—Tape Player (Built-in Power Amplifier)
P: Radio—Tape—CD Player (Separate Power Amplifier)

Functions OK if different cassette tape inserted?
- Yes → Cassette tape faulty.
- No ↓

Is radio operating normally?
- Yes →

S		Tape player faulty.
U	P	Radio assembly faulty.

- No ↓

Is there, continuity in speaker wire harness?
- No → Speaker wire harness faulty.
- Yes ↓

Temporarily install another speaker. Functions OK?
- Yes → Speaker faulty.
- No ↓

P → S U

S	Tape player faulty.
U	Radio assembly faulty.

P

Hissing sound from speaker?
- No → Power amplifier faulty. Recheck system after repair.
- Yes ↓

Radio assembly faulty. Recheck system after repair.

V03831

11 Tape Player — EITHER SPEAKER DOES NOT WORK

[S]: Radio + Tape Player [U]: Radio – Tape Player (Built-in Power Amplifier)
[P]: Radio – Tape – CD Player (Separate Power Amplifier)

- Is FADER or BALANCE knob in the normal position?
  - No → Position the knob normally.
  - Yes ↓
- Is radio operating normally?
  - Yes →

S		Tape player faulty.
U	P	Radio assembly faulty.

  - No ↓
- Is hiss produced by non-functioning speaker?
  - Yes →

S	Tape player faulty.
U	Radio assembly faulty.
P	Radio assembly faulty. Recheck system after repair.

  - No ↓
- Is there continuity in speaker wire harness?
  - No → Speaker wire harness faulty.
  - Yes ↓
- Temporarily install another speaker. Functions OK?
  - OK → Speaker faulty.
  - NG ↓

S	Tape player faulty.
U	Radio assembly faulty.
P	Radio assembly faulty. Recheck system after repair.

Y
V07617

BE

12 Tape Player — SOUND QUALITY POOR (VOLUME FAINT)

S: Radio + Tape Player U: Radio – Tape Player (Built-in Power Amplifier)
P: Radio – Tape – CD Player (Separate Power Amplifier)

- Is BASS, (MID) or TREBLE knob in the normal position?
  - No → Position the knob normally.
  - Yes ↓
- Functions OK if different cassette tape inserted?
  - Yes → Cassette tape faulty.
  - No ↓
- Operates normally after cleaning the heads? (See page BE-122)
  - Yes → Head dirty.
  - No ↓
- Is radio operating normally?
  - Yes → Radio assembly faulty.
  - No ↓
- Is speaker properly installed?
  - No → Install properly.
  - Yes ↓
- Temporarily install another speaker. Functions OK?
  - Yes → Speaker faulty.
  - No ↓

S	Tape player faulty.
U	Radio assembly faulty.
P	Radio assembly faulty. Recheck system after repair.

13 Tape Player — TAPE JAMMED, MALFUNCTION WITH TAPE SPEED OR AUTO-REVERSE

S: Radio + Tape Player U: Radio – Tape Player (Built-in Power Amplifier)
P: Radio – Tape – CD Player (Separate Power Amplifier)

- Functions OK if different tape (less than 90 mins.) is inserted?
  - Yes → Cassette tape faulty.
  - No ↓
- Is there a foreign object or liquid such as juice inside tape player?
  - Yes → Remove foreign object.
  - No ↓
- Operates normally after cleaning the heads? (See page BE-122)
  - Yes → Head dirty.
  - No ↓

S		Tape player faulty.
U	P	Radio assembly faulty.

14 Tape Player — APS, SKIP, RPT BUTTONS NOT OPERATING

[S]: Radio + Tape Player [U]: Radio—Tape Player (Built-in Power Amplifier)
[P]: Radio—Tape—CD Player (Separate Power Amplifier)

Functions OK if different cassette tape inserted? — No → Radio assembly faulty.

Yes →

Cassette tape faulty. (Less than 3 secs. of silence between songs (APS, RPT). Less than 15 secs. of silence (SKIP).)

15 Tape Player — CASSETTE TAPE WILL NOT EJECT

[S]: Radio + Tape Player [U]: Radio—Tape Player (Built-in Power Amplifier)
[P]: Radio—Tape—CD Player (Separate Power Amplifier)

Is tape player operating normally? — No → Cassette tape jammed.

Yes →

Is radio operating normally? — Yes →

S		Tape player faulty.
U	P	Radio assembly faulty.

Check if DOME fuse is OK? — NG → Replace fuse.

OK →

Is B+ applied to power amplifier? — No → B+ wire harness faulty.

Yes →

S		Is B+ applied to tape player?
U	P	Is B+ applied to radio assembly?

No [P] → Is there continuity in B+ wire harness between power amplifier and radio assembly? — Yes → Power amplifier faulty.

No →

B+ wire harness faulty.

[S] [U] →

Yes →

S		Tape player faulty.
U	P	Radio assembly faulty.

V03818

16 CD Player — CD CANNOT BE INSERTED

- Is CD already inserted?
  - Yes → Eject CD.
  - No ↓
- Is auto search button of radio operating normally?
  - Yes → Is B+ applied to CD player?
    - No → Radio assembly faulty.
    - Yes ↓
      - Check if GND (wire harness side) to CD player is OK?
        - NG → Radio assembly faulty.
        - OK ↓
          - CD player faulty.
  - No ↓
- Check if DOME fuse is OK.
  - NG → Replace fuse.
  - OK ↓
- Is B+ applied to to power amplifier?
  - No → B+ wire harness faulty.
  - Yes ↓
- Check if GND (wire harness side) to power amplifier is OK?
  - NG → GND faulty.
  - OK ↓
- Is B+ applied to radio assembly?
  - No → Power amplifier faulty.
  - Yes ↓
- Check if GND (wire harness side) to radio assembly is OK?
  - NG → Power amplifier faulty.
  - OK ↓
- Radio assembly faulty.

17 CD Player — CD INSERTS, BUT NO POWER

- Is radio operating normally?
  - Yes → Is ACC applied to CD player?
    - No → Radio assembly faulty.
    - Yes ↓
      - CD player faulty.
  - No ↓
- Check if CIG & RAD fuse is OK?
  - NG → Replace fuse.
  - OK ↓
- Is ACC applied to power ampifier?
  - No → ACC wire harness faulty.
  - Yes ↓
- Is ACC applied to radio assembly?
  - No → Is there continuity in ACC wire harness between the radio assembly and the power amplifier?
    - No → ACC wire harness faulty.
    - Yes → Power amplifier faulty.
  - Yes ↓
- Radio assembly faulty.

V03819

18 CD Player — POWER COMING IN, BUT CD PLAYER NOT OPERATING

- Is CD inserted correct side up?
  - No → Insert correctly.
  - Yes ↓
- Functions OK if different CD inserted?
  - Yes → CD faulty.
  - No ↓
- Is radio operating normally?
  - Yes → Is temperature inside cabin hot?
    - Yes → Protective circuit in operation.
    - No ↓
  - Has sudden temperature change occurred inside cabin?
    - Yes → Formation of condensation due to temp. change.
    - No ↓
  - CD player faulty.
  - No ↓
- Is there continuity in speaker wire harness?
  - No → Speaker wire harness faulty.
  - Yes ↓
- Temporarily install another speaker. Functions OK?
  - Yes → Speaker faulty.
  - No ↓
- Hissing sound from speaker?
  - No → Power amplifier faulty. Recheck system after repair.
  - Yes ↓
- Radio assembly faulty. Recheck system after repair.

19 CD Player — SOUND JUMPS

- Does sound jump only during strong vibration?
  - Yes → Jumping caused by vibration.
  - No ↓
- Is CD player properly installed?
  - No → Install properly.
  - Yes ↓
- Functions OK if different CD inserted?
  - Yes → CD faulty.
  - No ↓
- Has sudden temperature change occurred inside cabin?
  - Yes → Formation of condensation due to temp. change.
  - No ↓
- CD player faulty.

V03820

20 CD Player — SOUND QUALITY POOR (VOLUME FAINT)

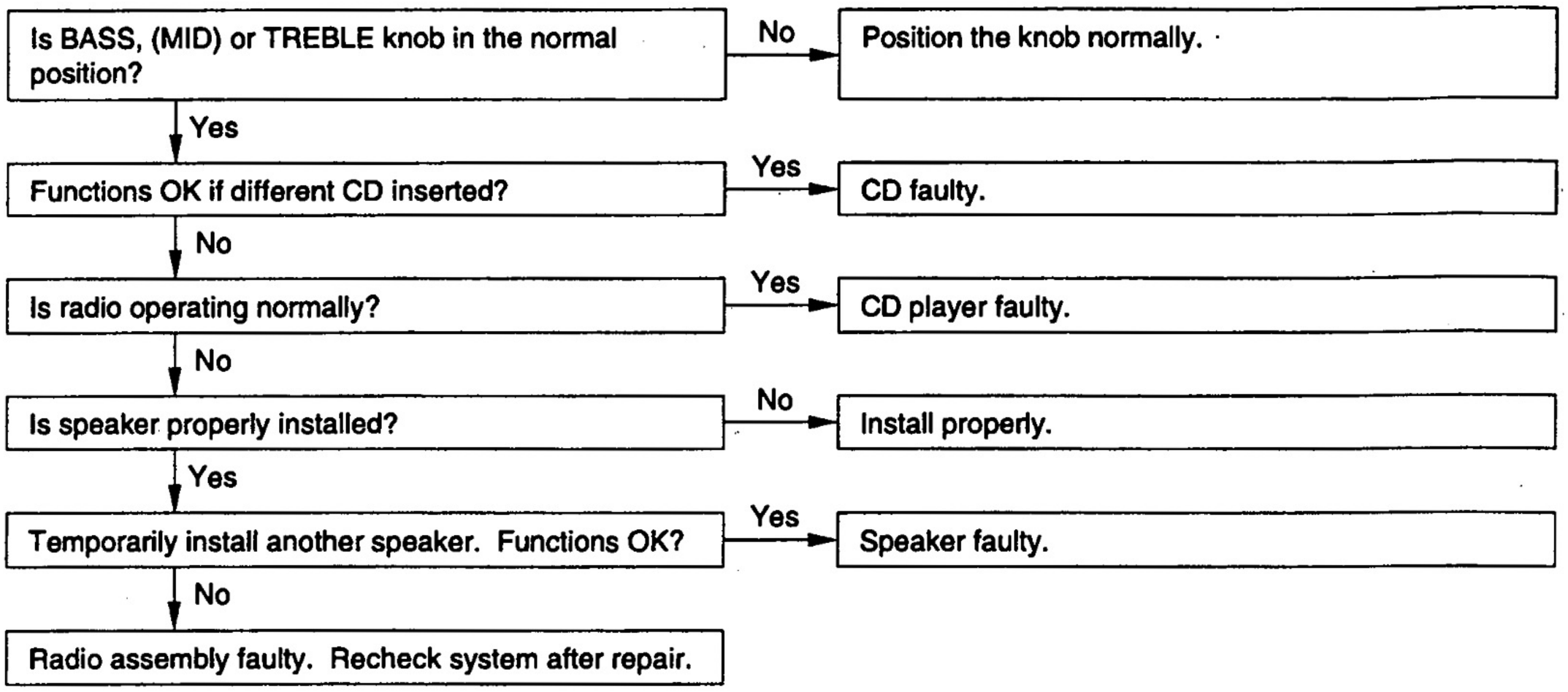

21 CD Player — EITHER SPEAKER DOES NOT WORK

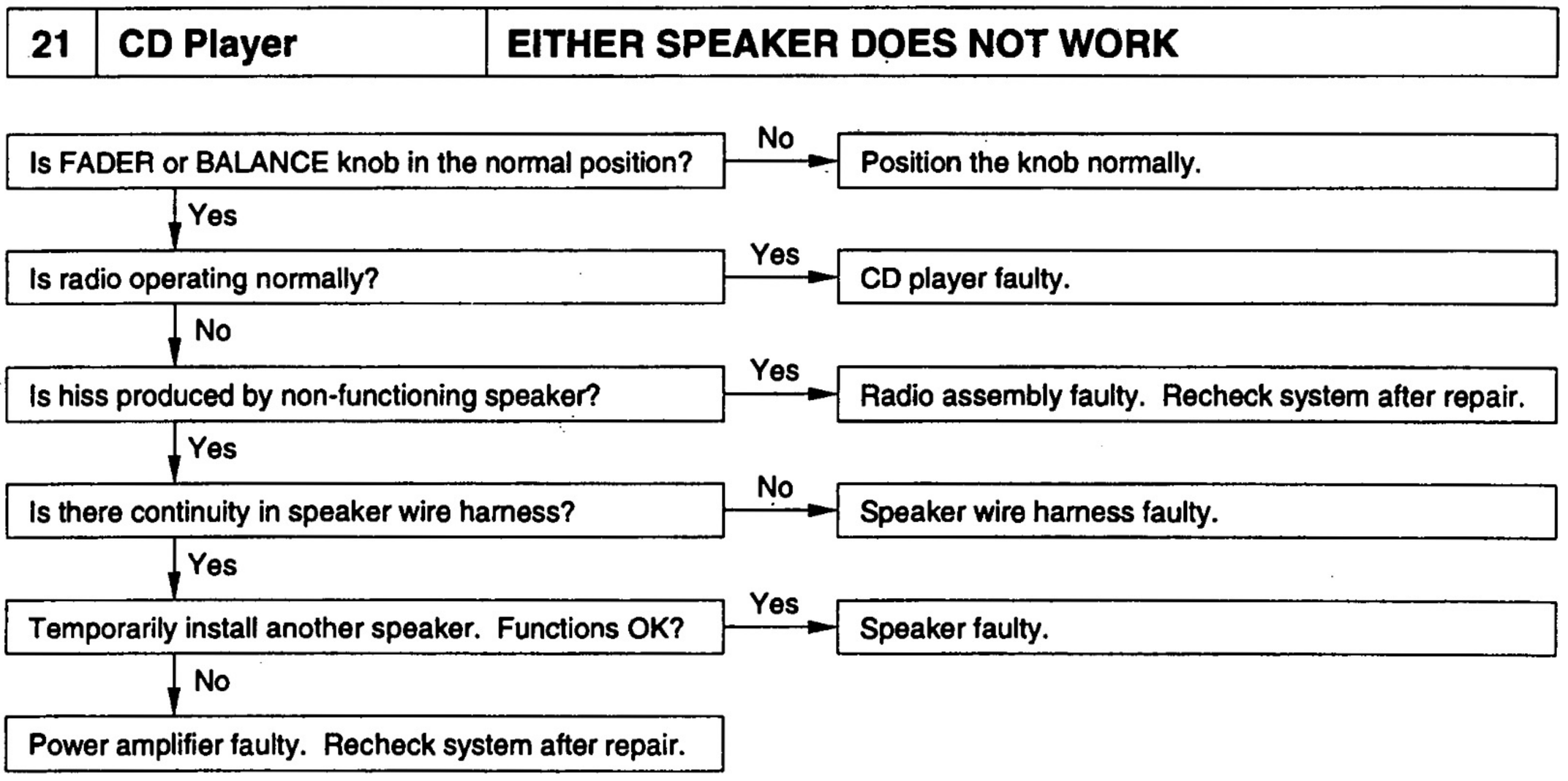

BE

V07615

22	CD Player	CD WILL NOT EJECT

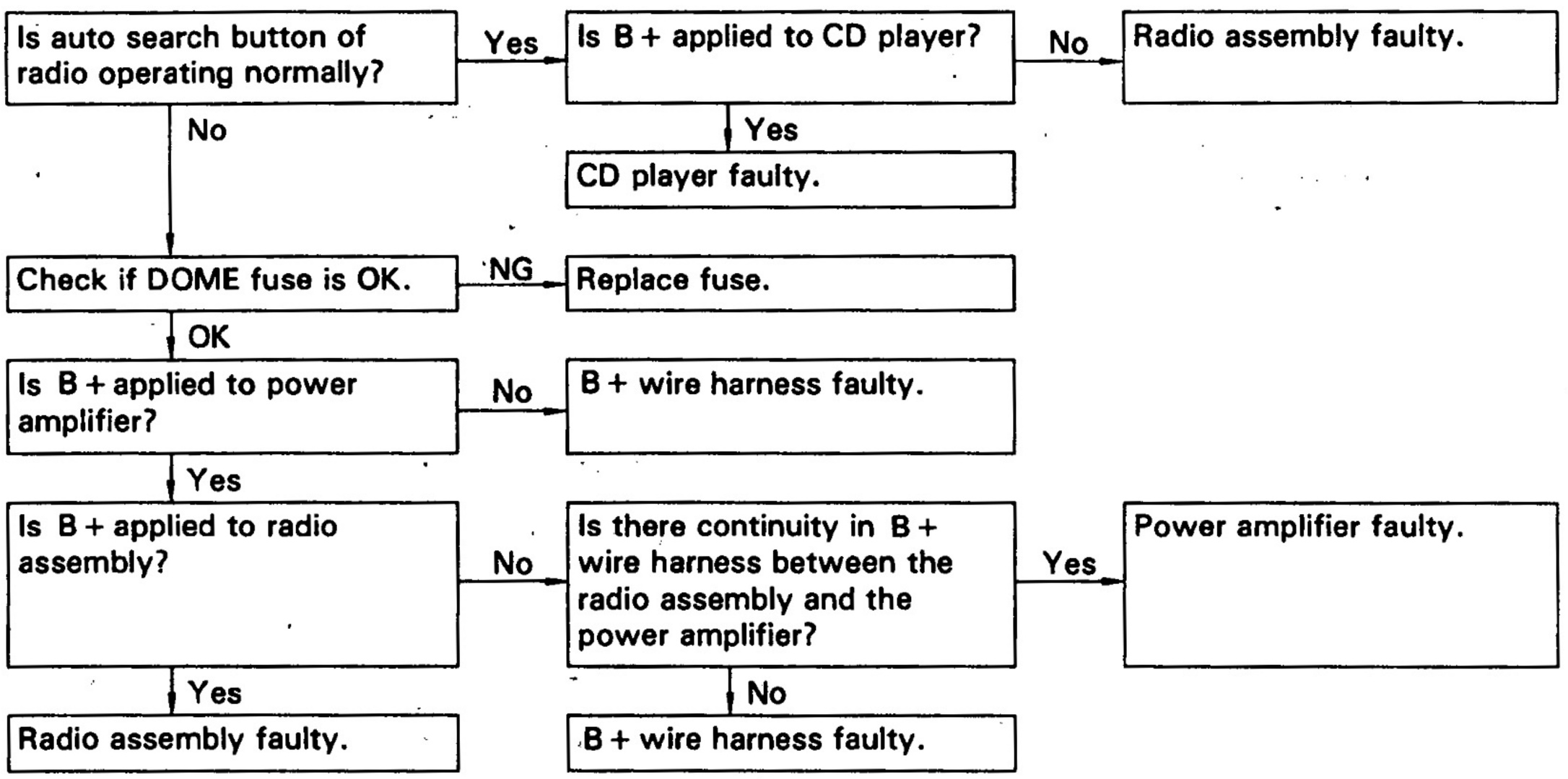

V03837

23	Antenna	ANTENNA DOES NOT FULLY EXTENED OR FULLY RETRACT

Remove the antenna cap. Can you remove the antenna rod as prescribed by the antenna rod R & R procedure?

Yes → Can you see any problem with the exterior of the removed antenna eg. deformation, cracks? When you extened or retract the antenna by hand, do you feel any irregularity in its movement?

Yes → Replace the antenna rod with supply parts according to the antenna rod R & R procedure.

No → Reinstall the removed antenna according to the antenna rod R & R procedure. Then again check antenna rod operation using the radio switch.

No → Are fuses OK?

No → Replace fuses.

Yes → Is ACC applied to motor antenna control relay?

No → ACC wire harness faulty.

Yes → Is +B applied to motor antenna control relay?

No → +B wire harness faulty.

Yes → Is IG applied to motor antenna control relay?

No → IG wire harness faulty.

Yes → Is GND (Wire harness side) to motor antenna control relay OK?

No → GND faulty.

Yes

CONTINUED ON NEXT PAGE

V06161

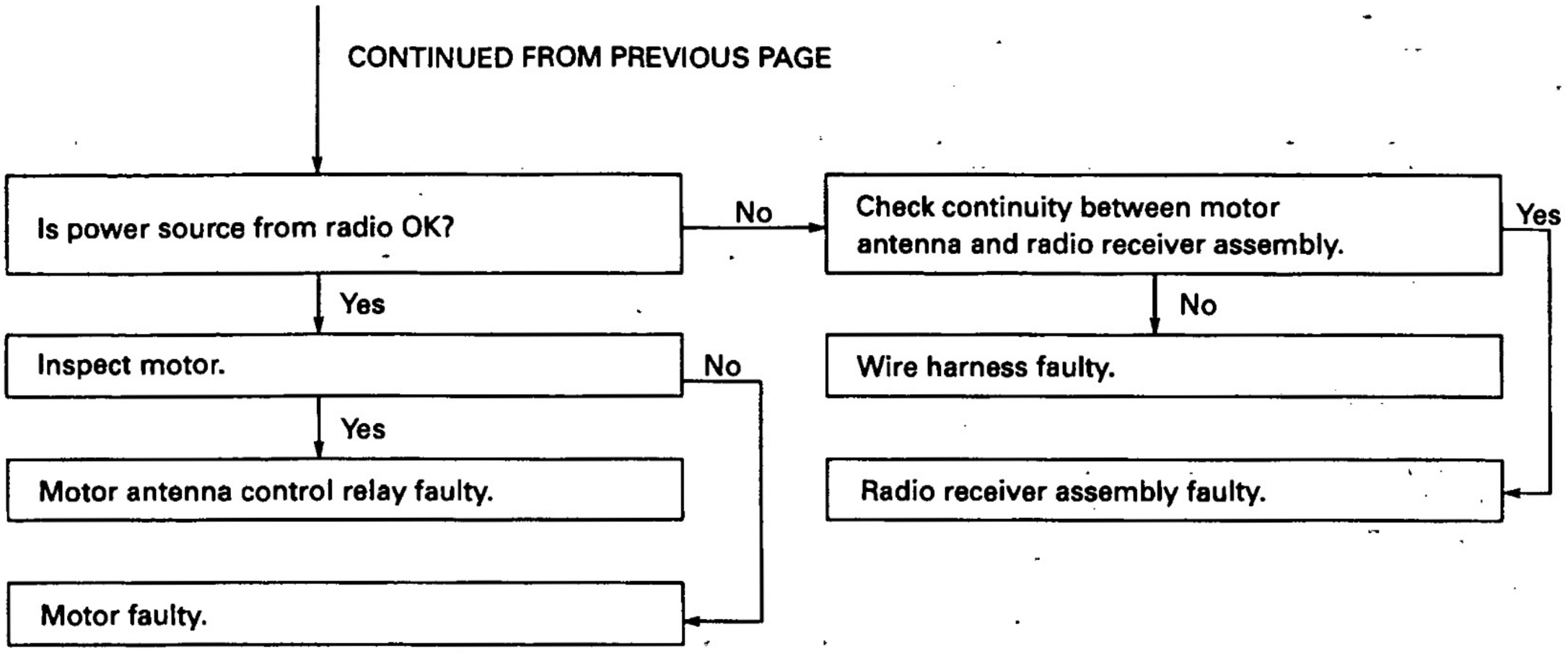
CONTINUED FROM PREVIOUS PAGE
Is power source from radio OK?
No
Check continuity between motor antenna and radio receiver assembly.
Yes
Yes
No
Inspect motor.
No
Wire harness faulty.
Yes
Motor antenna control relay faulty.
Radio receiver assembly faulty.
Motor faulty.

24	Antenna	ANTENNA-RELATED

Is the antenna cable connected securely to the radio?
- No → Connect the cable.
- Yes ↓

- Normal Type
  Does antenna rod extened fully when radio switch is turned on?
- Variable Length Type
  Does antenna rod extened to the specified length when the radio switch is turned on.
  Does antenna rod fully retract when the radio switch is turned off?

- No → Go to 23.
- Yes ↓

Inspect glass printed antenna.
(w/ glass printed antenna)
- NG → Glass printed antenna faulty.
- OK ↓

Is the antenna nut tight?
- No → Tighten nut.
- Yes ↓

Temporarily install another antenna. Functions OK?
- Yes → Motor antenna faulty.
- Yes ↓

Radio receiver side faulty.

V07614

25	Noise	NOISE PRODUCED BY VIBRATION OR SHOCK WHILE DRIVING

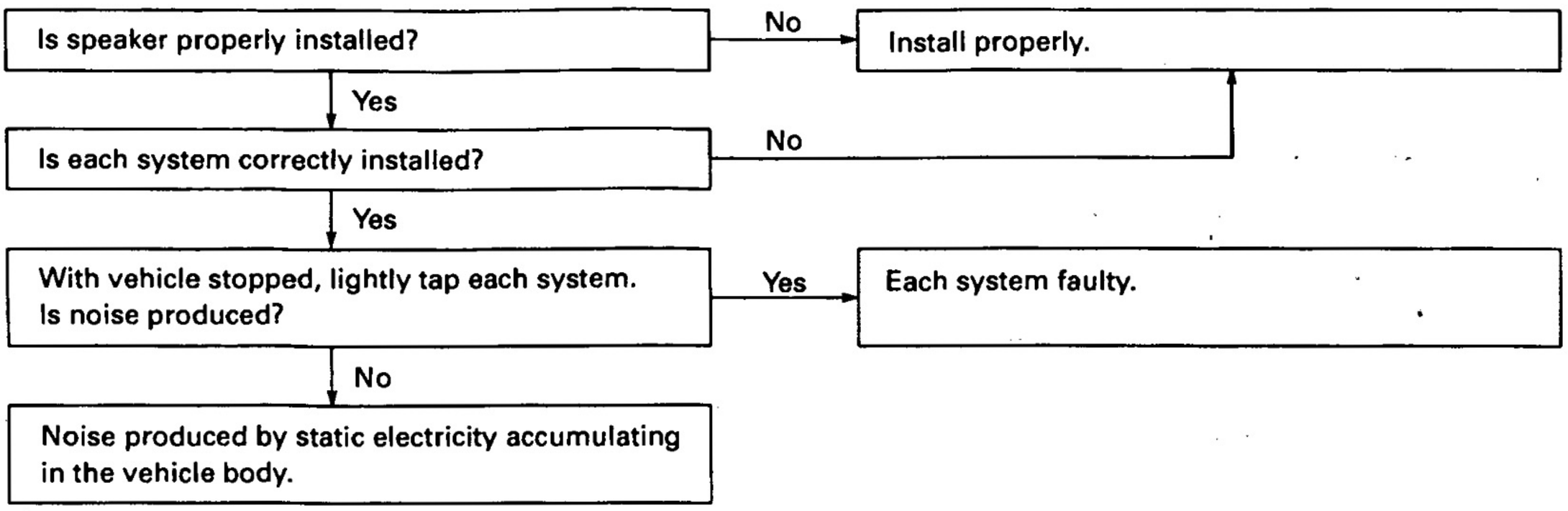

BE

V06164

26 Noise — NOISE PRODUCED WHEN ENGINE STARTS

Whistling noise which becomes high-pitched when accelerator strongly depressed, disappears shortly after engine stops.
- Yes → Generator noise.
- No ↓

Whining noise occurs when A/C is operating.
- Yes → A/C noise.
- No ↓

Scratching noise occurs during sudden acceleration, driving on rough roads or when ignition switch is turned on.
- Yes → Fuel gauge noise.
- No ↓

Clicking sound heard when horn button is pressed, then released. Whirring/grating sound when pushed continuously.
- Yes → Horn noise.
- No ↓

Murmuring sound, stops when engine stops.
- Yes → Ignition noise.
- No ↓

Tick-tock noise, occurs in co-ordination with blinking of flasher.
- Yes → Turn signal noise.
- No ↓

Noise occurs during window washer operation.
- Yes → Washer noise.
- No ↓

Scratching noise occurs while engine is running, continues a while even after engine stops.
- Yes → Engine coolant temp. gauge noise.
- No ↓

Scraping noise in time with wiper beat.
- Yes → Wiper noise.
- No ↓

Other type of noise.

BE

V06165

BE37V-01

ANTENNA REMOVAL

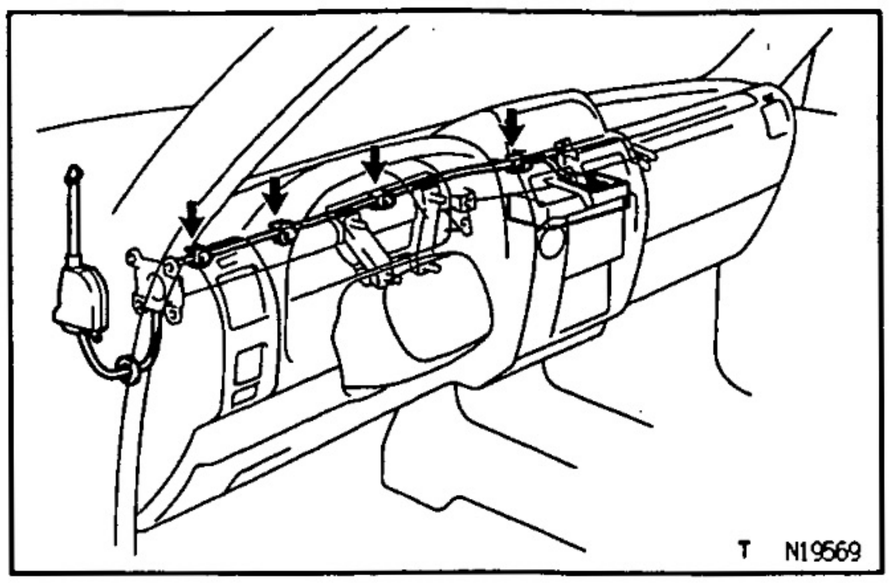

1. **REMOVE INSTRUMENT PANEL**
   (See page BO–55)
2. **DISCONNECT ANTENNA CABLE**

(a) Remove the radio and disconnect the antenna cable.
(b) Disconnect the antenna cable from the 4 clamps.

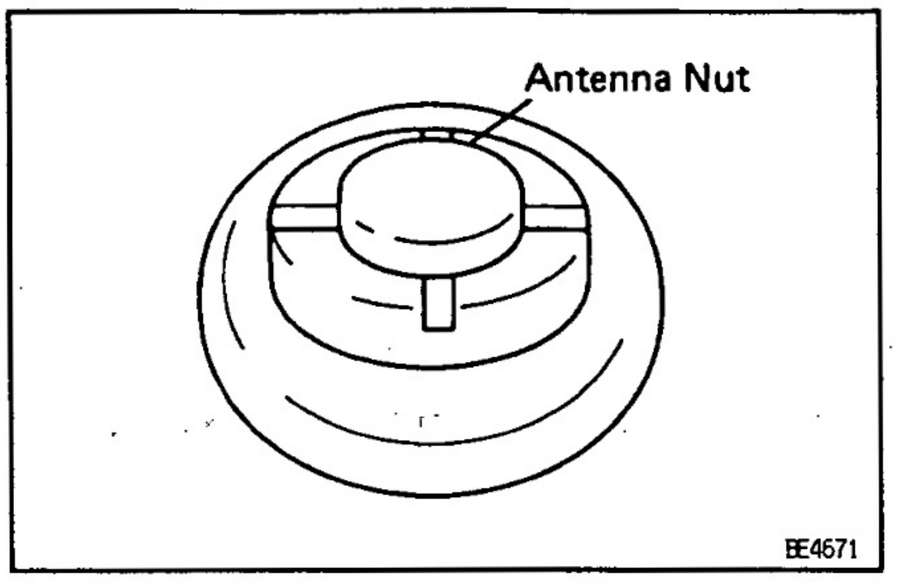

3. **REMOVE ANTENNA NUT AND ORNAMENT**

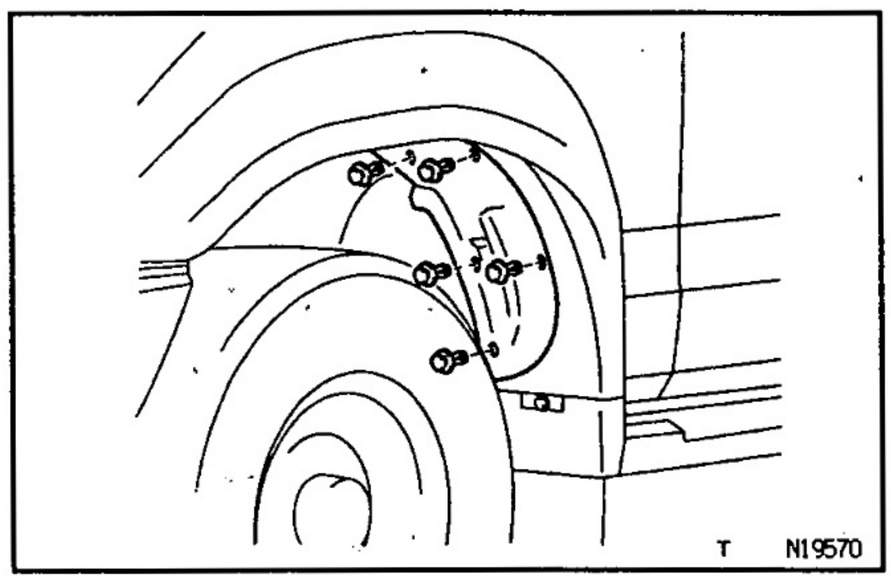

4. **REMOVE ANTENNA ASSEMBLY**

(a) Whether or not the wheel opening extension is installed, remove the 5 clips.
(b) Pull the fender liner.

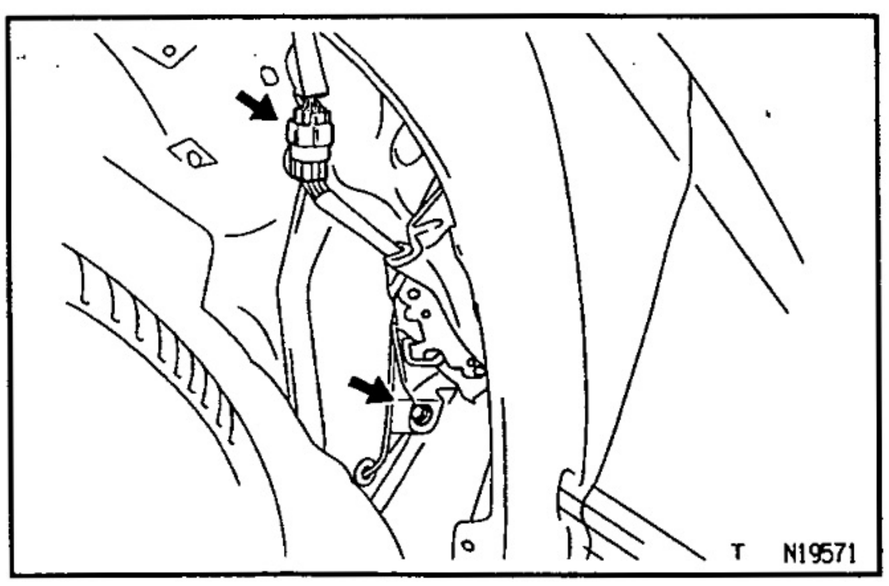

(c) Auto Antenna models:
Disconnect the connector.
(d) Remove the bolt and antenna assembly.

BE37W-01

ANTENNA INSTALLATION

Installation is in the reverse order of removal.

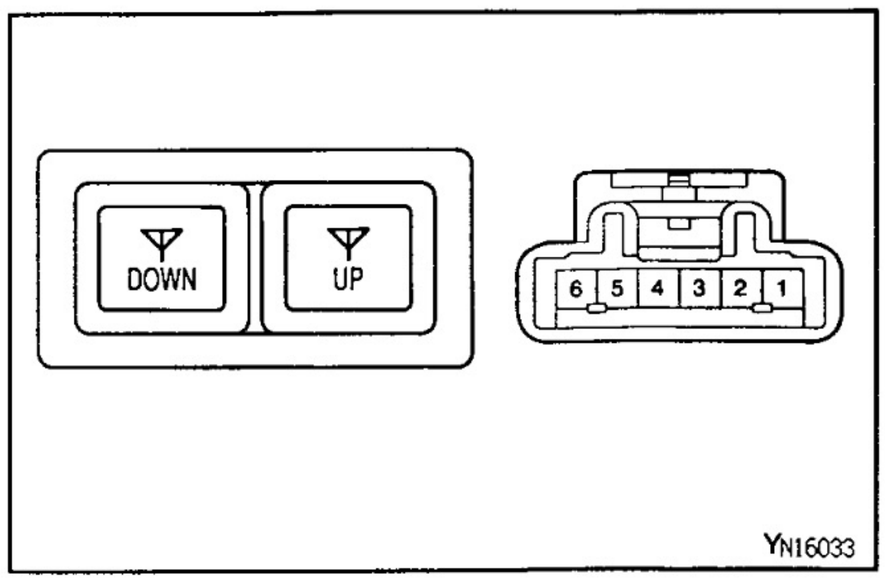

BE37X–01

ANTENNA SWITCH INSPECTION

1. INSPECT SWITCH CONTINUITY w/ Motor Antenna: Except: Radio–Linked Type

Condition	Tester connection	Specified condition
UP Button Position Free	2 – 5	Continuity
UP Button Position Pushed in	4 – 5	Continuity
DOWN Button Position Free	2 – 3	Continuity
DOWN Button Position Pushed in	3 – 4	Continuity
Illumination circuit	1 – 6	Continuity

If continuity is not as specified, replace the switch.

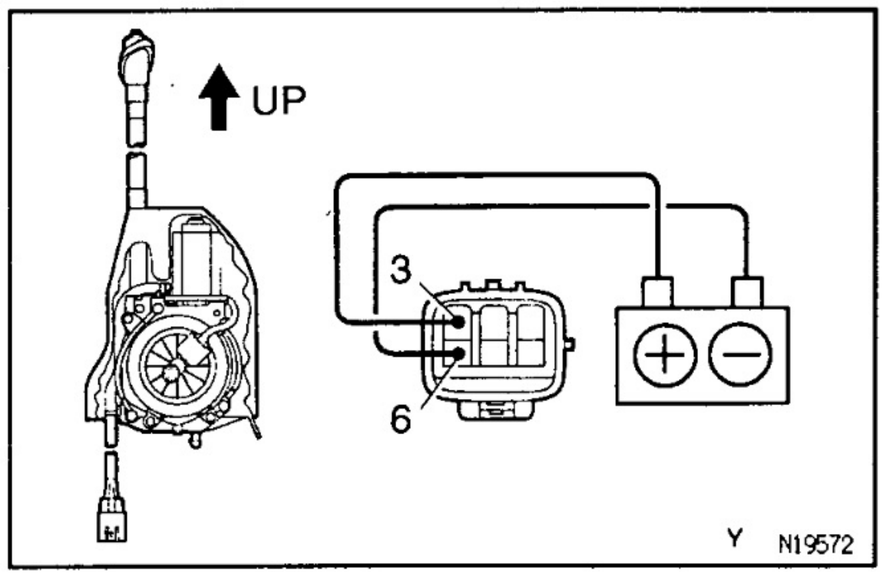

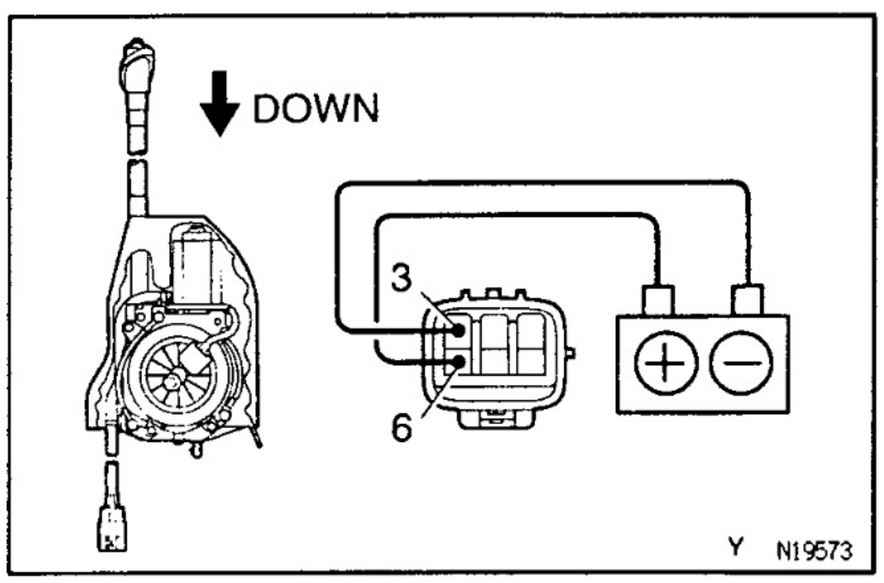

BE37Y–01

ANTENNA MOTOR INSPECTION

INSPECT MOTOR OPERATION w/ Motor antenna:

(a) Connect the positive (+) lead from the battery to terminal 3 and the negative (–) lead to terminal 6.

(b) Check that the motor turns (moves upwards).
NOTICE: These tests must be done quickly (within 3–5 seconds) to prevent the coil from burning out.

(c) Then, reverse the polarity, check that the motor turns the opposite way (moves downward).
NOTICE: These tests must be done quickly (within 3–5 seconds) to prevent the coil from burning out.

If operation is not as specified, replace the motor.

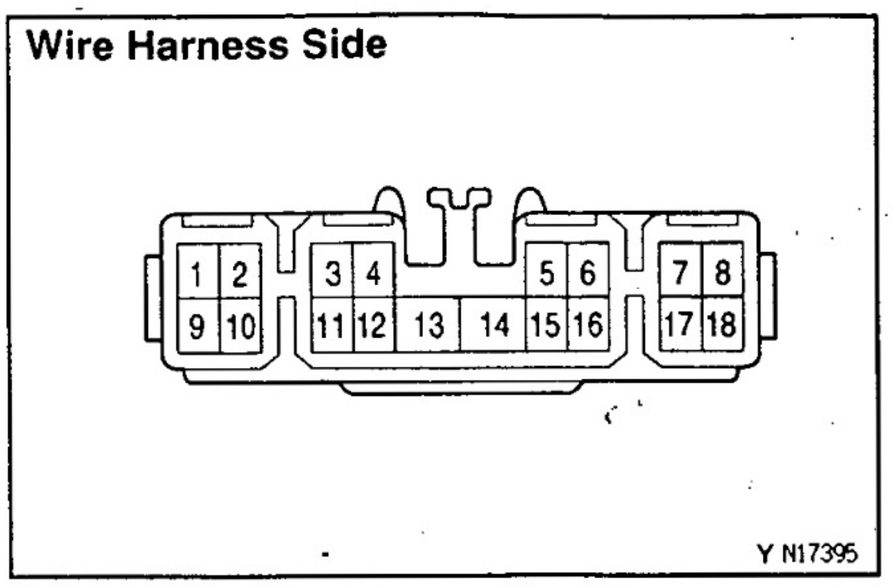

ANTENNA CONTROL RELAY INSPECTION

BE35T-02

INSPECT RELAY CIRCUIT

Disconnect the connector from the relay and inspect the connector on the harness side, as shown.

Tester connector	Condition	Specified condition
1 – Ground	Antenna "UP" switch OFF	No continuity
1 – Ground	Anténna "UP" switch ON	Continuity
5 – Ground	Constant	Continuity
4 – Ground	Constant	Battery voltage
7 – Ground	Ignition switch position LOCK or ACC	No voltage
7 – Ground	Ignition switch position ON	Battery voltage
17 – Ground	Ignition switch position LOCK	No voltage
17 – Ground	Ignition switch position ACC	Battery voltage

If the circuit is not as specified, inspect the circuits connected to other parts.

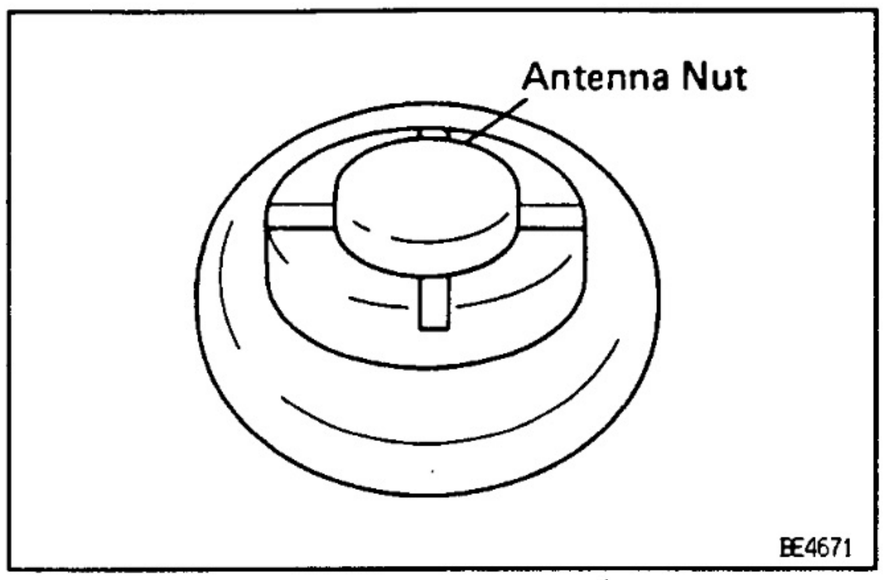

BE37Z-01

ANTENNA ROD REMOVAL AND INSTALLATION

1. REMOVE ANTENNA ROD

HINT: Do this operation with the negative (–) terminal cable connected to the battery.

(a) Turn the ignition switch to the "LOCK" position.

(b) Remove the antenna nut.

(c) Press the antenna switch to "UP", and simultaneously turn the ignition switch to the "ACC" position.

HINT:

- The rod will extend fully and be released from the motor antenna.
- After removing the antenna rod, leave the ignition switch at "ACC".

NOTICE: To prevent body damage when the antenna rod is released, hold the rod while it comes out.

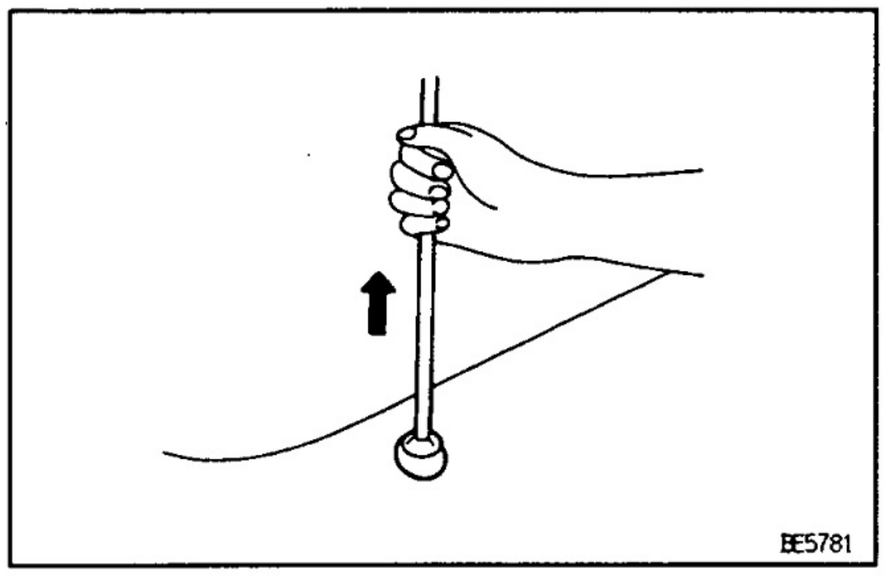

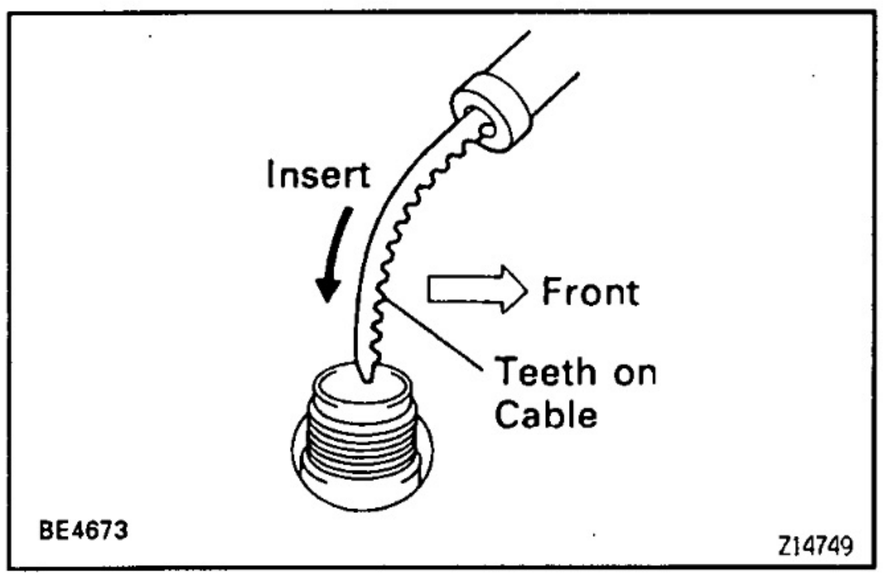

2. INSTALL ANTENNA ROD

(a) Insert the cable of the rod until it reaches the bottom.

HINT:

- When inserting the cable, the teeth on the cable must face toward the rear of the vehicle.
- Insert the cable approx. 400 mm.

(b) Wind the cable to retract the rod by turning the ignition switch to the "LOCK" position.

HINT:

- If the ignition switch is already in the "LOCK" position, do step 1 (c) first, then turn the ignition switch to the "ACC" position.
- In case the cable is not wound, twist it as shown in the illustration.
- Even if the rod has not retracted fully, install the antenna nut and inspect the antenna rod operation. It will finally retract fully.

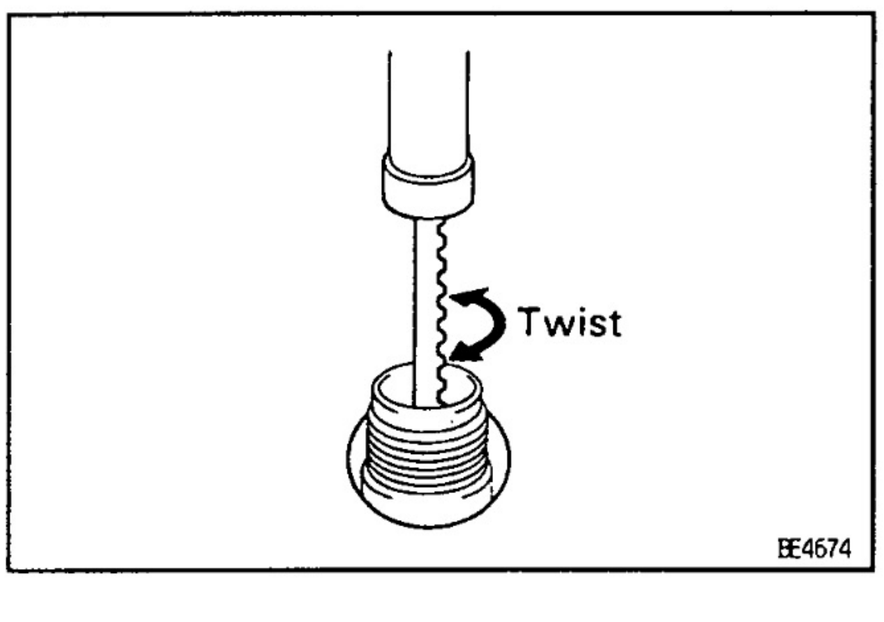

(c) Inspect the antenna rod operation by pushing the antenna switch to "UP" or "DOWN".

CLOCK

TROUBLESHOOTING

• BE39F-01

HINT: Troubleshoot the clock according to the table below.

Clock will not operate	1
Clock loses or gains time	2

± 1.5 seconds / day

w/ Sub fuel gauge:

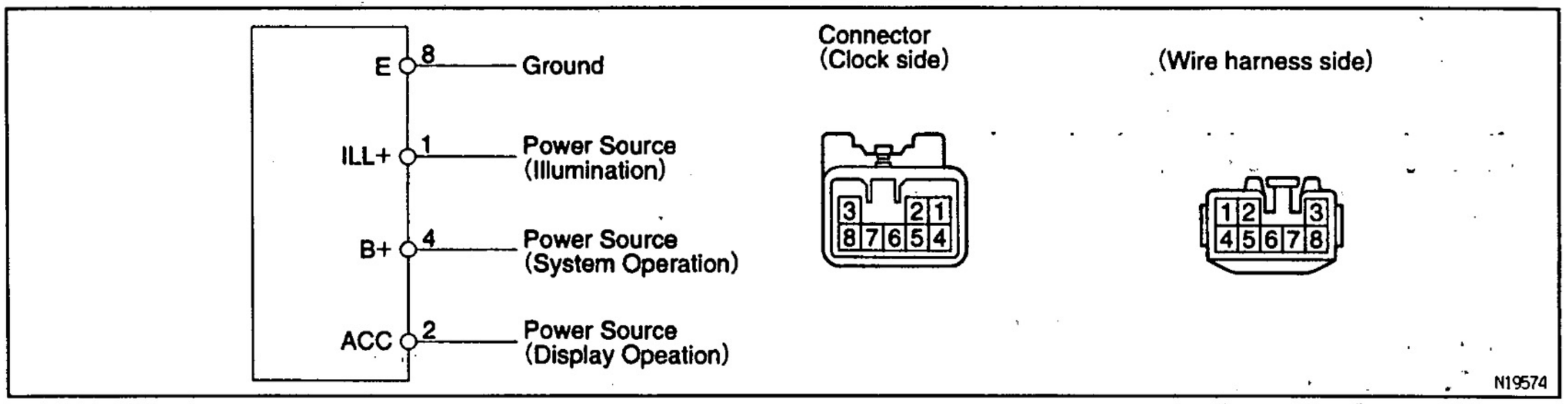

1 CLOCK WILL NOT OPERATE

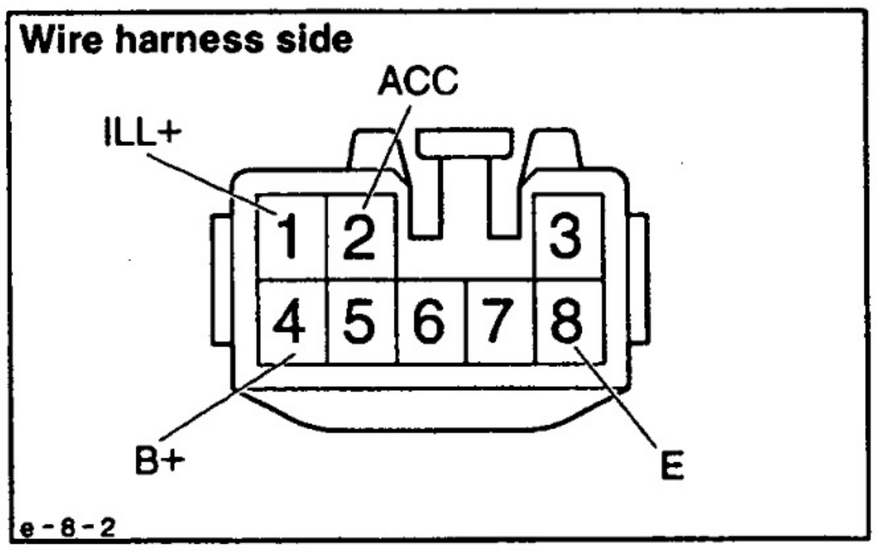

(a) Check that the battery voltage is 10 – 16 V.
If voltage is not as specified, replace the battery.

(b) Check that the TAIL, DOME and CIG fuses in not below.
If the fuse is blown, replace the fuse and check for short.

(c) Troubleshoot the clock as follows.
HINT : Inspect the connector on the wire harness side.

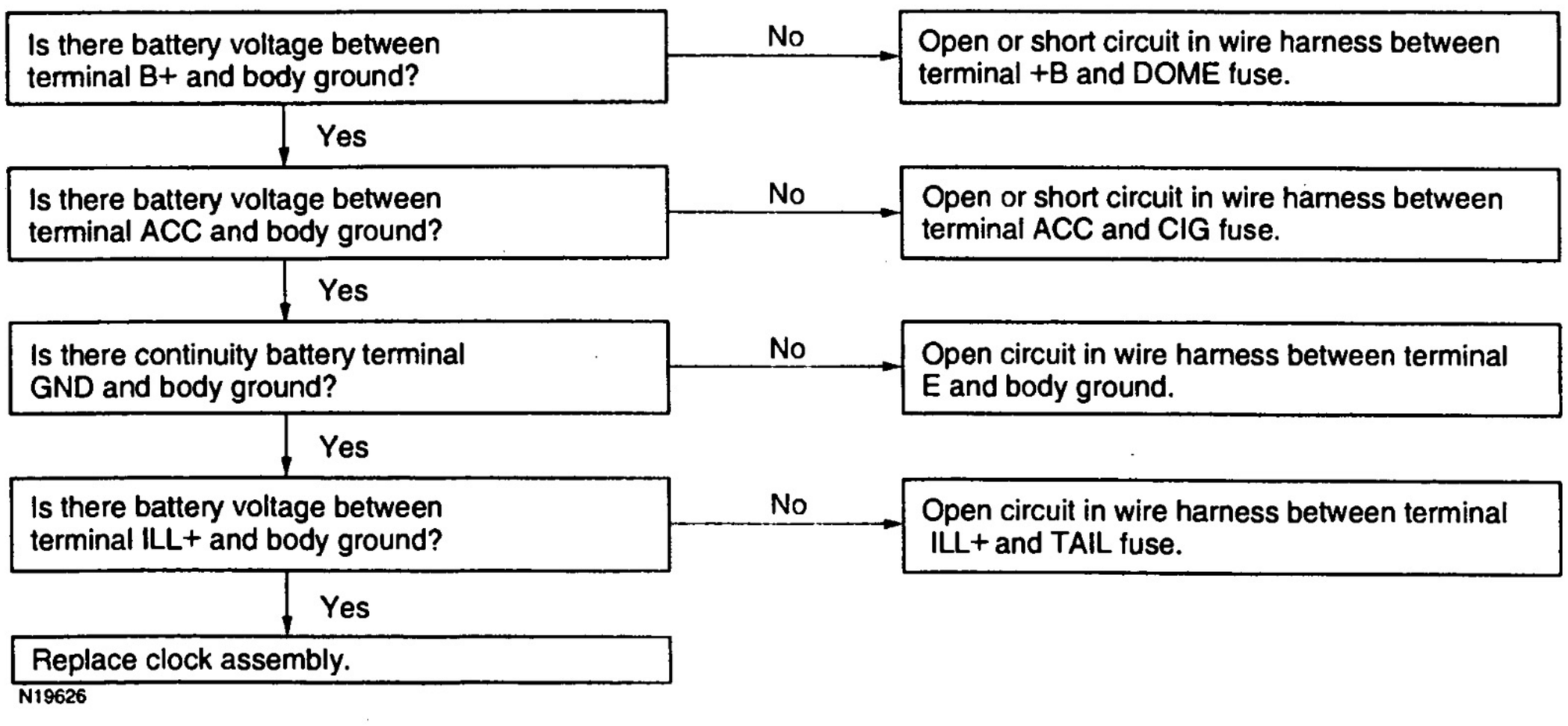

BE

T

V08043

2 CLOCK LOSES OR GAINS TIME

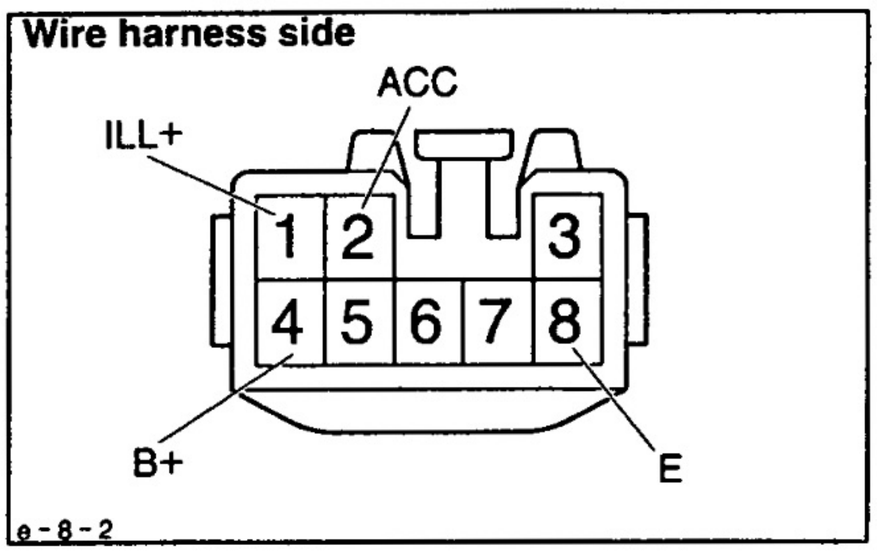

(a) Check that the battery voltage is 10 - 16 V.
If voltage is not as specified, replace the battery.

(b) Inspect the error of the clock.
Allowable error (per day) ±1.5 seconds
if the error exceeds the allowable error, replace the clock assembly.

(c) Check if the clock adjusting button is sticking in position and has failed to return.

(d) Troubleshoot the clock as follows.
HINT : Inspect the connector on the wire harness side.

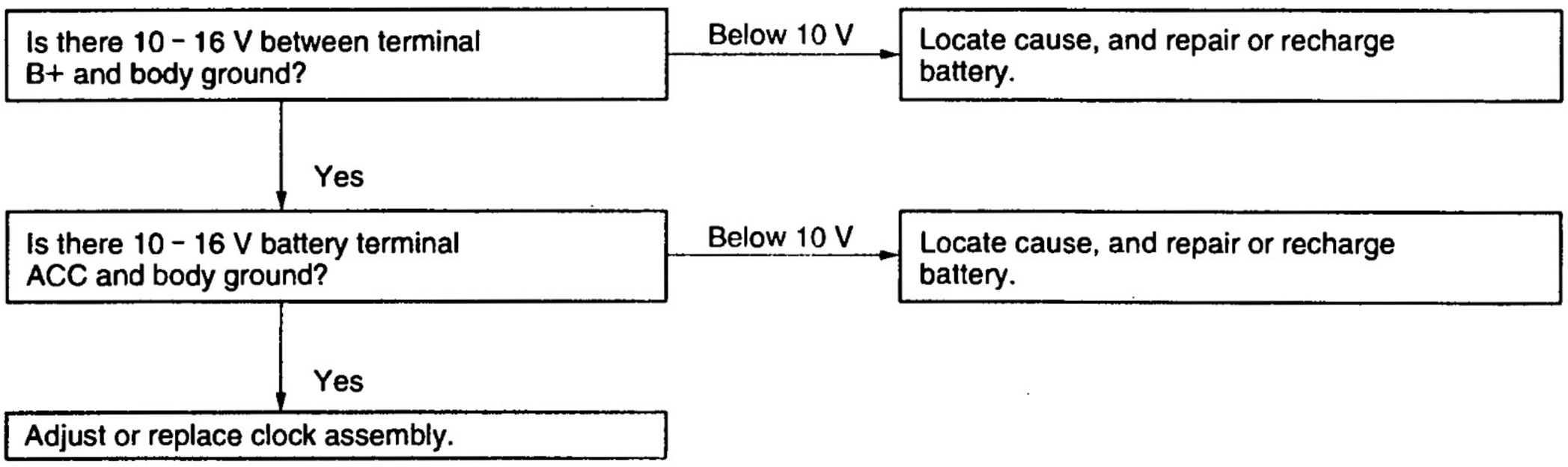

w/o Sub fuel gauge:

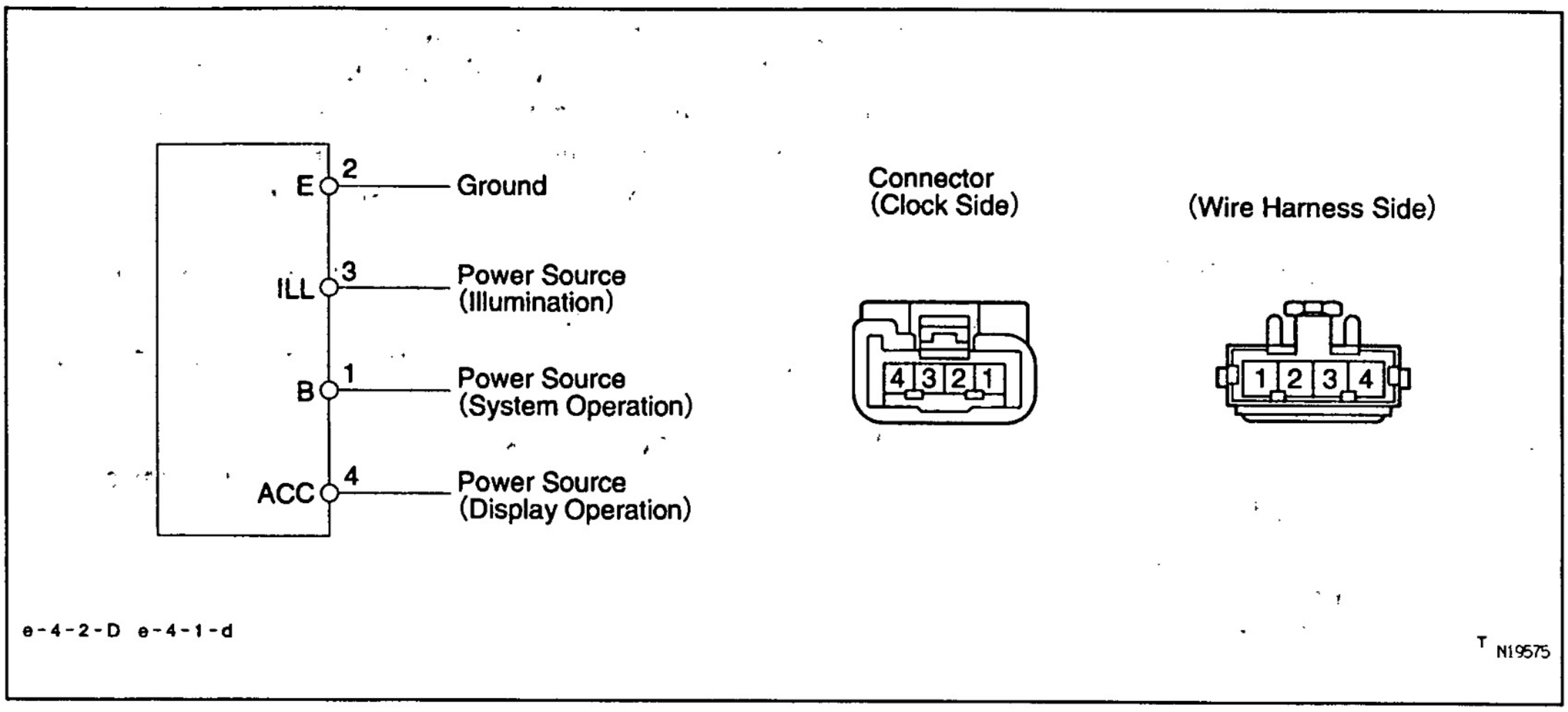

1 CLOCK WILL NOT OPERATE

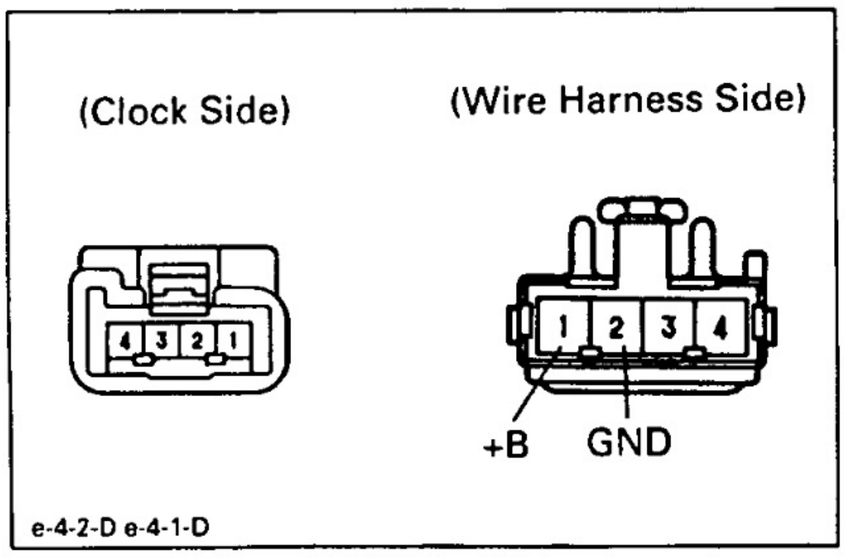

(a) Check that the battery voltage is 10 – 16 V.
If voltage is not as specified, replace the battery.

(b) Check that the DOME fuse is not blown.
If the fuse is blown, replace the fuse and check for short.

(c) Troubleshoot the clock as follows.
HINT: Inspect the connector on the wire harness side.

BE

Is there battery voltage between terminal +B and body ground?

No → Open or short circuit in wire harness between terminal +B and DOME fuse.

Yes ↓

Is there continuity between terminal GND and body ground?

No → Open circuit in wire harness between terminal GND and body ground.

Yes ↓

Replace clock.

V04928

2 CLOCK LOSES OR GAINS TIME

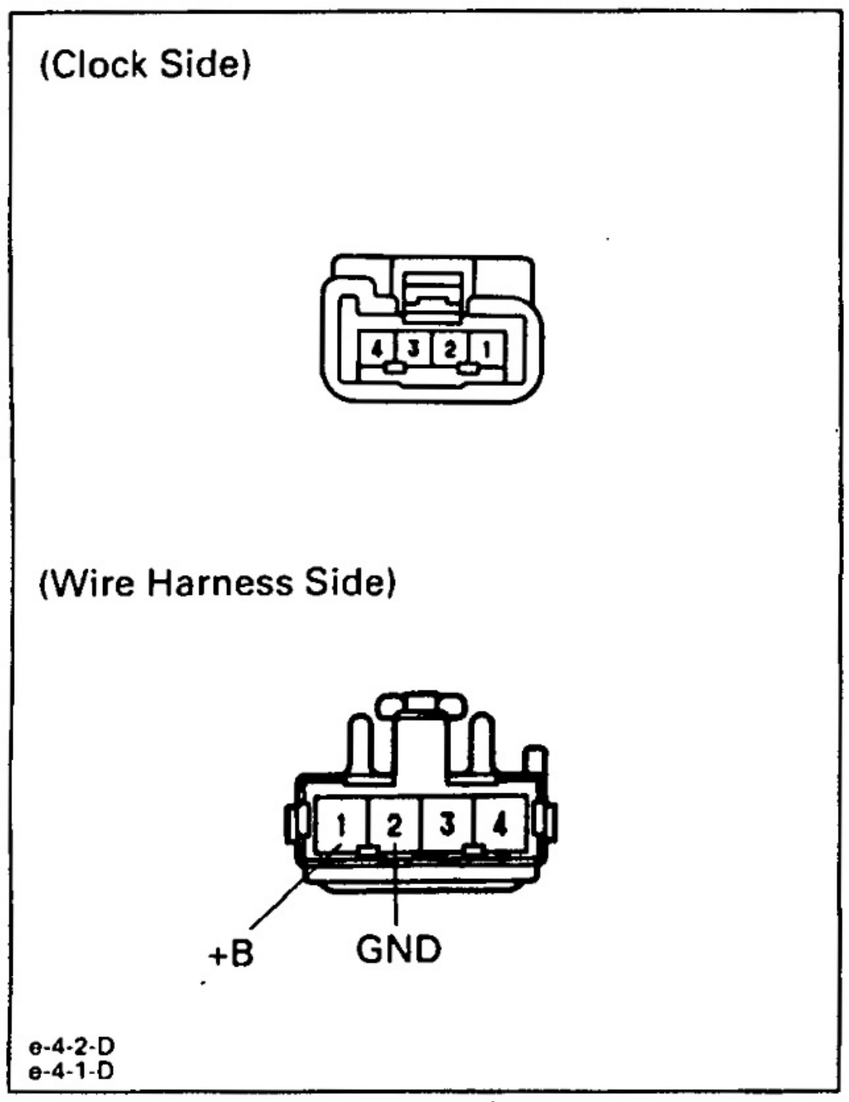

(a) Check that the battery voltage is 10 – 16 V.
If voltage is not as specified, replace the battery.

(b) Inspect the error of the clock.
Allowable error (per day): ± 1.5 seconds
If the error exceeds the allowable error, replace the clock.

(c) Check that the clock adjusting button is sticking in position and has failed to return.
If the error exceeds the allowable error, replace the clock.

(d) Troubleshoot the clock as follows.
HINT: Inspect the connector on the wire harness side.

Is there 10 – 16 V between terminal +B and body ground?

Below 10V → Locate cause and repair, or recharge battery.

Yes ↓

Adjust or replace clock.

V04929

WIRELESS DOOR LOCK CONTROL SYSTEM

HOW TO PROCEED WITH TROUBLESHOOTING ····· BE – 156
CUSTOMER PROBLEM ANALYSIS CHECK SHEET ····· BE – 157
PRECHECK TYPE I ····· BE – 158
PRECHECK TYPE II ····· BE – 160
INSPECTION OF TRANSMITTER ····· BE – 164
INSPECTION OF ANTENNA CIRCUIT ····· BE – 165
WIRELESS DOOR LOCK ECU REMOVAL AND INSTALLATION ····· BE – 166
TRANSMITTER AND RECOGNITION CODE REPLACEMENT ····· BE – 166
PARTS LOCATION ····· BE – 171
TERMINALS OF ECU ····· BE – 173
PROBLEM SYMPTOMS TABLE ····· BE – 174
CIRCUIT INSPECTION ····· BE – 175
- ECU Power Source Circuit ····· BE – 175
- Ignition Switch Circuit ····· BE – 177
- Door Unlock Detection Switch Circuit ··· BE – 179
- Door Key Lock and Unlock Switch Circuit (Unlock Side) ····· BE – 181
- Door Key Lock and Unlock Switch Circuit (Lock Side) ····· BE – 183
- Key Unlock Warning Switch Circuit ····· BE – 185
- Door Courtesy Switch Circuit ····· BE – 187

HOW TO PROCEED WITH TROUBLESHOOTING

Perform troubleshooting in accordance with the procedure on the following page.

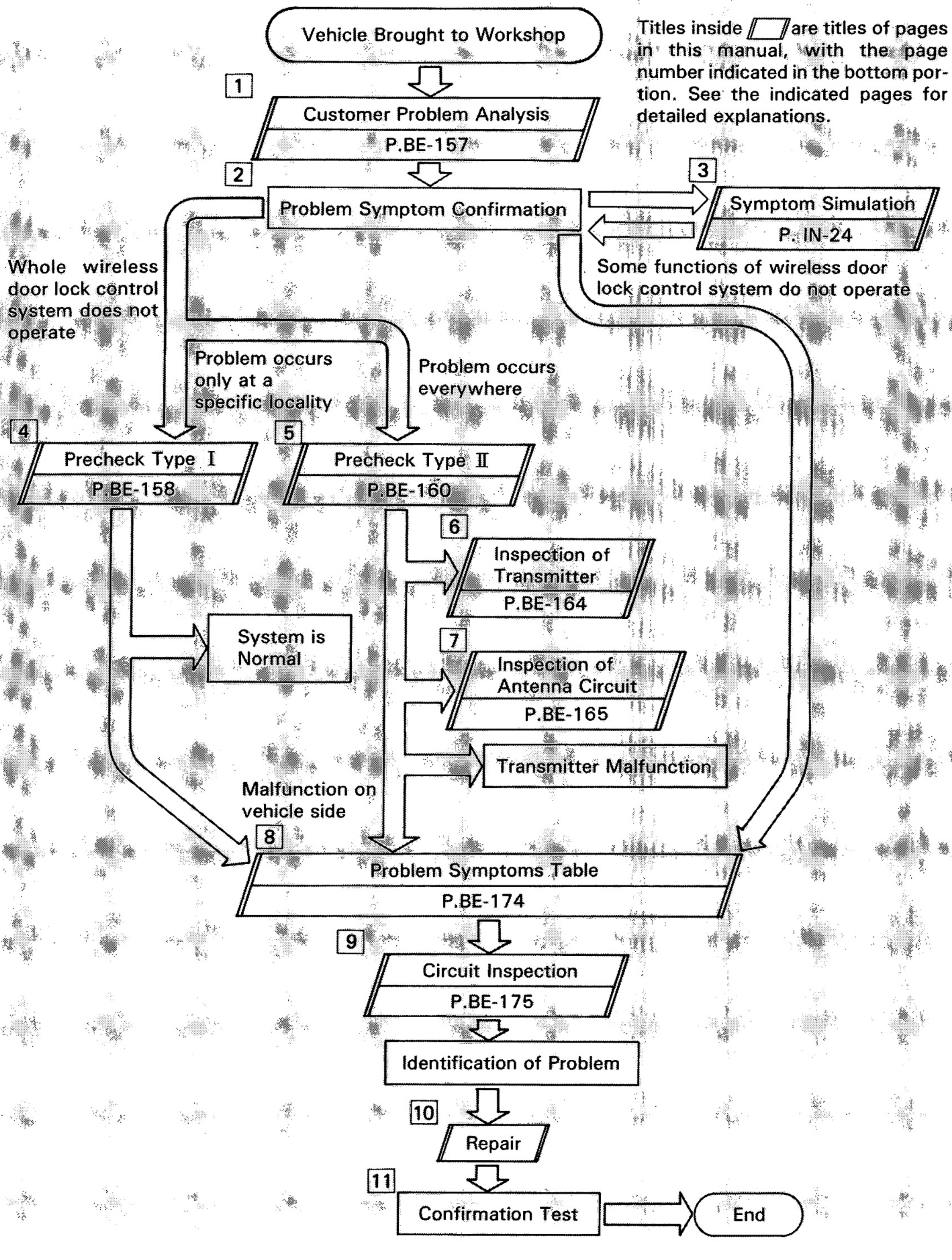

Titles inside ▱ are titles of pages in this manual, with the page number indicated in the bottom portion. See the indicated pages for detailed explanations.

CUSTOMER PROBLEM ANALYSIS CHECK SHEET

WIRELESS DOOR LOCK CONTROL System Check Sheet

Inspector's Name :

Customer's Name		**Registration No.**	
		Registration Year	/ /
		Frame No.	
Date Vehicle Brought In	/ /	**Odometer Reading**	km Miles

Date Problem First Occurred		/ /
Frequency Problem Occurs		☐ Constant ☐ Sometimes (times/per day, month) ☐ Once only
Weather Conditions When Problem Occurs	**Weather**	☐ Fine ☐ Cloudy ☐ Rainy ☐ Snowy ☐ Various/Others
	Outdoor Temperature	☐ Hot ☐ Warm ☐ Cool ☐ Cold (Approx. °F (°C))
	Place	☐ Everywhere ☐ Specific Locality ( )
Date Transmitter Battery Last Replaced		/ /

Problem Symptom	☐ Whole wireless door lock control system does not operate.	
	☐ Only door unlock operation is not possible.	
	☐ Only door lock operation is not possible.	
	☐ Only key confine prevention function is not possible.	
	☐ Wireless door lock function operates even when each door is opened.	
	☐ Wireless door lock function incorrectly. (Although one door is unlocked, when the transmitter switch is pressed, all doors unlock.	☐ When Front RH door is unlocked ☐ When Front LH door is unlocked ☐ When Rear RH door is unlocked ☐ When Rear LH door is unlocked
	Others	

BE

PRECHECK TYPE I

Only Wireless Function (Remote Control) Not Operating (Malfunctions Only at a Specific Locality)

Put vehicle in initial condition as follows:
① Key is not inserted in ignition key cylinder.
② All doors are closed.

Enter diagnostic mode.
Put the door lock receiver in diagnostic mode as follows:
① Open the driver's door.
② Lock all doors.
③ Insert the key in the ignition key cylinder, then window it.
④ Using the door control (for manual operation), within a period of 30 seconds, switch 9 times from UNLOCK or vice-versa at 1 second intervals).
For the 10th time, switch only from UNLOCK to LOCK.
(If operation of the door control switch is too slow or too fast, diagnostic mode is not initiated.)

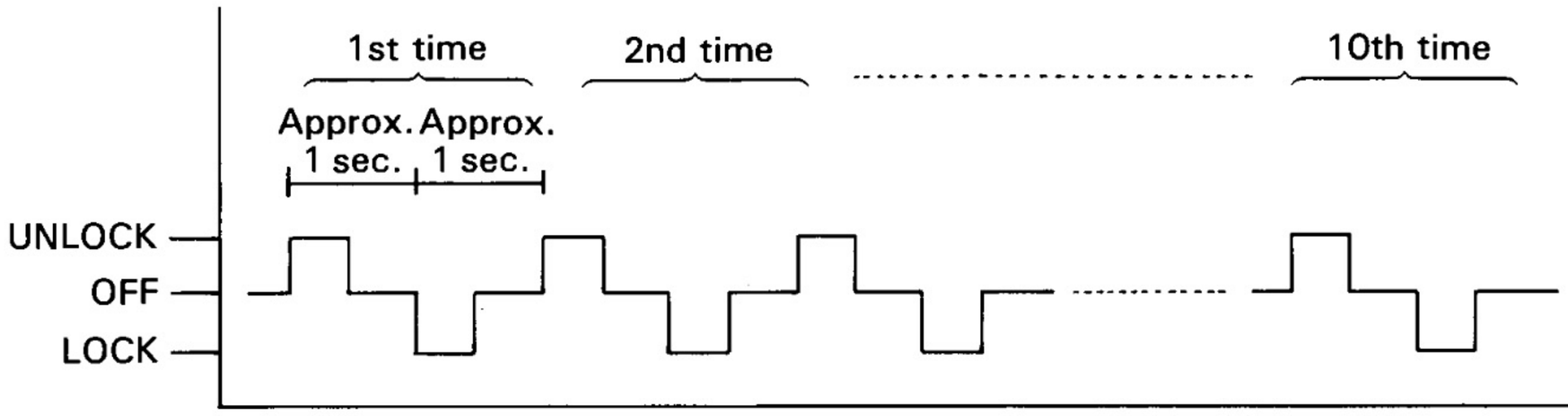

Does UNLOCK-LOCK automatically occur 1 time within 3 seconds of switching to diagnostic mode?

No
(Not in diagnostic mode)

Correct method for entering diagnostic mode

No

Yes

Receiver faulty

Yes
(Diagnostic mode entered)

Does UNLOCK-LOCK automatically occur several times within 10 seconds of the previous UNLOCK-LOCK operation.

UNLOCK-LOCK Occurs Once
(Received FM frequency matching ID code of this vehicle.)

Transmission received from another vehicle.

No operation
(No FM signals received on transmitter's frequency)

UNLOCK-LOCK Occurs Twice
(The wireless door lock main switch received an FM signal at the transmitter frequency, or matching ID coder of other vehicle.)

Normal
<Reference>
If the inspection is done in a locality where noise does not occur regularly, and no noise happens to occur at the time of the test, the transmitter may be judged as normal.

Noise Occurs in Region of Use
<Reference>
- The transmitter uses weak signals, so noise affects it and makes remote control operation difficult within normal operating range.
- To reduce the influence of noise, ground the tip of the transmitter key groove by applying it to the antenna part of the back window grass.
  When you press the transmitter switch, door lock remote control operation becomes possible.
- If door lock remote control still does not work, insert the key in the door key cylinder and operate the cylinder.

PRECHECK TYPE Ⅱ

Only Wireless Function (Remote control) Not Operating (Malfunction Not concentrated in Specific Locality)

Put vehicle in initial condition as follows:
① Key is not inserted in ignition key cylinder.
② All doors are closed and locked.

↓

Do doors UNLOCK by the following standard operation?
① Hold transmitter about 1 meter to the right of the driver's outside door handle.
② Point the key plate of the transmitter toward the vehicle and press the transmission switch for about 1 sec.
(Do not touch the transmitter's key plate with your fingers.)

↓ No

↓ Yes

NORMAL
<Reference>
- The minimum operating distance varies according to who the operator is, how the key is hold, and the vehicle location.
- A very weak signal is used, so the operable distance can become shortened by the presence of strong radio waves or noise interfering with the signal.
- If you touch the key plate, the operating distance is reduced.

↓

Is the transmitter's battery charge sufficient? (See "Separate Inspection" – "Control Transmitter")

No → Battery faulty.

↓ Yes

Set the FM radio to 94.0 MHz (93.9 MHz – 94.1 MHz) and bring the transmitter key plate close to the radio antenna.
<Reference>
- Although the inspection can be done by inserting the transmitter in the ignition key cylinder, turning it to ACC and using the radio, the transmitter is separated from the antenna so it is not possible to judge whether the transmitter is faulty.
- If the frequency 94.0 MHz (93.9 MHz – 94.1 MHz) is the same as an FM radio station frequency, use a portable radio and do the inspection in doors where radio reception is weak. In this case, touch the key plate against the antenna of the portable radio.

↓

Does noise affect the speaker when the transmitter switch is pressed?
NOTICE:
- The sound differs according to the battery capacity remaining and the way the key is held, so no judgement about malfunction can be made based on sound volume or quality.
- Judgement about whether the battery is functioning properly or not cannot be made based on noise interference.

↓ Yes

↓ No

Transmitter faulty

Put the vehicle in initial condition.

Put the door lock receiver in diagnostic mode as follows:

① Open the driver's door.
② Lock all doors.
③ Insert the key in the ignition key cylinder, then withdraw it.
④ Using the door control switch (for manual operation), within a period of 30 seconds, switch 9 times from UNLOCK to LOCK to UNLOCK (switching from LOCK to UNLOCK or vice −versa at 1 second intervals). For the 10th time, switch only from UNLOCK to LOCK.
(If operation of the door control switch is too slow or too fast, diagnostic mode is not initiated.)

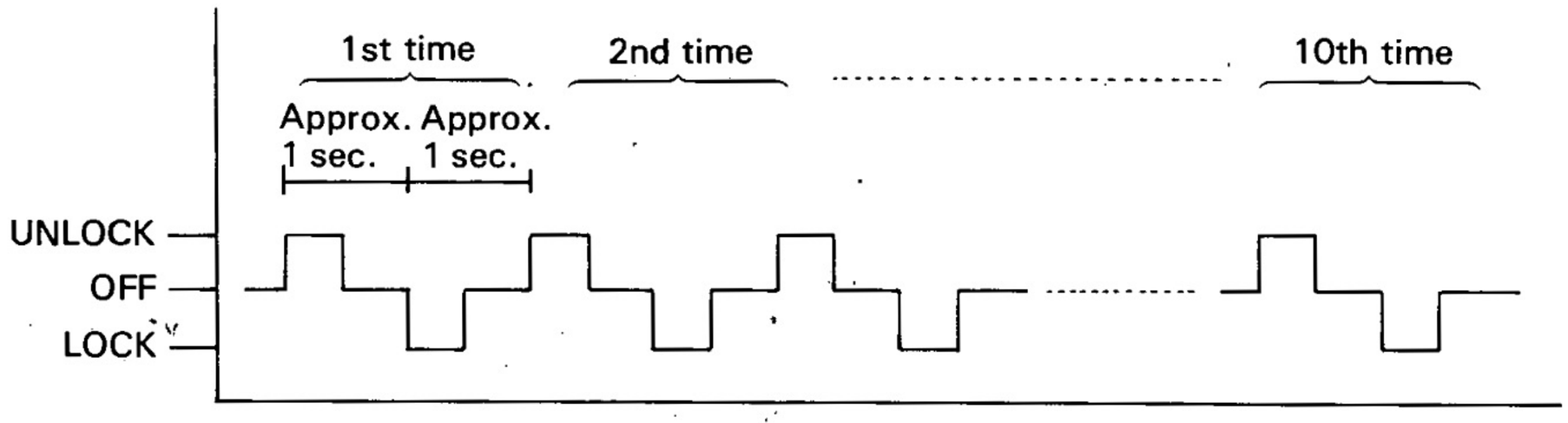

Does UNLOCK-LOCK automatically occur 1 time within 3 seconds, of switching to diagnostic mode?

No (Not in diagnostic mode)

Correct method for entering diagnostic mode?

No

Yes

Yes (Diagnostic mode entered)

For each terminal of the connector connected to the receiver, check continuity with the body ground, check the voltage or check for normal operation of the electronic door lock, as specified below.

Specifications

Terminal No.	Check Item	Inspection Condition	Specification
2	Voltage	Constant	10 ～ 14 V
3	Voltage	Ignition switch OFF → ON	0V→10～14V
4	Operation	All doors locked → ground terminal 4 while grownding terminal 9	All doors UNLOCK
6	Operation	All doors unlocked → ground terminal 6	All doors LOCK
7	Voltage	Door lock knob of all doors to LOCK → except driver's door lock knob to UNLOCK	5 V more → 0 V
8	Voltage	Insert key plate into ignition key cylinder → remove key plate	0V→10～14V
9	Continuity	Constant	Continuity
10	Voltage	Driver's door lock knob LOCK → UNLOCK	5 V more → 0 V
12	Voltage	All doors closed → any door open	10～14V→0V

Yes

Receiver faulty

No

Vehicle wiring faulty

BE

Within 5 seconds of entering diagnostic mode, insert the transmitter into the door key cylinder and push the transmitter switch for at least 1 second.

Within the next 10 seconds, how many times does UNLOCK-LOCK automatically occur?

Occured 2 times
(FM transmission on transmitter frequency received, or matching ID code of other vehicle.)
→ Transmitter faulty

Occured once (Received FM transmission on transmitter frequency matching vehicle's code.)

Is mode for confirming registration of ID code normal?
See "Door Control Receiver and Transmitter"

Yes

No

When ignition switch is turned OFF → ON, does voltage between 3 terminals of connector connected to receiver and body ground go from 0 V → 10 ~ 14 V?

Yes → Receiver Faulty

No → Fault in ignition power source system

Are ID code registration changeover mode and additional mode normal?
(See "Door Control Receiver and Transmitter" and "Registration of ID codes"

No → Transmitter Faulty

Yes

Registration of ID codes Normal

Put vehicle in initial condition

Remove antenna cable from receiver, insert transmitter key plate directly into the antenna cable jack and press the transmitter switch for about 1 second.

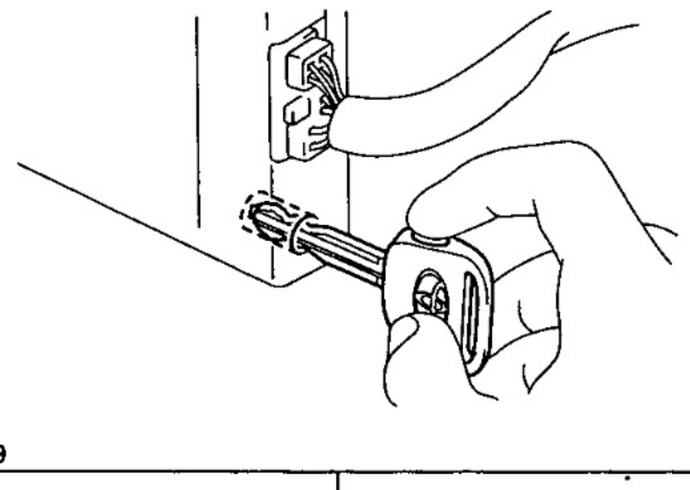

N19629

Does UNLOCK occur?

Yes → Is there continuity between the bottom terminal of the transmitter and the key plate.

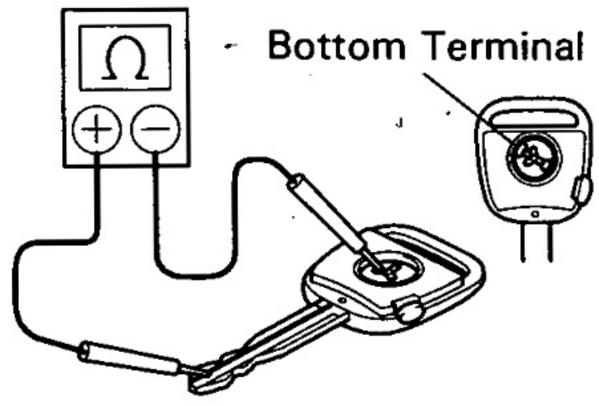

Yes → Antenna system faulty

No → Transmitter faulty

No → Transmitter or receiver faulty

INSPECTION OF TRANSMITTER

HINT: Perform this inspection only when transmitter is judged to be faulty in precheck type Ⅱ.

1	Transmitter battery capacity check.

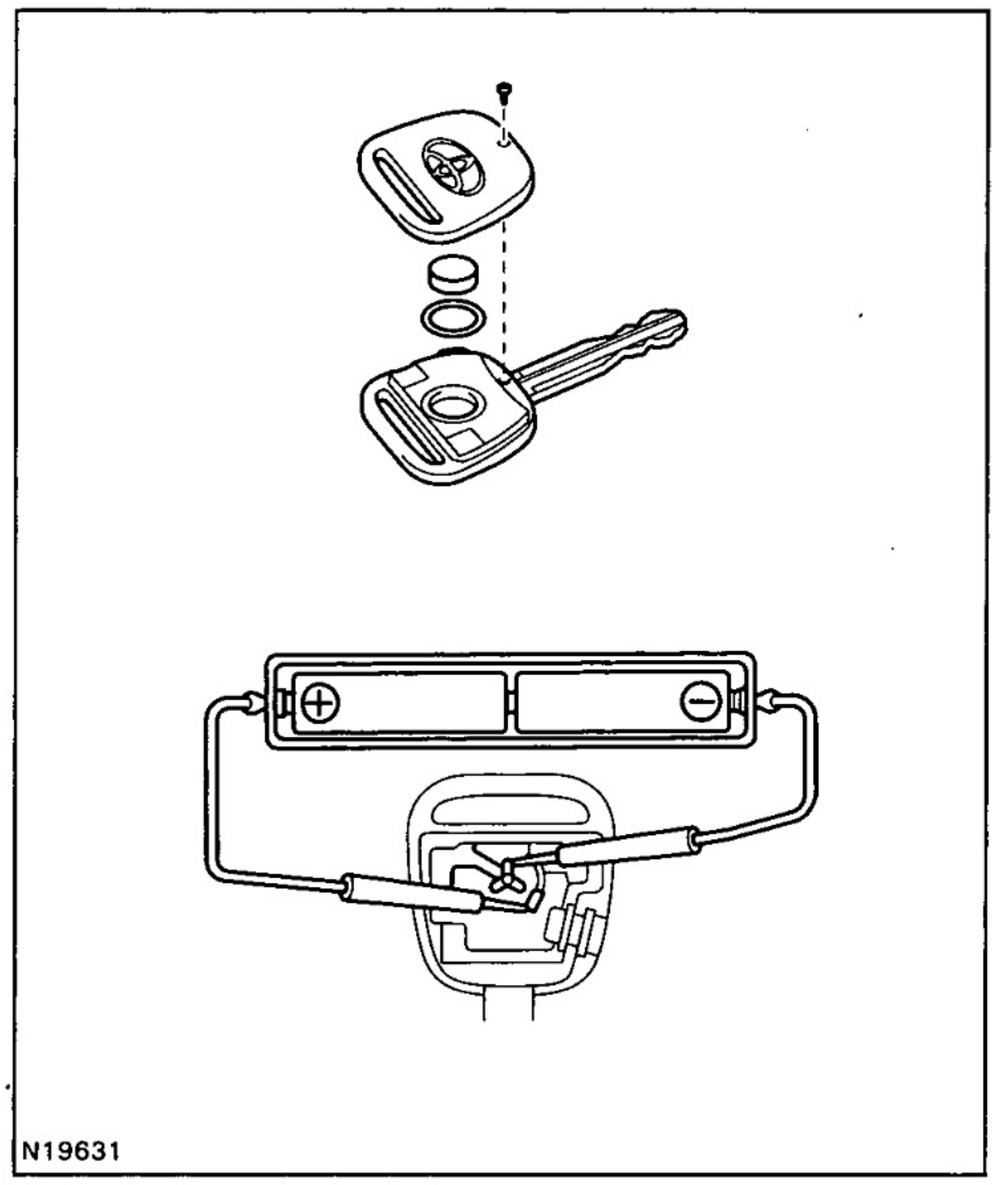

N19631

HINT:
This inspection is not directly for the purpose of checking the capacity of the transmitter battery, but is performed when remote control operation becomes difficult or impossible, in order to ascertain if this is caused by low battery capacity.

PREPARATION:

(1) Remove the transmitter screw.
(2) Remove the cover.
(3) Remove the O-ring and battery.

CHECK:

(1) Connect 2 new 1.5 V dry-cell batteries in series. Connect the battery ⊕ terminal to the battery receptacle side terminal and the battery ⊖ terminal to the bottom terminal to provide 3 V to the transmitter.
(2) In the condition (1), push the wireless door lock remote control switch on the side of the transmitter body and operate the door lock by remote control.

OK:

Remote control operation possible.

NG → **Replace transmitter and registration of recognition code (See page BE-167).**

OK → **Replace the battery for transmitter (See page BE-166).**

INSPECTION OF ANTENNA CIRCUIT

Antenna Circuit

CIRCUIT DESCRIPTION

The antenna receives the electromagnetic wave emitted by the transmitter and sends it to the wireless door lock ECU.

WIRING DIAGRAM

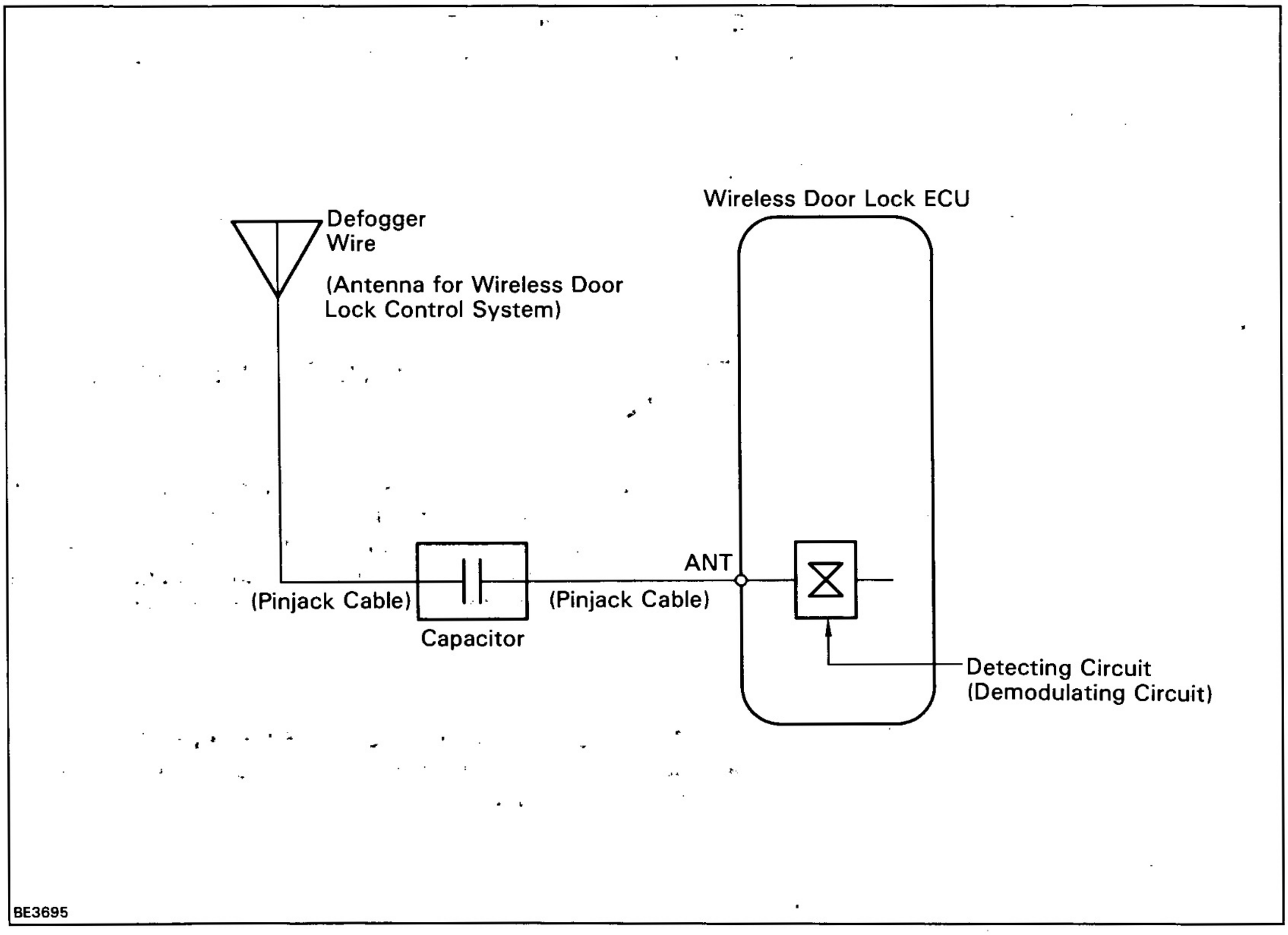

INSPECTION PROCEDURE

1	Check defogger wire (See page BE-71).

OK

NG → Repair defogger wire.

Replace antenna pinjack cable and capacitor.

• 3 Doors

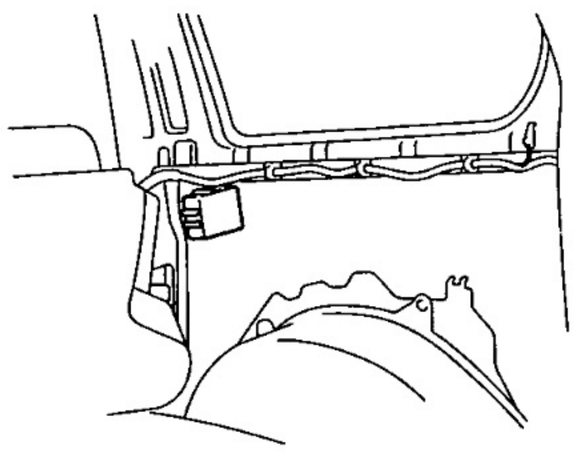

N19632

• 5 Doors

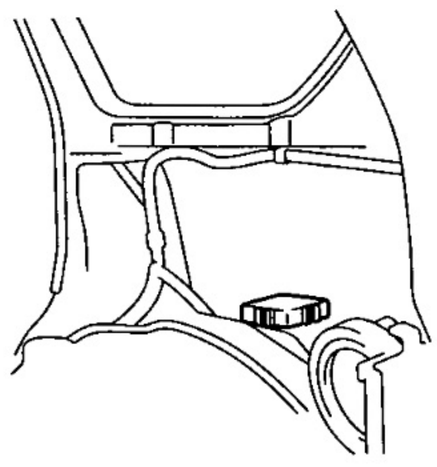

N19633

WIRELESS DOOR LOCK ECU REMOVAL AND INSTALLATION

1. **REMOVE WIRELESS DOOR LOCK ECU.**
(a) Remove quarter trim RH side cover.
(b) Remove the 2 nuts.
(c) Disconnect the connectors.
(d) Remove the ECU.

2. **INSTALL WIRELESS DOOR LOCK ECU**
Installation is in the reverse order of removal.

TRANSMITTER AND RECOGNITION CODE REPLACEMENT

CAUTION:
- **Each part is a precise electronic instrument which must be handled carefully.**
- **The transmitter and door control receiver are provided as separate supply parts, so the recognition code must be registered when replacing the parts.**

BE

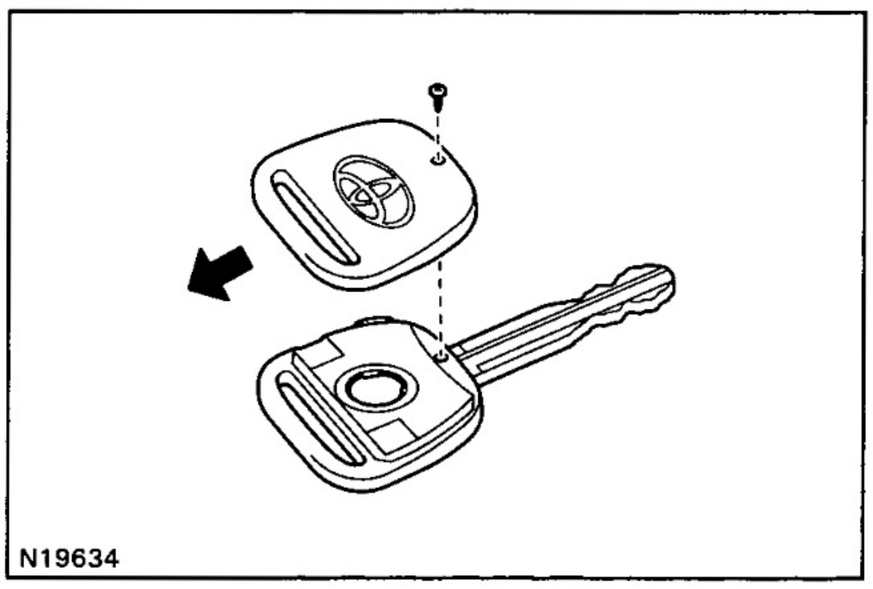

N19634

1. **REPLACEMENT OF TRANSMITTER BATTERY**
(a) Remove the screw and slide the cover to the rear to remove the cover.

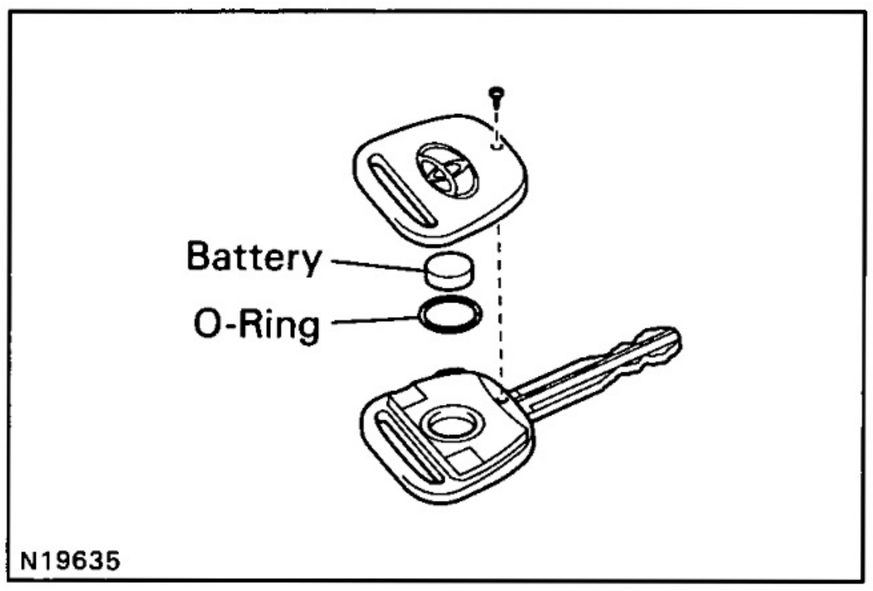

N19635

(b) Remove the battery and O-ring.
(c) Set the new O-ring and battery into the transmitter with the battery's positive terminal (+) facing upward.
HINT: The O-ring and battery are supplied as a set.
(d) When closing the cover, take care that the O-ring is not twisted or displaced.
(e) Tighten the screw.

2. REGISTRATION OF RECOGNITION CODE

Follow the flow chart on the following page to register the transmitter recognition code with the door control receiver.

HINT:

- If the prescribed conditions are not entered while registering the transmitter code, the receiver returns to normal operation.
- There are 4 modes: add mode, rewrite mode, confirmation mode and erase mode; the mode to use is decided after the recognition code is registered.
- If maximum of 4 recognition codes can be registered.

REFERENCE:

- The add mode is used to retain codes already registered while you register new recognition codes. However, if the number of registered codes exceeds 4 codes, previous registered codes are correspondingly erased in order, starting from the first registered code.
- The rewrite mode is used to erase all previous registered codes before registering new recognition codes. This mode is used when replacing the transmitter or door control receiver.
- The confirmation mode is for confirming how many recognition codes are already registered before you register additioned recognition codes.
- The erase mode is used to erase all registered modes and cancels the wireless door lock operates. Use this mode when the transmitter is lost.

Start registration of recognition code

The vehicle should be as follows.
- The key is not inserted in the ignition key cylinder.
- Driver's door is OPEN. (Other doors are CLOSED)
- Driver's door is UNLOCKED.

Insert the key into the ignition key cylinder, then remove it.

within 20 secs.

Using the door control switch (for manual operation) move the switch 5 times to LOCK/UNLOCK at approx. 1 sec. intervals.

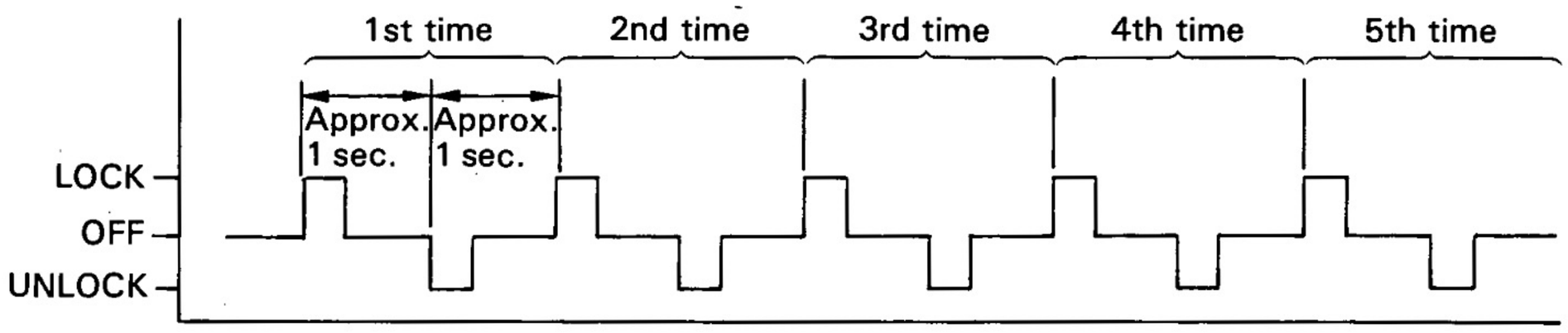

within 20 secs.

Close the driver's door, then open it.

within 20 secs.

Again using the door control switch (for manual operation), move the switch 5 times to LOCK/UNLOCK at approx. 1 sec. intervals.

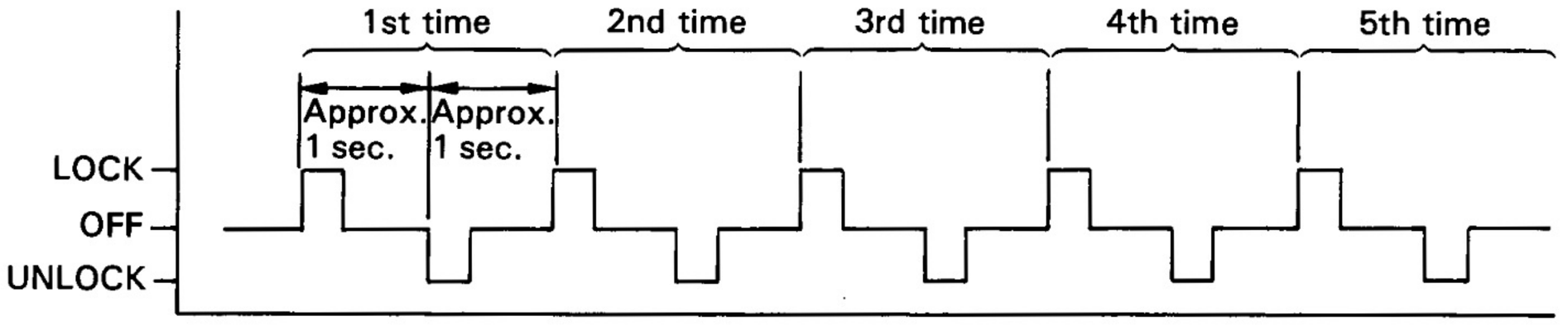

Insert the key into the ignition key cylinder.

Turn the ignition switch from ON to LOCK at approx. 1 sec. intervals for 1 to 4 times according to the desired mode.

Add Mode

ON-LOCK change occurs 1 time

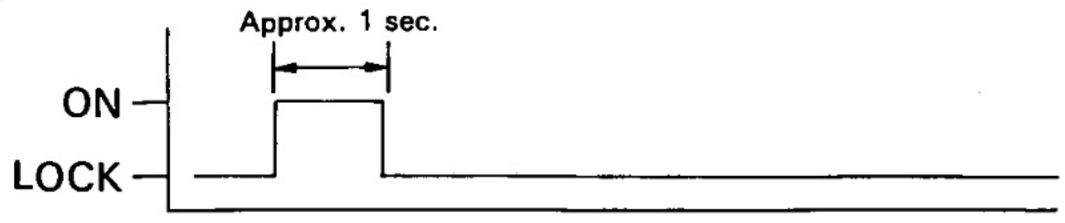

Rewrite Mode

ON-LOCK change occurs 2 times

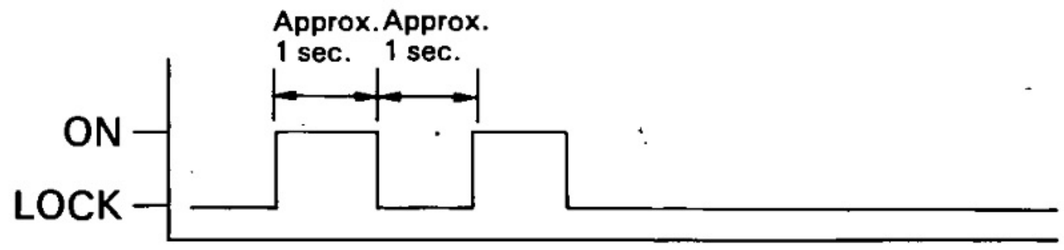

Confirmation Mode

ON-LOCK change occurs 3 times

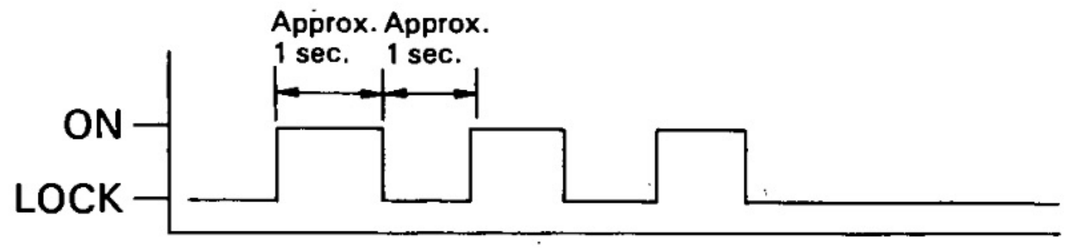

Erase Mode

ON-LOCK change occurs 4 times

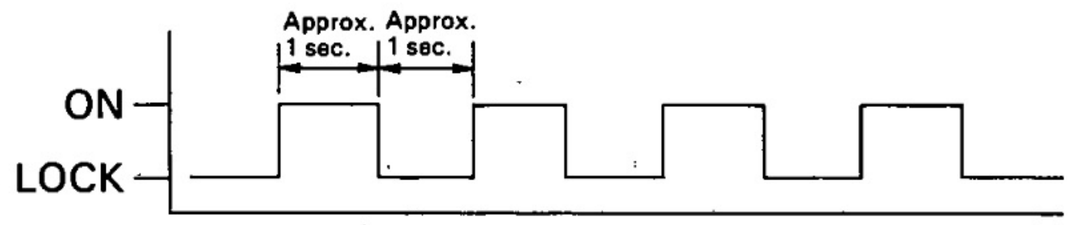

within 20 secs.

Remove the key from the ignition key cylinder.

When add mode, rewrite mode or erase mode been selected.

The receiver automatically performs the LOCK-UNLOCK operation once, twice or 5 times at 1 sec. intervals to inform the technician whether the add mode, rewrite mode or erase mode has been selected.

LOCK-UNLOCK occurs once

Indicates that add mode has been selected.

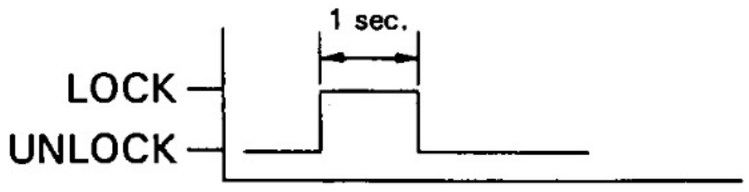

LOCK-UNLOCK occurs twice

Indicates that rewrite mode has been selected.

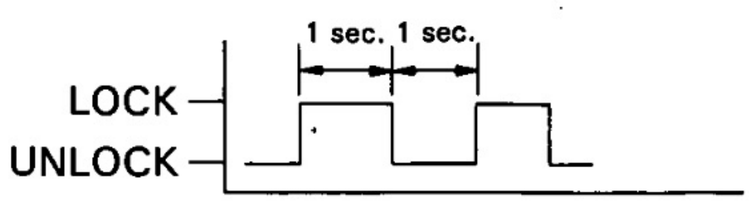

LOCK-UNLOCK occurs 5 times

Indicates that erase mode has been selected.

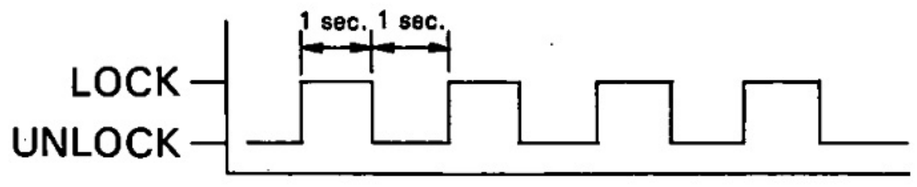

When confirmation mode is selected.

The receiver automatically performs the LOCK-UNLOCK operation 0 to 4 times at 2 secs. intervals to inform the technician of the number of registered codes.

Example:
LOCK-UNLOCK occurs twice:
2 recognition codes are registered.

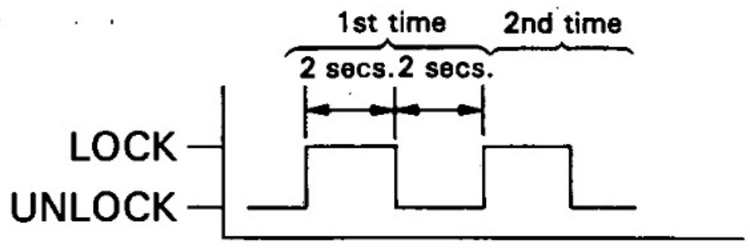

Registration of recognition code (Confirmation mode) and erase mode completed.

Erase Mode

BE

within 15 secs.

Press transmitter switch for at least 1sec.

within 3 secs.

The receiver automatically performs LOCK-UNLOCk once at a 1 sec. interval to inform the technician that it has received the signal from the transmitter.

within 20 secs.

Close the dirver's door, then open it.

Again press the transmitter switch for at least 1 sec.

within 3 secs.

The receiver automatically performs LOCK-UNLOCK once or twice at 1 sec. intervals to inform the technician that it has received the signal from the transmitter.

LOCK-UNLOCK occurs once

Registration of recognition code is completed

LOCK-UNLOCK occurs twice

Registration of recognition code has not been completed.

- Recognition code received first time and second time did not match.
- When selecting add mode, a recognition code indicating registration completed was already received.

To continue registration

If even one of the following conditions exists, registration of recognition codes is completed.

- 20 secs. elapses since the receiver response.
- The driver's door is closed.
- The key plate is inserted in the ignition key cylinder.
- 4 recognition codes are registered at one time.

Registration of recognition codes (add mode or rewrite mode) is completed.

PARTS LOCATION

*1: Gasoline Engine and Diesel Engine (LHD models)

*2: Diesel Engine (RHD models)

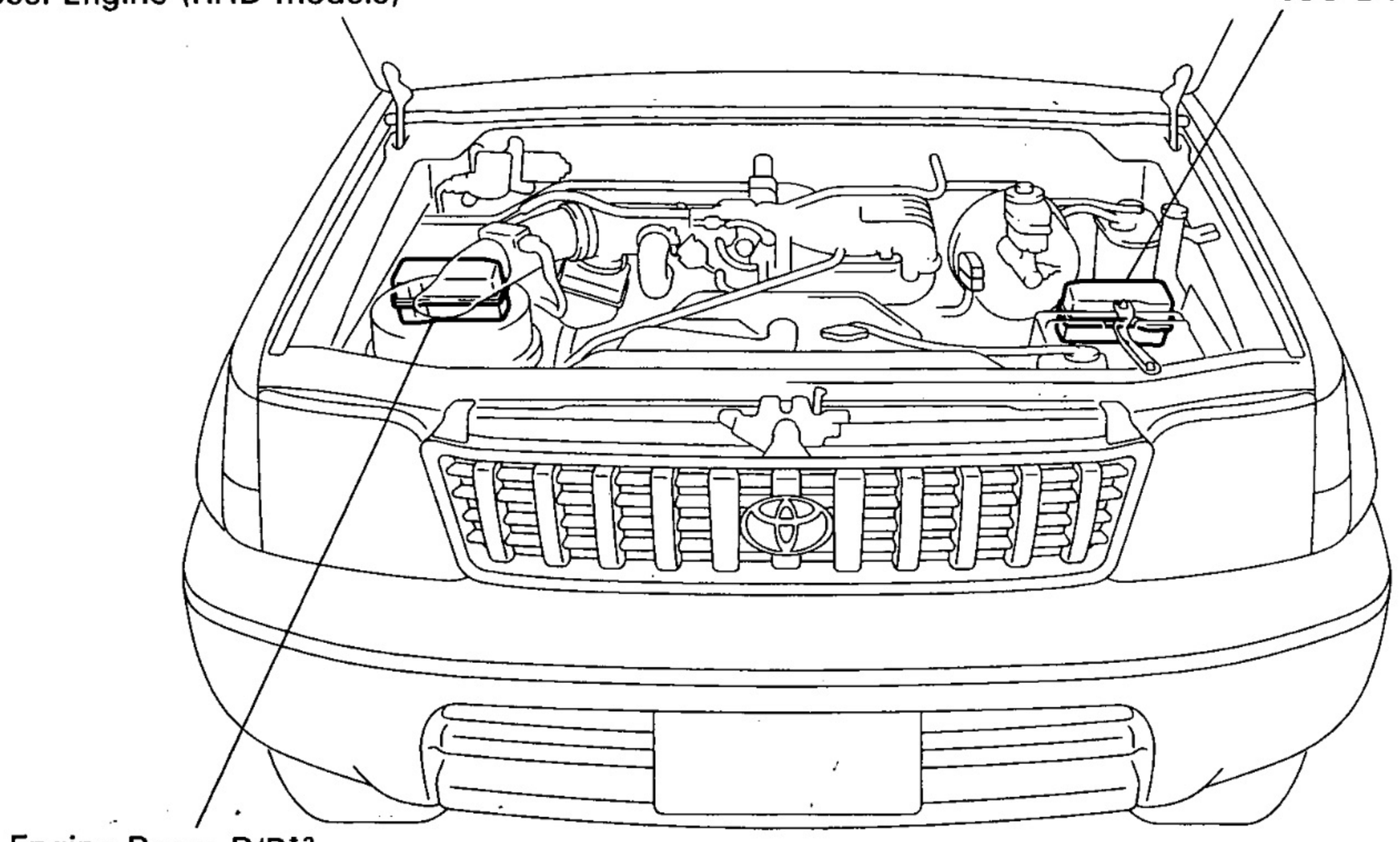

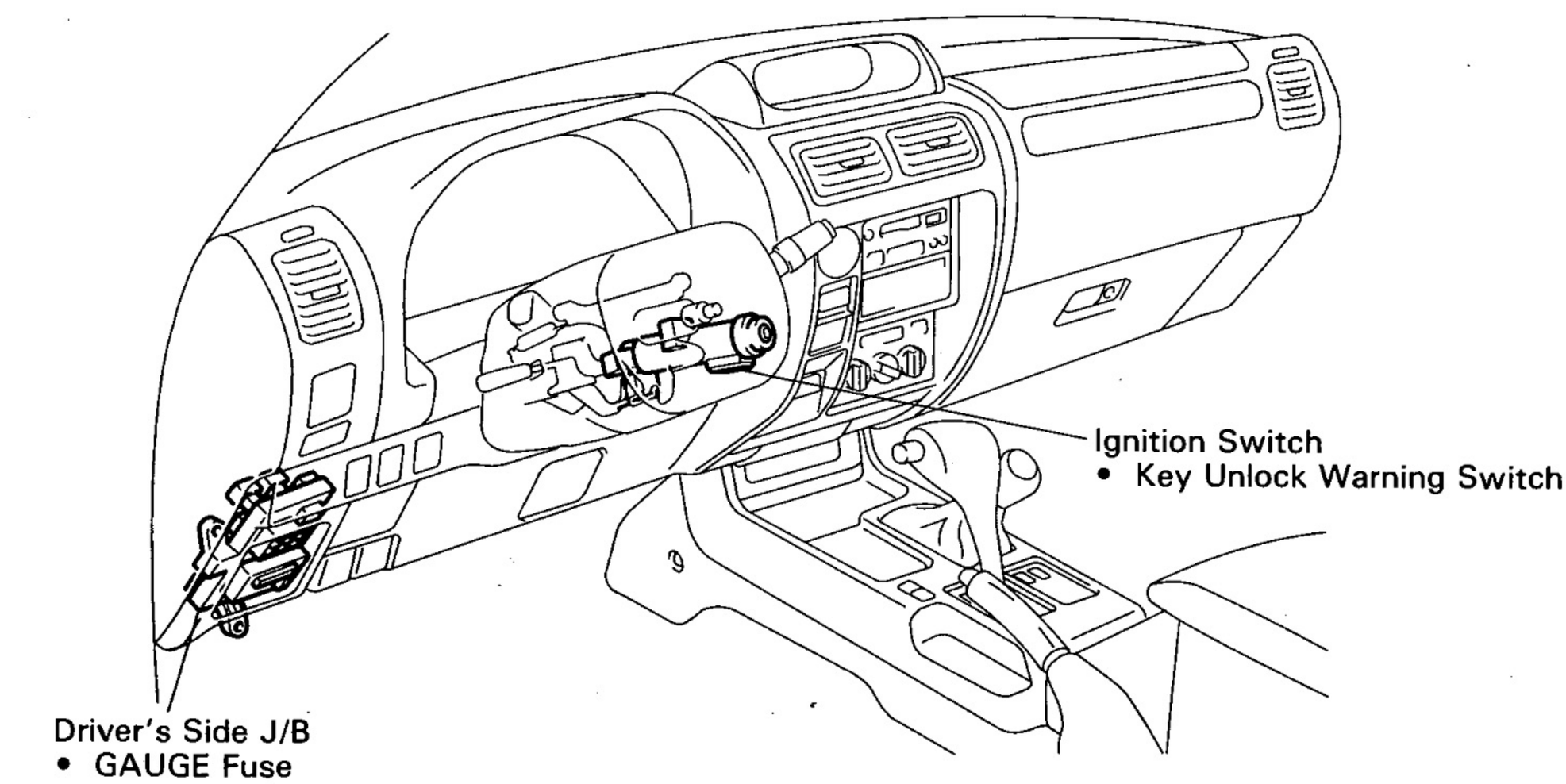

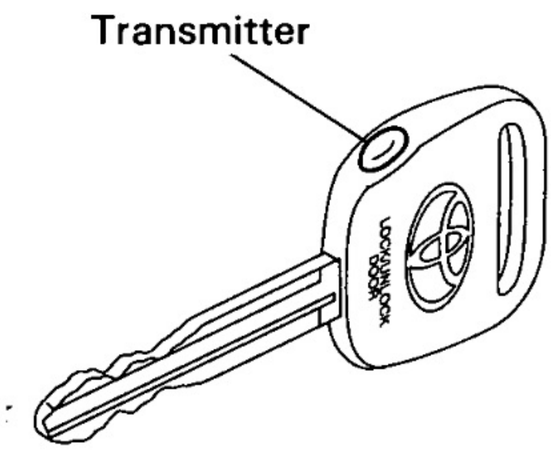

N19196
N19200
N19638

3 Door Models:

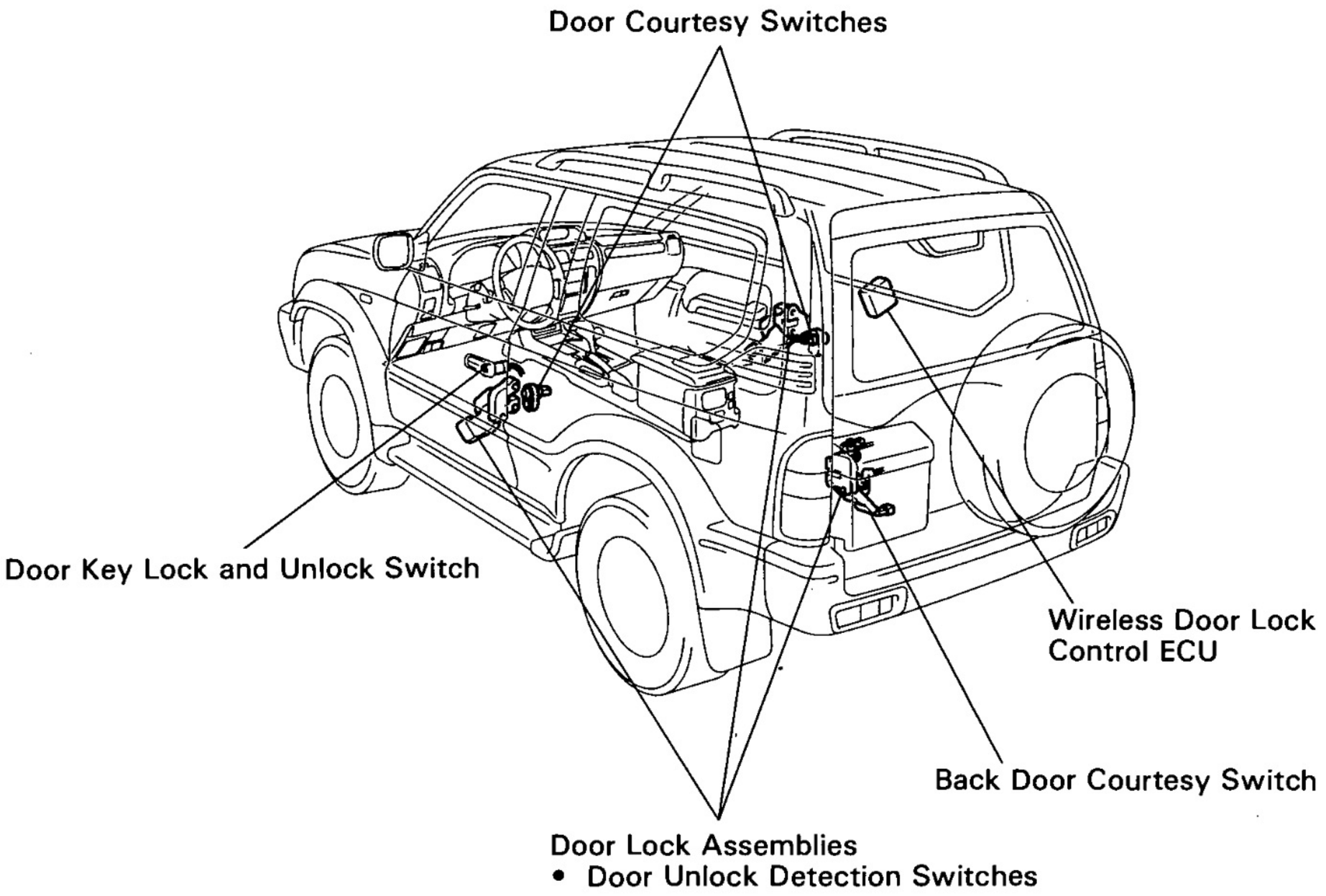

5 Door Models:

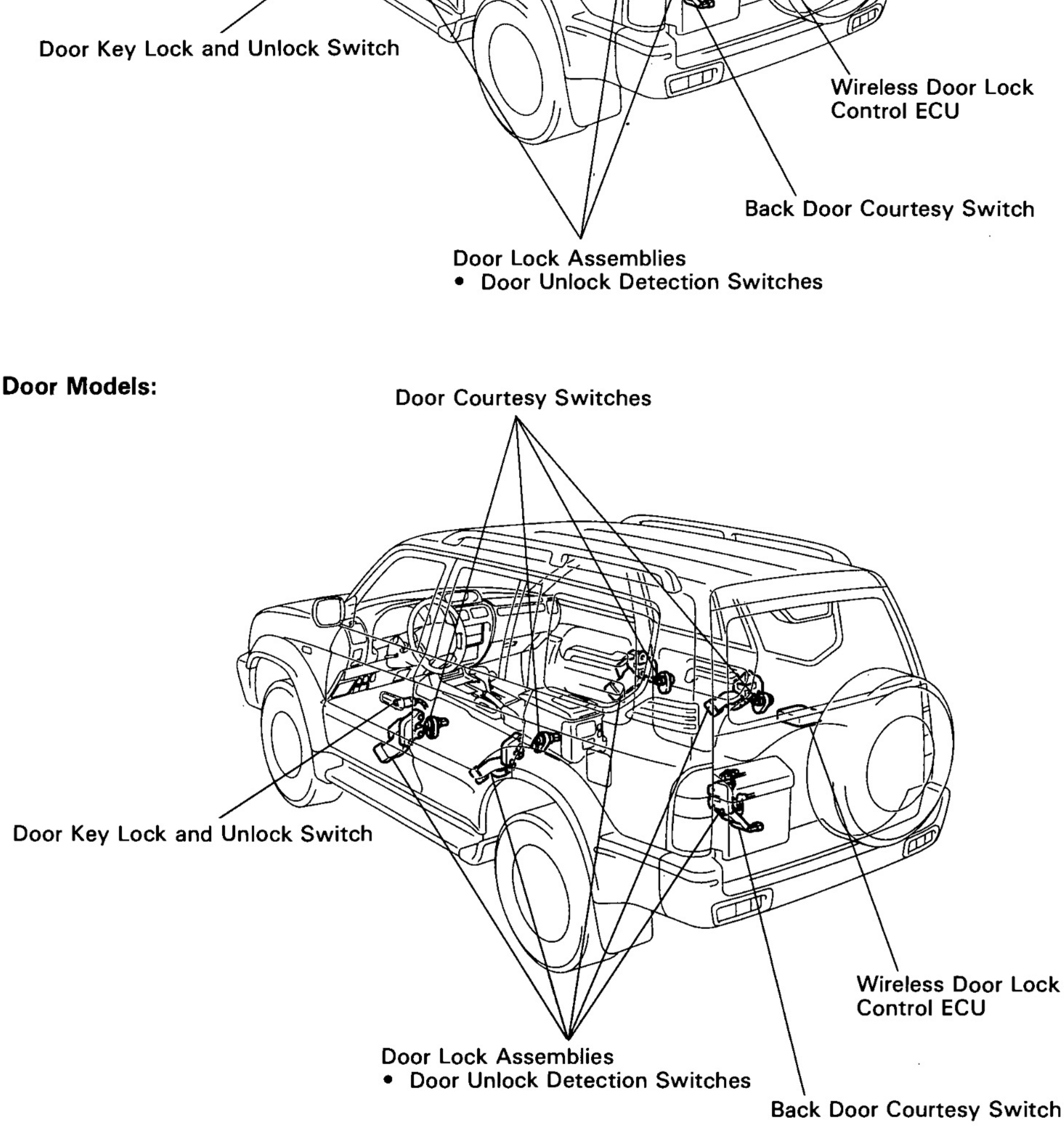

N19639
N19640

TERMINALS OF ECU

Terminals	Symbols	Condition	Standard Value
W8-2 ↔W8-9	+B↔GND	Always	10 ~ 14 V
W8-3 ↔Ground	IG↔Ground	Turn the ignition switch OFF or ACC	Below 1 V
		Turn the ignition switch ON	10 ~ 14 V
W8-4 ↔Ground	UL↔Ground	Door key lock and unlock switch left and right UNLOCK	Below 1.5 V
		Door key lock and unlock switch left or right UNLOCK	
		Except above mention	8 ~ 10 V
W8-6 ↔Ground	L↔Ground	Door key lock and unlock switch LOCK	Below 1 V
		Except above mention	8 ~ 10 V
W8-7 ↔Ground	LSWF↔Ground	Door lock knob of except driver's door UNLOCK	Below 1 V
		Door lock knob of except driver's door LOCK	8 ~ 10 V
W8-8 ↔Ground	ULSW↔Ground	Ignition key insert key cylinder	Below 1 V
		Ignition key pull out key cylinder	10 ~ 14 V
W8-9 ↔Ground	GND↔Ground	Always	Below 1 V
W8-10↔Ground	LSWD↔Ground	Door lock knob of driver's door UNLOCK	Below 1 V
		Door lock knob of driver's door LOCK	8 ~ 10 V
W8-12↔Ground	CTY↔Ground	Door open detection switch ON (all door)	Below 1 V
		Door open detection switch ON (either door)	
		Door open detection switch OFF (all door)	10 ~ 14 V

BE

(W8)

Wireless Door Lock Control ECU

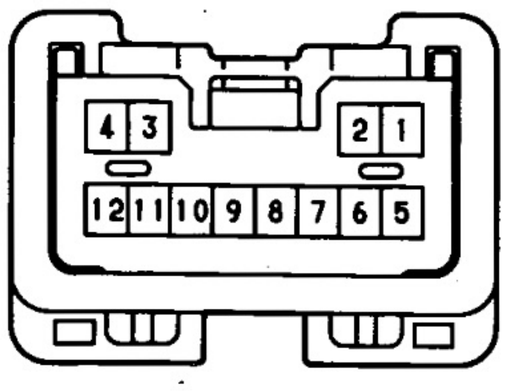

h-12-2

PROBLEM SYMPTOMS TABLE

Perform troubleshooting of the circuits for the applicable problem symptom in the order given in the chart below.
Proceed to the page located for each circuit.
HINT:

- Troubleshooting of the wireless door lock control system is based on the premise that the door lock control system is operating normally. Accordingly, before troubleshooting the wireless door lock control system, first make certain that the door lock control system is operating normally.
- If the instruction "Proceed to next circuit inspection shown on matrix chart" is given in the flow chart for each circuit proceed to the circuit with the next large number in the table to continue the check.
- If the trouble still reappears even though there are no abnormalities in any of the other circuits, then check and replace the Wireless Door Lock ECU as the last step.

See Page / Suspect Area / Symptom	BE-175	BE-177	BE-179	BE-181	BE-183	BE-185	BE-187	IN-35
	ECU Power Source Circuit	Ignition Switch Circuit	Door Unlock Detection Switch Circuit	Door Key Lock and Unlock Switch Circuit (Unlock side)	Door Key Lock and Unlock Switch Circuit (Lock side)	Key Unlock Warning Switch Circuit	Door Courtesy Switch Circuit	Wireless Door Lock Control ECU
All functions of wireless door lock control system do not operate.	1	2		4	5	6	3	7
Only door unlock operation is not possible (Lock operation is possible).			2	1				3
Only door lock operation is not possible (Unlock operation is possible).					1			2
Only transmitter misoperation prevention function is not possible.						1		2
Wireless door lock function operates even when each door is opened.							1	2
Wireless door lock functions incorrectly. (Although one door is unlocked, when the transmitter switch is pressed, all does unlock.)			1					2

BE

CIRCUIT INSPECTION

ECU Power Source Circuit

CIRCUIT DESCRIPTION

Battery voltage is applied to terminal +B of the wireless door lock ECU, causing the ECU to operate.

WIRING DIAGRAM

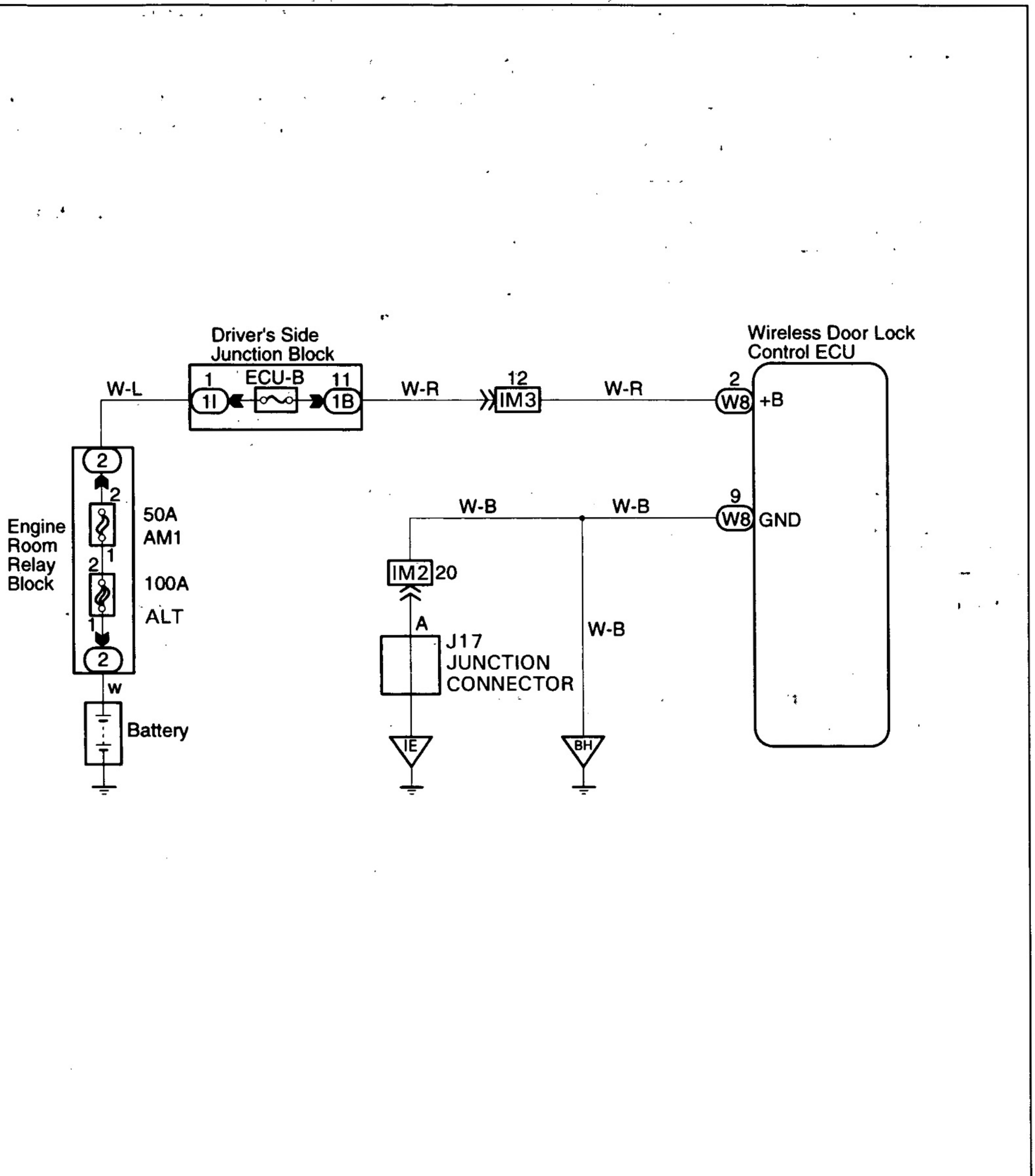

INSPECTION PROCEDURE

1	Check ECU-B fuse.

OK

NG → Check for short in all the harness and components connected to ECU-B fuse (See attached wiring diagram).

2	Check voltage between terminals +B and E of ECU connector.

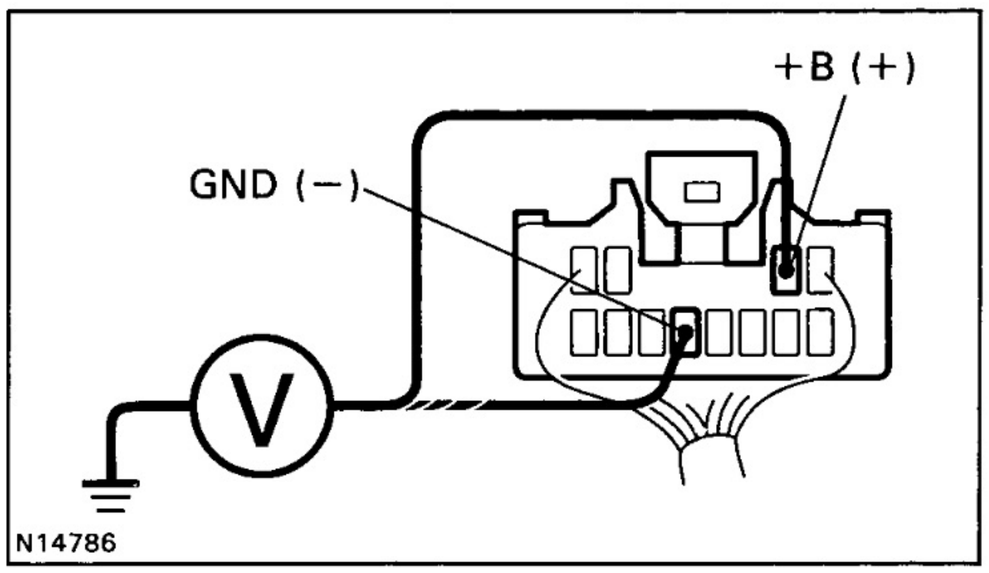

PREPARATION:

(1) Remove the quarter trim panel RH side cover.
(2) Remove the ECU and disconnect the ECU connector.

CHECK:

Measure voltage between terminals +B and E of ECU connector.

OK:

Voltage: 10 – 14 V

NG

OK → Proceed to next circuit inspection shown on problem symptoms table (See page BE-174).

BE

3	Check for open in harness and connector between terminal E of ECU and body ground (See page IN-30).

OK

NG → Repair or replace harness or connector.

Check and repair harness and connector between ECU and battery.

Ignition Switch Circuit

CIRCUIT DESCRIPTION

When the ignition switch is turned to the ON position, battery voltage is applied to the terminals IG of the ECU.

WIRING DIAGRAM

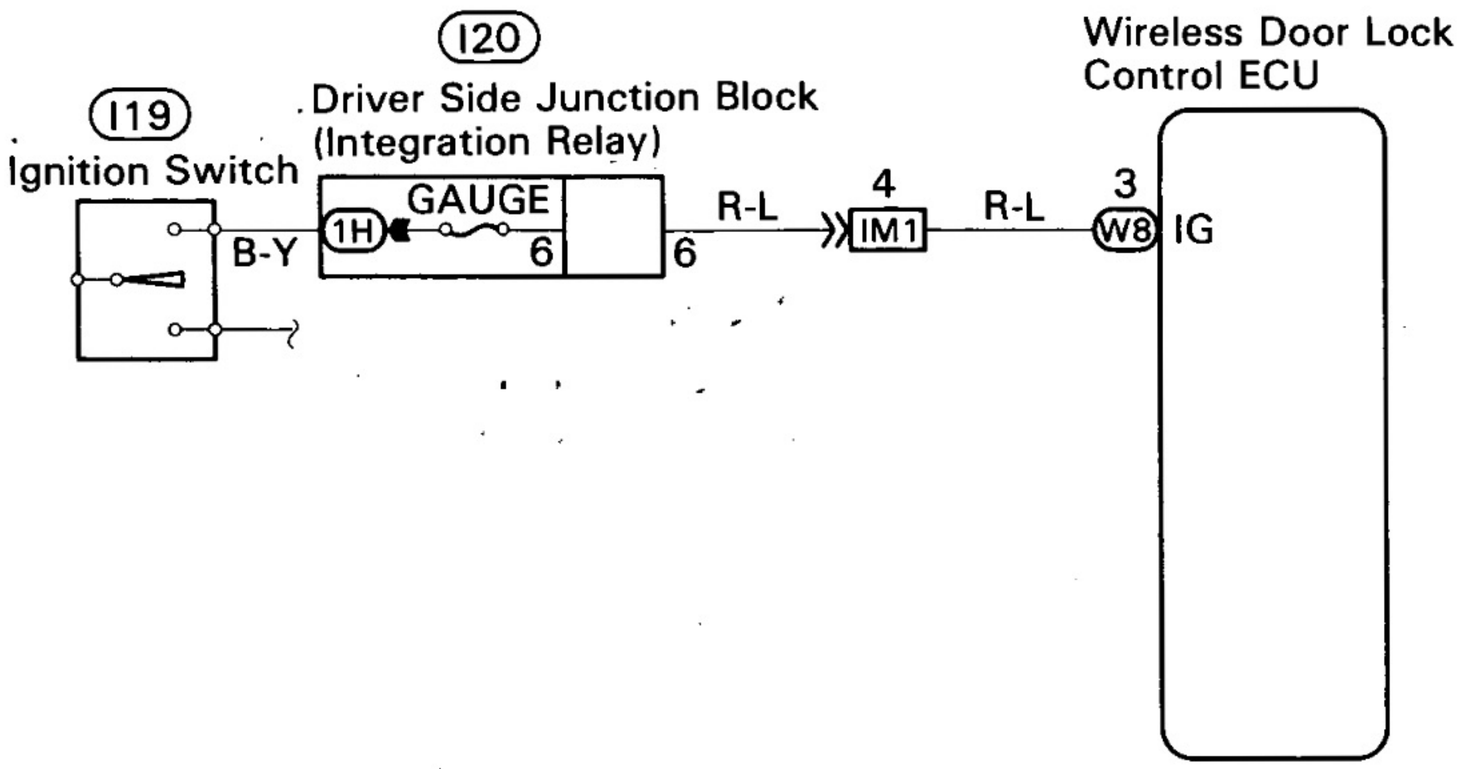

N19642

INSPECTION PROCEDURE

1 Check GAUGE fuses.

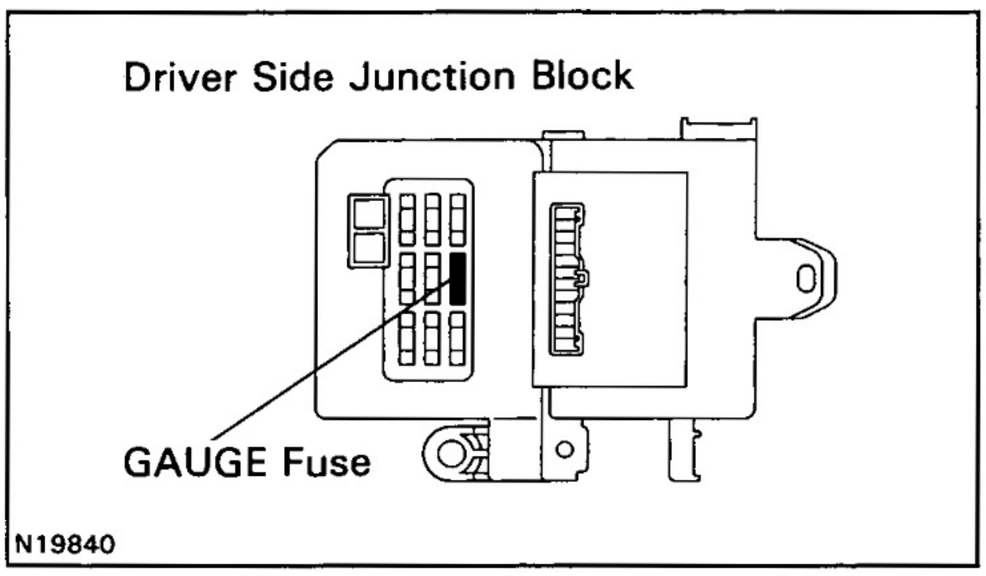

PREPARATION:

(1) Remove the front lower panel.
(2) Remove GAUGE fuses from driver side junction block.

CHECK:

Check continuity of GAUGE fuses.

OK:

Continuity

OK

NG → **Check for short in all the harness and components connected to the GAUGE fuses (See attached wiring diagram).**

2 Check voltage between terminals IG of ECU and body ground.

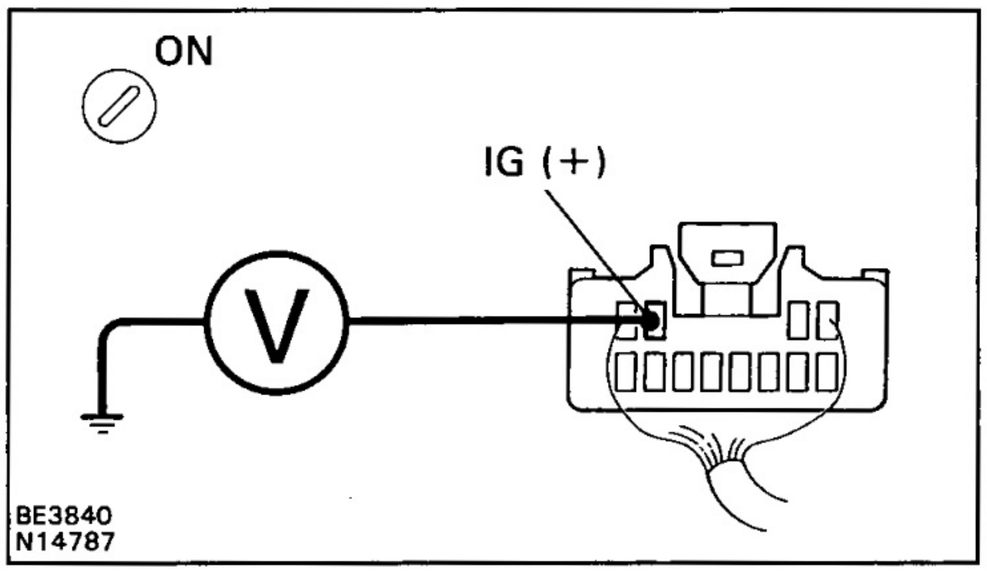

PREPARATION:

(1) Remove the quarter trim panel RH side cover.
(2) Remove the ECU and disconnect the ECU connector.
(3) Turn the ignition switch on.

CHECK:

Measure voltage between terminals IG of ECU connector and body ground.

OK:

Voltage: 10 – 14 V

NG

OK → **Check and replace ECU.**

Check and repair harness and connector between ECU and battery (See page IN-30).

BE

Door Unlock Detection Switch Circuit

CIRCUIT DESCRIPTION

The door unlock detection switch is built into the door lock motor assembly. The switch is OFF when the door lock knob is in Lock position, and is ON when the knob is in Unlock position.
Furthermore, the door unlock detection switch circuit has terminal +B connected inside the theft deterrent ECU, when the door unlock detection switch is OFF, battery voltage is applied to the terminal of the door unlock detection switch circuit of the wireless door lock ECU.

WIRING DIAGRAM

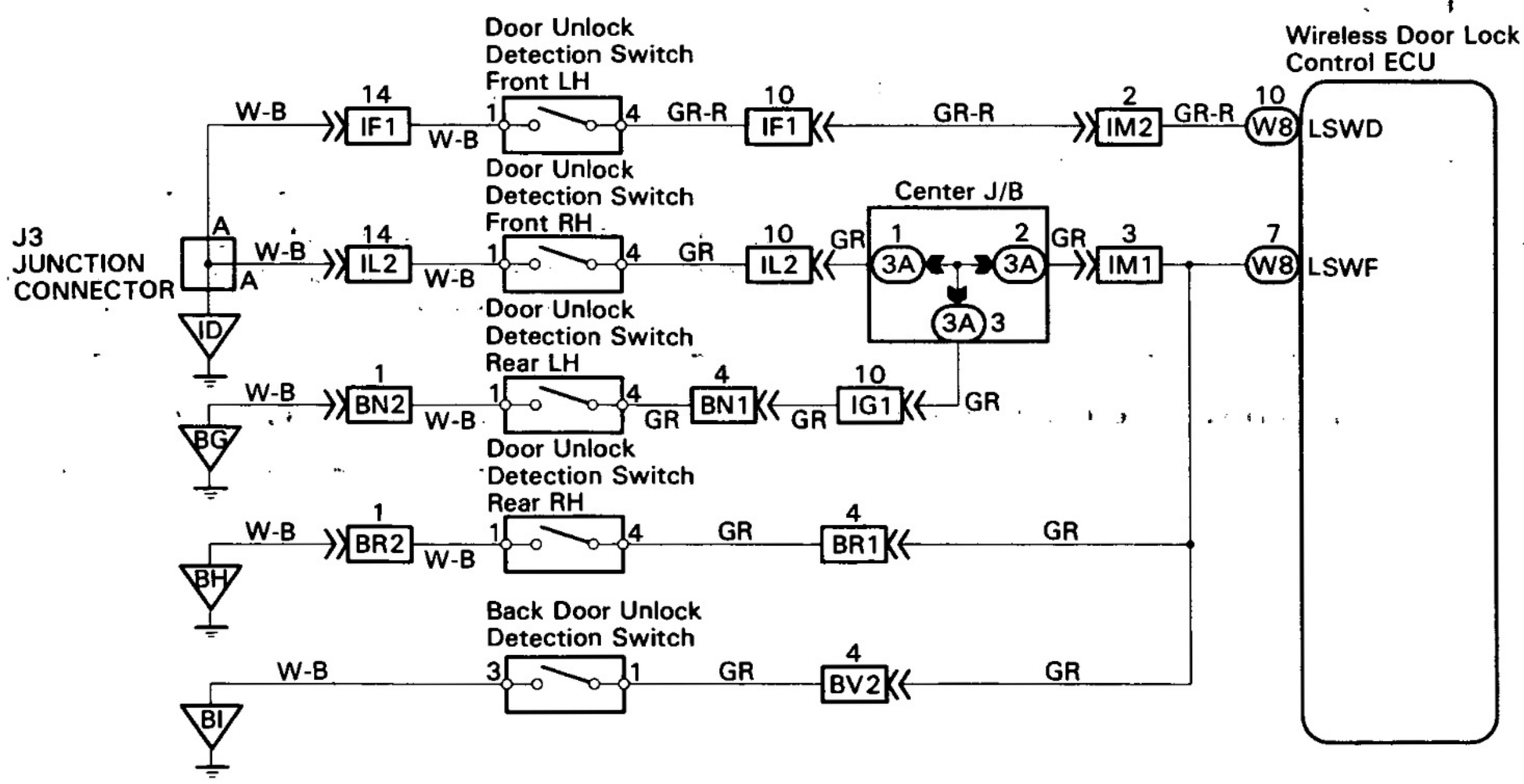

INSPECTION PROCEDURE

1	**Check voltage between terminals LSWD, LSWF of ECU connector and body ground.**

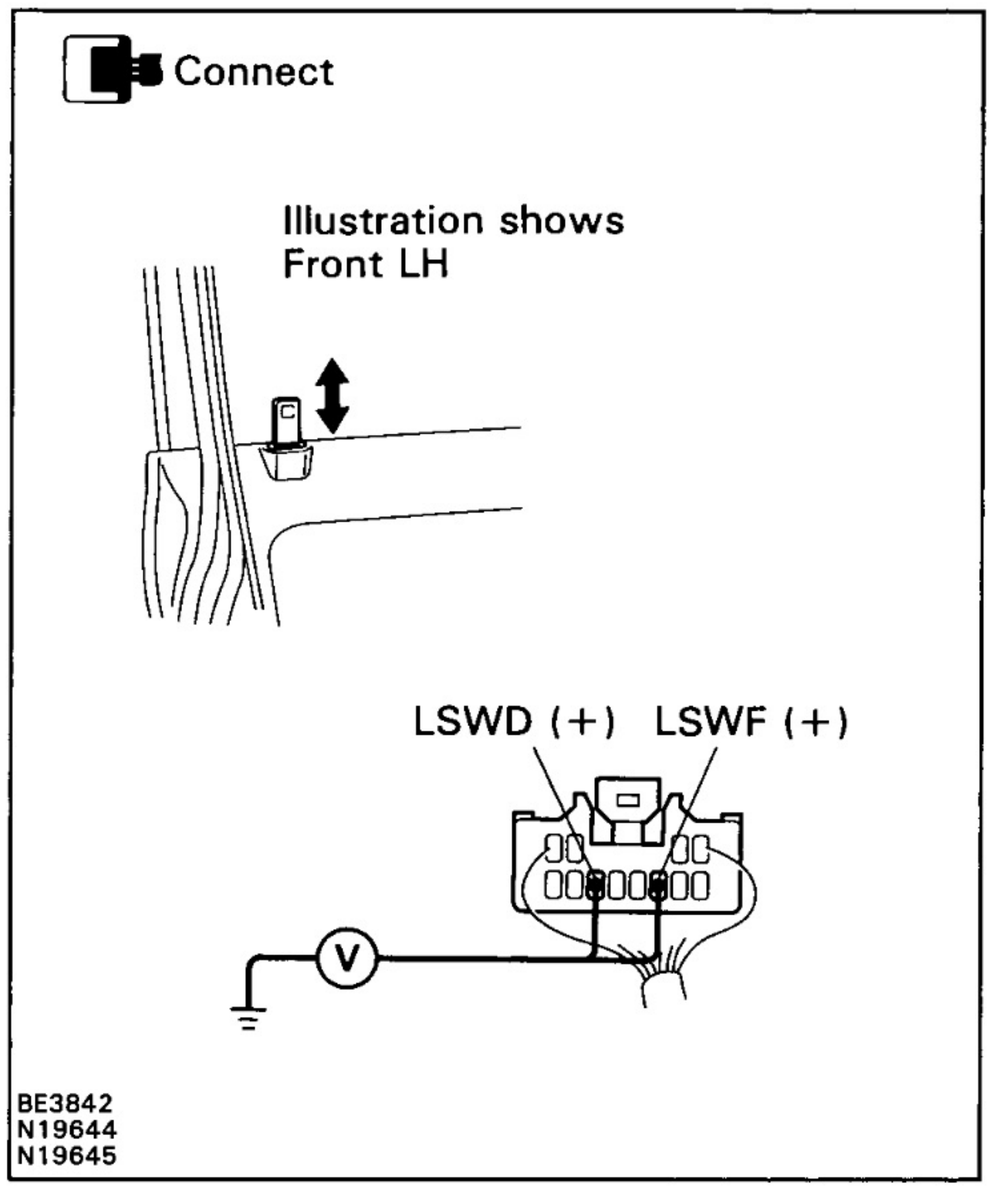

PREPARATION:

(1) Remove the quarter trim panel RH side cover.
(2) Remove the ECU and disconnect the ECU connector.

CHECK:

Measure voltage between terminals LSWD,LSWF of ECU connector and body ground, when the respective door lock knob involved is pushed to the lock side.

OK:

Voltage: 5 V or more

BE

NG

Check and repair harness and connector between ECU and door unlock detection switch.

OK

Proceed to next circuit inspection shown on problem symptoms table (See page BE-174).

Door Key Lock and Unlock Switch Circuit (Unlock Side)

CIRCUIT DESCRIPTION

The door key lock and unlock switch is built into the door key cylinder. When the key is turned to the lock side, the lock terminal of the switch is grounded, and when the key is turned to the unlock side the unlock terminal is grounded.
Furthermore, the door key lock and unlock switch circuit has terminal +B connected inside the integration relay, when neither the lock or unlock terminal of the door key lock and unlock switch are grounded, battery voltage is applied to the door key lock and unlock switch circuit of the wireless door lock ECU.
(Tr inside the ECU coming ON causes the wireless door lock ECU to output a signal to unlock all the doors.)

WIRING DIAGRAM

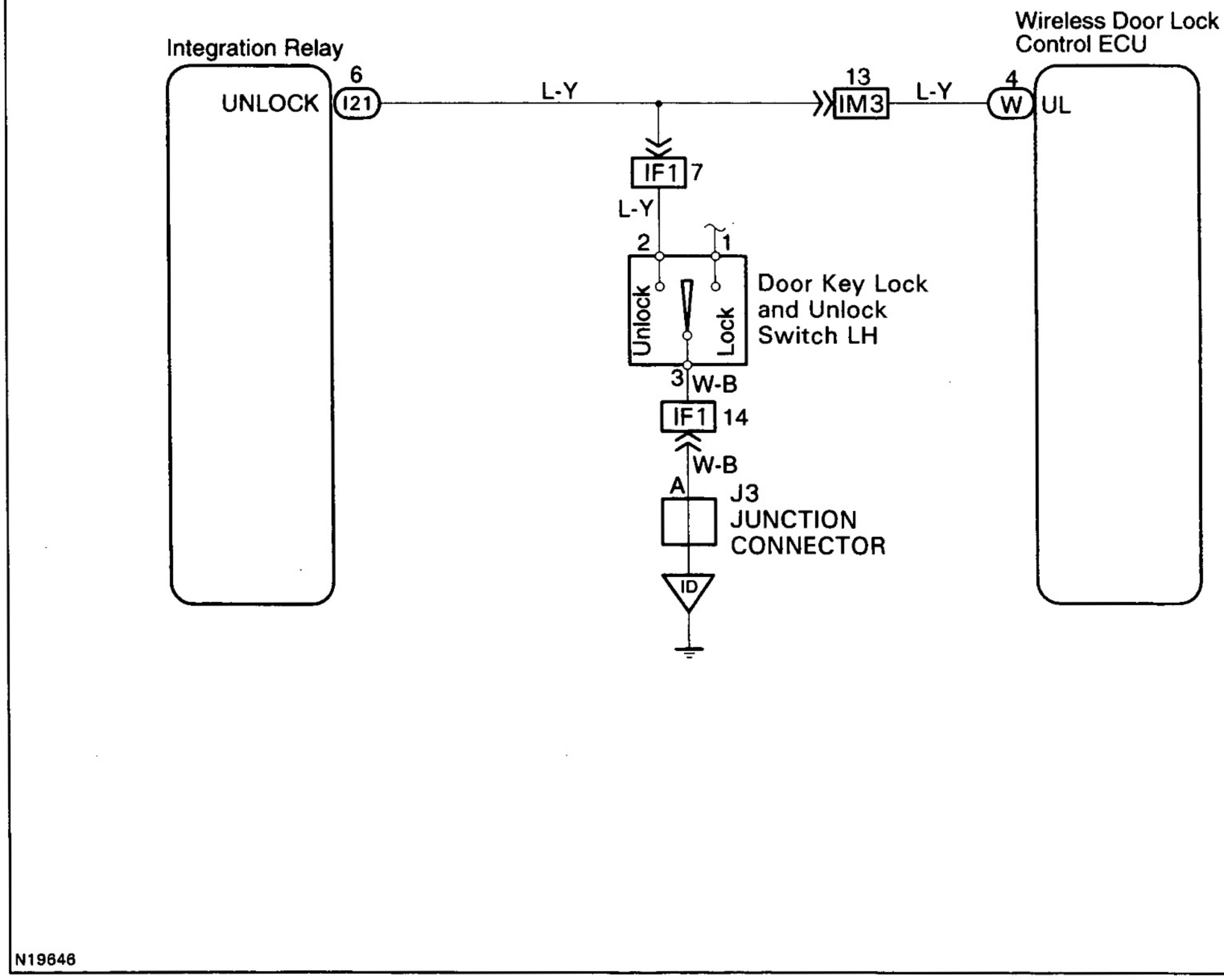

INSPECTION PROCEDURE

1	Check voltage between terminal UL of ECU connector and body ground.

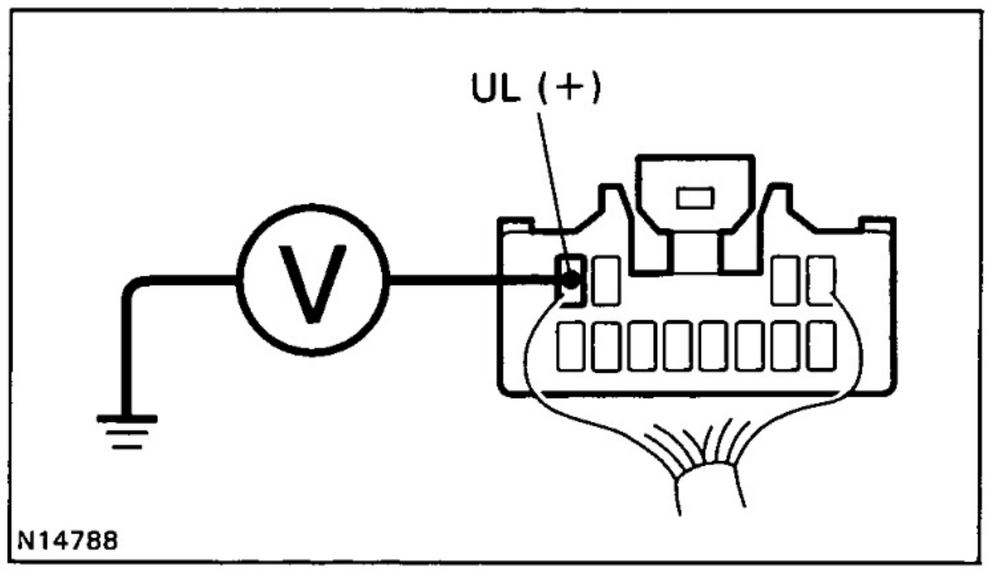

PREPARATION:

(1) Remove the quarter trim panel RH side cover.
(2) Remove the ECU and disconnect the ECU connector.

CHECK:

Measure voltage between terminal UL of ECU connector and body ground.

OK:

Voltage: 10 – 14 V

NG

OK → **Proceed to next circuit inspection shown on problem symptoms table (See page BE-174).**

Check and repair harness and connector between ECU and door key lock and unlock switch.

Door Key Lock and Unlock Switch Circuit (Lock Side)

CIRCUIT DESCRIPTION

Refer to page BE-181.
Tr inside the ECU coming ON causes the wireless door lock ECU to output a signal to lock all the doors.

WIRING DIAGRAM

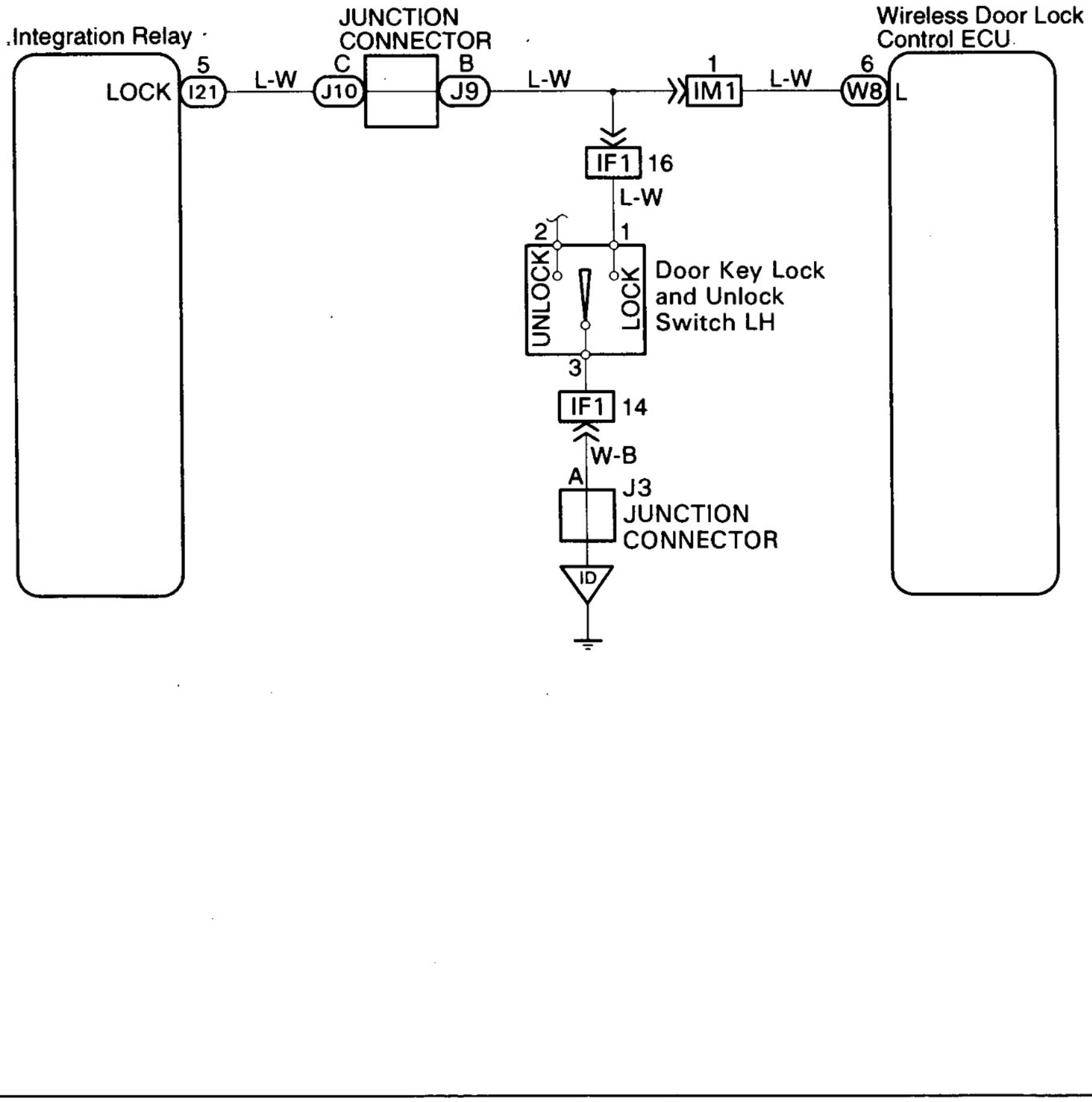

BE

INSPECTION PROCEDURE

1	**Check voltage between terminal L of wireless door lock ECU connector and body ground.**

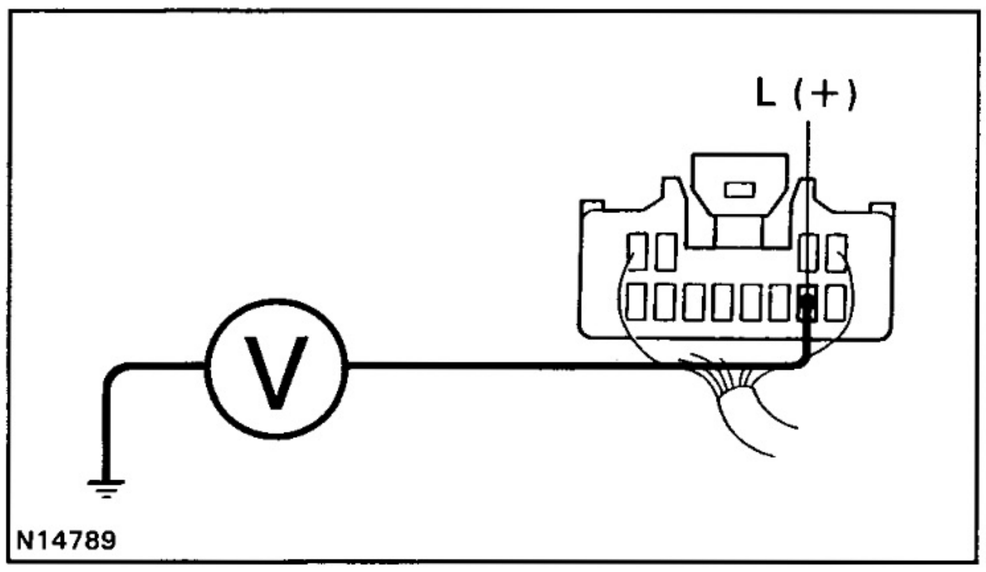

PREPARATION:

(1) Remove the quarter trim panel RH side cover.
(2) Remove the ECU and disconnect the ECU connector.

CHECK:

Measure voltage between terminal L of ECU connector and body ground.

OK:

Voltage: 10 — 14 V

NG

Check and repair harness and connector between ECU and door key lock and unlock switch.

OK

Proceed to next circuit inspection shown on problem symptoms table (See page BE-174).

Key Unlock Warning Switch Circuit

CIRCUIT DESCRIPTION

When the key is inserted in the ignition key cylinder, the key unlock warning switch comes ON, and when the key is not inserted, the switch is OFF.
When the key unlock warning switch is ON, the ECU operates the key confinement prevention function.

WIRING DIAGRAM

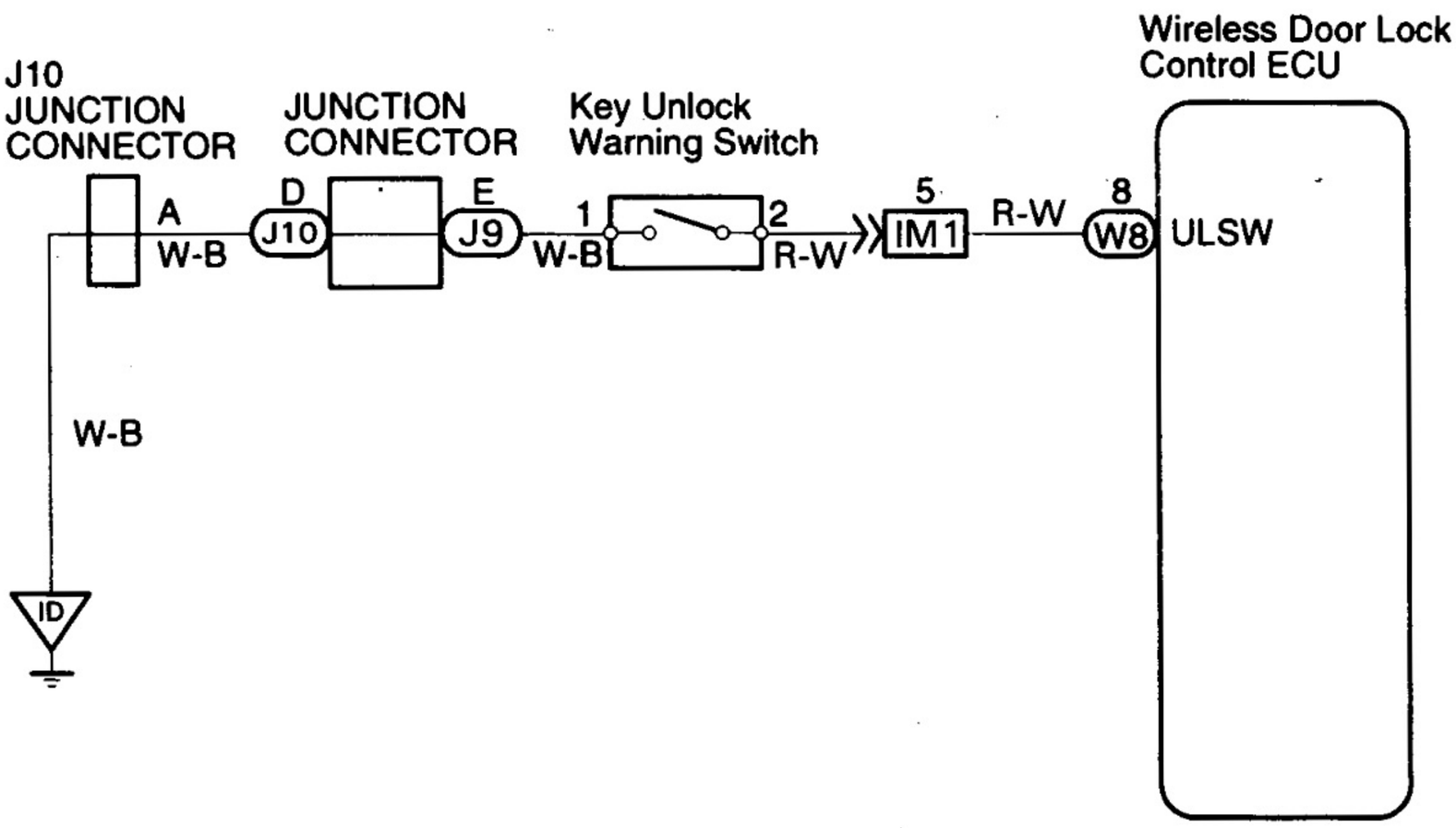

N19648

BE

INSPECTION PROCEDURES

1	Check voltage between terminal ULSW of ECU connector and body ground.

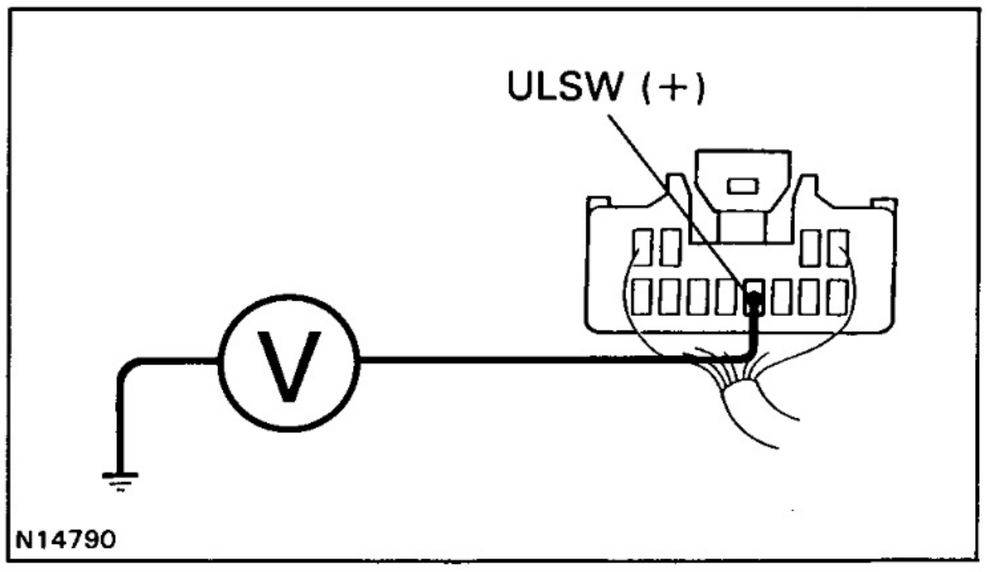

N14790

PREPARATION:

(1) Remove the quarter trim panel RH side cover.
(2) Remove the ECU and disconnect the ECU connector.
(3) Key plate is not inserted in the key cylinder.

CHECK:

Measure voltage between terminal ULSW of ECU connector and body ground, when key plate is not inserted in the key cylinder.

OK:

Voltage: 10 – 14 V

NG

OK → **Proceed to next circuit inspection shown on problem symptoms table (See page BE-174).**

Check and repair harness and connector between ECU and key unlock warning switch.

Door Courtesy Switch Circuit

CIRCUIT DESCRIPTION

The door courtesy switch comes ON when the door is opened and goes OFF when the door is closed. Furthermore the door courtesy switch circuit has terminal +B connected inside the theft deterrent and door lock ECU, battery voltage is applied to terminal CTY of the wireless door lock ECU when all doors are closed, i.e., when the door courtesy switch of all doors are OFF.

WIRING DIAGRAM

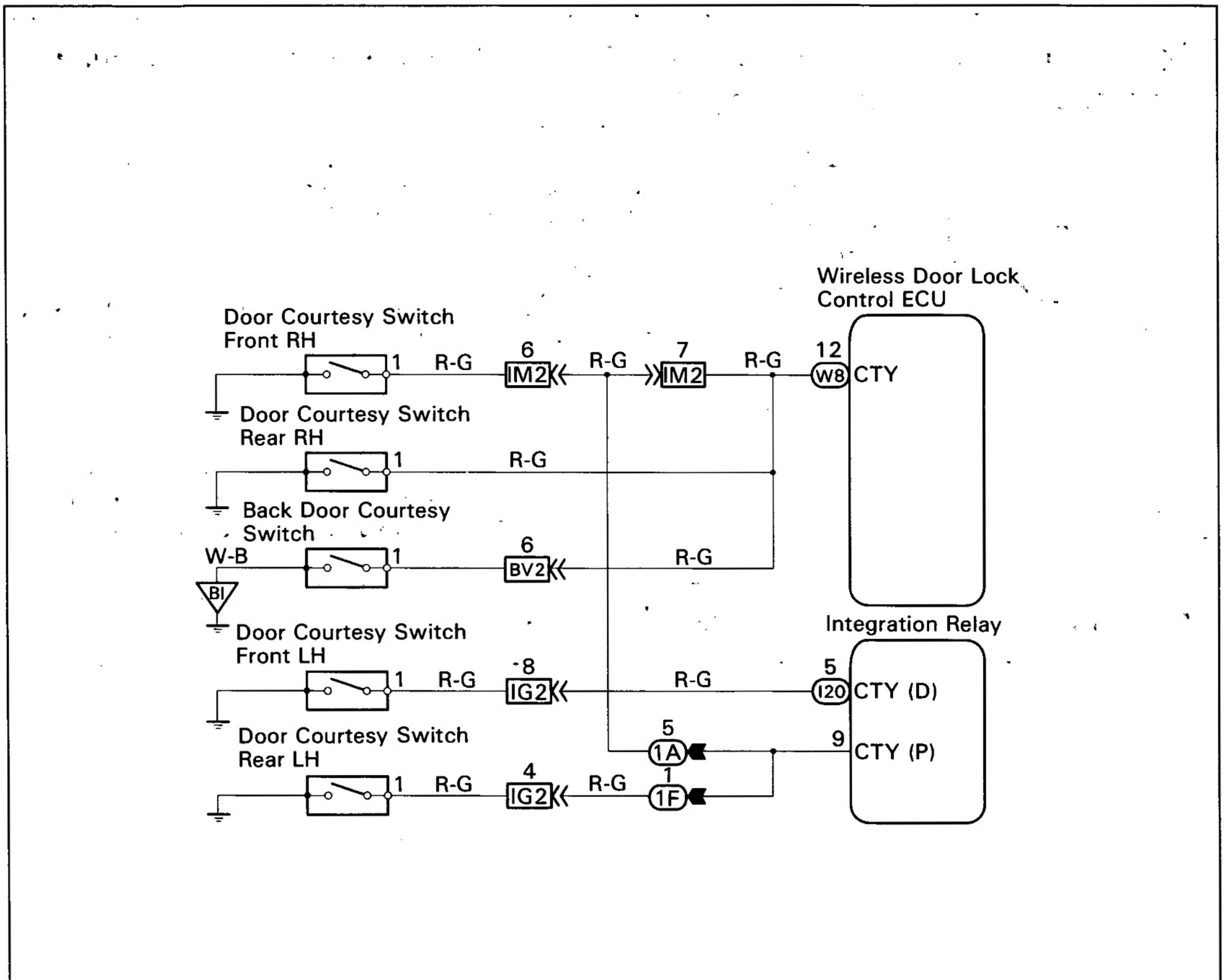

N19628

BE

INSPECTION PROCEDURE

1	Check operation of open door warning light.

CHECK:

Check that open door warning light comes on when each door is opened, and goes off when all doors are closed.

OK

NG → **Check open door warning light circuit (See page BE-64).**

2	Check voltage between terminal CTY of ECU connector and body ground.

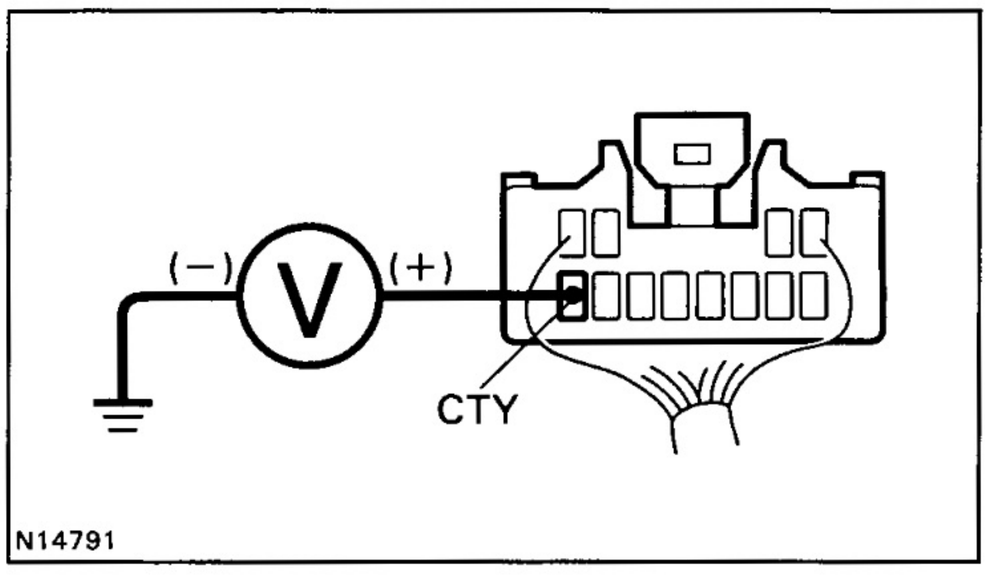

PREPARATION:

(1) Remove the quarter trim panel RH side cover.
(2) Remove the ECU and disconnect the ECU connector.
(3) Key plate is not inserted in the key cylinder.

CHECK:

Measure voltage between terminal CTY of ECU connector and body ground, when all doors are closed.

OK:

Voltage: 10 — 14 V

BE

NG

OK → **Proceed to next circuit inspection shown on problem symptoms table (See page BE-174).**

Check and repair harness and connector between ECU and door courtesy switch.

CRUISE CONTROL SYSTEM

ROAD TEST ····· BE – 190
HOW TO PROCEED WITH TROUBLESHOOTING ····· BE – 192
CUSTOMER PROBLEM ANALYSIS CHECK ·· BE – 193
PRE-CHECK ····· BE – 194
DIAGNOSTIC CODE CHART ····· BE – 197
PARTS LOCATION ····· BE – 198
TERMINALS OF ECU ····· BE – 199
PROBLEM SYMPTOMS TABLE ····· BE – 201
CIRCUIT INSPECTION
DTC. Code 11,15 Actuator Motor Circuit ····· BE – 203
DTC. Code 12 Magnetic Clutch Circuit ····· BE – 205
DTC. Code 13 Actuator Position Sensor Circuit (RHD models) ····· BE – 207
DTC. Code 14 Actuator Mechanical Malfunction ····· BE – 210
DTC. Code 21 Open in Vehicle Speed Sensor Circuit ····· BE – 213
DTC. Code 23 Vehicle Speed Signal Abnormal ····· BE – 216
DTC. Code 32 Control Switch Circuit (Cruise Control Switch) ····· BE – 217
DTC. Code 51 Idle Signal Circuit ····· BE – 220
Stop Light Switch Circuit ····· BE – 222
Idle Switch Circuit ····· BE – 225
Electronically Controlled Transmission Communication Circuit ····· BE – 227
Neutral Start Switch Circuit ····· BE – 230
Clutch Switch Circuit ····· BE – 233
ECU Power Source Circuit ····· BE – 235
Back-up Power Source Circuit ····· BE – 238
Main Switch Circuit (Cruise Control Switch) ····· BE – 240
CRUISE MAIN Indicator Light Circuit ···· BE – 242
Diagnosis Circuit ····· BE – 244
Actuator Control Cable ····· BE – 246

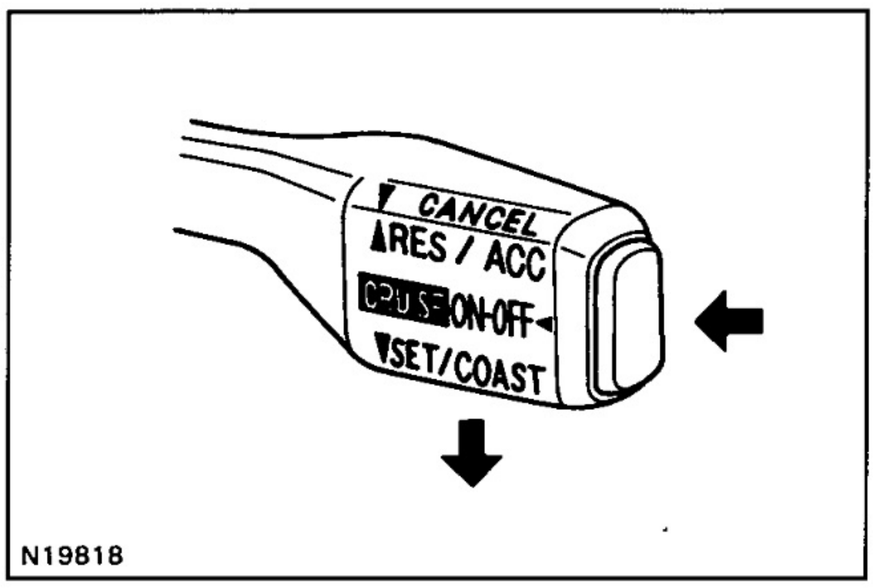

ROAD TEST

(a) SET INSPECTION
  (1) Push the main switch ON.
  (2) Drive at a desired speed (40 km/h (25 mph) or higher).
  (3) Press the control switch to the SET/COAST.
  (4) After releasing the switch, check that the vehicle cruises at the desired speed.

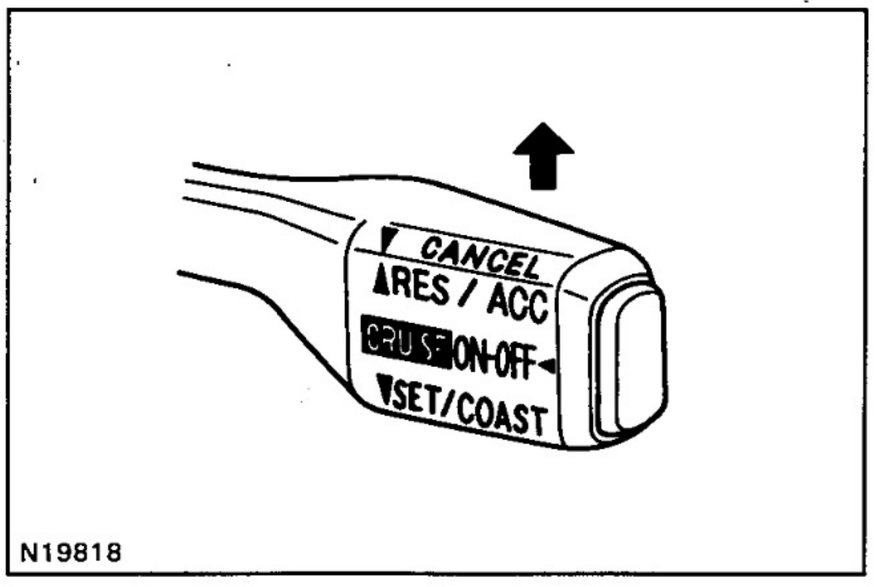

(b) ACCEL INSPECTION
  (1) Push the main switch ON.
  (2) Drive at a desired speed (40 km/h (25 mph) or higher).
  (3) Check that the vehicle speed is increased while the control switch turned to RES/ACC, and that the vehicle cruises at the set speed when the switch is released.
  (4) Momentarily press the control switch upward in the RES/ACC and then immediately release it. Check that the vehicle speed increases by about 1.5 km/h (Tap-up function).

BE

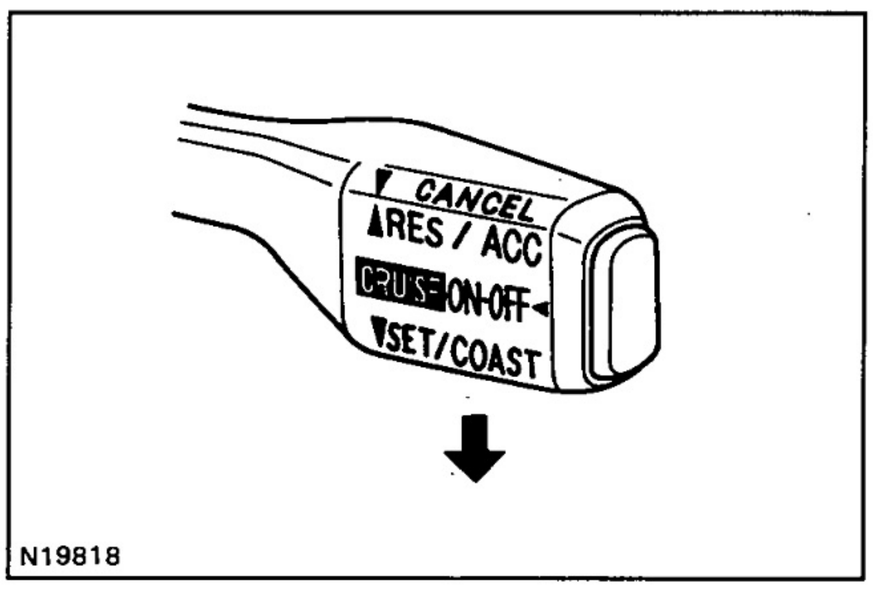

(c) COAST INSPECTION
  (1) Push the main switch ON.
  (2) Drive at a desired speed (40 km/h (25 mph) or higher).
  (3) Check that the vehicle speed is decreased while the control switch is turned to SET/COAST, and the vehicle cruise at the set speed when the switch is released.
  (4) Momentarily press the control switch is turned to SET/COAST, and then immediately release it. Check that the vehicle speed decreases by about 1.5 km/h (Tap-down function).

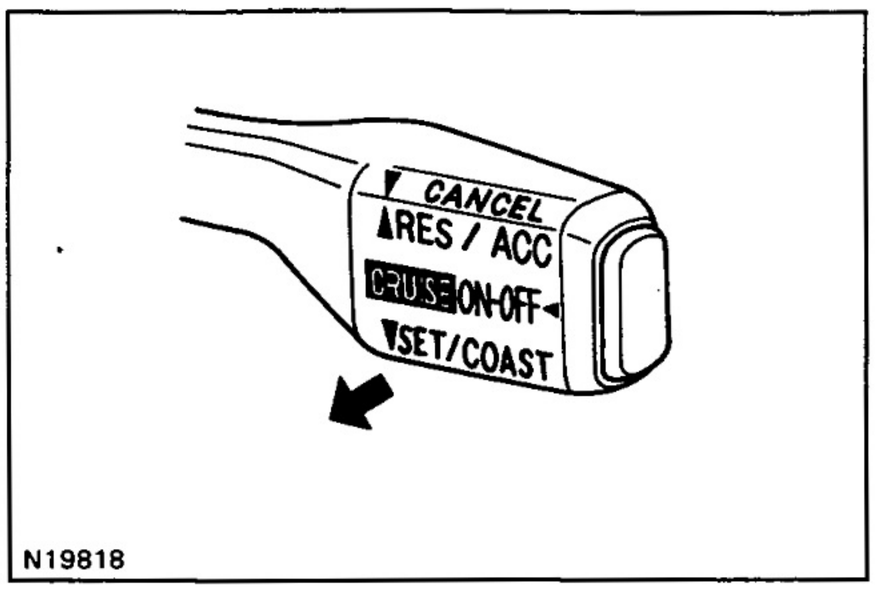

N19818

(d) CANCEL INSPECTION
(1) Push the main switch ON.
(2) Drive at a desired speed (40 km/h (25 mph) or higher).
(3) When operating one of the followings, check that the cruise control system is cancelled and that the normal driving mode is reset.
- Depress the brake pedal
- Depress the clutch pedal (M/T)
- Shift to except D range (A/T)
- Turn the main switch OFF
- Pull the cruise control switch to CANCEL

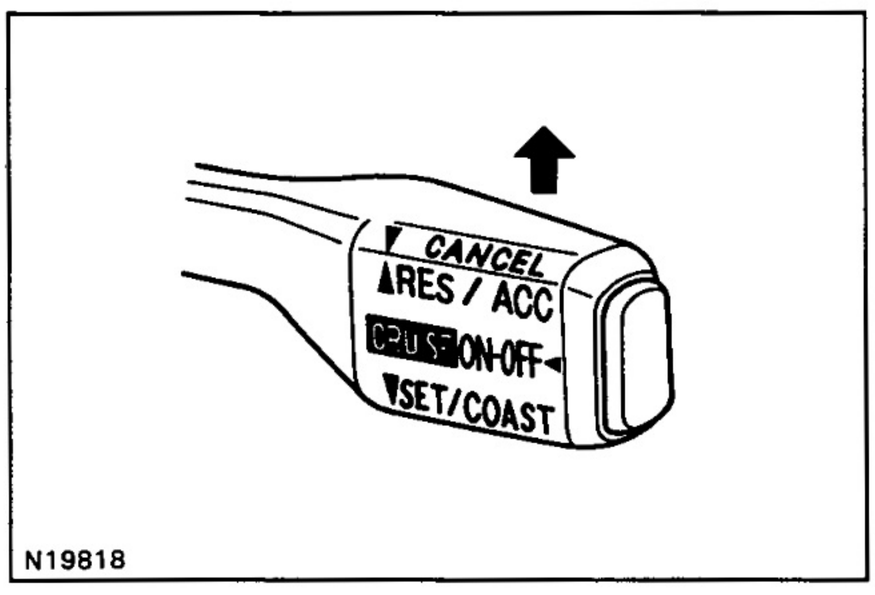

N19818

(e) RESUME INSPECTION
(1) Push the main switch ON.
(2) Drive at a desired speed (40 km/h (25 mph) or higher).
(3) When operating one of the followings, check that the cruise control system is cancelled and that the normal driving mode is reset.
- Depress the brake pedal
- Depress the clutch pedal (M/T)
- Shift to except D range (A/T)
- Turn the main switch OFF
- Pull the cruise control switch to CANCEL

(4) After the control switch is turned to RES/ACC at the driving speed of more than 40 km/h (25 mph), check that the vehicle restores the speed prior to the cancellation.

HOW TO PROCEED WITH TROUBLESHOOTING

Perform troubleshooting in accordance with the procedure on the following pages.

Items inside ▱ are titles of pages in this manual, with the page number indicated in the bottom portion.
See the indicated pages for detailed explanations.

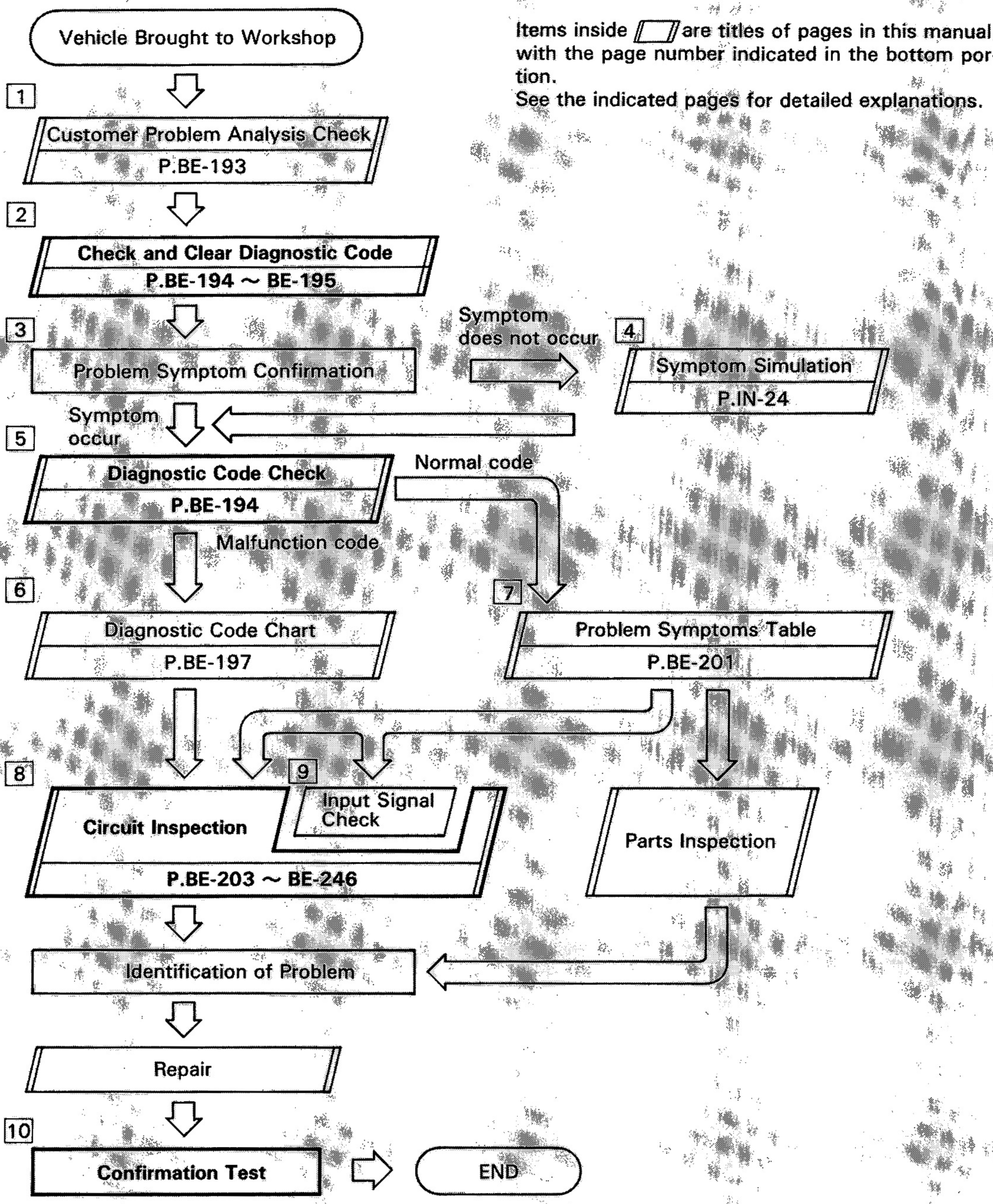

Step 2 , 5 , 8 , 10 : Diagnostic steps permitting the use of the TOYOTA hand-held tester or TOYOTA braek-out-box.

CUSTOMER PROBLEM ANALYSIS CHECK

CRUISE CONTROL SYSTEM Check Sheet

Inspector's Name _____

Customer's Name		**Registration No.**	
		Registration Year	
		Frame No.	
Data of Vehicle Brought in	/ /	**Odometer Reading**	km Mile

Condition of Problem Occurrence	**Date of Problem Occurrence**	/ /
	How Often does Problem Occur?	☐ Continuous ☐ Intermittent (Times a day)
	Vehicle Speed when Problem Occurred	km mile

Symptoms	☐ Auto cancel occurs	• Driving condition ☐ City driving ☐ Freeway ☐ Up hill ☐ Down hill • After cancel occurred, did the driver activate cruise control again? ☐ Yes ☐ No
	☐ Cancel does not occur	☐ With brake ON ☐ Except D range shift ☐ At 40 km/h (25 mph) or less ☐ When control SW turns to CANCEL position
	☐ Cruise control malfunction	☐ Slip to acceleration side ☐ Slip to deceleration side ☐ Hunting occurs ☐ O/D cut off does not occur ☐ O/D does not return
	☐ Switch malfunction	☐ SET ☐ ACCEL ☐ COAST ☐ RESUME ☐ CANCEL
	☐	☐ Remains ON ☐ Does not light up: ☐ Blinking

Diagnostic Code Check	**1st Time**	☐ Normal Code ☐ Malfunction Code (Code)
	2nd Time	☐ Normal Code ☐ Malfunction Code (Code)

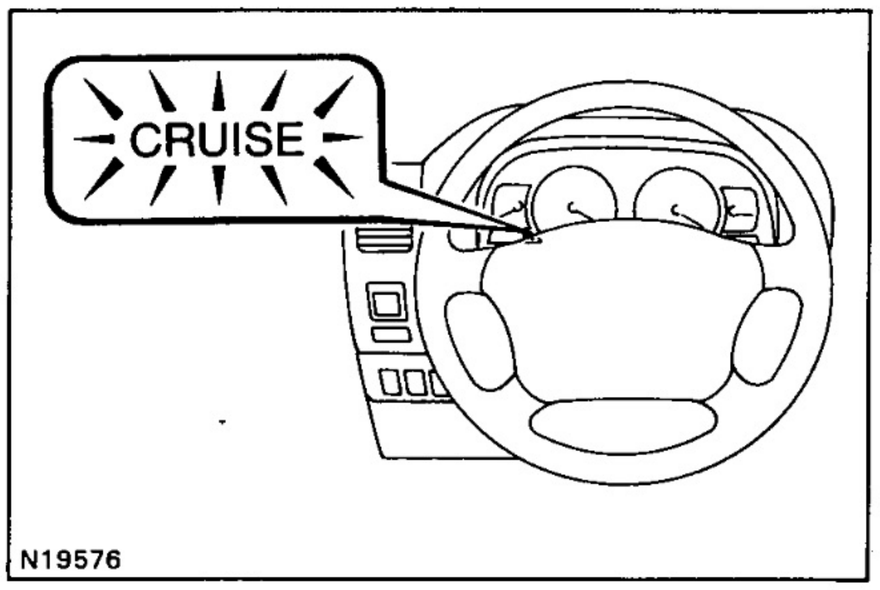

PRE-CHECK

1. DIAGNOSIS SYSTEM

(a) INDICATOR CHECK

(1) Turn the ignition switch to ON.

(2) Check that the CRUISE MAIN indicator light comes on when the cruise control main switch is turned on, and that the indicator light goes off when the main switch is turned OFF.

HINT:

If the indicator check result is not normal, proceed to troubleshooting (See page BE-51) for the combination meter section.

Indicator Light

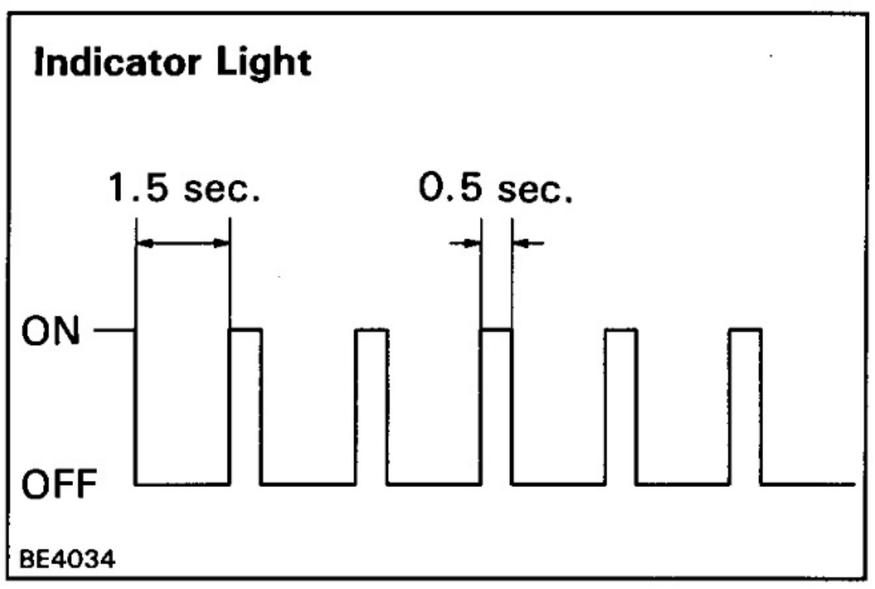

(b) DIAGNOSTIC CODE CHECK

HINT:

If a malfunction occurs in the No. 1 vehicle speed sensors or actuator, etc. during cruise control driving, the ECU actuates AUTO CANCEL of the cruise control and turns on and off the CRUISE MAIN indicator light to inform the driver of a malfunction. At the same time, the malfunction is stopped in memory as a diagnostic code.

Check Connector

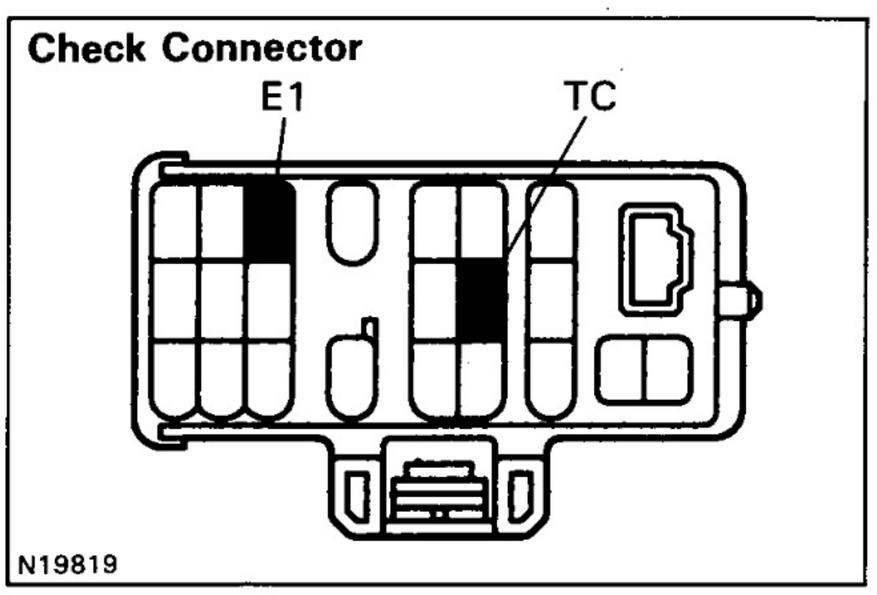

(c) OUTPUT OF DIAGNOSTIC CODE USING DIAGNOSIS CHECK WIRE

(1) Turn the ignition switch ON.

(2) Using SST, connect terminals Tc and E_1 of check connector.

SST 09843–18020

(3) Read the diagnostic code on the CRUISE MAIN indicator light.

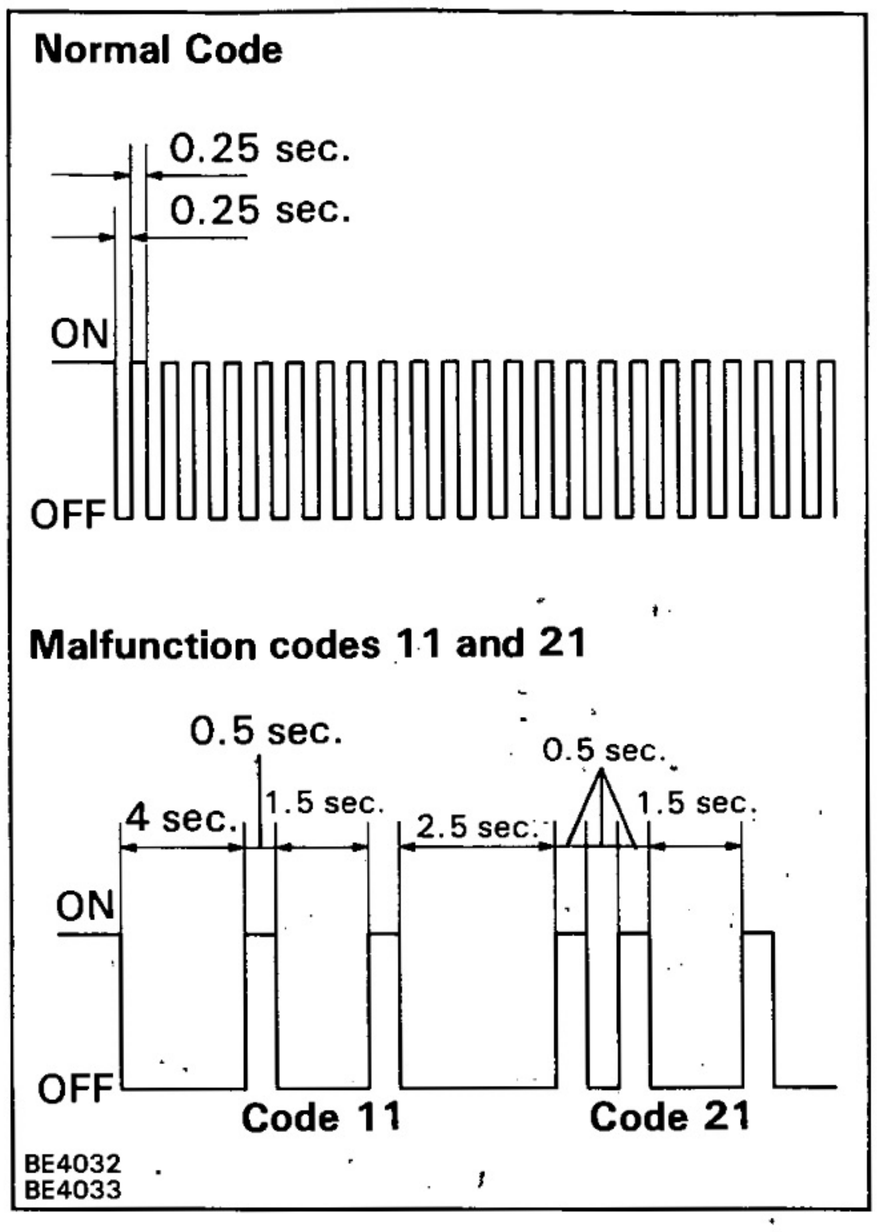

HINT:
If the diagnostic code is not output, inspect the diagnosis circuit (See page BE-244).
As an example, the blinking patterns for codes; normal, 11 and 21 are shown in the illustration.

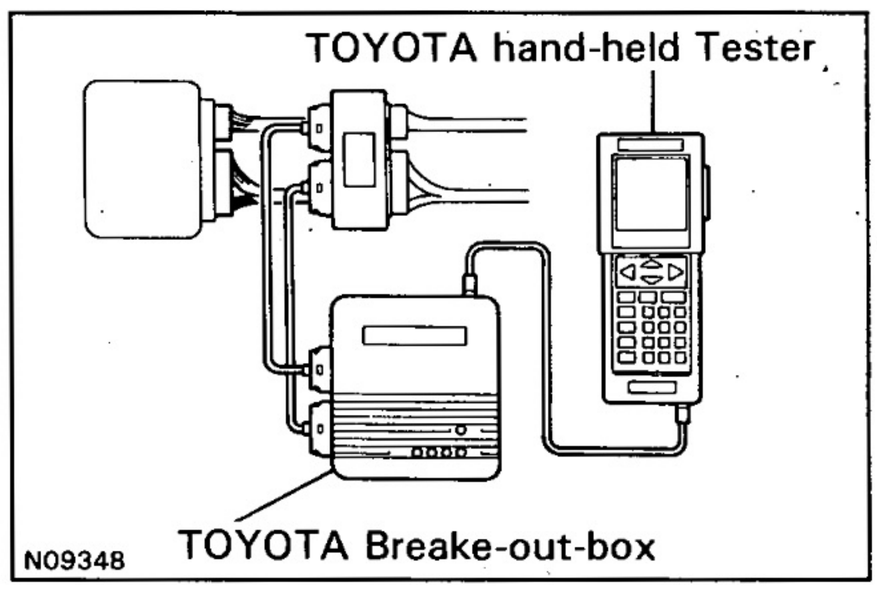

2. ECU TERMINAL VALUES MEASUREMENT BY USING TOYOTA BREAK-OUT-BOX AND TOYOTA HAND-HELD TESTER

(a) Hook up the TOYOTA break-out-box and TOYOTA hand-held tester to the vehicle.
(b) Read the ECU input/output values by following the prompts on the tester screen.
(c) Please refer to the TOYOTA hand-held tester. It has a "Snapshot" function. This records the measured data and is effective in the diagnosis of intermittent problems.

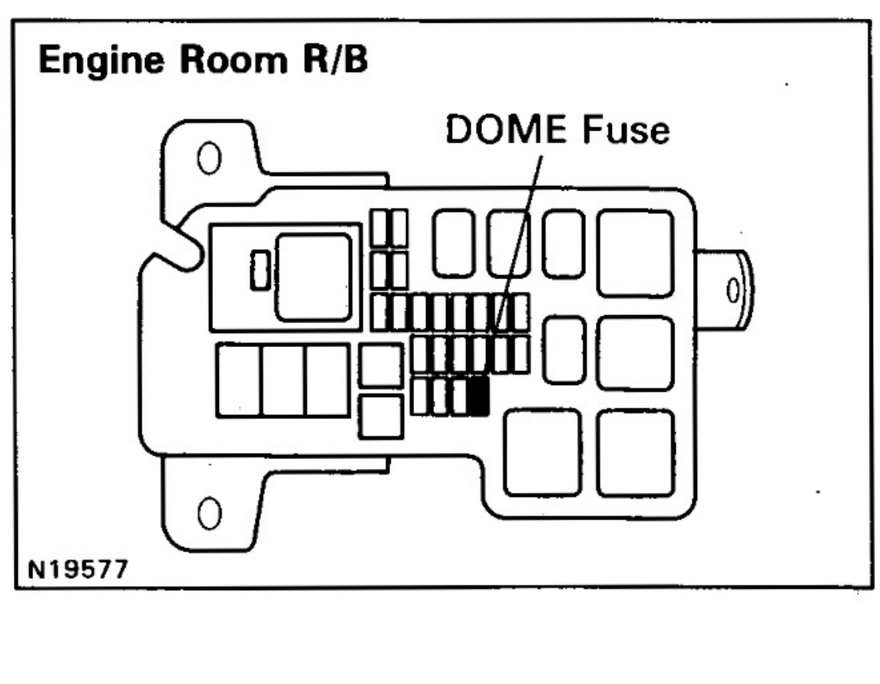

3. DIAGNOSTIC CODE CLEARANCE

(a) After completing repairs, the diagnostic code retained in memory can be cleared by removing the DOME fuse for 10 seconds or more, with the ignition switch off.
(b) Check that the normal code is displayed after connecting the fuse.

BE

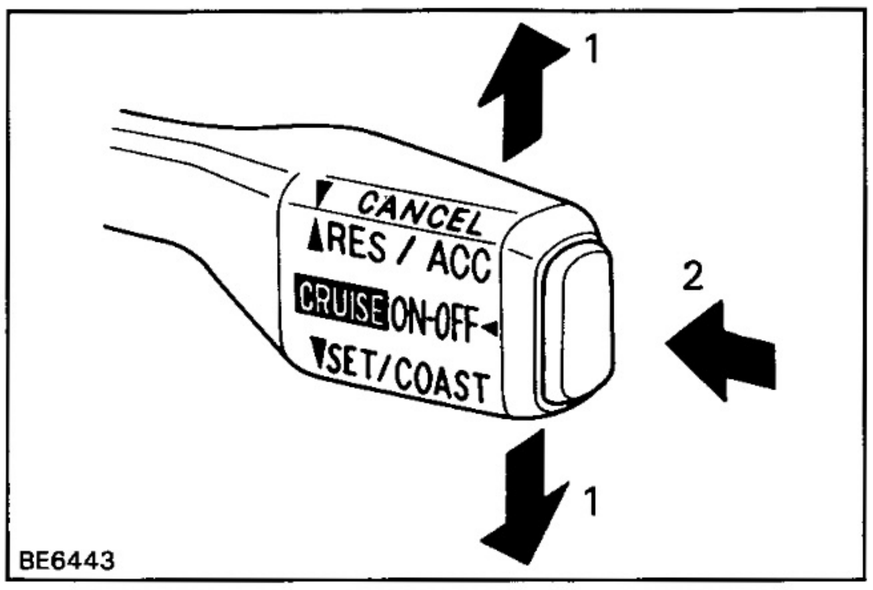

4. INPUT SIGNAL CHECK

HINT:

(1) For check No.1 ~ No.2
Turn the ignition switch ON.

(2) For check No.3
- Turn ignition switch ON.
- Shift to D range

(3) For check No.4
- Jack up the vehicle.
- Start the engine.
- Shift to D range.

(a) Press the control switch to SET/COAST or RES/ACC position and hold it down or hold it up to "1".

(b) Push on the main switch ON "2".

(c) Check that the CRUISE MAIN indicator light blinks twice or 3 times repeatedly after 3 seconds.

(d) Turn the SET/COAST or RES/ACC switch OFF.

(e) Operate each switch as listed in the table below.

(f) Read the blinking pattern of the CRUISE MAIN indicator light.

(g) After performing the check, turn the main switch OFF.

HINT:

When 2 or more signals are input to the ECU, the smallest numbered code will be displayed first.

No.	Operation Method	CRUISE MAIN Indicator Light Blinking Pattern	Diagnosis
1	Turn SET/COAST switch ON	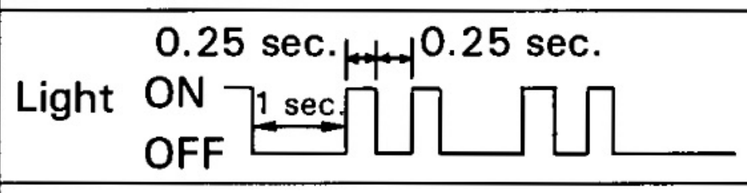	SET/COAST switch circuit is normal
2	Turn RES/ACC switch ON	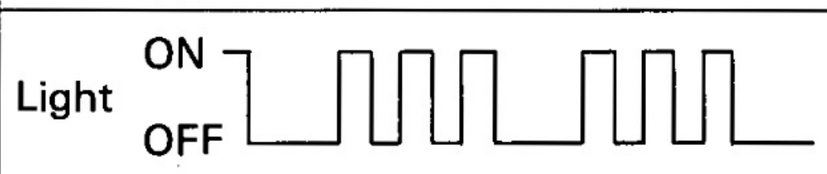	RES/ACC switch circuit is normal
3	Turn CANCEL switch ON	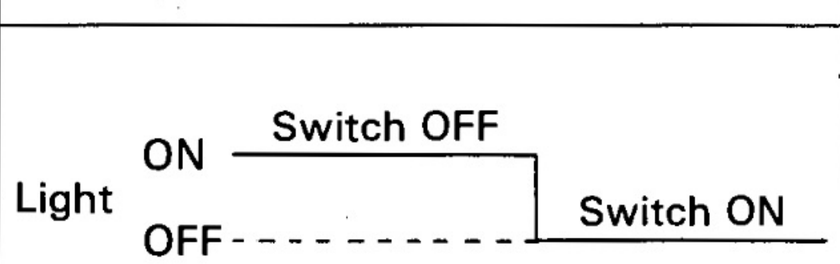	CANCEL switch circuit is normal
	Turn stop light switch ON Depress brake pedal		Stop light switch circuit is normal
	Turn neutral start switch OFF (Shift to except D range)	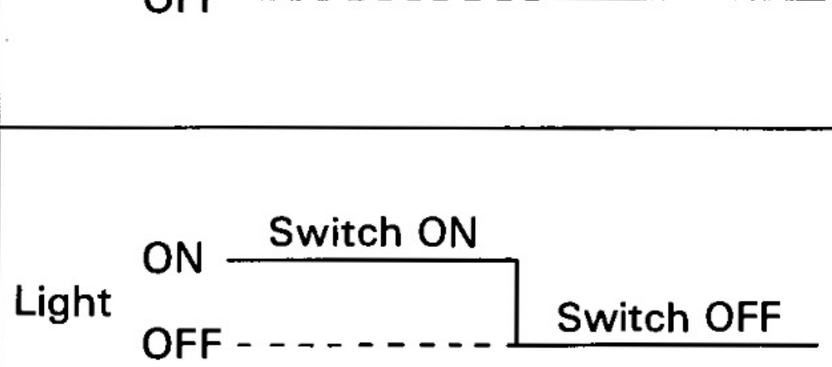	Neutral start switch circuit is normal
	Turn clutch switch OFF (Depress clutch pedal)		Clutch switch circuit is normal
4	Drive at about 40 km/h (25 mph) or higher	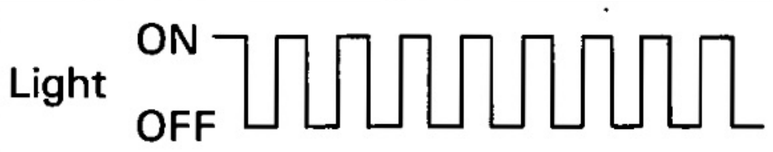	Vehicle Speed Sensor is normal
	Drive at about 40 km/h (25 mph)or below	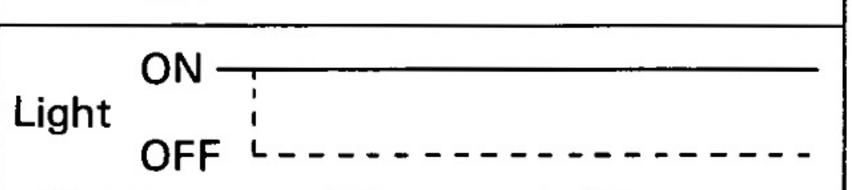	

BE

DIAGNOSTIC CODE CHART

If a malfunction code is displayed during the diagnostic code check, check the circuit listed for that code in the table below and proceed to the appropriate page.

Diagnostic Code No. (See Page)	Detection Item	Trouble Area
11,15*1 (BE-203)	Actuator Motor Circuit	• Cruise control actuator motor • Harness or connector between actuator motor and ECU • ECU
12 (BE-205)	Actuator Magnetic Clutch Circuit	• Cruise control magnetic clutch • Harness or connector between ECU and magnetic clutch, magnetic clutch and body ground • ECU
13*2 (BE-207)	Actuator Position Sensor Circuit	• Cruise control actuator motor • Cruise control actuator position sensor • Harness or connector between actuator position sensor and body ground • Harness or connector between actuator motor and ECU • ECU
14 (BE-210)	Actuator Motor Circuit Actuator Position Sensor	• Cruise control actuator motor • Cruise control actuator position sensor • Harness or connector between actuator position sensor and body ground • Harness or connector between actuator motor and ECU • ECU
21 (BE-213)	Vehicle Speed Sensor Circuit	• Vehicle speed sensor • ECM • Combination meter • Harness or connector between vehicle speed sensor and ECM, ECM and combination meter, combination meter and ECU • ECU
23 (BE-216)	Vehicle Speed Sensor Circuit	• Vehicle speed sensor • Harness or connector (SPD) • ECU
32 (BE-217)	Control Switch Circuit (Cruise Control Switch)	• Cruise control switch • Harness or connector between control switch and ECU • ECU
41	Cruise Control ECU	• Cruise control ECU
42	Source voltage drop	• Power source
51*1 (BE-220)	Idle switch circuit	• Throttle position sensor • Harness or connector between cruise control ECU and throttle position sensor • Cruise control ECU

*1: LHD models
*2: RHD models

PARTS LOCATION

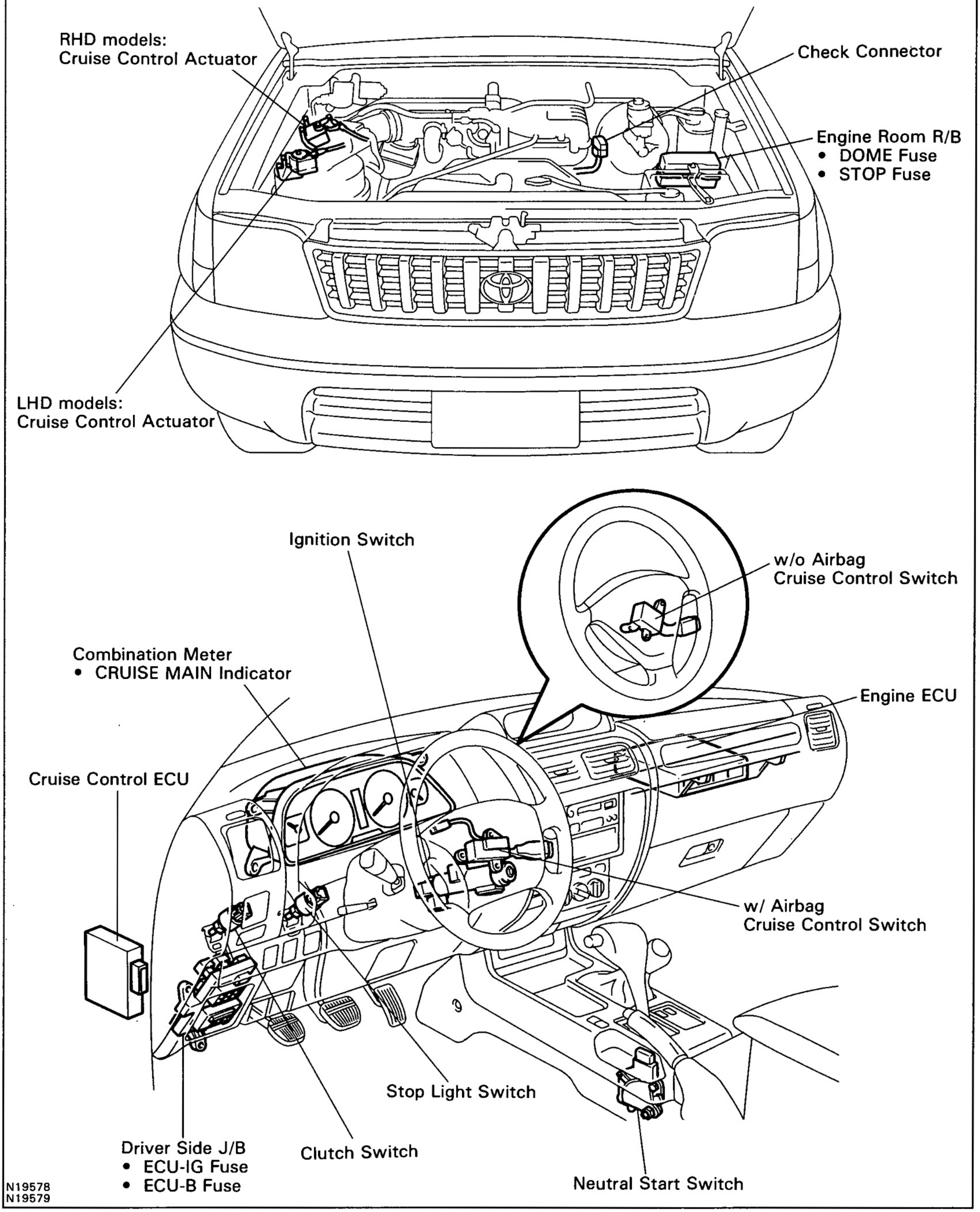

N19578
N19579

TERMINALS OF ECU

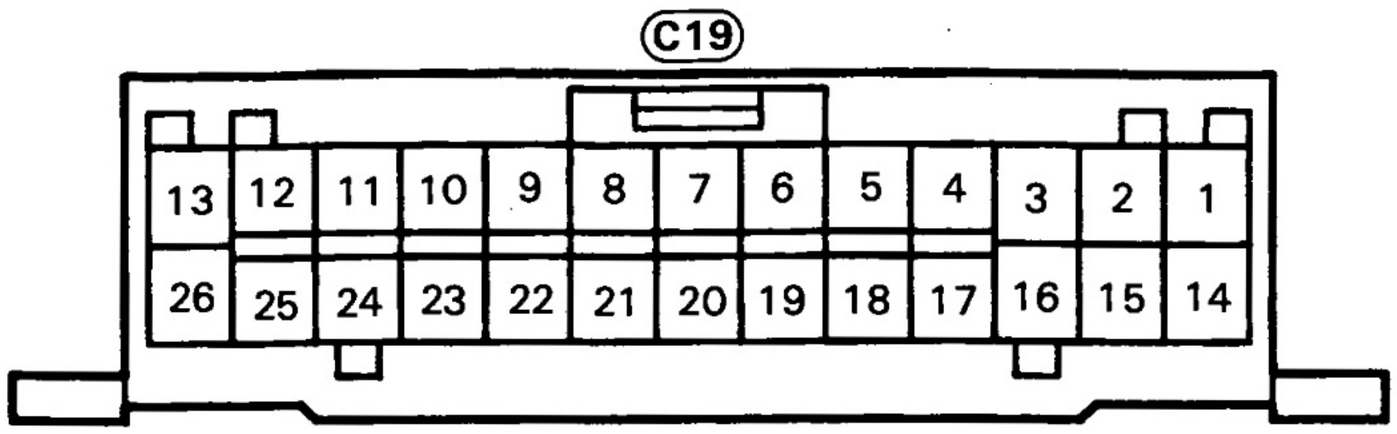

N19820

Symbols (Terminals No.)	Wiring Color	Condition	STD Voltage (V)
D ↔ GND (C17-2 ↔ C17-13)	M/T:G-Y ↔ W-B	M/T: Depress clutch pedal A/T: Shift to except D range	Below 1 V
	A/T:G-O ↔ W-B	M/T: Release clutch pedal A/T: Shift to D range	10 – 16 V
PI ↔ GND (C17-7 ↔ C17-13)	B-Y ↔ W-B	Ignition switch ON Cruise control main switch ON	Below 1.2 V
		Ignition switch ON Cruise control main switch OFF	10 – 16 V
TC ↔ GND (C17-8 ↔ C17-13)	P-L ↔ W-B	Ignition switch ON	10 – 16 V
		Ignition switch ON Connect terminals TC and E1 of diagnostic check connector	Below 1 V
OD ↔ GND (C17-9 ↔ C17-13)	V-R ↔ W-B	During cruise control driving OD switch ON	10 – 16 V
		During cruise control driving OD switch OFF (3rd driving)	Below 1 V
L ↔ GND (C17-10 ↔ C17-13)	R ↔ W-B	During cruise control driving	9 – 15 V
		Except during cruise control driving	Below 1 V
MC ↔ GND (C17-11 ↔ C17-13)	L-R ↔ W-B	During cruise control driving COAST switch hold ON	9 – 15 V
		During cruise control driving ACC switch hold ON	Below 1 V
MO ↔ GND (C17-12 ↔ C17-13)	L ↔ W-B	During cruise control driving ACC switch hold ON	9 – 15 V
		During cruise control driving COAST switch hold ON	Below 1 V
GND ↔ Body Ground (C17-13 ↔ Body Ground)	W-B ↔ Body Ground	Constant	Below 1 V
B ↔ GND (C17-14 ↔ C17-13)	B-R ↔ W-B	Ignition switch ON	10 – 16 V
BATT ↔ GND (C17-15 ↔ C17-13)	W-R ↔ W-B	Constant	10 – 16 V
STP ↔ GND (C19-16 ↔ C19-13)	G-W ↔ W-B	Depress brake pedal	10 – 16 V
		Release brake pedal	Below 1 V

Symbols (Terminals No.)	Wiring Color	Condition	STD Voltage (V)
CCS ↔ GND (C17-18 ↔ C17-13)	B ↔ W-B	Ignition switch ON	10 – 16 V
		Ignition switch ON CANCEL switch hold ON	5.1 – 8.3 V
		Ignition switch ON SET/COAST switch hold ON	2.4 – 4.0 V
		Ignition switch ON RES/ACC switch hold ON	0.8 – 1.4 V
CMS ↔ GND (C17-19 ↔ C17-13)	Y-R ↔ W-B	Ignition switch ON Main switch ON	Below 1 V
		Ignition switch ON Main switch OFF	10 – 16 V
SPD ↔ GND (C17-20 ↔ C17-13)	V-W ↔ W-B	Ignition switch ON	10 – 16 V
		During driving	3 – 7 V
IDL ↔ GND (C17-21 ↔ C17-13)	G-W ↔ W-B	Ignition switch ON Throttle valve fully closed	Below 1 V
		Ignition switch ON Throttle valve fully opened	10 – 16 V
ECT ↔ GND (C17-22 ↔ C17-13)	R-Y ↔ W-B	During driving Gear position O/D	Below 1 V
		During driving Gear position 3rd	10 – 16 V
*VR1 ↔ GND (C17-23 ↔ C17-13)	Y ↔ W-B	Ignition switch ON	4.7 – 5.2 V
*VR2 ↔ VR3 (C17-24 ↔ C17-25)	Y-G ↔ R-B	During cruise control driving	1.0 – 4.7 V
		Ignition switch ON Actuator control plate fully opened	4.2 – 4.7 V
		Ignition switch ON Actuator control plate fully closed	1.0 – 1.2 V
*VR3 ↔ GND (C17-25 ↔ C17-13)	R-B ↔ W-B	Constant	Below 1 V
L ↔ GND (C19-26 ↔ C19-13)	W-G ↔ W-B	Constant	Below 1 V

*: RHD models

BE

PROBLEM SYMPTOMS TABLE

Symptom	Suspect Area	See page
•Cruise control system does not set. •Cruise control system does not operate.	Input signal check No.4: OK 1. ECU Power Source Circuit 2. Wire Harness 3. Cruise Control Main Switch Circuit 4. Cruise Control Switch Circuit 5. Stop Light Switch Circuit 6. Neutral Start Switch or Clutch Switch Circuit 7. Actuator Control Cable 8. Cruise Control Actuator Motor Circuit 9. Cruise Control ECU Input signal check No.4: NG 1. Vehicle Speed Sensor Circuit 2. Cruise Control ECU	 BE-235 BE-240 BE-217 BE-222 BE-230,BE-233 BE-246 BE-203 IN-35 BE-213 IN-35
Indicator light does not light up.	1. Wire Harness 2. Indicator Light Circuit 3. Cruise Control ECU	 BE-242 IN-35
Vehicle speed drop when the cruise control switch turned to SET.	1. Actuator Control Cable 2. ECU Power Source Circuit 3. Idle Switch Circuit 4. Cruise Control Actuator Motor Circuit 5. Cruise Control ECU	BE-246 BE-235 BE-225 BE-203 IN-35
Set speed deviates on high or low side.	Input signal check No.4: OK 1. Vehicle Speed Sensor Circuit 2. Actuator Control Cable 3. ECU Power Source Circuit 4. Cruise Control Actuator Motor Circuit 5. Cruise Control ECU Input signal check No.4: NG 1. Cruise Control ECU	 BE-213 BE-246 BE-235 BE-203 IN-35 IN-35
Vehicle speed fluctuates when cruise control switch turn to SET.	1. Vehicle Speed Sensor Circuit 2. Actuator Control Cable 3. Idle Switch Circuit 4. ECT Communication Circuit 5. Cruise Control Actuator Motor Circuit 6. Cruise Control ECU	BE-213 BE-246 BE-225 BE-227 BE-203
Acceleration response is sluggish when cruise control switch turn to "ACCEL" or "RESUME".	Input signal check No.4: OK 1. Actuator Control Cable 2. Vehicle Speed Sensor Circuit 3. Cruise Control Actuator Motor Circuit 4. Cruise Control ECU Input signal check No.4: NG 1. Cruise Control Switch Circuit 2. Cruise Control ECU	 BE-246 BE-213 BE-203 IN-35 BE-217 IN-35
Set speed does not cancel when brake pedal depressed.	Input signal check No.3: OK 1. Cruise Control ECU Input signal check No.3: NG 1. Stop Light Switch Circuit 2. Cruise Control ECU	 IN-35 BE-222 IN-35
Cruise control does not cancel when transmission is shifted to except D range. (A/T)	Input signal check No.3: OK 1. Cruise Control ECU Input signal check No.3: NG 1. Neutral Start Switch Circuit 2. Cruise Control ECU	 IN-35 BE-230 IN-35

BE

Symptom	Suspect Area	See page
Cruise control does not cancel when clutch pedal depressed.	Input signal check No.3: OK 1. Cruise Control ECU Input signal check No.3: NG 1. Clutch Switch Circuit 2. Cruise Control ECU	 IN-35 BE-233 IN-35
Cruise control does not cancel when cruise control switch turned to CANCEL.	Input signal check No.3: OK 1. Cruise Control ECU Input signal check No.3: NG 1. Cruise Control Switch Circuit 2. Cruise Control ECU	 IN-35 BE-217 IN-35
Vehicle speed does not decrease when cruise control switch turned to COAST.	Input signal check No.1: OK 1. Cruise Control Actuator Motor Circuit 2. Actuator Control Cable 3. Vehicle Speed Sensor Circuit 4. Cruise Control ECU Input signal check No.1: NG 1. Cruise Control Switch Circuit 2. Cruise Control ECU	 BE-203 BE-246 BE-213 IN-35 BE-217 IN-35
Vehicle speed does not accelerate when cruise control switch turned to ACCEL.	Input signal check No.2: OK 1. Cruise Control Actuator Motor Circuit 2. Actuator Control Cable 3. Vehicle Speed Sensor Circuit 4. Cruise Control ECU Input signal check No.2: NG 1. Cruise Control Switch Circuit 2. Cruise Control ECU	 BE-203 BE-246 BE-213 BE-217 IN-35
Vehicle speed does not return to memorized speed when cruise control switch turned to RESUME.	Input signal check No.2: OK 1. Cruise Control Actuator Motor Circuit 2. Actuator Control Cable 3. Vehicle Speed Sensor Circuit 4. Cruise Control ECU Input signal check No.2: NG 1. Cruise Control Switch Circuit 2. Cruise Control ECU	 BE-203 BE-246 BE-213 IN-35 BE-217 IN-35
Speed can be set below about 40 km/h (25 mph).	Input signal check No.4: OK 1. Cruise Control ECU Input signal check No.4: NG 1. Vehicle Speed Sensor Circuit 2. Cruise Control ECU	 IN-35 BE-213 IN-35
Cruise control does not cancel when speed is less than 40 km/h (25 mph).	Input signal check No.4: OK 1. Cruise Control Actuator Motor Circuit 2. Cruise Control ECU Input signal check No.4: NG 1. Vehicle Speed Sensor Circuit 2. Cruise Control ECU	 BE-203 IN-35 BE-213 IN-35

BE

CIRCUIT INSPECTION

DTC	11,15	Actuator Motor Circuit

CIRCUIT DESCRIPTION

The actuator motor is operated by signals from the ECU. Acceleration and deceleration signals are transmitted by changes in the Duty Ratio (See note below).

Duty Ratio

The duty ratio is the ratio of the period of continuity in one cycle. For example, if A is the period of continuity in one cycle, and B is the period of non-continuity, then.

$$\text{Duty Ratio} = \frac{A}{A + B} \times 100\ (\%)$$

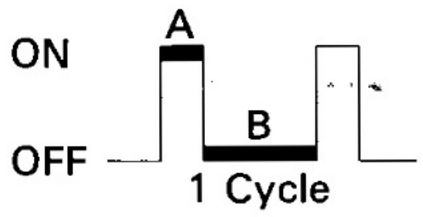

BE4056

DTC No.	Detection Item	Trouble Area
11	Short in actuator motor circuit	• Cruise control actuator • Harness or connector between actuator and cruise control ECU • Cruise control ECU
15	Open in actuator motor circuit	• Cruise control actuator

WIRING DIAGRAM

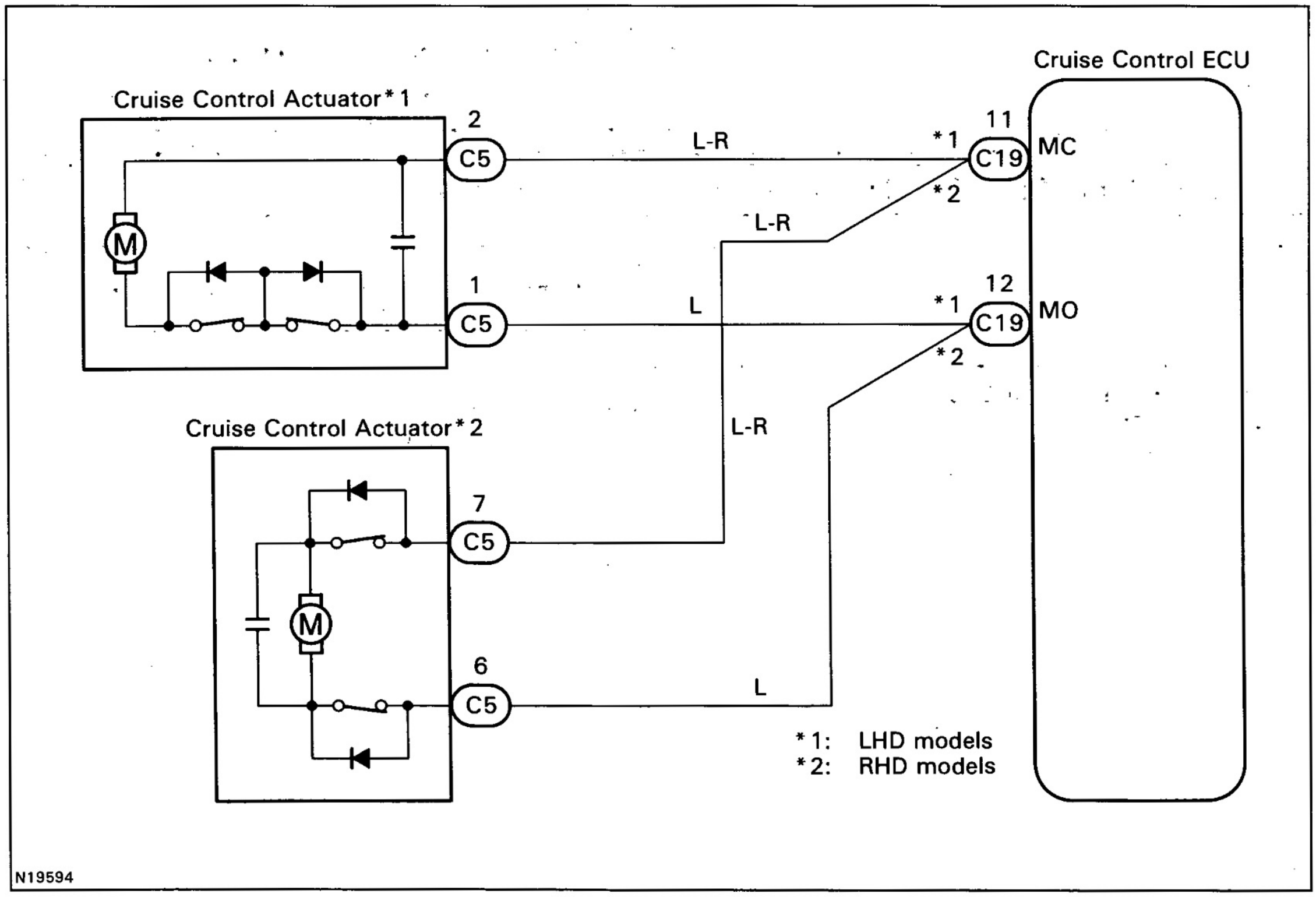

INSPECTION PROCEDURE

1	Check resistance between terminals MO and MC of cruise control actuator.

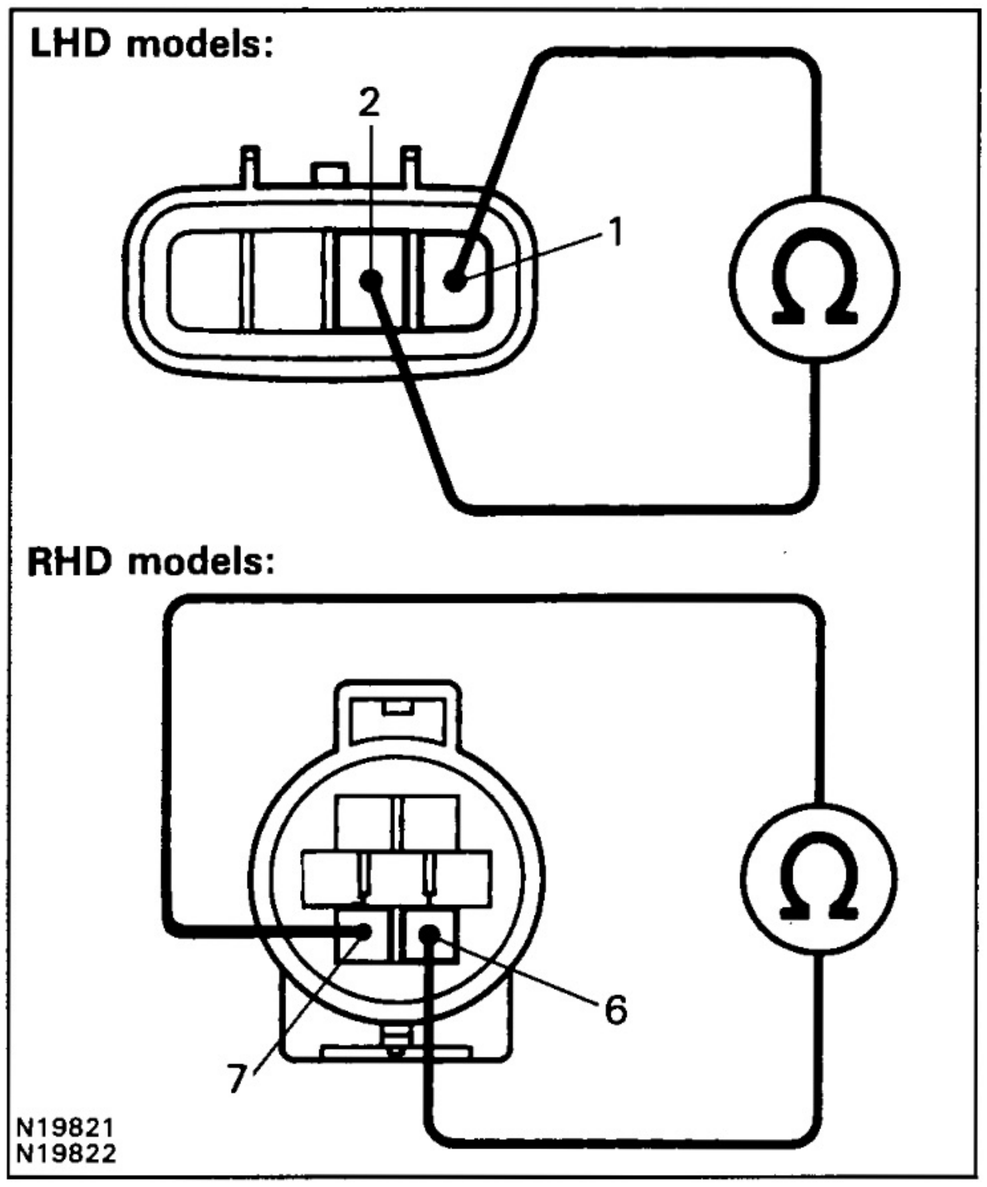

PREPARATION:

(a) Ignition switch ON.
(b) Disconnect actuator connector.

CHECK:

Measure resistance between terminals 1 (6) and 2 (7).
( ): RHD models
HINT:
If control plate position is fully opened or fully closed, resistance can not measure.

OK:

Resistance: more than 4.2 Ω

BE

OK → **NG** → **Replace cruise control actuator.**

2	Check wire harness and connector between terminals MO of cruise control ECU and MO of cruise control actuator (See page IN-30).

OK → **NG** → **Repair or replace harness or connector.**

Replace cruise control ECU.
(See page IN-35).

DTC	12	Magnetic Clutch Circuit

CIRCUIT DESCRIPTION

This circuit turns on the magnetic clutch inside the actuator during cruise control operation according to the signal from the ECU. If a malfunction occurs in the actuator or speed sensor, etc. during cruise control operation, the rotor shaft between the motor and control plate is released.
When the brake pedal is depressed, the stop light switch turns on, supplying electrical power to the stop light. Power supply to the magnetic clutch is mechanically cut and the magnetic clutch is turned OFF.
When driving downhill, if the vehicle speed exceeds the set speed by 15 km/h (6 mph) above the set speed, then cruise control at the set speed is resumed.

DTC No.	Detection Item	Trouble Area
12	• Short in magnetic clutch circuit. • Open (0.8 sec.) in magnetic clutch circuit	• Cruise control actuator magnetic clutch • Harness or connector between ECU and magnetic clutch, magnetic clutch and body ground • Cruise control ECU

WIRING DIAGRAM

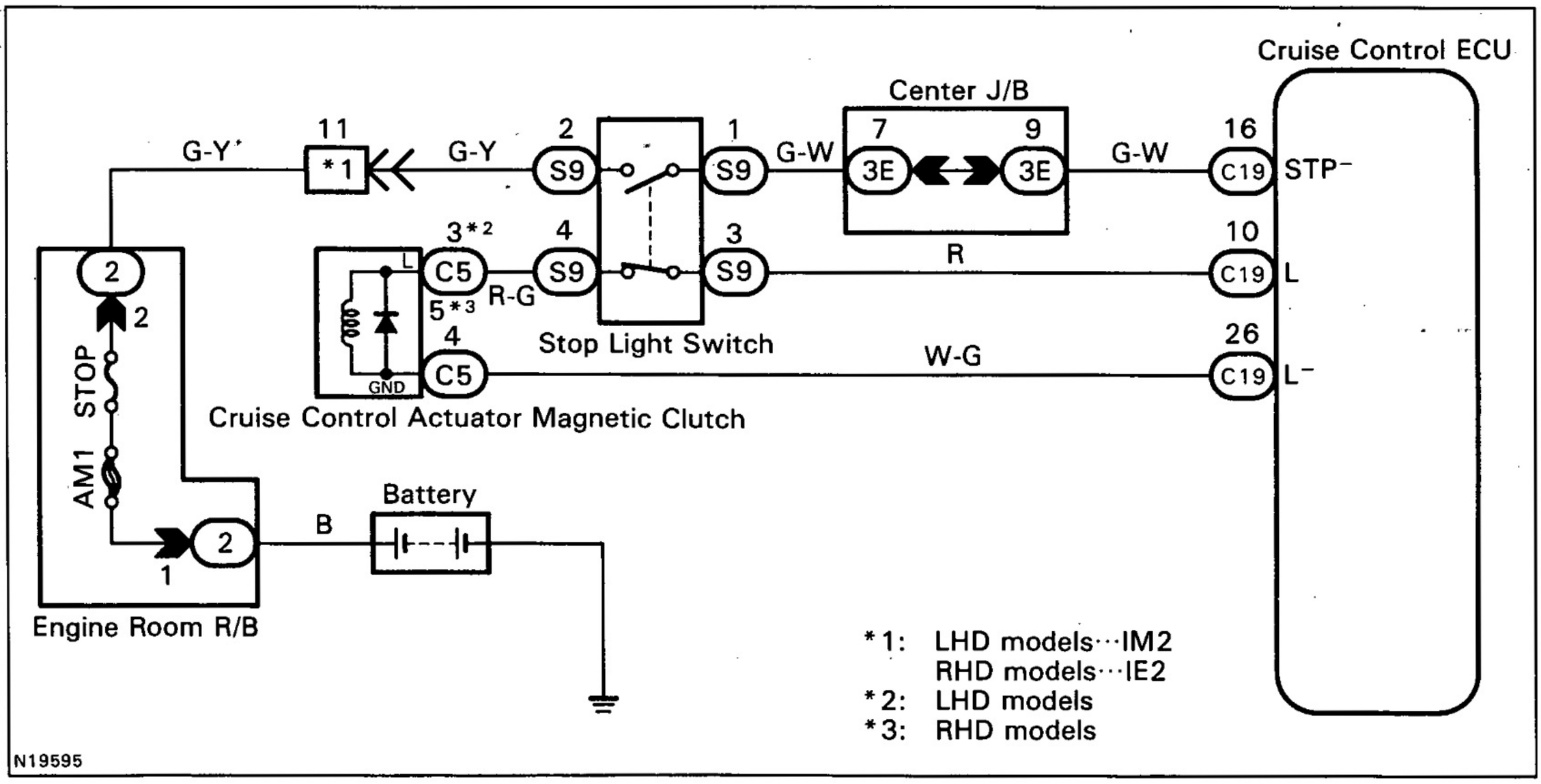

INSPECTION PROCEDURE

1	Check STOP fuse.

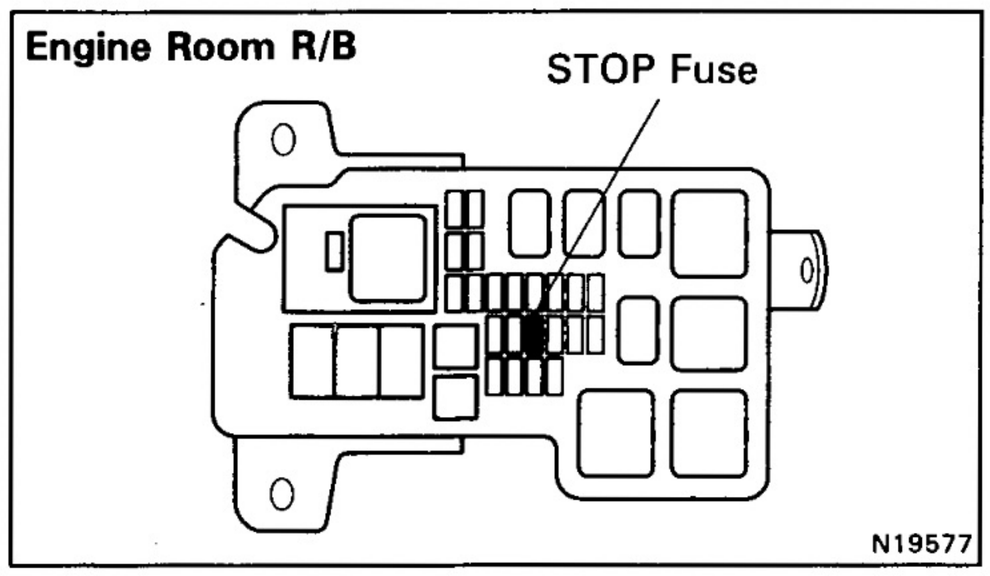

PREPARATION:

Remove the STOP fuse from engine room relay block.

CHECK:

Check fuse continuity.

OK:

There is continuity.

OK

NG → **Replace STOP fuse.**

2	Check harness and connector between actuator and cruise control actuator (See page IN-30).

OK

NG → **Repair or replace harness or connector.**

Check and replace cruise control ECU (See page IN-35).

DTC	13	Actuator Position Sensor Circuit (RHD models)

CIRCUIT DESCRIPTION

This circuit detects the rotation position of the actuator control plate and sends a signal to the ECU.

DTC No.	Detection Item	Trouble Area
13	• Position Sensor detects abnormal voltage.	• Cruise control actuator motor • Cruise control actuator position sensor • Harness or connector between actuator position sensor and body ground • Harness or connector between actuator motor and ECU • ECU
14	• Open in actuator motor circuit. • Position sensor signal valve does not change when the motor operates.	

WIRING DIAGRAM

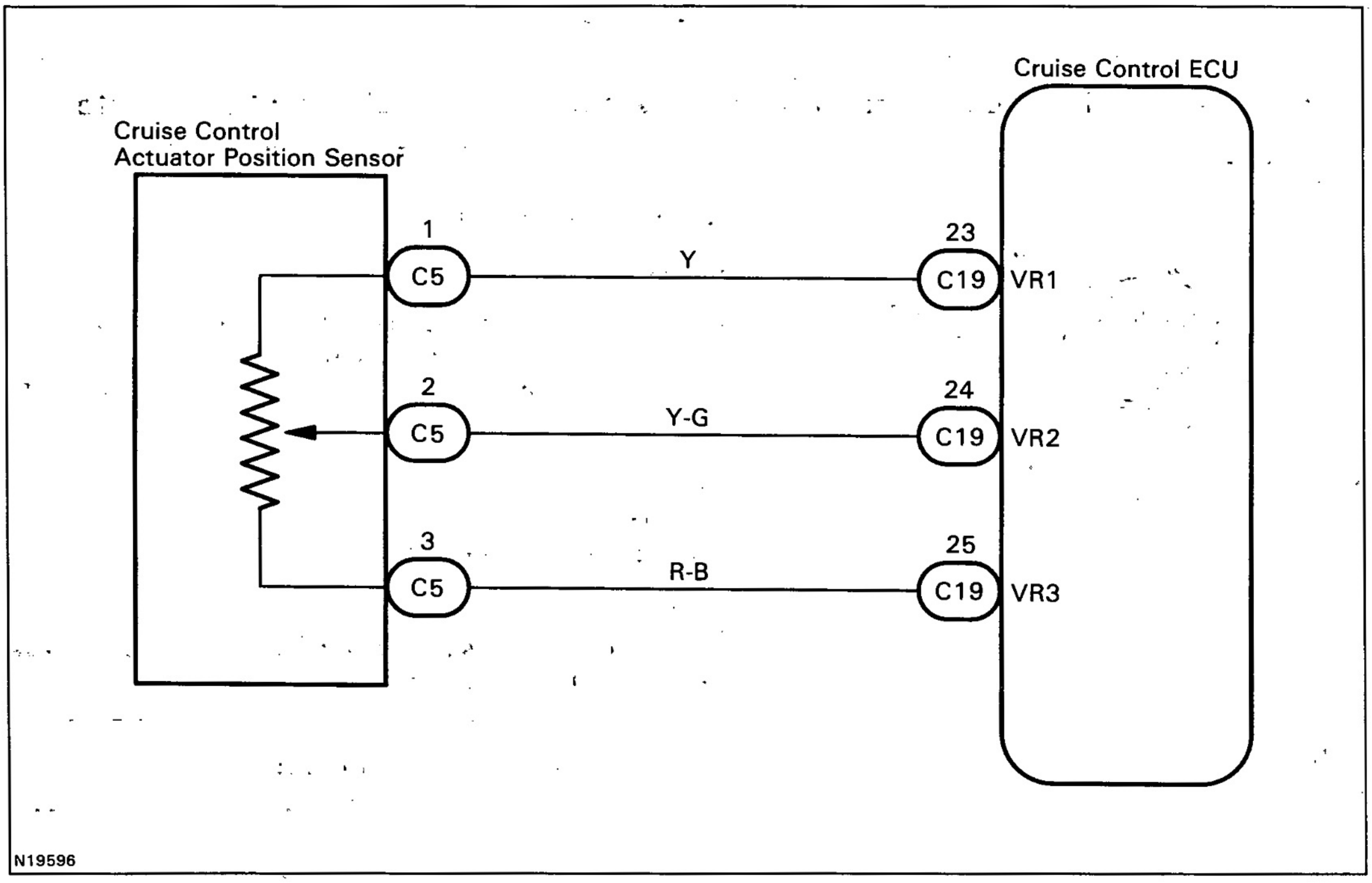

BE

INSPECTION PROCEDURE

1 **Check resistance between terminals VR1 and VR3 of actuator.**

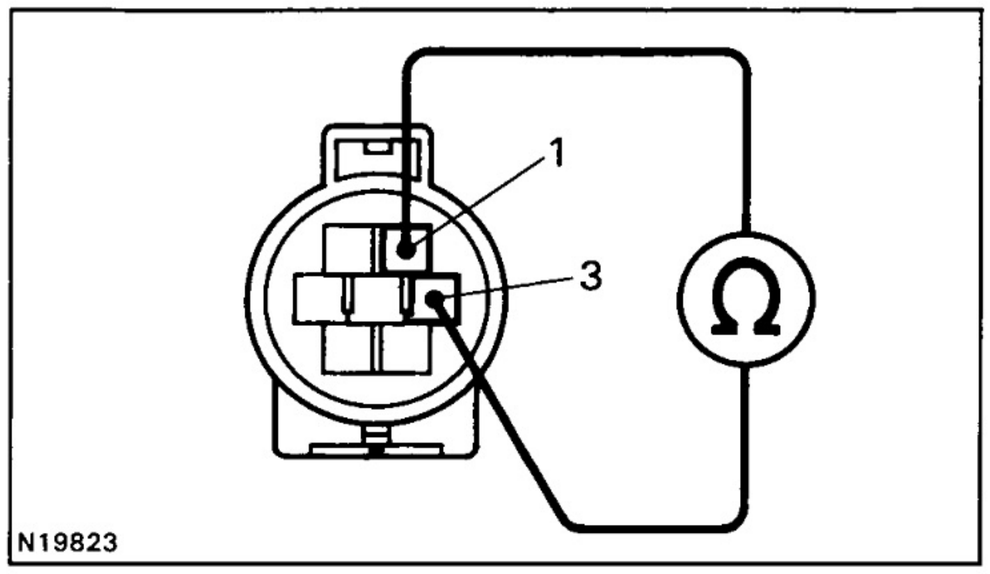

PREPARATION:

Disconnect the actuator connector.

CHECK:

Measure the resistance between the actuator terminal 1 and 3 of actuator connector.

OK:

Resistance: 1.8 ~ 2.2 kΩ (25°C)

OK

NG **Replace actuator.**

2 **Check voltage between terminals VR2 and VR3 of cruise control actuator.**

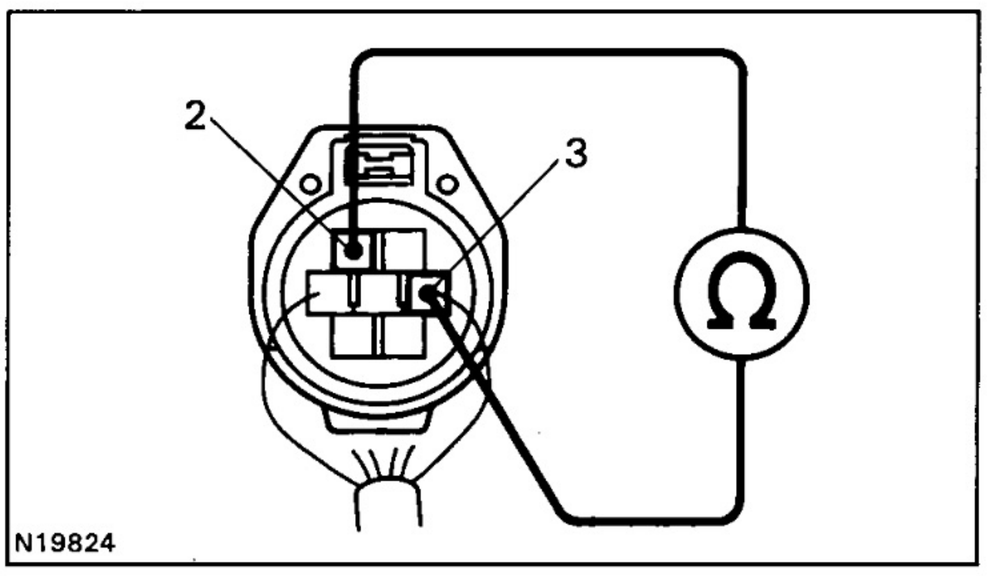

PREPARATION:

Turn the ignition switch ON.

CHECK:

Measure the voltage between terminals 2 and 3 of actuator connector while turning the control plate slowly by hand from the deceleration side to the acceleration side.

OK:

Voltage:
Fully closed: Approx. 1.3 V
Fully opened: Approx. 4.6 V

HINT:
As the control plate is turned, the voltage should increase gradually without interruption.

OK

NG **Replace cruise control actuator.**

BE

3	Check for open and short in harness and connector between ECU and actuator position sensor (See page IN-30).

OK

NG → Repair or replace harness or connector.

Chech and replace cruise control ECU
(See page IN-35).

DTC	14	Actuator Mechanical Malfunction

CIRCUIT DESCRIPTION

See page BE-203.

WIRING DIAGRAM

See page BE-203.

INSPECTION PROCEDURE

1 Check actuator arm locking operation

LHD models

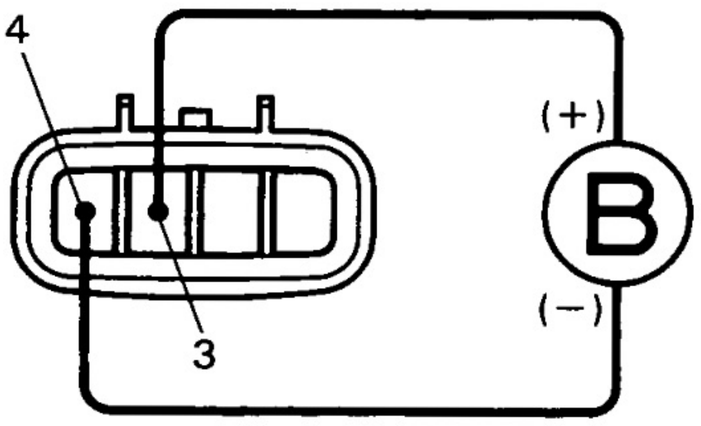

RHD models

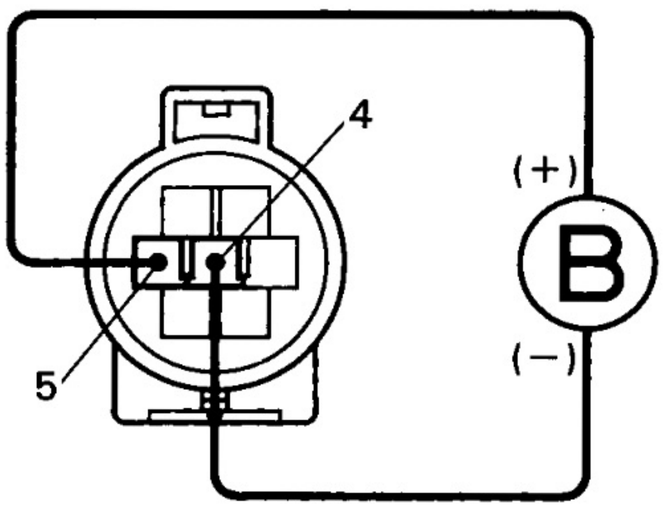

N19825
N19826

PREPARATION:

(a) Ignition switch OFF.
(b) Disconnect the actuator connector.

CHECK:

(a) Connect the positive (+) lead from the battery to the terminal 3 (5) of actuator and the negative (−) lead to terminal 4 (4).
( ): RHD models

NOTICE:

Do not connect the high tension cables to the wrong battery terminal. You will damage the cruise control actuator.

(b) Move the control plate by hand.

OK:

Control plate does not move.

OK

NG → **Replace cruise control actuator.**

2 Check actuator operation.

LHD models

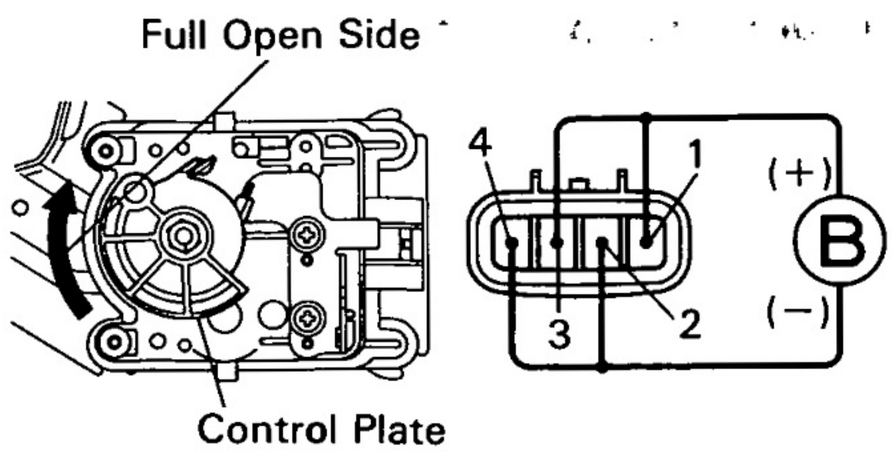

RHD models

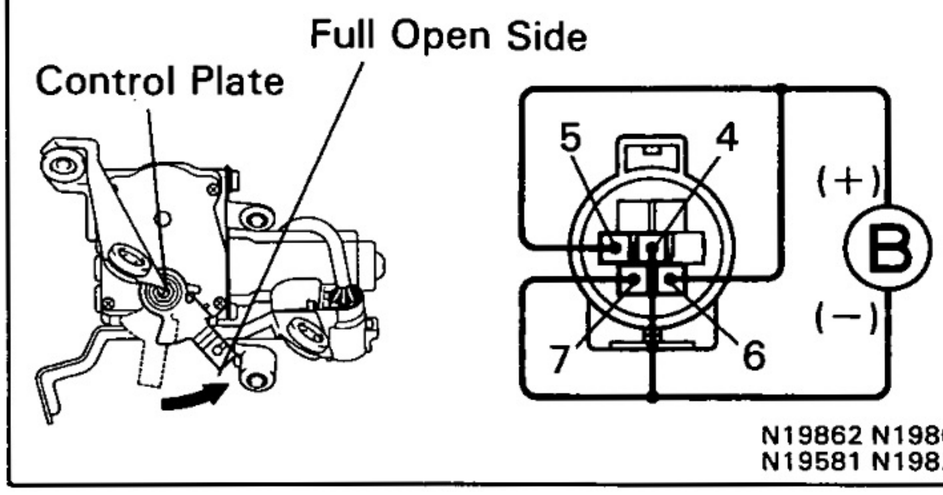

N19862 N19863
N19581 N19829

PREPARATION:

Disconnect the actuator connector.

CHECK:

Connect the positive (+) lead from the battery to terminals 3 (5) and 1 (6) of actuator, connect the negative (−) lead to terminals 4 (4) and 2 (7) of actuator.
( ): RHD models

OK:

Control arm moves to full open side

LHD models

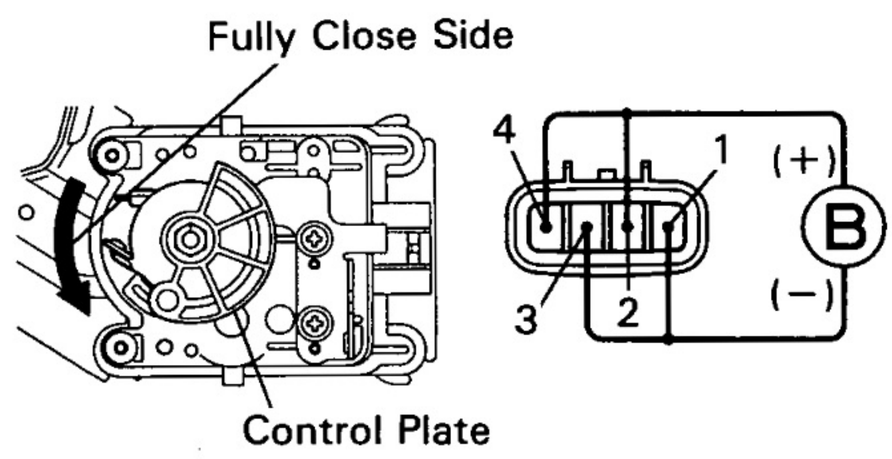

RHD models

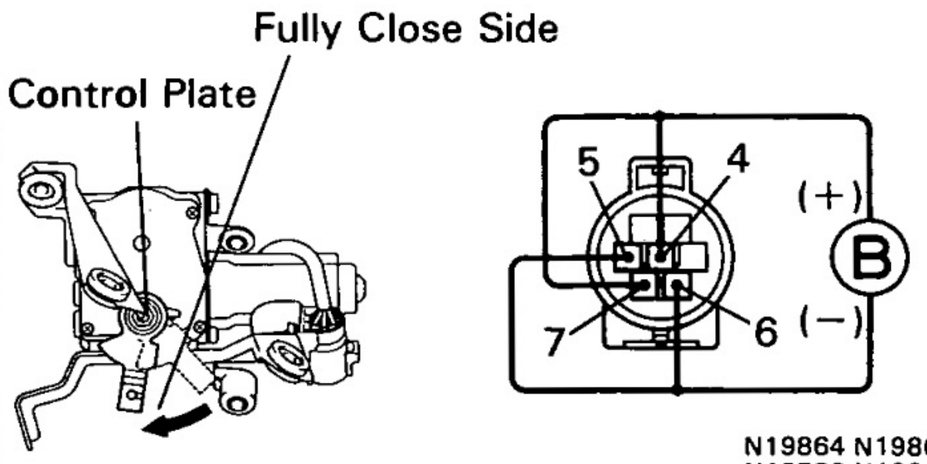

N19864 N19865
N19580 N19832

CHECK:

Connect the positive (+) lead from the battery to terminals 4 (4) and 2 (7) of actuator, connect the negative (−) lead to terminals 3 (5) and 1 (6) of actuator.
( ): RHD models

OK:

Control arm moves to full close side

BE

OK

NG **Replace actuator.**

3	Check harness and connector between actuator and cruise control ECU (See page IN-30).

OK

NG → Repair or replace harness or connector.

Check and replace cruise control ECU (See page IN-35).

DTC	21	Open in Vehicle Speed Sensor Circuit

CIRCUIT DESCRIPTION

The vehicle speed sensor circuit is sent to cruise control ECU as vehicle speed signal. For each rotation of the shaft, the vehicle speed sensor sends a signal through the combination meter to the cruise control ECU (See the following). The ECU calculates the vehicle speed from this pulse frequency.

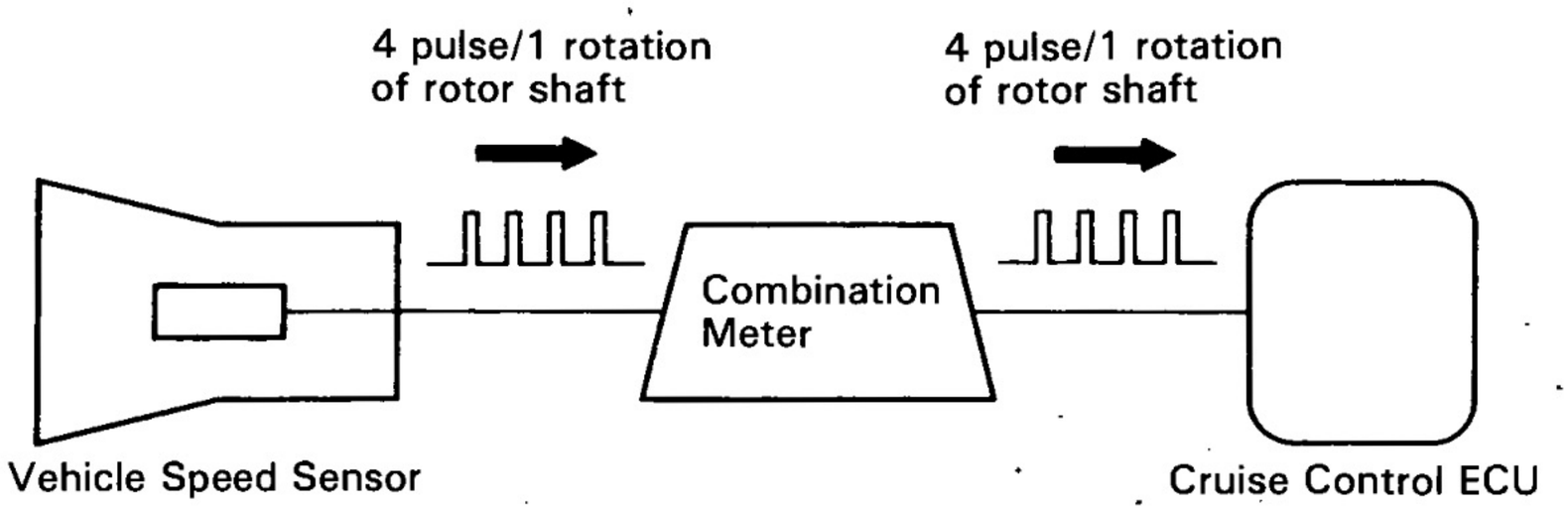

N10528

DTC No.	Detection Item	Trouble Area
21	Speed signal is not input to the cruise control ECU while cruise control is set.	• Vehicle speed sensor • Combination meter • Harness or connector between vehicle speed sensor and combination meter, combination meter and cruise control ECU • Cruise control ECU

BE

WIRING DIAGRAM

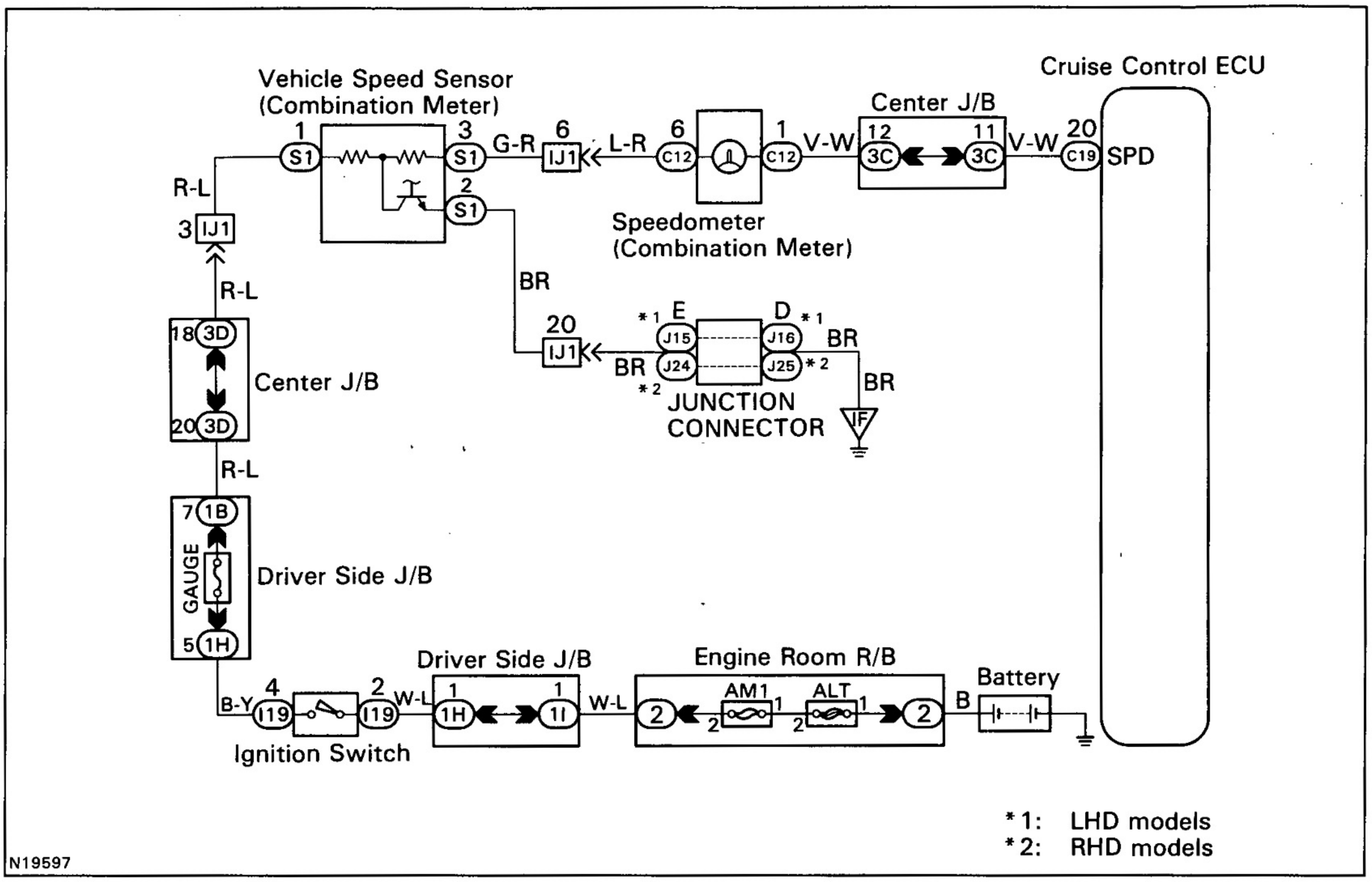

BE

INSPECTION PROCEDURE

1 Input signal check.

Input Signal	Indicator Light Blinking Pattern
Drive at about 40 km/h (25 mph) or below	Light: ON / OFF
Drive at about 40 km/h (25 mph) or higher	Light: ON / OFF

CHECK:

(a) See input signal check on page BE-196.
(b) Check the indicator light operation when driving with vehicle speed above 40 km/h (25 mph), and with vehicle speed below 40 km/h (25 mph).

OK:

Vehicle speed above 40 km/h (25 mph):
Indicator light blinks
Vehicle speed below 40 km/h (25 mph):
Indicator light stays on

NG

OK → **Check and replace cruise control ECU (See page IN-35).**

2	Check harness and connector between speed meter and cruise control ECU (See page IN-30).

OK

NG → Repair or replace harness or connector.

3	Check vehicle speed sensor (See page BE-56).

OK

NG → Replace vehicle speed sensor.

Check and replace cruise control ECU (See page IN-35).

DTC	23	Vehicle Speed Signal Abnormal

CIRCUIT DESCRIPTION

See page BE-213.

DTC No.	Detection Item	Trouble Area
23	• Vehicle speed sensor pulse is abnormal. (When speed signal is not input to the ECU below 0.2 sec., code will be displayed.)	• Vehicle speed sensor • Cruise control ECU

WIRING DIAGRAM

See page BE-214.

INSPECTION PROCEDURE

1	Check vehicle speed sensor (See page BE-56).

OK

NG → Replace vehicle speed sensor.

Chech and replace cruise control ECU (See page IN-35).

DTC	32	Control Switch Circuit (Cruise Control Switch)

CIRCUIT DESCRIPTION

This circuit carries the SET/COAST, RESUME/ACCEL and CANCEL signals (each voltage) to the ECU.

DTC No.	Detection Item	Trouble Area
32	Short in control switch circuit	• Cruise control switch • Harness or connector between control switch and cruise control ECU. • Cruise control ECU

WIRING DIAGRAM

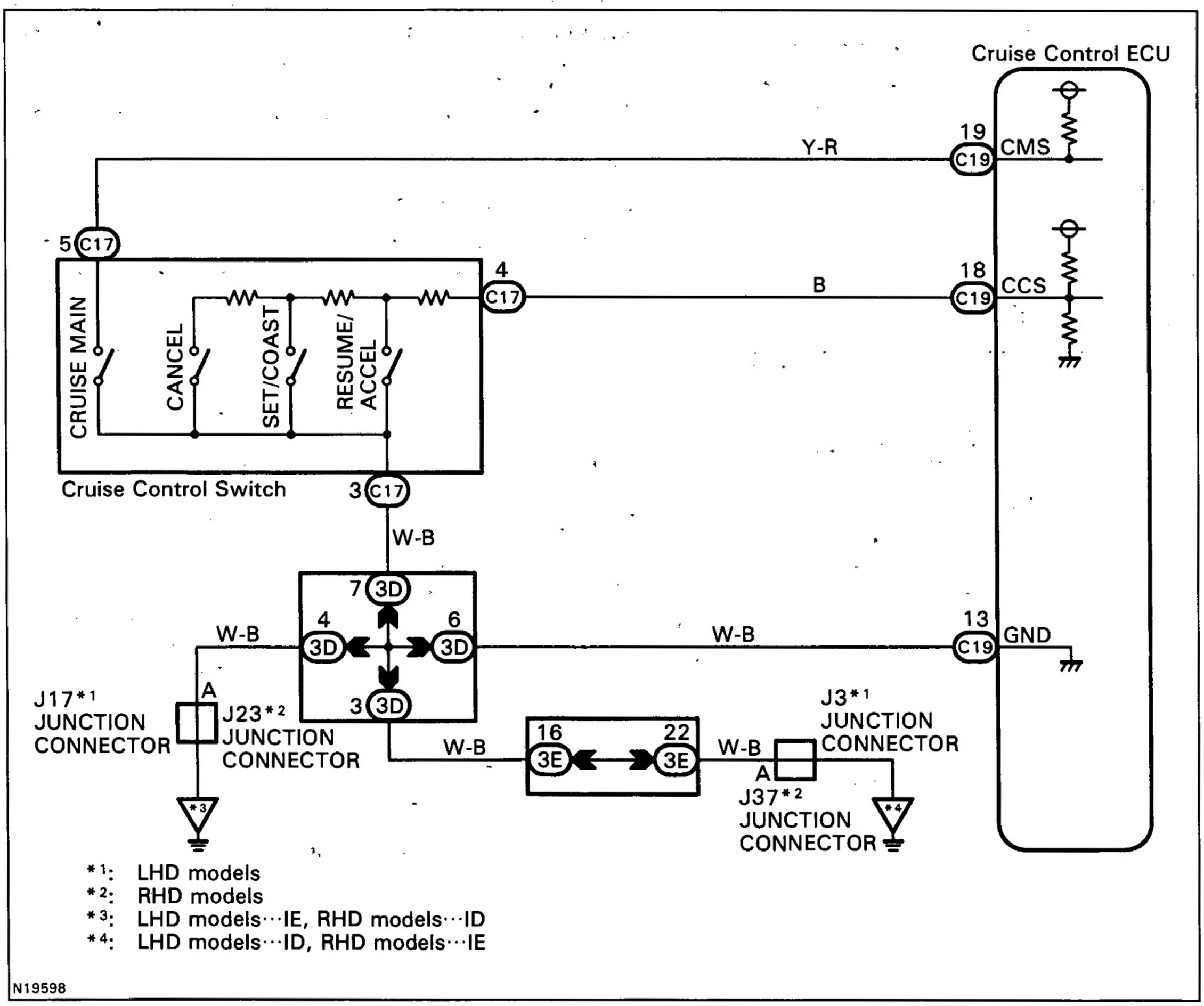

*1: LHD models
*2: RHD models
*3: LHD models···IE, RHD models···ID
*4: LHD models···ID, RHD models···IE

N19598

BE

INSPECTION PROCEDURE

1 Input signal check.

Input Signal	Indicator Light Blinking Pattern
SET/COAST switch	ON / OFF — 2 Pulses
RESUME/ACCEL switch	ON / OFF — 3 Pulses
CANCEL switch	ON / OFF — SW OFF, SW ON

PREPARATION:

See input signal check on page BE-196.

CHECK:

Check the indicator light operation when each of the SET/COAST, RESUME/ACCEL and CANCEL is turned on.

OK:

SET/COAST, RESUME/ACCEL switch
The signals shown in the table on the left should be output when each switch is ON. The signal should disappear when the switch is turned OFF.
CANCEL switch
The indicator light goes off when the cancel switch is turned ON.

NG

OK → **Wait and see.**

2 Check control switch.

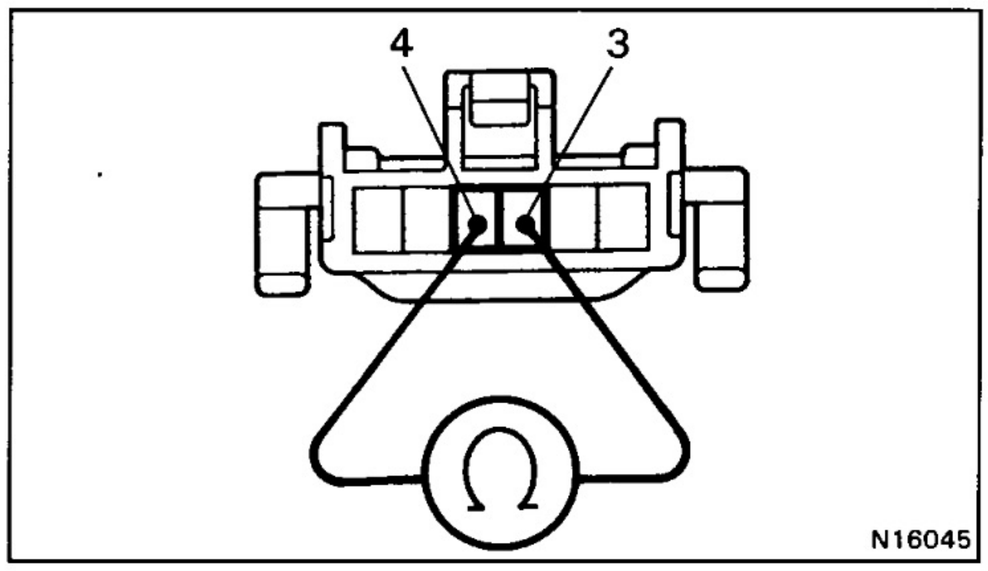

PREPARATION:

(a) Remove steering wheel center pad. (See page SR-16).
(b) Disconnect control switch connector.

CHECK:

Measure resistance between terminals 3 and 4 of control switch connector when control switch is operated.

Switch position	Resistance (Ω)
Neutral	∞ (No continuity)
RES/ACC	50 – 80
SET/COAST	180 – 220
CANCEL	400 – 440

NG

OK → **Replace control switch.**

3	Check harness and connector between cruise control switch and cruise control ECU (See page IN-30).

OK → 4

NG → Repair or replace harness or connector.

4	Input signal check (See step 1).

NG → Check and replace cruise control ECU (See page IN-35).

OK → Wait and see.

DTC	51	Idle Signal Circuit (LHD models)

CIRCUIT DESCRIPTION

When the idle switch in turned ON, a signal is sent to the ECU. The ECU uses this signal to correct the discrepancy between the throttle valve position and the actuator position sensor value to enable accurate cruise control at the set speed. If the idle switch is malfunctioning, problem symptoms also occur in the engine, so also inspect the engine.

DTC No.	Detection Item	Trouble Area
51	Short in idle signal circuit	• Harness or connector between cruise control ECU and throttle position sensor • Throttle position sensor • Cruise control ECU

WIRING DIAGRAM

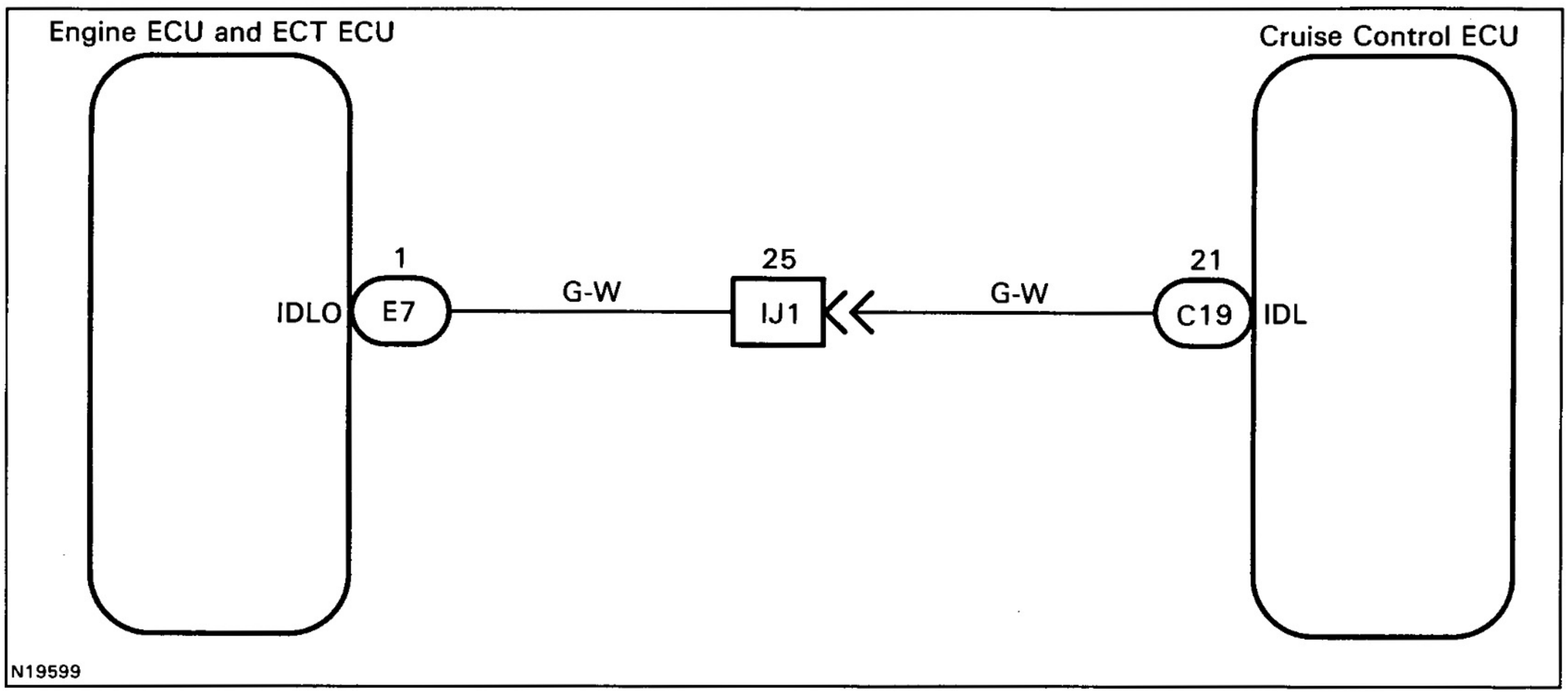

INSPECTION PROCEDURE

1	Check throttle position sensor circuit.

OK

NG → Replace throttle position sensor.

2	Check harness and connector between ECM and throttle position sensor (See page IN-30).

OK

NG → Repair or replace harness or connector.

3	Check harness and connector between cruise control ECU and throttle position sensor (See page IN-30).

OK

NG → Repair or replace harness or connector.

Check and replace cruise control ECU (See page IN-35).

Stop Light Switch Circuit

CIRCUIT DESCRIPTION

When the brake is on, battery positive voltage normally applies through the STOP fuse and stop light switch to terminal STP – of the ECU, and the ECU turns the cruise control off.
A fail – safe function is provided so that cancel functions normally, even if there is a malfunction in the stop light signal circuit.

If the harness connected to terminal STP – has an open circuit, terminal STP – will have battery voltage and the cruise control will be turned off.

Also, when the brake is on, the magnetic clutch is cut mechanically by the stop light switch, turning the cruise control off.(See page BE-205 for operation of the magnetic clutch)

WIRING DIAGRAM

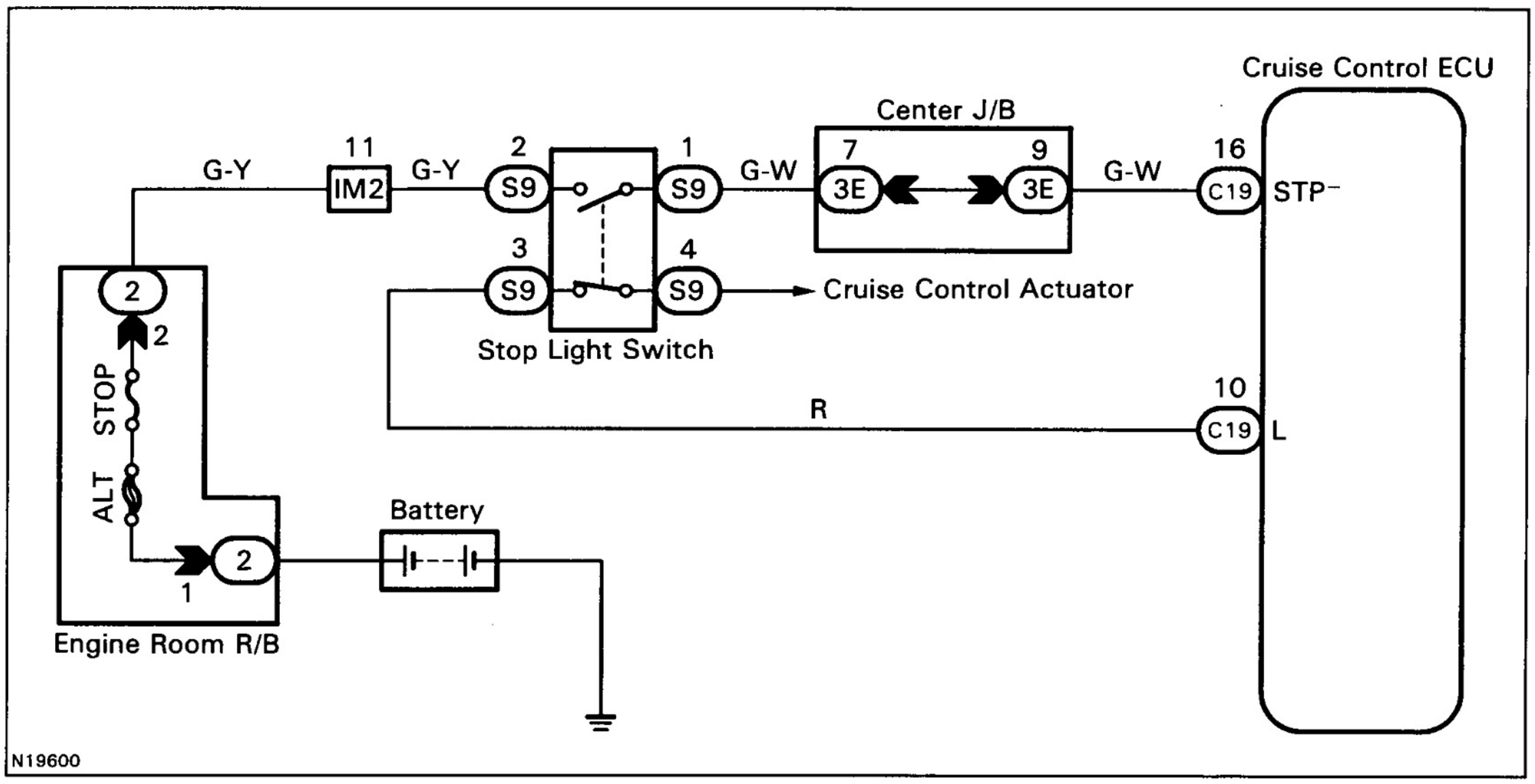

INSPECTION PROCEDURE

1 **Check operation of stop light.**

CHECK:

Check that stop light comes on when brake pedal is depressed, and turns off when brake pedal is released.

OK

NG → **Check stop light system.**

2 **Input signal check.**

Input Signal	Indicator Light Blinking Pattern
Stop Light switch ON	Light ON / OFF — SW OFF / SW ON

CHECK:

(a) See input signal check on BE-196.
(b) Check the indicator light when the brake pedal is depressed.

OK:

The indicator light goes off when the brake pedal is depressed.

NG

OK → **Proceed to next circuit inspection shown on problem symptoms table (See page BE-201).**

3	Check voltage between terminal STP– of cruise control ECU connector and body ground.

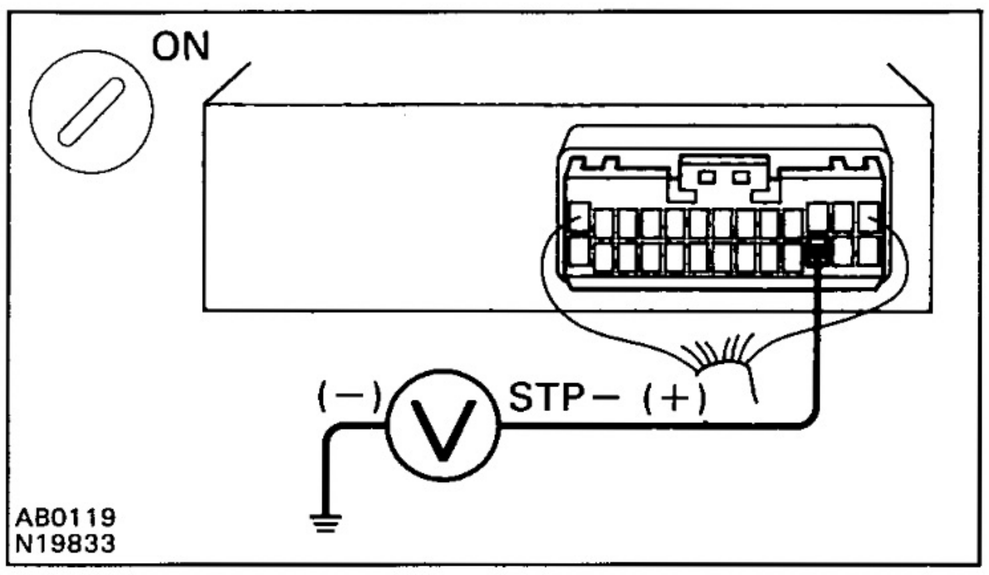

PREPARATION:

Remove the cruise control ECU with connectors still connected.

CHECK:

(a) Turn the ignition switch ON.
(b) Measure the voltage between terminal STP– of cruise control ECU connector and body ground, when the brake pedal is depressed and released.

OK:

Depressed	10 – 14 V
Released	Below 1 V

NG

OK → Proceed to next circuit inspection shown on problem symptoms table (See page BE-201).

4	Check for open in harness and connectors between terminal STP– of cruise control ECU and stop light switch (See page IN-30).

OK

NG → Repair or replace harness or connector.

Check and replace cruise control ECU (See page IN-35).

Idle Switch Circuit

CIRCUIT DESCRIPTION

See page BE-220.

WIRING DIAGRAM

See page BE-220.

INSPECTION PROCEDURE

1 Check voltage between terminal IDL of ECU connector and body ground.

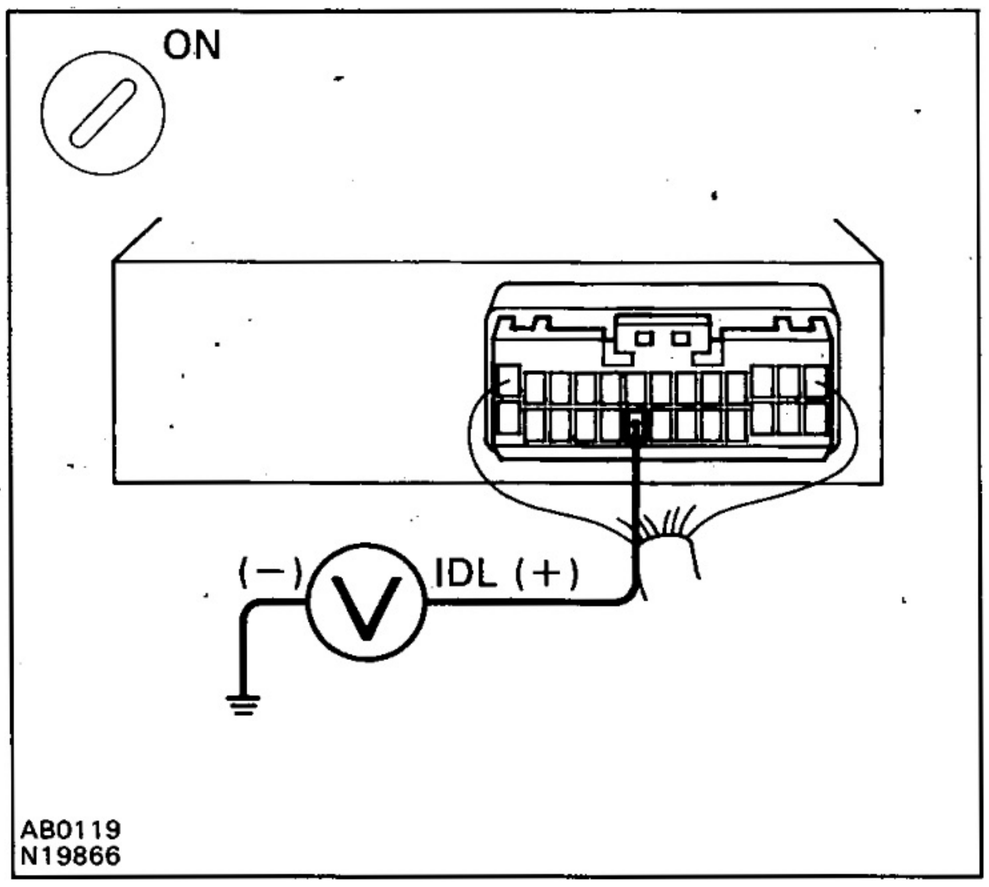

PREPARATION:

(a) Remove the cruise control ECU with connector still connected.
(b) Disconnect the ECM and ABS ECU connectors.
(c) Ignition switch ON.

CHECK:

Measure the voltage between terminal IDL of ECU connector and body ground when the throttle valve is fully closed and fully opened.

OK:

Throttle valve position	Voltage
Fully opened	10 — 14 V
Fully closed	Below 2 V

NG

OK → **Proceed to next circuit inspection shown on problem symptoms table (See page BE-201).**

BE

2 **Check throttle position sensor.**

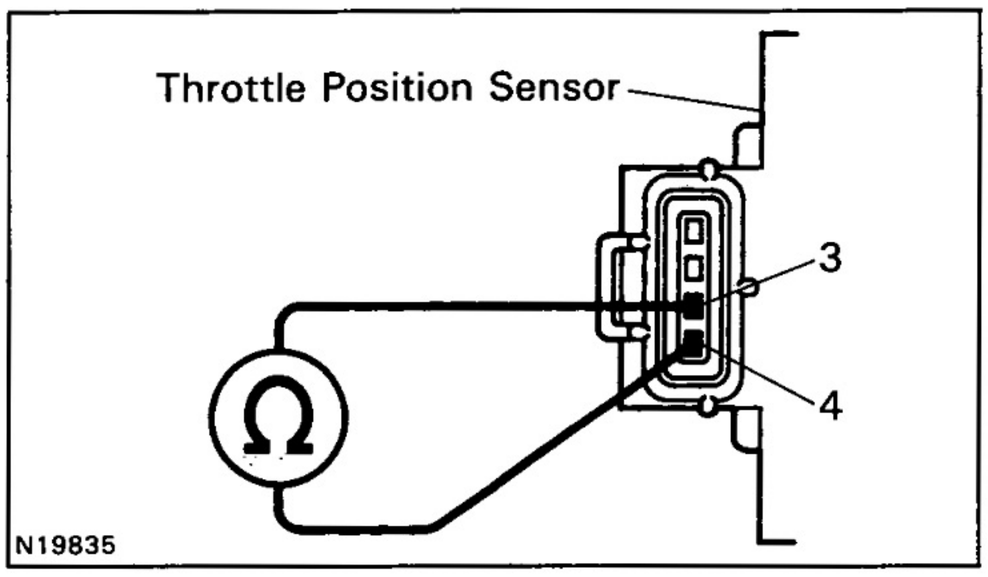

PREPARATION:

Disconnect the throttle position sensor connector.

CHECK:

Measure the resistance between terminals 3 and 4 of throttle position sensor connector when the throttle valve is fully closed and fully opened.

OK:

Throttle valve position	Resistance
Fully opened	1 MΩ or higher
Fully closed	Below 2.2 kΩ

OK

NG → **Replace throttle position sensor.**

3 **Check for open and short in harness and connector between ECU and throttle position sensor, throttle position sensor and body ground (See page IN-30).**

OK

NG → **Repair or replace harness or connector.**

BE

Check and replace cruise control ECU (See page IN-35).

Electronically Controlled Transmission Communication Circuit

CIRCUIT DESCRIPTION

When driving uphill under cruise control, in order to reduce shifting due to ON-OFF overdrive operation and to provide smooth driving, when down shifting in the electronically controlled transmission occurs, a signal to prevent upshift until the end of the up hill slope is sent from the cruise control ECU to the electronically controlled transmission.
Terminal ECT of the cruise control ECU detects the shift change signal (output to electronically controlled transmission No.2 solenoid) from the Engine & ECT ECU.
If vehicle speed down, also when terminal ECT of the cruise control ECU receives down shifting signal, it sends a signal from terminal OD to Engine & ECT ECU to cut overdrive until the end of the uphill slope, and the gear shifts are reduced and gear shift points in the electronically controlled transmission are changed.

WIRING DIAGRAM

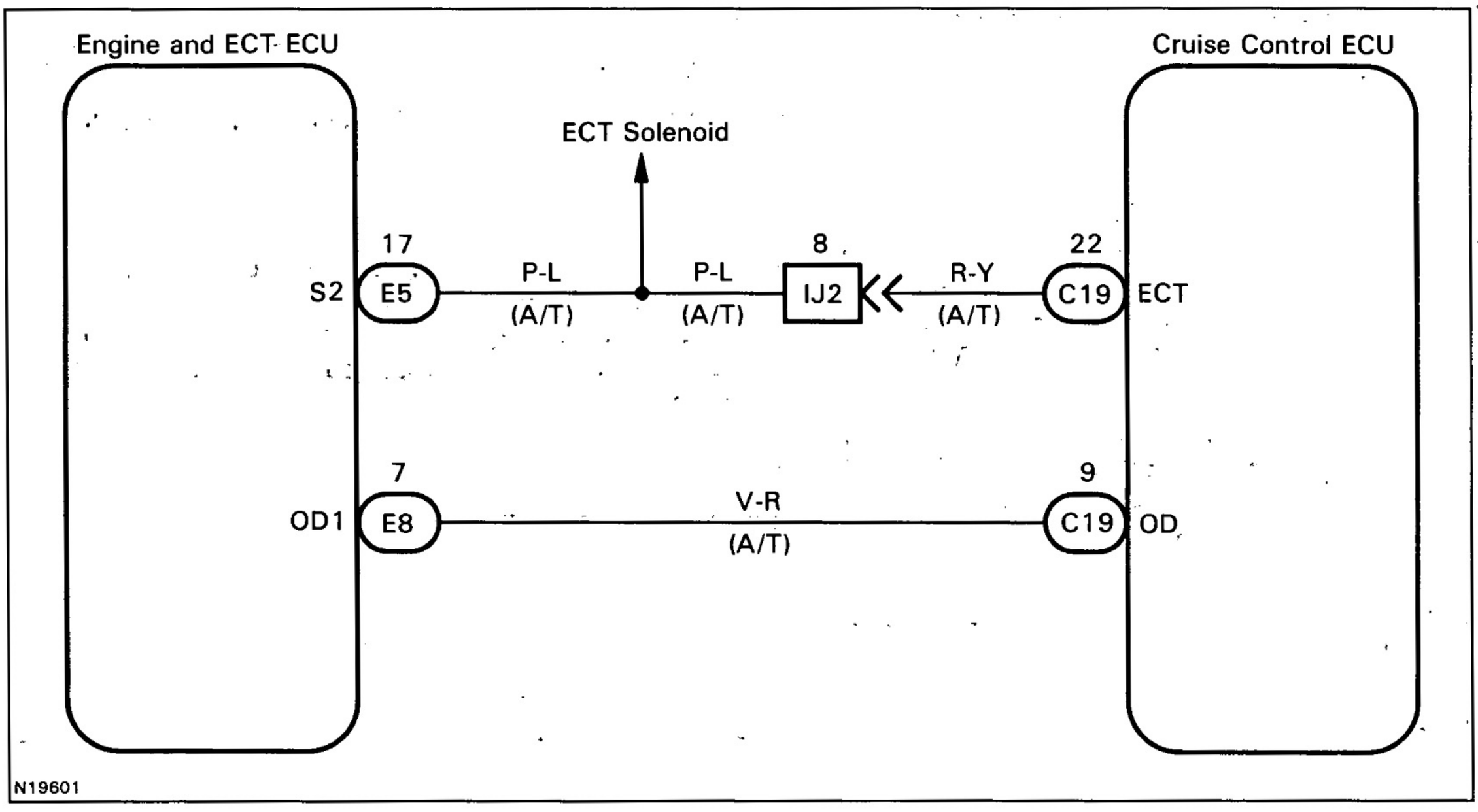

BE

INSPECTION PROCEDURE

1	Check operation of overdrive.

PREPARATION:

Test drive after engine warms up.

CHECK:

Check that overdrive ON ↔ OFF occurs with operation of OD switch ON-OFF.

OK

NG → **Check and repair electronically controlled transmission (See page AT-19).**

2	Check voltage between terminal OD of harness side connector of cruise con trol ECU and body ground.

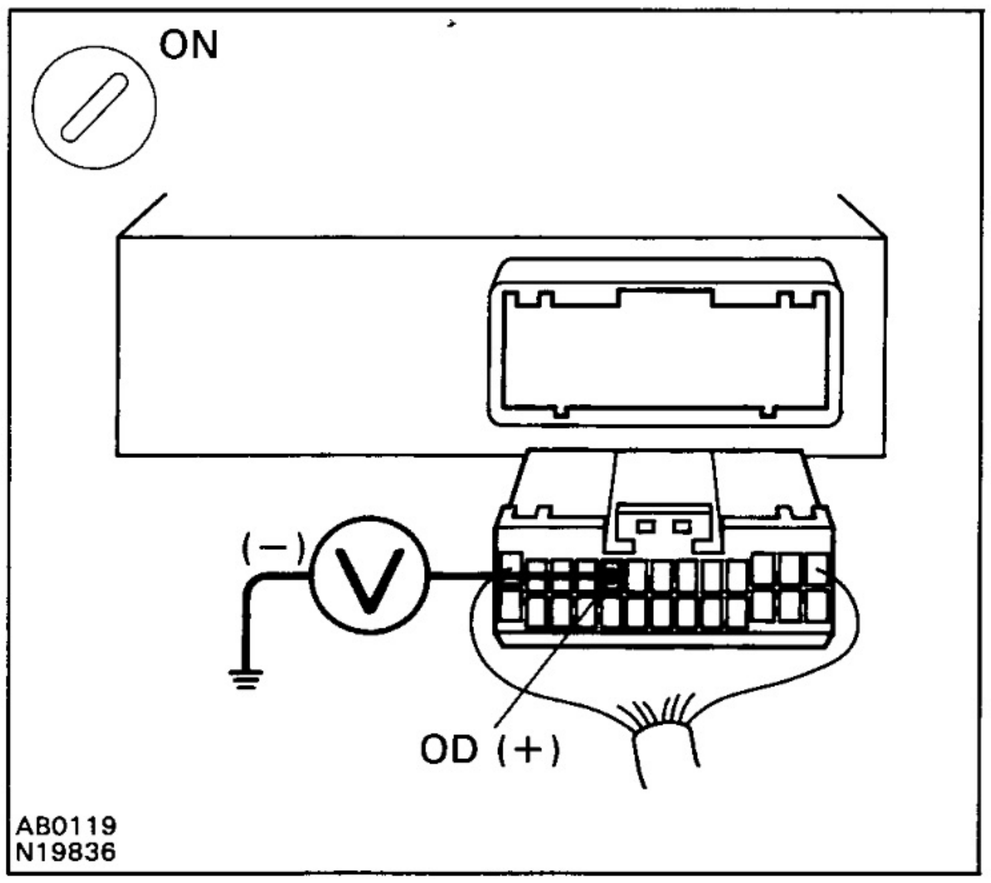

AB0119
N19836

PREPARATION:

Remove the cruise control ECU with connector still connected.

CHECK:

(a) Disconnect the cruise control ECU connector.
(b) Turn the ignition switch ON.
(c) Measure the voltage between terminal OD of harness side connector of cruise control ECU and body ground.

OK:

Voltage: 10 – 14 V

OK

NG → **Go to step 5.**

BE

3 **Check voltage between terminal ECT of cruise control ECU connector and body ground (On test drive).**

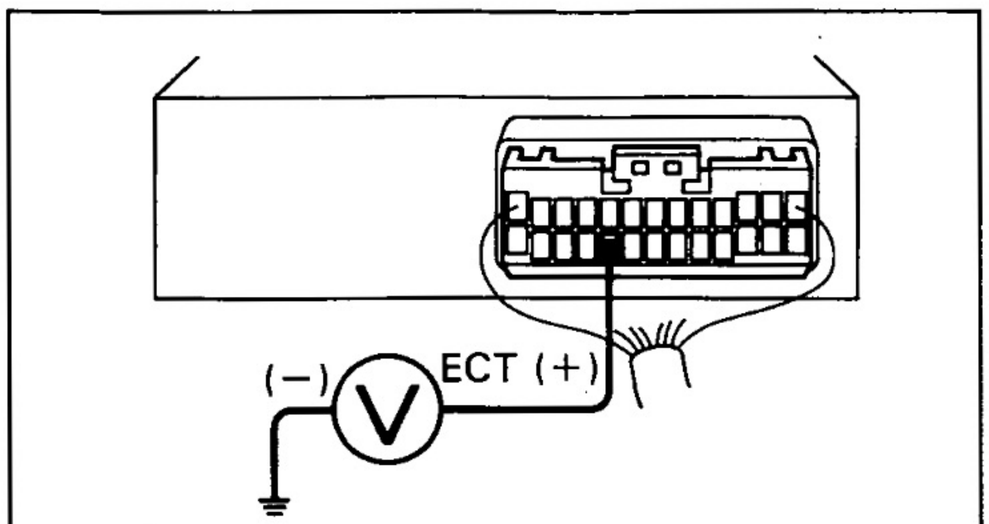

PREPARATION:

(a) Connect cruise control ECU connector.
(b) Test drive after engine warms up.

CHECK:

Check voltage between terminal ECT of cruise control ECU connector and body ground when OD switch is ON and OFF.

OK:

OD switch position	Voltage
ON	8 – 14 V
OFF	Below 0.5 V

NG

OK → **Proceed to next circuit inspection shown on problem symptoms table (See page BE-201).**

4 **Check harness and connector between terminal ECT of cruise control ECU and electronically controlled transmission solenoid (See page IN-30).**

OK

NG → **Repair or replace harness or connector.**

Check and replace cruise control ECU.

5 **Check harness and connector between terminal OD of cruise control ECU and terminal OD1 of ECM (See page IN-30).**

OK

NG → **Repair or replace harness or connector.**

Check and replace cruise control ECU (See page IN-35).

BE

Neutral Start Switch Circuit

CIRCUIT DESCRIPTION

When the shift position is put in except D range, a signal is sent from the neutral start switch to the ECU. When this signal is input during cruise control driving, the ECU cancels the cruise control.

WIRING DIAGRAM

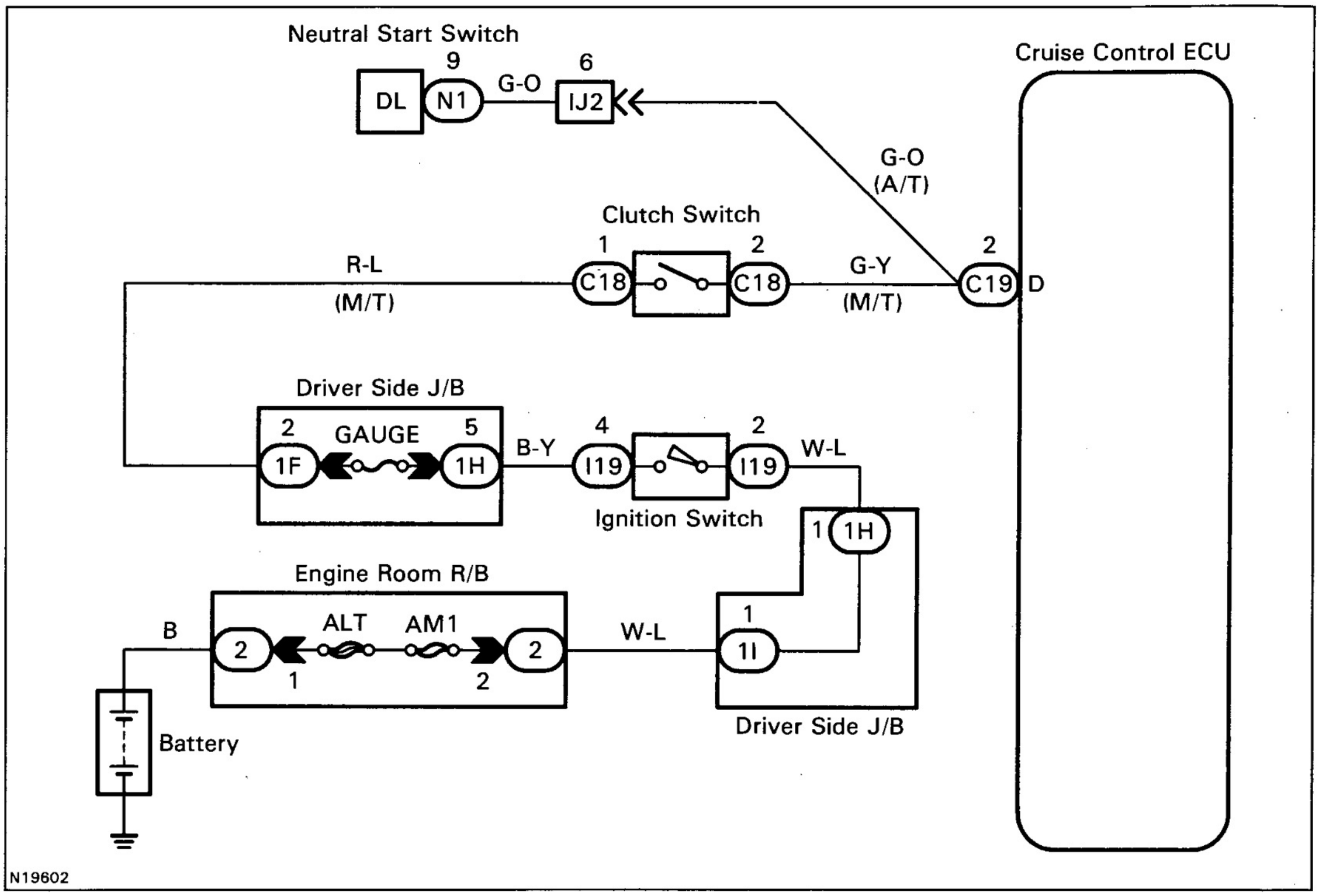

BE

INSPECTION PROCEDURE

1 Check starter operation.

CHECK:

Check that the starter operates normally and that the engine starts.

OK

NG → **Proceed to engine troubleshooting. (See ST section).**

2 Input signal check.

Input Signal	Indicator Light Blinking Pattern
Turn neutral start switch OFF (Shift to except D range)	Light ON / OFF – SW ON / SW OFF

PREPARATION:

See the input signal check on page BE-196.

CHECK:

Check the indicator light when shifting into except D range.

OK:

The indicator light goes off when shifting into except D range.

NG

OK → **Proceed to next circuit inspection shown on problem symptoms table (See page BE-201).**

3	Check voltage between terminal D of cruise control ECU and body ground.

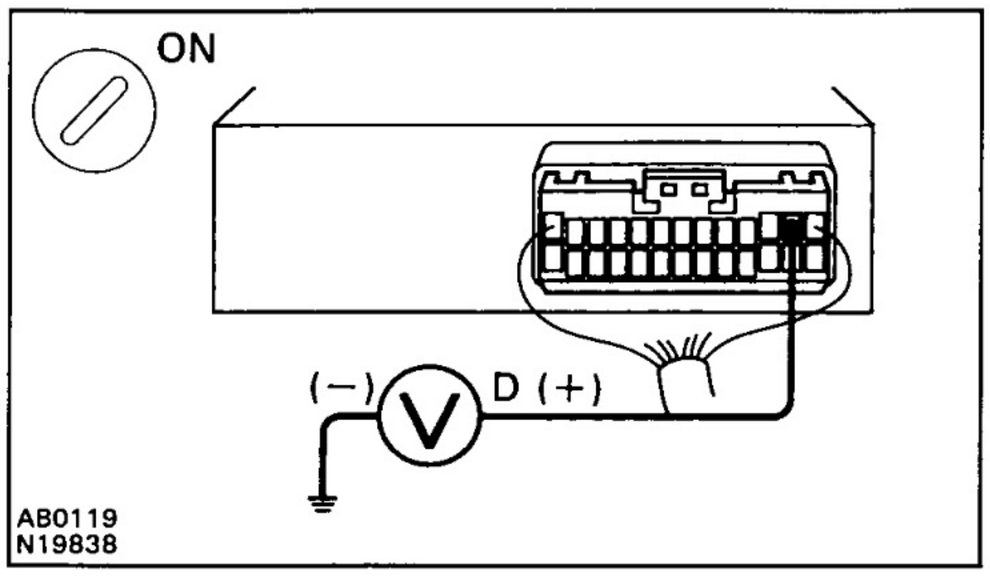

PREPARATION:

Turn the ignition switch ON.

CHECK:

Measure the voltage between terminal D of cruise control ECU connector and body ground when shifting into D range and other ranges.

OK:

Shift Position	Voltage
D range	10 – 14 V
Other ranges	Below 1 V

NG

OK → **Proceed to next circuit inspection shown on problem symptoms table (See page BE-201).**

4	Check harness and connector between neutral start switch and cruise control ECU (See page IN-30).

OK

NG → **Repair or replace harness or connector.**

Check and replace cruise control ECU (See page IN-35).

Clutch Switch Circuit

CIRCUIT DESCRIPTION

When the clutch pedal is depressed, the clutch switch sends a signal to the cruise control ECU. When the signal is input to the cruise control ECU during cruise control driving, the cruise control ECU cancels cruise control.

WIRING DIAGRAM

Refer to neutral start switch circuit on page BE-230.

INSPECTION PROCEDURE

1 **Check starter operation.**

CHECK:

Check that the starter operates normally and that the engine starts.

OK

NG → **Proceed to engine troubleshooting (See ST section).**

2 **Input signal check.**

Input Signal	Indicator Light Blinking Pattern
Clutch switch OFF (Depress clutch pedal)	Light ON — SW ON; OFF — SW OFF

PREPARATION:

See input signal check on page BE-196.

CHECK:

Check the indicator light when clutch pedal depressed.

OK:

The indicator light goes off when clutch pedal depressed.

NG

OK → **Proceed to next circuit inspection shown on problem symptoms table (See page BE-201).**

BE

3	Check voltage between terminal D of cruise control ECU and body ground.

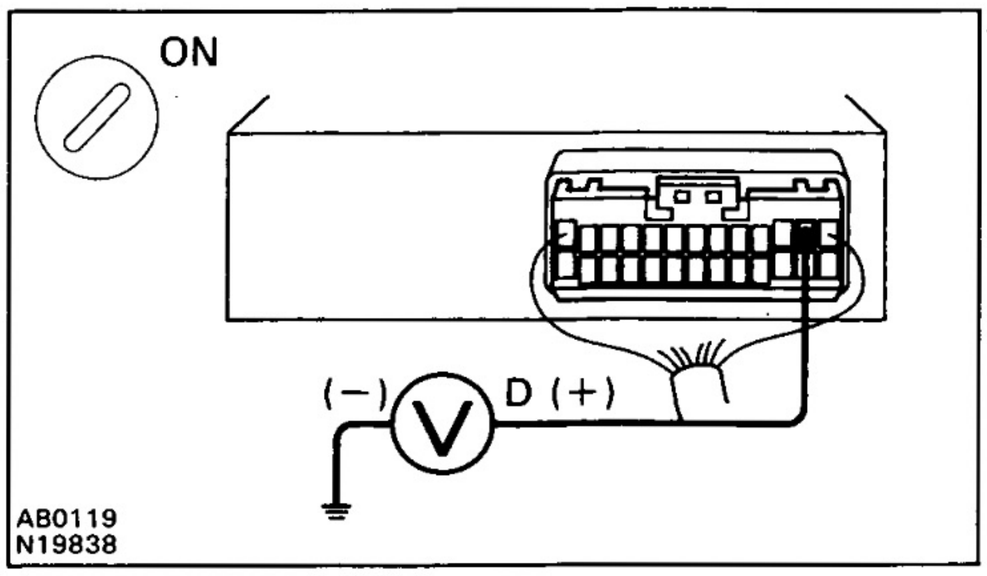

PREPARATION:

Turn the ignition switch ON.

CHECK:

Measure the voltage between terminal D of cruise control ECU connector and body ground when clutch pedal depressed and clutch pedal pushed in.

OK:

Shift Position	Voltage
Clutch pedal depressed	10 – 14 V
Clutch pedal pushed in	Below 1 V

NG

OK → **Proceed to next circuit inspection shown on problem symptoms table (See page BE-201).**

4	Check for open in harness and connector between ECU and GAUGE fuse (See page IN-30).

OK

NG → **Repair or replace harness or connector.**

Check and replace cruise control ECU (See page IN-35).

ECU Power Source Circuit

CIRCUIT DESCRIPTION

The ECU power source supplies power to the actuator and sensors, etc.. When terminal GND and the cruise control ECU case are grounded.

WIRING DIAGRAM

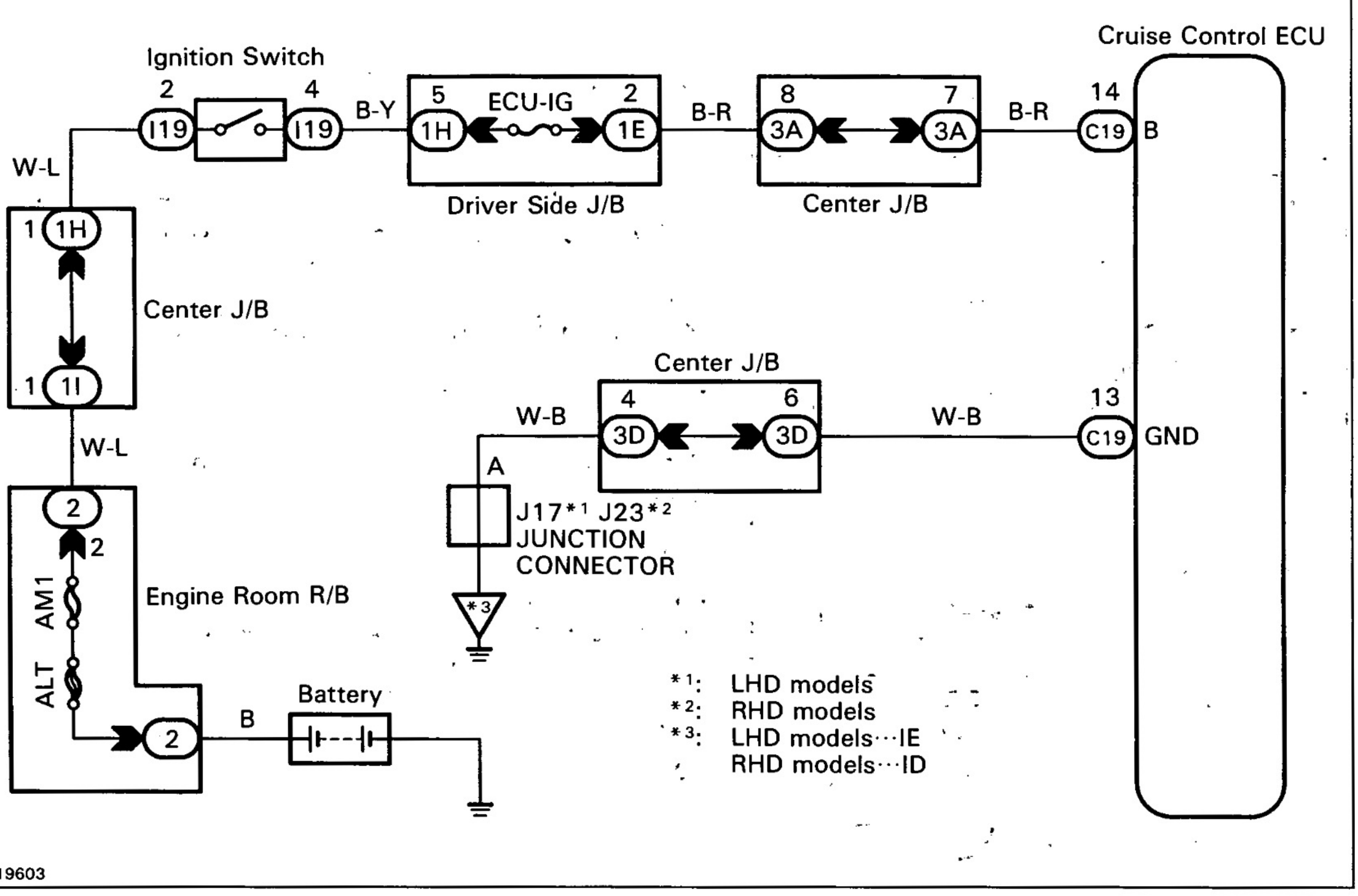

BE

INSPECTION PROCEDURE

1	Check ECU-IG fuse.

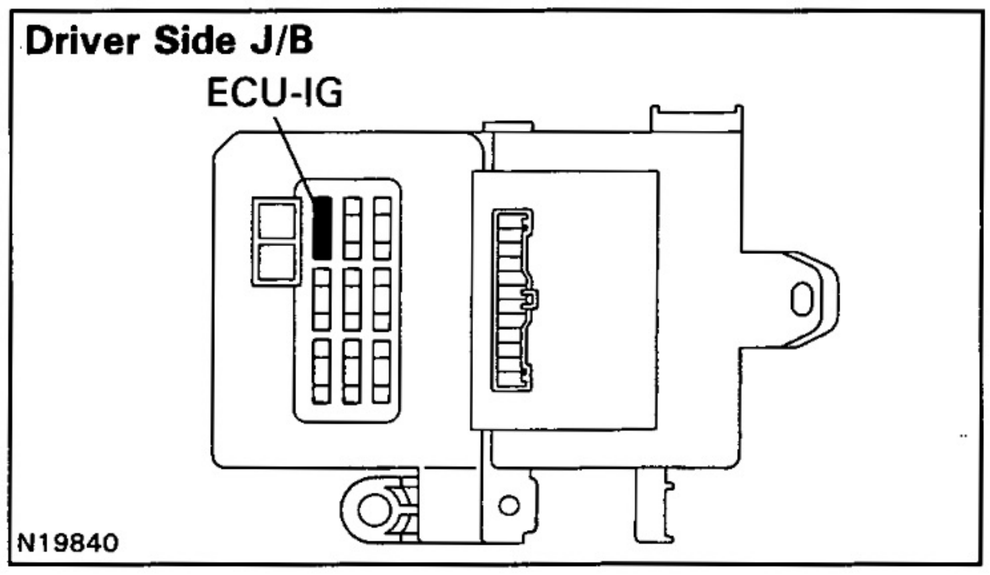

PREPARATION:

Remove the ECU-IG fuse from driver side junction block.

CHECK:

Check the continuity of ECU-IG fuse.

OK:

Continuity

OK

NG → **Check for short in all the harness and components connected to ECU-IG fuse.**

2	Check voltage between terminals B and GND of cruise control ECU connector.

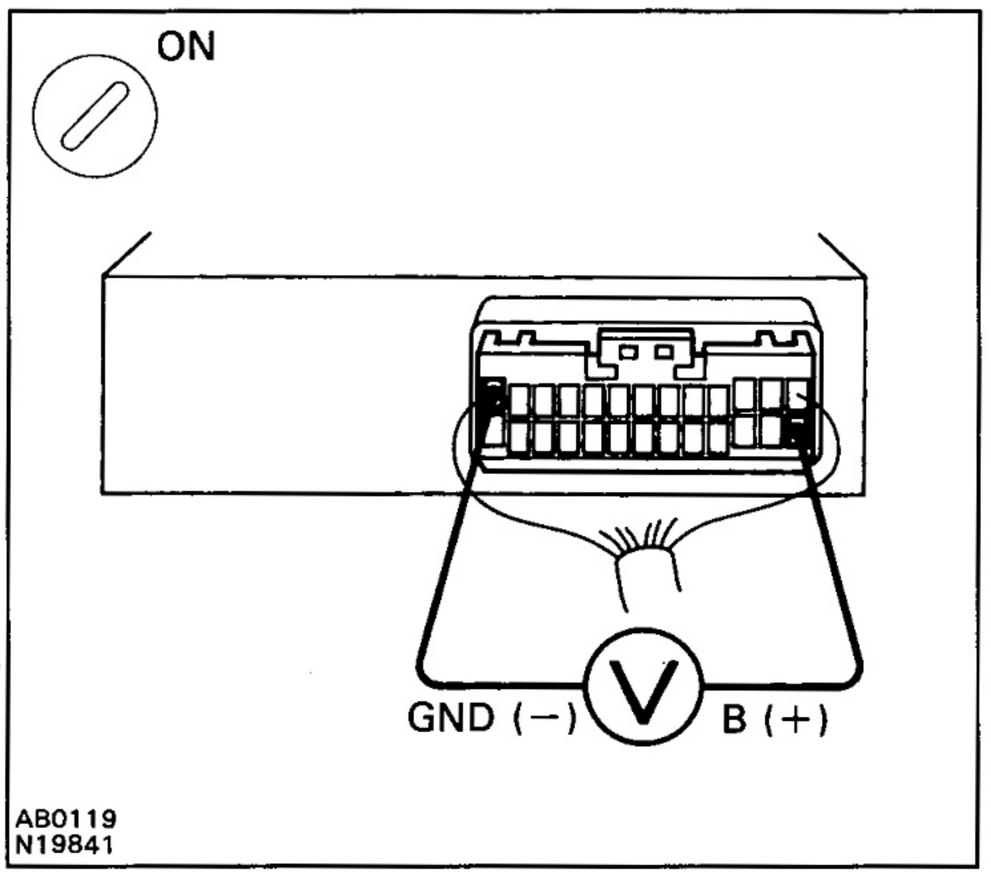

PREPARATION:

Remove the cruise control ECU with connector still connected.

CHECK:

(a) Turn the ignition switch ON.
(b) Measure the voltage between terminals B and GND of cruise control ECU connector.

OK:

10 – 14 V

NG

OK → **Proceed to next circuit inspection shown on problem symptoms table (See page BE-201).**

BE

3	**Check resistance between terminal GND of cruise control ECU connector and body ground (See page IN-31).**

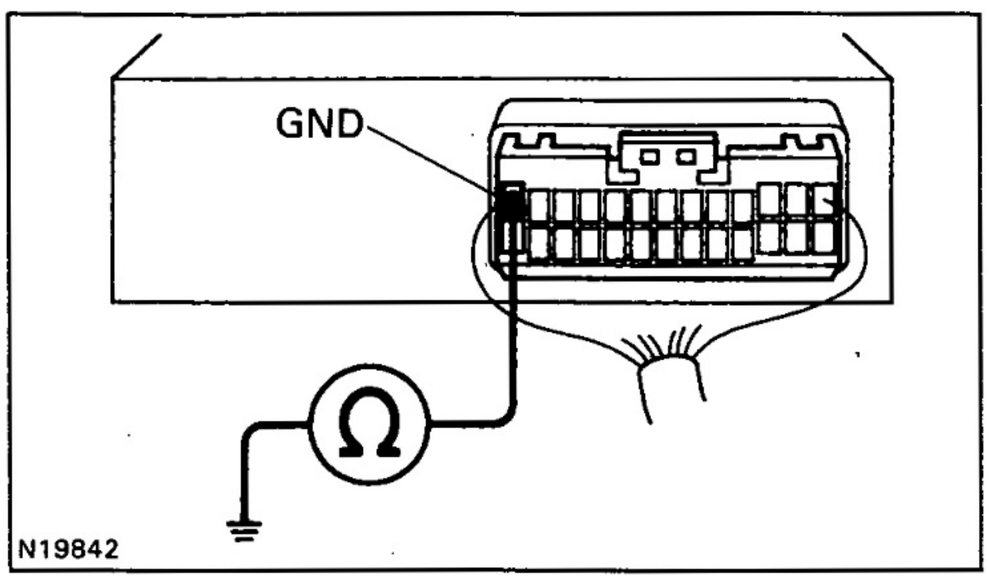

CHECK:

Measure the resistance between terminal GND of cruise control ECU connector and body ground.

OK:

Resistance: Below 1 Ω

OK

NG → **Repair or replace harness or connector.**

Check and repair harness and connector between battery and cruise control ECU (See page IN-30).

Back-up Power Source Circuit

CIRCUIT DESCRIPTION

The ECU back-up power source provides power even when the ignition is off and is used for diagnostic code memory etc..

WIRING DIAGRAM

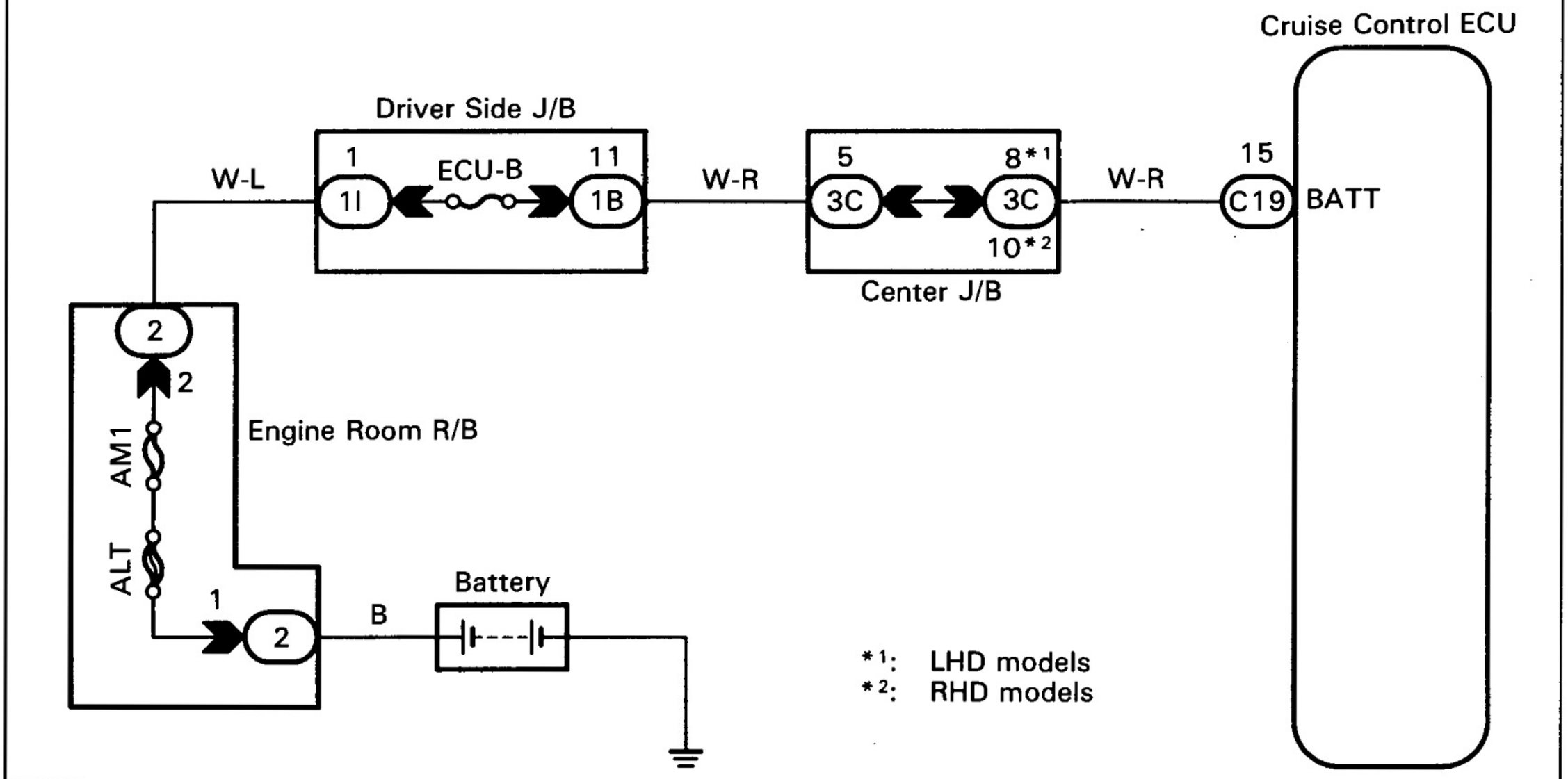

INSPECTION PROCEDURE

1 Check ECU-B Fuse.

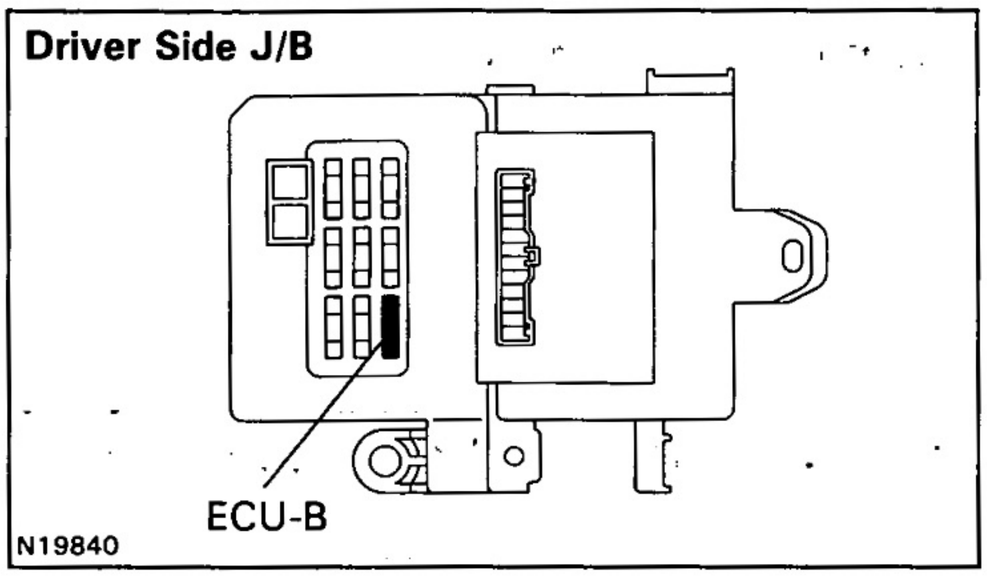

PREPARATION:

Remove the ECU-B fuse from driver side junction block.

CHECK:

Check the continuity of ECU-B fuse.

OK:

Continuity

OK

NG → **Check for short in all the harness and components connected to the ECU-B fuse.**

2 Check voltage between terminal BATT of cruise control ECU connector and body ground (See page IN-33).

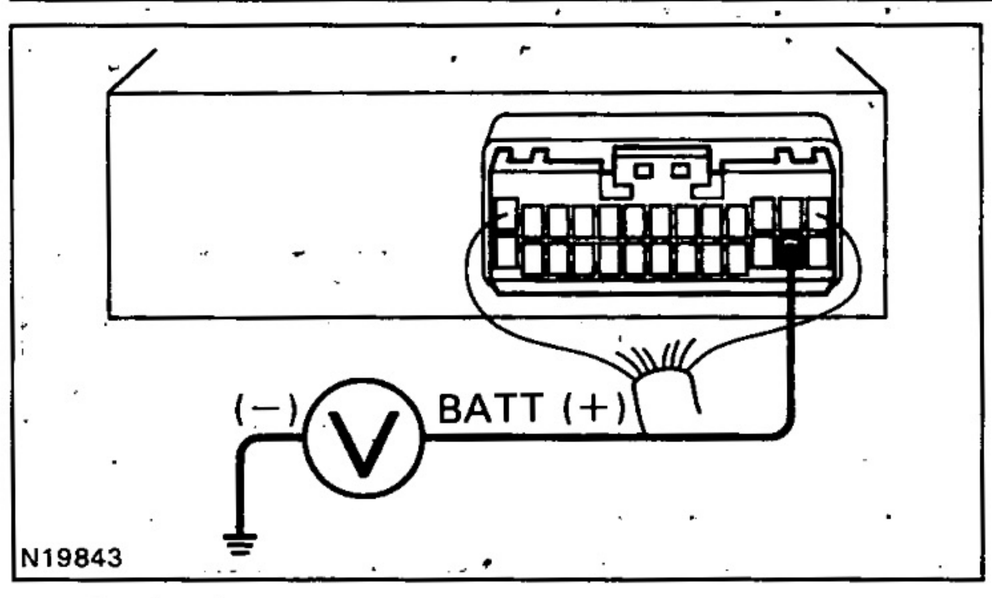

PREPARATION:

Remove the cruise control ECU with connector still connected.

CHECK:

Measure the voltage between terminal BATT of cruise control ECU connector and body ground.

OK:

Voltage: 10 – 14 V

NG

Check and repair harness and connector between battery and cruise control ECU (See page IN-30).

OK → **Proceed to next circuit inspection shown on problem symptoms table (See page BE-201).**

BE

Main Switch Circuit (Cruise Control Switch)

CIRCUIT DESCRIPTION

When the cruise control main switch is turned off, the cruise control does not operate.

WIRING DIAGRAM

See page BE-217.

INSPECTION PROCEDURE

1 Check voltage between terminal CMS of cruise control ECU connector and body ground.

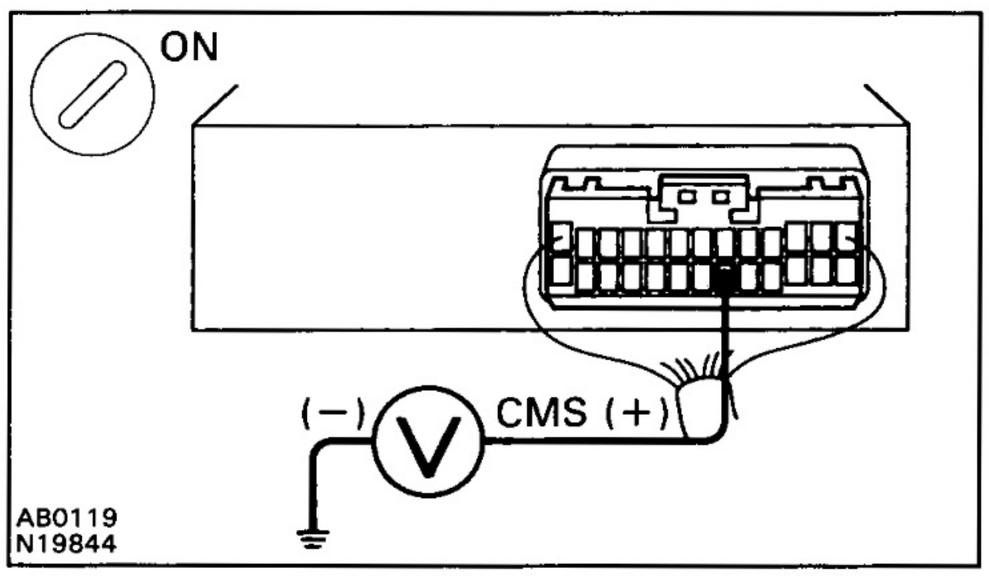

PREPARATION:

Remove the cruise control ECU with connector still connected.

CHECK:

(a) Turn the ignition switch ON.
(b) Measure the voltage between terminal CMS of the cruise control ECU connector when main switch is held on and off.

OK:

Main switch	Voltage
OFF	10 – 14 V
ON	Below 1 V

BE

NG

OK

Proceed to next circuit inspection shown on problem symptoms table (See page BE-201).

2 **Check main switch continuity.**

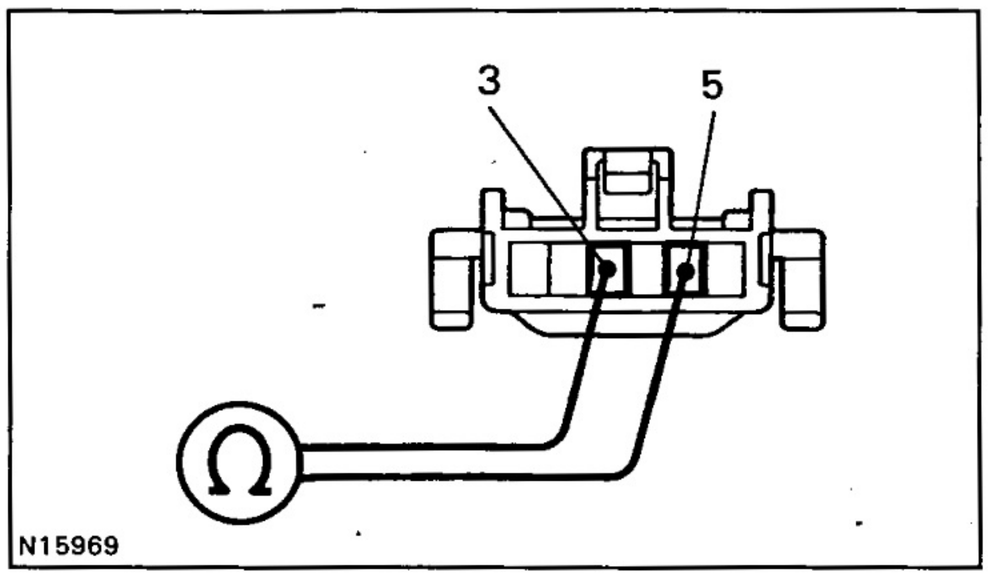

PREPARATION:

(a) Remove the steering wheel center pad. (See page SR-16)
(b) Disconnect the cruise control switch connector.

CHECK:

Check the continuity between terminals 3 and 5 of cruise control switch connector when main switch is held on and off.

OK:

Switch position	Tester connection	Specified condition
OFF	3 – 5	No continuity
Hold ON	3 – 5	Continuity

OK → **3** **Check harness and connector between cruise control ECU and main switch (See page IN-30).**

NG → **Replace control switch.**

OK → **Check and replace cruise control ECU (See page IN-35).**

NG → **Repair or replace harness or connector.**

CRUISE MAIN Indicator Light Circuit

CIRCUIT DESCRIPTION

When the cruise control main switch is turned ON, CRUISE MAIN indicator light lights up.

WIRING DIAGRAM

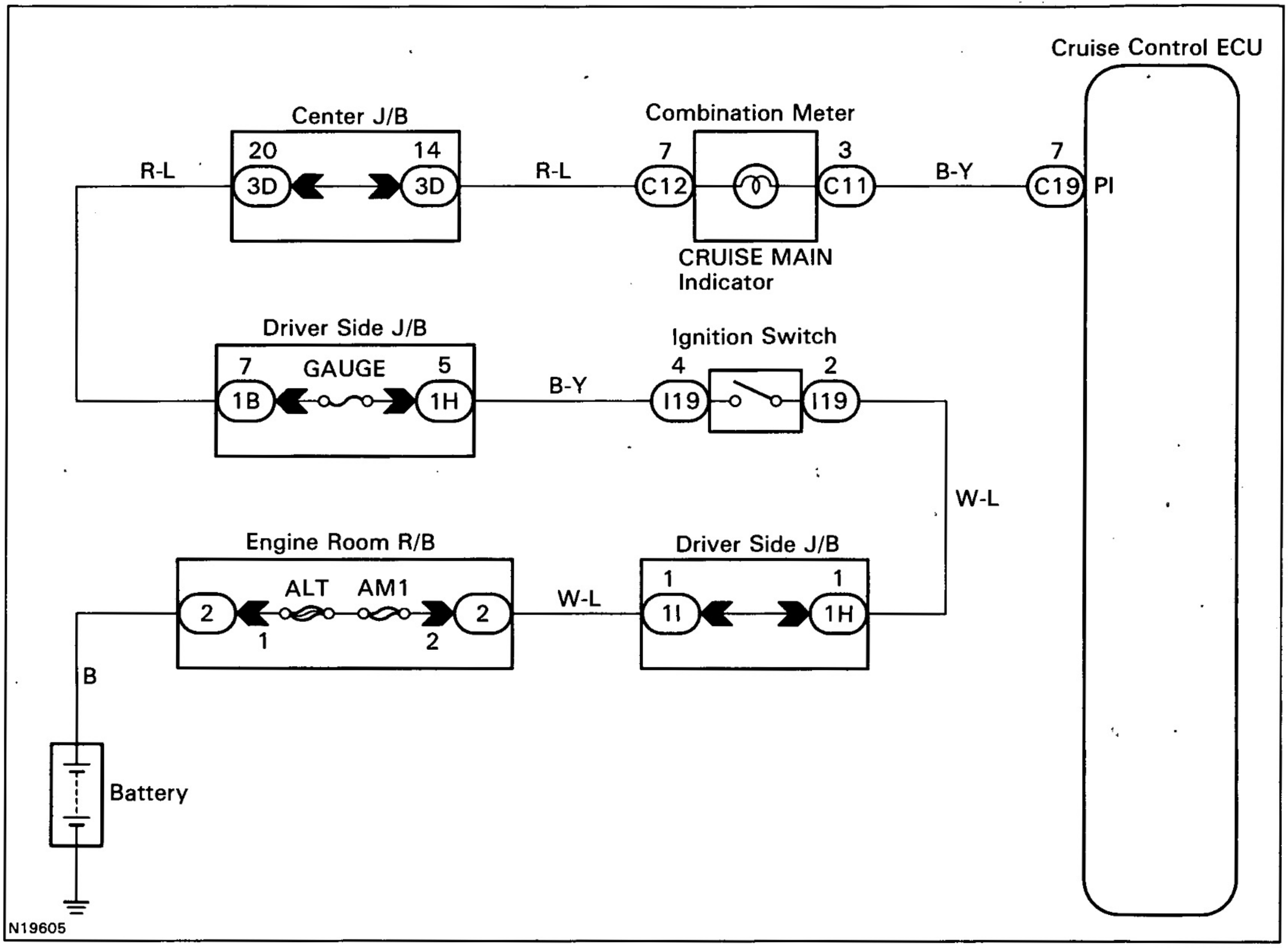

INSPECTION PROCEDURE

1	Check voltage between terminals PI and GND of cruise control ECU connector.

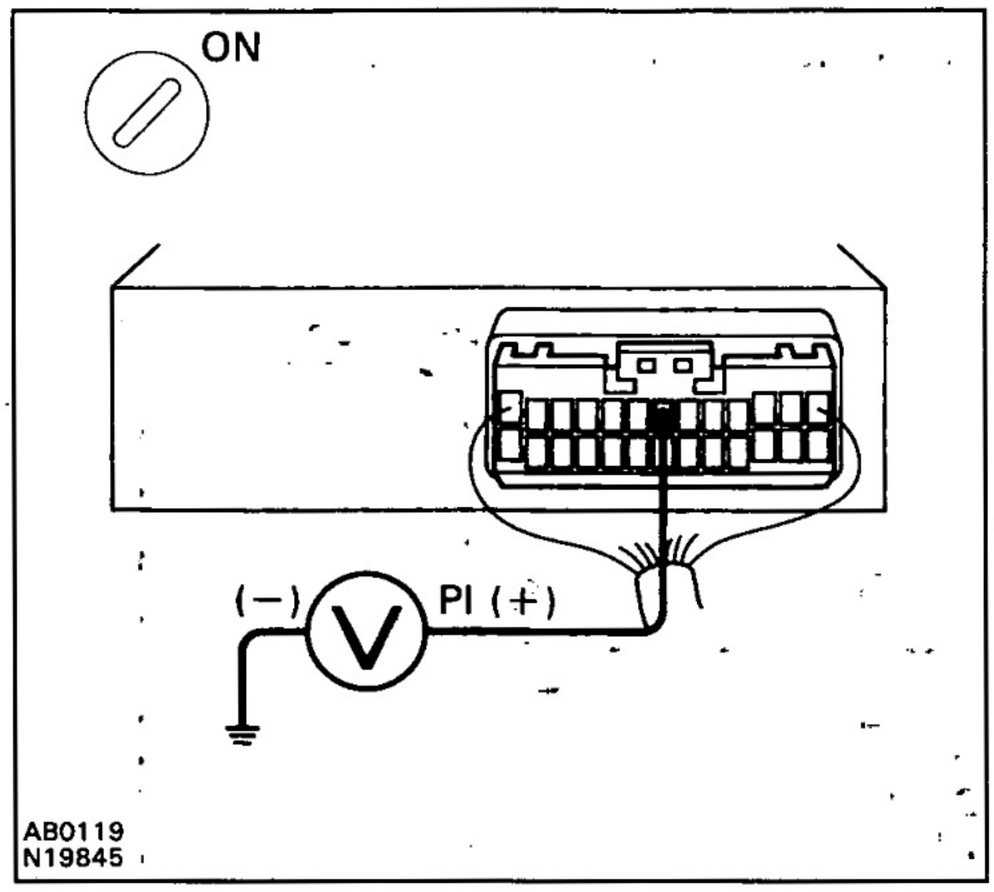

PREPARATION:

Ignition switch ON.

CHECK:

Measure the voltage between terminals PI and GND of the cruise control ECU connector when main switch on and off.

OK:

Switch position	Voltage
OFF	10 – 16 V
ON	Below 1.2 V

NG

OK → **Proceed to next circuit inspection shown on problem symptoms table (See page BE-201).**

2	Check combination meter. (See page BE-51)

OK

NG → **Replace combination meter.**

Check and replace cruise control ECU (See page IN-35).

BE

Diagnosis Circuit

CIRCUIT DESCRIPTION

This circuit sends a signal to the ECU that diagnostic code output is required.

WIRING DIAGRAM

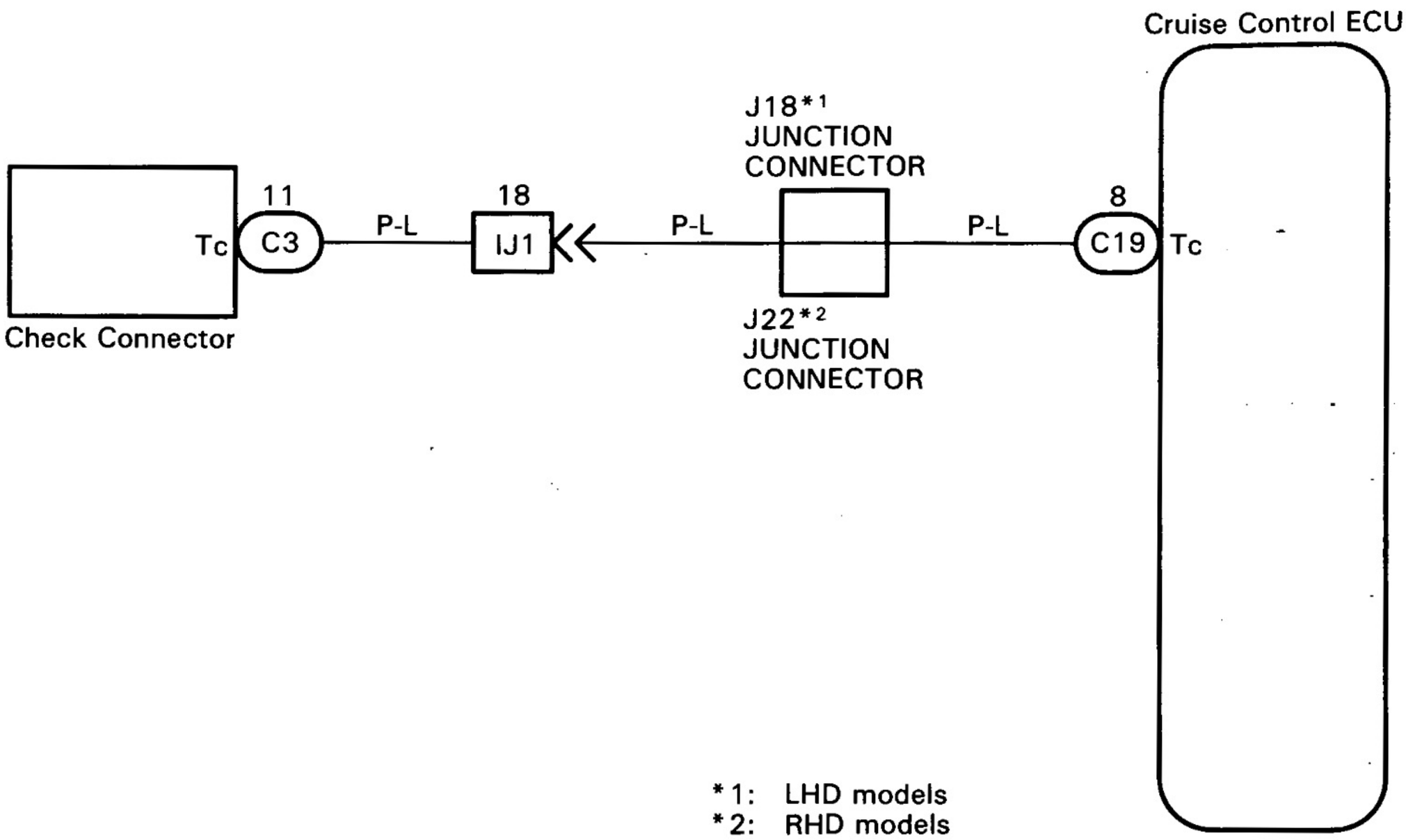

N19606

BE

INSPECTION PROCEDURE

1 **Check voltage between terminals Tc and E_1 of check connector.**

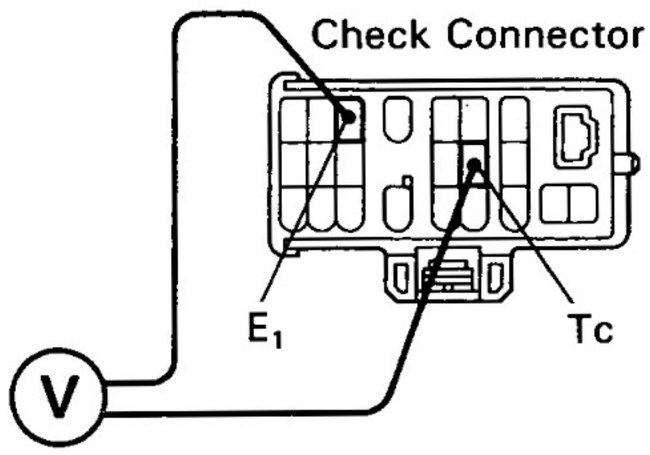

N15970

CHECK:

(a) Turn the ignition switch ON.
(b) Measure the voltage between terminals Tc and E_1 of the check connector.

OK:

Voltage: 10 – 14 V

NG

OK → **Proceed to next circuit inspection shown on problem symptoms table (See page BE-201).**

2 **Check harness and connector between cruise control ECU and check connector, check connector and body ground (See page IN-30).**

OK

NG → **Repair or replace harness or connector.**

Check and replace cruise control ECU (See page IN-35).

Actuator Control Cable

INSPECTION PROCEDURE

1	Actuator control cable inspection

CHECK:

(a) Check that the actuator and control cable throttle link are properly installed and that the cable and link are connected correctly.
(b) Check that the actuator and bell crank are operating smoothly.
(c) Check that the cable is not loose or too tight.

OK:

Freeplay: less than 10 mm

HINT:

- If the control cable is very loose, the vehicle's loss of speed going uphill will be large.
- If the control cable is too tight, the idle RPM will become high.

SERVICE SPECIFICATIONS

SERVICE DATA

BE1E1-00

INTEGRATION RELAY	
Junction Block Side:	
4 — Ground (Light control switch OFF)	No voltage
4 — Ground (Light control switch TAIL or HEAD)	Battery voltage
6 — Ground (Ignition switch LOCK or ACC)	No voltage
6 — Ground (Ignition switch ON)	Battery voltage
8 — Ground (Ignition switch LOCK)	No voltage
8 — Ground (Ignition switch ACC or ON)	Battery voltage
11 — Ground (Constant)	Battery voltage
12 — Ground (Constant)	Battery voltage
Wire Harness Side:	
A1 — Ground (Constant)	Battery voltage
DAYTIME RUNNING LIGHT RELAY	
Connector Disconnected:	
2 — Ground (Constant)	Battery voltage
4 — Ground (Constant)	Battery voltage
6 — Ground (Ignition switch LOCK or ACC)	No voltage
9 — Ground (Constant)	No voltage
Connector connected:	
7 — Ground (Headlight dimmer switch Low beam)	No voltage
7 — Ground (Headlight dimmer switch High or Flash)	Battery voltage
REAR FOR LIGHT SWITCH CIRCUIT	
Wire Harness Side:	
3 — Ground (Constant)	Battery voltage
TURN SIGNAL FLASHER	
Flashes / Minute	60 — 120
SPEEDOMETER (USING A SPEEDOMETER TESTER)	
Europe and G.C.C. countries	
Standard indication (km/h)	Allowable range (km/h)
20	20 — 26
40	40 — 48
60	60 — 70
80	80 — 92
100	100 — 114
120	120 — 136
140	140 — 158
160	160 — 180
Europe	
Standard indication (mph)	Allowable range (mph)
20	20 — 24.5
40	40 — 46.5
60	60 — 68.5
80	80 — 90.5
100	100 — 112.5

SPEEDOMETER (USING A SPEEDOMETER TESTER)	
Australia and General	
Standard indication (km/h)	Allowable range (km/h)
40	36 – 44
60	54 – 66
80	72 – 88
100	90 – 110
120	108 – 132
140	126 – 154
160	144 – 176
General	
Standard indication (mph)	Allowable range (mph)
20	18 – 24
40	38 – 44
60	58 – 66
80	78 – 88
100	98 – 110
120	118 – 132
TACHOMETER (ON–VEHICLE)	
Standard indication (rpm)	Allowable range (rpm)
700	630 – 770
1,000	(900 – 1,100)
2,000	(1,875 – 2,125)
3,000	2,850 – 3,150
4,000	(3,850 – 4,150)
5,000	4,850 – 5,150
6,000	(5,820 – 6,180)
7,000	(6,790 – 7,210)
PICK–UP SENSOR (Diesel Engine)	
Between terminals	Resistance (Ω)
1 – 2	Approx. 730
FUEL RECEIVER GAUGE	
Between terminals	Resistance (Ω)
A – B	Approx. 125.0
A – C	Approx. 228.0
B – C	Approx. 103.0

FUEL SENDER GAUGE	
Float position: mm (in.)	Resistance (Ω)
F: Approx. 78.9 (3.106) ~ 83.9 (3.303)	Approx. 3.0 ± 0.6
1/2: Approx. 192.9 (7.594)	Approx. 32.5 ± 1.5
E: Approx. 303.0 (11.929) ~ 308.0 (12.126)	Approx. 110.0 ± 2.5
WATER TEMPERATURE RECEIVER GAUGE	
Between terminals	Resistance (Ω)
A – B	Approx. 235.0
A – C	Approx. 175.0
B – C	Approx. 90.0
WATER TEMPERATURE SENDER GAUGE	
Temperature °C (°F)	Resistance (Ω)
50 (122.0)	160 ~ 240
120 (248.0)	17.1 ~ 21.2
ACCESSORY METER CIRCUIT	
Connector Disconnected:	
4 – Ground (Light control switch OFF)	No voltage
4 – Ground (Light control switch TAIL or HEAD)	Battery voltage
1 – Ground (Ignition switch LOCK or ACC)	No voltage
1 – Ground (Ignition switch ON)	Battery voltage
2 – Ground (Constant)	Battery voltage
TRANSPONDER KEY COMPUTER	
1 – Ground (Constant)	Battery voltage
2 – Ground (Ignition switch ON)	Battery voltage
SLIDING ROOF CONTROL RELAY CIRCUIT	
Wire Harness Side:	
6 – Ground (Ignition switch LOCK or ACC)	No voltage
6 – Ground (Ignition switch ON)	Battery voltage
12 – Ground (Constant)	Battery voltage
FUEL RECEIVER GAUGE	
Between terminals	Resistance (Ω)
3 – 5	Approx. 115.8
5 – 8	Approx. 177.2
3 – 8	Approx. 61.4
SUB FUEL SENDER GAUGE	
Float position: mm (in.)	Resistance (Ω)
F: Approx. 33.3 ± 2.0 (1.311 ± 0.079)	Approx. 3.0 ± 0.6
1/2: Approx. 62.6 (2.465)	Approx. 32.5 ± 1.5
E: Approx. 148.9 ± 1.8 (5.862 ± 0.071)	Approx. 110.0 ± 2.5

BODY

GENERAL INFORMATION ..... BO– 2
PRECAUTION ..... BO– 4
PREPARATION ..... BO– 5
FRONT BUMPER ..... BO– 7
REAR BUMPER ..... BO– 8
HOOD ..... BO– 9
FRONT DOOR ..... BO– 10
REAR DOOR ..... BO– 14
BACK DOOR ..... BO– 18
WIPER AND WASHER ..... BO– 22
BODY OUTSIDE MOULDING ..... BO– 25
WINDSHIELD MOULDING ..... BO– 33
BACK WINDOW MOULDING ..... BO– 33
WINDSHIELD ..... BO– 35
QUARTER WINDOW GLASS ..... BO– 40
BACK DOOR GLASS ..... BO– 44
SLIDING ROOF ..... BO– 47
INSTRUMENT PANEL ..... BO– 55
SEAT ..... BO– 60
SEAT BELT ..... BO– 69
SEAT BELT PRETENSIONER ..... BO– 73
ROOF HEADLINING ..... BO– 76
SIDE STEP ..... BO– 77
ROOF CARRIER ..... BO– 77
ROOF RACK ..... BO– 78
FUEL TANK AND LINE ..... BO– 79
SERVICE SPECIFICATIONS ..... BO– 81

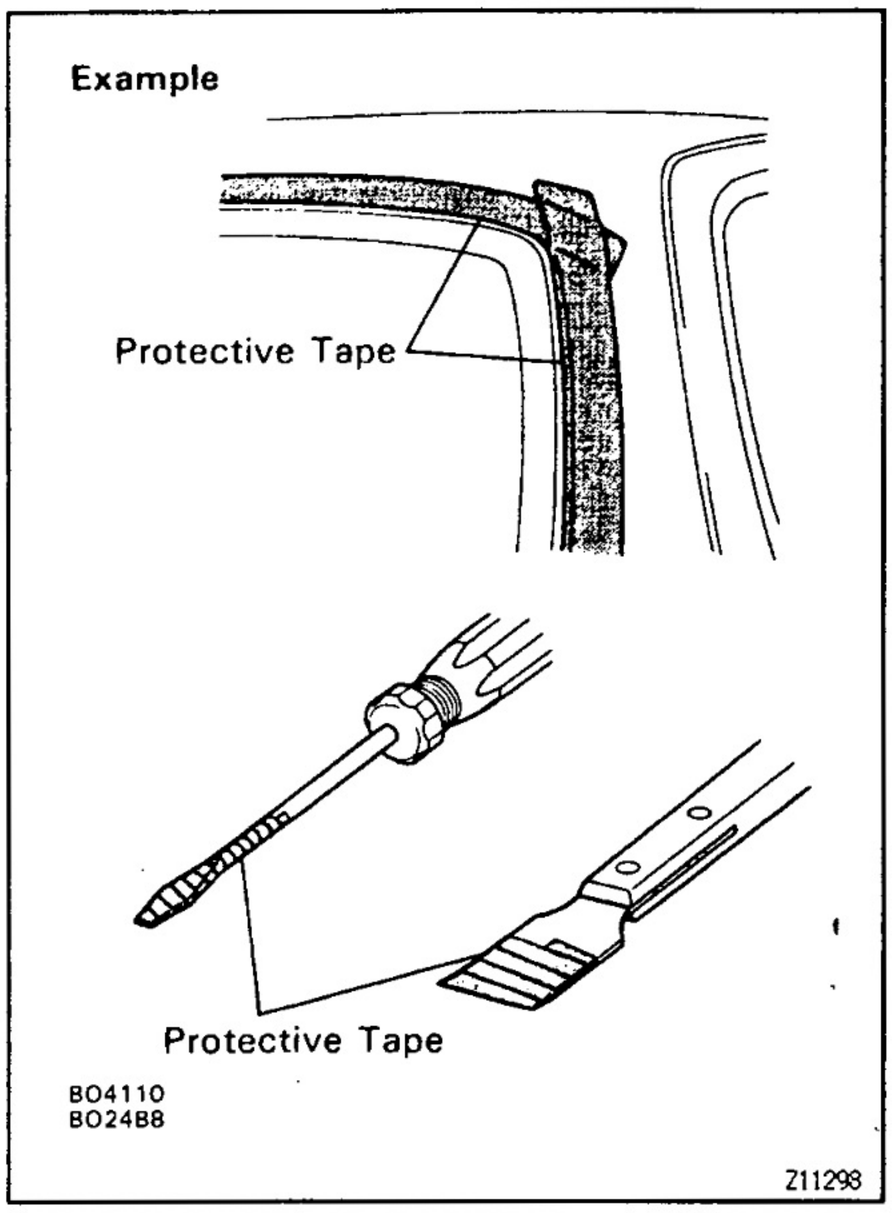

GENERAL INFORMATION

HANDLING PRECAUTIONS

BO263-02

Taping

When it is possible that the body or parts may be scratched during the operation, apply protective tape before starting work.

Example:

1. Before starting work, apply protective tape to body surfaces around parts to be removed and installed.
2. Before prying parts loose with a screwdriver or scraper etc., apply protective tape to the tip of the tool to avoid scratching parts or painted surfaces of the body.

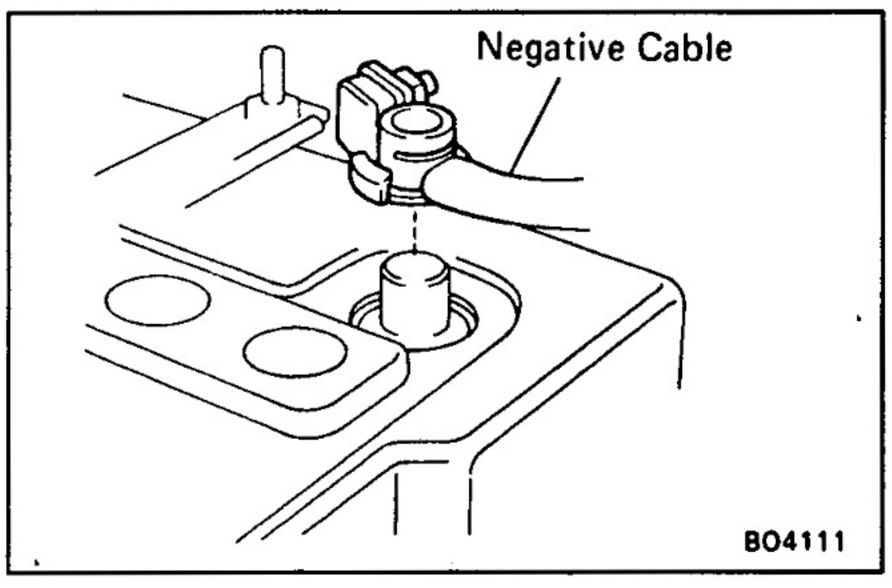

Battery

In order to prevent a short circuit while doing work on the electrical circuit such as disconnecting a connector, first turn off the ignition switch and disconnect the negative (−) terminal cable from the battery before starting work.

HINT: When battery voltage is required for operation of a functioning part, connect the cable to the battery, and promptly disconnect it when no longer necessary.

CAUTION:

- **Work must be started after 90 seconds from the time the ignition switch is turned to the "LOCK" position and the negative (−) terminal cable is disconnected from the battery.**
- **To avoid erasing the memory of each memory system, never use a back−up power supply from outside the vehicle.**

Fitting Adjustments

When removing and installing body panels which have a preload value, after installation refer to the page containing the installation adjustment methods, and make adjustments according to the required specifications.

HINT: When making adjustments, do not completely loosen the bolts and nuts of the part being adjusted. Tighten them appropriately, and move the panels by hand to align them.

BO264-02

CLIPS

The removal and installation methods of typical clips used in body parts are shown in the table below.
HINT: If the clip is damaged during the operation, always replace it with a new clip.

Shape (Example)	Removal/Installation
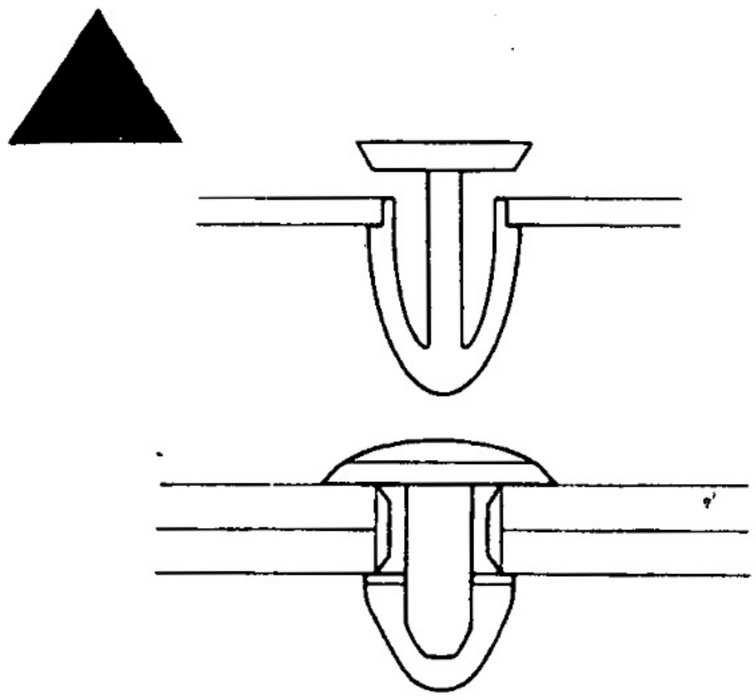 B04116	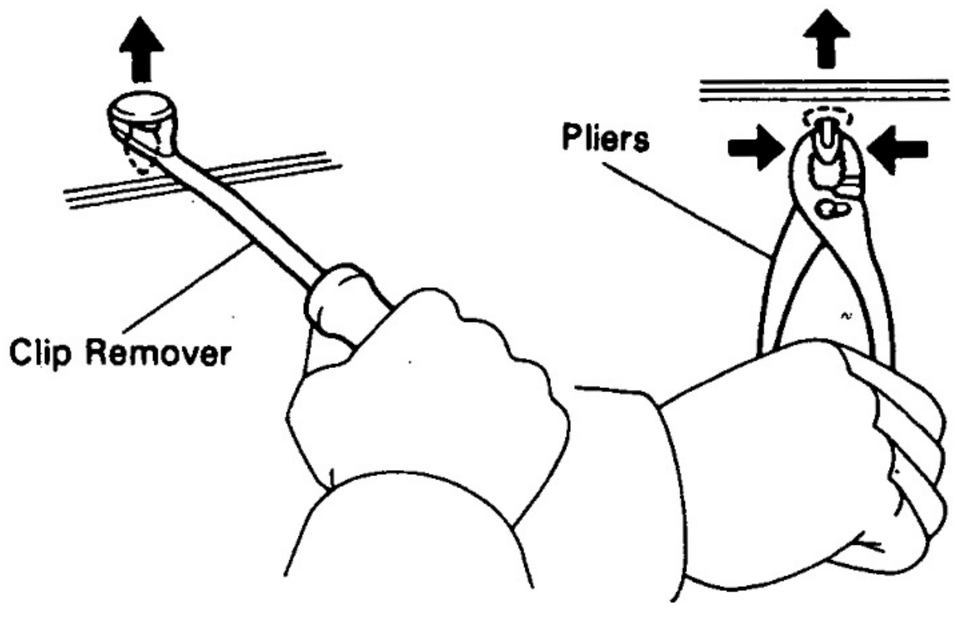 B04117
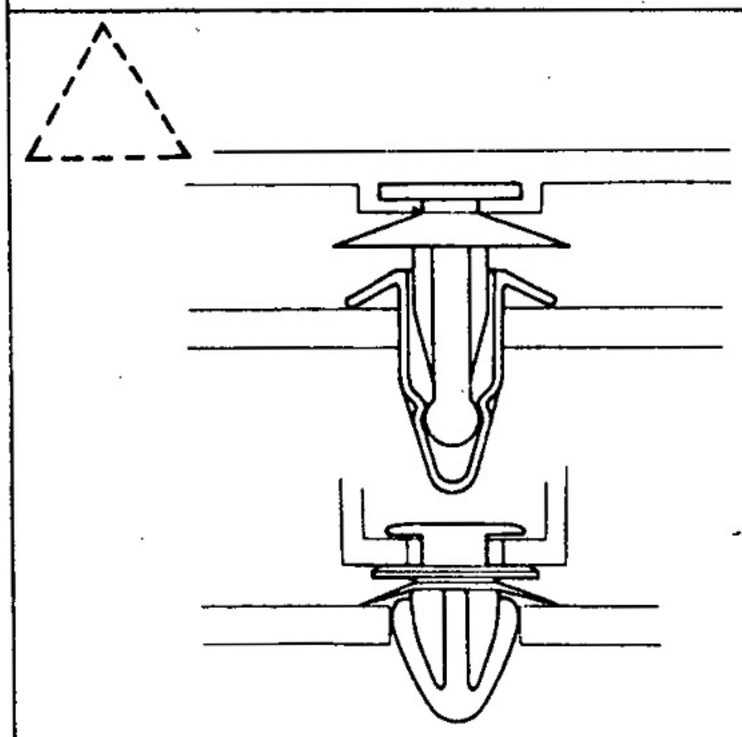 B04118	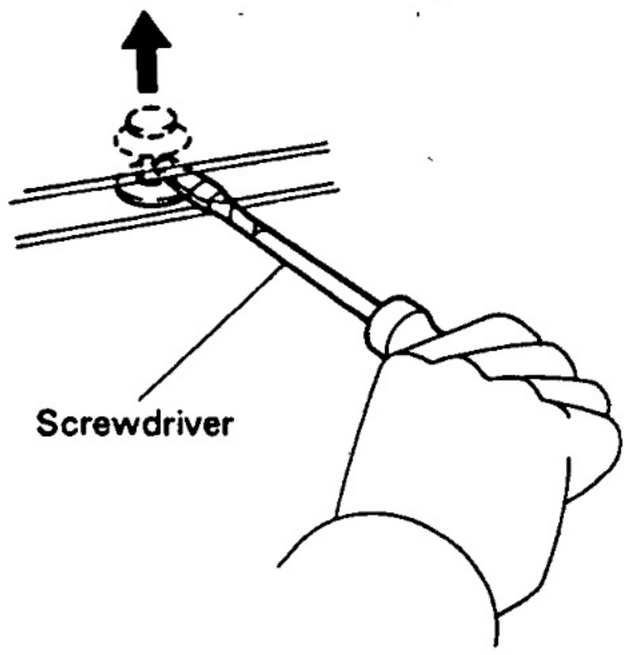 B04119
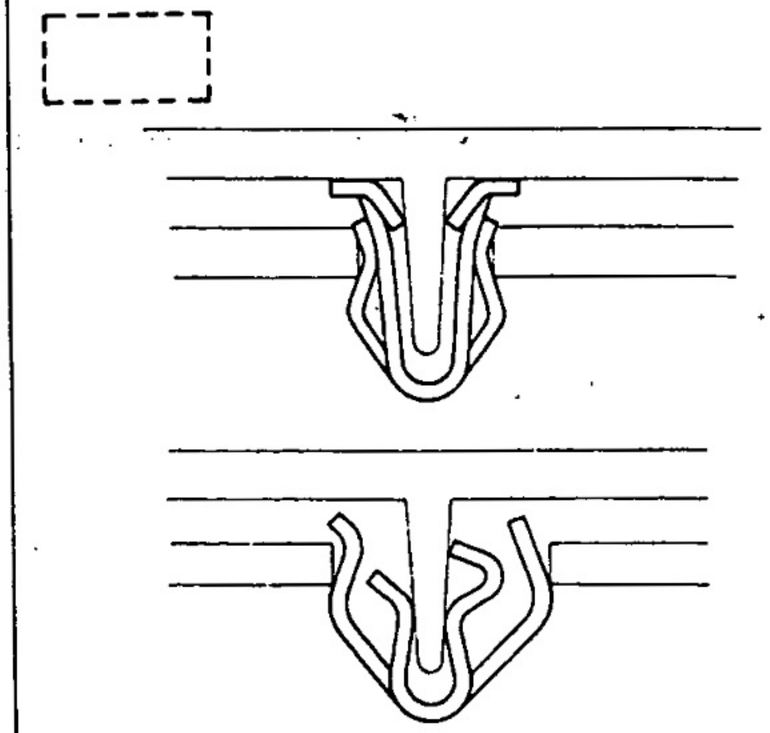 B04120	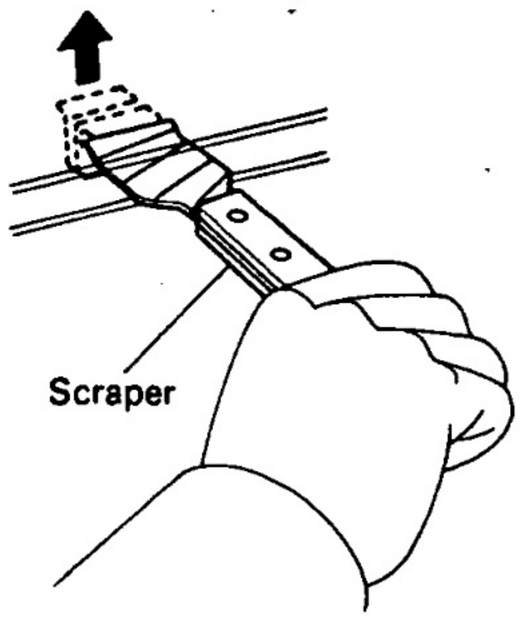 B04121

V00005

CLIPS (Cont'd)

Shape (Example)	Removal/Installation
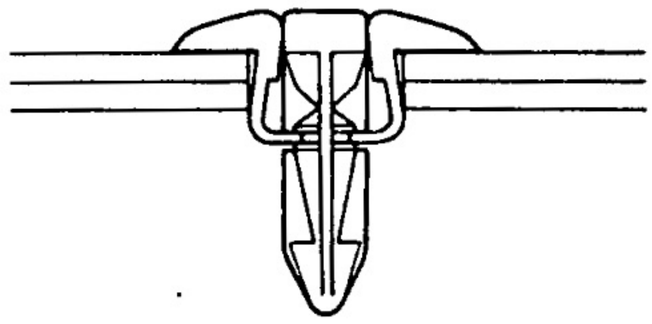 BO4122	Removal / Installation 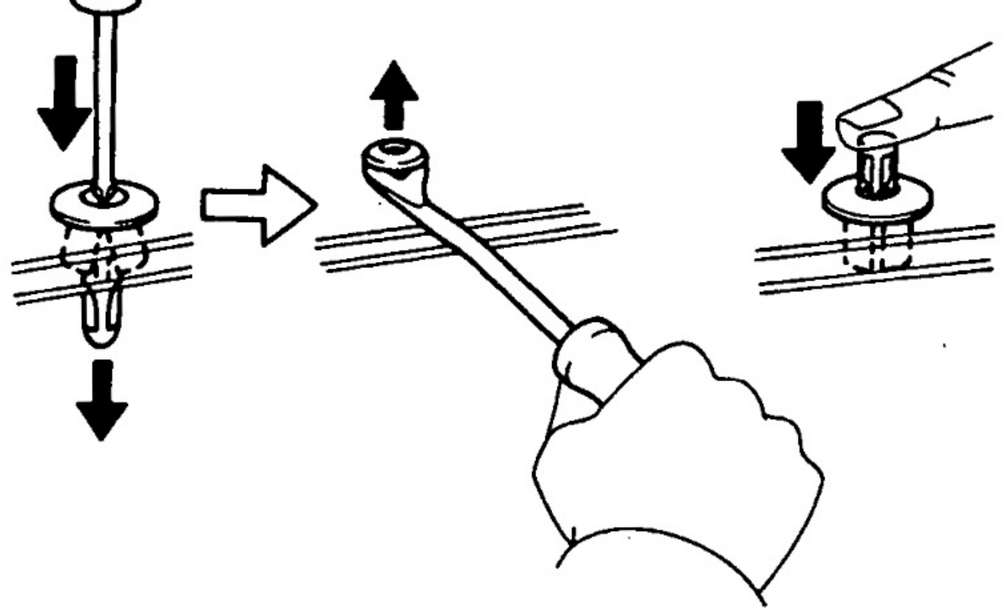 BO4123
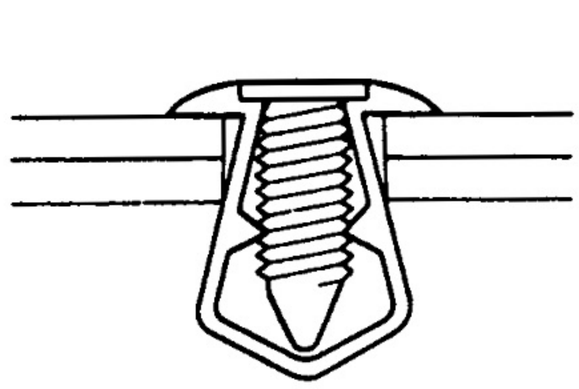 BO4124	Removal / Installation 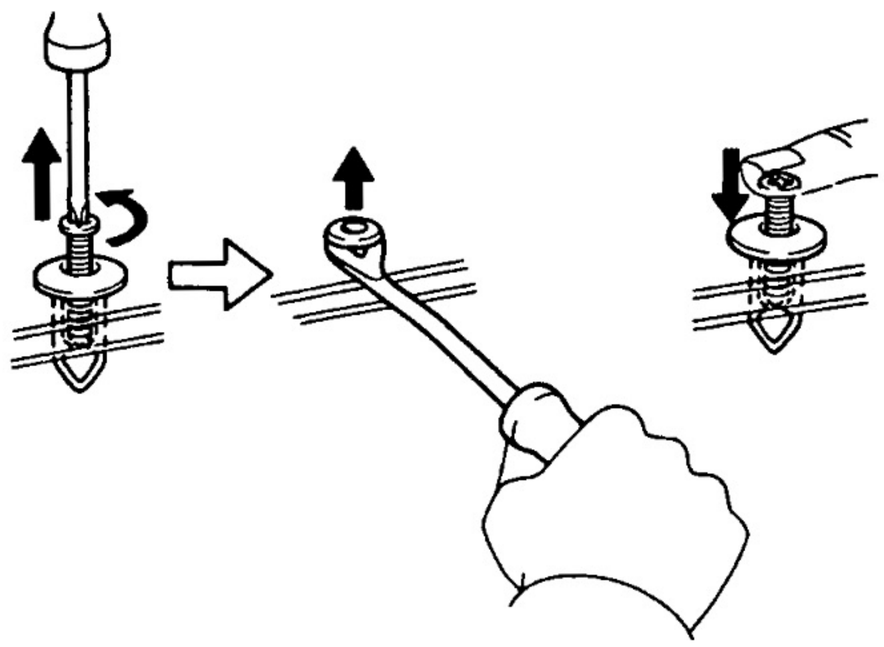 BO4125

V00012

PRECAUTION

SRS (Supplemental restraint system)

B0190-08

The LAND CRUISER/LAND CRUISER PRADO is equipped with an SRS (Supplemental Restraint System) such as the driver airbag and front passenger airbag. Failure to carry out service operation in the correct sequence could cause the SRS to unexpectedly deploy during servicing, possibly leading to a serious accident. Before servicing (including removal or installation of parts, inspection or replacement), be sure to read the precautionary notices in the RS section.

PREPARATION

SST (SPECIAL SERVICE TOOLS)

B004J–0R

	09812–00010	Door Hinge Set Bolt Wrench	Front door
	09806–30010	Windshield Moulding Remover	

EQUIPMENT

B018H–05

Clip remover	
Torque wrench	
Drill	
Drill bit, diam. 3.2 mm (0.126 in.)	
Hand riveter	
Tape	To avoid surface damage
Adhesive tape	To avoid surface damage
Adhesive	
Cleaner	
Shop rag	Regulator handle
Water pump pliers	Window regulator
Knife	Moulding
Heat light	Moulding
Piano wire	Windshield

BO

LUBRICANT

B0018–0Y

Item	Capacity	Classification
MP grease	–	–

SSM (SPECIAL SERVICE MATERIALS)

B0265–03

08833–00070	Adhesive 1324, THREE BOND 1324 or equivalent	Front door Rear door Back door
08850–00070	Windshield glass adhesive set No.15 or equivalent	Windshield Back door moulding and glass (0–15°C or 32–59°F)
08850–00080	Windshield glass adhesive set No.35 or equivalent	Windshield Back door moulding and glass (15–35°C or 59–95°F)

08850–00090	Windshield glass adhesive set No.45 or equivalent	Windshield Back door moulding and glass (35–45°C or 95–113°F)
08833–00030	Three cement black or equivalent	Windshield moulding and glass Back door moulding and glass

B0266–02

1. CHOOSE SUITABLE ADHESIVE SET

Use an adhesive set suitable for the ambient temperature.

Ambient temperature	Part No.	Part Name
0 – 15°C (32 – 59°F)	08850-00070	Windshield glass adhesive set No. 15
15 – 35°C (59 – 95°F)	08850-00080	Windshield glass adhesive set No. 35
35 – 45°C (95 – 113°F)	08850-00090	Windshield glass adhesive set No. 45

V00250

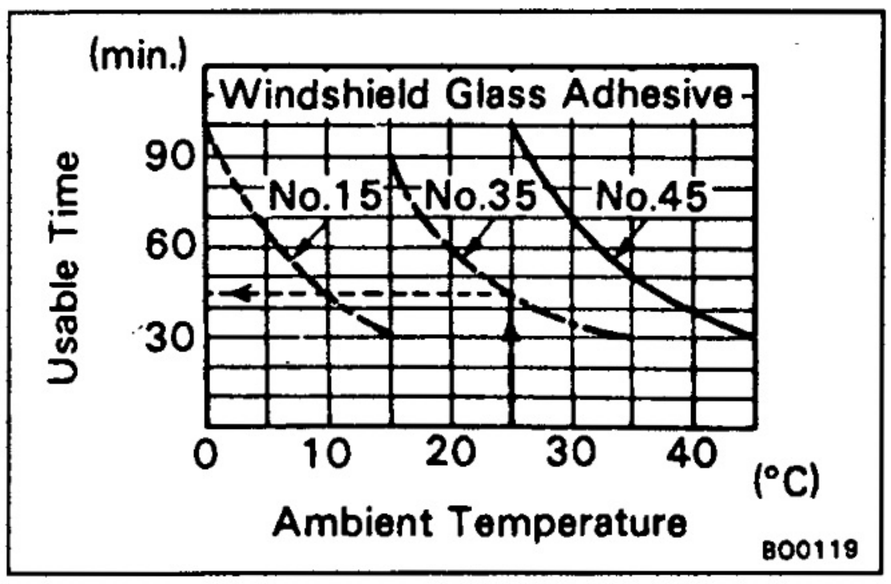

2. CHECK USABLE TIME OF ADHESIVE

After mixing main and hardening agents, finish glass installation within the specified time as shown.
Example: For glass installation in an ambient temperature of 25°C (77°F), apply adhesive set No.35 within 45 minutes.

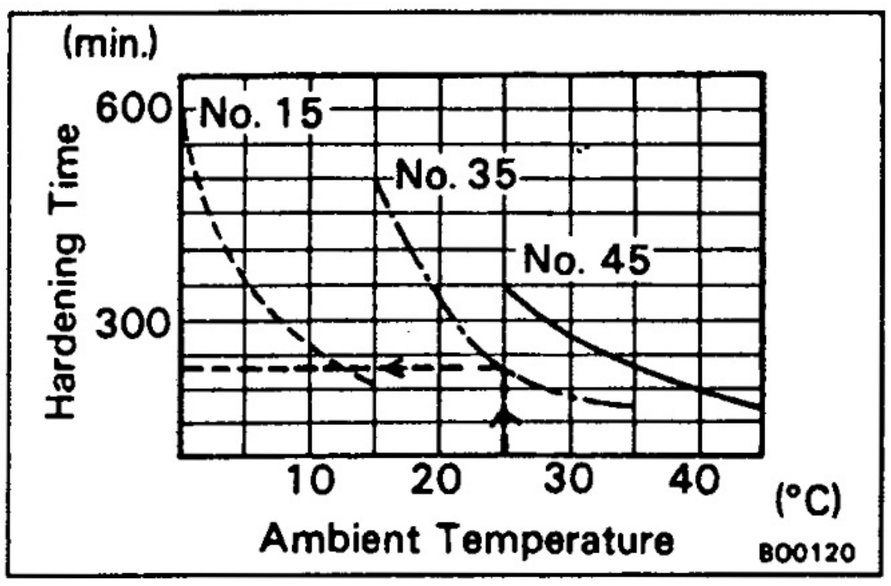

3. CHECK ADHESIVE HARDENING TIME

After main and hardening agents are mixed, leak tests should be made only after the hardening time has elapsed.
Example: The hardening time for adhesive set No.35 in an ambient temperature of 25°C (77°F) is 150 min.
NOTICE: Do not drive the vehicle until at least double the hardening time has elapsed.

FRONT BUMPER
COMPONENTS

BO04K-01

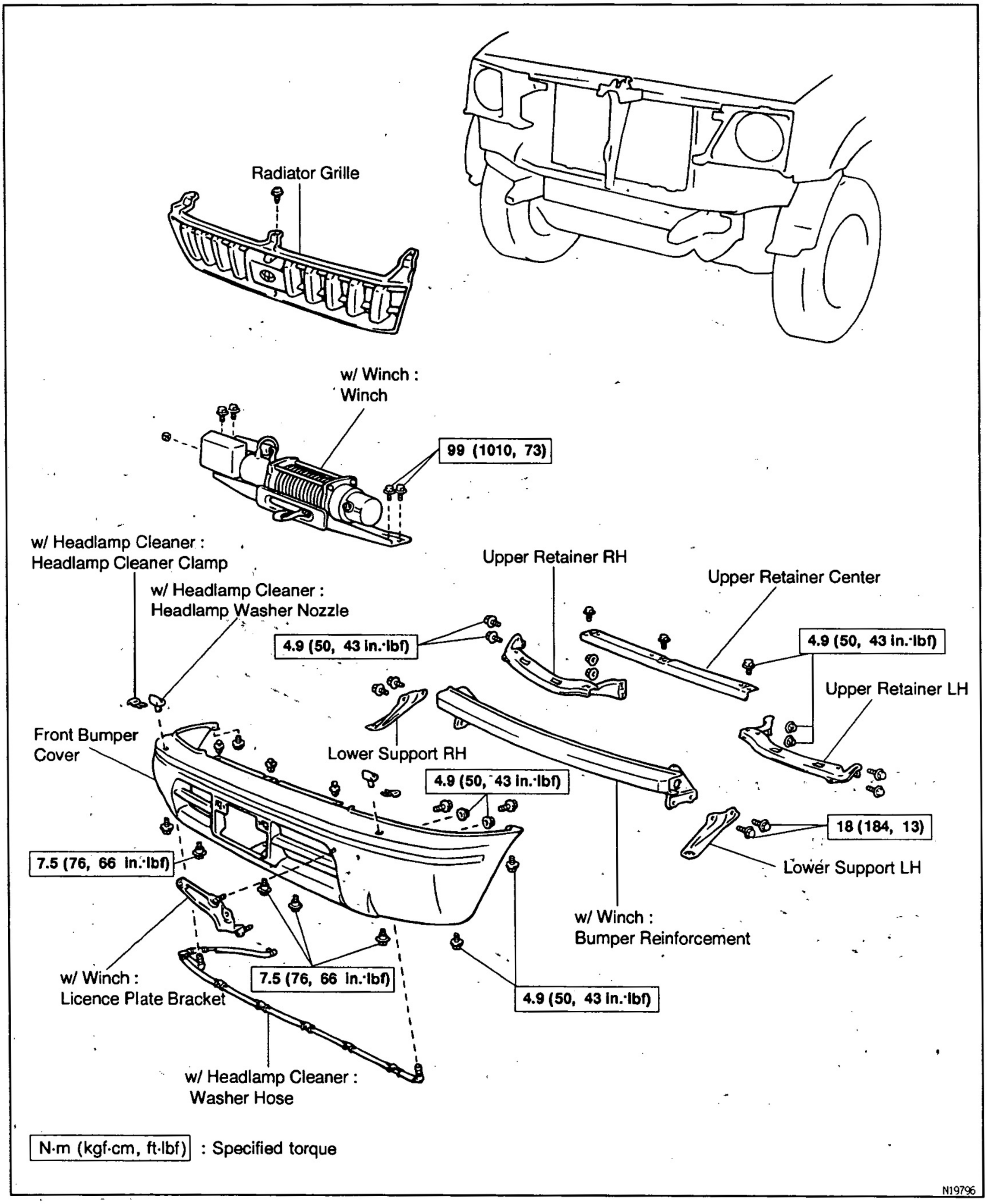

REAR BUMPER
COMPONENTS

B004M-0D

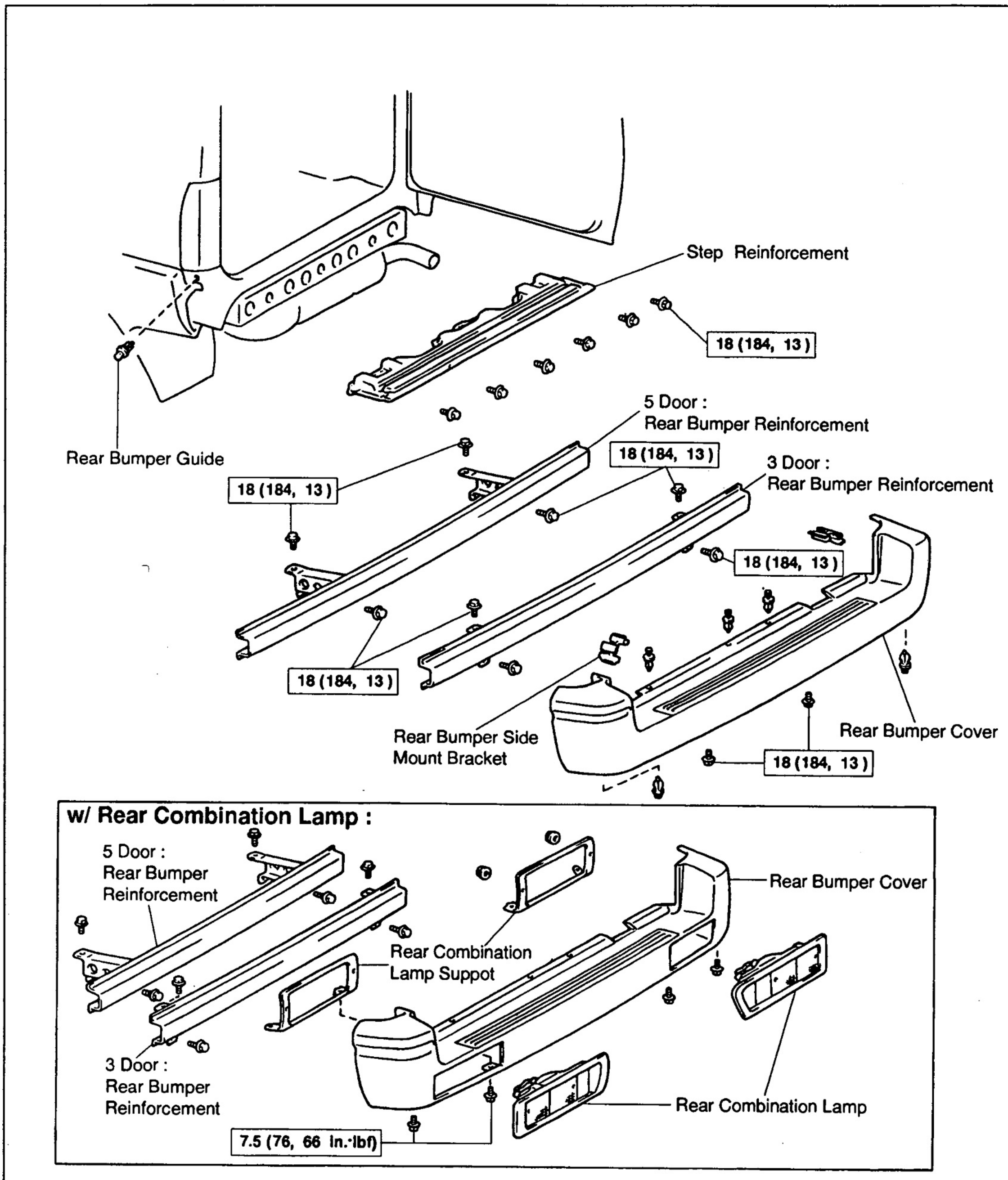

N·m (kgf·cm, ft·lbf) : Specified torque

N19797

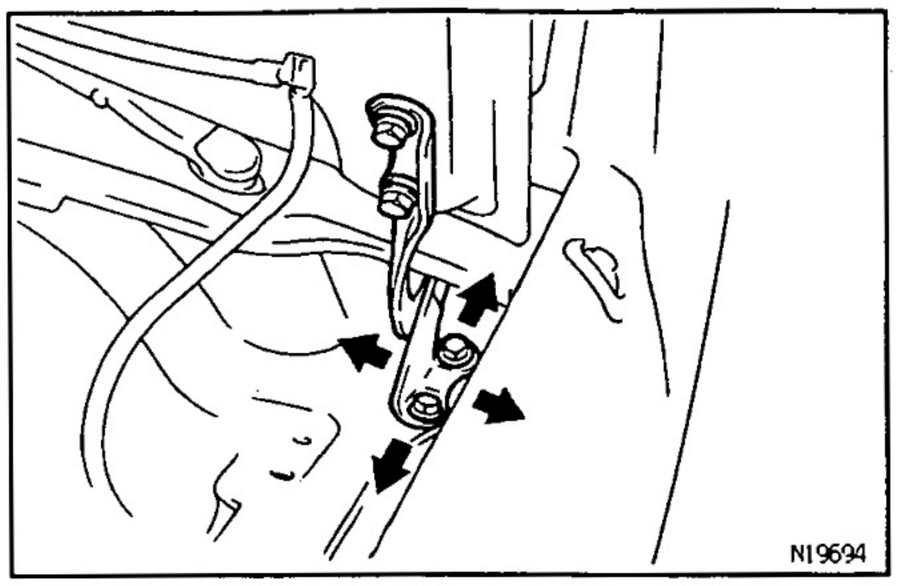

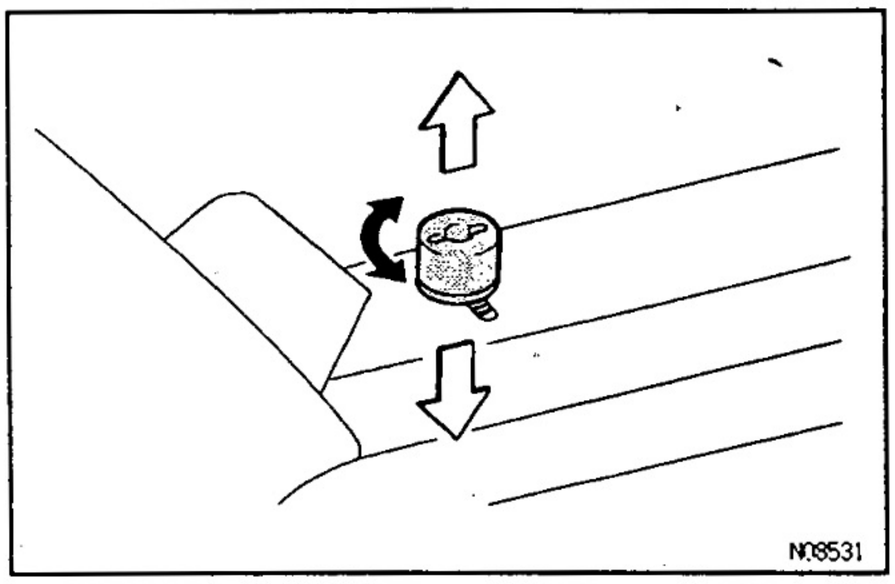

HOOD

HOOD ADJUSTMENT

BO2MN–01

1. **ADJUST HOOD IN FORWARD / REARWARD AND LEFT/RIGHT DIRECTIONS**
   Adjust the hood by loosening the body side hinge bolts.
   Torque: 13 N·m (130 kgf·cm, 9.4 ft·lbf)

2. **ADJUST FRONT EDGE OF HOOD IN VERTICAL DIRECTIONS**
   Adjust the hood by turning the cushions.

FRONT DOOR
COMPONENTS

B02MR-01

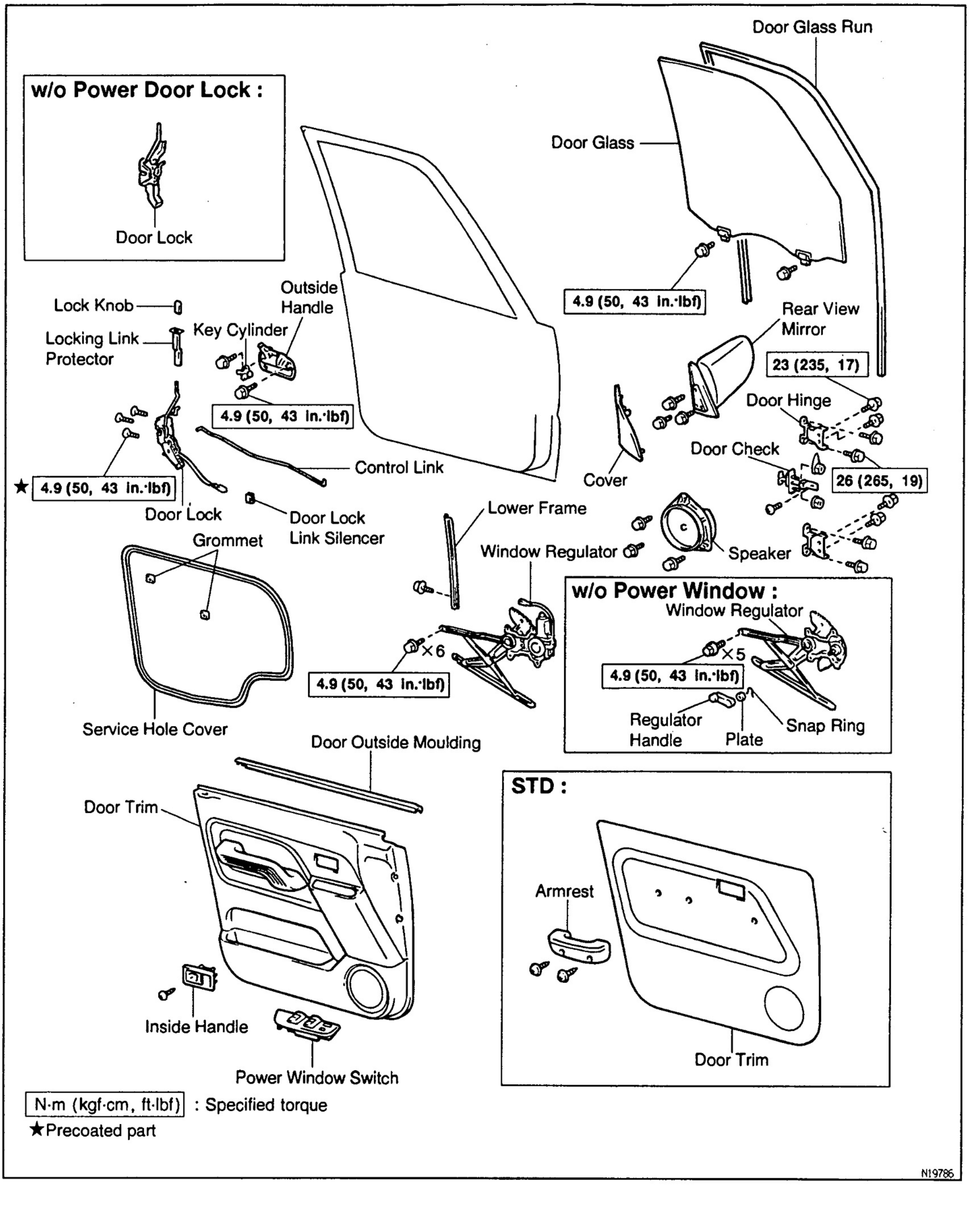

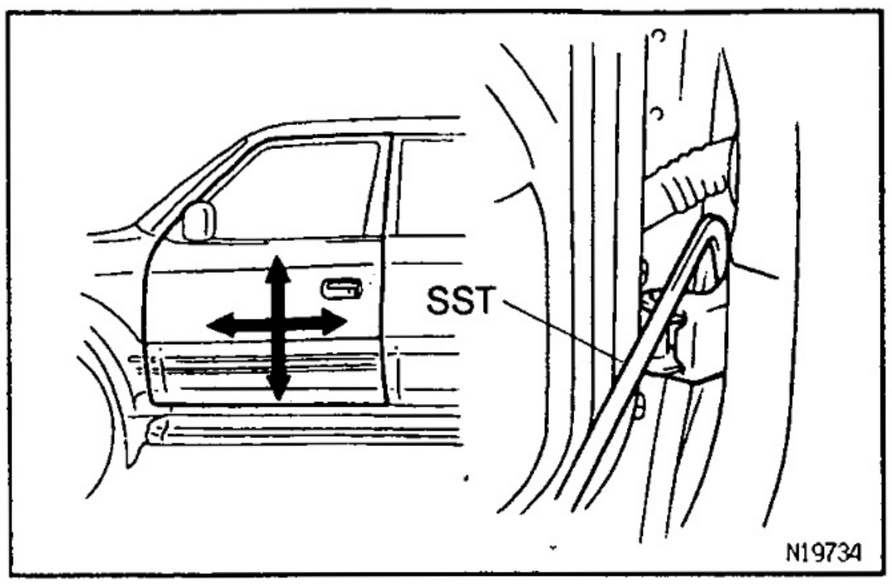

BO2MX–01

FRONT DOOR ADJUSTMENT

1. ADJUST DOOR IN FORWARD / REARWARD AND VERTICAL DIRECTIONS

Using SST, adjust the door by loosening the body side hinge bolts.

SST 09812–00010

Torque: 23 N·m (235 kgf·cm, 17 ft·lbf)

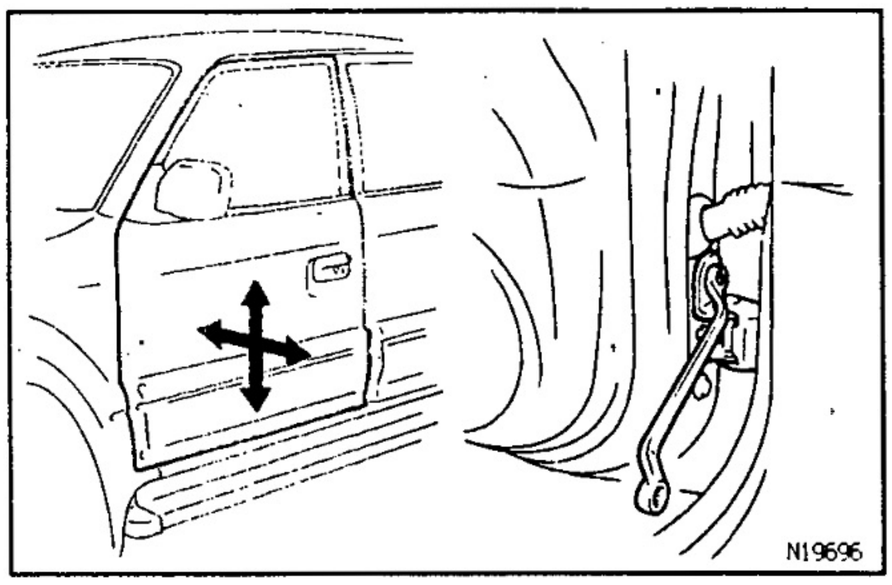

2. ADJUST DOOR IN LEFT/RIGHT AND VERTICAL DIRECTIONS

Loosen the door side hinge bolts to adjust.

Torque: 26 N·m (265 kgf·cm, 19 ft·lbf)

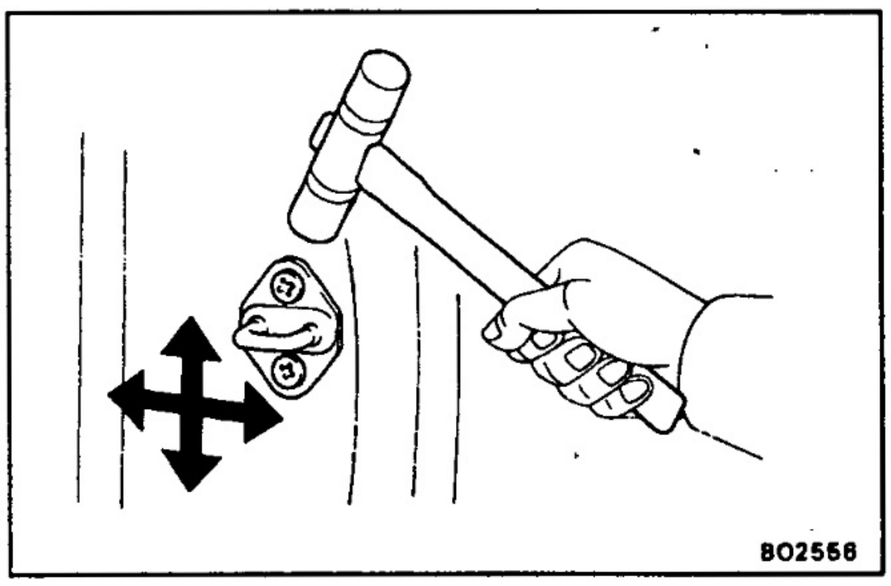

3. ADJUST DOOR LOCK STRIKER

(a) Check that the door fit and door lock linkages are adjust correctly.

(b) Loosen the striker mounting screws to adjust.

Torque: 11 N·m (115 kgf·cm, 8.3 ft·lbf)

(c) Using a plastic hammer, tap the striker to adjust it.

w/ Seat Belt Pretensioner

CAUTION: When adjustment the door lock striker, make sure you have cancelled the safety lock release lever of the seat belt pretensioner. (See page BO–73)

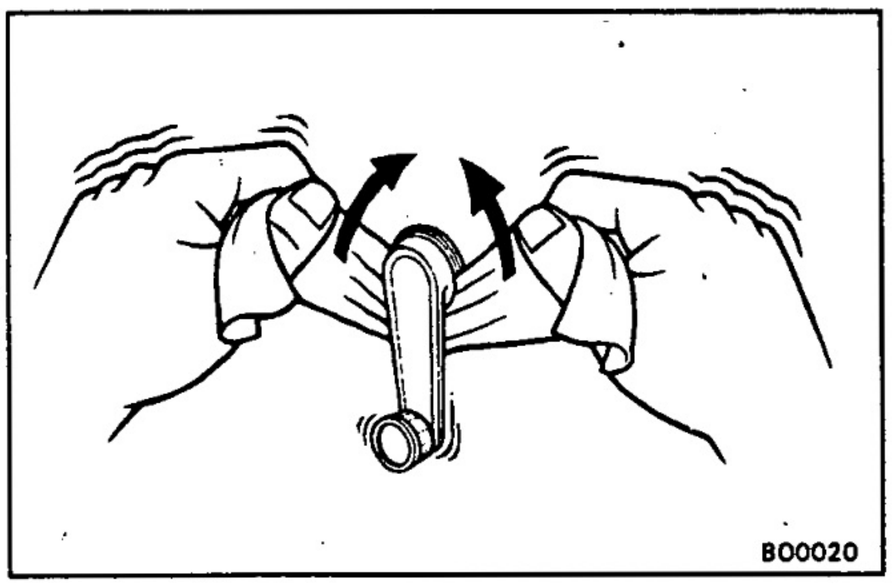

BO2MT–01

FRONT DOOR DISASSEMBLY

1. w/o Power Window:

REMOVE REGULATOR HANDLE

Pull off the shop rag and remove the regulator handle and plate.

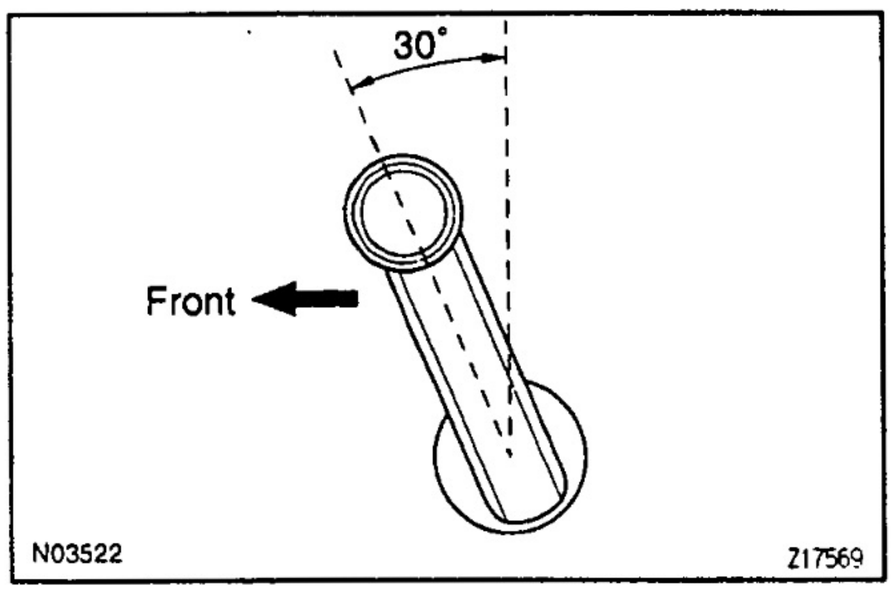

ASSEMBLY HINT: With the door window fully closed, install the plate and the regulator handle with the snap ring, as shown.

2. REMOVE THESE PARTS:

(a) Inside handle

(b) w/ Power Window:
Power window switch

(c) Rear view mirror and cover

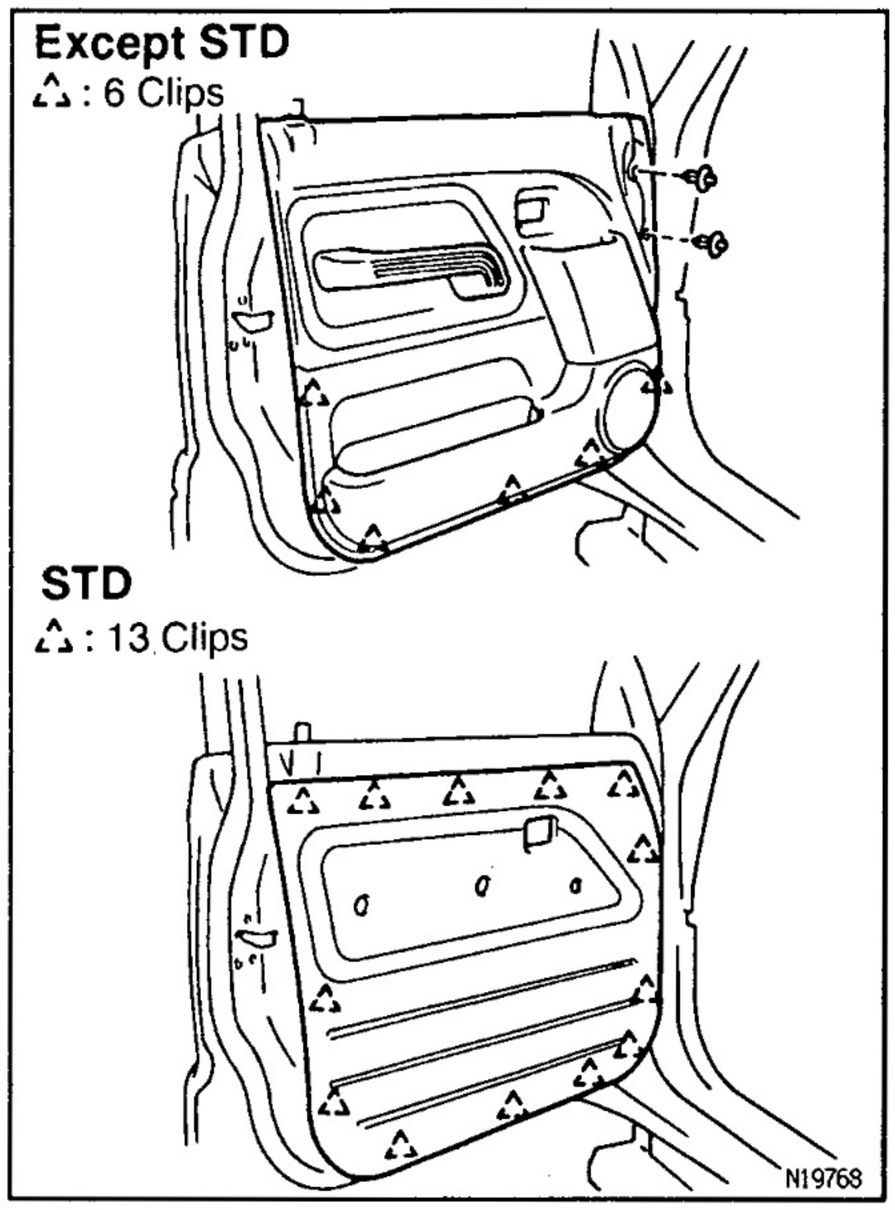

3. REMOVE DOOR TRIM

(a) Remove the 2 clips.

(b) Insert a screwdriver between the door and door trim to pry out.

NOTICE: Be careful not to damage the door and door trim.

HINT: Tape the screwdriver tip before use.

(c) Pull the trim upward to remove it.

4. REMOVE SERVICE HOLE COVER

(a) Remove the 3 grommets.

(b) Remove the service hole cover.

ASSEMBLY NOTICE: Do not block the grommet sealing with the cover.

ASSEMBLY HINT: Bring out the link through the service hole cover.

(c) Remove the back door lock control pad from the service hole cover.

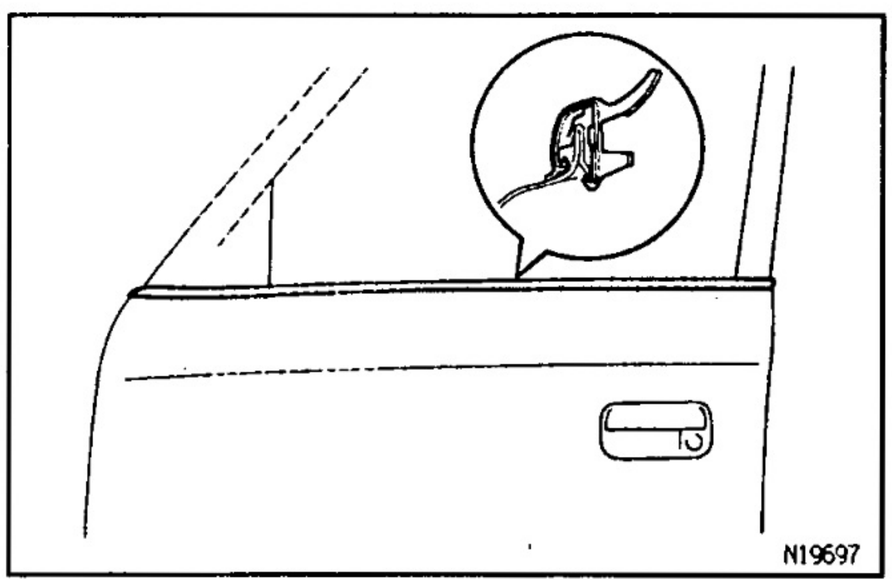

5. REMOVE THESE PARTS:

(a) Speaker

(b) Door outside moulding

(c) Door glass

Torque: 4.9 N·m (50 kgf·cm, 43 in.·lbf)

(d) Door glass run

(e) Lower frame

Torque: 4.9 N·m (50 kgf·cm, 43 in.·lbf)

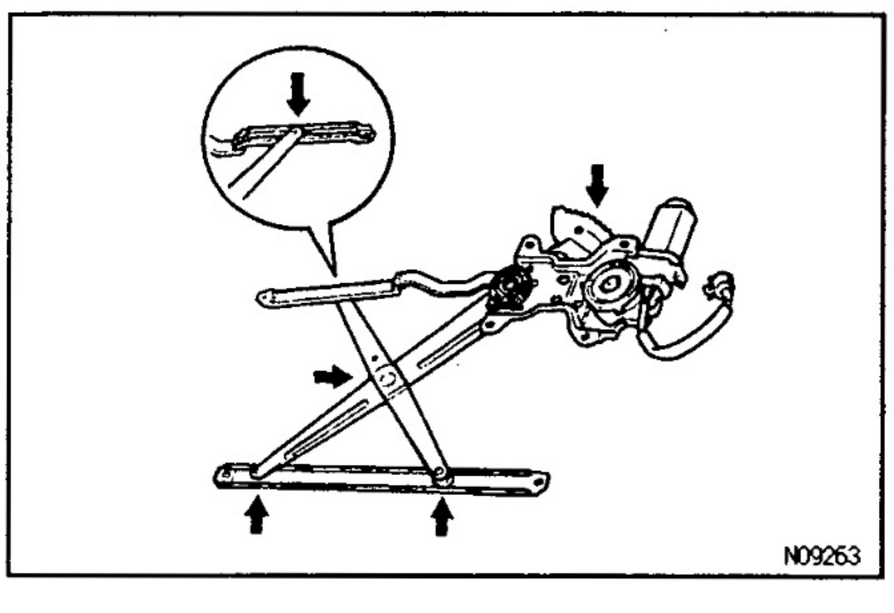

6. REMOVE WINDOW REGULATOR

(a) w/ Power Window:

Disconnect the connector, then remove the 6 bolts and window regulator.

Torque: 4.9 N·m (50 kgf·cm, 43 in.·lbf)

(b) w/o Power Window:

Remove the 5 bolts and window regulator.

Torque: 4.9 N·m (50 kgf·cm, 43 in.·lbf)

HINT: Remove the regulator through the service hole.

ASSEMBLY HINT: Apply MP grease to the window regulator.

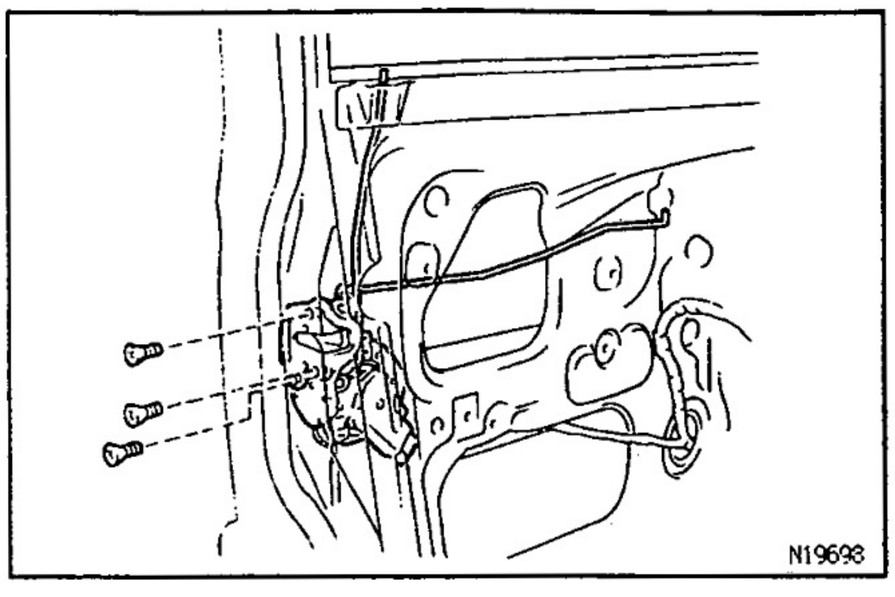

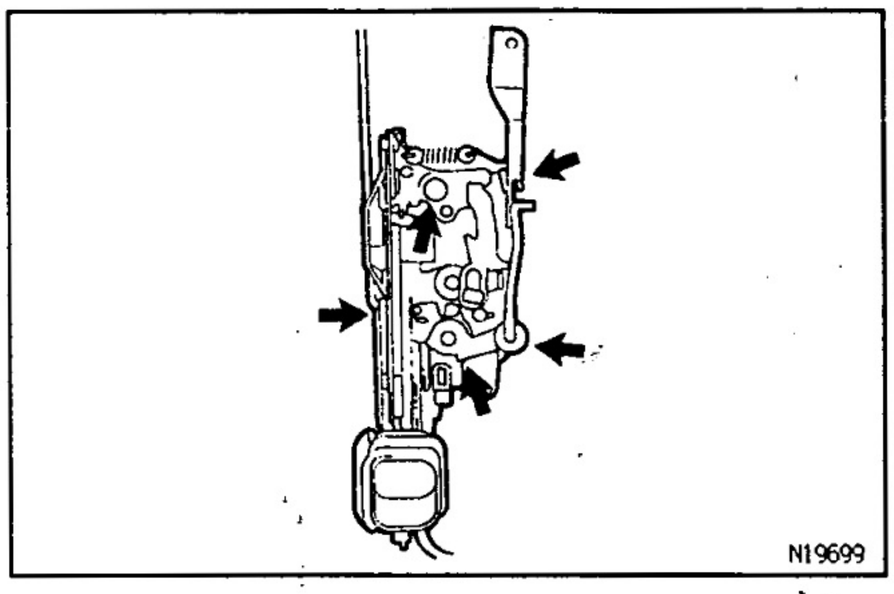

7. REMOVE DOOR LOCK

(a) Disconnect the control link from the door lock.

(b) Disconnect the links from the outside handle with key cylinder.

(c) w/ Power Door Lock:
Disconnect the connector.

(d) Remove the door lock control knob, holder and inside locking link protector.

(e) Remove the 3 screws.
Torque: 4.9 N·m (50 kgf·cm, 43 in.·lbf)
ASSEMBLY HINT: Apply adhesive to 3 screws.
Part No.08833–00070, THREE BOND 1324 or equivalent.

(f) Remove the door lock through the service hole.
ASSEMBLY HINT: Apply MP grease to the sliding surface of the door lock.

8. REMOVE OUTSIDE HANDLE
Torque: 4.9 N·m (50 kgf·cm, 43 in.·lbf)

FRONT DOOR ASSEMBLY

B02MV–01

Assembly is in the reverse order of disassembly.

REAR DOOR
COMPONENTS

BO2MZ–01

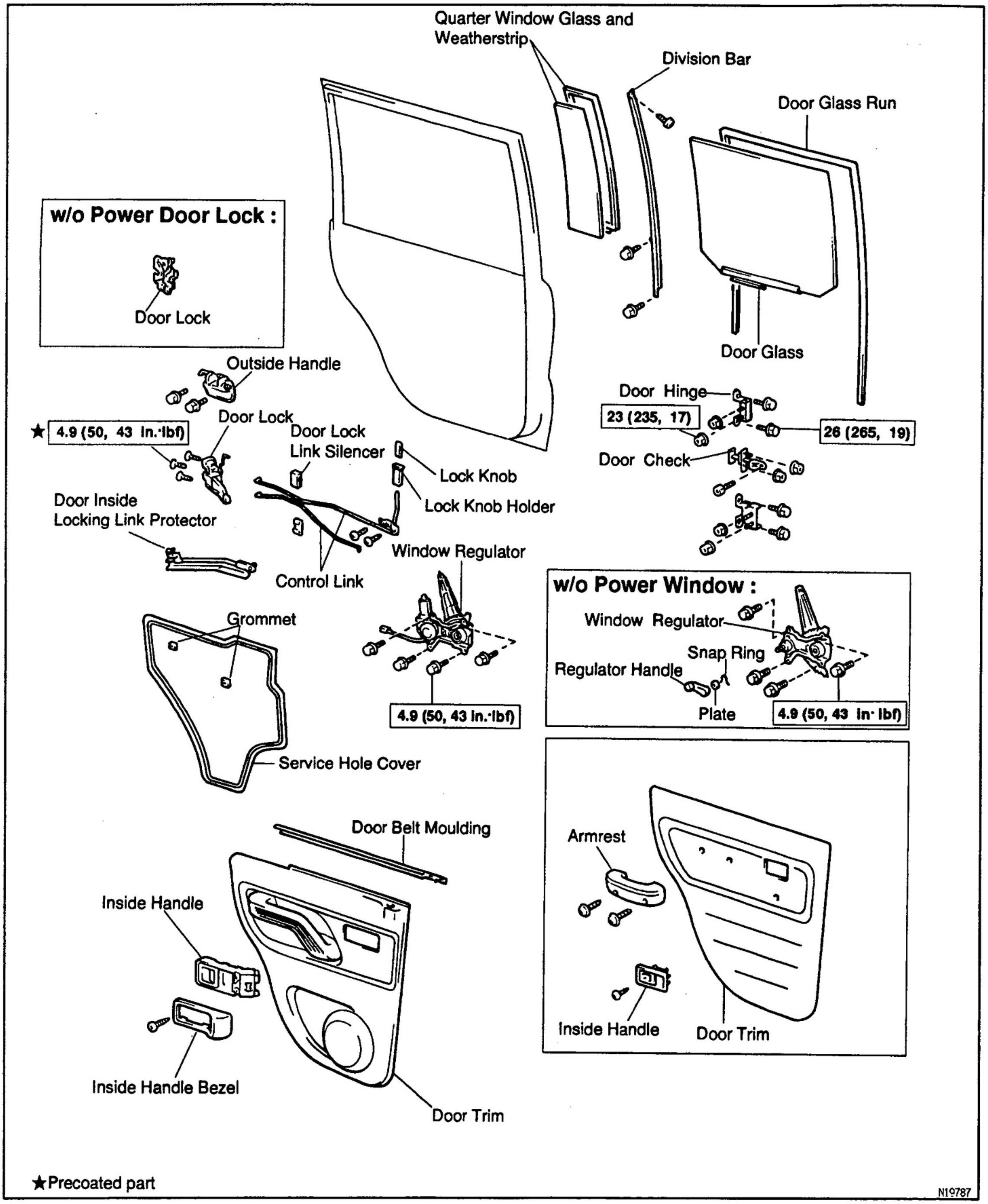

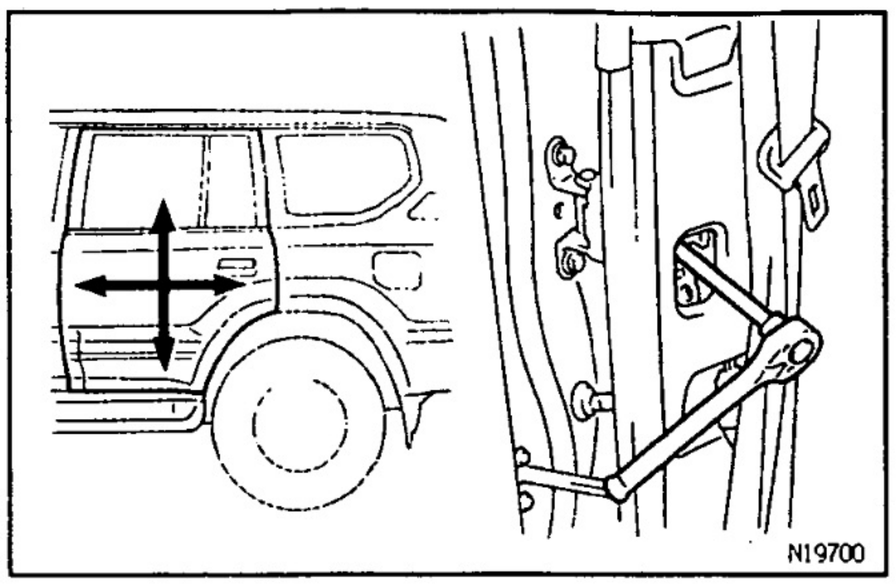

BO2N1–01

REAR DOOR ADJUSTMENT

1. ADJUST DOOR IN FORWARD / REARWARD AND VERTICAL DIRECTIONS

(a) Remove the front scuff plate.
(b) Remove the rear scuff plate.
(c) Remove the center pillar lower garnish hole cover.
(d) Remove the center pillar lower garnish.
(e) Loosen the body side hinge nuts to adjust.
Torque: 23 N·m (235 kgf·cm, 17 ft·lbf)
(f) Install the removed parts.

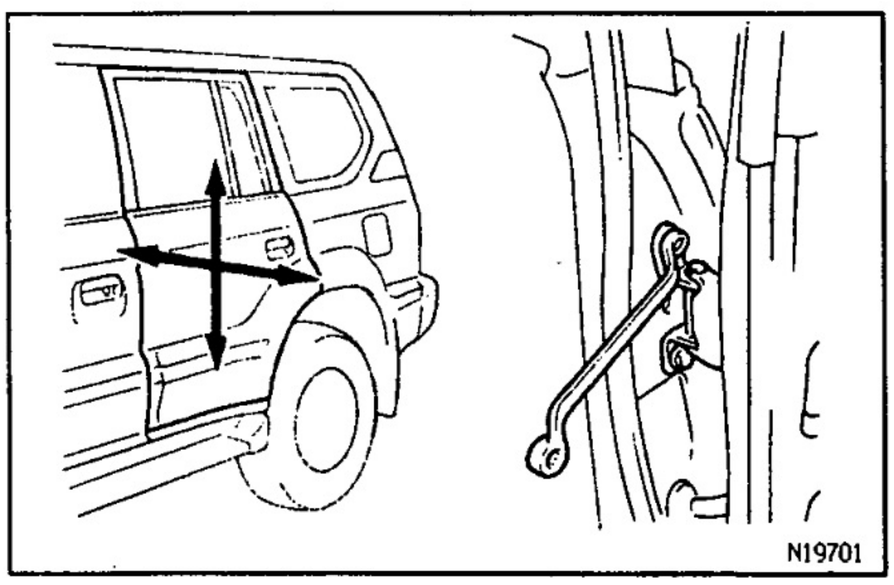

2. ADJUST DOOR IN LEFT/RIGHT AND VERTICAL DIRECTIONS

Loosen the door side hinge bolts to adjust.
Torque: 26 N·m (265 kgf·cm, 19 ft·lbf)

3. ADJUST DOOR LOCK STRIKER

Torque: 11 N·m (115 kgf·cm, 8.3 ft·lbf)

BO

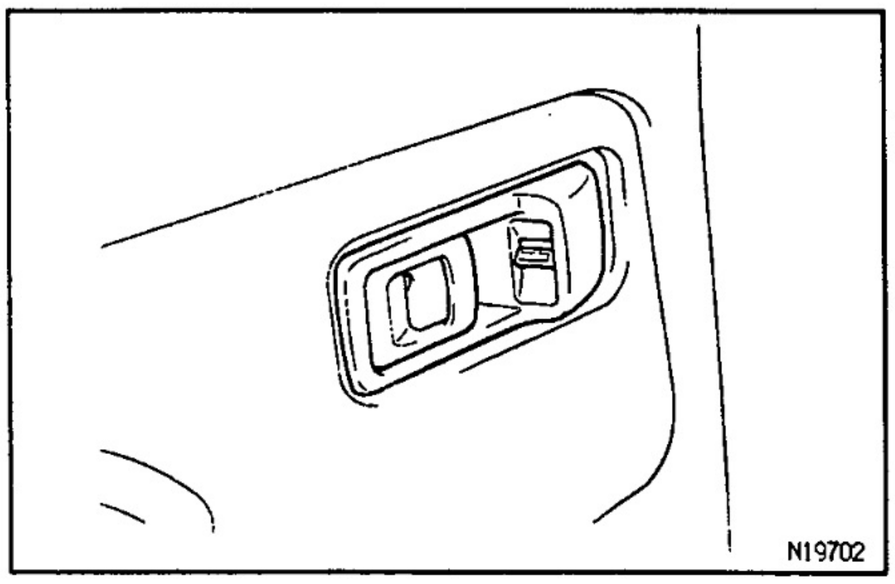

BO2N3–01

REAR DOOR DISASSEMBLY

1. w/ Power Window:
REMOVE DOOR INSIDE HANDLE BEZEL
Using a screwdriver, remove the inside handle bezel.
HINT: Tape the screwdriver tip before use.

2. w/o Power Window:
REMOVE DOOR INSIDE HANDLE

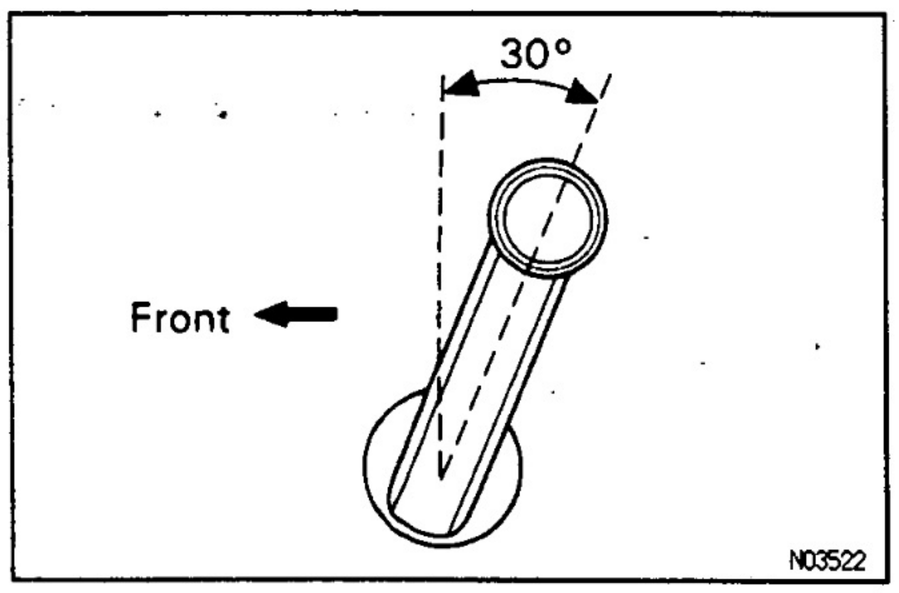

3. w/o Power Window:
REMOVE REGULATOR HANDLE
(See page BO–11)
ASSEMBLY HINT: With door window fully closed, install the plate and the regulator handle with the snap ring as shown.

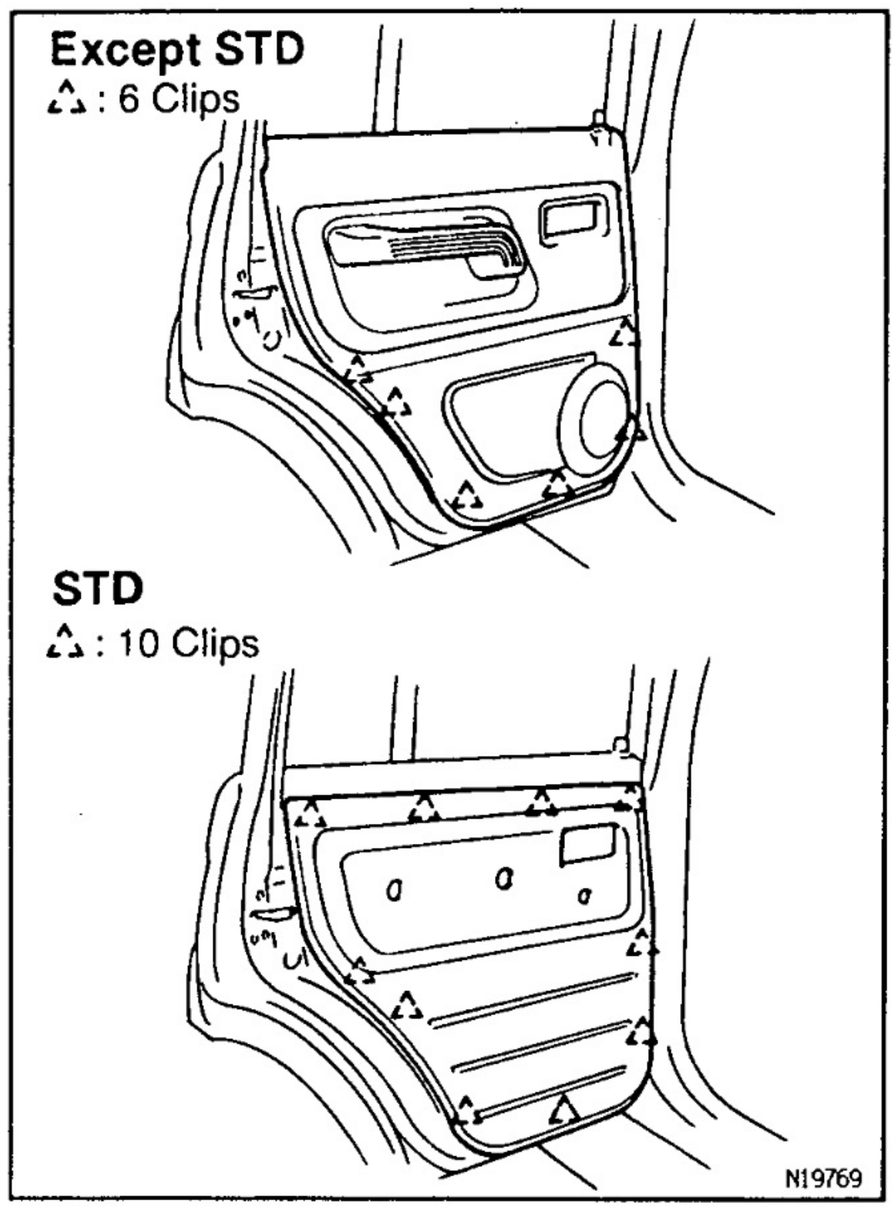

4. REMOVE DOOR TRIM

(a) Except Standard:
Remove the 2 screws.

(b) Standard:
Remove the 2 screws and armrest.

(c) Insert a screwdriver between the door and door trim to pry out.
NOTICE: Be careful not to damage the door and door trim.
HINT: Tape the screwdriver tip before use.

(d) Pull the trim upward to remove it.

5. REMOVE DOOR LOCK LINK SILENCER

6. w/ Power Window:
REMOVE DOOR INSIDE HANDLE

7. REMOVE SERVICE HOLE COVER

(a) Remove the 3 grommets.

(b) Remove the service hole cover.
ASSEMBLY NOTICE: Do not block the grommet sealing with the cover.
ASSEMBLY HINT: Bring out the link through the service hole cover.

BO

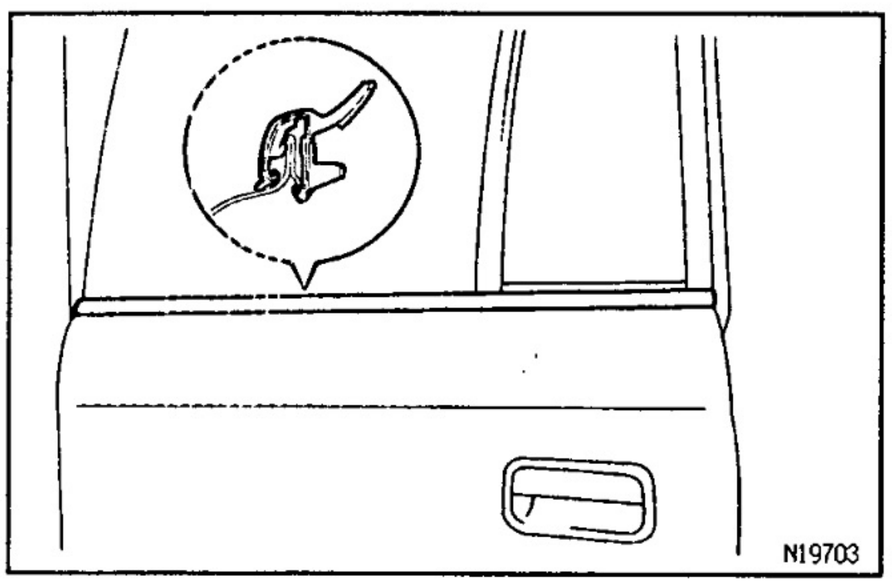

8. REMOVE THESE PARTS:

(a) Door belt moulding

(b) Door glass run

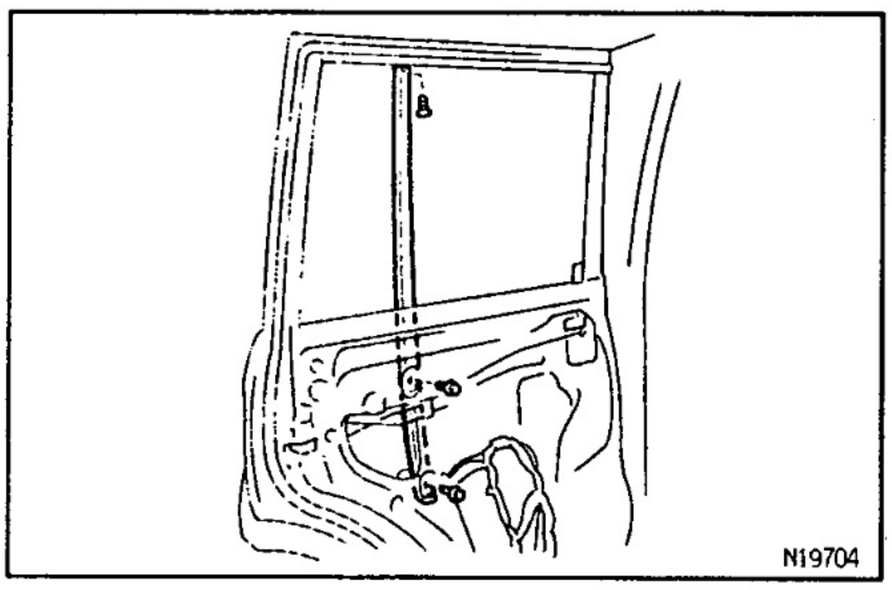

9. REMOVE DIVISION BAR
Remove the 2 bolts, screw and division bar as shown in the illustration.

10. REMOVE THESE PARTS:

(a) Door glass

(b) Quarter window glass and weatherstrip

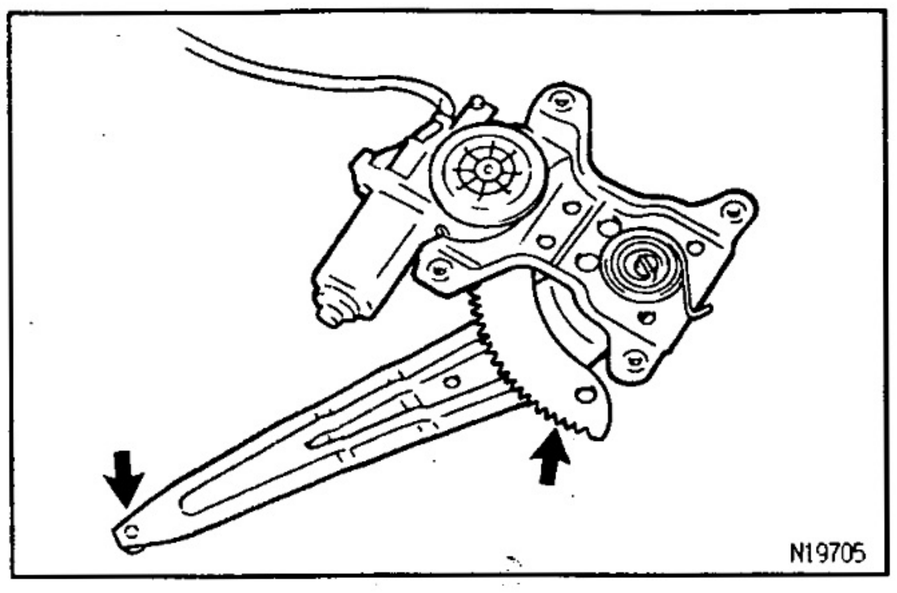

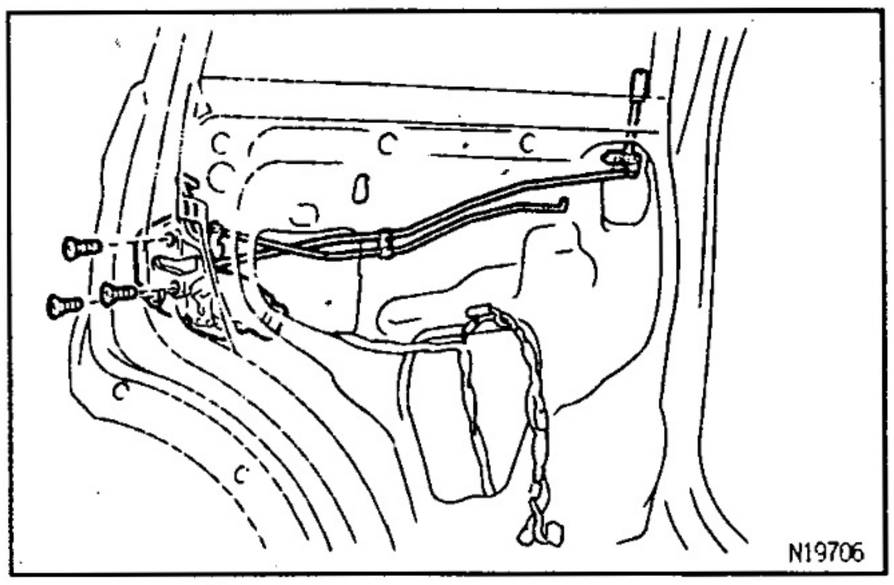

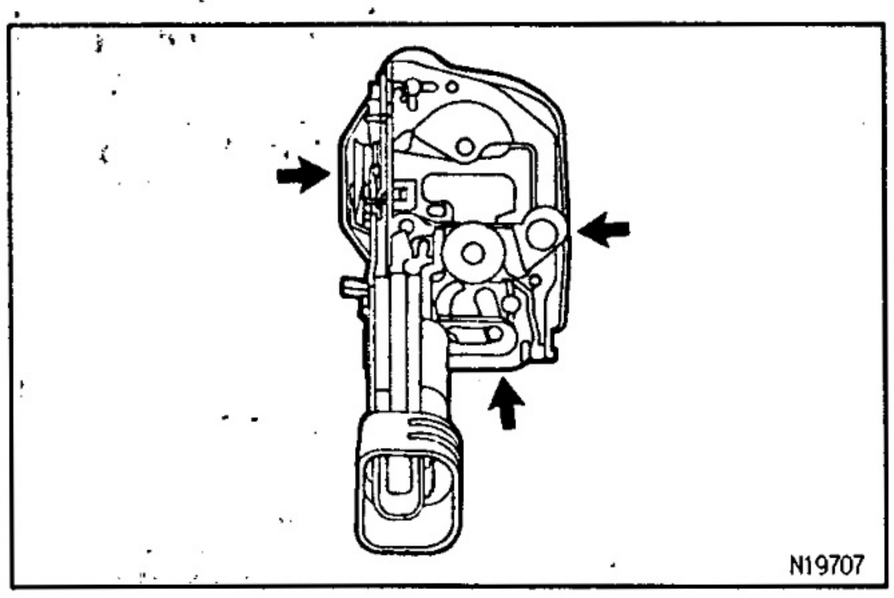

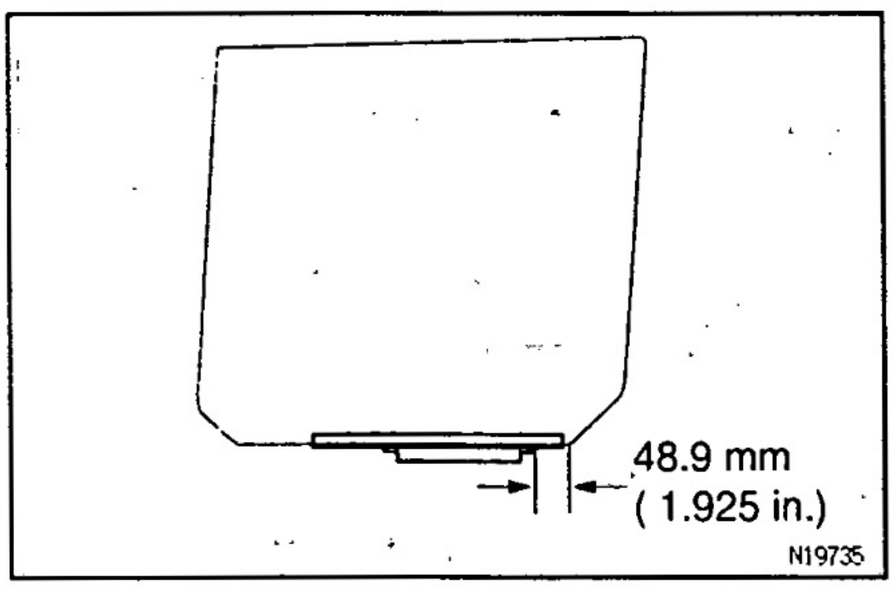

11. REMOVE WINDOW REGULATOR

(a) w/ Power Window:
Disconnect the connector, then remove the 4 bolts and window regulator.
Torque: 4.9 N·m (50 kgf·cm, 43 in.·lbf)

(b) w/o Power Window:
Remove the 3 bolts and window regulator.
Torque: 4.9 N·m (50 kgf·cm, 43 in.·lbf)
HINT: Remove the regulator though the service hole.
ASSEMBLY HINT: Apply MP grease to the window regulator.

12. REMOVE DOOR LOCK

(a) Remove the door lock control knob and holder.
(b) Disconnect the control links from the door lock.
(c) Remove the screw, grommet, clamp and control links.
(d) w/ Power Window:
Disconnect the connector.
(e) Remove the door inside locking link protector.
(f) Remove the 3 screws.
Torque: 4.9 N·m (50 kgf·cm, 43 in.·lbf)
ASSEMBLY HINT: Apply adhesive to 3 screws.
Part No.08833–00070, THREE BOND 1324, or equivalent.
(g) Remove the door lock through the service hole.
ASSEMBLY HINT: Apply MP grease to the sliding surface to the door lock.

13. REMOVE OUTSIDE HANDLE
Torque: 4.9 N·m (50 kgf·cm, 43 in.·lbf)

BO

REAR DOOR GLASS REPLACEMENT

BO2N6–01

1. REMOVE DOOR GLASS ACCESSARY SET WITH SCREWDRIVER OR LIKE OBJECT
2. APPLY SOAPY WATER TO INSIDE OF WEATHERSTRIP
3. INSTALL DOOR GLASS ACCESSARY SET BY TAPPING IT WITH PLASTIC HAMMER

REAR DOOR ASSEMBLY

BO2N7–01

Assembly is in the reverse order of disassembly.

BACK DOOR
COMPONENTS

BO2NB-01

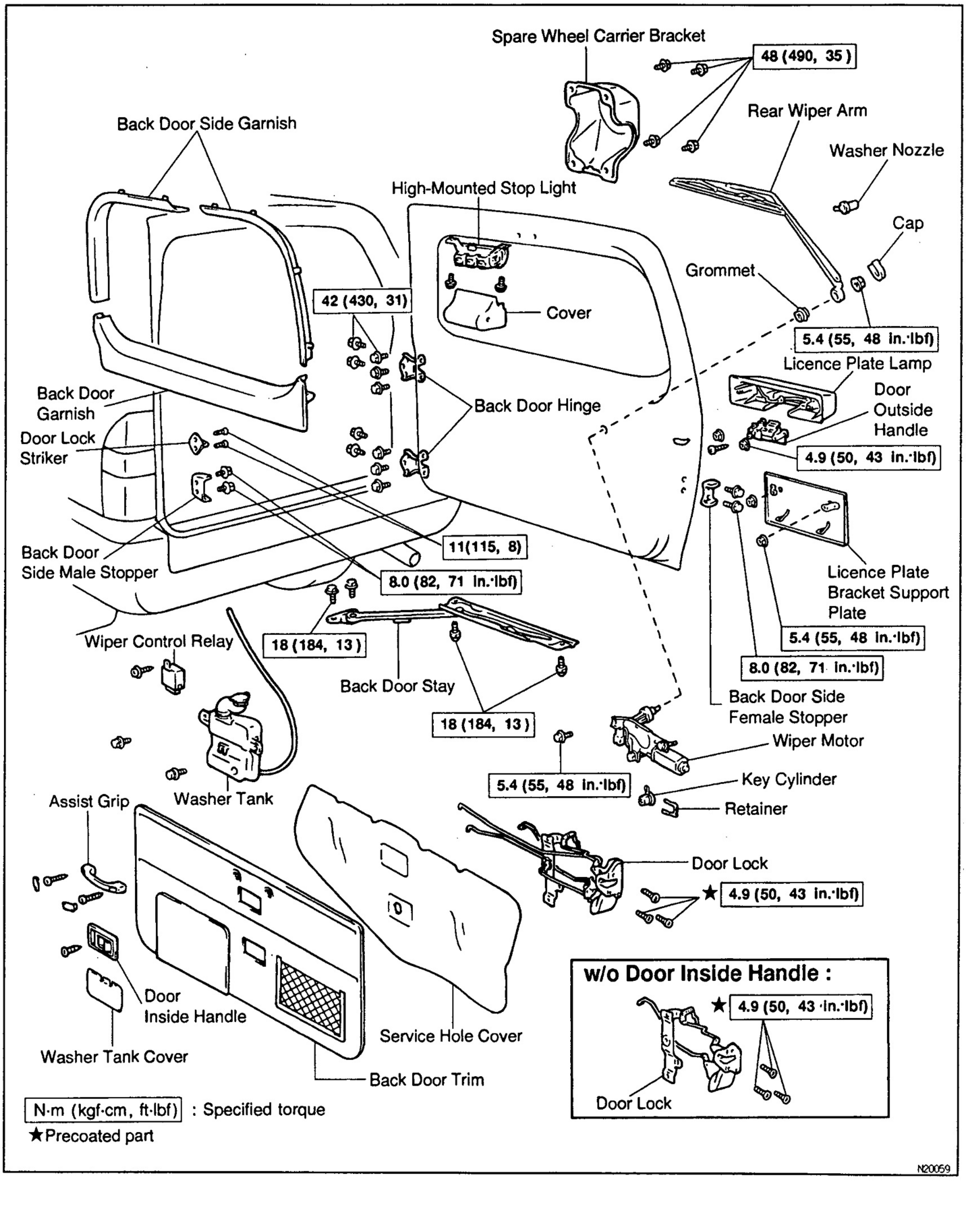

BO

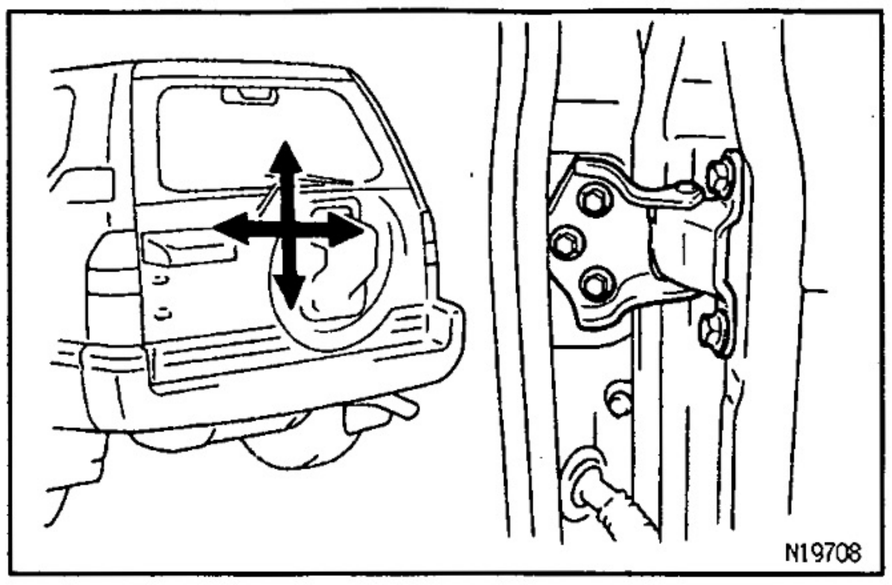

BO2ND-01

BACK DOOR ADJUSTMENT

1. ADJUST DOOR IN FORWARD/REARWARD DIRECTIONS

Adjust the door by slightly loosening the hinge bolts of the body side.

Torque: 42 N·m (430 kgf·cm, 31 ft·lbf)

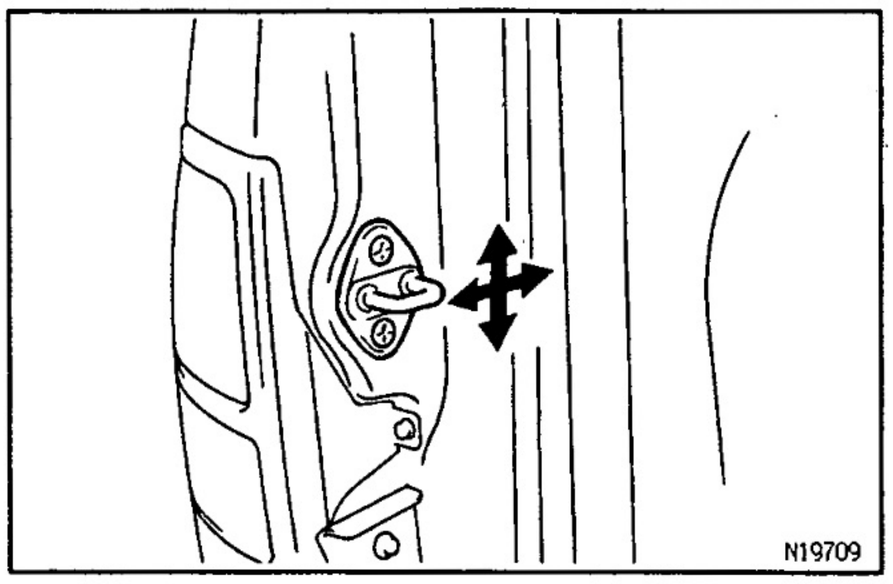

2. ADJUST DOOR LOCK STRIKER

(a) Loosen the striker mounting screws to adjust it.

Torque: 11 N·m (115 kgf·cm, 8 ft·lbf)

(b) Using a plastic hammer, tap the striker to adjust it.

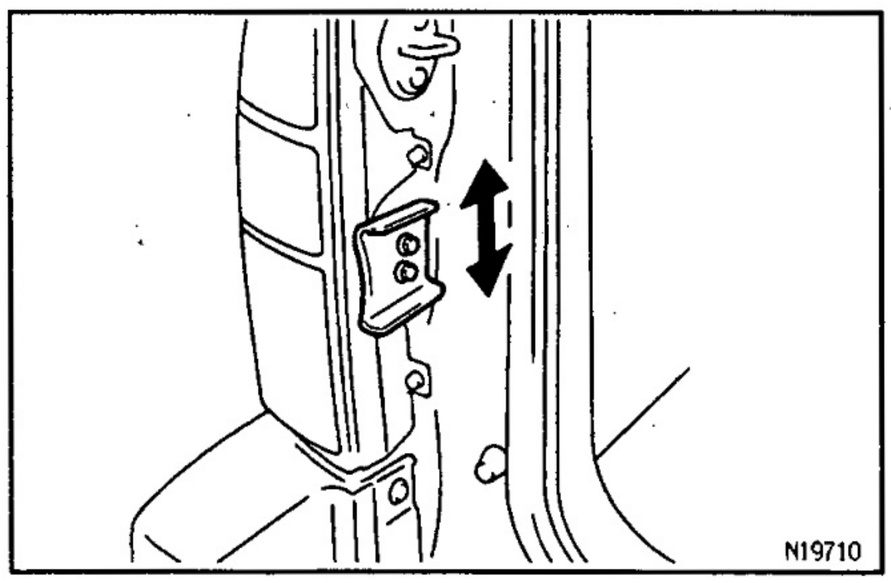

3. ADJUST BACK DOOR SIDE MALE STOPPER

Loosen the stopper mounting bolts to adjust.

Torque: 8.0 N·m (82 kgf·cm, 71 in.·lbf)

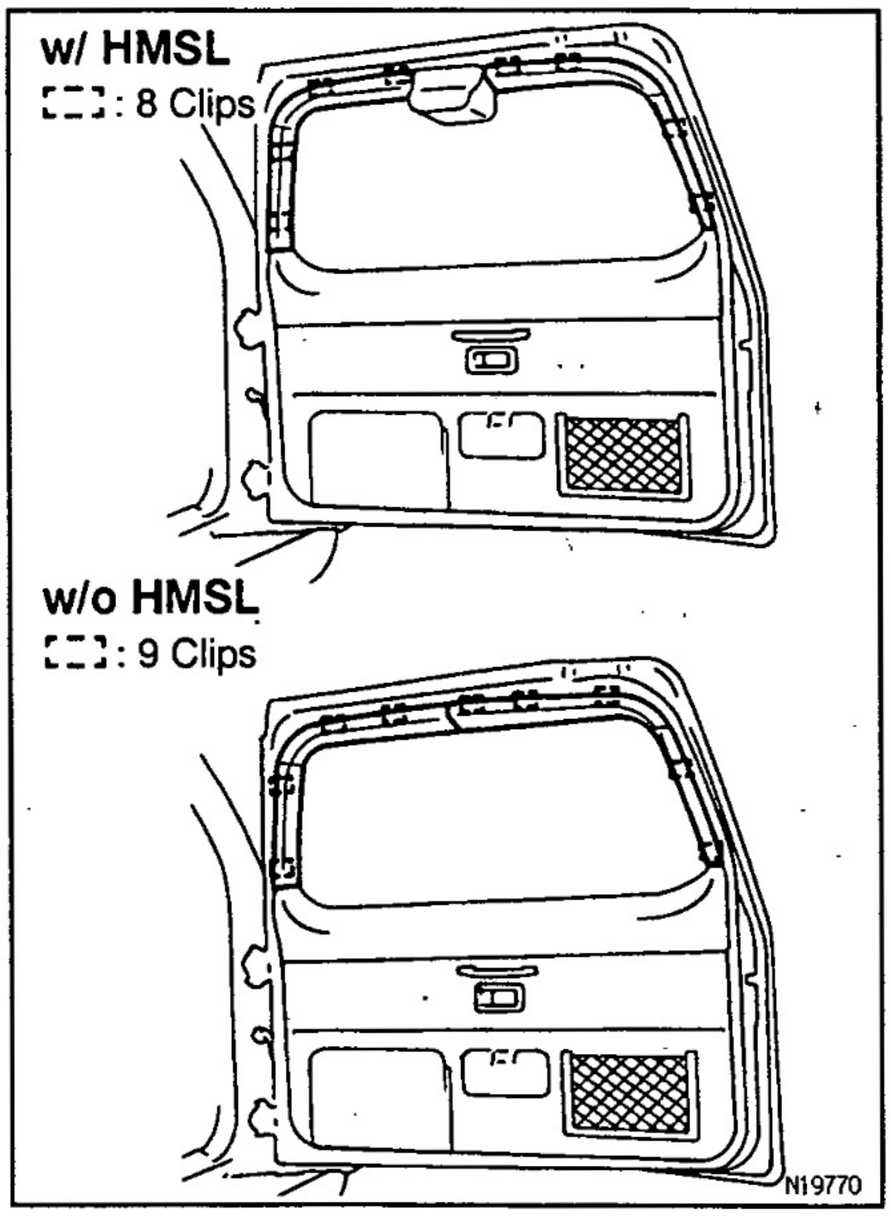

BO2NF-01

BACK DOOR DISASSEMBLY

1. REMOVE BACK DOOR SIDE GARNISH

Using a screwdriver, remove the back door side garnish as shown in the illustration.

HINT: Tape the screwdriver tip before use.

BO

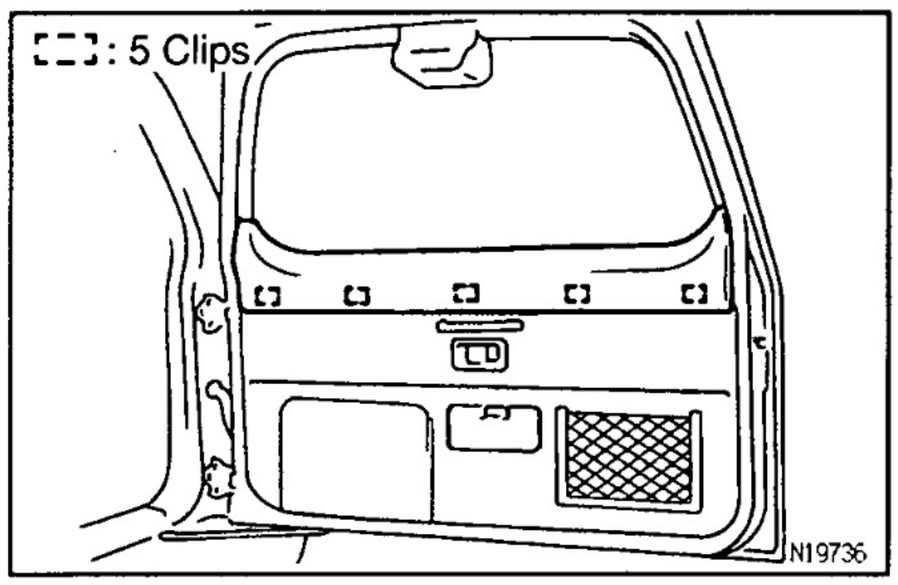

2. REMOVE BACK DOOR GARNISH

Using a screwdriver, remove the back door garnish.

HINT: Tape the screwdriver tip before use.

3. REMOVE THESE PARTS:

(a) w/ High–Mounted Stop Light:
High–mounted stop light

(b) Assist grip

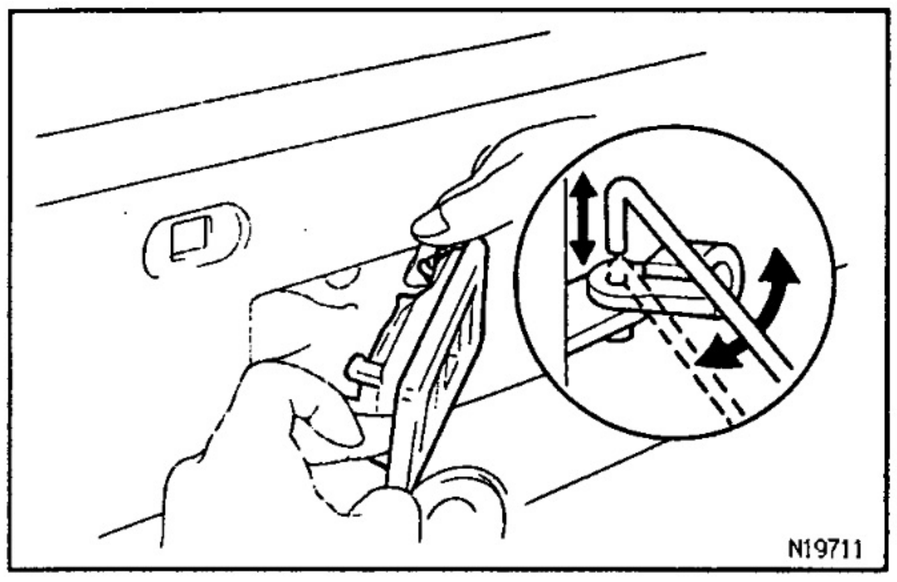

4. w/ Door Inside Handle:
REMOVE DOOR INSIDE HANDLE

(a) Remove the screw and slide the door inside handle.

(b) Disconnect the control links and remove it.

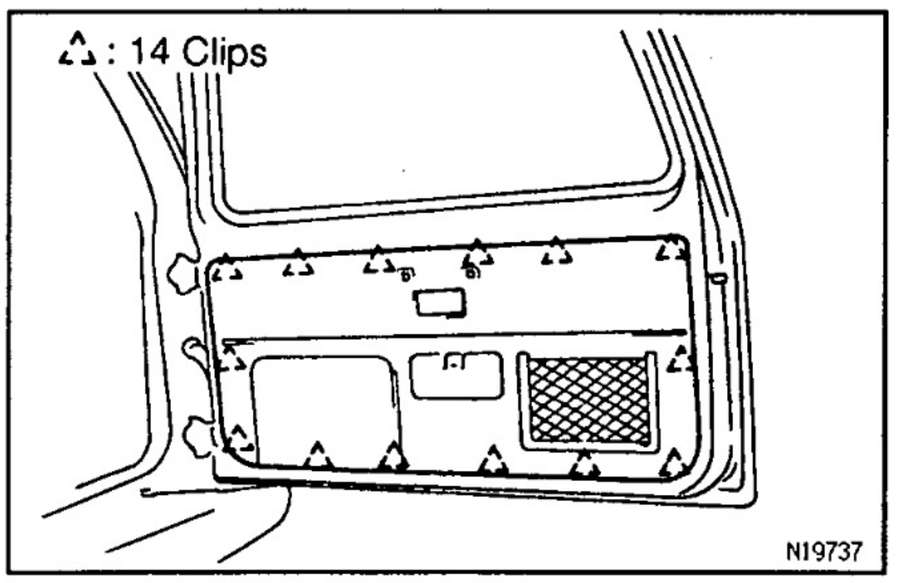

5. REMOVE DOOR TRIM

(a) Insert a screwdriver between the door and door trim to pry out.

NOTICE: Be careful not to damage the door and door trim.

HINT: Tape the screwdriver tip before use.

(b) Pull the trim to remove it.

6. REMOVE SERVICE HOLE COVER

(See page BO–12)

7. REMOVE THESE PARTS:

(a) Wiper control relay

(b) Rear wiper arm

Torque: 5.4 N·m (55 kgf·cm, 48 in.·lbf)

(c) Wiper motor

(See page BO–22)

Torque: 5.4 N·m (55 kgf·cm, 48 in.·lbf)

8. REMOVE DOOR LOCK

(a) w/ Door Inside Handle:
Remove the LH back door control handle link.

(b) Disconnect the link from the outside handle, then remove the 2 screws and back door control handle link.

(c) w/ Power Door Lock:
Disconnect the connector.

(d) Remove the 3 screws and door lock.

Torque: 4.9 N·m (50 kgf·cm, 43 in.·lbf)

ASSEMBLY HINT: Apply adhesive to the 3 screws.

Part No.08833–00070, THREE BOND 1324 or equivalent.

w/ Door Inside Handle

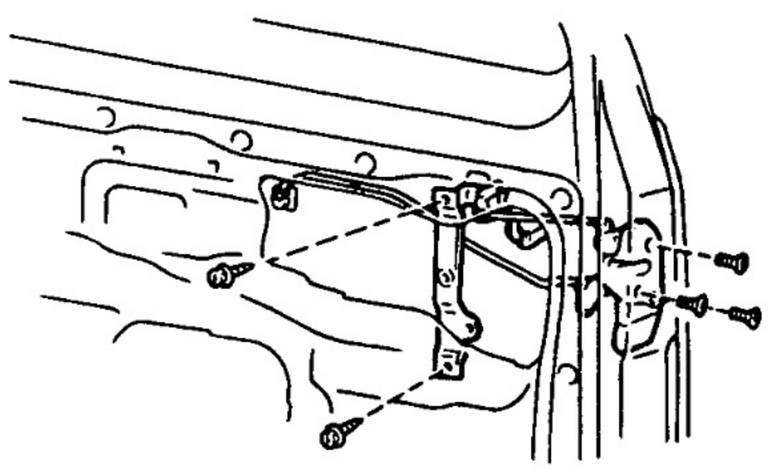

w/o Door Inside Handle

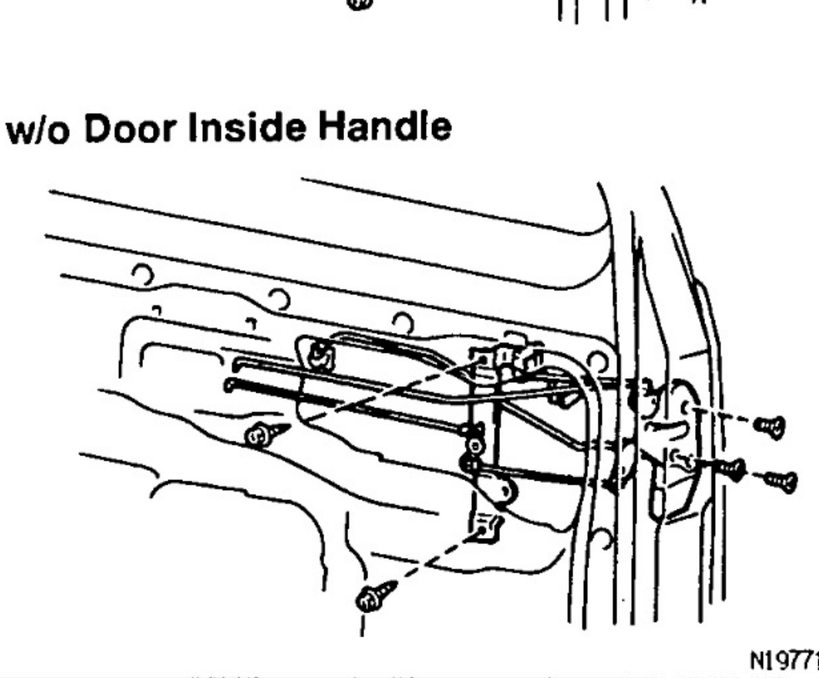

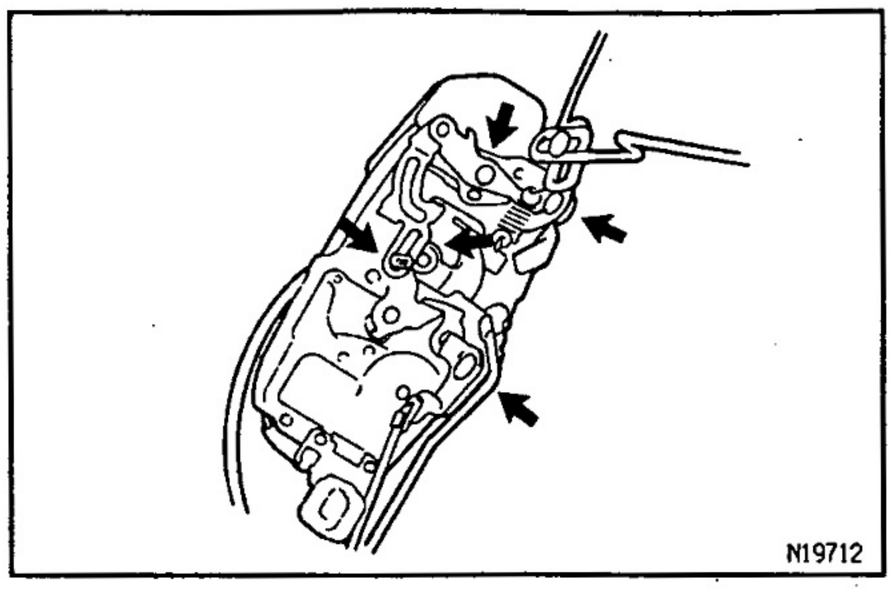

ASSEMBLY HINT: Apply MP grease to the sliding surface of the door lock.

9. REMOVE LICENSE PLATE LAMP WITH OUTSIDE HANDLE

(a) Disconnect the connector.

(b) Remove the 2 nuts and license plate lamp with outside handle.

Torque: 4.9 N·m (50 kgf·cm, 43 in.·lbf)

10. REMOVE THESE PARTS:

(a) Back door lock cylinder

(b) Washer nozzle and tank

(c) Spare wheel carrier bracket

Torque: 48 N·m (490 kgf·cm, 35 ft·lbf)

(d) Europe, Australia:
Rear license plate bracket support plate

(e) Back door stay

Torque: 18 N·m (184 kgf·cm, 13 ft·lbf)

(f) Back door side female stopper

Torque: 8.0 N·m (82 kgf·cm, 71 in.·lbf)

BO

BO2NH-01

BACK DOOR ASSEMBLY

Assembly is in the reverse order of disassembly.

WIPER AND WASHER
COMPONENTS

B02NL-01

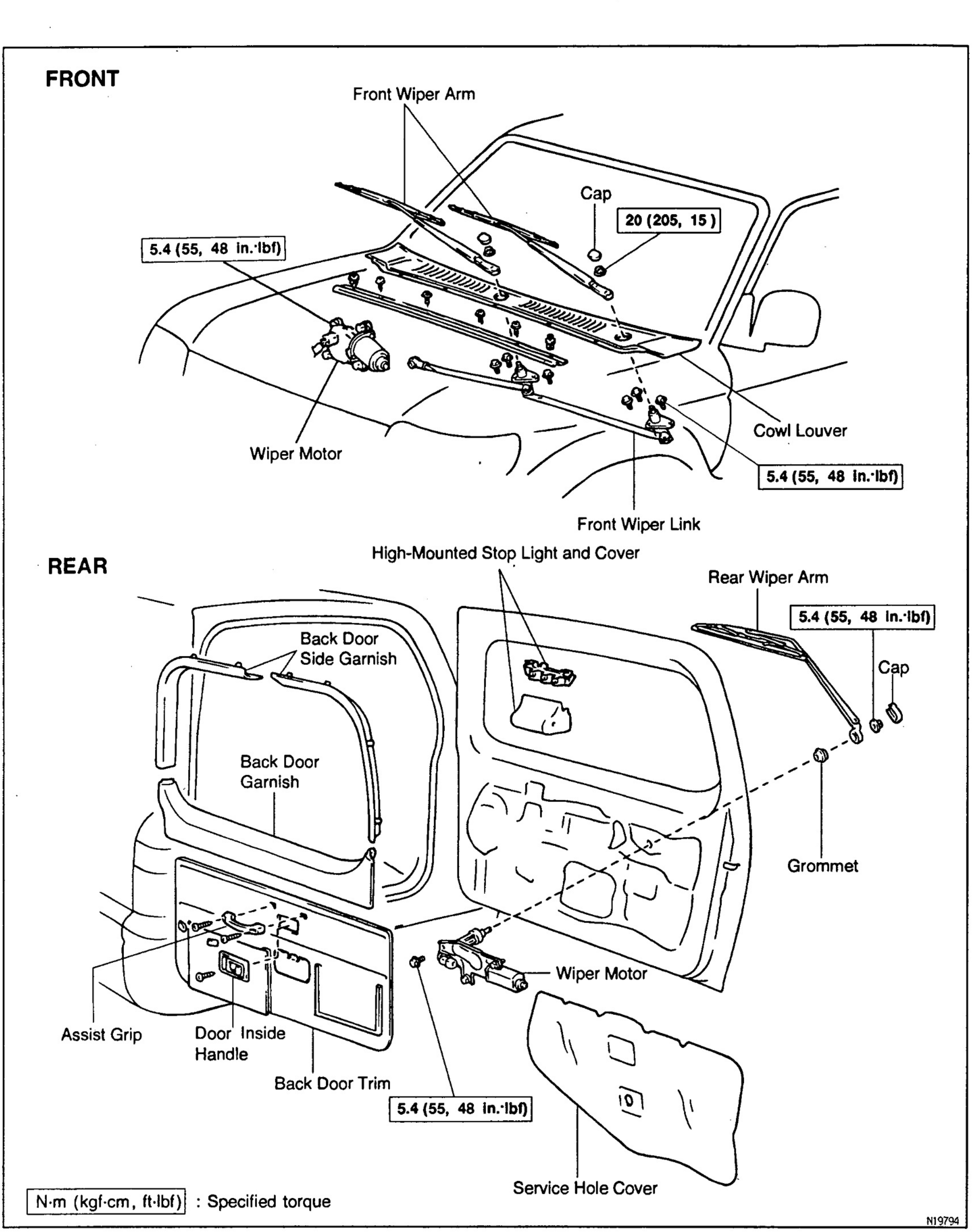

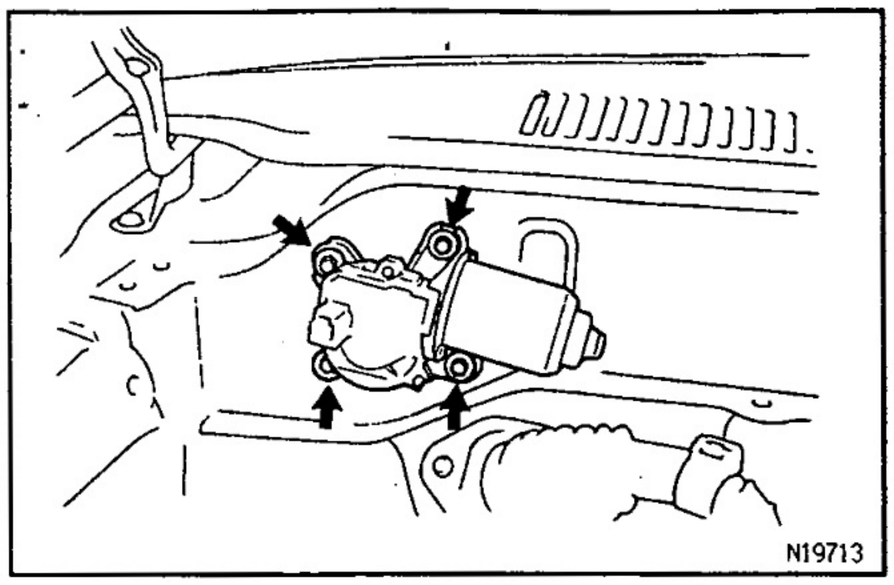

BO2NN-01

FRONT WIPER REMOVAL

1. REMOVE THESE PARTS:

(a) Wiper arms

(b) Cowl louver

2. REMOVE WIPER MOTOR

(a) Disconnect the connector, then unfasten the 4 bolts.

(b) Remove the wiper motor.

3. REMOVE WIPER LINK

BO2NO-01

FRONT WIPER INSTALLATION

1. INSTALL THESE PARTS:

(a) Wiper link

Torque: 5.4 N·m (55 kgf·cm, 48 in.·lbf)

(b) Wiper motor

Torque: 5.4 N·m (55 kgf·cm, 48 in.·lbf)

(c) Cowl louver

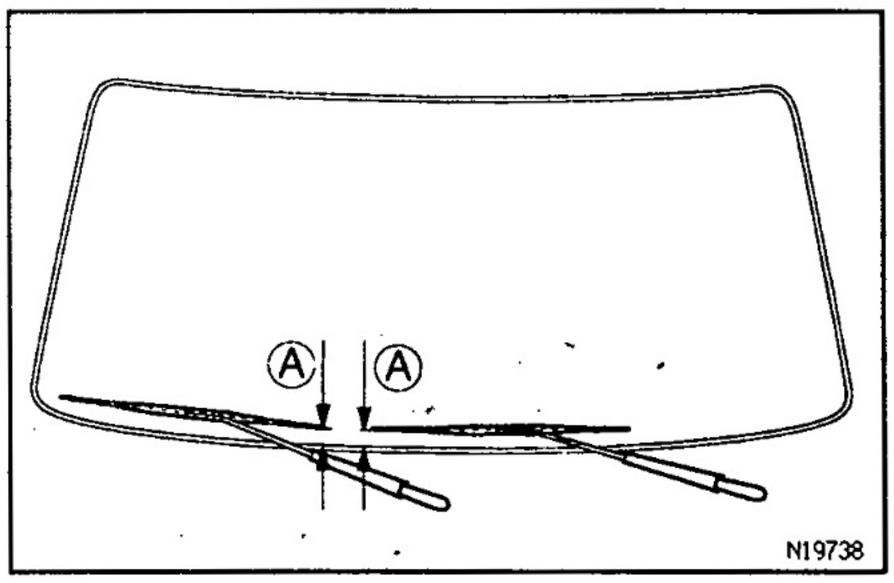

2. INSTALL FRONT WIPER ARM

(a) Install the wiper arms and operate the wipers once and turn the wiper switch OFF.

(b) Adjust the installation positions of the wiper arms to positions as shown in the illustration.

Ⓐ Approx. 25 ± 10 mm (0.98 ± 0.39 in.)

(c) Torque the nuts.

Torque: 20 N·m (205 kgf·cm, 15 ft·lbf)

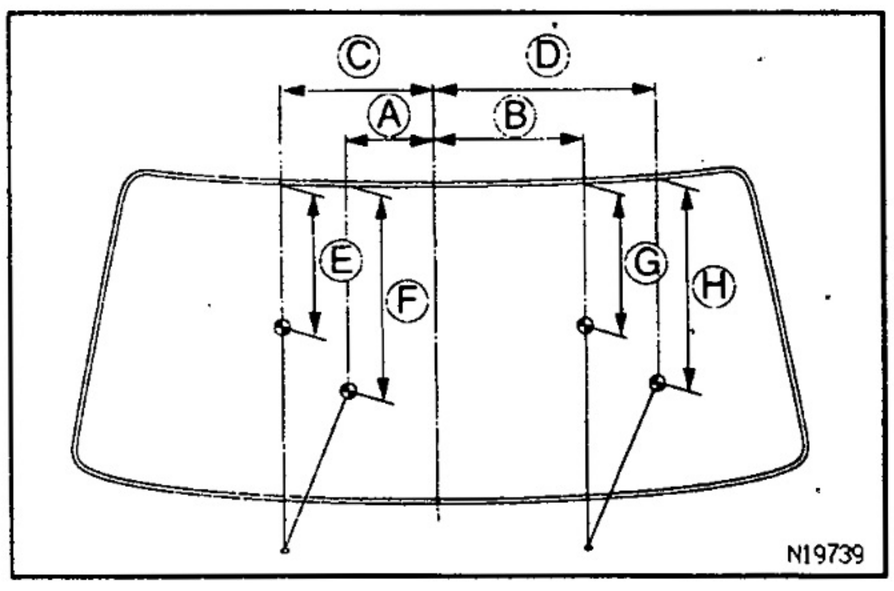

BO2NR-01

FRONT WASHER NOZZLE ADJUSTMENT

1. INSPECT FRONT WASHER NOZZLE

(a) While operating the washer, check that both point where the washer fluid from the upper nozzles hits the windshield, and the upsurge area are within the range indicated by the arrow.

Ⓐ Approx. 175 mm (6.89 in.)

Ⓑ Approx. 300 mm (11.81 in.)

Ⓒ Approx. 315 mm (12.40 in.)

Ⓓ Approx. 450 mm (17.72 in.)

Ⓔ Approx. 265 mm (10.43 in.)

Ⓕ Approx. 465 mm (18.31 in.)

Ⓖ Approx. 270 mm (10.63 in.)

Ⓗ Approx. 430 mm (16.93 in.)

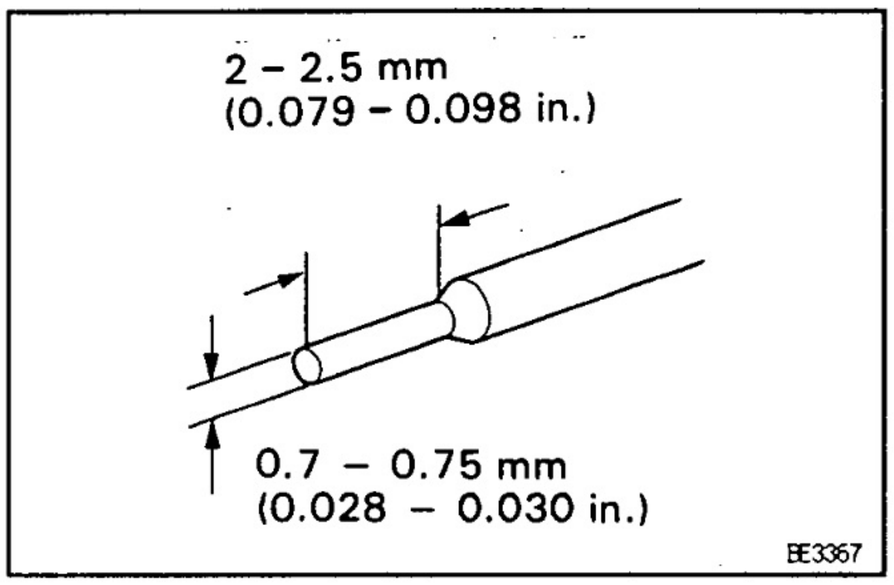

(b) Check if the lower point where the washer fluid hits the windshield is within the range of the wiping pattern (the area of the glass which is wiped by the wiper blades).

2. ADJUST FRONT WASHER NOZZLE

Using a tool like that shown in the illustration, change the direction of the nozzle hole to adjust the point where washer fluid strikes the windshield.

BO2NT–01

REAR WIPER REMOVAL

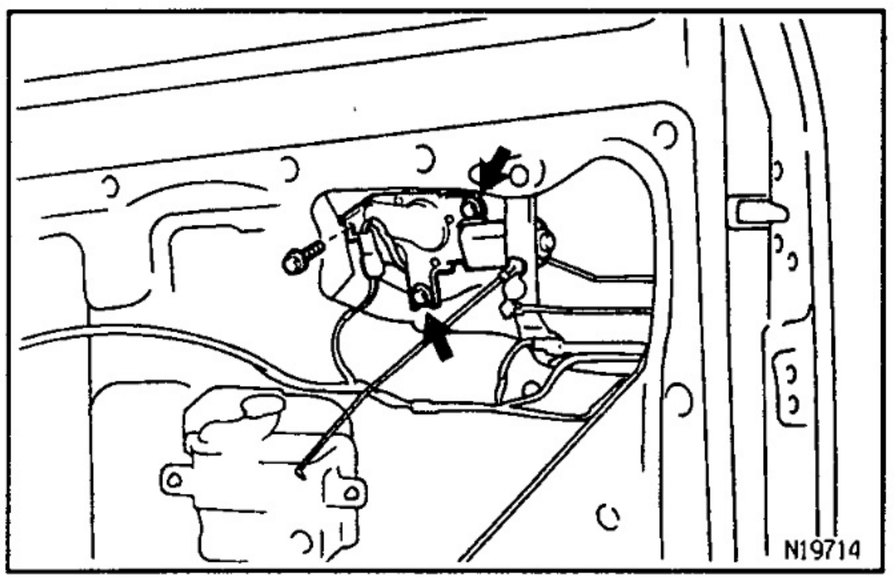

1. REMOVE THESE PARTS:
(See page BO–18)
(a) Back door side garnishes
(b) Back door garnishes
(c) High–mounted stop light
(d) Assist grip
(e) w/ Door Inside Handle:
Door inside handle
(f) Back door trim
(g) Service hole cover

2. REMOVE WIPER ARM
(a) Remove the cap and nut.
(b) Remove wiper arm.

3. REMOVE WIPER MOTOR AND CONTROL RELAY
(a) Disconnect the connector, then remove the screw and control relay.
(b) Disconnect the connector, then remove the bolt.
(c) Unfasten the 2 bolts and wiper motor.

BO2NV–01

REAR WIPER INSTALLATION

1. INSTALL THESE PARTS:
(a) Wiper motor
Torque: 5.4 N·m (55 kgf·cm, 48 in.·lbf)
(b) Control relay

2. INSTALL THESE PARTS:
(a) Service hole cover
(b) Back door trim
(c) w/ Door Inside Handle:
Door inside handle
(d) Assist grip
(e) High–mounted stop light
(f) Back door garnish
(g) Back door side garnishes

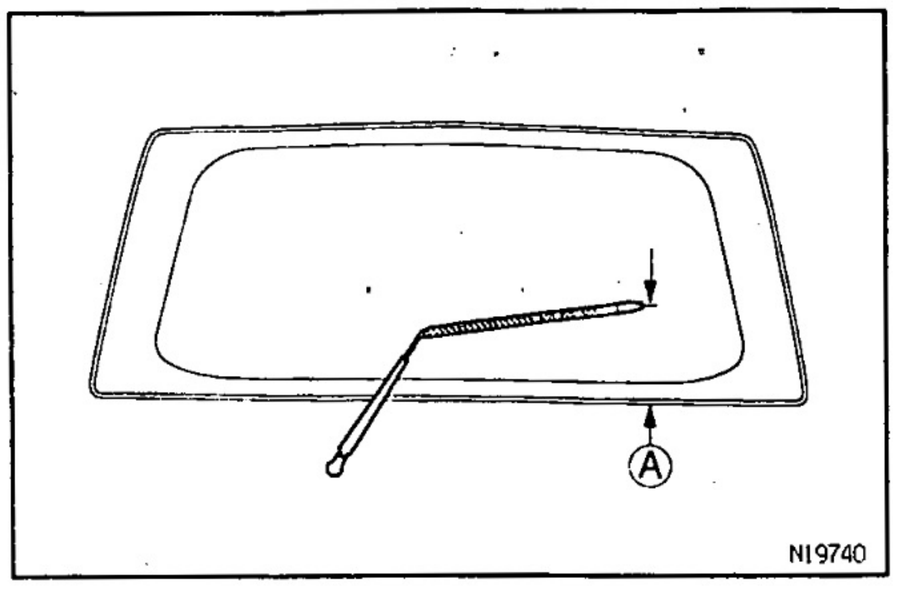

3. INSTALL WIPER ARM

(a) Install the wiper arm and operate the wipers once and turn the wiper switch OFF.

(b) Adjust the installation positions of the wiper arm to the positions shown in the illustration.
Ⓐ Approx. 130 ± 70 mm (5.12 ± 2.76 in.)

(c) Torque the nut.
Torque: 5.4 N·m (55 kgf·cm, 48 in.·lbf)

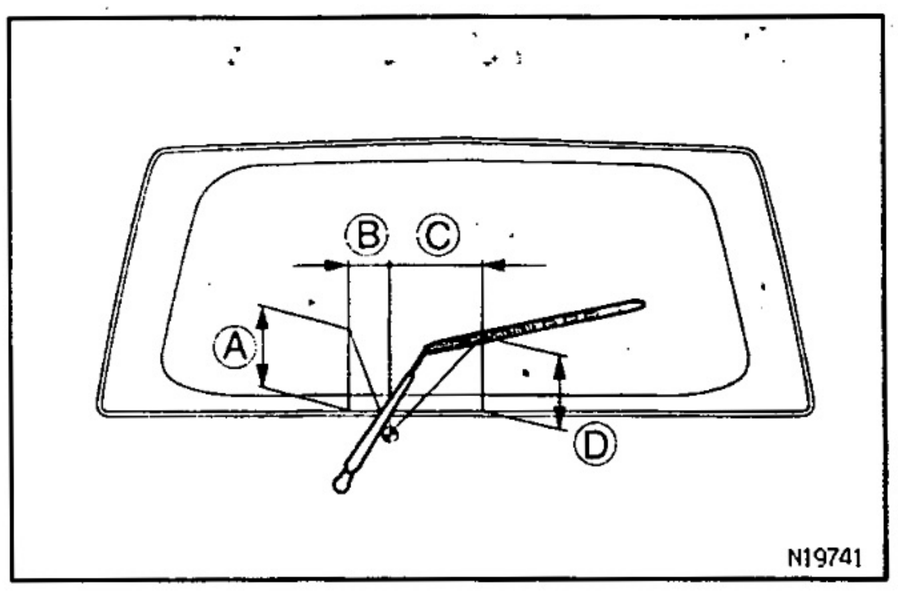

REAR WASHER NOZZLE ADJUSTMENT

B03NX-01

INSPECT REAR WASHER NOZZLE

While operating the washer, check whether the point where the washer fluid hits the back door glass and the upsurge area are within the range indicated by the hatched line.

Ⓐ Approx. 180 mm (7.09 in.)
Ⓑ Approx. 80 mm (3.15 in.)
Ⓒ Approx. 110 mm (4.33 in.)
Ⓓ Approx. 170 mm (6.69 in.)

BODY OUTSIDE MOULDING
COMPONENTS

B02P2-01

BO

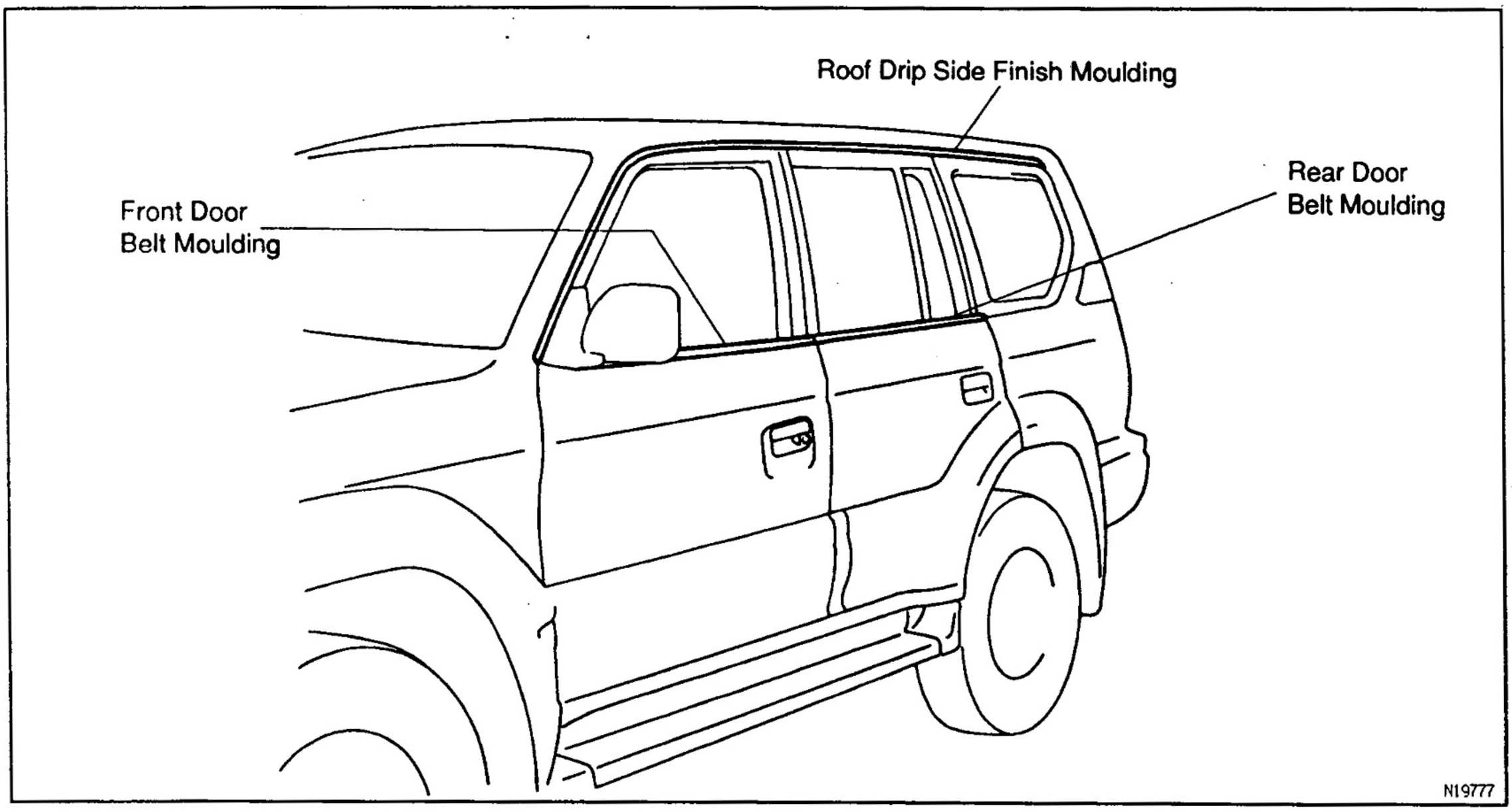

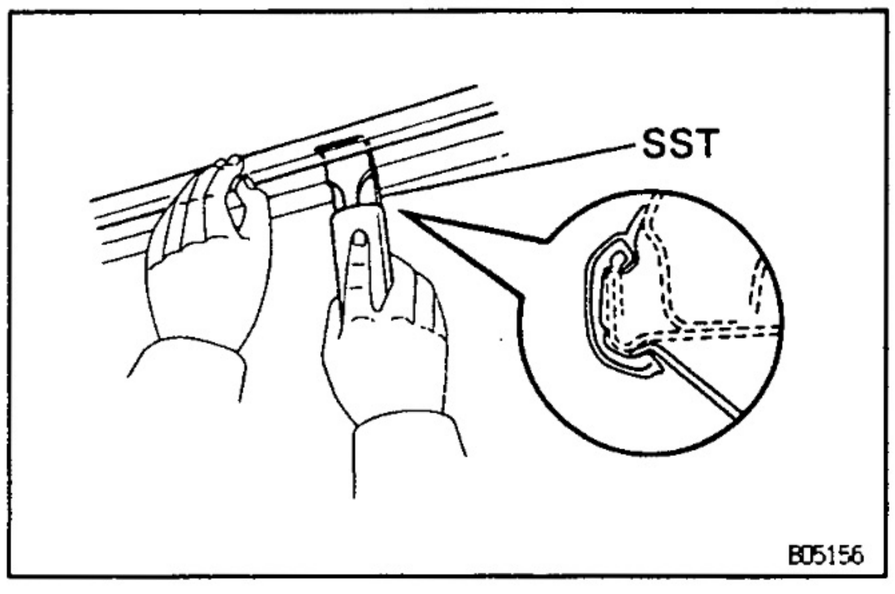

BO2P4-01

ROOF DRIP SIDE FINISH MOULDING REMOVAL

REMOVE ROOF DRIP MOULDING

Using SST, pull off the roof drip moulding from front ends.

SST 09806-30010

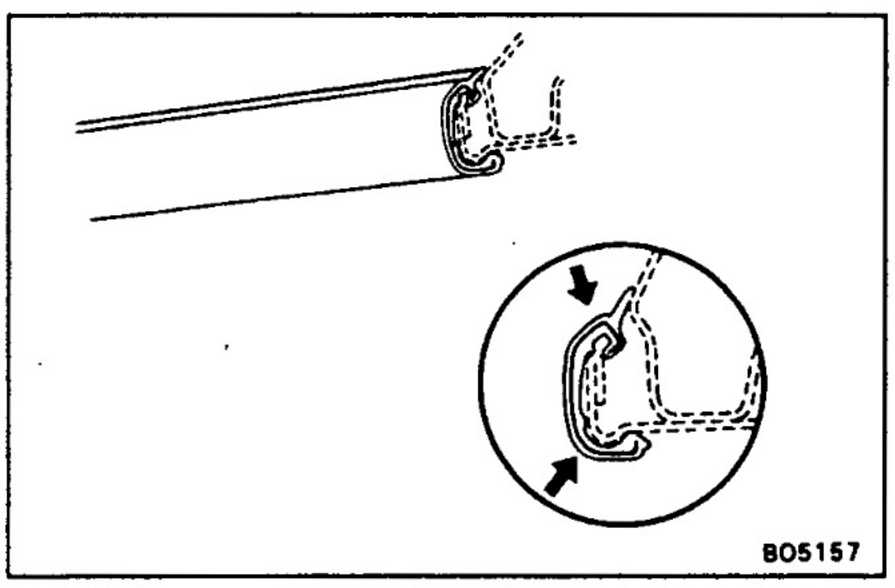

BO2P6-01

ROOF DRIP SIDE FINISH MOULDING INSTALLATION

INSTALL ROOF DRIP MOULDING

Attach the upper edge of the moulding to the body flange. Tap on the moulding by hand.

BO2P8-01

DOOR BELT MOULDING REMOVAL

1. **REMOVE FRONT DOOR BELT MOULDING**
   (See page BO-12)
2. **REMOVE REAR DOOR BELT MOULDING**
   (See page BO-16)

BO

BO2PA-01

DOOR BELT MOULDING INSTALLATION

Installation is in the reverse order of removal.

B02PB-01

COMPONENTS (Cont'd)

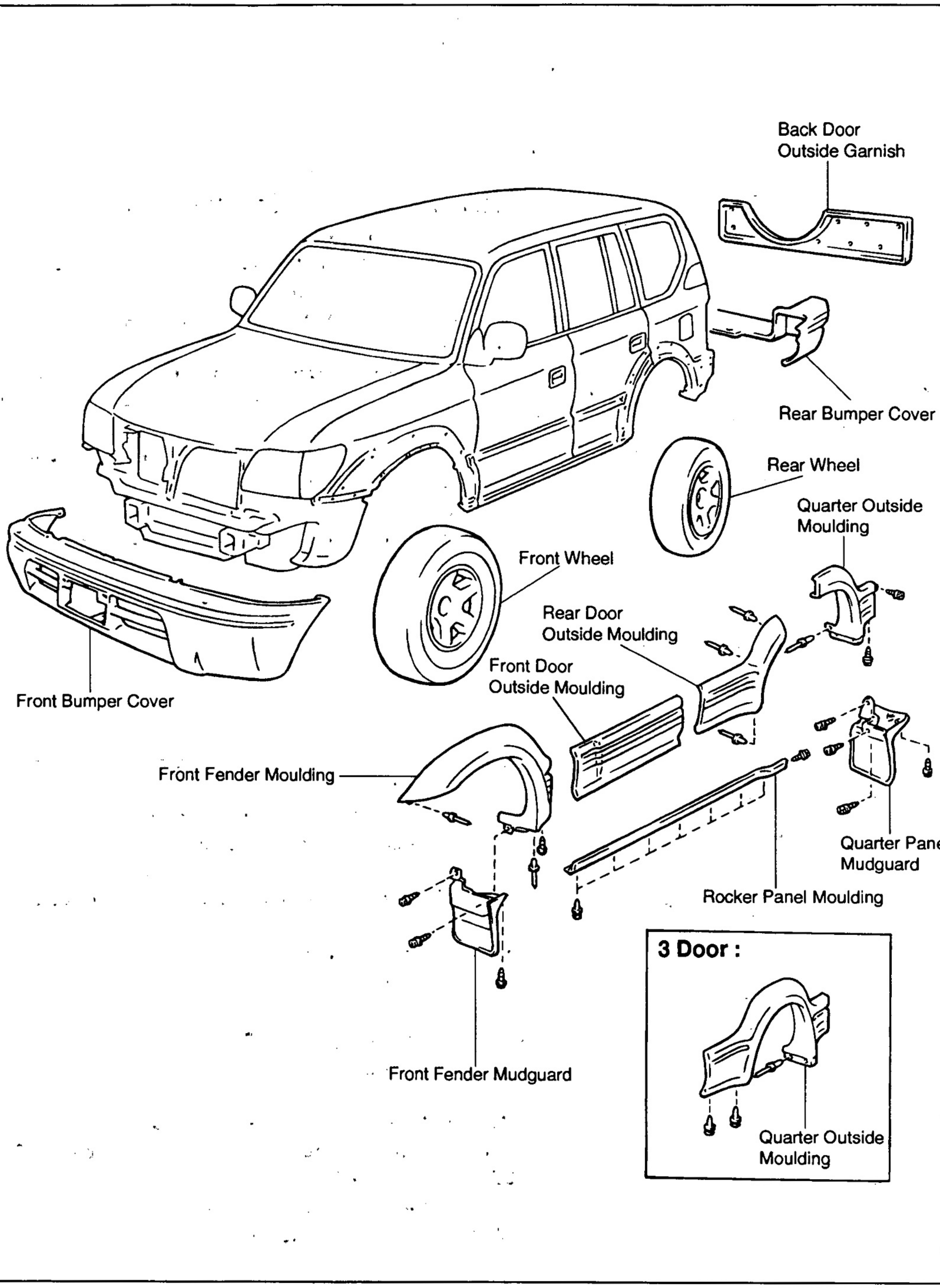

N19782

FRONT FENDER MOULDING REMOVAL

B02PD-01

1. REMOVE THESE PARTS:

(a) Front bumper cover
(See page BO—7)
(b) Front wheel
(c) Side step
(See page BO—77)
(d) Front fender mudguard

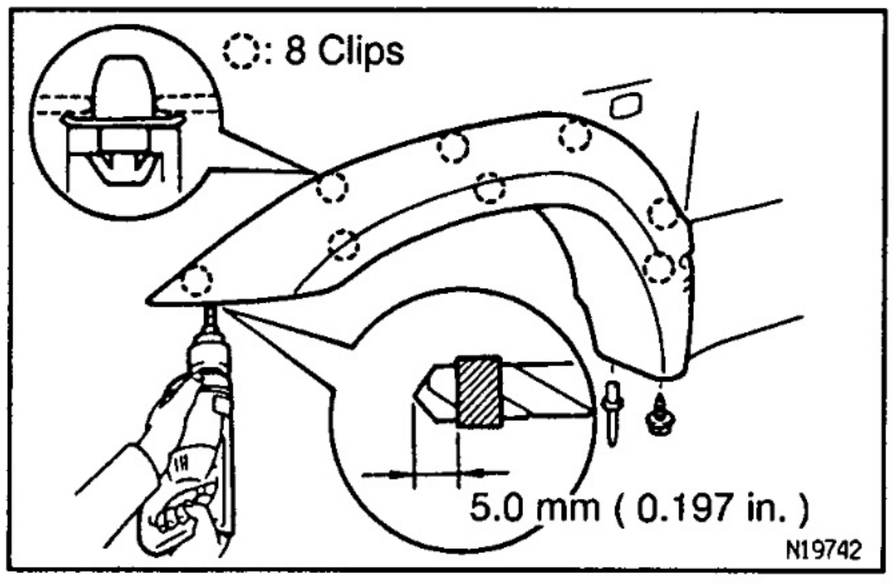

2. REMOVE FRONT FENDER MOULDING

(a) Remove the screw.
(b) Using a drill, cut the flange portion of the rivets.
HINT: Wind tape so that the drill blade appears approx. 5.0 mm (0.197 in.) on the edge.
NOTICE:
- **If the drill is pressed too firmly, the rivet will also rotate with the drill edge, thus its flange will not be cut.**
- **If the drill is pried against the rivet, the installation hole of the rivet may be cut or the drill blade may be damaged.**
- **Use caution against the hot rivet after cut.**

BO

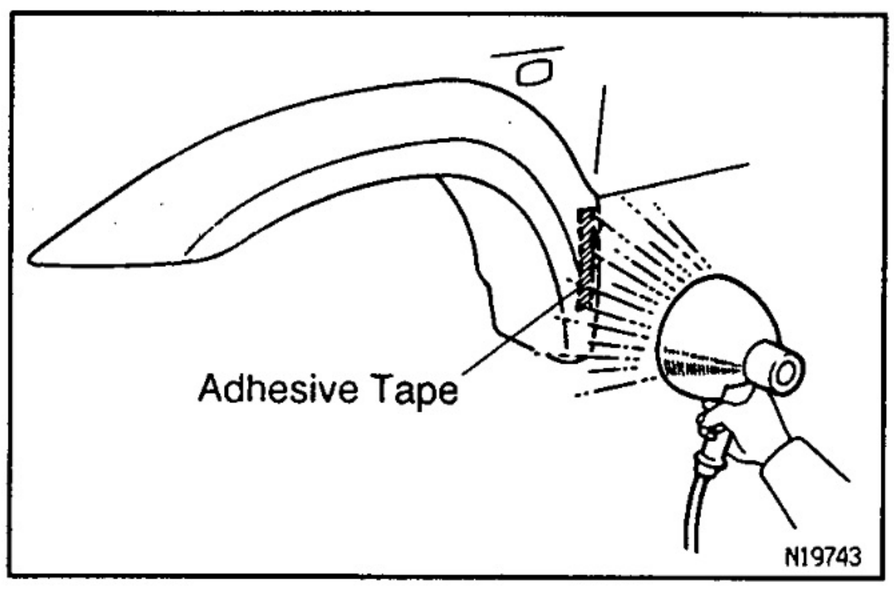

(c) Using a heat light, heat the moulding to 40 — 60 °C (104 — 140 °F).
NOTICE: Do not heat moulding excessively.
(d) Cut the adhesive tape with a knife.
NOTICE:
- **If reusing the moulding, take care not damage the moulding.**
- **Do not to damage the body.**

(e) Remove the moulding.

FRONT FENDER MOULDING INSTALLATION

B02PF-01

1. CLEAN BODY MOULDING SURFACE

(a) Using a heat light, the body moulding surface to 40 — 60 °C (104 — 140 °F).
(b) Remove the adhesive tape from the body.
(c) Wipe off stains with cleaner.

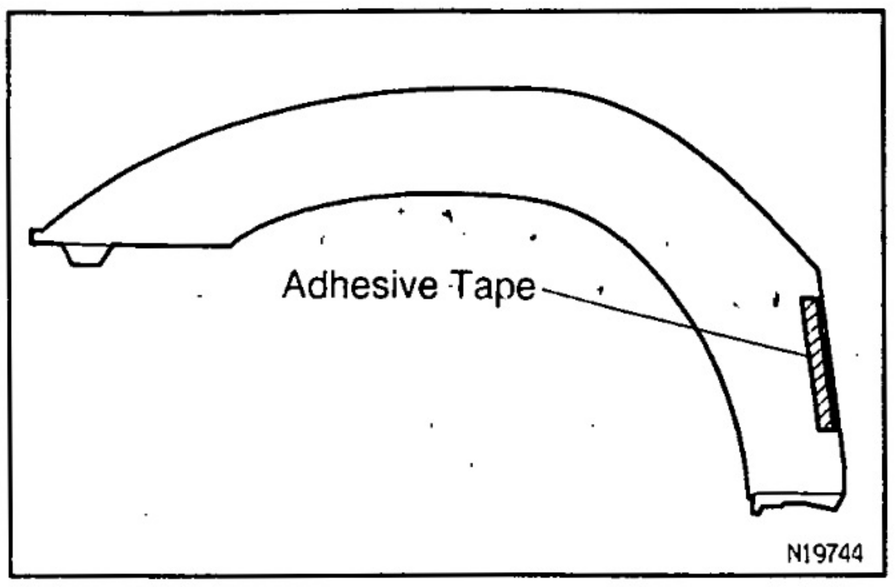

2. CLEAN FRONT FENDER MOULDING

If reusing the moulding:

(a) Using a heat light, heat the moulding to 20 — 30 °C (68 — 86 °F).

NOTICE: Do not hear moulding excessively.

(b) Remove the adhesive tape from the moulding.

(c) Wipe off stains with cleaner.

(d) Apply a new adhesive tape to the moulding as shown in the illustration.

3. INSTALL FRONT FENDER MOULDING

(a) Using a hear light, heat the body and moulding.

Body: 40 — 60 °C (104 — 140 °F)

Moulding: 20 — 30 °C (68 — 86 °F)

NOTICE: Do not heat moulding excessively.

(b) Left the moulding release sheet from the face of moulding.

NOTICE: When the moulding release sheet it removed, make sure that no dirt or dust can get onto the uncoated area.

(c) Align the bosses with their corresponding holes in the body, and press firmly on the moulding.

NOTICE: Do not apply excessive force onto the moulding, but steady pressure with your thumbs.

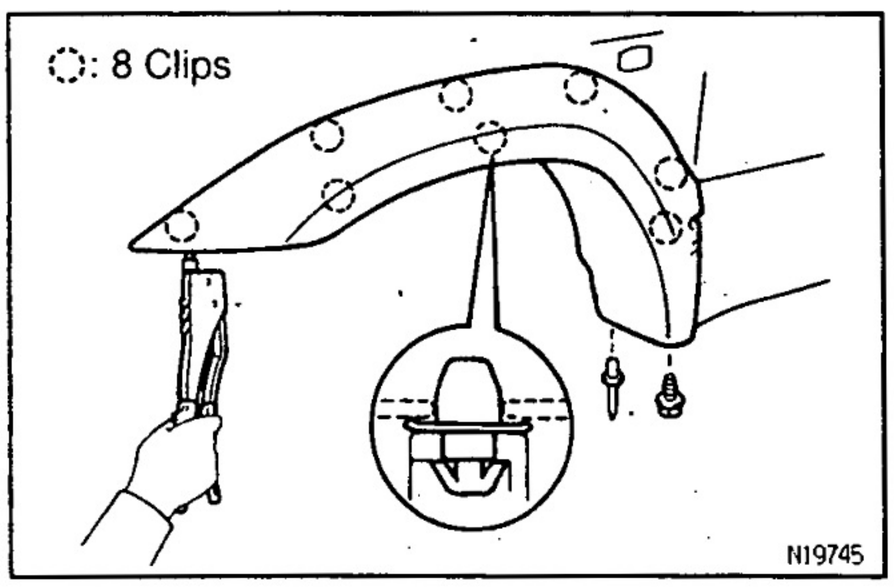

(d) Using a riveter, install the 2 rivets and moulding.

HINT: Install them with the rivet firmly pressed perpendicularly against the installation hole.

(e) Install the screw.

4. INSTALL THESE PARTS:

(a) Front fender mudguard

(b) Side step

(See page BO—77)

(c) Front wheel

(d) Front bumper cover

(See page BO—7)

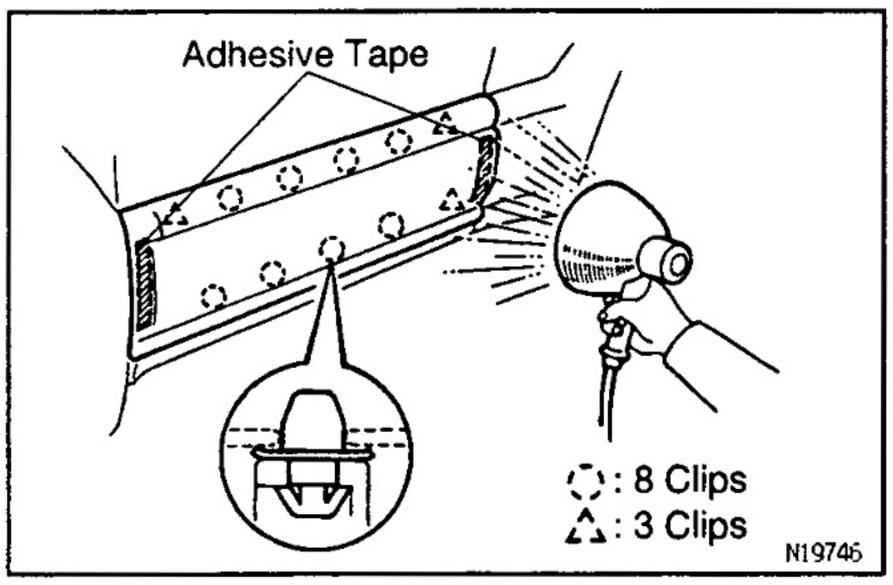

BO2PH-01

FRONT DOOR OUTSIDE MOULDING REMOVAL

1. **REMOVE FRONT DOOR OUTSIDE MOULDING**

(a) Using a heat light, heat the moulding to 40 — 60 °C (104 — 140 °F).
NOTICE: Do not heat moulding excessively.

(b) Cut the adhesive tape with a knife.
NOTICE:
- **If reusing the moulding, take care not to damage the moulding.**
- **Do not damage the body.**

(c) Remove the moulding.

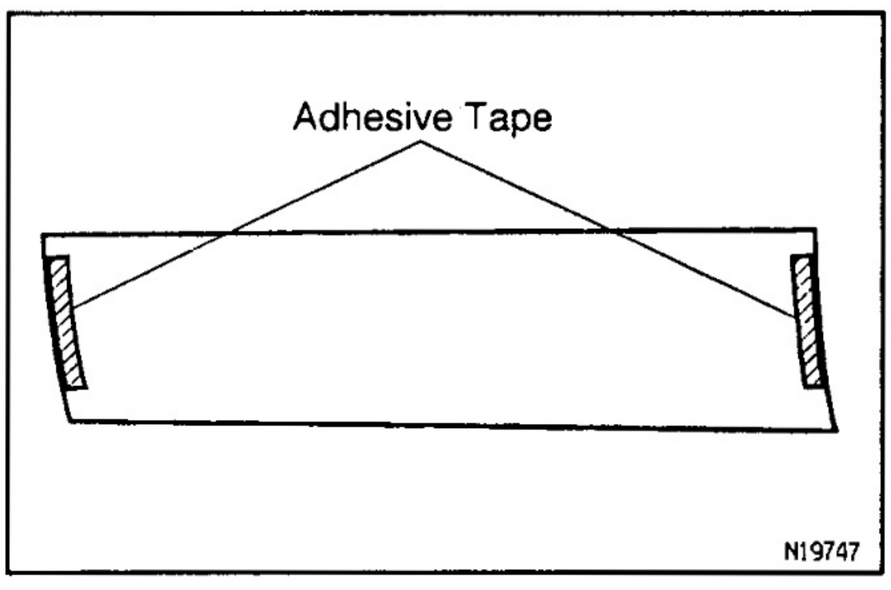

BO2PJ-01

FRONT DOOR OUTSIDE MOULDING INSTALLATION

1. **CLEAN BODY MOULDING SURFACE**
(See page BO—28)
2. **CLEAN FRONT DOOR OUTSIDE MOULDING**
(See page BO—29)
3. **INSTALL FRONT DOOR OUTSIDE MOULDING**

(a) Using a heat light, heat the body and moulding.
Body: 40 — 60 °C (104 — 140 °F)
Moulding: 20 — 30 °C (68 — 86 °F)
NOTICE: Do not heat moulding excessively.

(b) Lift the moulding release sheet from face of moulding.
NOTICE: When the moulding release sheet is removed, make sure that no dirt or dust can get onto the uncoated area.

(c) Align the bosses with their corresponding holes in the body, and press firmly on the moulding.
NOTICE: Do not apply excessive force onto the moulding, but steady pressure with your thumbs.

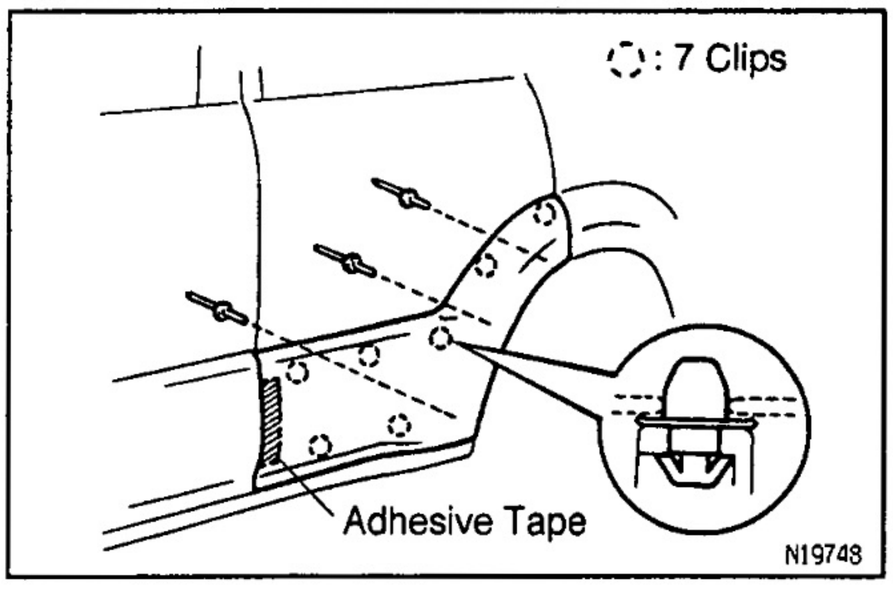

BO2PK-01

REAR DOOR OUTSIDE MOULDING REMOVAL (5 DOOR)

REMOVE REAR DOOR OUTSIDE MOULDING
(See page BO—28)

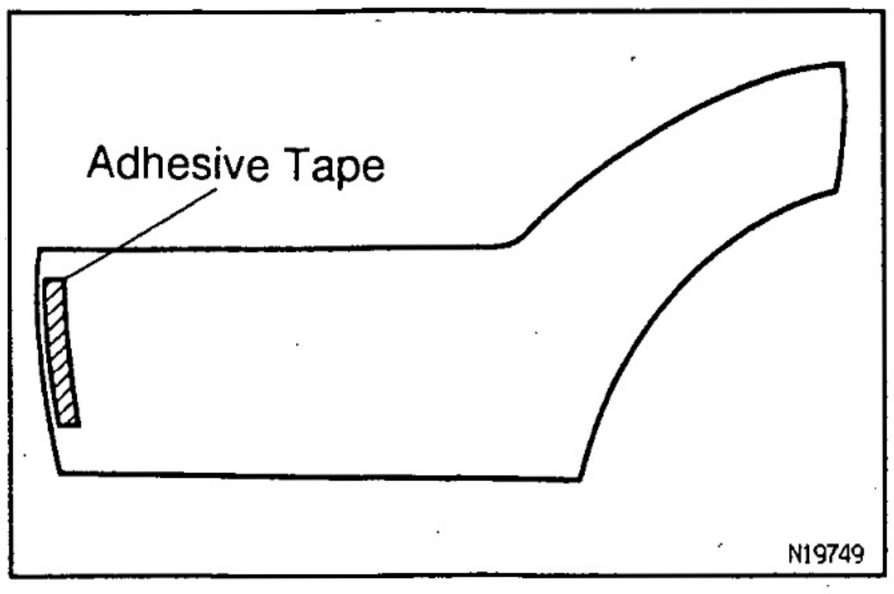

BO2PL-01

REAR DOOR OUTSIDE MOULDING INSTALLATION (5 DOOR)

1. CLEAN BODY MOULDING SURFACE
   (See page BO-28)
2. CLEAN REAR DOOR OUTSIDE MOULDING
   (See page BO-29)
3. INSTALL REAR DOOR OUTSIDE MOULDING
   (See page BO-29)

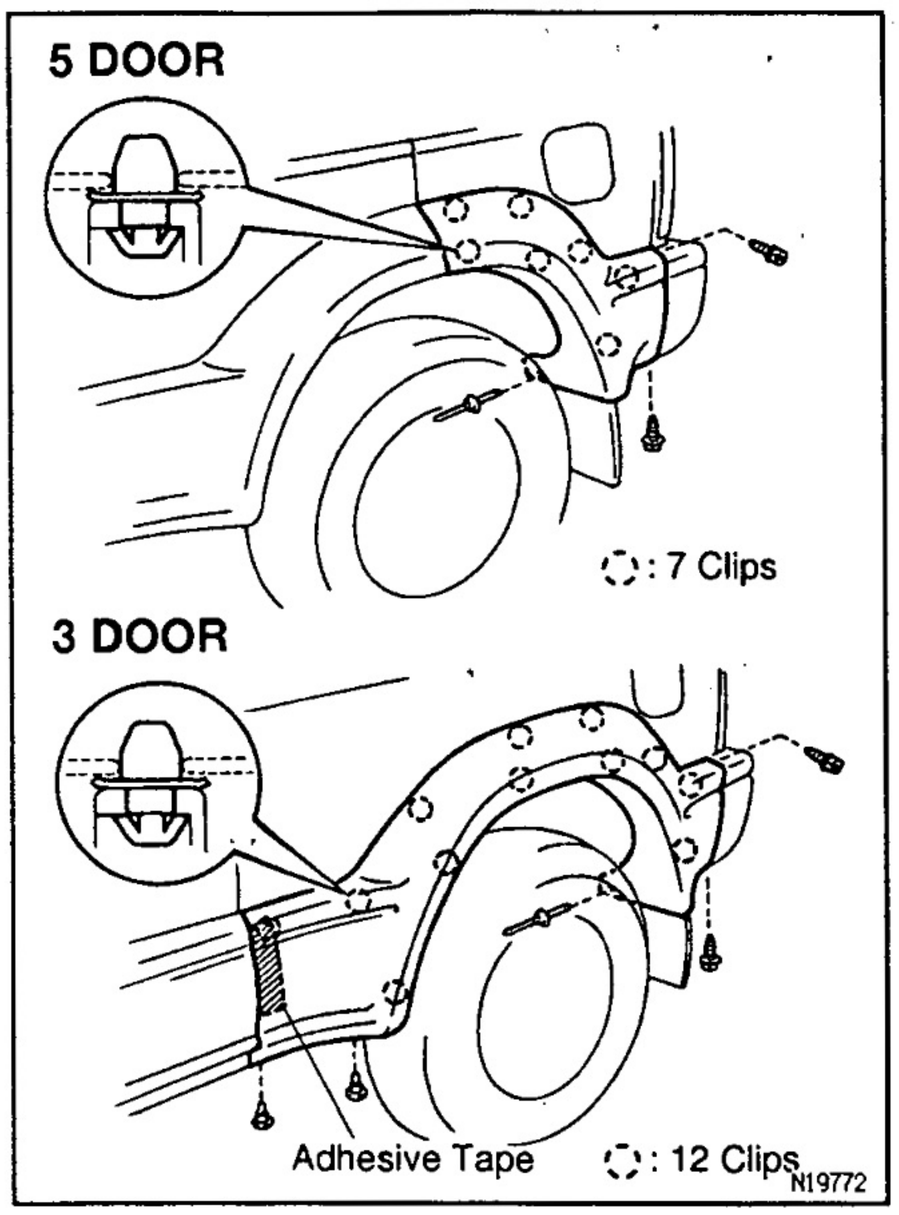

BO2PM-01

QUARTER OUTSIDE MOULDING REMOVAL

1. REMOVE THESE PARTS:
(a) Rear bumper cover
   (See page BO-8)
(b) Rear wheel
(c) Quarter panel mudguard
2. REMOVE QUARTER OUTSIDE MOULDING
   (See page BO-28)

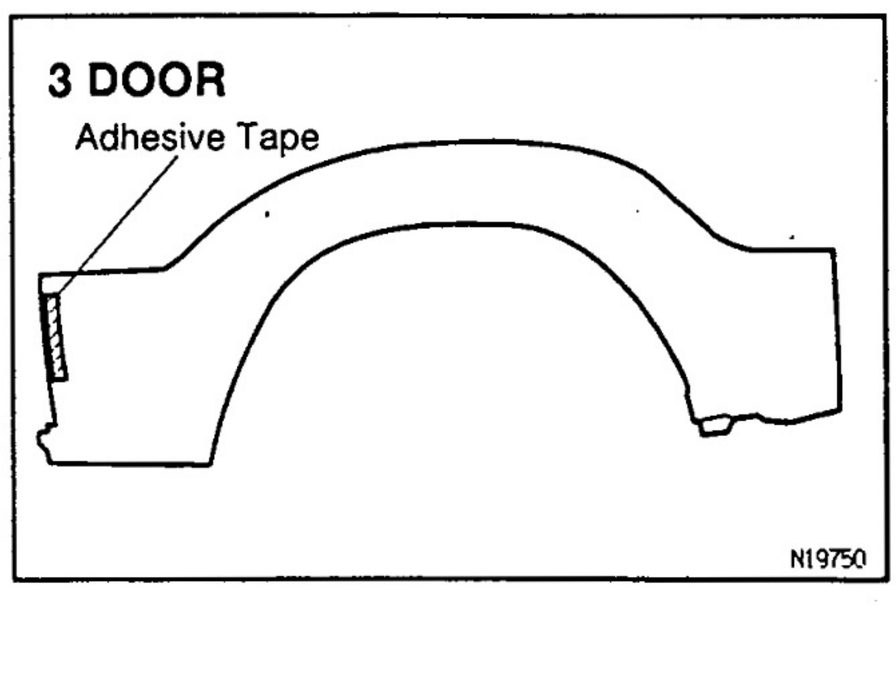

BO2PN-01

QUARTER OUTSIDE MOULDING INSTALLATION

1. 3 DOOR:
   CLEAN BODY MOULDING SURFACE
   (See page BO-28)
2. 3 DOOR:
   CLEAN QUARTER OUTSIDE MOULDING
   (See page BO-29)
3. INSTALL QUARTER OUTSIDE MOULDING
   (See page BO-29)
4. INSTALL THESE PARTS:
(a) Quarter panel mudguard
(b) Rear wheel
(c) Rear bumper cover
   (See page BO-8)

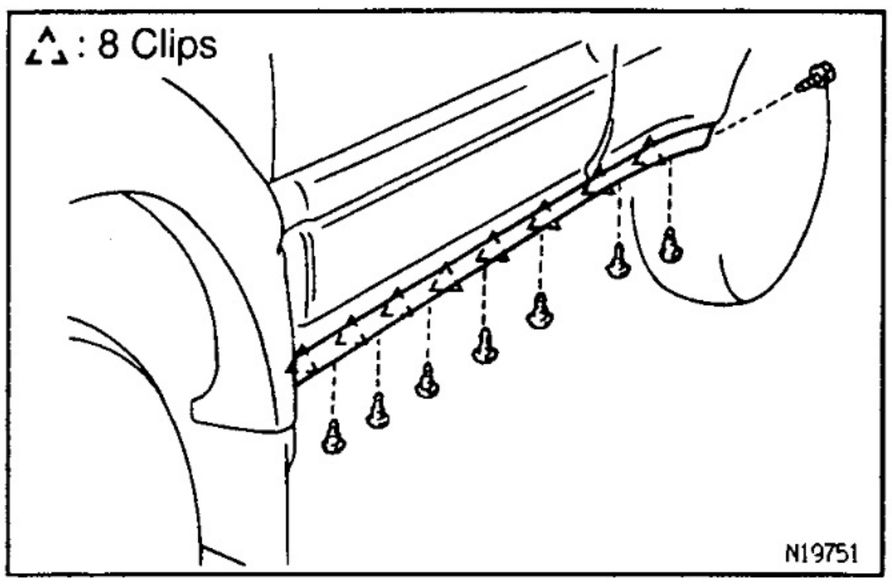

ROCKER PANEL MOULDING REMOVAL

BO2PP-01

1. **w/ Side Step:**
   REMOVE SIDE STEP
   (See page BO—77)
2. **REMOVE ROCKER PANEL MOULDING**

(a) Remove the 7 clips.

(b) Using a screwdriver, remove the moulding.
HINT: Tape the screwdriver tip before use.

ROCKER PANEL MOULDING INSTALLATION

BO2PQ-01

Installation is in the reverse order of removal.

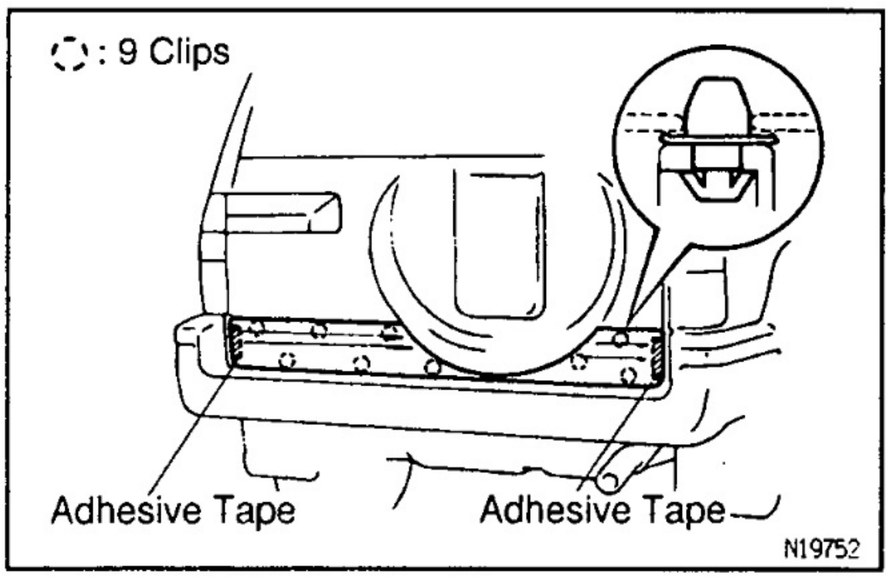

BACK DOOR OUTSIDE GARNISH REMOVAL

BO2PR-01

REMOVE BACK DOOR OUTSIDE GARNISH
(See page BO—30)

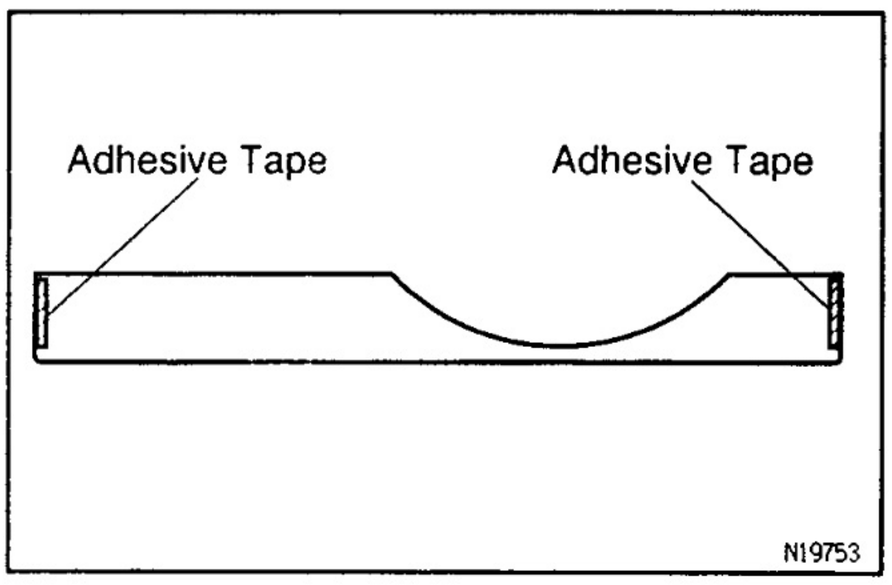

BACK DOOR OUTSIDE GARNISH INSTALLATION

BO2PS-01

INSTALL BACK DOOR OUTSIDE GARNISH
(See page BO—30)

BO

WINDSHIELD MOULDING
COMPONENTS

B02PC-01

(See page BO–35)

WINDSHIELD MOULDING REMOVAL

B02PE-01

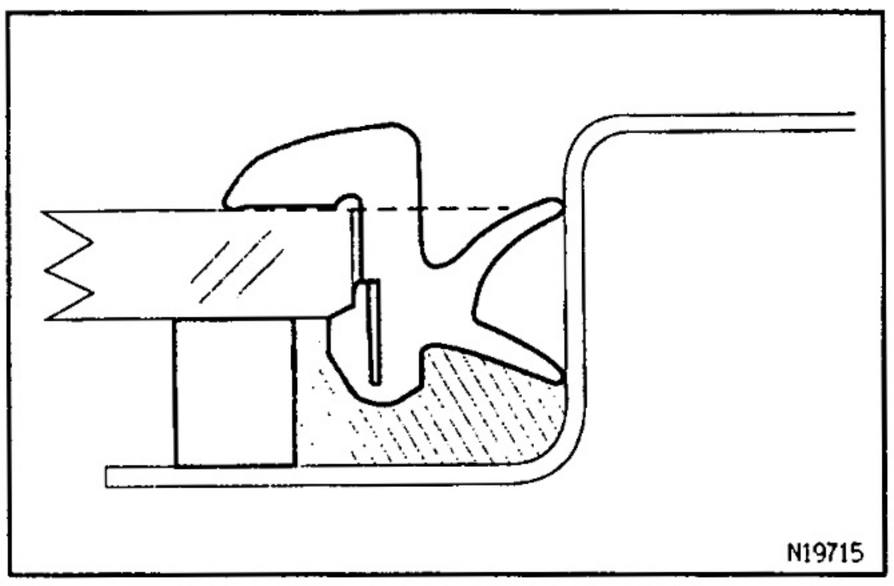

1. **REMOVE THESE PARTS:**
(a) Wiper arms
(b) Cowl louver
2. **REMOVE OUTSIDE MOULDING**
3. **REMOVE OUTSIDE UPPER MOULDING**
Using a knife, cut off the moulding as shown.
NOTICE: Do not damage the body with knife.

WINDSHIELD MOULDING INSTALLATION

B02PG-01

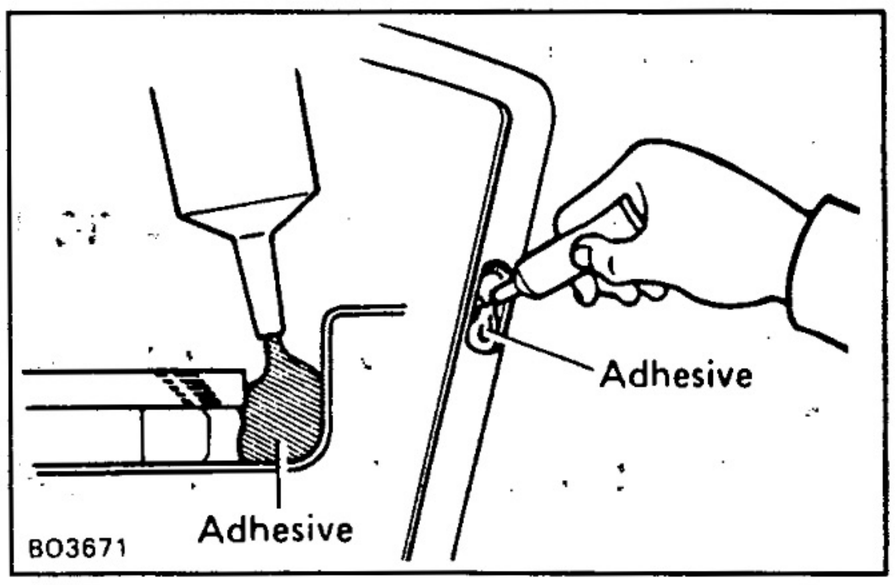

1. **CUT ADHESIVE AT MOULDING INSTALLATION AREA**
Using a knife, cut off the adhesive around the moulding installation area.
2. **APPLY ADHESIVE AT MOULDING INSTALLATION AREA**

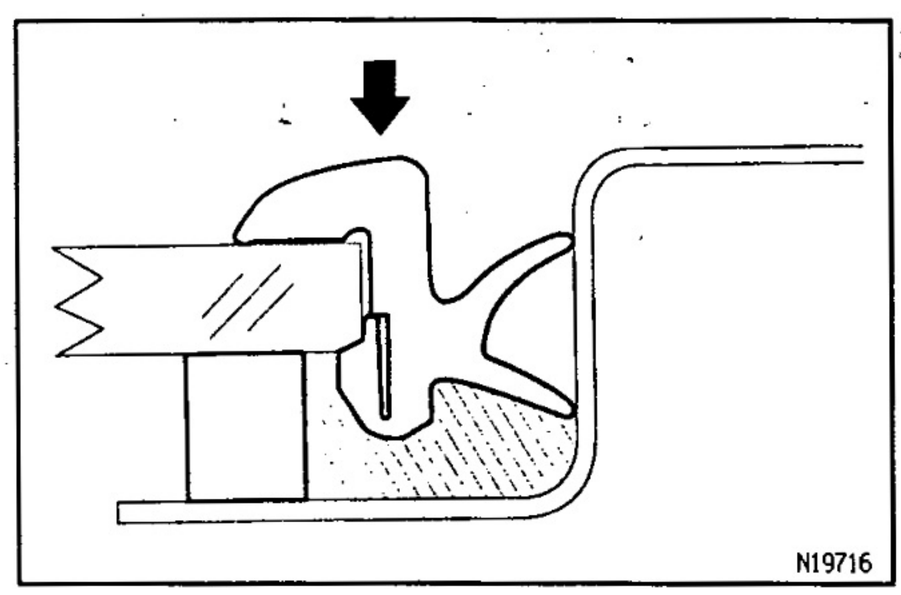

3. **INSTALL OUTSIDE UPPER MOULDING**
Place the moulding onto the body and tap it by hand.
4. **INSTALL OUTSIDE MOULDING**
5. **INSTALL THESE PARTS:**
(a) Wiper arms
Torque: 21 N·m (205 kgf·cm, 15 ft·lbf)
(b) Cowl louver

BO

BACK WINDOW MOULDING
COMPONENTS

B02PS-01

(See page BO–44)

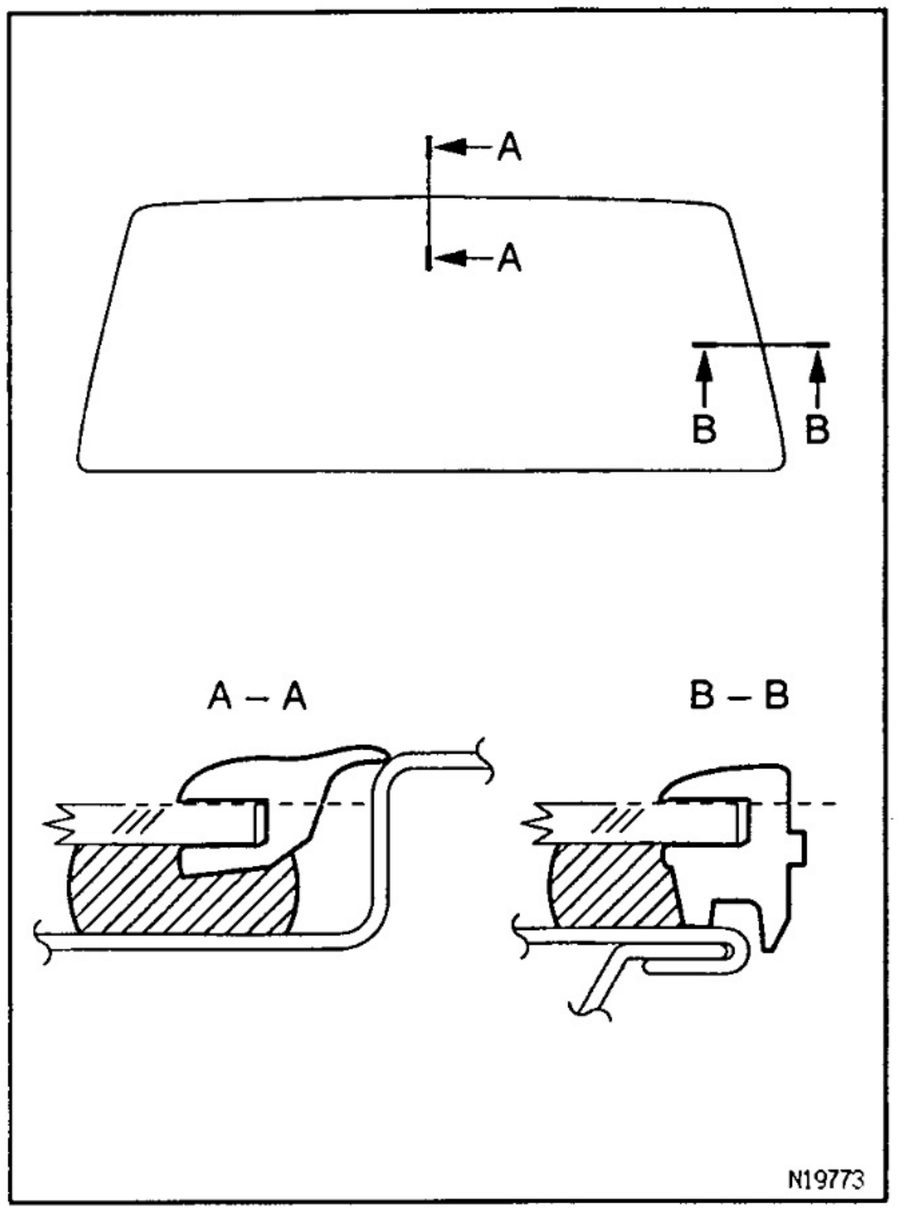

BACK WINDOW MOULDING REMOVAL

B02P7-01

1. REMOVE BACK WINDOW MOULDING

Using a knife, cut off the moulding as shown.

NOTICE: Do not damage the body with the knife.

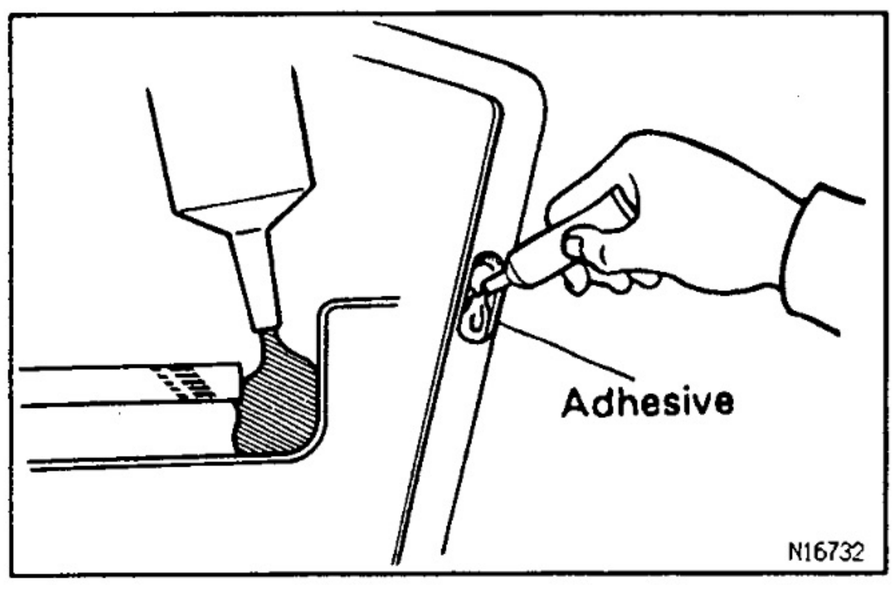

BACK WINDOW MOULDING INSTALLATION

B02P9-01

1. CUT ADHESIVE AT MOULDING INSTALLATION AREA

Using a knife, cut off the adhesive around the moulding installation area.

2. APPLY ADHESIVE AT MOULDING INSTALLATION AREA

3. INSTALL BACK WINDOW MOULDING

Place the moulding onto the body and tap it by hand.

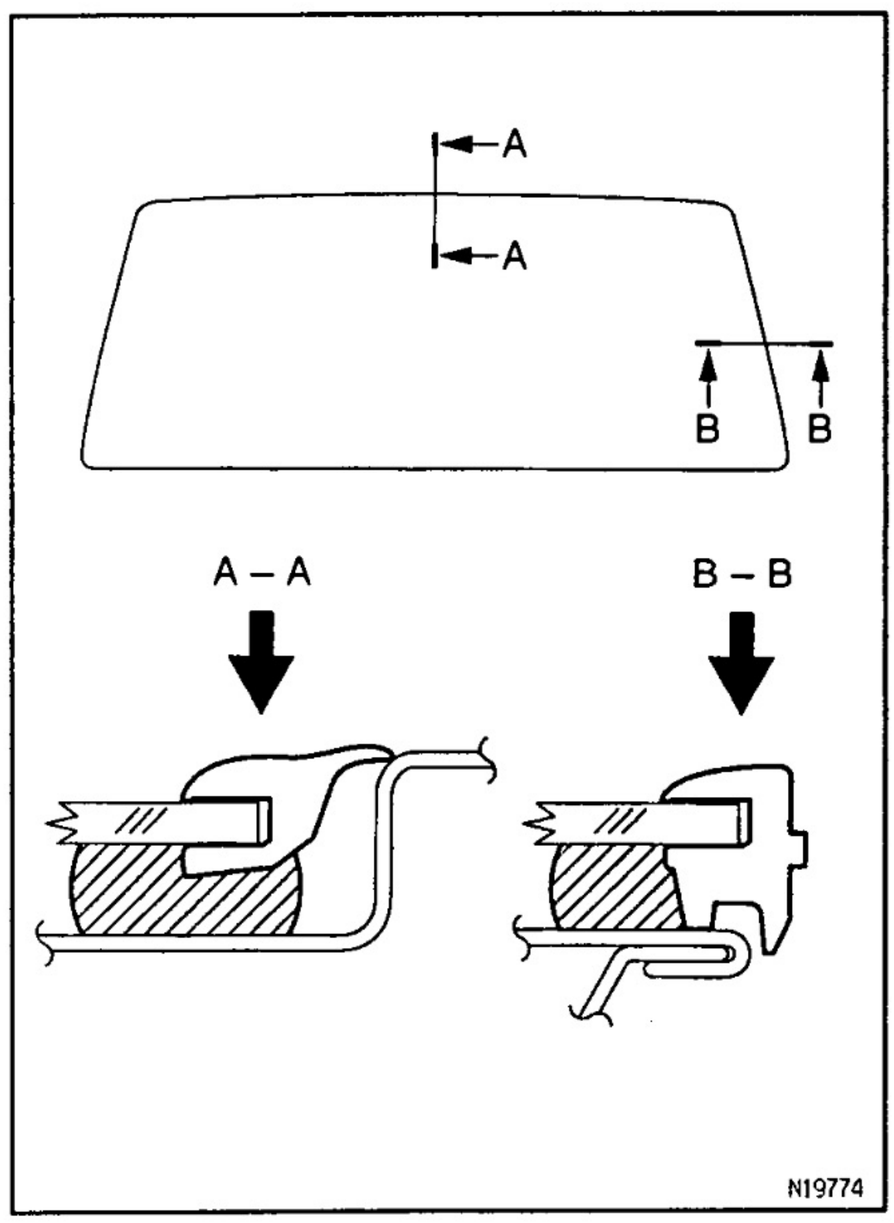

WINDSHIELD
COMPONENTS

BO2P0-01

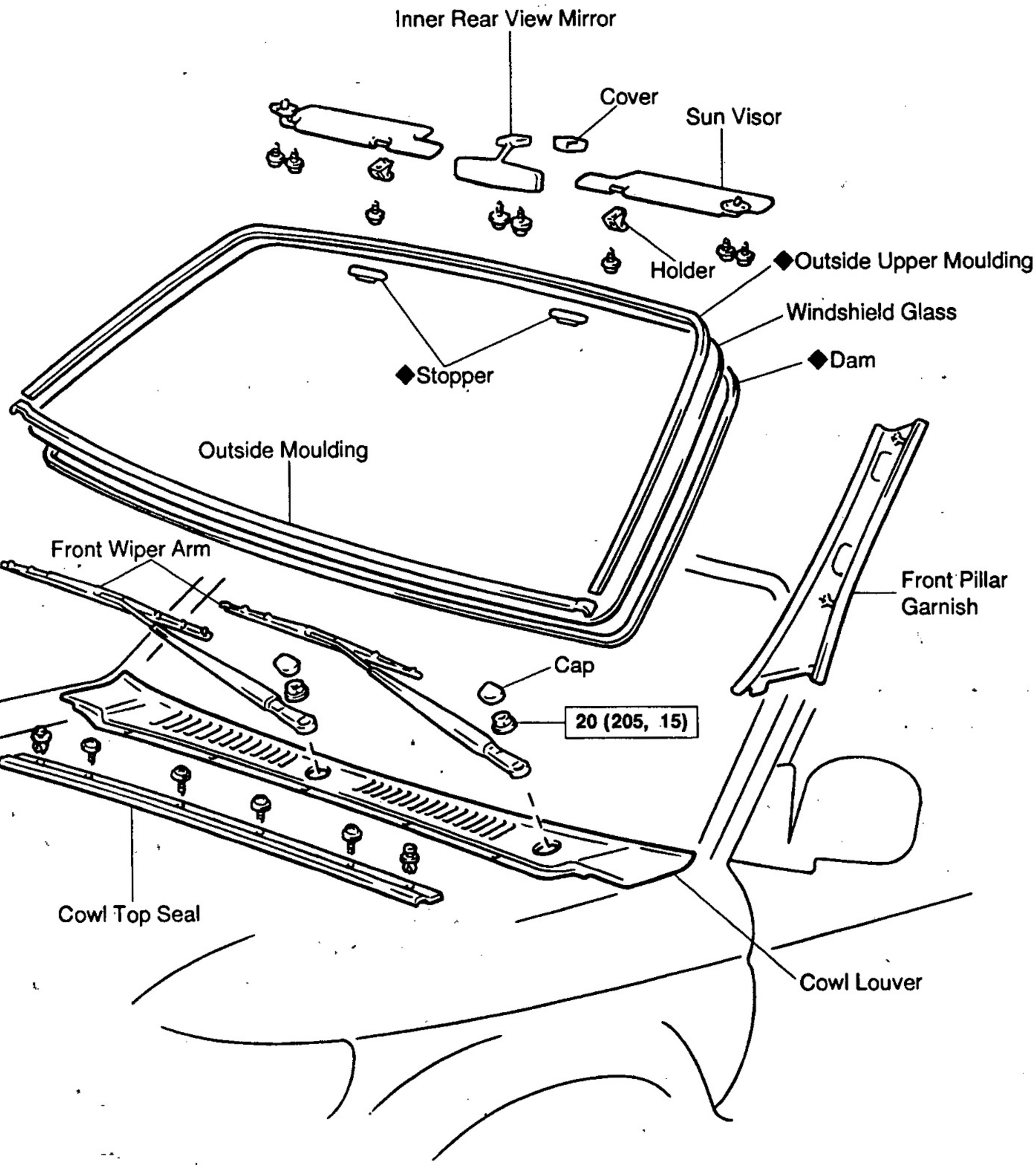

N·m (kgf·cm, ft·lbf) : Specified torque
◆Non-reusable part

N19790

BO2P1-01

WINDSHIELD REMOVAL

1. REMOVE THESE PARTS:

(a) Assist grips
(b) Front pillar garnishes
(c) Map lamp assembly
(d) Inner rear view mirror
(e) Sun visors and holders
(f) Wiper arms
(g) Cowl louver

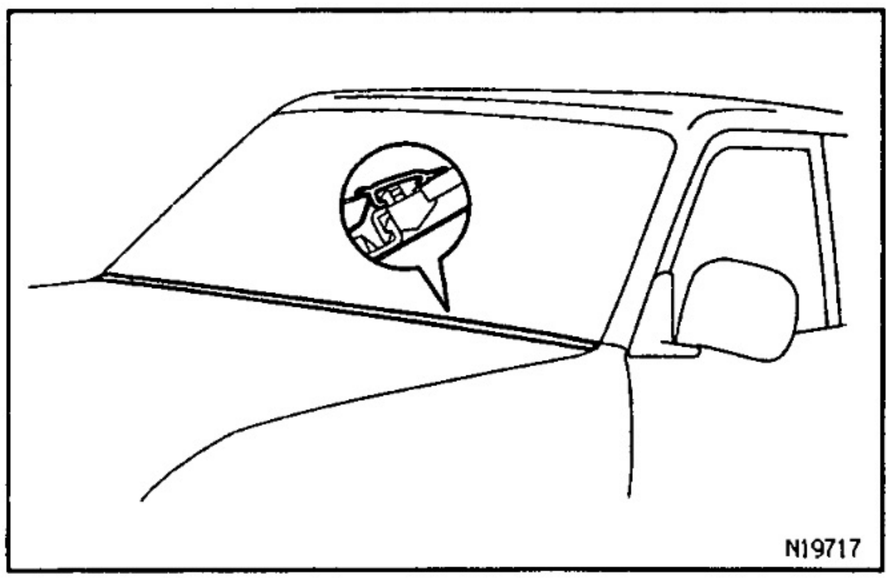

2. REMOVE OUTSIDE MOULDING

3. REMOVE OUTSIDE UPPER MOULDING

(See page BO—33)

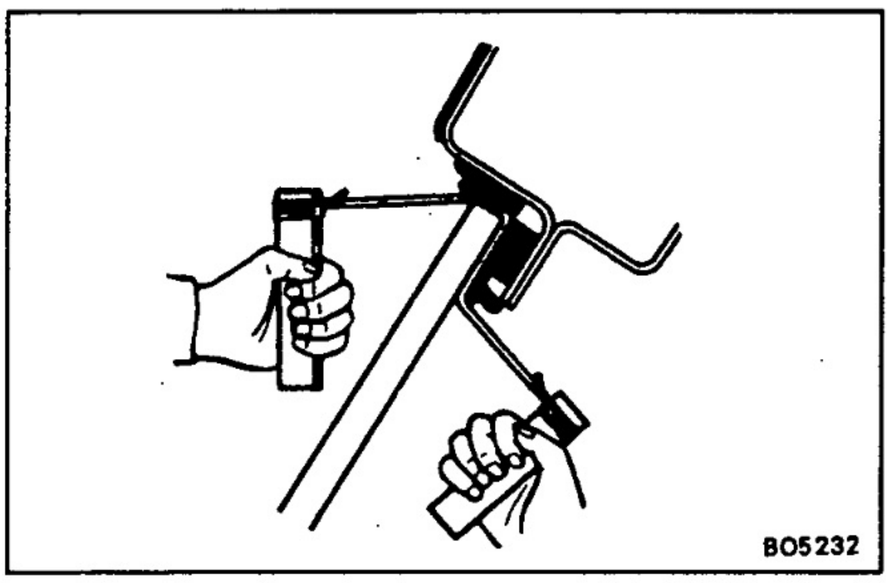

4. REMOVE WINDSHIELD GLASS

(a) Push piano wire through between the body and glass from the interior.
(b) Tie both wire ends to a wooden block or a similar object.
HINT: Apply adhesive tape to the outer surface to keep the surface from being scratched.

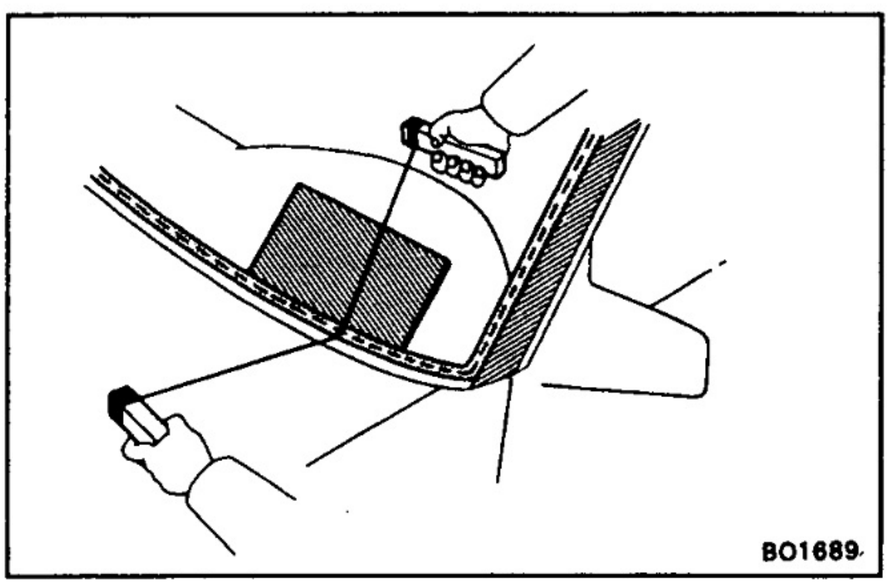

NOTICE: When separating the glass, take care not to damage the paint and interior and exterior ornaments. To prevent scratching the safety pad when removing the windshield, place a plastic sheet between the piano wire and safety pad.

(c) Cut the adhesive by pulling the piano wire around it.
(d) Remove the glass.
NOTICE: Leave as much of the adhesive on the body as possible when cutting off the glass.

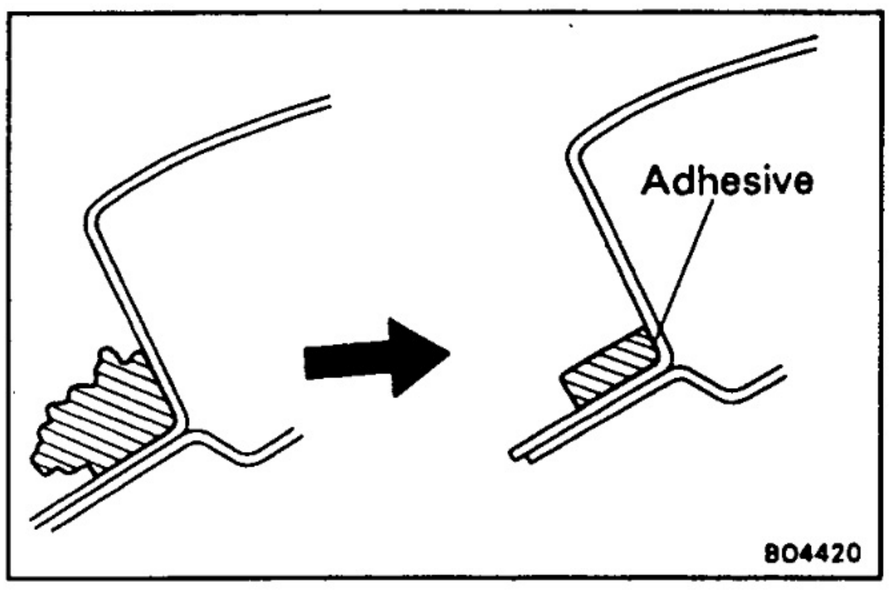

BO2P3-01

WINDSHIELD INSTALLATION

1. CLEAN AND SHAPE CONTACT SURFACE OF BODY

(a) Using a knife, cut away any rough areas on the body.
HINT: Leave as much of the adhesive on the body as possible.
(b) Clean the cutting surface of the adhesive with a piece of shop rag saturated in cleaner.

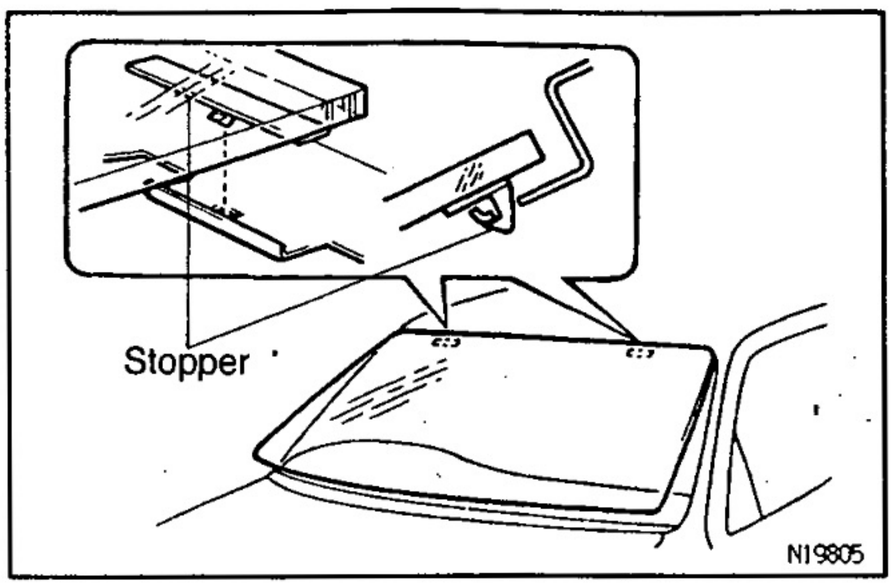

HINT: Even if all the adhesive has been removed, clean the body.

2. REPLACE STOPPER

(a) Remove the damaged stopper.

(b) Cut off the old adhesive around the stopper installation area.

NOTICE: Be careful not to damage the body.

(c) Clean the installation area.

(d) Install a new stopper onto the glass.

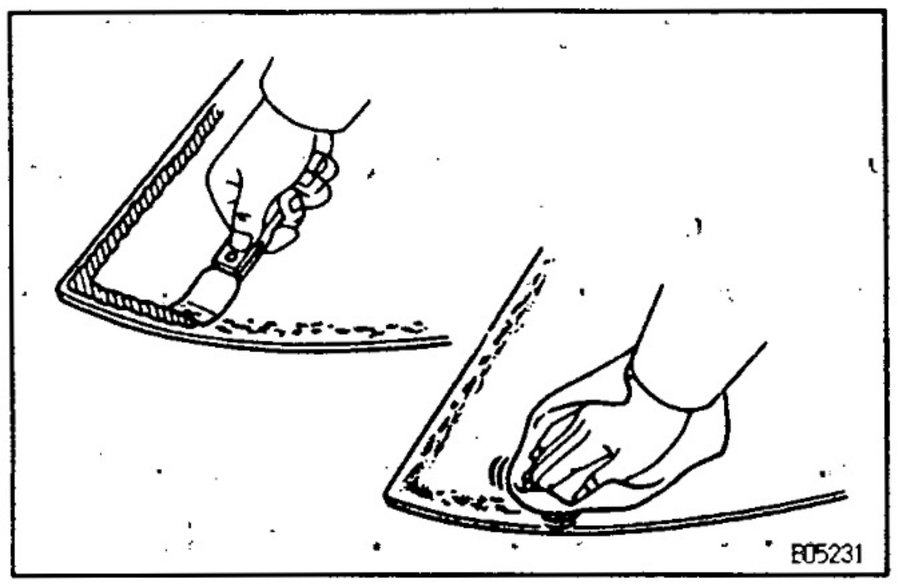

3. CLEAN REMOVED GLASS

(a) Using a scraper, remove the adhesive sticking to the glass.

(b) Clean the glass with cleaner.

NOTICE: Do not touch the glass after cleaning it.

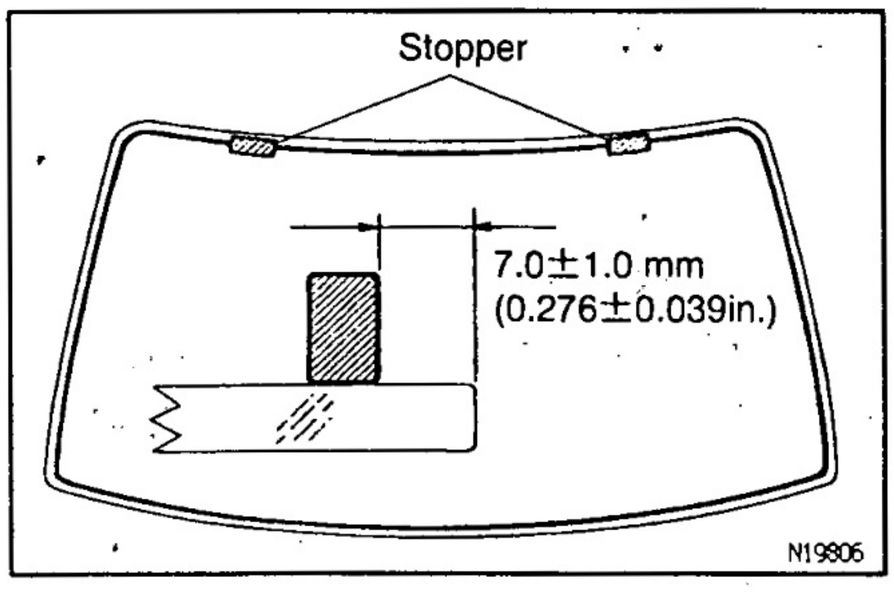

4. INSTALL DAM

Install the dam with double—stick tape as shown in the illustration.

NOTICE: Do not touch the glass face after cleaning it.

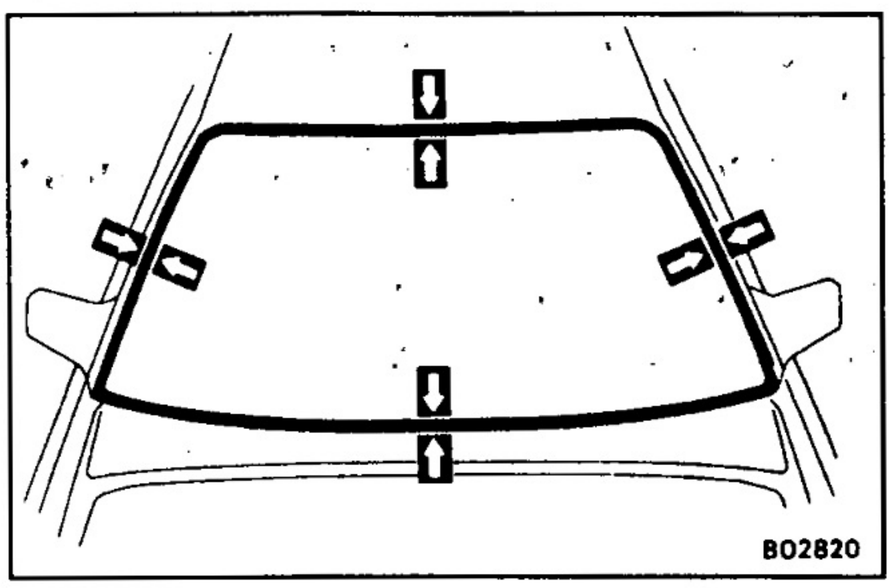

5. POSITION GLASS

(a) Place glass in the correct position.

(b) Check that all contacting parts of the glass rim are perfectly even and do not make contact with the fasteners.

(c) Place reference marks between the glass and body.

(d) Remove the glass.

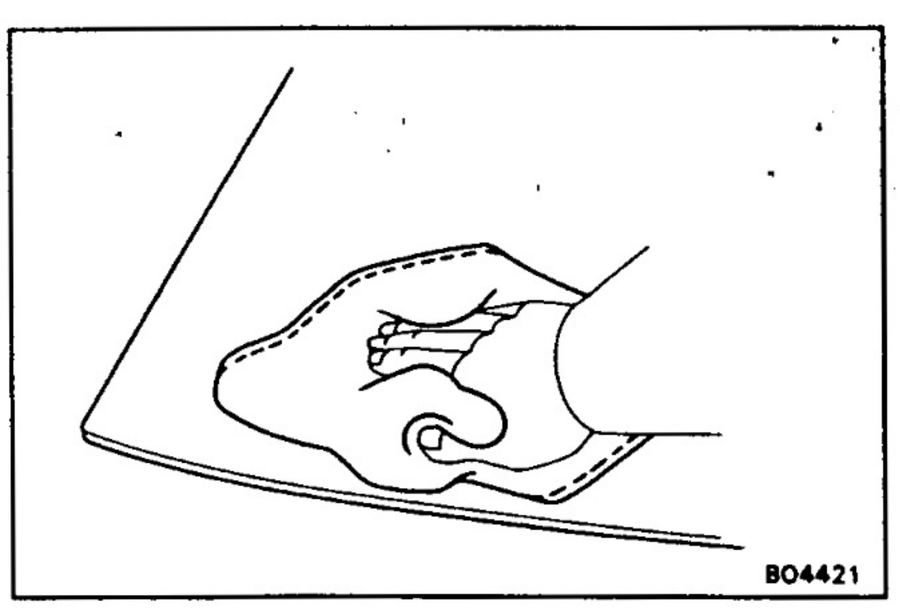

6. CLEAN CONTACT SURFACE OF GLASS

Using a cleaner, clean the contact surface black—colored area around the entire glass rim.

NOTICE: Do not touch the glass face after cleaning it.

BO

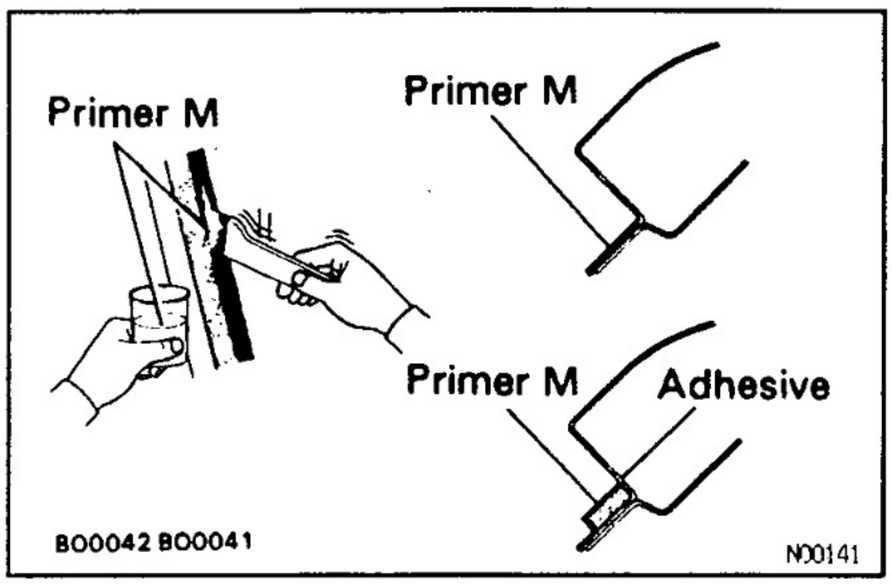

7. COAT CONTACT SURFACE OF BODY WITH PRIMER "M"

Using a brush, coat the contact surface on the body with Primer M.

NOTICE:

- **Let the primer coating dry for 3 minutes or more.**
- **Do not coat Primer M to the adhesive.**
- **Do not keep any of the opened Primer M for later use.**

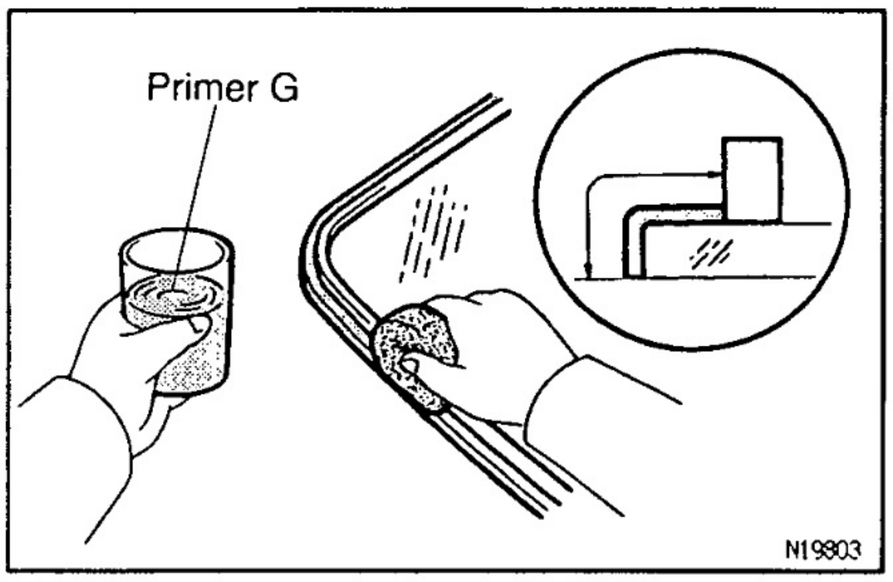

8. COAT CONTACT SURFACE OF GLASS WITH PRIMER "G"

(a) Using a brush or a sponge, coat the edge of the glass and the contact surface with Primer G.

(b) Before the primer dries, wipe it off with a clean shop rag.

NOTICE:

- **Let the primer coating dry for 3 minutes or more.**
- **Do not keep any of the opened Primer G for later use.**

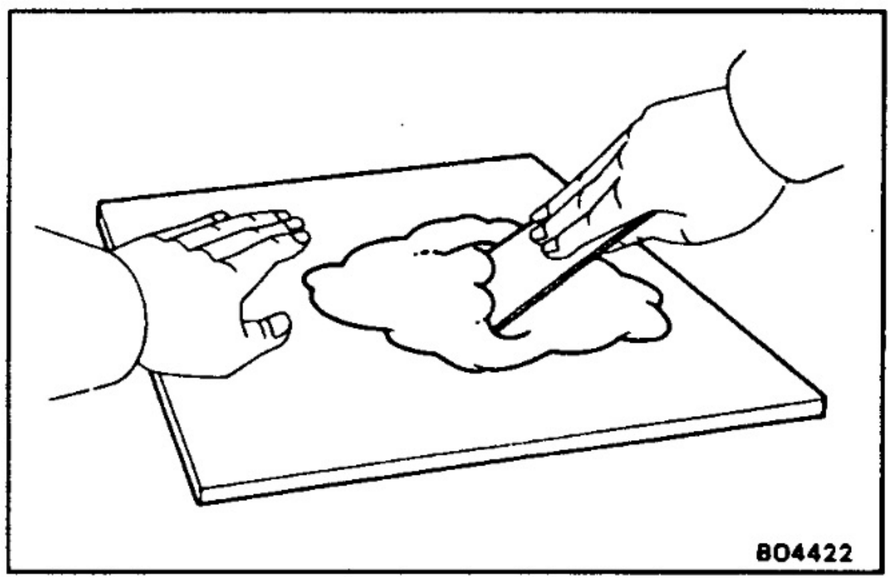

9. MIX ADHESIVE COATING

NOTICE:

- **Make sure that installation of the moulding is finished within usable time.**
  (See step 3 on page BO–6)
- **The mixture should be made in 5 minutes or less.**

(a) Thoroughly clean the glass plate and putty spatula with solvent.

(b) Thoroughly mix 500 g (17.64 oz.) of the main agent and 75 g (2.65 oz.) of the hardening agent on a glass plate or a similar object with a putty spatula.

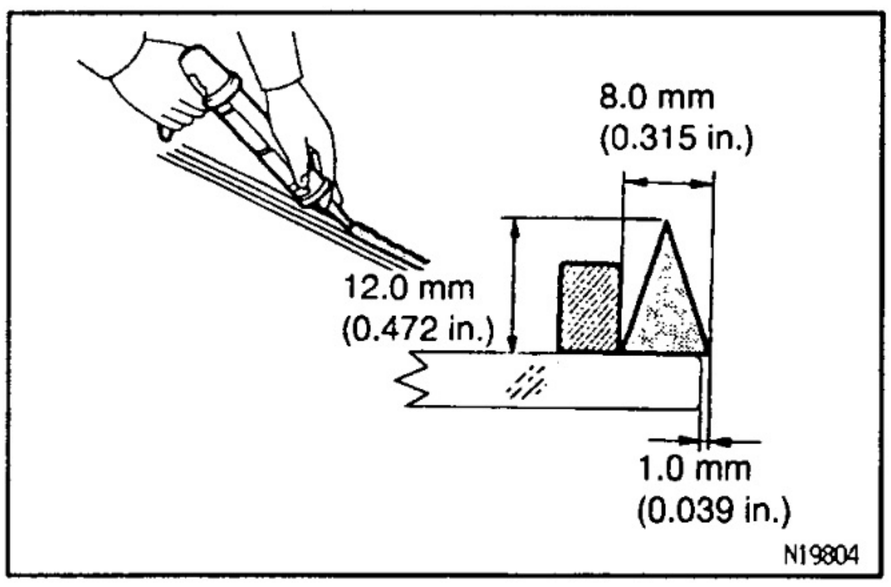

10. APPLY ADHESIVE

(a) Cut off the tip of the cartridge nozzle. Fill the cartridge with adhesive.

(b) Load the cartridge into the sealer gun.

(c) Coat the glass with adhesive as shown.

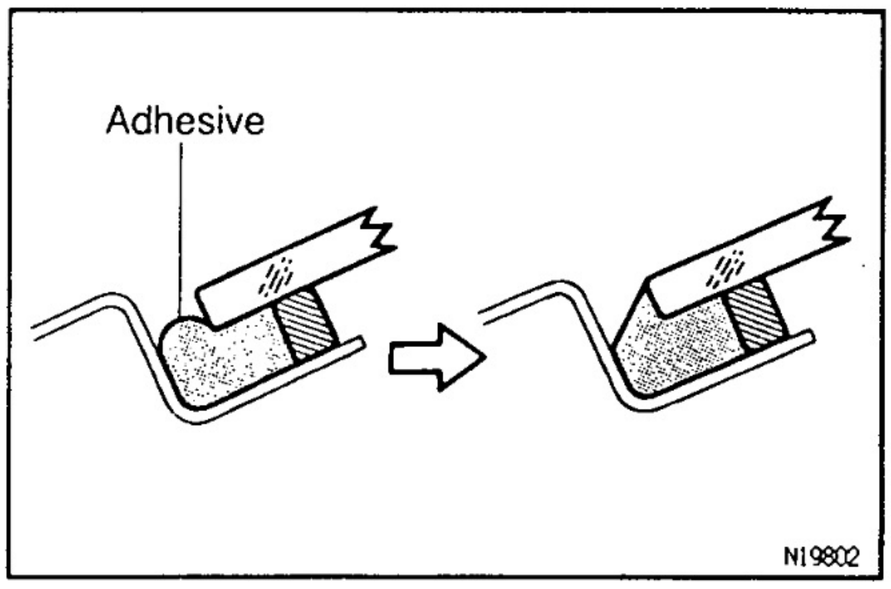

11. INSTALL GLASS

HINT: Confirm that the dam is attached the body panel as shown in the illustration.

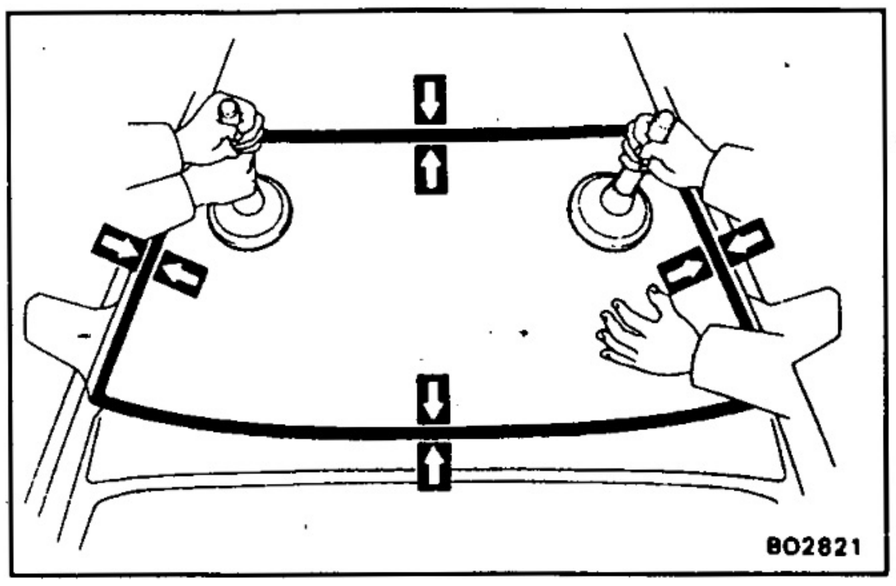

(a) Position the glass so that the reference marks are lined up, and press in gently along the rim.
(b) Using a spatula, apply adhesive on the glass rim.

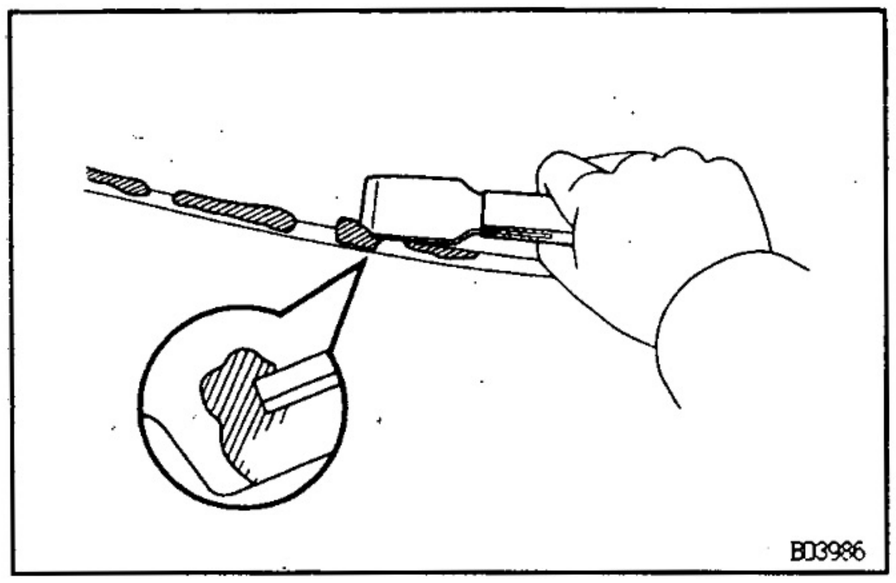

(c) Use a scraper to remove any excess or protruding adhesive.
(d) Fasten glass securely until the adhesive sets.

12. INSPECT FOR LEAKS AND REPAIR

(a) Do a leak test after the hardening time has elapsed.
(b) Seal any leak with sealant.
Part No. 08833–00030 or equivalent

13. INSTALL OUTSIDE UPPER MOULDING
(See page BO–33)

14. REMOVE OUTSIDE MOULDING

15. INSTALL THESE PARTS:

(a) Cowl louver
(b) Wiper arms
Torque: 21 N·m (205 kgf·cm, 15 ft·lbf)
(c) Sun visors and holders
(d) Inner rear view mirror
(e) Map lamp assembly
(f) Front pillar garnishes
(g) Assist grips

QUARTER WINDOW GLASS
COMPONENTS

B02N8-01

5 DOOR

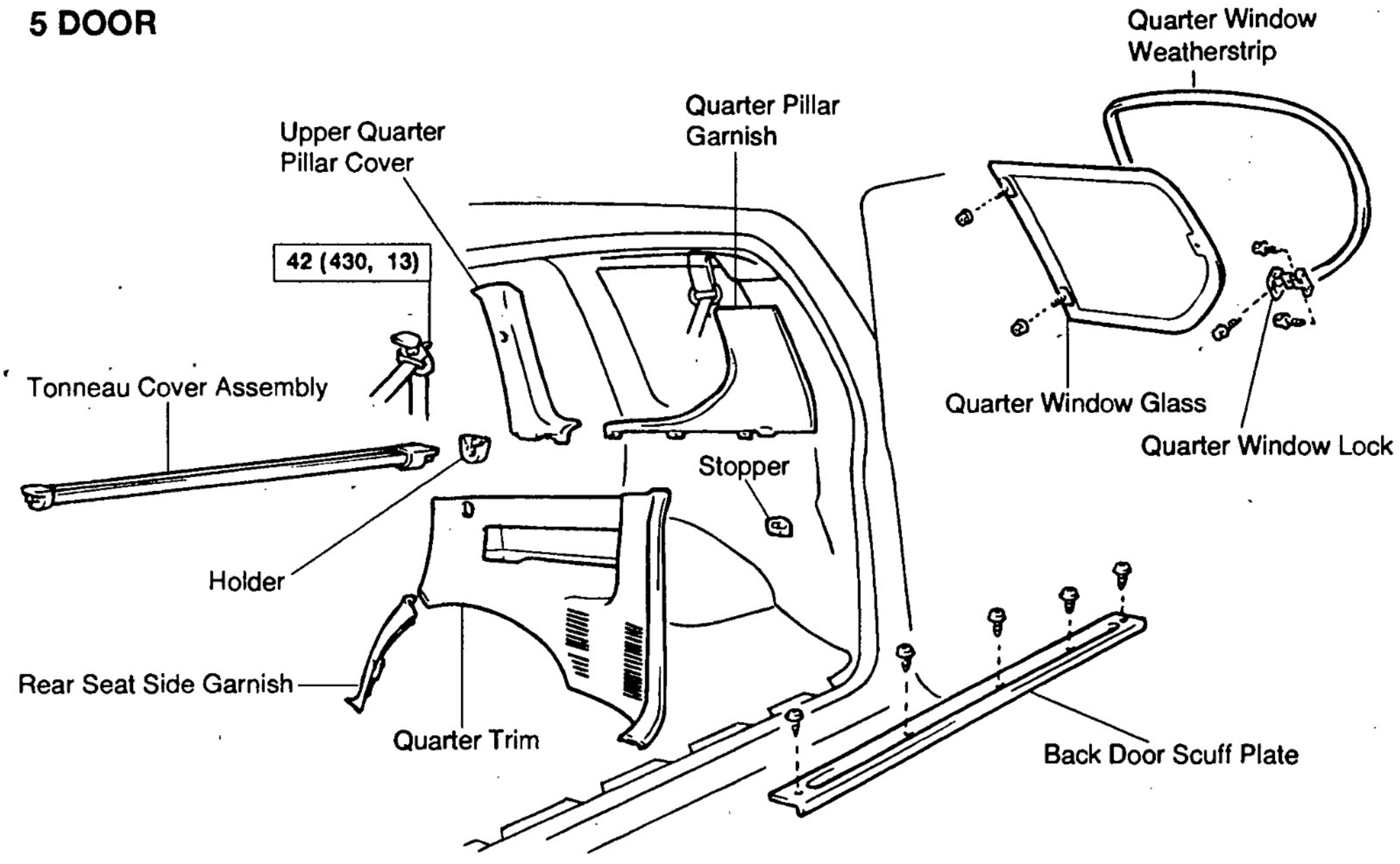

3 DOOR

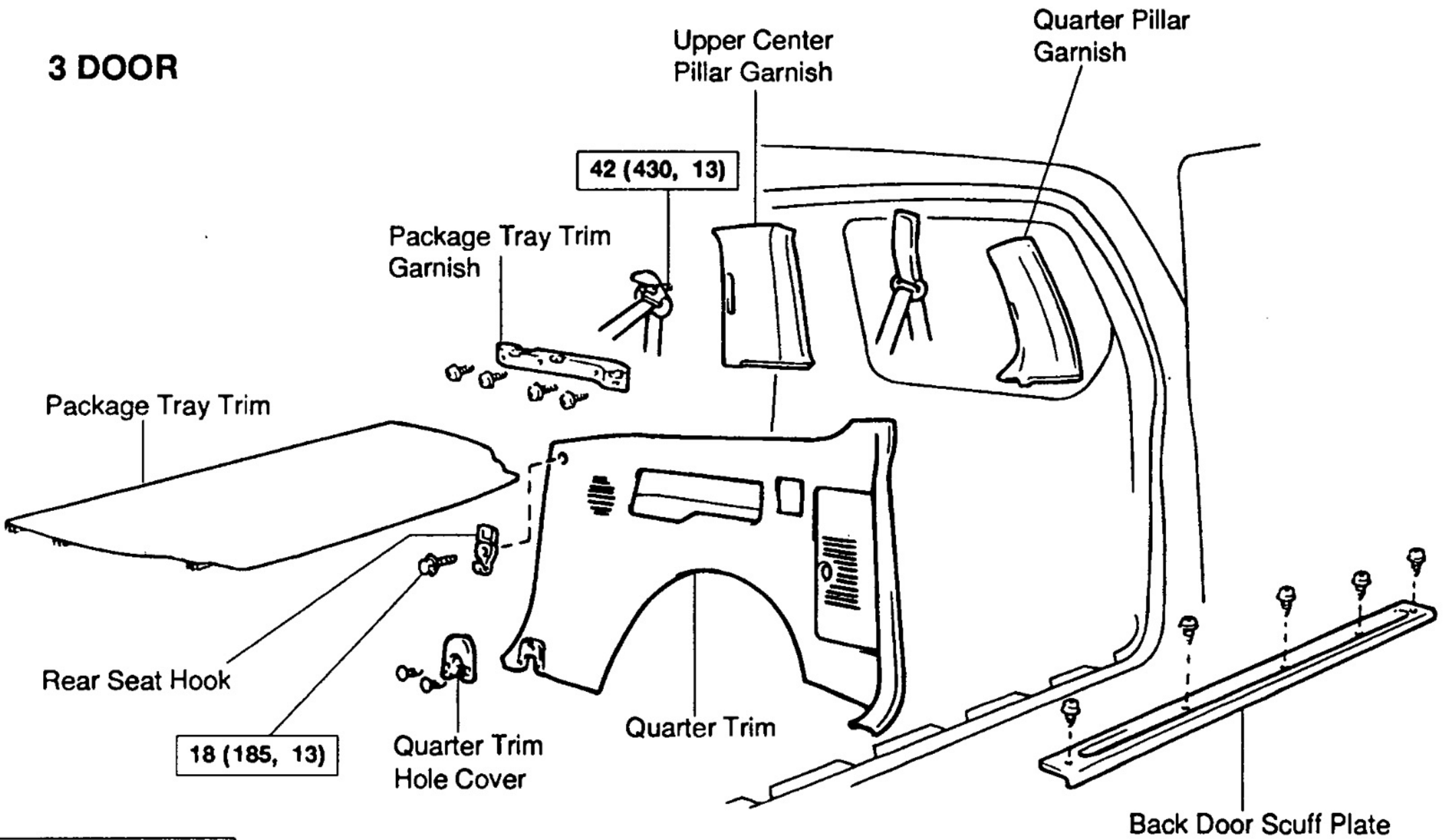

N·m (kgf·cm, ft·lbf) : Specified torque

N19793

QUARTER WINDOW GLASS REMOVAL (5 DOOR) BO2NU-01

1. REMOVE THESE PARTS:

(a) No.1 rear seat
Torque: 37 N·m (380 kgf·cm, 27 ft·lbf)

(b) w/ No.2 Rear Seat:
No.2 rear seat
Torque: 37 N·m (380 kgf·cm, 27 ft·lbf)

(c) Rear door scuff plate

(d) Back door scuff plate

(e) No.1 rear seat belt shoulder and floor anchor bolts
Torque: 42 N·m (430 kgf·cm, 31 ft·lbf)

(f) w/ No.2 Rear Seat Belt:
No.2 rear seat belt shoulder and floor anchor bolts
Torque: 42 N·m (430 kgf·cm, 31 ft·lbf)

(g) w/ Tonneau Cover:
Tonneau cover assembly and holder

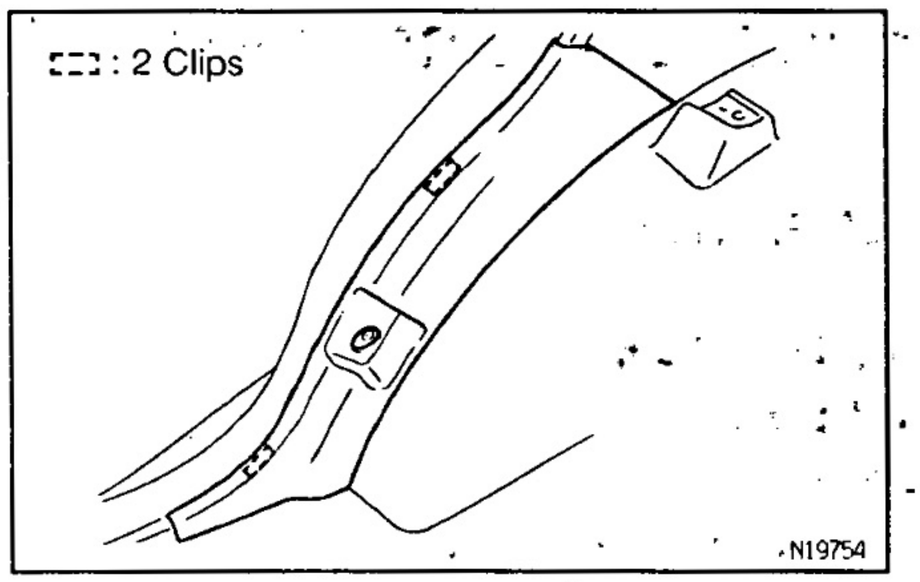

2. REMOVE REAR SEAT SIDE GARNISH
Remove the rear seat side garnish.

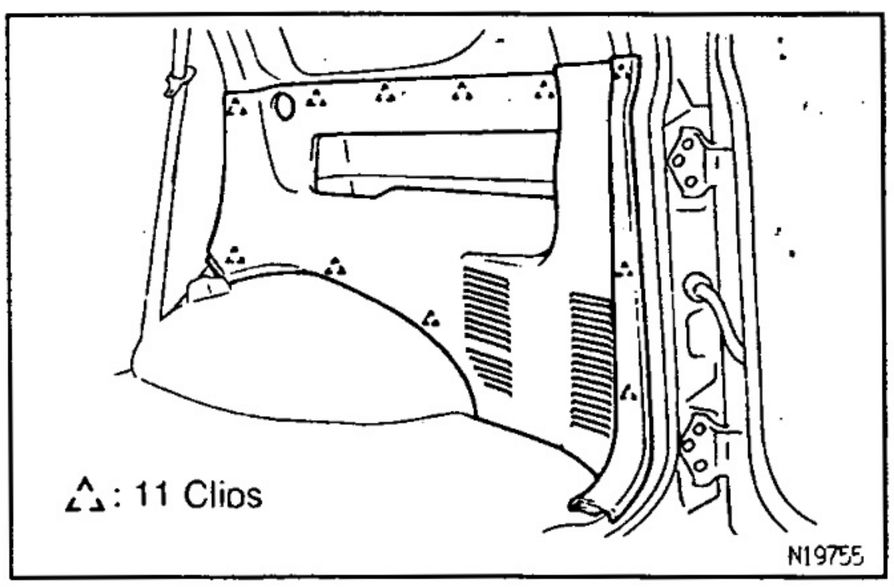

3. REMOVE QUARTER TRIM
Remove the quarter trim.

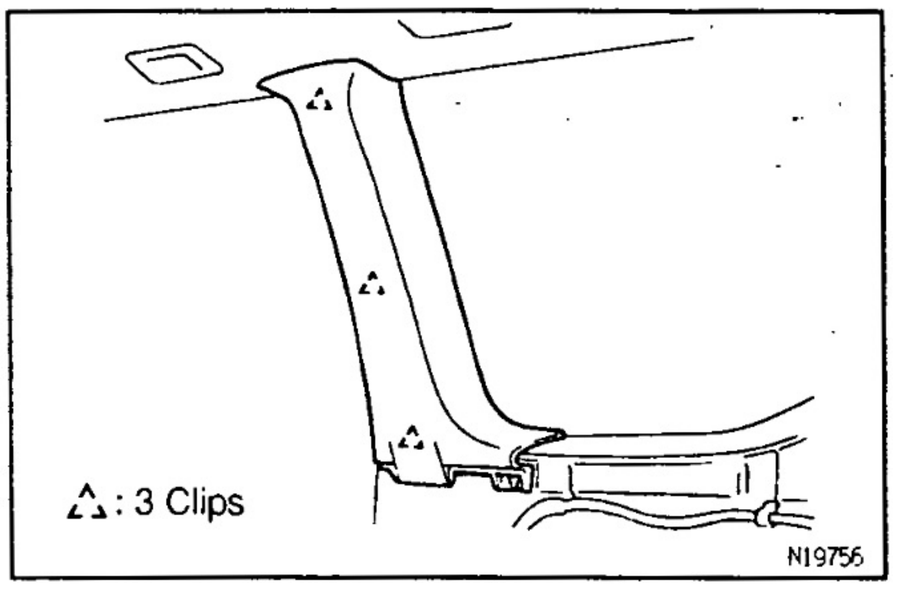

4. REMOVE UPPER QUARTER PILLAR COVER
Remove the upper quarter pillar cover.

BO

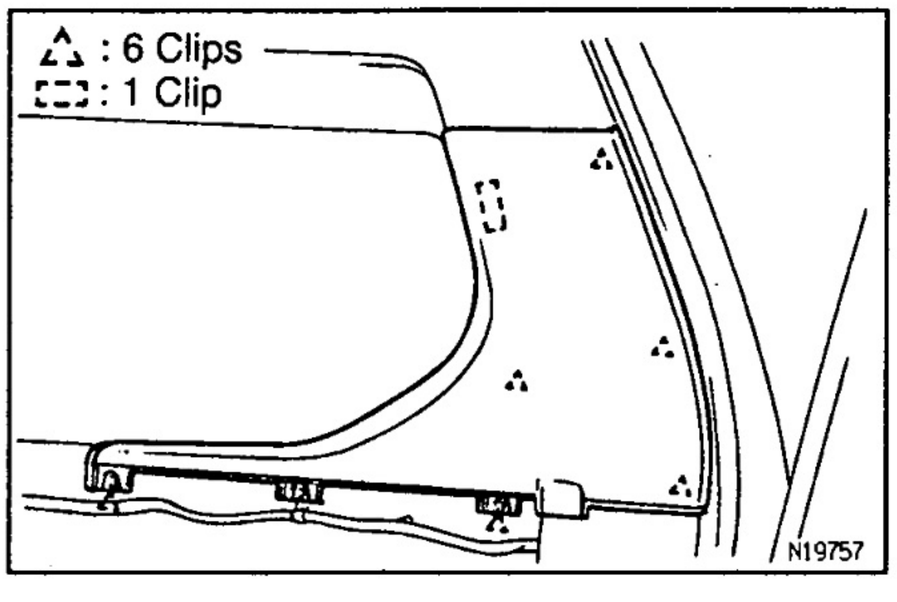

5. REMOVE QUARTER PILLAR GARNISH
Remove the quarter pillar garnish.

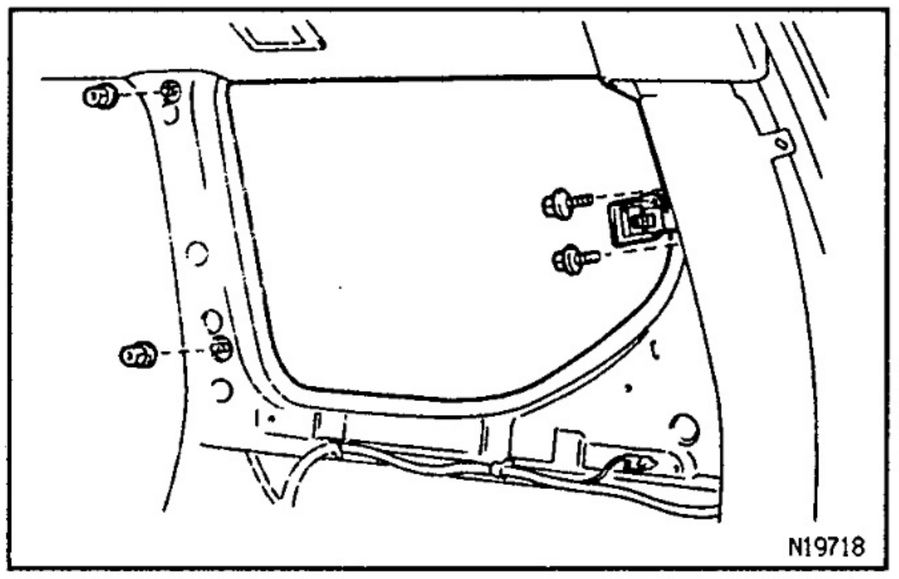

6. REMOVE QUARTER WINDOW GLASS
Remove the 2 screws, 2 nuts and quarter window glass.

7. REMOVE QUARTER WINDOW WEATHERSTRIP

QUARTER WINDOW GLASS REMOVAL (3 DOOR)

B02NW-01

1. REMOVE THESE PARTS:

(a) Rear seat
Torque: 37 N·m (380 kgf·cm, 27 ft·lbf)

(b) Front door scuff plate

(c) Back door scuff plate

(d) Front seat belt shoulder anchor bolt
Torque: 42 N·m (430 kgf·cm, 31 ft·lbf)

(e) Rear seat belt shoulder and floor anchor bolts
Torque: 42 N·m (430 kgf·cm, 31 ft·lbf)

(f) w/ Package Tray Trim:
Package tray trim panel and garnish

(g) w/ Rear Seat:
Seat hook
Torque: 18 N·m (185 kgf·cm, 13 ft·lbf)

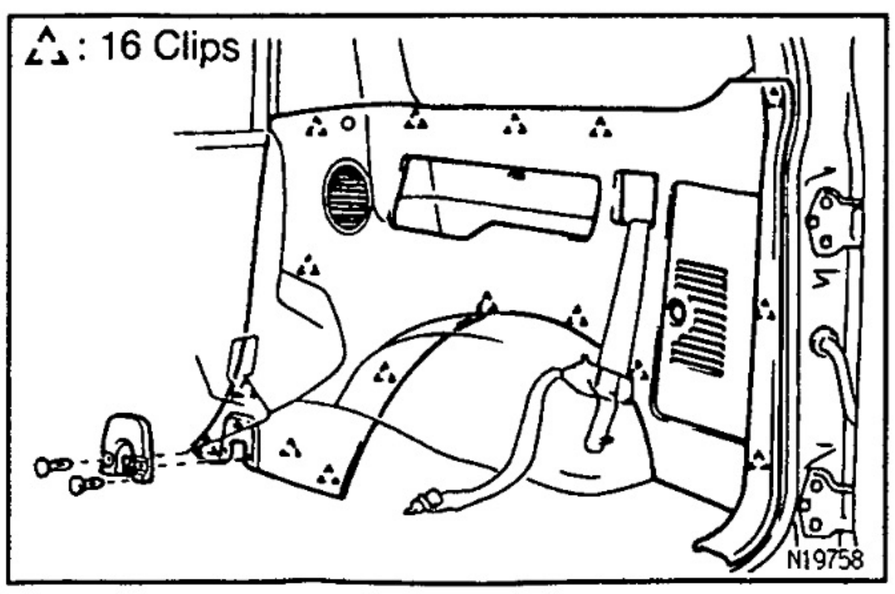

2. REMOVE QUARTER TRIM

(a) Remove the quarter trim hole cover.

(b) Remove the quarter trim.

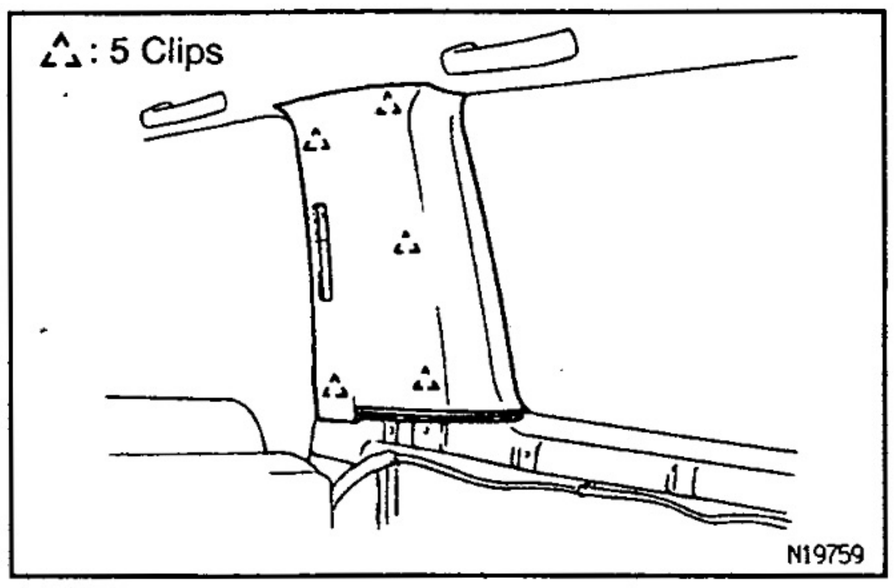

3. REMOVE UPPER CENTER PILLAR GARNISH

Remove the upper center pillar garnish.

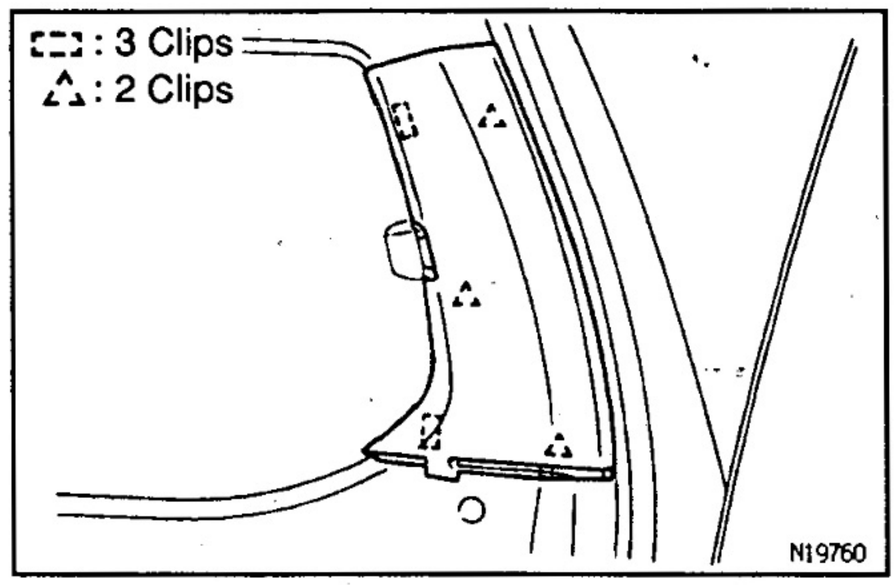

4. REMOVE QUARTER PILLAR GARNISH

Remove the quarter pillar garnish.

5. REMOVE QUARTER WINDOW GLASS

(See page BO–42)

6. REMOVE QUARTER WINDOW WEATHERSTRIP

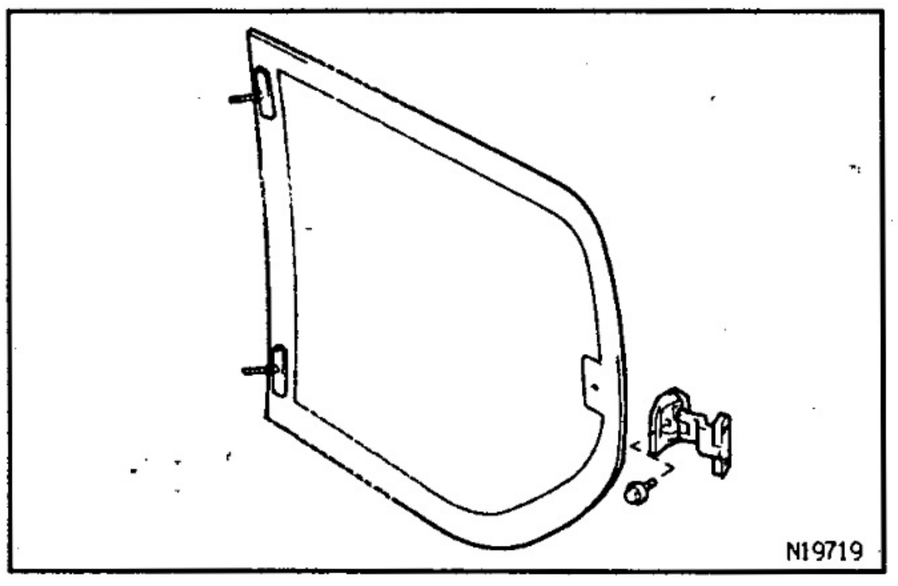

BO2NY–01

QUARTER WINDOW GLASS REPLACEMENT

1. REMOVE QUARTER WINDOW LOCK

Remove the screw and lock.

2. INSTALL QUARTER WINDOW LOCK

Install the screw and lock.

BO2NZ–01

QUARTER WINDOW GLASS INSTALLATION

Installation is in the reverse order of removal.

BACK DOOR GLASS
COMPONENTS

BO2NK–01

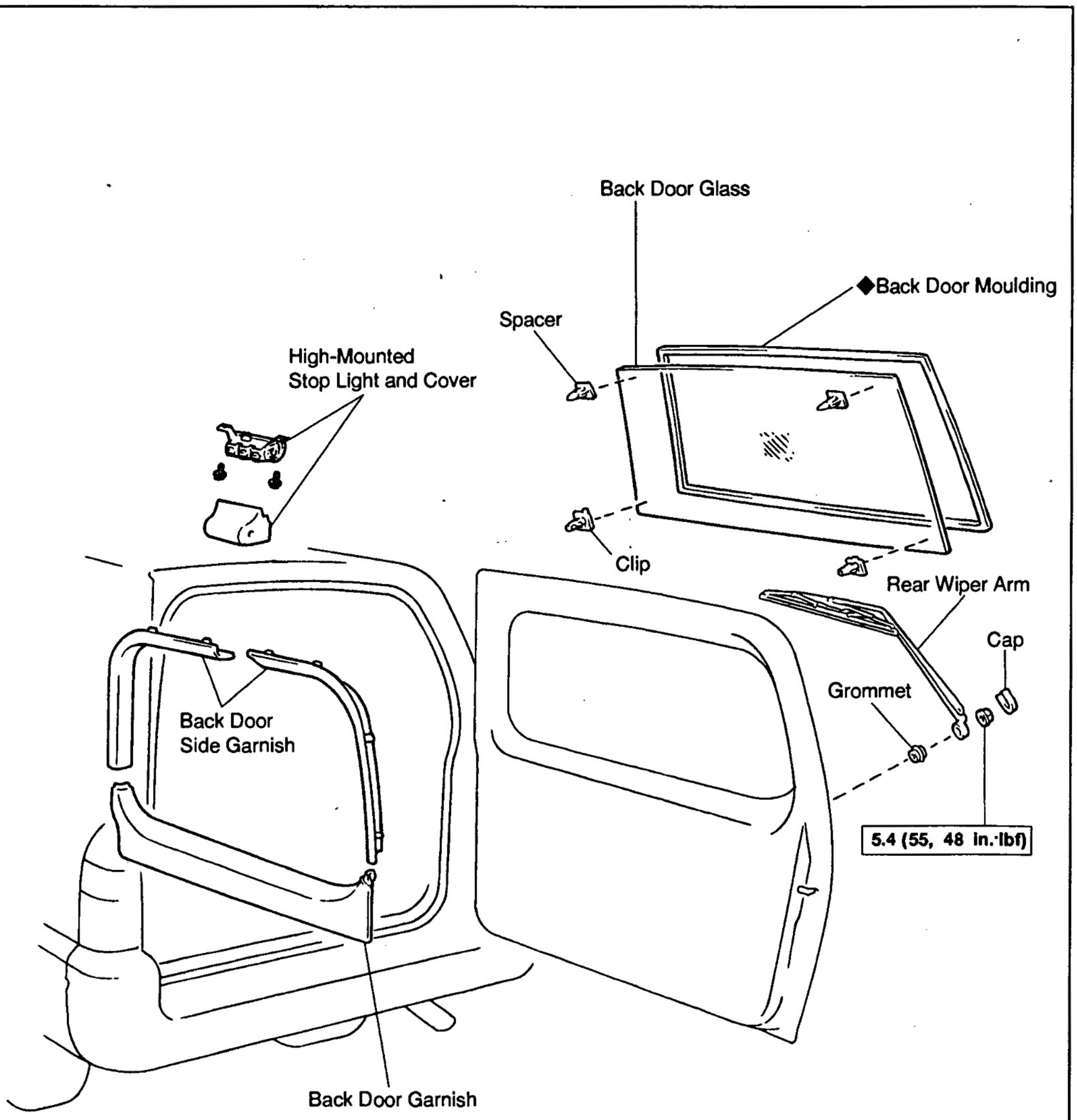

BO

N·m (kgf·cm, ft·lbf) : Specified torque

◆Non-reusable part

N19789

BO2NM-01

BACK DOOR GLASS REMOVAL

1. **REMOVE THESE PARTS:**
(a) Back door side garnishes
(b) Back door garnish
(c) w/ High—Mounted Stop Light:
High—mounted stop light and cover
2. **DISCONNECT DEFOGGER CONNECTOR**
3. **REMOVE BACK WINDOW MOULDING**
(See page BO—34)
4. **REMOVE BACK DOOR GLASS**
(See page BO—36)
(a) Push piano wire through between body and glass from the interior.
(b) Tie both wire ends to a wooden block or a similar object.
HINT: Apply adhesive tape to the outer surface to keep the surface from being scratched.
NOTICE: When separating the glass, take care not to damage the paint and exterior.
(c) Cut the adhesive by pulling the piano wire around it.
HINT: Cut the adhesive areas as shown in the illustration, leaving the adhesive where the spacer are cover.

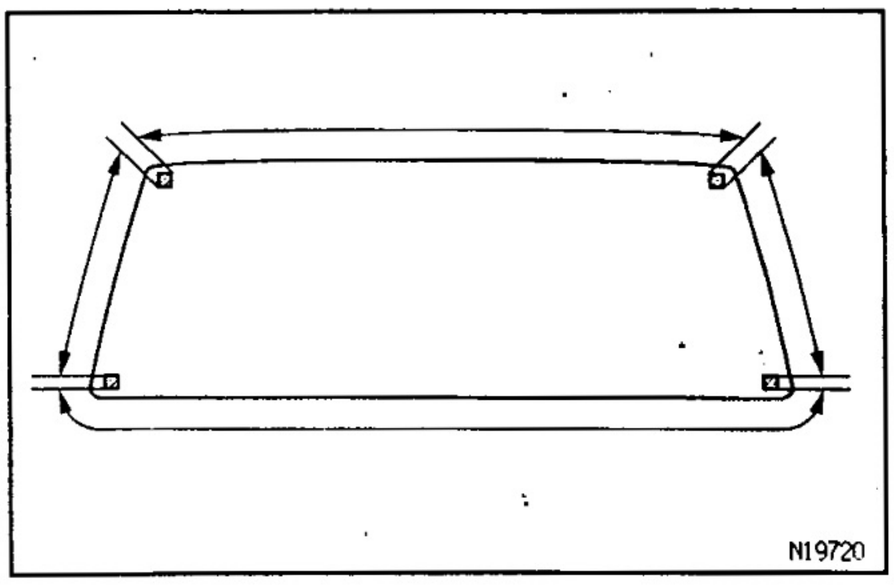
N19720

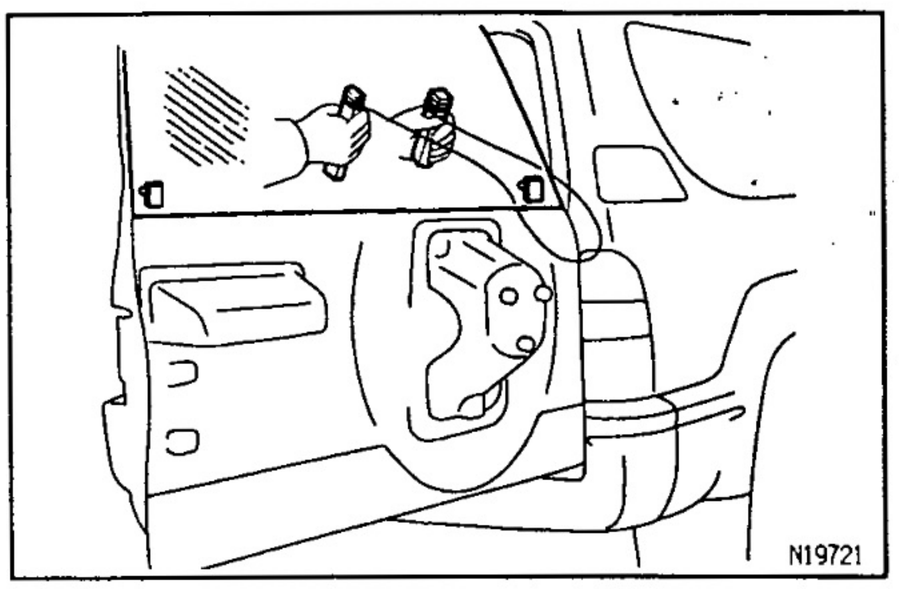
N19721

(d) Using piano wire as shown in the illustration, cut off the rest of the adhesive.
(e) Remove the glass.
NOTICE: Leave as much of the adhesive on the body as possible when cutting off the glass.

BO

BO2NP-01

BACK DOOR GLASS INSTALLATION

1. **CLEAN AND SHAPE CONTACT SURFACE OF BODY**
(See step 1 on page BO—36)
2. **REPLACE SPACER AND CLIP**
(a) Remove the damaged spacers and clips.
(b) Cut off the old adhesive around the stopper installation area.
NOTICE: Be careful not to damage the glass.

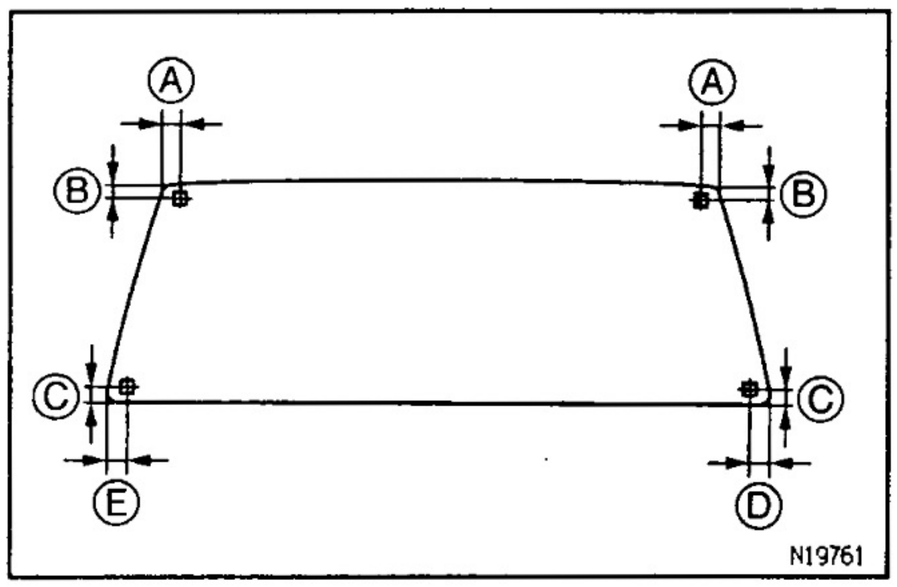

(c) Clean the installation area.

(d) Install a new spacers and clips onto the glass as shown in the illustration.

Ⓐ 38.9 mm (1.531 in.)
Ⓑ 41.2 mm (1.622 in.)
Ⓒ 44.1 mm (1.736 in.)
Ⓓ 52.1 mm (2.051 in.)
Ⓔ 58.1 mm (2.287 in.)

3. CLEAN REMOVED GLASS
(See step 3 on page BO—37)

4. POSITION GLASS
(See step 5 on page BO—37)

5. CLEAN CONTACT SURFACE OF GLASS
(See step 6 on page BO—37)

6. COAT CONTACT SURFACE OF BODY WITH PRIMER "M"
(See step 7 on page BO—37)

7. COAT CONTACT SURFACE OF GLASS WITH PRIMER "G"
(See step 8 on page BO—38)

8. MIX ADHESIVE COATING
(See step 9 on page BO—38)

9. APPLY ADHESIVE
(See step 10 on page BO—38)

10. INSTALL GLASS
(See step 11 on page BO—38)

11. INSPECT FOR LEAKS AND REPAIR
(See step 12 on page BO—39)

12. INSTALL BACK WINDOW MOULDING
(See page BO—34)

13. CONNECT DEFOGGER CONNECTOR

14. INSTALL THESE PARTS:

(a) w/ High—Mounted Stop Light:
High—mounted stop light and cover

(b) Back door garnish

(c) Back door side garnishes

SLIDING ROOF
COMPONENTS

BO2N8–01

5 DOOR

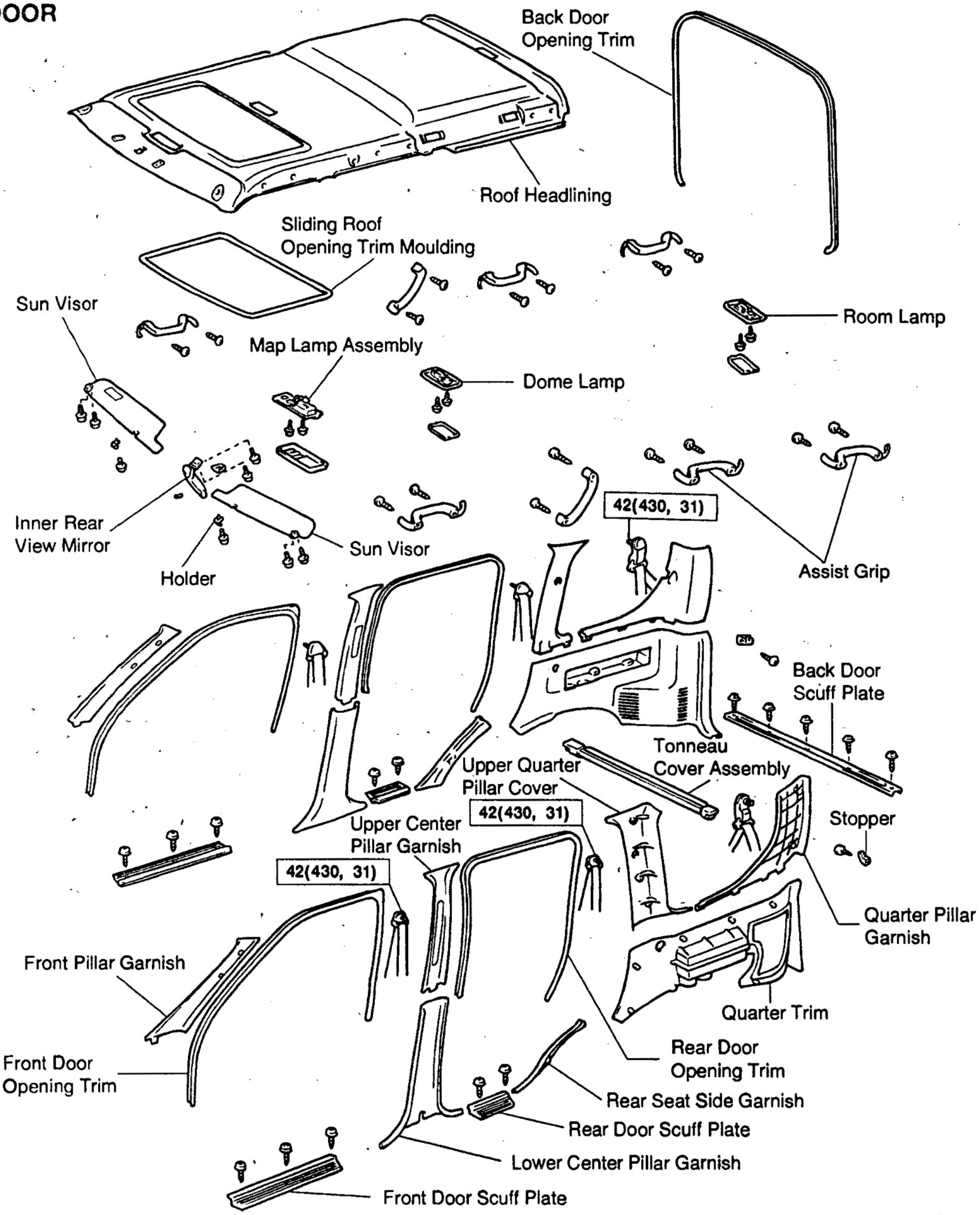

N·m (kgf·cm, ft·lbf) : Specified torque

N19779

COMPONENTS (Cont'd)

3 DOOR

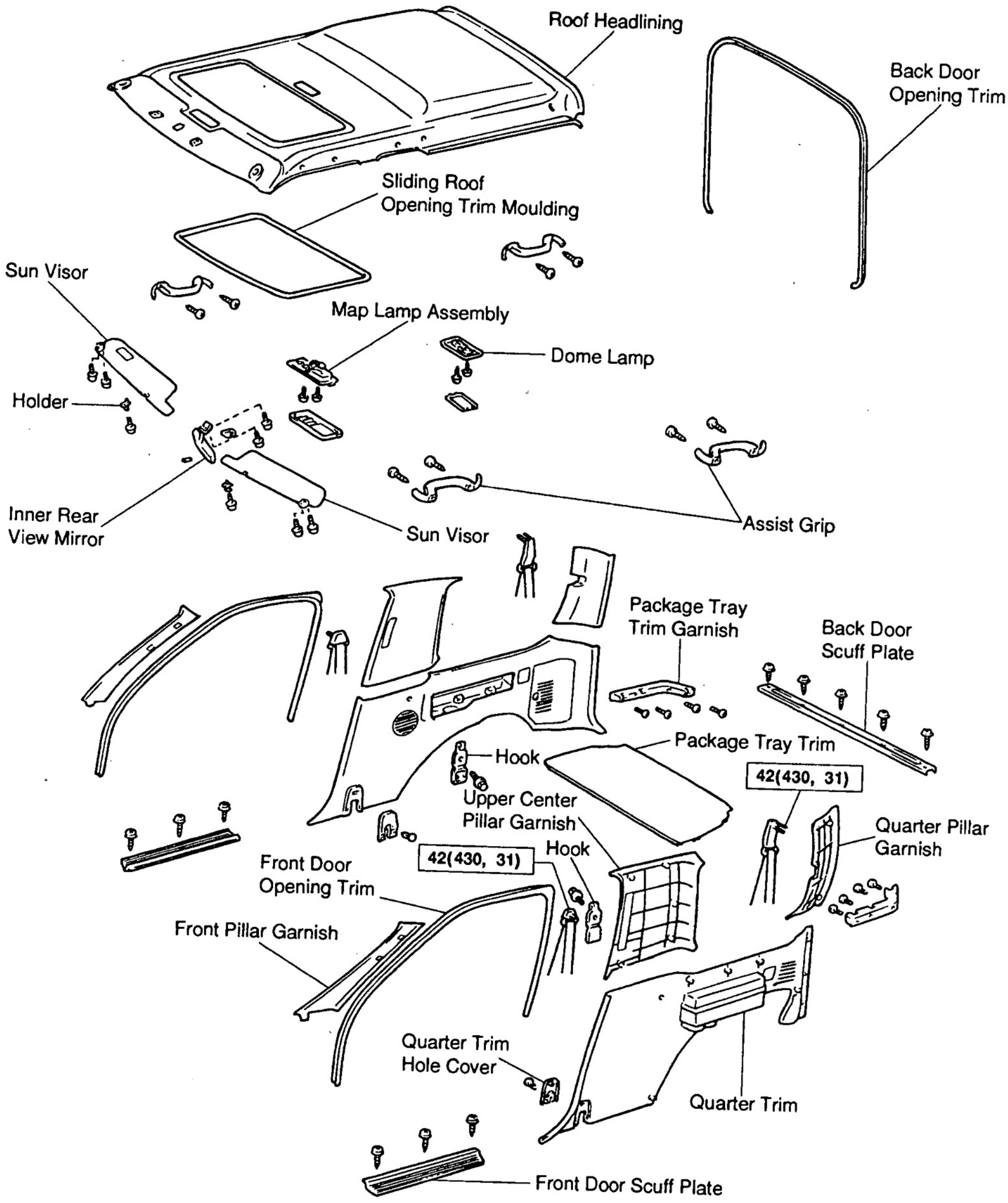

N·m (kgf·cm, ft·lbf) : Specified torque

N19780

COMPONENTS (Cont'd)

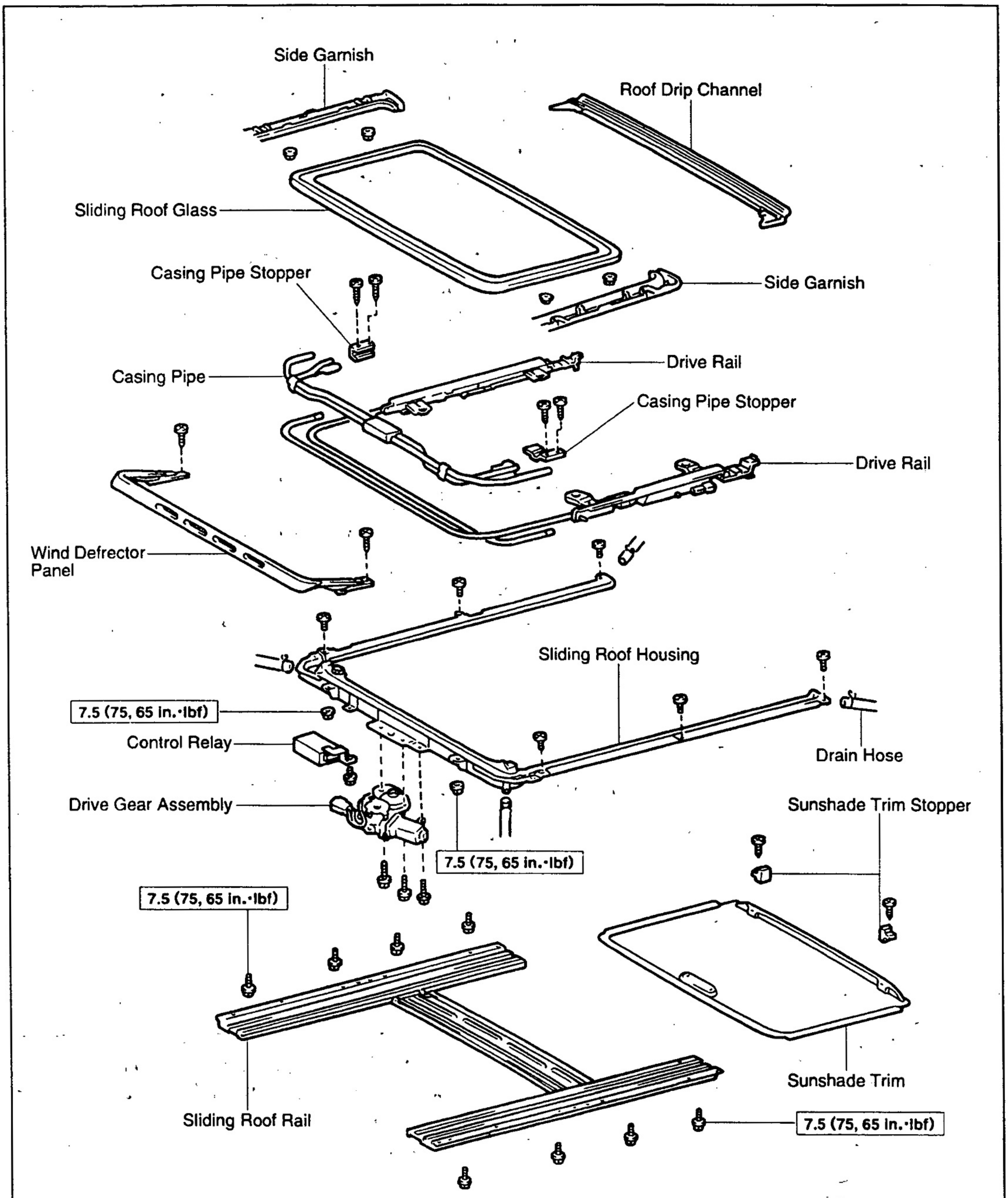

N·m (kgf·cm, ft·lbf): Specified torque

N17832

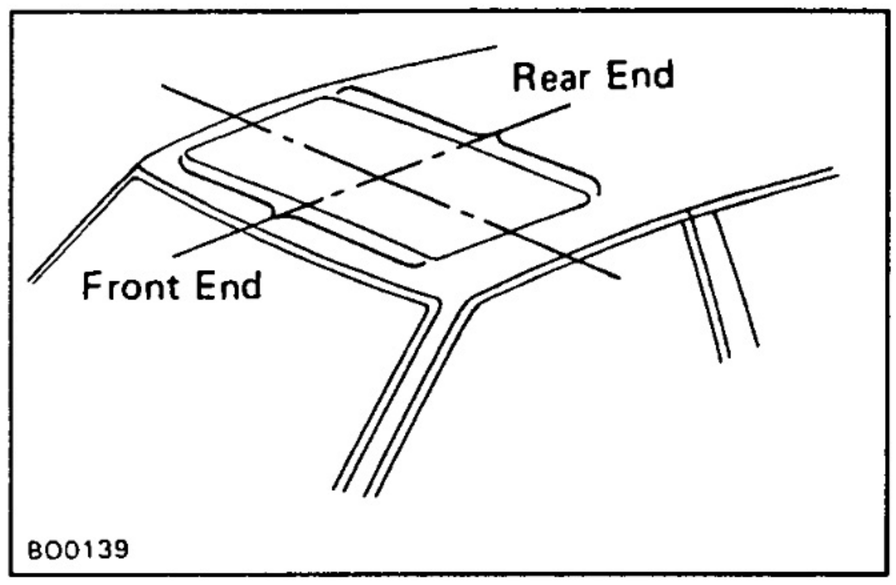

BO2N8-01

ON-VEHICLE INSPECTION

INSPECT SLIDING ROOF GLASS ALIGNMENT

(a) Start the engine and check the operation time of the sliding roof.
Operation time: Approx. 5 sec.
(b) Check for abnormal noise of binding during operation.
(c) With the sliding roof fully closed, check for water leakage.
(d) Check for a difference in level between the sliding roof weatherstrip and roof panel.
Front end:
0 ± 1.5 mm (0 ± 0.059 in.)
Rear end:
0 ± 1.5 mm (0 ± 0.059 in.)

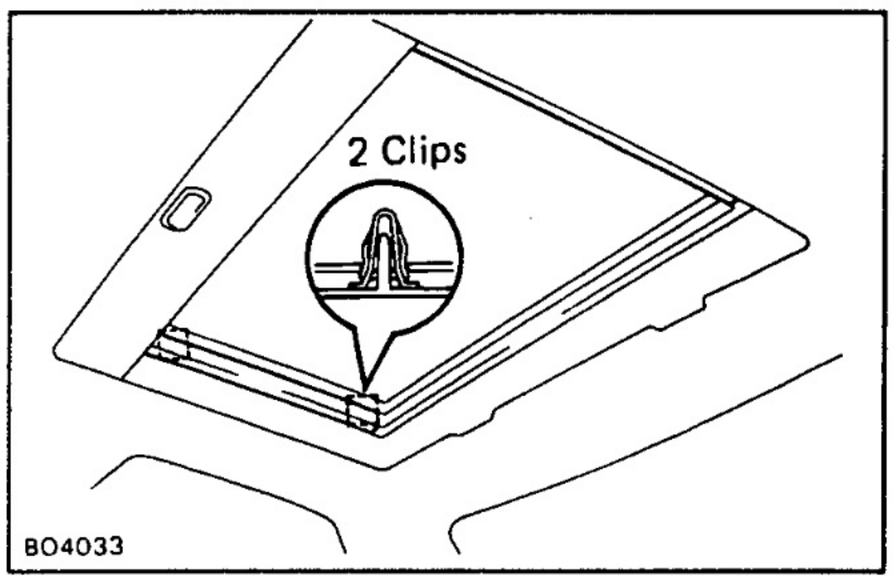

BO2N9-01

SLIDING ROOF ADJUSTMENT

1. REMOVE SIDE GARNISH

Before making adjustments, remove the left and right side garnishes.
HINT: After adjustment, reinstall the side garnishes.

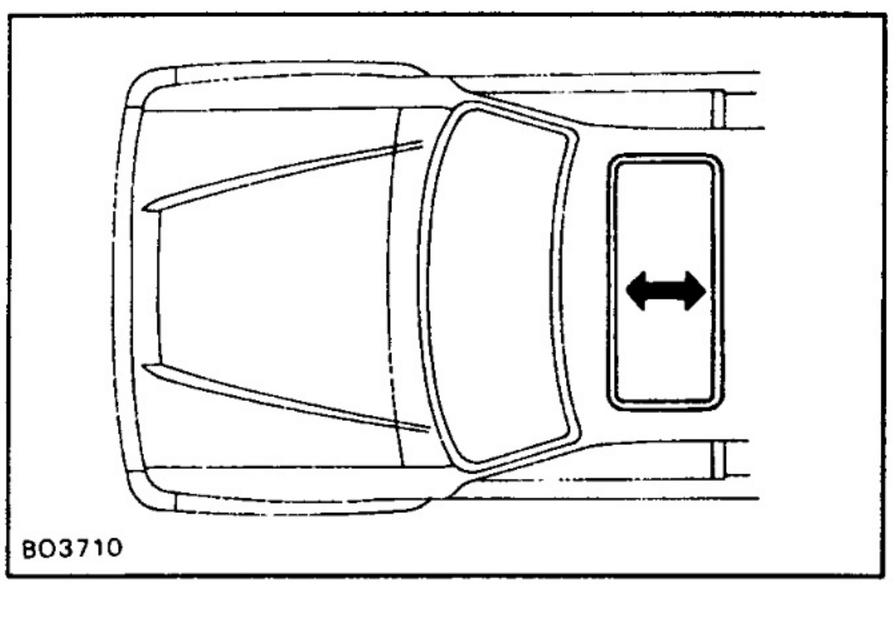

2. TO ADJUST FORWARD OR BACKWARD

(a) Adjust by loosening the sliding roof installation nuts, and move the sliding roof bracket forward and backward.

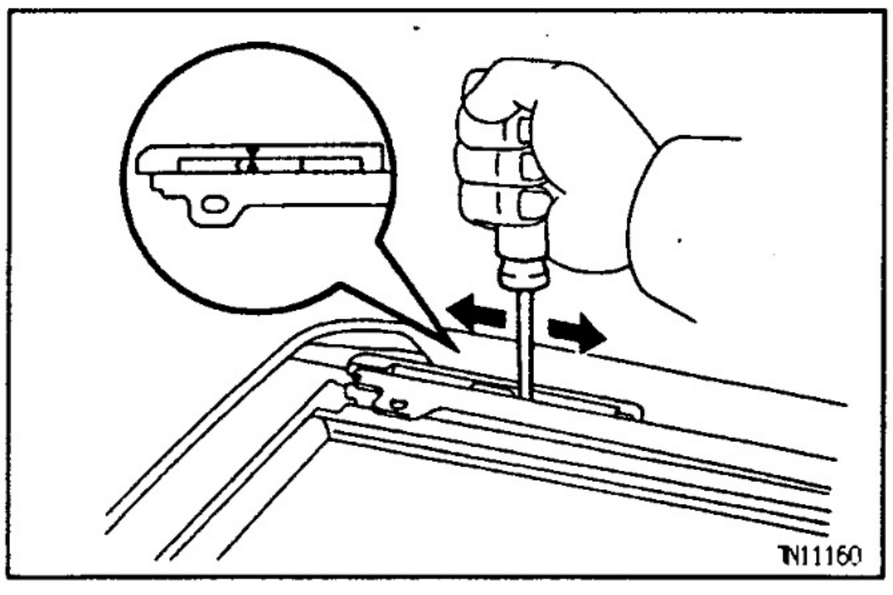

(b) When the front or rear alignment is not correct, remove the glass and adjust the drive rail.
(c) Using a screwdriver, slide the link forward or backward to align the 2 marks as shown.
(d) Slide the bracket to the forefront with your hand.

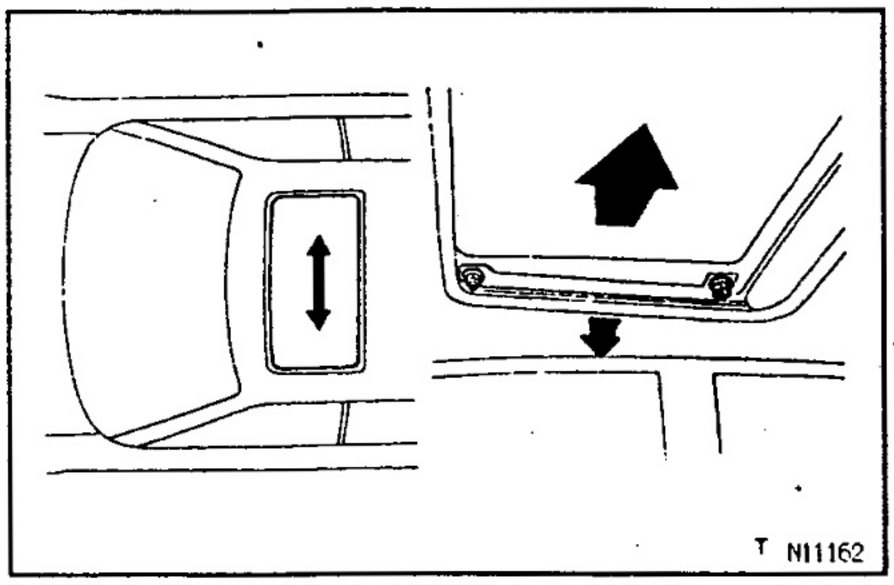

3. TO ADJUST RIGHT OR LEFT

Adjust by loosening the sliding roof rear shoe installation nuts, and move the sliding roof to the right and left.

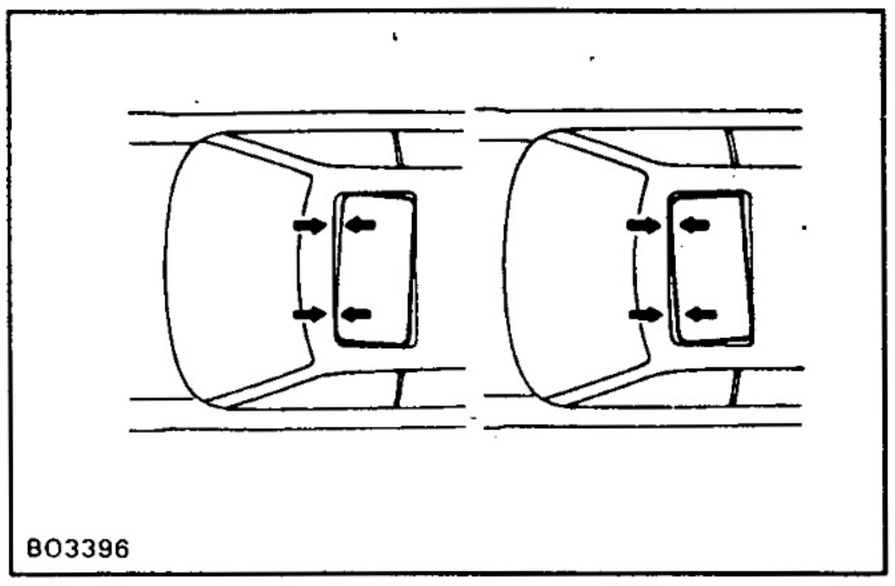

4. TO ADJUST CLEARANCE
(Difference in left and right clearance)

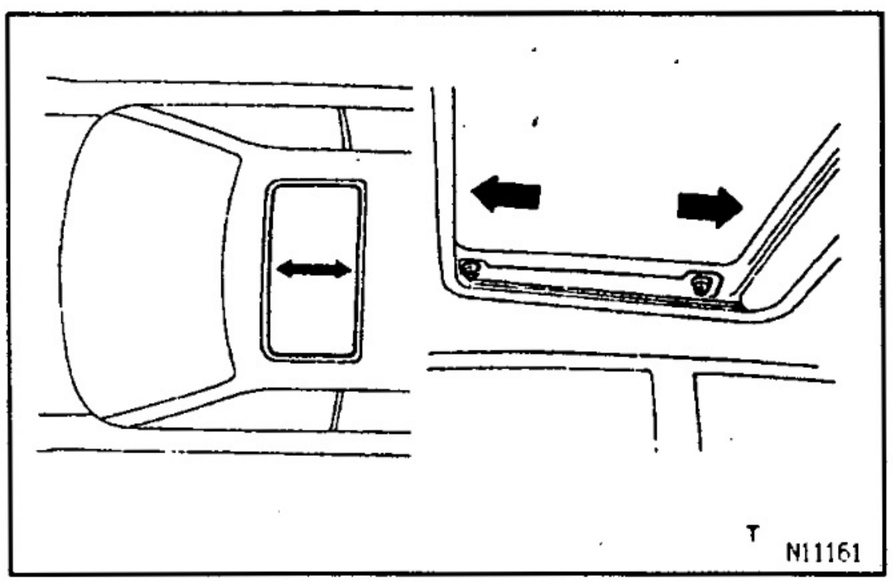

Adjust by loosening the sliding roof installation nuts and readjust the sliding roof to the proper position.

BO

BO2NA-01

SLIDING ROOF REMOVAL (5 DOOR)

1. **CHECK OPERATION TO SLIDING ROOF**
2. **REMOVE THESE PARTS:**

(a) Front and No.1 rear seat
Torque: 37 N·m (380 kgf·cm, 27 ft·lbf)

(b) w/ No.2 Rear Seat
No.2 rear seat
Torque: 37 N·m (380 kgf·cm, 27 ft·lbf)

(c) Front and rear door scuff plates
(d) Back door scuff plate
(e) Front and rear door opening trims
(f) Assist grips
(g) Front pillar garnishes
(h) Lower center pillar garnish hole covers and garnishes
(i) Front seat belt shoulder anchor bolts
Torque: 42 N·m (430 kgf·cm, 31 ft·lbf)
(j) Upper center pillar garnishes

(k) No.1 rear seat belt shoulder and floor anchor bolts
Torque: 42 N·m (430 kgf·cm, 31 ft·lbf)
(l) w/ No.2 Rear Seat Belt:
No.2 rear seat belt shoulder and floor anchor bolts
Torque: 42 N·m (430 kgf·cm, 31 ft·lbf)
(m) w/ Tonneau Cover:
Tonneau cover assembly and holder
(n) Rear seat side garnishes (See page BO−41)
(o) Quarter trims (See page BO−41)
(p) Upper quarter pillar covers (See page BO−41)
(q) Quarter pillar garnishes (See page BO−42)
(r) Sun visors and holders
(s) Inner rear view mirror
(t) Room lamp and dome lamp
(u) Map lamp assembly
(v) Back door opening trim
(w) Sliding roof opening trim moulding

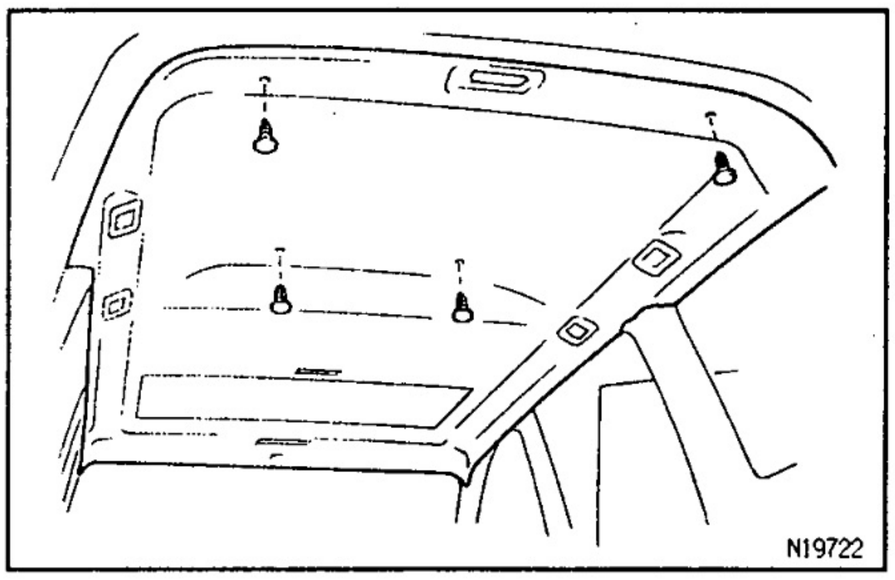

3. REMOVE ROOF HEADLINING
Remove the 4 clips and roof headlining.
4. REMOVE SLIDING ROOF SIDE GARNISH
(See page BO−50)
5. REMOVE SLIDING ROOF GLASS

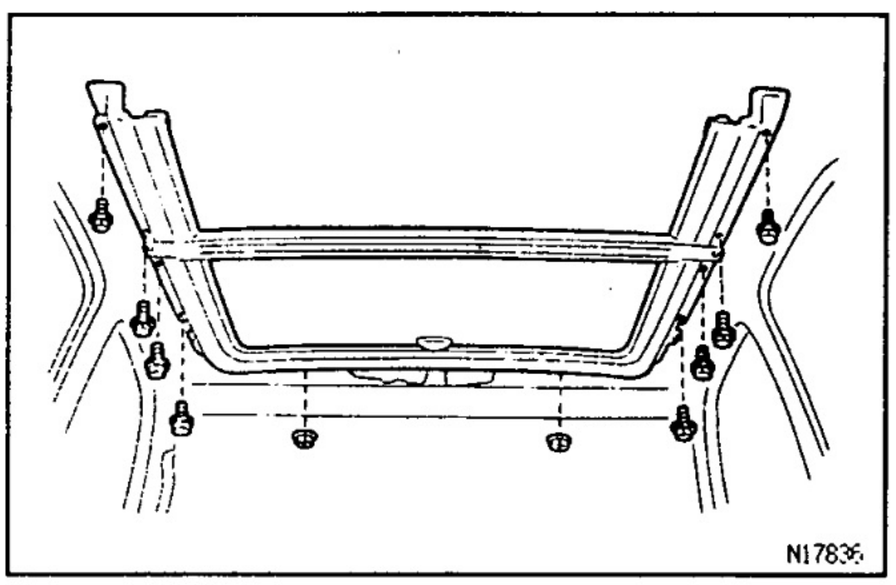

6. REMOVE SLIDING ROOF HOUSING ASSEMBLY

BO2NC−01

SLIDING ROOF REMOVAL (3 DOOR)

1. CHECK OPERATION TO SLIDING ROOF
2. REMOVE THESE PARTS:
(a) Front and rear seats
Torque: 37 N·m (380 kgf·cm, 27 ft·lbf)
(b) Front and back door scuff plates
(c) Front door opening trims

(d) Assist grips
(e) Front pillar garnishes
(f) Front seat belt shoulder anchor bolts
Torque: 42 N·m (430 kgf·cm, 31 ft·lbf)
(g) Rear seat belt shoulder and floor anchor bolts
Torque: 42 N·m (430 kgf·cm, 31 ft·lbf)
(h) w/ Package Tray Trim:
Package tray trim panel and garnish
(i) w/ Rear Seat:
Seat hook
(j) Quarter trims and hole covers (See page BO−42)
(k) Upper center pillar garnishes (See page BO−42)
(l) Quarter pillar garnishes (See page BO−43)
(m) Sun visors and holders
(n) Inner rear view mirror
(o) Dome lamp
(p) Map lamp assembly
(q) Back door opening trim
(r) Sliding roof opening trim moulding

3. REMOVE ROOF HEADLINING
(See page BO−52)

4. REMOVE SLIDING ROOF SIDE GARNISH
(See page BO−50)

5. REMOVE SLIDING ROOF GLASS

6. REMOVE SLIDING ROOF HOUSING ASSEMBLY
(See page BO−52)

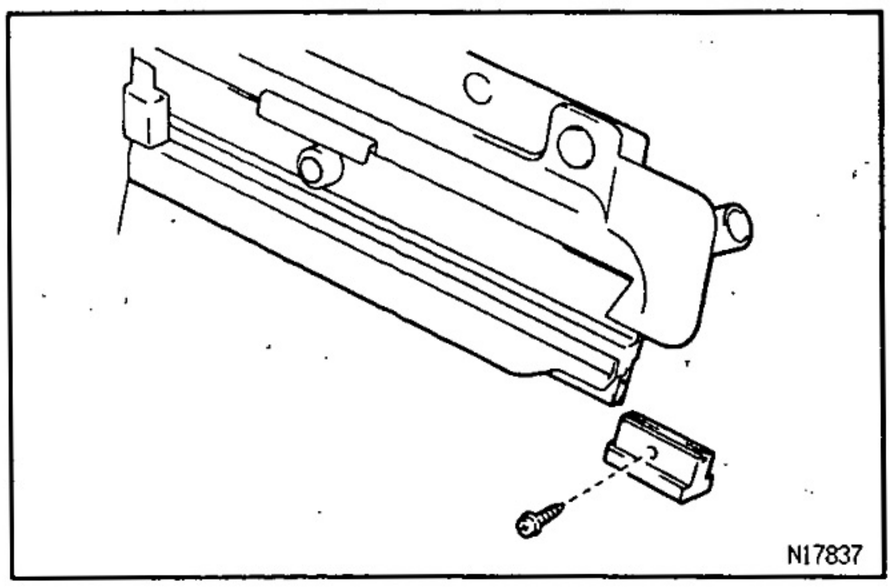

BO2NE-01

SLIDING ROOF DISASSEMBLY

1. REMOVE SUNSHADE TRIM STOPPER
Remove the screw and stopper.

2. REMOVE SUNSHADE TRIM

3. REMOVE SIDE GARNISH

4. REMOVE SLIDING ROOF GLASS
Remove the 4 nuts and glass.

5. REMOVE ROOF DRIP CHANNEL
Using a screwdriver, remove the roof drip channel.
HINT: Tape the screwdriver tip before use.

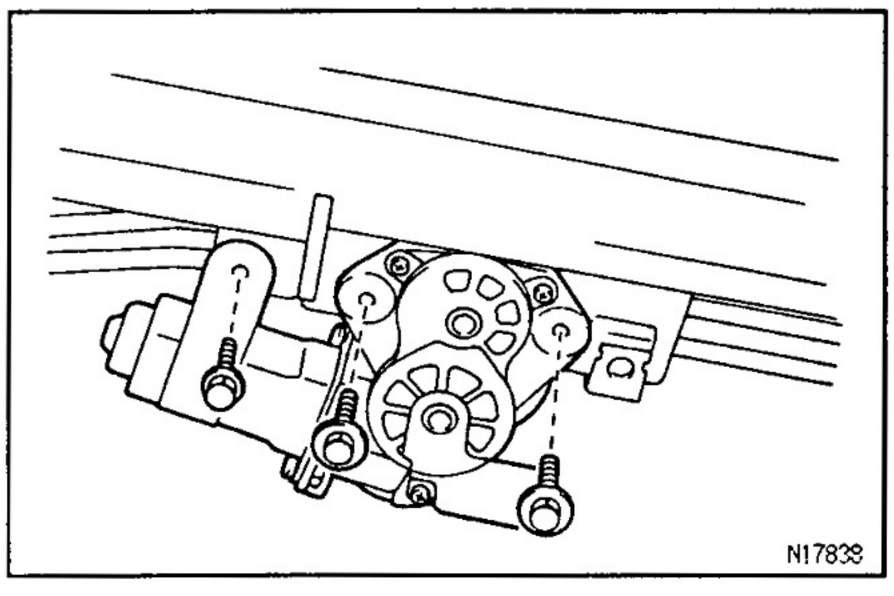

6. REMOVE CONTROL RELAY AND DRIVE GEAR ASSEMBLY

(a) Disconnect the connectors.
(b) Remove the bolt and relay.
(c) Remove the 3 bolts and drive gear assembly.

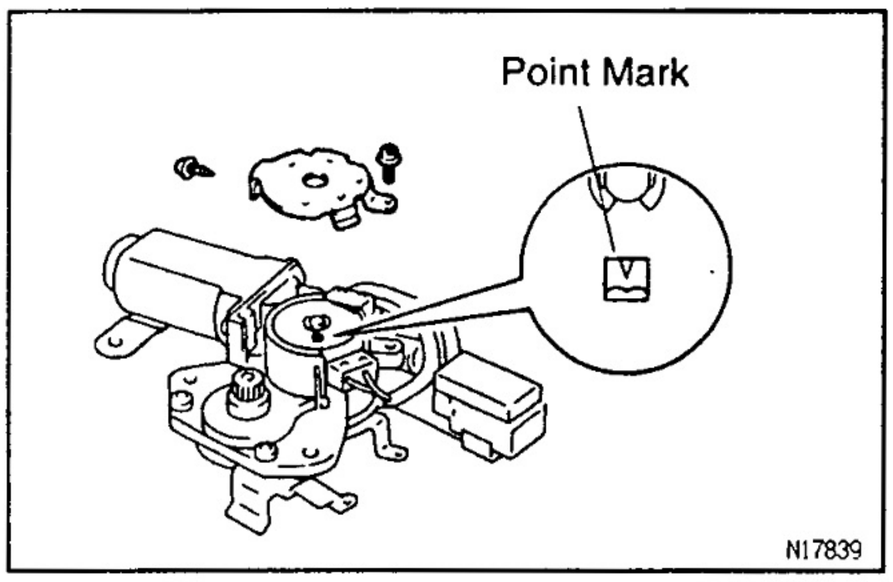

(d) Remove the screw and cam plate cover.
(e) Turn the drive shaft with screwdriver to align the housing and gear point mark, as shown.
Install the cam plate cover and screw.

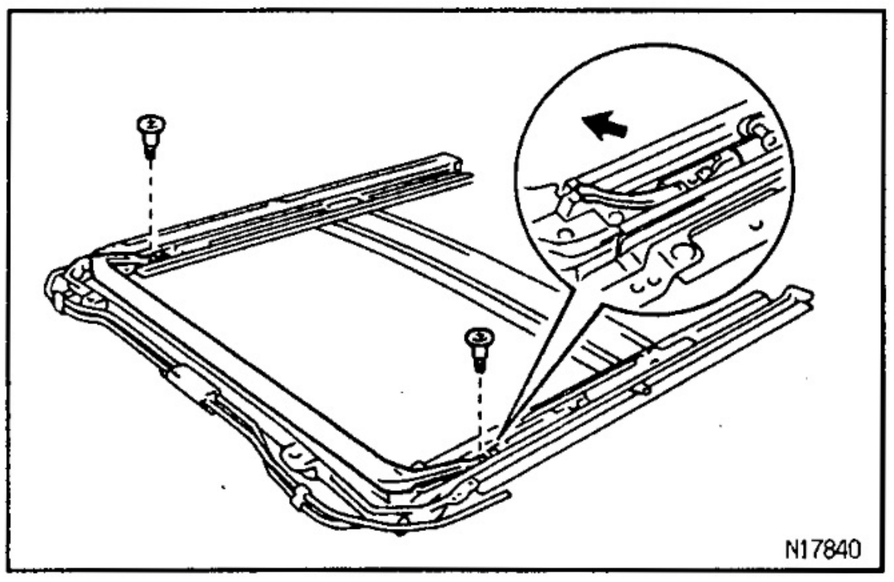

7. REMOVE WIND DEFLECTOR PANEL
Remove the 2 screws and panel.

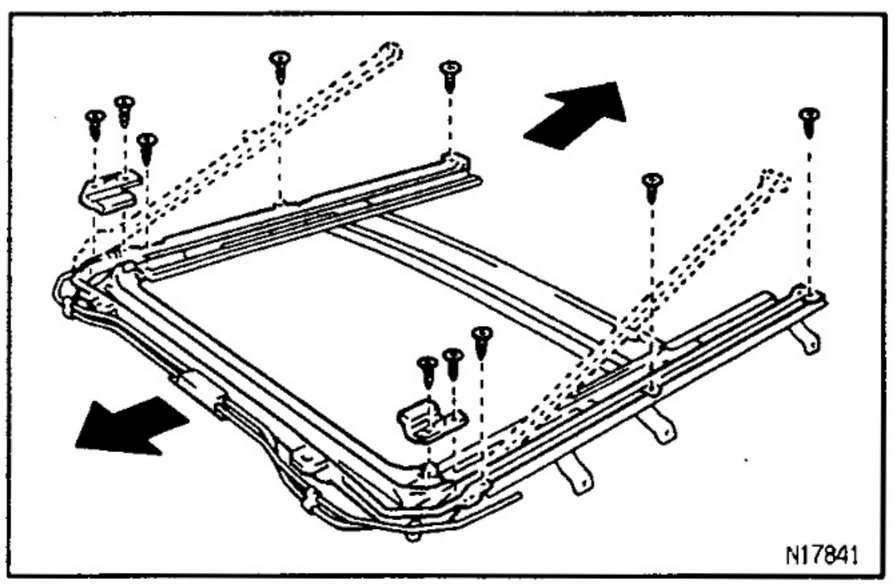

8. REMOVE SLIDING ROOF HOUSING

(a) Remove the 4 screws with casing pipe stoppers.
(b) Remove the 6 screws and housing.

9. REMOVE DRIVE RAIL

(a) Pull off the cable of drive rail from the casing pipe.
(b) Slide the drive rail forward, then remove it.

10. ADJUST DRIVE RAIL
(See page BO–50)

SLIDING ROOF ASSEMBLY

BO2NQ–01

Assembly is in the reverse order of disassembly.

SLIDING ROOF INSTALLATION

BO2NJ–01

Installation is in the reverse order of removal.

INSTRUMENT PANEL
COMPONENTS

B02D9-06

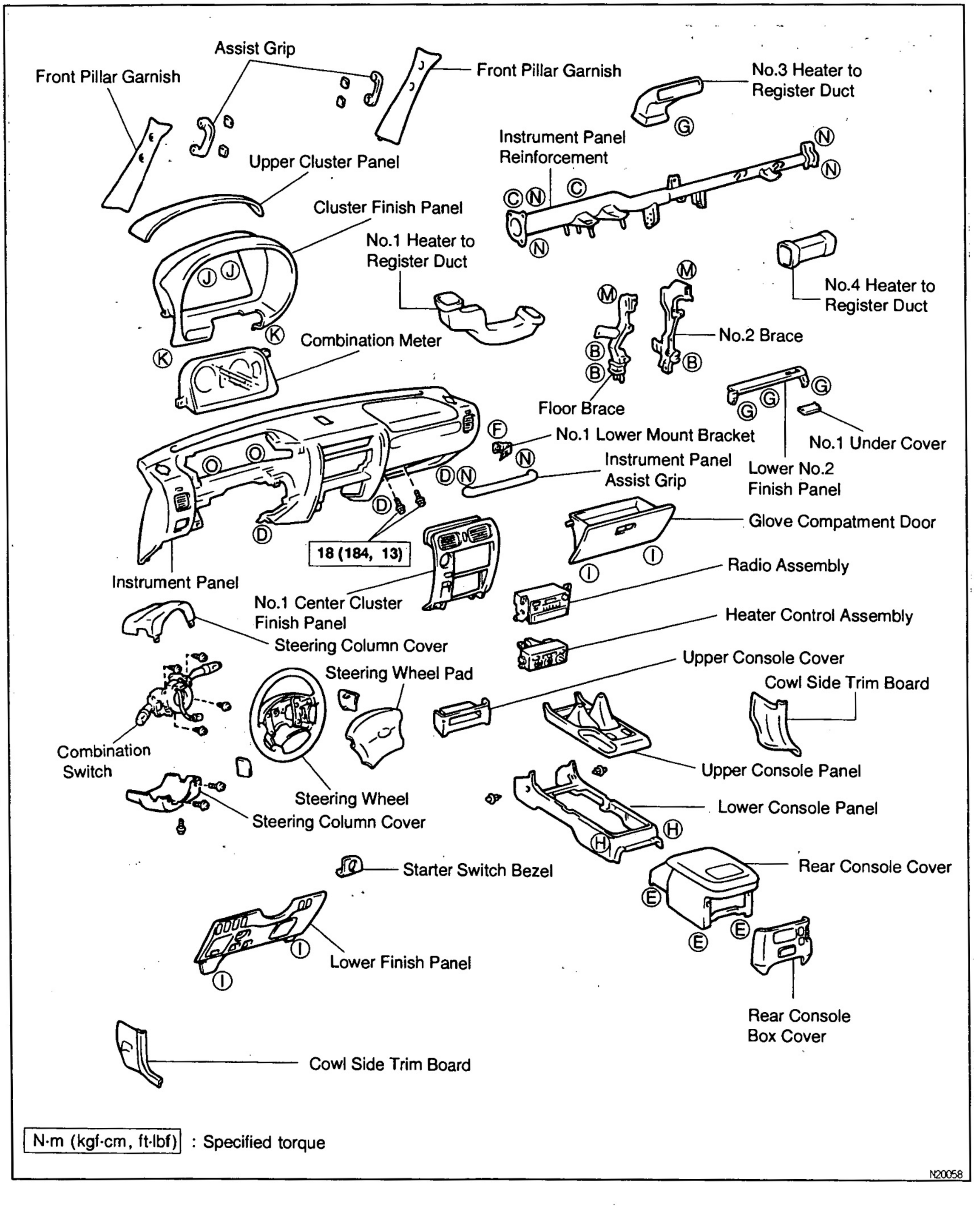

COMPONENTS (Cont'd)

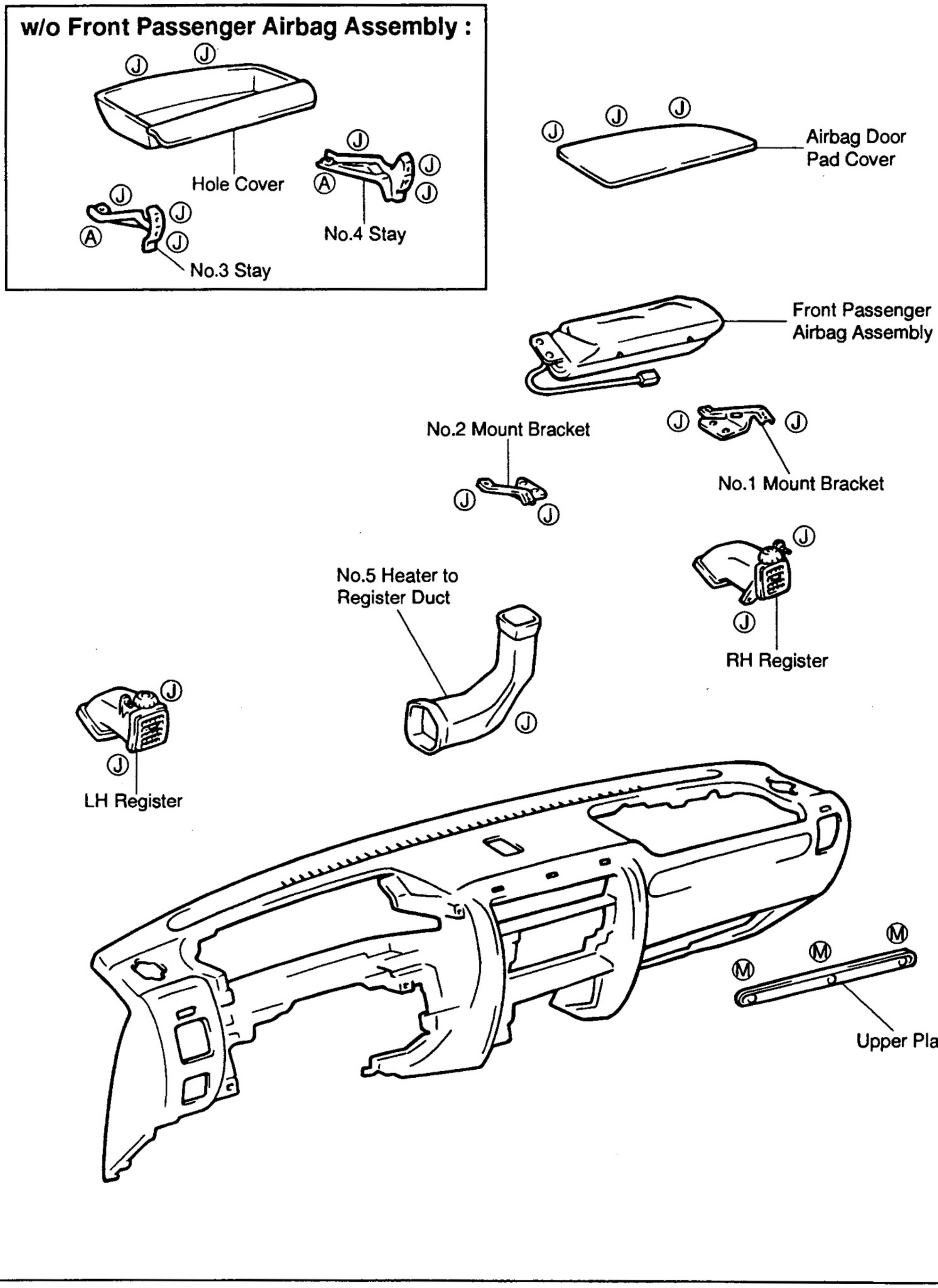

HINT: Screw shapes and size are indicated in the table below. The code (Ⓐ – ◎) correspond to those indicated on the previous page.

mm(in.)

	Shape	Size		Shape	Size		Shape	Size
Ⓐ	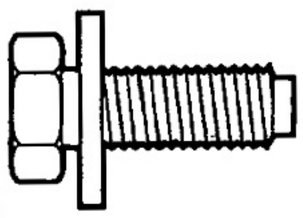	Ø = 8 (0.31) L = 22 (0.87)	Ⓑ	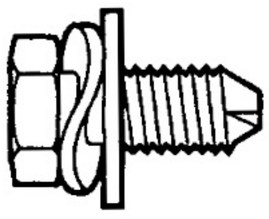	Ø = 8 (0.31) L = 18 (0.71)	Ⓒ	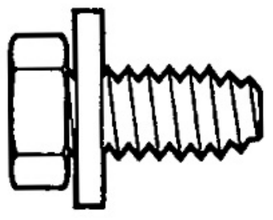	Ø = 8 (0.31) L = 16 (0.71)
Ⓓ	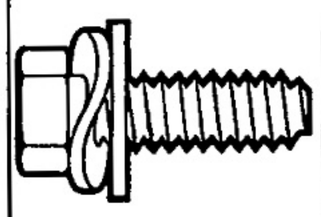	Ø = 6 (0.24) L = 22 (0.87)	Ⓔ	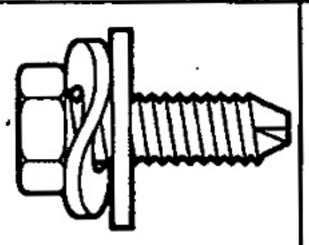	Ø = 6 (0.24) L = 20 (0.79)	Ⓕ	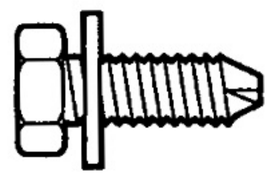	Ø = 6 (0.24) L = 18 (0.71)
Ⓖ		Ø = 5.22 (0.2055) L = 16 (0.63)	Ⓗ		Ø = 5 (0.20) L = 16 (0.63)	Ⓘ		Ø = 5 (0.20) L = 14 (0.55)
Ⓙ		Ø = 5 (0.20) L = 14 (0.55)	Ⓚ	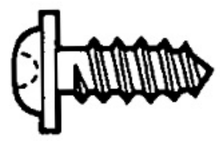	Ø = 5 (0.20) L = 14 (0.55)	Ⓛ		Ø = 5 (0.20) L = 12 (0.47)
Ⓜ	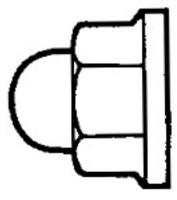	Ø = 8 (0.31)	Ⓝ	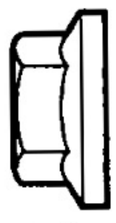	Ø = 6 (0.24)	◎		Ø = 6 (0.24)

N19778

V08038

BO2MY–01

INSTRUMENT PANEL REMOVAL

1. REMOVE THESE PARTS:

(a) Front door scuff plates

(b) Cowl side trim boards

2. REMOVE STEERING WHEEL
(See page SR–16)

3. REMOVE THESE PARTS:

(a) Assist grips

(b) Front pillar garnishes

(c) Steering column cover

4. REMOVE LOWER FINISH PANEL

(a) Remove the 2 screws and hood lock release lever.

(b) Remove the 2 screws and fuel lid opener.

(c) Remove the 2 bolts and panel then disconnect the connectors.

5. REMOVE THESE PARTS:

(a) Starter switch bezel

(b) No.1 heater to register duct

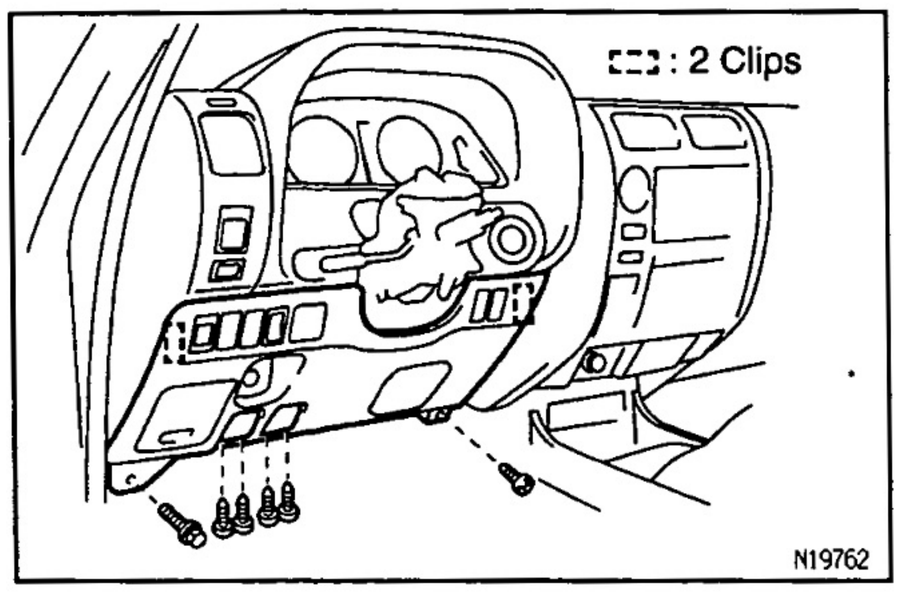

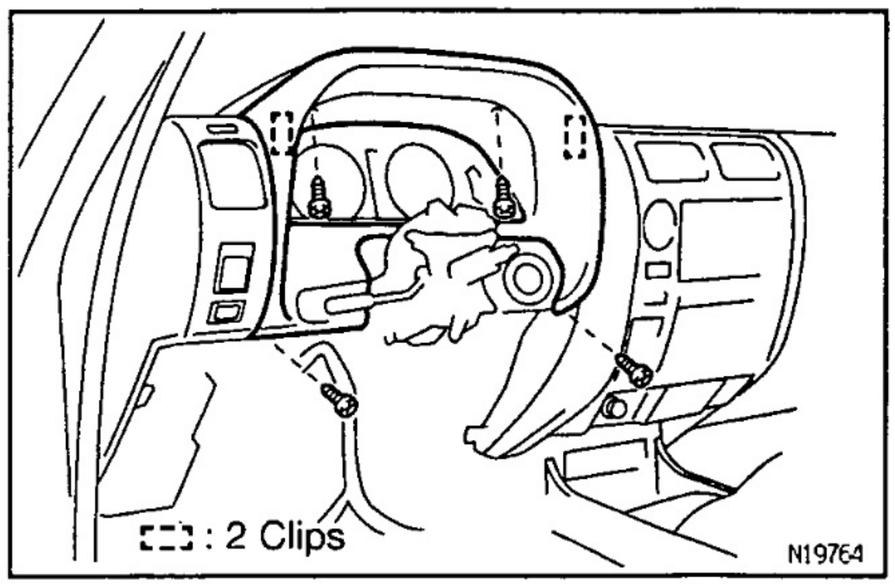

6. REMOVE CLUSTER FINISH PANEL

Remove the 4 screws and panel.

7. REMOVE THESE PARTS:

(a) Upper cluster finish panel
(b) Combination meter
(c) Instrument assist grip

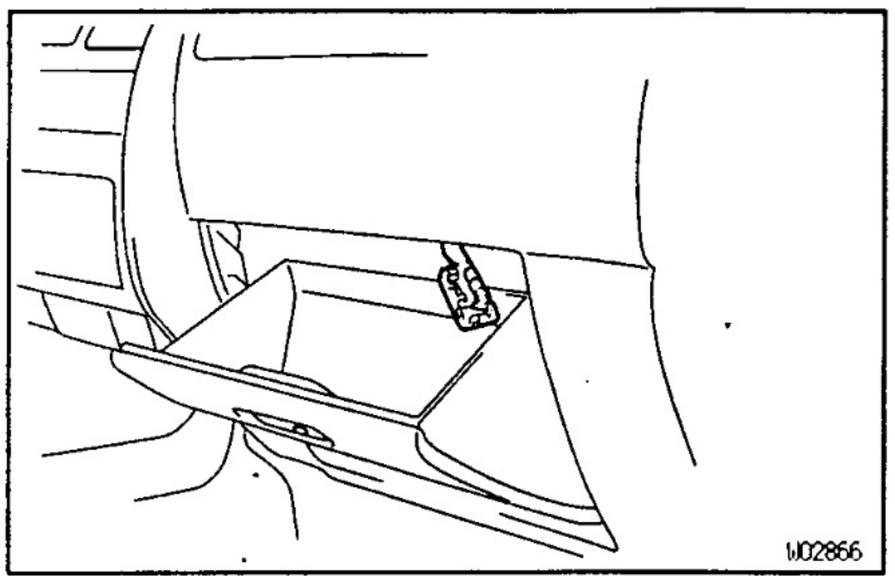

8. REMOVE GLOVE COMPARTMENT DOOR

(a) w/ Front Passenger Airbag Assembly:
Remove the No.1 under cover inside the glove compartment door.
NOTICE: When handling the airbag connector, take care not to damage the airbag wire harness.

(b) w/ Front Passenger Airbag Assembly:
Pull up and disconnect the airbag connector.
(See page RS—13)

(c) Remove the 2 screws and glove compartment door.
(d) Remove the 3 screws and lower No.2 finish panel.

9. REMOVE NO.4 HEATER TO REGISTER DUCT

10. w/ Console Box:
REMOVE REAR CONSOLE BOX

(a) Remove the rear console box cover, then disconnect the connectors.
(b) Remove the 3 bolts and rear console box, then disconnect the connectors.

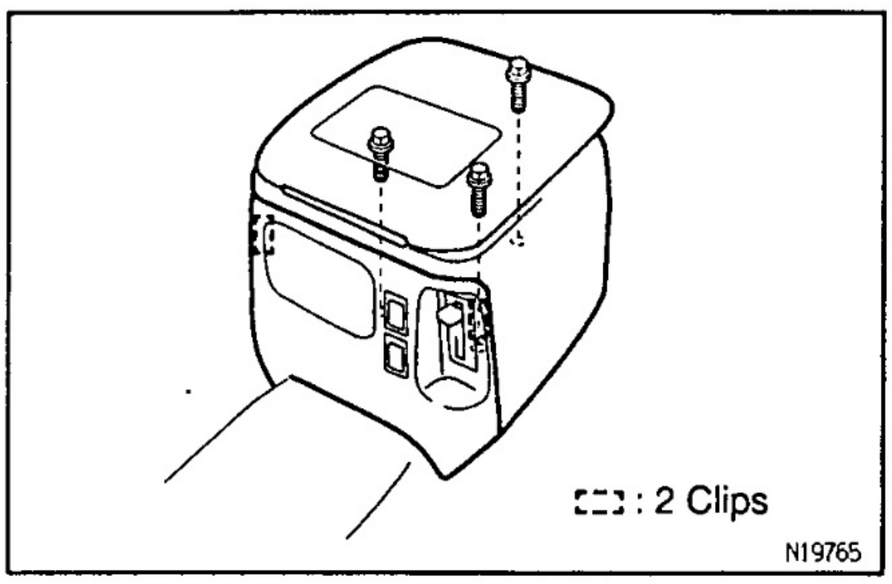

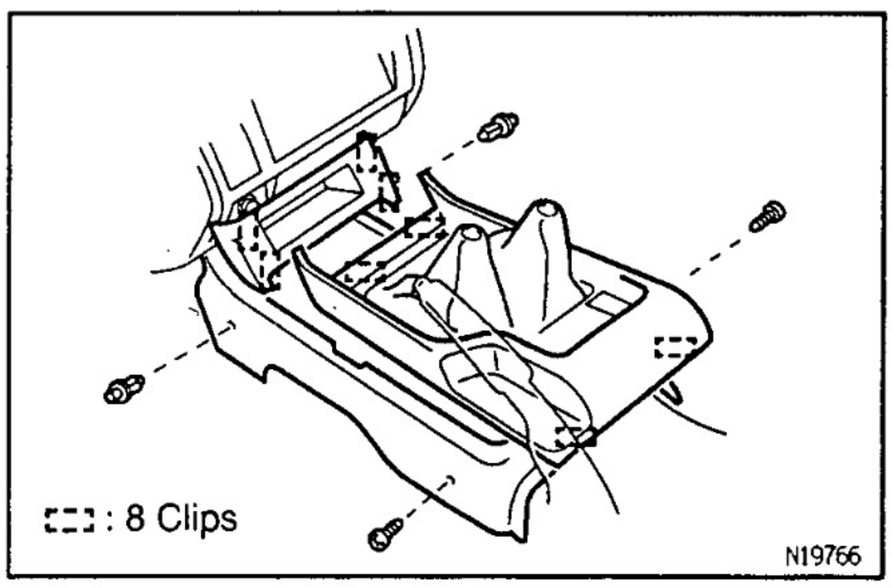

11. w/ Console Box:
REMOVE THESE PARTS:

(a) Upper console cover
(b) Upper console panel
(c) Lower console box

12. w/o Console Box:
REMOVE LOWER CENTER COVER

Remove the 2 clips and cover.

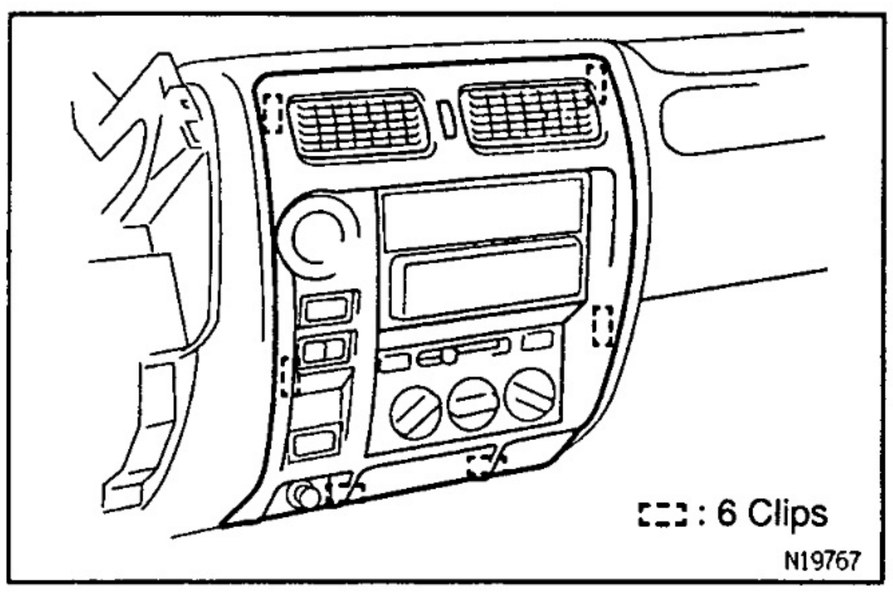

13. REMOVE NO.1 CENTER CLUSTER FINISH PANEL

Remove the panel, then disconnect the connector.

14. REMOVE THESE PARTS:

(a) Radio assembly
(b) Heater control assembly
(See page AC—80)

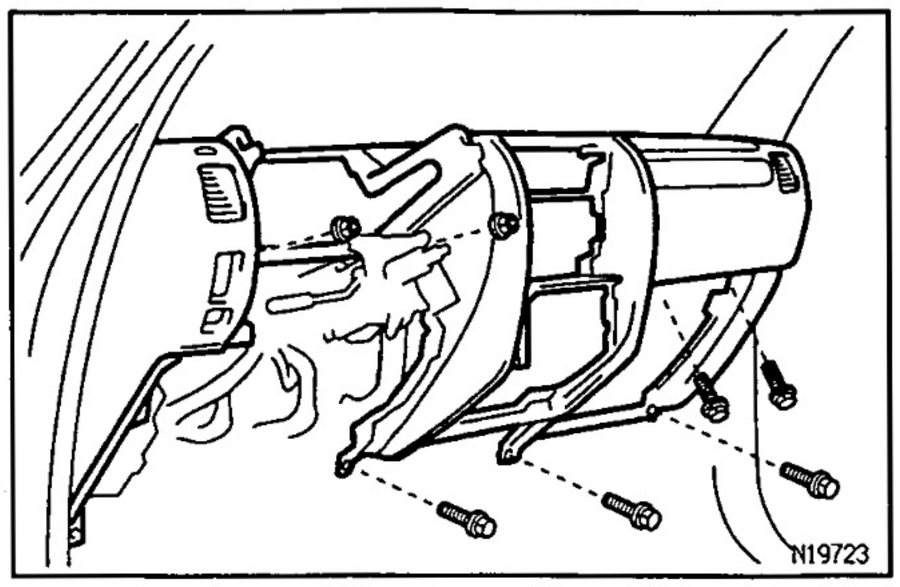

15. REMOVE INSTRUMENT PANEL

(a) Remove the 5 bolts and 2 nuts.

(b) Remove the instrument panel.

Torque: Passenger airbag assembly bolts
18 N·m (184 kgf·cm, 13 ft·lbf)

16. REMOVE INSTRUMENT PANEL REINFORCEMENT

(a) Remove the 2 bolts, nut and floor brace.

(b) Remove the bolt, nut and No.2 brace.

(c) Remove the screw and No.3 heater to register duct.

(d) Remove the 2 bolts, 4 nuts and reinforcement.

BO2N0-01

INSTRUMENT PANEL DISASSEMBLY

1. REMOVE THESE PARTS:

(a) No.5 heater to register duct

(b) LH and RH instrument panel register

(c) Center bracket

2. w/o Front Passenger Airbag Assembly:
REMOVE THESE PARTS:

(a) No.3 instrument panel stay

(b) No.4 instrument panel stay

(c) Instrument panel hole cover

3. w/ Front Passenger Airbag Assembly:
REMOVE FRONT PASSENGER AIRBAG ASSEMBLY (See page RS–13)

(a) Remove the 4 nuts and front passenger airbag assembly.

(b) Remove the 4 screws, No.1 and No.2 brackets.

(c) Remove the 3 screws and airbag door pad cover.

CAUTION:

- **Do not store the front passenger airbag assembly with the airbag deployment direction facing down.**
- **Never disassemble the front passenger airbag assembly.**

ASSEMBLY NOTICE:

- **Make sure that the front passenger airbag assembly is installed to the specified torque.**
- **When installing the instrument panel, take care that the airbag wire harness does not interfere with other parts and is not pinched between other parts.**

(d) Remove the upper plate.

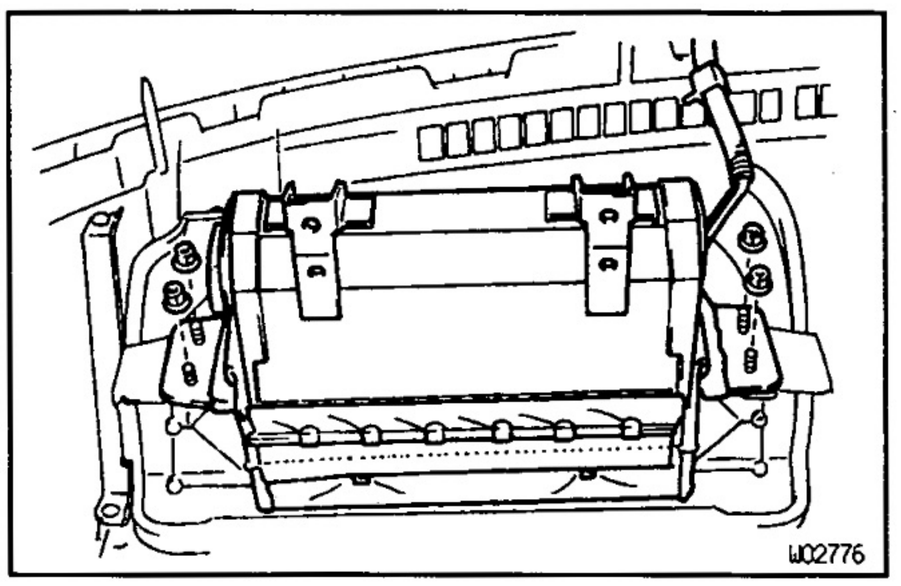

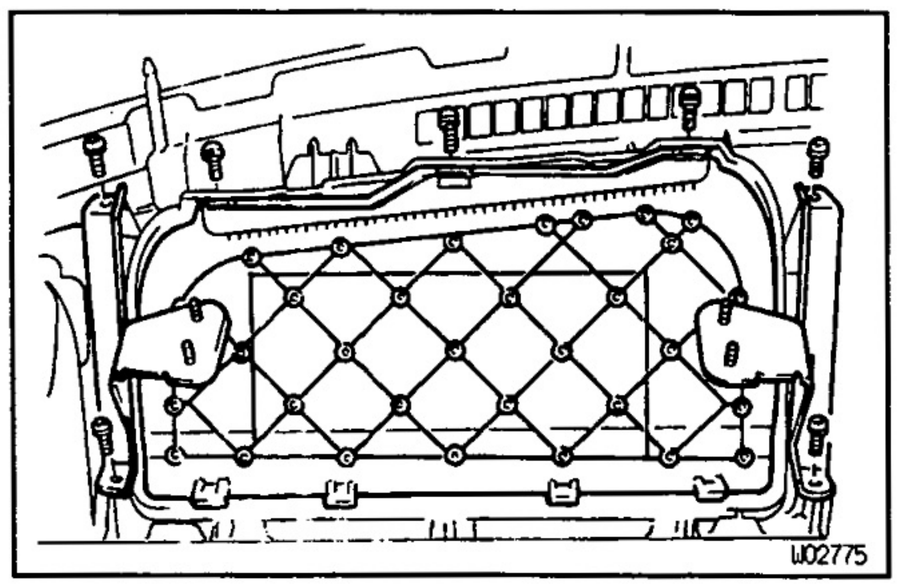

BO2N2-01

INSTRUMENT PANEL ASSEMBLY

Assembly is in the reverse order of disassembly.

BO2N4-01

INSTRUMENT PANEL INSTALLATION

Installation is in the reverse order of removal.

SEAT
COMPONENTS

B02MP-01

FRONT SEAT
Separate Type :

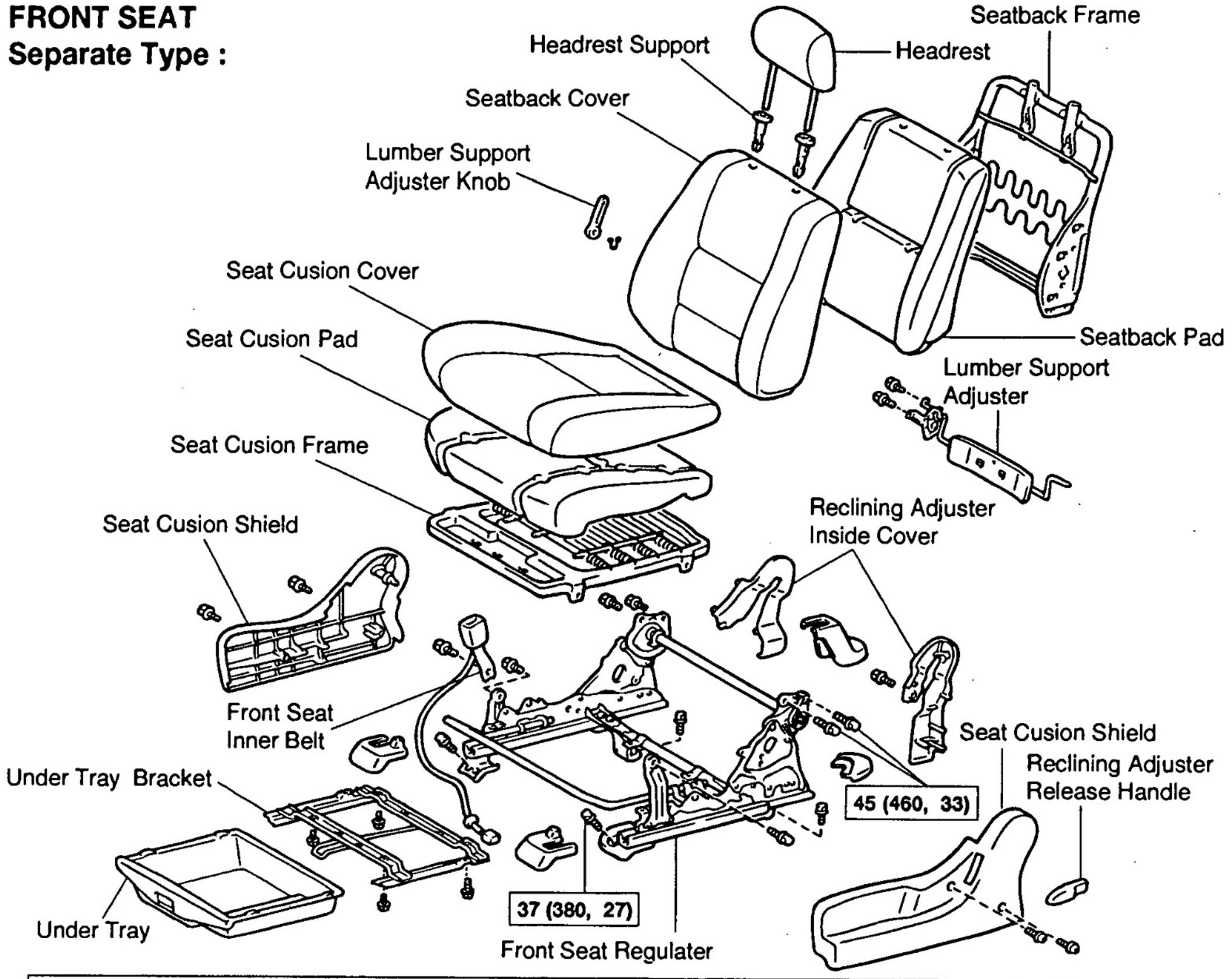

Power Seat

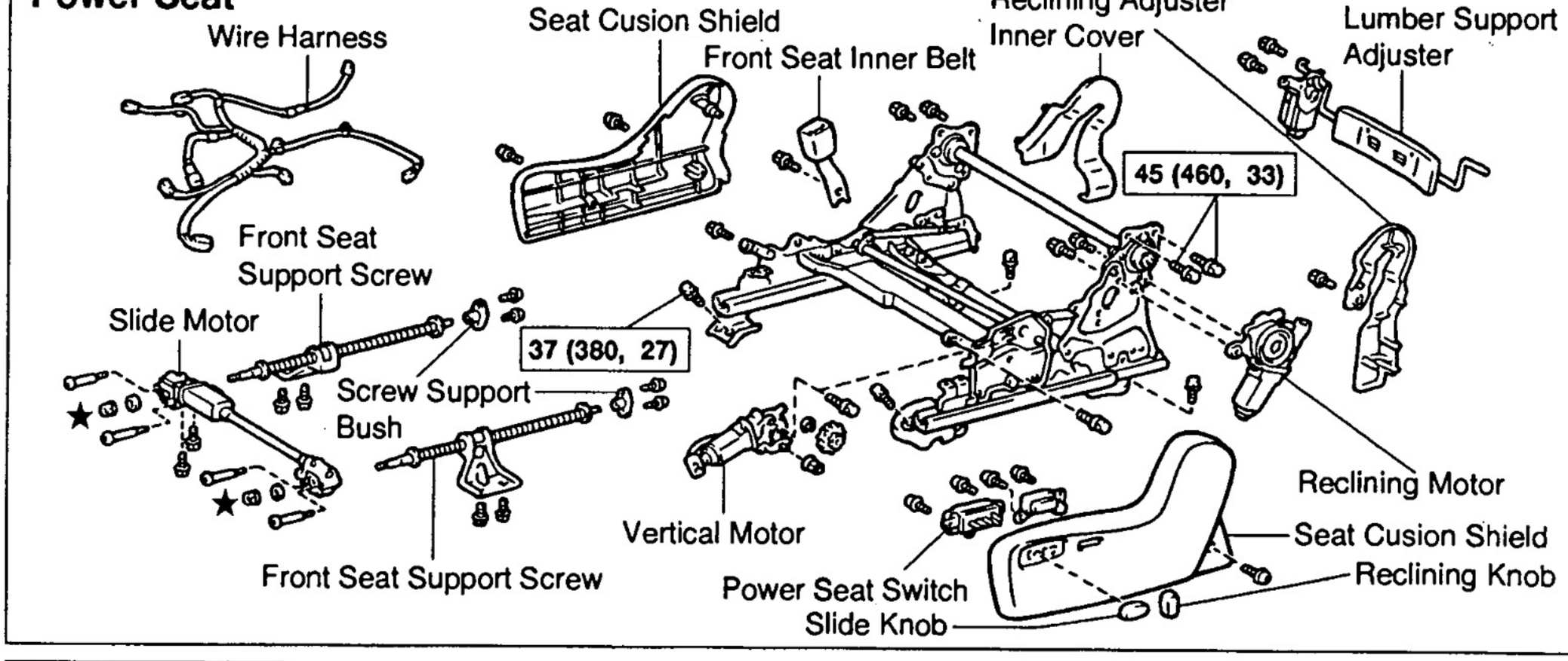

N·m (kgf·cm, ft·lbf) : Specified torque

★Precoated part

N19781

BO

COMPONENTS (Cont'd)

FRONT SEAT
Bench Type (Passenger Side) :

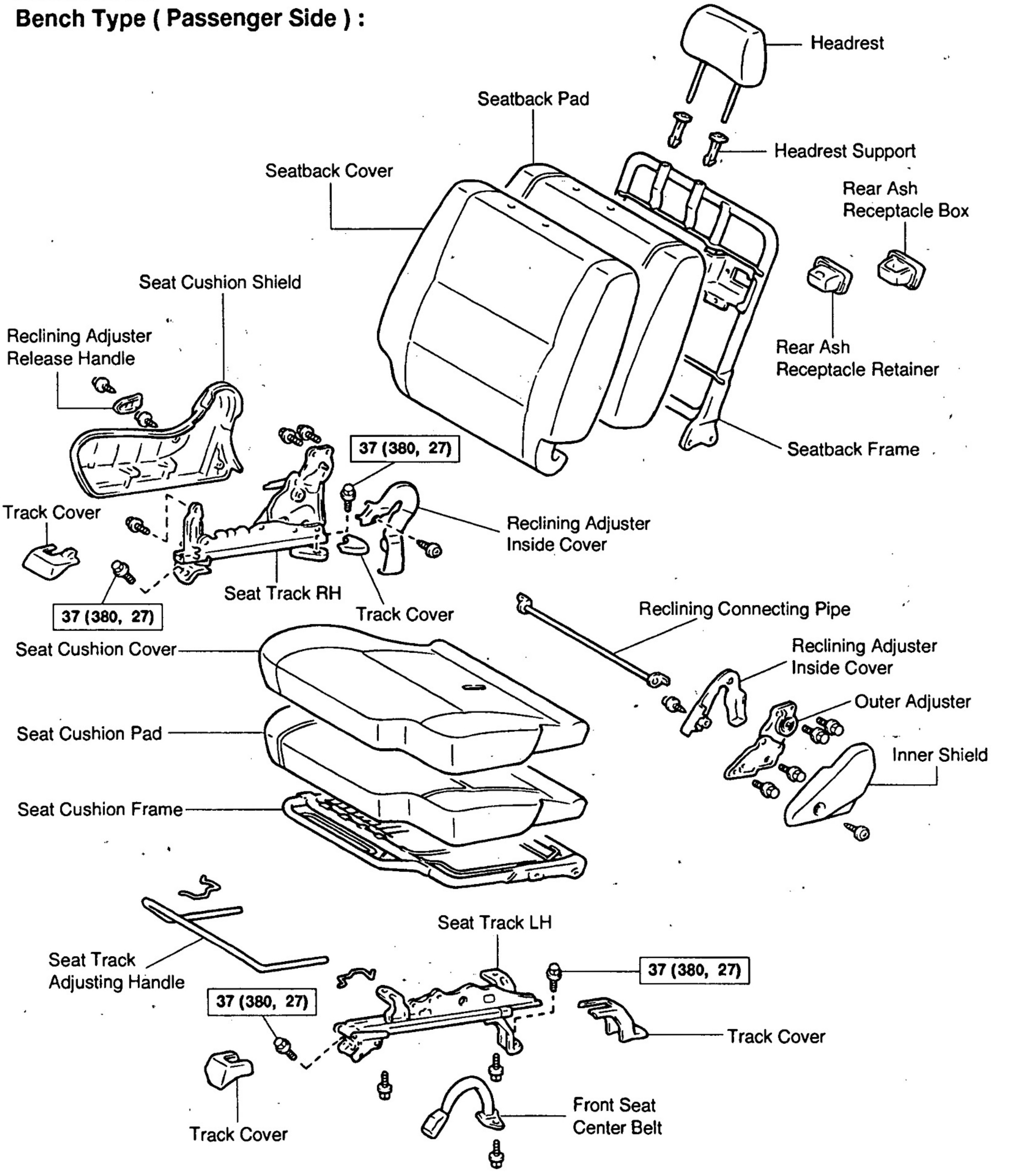

N·m (kgf·cm, ft·lbf) : Specified torque

N19784

BO

COMPONENTS (Cont'd)

No.1 REAR SEAT
Slide Type :

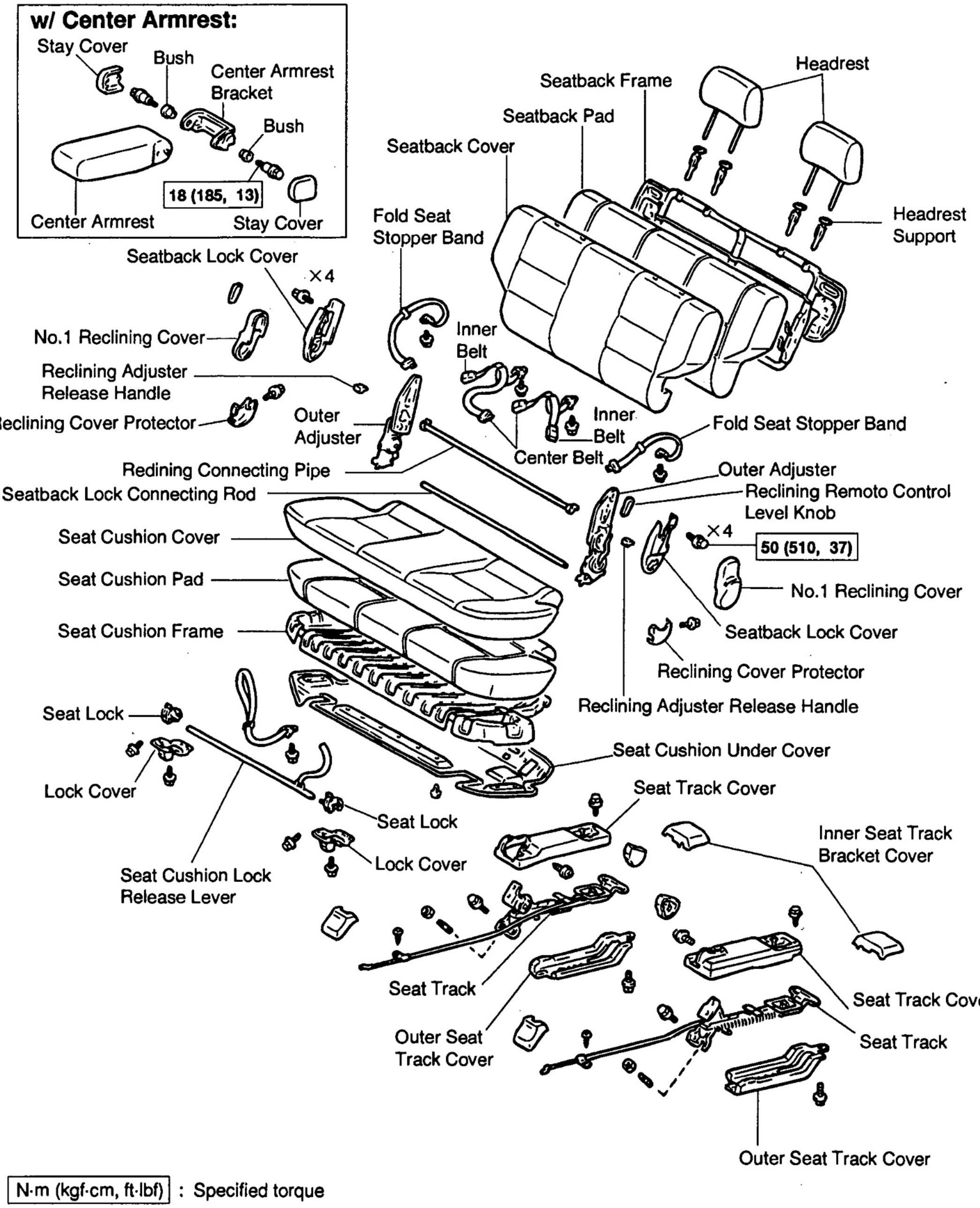

N·m (kgf·cm, ft·lbf) : Specified torque

N19788

COMPONENTS (Cont'd)

No.1 REAR SEAT
Separate Type :

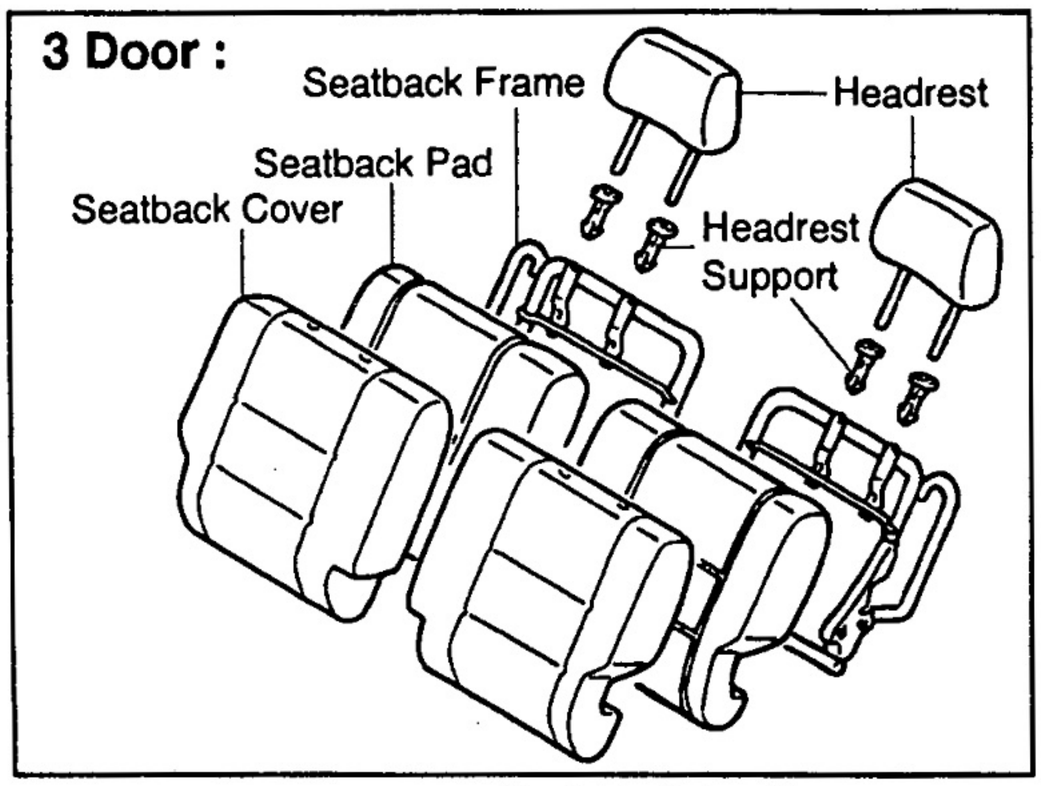

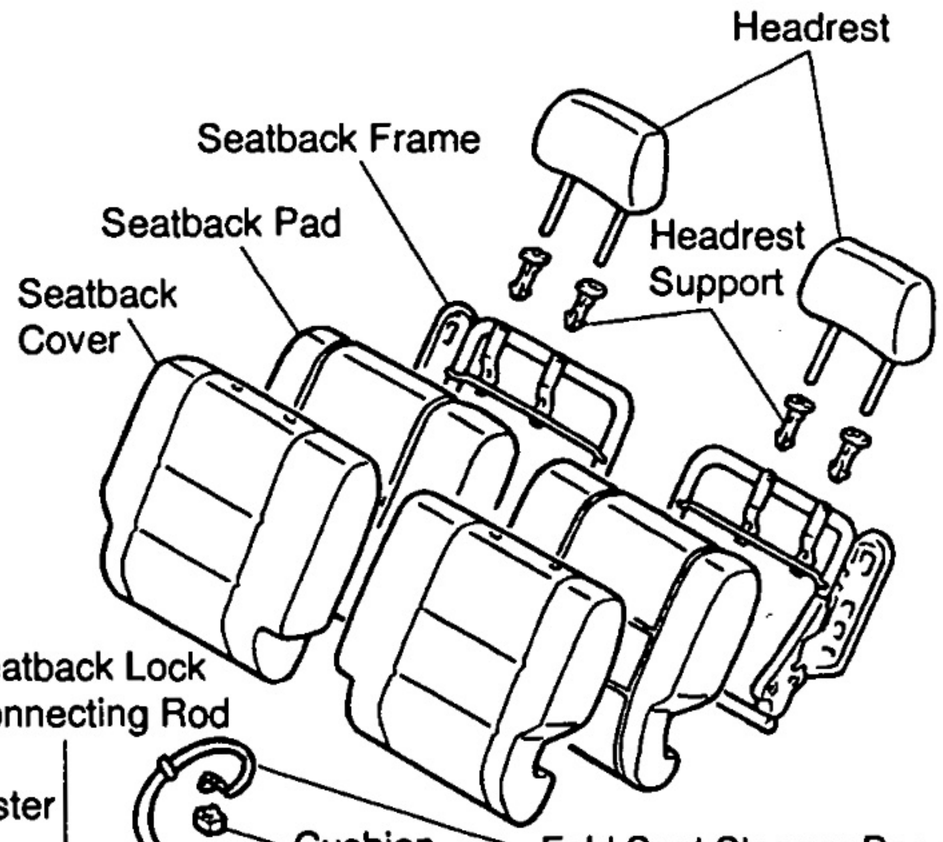

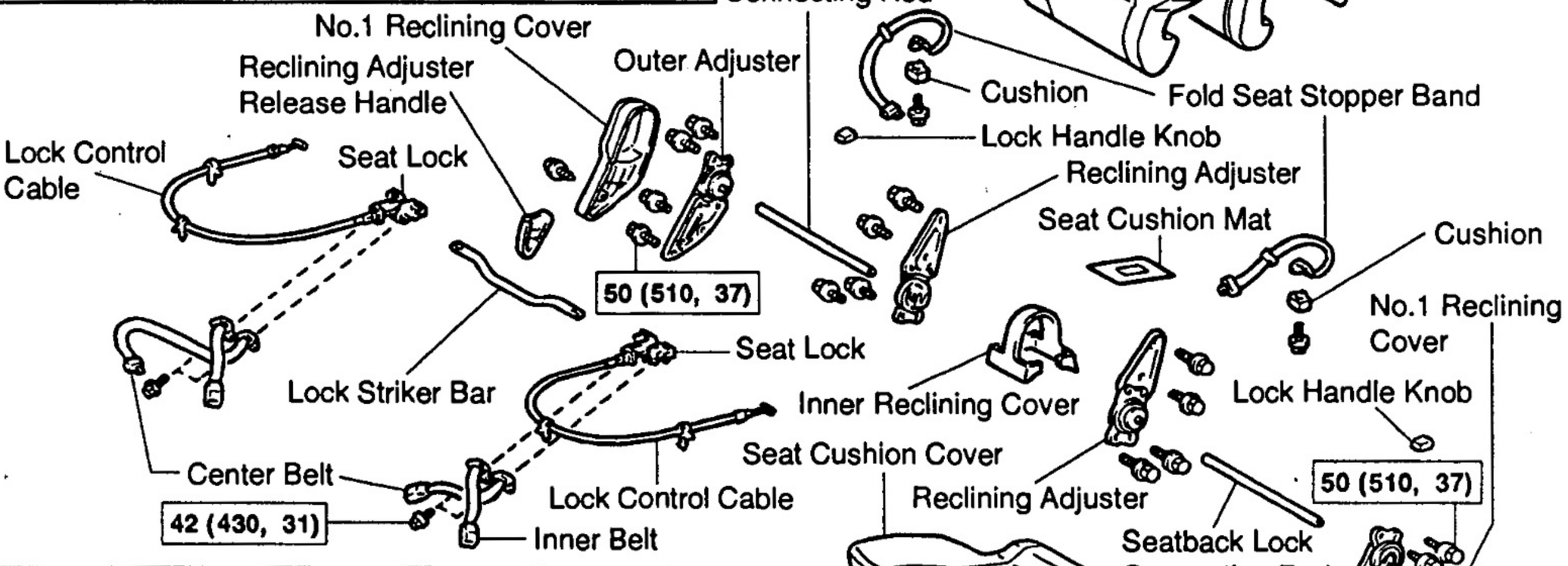

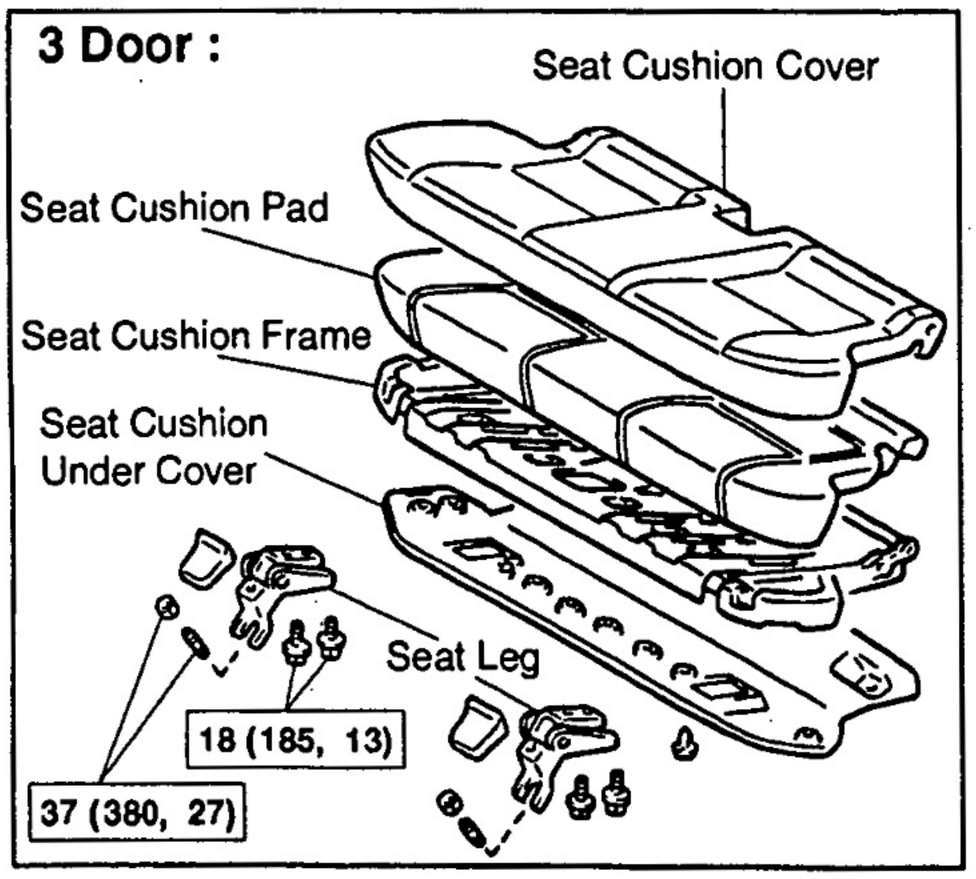

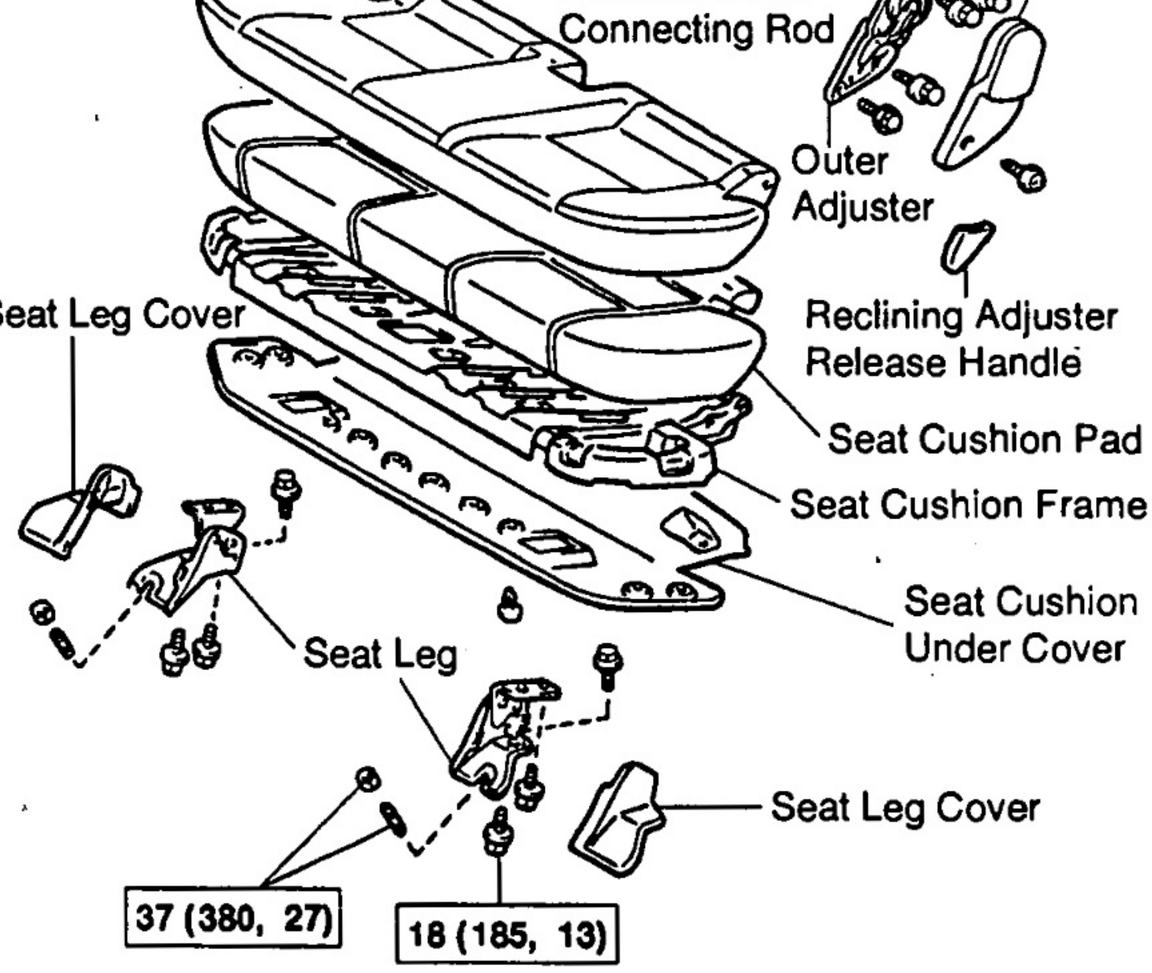

N·m (kgf·cm, ft·lbf) : Specified torque

N19800

COMPONENTS (Cont'd)

No.1 REAR SEAT
Bench Type :

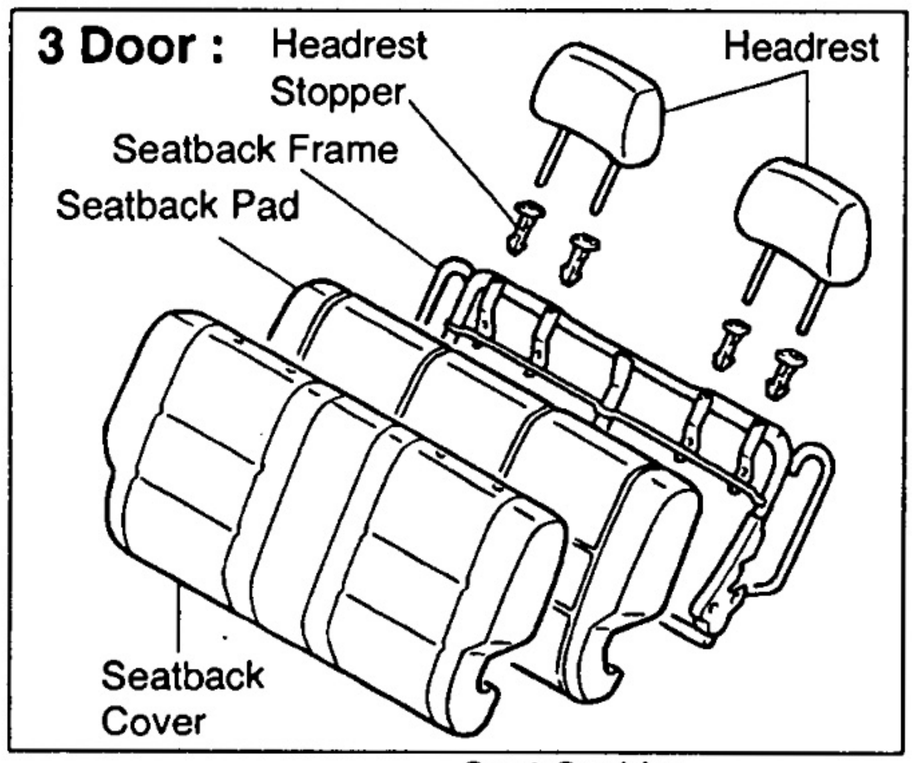

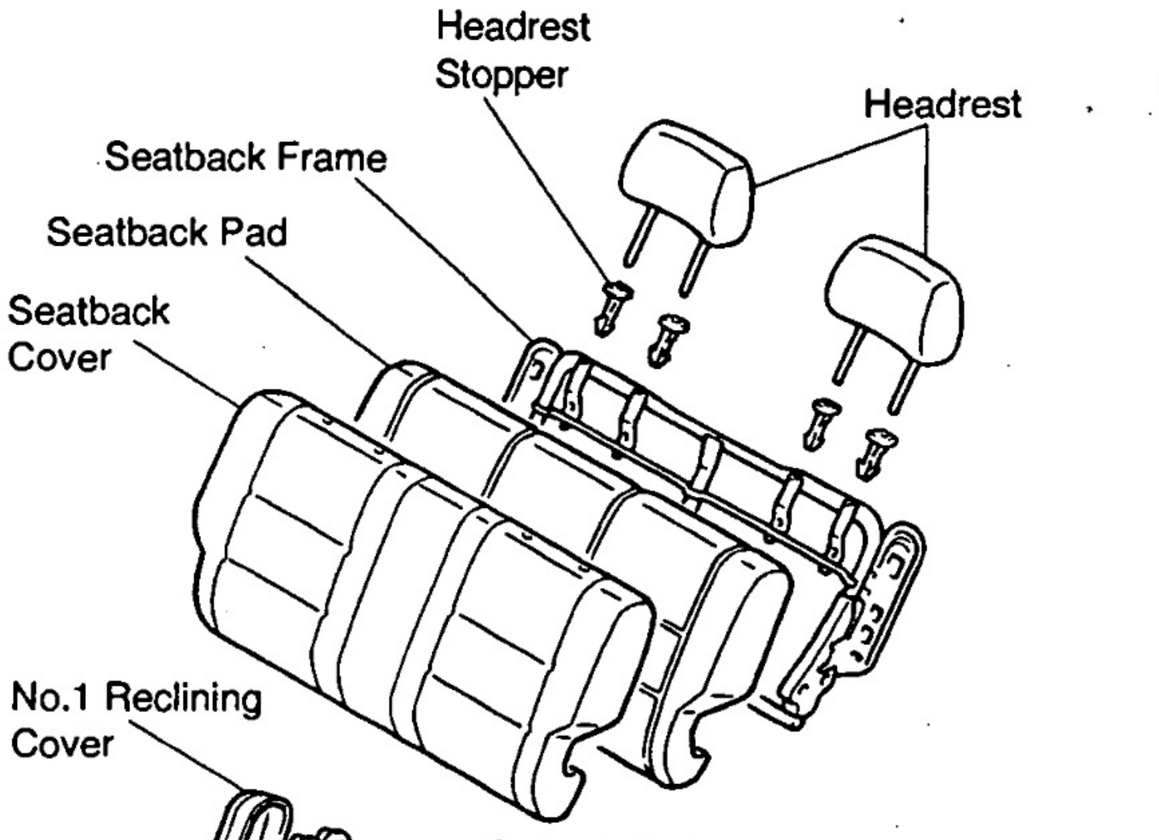

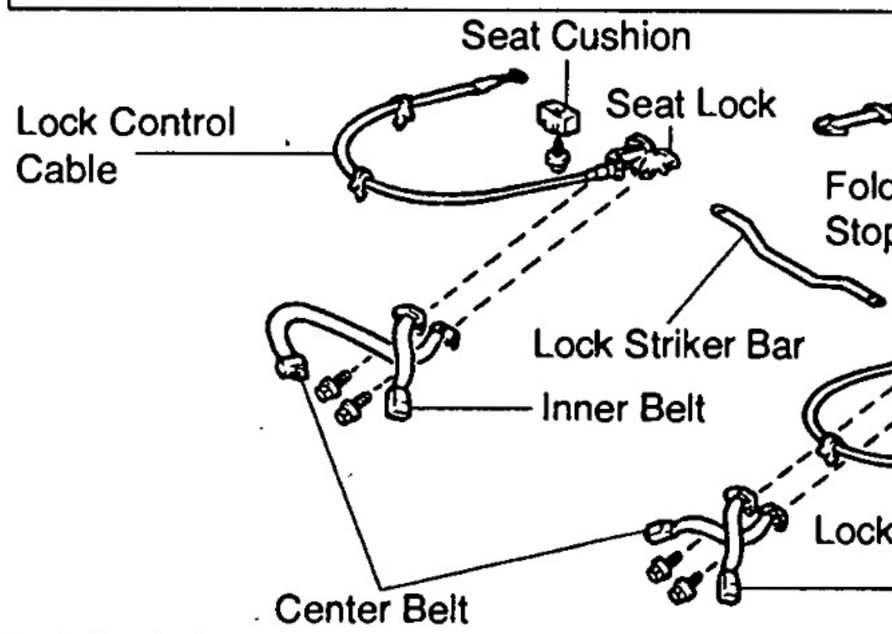

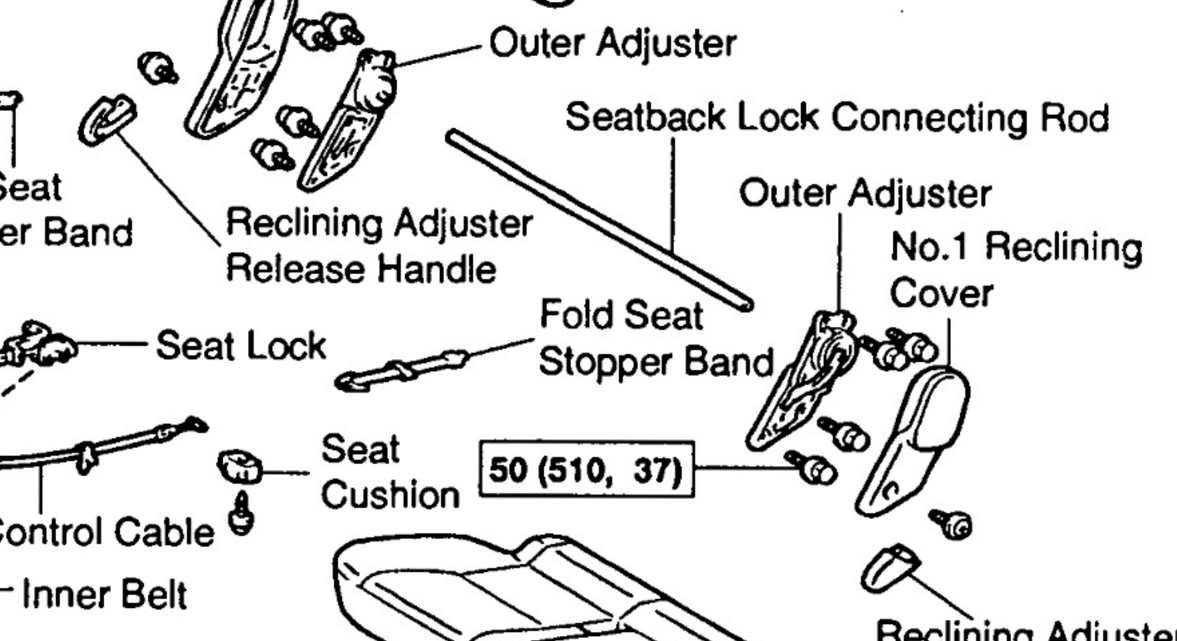

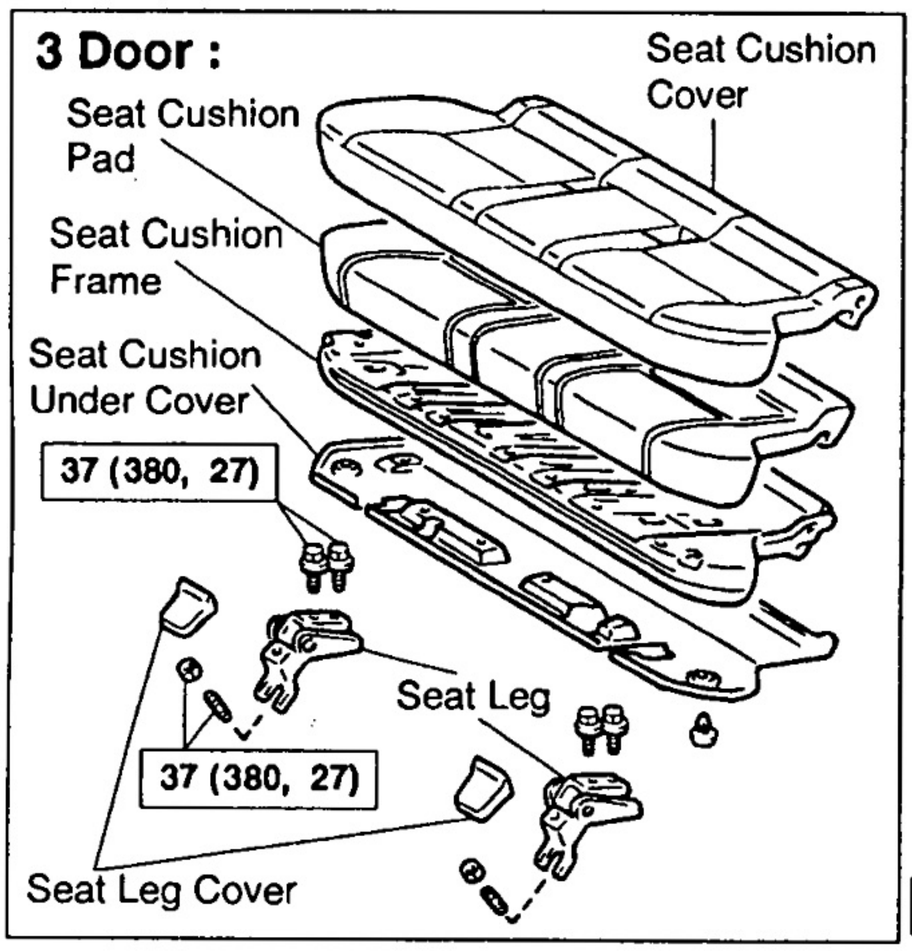

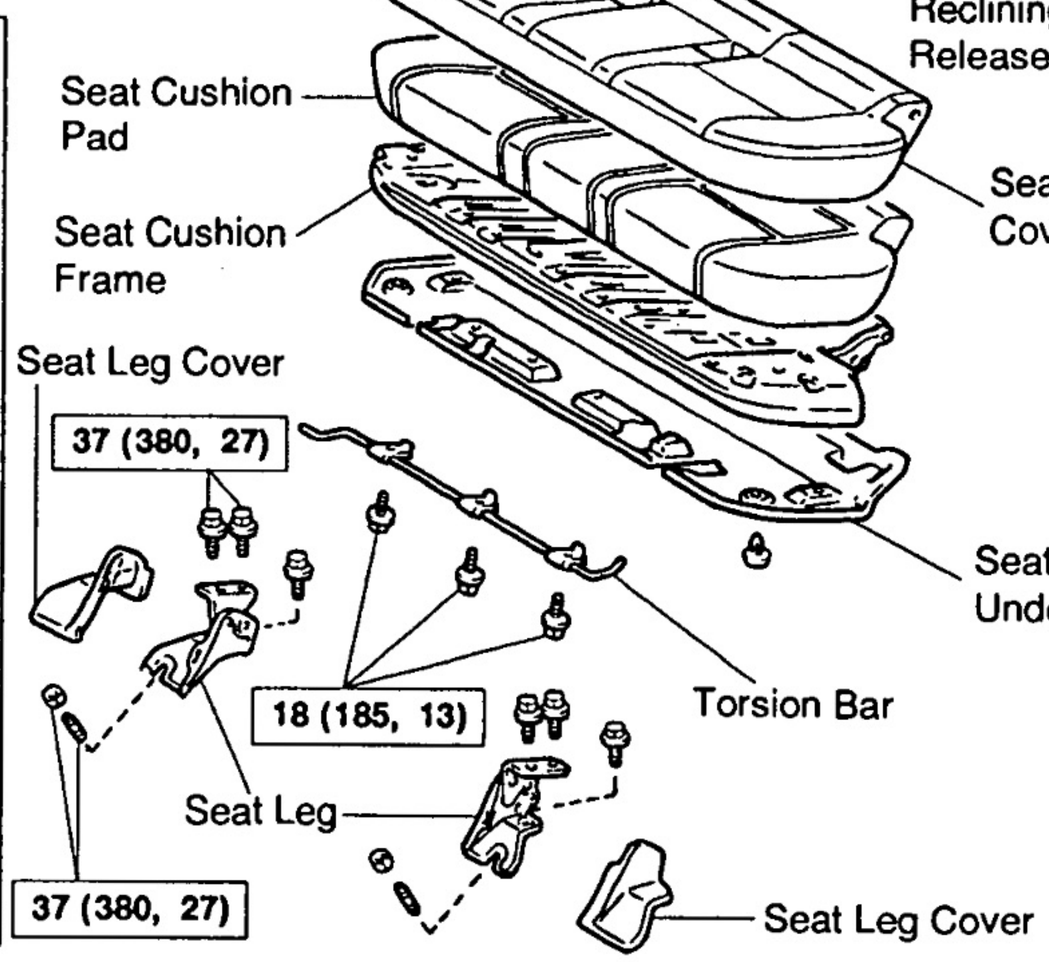

N·m (kgf·cm, ft·lbf) : Specified torque

N20042

COMPONENTS (Cont'd)

No.2 REAR SEAT (5 DOOR)

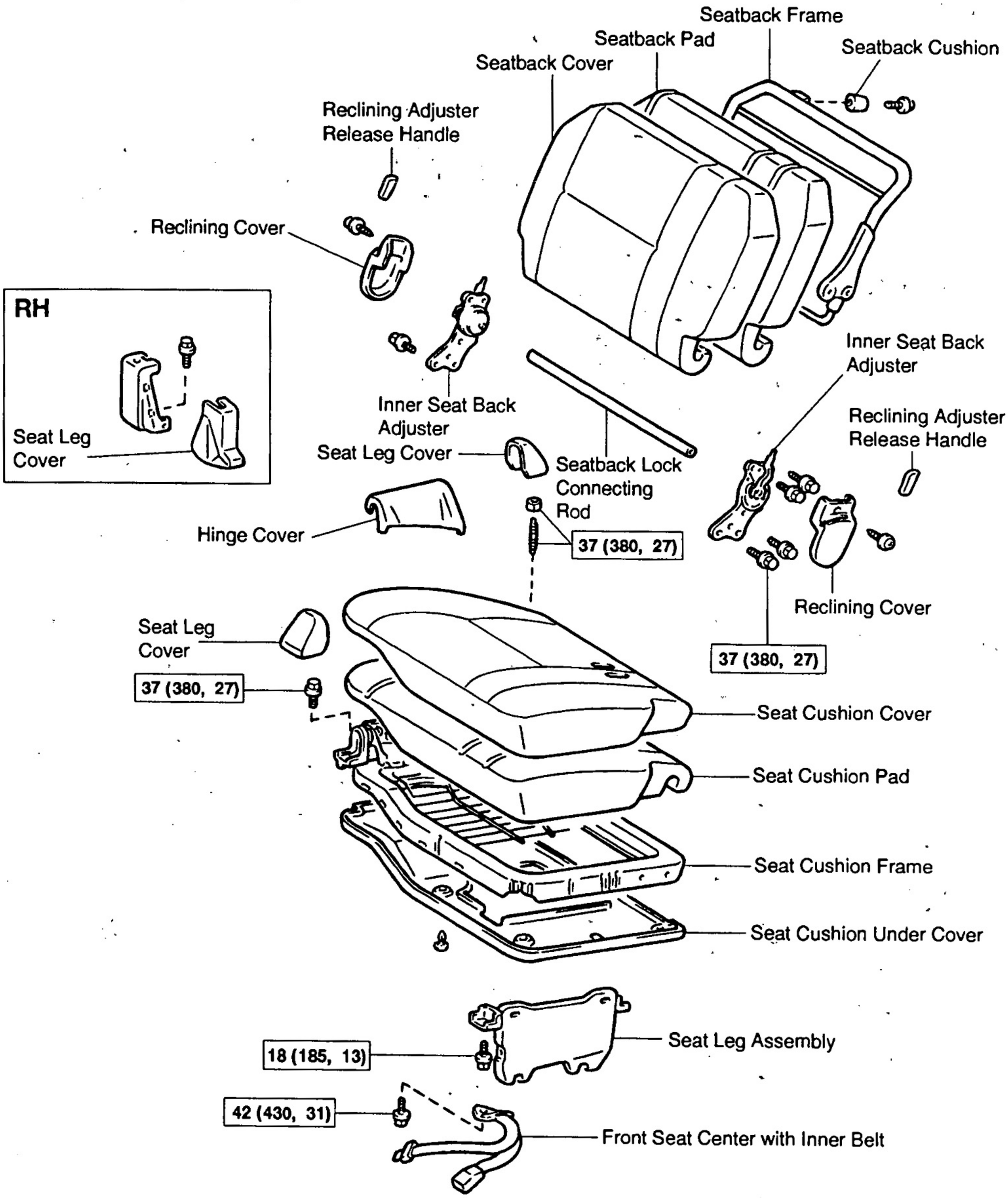

N·m (kgf·cm, ft·lbf) : Specified torque

NI9785

COMPONENTS (Cont'd)

No.2 REAR SEAT (5 Door) Longitudinal Type :

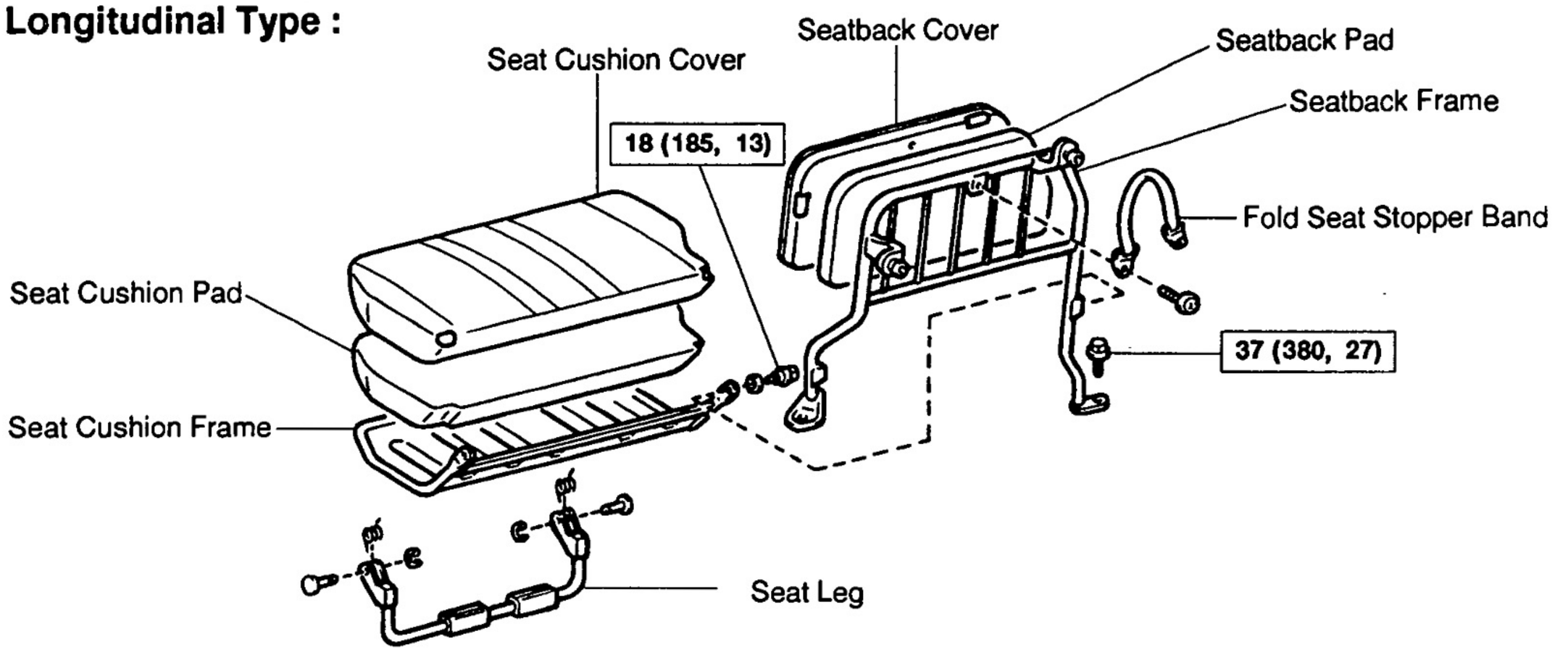

No.1 REAR SEAT (3 Door) Longitudinal Type :

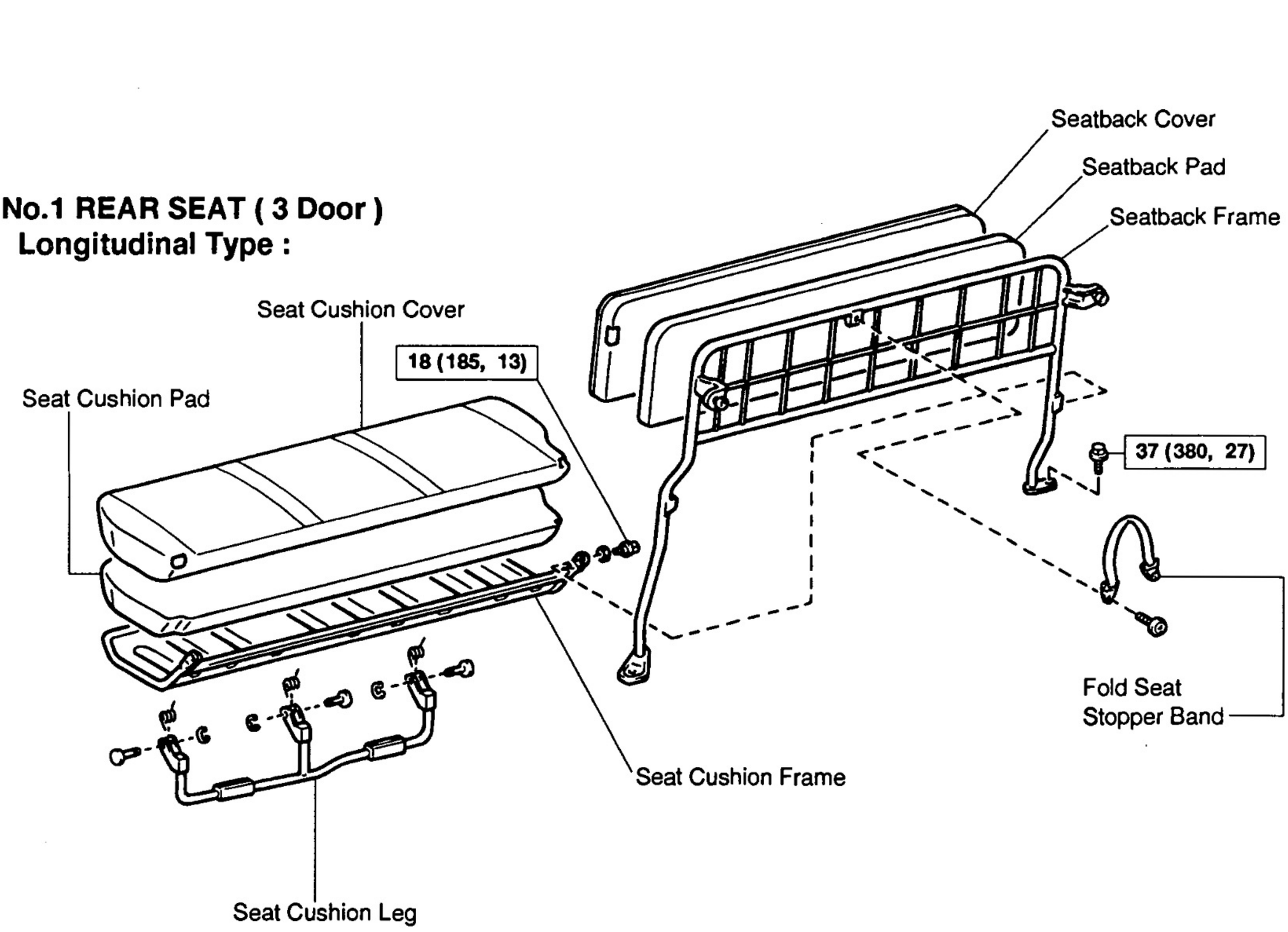

N·m (kgf·cm, ft·lbf) : Specified torque

N20060

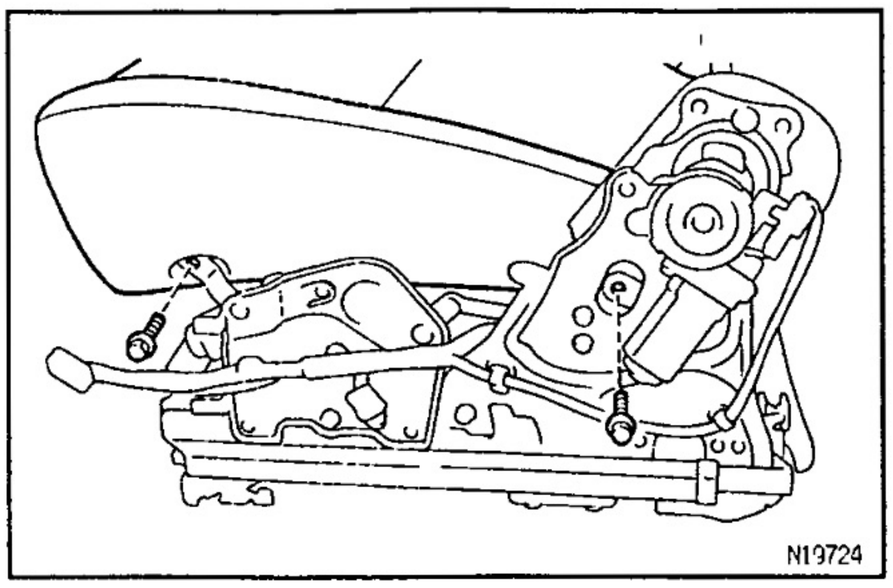

BO2MQ-01

POWER SEAT ADJUSTER REMOVAL

1. **REMOVE SEAT CUSHION SHIELD LH AND RH**
2. **REMOVE SEATBACK**
   Disconnect the connector, then remove the 4 bolts.
3. **REMOVE SEAT CUSHION**
   Remove the 4 bolts.

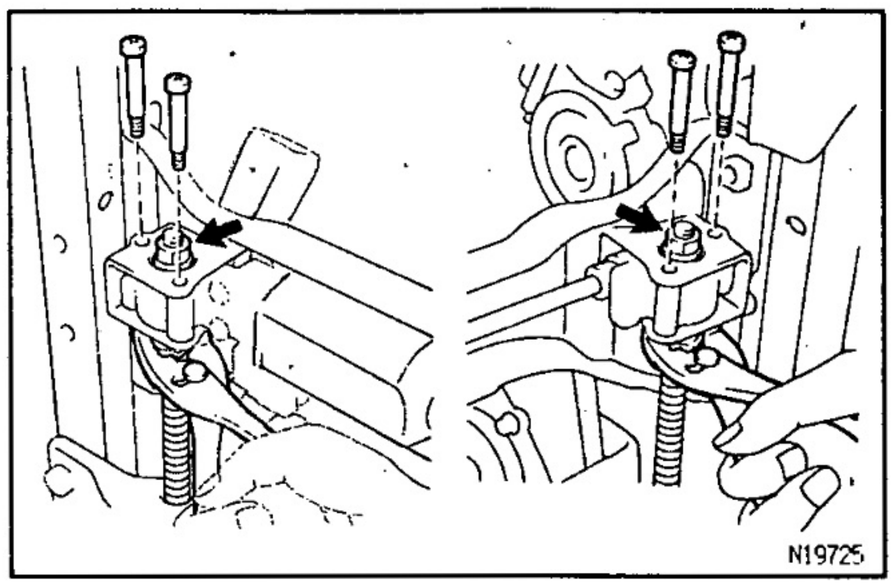

BO2MS-01

POWER SEAT ADJUSTER DISASSEMBLY

1. **REMOVE WIRE HARNESS**
2. **REMOVE SLIDE MOTOR**

(a) Remove the 4 housing bracket bolts.

(b) Hold the front seat horizontal jack screw with a plier, then remove the 2 nuts and 2 washers.
ASSEMBLY HINT: Apply adhesive to nut.
Part No.08833—00070, THREE BOND 1324 or equivalent.

(c) Remove the 4 screws and 2 vertical adjuster bushes.

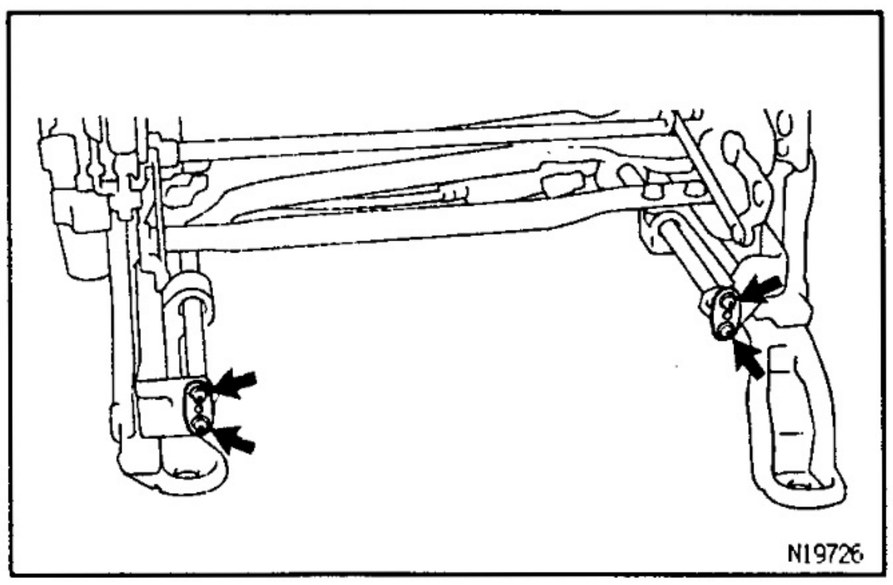

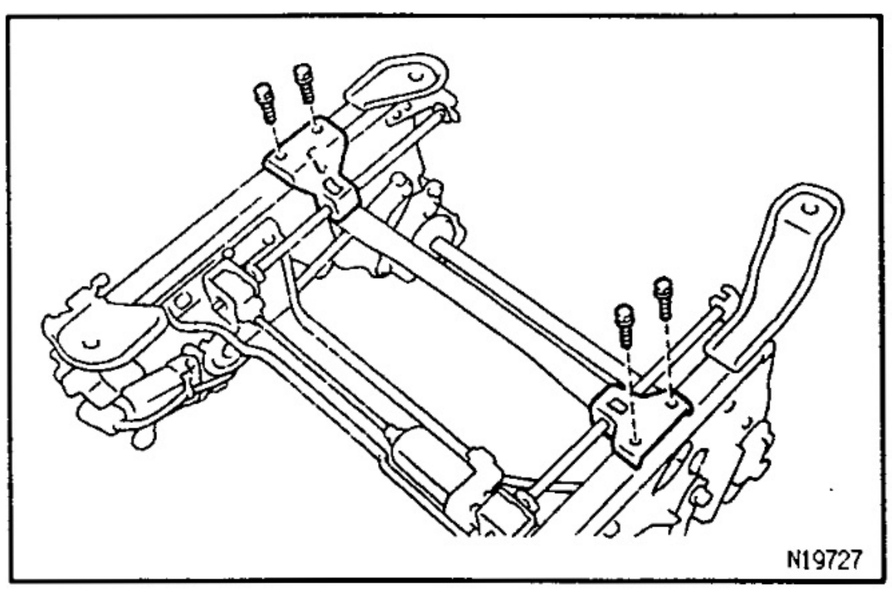

(d) Remove the 4 bolts.

(e) Remove the slide motor and front seat horizontal jack screw.
ASSEMBLY HINT: Apply MP grease to the front seat horizontal jack screw.

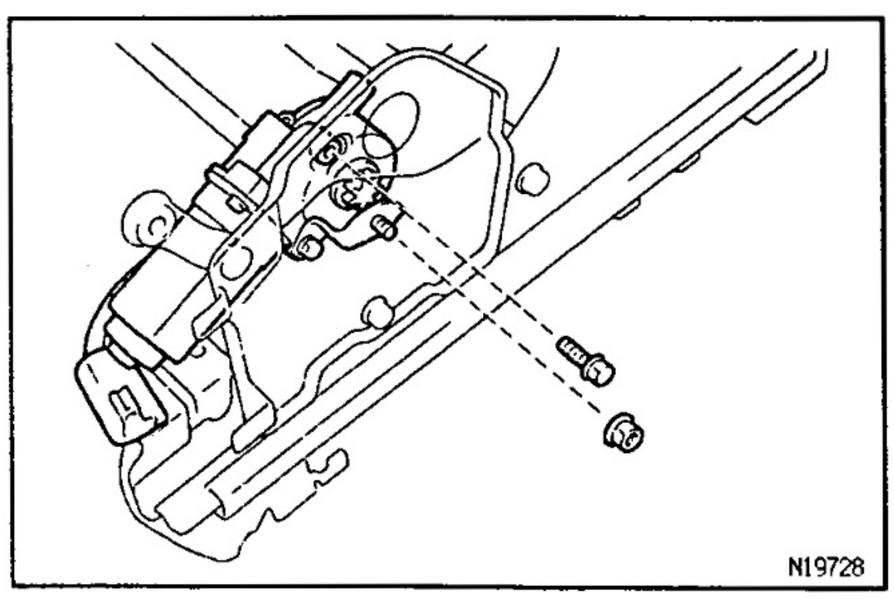

3. **REMOVE VERTICAL MOTOR**
   Remove the bolt, nut and vertical motor.

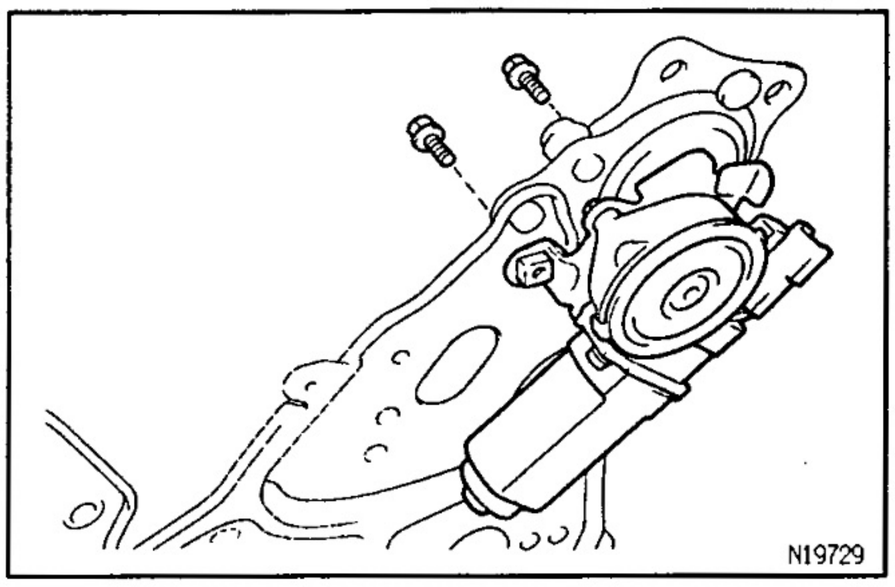

4. REMOVE RECLINING MOTOR

Remove the 2 bolts and reclining motor.

POWER SEAT ADJUSTER ASSEMBLY

BO2MU-01

Assembly is in the reverse order of disassembly.

POWER SEAT ADJUSTER INSTALLATION

BO2MW-01

Installation is in the reverse order of removal.

SEAT BELT
COMPONENTS

BO2ML–01

FRONT SEAT
Separate Type :

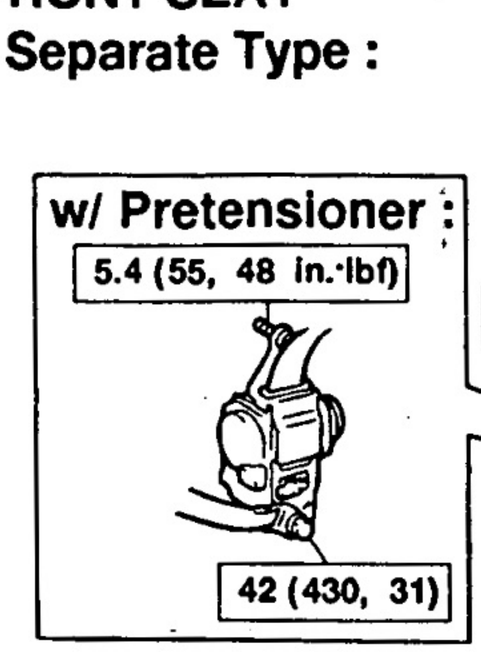

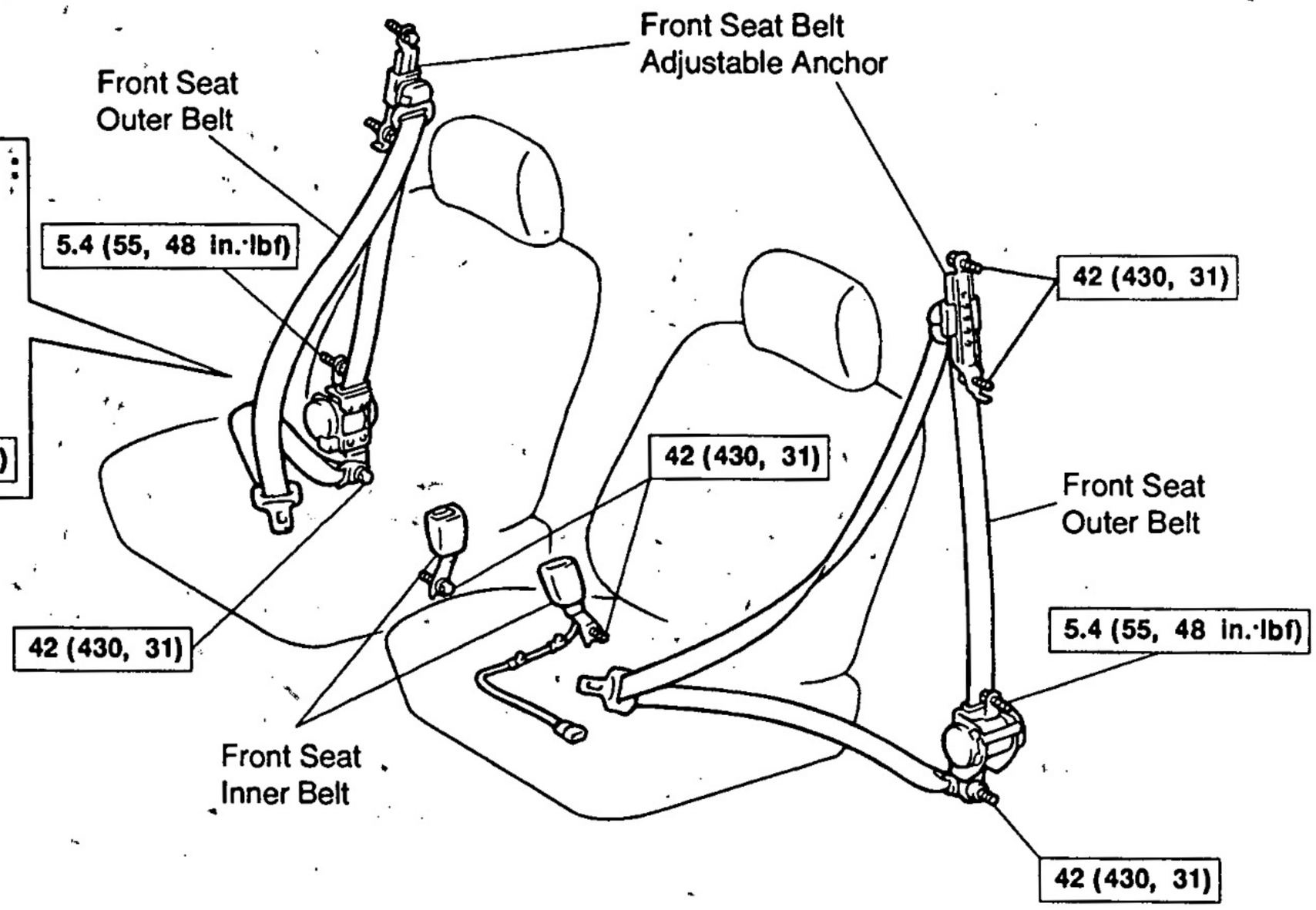

Bench Type :

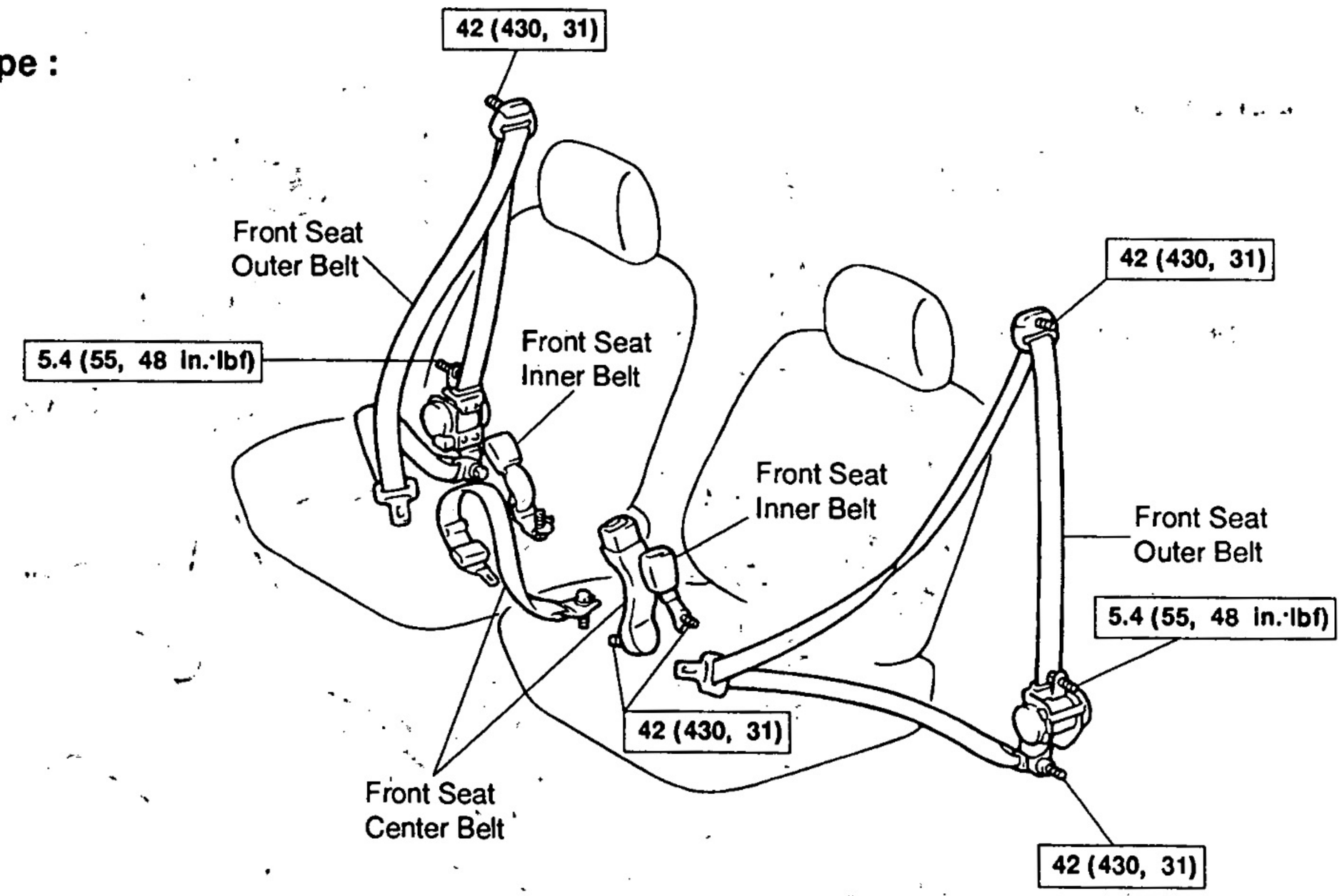

N·m (kgf·cm, ft·lbf) : Specified torque

N19792

COMPONENTS (Cont'd)

No.1 REAR SEAT (5 DOOR)
Slide Type :

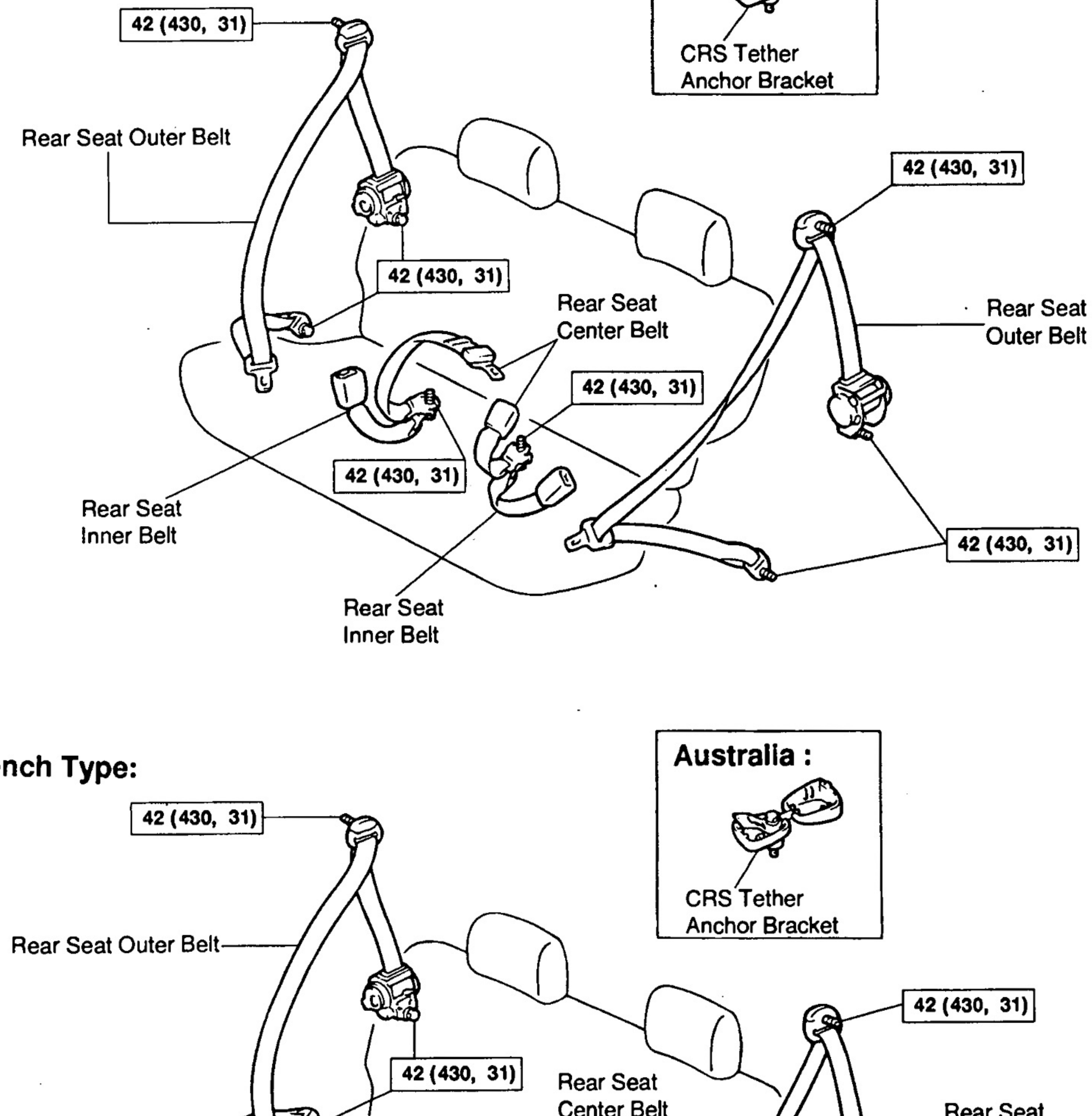

Bench Type:

N·m (kgf·cm, ft·lbf) : Specified torque

NI9798

BO

COMPONENTS (Cont'd)

No.2 REAR SEAT (5 DOOR)
Separate Type :

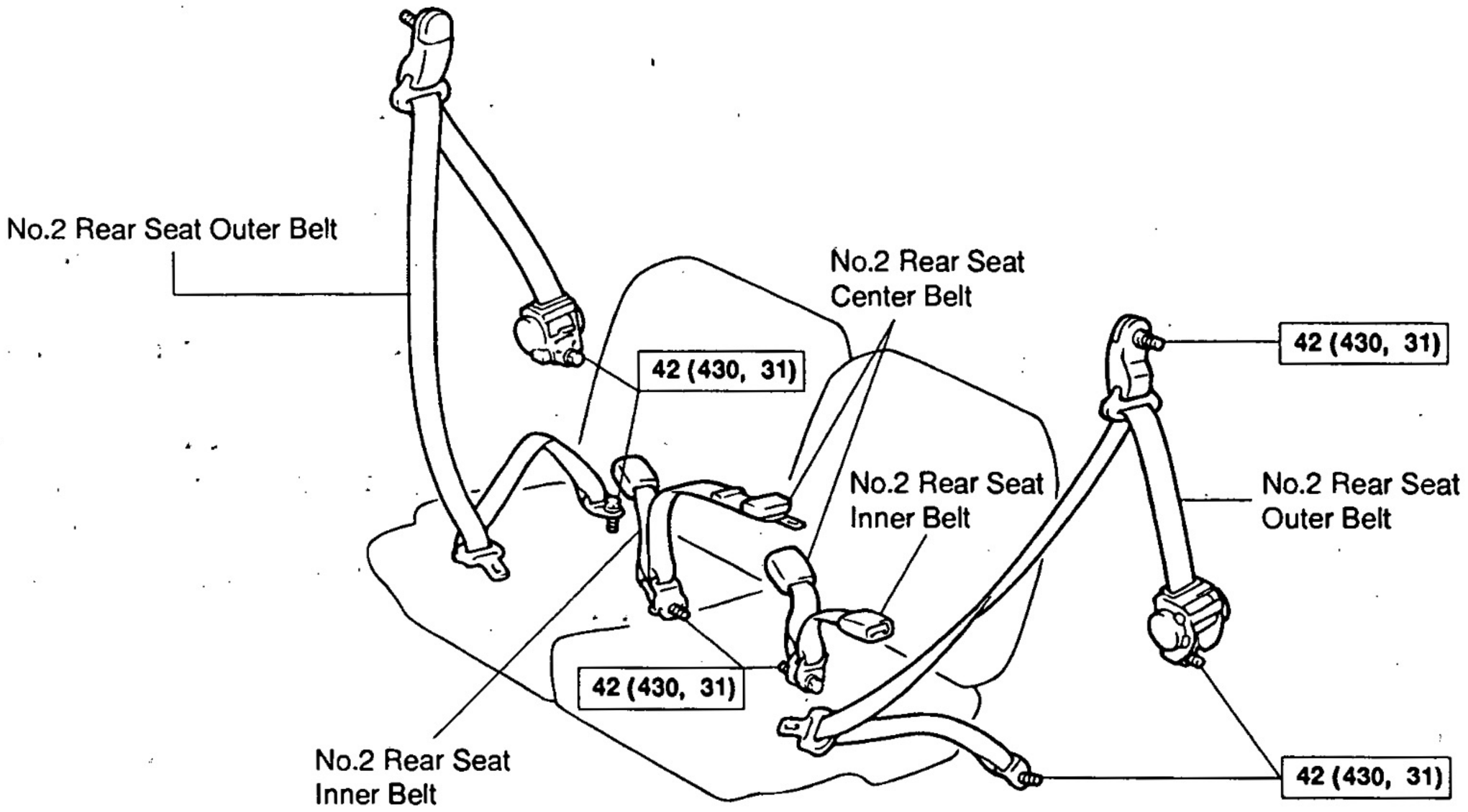

No.1 REAR SEAT (3 DOOR)

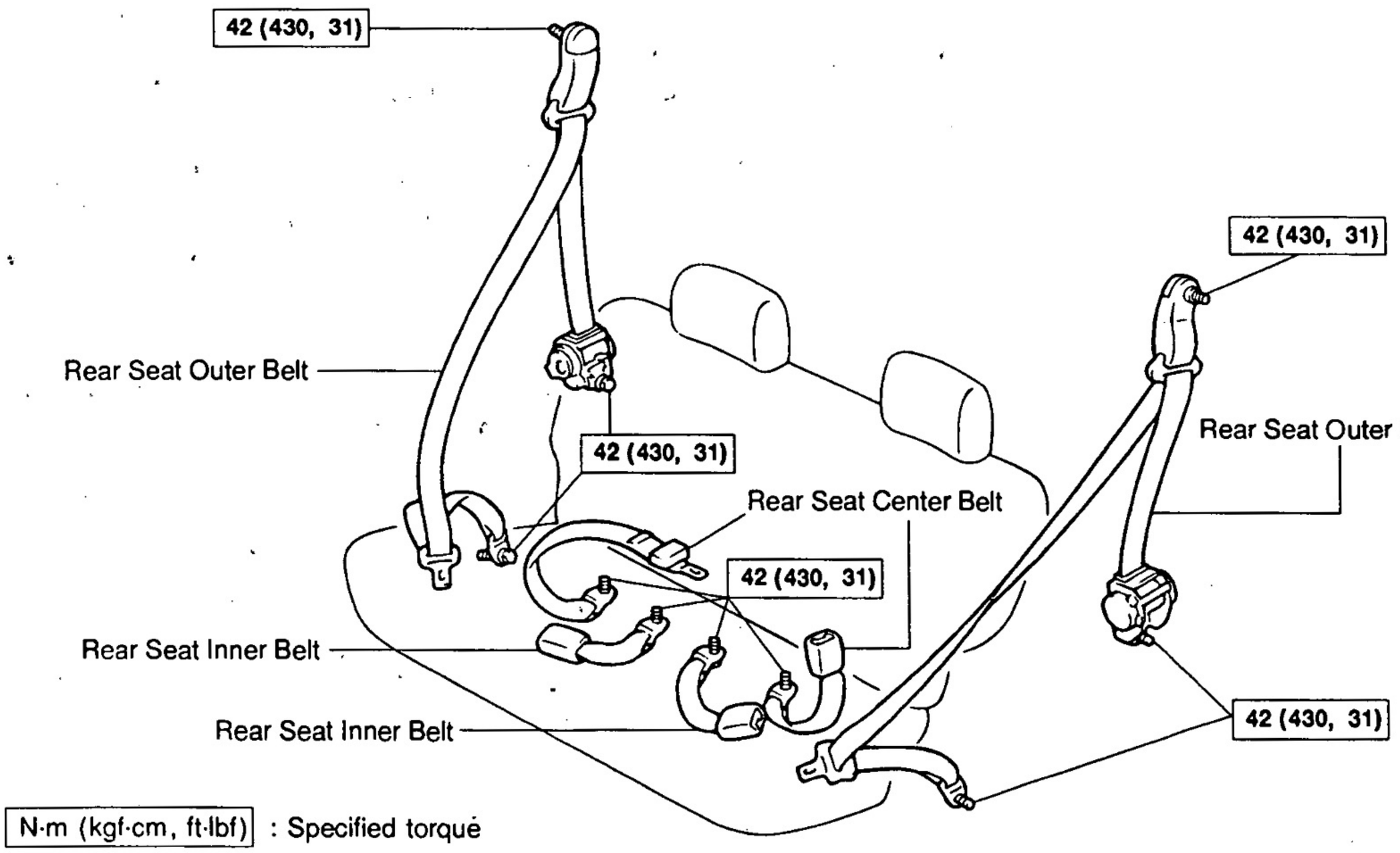

N·m (kgf·cm, ft·lbf) : Specified torque

N19799

BO

BO2MM-01

SEAT BELT INSPECTION

CAUTION: Replace the seat belt assembly (outer belt, inner belt, bolts, nuts or sill—bar) if it has been used in a severe impact. The entire assembly should be replaced even if damage is not obvious.

Emergency Locking Retractor (ELR) and Automatic Locking Retractor (ALR) type

1. RUNNING TEST (IN SAFE AREA)

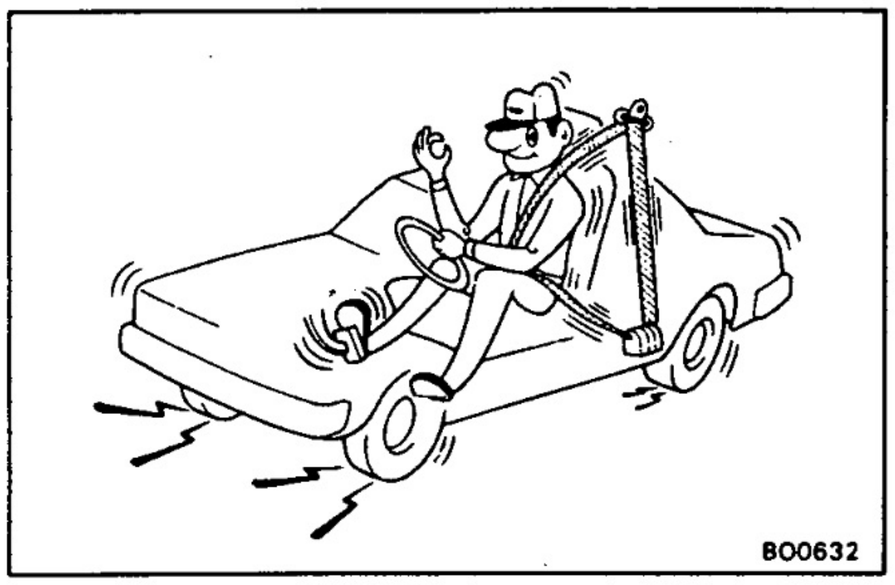

All seat belts:

(a) Fasten the front seat belts.

(b) Drive the car at 10 mph (16 km/h) and make a very hard stop.

Check that the belt locks and cannot be extended at this time.

HINT: Conduct this test in a safe area. If the belt does not lock, remove the belt mechanism assembly and conduct the following static check. Also, whenever installing a new belt assembly, verify the proper operation before installation.

2. STATIC TEST

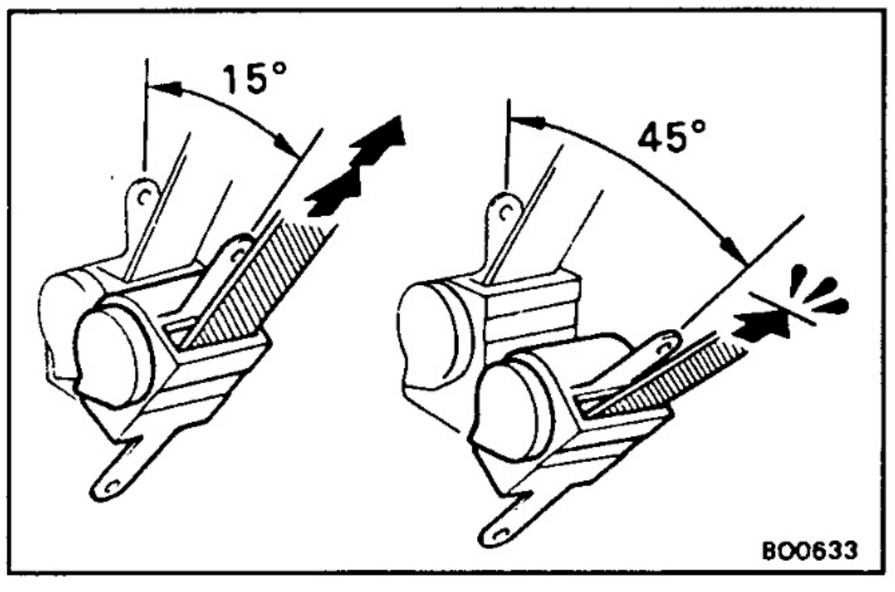

ELR:

(a) Make sure that the belt locks when pulled out quickly.

(b) Remove the locking retractor assembly.

(c) Tilt the retractor slowly.

(d) Make sure that the belt can be pulled out at a tilt of 15 degrees or less, and cannot be pulled out over 45 degrees of tilt.

If a problem is found, replace the assembly.

ALR/ ELR:

(a) Make sure that the belt locks when pulled out quickly.

(b) Remove the locking retractor assembly.

(c) Pull out the whole belt and measure the length of the whole belt.

Then retract the belt slightly and pull it out again.

(d) Make sure that the belt cannot be extended further.

If a problem is found, replace the assembly.

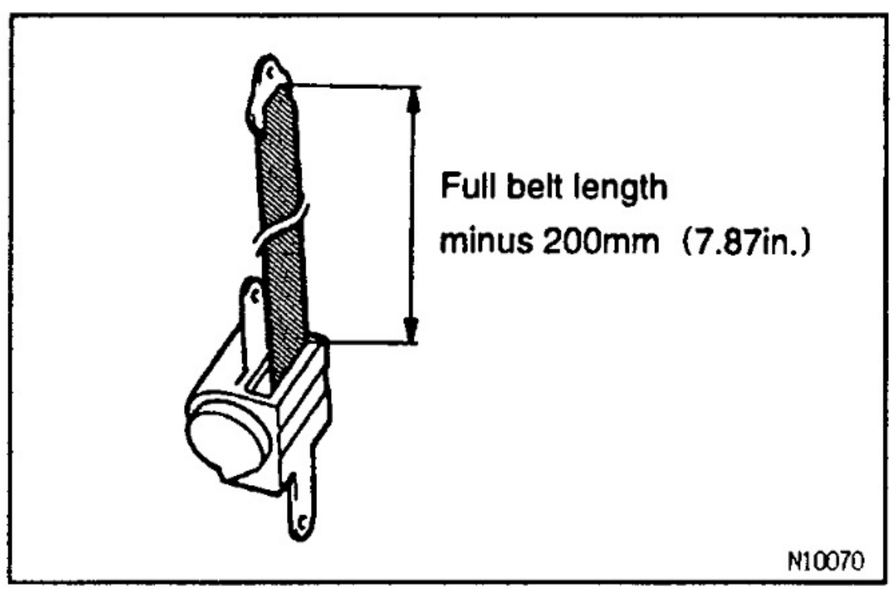

(e) Retract the whole belt, then pull out the belt until 200 mm (7.87 in.) of belt remains retracted.

(f) Tilt the retractor slowly.

(g) Make sure that the belt can be pulled out at a tilt of 15 degrees or less, and cannot be pulled out at over 45 degrees of tilt.

If a problem is found, replace the assembly.

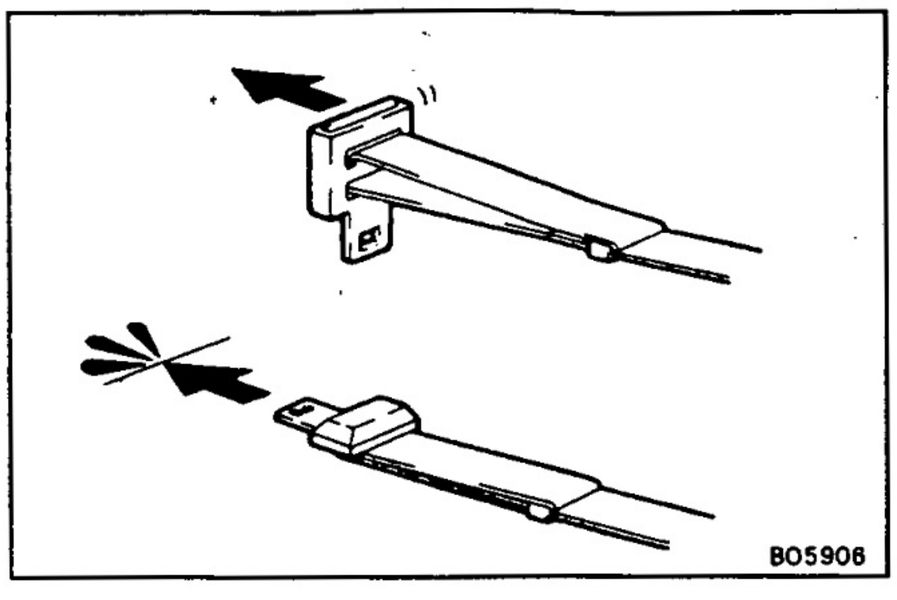

Manual Type

TESTING

(a) Adjust the belt to the proper length.
(b) Apply a firm load to the belt.
(c) Make sure that the belt does not extend.

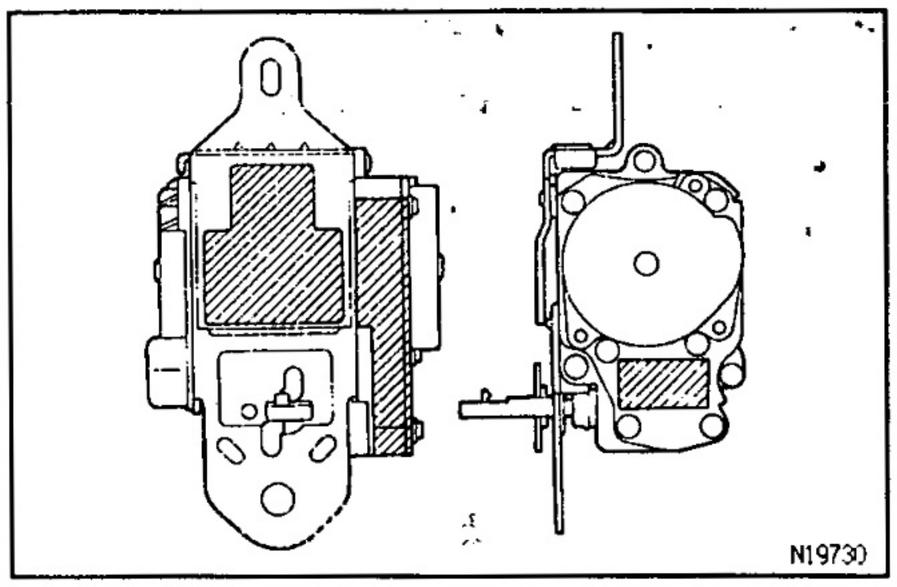

SEAT BELT PRETENSIONER

B027F-02

INSPECTION

1. INSPECT SEAT BELT PRETENSIONER ACTIVATION

If the caution label of the seat belt pretensioner has been torn by the gas exhaust hole underneath it as shown in the illustration, replace the front seat outer belt.

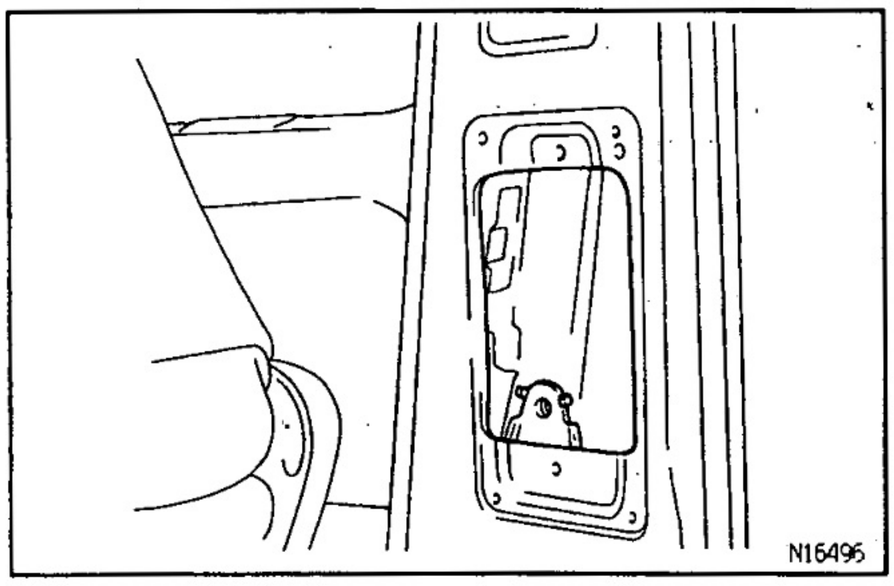

2. INSPECT SEAT BELT PRETENSIONER MOUNT

Remove the seat belt pretensioner and check for deformation of the center pillar. If you find any deformation, repair the center pillar.

CAUTION: Lock the sensor before removing the front seat outer belt.

BO

FRONT SEAT OUTER BELT REMOVAL AND INSTALLATION

B027D-02

CAUTION: When removing the seat belt pretensioner, always place it on a flat and stable surface.

NOTICE:

- **If the seat belt pretensioner has been dropped or damaged, replace it with a new one.**
- **Never install a seat belt pretensioner which has been used in another vehicle. When replacing a seat belt pretensioner, always install a new one.**

1. REMOVE THESE PARTS:

(a) Front door scuff plate
(b) 5 door:
Rear door scuff plate
(c) 5 door:
Lower center pillar garnish and hole cover
(d) 3 door:
Quarter trim and hole cover

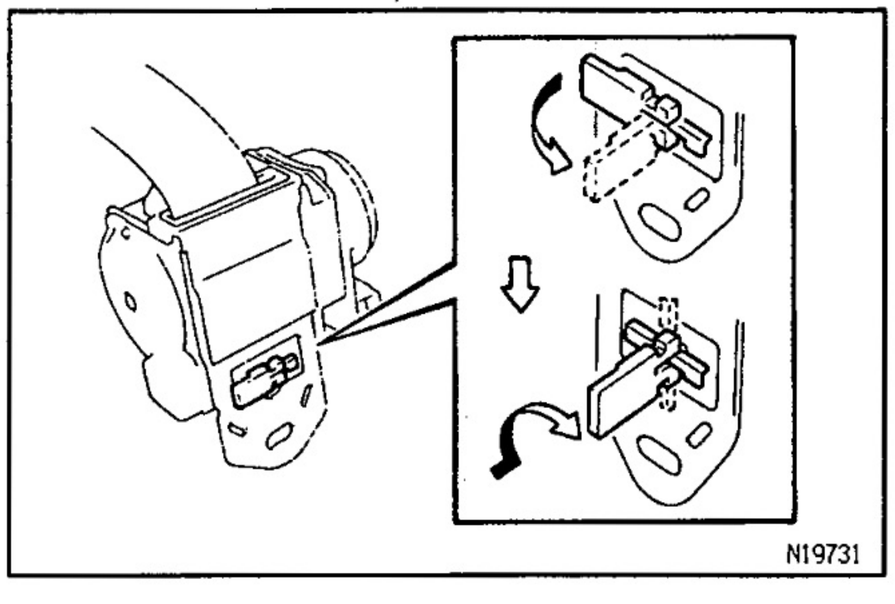

2. REMOVE FRONT SEAT OUTER BELT

CAUTION: Never disassemble the front seat outer belt.

(a) Lock the sensor by operating in the safety lock release lever as shown in the illustration.

(b) Remove the 3 bolts and front seat outer belt.

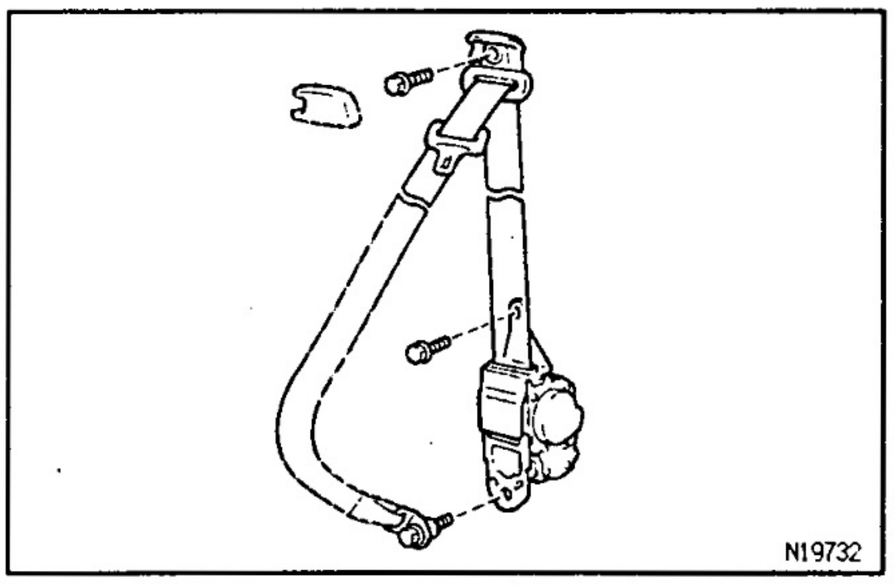

3. INSTALL FRONT SEAT OUTER BELT

(a) Install the outer belt shoulder anchor bolt.
Torque: 42 N·m (430 kgf·cm, 31 ft·lbf)

(b) Install the outer belt retractor and floor anchor.
Torque:
Upper Bolt: 5.4 N·m (55 kgf·cm, 48 in.·lbf)
Lower Bolt: 42 N·m (430 kgf·cm, 31 ft·lbf)

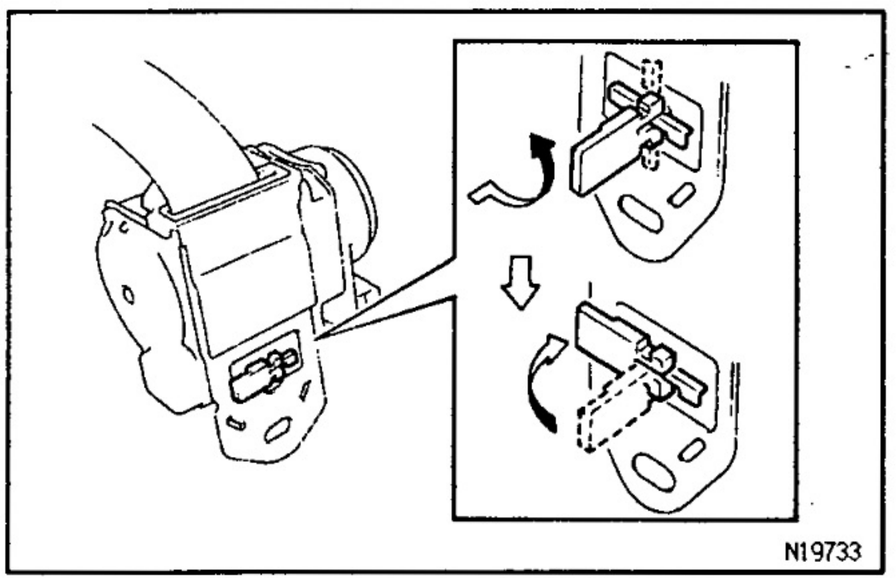

(c) Unlock the sensor by operating in the safety lock release lever as shown in the illustration.

4. INSTALL THESE PARTS:

(a) 3 door:
Quarter trim and hole cover

(b) 5 door:
Lower center pillar garnish and hole cover

(c) 5 door:
Rear door scuff plate

(d) Front door scuff plate

SEAT BELT PRETENSIONER DISPOSAL

B02MK-01

When scrapping vehicles equipped with a pre-tensioner or disposing of a front seat outer belt (with seat belt pretensioner), always first activate the seat belt pretensioner in accordance with the procedure described below. If any abnormality occurs with the seat belt pretensioner operation, contact the SERVICE DEPT. of the DISTRIBUTOR.

Never dispose of a front seat outer belt which has an unoperated pretensioner.

PRECAUTIONS FOR SEAT BELT PRETENSIONER DEPLOYMENT

- The seat belt pretensioner produces a sizeable exploding sound when it deploys, so perform the operation outdoors where it will not create a nuisance to nearby residents.
- Deploy the seat belt pretensioner in a safe place outdoors, on a flat concrete area.

- After unlocking the sensor, take care not to jolt or drop the seat belt pretensioner.
- Use gloves and safety glasses when handling a deployed seat belt pretensioner.
- Always stand at least 5 m (16 ft) away from the seat belt pretensioner when deploying it.
- The deployed seat belt pretensioner is very hot, so wait 30 minutes for it cool down. Do not splash water on it at all.
- Put the seat belt pretensioner in a vinyl bag, seal the bag and dispose of it.
- Seat belt pretensioners should always be deployed before disposal.

1. REMOVE FRONT SEAT OUTER BELT
(See page BO−73)

2. PREPARATION FOR DEPLOYING SEAT BELT PRETENSIONER

(a) Cut the belt off near the seat belt retractor.

(b) Confirm which side of the seat belt pretensioner is the vehicle front side.

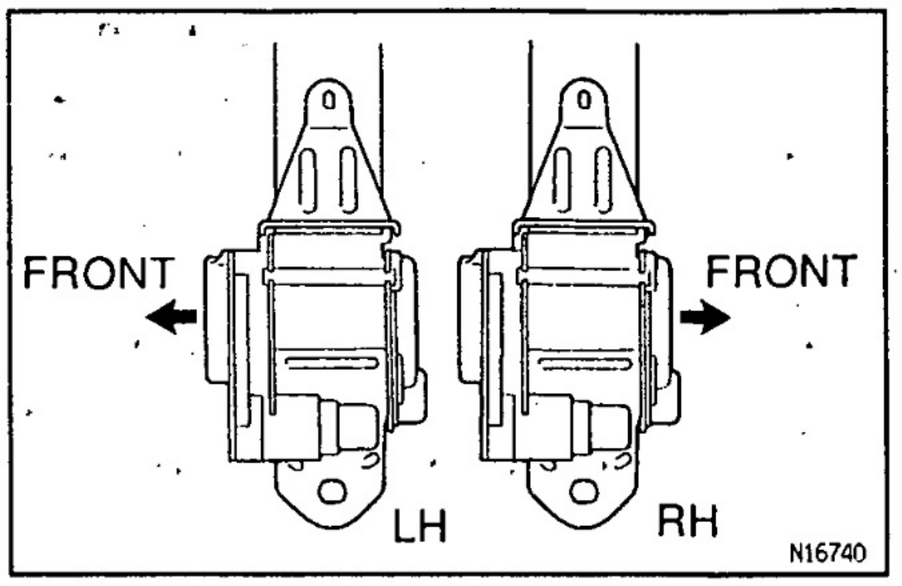

(c) As shown in the illustration, tie the seat belt pretensioner so that the vehicle front side of the pretensioner is facing downward and that the pretensioner is horizontal.

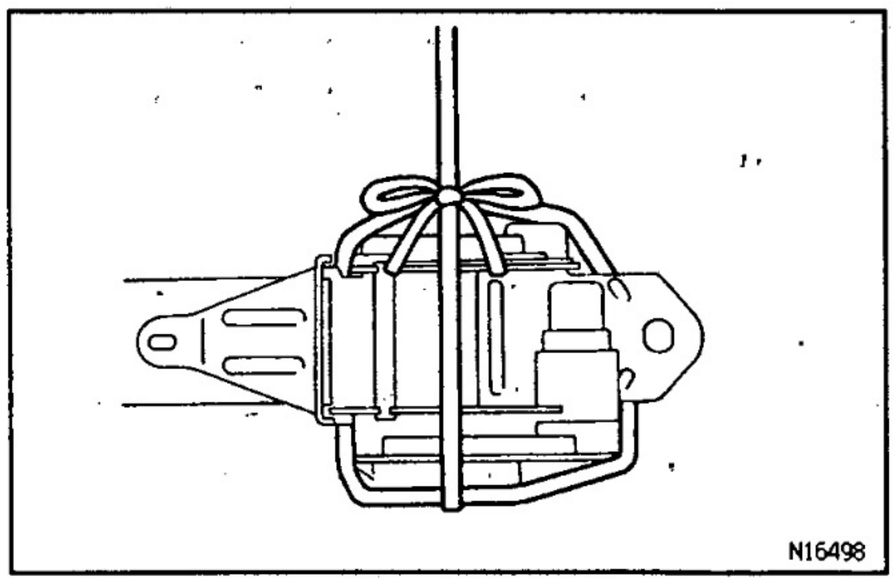

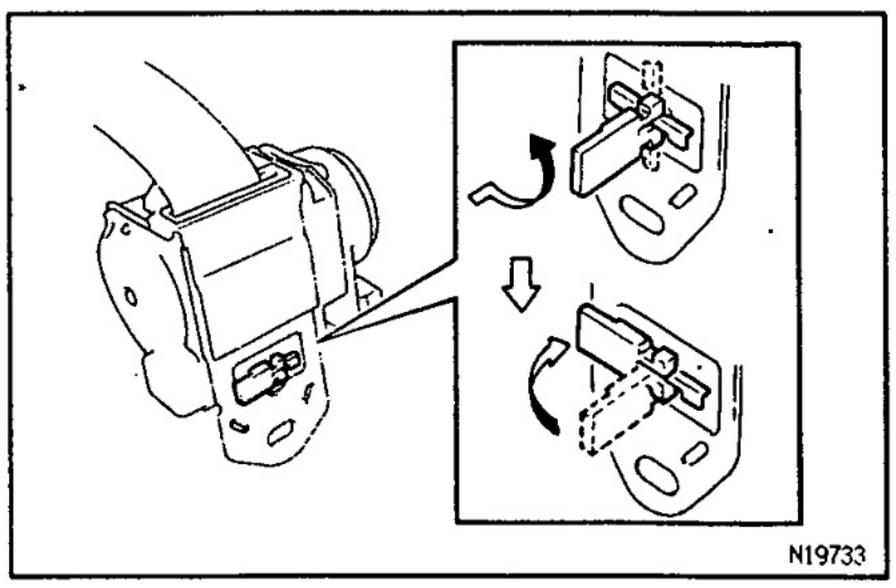

(d) Unlock the sensor by operating in the safety lock release lever as shown in the illustration.

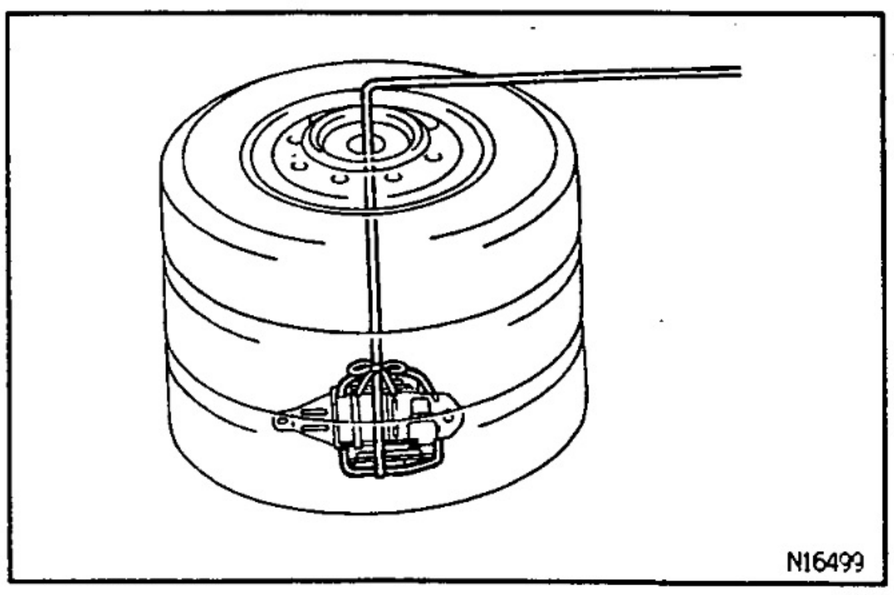

(e) Pile 2 tires and 1 tire with wheel around the seat belt pretensioner. Pass the cord through the wheel of the top tire.
CAUTION: Do not apply any shock to the seat belt pretensioner.

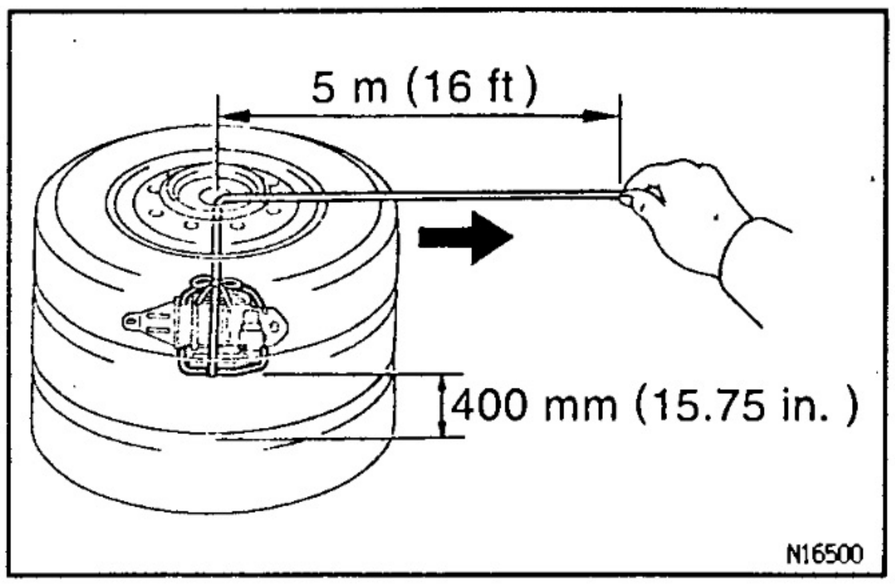

3. ACTIVATE SEAT BELT PRETENSIONER

(a) Stand at least 5 m (16 ft) away from the seat belt pretensioner and pull the pretensioner 400 mm (15.75 in.) off the ground.

CAUTION:

- **Before pulling the seat belt pretensioner up, check that the area around the tires is safe.**
- **Before deploying the seat belt pretensioner, always warn anyone nearby in a loud voice.**

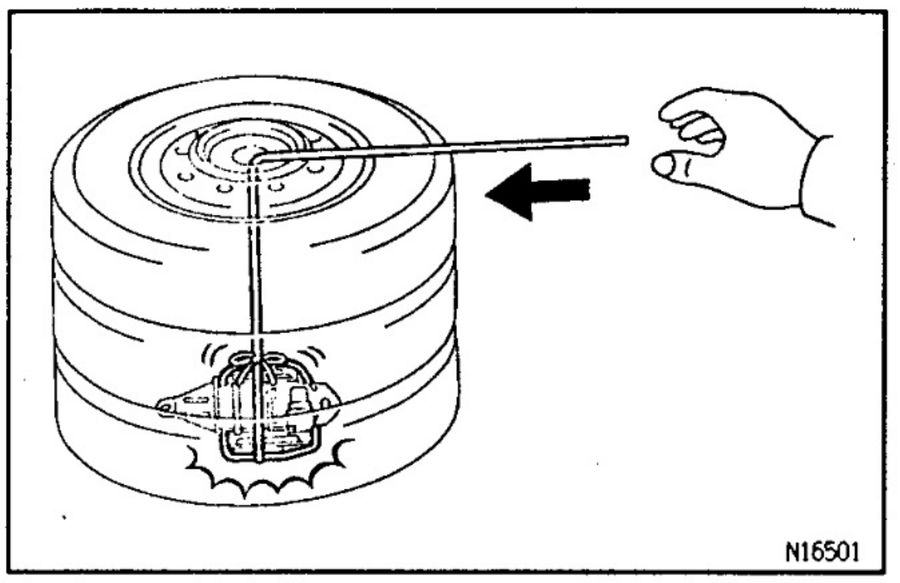

(b) Release the cord and drop the seat belt pretensioner.

CAUTION: The deployed seat belt pretensioner is very hot, so wait 30 minutes for it to cool down. Do not splash water on it at all. If the sensor lock is not fully released or if the seat belt pretensioner is not suspended horizontally, the seat belt pretensioner may not deploy. If this occurs, avoid any shocks to the pretensioner, lock the sensor and do the deployment precess again from the start.

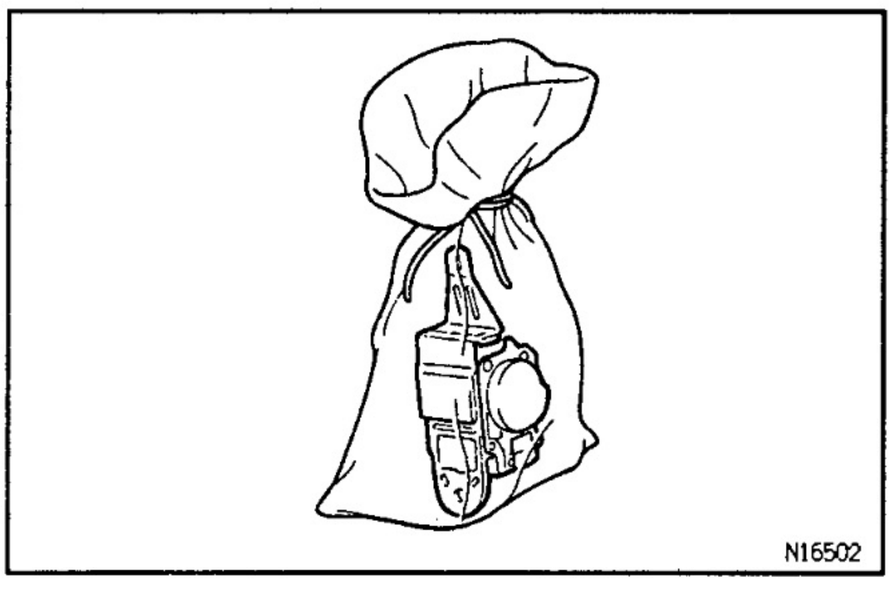

4. DISPOSAL OF SEAT BELT PRETENSIONER

(a) Put the seat belt pretensioner in a vinyl bag, seal the bag and dispose of it.

CAUTION:

- **Use gloves and safety glasses when handling a deployed seat belt pretensioner.**
- **Always wash your hands after completing disposal of the seat belt pretensioner.**

BO

ROOF HEADLINING

BO2MG-01

COMPONENTS

(See page BO–47)

ROOF HEADLINING REMOVAL

BO2MH-01

(See page BO–51)

ROOF HEADLINING INSTALLATION

BO2MJ-01

Installation is in the reverse order of removal.

SIDE STEP
COMPONENTS

BO2MF–01

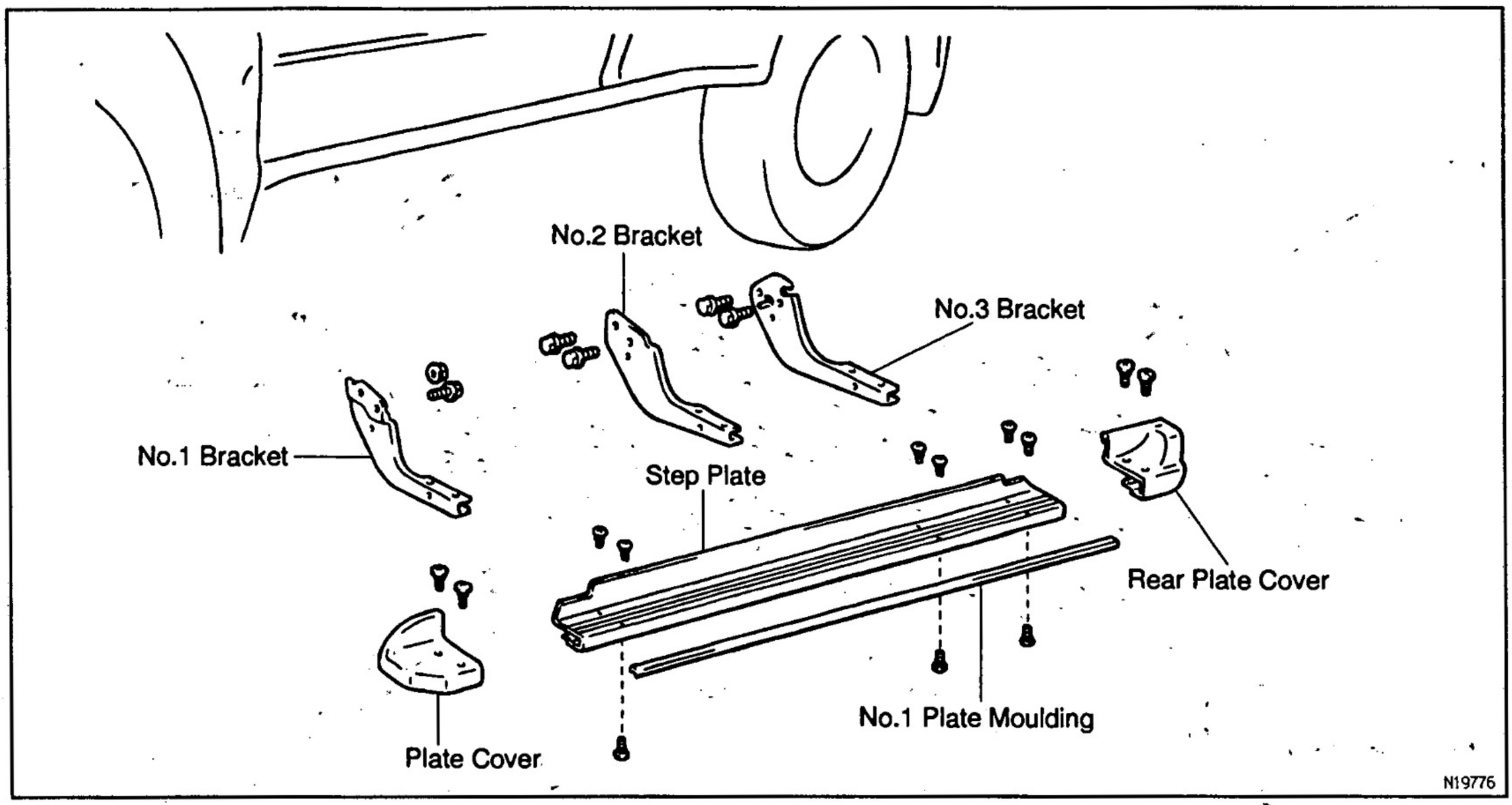

ROOF CARRIER
COMPONENTS

BO2ME–01

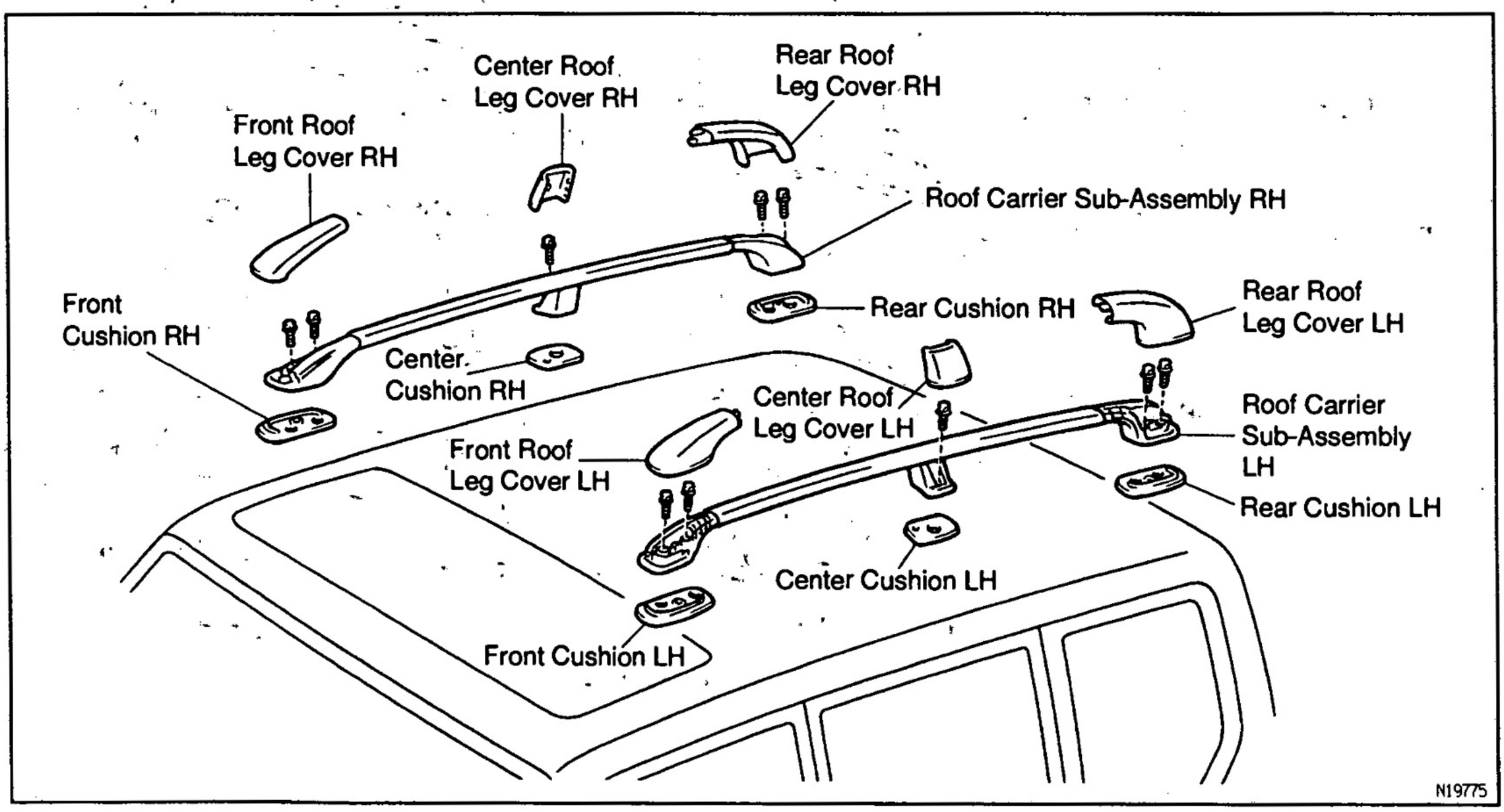

ROOF RACK
COMPONENTS

B02MD—01

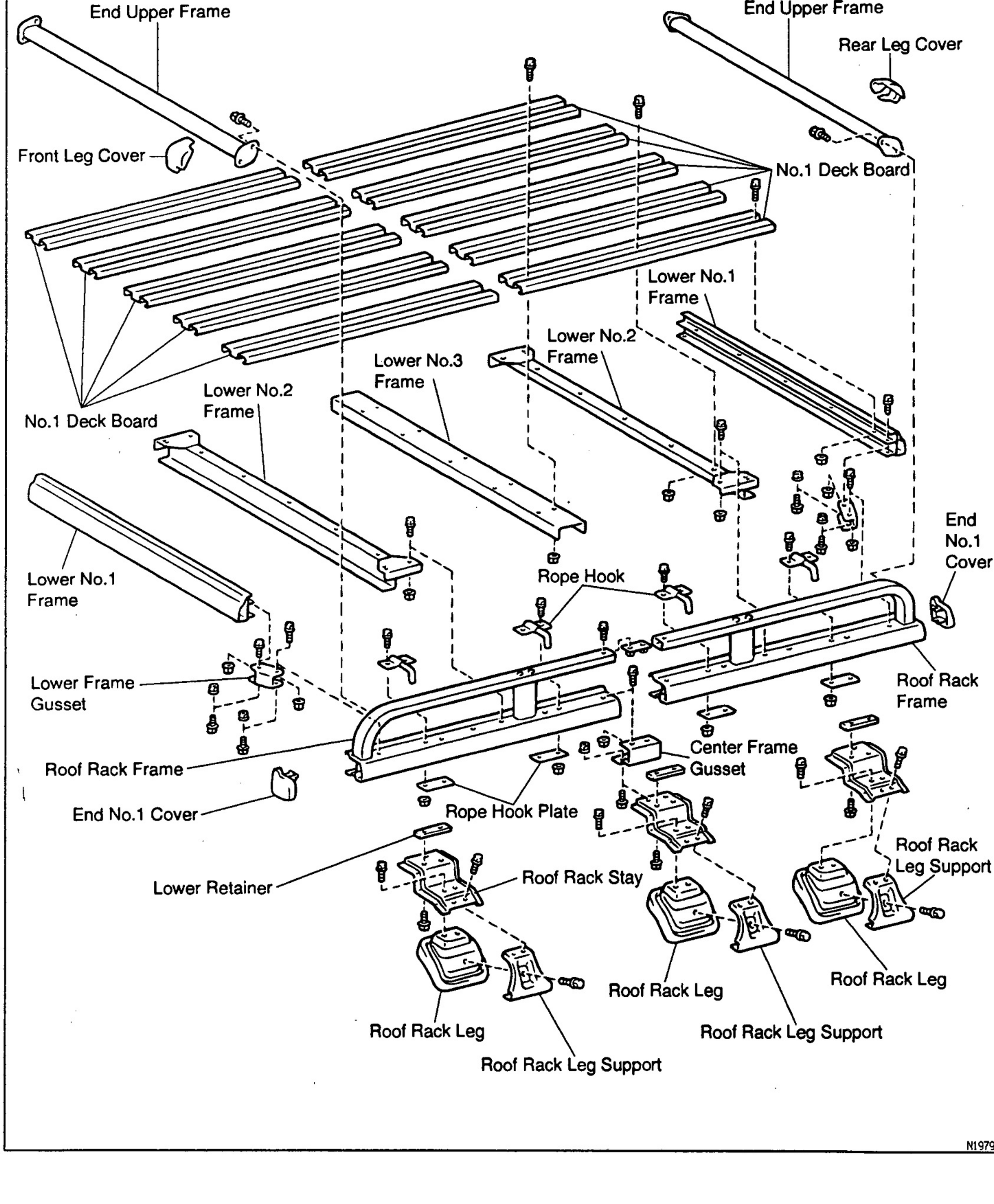

N19791

FUEL TANK AND LINE

COMPONENTS

B00AX-04

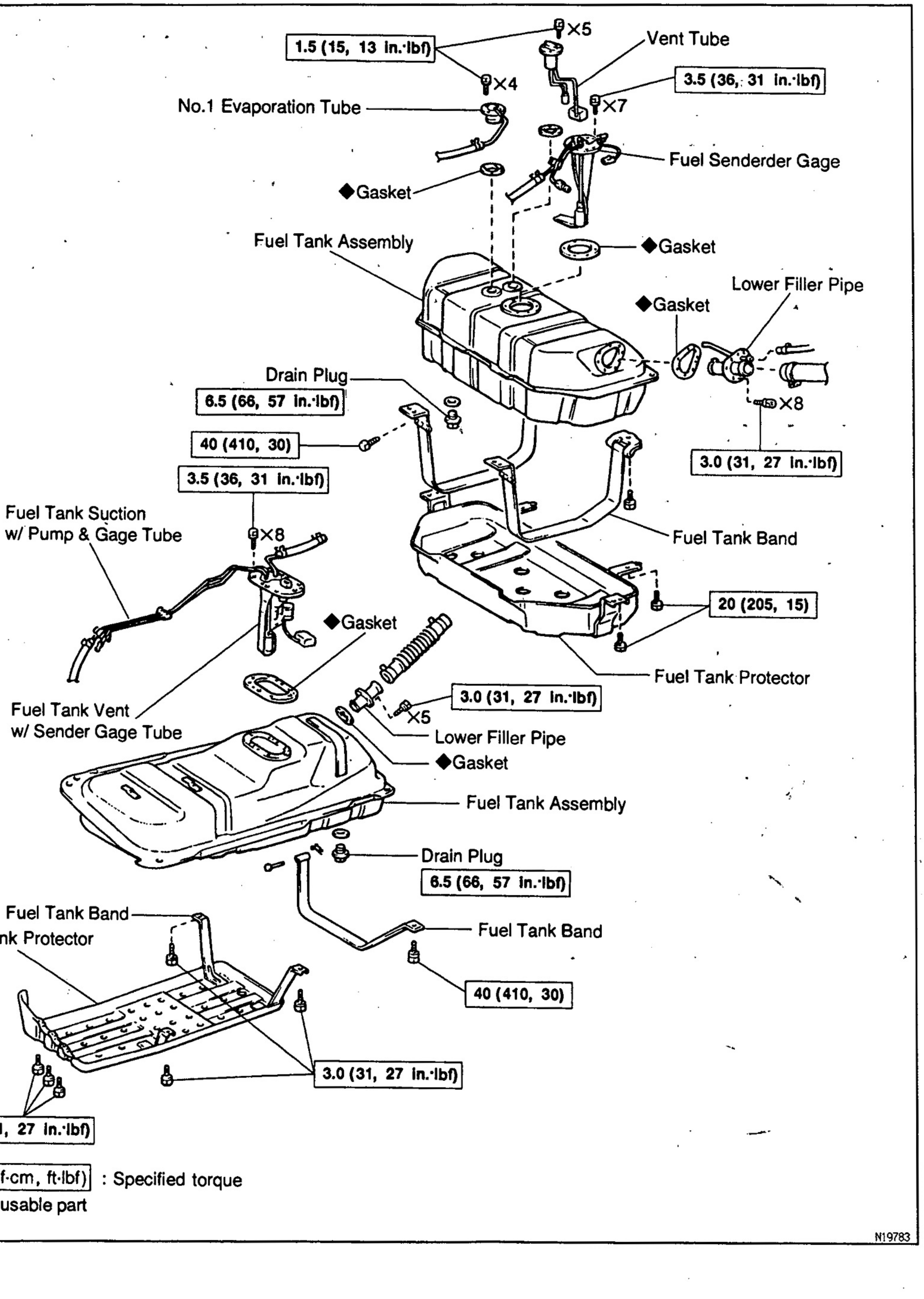

N·m (kgf·cm, ft·lbf) : Specified torque

◆Non-reusable part

N19783

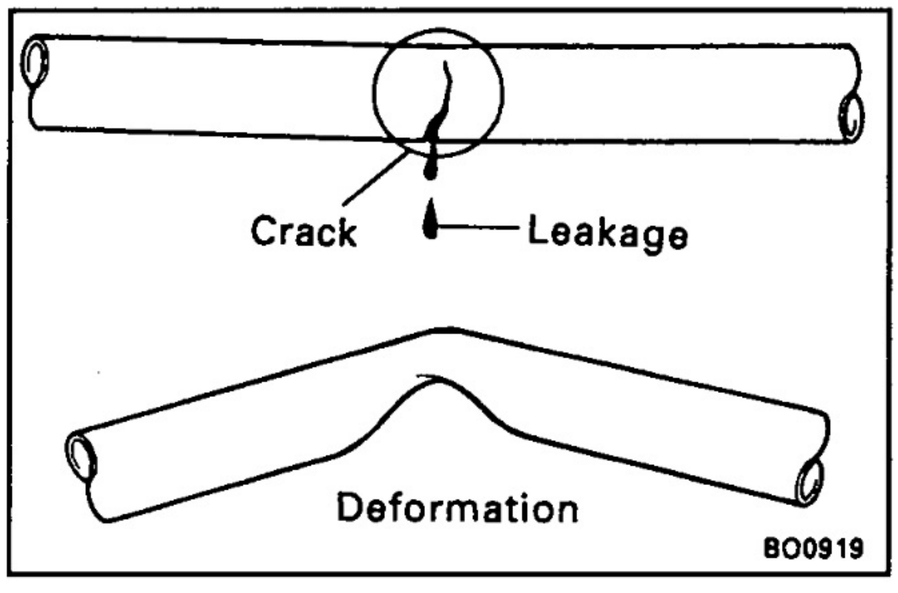

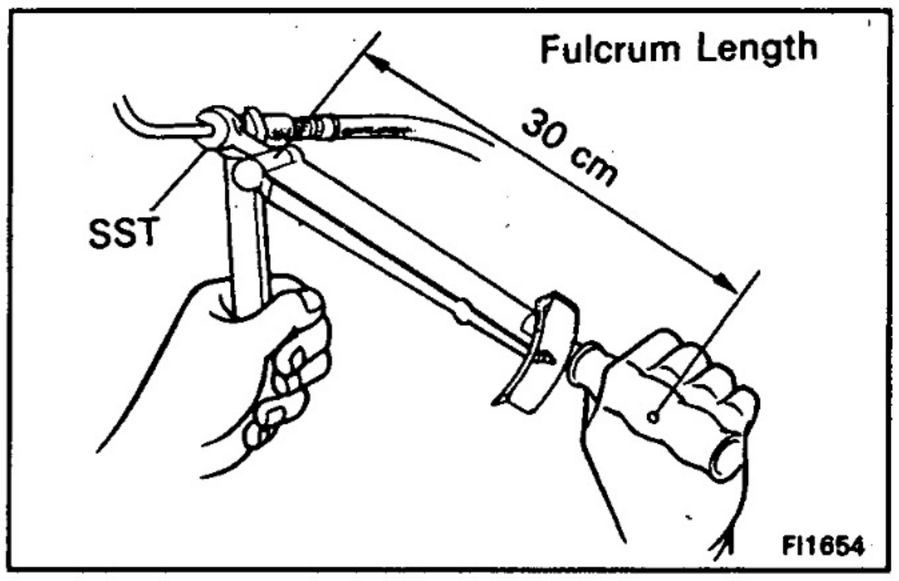

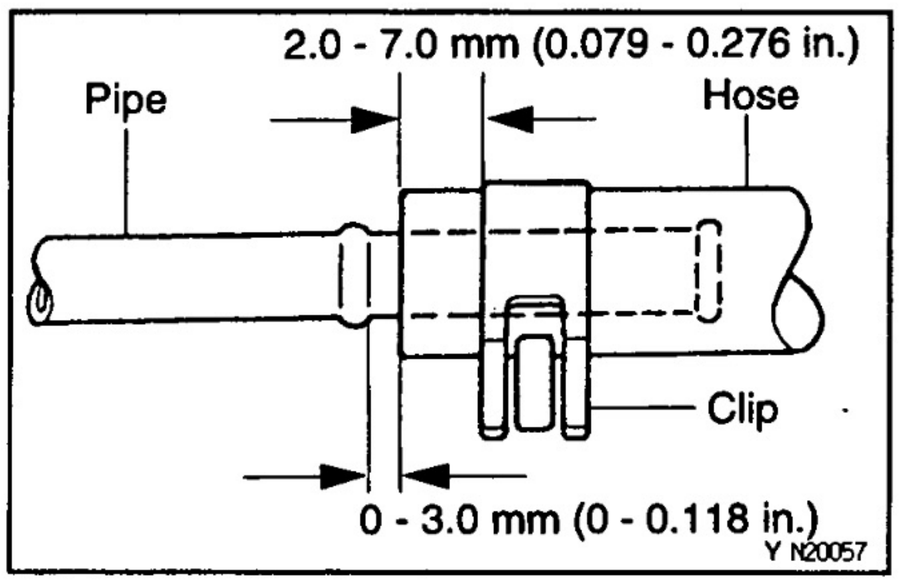

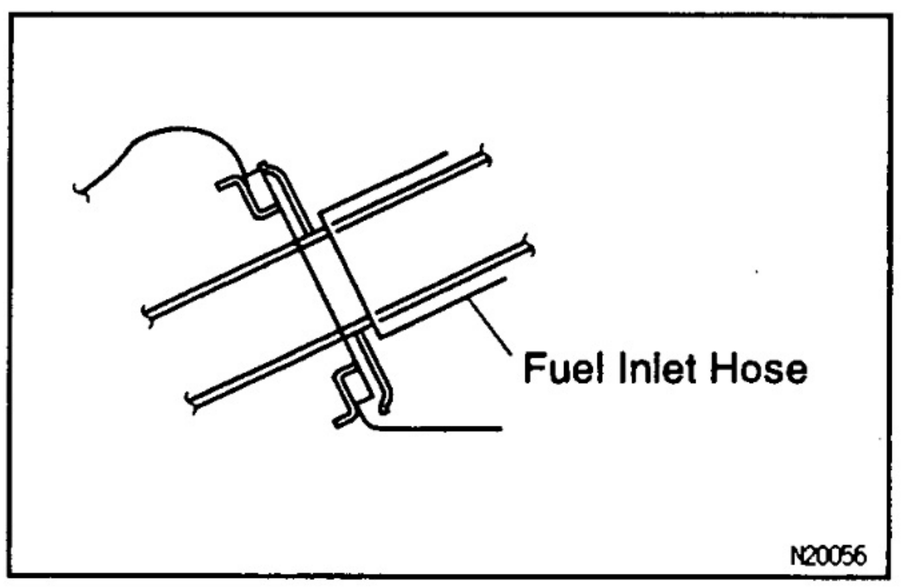

BO021Q-02

PRECAUTIONS

1. **Always use new gaskets when replacing the fuel tank or components parts.**
2. **Apply the proper torque to all parts tightened.**

INSPECT FUEL LINES AND CONNECTIONS

(a) Check the fuel lines for cracks or leakage, and all connections for deformation.
(b) Check the fuel tank vapor vent system hoses and connections for looseness, sharp bends or damage.
(c) Check the fuel tank for deformation, cracks, fuel leakage or tank band looseness.
(d) Check the inlet pipe for damage or fuel leakage.
(e) Hose and tube connections are as shown in the illustration.
(f) Make sure that the hose clamps do not interfere with the tank, tubes, hoses and other parts.
If a problem is found, repair or replace the parts as necessary.

SERVICE SPECIFICATIONS

TORQUE SPECIFICATIONS

BO0BO-06

Part tightened	N·m	kgf·cm	ft·lbf
FRONT BUMPER	—	—	—
Upper retainer x Body	4.9	50	43 in.·lbf
Bumper cover x Over fender	4.9	50	43 in.·lbf
Bumper cover x Fender liner	4.9	50	43 in.·lbf
Bumper cover x Body	7.5	76	66 in.·lbf
Licence plate bracket x Bumper cover	4.9	50	43 in.·lbf
Lower support x Body	18	184	13
Winch x Body	99	1010	73
REAR BUMPER	—	—	—
Step reinforcement x Body	18	184	13
Bumper reinforcement x Body	18	184	13
Bumper cover x Body	18	184	13
Rear combination lamp support x Bumper cover	7.5	76	66 in.·lbf
HOOD	—	—	—
Hood x Hood hinge	13	130	9.4
FRONT DOOR	—	—	—
Door hinge x Body	23	235	17
Door hinge x Door panel	26	265	19
Door lock striker x Body	11	115	8.3
Door glass x Window regulator	4.9	50	43 in.·lbf
Lower frame x Door panel	4.9	50	43 in.·lbf
Window regulator x Door panel	4.9	50	43 in.·lbf
Door lock x Door lock	4.9	50	43 in.·lbf
Outside handle x Door panel	4.9	50	43 in.·lbf
REAR DOOR	—	—	—
Door hinge x Body	23	235	17
Door hinge x Door panel	26	265	19
Door lock striker x Body	11	115	8.3
Window regulator x Door panel	4.9	50	43 in.·lbf
Door lock x Door lock	4.9	50	43 in.·lbf
Outside handle x Door panel	4.9	50	43 in.·lbf
BACK DOOR	—	—	—
Door hinge x Body	42	430	31
Door hinge x Door panel	42	430	31
Door lock strider x Body	11	115	8
Side male stopper x Body	8.0	82	71 in.·lbf
Door lock x Door panel	4.9	50	43 in.·lbf
Licence plate lamp x Door panel	4.9	50	43 in.·lbf
Spare Wheel carrier bracket x Door panel	48	490	35
Back door stay x Door panel	18	184	13
Back door stay x Body	18	184	13

TORQUE SPECIFICATIONS (Cont'd)

Part tightened		N·m	kgf·cm	ft·lbf
WIPER AND WASHER		–	–	–
Front wiper arm x Wiper link		20	205	15
Front wiper link x Body		5.4	55	48 in.·lbf
Front wiper motor x Body		5.4	55	48 in.·lbf
Rear wiper arm x Wiper motor		5.4	55	48 in.·lbf
Rear wiper motor x Door panel		5.4	55	48 in.·lbf
INSTRUMENT PANEL		–	–	–
Front passenger airbag assembly x Reinforcement		18	184	13
SEAT		–	–	–
Front Seat		–	–	–
Seat adjuster x Body		37	380	27
Seat adjuster x Seatback frame		45	460	33
Seat adjuster x Seat cushion frame		18	184	13
No.1 Rear Seat		–	–	–
Seat track x Body		37	380	27
Center armrest x Seatback frame		18	184	13
Outer adjuster x Seatback frame		50	510	37
Outer adjuster x Seat cushion frame		50	510	37
Seat track x Seat cushion frame		18	184	37
Seat leg x Body		37	380	27
Seat leg x Seat cushion frame		18	184	13
Seatback frame x Body		37	380	27
Seatback frame x Seat cushion frame		18	184	13
No.2 Rear Seat		–	–	–
Seat cushion x Body		37	380	27
Inner seat back adjuster x Seatback frame		37	380	27
Inner seat back adjuster x Seat cushion frame		37	380	27
Seat leg assembly x Seat cushion frame		18	184	13
Seatback frame x Body		37	380	27
Seatback frame x Seat cushion frame		18	184	13
SEAT BELT		–	–	–
Adjustable anchor x Body		42	430	31
Retractor x Body	Upper Bolt:	5.4	55	48 in.·lbf
Retractor x Body	Lower Bolt:	42	430	31
Shoulder anchor x Body		42	430	31
Inner belt x Seat		42	430	31
Center belt x Body		42	430	31
FUEL TANK		–	–	–
No.1 evaporation tube x Fuel tank		1.5	15	13 in.·lbf
Vent tube x Fuel tank		1.5	15	13 in.·lbf
Fuel sender gage x Fuel tank		3.5	36	31 in.·lbf
Lower filler pipe x Fuel tank		3.0	31	27 in.·lbf
Drain plug x Fuel tank		6.5	66	57 in.·lbf
Fuel tank band x Body		40	410	30
Fuel suction w/pump and gage tube x Fuel tank		3.5	36	31 in.·lbf
Fuel tank protector x Body	Main tank:	20	205	15
Fuel tank protector x Body	Sub tank:	30	305	22

WINCH

PREPARATION ..... WI– 2
ON–VEHICLE INSPECTION ..... WI– 2
WINCH ..... WI– 4
SERVICE SPECIFICATIONS ..... WI– 8

PREPARATION

RECOMMENDED TOOLS

W1002–01

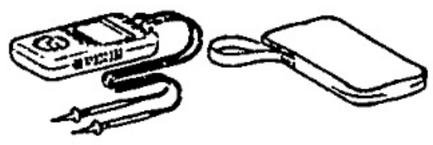	09082–00040 TOYOTA Electrical Tester.	

W1003–01

EQUIPMENT

Hexagon Wrench (3 mm)	Winch Wire

W1005–01

LUBRICANT

Item	Capacity	Classification
MP grease No.2	–	–

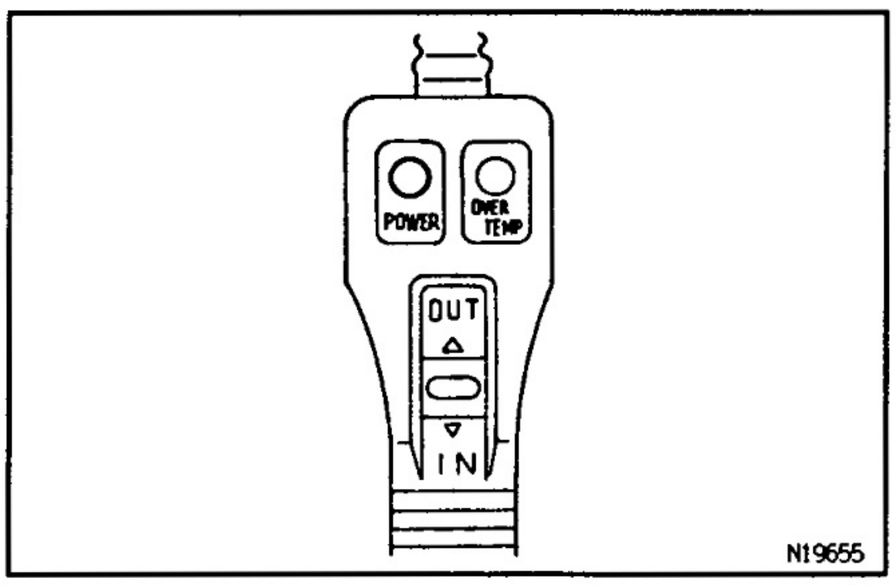

N19655

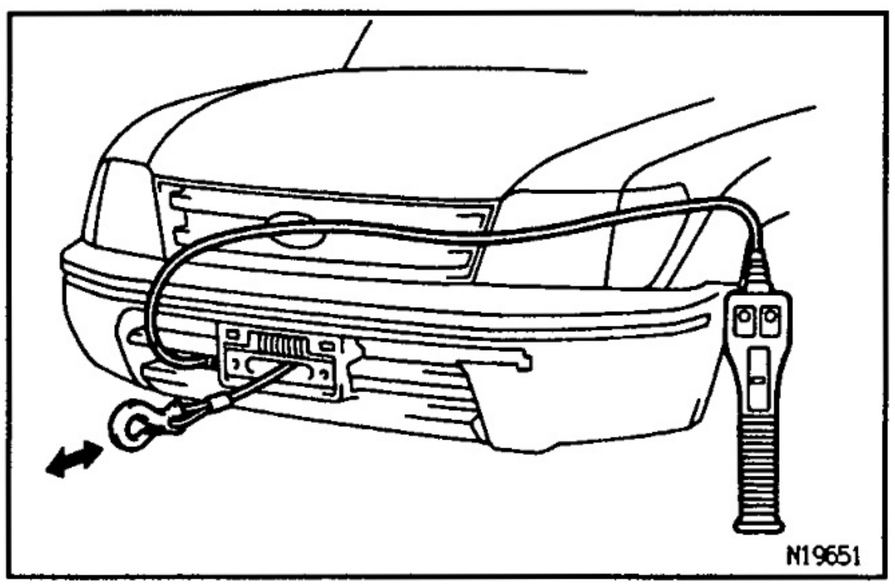
N19651

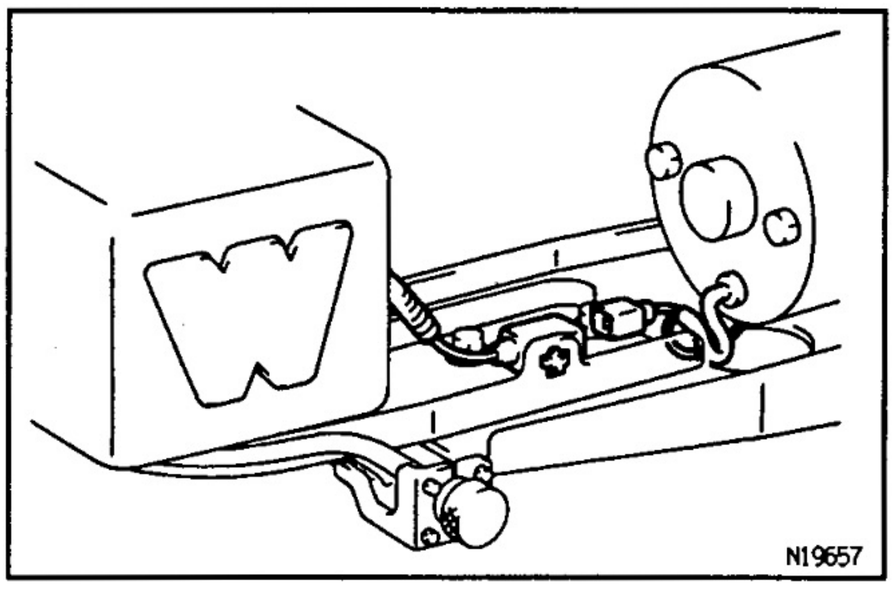
N19657

ON–VEHICLE INSPECTION

WINCH REMOTE CONTROL SWITCH

W1006–01

INSPECTION

1. **CONNECT WINCH CONTROL SWITCH CONNECTOR**
2. **INSPECT WINCH CONTROL SWITCH**

(a) The power indicator light will light when the ignition switch is tured ON.

(b) Operate winch control switch, confirm winch function.
HINT: Be careful not to tighten or strain the winch wire.

(c) Turn ignition switch OFF.

3. **INSPECT OVERHEAT TEMPERATURE INDICATOR**

(a) Turn ignition switch OFF.
(b) Remove the front grille.
(c) Remove the front bumper.
(d) Disconnct the connector.

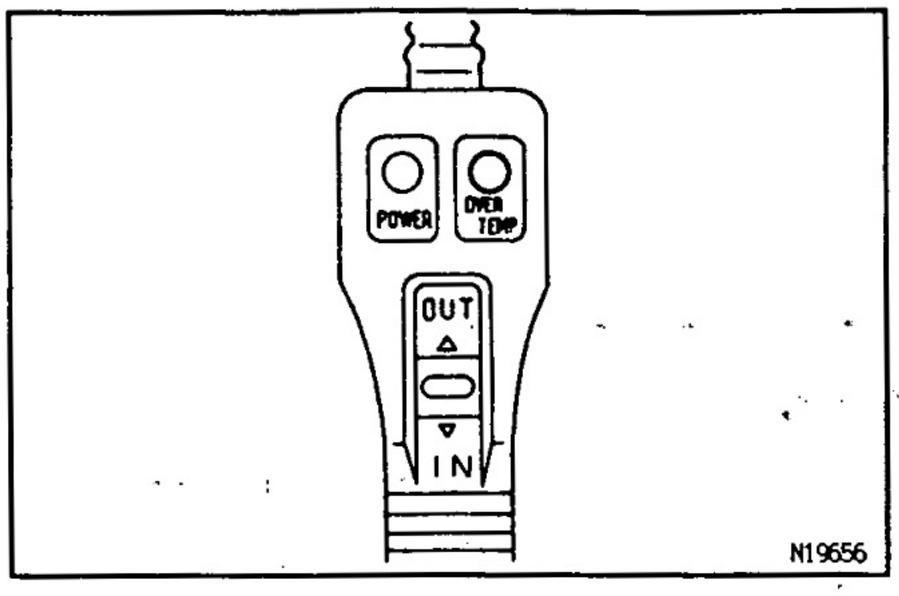

(e) When ignition switch ON, the overheat temperature indicator light will light and buzzer sound.
(f) Turn ignition switch OFF.

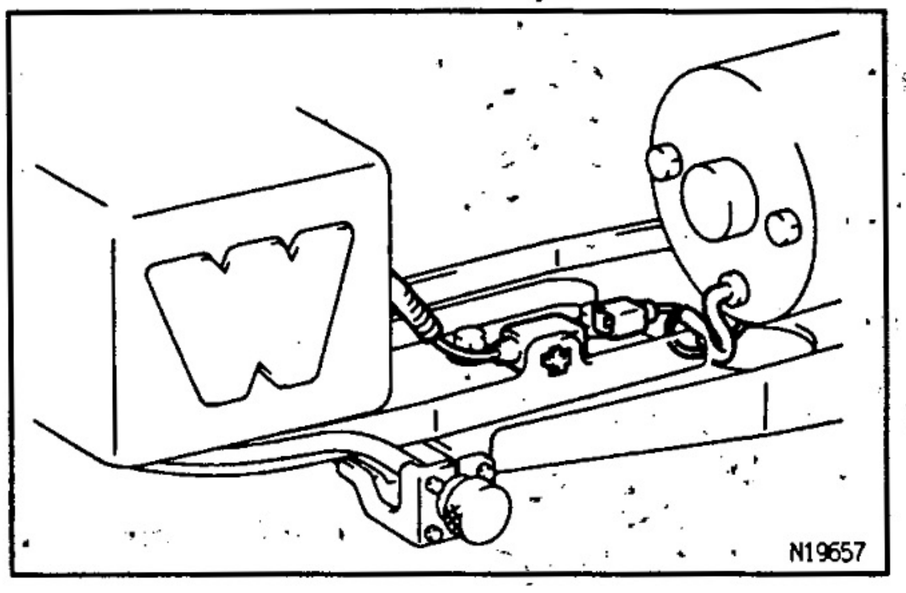

(g) Connect the connector.
(h) Install the front bumper.
(i) Install the front grille.

4. DISCONNECT WINCH CONTROL SWITCH CONNECTOR

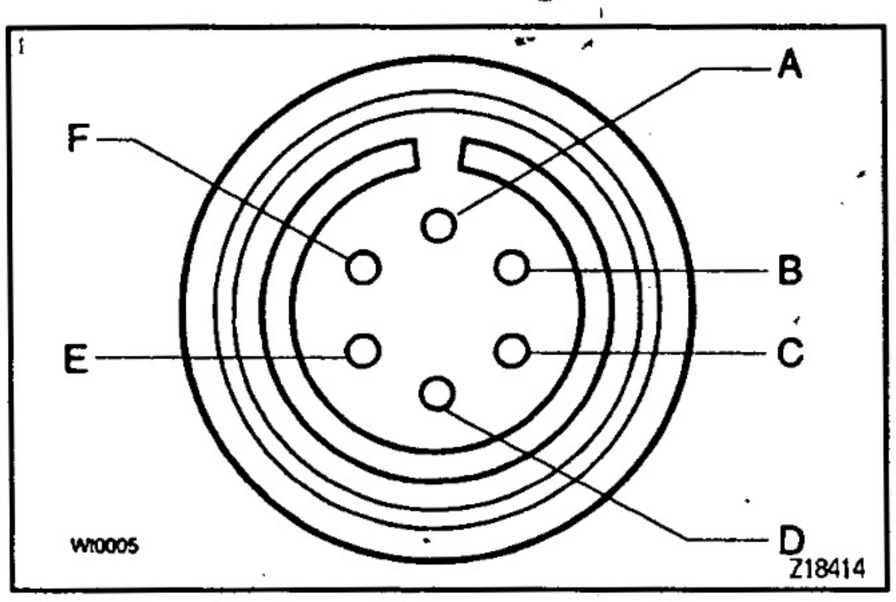

5. CHECK WINCH REMOTE CONTROL SWITCH CIRCUIT

Check that there is continuity between terminals.

SW position	Tester cnnection	Specified condition
Neutral	A — B B — C B — E	Continuity
IN	B — C B — D	Continuity
OUT	B — C B — F	Continuity

If there is no continuity, replace the remote control switch.

WI

WINCH
COMPONENTS

WI007-01

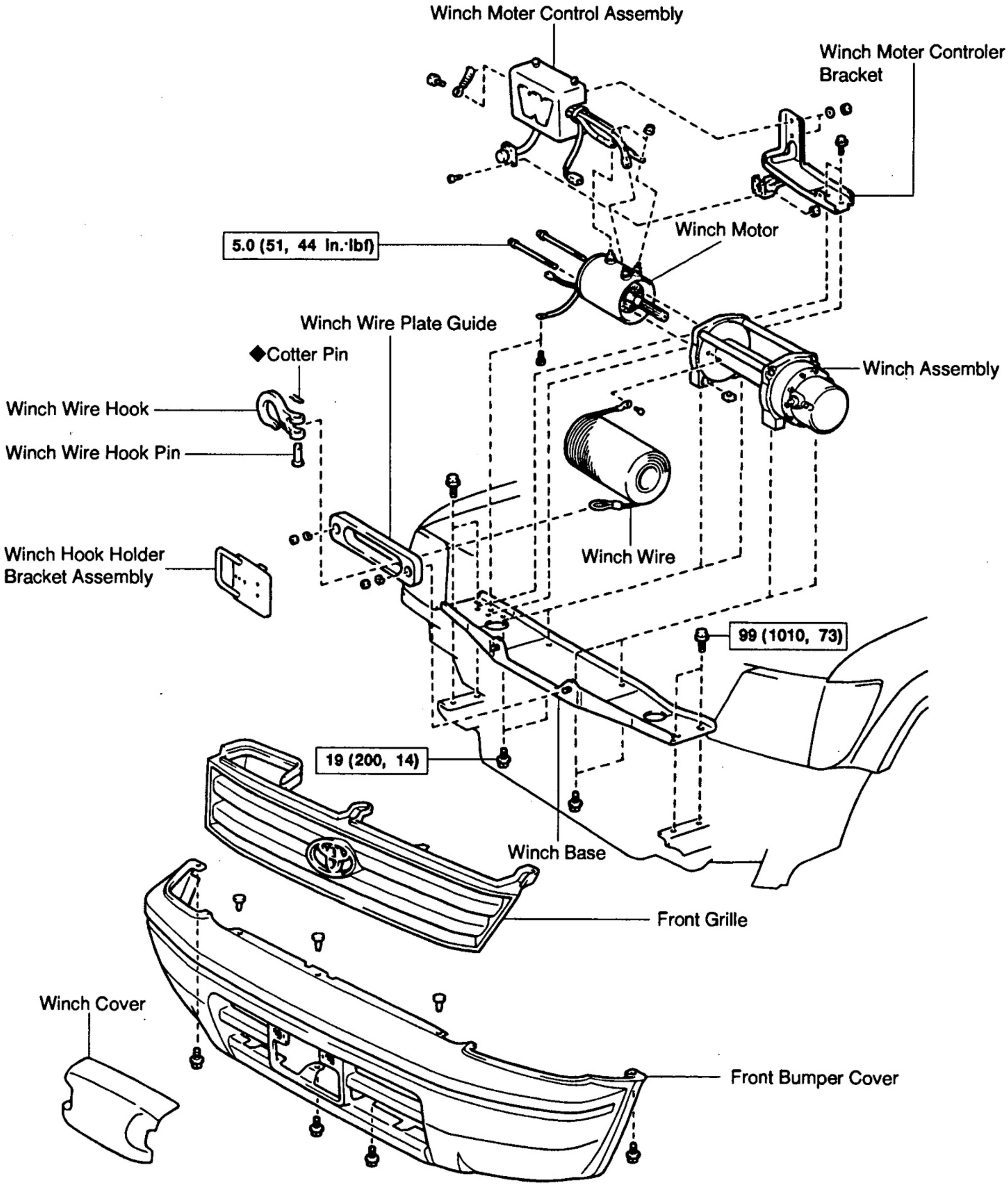

N·m (kgf·cm, ft·lbf) : Specified torque

◆Non-reusable part

N19542

WI

COMPONENTS (Cont'd)

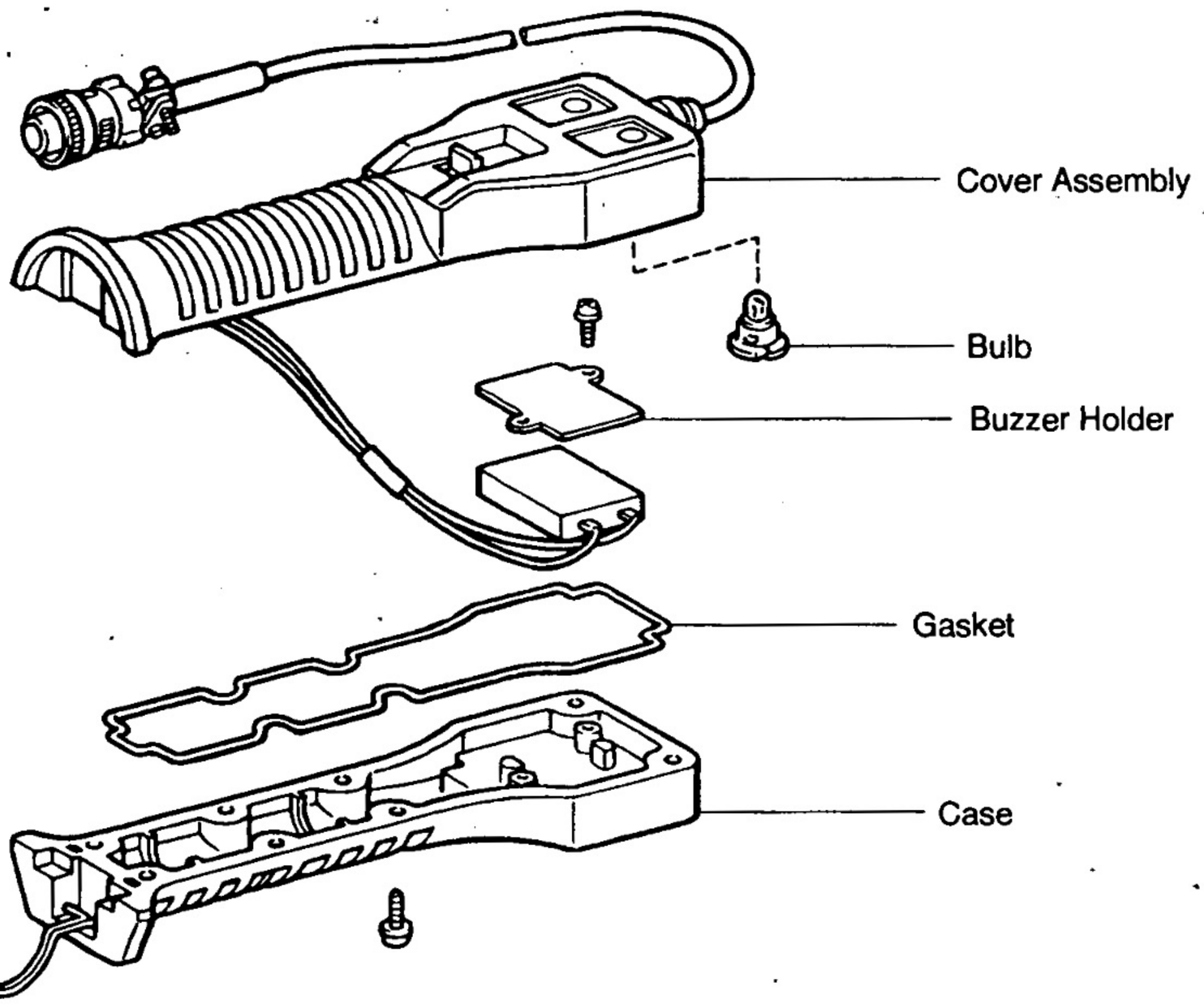

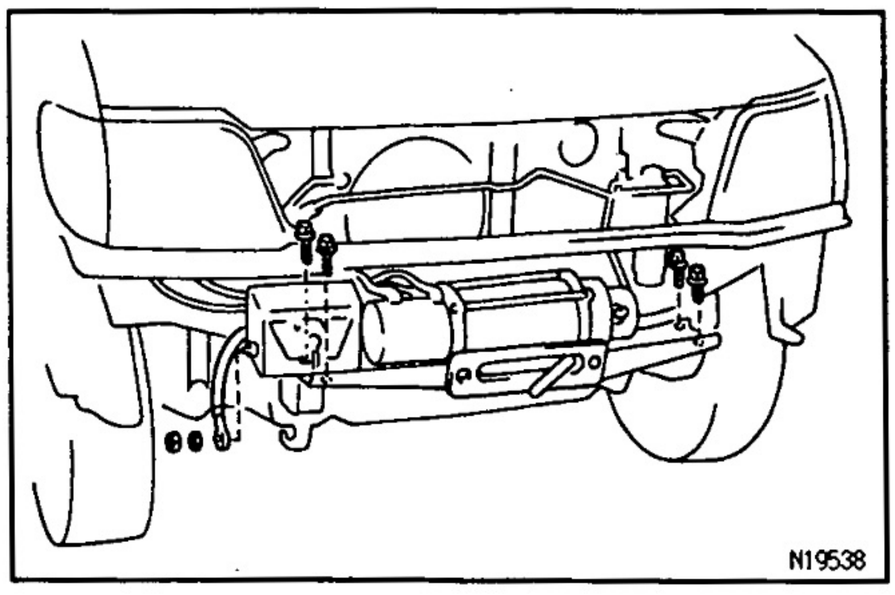

W1008-01

WINCH REMOVAL

1. **REMOVE WINCH COVER**
2. **REMOVE FRONT CRILLE**
3. **REMOVE FRONT BUMPER COVER**
4. **REMOVE WINCH ASSEMBLY**
   Remove the 4 bolts and nut.
   Torque: 99 N·m (1010 kgf·cm, 73 ft·lbf)

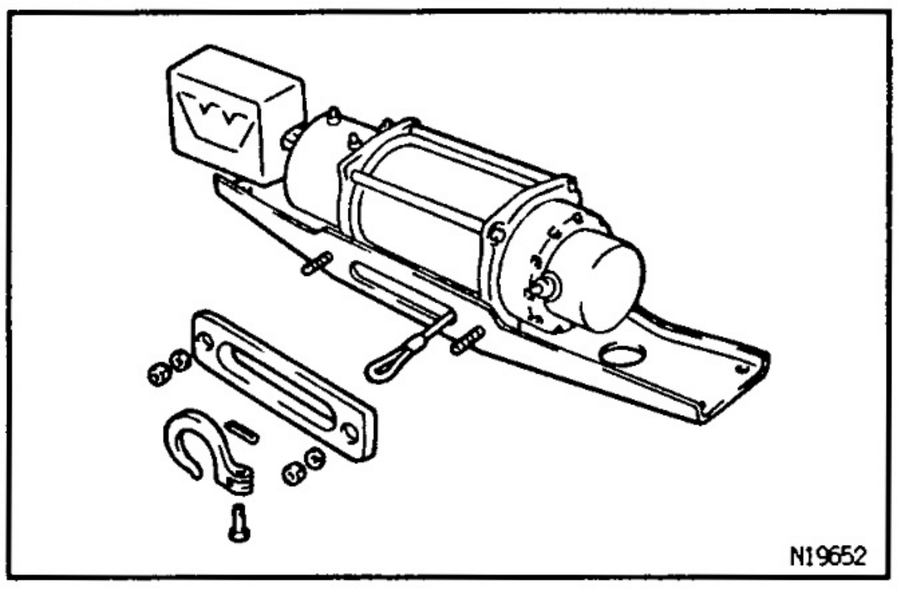

W1009-01

WINCH ASSEMBLY DISASSEMBLY

1. REMOVE WINCH HOOK HOLDER BRACKET ASSEMBLY

2. REMOVE WINCH WIRE PLATE GUIDE

(a) Remove the cotter pin and winch wire hook pin, winch wire hook.

(b) Remove the 2 nuts and washers, winch wire plate guide.

Torque: 95 N·m (970 kgf·cm, 70 ft·lbf)

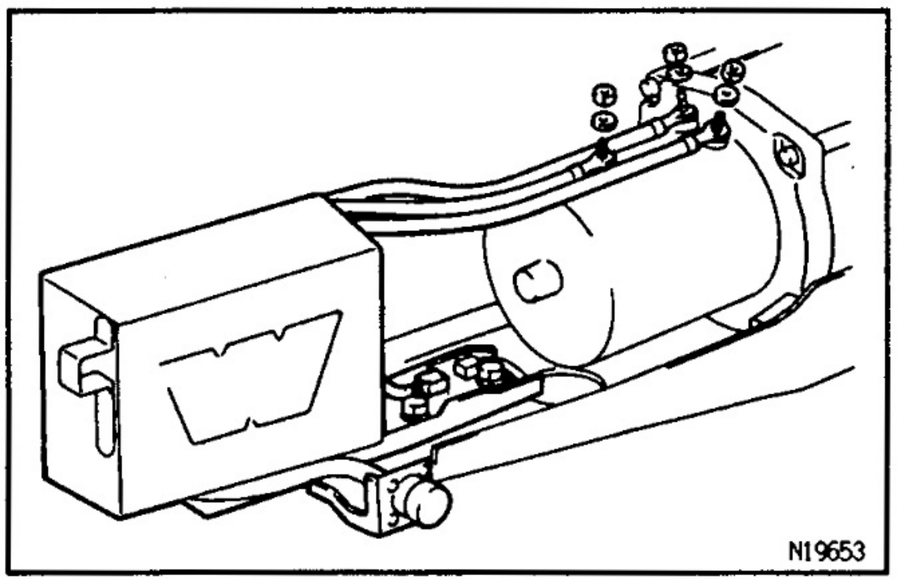

3. REMOVE WINCH MOTOR CONTROLLER ASSEMBLY

(a) Disconnect the connector.

(b) Remove the 3 nuts and washers, then disconnect wire harness.

(c) Remove the 2 bolts.

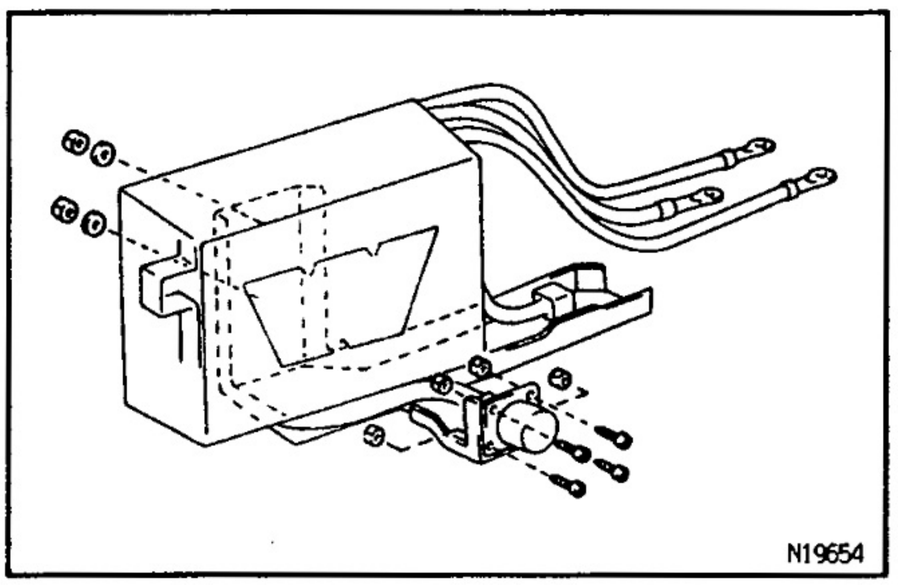

(d) Remove the 2 nuts and washers.

(e) Remove the 4 screws and winch motor control assembly from winch controler bracket.

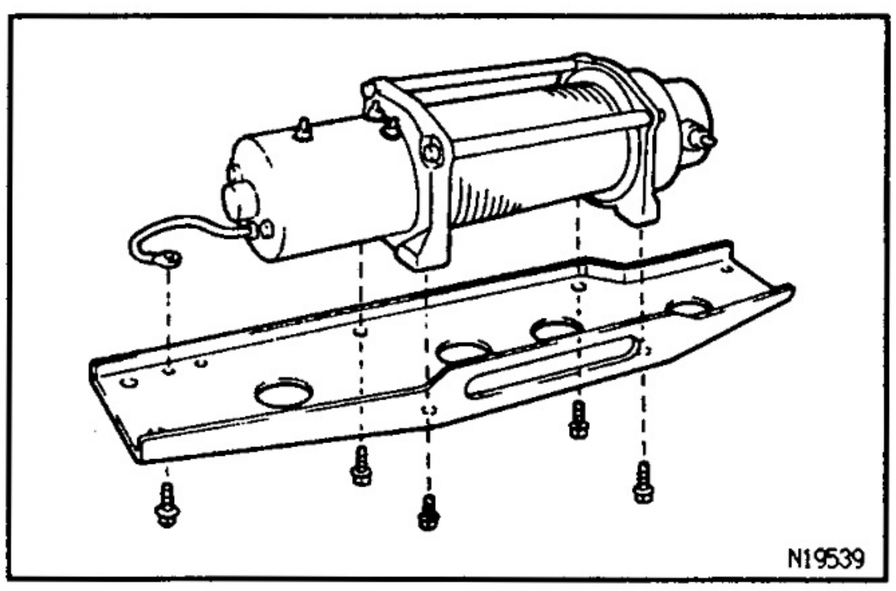

4. REMOVE WINCH MOTOR AND WINCH ASSEMBLY

(a) Remove winch motor ground bolt.

(b) Remove the 4 bolts.

Torque: 19 N·m (200 kgf·cm, 14 ft·lbf)

(c) Remove the winch motor and winch assembly from winch base.

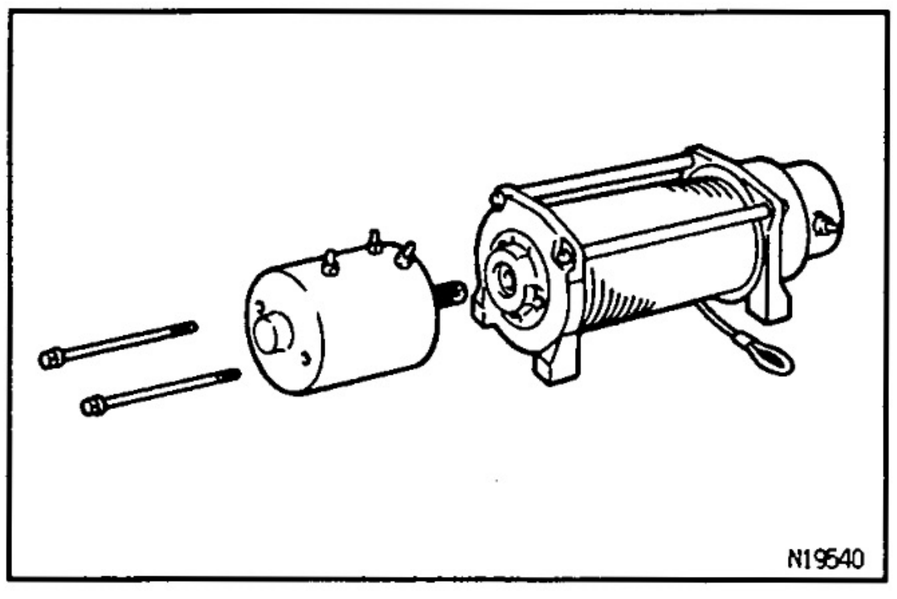

(d) Remove the 2 bolts.

Torque: 5.0 N·m (51 kgf·cm, 44 in.·lbf)

(e) Remove the winch motor from winch assembly.

W100A–01

WINCH WIRE INSPECTION

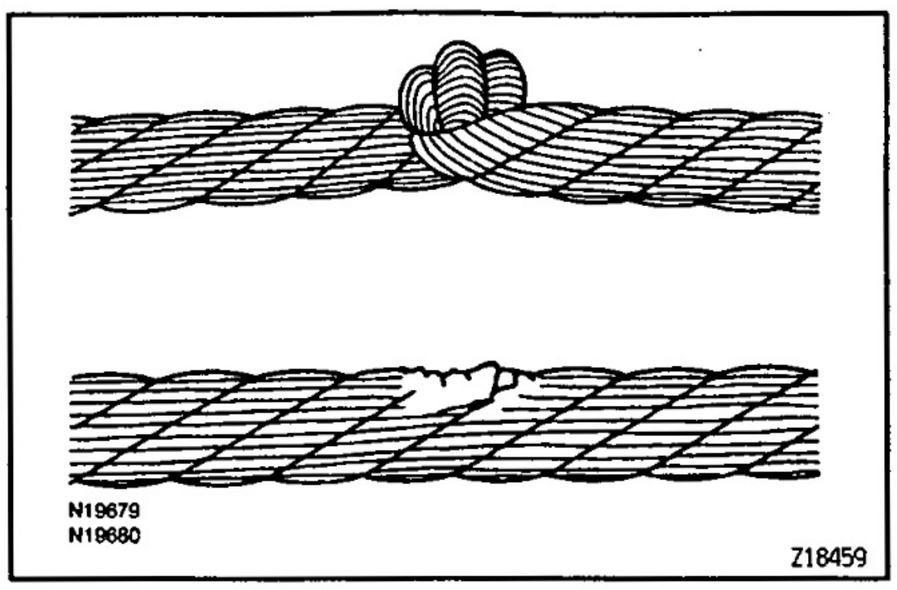

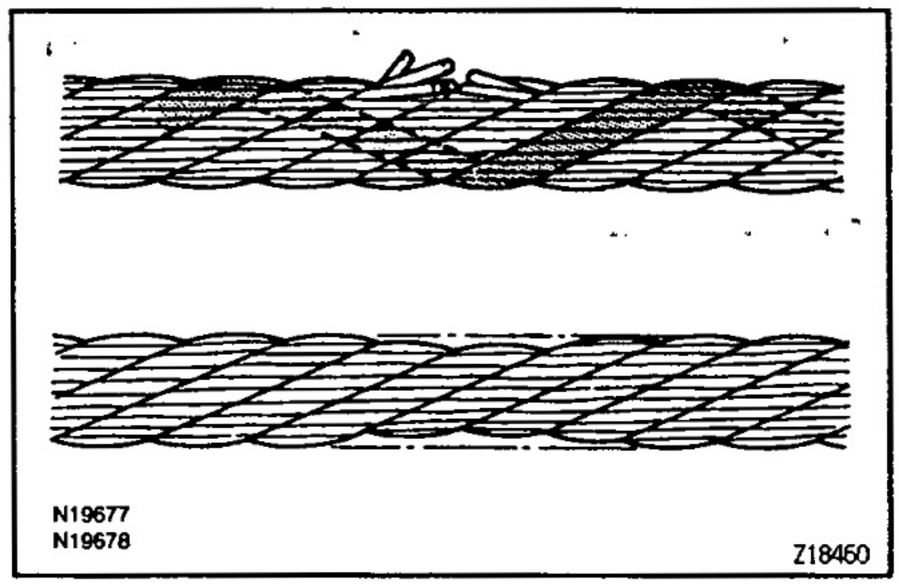

1. **INSPECT WINCH WIRE**

Inspect the winch wire for the following items.
If damage, replace the winch wire.

- **Wire than 12 severed strands per wind**
- **Wire diameter of less than 7.5 mm (0.295 in.)**
- **Kinks**
- **Corrosion**
- **Fraying**

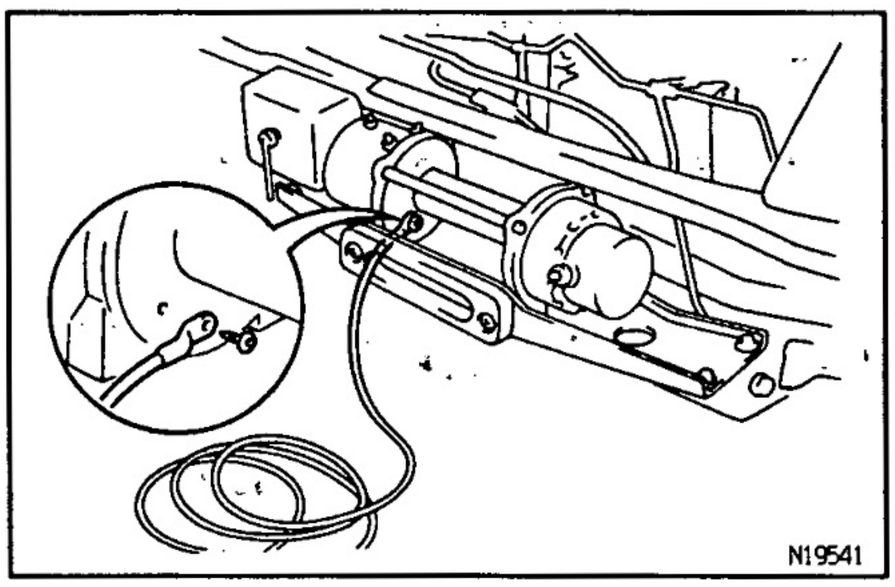

2. **REMOVE WINCH WIRE**

(a) Turn the winch clutch lever to the FREE position.
(b) Hold the hook and pull on it to pull out the winch wire.
(c) Using a hexagon wrench (3 mm), remove the bolt.

3. **INSTALL WINCH WIRE**

(a) Using a hexagon wrench (3 mm), install the bolt.
(b) Using the winch wire control switch, wind the winch wire.

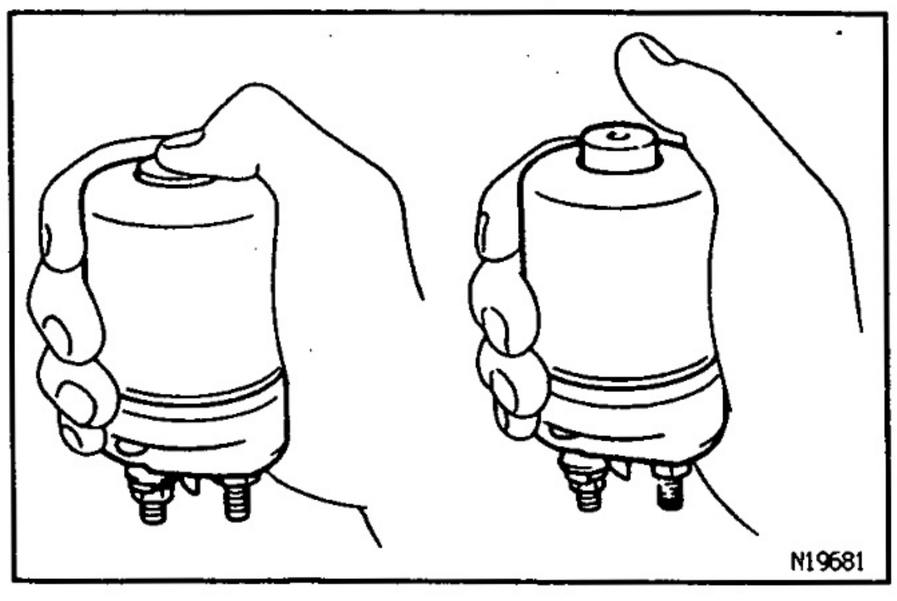

W100D–01

MAGNET SWITCH NO.1 INSPECTION

INSPECT MAGNET SWITCH NO.1

(a) Remove the cover and stopper.
(b) Push in the plunger and release it. Check that it returns quickly to its original position.

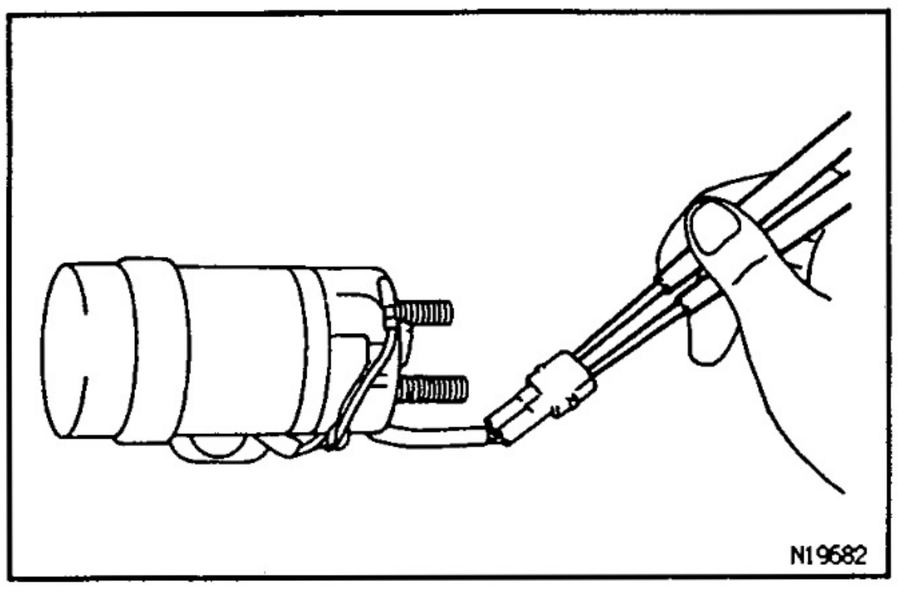

(c) Using an ohmmeter, check for continuity between the connector terminals.
Standard: Continuity

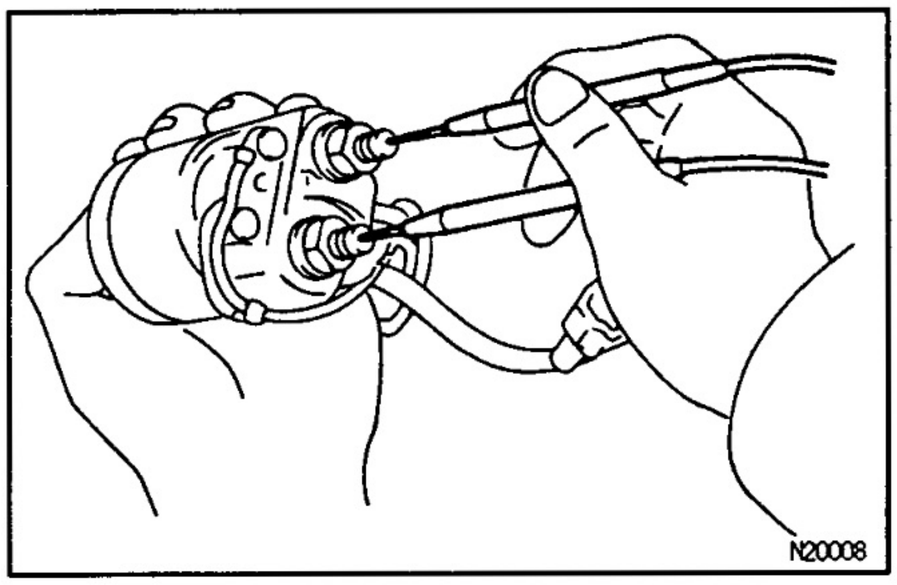

(d) Using an ohmmeter, check for no continuity between the terminals with the plunger released.
Standard: Plunger is free..... Continuity
Plunger is pushed..... No continuity

W1008-01

WINCH ASSEMBLY ASSEMBLY

Assembly is in the reverse order of disassembly.

W100C-01

WINCH ASSEMBLY INSTALLATION

Installation is in the reverse order of removal.

WI

SERVICE SPECIFICATIONS

W1004-01

TORQUE SPECIFICATIONS

Part tightened	N·m	kgf·cm	ft·lbf
WINCH	–	–	–
Winch Assembly x Body	99	1010	73
Winch Wire Plate Guide x Winch Base	95	970	70
Winch Base x Winch Assembly	19	200	14
Winch Motor x Winch Assembly	5.0	51	44 in.·lbf

AIR CONDITIONING

PRECAUTION ····· AC– 2
DESCRIPTION ····· AC– 4
PREPARATION ····· AC– 7
USE OF MANIFOLD GAUGE SET ····· AC– 9
EVACUATING AIR IN REFRIGERATION SYSTEM AND CHARGING WITH REFRIGERANT ··· AC– 10
TROUBLESHOOTING ····· AC– 13
REFRIGERANT VOLUME ····· AC– 21
DRIVE BELT TENSION ····· AC– 22
IDLE–UP SPEED ····· AC– 24
REFRIGERANT LINES ····· AC– 28
FRONT COOLING UNIT ····· AC– 32
REAR COOLING UNIT ····· AC– 35
FRONT HEATER UNIT ····· AC– 38
REAR HEATER UNIT ····· AC– 40
BLOWER UNIT ····· AC– 42
COMPRESSOR ····· AC– 44
RECEIVER ····· AC– 58
CONDENSER ····· AC– 59
HEATER RADIATOR ····· AC– 61
EVAPORATOR ····· AC– 62
EXPANSION VALVE ····· AC– 62
MAGNETIC VALVE ····· AC– 63
THERMISTOR ····· AC– 64
BLOWER MOTOR ····· AC– 66
BLOWER RESISTOR ····· AC– 67
WATER VALVE ····· AC– 69
VACUUM SWITCHING VALVE (VSV) ····· AC– 71
CONDENSER FAN ····· AC– 72
PRESSURE SWITCH ····· AC– 74
RELAY ····· AC– 76
AIR CONDITIONER AMPLIFIER ····· AC– 77
AIR CONDITIONER CONTROL ASSEMBLY ····· AC– 80
REAR COOLER CONTROL PANEL ····· AC– 84
REAR COOLER SWITCH ····· AC– 86
REAR HEATER CONTROL ASSEMBLY ····· AC– 87
REAR BLOWER SPEED CONTROL SWITCH ····· AC– 88
REAR HEATER SWITCH ····· AC– 89
SERVICE SPECIFICATIONS ····· AC– 90

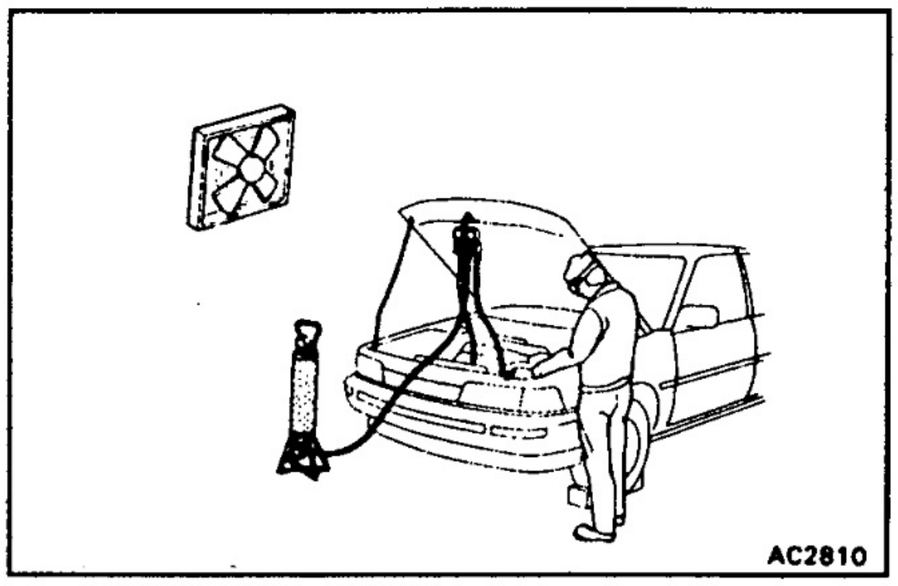

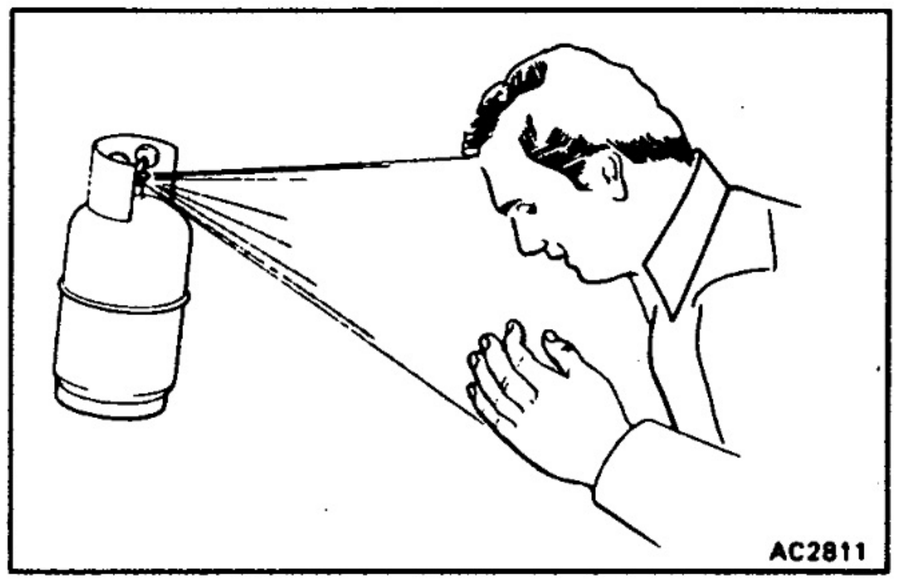

PRECAUTION

AC0R3-1B

HANDLING PRECAUTIONS FOR REFRIGERANT

1. DO NOT HANDLE REFRIGERANT IN ENCLOSED AREA OR NEAR OPEN FLAME

2. ALWAYS WEAR EYE PROTECTION

3. BE CAREFUL THAT LIQUID REFRIGERANT DOES NOT GET IN YOUR EYES OR ON YOUR SKIN

If liquid refrigerant gets in your eyes or on your skin:

(a) Wash the area with lots of cool water.
CAUTION: Do not rub your eyes or skin.

(b) Apply clean petroleum jelly to the skin.

(c) Go immediately to a physician or hospital for professional treatment.

AC1V0-0E

HANDLING PRECAUTIONS FOR REFRIGERANT CONTAINER

1. NEVER HEAT CONTAINER OR EXPOSE IT TO NAKED FLAME

2. BE CAREFUL NOT TO DROP CONTAINER AND NOT TO APPLY PHYSICAL SHOCKS TO IT

AC

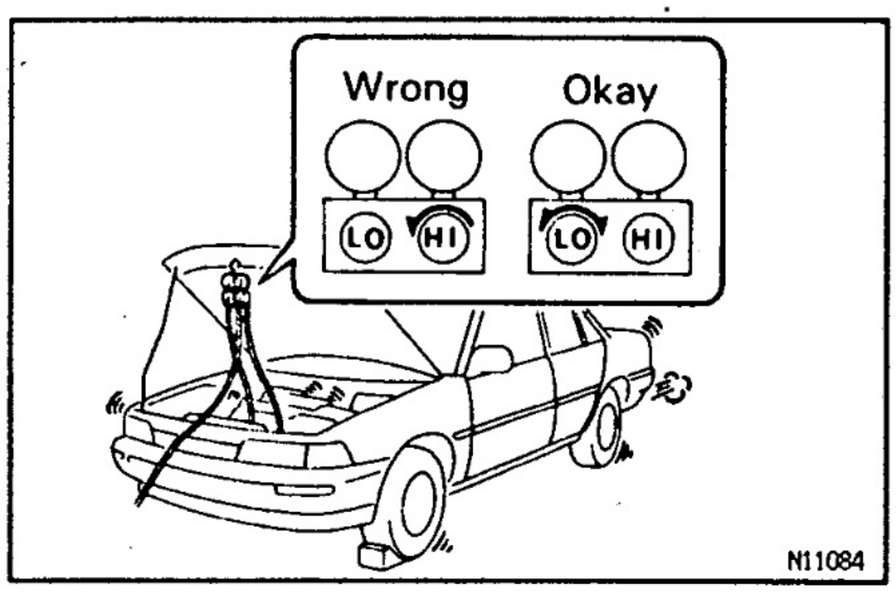

AC0N6-1H

PRECAUTIONS WHEN CHARGING REFRIGERANT

1. DO NOT OPERATE COMPRESSOR WITHOUT ENOUGH REFRIGERANT IN REFRIGERATION SYSTEM

If there is not enough refrigerant in the refrigeration system, oil lubrication will be insufficient and compressor burnout may occur, so take care to avoid this.

2. DO NOT OPEN HIGH PRESSURE MANIFOLD VALVE WHILE COMPRESSOR IS OPERATING

If the high pressure valve is opened, refrigerant flows in the reverse direction and could cause the charging cylinder to rupture, so open and close the only low pressure valve.

3. **BE CAREFUL NOT TO OVERCHARGE SYSTEM WITH REFRIGERANT**

If refrigerant is overcharged, it causes problems such as insufficient cooling, poor fuel economy, engine overheating etc.

AC1V1–07

GAS LEAK TEST DESCRIPTION

1. **PERFORM IN THESE CONDITIONS:**
   - Stop engine.
   - Secure good ventilation (If not, the gas leak detector may react to volatile gases which are not refrigerant, such as evaporated gasoline and exhaust gas.)
   - Repeat the test 2 or 3 times.
   - Make sure that there is some refrigerant remaining in the refrigeration system.

When compressor is OFF: approximately 392 — 588 KPa (4 — 6 kgf/cm², 57 — 85 psi)

2. **GAS LEAK TEST IN COOLING UNIT**

(a) Bring the gas leak detector close to the drain hose before performing the test.

HINT:
- After the blower motor is stopped, leave the cooling unit for more than 15 minutes.
- Expose the gas leak detector sensor under the drain hose.
- When bring the gas leak detector close to the drain hose, make sure that the gas leak detector does not react to the volatile gases.

If such reaction is unavoidable, the vehicle must be lifted up.

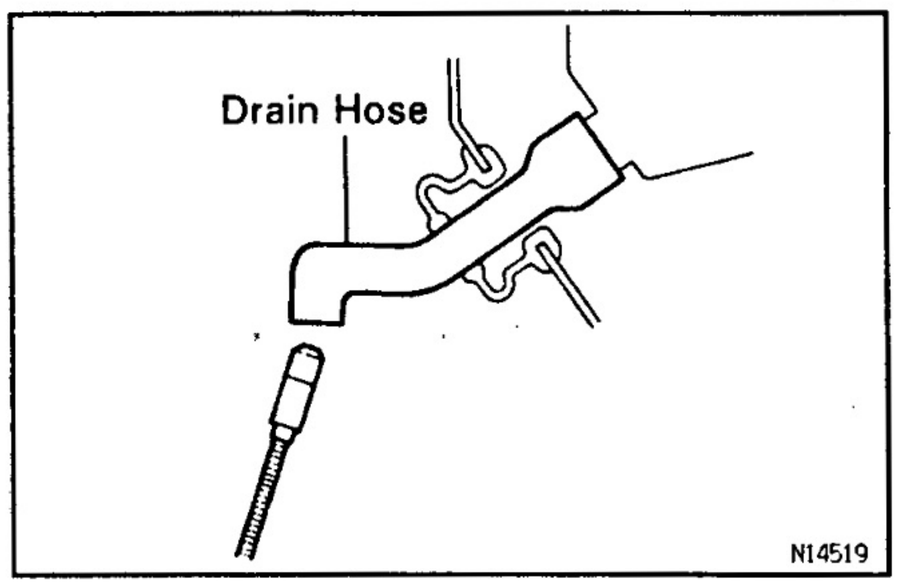

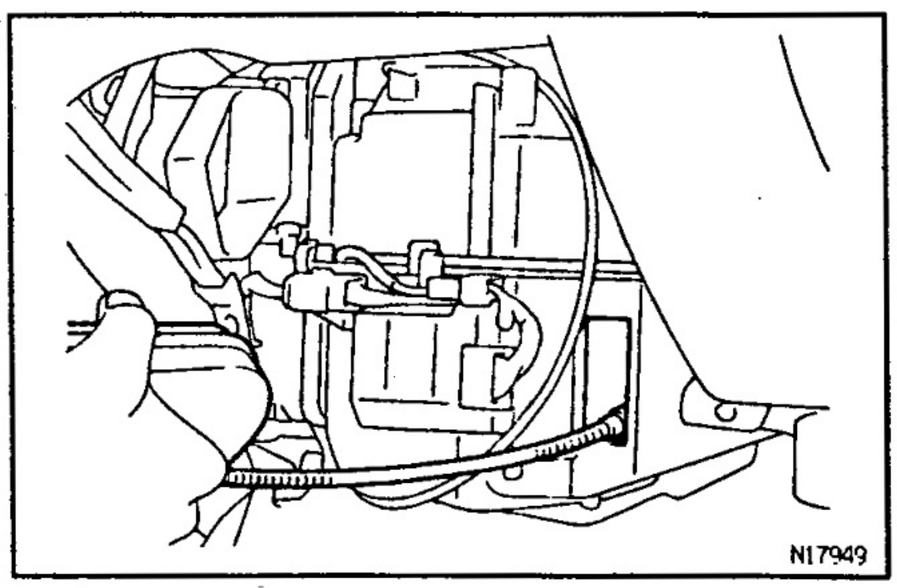

(b) If gas leak is not detected on the drain hose, remove the blower resistor from the cooling unit. Then insert the gas leak detector sensor into the unit and perform the test.

3. **GAS LEAK TEST AT PRESSURE SWITCH**

Disconnect the connector and leave the pressure switch for approximately 20 minutes. Then bring the gas leak detector close to the pressure switch and perform the test.

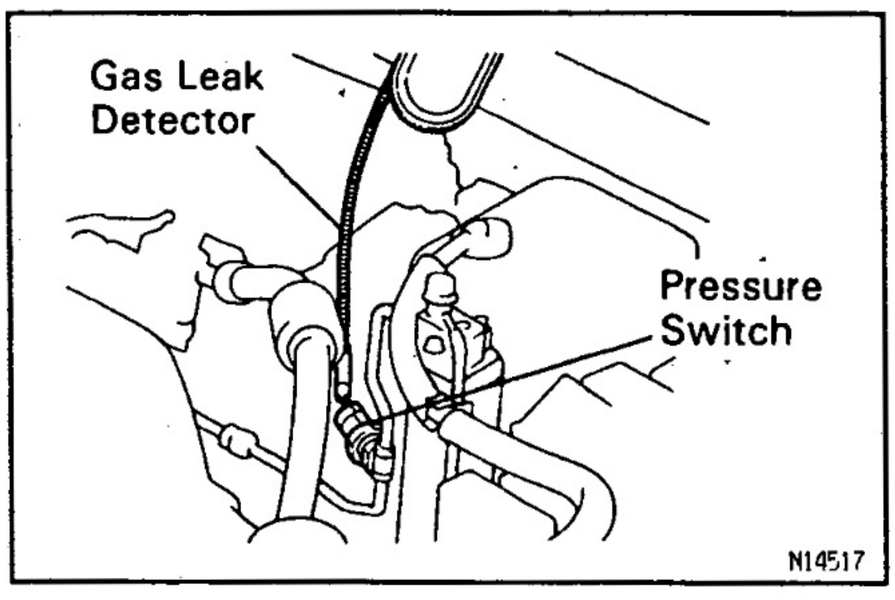

4. **GAS LEAK TEST AT REFRIGERANT LINES**

Bring the gas leak detector close to the refrigerant lines and perform the test.

HINT: Make sure that there is no dirt on joints.

AC

SUPPLEMENTAL RESTRAINT SYSTEM (SRS)

AC0X8-1D

The LAND CRUISER/LAND CRUISER PRADO is equipped with an SRS (Supplemental Restraint System) such as the driver airbag and front passenger airbag. Failure to carry out service operations in the correct sequence could cause the SRS to unexpectedly deploy during servicing, possibly lead to a serious accident. Further, if a mistake is made in servicing the SRS, the SRS may fail to operate when required. Before servicing (including removal or installation of parts, inspection and replacement), be sure to read the following items carefully, then follow the correct procedure described in the repair manual.

DESCRIPTION

PARTS LOCATION

AC2TA-01

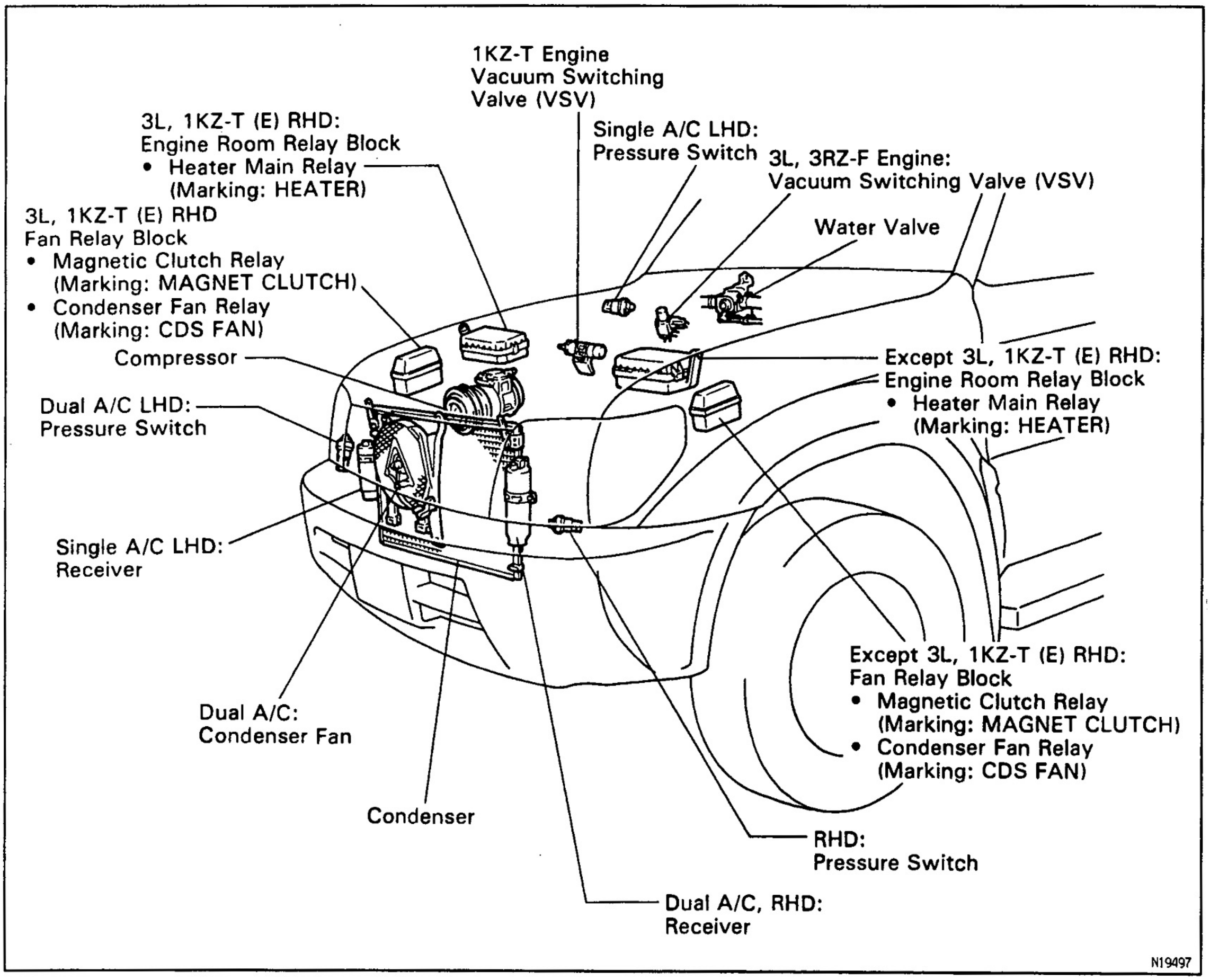

N19497

PARTS LOCATION (Cont'd)

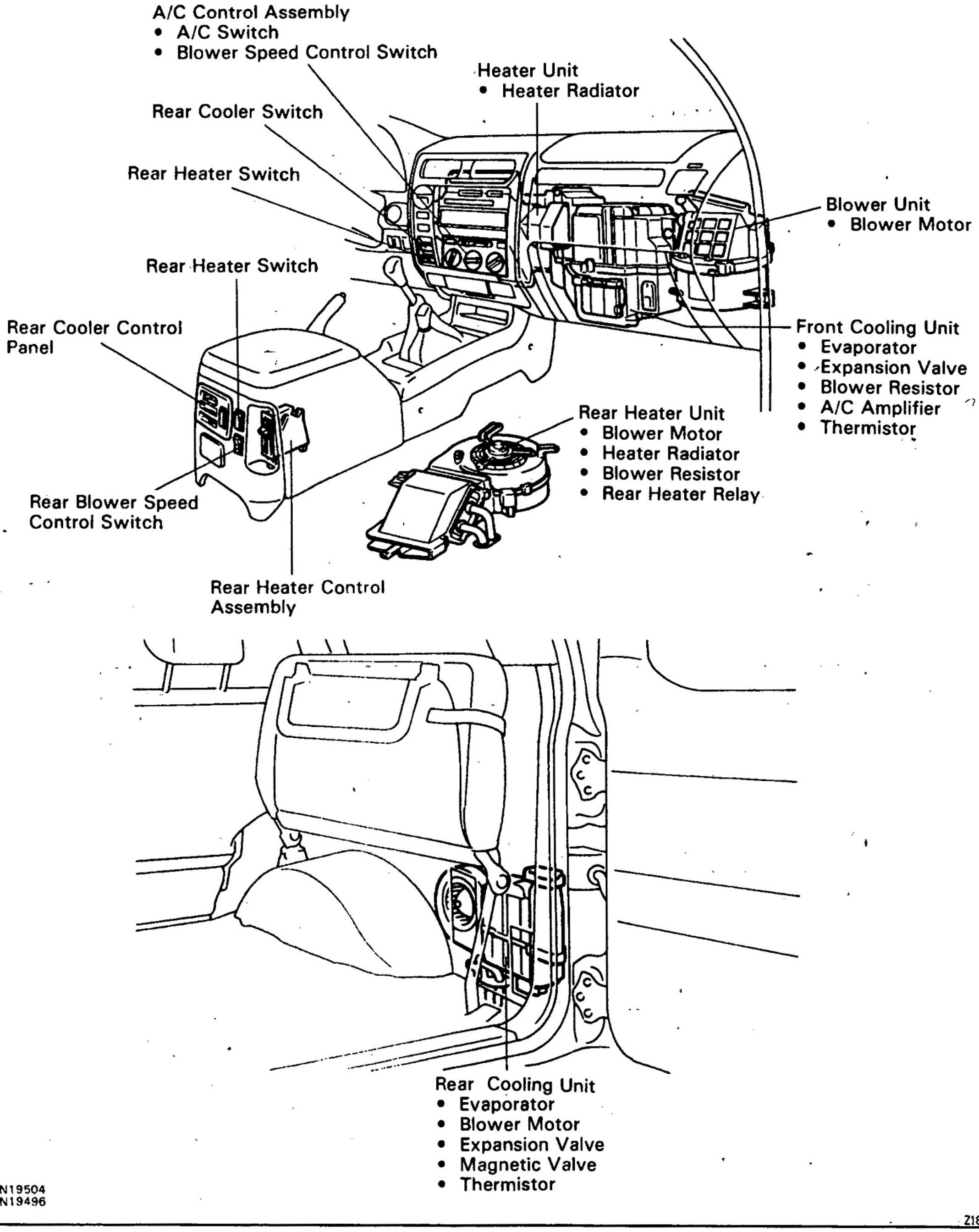

N19504
N19496

Z18554

AC

DAMPER POSITIONS

AC3TB-01

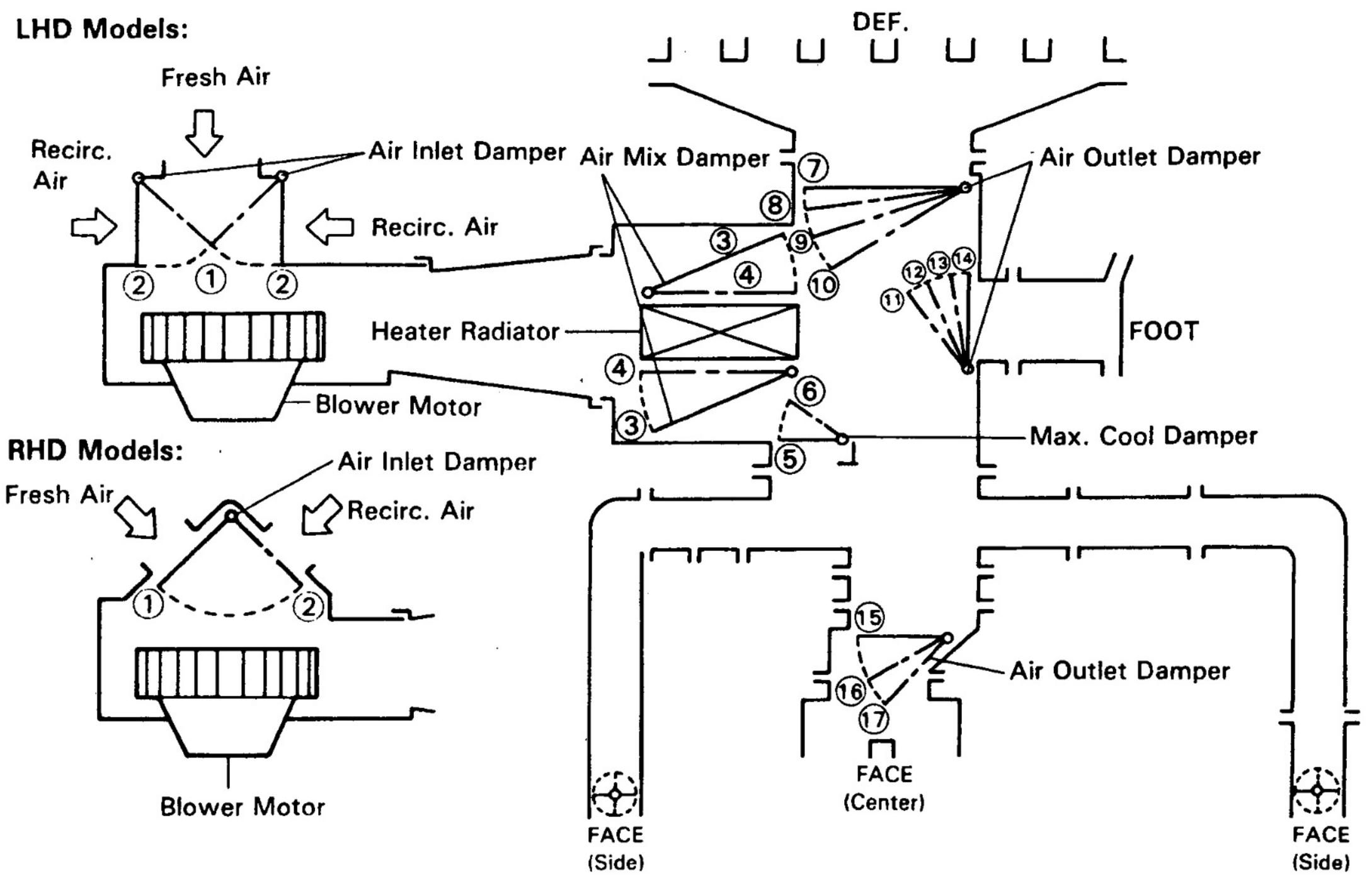

Damper Name	A/C Control Lever Position	Damper Position	Air Flow Vents			
			FACE		FOOT	DEF
			Center	Side		
Air Inlet Damper	Recirc.	①				
	Fresh	②				
Air Mix Damper	WARM (Red) ← COOL (Blue)	③ ↔ ④				
Max. Cool Damper	COOL ← Max. COOL	⑤ ↔ ⑥				
Air Outlet Damper	Face	⑦ ⑭ ⑰	○	○		
	Bi-Level	⑦ ⑬ ⑯	○	○	○	
	Foot	⑧ ⑪ ⑮		○	◯	○
	Foot/Def.	⑨ ⑫ ⑮		○	○	○
	Def.	⑩ ⑭ ⑮		○		◯

The size of the circle (○) indicates the proportion of air flow volume

N19498
N17988

Z18556

AC

PREPARATION

SST (SPECIAL SERVICE TOOLS)

ACONH-1T

	07110-58060 Air Conditioner Service Tool Set	
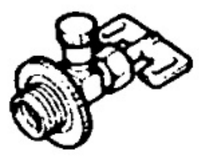	(07117-58060) Refrigerant Drain Service Valve	
	(07117-58070) T-Joint	
	(07117-58080) Quick Disconnect Adapter	Discharge (diam. 16 mm)
	(07117-58090) Quick Disconnect Adapter	Suction (diam. 13 mm)
	(07117-78050) Refrigerant Charging Gauge	
	(07117-88060) Refrigerant Charging Hose	Discharge (Red)
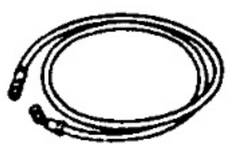	(07117-88070) Refrigerant Charging Hose	Suction (Blue)
	(07117-88080) Refrigerant Charging Hose	Utility (Green)
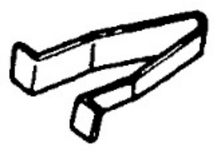	07112-15020 Seal Plate Remover	
	07112-66040 Magnetic Clutch Remover	
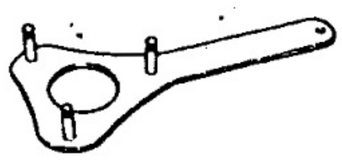	07112-76060 Magnetic Clutch Stopper	
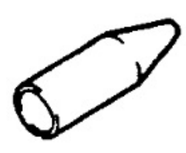	07112-85010 Lip Seal Protector	

AC

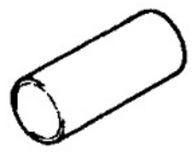	07112–85020	Lip Seal Presser	
	07112–85030	Lip Seal Remover	
	07114–84010	Snap Ring Pliers	
	07114–84020	Snap Ring Pliers	
	07116–38360	Gas Leak Detector Assembly	
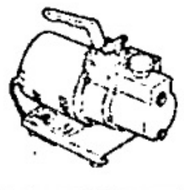	07117–48130	Vacuum Pump (220 V)	Roted voltage AC 220 V
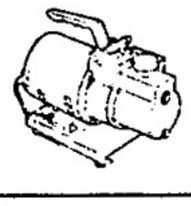	07117–48140	Vacuum Pump (240 V)	Roted voltage AC 240 V

AC0NJ–1A

RECOMMENDED TOOLS

AC

	09082–00040	TOYOTA Electrical Tester.	
	09216–00021	Belt Tension Gauge .	
	09216–00030	Belt Tension Gauge Cable .	

AC0V8–1B

LUBRICANT

Item	Capacity	Classification
Compressor oil	–	ND–OIL 8 or equivalent
When replacing receiver	20 cc (0.7 fl.oz.)	
When replacing condenser	40 cc (1.4 fl.oz.)	
When replacing evaporator	40 cc (1.4 fl.oz.)	

USE OF MANIFOLD GAUGE SET

MANIFOLD GAUGE SET INSTALLATION AC2TC-01

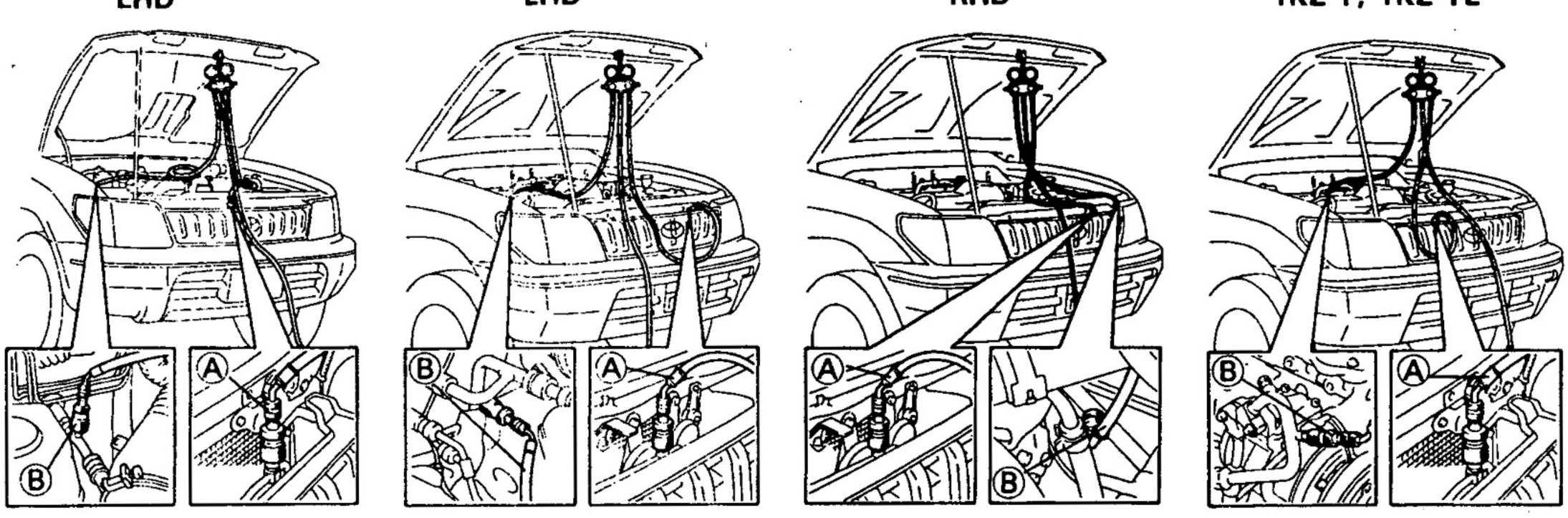

N19508 N19666 N19509 N19507

Z18515

1. **CONNECT CHARGING HOSES TO MANIFOLD GAUGE SET**
   Tighten the nuts by hand.
   CAUTION: Do not connect the wrong hoses.
2. **CONNECT QUICK DISCONNECT ADAPTERS TO CHARGING HOSES**
   Tighten the nuts by hand.
3. **CLOSE BOTH HAND VALVES OF MANIFOLD GAUGE SET**
4. **REMOVE CAPS FROM SERVICE VALVES ON REFRIGERANT LINE**

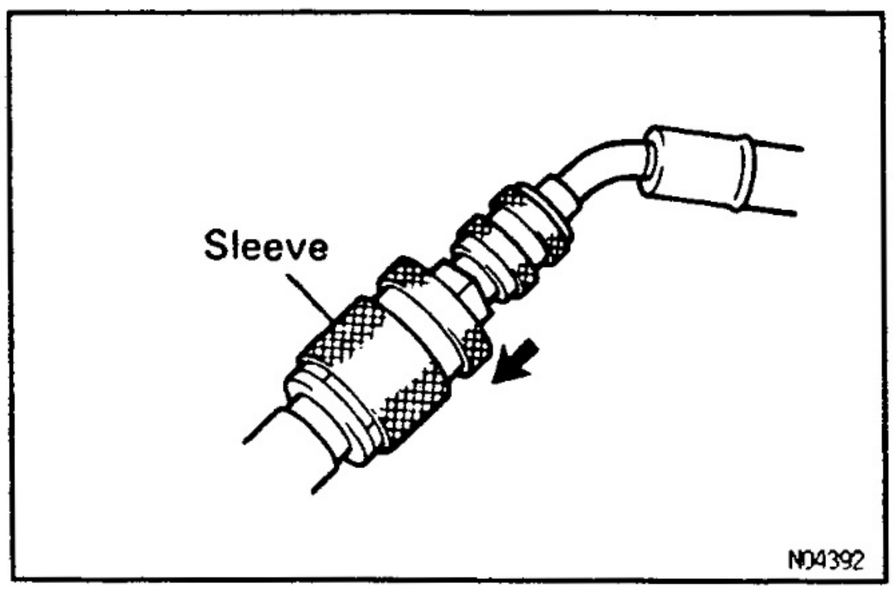

5. **CONNECT QUICK DISCONNECT ADAPTERS TO SERVICE VALVES**
   HINT: Push the quick disconnect adapter onto the service valve, then slide the sleeve of the quick disconnect adapter downward to lock it.

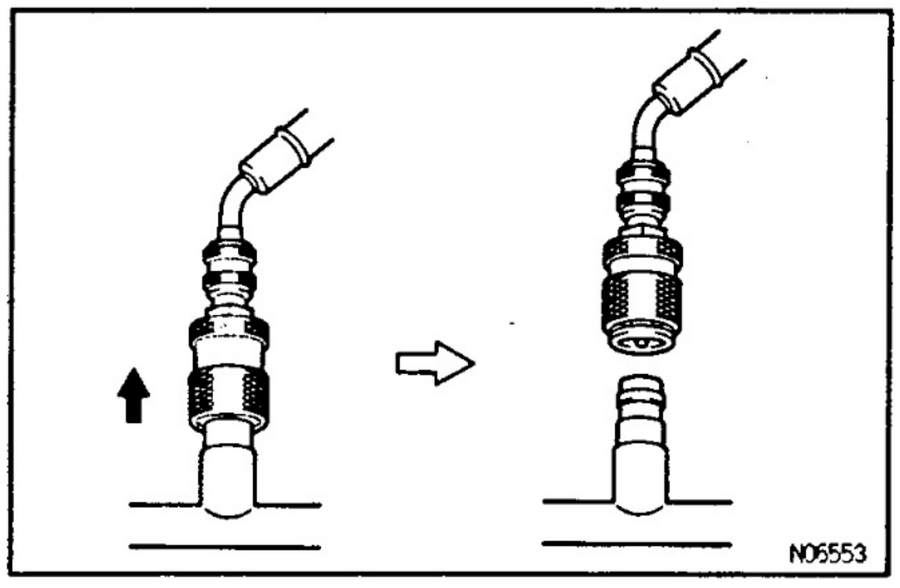

AC2TD-01

MANIFOLD GAUGE SET REMOVAL

1. **CLOSE BOTH HAND VALVES OF MANIFOLD GAUGE SET**
2. **DISCONNECT QUICK DISCONNECT ADAPTERS FROM SERVICE VALVES ON REFRIGERANT LINE**
   HINT: Slide the sleeve of the quick disconnect adapter upward to unlock the adapter and remove it from the service valve.
3. **INSTALL CAPS TO SERVICE VALVES ON REFRIGERANT LINE**

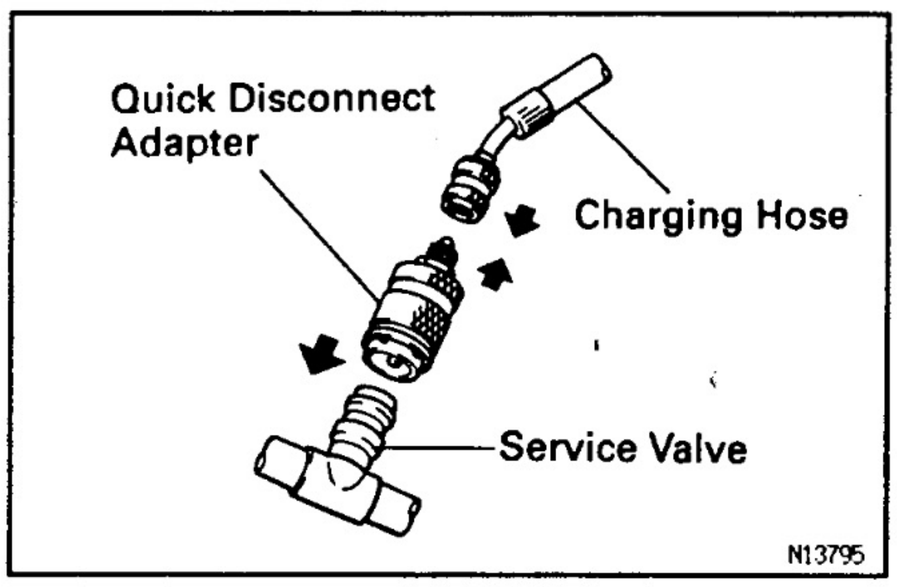

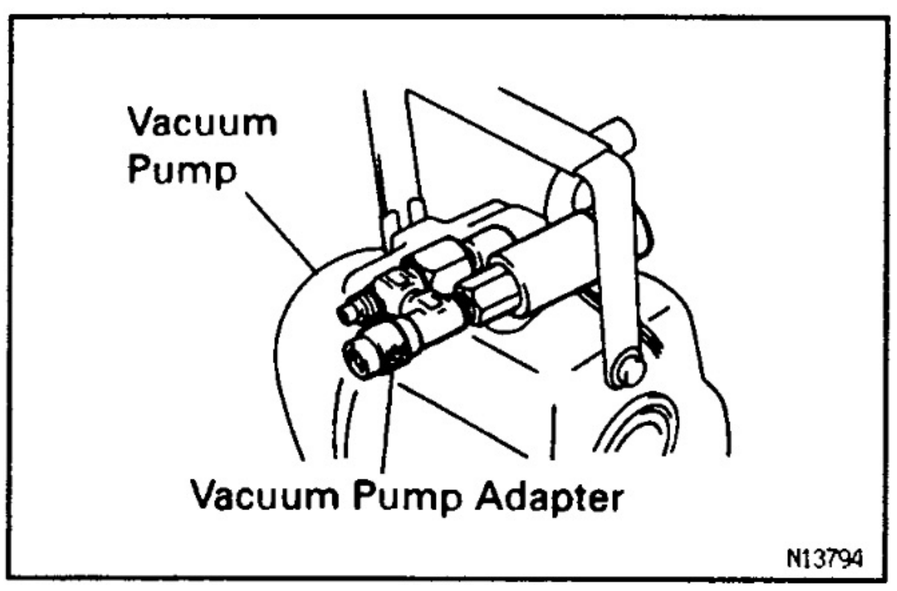

AC

EVACUATING AIR IN REFRIGERATION SYSTEM A ND CHARGING WITH REFRIGERANT

AC10A-0M

1. **CONNECT QUICK DISCONNECT ADAPTERS TO CHARGING HOSES**
2. **REMOVE CAPS FROM SERVICE VALVES ON REFRIGERANT LINES**
3. **INSTALL MANIFOLD GAUGE SET ON SERVICE VALVES**

(a) Close both hand valves of manifold gauge set.
(b) Connect the quick disconnect adapters to the service valves.

4. **EVACUATE AIR FROM REFRIGERATION SYSTEM**

(a) Connect the vacuum pump adapter to the vacuum pump.

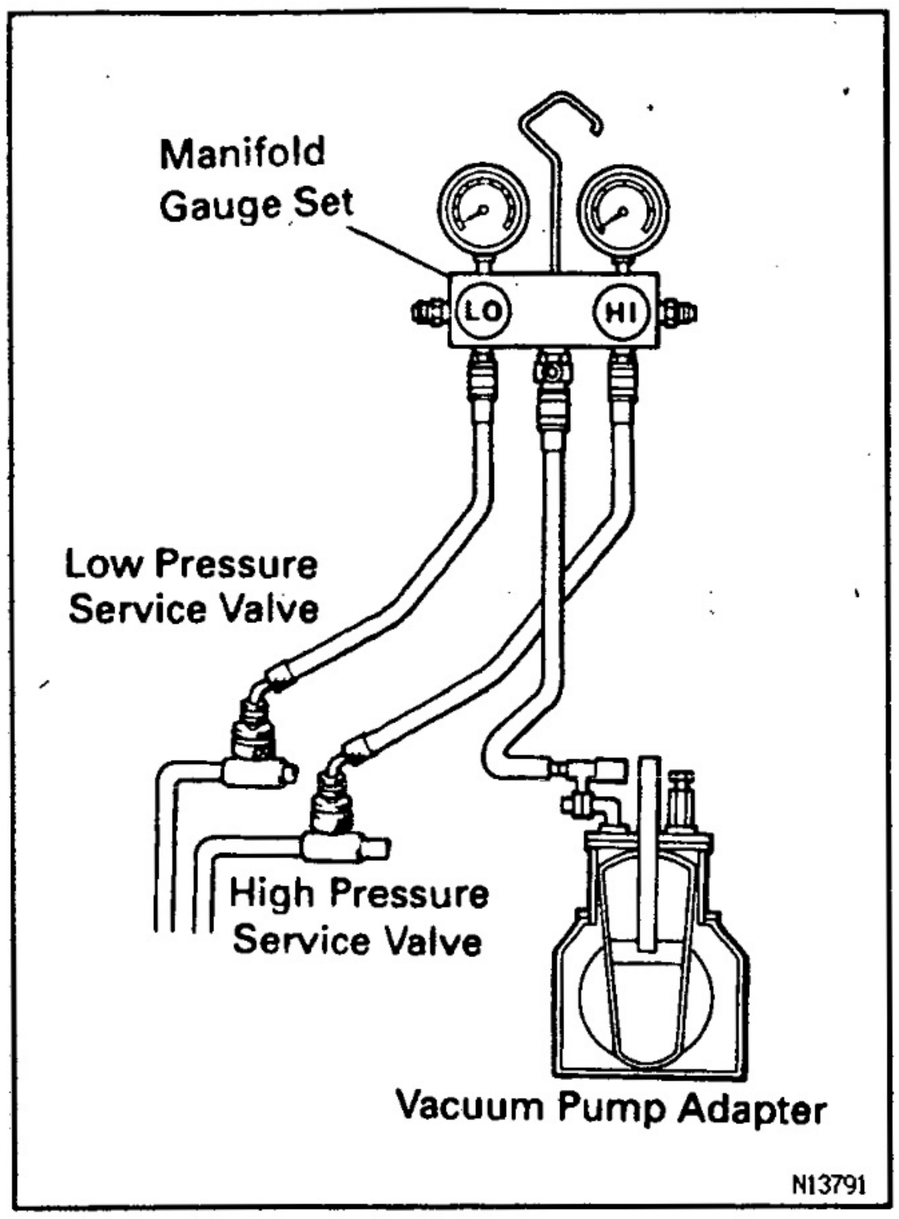

(b) Connect the center hose of the manifold gauge set to the vacuum pump adapter.
(c) Open both the high and low hand valves and run the vacuum pump.
(d) After 10 minutes or more, check that the low pressure gauge indicates 750 mmHg (30 in.Hg) or more.
HINT: If the reading is not 750 mmHg (30 in.Hg) or more, close both hand valves of manifold gauge set and stop the vacuum pump.
Check the system for leaks and repair as necessary.
(e) Close both the high and low hand valves and stop the vacuum pump.
(f) Leave the system in this condition for 5 minutes or more and check that there is no gauge indicator.

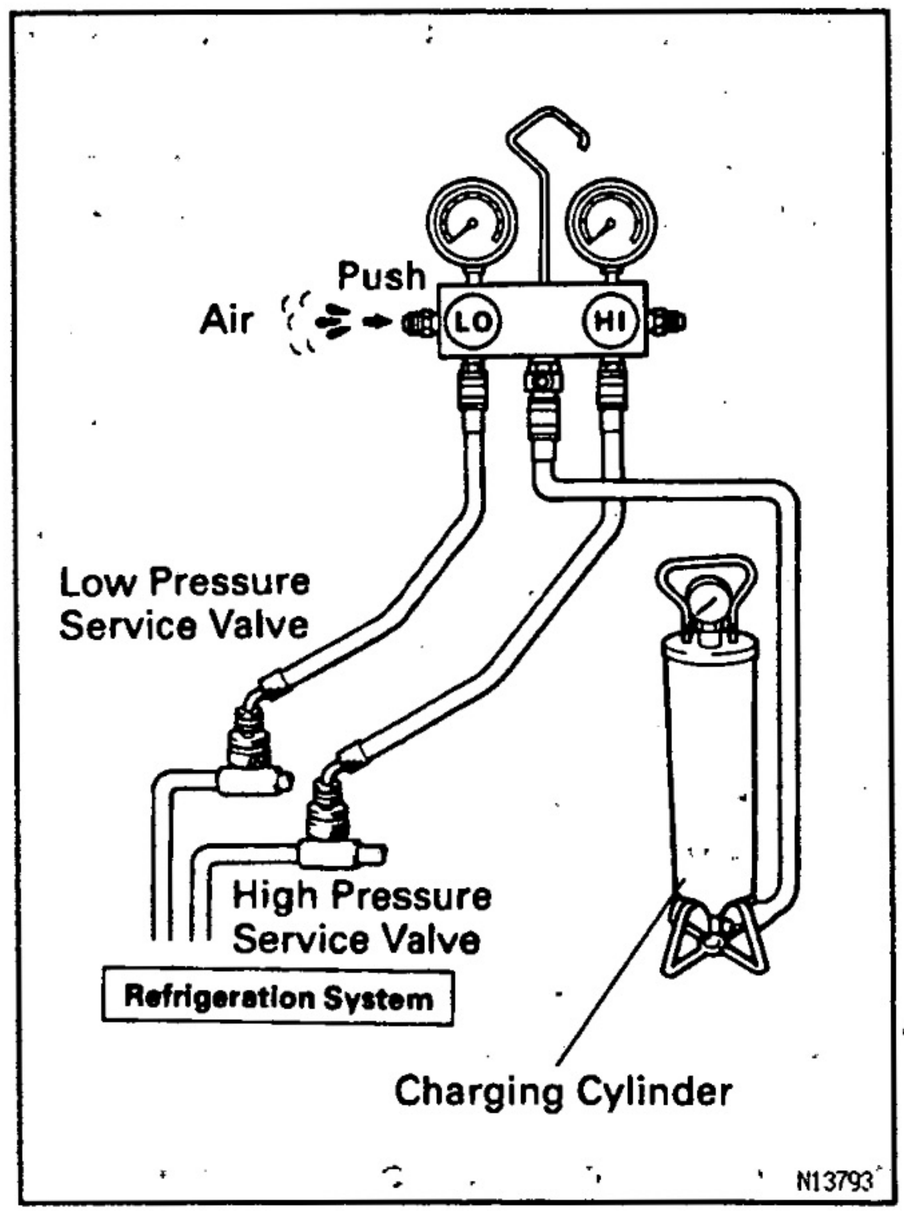

5. INSTALL CHARGING CYLINDER
HINT: When handling the charging cylinder, always follow the direction given in the instruction manual.
(a) Charge the proper amount of refrigerant in charging cylinder.
(b) Connect the center hose to the charging cylinder.
CAUTION: Do not open both high and low hand valves of manifold gauge set.
(c) Open the valve of the charging cylinder.
(d) Press the valve core on the side of the manifold gauge and expel the air inside of the center hose.

AC

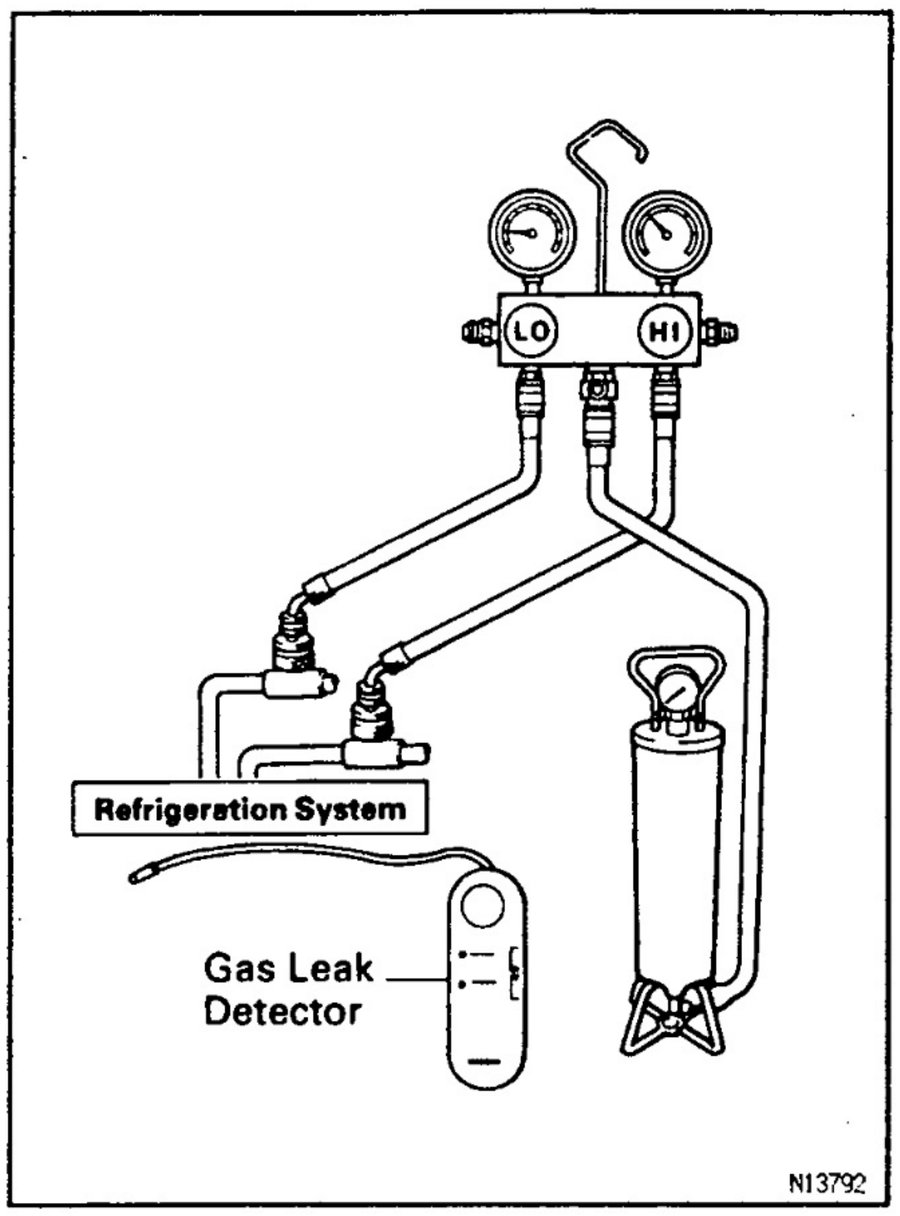

6. INSPECT REFRIGERATION SYSTEM FOR LEAKS

(a) Open the high pressure hand valve and charge refrigerant.

(b) When the low pressure gauge indicates 98 kPa (1 kgf/cm², 14 psi), close the high pressure hand valve.

(c) Using a gas leak detector, check the system for leakage.

(d) If leak is found, repair the faulty component or connection. Add evacuate air from refrigeration system (Refer to 4).

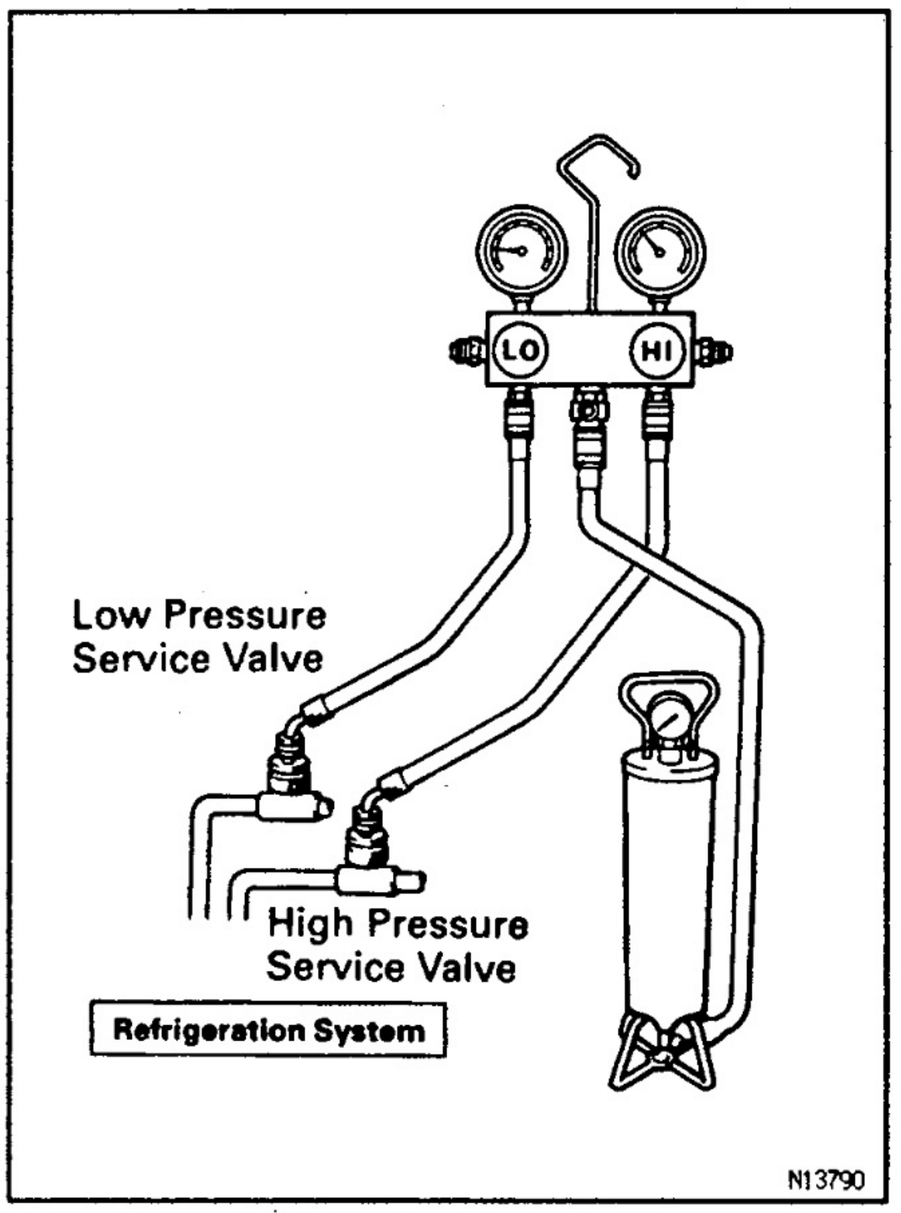

7. CHARGE REFRIGERANT INTO REFRIGERANT SYSTEM

If there is no leak after refrigerant leak check charge, the proper amount of refrigerant into refrigeration system.

CAUTION:

- Never run the engine when charging the system through the high pressure side.
- Do not open the low pressure hand valve when the system is being charged with liquid refrigerant.

(a) Open the high pressure hand valve fully.

(b) Charge specified amount of refrigerant, then close the high pressure hand valve.

HINT: A fully charged system is indicated by the sight glass being free of any bubbles.

8. REMOVE MANIFOLD GAUGE SET FROM SERVICE VALVES

(a) Close both hand valves of the manifold gauge set.

(b) Disconnect the quick disconnect adapters from the service valves.

9. INSTALL CAPS TO SERVICE VALVES ON REFRIGERANT LINES

AC

TROUBLESHOOTING

AC2TE-01

Use the table below to help you find the cause of the problem. The numbers indicate the priority of the likely cause of the problem. Check each part in order. If necessary, replace these parts.

See Page / Part Name / Trouble	AC-21	—	AC-22	AC-82	—	—	—	AC-76	AC-76	AC-66	AC-81
	Refrigerant volume	Engine coolant volume	Drive belt	A/C control cables	HEATER Fuse	A.C Fuse	CDS FAN Fuse (Dual A/C)	Heater main relay	Magnetic clutch relay	Blower motor	Blower speed control switch
No blower operation					1			2		3	4
No air temperature control		1		2							
No compressor operation	1					2		3	4		
Compressor operates intermittently	1		6					2	3		
No condenser fan operation							1				
No cool air comes out	1		2	6							
Cool air comes out intermittently	1		2								
Cool air comes out only at high engine rpm	1		2								
Insufficient cooling	1		2				3				
No engine idle up when A/C switch on											
No warm air comes out		1		2							
A/C indicator does not light up											

V08072

AC

5	Blower resistor																
	Condenser fan relay (Dual A/C)																
	Condenser fan motor (Dual A/C)																
	Compressor	6							9	10	7	5	8				11
	Condenser	7									4	5					
	Receiver	2	4								3						
	Evaporator	4							8	7	5	3	6				
	Expansion valve					5	4			3			6				
	Refrigerant lines	3	4	5	7	6	8										
	A/C switch	4	5	6	7	8	10	9	11								
	A/C amplifier									1	2				3		4
	Pressure switch															3	4
	Magnetic clutch									1	2						3
	Thermistor																
	Vacuum switching valve (3L, 1KZ-T 3RZ-F)																
	Heater radiator																
	Water valve																
	Wire harness																

AC

V08073

Rear Heater:

See Page / Part Name / Trouble	Refrigerant volume (AC-21)	RR A.C Fuse (—)	Rear A/C relay (AC-76)	Rear cooler switch (AC-86)	Rear cooler control panel (AC-84)	Rear expansion valve (AC-62)	Rear cooler thermistor (AC-64)	Rear evaporator (AC-62)	Rear cooler blower motor (AC-67)	Rear cooler blower resistor (AC-68)	A/C amplifier (AC-78)	Wire harness (—)
No blower operation		1	2		3				4	5		6
No blower control					1				3	2		4
No cool air comes out	1					2		3				
No temperature control					1	2		3			4	5
Rear A/C indicator does not light up		1	2	3							4	5

V08074

Rear A/C:

See Page / Part Name / Trouble	Engine coolant volume (—)	RR HTR Fuse (—)	Rear heater relay (AC-76)	Rear heater switch (AC-89)	Rear heater control assembly (AC-87)	Rear heater radiator (AC-61)	Rear heater blower motor (AC-67)	Rear heater blower resistor (AC-68)	Rear blower speed control switch (AC-88)	Wire harness (—)
No blower operation		1	2	3			6	5	4	7
No blower control								2	1	3
No warm air comes out	1					2				
Rear heater indicator does not light up				1						2
No temperature control	1				2					

V08075

AC

REFRIGERANT SYSTEM INSPECTION WITH MANIFOLD GAUGE SET

AC0EY-0F

This is a method in which the trouble is located by using a manifold gauge set.
(See "USE OF MANIFOLD GAUGE SET" on page AC−9)
Read the manifold gauge pressure when the these conditions are established:

(a) Temperature at the air inlet with the switch set at RECIRC is 30 — 35 °C (86 — 95 °F)
(b) Engine running at 1,500 rpm
(c) Blower speed control switch set at high
(d) Temperature control set at max. cool
HINT: It should be noted that the gauge indications may vary slightly due to ambient temperature conditions.

AC0E2-0F

1. NORMALLY FUNCTIONING REFRIGERATION SYSTEM

Gauge reading:

Low pressure side:

0.15 — 0.25 MPa (1.5 — 2.5 kgf/cm²)

High pressure side:

1.37 — 1.57 MPa (14 — 16 kgf/cm²)

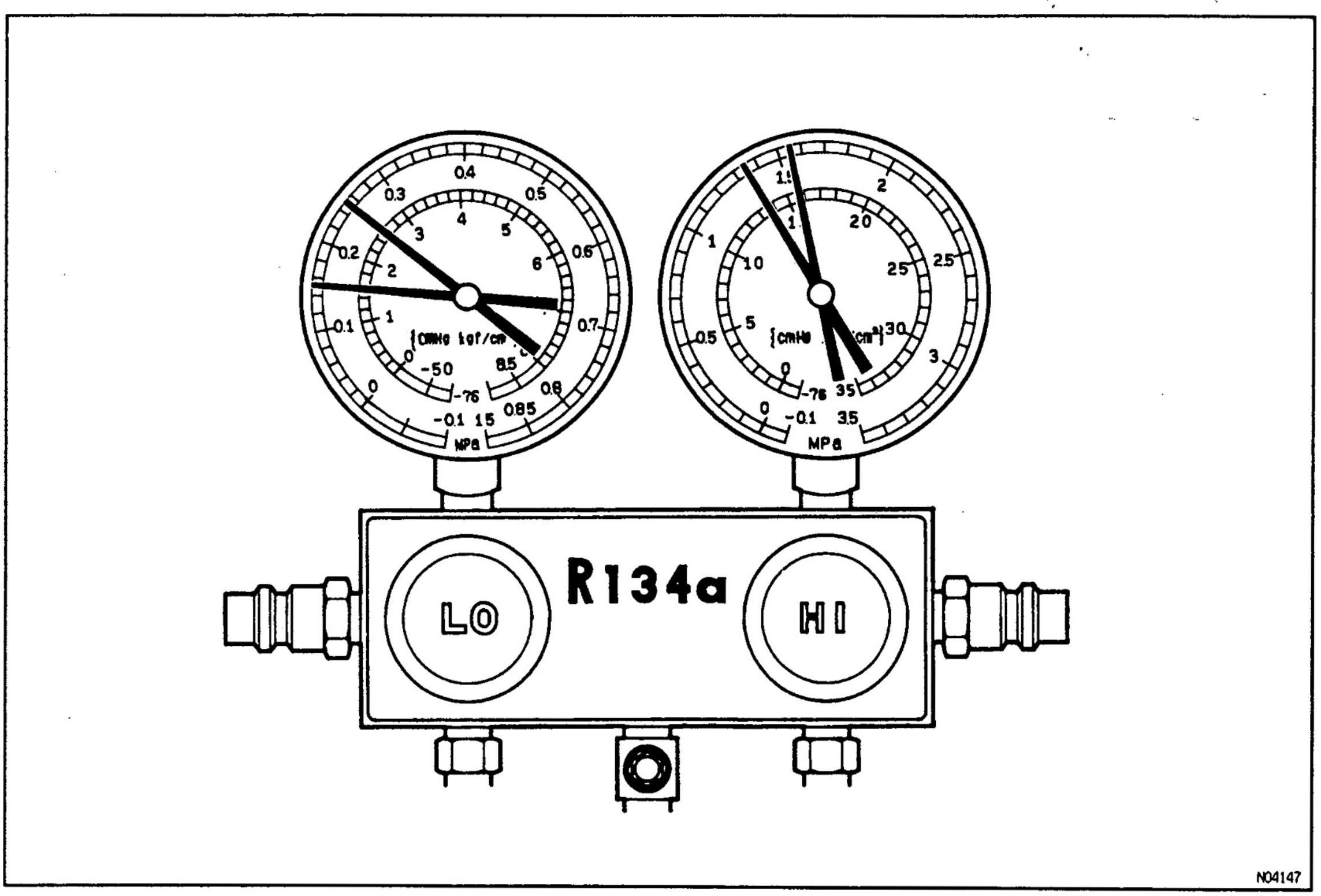

AC

2. MOISTURE PRESENT IN REFRIGERATION SYSTEM

Condition: Periodically cools and then fails to cool

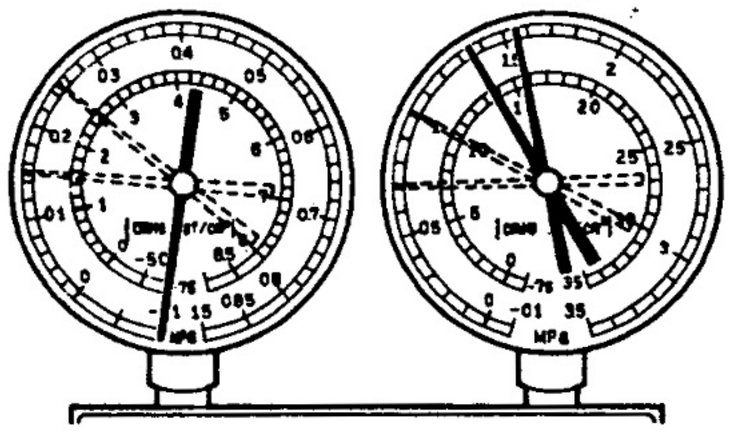

N04148

Symptom seen in refrigeration system	Probable cause	Diagnosis	Remedy
• During operation, pressure on low pressure side sometimes becomes a vacuum and sometimes normal	• Moisture entered in refrigeration system freezes at expansion valve orifice and temporarily stops cycle, but normal state is restored after a time when the ice melts	• Drier in oversaturated state ↓ • Moisture in refrigeration system freezes at expansion valve orifice and blocks circulation of refrigerant	(1) Replace receiver/drier (2) Remove moisture in cycle through repeatedly evacuating air (3) Charge proper amount of new refrigerant

V01034

3. INSUFFICIENT REFRIGERANT

AC

Condition: Insufficient cooling

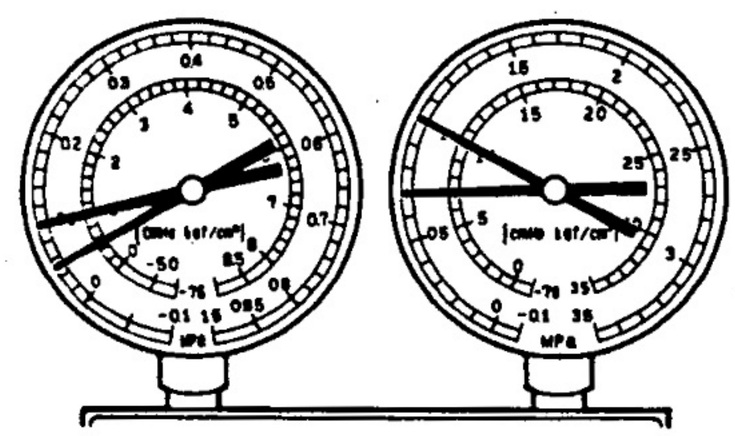

N04149

Symptom seen in refrigeration system	Probable cause	Diagnosis	Remedy
• Pressure low on both low and high pressure sides • Bubbles seen in sight glass continuously • Insufficient cooling performance	• Gas leakage at some place in refrigeration system	• Insufficient refrigerent in system ↓ • Refrigerant leaking	(1) Check for gas leakege with leak detector and repair if necessary (2) Charge proper amount of refrigerant (3) If indicated pressure value is near 0 when connected to gauge, create the vacuum after inspecting and repairing the location of the leak

V01035

4. POOR CIRCULATION OF REFRIGERANT

Condition: Insufficient cooling

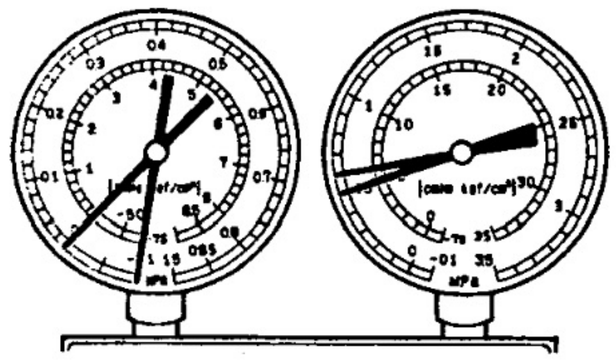

N04150

Symptom seen in refrigeration system	Probable cause	Diagnosis	Remedy
• Pressure low on both low and high pressure sides • Frost on tubes from receiver to unit	• Refrigerant flow obstructed by dirt in receiver	• Receiver clogged	• Replace receiver

V01030

5. REFRIGERANT DOES NOT CIRCULATE

Condition: Does not cool (Cools from time to time in some cases)

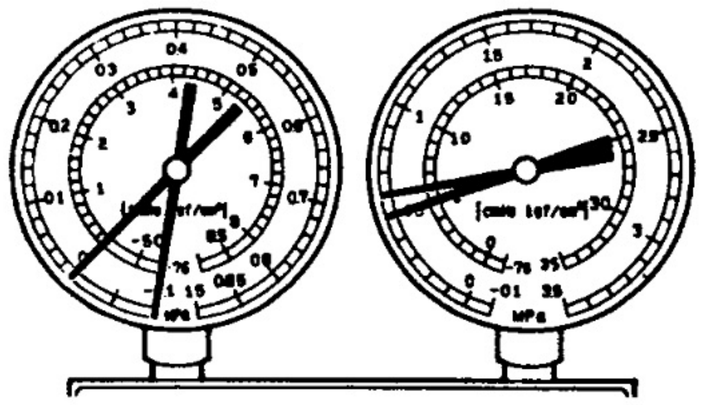

N04150

Symptom seen in refrigeration system	Probable cause	Diagnosis	Remedy
• Vacuum indicated on low pressure side, very low pressure indicated on high pressure side • Frost or dew seen on piping before and after receiver/drier or expansion valve	• Refrigerant flow obstructed by moisture or dirt in refrigeration system • Refrigerant flow obstructed by gas leakage from expansion valve heat sensing tube	• Refrigerant does not circulate	(1) Check heat sensing tube, expansion valve (2) Clean out dirt in expansion valve by blowing with air If not able to remove dirt, replace expansion valve (3) Replace receiver (4) Evacuate air and charge new refrigerant to proper amount. For gas leakage from heat sensing tube, replace expansion valve.

V08076

AC

6. REFRIGERANT OVERCHARGE OR INSUFFICIENT COOLING OF CONDENSER

Condition: Insufficient Cooling

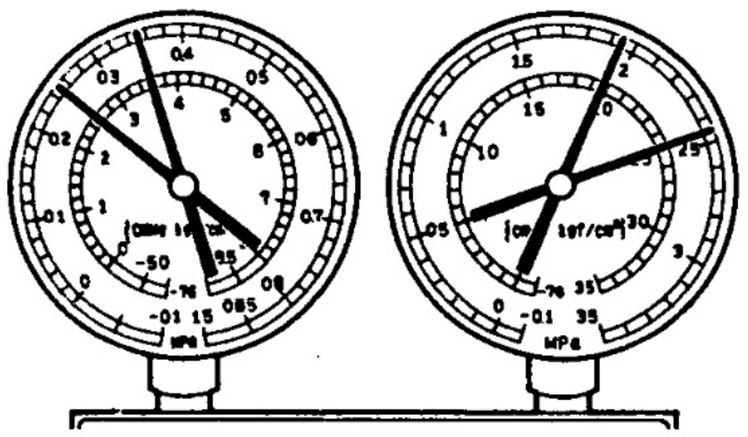

N04151

Symptom seen in refrigeration system	Probable cause	Diagnosis	Remedy
• Pressure too high on both low and high pressure sides • No air bubbles seen through the sight glass even when the engine rpm is lowered.	• Unable to develop sufficient performance due to excessive refrigerant in system • Insufficient cooling of condenser	• Excessive refrigerant in cycle → refrigerant overcharged • Condenser cooling insufficient → condenser fins clogged or fan motor faulty	(1) Clean condenser (2) Check fan motor operation (3) If (1) and (2) are in normal state, check amount of refrigerant Charge proper amount of refrigerant

V01032

7. AIR PRESENT IN REFRIGERATION SYSTEM

AC

Condition: Insufficient cooling

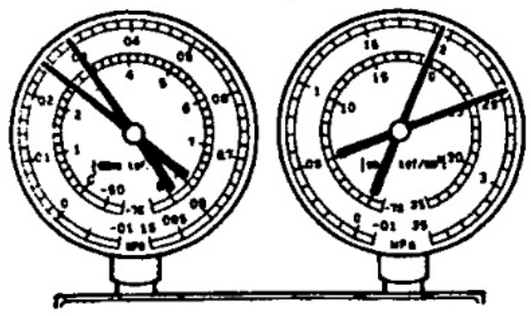

NOTE: These gauge indications are shown when the refrigeration system has been opened and the refrigerant charged without vacuum purging.

N04153

Symptom seen in refrigeration system	Probable cause	Diagnosis	Remedy
• Pressure too high on both low and high pressure sides • The low pressure piping is hot to the touch • Bubbles seen in sight glass	• Air entered in refrigeration system	• Air present in refrigeration system ↓ • Insufficient vacuum purging	(1) Check compressor oil to see if it is dirty or insufficient (2) Evacuate air and charge new refrigerant

V01033

8. EXPANSION VALVE IMPROPERLY MOUNTED/HEAT SENSING TUBE DEFECTIVE (OPENS TOO WIDE)

Condition: Insufficient cooling

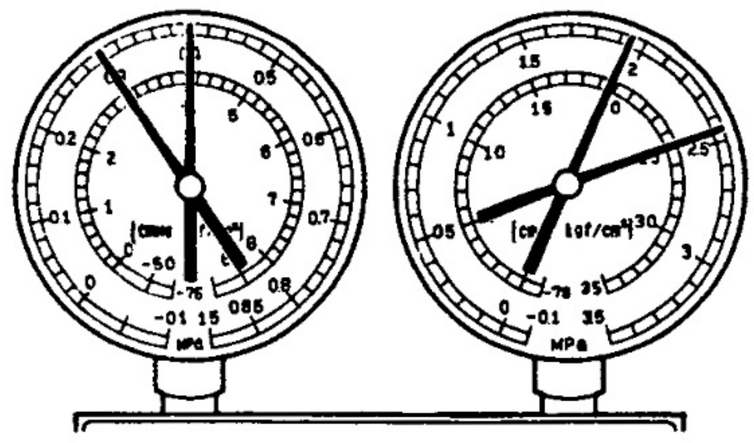

N04152

Symptom seen in refrigeration system	Probable cause	Diagnosis	Remedy
• Pressure too high on both low and high pressure sides • Frost or large amount of dew on piping on low pressure side	• Trouble in expansion valve or heat sensing tube not installed correctly	• Excessive refrigerant in low pressure piping ↓ • Expansion valve opened too wide	(1) Check heat sensing tube installed condition (2) If (1) is normal, check expansion valve Replace if defective

V01031

9. DEFECTIVE COMPRESSION COMPRESSOR

AC

Condition: Does not cool

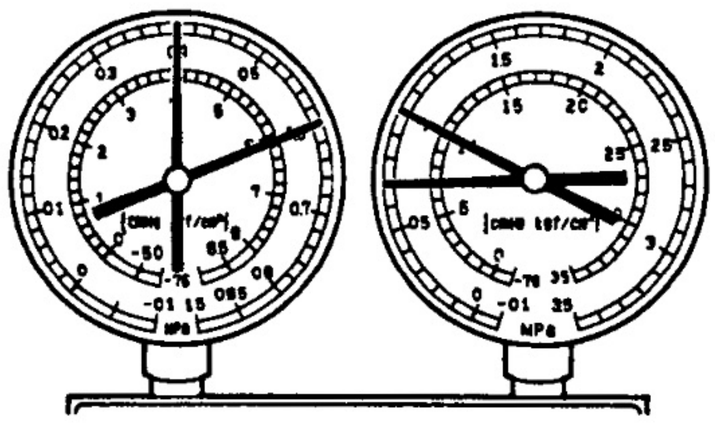

N04146

Symptom seen in refrigeration system	Probable cause	Diagnosis	Remedy
• Pressure too high on low pressure side • Pressure too low on high pressure side	• Internal leak in compressor	• Compression defective ↓ • Valve leaking or broken sliding parts	• Repair or replace compressor

V01029

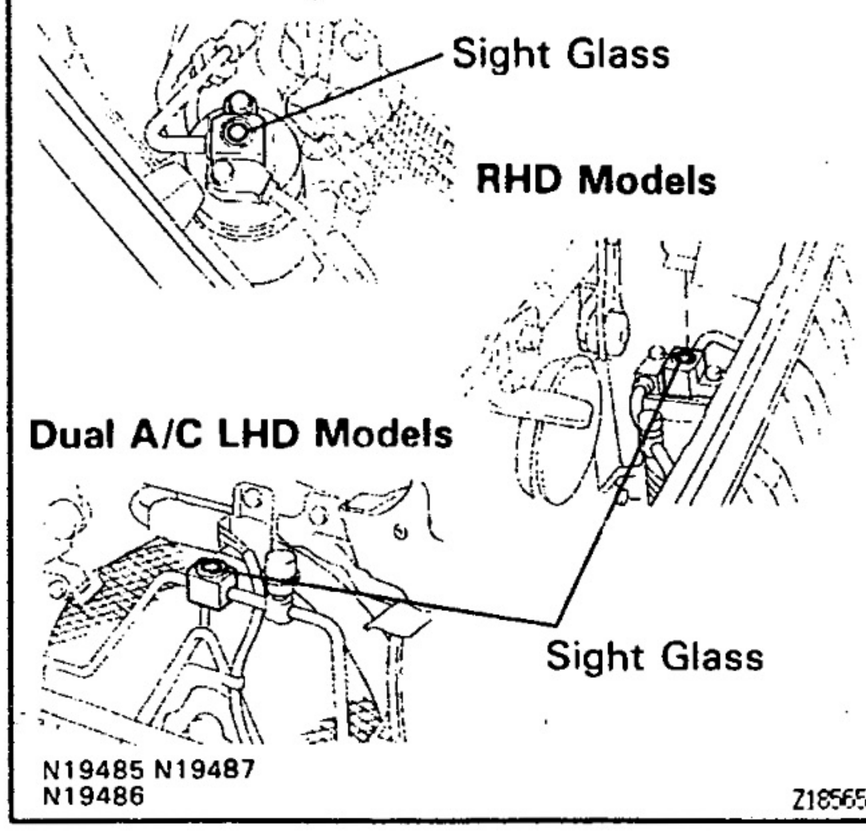

REFRIGERANT VOLUME

REFRIGERANT VOLUME INSPECTION

AC3TF-01

1. **SET VEHICLE IN THESE CONDITIONS:**
(a) Run engine at approx. 1,500 rpm
(b) Fully open the doors
2. **SET A/C CONTROL ASSEMBLY IN THESE CONDITIONS:**
(a) Blower speed control switch to HI
(b) A/C switch ON
(c) Air inlet control dial to "RECIRC."
(d) Temperature control dial MAX. COOL
3. **INSPECT AMOUNT OF REFRIGERANT**
Observe the sight glass on the liquid tube.

Item	Symptom	Amount of refrigerant	Remedy
1	Bubbles present in sight glass	Insufficient*	(1) Check for gas leakage with gas leak detector and repair if necessary (2) Add refrigerant until bubbles disappear
2	No bubbles present in sight glass	None, sufficient or too much	Refer to items 3 and 4
3	No temperature difference between compressor inlet and outlet	Empty or nearly empty	(1) Check for gas leakage with gas leak detector and repair if necessary (2) Add refrigerant until bubbles disappear
4	Temperature between compressor inlet and outlet is noticeably different	Correct or too much	Refer to items 5 and 6
5	Immediately after air conditioner is turned off, refrigerant in sight glass stays clear	Too much	(1) Discharge refrigerant (2) Evacuate air and charge proper amount of purified refrigerant
6	When air conditioner is turned off, refrigerant foams and then stays clear	Correct	—

* Bubbles in the sight glass with ambient temperatures higher than usual can be considered normal if cooling is sufficient.

AC

REFRIGERANT CHARGE VOLUME

AC2TG-01

Specified amount:

Single A/C:	700 ± 50 g (24.69 ± 1.76 oz.)
Dual A/C:	950 ± 50 g (33.51 ± 1.76 oz.)

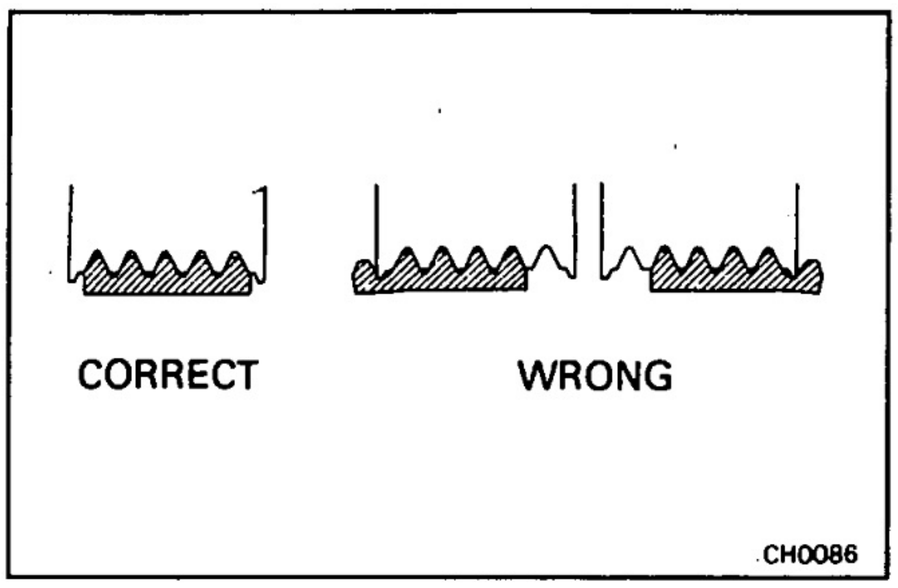

DRIVE BELT TENSION

ON—VEHICLE INSPECTION

AC2TH—01

1. INSPECT DRIVE BELT'S INSTALLATION CONDITION

3RZ—F, 3RZ—FE and 5VZ—FE Engine Models:

Check that the drive belt fits properly in the ribbed grooves.

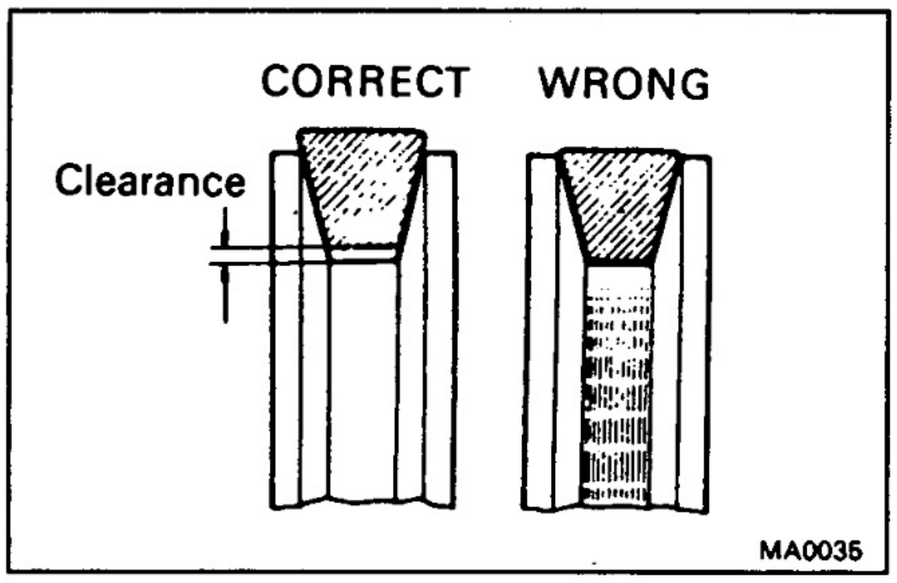

3L, 1KZ—T and 1KZ—TE Engine Models:

Visually check the belt for cracks, oiliness or wear.

Check that the belt does not touch the bottom of the pulley groove.

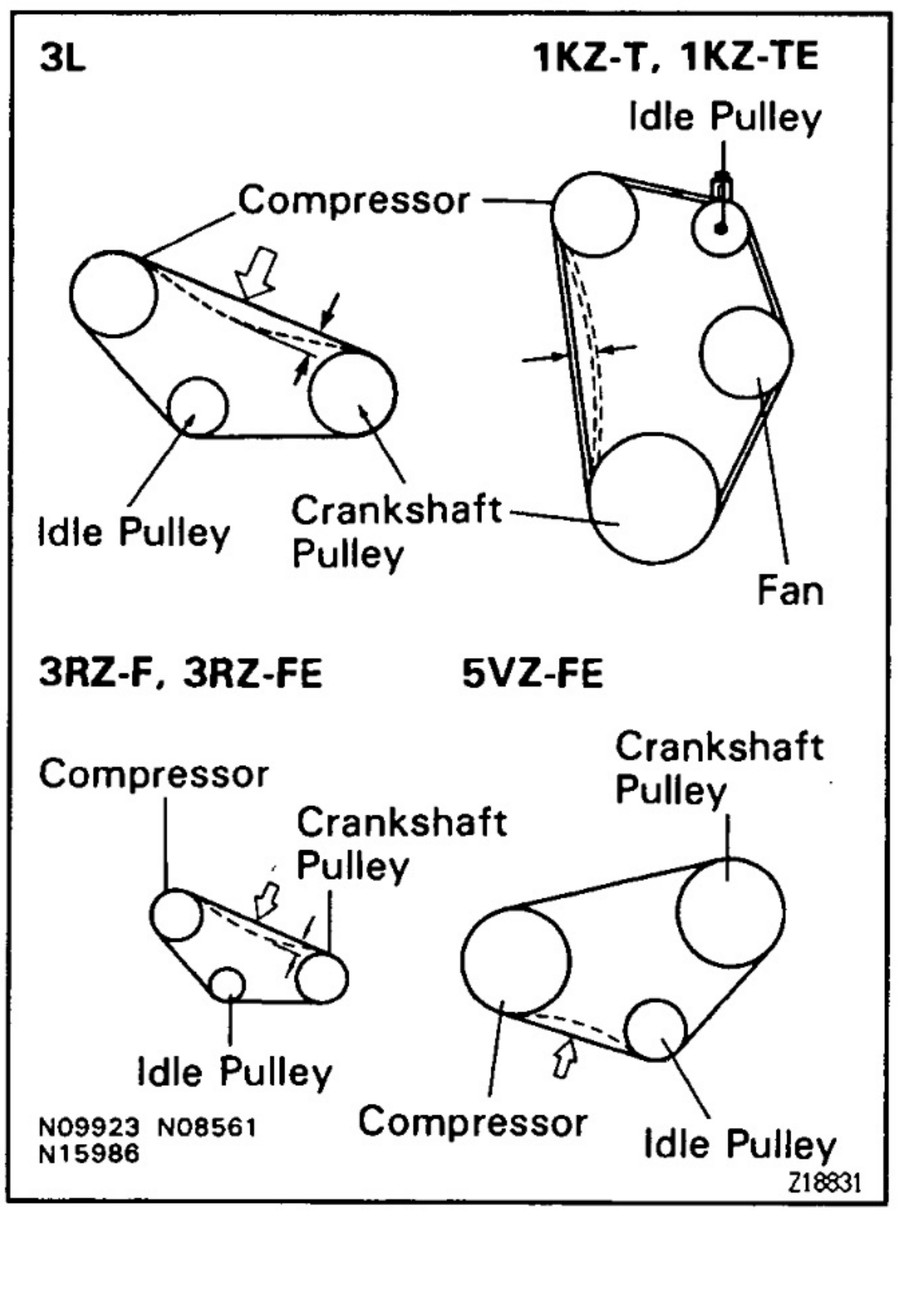

2. CHECK DRIVE BELT DEFLECTION

(a) Using a belt tension gauge, apply a load of 9.8 N (10 kgf, 22 lbf).

(b) Measure drive belt deflection.

Drive belt deflection:

3L Engine Models:

New belt: 13.0 — 15.0 mm (0.51 — 0.59 in.)

Used belt: 17.0 — 21.0 mm (0.67 — 0.83 in.)

1KZ—T and 1KZ—TE Engine Models:

New belt: 13.0 — 15.0 mm (0.51 — 0.59 in.)

Used belt: 15.0 — 21.0 mm (0.51 — 0.83 in.)

3RZ—F and 3RZ—FE Engine Models:

New belt: 10.0 — 13.0 mm (0.39 — 0.51 in.)

Used belt: 13.0 — 18.0 mm (0.51 — 0.71 in.)

5VZ—FE Engine Models:

New belt: 3.5 — 5.0 mm (0.14 — 0.20 in.)

Used belt: 5.0 — 7.0 mm (0.20 — 0.28 in.)

HINT:

- "New belt" refers to a belt which has been used less than 5 minutes on a running engine.
- "Used belt" refers to a belt which has been on a running engine for 5 minutes or more.

If one belt has any of the above defects, replace both belts.

AC

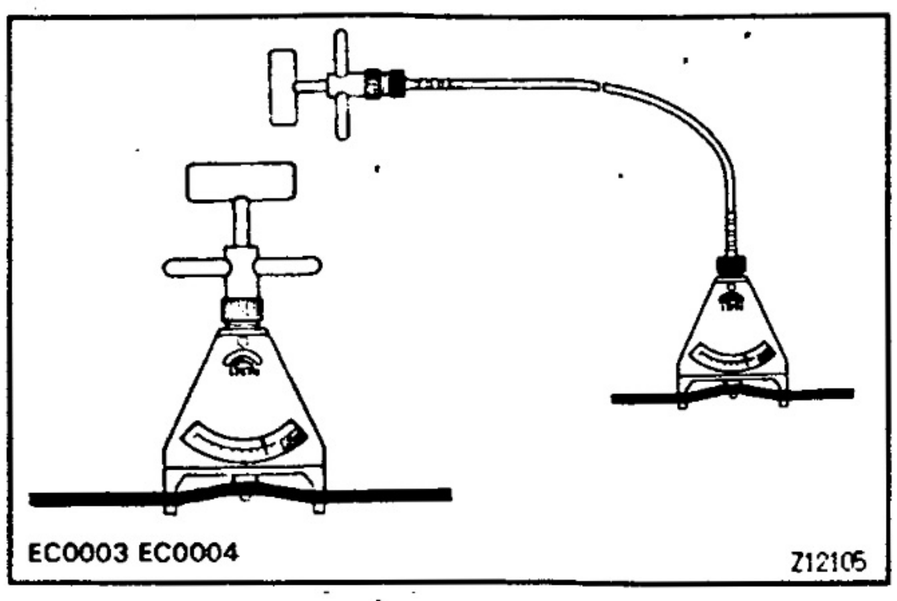

Reference:

Using a belt tension gauge, check the drive belt tension.

Drive belt tension:

3L Engine Models:

New belt: 441 — 444 N (45 — 68 kgf)

Used belt: 264 — 441 N (27 — 45 kgf)

1KZ—T and 1KZ—TE Engine Models:

New belt: 372 — 608 N (38 — 62 kgf)

Used belt: 196 — 392 N (20 — 30 kgf)

3RZ—F and 3RZ—FE Engine Models:

New belt: 593 — 823 N (61 — 84 kgf)

Used belt: 353 — 530 N (36 — 54 kgf)

5VZ—FE Engine Models:

New belt: 519 — 755 N (53 — 77 kgf)

Used belt: 196 — 392 N (20 — 30 kgf)

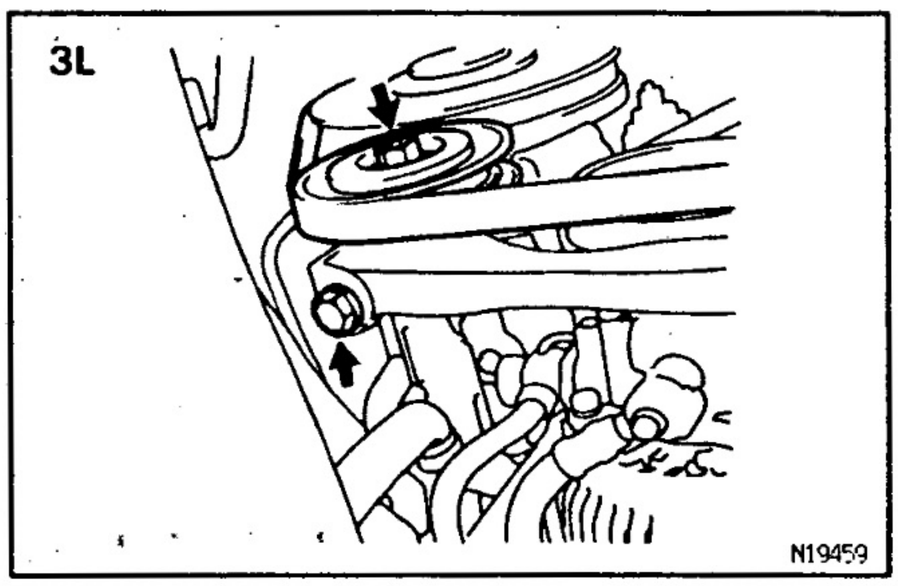

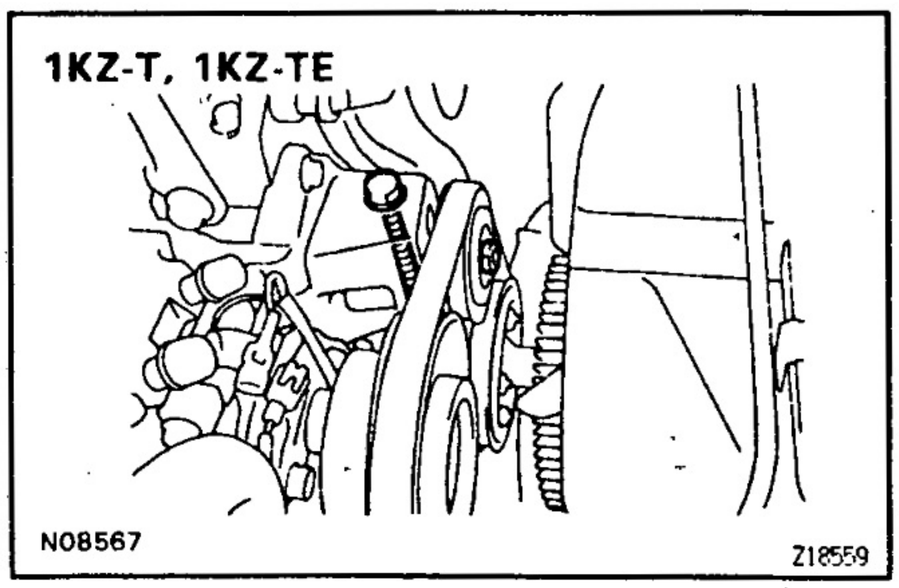

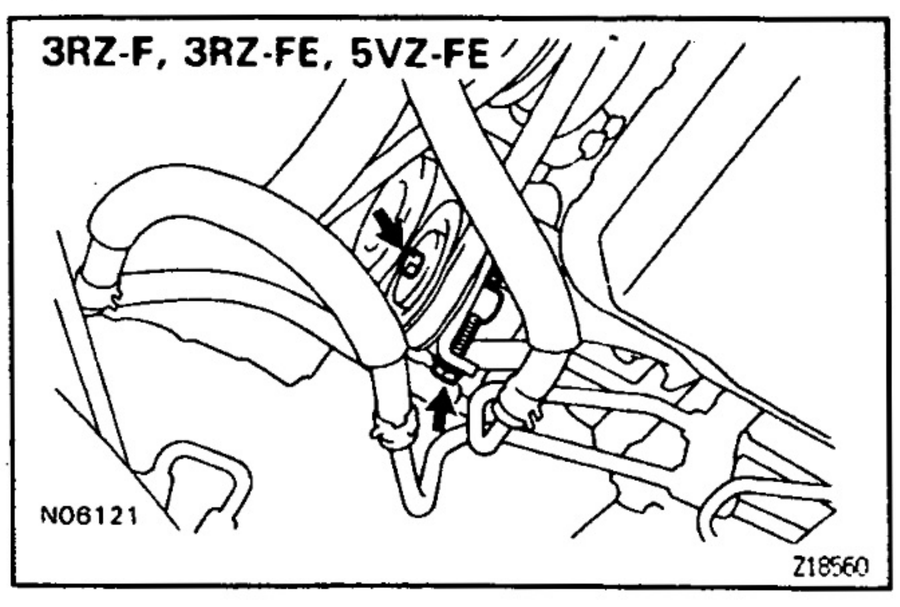

AC2TJ-01

DRIVE BELT REMOVAL

1. **3RZ—F, 3RZ—FE and 5VZ—FE Engine Models: REMOVE PS PUMP DRIVE BELT**
2. **REMOVE DRIVE BELT**

(a) Except 1KZ—T and 1KZ—TE Engine Models:
Remove the engine under cover.

(b) Loosen the idle pulley lock nut.
Torque: 39 N·m (400 kgf·cm, 29 ft·lbf)

(c) Loosen the adjusting bolt and remove the drive belt.

AC

AC2TX—01

DRIVE BELT INSTALLATION

Installation is in the reverse order of removal.

IDLE—UP SPEED

AC2TL—01

IDLE—UP SPEED INSPECTION

1. **WARM UP ENGINE**
2. **SET VEHICLE IN THESE CONDITIONS:**
(a) Blower speed control switch HI
(b) A/C switch ON
(c) Temperature control dial MAX COOL
(d) Put gear shift in neutral
3. **INSPECT IDLE—UP SPEED**

3L Engine Models

Magnetic clutch condition	Idle speed
Magnetic clutch not engaged	700 ± 50 rpm
Magnetic clutch engaged	950 ± 50 rpm

If idle speed is not as specified, adjust the idle—up speed or check the VSV and A/C amplifier circuit.

1KZ—T and 1KZ—TE Engine Models

Magnetic clutch condition	Idle speed
Magnetic clutch not engaged	700 ± 50 rpm
Magnetic clutch engaged	950 ± 50 rpm

1KZ—T Engine Models:
If idle speed is not as specified, adjust the idle—up speed or check the VSV and A/C amplifier circuit.
1KZ—TE Engine Models:
If idle speed is not as specified, check the air intake system.

3RZ—F and 3RZ—FE Engine Models

Magnetic clutch condition	Idle speed
Magnetic clutch not engaged	700 ± 50 rpm
Magnetic clutch engaged	900 ± 50 rpm

3RZ—F Engine Models:
If idle speed is not as specified, adjust the idle—up speed or check the VSV and A/C amplifier circuit.
3RZ—FE Engine Models:
If idle speed is not as specified, check the IAC valve and air intake system.

AC

5VZ—FE Engine Models

Magnetic clutch condition	Idle speed
Magnetic clutch engaged	700 ± 50 rpm
Magnetic clutch not engaged	850 ± 50 rpm

If idle speed is not as specified, check the IAC valve and air intake system.

AC2TM—01

IDLE—UP SPEED ADJUSTMENT

3L Engine Models:

1. SET VEHICLE IN THESE CONDITIONS:

(a) Engine at normal operating temperature
(b) Injection timing set correctly
(c) Put gear shift in neutral
(d) Idle speed set correctly

2. CONNECT TACHOMETER

3. ADJUST IDLE—UP SETTING SPEED

(a) Start the engine.
(b) Set the A/C control assembly in these conditions:
- A/C switch to ON
- Blower speed control switch to HI
- Air inlet control dial to "RECIRC"
- Air outlet control dial to "FACE"
- Temperature control dial to "COOL"

(c) Disconnect the vacuum hose from the idle—up actuator.
(d) Apply vacuum to the idle—up actuator.
(e) Race the engine to 2,500 rpm a few seconds, release the throttle and check the idle—up setting speed.

A/C idle—up setting speed:

950 rpm

(f) Adjust the idle—up setting speed by turning the idle—up setting speed adjusting screw.
(g) Race the engine to 2,500 rpm for a few seconds, release the throttle and recheck the A/C idle—up setting speed.
(h) Connect the vacuum hose to the idle—up actuator.

Type A

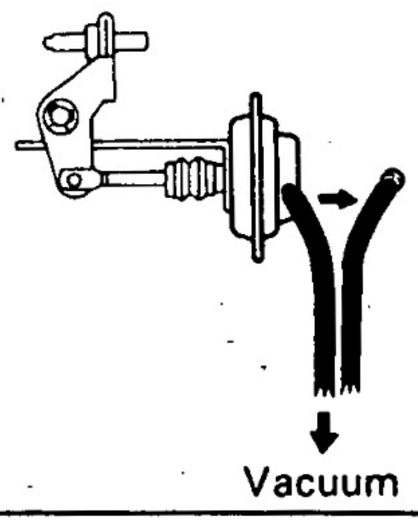

Type B

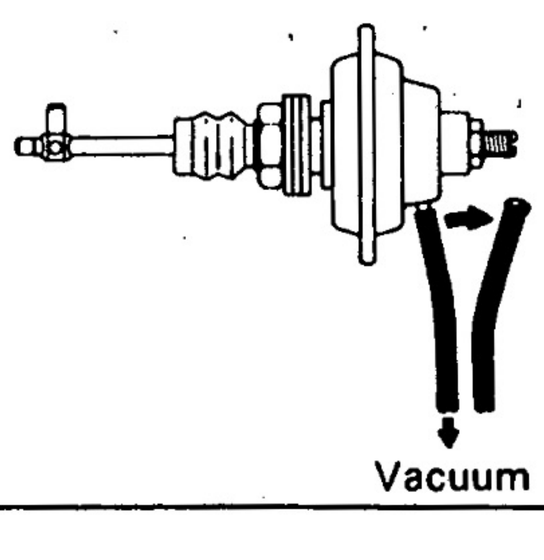

Type A

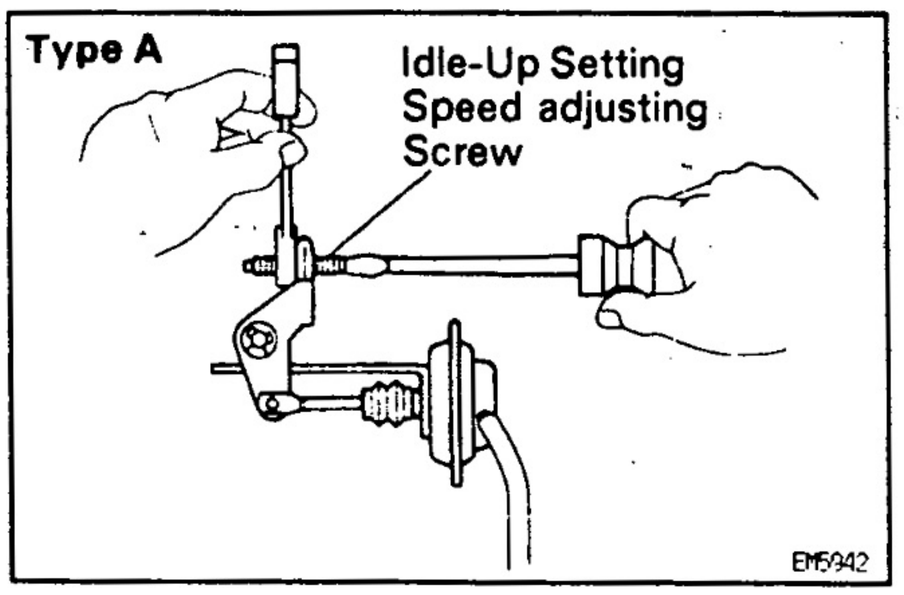

AC

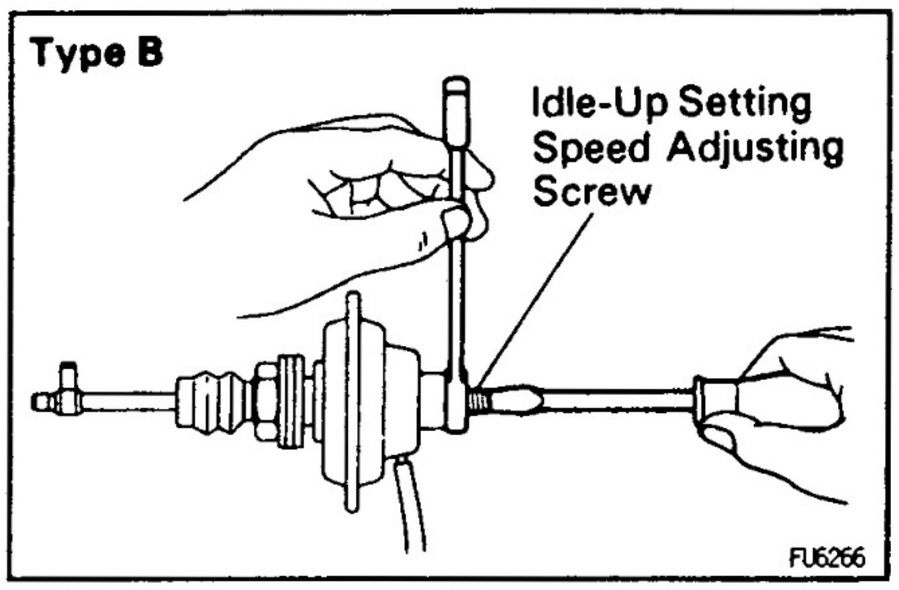

AC2TN–01

IDLE–UP SPEED ADJUSTMENT

1KZ–T Engine Models:

1. SET VEHICLE IN THESE CONDITIONS:

(a) Engine at normal operating temperature
(b) Put gear shift in neutral
(c) Idle speed set correctly

2. CONNECT TACHOMETER

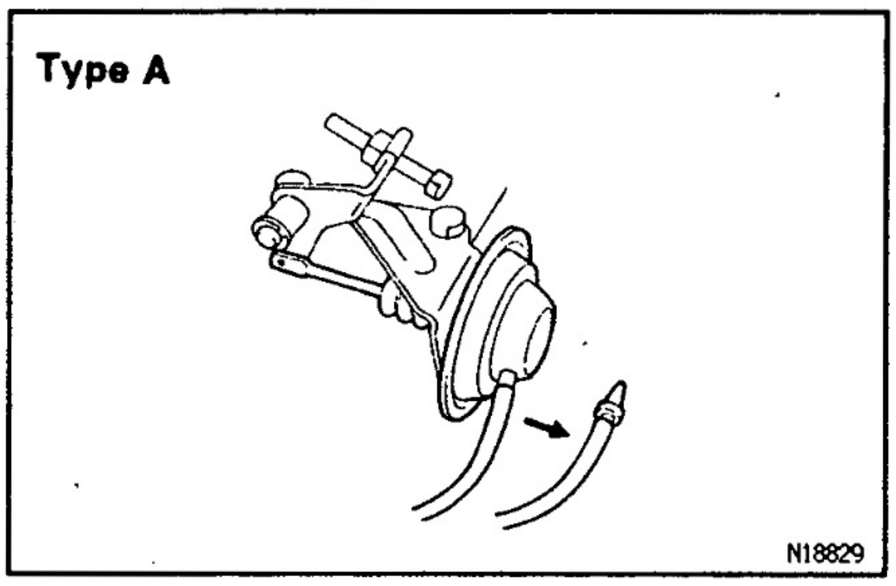

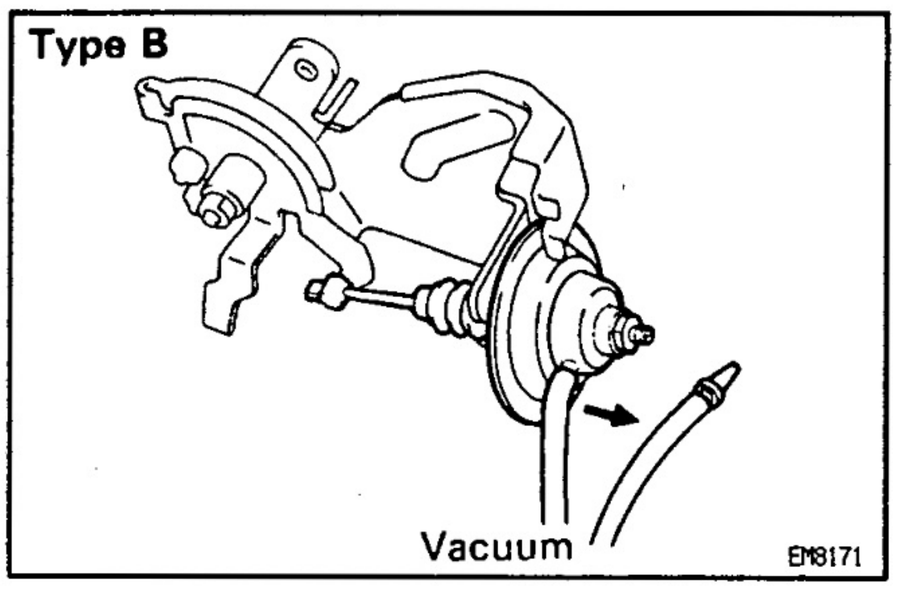

3. ADJUST IDLE–UP SETTING SPEED

(a) Start engine.
(b) Set A/C control assembly in these conditions:
- A/C switch ON
- Blower speed control switch to HI
- Air inlet control dial to "RECIRC"
- Air outlet control dial to "FACE"
- Temperature control dial to "COOL"

(c) Disconnect the vacuum hose from the idle–up actuator.
(d) Apply vacuum to the idle–up actuator.
(e) Race the engine to 2,500 rpm for a few seconds, release the throttle and check the idle–up setting speed.

A/C idle–up setting speed:

950 rpm

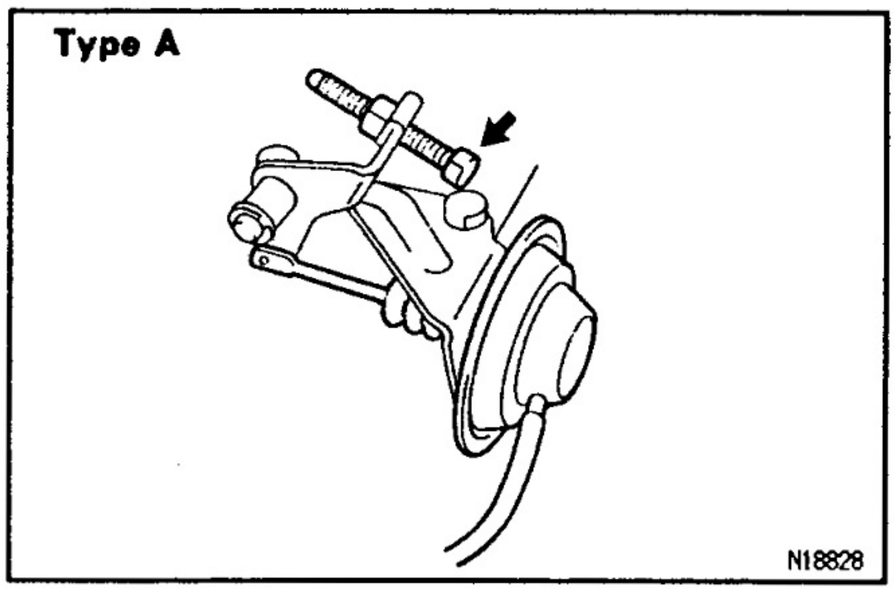

(f) Adjust the idle–up setting speed by turning the idle–up setting speed adjusting bolt.
(g) Race the engine to 2,500 rpm for a few seconds, release the throttle and recheck the A/C idle–up setting speed.
(h) Connect the vacuum hose to the idle–up actuator.

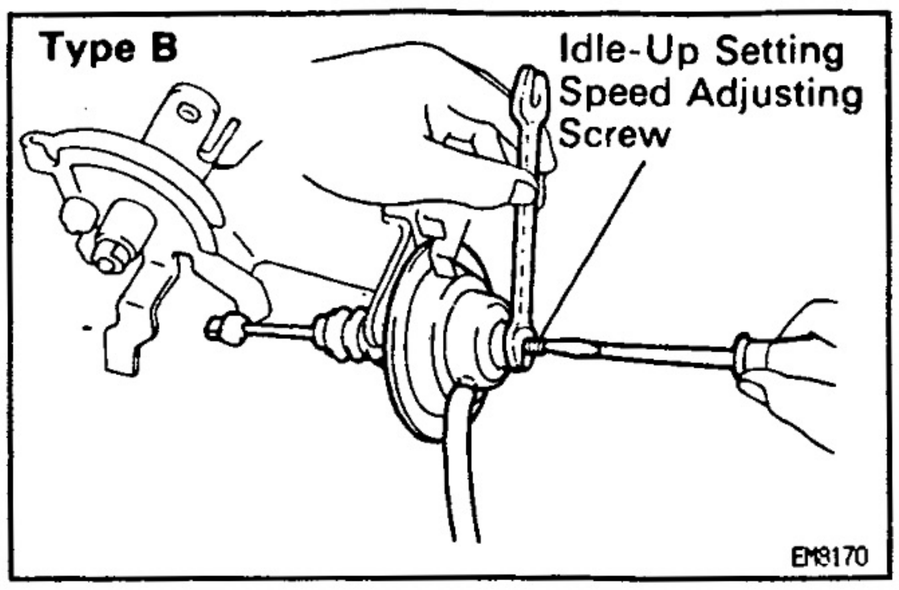

AC2TP–01

IDLE–UP SPEED ADJUSTMENT

3RZ–F Engine:

1. **SET VEHICLE IN THESE CONDITIONS:**

(a) Engine at normal operating temperature
(b) Put gear shift in neutral
(c) Idle speed set correctly

2. **CONNECT TACHOMETER**

3. **ADJUST IDLE–UP SETTING SPEED**

(a) Start engine.
(b) Set A/C control assembly in these conditions:
- A/C switch ON
- Blower speed control switch to HI
- Air inlet control lever to "RECIRC"
- Temperature control dial to "COOL"

(c) Race the engine to 2,500 rpm for a few seconds, release the throttle and check the idle–up setting speed.

A/C idle–up setting speed:

900 rpm

(d) Adjust the idle–up setting speed by turning the idle–up speed adjust screw.
(e) Race the engine to 2,500 rpm for a few seconds, release the throttle and recheck the A/C idle–up setting speed.

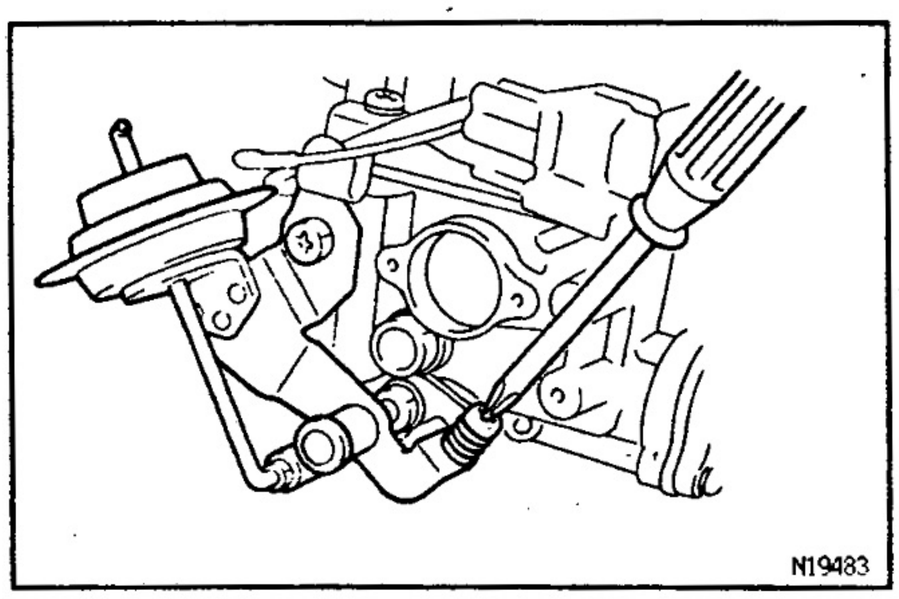

AC

REFRIGERANT LINES

TIGHTENING TORQUE OF REFRIGERATION LINES

AC2TQ-01

Single A/C
LHD

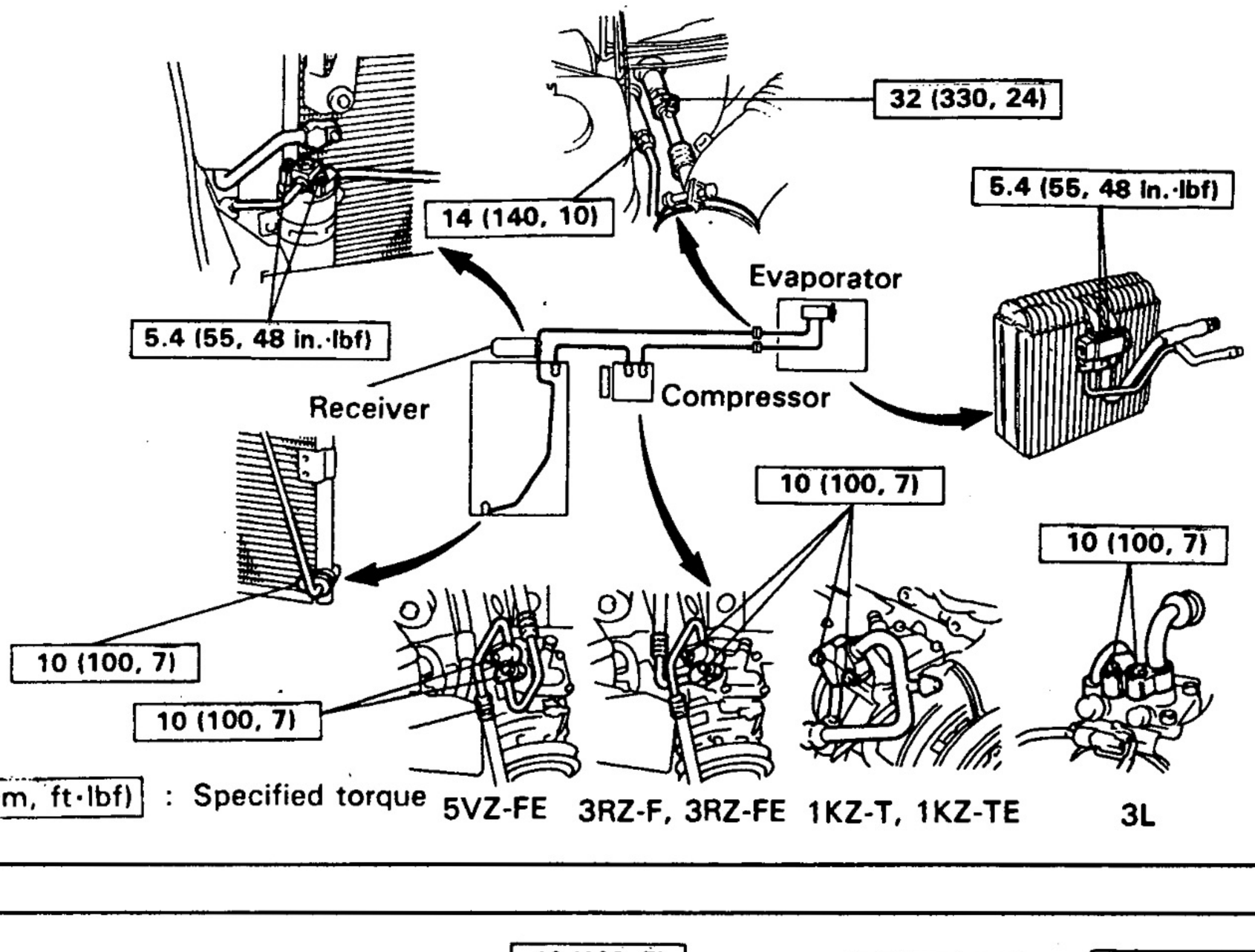

N19502

Single A/C
RHD

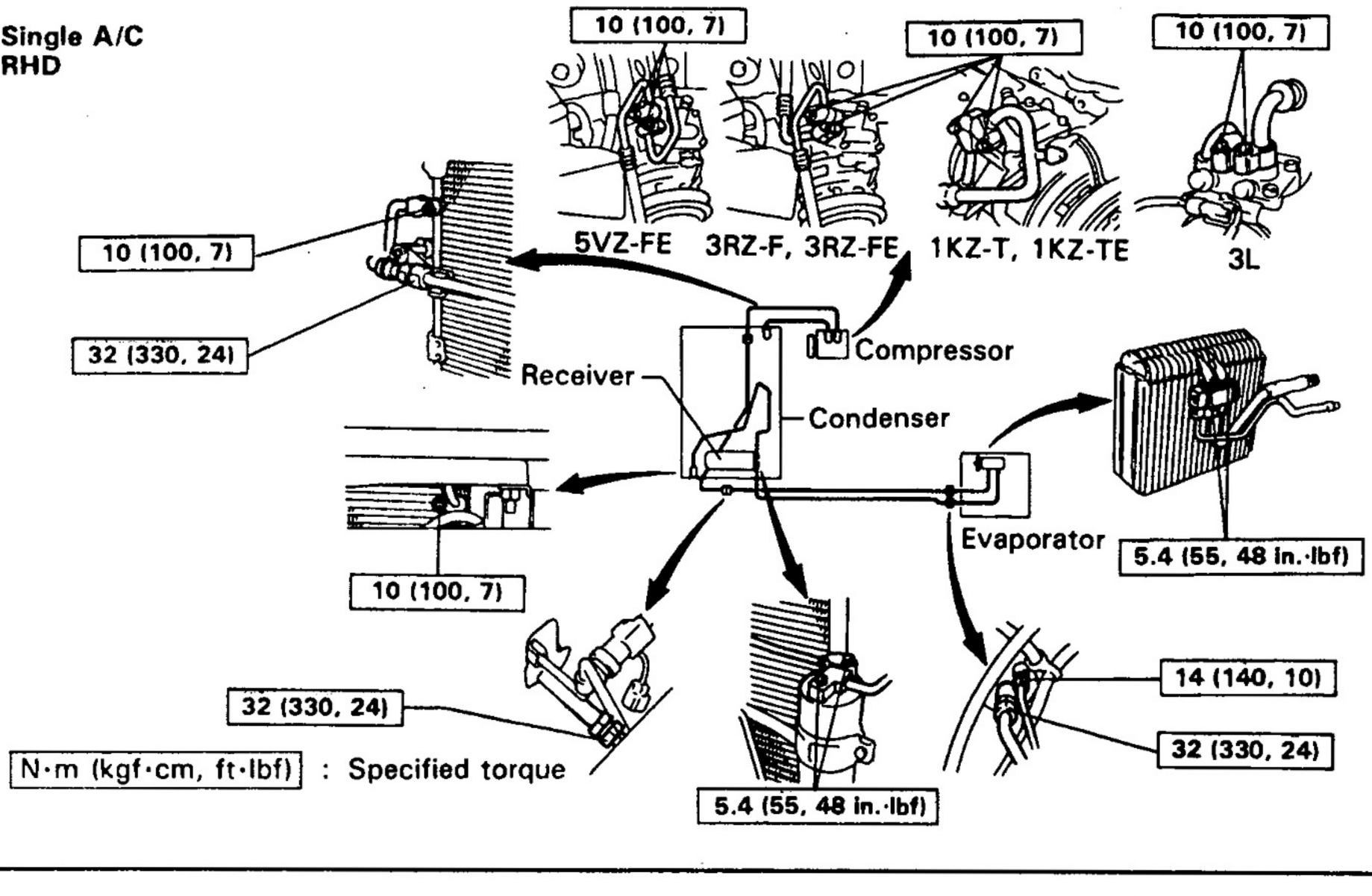

N19501

AC

Dual A/C
LHD

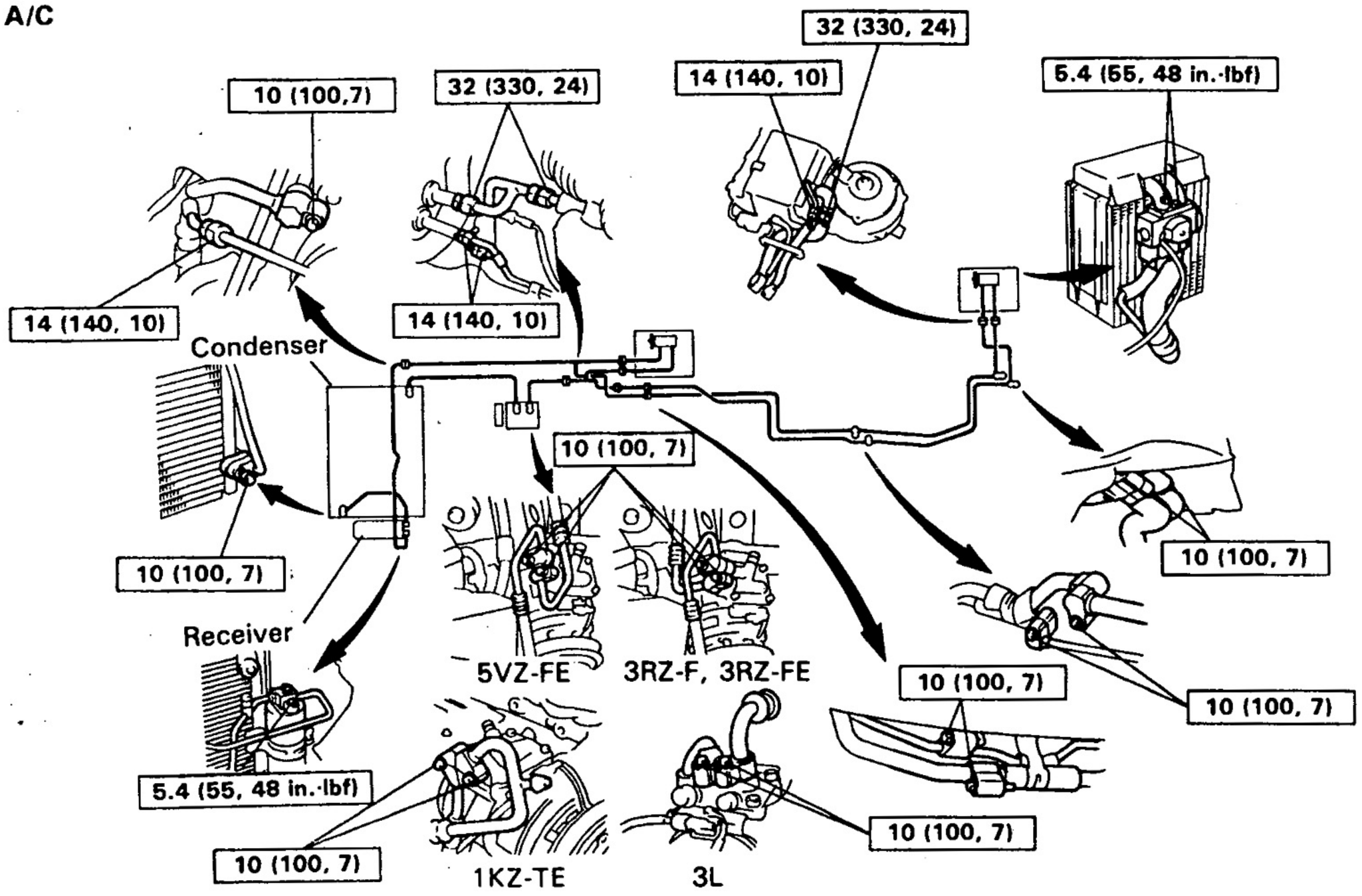

N·m (kgf·cm, ft·lbf) : Specified torque

N19499

Dual A/C
RHD

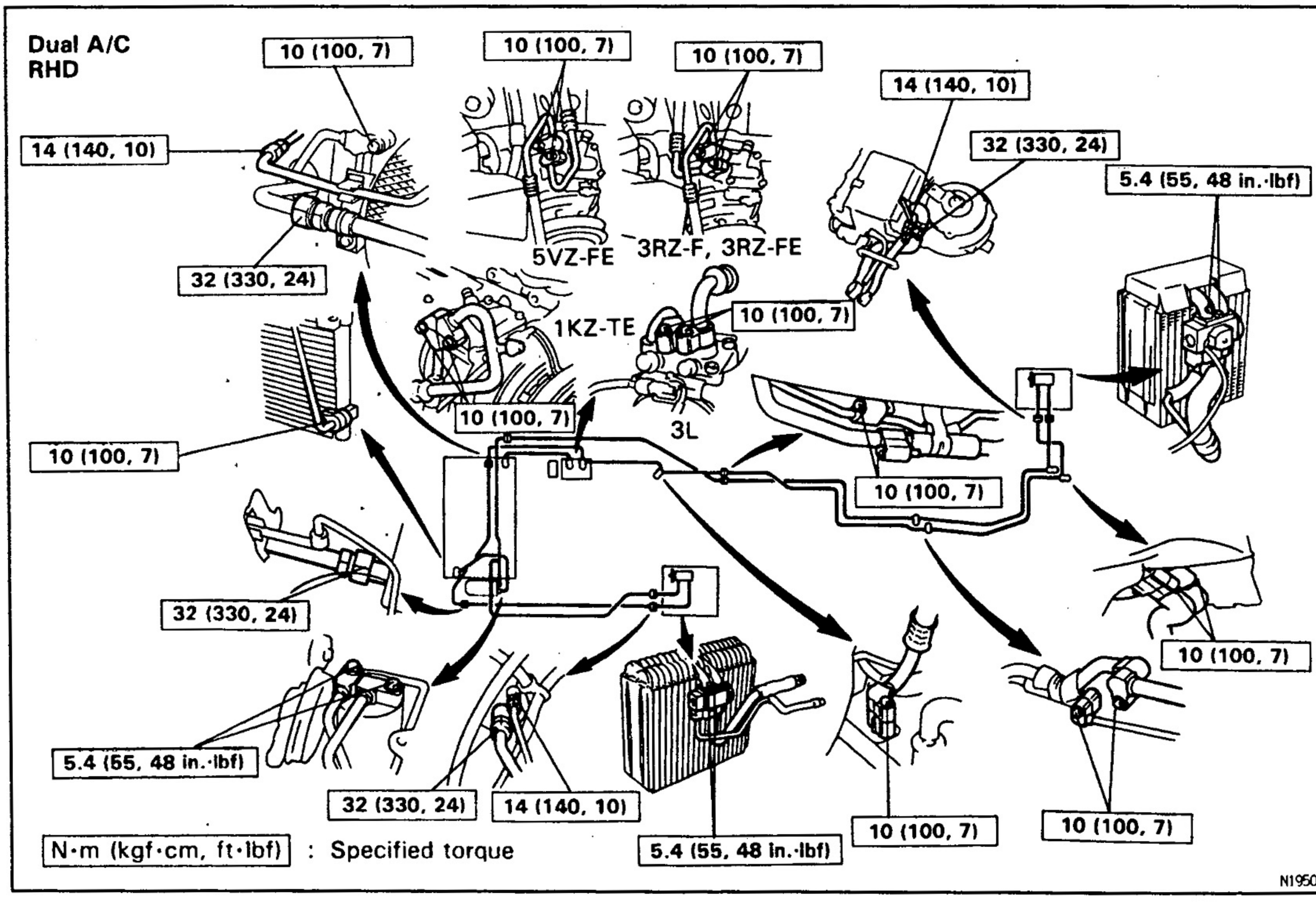

N·m (kgf·cm, ft·lbf) : Specified torque

N19500

AC2TR-01

ON-VEHICLE INSPECTION

1. **INSPECT HOSES AND TUBES FOR LEAKAGE**
   Using a gas leak detector, check for leakage of refrigerant.
2. **INSPECTION HOSE AND TUBE CONNECTIONS FOR LOOSENESS**

AC2T8-01

REFRIGERANT LINES REPLACEMENT

1. **DISCHARGE REFRIGERANT IN REFRIGERATION SYSTEM**
2. **REPLACE FAULTY TUBE OR HOSE**
   NOTICE: Cap the open fittings immediately to keep moisture or dirt out of the system.
3. **TORQUE CONNECTIONS TO SPECIFIED TORQUE**
   NOTICE: Connections should not be torque tighter than the specified torque.

Compressor x Discharge hose
Torque: 10 N·m (100 kgf·cm, 7 ft·lbf)

Compressor x Suction hose
Torque: 10 N·m (100 kgf·cm, 7 ft·lbf)

Condenser x Discharge hose
Torque: 10 N·m (100 kgf·cm, 7 ft·lbf)

Condenser x Liquid tube
Torque: 10 N·m (100 kgf·cm, 7 ft·lbf)

Receiver x Liquid tube
Torque: 5.4 N·m(55 kgf·cm, 48 in.·lbf)

Front cooling unit x Liquid tube
Torque: 14 N·m (140 kgf·cm, 10 ft·lbf)

Front cooling unit x Suction hose
Torque: 32 N·m (330 kgf·cm, 24 ft·lbf)

Expansion valve x Evaporator
Torque: 5.4 N·m (55 kgf·cm, 48 in.·lbf)

Rear cooling unit x Liquid tube
Torque: 10 N·m (100 kgf·cm, 7 ft·lbf)

Rear expansion valve x Rear evaporator
Torque: 5.4 N·m (55 kgf·cm, 48 in.·lbf)

Rear cooling unit x Suction tube
Torque: 10 N·m (100 kgf·cm, 7 ft·lbf)

Liquid lines (Piping joint)
Torque: 14 N·m (140 kgf·cm, 10 ft·lbf)

Liquid lines (Block joint)
Torque: 10 N·m (100 kgf·cm, 7 ft·lbf)

Suction lines (Piping joint)
Torque: 32 N·m (330 kgf·cm, 24 ft·lbf)

Suction lines (Block joint)

Torque: 10 N·m (100 kgf·cm, 7 ft·lbf)

4. **EVACUATE AIR IN REFRIGERATION SYSTEM AND CHARGE WITH REFRIGERANT**

Specified amount:

Single A/C: 700 ± 50 g (24.69 ± 1.76 oz.)

Dual A/C: 950 ± 50 g (33.51 ± 1.76 oz.)

5. **INSPECT FOR LEAKAGE OF REFRIGERANT**

Using a gas leak detector, check for leakage of refrigerant.

6. **INSPECT A/C OPERATION**

AC

FRONT COOLING UNIT
COMPONENTS

AC2TT-01

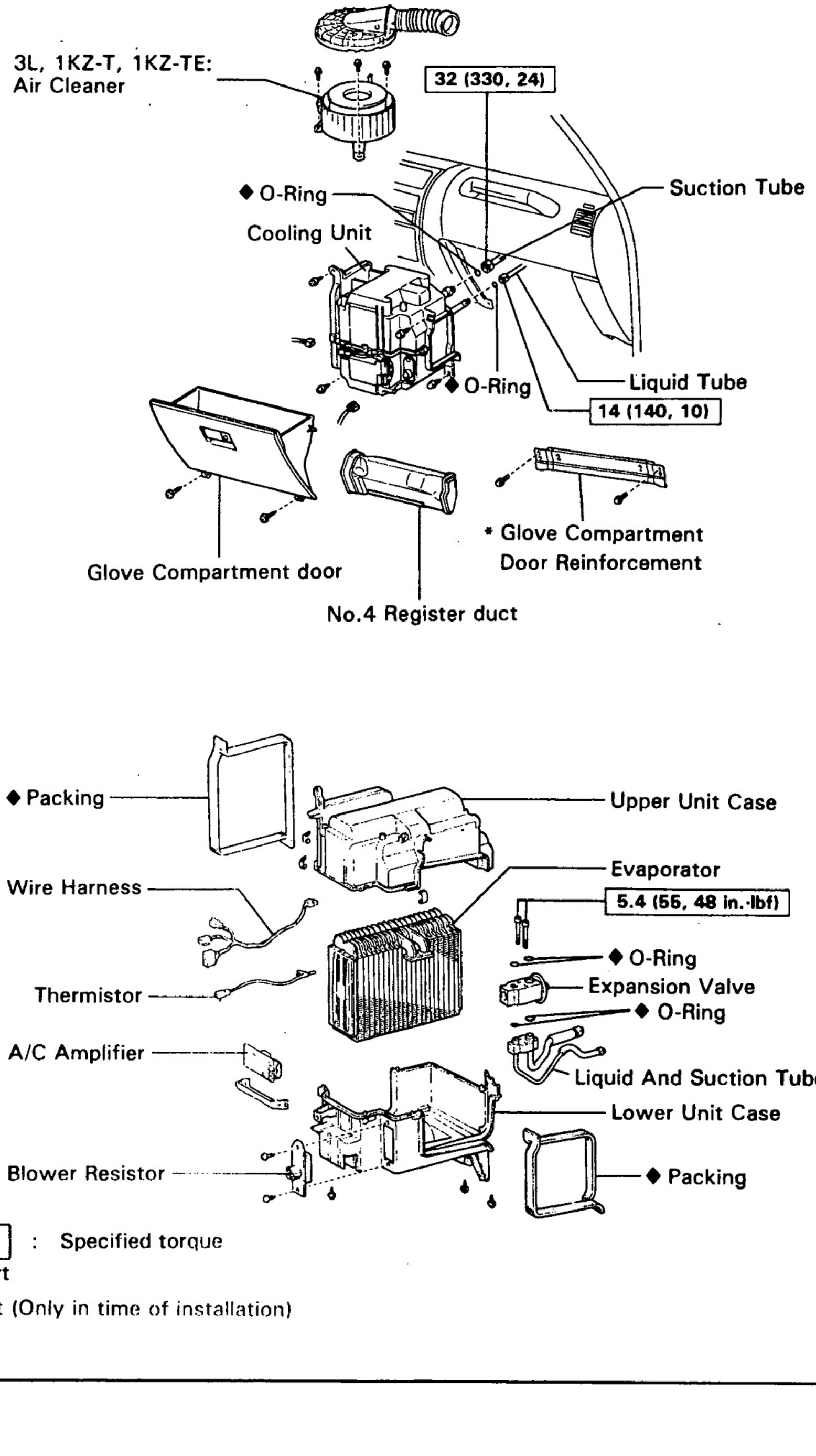

N19493
N18278

N·m (kgf·cm, ft·lbf) : Specified torque

◆ Non-reusable part

*: Substitution part (Only in time of installation)

Z18555

AC2TU-01

FRONT COOLING UNIT REMOVAL

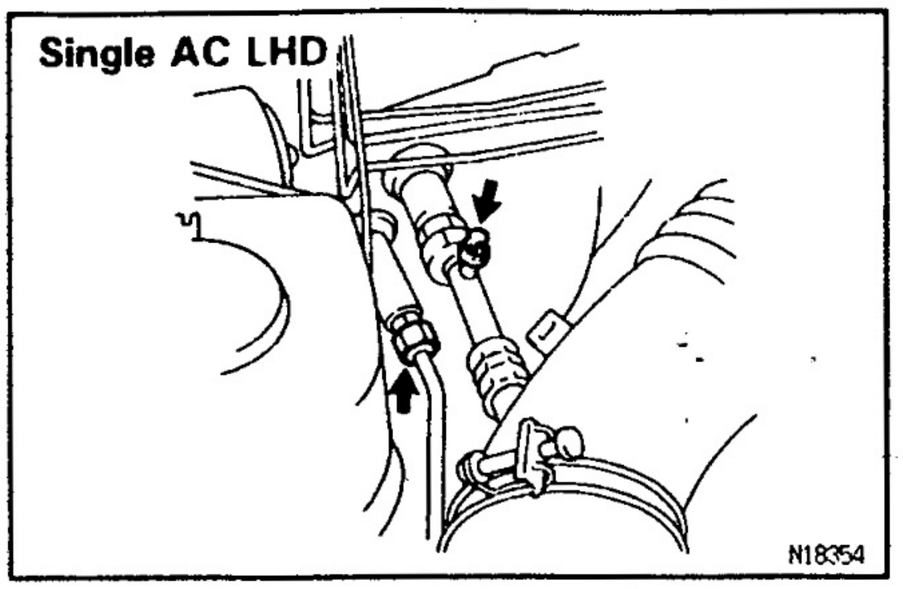

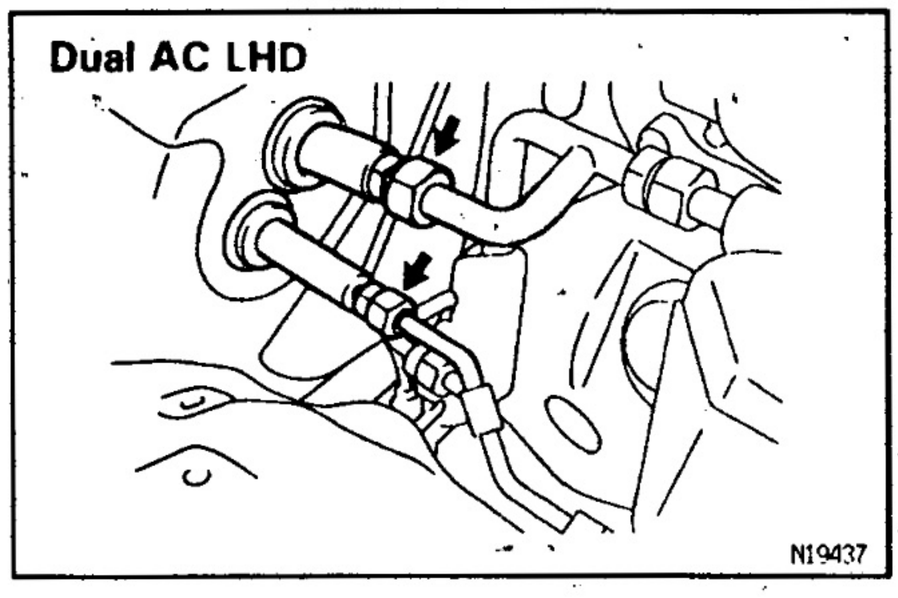

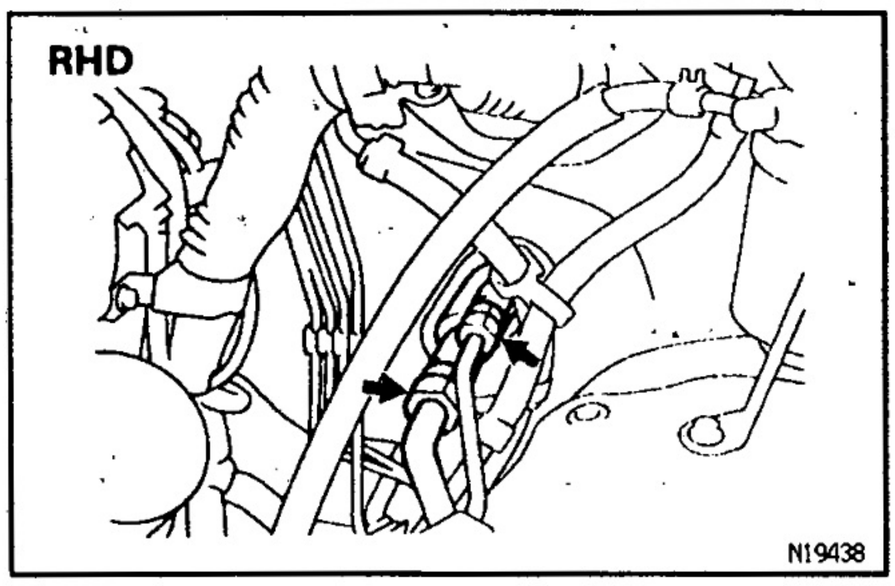

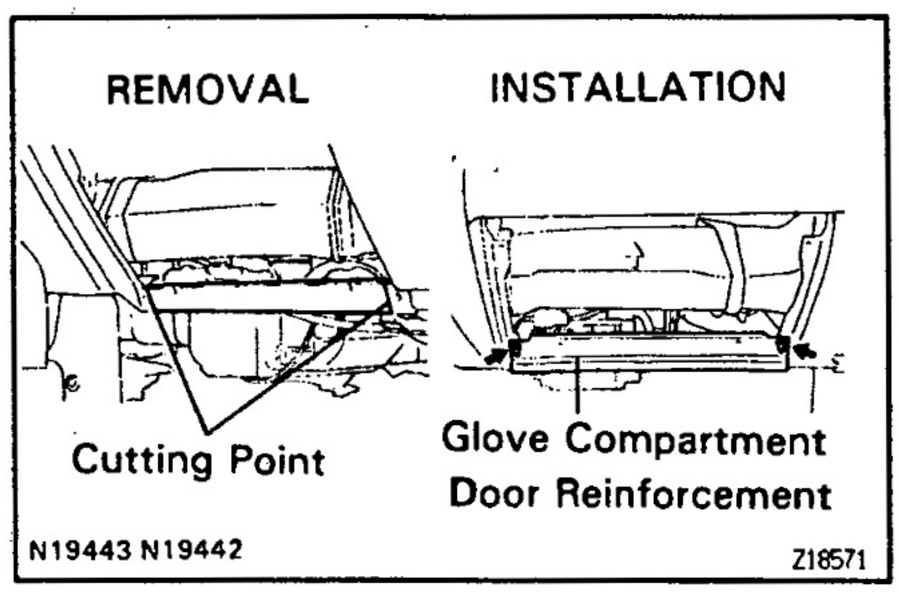

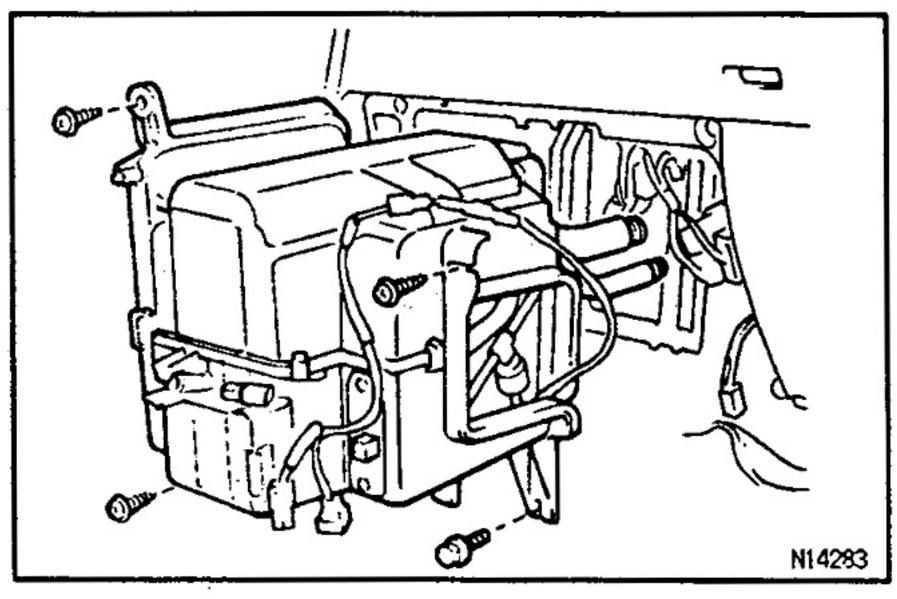

1. **DISCHARGE REFRIGERANT FROM REFRIGERATION SYSTEM**

   INSTALLATION HINT: Evacuate air from refrigeration system.

   Charge system with refrigerant and inspect for leakage of refrigerant.

   Specified amount:

   Single A/C: 700 ± 50 g (24.69 ± 1.76 oz.)

   Dual A/C: 950 ± 50 g (33.51 ± 1.76 oz.)

2. **3L, 1KZ—T and 1KZ—TE Engine Models:**
   REMOVE AIR CLEANER

3. **DISCONNECT SUCTION HOSE AND LIQUID TUBE FROM COOLING UNIT FITTINGS**

   Loosen the 2 nuts and disconnect the both tubes.

   Torque:

   Liquid tube: 14 N·m (140 kgf·cm, 10 ft·lbf)

   Suction tube: 32 N·m (330 kgf·cm, 24 ft·lbf)

   REMOVAL NOTICE: Cap the open fittings immediately to keep moisture or dirt out of the system.

   INSTALLATION HINT: Lubricate 2 new O—rings with compressor oil and install the tubes.

4. **REMOVE THESE PARTS:**

(a) Suction and liquid tube grommets
(b) Drain hose grommets
(c) Glove compartment door
(See page BO—55)
(d) No.4 register duct

5. **REMOVE COOLING UNIT**

(a) Using a knife, cut off the reinforcement of glove compartment.

INSTALLATION HINT: Install the glove compartment door reinforcement (supply parts), instead of cutting reinforcement.

Part No. 55558—60050

(b) Disconnect the connectors.
(c) Remove the 3 screws, bolt and cooling unit.

AC

FRONT COOLING UNIT DISASSEMBLY AC2TV-01

1. **REMOVE THESE PARTS:**
(a) A/C amplifier.
(b) Wire harness.
2. **REMOVE BLOWER RESISTOR**
Remove the 2 screws and blower resistor.
3. **SEPARATE UPPER AND LOWER UNIT CASES**
(a) Using a knife, cut off the each packing.
(b) Remove 3 clips and 3 screws.
(c) Separate the upper and lower unit case.
4. **REMOVE EVAPORATOR FROM LOWER UNIT CASE**
ASSEMBLY HINT: If evaporator was replaced, add compressor oil to the compressor.
Add 40 — 50 cc (1.4 —1.7 fl.oz.)
Compressor oil:
ND—OIL 8 or equivalent
5. **REMOVE THERMISTOR**
Pull out the thermistor from evaporator.
6. **REMOVE EXPANSION VALVE**
Using a hexagon wrench, remove the 2 bolts and separate the expansion valve and evaporator.
Torque: 5.4 N·m (55 kgf·cm, 48 in.·lbf)
ASSEMBLY HINT: Lubricate 4 new O—rings with compressor oil and install the tubes.

FRONT COOLING UNIT ASSEMBLY AC2TW-01

Assembly is in the reverse order of disassembly.

AC

FRONT COOLING UNIT INSTALLATION AC2TX-01

Installation is in the reverse order of removal.

REAR COOLING UNIT
COMPONENTS

AC2TY—01

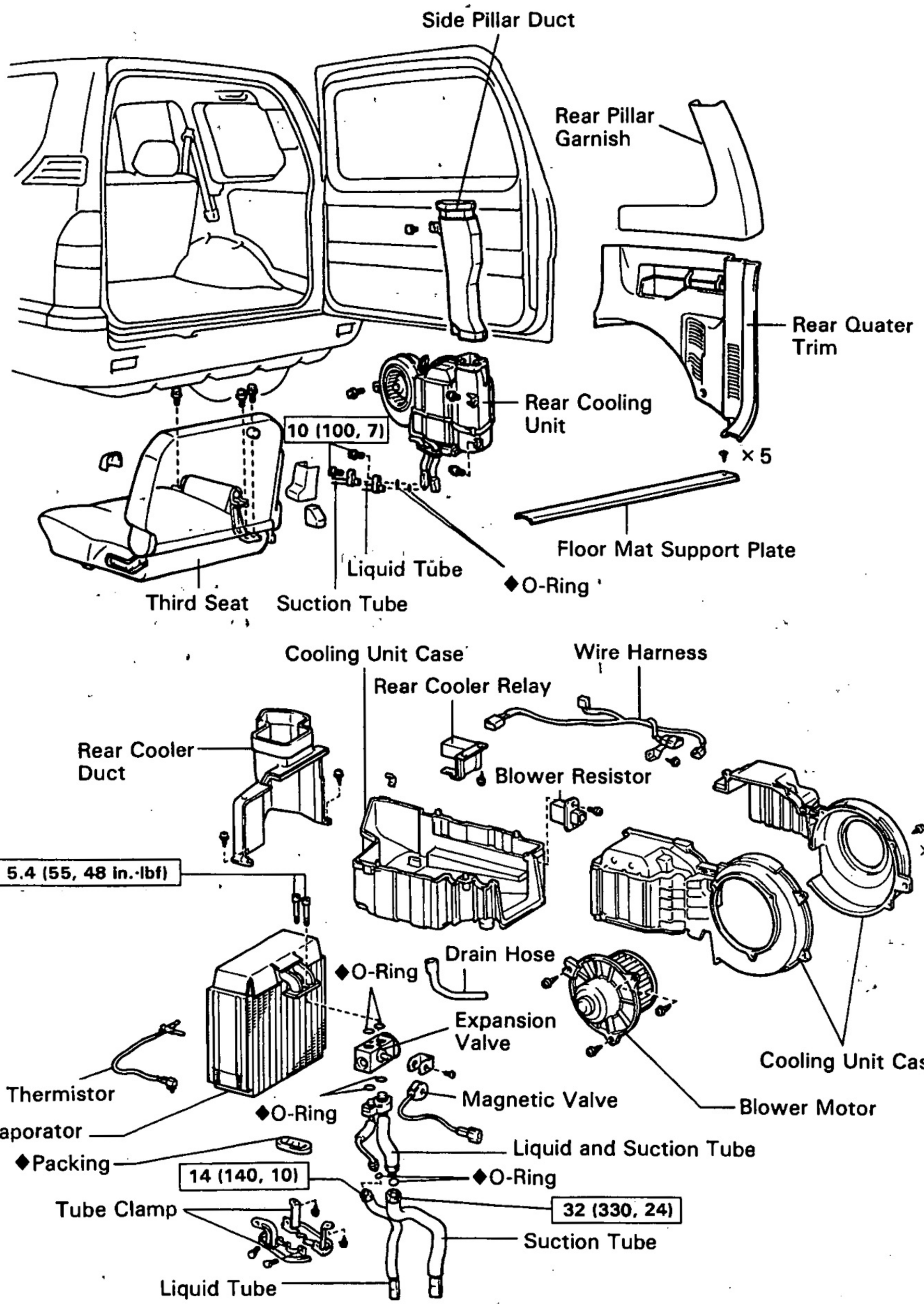

N19505
N19490

N·m (kgf·cm, ft·lbf) : Specified torque

◆ Non-reusable part

Z18558

AC

AC2TZ-01

REAR COOLING UNIT REMOVAL

1. **DISCHARGE REFRIGERANT FROM REFRIGERATION SYSTEM**

INSTALLATION HINT: Evacuate air from refrigeration system.

Charge system with refrigerant and inspect for leakage of refrigerant.

Specified amount:

950 ± 50 g (33.51 ± 1.76 oz.)

2. **REMOVE THESE PARTS:**

(a) Third seat
(b) Floor mat support plate
(c) Rear quarter trim
(d) Rear pillar garnish

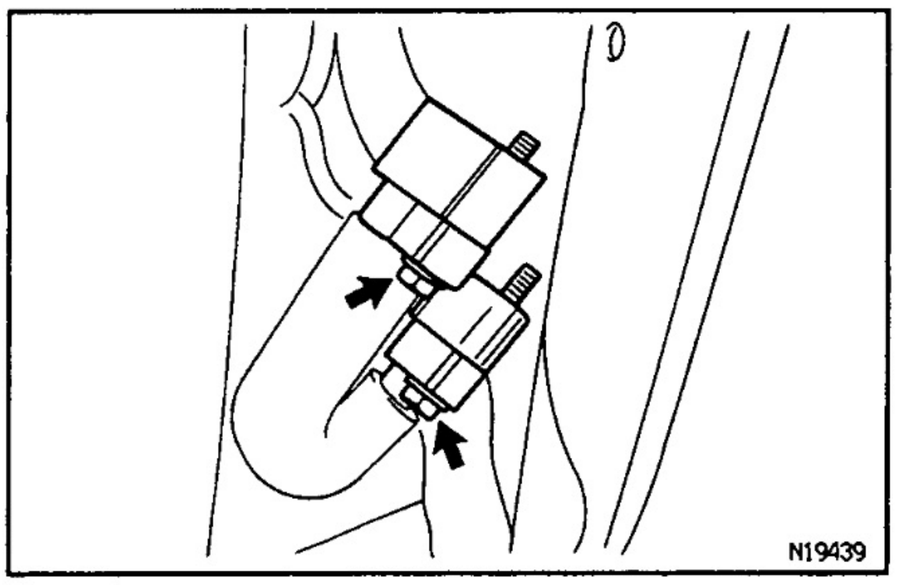

3. **DISCONNECT LIQUID AND SUCTION TUBE**

Remove the 2 bolts and disconnect the both tube.

Torque: 10 N·m (100 kgf·cm, 7 ft·lbf)

REMOVAL NOTICE: Cap the open fittings immediately to keep moisture or dirt out of the system.

INSTALLATION HINT: Lubricate 2 new O—rings with compressor oil and install the tubes.

AC

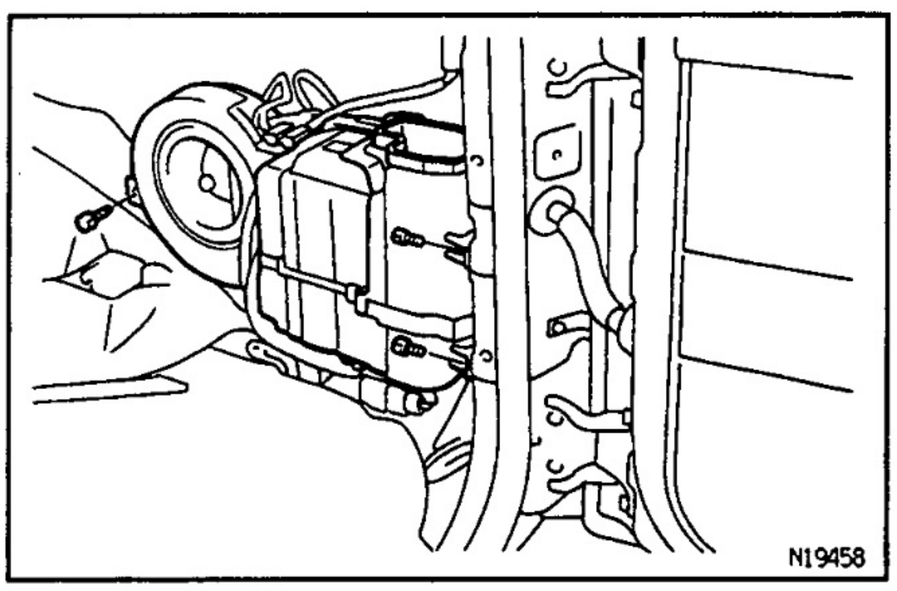

4. **REMOVE REAR COOLING UNIT**

(a) Remove the side pillar duct.
(b) Remove the 3 screws and cooling unit, then disconnect the connector.

AC2U0-01

REAR COOLING UNIT DISASSEMBLY

1. **REMOVE BLOWER MOTOR**

(a) Disconnect the connector.
(b) Remove the 3 screws and blower motor.

2. **REMOVE BLOWER RESISTOR**

(a) Disconnect the connector.
(b) Remove the 2 screws and blower resistor.

3. REMOVE THESE PARTS:

(a) Rear cooler relay

(b) Wire harness

4. REMOVE REAR COOLER DUCT

Remove the 2 screws and duct.

5. DISCONNECT LIQUID TUBE AND SUCTION TUBE

(a) Remove the 4 screws and tube clamp.

(b) Remove the packing from the suction tube.

(c) Loosen the 2 nuts and disconnect both tubes.

Torque:

Liquid tube: 14 N·m (140 kgf·cm, 10 ft·lbf)

Suction tube: 32 N·m (330 kgf·cm, 24 ft·lbf)

DISASSEMBLY NOTICE: Cap the open fittings immediately to keep moisture or dirt out of the system.

ASSEMBLY HINT: Lubricate 2 new O—rings with compressor oil and install the tubes.

6. SEPARATE COOLING UNIT CASES

Remove the 8 screws and separate unit cases.

7. REMOVE EVAPORATOR

ASSEMBLY HINT: If evaporator was replaced, add compressor oil to the compressor.

Add 40 — 50 cc (1.4 —1.7 fl.oz.)

Compressor oil:

ND—OIL 8 or equivalent

8. REMOVE THERMISTOR FROM EVAPORATOR

9. REMOVE EXPANSION VALVE WITH MAGNETIC VALVE

Using a hexagon wrench, remove the 2 bolts and separate the expansion valve and evaporator.

Torque: 5.4 N·m (55 kgf·cm, 48 in.·lbf)

REASSEMBLY HINT: Lubricate 4 new O—rings with compressor oil and install the tubes.

10. REMOVE MAGNETIC VALVE

Remove the screw and the valve.

AC

AC2U1-01

REAR COOLING UNIT ASSEMBLY

Assembly is in the reverse order of disassembly.

AC2U2-01

REAR COOLING UNIT INSTALLATION

Installation is in the reverse order of removal.

FRONT HEATER UNIT
COMPONENTS

AC2U3–01

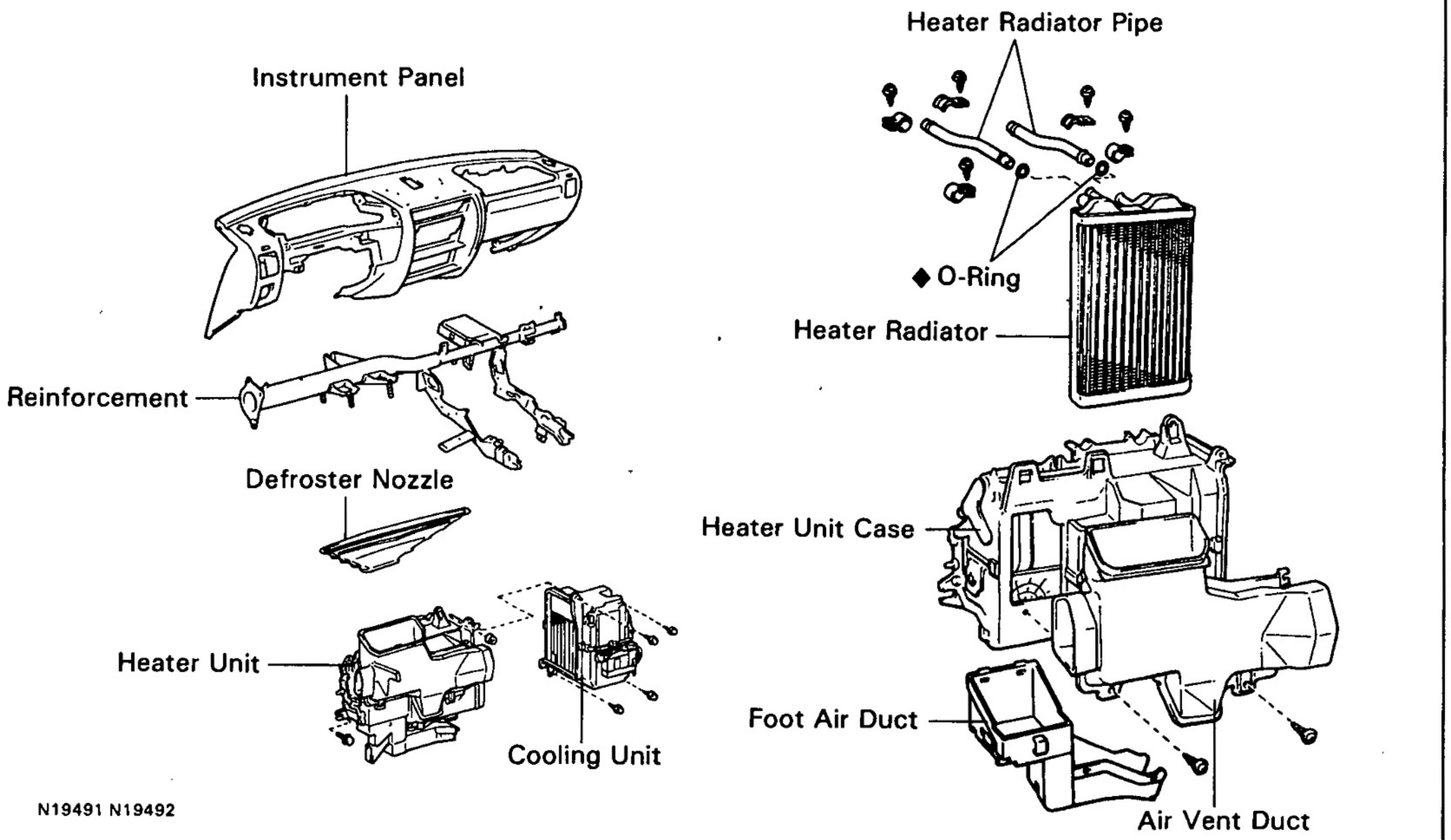

◆ Non-reusable part

Z18567

AC

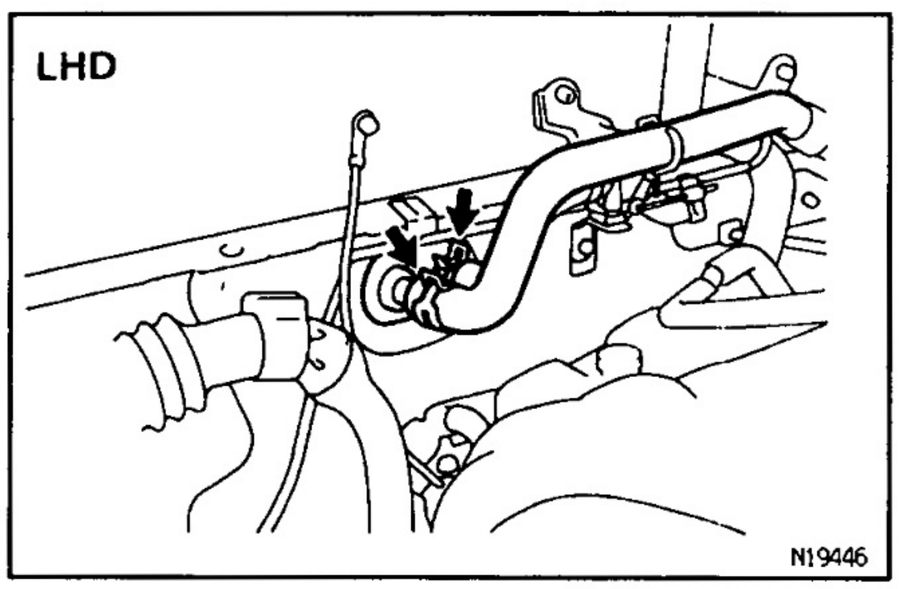

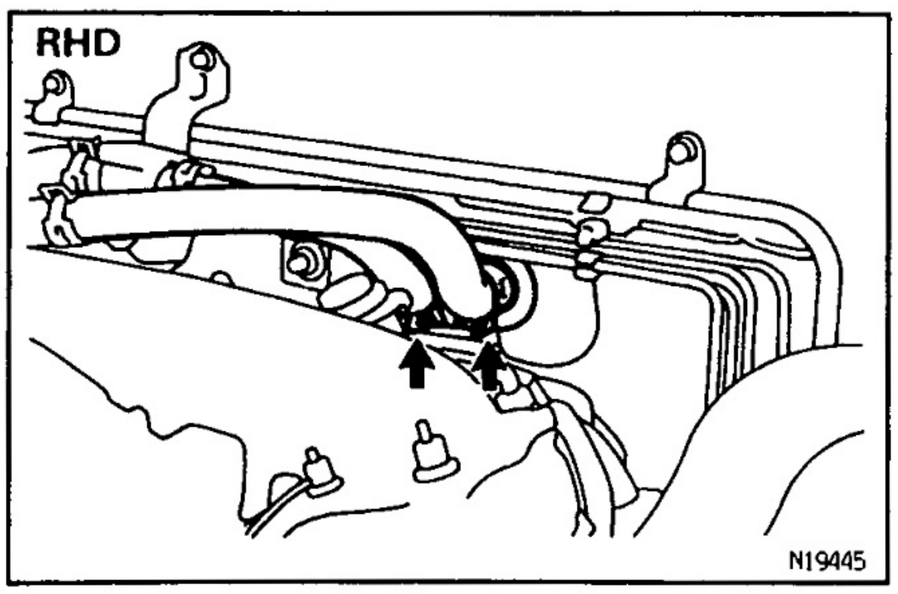

AC2U4–01

HEATER UNIT REMOVAL

1. **REMOVE FRONT COOLING UNIT**
   (See page AC–32)
2. **DRAIN ENGINE COOLANT FROM RADIATOR**
   REMOVAL HINT: It is not necessary to drain out all the coolant.
3. **DISCONNECT WATER HOSES FROM HEATER RADIATOR PIPES**

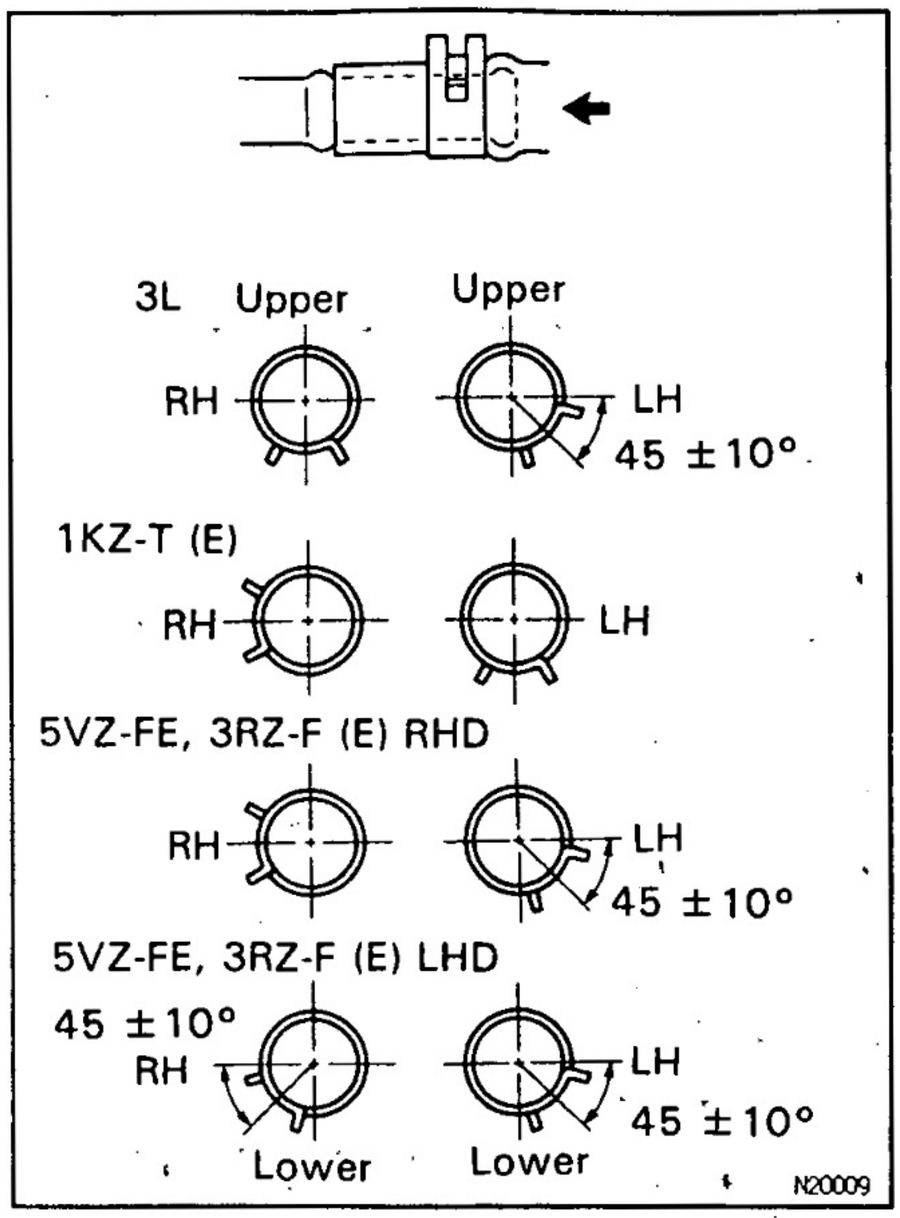

INSTALLATION HINT:

- Push the water hose onto the heater radiator pipe as far as the ridge on the pipe.
- Install the hose clip in a position, as shown in the illustration.

4. **REMOVE INSTRUMENT PANEL AND REINFORCEMENT**
(See page BO–55)
5. **REMOVE AIR BAG SENSOR ASSEMBLY**
(See page RS–32)
6. **REMOVE HEATER UNIT**
Remove the nut and 2 bolts then remove the heater unit.

HEATER UNIT DISASSEMBLY

AC2U8–01

1. **REMOVE PACKING**
2. **REMOVE HEATER RADIATOR**
(a) LHD Models:
Remove the 3 screws and 3 plates.
RHD Models:
Remove the 2 screws and 2 plates.
(b) Pull out the heater radiator.
(c) Remove the 2 screws and heater radiator pipes from heater radiator.
3. **REMOVE AIR VENT DUCT**
Remove the 2 screws and duct.
4. **REMOVE FOOT AIR DUCT**
Release the 3 claws and remove the duct.

AC

HEATER UNIT ASSEMBLY

AC2U6–01

Assembly is in the reverse order of disassembly.

HEATER UNIT INSTALLATION

AC2U7–01

Installation is in the reverse order of removal.

REAR HEATER UNIT

COMPONENTS

AC2U8-01

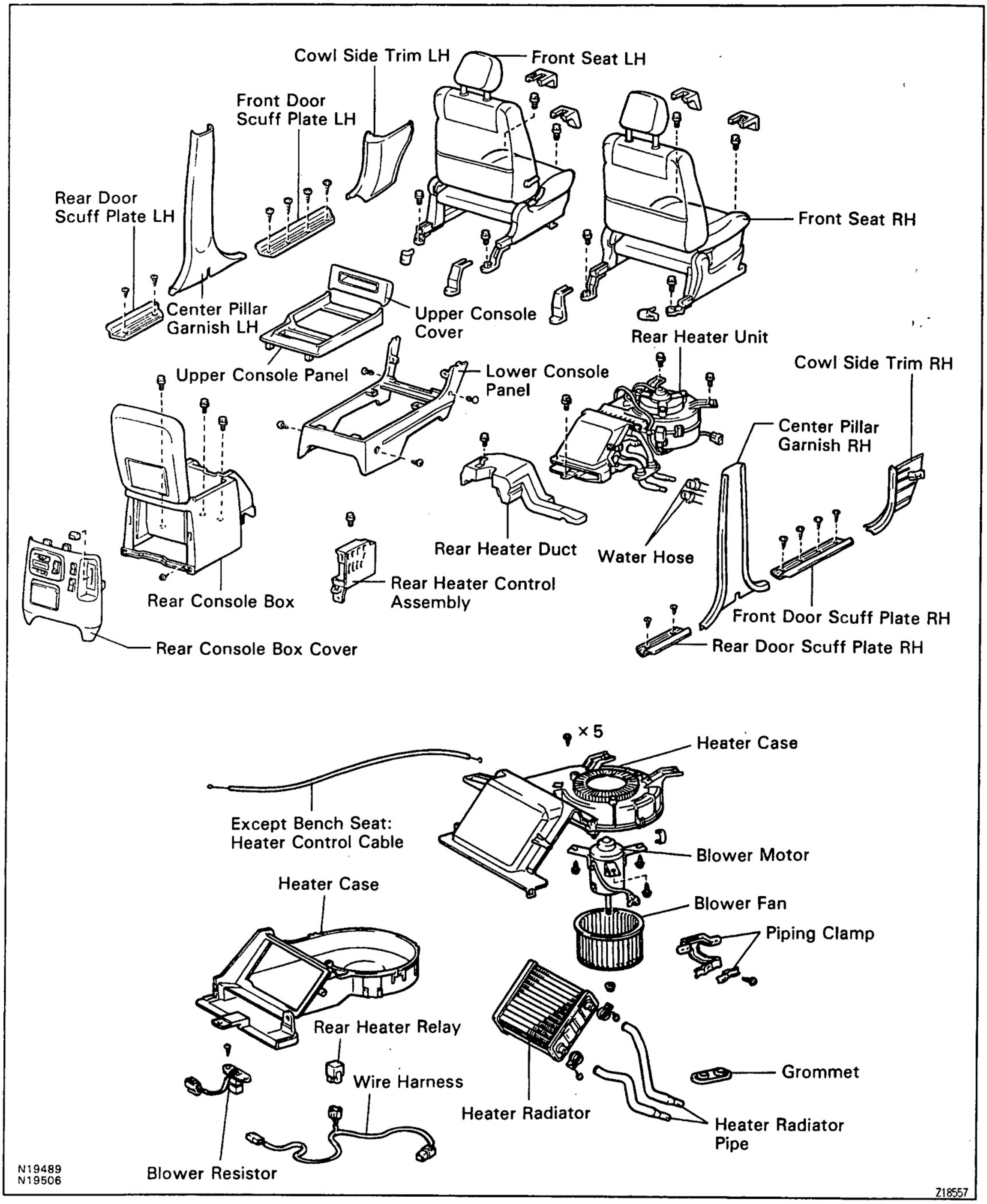

AC

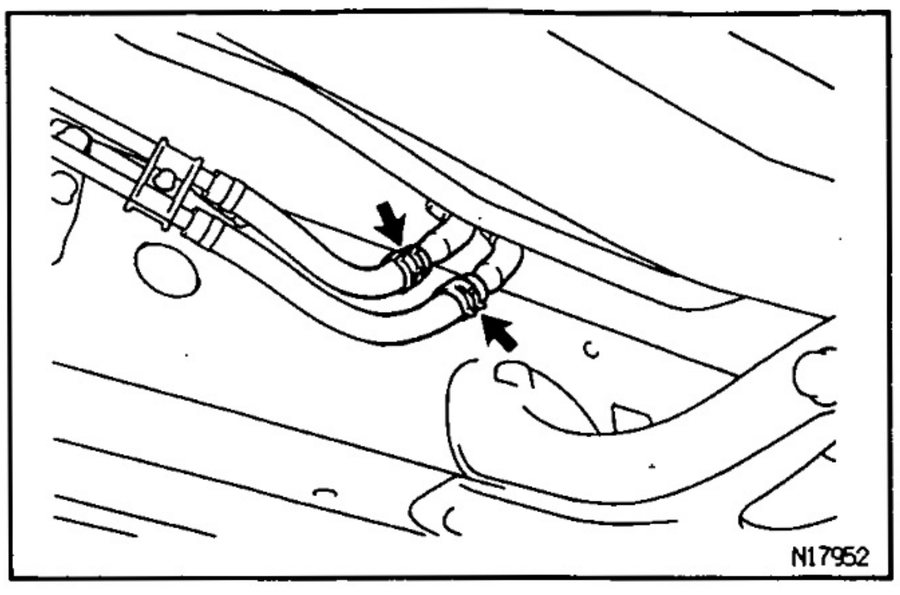

AC2U9-01

REAR HEATER UNIT REMOVAL

1. **DRAIN ENGINE COOLANT FROM REDIATOR**
   REMOVAL HINT: It is not necessary to drain out all coolant.
2. **DISCONNECT WATER HOSES**

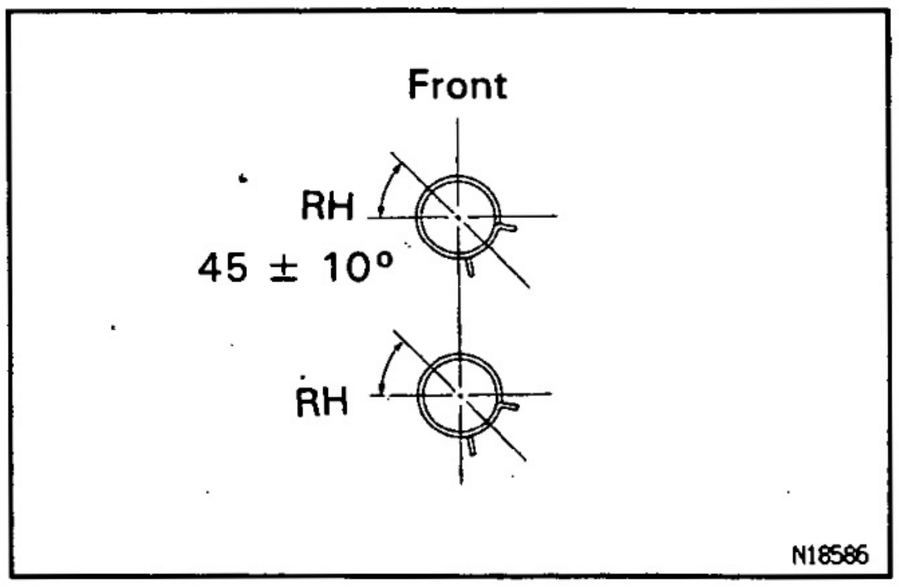

INSTALLATION HINT: Install the hose clip in a position, as shown in the illustration.

3. **REMOVE THESE PARTS:**
(a) Cowl side trim
(b) Front door scuff plates LH, RH
(c) Rear door scuff plates LH, RH
(d) Center pillar garnish LH, RH
(e) Front seats
(f) Upper console cover
(g) Upper console panel
(h) Lower console panel
(i) Rear console box cover
(j) Rear console box cover
(k) Rear heater control assembly

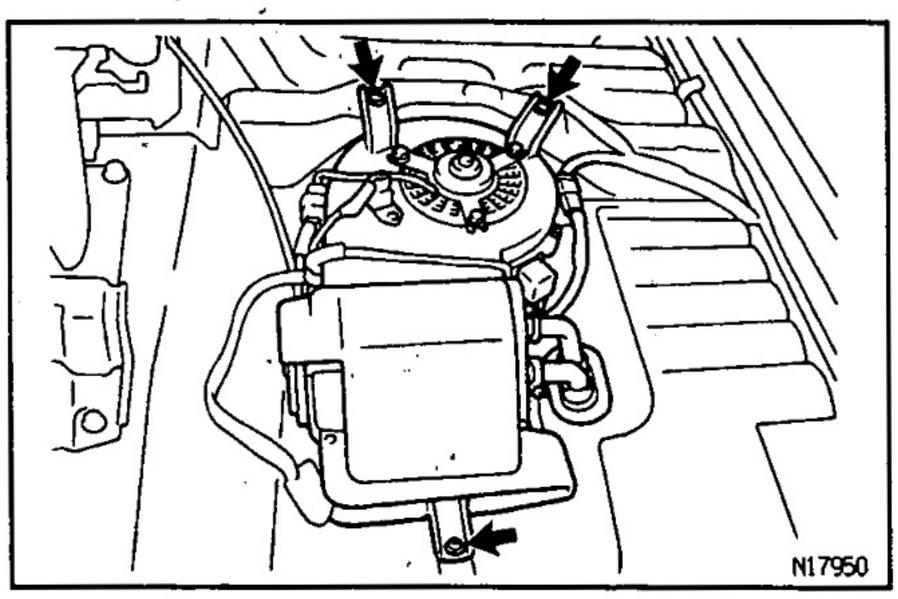

4. **REMOVE REAR HEATER UNIT**
(a) Slide the floor carpet backward.
(b) Disconnect the connector.
(c) Remove the bolt and rear heater duct.
(d) Remove the 3 screws and rear heater unit.

AC

AC2UA-01

REAR HEATER UNIT DISASSEMBLY

1. **REMOVE THESE PARTS:**
(a) Blower resistor
(b) Rear heater relay
(c) Wire harness

2. REMOVE HEATER RADIATOR

(a) Remove the 2 screws and pull out the heater radiator.

(b) Remove the screw and heater piping clamp.

(c) Remove the 2 screws and heater radiator pipes.

3. SEPARATE HEATER CASES

Remove the 5 screws and 4 clips and separate the heater cases.

4. REMOVE BLOWER MOTOR

(a) Remove the 3 screws and motor.

(b) Remove the nut and blower fan.

AC2UB–01

REAR HEATER UNIT ASSEMBLY

Assembly is in the reverse order of disassembly.

AC2UC–01

REAR HEATER UNIT INSTALLATION

Installation is in the reverse order of removal.

BLOWER UNIT

AC2UD–01

COMPONENTS

N19494 N14183

*: Substitution part (Only in time of installation)

Z18584

AC2UE–02

BLOWER UNIT REMOVAL

1. **REMOVE FRONT COOLING UNIT**
   (See page AC–32)
2. **REMOVE BLOWER UNIT**

(a) Disconnect the connector from the blower motor.

(b) Disconnect the air inlet damper control cable from the blower unit.

INSTALLATION HINT: For installing the control cable, refer to "A/C CONTROL CABLES ADJUSTMENT" on page AC–82.

(c) Remove the nut, bolt and blower unit.

AC2UF–01

BLOWER UNIT DISASSEMBLY

REMOVE BLOWER MOTOR

Remove the 3 screws and blower motor.

AC2UG–01

BLOWER UNIT ASSEMBLY

Assembly is in the reverse order of disassembly.

AC2UH–01

BLOWER UNIT INSTALLATION

Installation is in the reverse order of removal.

AC

COMPRESSOR

AC2UJ-01

ON–VEHICLE INSPECTION

Magnetic Clutch:

1. **MAKE THESE VISUAL CHECKS:**

(a) Leakage of grease from the clutch bearing.

(b) Signs of oil on the pressure plate or rotor.
Repair or replace, as necessary.

2. **INSPECT MAGNETIC CLUTCH BEARING FOR NOISE**

(a) Start engine.

(b) Check for abnormal noise from near the compressor when the A/C switch is OFF.
If abnormal noise is being emitted, replace the magnetic clutch.

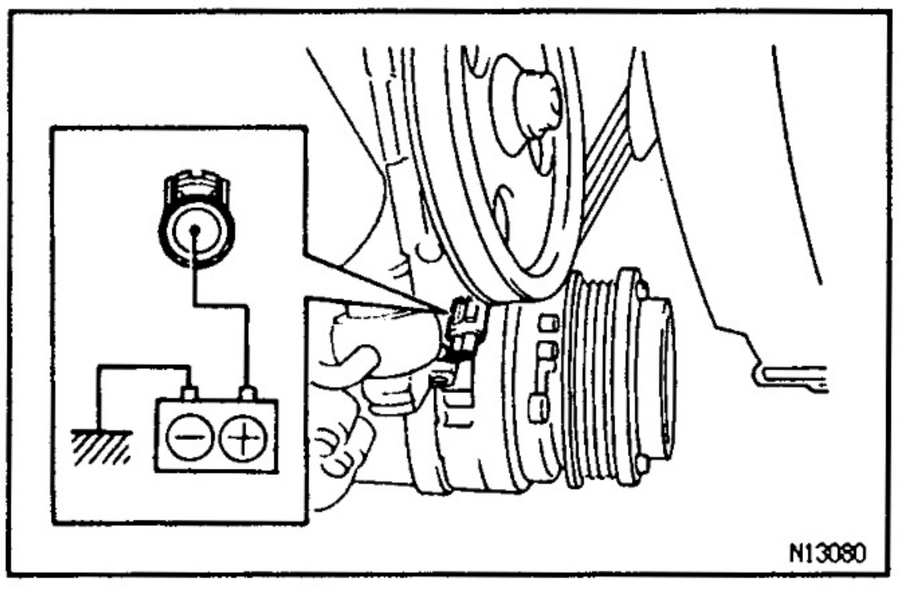

3. **INSPECT MAGNETIC CLUTCH**

(a) Disconnect the connector from the magnetic clutch.

(b) Connect the positive (+) lead from the battery to the terminal on the magnetic clutch connector and the negative (–) lead to the body ground.

(c) Check that the magnetic clutch is energized.
If operation is not as specified, replace the magnetic clutch.

Compressor:

1. **INSTALL MANIFOLD GAUGE SET**
(See page AC–9)

2. **START ENGINE**

3. **INSPECT COMPRESSOR FOR METALLIC SOUND**
Check that there is a metallic sound from the compressor when the A/C switch is turned on.
If metallic sound is heard, replace the compressor assembly.

4. **INSPECT PRESSURE OF REFRIGERATION SYSTEM**
See " REFRIGERANT SYSTEM INSPECTION WITH MANIFOLD GAUGE SET" on page AC–16.

5. **STOP ENGINE**

6. **INSPECT VISUALLY FOR LEAKAGE OF REFRIGERANT FROM SAFETY SEAL**
Using a gas leak detector, check for leakage of refrigerant.
If there is any leakage, replace the shaft seal.

AC2UK-01

COMPRESSOR REMOVAL

3L

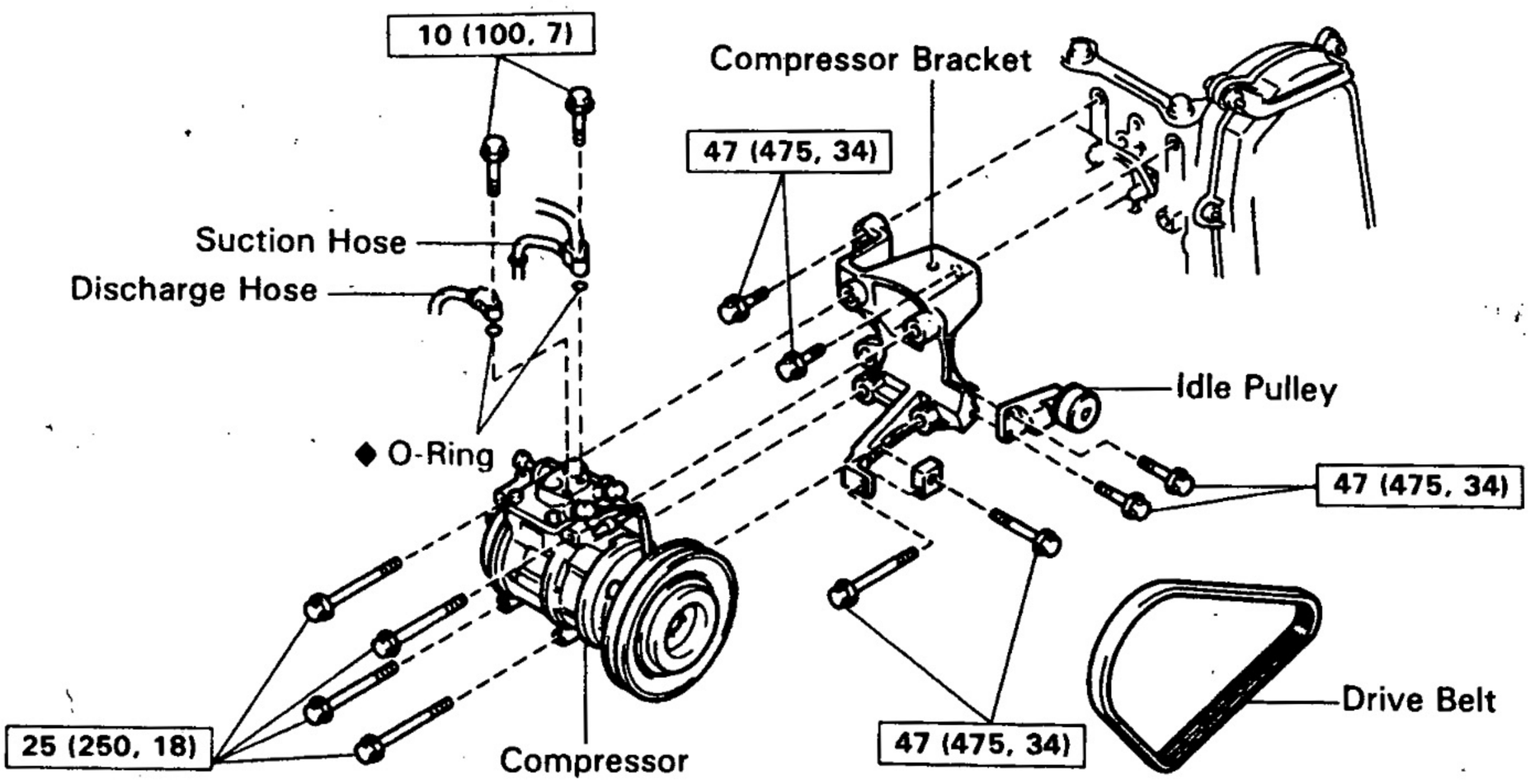

N·m (kgf·cm, ft·lbf) : Specified torque

◆ Non-reusable part

N19503

1KZ-T, 1KZ-TE

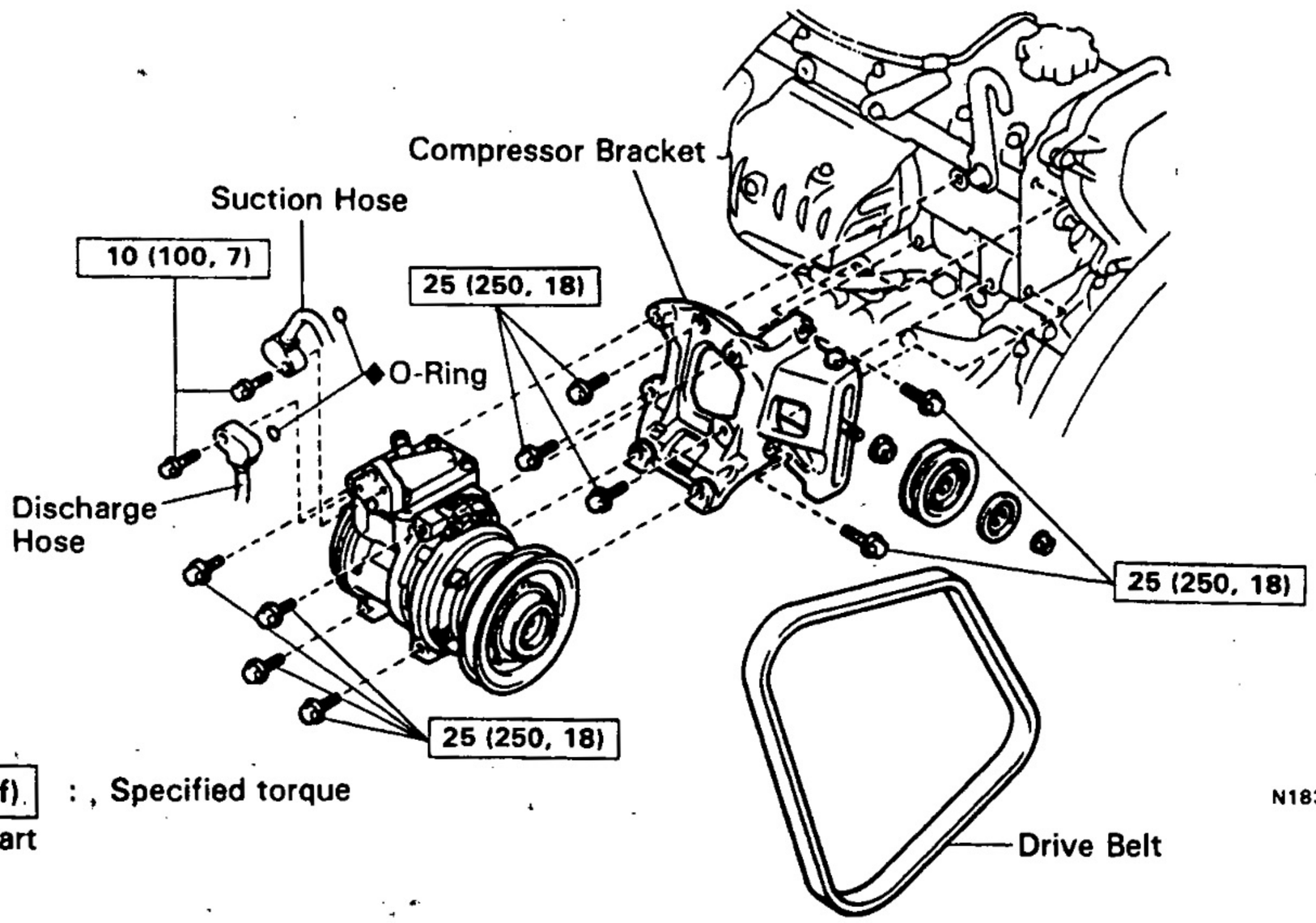

N·m (kgf·cm, ft·lbf) : , Specified torque

◆ Non-reusable part

N18342

Z18563

AC

3RZ-F, 3RZ-FE

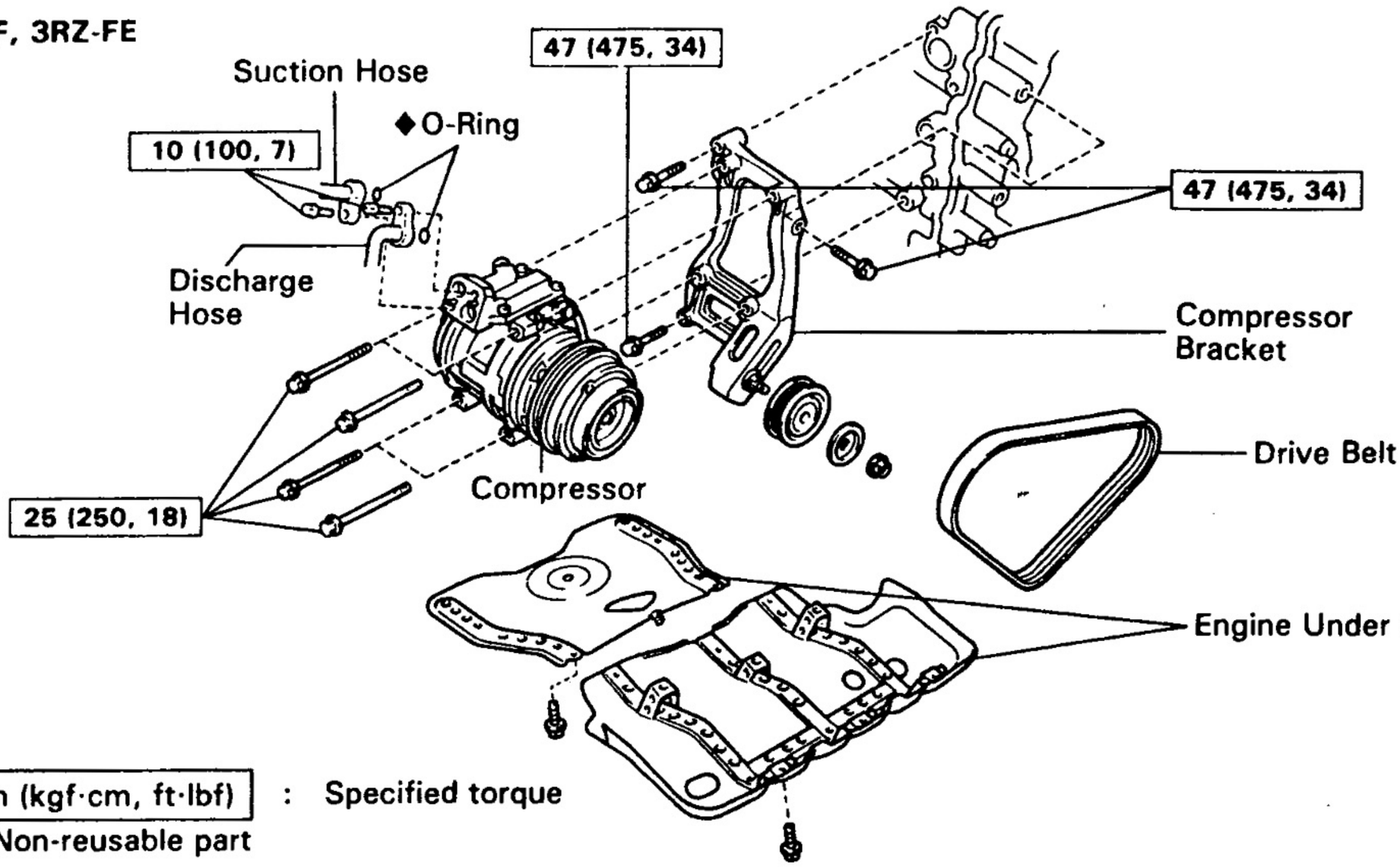

N·m (kgf·cm, ft·lbf) : Specified torque
◆ Non-reusable part

N17876

Z18564

5VZ-FE

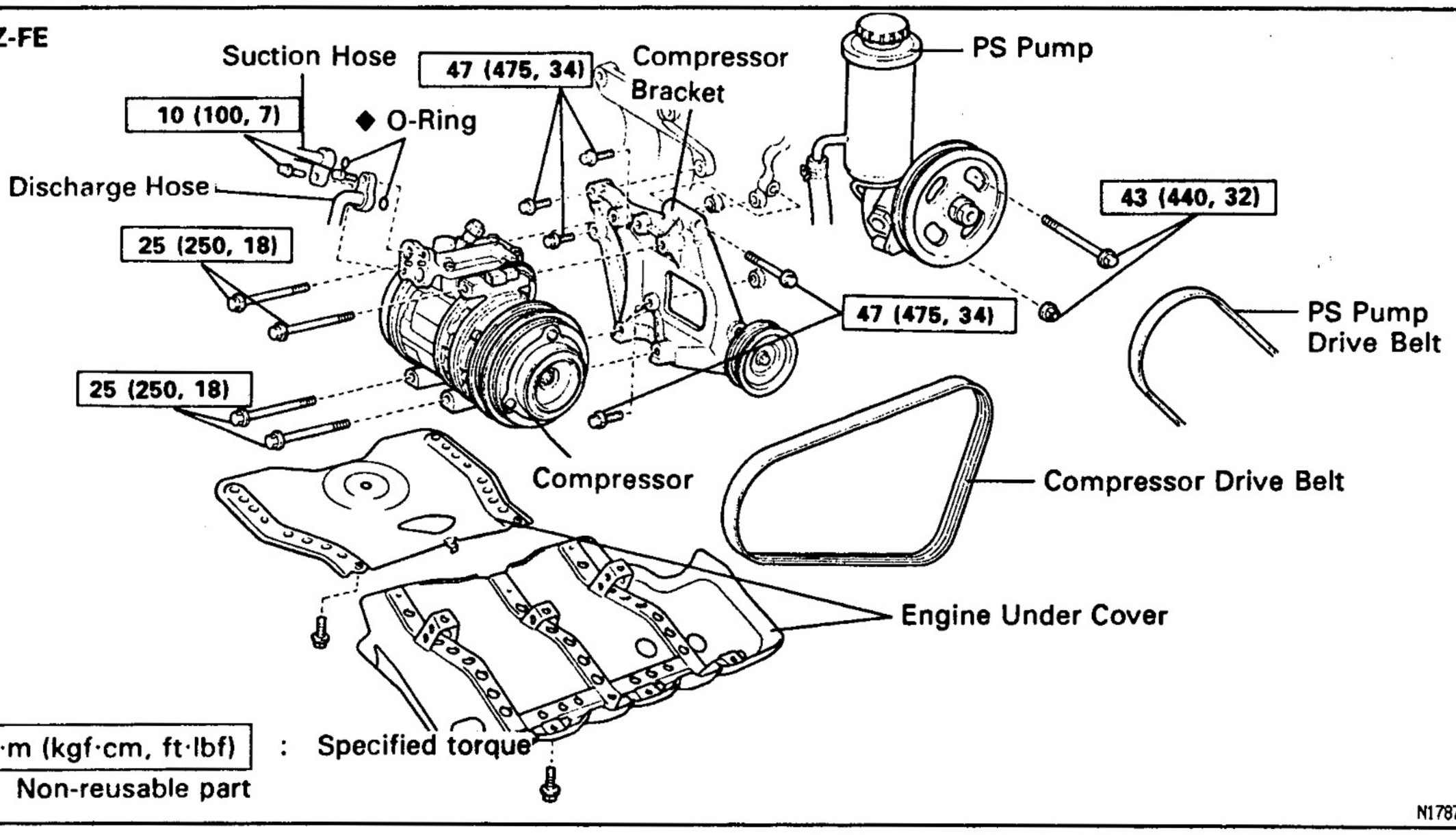

N·m (kgf·cm, ft·lbf) : Specified torque
◆ Non-reusable part

N17875

1. RUN ENGINE AT IDLE SPEED WITH A/C ON FOR APPROX. 10 MINUTES WITH A/C ON
2. STOP ENGINE
3. DISCONNECT NEGATIVE (−) TERMINAL CABLE FROM BATTERY
4. DISCHARGE REFRIGERANT FROM REFRIGERATION SYSTEM

AC

5. **Except 1KZ–T and 1KZ–TE Engine Models:**
   REMOVE ENGINE UNDER COVER
6. **DISCONNECT DISCHARGE AND SUCTION HOSES**
   Remove the 2 bolts and disconnect the both hoses.
   NOTICE: Cap the open fitting immediately to keep moisture or dirt out of the system.
7. **REMOVE DRIVE BELT**
   (See page AC–23)
8. **5VZ–FE Engine Models:**
   REMOVE PS PUMP SET BOLTS
9. **REMOVE COMPRESSOR**
   (a) Disconnect the connector.
   (b) Remove the 4 bolts and compressor.

MAGNETIC CLUTCH DISASSEMBLY

AC3UL–01

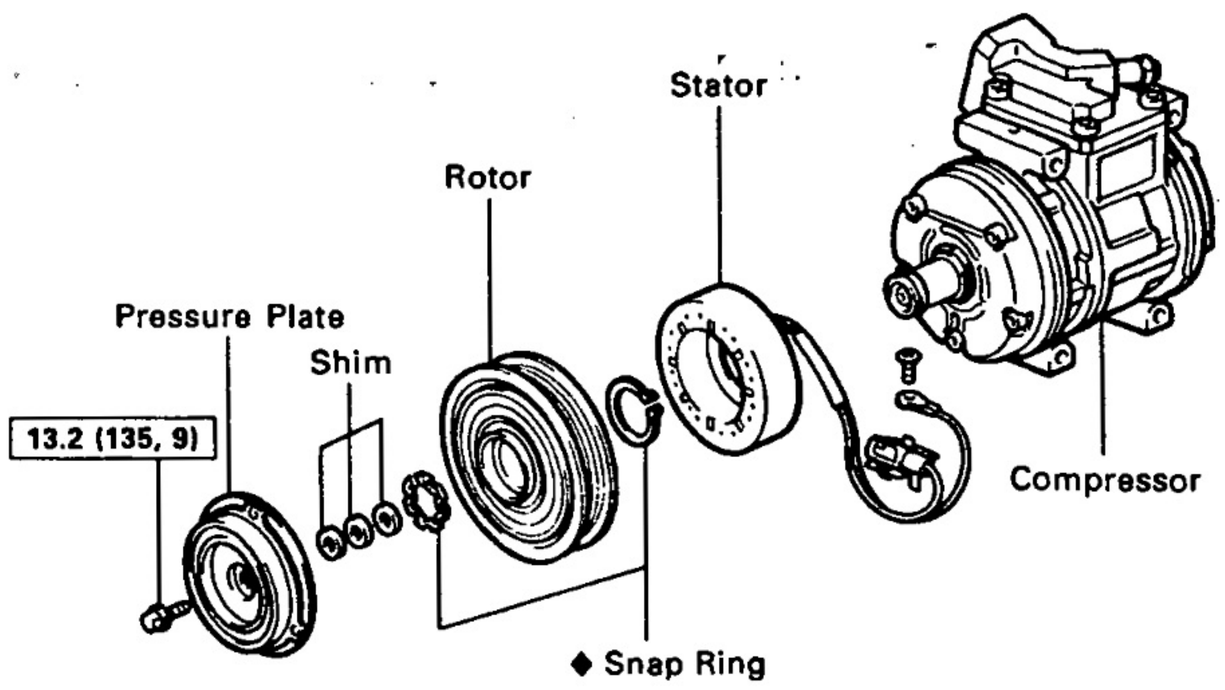

N·m (kgf·cm; ft·lbf) : Specified torque
◆ Non-reusable part

N12543

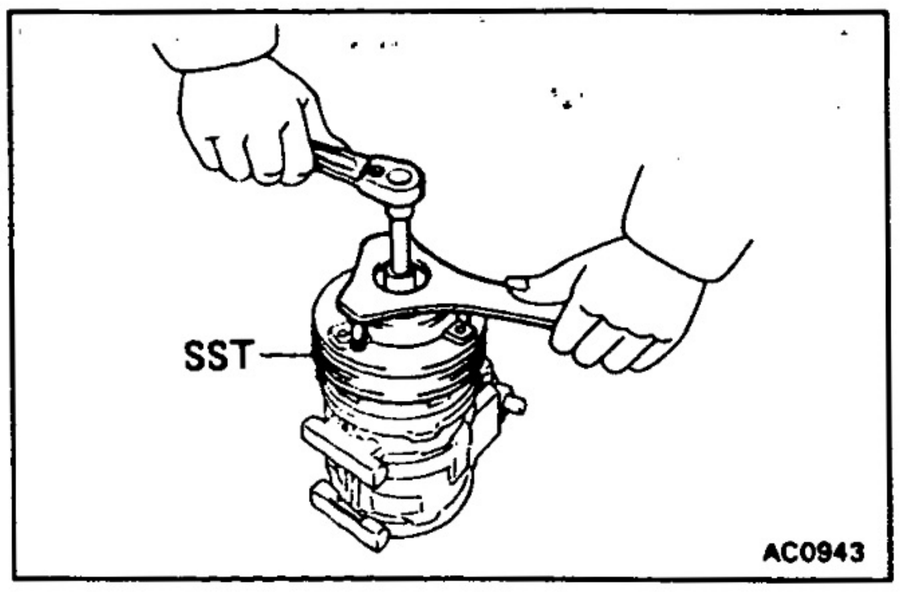

1. **REMOVE PRESSURE PLATE**
   (a) Using SST and a socket wrench, remove the shaft bolt.
   Torque: 13.2 N·m (135 kgf·cm, 9 ft·lbf)
   SST 07112–76060

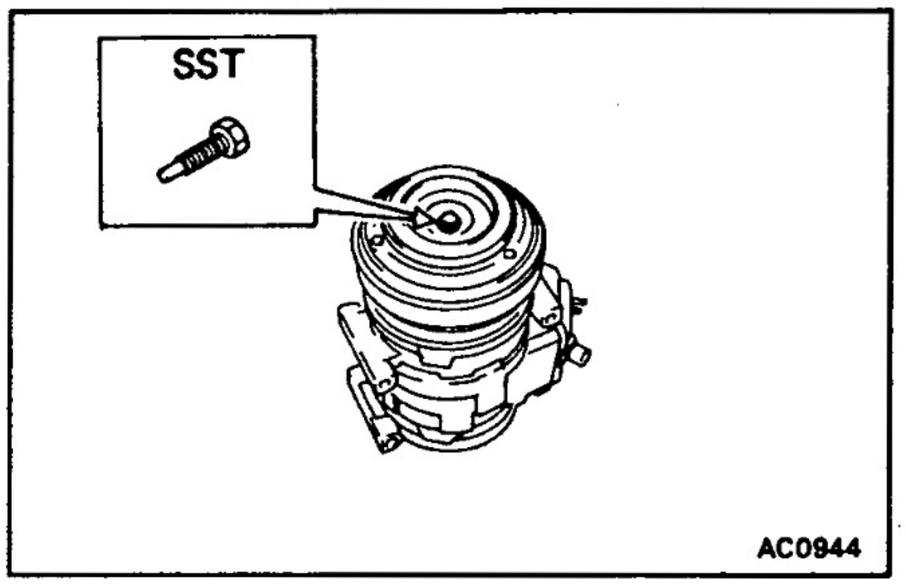

(b) Install a SST on the pressure plate.
SST 07112–66040

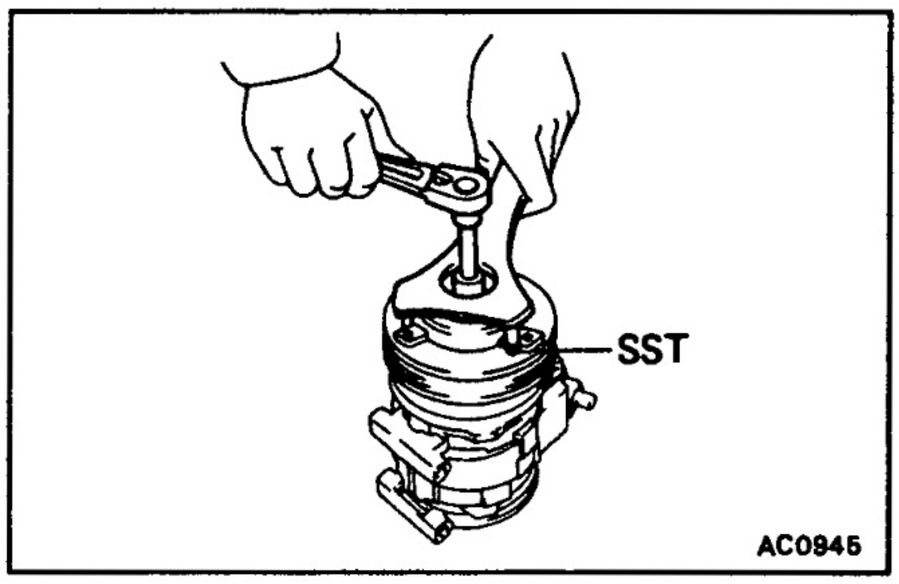

(c) Using SST and a socket wrench, remove the pressure plate.
SST 07112–66040, 07112–76060

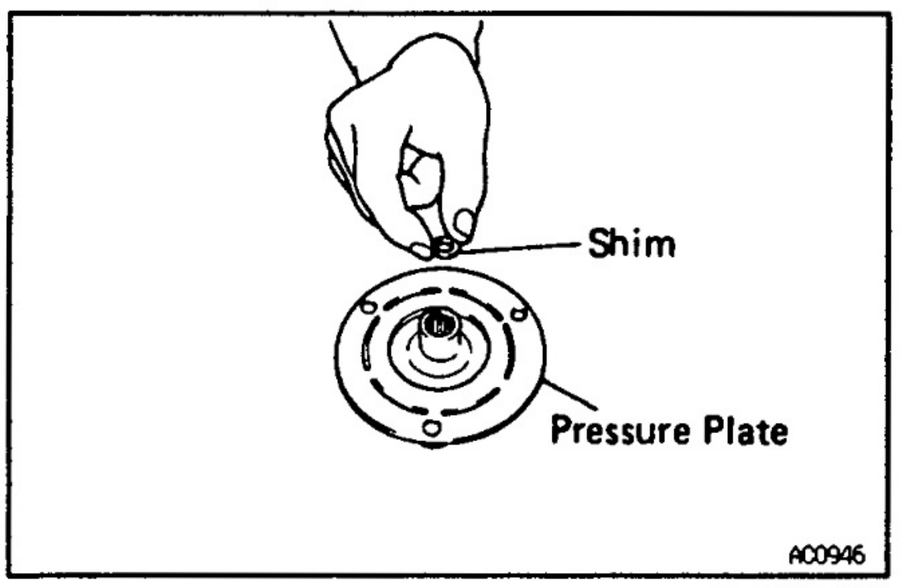

(d) Remove the shims from the pressure plate.

AC

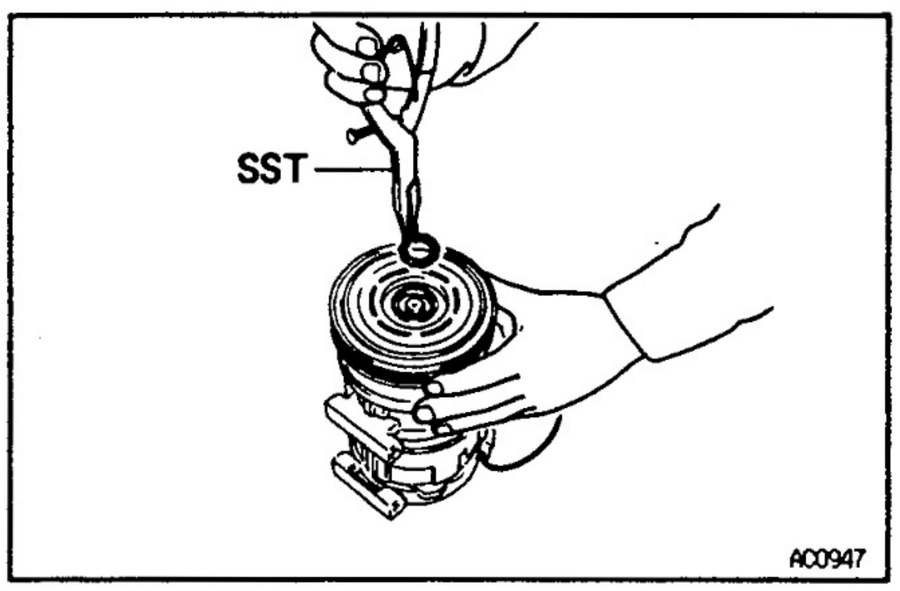

2. REMOVE ROTOR

(a) Using SST, remove the snap ring.
SST 07114–84020

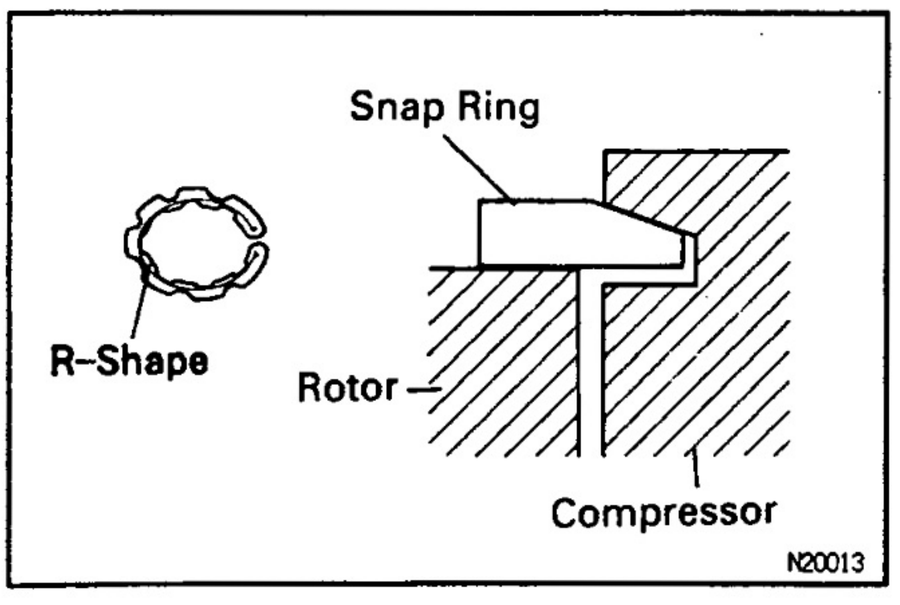

REASSEMBLY NOTICE: The snap ring should be installed so that its beveled side faces up.

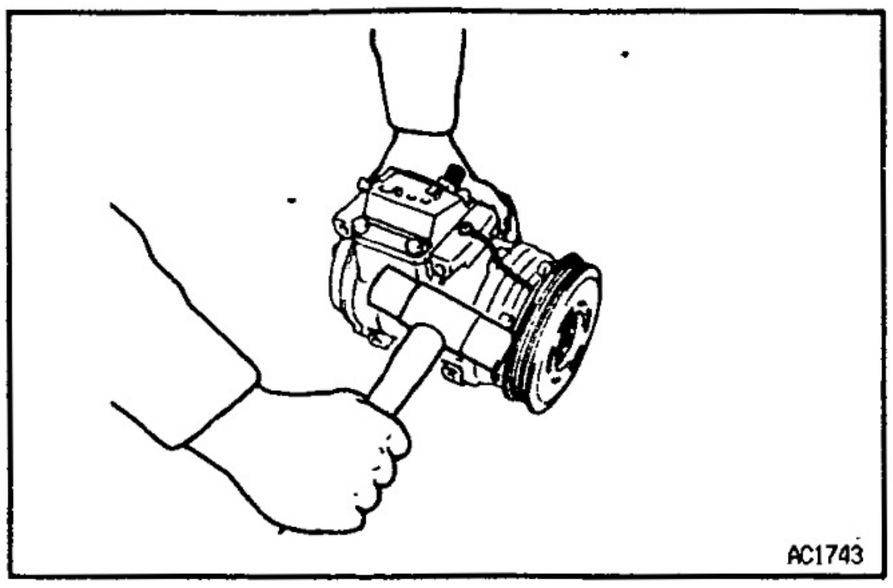

(b) Using a plastic hammer, tap the rotor off the shaft.
DISASSEMBLY NOTICE: Be careful not to damage the pulley when tapping on the rotor.

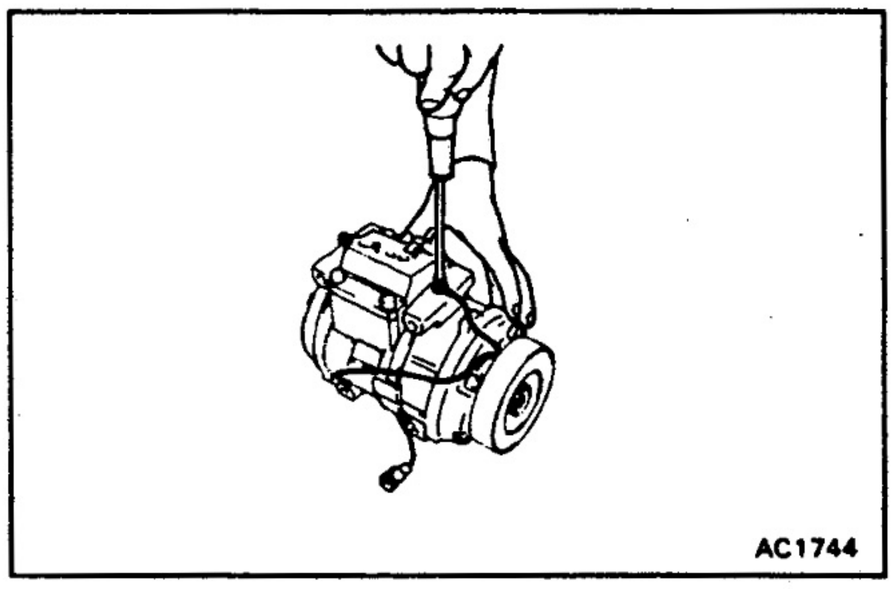

3. REMOVE STATOR

(a) Disconnect the stator lead wire from the compressor housing.

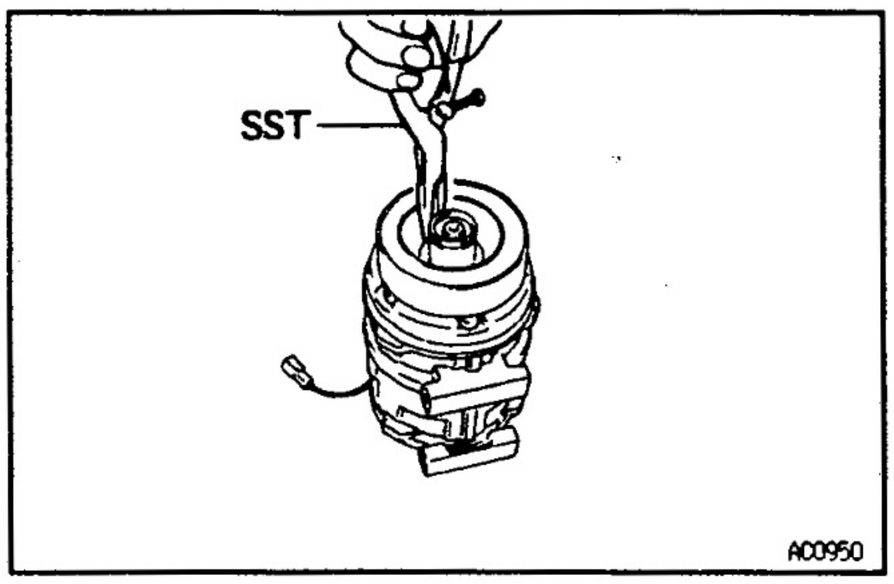

(b) Using SST, remove the snap ring.
SST 07114–84020

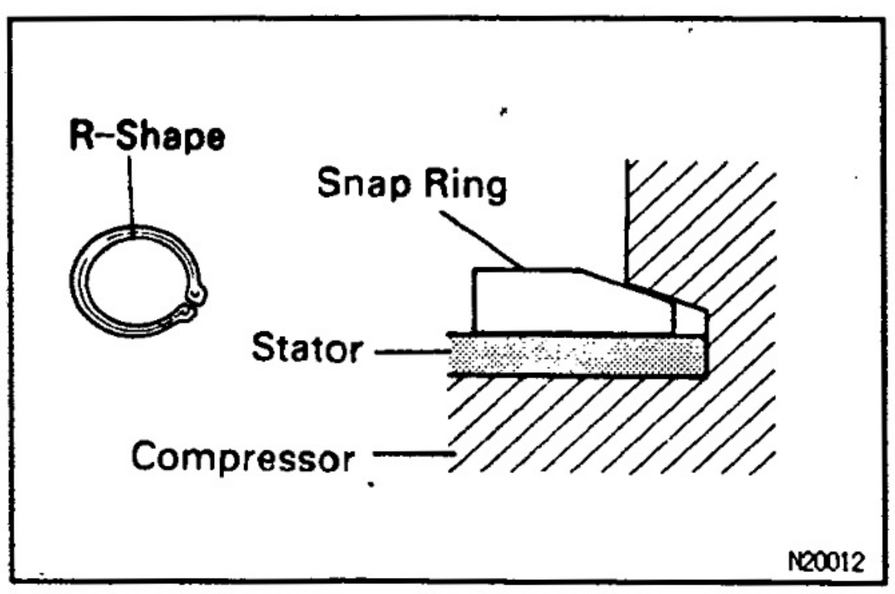

ASSEMBLY NOTICE: The snap ring should be installed so that its beveled side faces up.

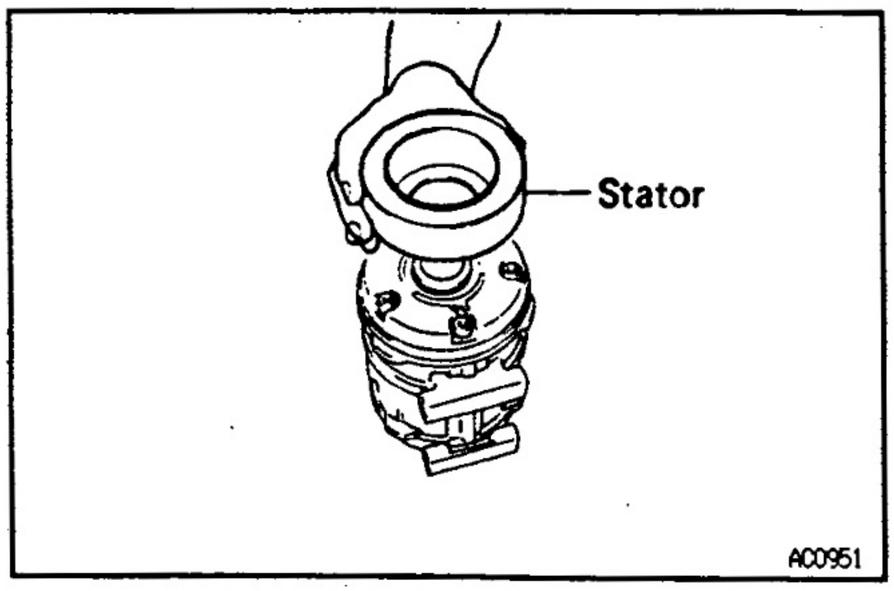

(c) Remove the stator.

AC

AC2UM-01

SHAFT SEAL REPLACEMENT

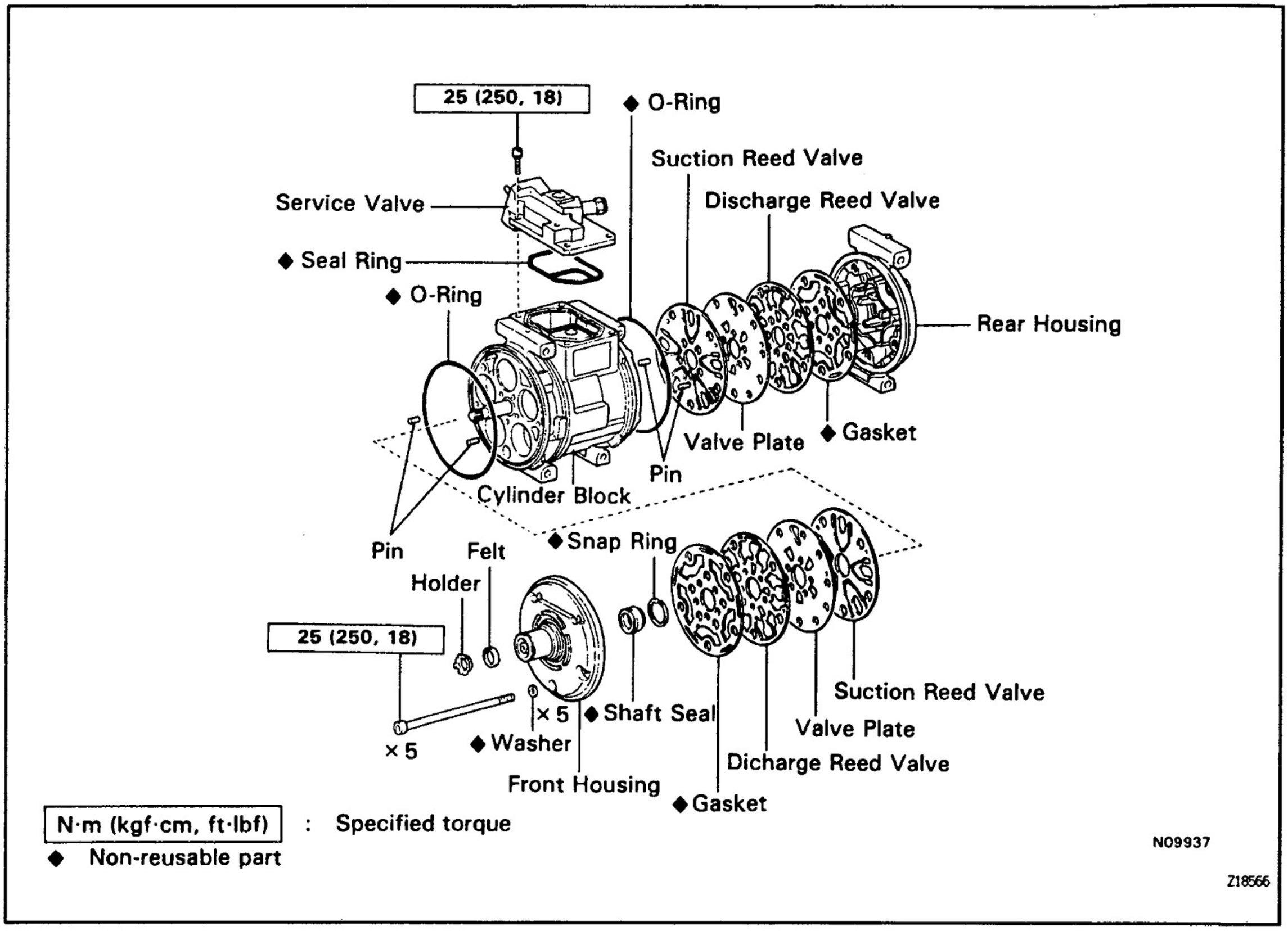

AC

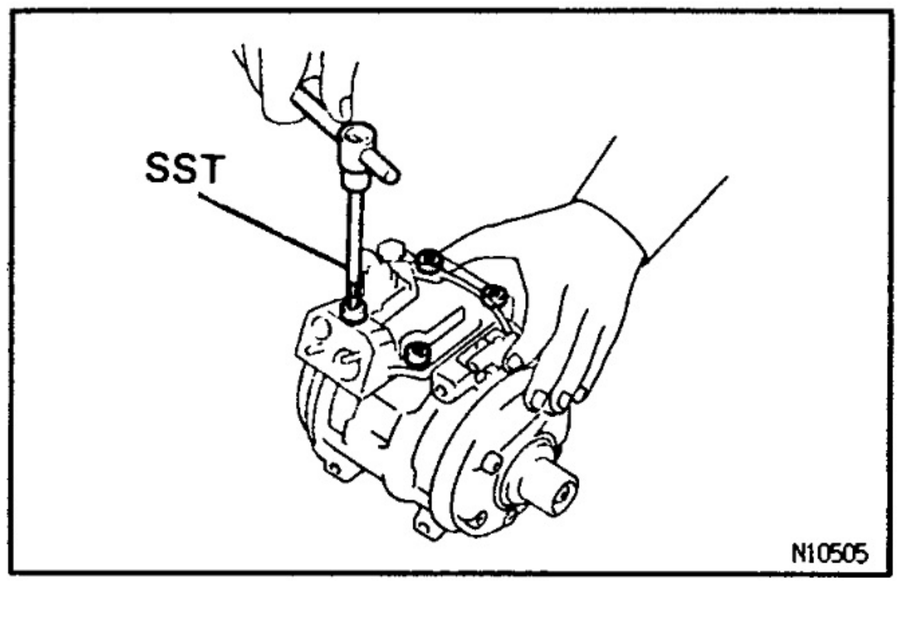

1. REMOVE SERVICE VALVE

(a) Using SST, remove the bolts holding the service valve.
SST 07110−61050

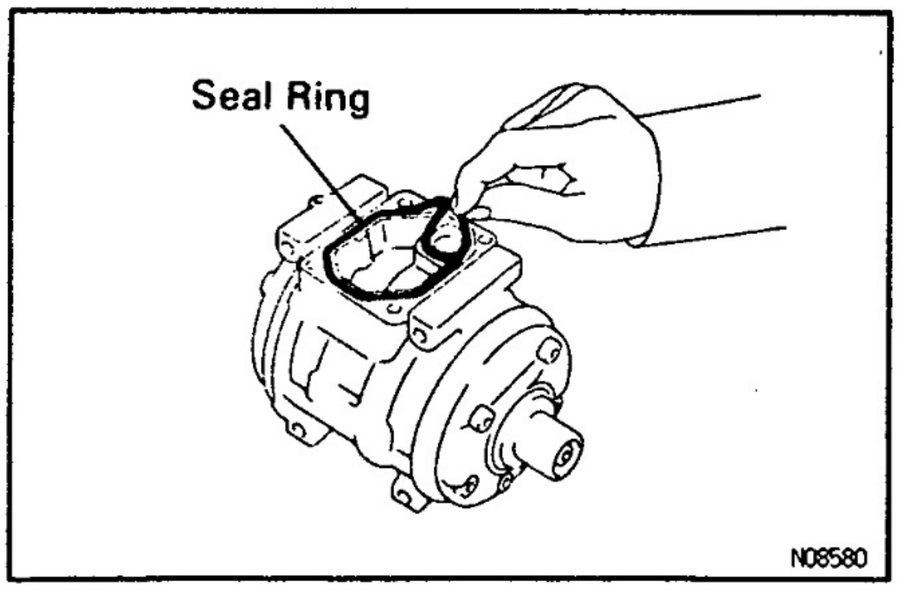

(b) Remove the seal ring from the cylinder block. Discard the seal ring.

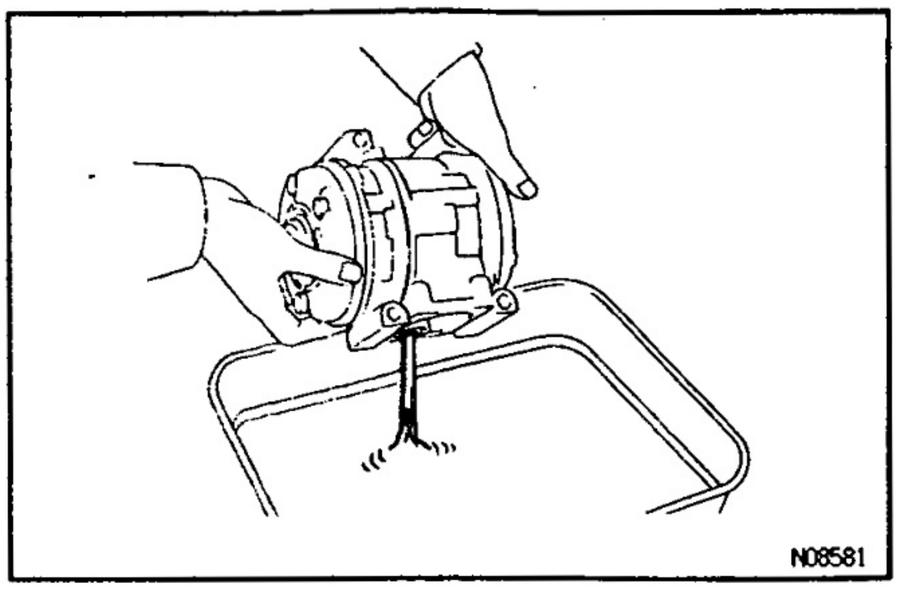

2. DRAIN COMPRESSOR OIL INTO MEASURING FLASK

Measure the quantity of drained oil because the same amount should be replaced later.

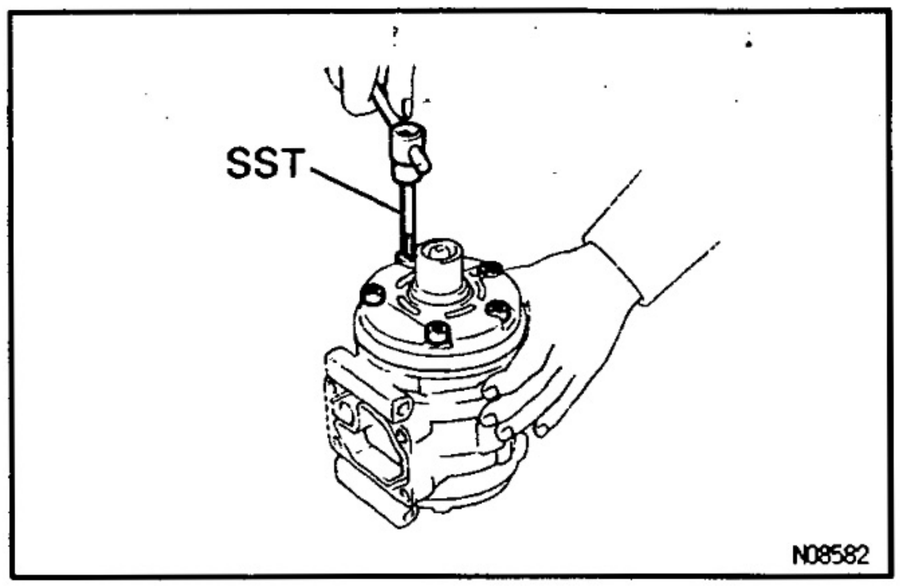

3. REMOVE FRONT HOUSING

(a) Using SST, remove the 5 through bolts.
SST 07110–61050
HINT: Do not reuse the 5 washers.

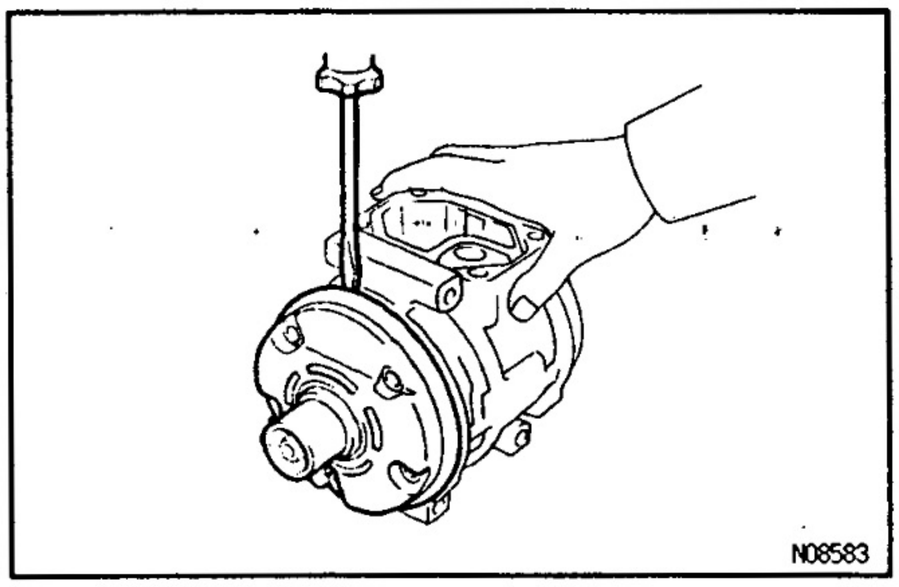

(b) Using a screwdriver, remove the front and rear housing.
NOTICE: Be careful not to scratch the sealing surface of the front housing.

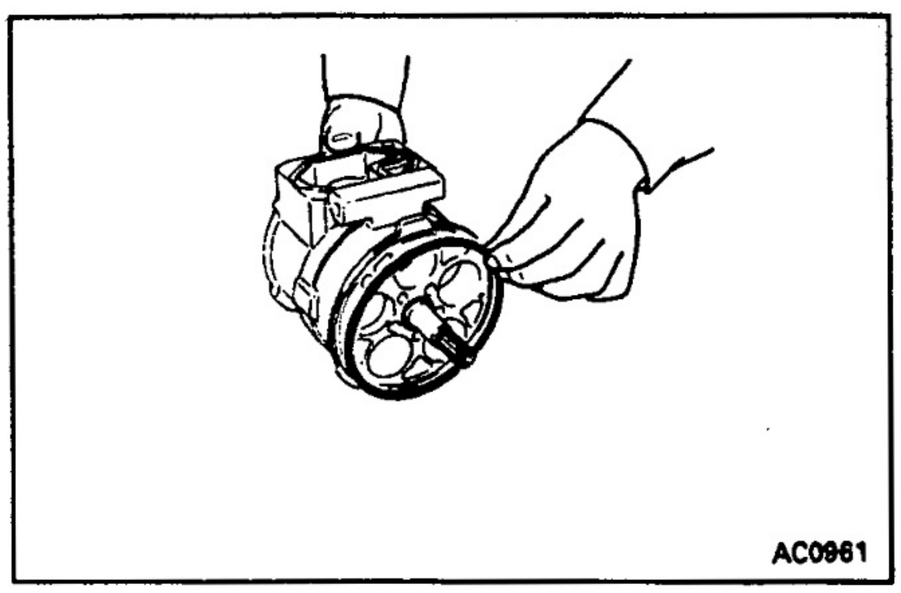

(c) Remove the front O–rings.
Discard the O–ring.

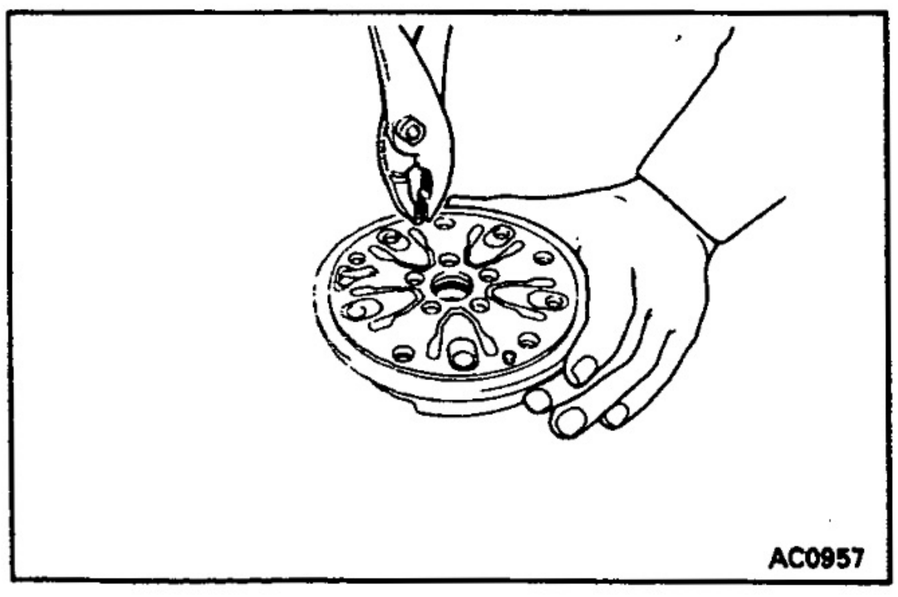

4. REMOVE 2 PINS FROM FRONT HOUSING

5. REMOVE THESE PARTS FROM FRONT HOUSING:

(a) Suction reed valve
(b) Valve plate
(c) Discharge reed valve
(d) Gasket

AC

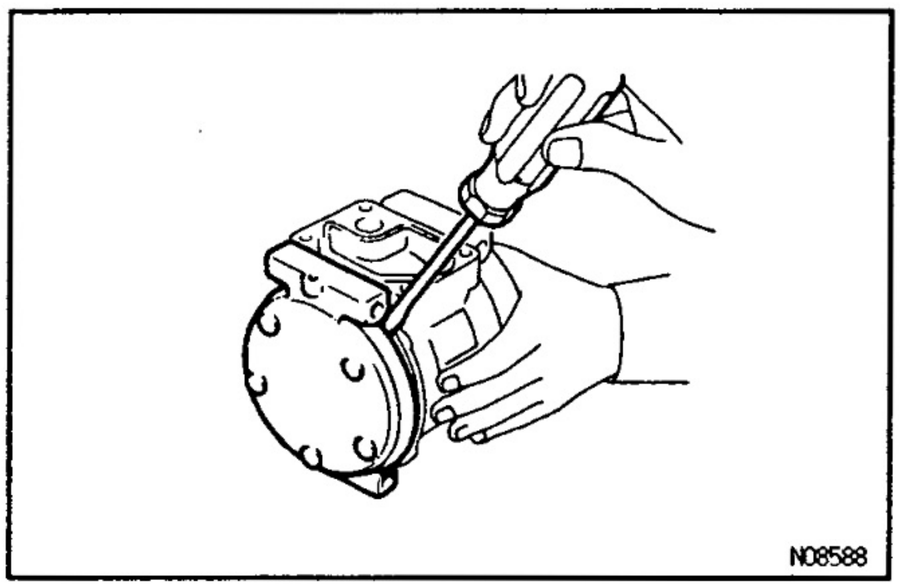

6. REMOVE REAR HOUSING

Using a screwdriver, remove the rear hosing.

NOTICE: Be careful not to scratch the sealing surface of the rear housing.

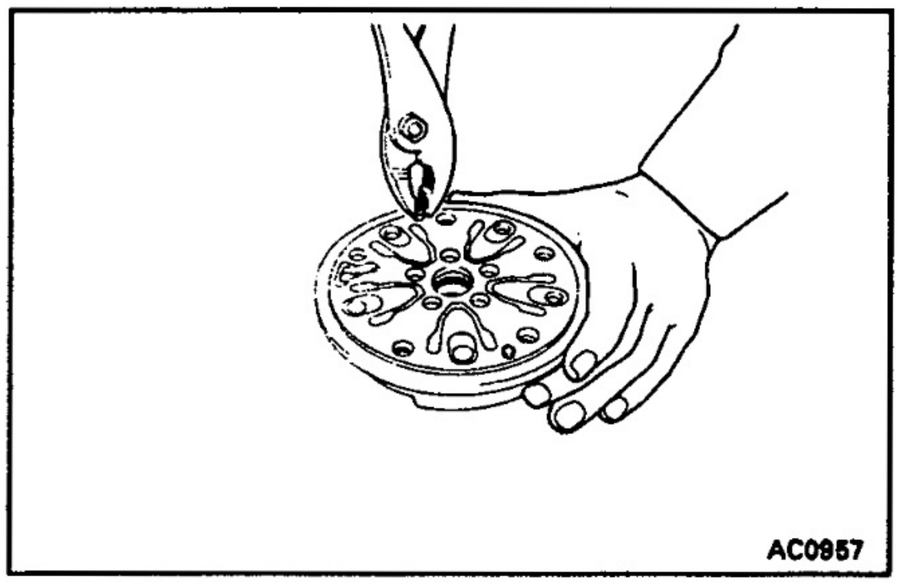

7. REMOVE 2 PINS FROM REAR HOUSING

8. REMOVE THESE PARTS FROM REAR HOUSING:

(a) Suction reed valve
(b) Valve plate
(c) Discharge reed valve
(d) Gasket

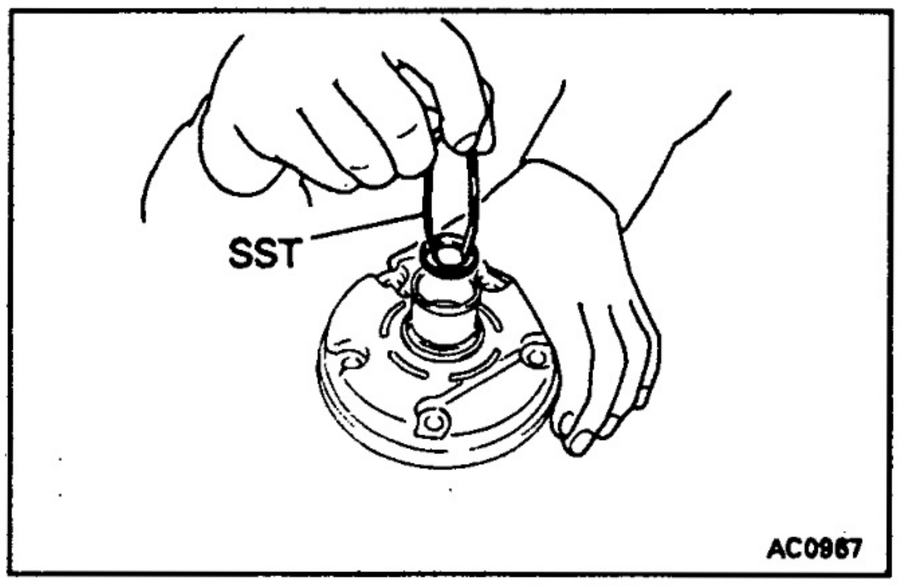

9. REMOVE FELT

(a) Set SST on the shaft.
SST 07112–15020
(b) Pull out the felt with felt holder of the front housing.

AC

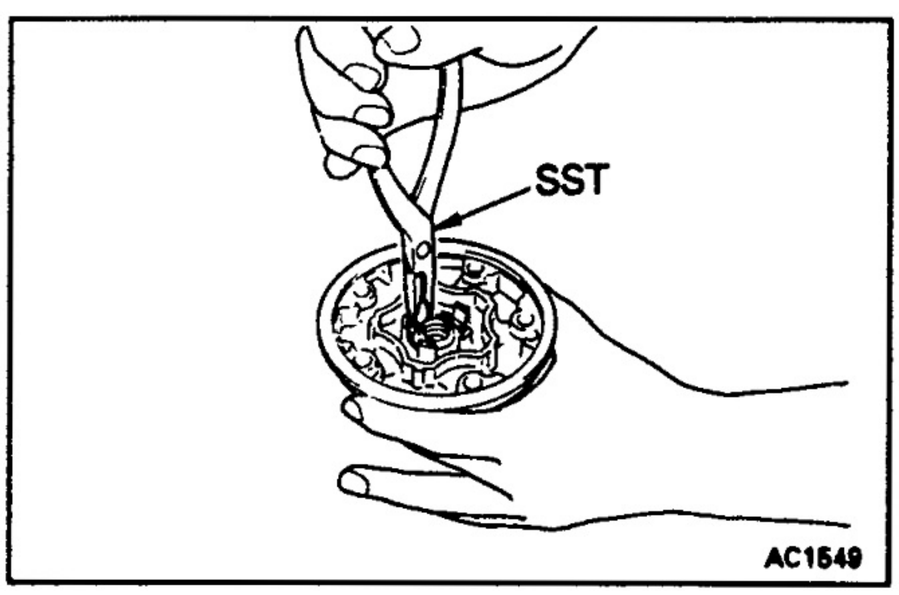

10. REMOVE SHAFT SEAL

(a) Using SST, remove the snap ring from the front housing.
SST 07114–87010

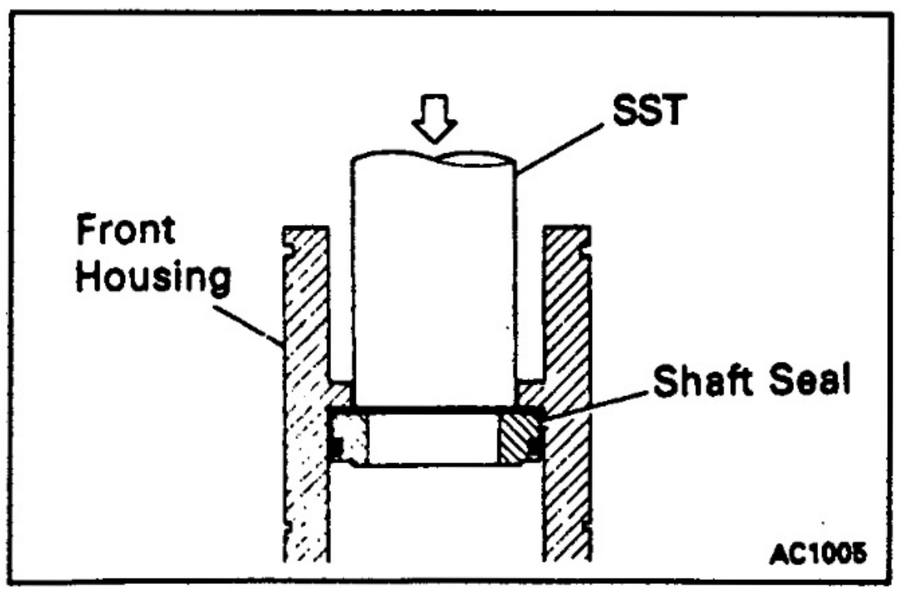

(b) Set SST on the shaft seal.
07112–85030

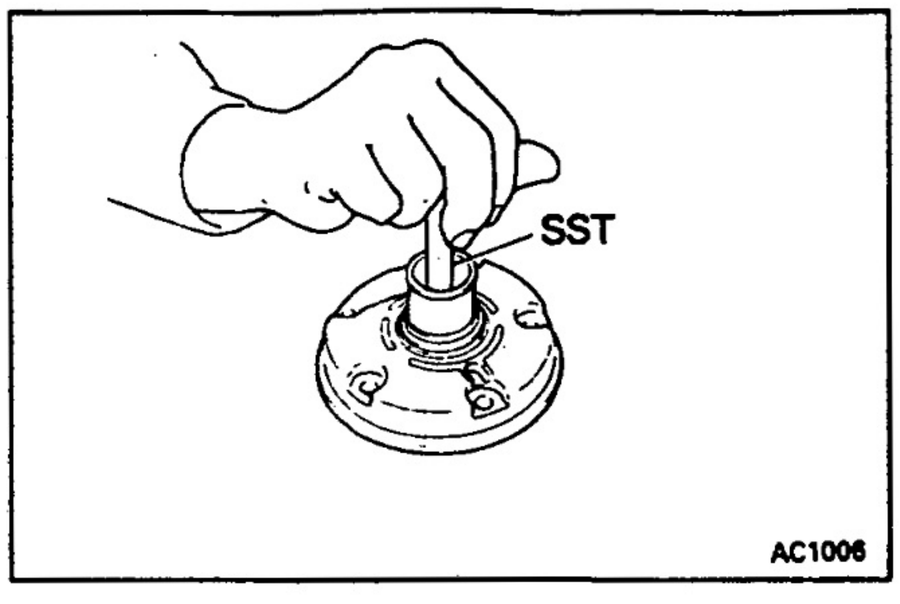

(c) Using SST, put the shaft seal out of the front housing.
SST 07112–85030

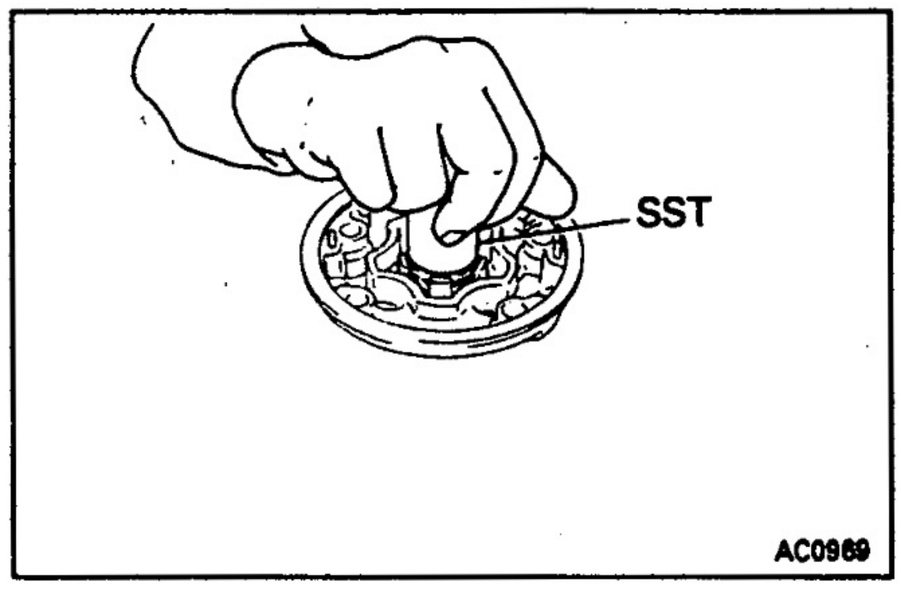

11. INSTALL NEW SHAFT SEAL

(a) Fit the new shaft seal onto SST, and install the shaft seal into the front housing.
SST 07112–85020
HINT: Clean up the surface of the shaft seal with compressor oil.

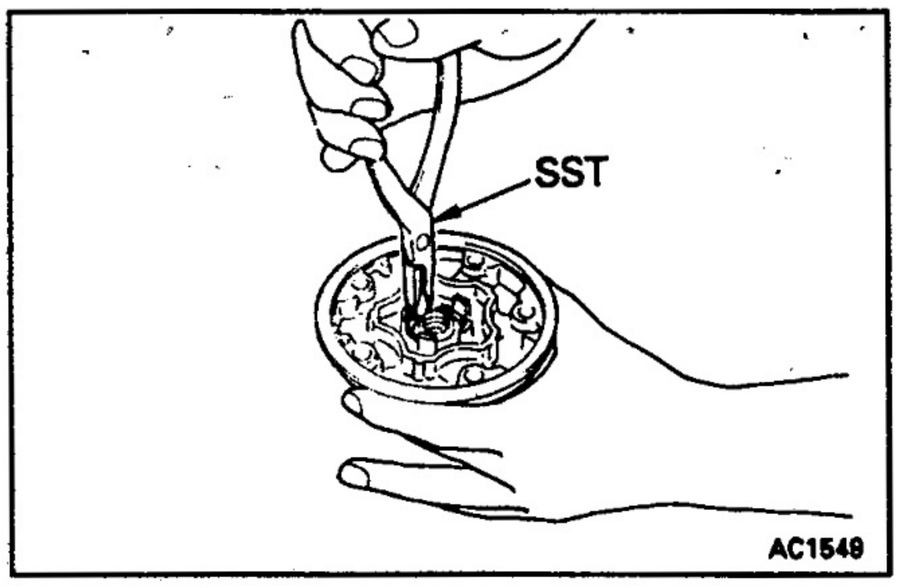

(b) Using SST, install the snap ring into the front housing.
SST 07114–84010

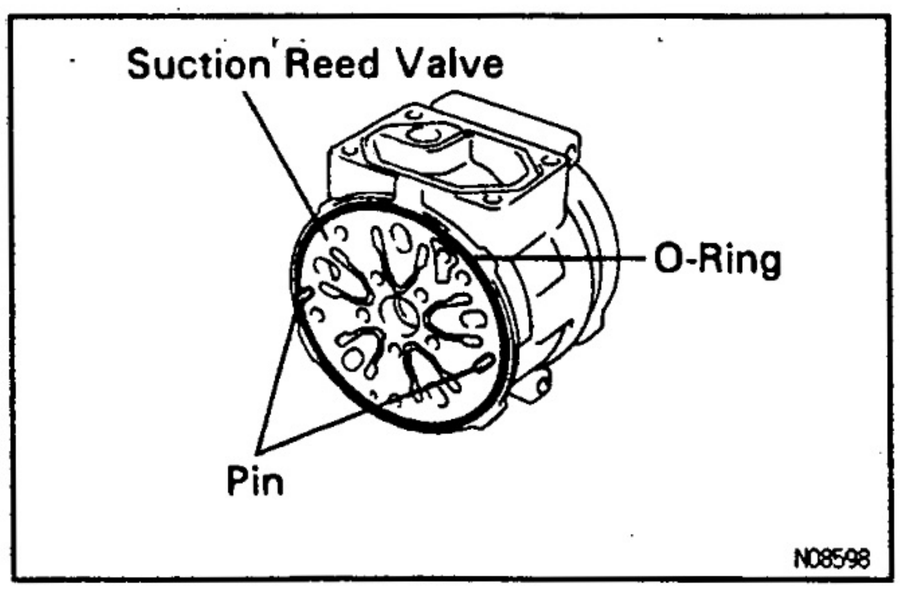

12. INSTALL REAR HOUSING

(a) Install 2 pins in the rear cylinder.

(b) Lubricate a new O–ring with compressor oil. Install the O–ring in the rear cylinder.

(c) Install the rear suction value over the pins on the rear cylinder.

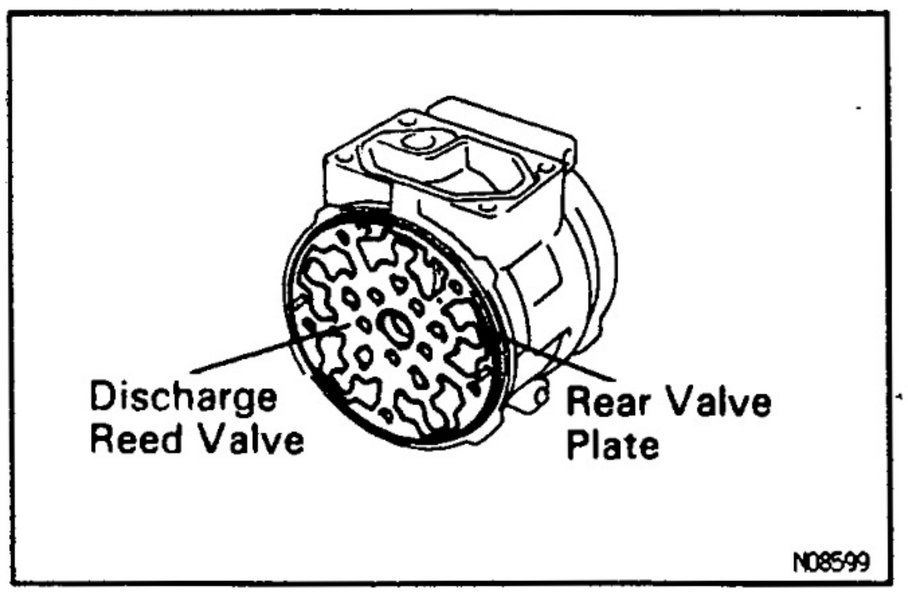

(d) Install the rear valve plate together with the discharge valve over the pins on the rear cylinder.
HINT: The rear valve plate is marked with an "R".

AC

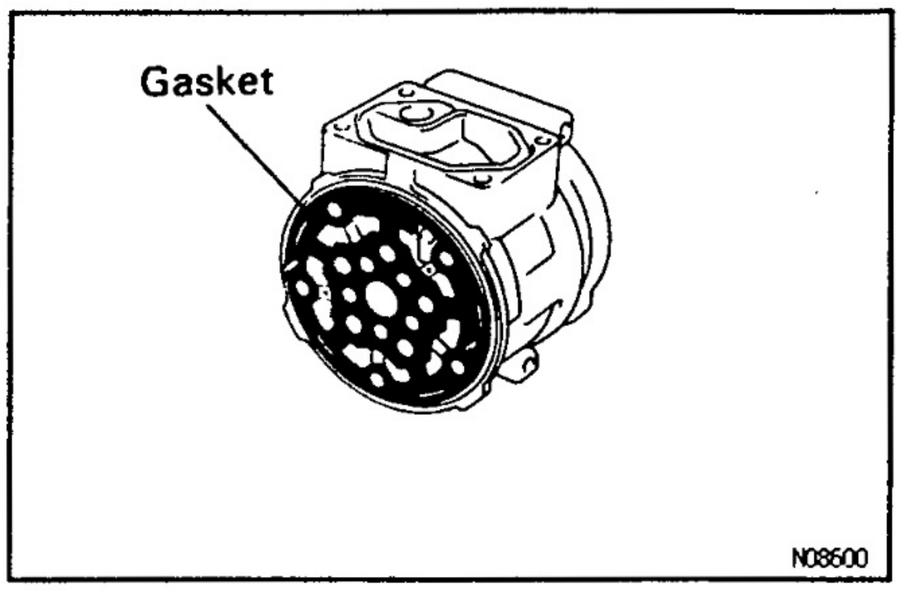

(e) Lubricate a new gasket with compressor oil and install the gasket on the valve plate.

(f) Install the rear housing on the rear cylinder.

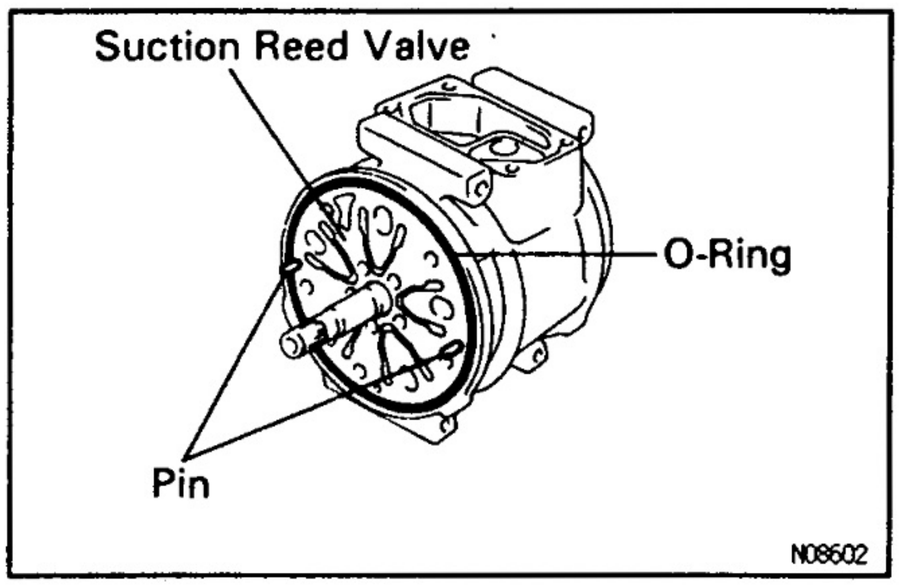

13. INSTALL FRONT HOUSING

(a) Install the 2 pins in the front cylinder.

(b) Lubricate a new O–ring with compressor oil and install the O–ring in the front housing.

(c) Install the front suction value over the pins on the front cylinder.

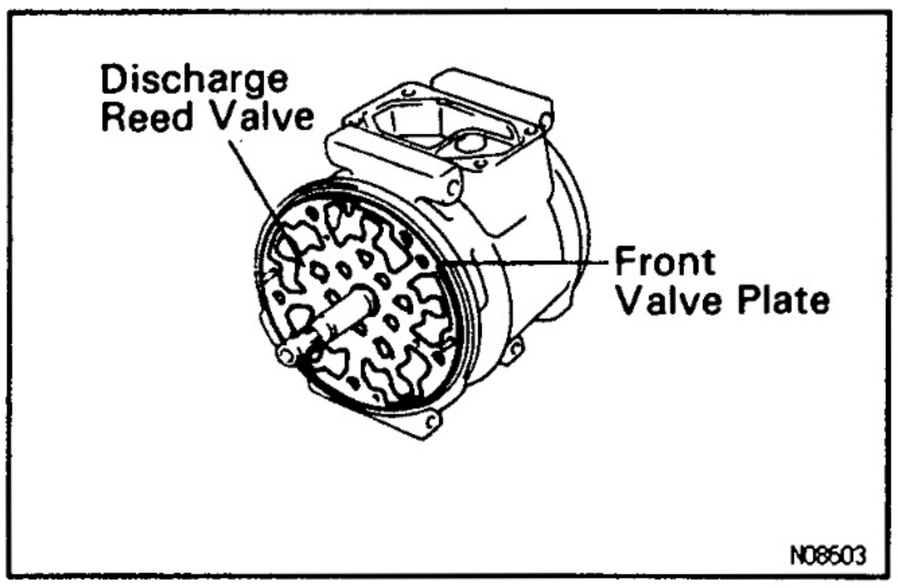

(d) Install the front valve plate together with the discharge valve over the pins on the front cylinder.
HINT: The front valve plate is marked with an "F".

AC

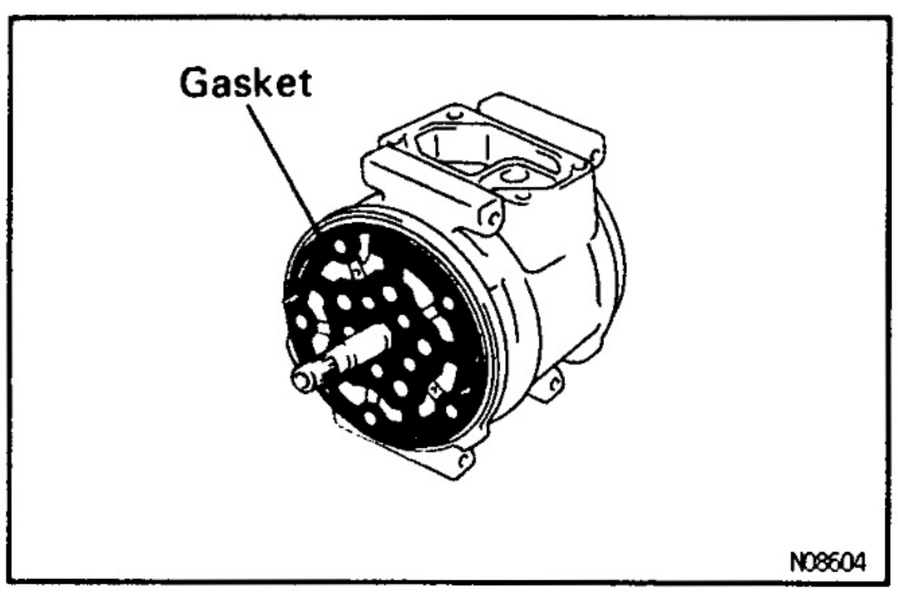

(e) Lubricate a new gasket with compressor oil and install the gasket on the valve plate.

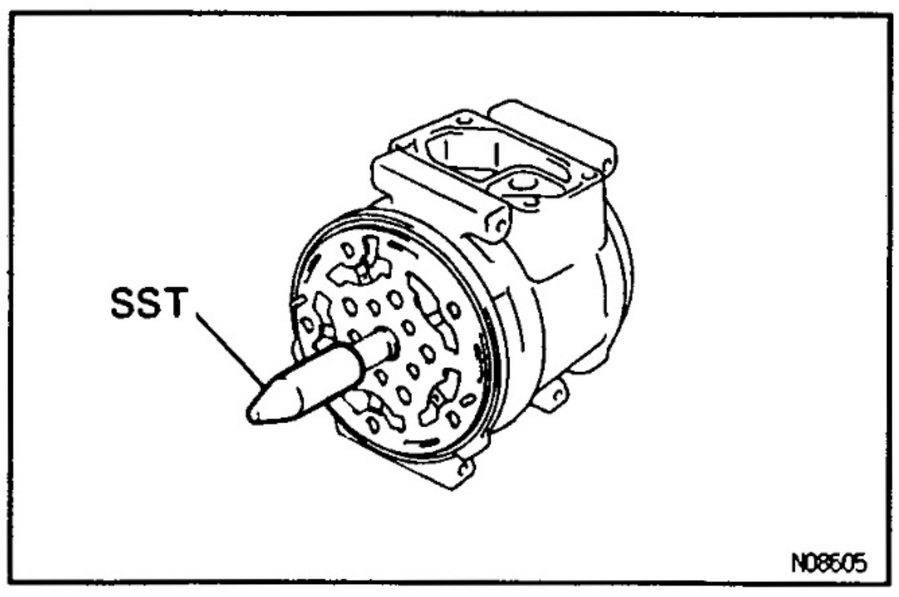

(f) Set SST on the shaft to protect the lip seal.
SST 07112–85010

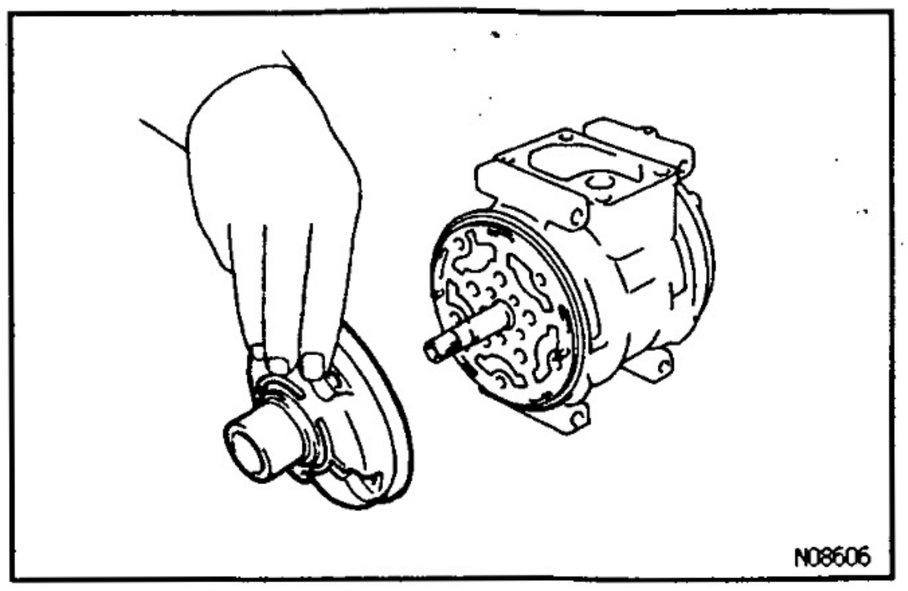

(g) Install the front housing on the front cylinder.
(h) Pull out the SST from the front housing.

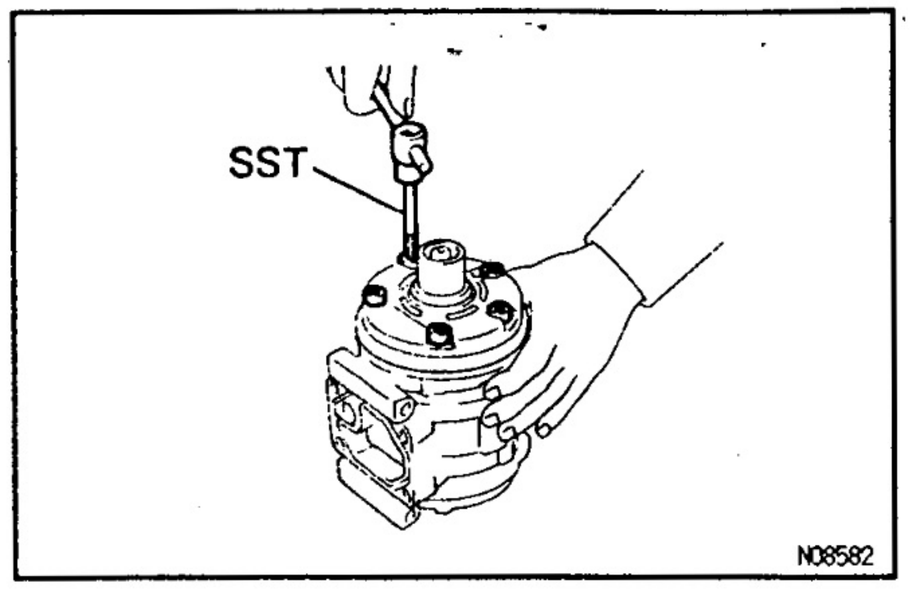

14. TIGHTEN 5 THROUGH BOLTS

Using SST and a torque wrench, gradually tighten the 5 through bolts in 2 or 3 passes.
SST 07110–61050
Torque: 25 N·m (250 kgf·cm, 18 ft·lbf)

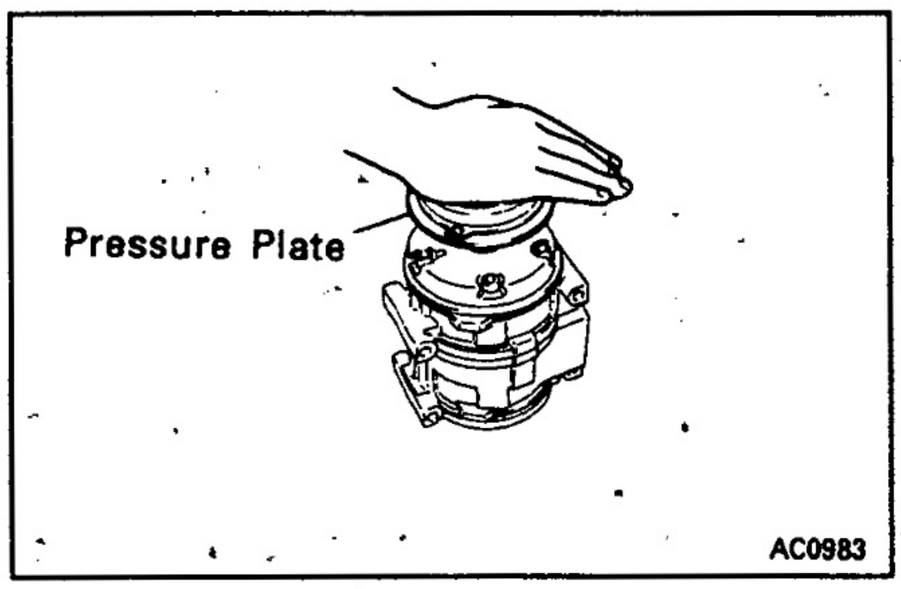

15. INSTALL FELT

(a) Set the felt with felt holder to the front housing.
(b) Using pressure plate of magnetic clutch, install the felt.

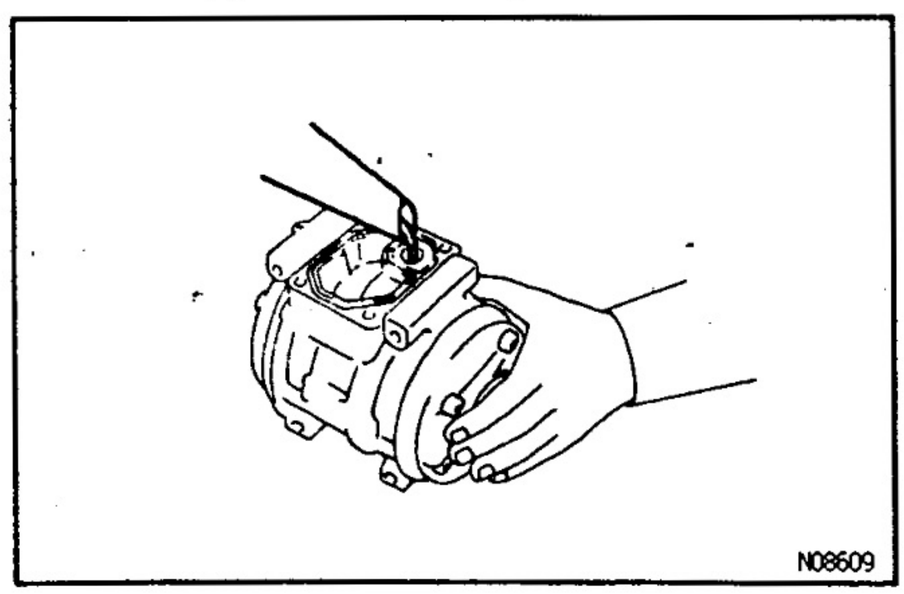

16. POUR COMPRESSOR OIL INTO COMPRESSOR

Add the same quantity of oil as was removed, plus 20 cc (0.7 fl.oz.), into the compressor.
Compressor oil:

ND–OIL 8 or equivalent

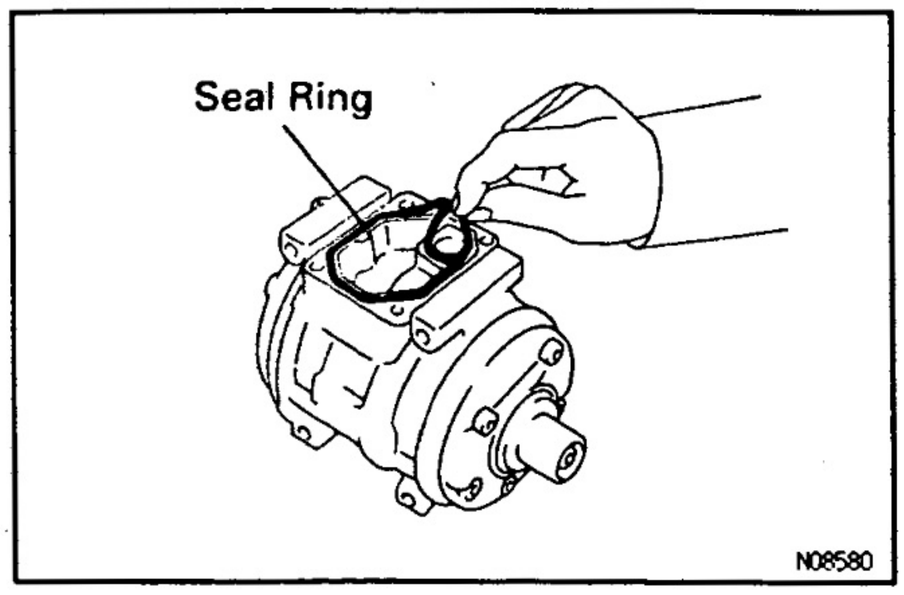

17. INSTALL SERVICE VALVE

(a) Lubricate a new seal ring with compressor oil and install the seal ring in the service valve.

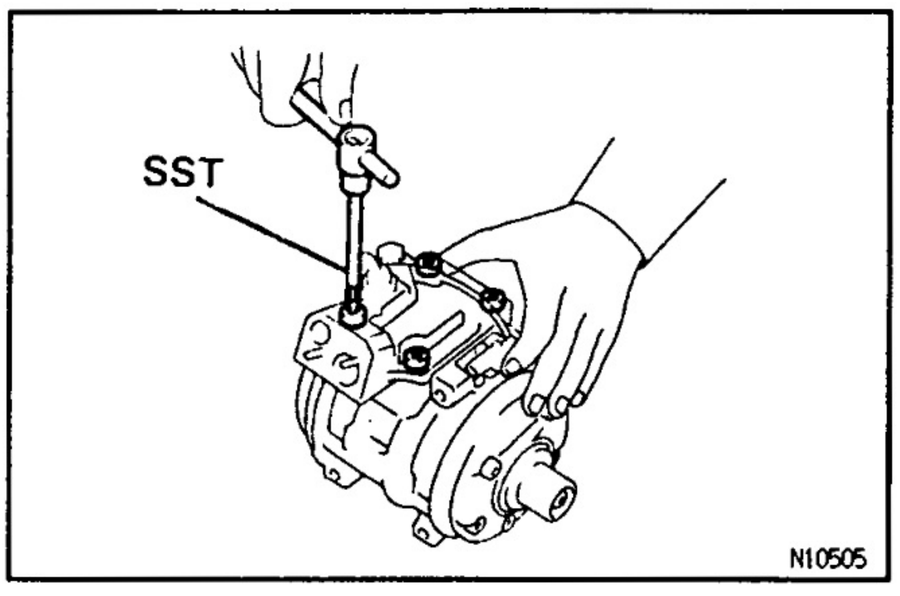

(b) Install the service valve on the compressor. Using SST and a torque wrench, tighten the bolts.
SST 07110–61050
Torque: 25 N·m (260 kgf·cm, 19 ft·lbf)

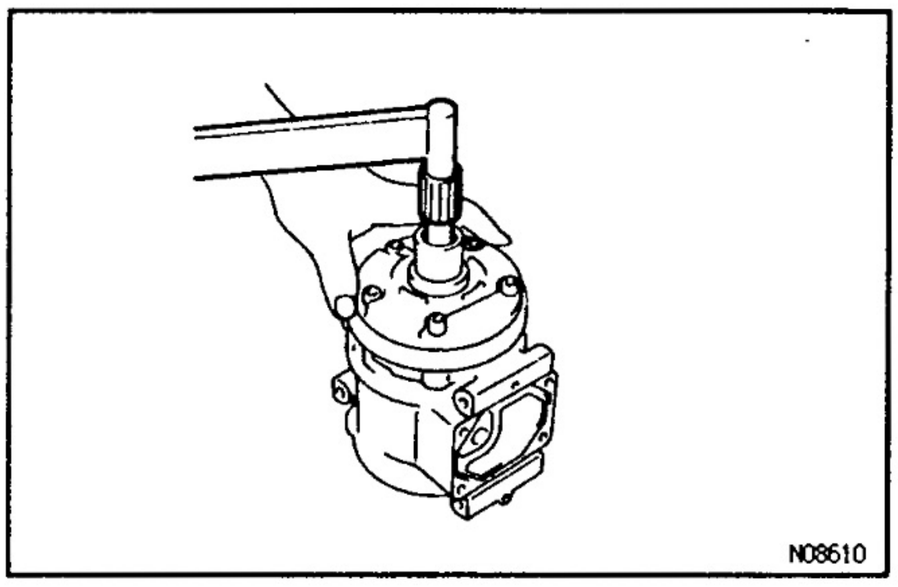

18. CHECK SHAFT STARTING TORQUE
Torque: 2.9 N·m (30 kgf·cm, 26 in.·lbf)

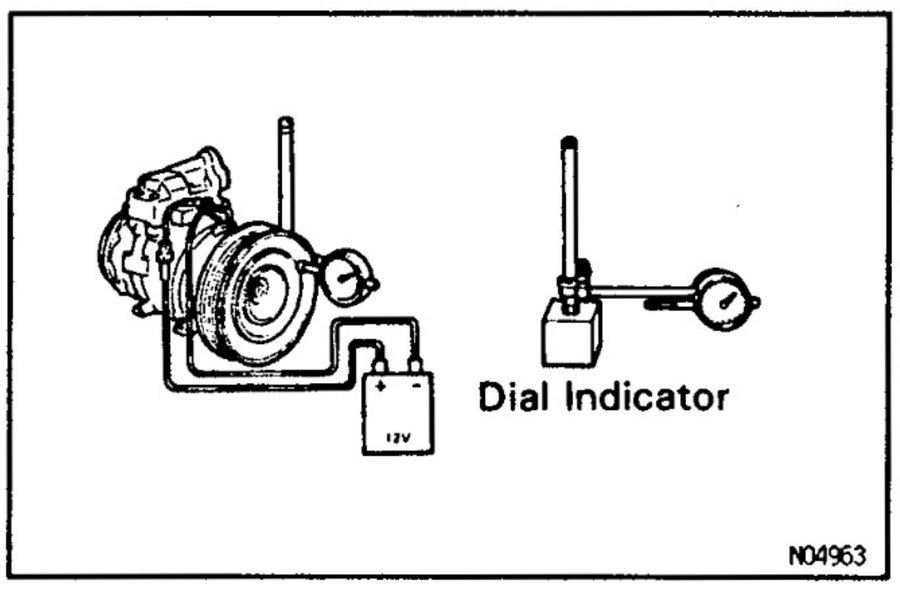

MAGNETIC CLUTCH ASSEMBLY

AC2UR–01

Assembly is in the reverse order of disassembly.

CHECK CLEARANCE OF MAGNETIC CLUTCH

(a) Set the dial–indicator to the pressure plate of the magnetic clutch.

(b) Connect the magnetic clutch lead wire to the positive (+) terminal of the battery.

(c) Check the clearance between the pressure plate and rotor when connecting the negative (–) terminal of the battery.
Standard clearance:
0.5 ± 0.15 mm (0.020 ± 0.059 in.)
If the clearance is not within standard clearance, adjust the clearance using shims to obtain the standard clearance.

AC

AC2UP-01

COMPRESSOR INSTALLATION

1. **INSTALL COMPRESSOR**

(a) Install the compressor with 4 bolts.
Torque: 25 N·m (250 kgf·cm, 18 ft·lbf)

(b) Connect the connector.

2. **INSTALL AND CHECK DRIVE BELT**
(See page AC—22)

3. **CONNECT DISCHARGE AND SUCTION HOSES**
Torque: 10 N·m (100 kgf·cm, 7 ft·lbf)
NOTICE: Hoses should be connected immediately after the caps have been removed.
HINT: Lubricate 2 new O—rings with compressor oil and install the hoses.

4. **Except 1KZ—T and 1KZ—TE Engine Models:**
INSTALL ENGINE UNDER COVER

5. **5VZ—FE Engine Models:**
INSTALL PS PUMP SET BOLTS
Torque: 43 N·m (440 kgf·cm, 32 ft·lbf)

6. **CONNECT NEGATIVE (—) TERMINAL CABLE TO BATTERY**

7. **EVACUATE AIR FROM REFRIGERATION SYSTEM**

8. **CHARGE SYSTEM WITH REFRIGERANT**
Specified amount:
Single A/C: 700 ± 50 g (24.69 ± 1.76 oz.)
Dual A/C: 950 ± 50 g (33.51 ±1.76 oz.)

9. **INSPECT FOR LEAKAGE OF REFRIGERANT**
Using a gas leak detector, check for leakage of refrigerant.
If there is leakage, check the tightening torque at the joints.

AC

RECEIVER

ON—VEHICLE INSPECTION

AC2UG-01

INSPECT FITTINGS FOR LEAKAGE

Using a gas leak detector, check for leakage.
If there is leakage, check the tightening toque at the joints.

RECEIVER REMOVAL

AC2UR-01

1. **DISCHARGE REFRIGERANT FROM REFRIGERATION SYSTEM**
   INSTALLATION HINT: Evacuate air from refrigeration system.
   Charge system with refrigerant and inspect for leakage of refrigerant.
   Specified amount:
   Single A/C: 700 ± 50 g (24.69 ± 1.76 oz.)
   Dual A/C: 950 ± 50 g (33.51 ± 1.76 oz.)
2. **REMOVE RADIATOR GRILLE**
3. **DISCONNECT 2 LIQUID TUBES FROM RECEIVER**
   Remove the 2 bolts and disconnect the both tubes.
   Torque: 5.4 N·m (55 kgf-cm, 48 in.-lbf)
   REMOVAL NOTICE: Cap the open fittings immediately to keep moisture or dirt out of the system.
   INSTALLATION HINT: Lubricate 2 new O—rings with compressor oil and install the tubes.
4. **REMOVE RECEIVER**

(a) Remove the holder bolt and pull out the receiver downward.
INSTALLATION HINT: If receiver was replaced, add compressor oil to the compressor.
Add 20 cc (0.71 fl.oz.)
Compressor oil:
ND—OIL 8 or equivalent

(b) Remove the bolt and holder.

LHD

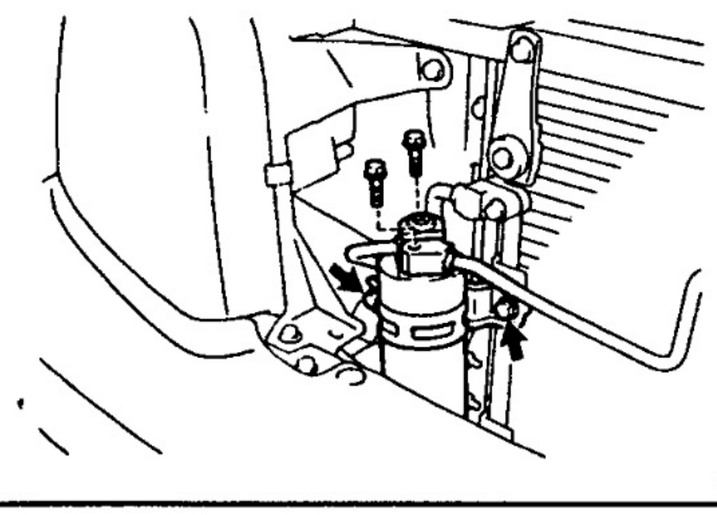

N19435

RHD

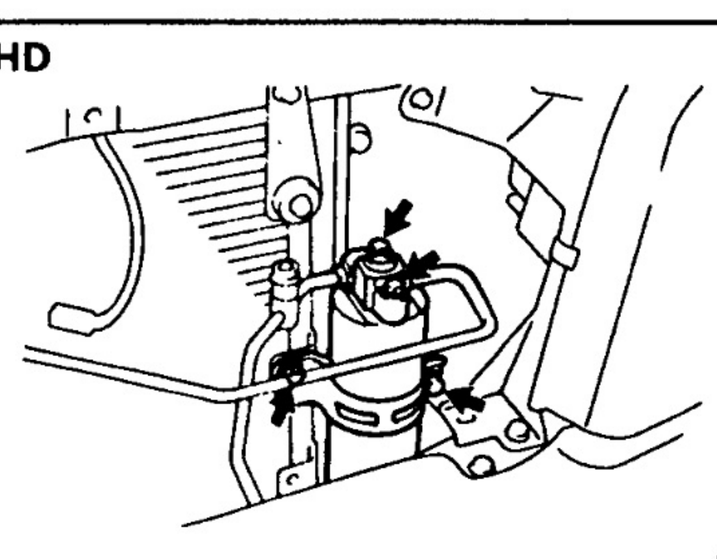

N19436

RECEIVER INSTALLATION

AC2US-01

Installation is in the reverse order of removal.

AC

CONDENSER

ON—VEHICLE INSPECTION

AC2UT—01

1. **INSPECT CONDENSER FINS FOR BLOCKAGE OR DAMAGE**

   If the fins are clogged, wash them with water and dry with compressed air.

   NOTICE: Be careful not to damage the fins.

   If the fins are bent, straighten them with a screwdriver or pliers.

2. **INSPECT CONDENSER AND FITTINGS FOR LEAKAGE**

   Repair as necessary.

CONDENSER REMOVAL

AC2UU—01

1. **DISCHARGE REFRIGERANT FROM REFRIGERATION SYSTEM**

   INSTALLATION HINT: Evacuate air from refrigeration system.

   Charge system with refrigerant and inspect for leakage of refrigerant.

   Specified amount:

   Single A/C: 700 ± 50 g (24.69 ± 1.76 oz.)

   Dual A/C: 950 ± 50 g (33.51 ± 1.76 oz.)

2. **REMOVE THESE PARTS:**

   (a) Radiator grill

   (b) Horn

   (c) Receiver and holder

   (See page AC—58)



3. **REMOVE LIQUID TUBE**

   Single A/C:

   Remove the bolt and remove the liquid tube.

   Torque: 10 N·m (100 kgf·cm, 7 ft·lbf)

   REMOVAL NOTICE: Cap the open fittings immediately to keep moisture or dirt out of the system.

   INSTALLATION HINT: Lubricate a new O—ring with compressor oil and install the tube.

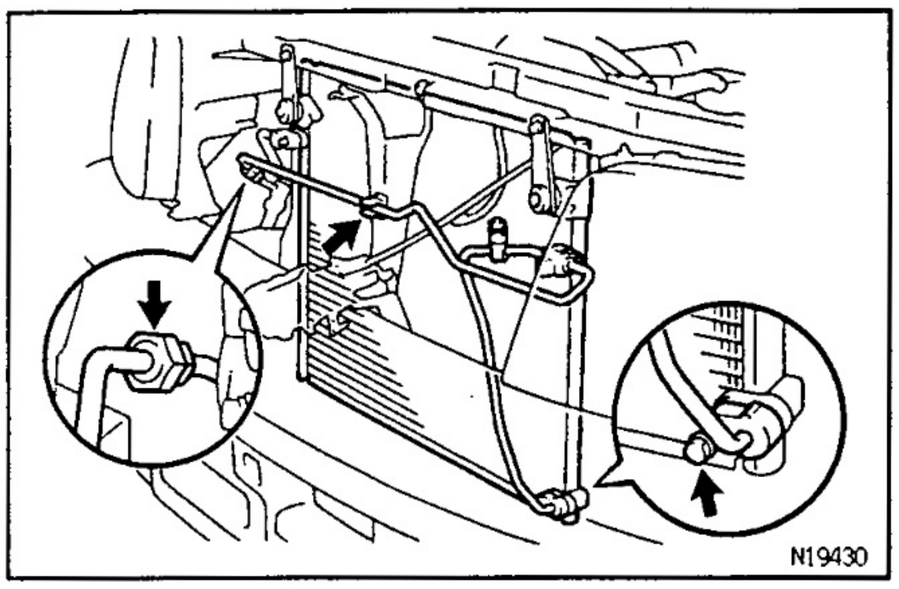

Dual A/C LHD Models:

Loosen the nut and bolt, then remove the liquid tubes.

Torque:

Block joint:	**10 N·m (100 kgf·cm, 7 ft·lbf)**
Piping joint:	**14 N·m (140 kgf·cm, 10 ft·lbf)**

REMOVAL NOTICE: Cap the open fittings immediately to keep moisture or dirt out of the system.

INSTALLATION HINT: Lubricate 2 new O—rings with compressor oil and install the tube.

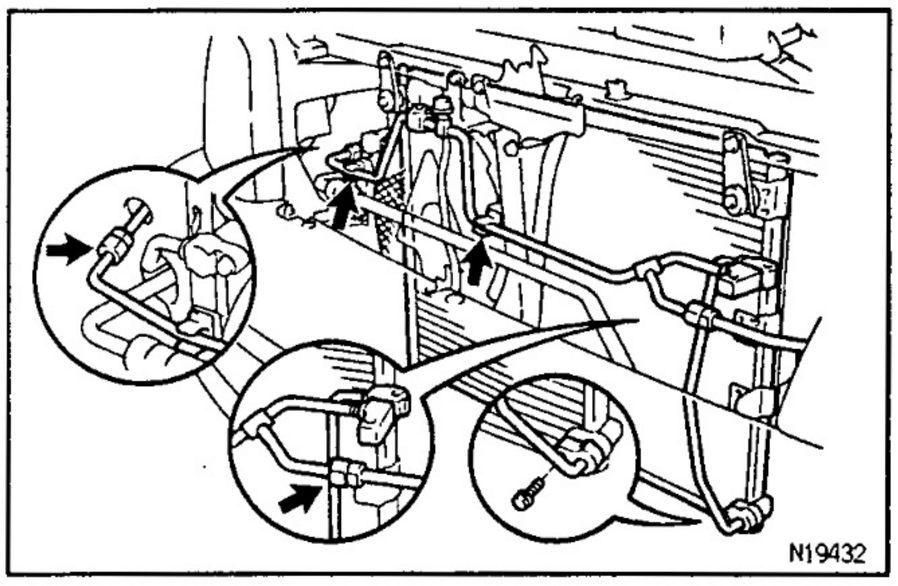

Dual A/C RHD Models:

Loosen the 2 nut and bolt, then remove the liquid tubes.

Torque:

Block joint:	**10 N·m (100 kgf·cm, 7 ft·lbf)**
Piping joint:	**14 N·m (140 kgf·cm, 10 ft·lbf)**

REMOVAL NOTICE: Cap the open fittings immediately to keep moisture or dirt out of the system.

INSTALLATION HINT: Lubricate 3 new O—rings with compressor oil and install the tube.

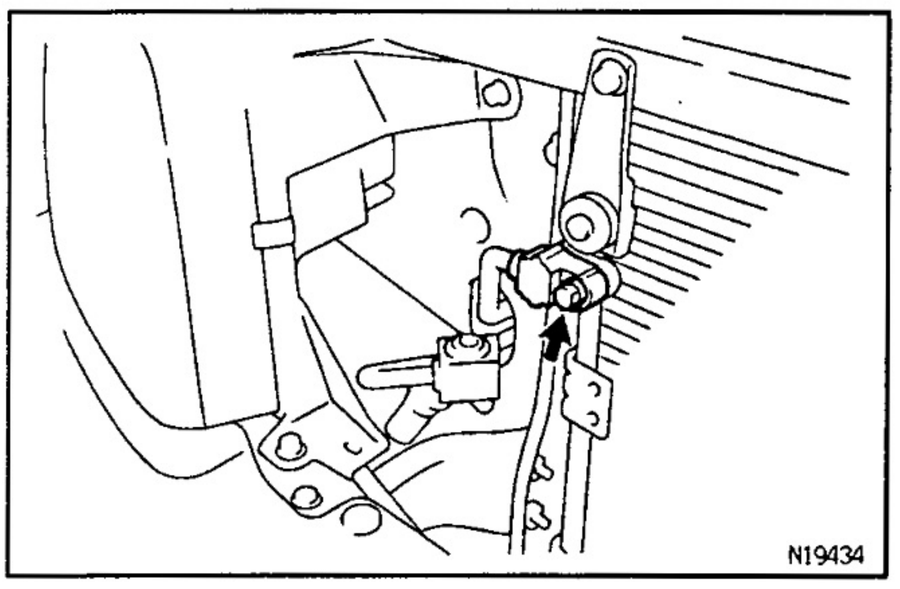

3. **DISCONNECT DISCHARGE HOSE**

Remove the bolt and disconnect the discharge hose.

Torque: 10 N·m (100 kgf·cm, 7 ft·lbf)

REMOVAL NOTICE: Cap the open fittings immediately to keep moisture or dirt out of the system.

INSTALLATION HINT: Lubricate a new O—ring with compressor oil and install the hose.

AC

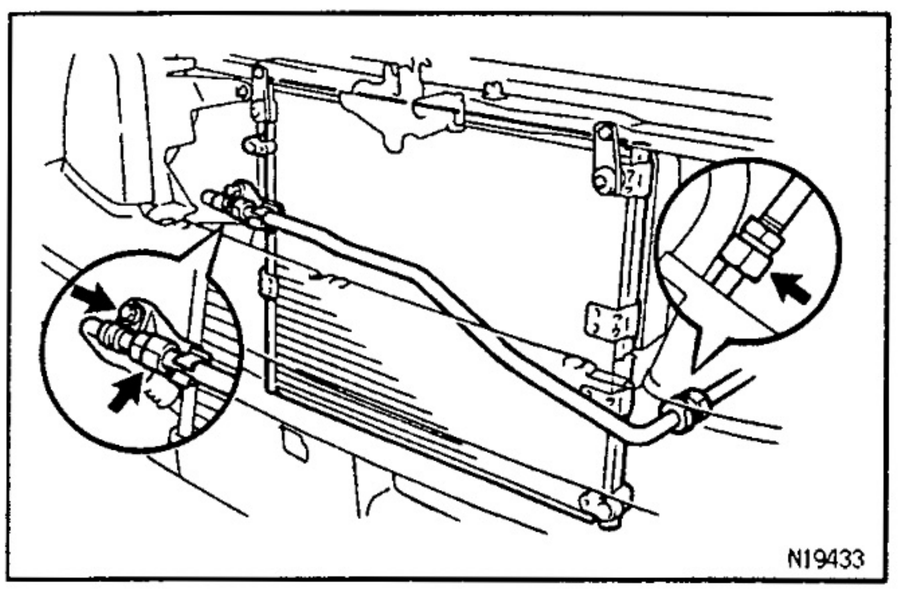

4. **RHD Models Only:**
   REMOVE SUCTION TUBE

(a) Remove the screw from the piping clamp.

(b) Loosen the 2 nuts and remove the tube.

Torque: 32 N·m (330 kgf·cm, 24 ft·lbf)

REMOVAL NOTICE: Cap the open fittings immediately to keep moisture or dirt out of the system.

INSTALLATION HINT: Lubricate 2 new O—rings with compressor oil and install the tube.

5. **Dual A/C Models Only:**
   REMOVE CONDENSER FAN
   (See page AC—73)

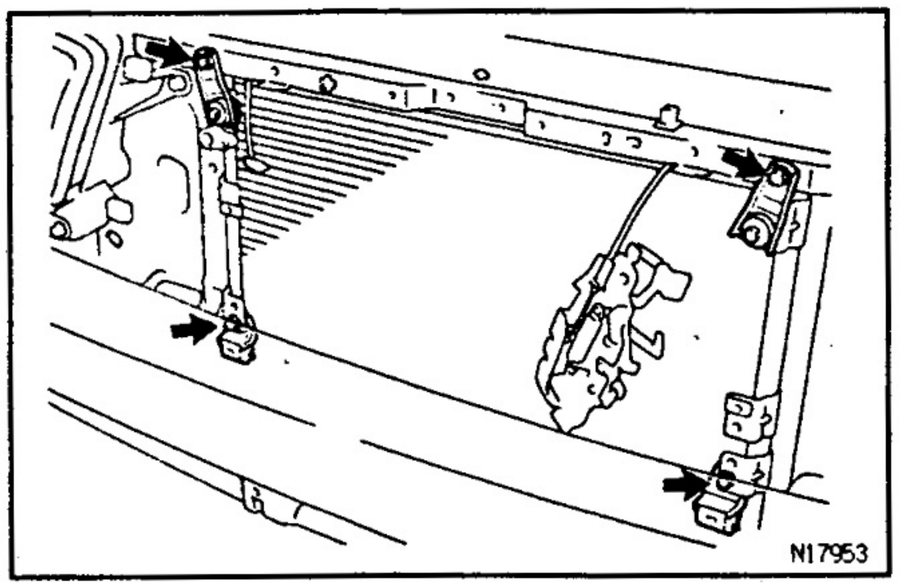

6. REMOVE CONDENSER

(a) Remove the 2 bolts from condenser upper mountings.

(b) Remove the 2 bolts from condenser lower mountings.

(c) Pull the condenser forward and pull it upward.

INSTALLATION HINT: If condenser was replaced, add compressor oil to the compressor.

Add 40–50 cc (1.4–1.7 fl.oz.)

Compressor oil:

ND–OIL 8 or equivalent

AC2UV–01

CONDENSER INSTALLATION

Installation is in the reverse order of removal.

HEATER RADIATOR

AC2UW–01

HEATER RADIATOR REMOVAL AND INSTALLATION

Front Heater:

(See "FRONT HEATER UNIT" on page AC–38)

Rear Heater:

(See "REAR HEATER UNIT" on page AC–40)

AC2UX–01

HEATER RADIATOR INSPECTION

1. INSPECT FINS FOR BLOCKAGE

If the fins are clogged, clean them with compressed air.

NOTICE: Never use water to clean the evaporator.

2. INSPECT FITTINGS FOR CRACKS OR SCRATCHES

Repair as necessary.

AC

EVAPORATOR

EVAPORATOR REMOVAL AND INSTALLATION

AC2UY-01

Front A/C:
(See "FRONT COOLING UNIT" on page AC—32)
Rear Cooler:
(See "REAR COOLING UNIT" on page AC—35)

EVAPORATOR INSPECTION

AC3UZ-01

1. **CHECK EVAPORATOR FINS FOR BLOCKAGE**
   If the fins are clogged, clean them with compressed air.
   NOTICE: Never use water to clean the evaporator.
2. **CHECK FITTINGS FOR CRACKS OR SCRATCHES**
   Repair as necessary.

EXPANSION VALVE

ON—VEHICLE INSPECTION

AC3V0-01

1. **CHECK QUANTITY OF GAS DURING REFRIGERATION CYCLE**
2. **INSTALL MANIFOLD GAUGE SET**
   (See page AC—9)
3. **RUN ENGINE**
   Run the engine at 1,500 rpm for at least 5 minutes. Then check that the high pressure reading is 1.37—1.57 MPa (14—16 kgf/cm², 199—228 psi).
4. **CHECK EXPANSION VALVE**
   If the expansion valve is faulty, the low pressure reading will drop to 0 kPa (0 kgf/cm², 0 psi).
   HINT: When the low pressure drops to 0 kPa (0 kgf/cm², 0 psi), feel the receiver's IN and OUT sides for 0 temperature difference.

AC

FRONT EXPANSION VALVE REMOVAL AND INSTALLATION

AC3V1-01

Front A/C:
(See "FRONT COOLING UNIT" on page AC—32)
Rear Cooler:
(See "REAR COOLING UNIT" on page AC—35)

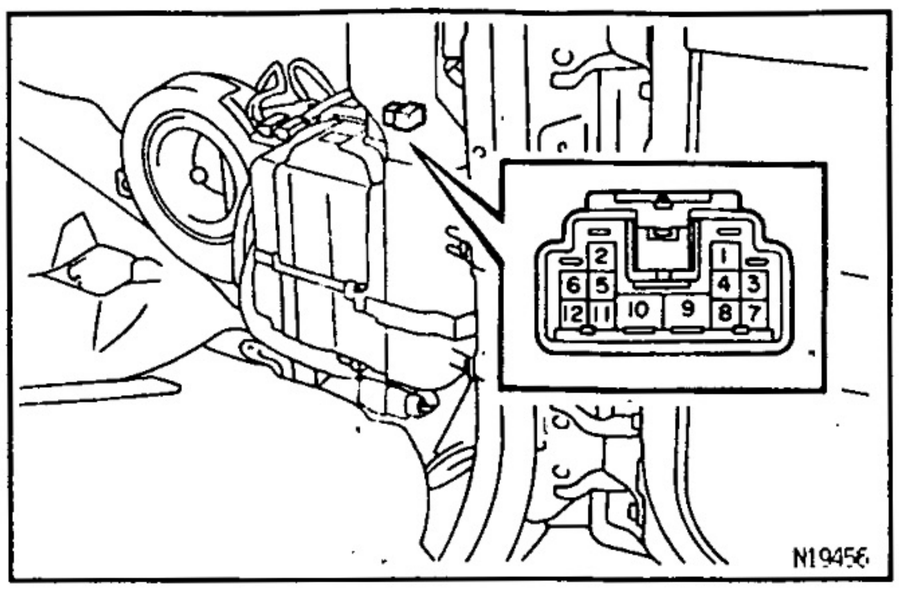

MAGNETIC VALVE

ON–VEHICLE INSPECTION

AC2V2–01

1. REMOVE THESE PARTS:

(a) Third seat RH
(b) Rear quarter trim
(c) Side pillar duct

2. INSPECT MAGNETIC VALVE CONTINUITY

Wire Harness Side:

(a) Disconnect the connector from rear cooling unit.
(b) Using an ohmmeter, check the continuity between terminals 2 and 5.

If continuity is not as specified, proceed next inspection.

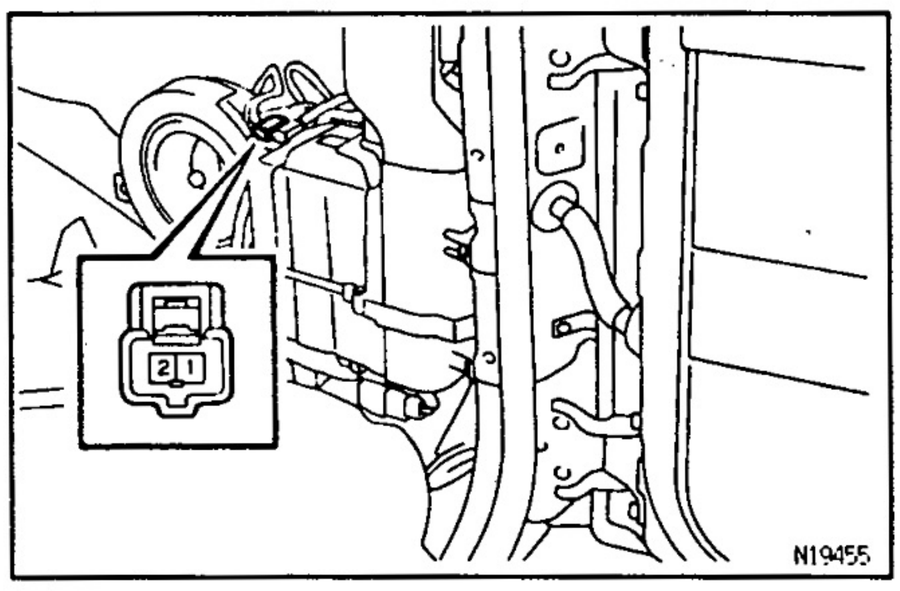

Magnetic Valve Side:

(a) Disconnect the connector from the magnetic valve.
(b) Using an ohmmeter, check the continuity between terminals.

If continuity is not as specified, replace the magnetic valve.

If continuity is as specified, replace the wire harness of rear cooling unit.

AC

MAGNETIC VALVE REMOVAL AND INSTALLATION

AC2V3–01

(See "REAR COOLING UNIT" on page AC–35)

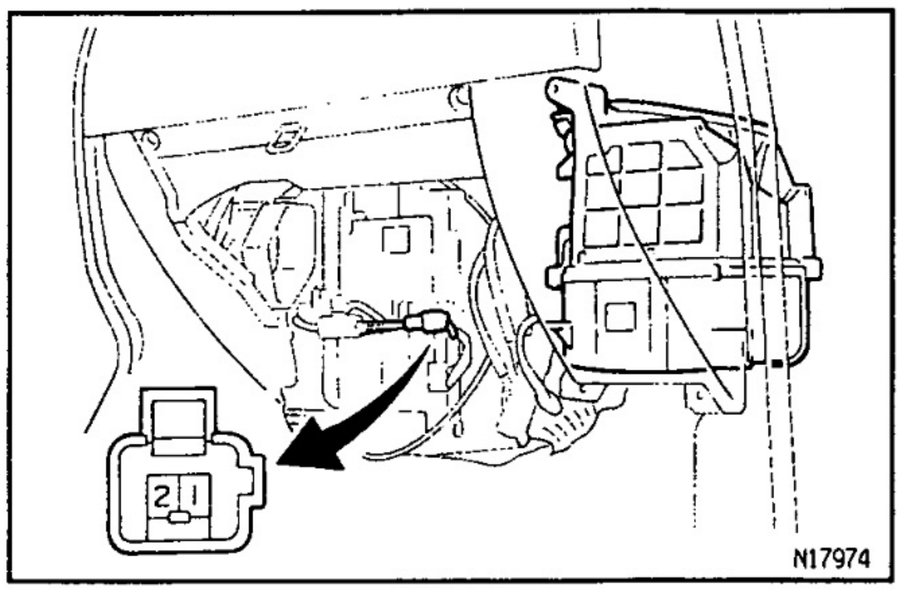

THERMISTOR

AC2V4–01

ON–VEHICLE INSPECTION

Front A/C:

1. **REMOVE GLOVE COMPARTMENT DOOR**
   (See page BO–55)
2. **INSPECT THERMISTOR RESISTANCE**

(a) Disconnect the connector.

(b) Measure resistance between terminals.

Standard resistance:

1,500 Ω at 25°C (77°F)

If resistance is not as specified, replace the thermistor.

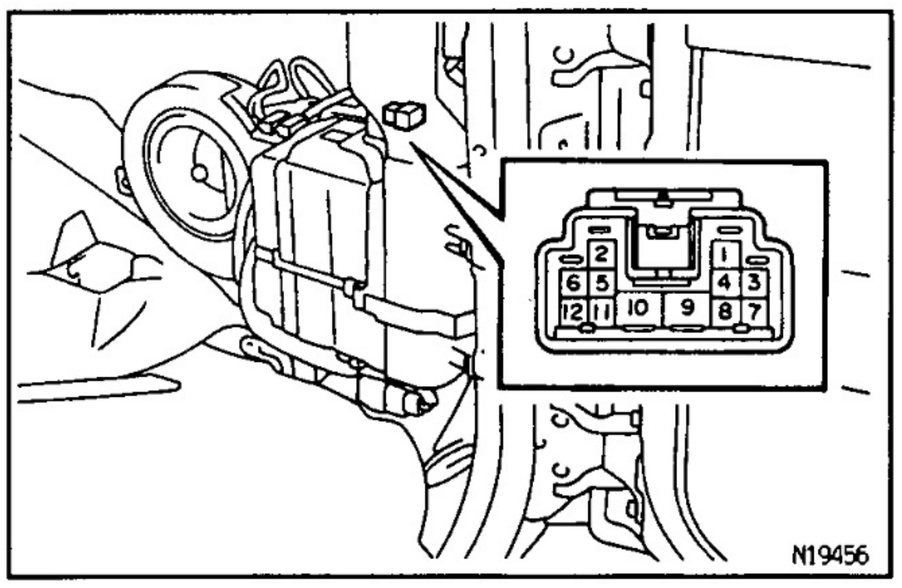

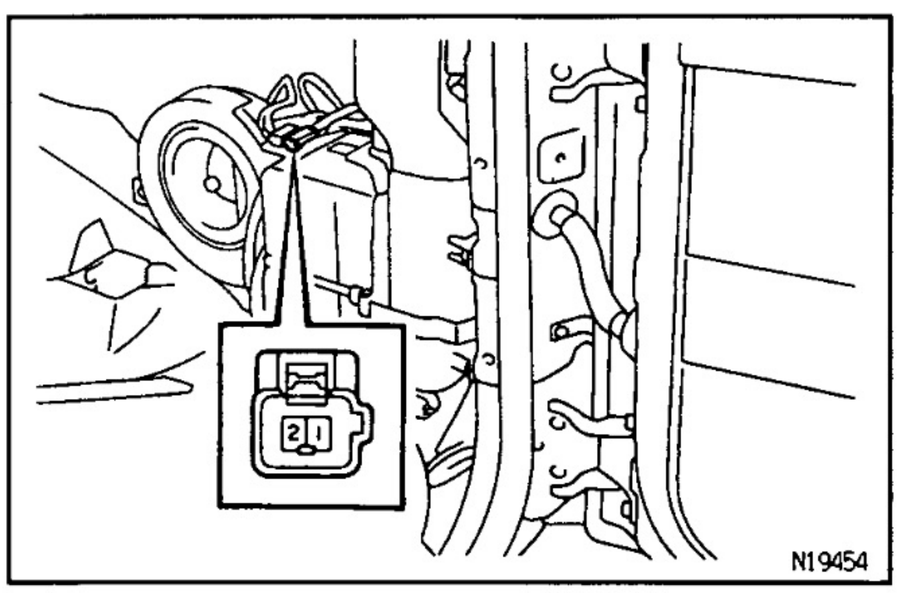

AC2V5–01

ON–VEHICLE INSPECTION

Rear Cooler:

1. **REMOVE THESE PARTS:**

(a) Third seat RH

(b) Rear quarter trim

(c) Pillar duct

2. **INSPECT THERMISTOR RESISTANCE**

Wire Harness Side:

(a) Disconnect the connector.

(b) Measure resistance between terminals 3 and 4.

Standard resistance:

1,500 Ω at 25°C (77°F)

If resistance is not as specified, proceed next inspection.

Thermistor Side:

(a) Disconnect the connector.

(b) Measure resistance between terminals.

Standard resistance:

1,500 Ω at 25°C (77°F)

If resistance is not as specified, replace the thermistor.

If resistance is as specified, replace the wire harness of rear cooling unit.

AC2V6–01

THERMISTOR REMOVAL AND INSTALLATION

Front A/C:
(See "FRONT COOLING UNIT" on page AC–32)
Rear Cooler:
(See "REAR COOLING UNIT" on page AC–35)

AC2V7–01

THERMISTOR INSPECTION

INSPECT THERMISTOR RESISTANCE

(a) Place the thermistor in cold water, and while changing the temperature of the water, measure resistance at the connector and at the same time, measure temperature of the waster with a thermometer.

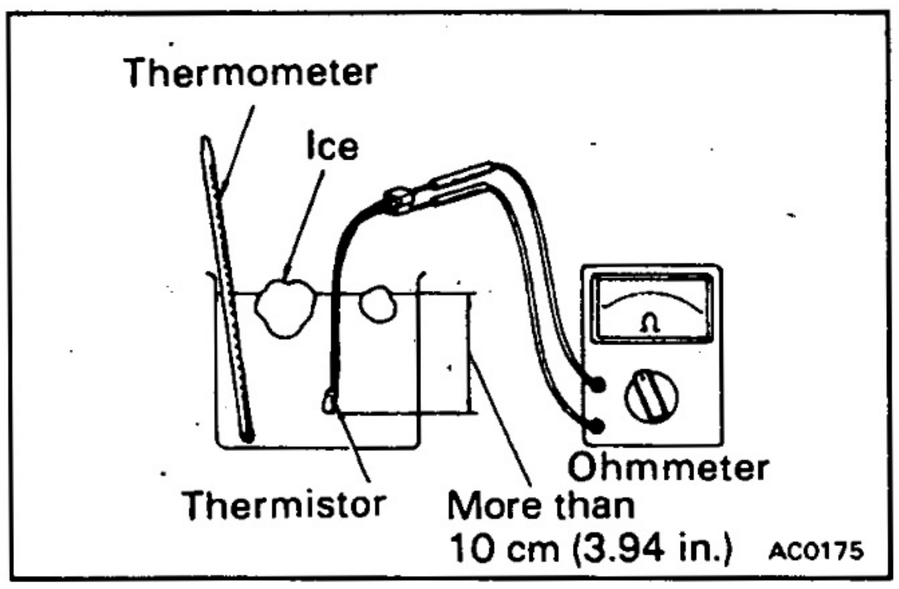

(b) Compare the 2 readings on the chart.
If resistance value is not as specified, replace the thermistor.

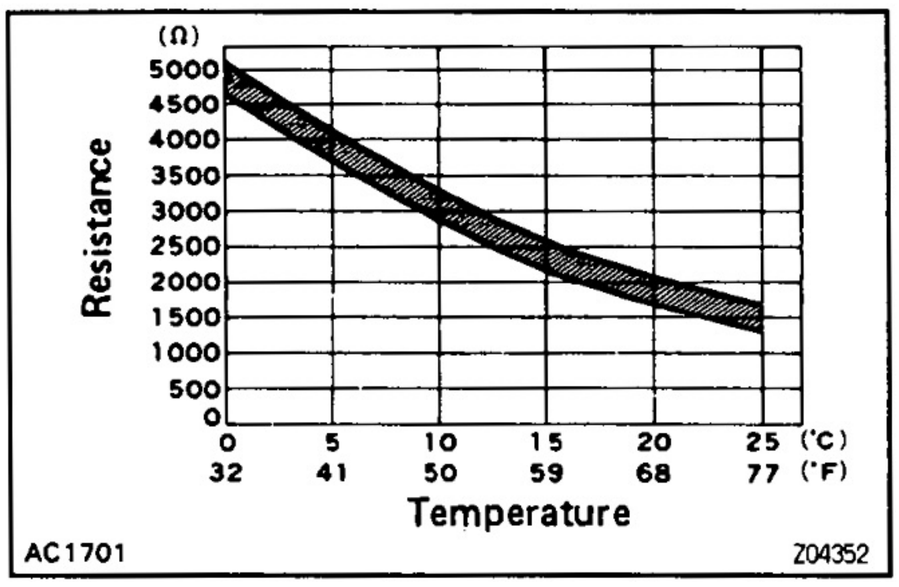

AC

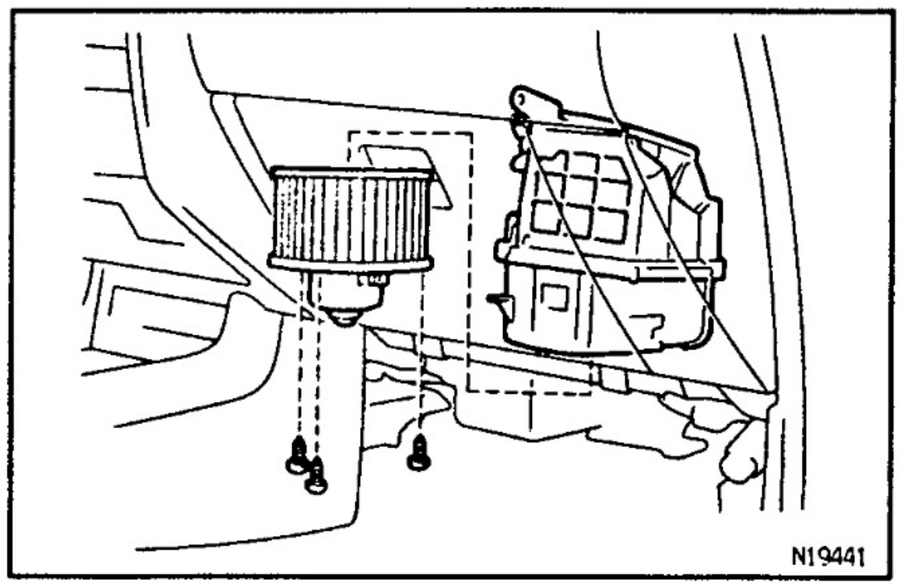

BLOWER MOTOR

FRONT BLOWER MOTOR REMOVAL

AC2V8-01

REMOVE BLOWER MOTOR

(a) Disconnect the connector from the blower motor.
(b) Remove the 3 screws and blower motor.

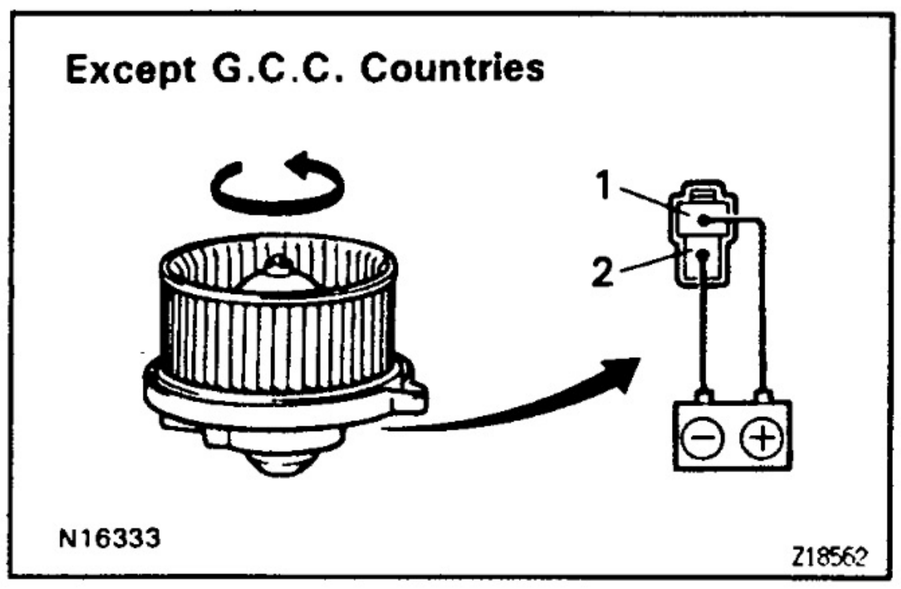

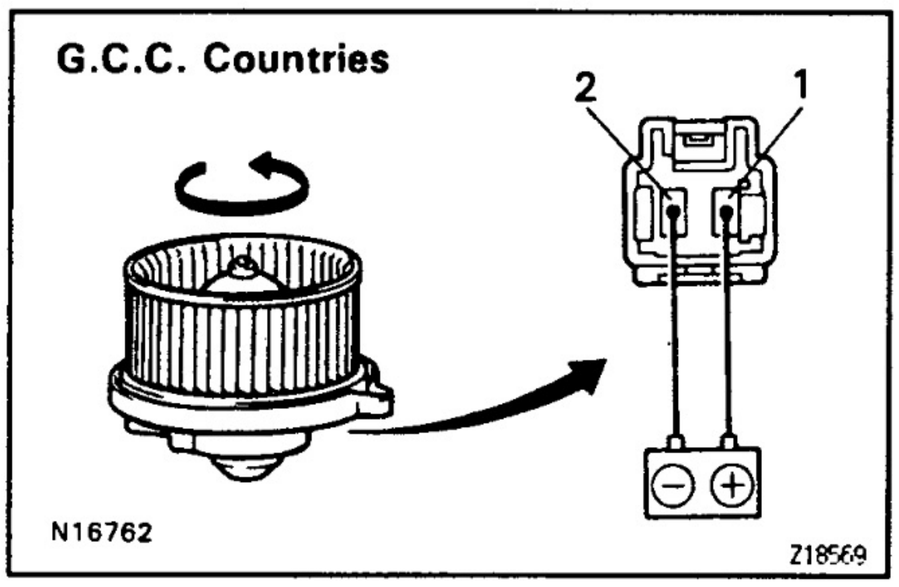

FRONT BLOWER MOTOR INSPECTION

AC2V8-01

INSPECT BLOWER MOTOR OPERATION

( ): G.C.C. Countries

Connect the positive (+) lead from the battery to terminal 1(2) and the negative (−) lead to terminal 2 (1), then check that the motor operations smoothly.

If operation is not as specified, replace the blower motor.

AC

FRONT BLOWER INSTALLATION

AC2VA-01

Installation is in the reverse order of removal.

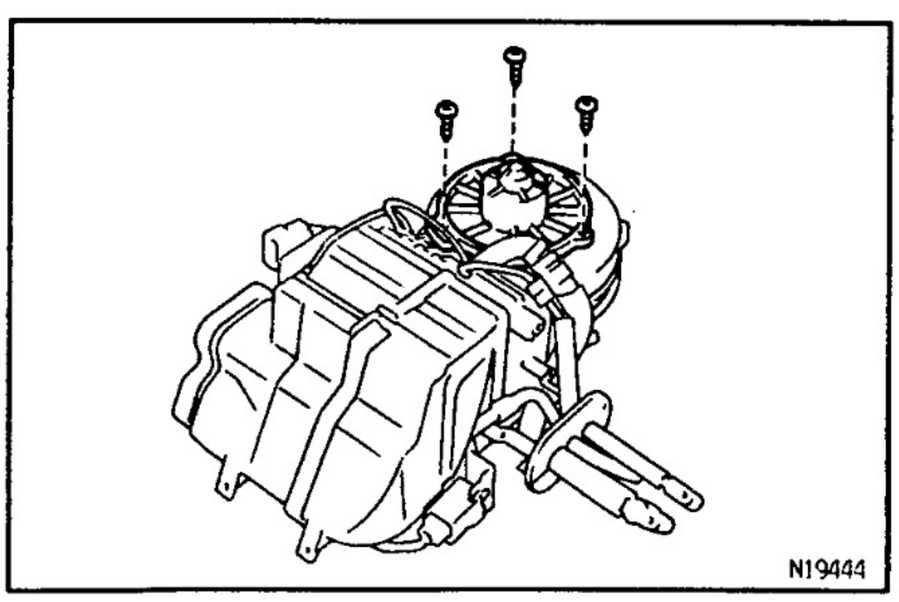

REAR COOLER BLOWER MOTOR REMOVAL

AC2V8-01

1. REMOVE REAR COOLING UNIT

(See page AC−35)

2. REMOVE BLOWER MOTOR

(a) Disconnect the connector.
(b) Remove the 3 screws and blower motor.

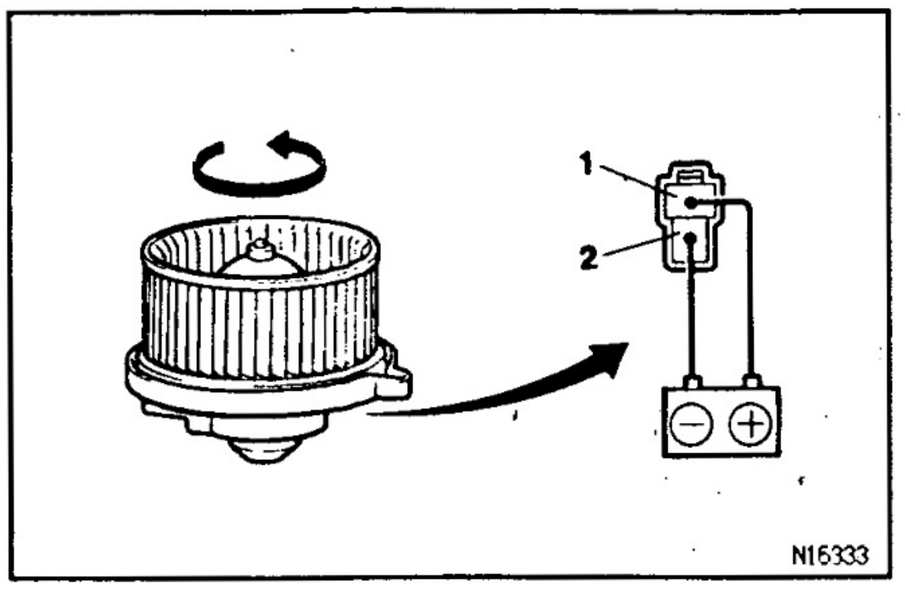

AC2VC-01

REAR COOLER BLOWER MOTOR INSPECTION

INSPECT BLOWER MOTOR OPERATION

Connect the positive (+) lead from the battery to terminal 1 and the negative (−) lead to terminal 2, then check that the motor operations smoothly.
If operation is not as specified, replace the blower motor.

AC2VD-01

REAR COOLER BLOWER MOTOR INSTALLATION

Installation is in the reverse order of removal.

AC2VE-01

REAR HEATER BLOWER MOTOR REMOVAL AND INSTALLATION

(See "REAR HEATER UNIT" on page AC−38)

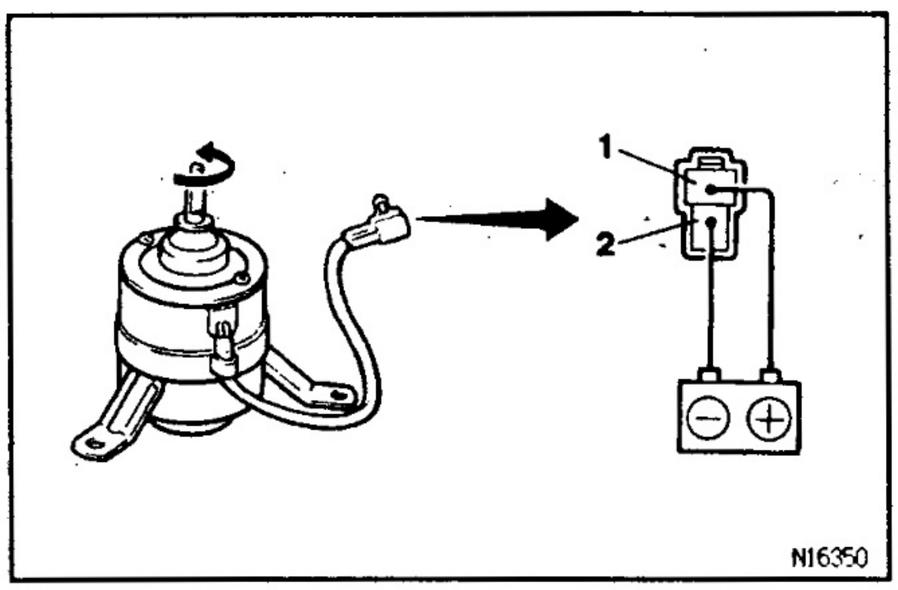

AC2VF-01

REAR HEATER BLOWER MOTOR INSPECTION

INSPECT BLOWER MOTOR OPERATION

Connect the positive (+) lead from the battery to terminal 1 and the negative (−) lead to terminal 2, then check that the motor operations smoothly.
If operation is not as specified, replace the motor.

AC

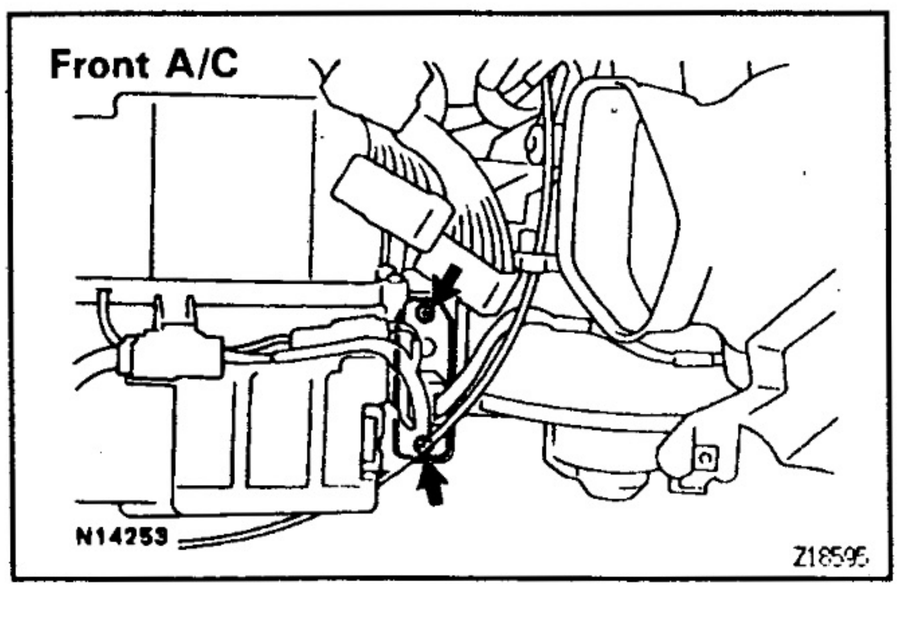

AC2VG-01

BLOWER RESISTOR
BLOWER RESISTOR REMOVAL

Front A/C:

1. **REMOVE THESE PARTS:**

(a) Glove compartment door
(See page BO−55)
(b) No.4 heater to register duct
(See page BO−55)

2. **REMOVE BLOWER RESISTOR**

(a) Disconnect the connector.
(b) Remove the 2 screws and blower resistor.

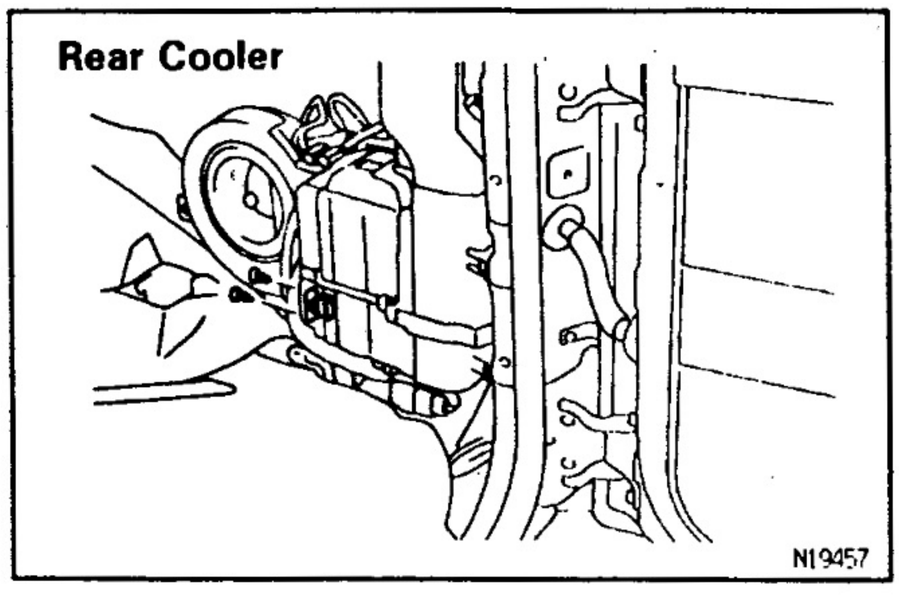

Rear Cooler:

1. **REMOVE THESE PARTS:**

(a) Floor mat support plate
(b) Rear quater trim

2. **REMOVE BLOWER RESISTOR**

(a) Disconnect the connector.
(b) Remove the 2 screws and blower resistor.

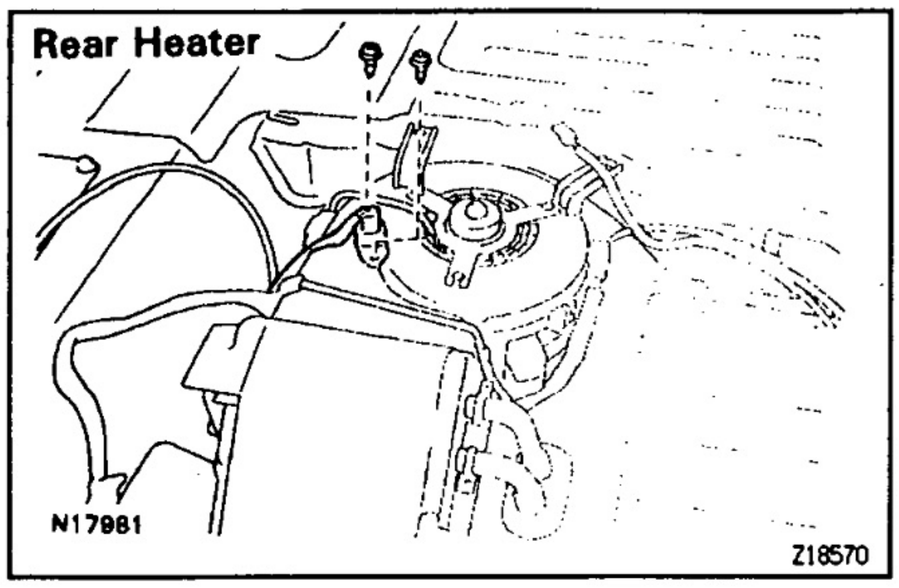

Rear Heater:

1. REMOVE THESE PARTS:

(a) Front seats

(b) Front consol panel

(c) Rear consol panel

2. REMOVE BLOWER RESISTOR

(a) Slide the floor carpet backward.

(b) Disconnect the connector.

(c) Remove the 2 screws and blower resistor.

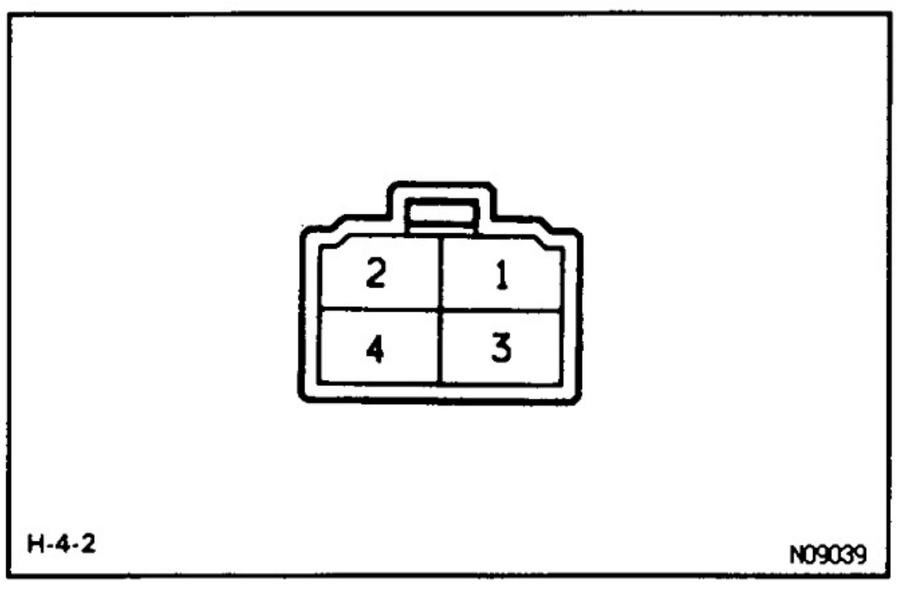

AC2VH-01

BLOWER RESISTOR INSPECTION

INSPECT BLOWER RESISTOR RESISTANCE

Front A/C:

Tester connection	condition	Specified condition
1—4	Constant	2.2 ± 0.1 Ω
1—3	Constant	1.2 ± 0.2 Ω
1—2	Constant	0.8 ± 0.2 Ω

If resistance is not as specified, replace the blower resistor.

Rear Cooler:

Check the blower resistor in the same way for " FRONT A/C BLOWER RESISTOR".

AC

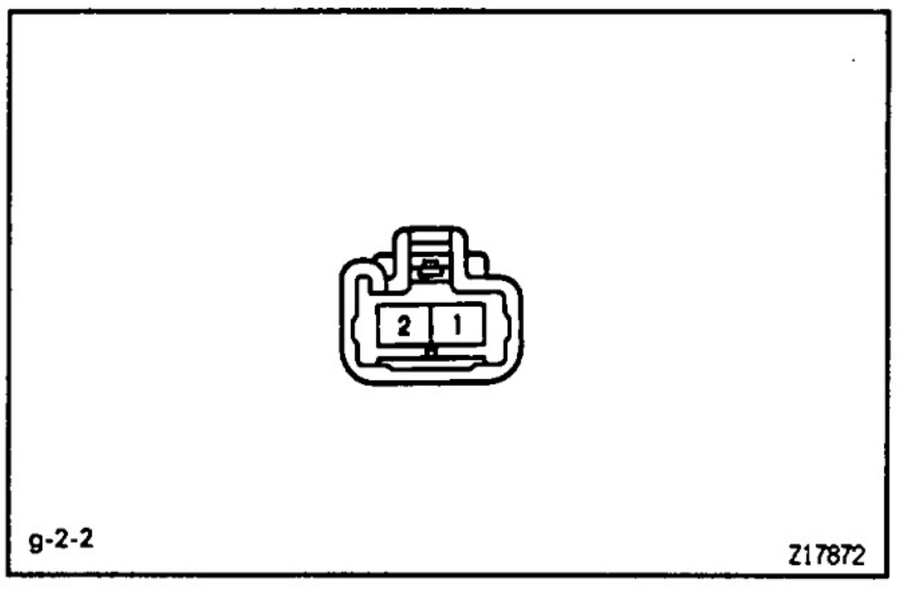

Rear Heater:

Measure resistance between terminals.

Standard resistance

3.2 ± 0.2 Ω

If resistance is not within the specification, replace the blower resistor.

AC2VJ-01

BLOWER RESISTOR INSTALLATION

Installation is in the reverse order of removal.

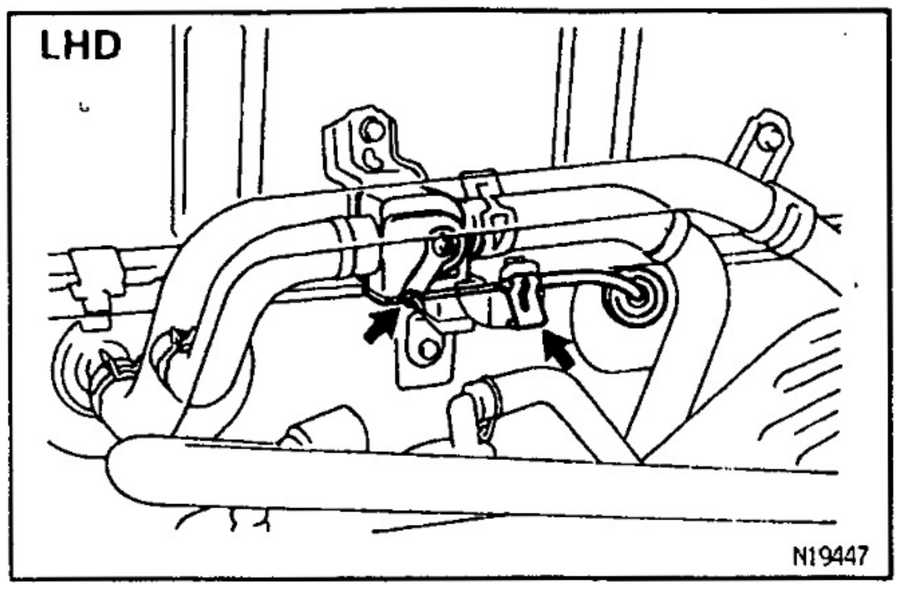

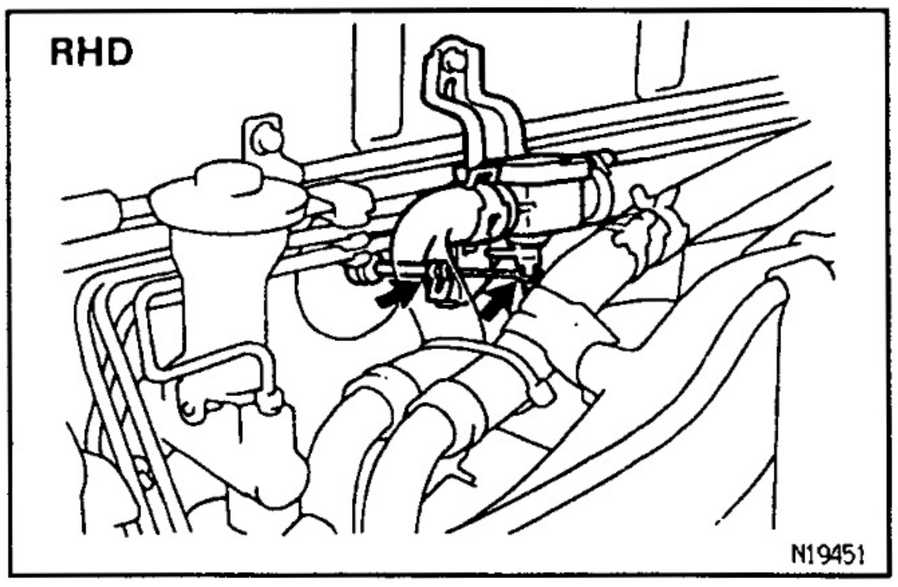

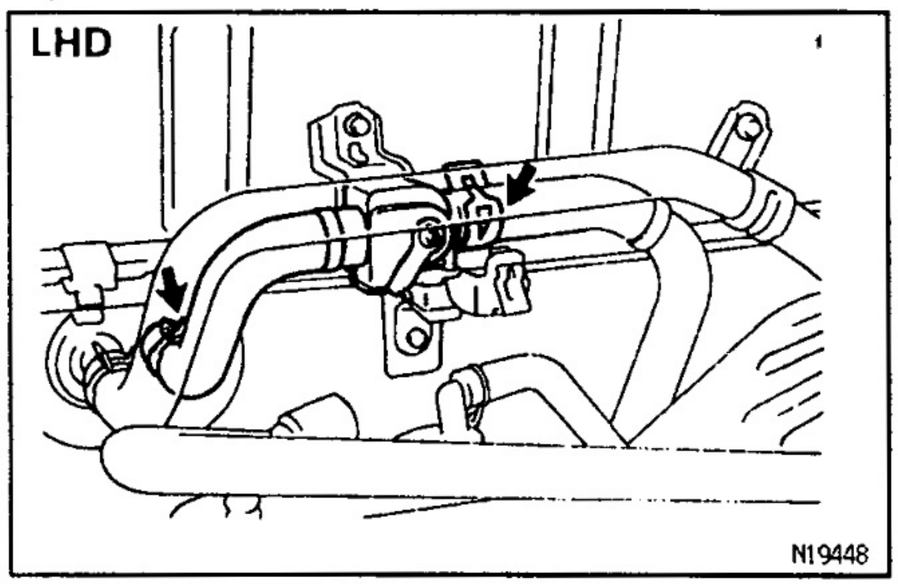

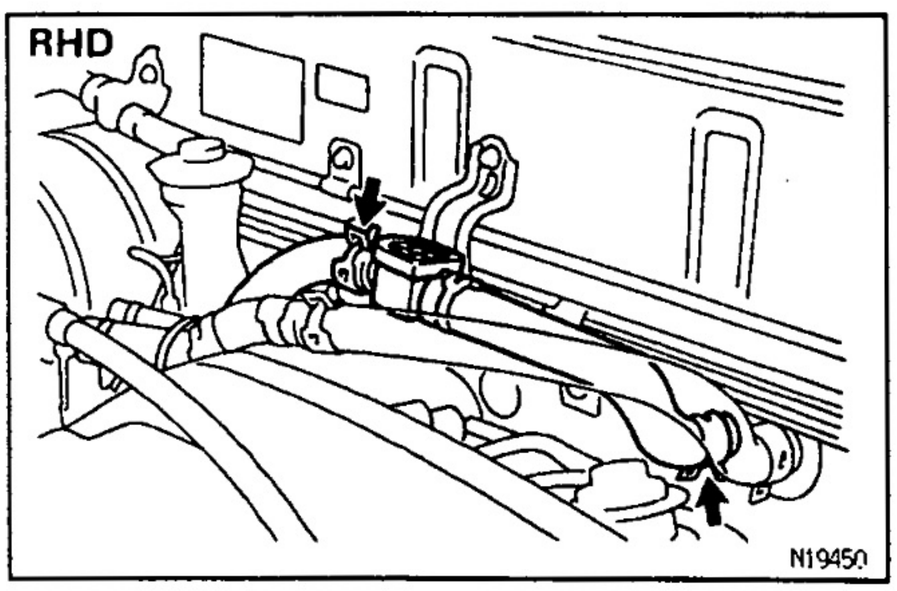

WATER VALVE

AC2VK-01

WATER VALVE REMOVAL

1. **DRAIN ENGINE COOLANT FROM RADIATOR**
   REMOVAL HINT: It is not necessary to drain out all the coolant.
2. **DISCONNECT WATER VALVE CONTROL CABLE FROM WATER VALVE**
   INSTALLATION HINT: For installing the control cable, refer to "A/C CONTROL CABLES ADJUSTMENT" page AC-82.

3. **DISCONNECT WATER HOSES**
(a) Disconnect the water hose from the water valve.
(b) Disconnect the water hose from the heater radiator pipe.

AC

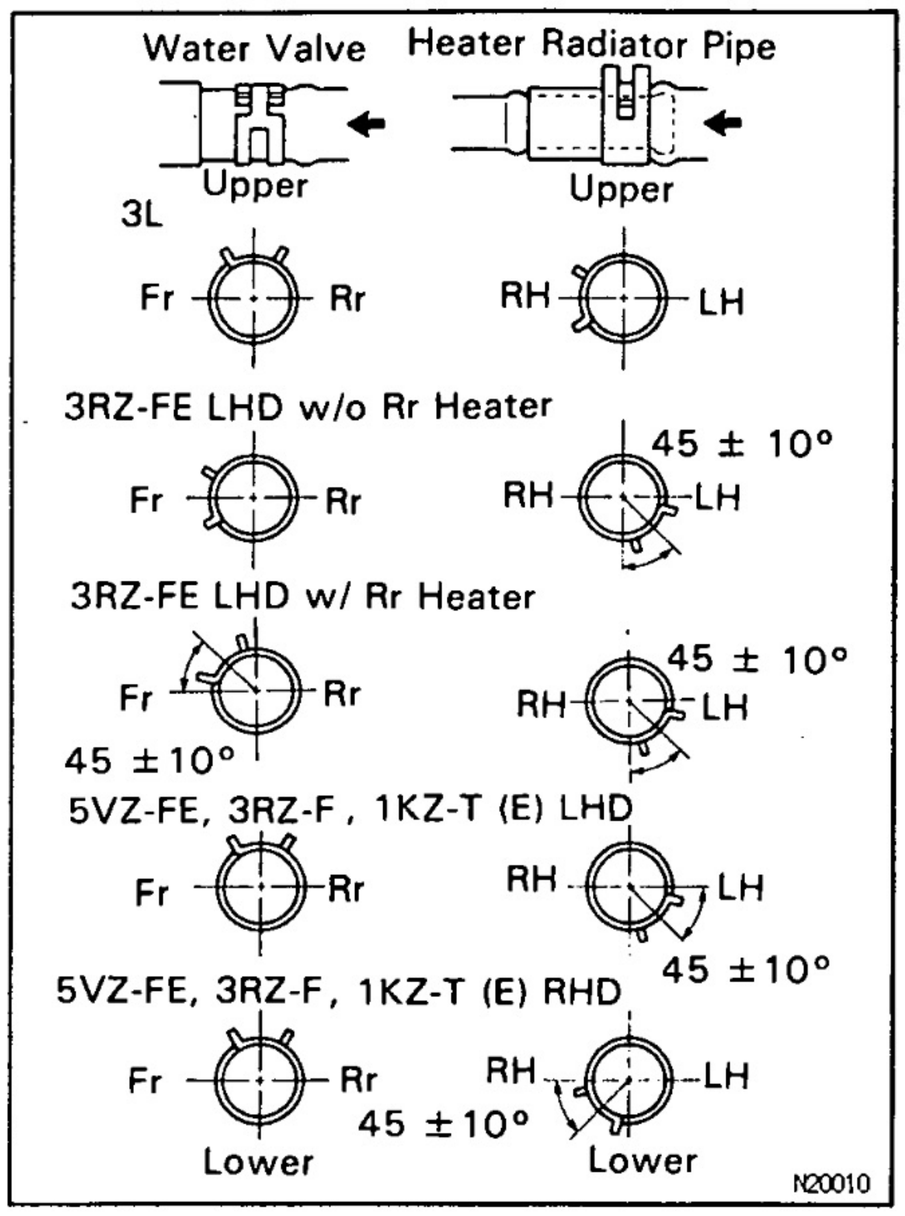

INSTALLATION HINT:

- Push the water hose on to the heater radiator pipe as far as the ridge on the pipe and install the hose clip.
- Install the hose clip in a position, as shown in the illustration.

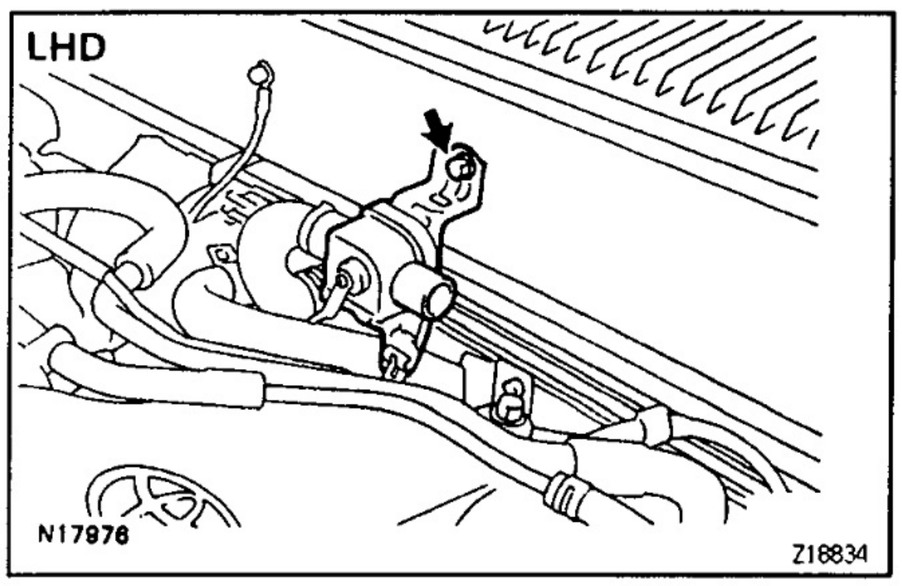

4. REMOVE WATER VALVE

Remove the bolt and water valve.

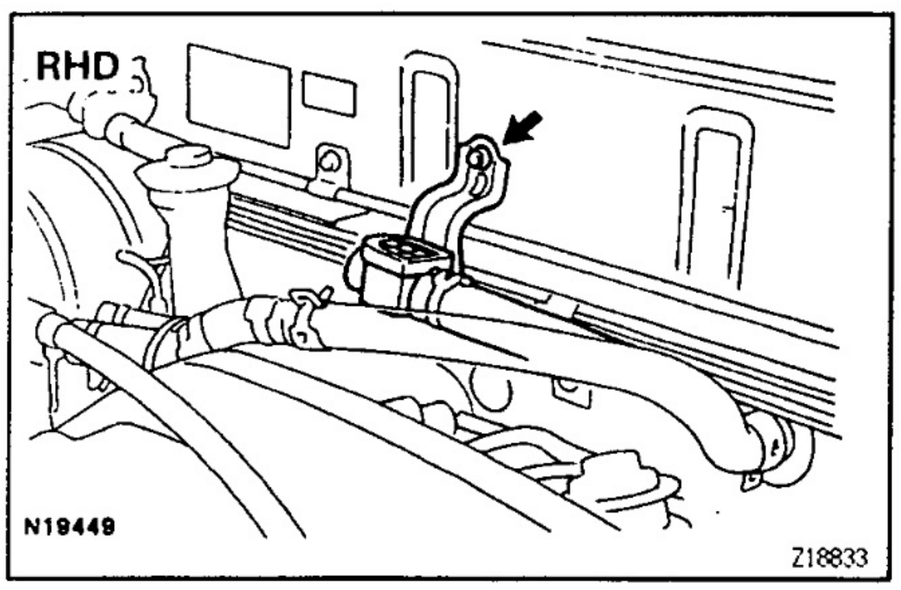

AC

WATER VALVE INSTALLATION

AC2VL-01

Installation is in the reverse order of removal.

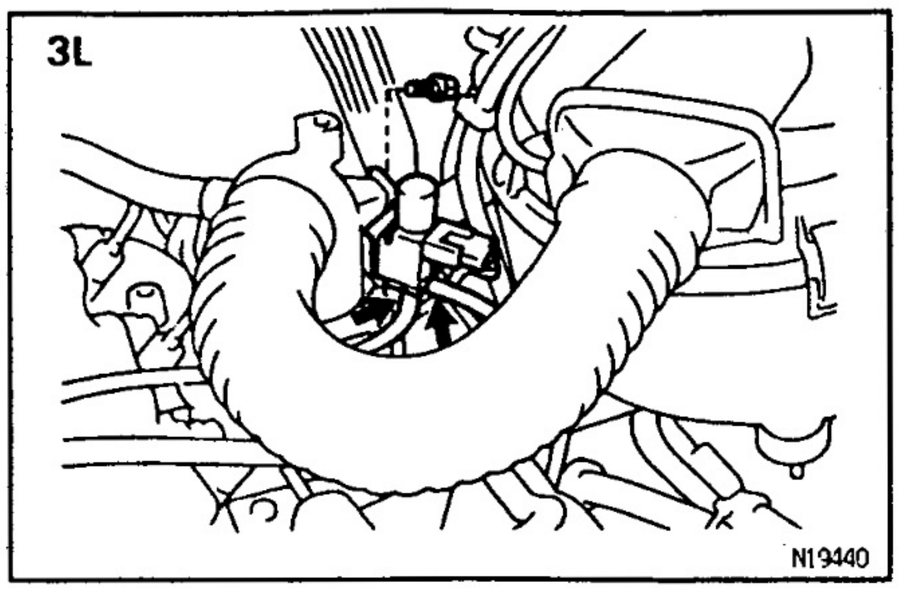

VACUUM SWITCHING VALVE (VSV)

AC2VM-01

VACUUM SWITCHING VALVE

INSPECTION

1. REMOVE VSV

Discoonect the 2 hoses, and remove the bolt and VSV.

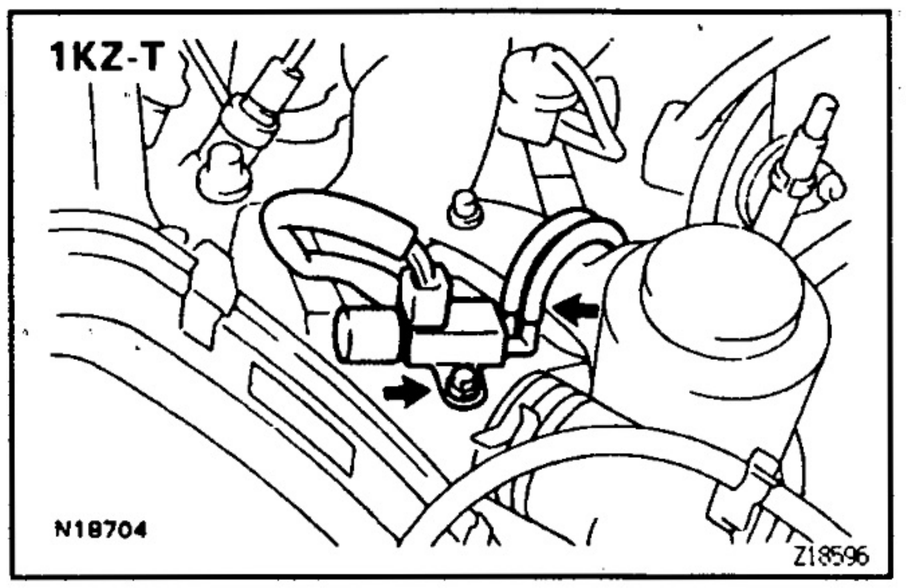

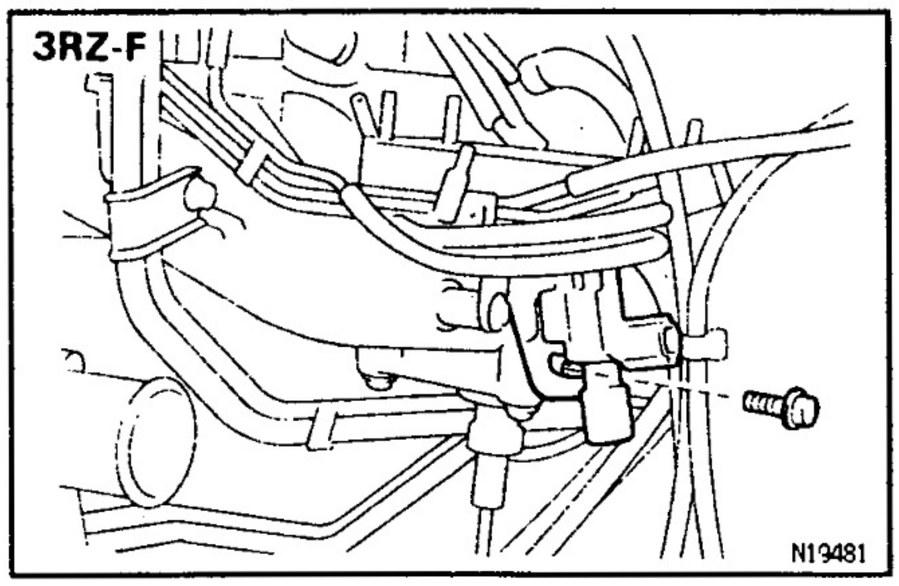

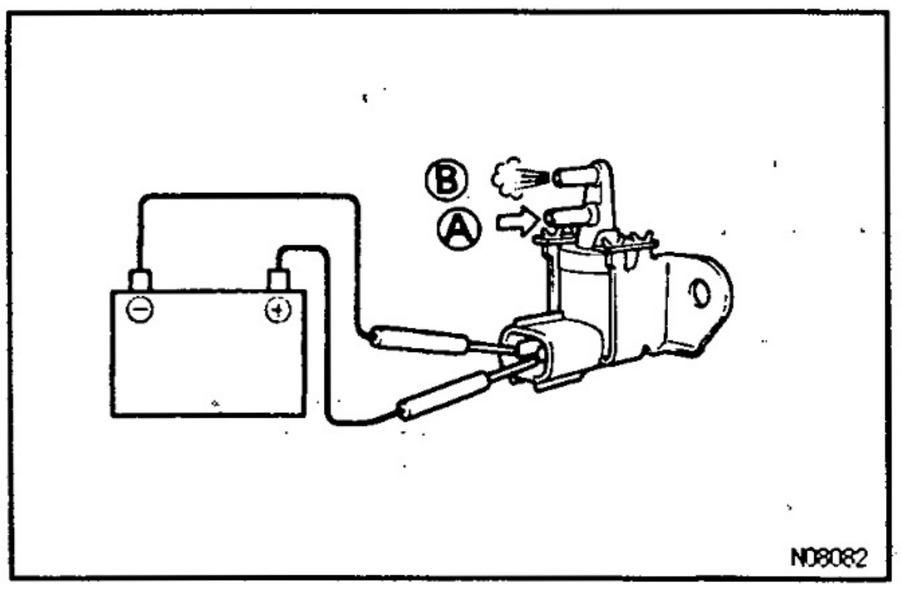

2. CHECK VACUUM CIRCUIT CONTINUITY IN VSV BY BLOWING AIR INTO PIPES

(a) Connect the VSV terminals to the battery terminals as illustrated.

(b) Blow into pipe "A" and check that air comes out of pipe "B".

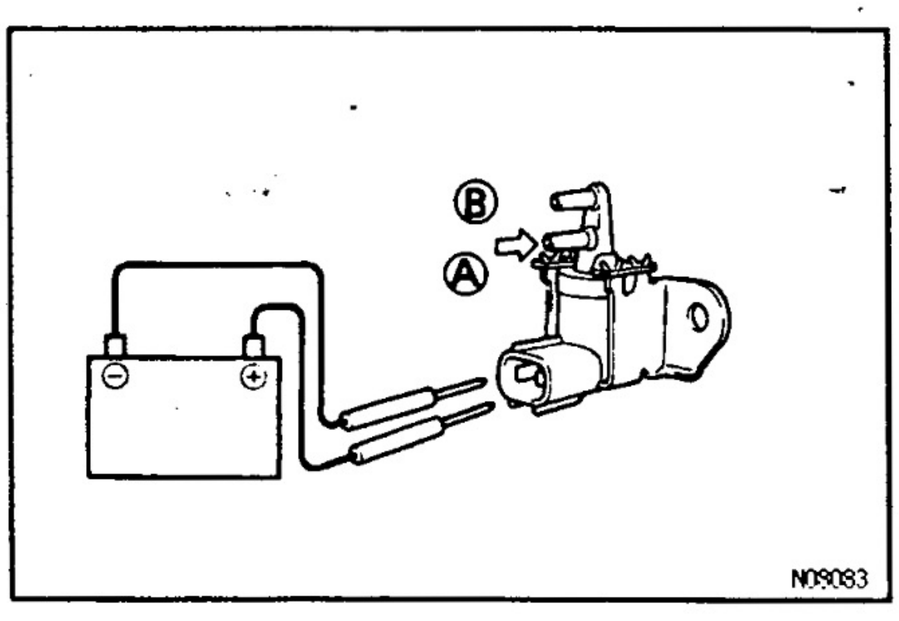

(c) Disconnect the battery.

(d) Blow into pipe "A" and check that air does not come out of pipe "B".
If a problem is found, replace the VSV.

AC

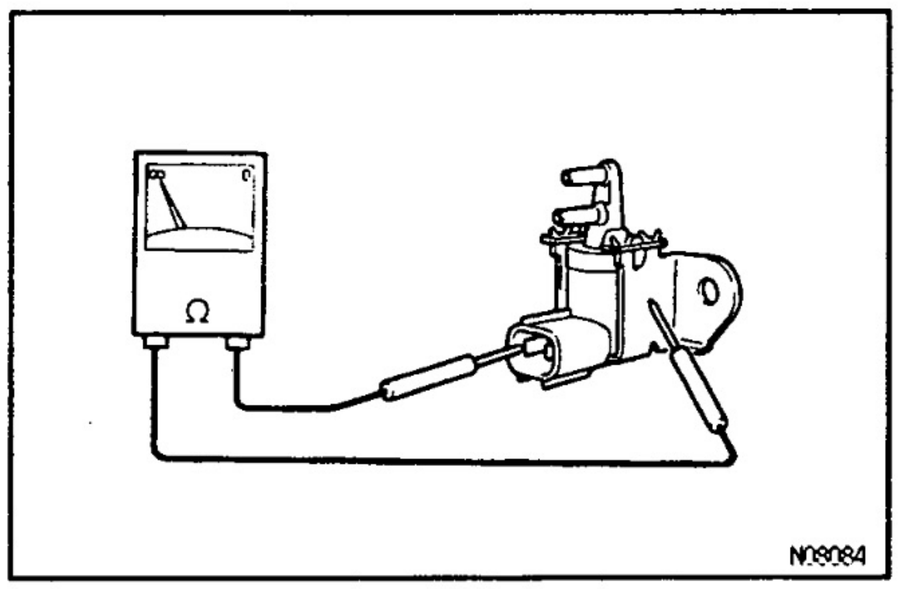

3. CHECK FOR SHORT CIRCUIT

Using an ohmmeter, check that there is no continuity between each terminals and the VSV body.
If there is continuity, replace the VSV.

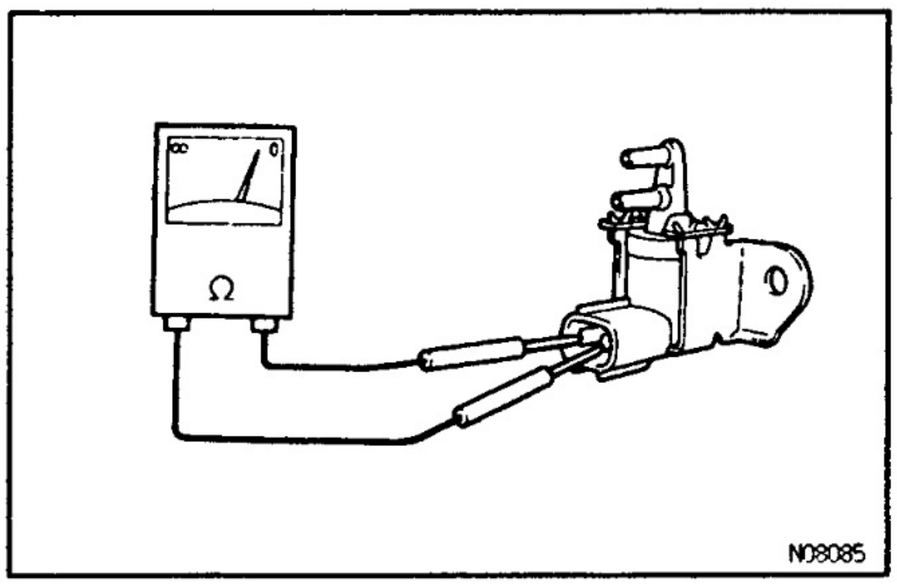

4. CHECK FOR OPEN CIRCUIT

Using an ohmmeter, measure resistance between terminals.

Resistance:

143.5 Ω

If resistance value is not as specified, replace the VSV.

CONDENSER FAN

ON–VEHICLE INSPECTION

AC2VR–01

1. INSPECT COOLING FAN OPERATION

Inspect the condenser fan operation, as shown in the chart below.
Test conditions:

- Ignition switch ON
- Blower speed control switch position "HI"
- A/C switch ON
- Rear cooler switch ON
- Rear cooler blower speed control switch "HI"
- Temperature control dial "MAX COOL"
- Rear cooler temperature control lever "MAX COOL"
- Install manifold gauge set

AC

Condition	Fan operation
Refrigerant pressure is less than 1,520 kPa (32 kgf/cm², 220 psi)	Not rotate
Refrigerant pressure is 1,520 kPa (32 kgf/cm², 220 psi) or above	Rotate

If operation is not as specified, proceed next inspection.

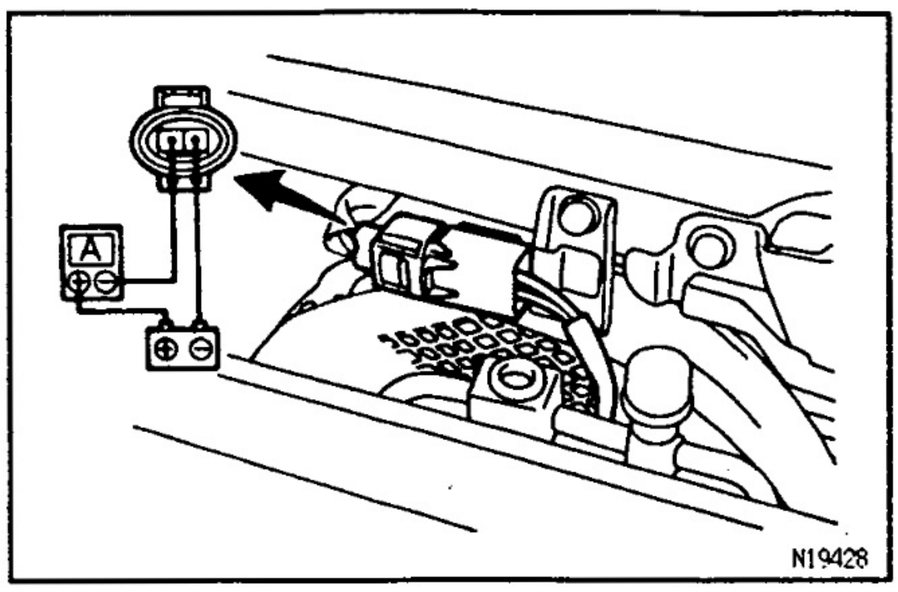

2. INSPECT COOLING FAN MOTOR OPERATION

(a) Disconnect the cooling fan connector.

(b) Connect battery and ammeter.

(c) Check that the cooling fan rotates smoothly, and check that the reading on the ammeter.

Specified amperage:1.5 A or below

If operation is not as specified, replace the fan motor.

If operation is as specified, check the pressure switch or condenser fan relay.

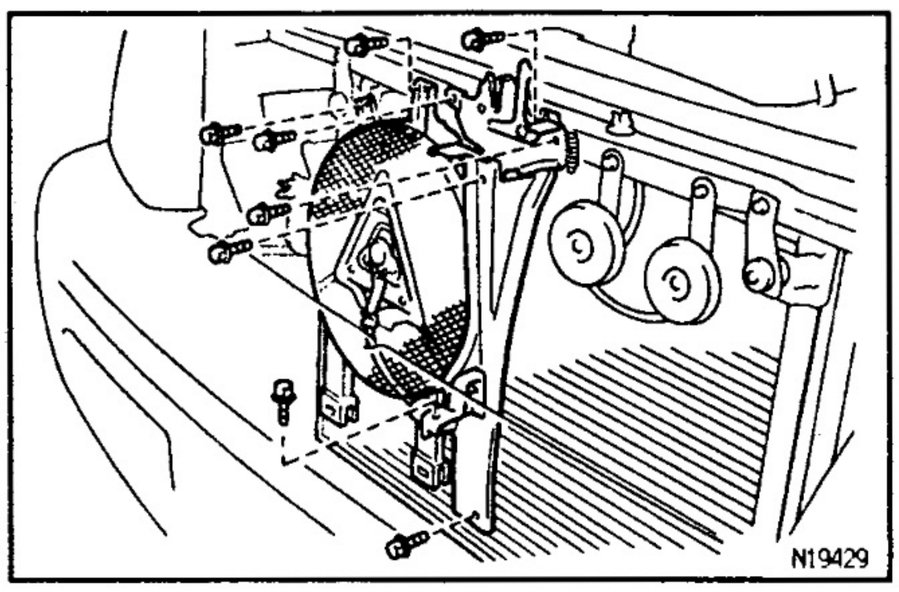

CONDENSER FAN MOTOR REMOVAL

AC3VP-01

1. REMOVE THESE PARTS:

(a) Radiator grill

(b) Hood lock

(c) Hood lock brace

(d) Liquid tube
(See page AC−59)

(e) RHD Models:
Suction tube
(See page AC−59)

2. REMOVE CONDENSER FAN

(a) Disconnect the connector.

(b) Remove the 2 bolts and condenser fan.

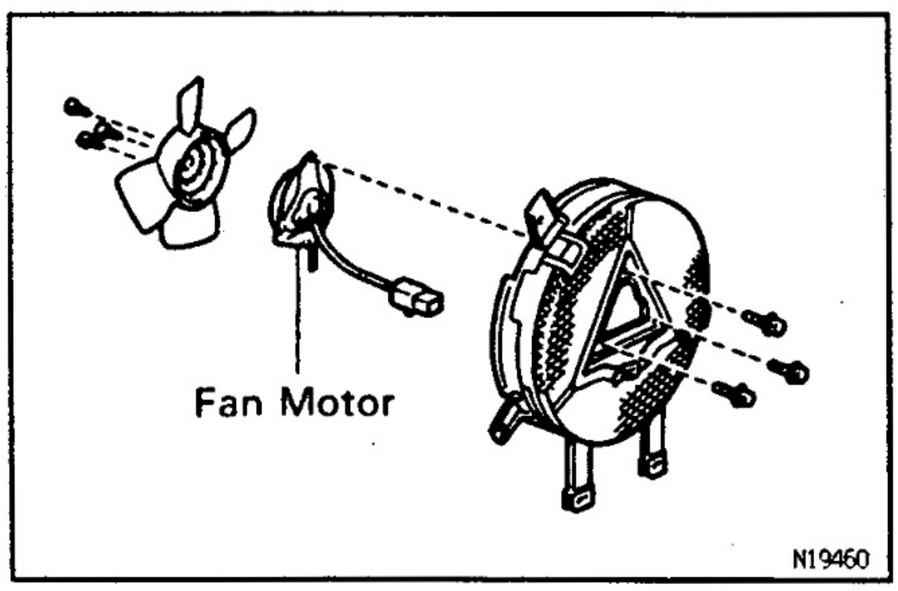

AC

3. REMOVE FAN MOTOR

(a) Disconnect the wire harness clamps from the fan shroud.

(b) Remove the 3 screws and fan motor with fan.

(c) Remove the 3 screws and fan motor from fan.

CONDENSER FAN MOTOR INSTALLATION

AC3VQ-01

Installation is in the reverse order of removal.

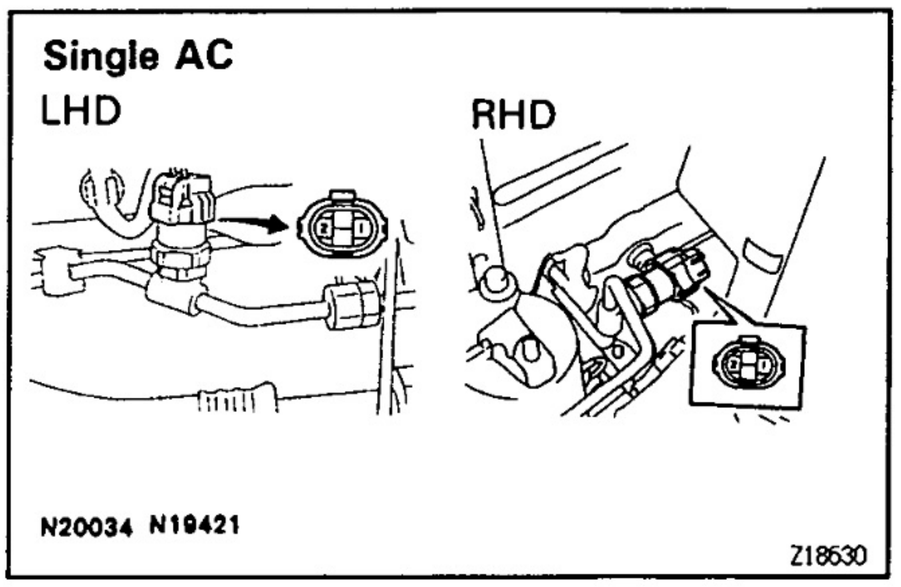

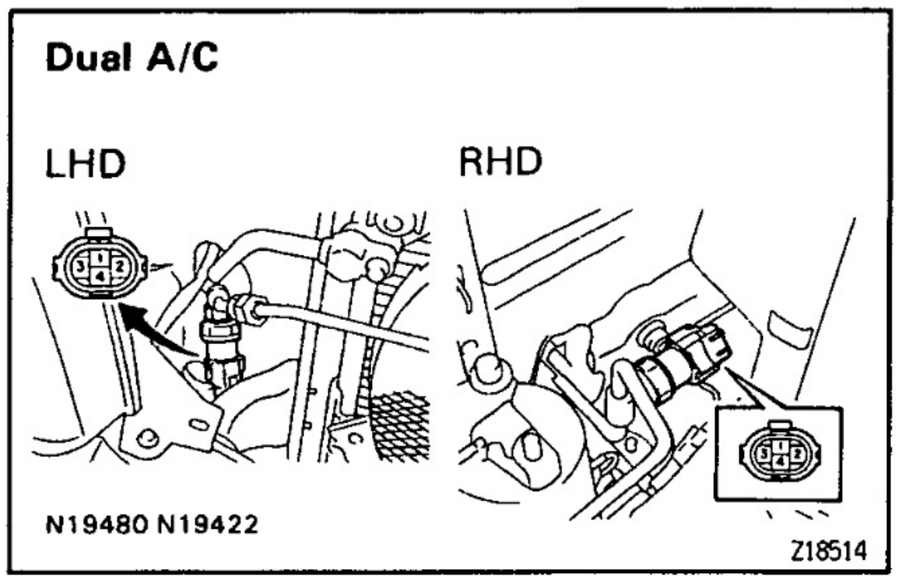

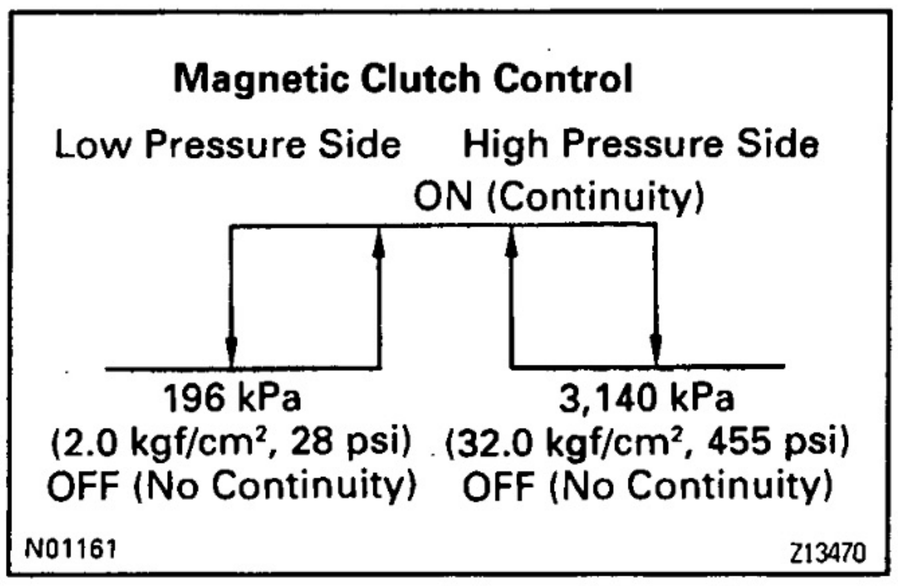

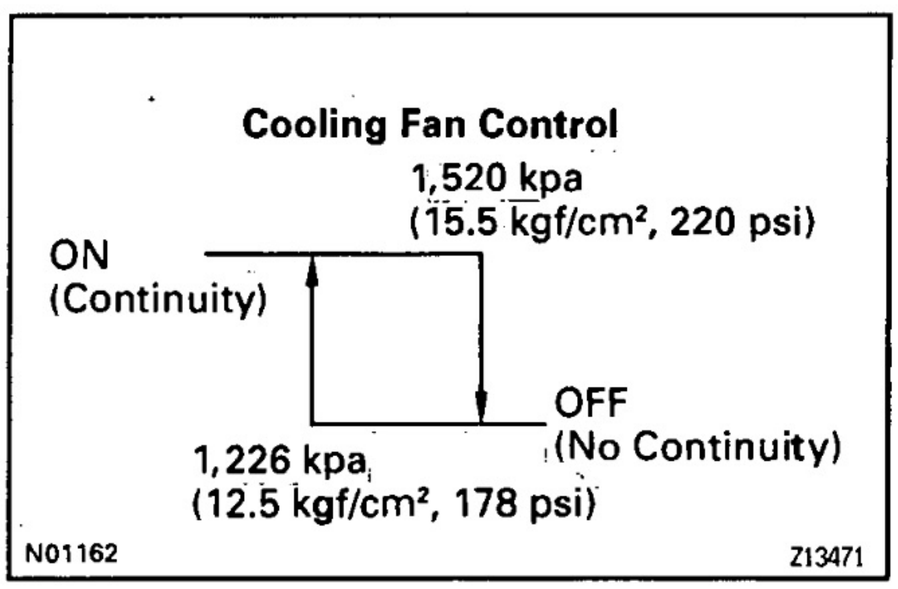

PRESSURE SWITCH

ON–VEHICLE INSPECTION

AC2VR–01

1. INSTALL MANIFORLD GAUGE SET
   (See page AC–9)
2. RHD and Dual A/C Models:
   REMOVE RADIATOR GRILL
3. RUN ENGINE AT APPROX. 1,500 RPM
4. INSPECT PRESSURE SWITCH OPERATION

Magnetic Clutch Control:
( ): Single A/C

(a) Connect the positive (+) lead from the ohmmeter to terminal 4(2) and the negative (–) lead to terminal 1.
(b) Check continuity between terminals when refrigerant pressure is changed, as shown in the illustration.
If operation is not as specified, replace the pressure switch.

Cooling Fan Control (Dual A/C Only):

(a) Connect the positive (+) lead from the ohmmeter to terminal 2 and the negative (–) lead to terminal 3.
(b) Check continuity between terminals when refrigerant pressure is changed, as shown in the illustration.
If operation is not as specified, replace the pressure switch.

AC

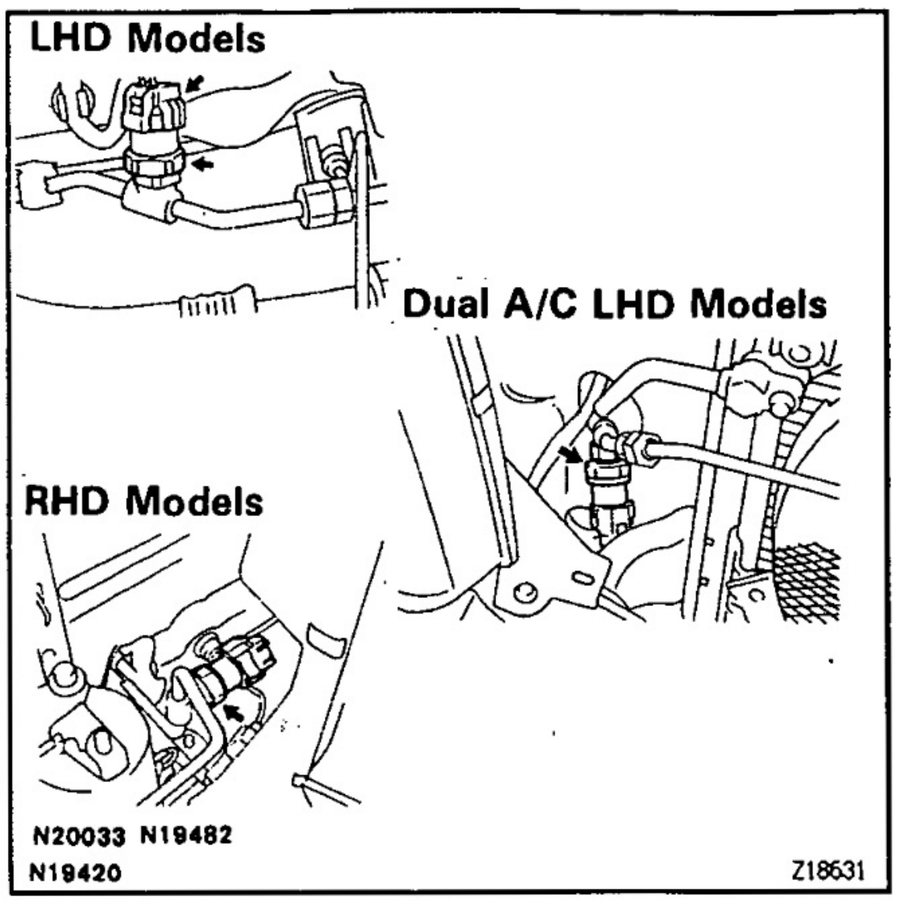

AC2V8-01

PRESSURE SWITCH REMOVAL

1. **DISCHARGE REFRIGERANT FROM REFRIGERATION SYSTEM**
   INSTALLATION HINT: Evacuate air from refrigeration system.
   Charge system with refrigerant and inspect for leakage of refrigerant.
   Specified amount:
   Single A/C: 700 ± 50 g (24.69 ± 1.76 oz.)
   Dual A/C: 950 ± 50 g (33.51 ± 1.76 oz.)
2. **RHD and Dual A/C Models:**
   REMOVE RADIATOR GRILL
3. **REMOVE PRESSURE SWITCH FROM LIQUID TUBE**
   Disconnect the connector and remove the pressure switch.
   Torque: 10 N·m (100 kgf·cm, 7 ft·lbf)
   INSTALLATION HINT: Lubricate a new O—ring with compressor oil and install the switch.
   HINT: Lock the switch mount on the tube with an open end wrench, being careful not to deform the tube, and remove the switch.

AC2VT-01

PRESSURE SWITCH INSTALLATION

Installation is in the reverse order of removal.

AC

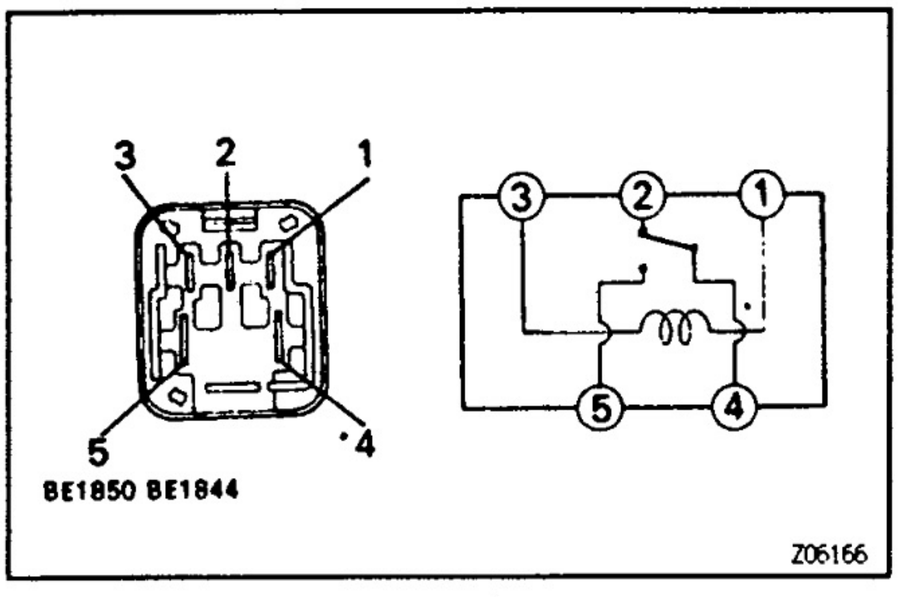

RELAY

RELAY INSPECTION

AC3VU-01

1. INSPECT HEATER MAIN RELAY (Marking: HEATER) CONTINUITY

Condition	Tester connection	Specified condition
Constant	1 — 3 2 — 4	Continuity
Apply B+ between terminals 1 and 3.	4 — 5	Continuity

If continuity is not as specified, replace the relay.

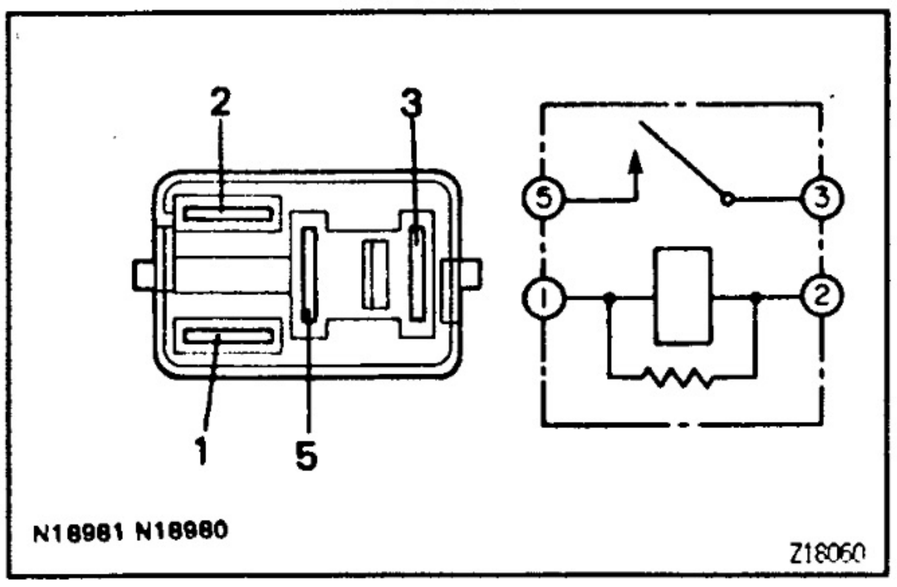

2. INSPECT MAGNETIC CLUTCH RELAY (Marking: MAGNET CLUTCH) CONTINUITY

Condition	Tester connection	Specified condition
Constant	1 — 2	Continuity
Apply B+ between terminals 1 and 2.	3 — 5	Continuity

If continuity is not as specified, replace the relay.

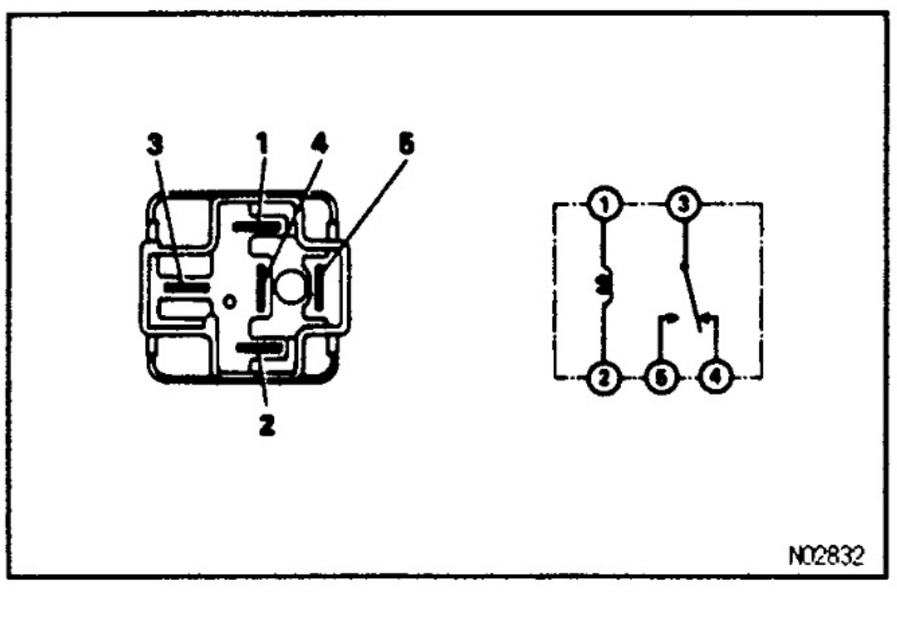

3. INSPECT REAR HEATER RELAY CONTINUITY

Condition	Tester connection	Specified condition
Constant	1 — 2 3 — 4	Continuity
Apply B+ between terminals 1 and 2.	3 — 5	Continuity

If continuity is not as specified, replace the relay.

4. INSPECT CONDENSER FAN RELAY (Marking: CDS FAN) CONTINUITY

Check the relay in the same way for magnetic clutch relay.

5. INSPECT REAR COOLER RELAY CONTINUITY

Check the relay in the same way for heater main relay.

AC

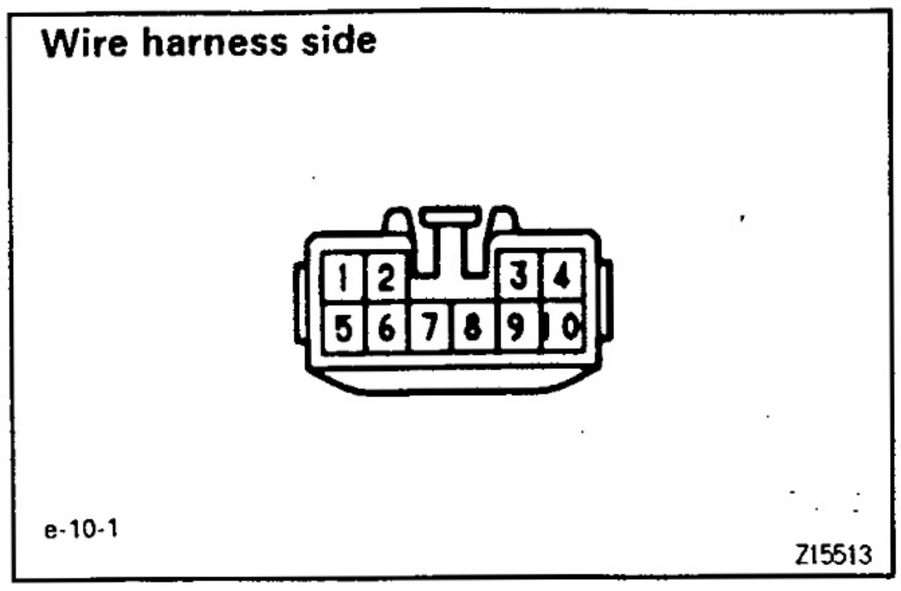

AIR CONDITIONER AMPLIFIER

AC2VV-01

ON-VEHICLE INSPECTION

Single A/C:

INSPECT AMPLIFIER CIRCUIT

(a) Disconnect the amplifier connector and inspect the connector on wire harness side, as shown in the chart below.

Test conditions:

- Ignition switch ON
- Blower speed switch HI
- Temperature control lever Max. Cool

Tester connection	Condition	Specified condition
4 — Ground	Constant	Continuity
6 — 2	Constant	Continuity
3 — Engine (and ECT) ECU terminal ACT (1KZ-TE, 3RZ-FE, 5VZ-FE)	Constant	Below 1V
8 — Engine (and ECT) ECU terminal AC1 (1KZ-TE, 3RZ-FE, 5VZ-FE)	Constant	Below 1V
7 — Ground (1KZ-T)	Turn ignition switch to START	Battery voltage
9 — Ground (3L, 1KZ-T, 3RZ-F)	Constant	Approx. 40 Ω
2 — 10	Constant	Approx. 1.5 kΩ at 25°C (77 °F)
9 — Ground	Constant	Approx. 3.8 Ω
5 — Ground	A/C switch ON	Battery voltage
5 — Ground	A/C switch OFF	No voltage
5 — Ground	Mode lever DEF. position	Battery voltage

If circuit is as specified, try replacing the amplifier with a new one. If the circuit is not as specified, inspect the circuits connected to other parts.

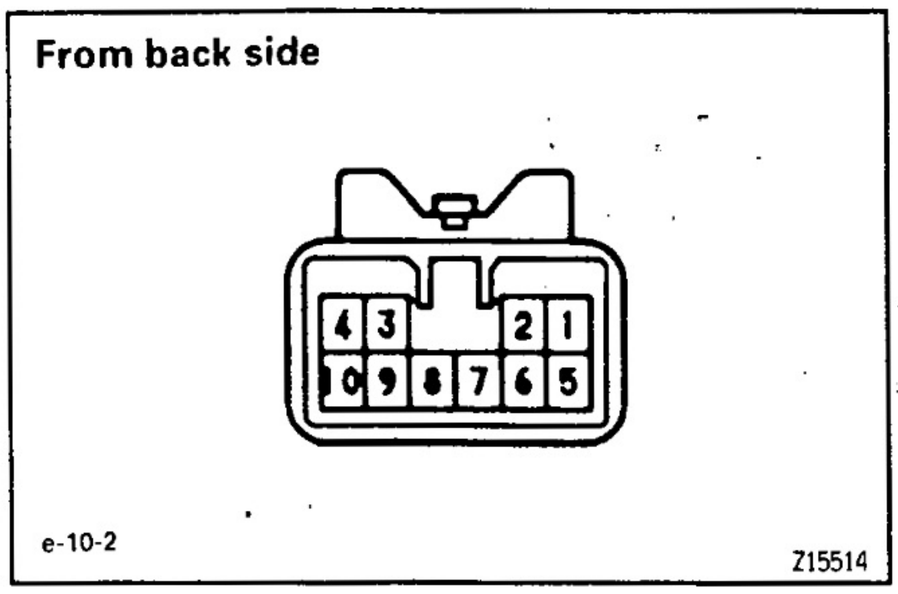

(b) Connect the connector to amplifier and inspect wire harness side connector from the back side, as shown in the chart below.

Test conditions

- Ignition switch ON
- Blower speed switch HI
- A/C switch ON
- Temperature control lever Max Cool
- Set on manifold gauge set

Tester connection	Condition	Specified condition
1 – Ground	Refrigerant pressure 196 – 1,340 kPa	Battery voltage
1 – Ground	Refrigerant pressure less than 196 or more than 3,140 kPa	No voltage

If circuit is as specified, try replacing the amplifier with a new one. If the circuit is not as specified, inspect the circuits connected to other parts.

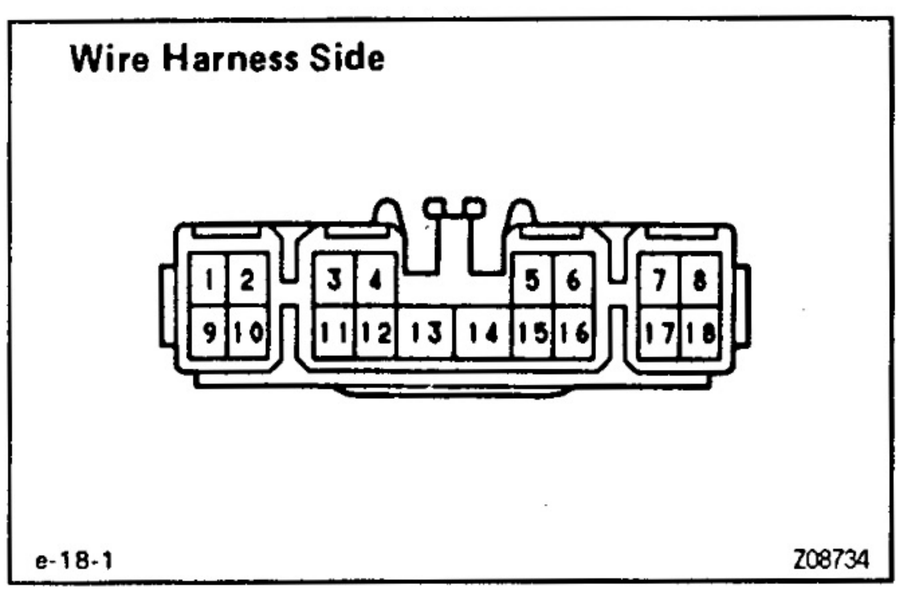

AC2VW-01

ON-VEHICLE INSPECTION

Dual A/C:

INSPECT AMPLIFIER CIRCUIT

(a) Disconnect the amplifier connector and inspect the connector on wire harness side, as shown in the chart below.

Test conditions:

- Ignition switch ON
- Front blower speed switch HI
- Rear cooler blower switch HI
- Temperature control levers Max. Cool

Tester connection	Condition	Specified condition
6 – Ground	Constant	Continuity
8 – Engine (and ECT) ECU terminal AC1 (1KZ-TE, 3RZ-FE, 5VZ-FE)	Constant	Below 1 V
10 – Engine (and ECT) ECU terminal ACT (1KZ-TE, 3RZ-FE, 5VZ-FE)	Constant	Below 1 V
6 – Ground (3L, 1KZ-T)	Constant	Approx. 40 Ω
8 – Ground (3RZ-F)	Constant	Approx. 40 Ω
4 – 16	Constant	Approx. 1.5 kΩ
7 – 16	Constant	Approx. 1.5 kΩ
7 – 17	Rear cooler temp. lever at "COOL" position	Approx. 0 Ω
7 – 17	Rear cooler temp. lever at "OFF" position	Approx. 3 kΩ
2 – Ground	Rear cooler switch ON	Below 4 V
2 – Ground	Rear cooler switch OFF	No voltage
11 – Ground	Front A/C switch ON	Battery voltage
11 – Ground	Front A/C switch OFF	No voltage
15 – Ground	Ignition switch ON	Battery voltage
15 – Ground	Ignition switch OFF	No voltage
18 – Ground (1KZ-T)	Turn ignition switch to START	Battery voltage

If circuit is as specified, try replacing the amplifier with a new one. If the circuit is not as specified, inspect the circuits connected to other parts.

AC

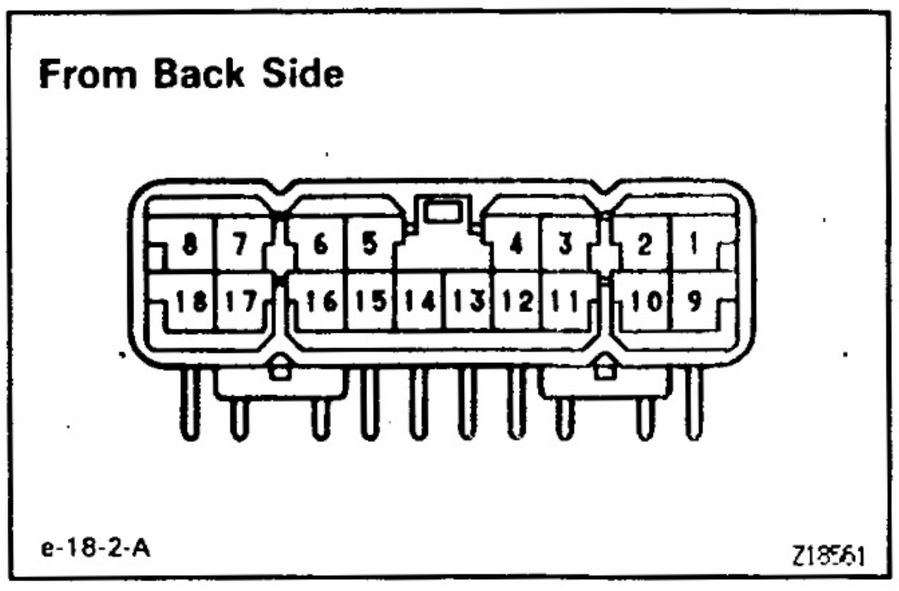

(b) Connect the connector to amplifier and inspect wire harness side connector from the back side, as shown in the chart below.
Test conditions
- Ignition switch ON
- Front blower speed switch HI
- A/C switch ON
- Rear cooler switch ON
- Rear cooler blower switch HI
- Temperature control levers Max. Cool
- Install manifold gauge set

Tester connection	Condition	Specified condition
13 — Ground	Refrigerant pressure 196 — 1,340 kPa	Battery voltage
13 — Ground	Refrigerant pressure less than 196 or more than 3,140 kPa	No voltage
8 — Ground	Rear cooler switch ON	Battery voltage
8 — Ground	Rear cooler switch OFF	No voltage

If circuit is as specified, try replacing the amplifier with a new one. If the circuit is not as specified, inspect the circuits connected to other parts.

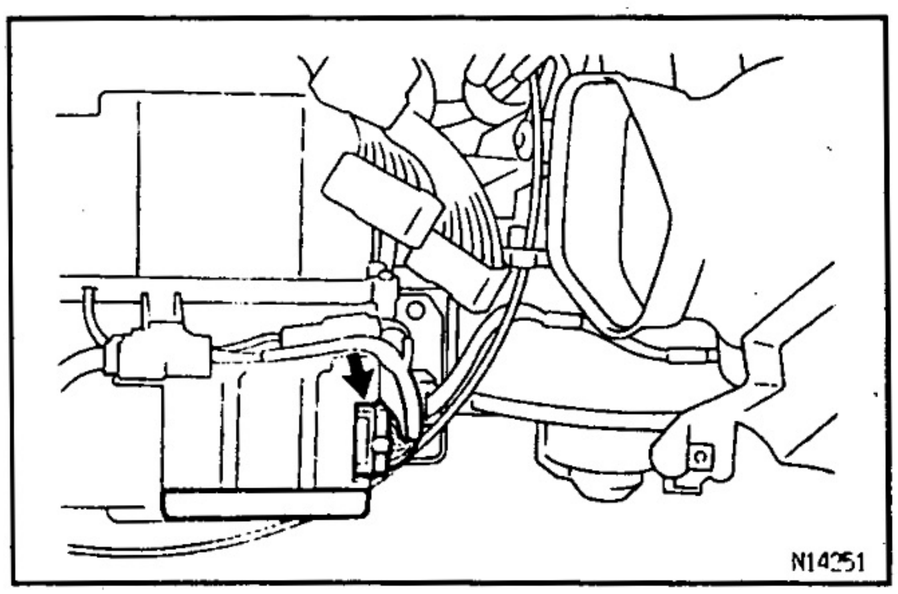

AC2VX-01

AC

A/C AMPLIFIER REMOVAL

1. REMOVE GLOVE COMPARTMENT DOOR (See page BO-55)
2. REMOVE A/C AMPLIFIER

(a) Disconnect the connector from the amplifier.
(b) Remove amplifier cover.
(c) Remove the amplifier from the cooling unit.

AC2VY-01

A/C AMPLIFIER INSTALLATION

Installation is in the reverse order of removal.

AIR CONDITIONER CONTROL ASSEMBLY

AC2VZ-01

ON-VEHICLE INSPECTION

INSPECT A/C CONTROL LEVERS OPERATION

Move the control lever and dials left and right and check for stiffness and binding through the full range of the levers.

AC2W0-01

A/C CONTROL ASSEMBLY REMOVAL

1. **REMOVE THESE PARTS:**
(a) Glove compartment door
(See page BO-55)
(b) Front door scuff plate driver side
(See page BO-55)
(c) Cowl side trim driver side
(See page BO-55)
(d) Center cluster finish panel No. 1
(See page BO-55)
(e) No. 4 heater to register duct
(See page BO-55)
(f) Instrument lower finish panel
(See page BO-55)
(g) No. 1 heater to register duct
(See page BO-55)
2. **DISCONNECT A/C CONTROL CABLES**

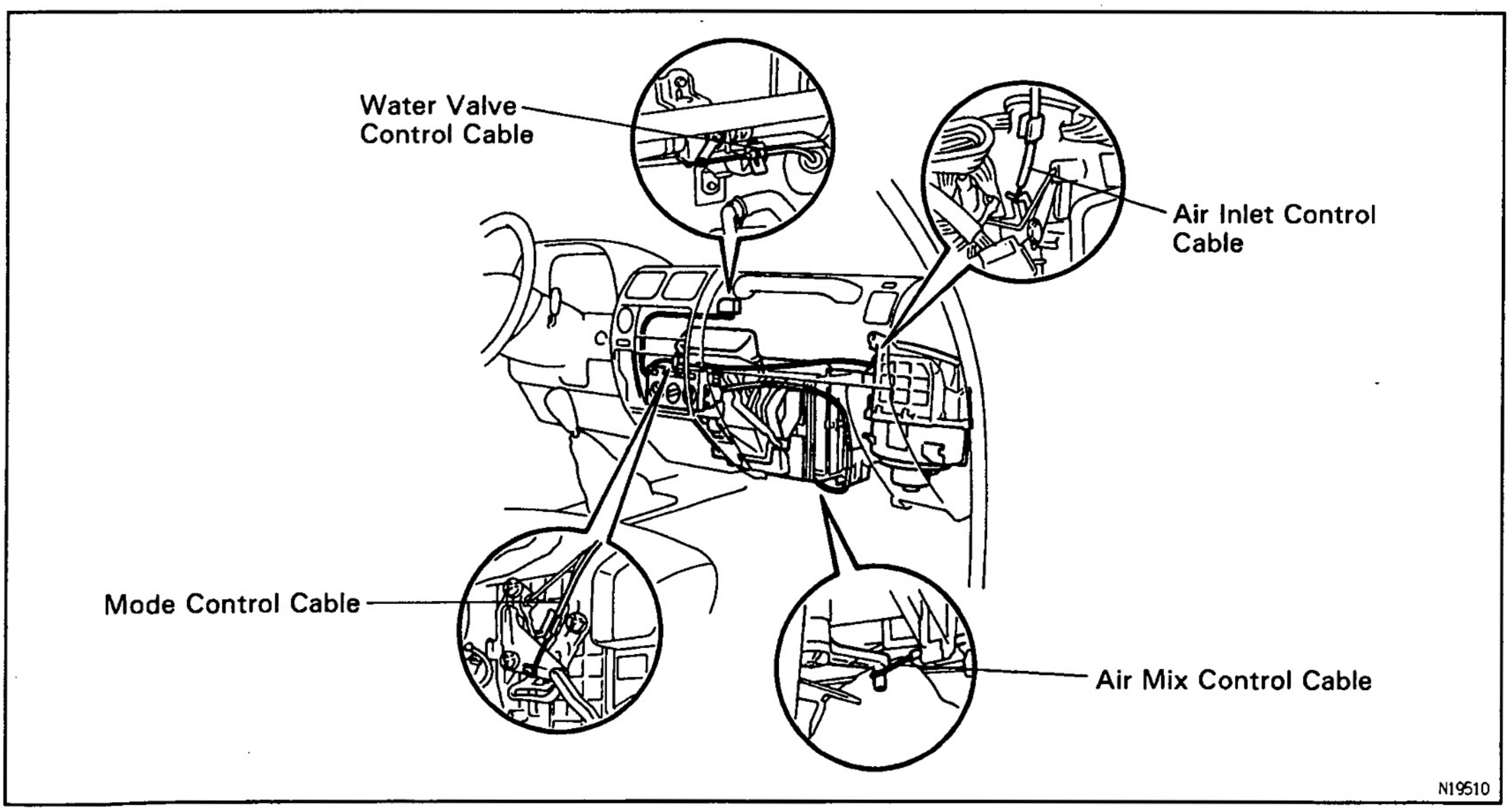

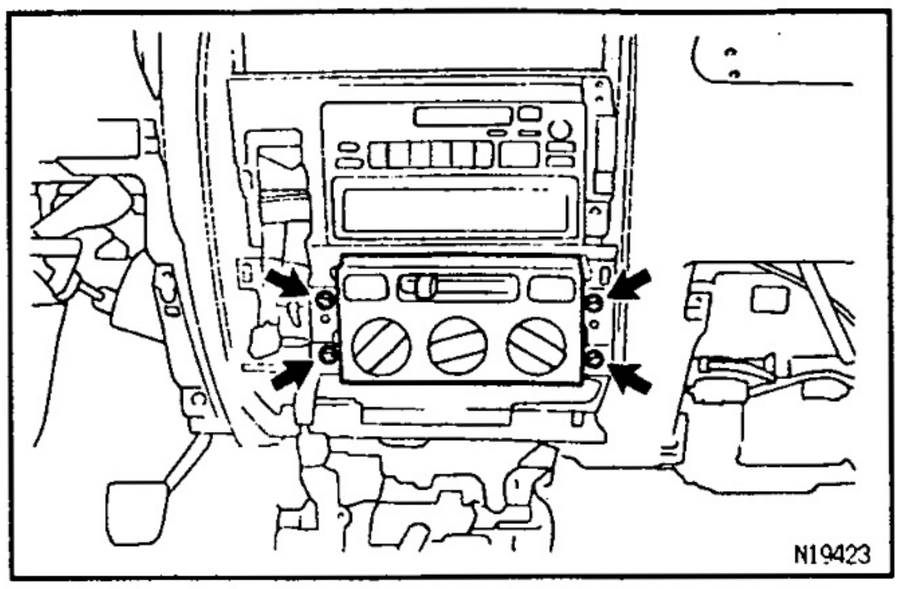

3. REMOVE A/C CONTROL ASSEMBLY

Remove the 4 screws and pull out the A/C control assembly, then disconnect the connectors.

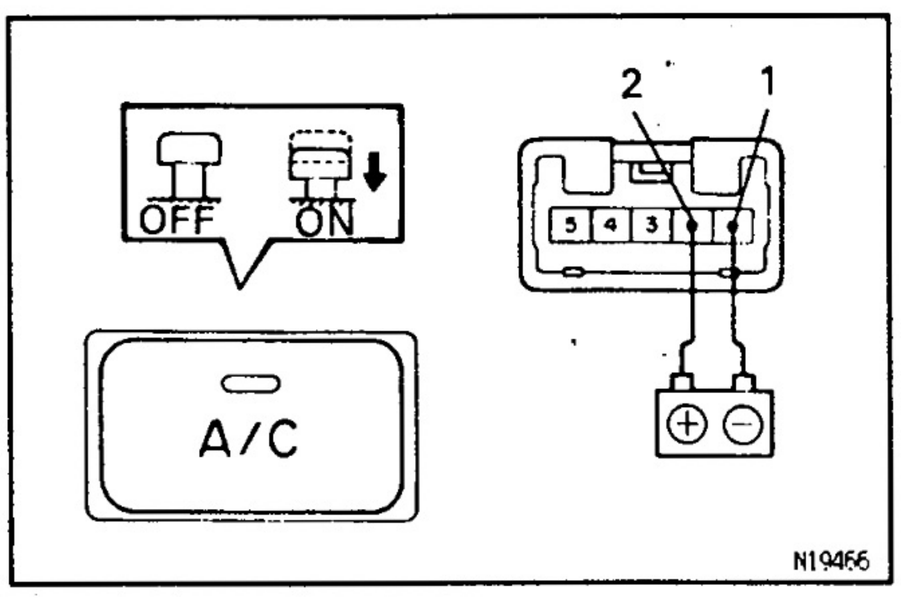

A/C CONTROL ASSEMBLY INSPECTION AC3W1-01

1. INSPECT A/C INDICATOR OPERATION

(a) Connect the positive (+) lead from the battery to terminal 2 and the negative (−) lead to terminal 1.

(b) Push the A/C button in and then check that the indicator lights up.

If operation is not as specified, replace the switch.

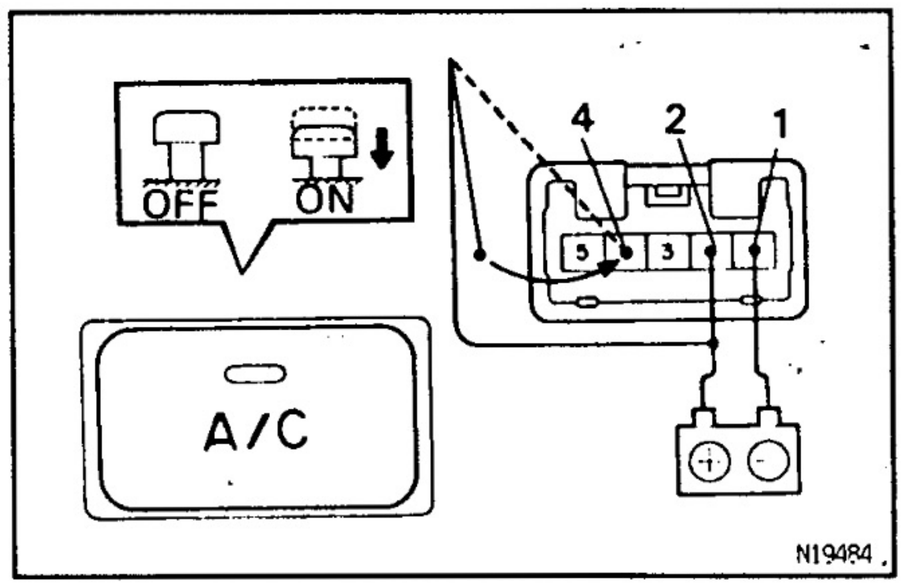

2. INSPECT DIMMING OPERATION

(a) Connect the positive (+) lead from the battery terminal 2 and the negative (−) lead to terminal 1, while press the switch.

(b) Connect the positive (+) lead from battery to terminal 4 and then check that the indicator dims.

If operation is not as specified, replace the switch.

3. INSPECT A/C SWITCH CONTINUITY

Condition/ Circuit	Tester connection	Specified condition
OFF	—	No continuity
ON	2 — 5	Continuity
Illumination circuit	3 — 4	Continuity

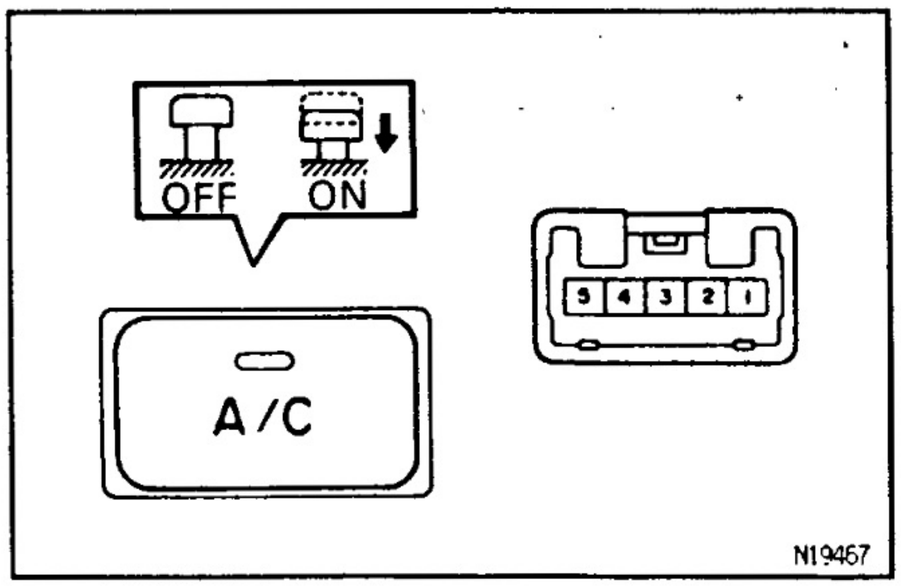

Switch continuity:

If continuity is not as specified, replace the switch.

Illumination circuit:

If continuity is not as specified, replace the bulb.

4. INSPECT BLOWER SPEED CONTROL SWITCH CONTINUITY

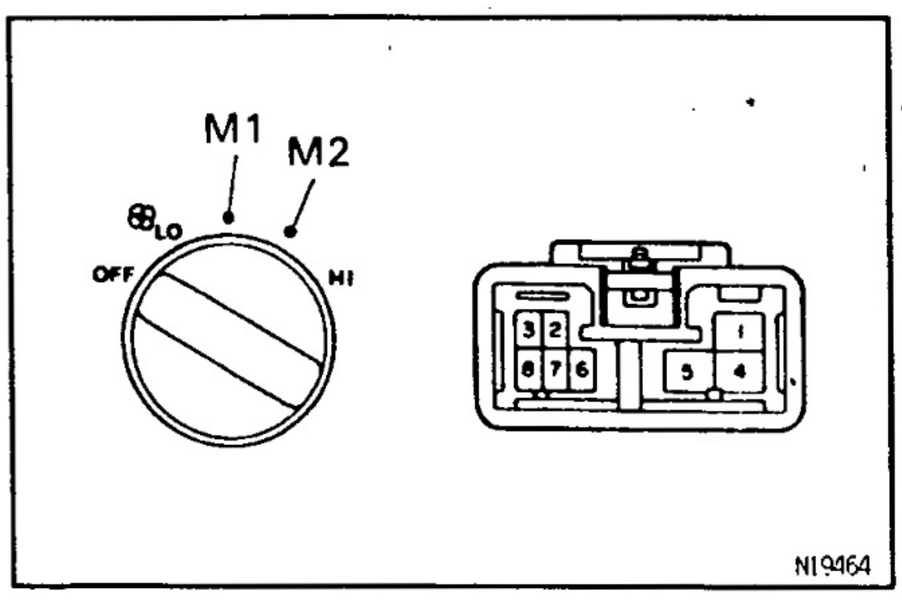

Position/ Circuit	Tester connection	Specified condition
OFF	—	No continuity
LO	1 — 8	Continuity
M1	1 — 6 — 8	Continuity
M2	1 — 5 — 8	Continuity
HI	1 — 4 — 8	Continuity
Illumination circuit	2 — 3	Continuity

If continuity is not as specified, replace the A/C control assembly.

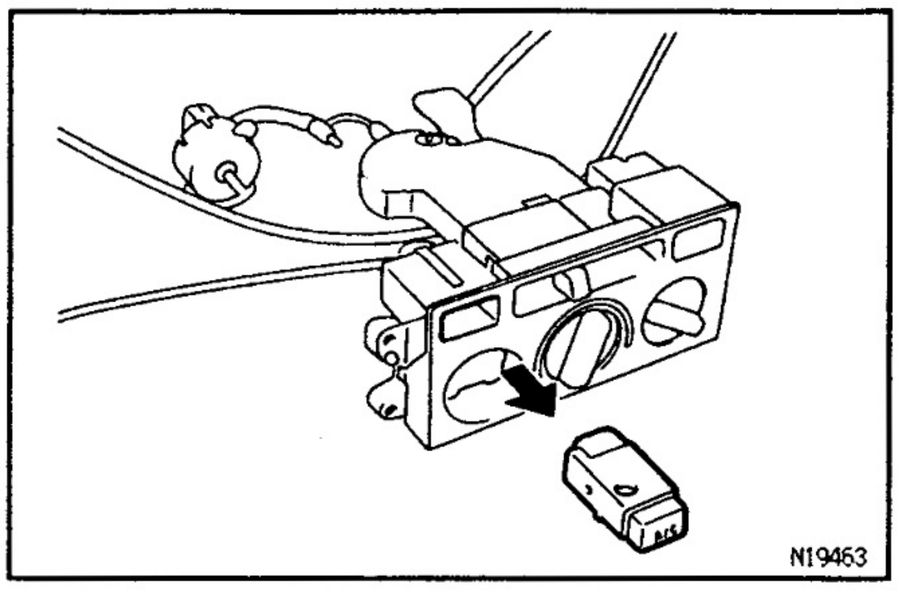

AC2W2-01

A/C SWITCH REMOVAL

1. **REMOVE A/C SWITCH**
   Release the claw and pull out the A/C switch.

AC2W3-01

A/C SWITCH INSTALLATION

Installation is in the reverse order of removal.

AC2W4-01

A/C CONTROL ASSEMBLY INSTALLATION

Installation is in the reverse order of removal.
HINT: If cable's adjustment is in need, refer to "A/C CONTROL CABLES ADJUSTMENT".

AC2W5-01

A/C CONTROL CABLES ADJUSTMENT

1. **SET A/C CONTROL LEVER AND DIALS IN THESE CONDITIONS:**

(a) Air inlet control lever to the "FRESH" position
(b) Mode control dial to the "FACE" position
(c) Temperature control dial to the "COOL" position

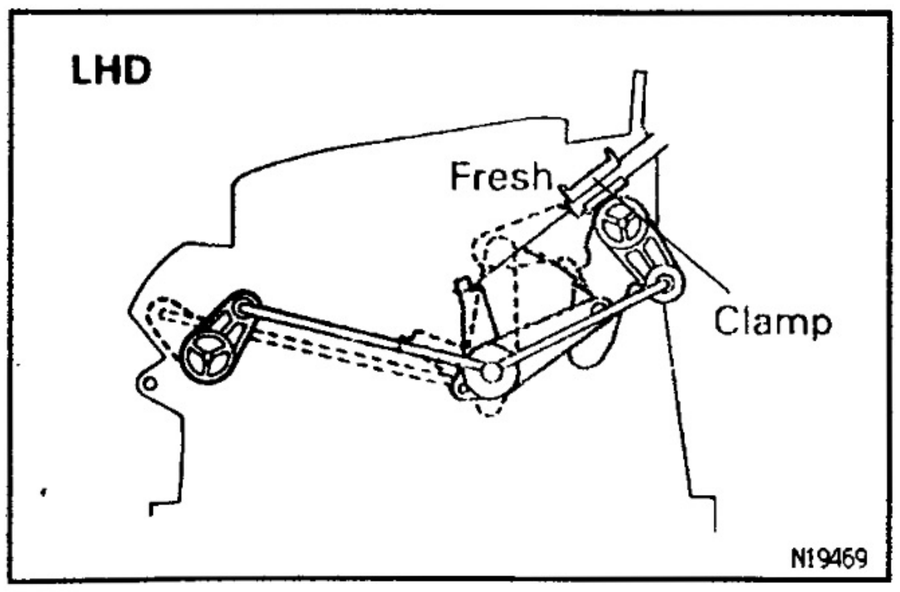

2. **ADJUST AIR INLET CONTROL CABLE**
   Set the air inlet damper on "FRESH" position and install the control cable and lock the clamp.

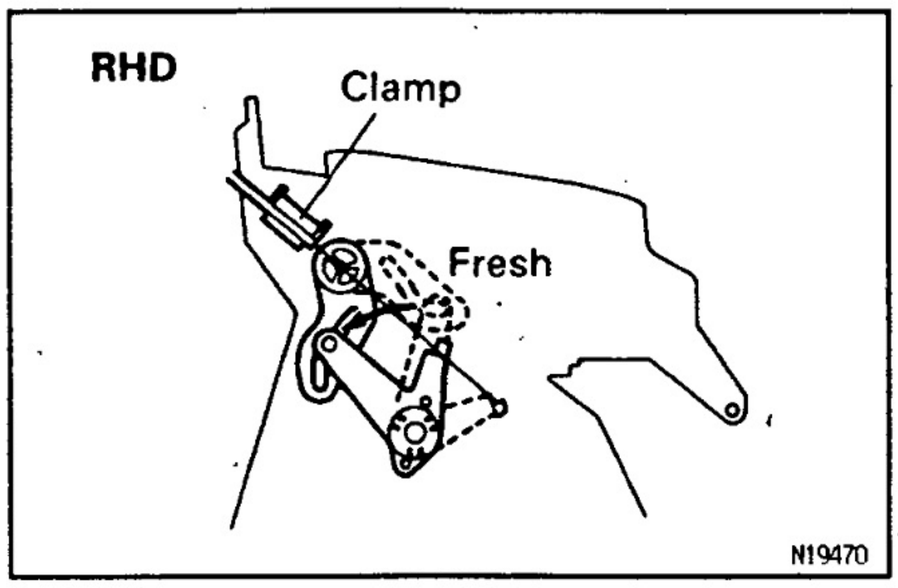

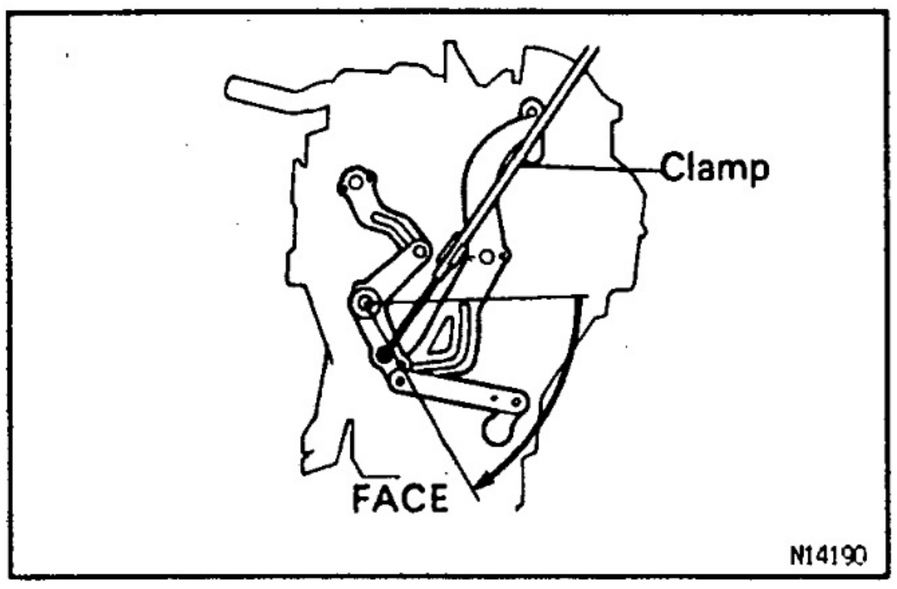

3. ADJUST MODE CONTROL CABLE

Set the mode damper on "FACE" position and install the control cable and lock the clamp.

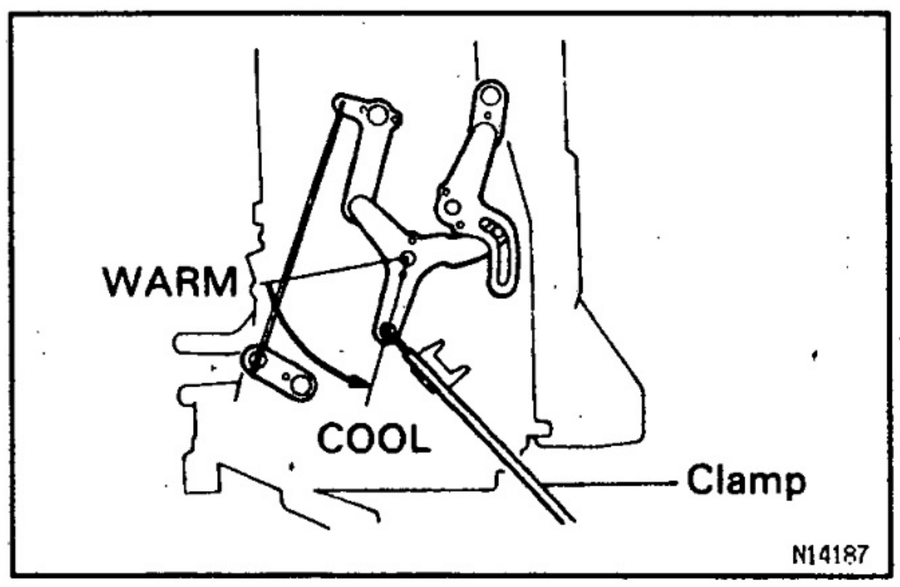

4. ADJUST AIR MIX CONTROL CABLE

Set the air mix damper on "COOL" position and install the control cable and lock the clamp.

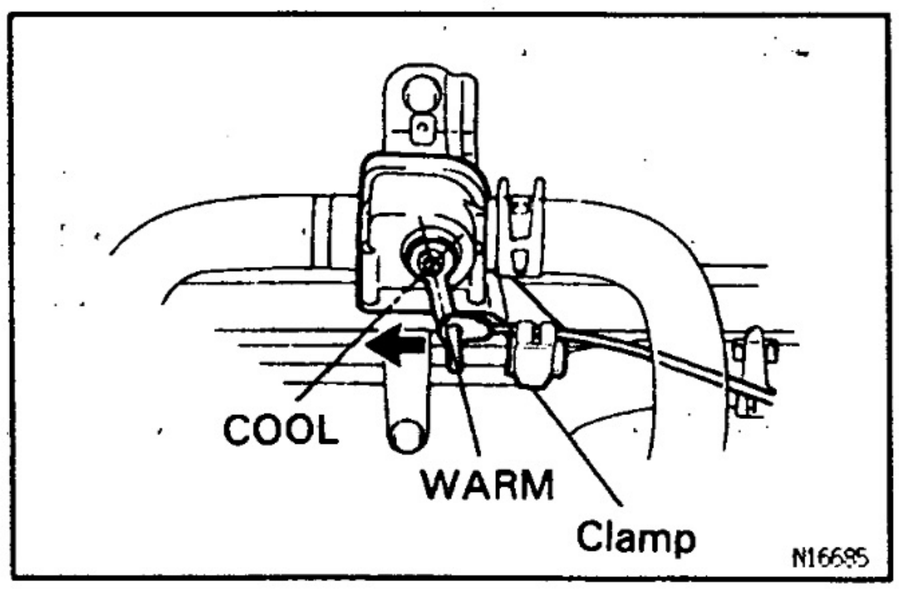

5. ADJUST WATER VALVE CONTROL CABLE

Set the water valve on "COOL" position, install the control cable and lock the clamp.

AC

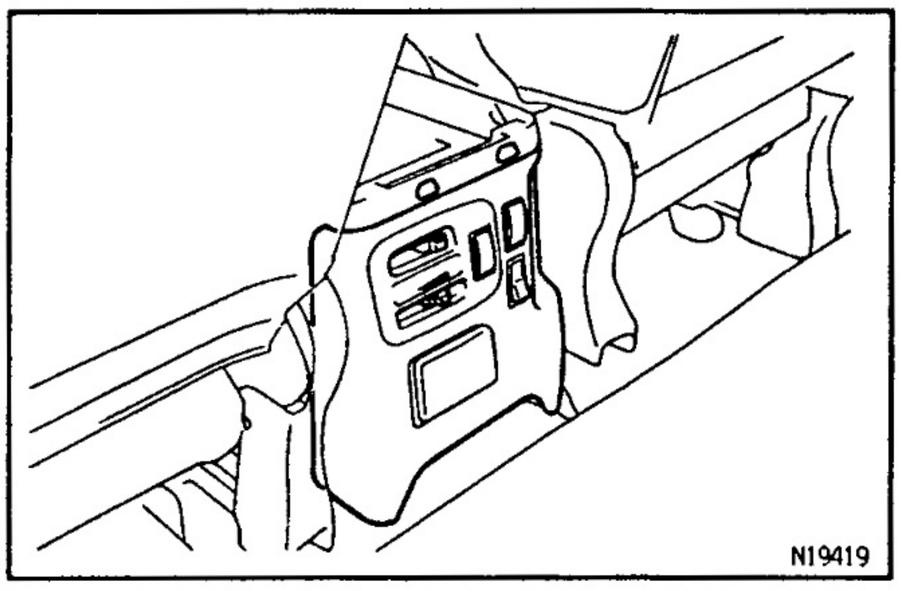

REAR COOLER CONTROL PANEL

AC3W6-01

REAR COOLER CONTROL PANEL

REMOVAL

1. **REMOVE REAR CONSOL PANEL**
   Release the 6 craws and pull out the panel then. disconnect the connectors.
2. **REMOVE REAR COOLER CONTROL PANEL**

(a) Remove the screw of connector bracket.
(b) Remove the cooler control knobs.
(c) Release the 4 craws and pull out the rear cooler control panel.

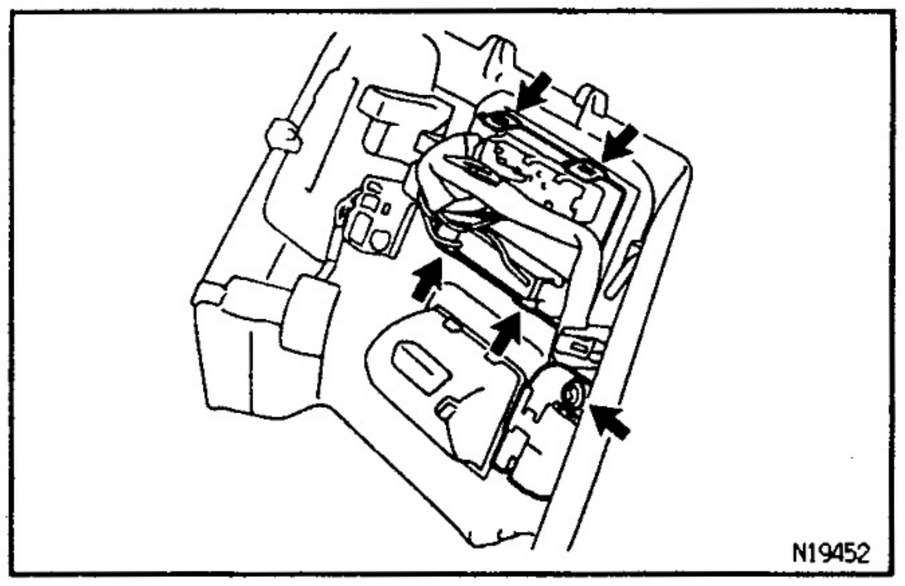

AC3W7-01

REAR COOLER CONTROL PANEL INSPECTION

1. **INSPECT PANEL ILLUMINATION**
   Connect the positive (+) lead from the battery to terminal 1 and negative (−) lead to terminal 2, then check that the illuminations light up.
   If illumination does not light up, replace the panel.

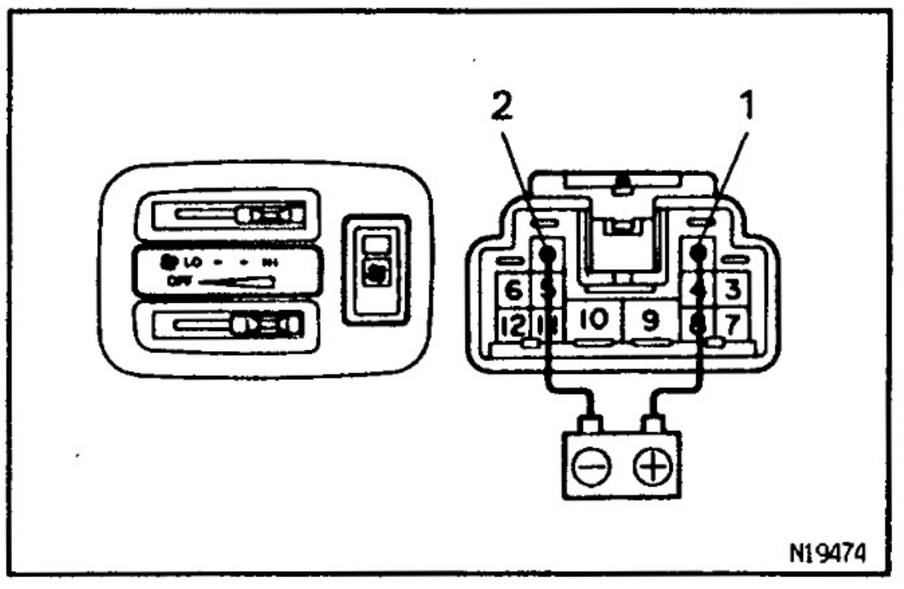

AC

2. **INSPECT REAR COOLER SWITCH OPERATION**
   Indicator Operation:

(a) Connect the positive (+) lead from the battery to terminal 7 and the negative (−) lead to terminal 8, then check that the indicator lights up while switch is pressed.
   If operation is not as sepcified, replace the panel.

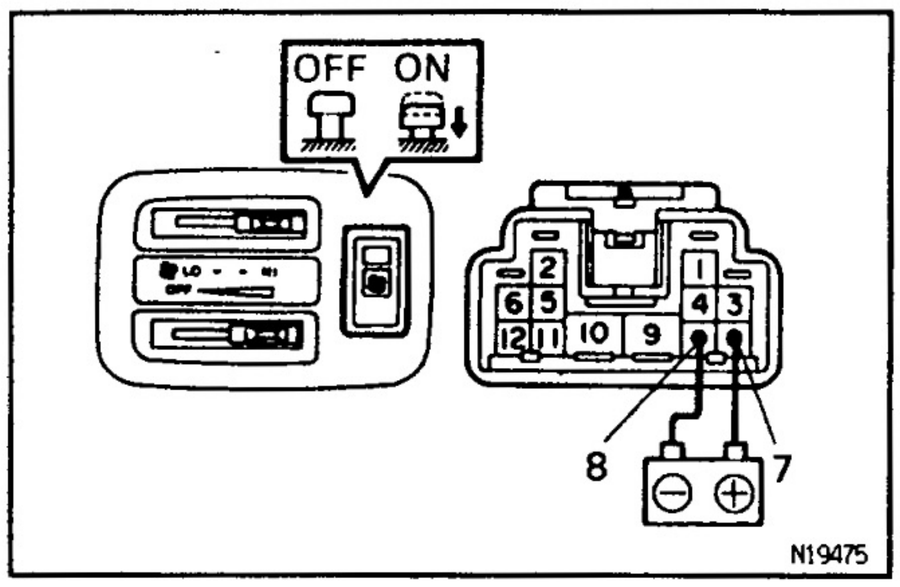

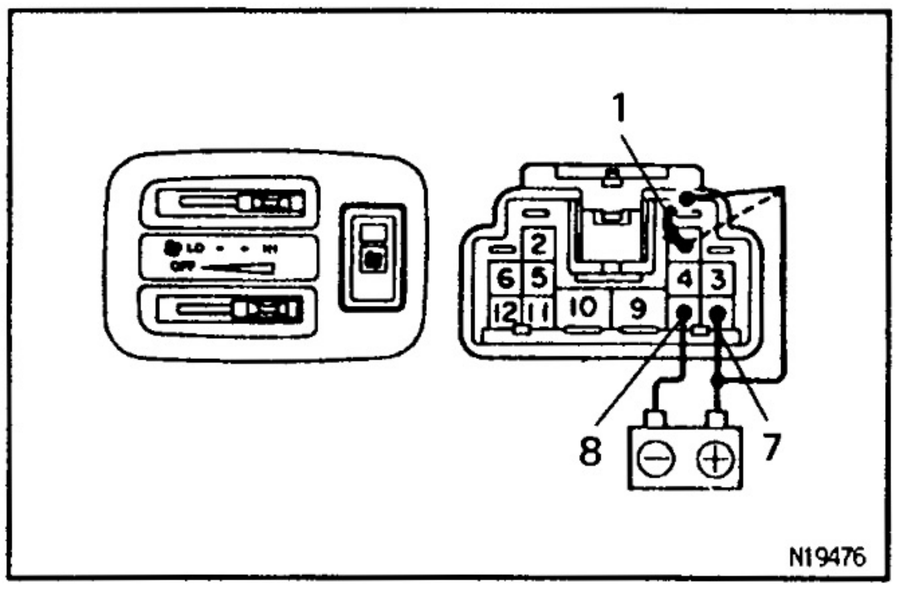

(b) Connect the positive (+) lead from the battery to terminal 7 and the negative (−) lead to terminal 8, while press the switch.
(c) Connect the positive (+) lead from the battery to terminal 1, then check that the indicator dims.
   If operation is not as specified, replace the panel.

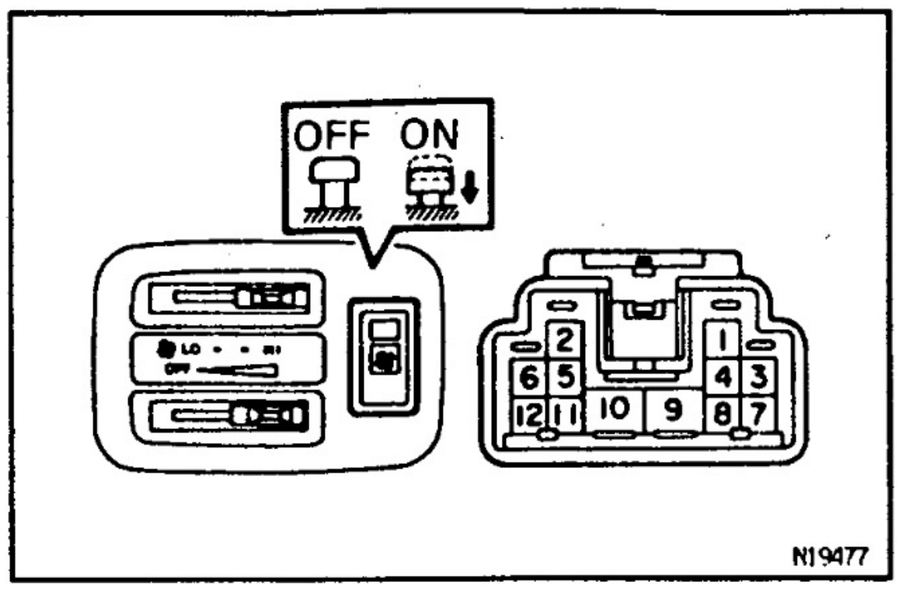

Continuity:

Switch position	Tester connection	Specified condition
OFF	—	No continuity
ON	8 — 11	Continuity

If continuity is not as specified, replace the panel.

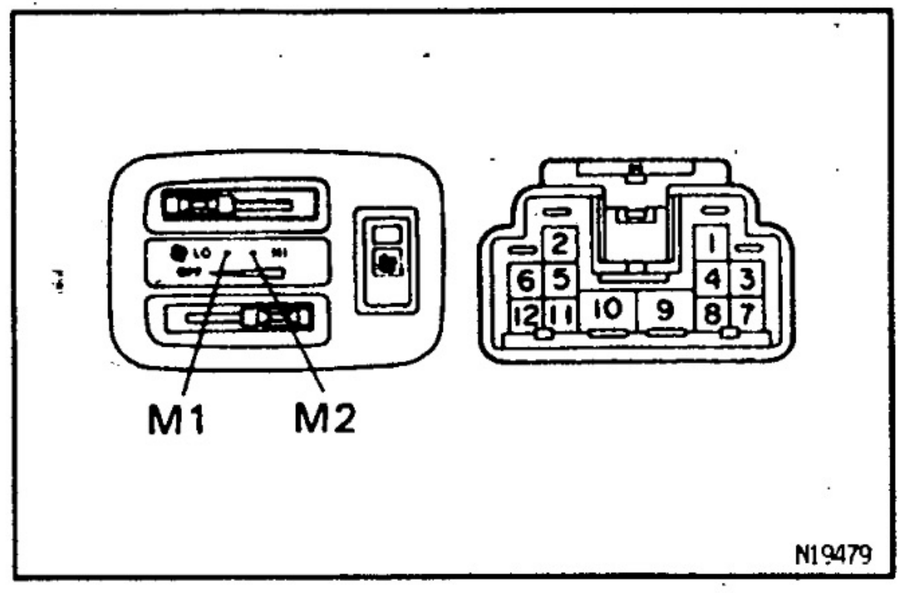

3. INSPECT BLOWER SPEED CONTROL SWITCH CONTINUITY

Switch position	Tester connection	Specified condition
LO	—	No continuity
M1	6 — 10	Continuity
M2	10 — 12	Continuity
HI	9 — 10	Continuity

If continuity is not as specified, replace the panel.

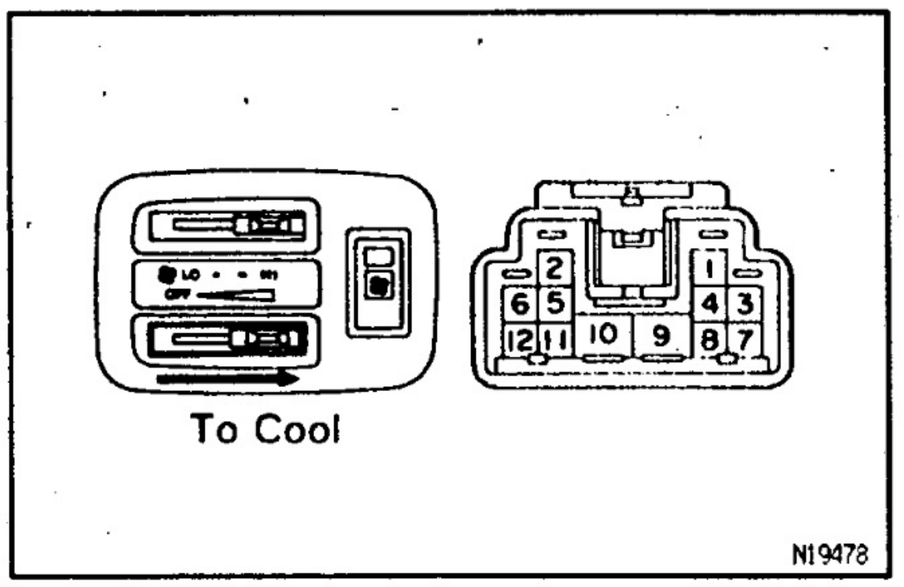

4. INSPECT TEMPERATURE CONTROL SWITCH OPERATION

(a) Check that the there is no continuity between terminals 3 and 4, when lever position is OFF.

(b) Check that the resistance between terminals 3 and 4 decrease from approx. 3 kΩ to 0 Ω, when lever is moved "COOL" position.
If resistence is not as specified, replace the panel.

AC2W6-01

REAR COOLER CONTROL PANEL INSTALLATION

Installation is in the reverse order of removal.

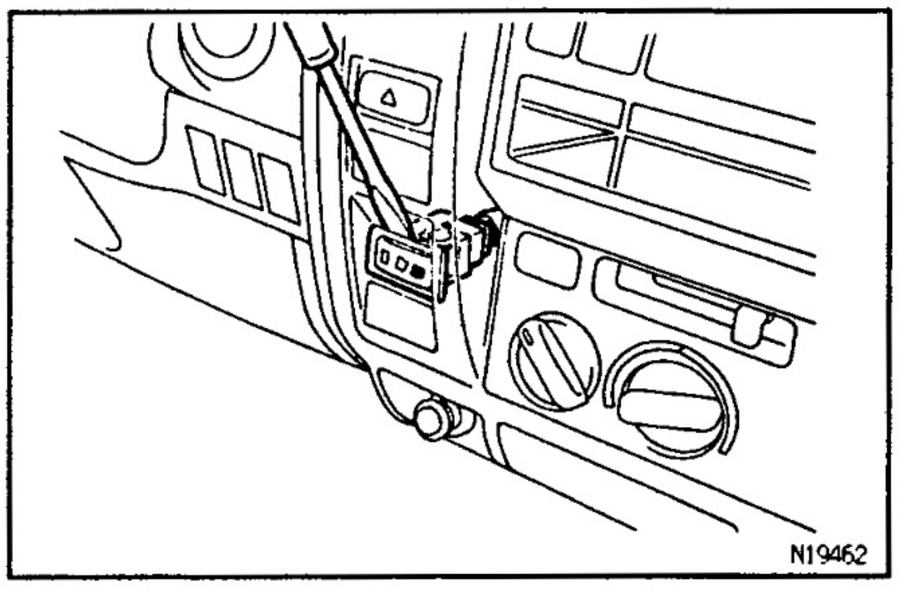

REAR COOLER SWITCH

AC2W8-01

REAR COOLER SWITCH REMOVAL

REMOVE SWITCH

Using a screwdriver, remove the switch, then disconnect the connector.

REMOVAL HINT: Tape the screwdriver tip before use.

AC2WA-01

REAR COOLER SWITCH INSPECTION

1. INSPECT INDICATOR OPERATION

(a) Connect the positive (+) lead from the battery to terminal 2 and the negative (−) lead to terminal 5, then check that the indicator lights up while switch is pressed.

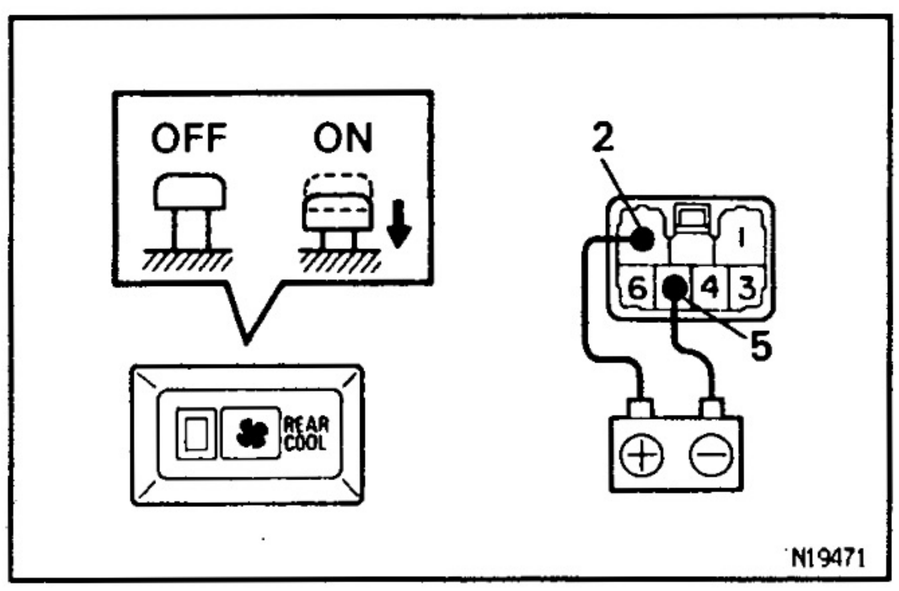

(b) Connect the positive (+) lead from the battery to terminal 2 and the negative (−) lead to terminal 5, while press the switch.

(c) Connect the positive (+) lead from the battery to terminal 1 and check that the indicator dims.

If operation is not as specified, replace the panel.

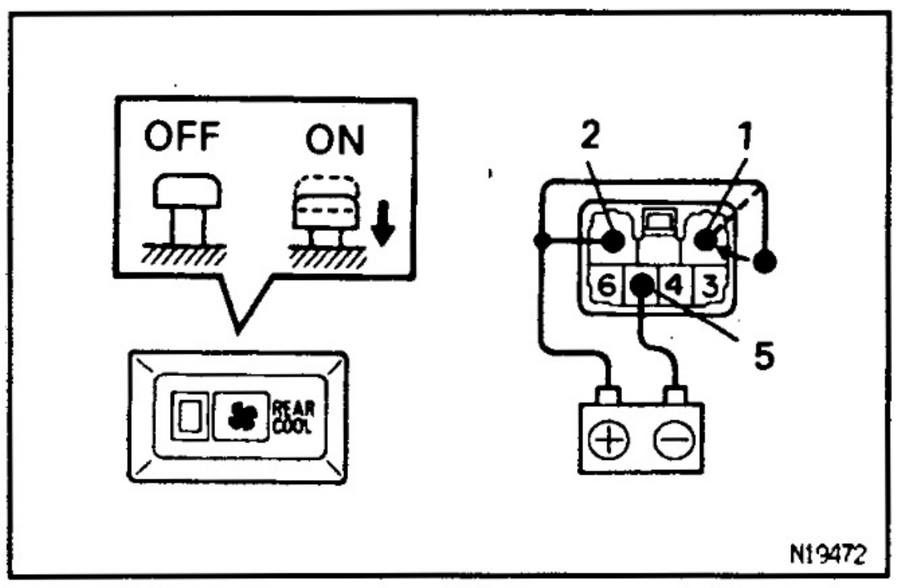

AC

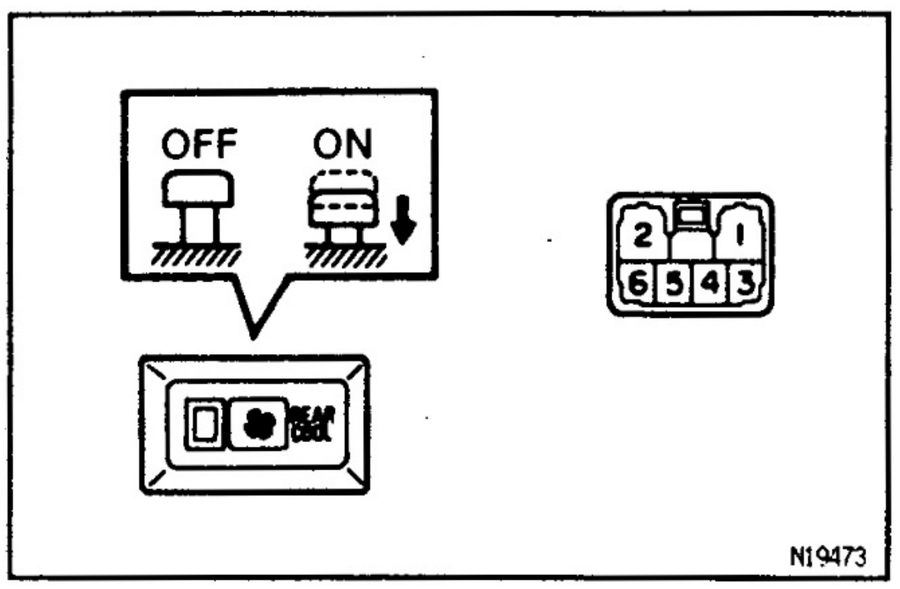

2. INSPECT SWITCH CONTINUITY

Position/ Circuit	Tester connection	Specified condition
ON	4 − 5	Continuity
OFF	5 − 6	Continuity
Illumination circuit	1 − 2	Continuity

Switch continuity:

If continuity is not as specified, replace the switch.

Illumination circuit:

If continuity is not as specified, replace the bulb.

AC2WB-01

REAR COOLER SWITCH INSTALLATION

Installation is in the reverse order of removal.

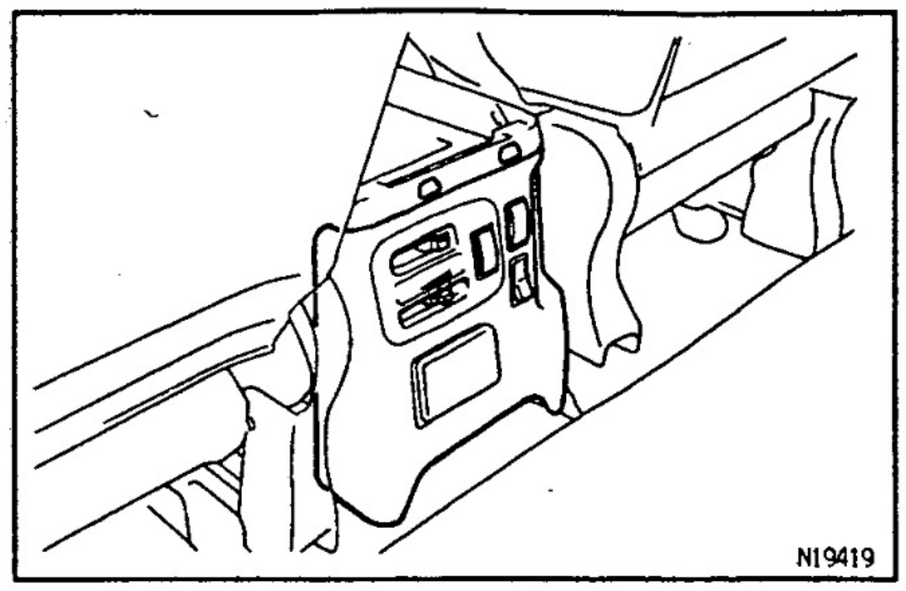

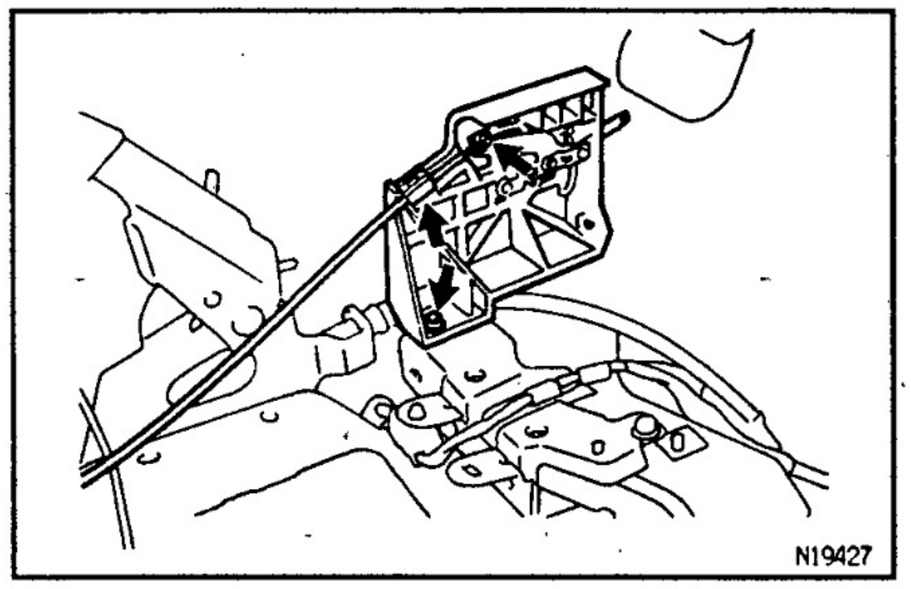

REAR HEATER CONTROL ASSEMBLY

AC2WC-01

REAR HEATER CONTROL ASSEMBLY

REMOVAL

1. REMOVE REAR CONSOL PANEL

(a) Pull out the heater control knob.

(b) Release the 6 claws and pull out the panel, then disconnect the connectors.

2. REMOVE REAR CONSOLE BOX

(See page BO–55)

3. REMOVE REAR HEATER CONTROL ASSEMBLY

(a) Disconnect heater control cable from heater control assembly.

INSTALLATION HINT: For installing the control cable refter to "HEATER CONTROL CABLE ADJUSTMENT".

(b) Remove the 2 screws and remove the heater control cable assembly.

AC2WD-01

INSTALLATION

Installation is in the reverse order of removal.

HINT: If cable's adjustment is in need, refer to "HEATER CONTROL CABLE ADJUSTMENT".

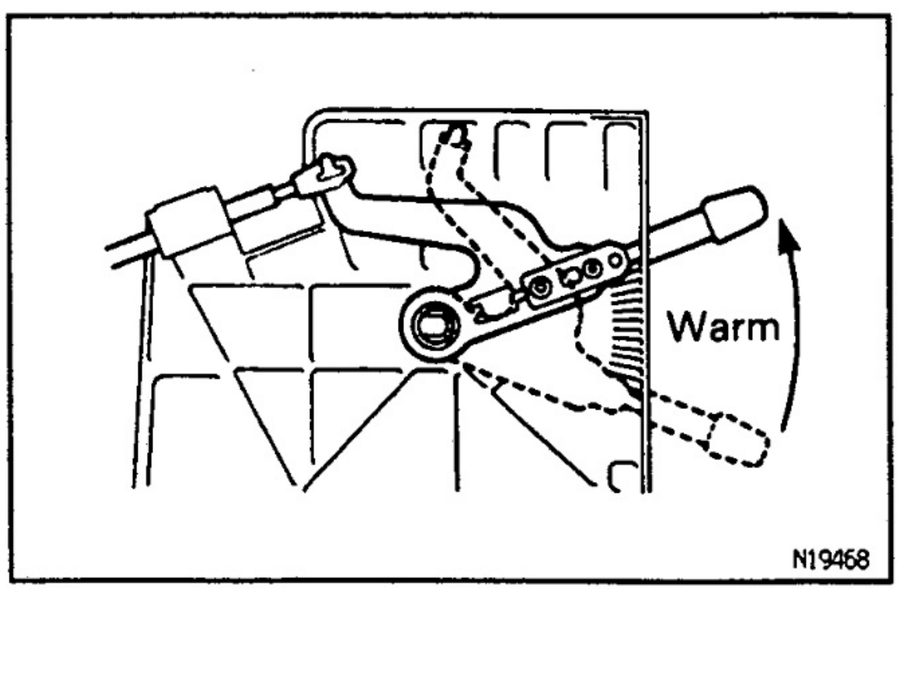

AC2WE-01

HEATER CONTROL CABLE ADJUSTMENT

1. SET DAMPER CONTROL LEVER TO "WARM" POSITION

2. ADJUST REAR HEATER CONTROL CABLE

Set the rear heater control lever to "WARM" position, install the control cable and lock the clamp.

AC

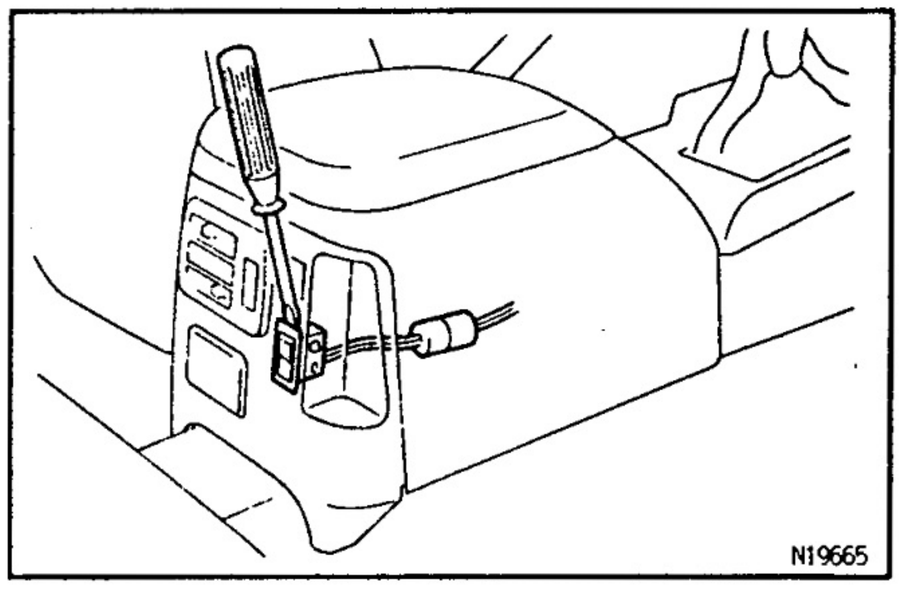

REAR BLOWER SPEED CONTROL SWITCH

REAR BLOWER SPEED CONTROL SWITCH AC2WF-01

REMOVAL

REMOVE SWITCH

Using a screwdriver, pull out the switch then disconnect the connector.

REMOVAL HINT: Tape the screwdriver tip before use.

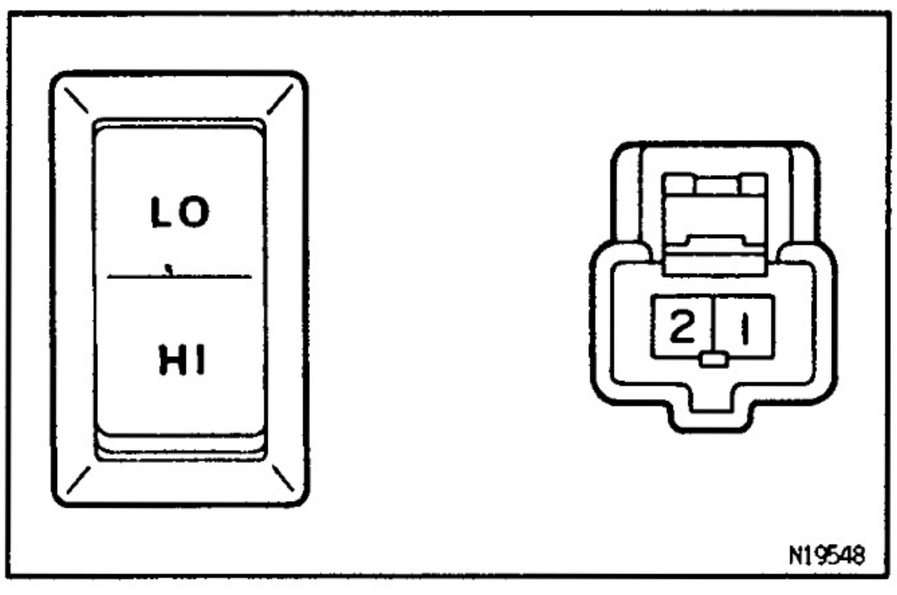

REAR BLOWER SPEED CONTROL SWITCH AC2WG-01

INSPECTION

INSPECT SWITCH CONTINUITY

Switch position	Tester connection	Specified condition
LO	1 – 2	No continuity
HI	1 – 2	Continuity

If continuity is not as specified, replace the switch.

REAR BLOWER SPEED CONTROL SWITCH AC2WH-01

INSTALLATION

Installation is in the reverse order of removal.

AC

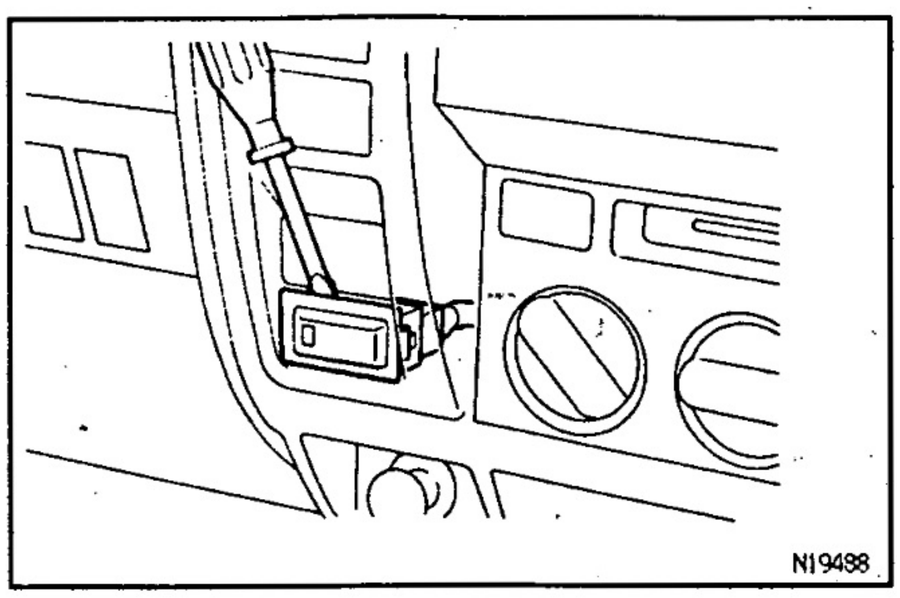

REAR HEATER SWITCH

REAR HEATER SWITCH REMOVAL

AC2WJ-01

REMOVE SWITCH

Using a screwdriver, pull out the switch then disconnect the connector.
REMOVAL HINT: Tape the screwdriver tip before use.

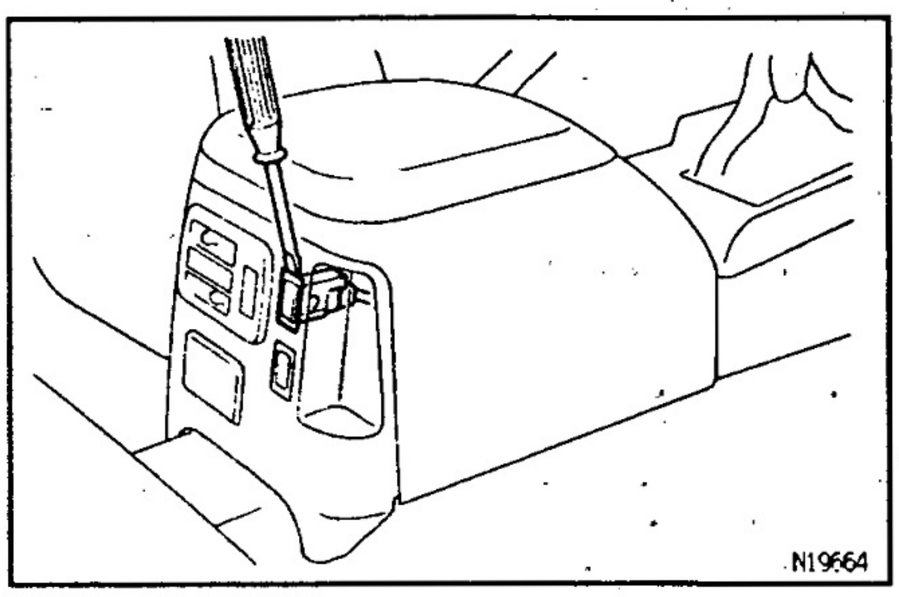

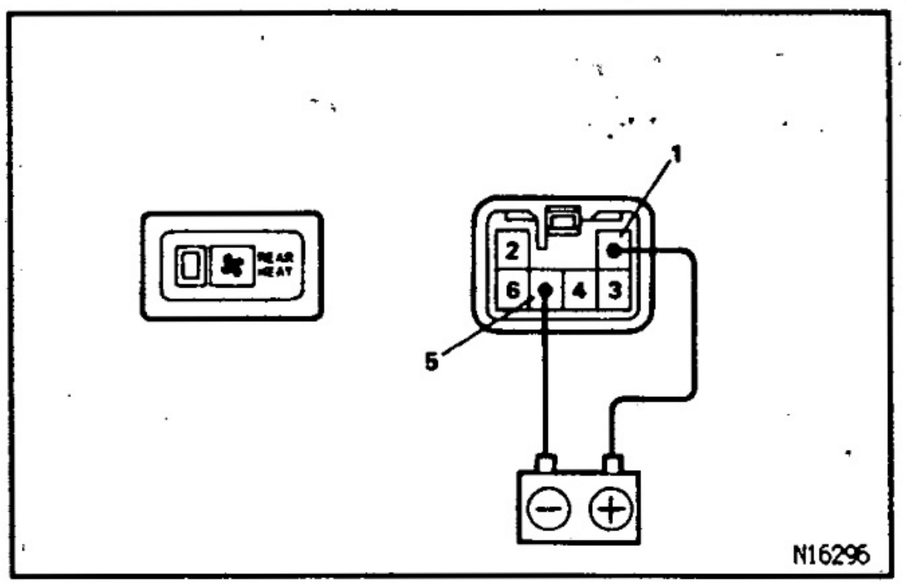

REAR HEATER SWITCH INSPECTION

AC3WK-01

1. **INSPECT REAR HEATER INDICATOR OPERATION**
Connect the positive (+) lead from the battery to terminal 1 and negative (−) lead to terminal 5 and then check that the indicator lights up.
If operation is not as specified, replace the switch.

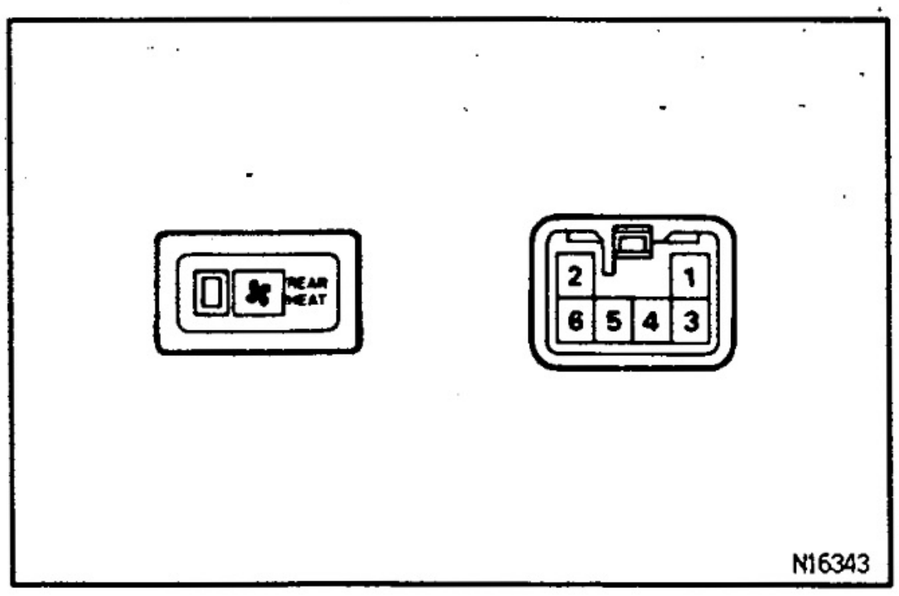

2. **INSPECT REAR HEATER SWITCH CONTINUITY**

Condition/ Circuit	Tester connection	Specified condition
OFF	3 — 4	Continuity
ON	4 — 5	Continuity
Illumination circuit	2 — 6	Continuity

Switch Continuity:
If continuity is not as specified, replace the switch.
Illumination Circuit:
If continuity is not as specified, test the bulb.

REAR HEATER SWITCH INSTALLATION

AC2WL-01

Installation is in the reverse order of removal.

AC

SERVICE SPECIFICATIONS

SERVICE DATA

AC2WM-01

Refrigerant volume	Single A/C	700 ± 50 g (24.69 ± 1.76 oz.)
	Dual A/C	950 ± 50 g (33.51 ± 1.76 oz.)
Drive belt deflection (Apply load of 9.8 N)		—
3L	New belt	13.0 — 17.0 mm (0.51 — 0.67 in.)
	Used belt	17.0 — 21.0 mm (0.67 — 0.83 in.)
1KZ—T, 1KZ—TE	New belt	13.0 — 15.0 mm (0.51 — 0.59 in.)
	Used belt	15.0 — 21.0 mm (0.51 — 0.83 in.)
3RZ—F, 3RZ—FE	New belt	10.0 — 13.0 mm (0.39 — 0.51 in.)
	Used belt	13.0 — 18.0 mm (0.51 — 0.71 in.)
5VZ—FE	New belt	3.5 — 5.0 mm (0.14 — 0.20 in.)
	Used belt	5.0 — 7.0 mm (0.20 — 0.28 in.)
Drive belt tension		—
3L	New belt	441 — 444 N (45 — 68 kgf)
	Used belt	264 — 441 N (27 — 45 kgf)
1KZ—T, 1KZ—TE	New belt	372 — 608 N (38 — 62 kgf)
	Used belt	196 — 392 N (20 — 30 kgf)
3RZ—F, 3RZ—FE	New belt	598 — 823 N (61 — 84 kgf)
	Used belt	353 — 530 N (36 — 54 kgf)
5VZ—FE	New belt	519 — 755 N (53 — 77 kgf)
	Used belt	196 — 392 N (20 — 30 kgf)
Idle—up speed		—
3L	Magnetic clutch not engaged	700 ± 50 rpm
	Magnetic clutch engaged	950 ± 50 rpm
1KZ—T, 1KZ—TE	Magnetic clutch not engaged	700 ± 50 rpm
	Magnetic clutch engaged	950 ± 50 rpm
3RZ—F, 3RZ—FE	Magnetic clutch not engaged	700 ± 50 rpm
	Magnetic clutch engaged	900 ± 50 rpm
5VZ—FE	Magnetic clutch not engaged	700 ± 50 rpm
	Magnetic clutch engaged	850 ± 50 rpm
Magnetic clutch clearance		0.5 ± 0.15 mm (0.020 ± 0.0059 in.)

AC

AC2WX-01

TORQUE SPECIFICATIONS

Part tightened	N·m	kgf·cm	ft·lbf
Compressor x Compressor bracket	25	250	18
Compressor bracket x Engine	47	475	34
Idle pulley x Compressor bracket	39	400	29
Compressor x Discharge hose	10	100	7
Compressor x Suction hose	10	100	7
Condenser x Discharge hose	10	100	7
Condenser x Liquid tube	10	100	7
Receiver x Liquid tube	5.4	55	48 in.·lbf
Front cooling unit x Liquid tube	14	140	10
Front cooling unit x Suction hose	32	330	24
Front evaporator x Expansion valve	5.4	55	48 in.·lbf
Rear cooling unit x Liquid tube	10	100	7
Rear cooling unit x Suction tube	10	100	7
Rear evaporator x Rear expansion valve	5.4	55	48 in.·lbf
Pressure plate x Compressor	13.2	135	9
Service valve x Cylinder block	25	250	18
Front housing x Cylinder block	25	250	18
Liquid lines (Block joint)	10	100	7
Liquid lines (Piping joint)	14	140	10
Suction lines (Block joint)	10	100	7
Suction lines (Piping joint)	32	330	24
PS pump x Engine	43	440	32

TOYOTA

Land Cruiser Prado RZJ95 / VZJ95

Supplement - Rear Axle Shaft Removal

This supplement has been introduced to provide additional information on Land Cruiser Prado rear axle shaft removal.

Please use the supplement in conjunction with Chassis and Body Repair Manual Pub. No. RM517E.

TOYOTA QUALITY SERVICE

Toyota Motor Corporation Australia Limited A.C.N. 004 384 338

© Toyota Motor Corporation Australia Limited. Reproduction in whole or part prohibited without written approval.

REAR AXLE SHAFT

REMOVAL

1. **REMOVE REAR WHEEL**
   Torque: 11 N·m (1,150 kgf·cm, 83 ft·lbf)
2. **REAR DRUM BRAKE:**
   REMOVE BRAKE DRUM
3. **REAR DISC BRAKE:**
   REMOVE BRAKE CALIPER AND DISC

(a) Remove the 2 bolts and brake caliper from the rear axle housing.
Torque: 103 N·m (1,050 kgf·cm, 76 ft·lbf)

(b) Support the brake caliper securely.

(c) Remove the disc.

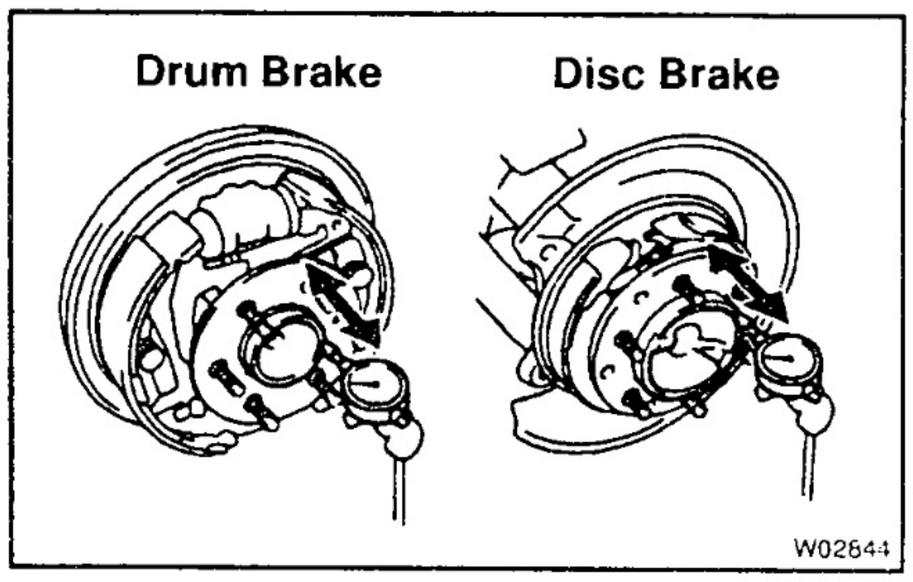

4. **CHECK BEARING BACKLASH AND AXLE SHAFT DEVIATION**

(a) Using a dial indicator, check the backlash in the bearing shaft direction.
Maximum: 0.7 mm (0.027 in.)

If the backlash exceeds the maximum, replace the bearing.

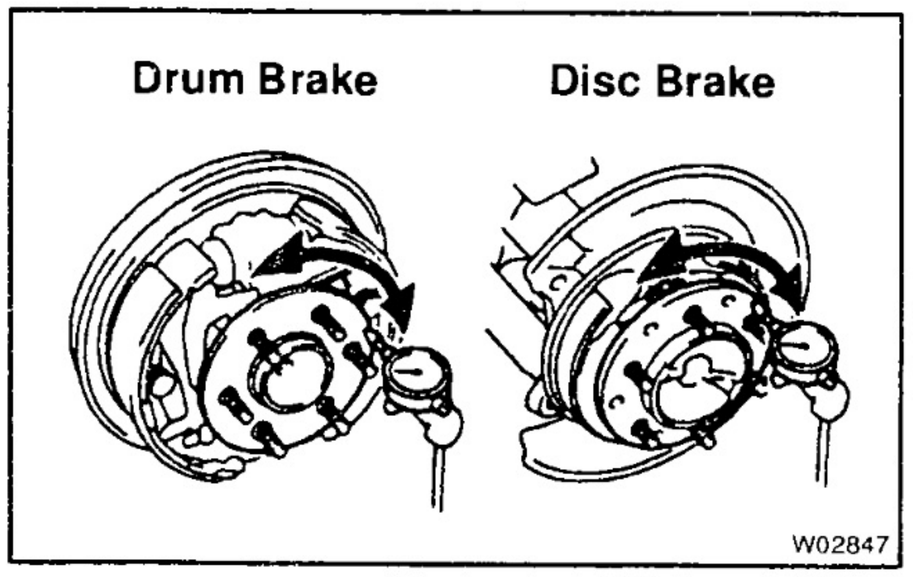

(b) Using a dial indicator, check the deviation at the surface of the axle shaft outside the hub bolt.
Maximum: 0.1 mm (0.004 in.)

If the deviation exceeds the maximum, replace the axle shaft.

5. **w/ ABS:**
   REMOVE ABS SPEED SENSOR FROM REAR AXLE HOUSING
   Torque: 8.0 N·m (82 kgf·cm, 71 in.·lbf)

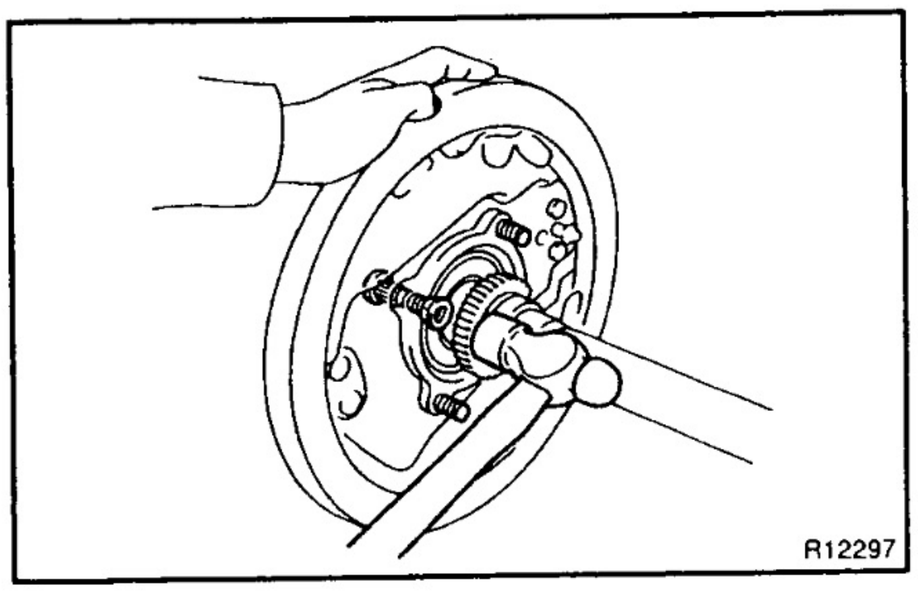

COMPONENTS INSPECTION AND REPAIR

1. w/ ABS:
REMOVE BEARING RETAINER (DIFFERENTIAL SIDE) AND ABS SPEED SENSOR ROTOR

(a) Attach 4 nuts to the serration bolts and remove the serration bolts from the backing plate using a hammer.

NOTICE:
Do not reuse the nuts previously removed from the vehicle.

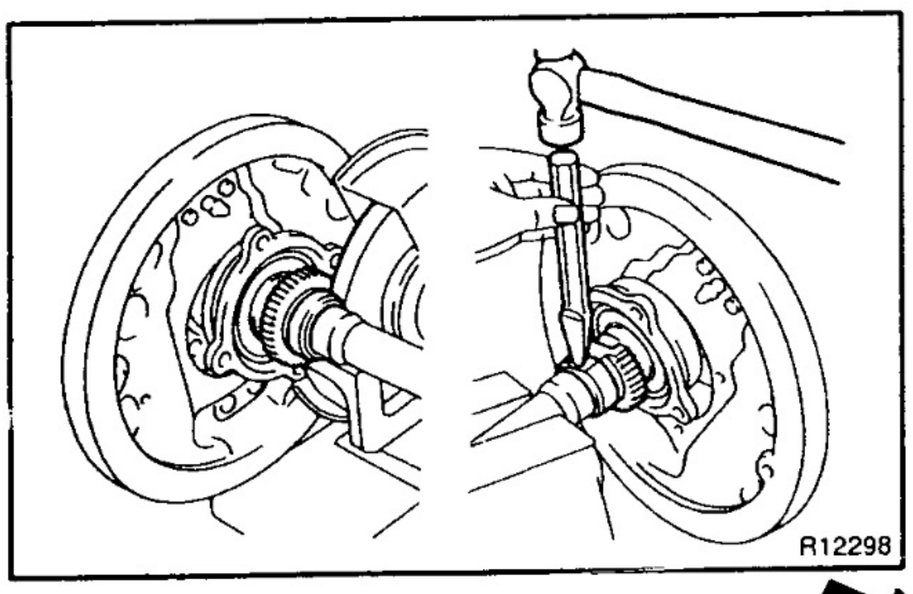

(b) Grind the retainer and sensor rotor surfaces using a grinder, then chisel them out with a chisel.

(c) Attach washers and nuts to the 4 serration bolts, then torque the nuts to install the serration bolts to the backing plate.

(d) Remove the 4 nuts from the serration bolts.

2. REMOVE SNAP RING FROM AXLE SHAFT

Using a snap ring expander, remove the snap ring.

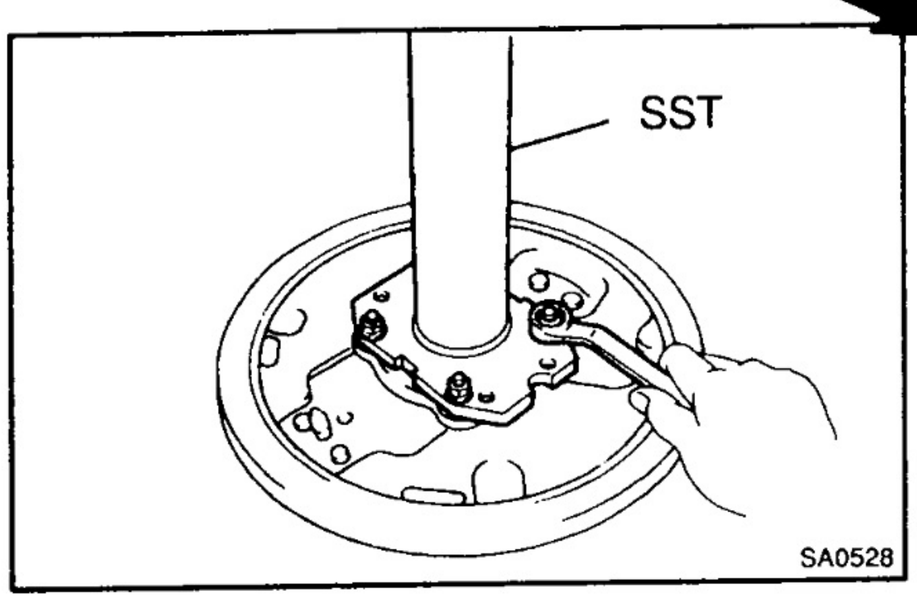

3. REAR DRUM BRAKE:
REMOVE REAR AXLE SHAFT FROM BACKING PLATE

(a) Position SST on the backing plate with the 4 nuts.
SST 09521–25011

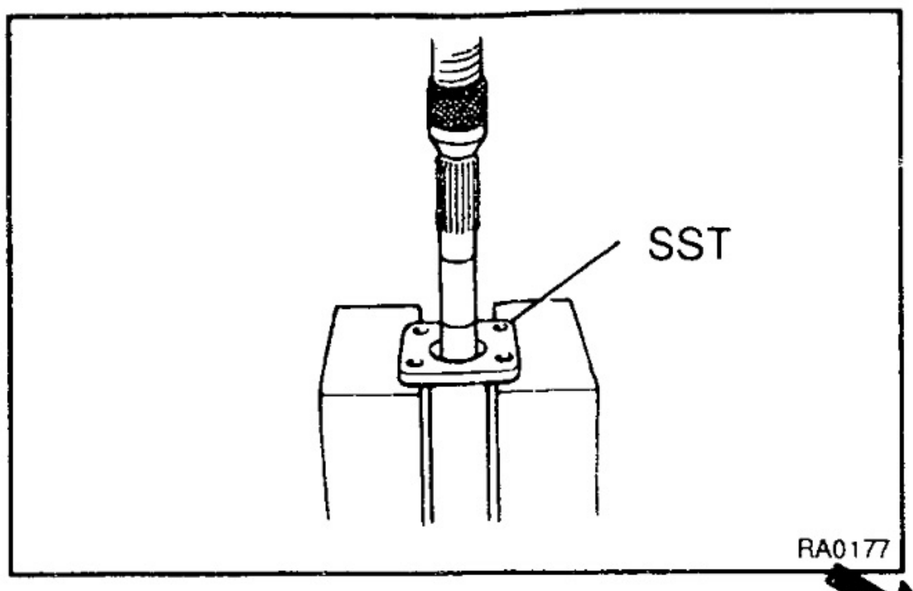

(b) Using a press, remove the rear axle shaft with the bearing retainer from the backing plate.

(c) Remove the SST.
SST 09521–25011

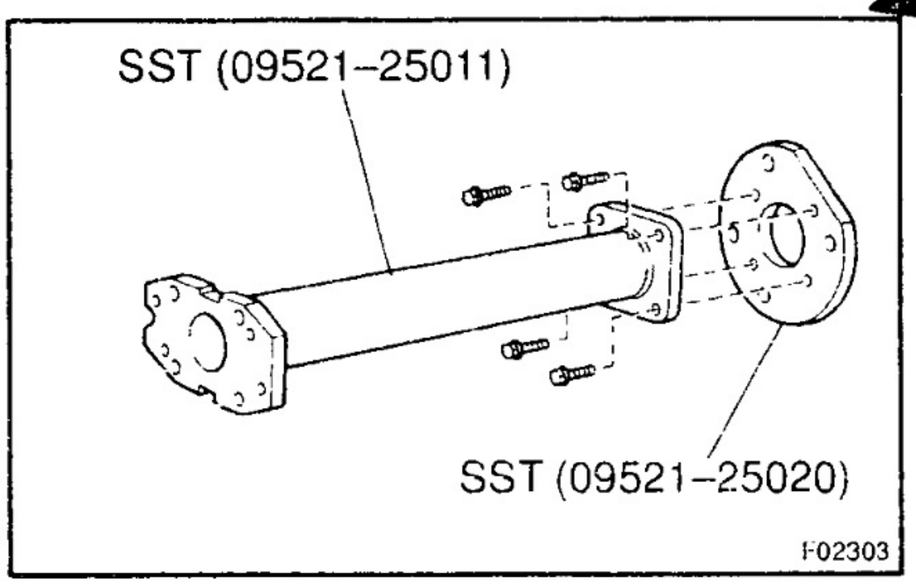

4. REAR DISC BRAKE:
REMOVE REAR AXLE SHAFT FROM BACKING PLATE

(a) Assemble SST with 4 bolts to SST.
SST 09521–25011, 09521–25020

HINT:
Install SST (09521–25020) to the opposite side of the regular installation portion for the backing plate of SST (09521–25011).

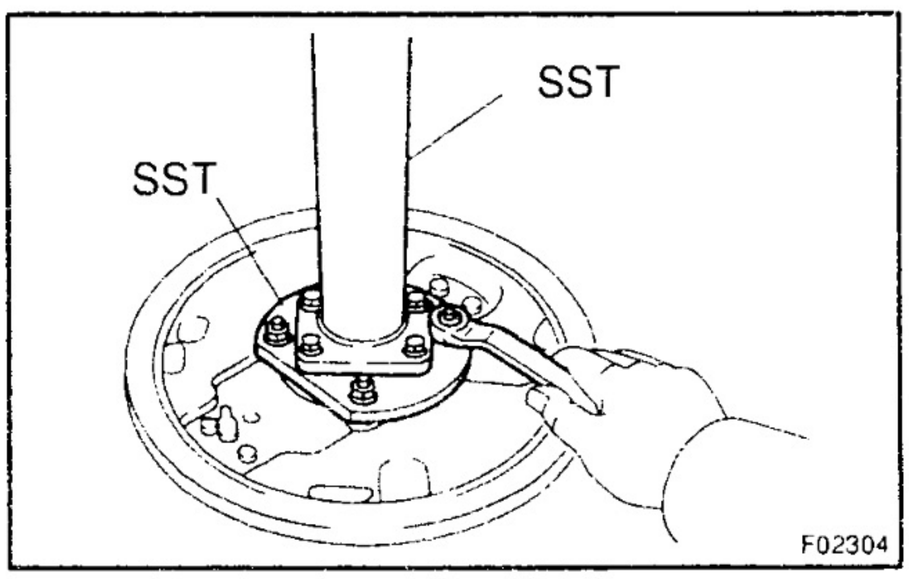

(b) Install the above–mentioned assembled SST with 4 nuts on the backing plate.

HINT:
Install the side with the installed SST (09521–25020) on the backing plate.

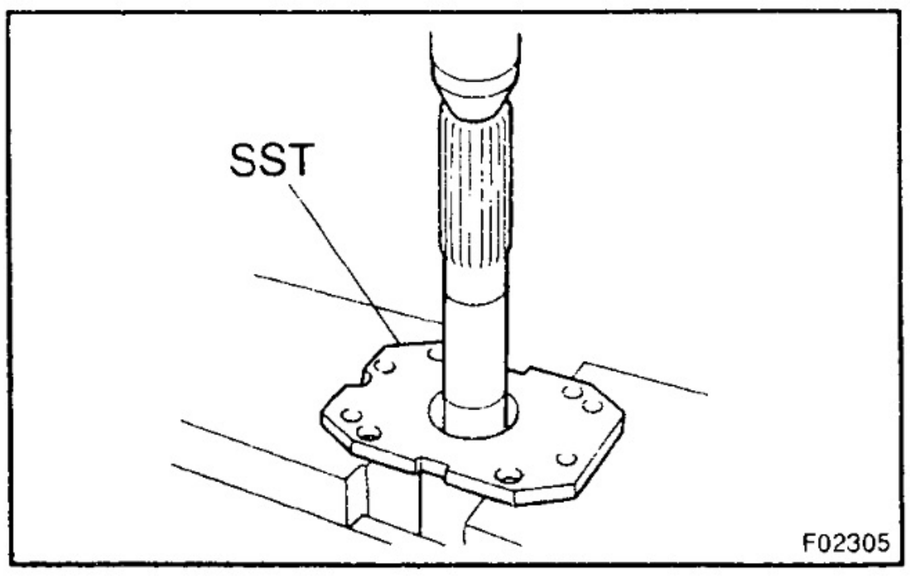

(c) Using a press, remove the rear axle shaft with the bearing retainer from the backing plate.

(d) Remove the SST.
SST 09521–25011, 09521–25020

5. IF NECESSARY, REPLACE OIL DEFLECTOR AND GASKET

(a) Remove the 6 hub bolts (See Pub. No. RM517E on page SA–69).

(b) Remove the oil deflector and gasket.

(c) Install a new gasket and oil deflector.

(d) Install the 6 hub bolts (See Pub. No. RM517E on page SA–69).

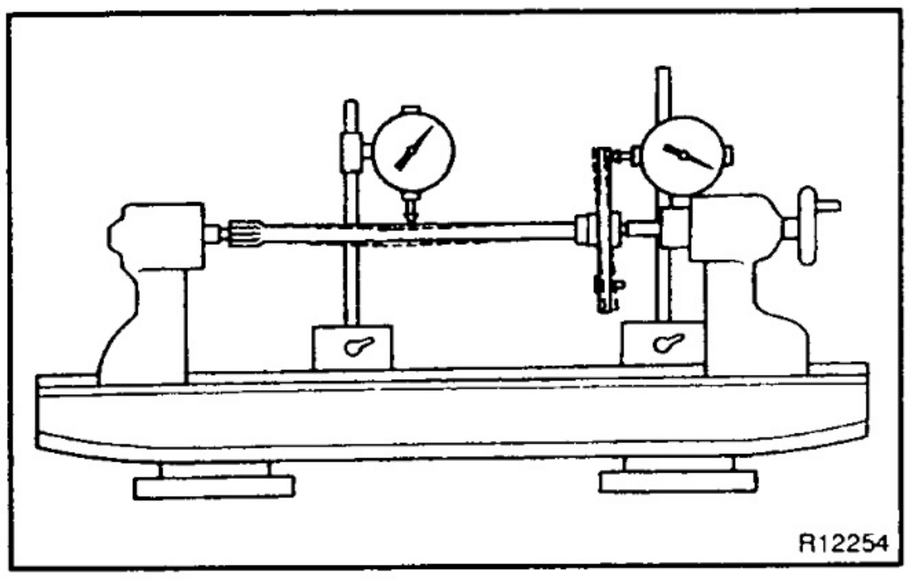

6. INSPECT REAR AXLE SHAFT RUNOUT

Maximum shaft runout: 2.0 mm (0.079 in.)

Maximum flange runout: 0.1 mm (0.004 in.)

If the rear axle shaft or flange are damaged or worn, or if runout is greater than the maximum, replace the rear axle shaft.

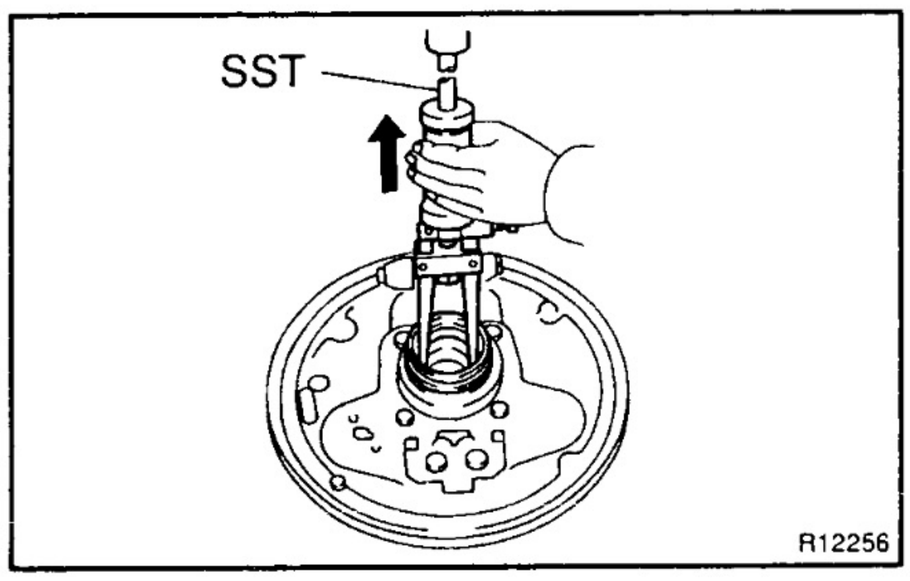

7. REMOVE OUTER OIL SEAL

Using SST, remove the oil seal.

SST 09308–00010

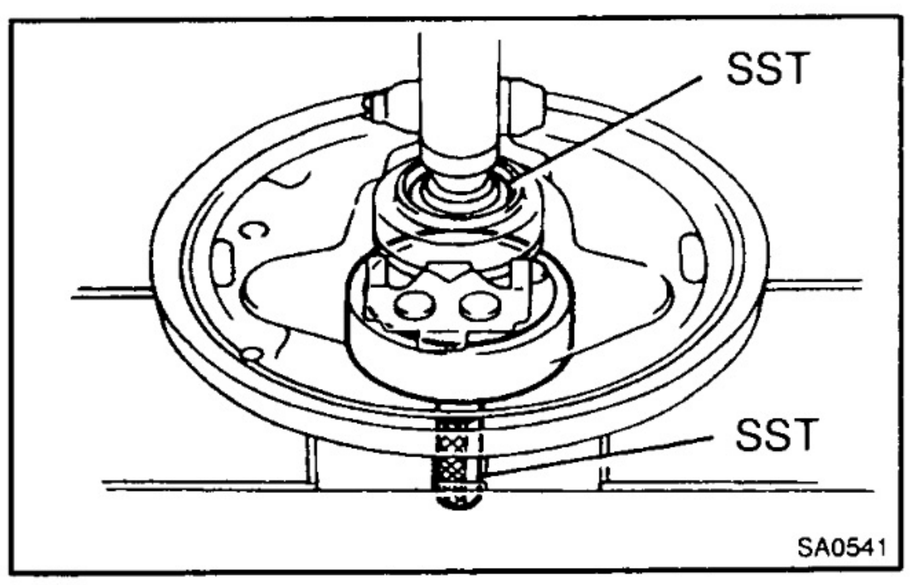

8. REPLACE REAR AXLE BEARING

(a) Using SST, remove the bearing.

SST 09223–56010,
09950–60010 (09951–00560)

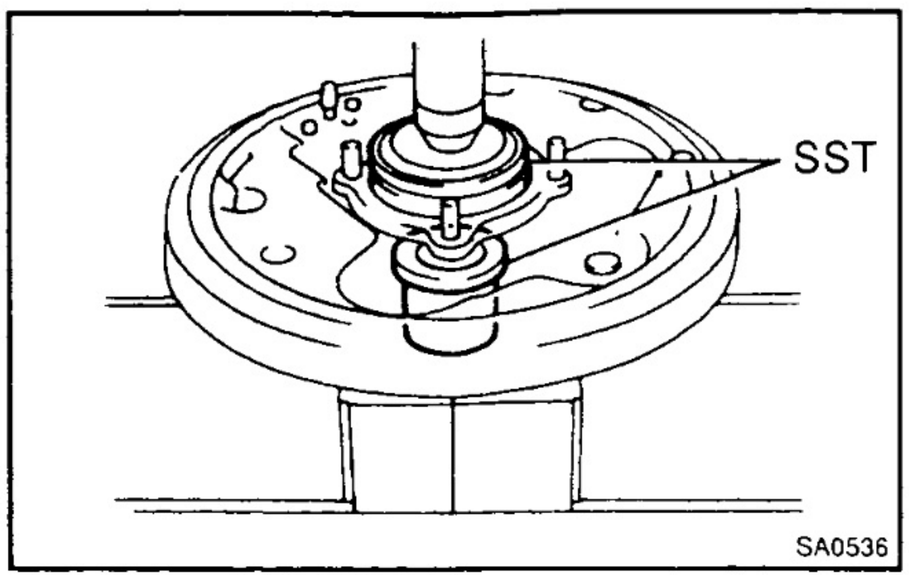

(b) Using SST, install a new bearing.
SST 09515–30010,
09950–60020 (09951–00890)

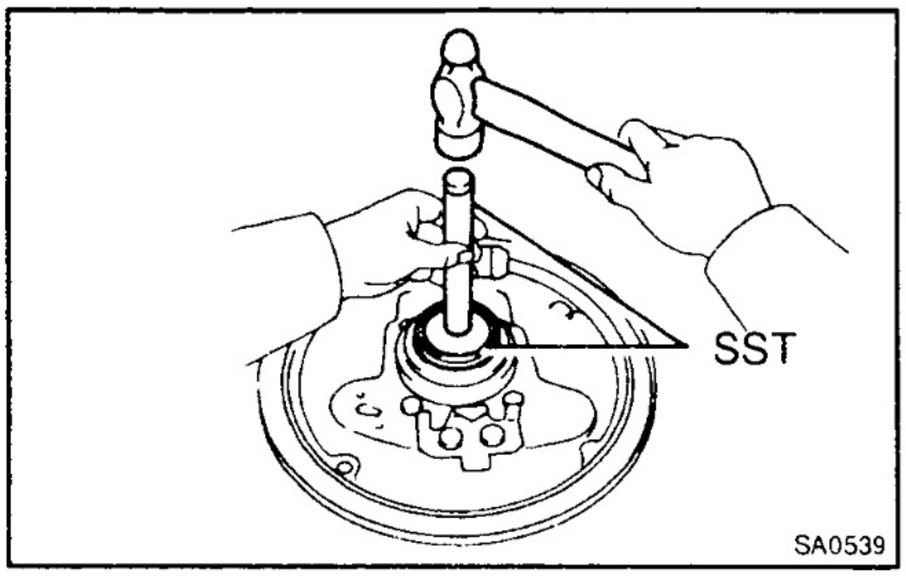

9. INSTALL NEW OUTER OIL SEAL

Using SST and a hammer, install a new oil seal.
SST 09950–60010 (09951–00610),
09950–70010 (09951–07150)

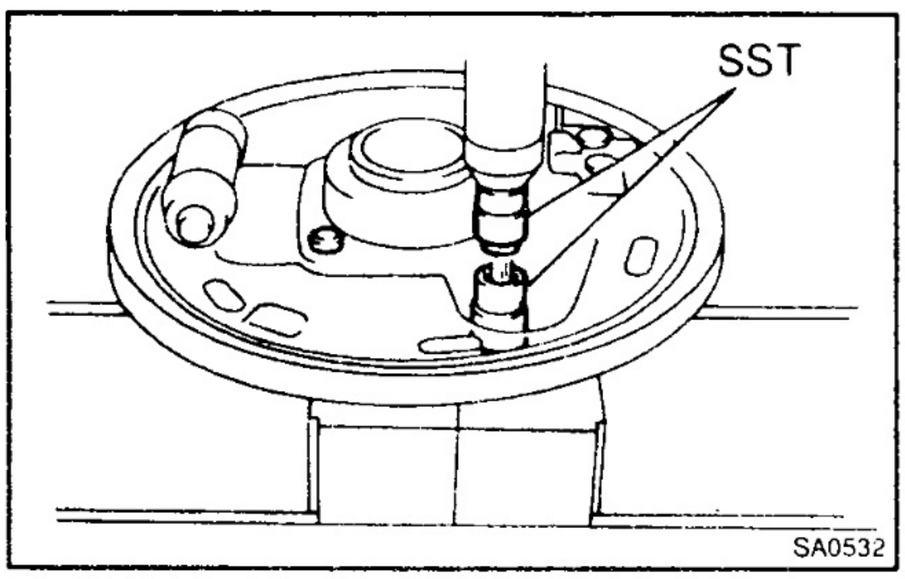

10. REPLACE BEARING CASE

(a) Remove the oil seal (outer side) and bearing.
(b) Install 4 nuts to the serration bolts.
(c) Using a hammer, remove the 4 serration bolts and remove the bearing case.
(d) Position the backing plate on a new bearing case and, using 2 socket wrenches, install the 4 serration bolts.
(e) Install a new bearing and oil seal (outer side).

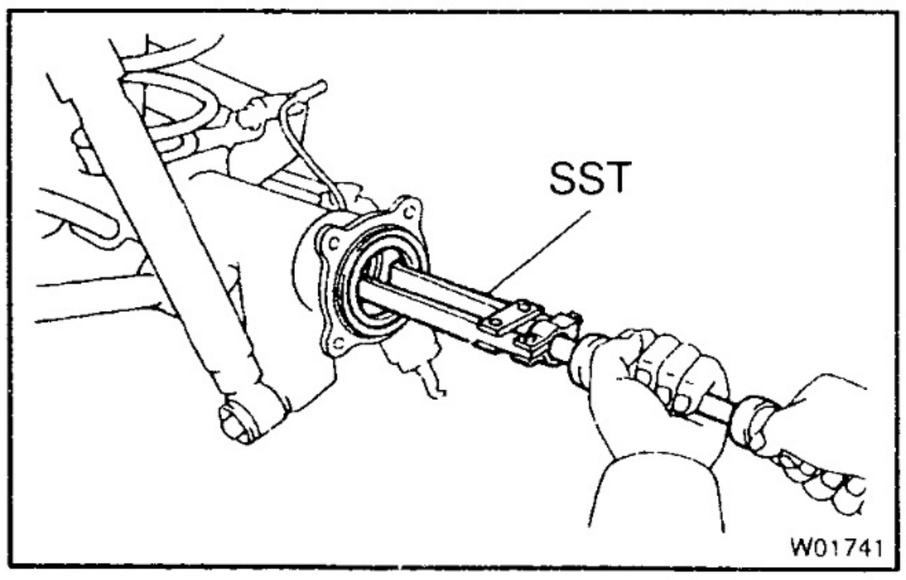

11. REPLACE OIL SEAL (INNER SIDE)

(a) Using SST, remove the oil seal.
SST 09308–00010

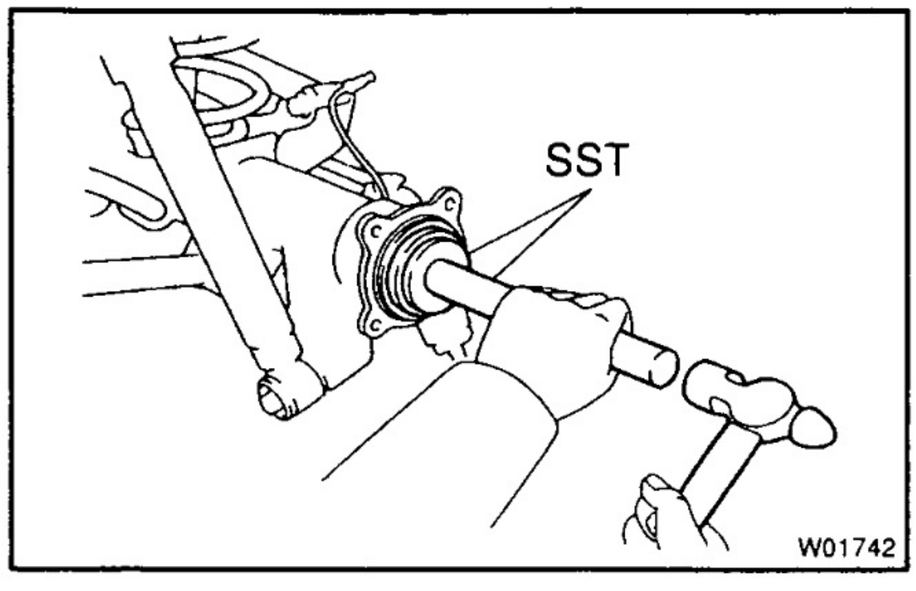

(b) Using SST and a hammer, install a new oil seal.
SST 09950–60020 (09951–00650),
09950–70010 (09951–07150)

(c) Apply MP grease to the oil seal lip.

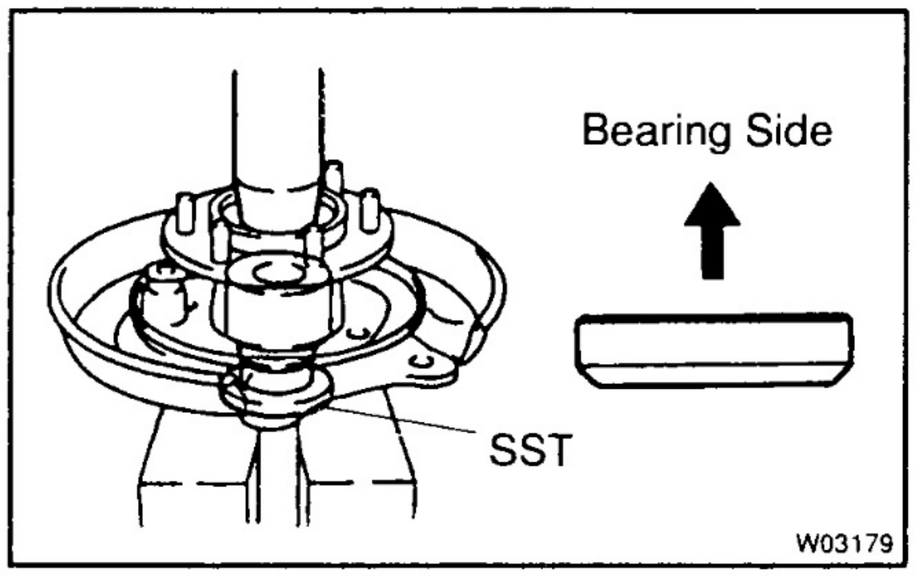

12. INSTALL REAR AXLE SHAFT IN BACKING PLATE

(a) Apply MP grease to the oil seal lip.

(b) Install the backing plate and bearing retainer on the rear axle shaft.

(c) Using SST and a press, install the rear axle shaft into the backing plate.
SST 09316–60010 (09316–00051)

(d) Using snap ring pliers, install a new snap ring.

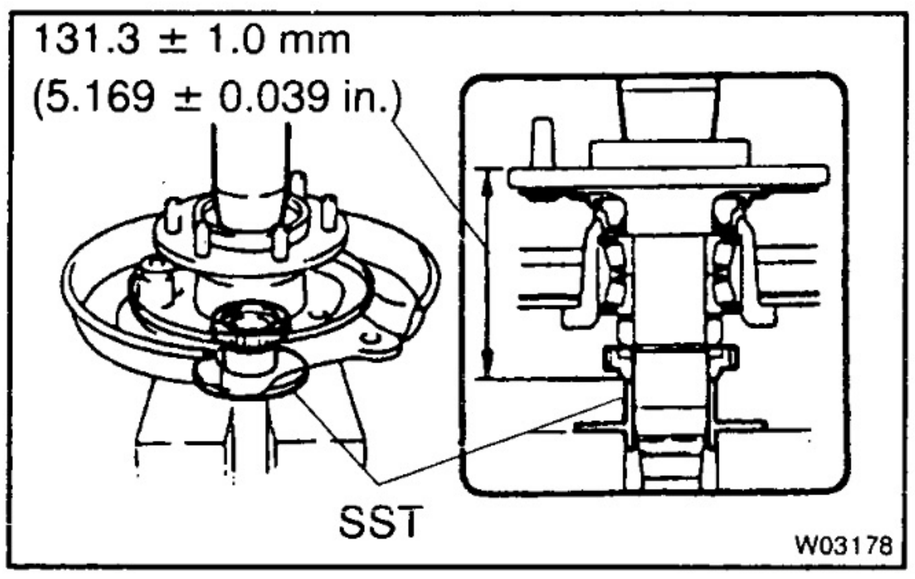

13. w/ ABS:
INSTALL ABS SPEED SENSOR ROTOR AND BEARING RETAINER (DIFFERENTIAL SIDE)

Using SST and a press, install a new sensor rotor and new bearing retainer to the axle shaft.
SST 09316–60010 (09316–00051)
Standard length:
131.3 ± 1.0 mm (5.169 ± 0.039 in.)

INSTALLATION

Installation is in the reverse order of removal.

1. **AFTER INSTALLATION, BLEED BRAKE SYSTEM (See Pub. No. RM517E on page BR–6) AND CHECK FOR LEAKS**
2. **CHECK ABS SPEED SENSOR SIGNAL (See Pub. No. RM517E on page BR–59)**