TOYOTA

1KZ-T

ENGINE

REPAIR MANUAL

May, 1993

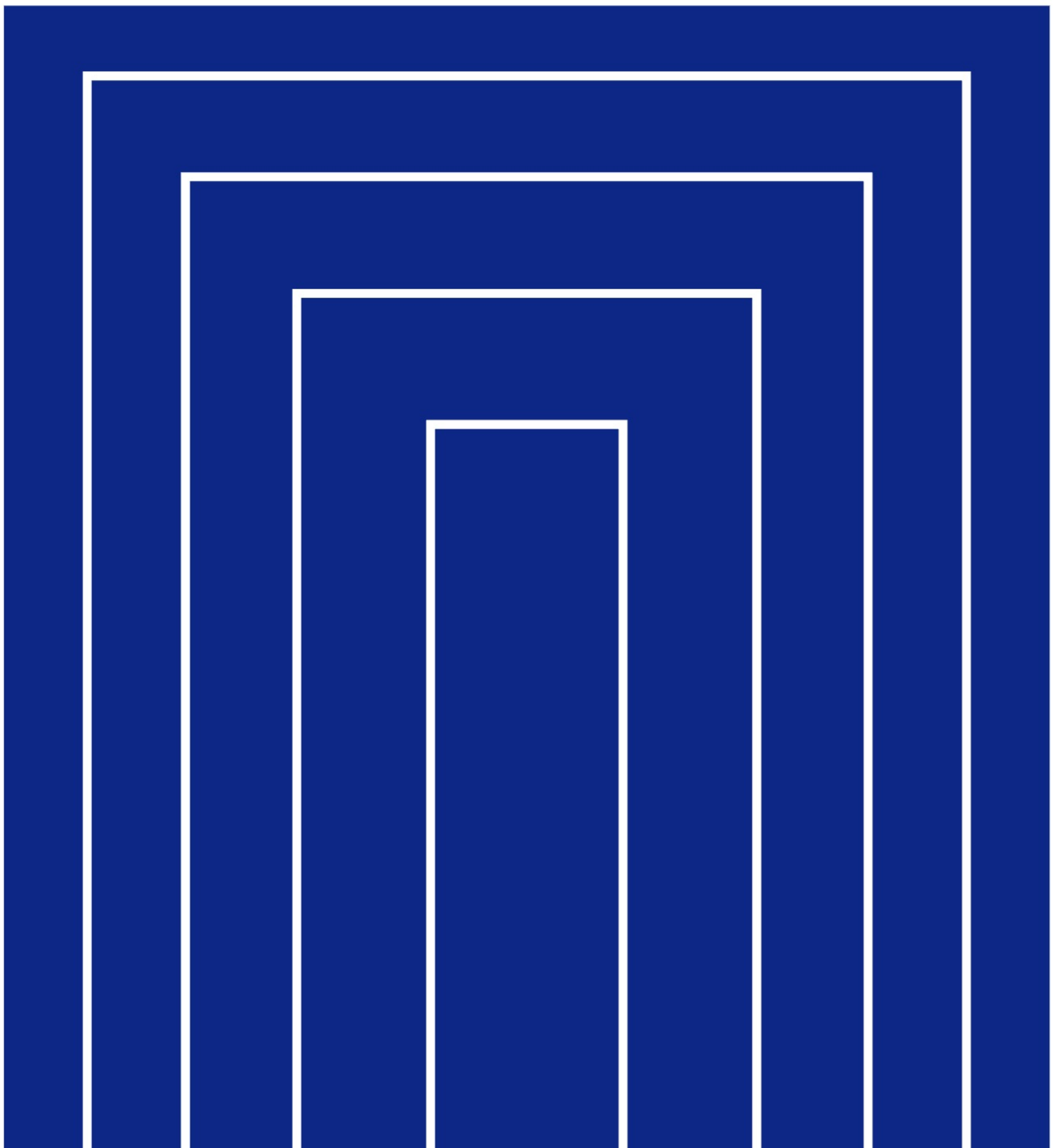

Pub. No. RM353E

FOREWORD

This repair manual has been prepared to provide information covering general service repairs for the 1KZ-T engine equipped in the TOYOTA LAND CRUISER.

Applicable models: KZJ70, 73, 77 series

All information in this manual is based on the latest product information at the time of publication. However specifications and procedures are subject to change without notice.

TOYOTA MOTOR CORPORATION

© 1998 TOYOTA MOTOR CORPORATION
All rights reserved. This book may not be reproduced or copied, in whole or in part, without the written permission of Toyota Motor Corporation.
First Printing: Jun. 4, 1993 01-930604-00
Sixth Printing: Nov. 12, 1998 06-981111-03-2

CAUTION

This manual does not include all the necessary items about repair and service. this manual is made for the purpose of the use for the persons who have special techniques and certifications. In the cases that non-specialized or uncertified technicians perform repair or service only using this manual or without proper equipment or tool, that may cause severe injury to you or other people around and also cause damage to your customer's vehicle.

In order to prevent dangerous operation and damages to your customer's vehicle, be sure to follow the instruction shown below.

- Must read this manual thoroughly. It is especially important to have good understanding all the contents written in the PRECAUTION of "IN" section.

- The service method written in this manual is very effective to perform repair and service. When performing the operations following the procedures using this manual, be sure to use tools specified and recommended. If using non-specified or recommended tools and service method, be sure to confirm safety of the technicians and any possibility of causing personal injury or damage to the customer's vehicle before starting the operation.

- If part replacement is necessary, must replace the part with the same part number or equivalent part. Do not replace it with inferior quality.

- It is important to note that this manual contains various "Cautions" and "Notices" that must be carefully observed in order to reduce the risk of personal injury during service or repair, or the possibility that improper service or repair may damage the vehicle or render it unsafe. It is also important to understand that these "Cautions" and "Notices" are not exhaustive, because it is important to warn of all the possible hazardous consequences that might result from failure to follow these instructions.

INTRODUCTION IN
ENGINE EG
STARTING SYSTEM ST
CHARGING SYSTEM CH

INTRODUCTION

HOW TO USE THIS MANUAL ..... IN— 2
IDENTIFICATION INFORMATION ..... IN— 5
GENERAL REPAIR INSTRUCTIONS ..... IN— 5
ABBREVIATIONS USED IN THIS MANUAL ..... IN— 8
STANDARD BOLT TORQUE SPECIFICATIONS ..... IN— 9

HOW TO USE THIS MANUAL

IN002–0V

INDEX

An INDEX is provided on the first page of each section to guide you to the item to be repaired. To assist you in finding your way through the manual, the Section Title and major heading are given at the top of every page.

GENERAL DESCRIPTION

At the beginning of each section, a General Description is given that pertains to all repair operations contained in that section.
Read these precautions before starting any repair task.

TROUBLESHOOTING

TROUBLESHOOTING tables are included for each system to help you diagnose the problem and find the cause.

PREPARATION

Preparation lists the SST (Special Service Tools), recommended tools, equipment, lubricant and SSM (Special Service Materials) which should be prepared before beginning the operation and explains the purpose of each one.

REPAIR PROCEDURES

Most repair operations begin with an overview illustration. It identifies the components and shows how the parts fit together.
Example:

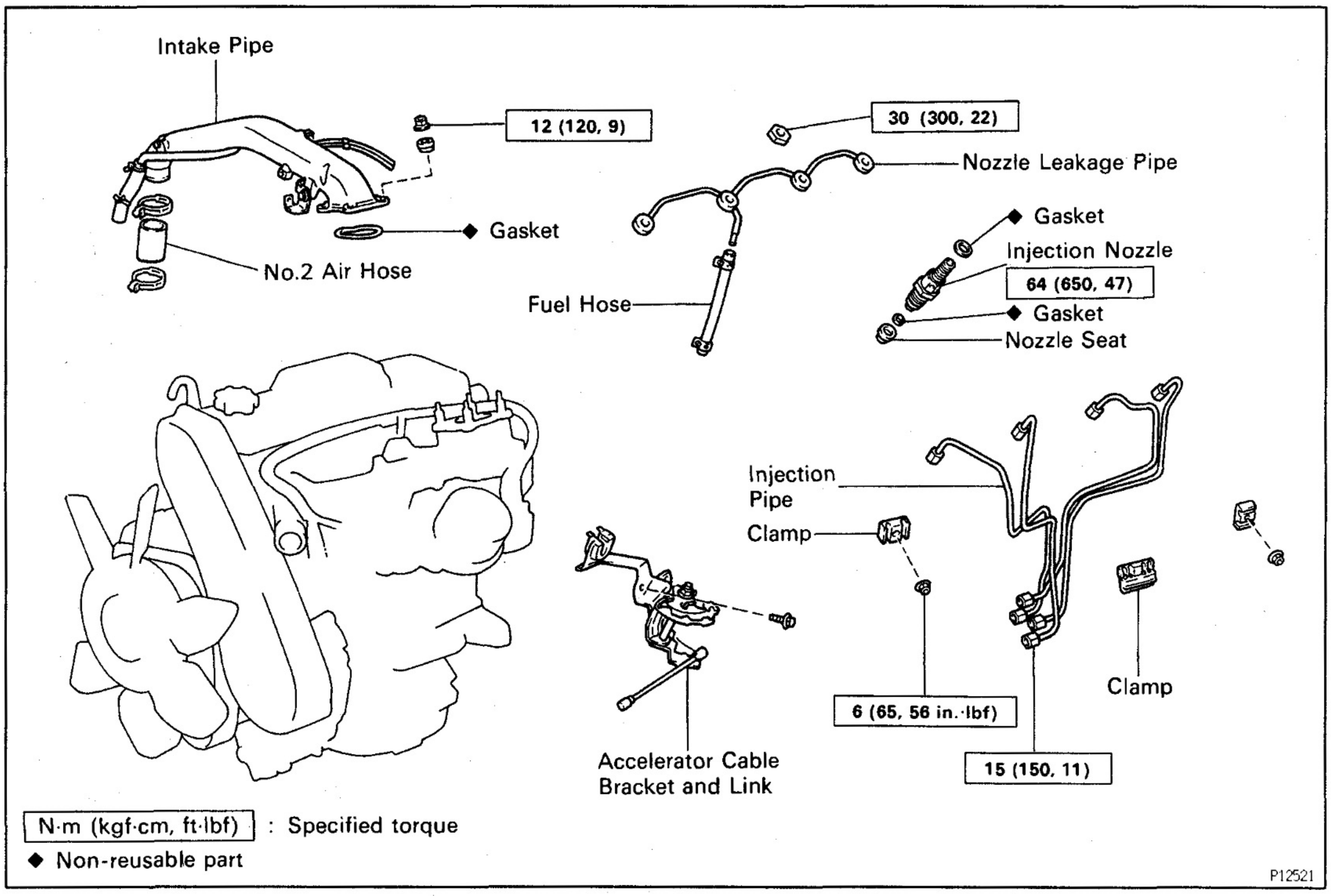

The procedures are presented in a step–by–step format:

- The illustration shows what to do and where to do it.
- The task heading tells what to do.
- The detailed text tells how to perform the task and gives other information such as specifications and warnings.

Example:

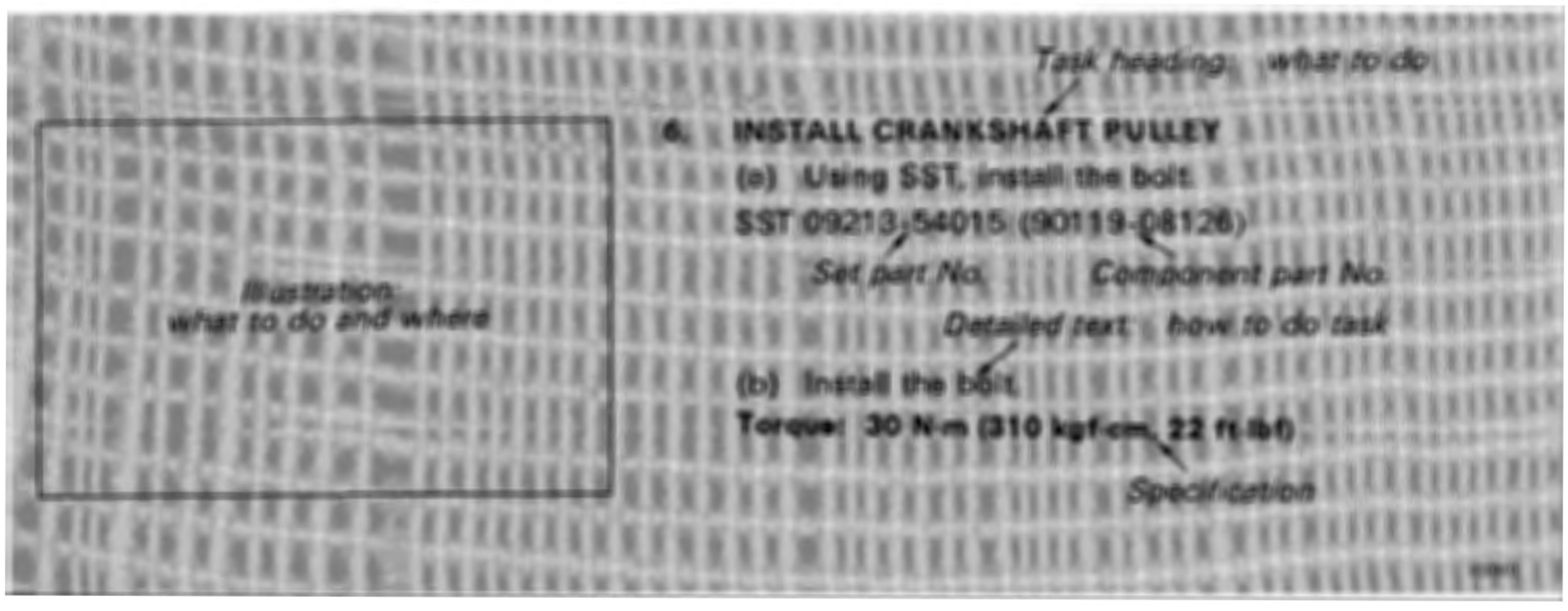

This format provides the experienced technician with a FAST TRACK to the information needed. The upper case task heading can be read at a glance when necessary, and the text below it provides detailed information. Important specifications and warnings always stand out in bold type.

REFERENCES

References have been kept to a minimum. However, when they are required you are given the page to refer to.

SPECIFICATIONS

Specifications are presented in bold type throughout the text where needed. You never have to leave the procedure to look up your specifications. They are also found at the end of each section, for quick reference.

CAUTIONS, NOTICES, HINTS:

- CAUTIONS are presented in bold type, and indicate there is a possibility of injury to you or other people.
- NOTICES are also presented in bold type, and indicate the possibility of damage to the components being repaired.
- HINTS are separated from the text but do not appear in bold. They provide additional information to help you perform the repair efficiently.

SI UNIT

The UNITS given in this manual are primarily expressed according to the SI UNIT(International System of Unit), and alternately expressed in the metric system and in the English System.

Example:

Torque: 30 N·m (310 kgf·cm, 22 ft·lbf)

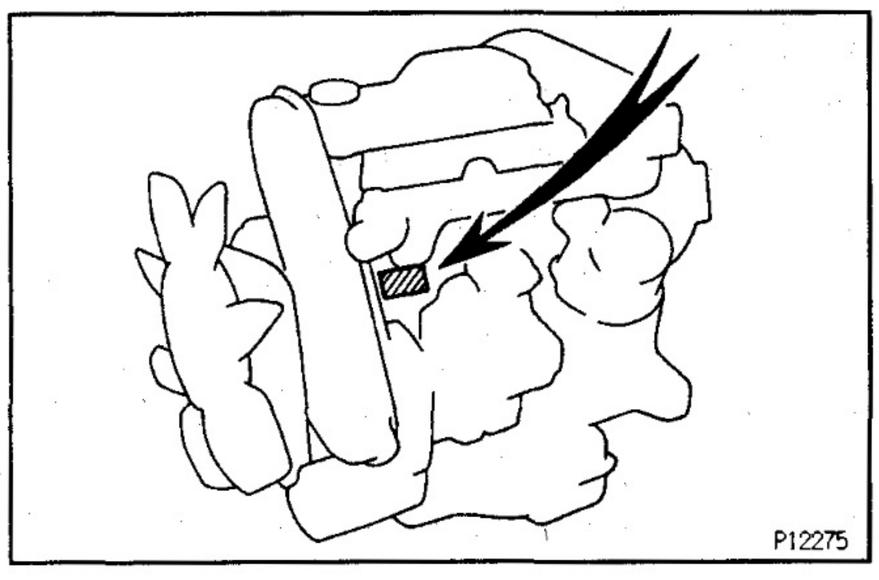

IDENTIFICATION INFORMATION

ENGINE SERIAL NUMBER

IN01A–03

The engine serial number is stamped on the engine block as shown.

GENERAL REPAIR INSTRUCTIONS

IN02X–01

1. Use fender, seat and floor covers to keep the vehicle clean and prevent damage.
2. During disassembly, keep parts in the appropriate order to facilitate reassembly.
3. Observe the following:
   (a) Before performing electrical work, disconnect the negative cable from the battery terminal.
   (b) If it is necessary to disconnect the battery for inspection or repair, always disconnect the cable from the negative (–) terminal which is grounded to the vehicle body.
   (c) To prevent damage to the battery terminal post, loosen the terminal nut and raise the cable straight up without twisting or prying it.
   (d) Clean the battery terminal posts and cable terminals with a clean shop rag. Do not scrape them with a file or other abrasive objects.
   (e) Install the cable terminal to the battery post with the nut loose, and tighten the nut after installation. Do not use a hammer to tap the terminal onto the post.
   (f) Be sure the cover for the positive (+) terminal is properly in place.
4. Check hose and wiring connectors to make sure that they are secure and correct.
5. Non–reusable parts
   (a) Always replace cotter pins, gaskets, O–rings and oil seals etc. with new ones.
   (b) Non–reusable parts are indicated in the component illustrations by the "◆" symbol.

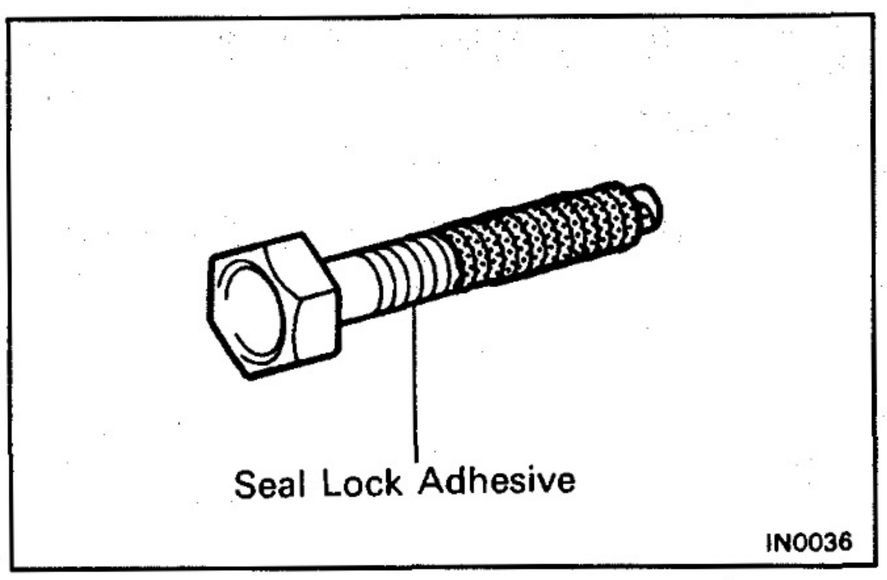

6. Precoated parts
   Precoated parts are bolts and nuts, etc. that are coated with a seal lock adhesive at the factory.
   (a) If a precoated part is retightened, loosened or caused to move in any way, it must be recoated with the specified adhesive.
   (b) When reusing precoated parts, clean off the old adhesive and dry with compressed air. Then apply the specified seal lock adhesive to the bolt, nut or threads.
   (c) Precoated parts are indicated in the component illustrations by the "★" symbol.
7. When necessary, use a sealer on gaskets to prevent leaks.
8. Carefully observe all specifications for bolt tightening torques. Always use a torque wrench.
9. Use of special service tools (SST) and special service materials (SSM) may be required, depending on the nature of the repair. Be sure to use SST and SSM where specified and follow the proper work procedure. A list of SST and SSM can be found in the preparation part at the front of each section in this manual.
10. When replacing fuses, be sure the new fuse has the correct amperage rating. DO NOT exceed the rating or use one with a lower rating.

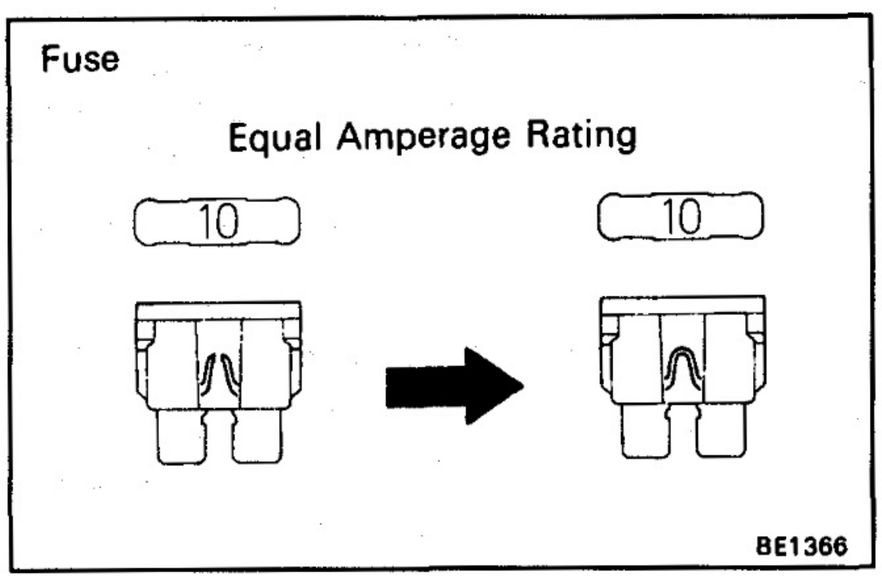

Illustration	Symbol	Part Name	Abbreviation
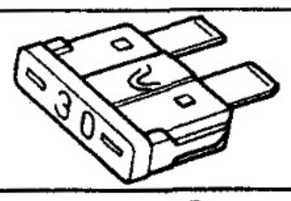 BE5594	 IN0365	FUSE	FUSE
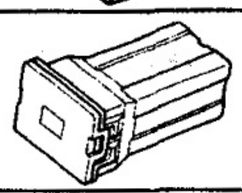 BE5595	 IN0366	MEDIUM CURRENT FUSE	M-FUSE
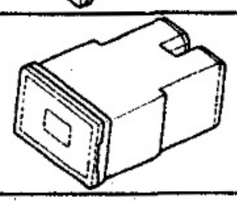 BE5596	 IN0367	HIGH CURRENT FUSE	H-FUSE
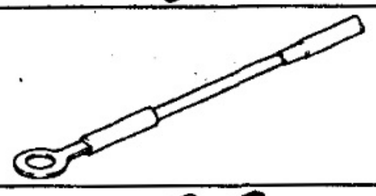 BE5597	 IN0367	FUSIBLE LINK	FL
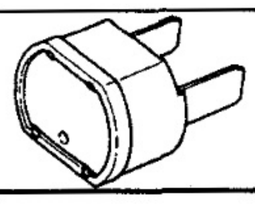 BE5598	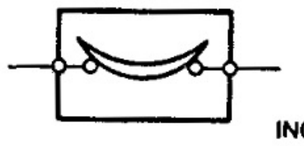 IN0368	CIRCUIT BREAKER	CB

11. Care must be taken when jacking up and supporting the vehicle. Be sure to lift and support the vehicle at the proper locations.
    (a) If the vehicle is to be jacked up only at the front or rear end, be sure to block the wheels at the opposite end in order to ensure safety.
    (b) After the vehicle is jacked up, be sure to support it on stands. It is extremely dangerous to do any work on a vehicle raised on a jack alone, even for a small job that can be finished quickly.
12. Observe the following precautions to avoid damage to the parts:
    (a) Do not open the cover or case of the ECU unless absolutely necessary. (If the IC terminals are touched, the IC may be destroyed by static electricity.)

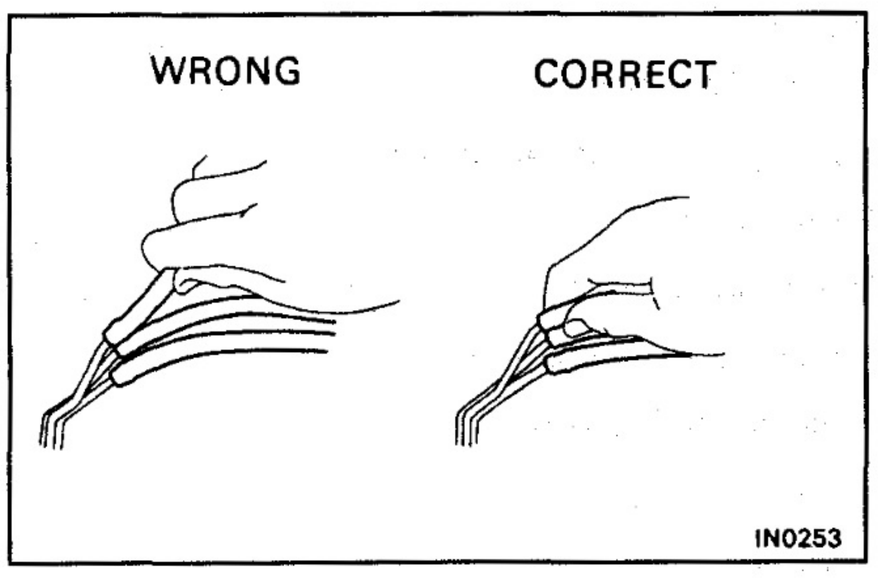

    (b) To disconnect vacuum hoses, pull on the end, not the middle of the hose.
    (c) To pull apart electrical connectors, pull on the connector itself, not the wires.
    (d) Be careful not to drop electrical components, such as sensors or relays. If they are dropped on a hard floor, they should be replaced and not reused.
    (e) When steam cleaning an engine, protect the distributor, air filter, and VCV from water.
    (f) Never use an impact wrench to remove or install temperature switches or temperature sensors.
    (g) When checking continuity at the wire connector, insert the tester probe carefully to prevent terminals from bending.
    (h) When using a vacuum gauge, never force the hose onto a connector that is too large. Use a step—down adapter instead. Once the hose has been stretched, it may leak.

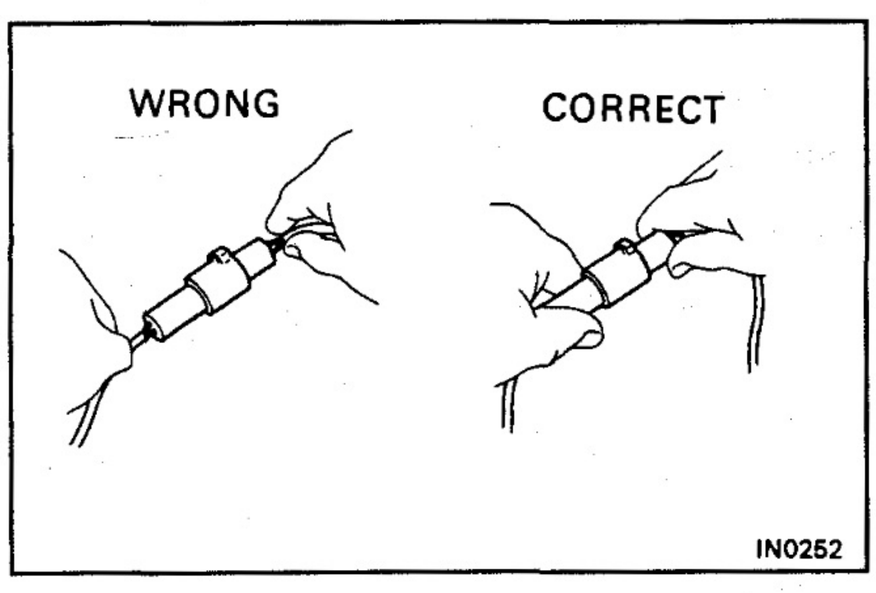

13. Tag hoses before disconnecting them:
    (a) When disconnecting vacuum hoses, use tags to identify how they should be reconnected.
    (b) After completing a job, double check that the vacuum hoses are properly connected. A label under the hood shows the proper layout.

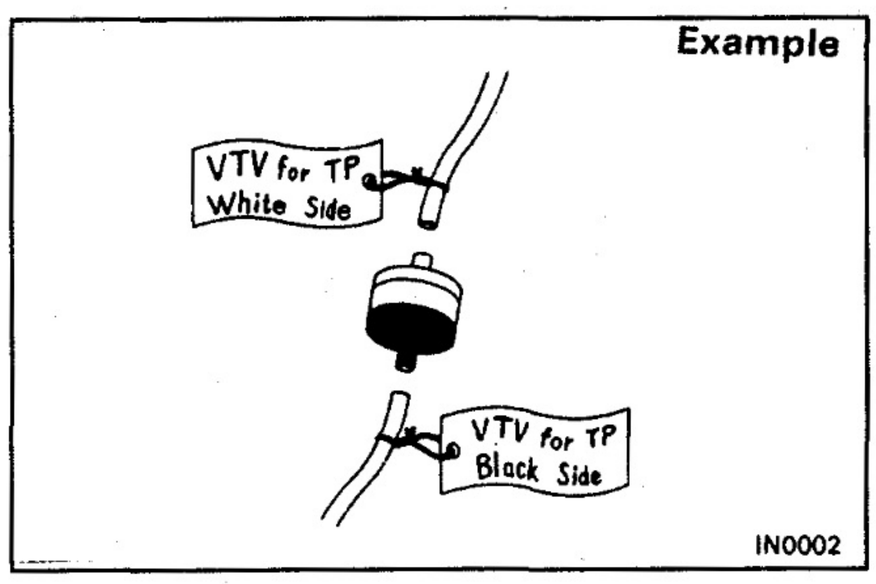

ABBREVIATIONS USED IN THIS MANUAL

IN009-06

A/C	Air Conditioner
ACSD	Automatic Cold Start Device
Approx.	Approximately
BACS	Boost and Altitude Compensation Stopper
DP	Dash Pot
Ex.	Except
FL	Fusible Link
FIPG	Formed in Place Gasket
LH	Left-Hand
LHD	Left-Hand Drive
LST	Load Sensing Timer
MP	Multipurpose
OHC	Over Head Cam
O/S	Oversized
PCS	Power Control System
PCV	Positive Crankcase Ventilation
RH	Right-Hand
RHD	Right-Hand Drive
SSM	Special Service Materials
SST	Special Service Tools
STD	Standard
SW	Switch
TDC	Top Dead Center
U/S	Undersize
w/	With
w/o	Without

V03897

STANDARD BOLT TORQUE SPECIFICATIONS

IN008-01

HOW TO DETERMINE BOLT STRENGTH

<table>
<tr><th></th><th>Mark</th><th>Class</th><th></th><th>Mark</th><th>Class</th></tr>
<tr><td rowspan="2">Hexagon head bolt</td><td>
</td><td>4T
5T
6T
7T
8T
9T
10T
11T</td><td rowspan="2">Stud bolt</td><td rowspan="2">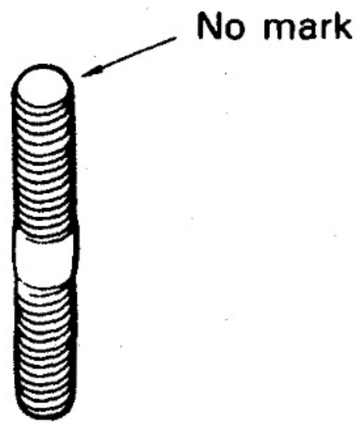
</td><td rowspan="2">4T</td></tr>
<tr><td> No mark</td><td>4T</td></tr>
<tr><td>Hexagon flange bolt
w/ washer hexagon bolt</td><td>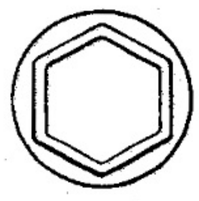 No mark</td><td>4T</td><td rowspan="4">Grooved</td><td rowspan="4"></td><td rowspan="4">6T</td></tr>
<tr><td>Hexagon head bolt</td><td> 2 protruding lines</td><td>5T</td></tr>
<tr><td>Hexagon flange bolt
w/ washer hexagon bolt</td><td>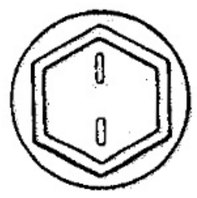 2 protruding lines</td><td>6T</td></tr>
<tr><td>Hexagon head bolt</td><td>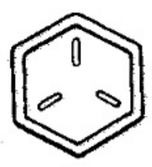 3 protruding lines</td><td>7T</td></tr>
<tr><td>Hexagon head bolt</td><td> 4 protruding lines</td><td>8T</td><td>Welded bolt</td><td>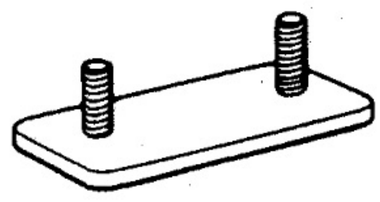</td><td>4T</td></tr>
</table>

V00078

SPECIFIED TORQUE FOR STANDARD BOLTS

Class	Diameter mm	Pitch mm	Specified torque					
			Hexagon head bolt			Hexagon flange bolt		
			N·m	kgf·cm	ft·lbf	N·m	kgf·cm	ft·lbf
4T	6	1	5	55	48 in.·lbf	6	60	52 in.·lbf
	8	1.25	12.5	130	9	14	145	10
	10	1.25	26	260	19	29	290	21
	12	1.25	47	480	35	53	540	39
	14	1.5	74	760	55	84	850	61
	16	1.5	115	1,150	83	—	—	—
5T	6	1	6.5	65	56 in.·lbf	7.5	75	65 in.·lbf
	8	1.25	15.5	160	12	17.5	175	13
	10	1.25	32	330	24	36	360	26
	12	1.25	59	600	43	65	670	48
	14	1.5	91	930	67	100	1,050	76
	16	1.5	140	1,400	101	—	—	—
6T	6	1	8	80	69 in.·lbf	9	90	78 in.·lbf
	8	1.25	19	195	14	21	210	15
	10	1.25	39	400	29	44	440	32
	12	1.25	71	730	53	80	810	59
	14	1.5	110	1,100	80	125	1,250	90
	16	1.5	170	1,750	127	—	—	—
7T	6	1	10.5	110	8	12	120	9
	8	1.25	25	260	19	28	290	21
	10	1.25	52	530	38	58	590	43
	12	1.25	95	970	70	105	1,050	76
	14	1.5	145	1,500	108	165	1,700	123
	16	1.5	230	2,300	166	—	—	—
8T	8	1.25	29	300	22	33	330	24
	10	1.25	61	620	45	68	690	50
	12	1.25	110	1,100	80	120	1,250	90
9T	8	1.25	34	340	25	37	380	27
	10	1.25	70	710	51	78	790	57
	12	1.25	125	1,300	94	140	1,450	105
10T	8	1.25	38	390	28	42	430	31
	10	1.25	78	800	58	88	890	64
	12	1.25	140	1,450	105	155	1,600	116
11T	8	1.25	42	430	31	47	480	35
	10	1.25	87	890	64	97	990	72
	12	1.25	155	1,600	116	175	1,800	130

ENGINE

ENGINE MECHANICAL ..... EG– 2
- DESCRIPTION ..... EG– 2
- OPERATION ..... EG– 2
- PREPARATION ..... EG– 4
- TROUBLESHOOTING ..... EG– 8
- TUNE–UP ..... EG– 14
- COMPRESSION CHECK ..... EG– 29
- TIMING BELT ..... EG– 31
- TIMING GEAR ..... EG– 40
- CYLINDER HEAD ..... EG– 57
- CYLINDER BLOCK ..... EG– 87
- SERVICE SPECIFICATIONS EG–118

TURBOCHARGER SYSTEM EG–124
- DESCRIPTION EG–124
- OPERATION EG–125
- PREPARATION EG–126
- PRECAUTION EG–127
- TROUBLESHOOTING EG–128
- TURBOCHARGER EG–130
- TURBO PRESSURE SENSOR EG–140
- SERVICE SPECIFICATIONS EG–142

FUEL SYSTEM EG–143
- DESCRIPTION EG–143
- OPERATION EG–144
- PREPARATION EG–146
- FUEL FILTER EG–148
- FUEL HEATER SYSTEM EG–150
- INJECTION NOZZLE EG–152
- INJECTION PUMP EG–160
- POWER CONTROL SYSTEM EG–222
- SERVICE SPECIFICATIONS EG–224

COOLING SYSTEM EG–230
- DESCRIPTION EG–230
- OPERATION EG–230
- PREPARATION EG–232
- COOLANT CHECK AND REPLACEMENT ... EG–233
- WATER PUMP EG–234
- THERMOSTAT EG–239
- RADIATOR EG–241
- SERVICE SPECIFICATIONS EG–243

LUBRICATION SYSTEM EG–244
- DESCRIPTION EG–244
- OPERATION EG–244
- PREPARATION EG–246
- OIL PRESSURE CHECK EG–247
- OIL AND FILTER REPLACEMENT EG–248
- OIL PUMP EG–250
- OIL COOLER EG–259
- OIL NOZZLE EG–264
- SERVICE SPECIFICATIONS EG–266

ENGINE MECHANICAL

DESCRIPTION

EG17L–03

The 1KZ–T engine is a 3.0L OHC turbo diesel engine.

OPERATION

EG

EG28D–02

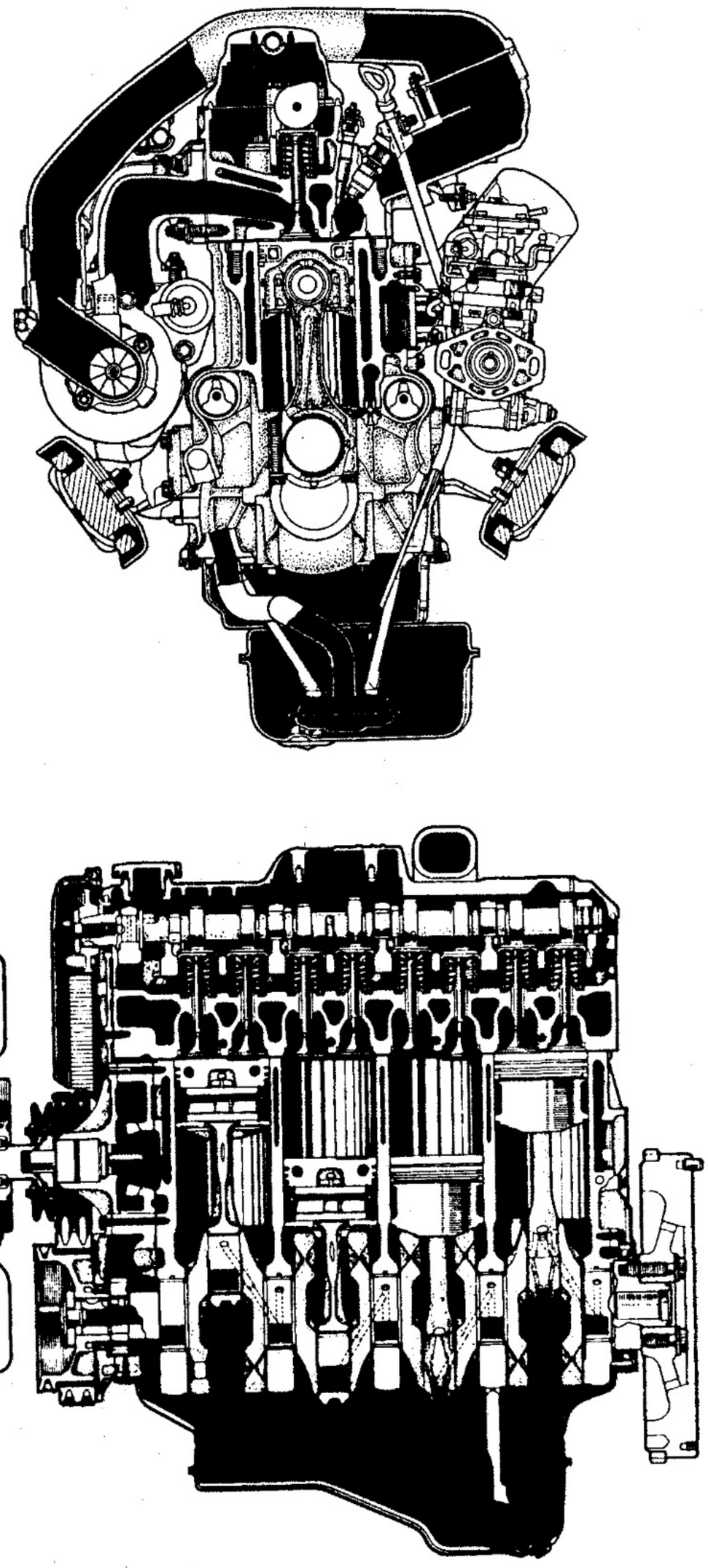

P13018
P13017

Z09657

Aluminum alloy is used for the cylinder head and resin for the cylinder head cover to reduce weight. The camshaft is belt driven and its serviceability has been increased by driving it with the injection pump gear. The belt tensioner is a hydraulic type to maintain appropriate tension.

The cylinder block has a balance shaft built into it to reduce engine vibration. For the idle gear between the crankshaft gear and injection pump gear a scissors type gear is used to reduce gear grinding noise. The crankshaft has a streamlined counterweight to reduce oil friction at high engine speeds.

A cooling channel has been provided in the piston head to reduce heat transmission to the top ring groove. To improve the durability of the top ring, FRM (Fiber Reinforced Metal) is embedded into it. Also, the groove has been positioned closer to the upper surface of the piston to reduce the volume of the piston chamber. The top of the piston is alumite–coated for greater heat resistance.

PREPARATION

SST (SPECIAL SERVICE TOOLS)

EG0AY-0K

	09032-00100 Oil Pan Seal Cutter	
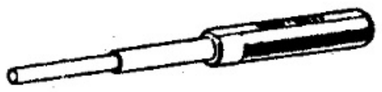	09201-60011 Valve Guide Bushing Remover & Replacer	
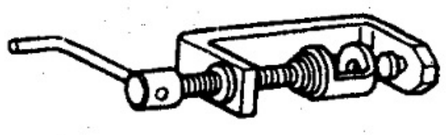	09202-43013 Valve Spring Compressor	
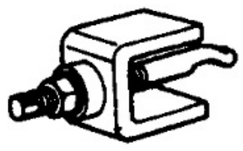	09208-48010 Combustion Chamber Remover	
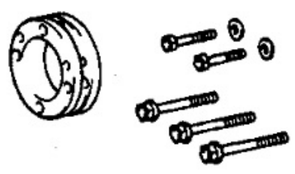	09213-58012 Crankshaft Pulley Hoolding Tool	
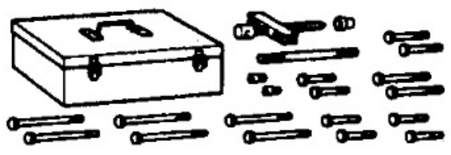	09213-60017 Crankshaft Pulley & Gear Puller Set	
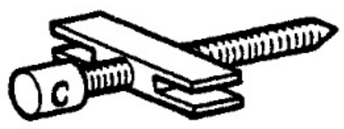	(09213-00020) Body With Bolt	
	(09213-00030) Handle	
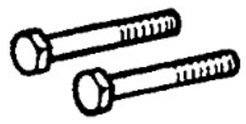	(09213-00060) Bolt Set	
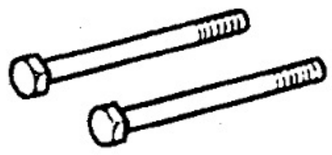	(09213-00130) Bolt Set	
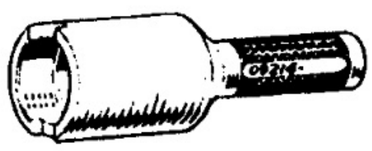	09214-76011 Crankshaft Pulley Replacer	
	09216-00020 Belt Tension Gauge	
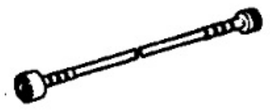	09216-00030 Belt Tension Gauge Cable	

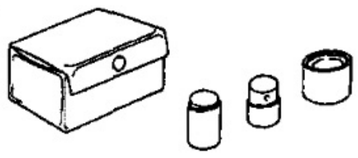	09222–67010	Connecting Rod Bushing Remover & Replacer	
	(09222–06010)	Remover & Replacer	
	(09222–06020)	Guide	
	(09222–06030)	Base	
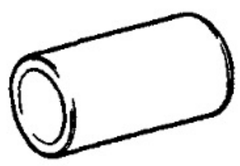	09223–00010	Cover & Seal Replacer	
	09223–15030	Oil Seal & Bearing Replacer	
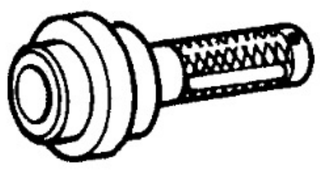	09223–46011	Crankshaft Front Oil Seal Replacer	Camshaft oil seal
	09223–78010	Crankshaft Oil Seal Replacer	
	09248–64010	Valve Clearance Adjusting Tool	
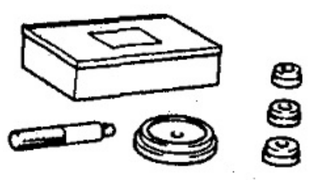	09250–10011	Replacer Set "A"	
	(09252–10010)	No. 1 Replacer Handle	
	09268–64010	Injection Nozzle Wrench Set	
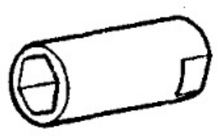	(09268–64020)	Injection Nozzle Holder Retaining Nut Wrench	
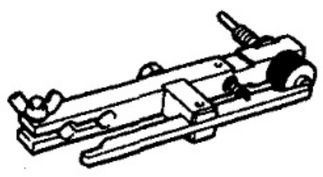	09275–54011	Plunger Stroke Measuring Tool	

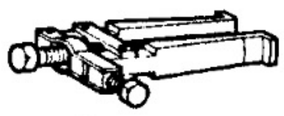	09308–10010 Oil Seal Puller	
	09330–00021 Companion Flange Holding Tool	Crankshaft pulley
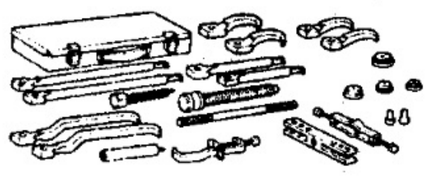	09950–20017 Universal Puller	
	09960–10010 Variable Pin Wrench Set	
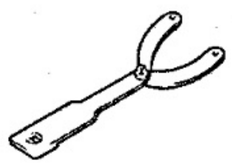	(09962–01000) Variable Pin Wrench Arm Assy	
	(09963–00600) Pin 6	

RECOMMENDED TOOLS

EG0AZ–0C

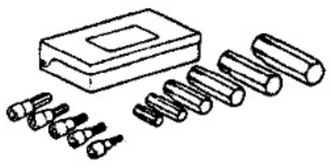	09040–00010 Hexagon Wrench Set	
	09200–00010 Engine Adjust Kit	
	09258–00030 Hose Plug Set	Plug for vacuum hose, fuel hose etc.
	09904–00010 Expander Set	

EG0B0–0A

EQUIPMENT

Battery specific gravity gauge	
Caliper gauge	
Compression gauge	
Connecting rod aligner	
Cylinder gauge	

Dye penetrant	
Heater	
Magnetic finger	
Micrometer	
Piston ring compressor	
Piston ring expander	
Plastigage	
Precision straight edge	
Soft brush	
Spring tester	Valve spring
Steel square	Valve spring
Torque wrench	
Valve seat cutter	
Vernier calipers	
Ohmmeter	
V–block	

EG091–0X

SSM (SERVICE SPECIAL MATERIALS)

08826–00080	Seal packing or equivalent	Camshaft bearing cap Cylinder head Cylinder head semi–circular plug
08833–00070	Adhesive 1311, THREE BOND 1311 or equivalent	Flywheel bolt
08833–00080	Adhesive 1344, THREE BOND 1344, LOCTITE 242 or equivalent	Oil pressure switch

TROUBLESHOOTING

EG34F-01

Diesel Engine Daignosis

GENERAL

1. Diesel engine problems are usually caused by the engine or fuel system. The injection pump is very rarely the cause of fuel system problems.
2. Before beginning fues system tests, first check that the engine compression, valve timing and other major systems are within specifications.

PRELIMINARY CHECKS

1. Before performing fuel system checks, ensure that the engine is in good running condition. If necessary, first check the compression, timing and major components or systems.
2. Check the air filter, and clean or replace it if necessary.
3. Check that there is sufficient fuel in the tank.
4. Check if the fuel is contaminated with gasoline or other foreign elements. Only good—quality diesel fuel should be used.
5. Bleed air from the system by pumping the priming.
6. Check for water in the fuel filter and fuel tank, and drain as necessary.
7. If the engine will not crank or if it cranks slowly, first troubleshoot the electrical system.

PRECAUTION:

1. **The basic troubleshooting procedures for the diesel engine (valve clearance, compression, bearings, valves, pistons, etc.) are the same checks you would make for gasoline engine.**
2. **Repair of the injection pump requires considerable skill and use of a special test bench.**

	See page	CH-5	CH-5	CH-5	ST-5 ST-16	ST-27	ST-28	ST-33	EG-152	EG-148	EG-177	–	EG-13	–	–	–	–	EG-23	EG-15	–	EG-31	–
	Suspect area / Symptom	Battery	Battery Terminal	Fusible Link	Starter	Starter Relay	Pre-heating System	Glow Plug	Injection Nozzle	Fuel Filter	Delivery Valve	Fuel Line	Fuel Cut Solenoid Operation	(w/ ACSD) ACSD	Fuel Quality	No Fuel	Fuel Leakage	Injection Timing	Air Cleaner	Accelerator Cable	Timing Belt	Ignition Switch
Does not start	Engine does not crank	2	1	3	6	4																5
	Engine cranks normally								5			2	1	6				4				
Difficult to start	Engine cranks slowly	2	1		3																	
	Engine cranks normally						1	2														
Poor idling	High engine idle speed													3						1		
	Rough idle with warm engine								6		7						2	5				
Others	Lack of power								9	6					12		5	8	1	2		
	Engine suddenly stops												2		4	1					3	
	Engine does not shut off with key												1									2
	Excessive exhaust smoke								4	3								2	1			
	Excessive fuel consumption								8						10		5	7	1			
	Engine overheat																	7				
	Low oil pressure																					
	High oil pressure																					
	Engine noise when warm								2									1				

HINT: When inspecting a wire harness or circuit the Electrical Wiring Diagram repair manual should be referred to and the circuits of related systems also should be checked.

W03899

	See page	EG-26	EG-26	EG-39	EG-29	EG-239	EG-16	EG-236	EG-234	EG-241	EG-242	EG-250	EG-253	–	–	–	EG-87	EG-87	EG-57	EG-87	–	
	Suspect area / Symptom	Idle Speed	Maximum Speed	Valve Timing	Compression	Thermostat	Fanbelt	Fluid Coupling	Water Pump	Radiator and Radiator Cap	Coolant Leakage	Oil Pump	Relief Valve	Oil Pressure Switch	Clutch Slipping	Brake Grabbing	Connecting Rod Bearing	Crankshaft Bearing	Cylinder Head	Cylinder Block	Flywheel	
Does not start	Engine does not crank			8																	7	
	Engine cranks normally			3																		
Difficult to start	Engine cranks slowly																4	5				
	Engine cranks normally																					
Poor idling	High engine idle speed					2																
	Rough idle with warm engine	1		4	3																	
Others	Lack of power		7	11	10										3	4						
	Engine suddenly stops																					
	Engine does not shut off with key																					
	Excessive exhaust smoke																					
	Excessive fuel consumption	4	6		9										2	3						
	Engine overheat					5	2	3	6	4	1								8	9		
	Low oil pressure											3	2	1			4	5				
	High oil pressure												1									
	Engine noise when warm																					

V03900

Diesel Electrical System Diagnosis

ENGINE DOES NOT START COLD

HINT:

- Battery voltage at 12 V — Ignition switch OFF.
- Engine cranks nomally.
- Fusible link okay.
- Check the voltage marked with an asterisk (*) just as the ignition switch is placed at ON because the voltage will change.

1. Pre—Heating System

Disconnect the water temperature sensor.

↓

Check if indicator light lights up with ignition switch ON.
Light on: Approx. 6 seconds

→ No → Check fuse. (See page ST-28)

→ Fuse Blown → Check for short circuit and repair if necessary.

Fuse OK ↓

Check indicator light bulb.

→ Bulb No Good → Replace bulb.

Bulb OK ↓

Check for battery voltage to terminal S-IND of pre-heating timer connector (on wire harness side).
If okay, pre-heating timer is faulty and should be replaced.

Yes ↓

Ignition switch OFF.

↓

*Check for battery voltage to terminal S-REL of pre-heating timer with ignition switch ON.

→ No Voltage → *Check that there is 1 V or less to terminal CHG.
If okay, timer is faulty and should be replaced.

Voltage ↓

*Check if voltage to terminal S-REL of pre-heating timer is terminated after engine is started.

→ No → Start engine and check if there is voltage at terminal CHG of pre-heating timer.
If faulty, repair charging system as necessary.
If okay, pre-heating timer is faulty and should be replaced.

Yes ↓

Ignition switch OFF.

↓

CONTINUED ON PAGE EG-12

Pre-Heating Timer

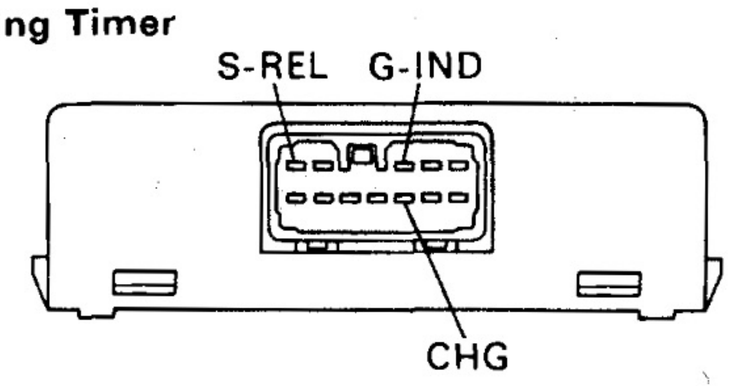

P08055

V03870

CONTINUED FROM PAGE EG-11

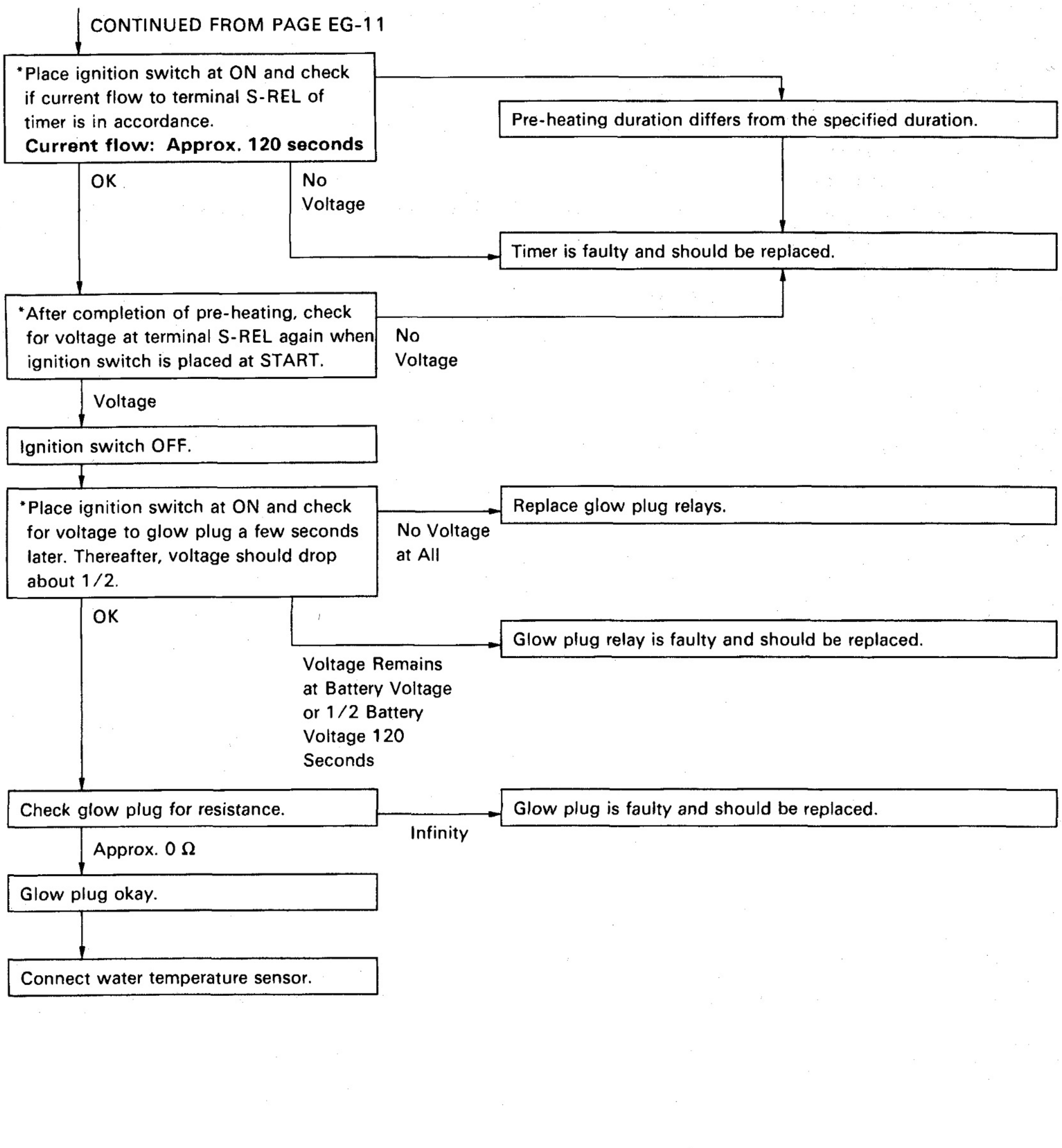

V03871

2. Fuel Cut Solenoid Valve

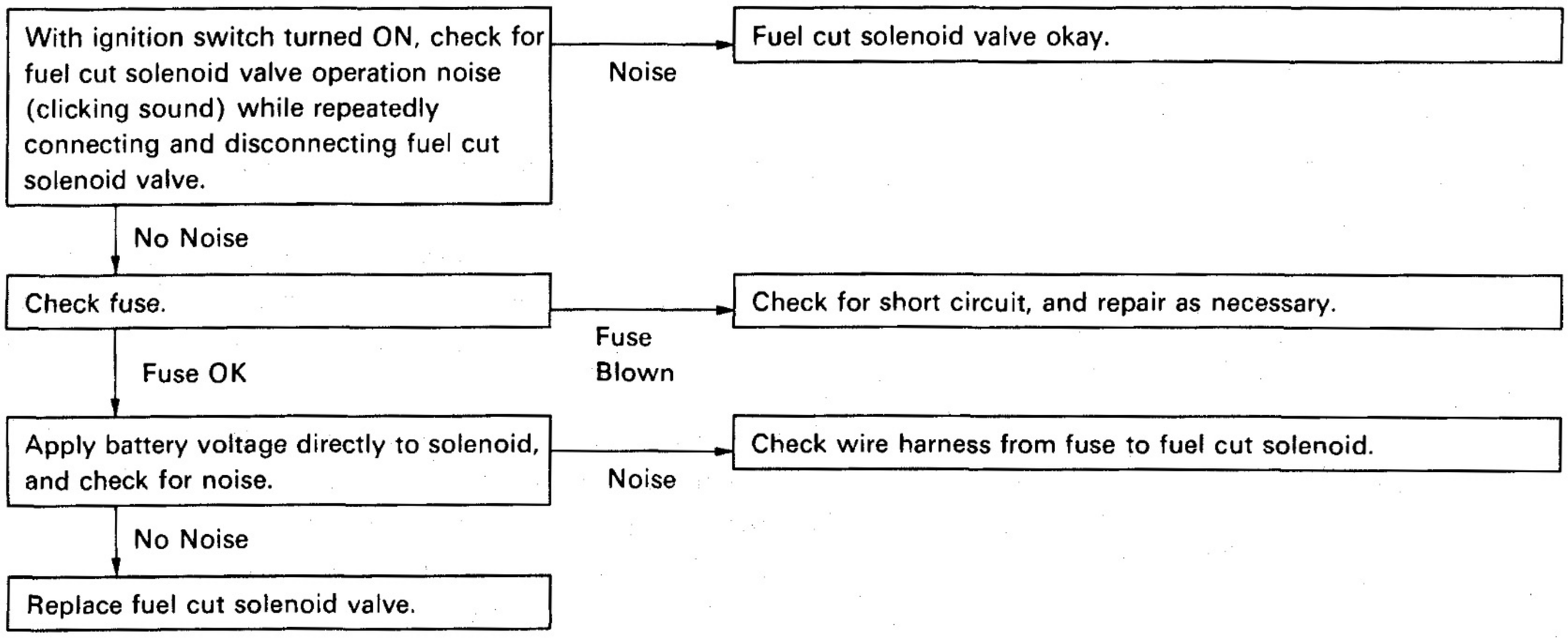

V03372

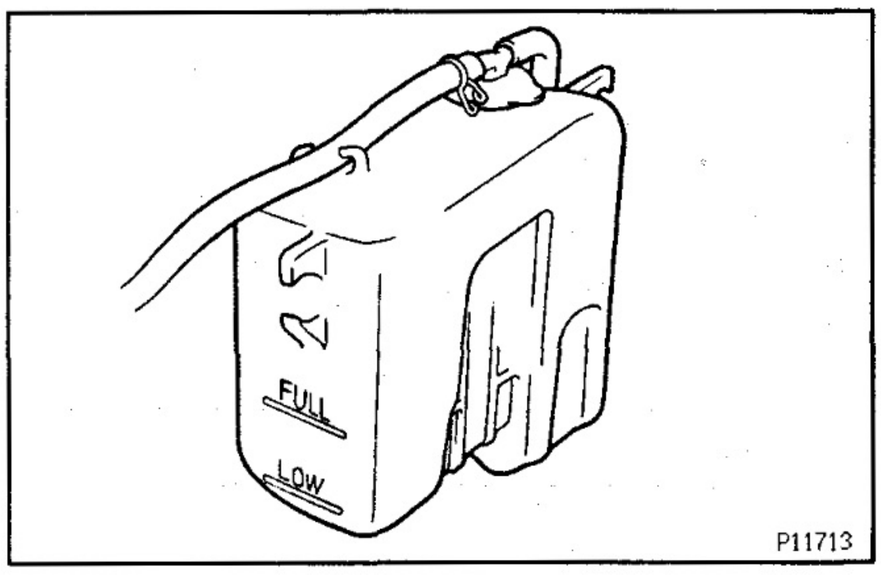

TUNE—UP

ENGINE COOLANT INSPECTION

EG34G—01

1. CHECK ENGINE COOLANT LEVEL AT RESERVOIR TANK

The engine coolant level should be between the "LOW" and "FULL" lines.

If low, check for leaks and add engine coolant up to the "FULL" line.

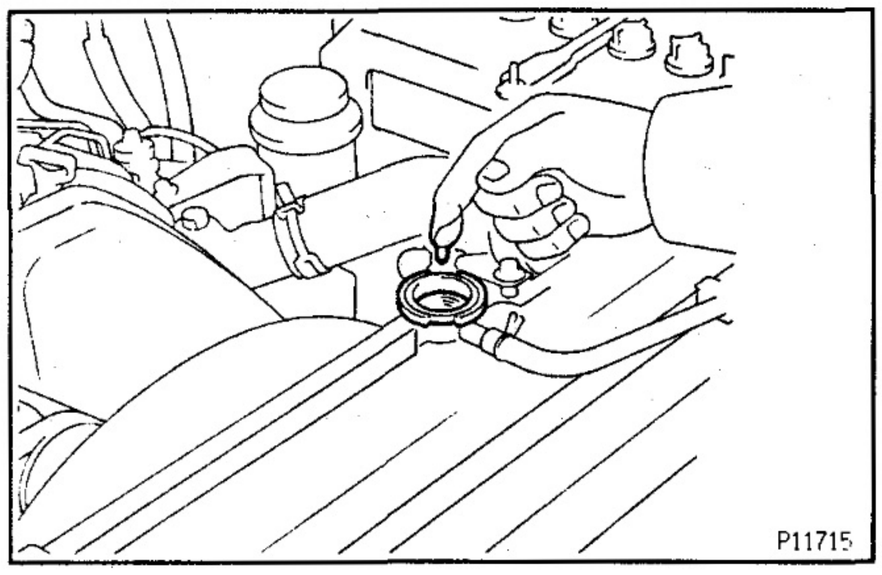

2. CHECK ENGINE COOLANT QUALITY

(a) Remove the radiator cap.

CAUTION: To avoid the danger of being burned, do not remove the radiator cap while the engine and radiator are still hot, as fluid and steam can be blown out under pressure.

(b) There should not be any excessive deposits of rust or scale around the radiator cap or radiator filler hole, and the coolant should be free from oil.

If excessively dirty, replace the coolant.

(c) Reinstall the radiator cap.

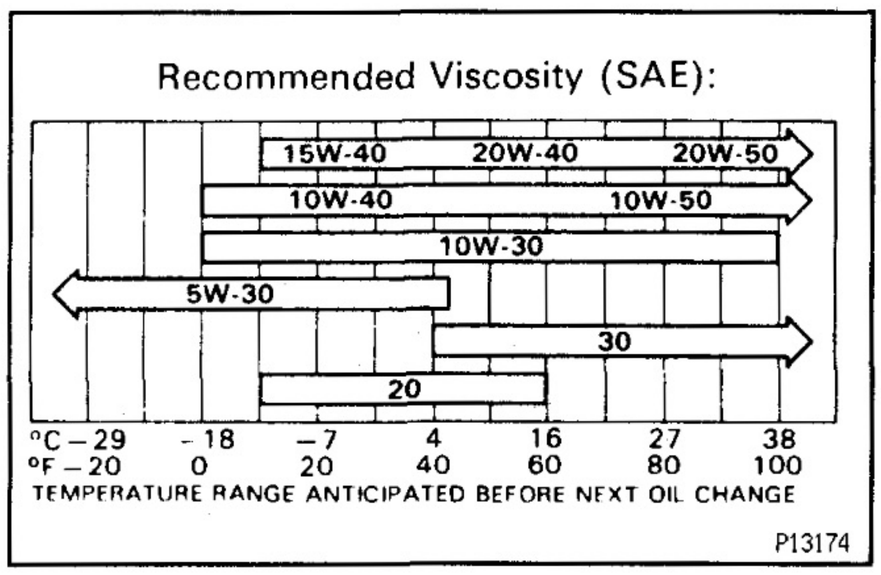

ENGINE OIL INSPECTION

EG084—0D

1. CHECK OIL QUALITY

Check the oil for deterioration, entry of water, dis—coloring or thinning.

If oil quality is visibly poor, replace it.

Oil grade:

API grade CD or better

Recommended viscosity:

Refer to illustration

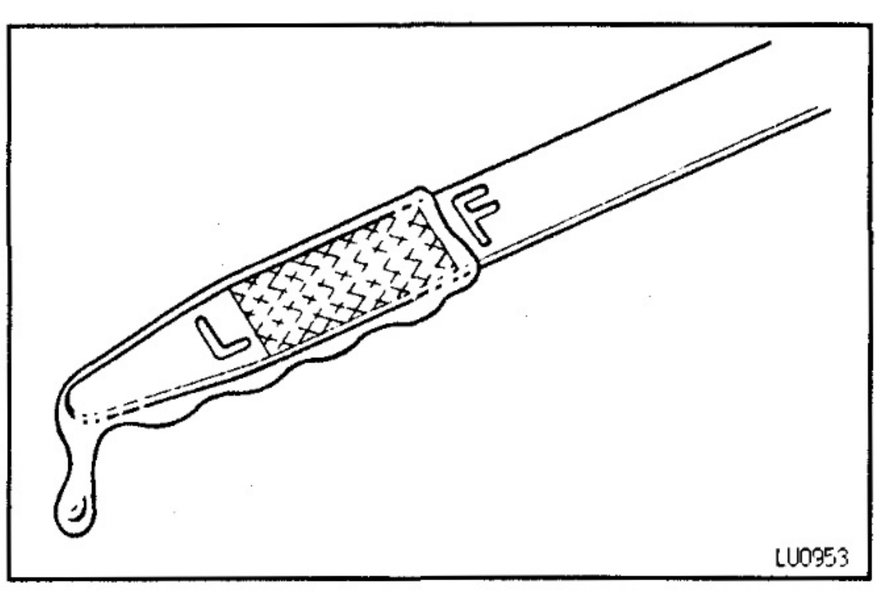

2. CHECK ENGINE OIL LEVEL

The oil level should be between the "L" and "F" marks on the dipstick.

If low, check for leakage and add oil up to the "F" mark.

NOTICE: Do not fill with engine oil above the "F" mark.

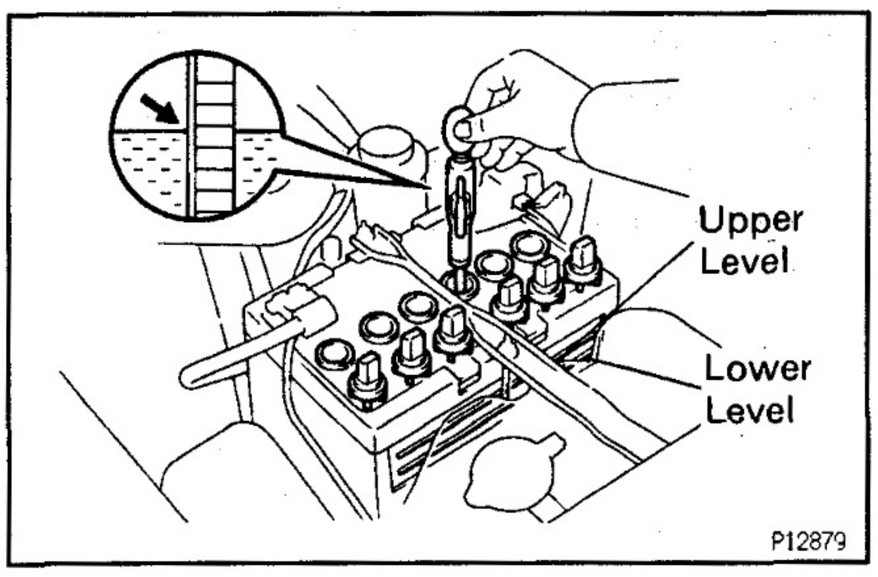

EG17T–03

BATTERY INSPECTION

1. CHECK BATTERY SPECIFIC GRAVITY AND ELECTROLYTE LEVEL

(a) Check the electrolyte quantity of each cell.
If insufficient, refill with distilled (or purified) water.

(b) Check the specific gravity of each cell.
Standard specific gravity at 20°C (68°F):
1.27 — 1.29
If not within specifications, charge the battery.

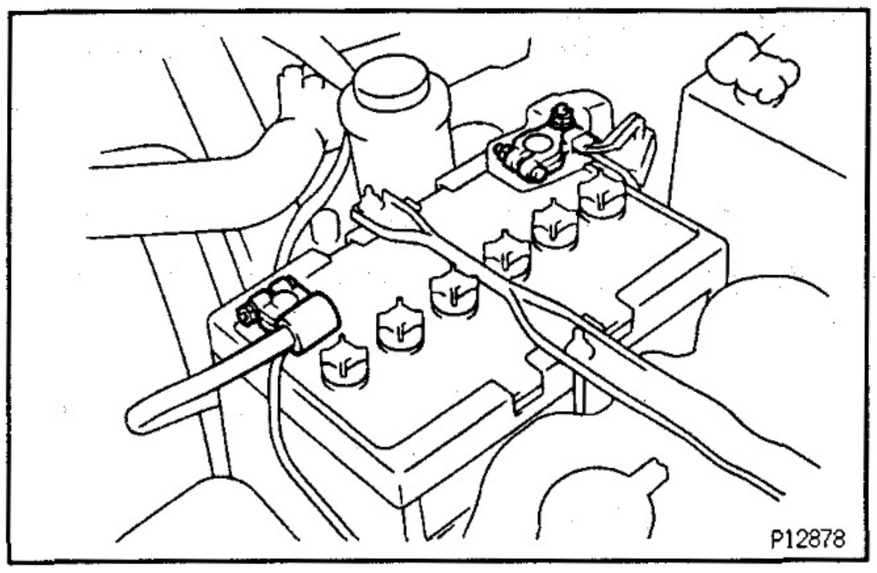

2. CHECK BATTERY TERMINALS, FUSIBLE LINK AND FUSES

(a) Check that the battery terminals are not loose or corroded.

(b) Check the fusible links and fuses for continuity.

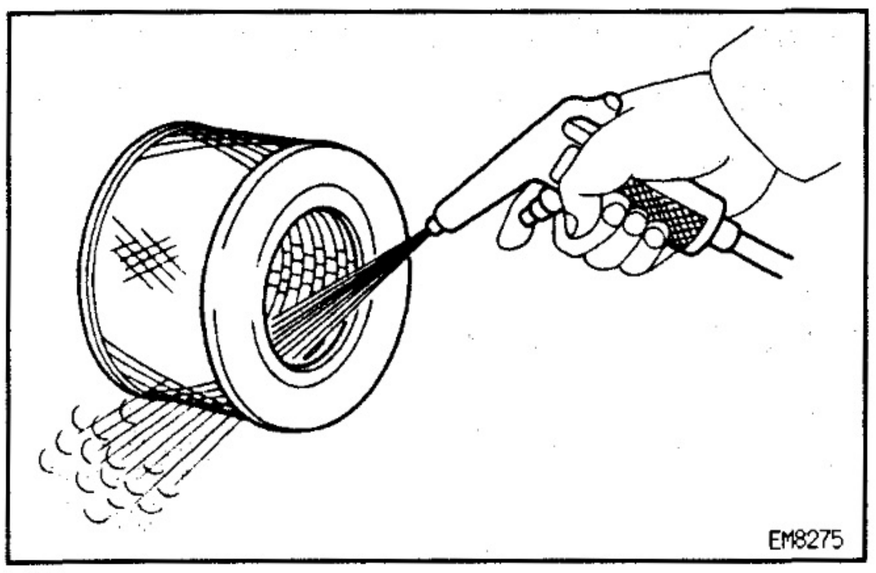

EG34H–01

AIR FILTER INSPECTION AND CLEANING

Paper Filter Type:

1. INSPECT AIR FILTER
Visually check that the filter element is not excessively dirty, damaged or oily.

2. CLEAN AIR FILTER
Clean the filter element with compressed air.
First blow from the inside thoroughly. Then blow off the outside of the filter element.

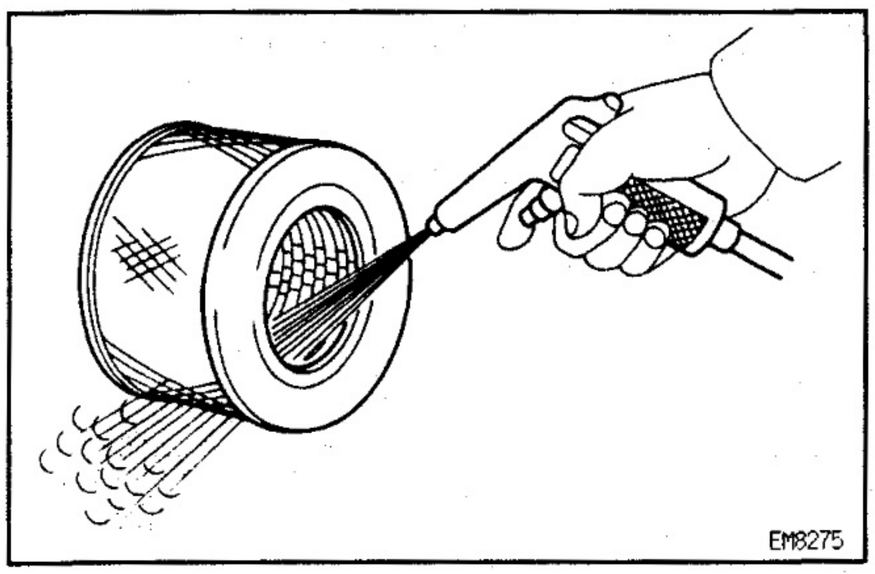

Washable Type:

1. INSPECT AIR FILTER
Visually check that the filter element is not excessively dirty, damaged or oily.

2. CLEAN AIR FILTER

(a) Blow dirt off in the filter element with compressed air.

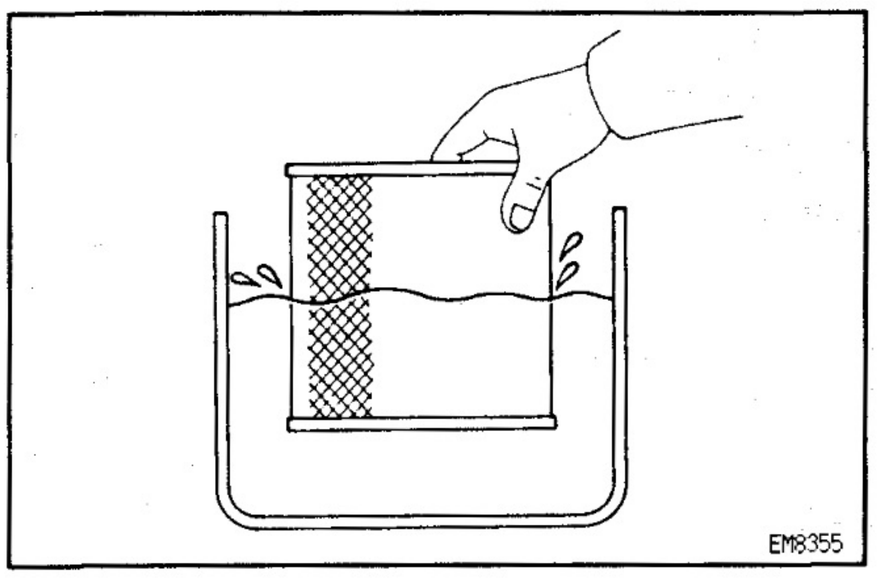

(b) Submerge the filter element in the water and agitate it up and down more than 10 times.

(c) Repeat rinsing in clean water until rinsing water is clear.

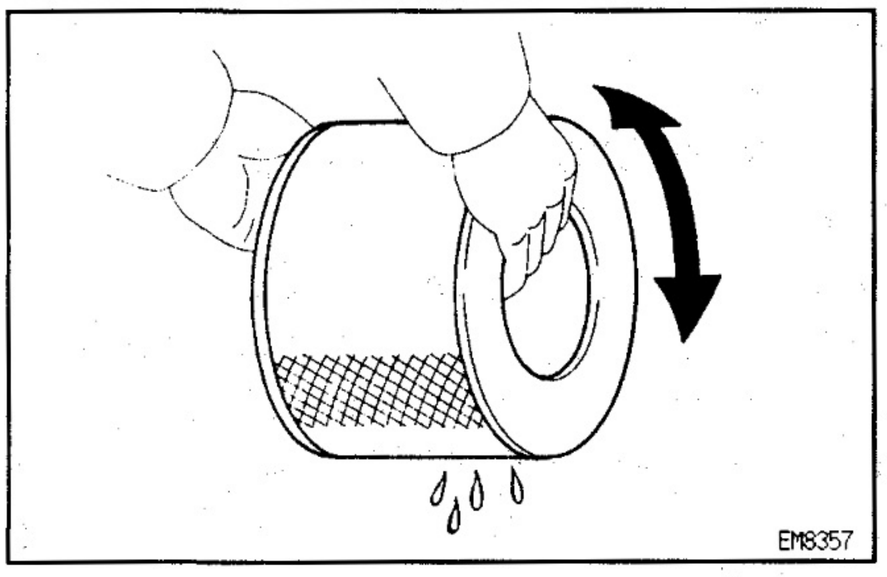

(d) Remove excess water by shaking the filter element or blowing with compressed air.
NOTICE: Do not beat or drop filter element.

(e) Wipe off dust on the air cleaner case interior.

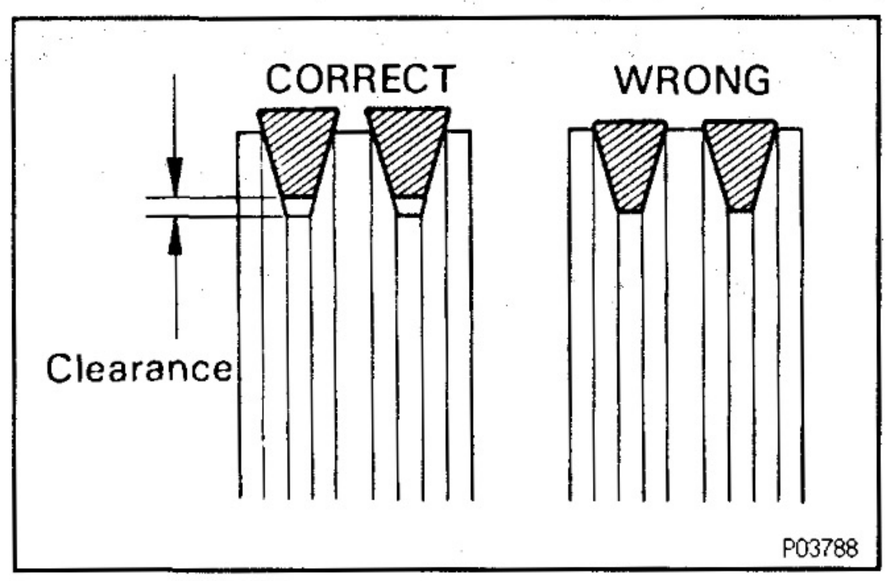

ALTERNATOR DRIVE BELT INSPECTION EG34J-01

INSPECT DRIVE BELT

(a) Visually check the belt for cracks, oiliness or wear.
Check that the belt does not touch the bottom of the pulley groove.
If one belt has any of the above defects, replace both belts.

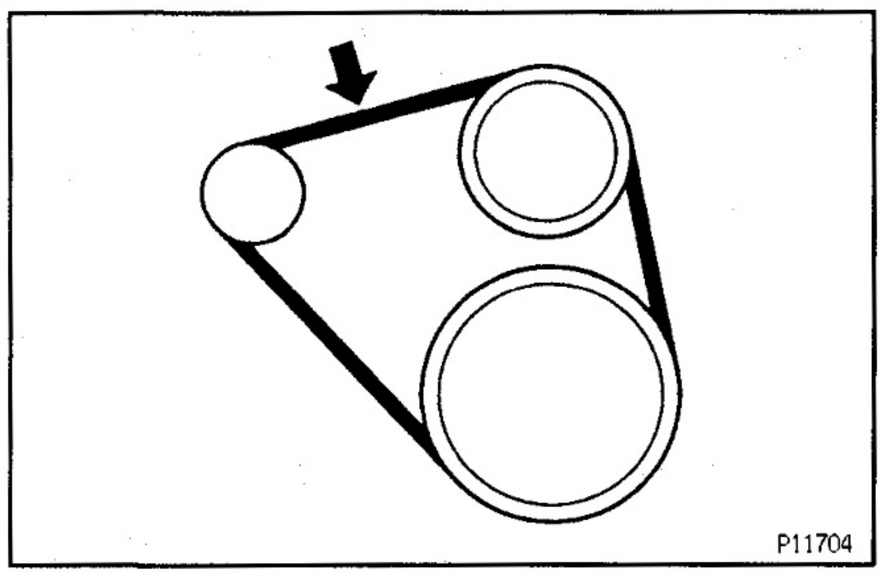

(b) Check the drive belt deflection by pressing on the belt at the points indicated in the illustration with 98 N (10 kgf, 22 lbf) of pressure.
Deflection:
New belt
6 – 8 mm (0.24 – 0.31 in.)
Used belt
8 – 12 mm (0.31 – 0.47 in.)

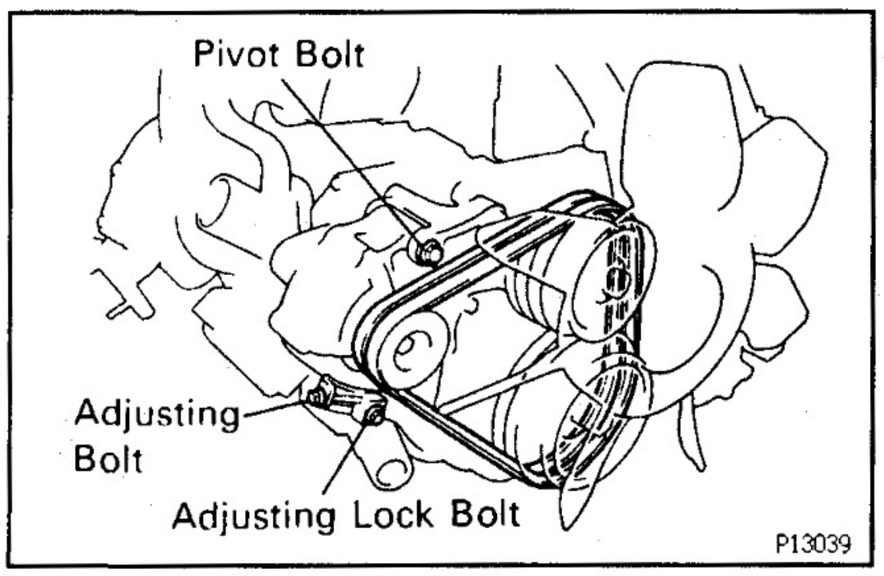

If the deflection is not as specified, adjust it.

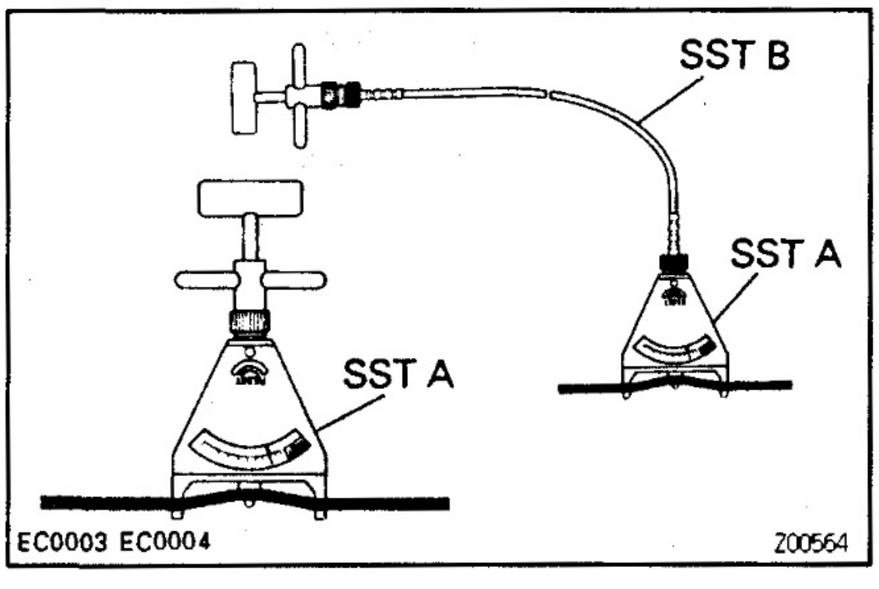

Reference
Using SST, check the drive belt tension.
SST A 09216–00020
SST B 09216–00030
Drive belt tension:
New belt
38 – 62 kgf
Used belt
20 – 40 kgf

HINT:

- "New belt" refers to a belt which has been used less than 5 minutes on a running engine.
- "Used belt" refers to a belt which has been used on a running engine for 5 minutes or more.
- After installing a new belt, run the engine for about 5 minutes and recheck the belt deflection or belt tension.

GLOW PLUGS INSPECTION EG34K-01

NOTICE: When checking the resistance of the glow plugs, do it with the engine installed. Keep removal and installation of the glow plugs to a minimum.

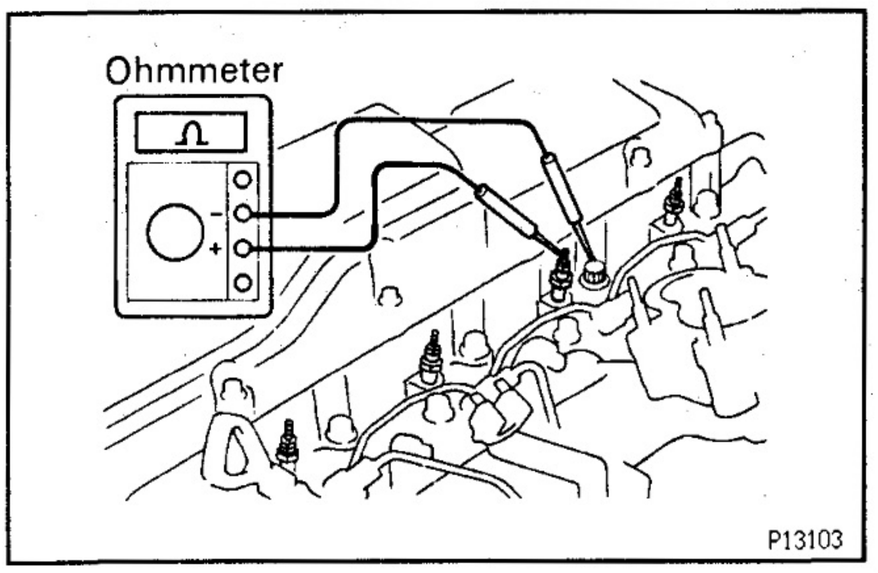

INSPECT GLOW PLUGS (See page ST—33)

Using an ohmmeter, check that there is continuity between the glow plug terminal and ground.

Resistance (Cold):

Approx. 0.65 Ω

If the resistance exceeds 1.0 Ω, replace the glow plug.

VALVE CLEARANCE INSPECTION AND ADJUSTMENT EG34L-01

HINT: Inspect and adjust the valve clearance when the engine is cold.

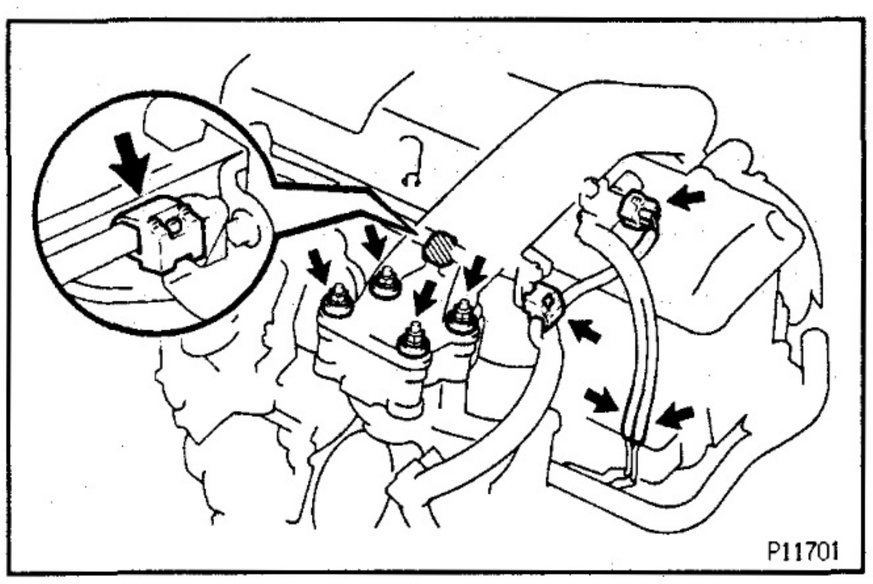

1. REMOVE INTAKE PIPE

(a) Disconnect the VSV connector and 2 vacuum hoses.
(b) Disconnect the 2 wire harness clamps.
(c) Remove the 4 nuts and seal washers.

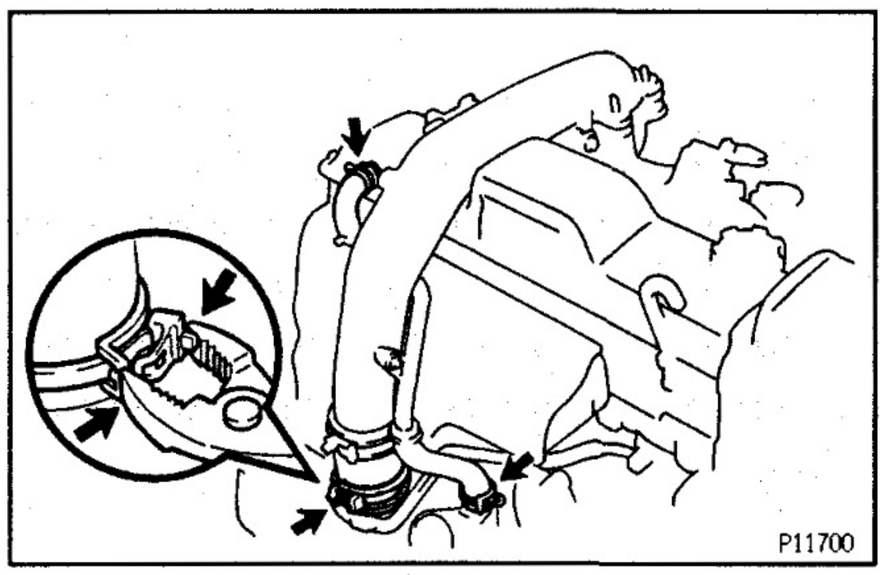

(d) Disconnect the 2 PCV hoses.
(e) Use pliers to pinch the ends of the clamp together until the lock plate engages the catch.
Make sure the lock plate and catch are engaged securely.
(f) Remove the intake pipe and gasket.

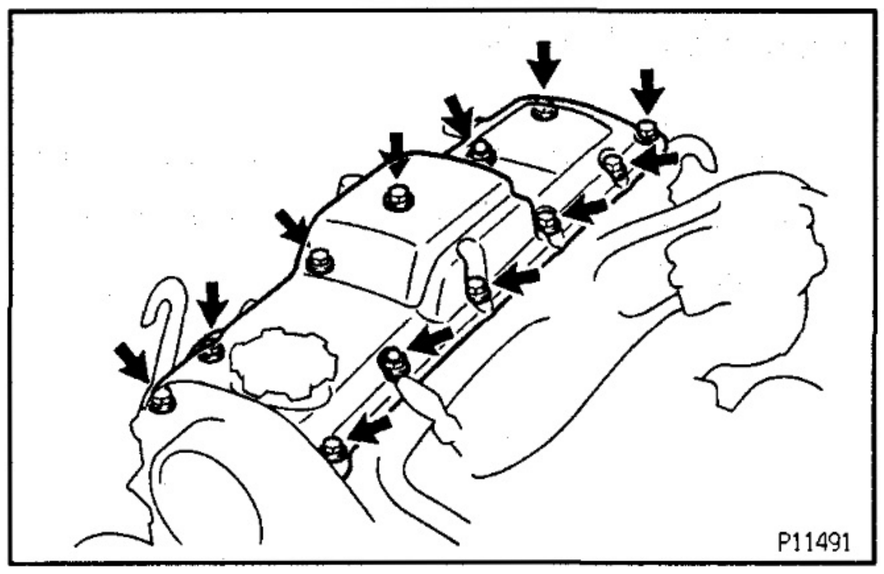

2. REMOVE CYLINDER HEAD COVER

Remove the 10 bolts, 2 nuts, cylinder head cover and gasket.

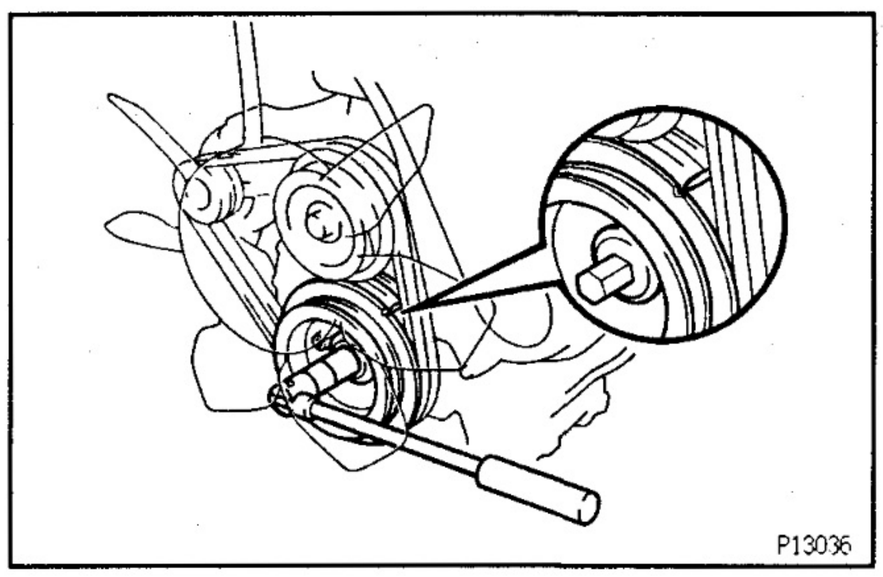

3. SET NO.4 CYLINDER TO TDC/COMPRESSION

(a) Turn the crankshaft pulley clockwise, and align its groove with the timing pointer.
(b) Check that the valve lifters on the No.4 cylinder are loose and valve lifters on the No.1 cylinder are tight.
If not, turn the crankshaft one revolution (360°) and align the mark as above.

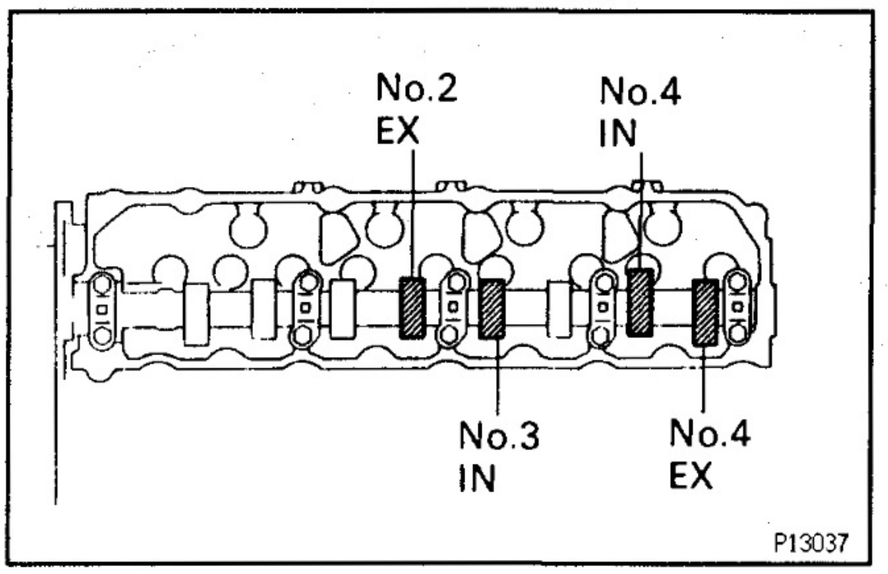

4. ADJUST VALVE CLEARANCE

(a) Check only the valves indicated in the illustration.
- Using a thickness gauge, measure the clearance between the valve lifter and camshaft.
- Record the out — of — specification valve clearance measurements. They will be used later to determine the required replacement adjusting shim.

Valve clearance (Cold):

Intake

0.20 — 0.30 mm (0.008 — 0.012 in.)

Exhaust

0.25 — 0.35 mm (0.010 — 0.014 in.)

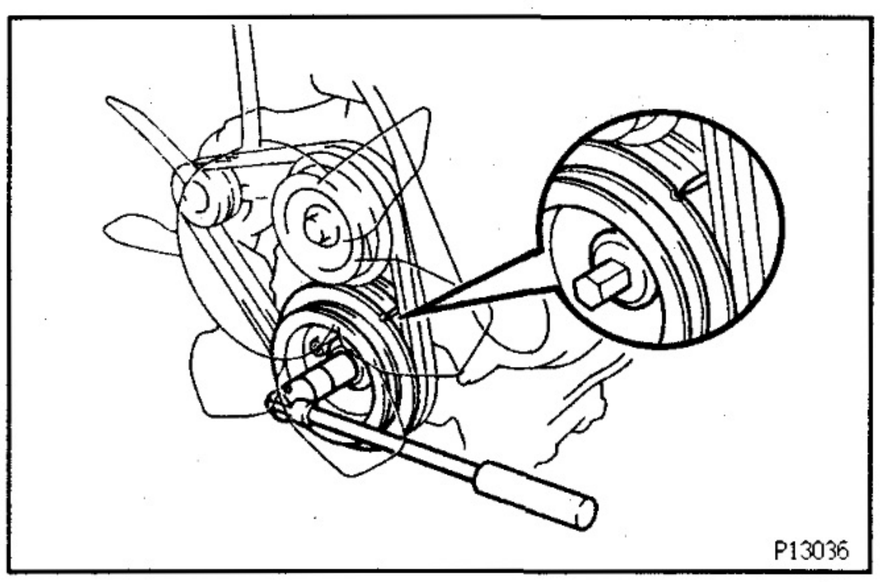

(b) Turn the crankshaft pulley one revolution (360°) and align the mark as above (See procedure step 4).

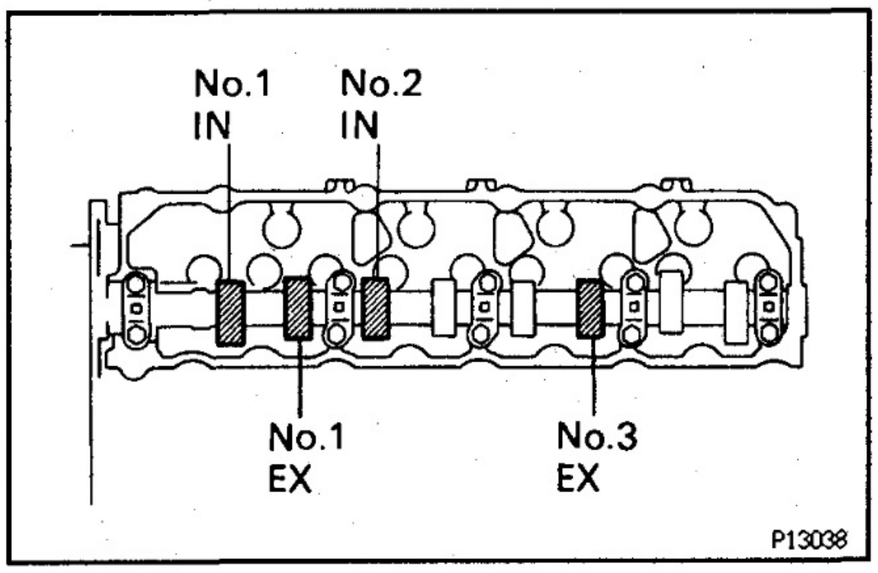

(c) Check only the valves indicated as shown. Measure the valve clearance. (See procedure in step (a))

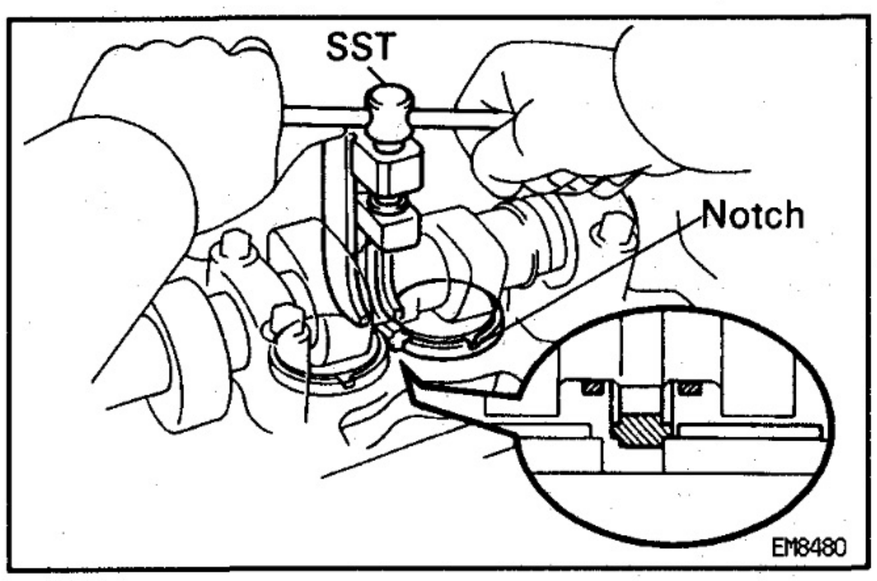

(d) Remove the adjusting shim.

- Turn the crankshaft to position the cam lob of the camshaft on the adjusting valve upward.
- Using SST, press down the valve lifter.

SST 09248–64010

HINT: Before pressing down the valve lifter, position the notch on the exhaust manifold side.

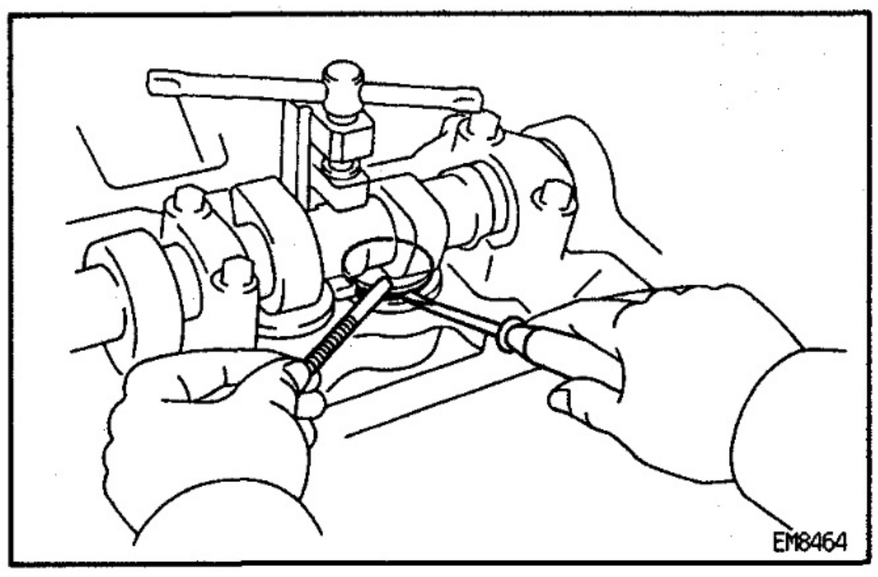

- Remove the adjusting shim with small screwdriver and magnetic finger.

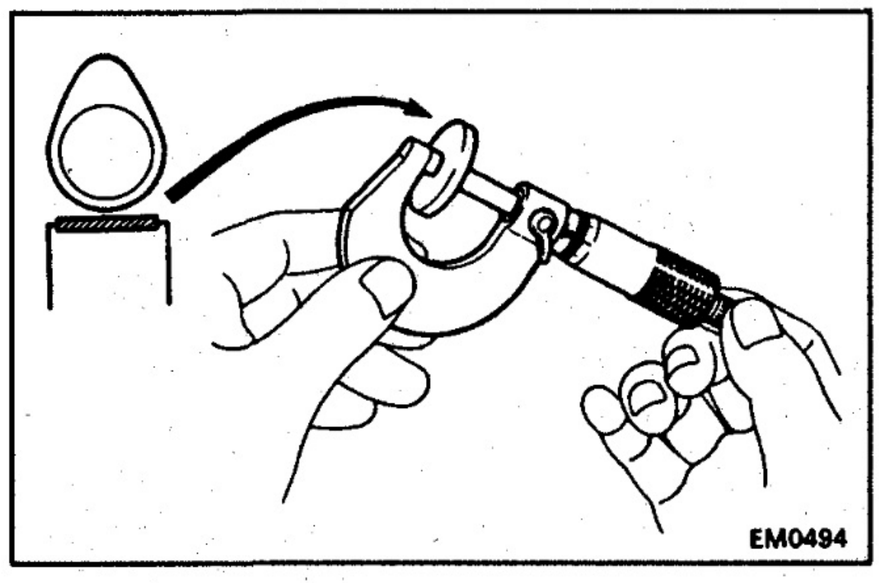

(e) Determine the replacement adjusting shim size by using following the formula or charts:

- Using a micrometer, measure the thickness of the shim which was removed.
- Calculate the thickness of the new shim so the valve clearance comes within specified value.

T ..... Thickness of removed shim

A ..... Measured valve clearance

N ..... Thickness of new shim

Intake:

N = T + (A – 0.25 mm (0.010 in.))

Exhaust:

N = T + (A – 0.30 mm (0.012 in.))

- Select a new shim with a thickness as close as possible to the calculated values.

HINT: Shims are available in 17 sized in increments of 0.050 mm (0.0020 in.), from 2.500 mm (0.0984 in.) to 3.300 mm (0.1299 in.).

Adjusting Shim Selection Using Chart

INTAKE

| Measured clearance mm (in.) | Installed shim thickness mm (in.) | | |

Adjusting Shim Selection Using Chart

EXHAUST

| Measured clearance mm (in.) | Installed shim thickness mm (in.) | | |

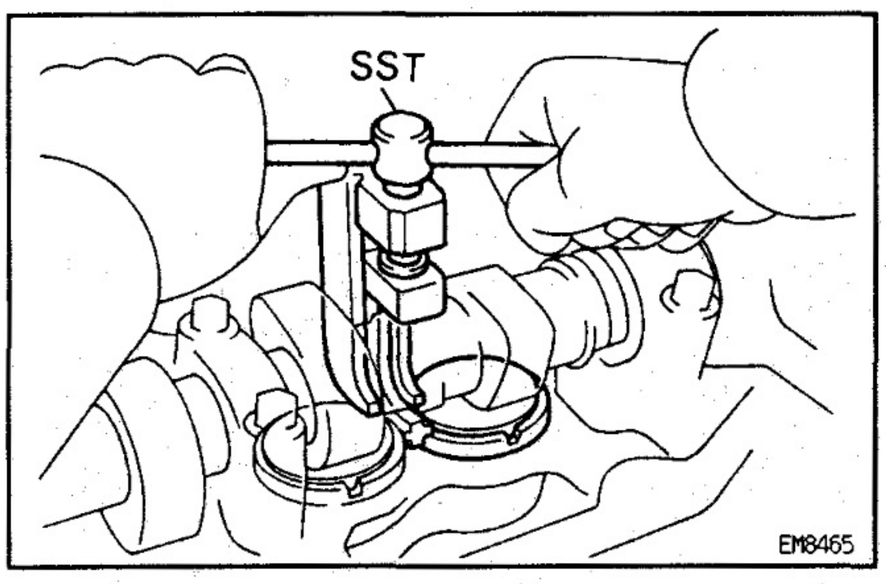

(f) Install a new adjusting shim.
- Place a new adjusting shim on the valve lifter.
- Remove the SST.

SST 09248–64010

(g) Recheck the valve clearance.

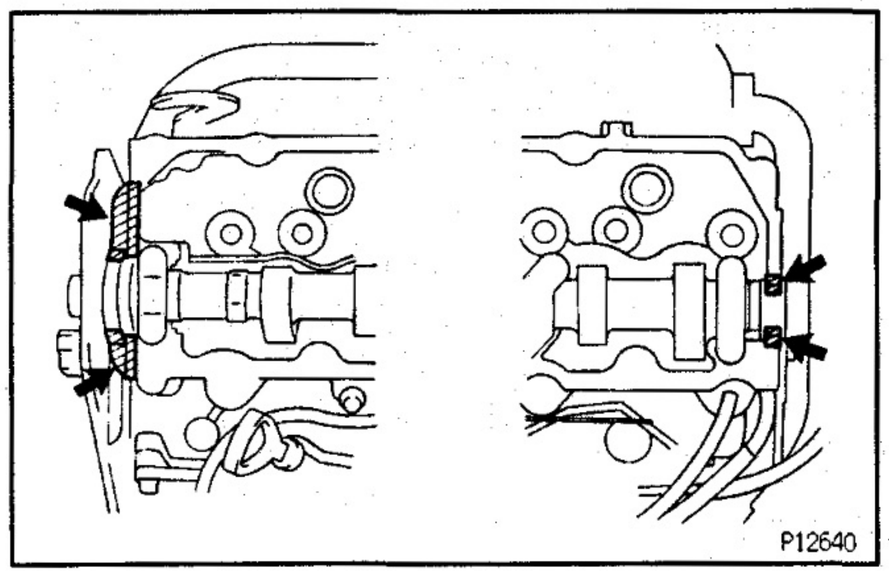

5. INSTALL CYLINDER HEAD COVER

(a) Remove any old packing (FIPG) material.

(b) Apply seal packing to the cylinder head as shown in the illustration.

Seal packing:

Part No. 08826–00080 or equivalent

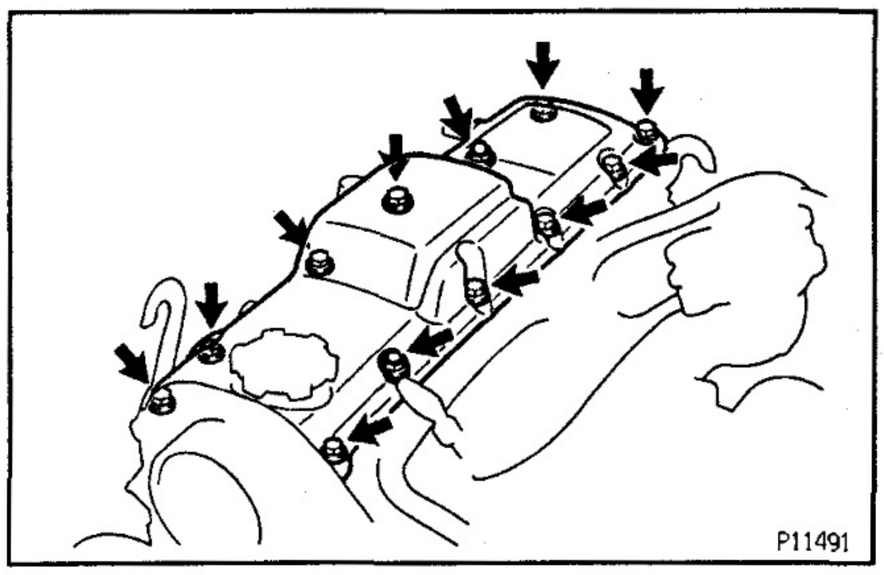

(c) Install the gasket to the cylinder head cover.

(d) Install the cylinder head cover with the 10 bolts and 2 nuts.

Torque: 9 N·m (90 kgf·cm, 78 in.·lbf)

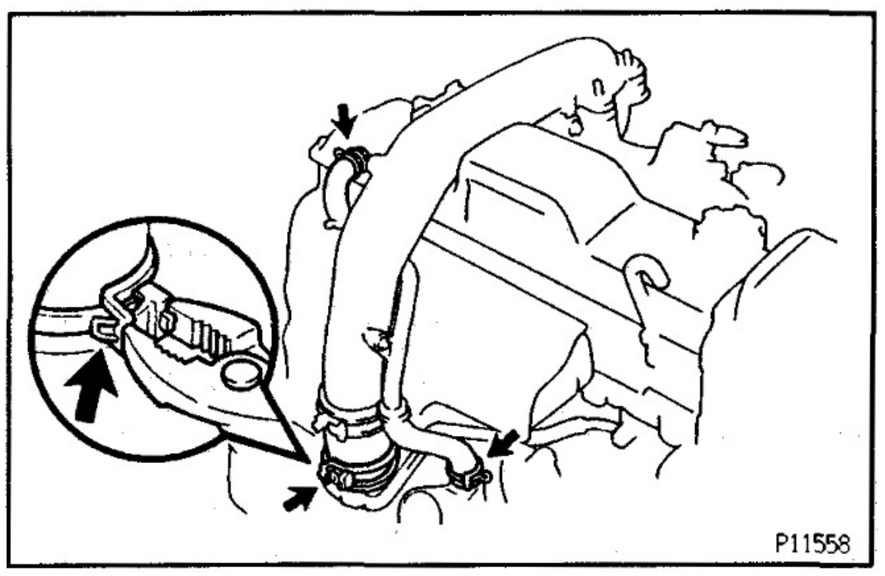

6. INSTALL INTAKE PIPE

(a) Place a new gasket on the intake manifold.

(b) Connect the air hose and install the intake pipe.

(c) Press the clamp lock together with pliers and press down the tip of the lock plate. Carefully let the lock spread apart.

Take care not to let the pliers slip.

(d) Connect the 2 PCV hoses.

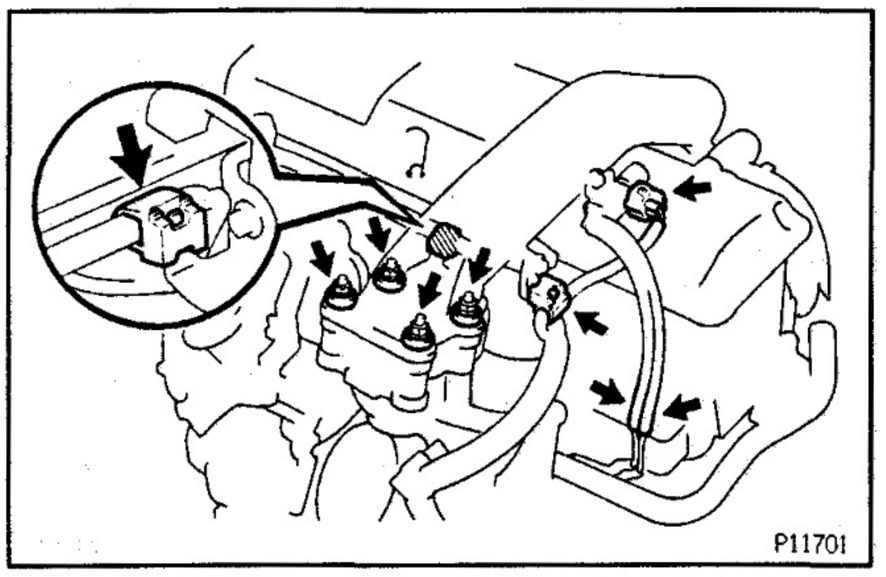

(e) Install the 4 seal washers and nuts.

12 N·m (120 kgf·cm, 9 ft·lbf)

(f) Connect the 2 wire harness clamps.

(g) Connect the VSV connector and 2 vacuum hoses.

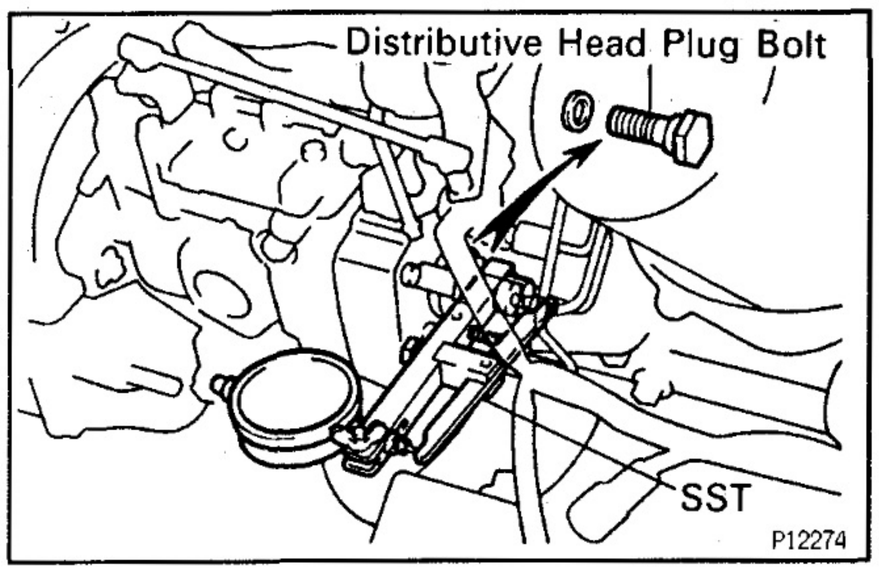

EG34M-01

INJECTION TIMING INSPECTION AND ADJUSTMENT

1. INSTALL SST AND DIAL INDICATOR

(a) Remove the plug bolt and gasket from the distributive head plug of the injection pump.

(b) Install SST (plunger stroke measuring tool) and a dial indicator to the plug bolt hole of distributive head plug.
SST 09275−54011

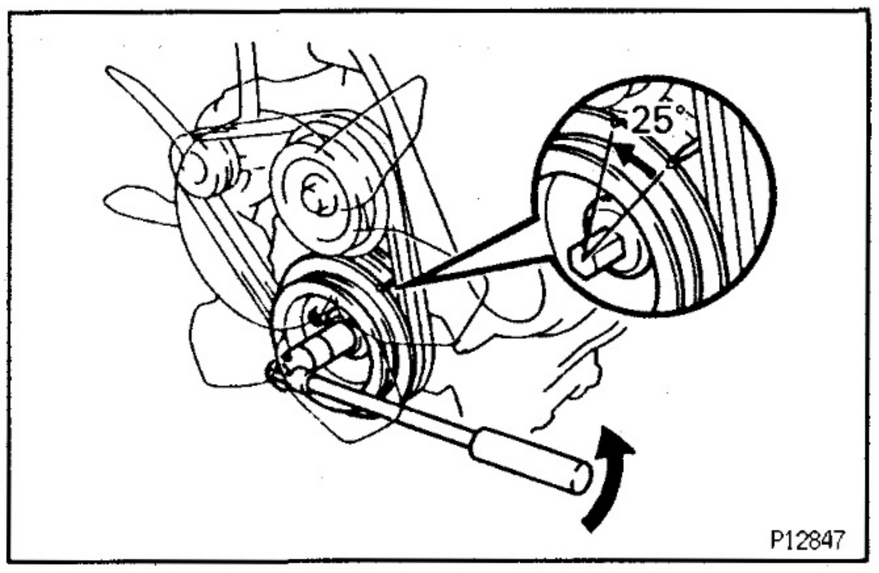

2. SET NO.1 OR NO.4 CYLINDER TO 25° OR MORE BTDC/COMPRESSION

Turn the crankshaft pulley counterclockwise, so the pulley groove is 25° or more from the timing pointer.

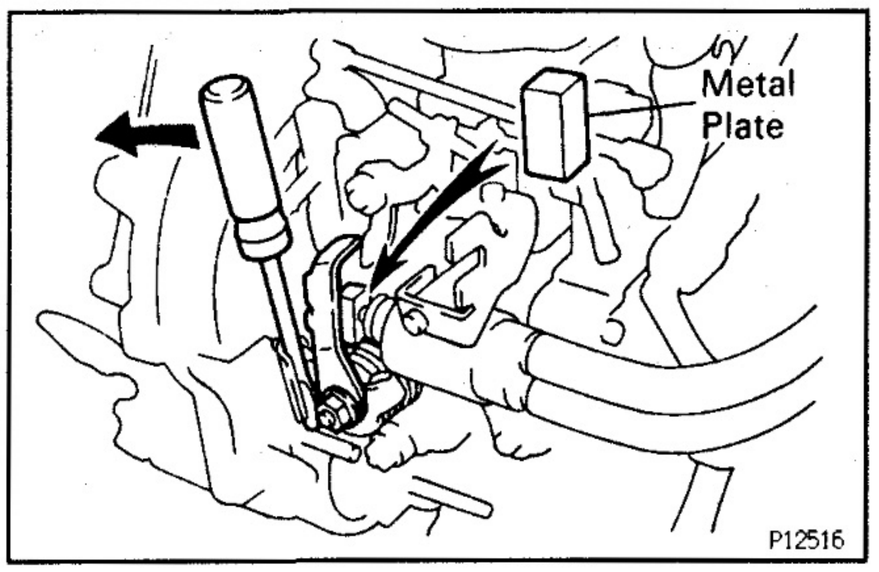

3. w/ ACSD: RELEASE ACSD ADVANCE

(a) Using a screwdriver, turn the cold starting lever counterclockwise approx. 20°.

(b) Put a metal plate (thickness of 8.5 — 10 mm (0.335 — 0.394 in.)) between the cold starting lever and thermo wax plunger.

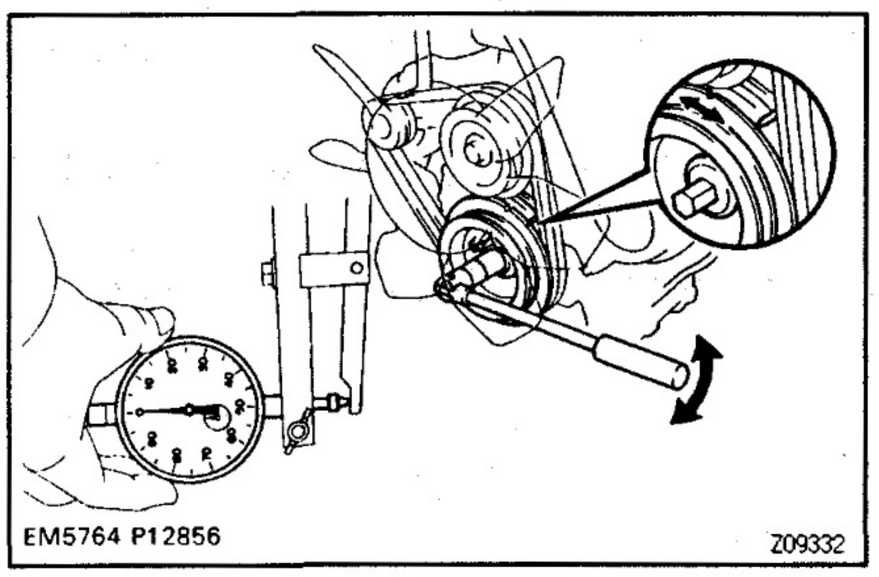

4. ADJUST INJECTION TIMING

(a) Set the dial indicator at 0 mm (0 in.).

(b) Recheck to see that the dial indicator remains at 0 mm (0 in.) while slightly rotating the crankshaft pulley clockwise or counterclockwise.

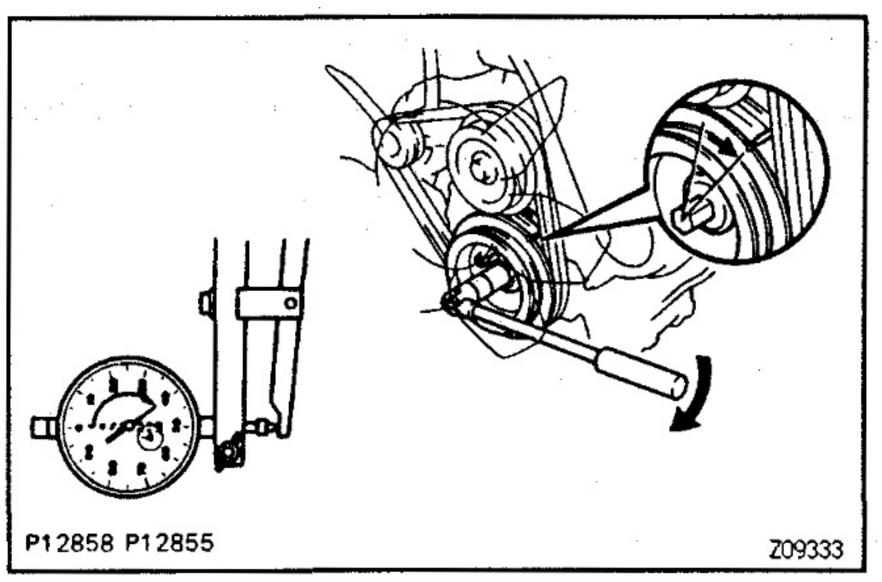

(c) Slowly rotate the crankshaft pulley clockwise until pulley groove is aligned with the timing pointer.

(d) Measure the plunger stroke.

Plunger stroke:

Europe

0.39 — 0.43 mm (0.0154 — 0.0169 in.)

Others

0.58 — 0.62 mm (0.0228 — 0.0244 in.)

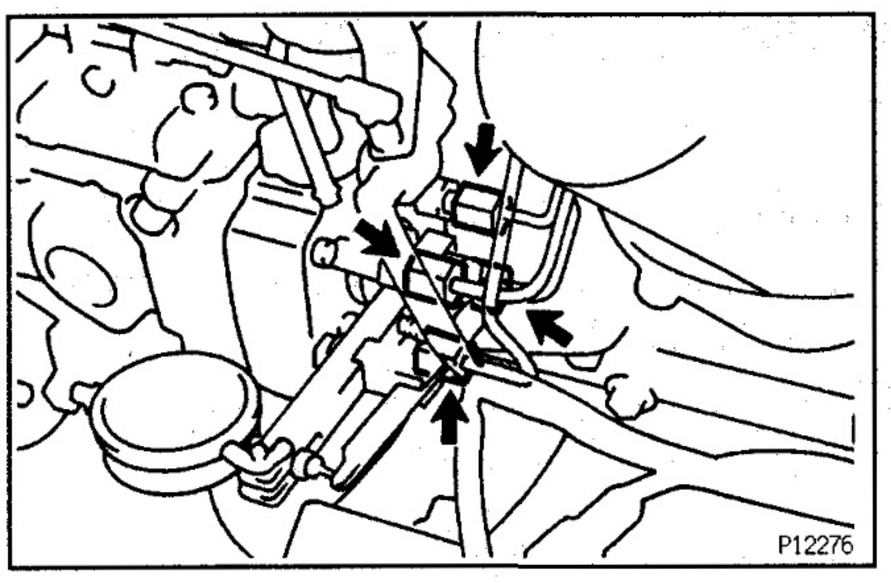

(e) Loosen the following nuts and bolt:
(1) 4 union nuts of injection pipes at injection pump side

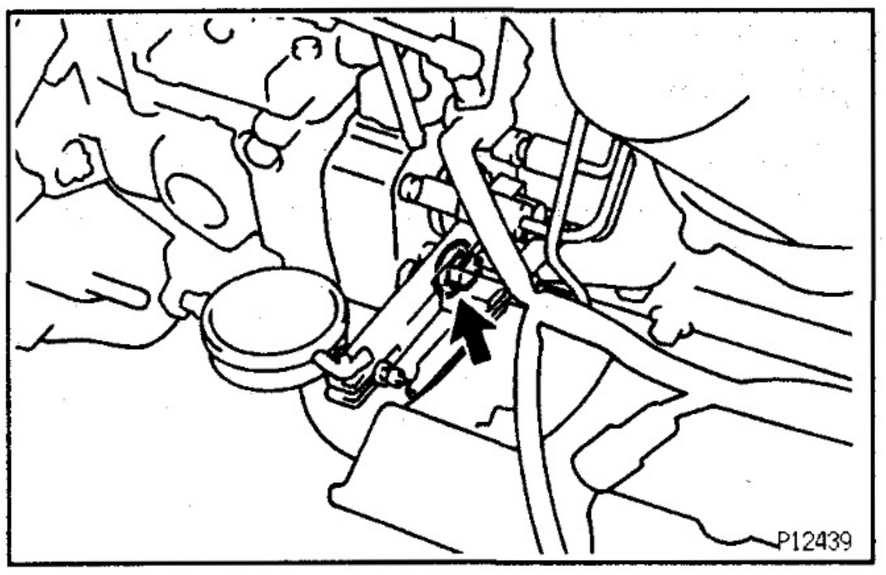

(2) Bolt holding injection pump to injection pump stay

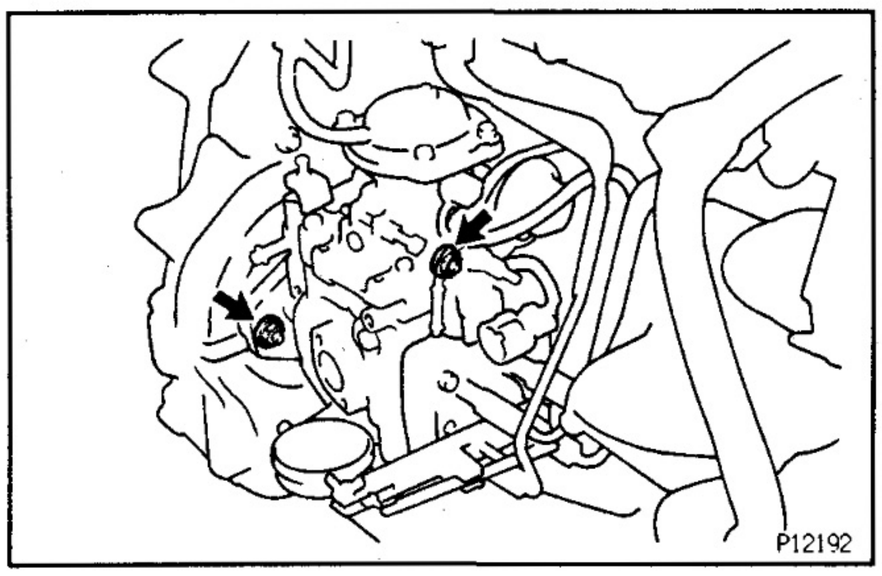

(3) 2 nuts holding injection pump to timing gear case

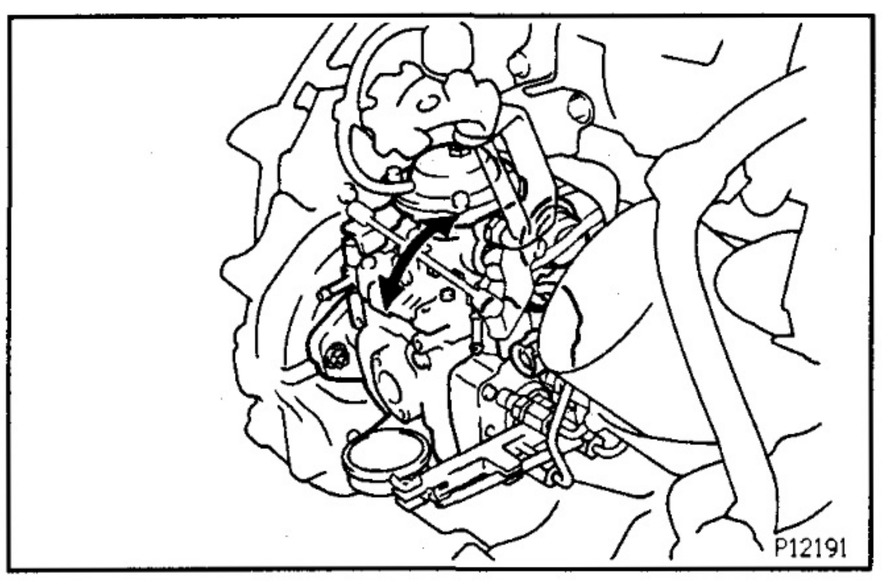

(f) Adjust plunger stroke by slightly tilting the injection pump body.
If the stroke is less than specification, tilt the pump toward the engine.
If the stroke is greater than specification, tilt the pump away from the engine.

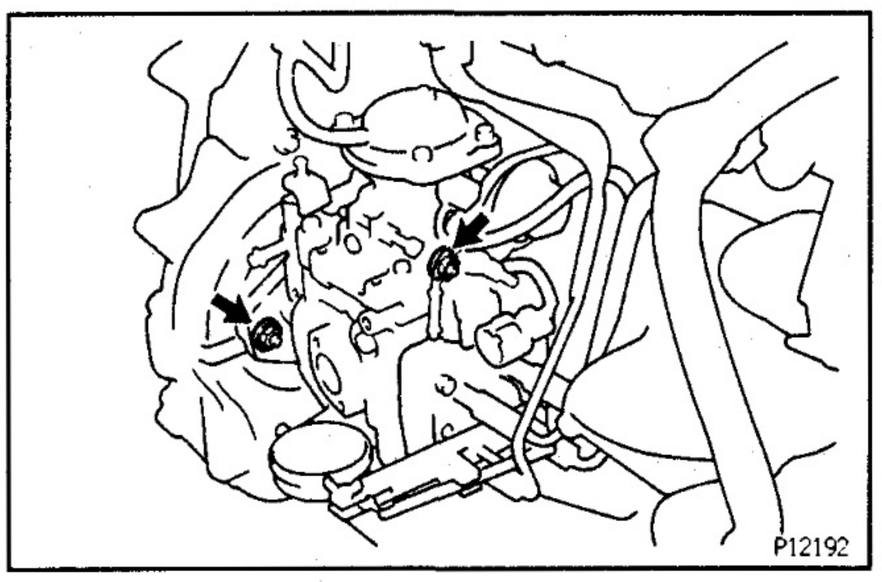

(g) Tighten the following nuts and bolt:
(1) 2 nuts holding injection pump to timing gear case
Torque: 21 N·m (210 kgf·cm, 15 ft·lbf)

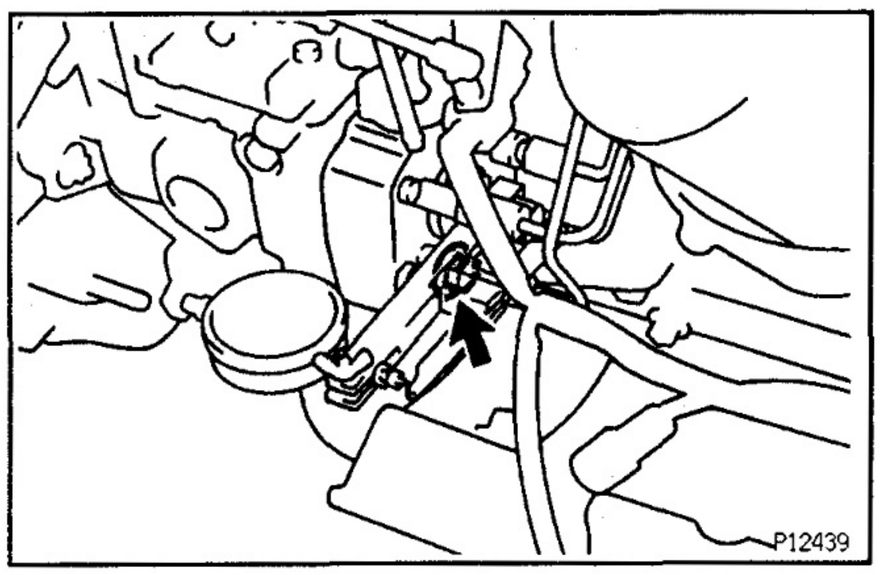

(2) Bolt holding injection pump to injection pump stay

Torque: 32 N·m (330 kgf·cm, 24 ft·lbf)

- Recheck the plunger stroke.

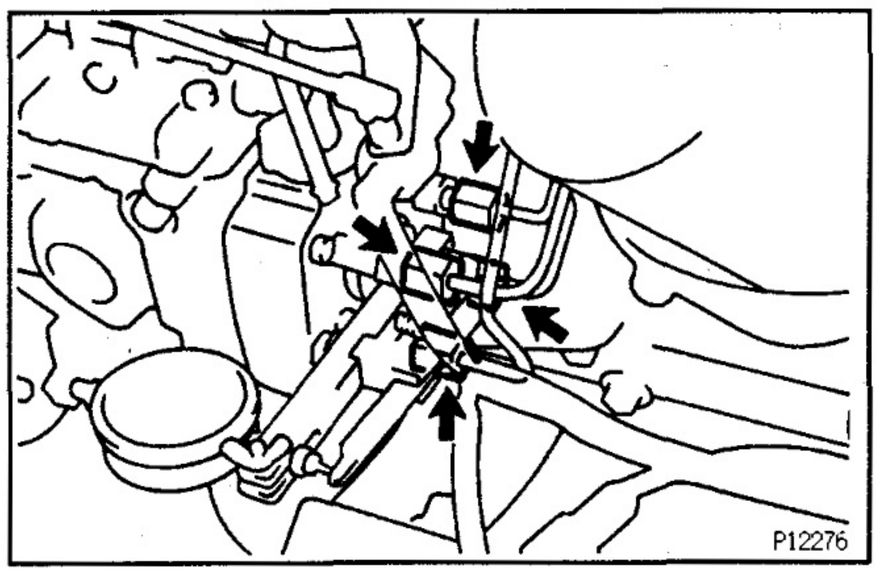

(3) 4 union nuts of injection pipes

Torque: 15 N·m (150 kgf·cm, 11 ft·lbf)

5. w/ ACSD:
REMOVE METAL PLATE

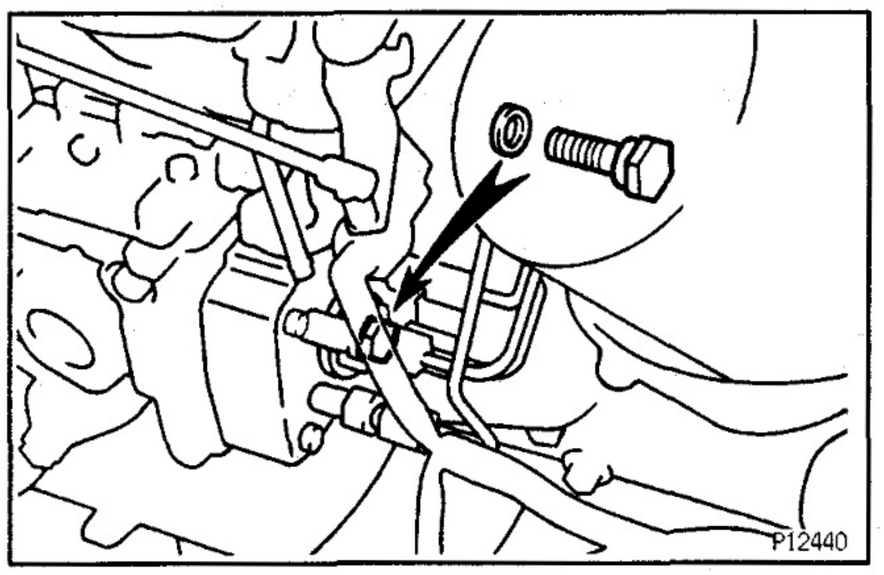

6. REMOVE SST AND DIAL INDICATOR

(a) Remove the SST and dial indicator.
SST 09275−54011

(b) Install a new gasket and the plug bolt of the distributive head plug.

Torque: 25.5 N·m (260 kgf·cm, 19 ft·lbf)

7. START ENGINE AND CHECK FOR LEAKAGE

EG34N-01

IDLE SPEED AND MAXIMUM SPEED INSPECTION AND ADJUSTMENT

1. INITIAL CONDITIONS

(a) Engine at normal operating temperature
(b) Air cleaner installed
(c) All accessories switched OFF
(d) All vacuum lines properly connected
(e) Valve clearance set correctly
(f) Injection timing set correctly

2. CONNECT TACHOMETER

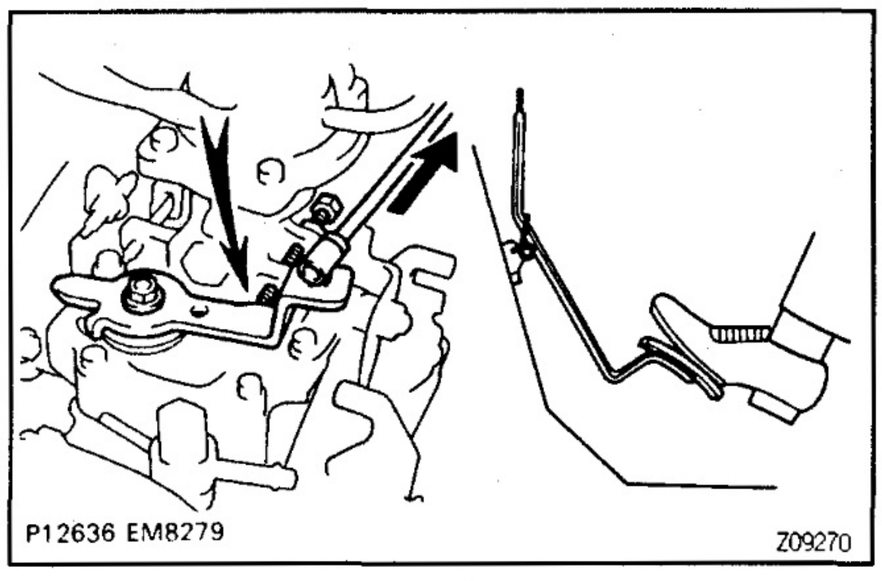

P12636 EM8279 Z09270

3. ADJUST IDLE SPEED

(a) Check that the adjusting lever touches the idle speed adjusting screw when the accelerator pedal is released.
If not, adjust the accelerator linkage.
(b) Start the engine.
(c) Check the idle speed.
Idle speed:
700±50 rpm
(d) Adjust the idle speed.
- Disconnect the accelerator likage.
- Loosen the lock nut of the idle speed adjusting screw.

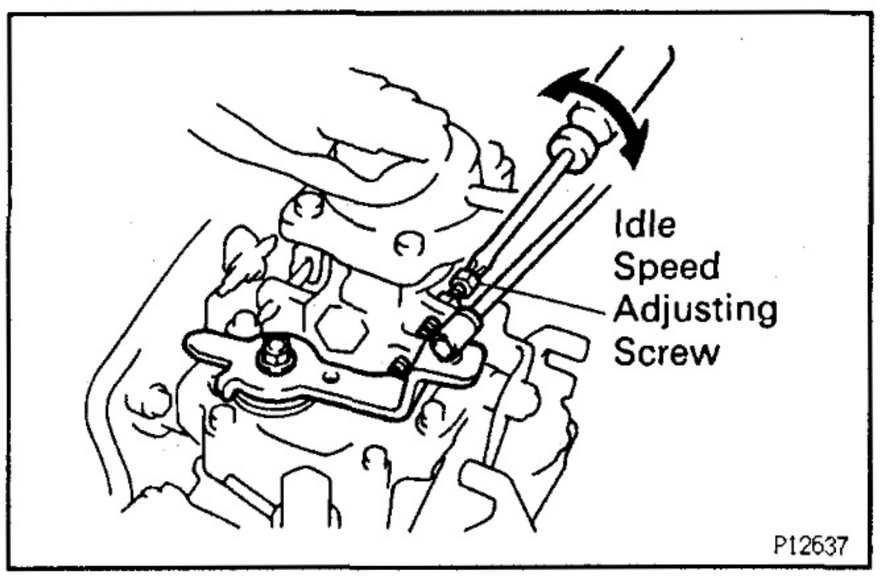

P12637

- Adjust the idle speed by turning the IDLE SPEED ADJUSTING SCREW.

Idle speed:
700 rpm

- Securely tighten the lock nut, and recheck the idle speed.
- Reconnect the accelerator linkage.
- After adjustment, adjust the accelerator linkage.

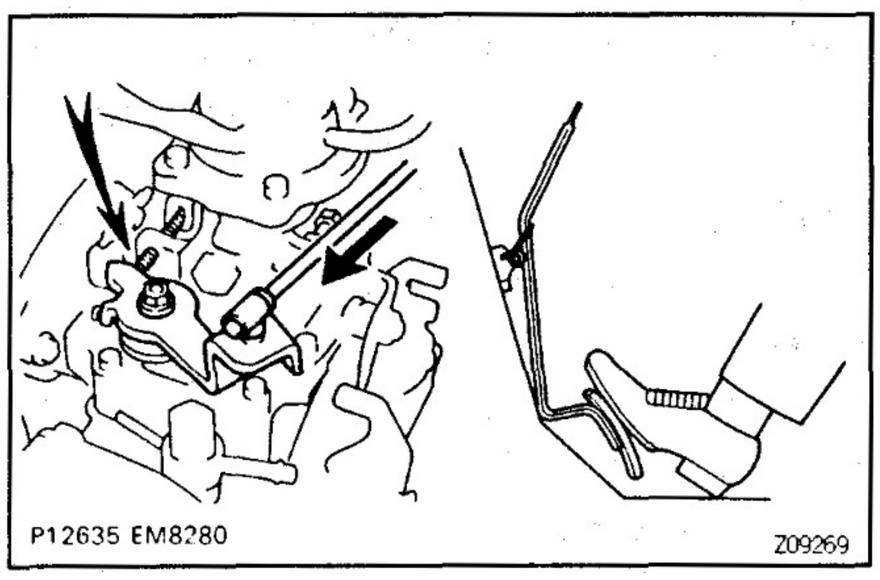

4. ADJUST MAXIMUM SPEED

(a) Check that the adjusting lever touches the maximum speed adjusting screw when the accelerator pedal is depressed all the way.
If not, adjust the accelerator linkage.
(b) Start the engine.
(c) Depress the accelerator pedal all the way.
(d) Check the maximum speed.
Maximum speed:
4600±130 rpm
If the maximum speed is not as specified, refer to INJECTION PUMP ADJUSTMENT (See page EG—197).

AIR CONDITIONER IDLE–UP SETTING SPEED INSPECTION AND ADJUSTMENT

EG34P–01

1. INITIAL CONDITIONS

(a) Engine at normal operating temperature
(b) Air cleaner installed
(c) All vacuum lines properly connected
(d) Valve clearance set correctly
(e) Injection timing set correctly
(f) Idle speed set correctly

2. CONNECT TACHOMETER

3. ADJUST AIR CONDITIONER IDLE – UP SETTING SPEED

(a) Start the engine.
(b) A/C switches ON.
(c) Disconnect the vacuum hose from the idle–up actuator.
(d) Apply vacuum to the idle–up actuator.
(e) Race the engine to 2,500 rpm for a few seconds, release the throttle and check the idle–up setting speed.

A/C idle–up setting speed:

950 rpm

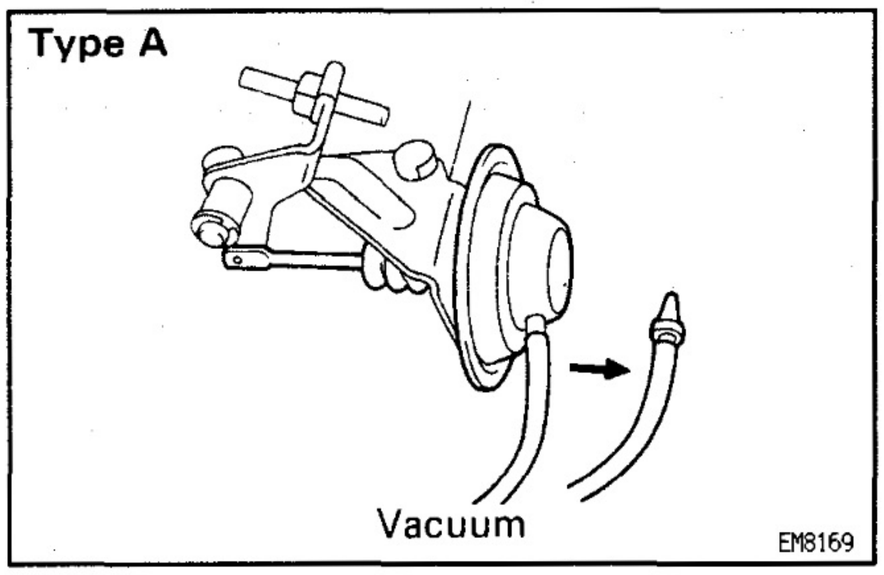

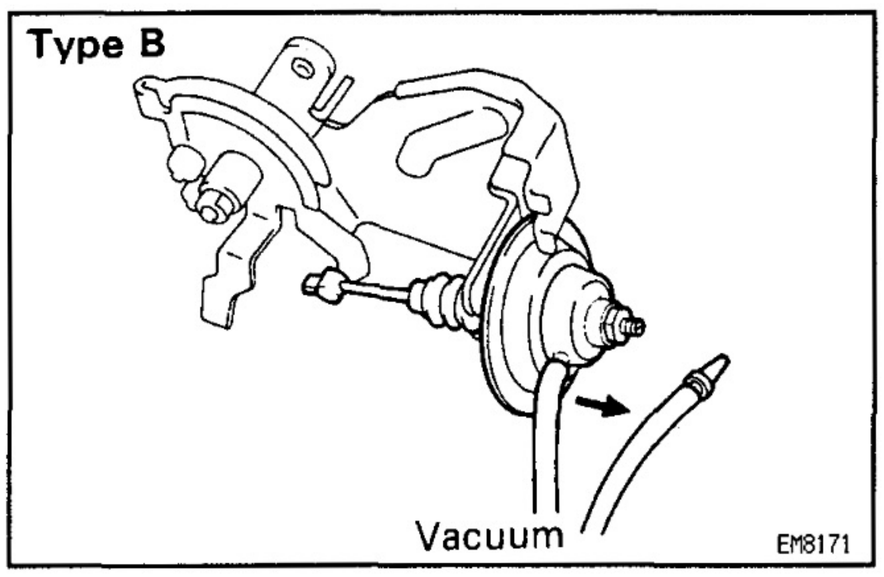

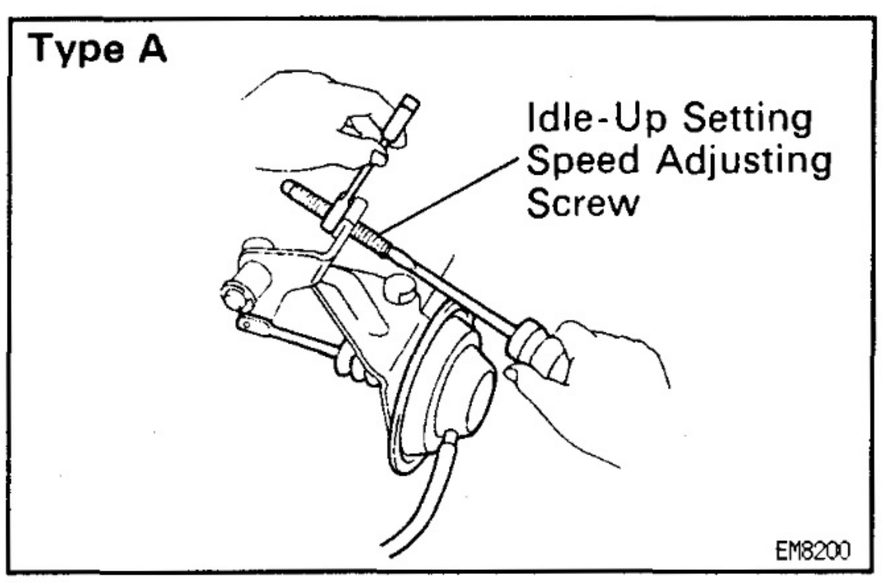

(f) Adjust the idle–up setting speed by turning the IDLE–UP SETTING SPEED ADJUSTING SCREW.
(g) Race the engine to 2,500 rpm for a few seconds, release the throttle and recheck the A/C idle–up setting speed.
(h) Reconnect the vacuum hose to the idle–up actuator.

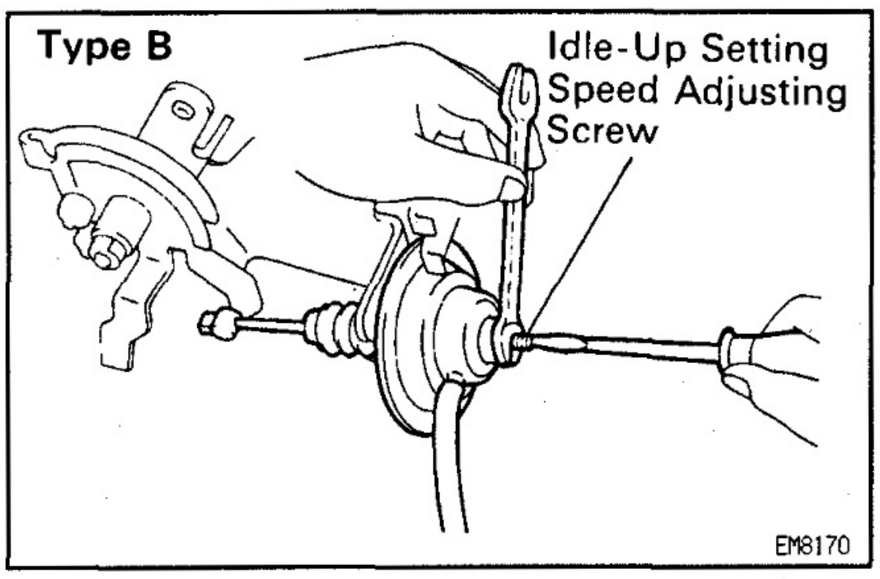

COMPRESSION CHECK

EG340-01

HINT: If there is lack of power, excessive oil consumption or poor fuel economy, measure the compression pressure.

1. WARM UP AND STOP ENGINE

Allow the engine to warm up to normal operating temperature.

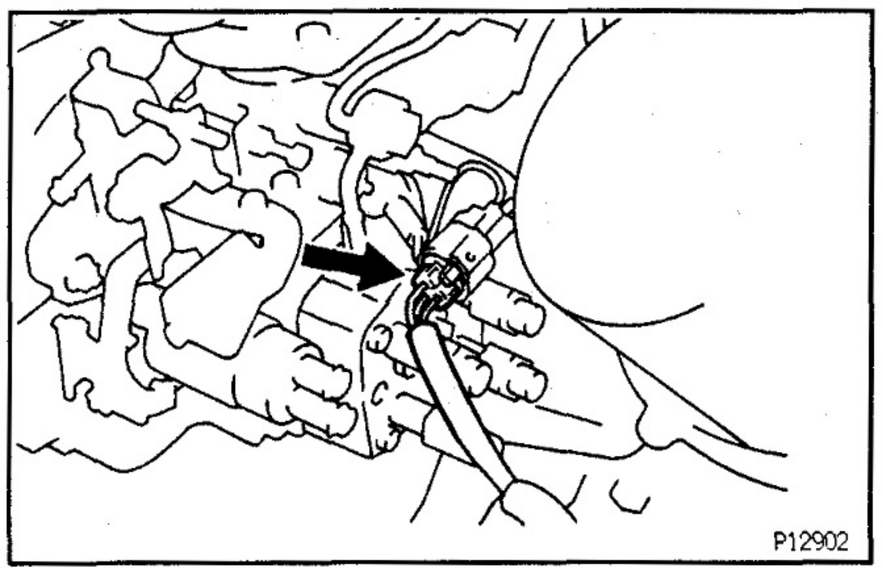

2. DISCONNECT INJECTION PUMP (FUEL CUT SOLENOID) CONNECTOR

3. REMOVE INJECTION NOZZLES

(See page EG—152)

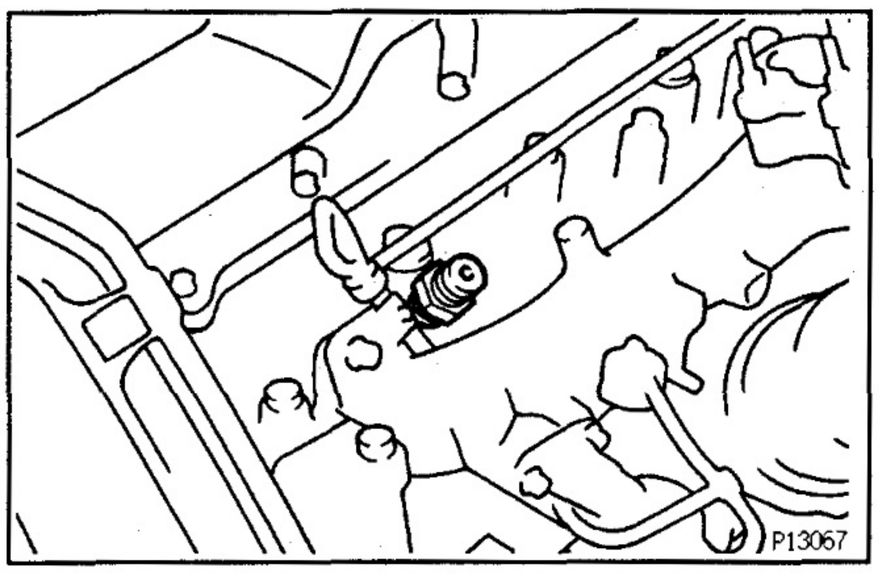

4. CHECK CYLINDER COMPRESSION PRESSURE

(a) Install an attachment to the injection nozzle hole.
BANZAI TDG—1F (TDG—12)
IYASAKA DCG—UTTN—2 (No.34)

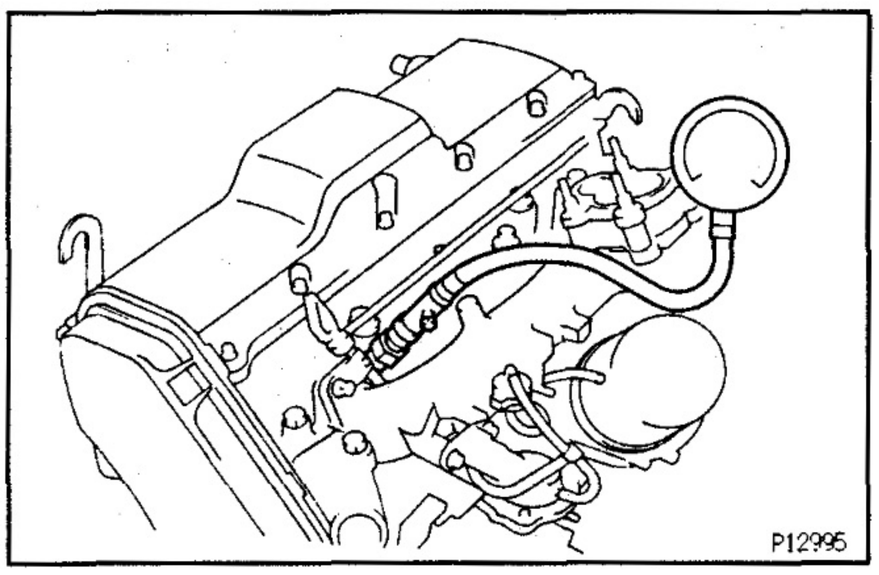

(b) Connect a compression gauge to the attachment.
BANZAI TDG—1F
IYASAKA DCG—UTTN—2

(c) While cranking the engine, measure the compression pressure.
HINT: Always use a fully charged battery to obtain engine revolution of 250 rpm or more.

(d) Repeat steps (a) through (c) for each cylinder.
NOTICE: This measurement must be done in as short a time as possible.

Compression pressure:
3,040 kPa (31.0 kgf/cm², 441 psi) or more
Minimum pressure:
1,961 kPa (20.0 kgf/cm², 284 psi)
Difference between each cylinder:
490 kPa (5.0 kgf/cm², 71 psi) or less

(e) If the cylinder compression in one or more cylinders is low, pour a small amount of engine oil into the cylinder through the injection nozzle hole and repeat steps (a) through (c) for the cylinder with low compression.
- If adding oil helps the compression, chances are that the piston rings and/or cylinder bore are worn or damaged.
- If pressure stays low, a valve may be sticking or seating improperly, or there may be leakage past the gasket.

5. REINSTALL INJECTION NOZZLES
(See page EG−158)

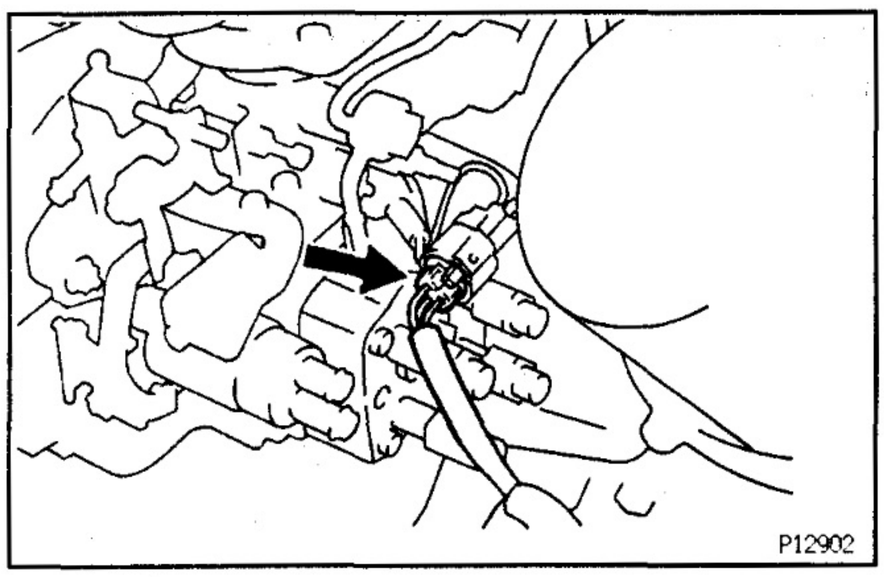
P12902

6. RECONNECT INJECTION PUMP (FUEL CUT SOLENOID) CONNECTOR

7. START ENGINE AND CHECK FUEL LEAKAGE

TIMING BELT

EG17P-03

HINT: If replacing the timing belt before the timing belt warning light comes on, (light comes on after 100,000 km of driving), be sure to reset the timing belt counter of the speedometer to zero.

COMPONENTS FOR REMOVAL AND INSTALLATION

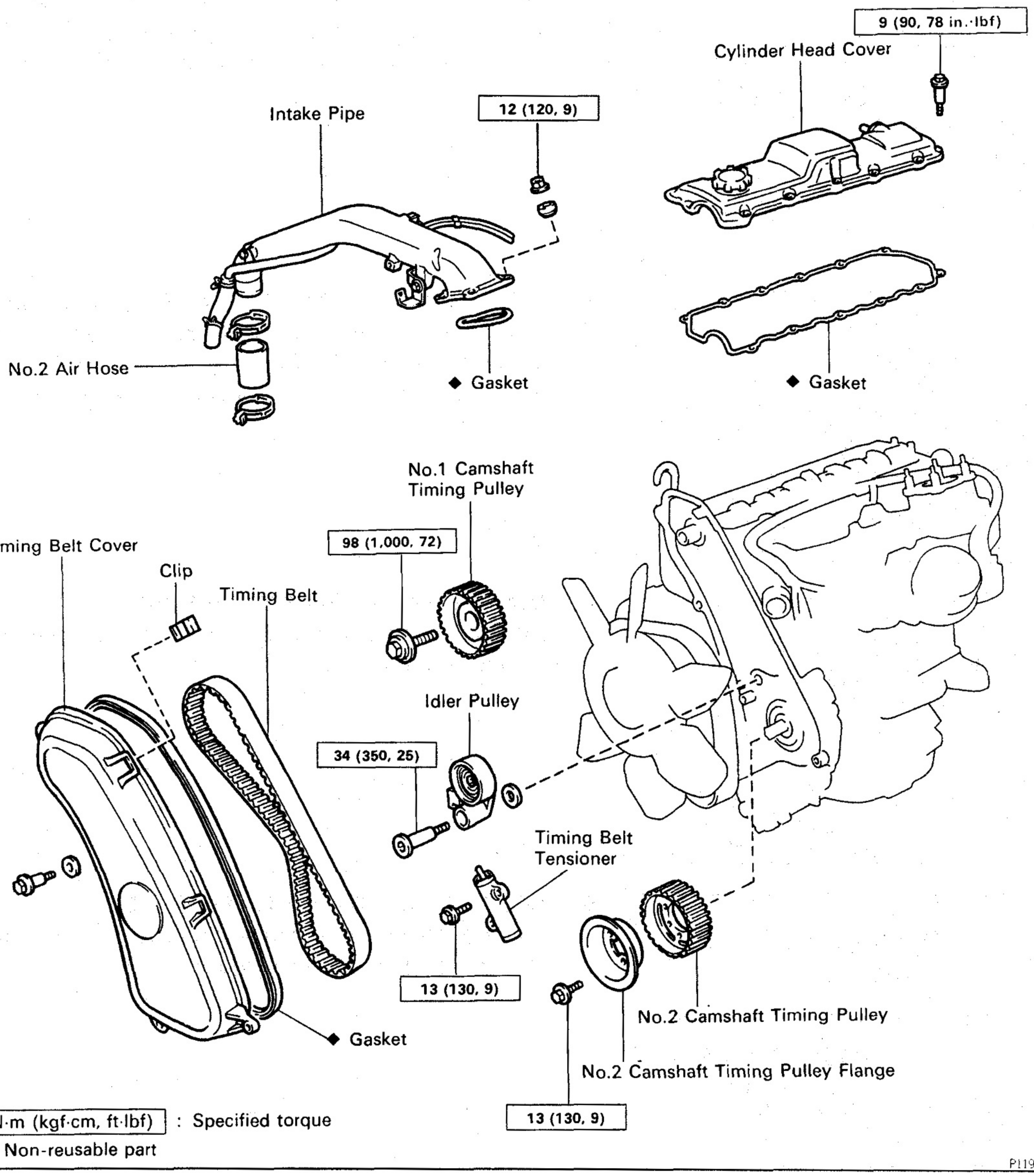

EO33N–01

TIMING BELT REMOVAL

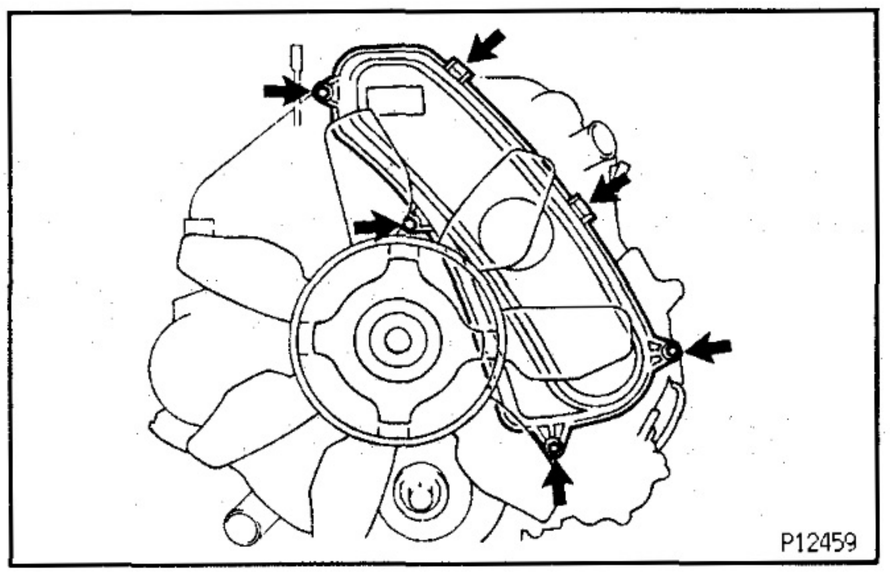

(See Components for Removal and Installation)

1. **REMOVE TIMING BELT COVER**
   Remove the 4 bolts, seal washers, 2 clips, timing belt cover and gasket.

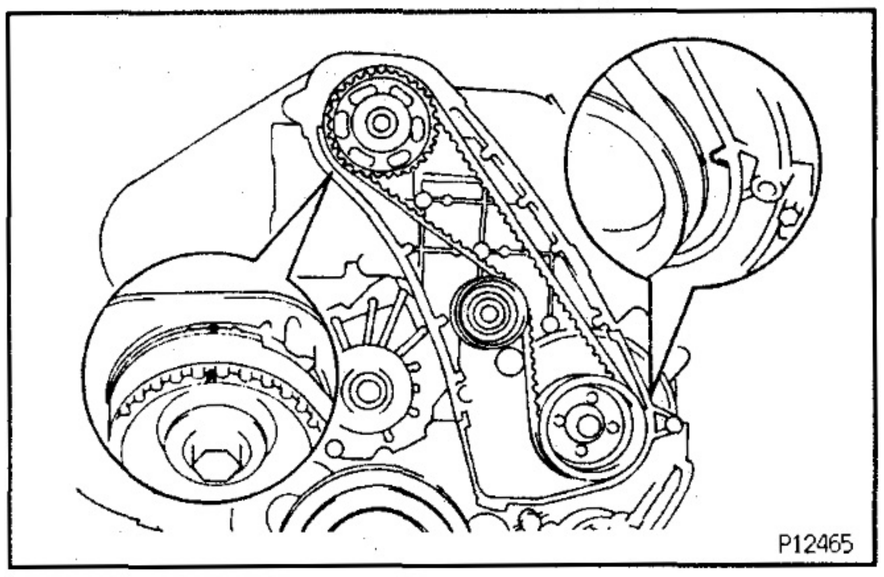

2. **SET NO.4 CYLINDER TO TDC/COMPRESSION**
   Turn the crankshaft pulley clockwise, set both No.1 and No.2 camshaft pulley grooves at TDC marks.

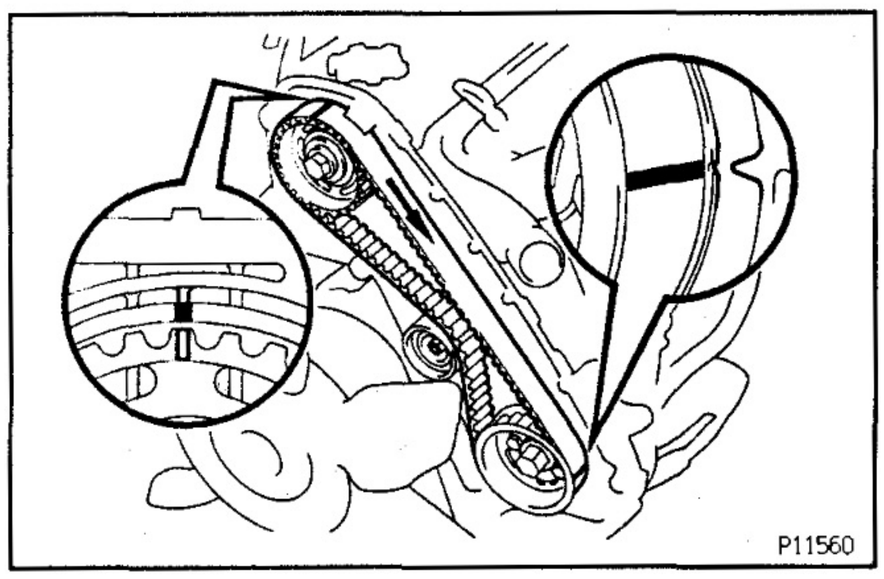

3. **IF RE–USING TIMING BELT, MARK TIMING BELT**
   HINT: If reusing the timing belt, draw a direction arrow on the belt (in the direction of engine revolution), and place matchmarks on the pulleys and belt as shown in the illustration.

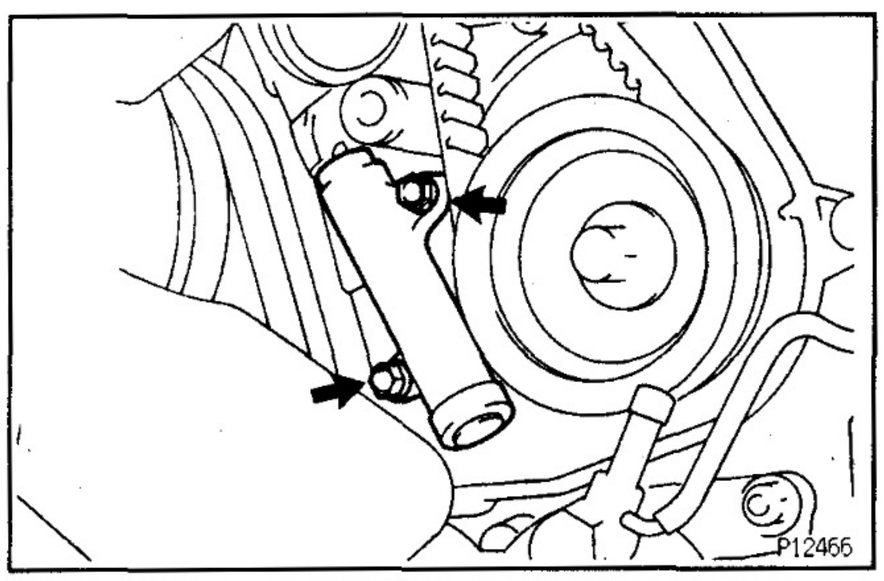

4. **REMOVE TIMING BELT TENSIONER**
   Alternately loosen the 2 bolts, remove them and timing belt tensioner.

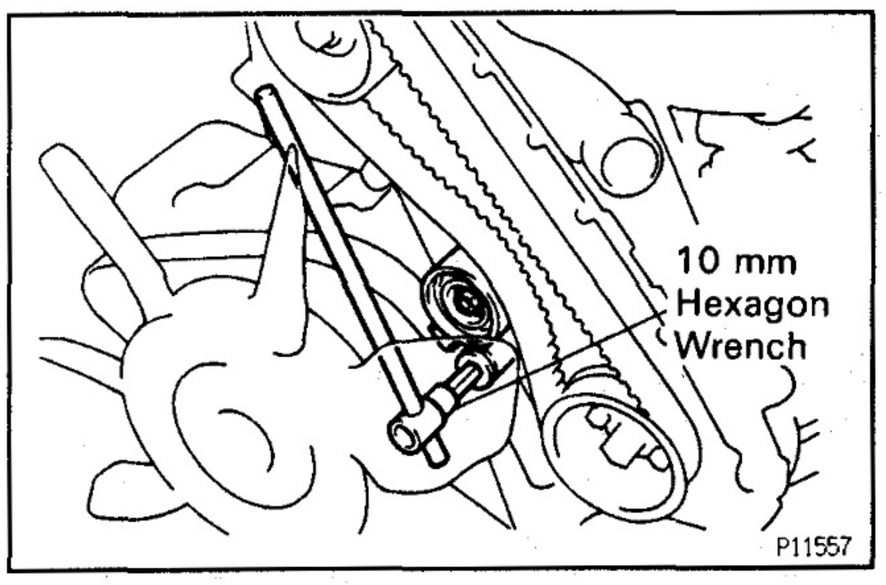

5. **REMOVE TIMING BELT IDLER PULLEY**
   Using a 10 mm hexagon wrench, remove the bolt, timing belt idler pulley and washer.

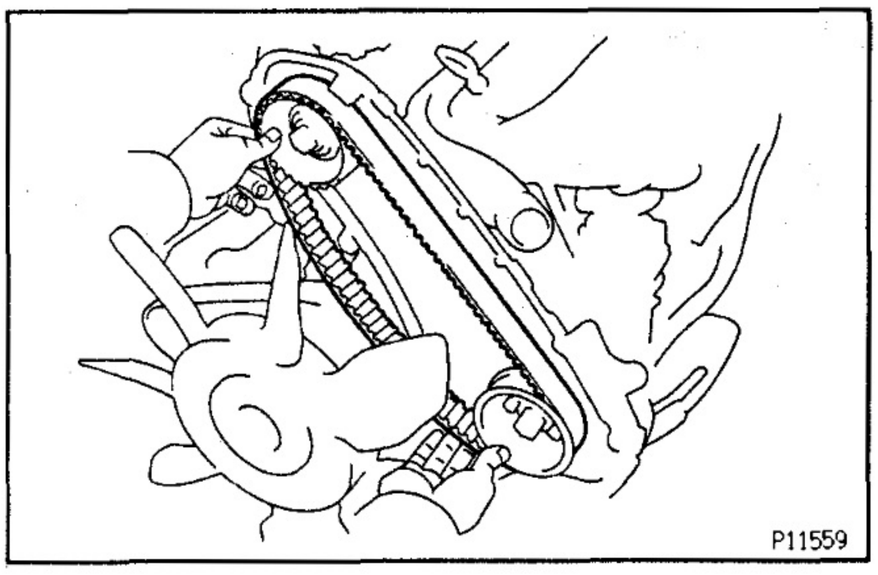

6. REMOVE TIMING BELT

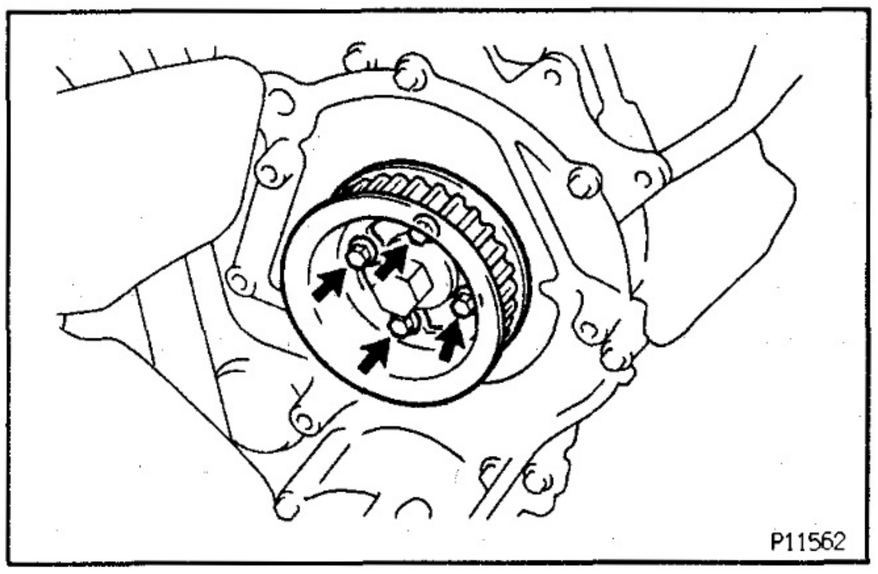

7. REMOVE NO.2 CAMSHAFT TIMING PULLEY

Remove the 4 bolts, No. 2 camshaft timing pulley flange and No.2 camshaft timing pulley.

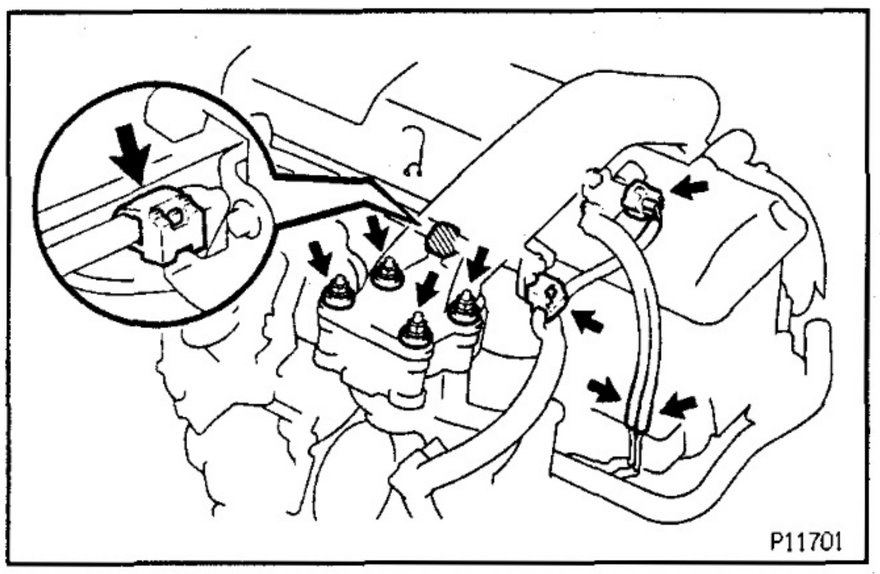

8. REMOVE INTAKE PIPE

(a) Disconnect the VSV connector and 2 vacuum hoses.
(b) Disconnect the 2 wire harness clamps.
(c) Remove the 4 nuts and seal washers.

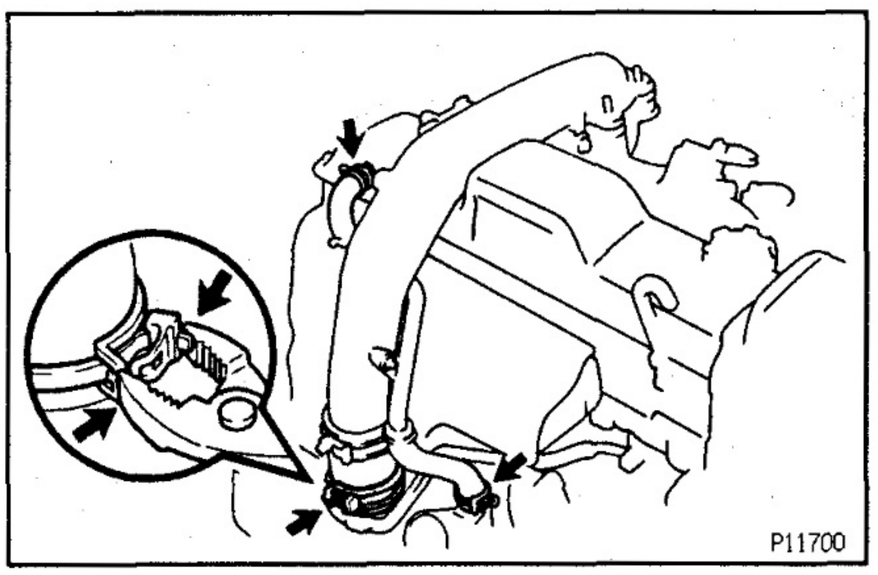

(d) Disconnect the 2 PCV hoses.
(e) Use pliers to pinch the ends of the clamp together until the lock plate engages the catch.
Make sure the lock plate and catch are engaged securely.
(f) Remove the intake pipe and gasket.

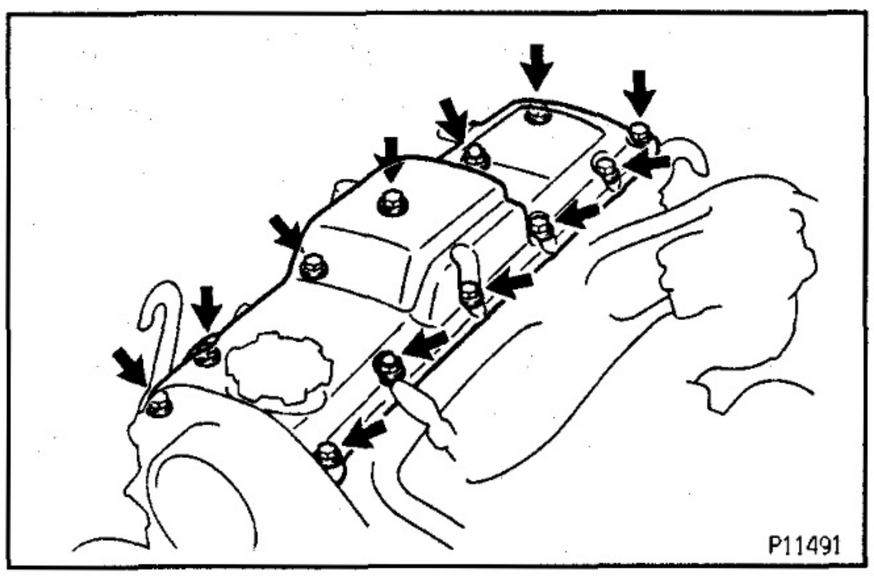

9. REMOVE CYLINDER HEAD COVER

Remove the 10 bolts, 2 nuts, cylinder head cover and gasket.

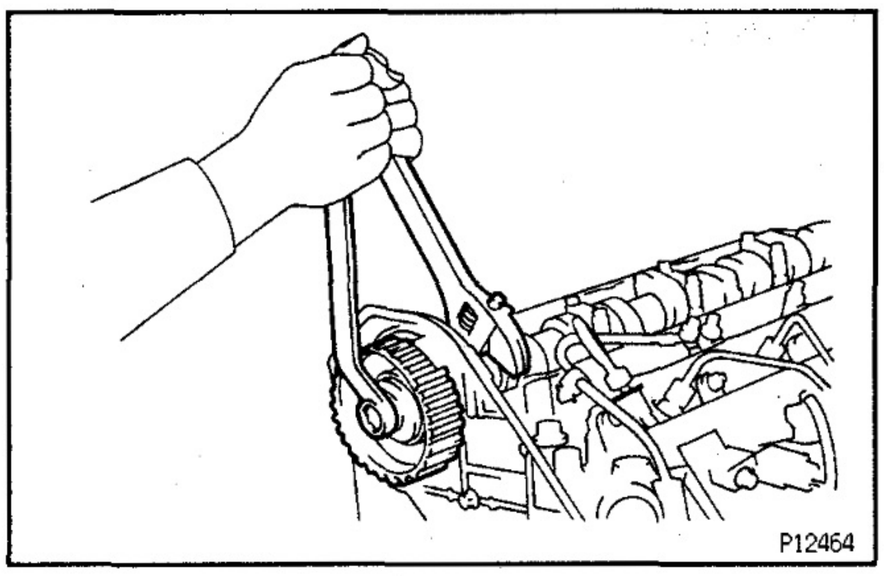

10. REMOVE NO.1 CAMSHAFT TIMING PULLEY

(a) Hold the hexagonal wrench head portion of the camshaft with a wrench, and remove the No.1 camshaft timing pulley bolt and No.1 camshaft timing pulley.

(b) Remove the set key.

TIMING BELT COMPONENTS INSPECTION EG33P-01

1. INSPECT TIMING BELT

NOTICE:

- **Do not bend, twist or turn the timing belt inside out.**
- **Do not allow the timing belt to come into contact with oil, water or steam.**
- **Do not utilize timing belt tension when installing or removing the mounting bolt of the camshaft timing pulley.**

If there are any defects as shown in the illustration, check the following points:

(a) Premature parting

- Check the proper installation.
- Check the timing cover gasket for damage and proper installation.

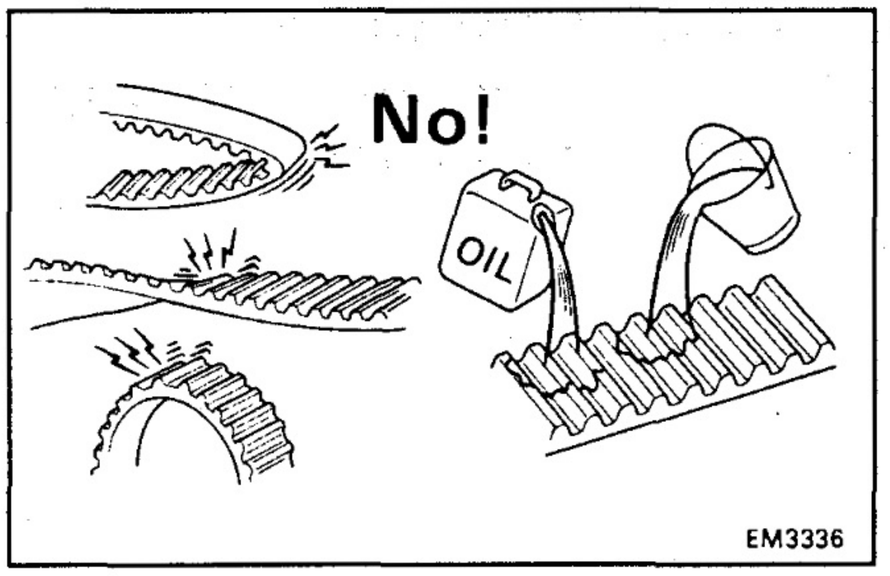

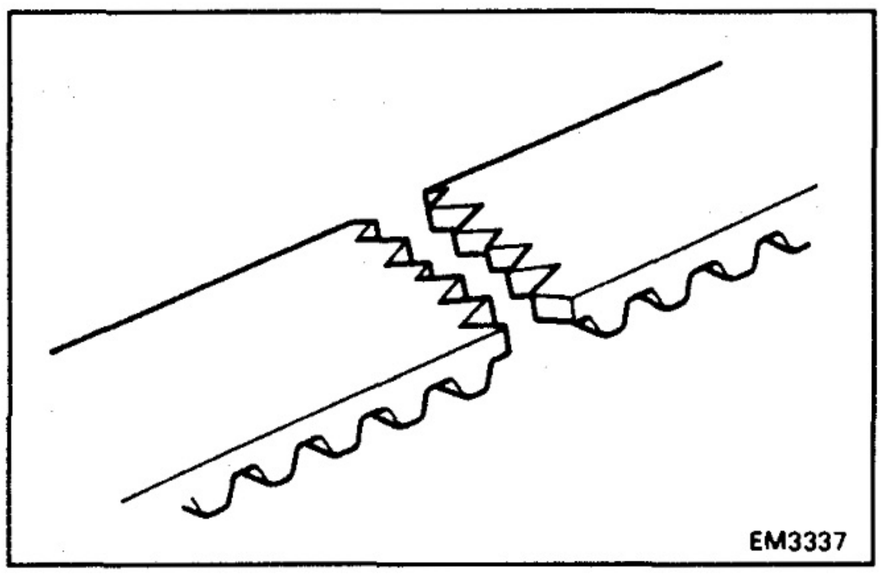

(b) If the belt teeth are cracked or damaged, check to see if either camshaft or water pump is locked.

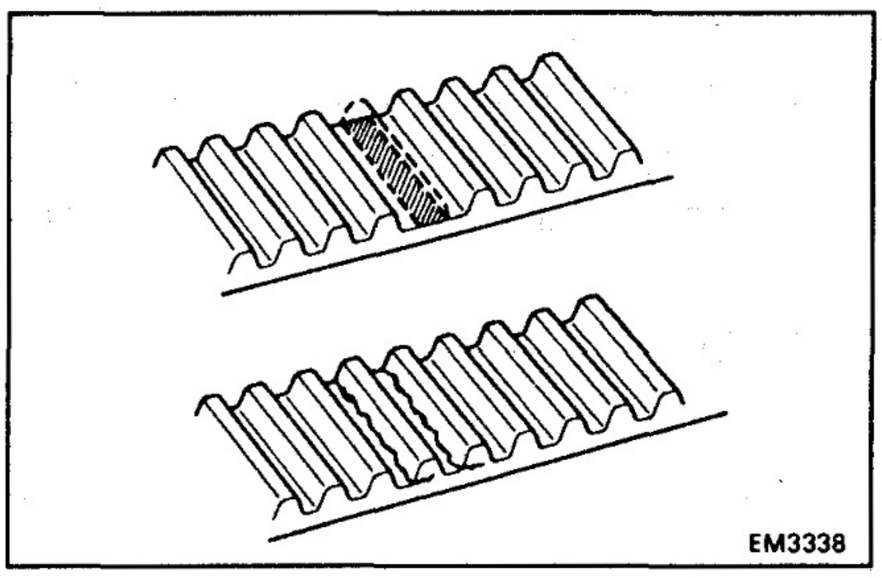

(c) If there is noticeable wear or cracks on the belt face, check to see if there are nicks on the side of the idler pulley lock.

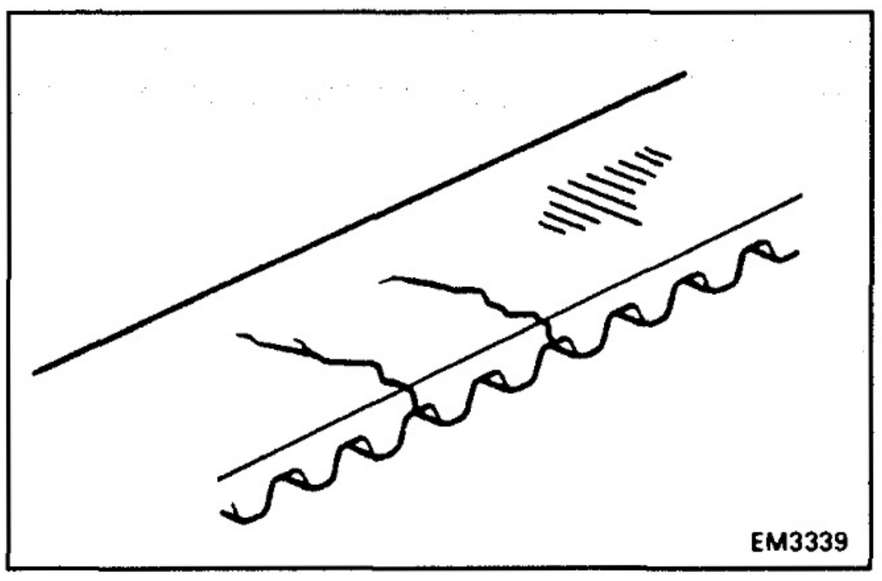

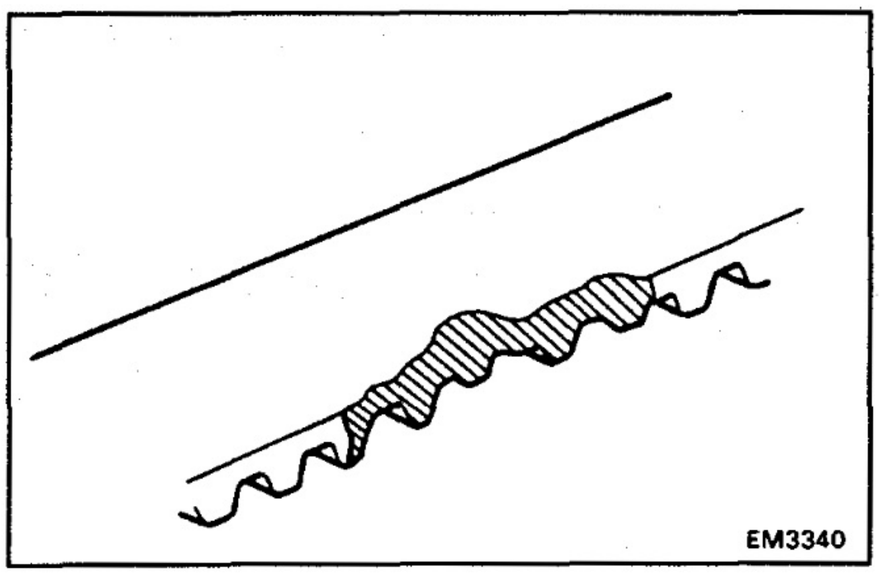

(d) If there is wear or damage on only one side of the belt, check the belt guide and the alignment of each pulley.

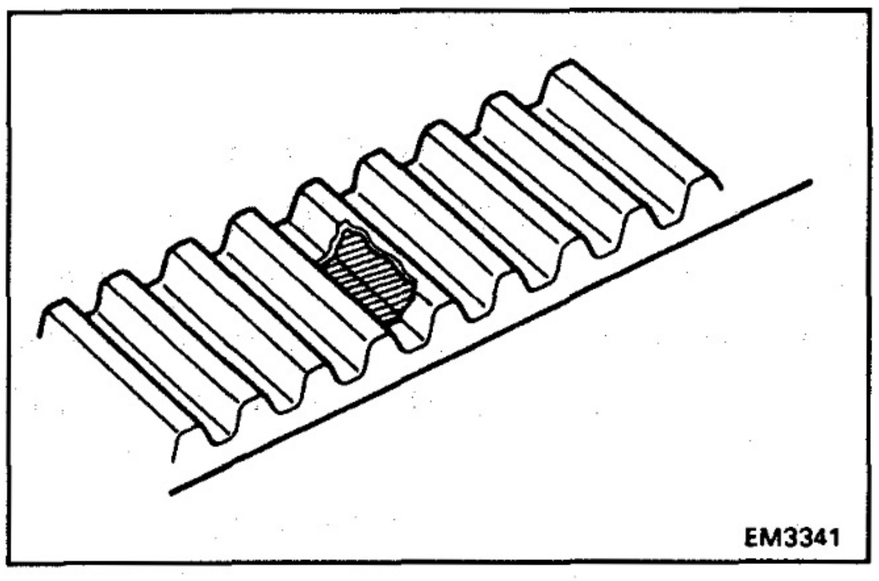

(e) If there is noticeable wear on the belt teeth, check the timing cover for damage, correct gasket installation, and the foreign material on the pulley teeth.
If necessary, replace the timing belt.

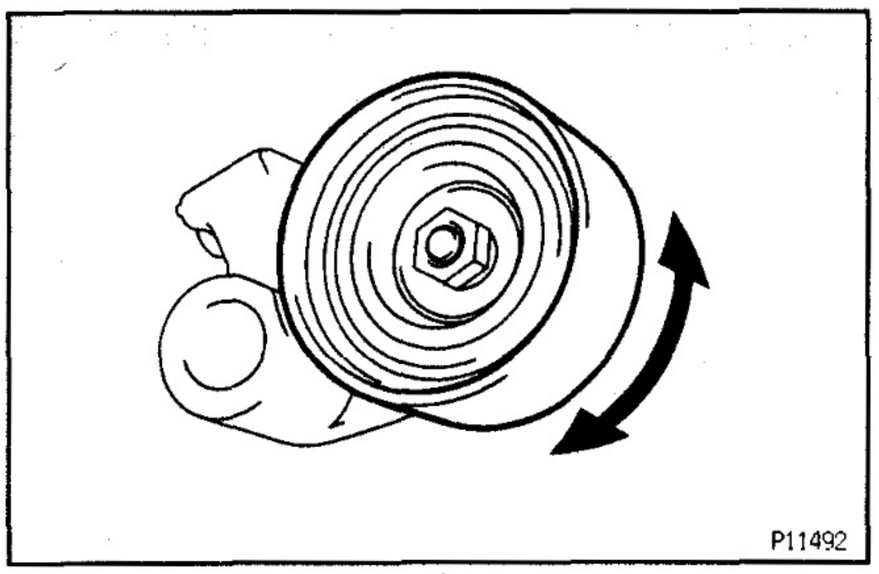

2. INSPECT IDLER PULLEY

Check that the idler pulley turns smoothly.
If necessary, replace the idler pulley.

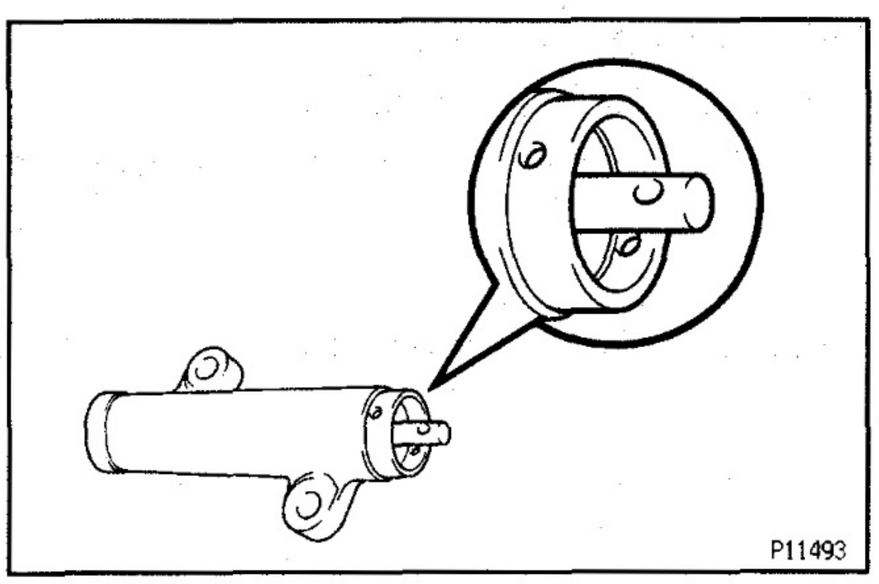

3. INSPECT TIMING BELT TENSIONER

(a) Visually check tensioner for oil leakage.
HINT: If there is only the faintest trace of oil on the seal on the push rod side, the tensioner is all right.
If leakage is found, replace tensioner.

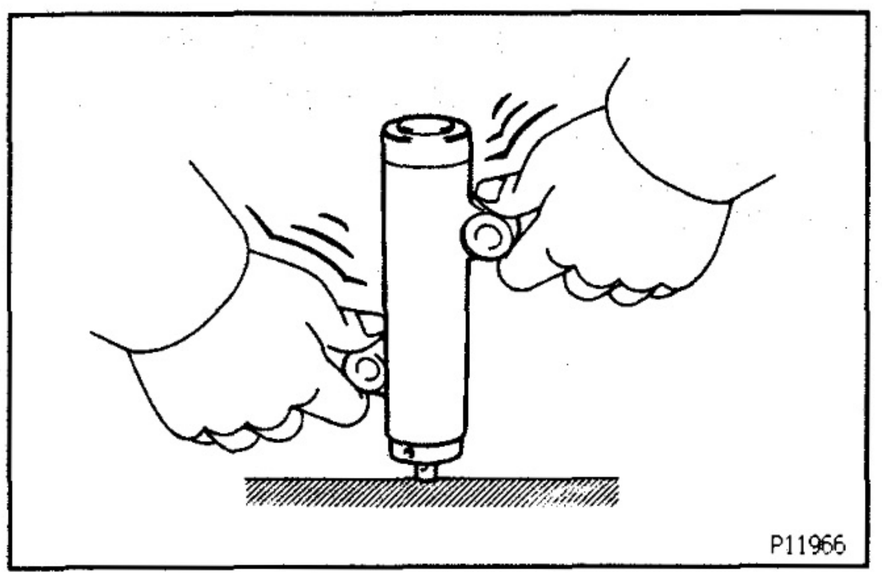

(b) Hold the tensioner with both hands and push the push rod strongly against the floor or wall to check that it doesn't move.
If the push rod moves, replace the tensioner.

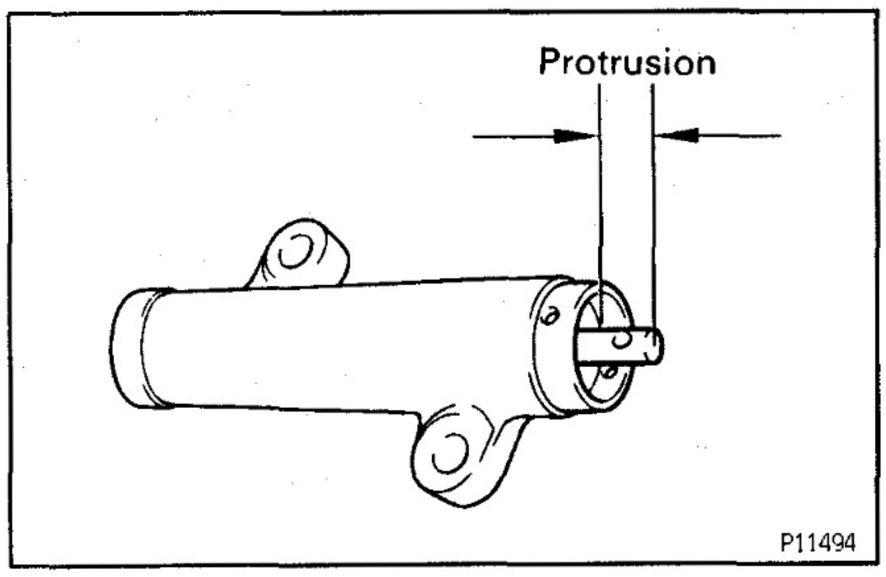

(c) Measure the protrusion of the push rod from the housing end.
Protrusion:
9.0 – 9.8 mm (0.354 – 0.386 in.)
If the protrusion is not as specified, replace the tensioner.

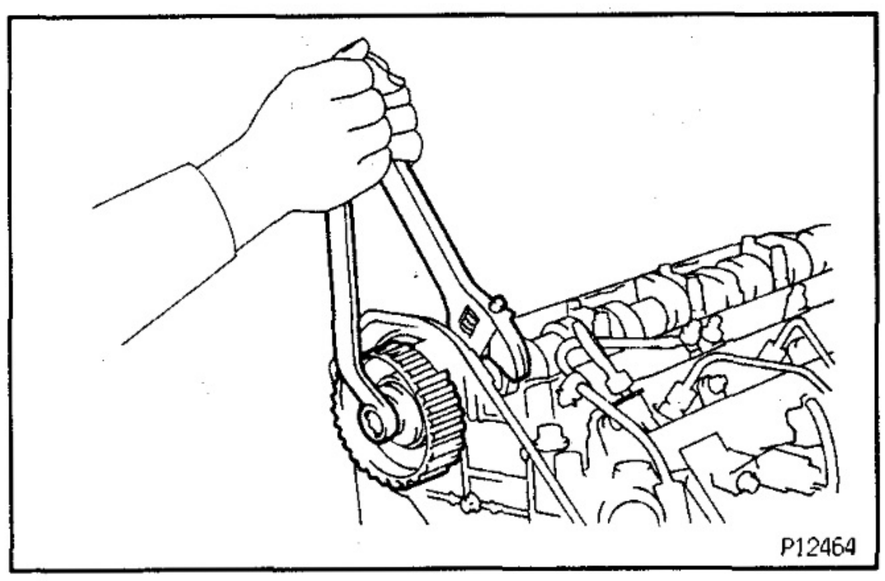

EG330-01

TIMING BELT INSTALLATION

(See Components for Removal and Installation)

1. INSTALL NO.1 CAMSHAFT TIMING PULLEY

(a) Install the set key to the key groove of the camshaft.
(b) Align the pulley set key with the key groove of the No. 1 camshaft timing pulley, slide the No.1 camshaft timing pulley.
(c) Temporarily install the No.1 timing pulley bolt.
(d) Hold the hexagon wrench head portion of the camshaft with a wrench, and tighten the No.1 camshaft timing pulley bolt.
Torque: 98 N·m (1,000 kgf·cm, 72 ft·lbf)

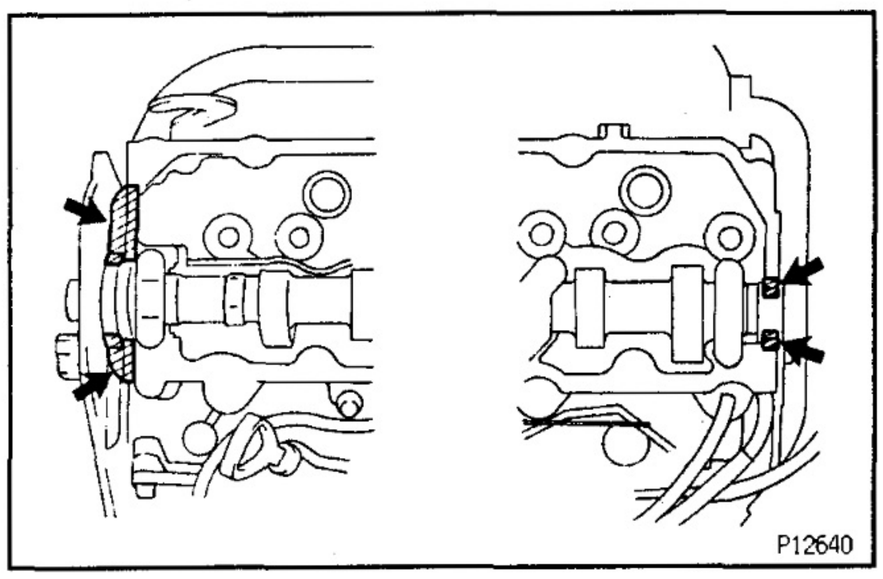

2. INSTALL CYLINDER HEAD COVER

(a) Remove any old packing (FIPG) material.
(b) Apply seal packing to the cylinder head as shown in the illustration.
Seal packing:
Part No. 08826–00080 or equivalent

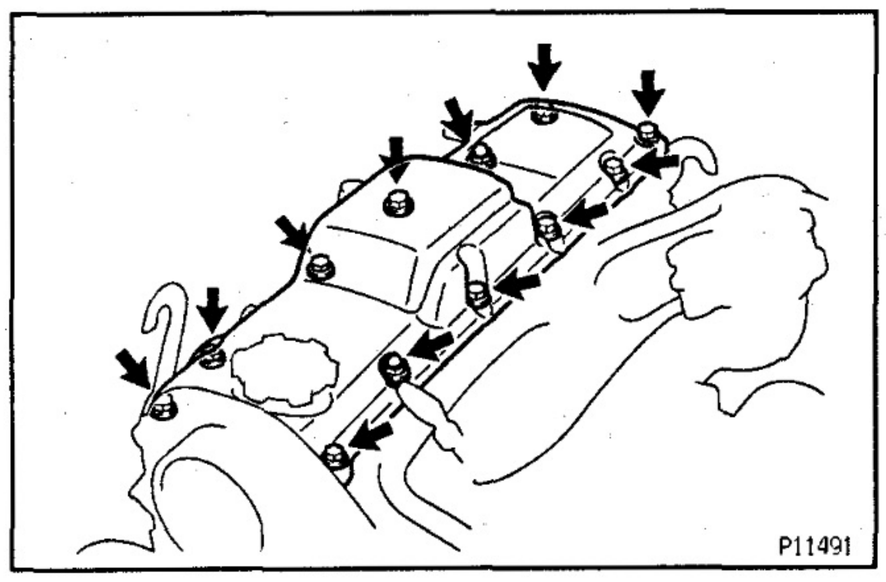

(c) Install a new gasket to the cylinder head cover.
(d) Install the cylinder head cover with the 10 bolts and 2 nuts.
Torque: 9 N·m (90 kgf·cm, 78 in.·lbf)

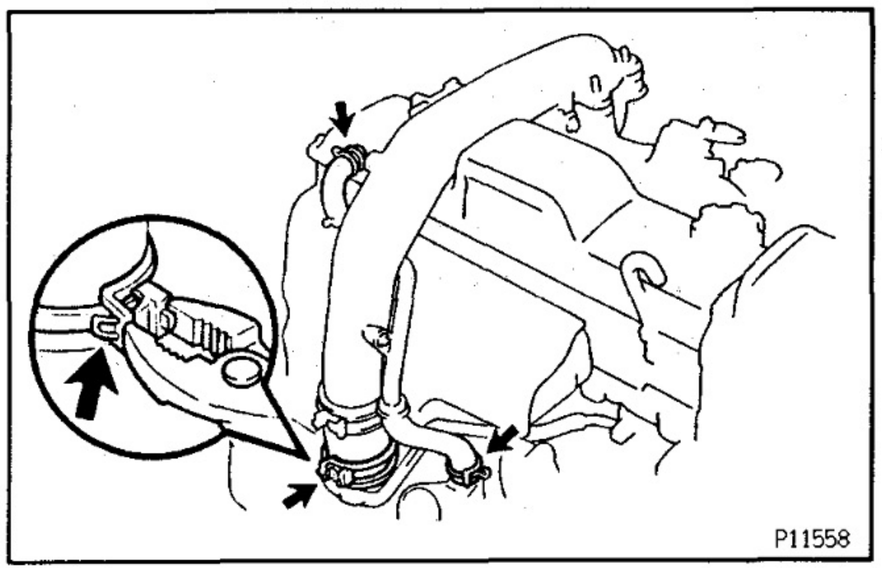

3. INSTALL INTAKE PIPE

(a) Place a new gasket on the intake manifold.
(b) Connect the air hose and install the intake pipe.
(c) Press the clamp lock together with pliers and press down the tip of the lock plate. Carefully let the lock spread apart.
Take care not to let the pliers slip.
(d) Connect the 2 PCV hoses.

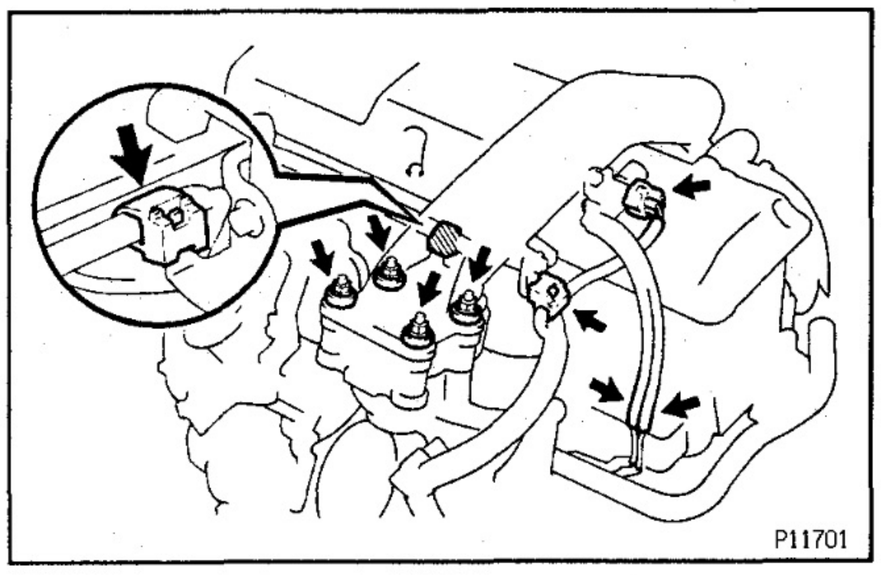

(e) Install the 4 seal washers and nuts.
Torque: 12 N·m (120 kgf·cm, 9 ft·lbf)
(f) Connect the 2 wire harness clamps.
(g) Connect the VSV connector and 2 vacuum hoses.

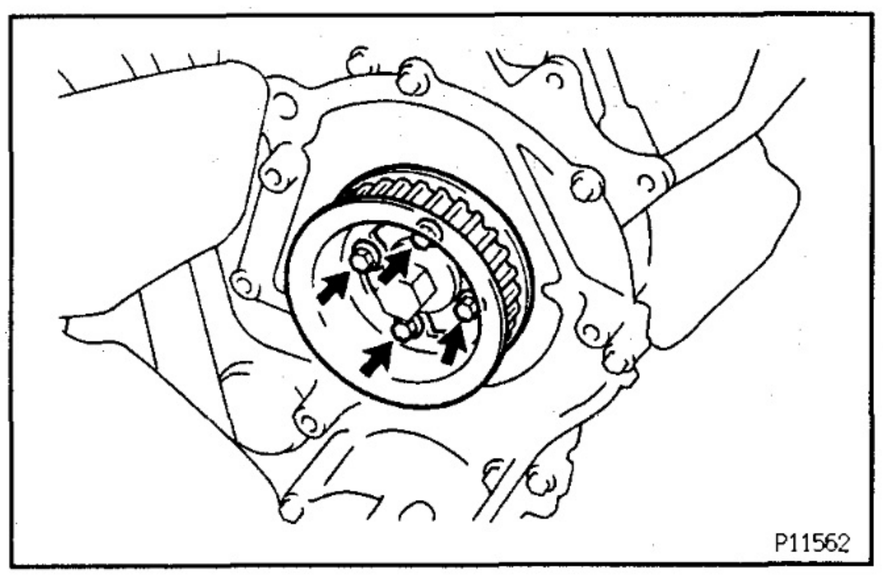

4. INSTALL NO.2 CAMSHAFT TIMING PULLEY

Align the knock pin of the injection pump drive gear with the knock pin hole of the No.2 camshaft timing pulley, install the pulley and No.2 camshaft timing pulley flange with the 4 bolts.
Torque: 13 N·m (130 kgf·cm, 9 ft·lbf)

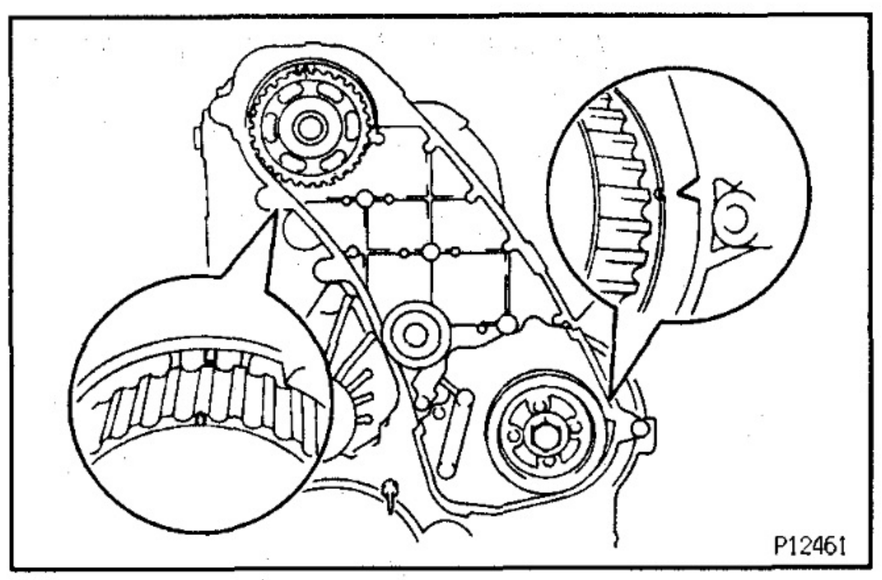

5. SET NO.4 CYLINDER TO TDC/COMPRESSION

Set the timing pulley at each position.
NOTICE: When turning the crankshaft, the valve heads will hit against the piston top. So do not turn it more than necessary.

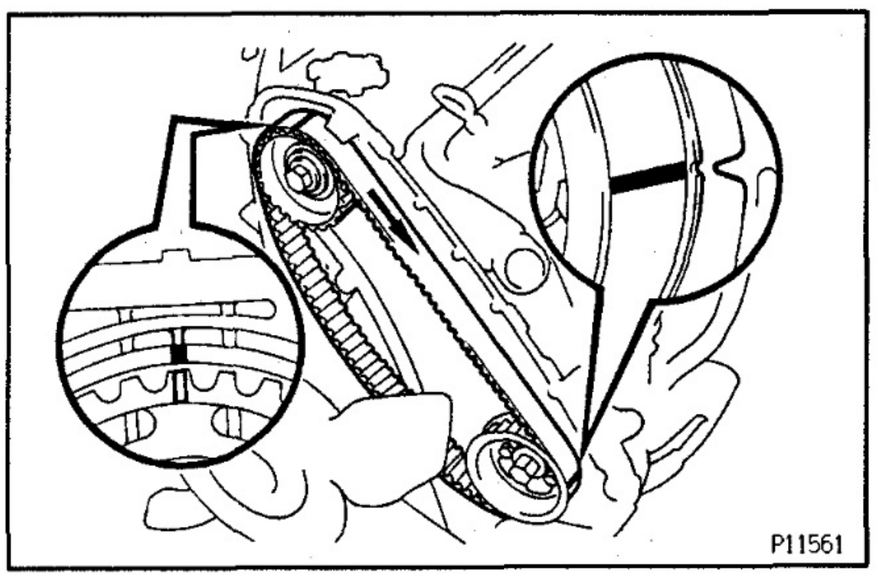

6. INSTALL TIMING BELT

NOTICE: The engine should be cold.
HINT: If re—using the timing belt, align the points marked during removal, and install the belt with the arrow pointing in the direction of engine revolution.

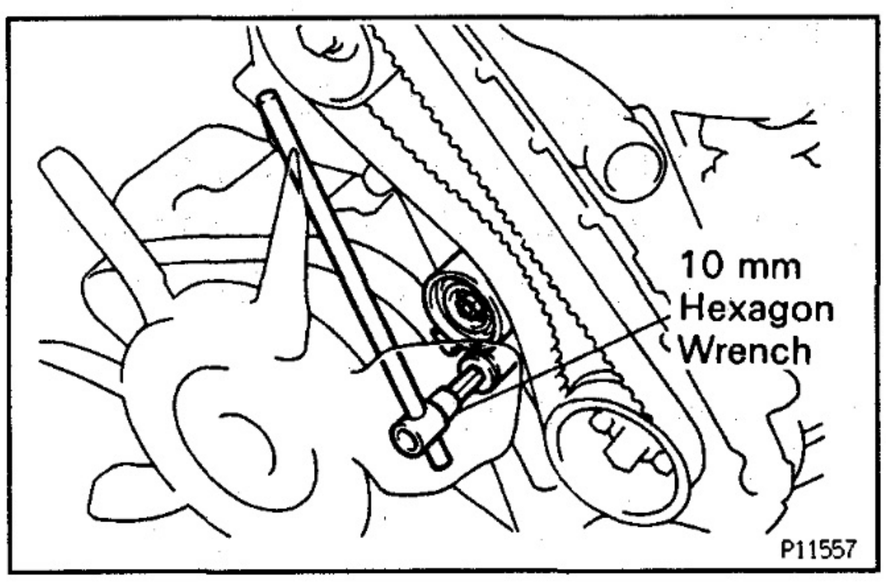

7. INSTALL TIMING BELT IDLER PULLEY

(a) Using a 10 mm hexagon wrench, install the washer and timing belt idler pulley with the bolt.
Torque: 34 N·m (350 kgf·cm, 25 ft·lbf)

(b) Check that the idller pulley moves smoothly.
If it doesn't move smoothly, check the idller pulley and washer.

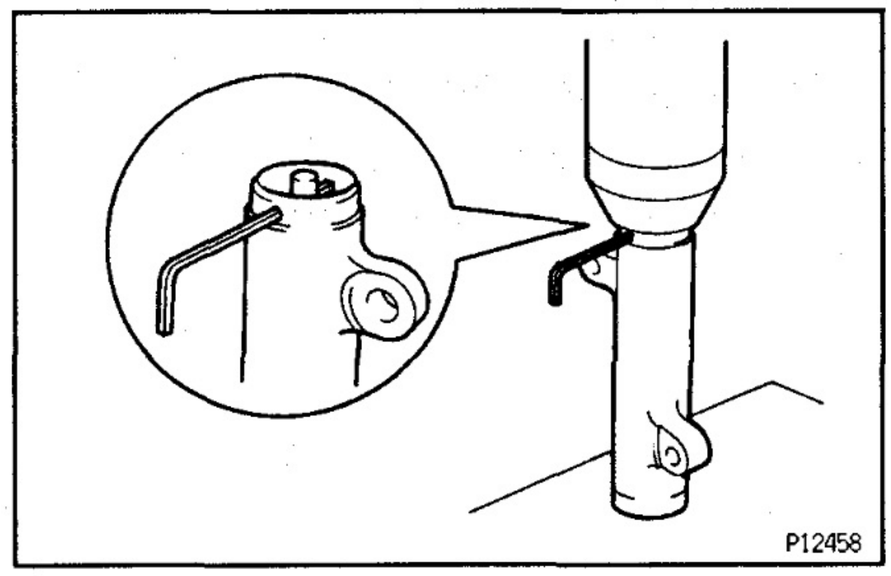

8. SET TIMING BELT TENSIONER

(a) Using a press, slowly press in the push rod using 981 — 9,807 N (100 — 1,000 kgf, 220 — 2,205 lbf) of force.

(b) Align the holes of the push rod and housing, pass a 1.5 mm hexagon wrench through the holes to keep the setting position of the push rod.

(c) Release the press.

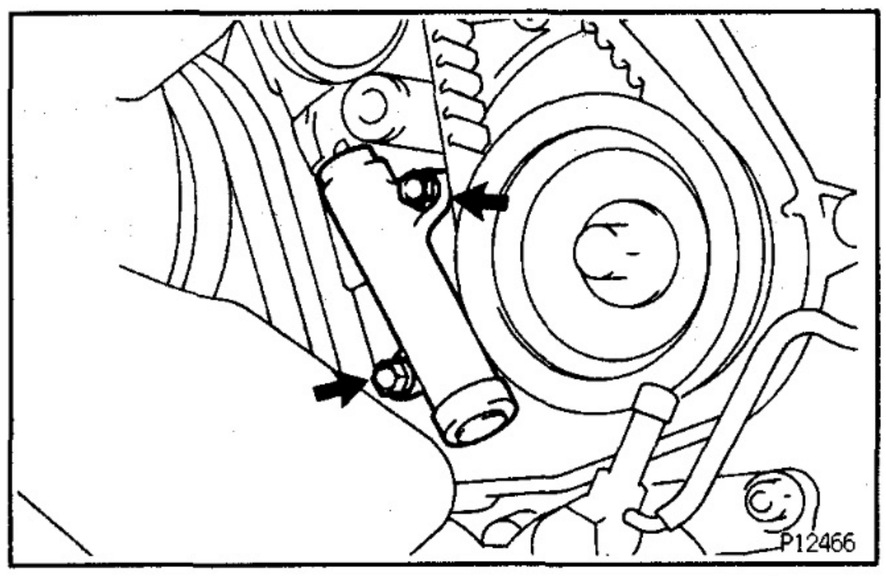

9. INSTALL TIMING BELT TENSIONER

(a) Temporarily install the timing belt tensioner with the 2 bolts while pushing the idler pulley toward the timing belt.

(b) Tighten the 2 bolts.
Torque: 13 N·m (130 kgf·cm, 9 ft·lbf)

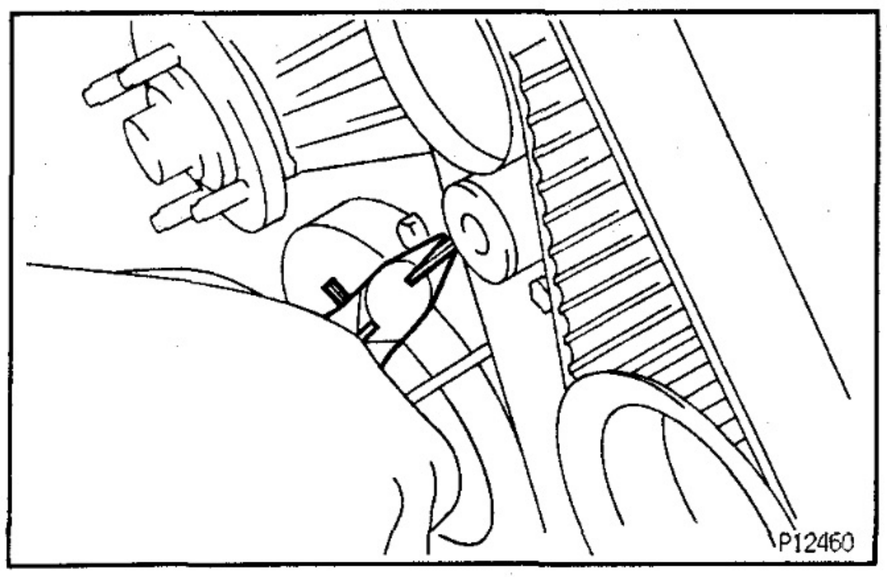

(c) Remove the 1.5 mm hexagon wrench from the tensioner.

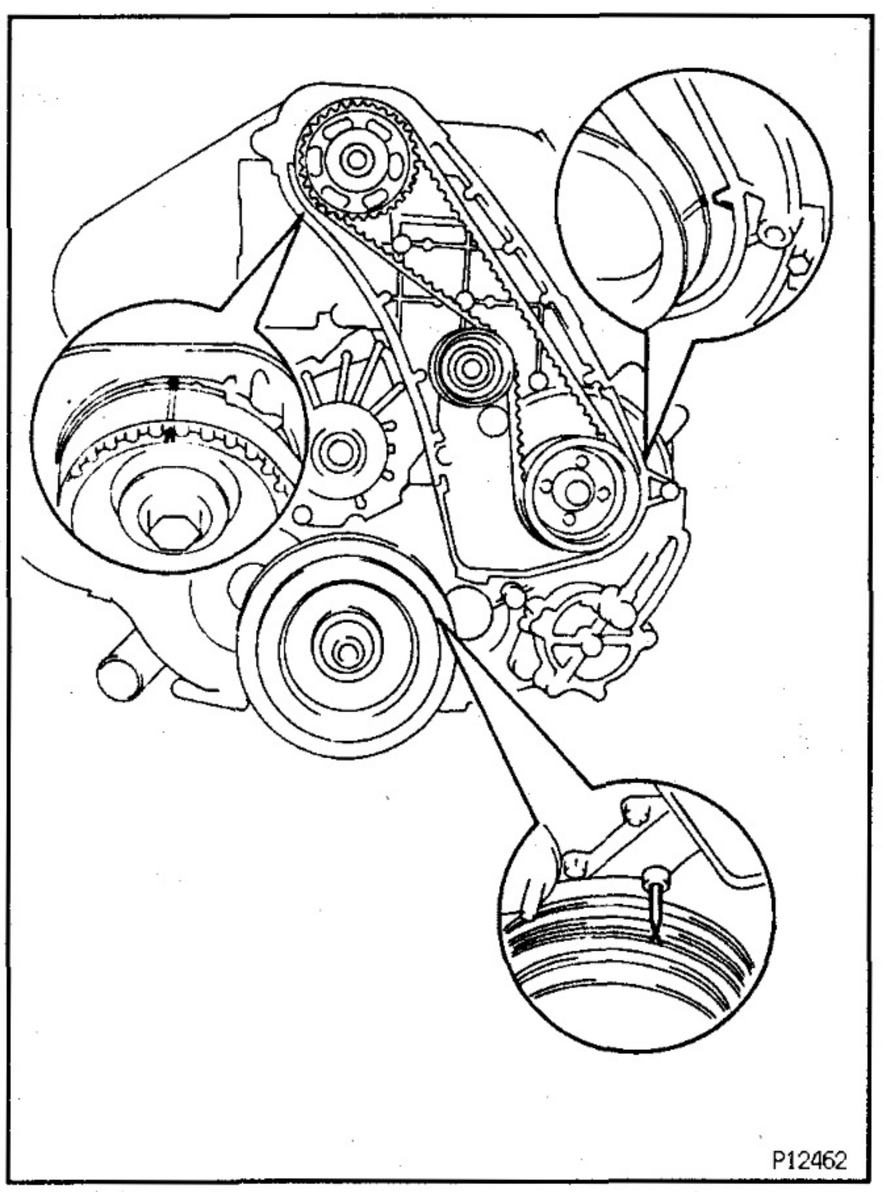
P12462

10. CHECK VALVE TIMING

Turn the crankshaft pulley clockwise and check that each pulley aligns with the timing marks (TDC mark) as shown in the illustration.

If the marks do not align, remove the timing belt and reinstall it.

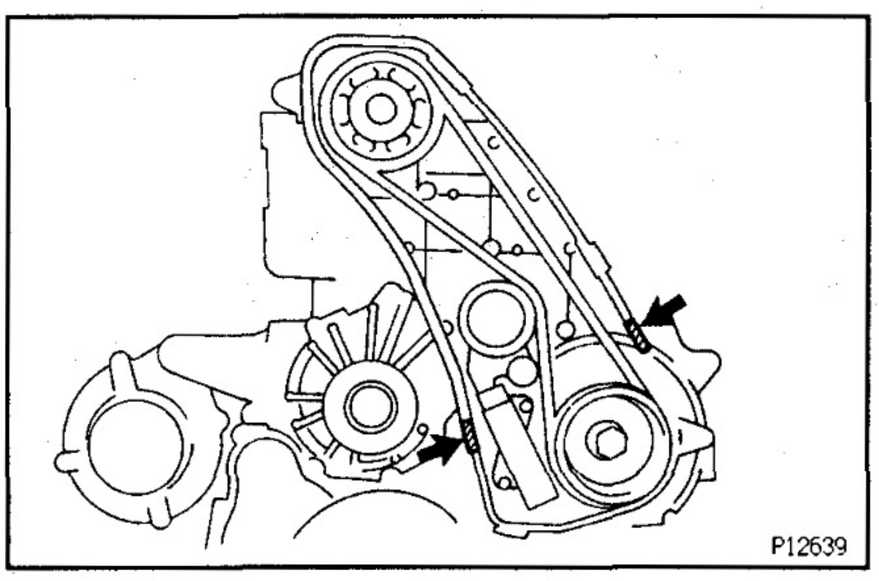
P12639

11. INSTALL TIMING BELT COVER

(a) Remove any old packing (FIPG) material.

(b) Apply seal packing to the camshaft oil seal retainer and timing gear cover as shown in the illustration.

Seal packing:

Part No.08826—00080 or equivalent

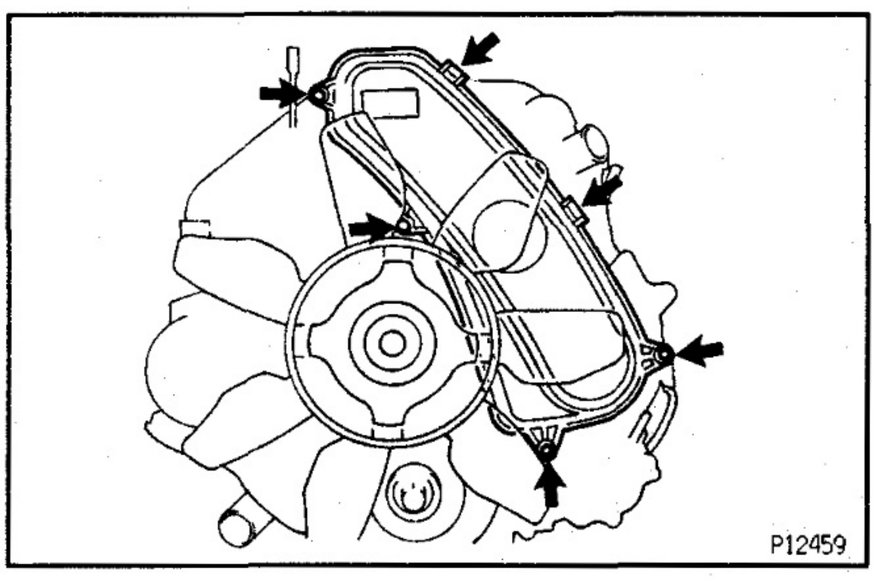
P12459

(c) Install a new gasket to the timing belt cover.

(d) Install the timing belt cover with the 4 seal washers, bolts and 2 clips.

TIMING GEAR
COMPONENTS FOR REMOVAL AND INSTALLATION

EG34R-01

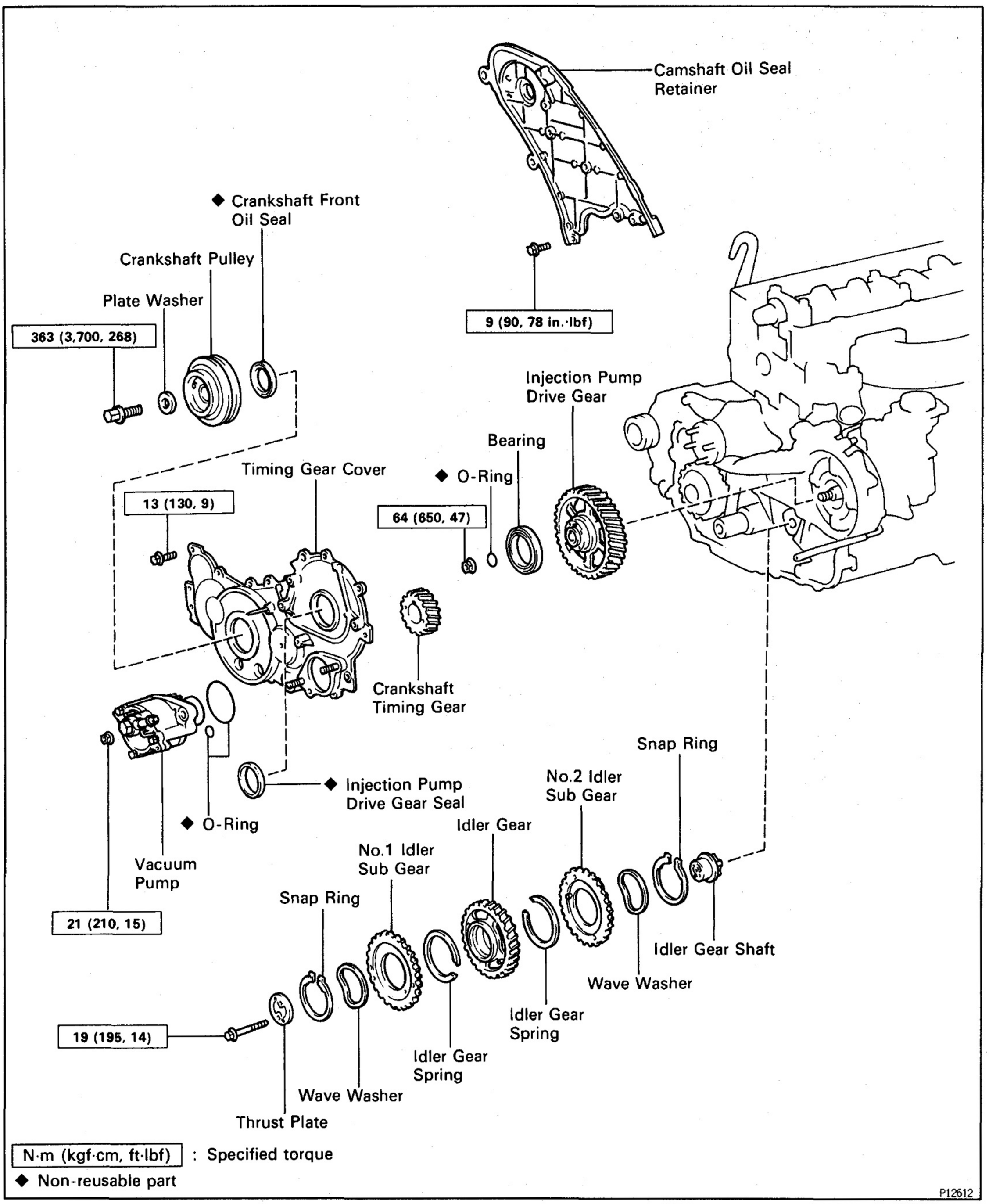

EG348-01

TIMING GEARS REMOVAL

(See Components for Disassembly and Assembly)

1. REMOVE DRIVE BELT, FAN AND WATER PUMP PULLEY
   (See page EG–235)
2. REMOVE TIMING BELT AND PULLEYS
   (See page EG–32)

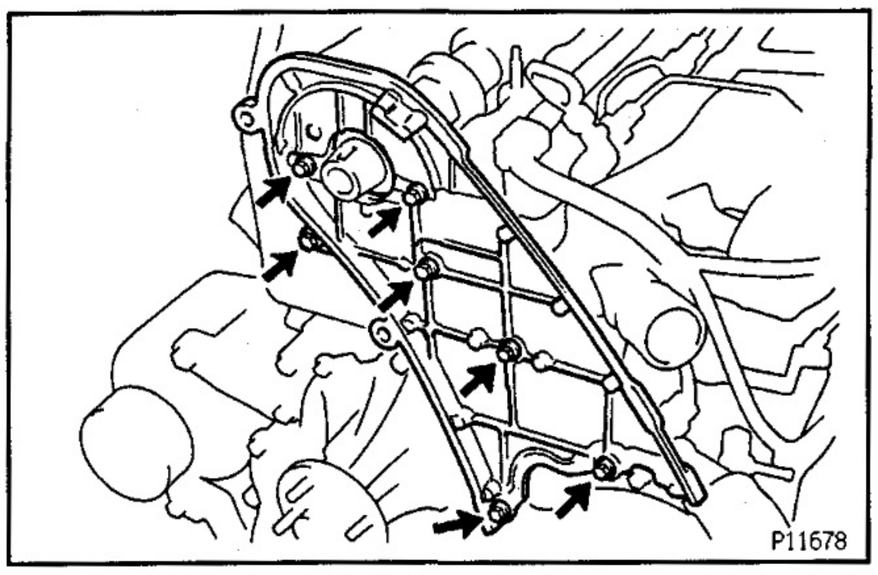

3. REMOVE CAMSHAFT OIL SEAL RETAINER
   Remove 7 bolts and camshaft oil seal retainer.

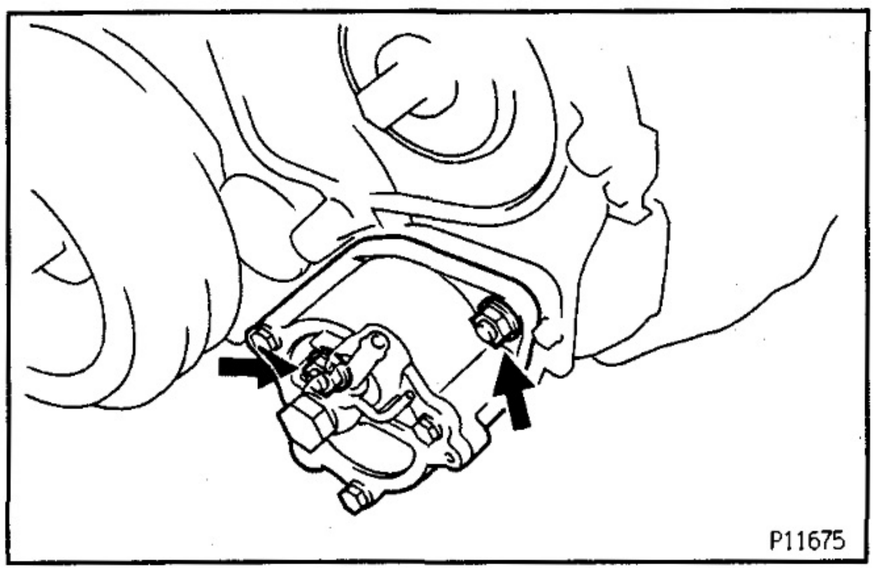

4. REMOVE VACUUM PUMP
   (a) Remove the vacuum hose.
   (b) Remove the 2 nuts and vacuum pump.
   (c) Remove 2 O–rings.

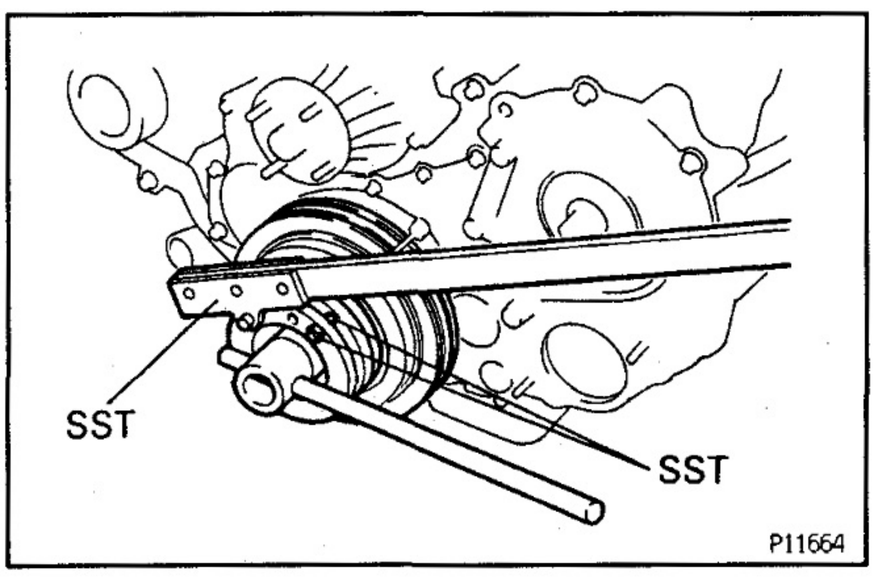

5. REMOVE CRANKSHAFT PULLEY
   (a) Using SSTs, remove the pulley bolt and plate.
   SST 09213–58012 x 2
   SST 09330–00021

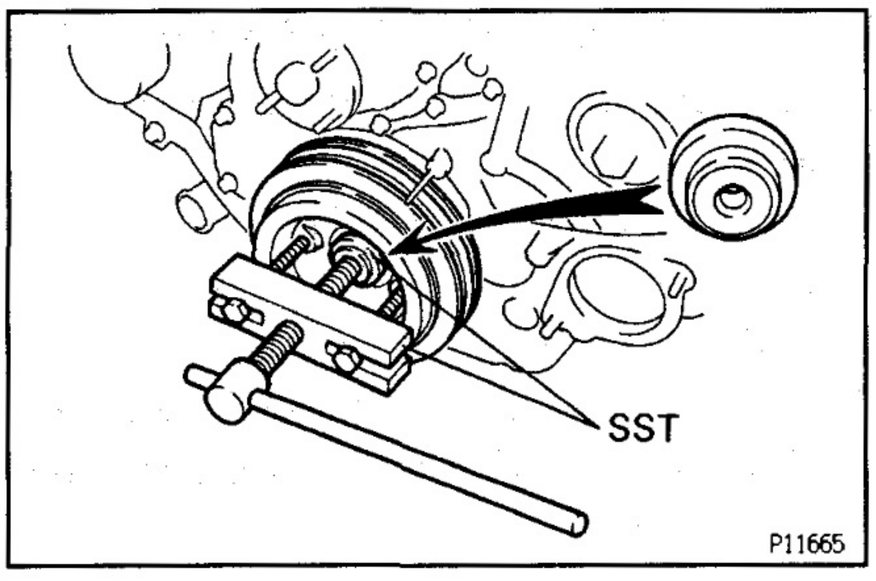

   (b) Using SST, remove the crankshaft pulley.
   SST 09213–60017 (09213–00020, 09213–00030, 09213–00060) and 09950–20017 (09958–20010)

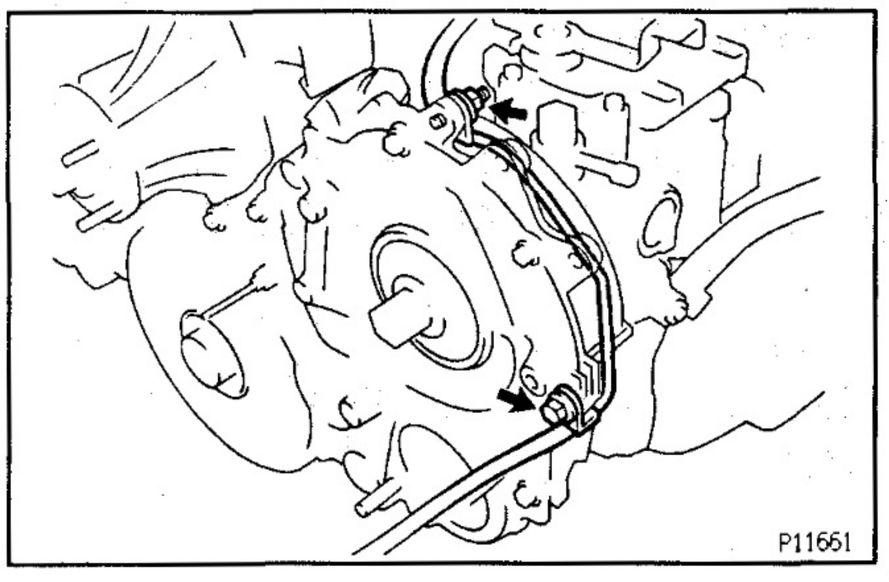

6. REMOVE TIMING GEAR COVER

(a) Remove the bolt, nut and washer and disconnect the vacuum pipe.

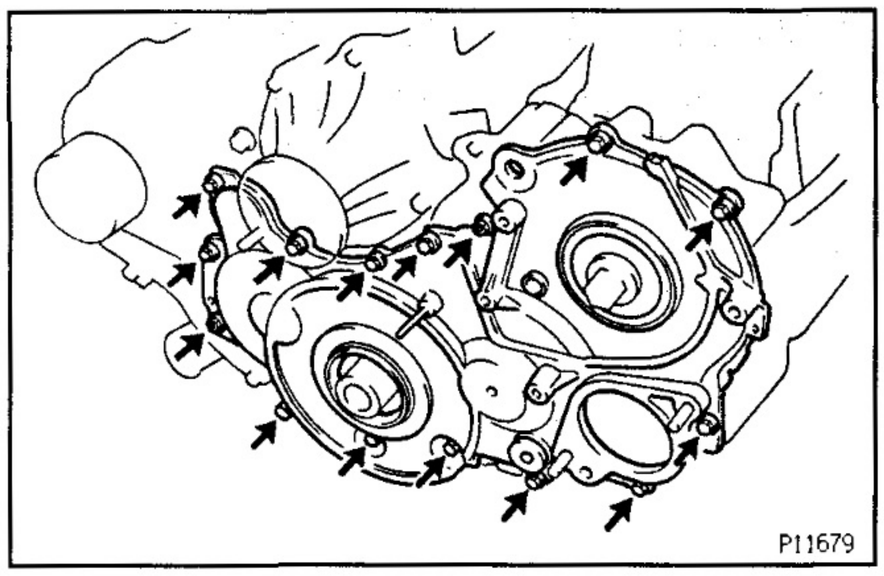

(b) Remove the 13 bolts and 2 nuts.

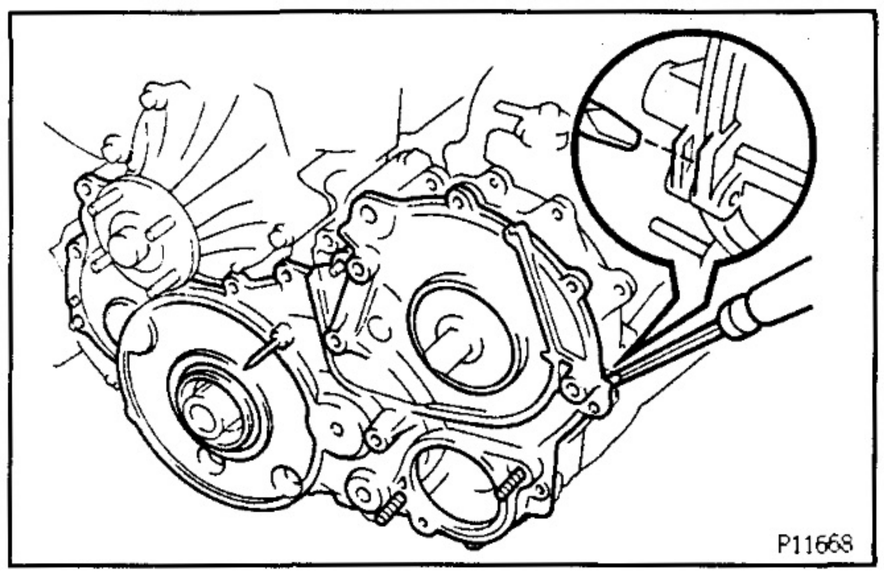

(c) Pry out the timing gear cover.

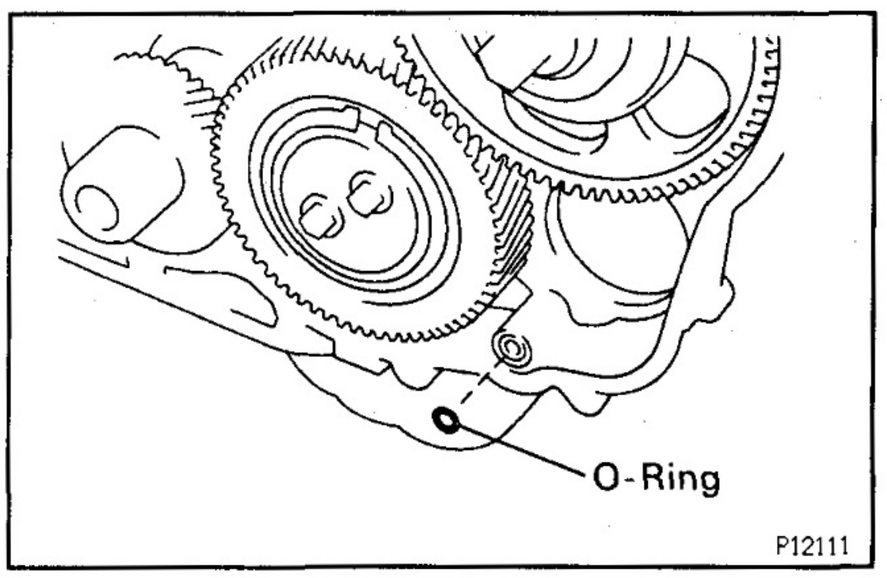

(d) Remove the O–ring.

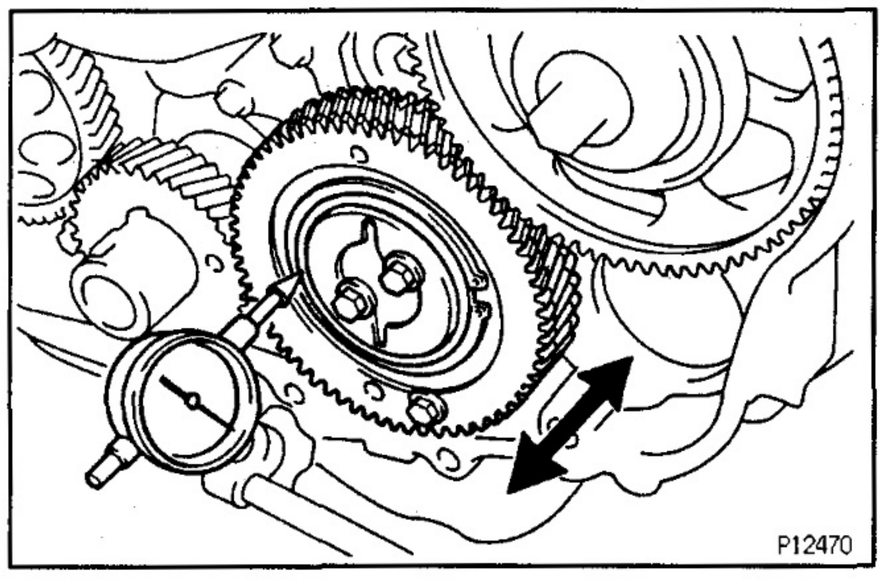

7. CHECK THRUST CLEARANCE OF IDLER GEAR

Using a dial indicator, measure the thrust clearance.

Standard thrust clearance:

0.05 – 0.15 mm (0.0020 – 0.0060 in.)

Maximum thrust clearance:

0.30 mm (0.0118 in.)

If the thrust clearance is greater than maximum, replace the thrust plate. If necessary, replace the idler gear and/or idler gear shaft.

8. REMOVE TIMING GEARS

NOTICE:

- **The match mark on each gear faces the front of the engine.**
- **Take care not to damage the gear teeth when removing and installing the gears. Do not use parts that are scratched or damaged, they cause noise.**

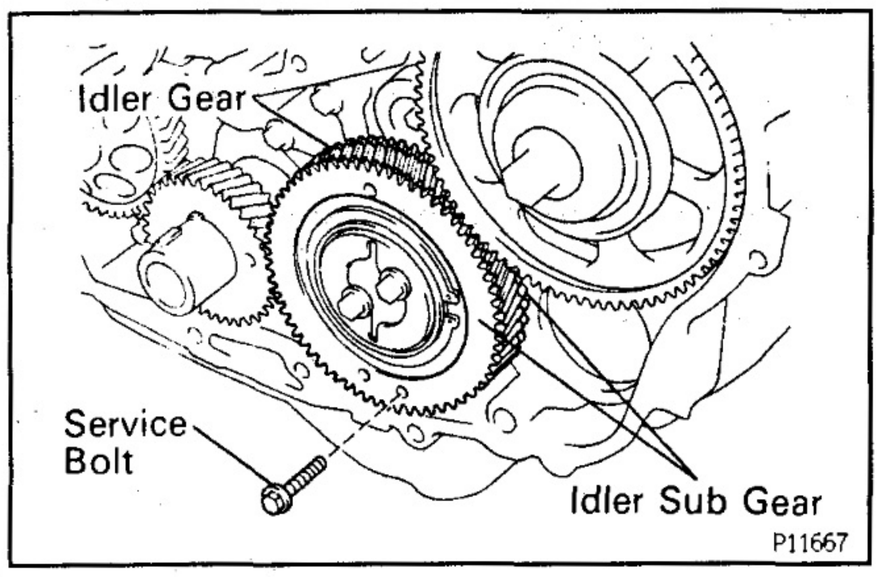

A. Remove crankshaft timing gear

(a) Secure the idler sub—gears to idler gear with a service bolt.

Recommended service bolt:

Thread diameter	**6 mm**
Thread pitch	**1.0 mm**
Bolt length	**28.0 mm (1.10 in.)**

HINT: When removing the idler gear, make sure that the torsional spring force of the sub—gears has been eliminated by the above operation.

(b) Using SST, remove the crankshaft timing gear.
SST 09213—60017 (09213—00020, 09213—00030, 09213—00130) and 09950—20017 (09958—20010)

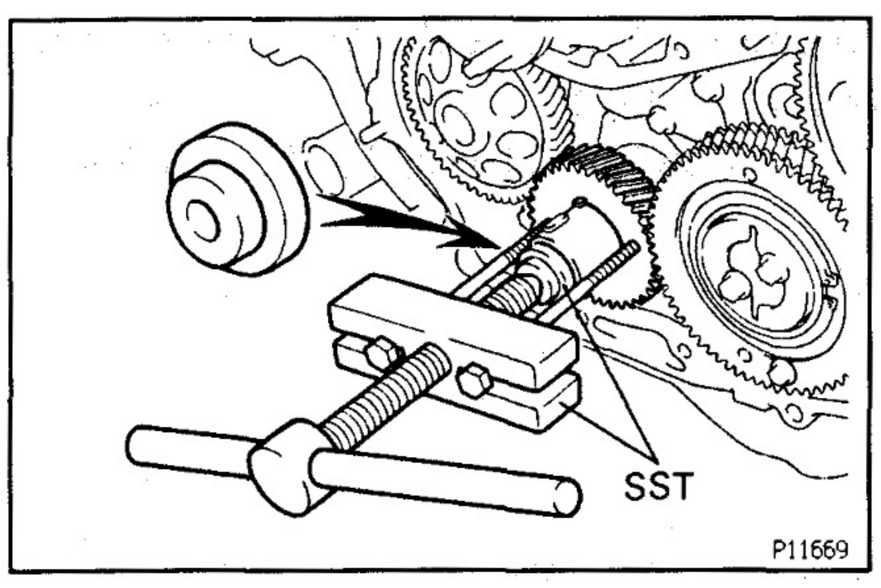

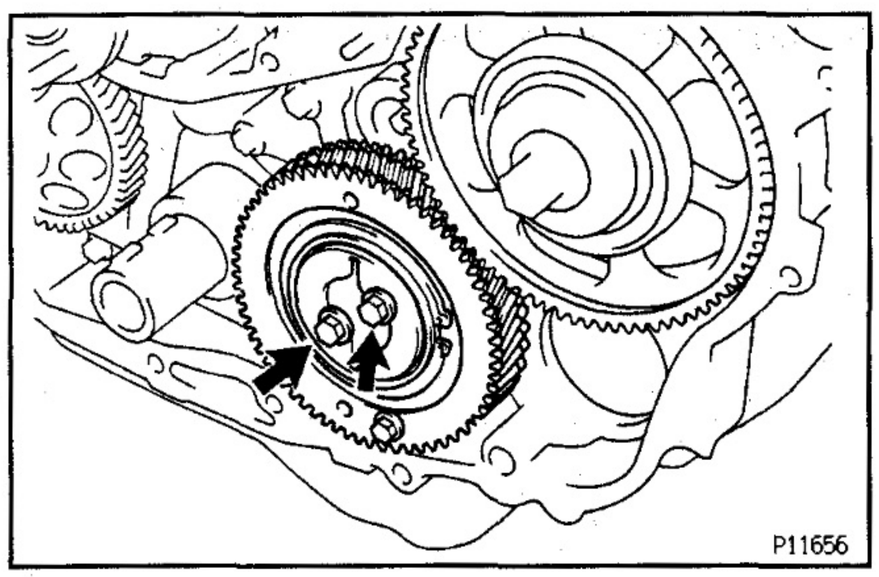

B. Remove idler gear

Remove the 2 bolts, thrust plate, idler gear assembly and idler gear shaft.

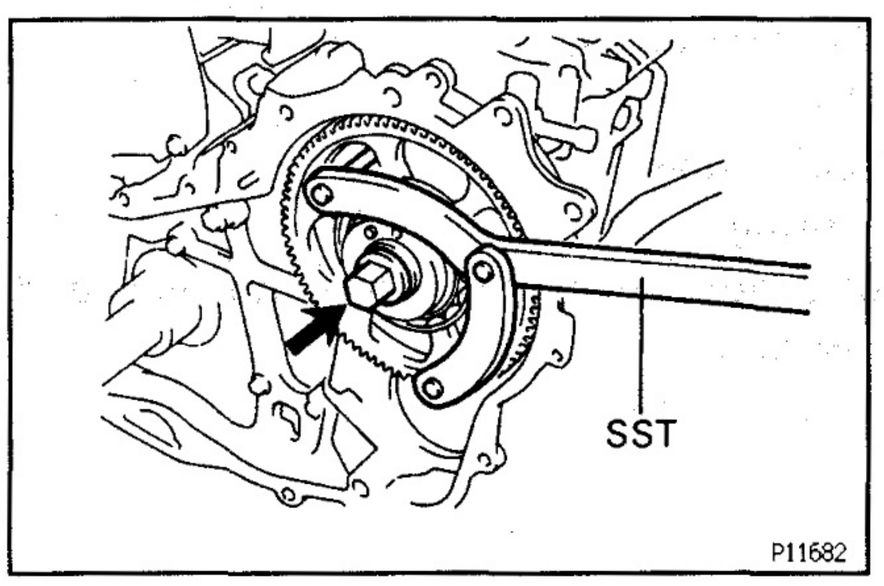

C. Remove injection pump drive gear

(a) Using SST, remove the injection pump drive gear set nut.
SST 09960—10010 (09962—01000, 09963—00600)

(b) Remove the O—ring.

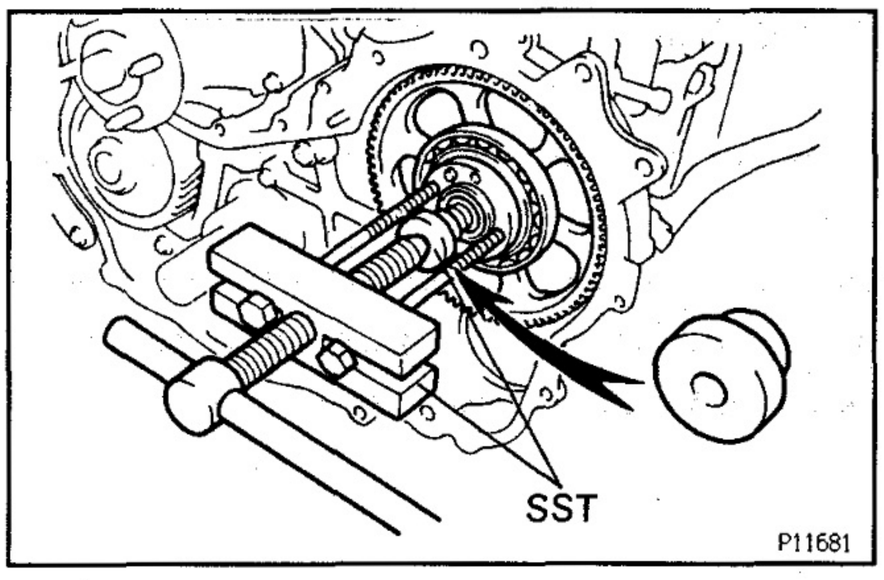

(c) Using SST, remove the injection pump drive gear.
SST 09213–60017 (09213–00020, 09213–00030, 09213–00130) and 09950–20017 (09958–20010)

NOTICE:

- **Tighten the 2 bolts of SST more than 8 mm (0.31 in.)**
- **Set the SST so that it is balanced.**

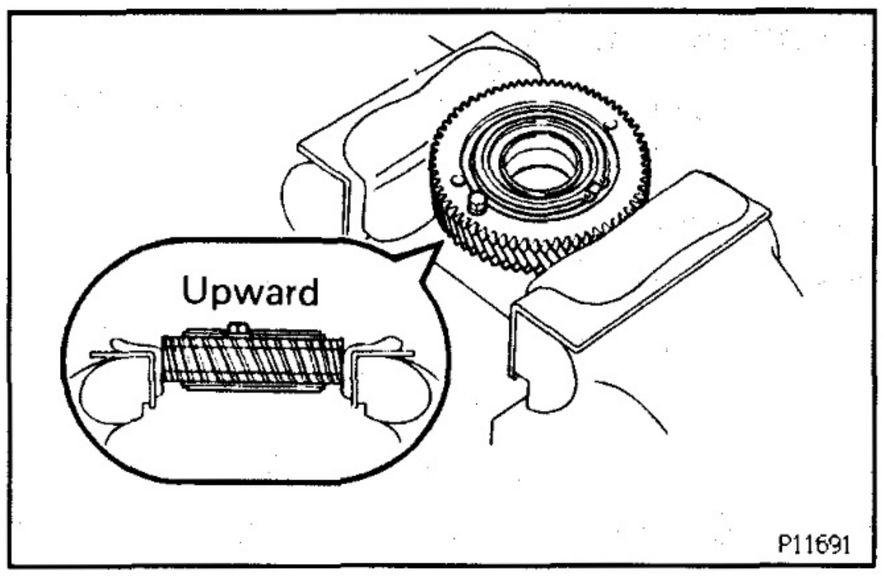

9. DISASSEMBLY IDLER GEAR

(a) Mount the idler gear and No.2 idler sub–gear in a vise.

NOTICE: Be careful not to damage the gears.

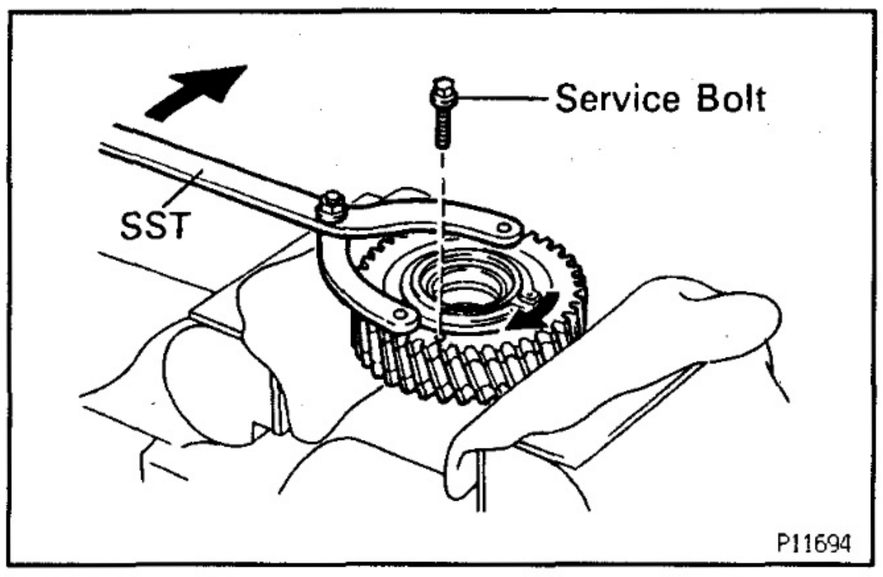

(b) Using SST, turn the No.1 idler sub–gear clockwise, and remove the service bolt.
SST 09960–10010 (09962–01000, 09963–00600)

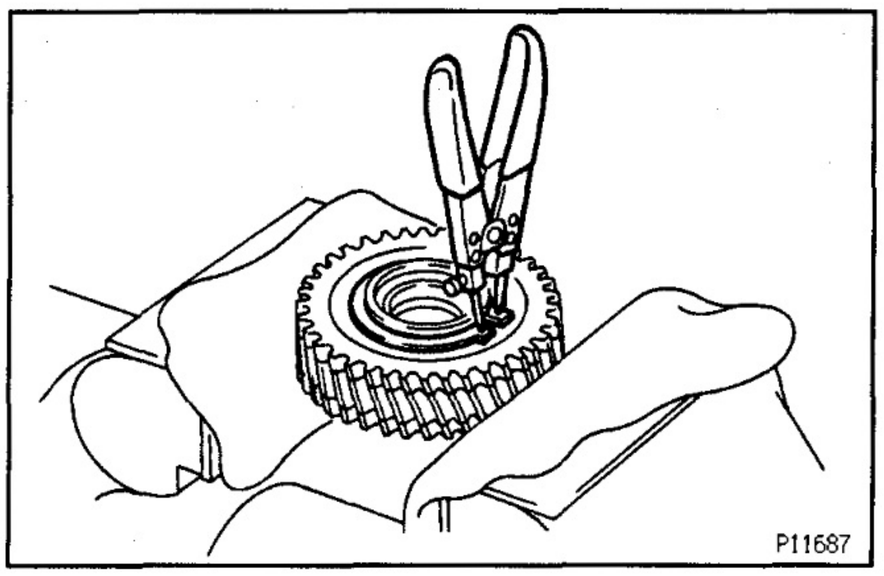

(c) Using snap ring pliers, remove the snap ring.

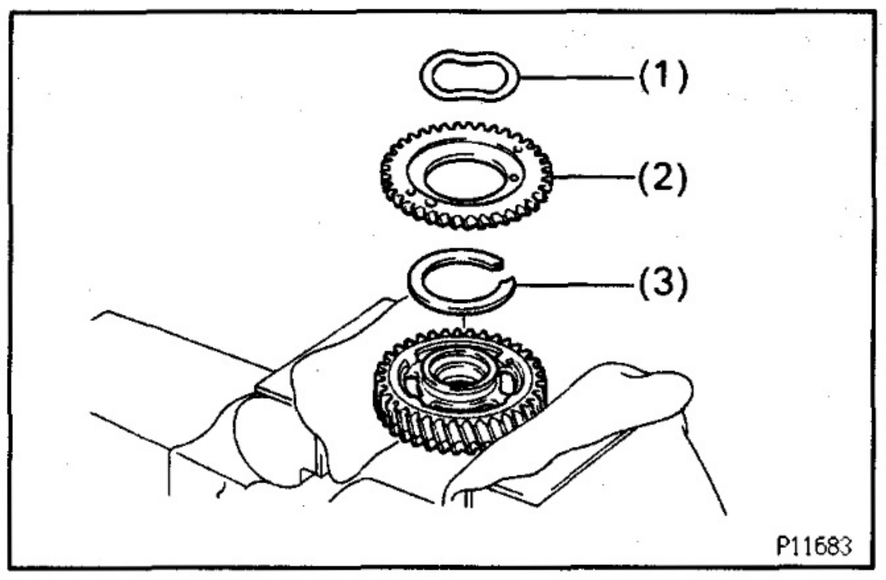

(d) Remove the following parts:
(1) Wave washer
(2) No.1 idler sub–gear
(3) Idler gear spring

(e) Remove the idler gear assembly from the vice and turn it upside down.

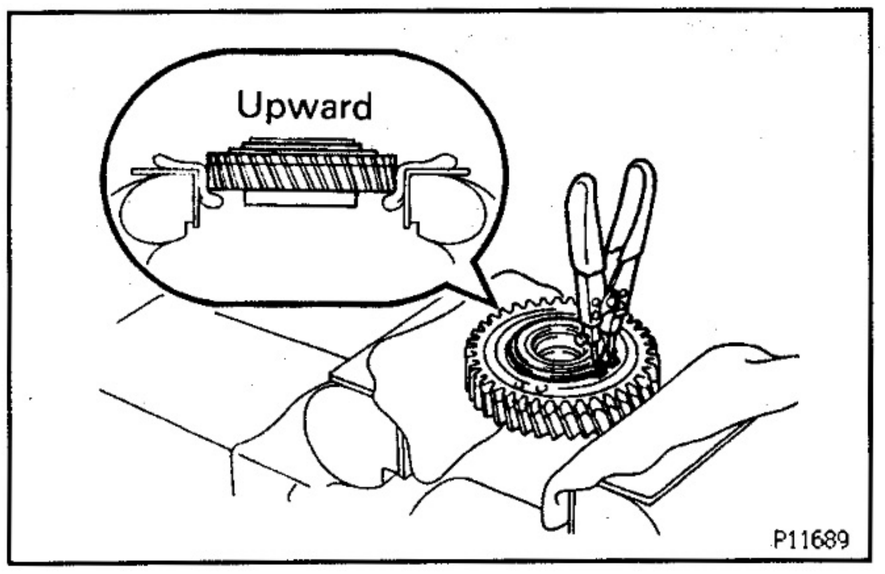

(f) Mount the idler gear in a vise.
NOTICE: Be careful not to damage the gear.

(g) Using snap ring pliers, remove the snap ring.

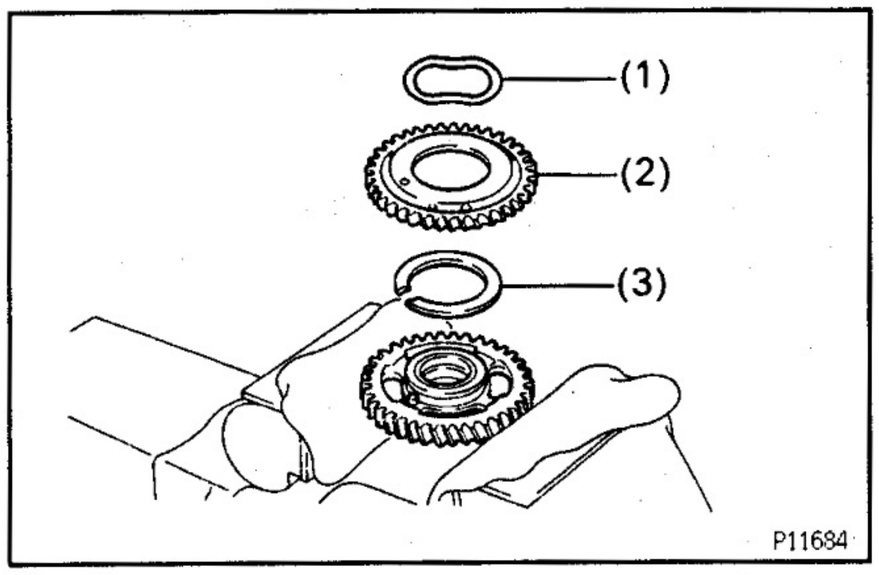

(h) Remove the following parts.
(1) Wave washer
(2) No.2 idler sub—gear
(3) Idler gear spring

EG34T–01

TIMING GEARS INSPECTION

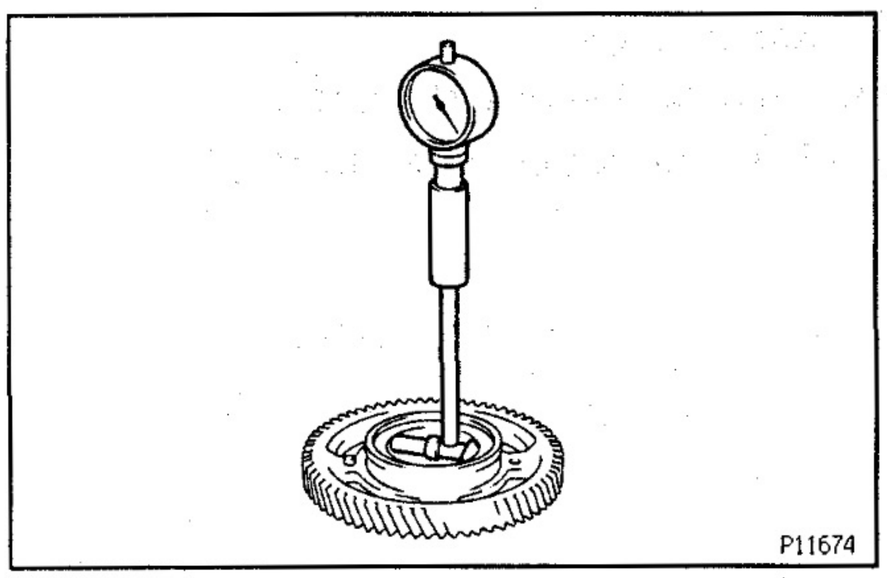

1. INSPECT IDLER GEAR

(a) Using a cylinder gauge, measure the inside diameter of the idler gear.

Idler gear inside diameter:

44.000 — 44.025 mm (1.7323 — 1.7333 in.)

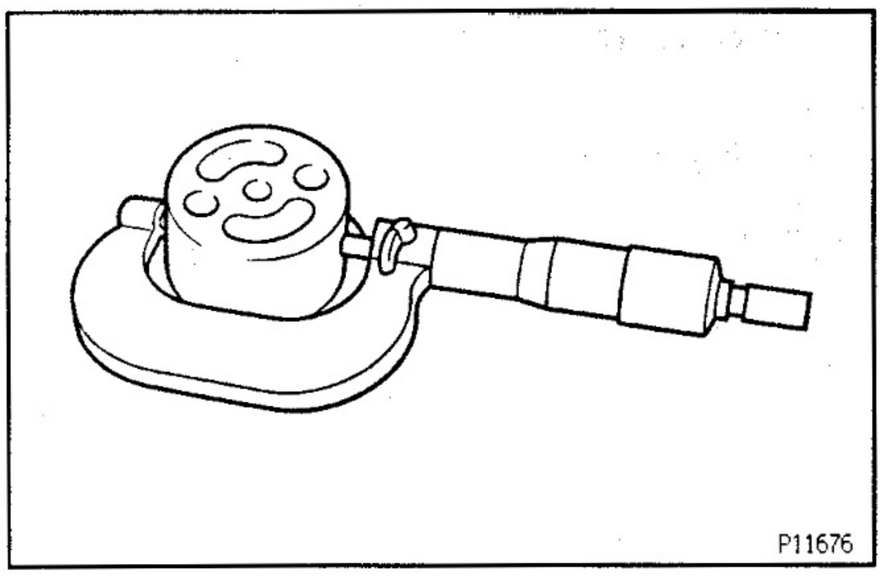

(b) Using a micrometer, measure the diameter of the idler gear shaft.

Idler gear shaft diameter:

43.965 — 44.000 mm (1.7309 — 1.7323 in.)

(c) Subtract the idler gear shaft diameter measurement from the idler gear inside diameter measurement.

Standard oil clearance:

0.025 — 0.060 mm (0.0010 — 0.0023 in.)

Maximum oil clearance:

0.20 mm (0.0079 in.)

If the clearance is greater than maximum, replace the gear and shaft.

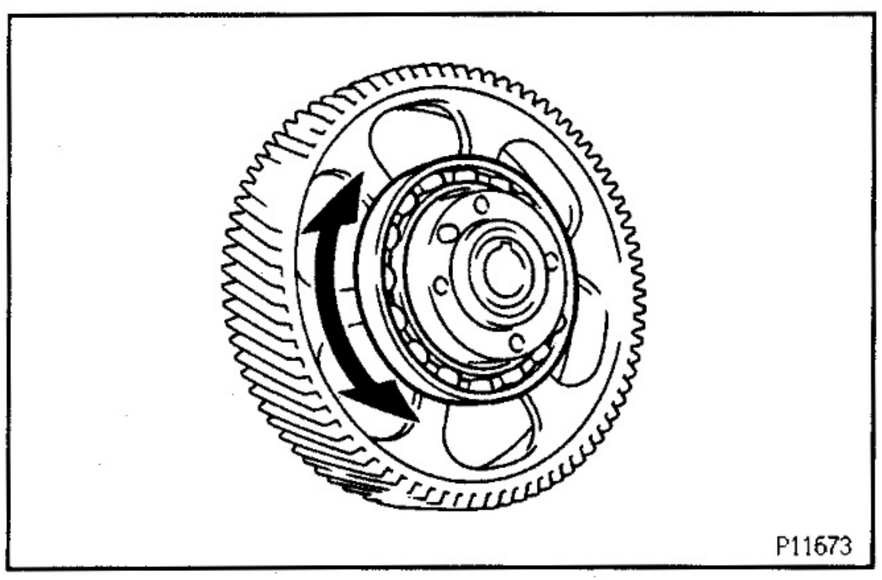

2. INSPECT INJECTION PUMP DRIVE GEAR BEARING

Check that bearing is not rough or worn.

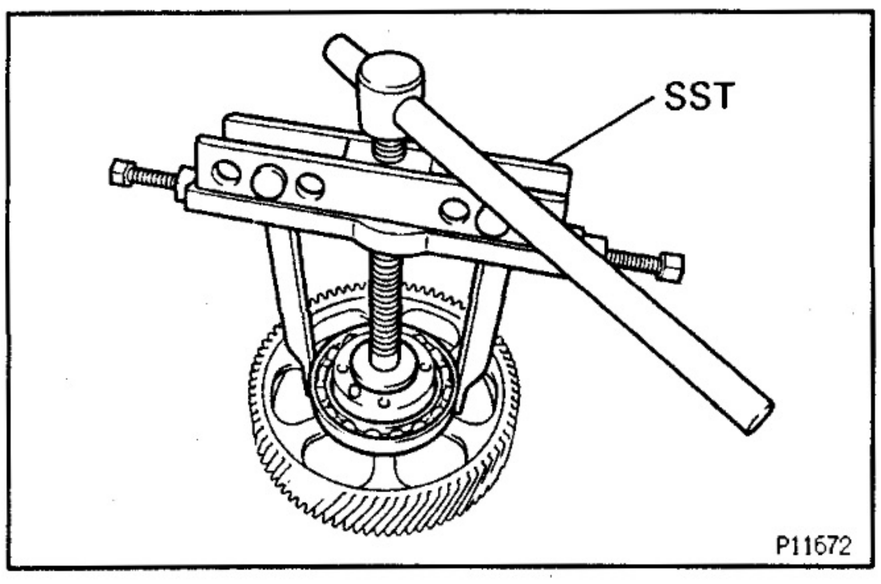

3. IF NECESSARY, REPLACE INJECTION PUMP DRIVE GEAR BEARING

A. Remove bearing

Using SST, remove the bearing.

SST 09950–20017

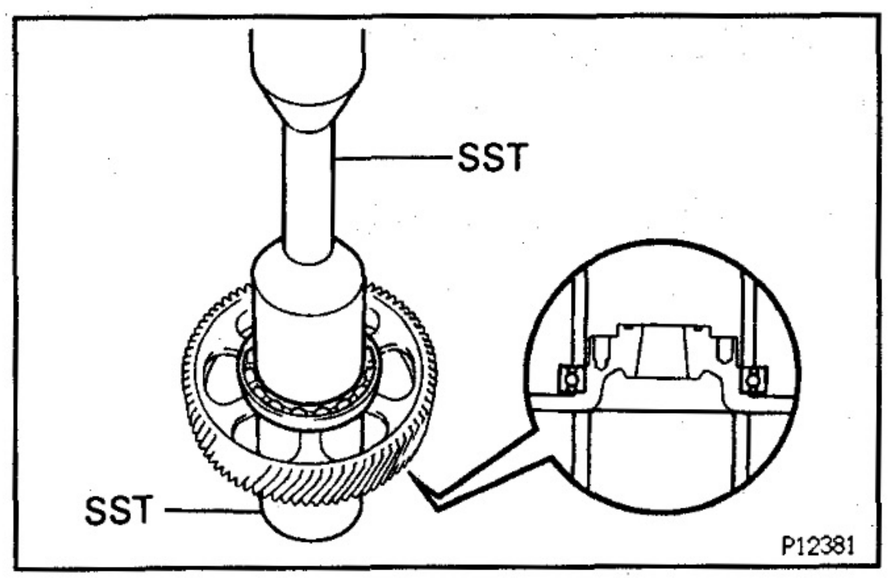

B. Install bearing

Using SST and a press, press in a new bearing.
SST 09214–76011 and 09223–00010

4. CHECK BACKLASH OF TIMING GEARS

Using a dial indicator, measure the backlash.

Standard gear backlash:

0.02 – 0.15 mm (0.0008 – 0.0060 in.)

Maximum gear backlash:

0.20 mm (0.0079 in.)

If the gear backlash is greater than maximum, replace the gears as a set.

Balance Shaft No.1 x Oil Pump

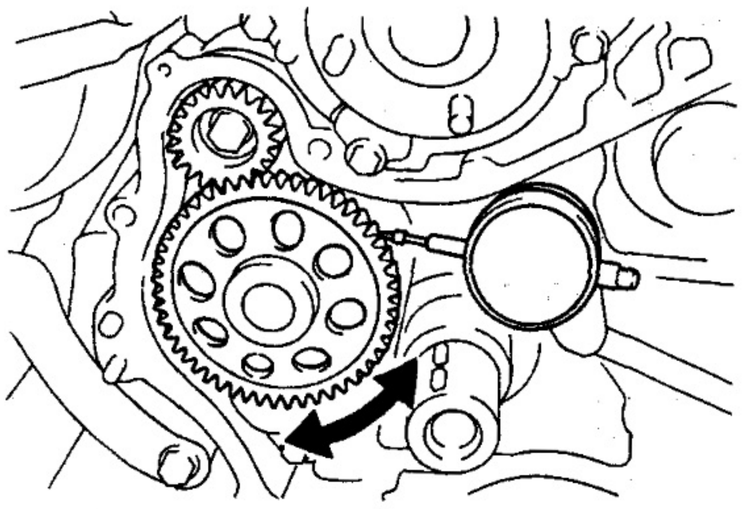

Balance Shaft No.2 x Injection Pump

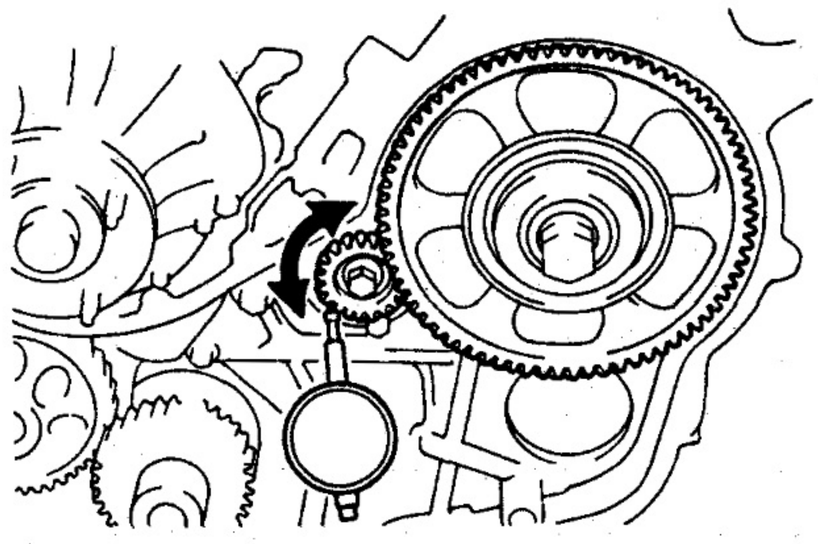

Crankshaft x Idler

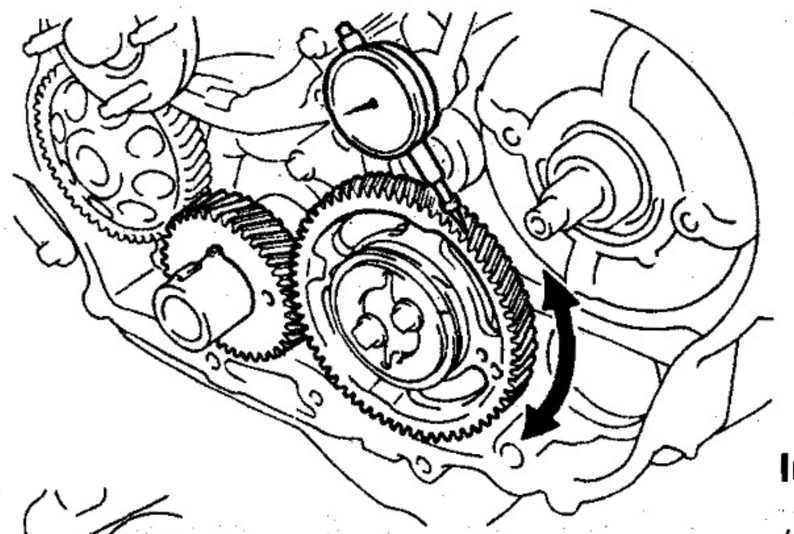

Oil Pump x Crankshaft

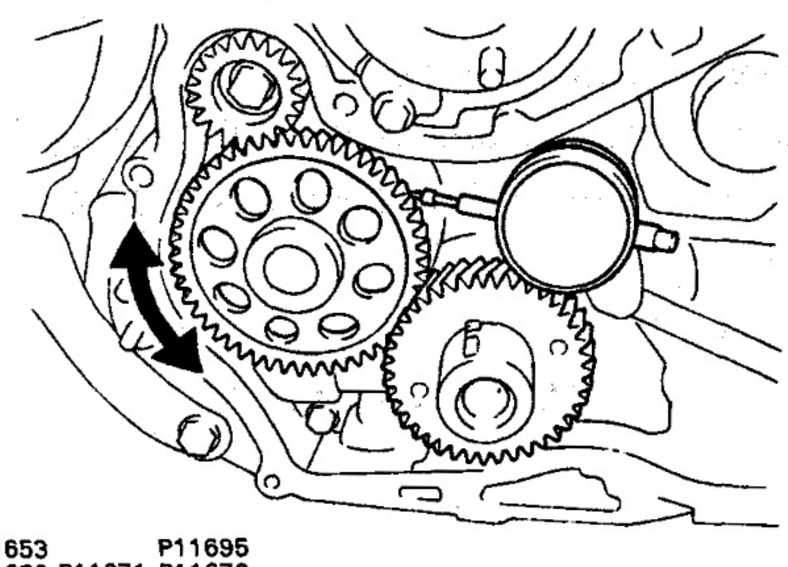

Injection Pump x Idler

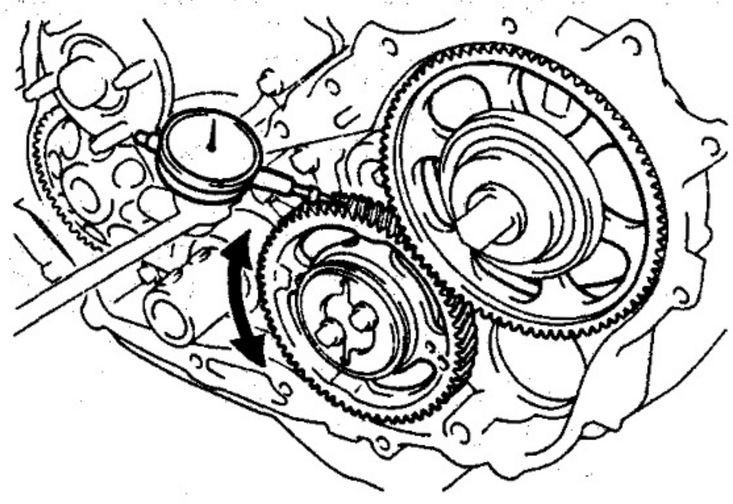

P11653 P11695
P11652 P11671 P11670

Z09204

EG34U-01

CRANKSHAFT FRONT OIL SEAL REPLACEMENT

HINT: There are two methods (A and B) to replace the oil seal as follows:

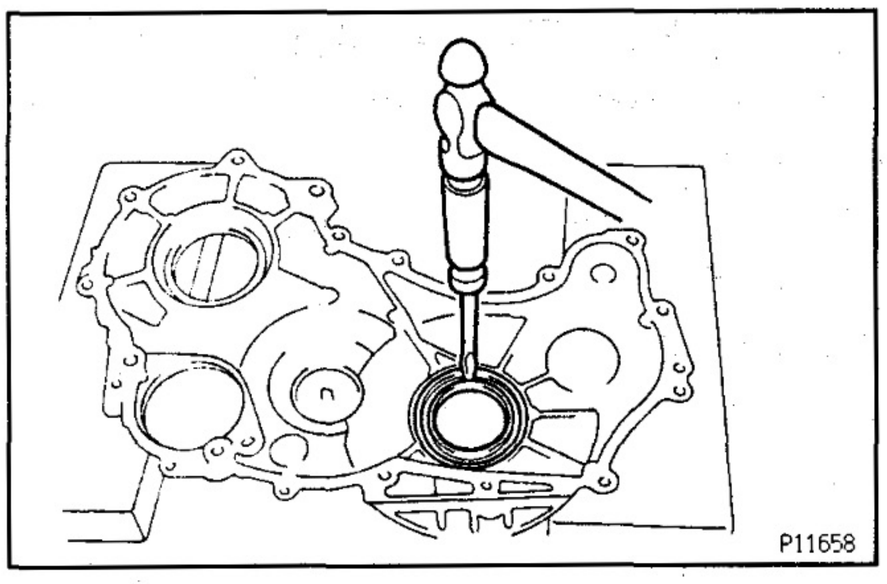

REPLACE CRANKSHAFT FRONT OIL SEAL

A. If timing gear cover is removed from cylinder block:

(a) Using a screwdriver and hammer, tap out the oil seal.

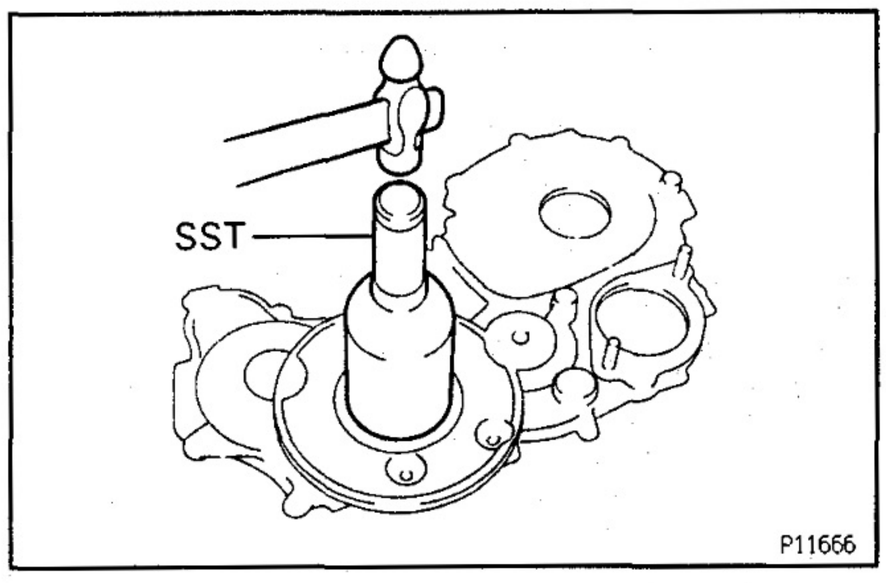

(b) Using SST and a hammer, tap in a new oil seal until its surface is flush with the timing gear cover edge.
SST 09214−76011

(c) Apply MP grease to the oil seal lip.

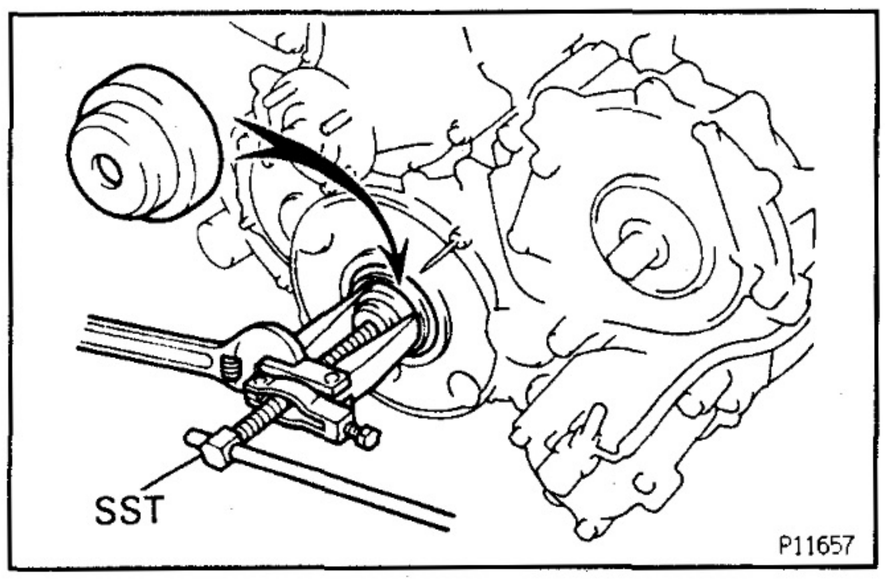

B. If timing gear cover is installed to the cylinder block:

(a) Using SST, remove the oil seal.
SST 09308−10010 and 09950−20017

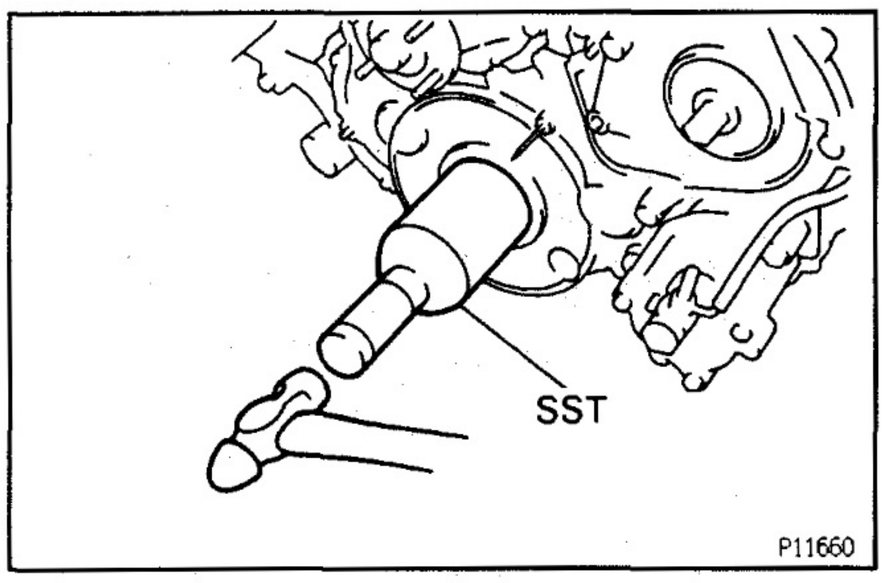

(b) Apply MP grease to a new oil seal lip.

(c) Using SST and a hammer, tap in the oil seal until its surface is flush with the timing gear cover edge.
SST 09214−76011

INJECTION PUMP DRIVE GEAR OIL SEAL REPLACEMENT

EG34V-01

HINT: There are two methods (A and B) to replace the oil seal as follows:

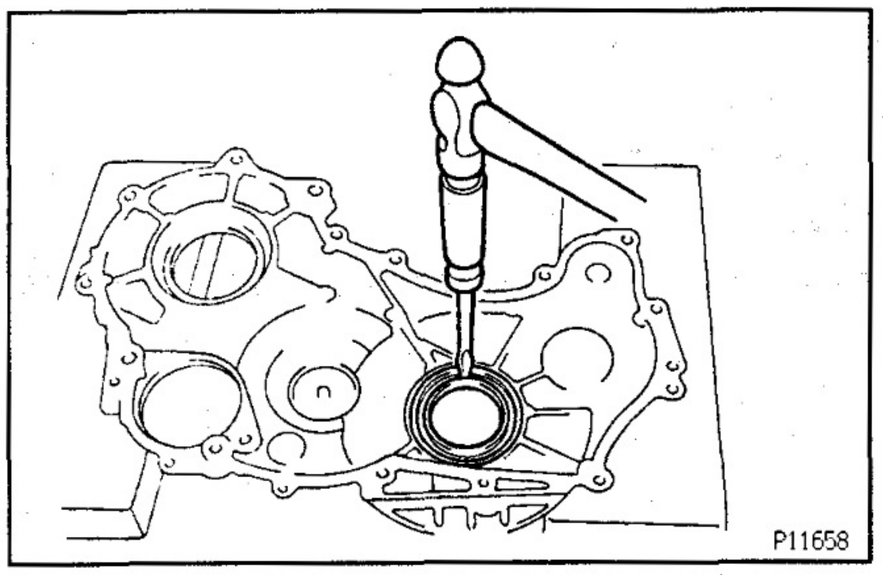

REPLACE INJECTION PUMP DRIVE GEAR OIL SEAL

A. If timing gear cover is removed from cylinder block:

(a) Using a screwdriver and hammer, tap out the oil seal.

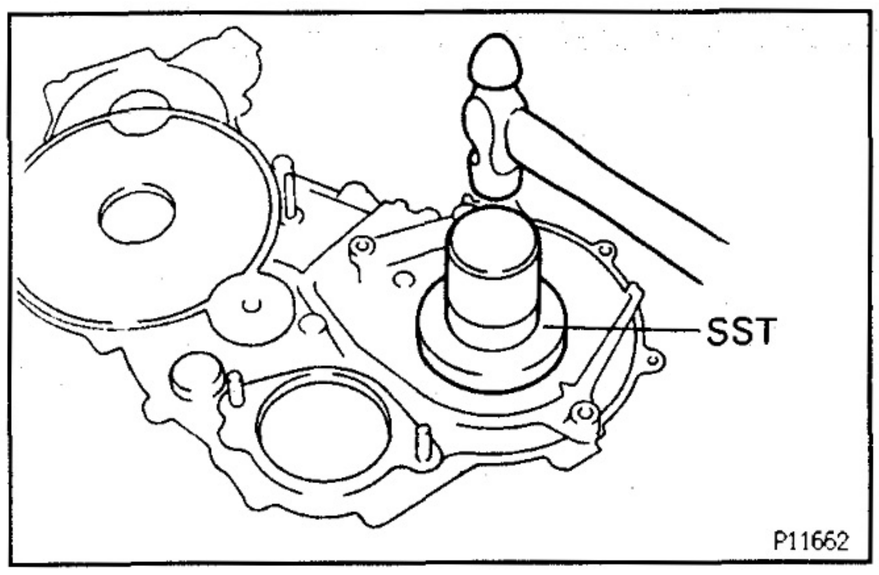

(b) Using SST and a hammer, tap in a new oil seal until its surface is flush with the timing gear cover edge.
SST 09223–78010

(c) Apply MP grease to the oil seal lip.

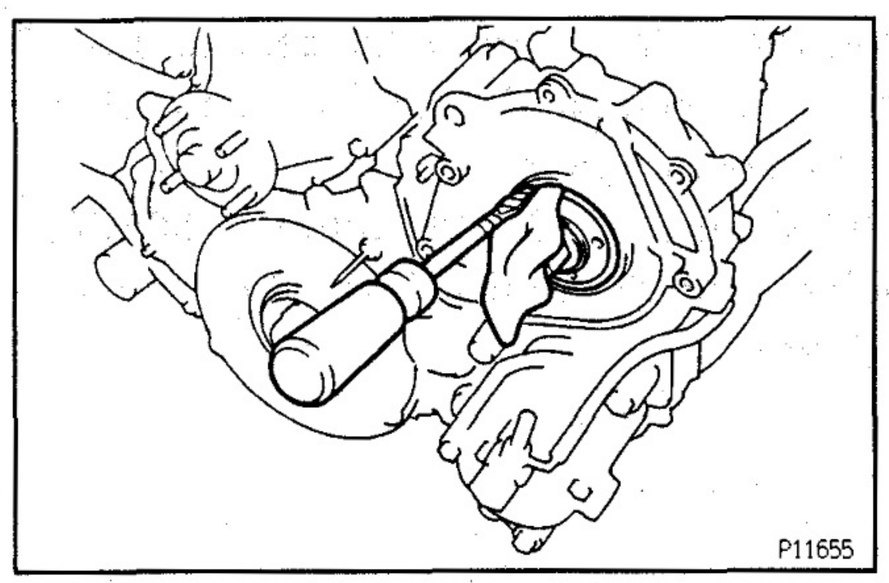

B. If timing gear cover is installed to the cylinder block:

(a) Using a screwdriver, pry out the oil seal.
NOTICE: Be careful not to damage the injection pump drive gear. Tape the screwdriver tip.

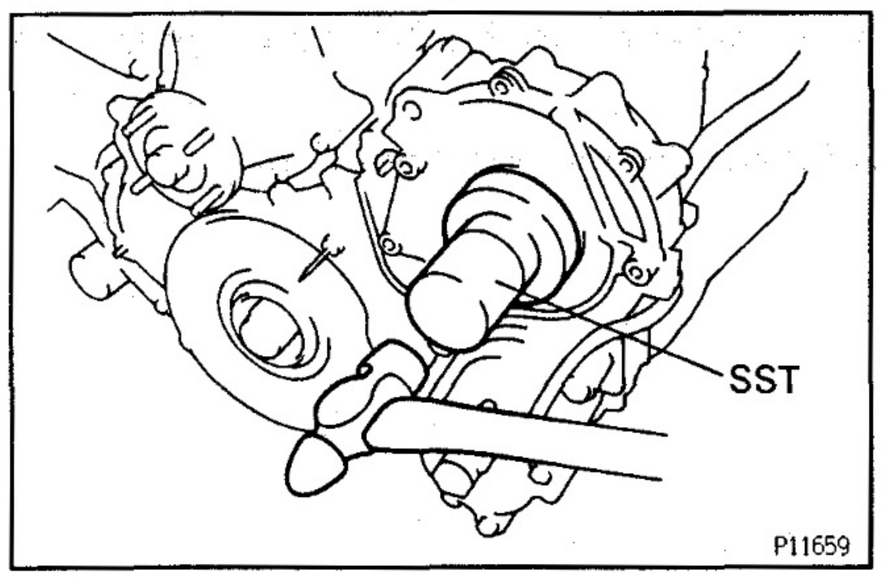

(b) Apply MP grease to the oil seal lip.

(c) Using SST and a hammer, tap in a new oil seal until its surface is flush with the timing gear cover edge.
SST 09223–78010

EG34W-01

TIMING GEARS INSTALLATION

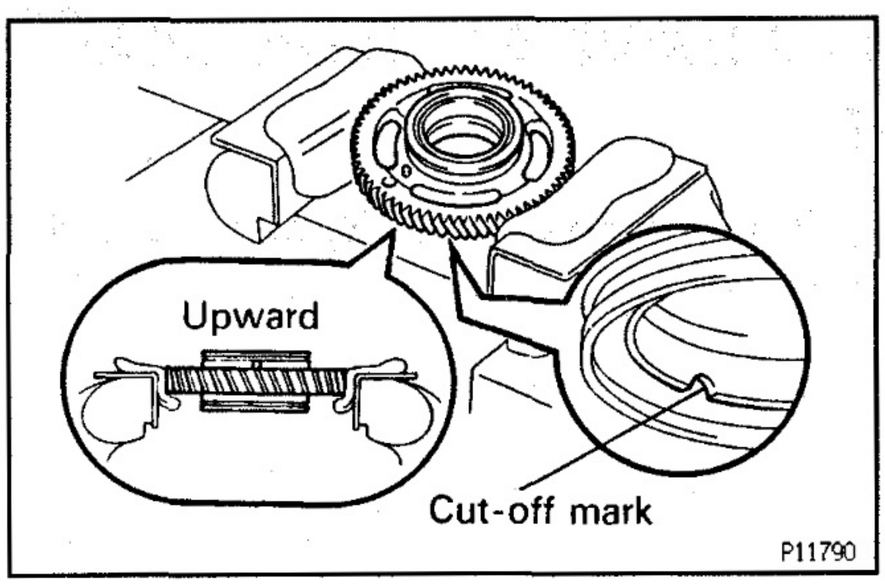

(See Components for Removal and Installation)

1. ASSEMBLE IDLER GEAR

(a) Mount the idler gear in a vise.
HINT: Install the idler gear with the cut—off mark facing downward.
NOTICE: Be careful not to damage the gear.

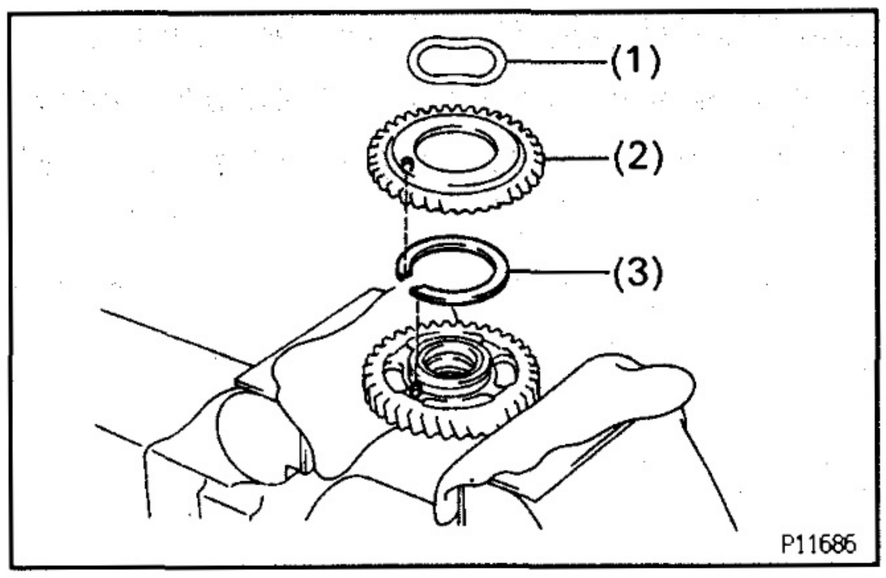

(b) Install the following parts:
(1) Idler gear spring
(2) No.2 idler sub—gear
(3) Wave washer
HINT: Align the pins on the gears with the spring ends.

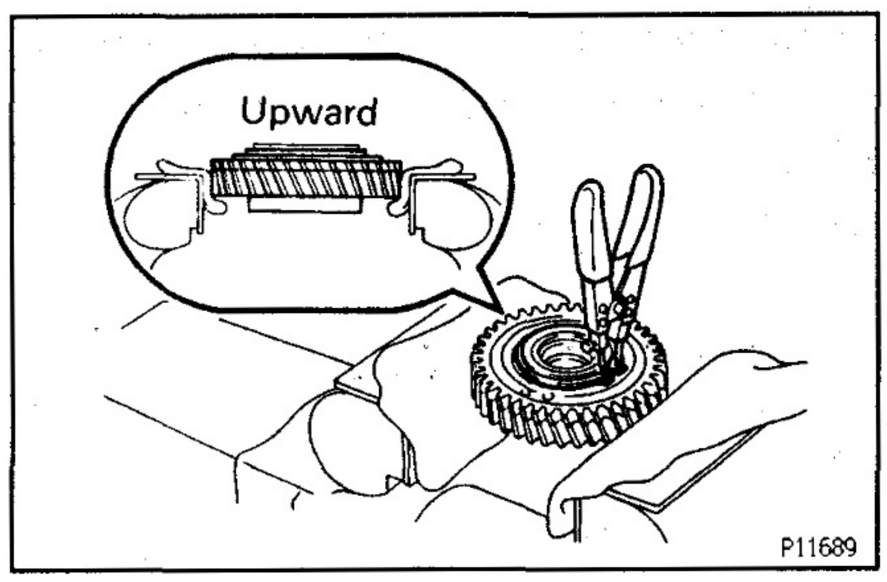

(c) Using snap ring pliers, install the snap ring.

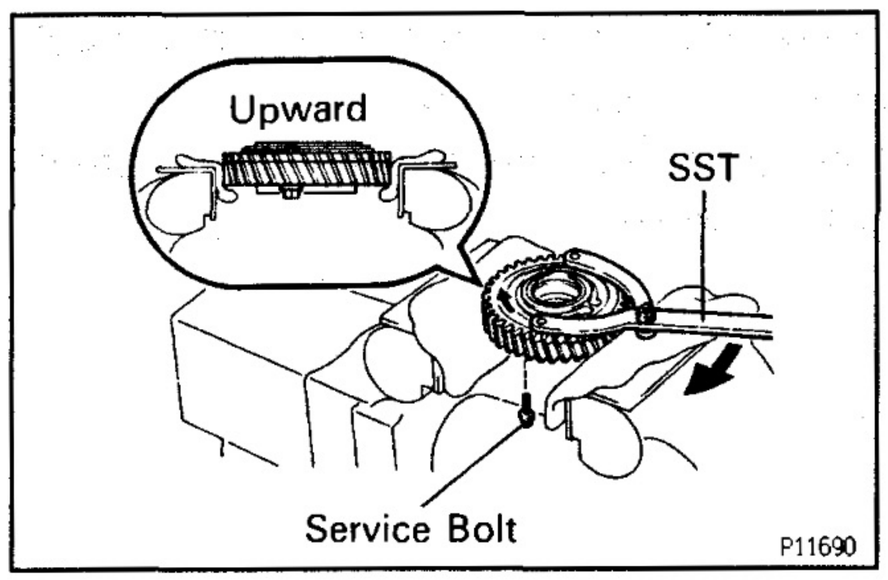

(d) Using SST, align the holes of the idler gear and No.2 idler sub—gear by turning No.2 idler sub—gear clockwise, and install a service bolt.
SST 09960—10010 (09962—01000, 09963—00600)

(e) Remove the idler gear assembly from the vice and turn it upside down.

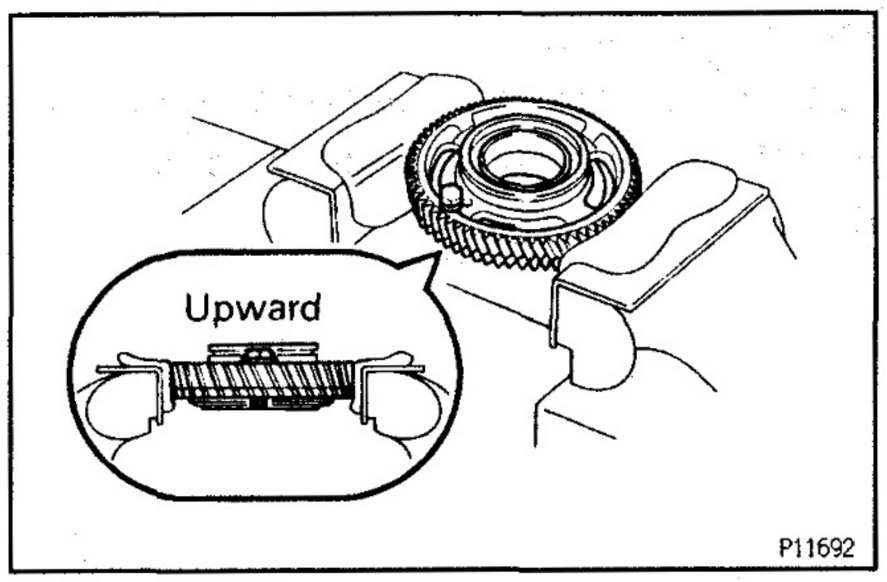

(f) Mount the idler gear and No.2 idler sub—gear in a vise.
NOTICE: Be careful not to damage the gears.

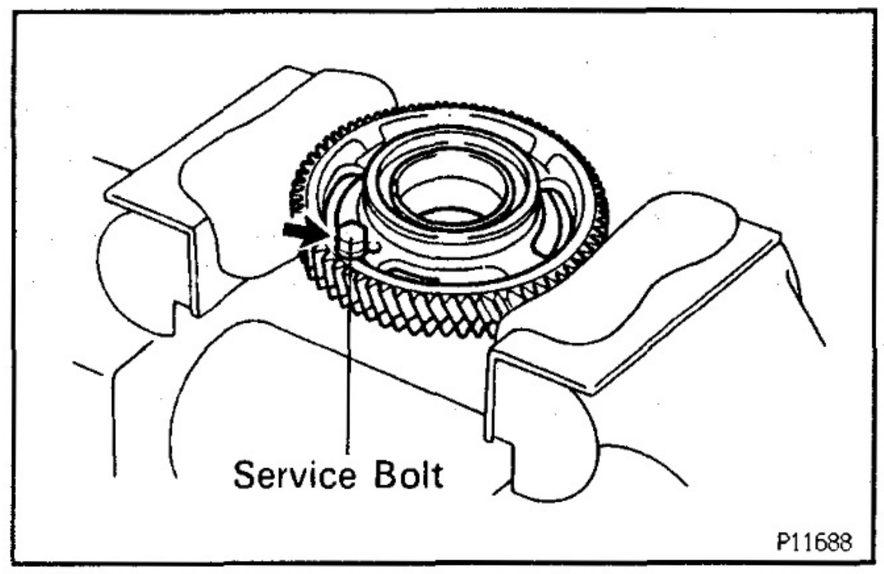

(g) Remove the service bolt.

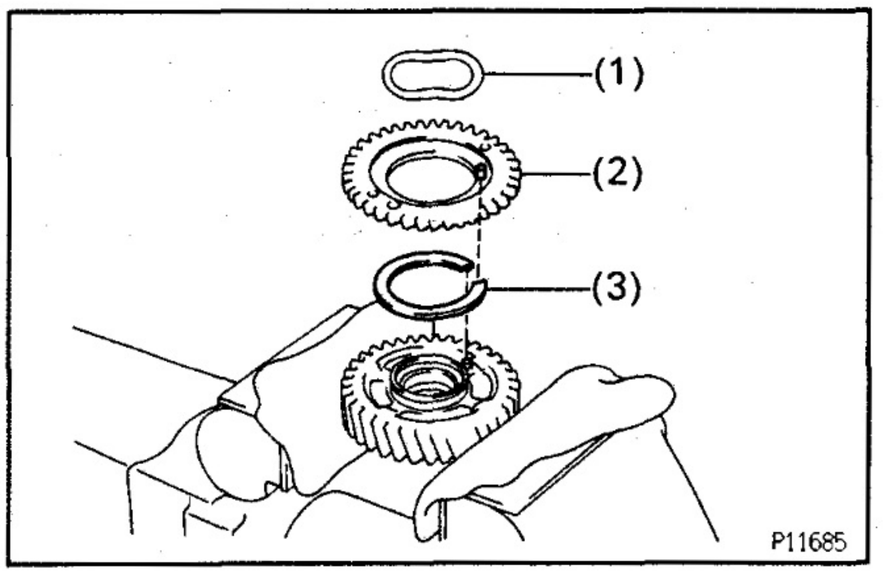

(h) Install the following parts:
(1) Idler gear spring
(2) No.1 idler sub–gear
(3) Wave washer
HINT: Align the pins on the gears with the spring ends.

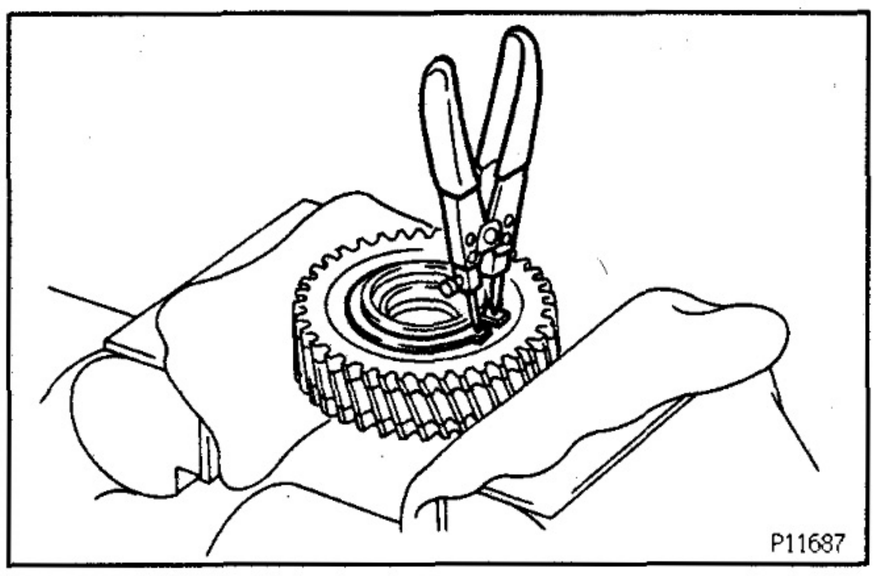

(i) Using snap ring pliers, install the snap ring.

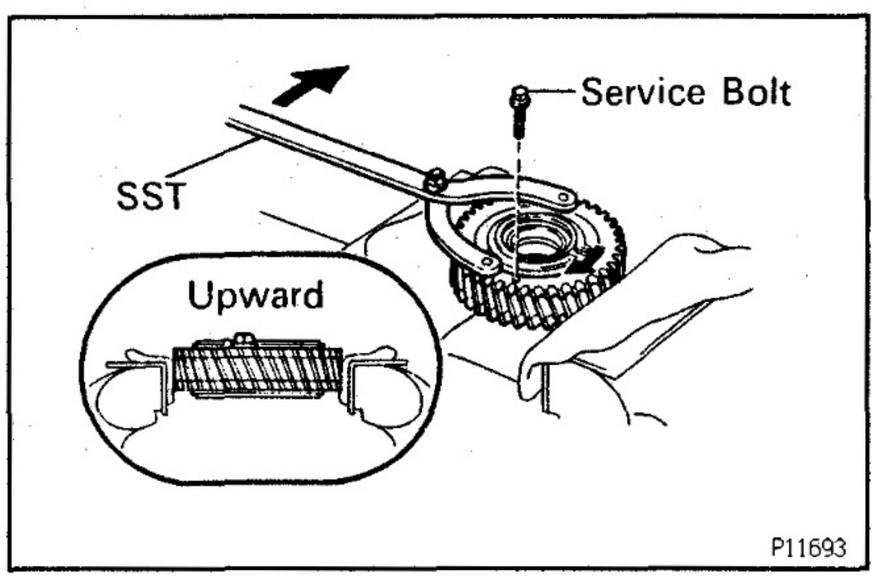

(j) Using SST, align the holes of the idler gear and No.1 idler sub–gear by turning No.1 idler sub–gear clockwise, and install a service bolt.
SST 09960–10010 (09962–01000, 09963–00600)

2. INSTALL TIMING GEARS

NOTICE:

- **The match mark on each gear faces the front of the engine.**
- **Take care not to damage the gear teeth when removing and installing the gears. Do not use parts that are scratched or damaged, they cause noise.**

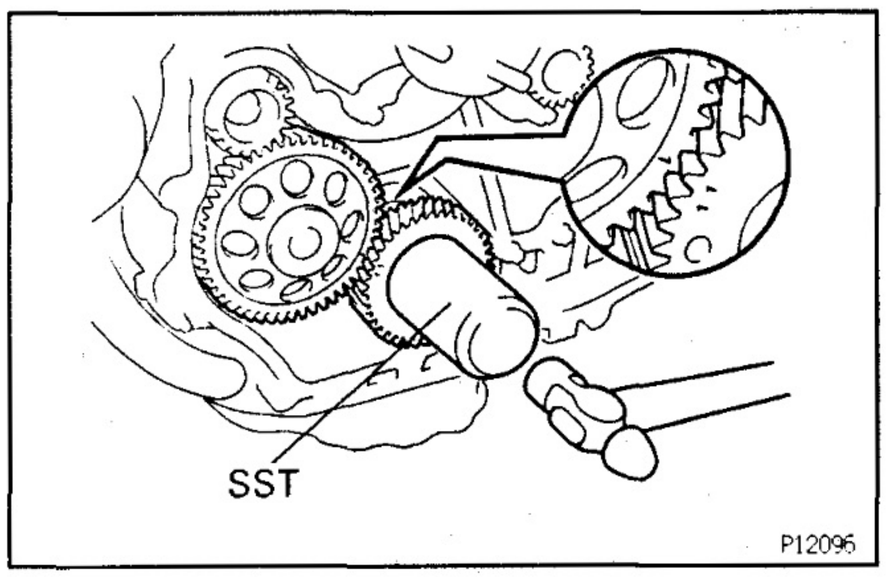

A. Install crankshaft timing gear

(a) With the crankshaft key groove facing upward, install the crankshaft timing gear into the crankshaft.

(b) When doing this, the matchmarks of the oil pump drive shaft gear and crankshaft timing gear should be matched at "1".

(c) Using SST and a hammer, tap in the timing gear.
SST 09223–00010

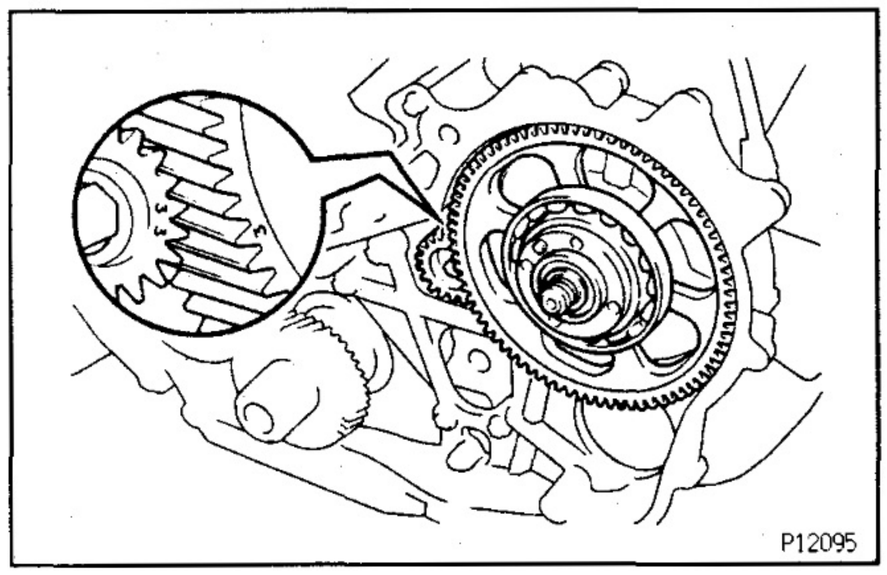

B. Install injection pump drive gear

(a) Install the set key to the groove of the injection pump drive shaft.

(b) The matchmarks on the No.2 balance shaft driven gear should be aligned with the "3" mark.

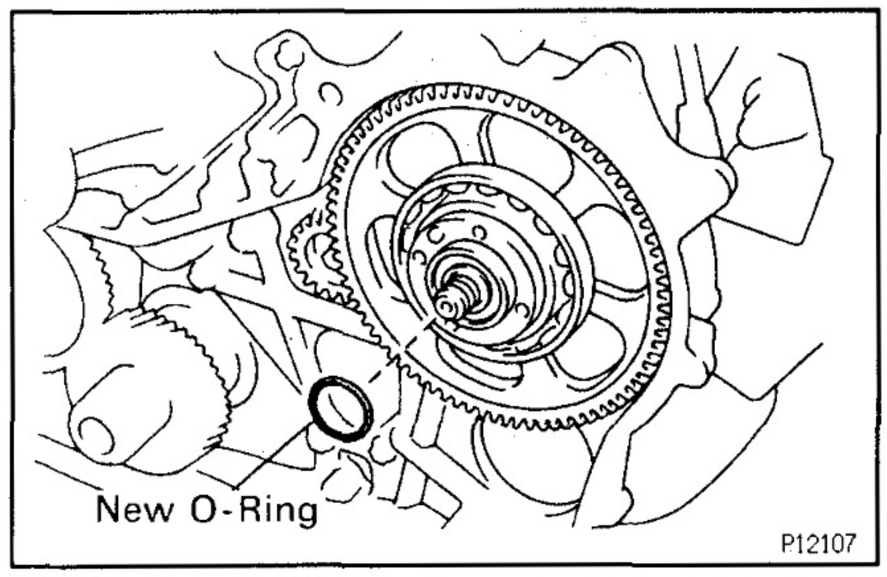

(c) Install a new O–ring to the injection pump drive gear.

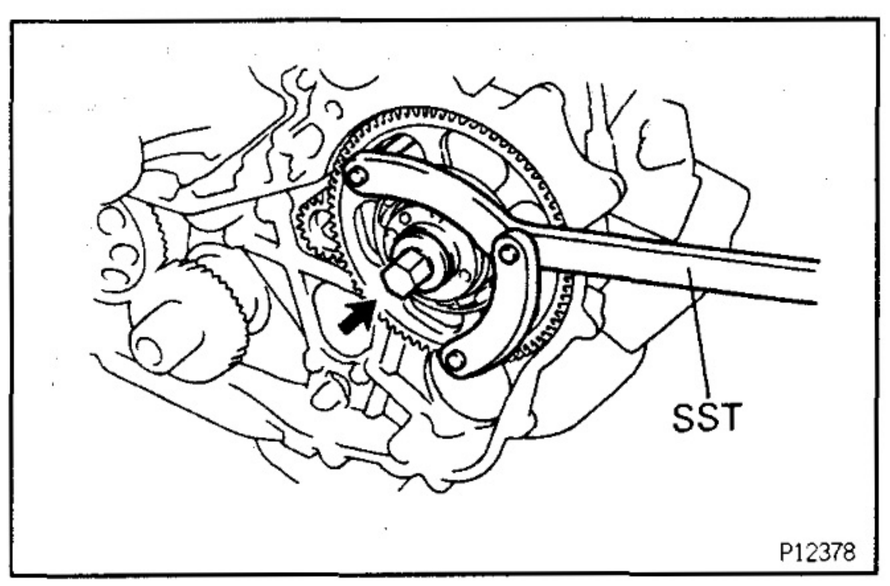

(d) Install the injection pump drive gear set nut.

(e) Using SST, torque the nut.
SST 09960–10010 (09962–01000, 09963–00600)
Torque: 64 N·m (650 kgf·cm, 47 ft·lbf)

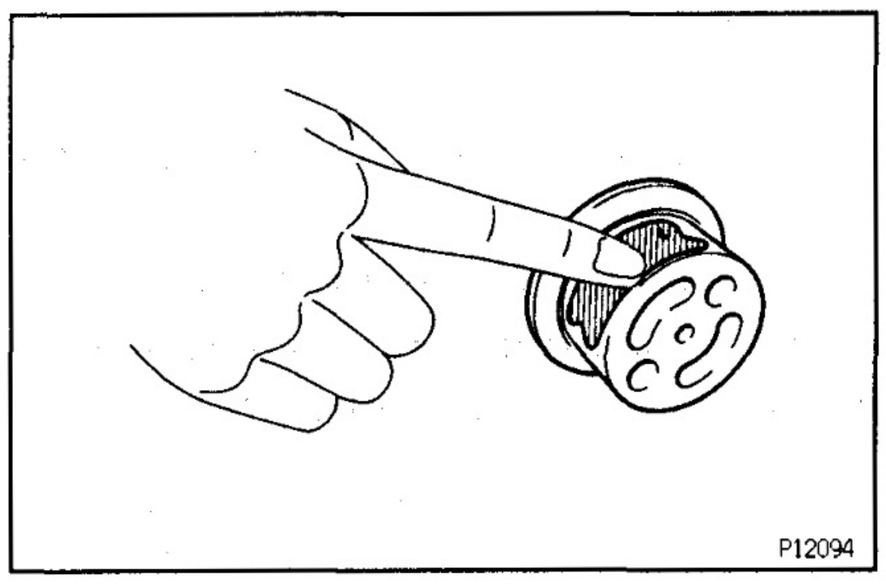

C. Install idler gear

(a) Coat the idle gear shaft with engine oil as shown in the illustration.

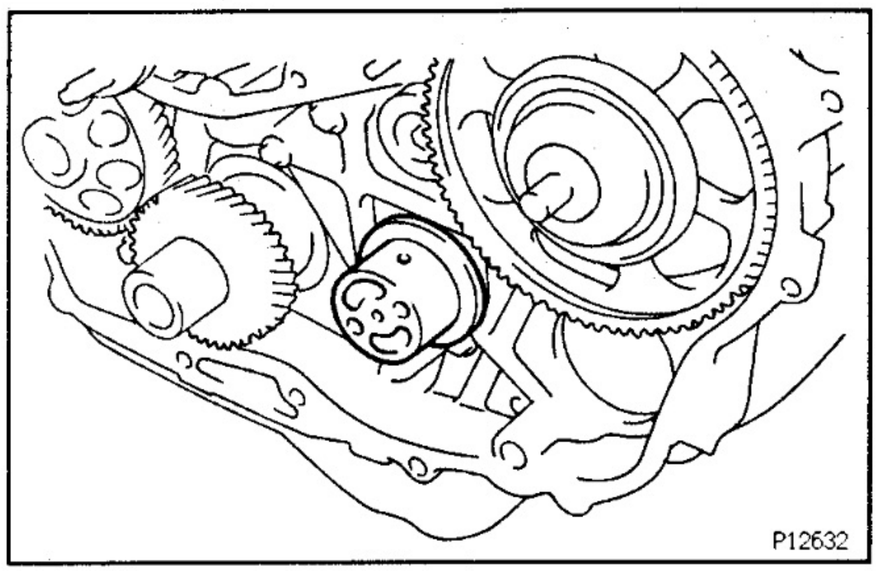

(b) Install the idle gear shaft to the cylinder block.

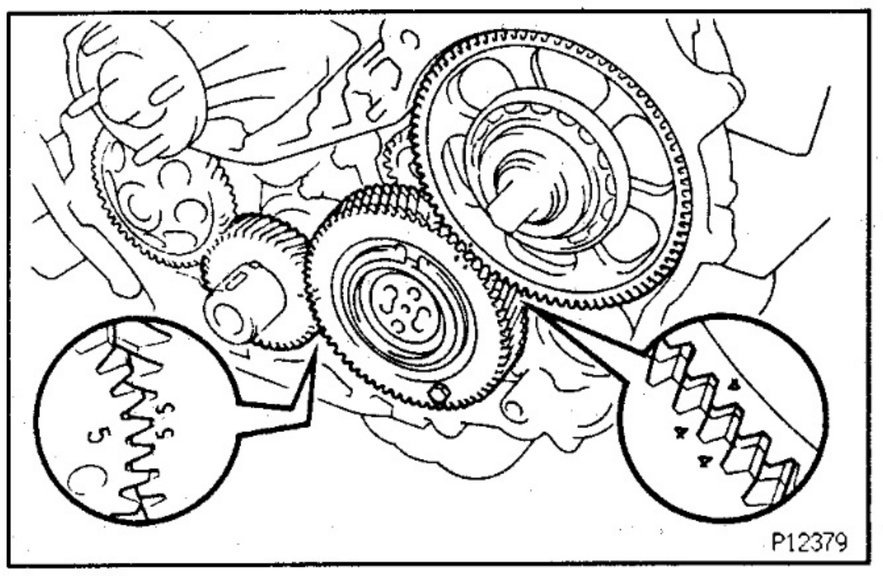

(c) Align the idler gear assembly timing marks "5" and "4" with the crankshaft timing gear mark "5" and injection pump drive gear timing mark "4" respectively, and mesh the gears.

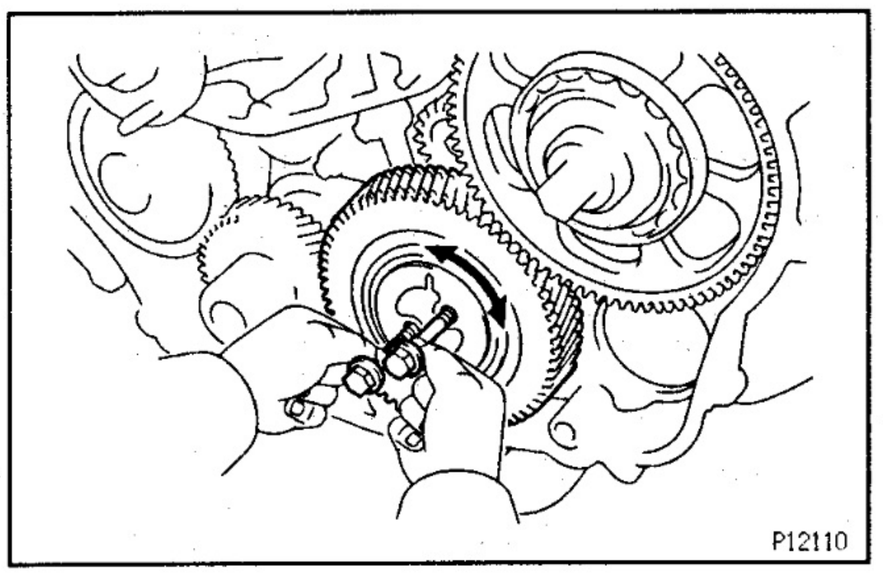

(d) Align the thrust plate set bolt holes.

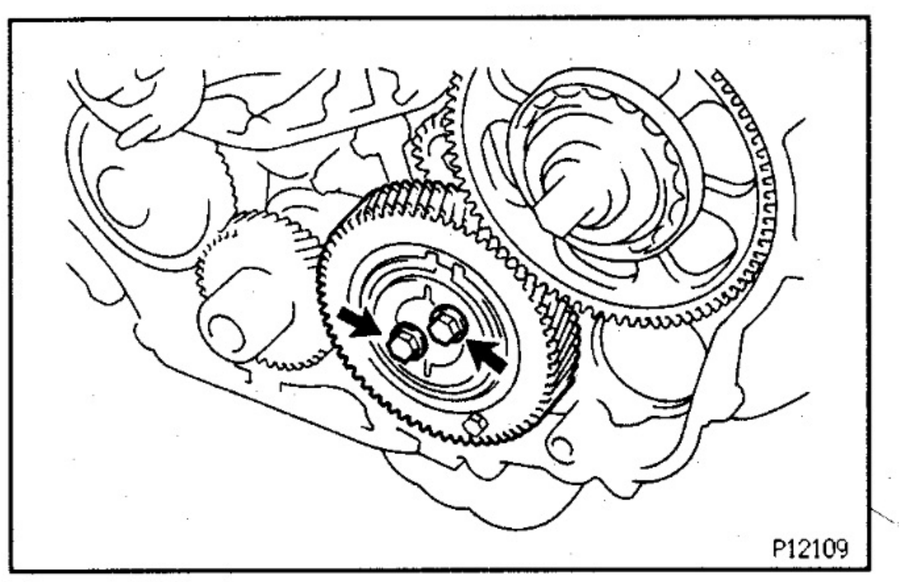

(e) Install the thrust plate with the 2 bolts. Torque the bolts.
Torque: 19 N·m (195 kgf·cm, 14 ft·lbf)

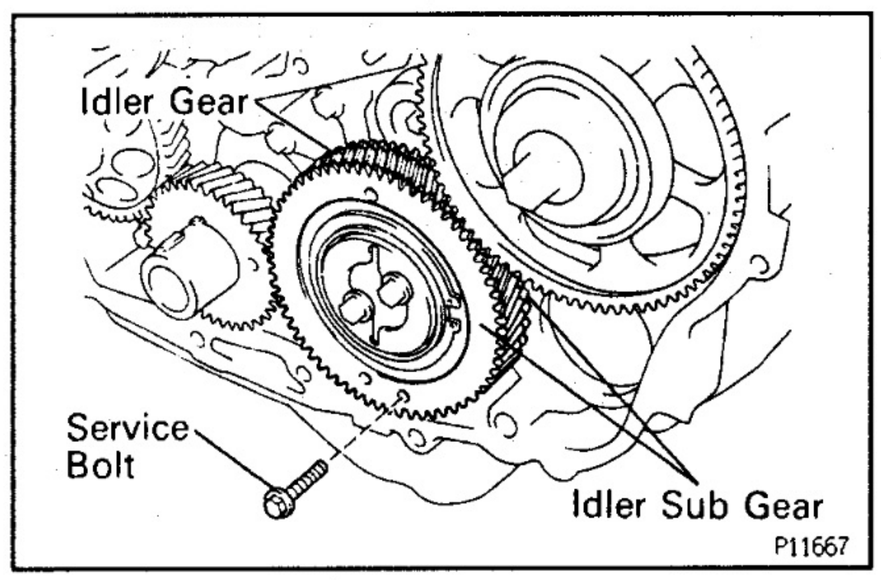

(f) Remove service bolt.

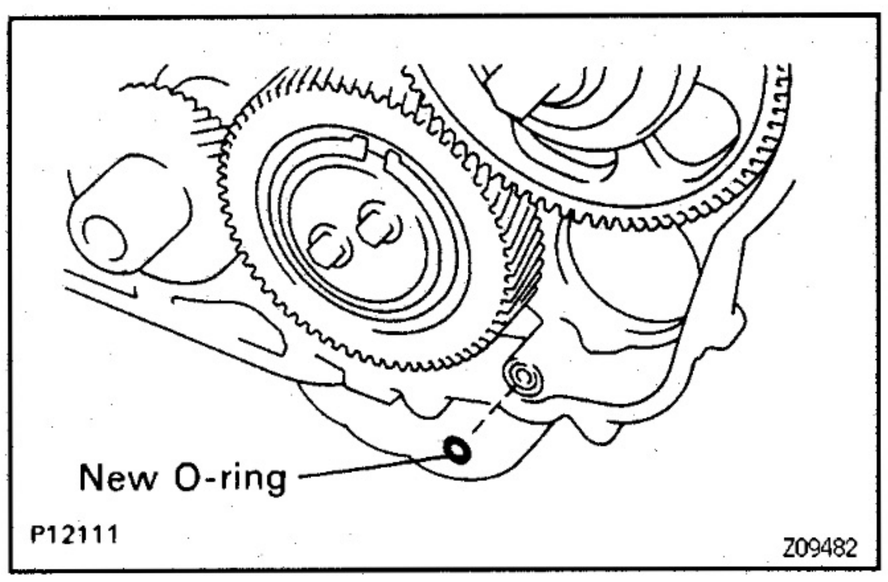

3. INSTALL TIMING GEAR COVER

(a) Install a new O—ring to the timing gear case.

(b) Remove any old packing (FIPG) material and be careful not to drop any oil on the contact surfaces of the timing gear cover and cylinder block.

- Using a razor blade and gasket scraper, remove all the old packing (FIPG) material from the gasket surfaces and sealing groove.
- Thoroughly clean all components to remove all the loose material.
- Using a non—residue solvent, clean both sealing surfaces.

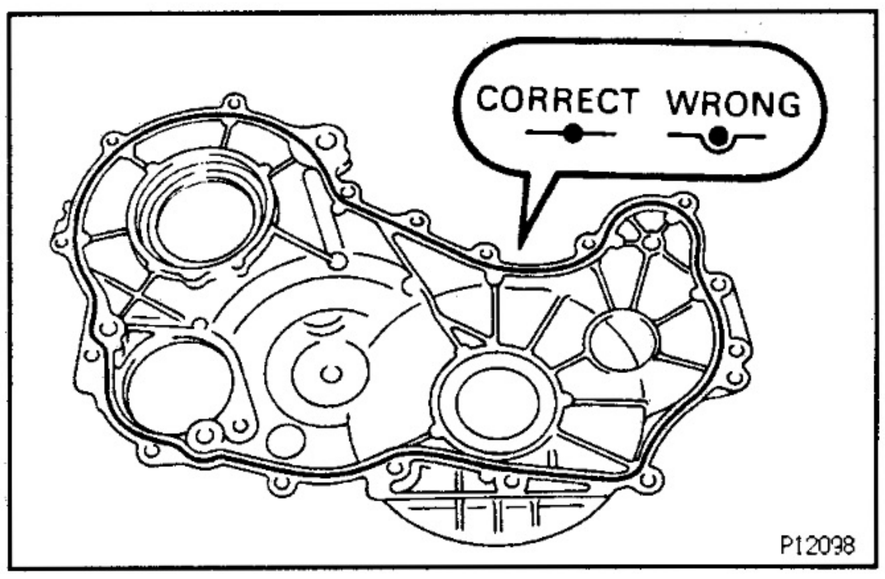

(c) Apply seal packing to the timing gear cover as shown in the illustration.

Seal packing: Part No.08826—00080 or equivalent

- Install a nozzle that has been cut to a 2 — 3 mm (0.08 — 0.12 in.) opening.
- Parts must be assembled within 5 minutes of application. Otherwise the material must be removed and reapplied.
- Immediately remove nozzle from the tube and reinstall cap.

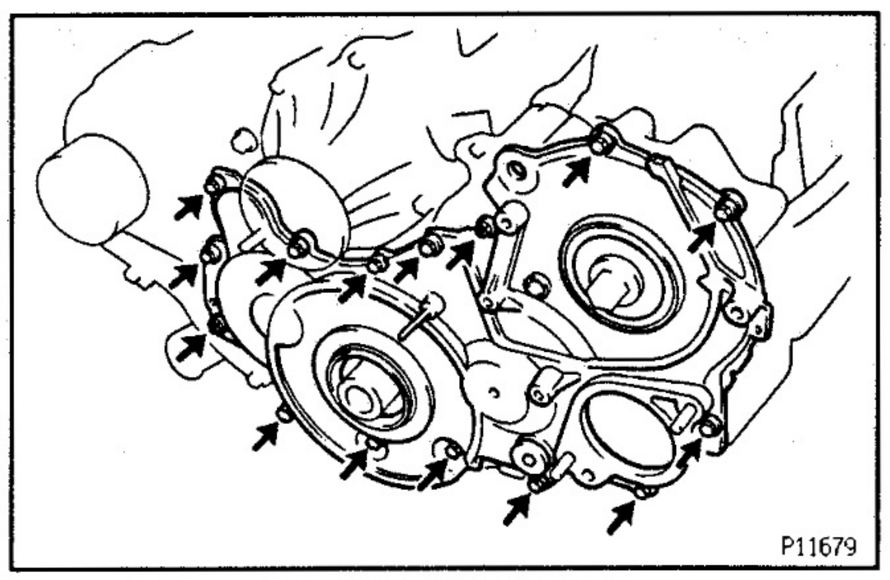

(d) Install the timing gear cover with the 13 bolts and 2 nuts.

Torque: 13 N·m (130 kgf·cm, 9 ft·lbf)

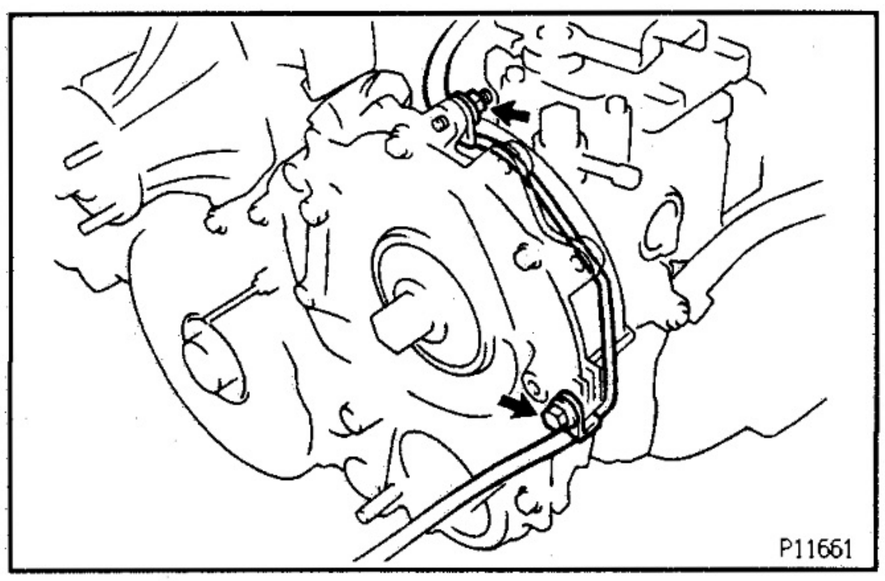

(e) Connect the vacuum pipe with the bolt, nut and washer.

Torque: 13 N·m (130 kgf·cm, 9 ft·lbf)

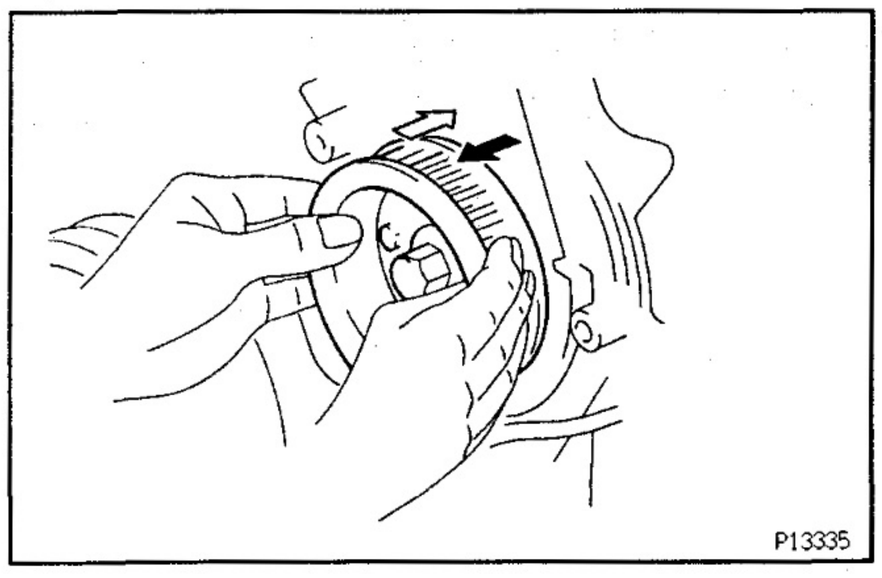

4. CHECK INJECTION PUMP DRIVE SHAFT THRUST CLEARANCE

(a) Temporarily install the No. 2 camshaft timing pul ley and flange with the 4 bolts.

(b) Move the No.2 camshaft timing pulley back and forth to check that the injection pump drive shaft has sufficient thrust clearance.

Reference

0.15 — 0.55 mm (0.0059 — 0.0217 in.)

If the thrust clearance is not sufficient, loosen the 2 injection pump nuts and the 3 pump stay bolts, then retighten them.

If the thrust clearance is still not sufficient, remove the timing gear cover and then reinstall it.

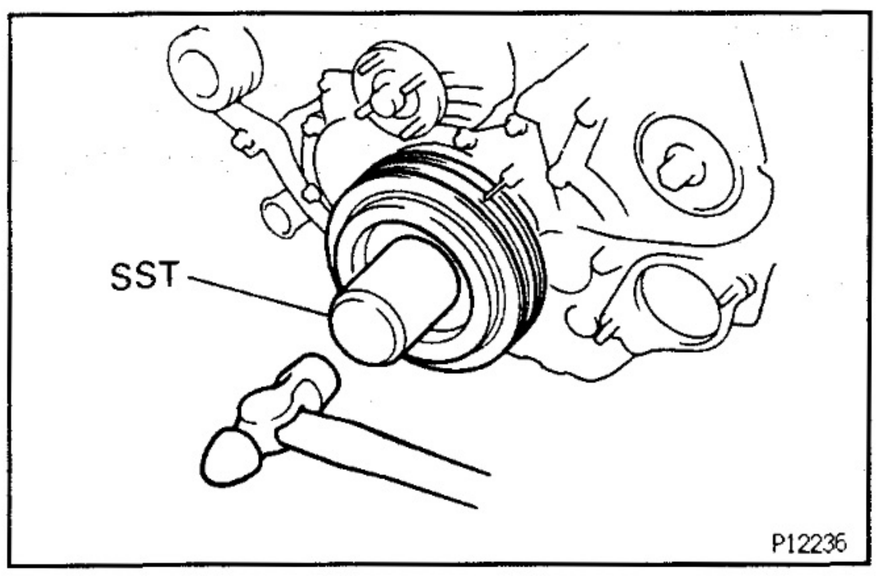

5. INSTALL CRANKSHAFT PULLEY

(a) Align the pulley set key with the key groove of the pulley.

(b) Using SST and a hammer, tap in the pulley.
SST 09214—60010

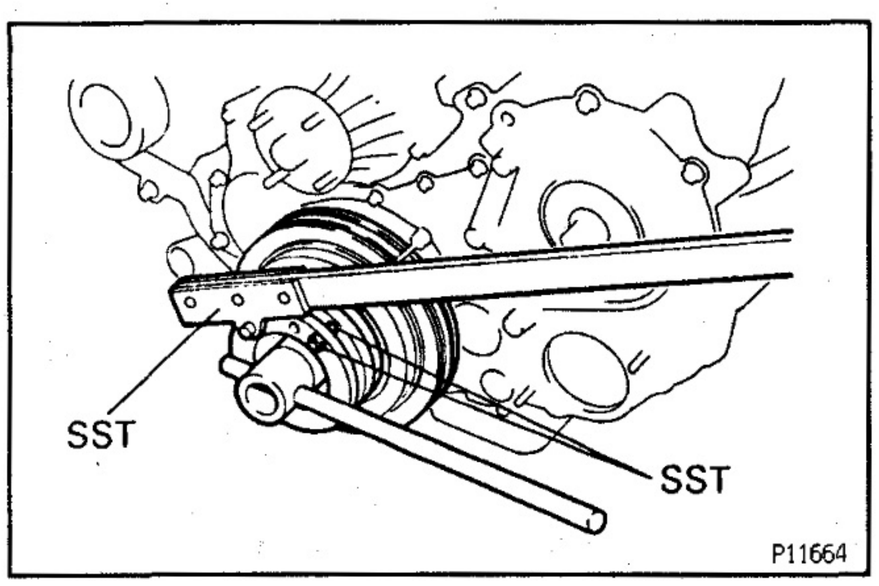

(c) Using SSTs, install and torque the plate and bolt.
SST 09213—58012 x 2
SST 09330—00021
Torque: 363 N·m (3,700 kgf·cm, 268 ft·lbf)

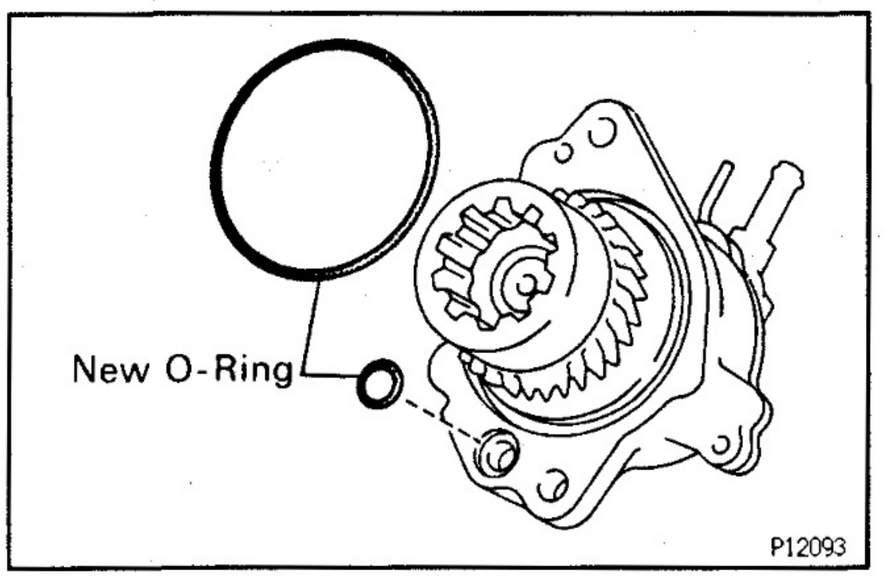

6. INSTALL VACUUM PUMP

(a) Install the 2 new O—rings to the vacuum pump.

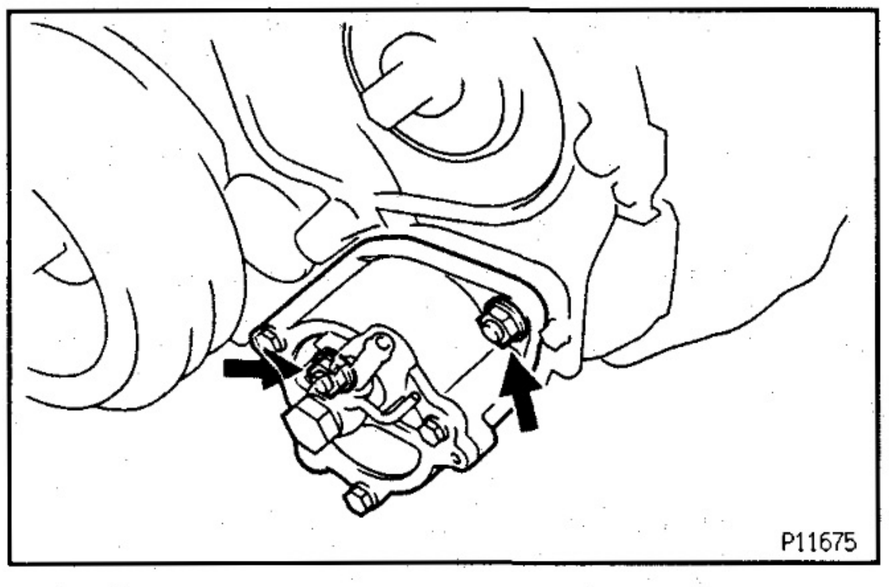

(b) Install the vacuum pump with the 2 nuts.
Torque: 21 N·m (210 kgf·cm, 15 ft·lbf)

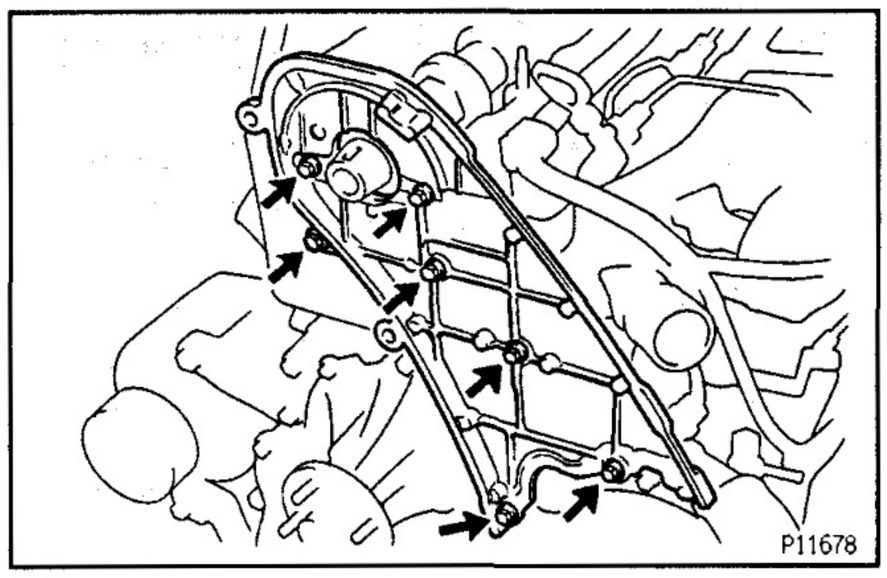

7. INSTALL CAMSHAFT OIL SEAL RETAINER
Install camshaft oil seal retainer with the 7 bolts.
Torque: 9 N·m (90 kgf·cm, 78 in.·lbf)

8. INSTALL TIMING BELT AND PULLEYS
(See page EG−36)

9. INSTALL WATER PUMP PULLEY, FAN AND DRIVE BELT
(See page EG−238)

CYLINDER HEAD
COMPONENTS FOR REMOVAL AND INSTALLATION

EG181-03

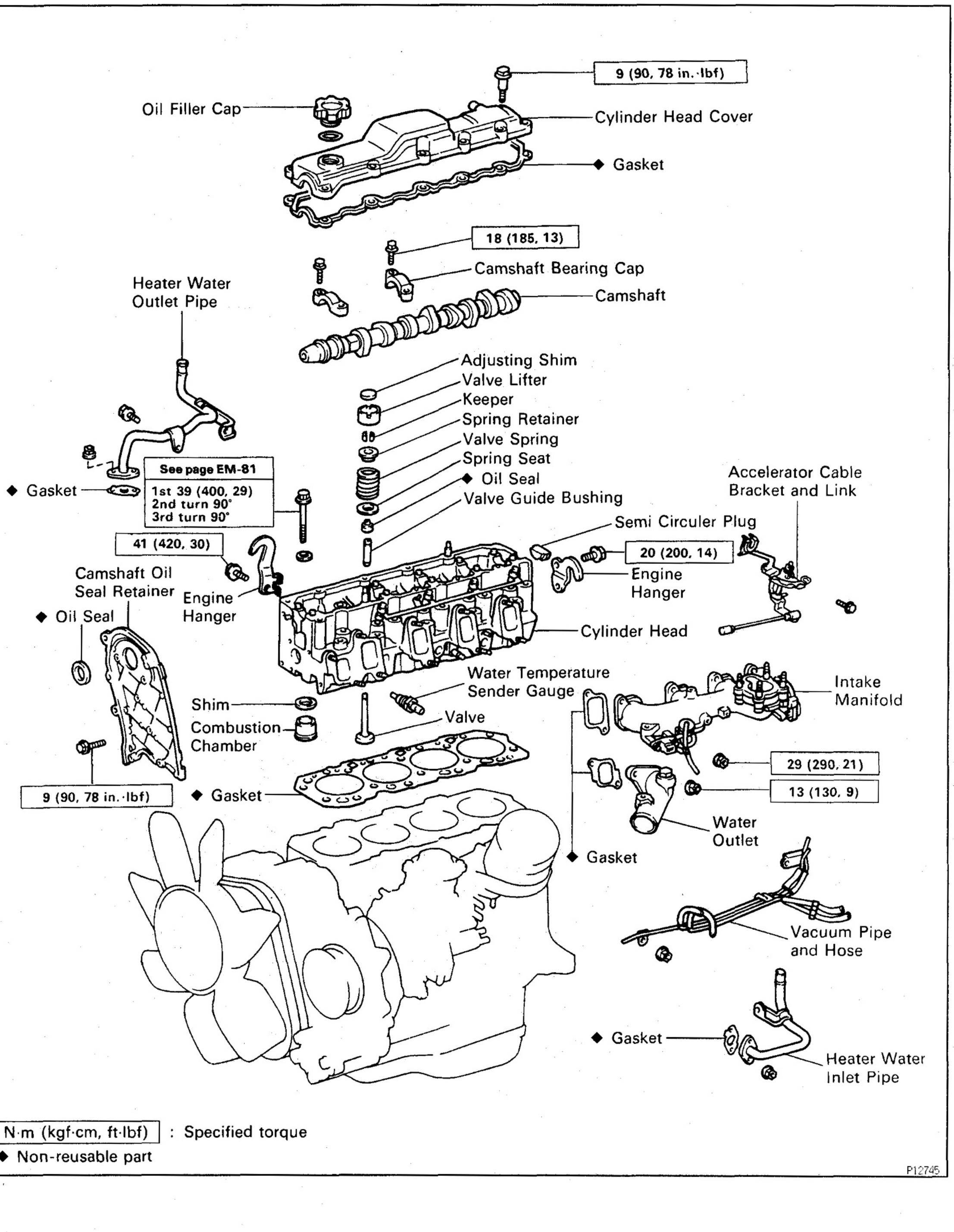

N·m (kgf·cm, ft·lbf) : Specified torque

◆ Non-reusable part

P12745

w/o BACS

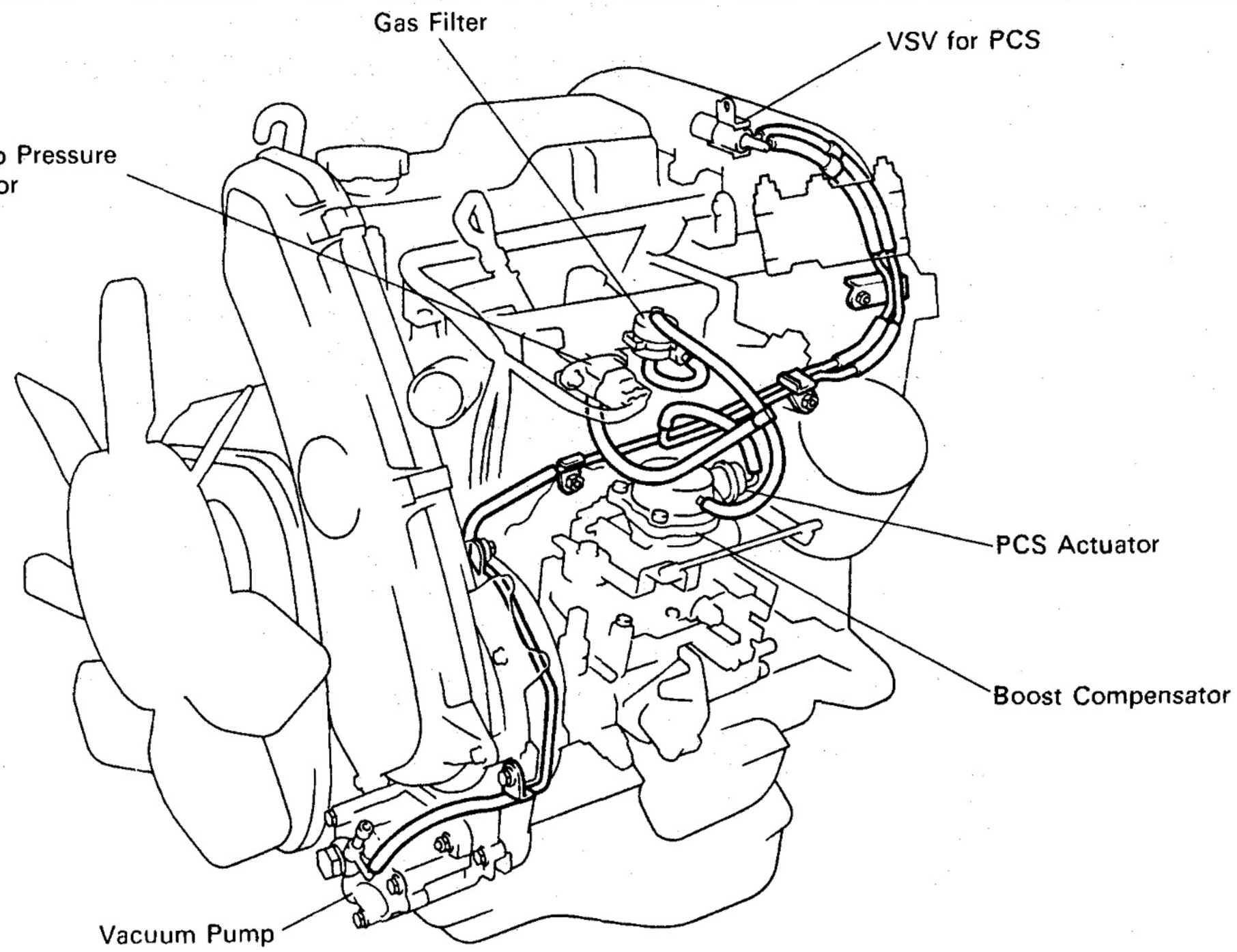

w/ BACS

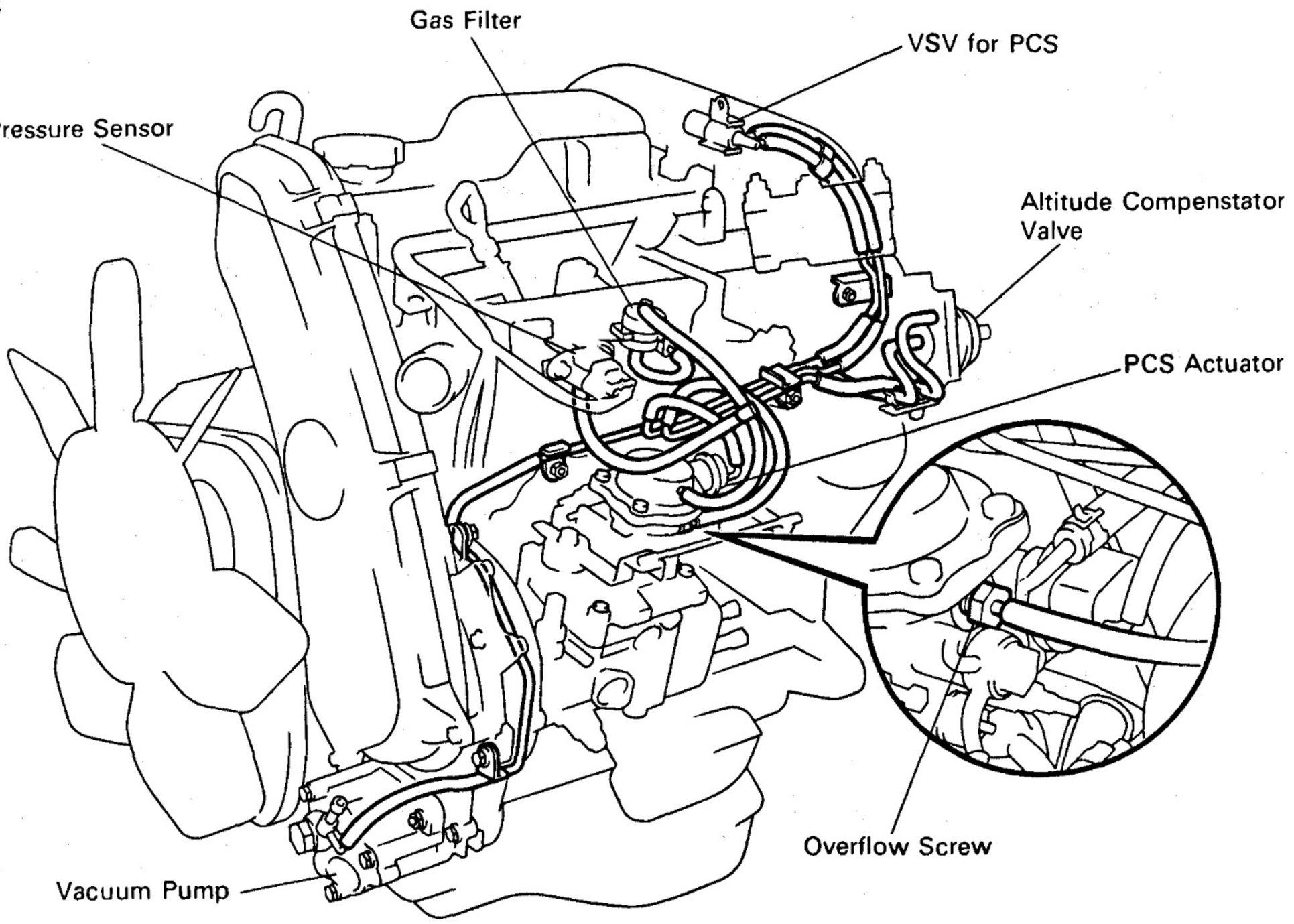

P13040
P13041

Z09555

EG352-01

CYLINDER HEAD REMOVAL

(See Components for Removal and Installation)

NOTICE:

- **This engine uses ceramic glow plugs. To prevent damage to the glow plugs, do not remove them unless necessary.**
- **Before removing the glow plugs, refer to the page in this manual explaining how to handle the glow plugs (See page ST−32).**

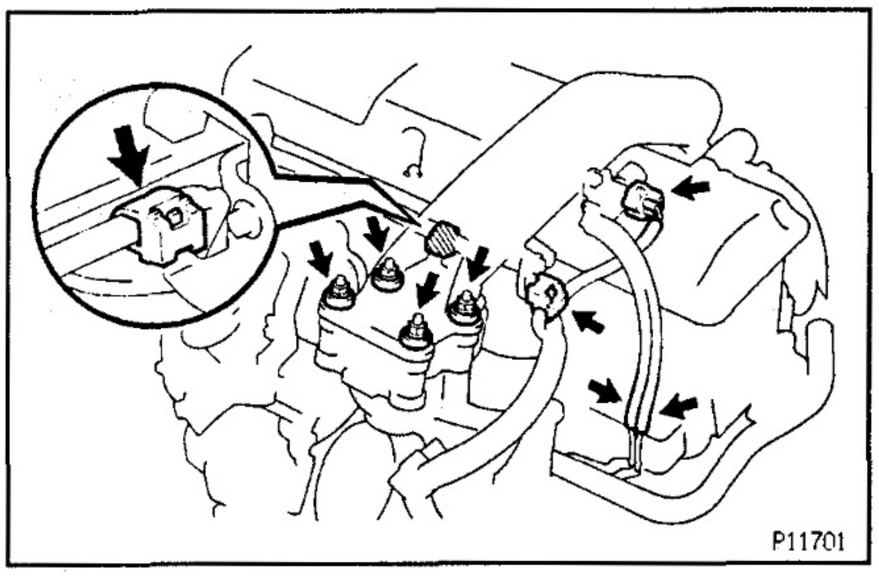

1. DRAIN ENGINE COOLANT (See page EG−233)

2. REMOVE INTAKE PIPE

(a) Disconnect the VSV connector and 2 vacuum hoses.

(b) Disconnect the 2 wire harness clamps.

(c) Remove the 4 nuts and seal washers.

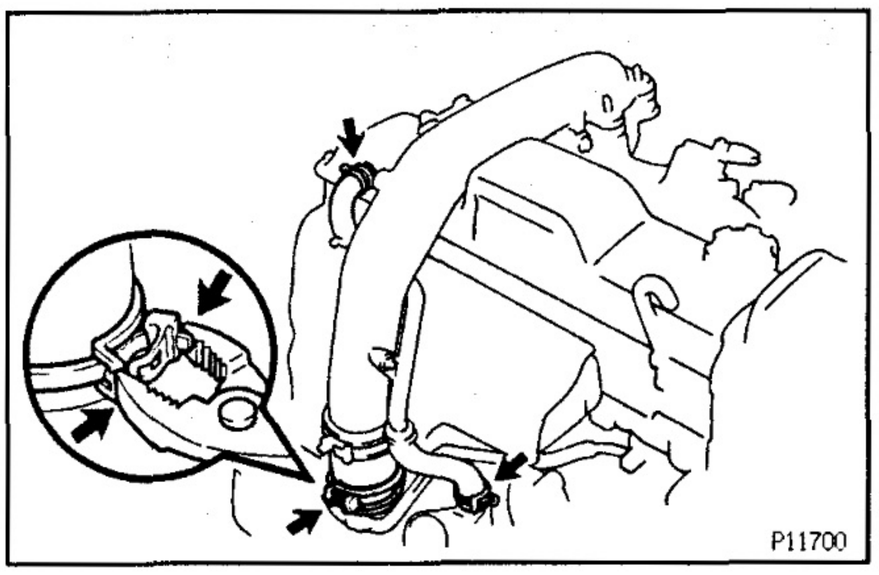

(d) Disconnect the 2 PCV hoses.

(e) Use pliers to pinch the ends of the clamp together until the lock plate engages the catch.
Make sure the lock plate and catch are engaged securely.

(f) Remove the intake pipe and gasket.

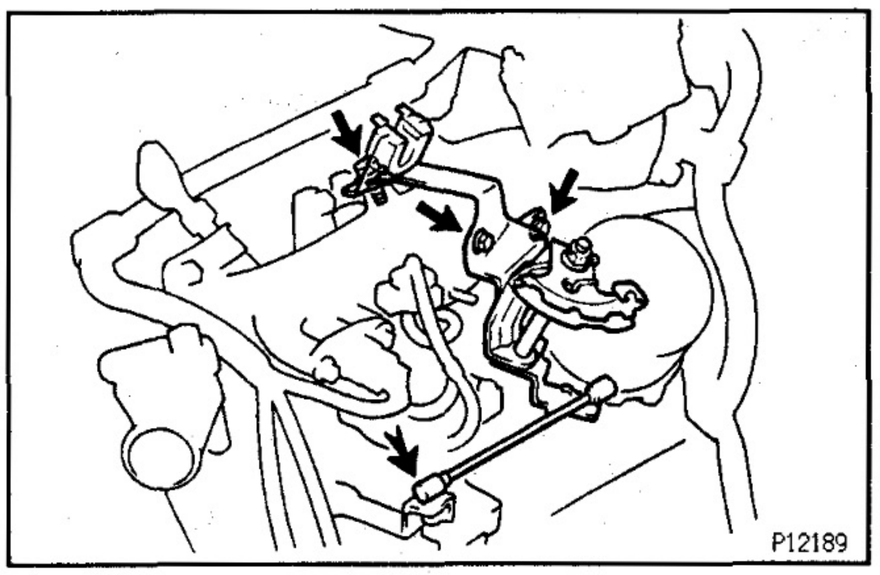

3. REMOVE ACCELERATOR CABLE BRACKET AND LINK

(a) Disconnect the accelerator link from the injection pump.

(b) Remove the 3 bolts and accelerator cable bracket and link.

4. REMOVE INJECTION PIPES
(See step 3 on page EG−153)

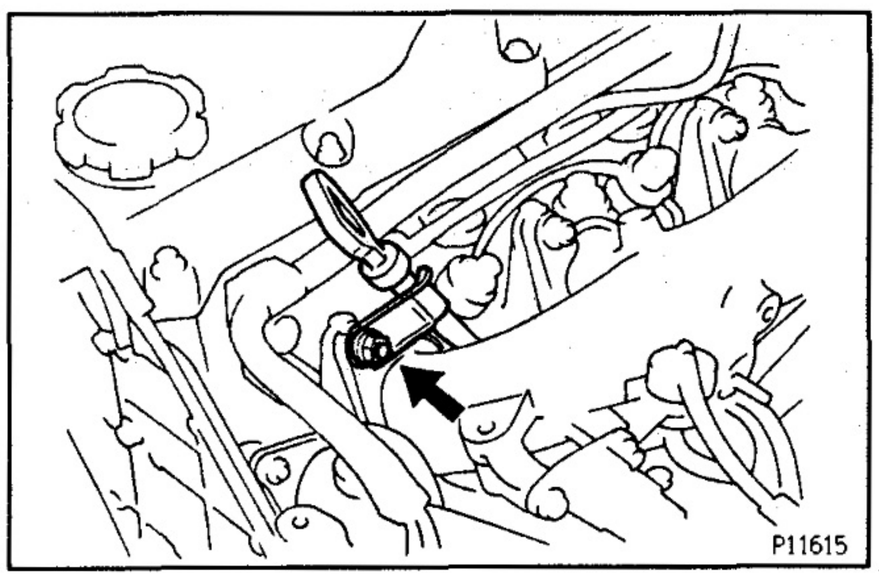

5. REMOVE OIL DIPSTICK AND GUIDE

(a) Remove the nut and oil dipstick guide assembly.

(b) Remove the O−ring from the oil dipstick guide.

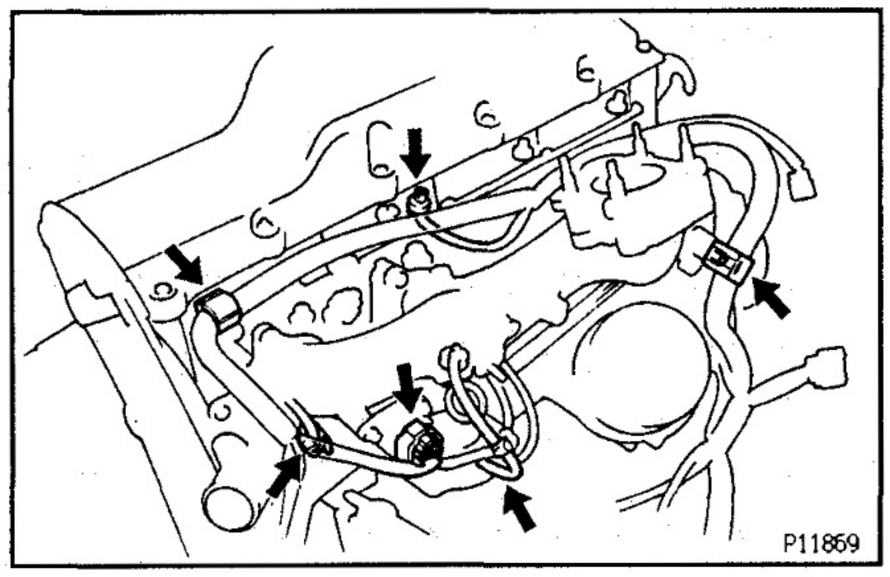

6. REMOVE INTAKE MANIFOLD

(a) Disconnect the following connectors:
- Turbo pressure sensor connector
- Water temperature sender gauge connector

(b) Disconnect the vacuum hose from the injection pump.

(c) Remove the grommet, nut and wire.

(d) Disconnect the 2 engine wire harness clamps.

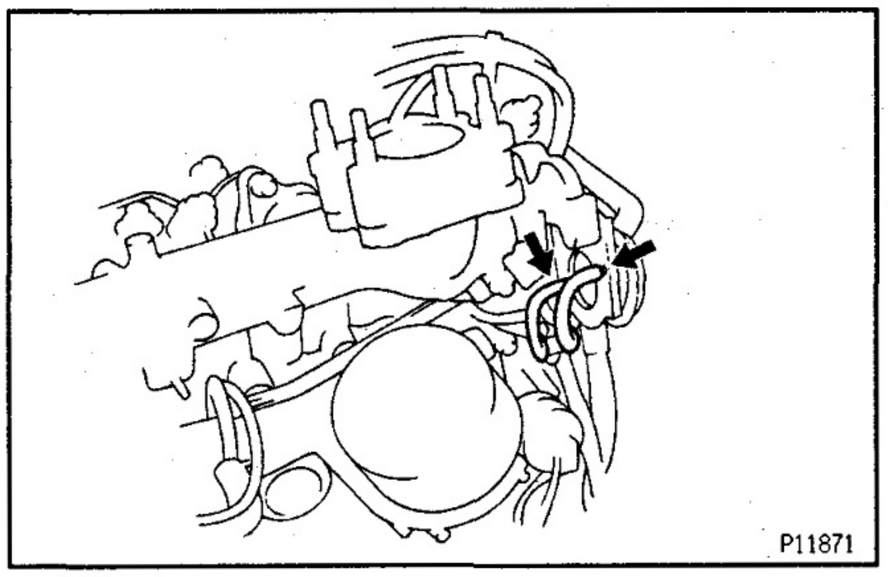

(e) w/ BACS:
Disconnect the 2 vacuum hoses from the altitude compensator.

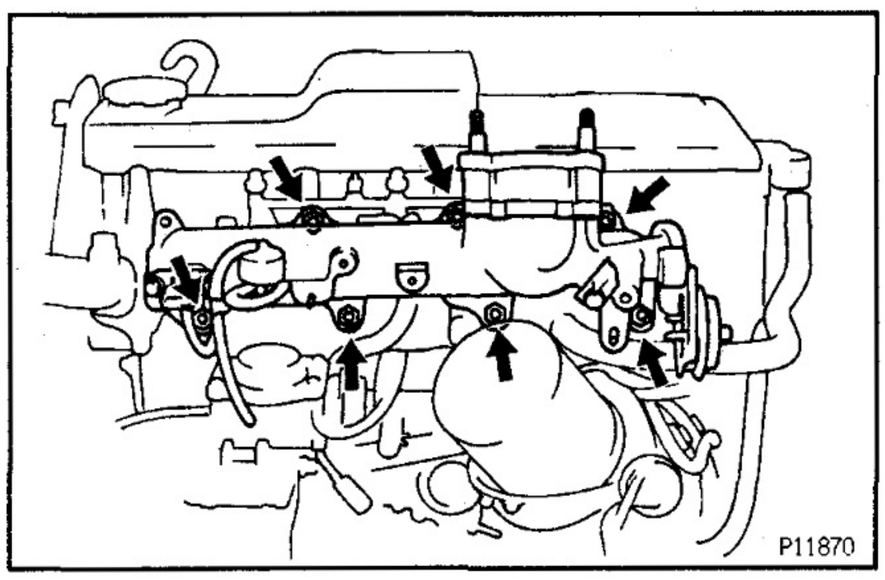

(f) Remove the 7 nuts, intake manifold and 4 gaskets.

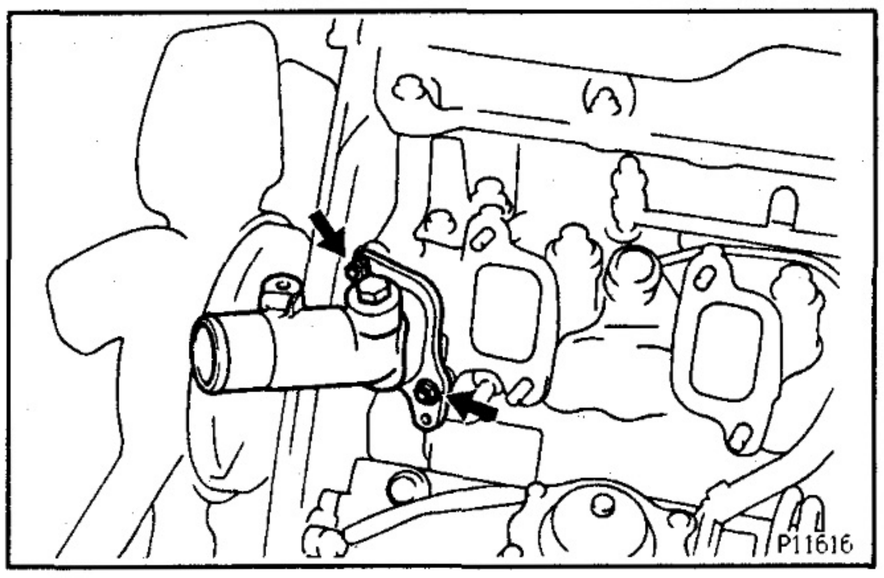

7. REMOVE WATER OUTLET

Remove the 2 nuts, water outlet and gasket.

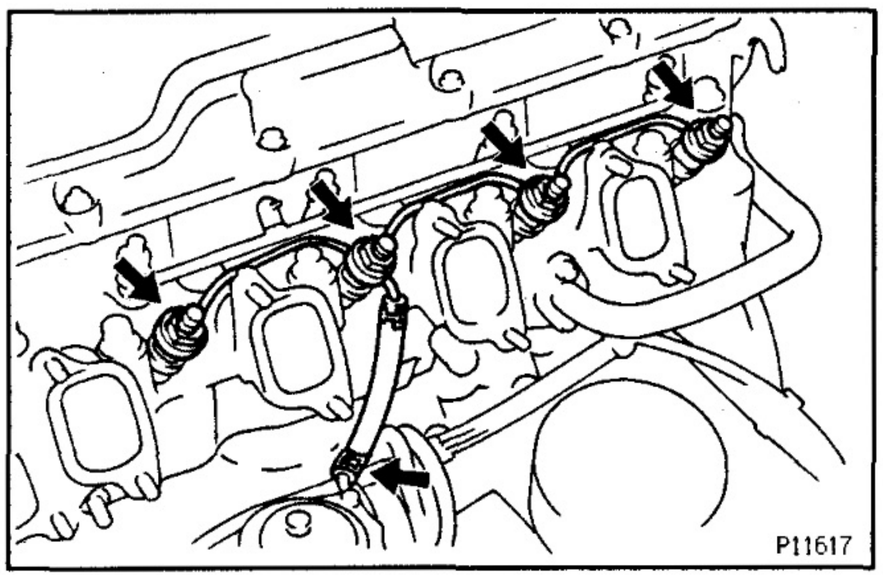

8. REMOVE NOZZLE LEAKAGE PIPE

(a) Disconnect the fuel hose from the return pipe.

(b) Remove the 4 union nuts, nozzle leakage pipe and 4 gaskets.

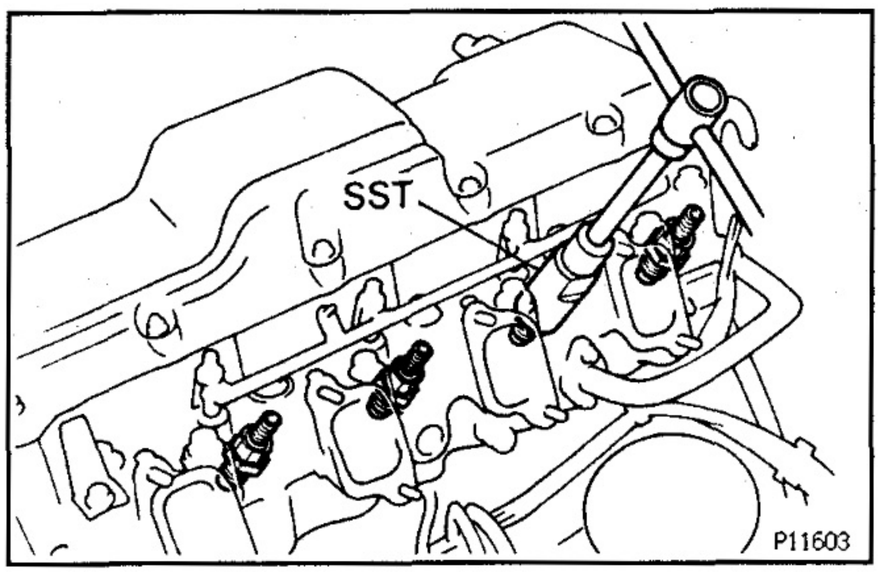

9. REMOVE INJECTION NOZZLES

Using SST, remove the 4 injection nozzles, gaskets and seats.

SST 09268−64010 (09268−64020)

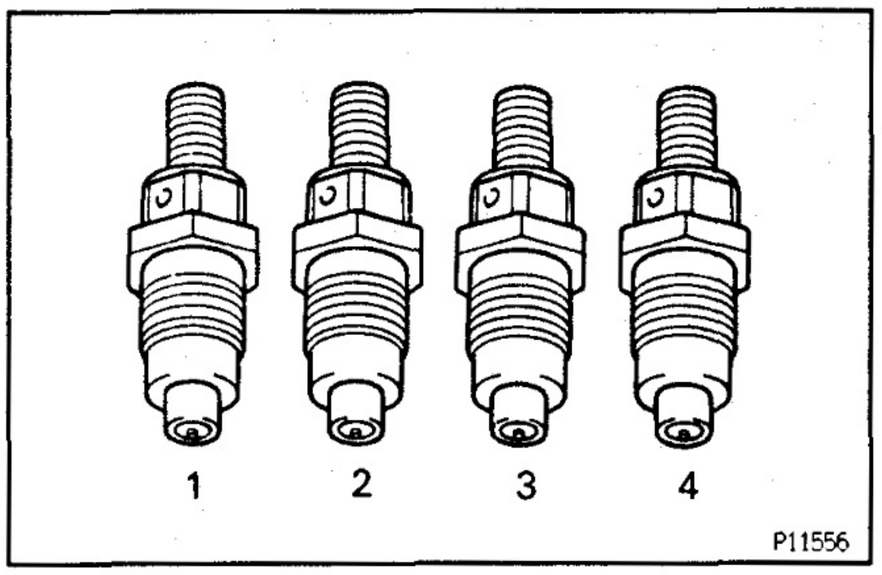

HINT: Arrange the injection nozzles in correct order.

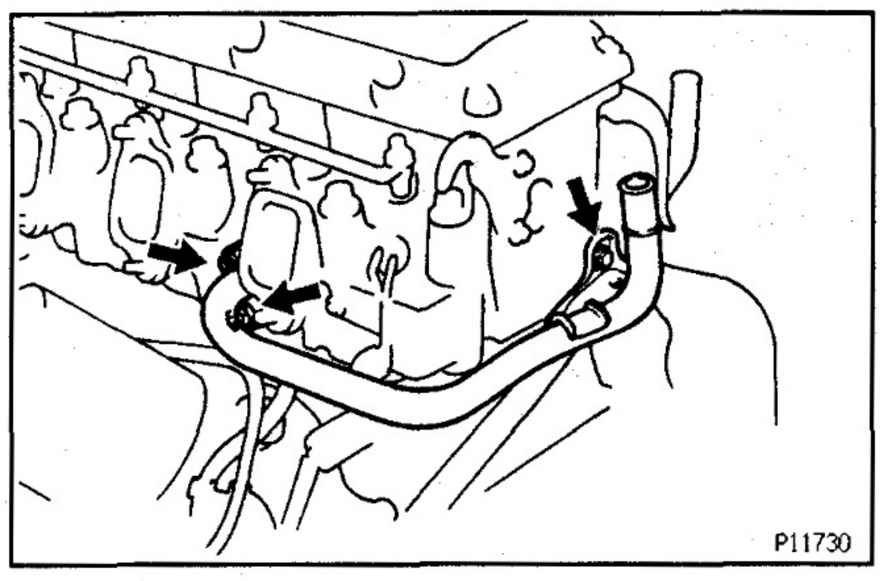

10. REMOVE HEATER WATER INLET PIPE

Remove the bolt, 2 nuts, heater water inlet pipe and gasket.

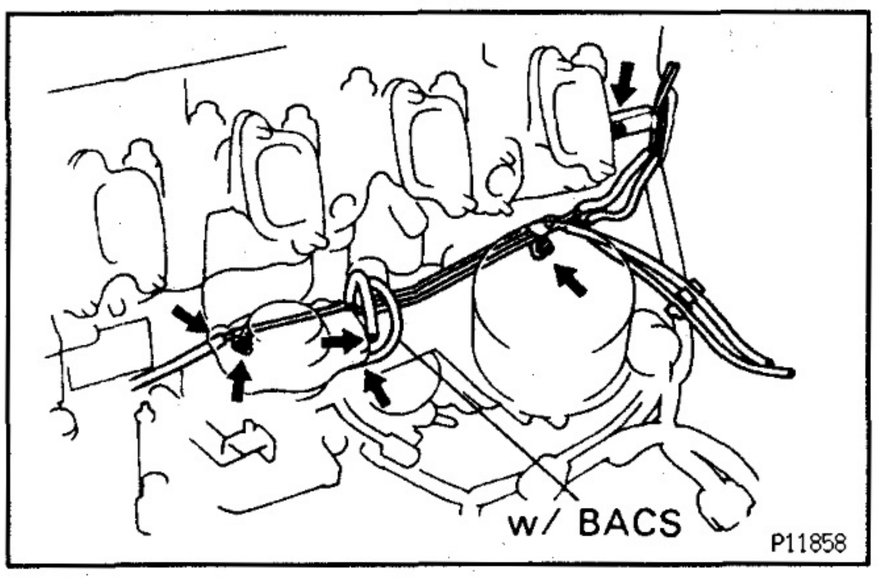

11. REMOVE VACUUM PIPE

(a) Disconnect the following vacuum hoses:
- Hose from the vacuum pipe
- w/o BACS:
  Hose from the injection pump
- w/ BACS:
  2 hoses from the injection pump

(b) Remove the 3 nuts and vacuum pipe.

12. REMOVE TURBOCHARGER AND EXHAUST MANIFOLD ASSEMBLY

(See page EG−132)

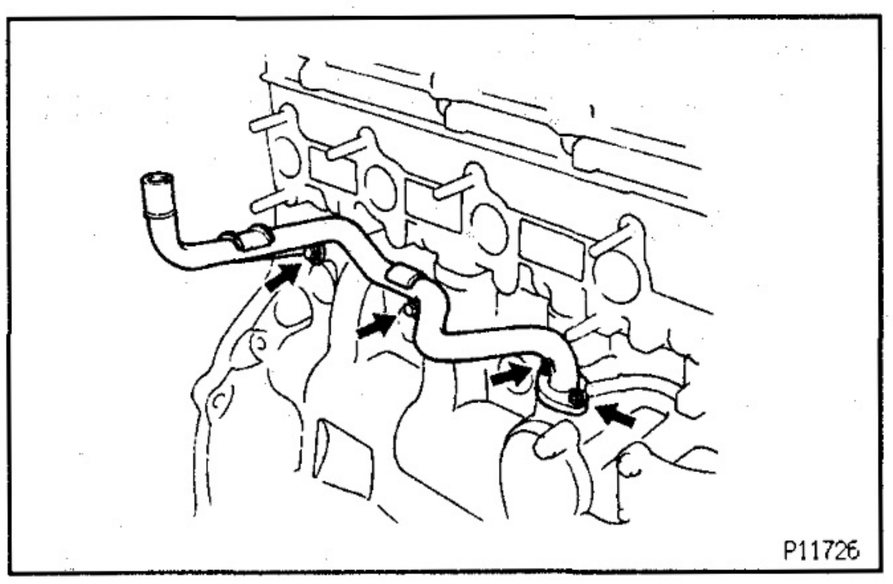

13. REMOVE HEATER WATER OUTLET PIPE

Remove the 2 bolts, nuts, heater water outlet pipe and gasket.

14. REMOVE TIMING BELT AND PULLEYS

(See steps 1 to 6 and 9 to 10 on pages EG—32 to 34)

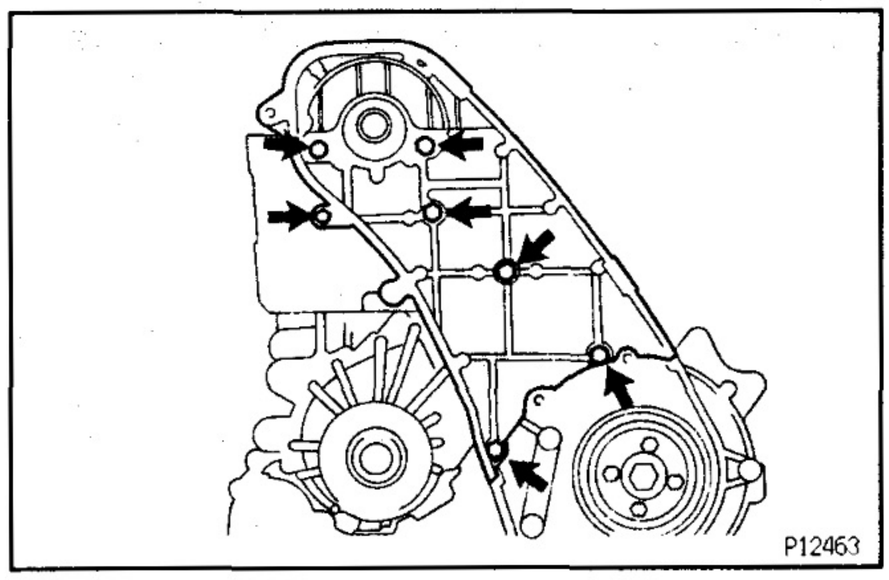

15. REMOVE CAMSHAFT OIL SEAL RETAINER

(a) Remove the 7 bolts holding the camshaft oil seal retainer to the cylinder head.

(b) Pry out the camshaft oil seal retainer.

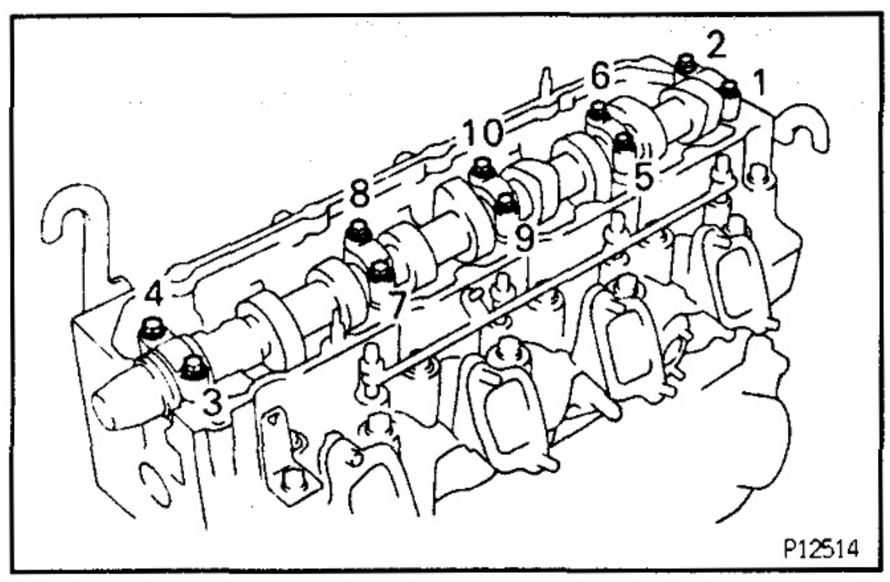

16. REMOVE CAMSHAFT

(a) Uniformly loosen and remove the 10 bearing cap bolts in several passes in the sequence shown.

(b) Remove the 5 bearing caps and camshaft.

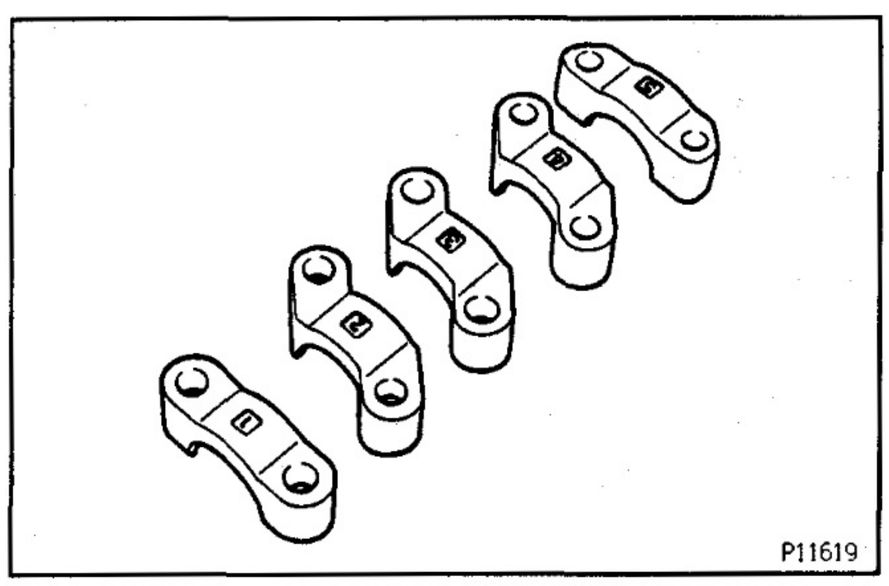

HINT: Arrange the bearing caps in correct order.

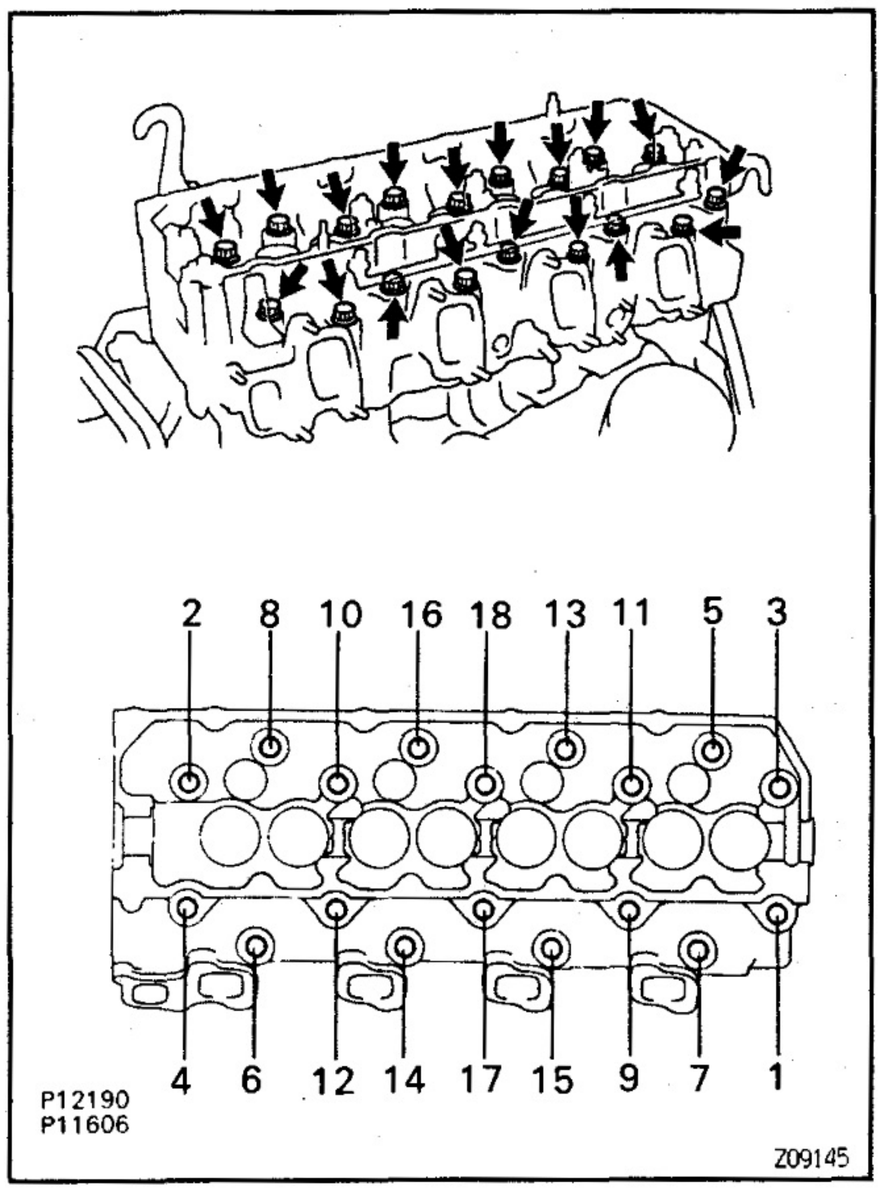

17. REMOVE CYLINDER HEAD

(a) Uniformly loosen and remove the 18 cylinder head bolts in several passes in the sequence shown.
NOTICE: Head warpage or cracking could result from removing bolts in incorrect order.

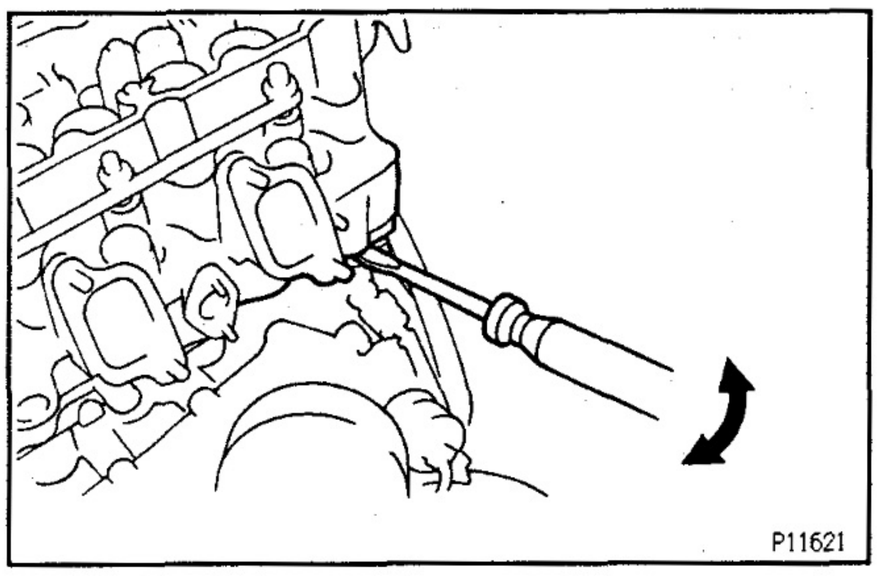

(b) Lift the cylinder head from the dowels on the cylinder block and place the head on wooden blocks on a bench.
HINT: If the cylinder head is difficult to lift off, pry with a screwdriver between the cylinder head and block.
NOTICE: Be careful not to damage the cylinder head and cylinder block surfaces of cylinder head gasket side.

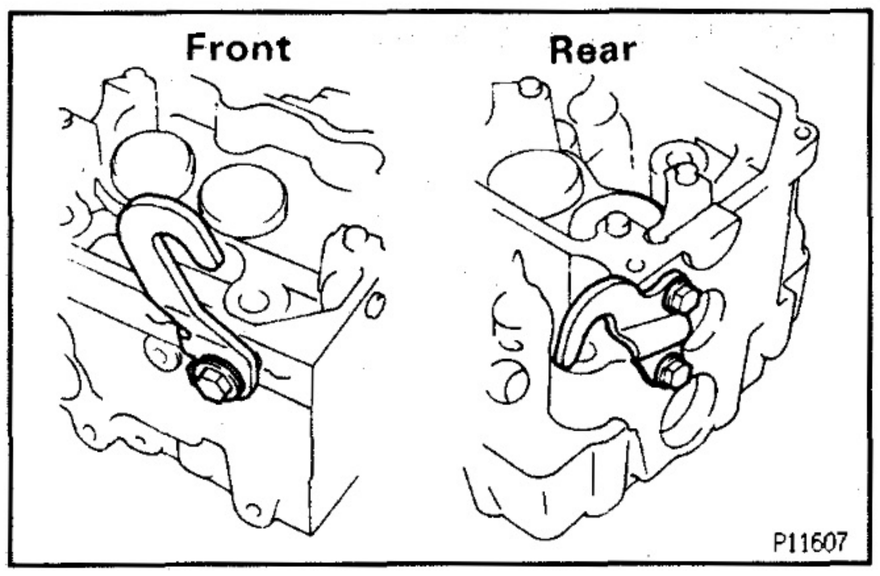

CYLINDER HEAD DISASSEMBLY

EG33H-01

(See Components for Removal and Installation)

1. **REMOVE FRONT AND REAR ENGINE HANGERS**
2. **REMOVE WIRE CLAMP BRACKET**
3. **REMOVE WATER TEMPERATURE SENDER GAUGE**

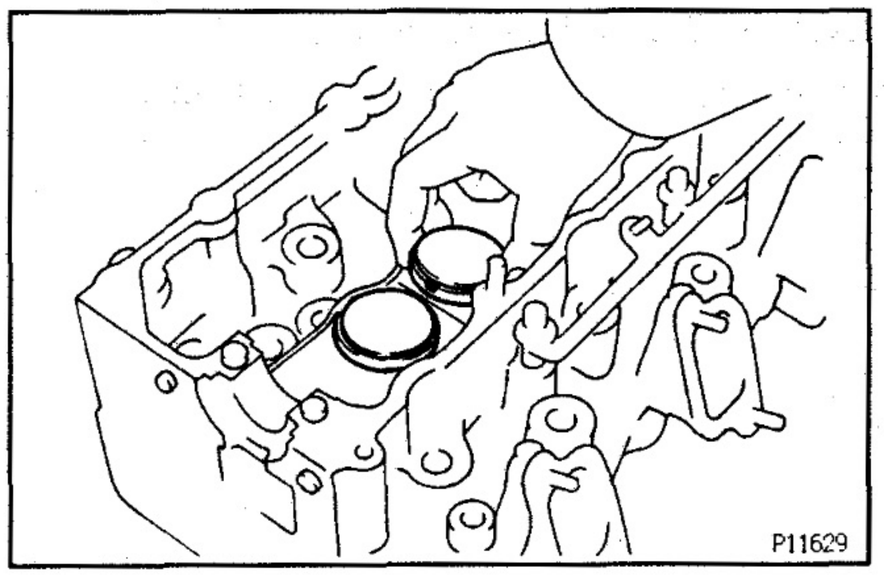

4. **REMOVE VALVE LIFTERS AND SHIMS**

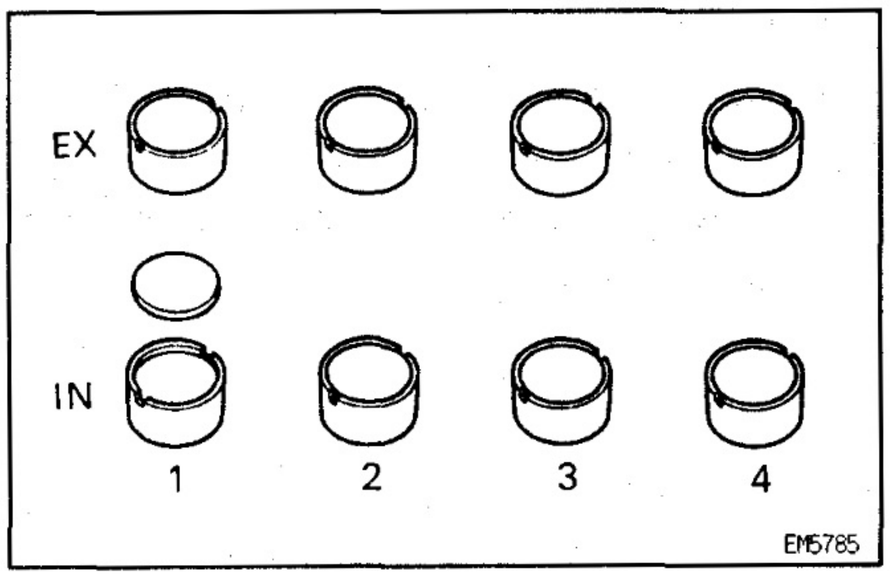

HINT: Arrange the valve lifters and shims in correct order.

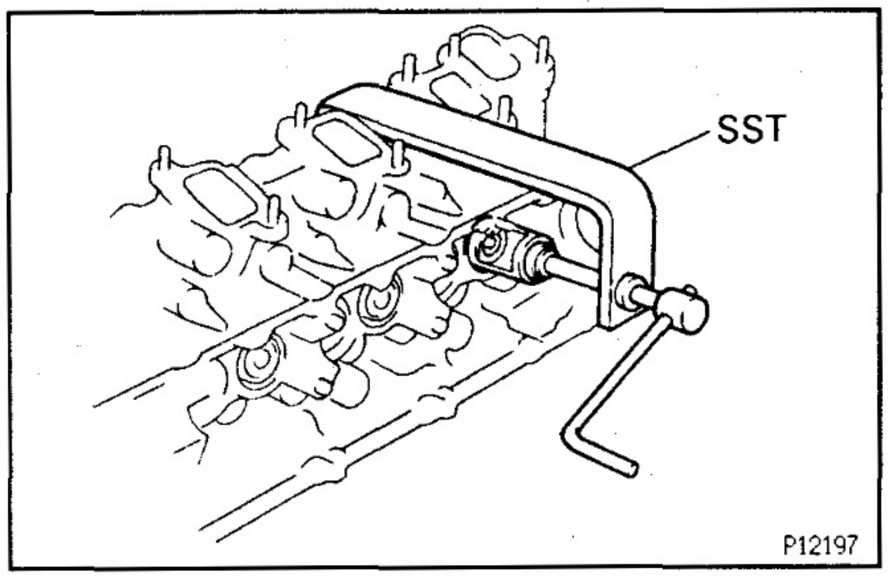

5. REMOVE VALVES

(a) Using SST, compress the valve spring and remove the 2 keepers.
SST 09202−43013

(b) Remove the spring retainer, valve spring, valve and spring seat.

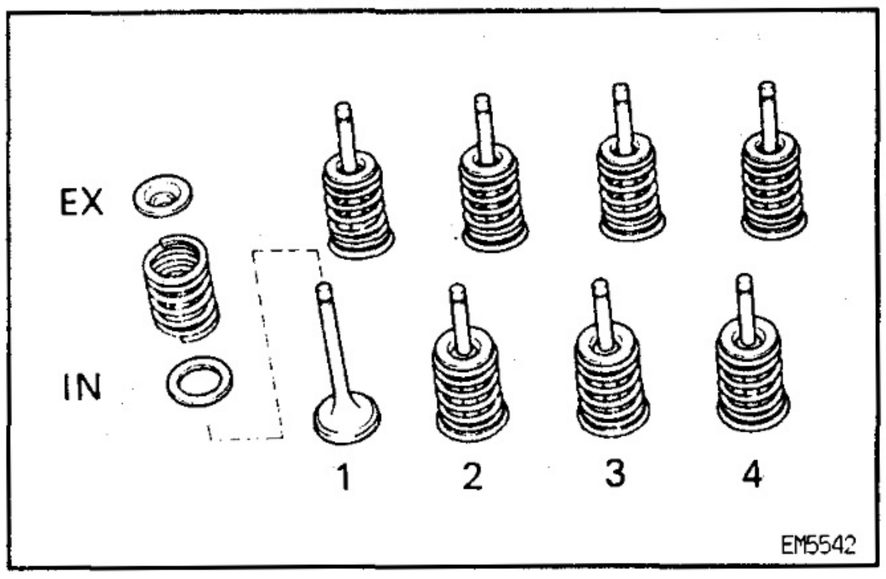

HINT: Arrange the valves, valve springs, spring seats and spring retainers in correct order.

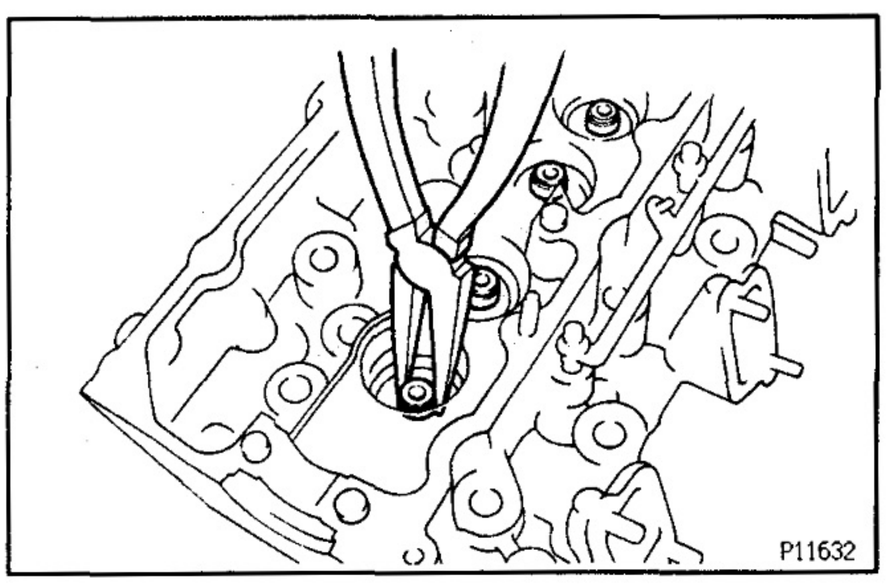

(c) Using needle−nose pliers, remove the oil seal.

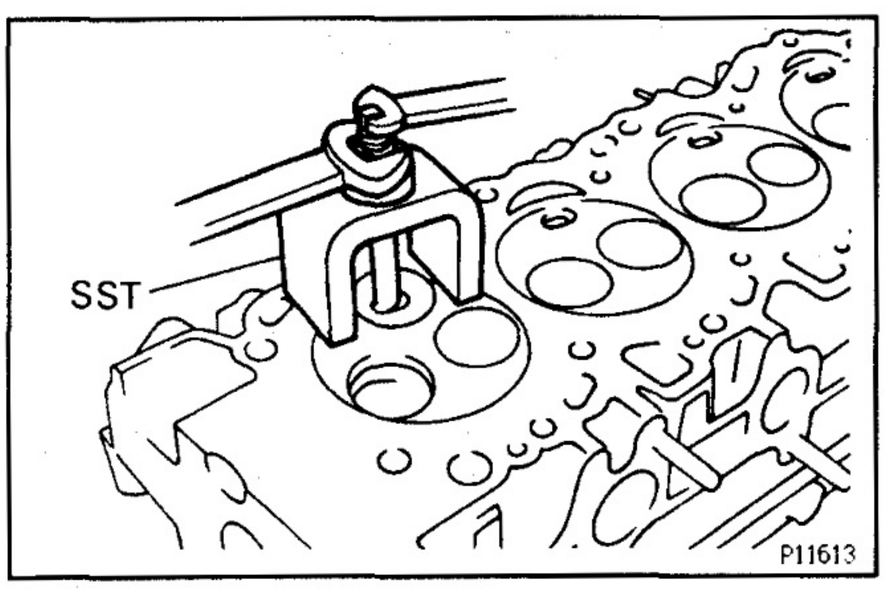

6. REMOVE COMBUSTION CHAMBERS

Using SST, remove the 4 combustion chambers.
SST 09208−48010

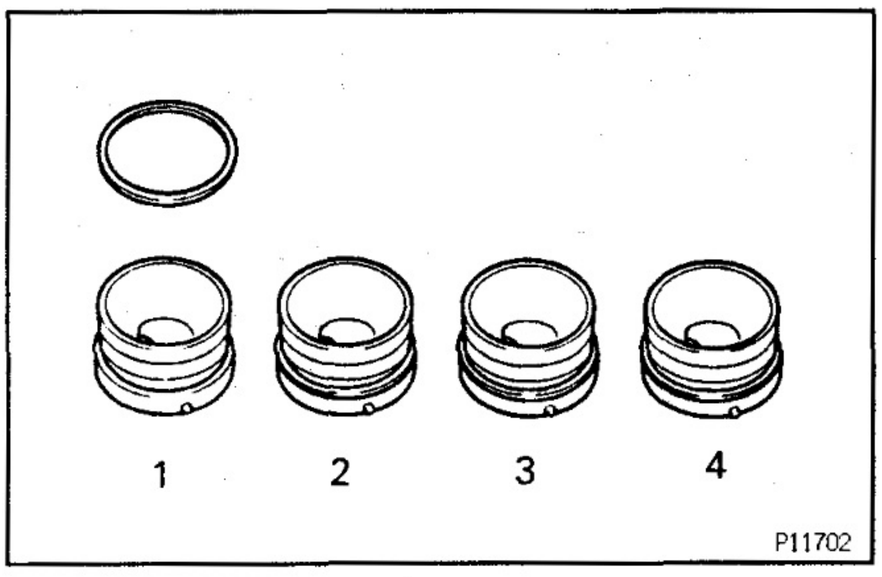

HINT: Arrange the combustion chambers in correct order.

7. REMOVE SEMI CIRCULAR PLUG

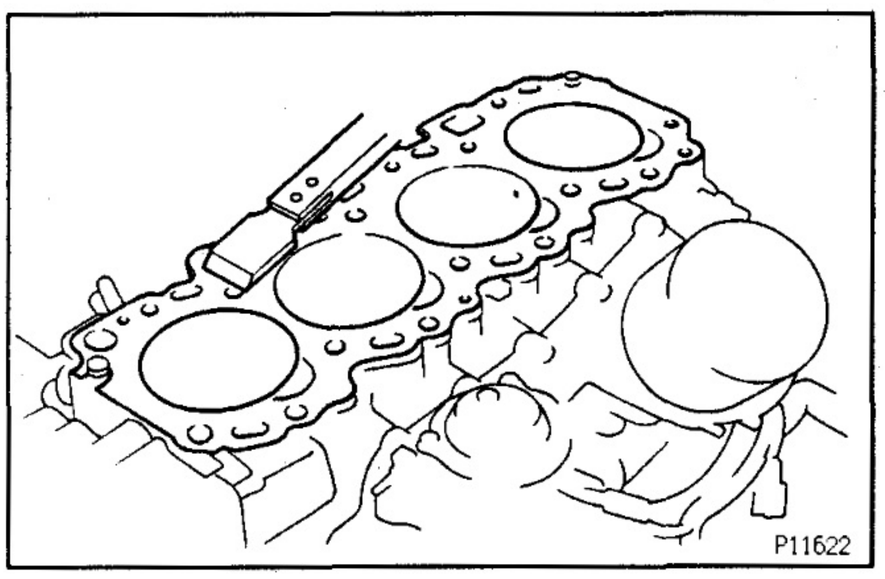

EG33J-01

CYLINDER HEAD COMPONENTS INSPECTION AND REPAIR

1. CLEAN TOP SURFACES OF PISTONS AND CYLINDER BLOCK

(a) Turn the crankshaft, and bring each piston to the top dead center (TDC). Using a gasket scraper, remove all the carbon from the piston top surface.

(b) Remove all the gasket material from the top of the cylinder block.

NOTICE: Be careful not to scratch the surfaces.

(c) Using compressed air, blow carbon and oil from the bolt holes.

CAUTION: Protect your eyes when using high — compressed air.

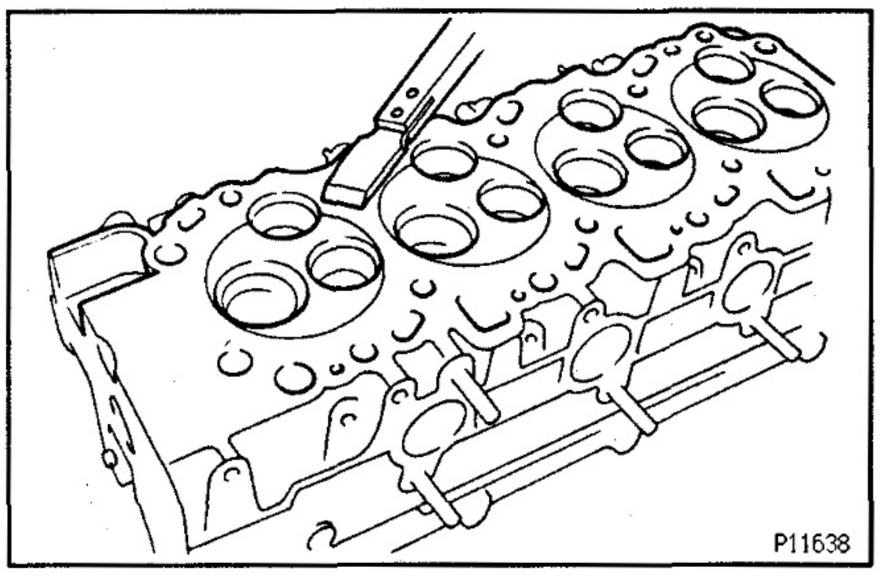

2. CLEAN CYLINDER HEAD

A. Remove gasket material

Using a gasket scraper, remove all the gasket material from the cylinder block contact surface.

NOTICE: Be careful not to scratch the cylinder block contact surface.

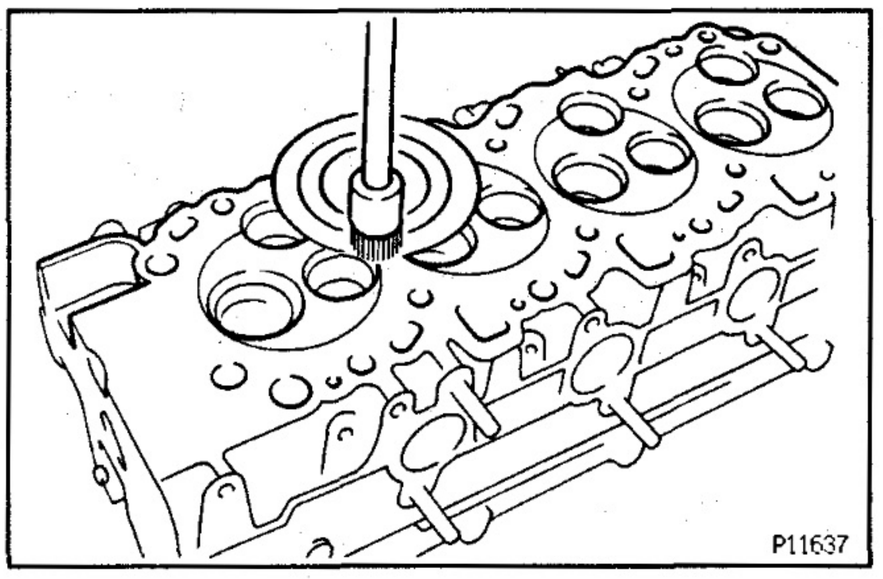

B. Clean combustion chambers

Using a wire brush, remove all the carbon from the combustion chambers.

NOTICE: Be careful not to scratch the cylinder block contact surface.

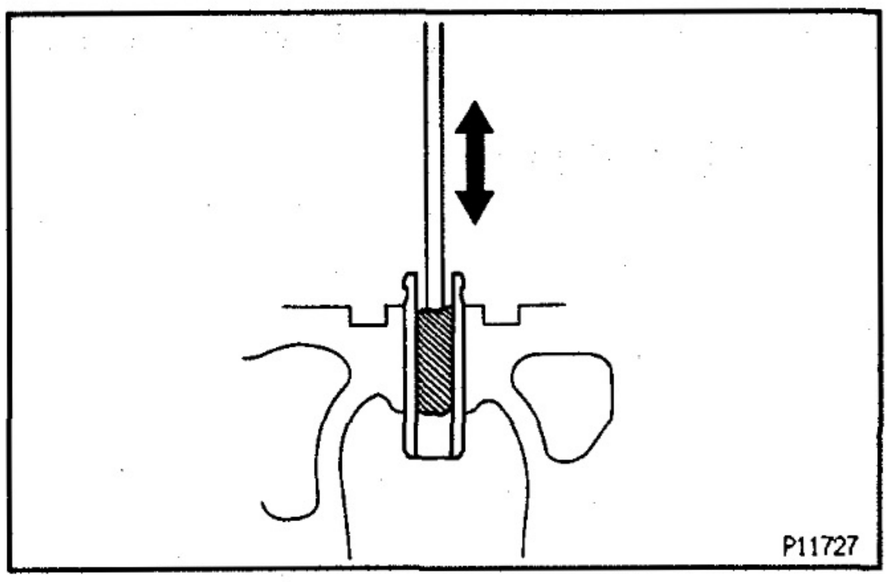

C. Clean valve guide bushings
Using a valve guide bushing brush and solvent, clean all the guide bushings.

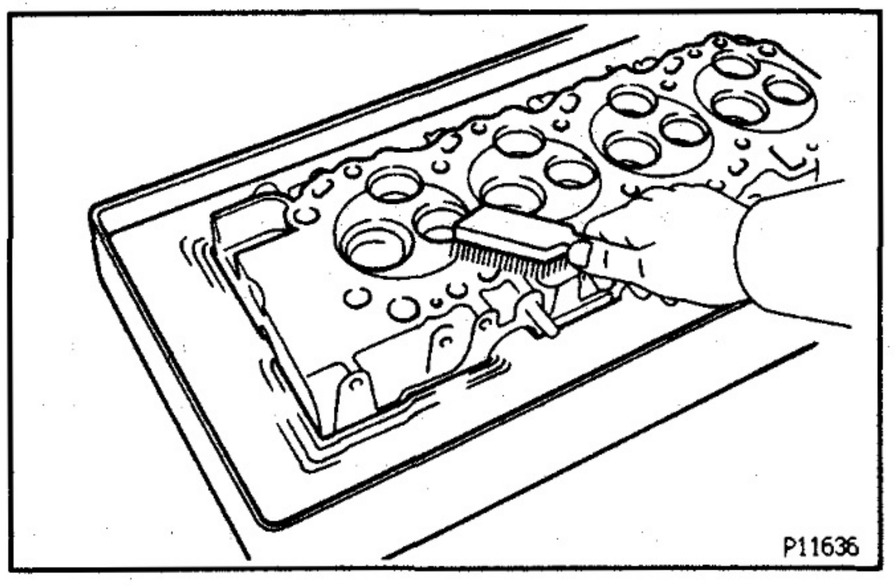

D. Clean cylinder head
Using a soft brush and solvent, thoroughly clean the cylinder head.

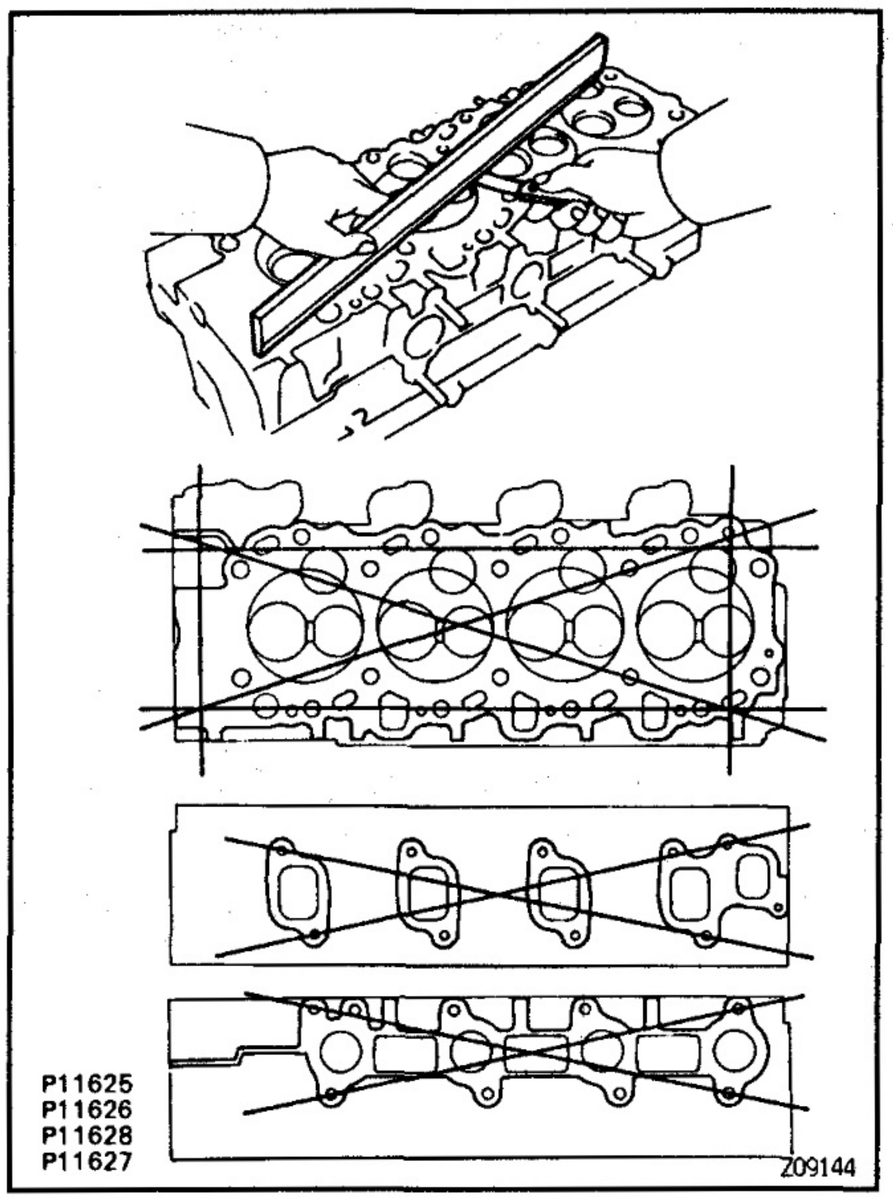

3. INSPECT CYLINDER HEAD

A. Inspect for flatness
Using a precision straight edge and thickness gauge, measure the surfaces contacting the cylinder block and the manifolds for warpage.
Maximum warpage:
0.15 mm (0.0059 in.)
If warpage is greater than maximum, replace the cylinder head.

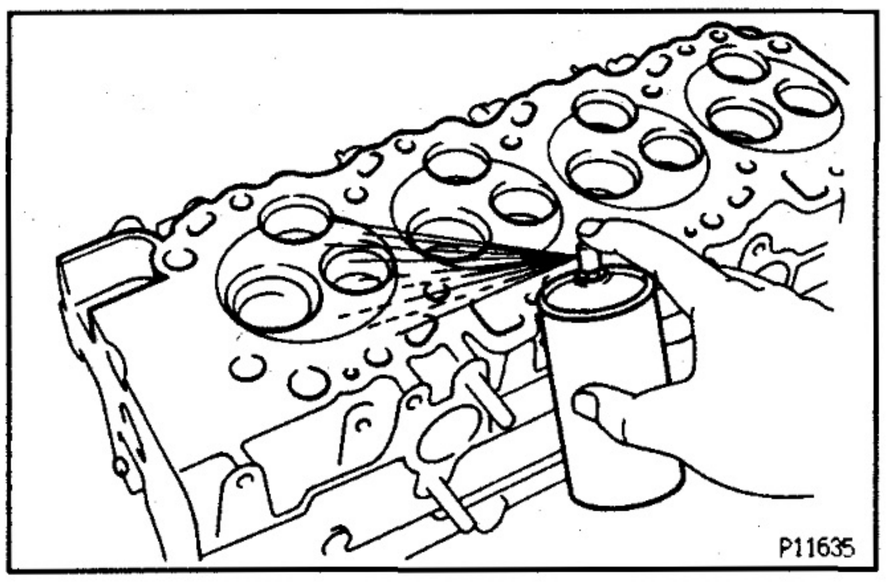

B. Inspect for cracks
Using a dye penetrant, check the combustion chambers, intake ports, exhaust ports and surface contacting the cylinder block.
If cracked, replace the cylinder head.

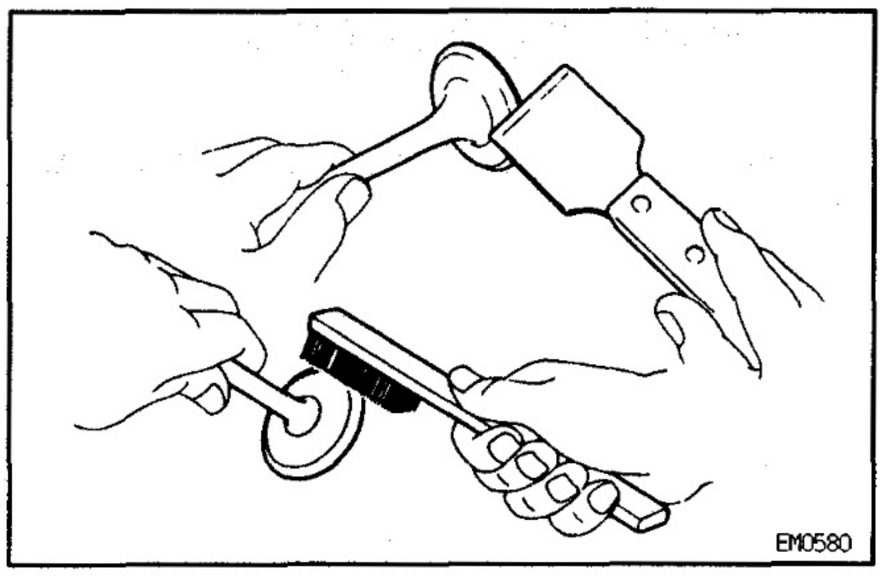

4. CLEAN VALVES

(a) Using a gasket scraper, chip off any carbon from the valve head.

(b) Using a wire brush, thoroughly clean the valve.

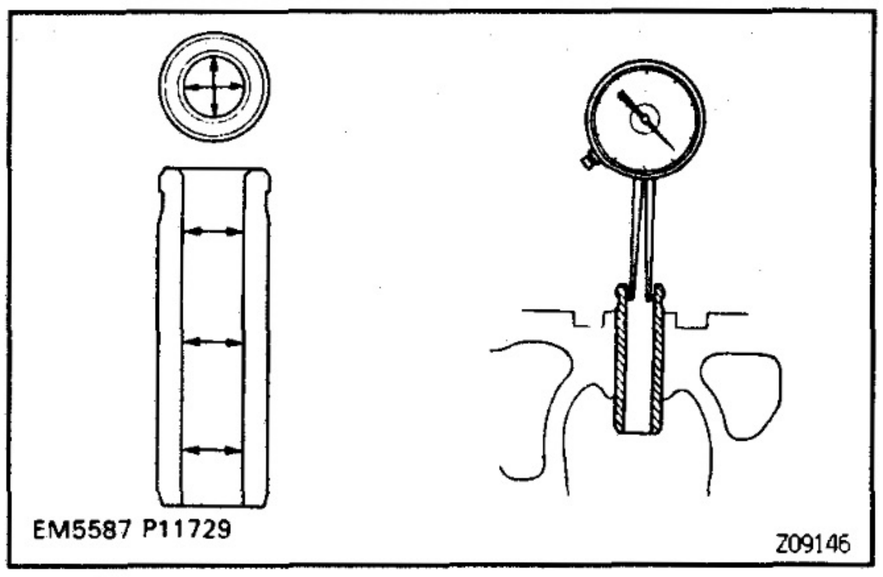

5. INSPECT VALVE STEMS AND GUIDE BUSHINGS

(a) Using a caliper gauge, measure the inside diameter of the guide bushing.

Bushing inside diameter:

8.010 – 8.030 mm (0.3154 – 0.3161 in.)

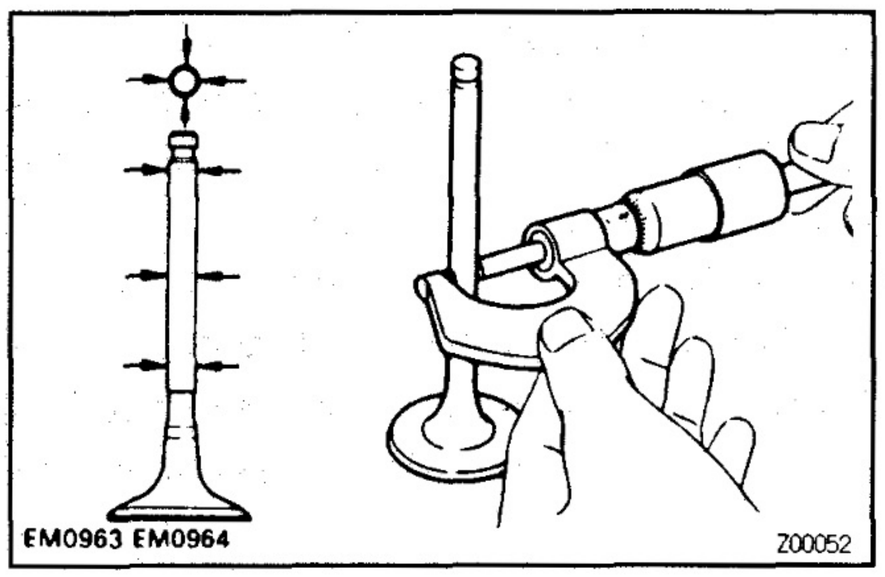

(b) Using a micrometer, measure the diameter of the valve stem.

Valve stem diameter:

Intake

7.975 – 7.990 mm (0.3140 – 0.3146 in.)

Exhaust

7.960 – 7.975 mm (0.3134 – 0.3140 in.)

(c) Subtract the valve stem diameter measurement from the guide bushing inside diameter measurement.

Standard oil clearance:

Intake

0.020 – 0.055 mm (0.0008 – 0.0022 in.)

Exhaust

0.035 – 0.070 mm (0.0014 – 0.0028 in.)

Maximum oil clearance:

Intake

0.08 mm (0.0031 in.)

Exhaust

0.10 mm (0.0039 in.)

If the clearance is greater than maximum, replace the valve and guide bushing.

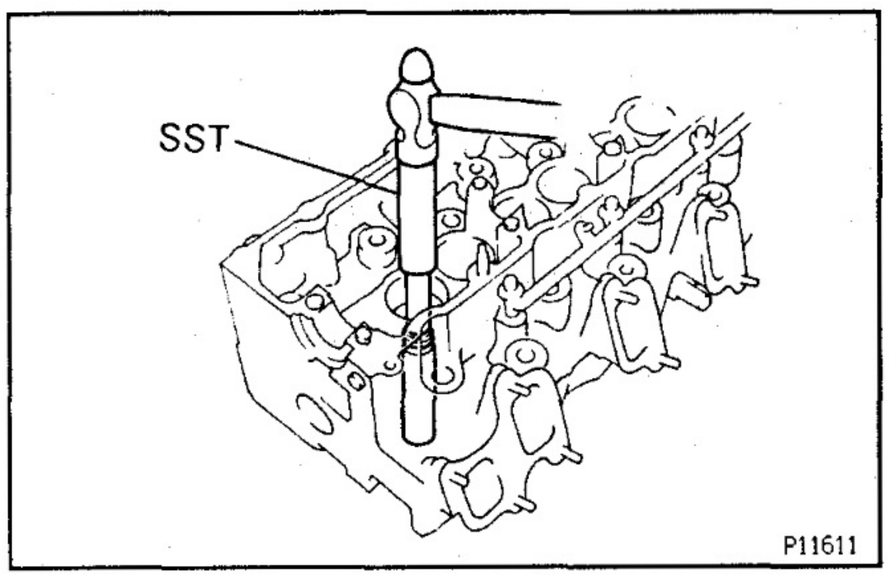

6. IF NECESSARY, REPLACE VALVE GUIDE BUSHINGS

(a) Using SST and a hammer, tap out the guide bushing.
SST 09201 – 60011

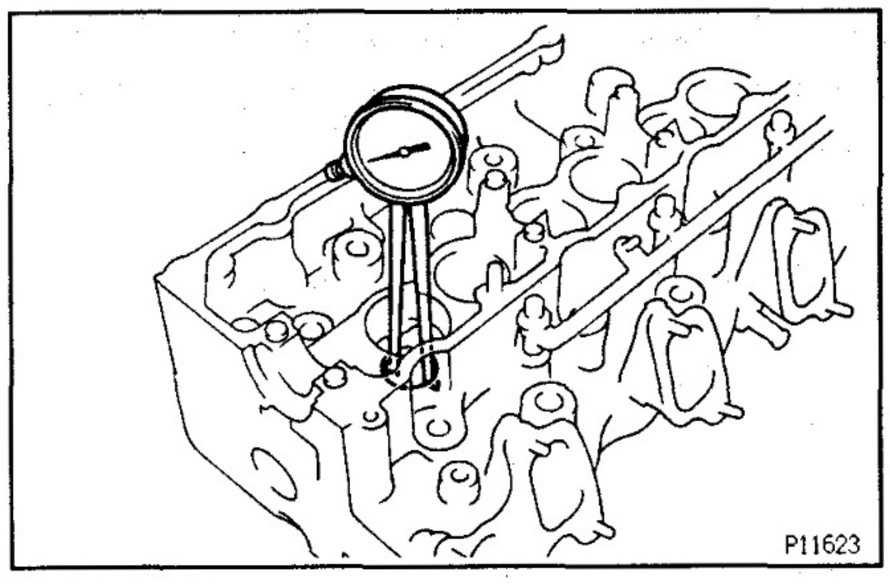

(b) Using a caliper gauge, measure the bushing bore diameter of the cylinder head.

Both intake and exhaust

Bushing bore diameter mm (in.)	Bushing size
13.000 – 13.027 (0.5118 – 0.5129)	Use STD
13.050 – 13.077 (0.5134 – 0.5148)	Use O/S 0.05

V03700

(c) Select a new guide bushing (STD or O/S 0.05).
If the bushing bore diameter of the cylinder head is greater than 13.027 mm (0.5129 in.), machine the bushing bore to the following dimension:
Rebored cylinder head bushing bore dimension:
13.050 – 13.077 mm (0.5138 – 0.5148 in.)
If the bushing bore diameter of the cylinder head is greater than 13.077 mm (0.5148 in.), replace the cylinder head.

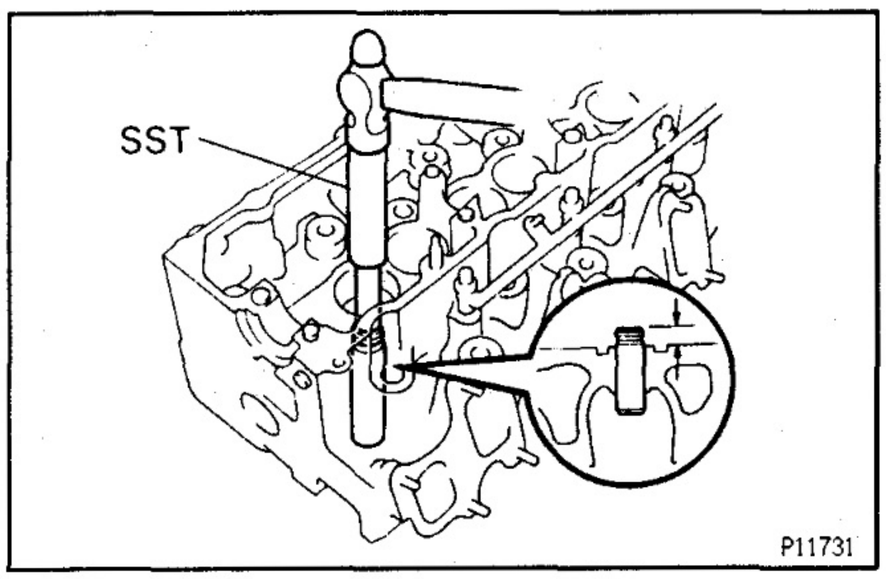

(d) Using SST and a hammer, tap in a new guide bushing until there is 12.8 – 13.2 mm (0.504 – 0.520 in.) protruding from the cylinder head.
SST 09201 – 60011

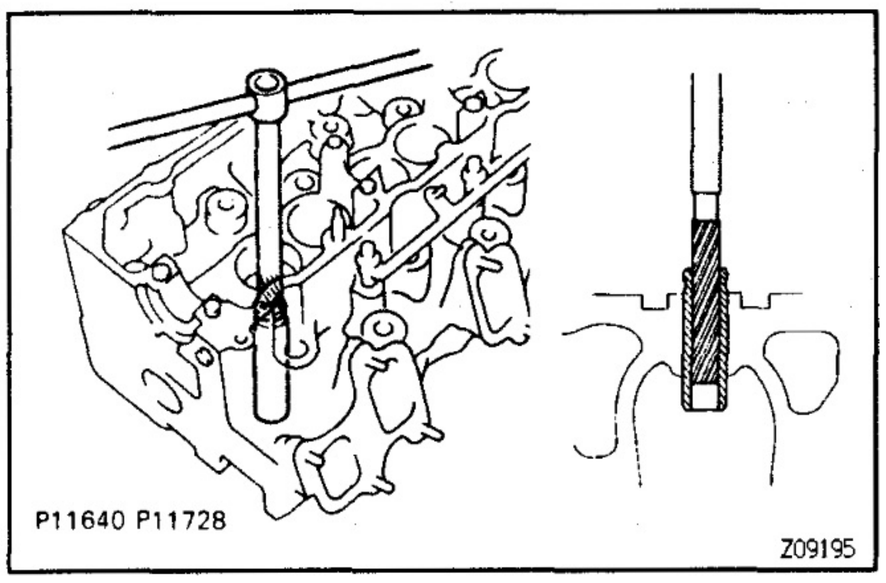

(e) Using a sharp 8 mm reamer, ream the guide bushing to obtain the standard specified clearance (See step 5 on page EG–67) between the guide bushing and valve stem.

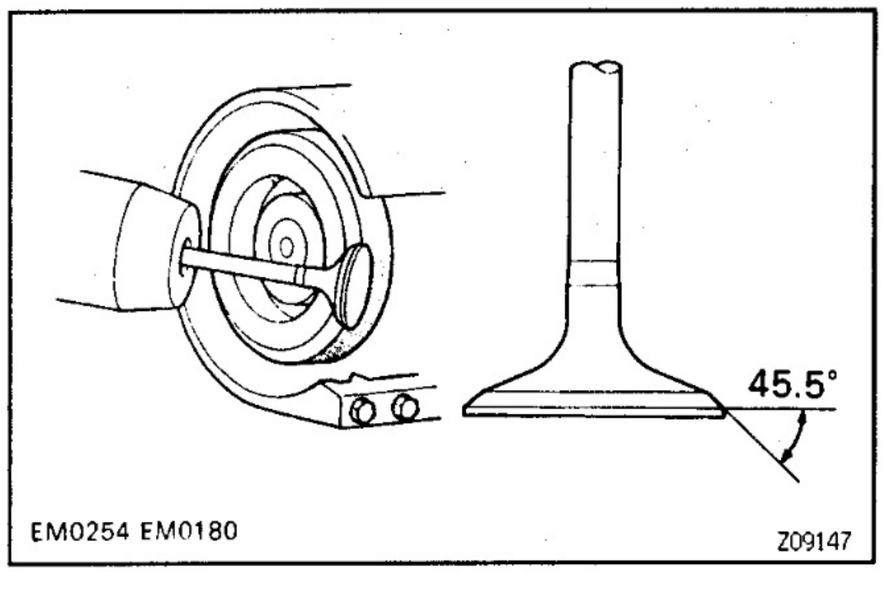

7. INSPECT AND GRIND VALVES

(a) Grind the valve enough to remove pits and carbon.

(b) Check that the valve is ground to the correct valve face angle.

Valve face angle:

45.5°

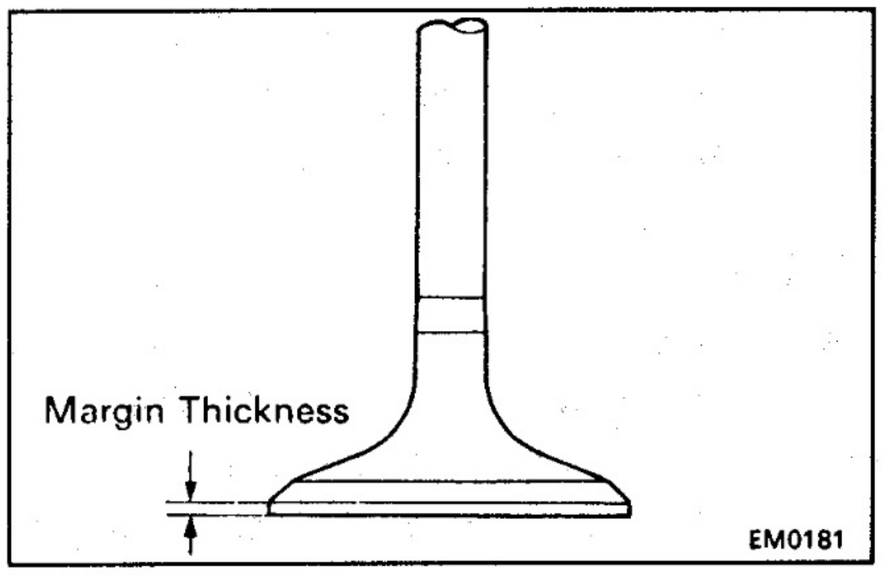

(c) Check the valve head margin thickness.

Standard margin thickness:

Intake

1.6 mm (0.063 in.)

Exhaust

1.7 mm (0.067 in.)

Minimum margin thickness:

Intake

1.1 mm (0.043 in.)

Exhaust

1.2 mm (0.047 in.)

If the margin thickness is less than minimum, replace the valve.

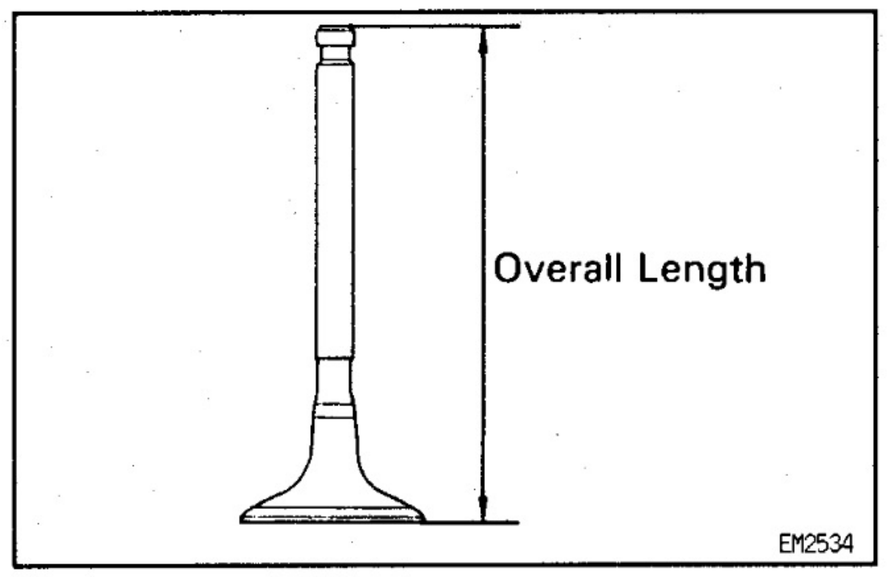

(d) Check the valve overall length.

Standard overall length:

103.29 — 103.69 mm (4.0665 — 4.0823 in.)

Minimum overall length:

102.79 mm (4.0468 in.)

If the overall length is less than minimum, replace the valve.

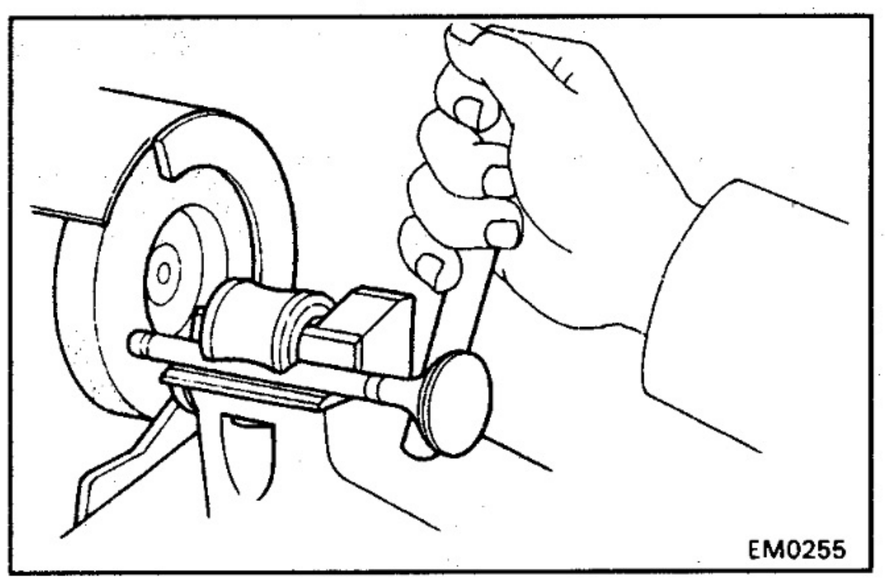

(e) Check the surface of the valve stem tip for wear.
If the valve stem tip is worn, resurface the tip with a grinder or replace the valve.

NOTICE: Do not grind off more than minimum overall length.

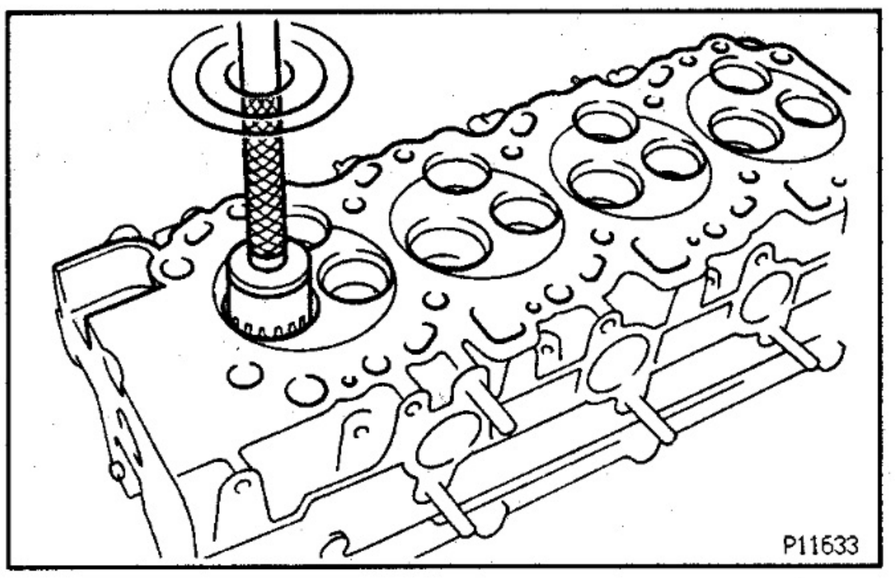

8. INSPECT AND CLEAN VALVE SEATS

(a) Using a 45° carbide cutter, resurface the valve seats. Remove only enough metal to clean the seats.

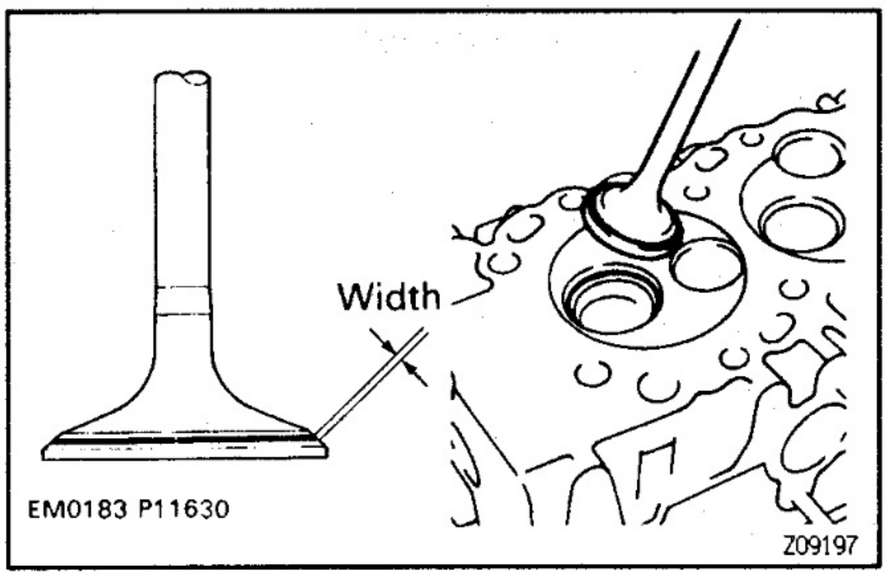

(b) Check the valve seating position.
Apply a light coat of prussian blue (or white lead) to the valve face. Lightly press the valve against the seat. Do not rotate valve.

(c) Check the valve face and seat for the following:

- If blue appears 360° around the valve face, the valve is concentric. If not, replace the valve.
- If blue appears 360° around the valve seat, the guide and face are concentric. If not, resurface the seat.
- Check that the seat contact is in the middle of the valve face with the following width:

Intake

1.5 – 1.9 mm (0.059 – 0.075 in.)

Exhaust

1.8 – 2.2 mm (0.071 – 0.087 in.)

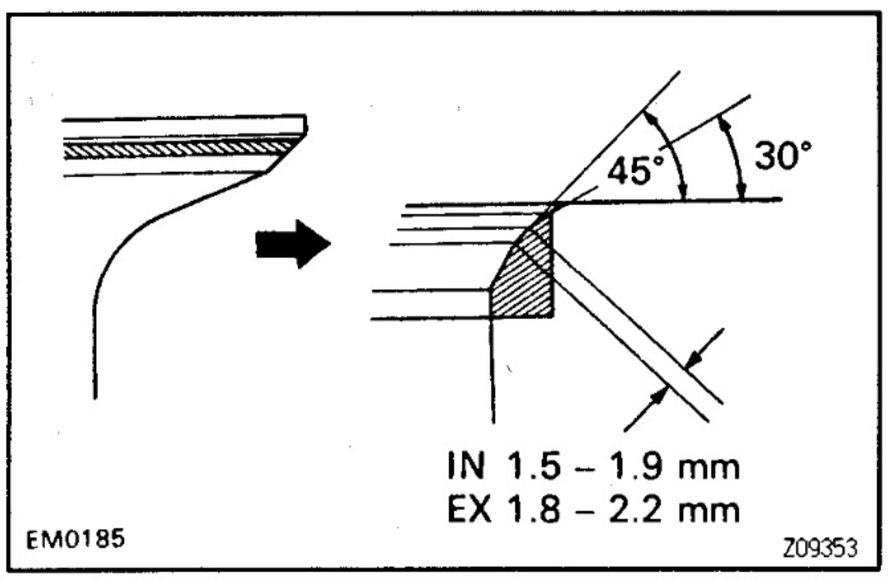

If not, correct the valve seats as follows:

(1) If the seating is too high on the valve face, use 30° and 45° cutters to correct the seat.

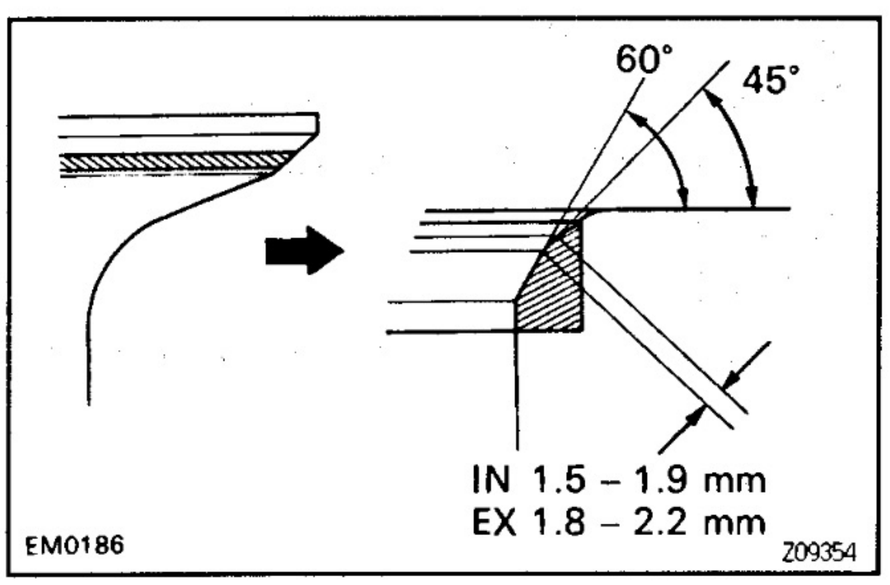

(2) If the seating is too low on the valve face, use 60° and 45° cutters to correct the seat.

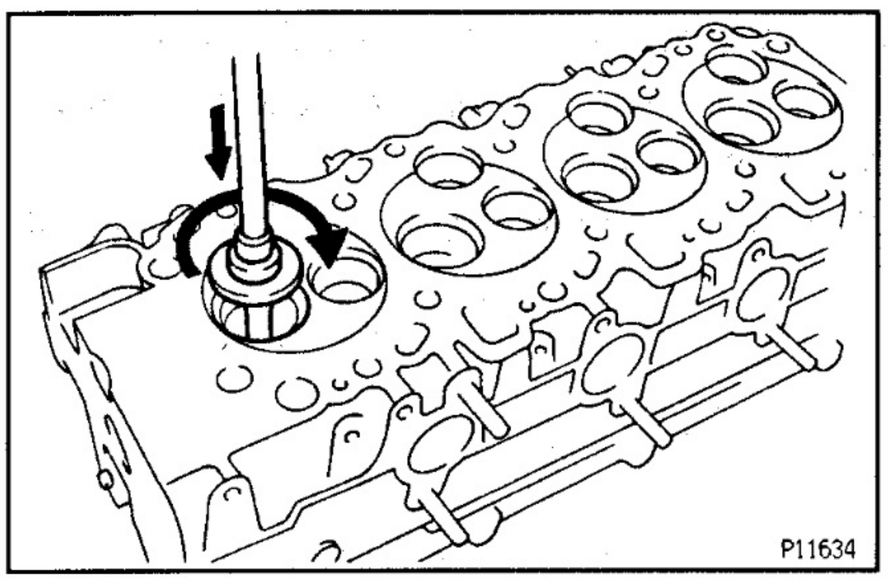

(d) Hand–lap the valve and valve seat with an abrasive compound.

(e) After hand–lapping, clean the valve and valve seat.

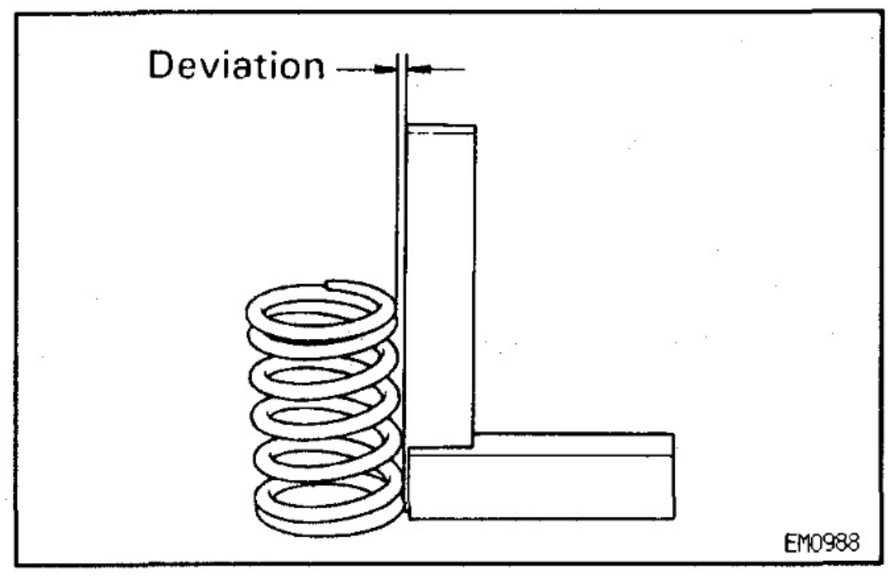

9. INSPECT VALVE SPRINGS

(a) Using a steel square, measure the deviation of the valve spring.

Maximum deviation:

2.0 mm (0.079 in.)

If the deviation is greater than maximum, replace the valve spring.

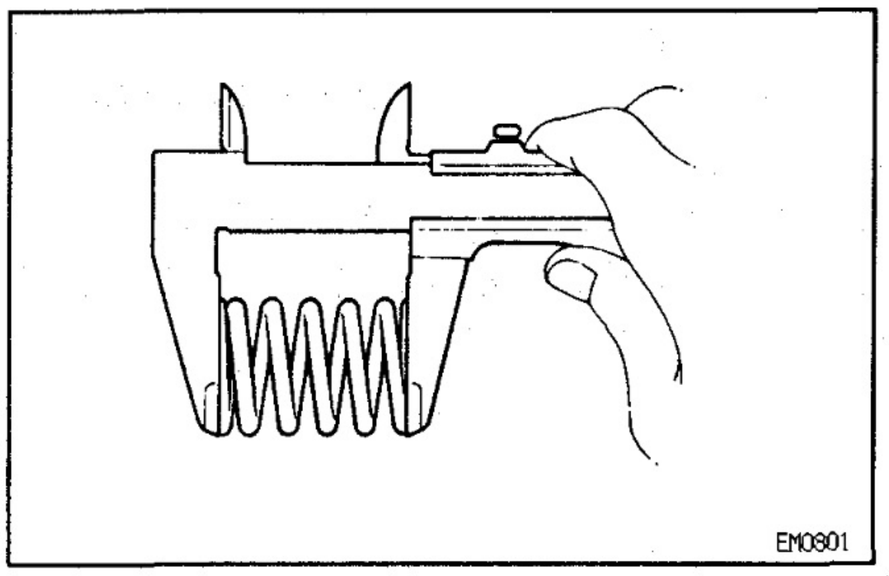

(b) Using a vernier caliper, measure the free length of the valve spring.

Free length:

48.54 mm (1.9110 in.)

If the free length is not as specified, replace the valve spring.

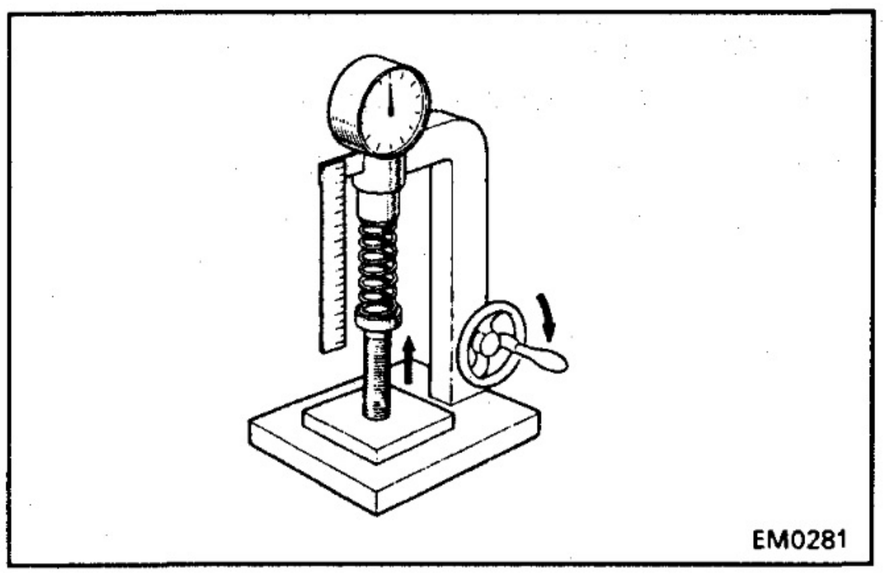

(c) Using a spring tester, measure the tension of the valve spring at the specified installed length.

Installed tension:

301 — 332 N (30.7 — 33.9 kgf, 67.7 — 74.7 lbf)

at 37.0 mm (1.457 in.)

If the installed tension is not as specified, replace the valve spring.

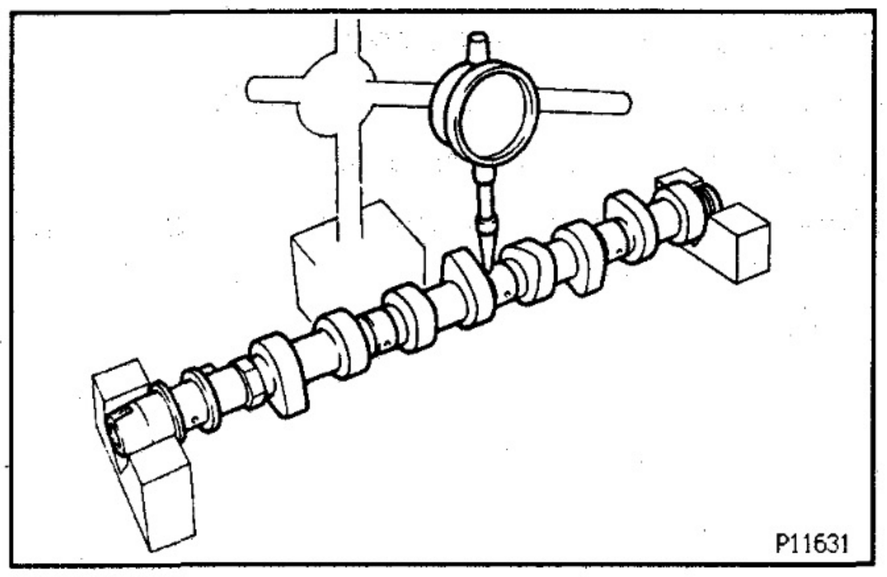

10. INSPECT CAMSHAFTS AND BEARINGS

A. Inspect camshaft for runout

(a) Place the camshaft on V—blocks.

(b) Using a dial indicator, measure the circle runout at the center journal.

Maximum circle runout:

0.06 mm (0.0024 in.)

If the circle runout is greater than maximum, replace the camshaft.

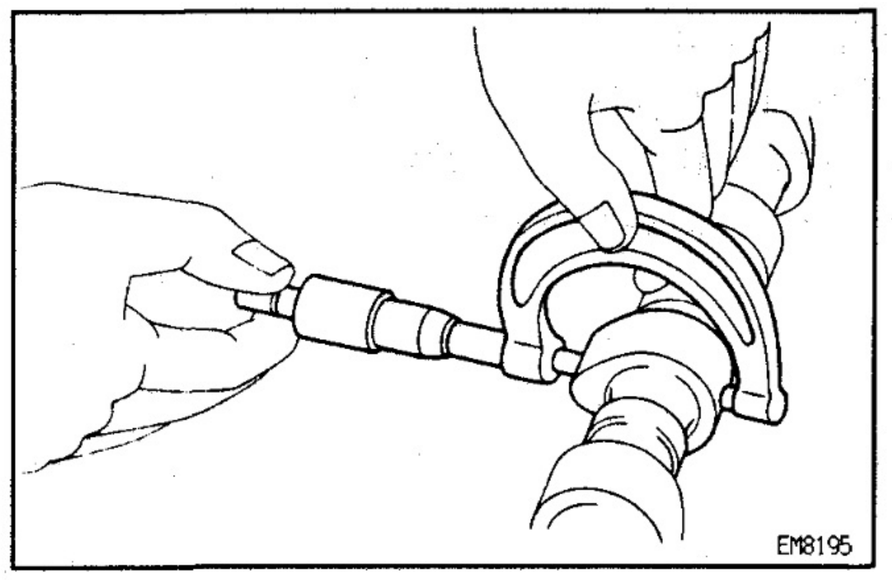

B. Inspect cam lobes

Using a micrometer, measure the cam lobe height.

Standard cam lobe height:

Intake

54.810 — 54.910 mm (2.1579 — 2.1618 in.)

Exhaust

56.140 — 56.240 mm (2.2102 — 2.2142 in.)

Minimum cam lobe height:

Intake

54.39 mm (2.1413 in.)

Exhaust

55.72 mm (2.1937 in.)

If the cam lobe height is less than minimum, replace the camshaft.

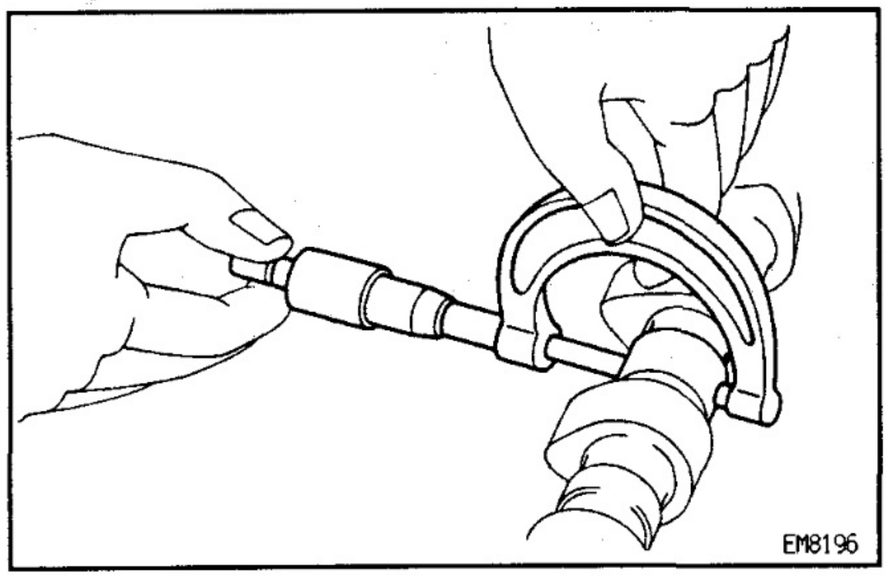

C. Inspect camshaft journals

Using a micrometer, measure the journal diameter.

Journal diameter:

27.969 — 27.985 mm (1.1011 — 1.1018 in.)

If the journal diameter is not as specified, check the oil clearance.

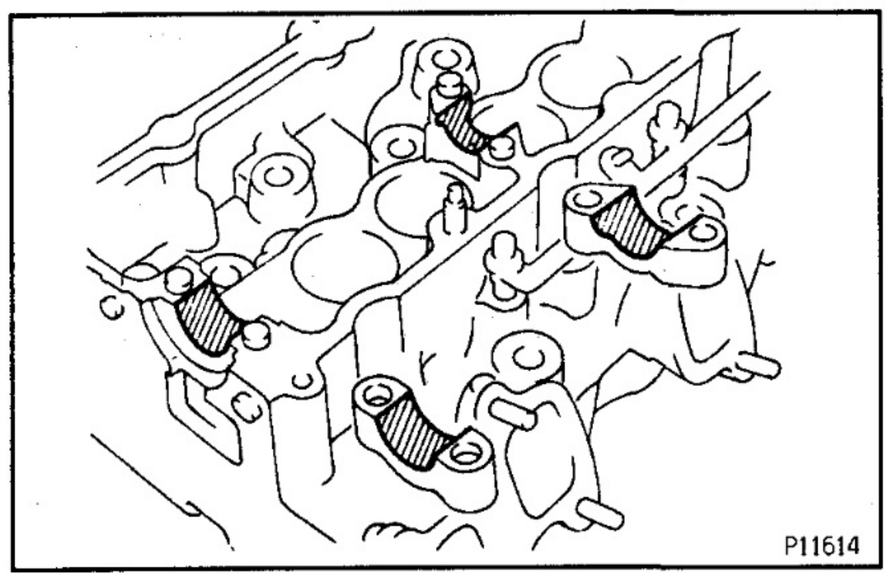

D. Inspect camshaft bearings

Check the bearings for flaking and scoring.

If the bearings are damaged, replace the bearing caps and cylinder head as a set.

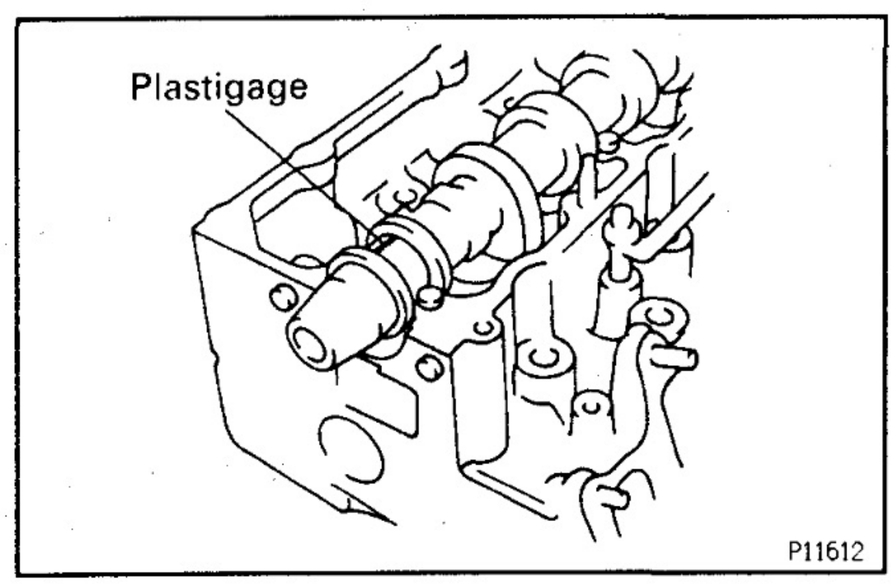

E. Inspect camshaft journal oil clearance

(a) Clean the bearing caps and camshaft journals.

(b) Place the camshaft on the cylinder head.

(c) Lay a strip of Plastigage across each of the camshaft journals.

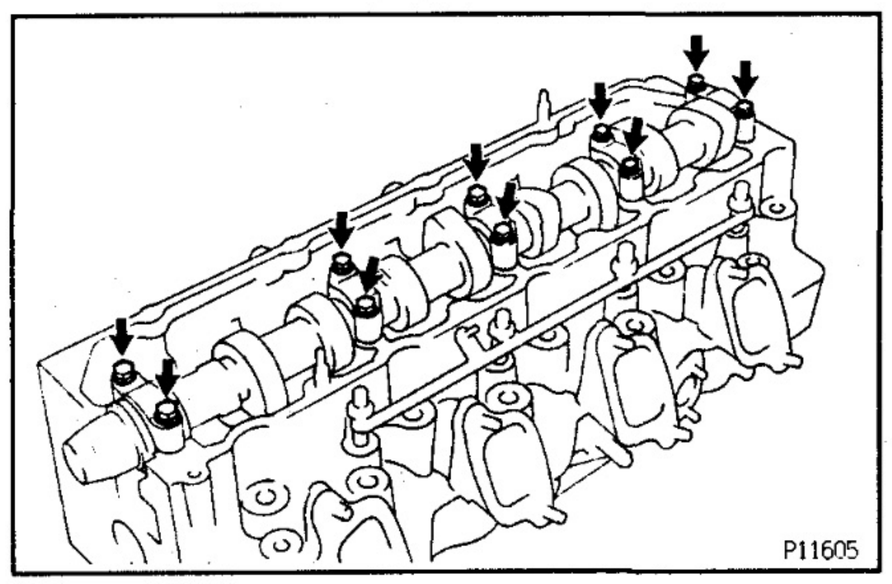

(d) Install the bearing caps.

(See step 4 on page EG—81)

Torque: 18 N·m (185 kgf·cm, 13 ft·lbf)

NOTICE: Do not turn the camshaft.

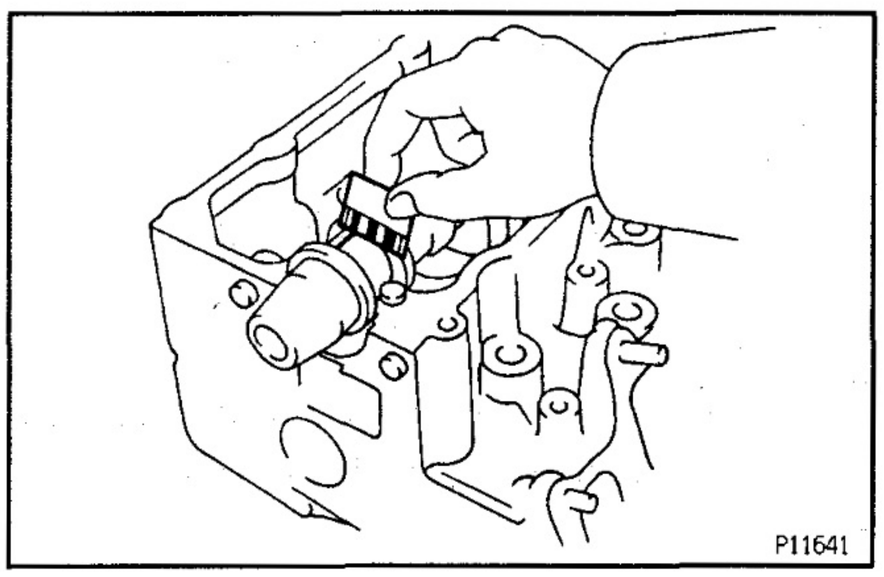

(e) Remove the bearing caps.

(f) Measure the Plastigage at its widest point.

Standard oil clearance:

0.025 – 0.062 mm (0.0010 – 0.0024 in.)

Maximum oil clearance:

0.10 mm (0.0039 in.)

If the oil clearance is greater than maximum, replace the camshaft. If necessary, replace the bearing caps and cylinder head as a set.

(g) Completely remove the Plastigage.

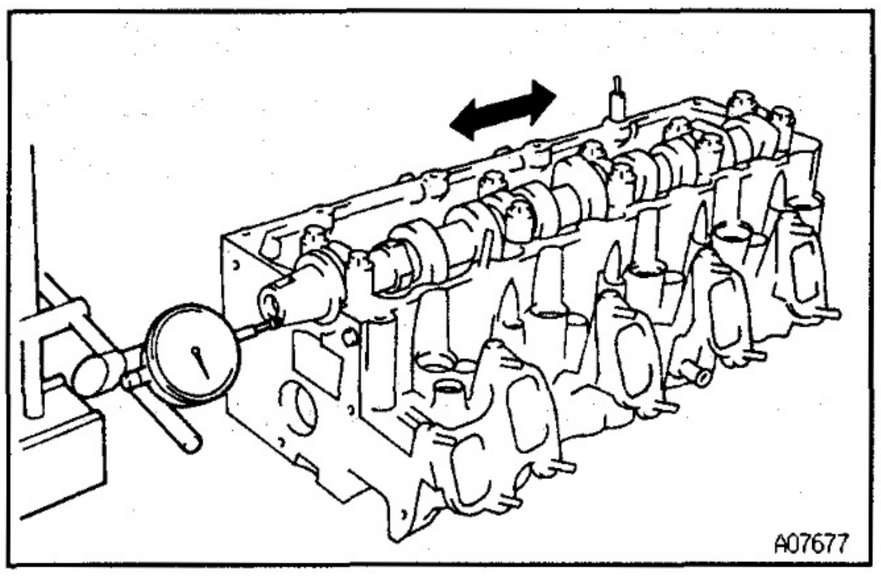

F. Inspect camshaft thrust clearance

(a) Install the camshaft.
(See step 4 on page EG–81)

(b) Using a dial indicator, measure the thrust clearance while moving the camshaft back and forth.

Standard thrust clearance:

0.08 – 0.18 mm (0.0031 – 0.0071 in.)

Maximum thrust clearance:

0.25 mm (0.0098 in.)

If the thrust clearance is greater than maximum, replace the camshaft. If necessary, replace the bearing caps and cylinder head as a set.

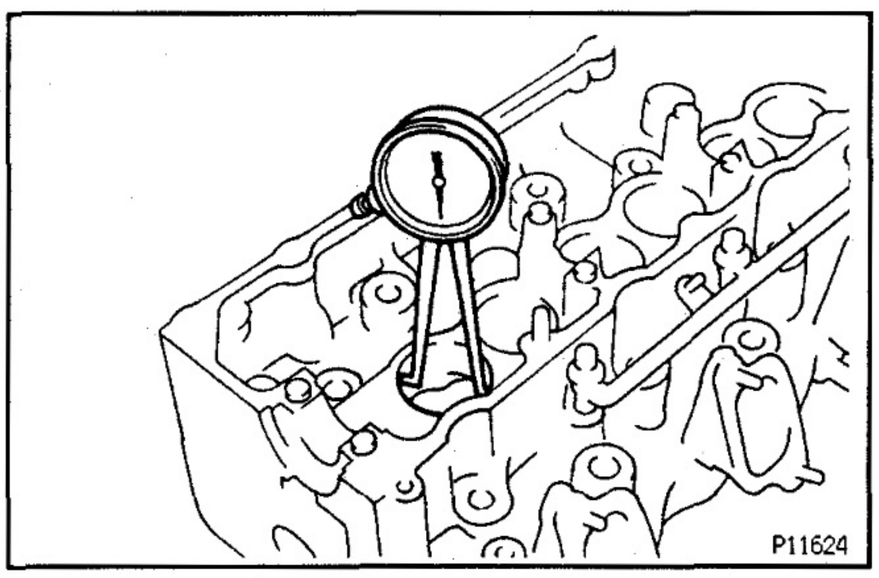

11. INSPECT VALVE LIFTERS AND LIFTER BORES

(a) Using a caliper gauge, measure the lifter bore diameter of the cylinder head.

Lifter bore diameter:

40.930 – 40.950 mm (1.6114 – 1.6122 in.)

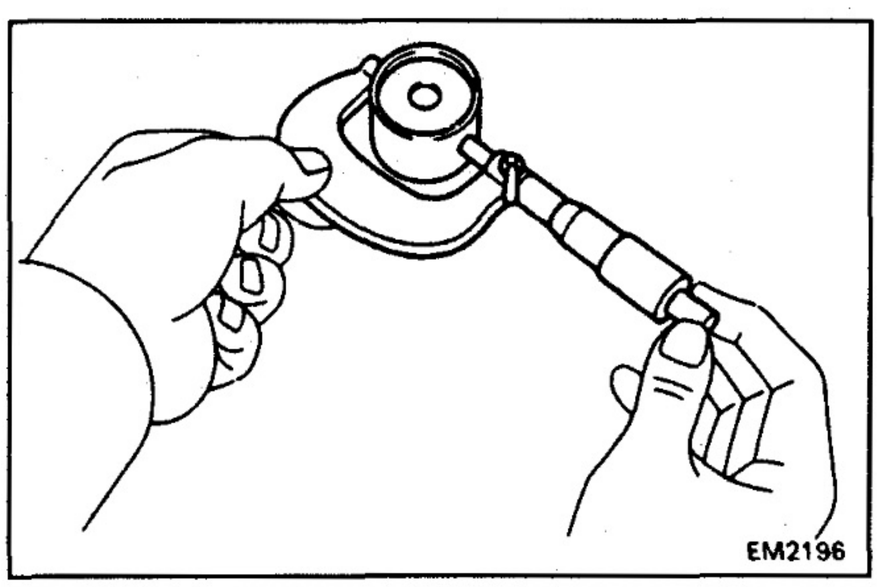

(b) Using a micrometer, measure the lifter diameter.

Lifter diameter:

40.892 – 40.902 mm (1.6099 – 1.6103 in.)

(c) Subtract the lifter diameter measurement from the lifter bore diameter measurement.

Standard oil clearance:

0.038 — 0.063 mm (0.0015 — 0.0025 in.)

Maximum oil clearance:

0.08 mm (0.0031 in.)

If the oil clearance is greater than maximum, replace the lifter. If necessary, replace the cylinder head.

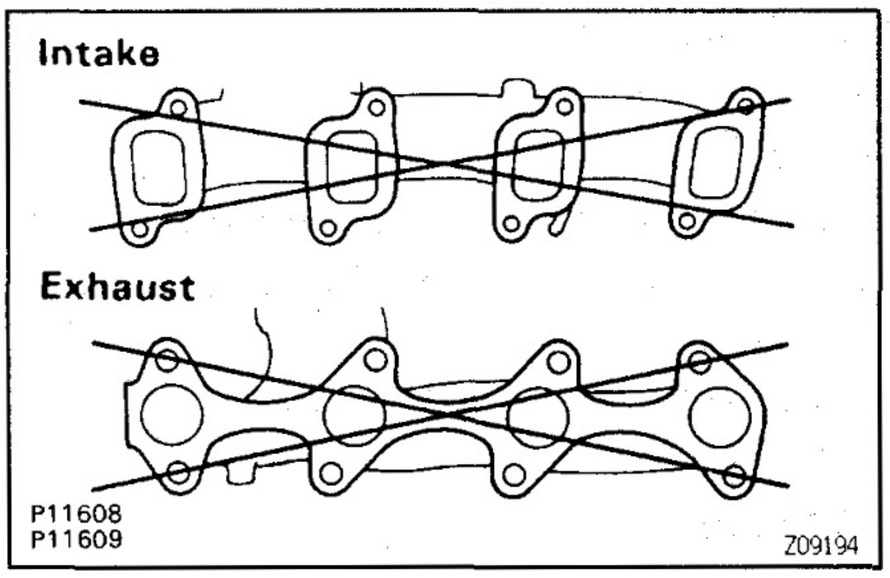

12. INSPECT INTAKE AND EXHAUST MANIFOLDS

Using a precision straight edge and thickness gauge, measure the surface contacting the cylinder head for warpage.

Maximum warpage:

0.40 mm (0.0157 in.)

If warpage is greater than maximum, replace the manifold.

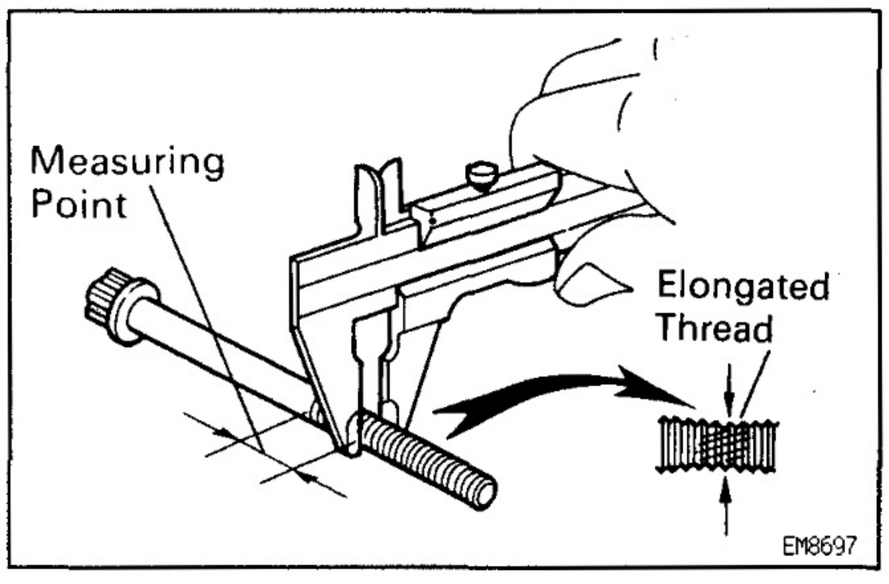

13. INSPECT CYLINDER HEAD BOLTS

Using vernier calipers, measure the minimum outer diameter of the compressed thread at the measuring point.

Standard outer diameter:

11.8 — 12.0 mm (0.465 — 0.472 in.)

Minimum outer diameter:

11.6 mm (0.457 in.)

If the outer diameter is less than minimum, replace the bolt.

CAMSHAFT OIL SEAL REPLACEMENT

EG33K–01

HINT: There are 2 methods (A and B) to replace the oil seal which are as follows:

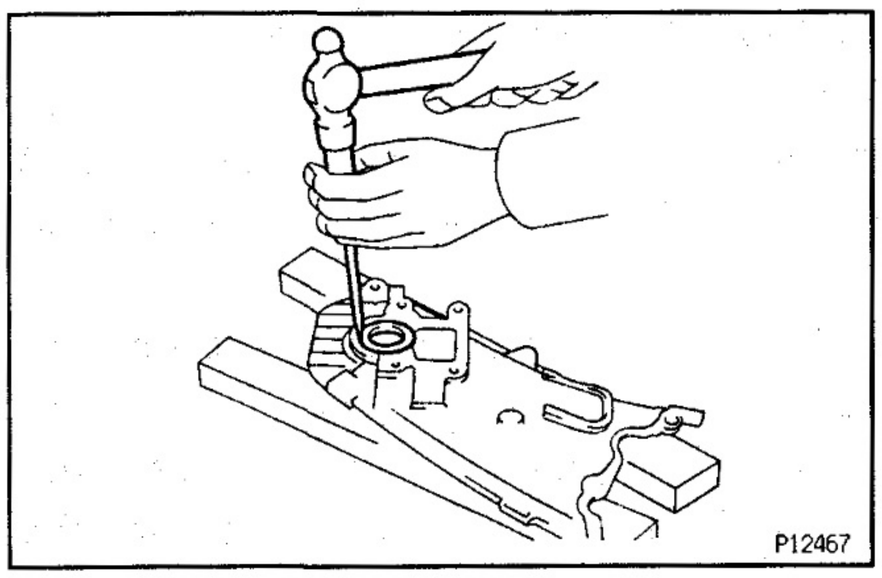

REPLACE CAMSHAFT OIL SEAL

A. If camshaft oil seal retainer is removed from cylinder head:

(a) Using a screwdriver, tap out the oil seal.

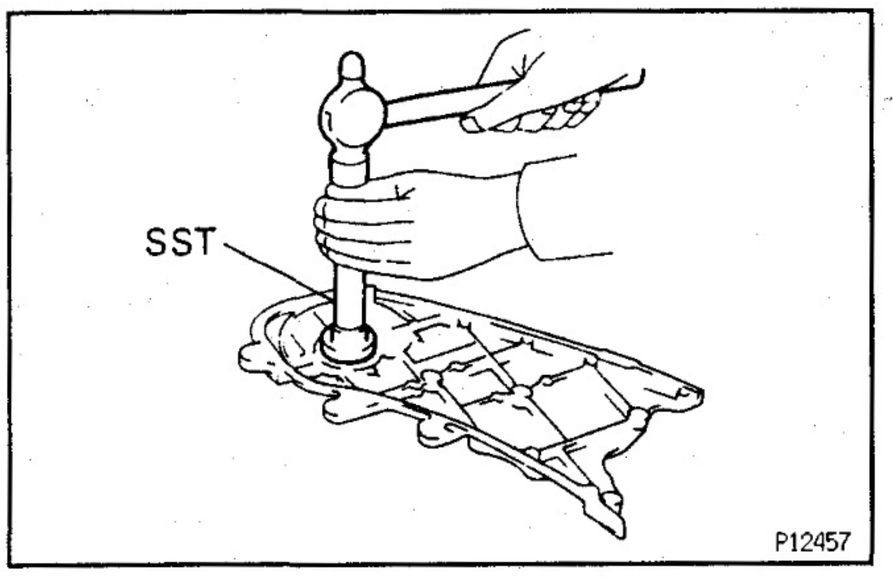

(b) Using SST and a hammer, tap in a new oil seal until its surface is flush with the oil seal retainer edge.
SST 09223–46011

(c) Apply MP grease to the oil seal lip.

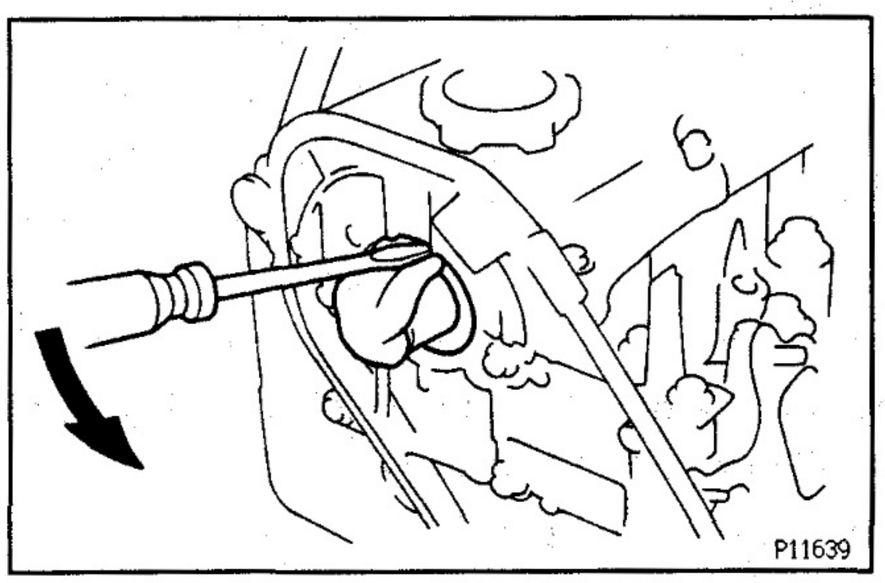

B. If camshaft oil seal retainer is installed to the cylinder head:

(a) Using a screwdriver, pry out the oil seal.
NOTICE: Be careful not to damage the camshaft. Tape the screwdriver tip.

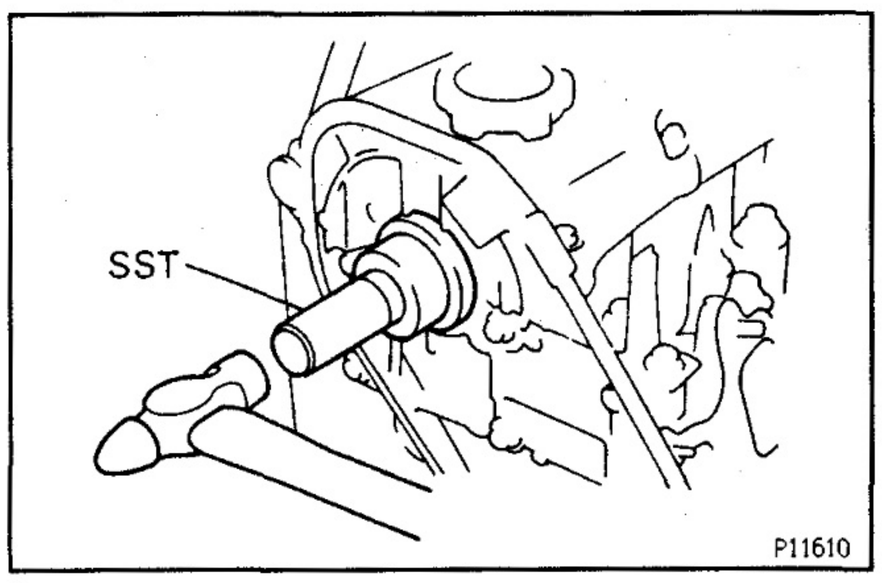

(b) Apply MP grease to a new oil seal lip.

(c) Using SST and a hammer, tap in the oil seal until its surface is flush with the oil seal retainer edge.
SST 09223–46011

EG33L-01

CYLINDER HEAD ASSEMBLY

(See Components for Removal and Installation)

HINT:

- Thoroughly clean all parts to be assembled.
- Before installing the parts, apply new engine oil to all sliding and rotating surfaces.
- Replace all gaskets and oil seals with new ones.

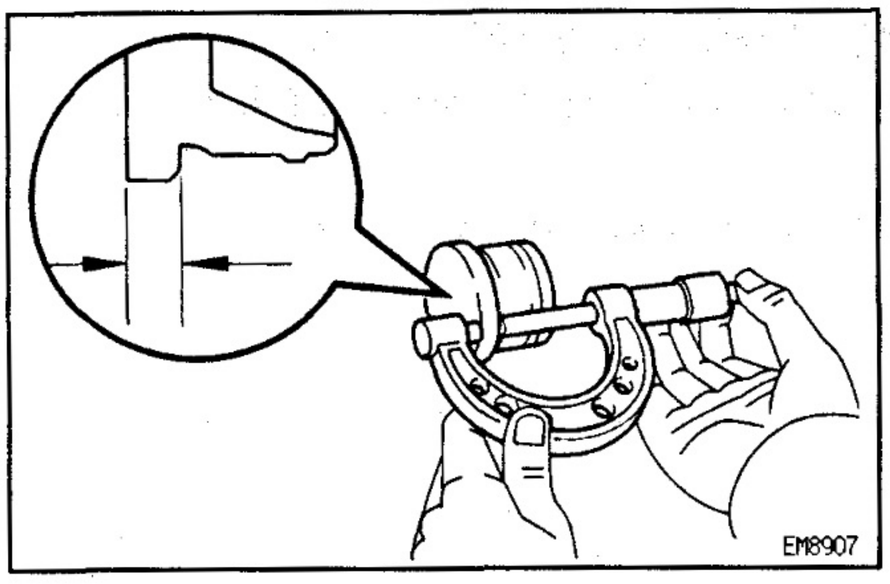

1. SELECT COMBUSTION CHAMBER SHIM

A. If using new combustion chamber:

(a) Using a micrometer, measure the thickness of each used combustion chamber at the position shown in the illustration.

(b) Measure the thickness of the new combustion chamber the same way as in (a).

(c) From the thickness of the new chamber subtract the thickness of the used chamber in order to select the appropriate shim thickness from the table below.

Difference in chamber thickness
= New chamber thickness — Used chamber thickness

mm (in.)

Difference in chamber thickness mm (in.)	Shim thickness required mm (in.)
Plus 0.02 — Minus 0.02 (Plus 0.0008 — Minus 0.0008)	No shim required
Minus 0.03 (Minus 0.0012)	0.05 (0.0020) or no shim required
Minus 0.04 — Minus 0.07 (Minus 0.0016 — Minus 0.0028)	0.05 (0.0020)
Minus 0.08 (Minus 0.0031)	0.05 (0.0020) or 0.10 (0.0039)
Minus 0.09 — Minus 0.12 (Minus 0.0035 — Minus 0.0047)	0.10 (0.0039)

NOTICE: Do not use two 0.05 mm (0.0020 in.) shims instead of one 0.10 mm (0.0039 in.) shim.

B. If reusing combustion chamber:

Install the combustion chamber back in its original position.

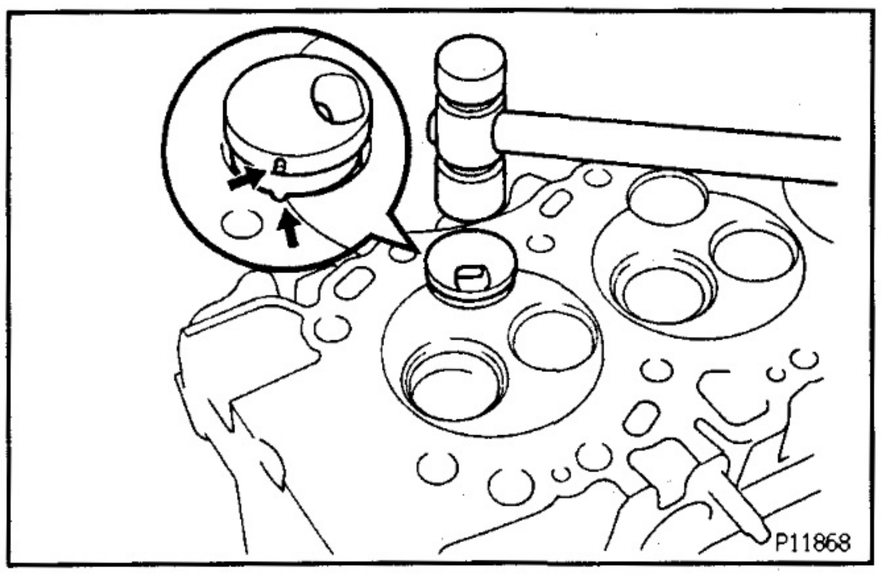

2. INSTALL COMBUSTION CHAMBERS

(a) Align the knock pin of the combustion chamber with the notch of the cylinder head.

(b) Using a plastic—faced hammer, tap in the combustion chamber.

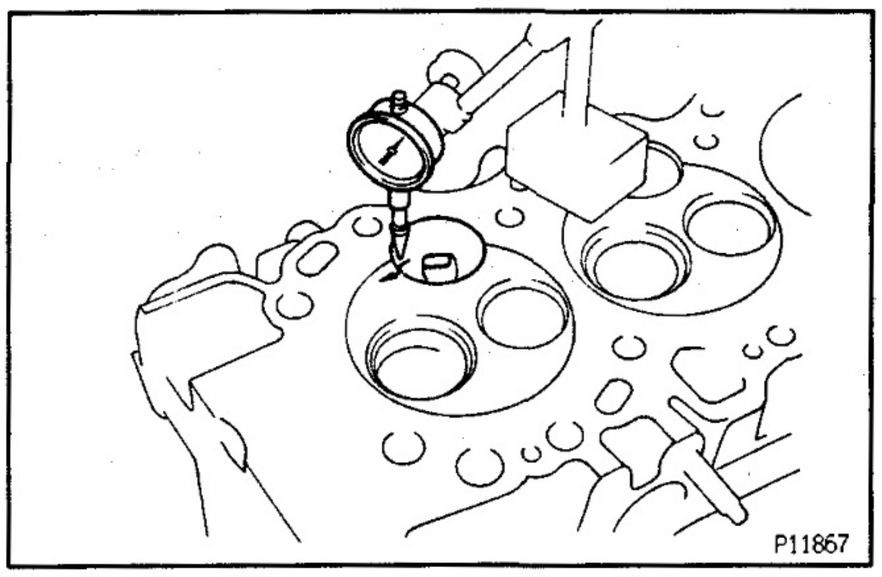

(c) Using a dial indicator, measure the protrusion of the combustion chamber from the cylinder head.

Protrusion:

Minus 0.03 — Plus 0.02 mm

(Minus 0.0012 — Plus 0.0008 in.)

If the protrusion is less than specified, adjust with shims.

Shim thickness

0.05 mm (0.0020 in.)

0.10 mm (0.0039 in.)

If the protrusion is greater than specification, replace the chamber and recheck the protrusion.

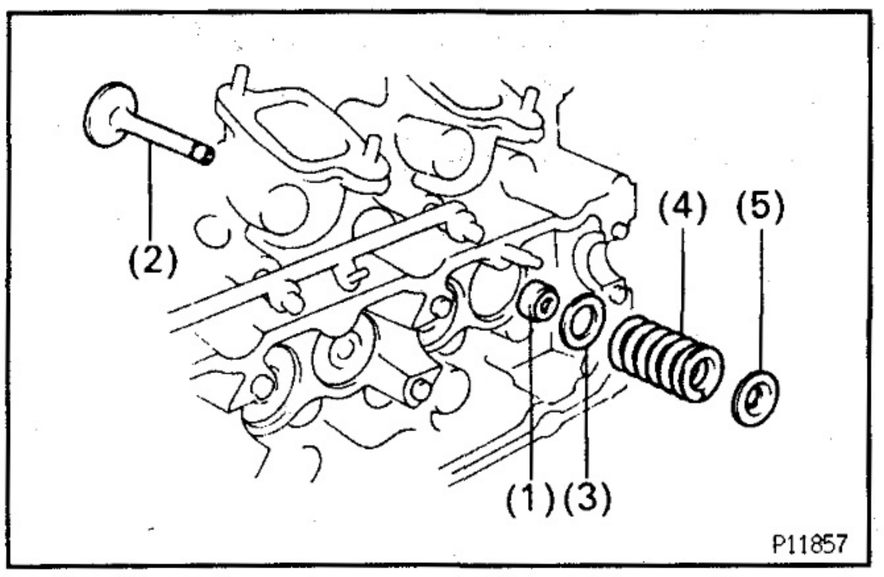

3. INSTALL VALVES

(a) Install the following parts:

(1) Oil seal
(2) Valve
(3) Spring seat
(4) Valve spring
(5) Spring retainer

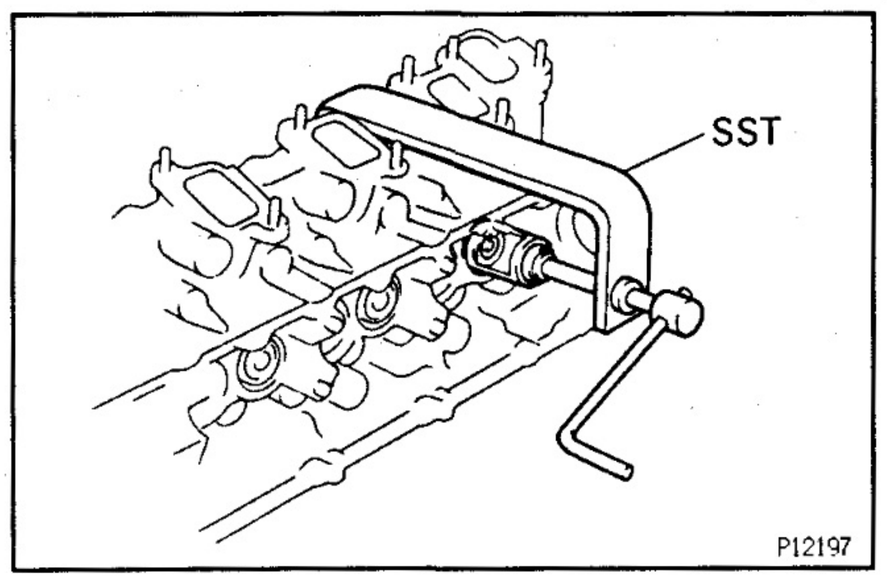

(b) Using SST, compress the valve spring and place the 2 keepers around the valve stem.
SST 09202—43013

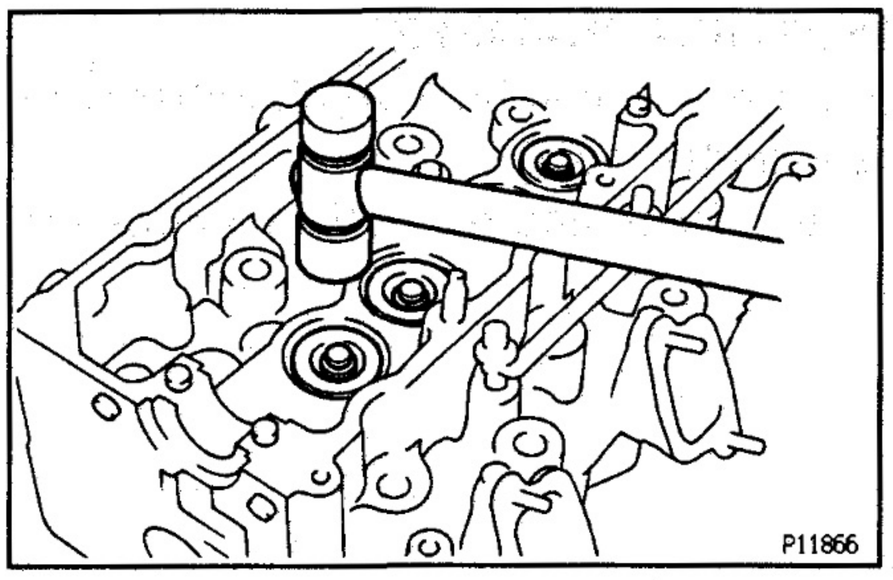

(c) Using a plastic—faced hammer, lightly tap the valve stem tip to assure a proper fit.

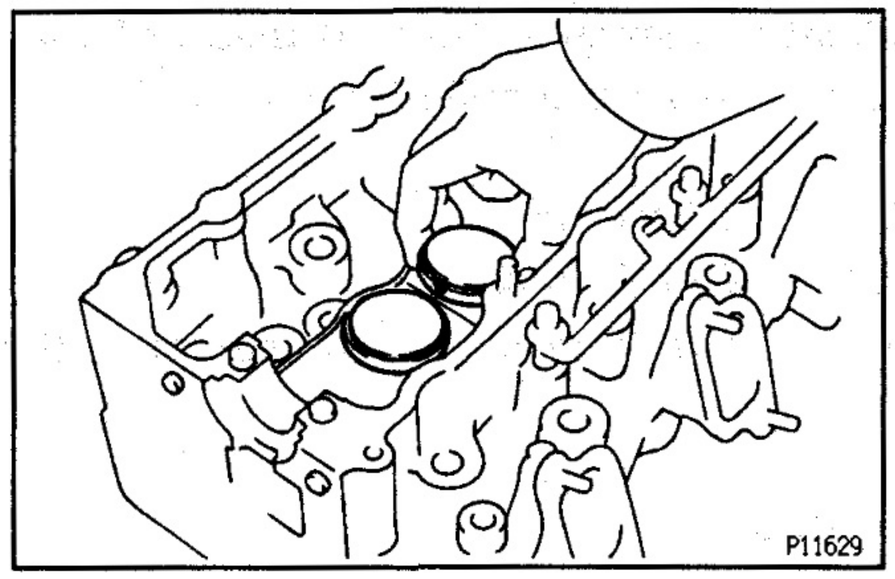

4. INSTALL VALVE LIFTERS AND SHIMS

(a) Install the valve lifter and shim.

(b) Check that the valve lifter rotates smoothly by hand.

5. INSTALL WATER TEMPERATURE SENDER GAUGE

6. INSTALL WIRE CLAMP BRACKET

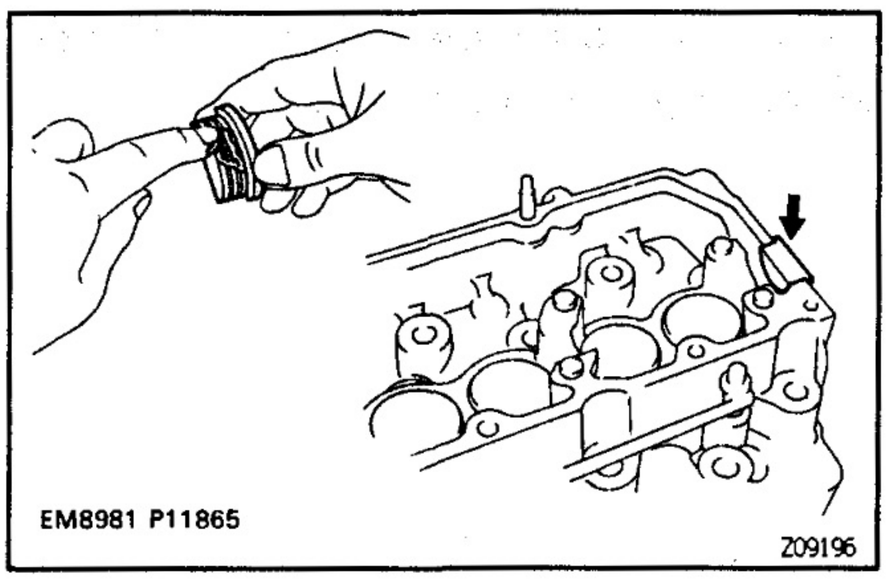

7. INSTALL SEMI CIRCULAR PLUG

(a) Remove any old packing (FIPG) material.

(b) Apply seal packing to the semi circular plug as shown.

Seal packing:

Part No.08826—00080 or equivalent

(c) Install the half circular plug to the cylinder head.

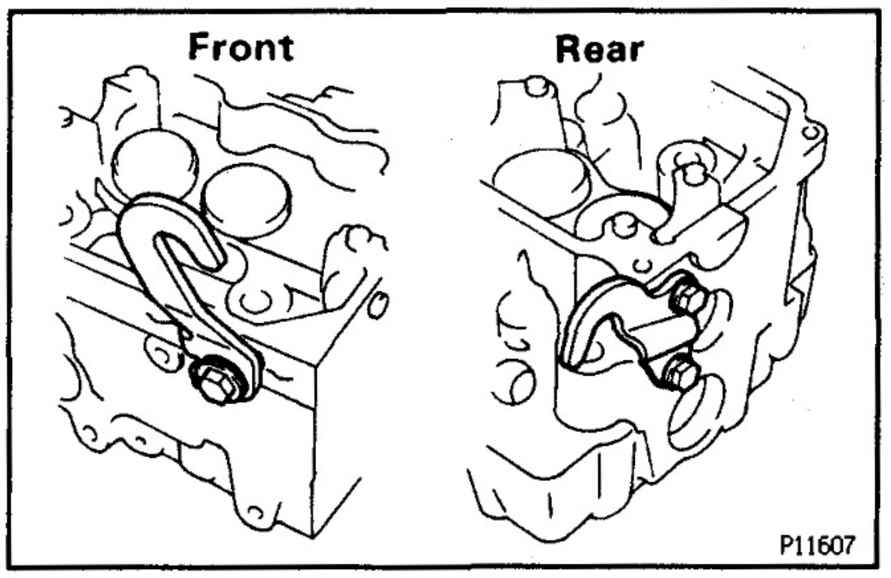

8. INSTALL FRONT AND REAR ENGINE HANGERS

Torque: 41 N·m (420 kgf·cm, 30 ft·lbf) for Front

Torque: 20 N·m (200 kgf·cm, 14 ft·lbf) for Rear

EG33M–01

CYLINDER HEAD INSTALLATION

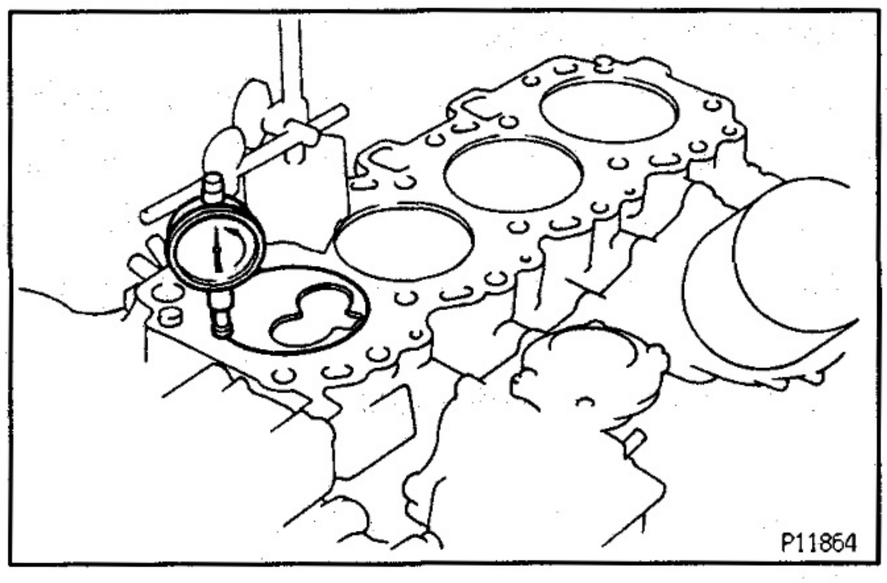

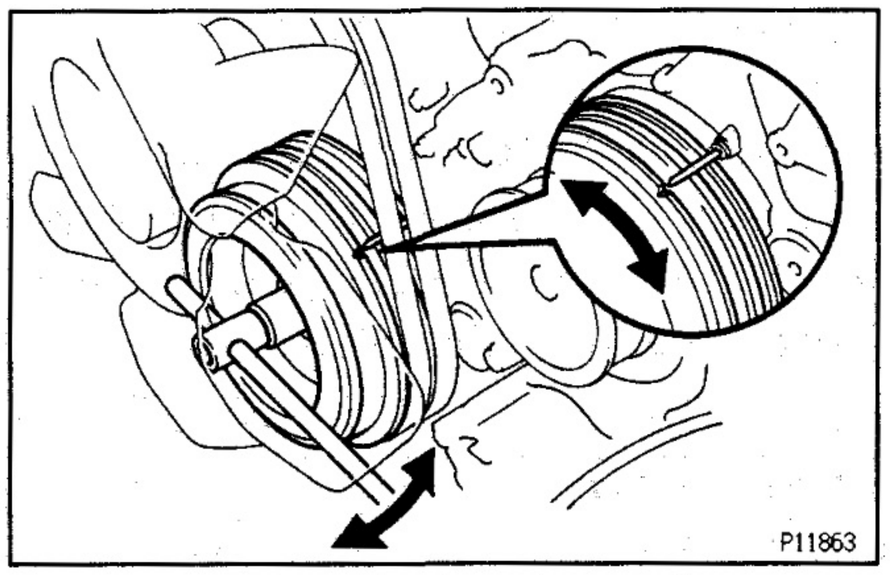

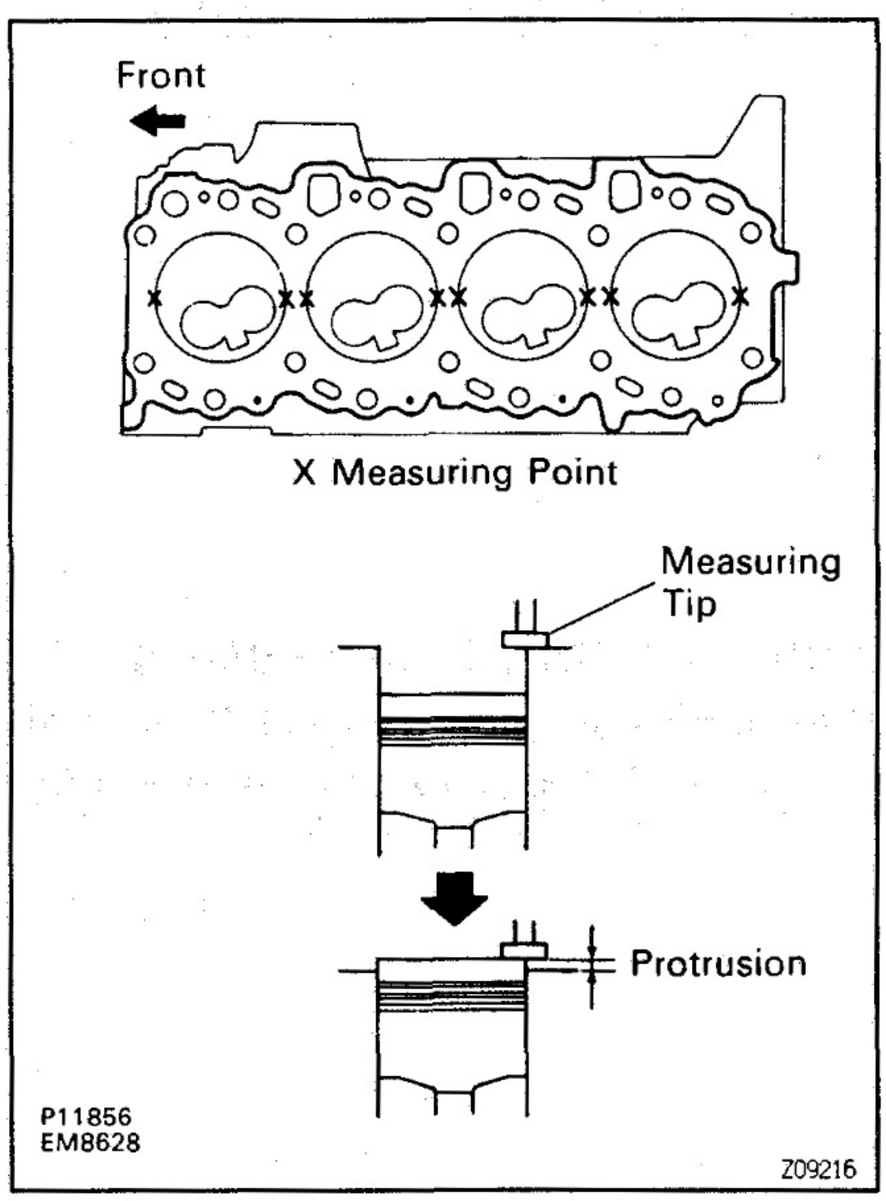

(See Components for Removal and Installation)

1. CHECK PISTON PROTRUSION AND SELECT CYLINDER HEAD GASKET

A. Check piston protrusions for each cylinder.

(a) Clean the cylinder block with solvent.

(b) Set the piston of the cylinder to be measured to slightly before TDC.

(c) Place a dial indicator on the cylinder block, and set the dial indicator at 0 mm (0 in.)

HINT:

- Use a dial indicator measuring tip as shown in the illustration.
- Make sure that the measuring tip is square to the cylinder block gasket surface and piston head when taking the measurments.

(d) Find where the piston head protrudes most by slowly turning the crankshaft clockwise and counterclockwise.

(e) Measure each cylinder at 2 places as shown in the illustration, making a total of 8 measurements.

(f) For the piston protrusion value of each cylinder, use the average of the 2 measurements of each cylinder.

Protrusion:

0.08 — 0.33 mm (0.0031 — 0.0130 in.)

(When removing piston and connecting rod assembly)

If the protrusion is not as specified, remove the piston and connecting rod assembly (See page EG—89) and reinstall it (See page EG—112).

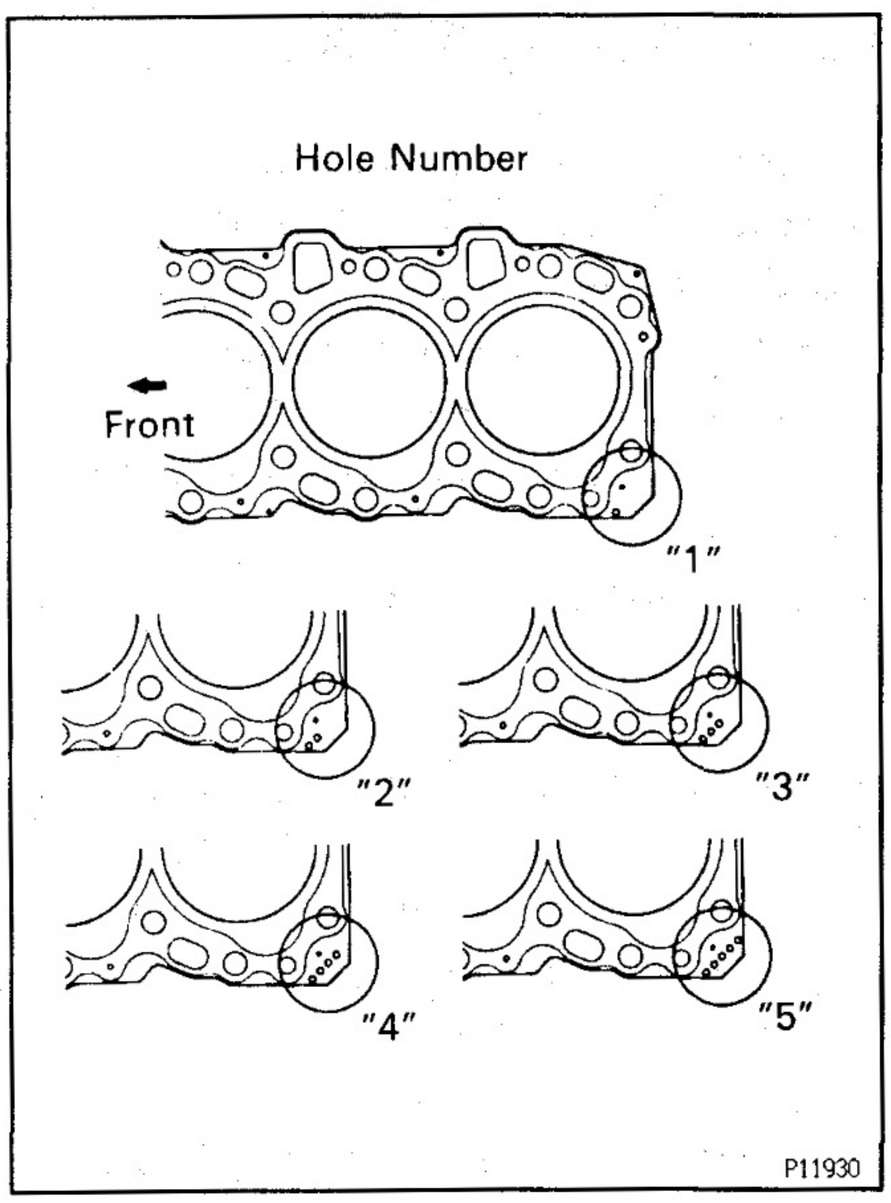

B. Select new cylinder head gasket

HINT: There are 5 types of cylinder head gasket (hole number 1 to 5) installed at factory, but only 3 types for supply parts (hole number "1", "3" and "5"), so when replacing the gasket select from one of 3 types above.

Installed cylinder head gasket thickness:

Hole number "1"

0.80 – 0.90 mm (0.0315 – 0.0354 in.)

Hole number "3"

0.90 – 1.00 mm (0.0354 – 0.0394 in.)

Hole number "5"

1.00 – 1.10 mm (0.0394 – 0.0433 in.)

Select the largest piston protrusion value from the measurements made, then select the appropriate cylinder head gasket according to the table below.

Piston protrusion mm (in.)	Gasket size
0.08 – 0.12 (0.0031 – 0.0047)	Use "1"
0.13 – 0.22 (0.0051 – 0.0087)	Use "3"
0.23 – 0.33 (0.0091 – 0.0130)	Use "5"

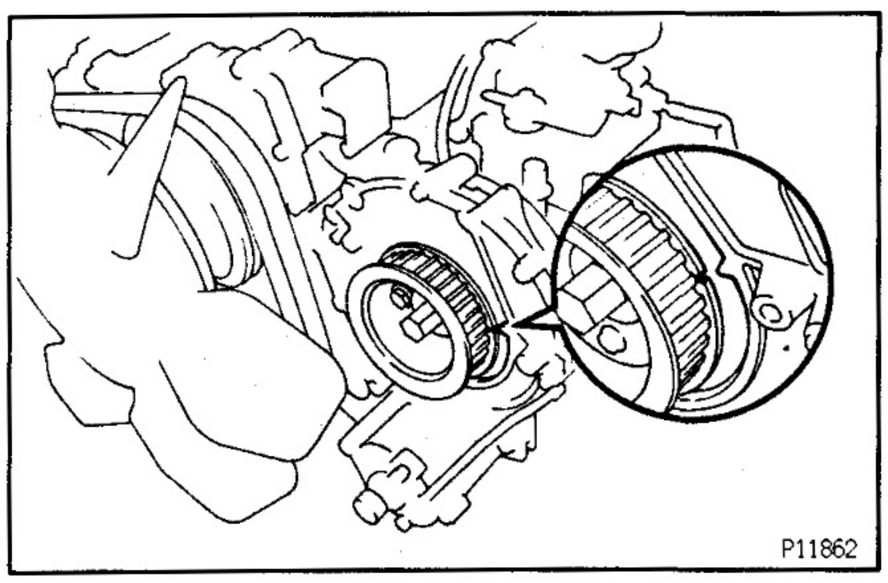

2. SET NO.4 CYLINDER TO TDC/COMPRESSION

Turn the crankshaft pulley, and align the TDC mark of the timing gear cover with the No.2 camshaft timing pulley.

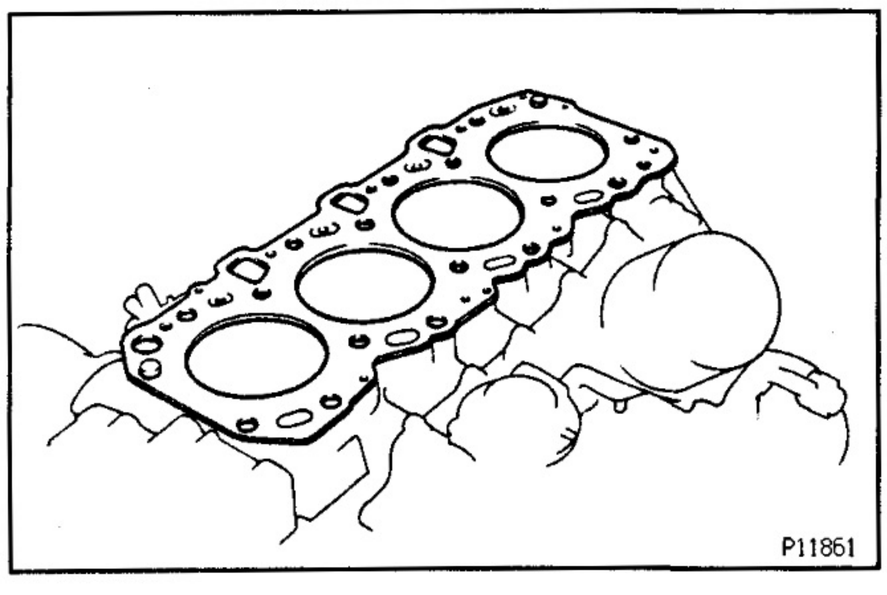

3. INSTALL CYLINDER HEAD

A. Place cylinder head on cylinder block

(a) Place a new cylinder head gasket in position on the cylinder block.

NOTICE: Be careful of the installation direction.

(b) Place the cylinder head in position on the cylinder head gasket.

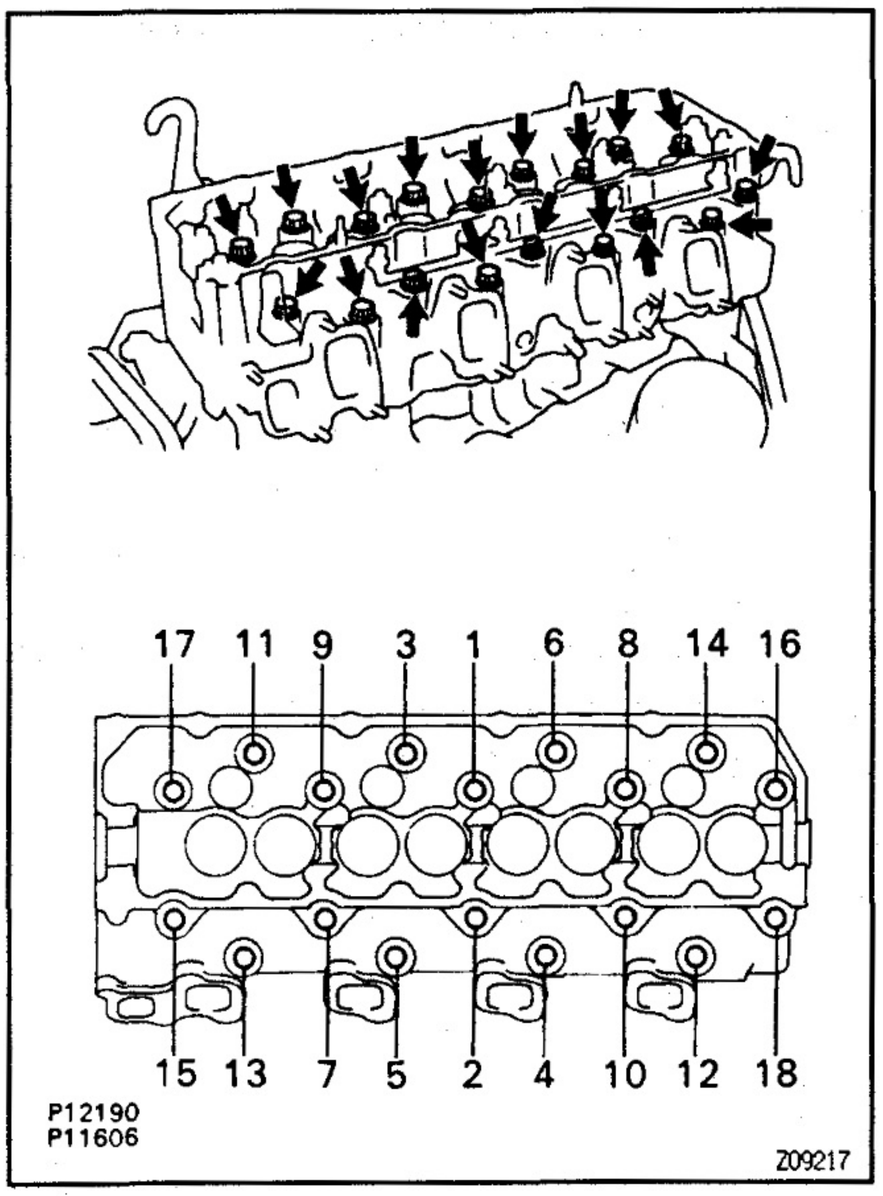

B. Install cylinder head bolts

HINT:

- The cylinder head bolts are tightened in 3 progressive steps (steps (b), (d) and (e)).
- If any bolts is broken or deformed, replace it.

(a) Apply a light coat of engine oil on the threads and under the heads of the cylinder head bolts.

(b) Install and uniformly tighten the 18 cylinder head bolts in several passes, in the sequence shown.
Torque: 39 N·m (400 kgf·cm, 29 ft·lbf)

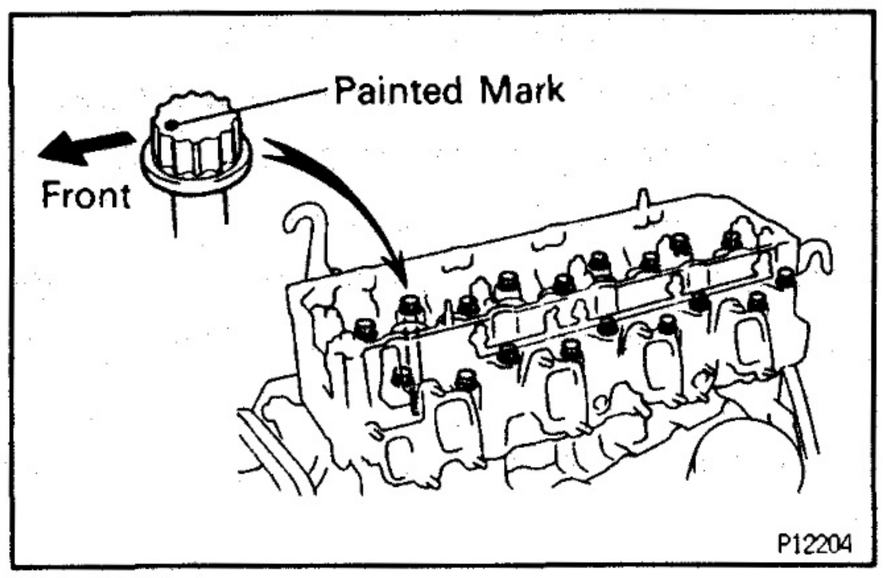

(c) Mark the front of the cylinder head bolt with paint.

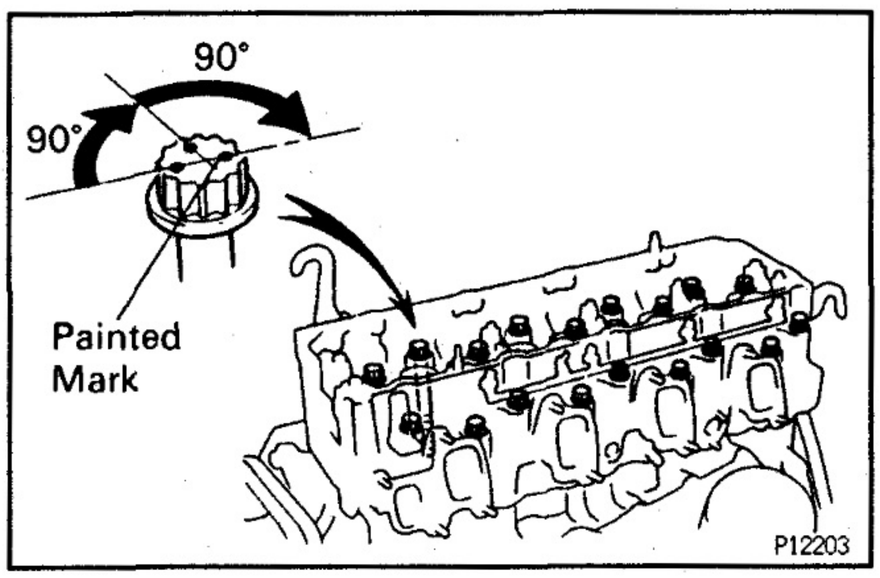

(d) Retighten the cylinder head bolts 90° in the numerical order shown.

(e) Retighten cylinder head bolts by an additional 90°.

(f) Check that the painted mark is now facing rearward.

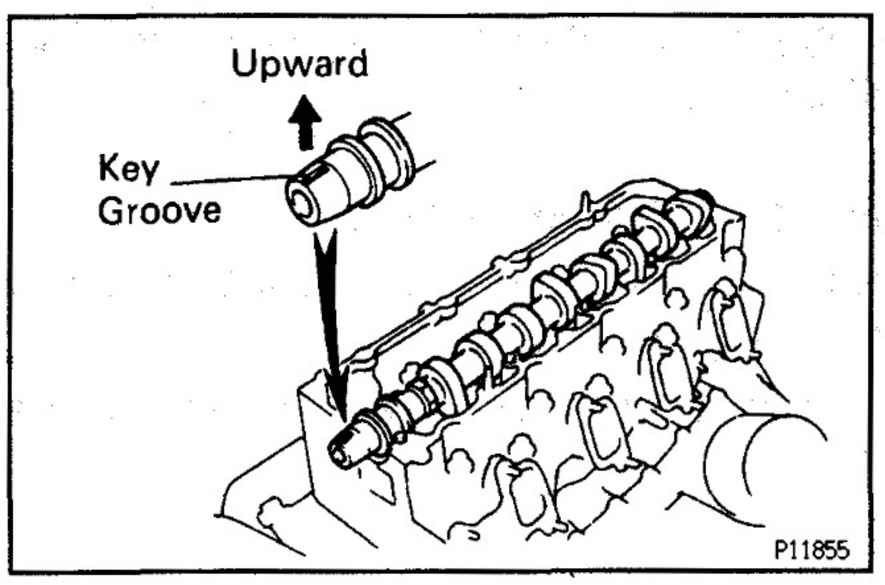

4. INSTALL CAMSHAFT

(a) Place the camshaft on the cylinder head, facing the key groove upward.

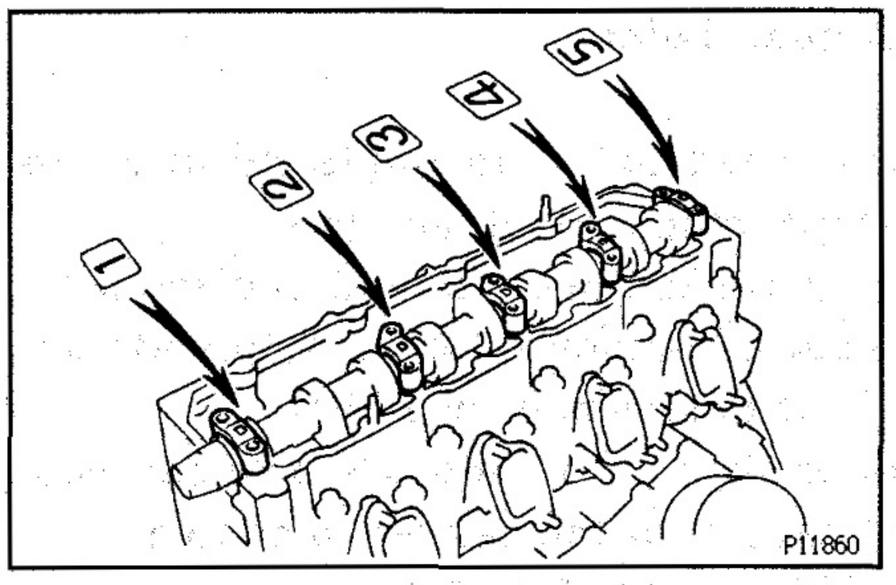

(b) Install the 5 bearing caps in their proper locations.

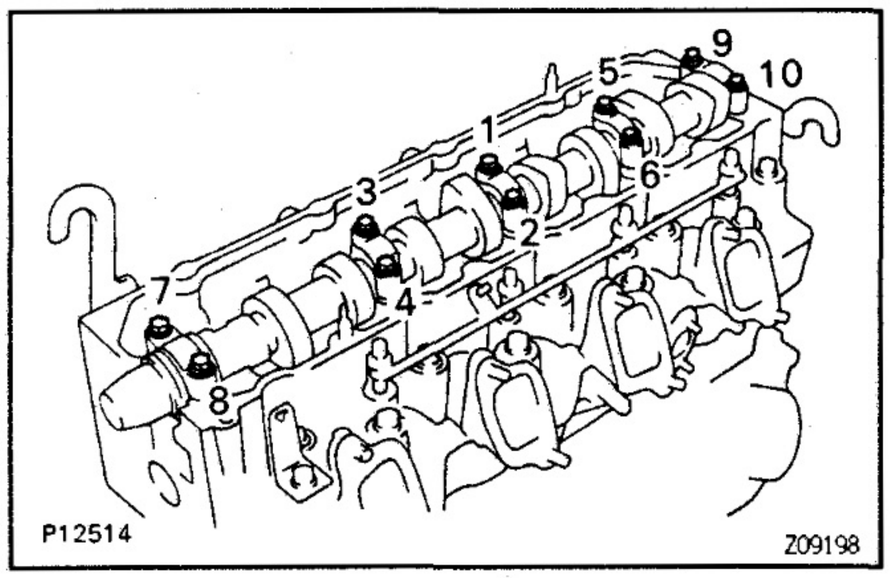

(c) Install and uniformly tighten the 10 bearing cap bolts in several passes in the sequence shown.
Torque: 18 N·m (185 kgf·cm, 13 ft·lbf)

5. INSTALL CAMSHAFT OIL SEAL RETAINER

(a) Remove any old packing (FIPG) material and be careful not to drop any oil on the contact surfaces of the camshaft oil seal retainer and cylinder head.

- Using a razor blade and gasket scraper, remove all the oil packing (FIPG) material from the gasket surfaces and sealing groove.
- Thoroughly clean all components to remove all the loose material.
- Using a non—residue solvent, clean both sealing surfaces.

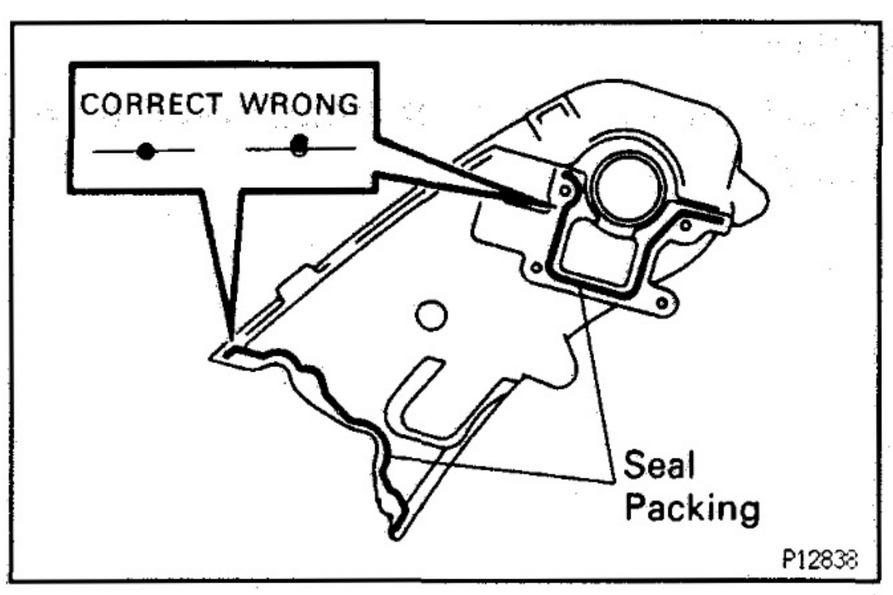

(b) Apply seal packing to the camshaft oil seal retainer as shown in the illustration.
Seal packing:
Part No. 08826—00080 or equivalent

- Install a nozzle that has been cut to a 2 — 3 mm (0.08 — 0.12 in.) opening.

HINT: Avoid applying an excessive amount to the surface.

- Parts must be assembled within 5 minutes of application. Otherwise the material must be removed and reapplied.
- Immediately remove nozzle from the tube and reinstall cap.

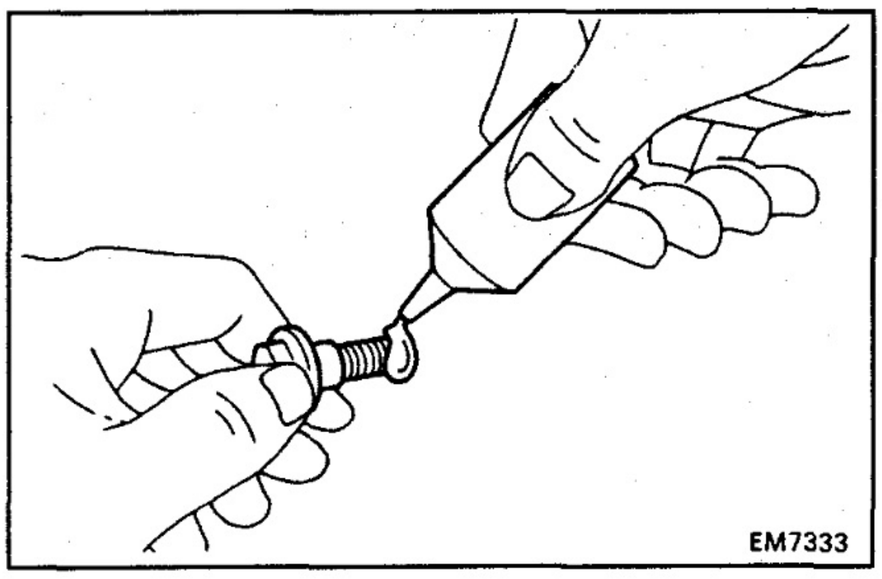

(c) Apply adhesive to 2 or 3 threads of the mounting bolt end.
Adhesive:
Part No. 08833—00070, THREE BOND 1324, or equivalent

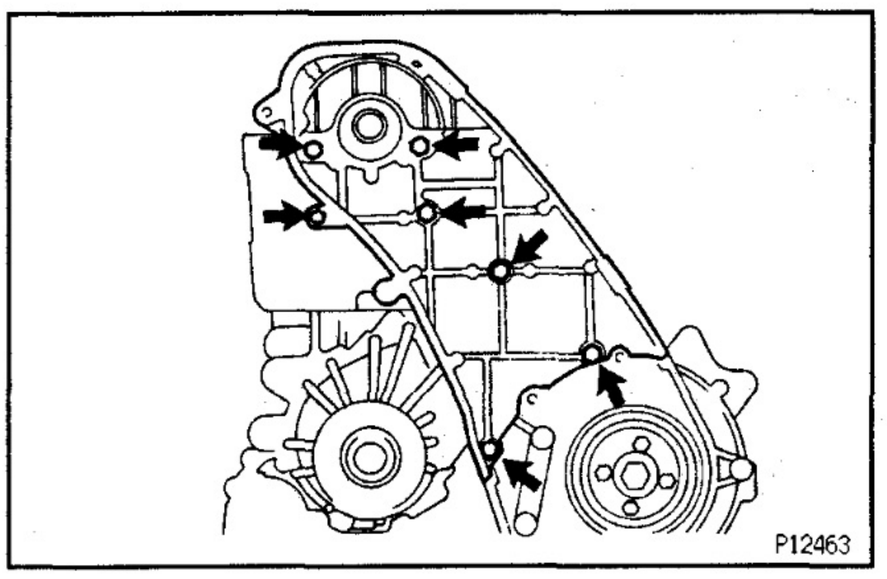

(d) Install the retainer with the 7 bolts.
Torque: 9 N·m (90 kgf·cm, 78 in.·lbf)

6. INSTALL PULLEYS AND TIMING BELT
(See steps 1 and 5 to 11 on pages EG—36 to 39)

7. CHECK AND ADJUST VALVE CLEARANCE
(See page EG—17)
Turn the camshaft and position the cam lobe upward, and check and adjust the valve clearance.
Valve clearance (Cold):
Intake
0.20 — 0.30 mm (0.008 — 0.012 in.)
Exhaust
0.25 — 0.35 mm (0.010 — 0.014 in.)

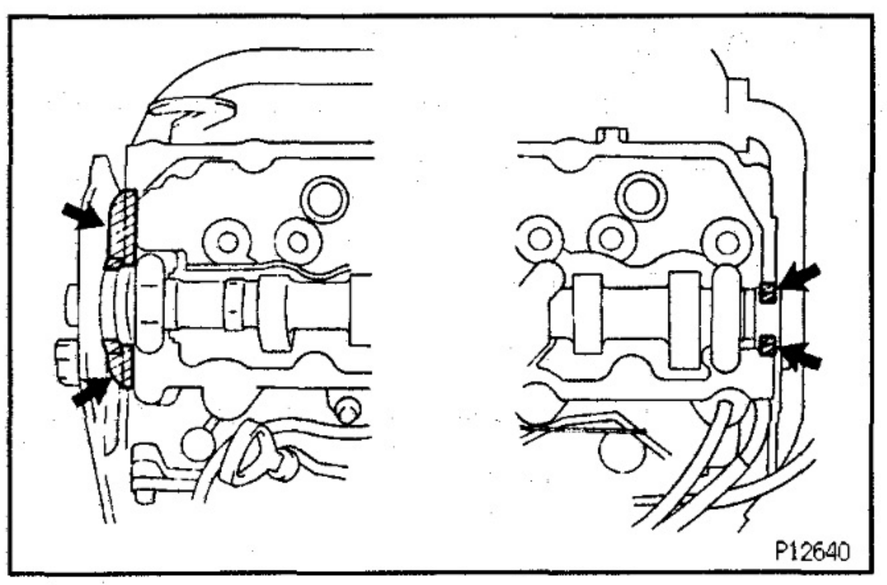

8. INSTALL CYLINDER HEAD COVER
(a) Remove any old packing (FIPG) material.
(b) Apply seal packing to the cylinder head as shown in the illustration.
Seal packing:
Part No. 08826—00080 or equivalent

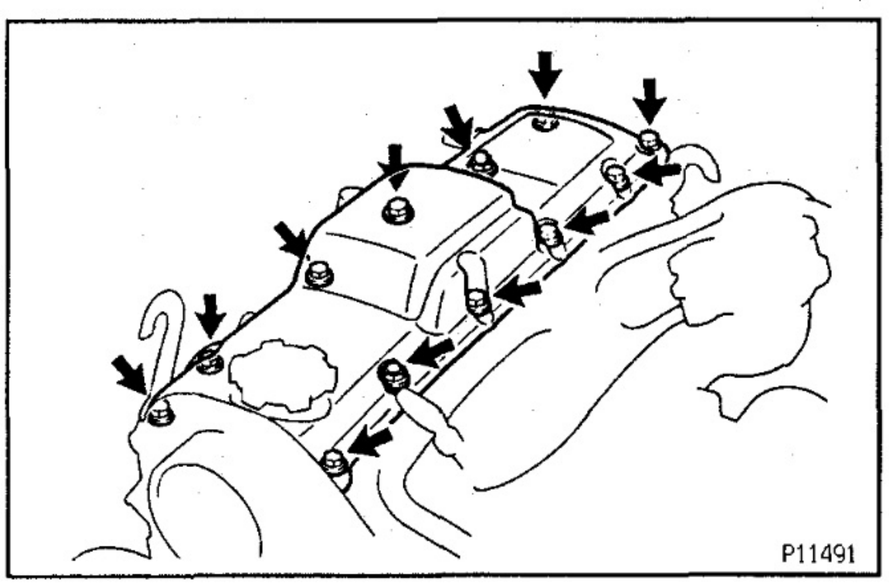

(c) Install the gasket to the cylinder head cover.
(d) Install the cylinder head cover with the 10 bolts and 2 nuts.
Torque: 9 N·m (90 kgf·cm, 78 in.·lbf)

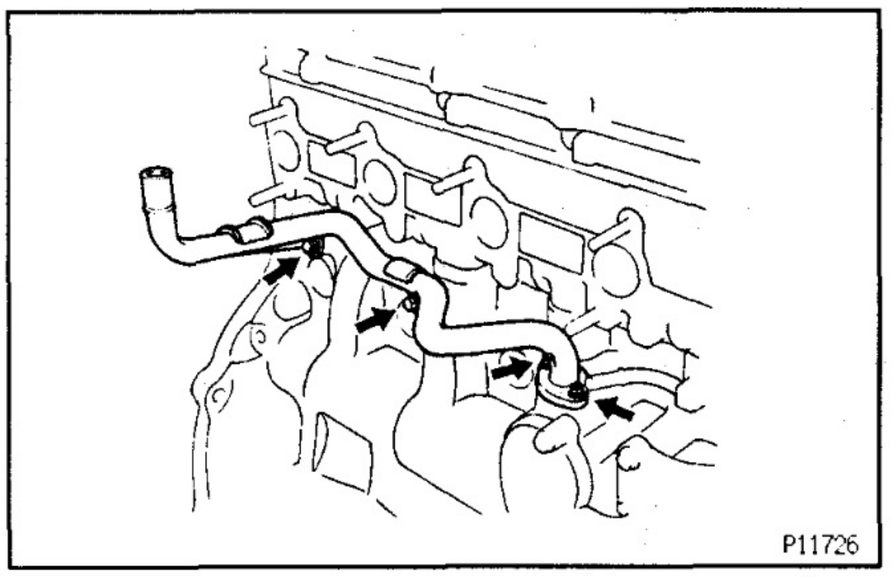

9. INSTALL HEATER WATER OUTLET PIPE
Install a new gasket, the heater water outlet pipe with the 2 bolts and nuts.

10. INSTALL TURBOCHARGER AND EXHAUST MANIFOLD ASSEMBLY
(See page EG−135)

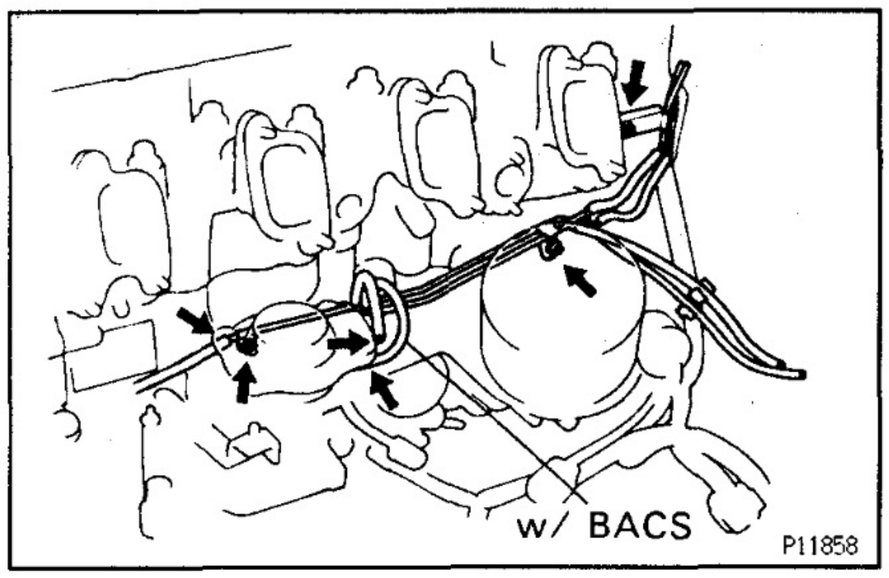

11. INSTALL VACUUM PIPE
(a) Install the vacuum pipe with the 3 nuts.
(b) Connect the follwing vacuum hoses:
- w/o BACS:
  Hose to the injection pump
- w/ BACS:
  2 hoses to the injection pump
- Hose to the vacuum pipe

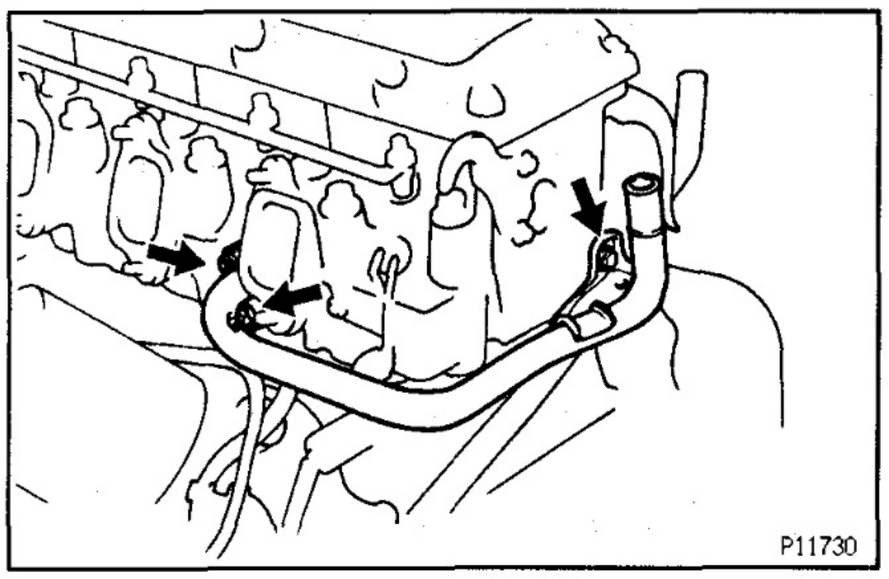

12. INSTALL HEATER WATER INLET PIPE
Install a new gasket, the heater water inlet pipe with the 2 nuts and bolt.

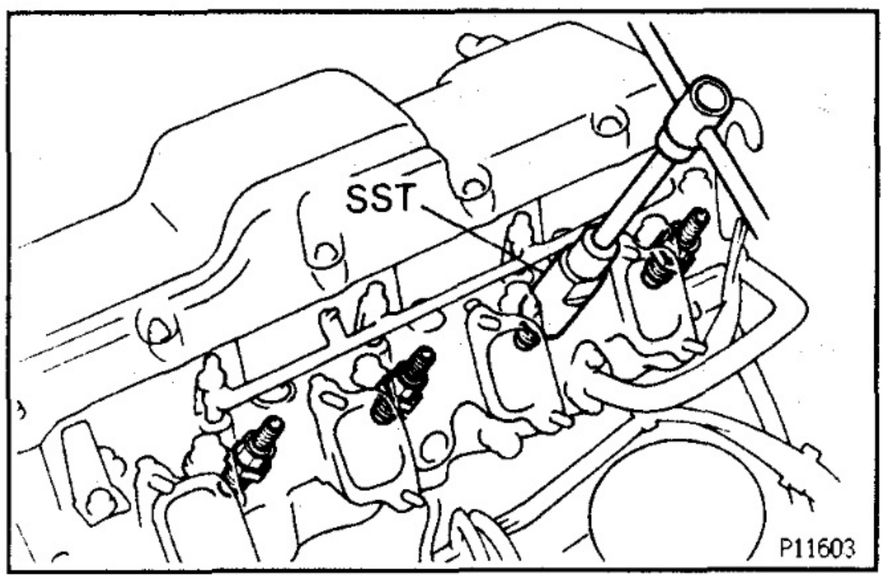

13. INSTALL INJECTION NOZZLES
(a) Place the nozzle seats and new gaskets into the injection nozzle holes of the cylinder head.
(b) Using SST, install the injection nozzles.
SST 09268−64010 (09268−64020)
Torque: 64 N·m (650 kgf·cm, 47 ft·lbf)
NOTICE: Over torquing could cause nozzle deformation and needle adhesion or other defects.

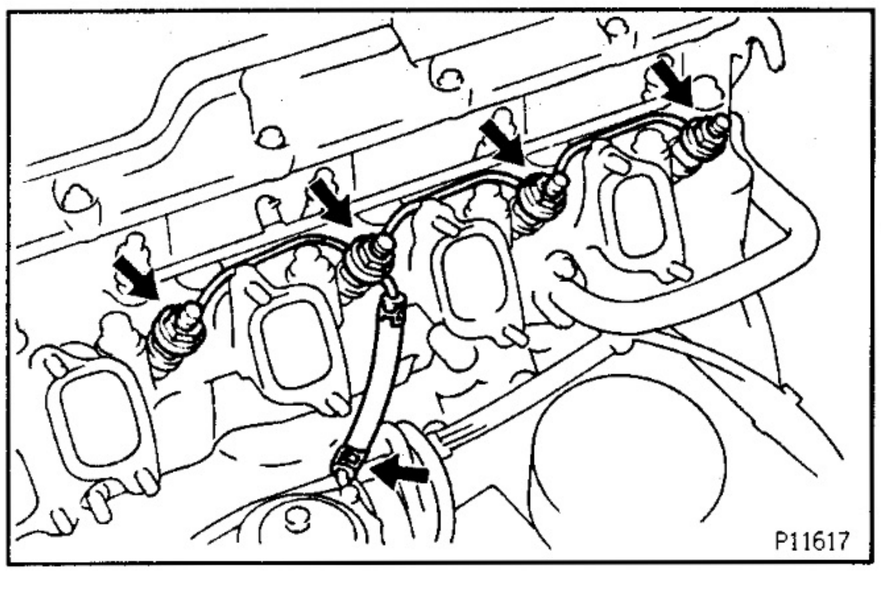

14. INSTALL NOZZLE LEAKAGE PIPE

(a) Install 4 new gaskets and the leakage pipe with the 4 nuts.
Torque: 30 N·m (300 kgf·cm, 22 ft·lbf)

(b) Connect the fuel hose to the return pipe.

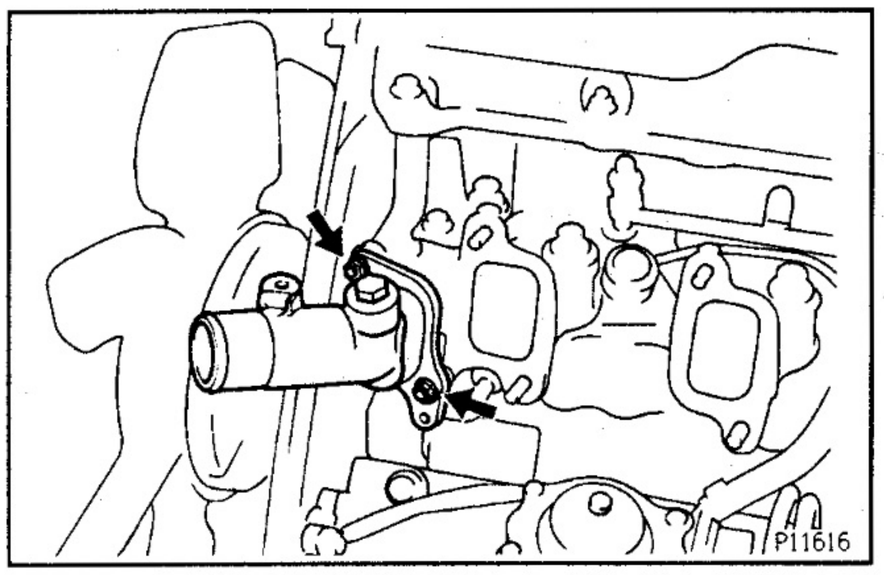

15. INSTALL WATER OUTLET

Install a new gasket and water outlet with the 2 nuts.
Torque: 13 N·m (130 kgf·cm, 9 ft·lbf)

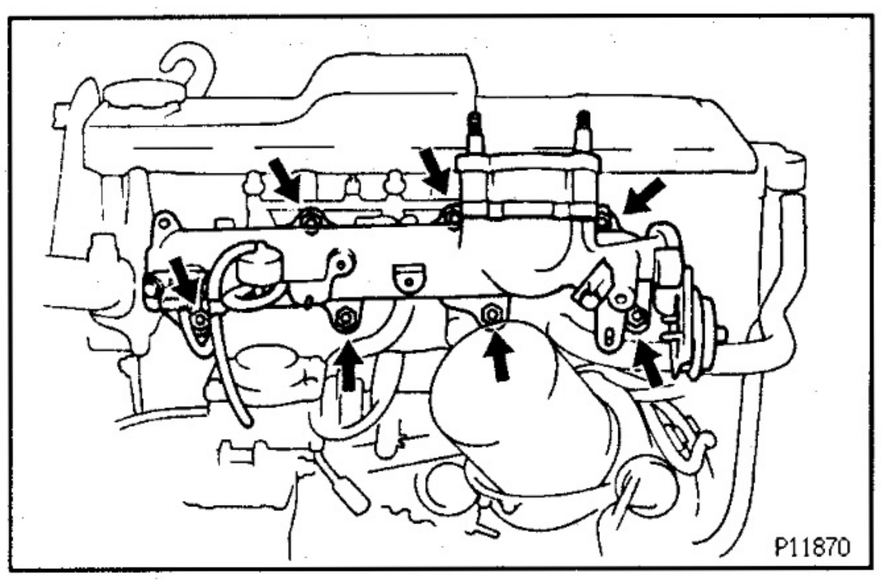

16. INSTALL INTAKE MANIFOLD

(a) Install 4 new gaskets and the intake manifold with the 7 nuts and seal washers.
Torque: 29 N·m (290 kgf·cm, 21 ft·lbf)

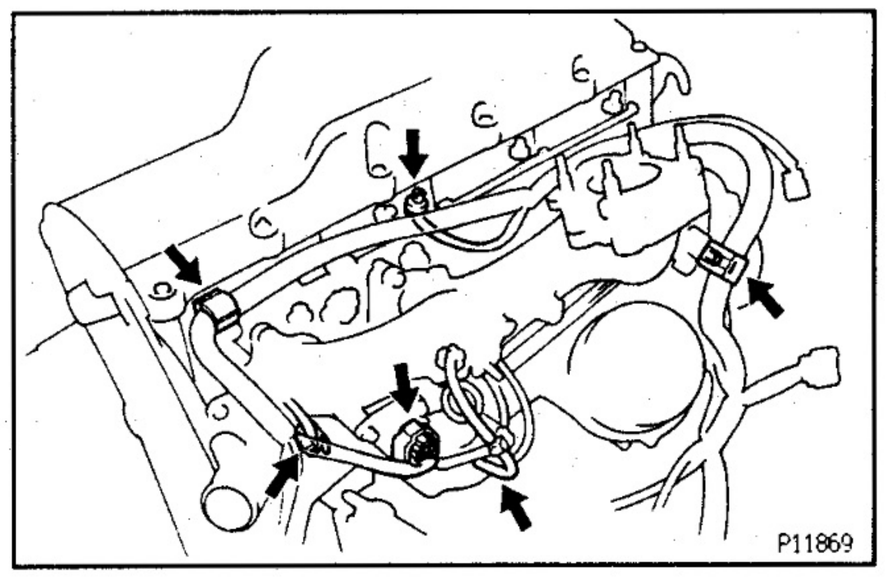

(b) Connect the 2 engine wire harness clamps.
(c) Install the wire, nut and grommet.
(d) Connect the vacuum hose to the injection pump.
(e) Connect the following connectors:
- Turbo pressure sensor connector
- Water temperature sender gauge connector

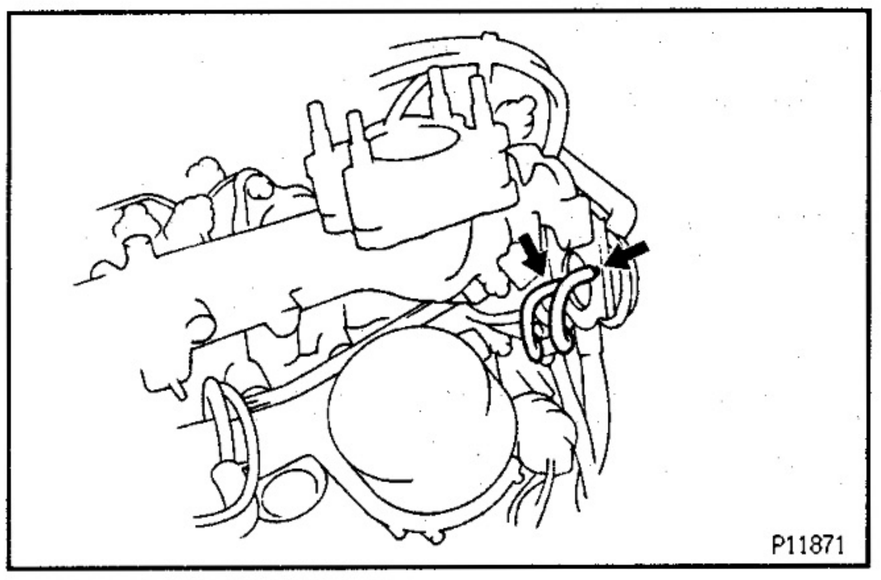

(f) w/ BACS:
Connect the 2 vacuum hoses to the altitude compensator.

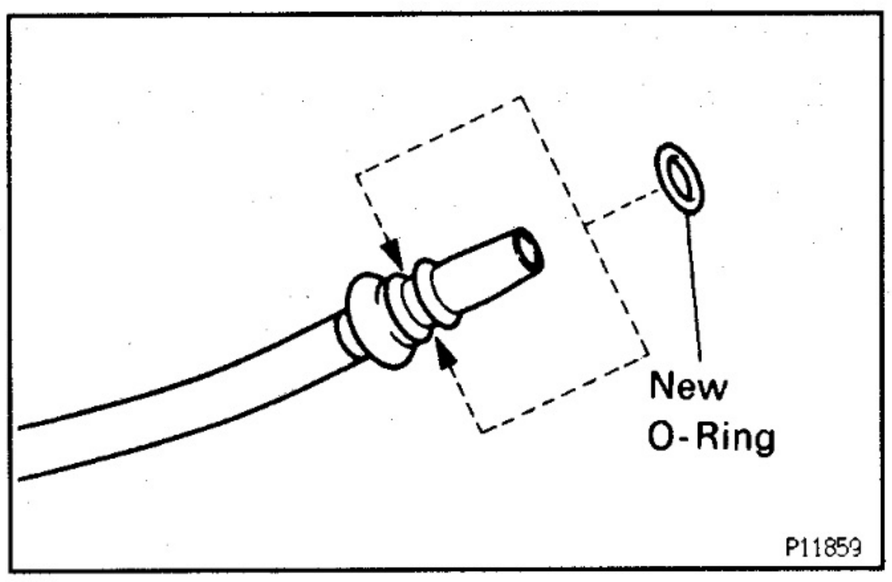

17. INSTALL OIL DIPSTICK GUIDE AND OIL DIPSTICK

(a) Install a new O—ring to the dipstick guide.

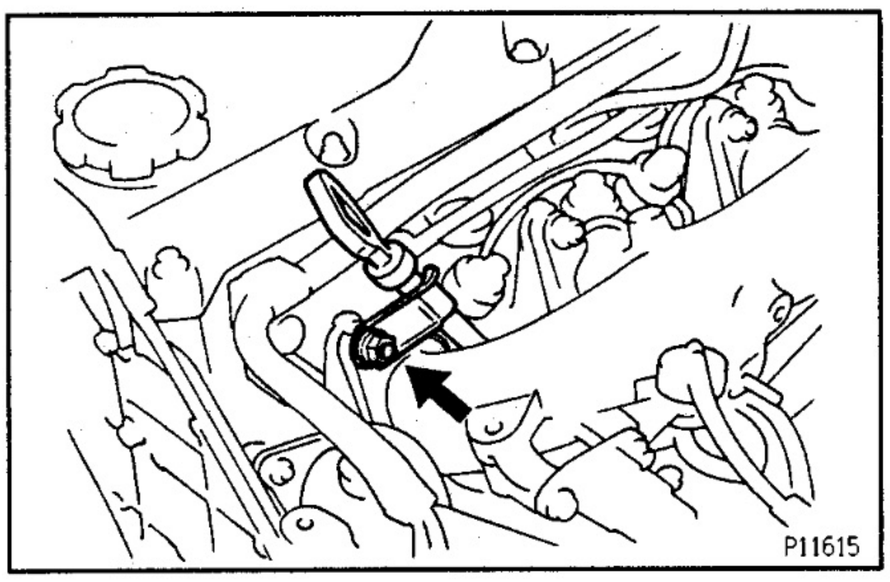

(b) Install the oil dipstick guide assembly with the nut.
Torque: 29 N·m (290 kgf·cm, 21 ft·lbf)

18. INSTALL INJECTION PIPES
(See step 3 on page EG—159)
Torque: 15 N·m (150 kgf·cm, 11 ft·lbf)

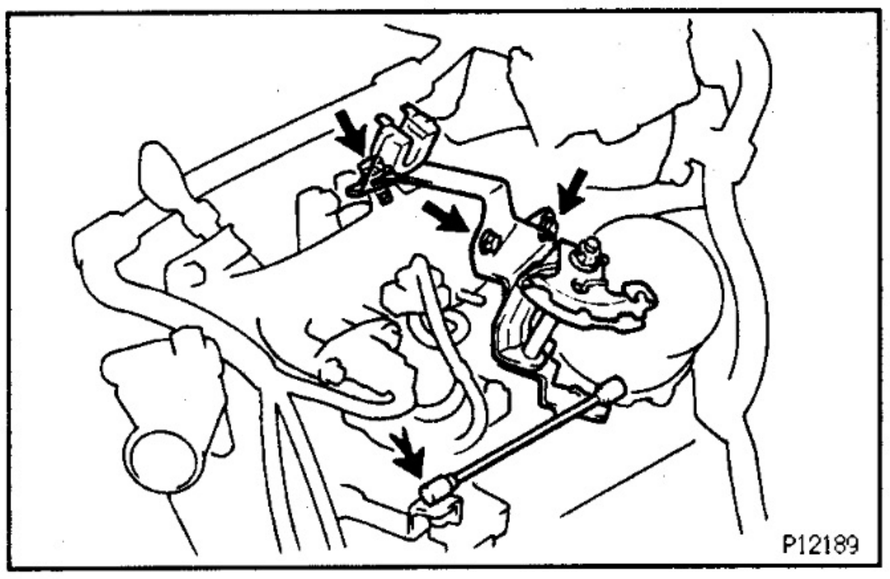

19. INSTALL ACCELERATOR CABLE BRACKET AND LINK

(a) Install the accelerator cable bracket and link with the 3 bolts.

(b) Connect the accelerator link to the injection pump.

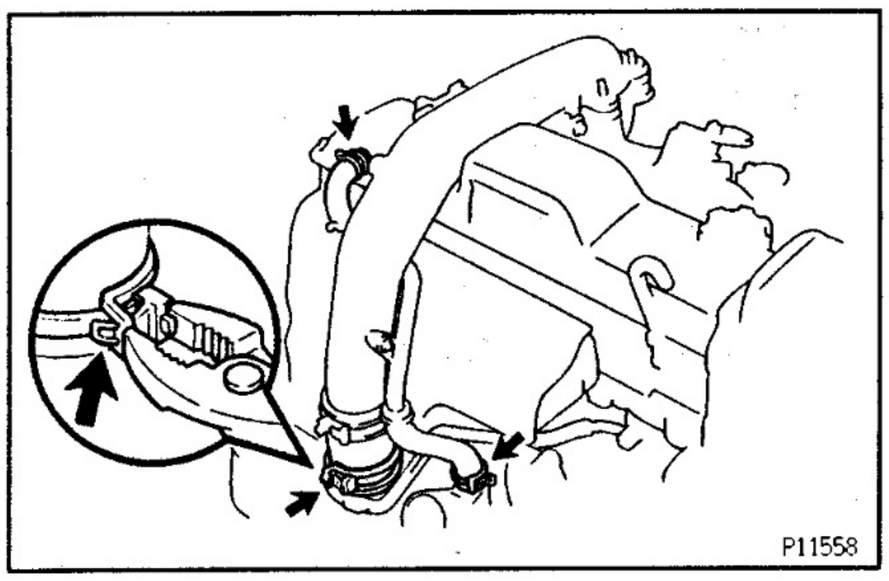

20. INSTALL INTAKE PIPE

(a) Place a new gasket on the intake manifold.

(b) Connect the air hose and install the intake pipe.

(c) Press the clamp lock together with pliers and press down the tip of the lock plate. Carefully let the lock spread apart.
Take care not to let the pliers slip.

(d) Connect the 2 PCV hoses.

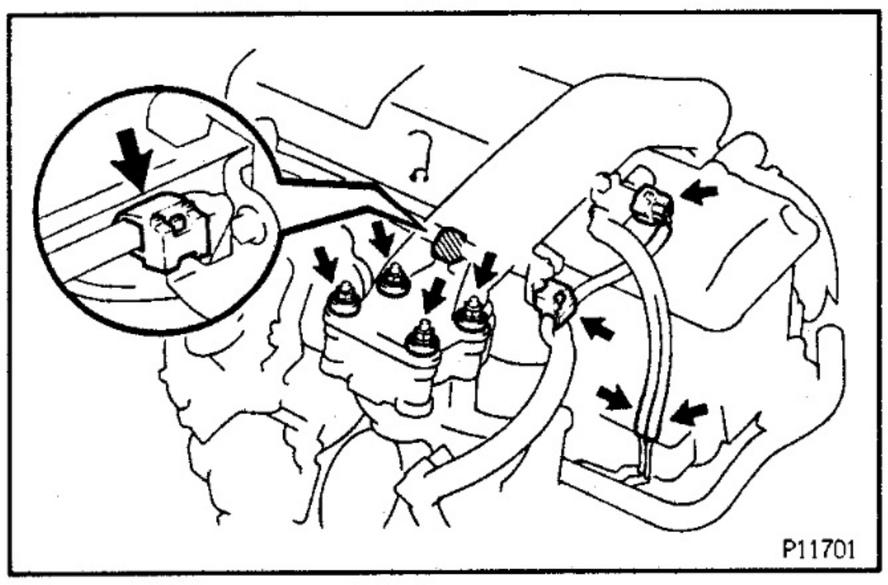

(e) Install the 4 seal washers and nuts.
Torque: 12 N·m (120 kgf·cm, 9 ft·lbf)

(f) Connect the 2 wire harness clamps.

(g) Connect the VSV connector and 2 vacuum hoses.

21. FILL WITH ENGINE COOLANT
(See page EG—233)

22. START ENGINE AND CHECK FOR LEAKS

23. RECHECK ENGINE COOLANT LEVEL AND OIL LEVEL

CYLINDER BLOCK

COMPONENTS FOR DISASSEMBLY AND ASSEMBLY

EG0S8-0H

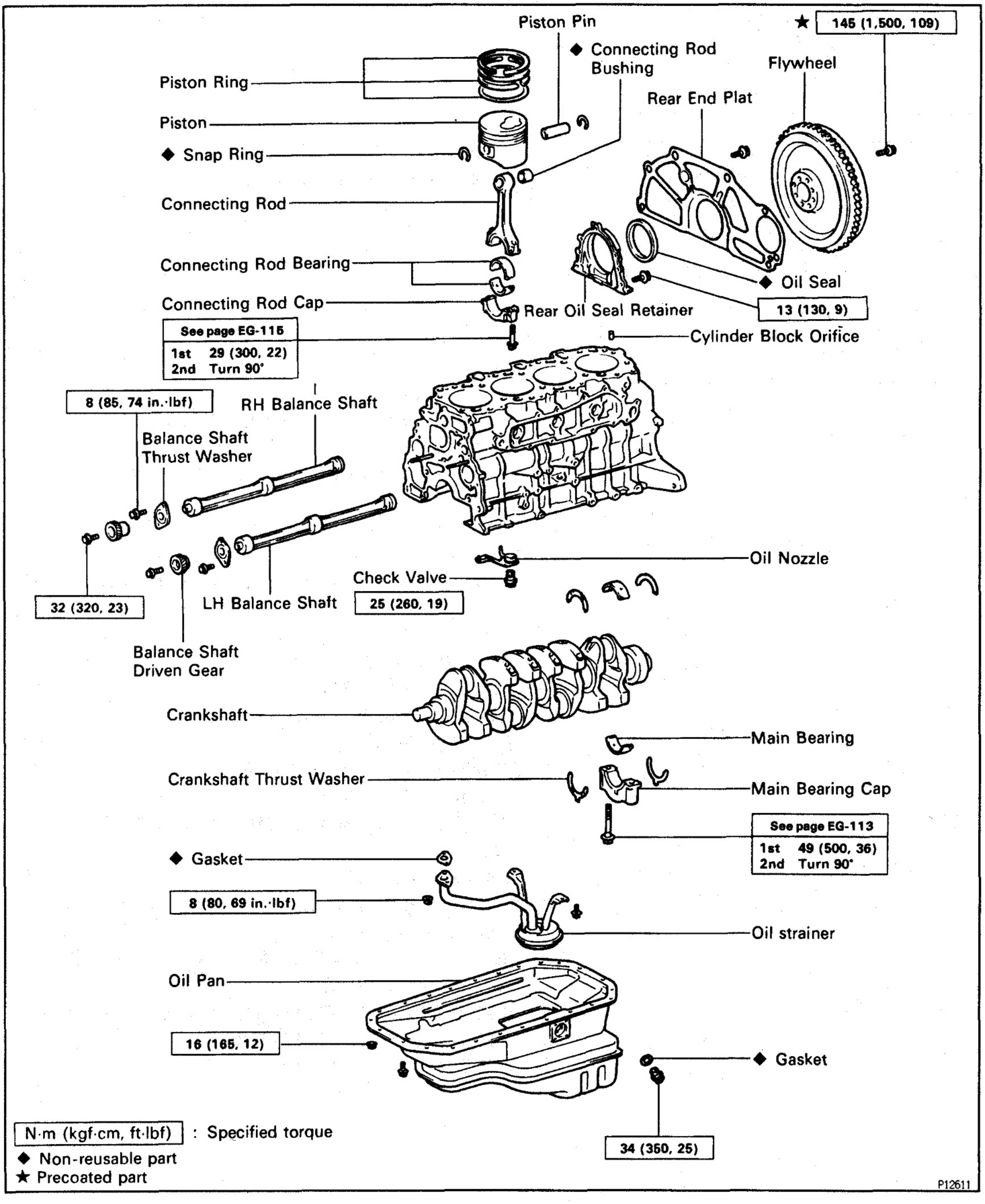

N·m (kgf·cm, ft·lbf) : Specified torque
◆ Non-reusable part
★ Precoated part

P12611

EG336-01

PREPARATION FOR DISASSEMBLY

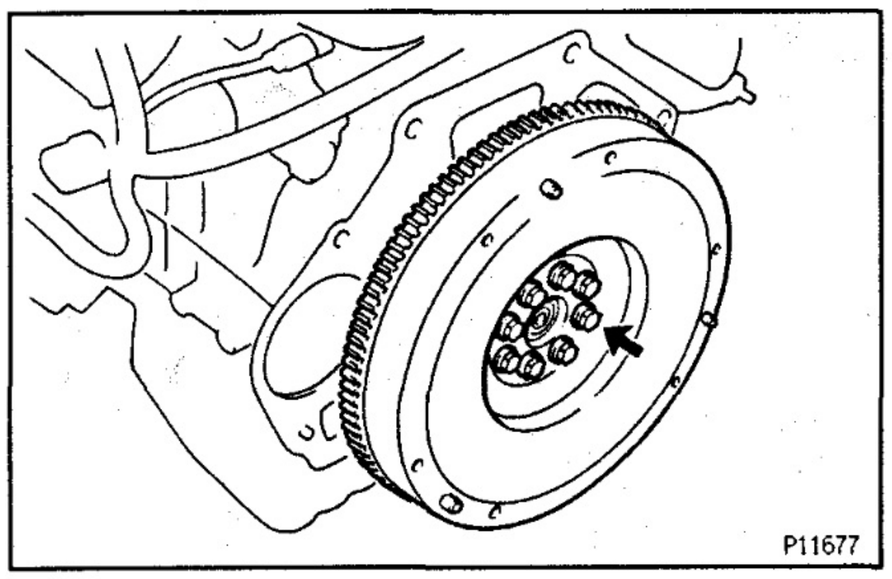

1. **REMOVE CLUTCH COVER AND DISC**
2. **REMOVE FLYWHEEL**
   Remove the 5 bolts and flywheel.

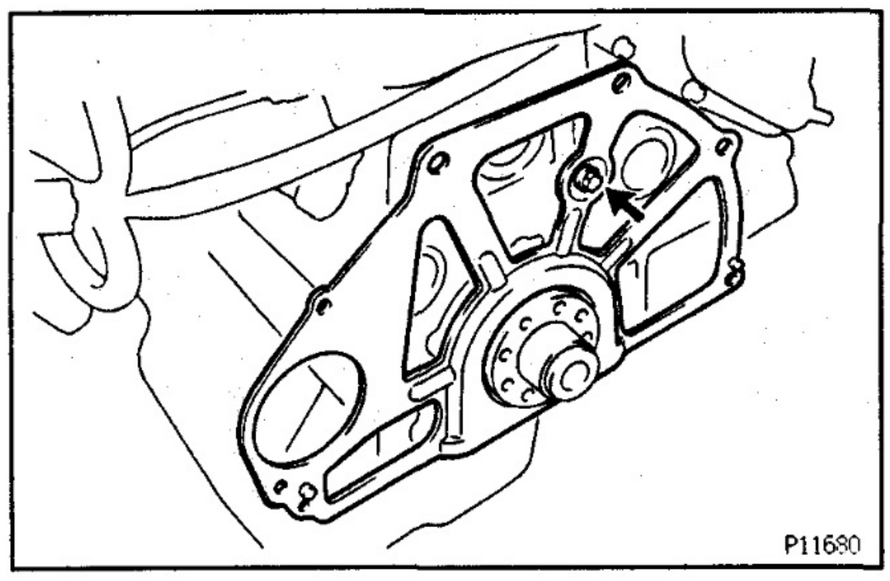

3. **REMOVE REAR END PLATE**
   Remove the bolt and end plate.
4. **INSTALL ENGINE TO ENGINE STAND FOR DISASSEMBLY**
5. **REMOVE TIMING BELT AND PULLEYS**
   (See page EG−32)
6. **REMOVE CYLINDER HEAD**
   (See page EG−59)
7. **REMOVE ALTERNATOR AND ALTERNATOR BRACKET**
   (See page EG−235)
8. **REMOVE WATER PUMP**
   (See page EG−235)
9. **REMOVE TIMING GEARS**
   (See page EG−41)
10. **REMOVE INJECTION PUMP**
    (See page EG−161)
11. **REMOVE OIL PAN AND TIMING GEAR CASE (OIL PUMP)**
    (See page EG−251)
12. **REMOVE OIL COOLER**
    (See page EG−260)
13. **REMOVE WATER INLET AND THERMOSTAT**
    (See page EG−239)
14. **REMOVE WATER TEMPERATURE SENSOR**
15. **REMOVE ENGINE MOUNTING**
16. **REMOVE PLUG HOLE**

EG337-02

CYLINDER BLOCK DISASSEMBLY

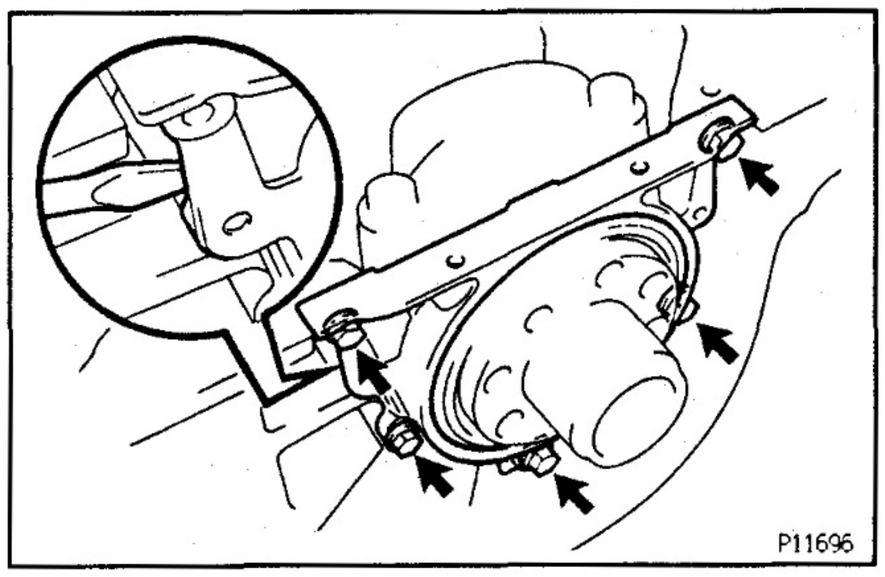

(See Components for Disassembly and Assembly)

1. REMOVE REAR OIL SEAL RETAINER

Remove the 5 bolts and retainer.

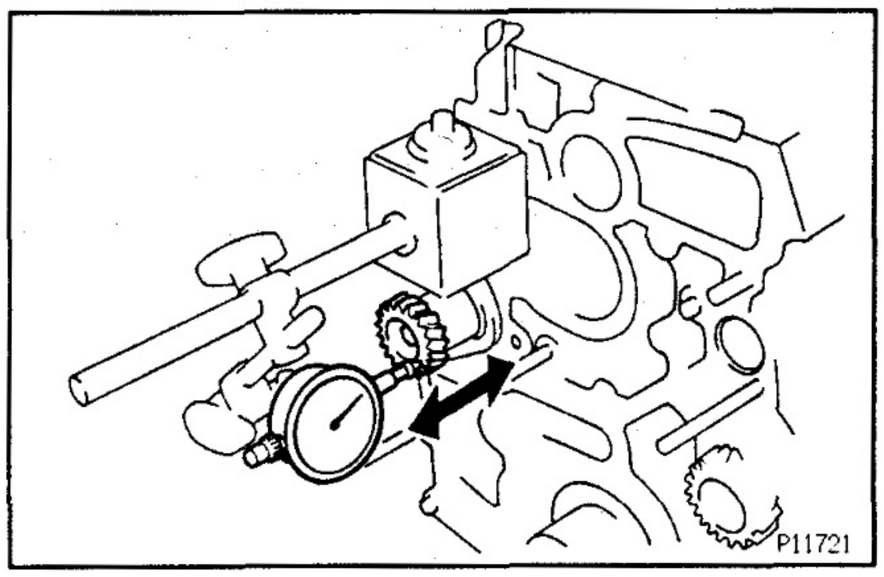

2. CHECK THRUST CLEARANCES OF RH AND LH BALANCE SHAFTS OF ENGINE BALANCER

Using a dial indicator, measure the thrust clearance while moving the balance shaft back and forth.

Standard thrust clearance:

0.065 – 0.140 mm (0.0026 – 0.0055 in.)

Maximum thrust clearance:

0.25 mm (0.0098 in.)

If the thrust clearance is greater than maximum, replace the balance shaft thrust washer.

If necessary, replace the balance shaft.

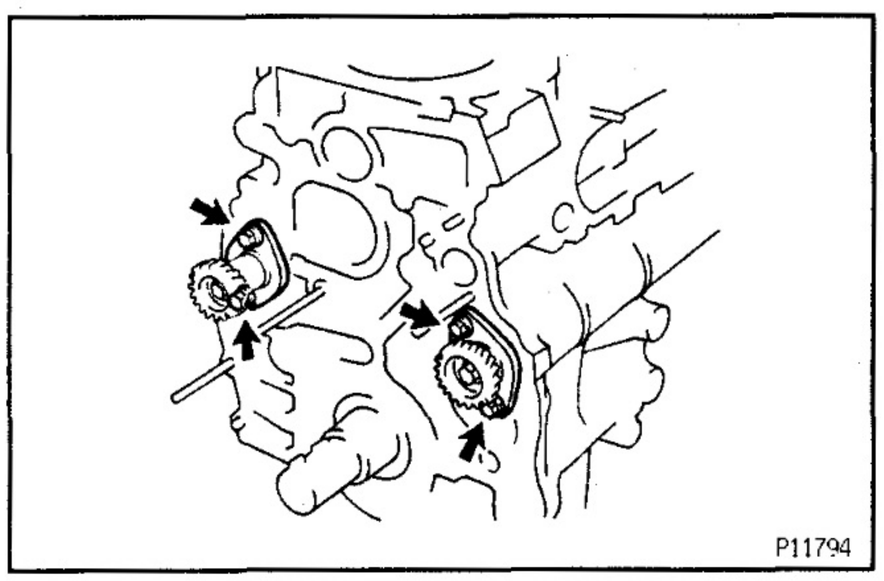

3. REMOVE RH AND LH BALANCE SHAFTS

(a) Remove the 2 bolts and RH balance shaft.

(b) Remove the 2 bolts and LH balance shaft.

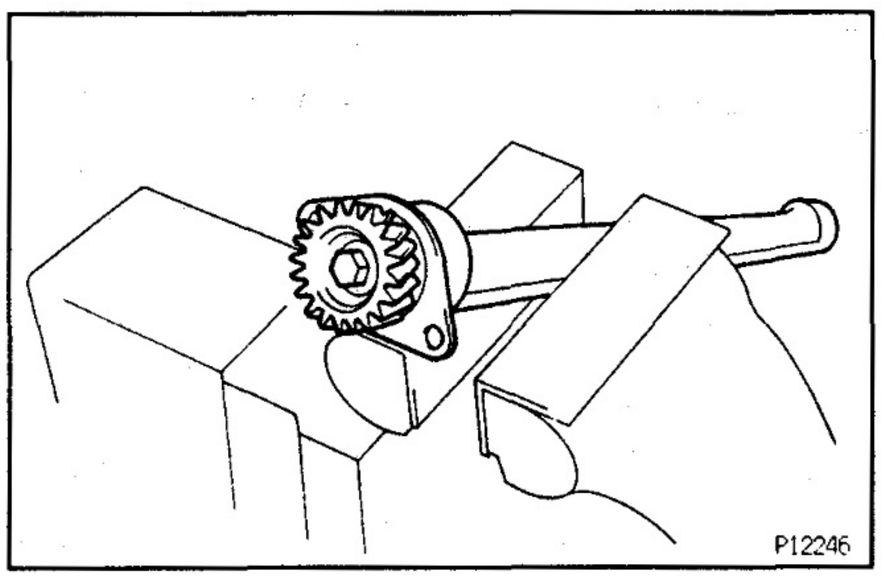

4. DISASSEMBLE RH AND LH BALANCE SHAFTS

(a) Mount the weight of the balance shaft in a vise.

NOTICE: Be careful not to damage the balance shaft.

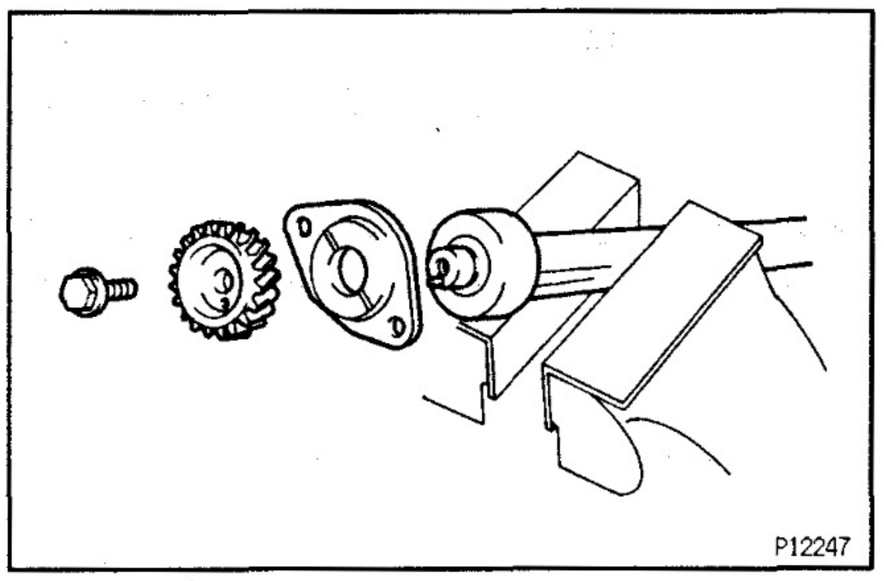

(b) Remove the bolt, balance shaft driven gear, and thrust washer.

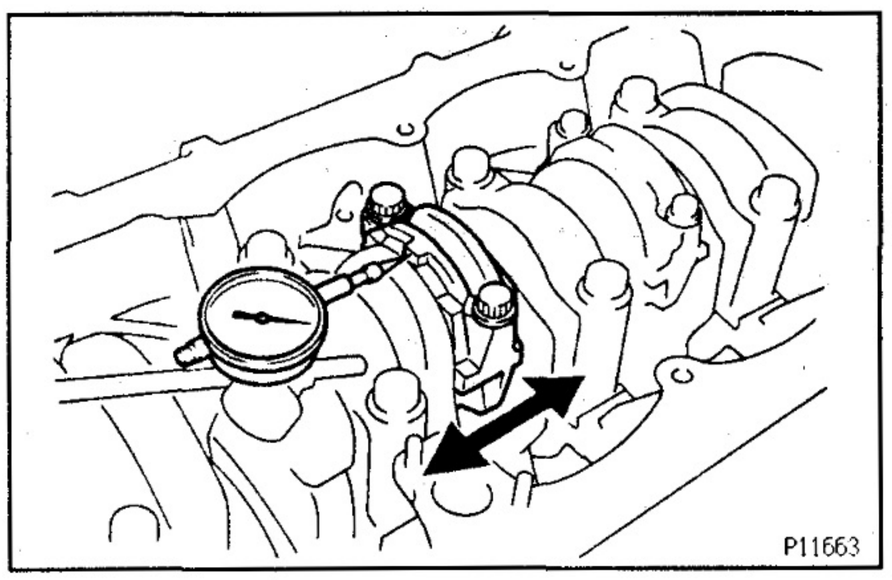

5. CHECK CONNECTING ROD THRUST CLEARANCE

Using a dial indicator, measure the thrust clearance while moving the connecting rod back and forth.

Standard thrust clearance:

0.10 — 0.30 mm (0.0039 — 0.0118 in.)

Maximum thrust clearance:

0.40 mm (0.0157 in.)

If the thrust clearance is greater than maximum, replace the connecting rod assembly. If necessary, replace the crankshaft.

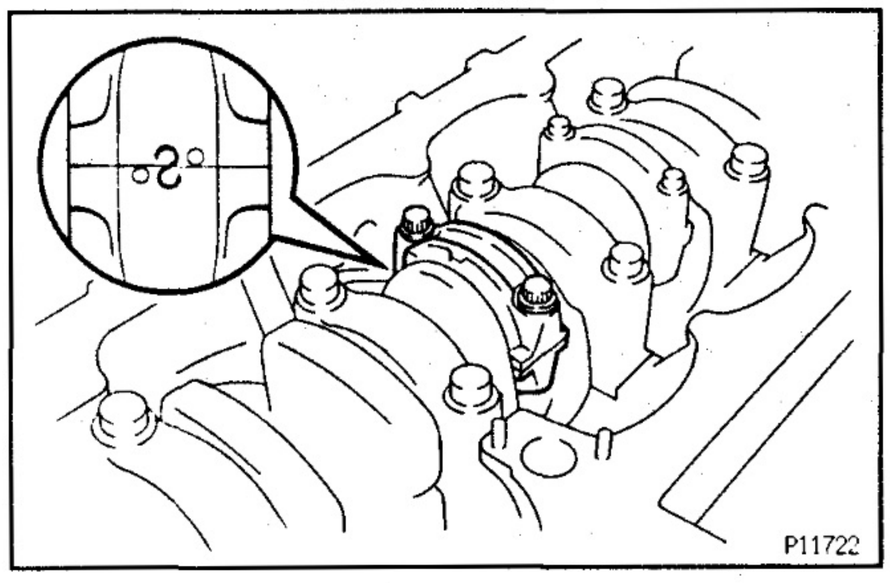

6. REMOVE CONNECTING ROD CAPS AND CHECK OIL CLEARANCE

(a) Using a punch or numbering stamp, place matchmarks on the connecting rod and cap to ensure correct reassembly.

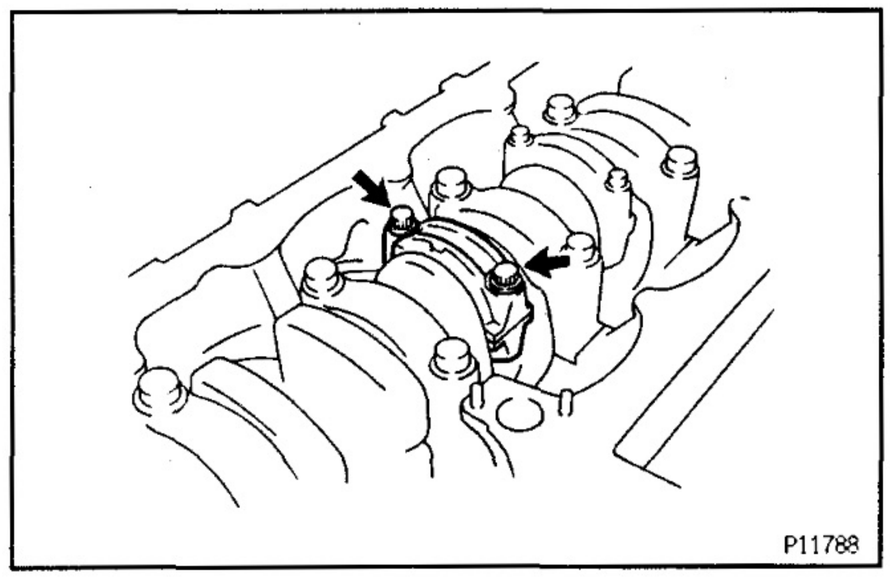

(b) Remove the connecting rod cap bolts.

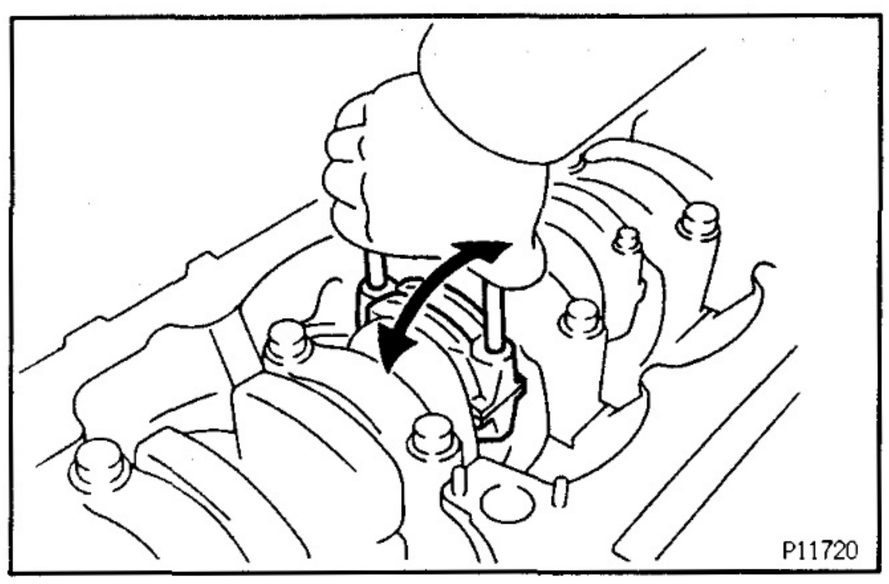

(c) Using the 2 removed connecting rod bolts, pry the connecting rod cap back and forth, and remove the connecting cap.

HINT: Keep the lower bearing inserted with the connecting rod cap.

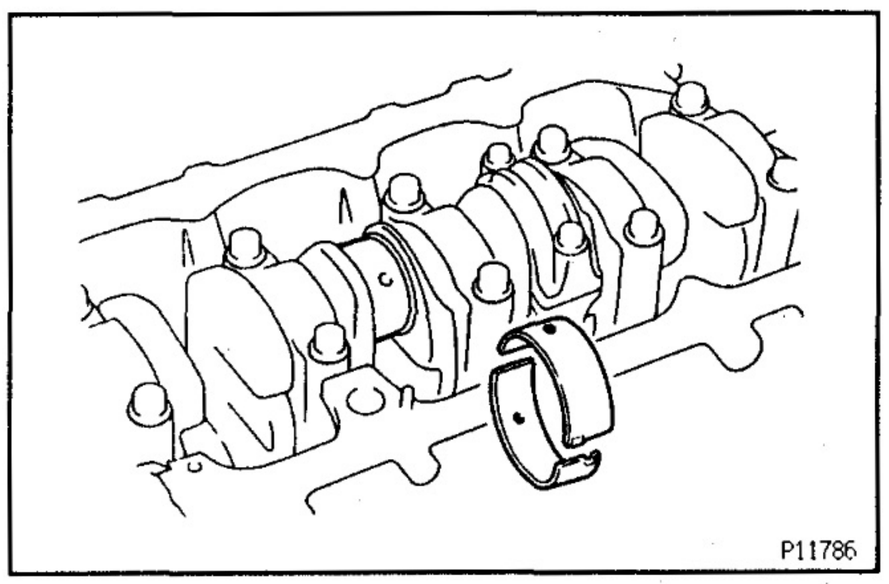

(d) Clean the crank pin and bearing.

(e) Check the crank pin and bearing for pitting and scratches.

If the crank pin or bearing is damaged, replace the bearings. If necessary, grind or replace the crankshaft.

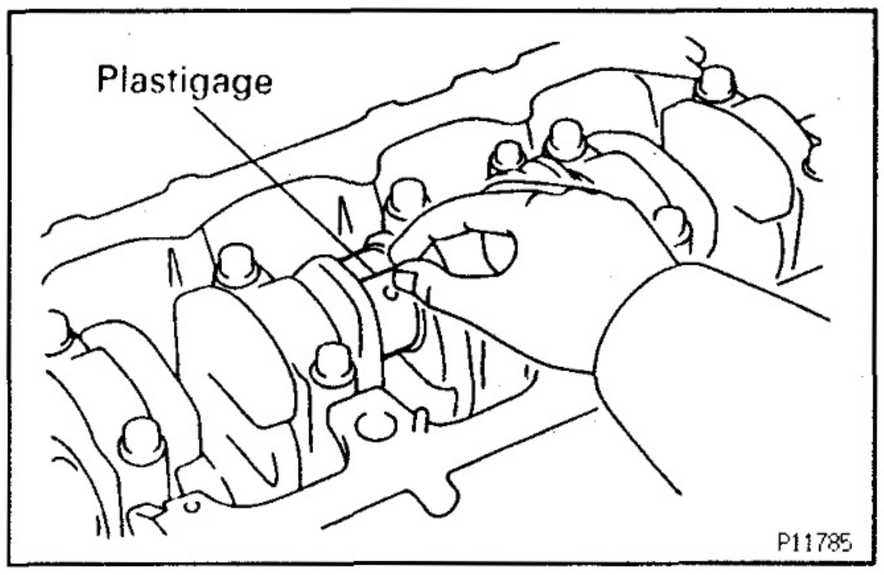

(f) Lay a strip of Plastigage across the crank pin.

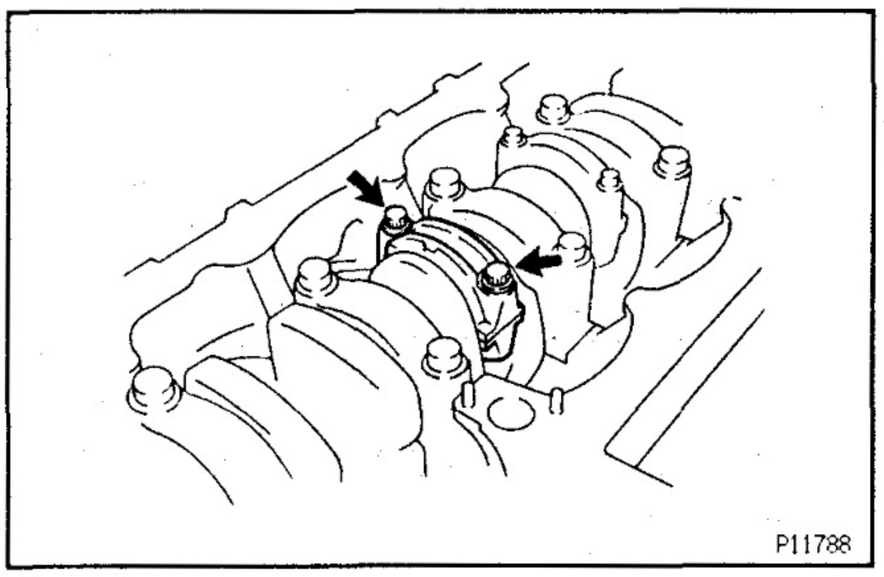

(g) Install the connecting rod cap with the 2 bolts.
(See step 8 on page EG—115)
1st
Torque: 29 N·m (300 kgf·cm, 22 ft·lbf)
2nd Turn 90°
NOTICE: Do not turn the crankshaft.

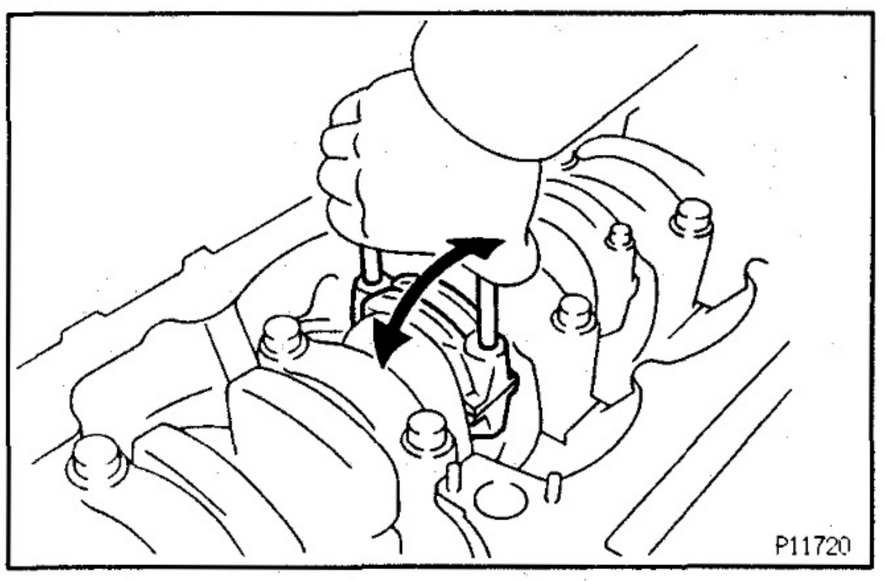

(h) Remove the 2 bolts, connecting rod cap and lower bearing.
(See procedure (b) and (c) above)

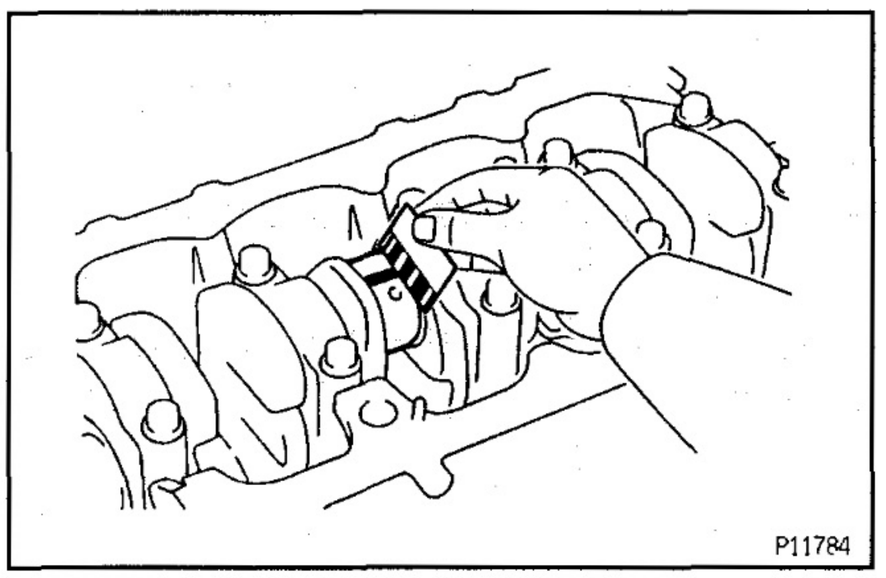

(i) Measure the Plastigage at its widest point.
Standard oil clearance:
STD
0.036 — 0.054 mm (0.0014 — 0.0021 in.)
U/S 0.25 and U/S 0.50
0.037 — 0.077 mm (0.0015 — 0.0030 in.)
Maximum oil clearance:
0.10 mm (0.0039 in.)
If the oil clearance is greater than maximum, replace the bearings. If necessary, grind or replace the crankshaft.
HINT: If using a standard bearing, replace it with one having the same number. If the number of the bearing cannot be determined, select the correct bearing by adding together the numbers inprinted on the crankshaft and connecting rod, then selecting the bearing with the same number as the total. There are 5 sizes of standard bearings, marked "2", "3", "4", "5", and "6" accordingly.

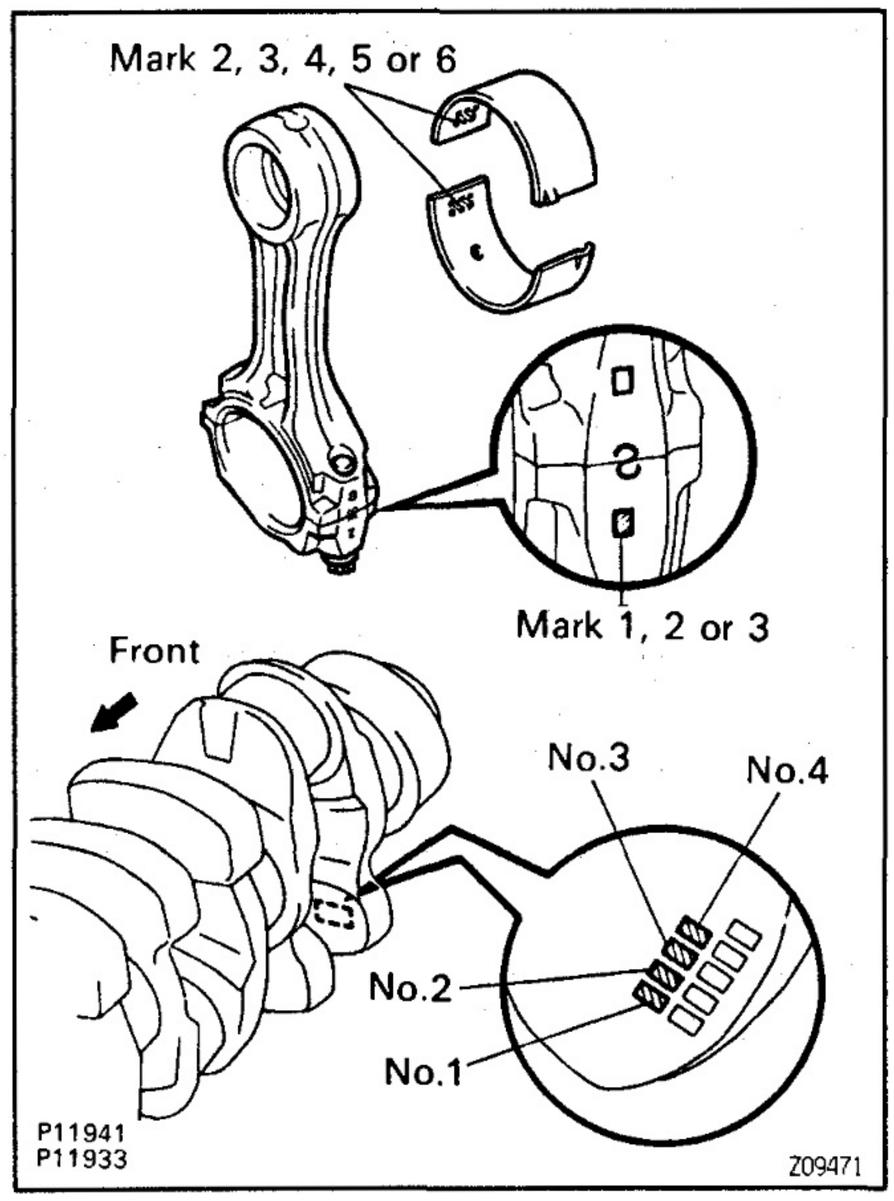

	Number marked								
Cylinder block	1			2			3		
Crankshaft	1	2	3	1	2	3	1	2	3
Use bearing	2	3	4	3	4	5	4	5	6

EXAMPLE: Cylinder block "2" + Crankshaft "1"
= Total number 3 (Use bearing "3")

V03852

Reference

Connecting rod big end inner diameter:

Mark "1"

62.014 – 62.020 mm (2.4415 – 2.4417 in.)

Mark "2"

62.020 – 62.026 mm (2.4417 – 2.4420 in.)

Mark "3"

62.026 – 62.032 mm (2.4420 – 2.4422 in.)

Crankshaft pin diameter:

Mark "1"

58.994 – 59.000 mm (2.3226 – 2.3228 in.)

Mark "2"

58.988 – 58.994 mm (2.3224 – 2.3226 in.)

Mark "3"

58.982 – 58.988 mm (2.3221 – 2.3224 in.)

Standard sized bearing center wall thickness:

Mark "2"

1.486 – 1.489 mm (0.0585 – 0.0586 in.)

Mark "3"

1.489 – 1.492 mm (0.0586 – 0.0587 in.)

Mark "4"

1.492 – 1.495 mm (0.0587 – 0.0589 in.)

Mark "5"

1.495 – 1.498 mm (0.0589 – 0.0590 in.)

Mark "6"

1.498 – 1.501 mm (0.0590 – 0.0591 in.)

(j) Completely remove the Plastigage.

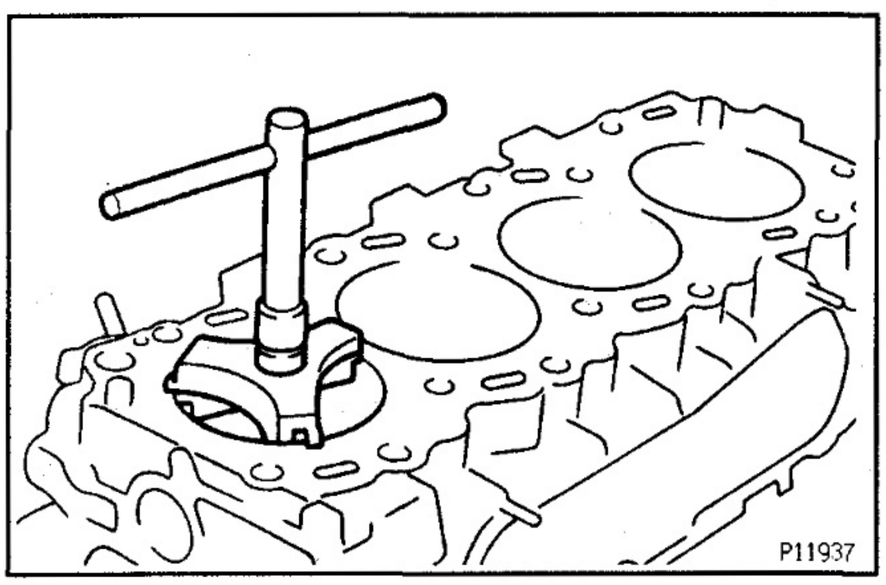

7. REMOVE PISTON AND CONNECTING ROD ASSEMBLIES

(a) Using a ridge reamer, remove all the carbon from the top of the cylinder.

(b) Push the piston, connecting rod assembly and upper bearing through the top of the cylinder block.

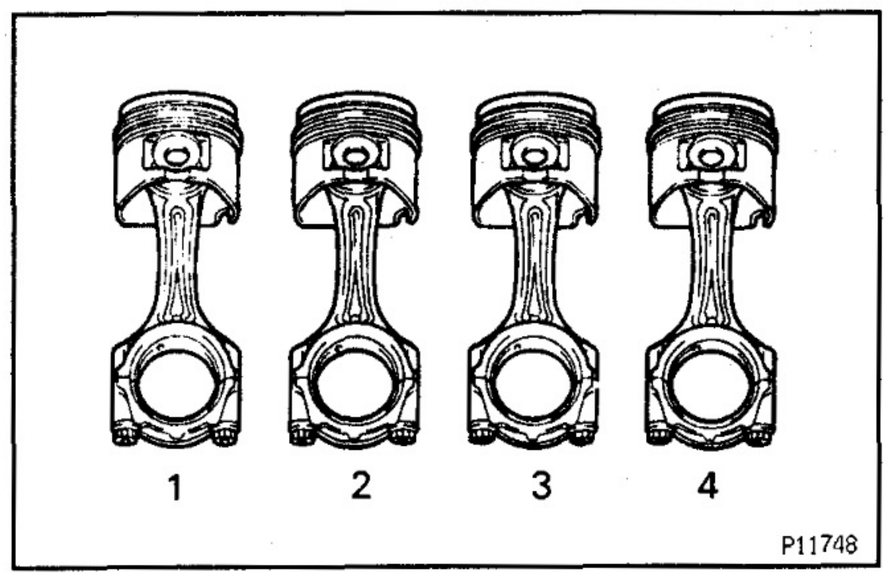

HINT:

- Keep the bearings, connecting rod and cap together.
- Arrange the piston and connecting rod assemblies in correct order.

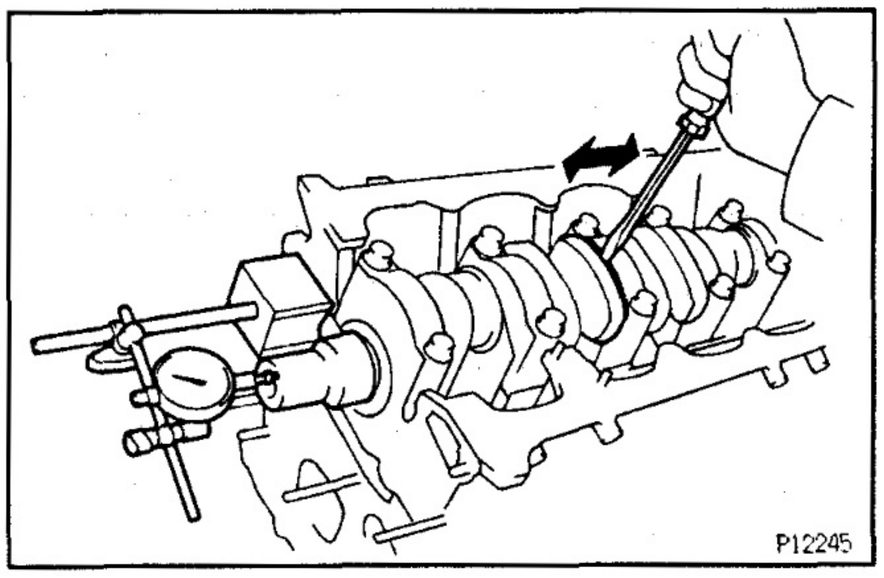

8. CHECK CRANKSHAFT THRUST CLEARANCE

Using a dial indicator, measure the thrust clearance while prying the crankshaft back and forth with a screwdriver.

Standard thrust clearance:

0.040 — 0.240 mm (0.0016 — 0.0094 in.)

Maximum thrust clearance:

0.30 mm (0.0118 in.)

If the thrust clearance is greater than maximum, replace the thrust washers as a set.

Thrust washer thickness:

STD

2.430 — 2.480 mm (0.0957 — 0.0976 in.)

U/S 0.25

2.555 — 2.605 mm (0.1006 — 0.1026 in.)

U/S 0.125

2.493 — 2.543 mm (0.0981 — 0.1001 in.)

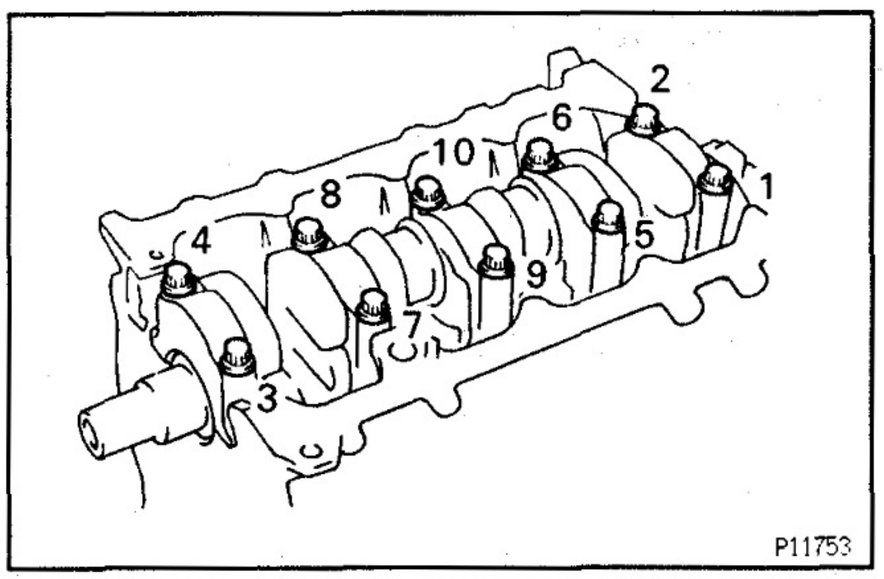

9. REMOVE MAIN BEARING CAPS AND CHECK OIL CLEARANCE

(a) Uniformly loosen and remove the main bearing cap bolts in several passes, in the sequence shown.

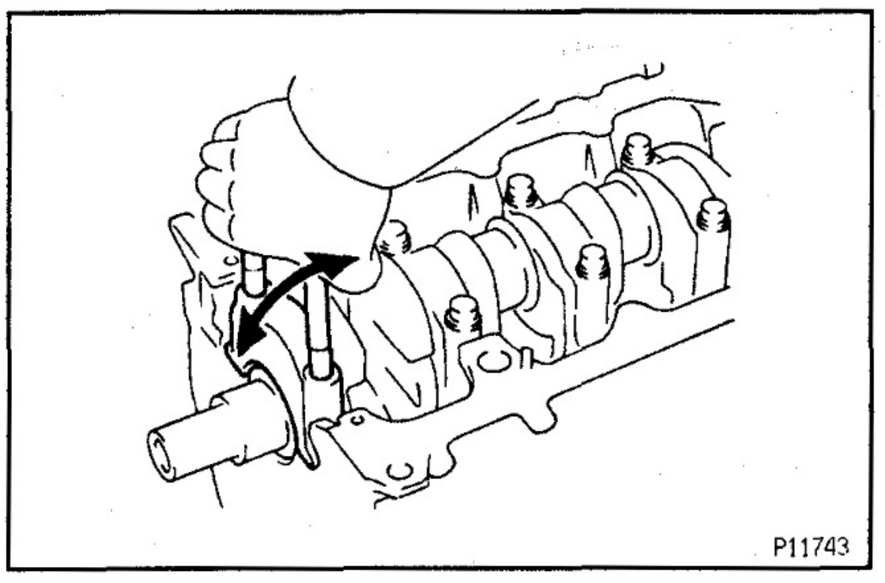

(b) Using the removed main bearing cap bolts, pry the main bearing cap back and forth, and remove the main bearing caps, lower bearings and lower thrust washers (No.5 main bearing cap only).

HINT:

- Keep the lower bearing and main bearing cap together.
- Arrange the main bearing caps and lower thrust washers in correct order.

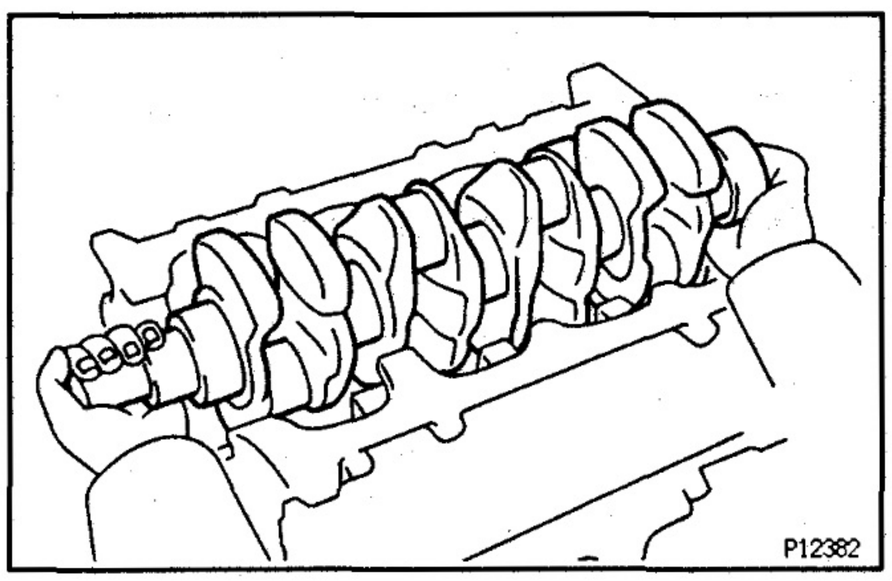

(c) Lift out the crankshaft.
HINT: Keep the upper bearings and upper thrust washers together with the cylinder block.

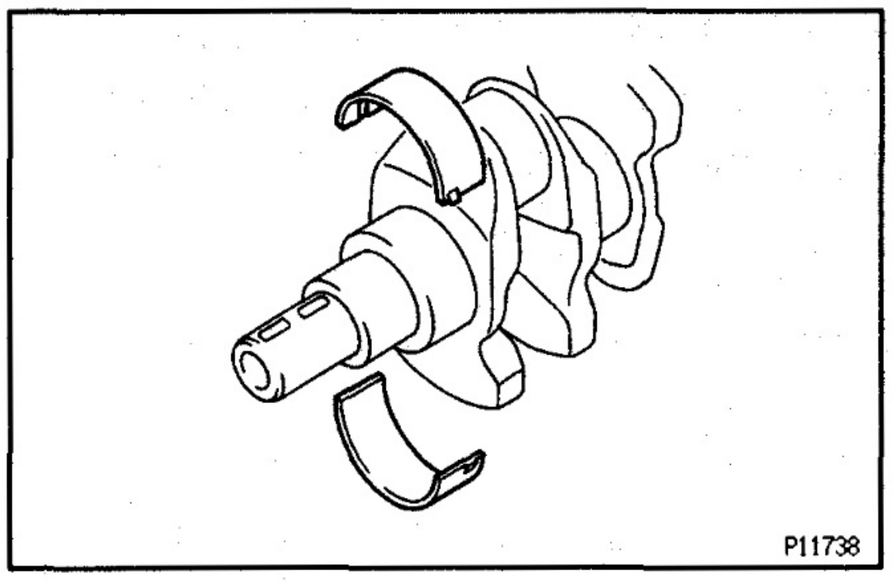

(d) Clean each main journal and bearing.
(e) Check each main journal and bearing for pitting and scratches.
If the journal or bearing is damaged, replace the bearings. If necessary, grind or replace the crankshaft.

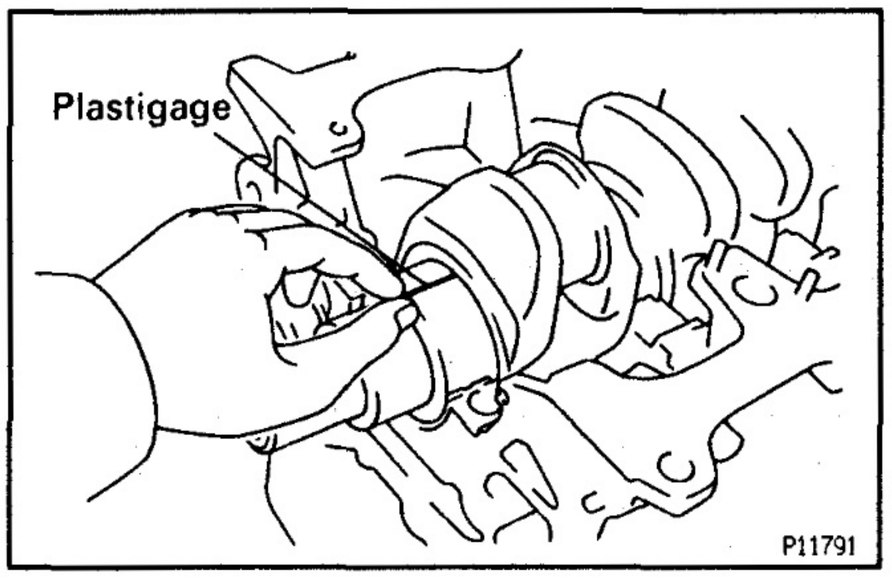

(f) Place the crankshaft on the cylinder block.
(g) Lay a strip of Plastigage across each journal.

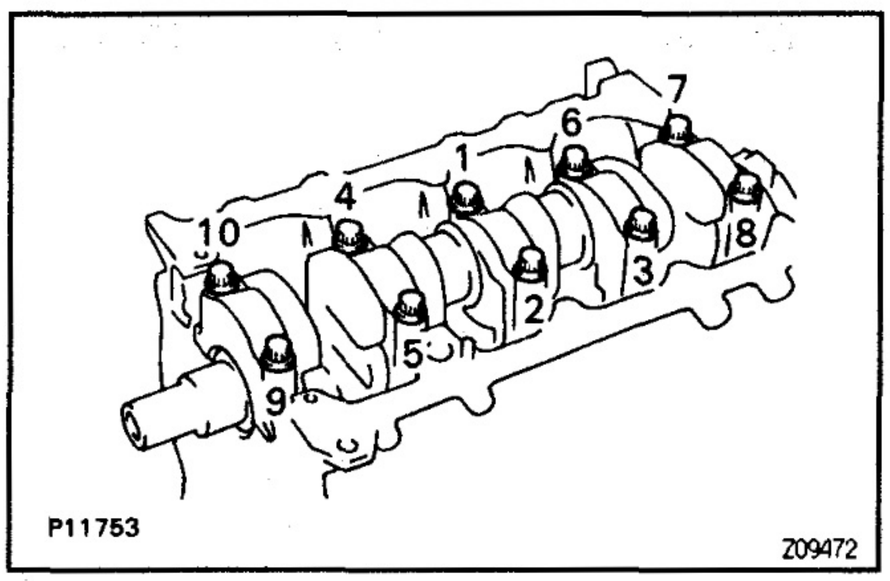

(h) Install the main bearing caps.
(See step 6 on page EG–113)
1st
Torque: 49 N·m (500 kgf·cm, 36 ft·lbf)
2nd Turn 90°
NOTICE: Do not turn the crankshaft.

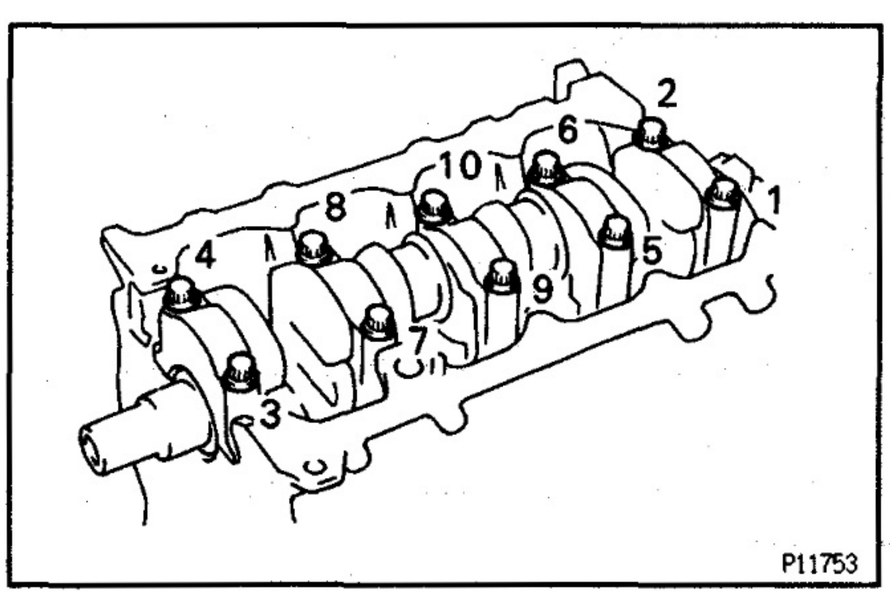

(i) Remove the main bearing caps.
(See procedure (a) and (b) above)

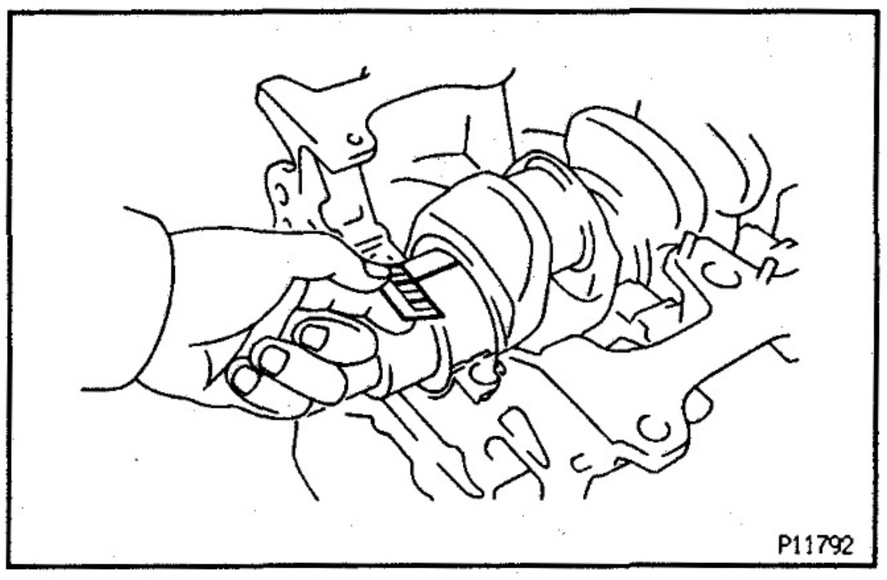

(j) Measure the Plastigage at its widest point.

Standard clearance:

STD

0.036 – 0.054 mm (0.0014 – 0.0021 in.)

U/S 0.25 and U/S 0.50

0.037 – 0.077 mm (0.0015 – 0.0030 in.)

Maximum clearance:

0.10 mm (0.0039 in.)

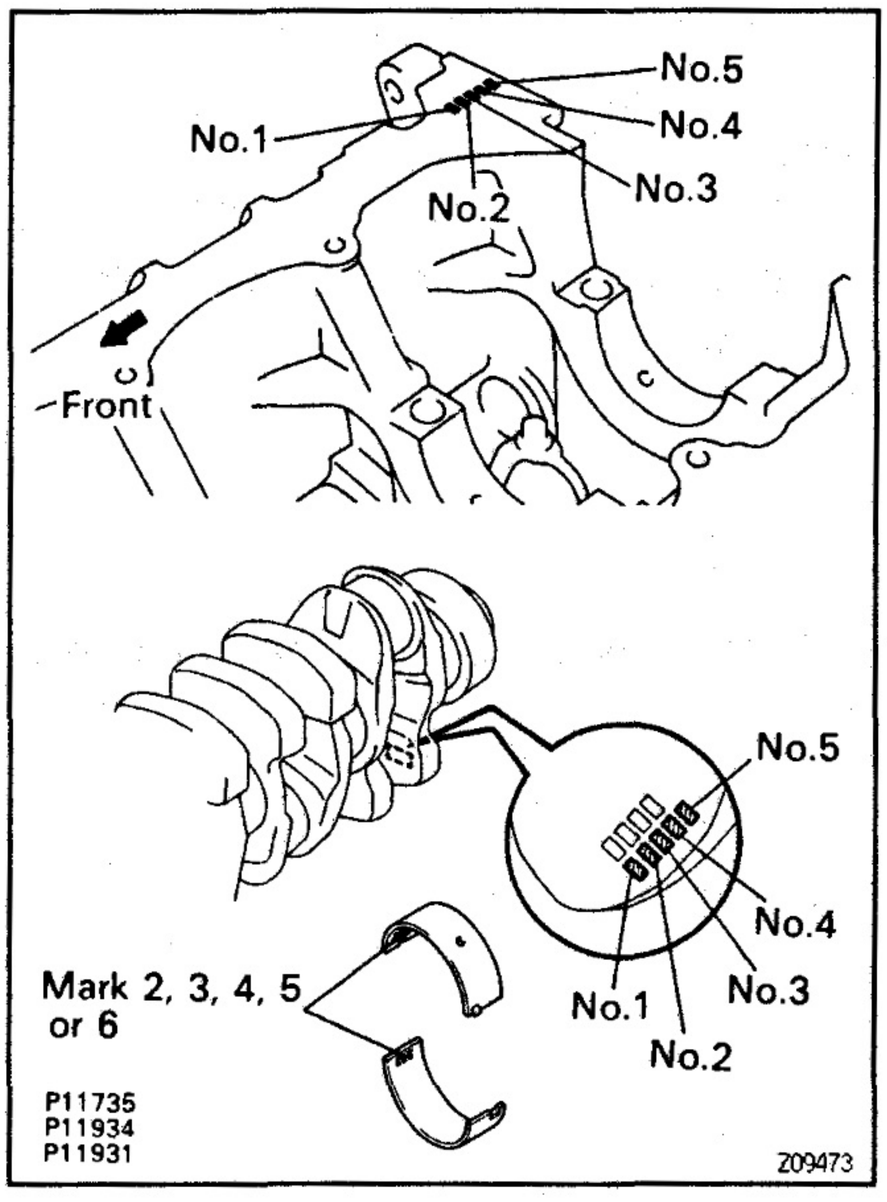

HINT: If replacing the cylinder block subassembly, the bearing standard clearance will be:

0.036 – 0.054 mm (0.0014 – 0.0021 in.)

If the oil clearance is greater than maximum, replace the bearings. If necessary, grind or replace the crankshaft.

HINT: If using a standard bearing, replace it with one having the same number. If the number of the bearing cannot be determined, select the correct bearing by adding together the numbers imprinted on the cylinder block and crankshaft, then selecting the bearing with the same number as the total. There are 5 sizes of standard bearings, marked "2", "3", "4", "5" and "6" accordingly.

	Number marked								
Cylinder block	1			2			3		
Crankshaft	1	2	3	1	2	3	1	2	3
Use bearing	2	3	4	3	4	5	4	5	6

EXAMPLE: Cylinder block "2" + Crankshaft "1"
= Total number 3 (Use bearing "3")

V03853

Reference

Cylinder block main journal bore diameter:

Mark "1"

75.000 – 75.006 mm (2.9528 – 2.9530 in.)

Mark "2"

75.006 – 75.012 mm (2.9530 – 2.9532 in.)

Mark "3"

75.012 – 75.018 mm (2.9532 – 2.9535 in.)

Crankshaft journal diameter:

Mark "1"

69.994 – 70.000 mm (2.7557 – 2.7559 in.)

Mark "2"

69.988 – 69.994 mm (2.7554 – 2.7557 in.)

Mark "3"

69.982 – 69.988 mm (2.7552 – 2.7554 in.)

Standard sized bearing center wall thickness:

Mark "2"

2.479 – 2.482 mm (0.0976 – 0.0977 in.)

Mark "3"

2.482 – 2.485 mm (0.0977 – 0.0978 in.)

Mark "4"

2.485 – 2.488 mm (0.0978 – 0.0980 in.)

Mark "5"

2.488 – 2.491 mm (0.0980 – 0.0981 in.)

Mark "6"

2.491 – 2.494 mm (0.0981 – 0.0982 in.)

(k) Completely remove the Plastigage.

10. REMOVE CRANKSHAFT

(a) Lift out the crankshaft.

(b) Remove the upper bearings and upper thrust washers from the cylinder block.

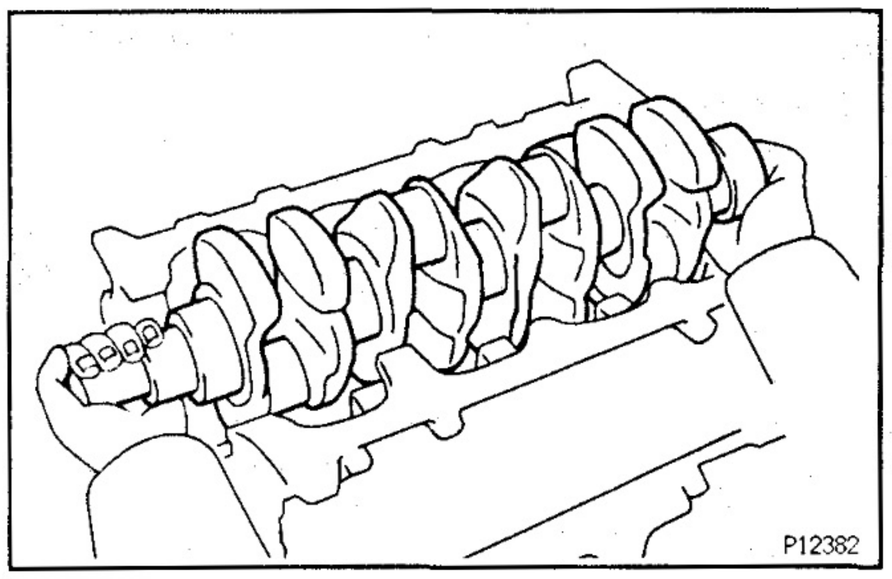

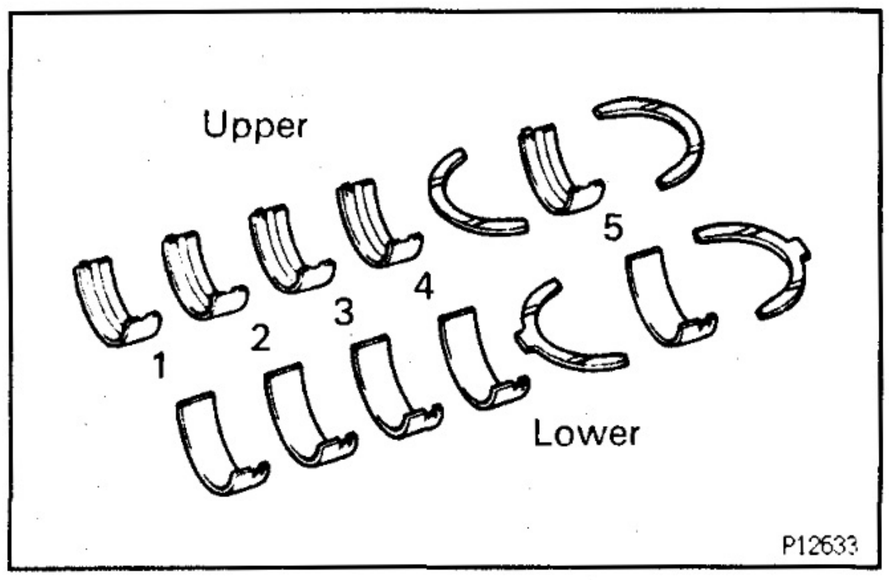

HINT: Arrange the main bearing caps, bearings and thrust washers in correct order.

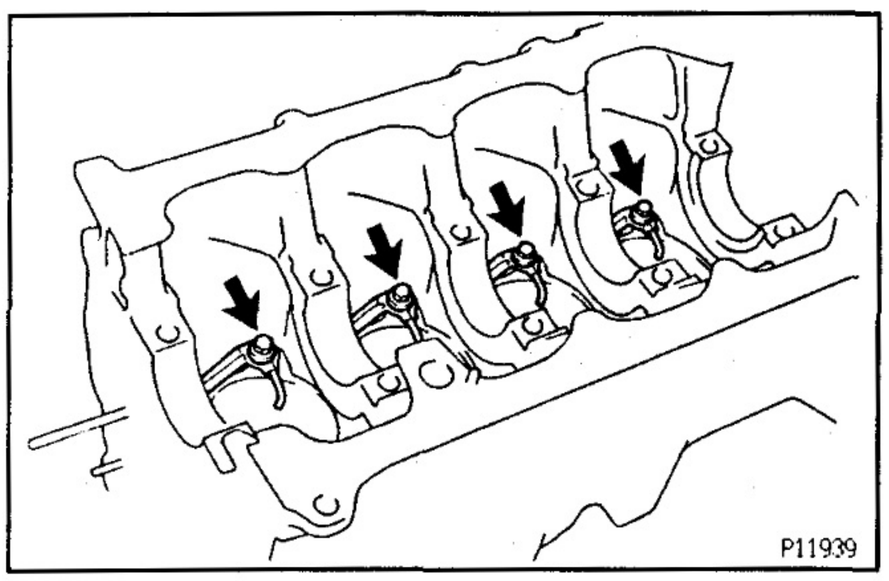

11. REMOVE CHECK VALVES AND OIL NOZZLES

Remove the 4 check valves and oil nozzles.

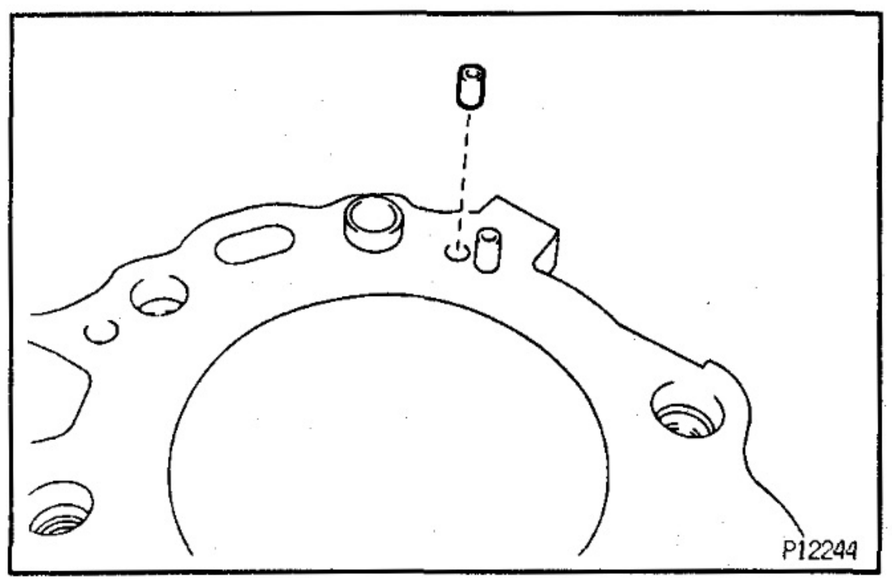

12. REMOVE CYLINDER BLOCK ORIFICE

EG338-01

CYLINDER BLOCK INSPECTION

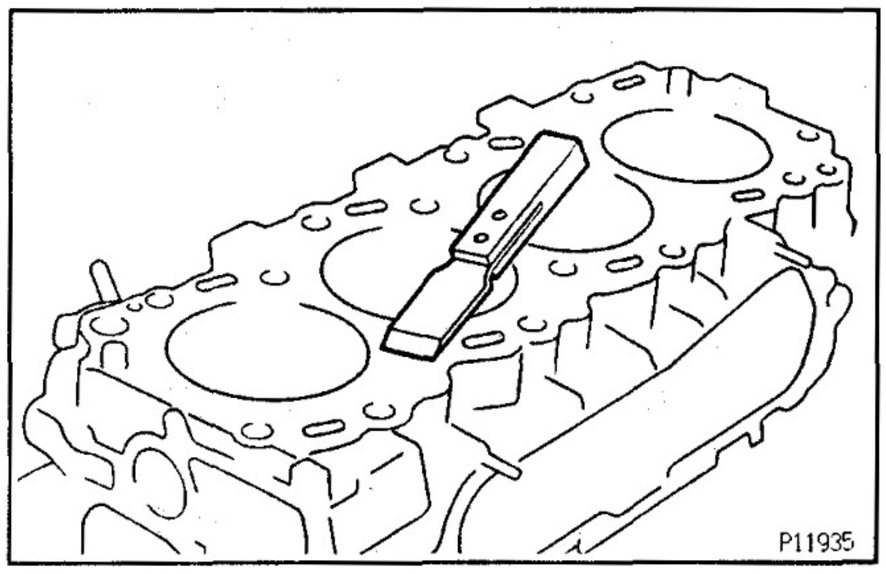

1. CLEAN CYLINDER BLOCK

A. Remove gasket material

Using a gasket scraper, remove all the gasket material from the top surface of the cylinder block.

B. Clean cylinder block

Using a soft brush and solvent, thoroughly clean the cylinder block.

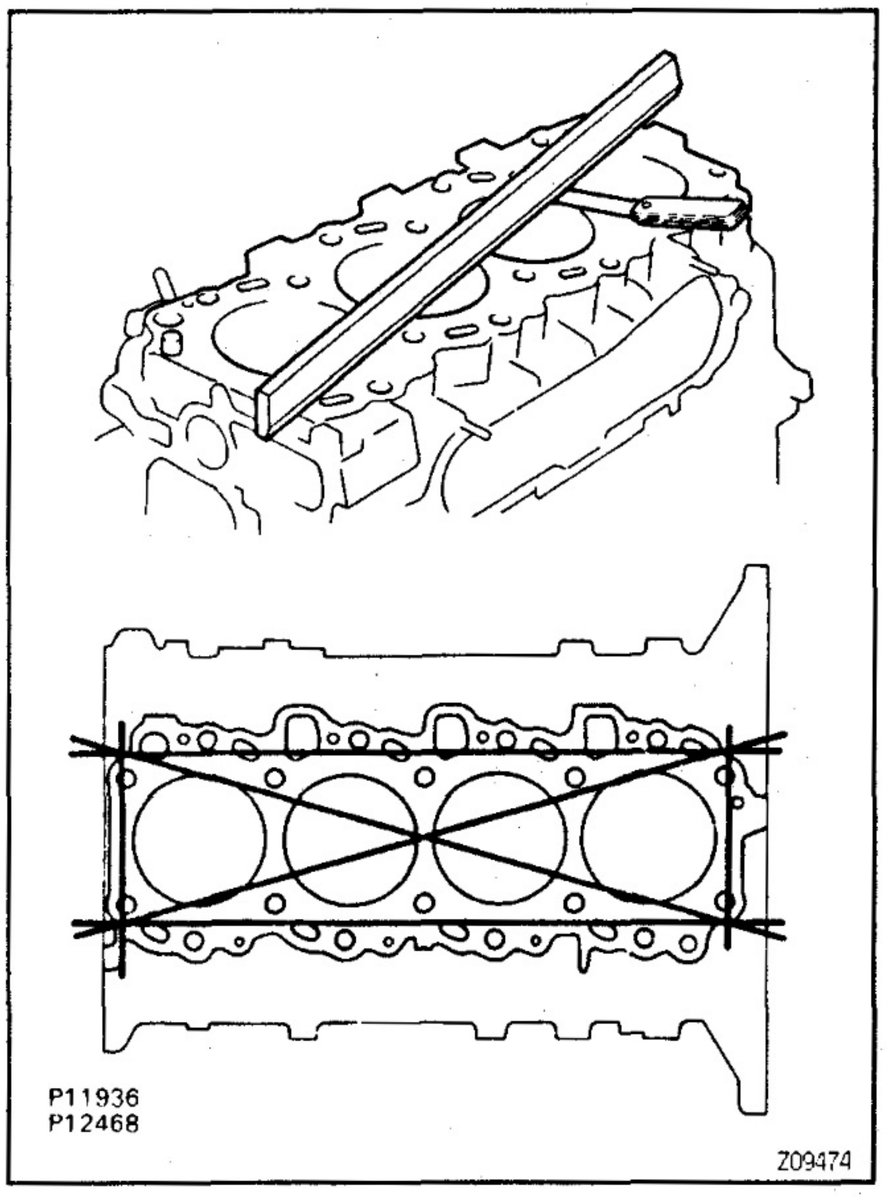

2. INSPECT TOP SURFACE OF CYLINDER BLOCK FOR FLATNESS

Using a precision straight edge and thickness gauge, measure the surfaces contacting the cylinder head gasket for warpage.

Maximum warpage:

0.10 mm (0.0039 in.)

If warpage is greater than maximum, replace the cylinder block.

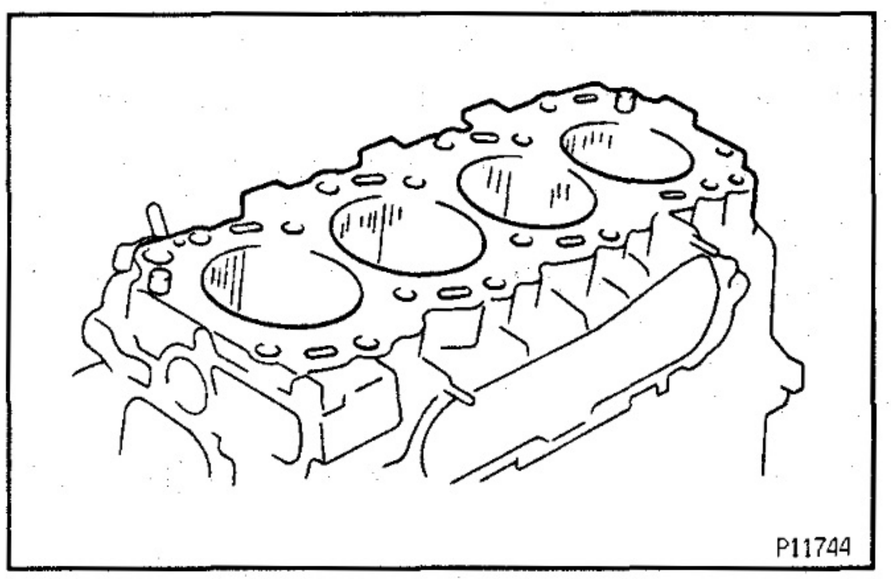

3. INSPECT CYLINDER FOR VERTICAL SCRATCHES

Visually check the cylinder for vertical scratches.

If deep scratches are present, rebore all the 4 cylinders. If necessary, replace the cylinder block.

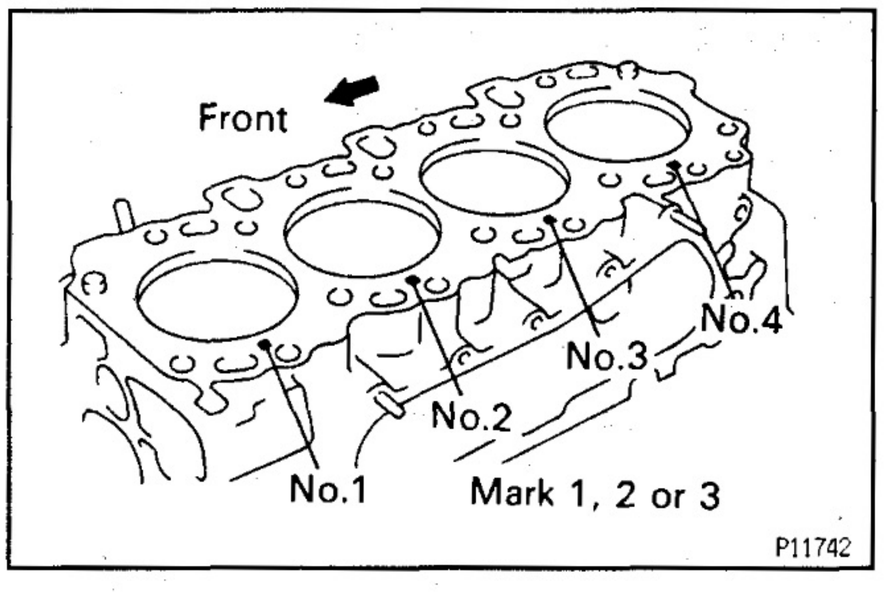

4. INSPECT CYLINDER BORE DIAMETER

HINT: There are 3 sizes of the standard cylinder bore diameter, marked "1", "2" and "3" accordingly. The mark is stamped on the top of the cylinder block.

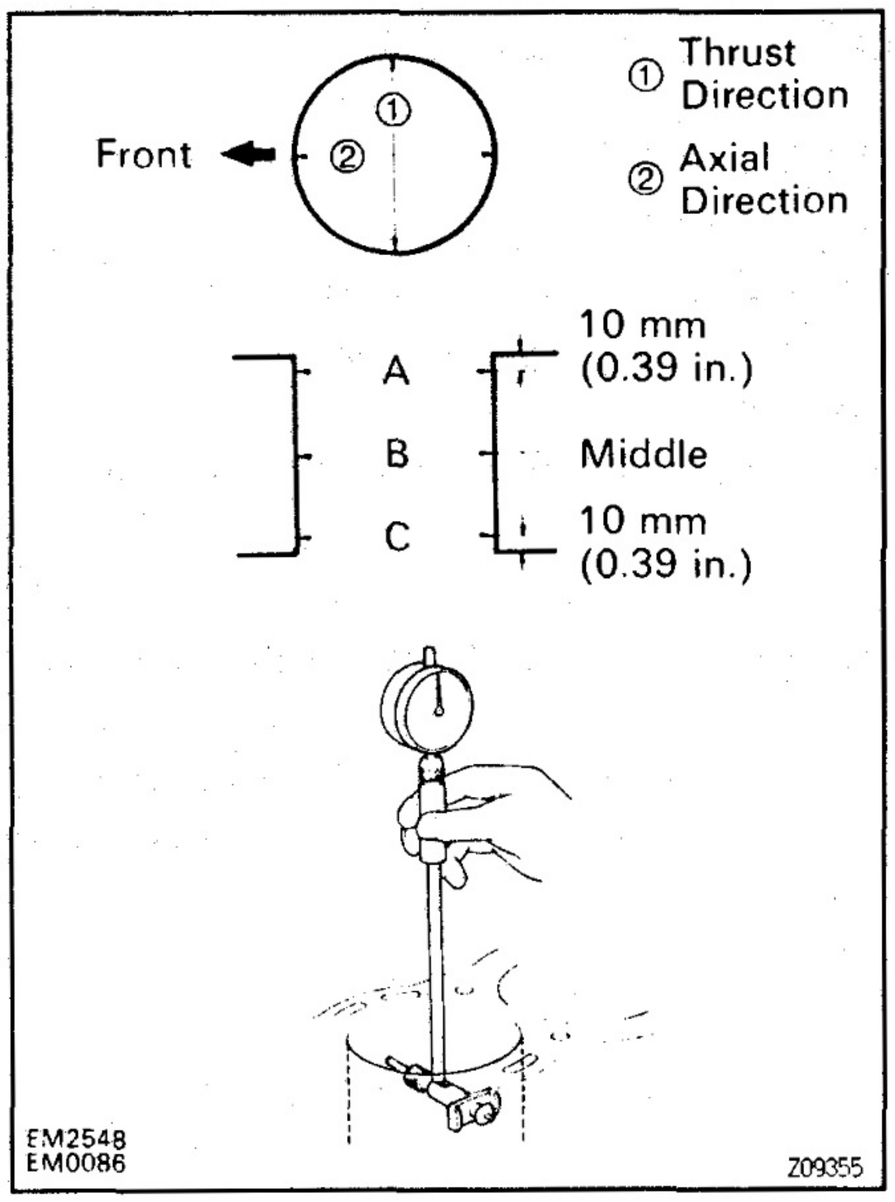

Using a cylinder gauge, measure the cylinder bore diameter at positions A, B and C in the thrust and axial directions.

Standard diameter:

STD

Mark "1"

96.000 — 96.010 mm (3.7795 — 3.7799 in.)

Mark "2"

96.010 — 96.020 mm (3.7799 — 3.7803 in.)

Mark "3"

96.020 — 96.030 mm (3.7803 — 3.7807 in.)

Maximum diameter:

STD

96.23 mm (3.7886 in.)

If the diameter is greater than maximum, rebore all the 4 cylinders. If necessary, replace the cylinder block.

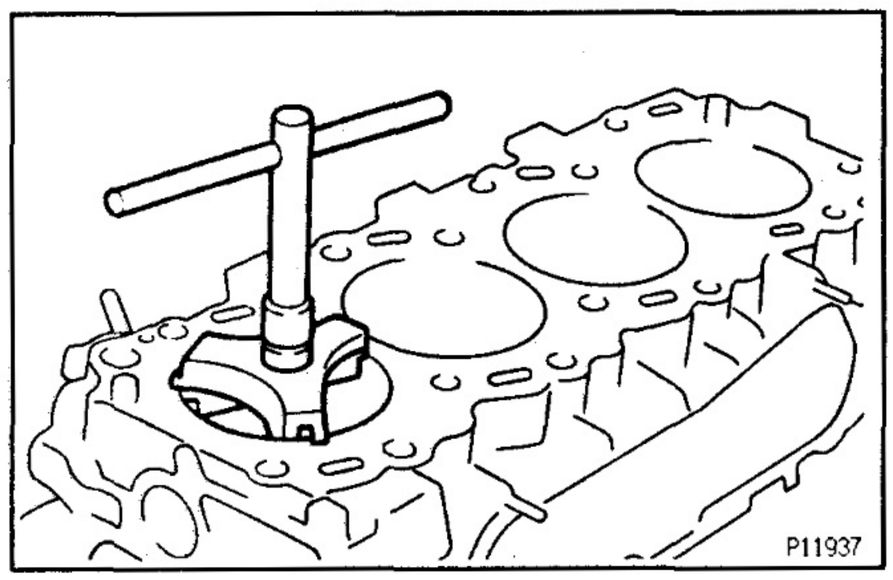

5. REMOVE CYLINDER RIDGE

If the wear is less than 0.2 mm (0.008 in.), using a ridge reamer, grind the top of the cylinder.

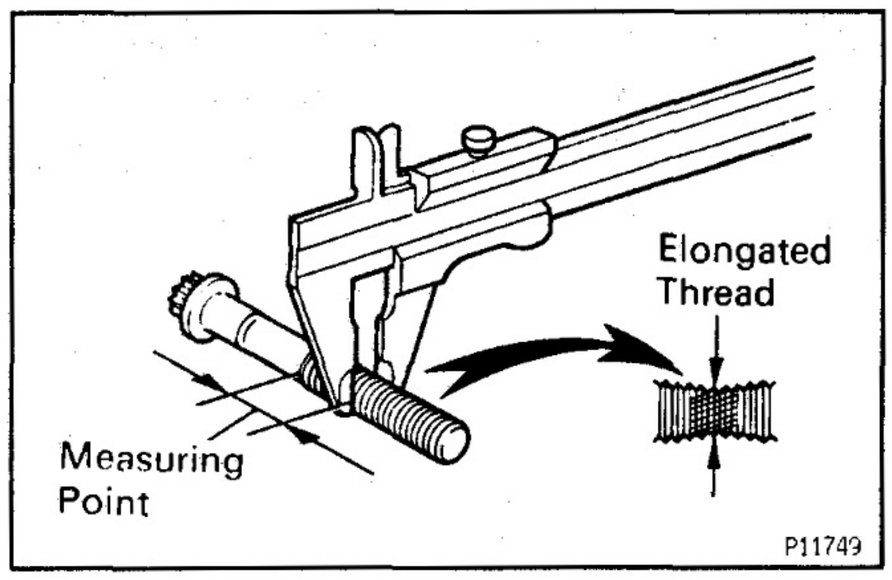

6. INSPECT MAIN BEARING CAP BOLTS

Using vernier clipers, measure the minimum diameter of the compressed thread at the measuring point.

Standard diameter:

13.500 — 14.000 mm (0.5315 — 0.5512 in.)

Minimum diameter:

12.60 mm (0.4961 in.)

If the diameter is less than minimum, replace the bolt.

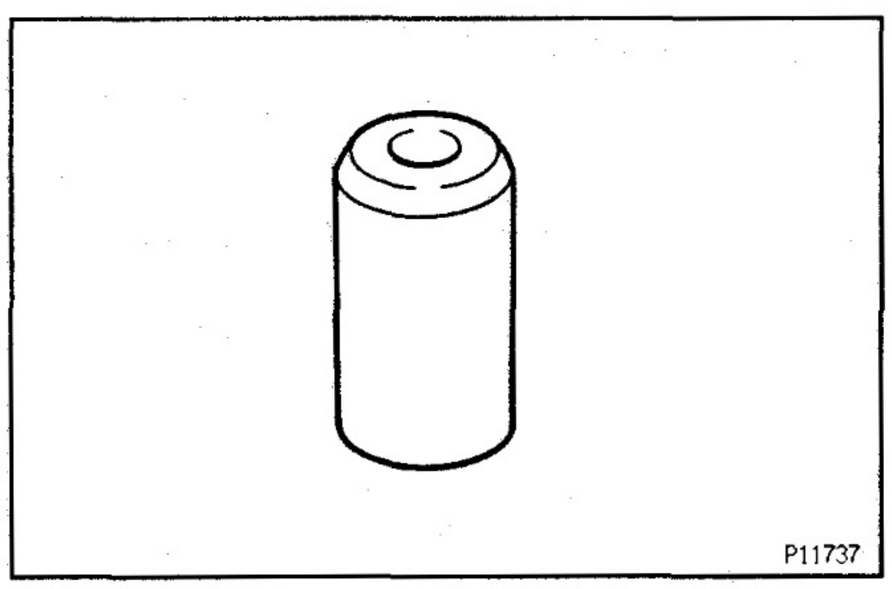

7. INSPECT CYLINDER BLOCK ORIFICE

Check that the orifice is not clogged.

EG339-01

PISTON AND CONNECTING ROD DISASSEMBLY

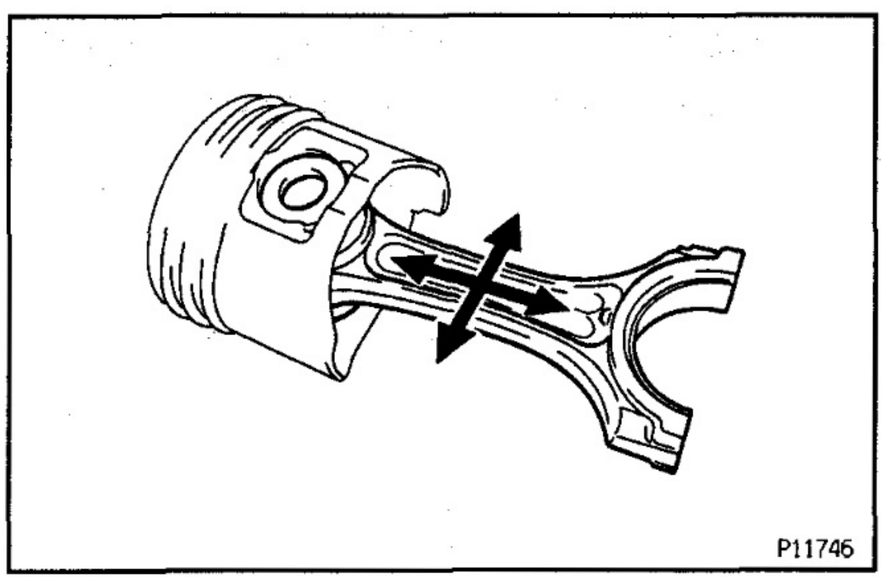
P11746

1. CHECK FIT BETWEEN PISTON AND PISTON PIN

Try to move the piston back and forth on the piston pin.

If any movement is felt, replace the piston and pin as a set.

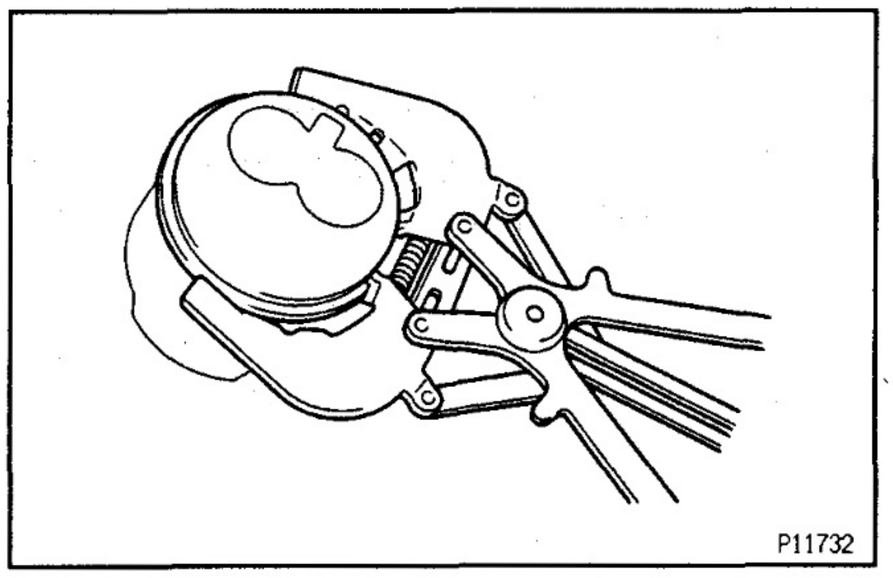
P11732

2. REMOVE PISTON RINGS

(a) Using a piston ring expander, remove the 2 compression rings and oil ring.

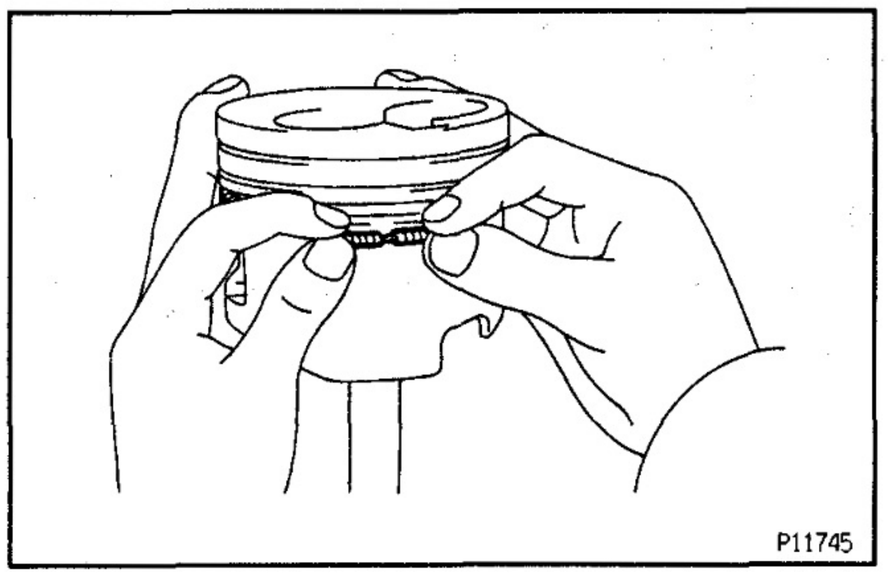
P11745

(b) Remove the coil by hand.
HINT: Arrange the rings in correct order only.

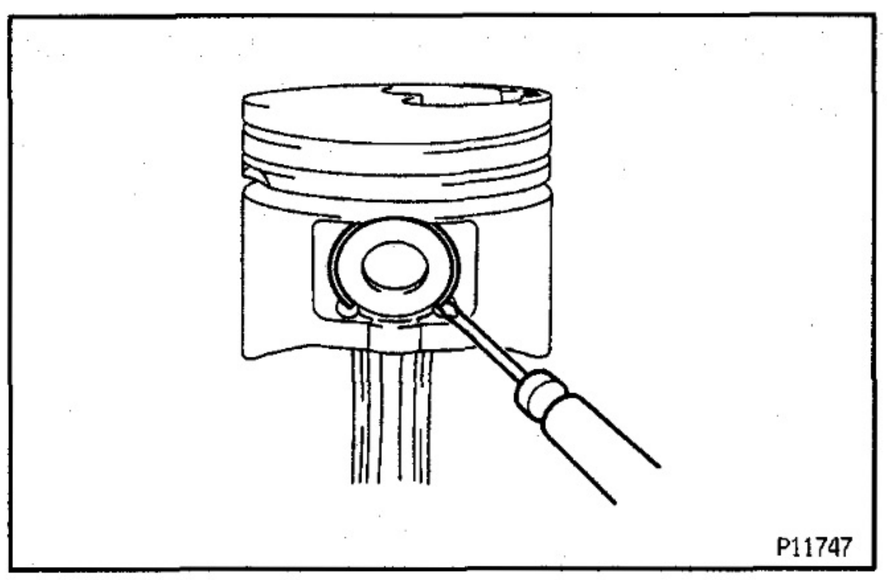
P11747

3. DISCONNECT CONNECTING ROD FROM PISTON

(a) Using a small screwdriver, pry off the snap ring from the piston.

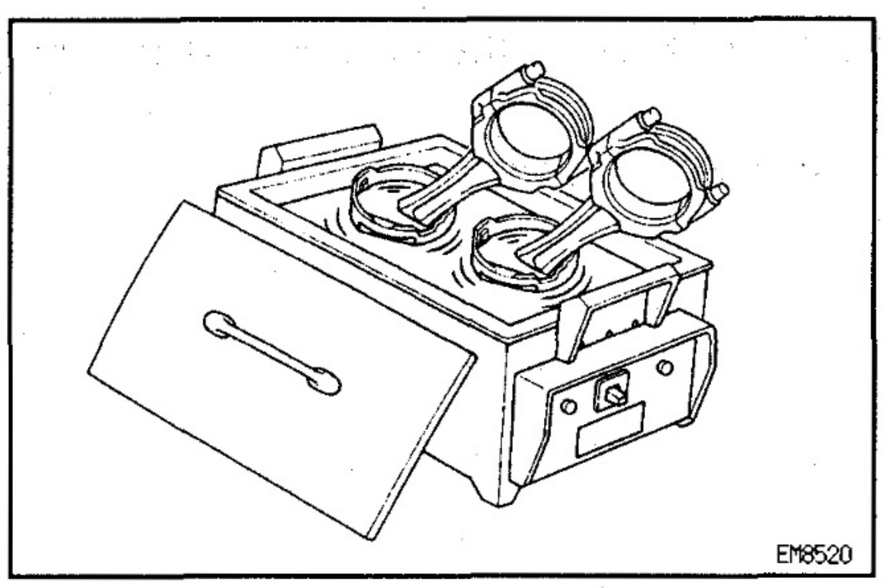
EM8520

(b) Gradually heat the piston to approx. 60°C (140°F).

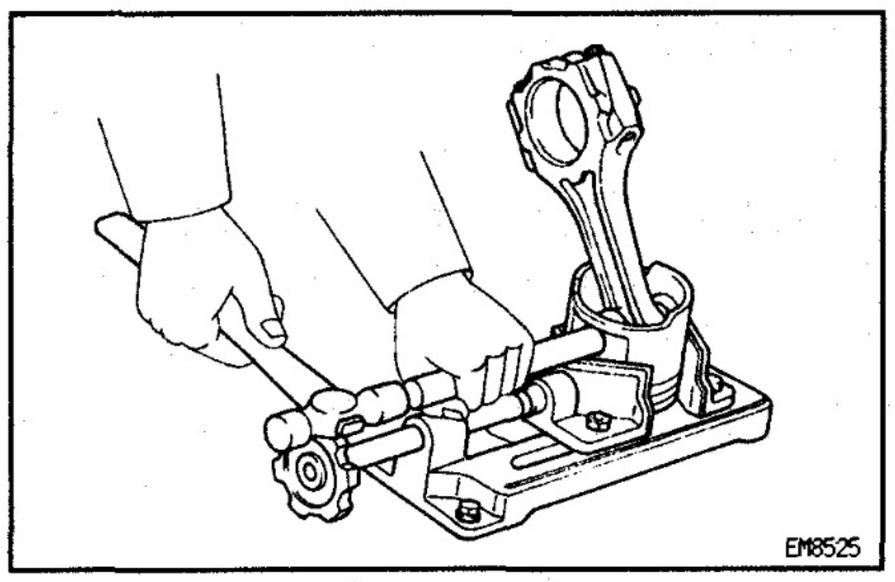

(c) Using a plastic–faced hammer and brass bar, lightly tap out the piston pin and remove the connecting rod.

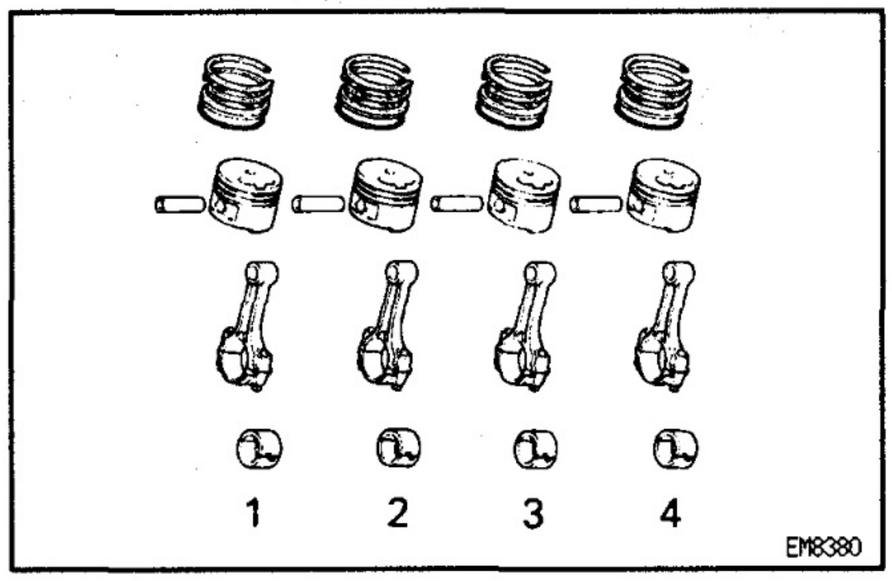

HINT:

- The piston and pin are a matched set.
- Arrange the pistons, pins, rings, connecting rods and bearings in correct order.

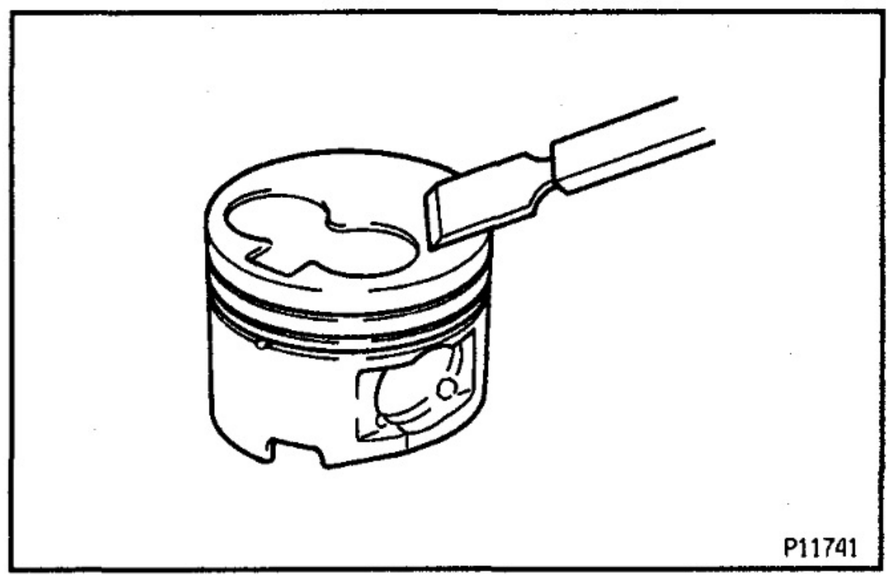

EG33A–01

PISTON AND CONNECTING ROD INSPECTION

1. CLEAN PISTON

(a) Using a gasket scraper, remove the carbon from the piston top.

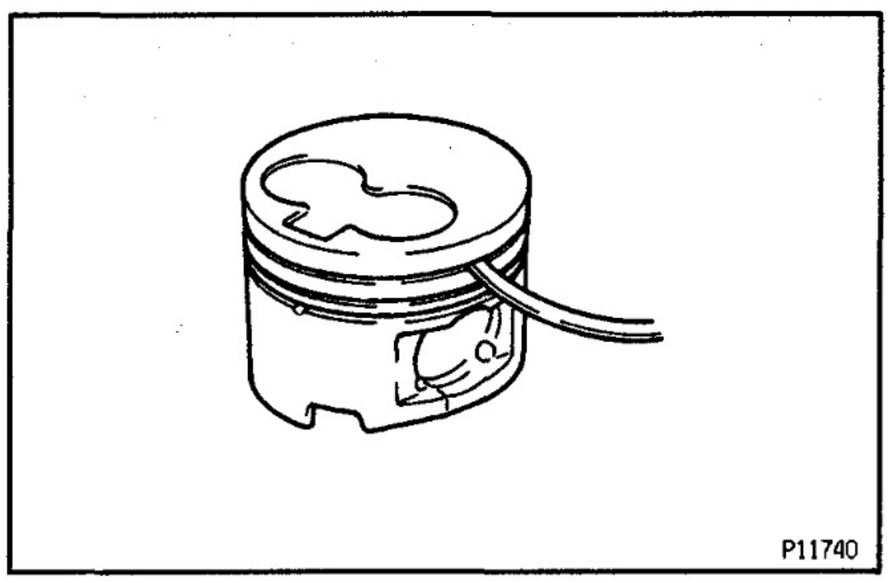

(b) Using a groove cleaning tool or broken ring, clean the piston ring grooves.

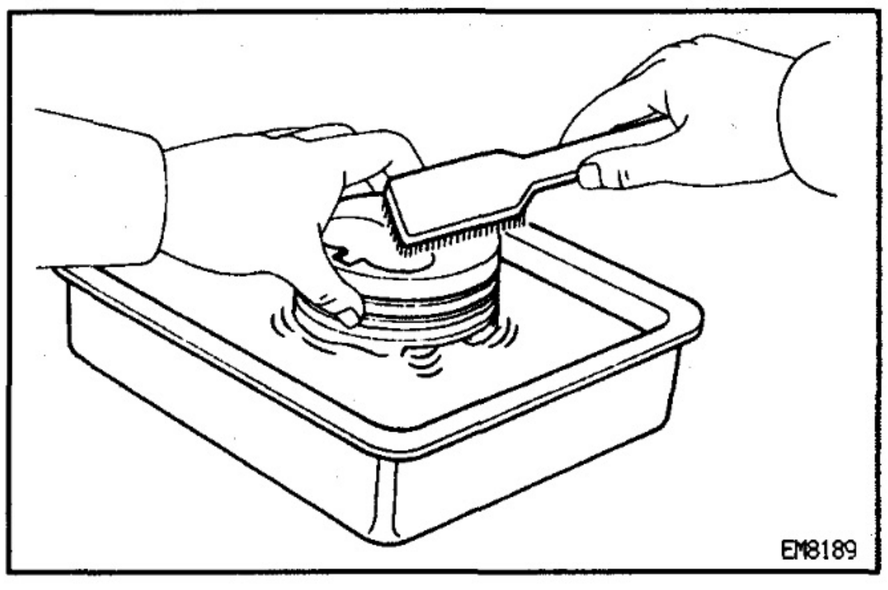

(c) Using solvent and a brush, thoroughly clean the piston.
NOTICE: Do not use a wire brush.

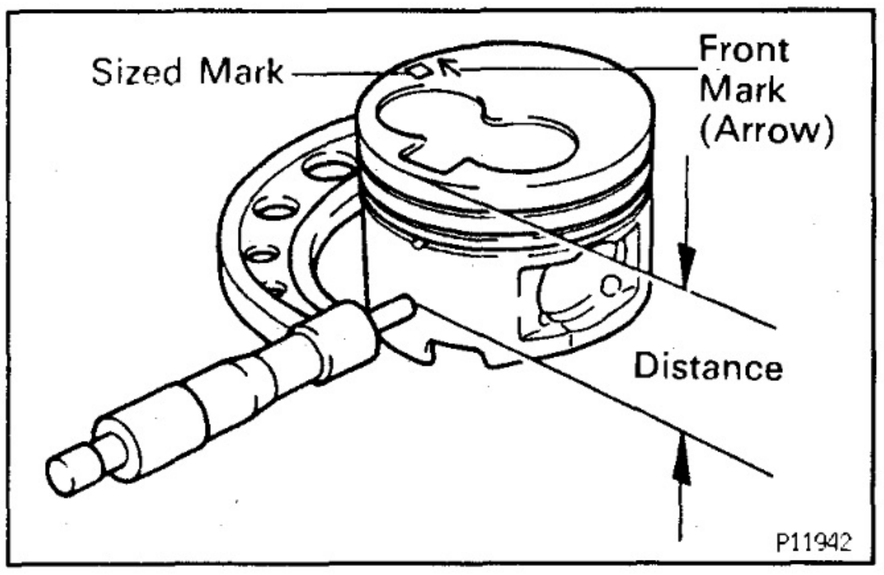

2. INSPECT PISTON AND PISTON RING

A. Inspect piston diameter and oil clearance

HINT: There are 3 sizes of the standard piston diameter, marked "1", "2" and "3" accordingly. The mark is stamped on the piston top.

(a) Using a micrometer, measure the piston diameter at right angles to the piston pin center line, 58.8 mm (2.315 in.) from the piston head.

Piston diameter:

STD

Mark "1"

95.940 — 95.950 mm (3.7772 — 3.7776 in.)

Mark "2"

95.950 — 95.960 mm (3.7776 — 3.7779 in.)

Mark "3"

95.960 — 95.970 mm (3.7779 — 3.7783 in.)

O/S 0.50

96.440 — 96.470 mm (3.7968 — 3.7980 in.)

O/S 0.75

96.690 — 96.720 mm (3.8067 — 3.8079 in.)

O/S 1.00

96.940 — 96.970 mm (3.8165 — 3.8177 in.)

(b) Measure the cylinder bore diameter in the thrust directions. (See step 4 on page EG—98)

(c) Subtract the piston diameter measurement from the cylinder bore diameter measurement.

Standard oil clearance:

0.050 — 0.070 mm (0.0020 — 0.0028 in.)

Maximum oil clearance:

0.14 mm (0.0055 in.)

If the oil clearance is greater than maximum, replace all the 4 pistons and rebore all the 4 cylinders. If necessary, replace the cylinder block.

HINT (Use new cylinder block): Use a piston with the same number mark as the cylinder bore diameter marked on the cylinder block.

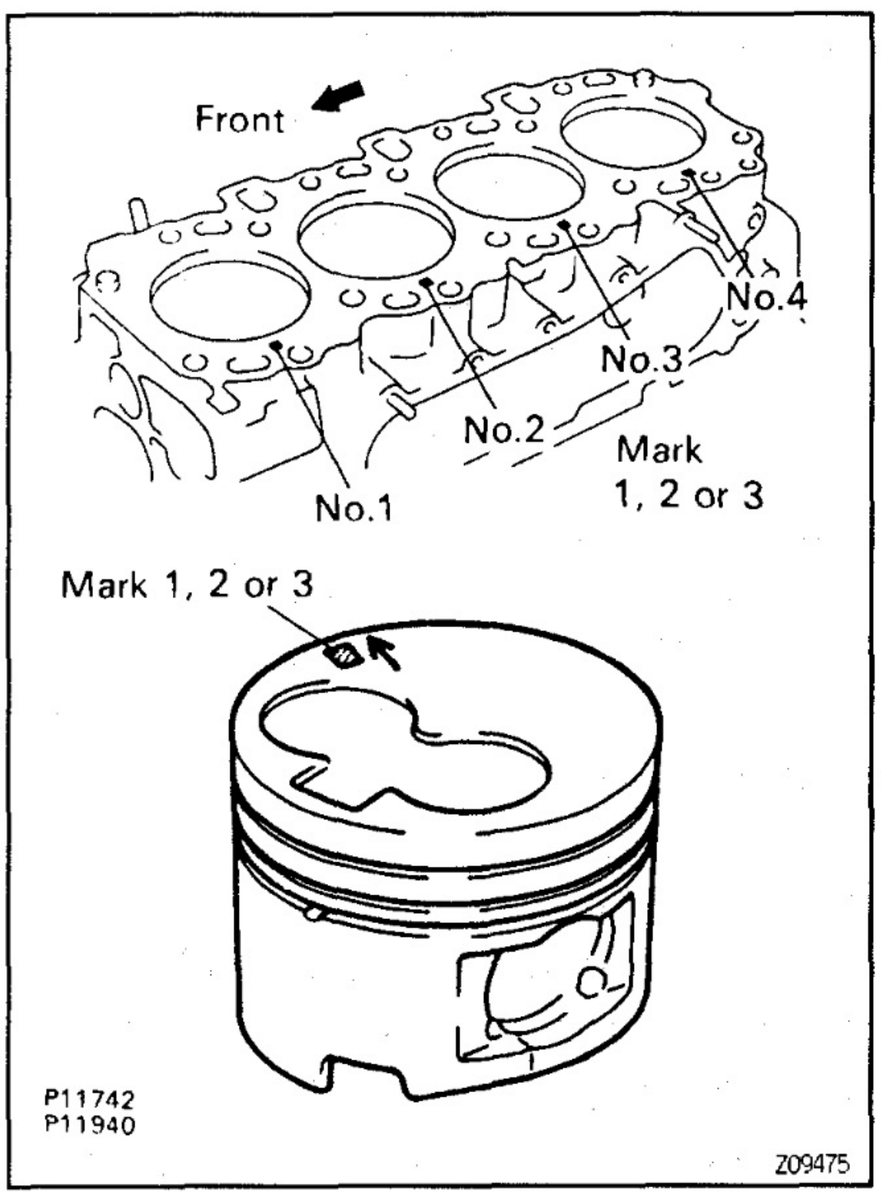

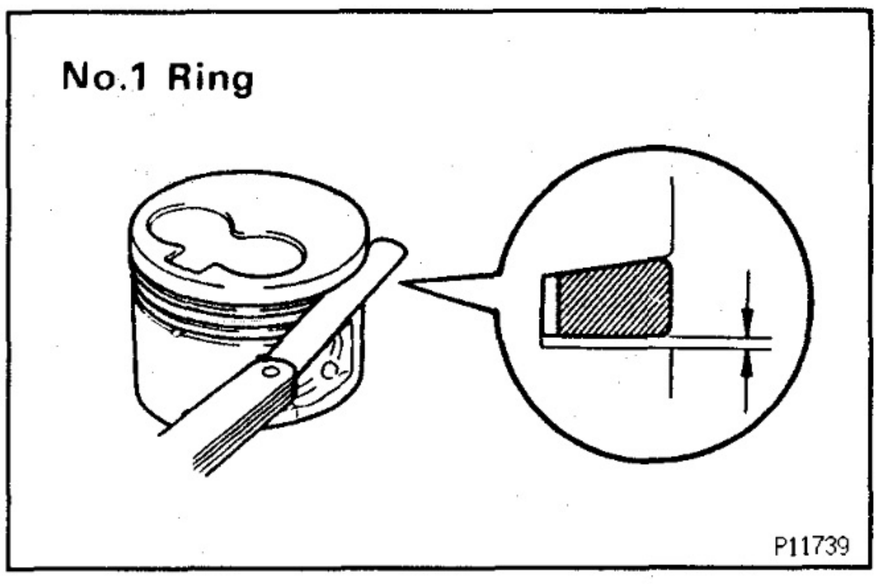

B. Inspect piston ring groove clearance

No.1 Ring:

Install new No.1 piston ring to the piston. Using a thickness gauge, measure the clearance between new piston ring and the wall of the ring groove.

Ring groove clearance:

No.1

0.060 — 0.110 mm (0.0024 — 0.0043 in.)

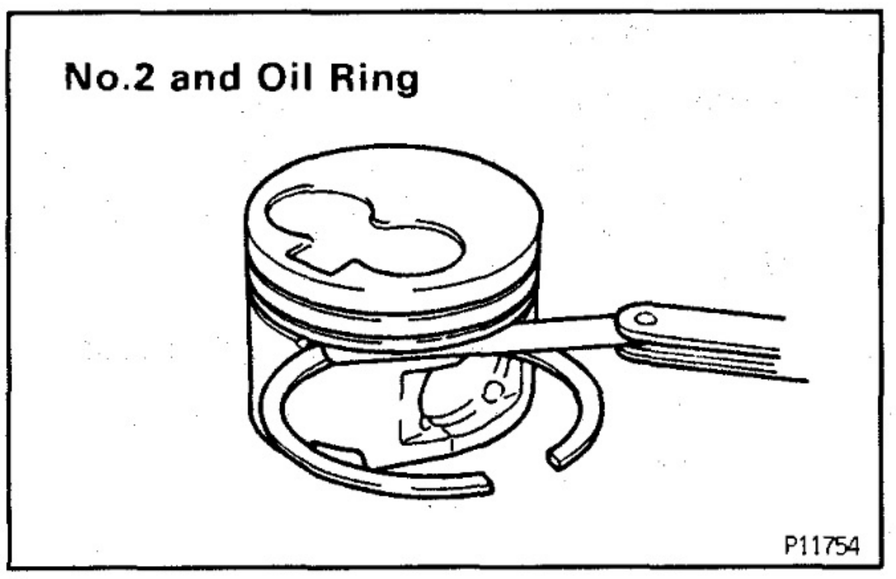

No.2 and Oil Ring:

Using a thickness gauge, measure the clearance between new piston ring and the wall of the ring groove.

Ring groove clearance:

No.2

0.060 — 0.100 mm (0.0024 — 0.0039 in.)

Oil

0.020 — 0.060 mm (0.0009 — 0.0024 in.)

If the clearance is greater than maximum, replace the piston.

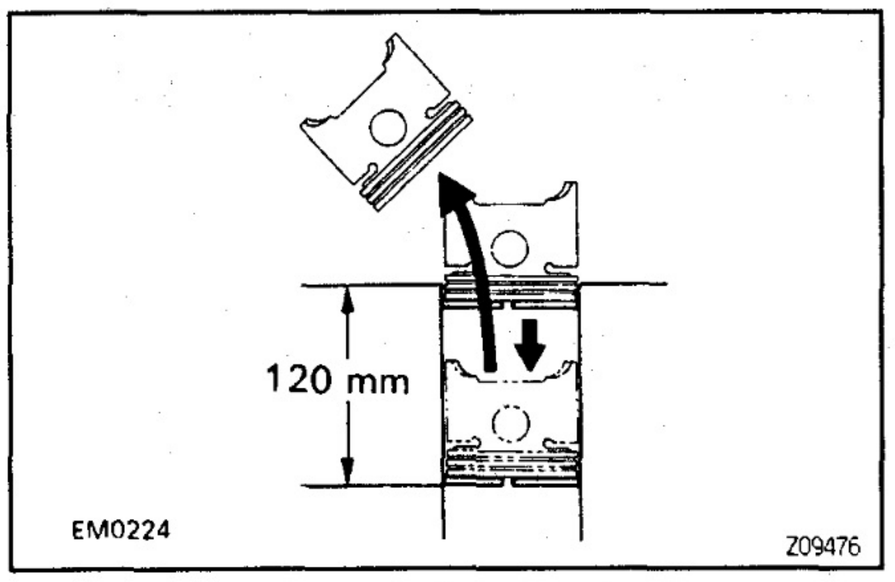

C. Inspect piston ring end gap

(a) Insert the piston ring into the cylinder bore.

(b) Using a piston, push the piston ring a little beyond the bottom of the ring travel, 120 mm (4.72 in.) from the top of the cylinder block.

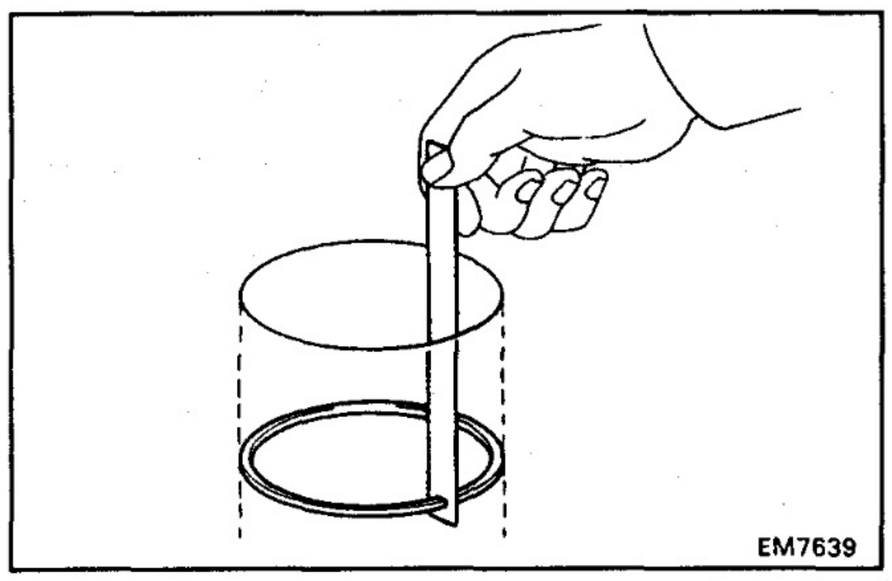

(c) Using a thickness gauge, measure the end gap.

Standard end gap:

No.1

0.350 — 0.570 mm (0.0138 — 0.0224 in.)

No.2

0.400 — 0.600 mm (0.0157 — 0.0236 in.)

Oil

0.200 — 0.500 mm (0.0079 — 0.0197 in.)

Maximum end gap:

No.1

1.03 mm (0.0406 in.)

No.2

1.10 mm (0.0433 in.)

Oil

0.87 mm (0.0343 in.)

If the end gap is greater than maximum, replace the piston ring. If the end gap is greater than maximum, even with a new piston ring, rebore all the 4 cylinders or replace the cylinder block.

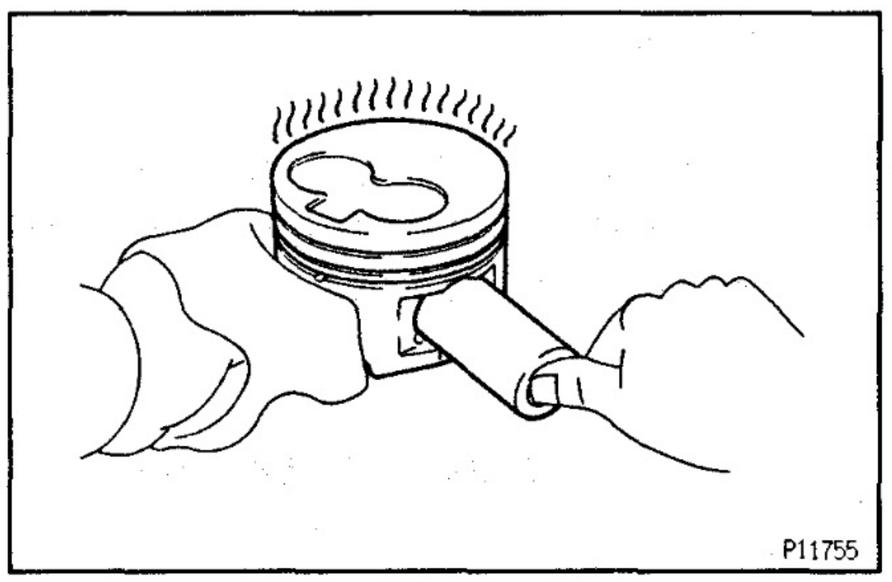

3. INSPECT PISTON PIN FIT

At 80°C (176°F), you should be able to push the piston pin into the piston pin hole with your thumb.

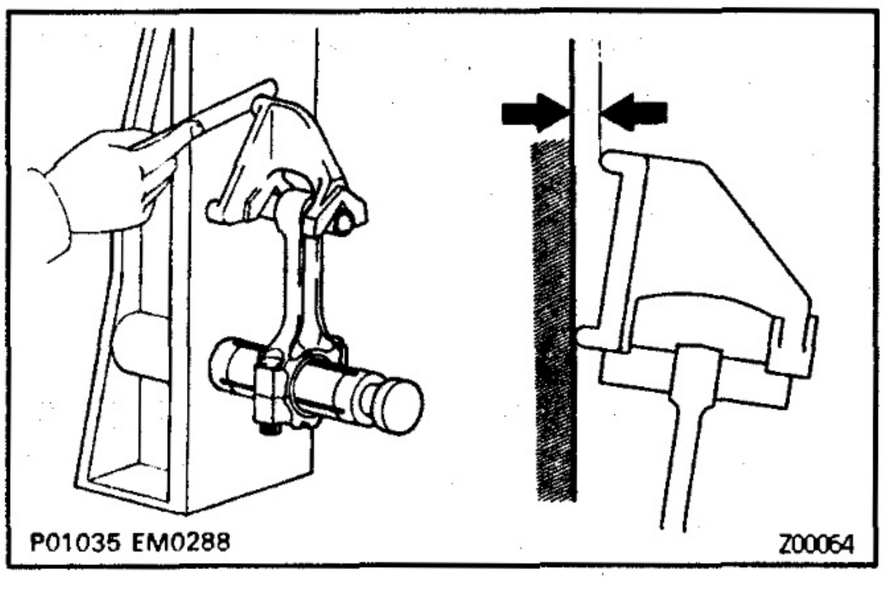

4. INSPECT CONNECTING ROD

A. Inspect connecting rod alignment

Using a rod aligner and thickness gauge, check the connecting rod alignment.

- Check for bend.

Maximum bend:

0.03 mm (0.0012 in.) per 100 mm (3.94 in.)

If bend is greater than maximum, replace the connecting rod assembly.

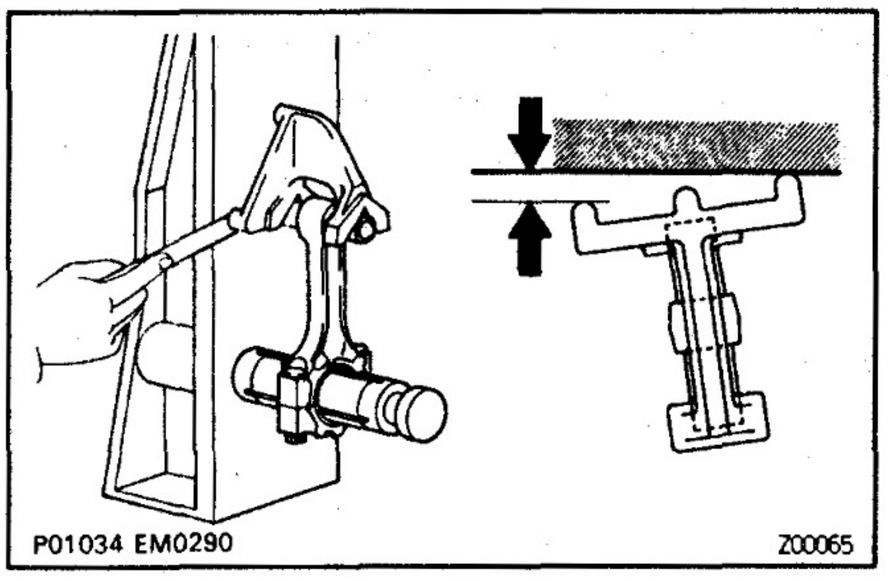

- Check for twist

Maximum twist:

0.15 mm (0.0059 in.) per 100 mm (3.94 in.)

If twist is greater than maximum, replace the connecting rod assembly.

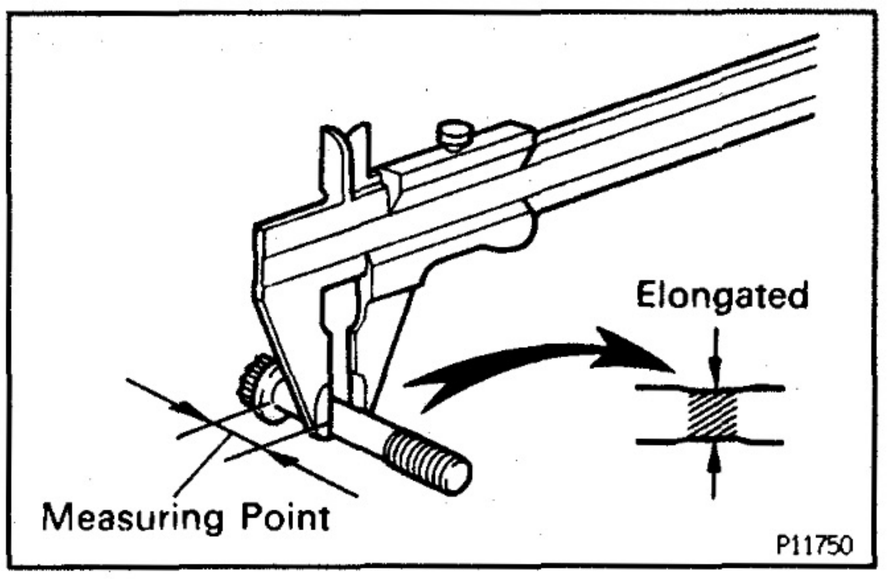

B. Inspect connecting rod bolts

Using vernier calipers, measure the minimum diameter of the compressed bolt at the measuring point.

Standard diameter:

8.400 — 8.600 mm (0.3307 — 0.3385 in.)

Minimum diameter:

8.20 mm (0.3228 in.)

If the diameter is less than minimum, replace the connecting rod bolt.

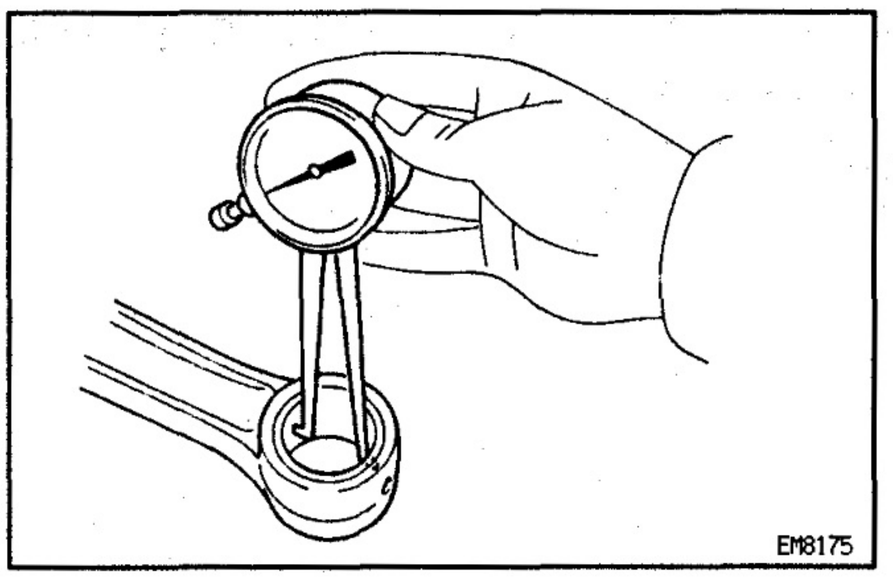

C. Inspect piston pin oil clearance

(a) Using caliper gauge, measure the inside diameter of the connecting rod bushing.

Bushing inside diameter:

34.012 — 34.024 mm (1.3391 — 1.3395 in.)

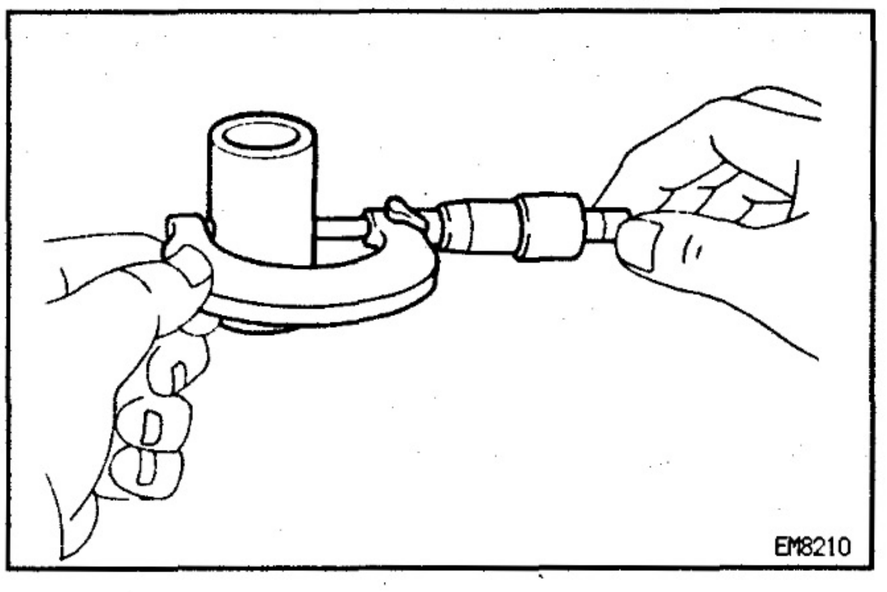

(b) Using micrometer, measure the piston pin diameter.

Piston pin diameter:

34.000 — 34.012 mm (1.3386 — 1.3391 in.)

(c) Subtract the piston pin diameter measurement from the bushing inside diameter measurement.
Standard oil clearance:
0.008 — 0.016 mm (0.0003 — 0.0006 in.)
Maximum oil clearance:
0.03 mm (0.0012 in.)
If the oil clearance is greater than maximum, replace the bushing. If necessary, replace the piston and piston pin as a set.

D. If necessary, replace connecting rod bushing

(a) Using SST and a press, press out the bushing.
SST 09222−67010 (09222−06010, 09222−06030)

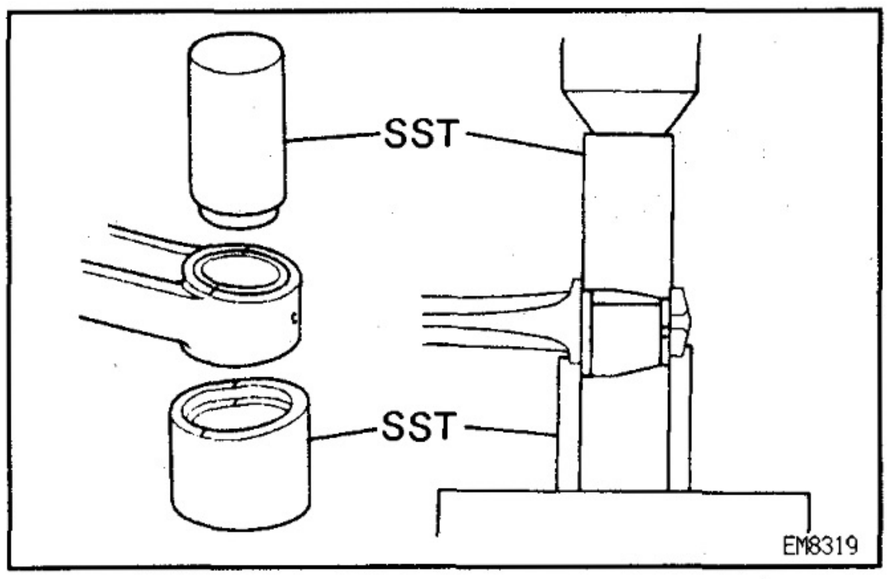

(b) Using a round file, lightly file off any roughness from the small end of the connecting rod.

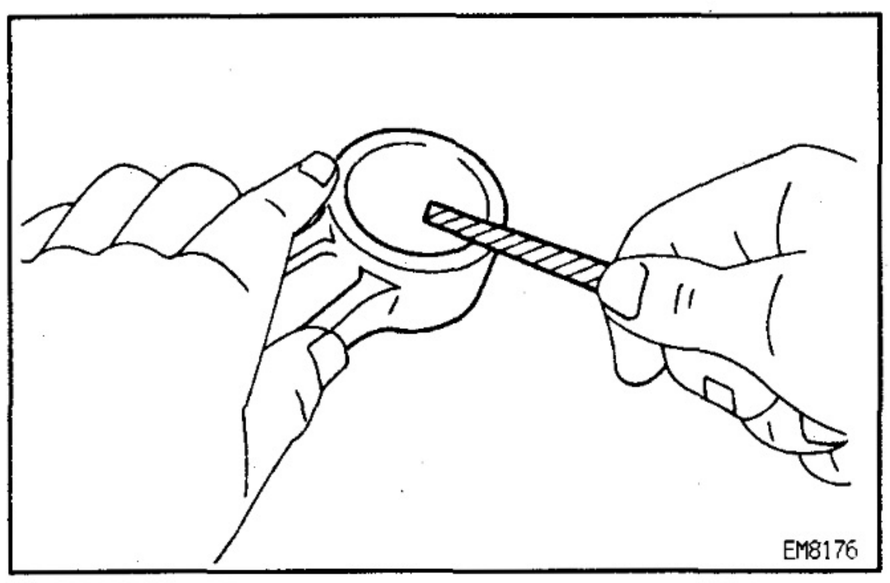

(c) Attach the bushing to SST with the ball of SST inside the oil hole of the bushing.
SST 09222−67010 (09222−06020)

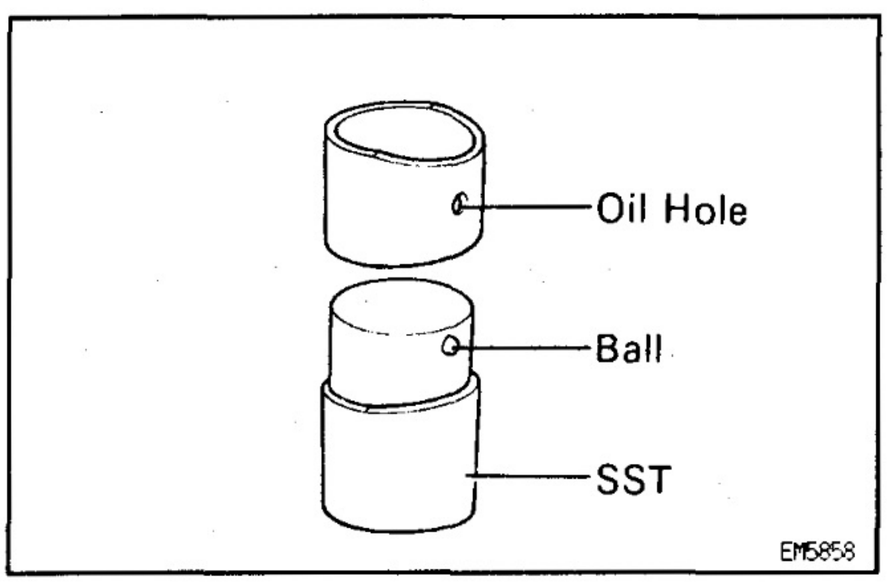

(d) Align the oil holes of a new bushing and the connecting rod.

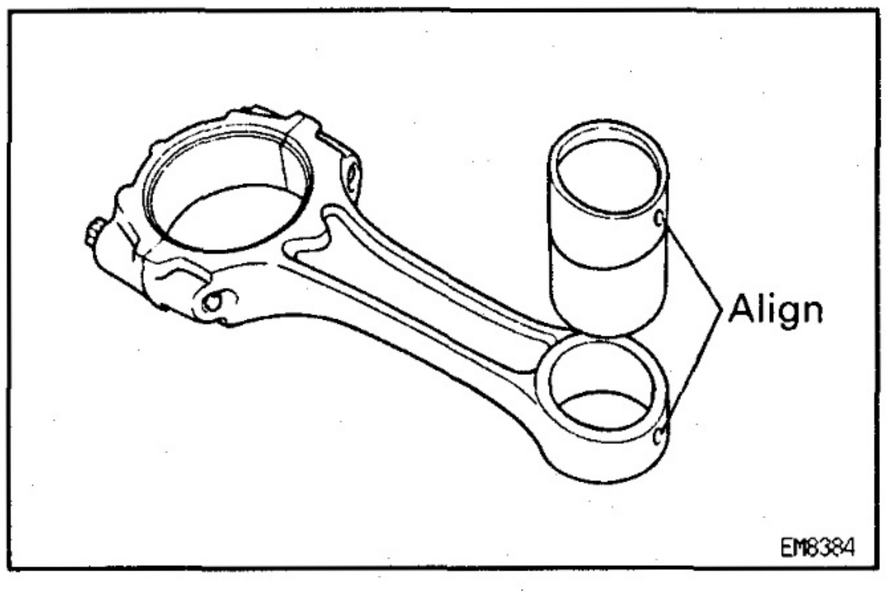

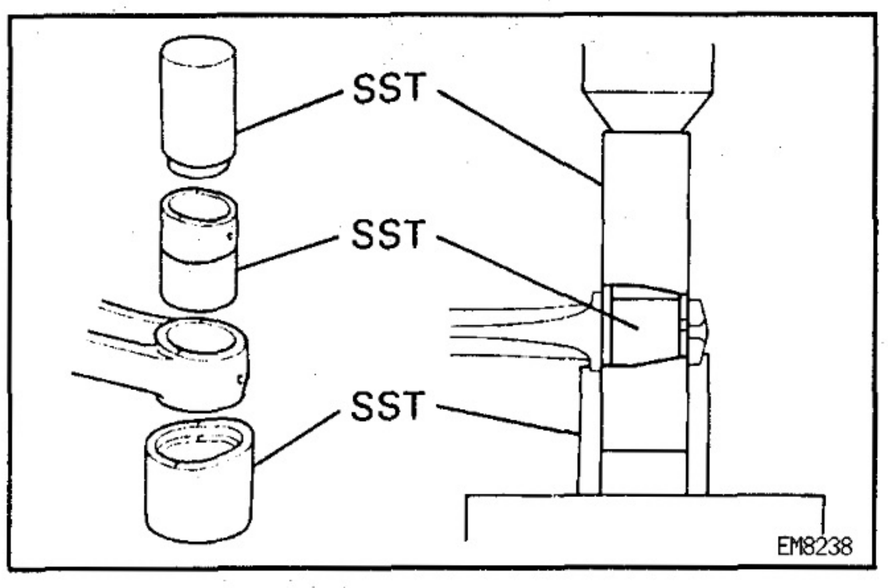

(e) Using SST and a press, press in the bushing.
SST 09222–67010 (09222–06010, 09222–06020, 09222–06030)

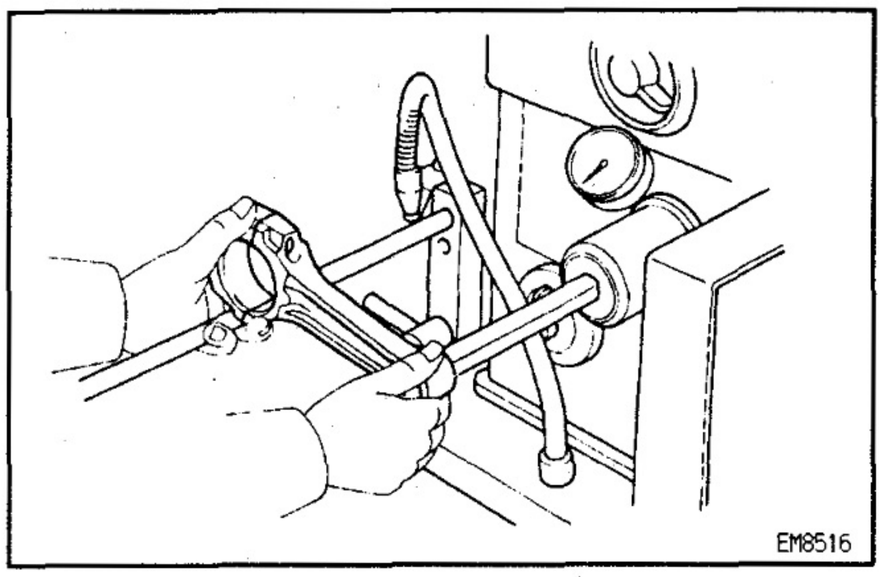

(f) Using a pin hole grinder, hone the bushing to obtain the standard specified clearance (see step C above) between the bushing and piston pin.

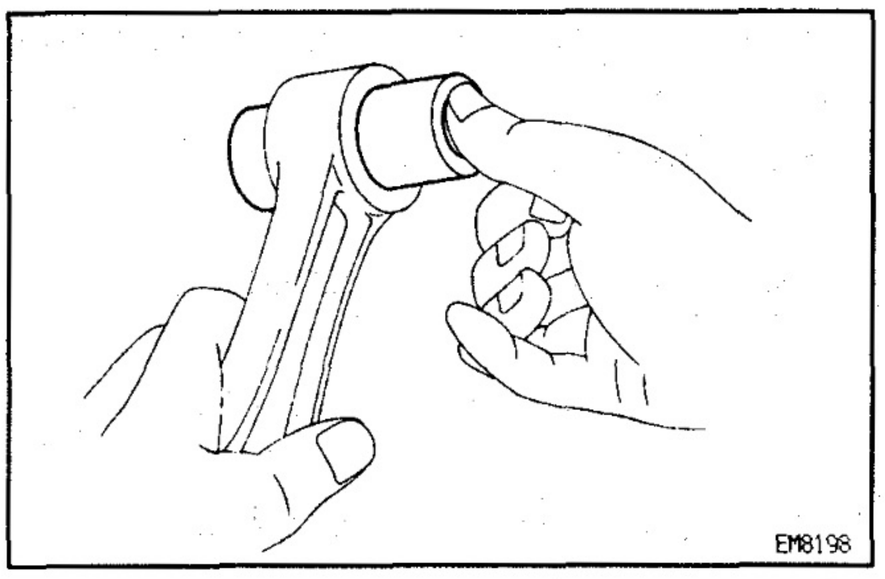

(g) Check the piston pin fit at normal room temperature. Coat the piston pin with engine oil, and push it into the connecting rod with your thumb.

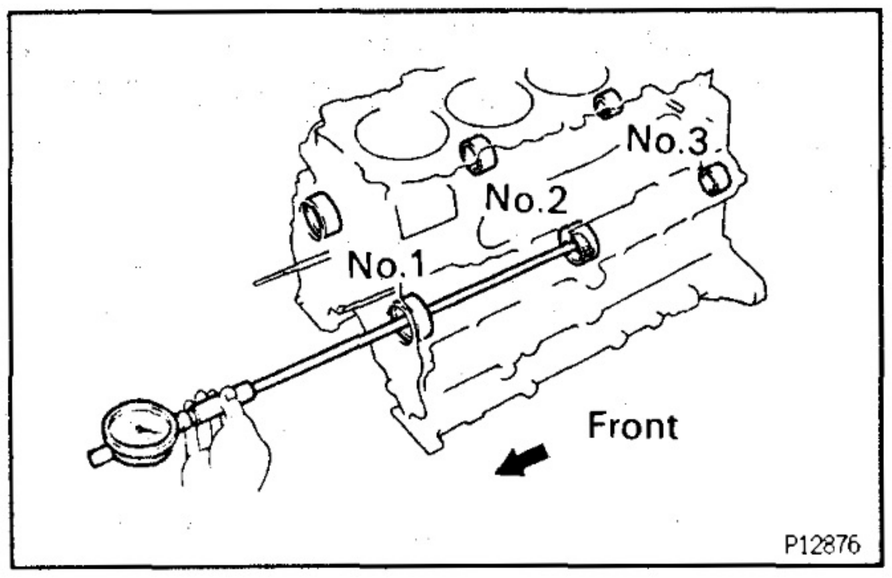

EG35J-01

BALANCE SHAFT INSPECTION

INSPECT RH AND LH BALANCE SHAFT

(a) Using a cylinder gauge, measure the inside diameter of the balance shaft bearing.

Bearing inside diameter (from front side):

No.1

42.000 – 42.020 mm (1.6535 – 1.6543 in.)

No.2

41.000 – 41.020 mm (1.6142 – 1.6150 in.)

No.3

32.000 – 32.020 mm (1.2598 – 1.2606 in.)

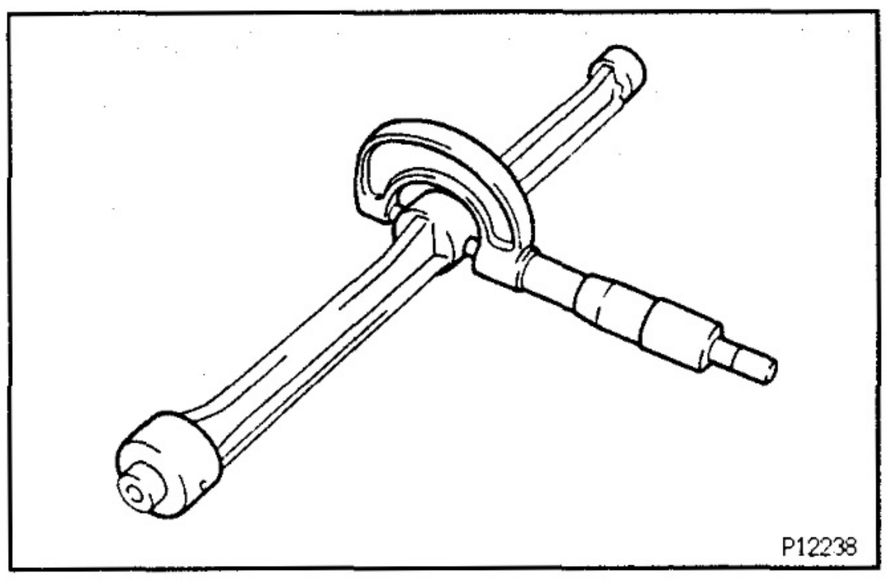

(b) Using a micrometer, measure the diameter of the balance shaft main journals.

Main journal diameter (from front side):

No.1

41.941 – 41.960 mm (1.6512 – 1.6520 in.)

No.2

40.931 – 40.950 mm (1.6115 – 1.6122 in.)

No.3

31.941 – 31.960 mm (1.2575 – 1.2583 in.)

(c) Subtract the balance shaft main journal diameter measurement from the balance shaft bearing inside diameter measurement.

Standard oil clearance:

No.1

0.040 – 0.079 mm (0.0016 – 0.0031 in.)

No.2

0.040 – 0.079 mm (0.0016 – 0.0031 in.)

No.3

0.050 – 0.089 mm (0.0020 – 0.0035 in.)

Maximum oil clearance:

No.1

0.18 mm (0.0071 in.)

No.2

0.19 mm (0.0075 in.)

No.3

0.18 mm (0.0071 in.)

If the clearance is greater than maximum, replace the cylinder block and balance shaft.

EG288-02

CYLINDER BORING

HINT:

- Bore all the 4 cylinders to the oversized piston outside diameter.
- Replace all the piston rings with ones to match the oversized pistons.

1. KEEP OVERSIZED PISTONS

Oversized piston diameter:

O/S 0.50

96.440 — 96.470 mm (3.7968 — 3.7980 in.)

O/S 0.75

96.690 — 96.720 mm (3.8067 — 3.8079 in.)

O/S 1.00

96.940 — 96.970 mm (3.8165 — 3.8177 in.)

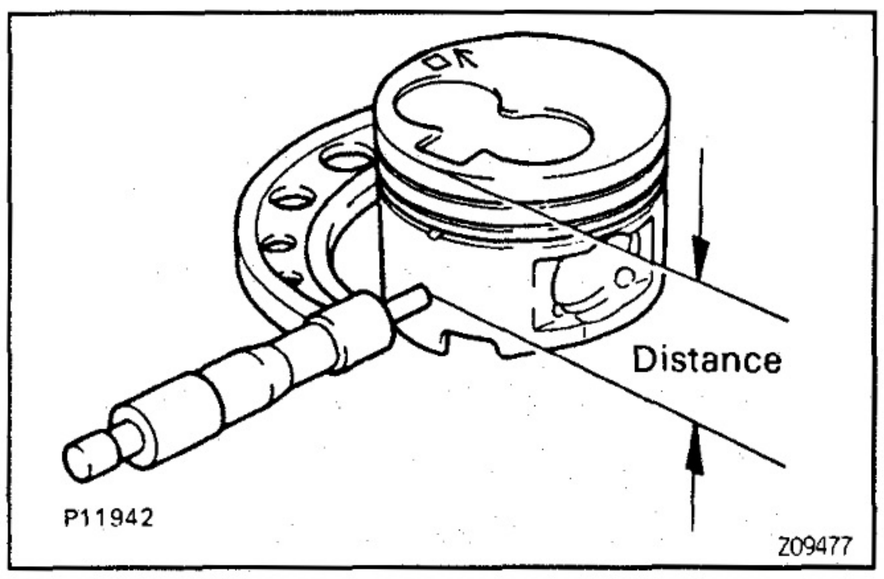

2. CALCULATE AMOUNT TO BORE CYLINDERS

(a) Using a micrometer, measure the piston diameter at right angles to the piston pin center line, 58.8 mm (2.315 in.) from the piston head.

(b) Calculate the amount each cylinder is to be rebored as follows:

Size to be rebored = P + C — H

P = Piston diameter

C = Piston clearance

0.050 — 0.070 mm (0.0020 — 0.0028 in.)

H = Allowance for honing

0.02 mm (0.0008 in.) or less

3. BORE AND HONE CYLINDER TO CALCULATED DIMENSIONS

Maximum honing:

0.02 mm (0.0008 in.)

NOTICE: Excess honing will destroy the finished roundness.

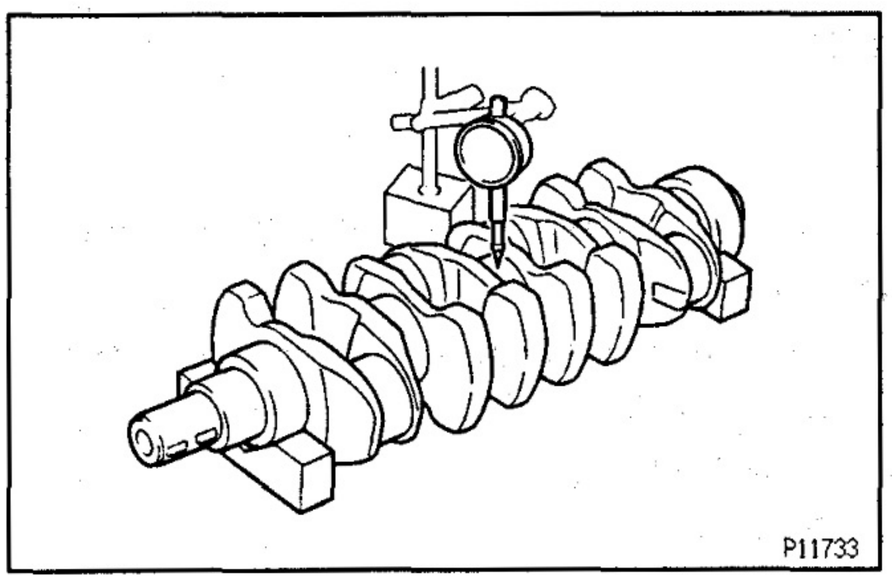

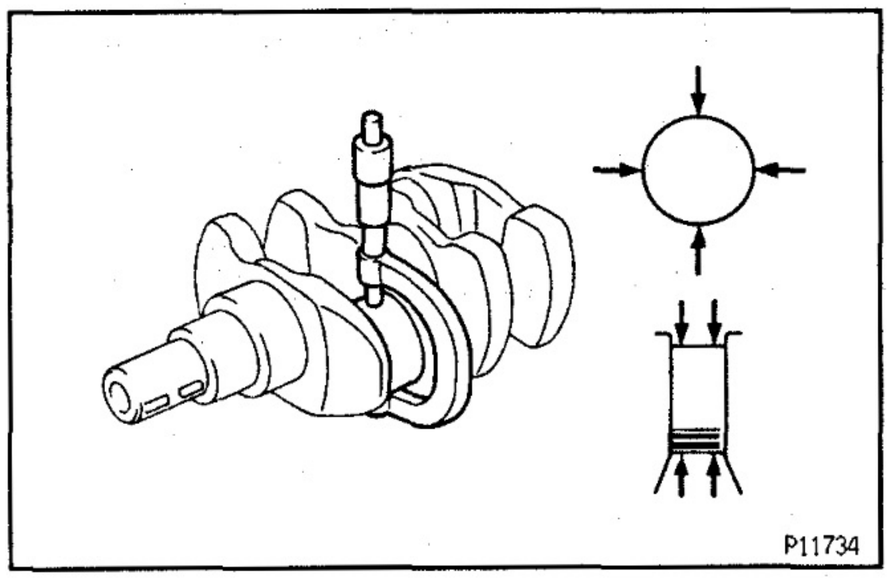

CRANKSHAFT INSPECTION AND REPAIR

EG0BY–0H

1. INSPECT CRANKSHAFT FOR RUNOUT

(a) Place the crankshaft on V–blocks.

(b) Using a dial indicator, measure the circle runout at the center journal.

Maximum circle runout:

0.06 mm (0.0024 in.)

If the circle runout is greater than maximum, replace the crankshaft.

2. INSPECT MAIN JOURNALS AND CRANK PINS

(a) Using a micrometer, measure the diameter of each main journal and crank pin.

Main journal diameter:

STD

69.982 – 70.000 mm (2.7552 – 2.7559 in.)

U/S 0.25

69.745 – 69.755 mm (2.7459 – 2.7463 in.)

U/S 0.50

69.495 – 69.505 mm (2.7360 – 2.7364 in.)

Crank pin diameter:

STD

58.982 – 59.000 mm (2.3221 – 2.3228 in.)

U/S 0.25

58.745 – 58.755 mm (2.3128 – 2.3132 in.)

U/S 0.50

58.495 – 58.505 mm (2.3028 – 2.3132 in.)

If the diameter is not as specified, check the oil clearance (See steps 6 and 9 on pages EG–90 and EG–93) If necessary, grind or replace the crankshaft.

(b) Check each main journal and crank pin for taper and out–of–round as shown.

Maximum taper and out–of–round:

0.020 mm (0.0008 in.)

If the taper and out–of–round is greater than maximum, replace the crankshaft.

3. IF NECESSARY, GRIND AND HONE MAIN JOURNALS AND/OR CRANK PINS

Grind and hone the main journals and/or crank pins to the finished undersized diameter (See procedure in step 2).

Install new main journal and/or crankshaft pin undersized bearings.

CRANKSHAFT OIL SEAL REPLACEMENT EG23C-02

HINT: There are 2 methods (A and B) to replace the oil seal which are as follows:

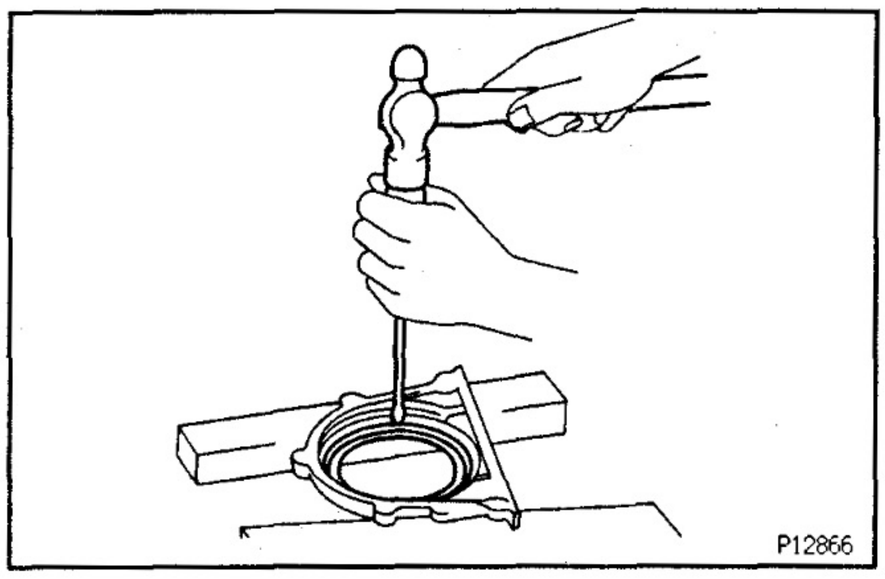

REPLACE CRANKSHAFT REAR OIL SEAL

A. If rear oil seal retainer is removed from cylinder block:

(a) Using a screwdriver and hammer, tap out the oil seal.

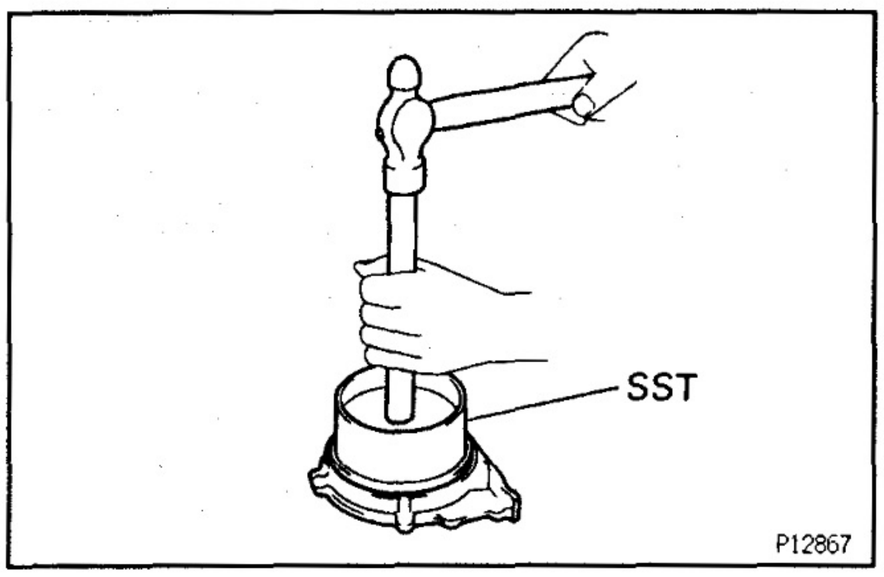

(b) Using SST and a hammer, tap in a new oil seal until its surface is flush with the rear oil seal retainer edge.
SST 09223–15030 and 09252–10010

(c) Apply MP grease to a new oil seal lip.

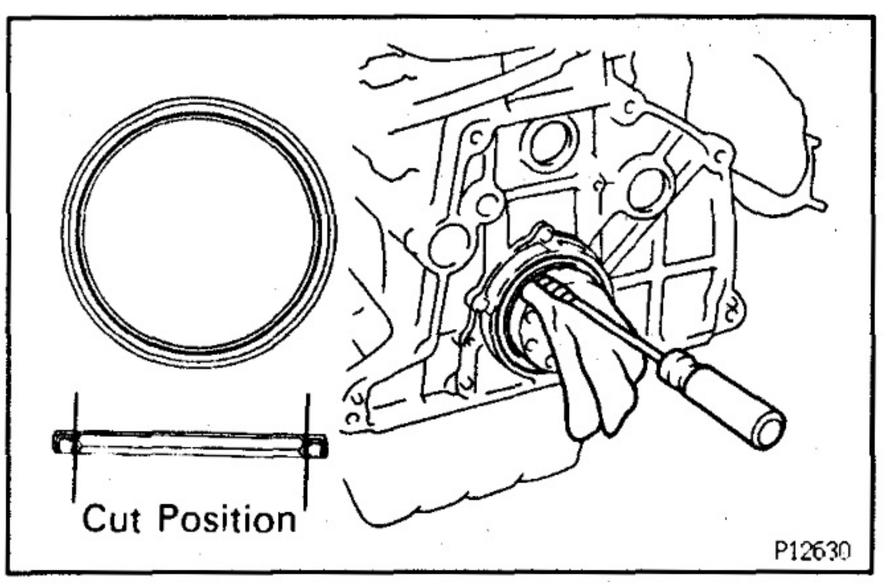

B. If rear oil seal retainer is installed to cylinder block:

(a) Using a knife, cut off the oil seal lip.

(b) Using a screwdriver, pry out the oil seal.
NOTICE: Be careful not to damage the crankshaft. Tape the screwdriver tip.

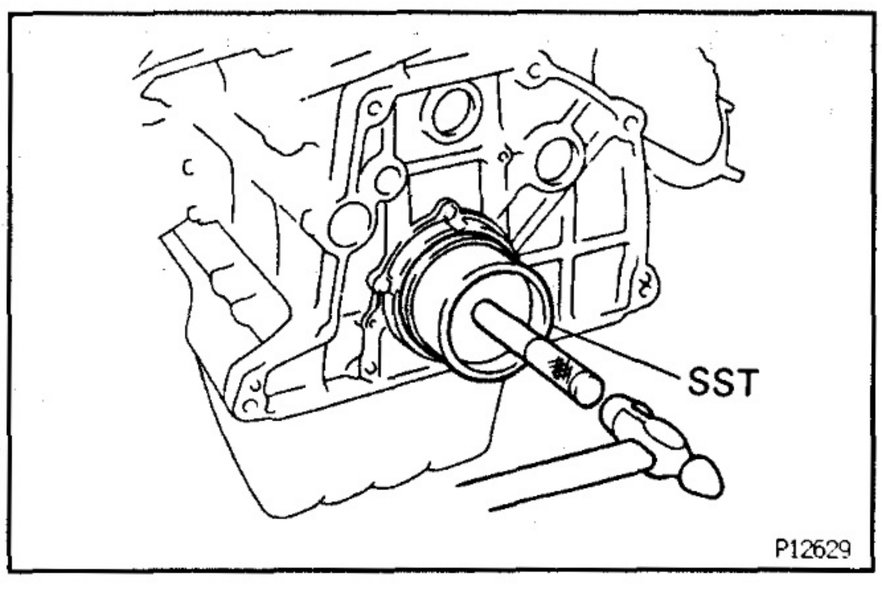

(c) Apply MP grease to a new oil seal lip.

(d) Using SST and a hammer, tap in the oil seal until its surface is flush with the rear oil seal retainer edge.
SST 09223–15030 and 09252–10010

EG33D-02

PISTON AND CONNECTING ROD ASSEMBLY

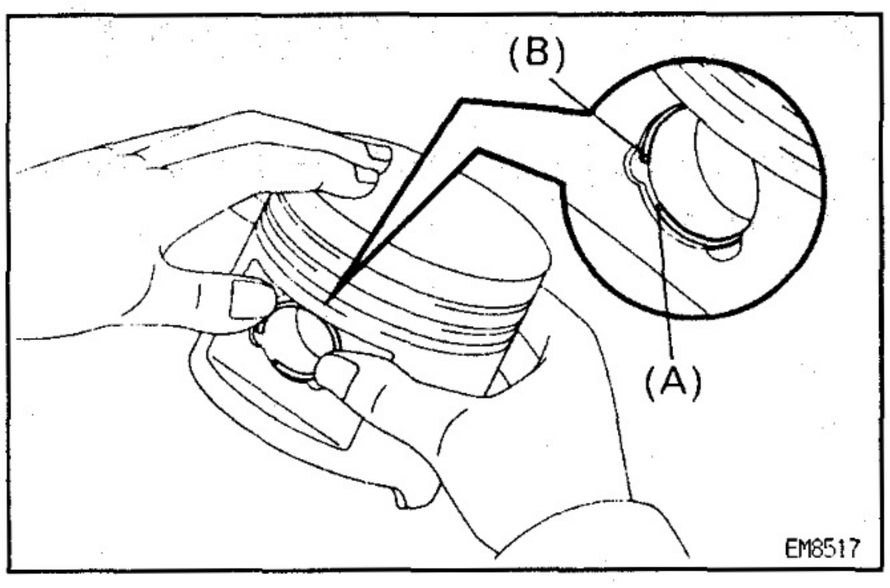

1. ASSEMBLE PISTON AND CONNECTING ROD

(a) Install a new snap ring on one side of the piston pin hole.

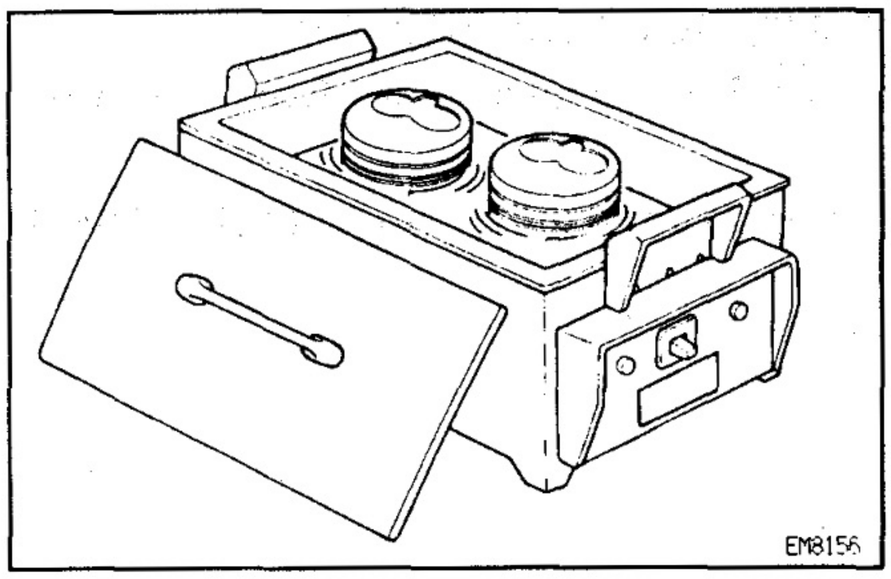

(b) Gradually heat the piston to 80°C (176°F).

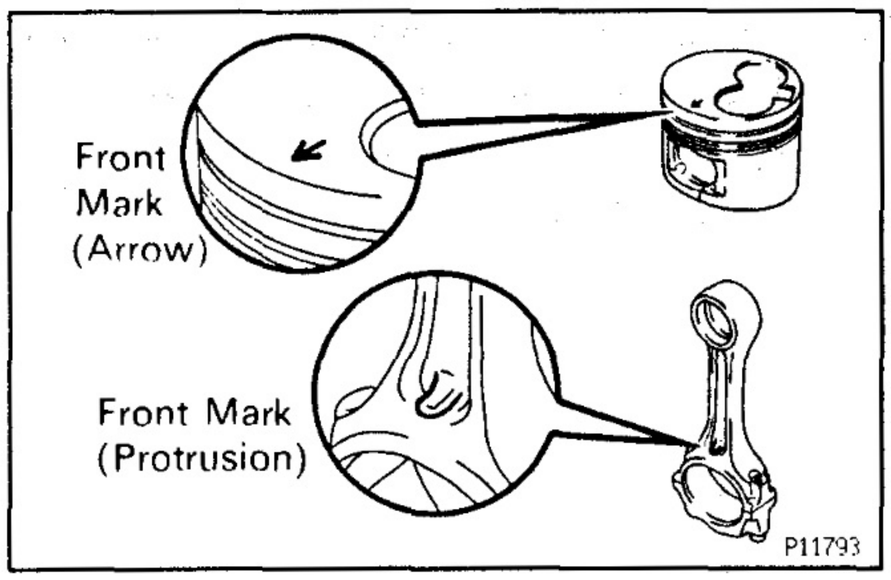

(c) Coat the piston pin with engine oil.
(d) Align the front marks of the piston and connecting rod, and push in the piston pin with your thumb.
(e) Install a new snap ring on the other side of the piston pin hole.

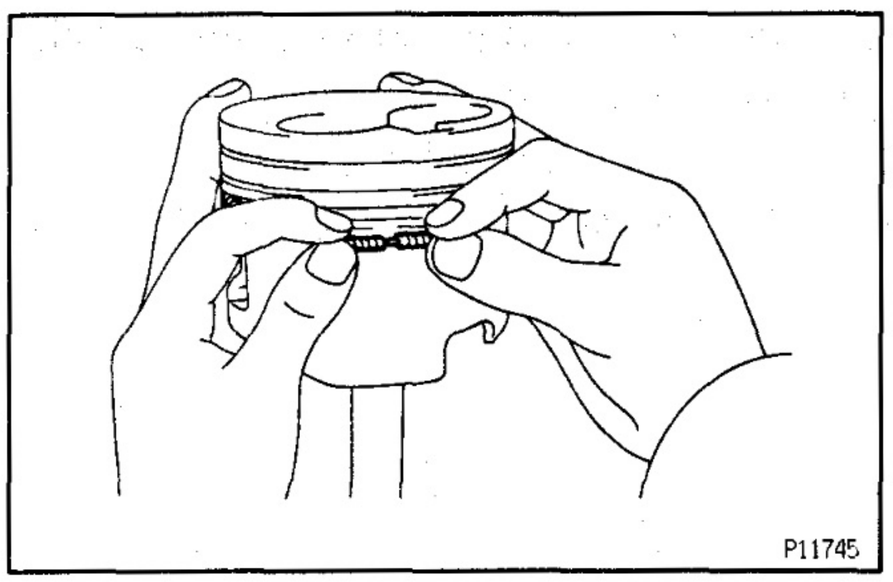

2. INSTALL PISTON RINGS

(a) Install the coil by hand.
(b) Install a piston ring expander, install the oil ring.

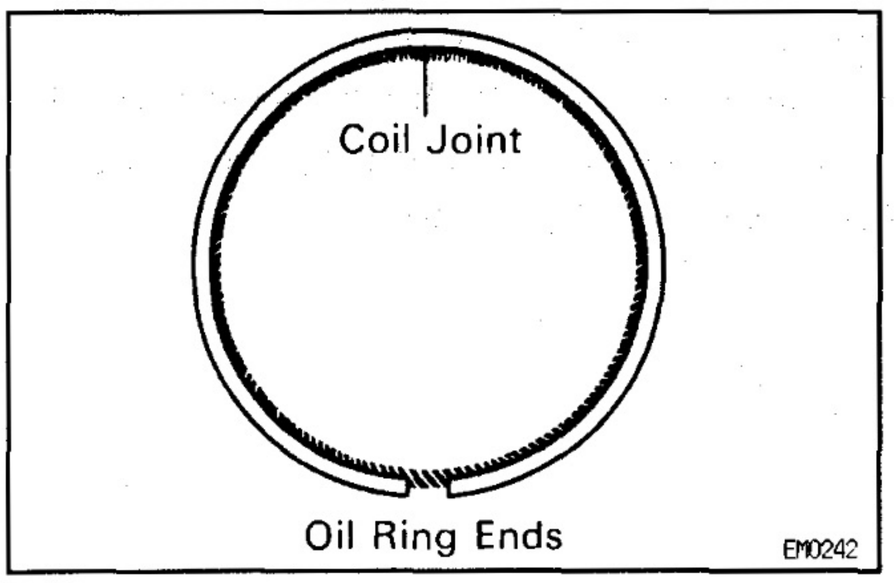

HINT: Face the end gap of the oil ring in the opposite direction of coil joint.

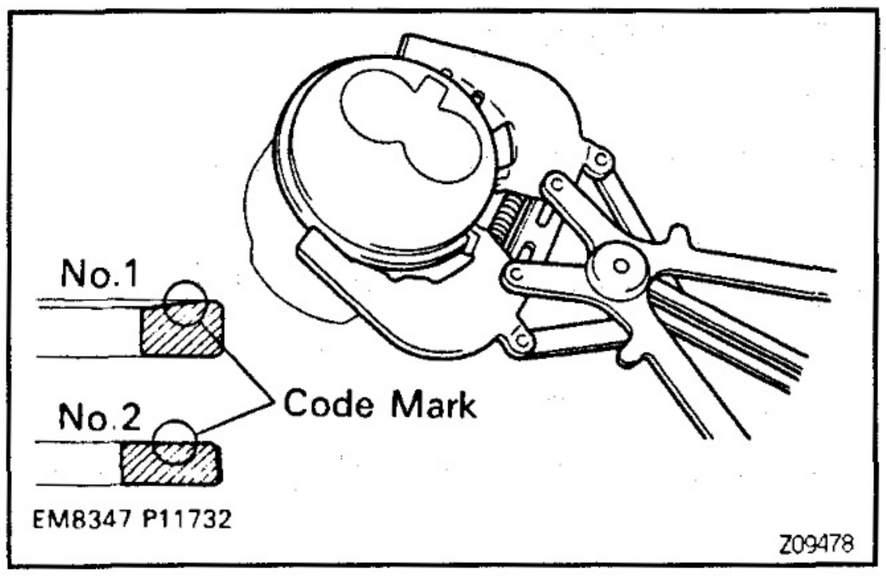

(c) Using a piston ring expander, install the 2 compression rings with the code mark facing upward.
Code mark:
No.1
1N
No.2
2N

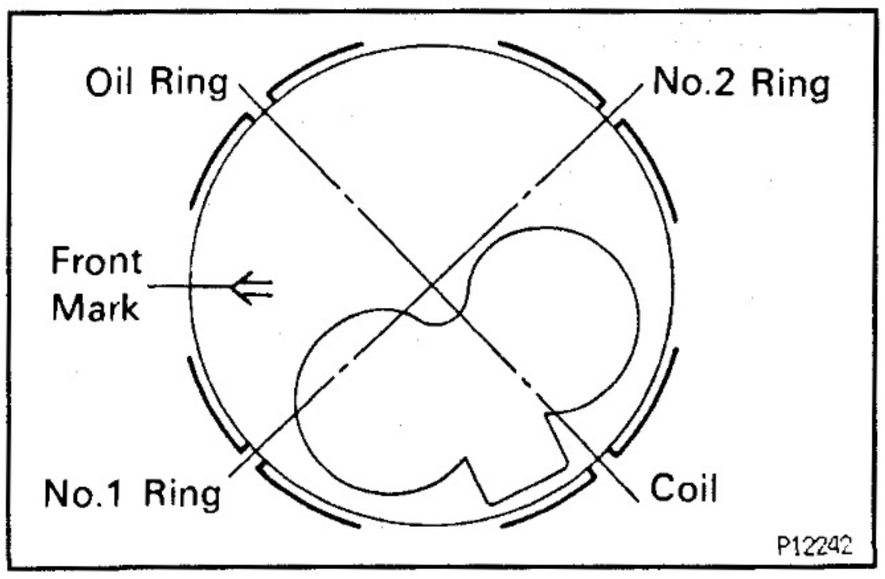

(d) Position the piston rings so that the ring ends are as shown.
NOTICE: Do not align the ring ends.

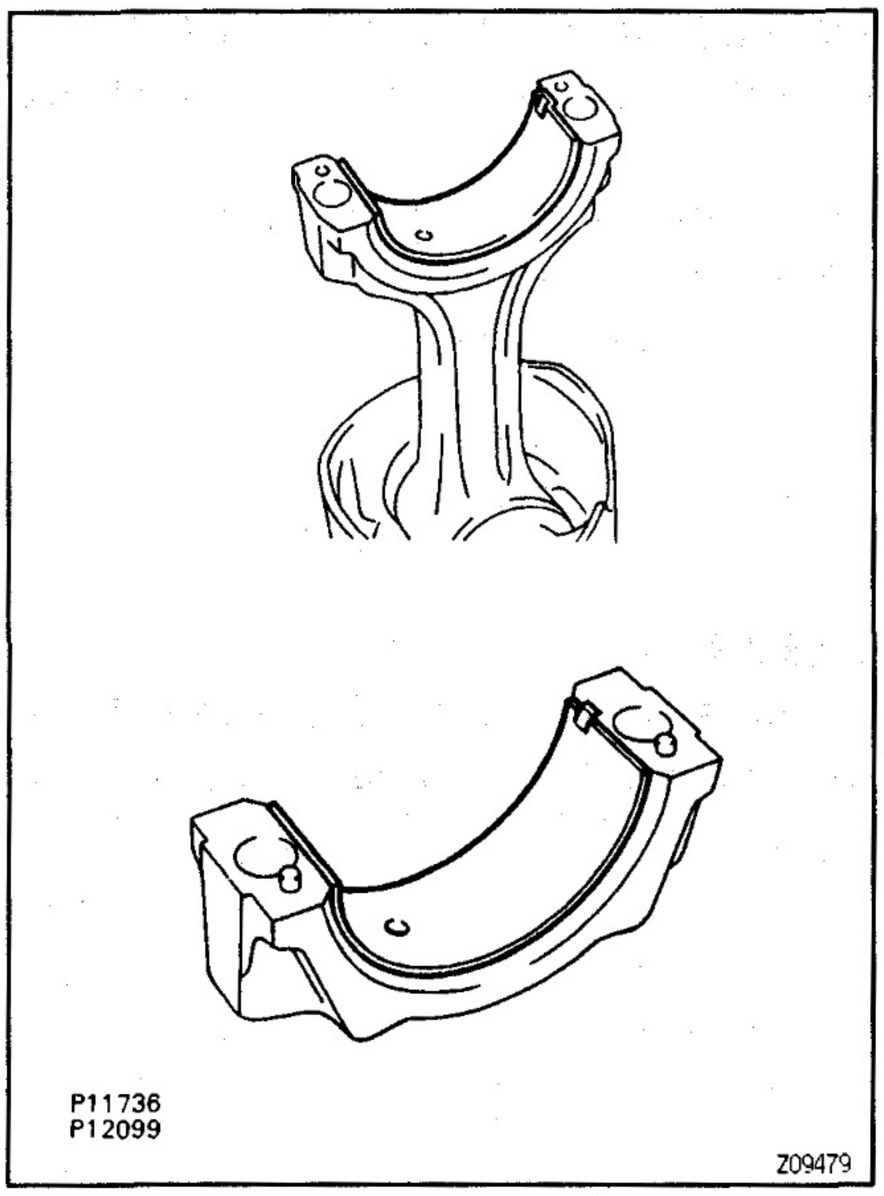

3. INSTALL BEARINGS

(a) Align the bearing claw with the groove of the connecting rod or connecting cap.
(b) Install the bearings in the connecting rod and connecting rod cap.

EG33E-01

CYLINDER BLOCK ASSEMBLY

(See Components for Disassembly and Assembly)

HINT:

- Thoroughly clean all parts to be assembled.
- Before installing the parts, apply new engine oil to all sliding and rotating surfaces.
- Replace all gaskets, O—rings and oil seals with new parts.

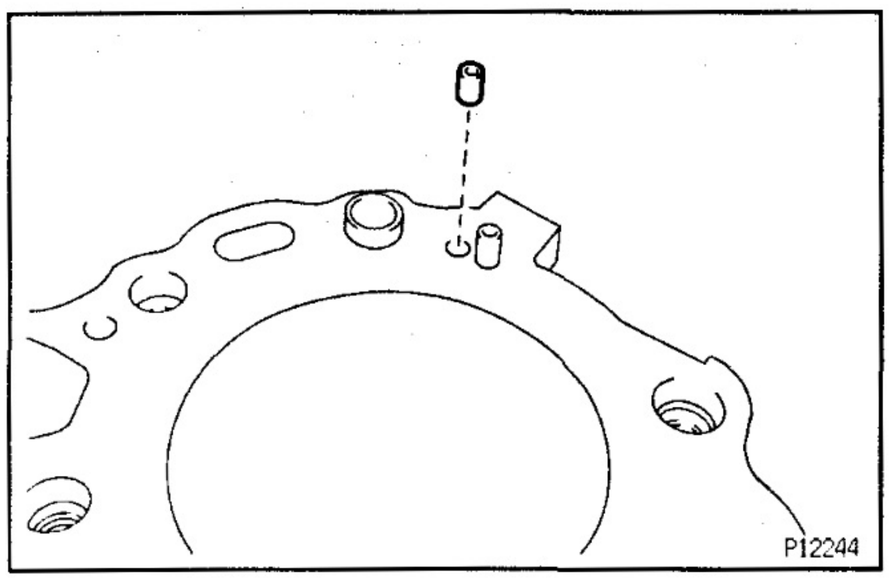

1. INSTALL CYLINDER BLOCK ORIFICE

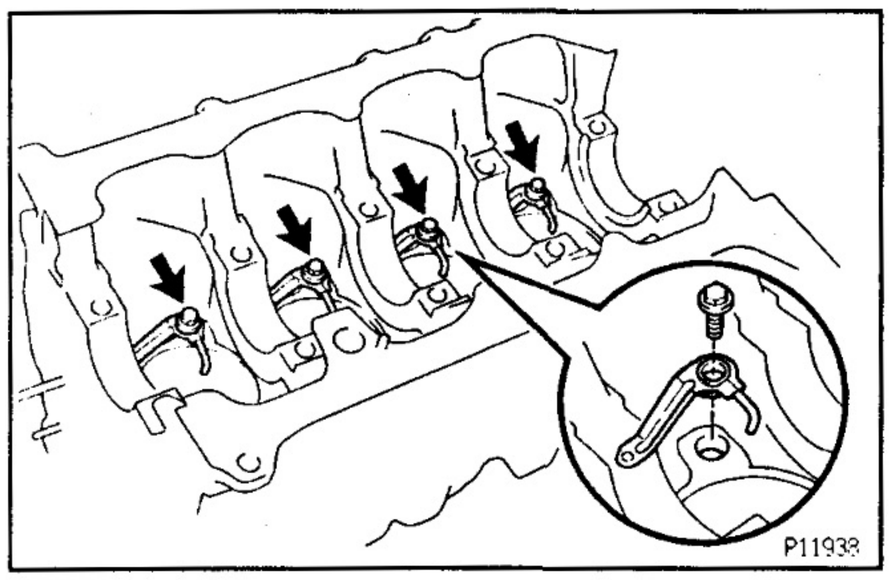

2. INSTALL OIL NOZZLES AND CHECK VALVES

(a) Align the pin of the oil nozzle with the pin hole of the cylinder block.

(b) Install the oil nozzle with the check valve. Install the 4 oil nozzles and check valves.
Torque: 25 N·m (260 kgf·cm, 19 ft·lbf)

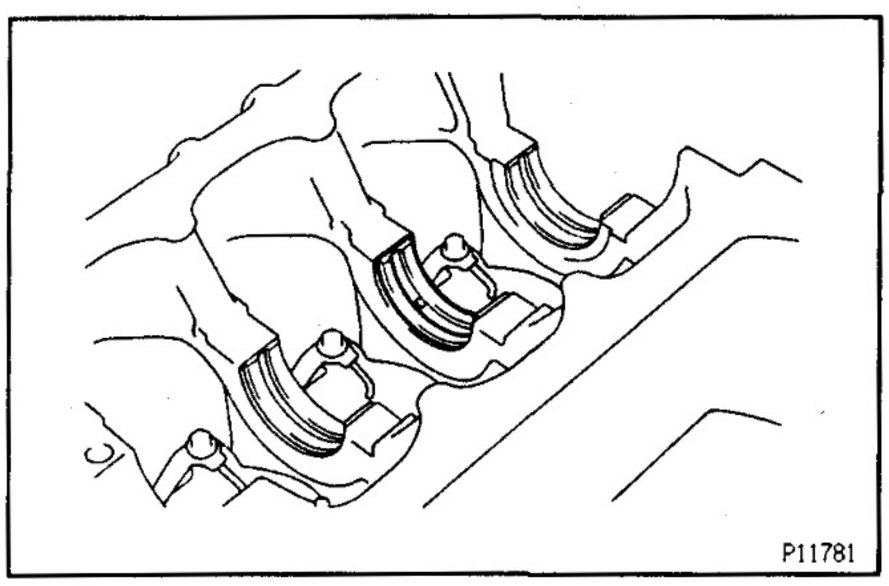

3. INSTALL MAIN BEARINGS

(a) Align the bearing claw with the claw groove of the cylinder block, and push in the 5 upper bearings.

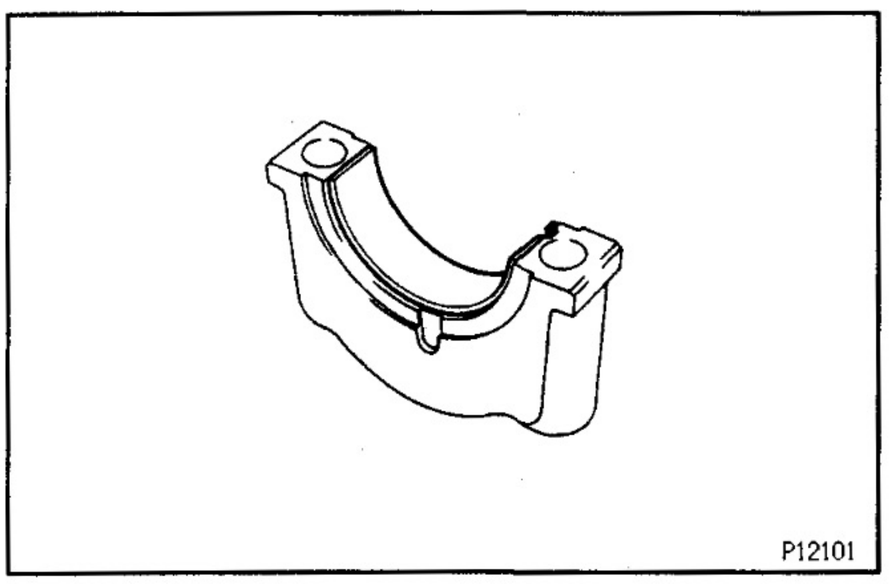

(b) Align the bearing claw with the claw groove of the main bearing cap, and push in the 5 lower bearings.

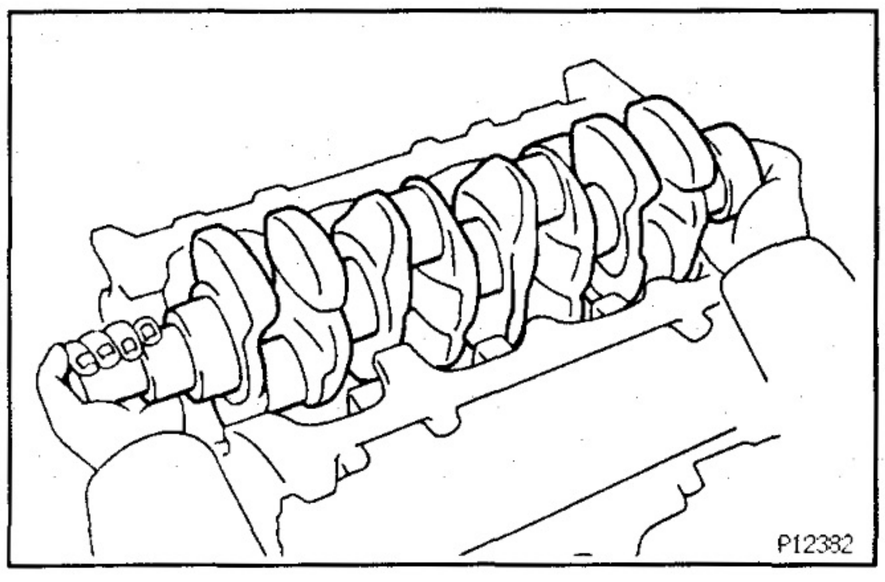

4. PLACE CRANKSHAFT ON CYLINDER BLOCK

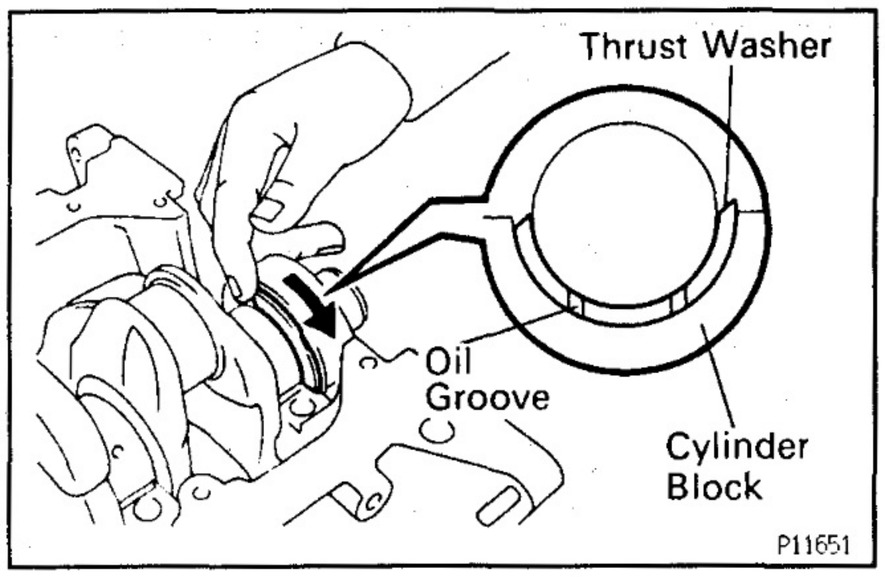

5. INSTALL UPPER THRUST WASHERS

(a) Push the crankshaft toward the front (rear) side.

(b) Install the 2 thrust washers to the No.5 journal position of the cylinder block with the oil grooves facing outward.

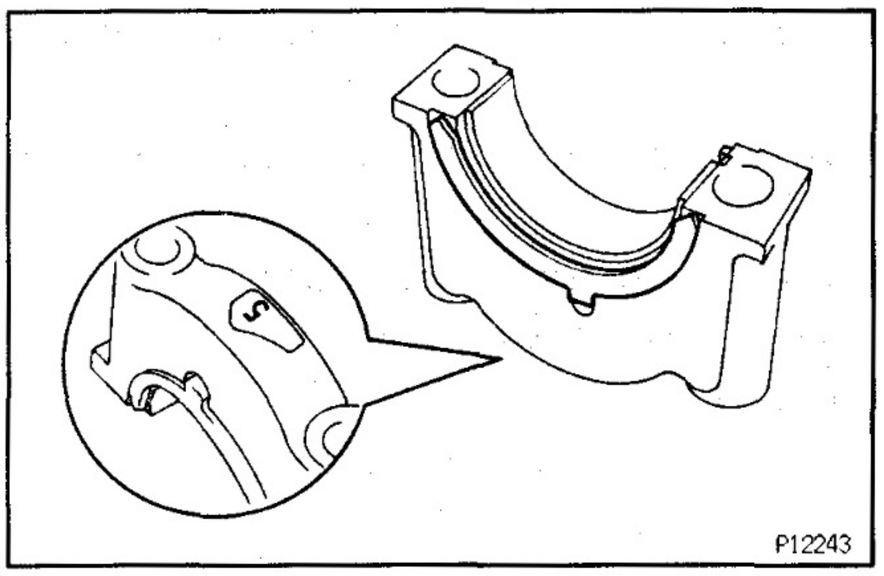

6. INSTALL MAIN BEARING CAPS AND LOWER THRUST WASHERS

A. Place main bearing cap and lower thrust washers on cylinder block

(a) Install the 2 thrust washers on the No.5 bearing cap with the grooves facing outward.

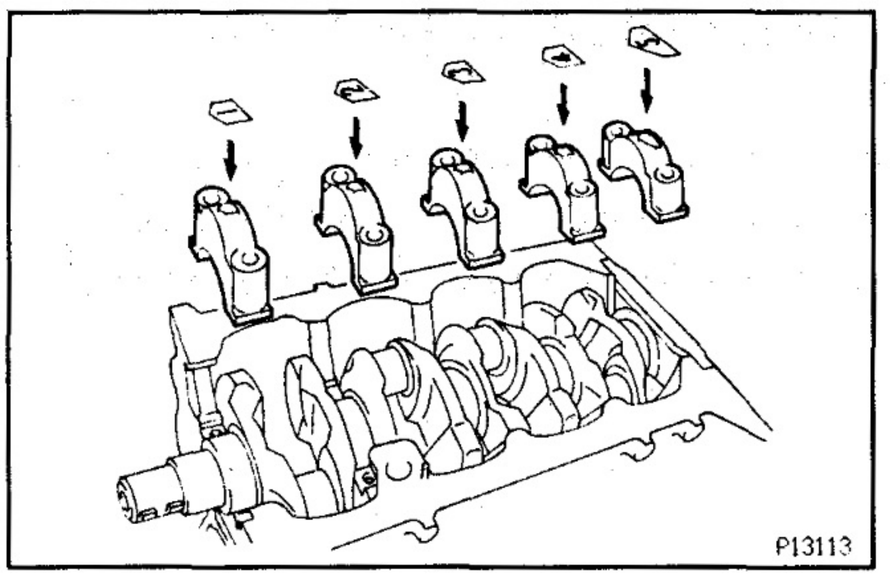

(b) Install the 5 main bearing caps in their proper locations.
HINT: Each bearing cap has a number and front mark.

B. Install main bearing cap bolts

HINT:

- The main bearing cap bolts are tightened in 2 progressive steps (steps (b) and (d)).
- If any one of the main bearing cap bolts is broken or deformed, replace it.

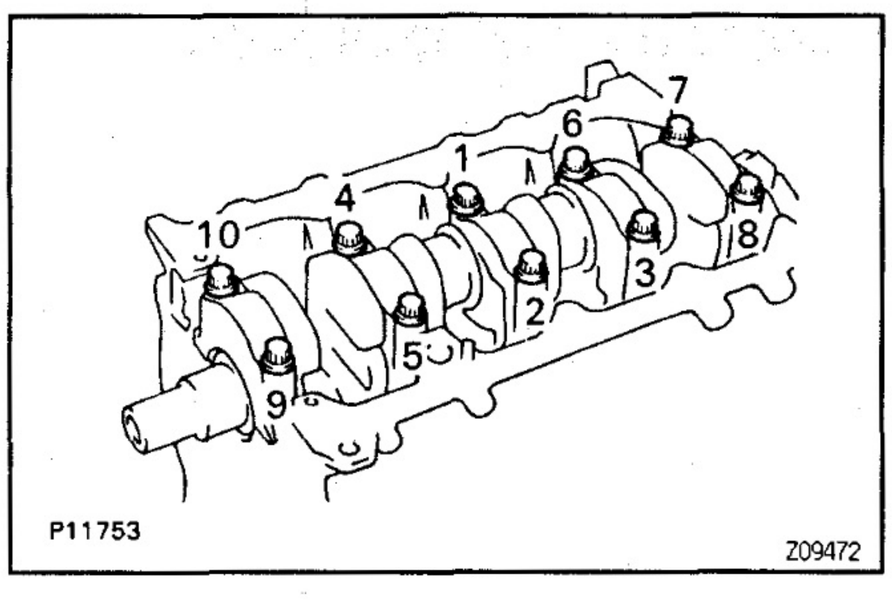

(a) Apply a light coat of engine oil on the threads and under the heads of the main bearing cap bolts.
(b) Install and uniformly tighten the 10 bolts of the main bearing caps in several passes, in the sequence shown.
Torque: 49 N·m (500 kgf·cm, 36 ft·lbf)
If any one of the main bearing cap bolts does not meet the torque specification, replace the main bearing cap bolt.

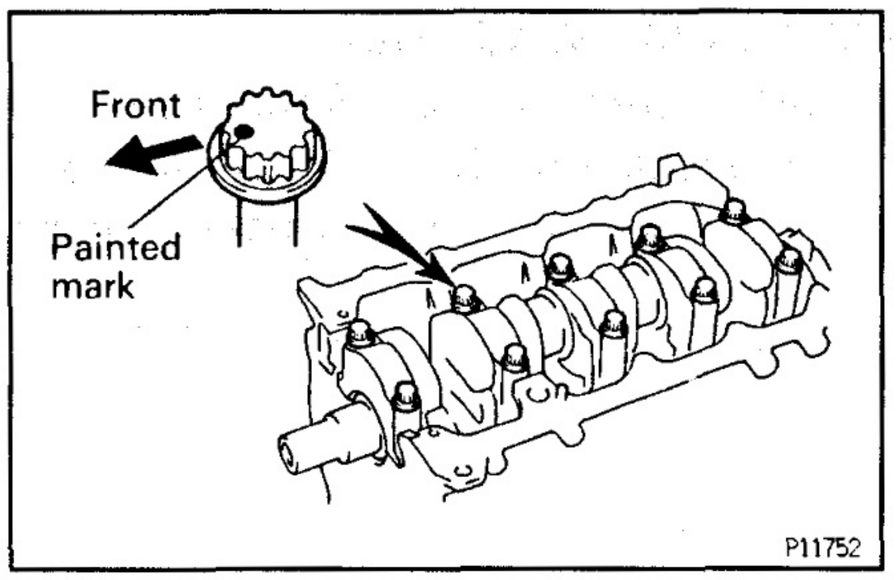

(c) Mark the front of the main bearing cap bolt with paint.

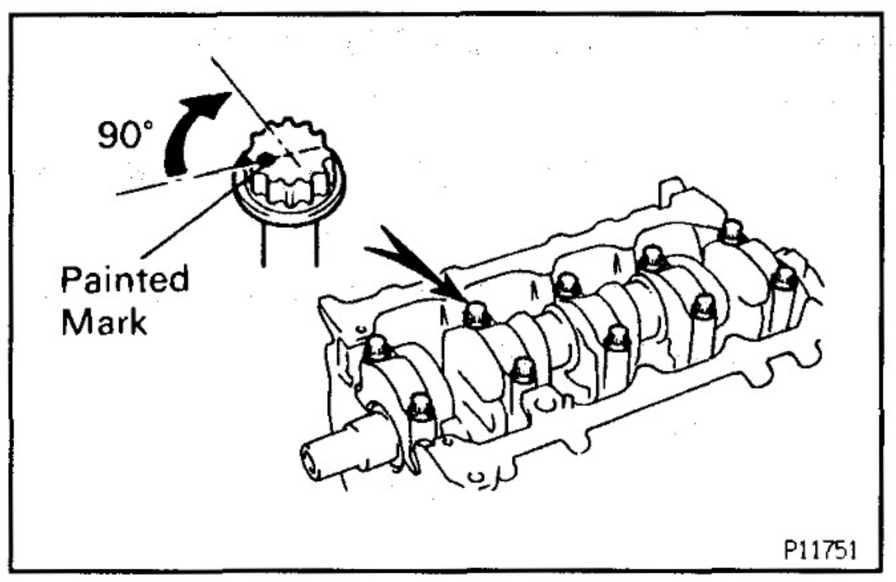

(d) Retighten the main bearing cap bolts 90° in the numerical order shown above.
(e) Check that the painted mark is now at a 90° angle to the front.
(f) Check that the crankshaft turns smoothly.
(g) Check the crankshaft thrust clearance.
(See step 8 on page EG−93)

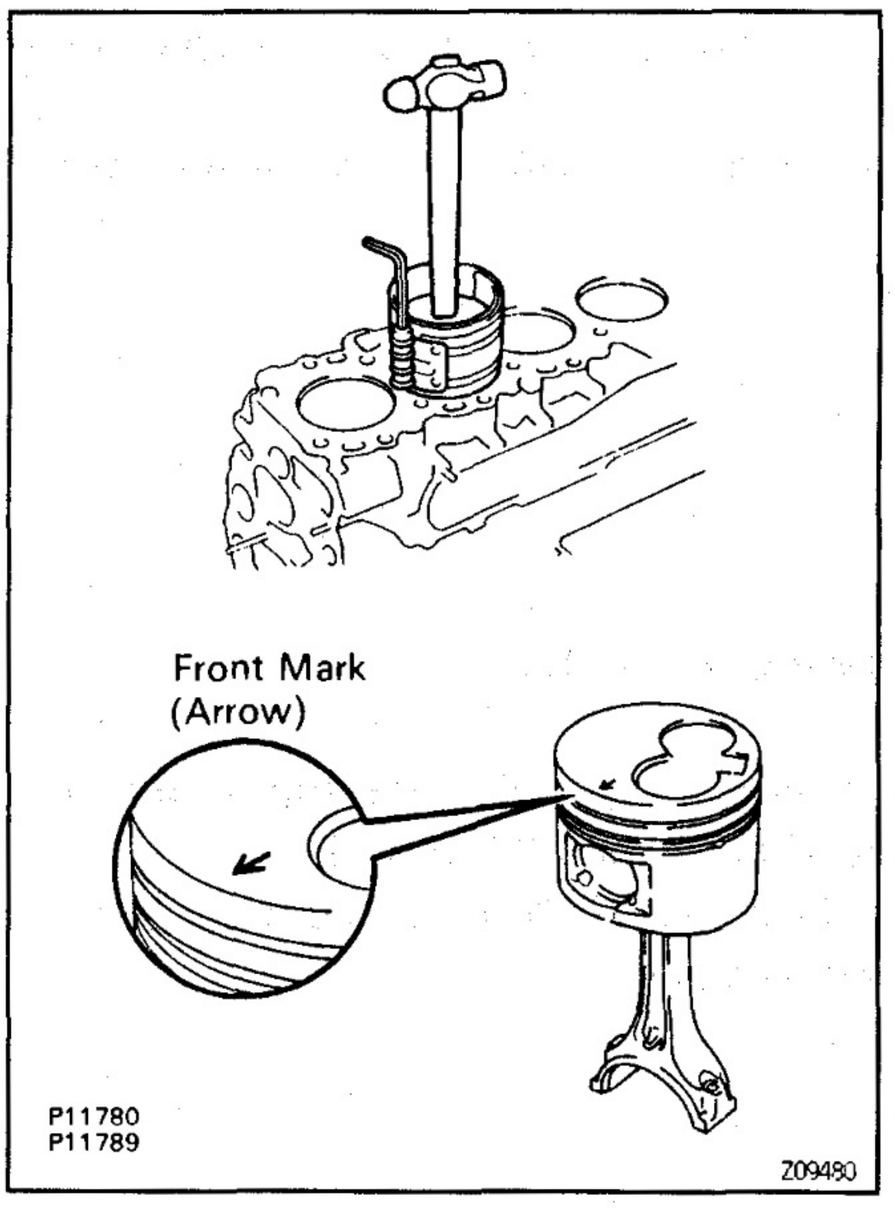

7. INSTALL PISTON AND CONNECTING ROD ASSEMBLIES

Using a piston ring compressor, push the correctly numbered piston and connecting rod assemblies into each cylinder with the front mark of the piston facing forward.

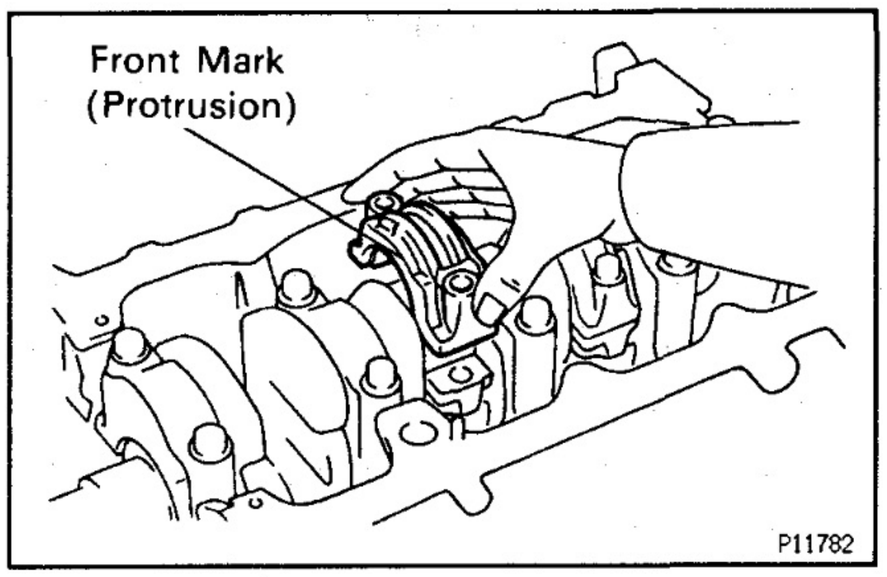

8. INSTALL CONNECTING ROD CAPS

A. Place connecting rod cap on connecting rod

(a) Match the numbered connecting rod cap with the connecting rod.

(b) Install the connecting rod cap with the front mark facing forward.

B. Install connecting rod cap bolts

HINT:

- The connecting rod cap nuts are tightened in 2 progressive steps (steps (b) and (d)).
- If any connecting rod bolt is broken or deformed, replace it.

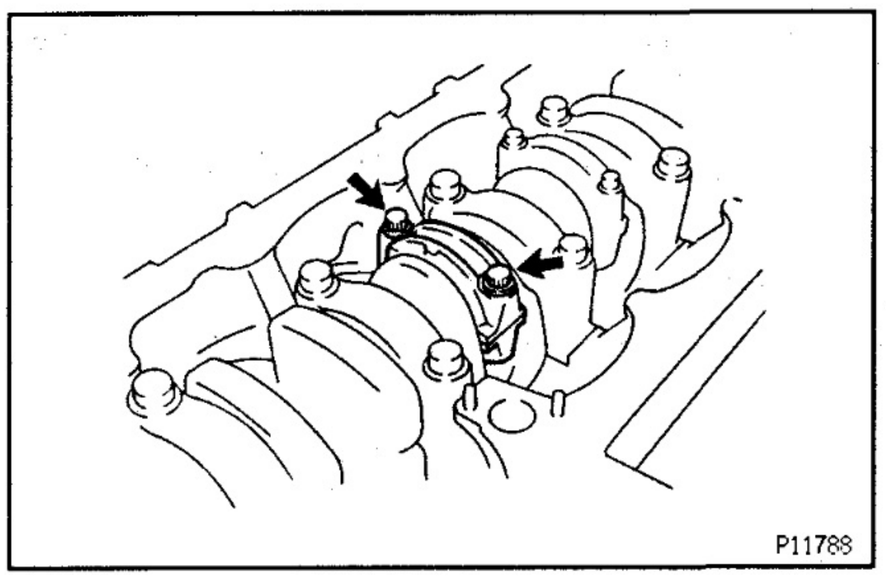

(a) Apply a light of engine oil on the threads and under the heads of the connecting rod cap bolts.

(b) Install and alternately tighten the bolts of the connecting rod cap in several passes.

Torque: 29 N·m (300 kgf·cm, 22 ft·lbf)

If any one of the connecting rod cap bolts does not meet the torque specification, replace the cap bolt.

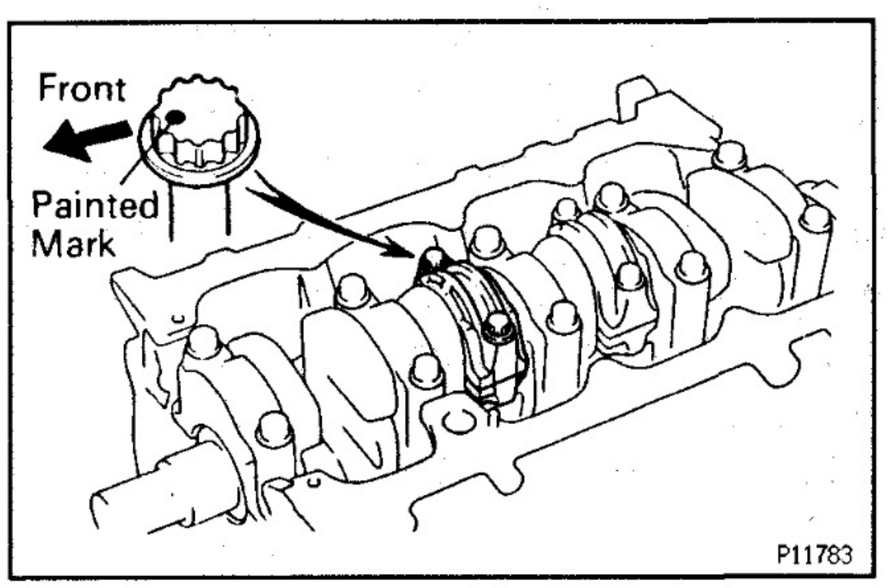

(c) Mark the front of the connecting rod cap bolt with paint.

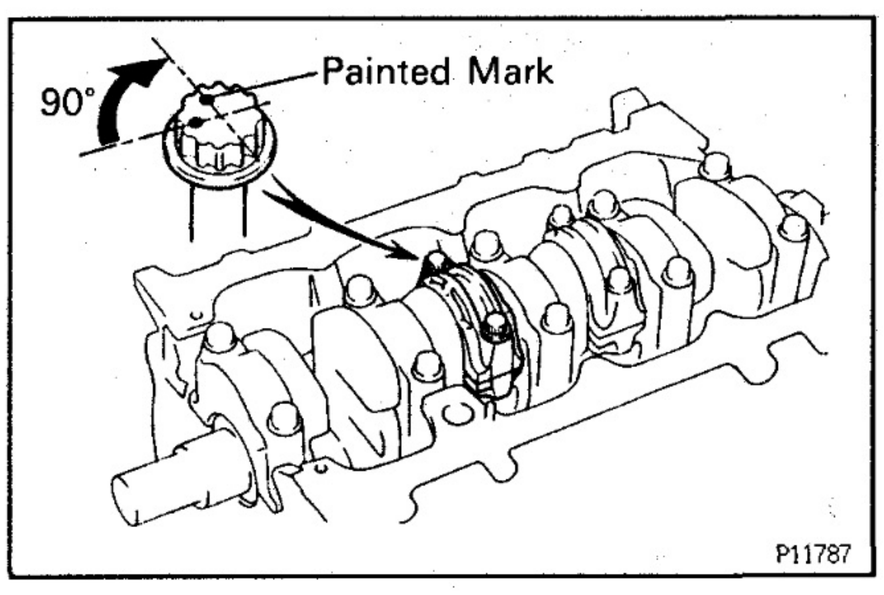

(d) Retighten the connecting rod cap bolts 90° as shown.

(e) Check that the painted mark is now at a 90° angle to the front.

(f) Check that the crankshaft turns smoothly.

(g) Check the connecting rod thrust clearance.
(See step 5 on page EG—90)

9. INSTALL REAR OIL SEAL RETAINER

(a) Remove any old packing (FIPG) material and be careful not to drop any oil on the contact surfaces of the retainer and cylinder block.
- Using a razor blade and gasket scraper, remove all the old packing (FIPG) material from the gasket surfaces and sealing groove.
- Thoroughly clean all components to remove all the loose material.
- Using a non—residue solvent, clean both sealing surfaces.

(b) Apply seal packing to the retainer as shown in the illustration.

Seal packing:

Part No. 08826—00080 or equivalent

- Install a nozzle that has been cut to a 2 — 3 mm (0.08 — 0.12 in.) opening.

HINT: Avoid applying an excessive amount to the surface.
- Parts must be assembled within 5 minutes of application. Otherwise the material must be removed and reapplied.
- Immediately remove nozzle from the tube and reinstall cap.

(c) Install the retainer with the 5 bolts.

Torque: 13 N·m (130 kgf·cm, 9 ft·lbf)

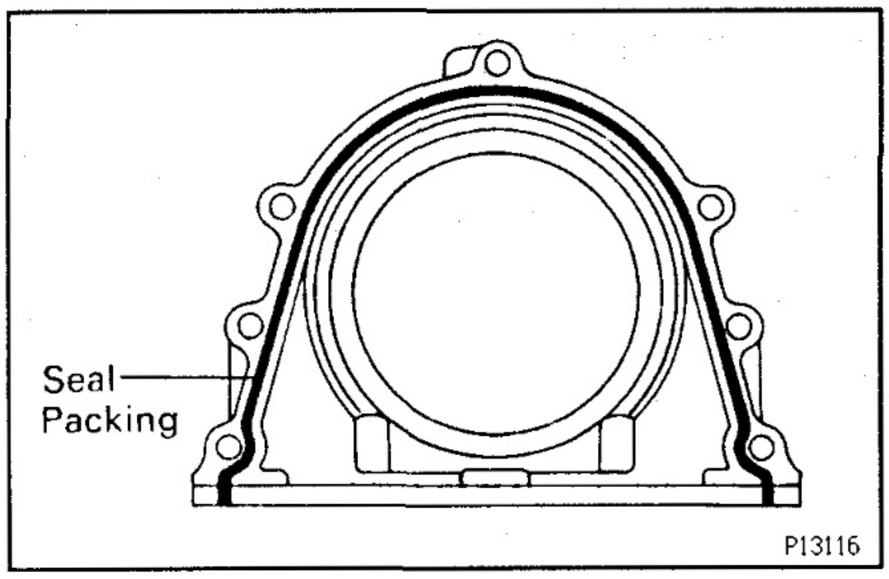

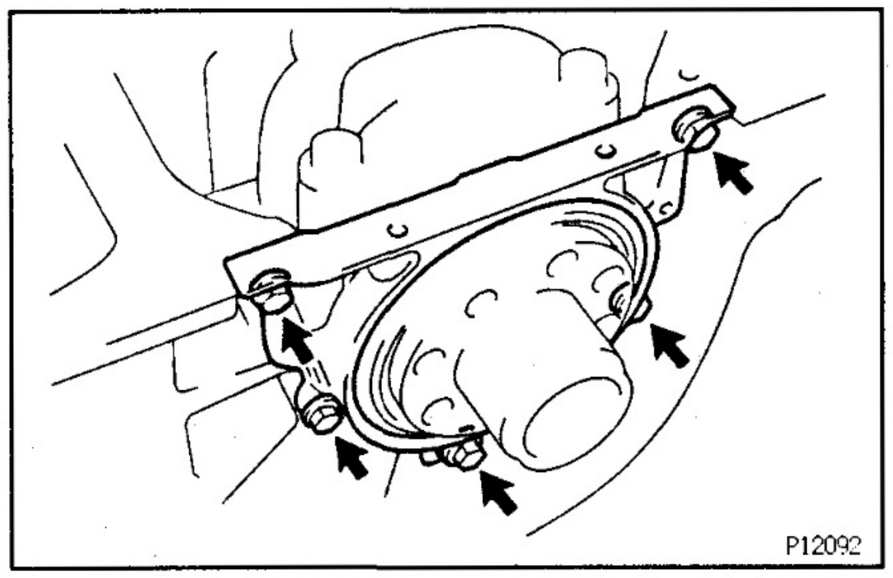

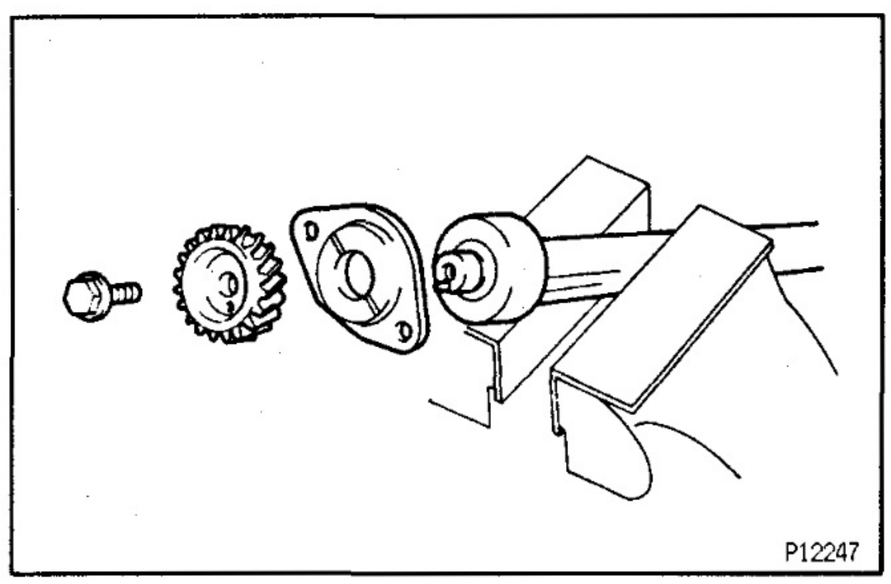

10. ASSEMBLY RH AND LH BALANCE SHAFTS

(a) Mount the weight of the balance shaft in a vise.

NOTICE: Be careful not to damage the balance shafts.

(b) Align the balance shaft knock pin with the knock pin hole of the balance shaft driven gear, install the thrust washer and balance shaft driven gear.

(c) Install and torque the bolt.

Torque: 32 N·m (320 kgf·cm, 23 ft·lbf)

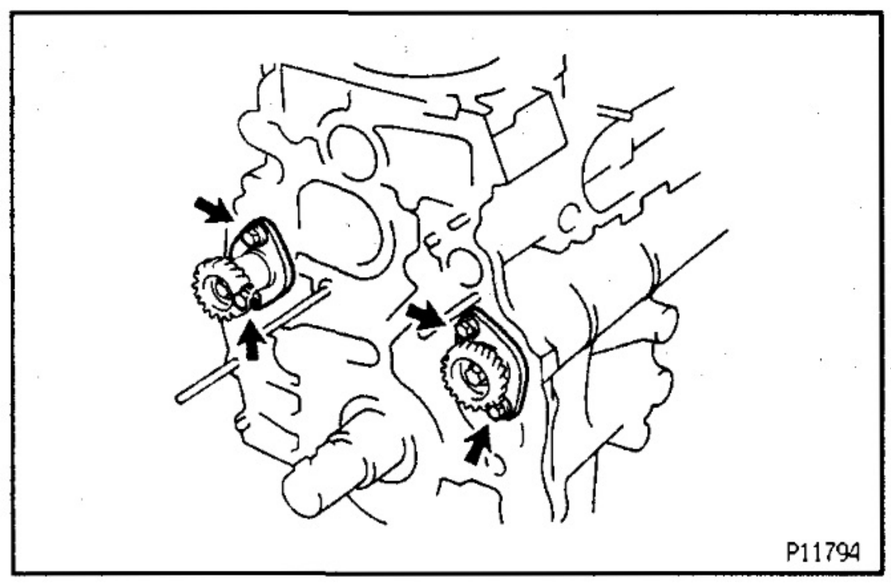

11. INSTALL RH AND LH BALANCE SHAFTS

(a) Install tha RH balance shaft with the 2 bolts.

(b) Install tha LH balance shaft with the 2 bolts.

Torque: 8 N·m (85 kgf·cm, 74 in.·lbf)

EG33F–02

POST ASSEMBLY

1. INSTALL PLUG HOLE
2. INSTALL ENGINE MOUNTING
3. INSTALL WATER TEMPERATURE SENSOR
4. INSTALL WATER INLET AND THERMOSTAT
   (See page EG–240)
5. INSTALL OIL COOLER
   (See page EG–262)
6. INSTALL OIL PAN AND TIMING GEAR CASE (OIL PUMP)
   (See page EG–255)
7. INSTALL INJECTION PUMP
   (See page EG–218)
8. INSTALL TIMING GEARS
   (See page EG–50)
9. INSTALL WATER PUMP
   (See page EG–237)
10. INSTALL ALTERNATOR AND ALTERNATOR BRACKET
    (See page EG–237)
11. INSTALL CYLINDER HEAD
    (See page EG–79)
12. INSTALL TIMING BELT AND PULLEYS
    (See page EG–36)
13. DISCONNECT ENGINE FROM ENGINE STAND
14. INSTALL REAR END PLATE

    Install the rear end plate with the bolt.

    Torque: 8 N·m (85 kgf·cm, 74 in.·lbf)

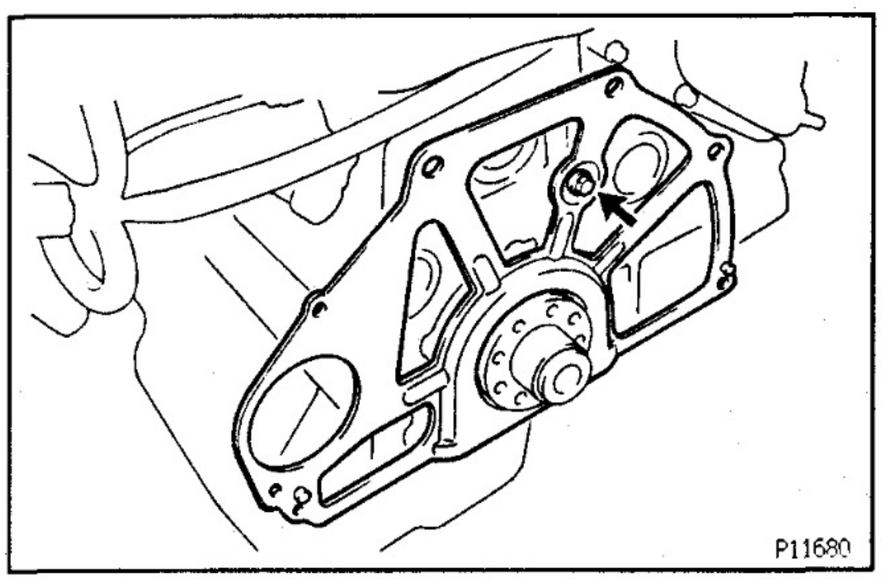

15. INSTALL FLYWHEEL

(a) Apply adhesive to 2 or 3 threads of the mounting bolt end.

Adhesive:

Part No. 08833–00070, THREE BOND 1324, or equivalent

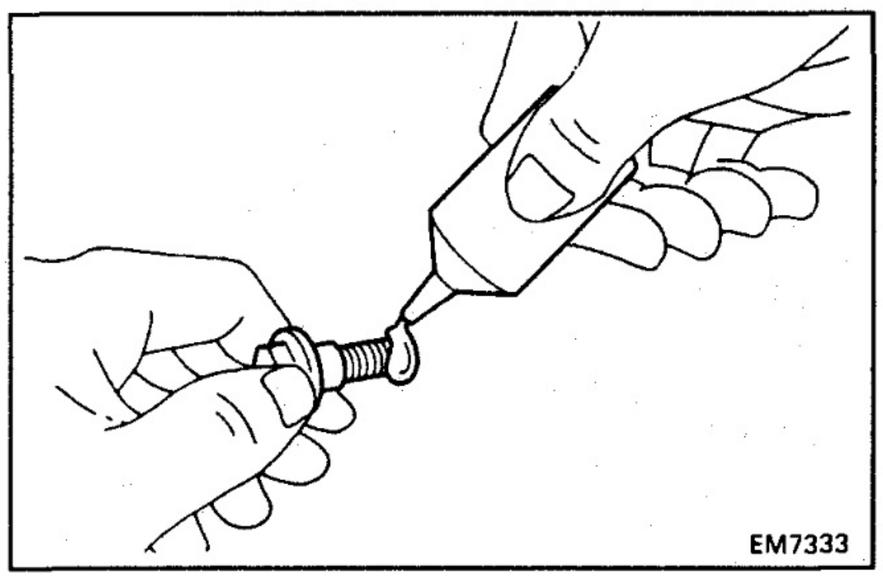

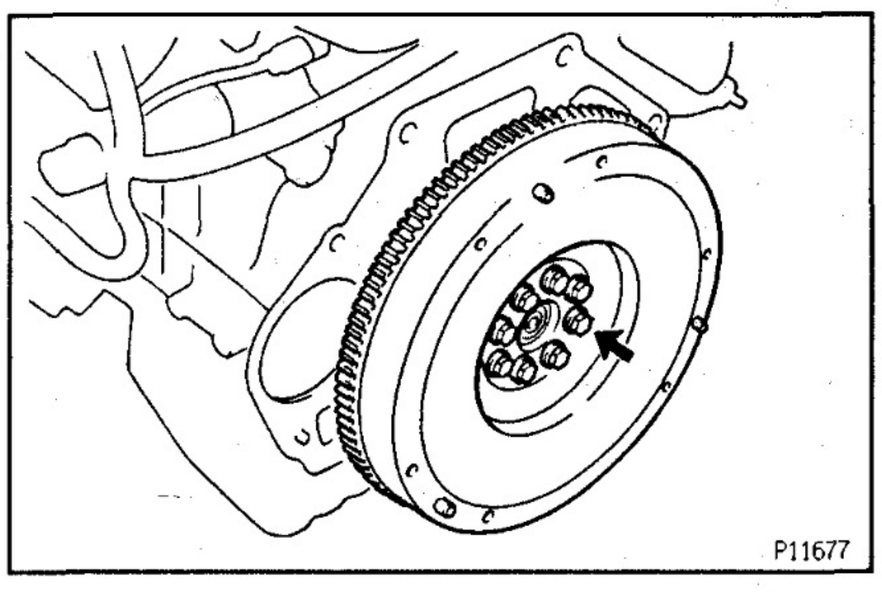

(b) Install the flywheel on the crankshaft.

(c) Install and uniformly tighten the mounting bolts in several passes, in the sequence shown.

Torque: 145 N·m (1,480 kgf·cm, 107 ft·lbf)

16. INSTALL CLUTCH COVER AND DISC

SERVICE SPECIFICATIONS

SERVICE DATA

EG0C5-0J

Tune—up	Engine oil API grade		CD or better
	Battery specific gravity		1.27 — 1.29 (when fully charged at 20°C (68°F))
	Alternator drive belt deflection with 98 N (10 kgf, 22.0 lbf)	New belt	6 — 8 mm (0.24 — 0.31 in.)
		Used belt	8 — 12 mm (0.31 — 0.47 in.)
	Alternator drive belt tension with SST	New belt	45 — 55 kgf
		Used belt	20 — 35 kgf
	Valve clearance (Cold)	Intake	0.20 — 0.30 mm (0.008 — 0.012 in.)
		Exhaust	0.25 — 0.35 mm (0.010 — 0.014 in.)
	New valve clearance adjusting shim thickness		2.50 mm (0.0984 in.) 2.55 mm (0.1004 in.) 2.60 mm (0.1024 in.) 2.65 mm (0.1043 in.) 2.70 mm (0.1063 in.) 2.75 mm (0.1083 in.) 2.80 mm (0.1102 in.) 2.85 mm (0.1122 in.) 2.90 mm (0.1142 in.) 2.95 mm (0.1161 in.) 3.00 mm (0.1181 in.) 3.05 mm (0.1201 in.) 3.10 mm (0.1220 in.) 3.15 mm (0.1240 in.) 3.20 mm (0.1260 in.) 3.25 mm (0.1280 in.) 3.30 mm (0.1299 in.)
	Injection timing		
	Plunger stroke	Europe	0.39 — 0.43 mm (0.0154 — 0.0169 in.)
		Others	0.58 — 0.62 mm (0.0228 — 0.0244 in.)
	Idle speed		700 ± 50 rpm
	Maximum speed		4,600 ± 130 rpm
	A/C idle—up setting speed		950 rpm
Compression pressure	at 250 rpm	STD	3,040 kPa (31.0 kgf/cm², 441 psi) or more
		Limit	1,961 kPa (20.0 kgf/cm², 284 psi)
	Difference of pressure between each cylinder		490 kPa (5.0 kgf/cm², 71 psi) or less
Timing belt tensioner	Protrusion (from housing end)		9.0 — 9.8 mm (0.354 — 0.386 in.)
Timing gear	Idler gear inside diameter		44.000 — 44.025 mm (1.7323 — 1.7333 in.)
	Idler gear shaft diameter		43.965 — 44.000 mm (1.7309 — 1.7323 in.)
	Idler gear oil clearance	STD	0.025 — 0.060 mm (0.0010 — 0.0023 in.)
		Limit	0.20 mm (0.0079 in.)
	Gear backlash	STD	0.02 — 0.15 mm (0.0008 — 0.0060 in.)
		Limit	0.20 mm (0.0079 in.)
	Idler gear thrust clearance	STD	0.05 — 0.15 mm (0.0020 — 0.0060 in.)
		Limit	0.30 mm (0.0118 in.)

Cylinder head	Warpage	Limit	0.15 mm (0.0059 in.)
	Valve seat		
	Refacing angle		30°, 45°, 60°
	Contacting angle		45°
	Contacting width	Intake	1.5 — 1.9 mm (0.059 — 0.075 in.)
		Exhaust	1.8 — 2.2 mm (0.071 — 0.087 in.)
	Cylinder head bolt outer diameter	STD	11.8 — 12.0 mm (0.465 — 0.472 in.)
		Limit	11.6 mm (0.457 in.)
	Installed cylinder head gasket thickness		
		Hole number "1"	0.80 — 0.90 mm (0.0315 — 0.0354 in.)
		Hole number "3"	0.90 — 1.00 mm (0.0354 — 0.0394 in.)
		Hole number "5"	1.00 — 1.10 mm (0.0394 — 0.0433 in.)
Valve guide bushing	Inside diameter		8.010 — 8.030 mm (0.3154 — 0.3161 in.)
	Outside diameter (for repair part)	STD	13.000 — 13.027 mm (0.5118 — 0.5129 in.)
		O/S 0.05	13.050 — 13.077 mm (0.5134 — 0.5148 in.)
Valve	Valve overall length	STD	103.29 — 103.69 mm (4.0665 — 4.0823 in.)
		Limit	102.79 mm (4.0468 in.)
	Vale face angle		45.5°
	Stem diameter	Intake	7.975 — 7.990 mm (0.3140 — 0.3146 in.)
		Exhaust	7.960 — 7.975 mm (0.3134 — 0.3140 in.)
	Stem oil clearance	STD (Intake)	0.020 — 0.055 mm (0.0008 — 0.0022 in.)
		(Exhaust)	0.035 — 0.070 mm (0.0014 — 0.0028 in.)
		Limit (Intake)	0.08 mm (0.0031 in.)
		(Exhaust)	0.10 mm (0.0039 in.)
	Margin thickness	STD (Intake)	1.6 mm (0.063 in.)
		(Exhaust)	1.7 mm (0.067 in.)
		Limit (Intake)	1.1 mm (0.043 in.)
		(Exhaust)	1.2 mm (0.047 in.)
Valve spring	Squareness	Limit	2.0 mm (0.079 in.)
	Free length		48.54 mm (1.9110 in.)
	Installed tension at 37.0 mm (1.457 in.)		301 — 332 N (30.7 — 33.9 kgf, 67.7 — 74.7 lbf)
Valve lifter	Lifter diameter		40.892 — 40.902 mm (1.6099 — 1.6103 in.)
	Lifter bore diameter		40.930 — 40.950 mm (1.6114 — 1.6122 in.)
	Oil clearance	STD	0.028 — 0.058 mm (0.0011 — 0.0023 in.)
		Limit	0.10 mm (0.0039 in.)
Manifold	Warpage	Limit	0.40 mm (0.0157 in.)
Camshaft	Thrust clearance	STD	0.08 — 0.18 mm (0.0031 — 0.0071 in.)
		Limit	0.25 mm (0.0098 in.)
	Journal oil clearance	STD	0.025 — 0.062 mm (0.0010 — 0.0024 in.)
		Limit	0.10 mm (0.0039 in.)
	Journal diameter		27.969 — 27.985 mm (1.1011 — 1.1018 in.)
	Circle runout	Limit	0.06 mm (0.0024 in.)
	Cam lobe height	STD (Intake)	54.810 — 54.910 mm (2.1579 — 2.1618 in.)
		(Exhaust)	56.140 — 56.240 mm (2.2102 — 2.2142 in.)
		Limit (Intake)	54.39 mm (2.1413 in.)
		(Exhaust)	55.72 mm (2.1937 in.)

Combustion chamber	Protrusion		Minus 0.03 – Plus 0.02 mm (Minus 0.0012 – Plus 0.0008 in.)
	Shim thickness		0.05 mm (0.0020 in.)
			0.10 mm (0.0039 in.)
Cylinder block	Cylinder head surface warpage	Limit	0.10 mm (0.0039 in.)
	Cylinder bore diameter	STD (Mark 1)	96.000 – 96.010 mm (3.7795 – 3.7799 in.)
		(Mark 2)	96.010 – 96.020 mm (3.7799 – 3.7803 in.)
		(Mark 3)	96.020 – 96.030 mm (3.7803 – 3.7807 in.)
		Limit (STD)	96.23 mm (3.7886 in.)
	Main journal bore diameter (Reference)	STD (Mark 1)	75.000 – 75.006 mm (2.9528 – 2.9530 in.)
		(Mark 2)	75.006 – 75.012 mm (2.9530 – 2.9532 in.)
		(Mark 3)	75.012 – 75.018 mm (2.9532 – 2.9535 in.)
Piston and piston ring	Piston diameter	STD (Mark 1)	95.940 – 95.950 mm (3.7772 – 3.7776 in.)
		(Mark 2)	95.950 – 95.960 mm (3.7776 – 3.7779 in.)
		(Mark 3)	95.960 – 95.970 mm (3.7779 – 3.7783 in.)
		O/S 0.50	96.440 – 96.470 mm (3.7968 – 3.7980 in.)
		O/S 0.75	96.690 – 96.720 mm (3.8067 – 3.8079 in.)
		O/S 1.00	96.940 – 96.970 mm (3.8165 – 3.8177 in.)
	Piston oil clearance	STD	0.050 – 0.070 mm (0.0020 – 0.0028 in.)
		Limit	0.14 mm (0.0055 in.)
	Piston ring groove clearance	No.1	0.060 – 0.110 mm (0.0024 – 0.0043 in.)
		No.2	0.060 – 0.100 mm (0.0024 – 0.0039 in.)
		Oil	0.020 – 0.060 mm (0.0009 – 0.0024 in.)
	Piston ring end gap	STD (No.1)	0.350 – 0.570 mm (0.0138 – 0.0224 in.)
		(No.2)	0.400 – 0.600 mm (0.0157 – 0.0236 in.)
		(Oil)	0.200 – 0.500 mm (0.0079 – 0.0197 in.)
		Limit (No.1)	1.03 mm (0.0406 in.)
		(No.2)	1.10 mm (0.0433 in.)
		(Oil)	0.87 mm (0.0343 in.)
Connecting rod	Thrust clearance	STD	0.10 – 0.30 mm (0.0039 – 0.0118 in.)
		Limit	0.40 mm (0.0157 in.)
	Connecting rod bearing center wall thickness (Reference)	STD (Mark 2)	1.486 – 1.489 mm (0.0585 – 0.0586 in.)
		(Mark 3)	1.489 – 1.492 mm (0.0586 – 0.0587 in.)
		(Mark 4)	1.492 – 1.495 mm (0.0587 – 0.0589 in.)
		(Mark 5)	1.495 – 1.498 mm (0.0589 – 0.0590 in.)
		(Mark 6)	1.498 – 1.501 mm (0.0590 – 0.0591 in.)
	Connecting rod oil clearance	STD (STD)	0.036 – 0.054 mm (0.0014 – 0.0021 in.)
		(U/S 0.25 and U/S 0.50)	0.037 – 0.077 mm (0.0015 – 0.0030 in.)
		Limit	0.10 mm (0.0039 in.)
	Rod bend	Limit per 100 mm (3.94 in.)	0.03 mm (0.0012 in.)
	Rod twist	Limit per 100 mm (3.94 in.)	0.15 mm (0.0059 in.)
	Connecting rod bolt outside diameter	STD	8.400 – 8.600 mm (0.3307 – 0.3385 in.)
		Limit	8.20 mm (0.3228 in.)
	Bushing inside diameter		34.012 – 34.024 mm (1.3391 – 1.3395 in.)
	Piston pin diameter		34.000 – 34.012 mm (1.3386 – 1.3391 in.)

Connecting rod	Piston pin oil clearance	STD	0.008 – 0.016 mm (0.0003 – 0.0006 in.)
		Limit	0.03 mm (0.0012 in.)
	Big end inner diameter		
	(Reference)	STD (Mark 1)	62.014 – 62.020 mm (2.4415 – 2.4417 in.)
		(Mark 2)	62.020 – 62.026 mm (2.4417 – 2.4420 in.)
		(Mark 3)	62.026 – 62.032 mm (2.4420 – 2.4422 in.)
Crankshaft	Thrust clearance	STD	0.040 – 0.240 mm (0.0016 – 0.0094 in.)
		Limit	0.30 mm (0.0118 in.)
	Thrust washer thickness		
		STD (STD)	2.430 – 2.480 mm (0.0957 – 0.0976 in.)
		(U/S 0.25)	2.555 – 2.605 mm (0.1006 – 0.1026 in.)
		(U/S 0.125)	2.493 – 2.543 mm (0.0981 – 0.1001 in.)
	Main journal oil clearance	STD (STD)	0.036 – 0.054 mm (0.0014 – 0.0021 in.)
		(U/S 0.25 and U/S 0.50)	0.037 – 0.077 mm (0.0015 – 0.0030 in.)
		Limit	0.10 mm (0.0039 in.)
	Main journal diameter	STD (Mark 1)	69.994 – 70.000 mm (2.7557 – 2.7559 in.)
		(Mark 2)	69.988 – 69.994 mm (2.7554 – 2.7557 in.)
		(Mark 3)	69.982 – 69.988 mm (2.7552 – 2.7554 in.)
		U/S 0.25	69.745 – 69.755 mm (2.7459 – 2.7463 in.)
		U/S 0.50	69.495 – 69.505 mm (2.7360 – 2.7364 in.)
	Main bearing center wall thickness (Reference)		
		STD (Mark 2)	2.479 – 2.482 mm (0.0976 – 0.0977 in.)
		(Mark 3)	2.482 – 2.485 mm (0.0977 – 0.0978 in.)
		(Mark 4)	2.485 – 2.488 mm (0.0978 – 0.0980 in.)
		(Mark 5)	2.488 – 2.491 mm (0.0980 – 0.0981 in.)
		(Mark 6)	2.491 – 2.494 mm (0.0981 – 0.0982 in.)
	Crank pin diameter	STD (Mark 1)	58.994 – 59.000 mm (2.3226 – 2.3228 in.)
		(Mark 2)	58.988 – 58.994 mm (2.3224 – 2.3226 in.)
		(Mark 3)	58.982 – 58.988 mm (2.3221 – 2.3224 in.)
		U/S 0.25	58.745 – 58.755 mm (2.3128 – 2.3132 in.)
		U/S 0.50	58.495 – 58.505 mm (2.3028 – 2.3132 in.)
	Circle runout	Limit	0.06 mm (0.0024 in.)
	Main journal taper and out–of–round	Limit	0.020 mm (0.0008 in.)
	Crank pin taper and out–of–round	Limit	0.020 mm (0.0008 in.)
	Main bearing cap bolt outer diameter	STD	13.500 – 14.000 mm (0.5315 – 0.5512 in.)
		Limit	12.60 mm (0.4961 in.)

Balance shaft	Thrust clearance	STD	0.065 – 0.140 mm (0.0026 – 0.0055 in.)
		Limit	0.25 mm (0.0098 in.)
	No.1 journal oil clearance	STD	0.040 – 0.079 mm (0.0957 – 0.0976 in.)
		Limit	0.180 mm (0.0071 in.)
	No.2 journal oil clearance	STD	0.040 – 0.079 mm (0.0957 – 0.0976 in.)
		Limit	0.190 mm (0.0075 in.)
	No.3 journal oil clearance	STD	0.050 – 0.089 mm (0.0020 – 0.0035 in.)
		Limit	0.180 mm (0.0071 in.)
	No.1 Bearing inside diameter		42.000 – 42.020 mm (1.6535 – 1.6543 in.)
	No.2 Bearing inside diameter		41.000 – 41.020 mm (1.6142 – 1.6150 in.)
	No.3 Bearing inside diameter		32.000 – 31.020 mm (1.2598 – 1.2606 in.)
	No.1 journal diameter		41.941 – 41.960 mm (1.6512 – 1.6520 in.)
	No.2 journal diameter		40.931 – 40.950 mm (1.6115 – 1.6122 in.)
	No.3 journal diameter		31.941 – 31.960 mm (1.2575 – 1.2583 in.)

EGOC6-0K

TORQUE SPECIFICATION

Part tightened		N·m	kgf·cm	ft·lbf
Intake pipe x Intake manifold		12	120	9
Injection pump x Timing gear case		21	210	15
Injection pump x Injection pump stay		15	150	11
Injection pump distributive head plug bolt		17	170	12
No.1 camshaft timing pulley x Camshaft		98	1,000	72
No.2 camshaft timing pulley x Injection pump drive gear		13	130	9
Idler pulley bolt x Timing gear case		34	350	25
Timing belt tensioner x Timing gear case		13	130	9
Injection pump drive gear x Injection pump		64	650	47
Idler gear x Timing gear case		19	195	14
Timing gear cover x Timing gear case		13	130	9
Crankshaft pulley x Crankshaft		363	3,700	268
Camshaft oil seal retainer x Cylinder head		9	90	78
Camshaft bearing cap x Cylinder head		18	185	13
Cylinder head x Cylinder block	1st	39	400	29
	2nd	Turn 90°		
	3rd	Turn 90°		
Injection nozzle x Cylinder head		64	650	47
Nozzle leakage pipe x Injection nozzle		29	300	22
Water outlet x Cylinder head		16	165	12
Intake manifold x Cylinder head		20	200	14
Oil dipstick guide x Cylinder head		20	200	14
Injection pipe x Injection nozzle		15	150	11
Injection pipe x Injection pump		15	150	11
Oil nozzle x Cylinder block		25	260	19
Main bearing cap x Cylinder block	1st	49	500	36
	2nd	Turn 90°		
Connecting rod cap x Connecting rod	1st	29	300	22
	2nd	Turn 90°		
Rear oil seal retainer x Cylinder block		13	130	9
Balance shaft driven gear x Balance shaft		32	320	23
Balance shaft x Cylinder block		8	85	74 in.·lbf
Rear end plate x Cylinder block		8	85	74 in.·lbf
Flywheel x Crankshaft		145	1,480	107

TURBOCHARGER SYSTEM

DESCRIPTION

EG0WW–03

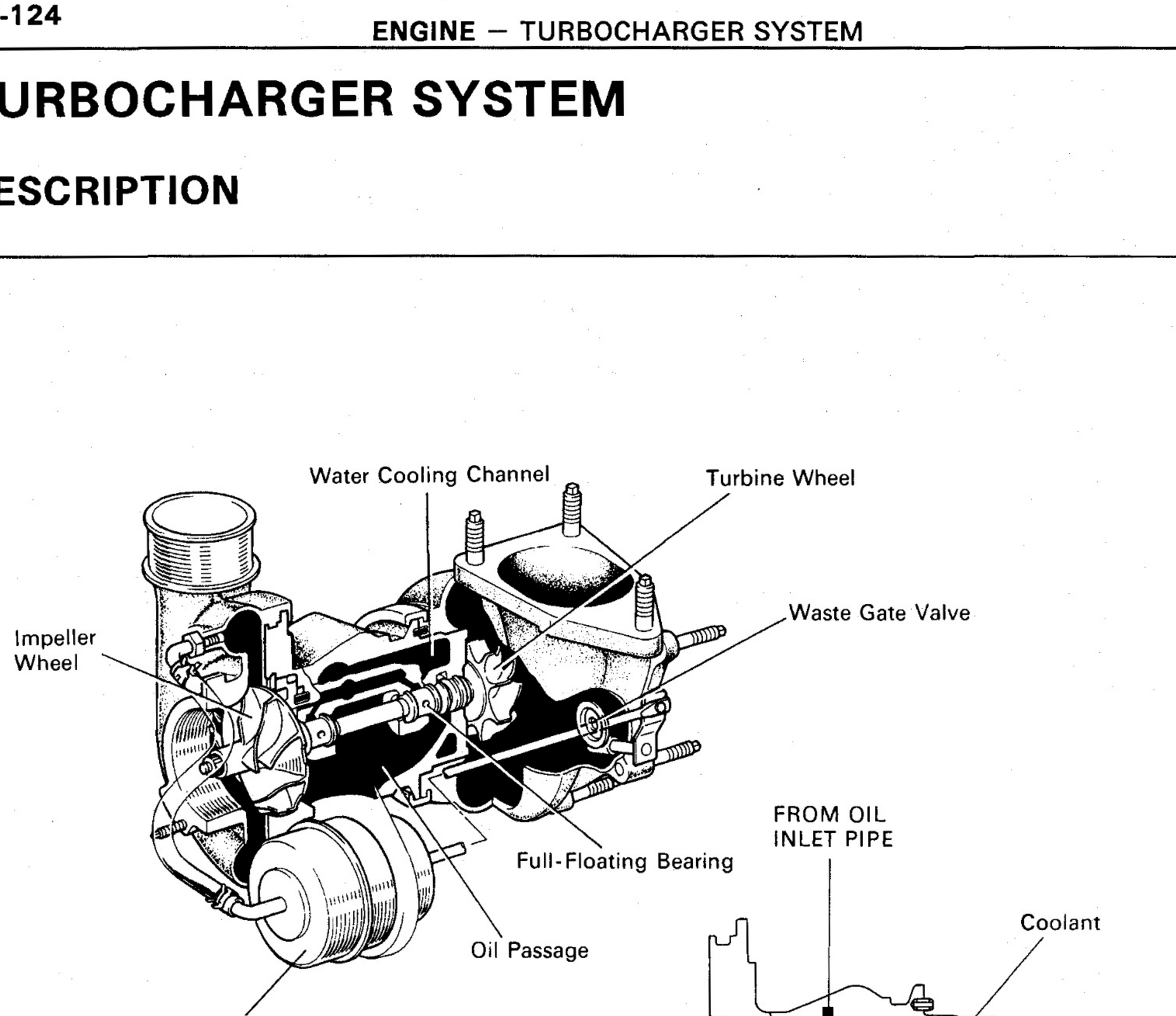

P13125
P13126

Z09463

The compact, advanced design uses lightweight high performance materials throughout for optimum turbocharging efficiency.
The turbocharger has been designed to withstand the high operating temperatures (800+°C) from the exhaust gasses, and the very high operating speeds required for this application.
Primary cooling and lubrication of the turbocharger is provided by the engine oil. Additional cooling is provided by the engine coolant.

OPERATION

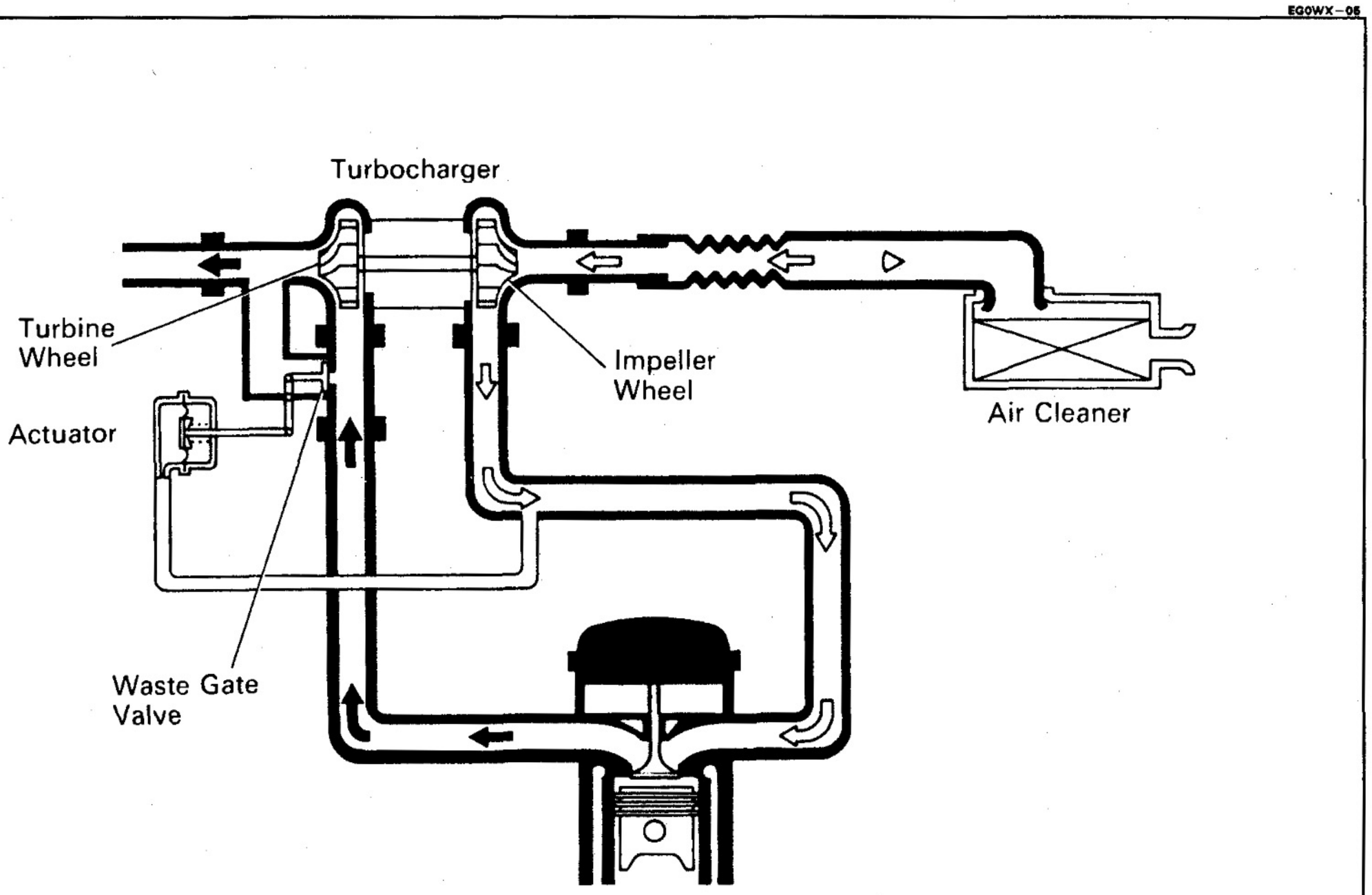

Exhaust gas acts on the turbine wheel inside the turbine housing, causing it to revolve. When the turbine wheel revolves, the impeller which is located on the same shaft also revolves, compressing the intake air which has passed through the air cleaner. When expelled from the compressor housing the compressed air is supplied to the cylinders. When the engine speed increases, the exhaust gas volume increases and the turbine wheel revolutions increases (approx. 20,000 – 120,000 rpm), thus the turbocharged air pressure grows greater and engine output increases.

Waste Gate Valve

If the turbocharged air pressure exceeds the prescribed air pressure, the flow of exhaust gas by passes the turbine, controlling turbine wheel revolutions and turbocharged air pressure. This by pass valve which controls the quantity of exhaust gas flowing to the turbine is called the waste gate valve. When the turbocharged air pressure exceeds the prescribed pressure, the actuator operates, the waste gate valve opens and part of the exhaust gas by passes the turbine. This causes a drop in the turbine revolution rate and controls the turbocharged air within the prescribed limits.

PREPARATION

SST (SPECIAL SERVICE TOOLS)

1G00R-03

	09992–00241 Turbocharger Pressure Gauge	

1G00T-03

EQUIPMENT

Dial indicator	Inpeller wheel
Torque wrench	

PRECAUTION

EGOWY-02

1. Do not stop the engine immediately after pulling a trailer or after high speed or uphill driving. Idle the engine for 20 — 120 seconds, depending on how hard the vehicle has been driven.
2. Avoid sudden acceleration or racing immediately after starting a cold engine.
3. Do not run the engine with air cleaner removed, as this may cause foreign material to enter and damage the impeller wheel operating at high speed.
4. If a turbocharger is found to be defective and must be replaced, check for the cause, and repair or replace the following items as necessary:
   - Engine oil level and quality
   - Conditions under which the turbocharger was used
   - Oil lines leading to the turbocharger

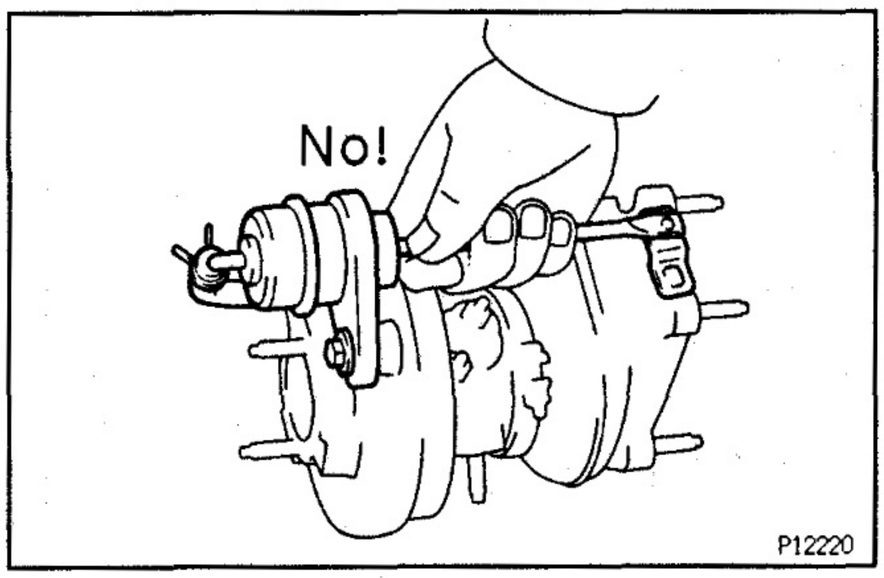

P12220

5. Use caution when removing and reinstalling the turbocharger assembly. Do not drop it or bang it against anything or grasp it by easily—deformed parts, such as the actuator or rod, when moving it.
6. Before removing the turbocharger, plug the intake and exhaust ports and oil inlet to prevent entry of dirt or other foreign material.

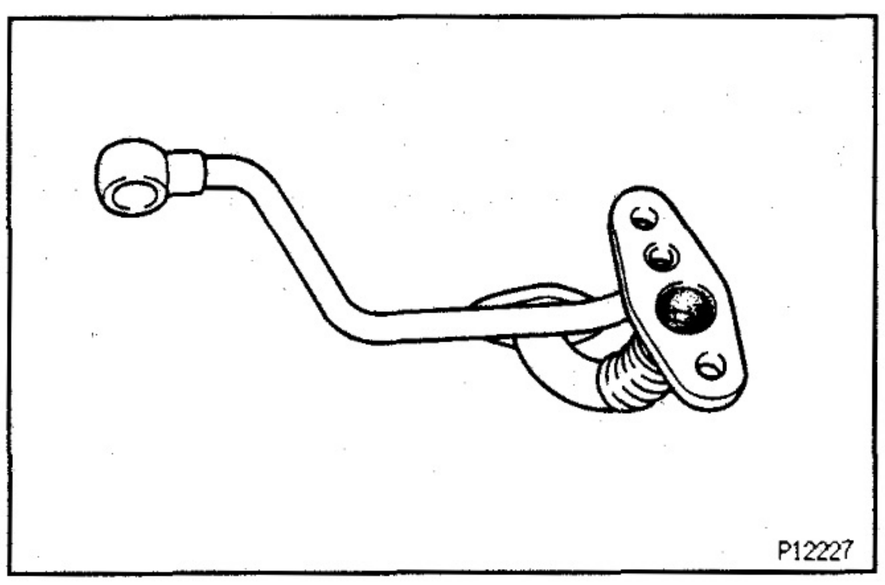
P12227

7. If replacing the turbocharger, check for accumulation of sludge particles in the oil pipes, and if necessary, replace the oil pipes.
8. Completely remove the gasket adhered to the lubrication oil pipe flange and turbocharger oil flange.
9. When replacing bolt or nuts, use only anthorized replacement parts to prevent breakage or deformation.

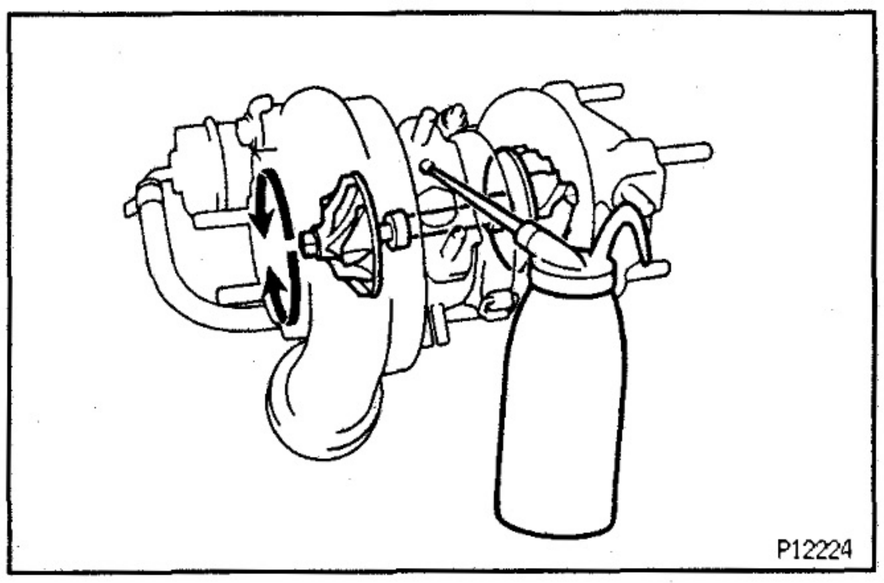
P12224

10. If replacing the turbocharger, put 20 cm^3 (1.2 cu in.) of oil into the turbocharger oil inlet and turn the impeller wheel by hand to spread oil to the bearing.
11. If overhauling or replacing the engine, cut the fuel supply after reassembly and crank the engine for 30 seconds to distribute oil throughout the engine. Then allow the engine to idle for 60 seconds.

TROUBLESHOOTING

HINT: Before troubleshooting the turbocharger, first check the engine itself. (Valve clearance, engine compression, ignition timing etc.) EG0WZ-03

INSUFFICIENT ACCELERATION, LACK OF POWER OR EXCESSIVE FUEL CONSUMPTION

(Possible Cause)	(Check Procedure and Correction Method)
1. TURBOCHARGING PRESSURE TOO LOW	Check turbocharging pressure. (See page EG-130) **Turbocharging pressure:** **57 – 67 kPa** **(0.52 – 0.68 kgf/cm², 7.4 – 9.7 psi)** If the pressure is below specifications, begin diagnosis from item 2.
2. RESTRICTED INTAKE SYSTEM	Check intake air system, and repair or replace parts as necessary. (See page EG-130)
3. LEAK IN INTAKE AIR SYSTEM	Check intake air system, and repair or replace parts as necessary. (See page EG-130)
4. RESTRICTED EXHAUST SYSTEM	Check exhaust system, and repair or replace parts as necessary. (See page EG-130)
5. LEAK IN EXHAUST SYSTEM	Check exhaust system, and repair or replace parts as necessary. (See page EG-130)
6. ERRATIC TURBOCHARGER OPERATION	Check rotation of impeller wheel. If it does not turn on turns with a heavy drag, replace the turbocharger assembly. Check axial and radial plays of impeller wheel. (See page EG-135) **Maximum axial play: 0.162 mm (0.0064 in.)** **Maximum radial play: 0.173 mm (0.0068 in.)** If not within specification, replace the turbocharger assembly.

V03850

ABNORMAL NOISE

(Possible Cause)	(Check Procedure and Correction Method)
1. TURBOCHARGING HEAT INSULATOR RESONANCE	Check for loose, improperly installed or deformed insulator mount bolts, and repair or replace as necessary.
2. EXHAUST PIPE LEAKING OR VIBRATING	Check for deformed exhaust pipe, loose mount bolts or damaged gasket, and repair or replace as necessary.
3. ERRATIC TURBOCHARGER OPERATION	Refer to Item 6 of INSUFFICIENT ACCELERATION, LACK OF POWER OR EXCESSIVE FUEL CONSUMPTION.

EXCESSIVE OIL CONSUMPTION OR WHITE EXHAUST

(Possible Cause)	(Check Procedure and Correction Method)
FAULTY TURBOCHARGER SEAL	Check for oil leakage in exhaust system. ● Remove the turbine elbow from the turbocharger and check for excessive carbon deposits on the turbine wheel. Excessive carbon deposits indicate a faulty turbocharger. Check for oil leakage in intake air system. ● Check for axial and radial plays in impeller wheel, and replace the turbocharger if necessary. (See page EG-135) **Maximum axial play: 0.173 mm (0.0068 in.)** **Maximum radial play: 0.110 mm (0.0045 in.)** **NOTICE: Some oil mist in the blowby from the PCV is normal.** **Do not mistake it for an oil leak from the turbocharger.**

V03851

TURBOCHARGER

ON–VEHICLE INSPECTION

EG34X–01

1. INSPECT INTAKE AIR SYSTEM

Check for leakage or clogging between the air cleaner housing and turbocharger inlet and between the turbocharger outlet and cylinder head.

- Clogged air cleaner .... Clean or replace element
- Hoses collapsed or deformed .... Repair or replace
- Leakage from connections .... Check each connection and repair
- Cracks in components .... Check and replace

2. INSPECT EXHAUST SYSTEM

Check for leakage or clogging between the cylinder head and turbocharger inlet and between the turbocharger outlet and exhaust pipe.

- Deformed components .... Repair or replace
- Foreign material in passages .... Remove
- Leakage from components .... Repair or replace
- Cracks in components .... Check and replace

3. CHECK TURBOCHARGING PRESSURE

(a) Warm up engine.

(b) Using a 3–way connector, connect SST, a turbocharger pressure gauge, to the hose between the intake manifold and manifold absolute pressure sensor.
SST 09992–00241

(c) Press in the clutch pedal, then press the accelerator pedal down as far as it will go. Measure the turbocharging pressure at maximum speed (4,600 rpm).

Standard pressure:

51 – 67 kPa (0.52 – 0.68 kgf/cm², 7.4 – 9.7 psi)

If the pressure is less than that specified, check the intake air and exhaust systems for leakage. If there is no leakage, replace the turbocharger assembly.

If the pressure is above specification, check if the actuator hose is disconnected or cracked. If not, replace the turbocharger assembly.

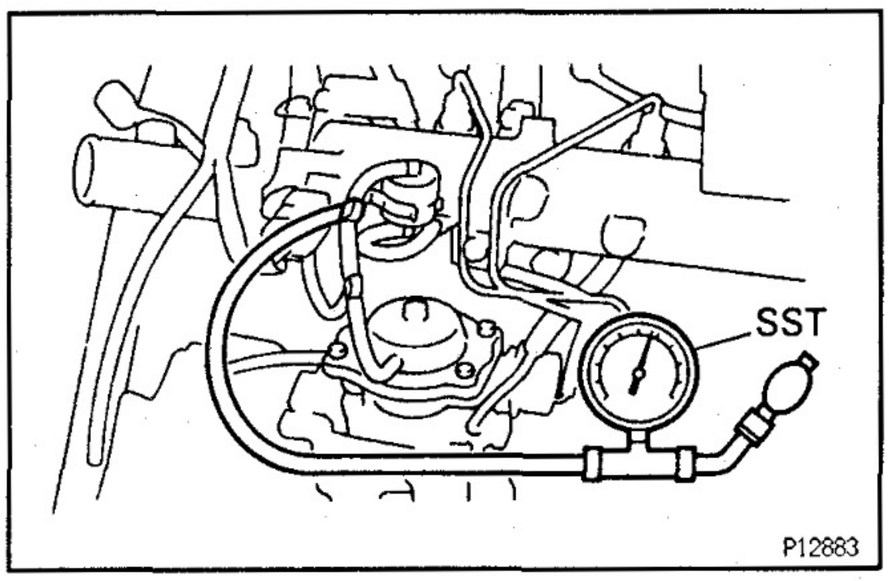

EG2XJ–02

COMPONENTS FOR REMOVAL AND INSTALLATION

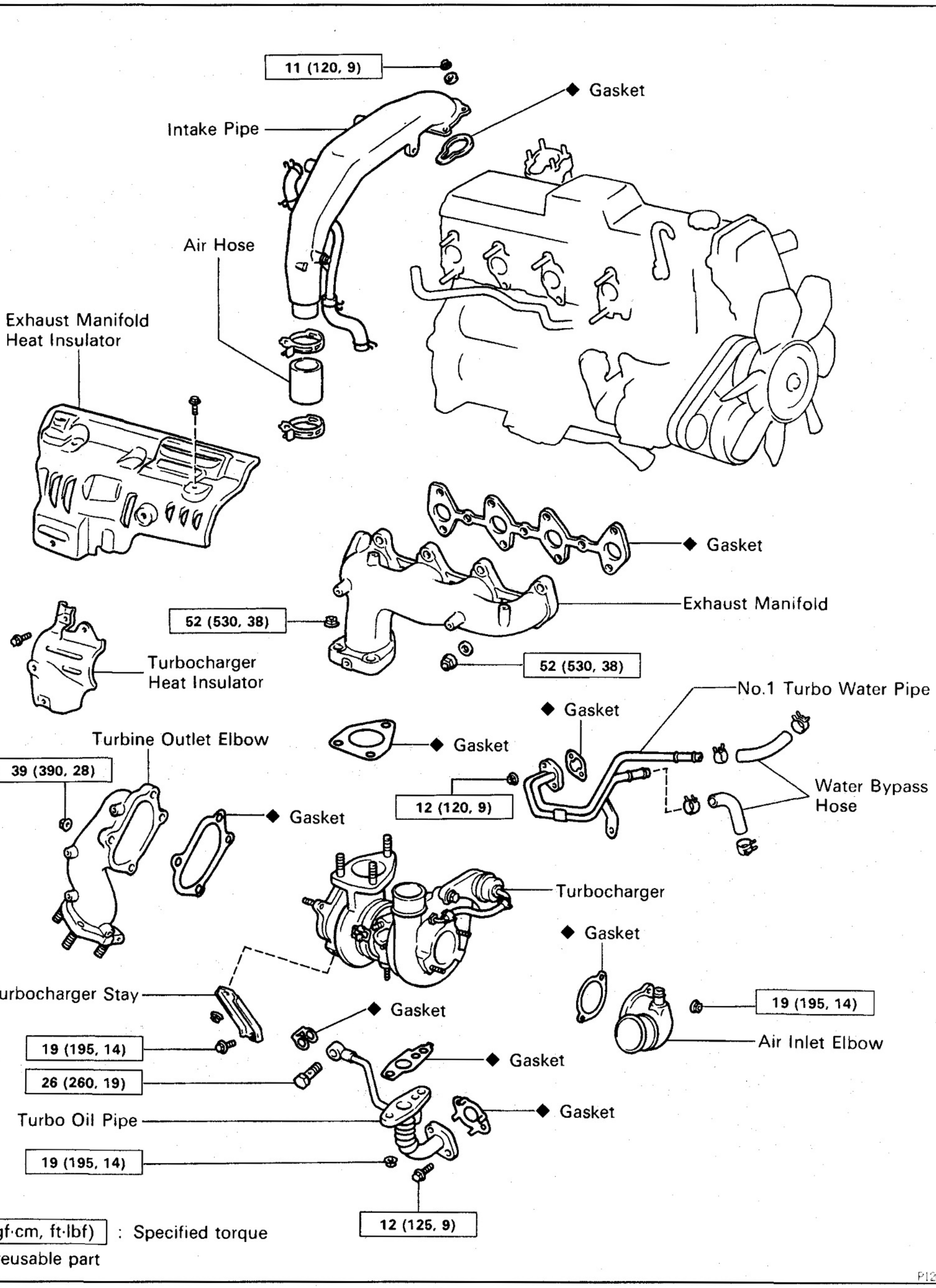

EG34Y–01

TURBOCHARGER REMOVAL

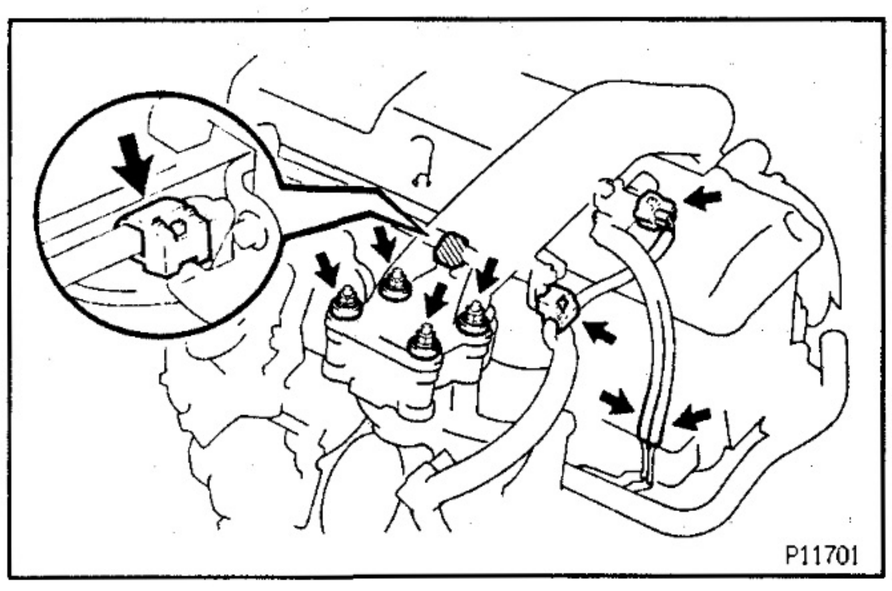
P11701

(See Components for removal and installation)

1. **DRAIN ENGINE COOLANT**
2. **REMOVE INTAKE PIPE**

(a) Disconnect the VSV connector and 2 vacuum hoses.
(b) Disconnect the 2 wire harness clamps.
(c) Remove the 4 nuts and seal washers.

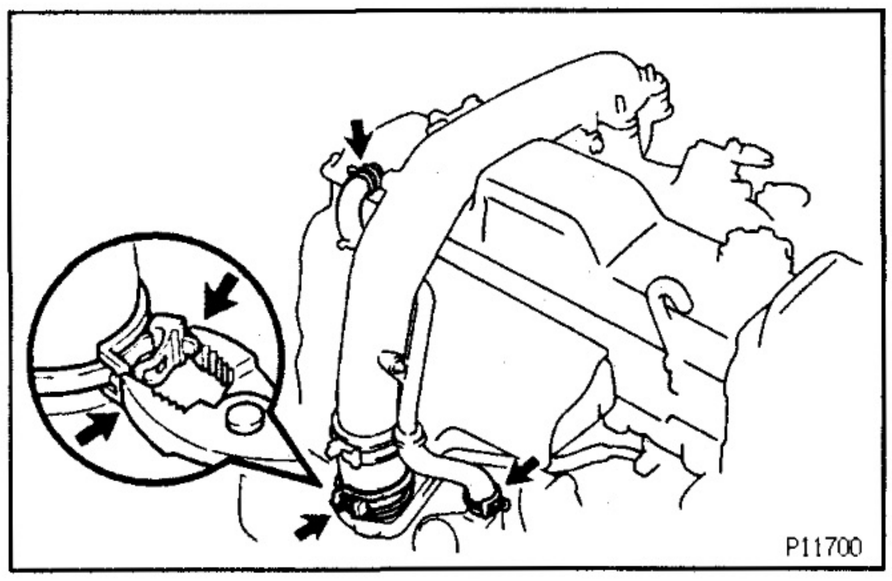
P11700

(d) Disconnect the 2 PCV hoses.
(e) Use pliers to pinch the ends of the clamp together until the lock plate engages the catch.
NOTICE: Make sure the lock plate and catch are engaged securely.
(f) Remove the intake pipe and gasket.

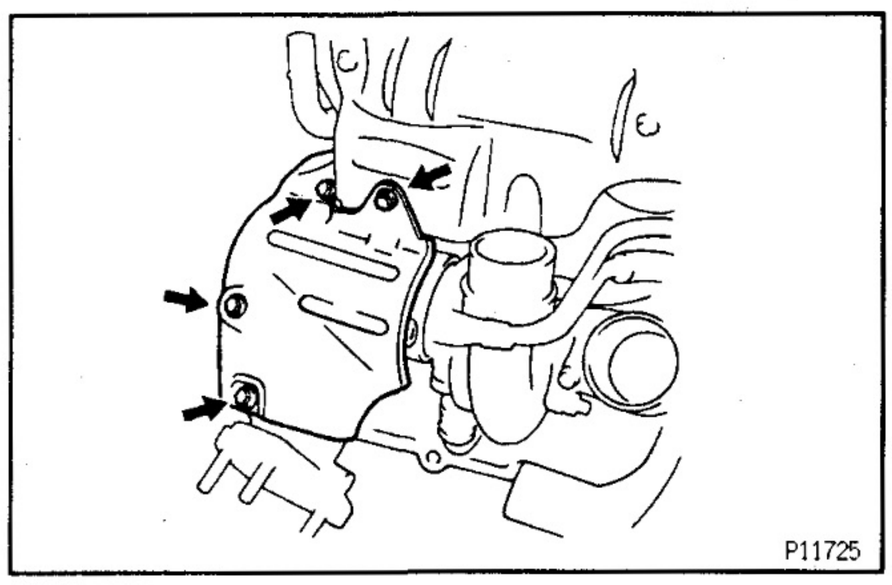
P11725

3. **REMOVE TURBOCHARGER HEAT INSULATOR**
Remove the 4 bolts and heat insulator.

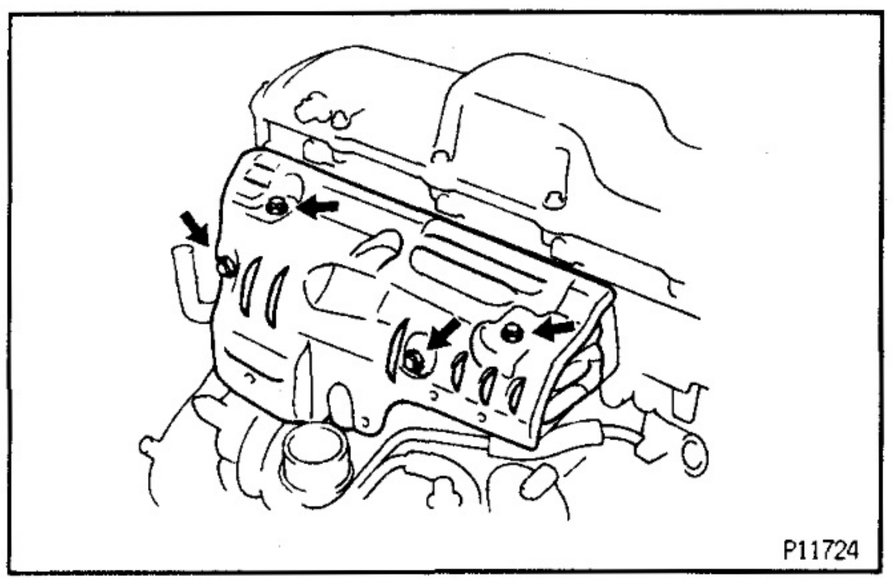
P11724

4. **REMOVE EXHAUST MANIHOLD HEAT INSULATOR**
Remove the 4 bolts and heat insulator.

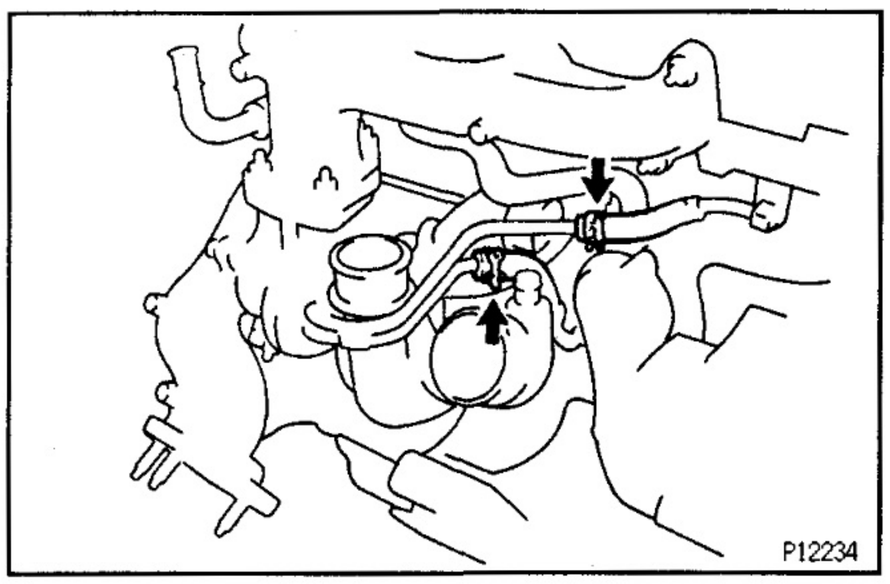
P12234

5. **DISCONNECT WATER BY PASS HOSES**
Disconnect the 2 water by pass hoses from the No.1 turbo water pipe.

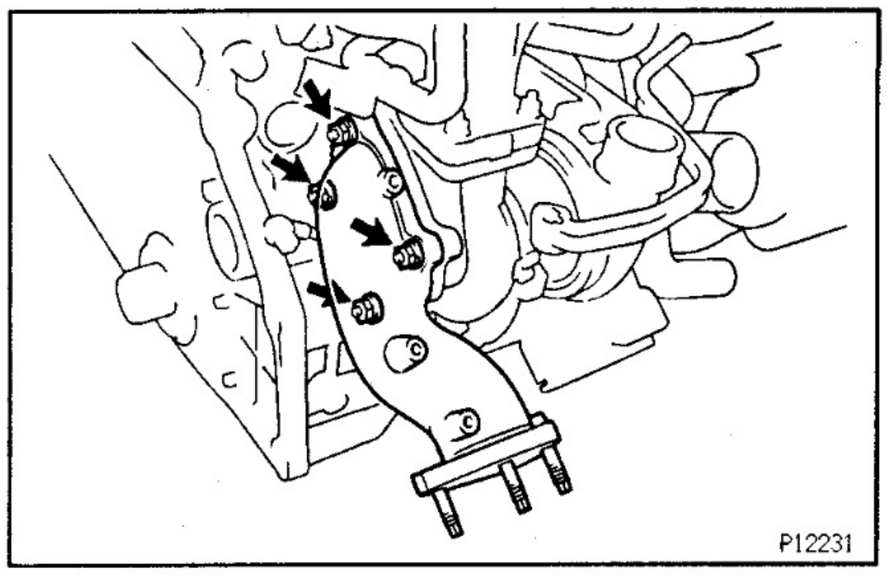

6. REMOVE TURBINE OUTLET ELBOW

Remove the 4 nuts, turbine outlet elbow and gasket.

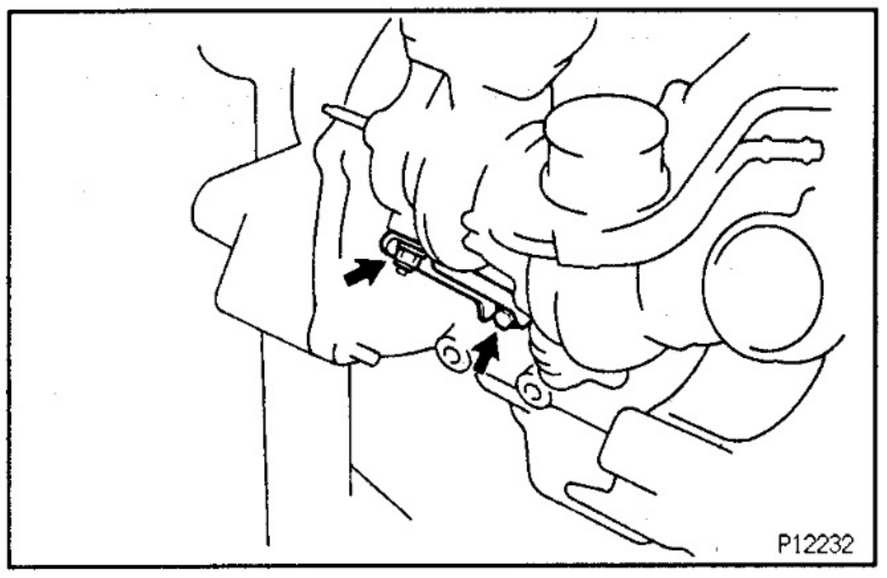

7. REMOVE TURBOCHARGER STAY

Remove the bolt, nut and turbocharger stay.

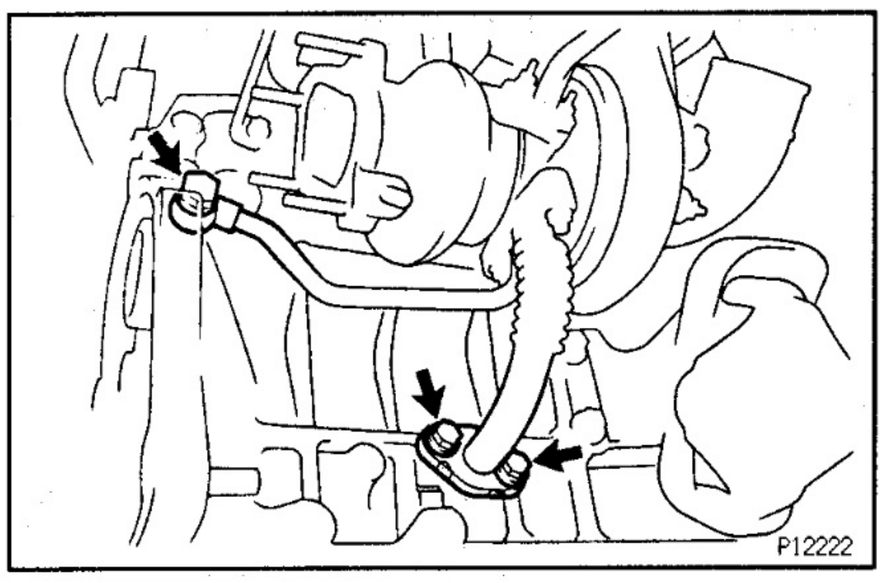

8. REMOVE TURBOCHARGER AND EXHAUST MANIFOLD

(a) Remove the 2 bolts and union bolt from the turbo oil pipe.

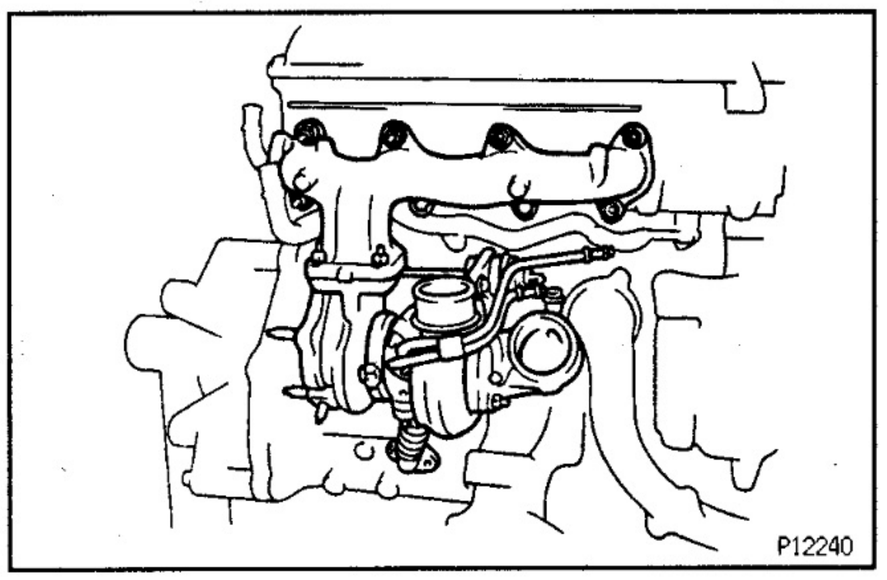

(b) Remove the 6 nuts, 2 bolts, turbocharger and exhaust manihold assembly and 3 gaskets.

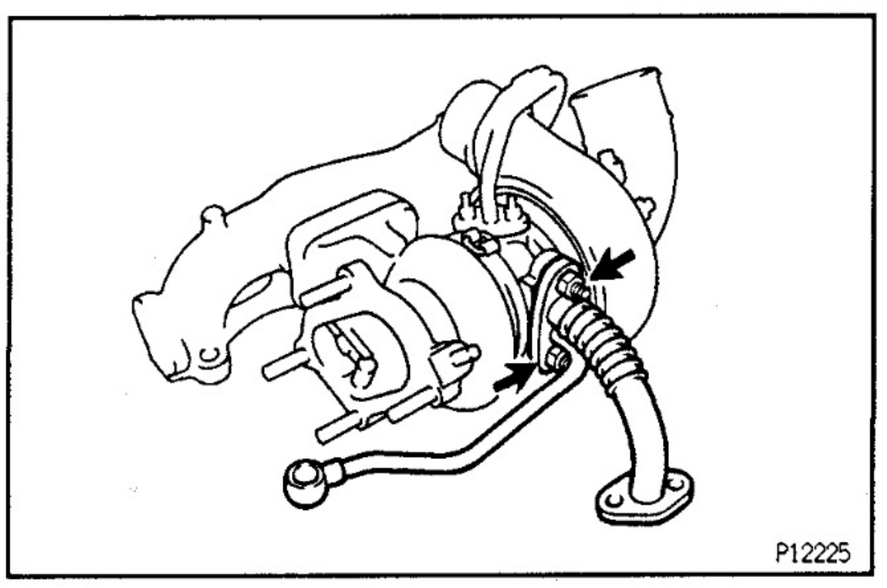

9. REMOVE TURBO OIL PIPE

Remove the 2 nuts, oil pipe and gasket.

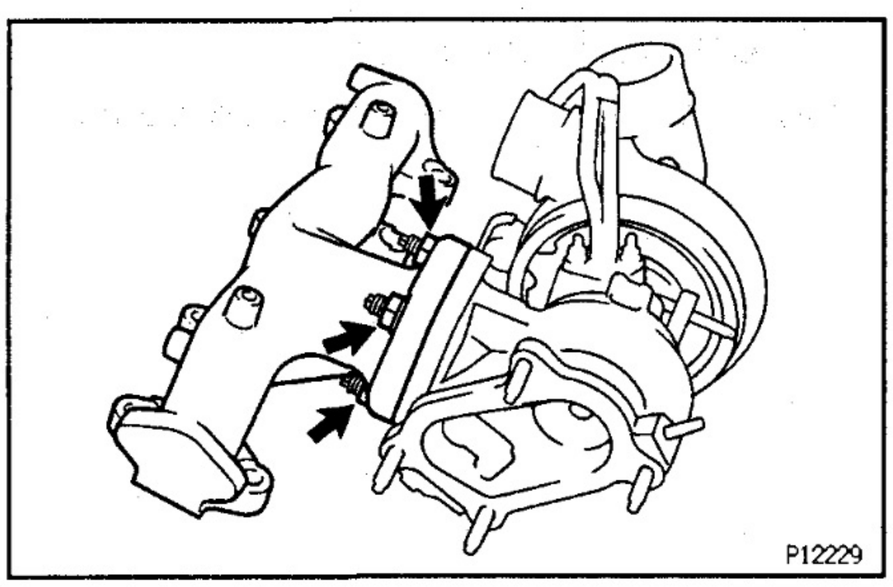

10. REMOVE EXHAUST MANIFOLD FROM TURBOCHARGER

Remove the 3 nuts, exhaust manifold and gasket.

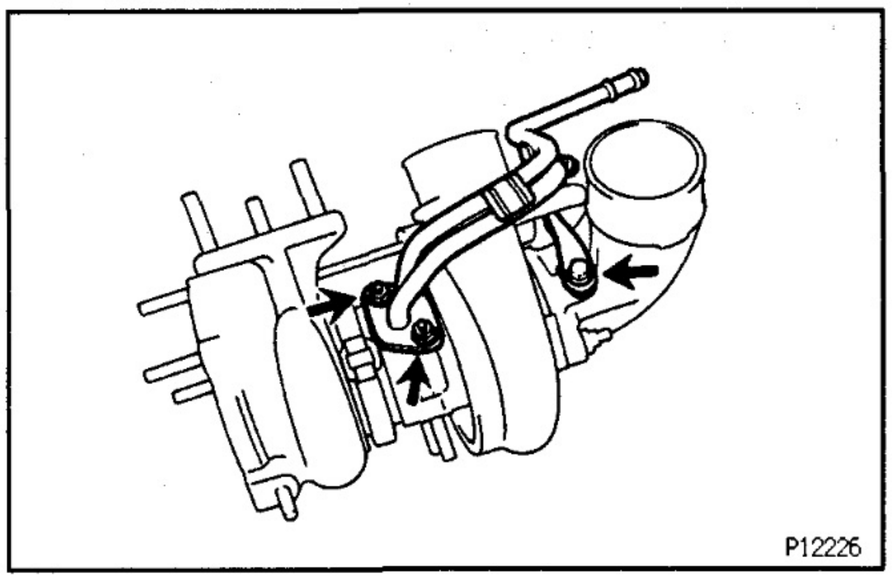

11. REMOVE TURBO WATER PIPE

Remove the 2 nuts, bolt, water pipe and gasket.

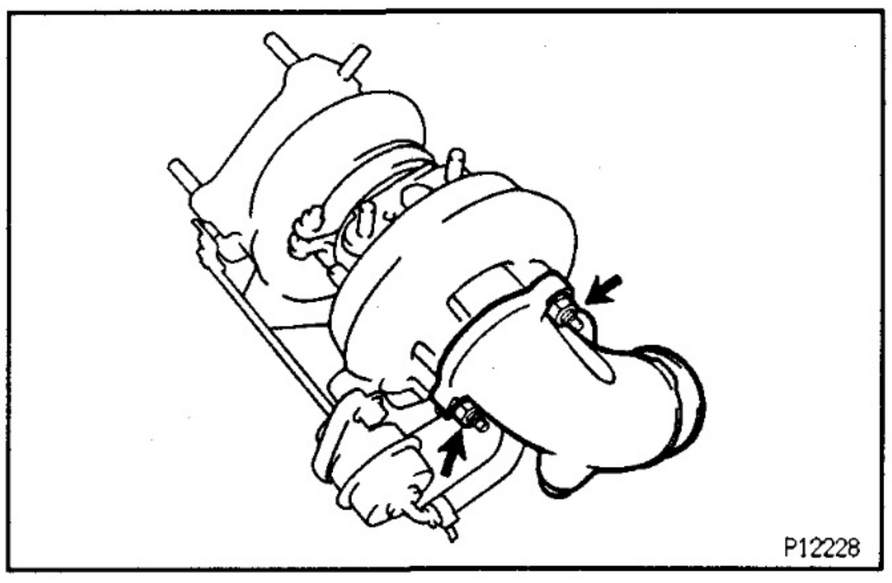

12. REMOVE TURBINE AIR INLET ELBOW

Remove the 2 nuts, inlet elbow and gasket.

EG34Z–01

TURBOCHARGER INSPECTION

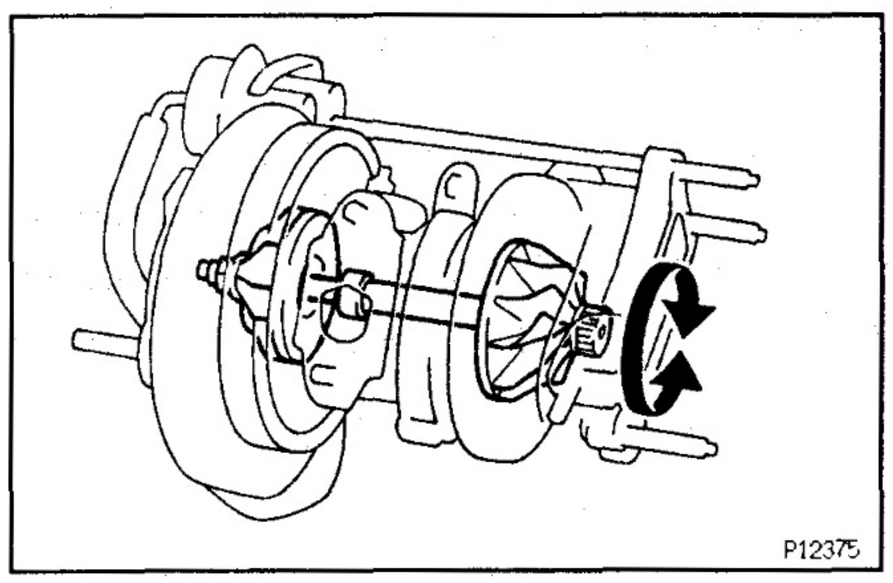

1. INSPECT IMPELLER WHEEL ROTATION

Grasp the edge of the turbine wheel and turn it. Check that the impeller wheel turns smoothly.

If the impeller wheel does not turn or if it turns with a heavy drag, replace the turbocharger assembly.

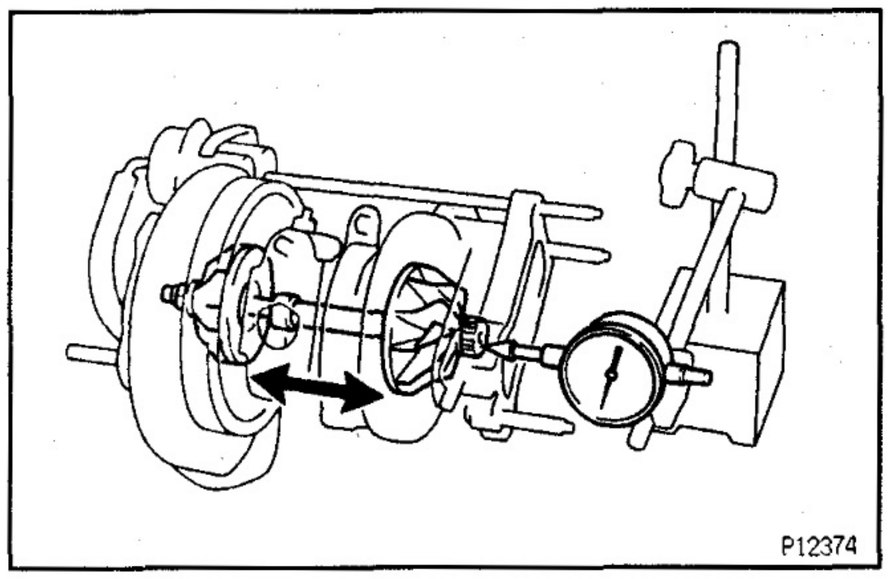

2. INSPECT AXIAL PLAY OF IMPELLER WHEEL

Insert a dial indicator into the intake side, hold the turbine wheel edge by hand, and check the axial play.

Maximum oil clearance:

0.173 mm (0.0068 in.)

If the axial play is not as specified, replace the turbocharger assembly.

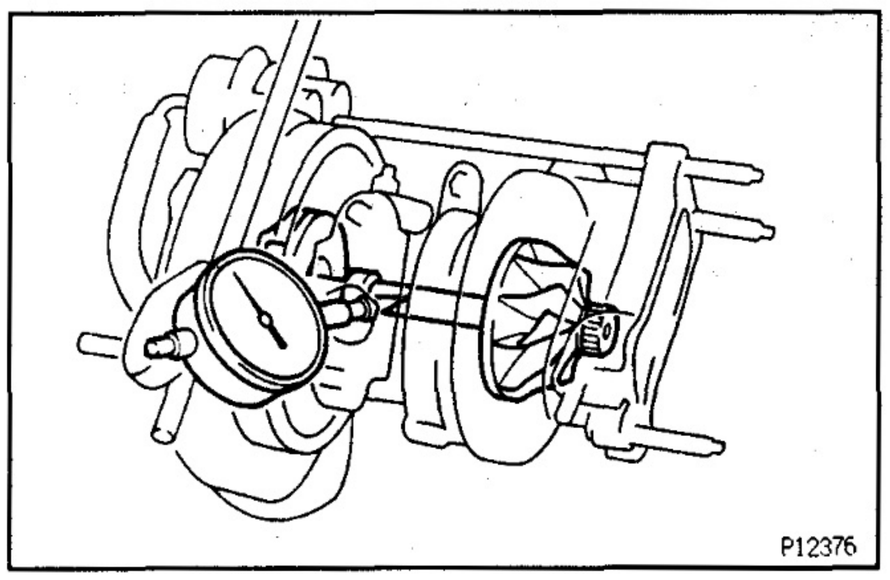

3. INSPECT RADIAL PLAY OF IMPELLER WHEEL

(a) From oil outlet hole, insert a dial indicator and set it in the center of the impeller shaft.

(b) Move the impeller shaft in a radial direction, measure the radial play of the impeller shaft.

Maximum oil clearance:

0.110 mm (0.0045 in.)

If the radial play is not as specified, replace the turbocharger assembly.

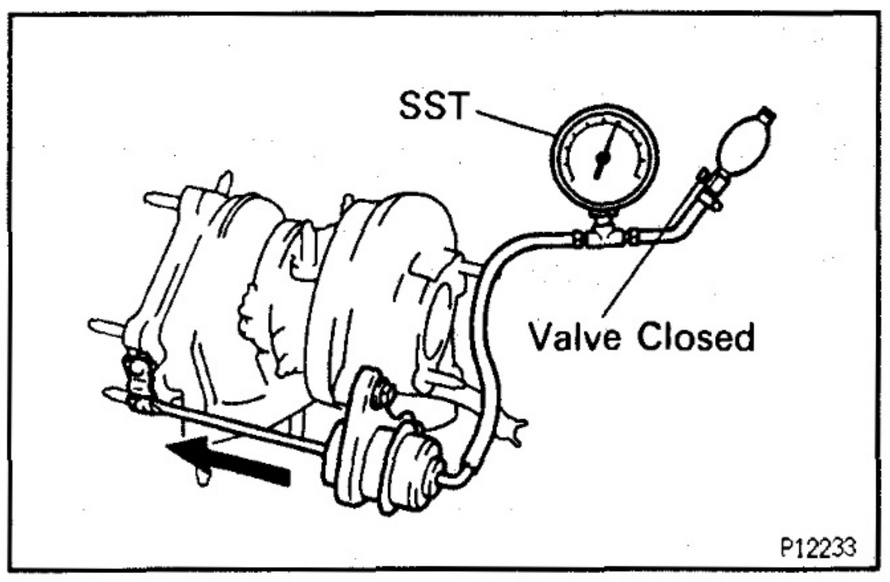

4. INSPECT ACTUATOR OPERATION

(a) Disconnect the actuator hose.

(b) Using SST, apply approx. 116 kPa (1.18 kgf/cm², 16.7 psi) of pressure to the actuator and check that the rod moves.

If the rod does not move, replace the turbocharger assembly.

SST 09992–00241

NOTICE: Never apply more than 127 kPa (1.30 kgf/cm², 18.5 psi) of pressure to the actuator.

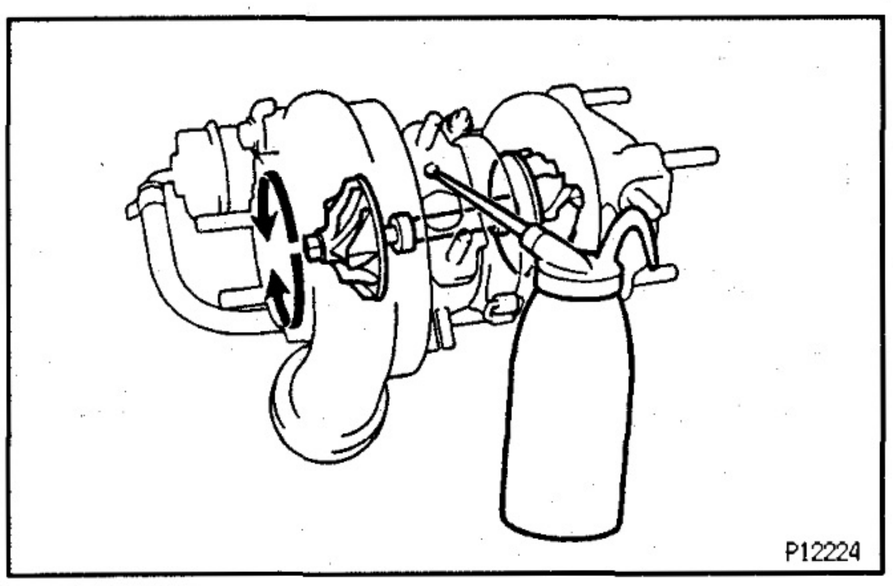

EG350-02

TURBOCHARGER INSTALLATION

(See Components for removal and installation)

NOTICE: After replacing the turbocharger assembly, pour approx. 20 cm³ (1.2 cu in.) of fresh oil into the oil inlet and turn the impeller wheel by hand to splash oil on the bearing.

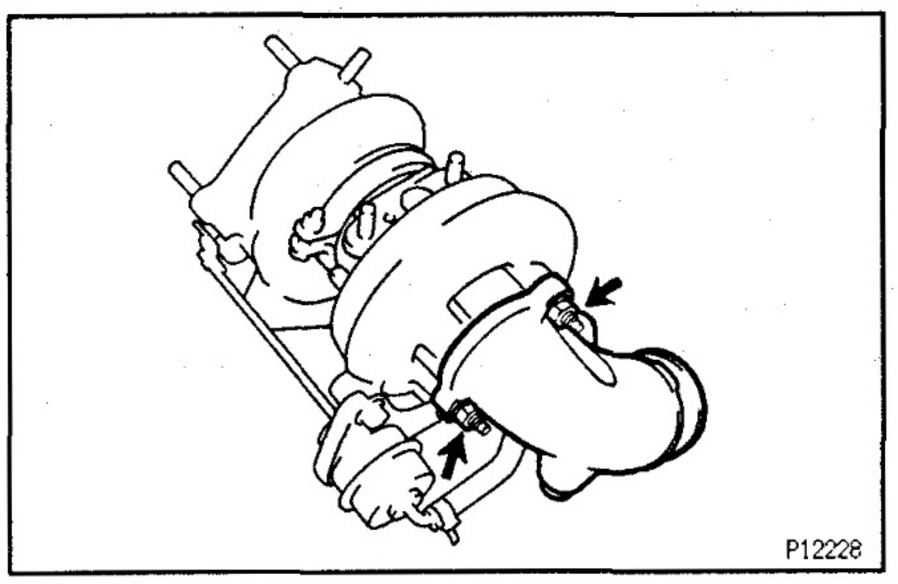

1. **INSTALL TURBINE AIR INLET ELBOW**
   Install a new gasket and the inlet elbow with the 2 nuts.
   Torque: 19 N·m (195 kgf·cm, 14 ft·lbf)

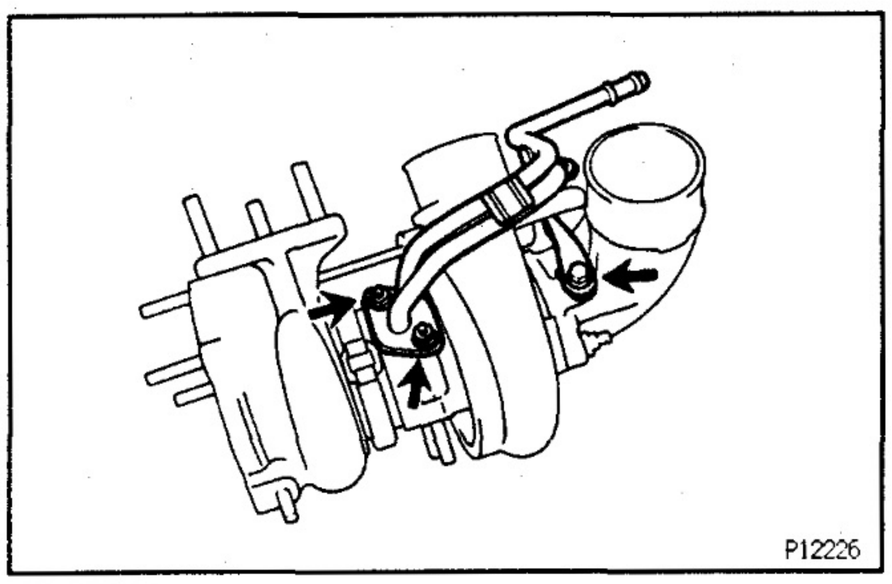

2. **INSTALL TURBO WATER PIPE**
   Install a new gasket and the water pipe with the 2 nuts and bolt.
   Torque: 12 N·m (120 kgf·cm, 9 ft·lbf) for Nut
   Torque: 8 N·m (80 kgf·cm, 69 in.·lbf) for Bolt

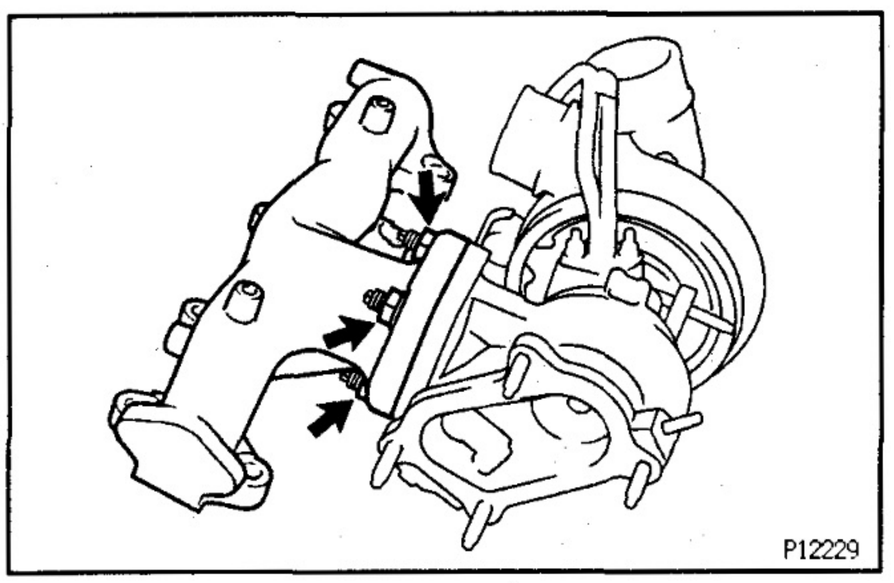

3. **INSTALL EXHAUST MANIFOLD TO TURBOCHARGER**
   Install a new gasket and the exhaust manifold with the 3 nuts.
   Torque: 52 N·m (530 kgf·cm, 38 ft·lbf)

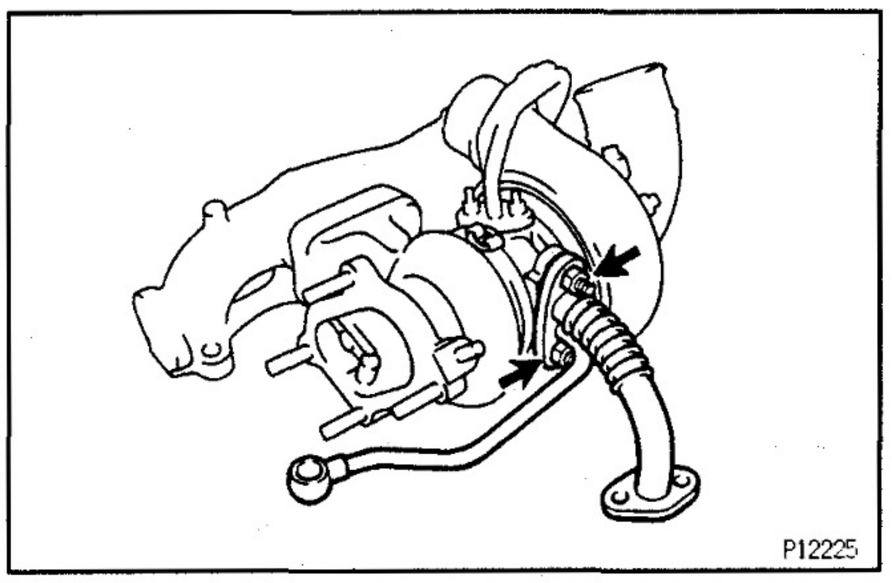

4. **INSTALL TURBO OIL PIPE**
   Install a new gasket and oil pipe with the 2 nuts.
   Torque: 19 N·m (195 kgf·cm, 14 ft·lbf)

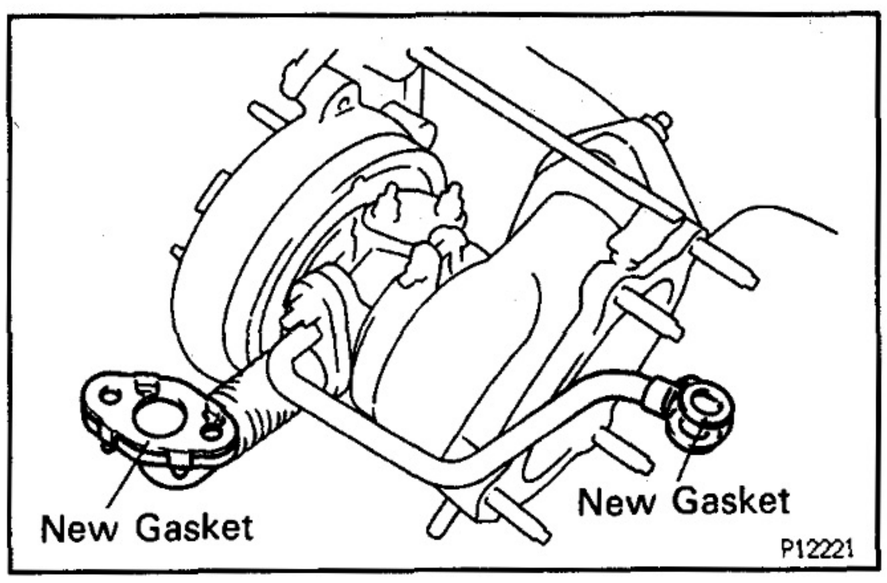

5. INSTALL TURBOCHARGER AND EXHAUST MANIFOLD ASSEMBLY

(a) Install 2 new gasket to the turbo oil pipe.

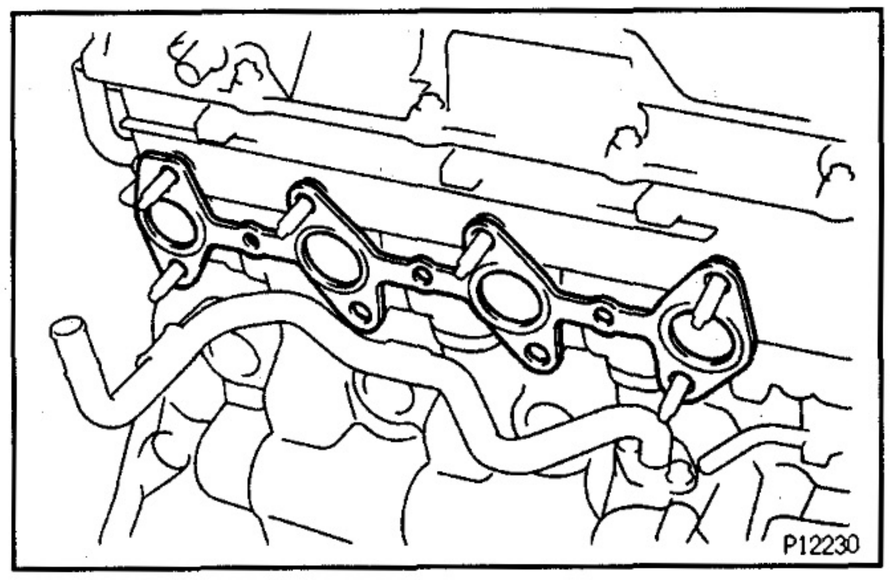

(b) Install a new gasket to the cylinder head.

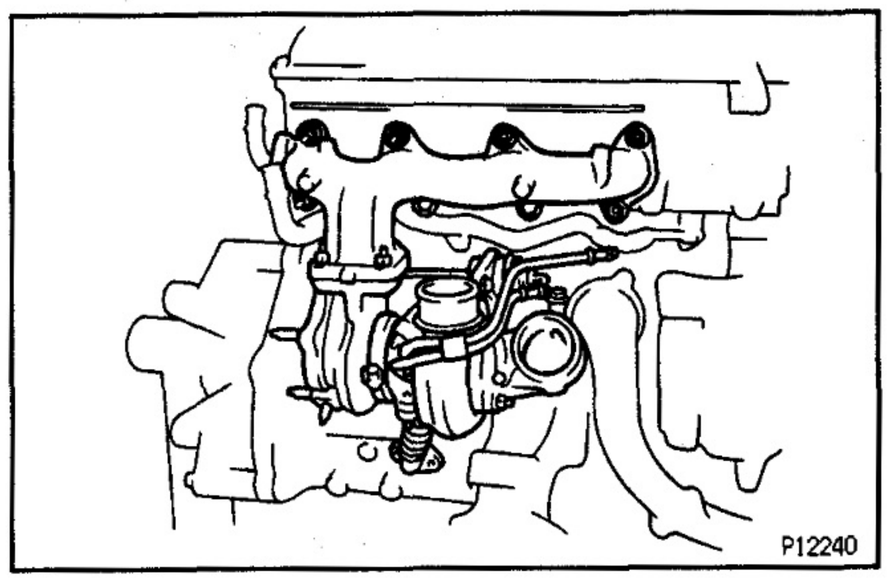

(c) Tighten the 6 nuts and 2 bolts holding the exhaust manifold to the cylinder head.
Torque: 52 N·m (530 kgf·cm, 38 ft·lbf)

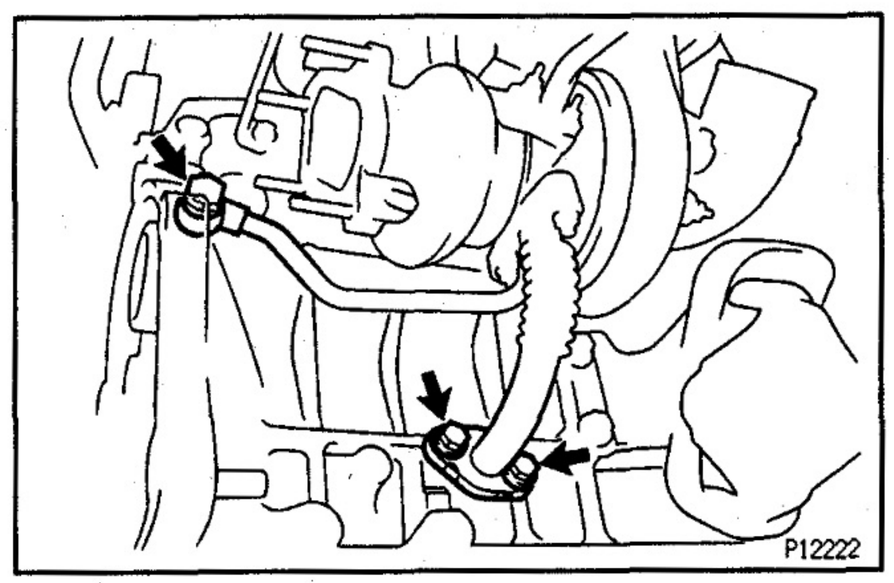

(d) Tighten the union bolt and 2 bolts holding the oil pipe to the cylinder block.
Torque: 26 N·m (260 kgf·cm, 19 ft·lbf) for Union bolt
Torque: 12 N·m (125 kgf·cm, 9 ft·lbf) for Bolt

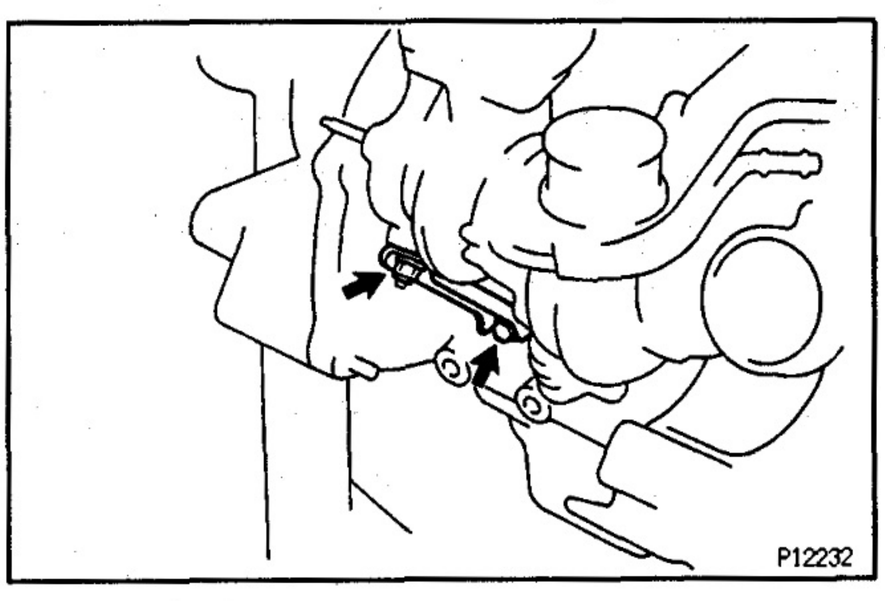

6. INSTALL TURBOCHARGER STAY

Install the turbocharger stay with the bolt and nut.
Torque: 19 N·m (195 kgf·cm, 14 ft·lbf)

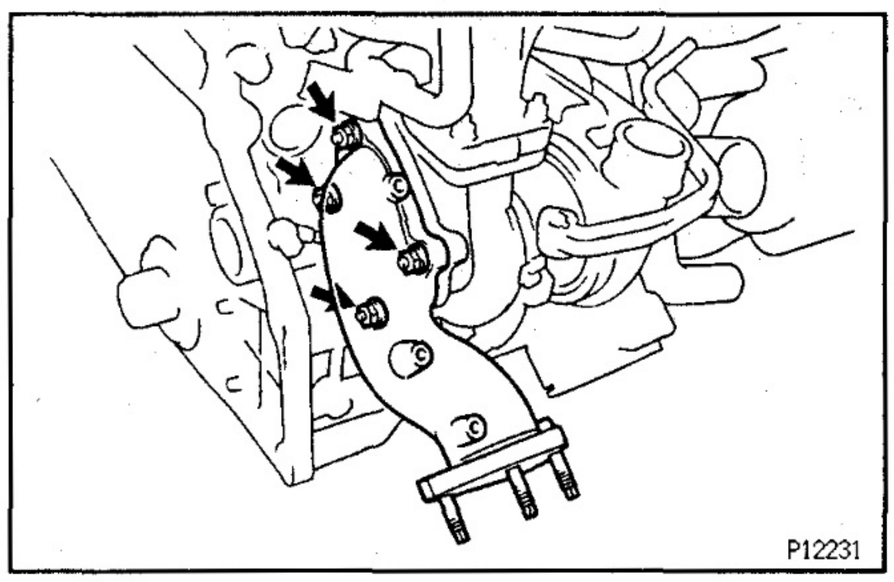

7. **INSTALL TURBINE OUTLET ELBOW**
Install a new gasket and the outlet elbow with the 4 nuts.
Torque: 39 N·m (390 kgf·cm, 28 ft·lbf)

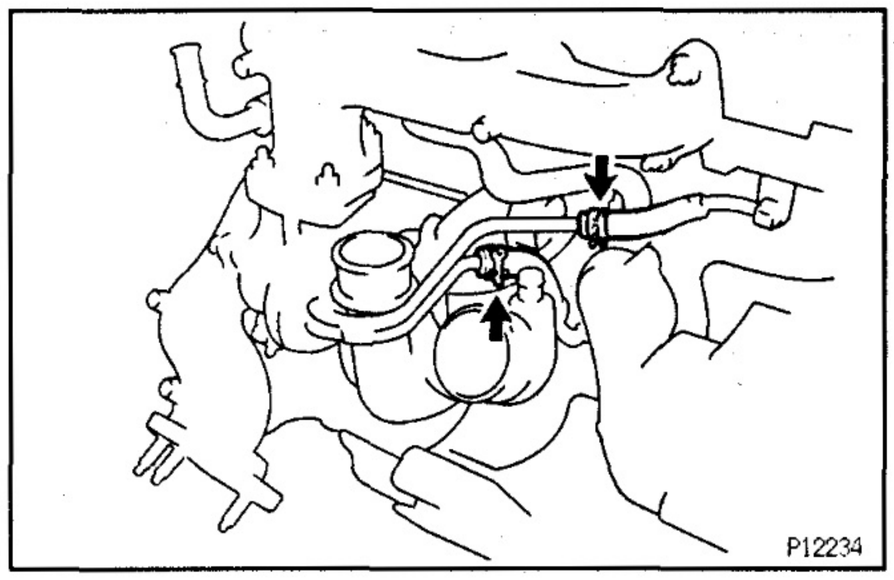

8. **CONNECT WATER BY PASS HOSES**
Connect the 2 water by pass hoses to the No.1 turbo water pipe.

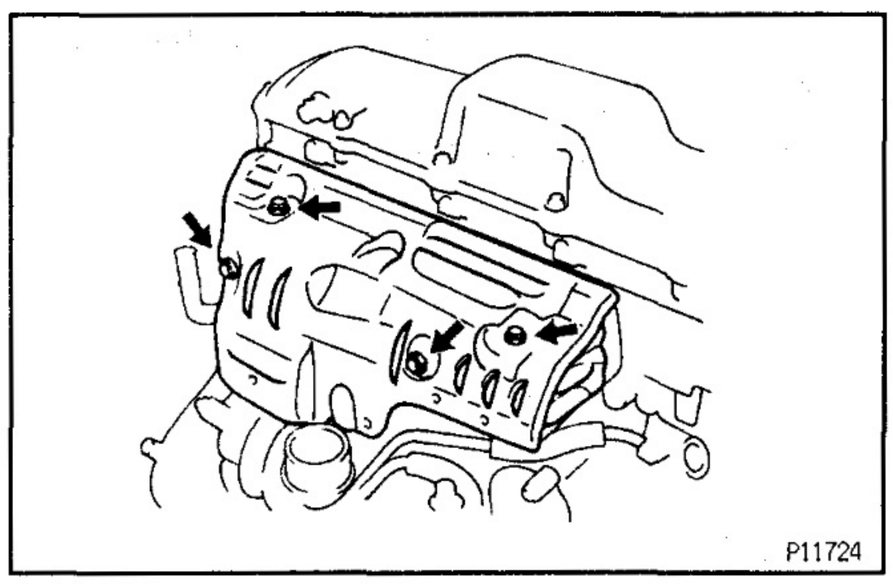

9. **INSTALL EXHAUST MANIFOLD HEAT INSULATOR**
Install the heat insulator with the 4 bolts.
Torque: 8 N·m (80 kgf·cm, 69 in.·lbf)

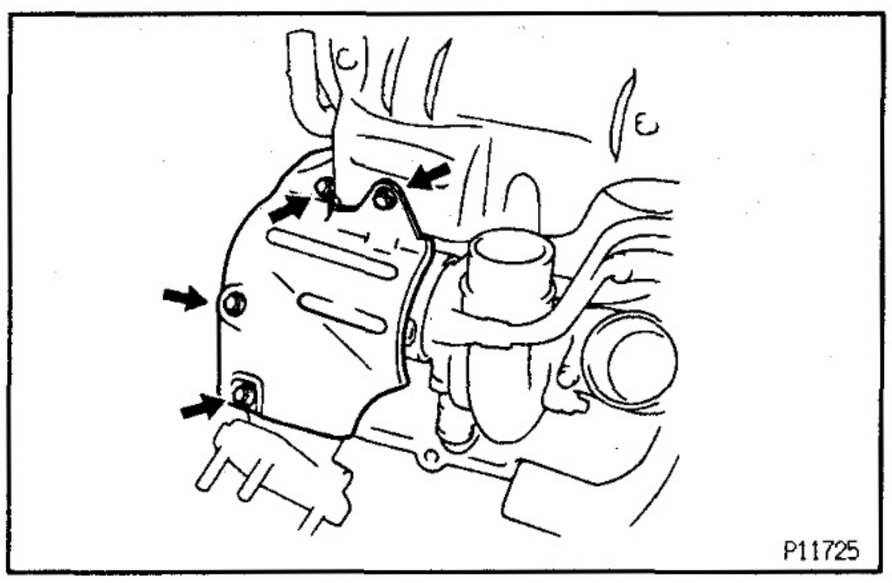

10. **INSTALL TURBOCHARGER HEAT INSULATOR**
Install the heat insulator with the 4 bolts.
Torque: 8 N·m (80 kgf·cm, 69 in.·lbf)

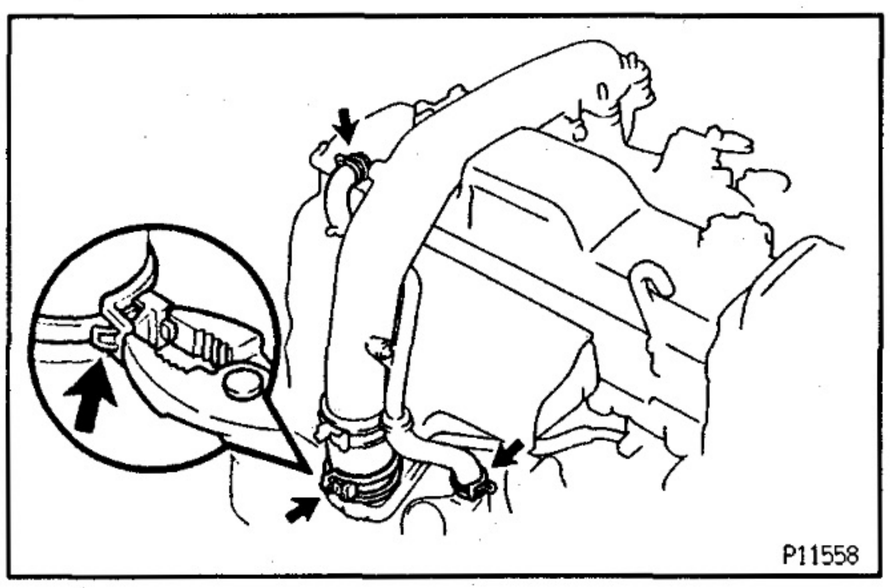

11. **INSTALL INTAKE PIPE**
(a) Place a new gasket on the intake manifold.
(b) Connect the air hose and install the intake pipe.
(c) Press the clamp lock together with pliers and press down the tip of the lock plate. Carefully let the lock spread apart.
NOTICE: Take care not to let the pliers slip.
(d) Connect the 2 PCV hoses.

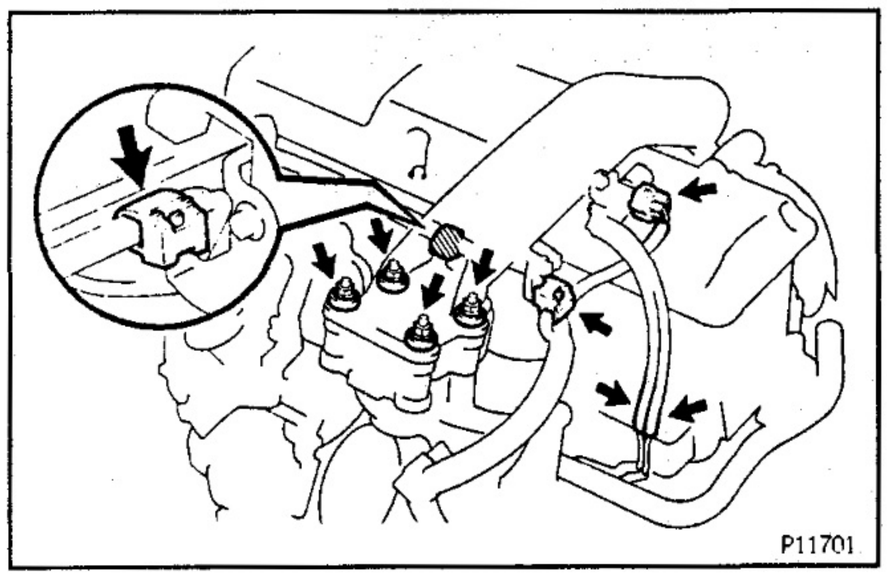

(e) Install the 4 seal washers and nuts.
Torque: 11 N·m (120 kgf·cm, 9 ft·lbf)

(f) Connect the 2 wire harness clamps.

(g) Connect the VSV connector and 2 vacuum hoses.

12. FILL WITH ENGINE COOLANT

13. START ENGINE AND CHECK FOR LEAKS

14. CHECK ENGINE OIL LEVEL

TURBO PRESSURE SENSOR

EG0E0-0C

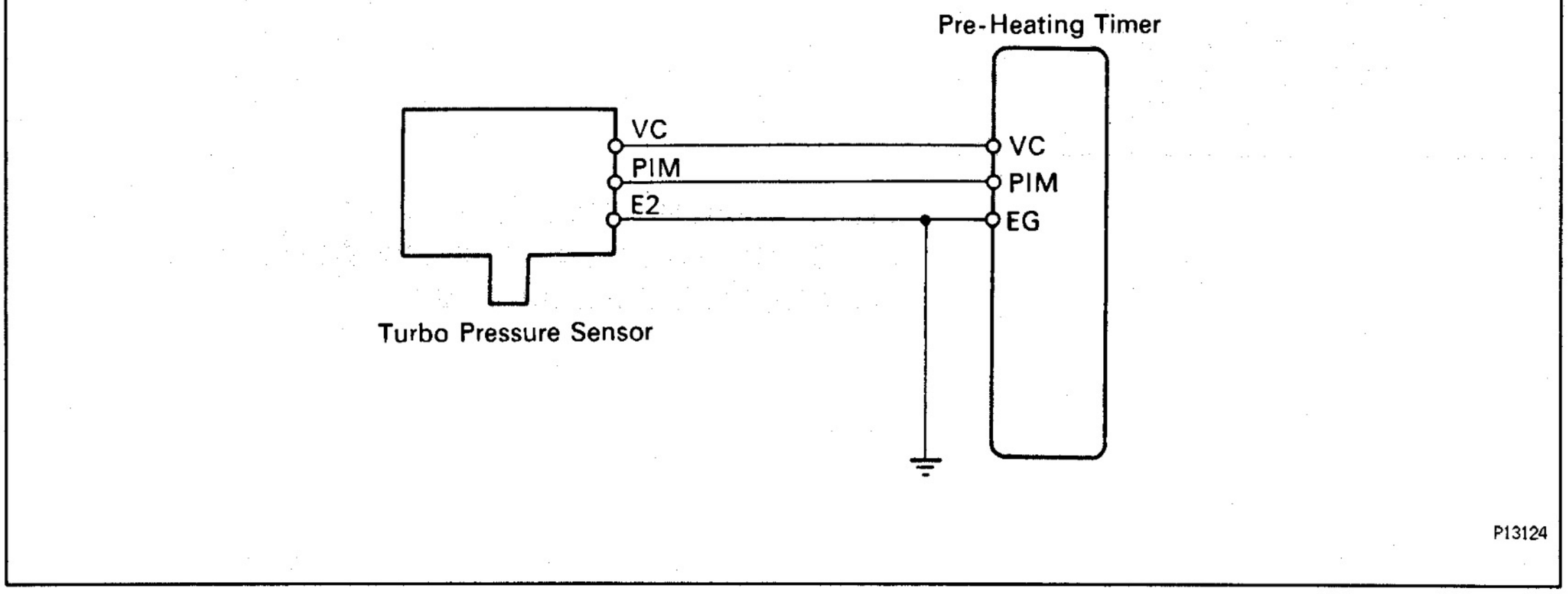

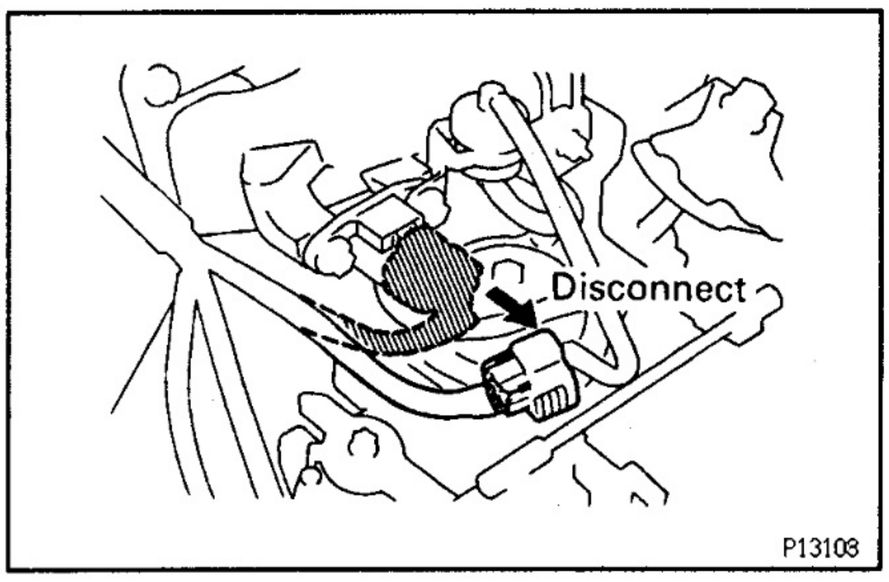

TURBO PRESSURE SENSOR INSPECTION EG351-01

1. INSPECT POWER SOURCE VOLTAGE OF TURBO PRESSURE SENSOR

(a) Disconnect the pressure sensor connector.
(b) Turn the ignition switch ON.

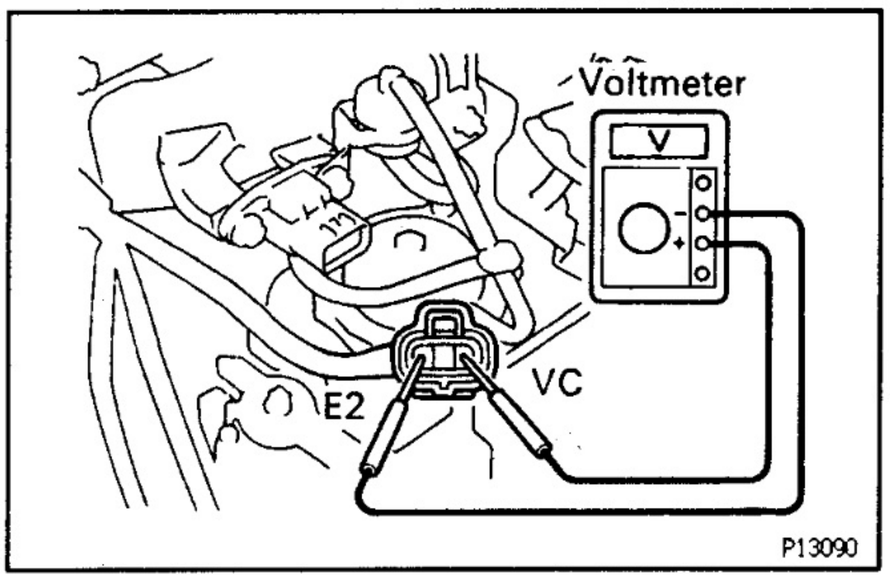

(c) Using a voltmeter, measure the voltage between connector terminals VC and E2 of the wiring harness side.
Voltage:
4.75 – 5.25 V
(d) Turn the ignition switch OFF.
(e) Reconnect the pressure sensor connector.

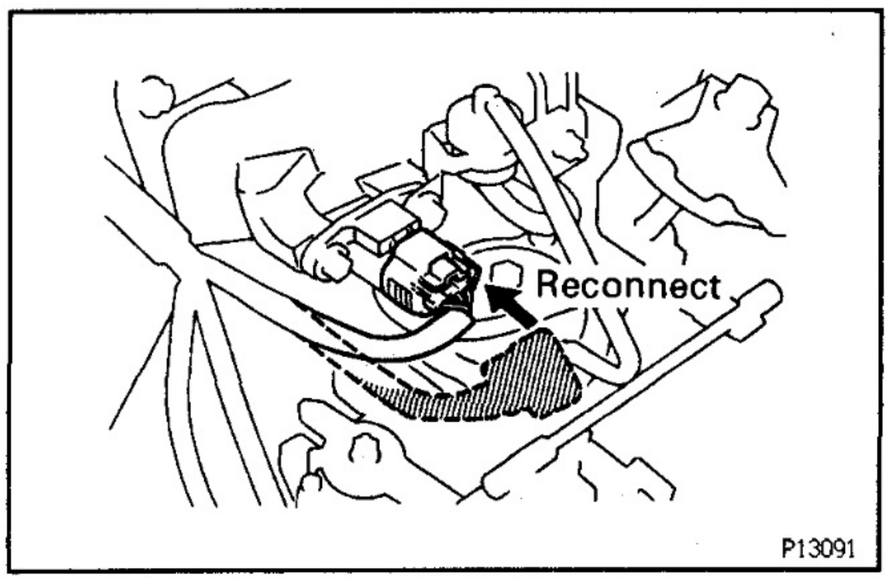

2. INSPECT SUPPLY POWER OF TURBO PRESSURE SENSOR CONNECTOR

(a) Turn the ignition switch ON.

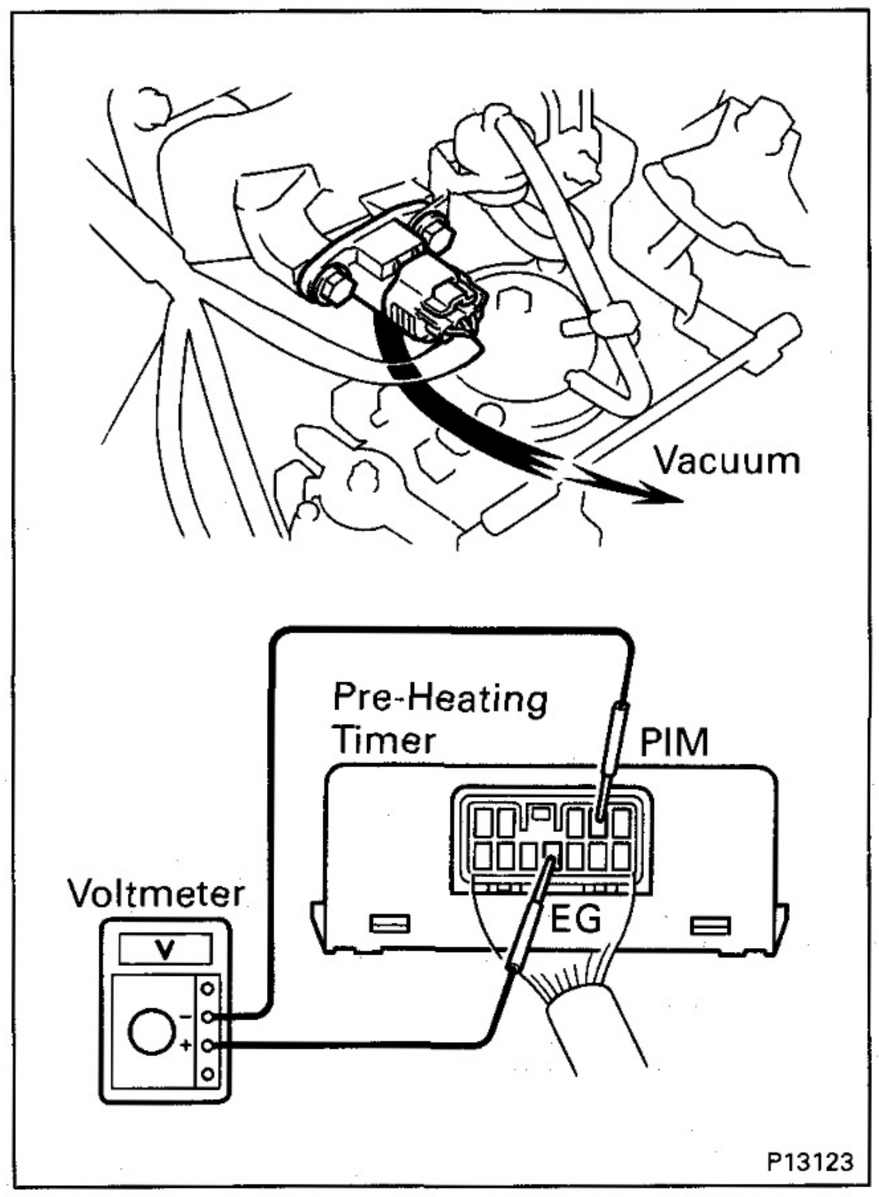

P13123

(b) Disconnect the vacuum hose on the intake manifold side.
(c) Connect a voltmeter to terminals PIM and EG of the pre — heating timer, and measure the output voltage under ambient atmospheric pressure.
(d) Apply vacuum to the turbo pressure sensor in 13.3 kPa (100 mmHg, 3.94 in.Hg) segments to 40.0 kPa (300 mmHg, 11.81 in.Hg).
(e) Measure the voltage drop from step (c) above for each segment.

Voltage drop:

Applied Vacuum kPa (mmHg, in.Hg)	13.3 (100, 3.94)	26.7 (200, 7.87)	40.0 (300, 11.81)
Voltage drop V	0.3 – 0.5	0.6 – 0.8	0.95 – 1.15

T V07862

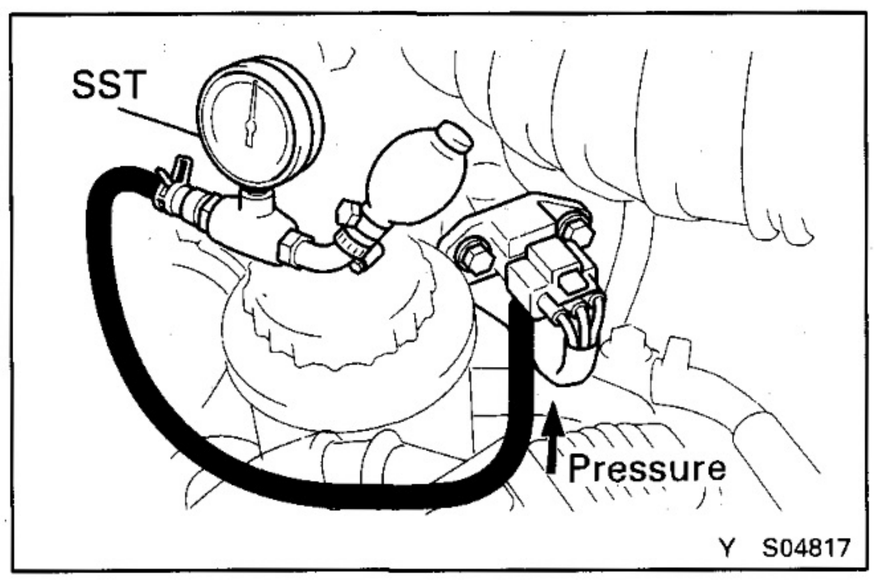

Y S04817

(f) Using SST (turbocharger pressure gauge), apply pressure to the turbo pressure sensor in 19.6 kPa (0.20 kgf/cm^2, 2.84 psi) segments to 98.0 kPa (1.00 kgf/cm^2, 14.2 psi).
SST 09992-00241
(g) Measure the voltage up from step (c) above for each segment.

Voltage up:

Applied pressure kPa (kgf/cm^2, psi)	19.6 (0.20, 2.84)	39.2 (0.40, 5.69)	58.8 (0.60, 8.53)	78.5 (0.80, 11.4)	98.0 (1.00, 14.2)
Voltage up V	0.4 – 0.7	0.9 – 1.2	1.4 – 1.7	2.0 – 2.3	2.5 – 2.8

T V07861

(h) Reconnect the vacuum hose to the turbo pressure sensor.

SERVICE SPECIFICATIONS

SERVICE DATA

EG0X8-03

Turbocharger	Turbocharging pressure		51 — 67 kPa (0.52 — 0.68 kgf/cm², 7.4 — 9.7 psi)
	Impeller wheel axial play	Maximum	0.173 mm (0.0068 in.)
	Impeller wheel radial play	Maximum	0.110 mm (0.0045 in.)
Turbocharger pressure sensor	Voltage		4.75 — 5.25 V

TORQUE SPECIFICATIONS

EG0X9-05

Part tightened		N·m	kgf·cm	ft·lbf
Turbine inlet elbow x Turbocharger		19	195	14
Turbo water pipe x Turbocharger	Nut	12	120	9
	Bolt	8	80	69 in.·lbf
Turbocharger x Exhaust manifold		52	530	38
Oil pipe x Turbocharger		19	195	14
Exhaust manifold x Cylinder block		52	530	38
Oil pipe x Cylinder block	Union bolt	26	260	19
	Bolt	12	125	12
Turbocharger stay x Turbocharger		19	195	14
Turbocharger stay x Cylinder block		19	195	14
Turbine outlet elbow x Turbocharger		39	390	28
Exhaust manifold heat insulator x Exhaust manifold		8	80	69 in.·lbf
Turbocharger heat insulator x Turbocharger		8	80	69 in.·lbf
Intake pipe x Intake manifold		11	120	9

FUEL SYSTEM

DESCRIPTION

EG338R-01

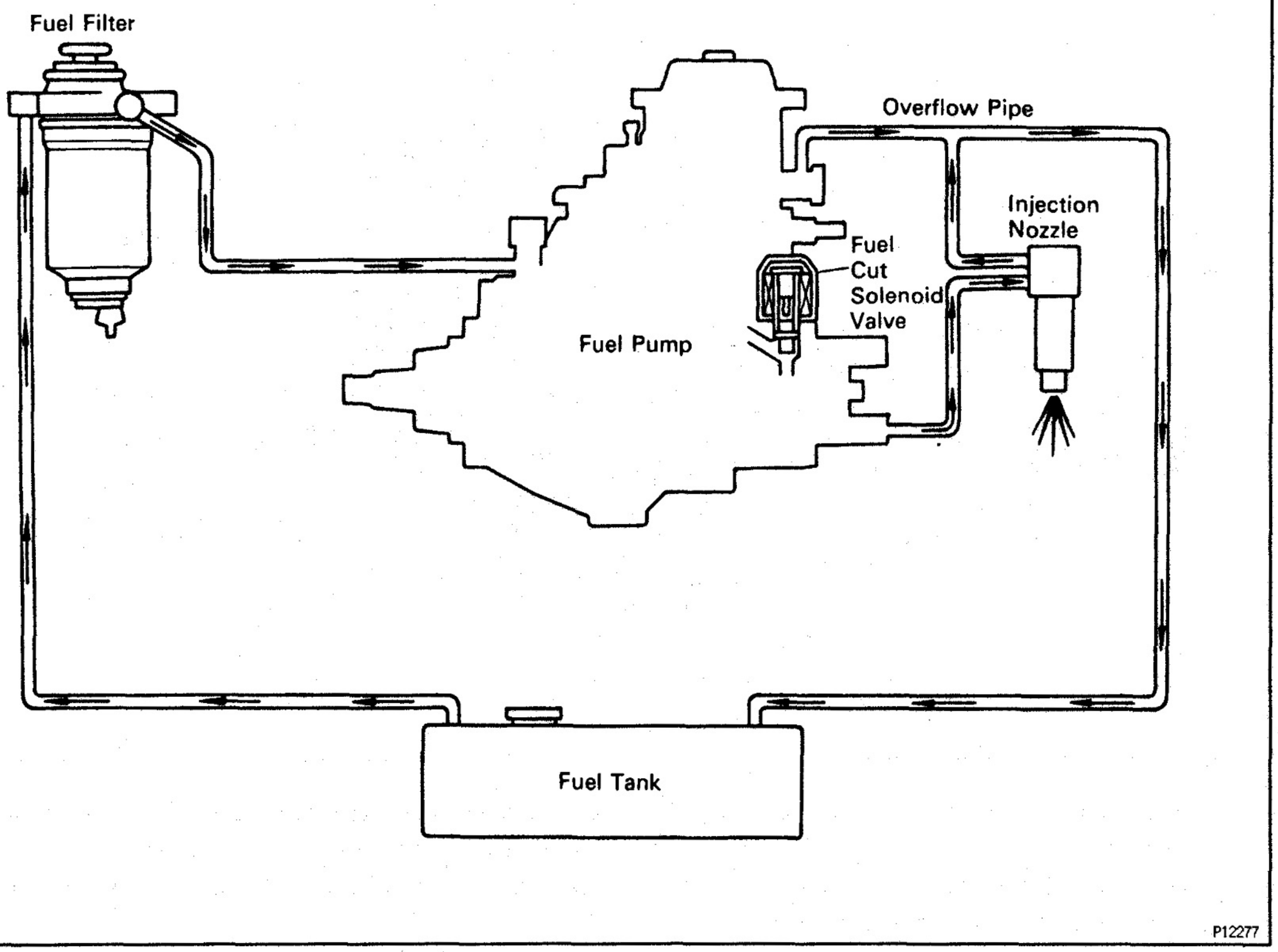

FUEL SYSTEM

Fuel is drawn up from the fuel tank through the fuel filter (sedimenter) by the feed pump built into the injection pump. The fuel drawn up is then sent into the pump housing. High pressure fuel from the pump housing is distributed to the injection nozzles according to the injection order, and injected at high pressure into the combustion chamber. Excess fuel in the pump housing flows through the overflow valve and along the overflow pipe and returns to the fuel tank. The fuel cycle provides both cooling and lubrication for the pump. The cycling of fuel through the pump chamber warms the fuel so that it is prevented from becoming wax—like at cold temperatures.

OPERATION

Injection Pump (VE pump)

EG338-01

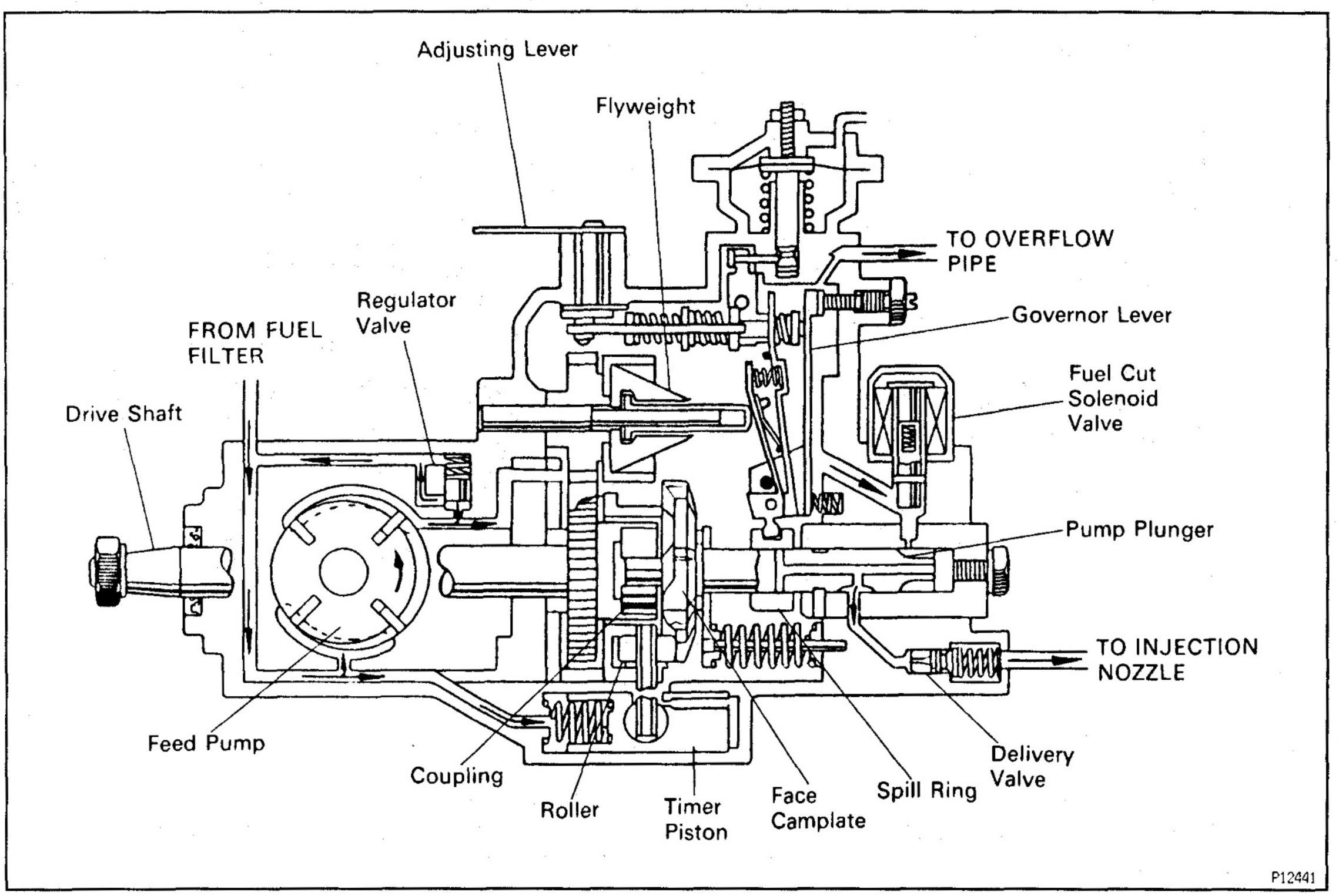

- The centrifugal type feed pump takes up a fixed volume of fuel with each turn. The fuel expulsion pressure from the feed pump is controlled by operation of the pressure regulator valve.
- Fuel is sent from the outlet side of the feed pump, through the hole in the upper part of the feed pump cover and into the pump body.
- The pump plunger also rotates as it moves up and down. After the fuel is drawn in, it is distributed under pressure to the delivery valve of each cylinder according to the injection order.
- The centrifugal force type minimum/maximum governor installed in the upper part of the injection pump moves the spill ring obstructing the plunger spill port and controls the fuel injection volume.
- The hydraulic type timer installed in the lower part of the injection pump is operated by the fuel pressure of the pump housing, and movement of the roller ring by the timer advances the injection angle and controls the injection timing.
- The fuel cut solenoid valve is connected to the ignition switch IG circuit, and when the ignition switch is turned to OFF, the current is cut off, the solenoid is de—energized, fuel is cut off and the engine stops.
- High Altitude Compensation (HAC) Device
  Due to the decrease in atmospheric pressure at high altitudes, the air fuel ratio becomes more dense and the smoke density increases. To prevent this, the device automatically reduces the fuel injection volume for full loads in response to the altitude.

- Boost Compensator with turbocharger
  The boost compensator is installed on the upper part of the governor of the injection pump. Turbocharged air pressure moves the diaphragm and push rod up and down, this movement is conveyed to the spill ring and the fuel injection volume increases according to the degree of movement.

PREPARATION

SST (SPECIAL SERVICE TOOLS)

EGOCF–0E

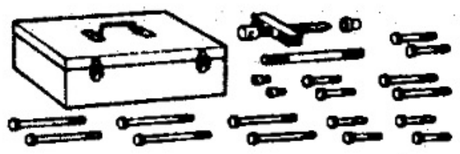	09213–60017 Crankshaft Pulley & Gear Puller Set	
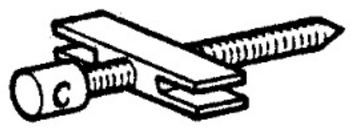	(09213–00020) Body With Bolt	
	(09213–00030) Handle	
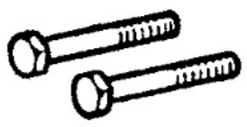	(09213–00060) Bolt Set	
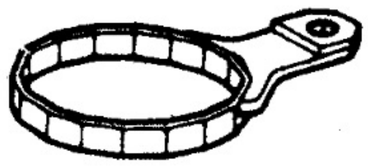	09228–64010 Fuel Filter Wrench	
	09236–00101 Water Pump Overhaul Tool Set	
	(09237–00070) Shaft "C"	Governor sleeve plug
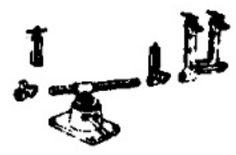	09241–76022 Injection Pump Stand Set	
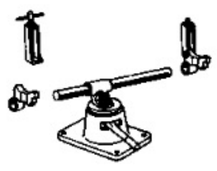	(09241–76010) Injection Pump Stand	
	09260–54012 Injection Pump Tool Set	
	(09262–54010) Distributor Head Plug Wrench	
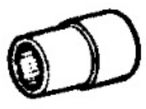	(09269–54020) Socket 14 mm	
	(09269–54030) Tweezers	

	(09269–54040) Governor Lever Support Bolt Wrench	
	(09262–54020) Regulator Valve Wrench	
	09268–64010 Injection Nozzle Wrench Set	
	(09268–64020) Injection Nozzle Holder Retaining Nut Wrench	
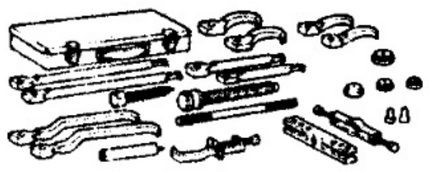	09950–20017 Universal Puller	
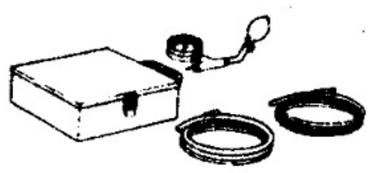	09992–00241 Turbocharger Pressure Gauge	

EGOCH-09

EQUIPMEMT

Angle gauge	
Brass brush	
Dial indicator with magnetic base	
Graduated cylinder	
Injection nozzle tester	
Injection pump tester	
Inner pressure gauge	
Ohmmeter	
Thickness gauge	
Timer measuring device	
Torque wrench	
Wooden stick	

FUEL FILTER

1. DISCONNECT FUEL FILTER WARNING SWITCH CONNECTOR EG33T-01

2. DRAIN FUEL FROM FUEL FILTER

(a) Connect a vinyl hose to the drain cock, and insert the other end of the vinyl hose in a container.

(b) Loosen the drain plug, and drain the fuel.

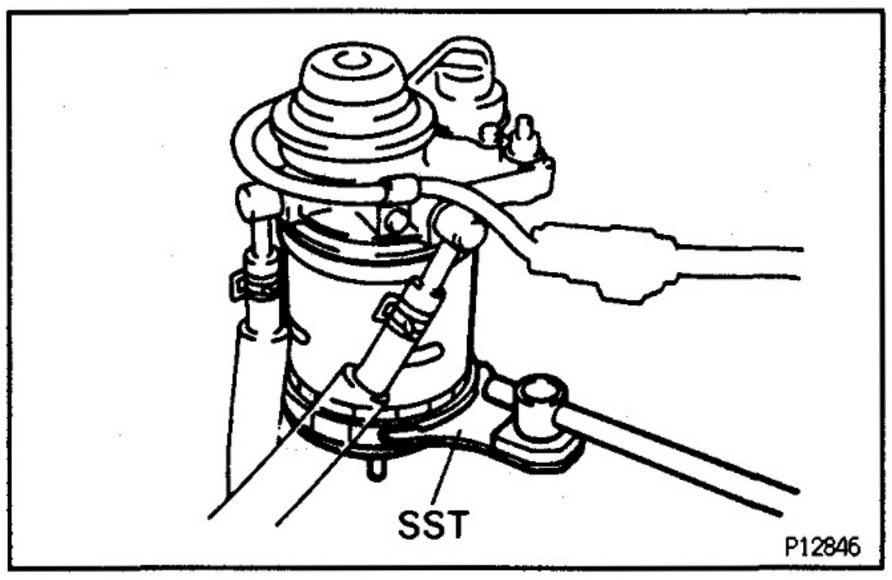

3. REPLACE FUEL FILTER

A. Remove fuel filter

Using SST, remove the fuel filter.

SST 09228−64010

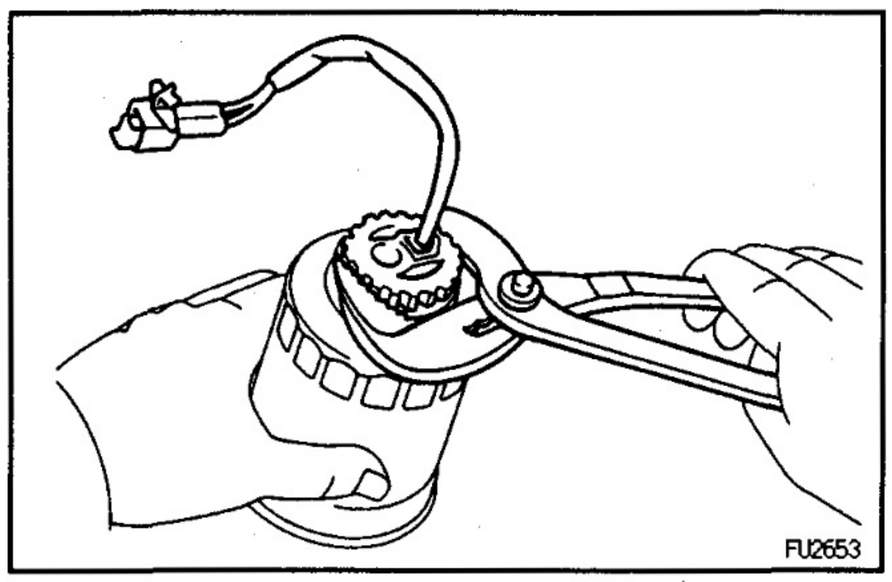

B. Remove fuel filter warning switch from fuel filter

Using pliers, remove the warning switch and O−ring.

NOTICE: Be careful not to damage the warning switch.

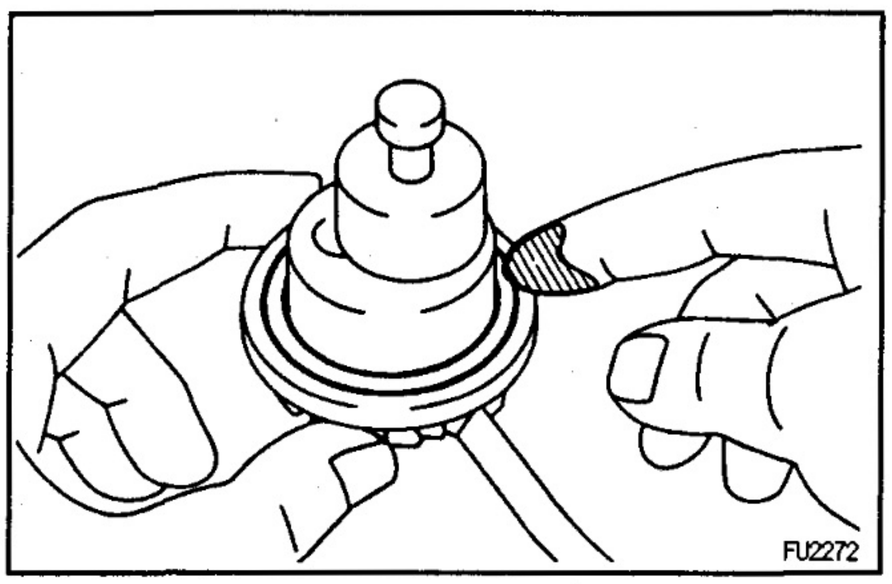

C. Install fuel filter warning switch to new fuel filter

(a) Install a new O−ring to the warning switch.

(b) Apply fuel to the O−ring of the warning switch.

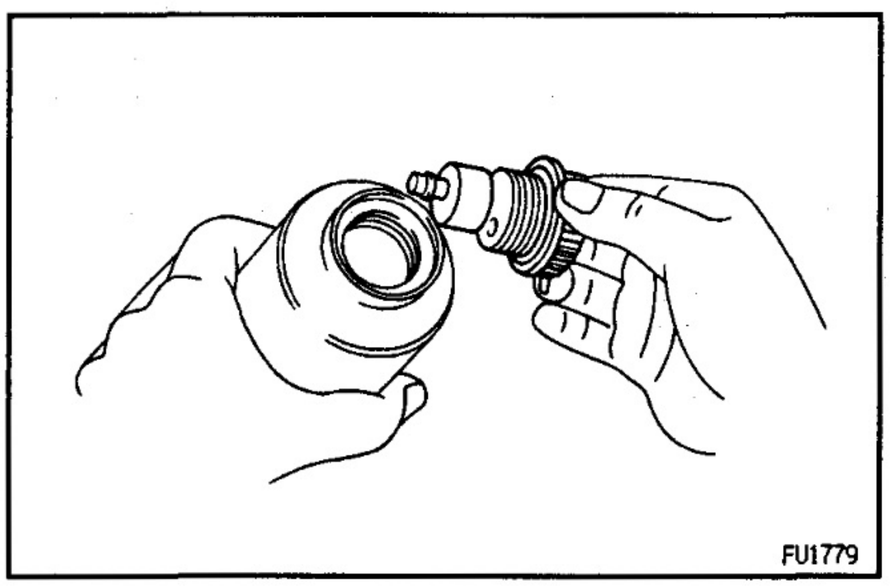

(c) **Install the warning switch to a new fuel filter by hand.**

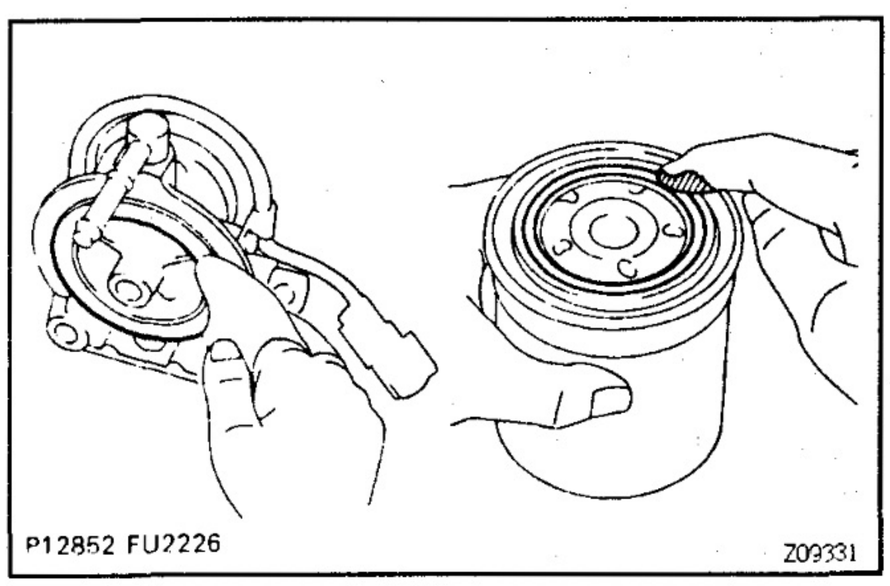

D. Install new fuel filter

(a) Check and clean the fuel filter installation surface.

(b) Apply fuel to the gasket of a new fuel filter.

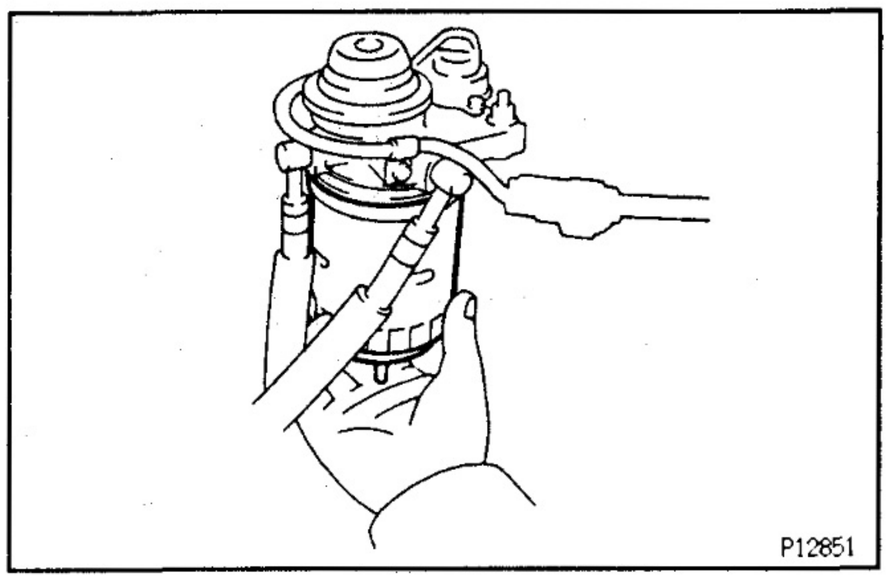

(c) Lightly screw the fuel filter into place, and tighten it until the gasket comes into contact with the seat.

(d) Tighten it additional 3/4 turn by hand.

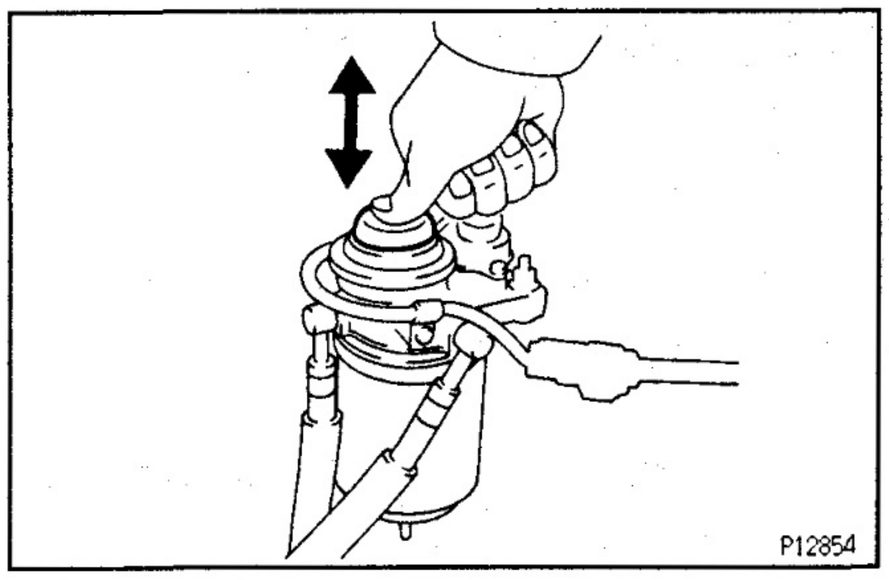

4. FILL FUEL FILTER WITH FUEL

Operate the hand pump until you feel more resistance.

5. CONNECT FUEL FILTER WARNING SWITCH CONNECTOR

6. START ENGINE AND CHECK FOR FUEL LEAKS

FUEL HEATER SYSTEM

SYSTEM CIRCUIT

EG33U-01

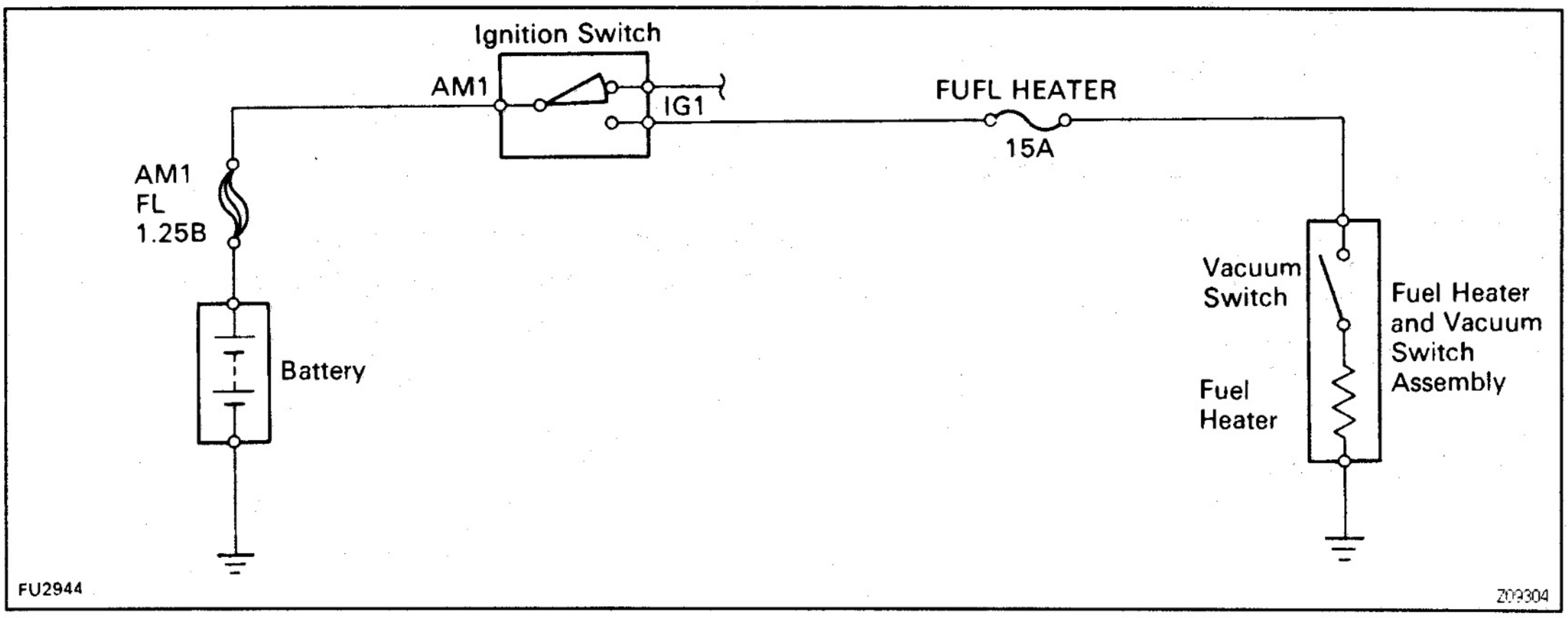

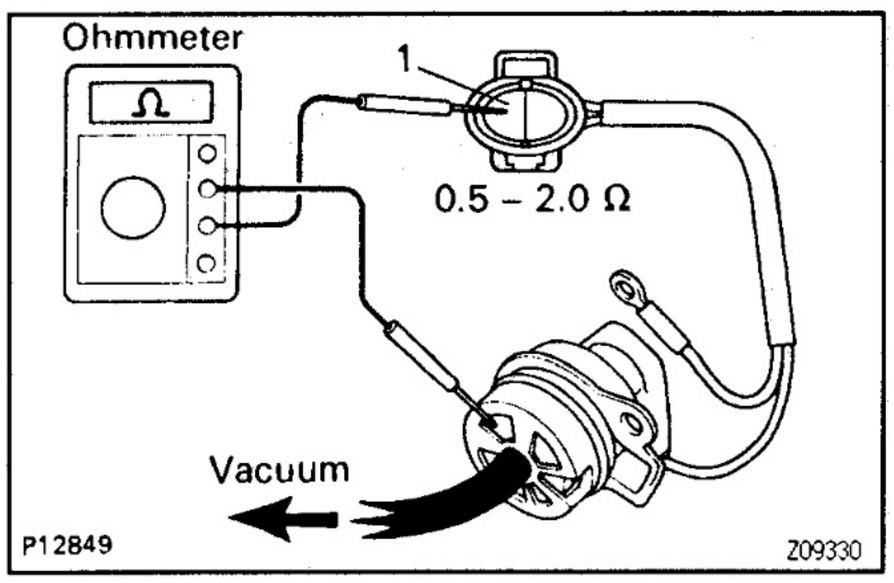

EG33V-01

COMPONENTS INSPECTION

Fuel Heater

INSPECT FUEL HEATER

(a) Apply a vacuum of 34.7 ± 5.3 kPa (260 ± 40 mmHg, 10.24 ± 1.57 in.Hg) or more to the vacuum switch port.

(b) Using an ohmmeter, measure the resistance between terminal 1 and the switch body.

Resistance:

1.4 – 2.0 Ω at 20°C (68°F)

If the resistance is not as specified, replace the fuel heater and vacuum switch assembly.

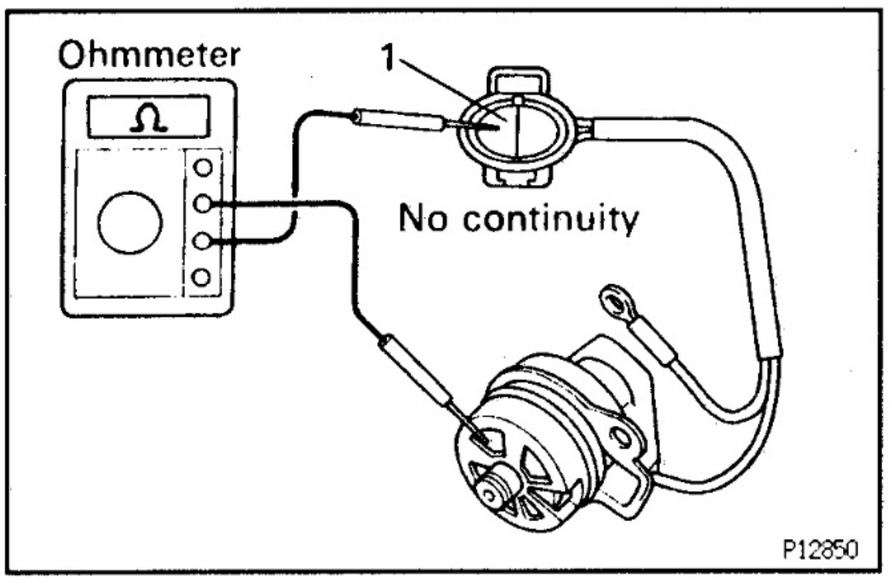

Vacuum Switch

1. **INSPECT SWITCH CONTINUITY**

Using an ohmmeter, check that there is no continuity between terminal 1 and the switch body.

If continuity is not as specified, replace the fuel heater and vacuum switch assembly.

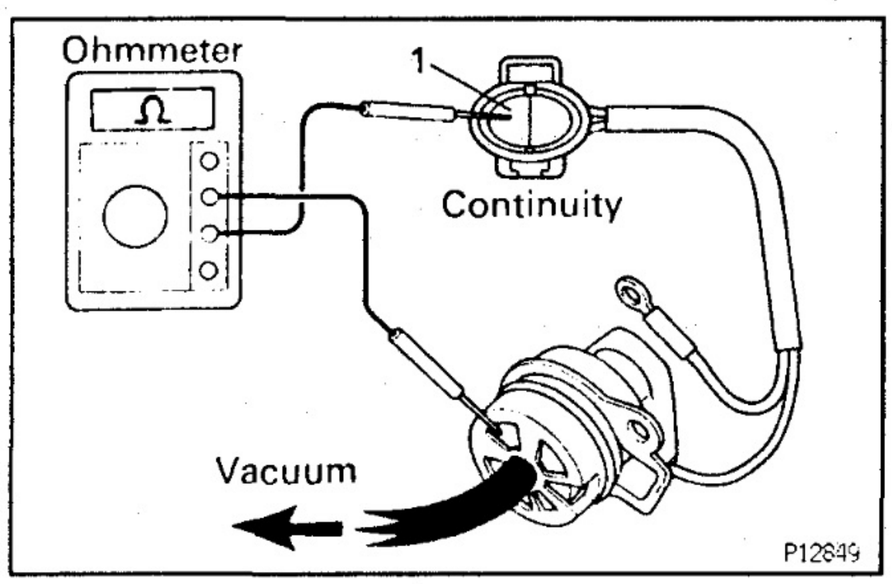

2. INSPECT SWITCH OPERATION

(a) Apply a vacuum of 34.7 ± 5.3 kPa (260 ± 40 mmHg, 10.24 ± 1.57 in.Hg) or more to the vacuum switch port.

(b) Using an ohmmeter, check that there is continuity between terminal 1 and the switch body.
If operation is not as specified, replace the fuel heater and vacuum switch assembly.

INJECTION NOZZLE

COMPONENTS FOR REMOVAL AND INSTALLATION

EG33W-01

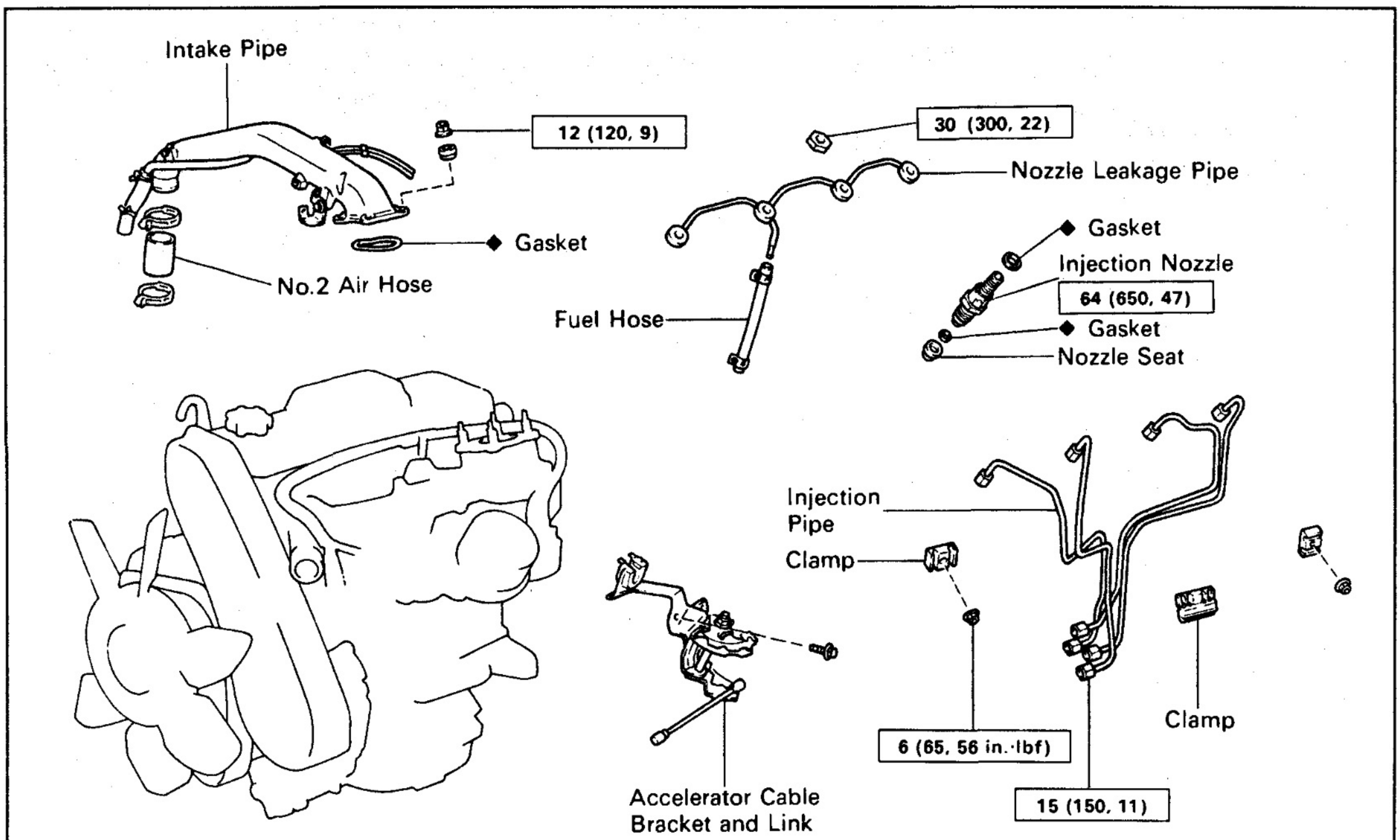

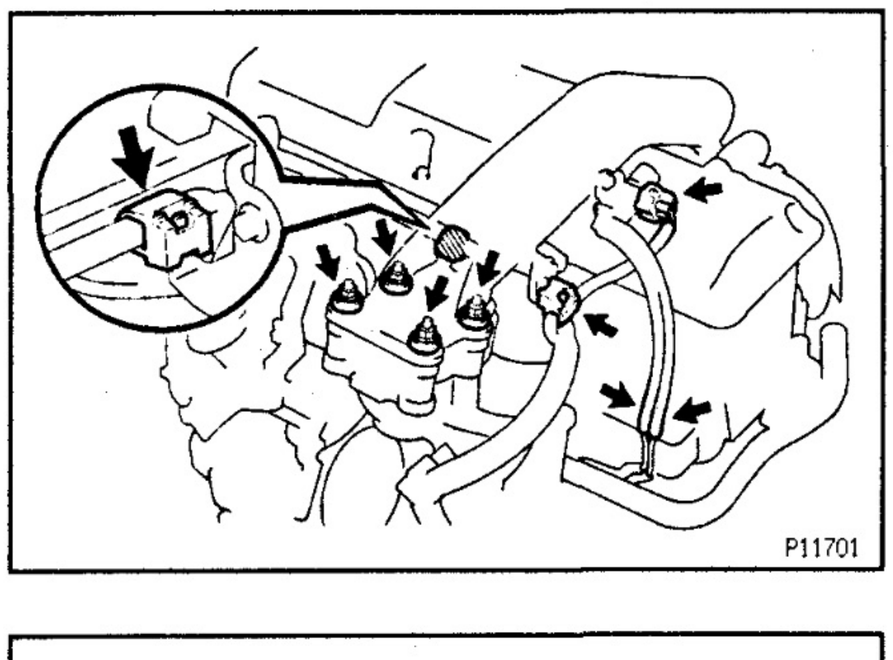

EG33X-01

INJECTION NOZZLES REMOVAL

1. REMOVE INTAKE PIPE

(a) Disconnect the VSV connector and 2 vacuum hoses.

(b) Disconnect the 2 wire harness clamps.

(c) Remove the 4 nuts and seal washers.

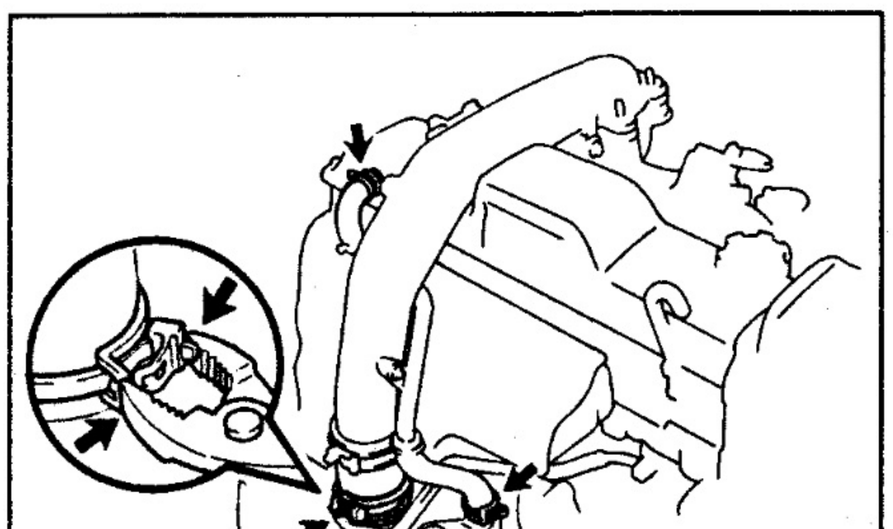

(d) Disconnect the 2 PCV hoses.

(e) Use pliers to pinch the ends of the clamp together until the lock plate engages the catch.
Make sure the lock plate and catch are engaged securely.

(f) Remove the intake pipe and gasket.

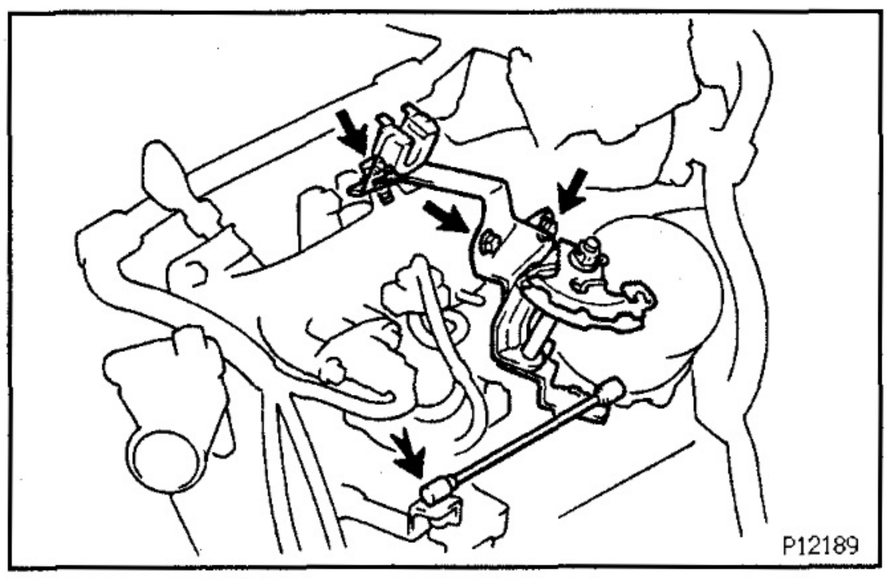

2. REMOVE ACCELERATOR CABLE BRACKET AND LINK

(a) Disconnect the accelerator link from the injection pump.

(b) Remove the 3 bolts and accelerator cable bracket and link.

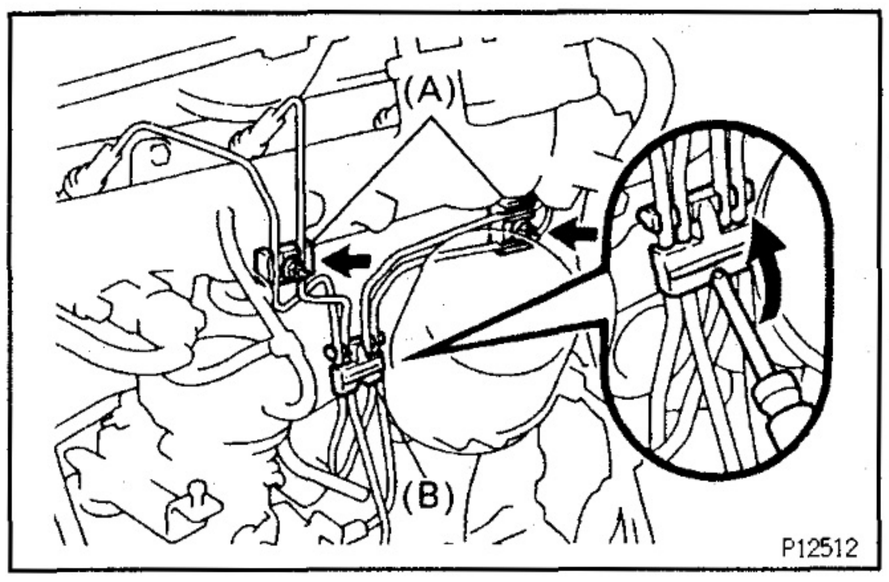

3. REMOVE INJECTION PIPES

(a) Remove the 2 nuts holding the clamps (A) to the intake manifold.

(b) Using a screwdriver, pry out the clamp (B).

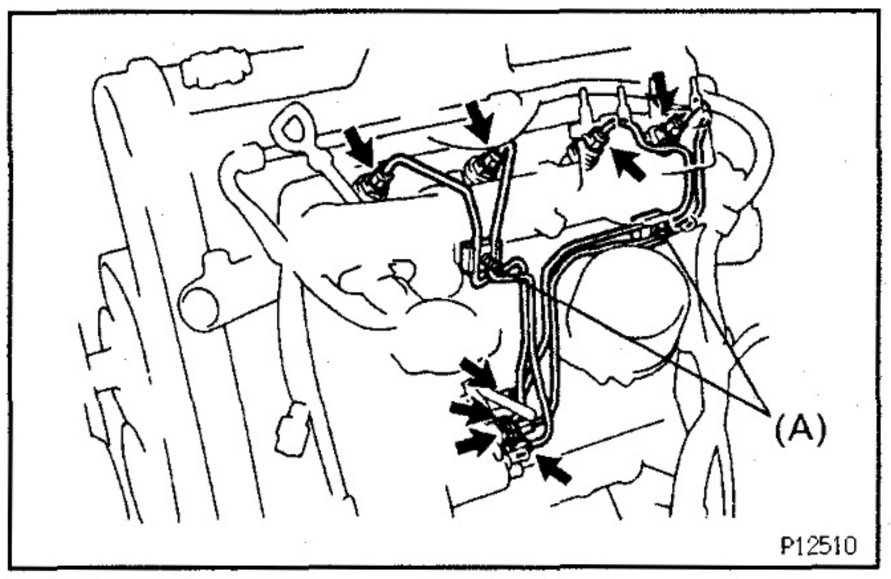

(c) Loosen the 8 union nuts of the injection pipes.

(d) Remove the 4 injection pipes and 2 clamps (A).

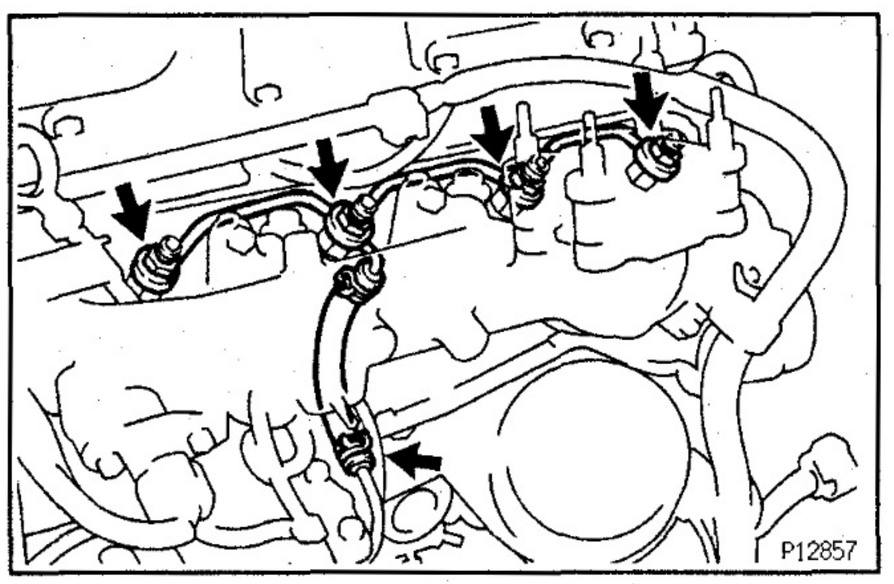

4. REMOVE NOZZLE LEAKAGE PIPE

(a) Disconnect the fuel hose from the return pipe.

(b) Remove the 4 nuts, leakage pipe and 4 gaskets.

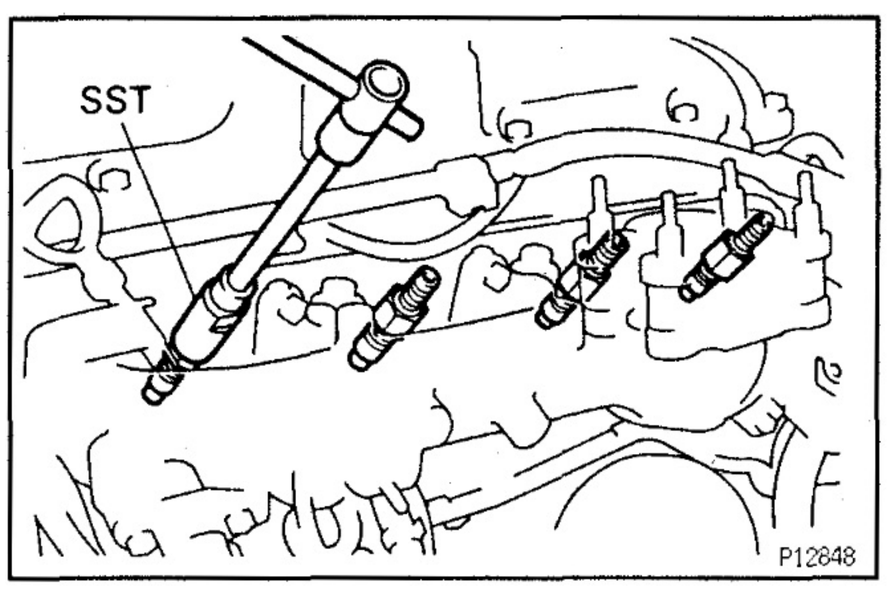

5. REMOVE INJECTION NOZZLES

Using SST, remove the 4 injection nozzles, gaskets and seats.

SST 09268–64010 (09268–64020)

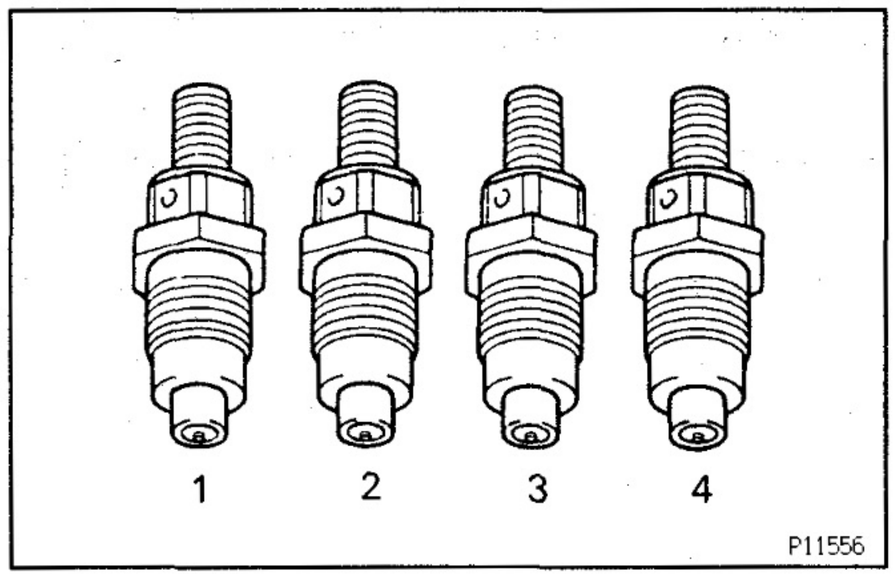

HINT: Arrange the injection nozzles in correct order.

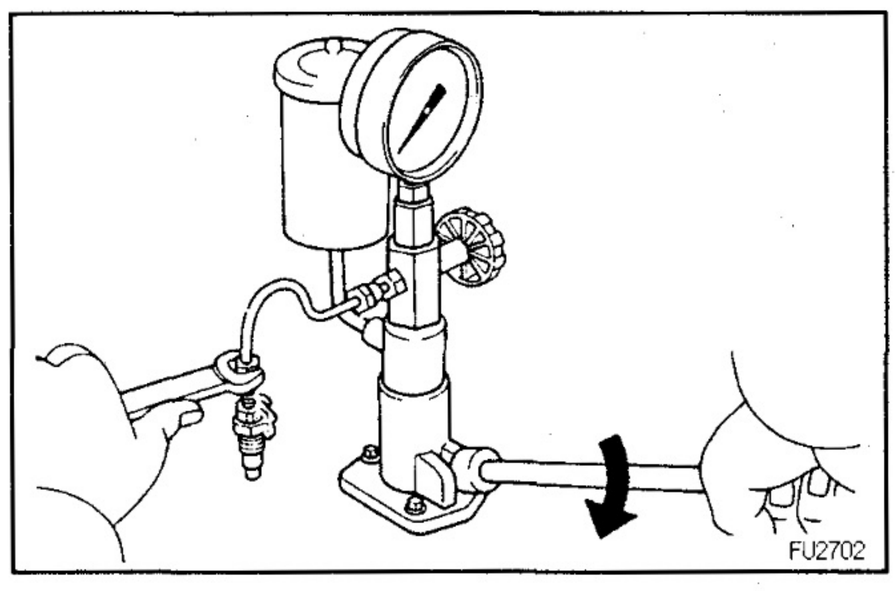

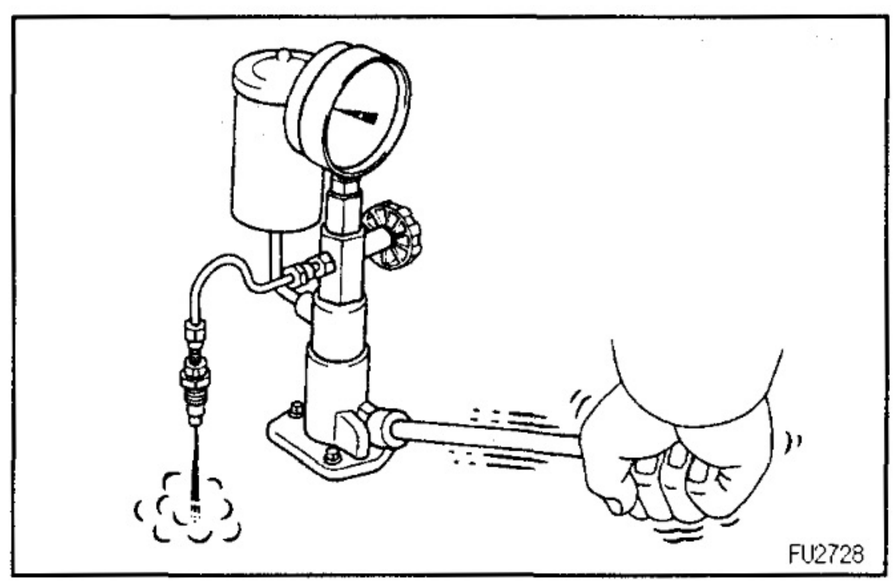

EG33Y–01

INJECTION NOZZLES TEST

1. INJECTION PRESSURE TEST

(a) Install the injection nozzle to the injection nozzle hand tester and bleed air from the union nut.
CAUTION: Do not place your finger over the nozzle injection hole.

(b) Pump the tester handle a few times as fast as possible to discharge the carbon from the injection hole.

(c) Pump the tester handle slowly and observe the pressure gauge.

(d) Read the pressure gauge just as the injection pressure begins to drop.

Opening pressure:

New nozzle

14,808 – 15,593 kPa
(151 – 159 kgf/cm²)
(2,148 – 2,261 psi)

Reused nozzle

14,710 – 15,593 kPa
(150 – 159 kgf/cm²)
(2,133 – 2,261 psi)

HINT: Proper nozzle operation can be determined by a swishing sound.

If the opening pressure is not as specified, disassemble the nozzle holder and change the adjusting shim on the top of the pressure spring. (See page EG–156).

Adjusted opening pressure:
14,710 – 15,593 kPa
(150 – 159 kgf/cm²)
(2,133 – 2,261 psi)

Adjusting shim thickness		mm (in.)
0.900 (0.0354)	1.275 (0.0502)	1.650 (0.0650)
0.925 (0.0364)	1.300 (0.0512)	1.675 (0.0659)
0.950 (0.0374)	1.325 (0.0522)	1.700 (0.0669)
0.975 (0.0384)	1.350 (0.0531)	1.725 (0.0679)
1.000 (0.0394)	1.375 (0.0541)	1.750 (0.0689)
1.025 (0.0404)	1.400 (0.0551)	1.775 (0.0699)
1.050 (0.0413)	1.425 (0.0561)	1.800 (0.0709)
1.075 (0.0423)	1.450 (0.0571)	1.825 (0.0719)
1.100 (0.0433)	1.475 (0.0581)	1.850 (0.0728)
1.125 (0.0443)	1.500 (0.0591)	1.875 (0.0738)
1.150 (0.0453)	1.525 (0.0600)	1.900 (0.0748)
1.175 (0.0463)	1.550 (0.0610)	1.925 (0.0758)
1.200 (0.0472)	1.575 (0.0620)	1.950 (0.0768)
1.225 (0.0482)	1.600 (0.0630)	
1.250 (0.0492)	1.625 (0.0640)	

V03745

HINT:

- Varying the adjusting shim thickness by 0.025 mm (0.0010 in.) changes the injection pressure by about 471 kPa (4.8 kgf/cm², 68 psi) .
- Only one adjusting shim should be used.

(e) There should be no dripping after injection.

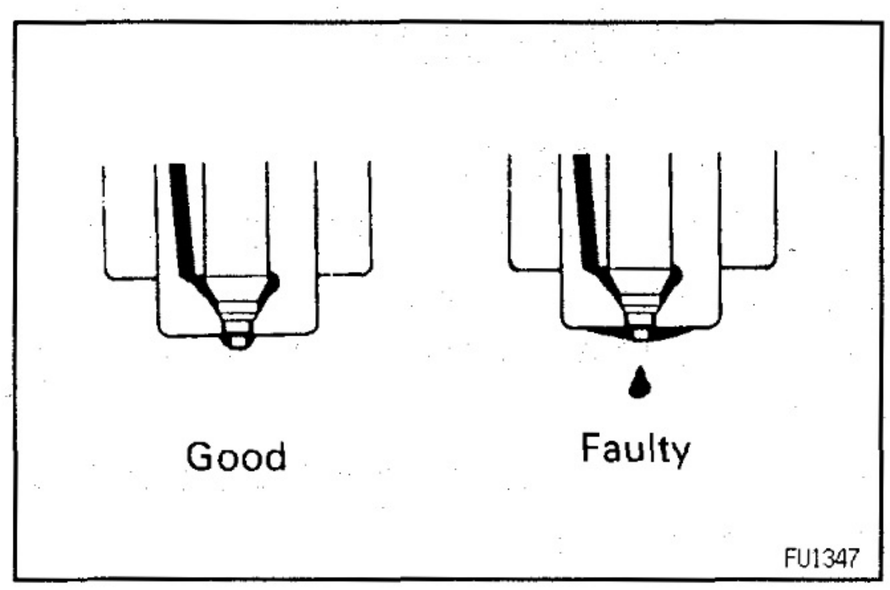

2. LEAKAGE TEST

While maintaining pressure at about 981 — 1,961 kPa (10 — 20 kgf/cm², 142 — 284 psi) below opening pressure (adjust by tester handle), check that there is no dripping for 10 seconds from the injection hole or around the retaining nut.

If the nozzle drips within 10 seconds, replace or clean and overhaul the nozzle assembly.

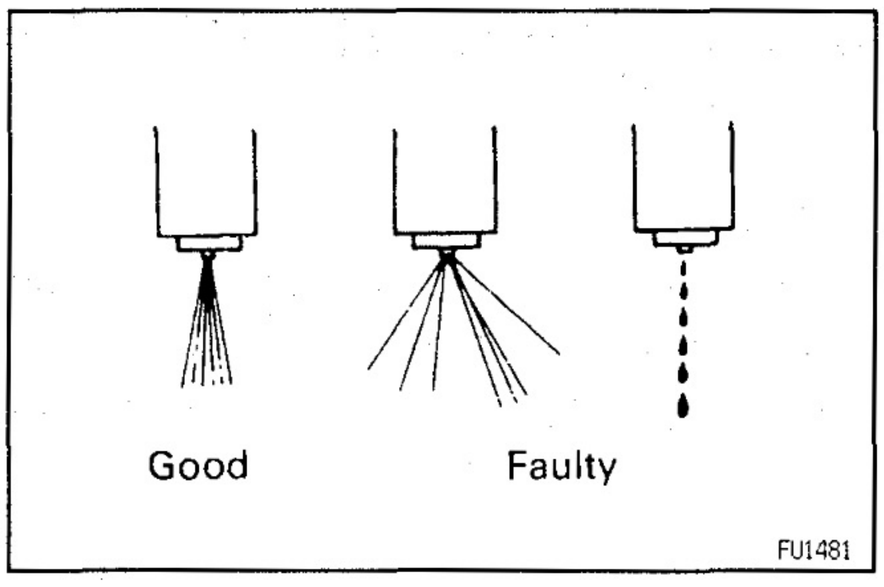

3. SPRAY PATTERN TEST

(a) The injection nozzle should shudder at a certain pumping speed between 15 — 60 times (old nozzle) or 30 — 60 times (new nozzle) per minute.

(b) Check the spray pattern during shuddering.
If the spray pattern is not correct during shuddering, the nozzle must be replaced or cleaned.

COMPONENTS FOR DISASSEMBLY AND ASSEMBLY

EG33Z-01

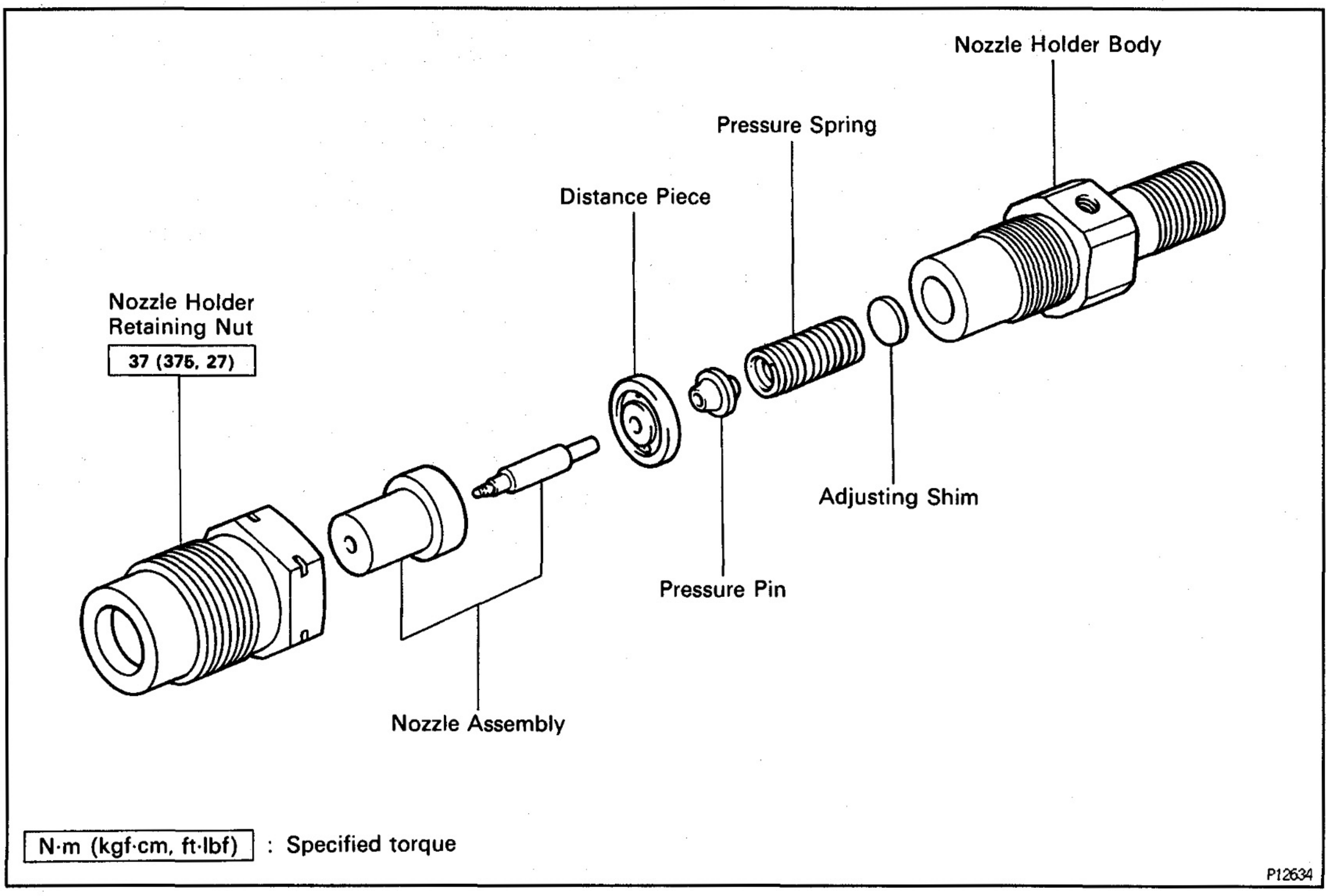

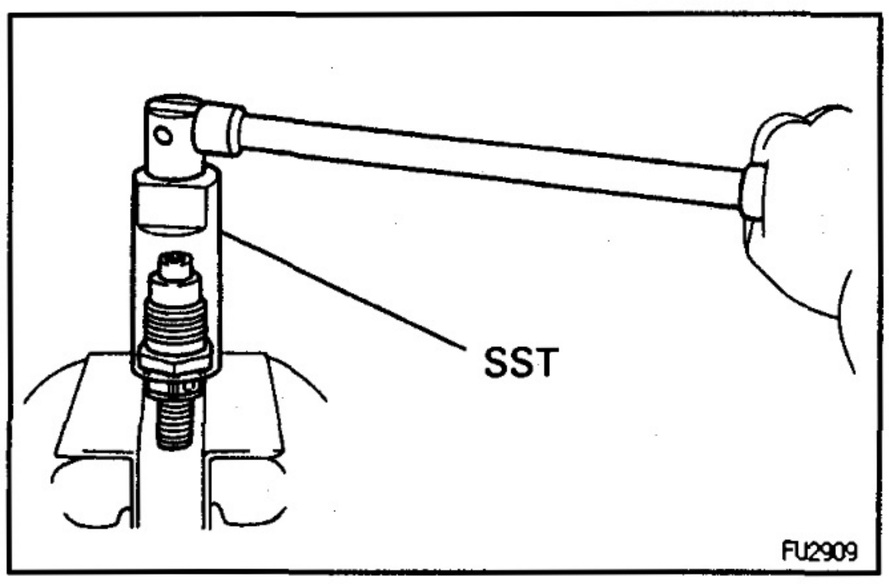

EG340-01

INJECTION NOZZLE DISASSEMBLY

DISASSEMBLE INJECTION NOZZLES

(a) Using SST, remove the nozzle holder retaining nut.
SST 09268–64010 (09268–64020)
NOTICE: When disassembling the nozzle, be careful not to drop the inner parts.

(b) Remove the pressure spring, shim, pressure pin, distance piece and the nozzle assembly.

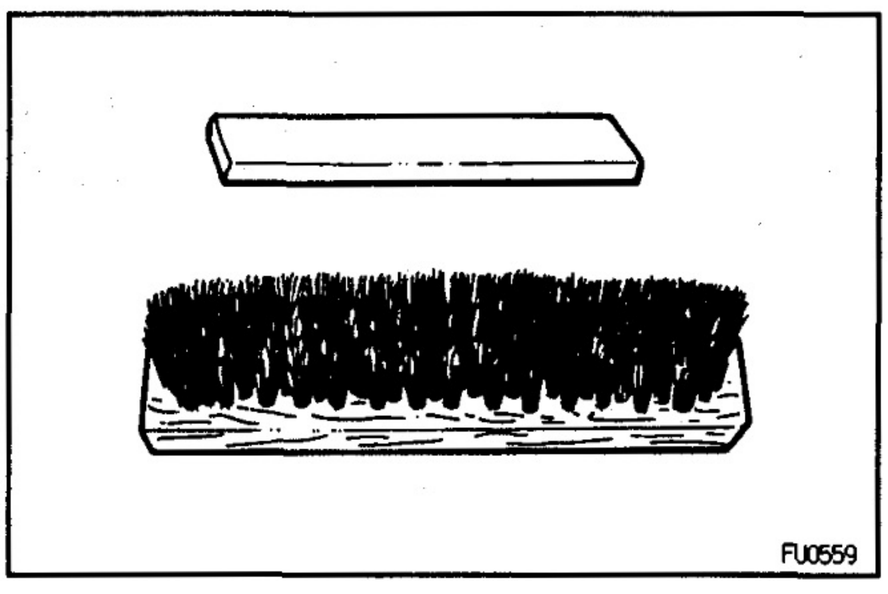

EG341-01

INJECTION NOZZLES CLEANING AND INSPECTION

1. NOZZLE CLEANING

(a) To wash the nozzles, use a wooden stick and brass brush. Wash them in clean diesel fuel.
HINT: Do not touch the nozzle mating surfaces with your fingers.

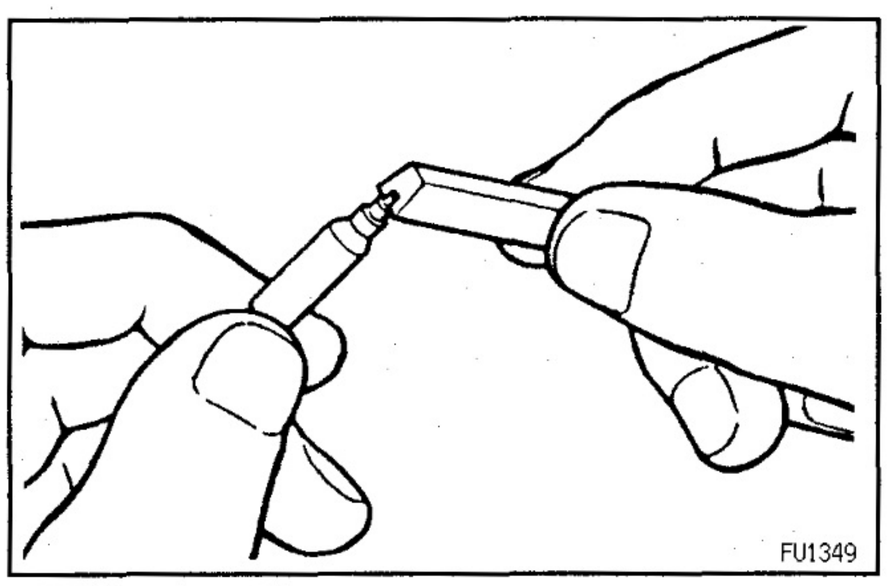

(b) Using a wooden stick, remove the carbon adhering to the nozzle needle tip.

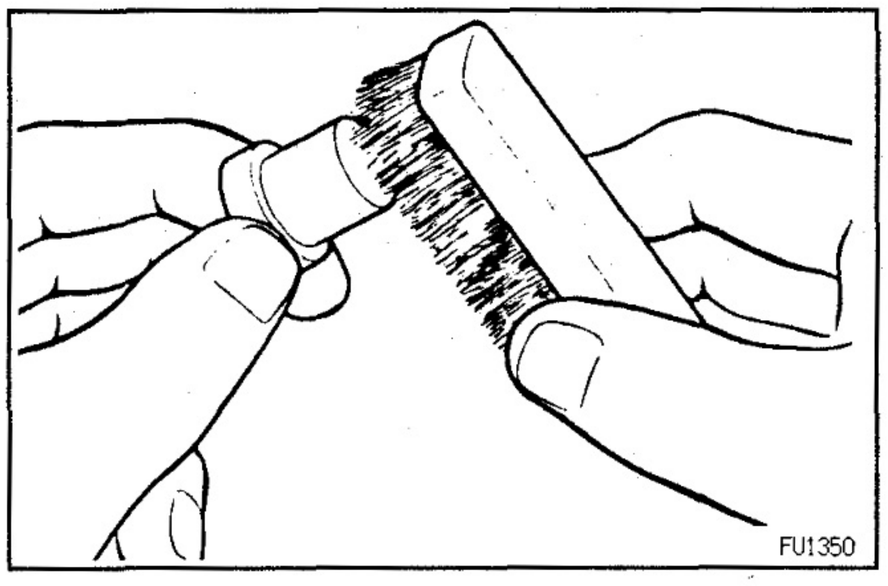

(c) Using a brass brush, remove the carbon from the exterior of the nozzle body (except lapped surface).

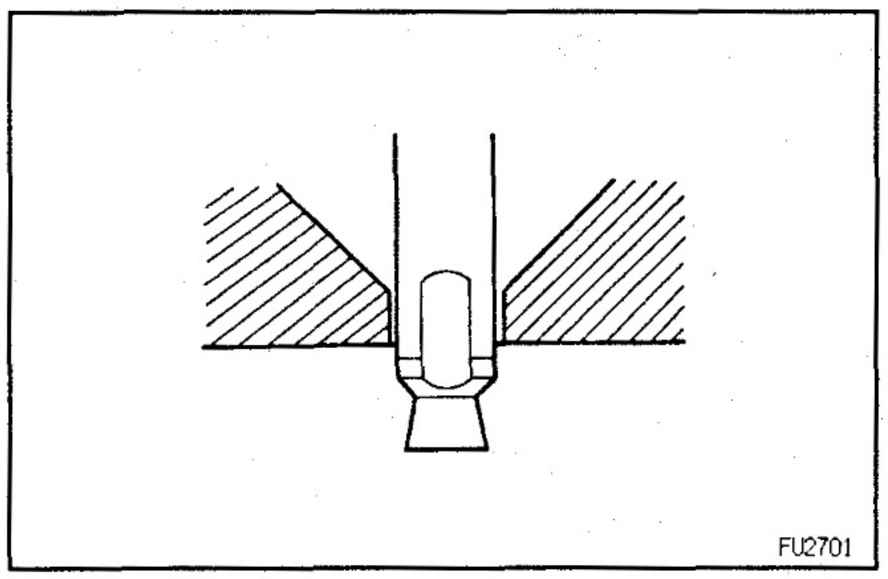

(d) Check the seat of the nozzle body for burns or corrosion.
(e) Check the nozzle needle tip for damage or corrosion.
If any of these conditions are present, replace the nozzle assembly.

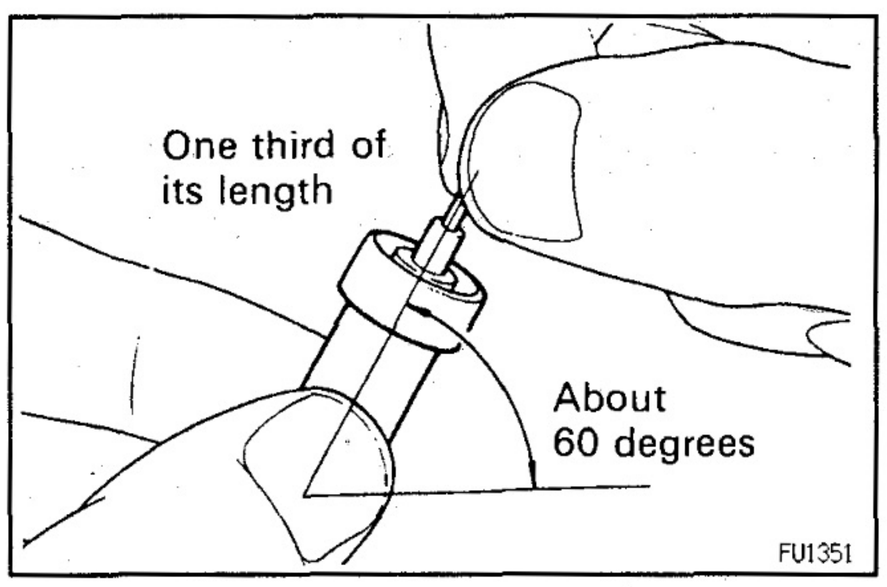

2. INSPECT NOZZLE ASSEMBLY

(a) Wash the nozzle in clean diesel fuel.
HINT: Do not touch the nozzle mating surfaces with your fingers.
(b) Tilt the nozzle body about 60 degrees and pull the needle out about one third of its length.

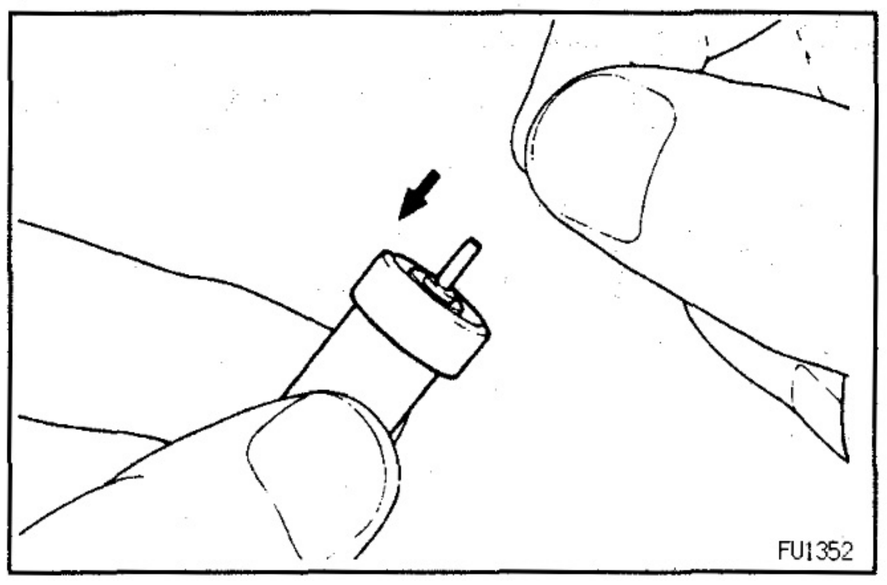

(c) When released, the needle should stick down into the body vent smoothly by its own weight.
(d) Repeat this test, rotating the needle slightly each time.
If the needle does not sink freely, replace the nozzle assembly.

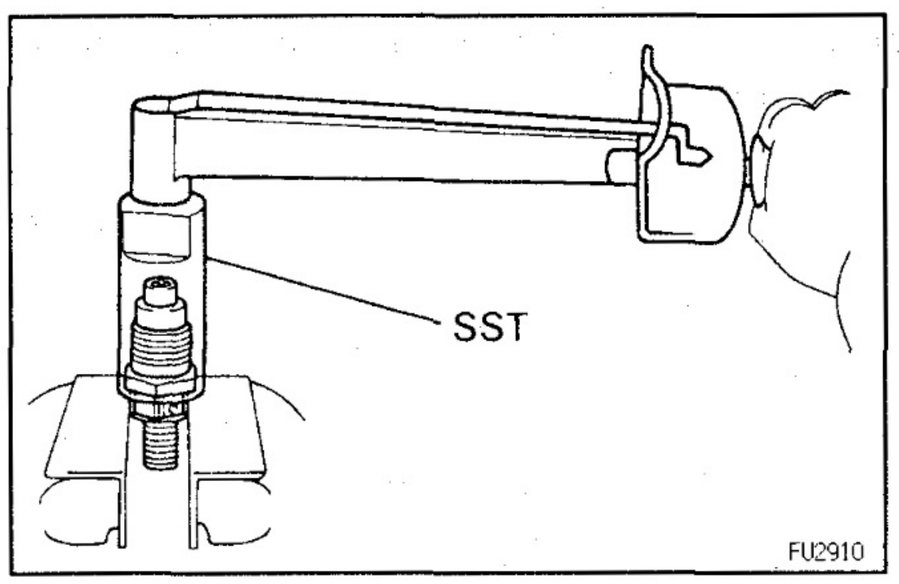

EG342-01

INJECTION NOZZLES ASSEMBLY

(See Components for Disassembly and Assembly)

1. ASSEMBLE INJECTION NOZZLE HOLDERS

(a) Assemble the nozzle holder retaining nut, the nozzle assembly, distance piece, pressure pin, pressure spring, adjusting shim and nozzle holder body, and finger tighten the retaining nut.

(b) Using SST, tighten the retaining nut.
SST 09268–64010 (09268–64020)
Torque: 37 N·m (375 kgf·cm, 27 ft·lbf)
NOTICE: Over torquing could cause nozzle deformation and needle adhesion or other defects.

2. PERFORM PRESSURE AND SPRAY PATTERN TEST
(See pages EG–154, 155)

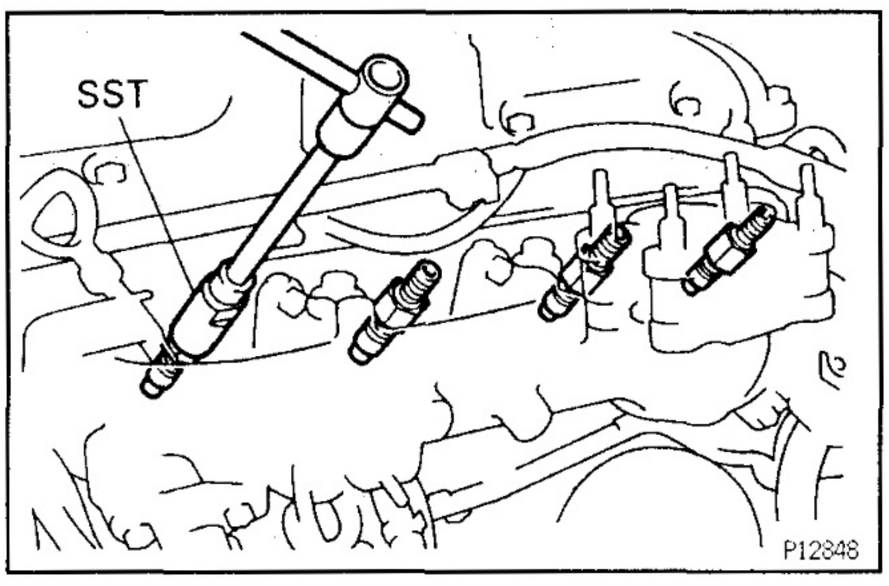

EG343-01

INJECTION NOZZLES INSTALLATION

(See Components for Removal and Installation)

1. INSTALL INJECTION NOZZLES

(a) Place the 4 nozzle seats and new gaskets into the injection nozzle holes of the cylinder head.

(b) Using SST, install the injection nozzles.
SST 09268–64010 (09268–64020)
Torque: 64 N·m (650 kgf·cm, 47 ft·lbf)
NOTICE:

- **Over torquing could cause nozzle deformation and needle adhesion or other defects.**
- **When installing the injection nozzle, never torque the nozzle holder body. Torque the retaining nut section.**

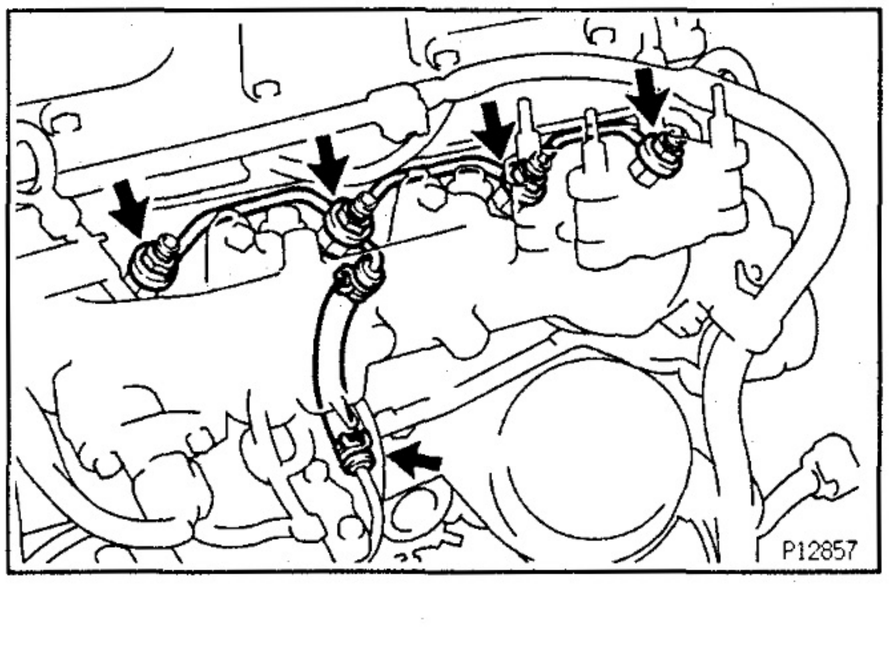

2. INSTALL NOZZLE LEAKAGE PIPE

(a) Install 4 new gaskets and the leakage pipe with the nuts.
Torque: 30 N·m (300 kgf·cm, 22 ft·lbf)

(b) Connect the fuel hose to the return pipe.

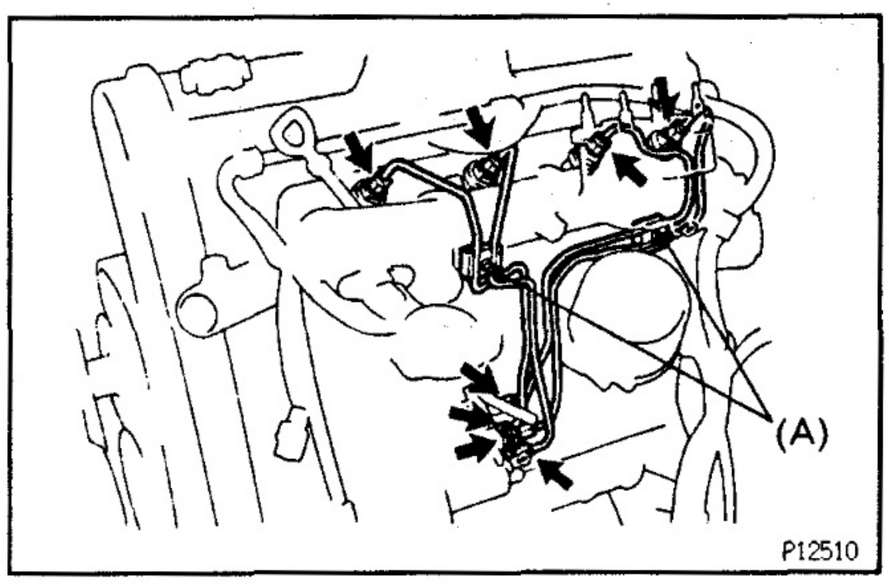

3. INSTALL INJECTION PIPES

(a) Temporarily install the 4 injection pipes and 2 clamps (A).

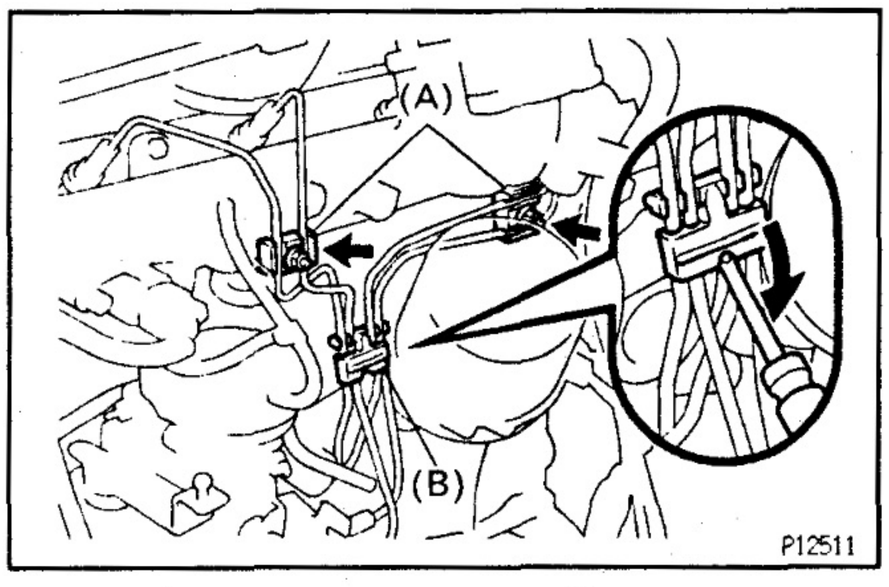

(b) Install the 2 nuts holding the clamps (A) to the intake manifold.
Torque: 6 N·m (65 kgf·cm, 56 in.·lbf)

(c) Using a screwdriver, attach the clamp (B).

(d) Tighten the 8 union nuts.
Torque: 15 N·m (150 kgf·cm, 11 ft·lbf)

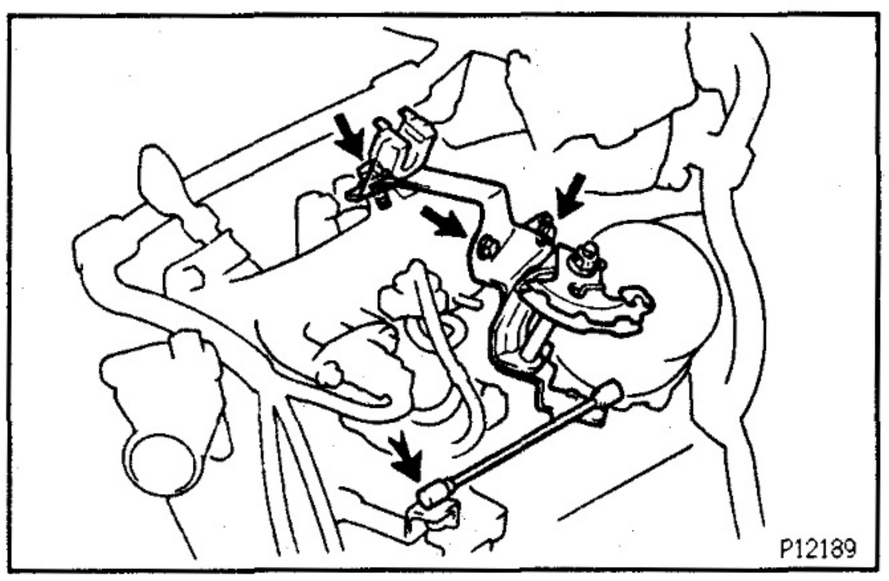

4. INSTALL ACCELERATOR CABLE BRACKET AND LINK

(a) Install the accelerator cable bracket and link with the 3 bolts.

(b) Connect the accelerator link to the injection pump.

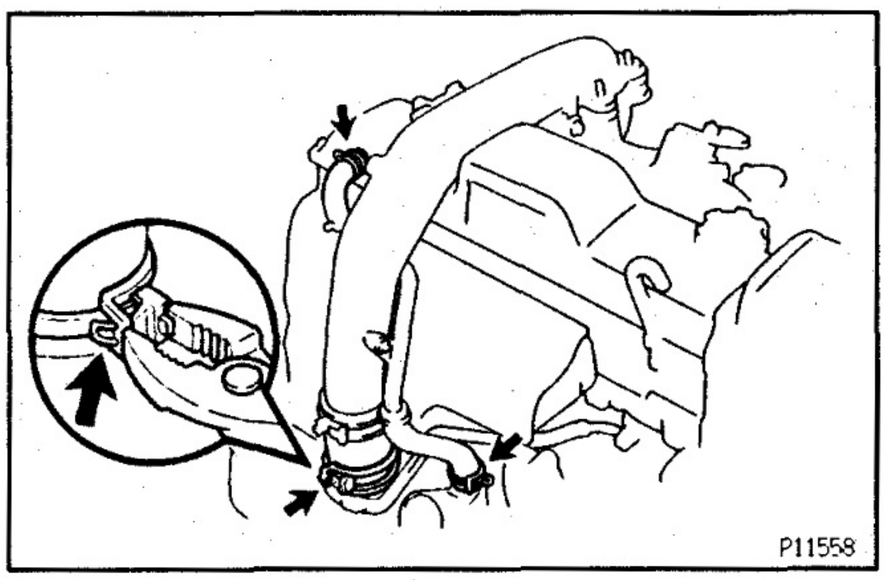

5. INSTALL INTAKE PIPE

(a) Place a new gasket on the intake manifold.

(b) Connect the air hose and install the intake pipe.

(c) Press the clamp lock together with pliers and press down the tip of the lock plate. Carefully let the lock spread apart.
Take care not to let the pliers slip.

(d) Connect the 2 PCV hoses.

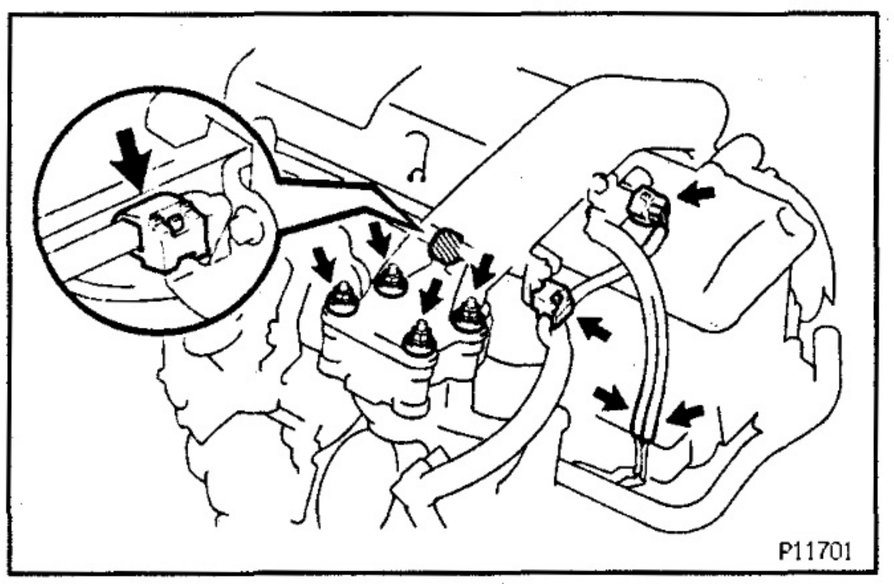

(e) Install the 4 seal washers and nuts.
Torque: 12 N·m (120 kgf·cm, 9 ft·lbf)

(f) Connect the 2 wire harness clamps.

(g) Connect the VSV connector and 2 vacuum hoses.

6. START ENGINE AND CHECK FOR FUEL LEAKAGE

INJECTION PUMP
COMPONENTS FOR REMOVAL AND INSTALLATION

EG344-01

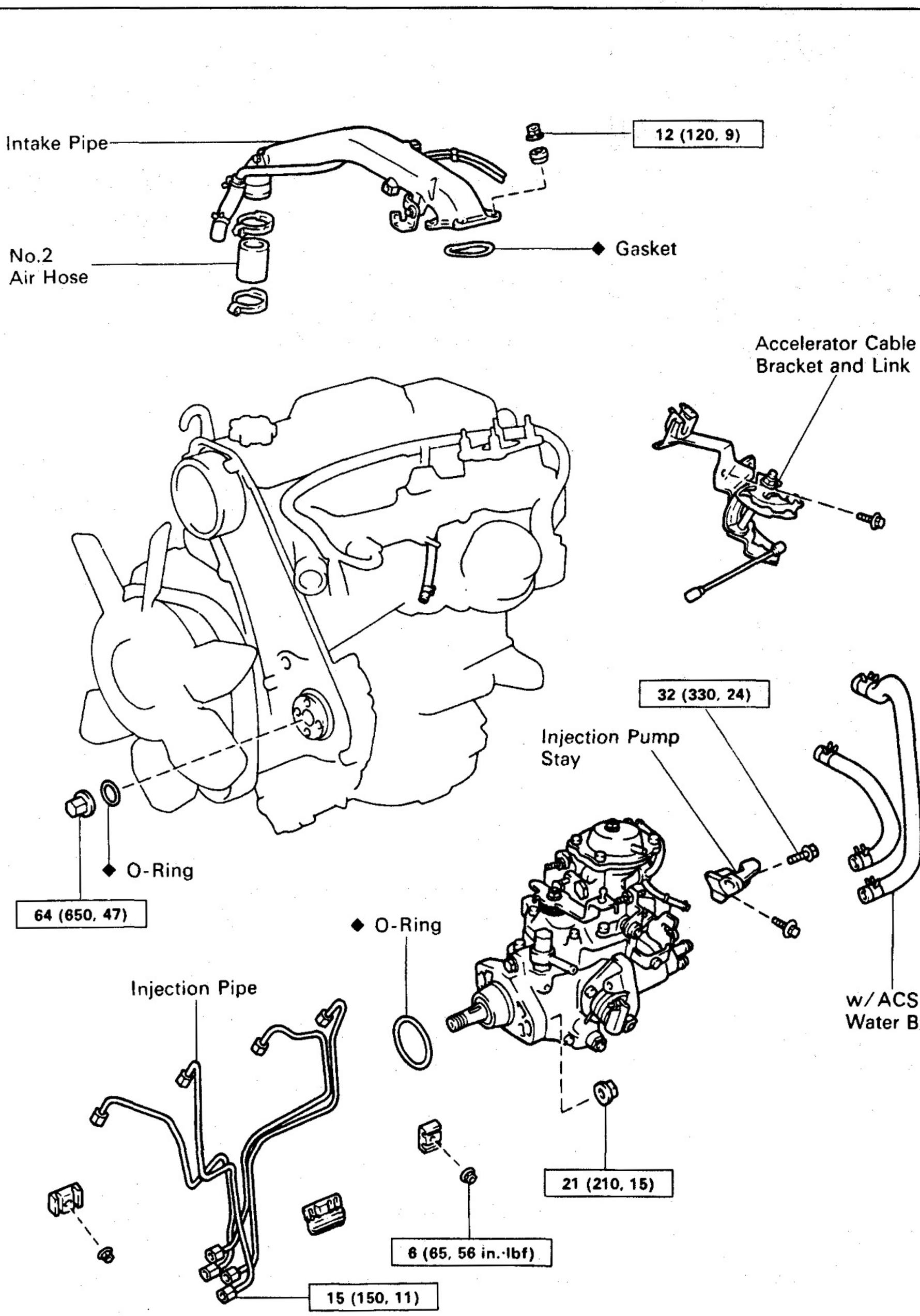

N·m (kgf·cm, ft·lbf) : Specified torque

◆ Non-reusable part

P12751

50348-01

INJECTION PUMP REMOVAL

(See Components for Removal and Installation)

1. w/ ACSD:
DRAIN ENGINE COOLANT
(See page EG–233)

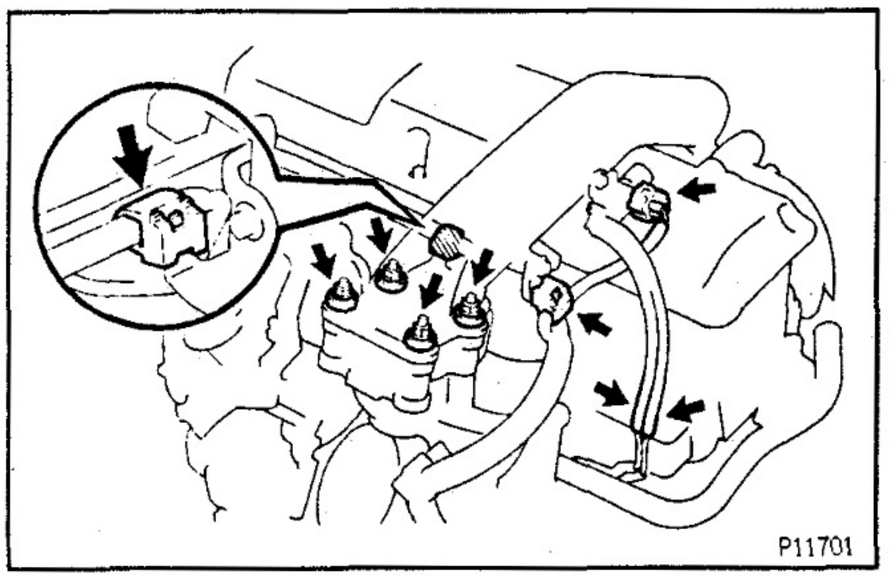

2. REMOVE INTAKE PIPE

(a) Disconnect the VSV connector and 2 vacuum hoses.
(b) Disconnect the 2 wire harness clamps.
(c) Remove the 4 nuts and seal washers.

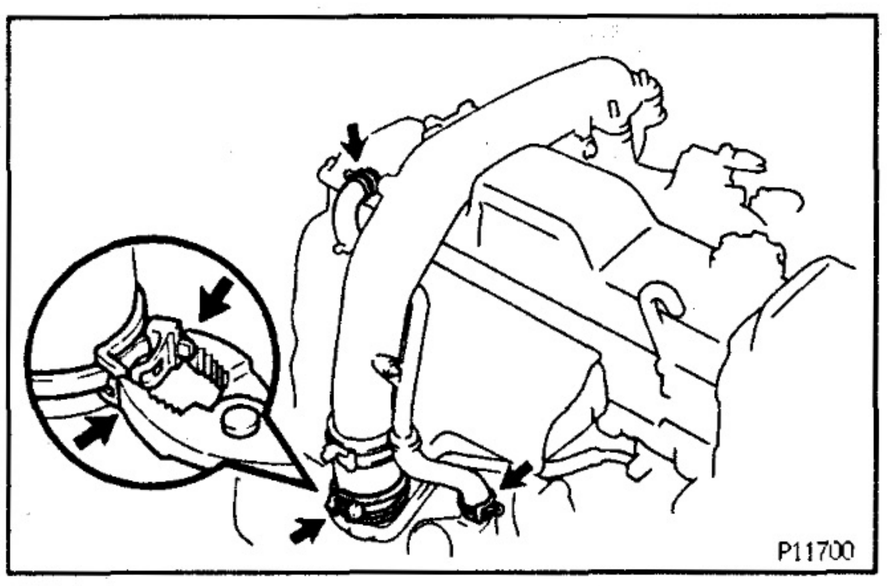

(d) Disconnect the 2 PCV hoses.
(e) Use pliers to pinch the ends of the clamp together until the lock plate engages the catch.
Make sure the lock plate and catch are engaged securely.
(f) Remove the intake pipe and gasket.

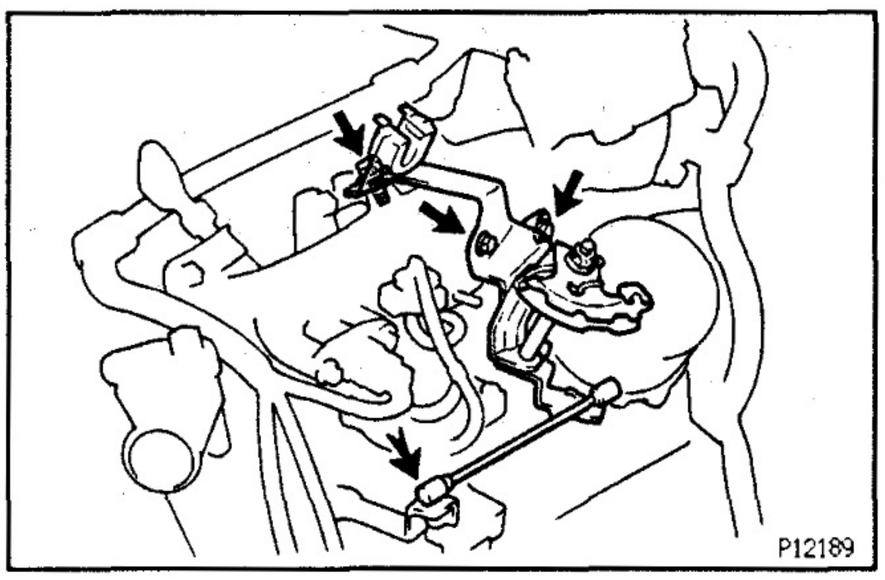

3. REMOVE ACCELERATOR CABLE BRACKET AND LINK

(a) Disconnect the accelerator link from the injection pump.
(b) Remove the 3 bolts and accelerator cable bracket and link.

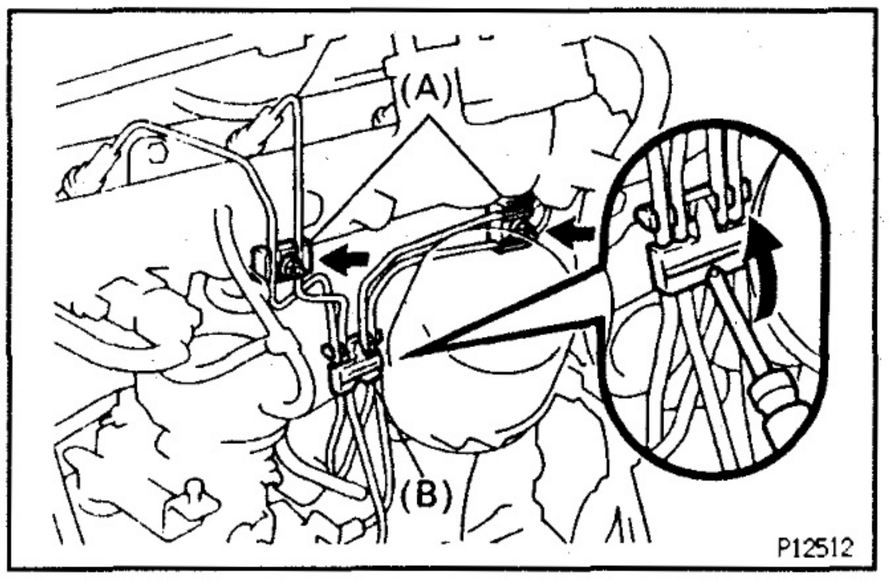

4. REMOVE INJECTION PIPES

(a) Remove the 2 nuts holding the clamps (A) to the intake manifold.
(b) Using a screwdriver, pry out the clamp (B).

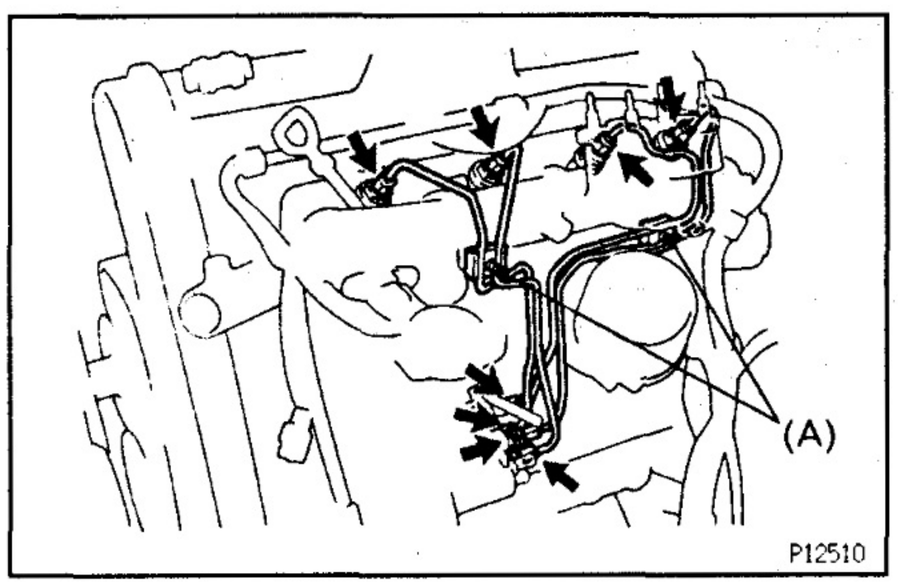

(c) Loosen the 8 union nuts of the injection pipes.
(d) Remove the 4 injection pipes and 2 clamps (A).

5. w/ A/C:
DISCONNECT A/C IDLE–UP VACUUM HOSE
6. REMOVE TIMING BELT
(See steps 1 to 6 on pages EG–32, 33)
7. REMOVE NO.2 CAMSHAFT TIMING PULLEY
(See step 7 on page EG–33)

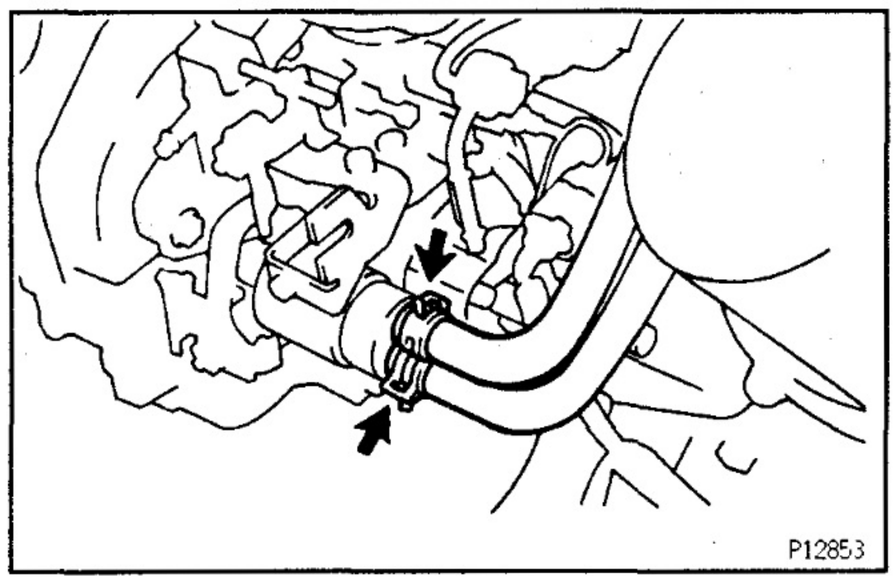

8. REMOVE INJECTION PUMP
(a) w/ ACSD:
Disconnect the 2 water bypass hoses from the thermo wax.

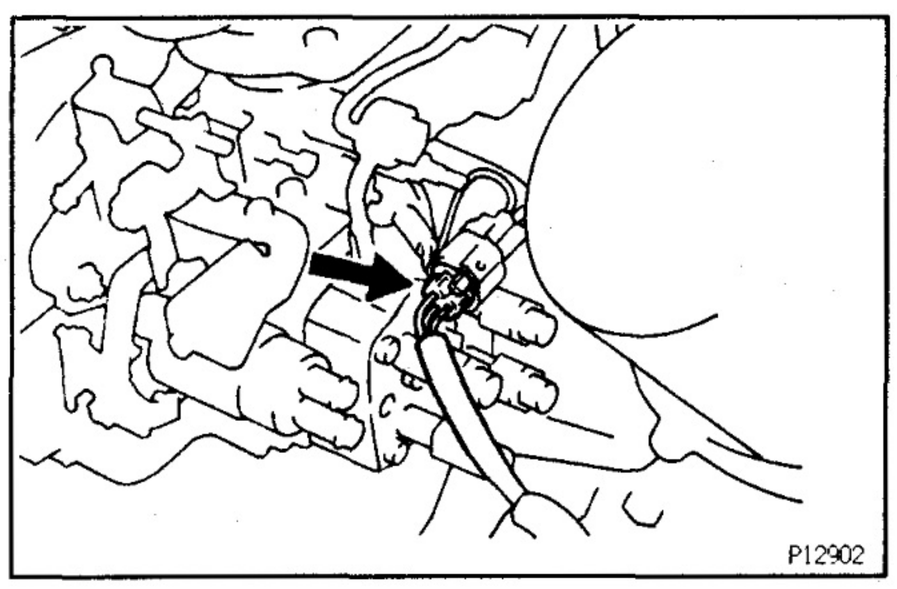

(b) Disconnect the injection pump connector.

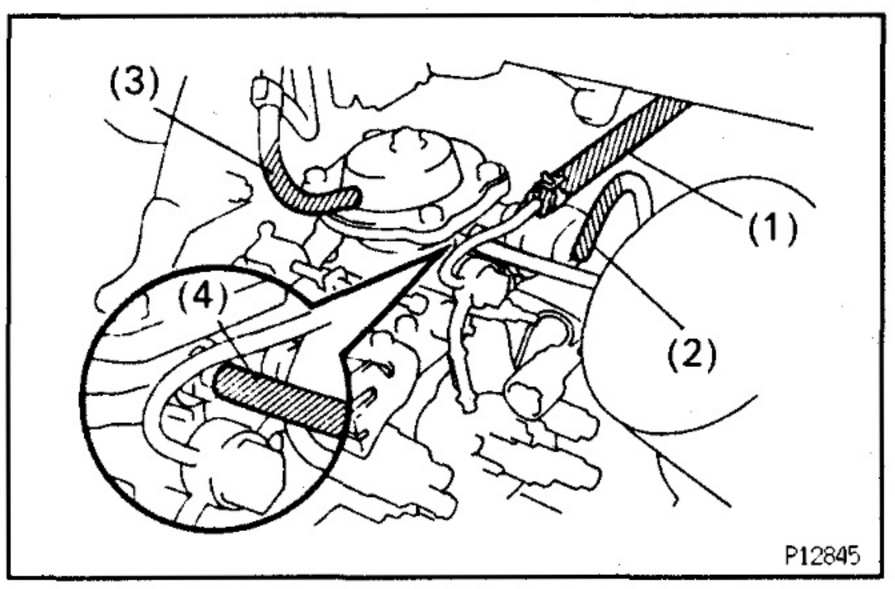

(c) Disconnect the following hoses:
(1) Fuel hose
(2) PCS vacuum hose
(3) Boost compensater hose
(4) w/ BACS:
BACS vacuum hose

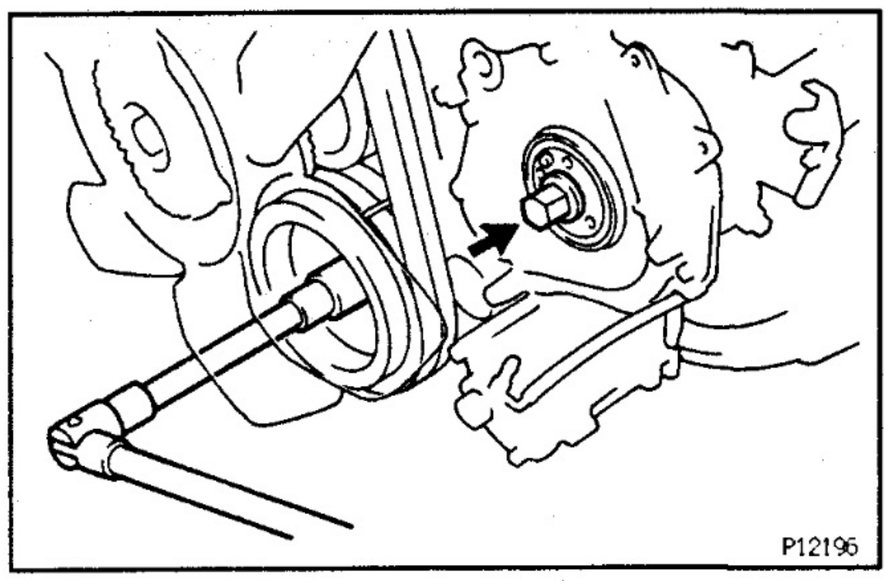

(d) Hold the crankshaft pulley, and remove the injection pump drive gear set nut.

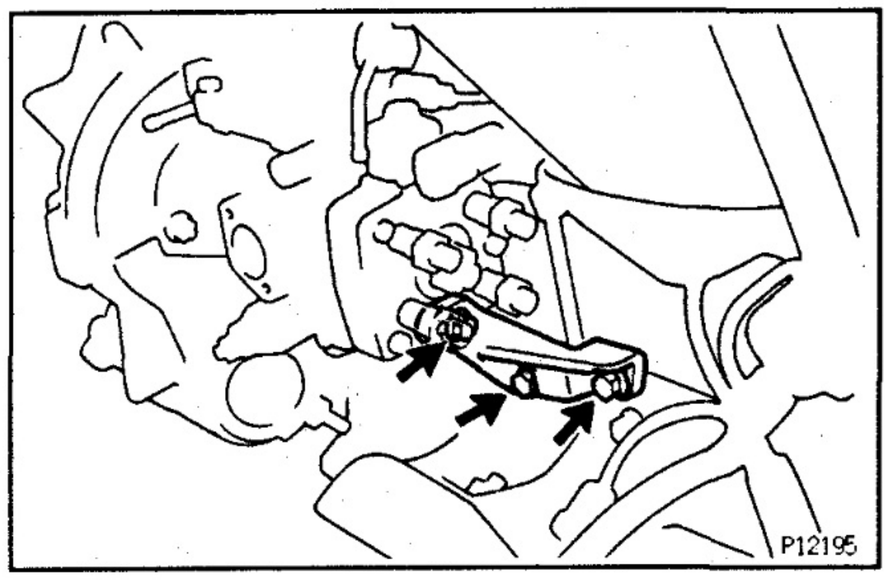

(e) Remove the 3 bolts and injection pump stay.

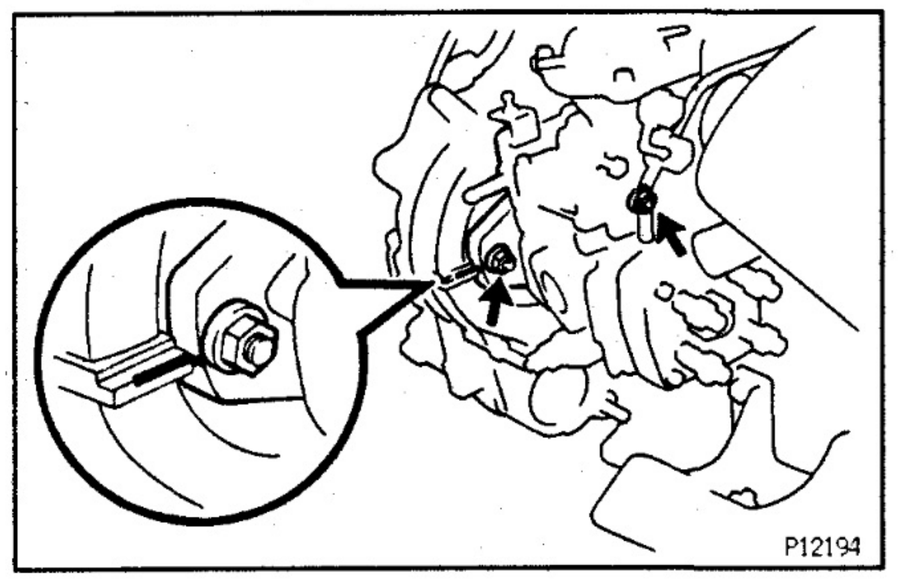

(f) Before removing the injection pump, check if the period lines are aligned.
If not, place new matchmarks for reinstallation.

(g) Remove the 2 nuts holding the injection pump to the timing gear case.

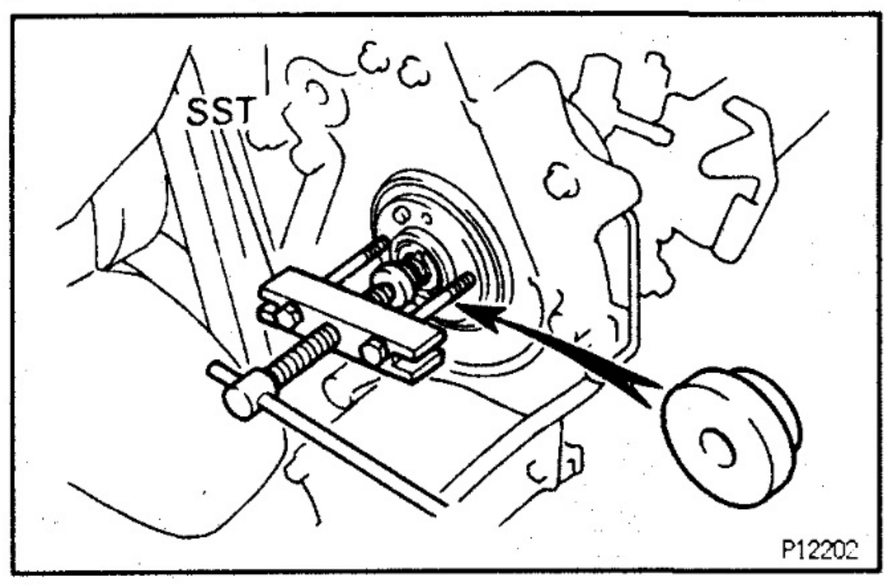

(h) Using SST, remove the injection pump.
SST 09213–60017 (09213–00020, 09213–00030, 09213–00060) and 09950–20017

NOTICE:

- **Tighten the 2 bolts more than 8 mm (0.31 in.).**
- **Set SST so that it is balanced.**
- **Do not hold or carry the injection pump by the adjusting lever.**
- **Do not put the injection pump at an angle more than 45° from the horizontal.**

(i) Remove the O–ring from the injection pump.

COMPONENTS FOR DISASSEMBLY AND ASSEMBLY

EG346-01

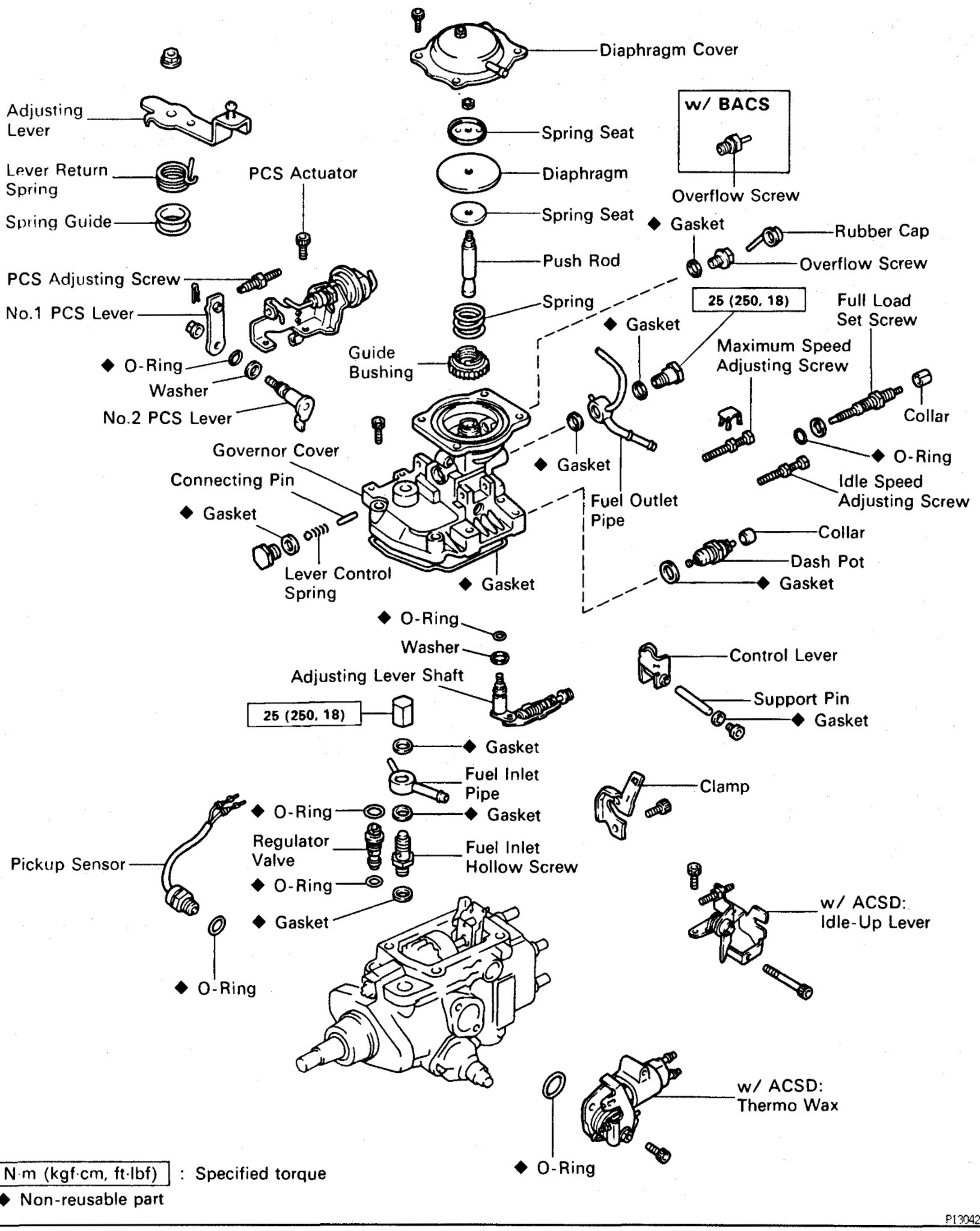

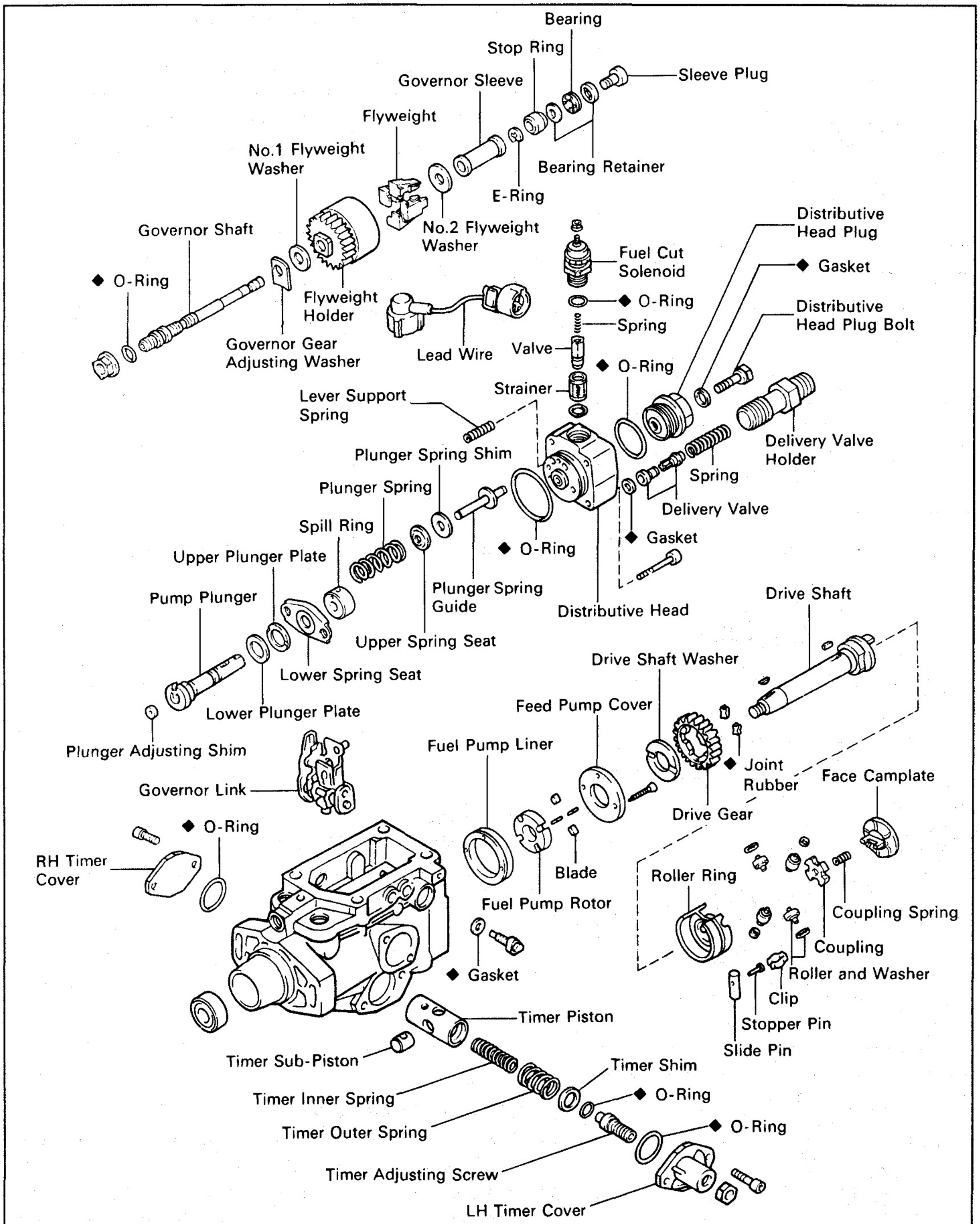
Bearing
Stop Ring
Governor Sleeve
Sleeve Plug
Flyweight
No.1 Flyweight Washer
Bearing Retainer
E-Ring
No.2 Flyweight Washer
Governor Shaft
◆ O-Ring
Flyweight Holder
Fuel Cut Solenoid
Distributive Head Plug
◆ Gasket
◆ O-Ring
Distributive Head Plug Bolt
Spring
Valve
Governor Gear Adjusting Washer
Lead Wire
◆ O-Ring
Strainer
Lever Support Spring
Delivery Valve Holder
Plunger Spring Shim
Spring
Plunger Spring
Delivery Valve
Spill Ring
◆ Gasket
◆ O-Ring
Upper Plunger Plate
Plunger Spring Guide
Distributive Head
Drive Shaft
Pump Plunger
Upper Spring Seat
Drive Shaft Washer
Lower Spring Seat
Feed Pump Cover
Lower Plunger Plate
Plunger Adjusting Shim
Fuel Pump Liner
◆ Joint Rubber
Face Camplate
Governor Link
Drive Gear
◆ O-Ring
RH Timer Cover
Blade
Roller Ring
Fuel Pump Rotor
Coupling Spring
Coupling
◆ Gasket
Roller and Washer
Clip
Timer Piston
Stopper Pin
Slide Pin
Timer Sub-Piston
Timer Shim
Timer Inner Spring
◆ O-Ring
Timer Outer Spring
◆ O-Ring
Timer Adjusting Screw
LH Timer Cover
◆ Non-reusable part
P12442

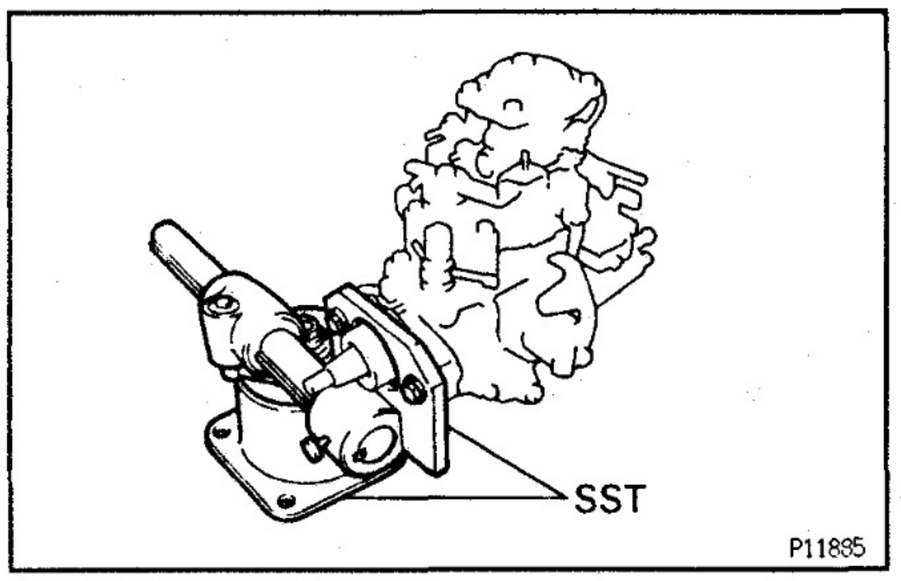

EG347-01

INJECTION PUMP DISASSEMBLY

(See Components for Disassembly and Assembly)

1. **MOUNT PUMP ASSEMBLY TO SST (STAND)**
   SST 09241–76022 and 09245–54010
2. **REMOVE SET KEY OF DRIVE PULLEY FROM DRIVE SHAFT**
3. **w/ A/C:**
   REMOVE IDLE–UP ACTUATOR

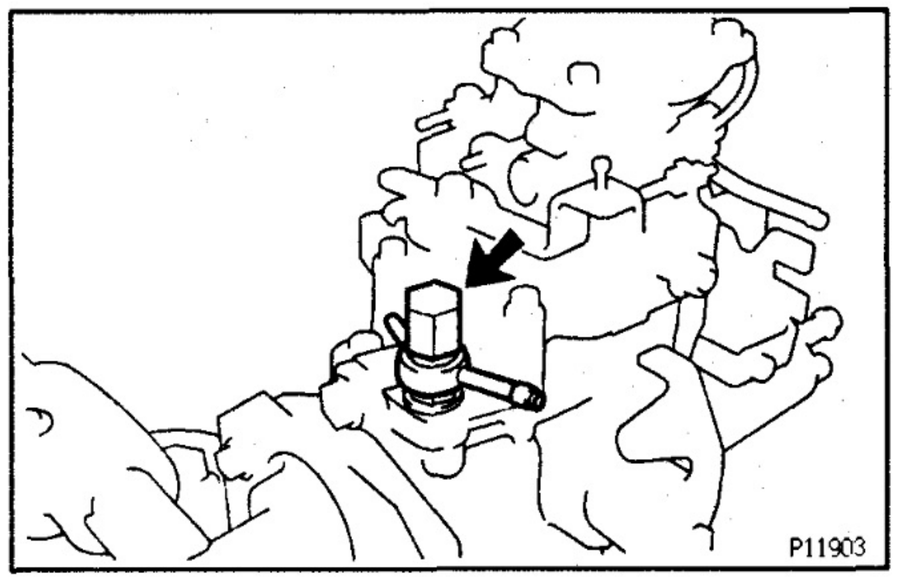

4. **REMOVE FUEL PIPES**

(a) Remove the cap nut, fuel inlet pipe and 2 gaskets.

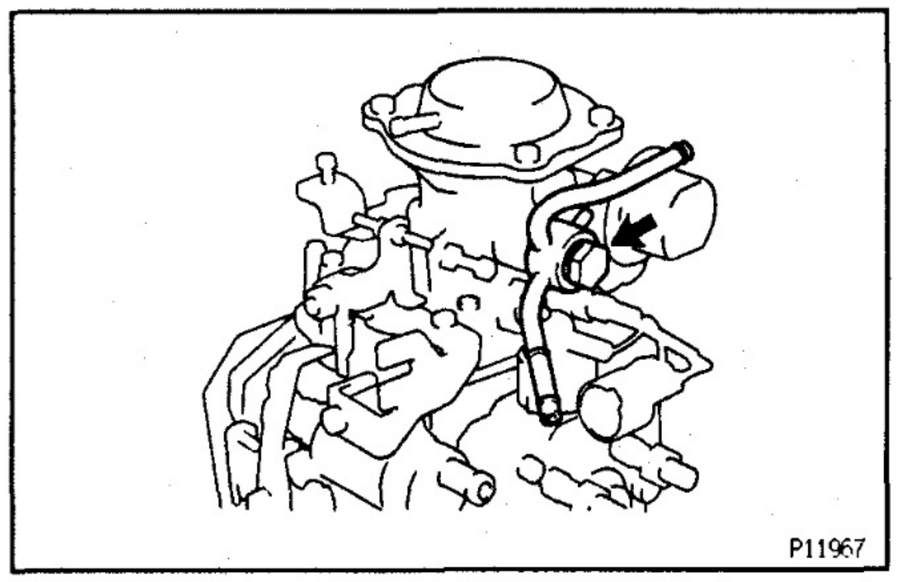

(b) Remove the union bolt, fuel outlet pipe and 2 gaskets.

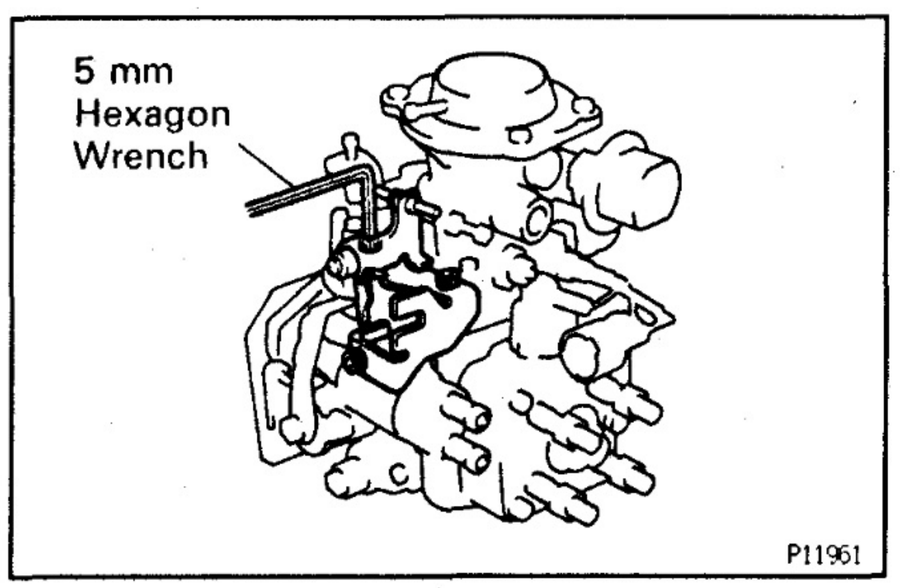

5. **w/ ACSD:**
   REMOVE IDLE–UP LEVER
   Using a 5 mm hexagon wrench, remove the 3 bolts and idle–up lever.

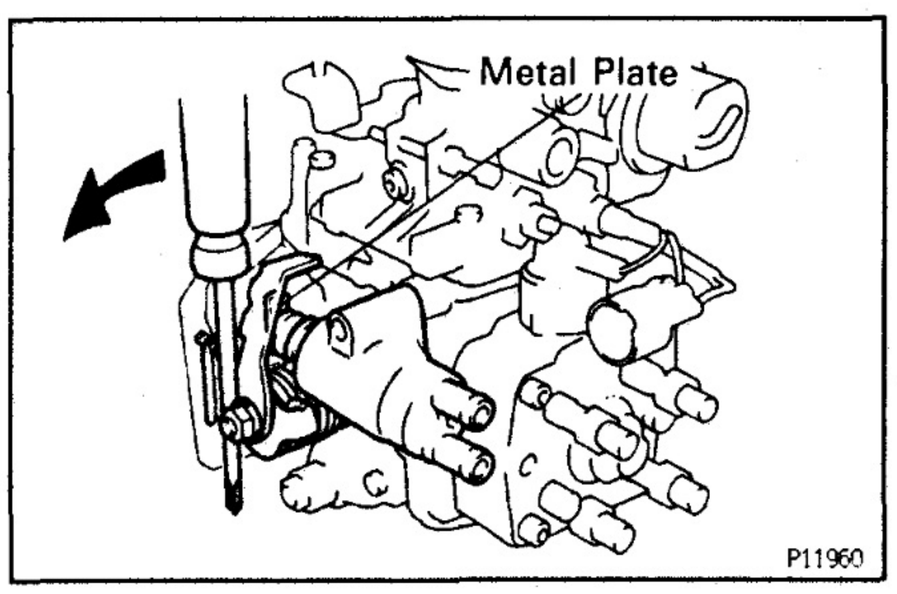

6. **w/ ACSD:**
   REMOVE THERMO WAX

(a) Using a screwdriver, turn the cold starting lever counterclockwise approx. 20°.

(b) Put a metal plate (thickness of 8.5 – 10 mm (0.33 – 0.39 in.)) between the cold starting lever and thermo wax plunger.

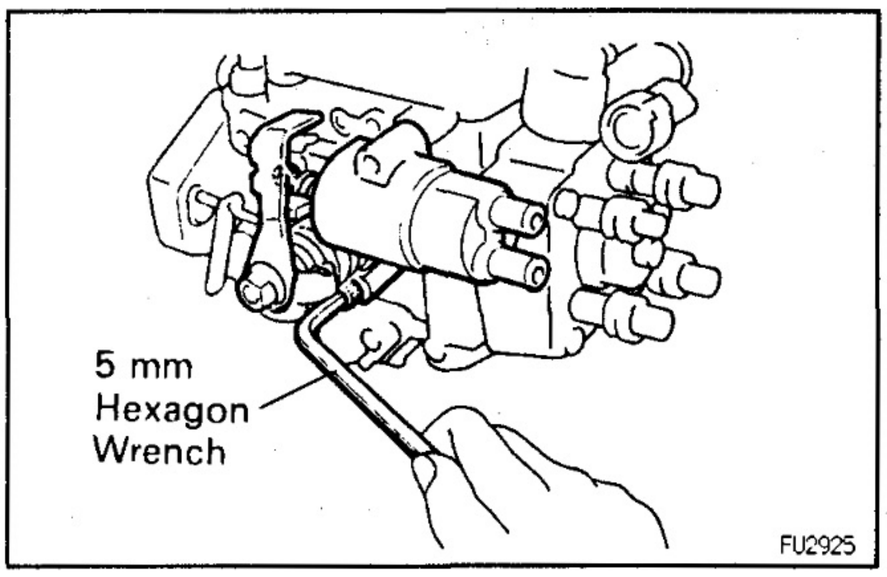

(c) Using a 5 mm hexagon wrench, remove the 2 bolts, thermo wax and O–ring.

7. REMOVE PCS ACTUATOR

(a) Remove the PCS adjusting screw.
(b) Remove the clip.
(c) Disconnect the wire harness.

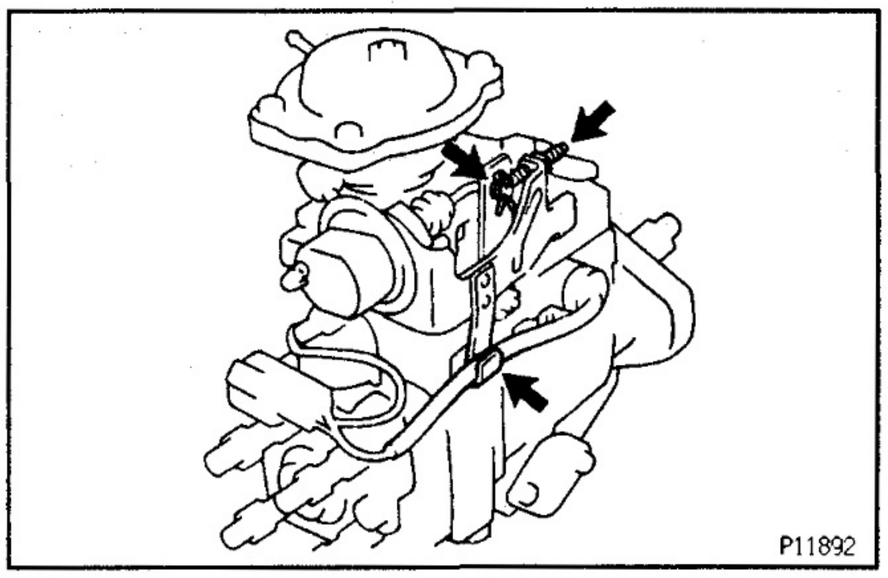

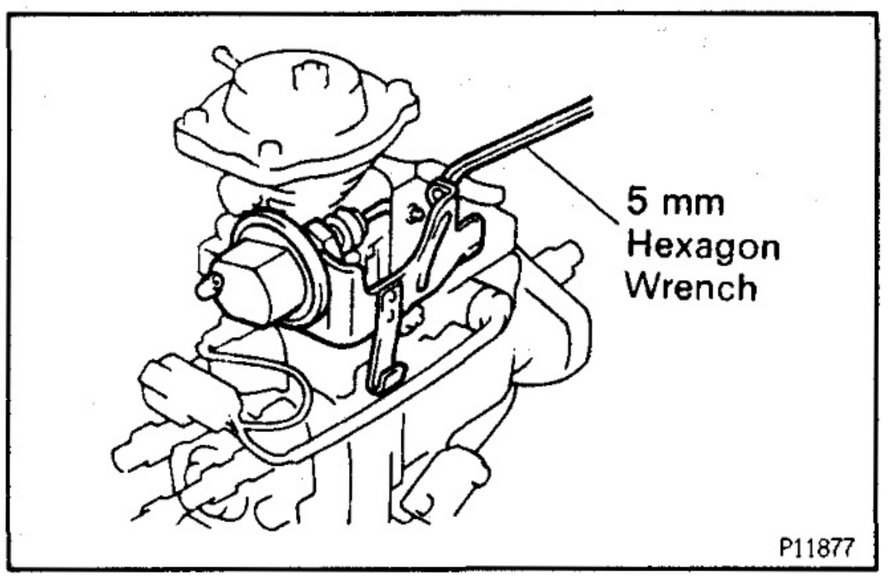

(d) Using a 5 mm hexagon wrench, remove the 2 bolts and PCS actuator assembly.

8. REMOVE NO.1 PCS LEVER

Remove the nut and No.1 PCS lever.

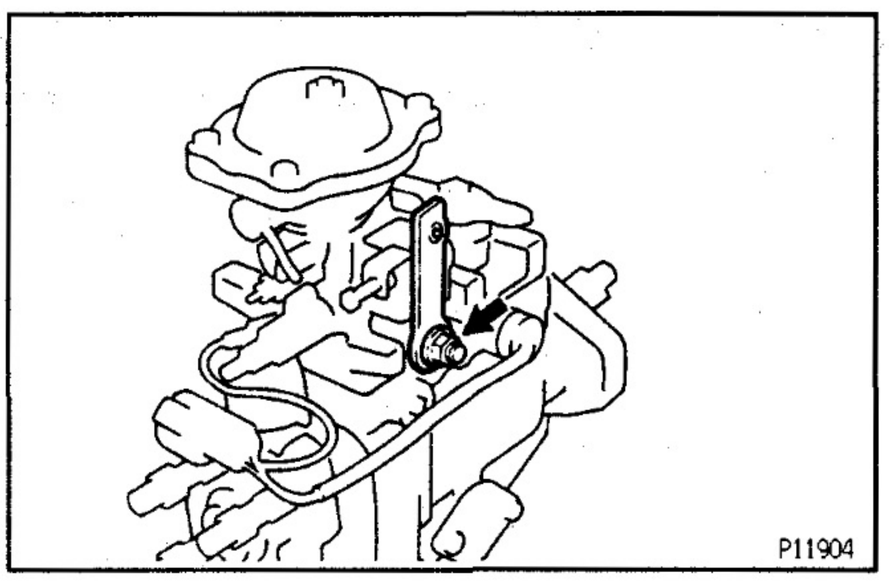

9. REMOVE DASH POT

Remove the dash pot and gasket.

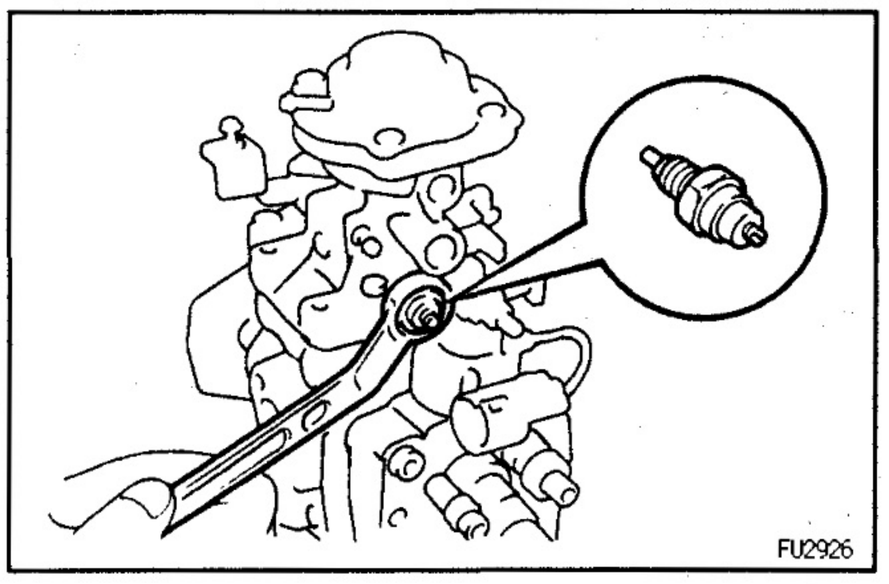

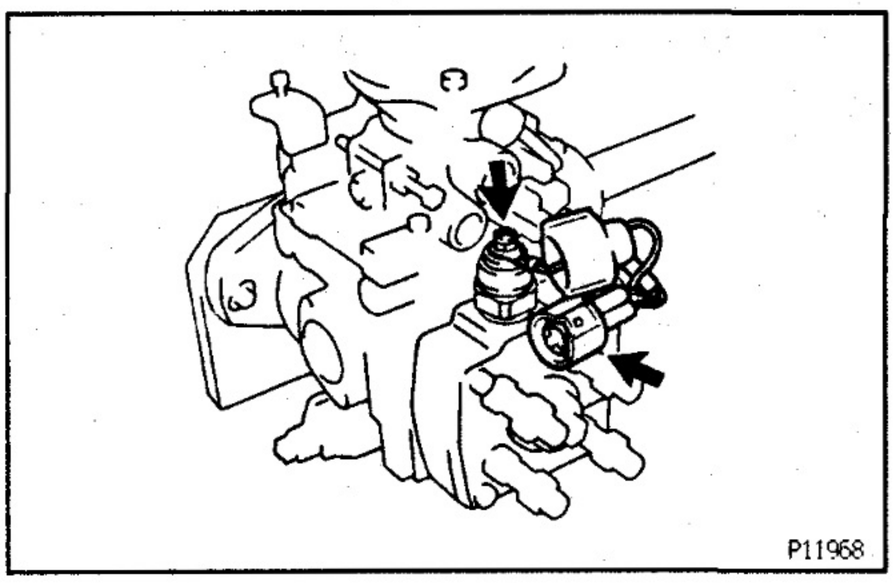

10. REMOVE FUEL CUT SOLENOID

(a) Disconnect the lead wire connector from the bracket.
(b) Disconnect the dust cover from the fuel cut solenoid.
(c) Remove the nut, lead wire and dust cover.

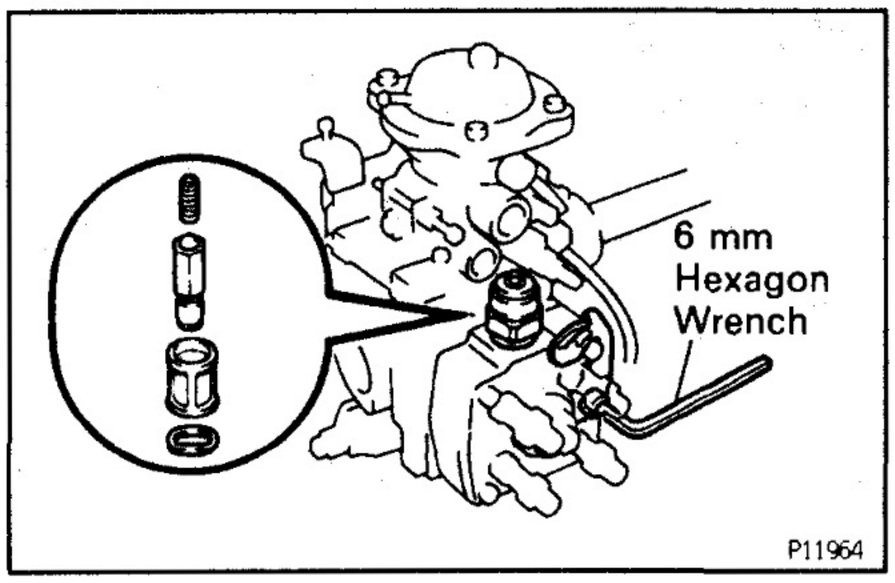

(d) Using a 6 mm hexagon wrench, remove the bolt and connector bracket.
(e) Remove the fuel cut solenoid, O–ring, spring, valve, strainer and wave washer.

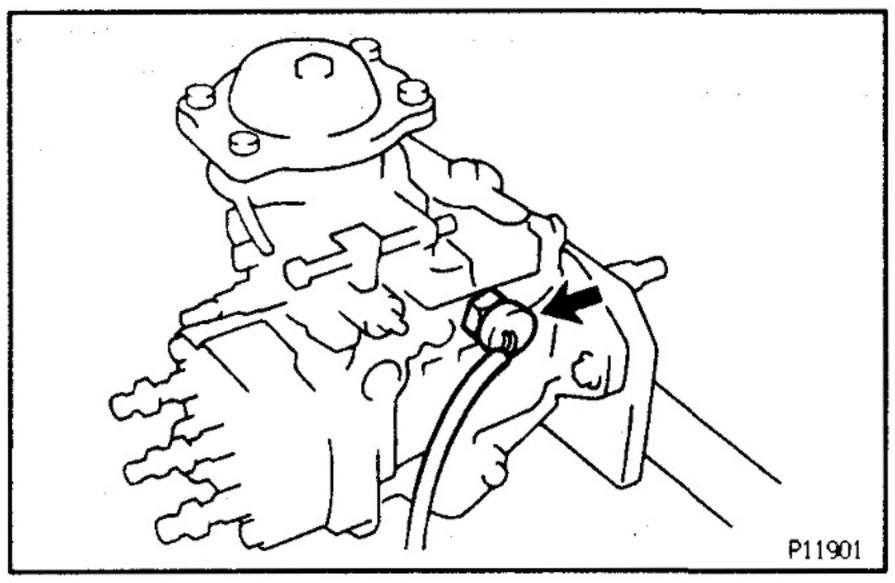

11. REMOVE PICKUP SENSOR

(a) Remove the pickup sensor and O–ring.
(b) Disconnect the sensor lead wires from the connector.

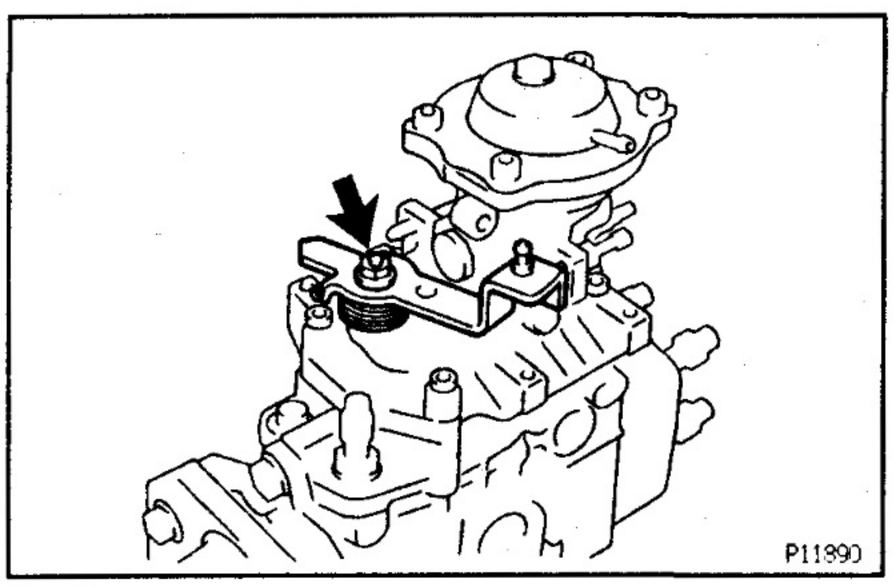

12. REMOVE ADJUSTING LEVER

Remove the nut, adjusting lever, return spring and return spring guide.

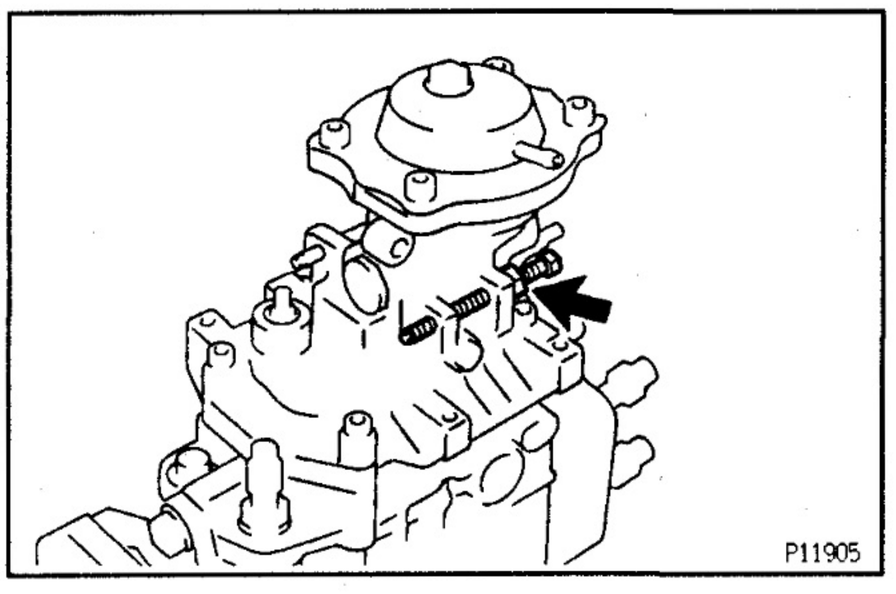

13. REMOVE GOVERNOR COVER

(a) Remove the idle speed adjusting screw.

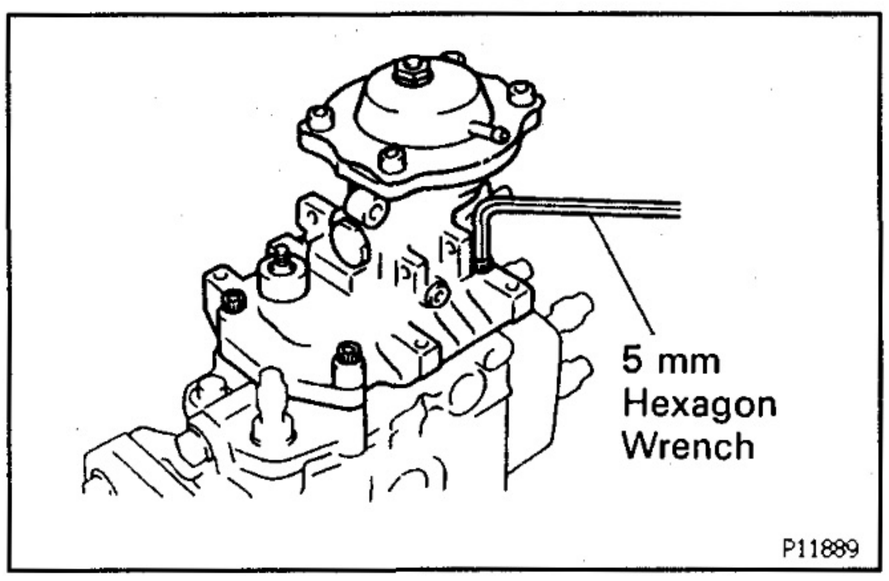

(b) Using a 5 mm hexagon wrench, remove the 4 bolts.

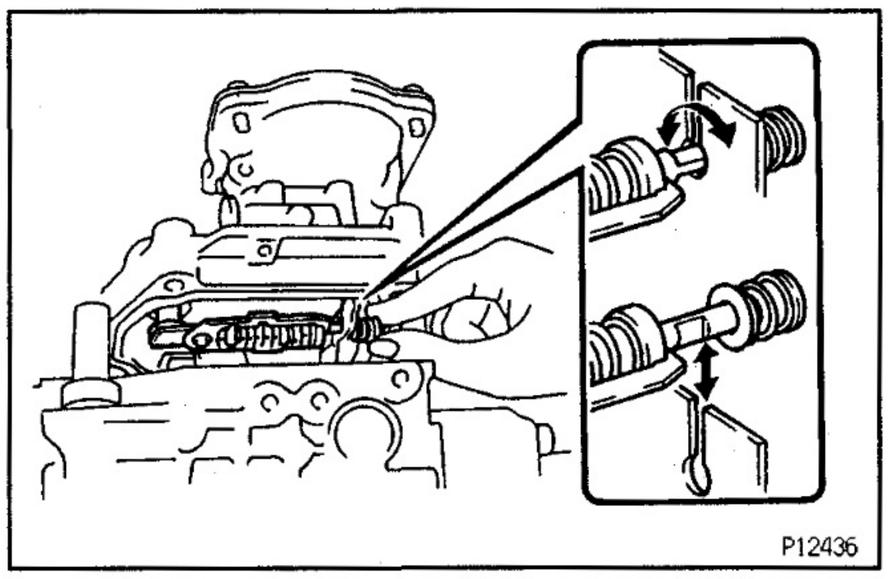

(c) Disconnect the adjusting shaft assembly from the governor link and remove the governor cover and gasket.

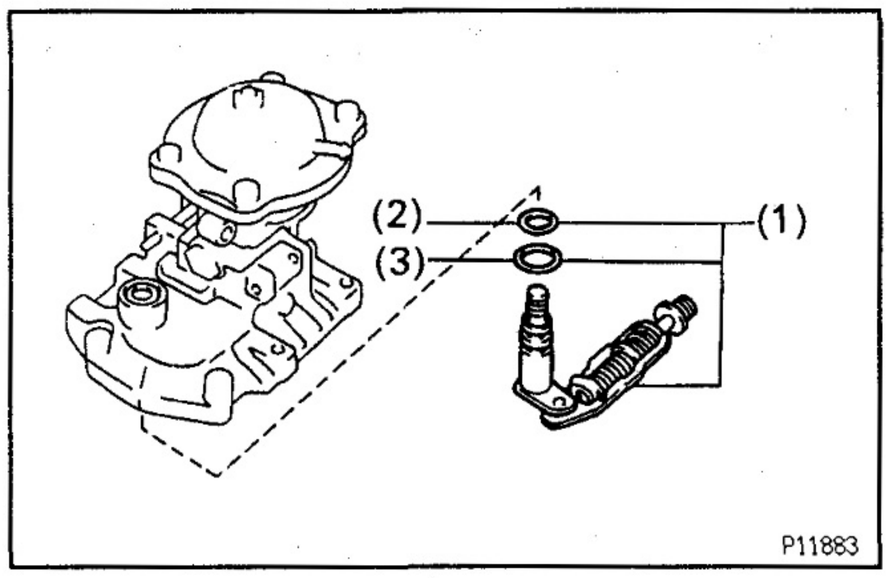

14. REMOVE GOVERNOR ADJUSTING LEVER SHAFT FROM GOVERNOR COVER

Remove the following parts from the governor cover.

(1) Adjusting lever shaft, O–ring and washer assembly
(2) O–ring
(3) Washer

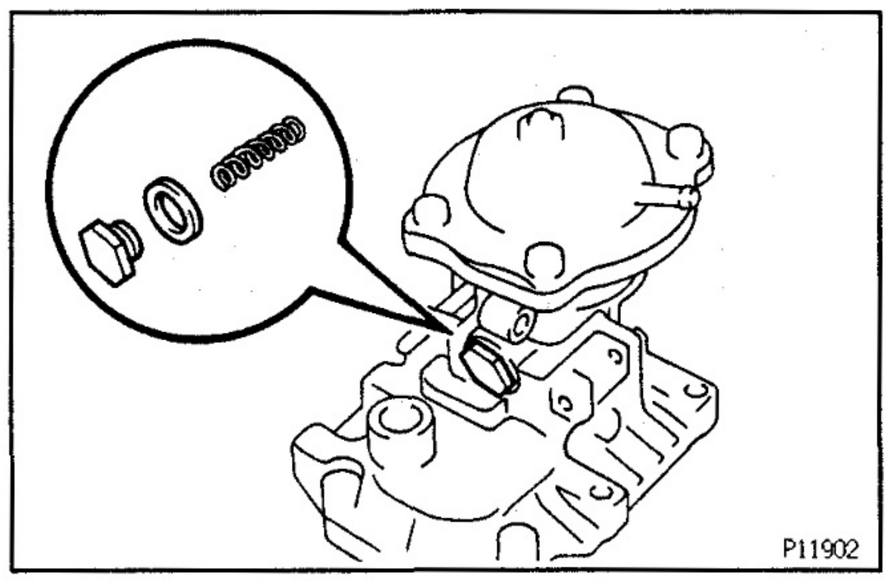

15. DISASSEMBLE BOOST COMPENSATOR

A. Remove lever control spring

Remove the bolt, gasket and lever control spring.

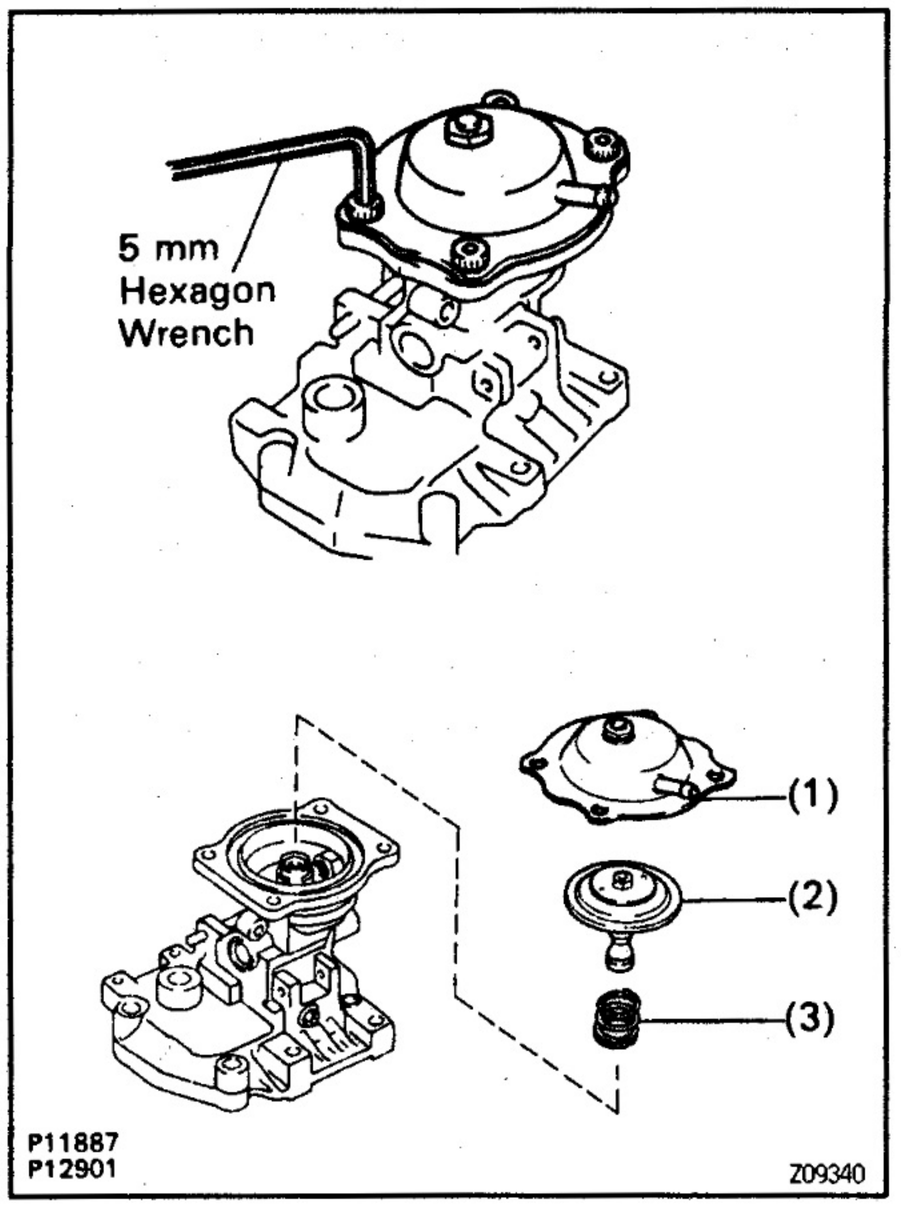

B. Remove boost compensator diaphragm

(a) Using a 5 mm hexagon wrench, remove the 4 bolts and following parts:
- (1) Diaphragm cover
- (2) Diaphragm assembly
- (3) Spring

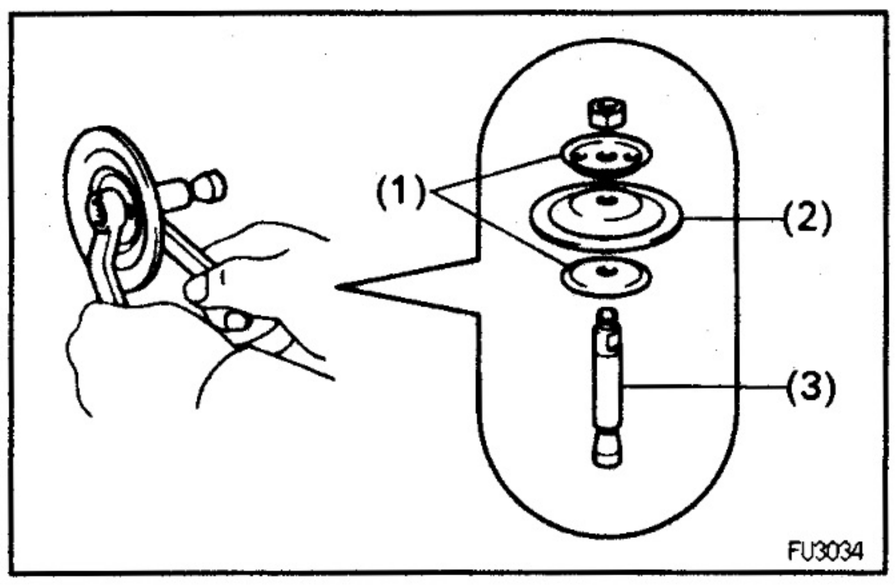

(b) Remove the nut, and disassemble the following parts:
- (1) 2 spring seats
- (2) Diaphragm
- (3) Push rod

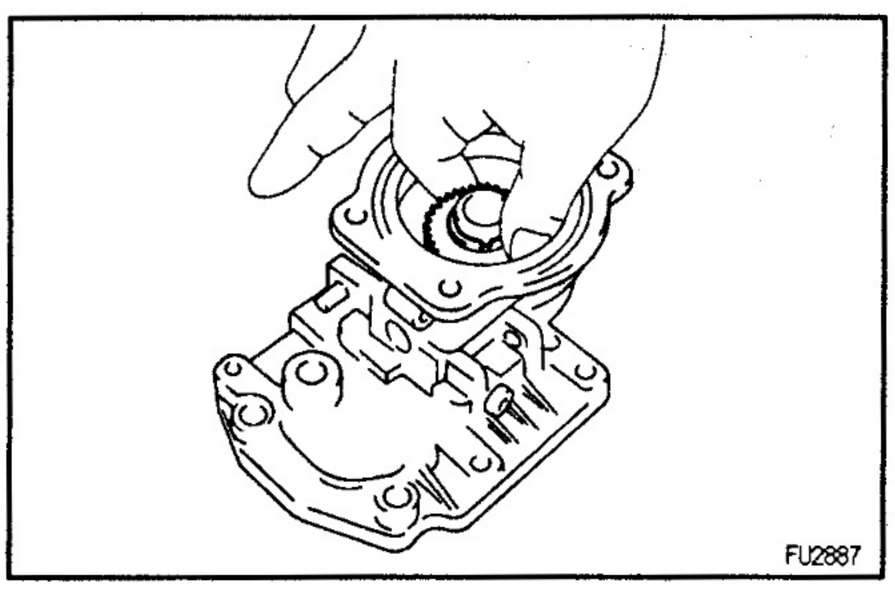

C. Remove guide bushing

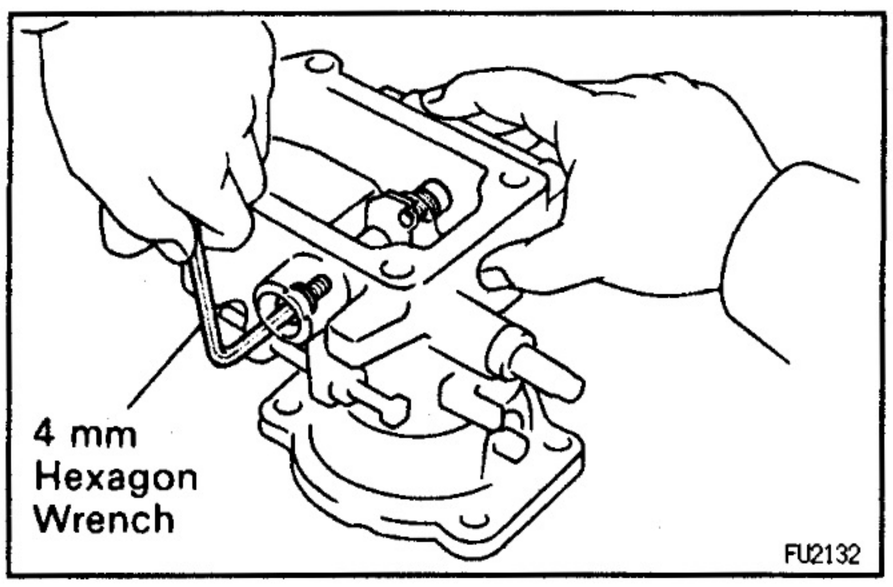

D. Remove control lever

(a) Using a 4 mm hexagon wrench, remove the 2 bolts and gaskets.

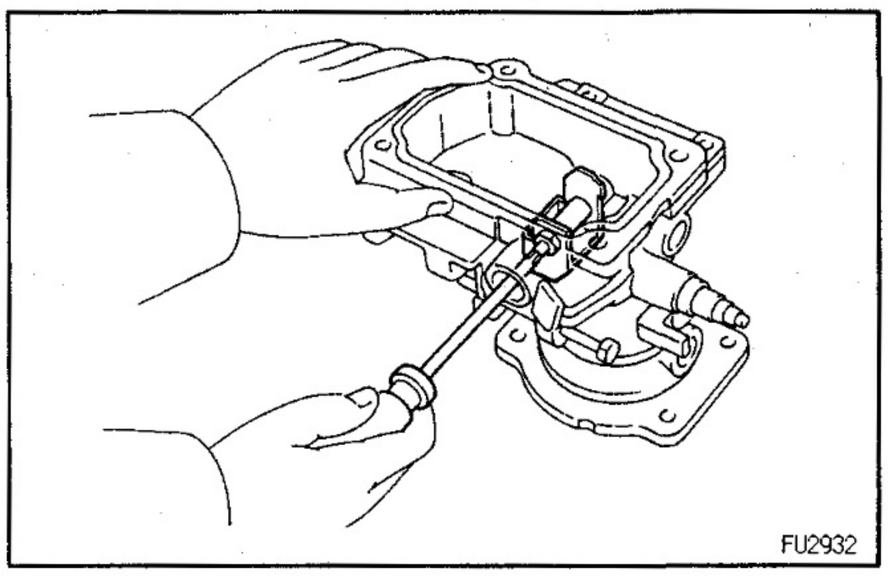

(b) Using a small screwdriver, push out the support pin and remove the control lever.

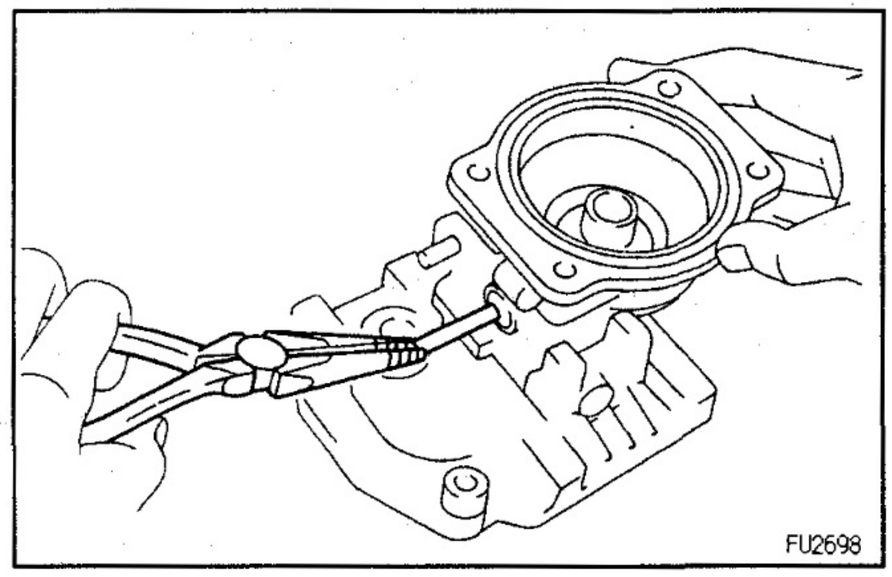

(c) Using needle nose pliers, remove the connecting pin.
NOTICE: Be careful not to damage the connecting pin. Tape the tip of the pliers.

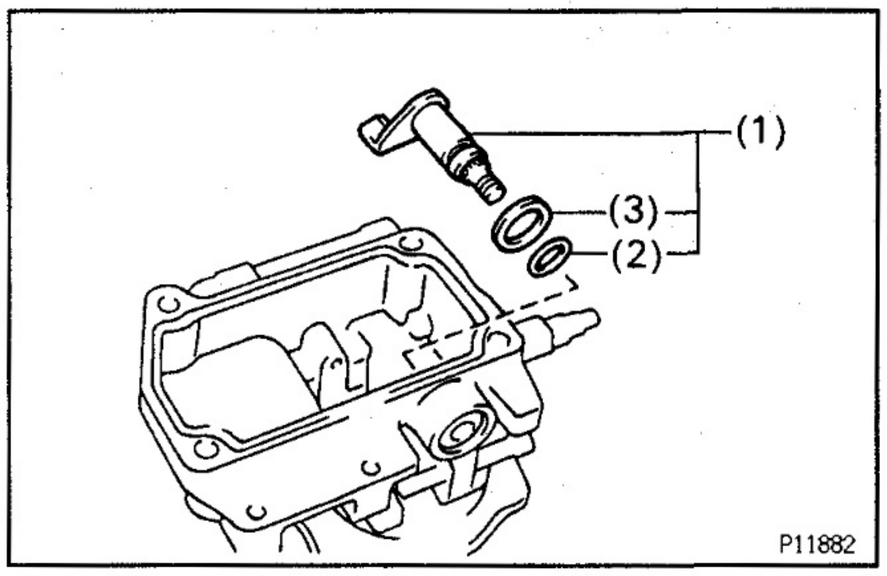

E. Remove No.2 PCS lever

Remove the following parts from the governor cover.
(1) No.2 PCS lever, O–ring and washer assembly
(2) O–ring
(3) Washer

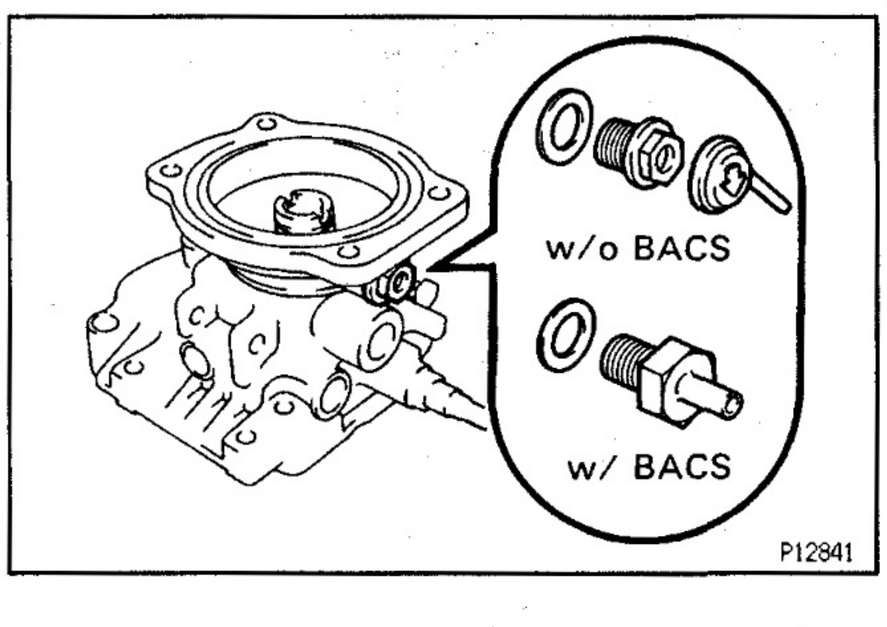

F. Remove overflow screw

(a) w/o BACS:
Remove the rubber cap.
(b) Remove the overflow screw and gasket.

16. CHECK FLYWEIGHT HOLDER THRUST CLEARANCE (See step 19 on page EG–189)

Thrust clearance:

0.15 – 0.35 mm (0.0059 – 0.0138 in.)

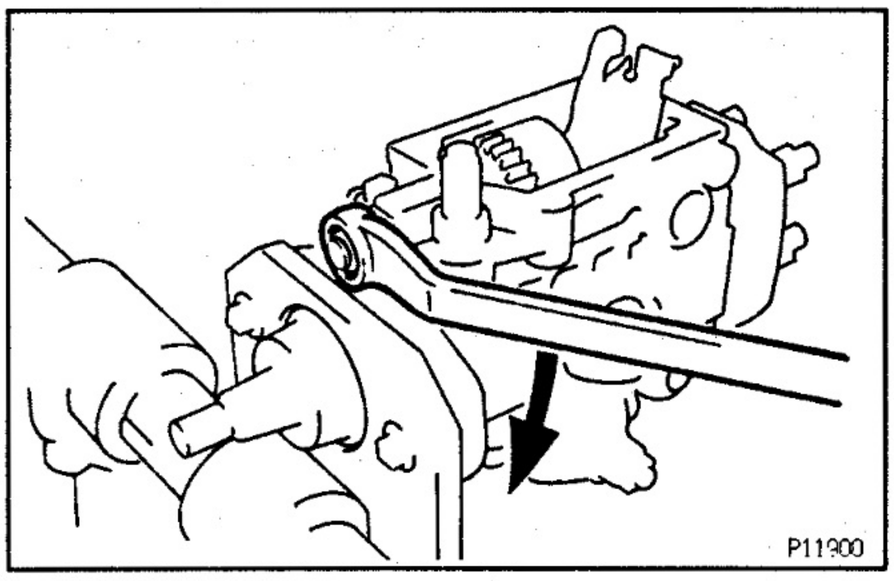

17. REMOVE GOVERNOR SHAFT AND FLYWEIGHT HOLDER

(a) Remove the governor shaft lock nut by turning it clockwise.
NOTICE: The governor shaft and lock nut have LH threads.

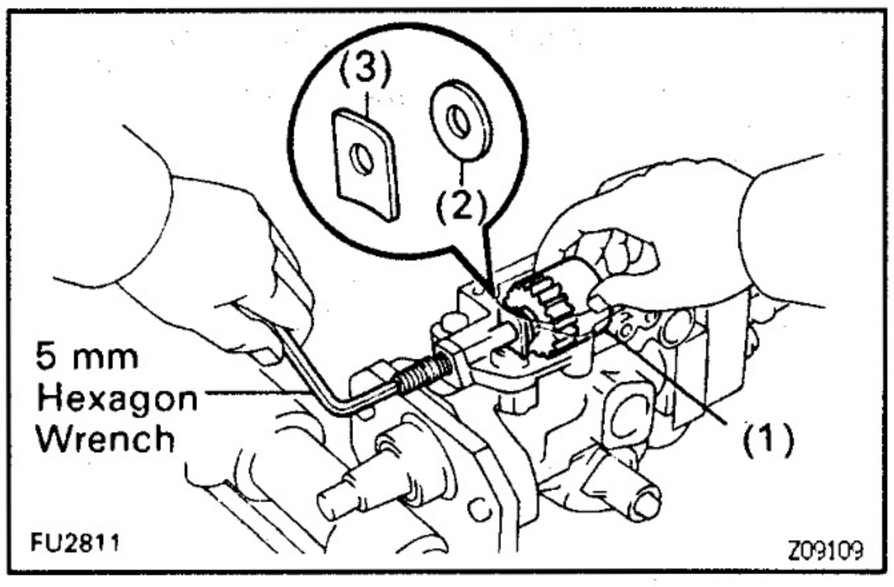

(b) Using a 5 mm hexagon wrench, remove the governor shaft clockwise, and remove the following parts:
(1) Flyweight holder assembly
(2) No.1 flyweight washer
(3) Governor gear adjusting washer
HINT: Be careful not to drop the 2 washers into the pump housing.

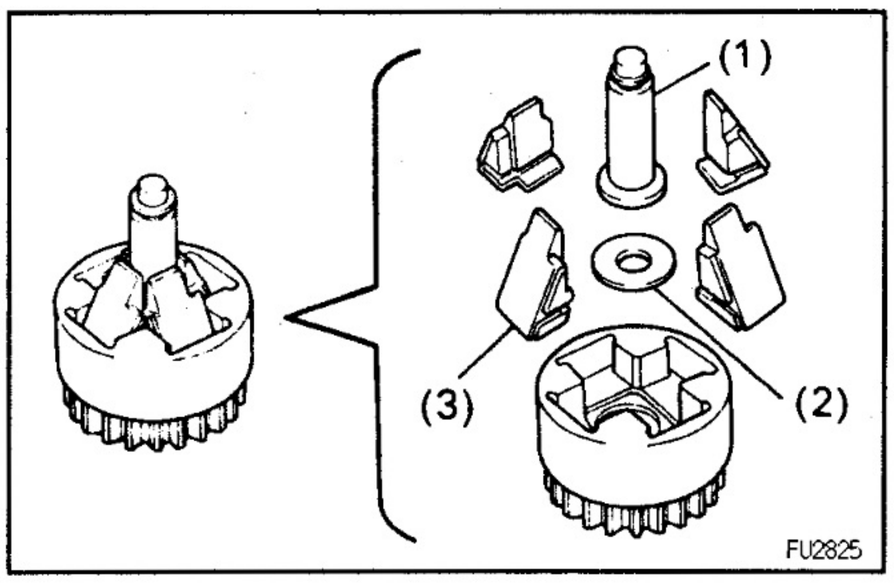

(c) Remove the following parts from the flyweight holder.
(1) Governor sleeve
(2) No.2 flyweight washer
(3) 4 flyweights

18. REMOVE DISTRIBUTIVE HEAD PLUG
Using SST, remove the distributive head plug.
SST 09260–54012 (09262–54010)

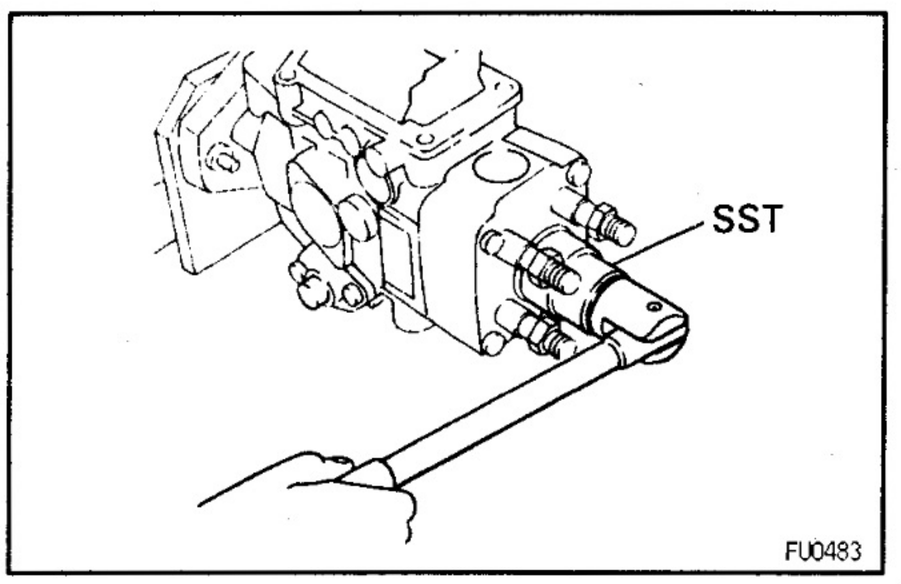

19. REMOVE DELIVERY VALVE HOLDERS
(a) Using SST, remove the 4 delivery valve holders and springs.
SST 09260–54012 (09269–54020)
(b) Remove the 4 delivery valves and gaskets.

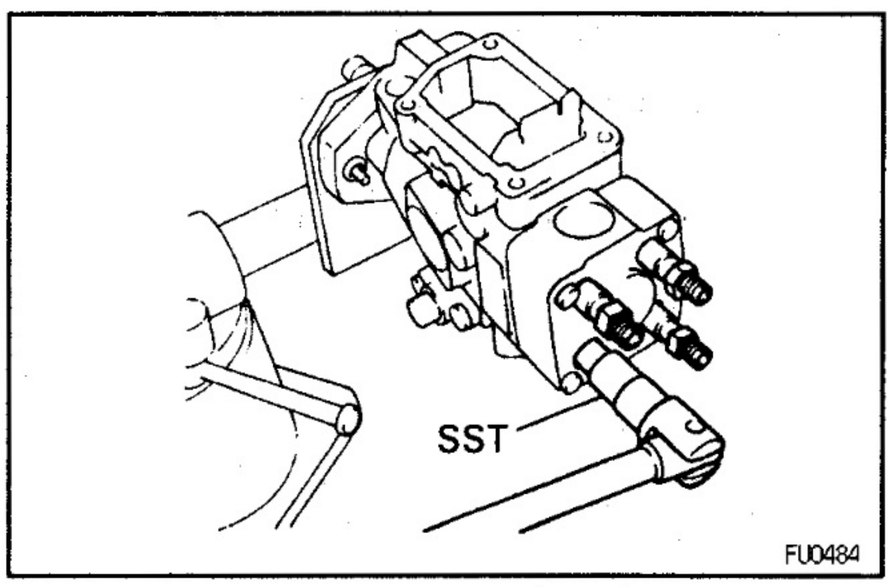

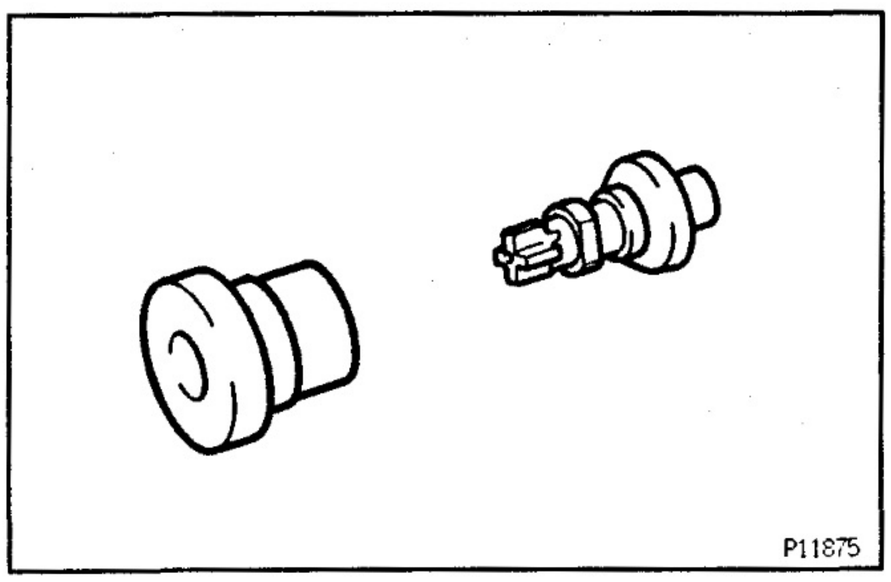

NOTICE: Do not touch the sliding surfaces of the delivery valve with your hand.

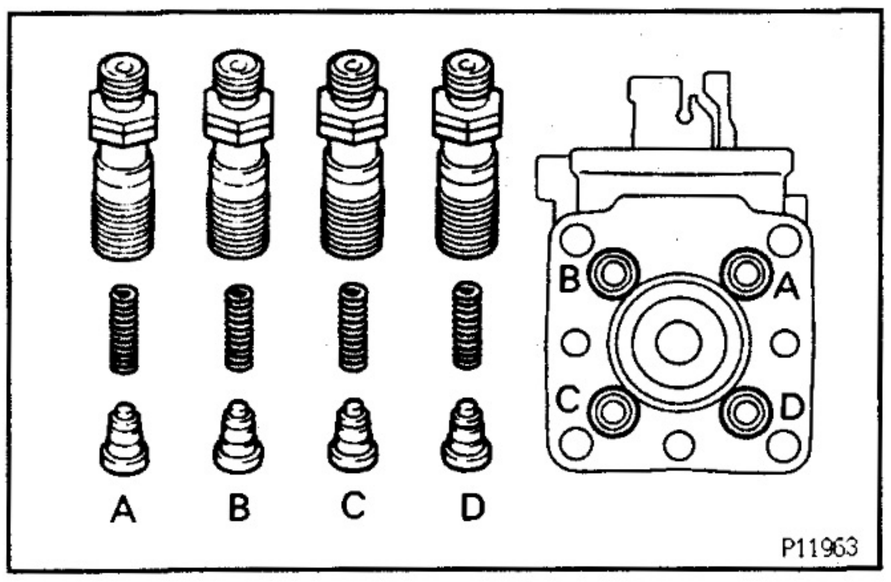

HINT: Arrange the delivery valves, springs, and holders in order.

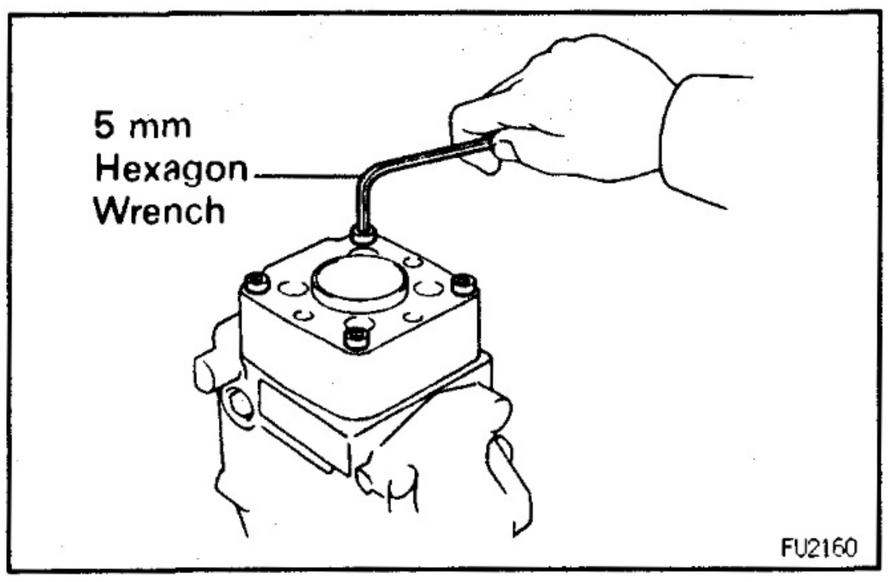

20. REMOVE DISTRIBUTIVE HEAD

(a) Using a 5 mm hexagon wrench, remove the 4 bolts.

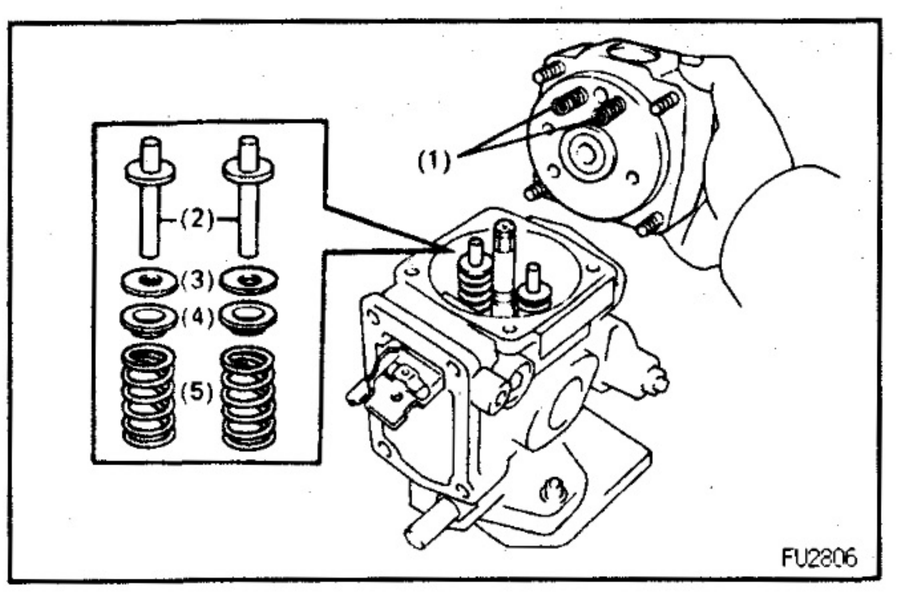

(b) Remove the distributive head and following parts:
- (1) 2 lever support springs
- (2) 2 plunger spring guides
- (3) 2 plunger spring shims
- (4) 2 upper spring seats
- (5) 2 plunger springs

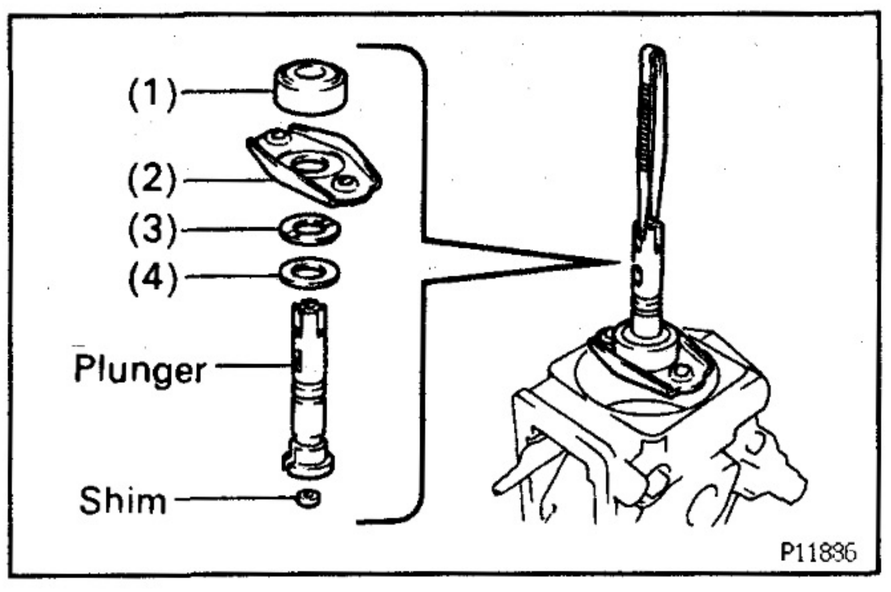

21. REMOVE PUMP PLUNGER

Using SST, remove the pump plunger and plunger adjusting shim together with the following parts:
- (1) Spill ring
- (2) Lower spring seat
- (3) Upper plunger plate
- (4) Lower plunger plate

SST 09260–54012 (09269–54030)

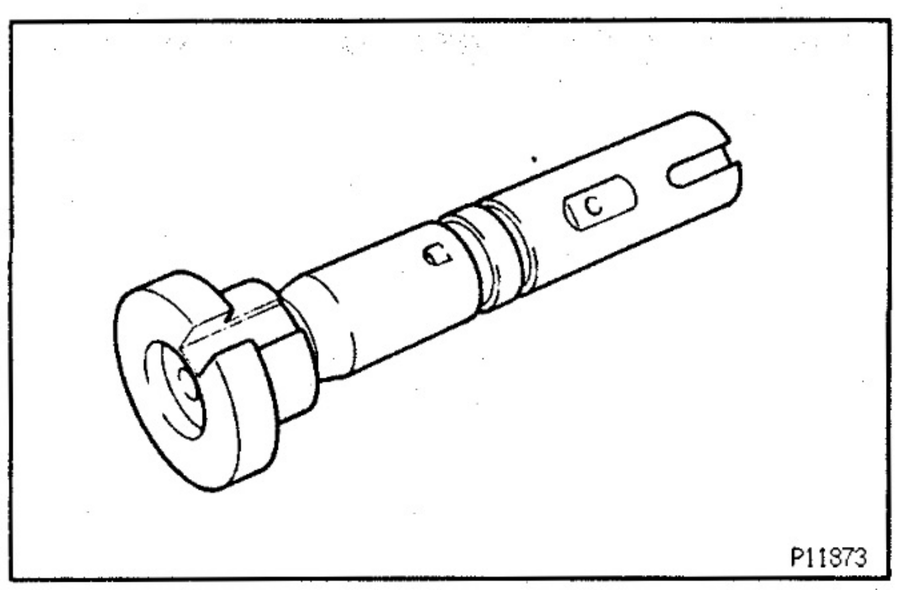

NOTICE: Do not touch the sliding surfaces of the pump plunger with your hand.

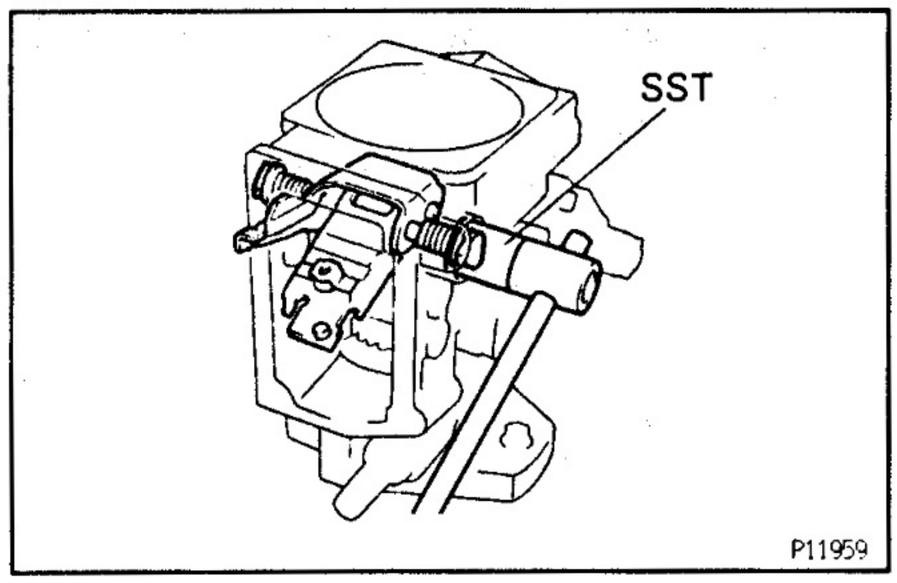

22. REMOVE GOVERNOR LINK

Using SST, remove the 2 support bolts, gaskets and governor link.

SST 09260–54012 (09269–54040)

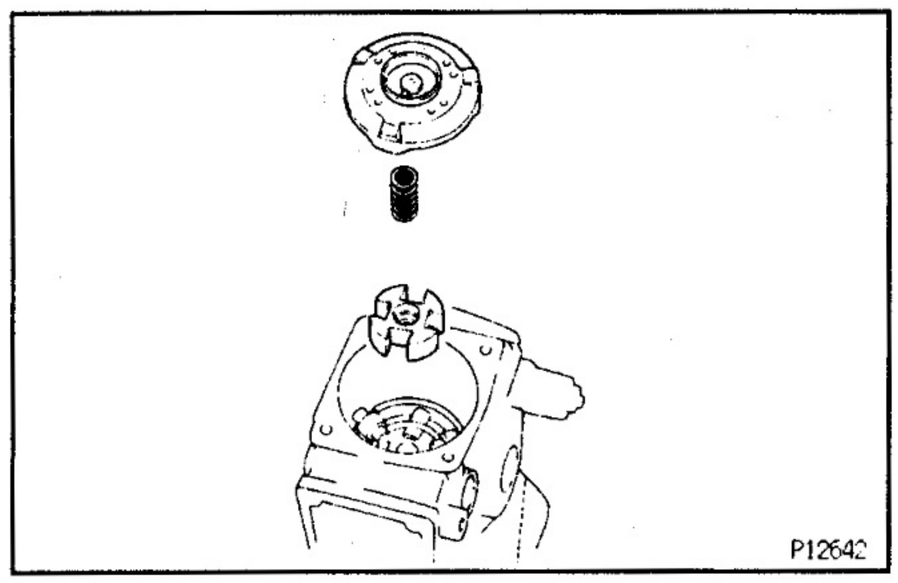

23. REMOVE FACE CAMPLATE AND COUPLING

Remove the face camplate, spring and coupling.

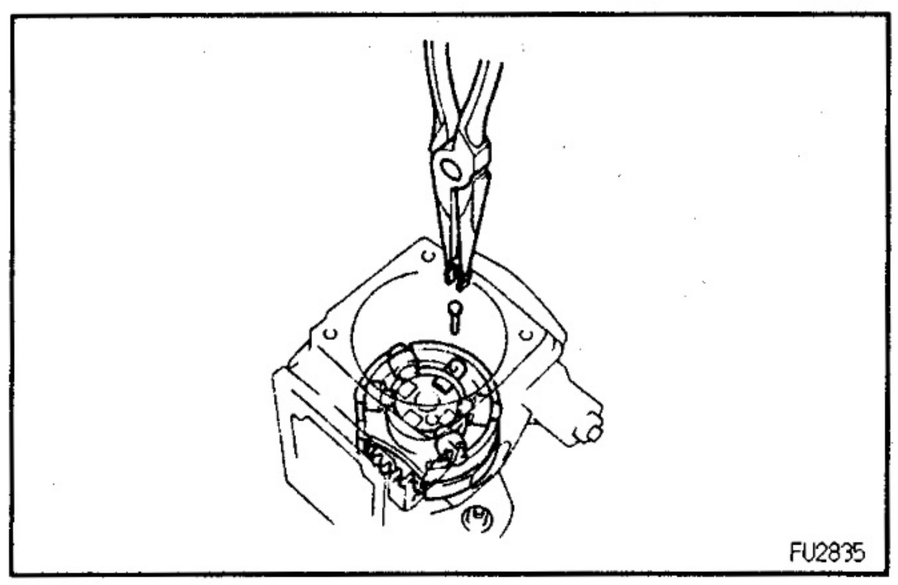

24. REMOVE ROLLER RING AND DRIVE SHAFT

(a) Remove the timer clip and stopper pin.

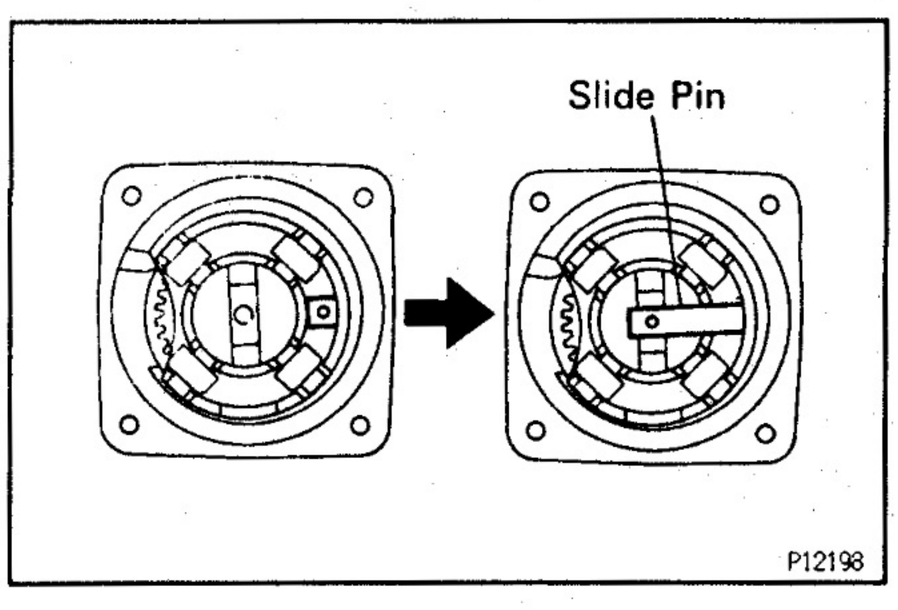

(b) Push the slide pin toward inside.

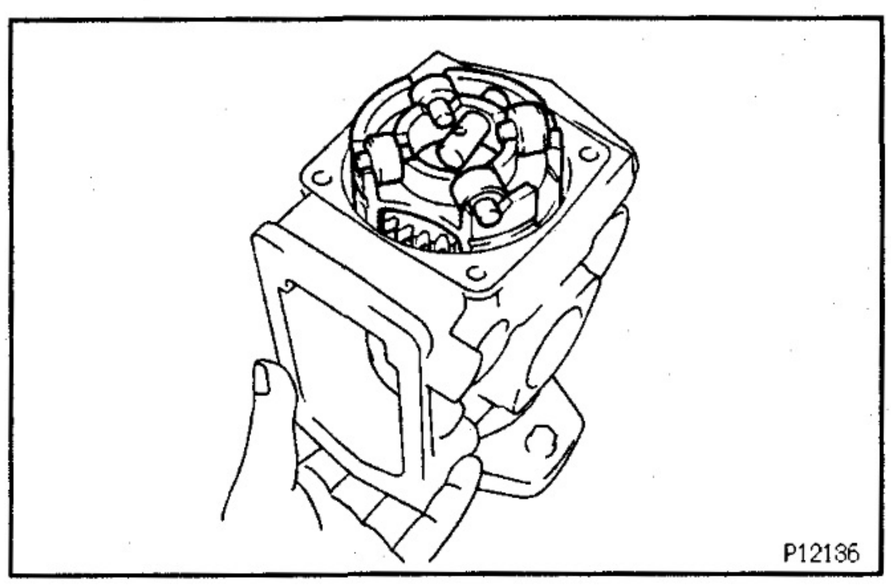

(c) Push the drive shaft, and remove the roller ring, 4 rollers and shims assembly.

NOTICE:

- **Be careful not to drop the rollers.**
- **Do not alter the position or assembly of the rollers.**

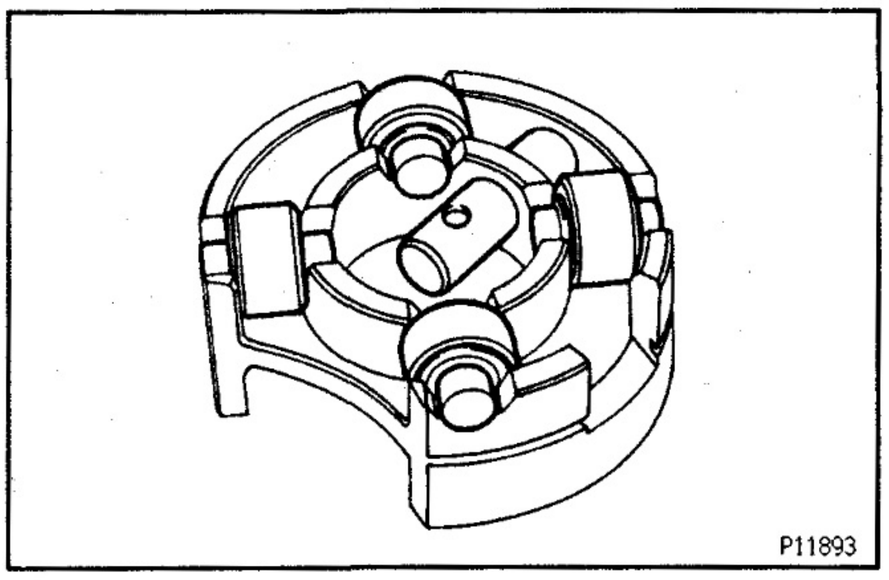

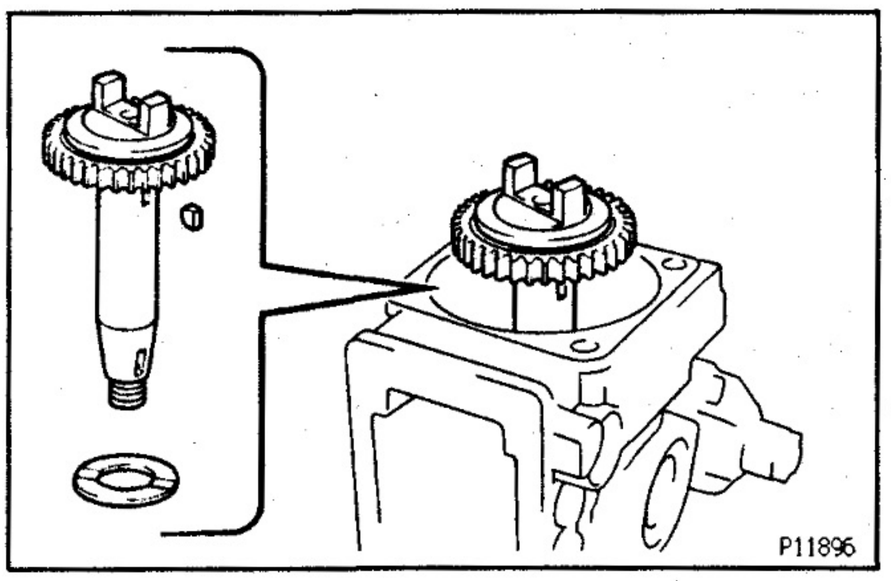

(d) Remove the drive shaft, governor drive gear, 2 joint rubbers assembly, set key and drive shaft washer.

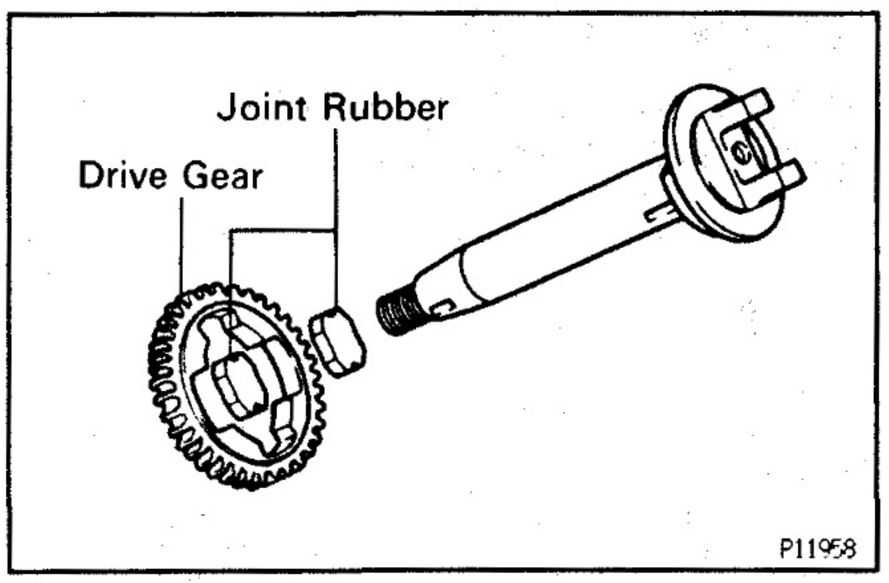

(e) Remove the drive gear and 2 joint rubbers from the drive shaft.

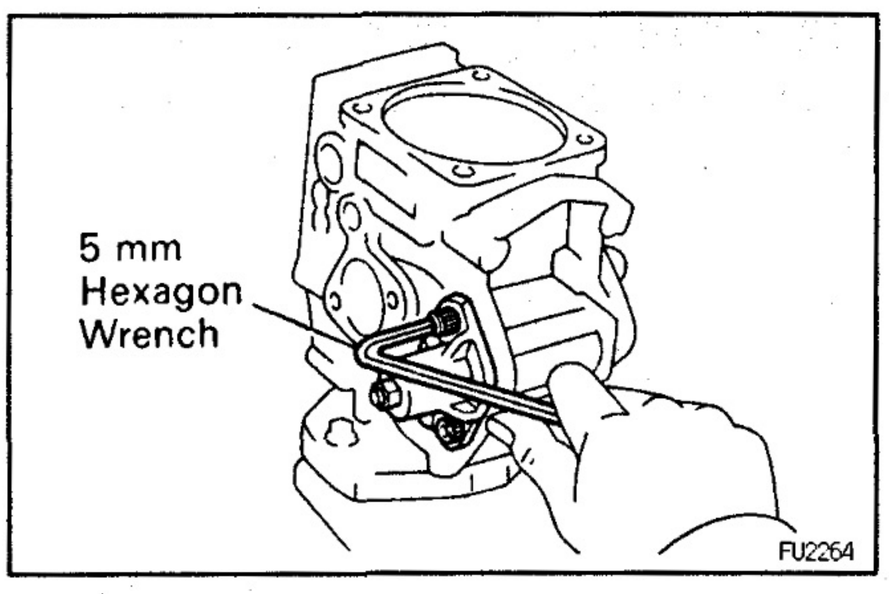

25. REMOVE TIMER

(a) Using a 5 mm hexagon wrench, remove the 4 bolts.

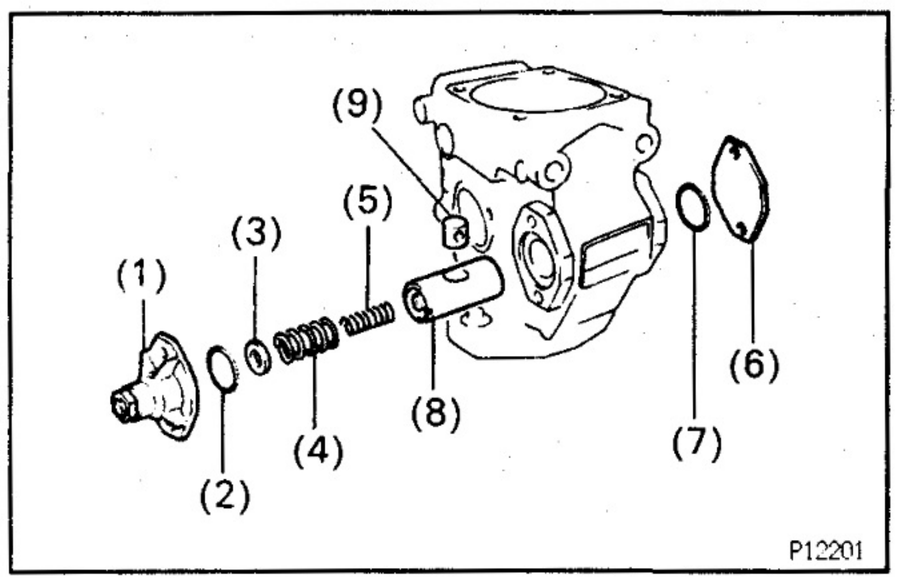

(b) Remove the following parts:
(1) LH timer cover, timer adjusting screw and nut assembly
(2) O–ring
(3) Shim
(4) Outer spring
(5) Inner spring
(6) RH timer cover
(7) O–ring
(8) Piston
(9) Sub–piston

(c) Remove the nut from the LH timer cover.

(d) Using a 5 mm hexagon wrench, remove the timer adjusting screw.

(e) Remove the O–ring from the timer adjusting ring.

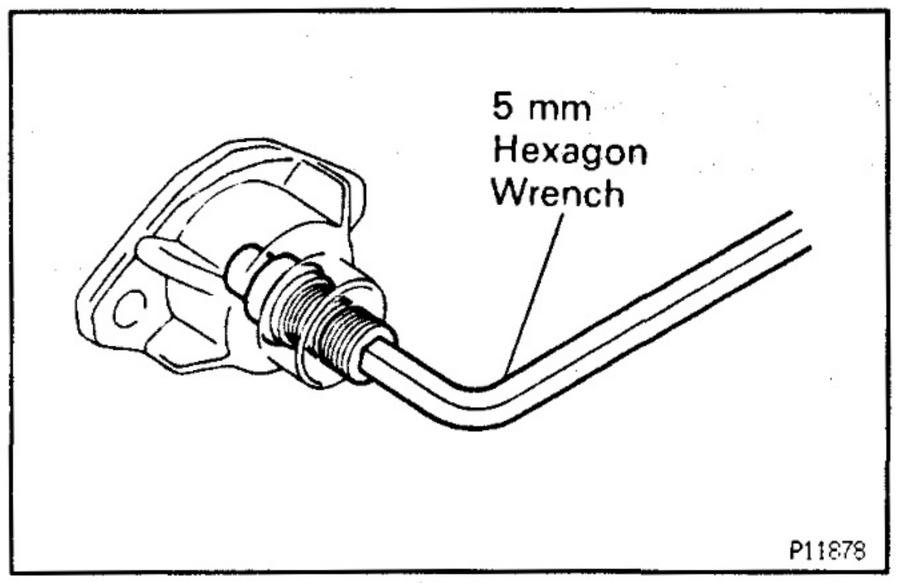

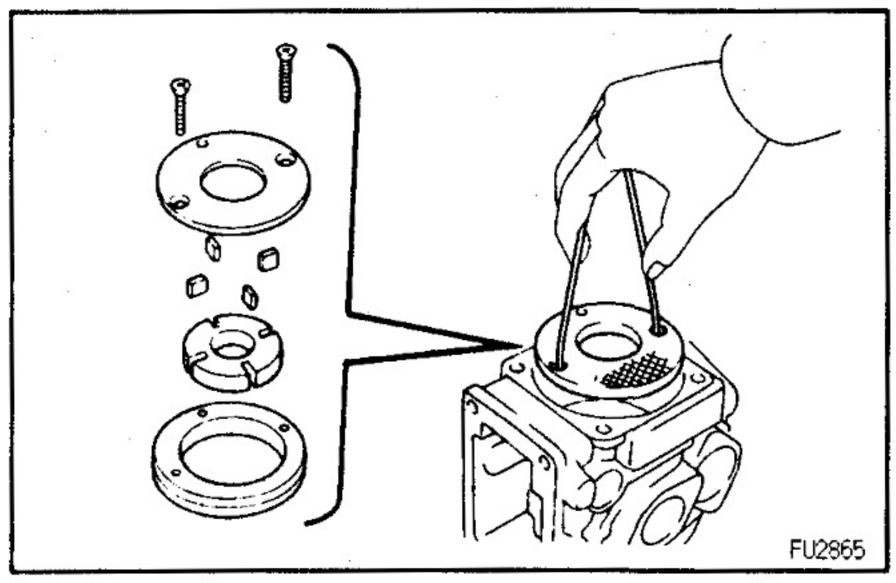

26. REMOVE FUEL FEED PUMP

(a) Remove the 2 screws.

(b) Using a piece of wire, remove the feed pump cover.

(c) Remove the feed pump rotor, 4 blades and liner.

NOTICE:

- **Be careful not to interchange the blade positions.**
- **Be careful not to damage the pump body.**

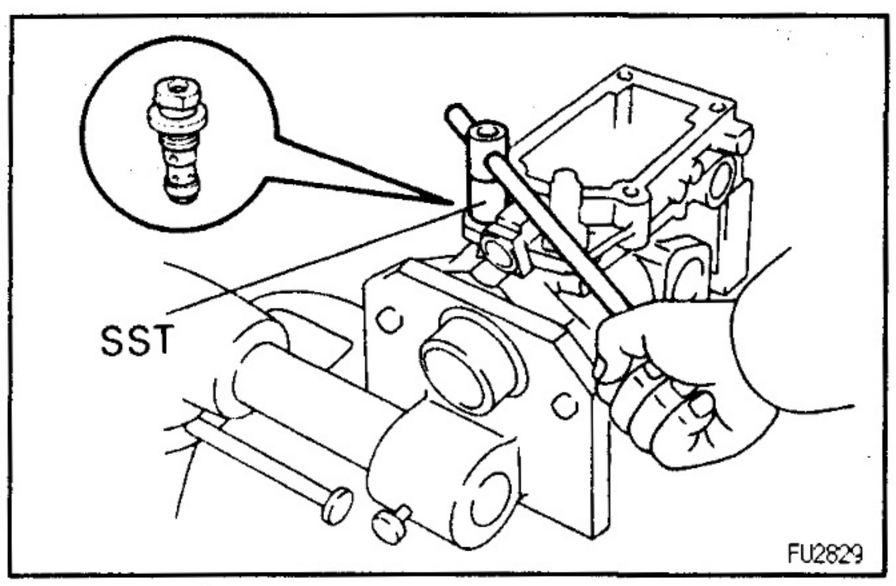

27. REMOVE REGULATOR VALVE

Using SST, remove the regulator valve and 2 O–rings.
SST 09260–54012 (09262–54020)

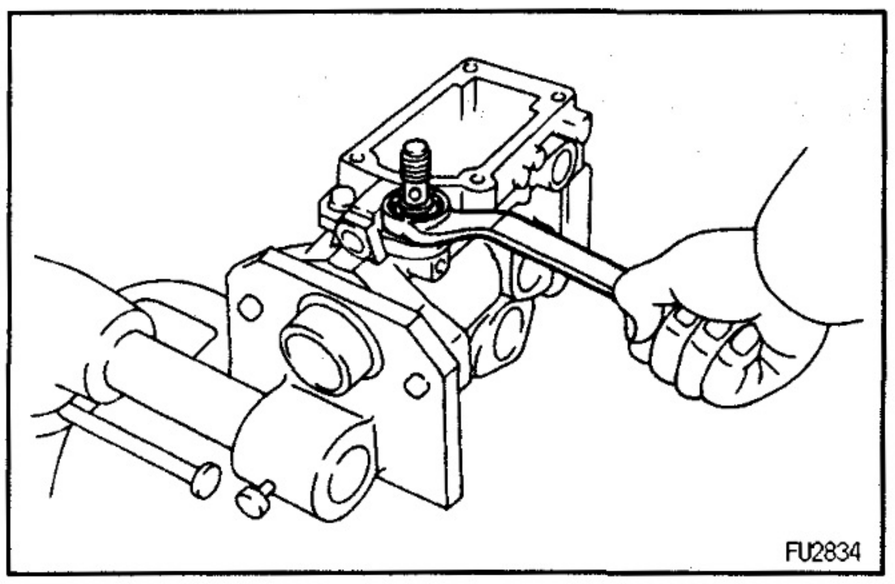

28. REMOVE FUEL INLET HOLLOW SCREW

Remove the hollow screw and gasket.

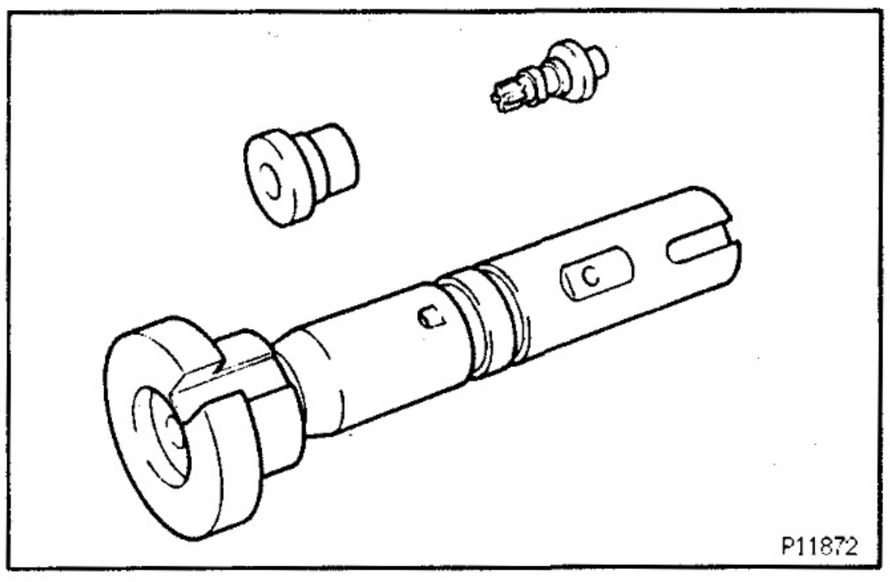

EG348-01

INJECTION PUMP COMPONENTS INSPECTION

NOTICE: Do not touch the sliding surfaces of the pump plunger and delivery valves.

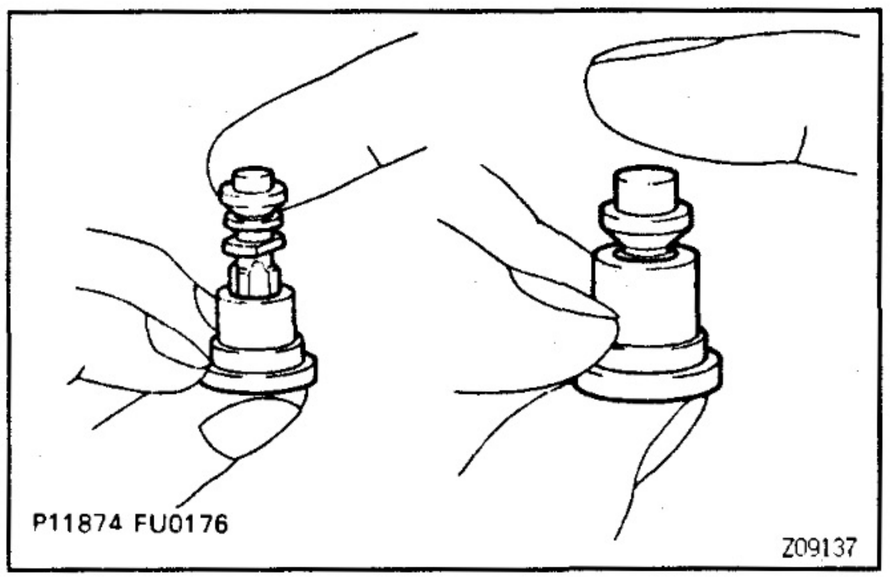

1. INSPECT DELIVERY VALVES

(a) Pull up the valve and close the hole at the valve seat bottom end with your thumb.
When the valve is released, it should sink down quickly and stop at the position where the relief ring closes the valve seat hole.

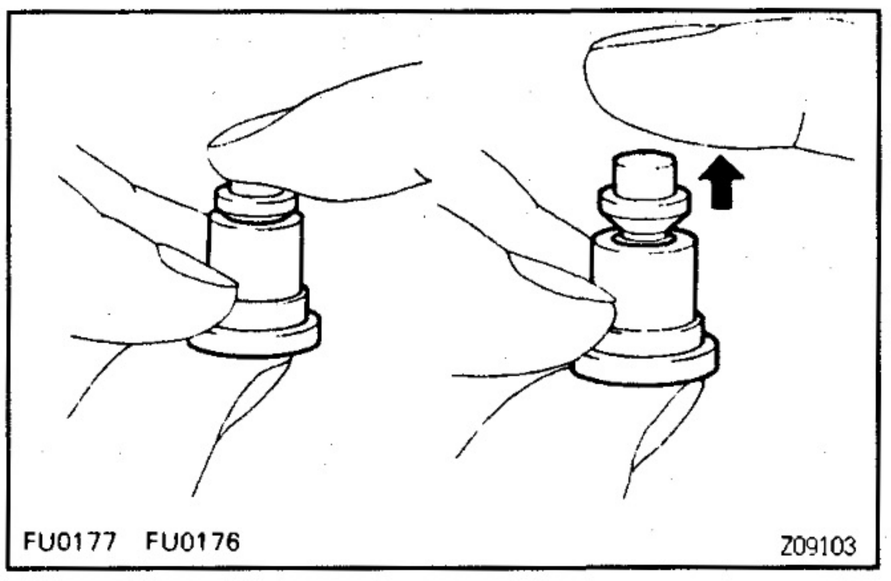

(b) Close the hole at the valve seat bottom end with your thumb.
Insert the valve into the valve seat and press down with your finger. When your finger is released, the valve should rise back to its original position.

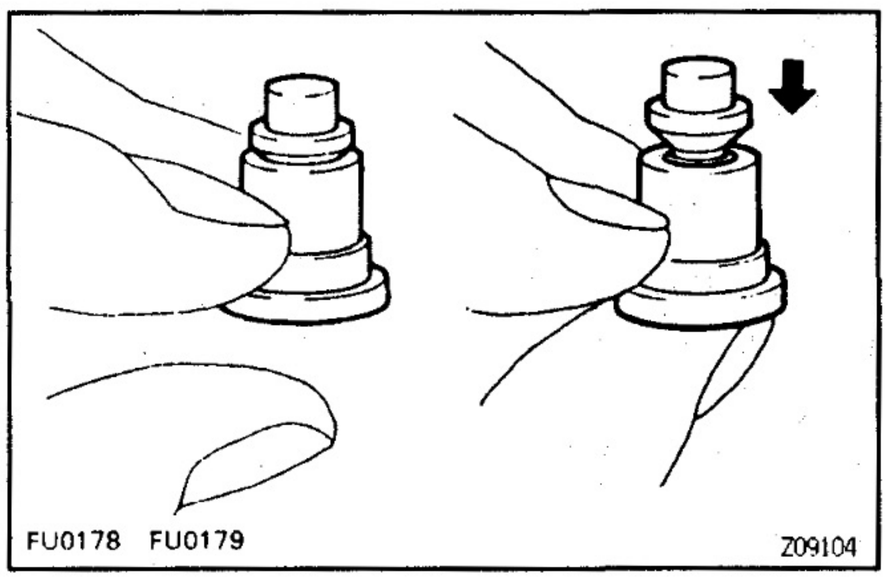

(c) Remove your thumb from the valve seat hole.
The valve should close completely by its own weight.
If operation is not as specified, replace the valve as a set.
HINT: Before using a new valve set, wash off the rust prevention compound with light oil or gasoline. Then re — wash with diesel fuel and perform the above tests.

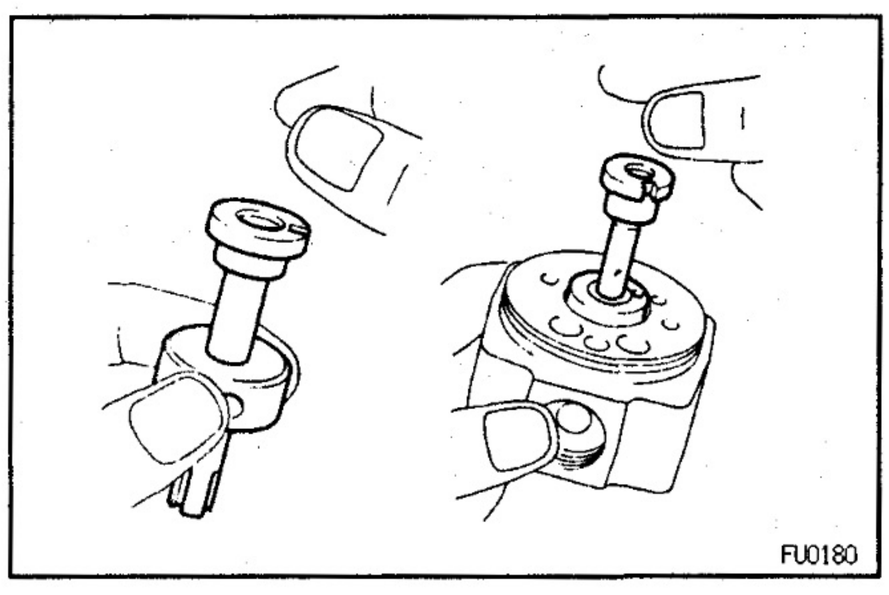

2. INSPECT PUMP PLUNGER, SPILL RING AND DISTRIBUTIVE HEAD

(a) Tilt the spill ring (distributive head) slightly and pull out the plunger.
(b) When released, the plunger should sink down smoothly into the spill ring (distributive head) by its own weight.
(c) Rotate the plunger and repeat the test at various positions.

If the plunger sticks at any position, replace the parts as a set.

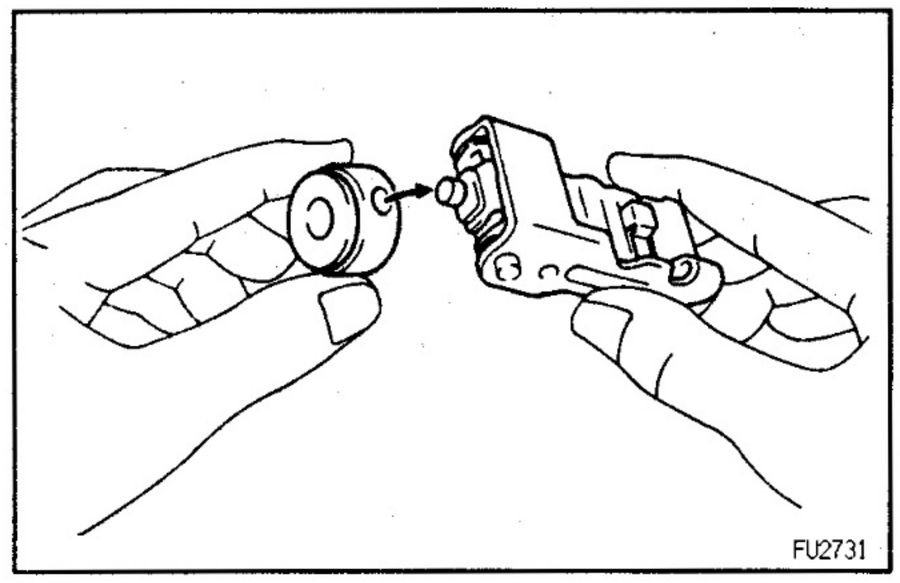

(d) Insert the governor link ball pin into the spill ring and check that it moves smoothly without any play.

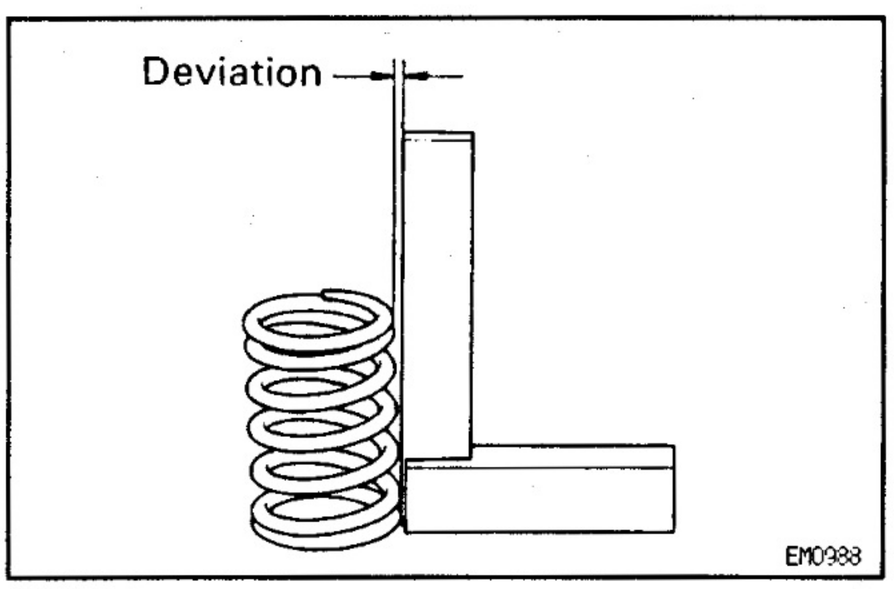

3. INSPECT PLUNGER SPRINGS FOR DEVIATION

Using a steel square, check the deviation of the plunger springs.

Maximum deviation:

2.0 mm (0.079 in.)

If deviation is greater than maximum, replace the springs.

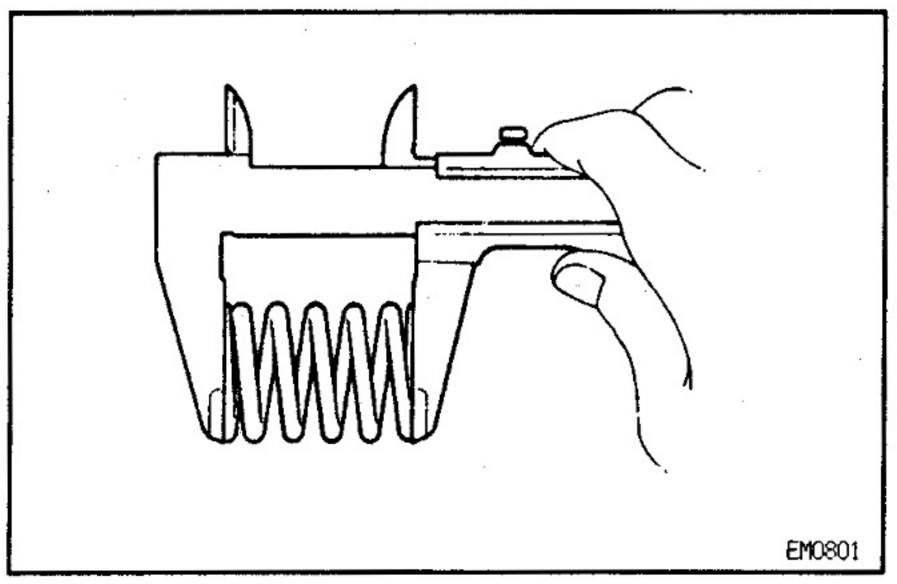

4. INSPECT SPRING LENGTH

Using vernier calipers, measure the free length of each spring.

Spring free length:

Delivery valve spring

24.4 mm (0.961 in.)

Plunger spring

30.0 mm (1.181 in.)

Coupling spring

15.5 mm (0.610 in.)

Boost compensator spring

w/o BACS 19.4 mm (0.764 in.)

w/ BACS 19.3 mm (0.760 in.)

If the free length is not as specified, replace the spring (s).

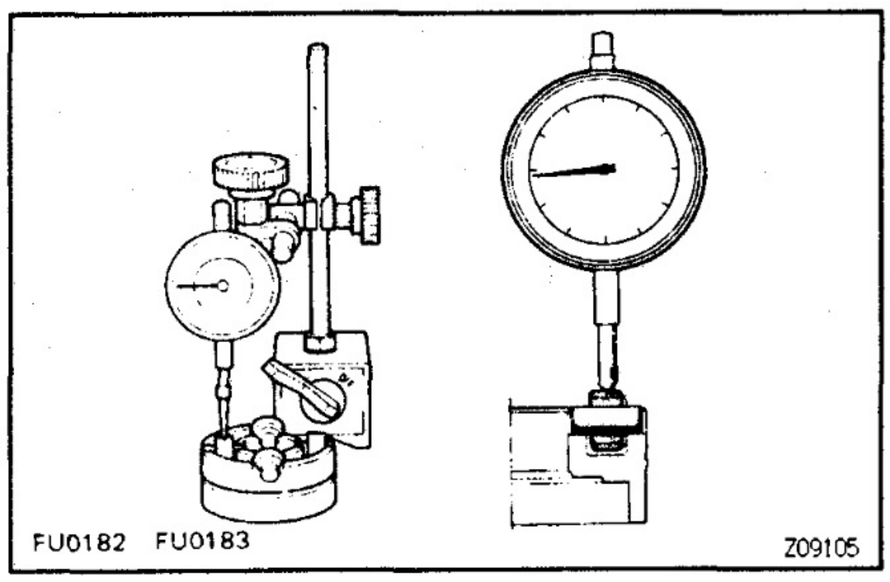

5. INSPECT ROLLER RING AND ROLLERS

Using a dial indicator, measure the roller height.

Maximum roller height variation:

0.02 mm (0.0008 in.)

If the variation is greater than specification, replace the roller ring and roller as a set.

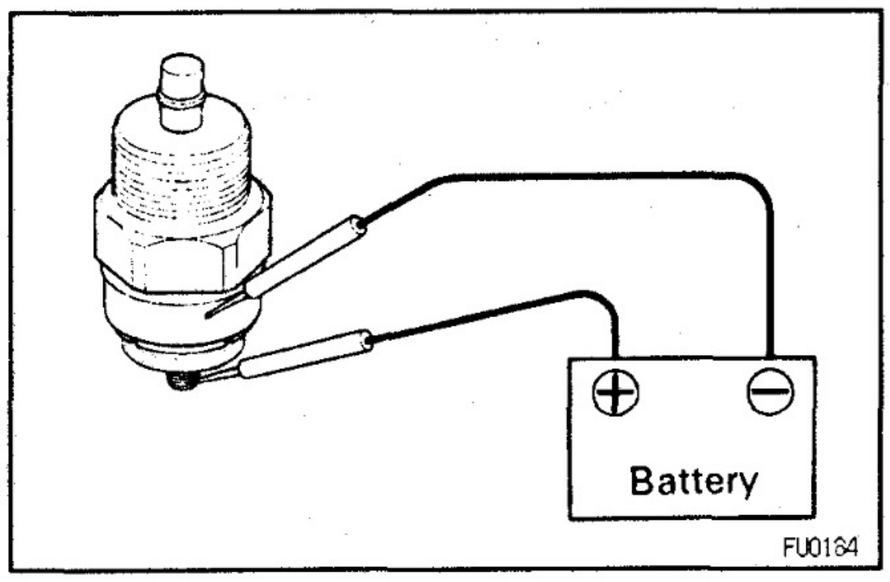

6. INSPECT FUEL CUT SOLENOID

(a) Connect the solenoid valve body and terminal to the battery terminals.

(b) You should feel the click from the solenoid valve when the battery power is connected and disconnected.
If the solenoid valve is not operating properly, replace it.

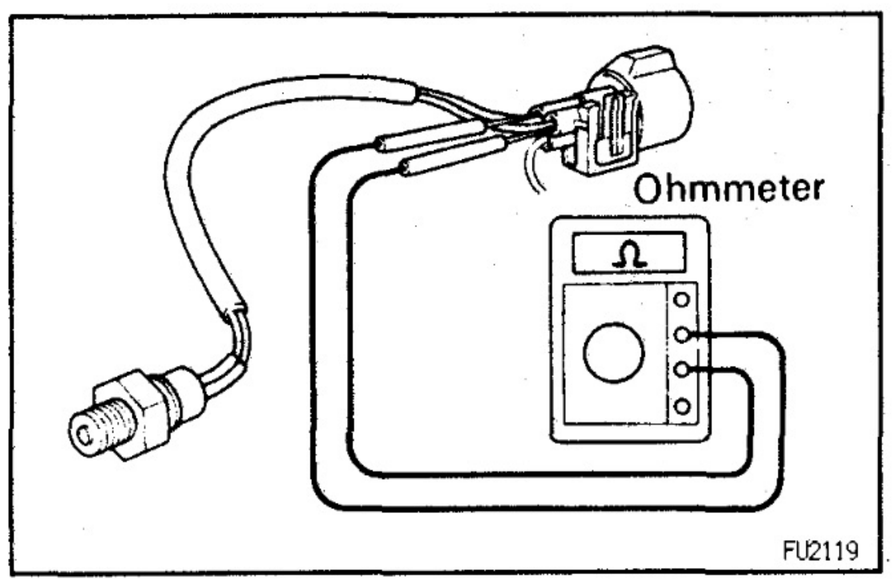

7. INSPECT PICKUP SENSOR

Using an ohmmeter, measure the resistance between the terminals.

Resistance: 650 – 970 Ω

If resistance is not as specified, replace the sensor.

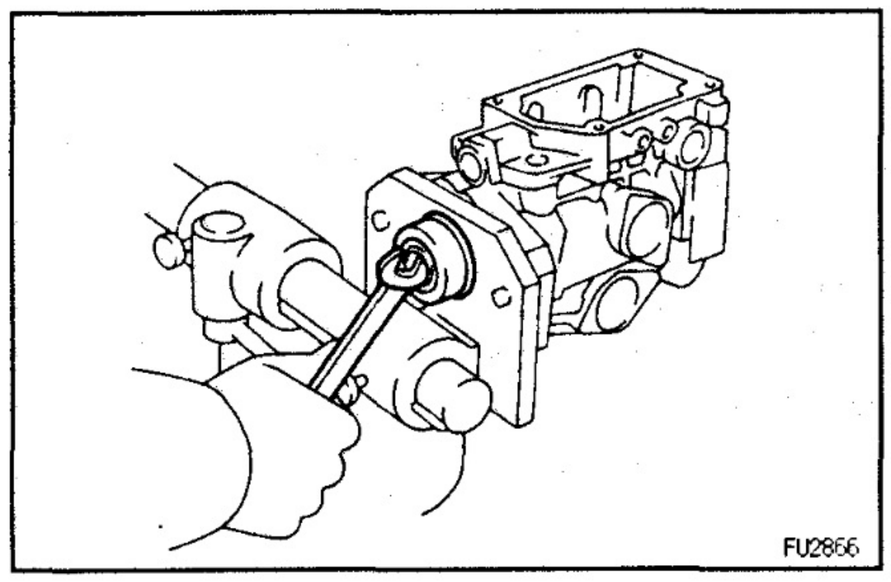

8. IF NECESSARY, REPLACE OIL SEAL

(a) Using a wrench, pry out the oil seal.

NOTICE: Be careful not to damage to the pump body.

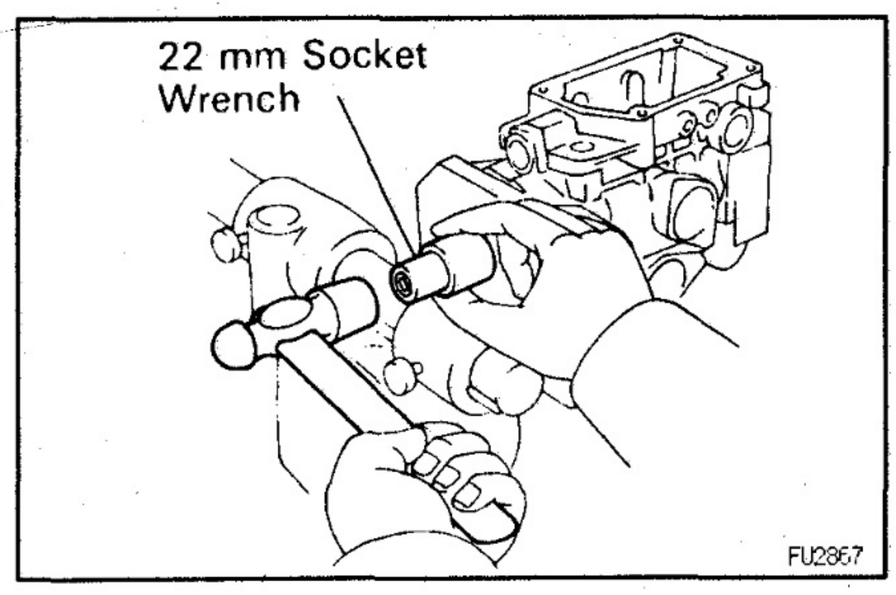

(b) Apply MP grease to the lip of a new oil seal.

(c) Using a 22 mm socket wrench, tap in the oil seal until its surface is flush with the pump housing.

EG349-01

INJECTION PUMP ASSEMBLY

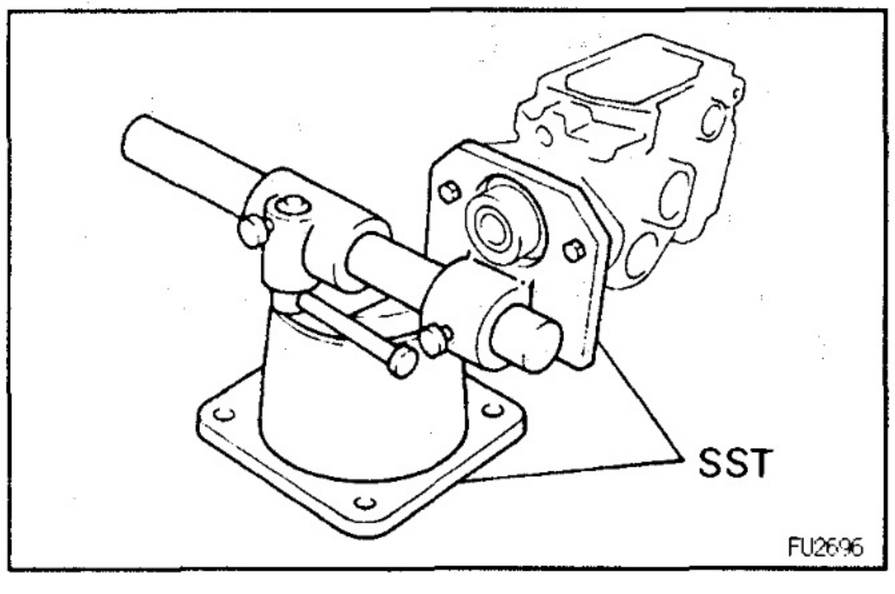

(See Components for Disassembly and Assembly)

1. MOUNT PUMP BODY TO SST (STAND)

SST 09241–76022 and 09245–54010

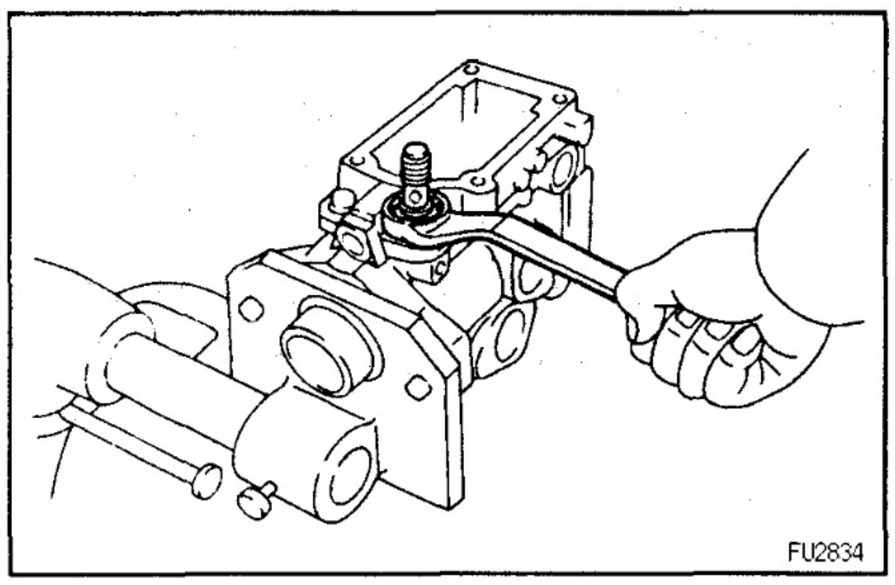

2. INSTALL FUEL INLET HOLLOW SCREW

Install a new gasket and the hollow screw.

Torque: 37 N·m (375 kgf·cm, 27 ft·lbf)

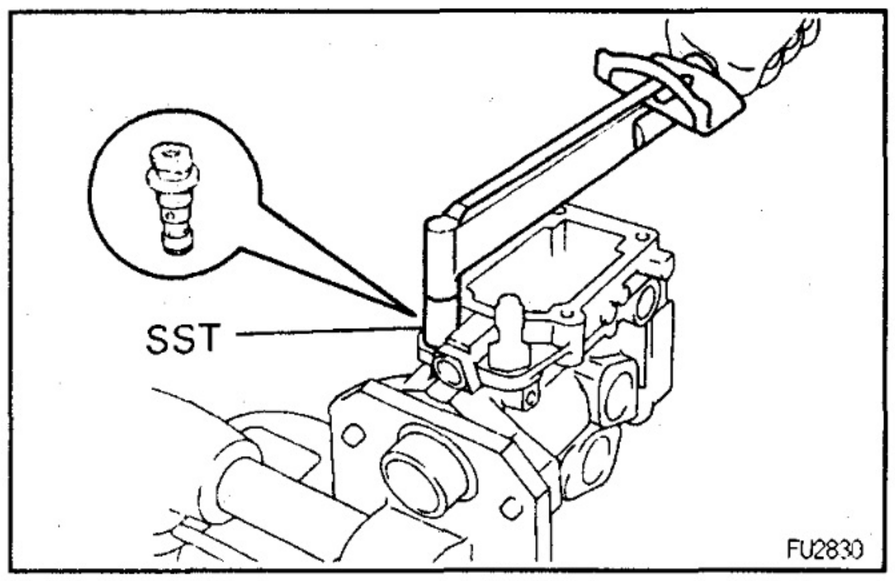

3. INSTALL REGULATOR VALVE

(a) Install the 2 O–rings to the regulator valve.

(b) Using SST, install the regulator valve.

SST 09260–54012 (09262–54020)

Torque: 8.8 N·m (90 kgf·cm, 78 in.·lbf)

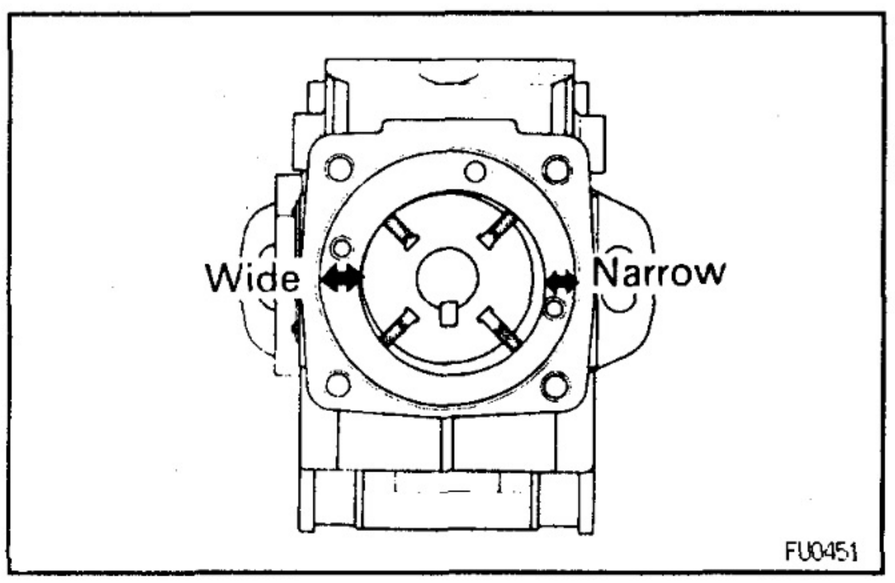

4. INSTALL FUEL FEED PUMP

(a) Install the liner, rotor and 4 blades.

(b) Check that the liner and blades are facing in the correct direction, as shown.

(c) Check that the blades move smoothly.

(d) Align the fuel outlet holes of the cover and liner.

(e) Install the pump cover with the 2 screws.

Torque: 2.5 N·m (25 kgf·cm, 22 in.·lbf)

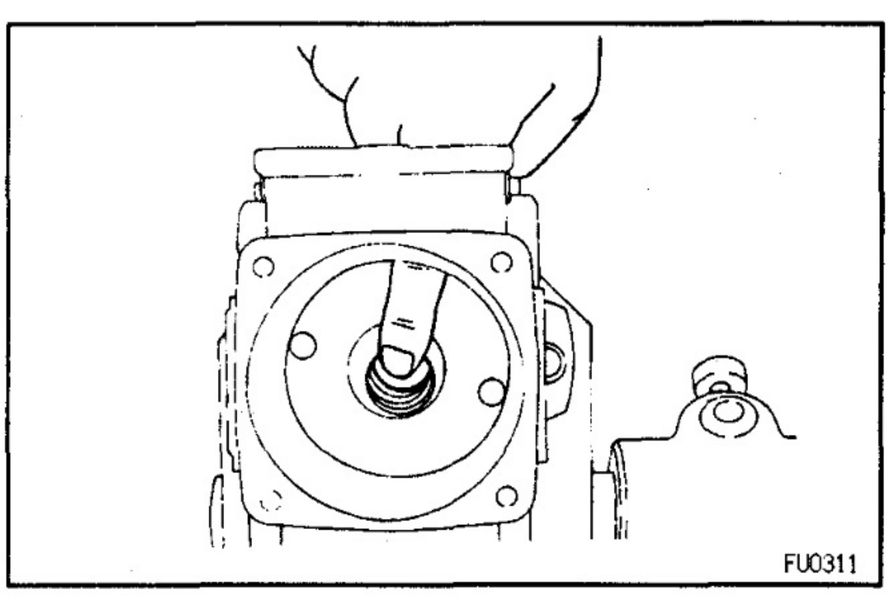

(f) Check that the rotor moves smoothly.

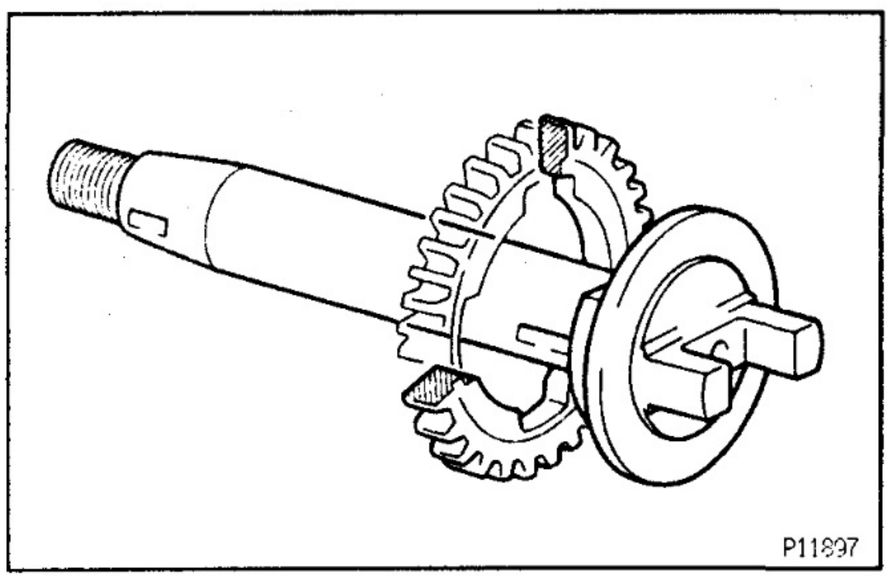

5. INSTALL DRIVE SHAFT

(a) Install the drive gear on the drive shaft as shown.

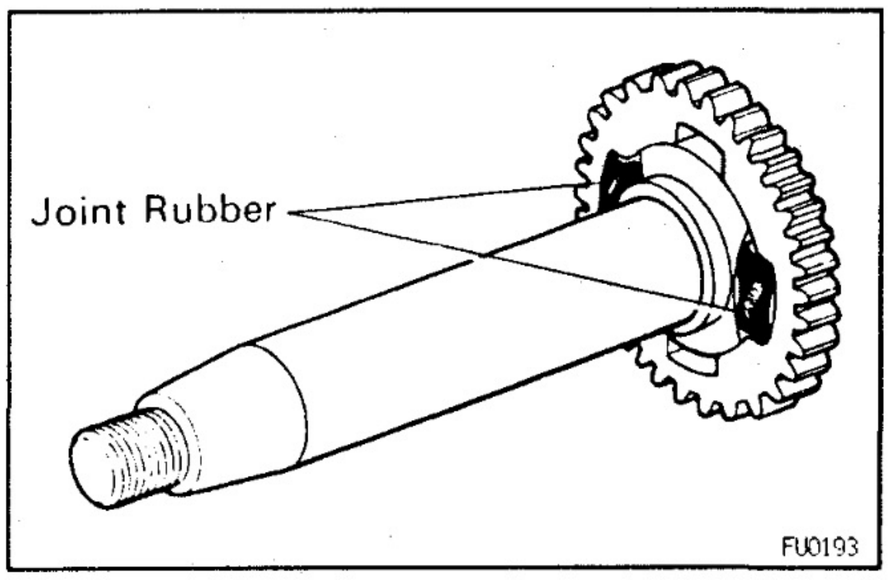

(b) Install 2 new joint rubbers into the drive gear.

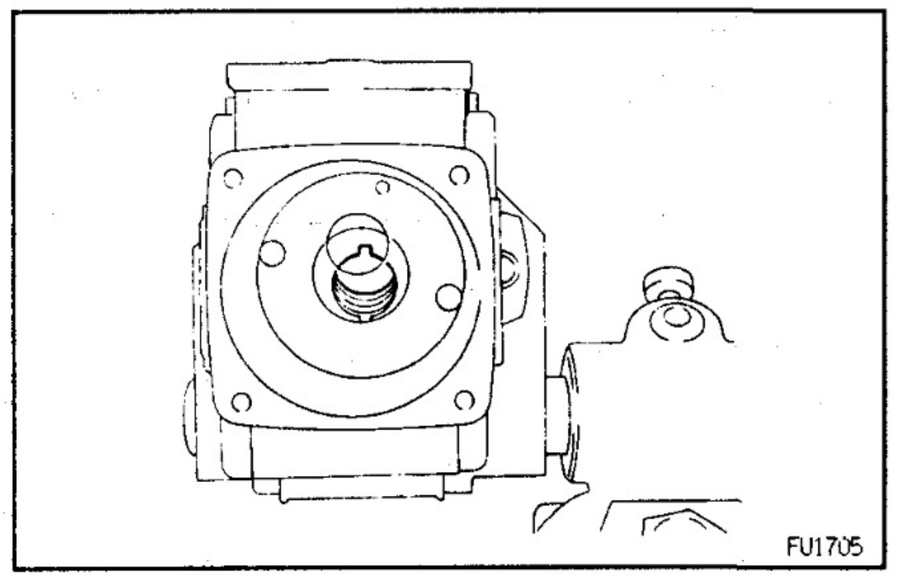

(c) Position the key groove of the feed pump rotor upward.

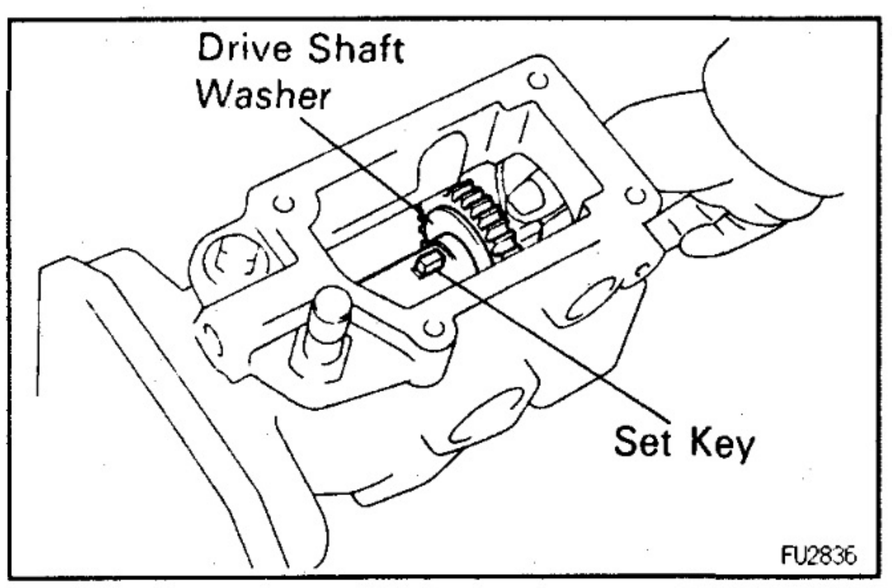

(d) Install the set key and drive shaft washer on the drive shaft and insert the drive shaft assembly into the pump housing.

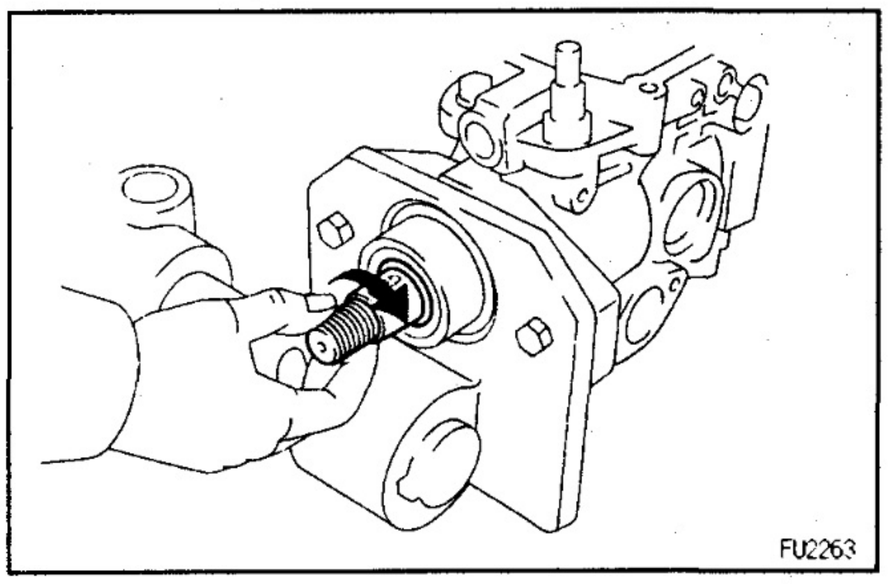

(e) Check that the drive shaft turns without catching.

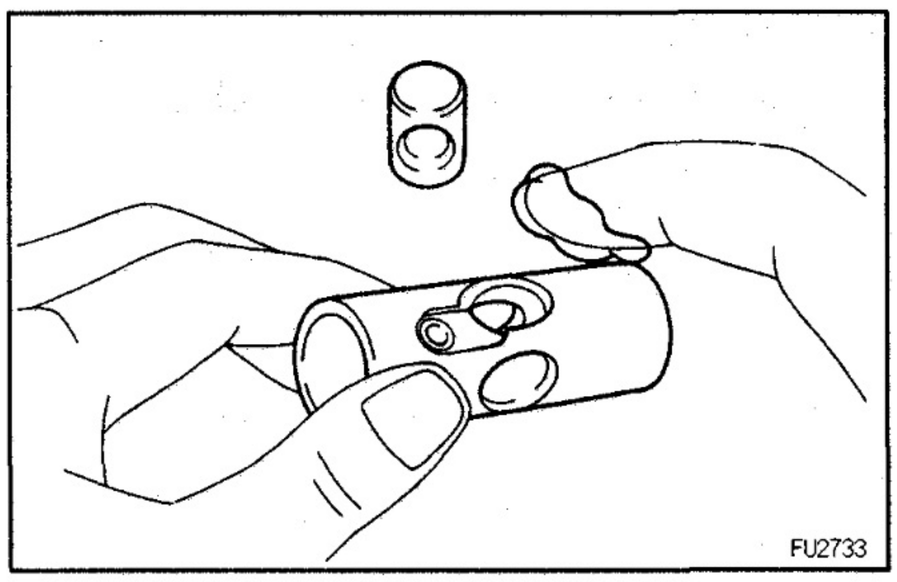

6. INSTALL TIMER PISTON

(a) Apply grease to the timer piston.

(b) Install the sub–piston into the timer piston.

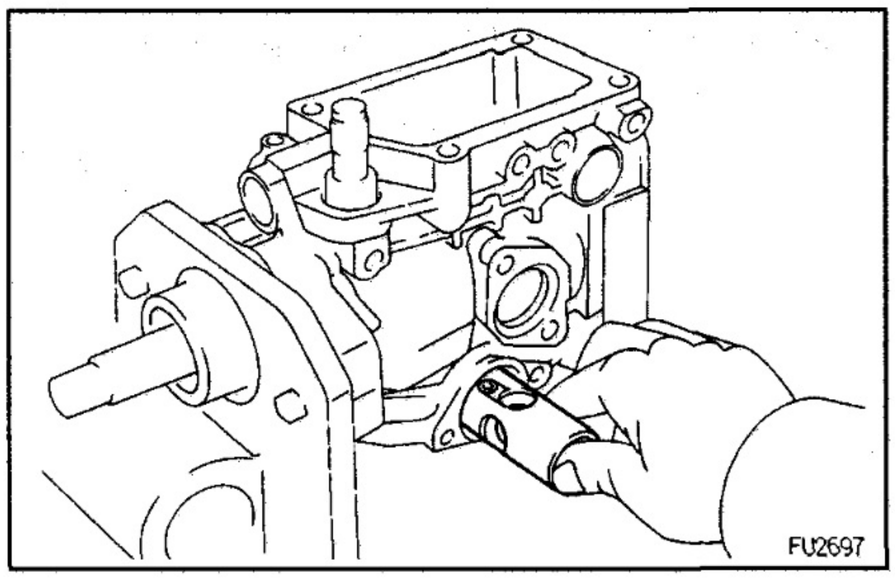

(c) Insert the timer piston into the pump housing.

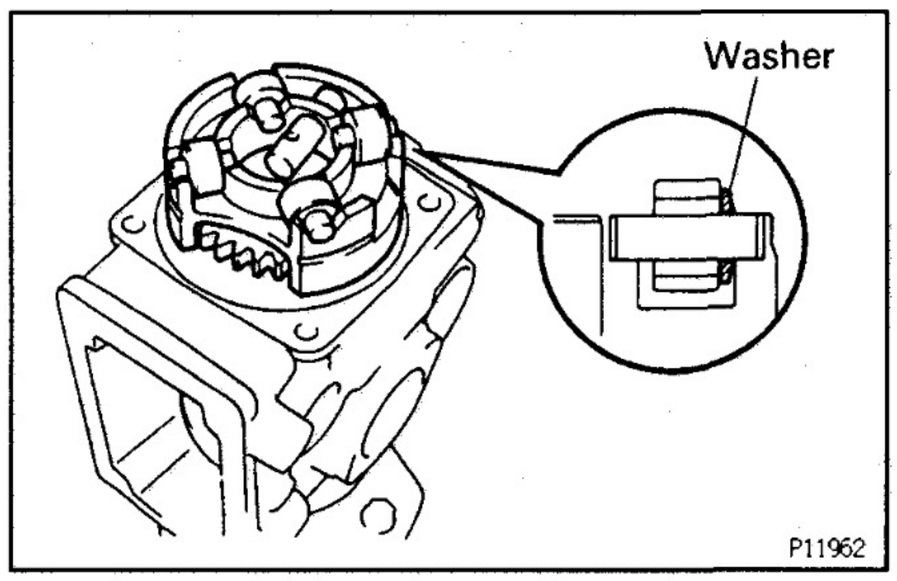

7. INSTALL ROLLER RING

(a) Install the slide pin, 4 rollers and washers on the roller ring.

(b) Check that the roller is facing the flat surface of the washer.

(c) Install the roller ring into the pump housing.

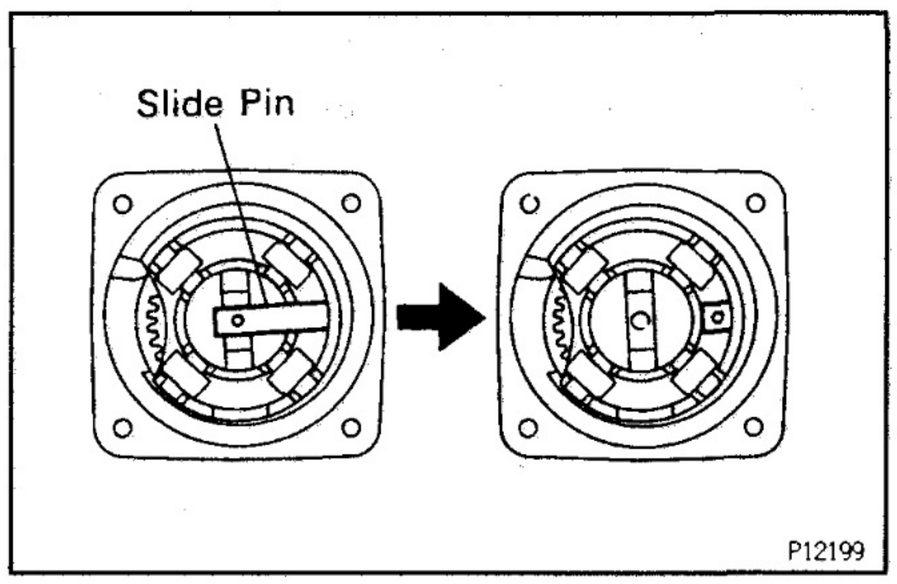

(d) Carefully install the slide pin into the sub–piston.

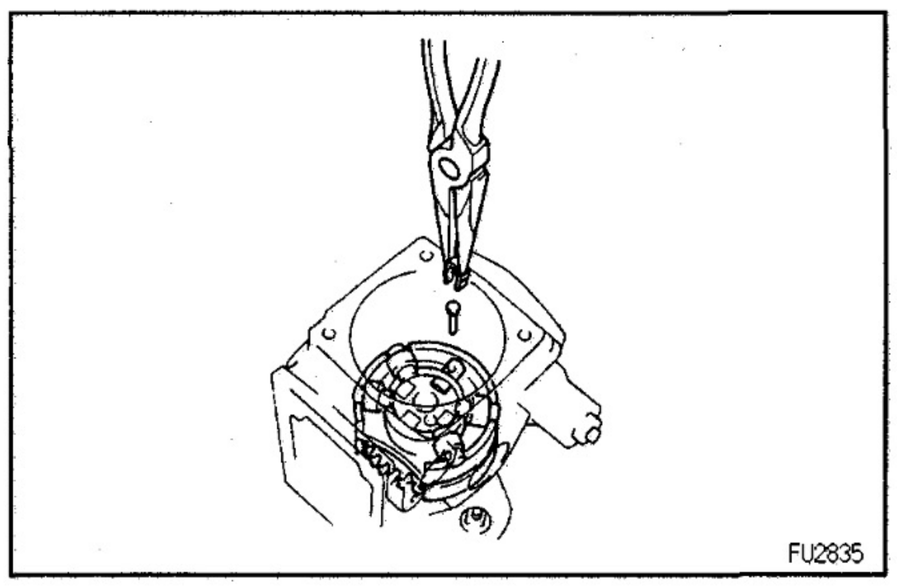

(e) Install the stopper pin and clip.

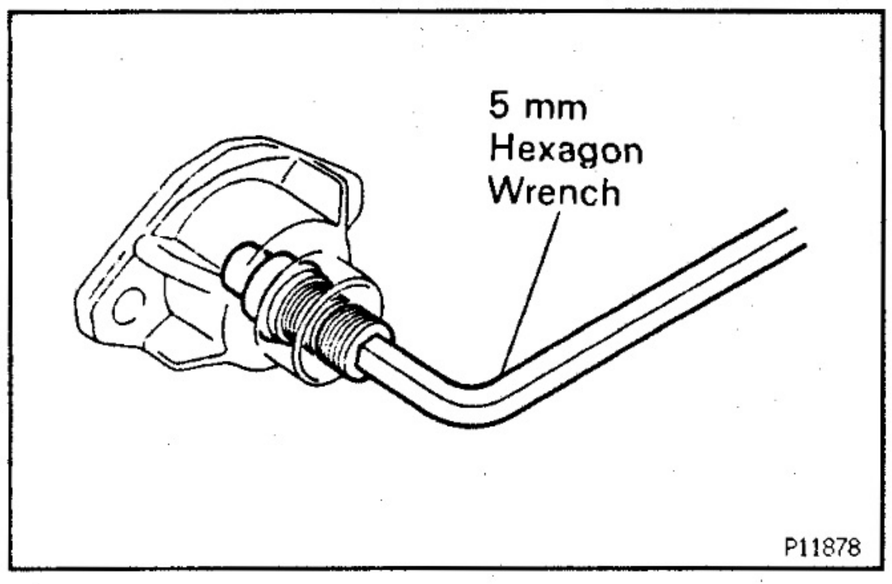

8. INSTALL TIMER SPRING

(a) Install a new O–ring to the timer adjusting screw.

(b) Using a 5 mm hexagon wrench, install the timer adjusting screw to the LH timer cover and temporarily install the nut.

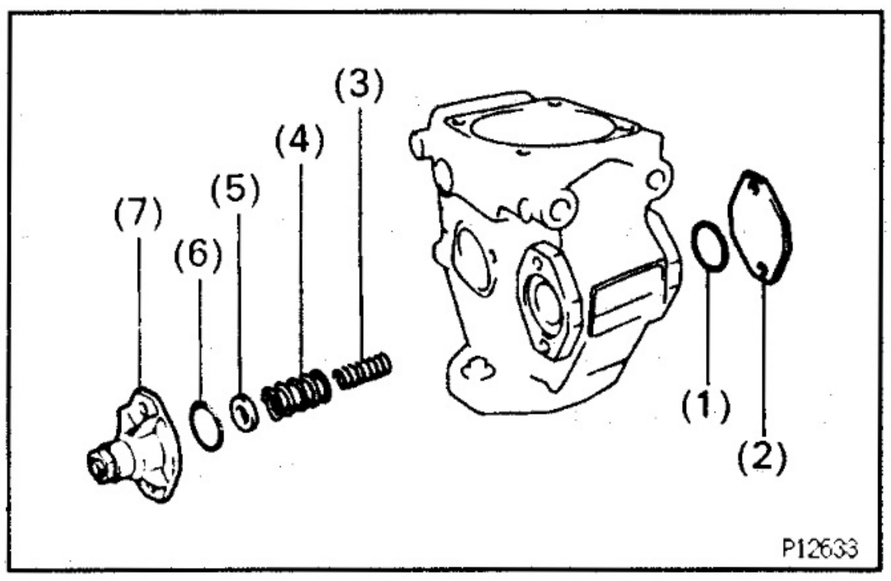

(c) Install the following parts:
- (1) New O–ring
- (2) RH timer cover
- (3) Inner spring
- (4) Outer spring
- (5) Shim
- (6) New O–ring
- (7) LH timer cover, timer adjusting screw and nut assembly

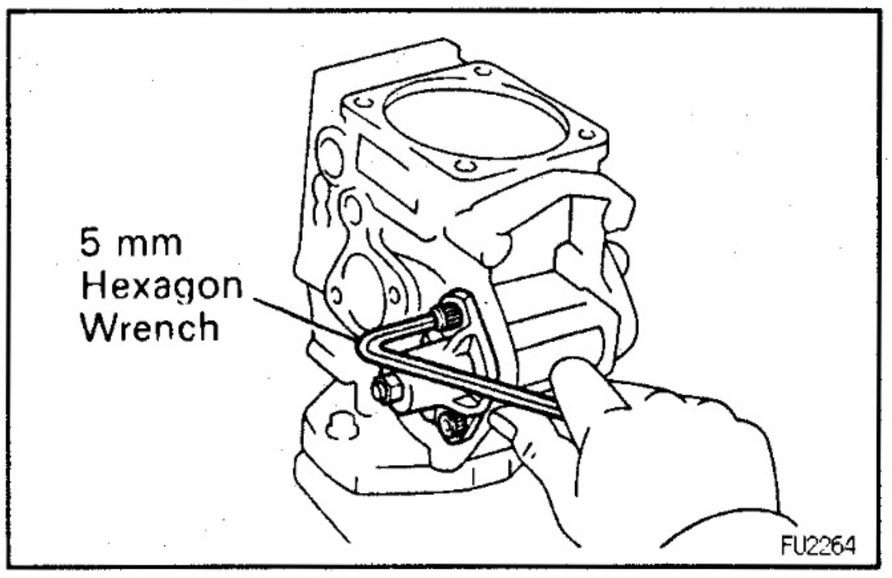

(d) Using a 5 mm hexagon wrench, install the 4 bolts.

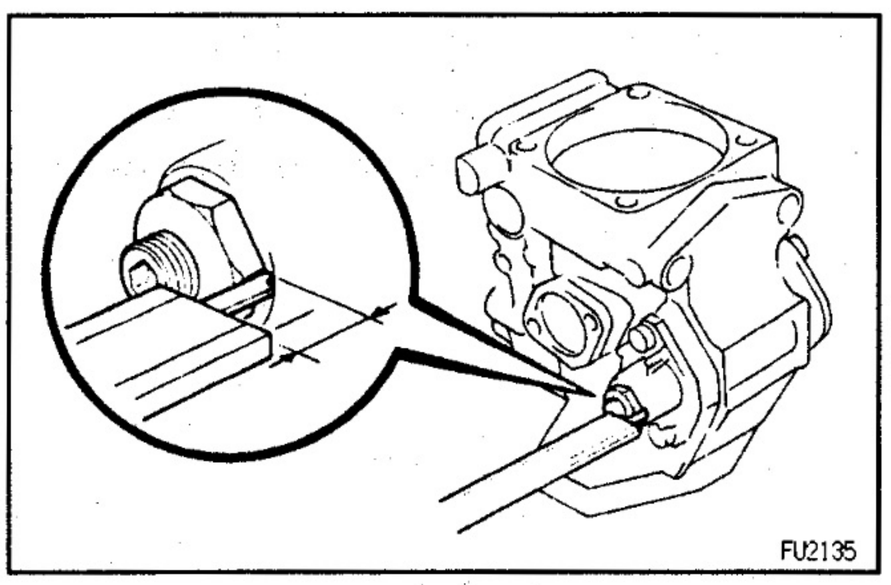

9. PRESET TIMER ADJUSTING SCREW

(a) Using vernier calipers, measure the protrusion of the adjusting screw from the timer cover.

Protrusion:

7.5 – 8.0 mm (0.295 – 0.315 in.)

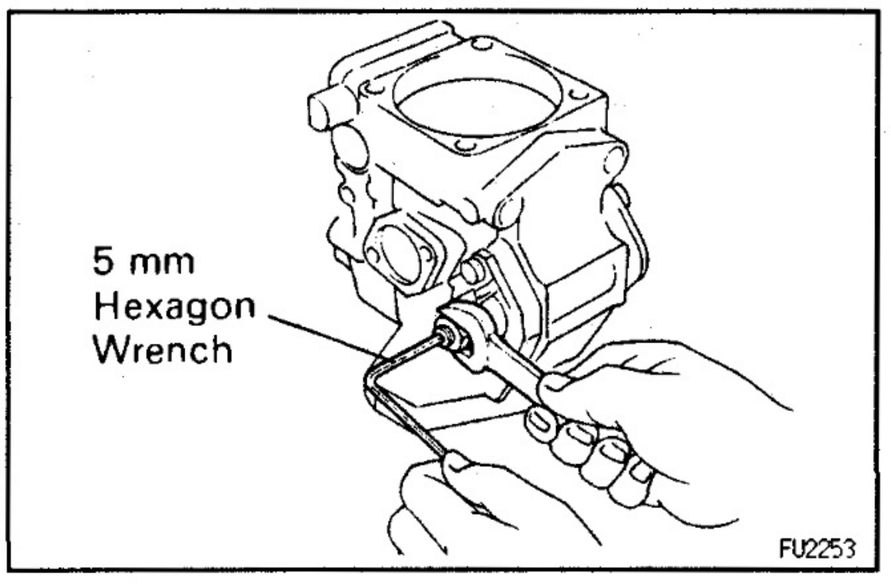

(b) Using a 5 mm hexagon wrench, adjust the protrusion of the adjusting screw from the timer cover.

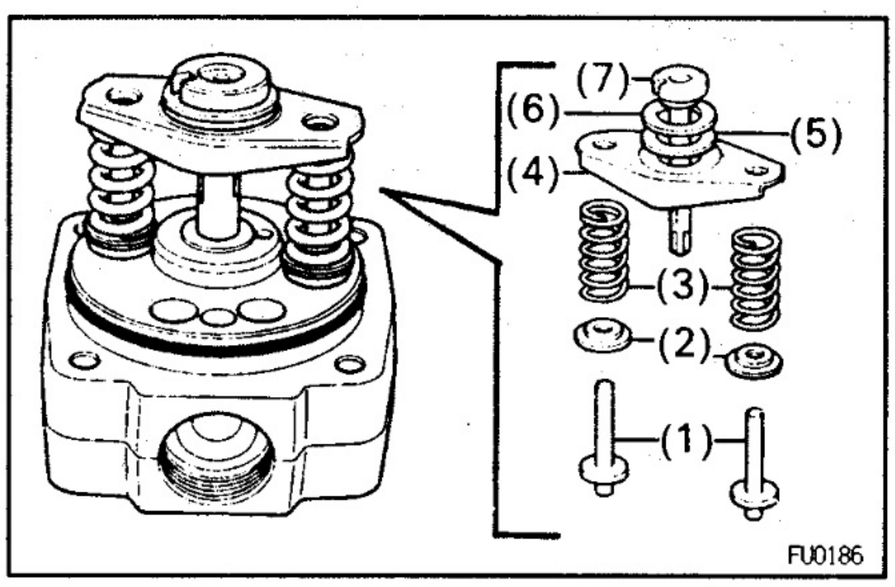

10. ADJUST PLUNGER SPRING SHIM

(a) Install the following parts to the distributive head:
- (1) 2 plunger spring guides
- (2) 2 upper spring seats
- (3) 2 plunger springs
- (4) Lower spring seat
- (5) Upper plunger plate
- (6) Lower plunger plate
- (7) Pump plunger

HINT: Do not assemble the plunger spring shims at this time.

(b) Using vernier calipers, measure clearance A indicated in the illustration.

(c) Determine the plunger spring shim size by using the following formula and chart.

New plunger spring shim thickness = 6.3 – A

A ... Measured plunger position

Plunger spring shim selection chart **mm (in.)**

Measured clearance	Shim thickness	Measured clearance	Shim thickness
More than 5.8 (0.228)	0.5 (0.020)	4.8 – 5.0 (0.189 – 0.197)	1.5 (0.059)
5.5 – 5.7 (0.217 – 0.224)	0.8 (0.031)	4.5 – 4.7 (0.177 – 0.185)	1.8 (0.071)
5.3 – 5.4 (0.209 – 0.213)	1.0 (0.039)	Less than 4.4 (0.173)	2.0 (0.079)
5.1 – 5.2 (0.201 – 0.205)	1.2 (0.047)	–	–

V03750

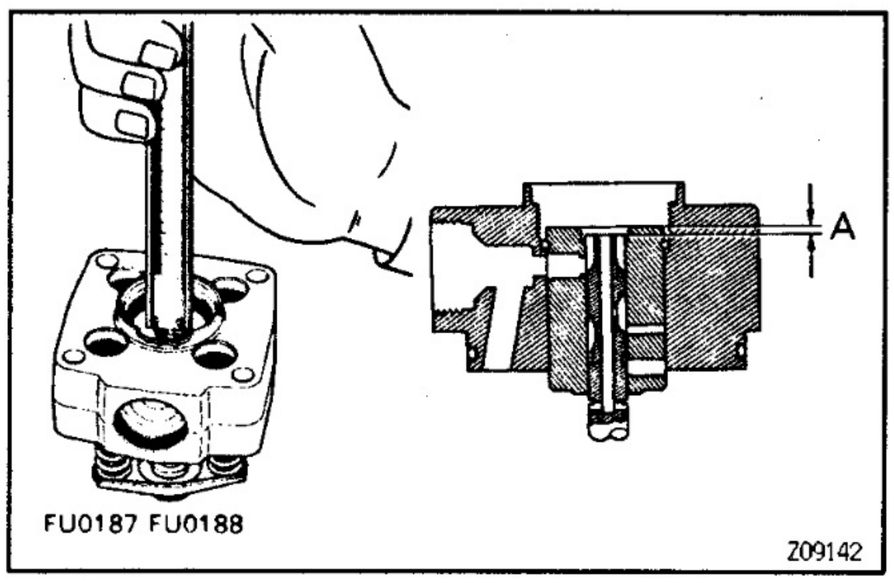

HINT:
- For a measurement between listed sizes, use the next larger size. Ex. If thickness is 1.1 mm (0.043 in.) by calculation, use a 1.2 mm (0.047 in.) shim.
- Select 2 shims which have the same thickness.

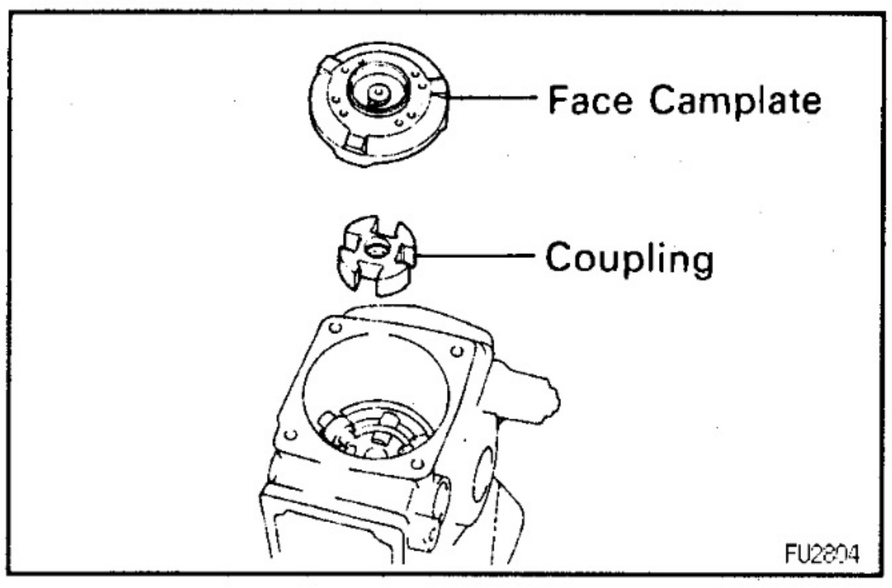

11. ADJUST PLUNGER ADJUSTING SHIM

(a) Install the coupling and face camplate.

HINT: Do not assemble the coupling spring.

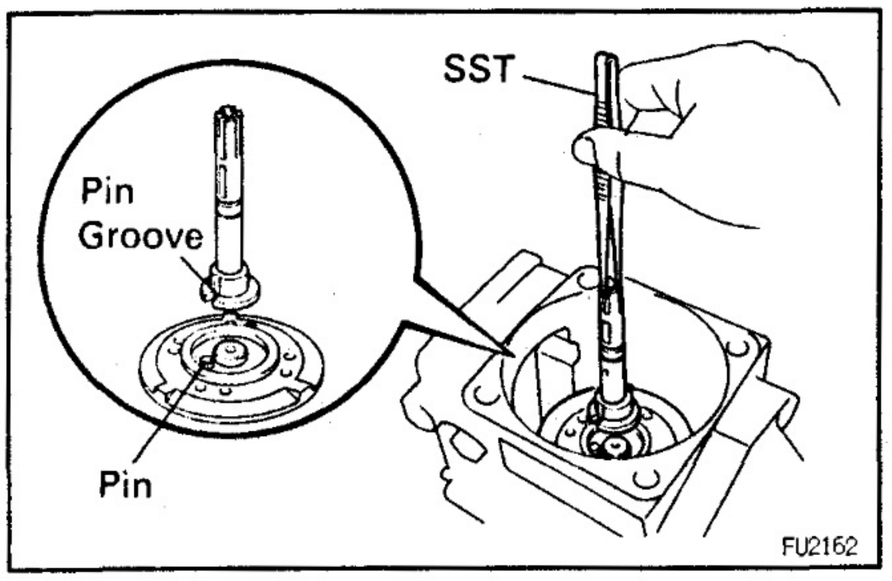

(b) Clean the plunger adjusting shim and contacting surface area.

(c) Align the pin groove of the pump plunger with the face camplate pin.

(d) Using SST, install the used plunger adjusting shim and pump plunger.
SST 09260–54012 (09269–54030)

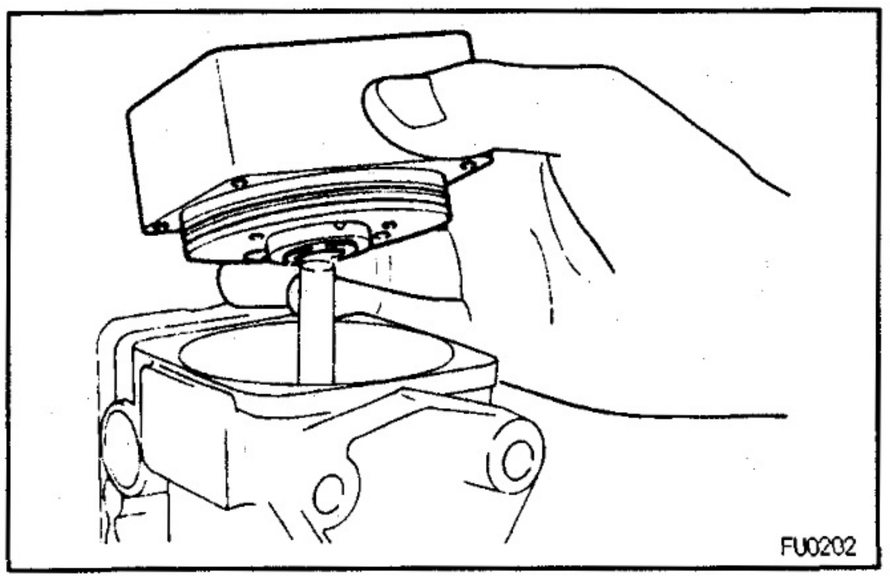

(e) Install the distributive head with the 4 bolts.
Torque: 12 N·m (120 kgf·cm, 9 ft·lbf)
NOTICE: Be careful not to damage the pump plunger.

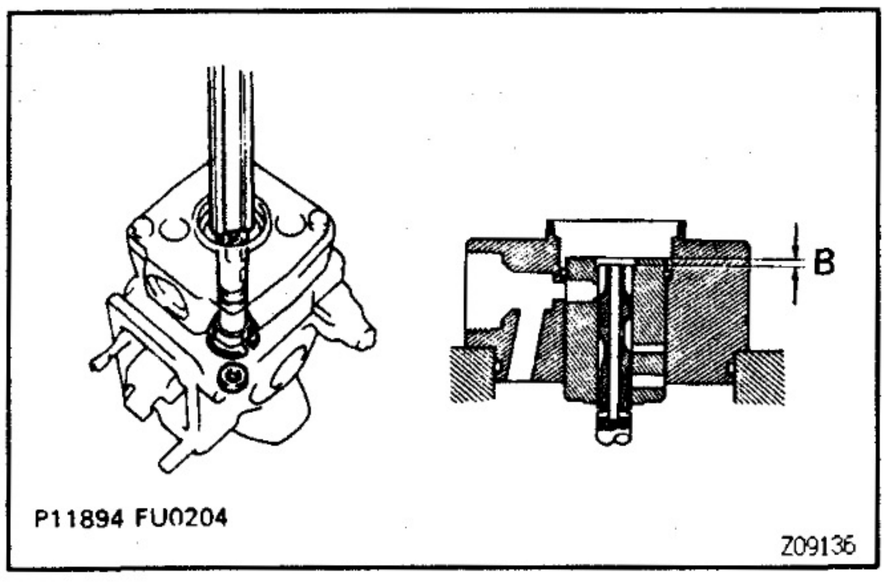

(f) Using vernier calipers, measure dimension B indicated in the illustration.

(g) Determine the plunger adjusting shim size by using the following formula and chart.
New adjusting shim thickness = T + (B – 3.3)
T ... Thickness of used shim
B ... Measured plunger position

Plunger adjusting shim selection chart

Installed shim mm	Measured clearance mm																			
	2.3	2.4	2.5	2.6	2.7	2.8	2.9	3.0	3.1	3.2 – 3.4	3.5	3.6	**3.7**	3.8	3.9	4.0	4.1	4.2	4.3	4.4
1.9											2.1	2.2	2.3	2.4	2.5	2.6	2.7	2.8	2.9	2.9
2.0									1.9		2.2	2.3	2.4	2.5	2.6	2.7	2.8	2.9	2.9	
2.1								1.9	1.9		2.3	2.4	2.5	2.6	2.7	2.8	2.9	2.9		
2.2							1.9	1.9	2.0		2.4	2.5	2.6	2.7	2.8	2.9	2.9			
2.3						1.9	1.9	2.0	2.1		2.5	2.6	2.7	2.8	2.9	2.9				
2.4					1.9	1.9	2.0	2.1	2.2		2.6	2.7	**2.8**	2.9	2.9					
2.5				1.9	1.9	2.0	2.1	2.2	2.3		2.7	2.8	2.9	2.9						
2.6			1.9	1.9	2.0	2.1	2.2	2.3	2.4		2.8	2.9	2.9							
2.7		1.9	1.9	2.0	2.1	2.2	2.3	2.4	2.5		2.9	2.9								
2.8	1.9	1.9	2.0	2.1	2.2	2.3	2.4	2.5	2.6		2.9									
2.9	1.9	2.0	2.1	2.2	2.3	2.4	2.5	2.6	2.7											

Plunger adjusting shim thickness mm (in.)	1.9 (0.075)	2.0 (0.079)	2.1 (0.083)	2.2 (0.087)	2.3 (0.091)	2.4 (0.094)	2.5 (0.098)	2.6 (0.102)	2.7 (0.106)	2.8 (0.110)	2.9 (0.114)

V03690

EXAMPLE: The 2.4 mm (0.094 in.) shim is installed and measured clearance is 3.7 mm (0.146 in.). Replace the 2.4 mm (0.094 in.) shim with a 2.8 mm (0.110 in.) shim.

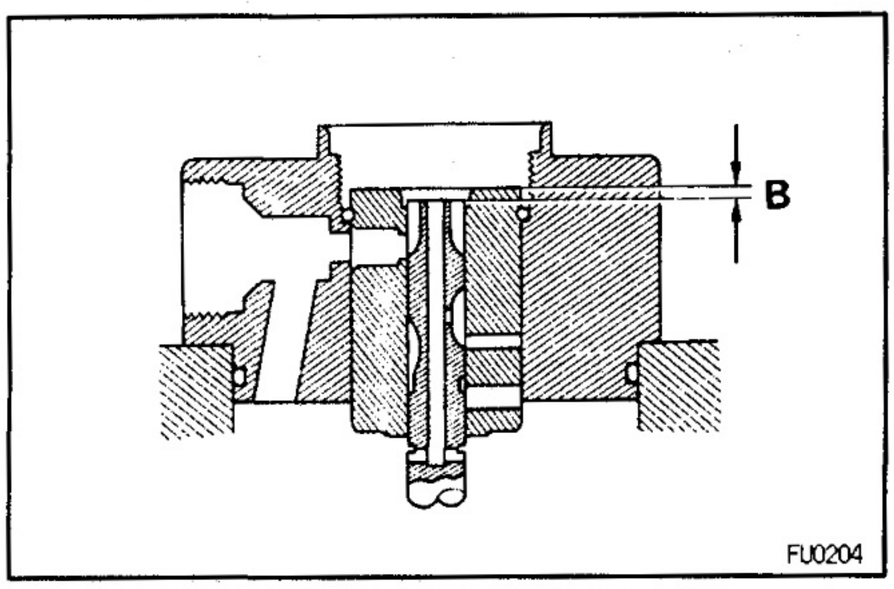

(h) Install a new plunger adjusting shim and recheck dimension B.

Dimension B:

3.2 – 3.4 mm (0.126 – 0.134 in.)

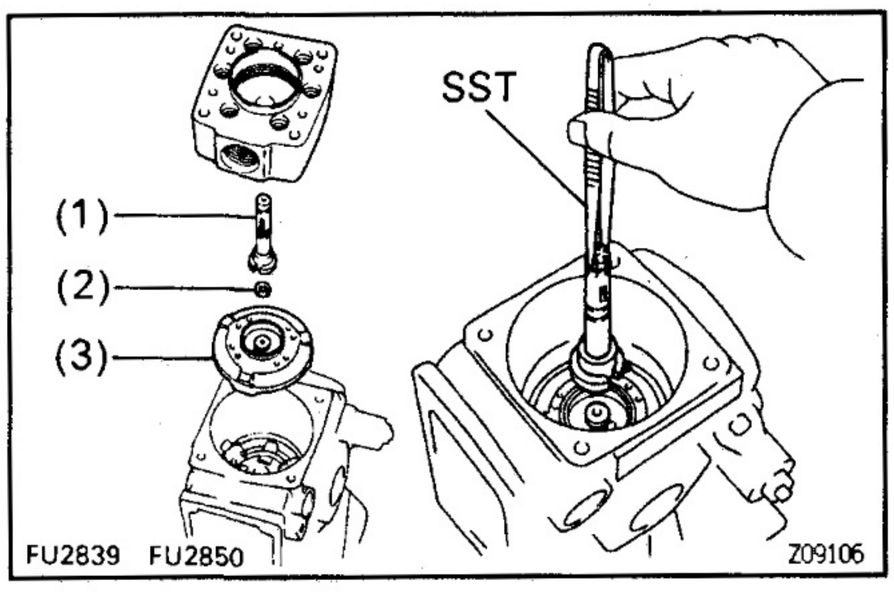

(i) Remove the distributive head.

(j) Using SST, remove the following parts:

(1) Pump plunger

(2) Plunger adjusting shim

(3) Face camplate

SST 09260–54012 (09269–54030)

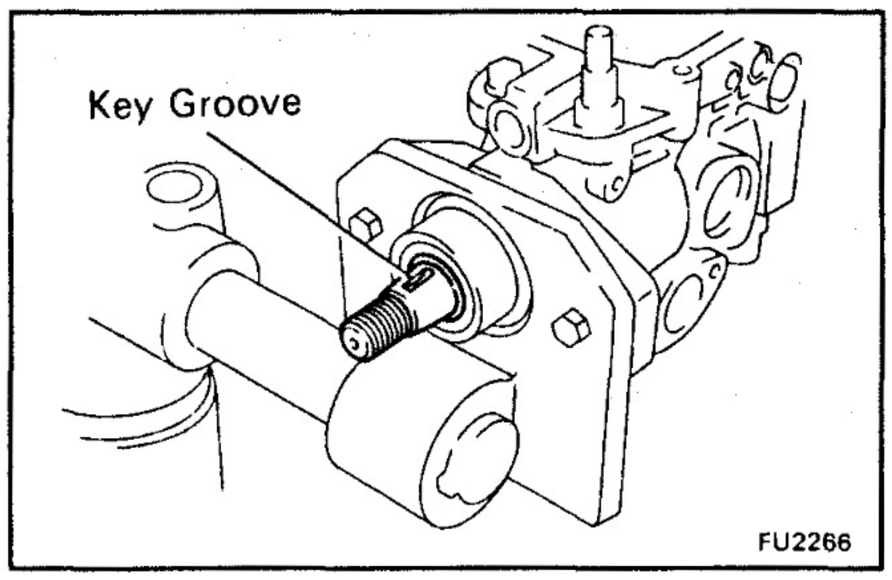

12. INSTALL FACE CAMPLATE

(a) Face the drive shaft with the key groove facing upward.

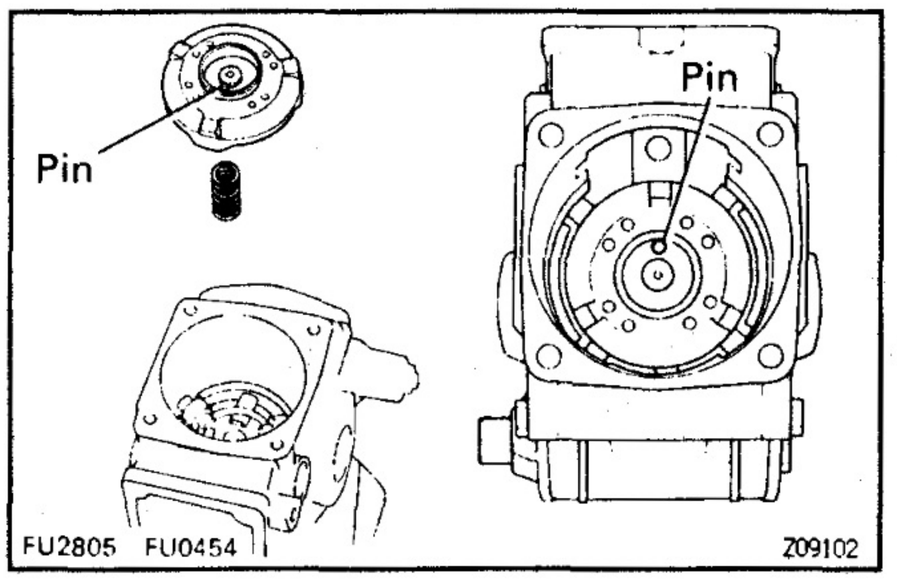

(b) Install the coupling spring and camplate with the camplate pin facing the governor cover side.

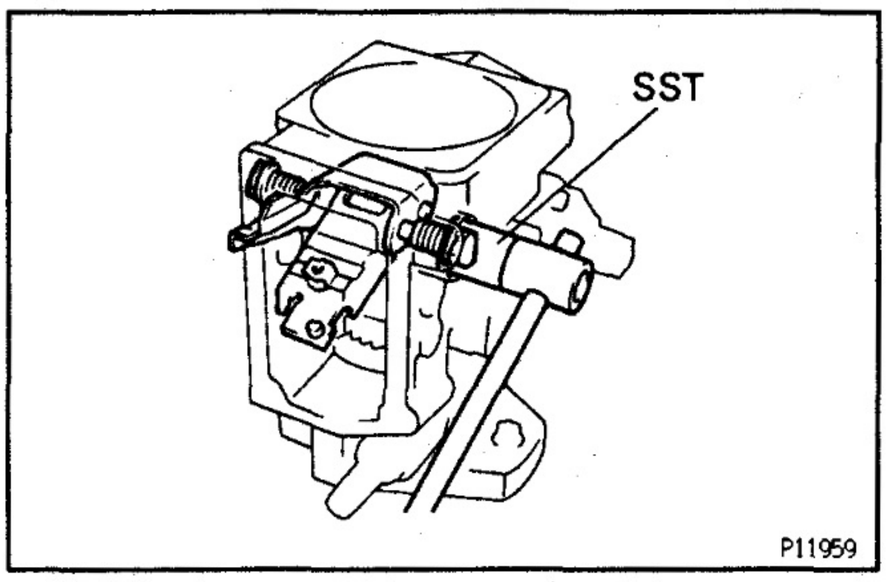

13. INSTALL GOVERNOR LINK

(a) Using SST, install the governor link with 2 new gaskets and the 2 support bolts.
Torque: 14 N·m (140 kgf·cm, 10 ft·lbf)
SST 09260–54012 (09269–54040)

(b) Check that the governor link moves smoothly.

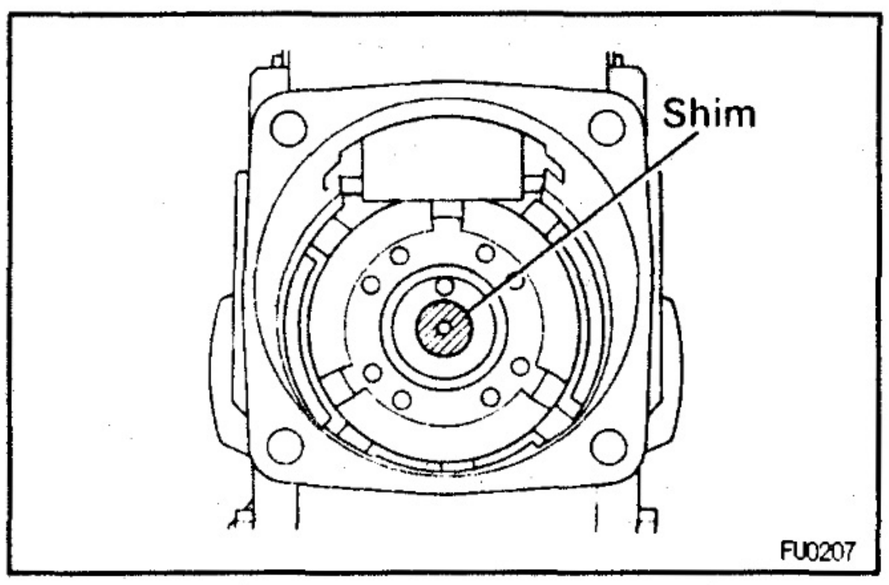

14. INSTALL PUMP PLUNGER

(a) Place the selected new plunger adjusting shim on the center of the camplate.
NOTICE: Do not apply grease to the shim.

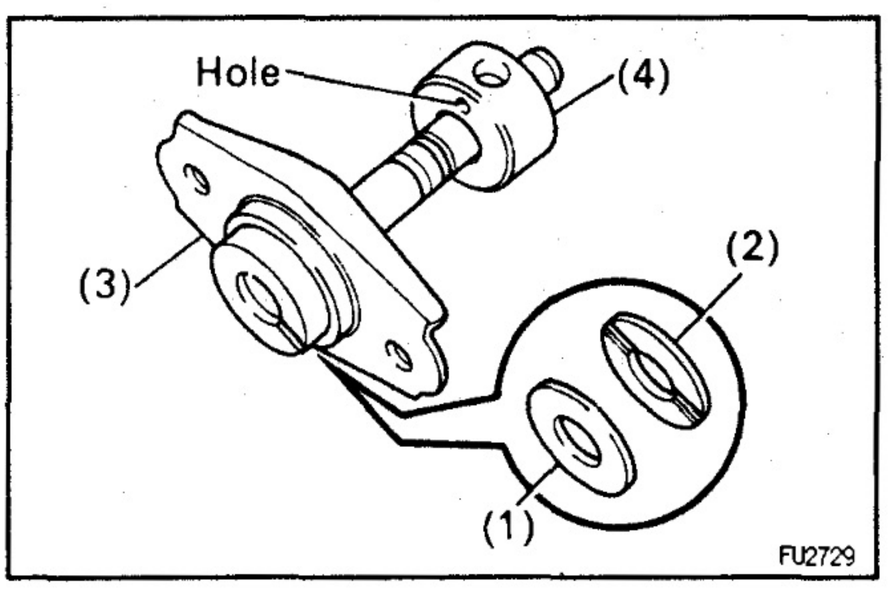

(b) Install the following parts to the pump plunger:
(1) Lower plunger plate
(2) Upper plunger plate
(3) Lower spring seat
(4) Spill ring
HINT: Face the spill ring with the hole facing the lower spring seat.

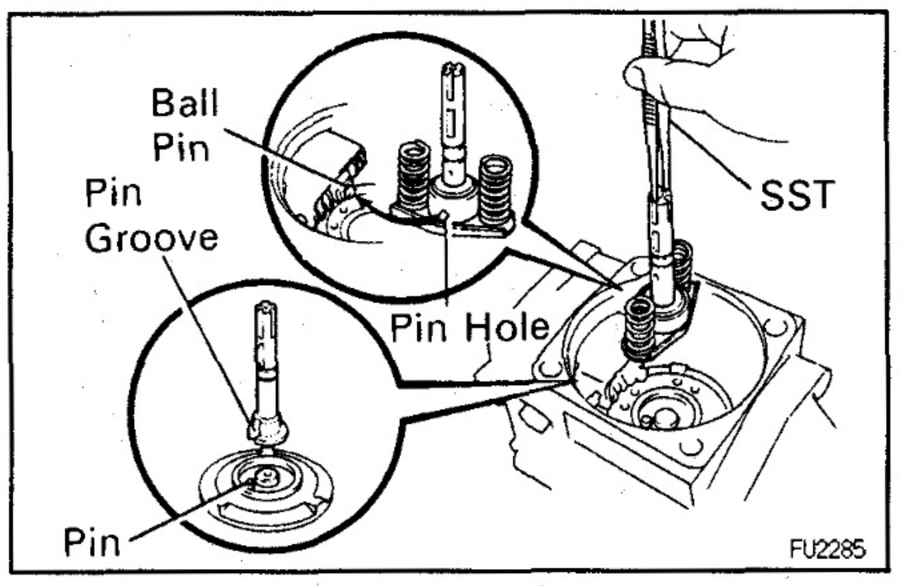

(c) Align the pin groove of the plunger with the pin of the face camplate.
(d) Align the ball pin of the governor link with the pin hole of the spill ring.
(e) Using SST, install the pump plunger and 2 plunger springs.
SST 09260–54012 (09269–54030)

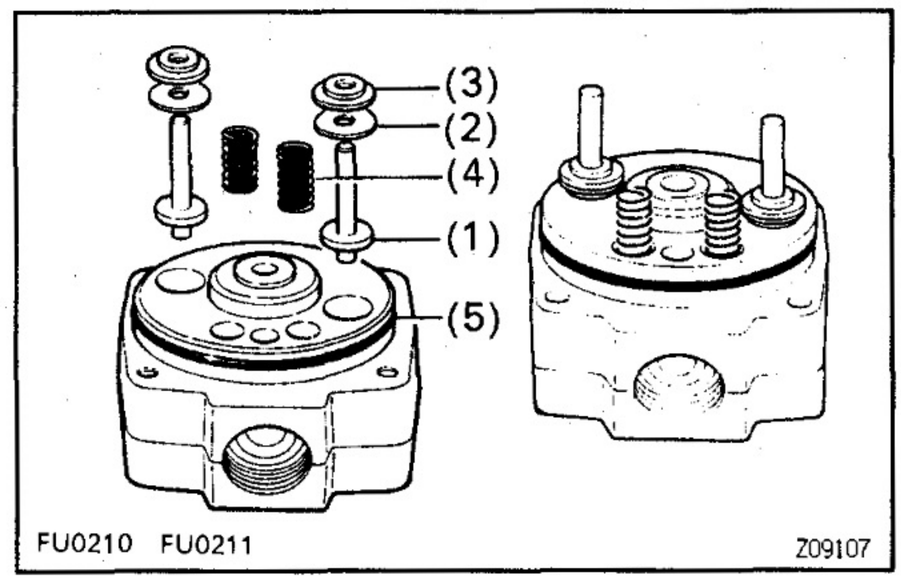

15. INSTALL DISTRIBUTIVE HEAD

(a) Apply grease to the following parts and install them to the distributive head:
(1) 2 plunger spring guides
(2) 2 new selected plunger spring shims
(3) 2 upper spring seats
(4) 2 lever support springs
(5) New O–ring

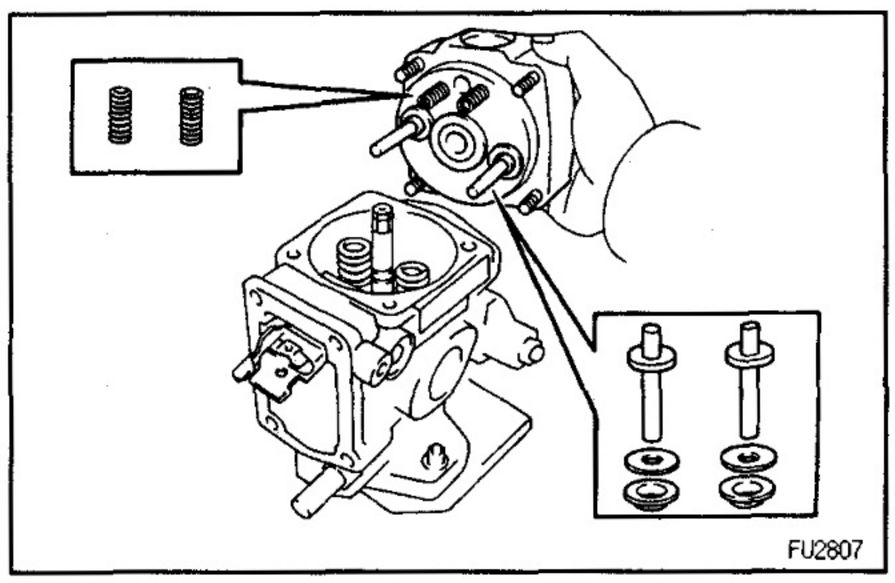

(b) Install the distributive head.
NOTICE: Be careful not to damage the pump plunger.

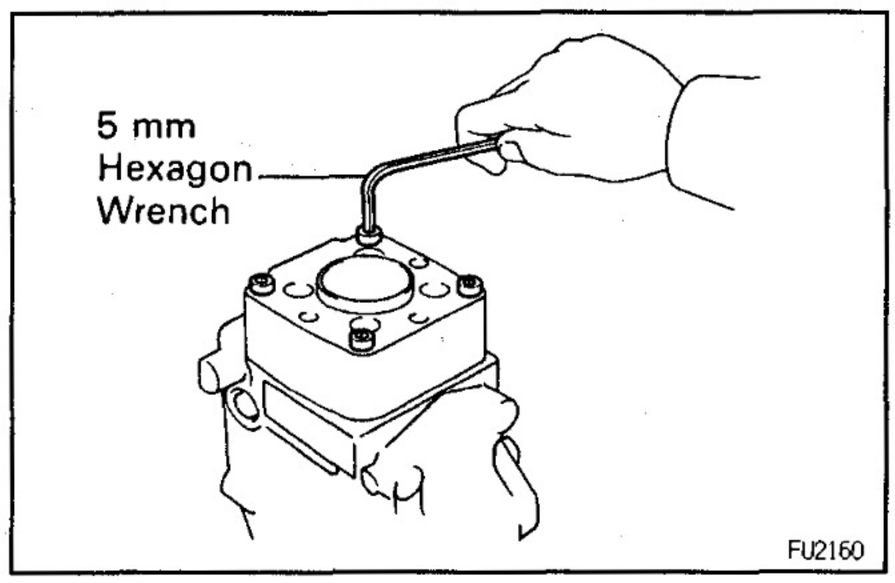

(c) Using a 5 mm hexagon wrench, install the 4 bolts.
Torque: 12 N·m (120 kgf·cm, 9 ft·lbf)
HINT: Use the bolt which is 45 mm (1.77 in.) in length.

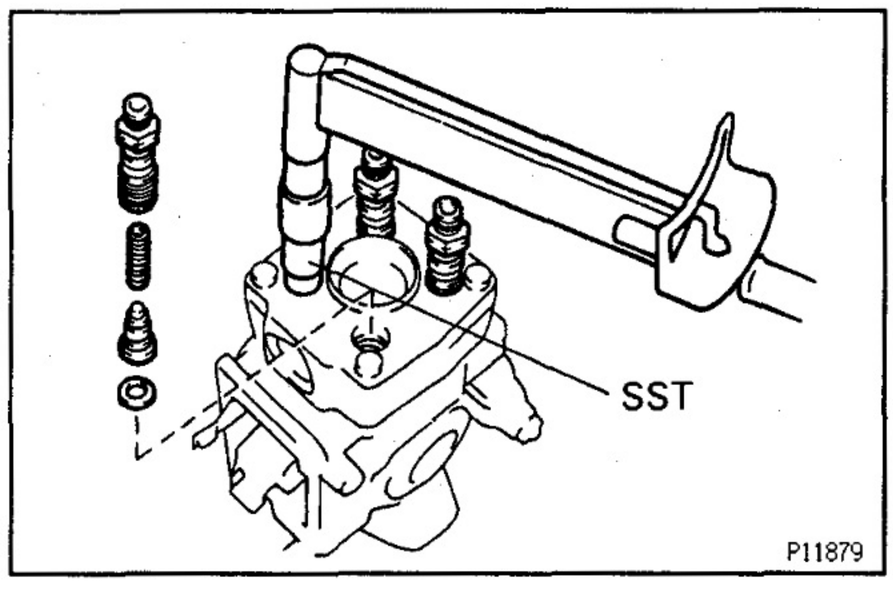

16. INSTALL DELIVERY VALVE HOLDERS

(a) Install new gaskets and the valves into the distributive head.
(b) Install the springs into the delivery valve holders.
(c) Using SST, install the delivery valve holders.
SST 09260–54012 (09269–54020)
Torque: 59 N·m (600 kgf·cm, 43 ft·lbf)

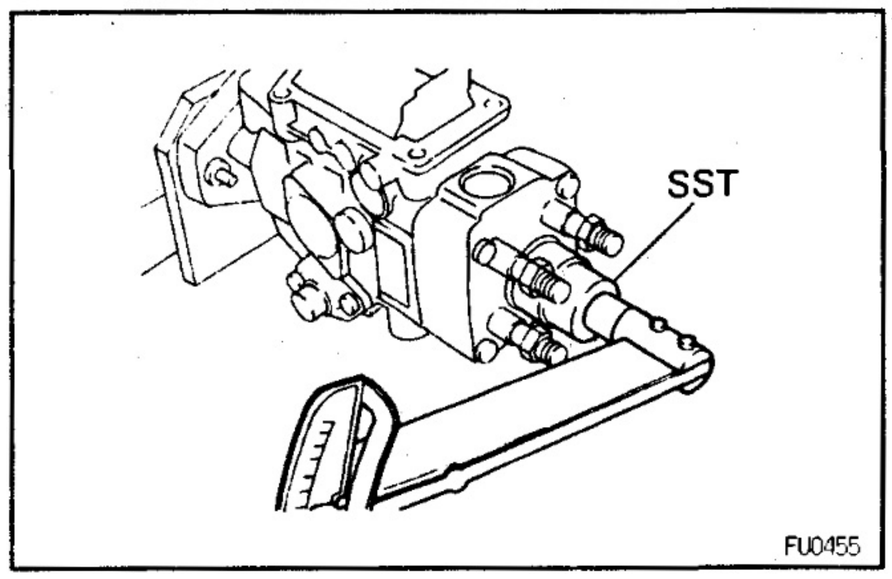

17. INSTALL DISTRIBUTIVE HEAD PLUG

(a) Install a new O–ring to the head plug.

(b) Using SST, install the head plug.
SST 09260–54012 (09262–54010)
Torque: 88 N·m (900 kgf·cm, 65 ft·lbf)

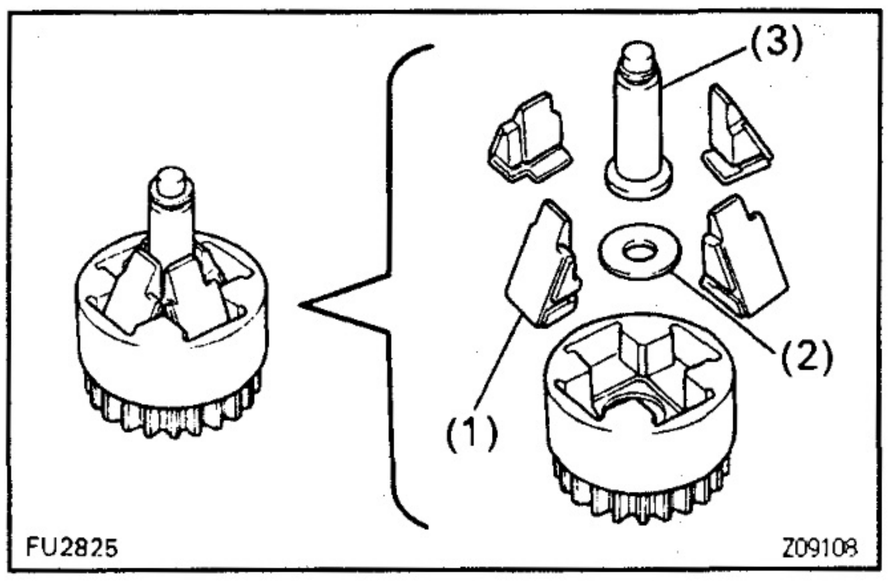

18. INSTALL GOVERNOR SHAFT AND FLYWEIGHT HOLDER

(a) Install the following parts to the flyweight holder:
(1) 4 flyweight
(2) No.2 flyweight washer
(3) Governor sleeve
HINT: Replace the 4 flyweights as a set.

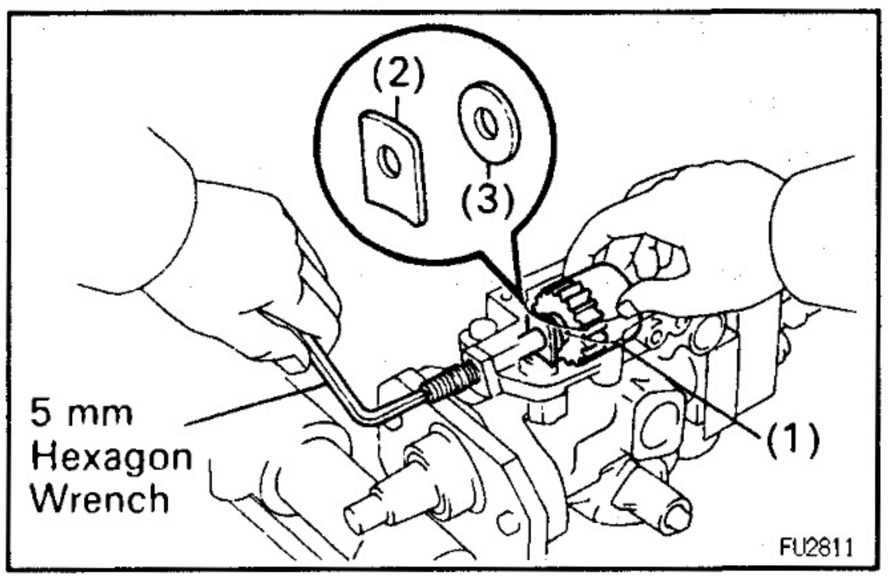

(b) Install a new O–ring to the governor shaft.

(c) Place the flyweight holder assembly (1) in position, and install the governor gear adjusting washer (2) and No. 1 flyweight washer (3) between the flyweight holder and pump housing.

(d) Install the governor shaft through the governor gear adjusting washer, No. 1 flyweight washer and flyweight holder assembly.

(e) Using a 5 mm hexagon wrench, turn the governor shaft counterclockwise.

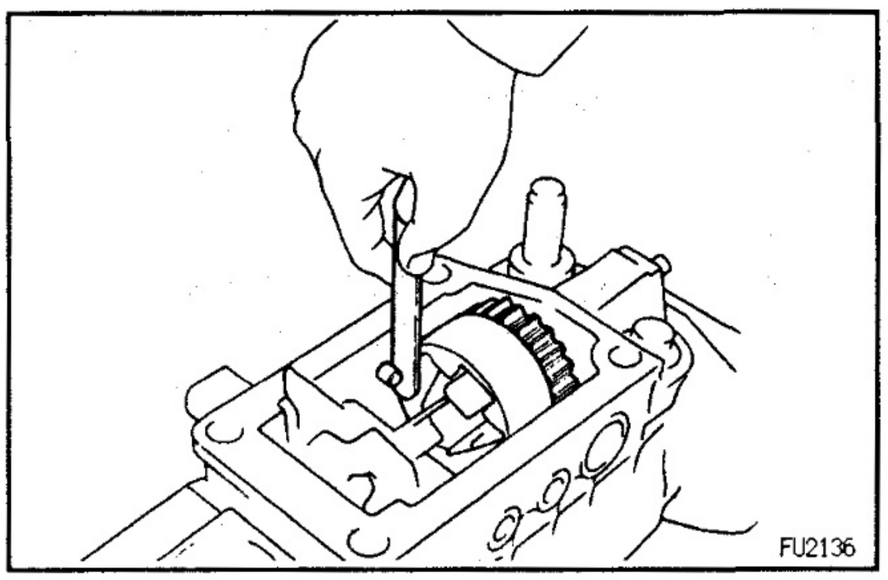

19. CHECK FLYWEIGHT HOLDER THRUST CLEARANCE

Using a thickness gauge, measure the thrust clearance between the housing pin and flyweight holder.
Thrust clearance:
0.15 – 0.35 mm (0.0059 – 0.0138 in.)

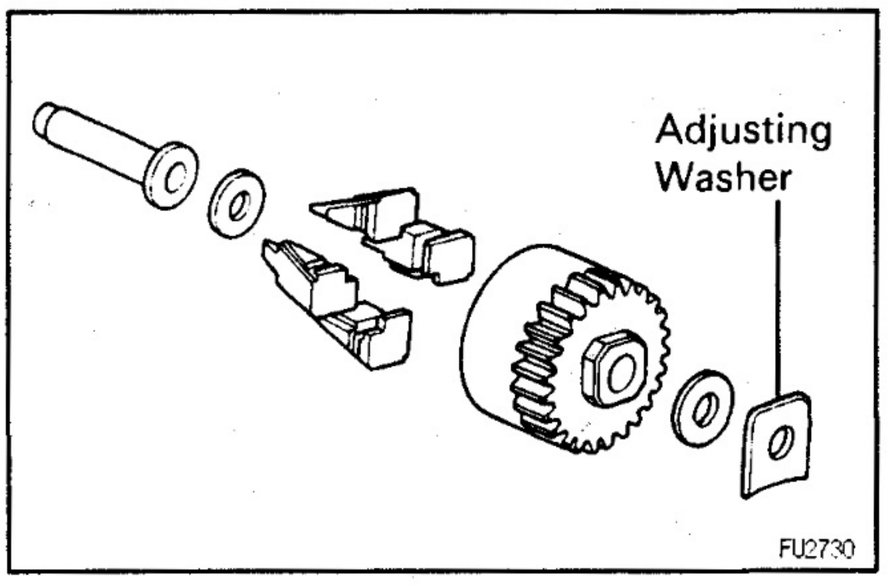

If the thrust clearance is not as specified, adjust with a governor gear adjusting washer.
Governor gear adjusting washer thickness:
1.05 mm (0.0413 in.)
1.25 mm (0.0492 in.)
1.45 mm (0.0571 in.)
1.65 mm (0.0650 in.)
1.85 mm (0.0728 in.)

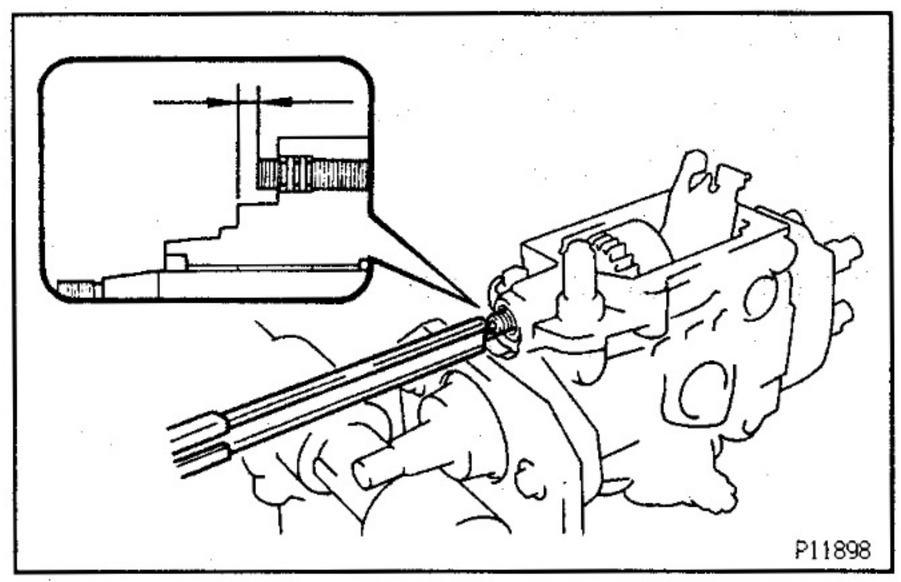

20. ADJUST PROTRUSION OF GOVERNOR SHAFT

(a) Using vernier calipers, measure the protrusion of the governor shaft.

Protrusion:

0.5 – 2.0 mm (0.020 – 0.079 in.)

If the protrusion is not as specified, adjust by turning the governor shaft.

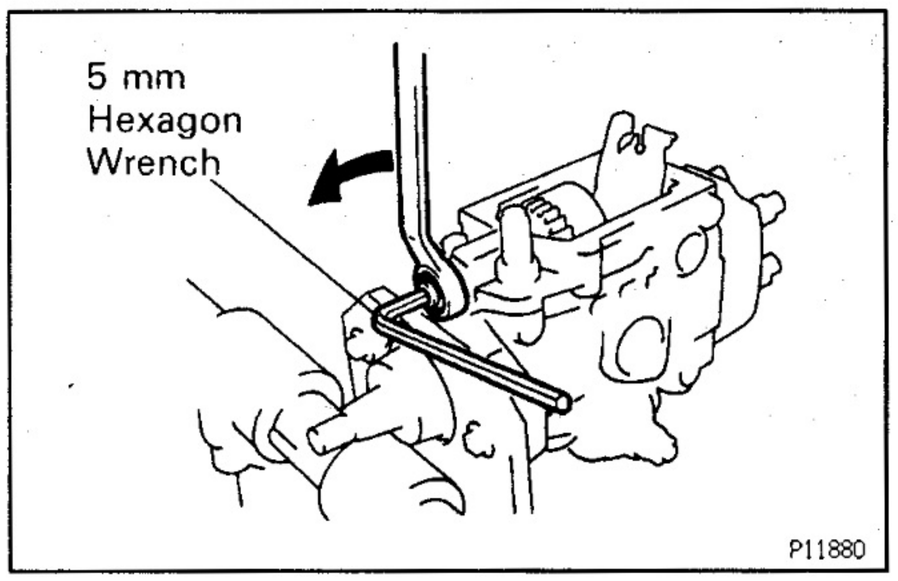

(b) Install and tighten the nut while holding the governor shaft with a 5 mm hexagon wrench.

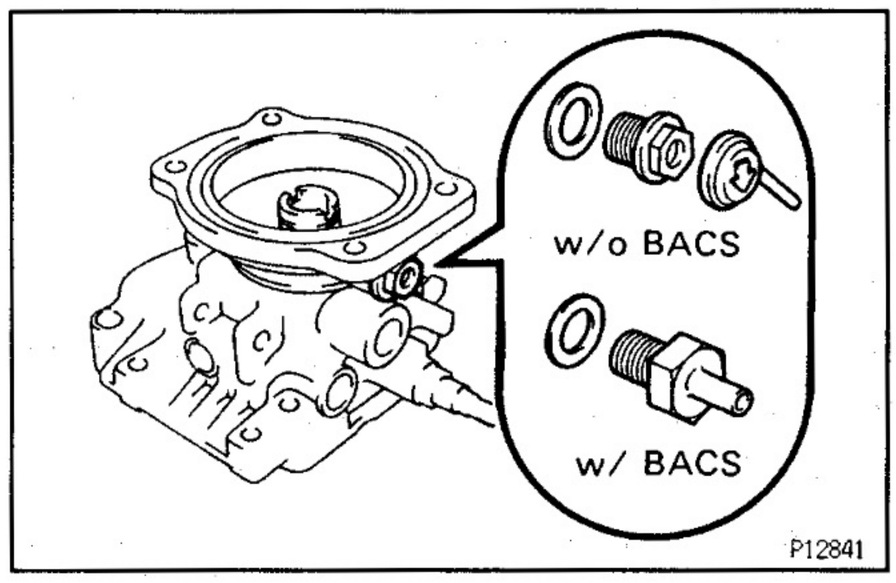

21. ASSEMBLE BOOST COMPENSATOR

A. Install overflow screw

(a) Install the overflow screw with a new gasket.

(b) w/o BACS:
Install the rubber cap facing the arrow downward.

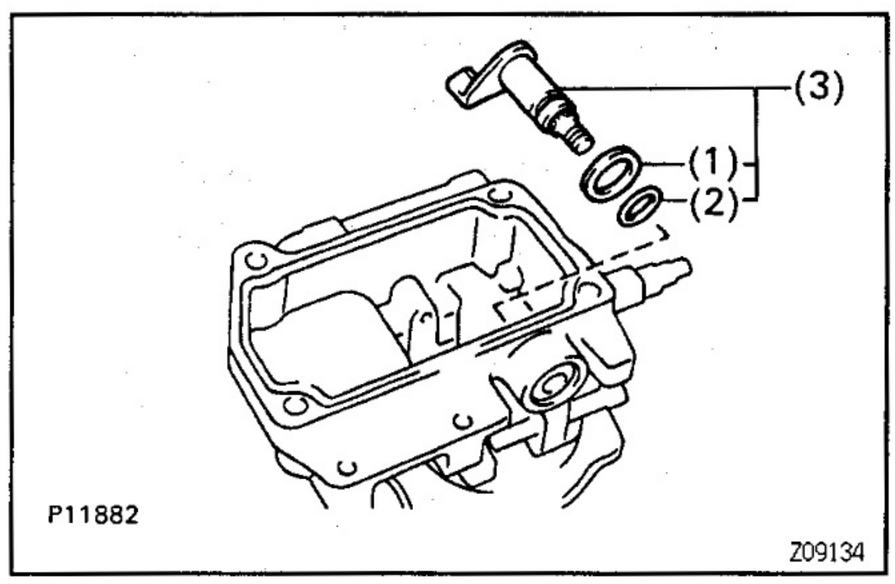

B. Install No.2 PCS lever

Install the following parts to the governor cover:

(1) Washer
(2) O–ring
(3) No.2 PCS lever, O–ring and washer assembly

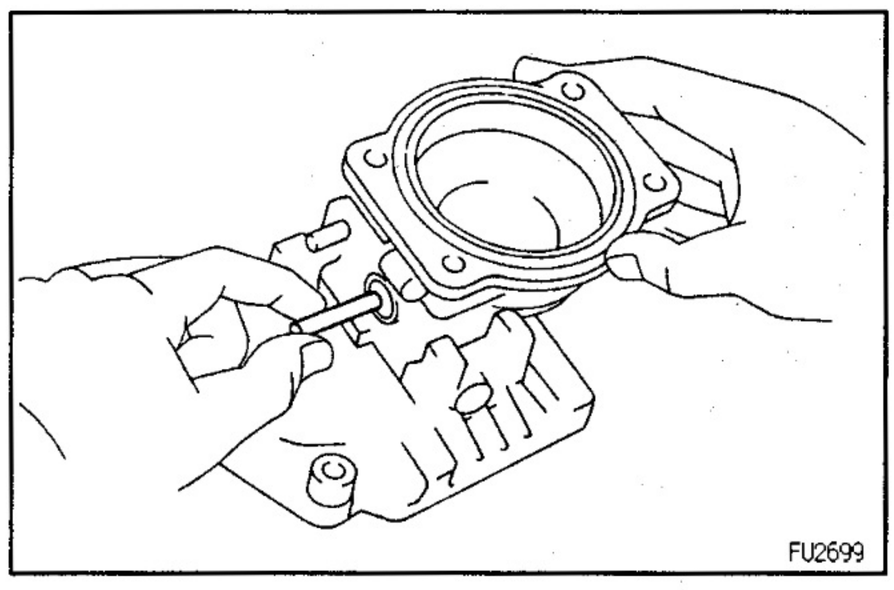

C. Install control lever

(a) Insert the connecting pin into the governor cover.

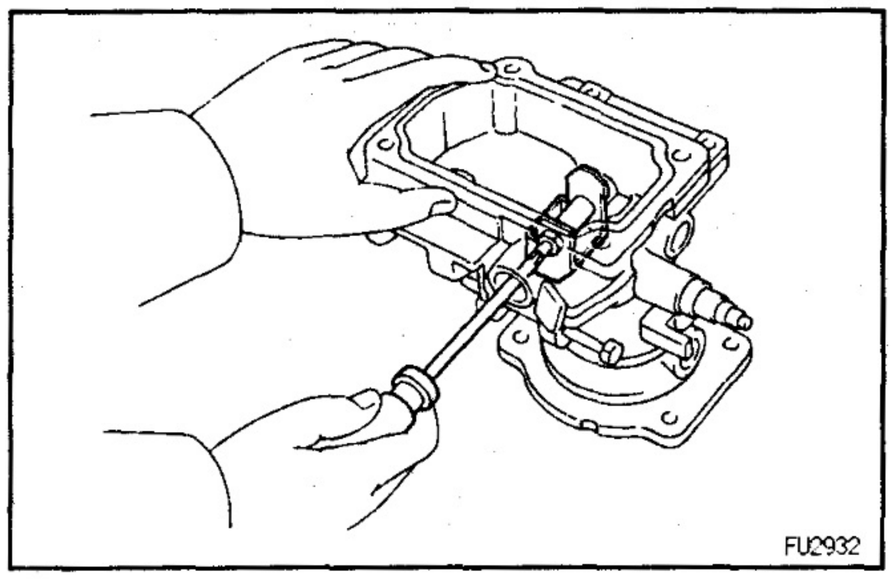

(b) Using a small screwdriver, install the control lever with the support pin.

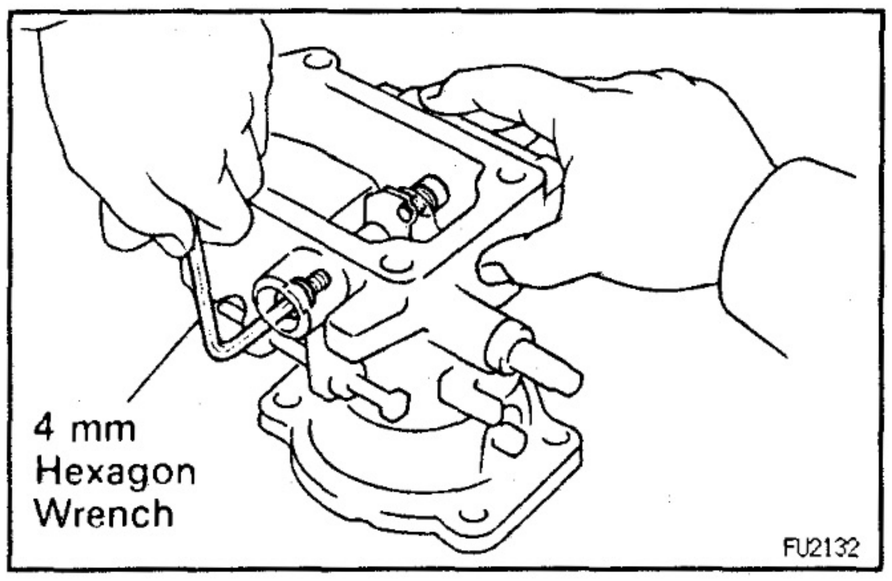

(c) Using a 4 mm hexagon wrench, install 2 new gaskets and the 2 bolts.

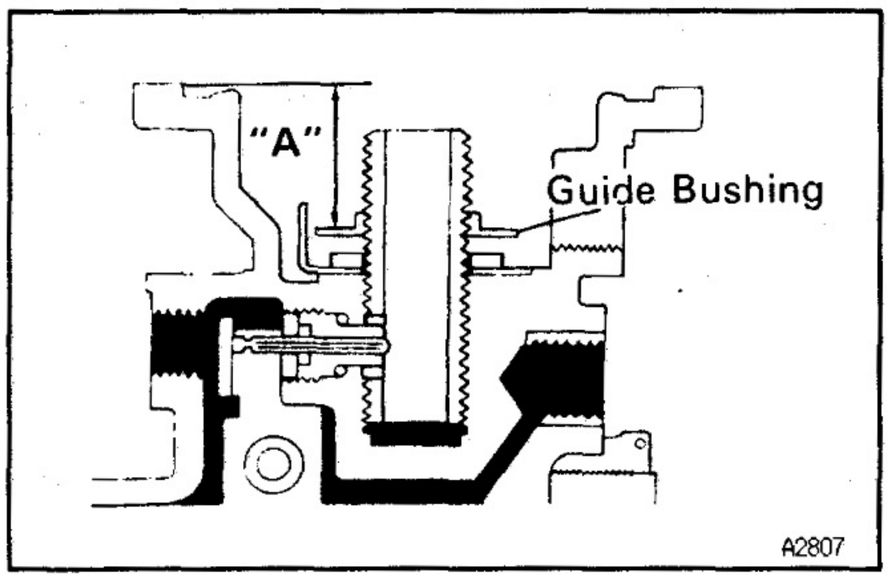

D. Install guide bushing

Install and adjust the guide bushing to the dimension" A" as shown in the illustration.

Dimension "A":

Europe 18.4 – 19.4 mm (0.724 – 0.764 in.)
Others 17.4 – 18.4 mm (0.685 – 0.724 in.)

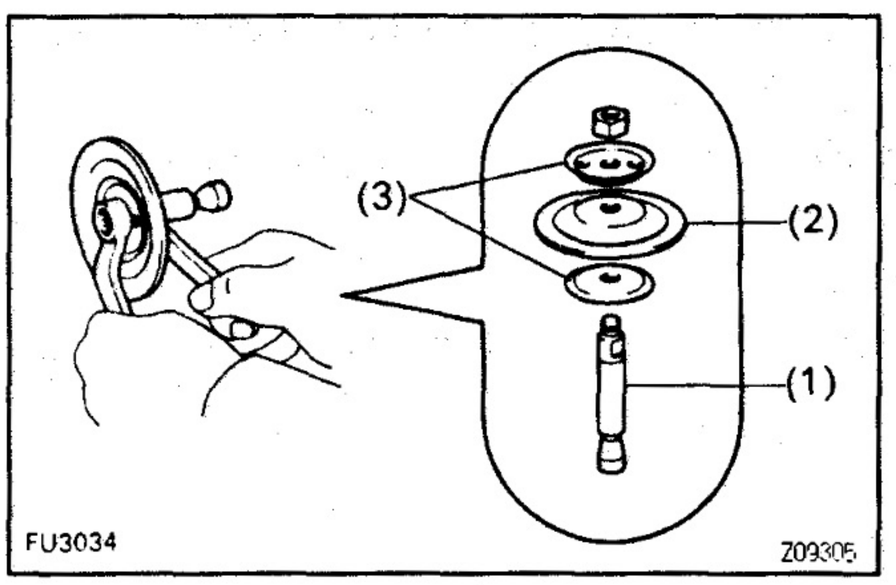

E. Install boost compensator diaphragm

(a) Assemble the following parts with the nut.
  (1) Push rod
  (2) Diaphragm
  (3) 2 spring seats

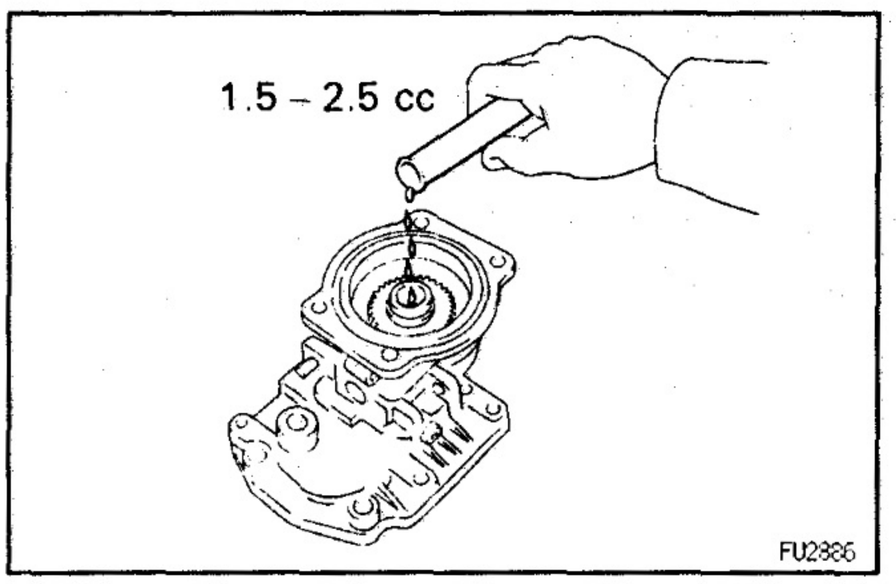

(b) Insert 1.5 – 2.5 cc (0.09 – 0.15 cu in.) of engine oil into the bushing hole.

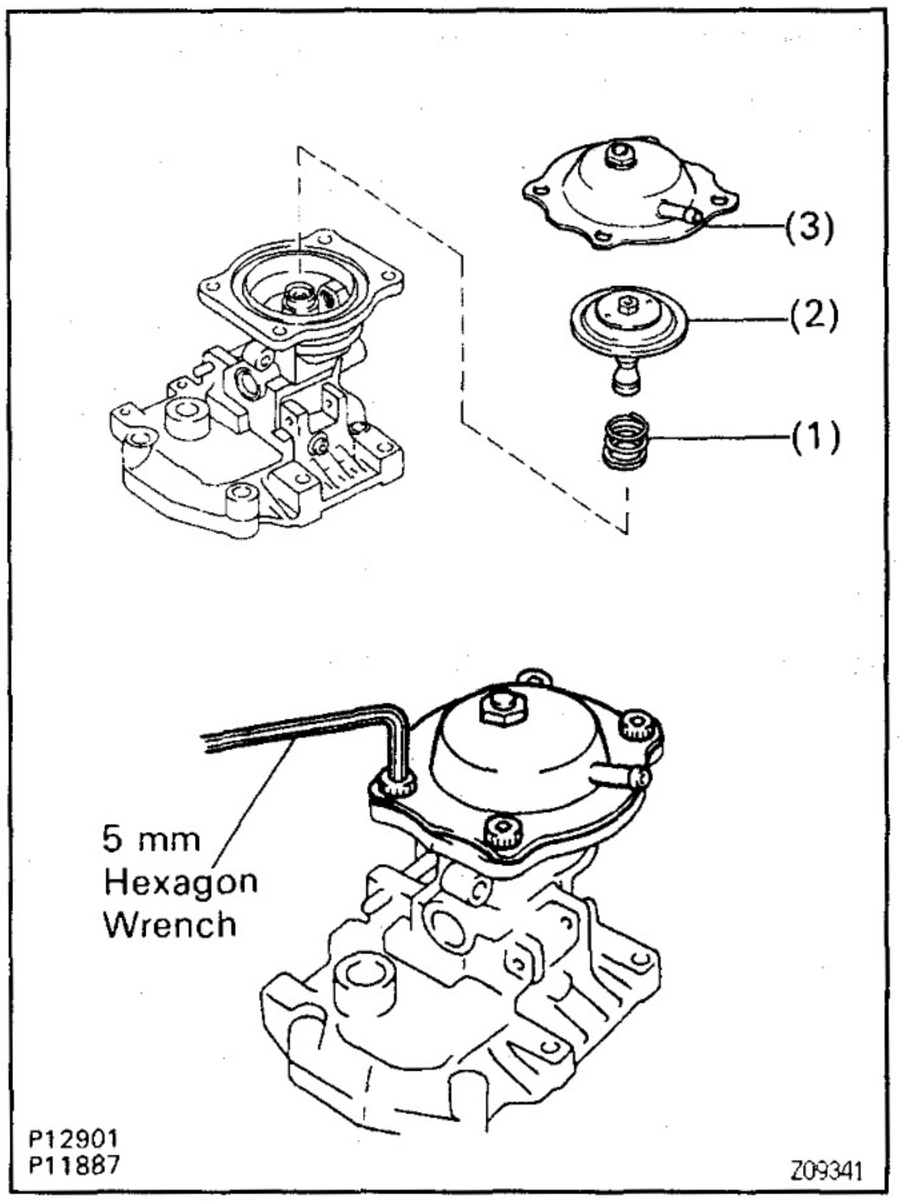

(c) Using a 5 mm hexagon wrench, install the following parts to the governor cover with the 4 bolts:
(1) Spring
(2) Diaphragm assembly
(3) Diaphragm cover

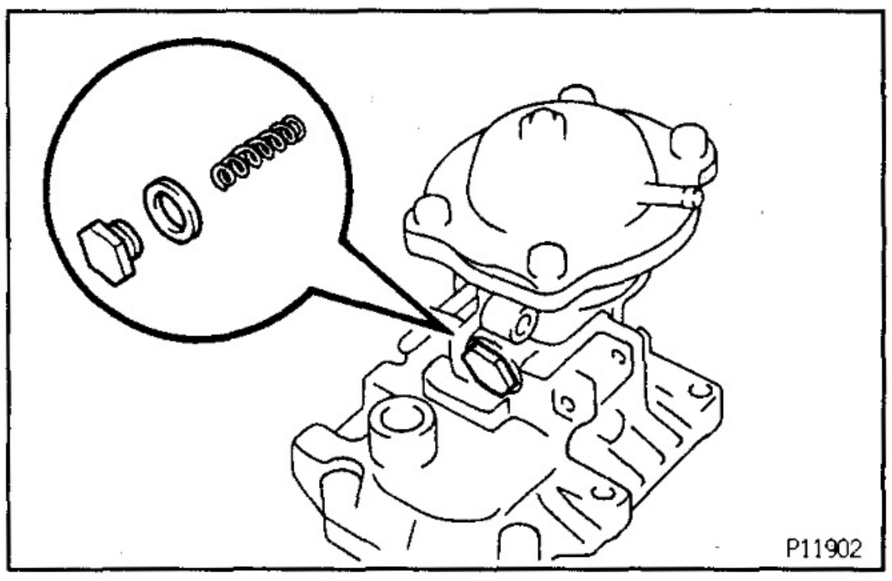

F. Install lever control spring
Install the lever control spring with a new gasket and the bolt.

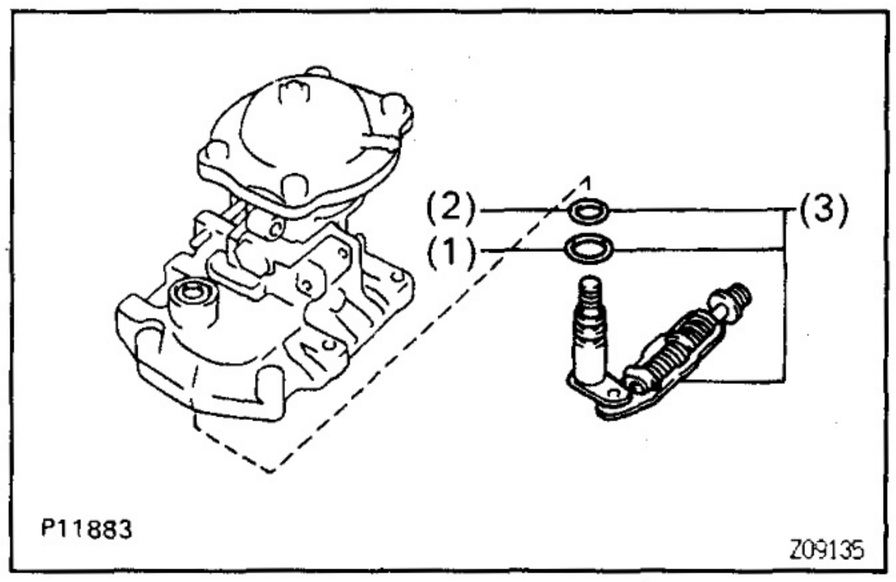

22. INSTALL ADJUSTING LEVER SHAFT TO GOVERNOR SHAFT
Install the following parts to the governor cover:
(1) Washer
(2) New O–ring
(3) Adjusting lever shaft, O–ring and plate washer assembly

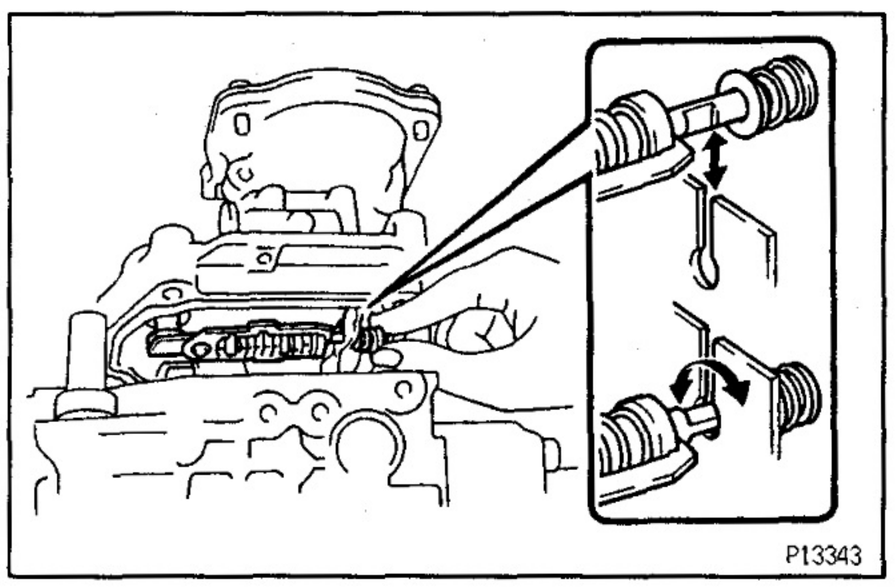

23. INSTALL GOVERNOR COVER
(a) Install a new gasket to the groove of the governor cover.
(b) Connect the adjusting lever shaft to the governor link and twist the shaft ligntly.

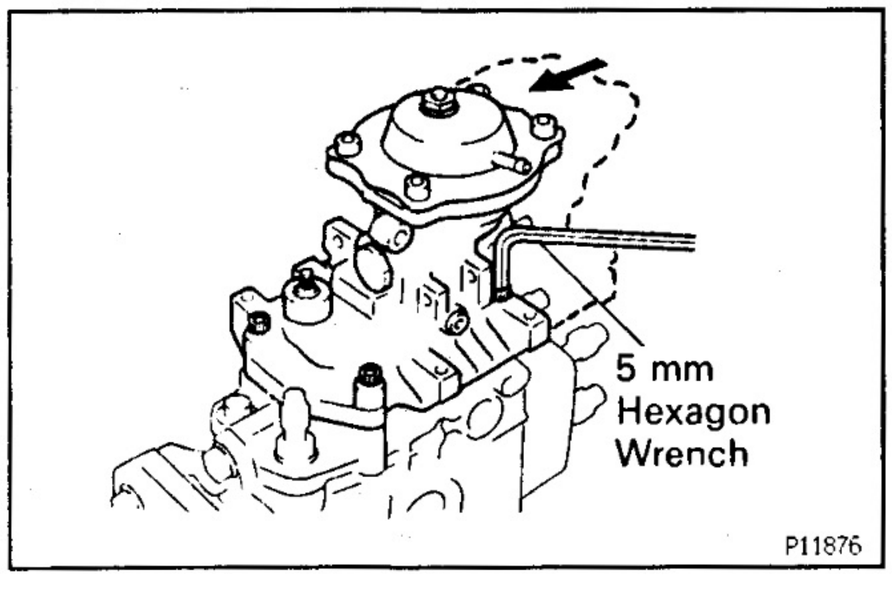

(c) Using a 5 mm hexagon wrench, install the governor cover with the 4 bolts.
Torque: 8.3 N·m (85 kgf·cm, 74 in.·lbf)
HINT: Use the bolt which is 35 mm (1.38 in.) length.

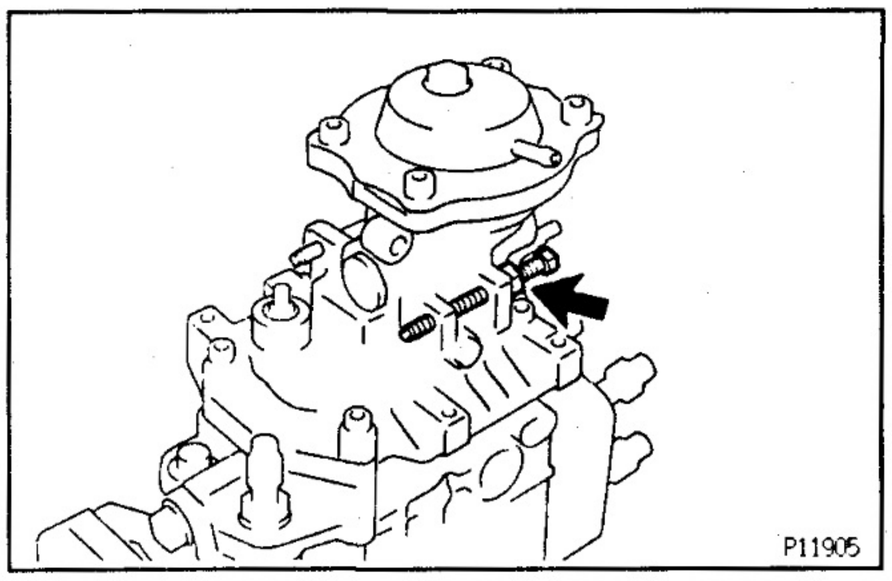

(d) Install the idle speed adjusting screw with the lock nut.

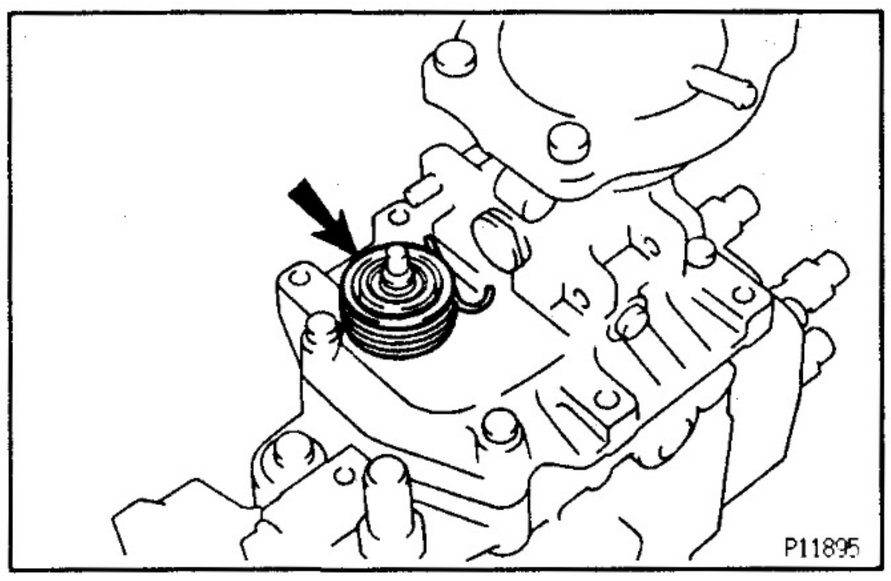

24. INSTALL ADJUSTING LEVER

(a) Place the return spring guide and return spring on the governor cover.

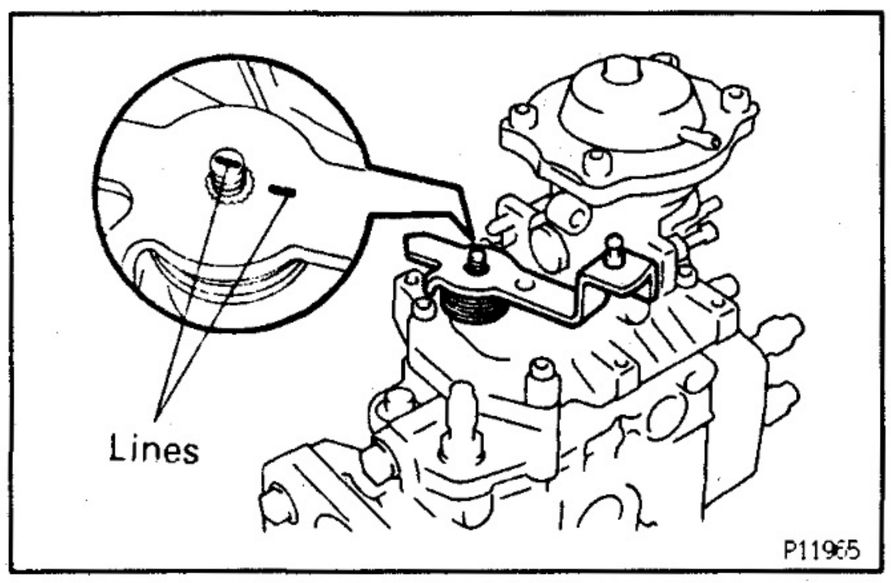

(b) Align the lines of the adjusting lever shaft and adjusting lever.

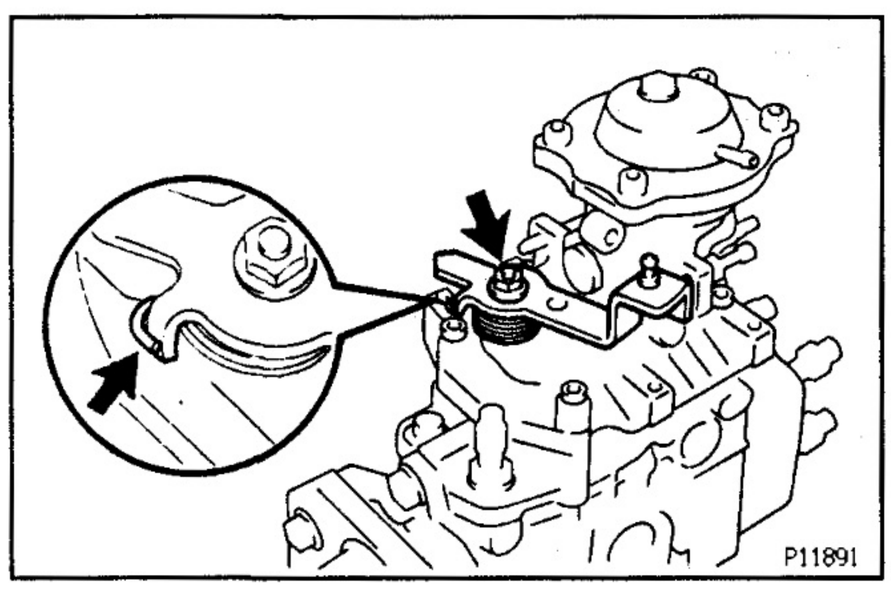

(c) Install the nut.
(d) Hook the return spring to the adjusting lever.

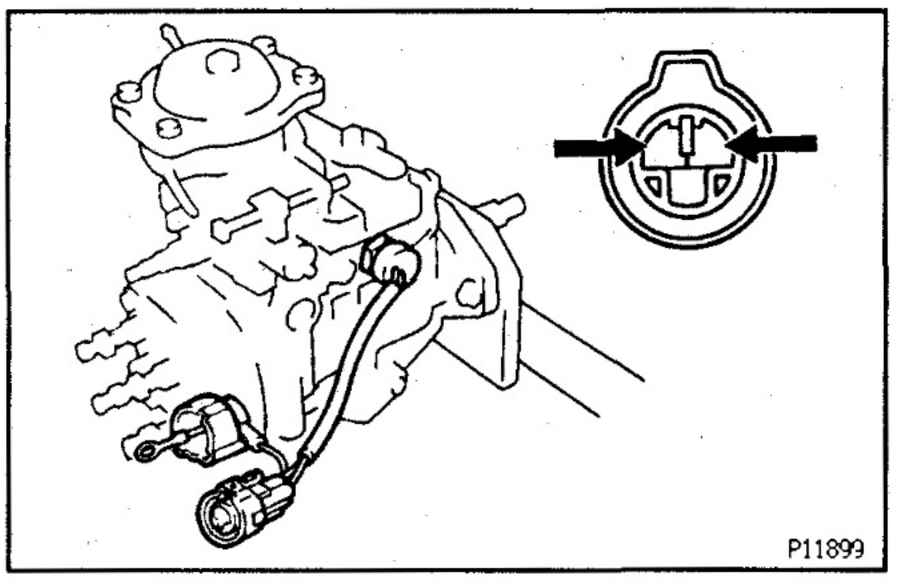

25. INSTALL PICKUP SENSOR

(a) Connect the sensor lead wires to the connector.

(b) Install a new O–ring and pickup sensor.
Torque: 21 N·m (210 kgf·cm, 15 ft·lbf)

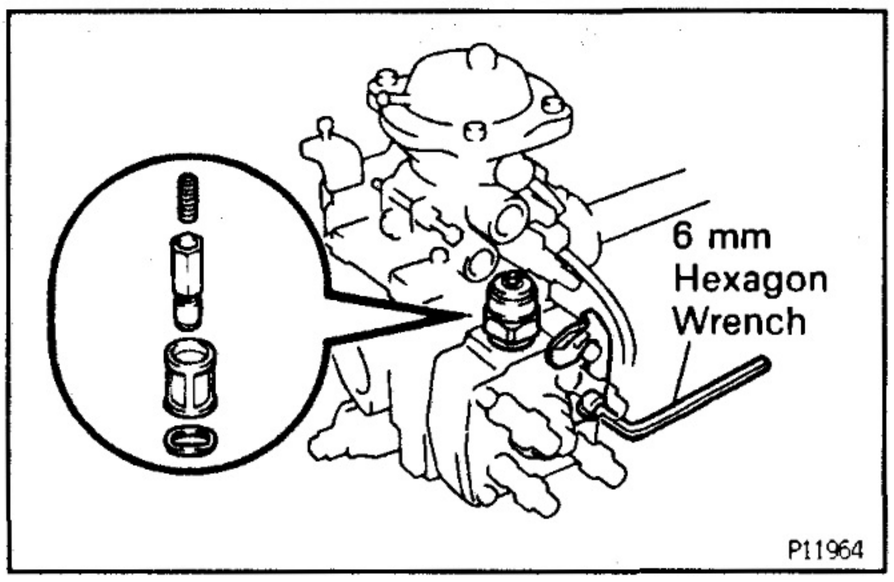

26. INSTALL FUEL CUT SOLENOID

(a) Install a new O–ring on the fuel cut solenoid.

(b) Install the wave washer, strainer, valve, spring and fuel cut solenoid.
Torque: 22 N·m (225 kgf·cm, 16 ft·lbf)

(c) Using a 6 mm hexagon wrench, install the connector bracket with the bolt.

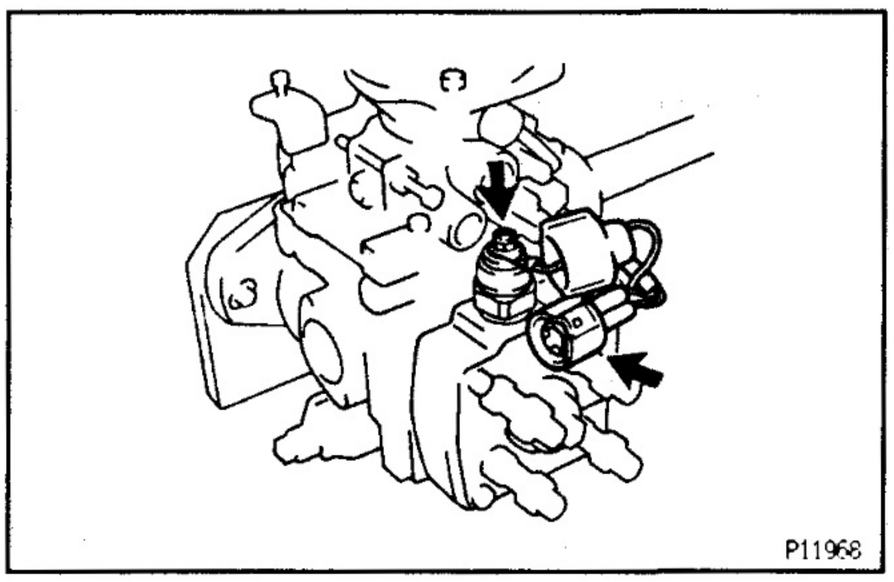

(d) Install the lead wire to the fuel cut solenoid with the nut.

(e) Install the dust cover to the fuel cut solenoid.

(f) Install the lead wire connector to bracket.

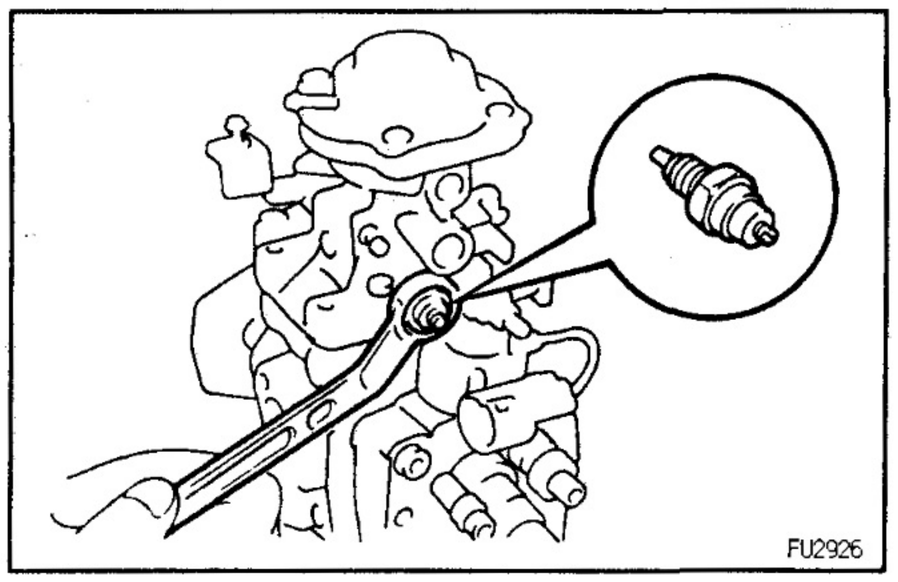

27. INSTALL DASH POT

Install a new gasket and the dash pot.
Torque: 11 N·m (115 kgf·cm, 8 ft·lbf)

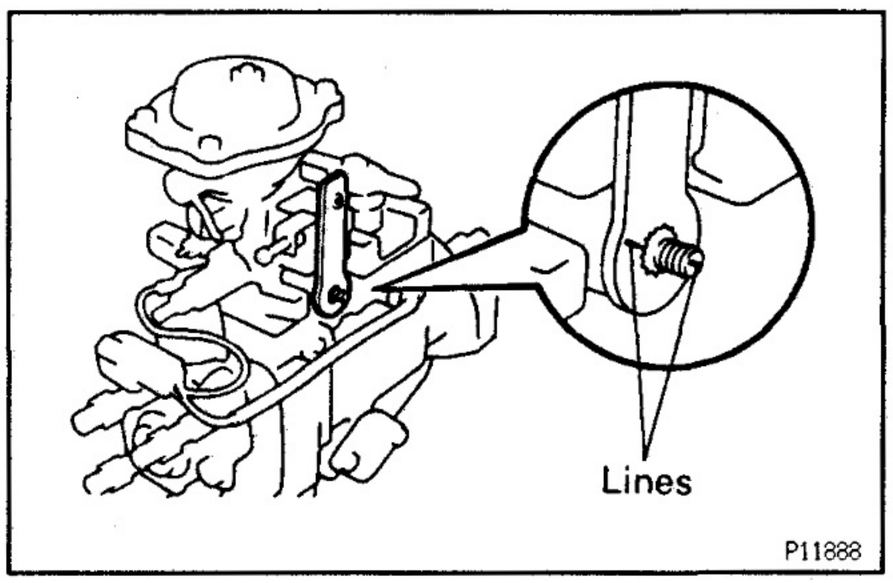

28. INSTALL NO.1 PCS LEVER

(a) Align the lines of the levers.

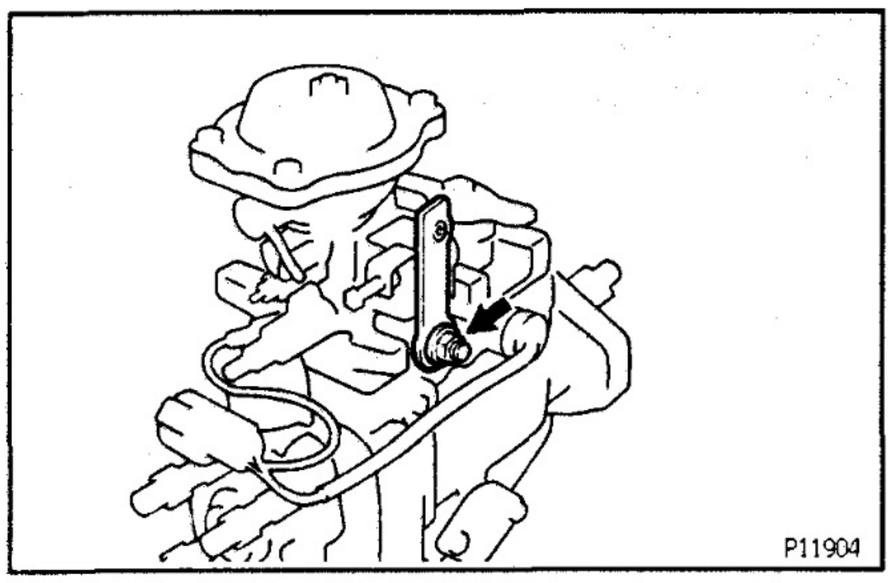

(b) Install the nut.

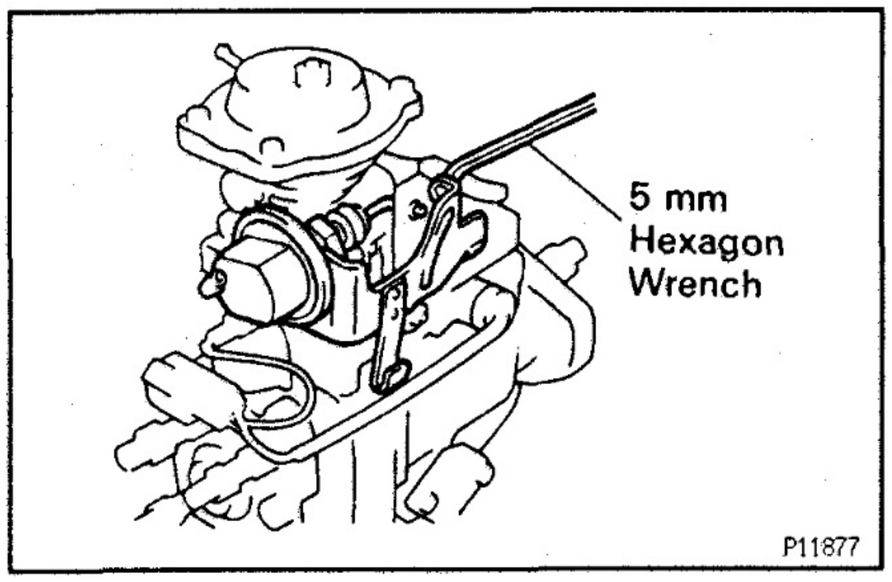

29. INSTALL PCS ACTUATOR

(a) Using a 5 mm hexagon wrench, install the PCS actuator assembly with the 2 bolts.

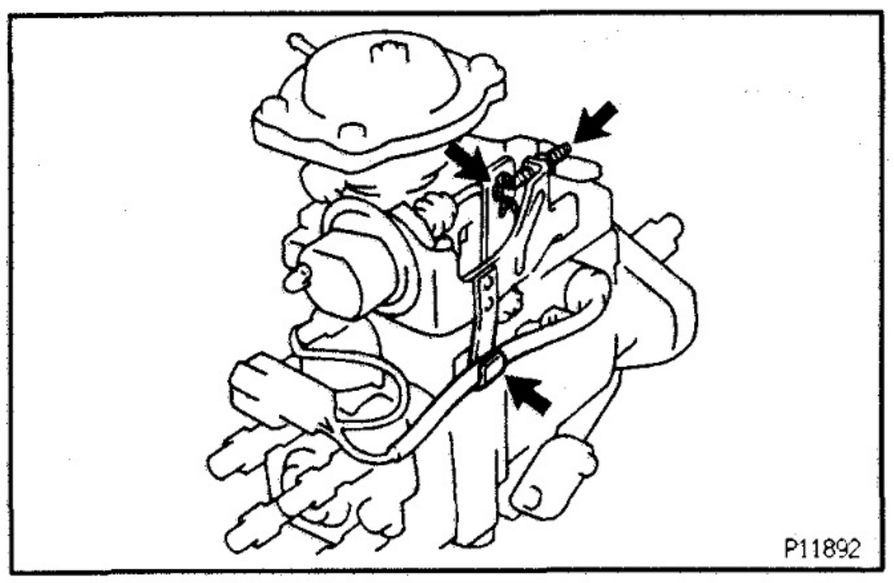

(b) Install the clip.
(c) Install the PCS adjusting screw.
(d) Connect the wire harness.

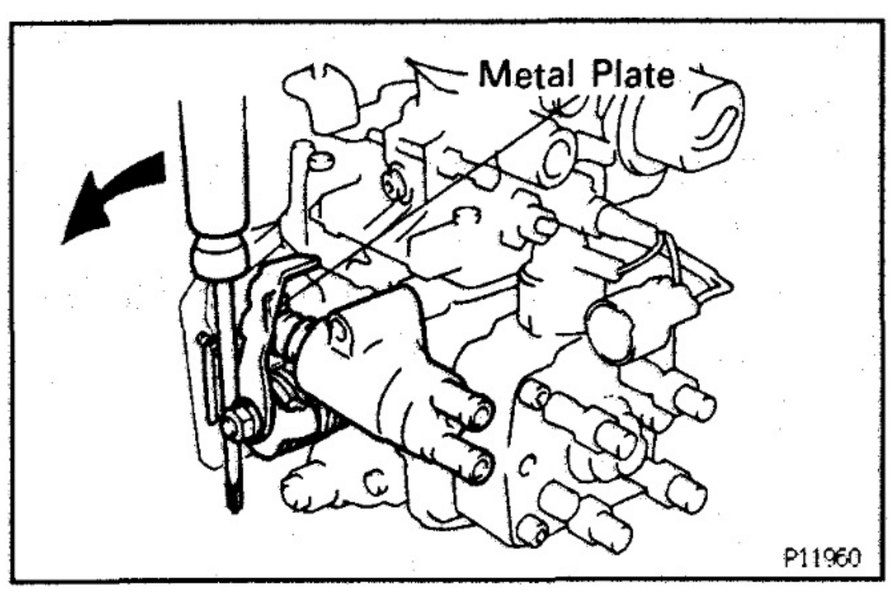

30. INSTALL THERMO WAX

(a) Using a screwdriver, turn the cold starting lever counterclockwise approx. 20°.
(b) Put a metal plate (thickness of 8.5 – 10 mm (0.33 – 0.39 in.)) between the cold starting lever and thermo wax plunger.

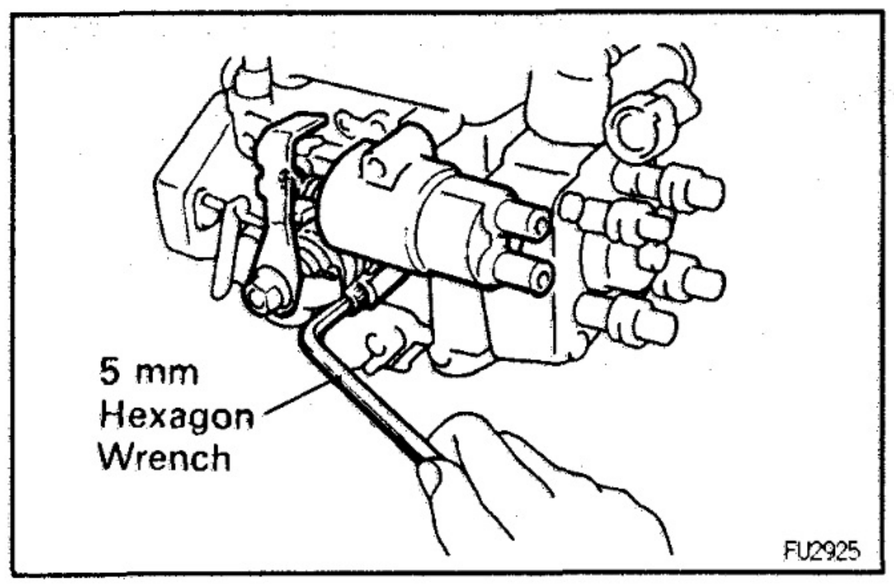

(c) Install a new O–ring to the pump body.
(d) Using a 5 mm hexagon wrench, install the thermo wax with the 2 bolts.

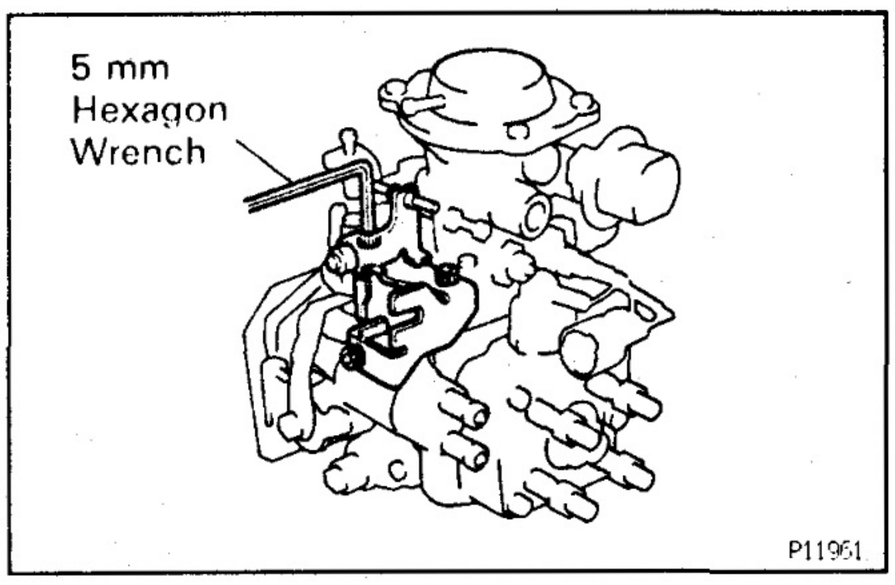

31. INSTALL IDLE–UP LEVER

Using a 5 mm hexagon wrench, install the idle–up lever with the 3 bolts.

32. w/ A/C:

INSTALL IDLE–UP ACTUATOR

33. REMOVE INJECTION PUMP FROM SST (STAND)

SST 09241–76022 and 09245–54010

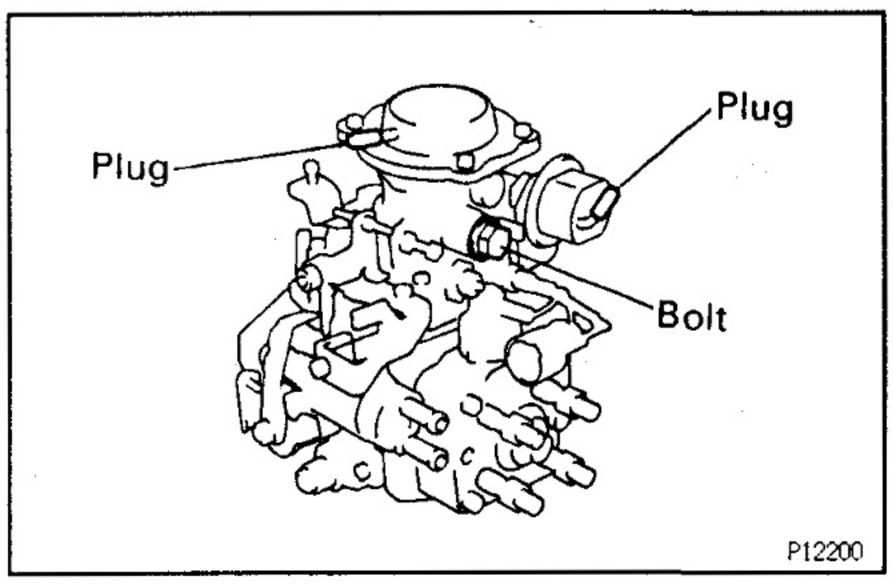

34. PERFORM AIR TIGHT TEST

(a) Install a bolt to the overflow port.

(b) Install the plug to each port of the boost compensator and PCS actuator.

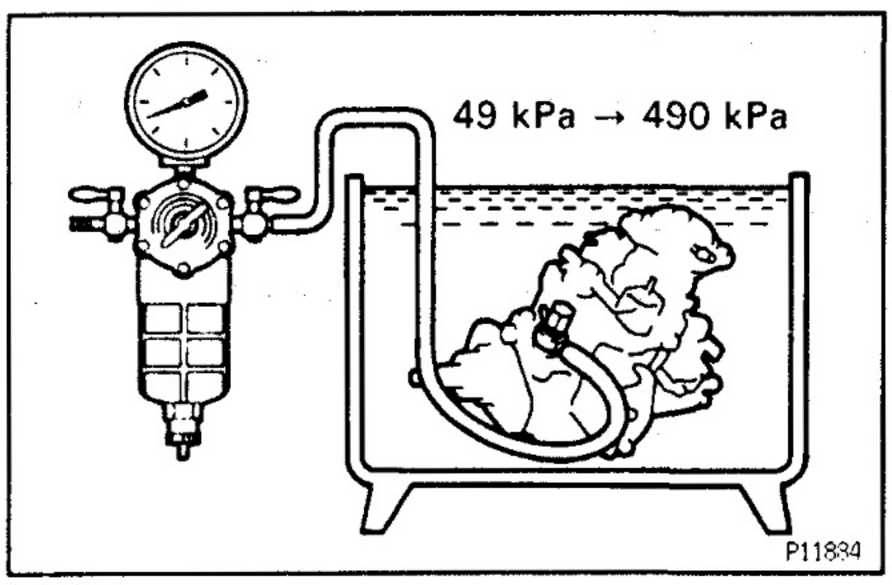

(c) Connect an air hose to the fuel inlet pipe and place the injection pump into diesel fuel.

(d) Apply 49 kPa (0.5 kgf/cm², 7 psi) of pressure and confirm that there are no leaks.

(e) Next check that there are no leaks with 490 kPa (5.0 kgf/cm², 71 psi) of pressure applied.

35. INSTALL SET KEY OF INJECTION PUMP DRIVE PULLEY ON DRIVE SHAFT

EG38Q-01

INJECTION PUMP ADJUSTMENT

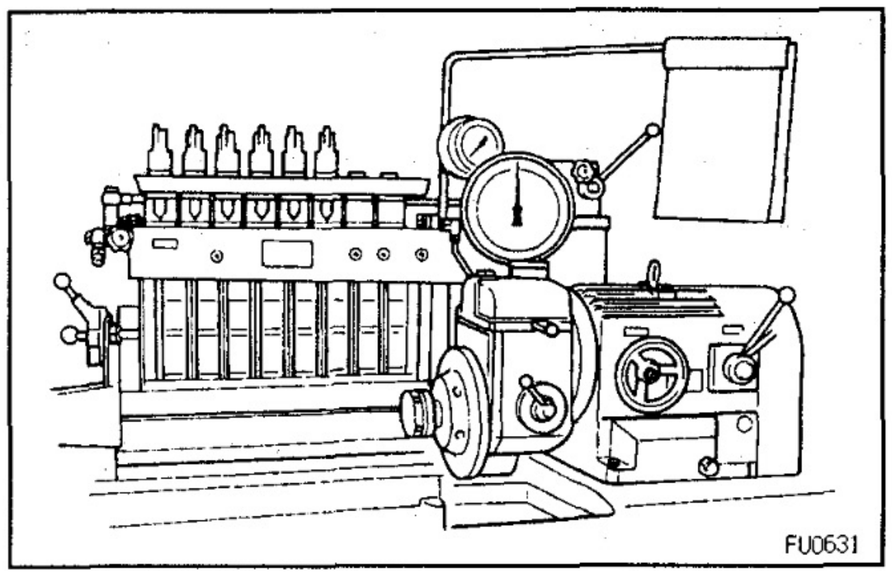

1. PRE–TEST CHECK AND PREPARATION

(a) The specifications for test nozzle and nozzle holders are as follows.

Test nozzle:

DN12SD12 (NIPPONDENSO)

Test nozzle opening pressure:

14.220 – 15.200 kPa

(145 – 155 kgf/cm², 2,062 – 2,205 psi)

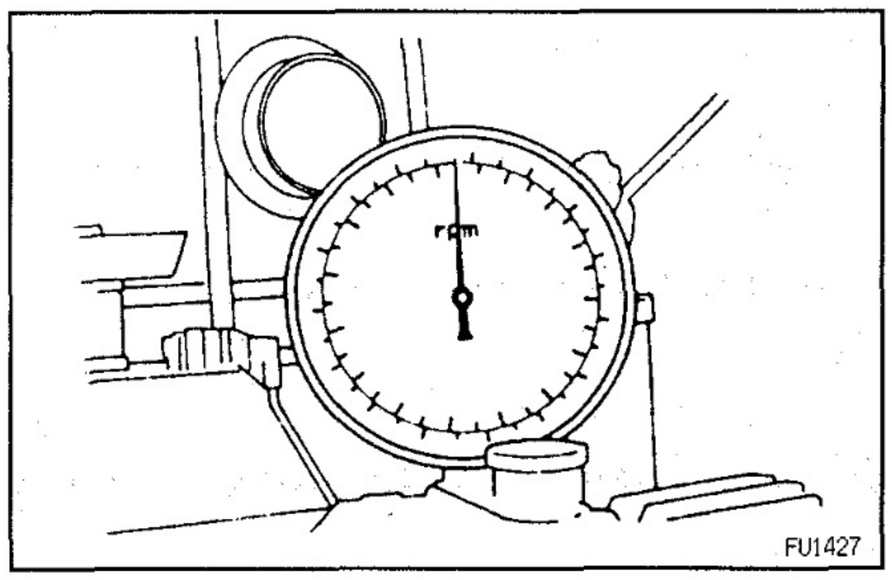

(b) Check the accuracy of the tachometer.

Allowable error:

± 40 rpm

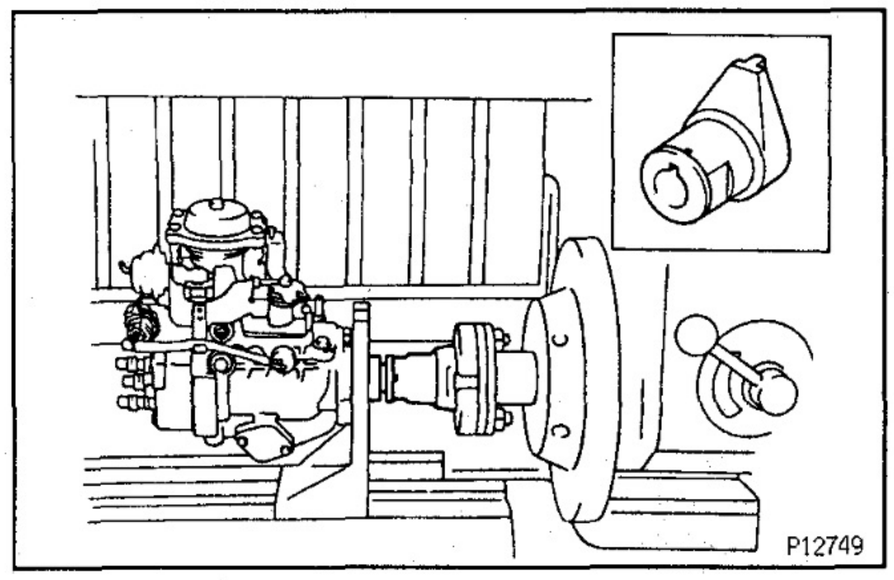

(c) Install the angle gauge stand.

(d) Mount the injection pump body on the pump tester.
HINT: Place a mark on the key groove portion of the coupling.

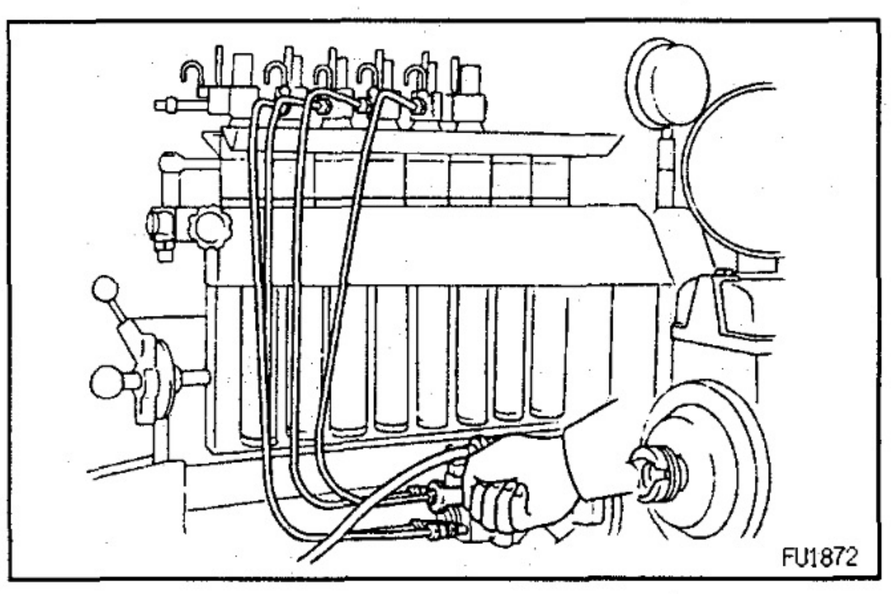

(e) Install an injection pipe with the following specifications.

Outer diameter:

6.0 mm (0.236 in.)

Inner diameter:

2.0 mm (0.079 in.)

Length:

840 mm (33.07 in.)

Minimum bending radius:

25 mm (0.98 in.) or more

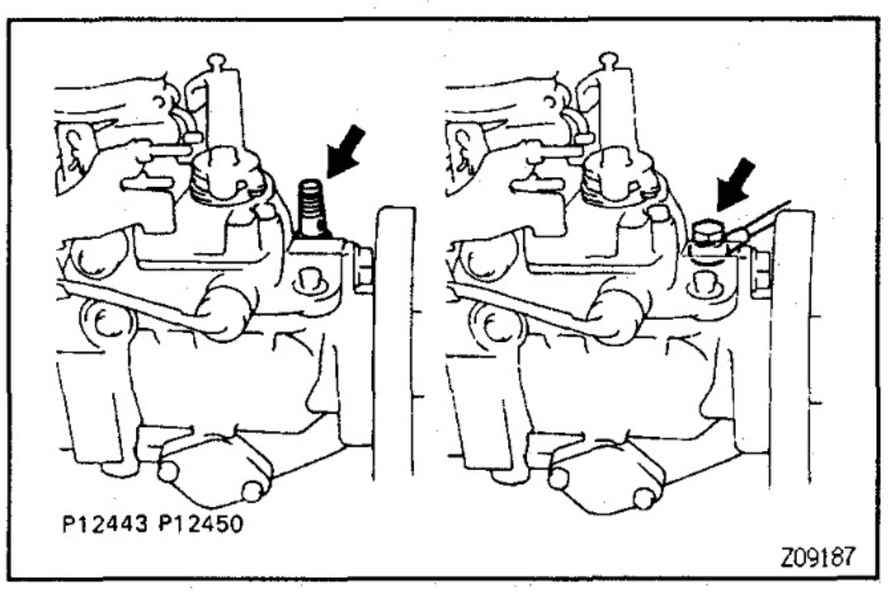

(f) Remove the fuel inlet hollow screw.

(g) Connect the fuel inlet pipe with an adapter.

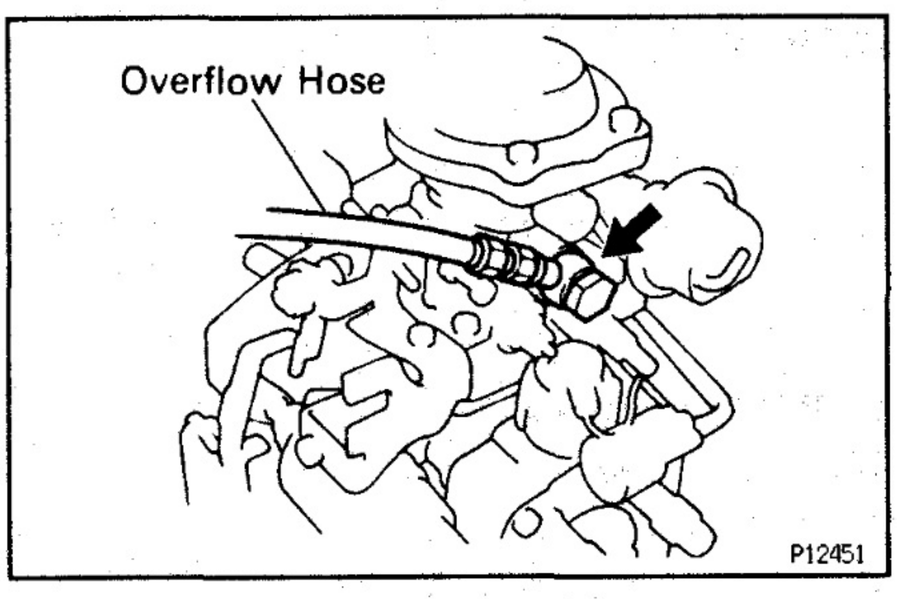

(h) Install an overflow hose with 2 new gaskets and union bolt.
HINT: Always use the overflow screw installed on the pump to be adjusted.

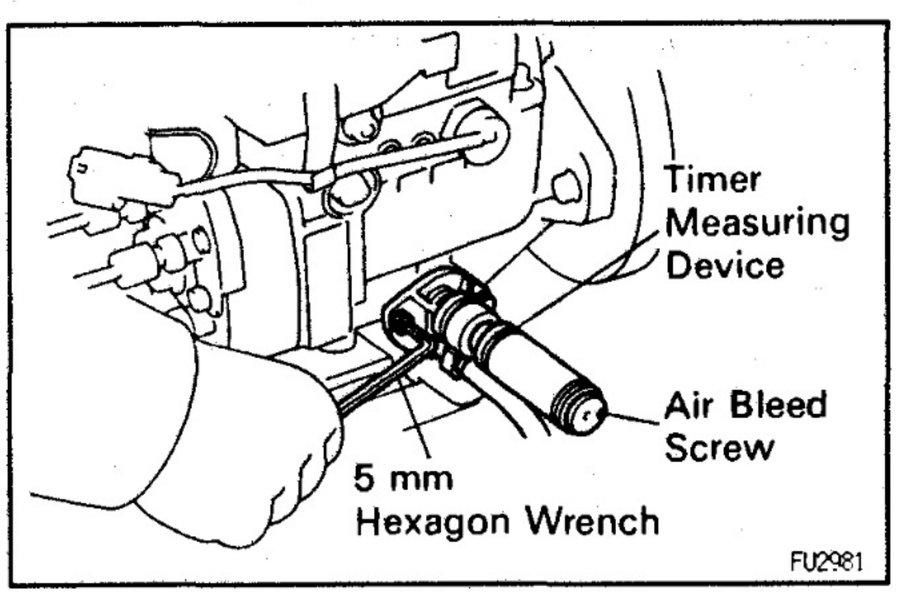

(i) Using a 5 mm hexagon wrench, remove the 2 bolts and RH timer cover.

(j) Install the inner pressure gauge with the timer measuring device.
Part No. 95095–10220 and 95095–10231 (NIPPONDENSO)
HINT: Bleed the air by the air bleed screw.

(k) Connect SST (turbocharger pressure gauge) to the boost compensator.
SST 09992–00241

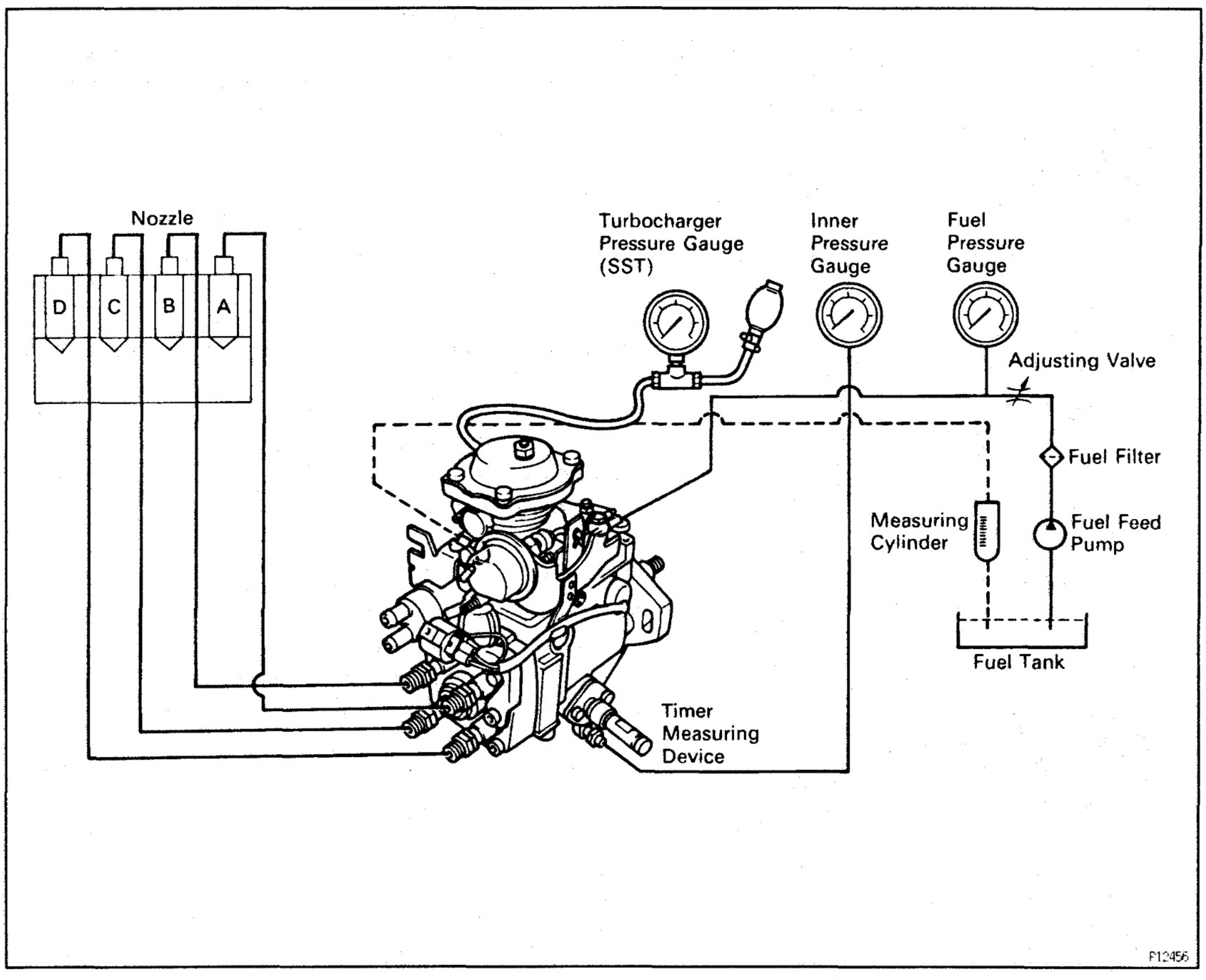

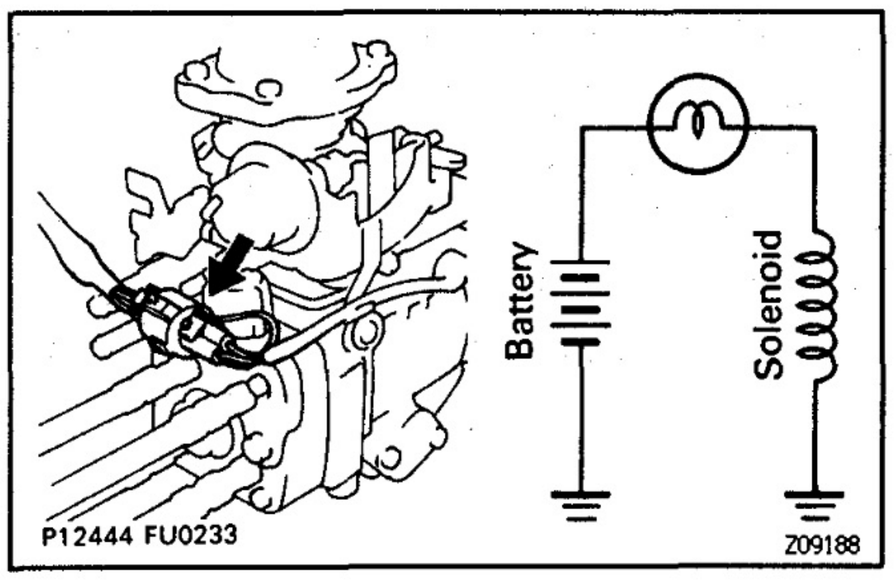

(l) Apply about 6 volts of DC power to the fuel cut solenoid.
NOTICE:
- **When applying voltage to the solenoid, position the battery as far away from the solenoid as possible so that a spark does not occur.**
- **When connecting the battery cable, connect the solenoid side first.**

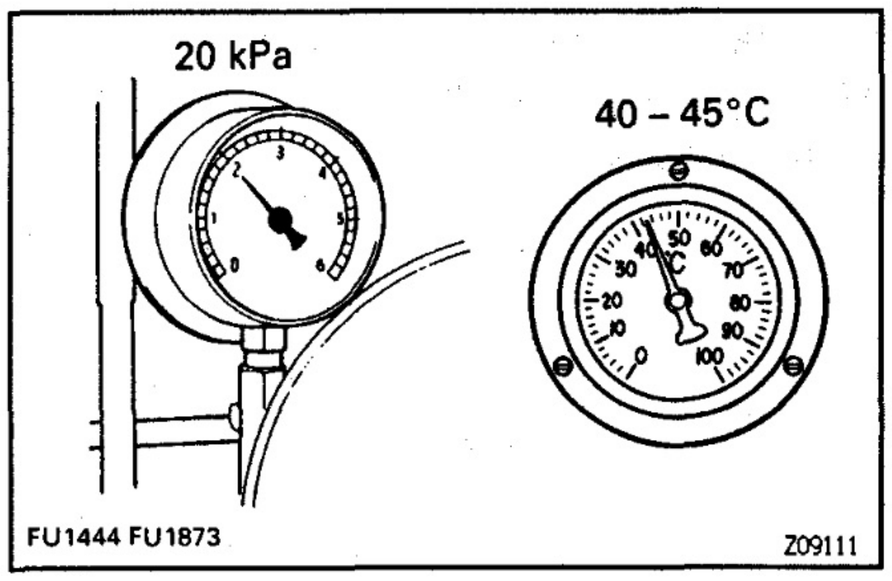

(m) The pressure for feeding fuel to the injection pump should be 20 kPa (0.2 kgf/cm², 2.8 psi). The fuel temperature for pump testing should be 40 – 45°C (104 – 113°F).

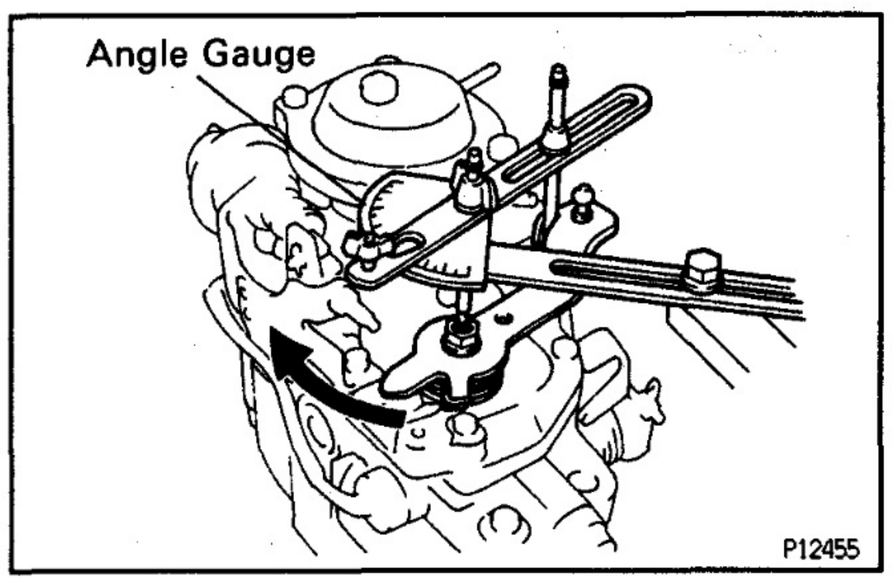

(n) Install an angle gauge to the stand and set it to the adjusting lever.
Part No. 95095–10360 (Stand w/ angle gauge)

(o) Secure the adjusting lever fully on the maximum speed side.

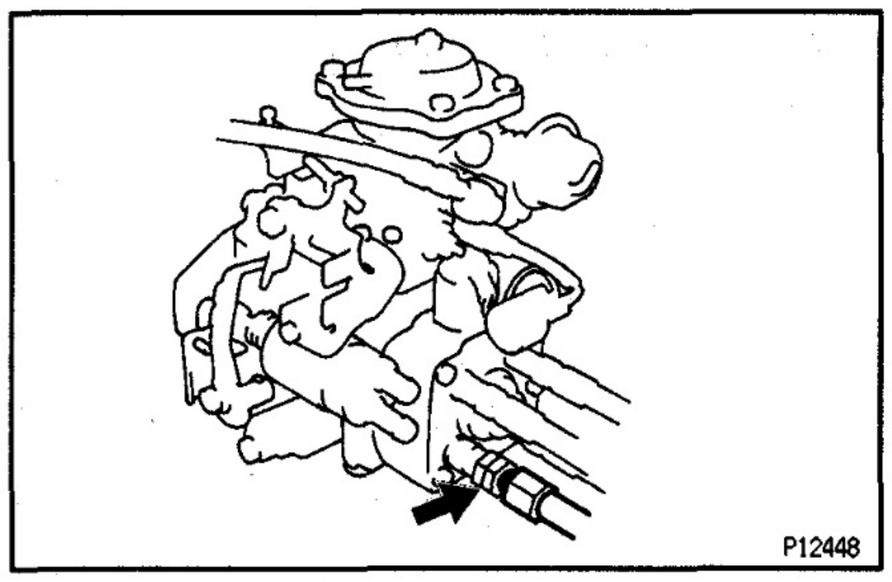

(p) Check the installation direction of the camplate as follows:
- Disconnect the injection pipe from the position marked "C" on the distributive head.

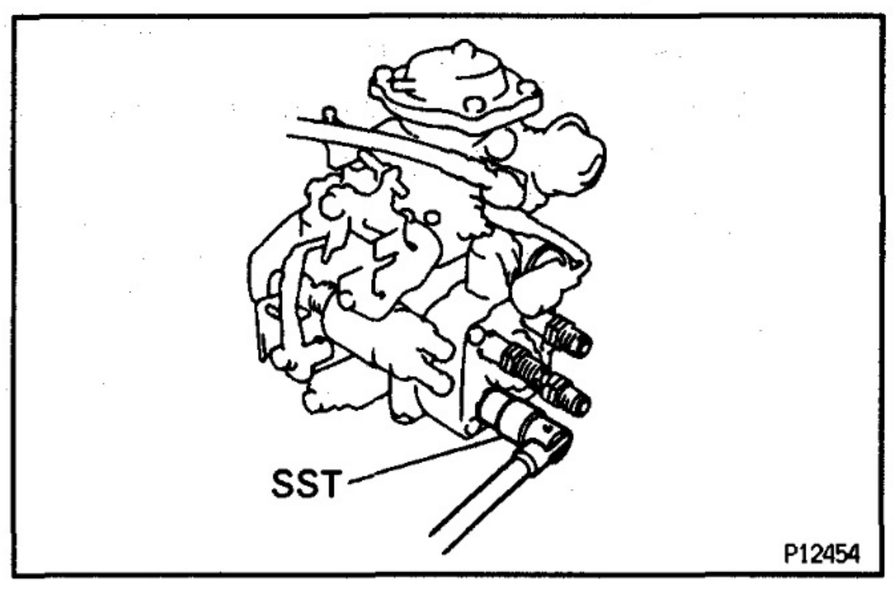

- Using SST, remove the delivery valve holder.

SST 09260–54012 (09269–54020)

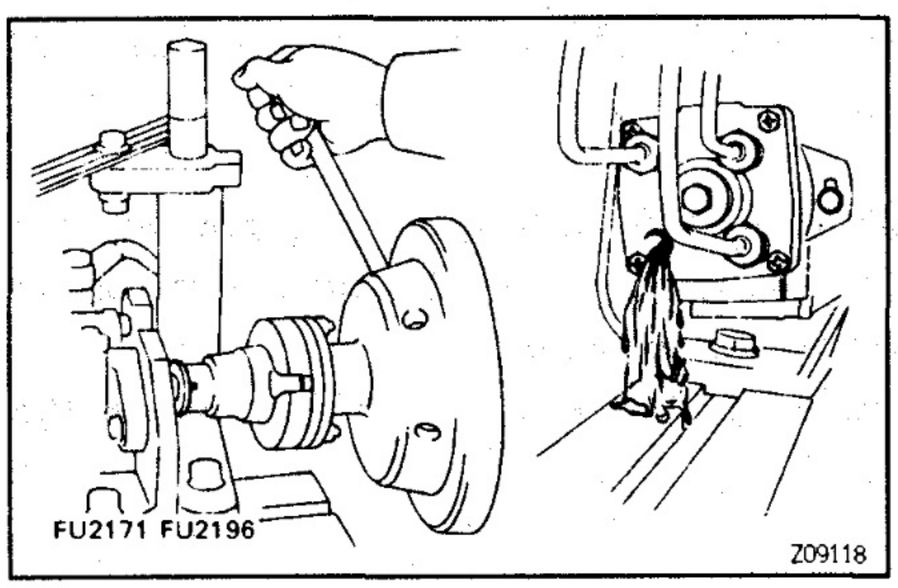

- Check that fuel is flowing out when the mark is in the position shown in the illustration.

If not, it is improperly assembled.

- Disassemble and change the camplate position 180° in the opposite direction.

HINT: At this time, disconnect the fuel cut solenoid wire harness.

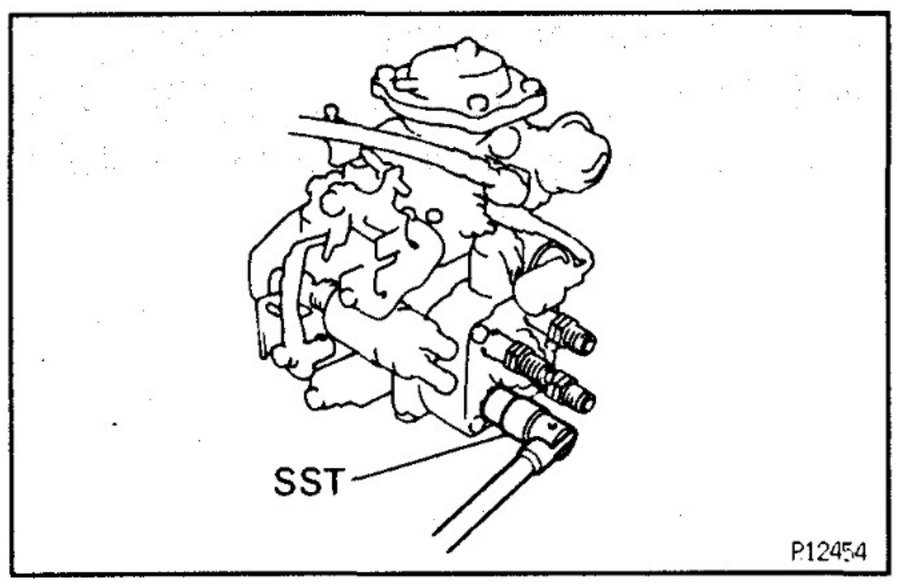

- Using SST, install the delivery valve holder.

SST 09260–54012 (09269–54020)

Torque: 59 N·m (600 kgf·cm, 43 ft·lbf)

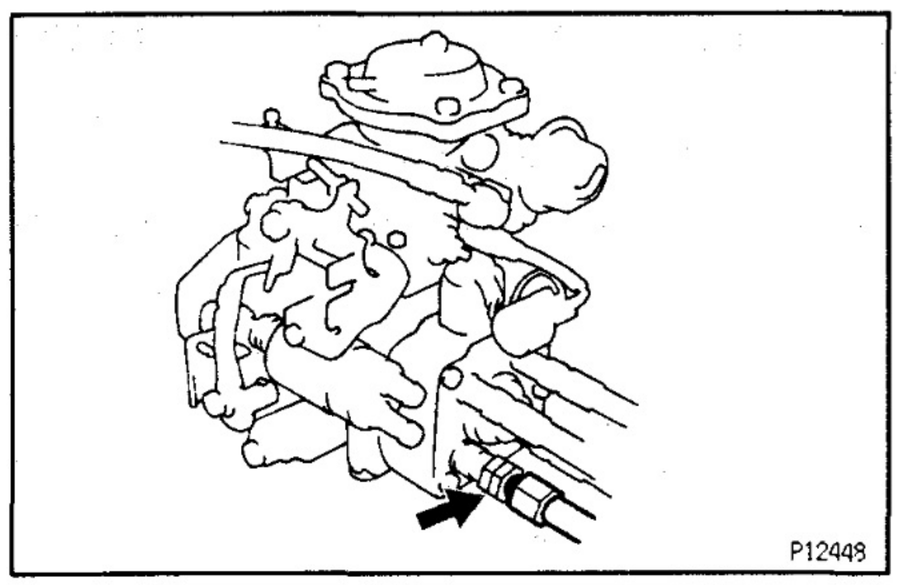

- Connect the injection pipe.

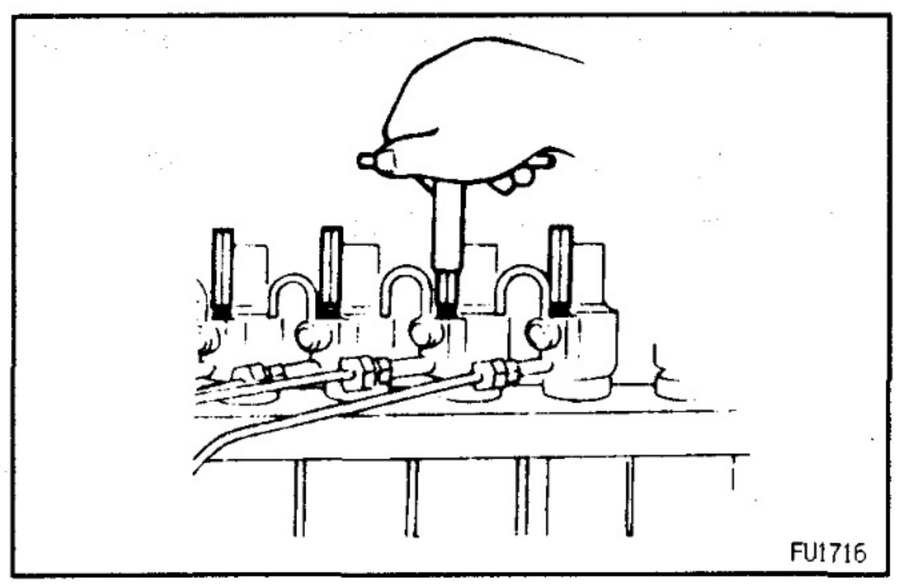

(q) Bleed the air from the injection pipes.

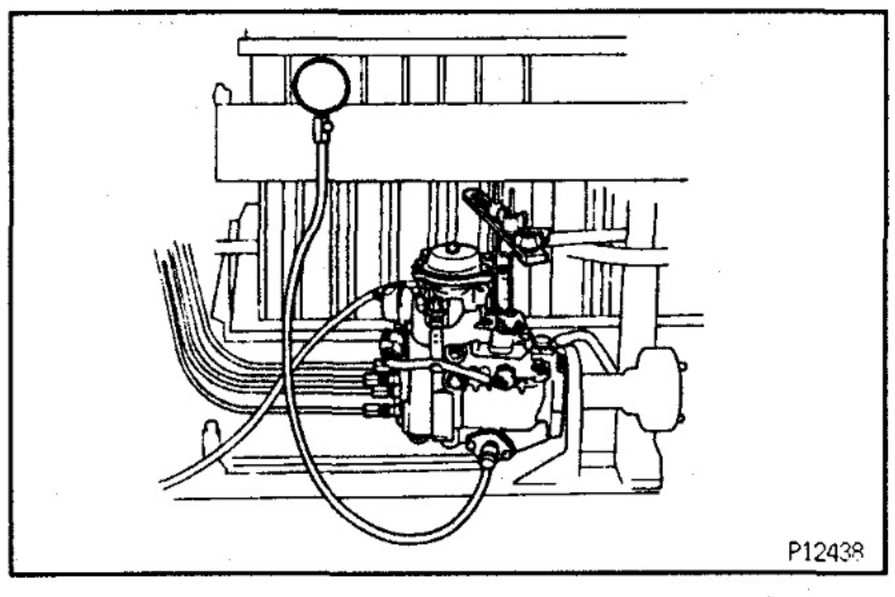

(r) Race the injection pump for 5 minutes at 1,200 rpm.

NOTICE: Check that there is no fuel leakage or abnormal noise.

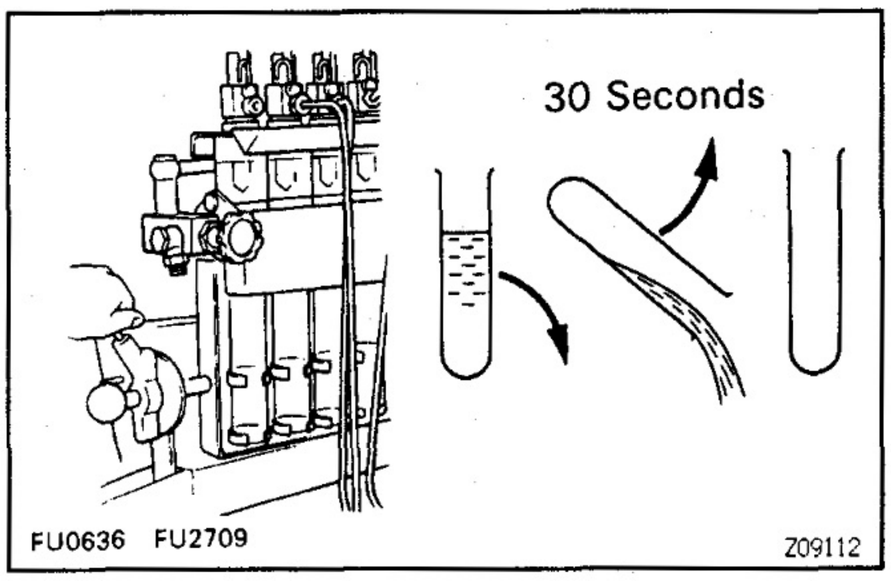

HINT:

- Measure the volume of each injection cylinder with a measuring cylinder.
- Before measuring the injection volume, first hold the cylinder tilted for at least 30 seconds to discard all the fuel.

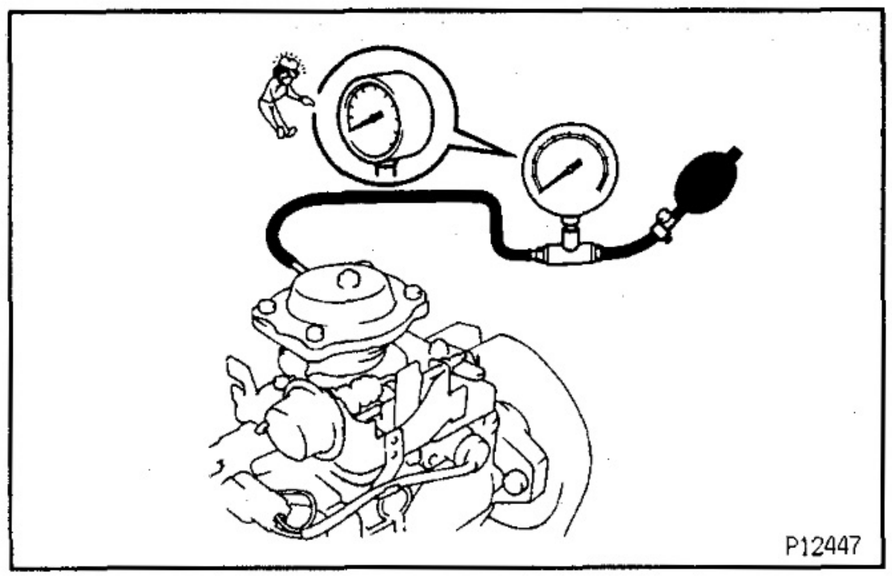

2. CHECK BOOST COMPENSATOR FOR AIR TIGHTNESS

(a) Apply 98 kPa (1.00 kgf/cm², 14.2 psi) of pressure to the boost compensator.

(b) Measure the time it takes for pressure to drop to 95 kPa (0.97 kgf/cm², 13.8 psi).

Pressure drop:

10 seconds or more

3. PRE–SET FULL LOAD INJECTION VOLUME

(a) Set the adjusting lever to maximum position.

(b) Apply 66.7 kPa (500 mmHg, 19.69 in.Hg) of vaccum to the PCS actuator.

(c) w/o BACS:
Apply 67 kPa (0.68 kgf/cm², 9.7 psi) of pressure to the boost compensator.

(d) w/ BACS:
Apply 116 kPa (1.17 kgf/cm², 16.6 psi) of pressure to the boost compensator.

(e) Measure the injection volume.

Item	Pump rpm	No. of measuring strokes	Injection volume of each cylinder cc (cu in.)
w/o BACS	1,800	200	15.4 – 15.8 (0.94 – 0.96)
w/ BACS	1,800	200	14.5 – 14.9 (0.88 – 0.91)

V03724

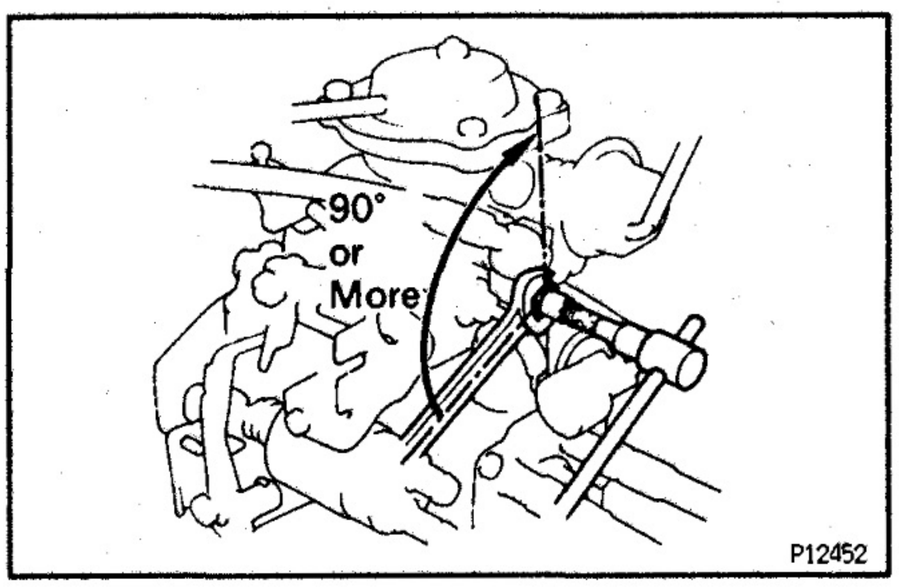

(f) Remove the collar seal as follows:
- Hold the full load set screw, and release the collar seal from the spot weld by turning the lock nut counterclockwise by 90° or more.

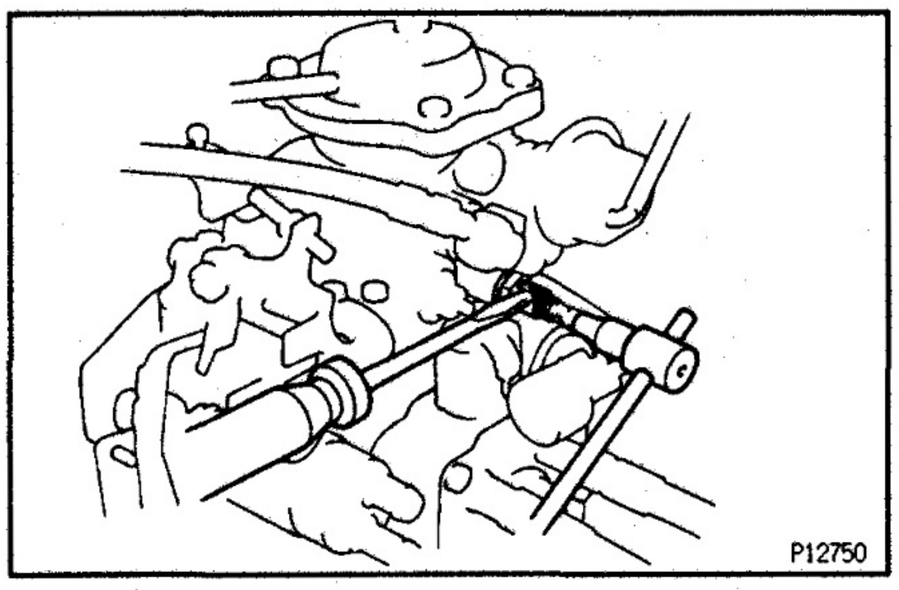

- Using a screwdriver, pry out the collar seal.

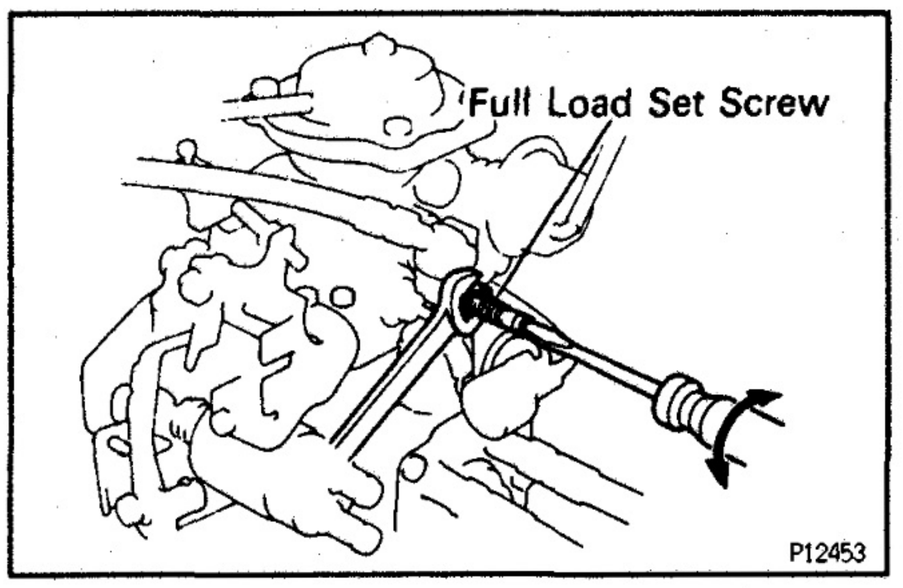

(g) Adjust by turning the full load set screw.
HINT: The injection volume will increase about 3 cc (0.18 cu in.) with each 1/2 turn of the screw.

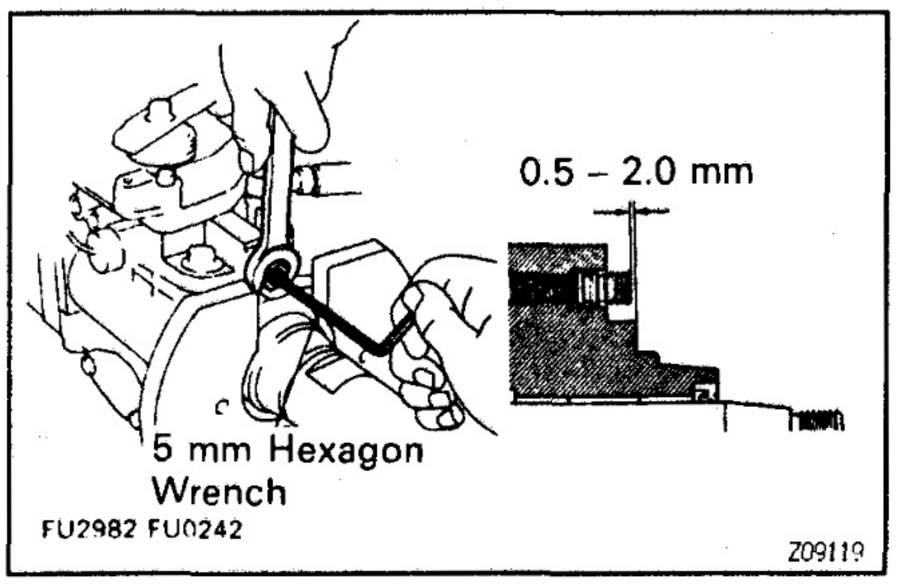

4. w/o BACS:
PRE–SETTING OF LOAD SENSING TIMER
Using a 5 mm hexagon wrench, adjust the protrusion of the governor shaft.
Protrusion:
0.5 – 2.0 mm (0.020 – 0.079 in.)

5. PRE–SET MAXIMUM SPEED
(a) Set the adjusting lever to maximum position.
(b) Apply 66.7 kPa (500 mmHg, 19.69 in.Hg) of vacuum to the PCS actuator.
(c) w/o BACS:
Apply 67 kPa (0.68 kgf/cm², 9.7 psi) of pressure to the boost compensator.

(d) w/ BACS:
Apply 116 kPa (1.17 kgf/cm², 16.6 psi) of pressure to the boost compensator.

(e) Measure the injection volume.

Pump rpm	No. of measuring strokes	Injection volume of each cylinder cc (cu in.)
2,300	200	5.2 – 7.2 (0.32 – 0.44)

V03726

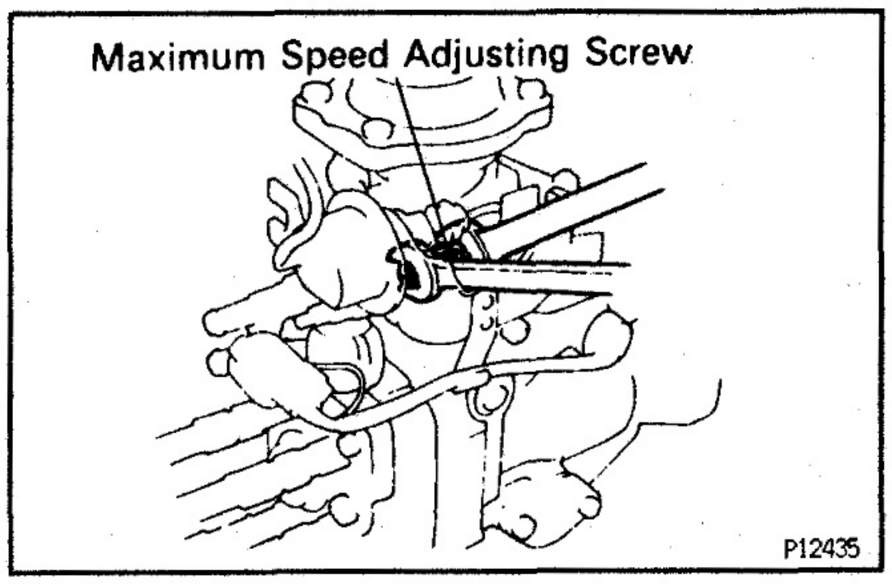

(f) Remove the lock plate.

(g) Adjust the injection volume with the maximum speed adjusting screw.

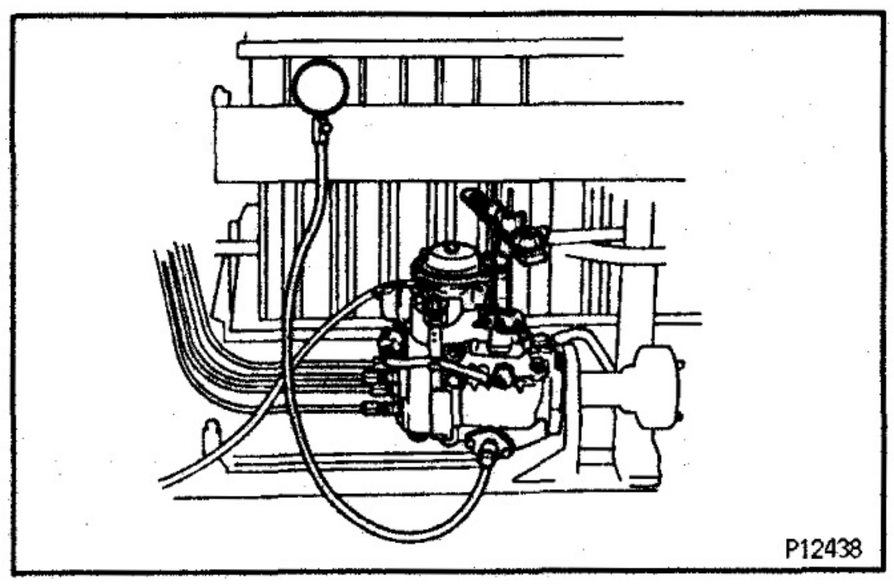

6. ADJUST PUMP INNER PRESSURE

(a) Measure the pump inner pressure at the below listed rpm.

Pump rpm	Inner pressure kPa (kgf/cm², psi)
500	412 – 471 (4.2 – 4.8, 60 – 68)
2,000	785 – 843 (8.0 – 8.6, 114 – 122)

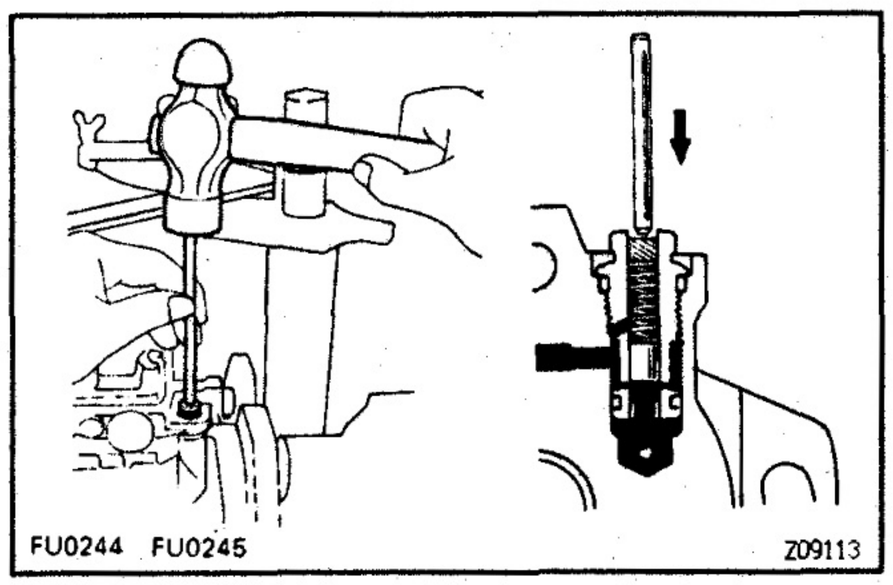

(b) If the pressure is low, adjust by lightly tapping the regulator valve piston while watching the pressure gauge.
HINT: If the pressure is too high or if the regulator valve was tapped in too far, the regulator valve must be replaced.

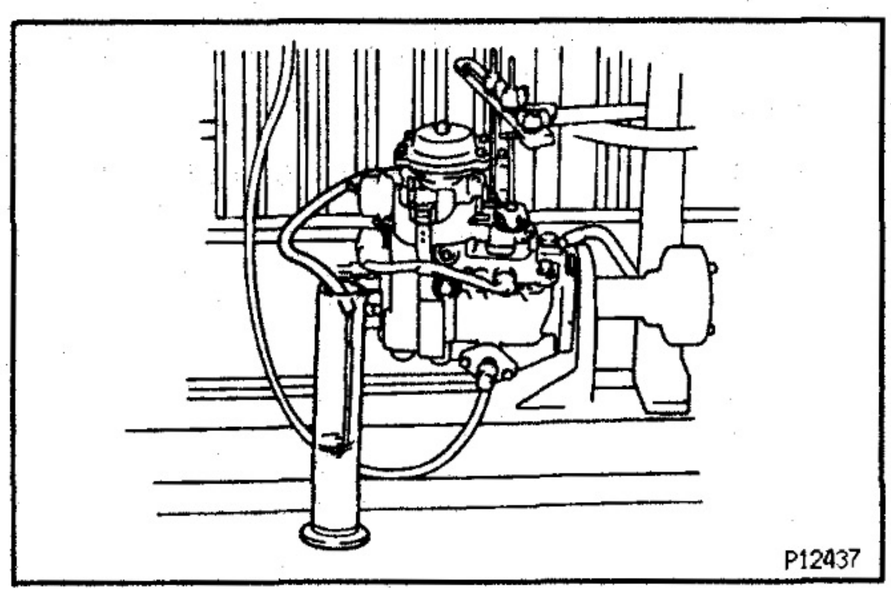

7. CHECK OVERFLOW VOLUME

Measure the overflow volume at the below listed rpm.

Pump rpm	Overflow volume cc/min. (cu in./min.)
500	720 – 1,150 (43.9 – 70.2)

HINT: Always use the overflow screw installed on the pump to be adjusted.

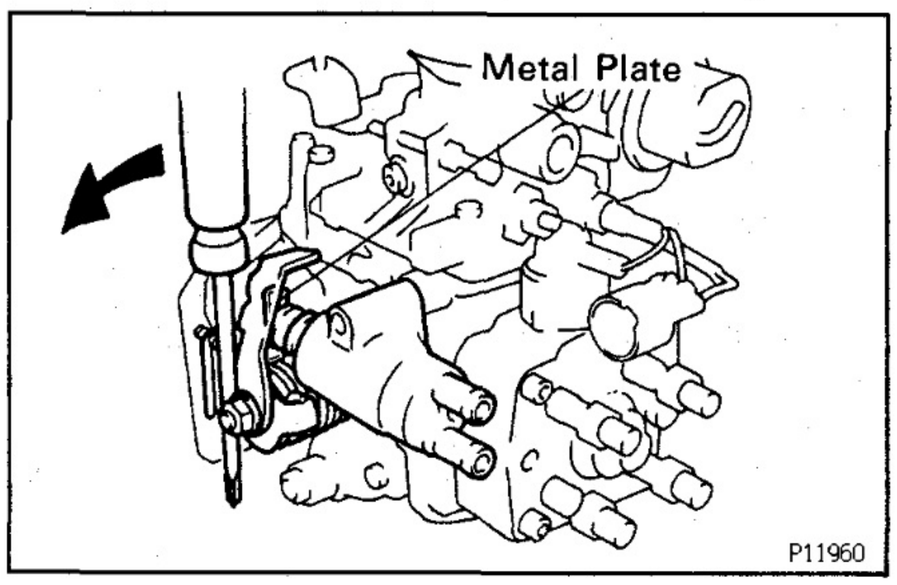

8. w/ ACSD:
RELEASE COLD STARTING SYSTEM FOR NEXT INSPECTIONS

(a) Using a screwdriver, turn the cold starting lever counterclockwise approx. 20°.

(b) Put a metal plate (thickness of 8.5 – 10 mm (0.33 – 0.39 in.)) between the cold starting lever and thermo wax plunger.
HINT: Keep the cold starting system released until all measurements and adjustments are finished.

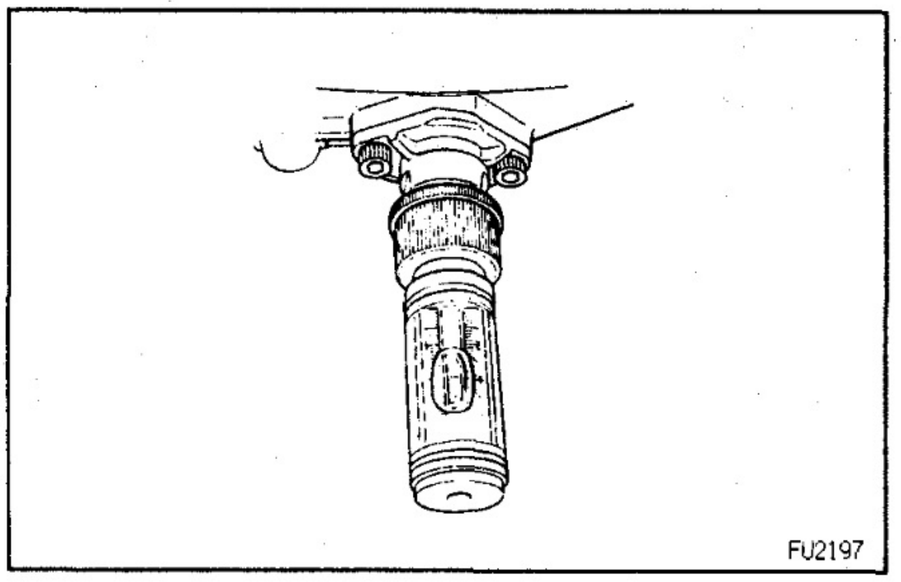

9. ADJUST TIMER

(a) Set the timer measuring device at zero.

(b) w/o BACS:
Apply 67 kPa (0.68 kgf/cm², 9.7 psi) of pressure to the boost compensator.

(c) w/ BACS:
Apply 116 kPa (1.17 kgf/cm², 16.6 psi) of pressure to the boost compensator.

(d) Measure the timer piston stroke at the below listed rpm.

Item	Pump rpm	Piston stoke mm (in.)
w/o BACS	600	0.7 – 1.5 (0.028 – 0.059)
	1,000	3.9 – 4.7 (0.154 – 0.185)
	1,800	8.3 – 9.1 (0.327 – 0.358)
	2,000	8.5 – 9.1 (0.335 – 0.358)
w/ BACS	750	0.6 – 1.4 (0.024 – 0.055)
	1,000	2.3 – 3.1 (0.091 – 0.122)
	1,800	6.7 – 7.5 (0.264 – 0.295)
	2,000	7.1 – 7.5 (0.280 – 0.295)

V03725

HINT: Check that the hysteresis is within 0.3 mm (0.012 in.).

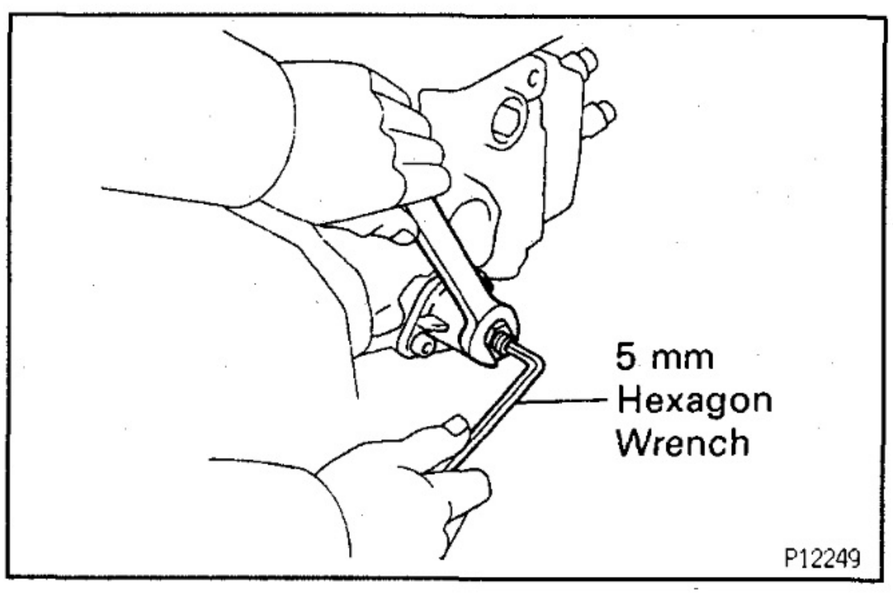

(e) Using a 5 mm hexagon wrench, adjust by turning the timer adjusting screw.
HINT: Turn colckwise to reduce the stroke, turn counterclockwise to increase the stroke.

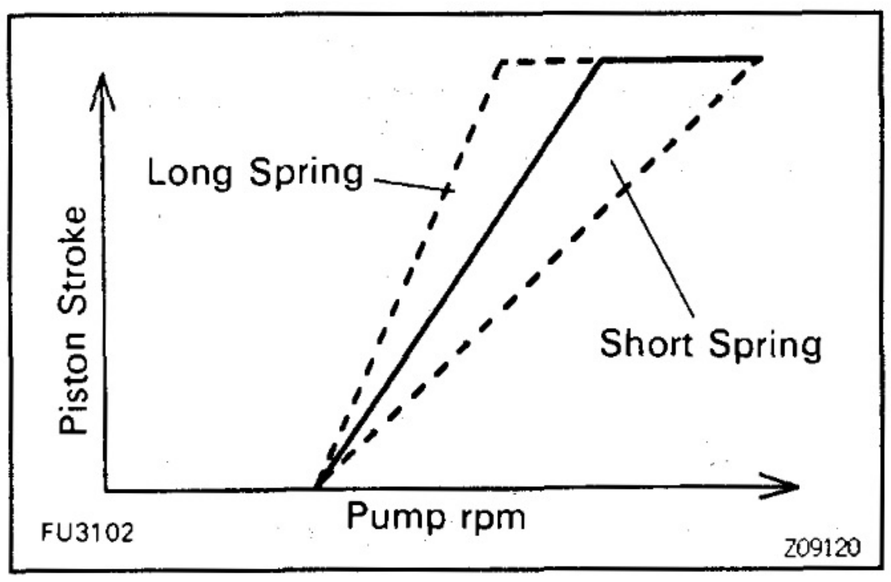

(f) Check the timer stroke for characteristic tendency.

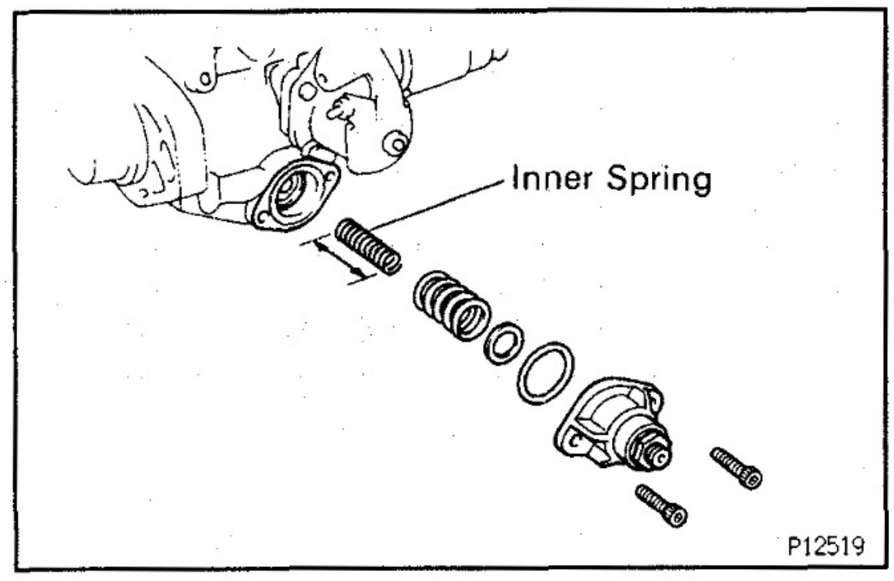

If tendency is not as specified, select and replace the inner spring.

Timer spring free length:

40.4 mm (1.59 in.)
39.5 mm (1.56 in.)
38.8 mm (1.53 in.)
38.2 mm (1.50 in.)

HINT: The timer stroke will increase with a long spring and decrease with a short spring.

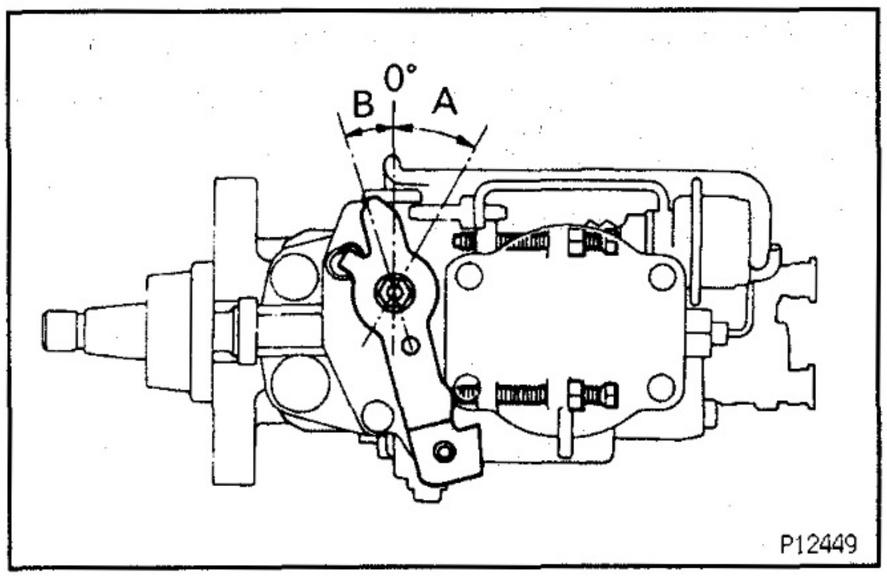

10. ADJUST FULL LOAD INJECTION VOLUME

(a) The adjusting lever angle for the adjustment below should be as shown in the illustration.

Adjusting lever angle:

A (Maximum speed side)	B (Idle speed side)
Plus 23.5 – 33.5°	Minus 12.5 – 22.5°

(b) Apply 66.7 kPa (500 mmHg, 19.69 in.Hg) of vacuum to the PCS actuator.

(c) w/o BACS:
Apply 67 kPa (0.68 kgf/cm², 97 psi) of pressure to the boost compensator.

(d) w/ BACS:
Apply 116 kPa (1.17 kgf/cm², 16.6 psi) of pressure to the boost compensator.

(e) Measure the full load injection volume.

Item	Adjusting lever angle	Pump rpm	No. of measuring strokes	Injection volume of each cylinder cc (cu in.)	Variation limit cc (cu in.)
w/o BACS	Plus 23.5 – 33.5°	1,800	200	15.4 – 15.8 (0.94 – 0.96)	0.7 (0.04)
w/ BACS	Plus 23.5 – 33.5°	1,800	200	14.5 – 14.9 (0.88 – 0.91)	0.7 (0.04)

V03727

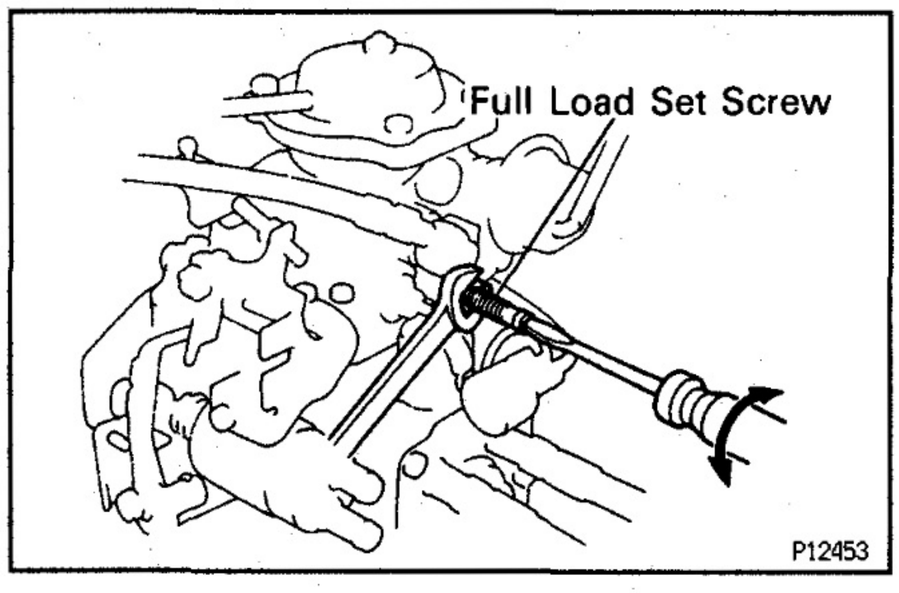

(f) Adjust by turning the full load set screw.
HINT: The injection volume will increase about 3 cc (0.18 cu in.) with each 1/2 turn of the screw.

(g) Release the vacuum from the PCS actuator.
(h) Measure the injection volume.

Item	Adjusting lever angle	Pump rpm	No. of measuring strokes	Injection volume of each cylinder cc (cu in.)
w/o BACS	Plus 23.5 – 33.5°	1,200	200	14.6 – 14.9 (0.89 – 0.91)
w/ BACS	Plus 23.5 – 33.5°	1,200	200	14.5 – 14.8 (0.88 – 0.90)

V03728

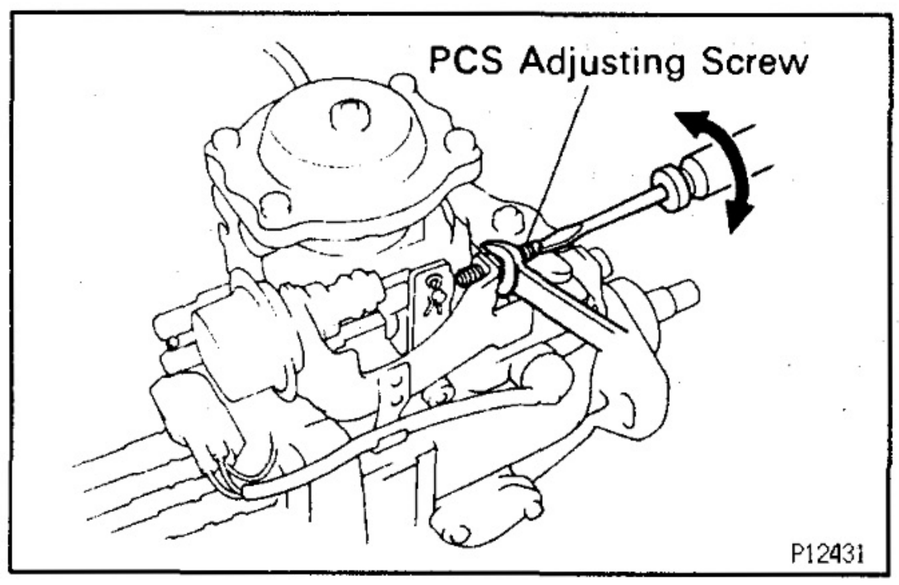

(i) Adjust by turning the PCS adjusting screw.
HINT: By screwing in the adjusting screw, the injection volume is increased; unscrewing the adjusting screw decreases the injection volume.

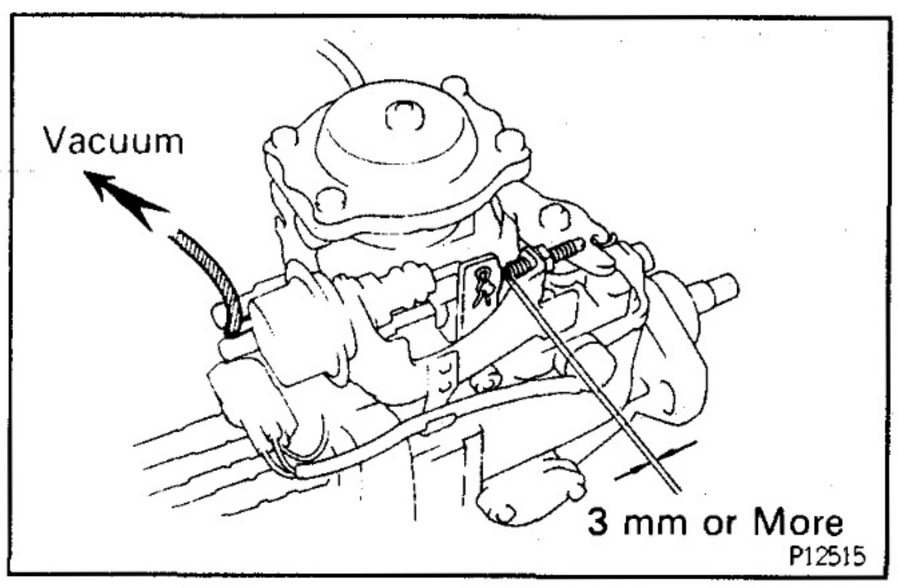

(j) Apply 66.7 kPa (500 mmHg, 19.69 in.Hg) of vacuum to the PCS actuator, then check that the clearance between the PCS lever and adjusting screw is 3 mm (0.12 in.) or more.

11. ADJUST MAXIMUM SPEED

(a) w/o BACS:
Apply 67 kPa (0.68 kgf/cm², 9.7 psi) of pressure to the boost compensator.
(b) w/ BACS:
Apply 116 kPa (1.17 kgf/cm², 16.6 psi) of pressure to the boost compensator.
(c) Apply 66.7 kPa (500 mmHg, 19.69 in.Hg) of vacuum to the PCS actuator.
(d) Measure the injection volume at each pump rpm.

Item	Adjusting lever angle position	Pump rpm	No. of measuring strokes	Injection volume of each cylinder cc (cu in.)	Remarks
w/o BACS	Plus 23.5 – 33.5°	2,200	200	8.8 – 13.6 (0.54 – 0.83)	–
		2,300		5.2 – 7.2 (0.32 – 0.44)	Adjust
		2,450		3.0 (0.18) or less	–
w/ BACS	Plus 23.5 – 33.5°	2,200	200	7.6 – 12.4 (0.46 – 0.76)	–
		2,300		5.2 – 7.2 (0.32 – 0.44)	Adjust
		2,450		3.0 (0.18) or less	–

V03729

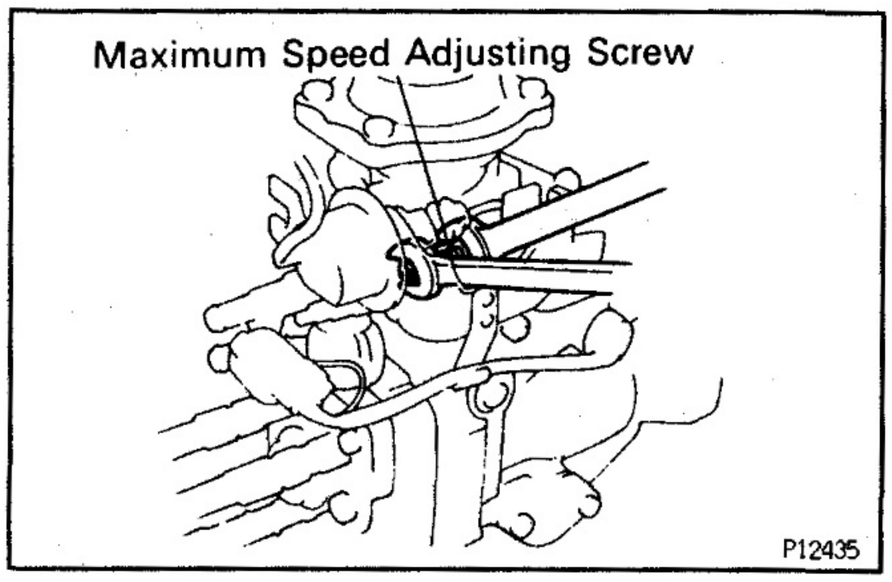

(e) Adjust by turning the maximum speed adjusting screw.

12. CHECK INJECTION VOLUME

(a) Apply 66.7 kPa (500 mmHg, 19.69 in.Hg) of vacuum to the PCS actuator.

(b) Measure the injection volume at each pump rpm and boost pressure.

Item	Adjusting lever angle	Pump rpm	Boost pressure kPa (kg/cm², psi)	No. of measuring strokes	Injection volume of each cylinder cc (cu in.)	Variation limit cc (cu in.)	Remarks
w/o BACS	Plus 23.5° – 33.5°	100	0 (0, 0)	200	14.6 – 19.4 (0.89 – 11.8)	1.3 (0.08)	Volume during starting
		500	20 (0.20, 2.8)		13.0 – 13.8 (0.79 – 0.84)	–	–
		700	34 (0.34, 4.8)		14.9 – 16.1 (0.91 – 0.98)	–	–
		1,200	67 (0.68, 9.7)		16.6 – 17.8 (1.01 – 1.09)	0.7 (0.04)	–
		1,800	67 (0.68, 9.7)		15.4 – 15.8 (0.94 – 0.96)	0.7 (0.04)	Basic full-load injection volume
w/ BACS	Plus 23.5° – 33.5°	100	49 (0.50, 7.1)	200	14.6 – 19.4 (0.89 – 11.8)	1.3 (0.08)	Volume during starting
		500	65 (0.66, 9.4)		12.2 – 13.0 (0.74 – 0.79)	–	–
		700	77 (0.79, 11.2)		13.8 – 15.0 (0.84 – 0.92)	–	–
		1,200	116 (1.17, 16.6)		16.3 – 17.5 (0.99 – 1.07)	0.7 (0.04)	–
		1,800	116 (1.17, 16.6)		14.5 – 14.9 (0.88 – 0.91)	0.7 (0.04)	Basic full-load injection volume

V03730

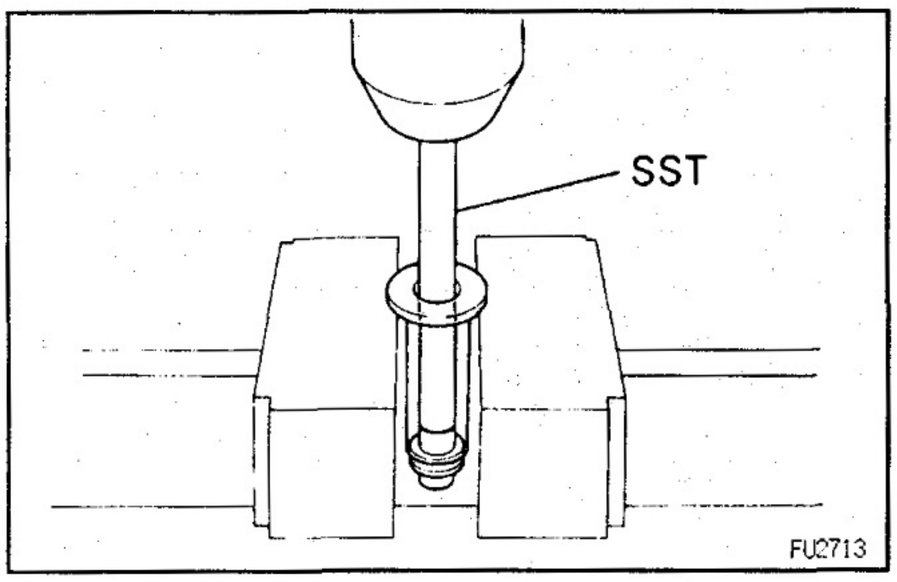

If the injection volume at 100 rpm is not as specified, replace the governor sleeve plug as follows:

- Using SST and a press, press out the sleeve plug assembly from the governor sleeve.

SST 09236–00101 (09237–00070)

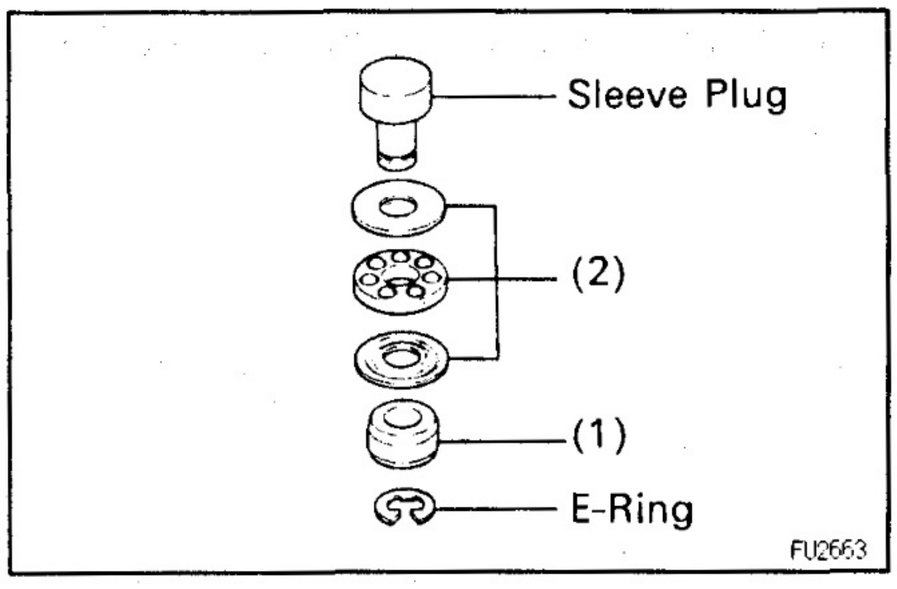

- Remove the E–ring and following parts from the sleeve plug:

(1) Stop ring
(2) Bearing and 2 bearing retainers

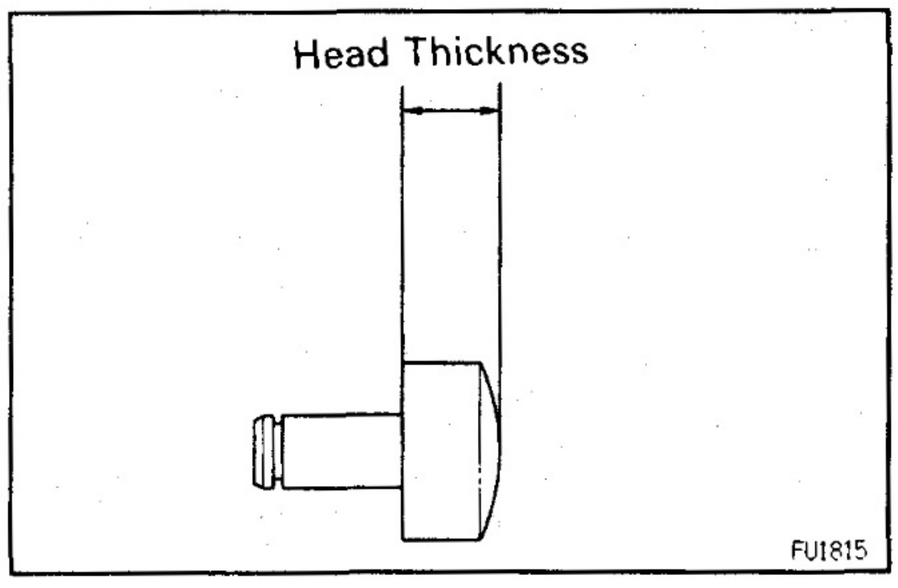

- Measure the head thickness of the sleeve plug, and select a new sleeve plug.

Governor sleeve plug head thickness: **mm (in.)**

3.0 (0.118)	3.6 (0.142)	4.2 (0.165)
3.2 (0.126)	3.8 (0.150)	4.4 (0.173)
3.4 (0.134)	4.0 (0.157)	–

HINT: Lengthening the plug by 0.1 mm (0.004 in.) will decrease injection volume by 1.0 cc (0.06 cu in.).
If the variation limit is greater than specified, replace the delivery valve.

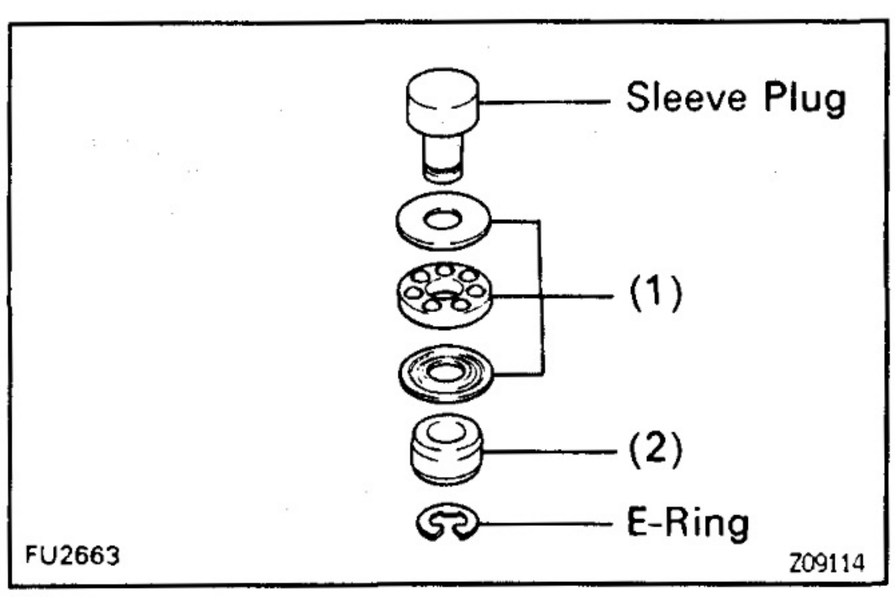

- Install the following parts to the new sleeve plug with a new E–ring:

(1) Bearing and 2 retainers
(2) Stop ring

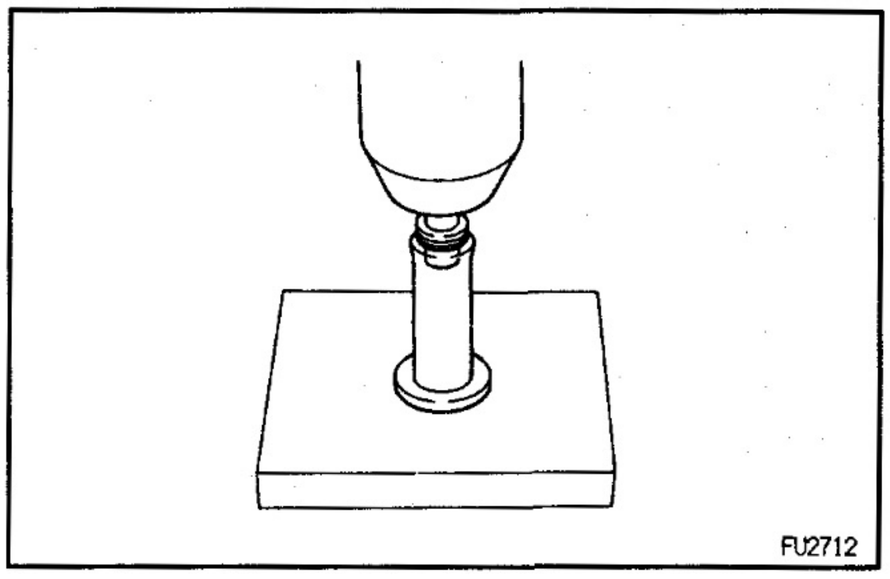

- Using a press, press in the sleeve plug assembly to the governor sleeve.

13. ADJUST FULL LOAD MINIMUM INJECTION VOLUME

(a) Set the adjusting lever to maximum position.
(b) Apply 66.7 kPa (500mmHg, 19.69 in.Hg) of vacuum to the PCS actuator.
(c) w/o BACS:
Release the pressure from the boost compensator.
(d) w/ BACS:
Apply 49 kPa (0.50 kgf/cm², 7.1 psi) of pressure to the boost compensator.
(e) Measure the injection volume.

Item	Adjusting lever angle	Pump rpm	Boost pressure kPa (kgf/cm², psi)	No. of measuring strokes	Injection volume of each cylinder cc (cu in.)
w/o BACS	Plus 23.5 – 33.5°	500	0 (0, 0)	200	11.9 – 12.5 (0.73 – 0.76)
w/ BACS	Plus 23.5 – 33.5°	500	49 (0.50, 7.1)	200	8.1 – 9.3 (0.49 – 0.57)

V03731

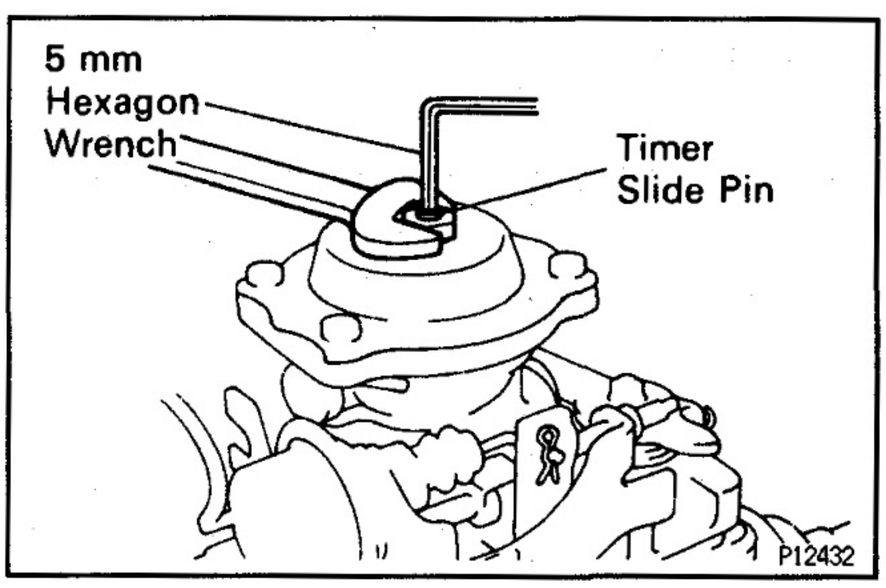

(f) Using a 5 mm hexagon wrench, adjust by turning the timer slide pin.

14. ADJUST BOOST COMPENSATOR

A. Adjust characteristic

(a) Apply 66.7 kPa (500 mmHg, 19.69 in.Hg) of vacuum to the PCS actuator.
(b) w/o BACS:
Apply 20 kPa (0.20 kgf/cm², 2.8 psi) of pressure to the boost compensator.

(c) w/ BACS:
Apply 65 kPa (0.66 kgf/cm², 9.4 psi) of pressure to the boost compensator.

(d) Measure the injection volume.

Item	Pump rpm	Boost pressure kPa (kgf/cm², psi)	No. of measuring strokes	Injection volume of each cylinder cc (cu in.)
w/o BACS	500	20 (0.20, 2.8)	200	13.0 – 13.8 (0.79 – 0.84)
w/ BACS	500	65 (0.66, 9.4)	200	12.2 – 13.0 (0.74 – 0.79)

V03732

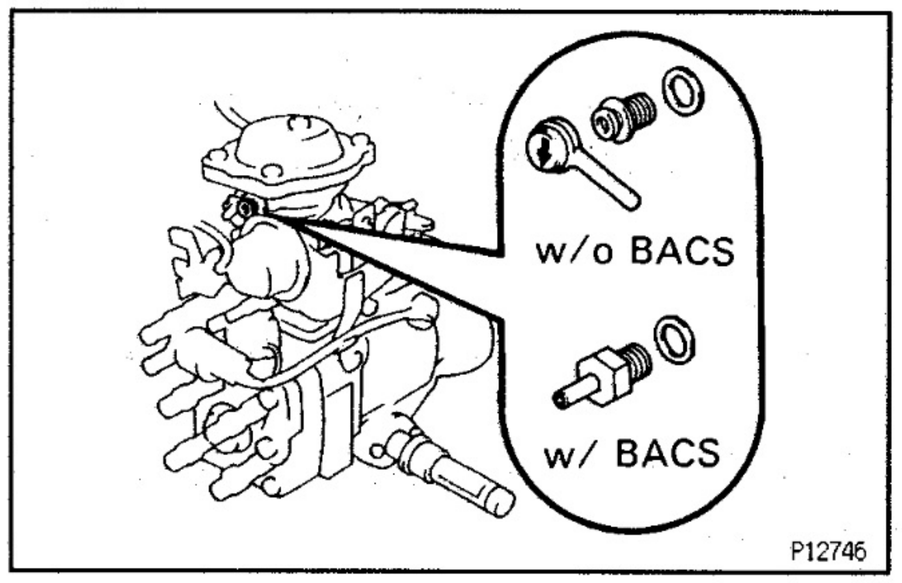

(e) w/o BACS:
Remove the rubber cap.

(f) Remove the overflow screw and gasket.

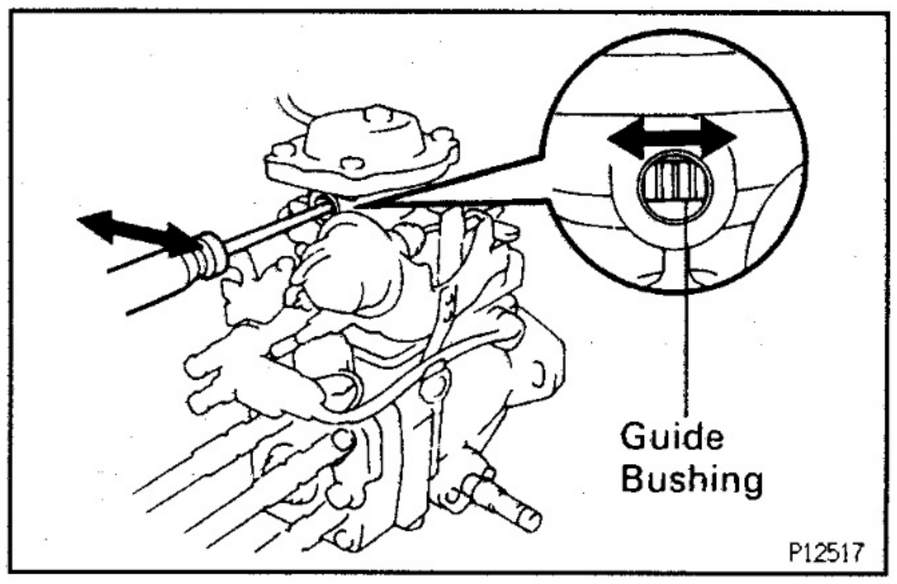

(g) Using a screwdriver, adjust the injection volume by the guide bushing.
HINT: When the guide bushing is turned clockwise, as seen from above, the injection volume will increase.

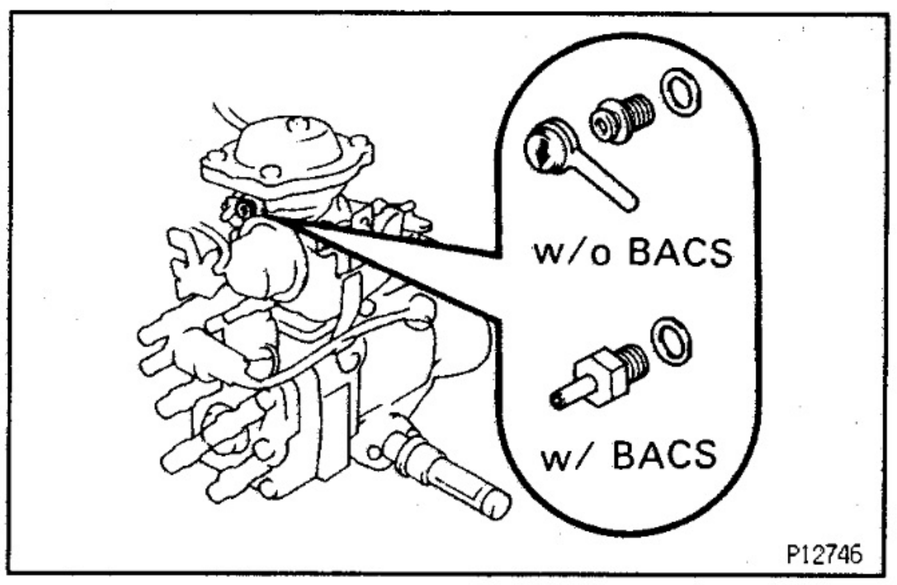

(h) Install the overflow screw with a new gasket.

(i) w/o BACS:
Install the rubber cap facing the arrow downward.

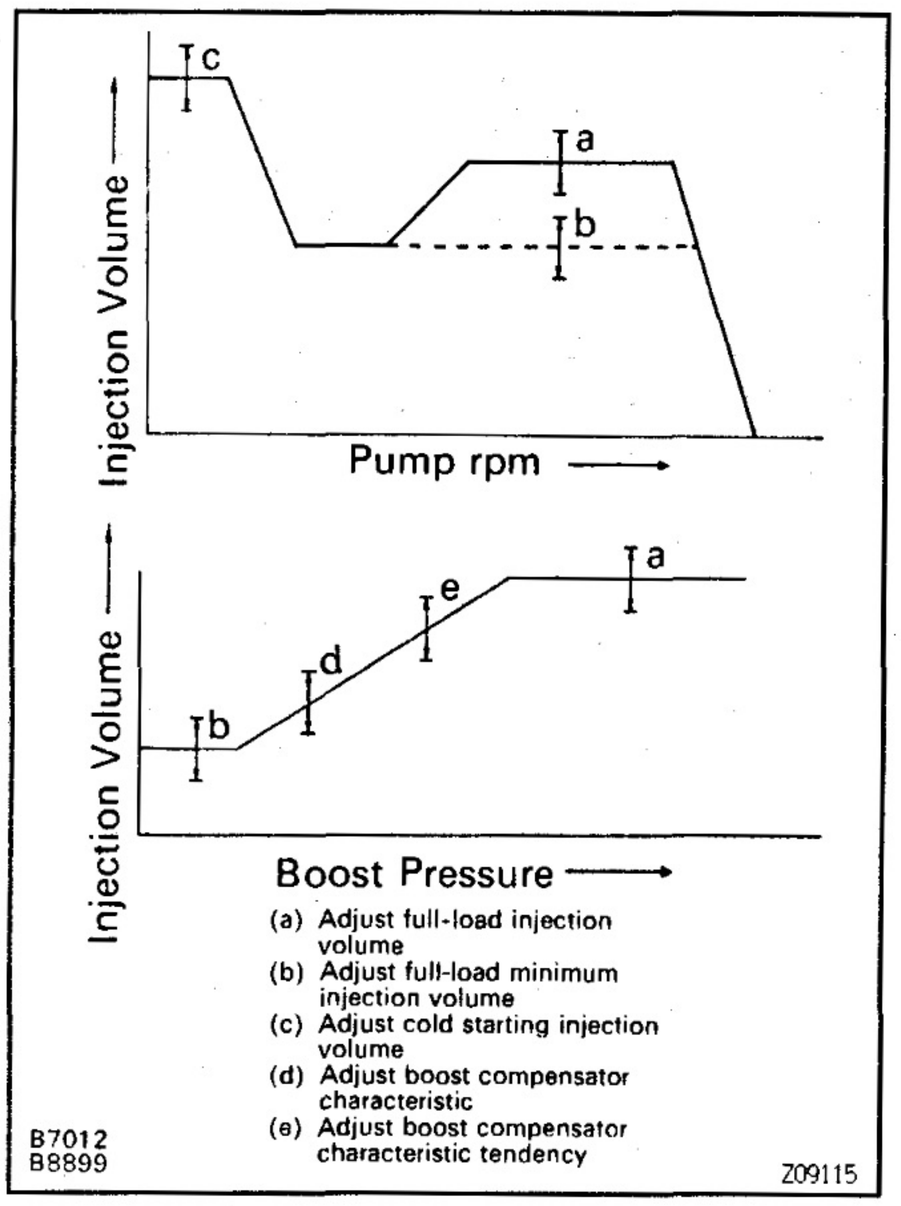

B. Check for characteristic tendency

(a) Apply 66.7 kPa (500 mmHg, 19.69 in.Hg) of vacuum to the PCS actuator.

(b) Measure the injection volume for each set of pump rpm / boost pressure conditions listed in the table below.

Item	Pump rpm	Boost pressure kPa (kgf/cm², psi)	No. of measuring strokes	Injection volume of each cylinder cc (cu in.)
w/o BACS	1,800	87 (0.88, 12.5)	200	15.3 – 15.9 (0.93 – 0.97)
	1,800	67 (0.68, 9.7)	200	15.4 – 15.8 (0.94 – 0.96)
	700	34 (0.34, 4.8)	200	14.9 – 16.1 (0.91 – 0.98)
	500	20 (0.20, 2.8)	200	13.0 – 13.8 (0.79 – 0.84)
	500	0 (0, 0)	200	11.9 – 12.5 (0.73 – 0.76)
w/ BACS	1,800	136 (1.38, 19.6)	200	14.4 – 15.0 (0.88 – 0.92)
	1,800	116 (1.17, 16.6)	200	14.5 – 14.9 (0.88 – 0.91)
	700	77 (0.79, 11.2)	200	13.8 – 15.0 (0.84 – 0.92)
	500	65 (0.66, 9.4)	200	12.2 – 13.0 (0.74 – 0.79)
	500	0 (0, 0)	200	8.1 – 9.3 (0.49 – 0.57)

V03734

If not within standard value, check each sliding part of the boost compensator and check whether or not there is any oil.

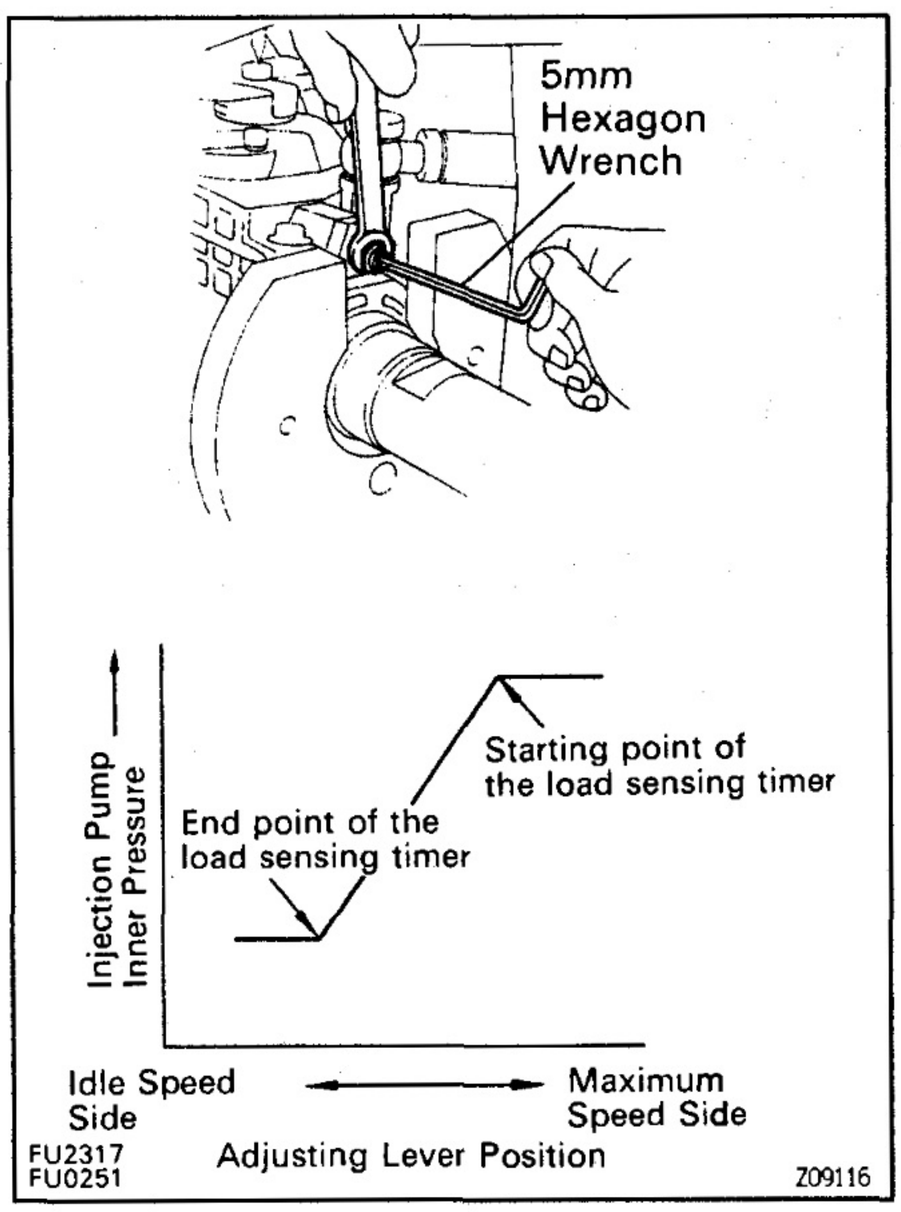

15. w/o BACS:
ADJUST LOAD SENSING TIMER

(a) Using a 5 mm hexagon wrench, adjust the starting and end points of the load sensing timer by turning the governor shaft.

(b) Set the adjusting lever to maximum position.

(c) Apply 66.7 kPa (500 mmHg, 19.69 in.Hg) of vacuum to the PCS actuator.

(d) Measure the injection volume.

Adjusting lever position	Pump rpm	No. of measuring strokes
Maximum speed side	1,000	200

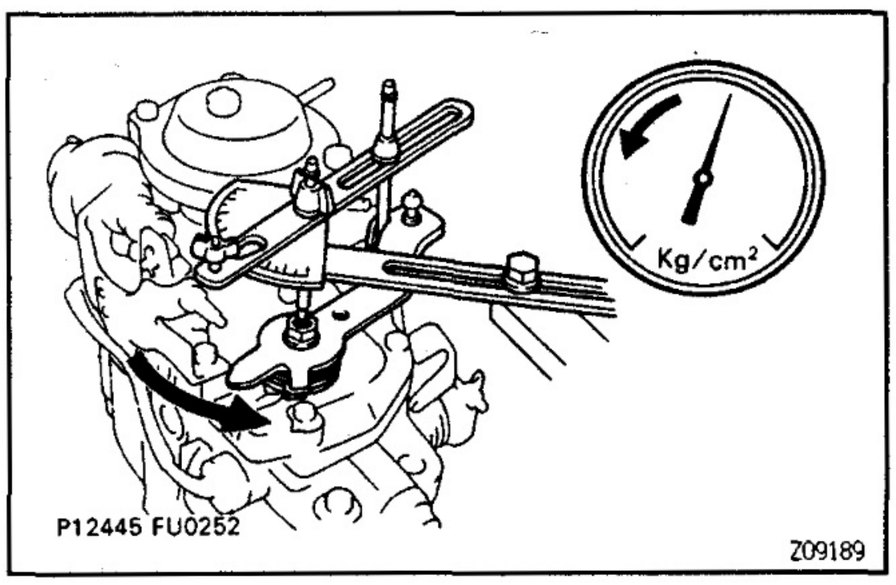

(e) Slowly move the adjusting lever from the maximum speed side to the idle speed side, and secure it at the point where the pump inner pressure begins to drop.

(f) Measure the injection volume at the drop point (starting point).

Pump rpm	No. of measuring strokes	Injection volume of each cylinder cc (cu in.)
1,000	200	Measured value at step (b) minus 0.6 (0.04) ± 0.4 (0.02)

V03735

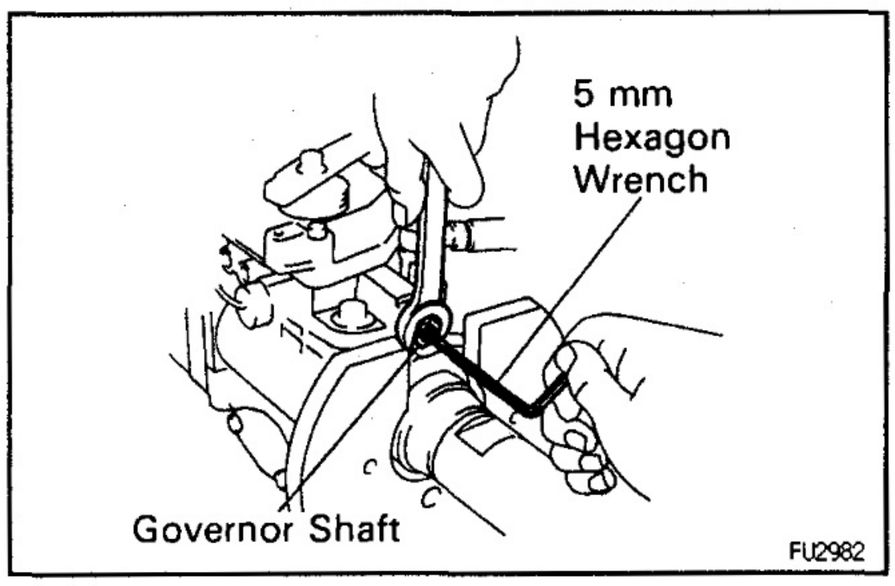

(g) Using a 5 mm hexagon wrench, adjust the load sensing timer by turning the governor shaft, and perform the measurement again as specified.
HINT: The injection volume will increase approx. 3 cc (0.2 cu in.) with each 1/2 turn of the governor shaft.

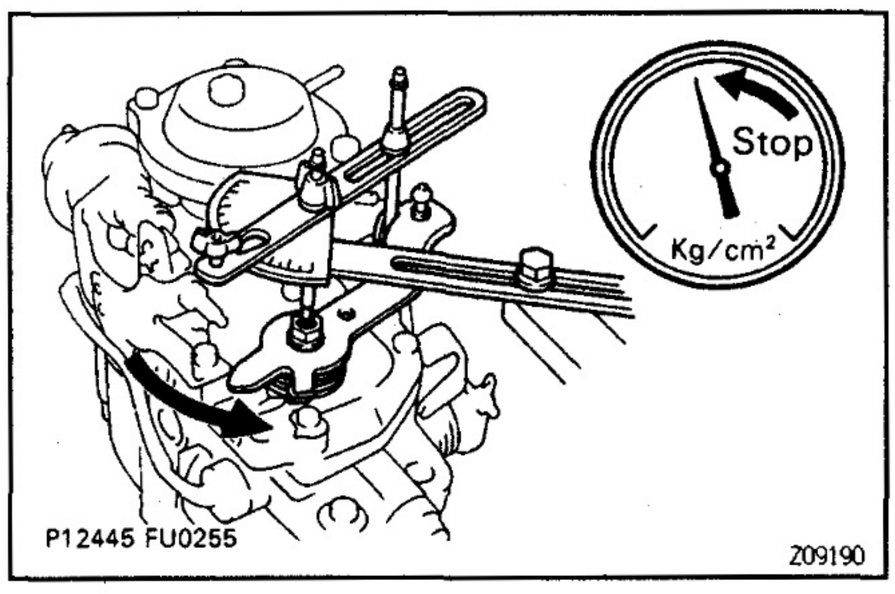

(h) Check the end point injection volume by slowly moving the adjusting lever from the maximum speed side to the idle speed side, and secure it at the point where the pump inner pressure stops dropping.

Pump rpm	No. of measuring strokes	Injection volume of each cylinder cc (cu in.)
1,000	200	10.2 – 10.6 (0.62 – 0.65)

V03736

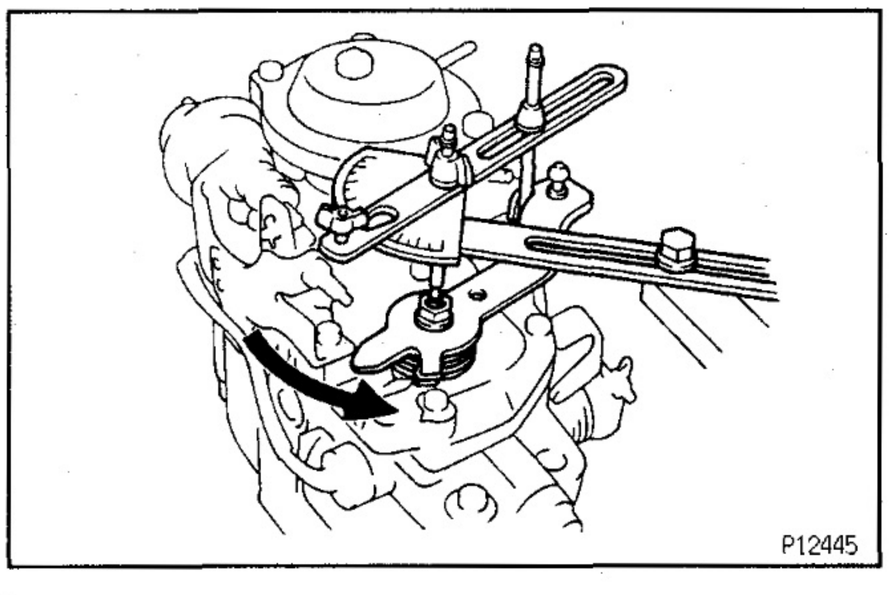

(i) When the adjusting lever is moved slowly from the maximum speed side to the idle speed side, the timer stroke at the maximum retard angle (minimum timer piston stroke) should be as shown in the table below. (end point)

Pump rpm	Timer piston stroke mm (in.)
1,000	1.44 – 2.24 (0.057 – 0.088)

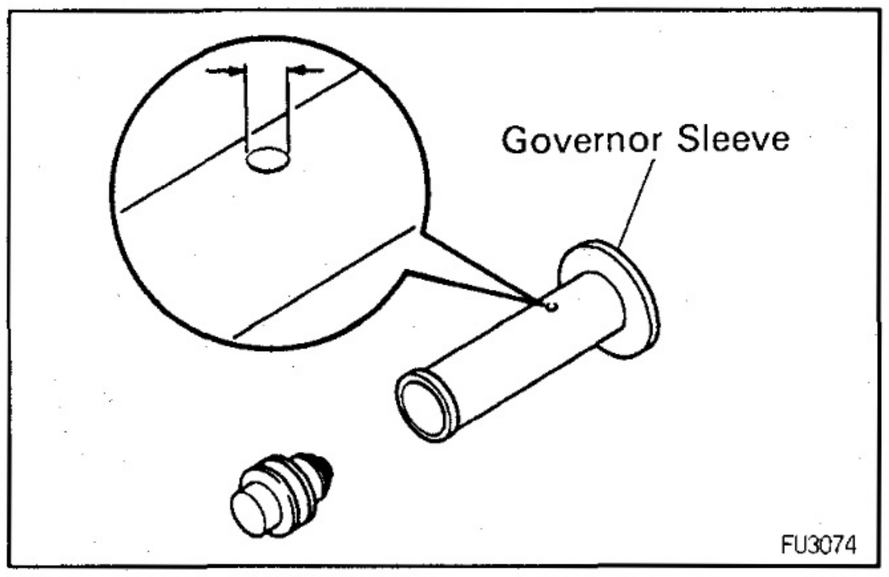

If the timer stroke is not as specified when the load sensing is at maximum retard angle, select a new governor sleeve.

Governor sleeve hole diameter:

0.75 mm (0.0295 in.) x 2 holes
0.80 mm (0.0315 in.) x 2 holes
0.85 mm (0.0335 in.) x 2 holes

HINT: A large hole diameter decreases the timer stroke and a smaller hole diameter increases the timer stroke.

(j) Check the protrusion of the governor shaft.

Protrusion:

0.5 – 2.0 mm (0.020 – 0.079 in.)

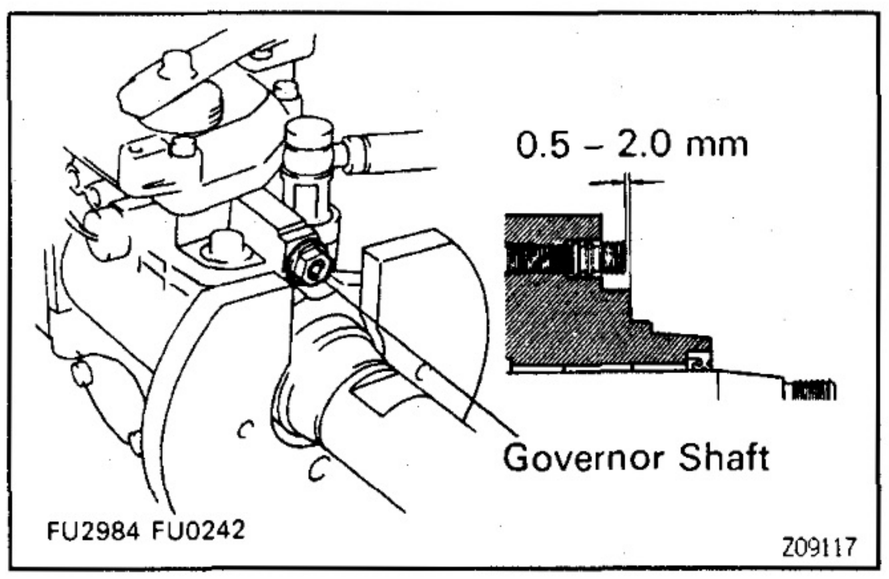

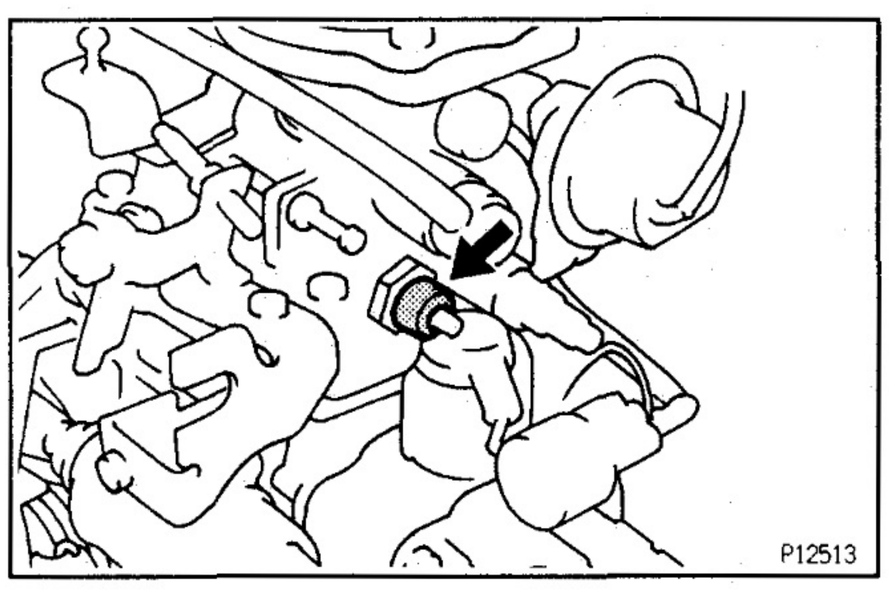

16. ADJUST IDLE SPEED

(a) Using pliers, remove the dash pot collar.

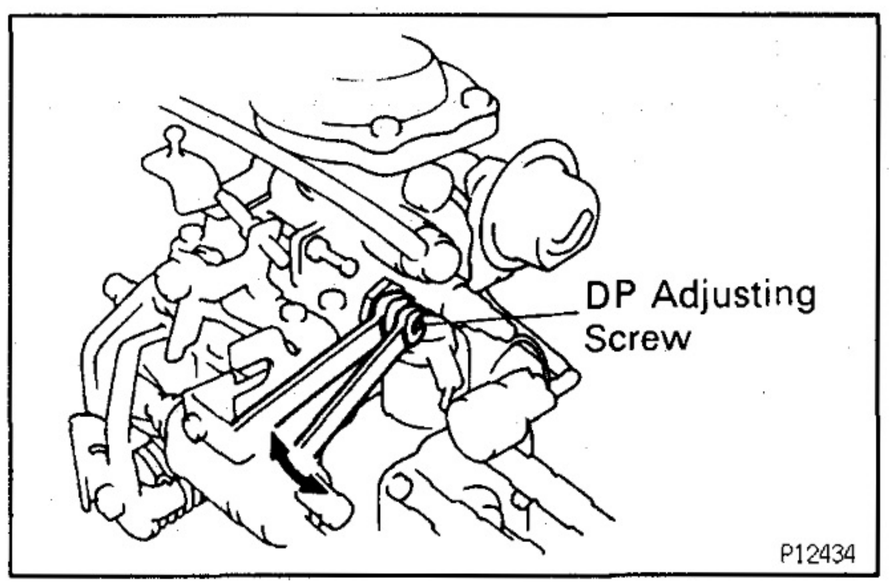

(b) Fully loosen the dash pot adjusting screw.
(c) Apply 66.7 kPa (500 mmHg, 19.69 in.) of vacuum to the PCS actuator.
(d) w/o BACS:
Release the pressure from the boost compensator.
(e) w/ BACS:
Apply 49 kPa (0.50 kgf/cm², 7.1 psi) of pressure to the boost compensator.

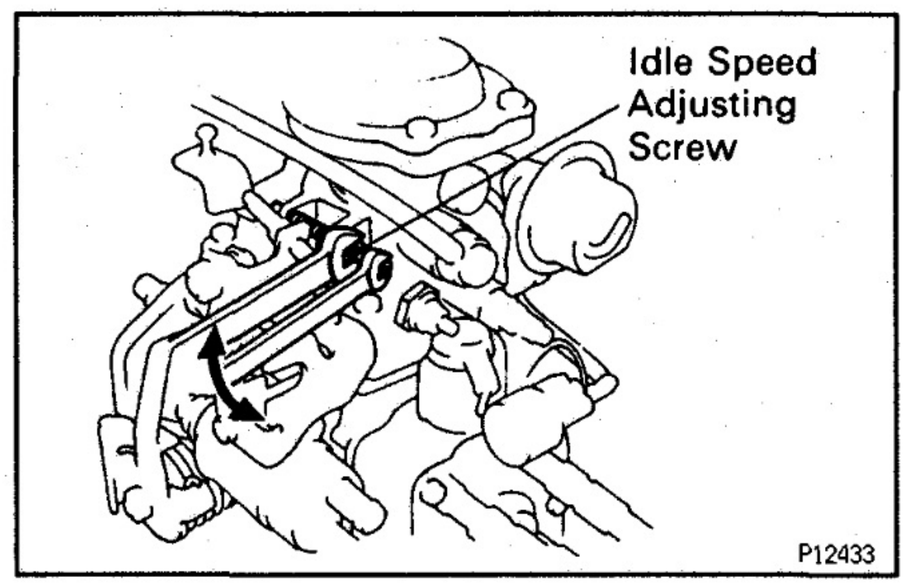

(f) (Pre–Set Idle Speed)
Adjust injection volume by turning the idle speed adjusting screw.

Item	Pump rpm	Boost pressure kPa (kgf/cm², psi)	No. of measuring strokes	Injection volume of each cylinder cc (cu in.)
w/o BACS	1,000	0 (0, 0)	200	q = 1.7 – 2.1 (0.10 – 0.13)
w/ BACS	1,000	49 (0.50, 7.1)	200	q = 1.7 – 2.1 (0.10 – 0.13)

V03746

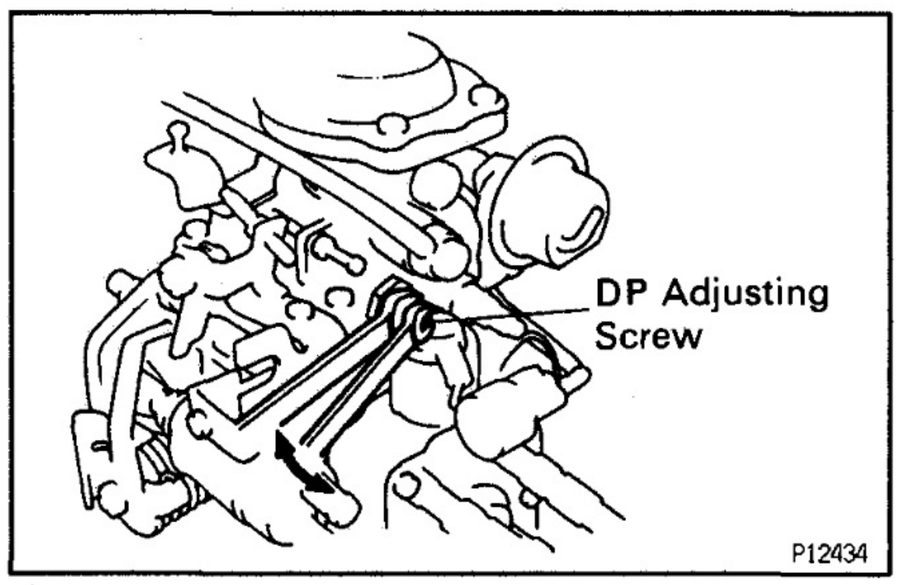

(g) (Adjust DP Speed)
Adjust injection volume by turning the DP adjusting screw.
HINT: The stroke will decrease with turn to clockwise and increase with turn to counterclockwise.

Item	Pump rpm	Boost pressure kPa (kgf/cm², psi)	No. of measuring strokes	Injection volume of each cylinder cc (cu in.)
w/o BACS	1,000	0 (0, 0)	200	q plus 0.06 – 0.16 (0.004 – 0.010)
w/ BACS	1,000	49 (0.50, 7.1)	200	q plus 0.06 – 0.16 (0.004 – 0.010)

V03747

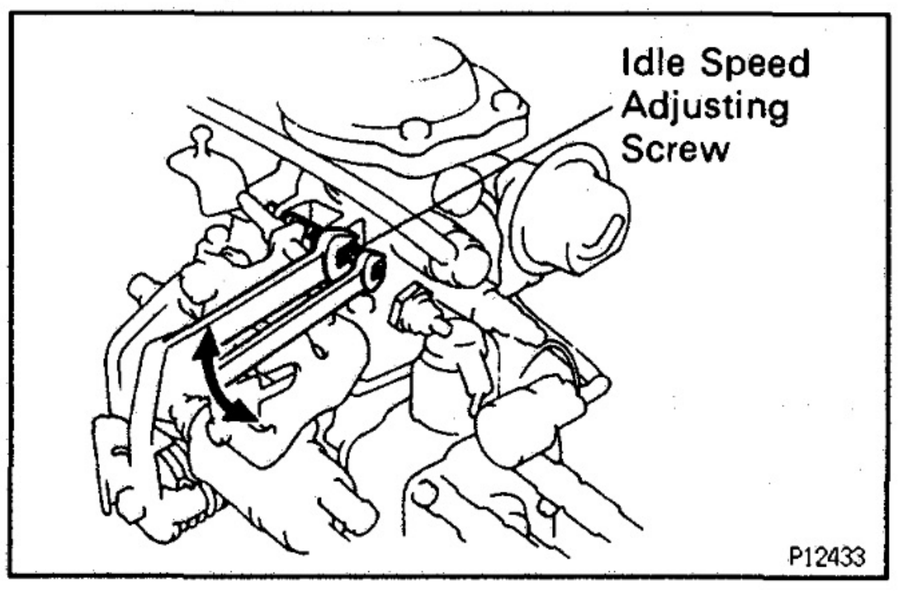

(h) (Adjust Idle Speed)
Adjust injection volume by turning the idle speed adjusting screw.

Item	Adjusting lever angle	Pump rpm	Boost pressure kPa (kgf/cm², psi)	No. of measuring strokes	Injection volume of each cylinder cc (cu in.)	Variation limit cc (cu in.)
w/o BACS	Minus 12.5 – 22.5°	350	0 (0, 0)	200	3.0 – 4.0 (0.18 – 0.24)	0.5 (0.03)
w/ BACS	Minus 12.5 – 22.5°	350	49 (0.50, 7.1)	200	3.0 – 4.0 (0.18 – 0.24)	0.5 (0.03)

V03748

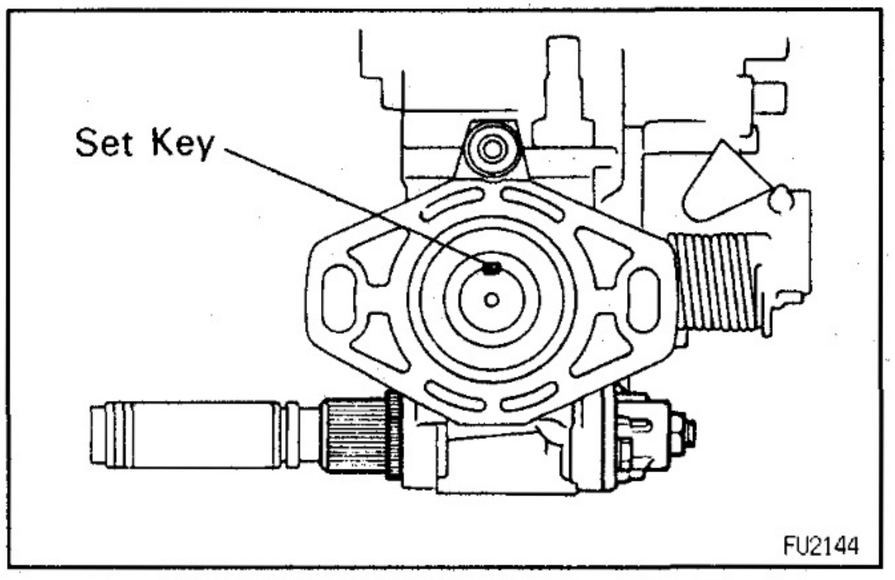

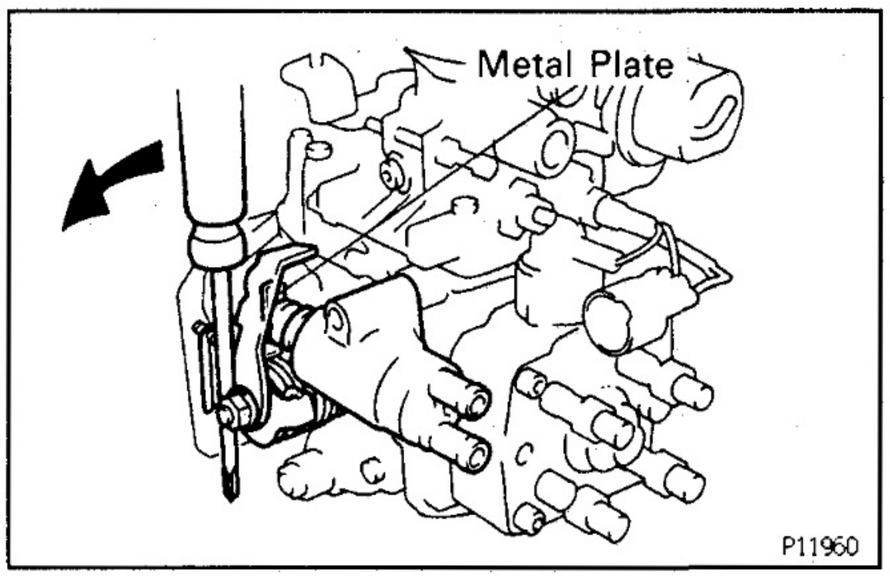

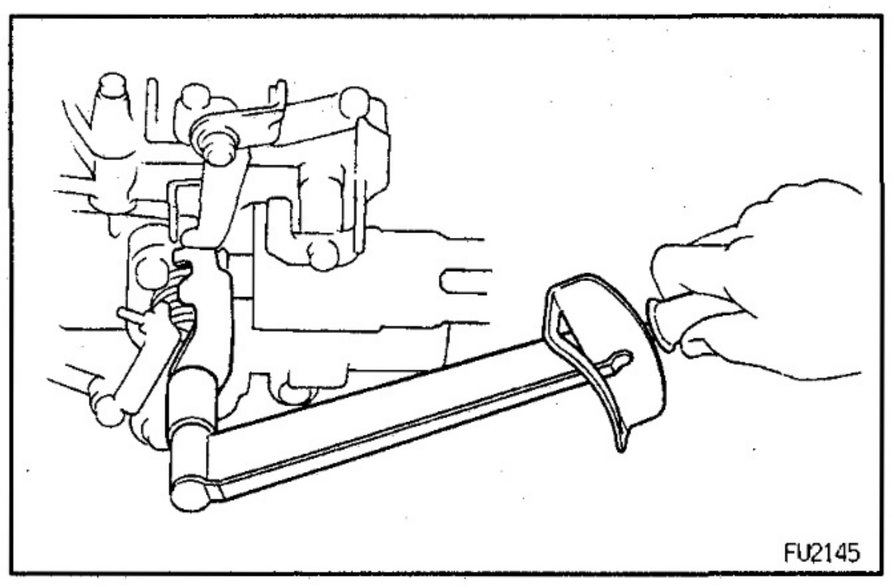

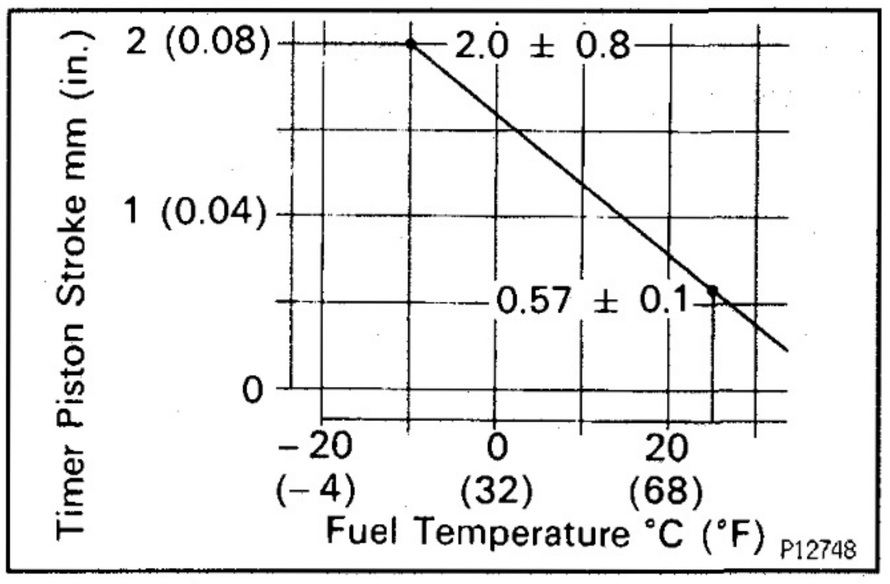

17. w/ ACSD:

ADJUST COLD STARTING SYSTEM

(a) Remove the overflow screw and check the fuel temperature in the fuel pump.

Fuel temperature:

15 – 35°C (59 – 95°F)

(b) Set the set key of the pump drive shaft in a vertical or horizontal position.

(c) Set the scale of the timer measuring device to zero.

(d) Check the adjusting lever opening angle and consider this angle as zero.

(e) Remove the metal plate between the cold starting lever and thermo wax plunger.

(f) Torque the cold starting lever clockwise to approx. 4.9 N·m (50 kgf·cm, 43 in.·lbf) and keep the lever tightened for about 10 seconds. Then release the torque.

(g) Measure the timer piston stroke.

Fuel temperature	Timer piston stroke mm (in.)
25°C (77°F)	0.47 – 0.67 (0.019 – 0.026)

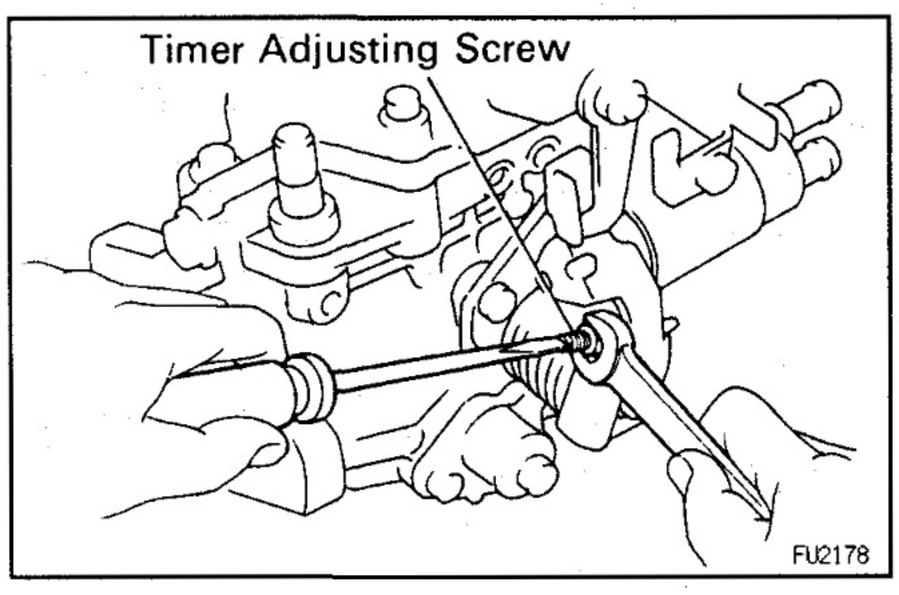

(h) Adjust by turning the timer adjusting screw.
HINT: Screw in for stroke decrease.

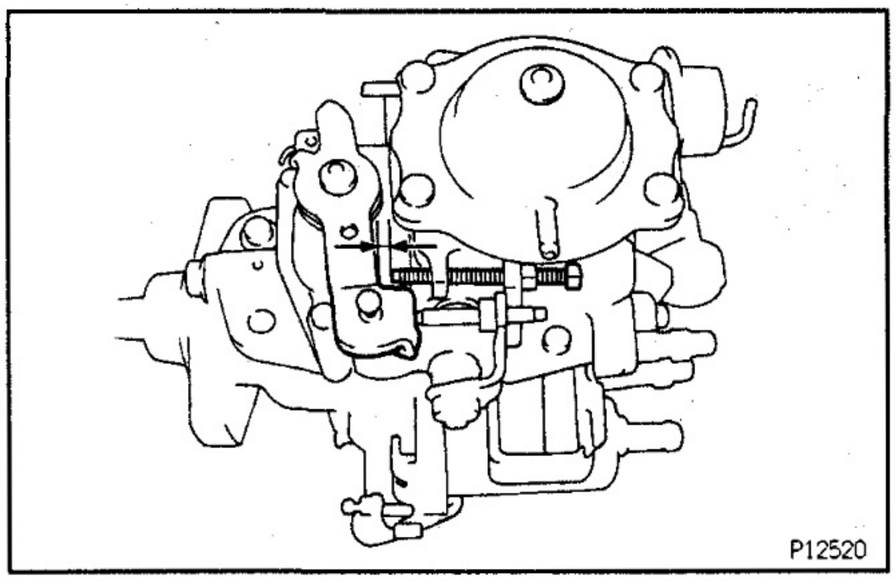

18. ADJUST FAST IDLE

(a) Measure the clearance between the adjusting lever and idle speed adjusting screw.

Fuel temperature	Clearance
25°C (68°F)	5.5 mm (0.217 in.)
50°C (122°F)	0 mm (0 in.)

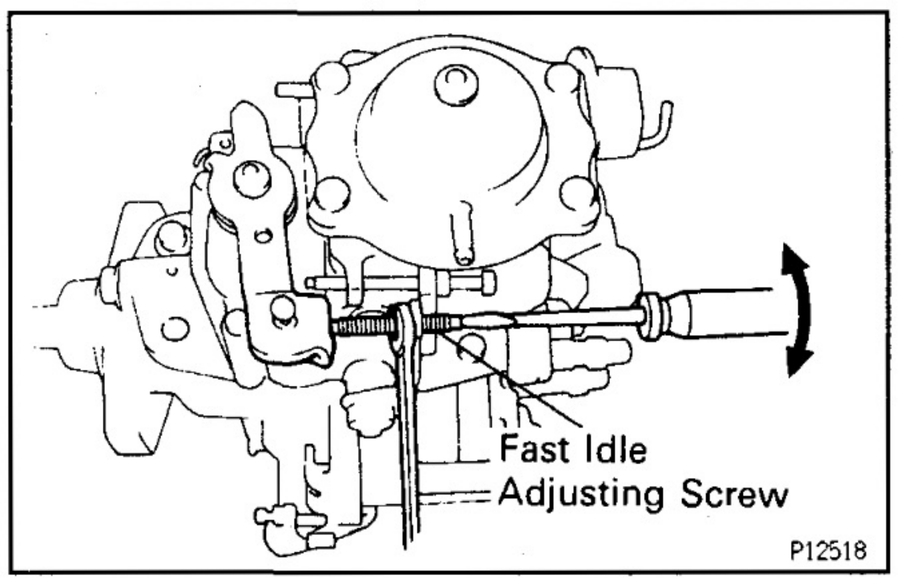

(b) Adjust by turning the fast idle adjusting screw.

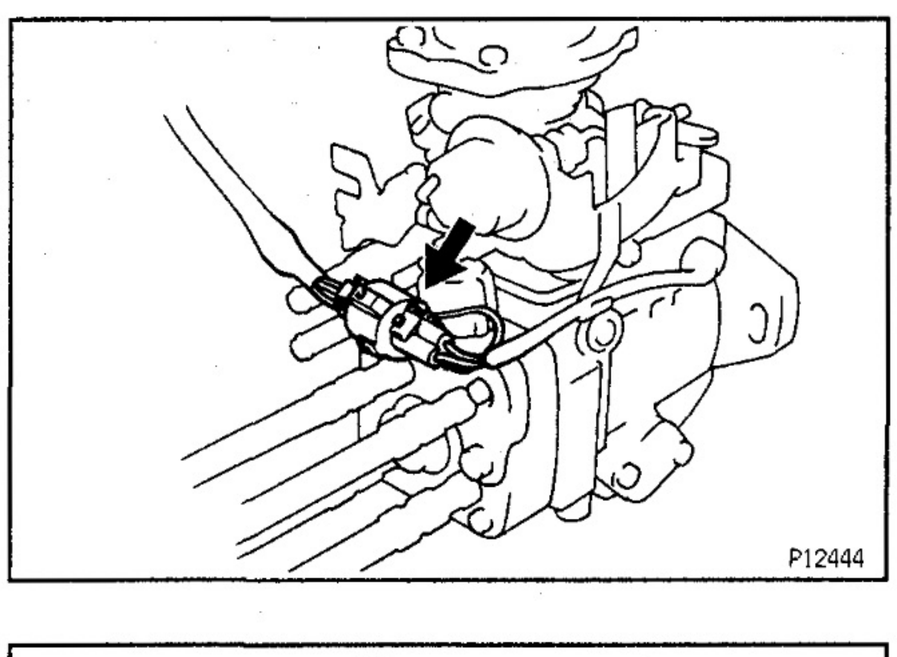

19. POST ADJUSTMENT CHECK

(a) Check that injection stops when the fuel cut solenoid harness is removed.
Pump revolution:
100 rpm

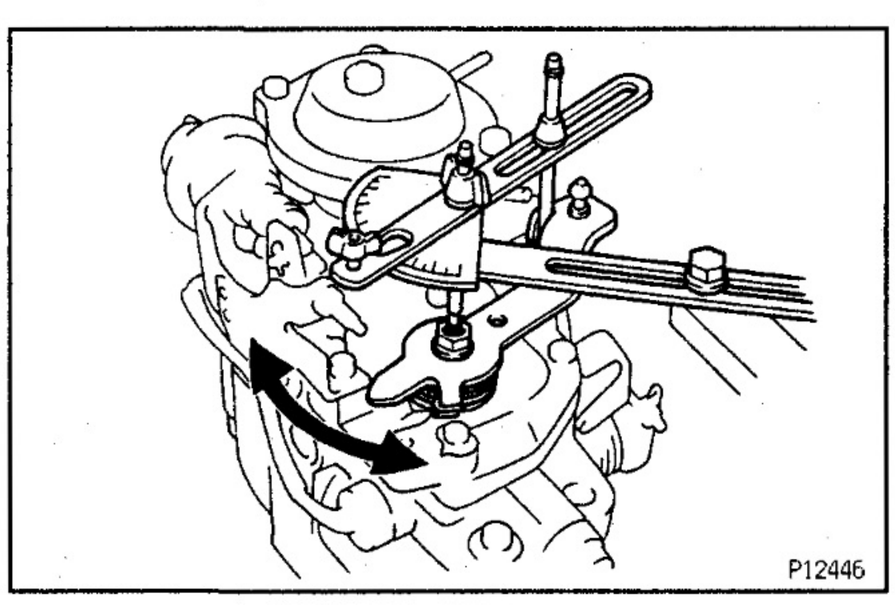

(b) Check the adjusting lever movement.
Adjusting lever angle:
41 – 51°

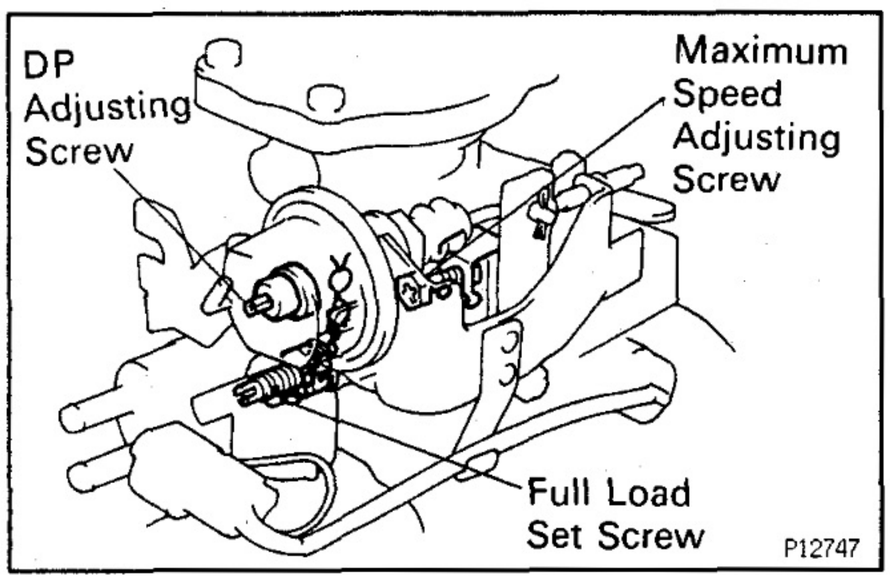

20. SEAL PARTS

(a) Seal the full load set screw with new lead seal.

(b) Install the lock plate to the maximum speed adjusting screw.

(c) Seal the DP adjusting screw with new collar.

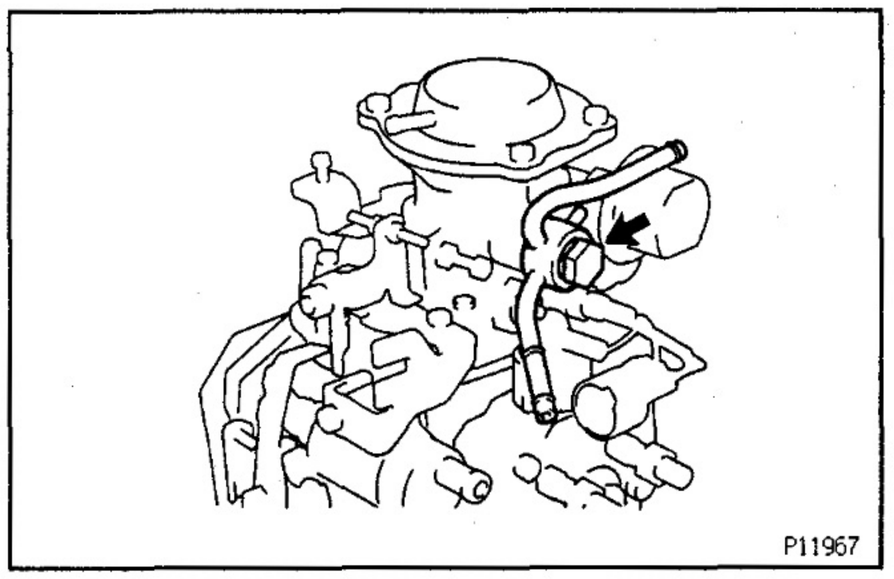

21. INSTALL FUEL PIPES

(a) Install the fuel outlet pipe with 2 new gaskets and the union bolt.

Torque: 25 N·m (250 kgf·cm, 18 ft·lbf)

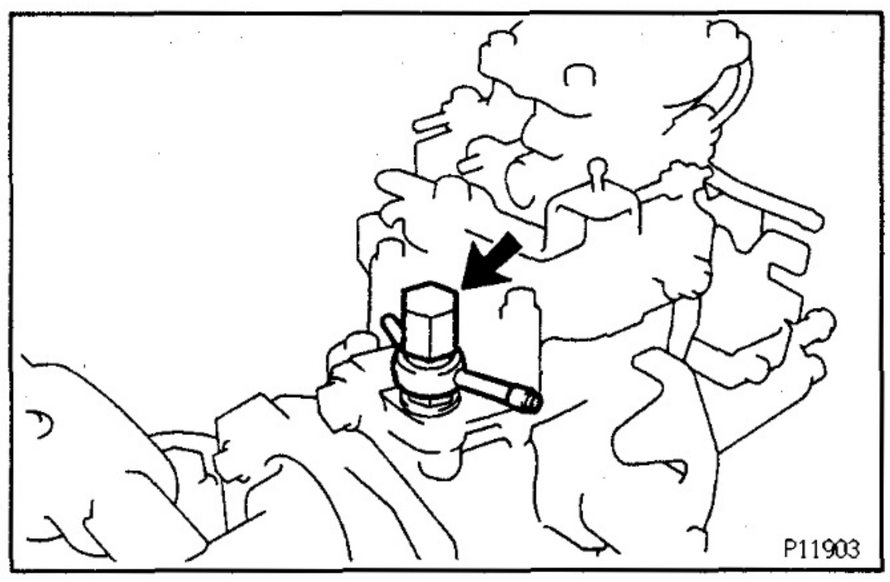

(b) Install the fuel inlet pipe with 2 new gaskets and the cap nut.

Torque: 25 N·m (250 kgf·cm, 18 ft·lbf)

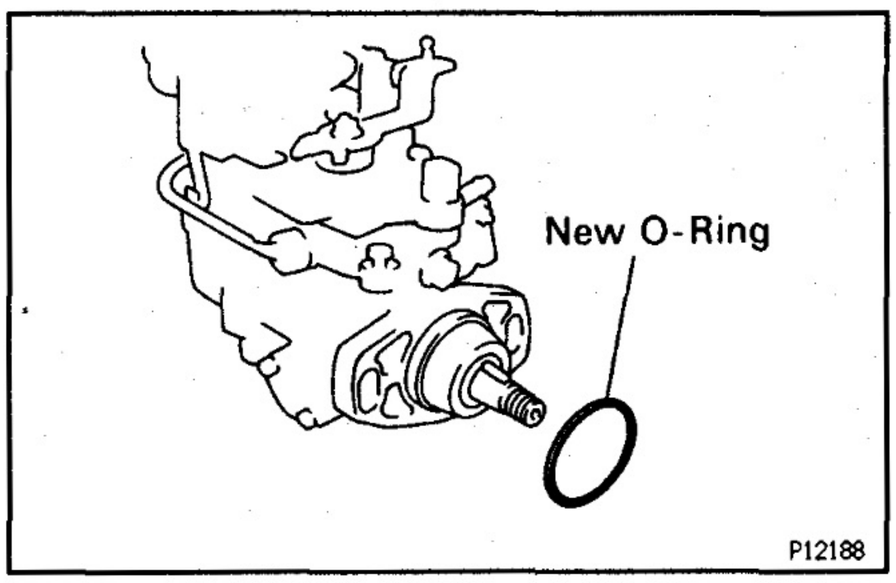

EG34B-01

INJECTION PUMP INSTALLATION

(See Components for Removal and Installation)

1. INSTALL INJECTION PUMP

NOTICE: Do not put the injection pump at an angle more than 45° from the horizontal.

(a) Install a new O–ring to the pump.

(b) Apply a light coat of engine oil on the O–ring.

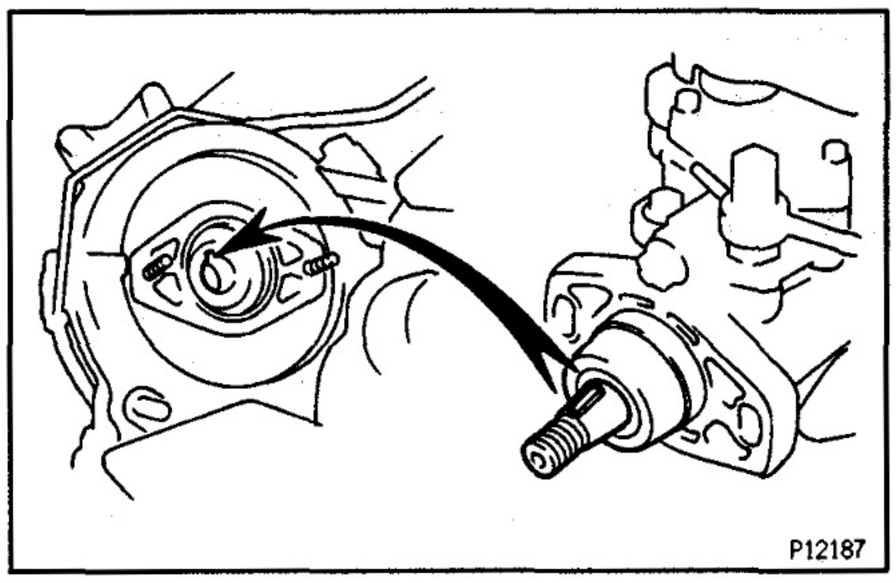

(c) Align the set key on the drive shaft and groove of the injection pump drive gear.

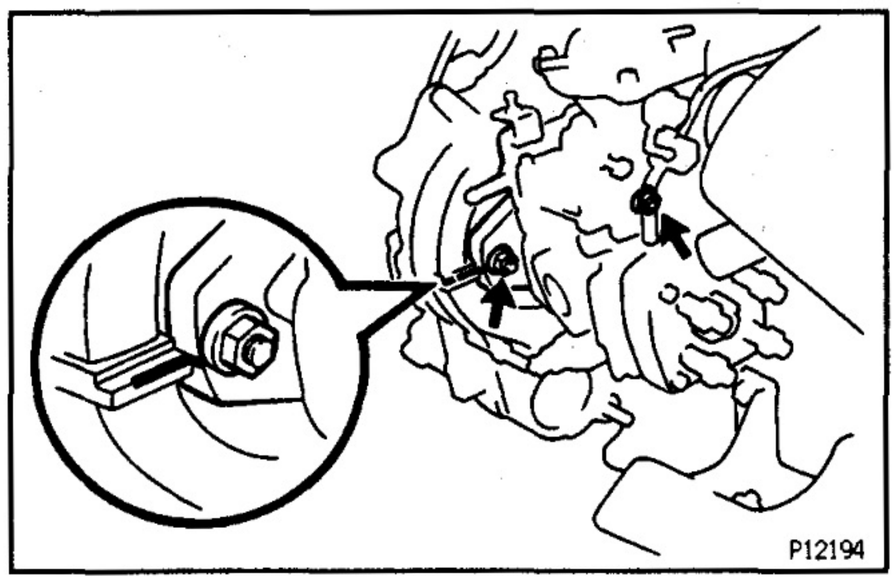

(d) Align the period lines (or matchmarks) of the injection pump and timing belt case.

(e) Install the 2 nuts holding the injection pump to the timing gear case.

Torque: 21 N·m (210 kgf·cm, 15 ft·lbf)

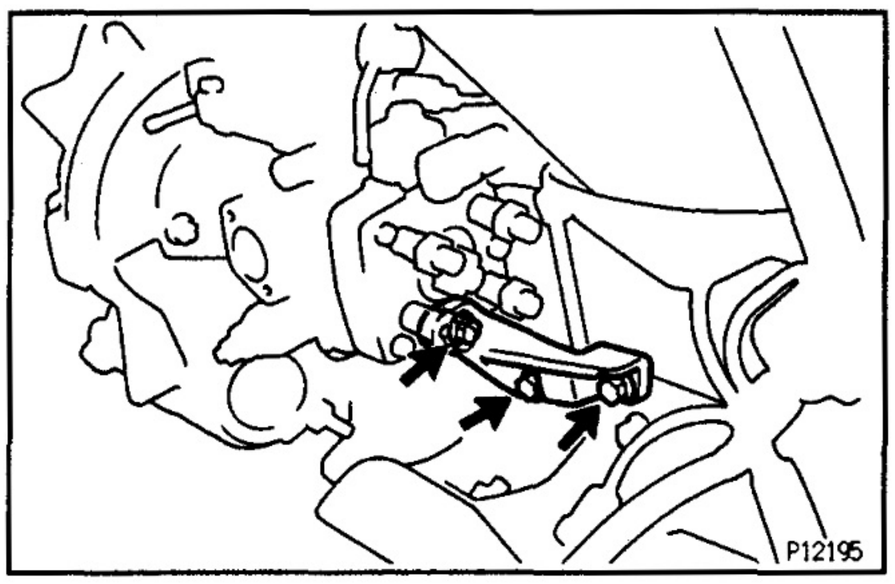

(f) Install the injection pump stay with the 3 bolts.

Torque:

32 N·m (330 kgf·cm, 24 ft·lbf)

for injection pump side

Torque:

32 N·m (330 kgf·cm, 24 ft·lbf)

for cylinder block side

NOTICE: Before tightening to the standard torque, check whether the pump stay is up against the injection pump. If there is a gap, loosen the bolts joining the pump stay to the cylinder block and set the pump stay against the injection pump.

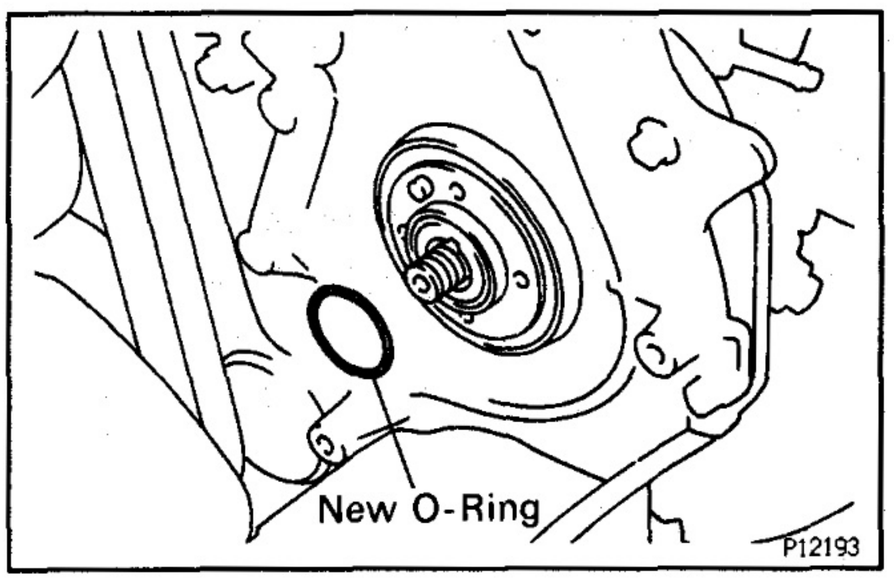

(g) Install a new O—ring to the injection pump drive gear.

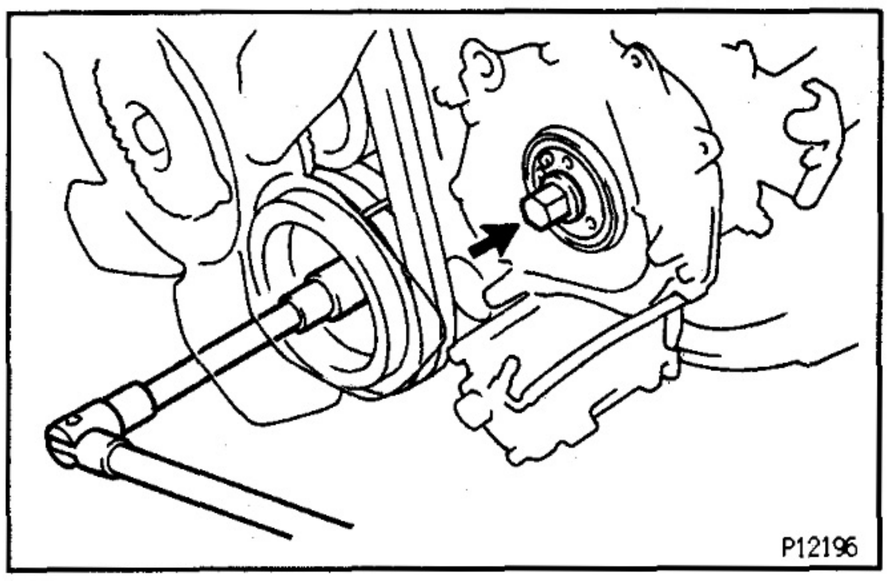

(h) Install the injection pump drive gear set nut.

(i) Hold the crankshaft pulley, and torque the set nut.
Torque: 64 N·m (650 kgf·cm, 47 ft·lbf)

(j) Check the thrust clearance of the injection pump drive shaft. (See step 4 on page EG—55)

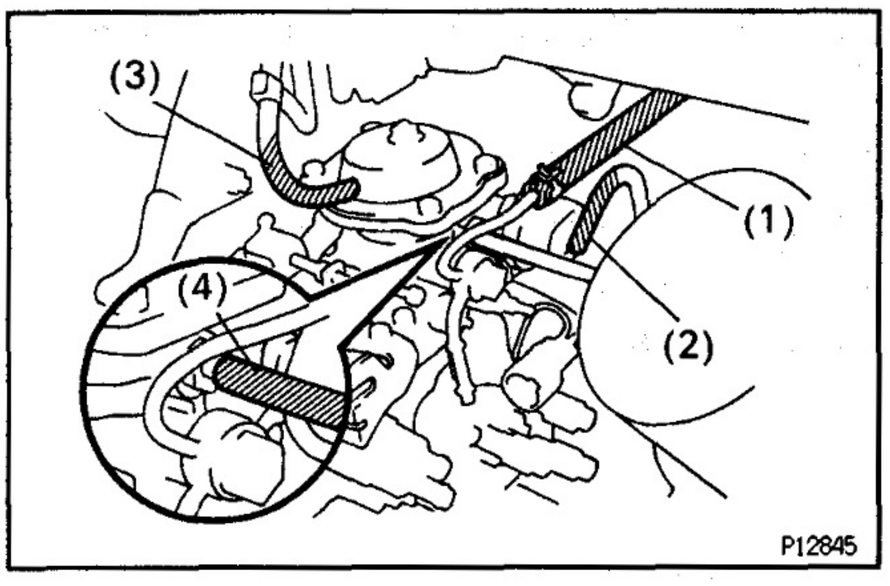

(k) Connect the following hoses:
(1) Fuel hose
(2) PCS vacuum hose
(3) Boost compensator hose
(4) w/ BACS:
BACS vacuum hose

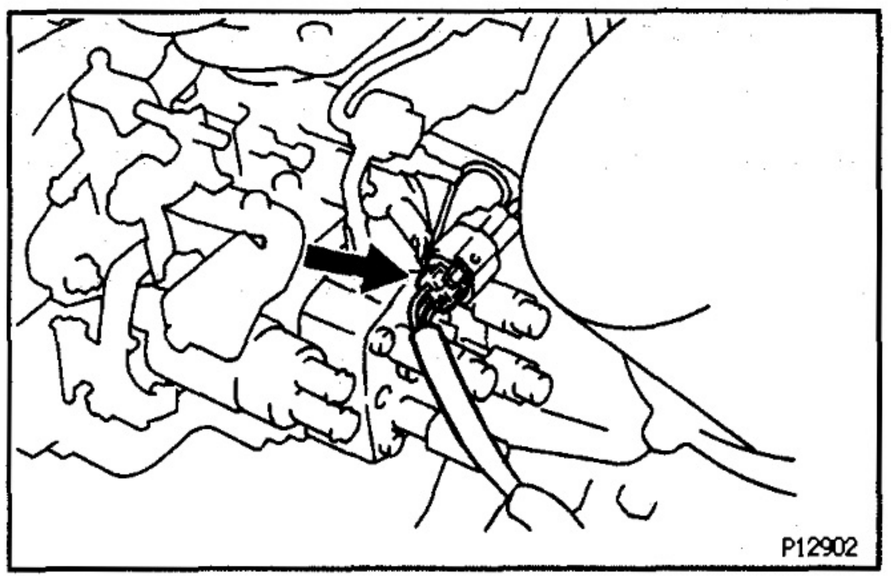

(l) Connect the injection pump connector.

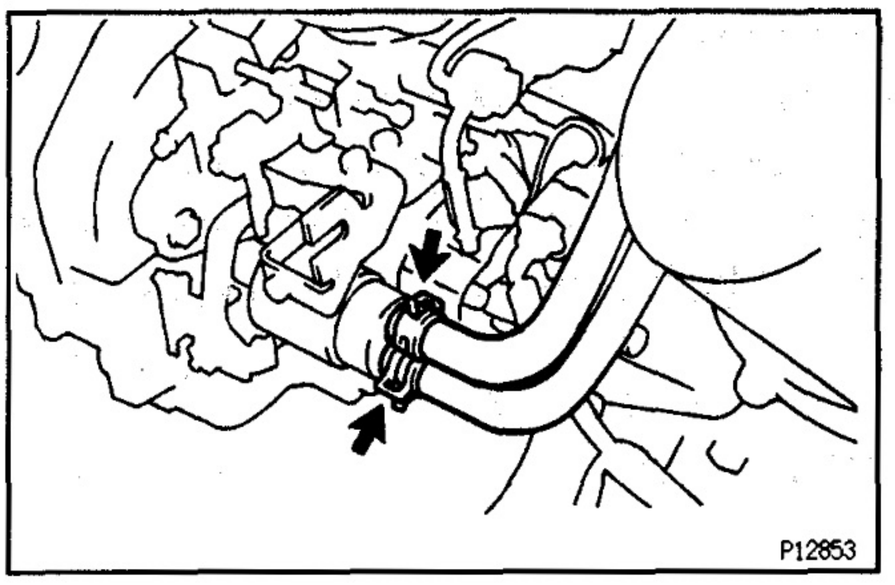

(m) w/ ACSD:
Connect the 2 water bypass hoses to the thermo wax.

2. **INSTALL NO.2 CAMSHAFT TIMING PULLEY**
(See step 4 on page EG–37)
3. **INSTALL TIMING BELT**
(See steps 5 to 11 on pages EG–37 to 39)
4. **CHECK INJECTION TIMING (See page EG–23)**
5. **w/ A/C:**
CONNECT A/C IDLE–UP VACUUM HOSE

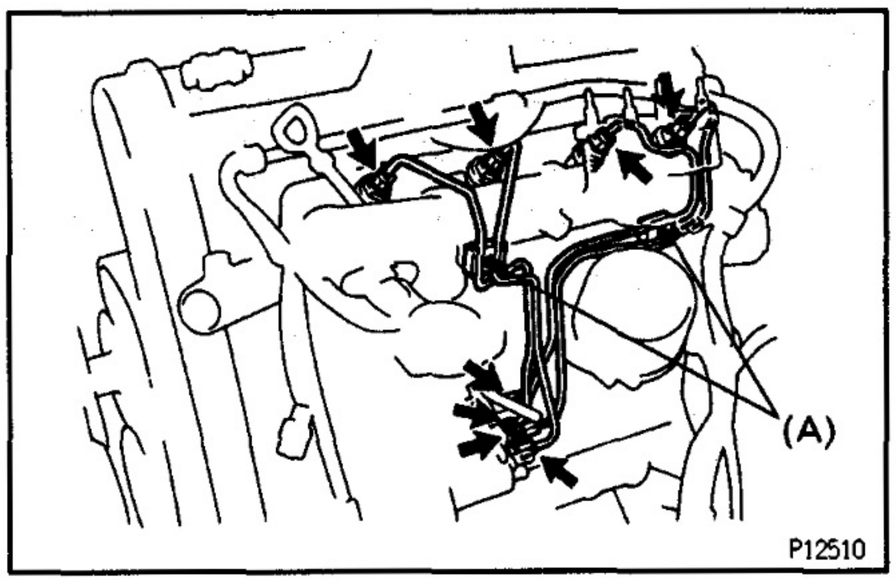

6. **INSTALL INJECTION PIPES**

(a) Temporarily install the 4 injection pipes and 2 clamps (A).

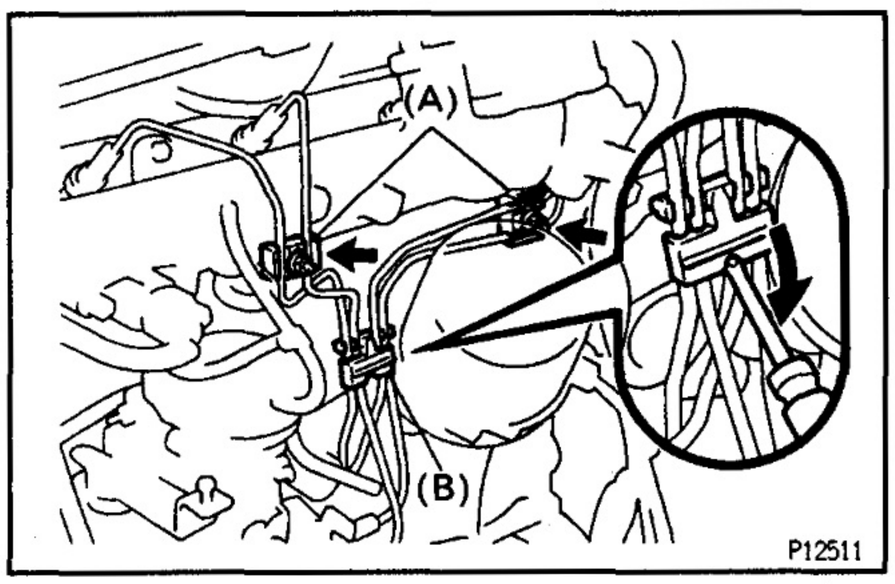

(b) Install the 2 nuts holding the clamps (A) to the intake manifold.
Torque: 6 N·m (65 kgf·cm, 56 in.·lbf)
(c) Using a screwdriver, attach the clamp (B).
(d) Tighten the 8 union nuts.
Torque: 15 N·m (150 kgf·cm, 11 ft·lbf)

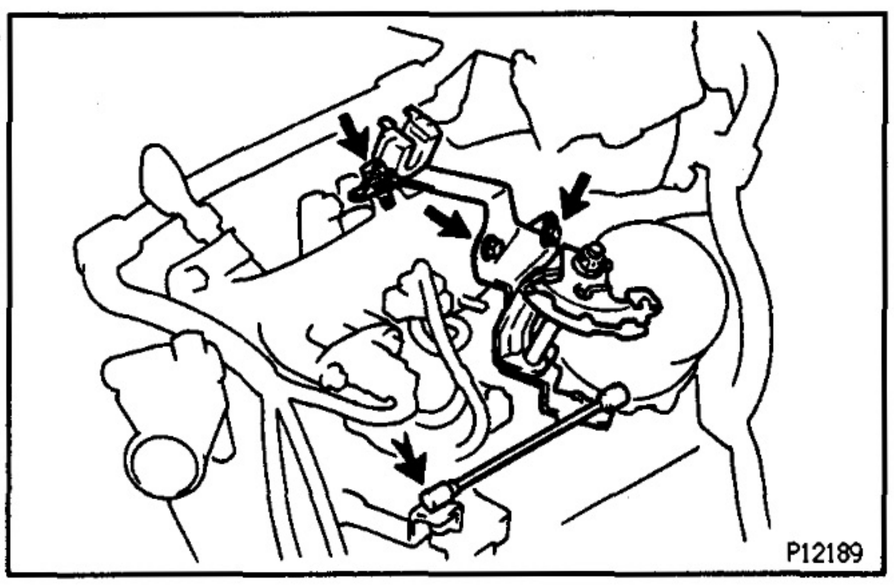

7. **INSTALL ACCELERATOR CABLE BRACKET AND LINK**

(a) Install the accelerator cable bracket and link with the 3 bolts.
(b) Connect the accelerator link to the injection pump.

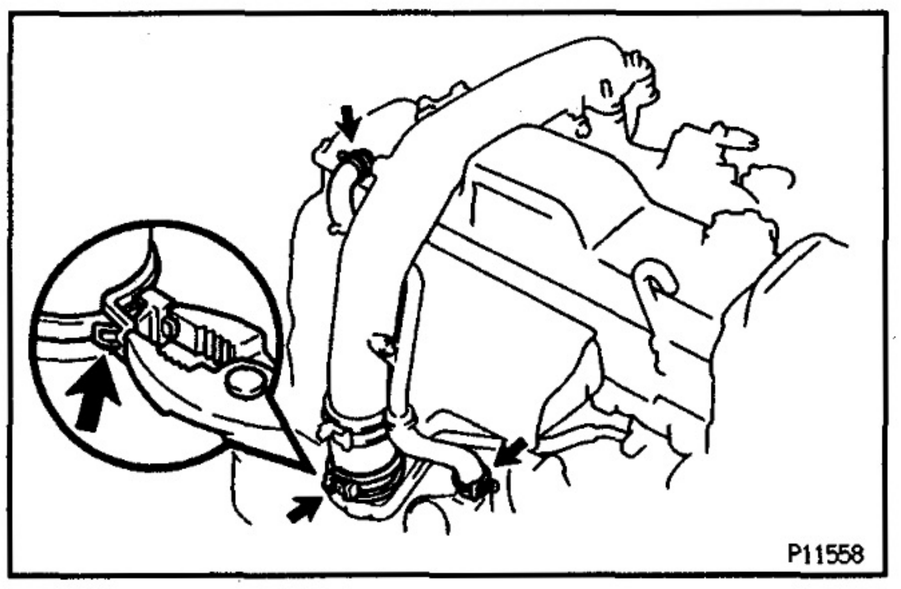

8. **INSTALL INTAKE PIPE**

(a) Place a new gasket on the intake manifold.
(b) Connect the air hose and install the intake pipe.
(c) Press the clamp lock together with pliers and press down the tip of the lock plate. Carefully let the lock spread apart.
Take care not to let the pliers slip.
(d) Connect the 2 PCV hoses.

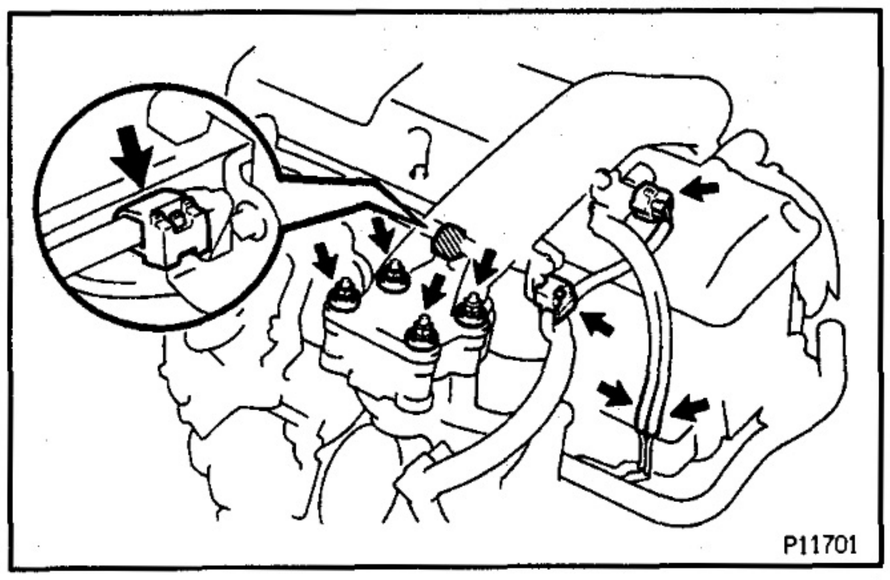

(e) Install the 4 seal washers and nuts.
Torque: 12 N·m (120 kgf·cm, 9 ft·lbf)

(f) Connect the 2 wire harness clamps.

(g) Connect the VSV connector and 2 vacuum hoses.

9. w/ ACSD:
FILL WITH ENGINE COOLANT

10. START ENGINE AND CHECK FOR FUEL LEAKAGE

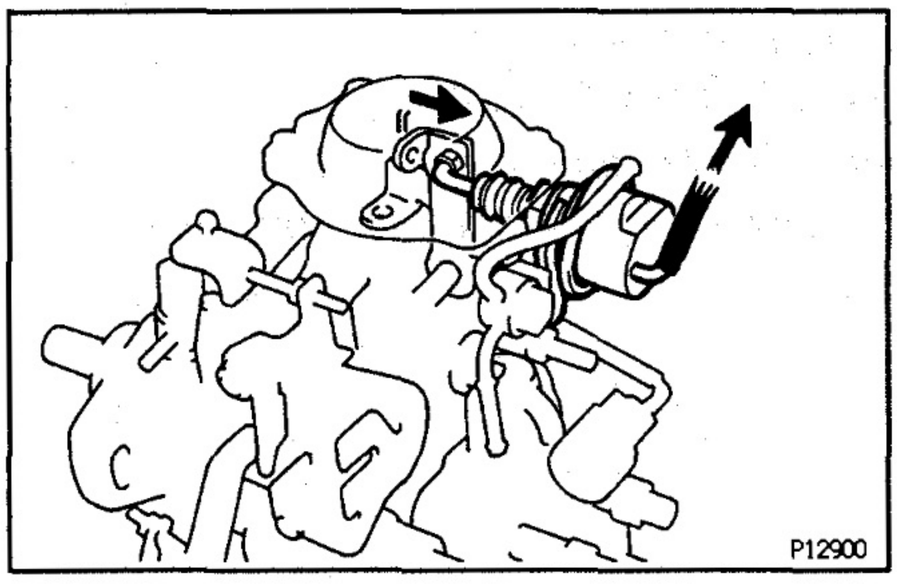

POWER CONTROL SYSTEM
ON–VEHICLE INSPECTION

EG34C–01

INSPECT POWER CONTROL SYSTEM (PCS)

(a) Start the engine.

(b) Depress the clutch pedal and check the operation of the actuator at each shift position.

Standard:

Shift to 1st or Reverse ... Actuator not operating

Shifting to other positions ... Actuator operates

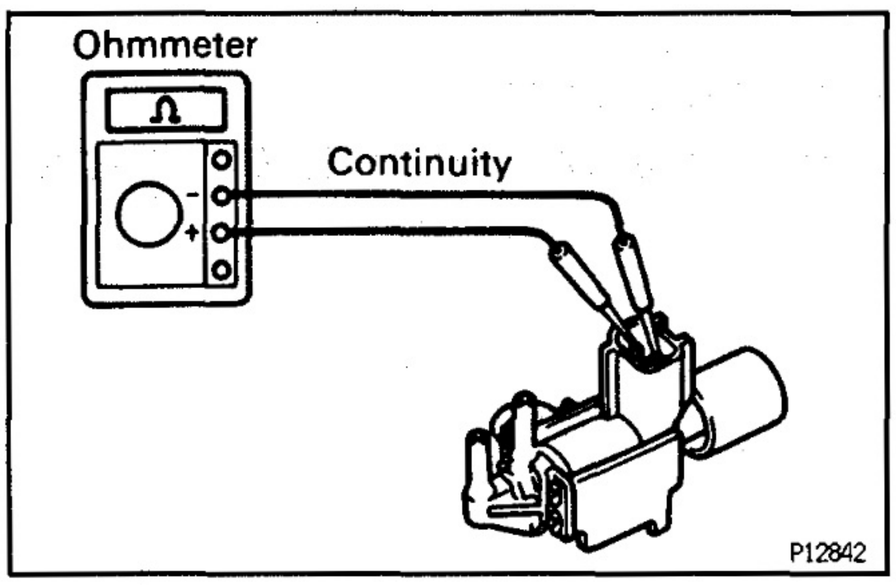

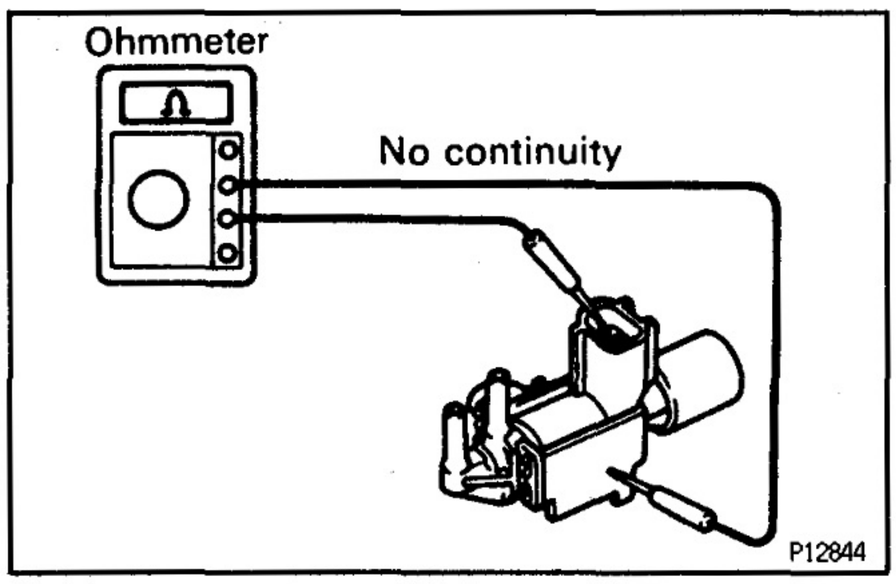

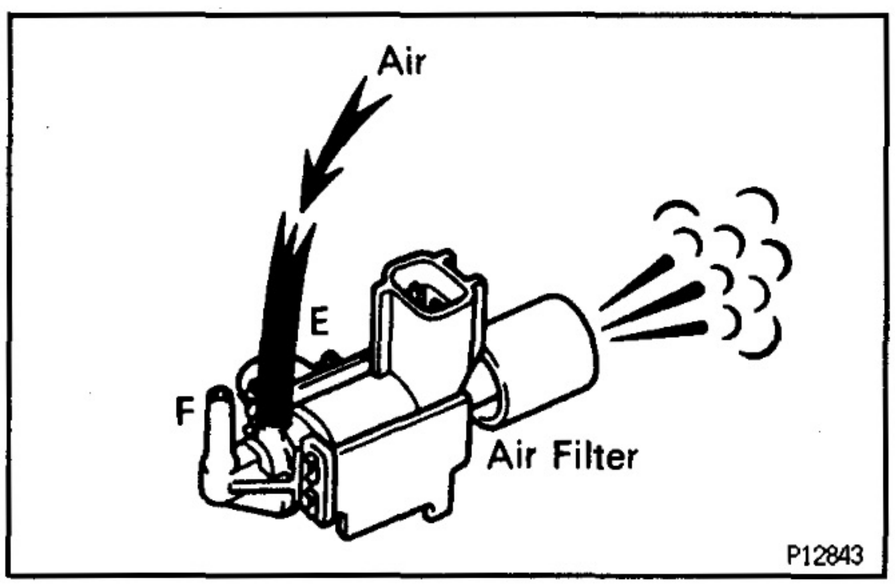

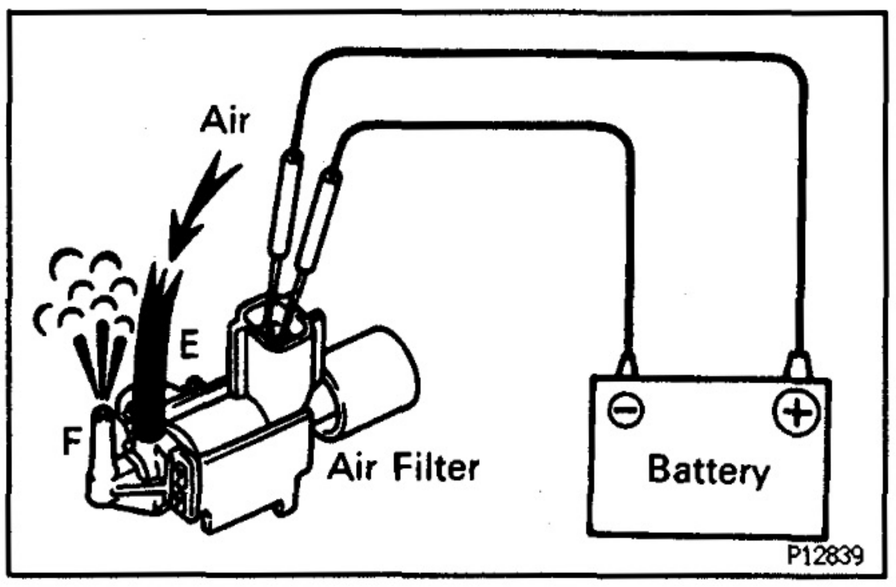

POWER CONTROL SYSTEM (PCS)
COMPONENTS INSPECTION

EG34D–01

1. INSPECT PCS VSV

LOCATION: Behind the intake pipe.

A. Inspect VSV for open circuit

Using an ohmmeter, check that there is continuity between the terminals.

Resistance (Cold):

38.5 – 44.5 Ω

If there is no continuity, replace the VSV.

B. Inspect VSV for ground

Using an ohmmeter, check that there is no continuity between each terminal and the body.

If there is continuity, replace the VSV.

C. Inspect VSV operation

(a) Check that air flows from pipe E to the filter.

(b) Apply battery voltage across the terminals.

(c) Check that air flows from pipe E to F.

If operation is not as specified, replace the VSV.

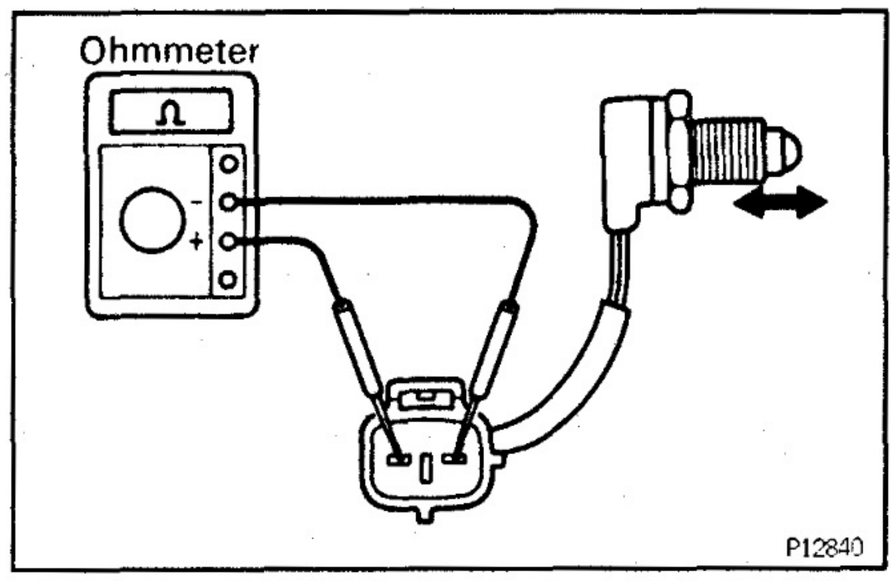

2. INSPECT SHIFT POSITION SWITCH

LOCATION: RH side of the transmission.

(a) Check that there is no continuity between terminals when the switch is pushed (shift position 1st or reverse).

(b) Check that there is continuity between terminals when switch is free (shift position others).

If continuity is not as specified, replace the switch.

SERVICE SPECIFICATIONS

SERVICE DATA

EG34E-01

Fuel heater	Resistance	at 20°C (68°F)	1.4 – 2.0 Ω
Injection nozzles	Nozzle type		DN0PD619
	Nozzle opening pressure	New nozzle	14,808 – 15,593 kPa (151 – 159 kgf/cm², 2,148 – 2,261 psi)
		Reused nozzle	14,710 – 15,593 kPa (150 – 159 kgf/cm², 2,133 – 2,261 psi)
	Adjusting shim thickness		0.900 mm (0.0354 in.) 0.925 mm (0.0364 in.) 0.950 mm (0.0374 in.) 0.975 mm (0.0384 in.) 1.000 mm (0.0394 in.) 1.025 mm (0.0404 in.) 1.050 mm (0.0413 in.) 1.075 mm (0.0423 in.) 1.100 mm (0.0433 in.) 1.125 mm (0.0443 in.) 1.150 mm (0.0453 in.) 1.175 mm (0.0463 in.) 1.200 mm (0.0472 in.) 1.225 mm (0.0482 in.) 1.250 mm (0.0492 in.) 1.275 mm (0.0502 in.) 1.300 mm (0.0512 in.) 1.325 mm (0.0522 in.) 1.350 mm (0.0531 in.) 1.375 mm (0.0541 in.) 1.400 mm (0.0551 in.) 1.425 mm (0.0561 in.) 1.450 mm (0.0571 in.) 1.475 mm (0.0581 in.) 1.500 mm (0.0591 in.) 1.525 mm (0.0600 in.) 1.550 mm (0.0610 in.) 1.575 mm (0.0620 in.) 1.600 mm (0.0630 in.) 1.625 mm (0.0640 in.) 1.650 mm (0.0650 in.) 1.675 mm (0.0659 in.) 1.700 mm (0.0669 in.) 1.725 mm (0.0679 in.) 1.750 mm (0.0689 in.) 1.775 mm (0.0699 in.)

Injection nozzles	Adjusting shim thickness		1.800 mm (0.0709 in.) 1.825 mm (0.0719 in.) 1.850 mm (0.0728 in.) 1.875 mm (0.0738 in.) 1.900 mm (0.0748 in.) 1.925 mm (0.0758 in.) 1.950 mm (0.0768 in.)
Injection pump	Part No.	w/o BACS	22100−67040
		w/ BACS	22100−67050
	Direction of rotation		Clockwise as seen from drive side
	Injection order		1 − 3 − 4 − 2 (A − B − C − D)
	Roller height variation		0.02 mm (0.0008 in.)
	Plunger spring squareness		2.0 mm (0.079 in.)
	Spring free length		
	Delivery valve spring		24.4 mm (0.961 in.)
	Plunger spring		30.0 mm (1.181 in.)
	Coupling spring		15.5 mm (0.610 in.)
	Boost compensator spring	w/o BACS	19.4 mm (0.764 in.)
		w/ BACS	19.3 mm (0.760 in.)
	Pickup sensor resistance		650 − 970 Ω
	Timer adjusting screw protrusion pre−setting		7.5 − 8.0 mm (0.295 − 0.315 in.)
	Plunger spring shim thickness		0.5 mm (0.020 in.) 0.8 mm (0.031 in.) 1.0 mm (0.039 in.) 1.2 mm (0.047 in.) 1.5 mm (0.059 in.) 1.8 mm (0.071 in.) 2.0 mm (0.079 in.)
	Plunger adjusting shim thickness		1.9 mm (0.075 in.) 2.0 mm (0.079 in.) 2.1 mm (0.083 in.) 2.2 mm (0.087 in.) 2.3 mm (0.091 in.) 2.4 mm (0.094 in.) 2.5 mm (0.098 in.) 2.6 mm (0.102 in.) 2.7 mm (0.106 in.) 2.8 mm (0.110 in.) 2.9 mm (0.114 in.)
	Flyweight holder thrust clearance		0.15 − 0.35 mm (0.0059 − 0.0138 in.)
	Governor shaft protrusion		0.5 − 2.0 mm (0.020 − 0.079 in.)
	Governor gear adjusting washer thickness		1.05 mm (0.0413 in.) 1.25 mm (0.0492 in.) 1.45 mm (0.0571 in.) 1.65 mm (0.0650 in.) 1.85 mm (0.0728 in.)

Preparations of pump tester	Test nozzle type	DN12SD12
	Test nozzle opening pressure	14,220 – 15,200 kPa (145 – 155 kgf/cm², 2,062 – 2,205 psi)
	Injection pipe	
	Outer diameter	6.0 mm (0.236 in.)
	Inner diameter	2.0 mm (0.079 in.)
	Length	840 mm (33.07 in.)
	Minimum bending radius	25 mm (0.98 in.) or more
	Fuel temperature	40 – 45°C
	Fuel feeding pressure	20 kPa (0.2 kgf/cm², 2.8 psi)
	Fuel cut solenoid voltage	12 V

Full load injection volume pre-setting	Item	Adjusting lever position	Pump rpm	No. of measuring strokes	Injection volume of each cylinder cc (cu in.)
	w/o BACS	Maximum speed side	1,800	200	15.4 – 15.8 (0.94 – 0.96)
	w/ BACS	Maximum speed side	1,800	200	14.5 – 14.9 (0.88 – 0.91)

Maximum speed pre-setting	Adjusting lever position	Pump rpm	No. of measuring strokes	Injection volume of each cylinder cc (cu in.)
	Maximum speed side	2,300	200	5.2 – 7.2 (0.32 – 0.44)

Pump inner pressure	Pump rpm	Inner pressure kPa (kgf/cm², psi)
	500	412 – 471 (4.2 – 4.8, 60 – 68)
	2,000	785 – 843 (8.0 – 8.6, 114 – 122)

Overflow volume	Pump rpm	Overflow volume cc/min. (cc in./min.)
	500	720 – 1,150 (43.9 – 70.2)

Automatic timer	Item	Pump rpm	Piston stroke mm (in.)
	w/o BACS	600	0.7 – 1.5 (0.028 – 0.059)
		1,000	3.9 – 4.7 (0.154 – 0.185)
		1,800	8.3 – 9.1 (0.327 – 0.358)
		2,000	8.5 – 9.1 (0.335 – 0.358)
	w/ BACS	750	0.6 – 1.4 (0.024 – 0.055)
		1,000	2.3 – 3.1 (0.091 – 0.122)
		1,800	6.7 – 7.5 (0.264 – 0.295)
		2,000	7.1 – 7.5 (0.280 – 0.295)

Full load injection volume	Item	Adjusting lever angle	Pump rpm	No. of measuring strokes	Injection volume of each cylinder cc (cu in.)	Variation limit cc (cu in.)
	w/o BACS	Plus 23.5 – 33.5°	1,800	200	15.4 – 15.8 (0.94 – 0.96)	0.7 (0.04)
	w/ BACS	Plus 23.5 – 33.5°	1,800	200	14.5 – 14.9 (0.88 – 0.91)	0.7 (0.04)

V03934

Maximum speed	Item	Adjusting lever angle	Pump rpm	No. of measuring strokes	Injection volume of each cylinder cc (cu in.)
	w/o BACS	Plus 23.5 – 33.5°	2,200	200	8.8 – 13.6 (0.54 – 0.83)
			2,300	200	5.2 – 7.2 (0.32 – 0.44)
			2,450	200	3.0 (0.18) or less
	w/ BACS	Plus 23.5 – 33.5°	2,200	200	7.6 – 12.4 (0.46 – 0.76)
			2,300	200	5.2 – 7.2 (0.32 – 0.44)
			2,450	200	3.0 (0.18) or less

Injection volume	Item	Adjusting lever angle	Pump rpm	Boost pressure kPa (kgf/cm², psi)	No. of measuring strokes	Injection volume of each cylinder cc (cu in.)	Variation limit cc (cu in.)
	w/o BACS	Plus 23.5 – 33.5°	100	0 (0, 0)	200	14.6 – 19.4 (0.89 – 11.8)	1.3 (0.08)
			500	20 (0.20, 2.8)		13.0 – 13.8 (0.79 – 0.84)	–
			700	34 (0.34, 4.8)		14.9 – 16.1 (0.91 – 0.98)	–
			1,200	67 (0.68, 9.7)		16.6 – 17.8 (1.01 – 1.09)	0.7 (0.04)
			1,800	67 (0.68, 9.7)		15.4 – 15.8 (0.94 – 0.96)	0.7 (0.04)
	w/ BACS	Plus 23.5 – 33.5°	100	49 (0.50, 7.1)	200	14.6 – 19.4 (0.89 – 11.8)	1.3 (0.08)
			500	65 (0.66, 9.4)		12.2 – 13.0 (0.74 – 0.79)	–
			700	77 (0.79, 11.2)		13.8 – 15.0 (0.84 – 0.92)	–
			1,200	116 (1.17, 16.6)		16.3 – 17.5 (0.99 – 1.07)	0.7 (0.04)
			1,800	116 (1.17, 16.6)		14.5 – 14.9 (0.88 – 0.91)	0.7 (0.04)
	Governor sleeve plug head thickness					3.0 mm (0.118 in.) 3.2 mm (0.126 in.) 3.4 mm (0.134 in.) 3.6 mm (0.142 in.) 3.8 mm (0.150 in.) 4.0 mm (0.157 in.) 4.2 mm (0.165 in.) 4.4 mm (0.173 in.)	

Full-load minimum injection volume	Item	Adjusting lever angle	Pump rpm	Boost pressure kPa (kgf/cm², psi)	No. of measuring strokes	Injection volume of each cylinder cc (cu in.)
	w/o ABCS	Plus 23.5 – 33.5°	500	0 (0, 0)	200	11.9 – 12.5 (0.73 – 0.76)
	w/ BACS	Plus 23.5 – 33.5°	500	49 (0.50, 7.1)	200	8.1 – 9.3 (0.49 – 0.57)

Boost compensator characteristic	Item	Pump rpm	Boost pressure kPa (kgf/cm², psi)	No. of measuring strokes	Injection volume of each cylinder cc (cu in.)
	w/o BACS	500	20 (0.20, 2.8)	200	13.0 – 13.8 (0.79 – 0.84)
	w/ BACS	500	65 (0.66, 9.4)	200	12.2 – 13.0 (0.74 – 0.79)

V03935

Boost compensator characteristic tendency	Item	Pump rpm	Boost pressure kPa (kgf/cm², psi)	No. of measuring strokes	Injection volume of each cylinder cc (cu in.)
	w/o BACS	1,800	87 (0.88, 12.5)	200	15.3 – 15.9 (0.93 – 0.97)
		1,800	67 (0.68, 9.7)	200	15.4 – 15.8 (0.94 – 0.96)
		700	34 (0.34, 4.8)	200	14.9 – 16.1 (0.91 – 0.98)
		500	20 (0.20, 2.8)	200	13.0 – 13.8 (0.79 – 0.84)
		500	0 (0, 0)	200	11.9 – 12.5 (0.73 – 0.76)
	w/ BACS	1,800	136 (1.38, 19.6)	200	14.4 – 15.0 (0.88 – 0.92)
		1,800	116 (1.17, 16.6)	200	14.5 – 14.9 (0.88 – 0.91)
		700	77 (0.79, 11.2)	200	13.8 – 15.0 (0.84 – 0.92)
		500	65 (0.66, 9.4)	200	12.2 – 13.0 (0.74 – 0.79)
		500	0 (0, 0)	200	8.1 – 9.3 (0.49 – 0.57)

Load sensing timer (w/o BACS only)	Pump rpm	No. of measuring strokes	Injection volume of each cylinder cc (cu in.)	Remark
	1,000	200	Measured value at step (b) minus 0.6 (0.04) ± 0.4 (0.02)	Set to starting point
	1,000	200	10.2 – 10.6 (0.62 – 0.65)	Check ending point

Pump rpm	Timer piston stroke mm (in.)
1,000	1.44 – 2.24 (0.057 – 0.088)

Pre-set idle speed	Item	Pump rpm	Boost pressure kPa (kgf/cm², psi)	No. of measuring strokes	Injection volume of each cylinder cc (cu in.)
	w/o BACS	1,000	0 (0, 0)	200	q = 1.7 – 2.1 (0.10 – 0.13)
	w/ BACS	1,000	49 (0.50, 7.1)	200	q = 1.7 – 2.1 (0.10 – 0.13)
DP speed	Item	Pump rpm	Boost pressure kPa (kgf/cm², psi)	No. of measuring strokes	Injection volume of each cylinder cc (cu in.)
	w/o BACS	1,000	0 (0, 0)	200	q plus 0.06 – 0.16 (0.004 – 0.010)
	w/ BACS	1,000	49 (0.50, 7.1)	200	q plus 0.06 – 0.16 (0.004 – 0.010)

Idle speed	Item	Adjusting lever angle	Pump rpm	Boost pressure kPa (kgf/cm², psi)	No. of measuring strokes	Injection volume of each cylinder cc (cu in.)	Variation cc (cu in.)
	w/o BACS	Minus 12.5 – 22.5°	350	0 (0, 0)	200	3.0 – 4.0 (0.18 – 0.24)	0.5 (0.03)
	w/ BACS	Minus 12.5 – 22.5°	350	49 (0.50, 7.1)	200	3.0 – 4.0 (0.18 – 0.24)	0.5 (0.03)

V03936

Cold start system	Fuel temperature °C (°F)	Timer piston stroke mm (in.)
	25 (77)	0.47 – 0.67 (0.019 – 0.026)
Fast idle	Fuel temperature °C (°F)	Clearance mm (in.)
	25 (77)	5.5 (0.217)
	50 (122)	0 (0)
Adjusting lever	Lever moving angle	41 – 51°

V03937

EGOEE–0H

TORQUE SPECIFICATIONS

Part tightened	N·m	kgf·cm	ft·lbf
Nozzle holder body x Nozzle holder retaining nut	37	375	27
Injection nozzle x Cylinder head	64	650	47
Nozzle leakage pipe x Injection nozzle	30	300	22
Injection pump clamp x Intake manifold	6	65	56 in.·lbf
Injection pipe x Injection nozzle	15	150	11
Injection pipe x Injection pump	15	150	11
Intake pipe x Intake manifold	12	120	9
Fuel inlet hollow screw x Injection pump body	37	375	27
Regulator valve x Injection pump body	8.8	90	78 in.·lbf
Feed pump cover x Injection pump body	2.5	25	22 in.·lbf
Distributive head x Injection pump body	12	120	9
Governor link support bolt	14	140	10
Delivery valve holder x Distributive head	59	600	43
Distributive head plug x Distributive head	88	900	65
Governor cover x Injection pump body	8.3	85	74 in.·lbf
Pickup sensor x Injection pump body	21	210	15
Fuel cut solenoid x Distributive head	22	225	16
Dash pot x Injection pump	11	115	8
Fuel outlet pipe x Injection pump	25	250	18
Fuel inlet pipe x Injection pump	25	250	18
Injection pump x Timing gear case	21	210	15
Pump stay x Injection pump	32	330	24
Pump stay x Cylinder block	32	330	24
Injection pump drive gear x Injection pump	64	650	47
Distributive head plug bolt	25	260	19

COOLING SYSTEM

DESCRIPTION

EG12N-06

This engine utilizes a pressurized forced circulation cooling system which includes a thermostat equipped with a by pass valve mounted on the inlet side.

OPERATION

EG12P-07

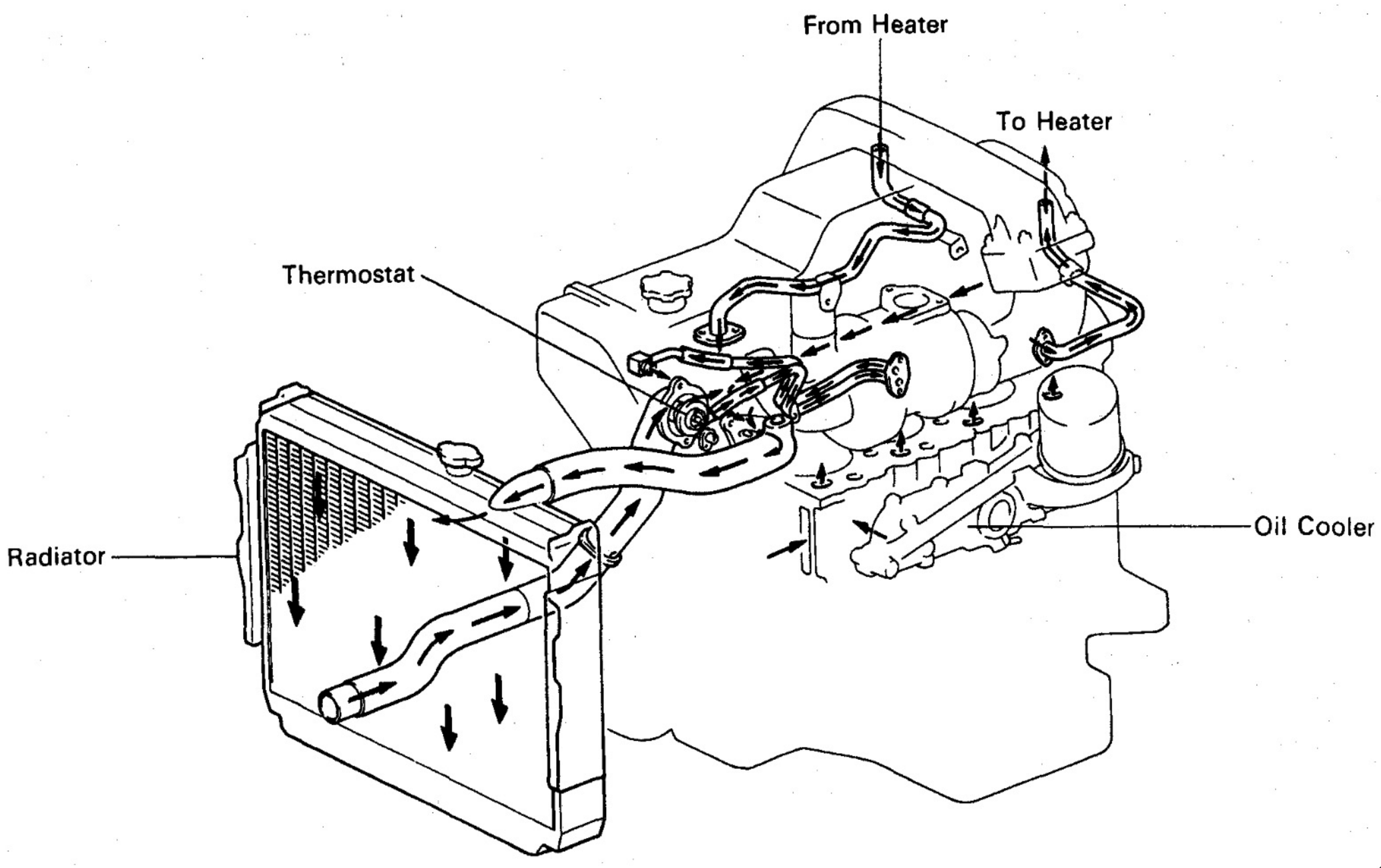

P13127

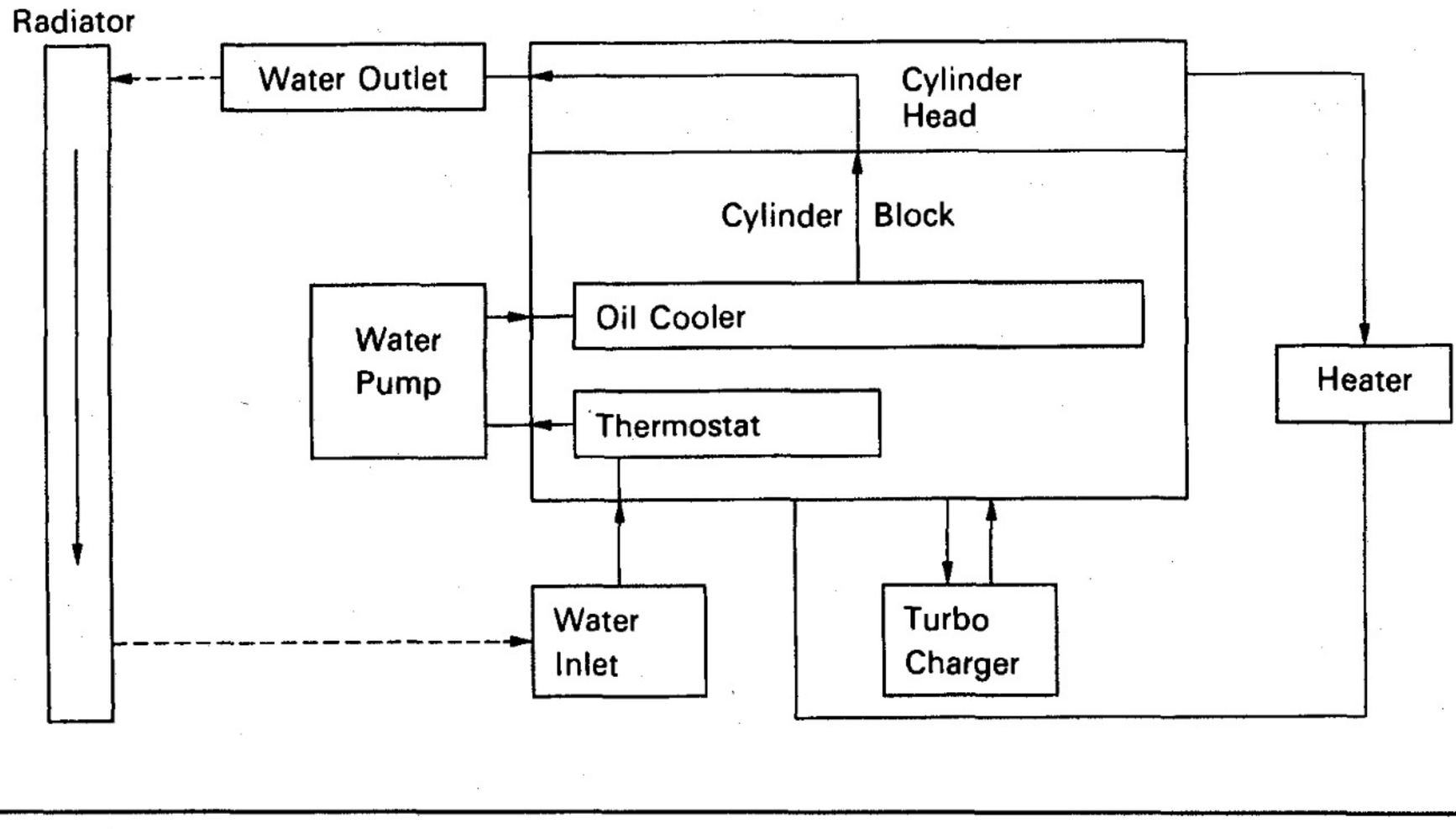

Z09470

The cooling system is composed of the water jacket (inside the cylinder block and cylinder head), radiator, water pump, thermostat, hoses and other components.
Coolant which is heated in the water jacket is pumped to the radiator, through which and cooling fan blows air to cool the coolant as it pass es through. Coolant which has been cooled is then sent back to the engine by the water pump, where it cools the engine.
The water jacket is a network of channels in the shell of the cylinder block and cylinder head through which coolant passes. It is designed to provide adequate cooling of the cylinders and combustion chambers which become heated during engine operation.

RADIATOR

The radiator cools the coolant which has passed through the water jacket and become hot, and it is mounted in the front of the vehicle.
The radiator consists of an upper tank and lower tank, and a core which connects the two tanks. The upper tank contains the inlet for coolant from the water jacket and the filler inlet. It also has a hose attached through which excess coolant or steam can flow. The lower tank has an outlet and drain cock for the coolant. The core contains many tubes through which coolant flows from the upper tank to the lower tank as well as to cooling fins which radiate heat away from the coolant in the tubes. The air sucked through the radiator by the cooling fan, as well as the wind generated by the vehicle's travel, passes through the radiator, cooling the coolant.

RADIATOR CAP

The radiator cap is a pressure type cap which seals the radiator, resulting in pressurization of the radiator as the coolant expands. The pressurization prevents the coolant from boiling even when the coolant temperature exceeds 100°C (212°F). A relief valve (pressurization valve) and a vacuum valve (negative pressure valve) are built into the radiator cap. The relief valve opens and lets steam escape through the overflow pipe when the pressure generated inside the cooling system exceeds the limit (coolant temperature: 110 – 120°C (230 – 248°F), pressure; 29.4 – 98.1 kPa (0.3 – 1.0 kgf/cm^2, 4.3 – 14.2 psi). The vacuum valve opens to alleviate the vacuum which develops in the coolant system after the engine is stopped and the coolant temperature drops. The valve's opening allows the coolant in the reservoir tank to return to the cooling system.

RESERVOIR TANK

The reservoir tank is used to catch coolant which overflows the cooling system as a result of volumetric expansion when the coolant is heated. The coolant in the reservoir tank returns to the radiator when the coolant temperature drops, thus keeping the radiator full at all times and avoiding needless coolant loss.
Check the reservoir tank level to learn if the coolant needs to be replenished.

WATER PUMP

The water pump is used for forced circulation of coolant through the cooling system. It is mounted on the front of the cylinder block and driven by a alternator drive belt.

THERMOSTAT

The thermostat has a wax type by pass valve and is mounted in the water inlet housing. The thermostat includes a type of automatic valve operated by fluctuations in the coolant temperature. This valve closes when the coolant temperature drops, preventing the circulation of coolant through the engine and thus permitting the engine to warm up rapidly. The valve opens when the coolant temperature has risen, allowing the circulation of coolant. Wax inside the thermostat expands when heated and contracts when cooled. Heating the wax thus generates pressure which overpowers the force of the spring which keeps the valve closed, thus opening the valve. When the wax cools, its contraction causes the force of the spring to take effect once more, closing the valve. The thermostat in this engine operates at a temperature of 82°C (180°F).

PREPARATION

SST (SPECIAL SERVICE TOOLS)

EG12S-04

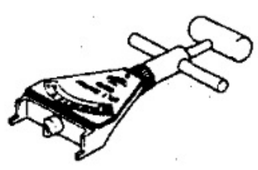	09216–00020 Belt Tension Gauge	
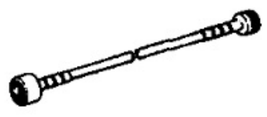	09216–00030 Belt Tension Gauge Cable	

EQUIPMENT

EG12W-05

Heater		
Radiator cap tester		
Thermometer		
Torque wrench		

COOLANT

EG12X-05

Item	Capacity	Classification
Engine coolant		Ethylene–glycol base
w/ Rear heater	11.0 liters (11.6 US qts, 9.7 Imp. qts)	
w/o Rear heater	10.1 liters (10.7 US qts, 8.9 Imp. qts)	

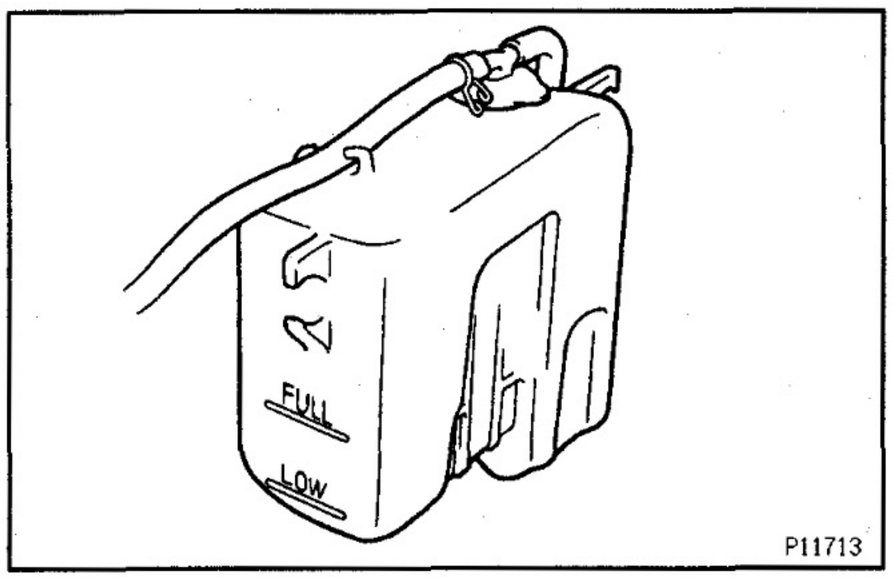

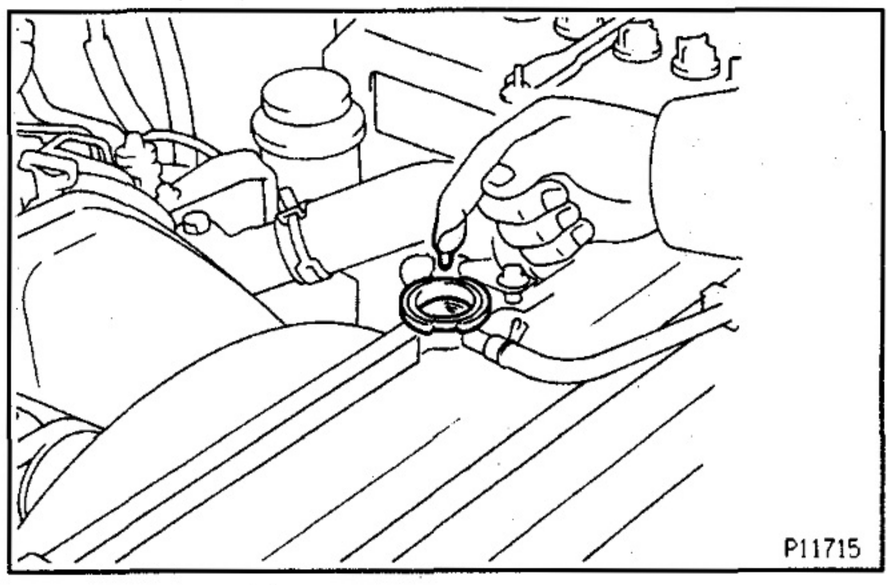

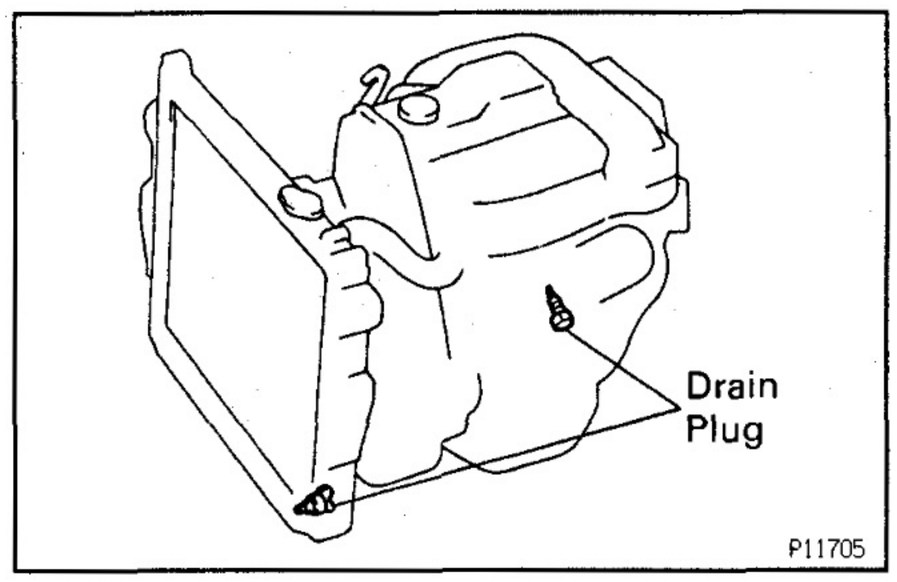

COOLANT CHECK AND REPLACEMENT

EG353-01

1. CHECK ENGINE COOLANT LEVEL AT RESERVOIR TANK

The engine coolant level should be between the " LOW" and "FULL" lines.

If low, check for leaks and add engine coolant up to the "FULL" line.

2. CHECK ENGINE COOLANT QUALITY

(a) Remove the radiator cap.

CAUTION: To avoid the danger of being burned, do not remove it while the engine and radiator are still hot, as fluid and steam can be blown out under pressure.

(b) There should not be any excessive deposits of rust or scales around the radiator cap or radiator filler hole, and the coolant should be free from oil.

If excessively dirty, replace the coolant.

(c) Reinstall the radiator cap.

3. REPLACE ENGINE COOLANT

(a) Remove the radiator cap.

CAUTION: To avoid the danger of being burned, do not remove it while the engine and radiator are still hot, as fluid and steam can be blown out under pressure.

(b) Drain the coolant from the radiator drain plug and engine drain plug. (The engine drain plug is on the left of engine block.)

(c) Close the drain plugs.

Torque (Engine drain plug):

8 N·m (80 kgf·cm, 69 in.·lbf)

(d) Slowly fill the system with coolant.

- Use a good brand of ethylene—glycol base coolant and mix it according to the manufacturer's directions.
- Using coolant which includes more than 50 % ethylene—glycol (but not more than 70 %) is recommended.

NOTICE:

- **Do not use a alcohol type coolant.**
- **The coolant should be mixed with demineralized water or distilled water.**

Capacity:

(w/ Rear heater)

11.0 liters (11.6 US qts, 9.7 Imp. qts)

(w/o Rear heater)

10.1 liters (10.7 US qts, 8.9 Imp. qts)

(e) Reinstall the radiator cap.

(f) Warm up the engine and check for leaks.

(g) Recheck the coolant level and refill as necessary.

WATER PUMP

COMPONENTS FOR REMOVAL AND INSTALLATION

EG16Z–03

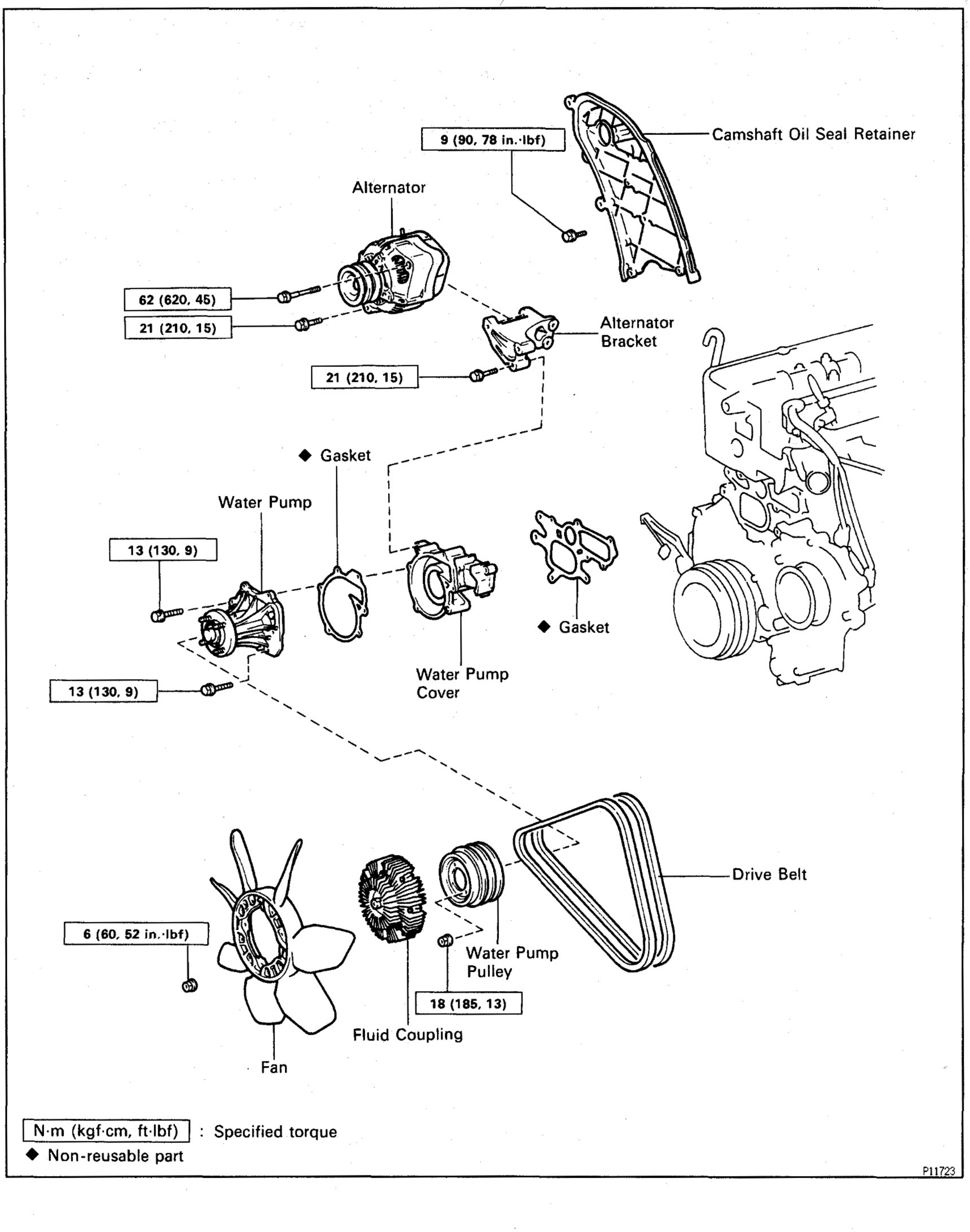

N·m (kgf·cm, ft·lbf) : Specified torque

◆ Non-reusable part

P11723

EG354–01

WATER PUMP REMOVAL

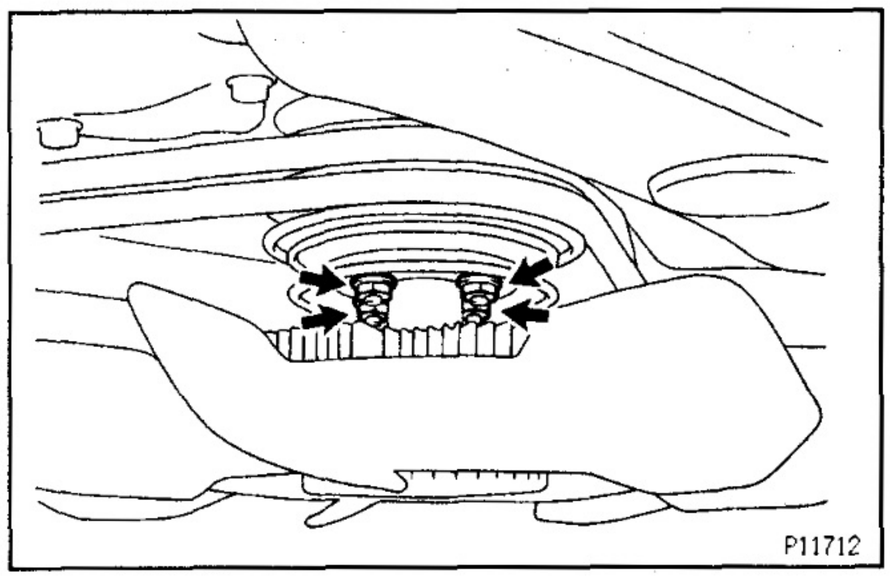
P11712

(See Components for Removal and Installation)

1. **DRAIN ENGINE COOLANT**
2. **REMOVE DRIVE BELT, FAN AND WATER PUMP PULLEY**

(a) Stretch the belt tight and loosen the 4 pump pulley set nuts.

(b) Loosen the pivot bolt and adjusting lock bolt.

(c) Loosen the adjusting bolt, and remove the drive belt.

(d) Remove the 4 nuts, fan and fluid coupling assembly and pulley.

3. **REMOVE TIMING BELT AND IDLER PULLEY (See step 1 to 9 on pages EG–32 to 33)**
4. **REMOVE NO.1 CAMSHAFT TIMING PULLEY (See step 10 on page EG–34)**
5. **REMOVE CAMSHAFT OIL SEAL RETAINER (See step 3 on page EG–41)**

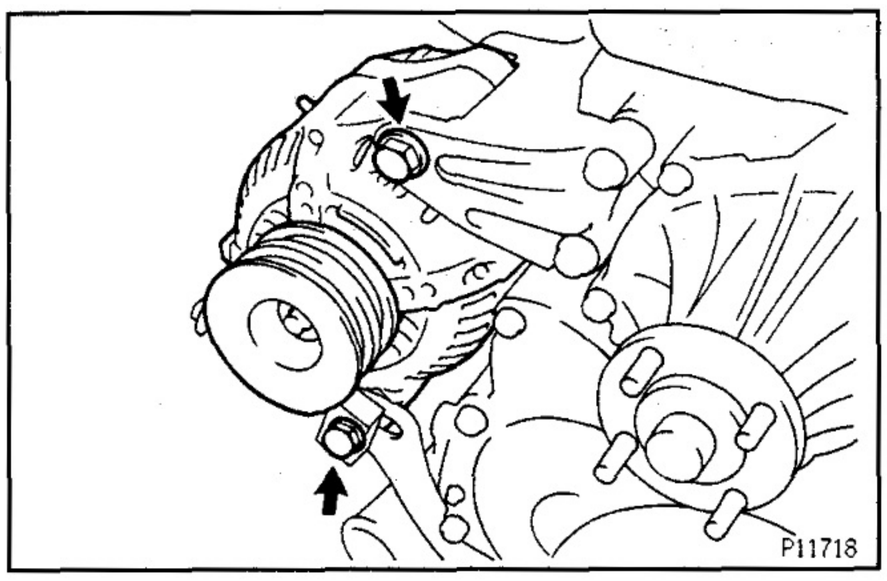
P11718

6. **REMOVE WATER PUMP**

(a) Remove the lock bolt and pivot bolt and alternator.

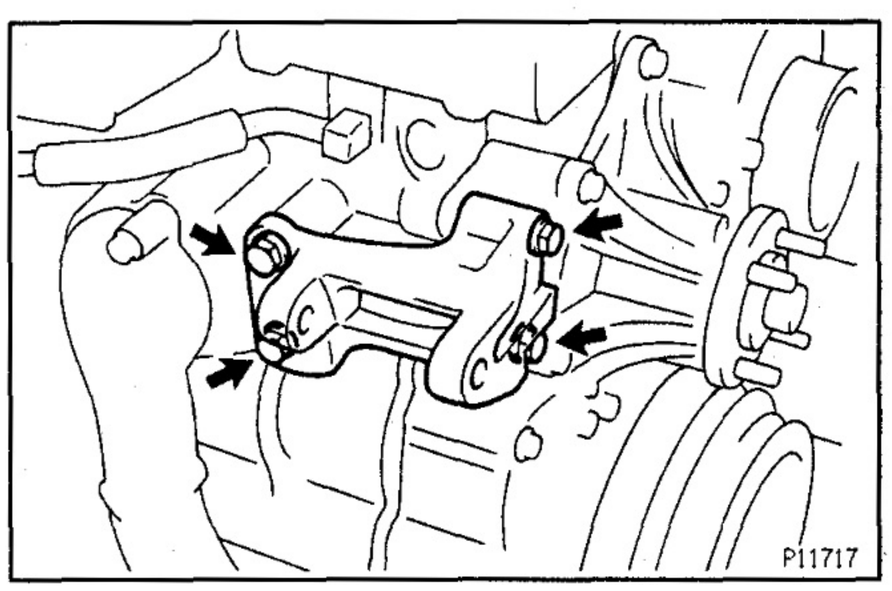
P11717

(b) Remove the 4 bolts and alternator bracket.

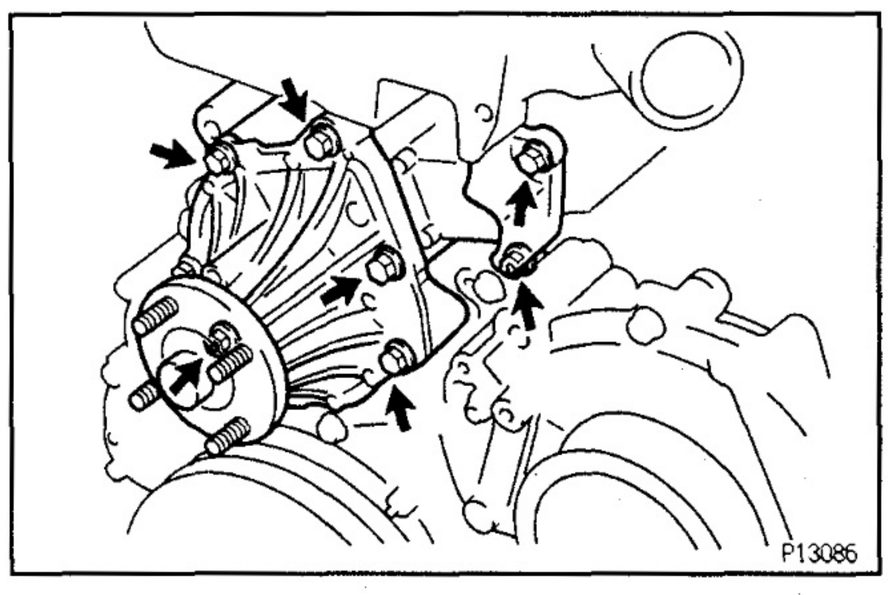
P13086

(c) Remove the 5 bolts, 2 nuts, water pump and gasket.

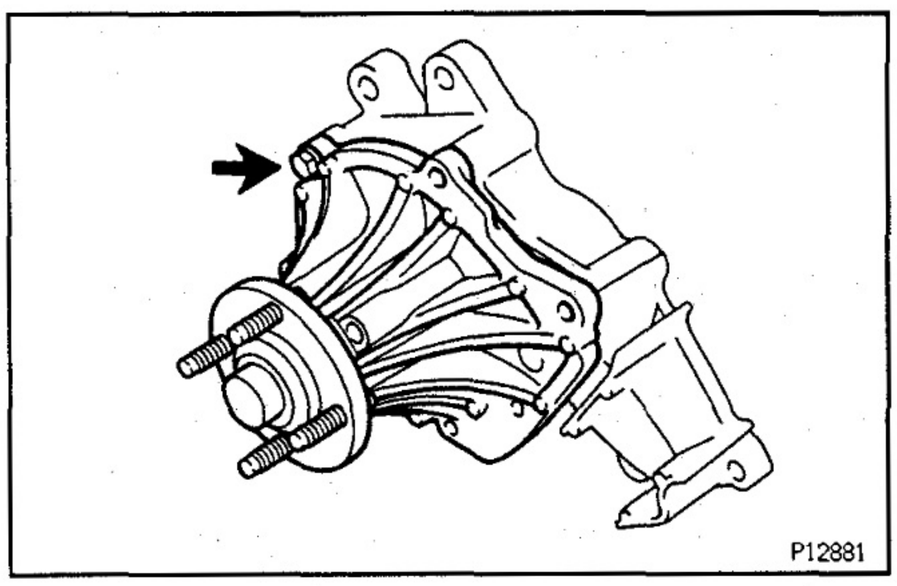

(d) Remove the bolt, water pump cover and gasket.

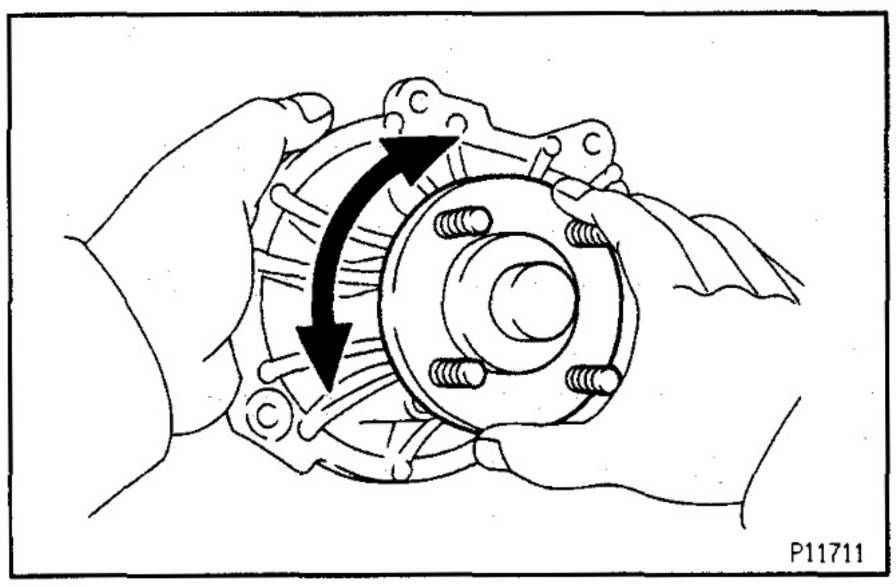

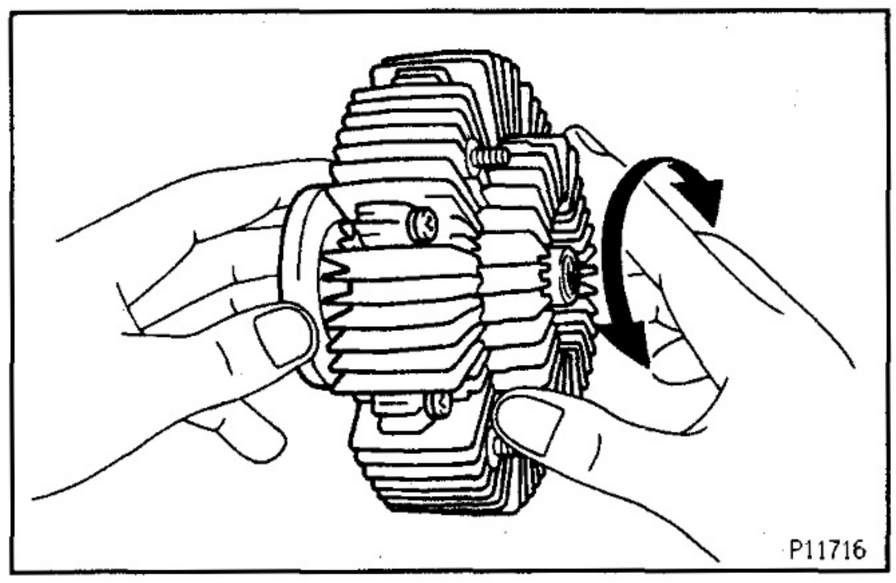

EG355-01

WATER PUMP INSPECTION

1. **INSPECT WATER PUMP**
   Turn the pulley and check that the water pump bearing moves smoothly and quietly.
   If necessary, replace the water pump.

2. **INSPECT FLUID COUPLING**
   Check the fluid coupling for damage and silicon oil leakage.
   If necessary, replace the fiuid coupling.

EG356-01

WATER PUMP INSTALLATION

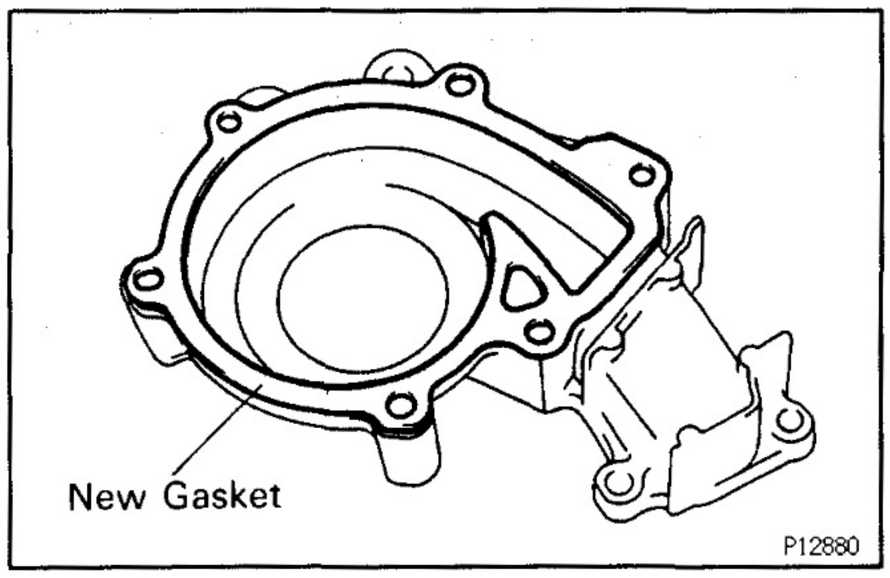

(See Components for Removal and Installation)

1. INSTALL WATER PUMP ASSEMBLY

(a) Install a new gasket to the water pump cover.

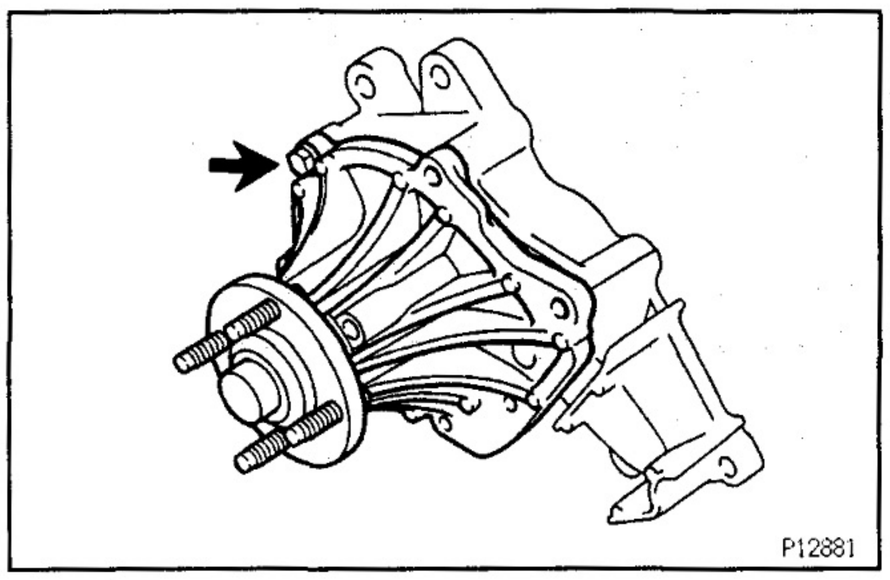

(b) Temporarily install the water pump and water pump cover with the bolt.

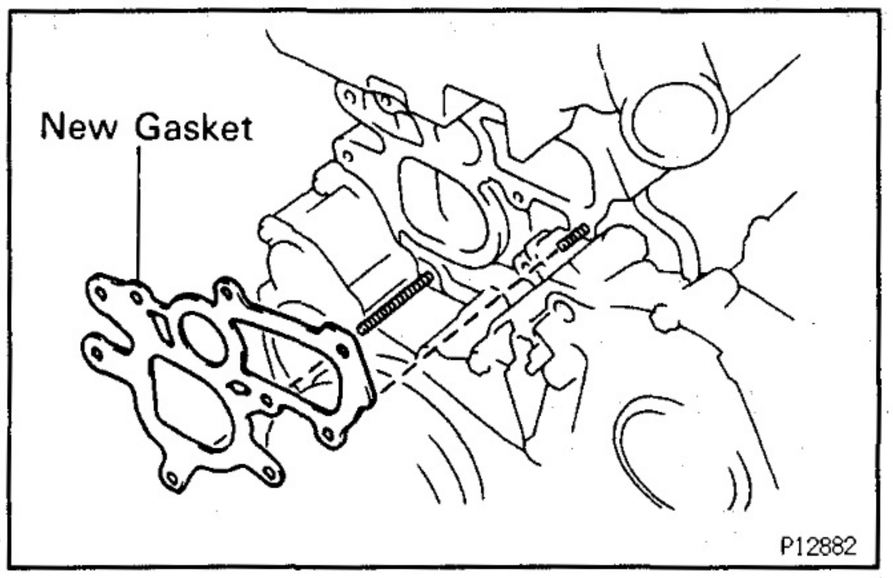

(c) Place a new gasket in position on the cylinder head.

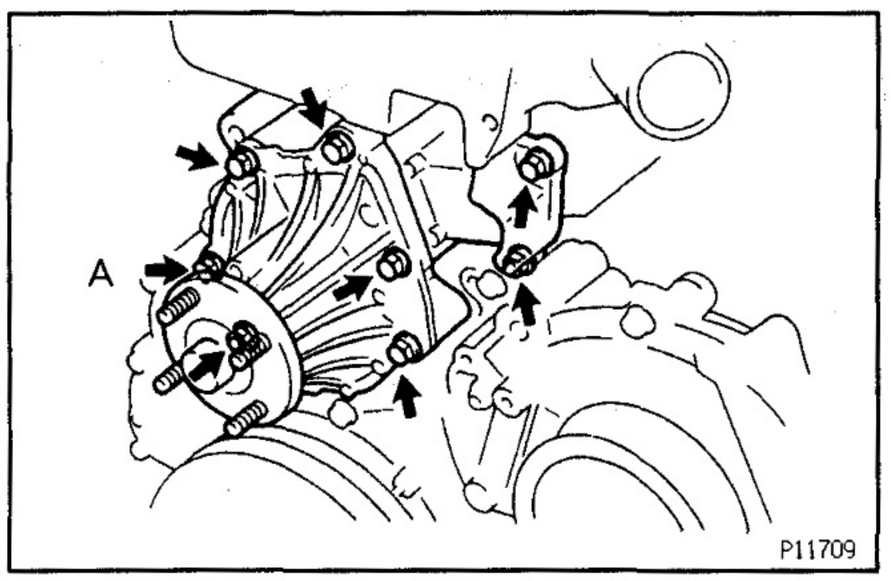

(d) Temporarily install the water pump with the 5 bolts and 2 nuts.

(e) Tighten the bolts and nuts.
Torque: 13 N·m (130 kgf·cm, 9 ft·lbf)

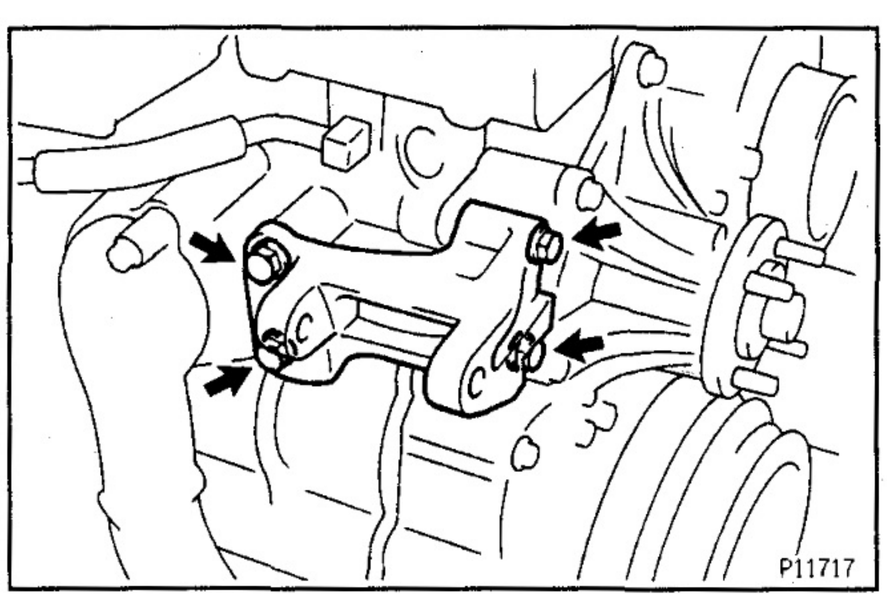

(f) Install the alternator bracket with the 4 bolts.
Torque: 21 N·m (210 kgf·cm, 15 ft·lbf)

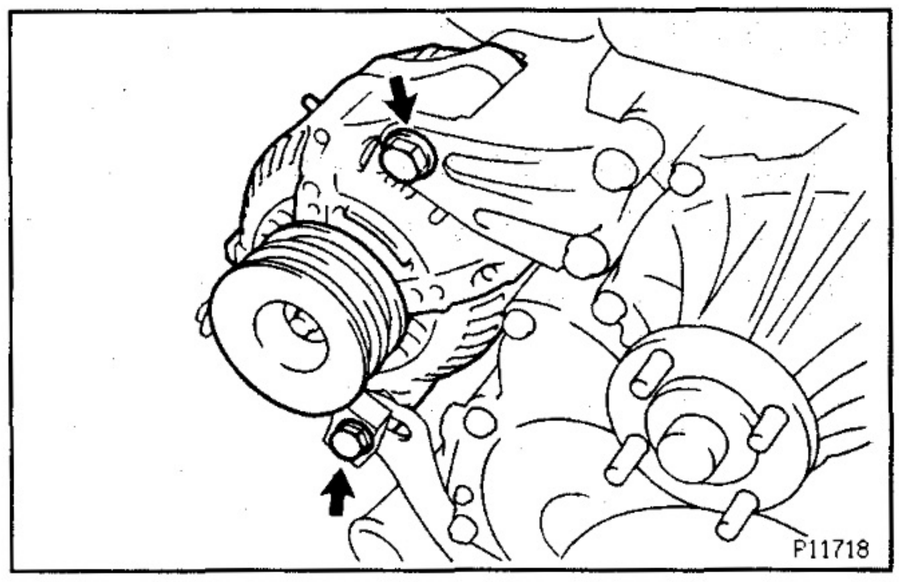

(g) Install the alternator with the pivot bolt and lock bolt.
Torque: 21 N·m (210 kgf·cm, 15 ft·lbf) for Lock bolt
Torque: 62 N·m (620 kgf·cm, 45 ft·lbf) for Pivot bolt

2. INSTALL CAMSHAFT OIL SEAL RETAINER
(See step 7 on page EG−56)
3. INSTALL NO.1 CAMSHAFT TIMING PULLEY
(See step 1 on page EG−36)
4. INSTALL IDLER PULLEY AND TIMING BELT
(See steps 2 to 11 on pages EG−36 to 39)

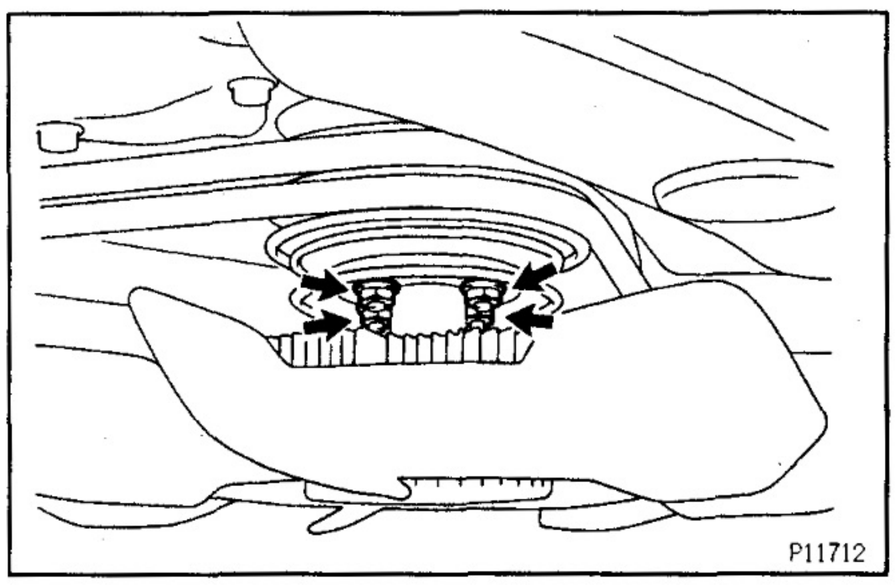

5. INSTALL WATER PUMP PULLEY, FAN AND DRIVE BELT
(a) Install the pump pulley, the fluid fan and coupling assembly with the 4 nuts.
(b) Place the drive belt on each pulley.
(c) Stretch the belt tight and torque the 4 nuts.
Torque: 18 N·m (185 kgf·cm, 13 ft·lbf)
(d) Adjust the drive belt deflection.
(See step 3 on page CH−5)

6. FILL WITH ENGINE COOLANT
7. START ENGINE AND CHECK FOR COOLANT LEAKS

THERMOSTAT

EG13D–09

COMPONENTS FOR REMOVAL AND INSTALLATION

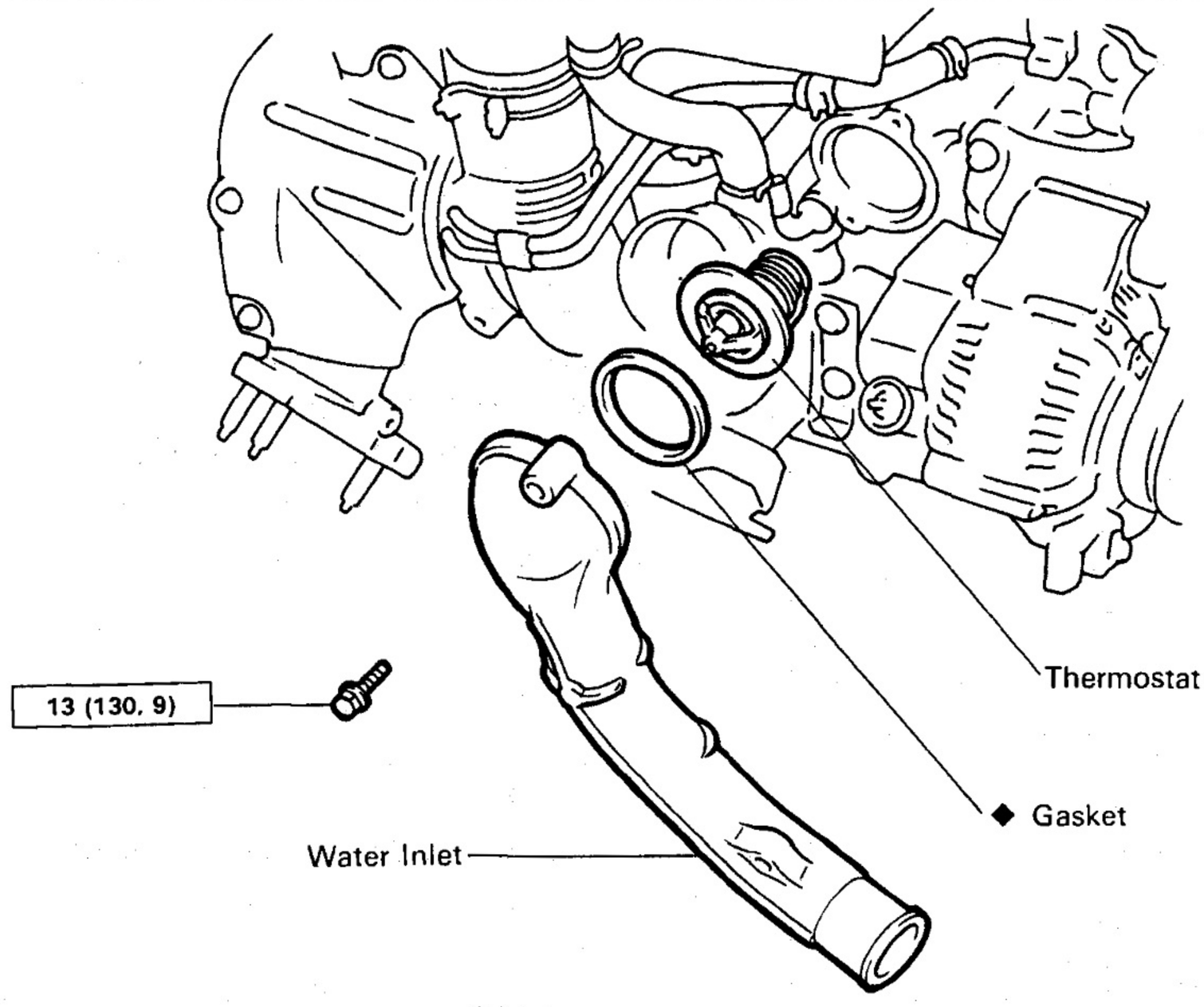

N·m (kgf·cm, ft·lbf) : Specified torque
◆ Non-reusable part

P11697

EG387–01

THERMOSTAT REMOVAL

(See Components for Removal and Installation)

HINT: Removal of the thermostat would have an adverse effect, causing a lowering of cooling efficiency. Do not remove the thermostat, even if the engine tends to overheat.

1. DRAIN ENGINE COOLANT

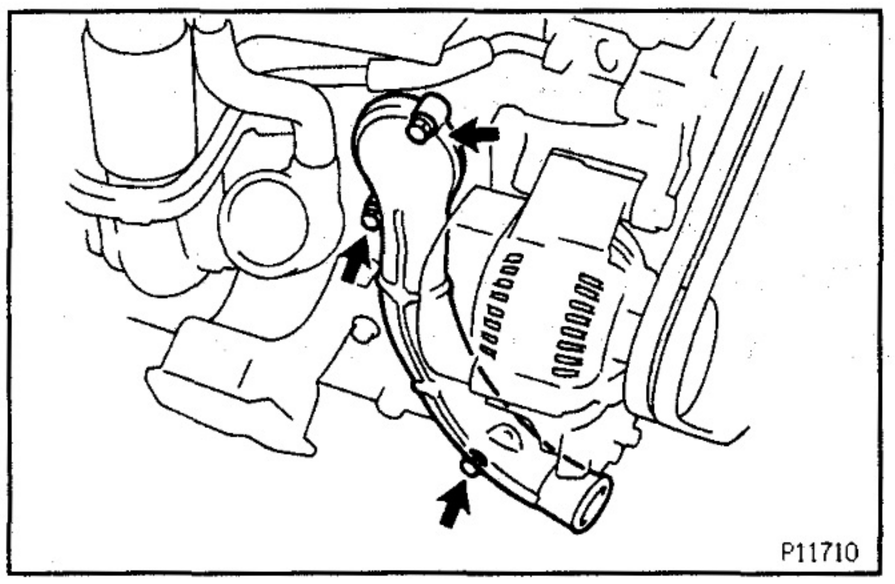

2. REMOVE WATER INLET AND THERMOSTAT

(a) Remove the 3 bolts and water inlet from the cylinder block.
(b) Remove the thermostat.
(c) Remove the gasket from the thermostat.

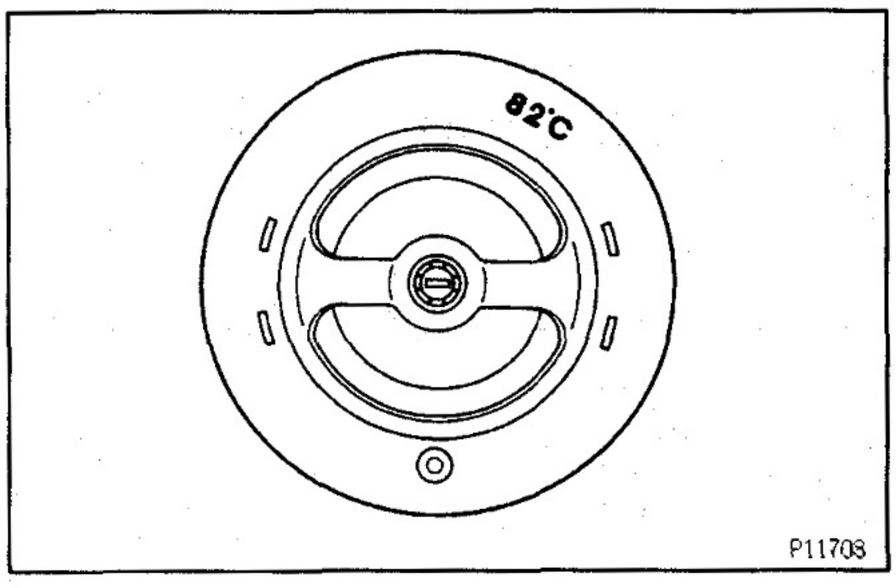

THERMOSTAT INSPECTION

EG13H–04

INSPECT THERMOSTAT

HINT: The thermostat is numbered with the valve opening temperature.

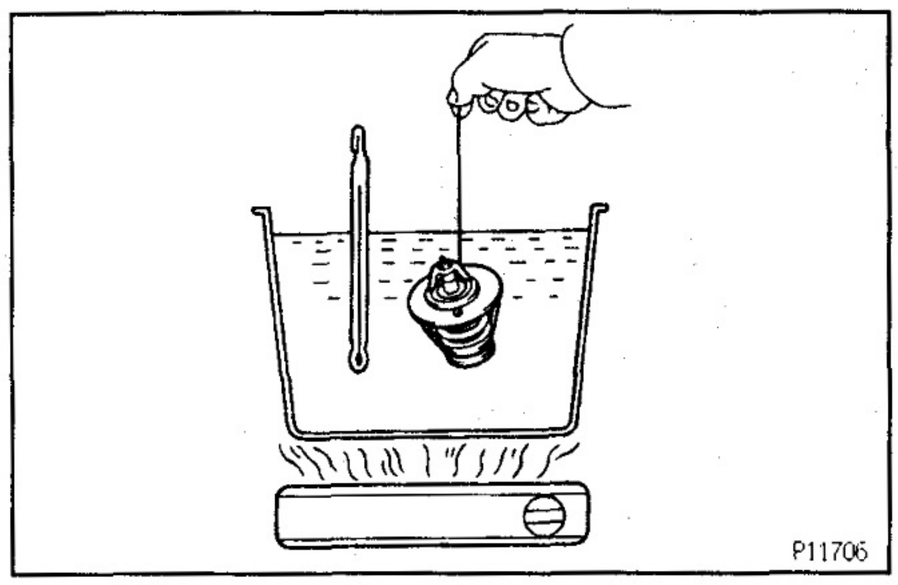

(a) Immerse the thermostat in water and gradually heat the water.

(b) Check the valve opening temperature.

Valve opening temperature:

80 – 84°C (176 – 183°F)

If the valve opening temperature is not as specified, replace the thermostat.

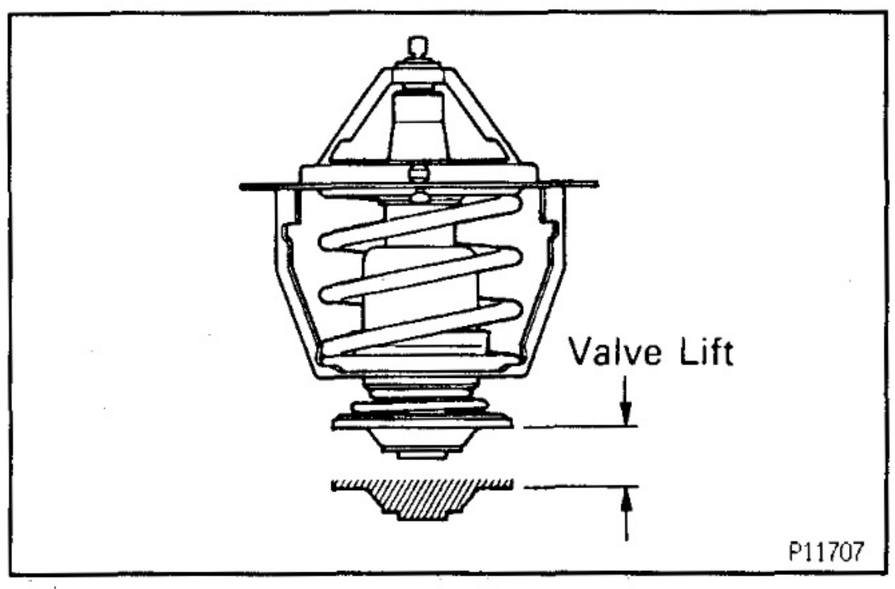

(c) Check the valve lift.

Valve lift:

8 mm (0.31 in.) or more at 95°C (203°F)

If the valve lift is not as specified, replace the thermostat.

(d) Check that the valve spring is tight when the thermostat is fully closed.

If not closed, replace the thermostat.

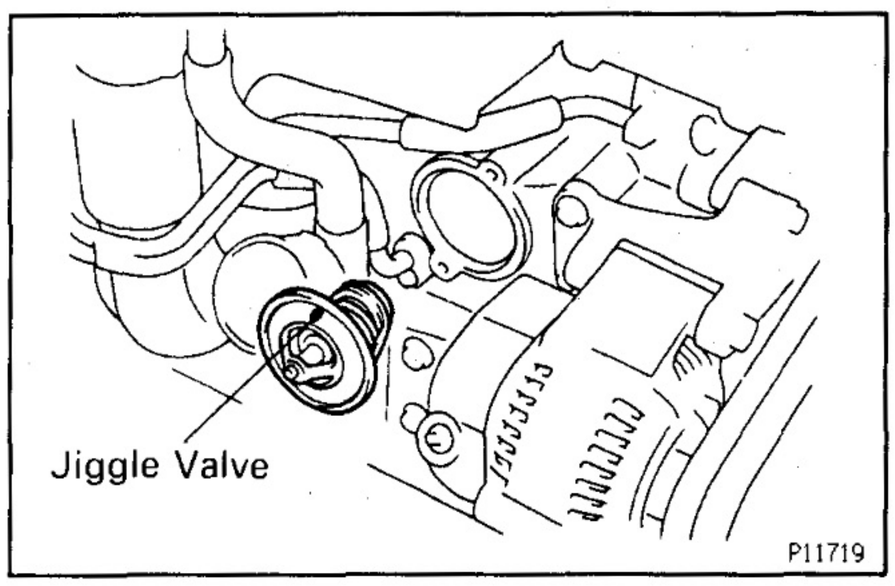

THERMOSTAT INSTALLATION

EG358–01

(See Components for Removal and Installation)

1. PLACE THERMOSTAT IN CYLINDER BLOCK

(a) Install a new gasket to the thermostat.

(b) Install the thermostat with the jiggle valve upward.

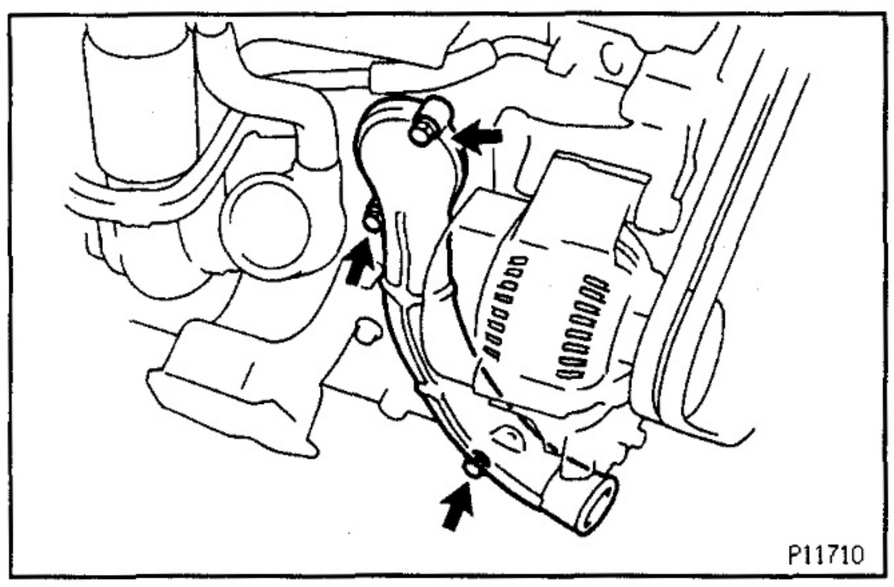

2. INSTALL WATER INLET TO CYLINDER BLOCK

Install the water inlet with the 3 bolts.

Torque: 13 N·m (130 kgf·cm, 9 ft·lbf)

NOTICE: Torque the 2 upper bolts first.

3. FILL WITH ENGINE COOLANT

4. START ENGINE AND CHECK FOR COOLANT LEAKS

RADIATOR

RADIATOR CLEANING

EG13L–03

Using water or a steam cleaner, remove any mud and dirt from the radiator core.

NOTICE: If using a high pressure type cleaner, be careful not to deform the fins of the radiator core. If the cleaner nozzle pressure is 2,942 – 3,432 kPa (30 – 35 kgf/cm², 427 – 498 psi), keep a distance of at least 40 – 50 cm (15.75 – 19.69 in.) between the radiator core and cleaner nozzle.

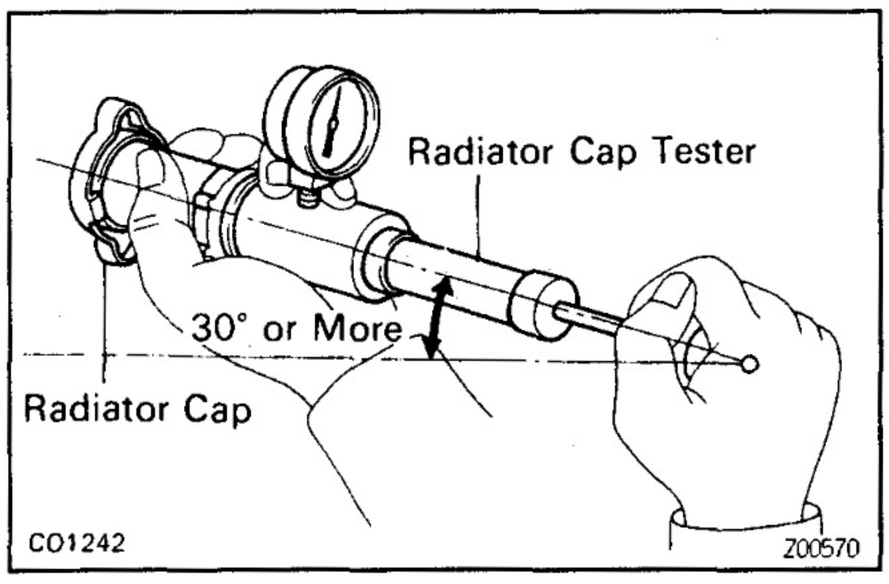

RADIATOR INSPECTION

EG359–01

1. REMOVE RADIATOR CAP

CAUTION: To avoid the danger of being burned, do not remove it while the engine and radiator are still hot, as fluid and steam can be blown out under pressure.

2. INSPECT RADIATOR CAP

NOTICE: When performing steps (a) and (b) below, keep the radiator pump tester at an angle of over 30° above the horizontal.

(a) Using a radiator cap tester, slowly pump the tester and check that air is coming from the relief valve.

Pump speed:

1 push/3 seconds or more

NOTICE: Push the pump at a constant speed.

If air is not coming from the relief valve, replace the radiator cap.

(b) Pump the tester several times and measure the relief valve opening pressure.

Pump speed:

1st time

1 push/1 second or less

2nd time or more

Any speed

Standard opening pressure:

74 – 103 kPa

(0.75 – 1.05 kgf/cm², 10.7 – 14.9 psi)

Minimum opening pressure:

59 kPa (0.6 kgf/cm², 8.5 psi)

If the opening pressure is less than minimum, replace the radiator cap.

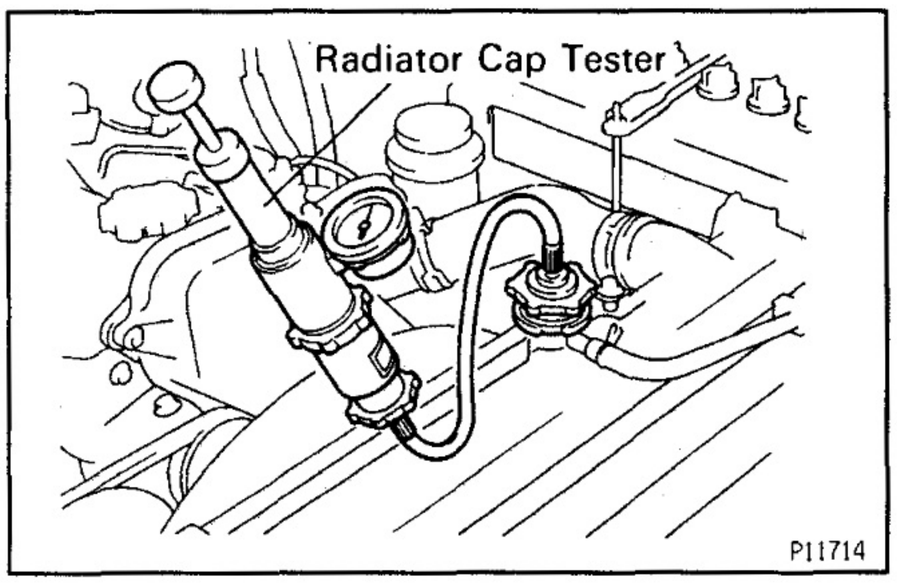

3. INSPECT COOLING SYSTEM FOR LEAKS

(a) Fill the radiator with coolant and attach a radiator cap tester to the water filler.

(b) Warm up the engine.

(c) Pump it to 118 kPa (1.2 kgf/cm², 17.1 psi), and check that the pressure does not drop.
If the pressure drops, check the hoses, radiator or water pump for leaks. If no external leaks are found, check the heater core, cylinder block and head.

4. REINSTALL RADIATOR CAP

SERVICE SPECIFICATIONS

SERVICE DATA

EG07L–0F

Thermostat	Valve opening temperature	80 – 84°C (176 – 183°F)
	Valve lift (at 95°C (203°F))	8 mm (0.31 in.) or more
Radiator cap	Relief valve opening pressure (STD)	74 – 103 kPa (0.75 – 1.05 kgf/cm², 10.7 – 14.9 psi)
	Relief valve opening pressure (Limit)	59 kPa (0.6 kgf/cm², 8.5 psi)

TORQUE SPACIFICATIONS

EG07M–0H

Part tightened		N·m	kgf·cm	ft·lbf
Cylinder block x Drain plug		8	80	69 in.·lbf
Water pump x Cylinder block		13	130	9
Alternator bracket x Cylinder block		21	210	15
Alternator x Alternator bracket	Lock bolt	21	210	15
	Pivot bolt	62	620	45
Fan x Water pump pulley		18	185	13
Water inlet x Cylinder block		13	130	9

LUBRICATION SYSTEM

DESCRIPTION

A fully pressurized, fully filtered lubrication system has been adopted for this engine.

EG140-02

OPERATION

EG14S-08

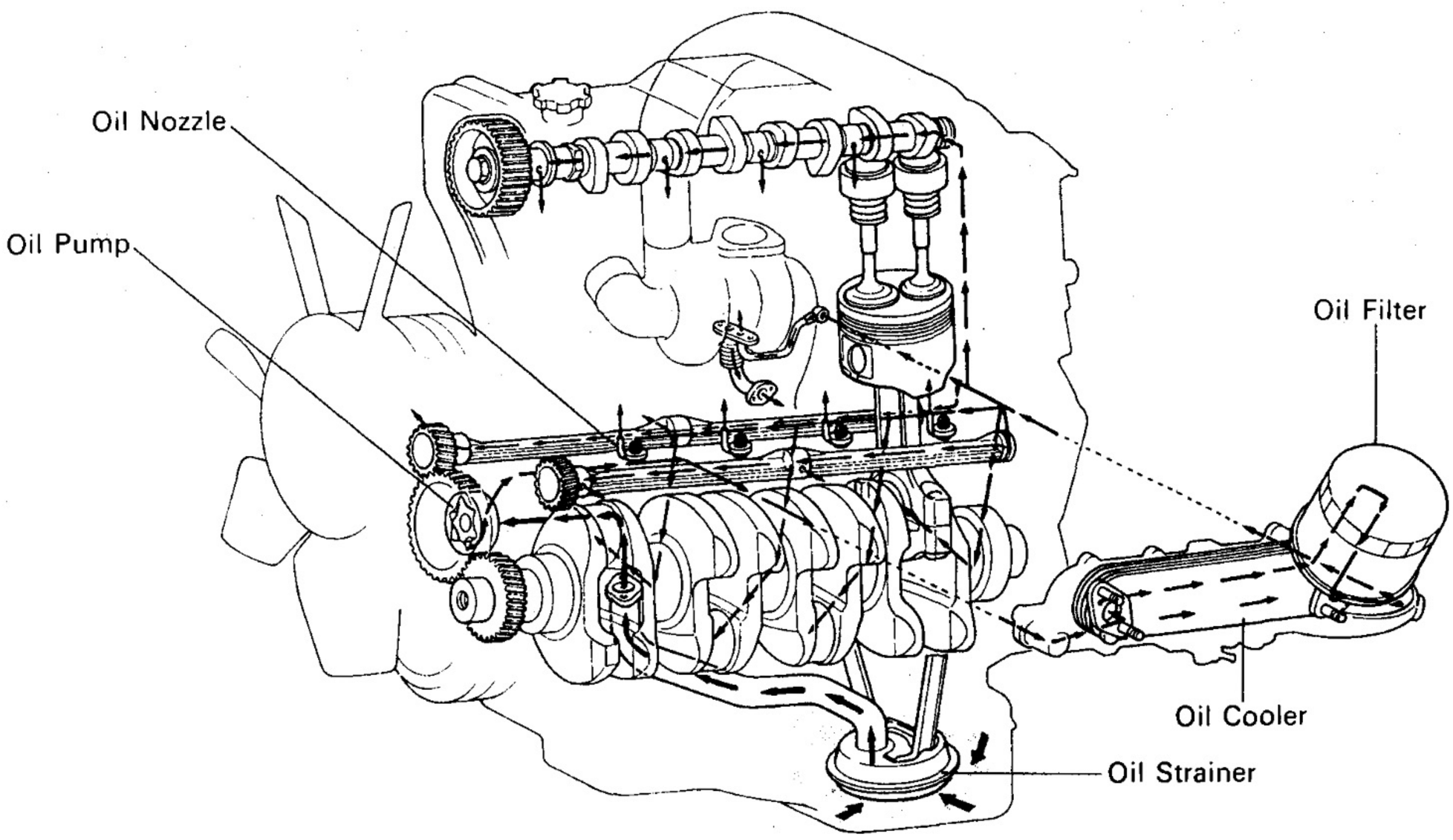

P11699

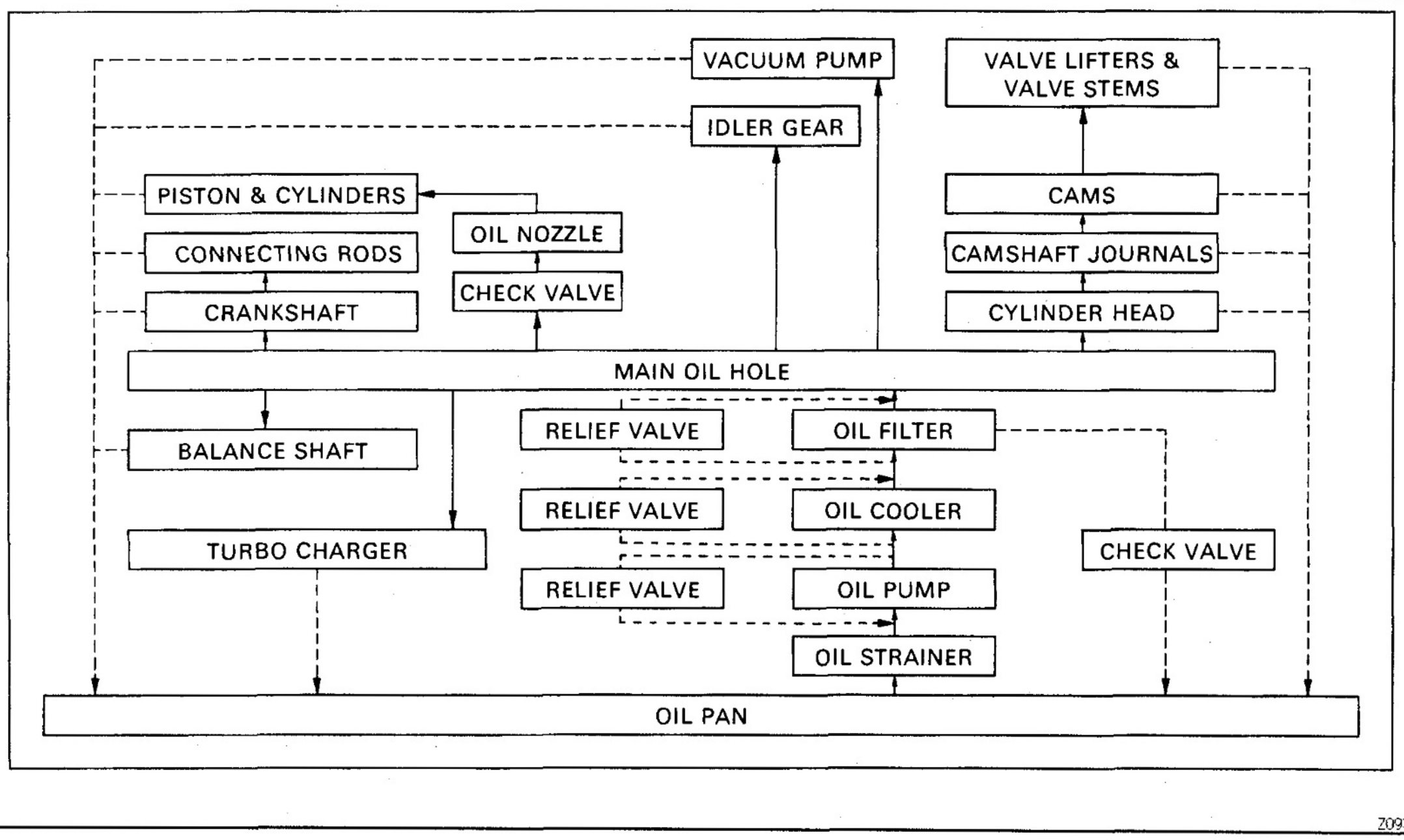

Z09337

A pressure feeding lubrication system has been adopted to supply oil to the moving parts of this engine. The lubrication system consists of an oil pan, oil pump, oil filter and other external parts which supply oil to the moving parts in the engine block. The oil circuit is shown in the illustration at the top of the previous page. Oil from the oil pan is pumped up by the oil pump. After it passes through the oil filter, it is fed through the various oil holes in the crankshaft and cylinder block. After passing through the cylinder block and performing its lubricating function, the oil is returned by gravity to the oil pan. A dipstick on the side of the oil pump is provided to check the oil level.

OIL PUMP

The oil pump pumps up oil from the oil pan and sends it under pressure to the various parts of the engine. An oil strainer is mounted in front of the inlet to the oil pump to remove impurities. The oil pump itself is a trochoid type pump, which uses a drive rotor and a driven inside the pump body. When the drive rotor rotates, the driven rotor rotates in the same direction. The axis of the drive rotor shaft is different from the center of the driven rotor, so when both rotors rotate, the space between the 2 rotors changes. Oil is drawn in when the space widens and is discharged when the space becomes narrow.

OIL PRESSURE REGULATOR (RELIEF VALVE)

At high engine speeds, the engine oil supplied by the oil pump exceeds the capacity of the engine to utilize it. For that reason, the oil pressure regulator works to prevent an oversupply of oil. During normal oil supply, a coil spring and valve keep the by pass closed, but when too much oil is being fed, the pressure becomes extremely high, overpowering the force of the spring and opening the valve. This allows the excess oil to flow through the valve and return to the oil pan.

OIL FILTER

The oil filter is a full flow type filter with a relief valve built into the paper filter element. Particles of metal from wear, airborne dirt, carbon and other impurities can get into the oil during use and could cause accelerated wear or seizing if allowed to circulate through the engine. The oil filter, integrated into the oil line, removes these impurities as the oil passes through it. The filter is mounted outside the engine to simplify replacement of the filter element. A relief valve is also included ahead of the filter element to relieve the high oil pressure in case the filter element becomes clogged with impurities. The relief valve opens when the oil pressure overpowers the force of the spring. Oil passing through the relief valve by passes the oil filter and flows directly into the main oil hole in the engine.

PREPARATION

SST (SPECIAL SERVICE TOOLS)

5814U–06

	09032–00100 Oil Pan Seal Cutter	
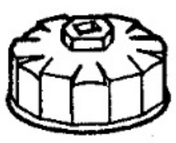	09228–10001 Oil Filter Wrench	

RECOMMENDED TOOLS

E014V–06

	09200–00010 Engine Adjust Kit .	
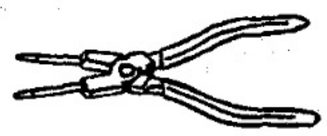	09905–00013 Snap Ring Pliers .	

EQUIPMENT

E014W–06

Oil pressure gauge	
Precision straight edge	
Torque wrench	

LUBRICANT

E014X–06

Item	Capacity	Classification
Engine oil (KZJ series)		API grade CD or better
Dry fill	8.0 liters (8.5 US qts, 7.0 Imp. qts)	
Drain and refill		
w/ Oil filter change	7.7 liters (8.1 US qts, 6.8 Imp. qts)	
w/o Oil filter change	7.0 liters (7.4 US qts, 6.2 Imp. qts)	
Engine oil (KZN series)		
Dry fill	7.4 liters (7.8 US qts, 6.5 Imp. qts)	
Drain and refill		
w/ Oil filter change	7.1 liters (7.5 US qts, 6.2 Imp. qts)	
w/o Oil filter change	6.4 liters (6.8 US qts, 5.6 Imp. qts)	

SSM (SPECIAL SERVICE MATERIALS)

E014Y–06

08826–00080	Seal Packing Black or equivalent (FIPG)	Oil pan
08833–00080	Adhesive 1344, THREE BOND 1344, LOCTITE 242 or equivalent	Oil pressure sender gauge

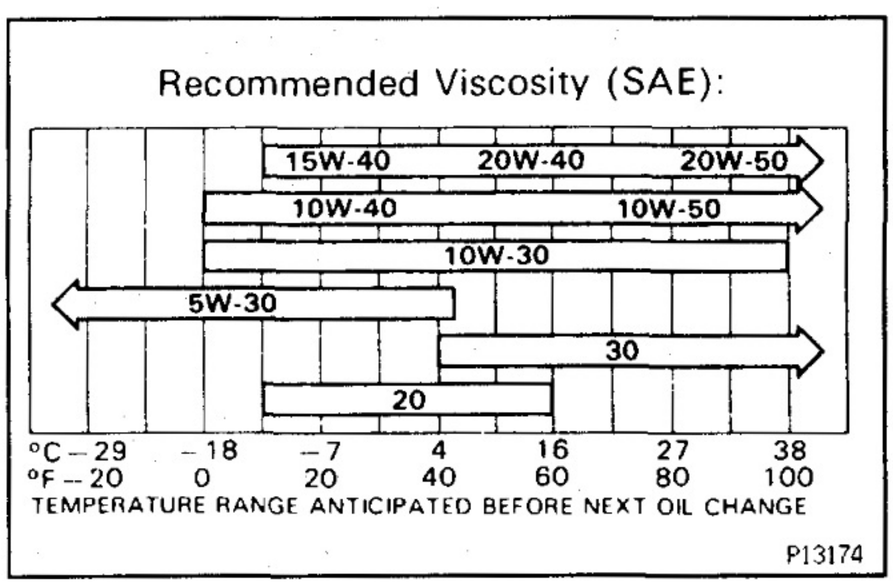

OIL PRESSURE CHECK

EG35A–01

1. CHECK ENGINE OIL QUALITY

Check the oil for deterioration, entry of water, discoloring or thinning.

If the quality is visibly poor, replace the oil.

Oil grade:

API grade CD or better

Recommended viscosity:

Refer to illustration

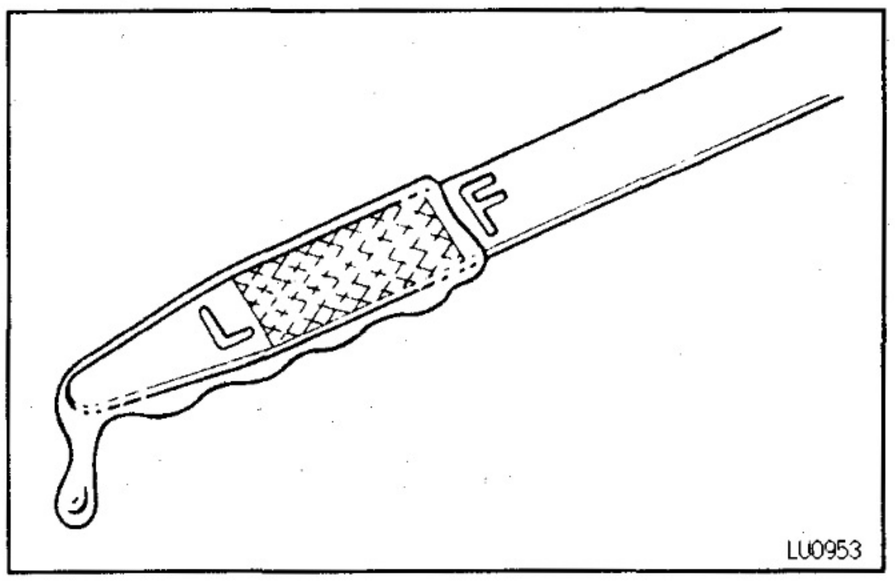

2. CHECK ENGINE OIL LEVEL

The oil level should be between the "L" and "F" marks on the dipstick.

If low, check for leakage and add oil up to "F" mark.

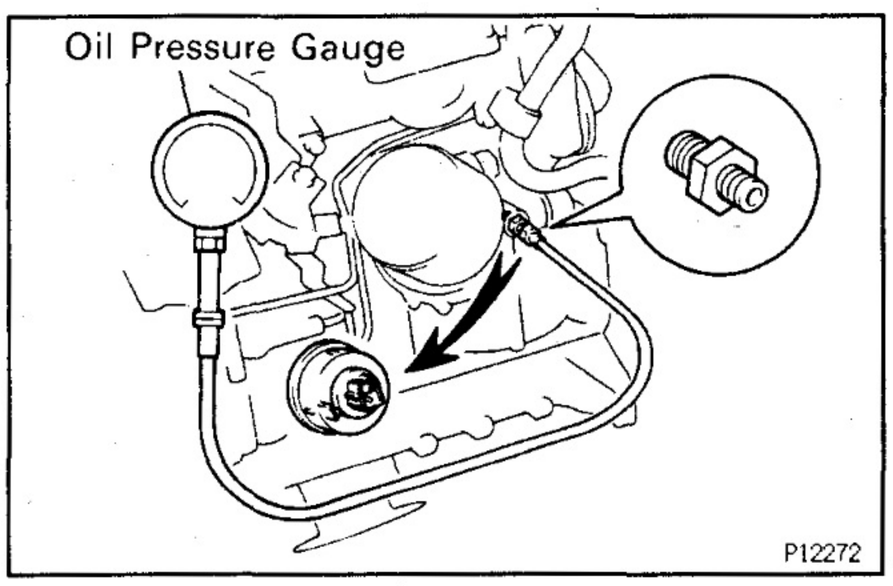

3. REMOVE OIL PRESSURE SENDER GAUGE

4. INSTALL OIL PRESSURE GAUGE

5. WARM UP ENGINE

Allow the engine to warm up to normal operating temperature.

6. CHECK OIL PRESSURE

Oil pressure:

At idle

29 kPa (0.3 kgf/cm², 4.3 psi) or more

At 3,000 rpm

250 – 600 kPa (2.5 – 6.1 kgf/cm², 18 – 42 psi)

7. REMOVE OIL PRESSURE GAUGE

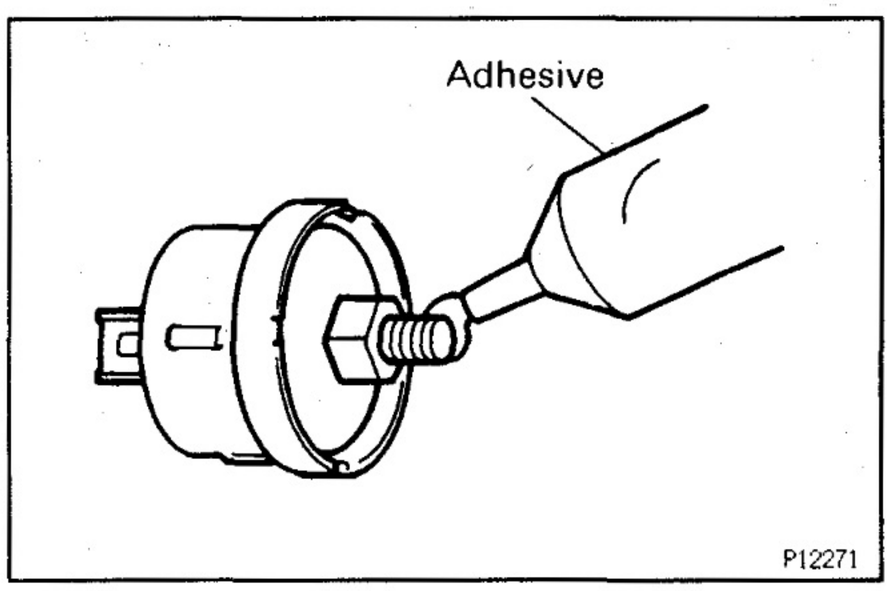

8. REINSTALL OIL PRESSURE SENDER GAUGE

(a) Apply adhesive to 2 or 3 threads of the oil pressure sender gauge.

Adhesive:

Part No. 08833–00080, THREE BOND 1344, LOCTITE 242 or equivalent

(b) Install the oil pressure sender gauge.

9. START ENGINE, AND CHECK FOR OIL LEAKS

OIL AND FILTER REPLACEMENT

EG177–03

CAUTION:

- **Prolonged and repeated contact with mineral oil will result in the removal of natural fats from the skin, leading to dryness, irritation and dermatitis. In addition, used engine oil contains potentially harmful contaminants which may cause skin cancer.**
- **Care should be taken, therefore, when changing engine oil to minimize the frequency and length of time your skin is exposed to used engine oil. Protective clothing and gloves that cannot be penetrated by oil should be worn. The skin should be thoroughthly washed with soap and water, or use water–less hand cleaner, to remove any used engine oil. Do not use gasoline, thinners, or solvents.**
- **In order to preserve the environment, used oil and used oil filter must be disposed of only at designated disposal sites.**

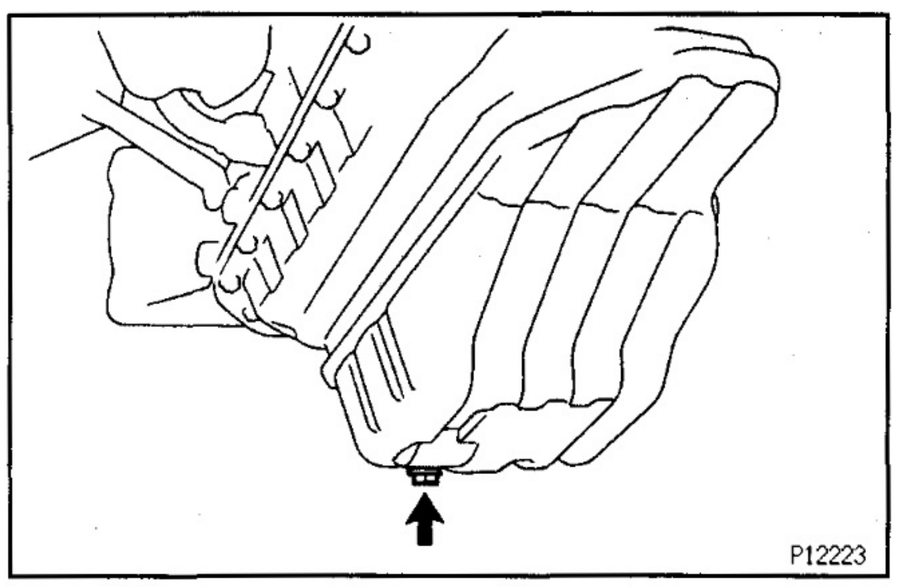

P12223

1. DRAIN ENGINE OIL

(a) Remove the oil filler cap.

(b) Remove the oil drain plug, and drain the oil into a container.

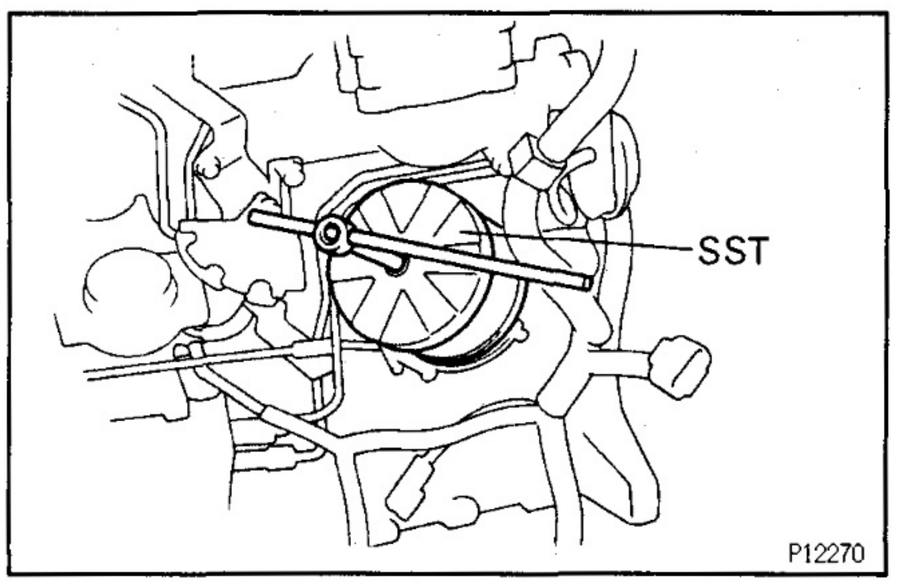

P12270

2. REPLACE OIL FILTER

(a) Using SST, remove the oil filter.
SST 09228–10001
HINT: Put a container under the drain hose.

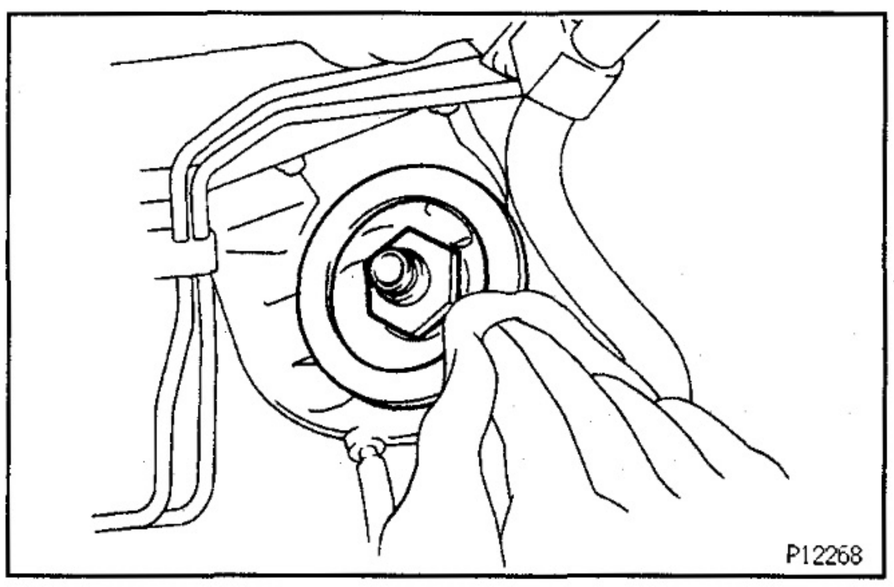

P12268

(b) Clean the oil filter contact surface on the oil filter mounting.

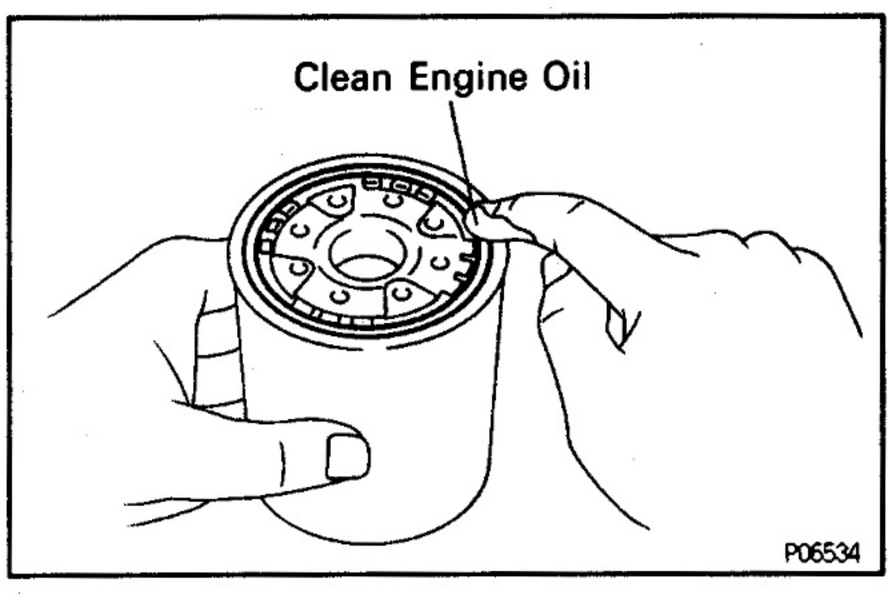

(c) Lubricate the filter rubber gasket with clean engine oil.

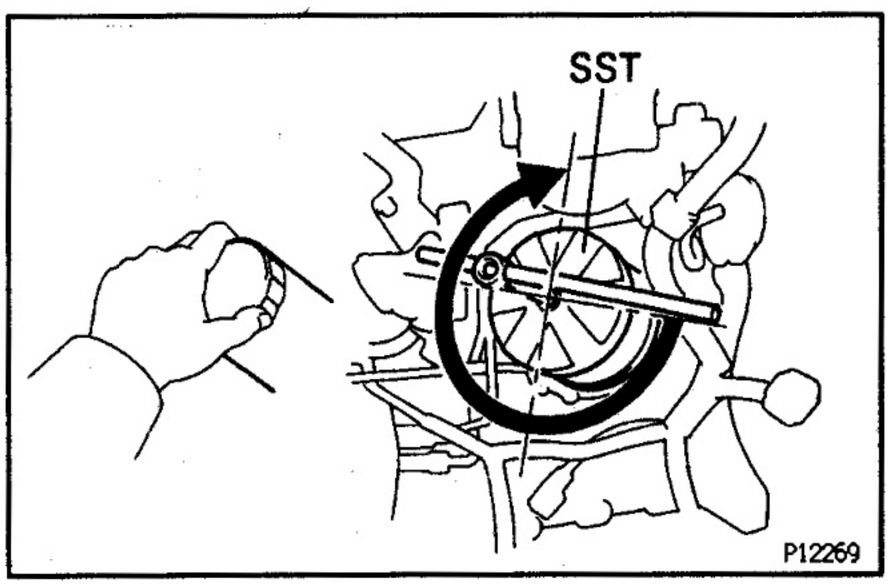

(d) Tighten the oil filter by hand until the rubber gasket contacts the seat of the filter mounting.

(e) Using SST, give it an additional 3/4 turn to seat the filter.
SST 09228–10001

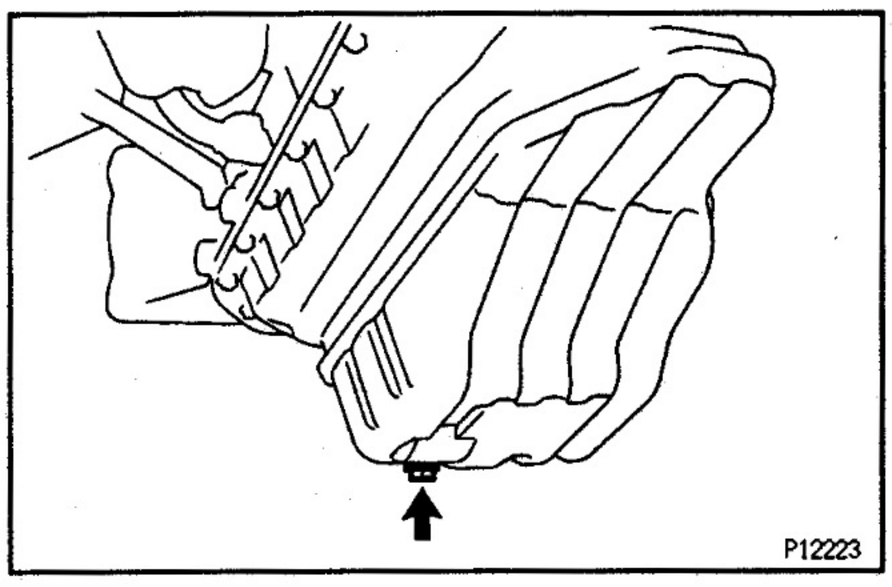

3. FILL WITH ENGINE OIL

(a) Clean and install the oil drain plug with a new gasket.
Torque: 34 N·m (350 kgf·cm, 25 ft·lbf)

(b) Fill with new engine oil.
Oil grade: (See step 1 Oil Pressure Check)
Capacity (KZJ series):
Drain and refill
w/ Oil filter change
7.7 liters (8.1 US qts, 6.8 Imp. qts)
w/o Oil filter change
7.0 liters (7.4 US qts, 7.0 Imp. qts)
Dry fill
8.0 liters (8.5 US qts, 7.0 Imp. qts)
Capacity (KZN series):
Drain and refill
w/ Oil filter change
7.1 liters (7.5 US qts, 6.2 Imp. qts)
w/o Oil filter change
6.4 liters (6.8 US qts, 5.6 Imp. qts)
Dry fill
7.4 liters (7.8 US qts, 6.5 Imp. qts)
NOTICE:
Use the dipstick to the oil quantity of the 1KZ–T engine 5 minutes after stopping the warmed up engine.

(c) Reinstall the oil filler cap.

4. START ENGINE AND CHECK FOR OIL LEAKS

5. RECHECK ENGINE OIL LEVEL

OIL PUMP
COMPONENTS FOR REMOVAL AND INSTALLATION

EG178-03

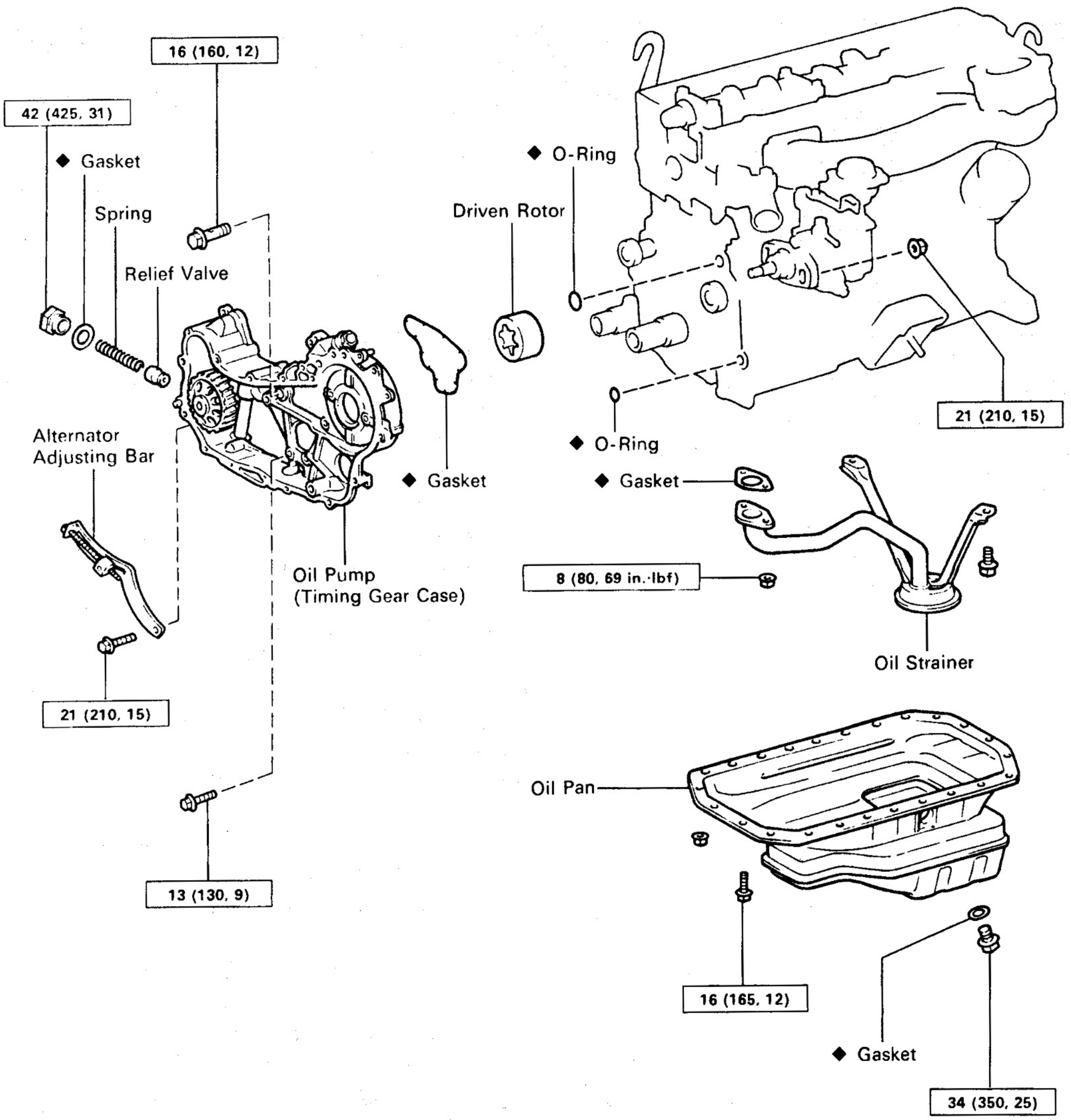

N·m (kgf·cm, ft·lbf) : Specified torque

◆ Non-reusable part

P12377

EG35B-01

OIL PUMP REMOVAL

(See Components for Removal and Installation)

HINT: When repairing the oil pump, the oil pan and strainer should be removed and cleaned.

1. **DRAIN ENGINE COOLANT**
2. **DRAIN ENGINE OIL**
3. **REMOVE DRIVE BELT, FAN AND WATER PUMP PULLEY(See step 2 on page EG–235)**
4. **REMOVE TIMING BELT**
   (See page EG–32)
5. **REMOVE TIMING GEARS**
   (See page EG–41)
6. **REMOVE ALTERNATOR ADJUSTING BAR**

(a) Remove the lock bolt.

(b) Remove the bolt and adjusting bar.

7. **REMOVE ALTERNATOR AND ALTERNATOR BRACKET**
   (See step 6 on page EG–235)
8. **REMOVE WATER PUMP**
   (See step 6 on page EG–235)
9. **REMOVE OIL LEVEL SENSOR**

(a) Disconnct the oil level sensor connector.

(b) Remove the 4 bolts and oil level sensor.

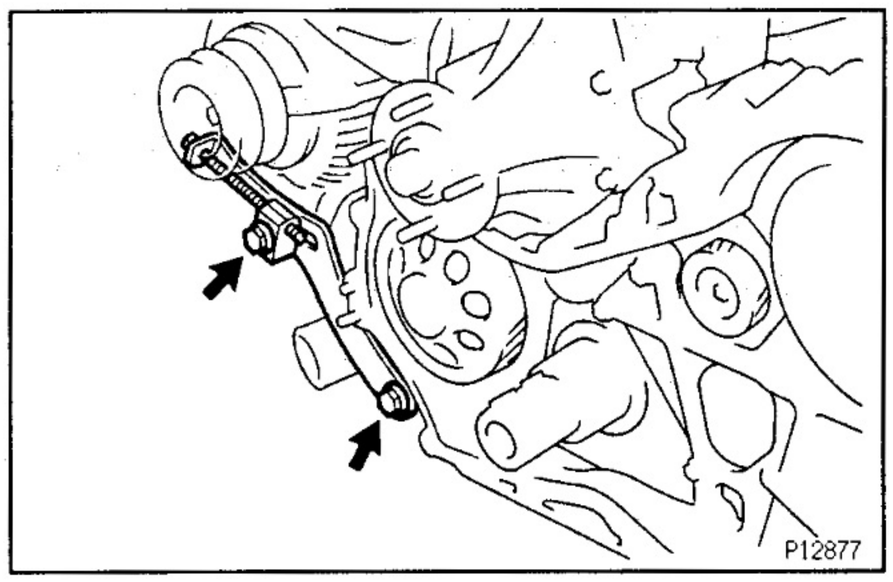

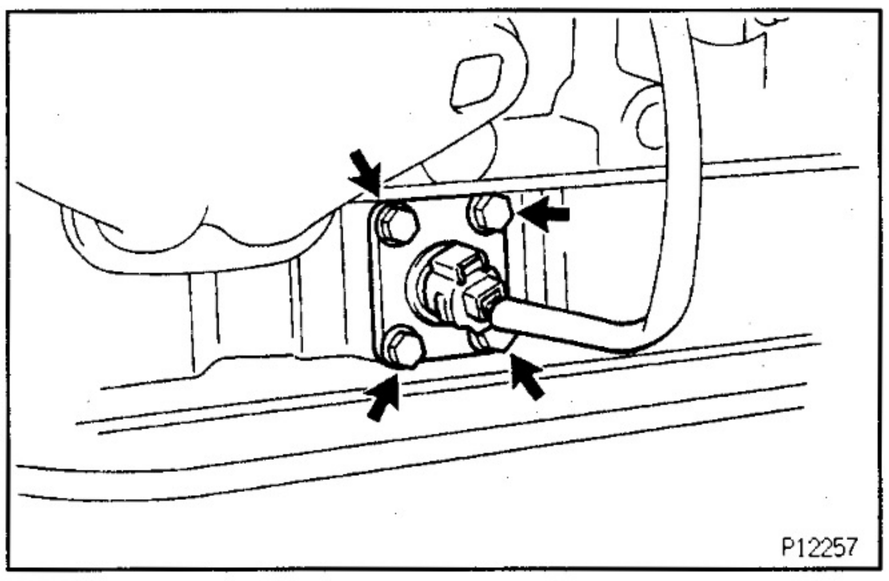

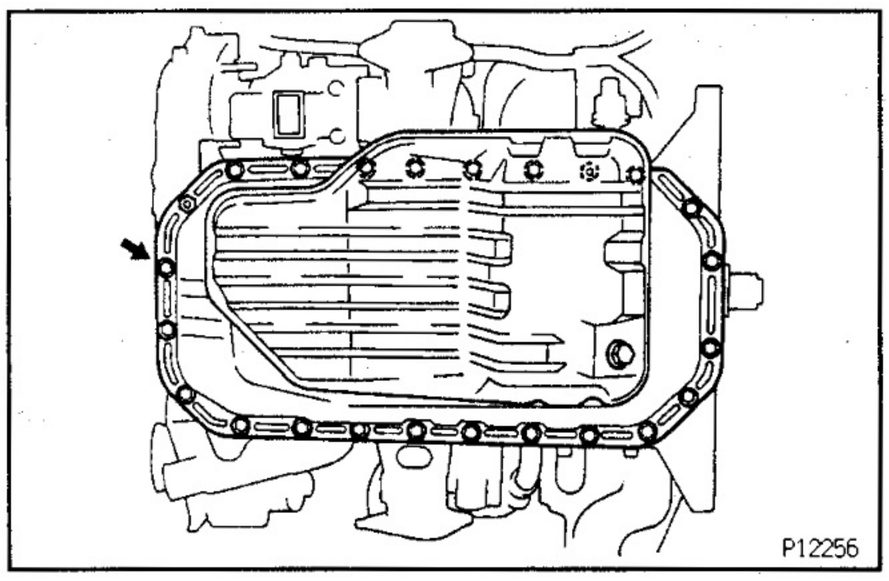

10. **REMOVE OIL PAN**

(a) Remove the 22 bolts and 2 nuts.

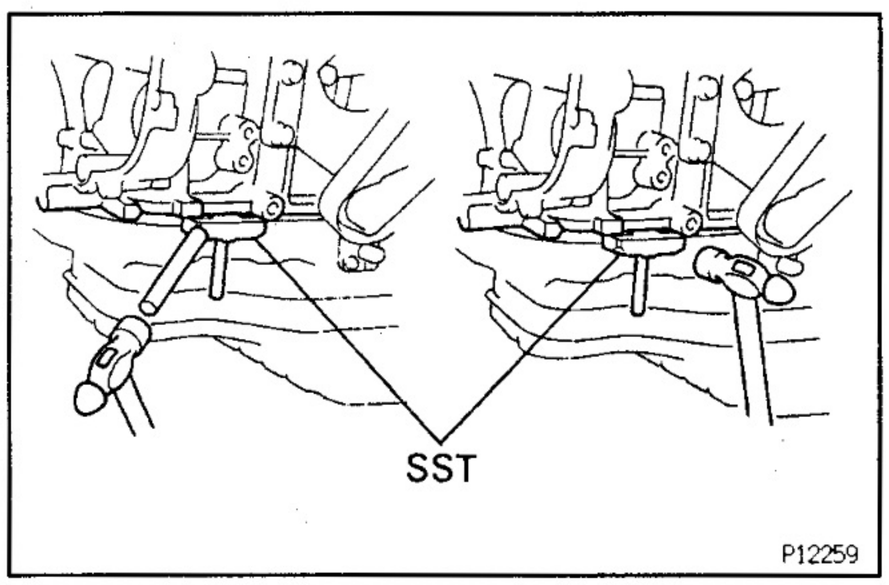

(b) Insert the blade of SST between the cylinder block and oil pan, and cut off applied sealer and remove the oil pan.
SST 09032–00100

NOTICE:

- **Do not use SST for the oil pump body side and rear oil seal retainer.**
- **Be careful not to damage the oil pan flange.**

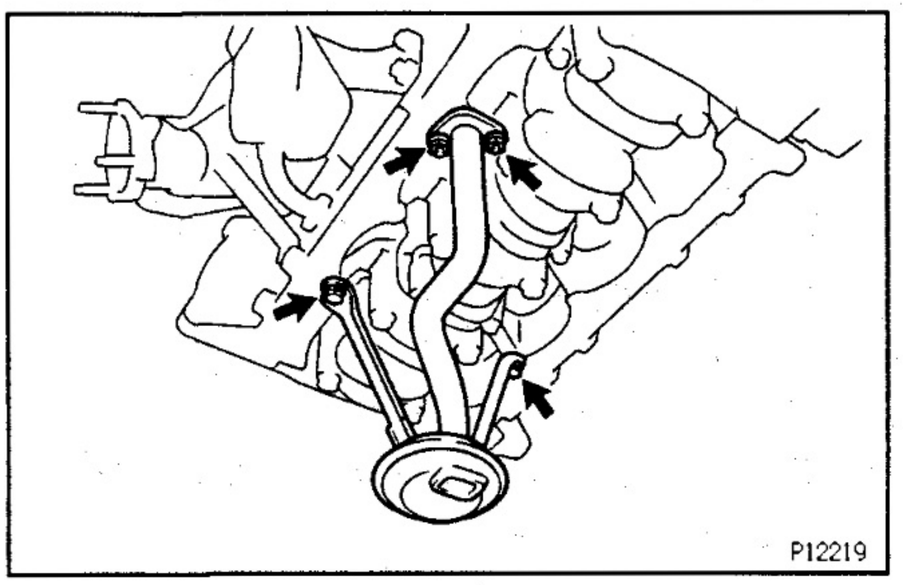

11. REMOVE OIL STRAINER

Remove the 2 bolts, 2 nuts, oil strainer and gasket.

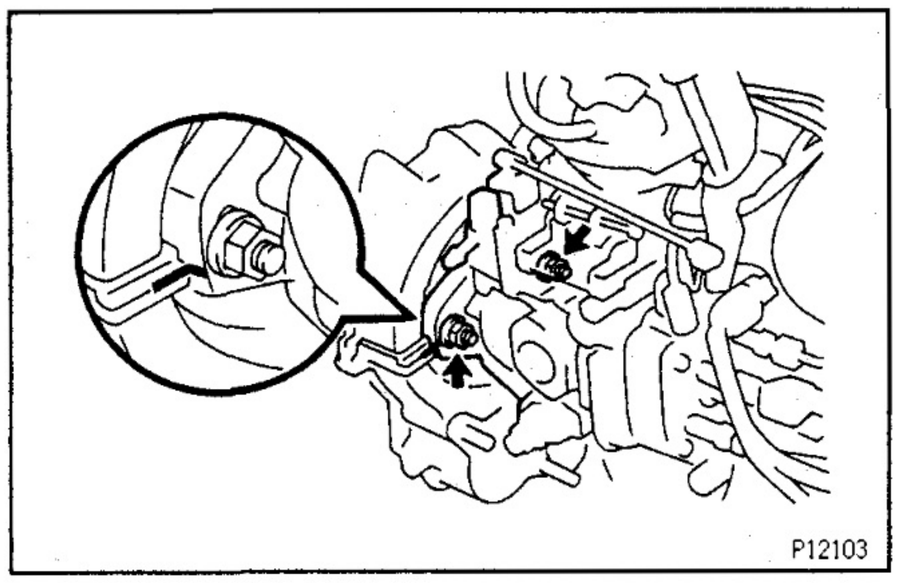

12. REMOVE OIL PUMP (TIMING GEAR CASE)

(a) Before removing the 2 nuts holding the timing gear case to the injection pump, check if the injection pump period lines are aligned.
If not, place new matchmarks for reinstallation.

(b) Remove the 2 nuts.

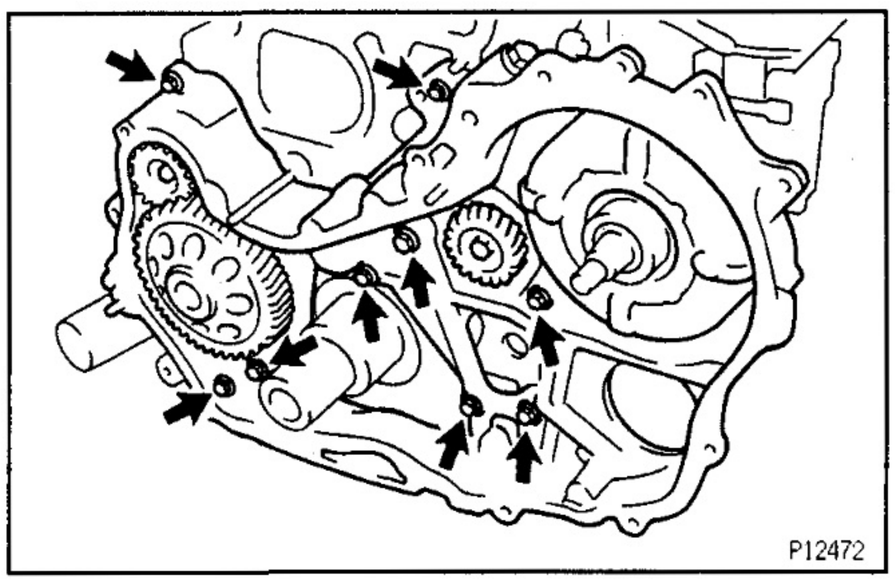

(c) Remove the 8 bolts and union bolt.

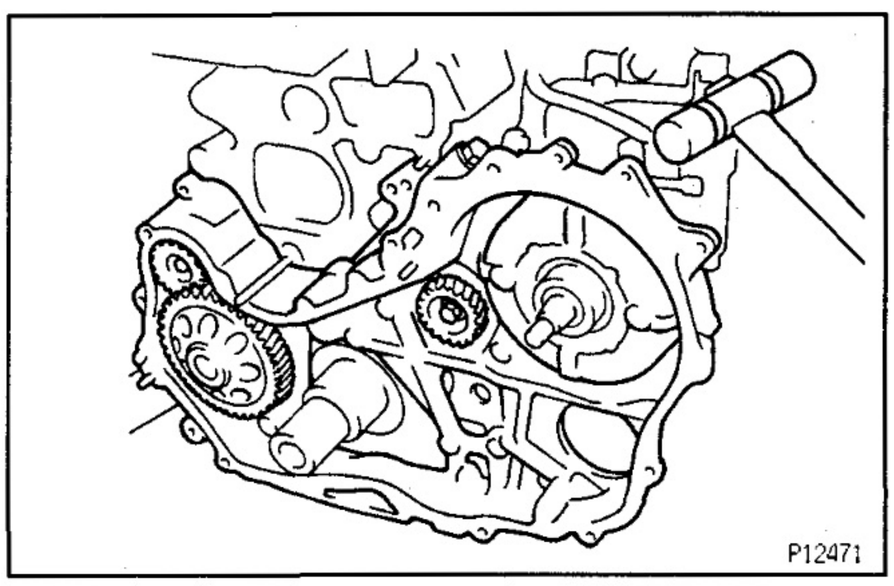

(d) Using a plastic—faced hammer, lightly tap out the timing gear case.

(e) Remove the 3 O—rings.

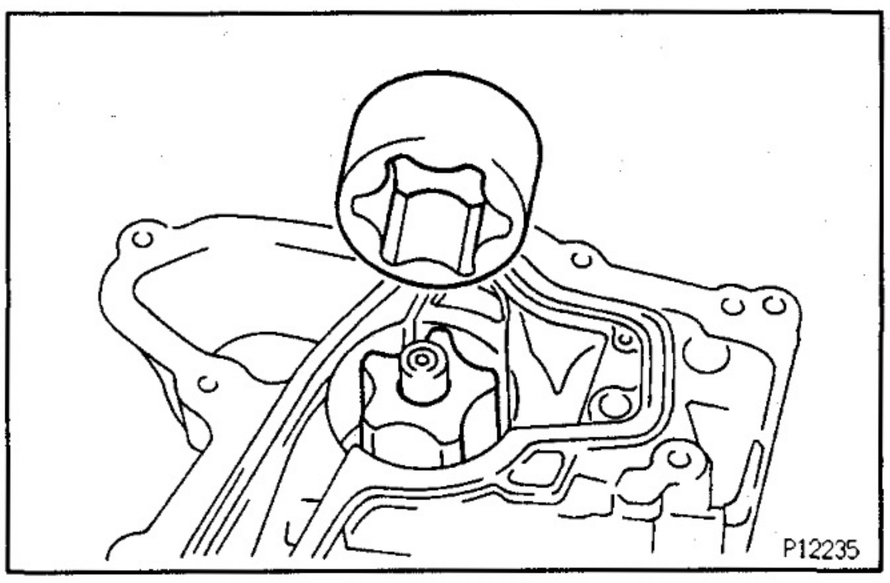

EG156–07

OIL PUMP DISASSEMBLY

(See Components for Removal and Installation)

1. REMOVE DRIVEN ROTOR

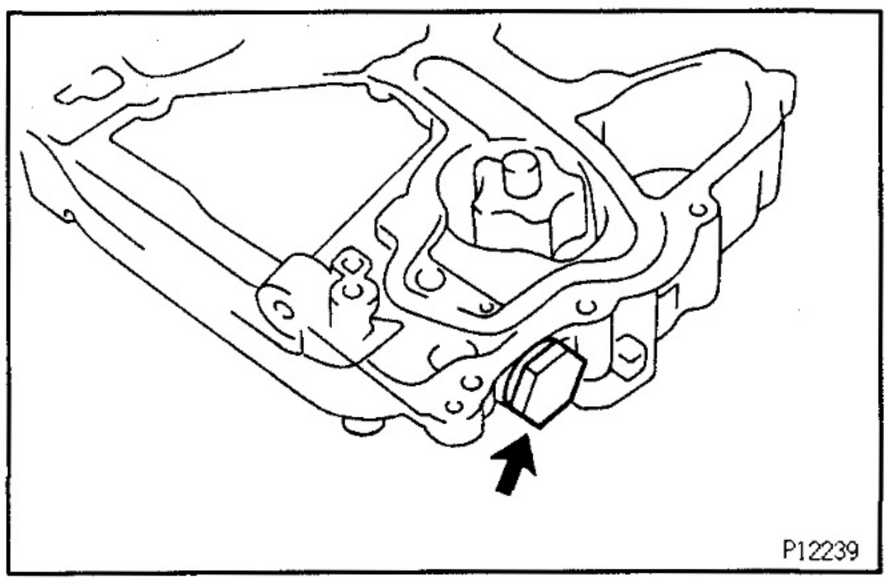

2. REMOVE RELIEF VALVE

Remove the plug, gasket, spring and relief valve.

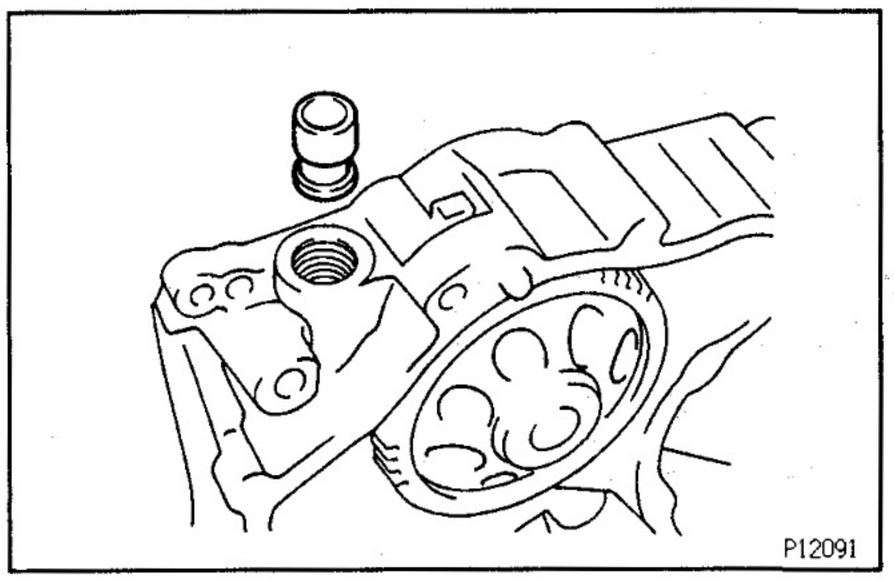

EG17A–03

OIL PUMP INSPECTION

1. INSPECT RELIEF VALVE

Coat the valve with engine oil and check that it falls smoothly into the valve hole by its own weight.
If it doesn't, replace the relief valve. If necessary, replace the oil pump assembly.

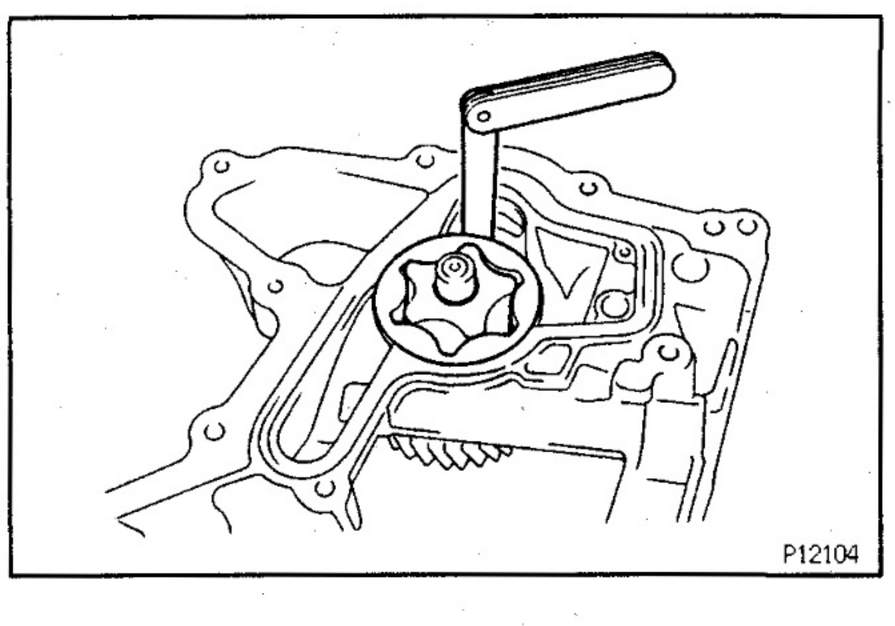

2. INSPECT DRIVE AND DRIVEN ROTORS

A. Inspect rotor body clearance

Using a thickness gauge, measure the clearance between the driven rotor and body.

Standard body clearance:

0.100 – 0.170 mm (0.0039 – 0.0067 in.)

Maximum body clearance:

0.20 mm (0.0079 in.)

If the body clearance is greater than maximum, replace the rotors as a set. If necessary, replace the oil pump assembly.

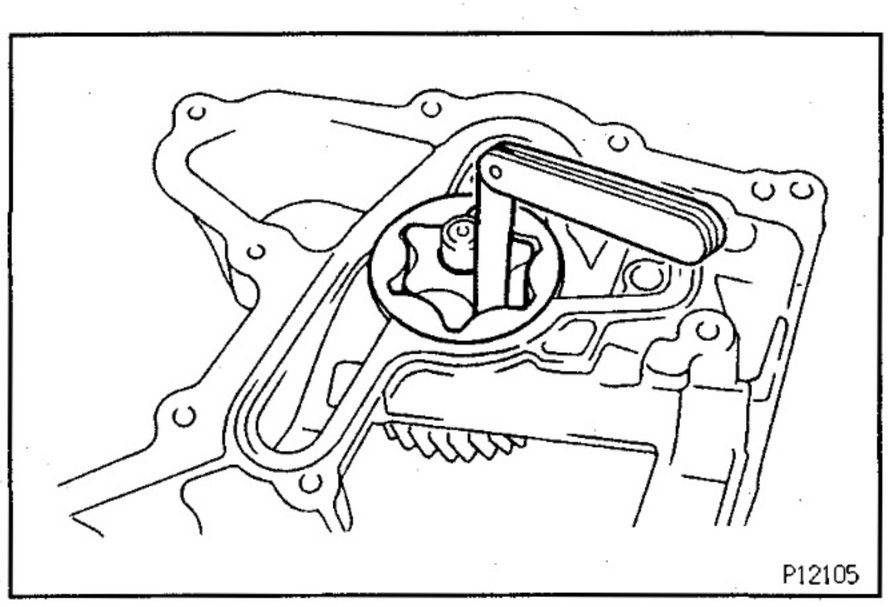

B. Inspect rotor tip clearance

Using a thickness gauge, measure the clearance between the drive and driven rotor tips.

Standard tip clearance:

0.060 – 0.160 mm (0.0024 – 0.0063 in.)

Maximum tip clearance:

0.21 mm (0.0083 in.)

If the tip clearance is greater than maximum, replace the rotors as a set.

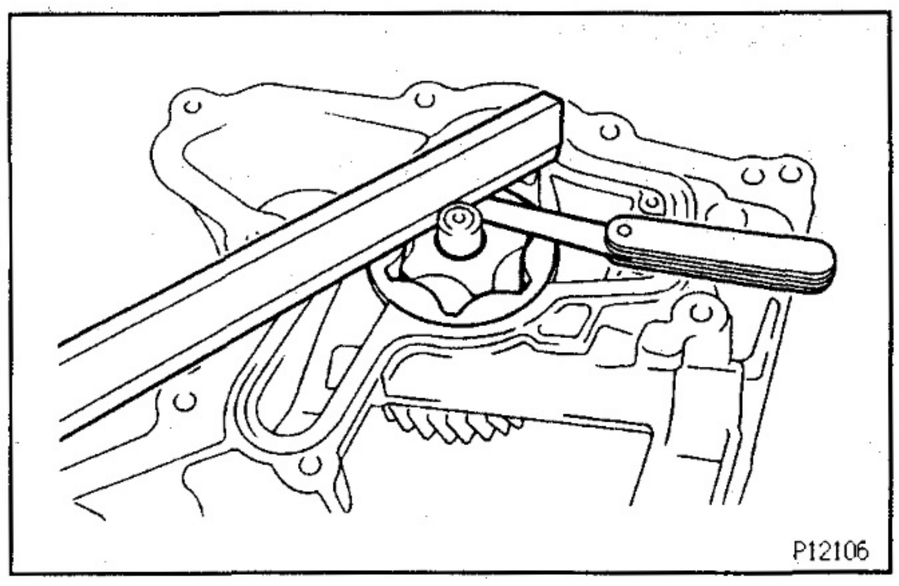

C. Inspect rotor side clearance

Using a thickness gauge and precision straight edge, measure the clearance between the rotors and precision straight edge.

Standard side clearance:

0.030 – 0.090 mm (0.0012 – 0.0035 in.)

Maximum side clearance:

0.15 mm (0.0059 in.)

If the side clearance is greater than maximum, replace the rotors as a set. If necessary, replace the oil pump assembly.

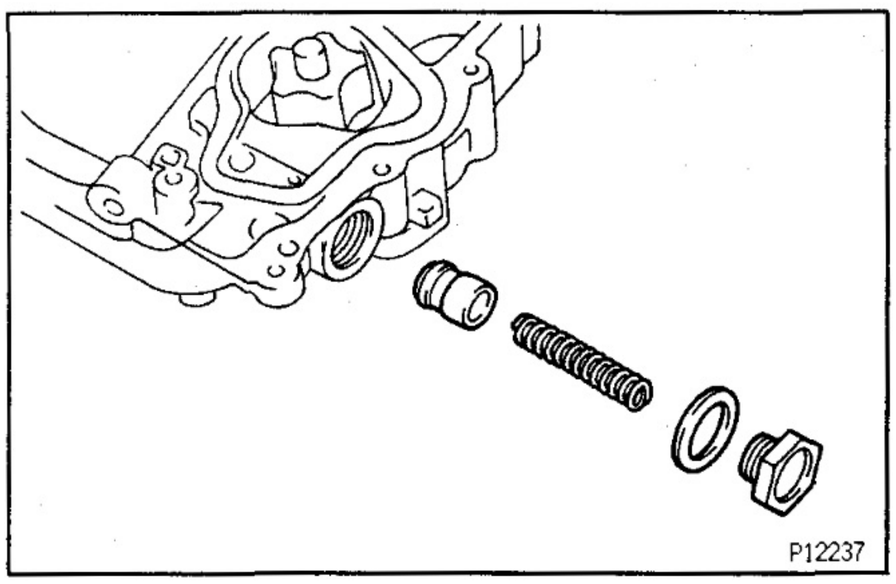

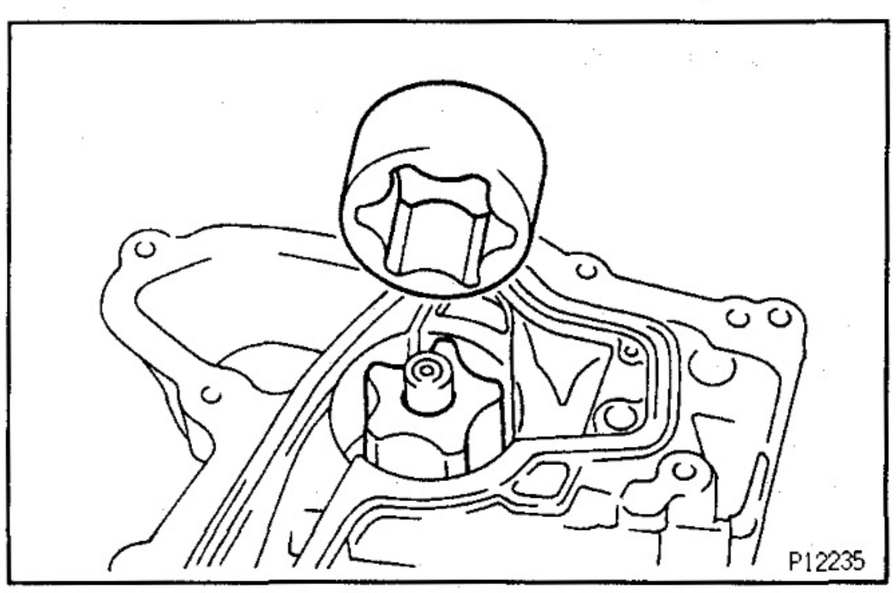

EG35C–01

OIL PUMP ASSEMBLY

(See Components for Removal and Installation)

1. INSTALL RELIEF VALVE

(a) Insert the relief valve and spring into the installation hole of the timing gear case.

(b) Install a new gasket and the plug.
Torque: 42 N·m (425 kgf·cm, 31 ft·lbf)

2. INSTALL DRIVE AND DRIVEN ROTORS

EG35D–01

OIL PUMP INSTALLATION

(See Components for Removal and Installation)

1. INSTALL OIL PUMP (TIMING GEAR CASE)

(a) Remove any old packing (FIPG) material and be careful not to drop any oil on the contact surfaces of the timing gear case and cylinder block.

- Using a razor blade and gasket scraper, remove all the old packing (FIPG) material from the gasket surfaces and sealing groove.
- Thoroughly clean all components to remove all the loose material.
- Using a non–residue solvent, clean both sealing surfaces.

NOTICE: Do not use a solvent which will affect the painted surfaces.

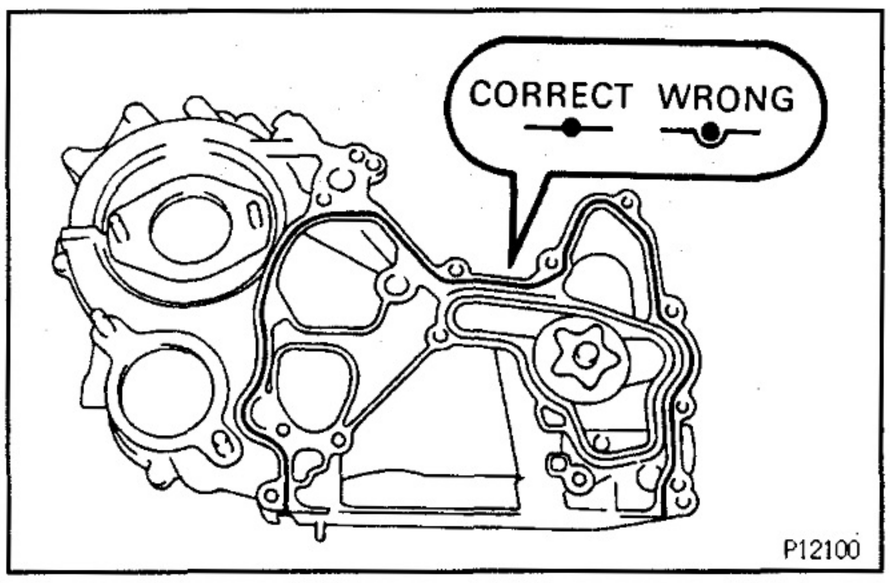

(b) Apply seal packing to the timing gear case as shown in the illustration.

Seal packing:

Part No. 08826–00080 or equivalent

- Install a nozzle that has been cut to a 3 – 5 mm (0.12 – 0.20 in.) opening.
- Parts must be assembled within 3 minutes of application. Otherwise the material must be removed and reapplied.
- Immediately remove nozzle from the tube and reinstall cap.

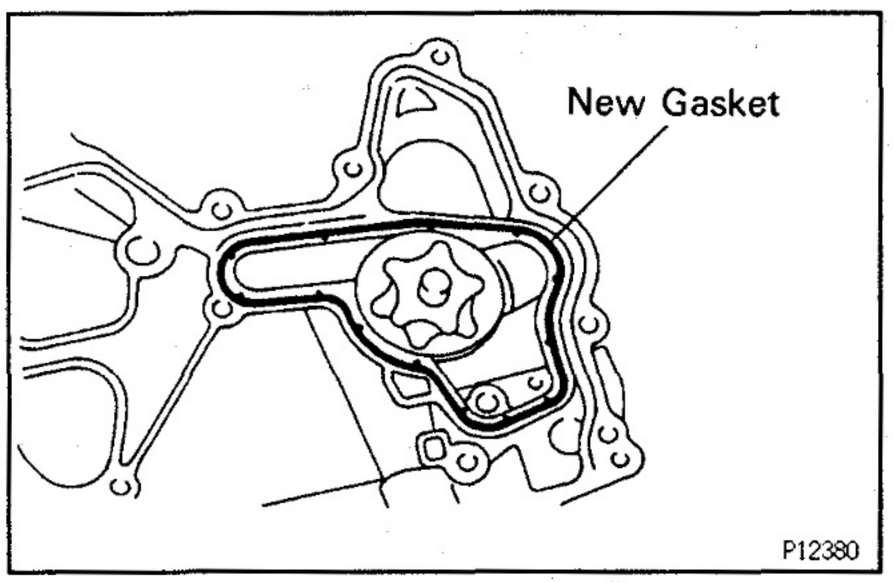

(c) Place a new gasket into the groove of the timing gear case as shown in the illustration.

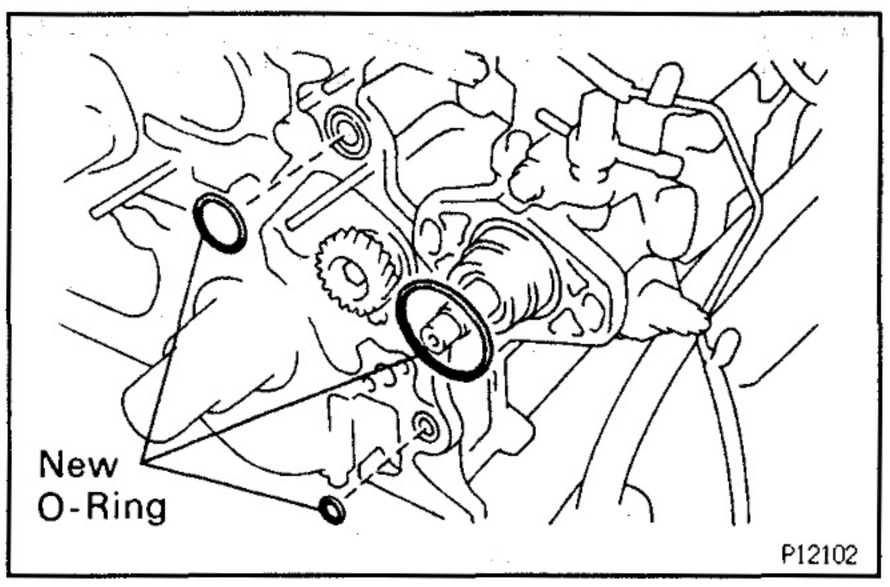

(d) Install the 3 new O–rings to the cylinder block and injection pump.

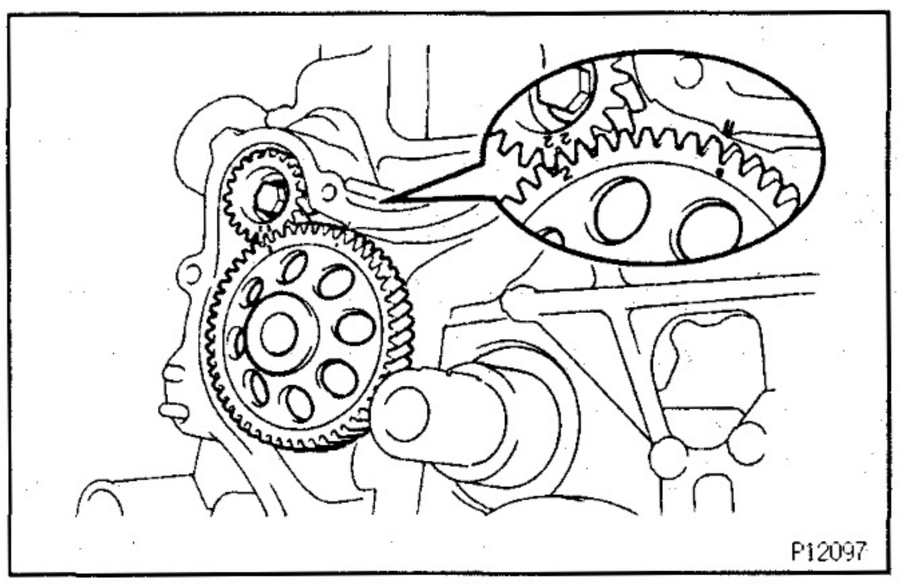
P12097

(e) Install the timing gear case.
(f) The match mark on the No.1 balance shaft driven gear should be aligned with the "2" mark.
(g) Align the mark on the oil pump drive gear with the mark on the timing gear case.

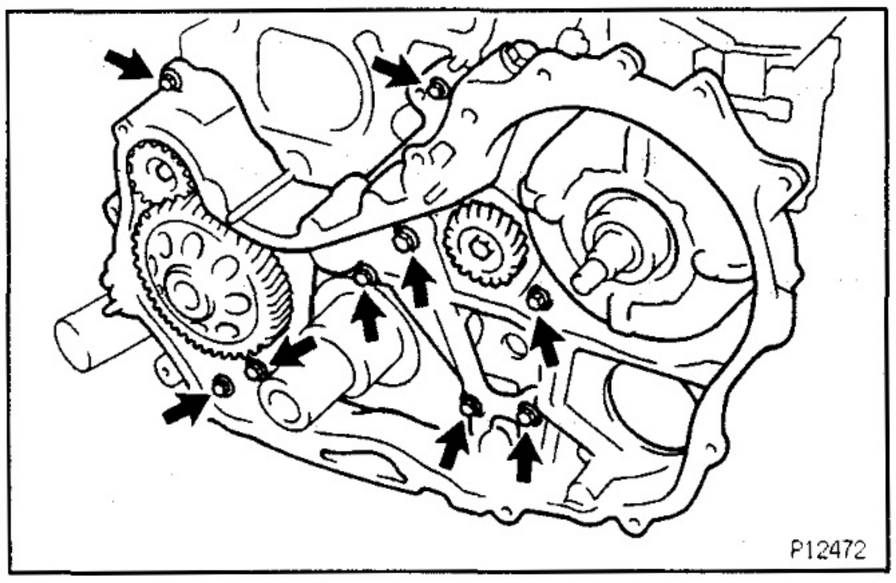
P12472

(h) Install the 8 bolts and union bolt.
Torque: 13 N·m (130 kgf·cm, 9 ft·lbf) for Bolt
Torque: 16 N·m (160 kgf·cm, 12 ft·lbf) for Union bolt

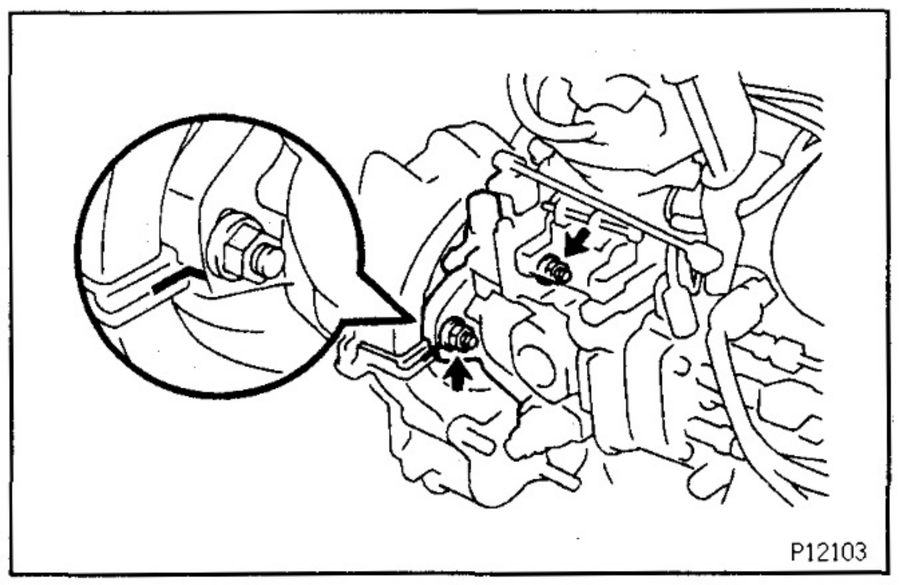
P12103

(i) Install the 2 nuts holding the injection pump to the timing gear case.
Torque: 21 N·m (210 kgf·cm, 15 ft·lbf)
(j) Check that the injection pump period lines (or match-marks) are aligned by tilting the injection pump.

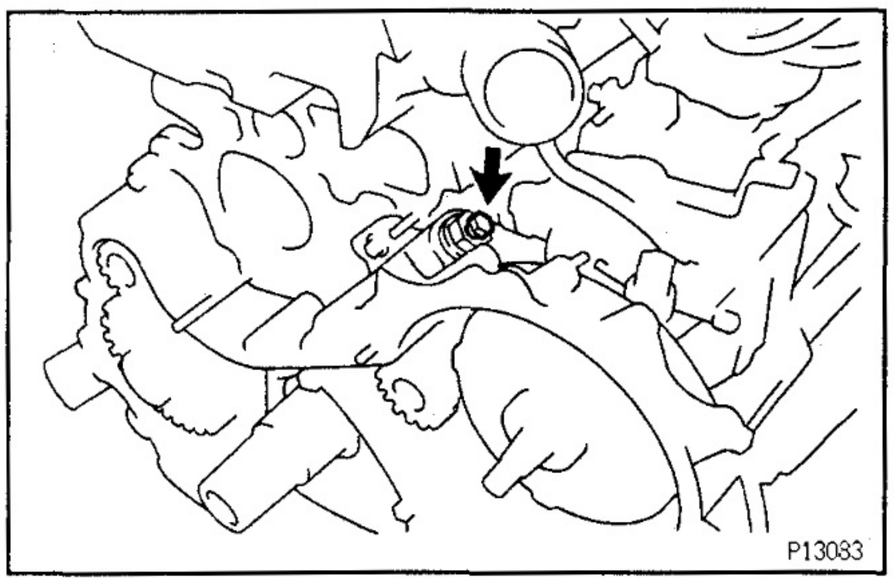
P13083

2. POUR ENGINE OIL INTO OIL PUMP

(a) Remove the taper screw plug.

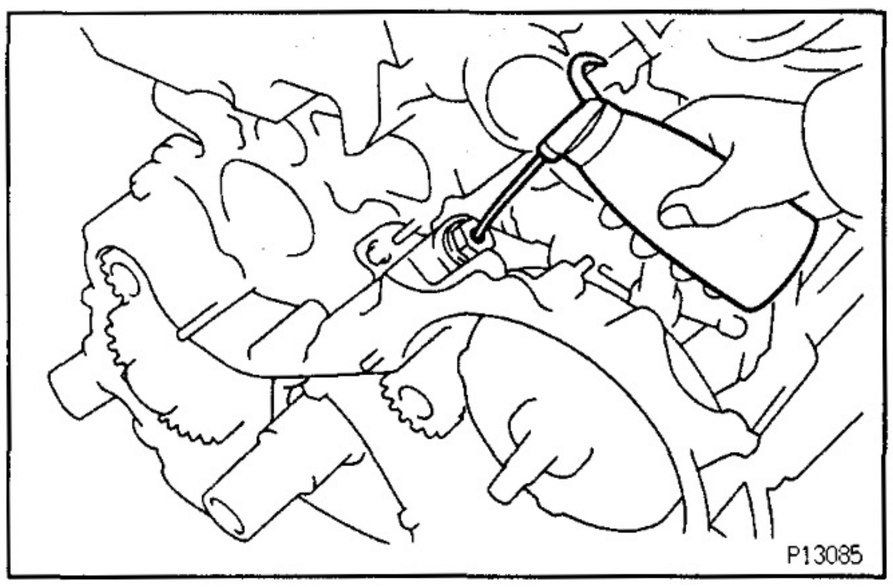
P13085

(b) Pour in approx. 20 cc (0.12 cu in.) of engine oil into the oil pump.

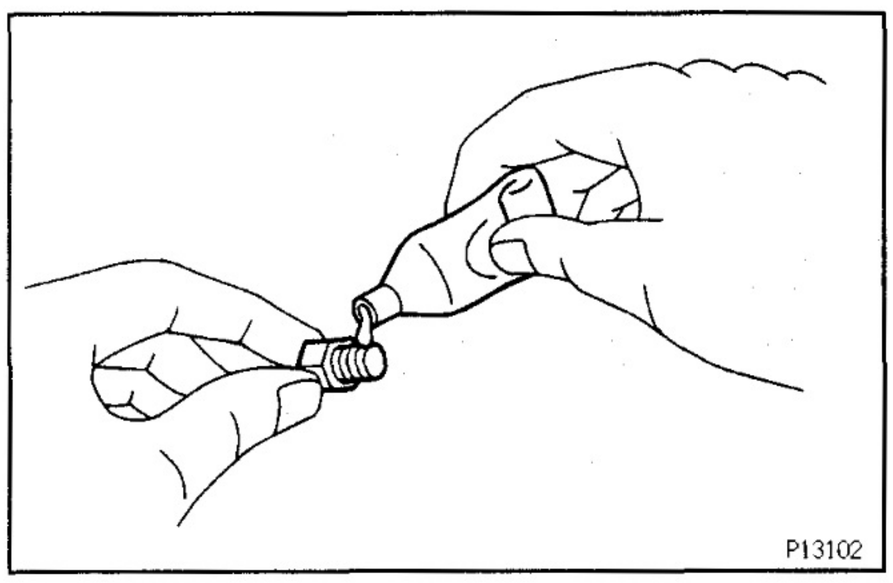

(c) Apply adheshive to 2 or 3 threads of the taper screw.
Adhesive:
Part No. 08833—00080, THREE BOND 1344, LOCTITE 242 or equivalent.

(d) Install the taper screw plug.

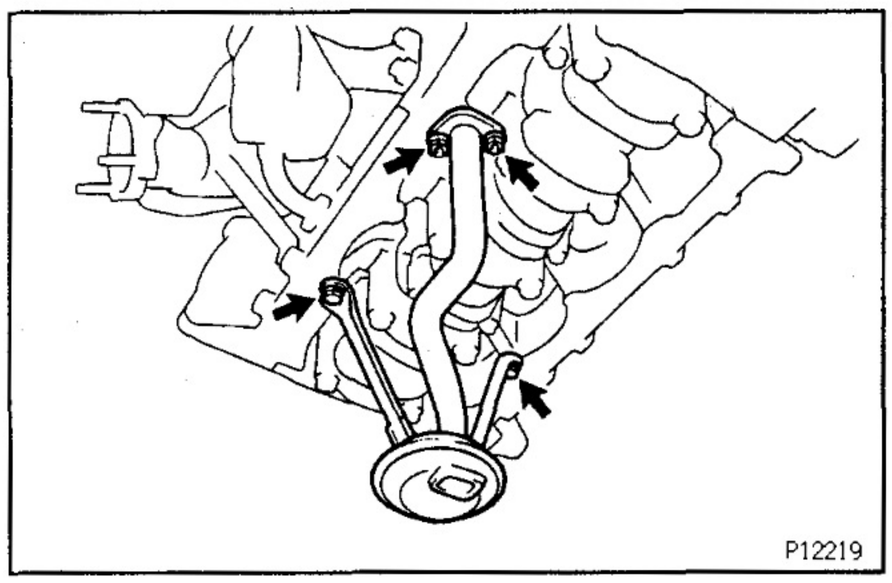

3. INSTALL OIL STRAINER

Install a new gasket and the oil strainer with the 2 bolts and 2 nuts.
Torque: 8 N·m (80 kgf·cm, 69 in.·lbf)

4. INSTALL OIL PAN

(a) Remove any old packing (FIPG) material and be careful not to drop any oil on the contact surfaces of the oil pan and cylinder block.

- Using a razor blade and gasket scraper, remove all the old packing (FIPG) material from the gasket surfaces and sealing groove.
- Thoroughly clean all components to remove all the loose material.
- Using a non—residue solvent, clean both sealing surfaces.

NOTICE: Do not use a solvent which will affect the painted surfaces.

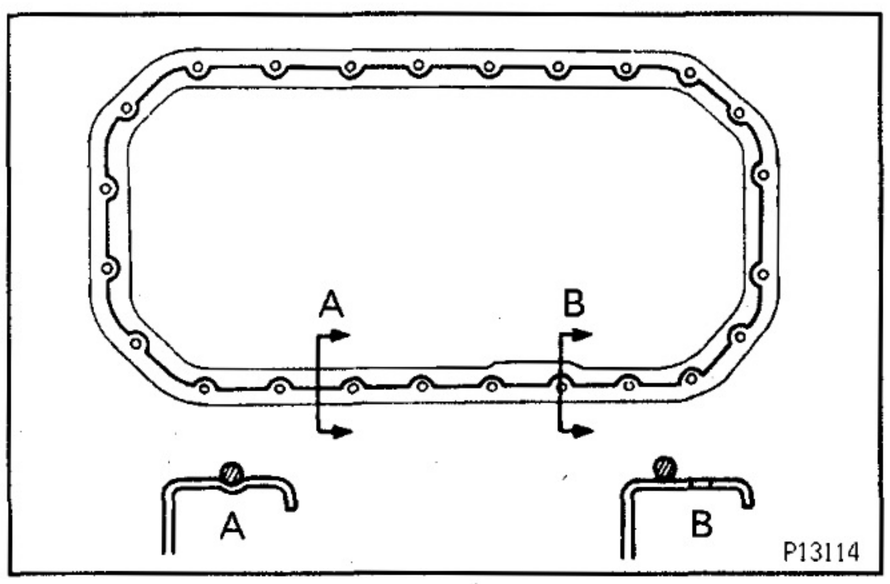

(b) Apply seal packing to the oil pan as shown in the illustration.
Seal packing:
Part No. 08826—00080 or equivalent

- Install a nozzle that has been cut to a 3 — 5 mm (0.12 — 0.20 in.) opening.
- Parts must be assembled within 5 minutes of application. Otherwise the material must be removed and reapplied.
- Immediately remove nozzle from the tube and reinstall cap.

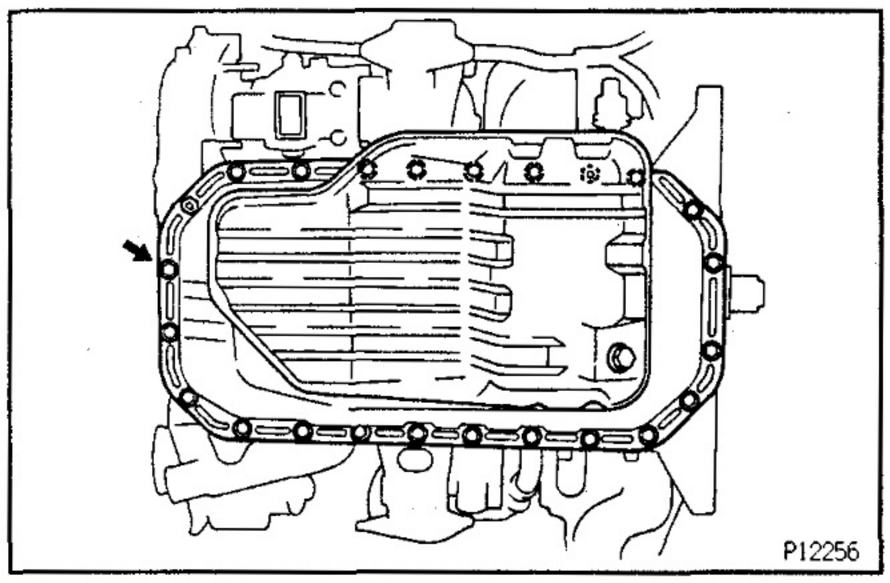

(c) Install the oil pan with the 22 bolts and 2 nuts.
Torque: 16 N·m (165 kgf·cm, 12 in.·lbf)

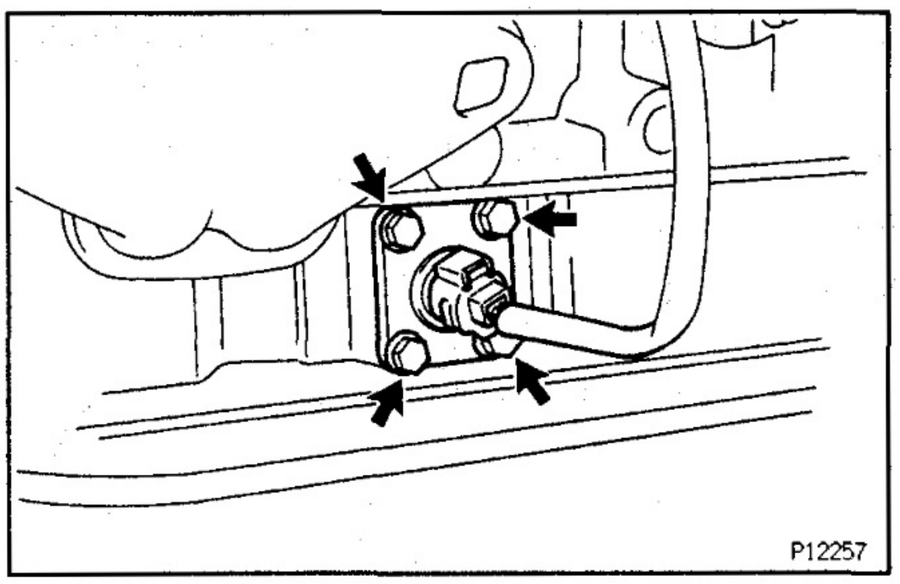

5. INSTALL OIL LEVEL SENSOR

(a) Install the oil level sensor with the 4 bolts.

(b) Connect the oil level sensor connector.

6. INSTALL WATER PUMP
(See step 1 on page EG–237)

7. INSTALL ALTERNATOR AND ALTERNATOR BRACKET
(See step 1 on page EG–237)

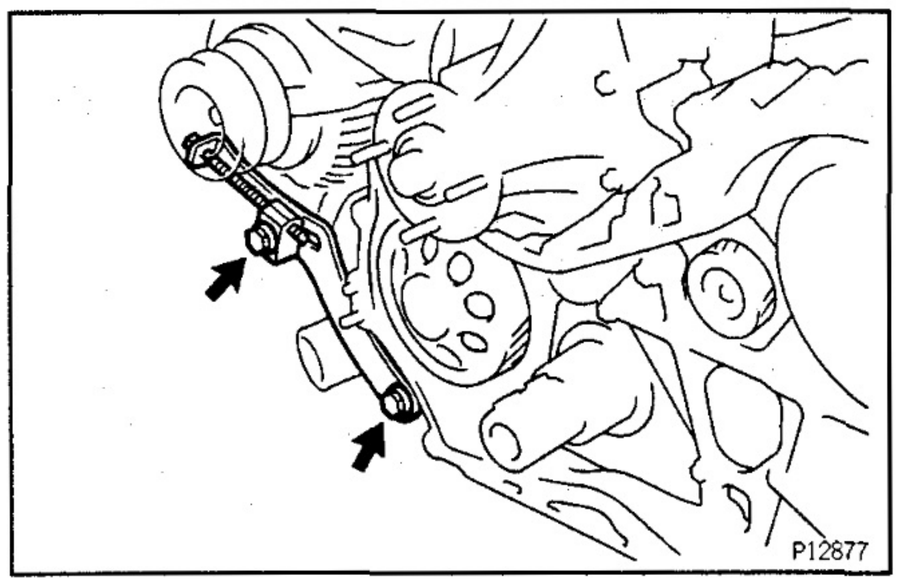

8. INSTALL ALTERNATOR ADJUSTING BAR

Install the adjusting bar with the bolt and lock bolt.

Torque: 21 N·m (210 kgf·cm, 15 in.·lbf)

9. INSTALL TIMING GEARS
(See page EG–50)

10. INSTALL TIMING BELT
(See page EG–36)

11. INSTALL WATER PUMP PULLEY, FAN AND DRIVE BELT(See step 5 on page EG–238)

12. FILL WITH ENGINE OIL

13. FILL WITH ENGINE COOLANT

14. START ENGINE AND CHECK FOR OIL LEAKS

15. RECHECK ENGINE OIL LEVEL

OIL COOLER
COMPONENTS FOR REMOVAL AND INSTALLATION

EG17D-03

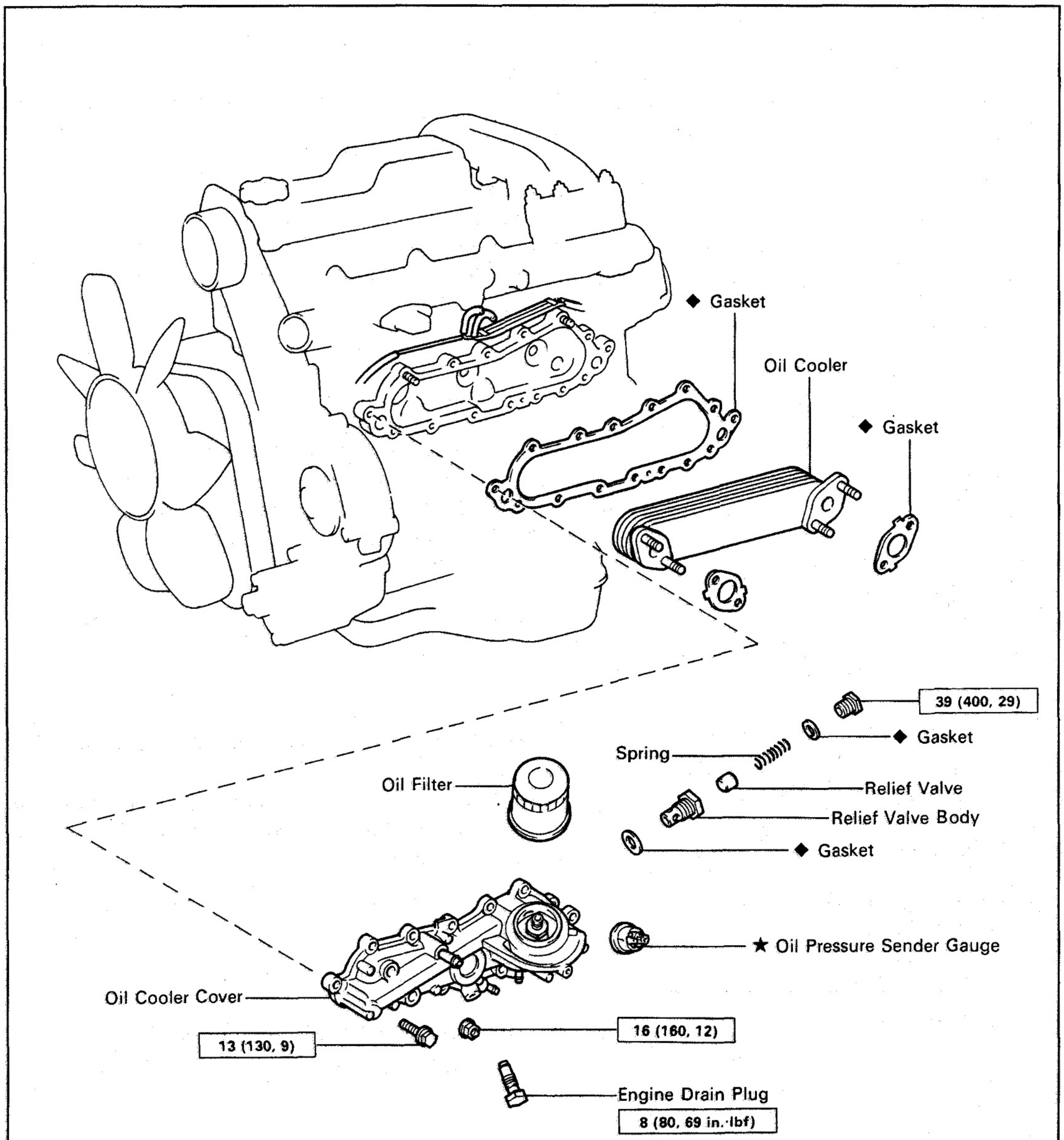

N·m (kgf·cm, ft·lbf) : Specified torque
◆ Non-reusable part
★ Precoated part

P12273

EG35E–01

OIL COOLER AND RELIEF VALVE REMOVAL

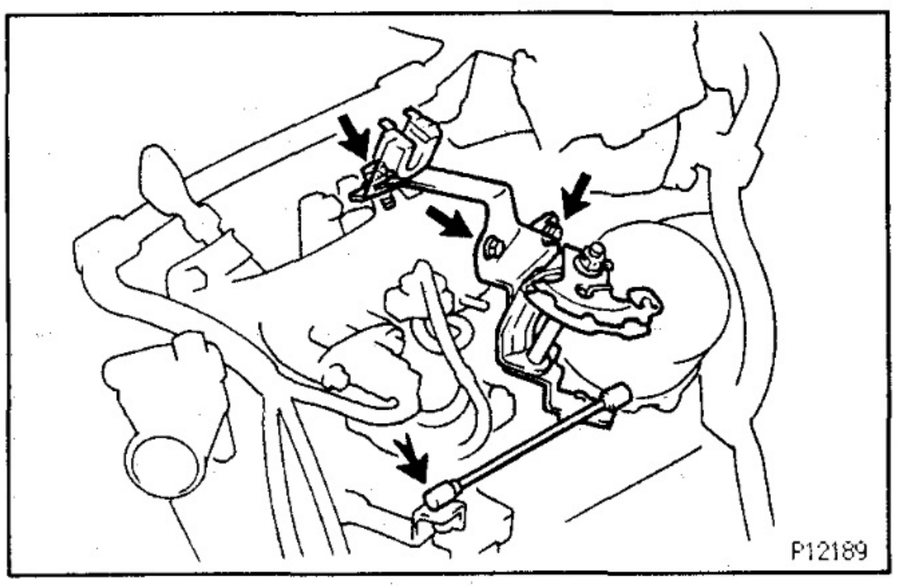
P12189

1. DRAIN ENGINE COOLANT

2. REMOVE ACCELERATOR CABLE BRACKET AND LINK

(a) Disconnect the accelerator link from the injection pump.

(b) Remove the 3 bolts and accelerator cable bracket and link.

3. REMOVE TIMING BELT
(See page EG–32)

4. REMOVE INJECTION PIPES
(See page EG–152)

5. REMOVE INJECTION PUMP
(See page EG–161)

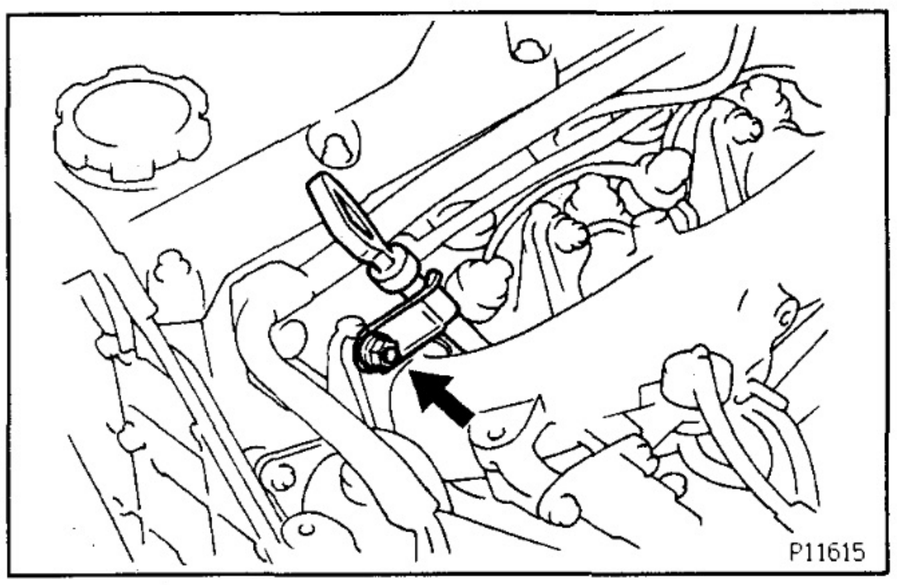
P11615

6. REMOVE OIL DIPSTICK AND GUIDE

(a) Remove the nut and oil dipstick guide assembly.

(b) Remove the O–ring from the oil dipstick guide.

7. REMOVE OIL FILTER
(See page EG–248)

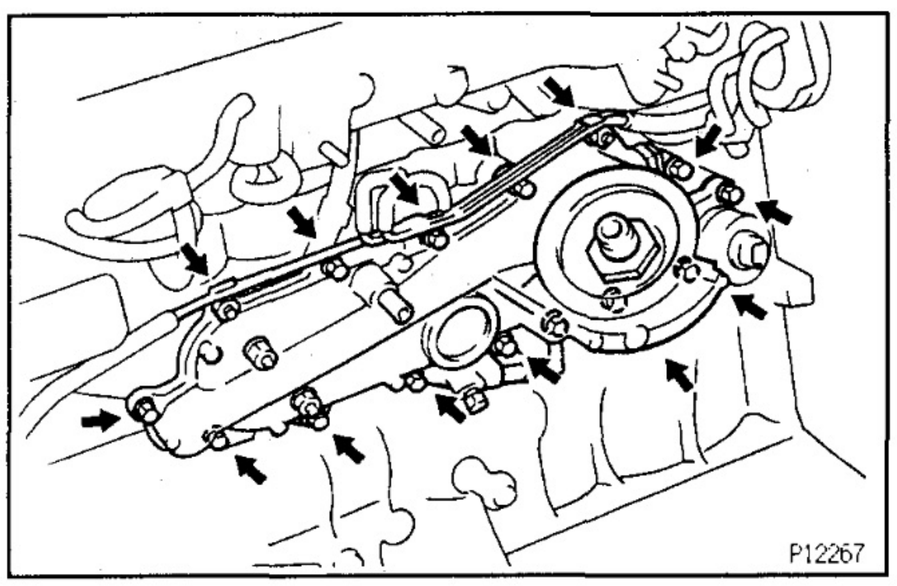
P12267

8. REMOVE OIL COOLER AND OIL COOLER COVER ASSEMBLY

(a) Remove the 2 nuts, and disconnect the vacuum pipe.

(b) Remove the 13 bolts, oil cooler, oil cooler cover assembly and gasket.

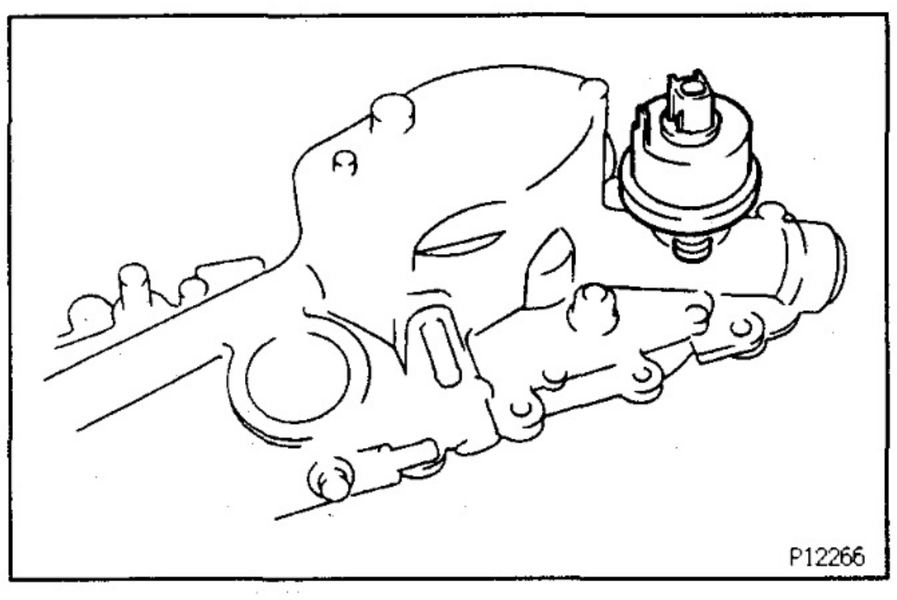
P12266

9. REMOVE OIL PRESSURE SENDER GAUGE

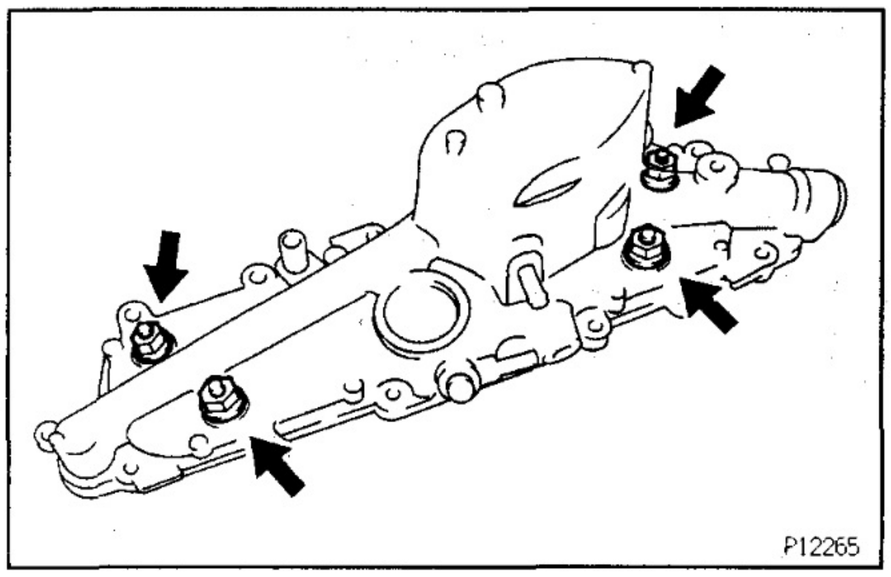

10. SEPARATE OIL COOLER AND OIL COOLER COVER

Remove the 4 nuts, oil cooler and 2 gaskets from the oil cooler cover.

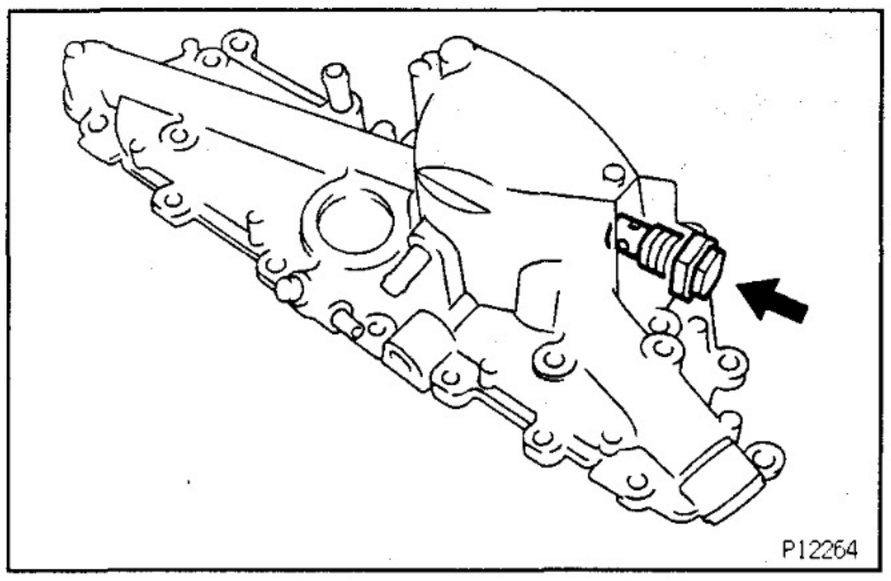

11. REMOVE RELIEF VALVE

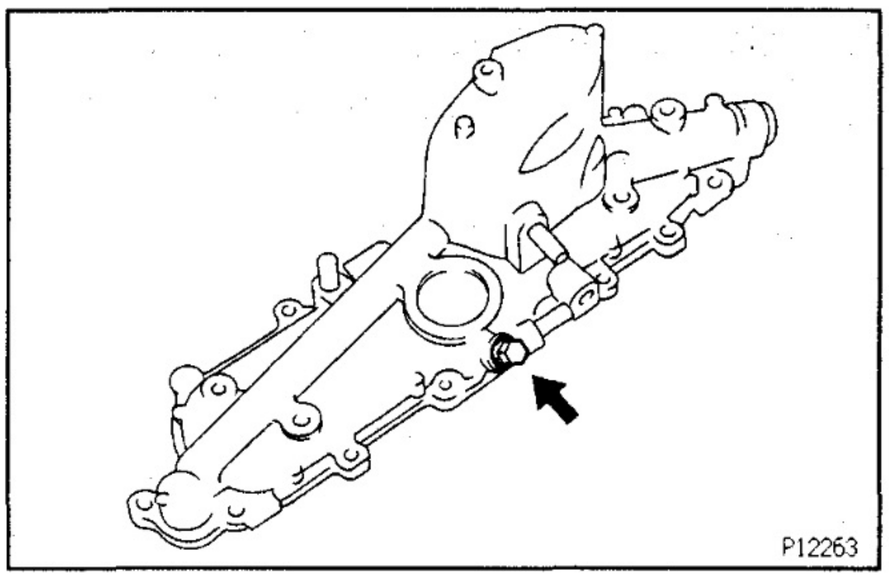

12. REMOVE DRAIN PLUG

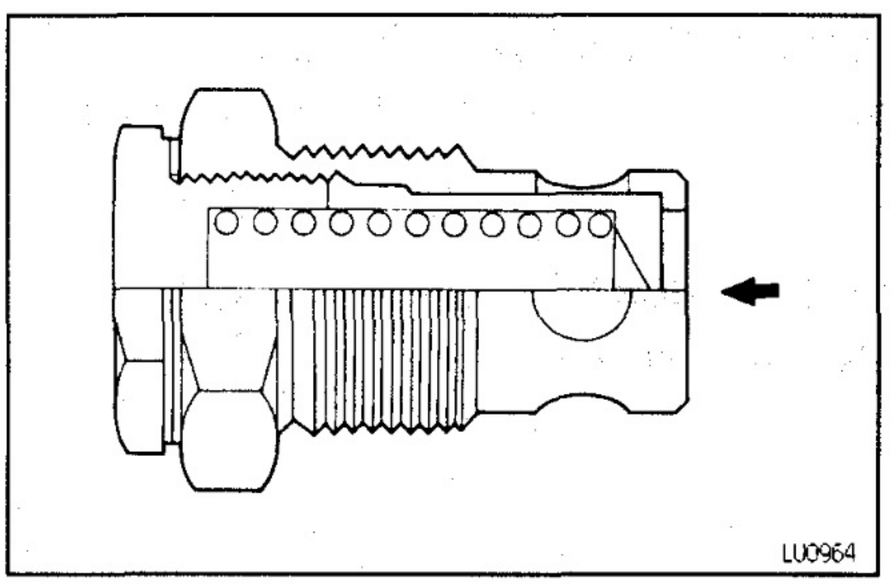

OIL COOLER AND RELIEF VALVE INSPECTION

EG2K0-02

1. INSPECT RELIEF VALVE

Push the valve with a wooden stick to check if it is stuck.

If stuck, replace the relief valve.

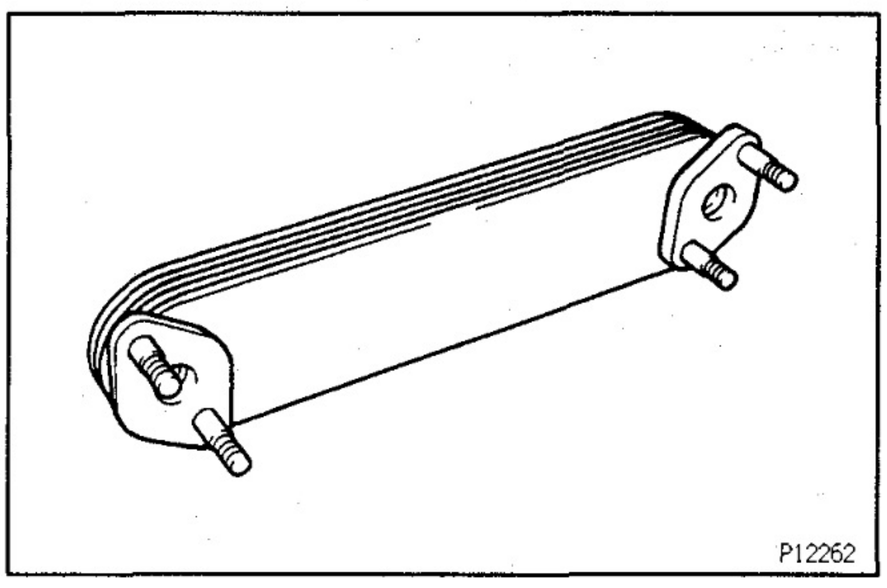

2. INSPECT OIL COOLER

Check the oil cooler for damage or clogging.

If necessary, replace the oil cooler.

EG35F–01

OIL COOLER AND RELIEF VALVE INSTALLATION

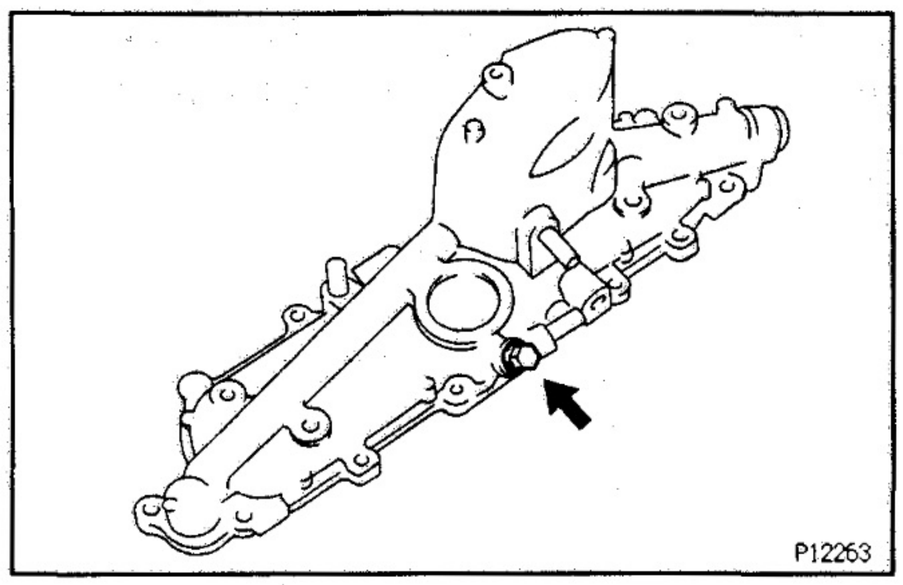

(See Components for Removal and Installation)

1. INSTALL ENGINE DRAIN PLUG

Torque: 8 N·m (80 kgf·cm, 69 in.·lbf)

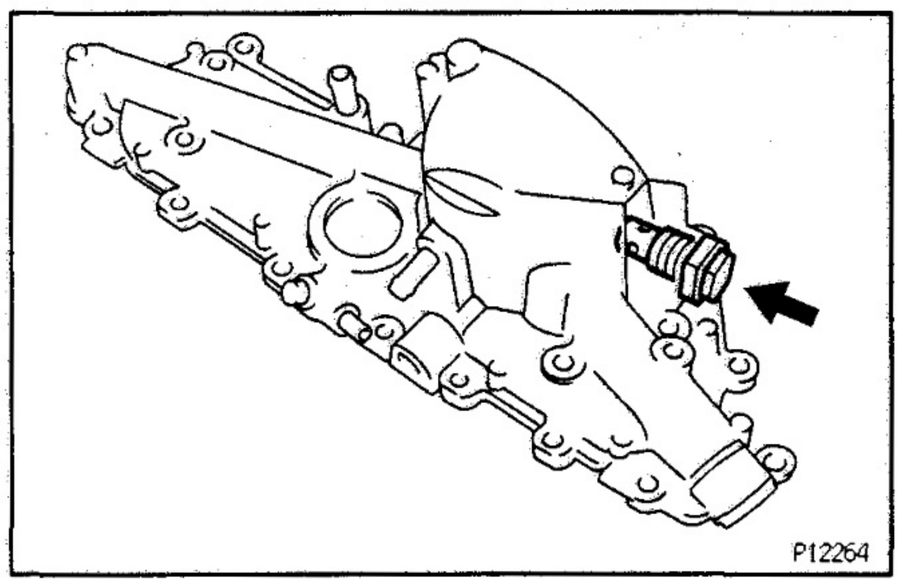

2. INSTALL RELIEF VALVE

Install a new gasket with the relief valve.

Torque: 39 N·m (400 kgf·cm, 29 ft·lbf)

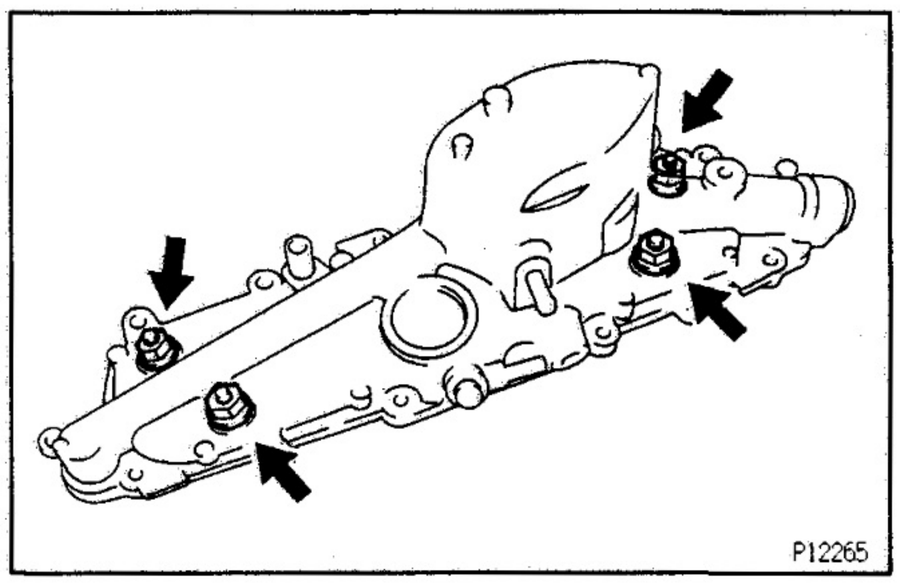

3. ASSEMBLY OIL COOLER AND OIL COOLER COVER

Install 2 new gaskets and the oil cooler to the oil cooler cover with the 4 nuts.

Torque: 16 N·m (160 kgf·cm, 12 ft·lbf)

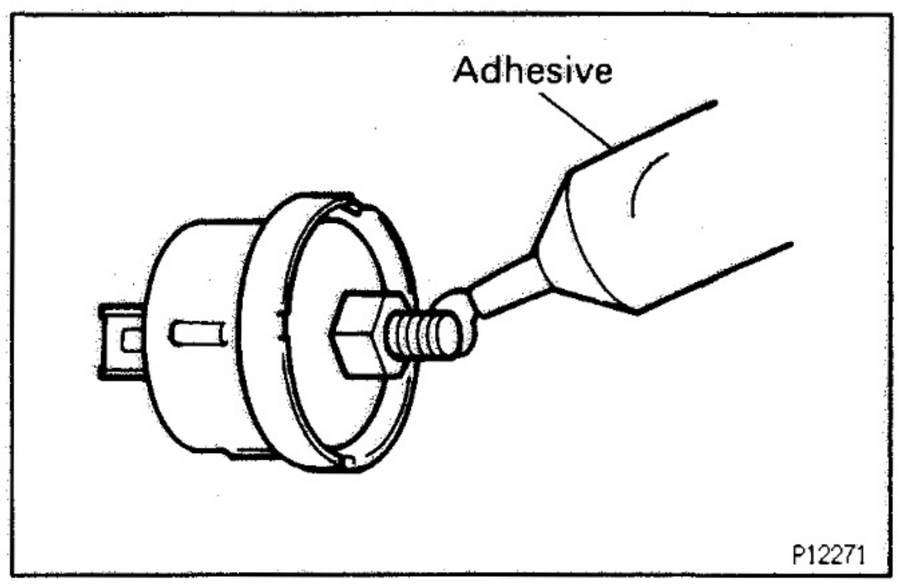

4. INSTALL OIL PRESSURE SENDER GAUGE

(a) Apply adhesive to 2 or 3 threads of the oil pressure sender gauge.

Adhesive:

Part No. 08833–00080, THREE BOND 1344, LOCTITE 242 or equivalent

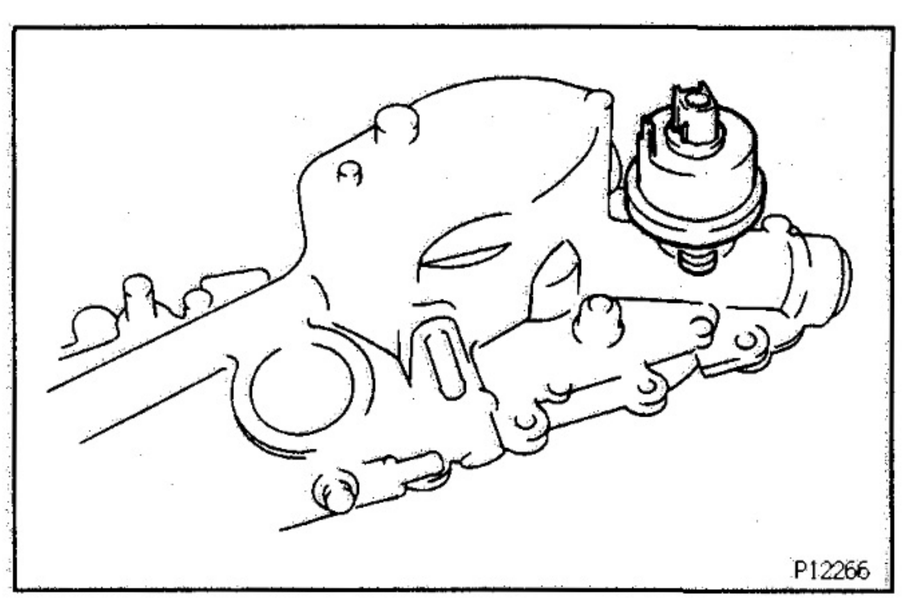

(b) Install the oil pressure sender gauge.

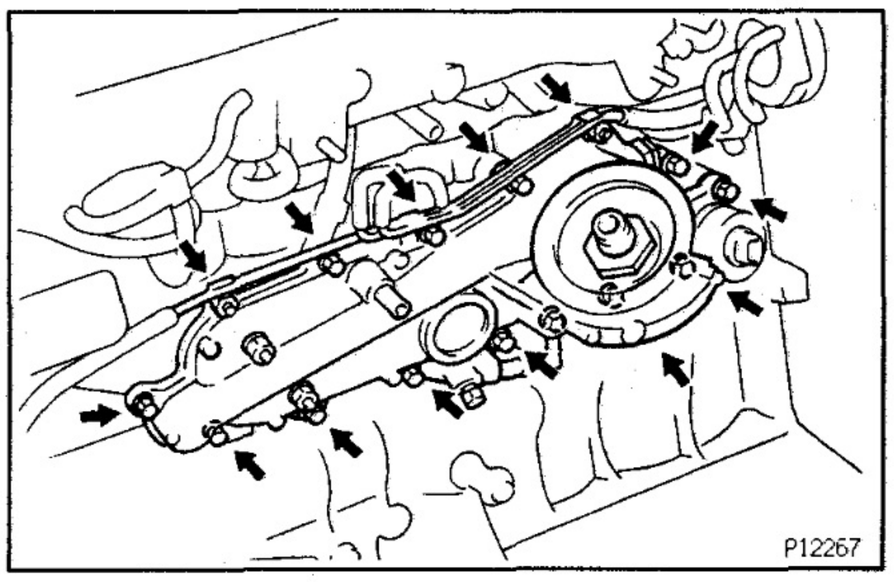

5. INSTALL OIL COOLER AND OIL COOLER COVER ASSEMBLY

(a) Install a new gasket, the oil cooler and oil cooler cover assembly with the 13 bolts.
Torque: 13 N·m (130 kgf·cm, 9 ft·lbf)

(b) Connect the vaccum pipe with the 2 nuts.
Torque: 13 N·m (130 kgf·cm, 9 ft·lbf)

6. INSTALL OIL FILTER
(See page EG−248)

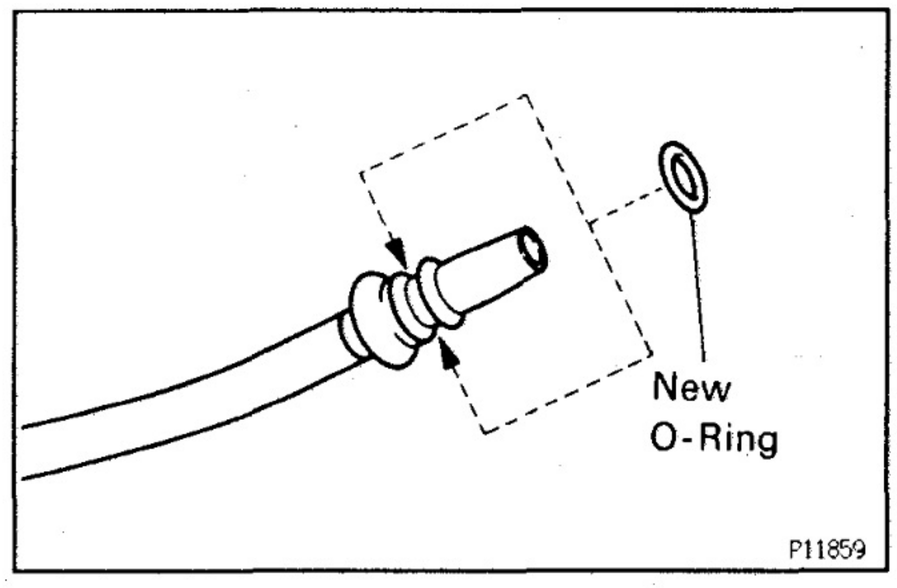

7. INSTALL OIL DIPSTICK GUIDE AND OIL DIPSTICK

(a) Install a new O−ring to the dipstick guide.

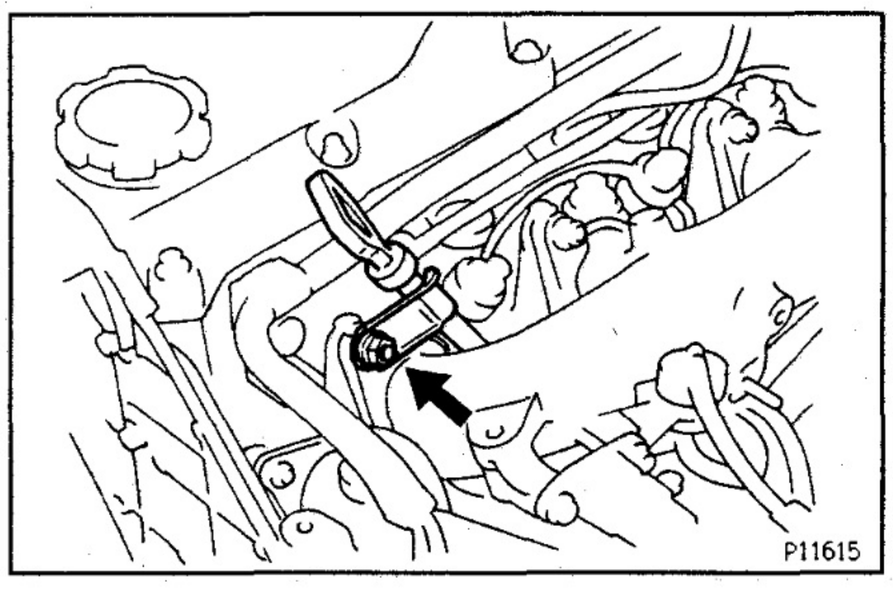

(b) Install the oil dipstick guide assembly with the nut.
Torque: 29 N·m (300 kgf·cm, 22 ft·lbf)

8. INSTALL INJECTION PUMP
(See page EG−218)

9. INSTALL INJECTION PIPES
(See page EG−158)

10. INSTALL TIMING BELT
(See page EG−36)

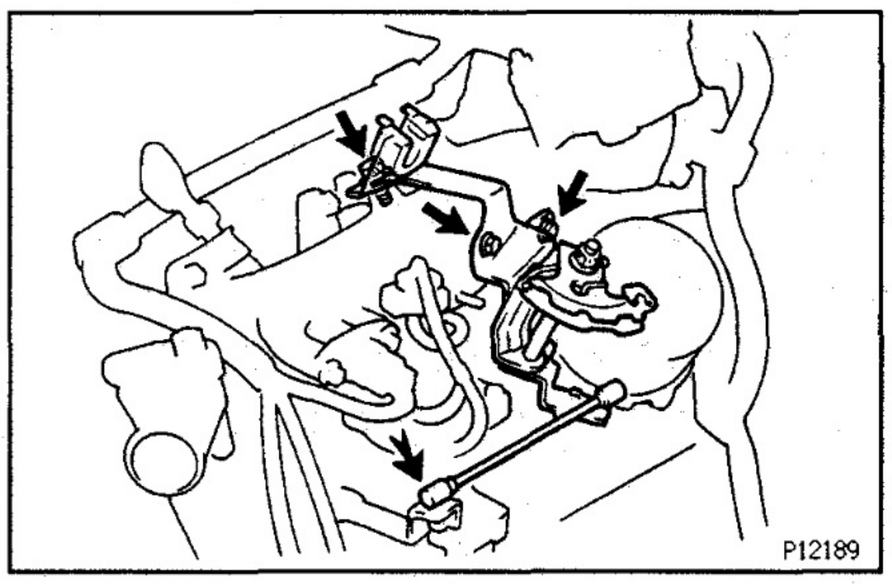

11. INSTALL ACCELERATOR CABLE BRACKET AND LINK

(a) Install the accelerator cable bracket and link with the 3 bolts.

(b) Connect the accelerator link to the injection pump.

12. FILL WITH ENGINE COOLANT

13. START ENGINE AND CHECK FOR LEAKS

14. CHECK ENGINE OIL LEVEL

OIL NOZZLE

COMPONENTS FOR REMOVAL AND INSTALLATION

EG2K2-03

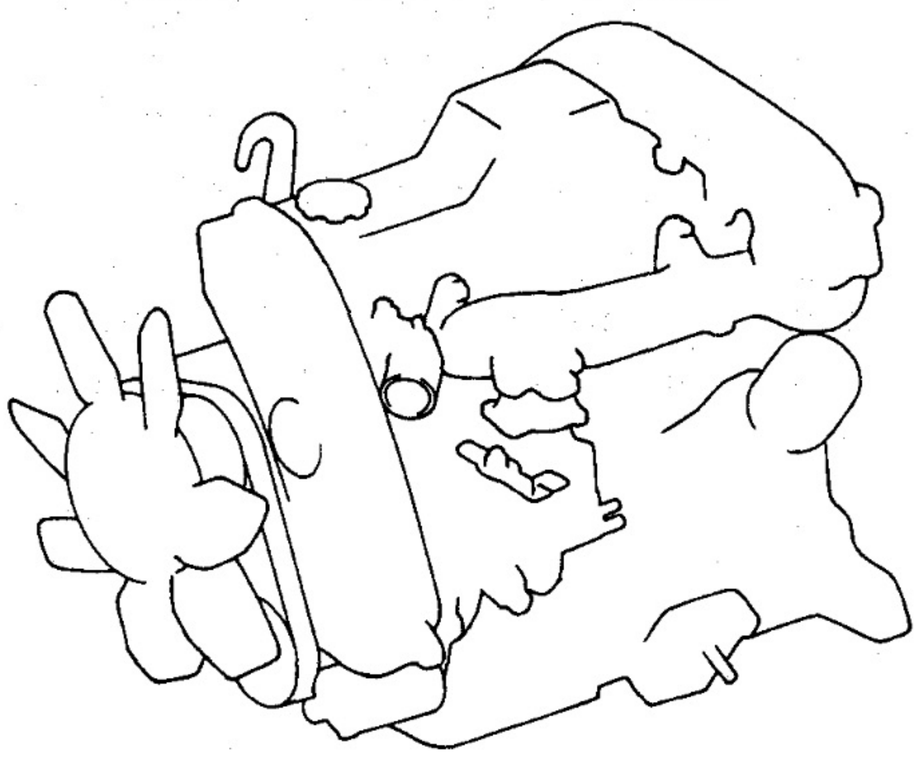

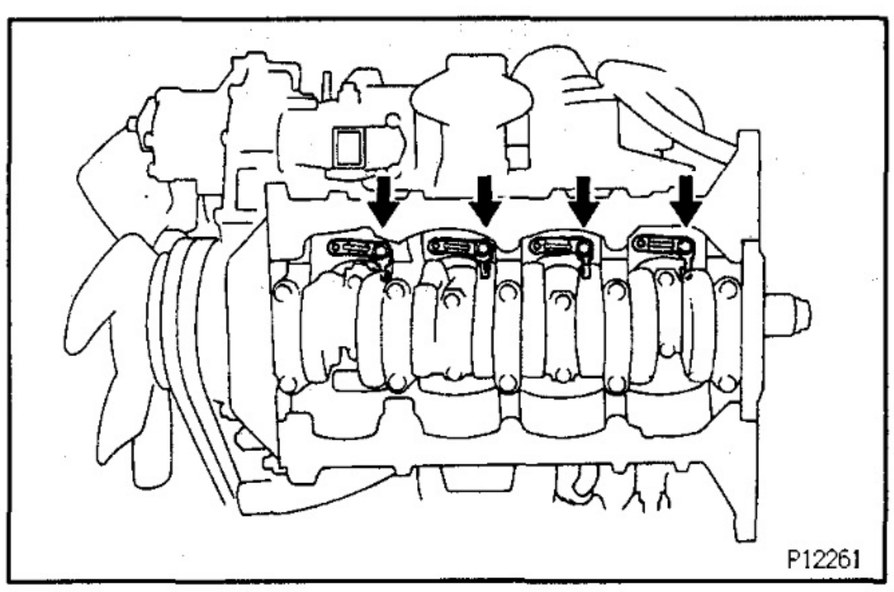

EG2K3-04

OIL NOZZLES REMOVAL

1. **DRAIN ENGINE OIL**
2. **REMOVE OIL PAN**
   (See step 9 on page EG–251)
3. **REMOVE CHECK VALVE AND OIL NOZZLES**
   Remove the 4 check valves and oil nozzles.

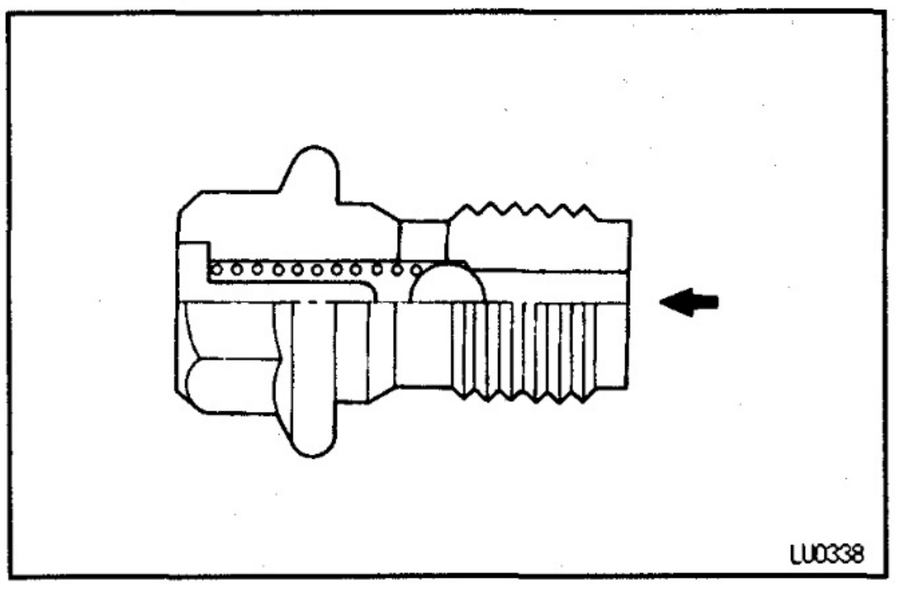

EG35G-01

OIL NOZZLES INSPECTION

1. **INSPECT CHECK VALVES**
   Push the valve with a wooden stick to check if it is stuck.
   If stuck, replace the check valve.

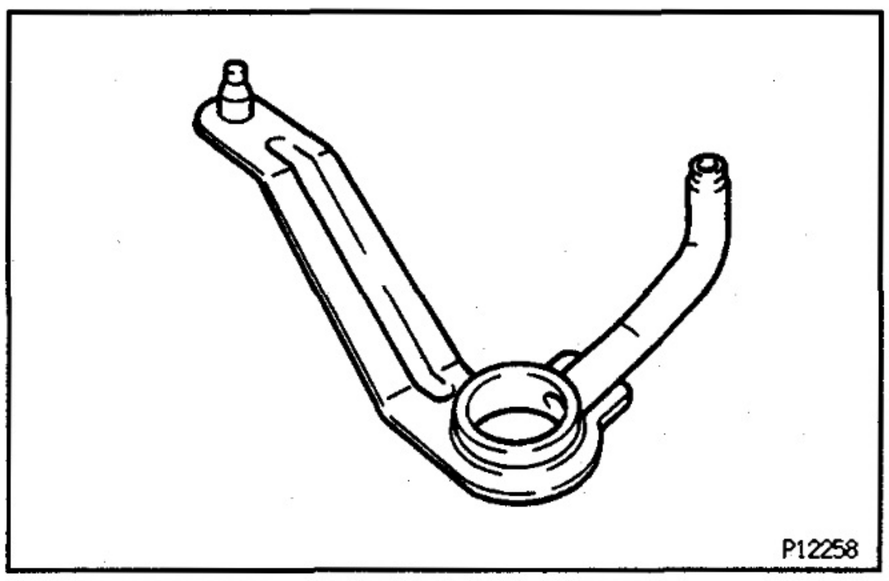

2. INSPECT OIL NOZZLES

Check the oil nozzles for damage or clogging. If necessary, replace the oil nozzle.

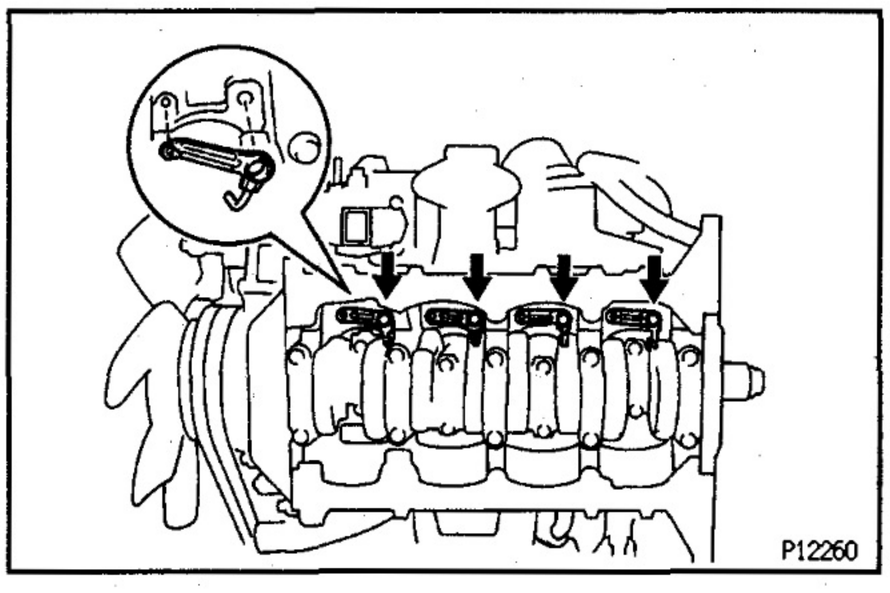

EG36H-01

OIL NOZZLES INSTALLATION

(See Components for Removal and Installation)

1. INSTALL OIL NOZZLES AND CHECK VALVES

(a) Align the pin of the oil nozzle with the pin hole of the cylinder block.

(b) Install the oil nozzle with the check valve. Install the 4 oil nozzles and check valves.

Torque: 26 N·m (260 kgf·cm, 19 ft·lbf)

2. INSTALL OIL PAN

(See step 4 on page EG–257)

3. FILL WITH ENGINE OIL

4. START ENGINE AND CHECK FOR LEEAKS

SERVICE SPECIFICATIONS

SERVICE DATA

EG15A–07

Oil presuure	At idle speed (normal operating temperature)	29 kPa (0.3 kgf/cm², 43 psi) or more
	At 3,000 rpm (normal operating temperature)	250 – 600 kPa (2.5 – 6.1 kgf/cm², 18 – 42 psi)
Oil pump	Body clearance (STD)	0.100 – 0.170 mm (0.0039 – 0.0067 in.)
	Body clearance Maximum)	0.20 mm (0.0079 in.)
	Tip clearance (STD)	0.060 – 0.160 mm (0.0024 – 0.0063 in.)
	Tip clearance (Maximum)	0.21 mm (0.0083 in.)
	Side clearance (STD)	0.030 – 0.090 mm (0.0012 – 0.0035 in.)
	Side clearance (Maximum)	0.15 mm (0.0059 in.)

TORQUE SPECIFICATIONS

EG15C–08

Part tightened		N·m	kgf·cm	ft·lbf
Oil pan x Drain plug		34	350	25
Relief valve x Oil pump		42	425	31
Oil pump x Cylinder block	Bolt	13	130	9
	Union bolt	16	160	12
Injection pump x Oil pump		21	210	15
Oil strainer x Cylinder block		8	80	69 in.·lbf
Oil pan x Cylinder block		16	165	12
Alternator adjusting bar x Oil pump		21	210	15
Oil cooler cover x Drain plug		8	80	69 in.·lbf
Oil cooler cover x Oil cooler		16	160	12
Oil cooler cover x Cylinder block		13	130	9
Dipstick guide x Intake manifold		29	300	22
Oil nozzle x Cylinder block		26	260	19

STARTING SYSTEM

DESCRIPTION ..... ST– 2
SYSTEM CIRCUIT ..... ST– 3
OPERATION ..... ST– 3
PREPARATION ..... ST– 4
STARTER (2.2 kW) ..... ST– 5
STARTER (2.7 kW) ..... ST– 16
STARTER RELAY ..... ST– 27
PRE–HEATING SYSTEM ..... ST– 28
GLOW PLUG ..... ST– 33
SERVICE SPECIFICATIONS ..... ST– 37

DESCRIPTION

The starter is a reduction type with a small, high—speed motor used to drive the pinion gear. ST05S—01

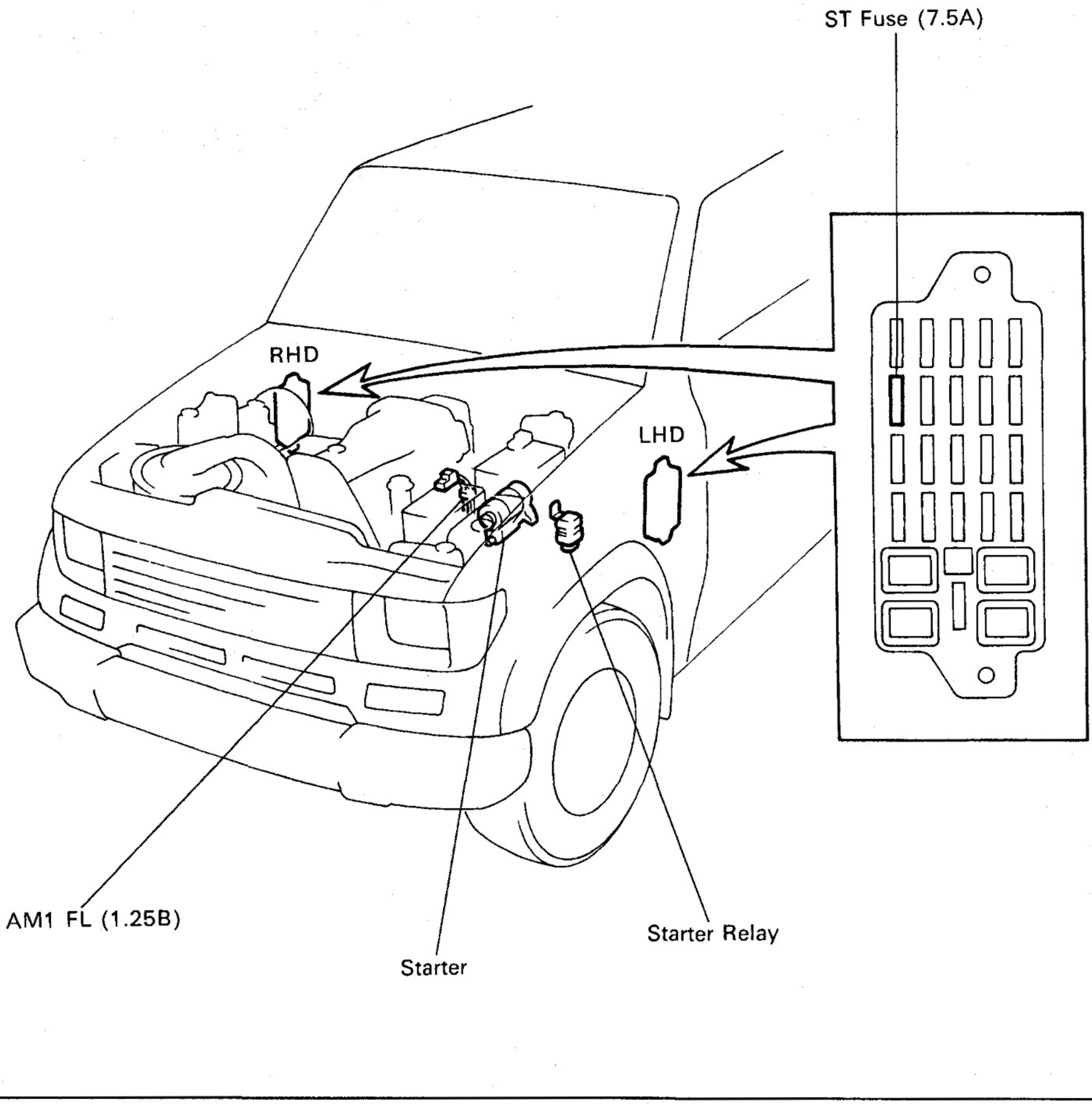

P13132

SYSTEM CIRCUIT

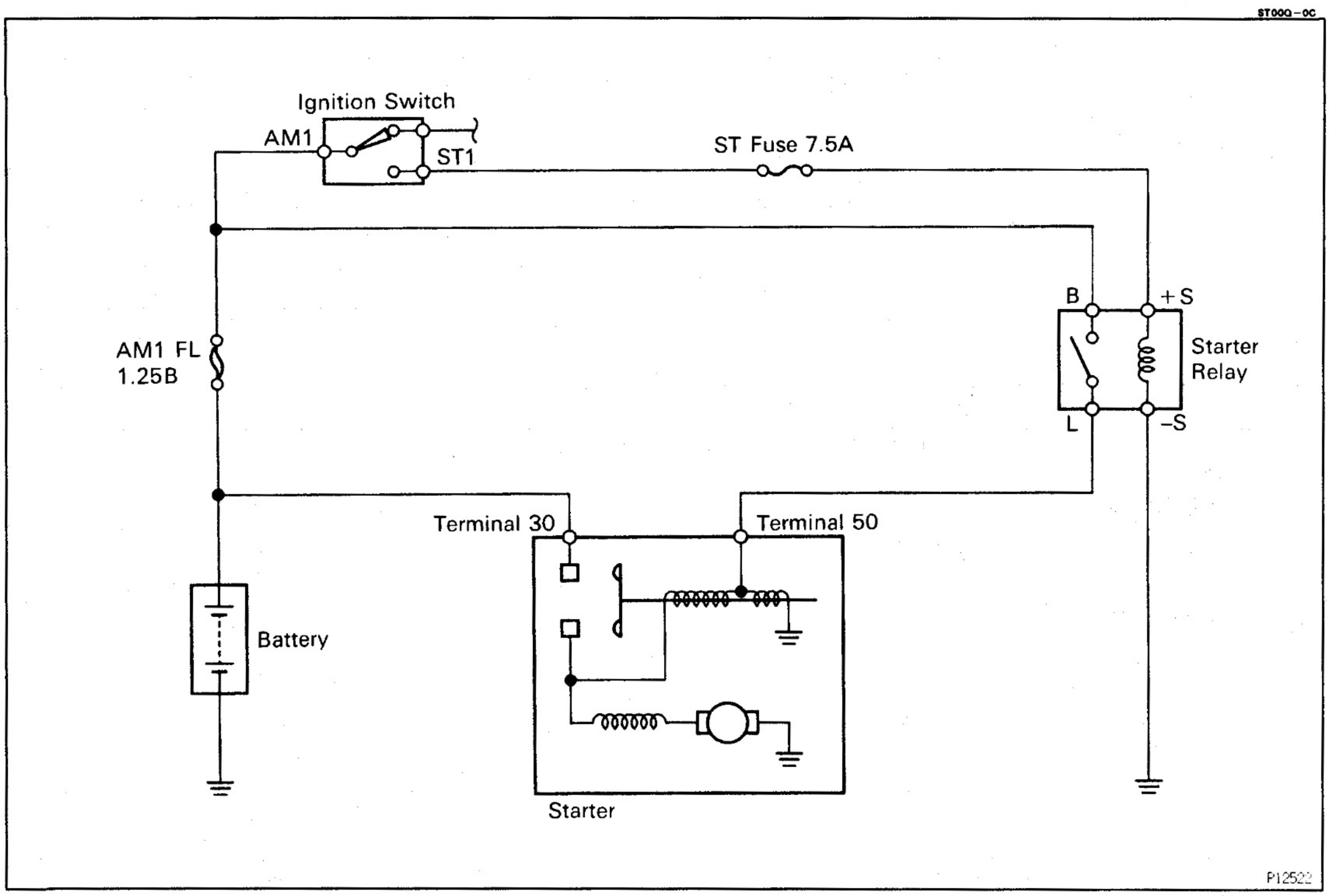

OPERATION

ST00R-04
When the ignition switch is turned to START position, current flows from terminal 50 to the coil of the solenoid and the plunger is pulled by the magnetic force of the coil. When the plunger is pulled to the left as shown above, the contact plate of the plunger allows current from the battery to flow directly from terminal 30 to the motor, and the starter rotates.
When the engine is running and the ignition switch is returned to ON, the magnetic force of the coil disappears and the contact plate of the plunger is returned to its original position by the return spring. Battery voltage no longer flows from terminal 30, so the motor stops.

PREPARATION

SST (SPECIAL SERVICE TOOLS)

ST00S–06

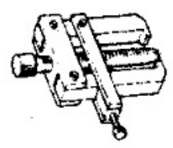	09286–46011	Injection Pump Spline Shaft Puller	
	09820–00030	Alternator Rear Bearing Replacer	Armature rear bearing for 2.7 kW type
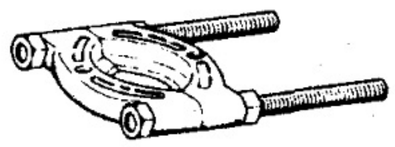	09950–00020	Bearing Remover	Armature rear bearing for 2.2 kW type

ST00T–01

RECOMMENDED TOOLS

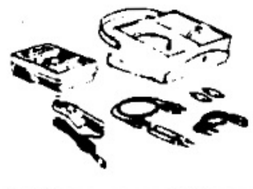	09082–00015	TOYOTA Electrical Tester	

ST00U–01

EQUIPMENT

Dial indicator	Commutator
Magnetic finger	
Pull scale	Brush spring
Sandpaper	Commutator
Torque wrench	
V–block	
Vernier calipers	Commutator, Brush

STARTER (2.2 kW)

COMPONENTS FOR DISASSEMBLY AND ASSEMBLY

ST00W-0D

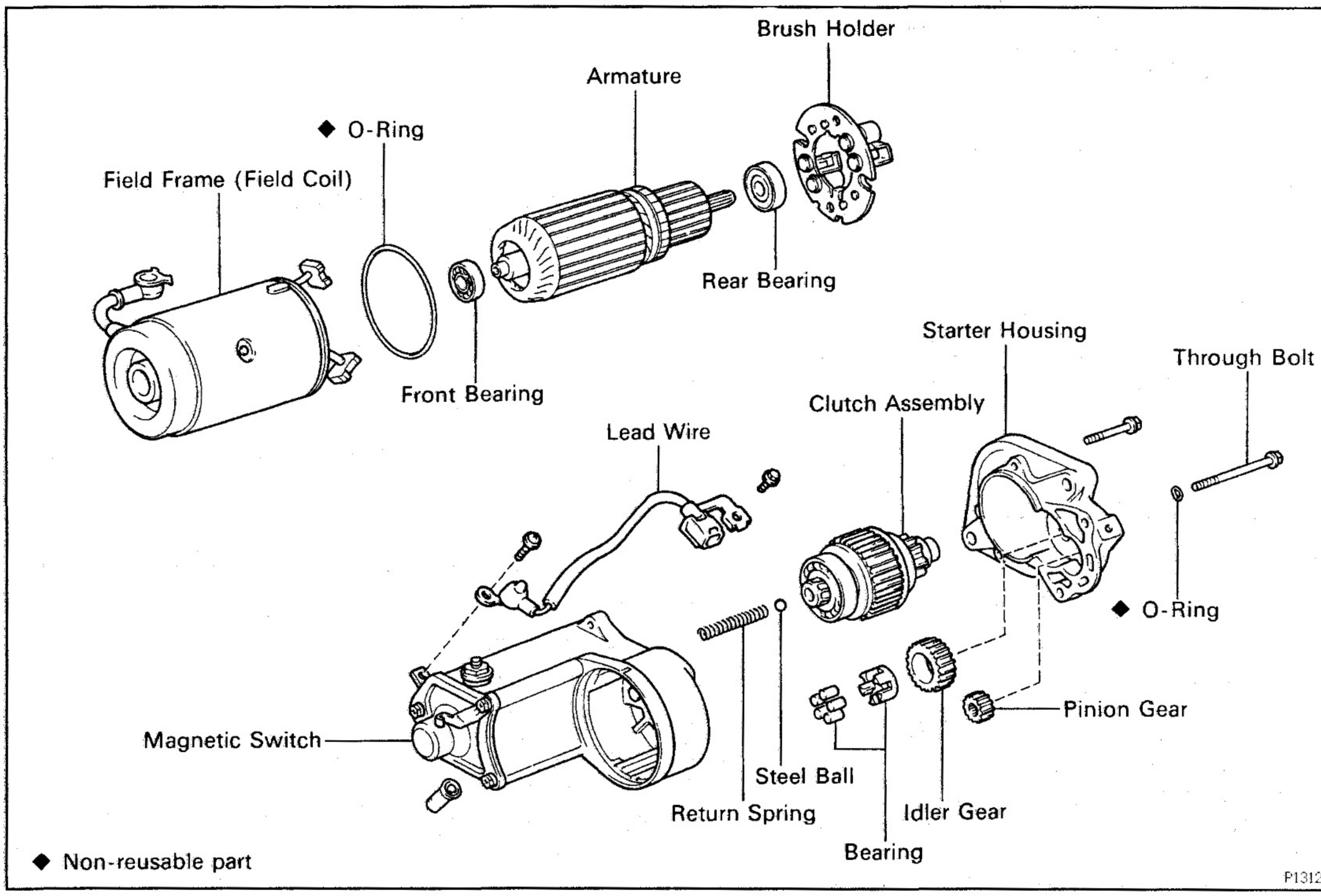

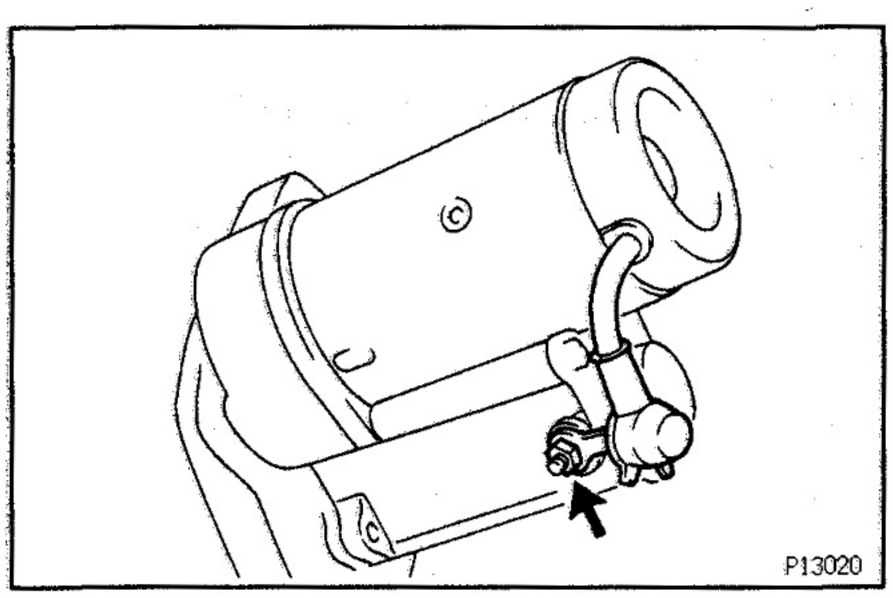

ST05T-01

STARTER DISASSEMBLY

1. REMOVE FIELD FRAME AND ARMATURE

(a) Remove the nut, and disconnect the lead wire from the magnetic switch terminal.

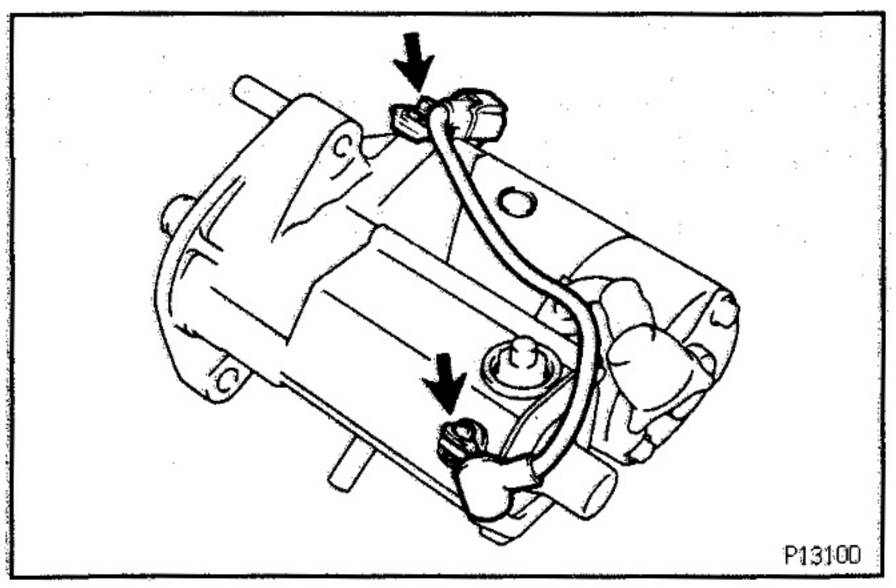

(b) Remove the bolt, screw and the lead wire from the terminal 50 and starter housing.

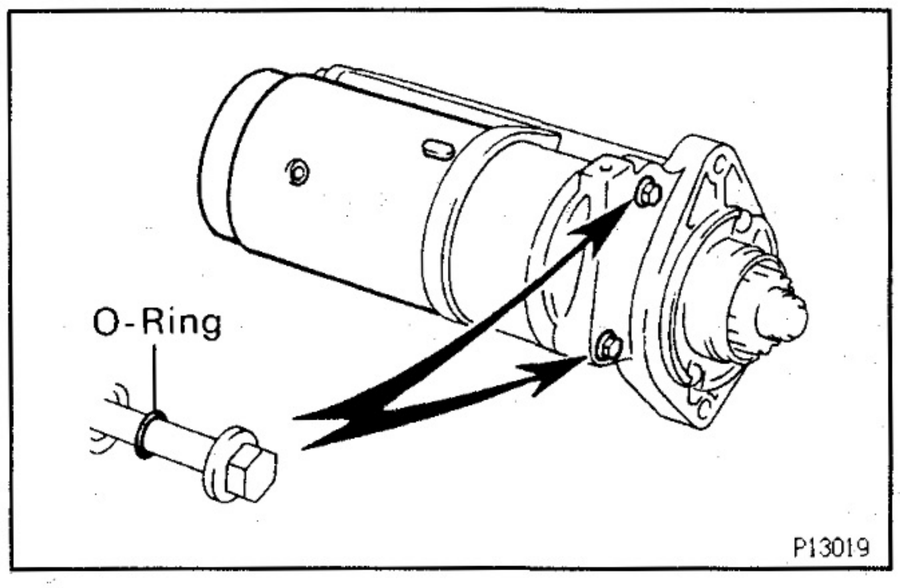

(c) Remove the 2 through bolts and O–rings.
(d) Pull out the field frame with the armature from the magnetic switch assembly.
(e) Remove the O–ring from the field frame.

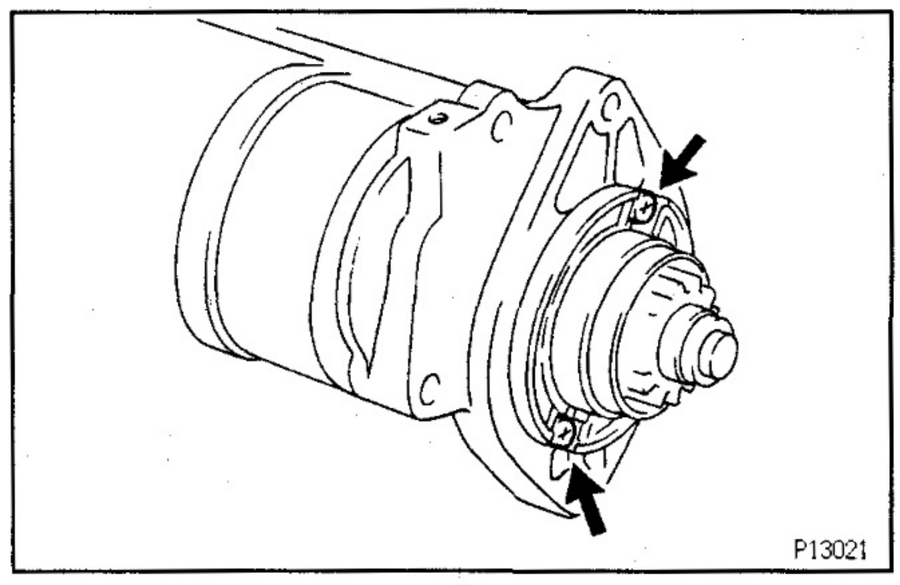

2. REMOVE STARTER HOUSING, CLUTCH ASSEMBLY AND GEARS

(a) Remove the 2 screws.

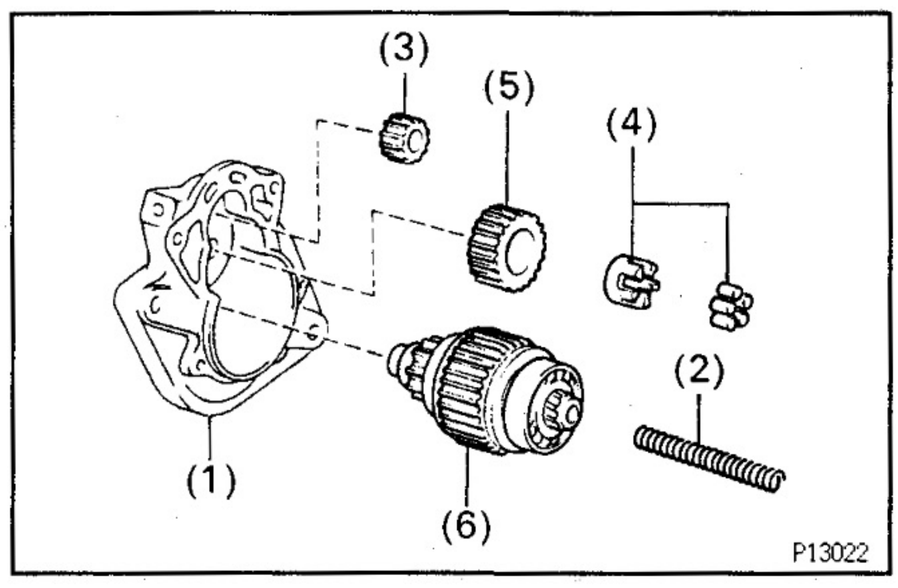

(b) Remove the following parts from the magnetic switch assembly:
(1) Starter housing
(2) Return spring
(3) Pinion gear
(4) Bearing
(5) Idler gear
(6) Clutch assembly

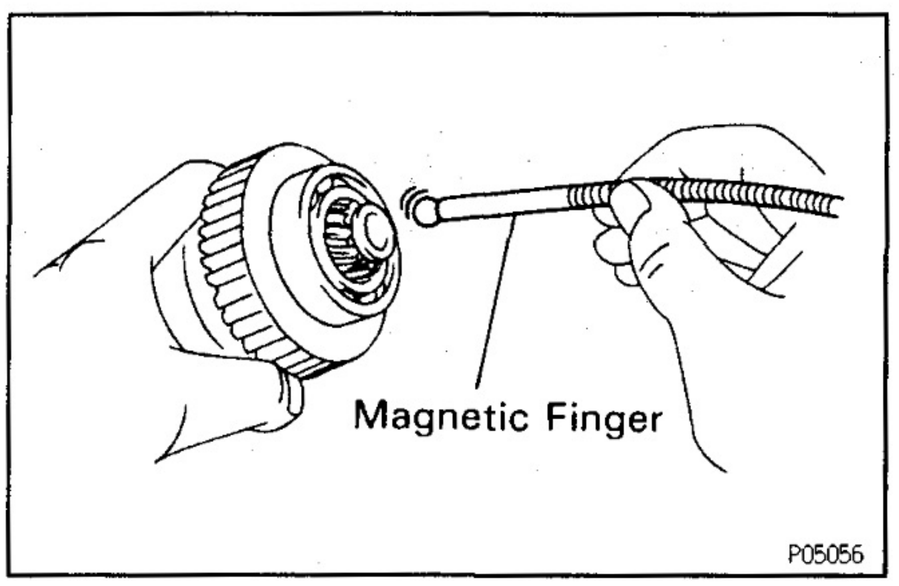

3. REMOVE STEEL BALL

Using a magnetic finger, remove the steel ball from the clutch shaft hole.

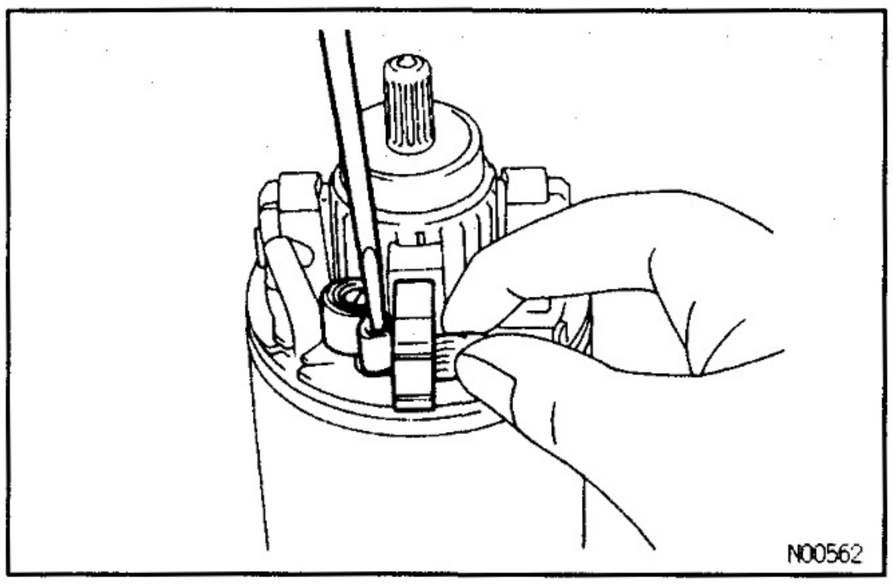

4. REMOVE BRUSH HOLDER

Using a screwdriver, hold the spring back and disconnect the brush from the brush holder. Disconnect the 4 brushes and remove the brush holder.

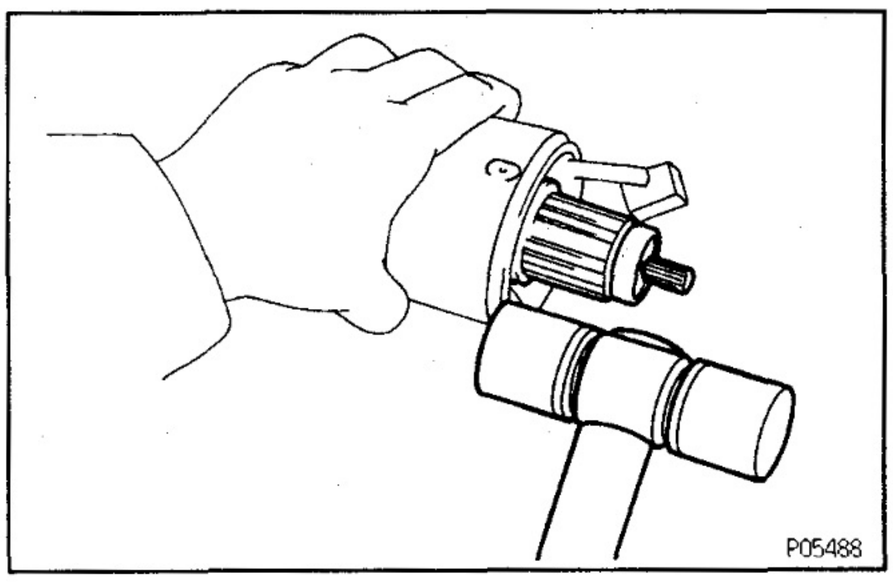

5. REMOVE ARMATURE FROM FIELD FRAME

Using a plastic hammer, tap the frame end to remove the armature from the field frame.

ST02P–03

STARTER INSPECTION AND REPAIR

Armature Coil

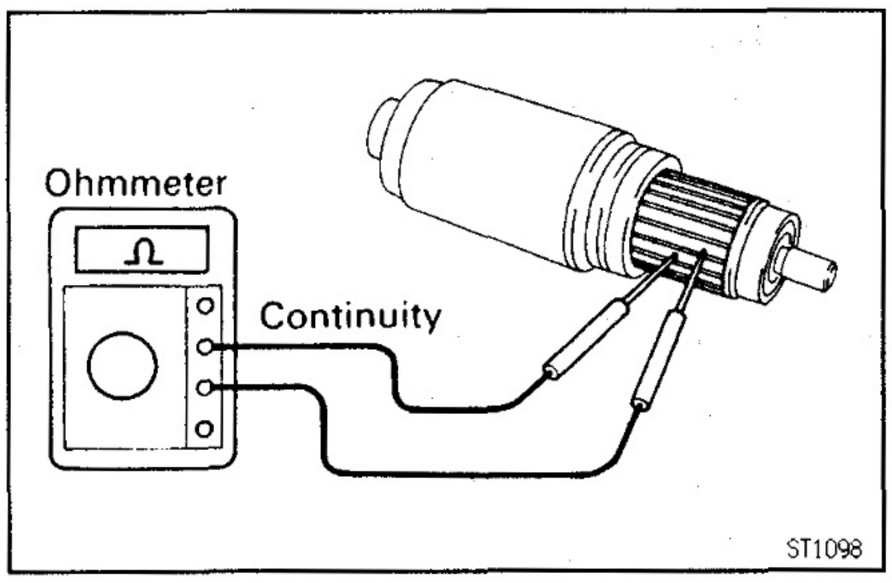

1. INSPECT COMMUTATOR FOR OPEN CIRCUIT

Using an ohmmeter, check that there is continuity between the segments of the commutator.

If there is no continuity between any segment, replace the armature.

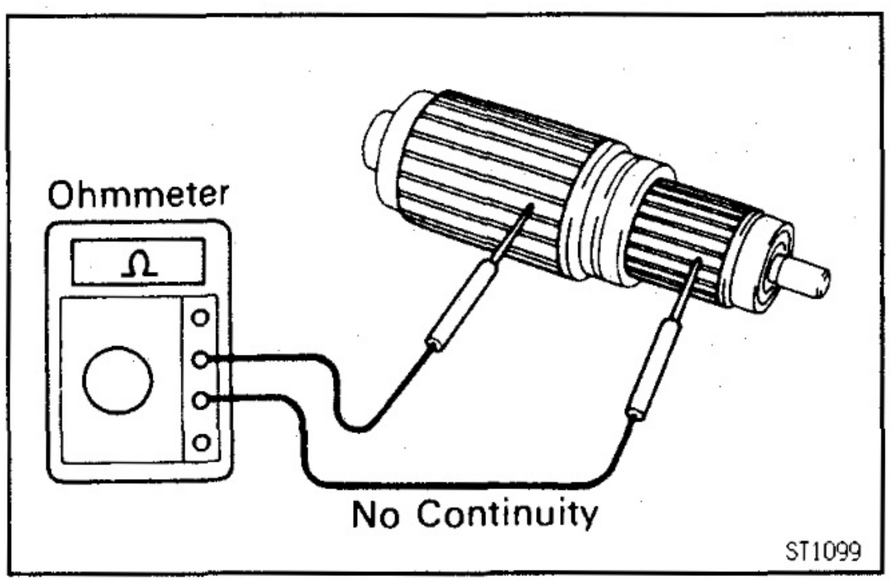

2. INSPECT COMMUTATOR FOR GROUND

Using an ohmmeter, check that there is no continuity between the commutator and armature coil core.

If there is continuity, replace the armature.

Commutator

1. INSPECT COMMUTATOR FOR DIRTY AND BURNT SURFACES

If the surface is dirty or burnt, correct it with sandpaper (No. 400) or on a lathe.

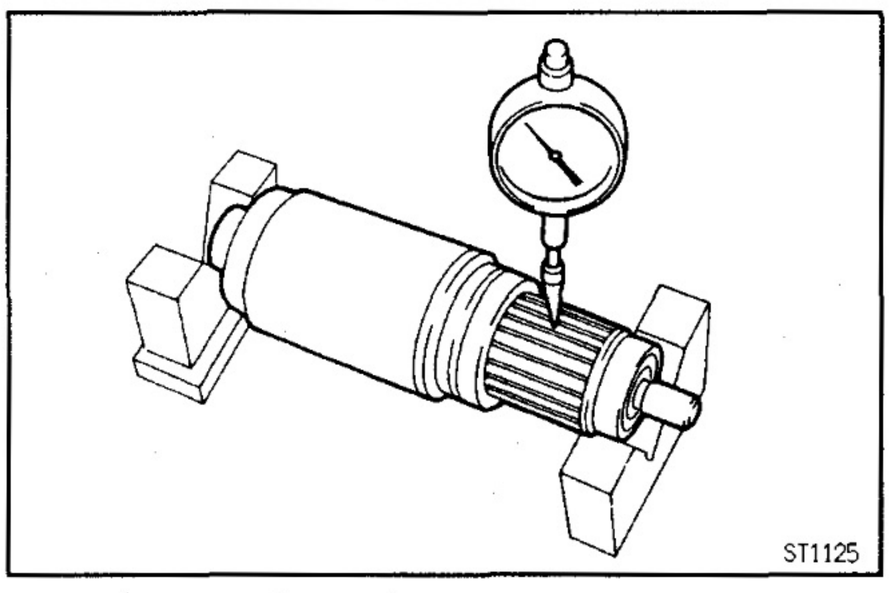

2. INSPECT COMMUTATOR CIRCLE RUNOUT

(a) Place the commutator on V—blocks.

(b) Using a dial gauge, measure the circle runout.

Maximum circle runout:

0.05 mm (0.0020 in.)

If the circle runout is greater than maximum, correct it on a lathe.

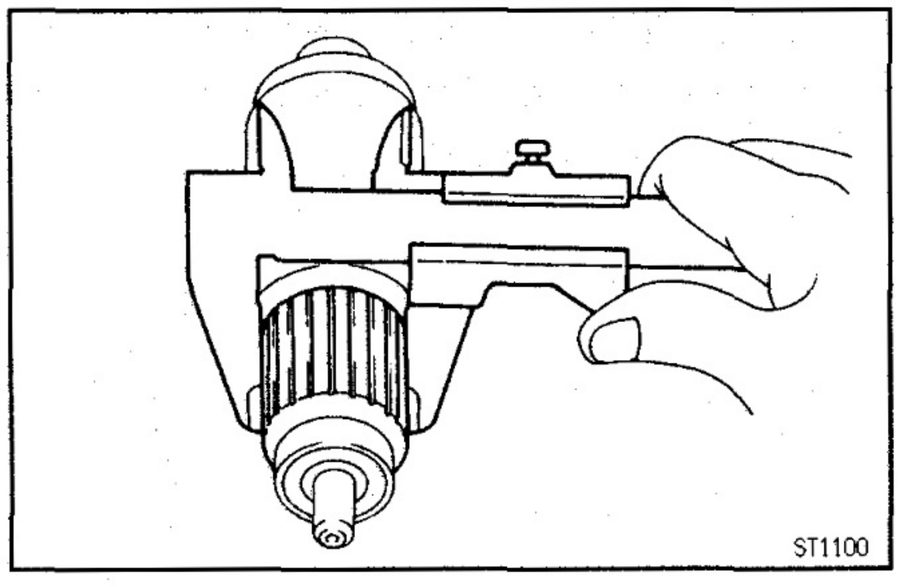

3. INSPECT COMMUTATOR DIAMETER

Using a vernier caliper, measure the commutator diameter.

Standard diameter:

35 mm (1.38 in.)

Minimum diameter:

34 mm (1.34 in.)

If the diameter is less than minimum, replace the armature.

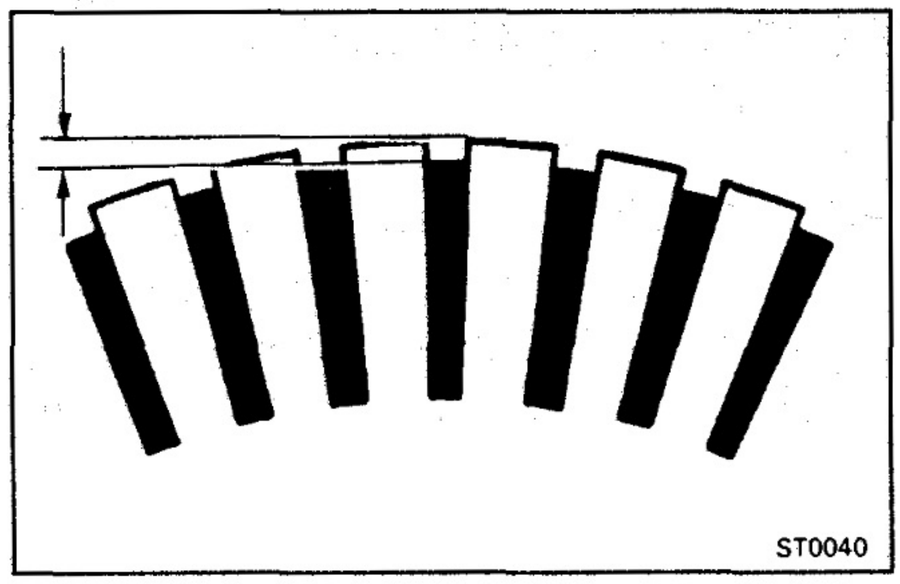

4. INSPECT UNDERCUT DEPTH

Check that the undercut depth is clean and free of foreign materials.Smooth out the edge.

Standard undercut depth:

0.6 mm (0.025 in.)

Minimum *undercut depth*:

0.2 mm (0.008 in.)

If the undercut depth is less than minimum, correct it with a hacksaw blade.

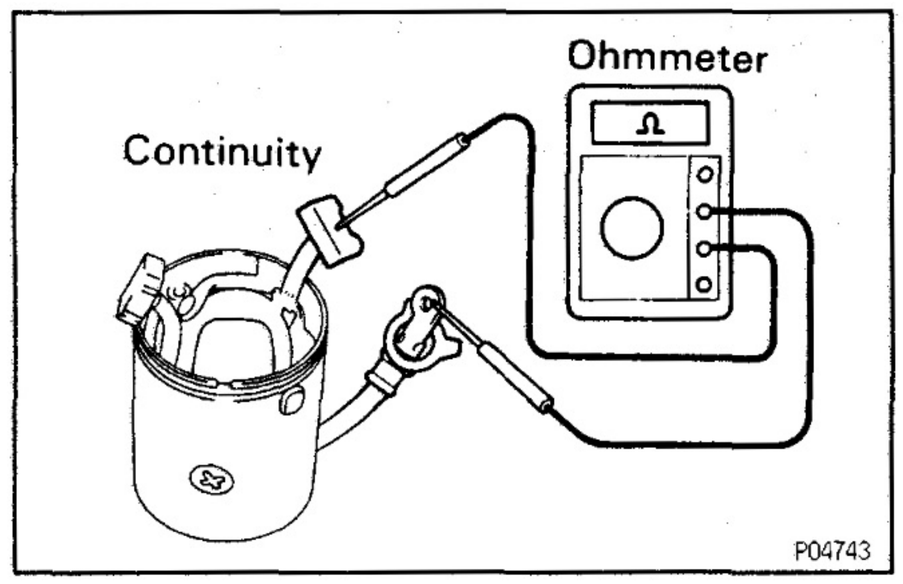

Field Frame (Field Coil)

1. INSPECT FIELD COIL FOR OPEN CIRCUIT

Using an ohmmeter, check that there is continuity between the lead wire and field coil brush lead.
If there is no continuity, replace the field frame.

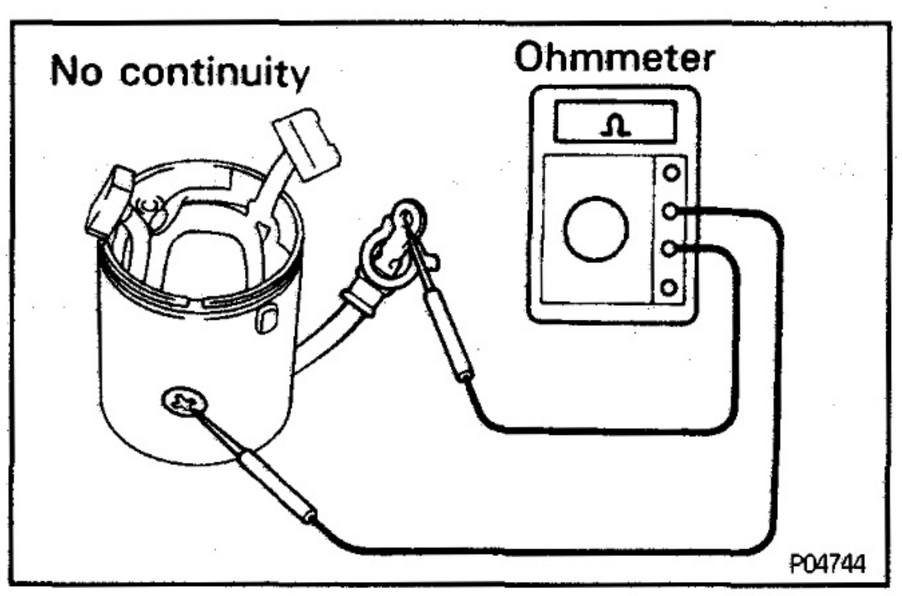

2. INSPECT FIELD COIL FOR GROUND

Using an ohmmeter, check that there is no continuity between the field coil end and field frame.
If there is continuity, repair or replace the field frame.

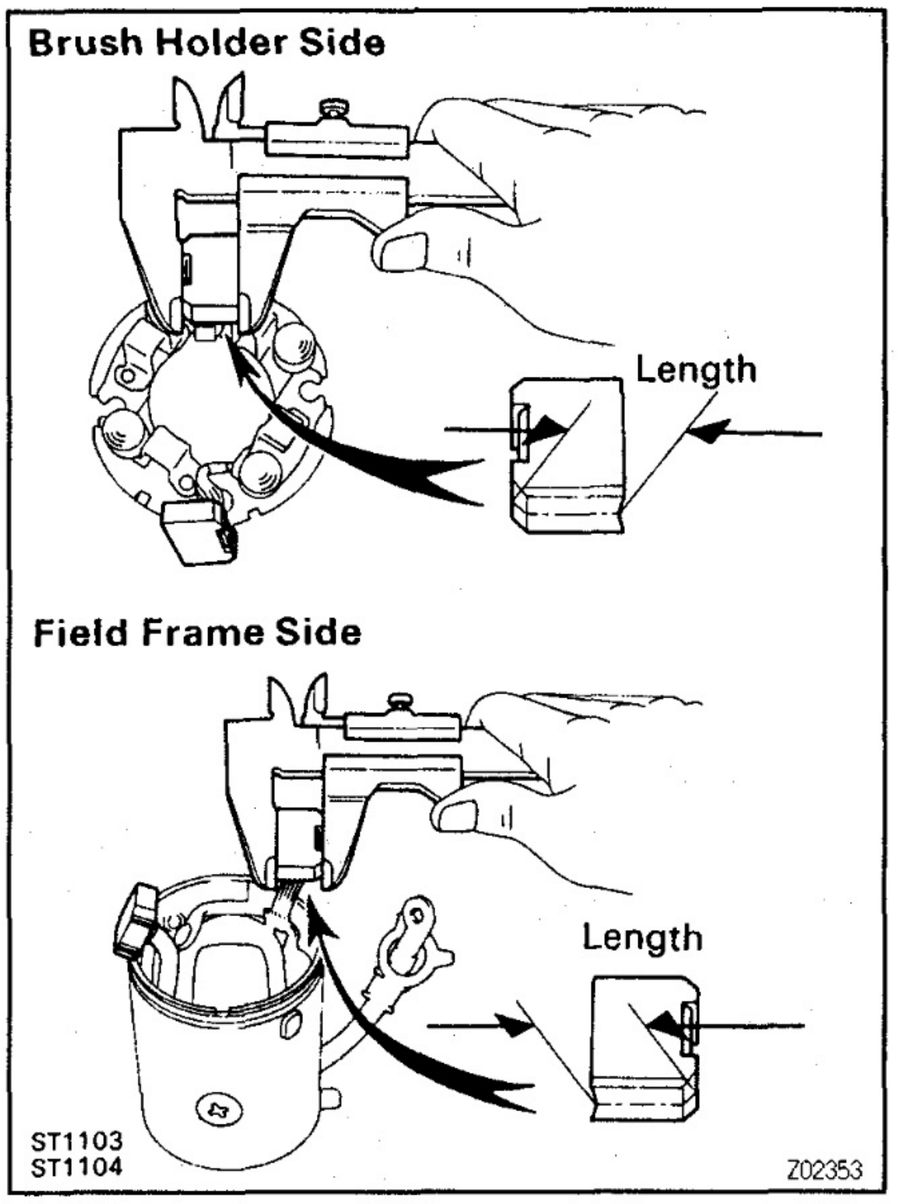

Brushes

INSPECT BRUSH LENGTH

Using a vernier caliper, measure the brush length.

Standard length:

16.5 – 17.0 mm (0.650 – 0.669 in.)

Minimum length:

9.0 mm (0.354 in.)

If the length is less than minimum, replace the brush holder and field frame.

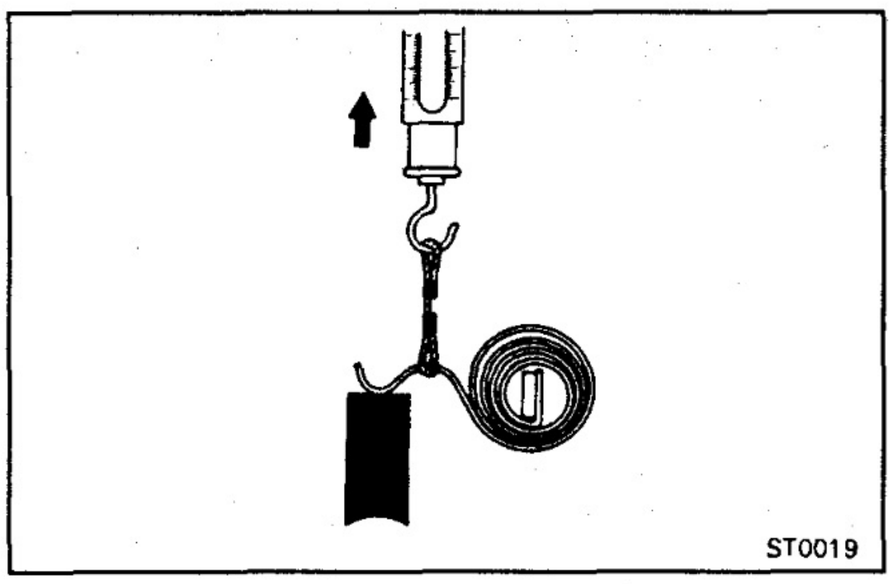

Brush Springs

INSPECT BRUSH SPRING LOAD

Take the pull scale reading the instant the brush spring separates from the brush.

Spring installed load:

26 – 32 N (2.7 – 3.3 kgf, 6.0 – 7.3 lbf)

If the installed load is not within specification, replace the brush springs.

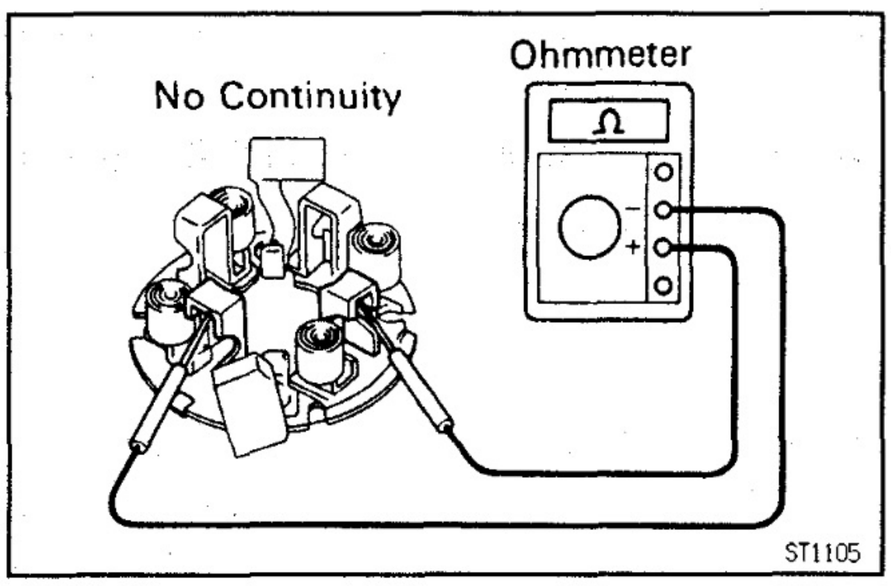

Brush Holder

INSPECT BRUSH HOLDER INSULATION

Using an ohmmeter, check that there is no continuity between the positive (+) and negative (–) brush holders.

If there is continuity, repair or replace the brush holder.

Clutch and Gears

1. **INSPECT GEAR TEETH**

Check the gear teeth on the pinion gear, idle gear and clutch assembly for wear or damage.

If damaged, replace the gear or clutch assembly.

If damaged, also check the drive plate ring gear for wear or damage.

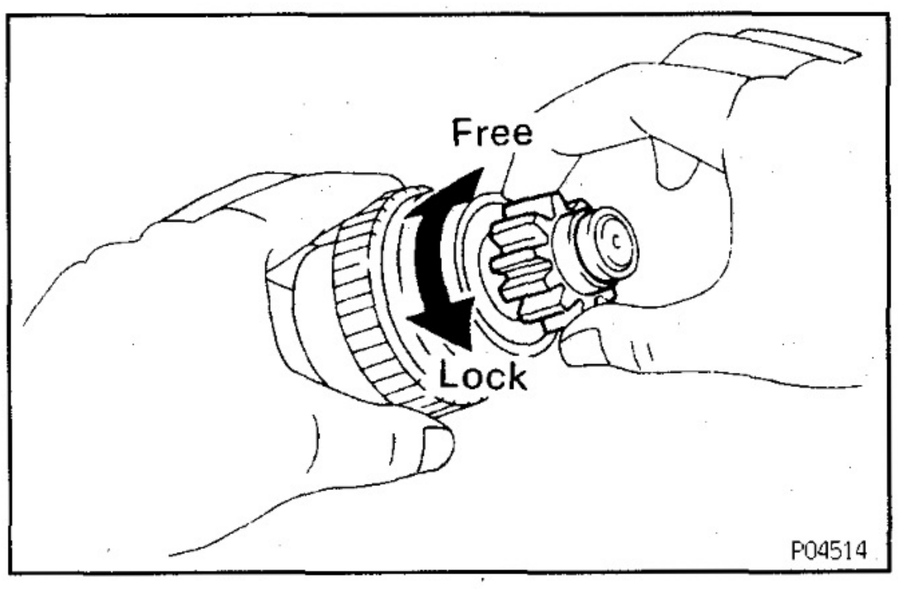

2. INSPECT CLUTCH PINION GEAR

Hold the starter clutch and rotate the pinion gear clockwise, and check that it turns freely. Try to rotate the pinion gear counterclockwise and check that it locks.

If necessary, replace the clutch assembly.

Bearings

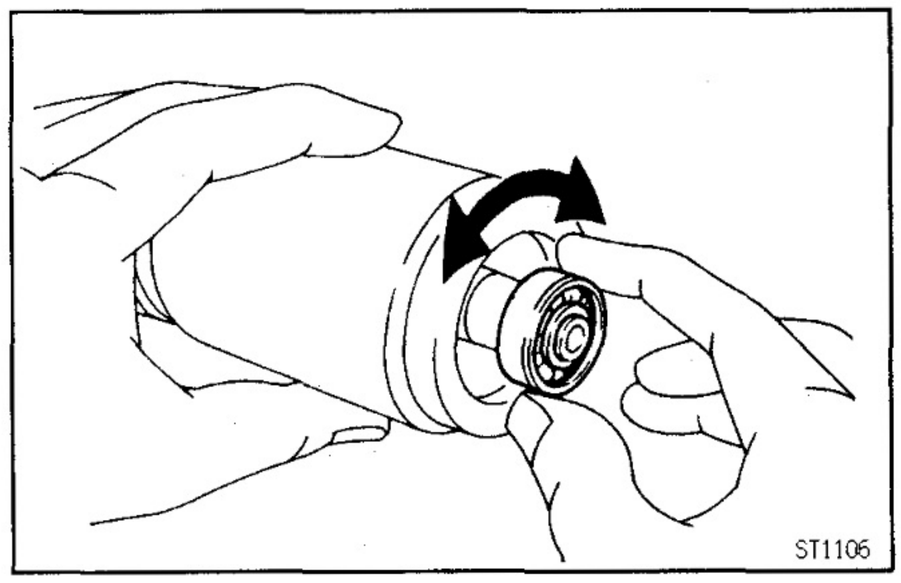

1. INSPECT FRONT BEARING

Turn the bearing by hand while applying inward force. If resistance is felt or the bearing sticks, replace the bearing.

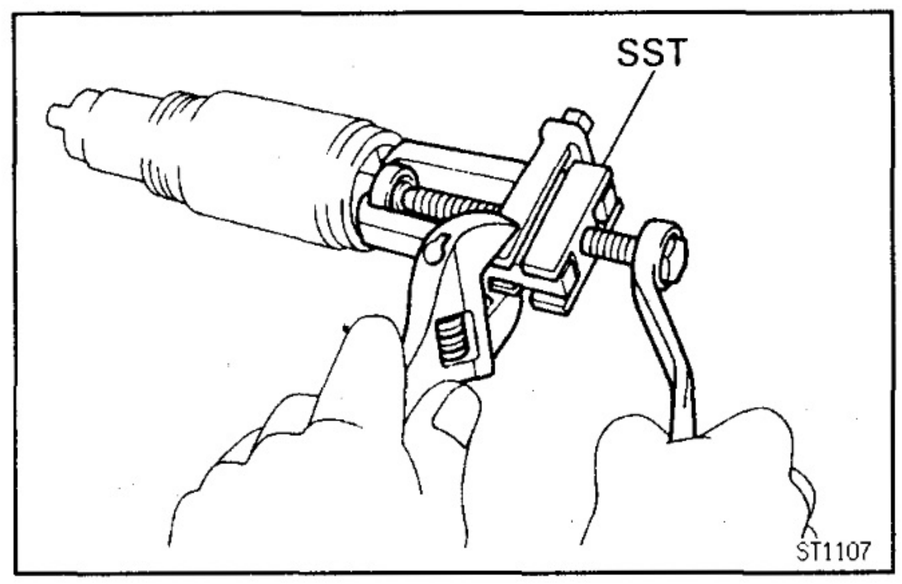

2. IF NECESSARY, REPLACE FRONT BEARING

(a) Using SST, remove the bearing.
SST 09286–46011

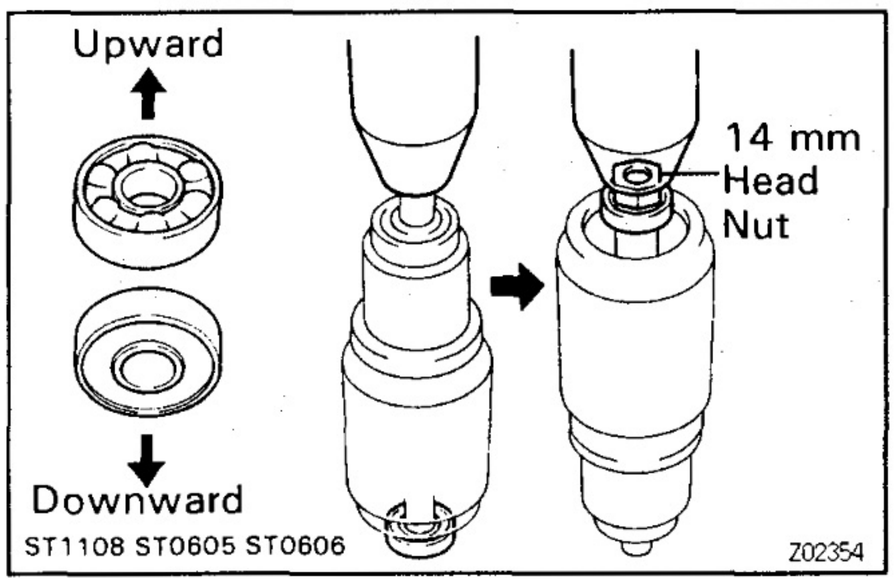

(b) Using a 14 mm head nut and press, press in a new bearing.
NOTICE: Be careful of the bearing installation direction.

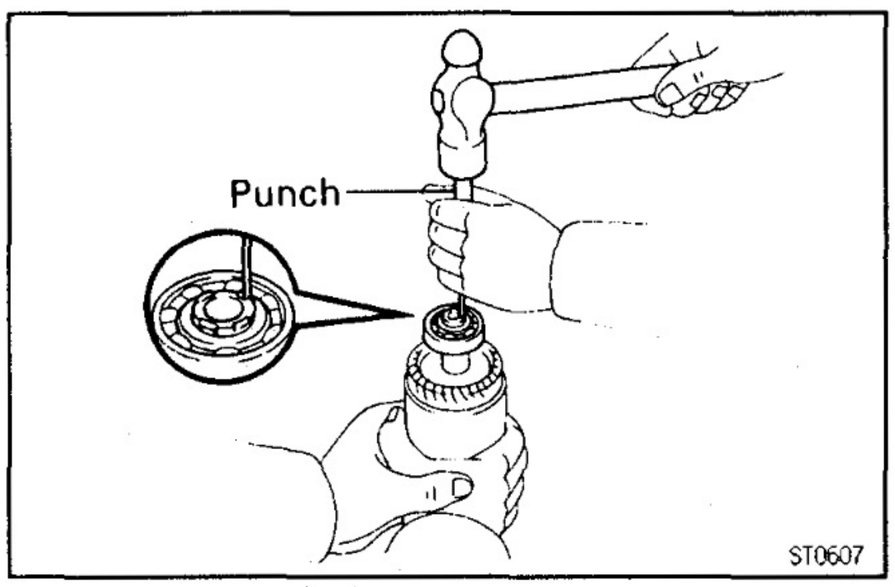

(c) Using a punch, stake the armature shaft.

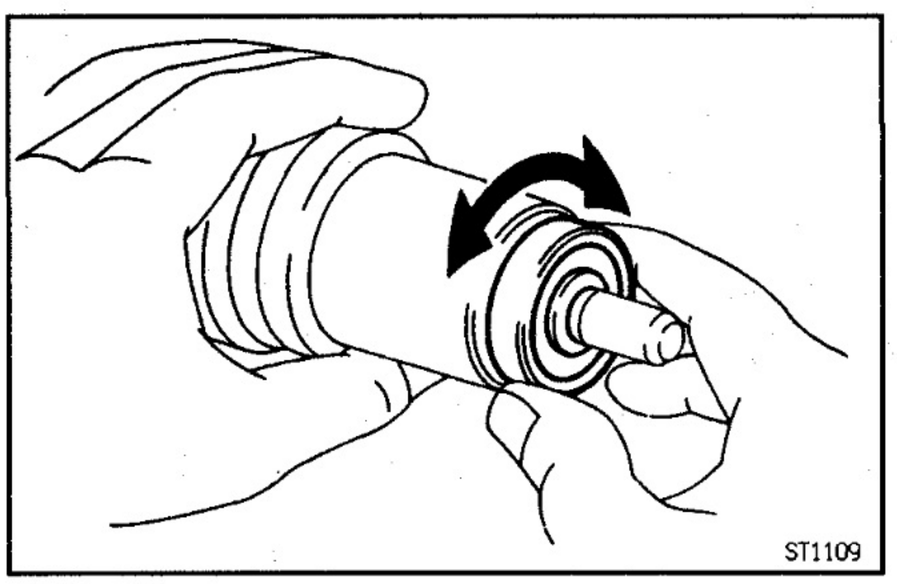

3. INSPECT REAR BEARING

Turn the bearing by hand while applying inward force.
If resistance is felt or the bearing sticks, replace the bearing.

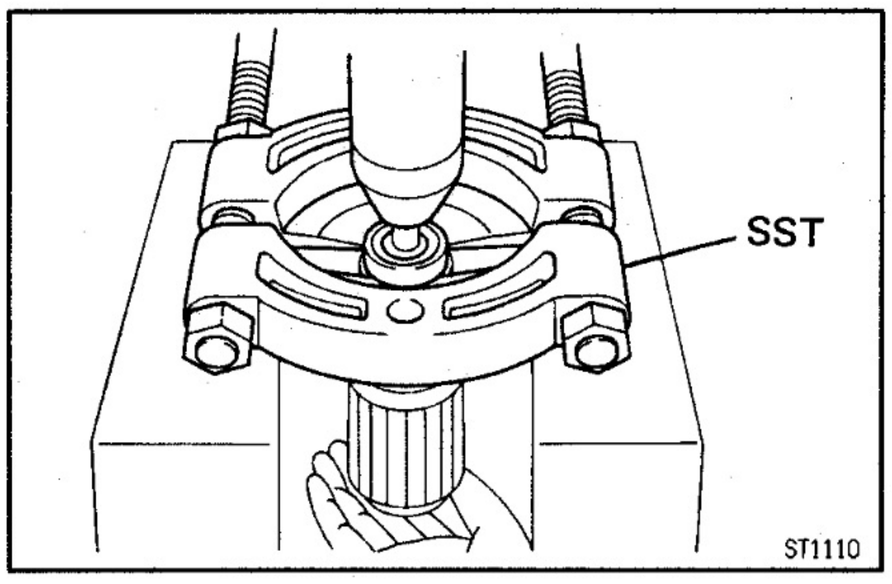

4. IF NECESSARY, REPLACE REAR EARING

(a) Using SST and a press, press out the bearing.
SST 09950–00020

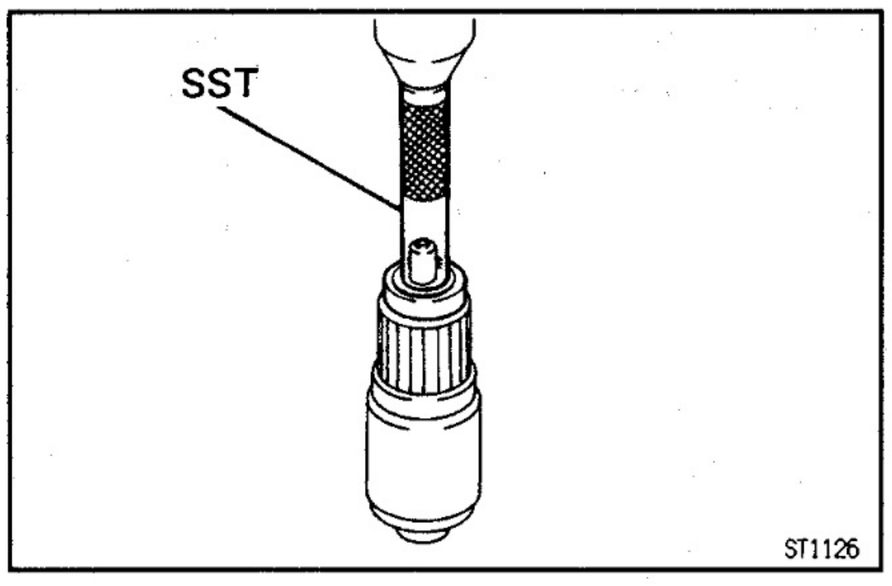

(b) Using SST and a press, press in a new bearing.
SST 09201–41020

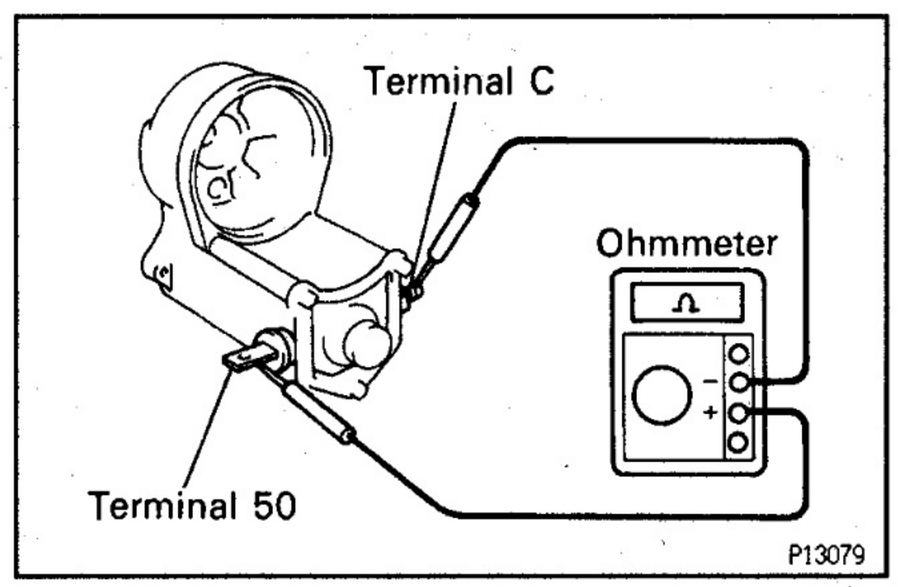

Magnetic Switch

1. PERFORM PULL–IN COIL OPEN CIRCUIT TEST

Using an ohmmeter, check that there is continuity between terminals 50 and C.
If there is no continuity, replace the magnetic switch.

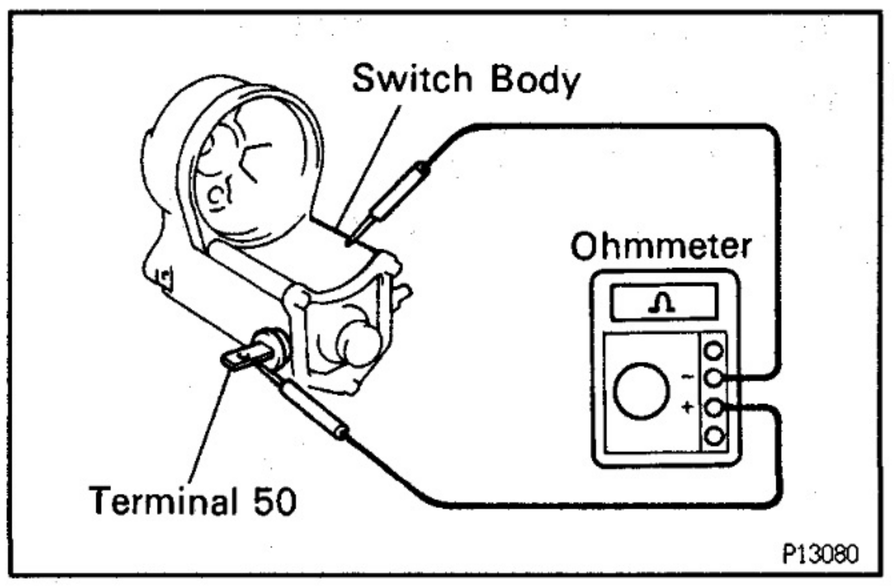

2. PERFORM HOLD–IN COIL OPEN CIRCUIT TEST

Using an ohmmeter, check that there is continuity between terminal 50 and the switch body.
If there is no continuity, replace the magnetic switch.

ST05U–01

STARTER ASSEMBLY

(See Components for Disassembly and Assembly)

HINT: Use high–temperature grease to lubricate the bearings and gears when assembling the starter.

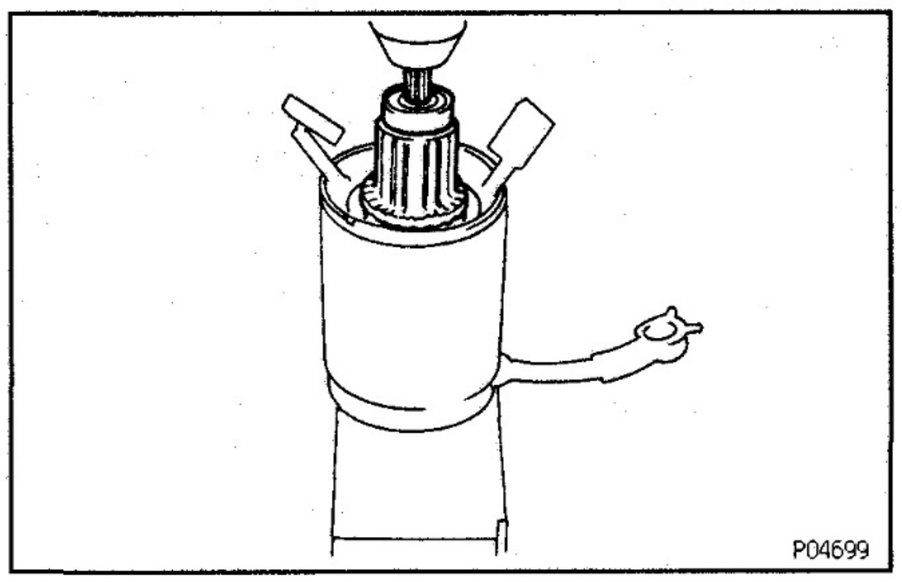
P04699

1. PLACE ARMATURE INTO FIELD FRAME

(a) Apply grease to the armature bearings.

(b) Using a press, press the armature into the field frame.

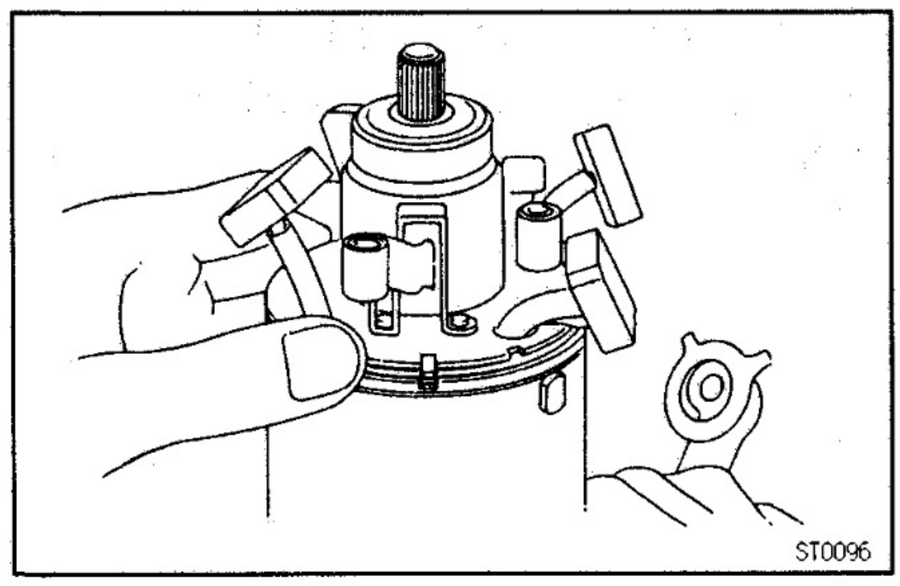
ST0096

2. INSTALL BRUSH HOLDER

(a) Align the claw of the brush holder with the claw groove of the field frame.

(b) Place the brush holder on the field frame.

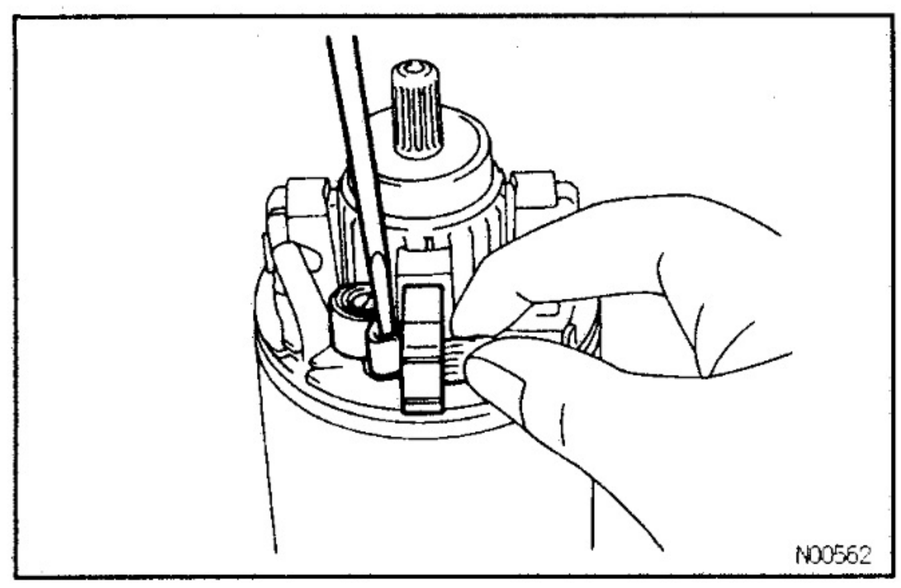
N00562

(c) Using a screwdriver, hold the brush spring back, and connect the brush into the brush holder. Connect the 4 brushes.

NOTICE: Check that the positive (+) lead wires are not grounded.

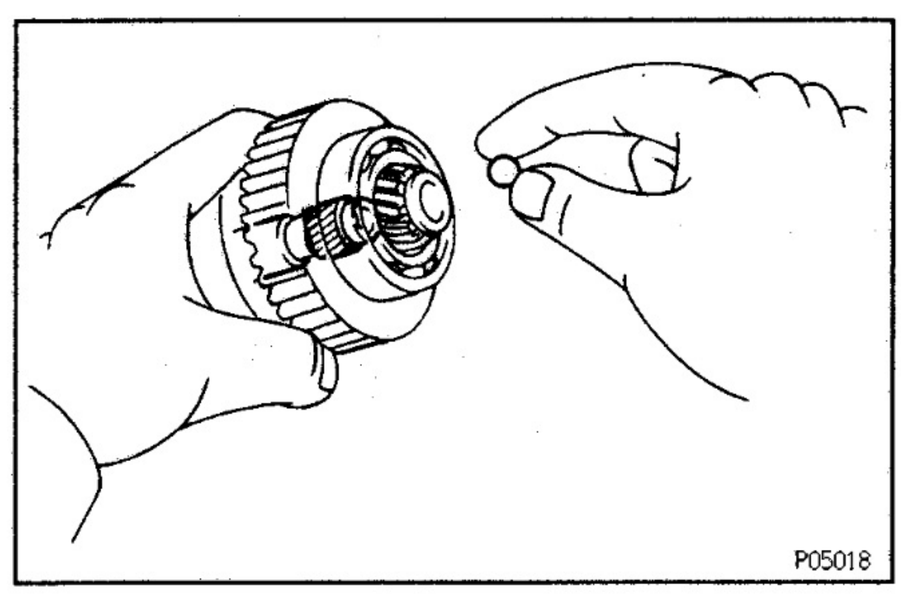
P05018

3. INSERT STEEL BALL INTO CLUTCH SHAFT HOLE

(a) Apply grease to the steel ball.

(b) Insert the steel ball into the clutch shaft hole.

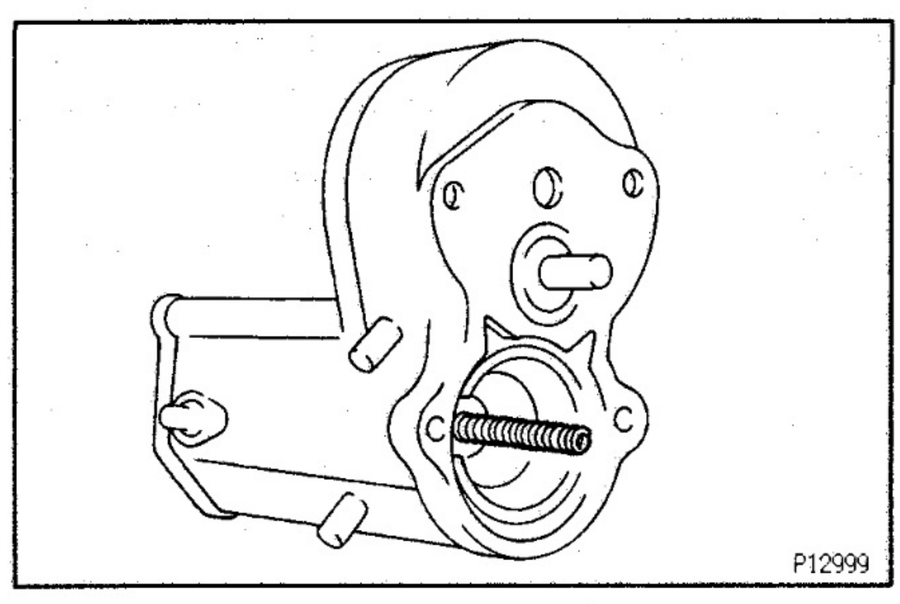
P12999

4. INSTALL STARTER HOUSING, CLUTCH ASSEMBLY AND GEARS

(a) Apply grease to the return spring.

(b) Insert the return spring into the magnetic switch hole.

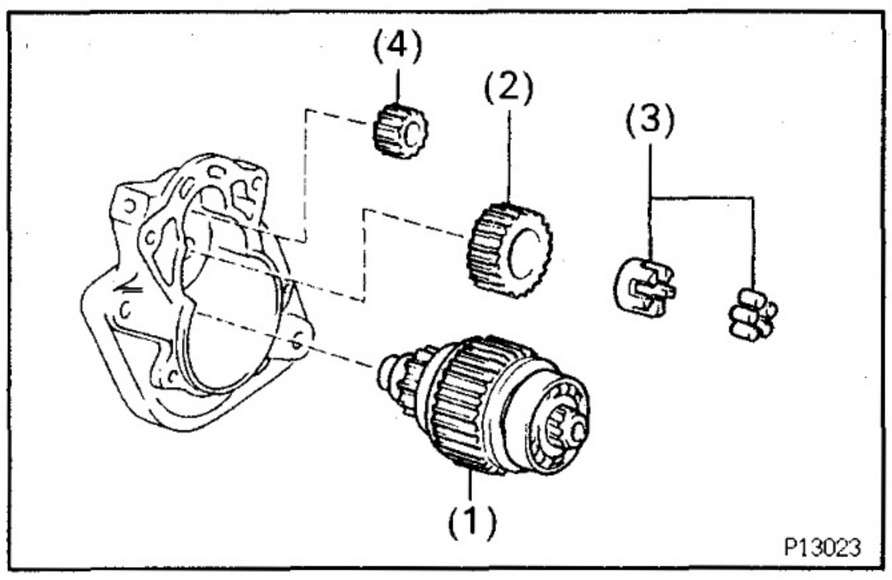

(c) Place the following parts in position on the starter housing:
(1) Clutch assembly
(2) Idler gear
(3) Bearing
(4) Pinion gear

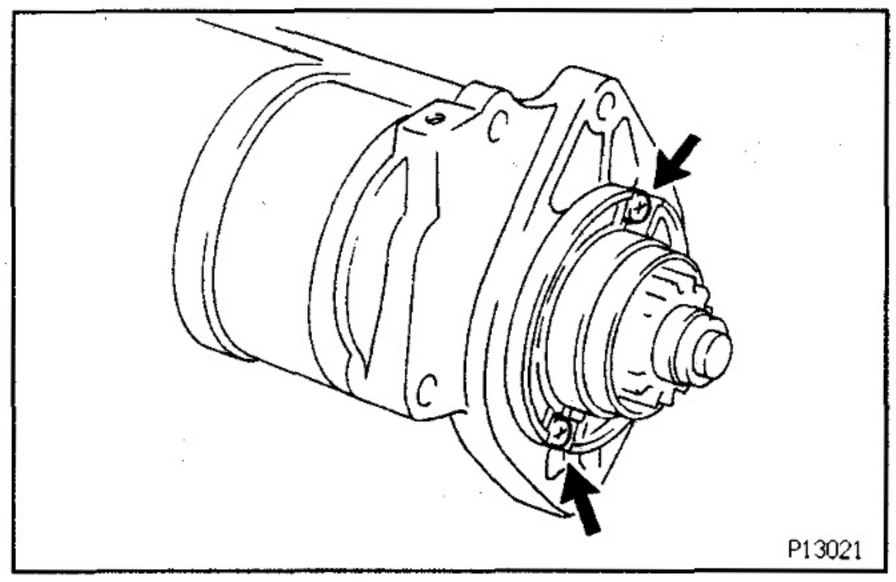

(d) Assemble the starter housing and magnetic switch assembly and install the 2 screws.

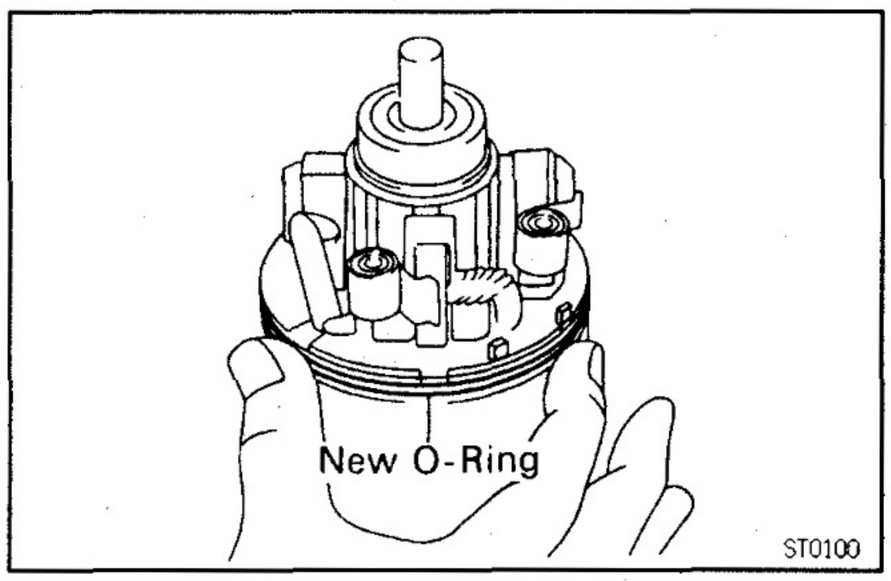

5. INSTALL FIELD FRAME AND ARMATURE ASSEMBLY

(a) Place a new O–ring in position on the field frame.

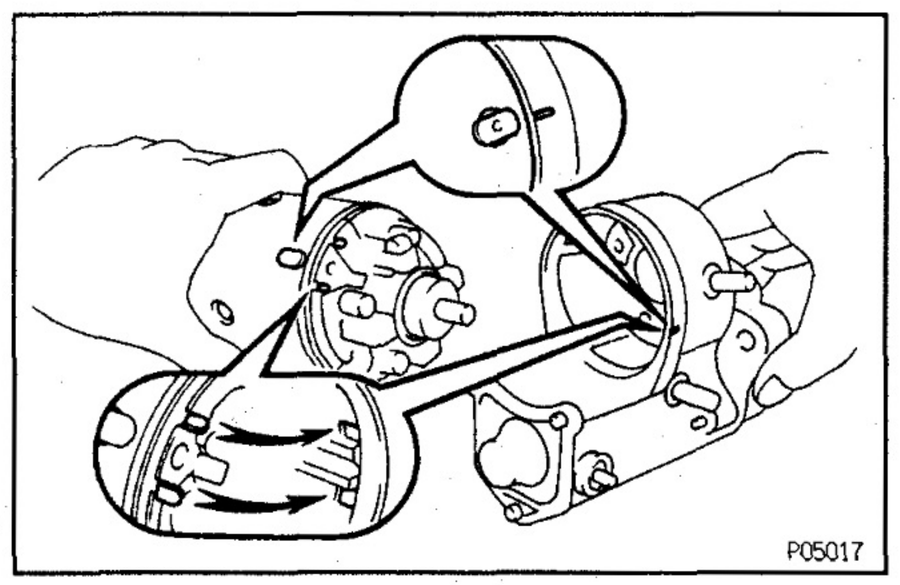

(b) Align the claws of the brush holder with the grooves of the magnetic switch, and install the field frame and amature shaft assembly.
(c) Align the punch mark of the field frame with the line of the magnet switch.

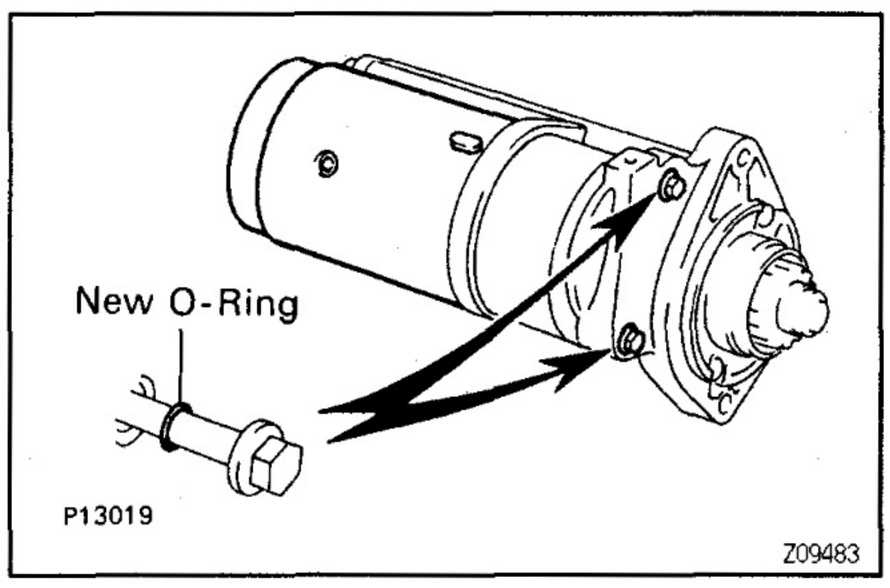

(d) Install a new O–rings to the through bolts.
(e) Install the field frame and armature assembly with the 2 through bolts.
Torque: 12.7 N·m (130 kgf·cm, 9 ft·lbf)

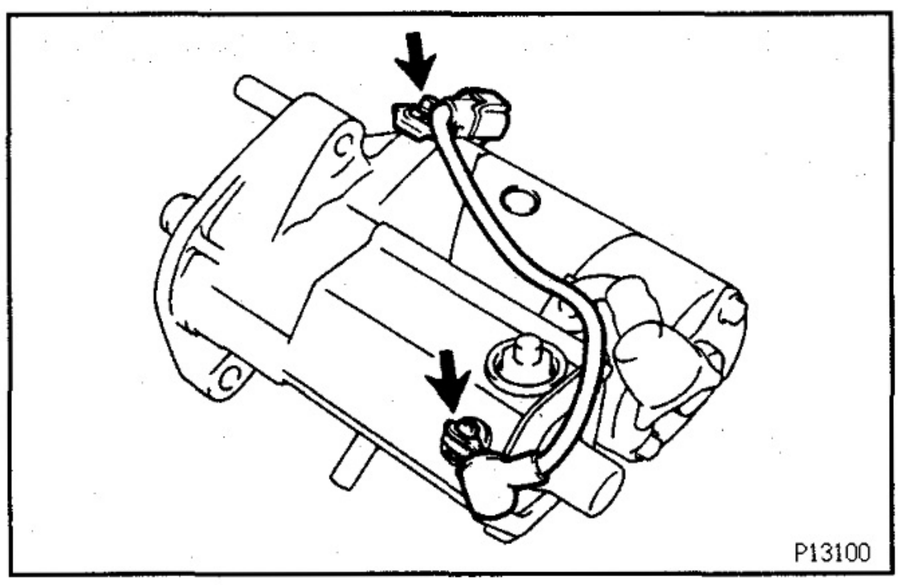

(f) Install the lead wire to terminal 50 and starter housing with the bolt and screw.
Torque: 3.6 N·m (41 kgf·cm, 35 in.·lbf)

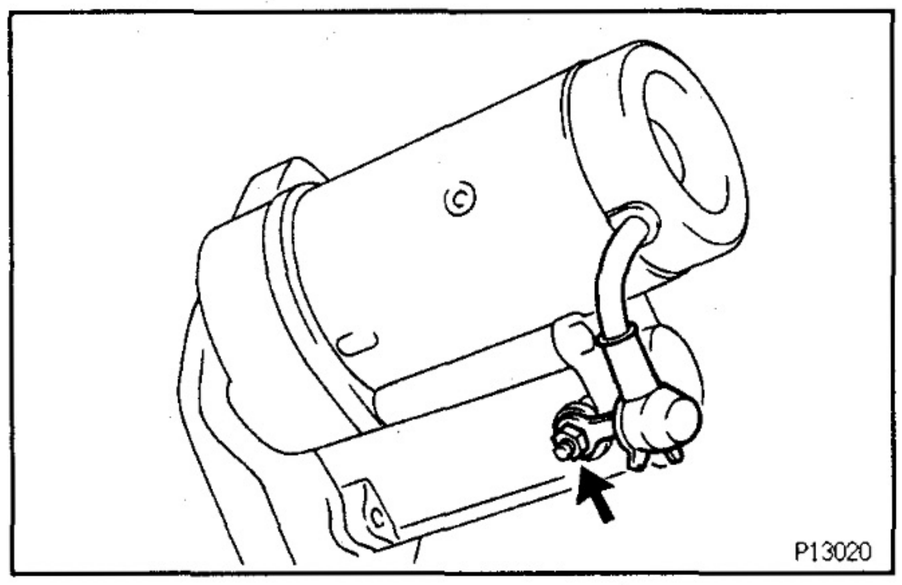

(g) Connect the lead wire to terminal C, and install the nut.
Torque: 5.4 N·m (51 kgf·cm, 44 in.·lbf)

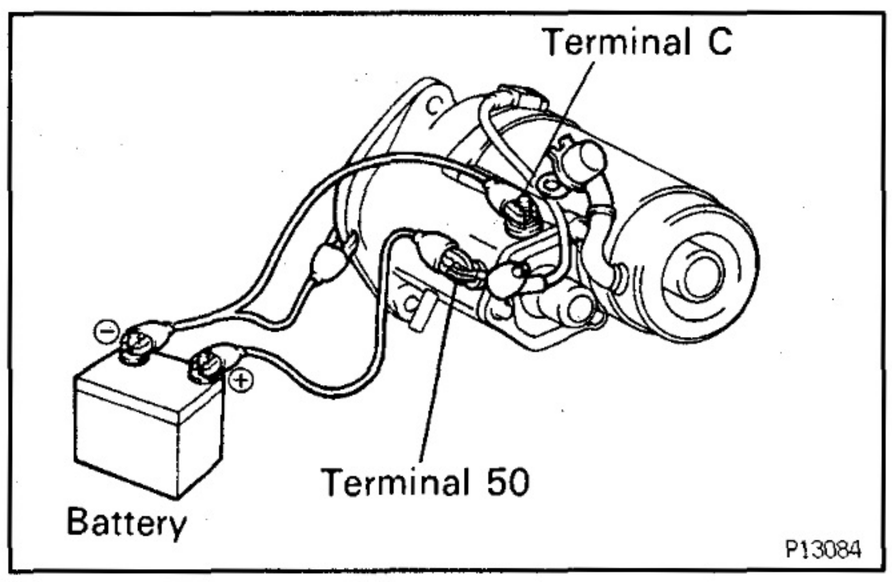

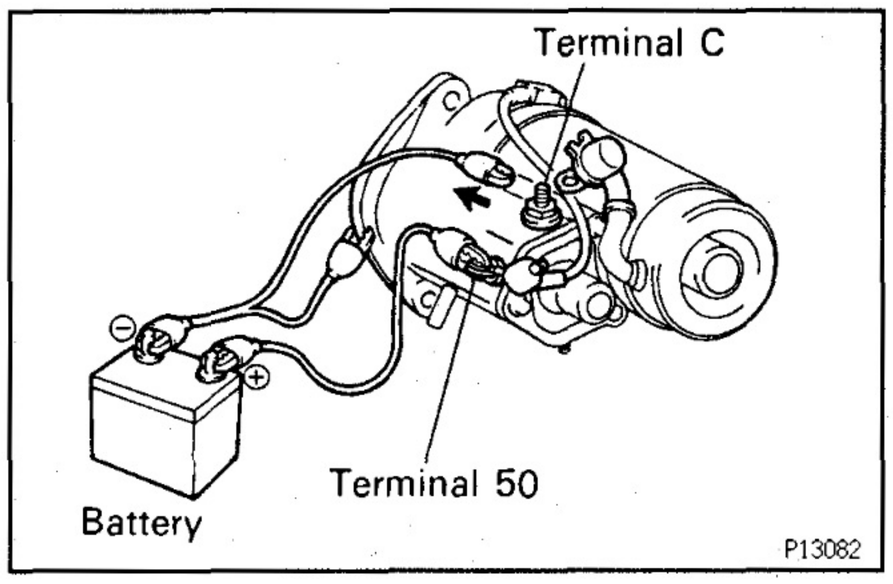

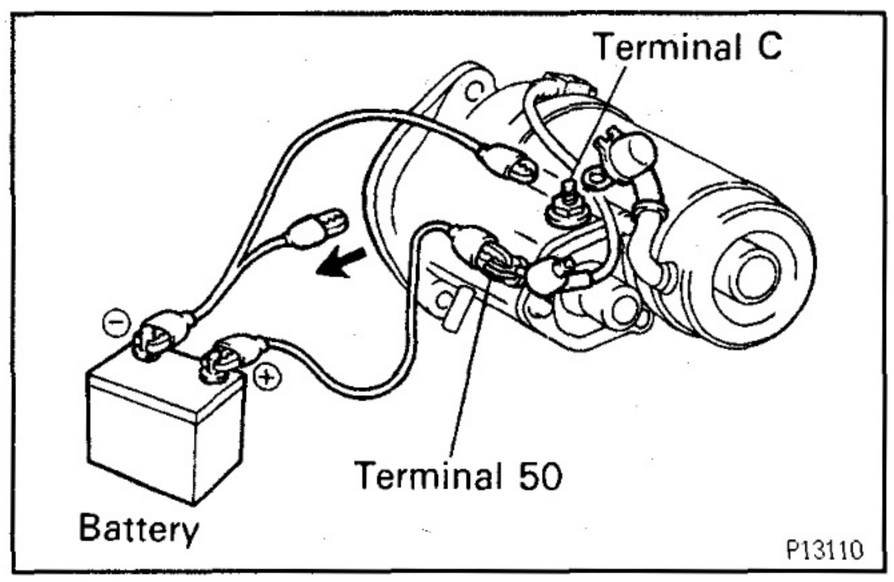

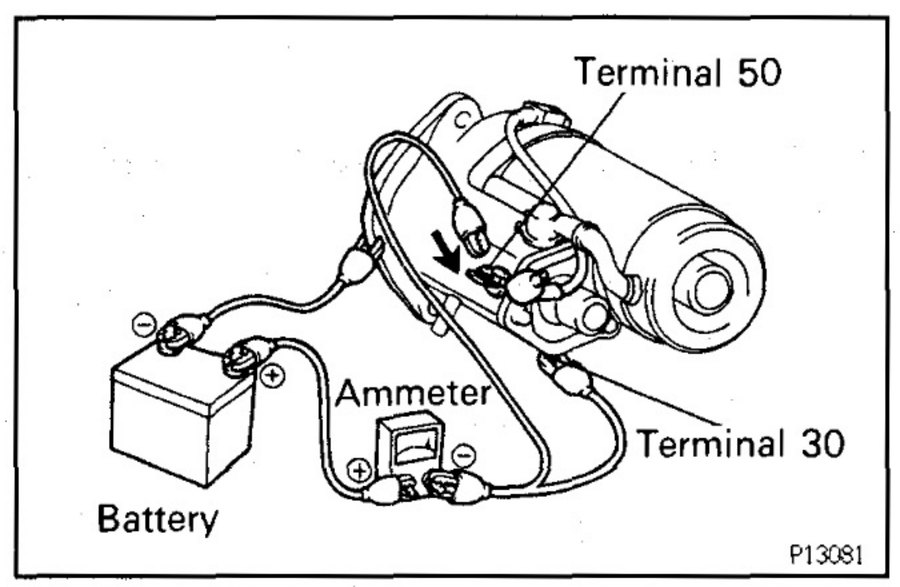

ST010-0A

STARTER PERFORMANCE TEST

NOTICE: These tests must be performed within 3 to 5 seconds to avoid burning out the coil.

1. PERFORM PULL—IN TEST

(a) Disconnect the field coil lead wire from terminal C.

(b) Connect the battery to the magnetic switch as shown. Check that the clutch pinion gear moves outward.
If the clutch pinion gear does not move, replace the magnetic switch assembly.

2. PERFORM HOLD—IN TEST

With battery connected as above with the clutch pinion gear out, disconnect the negative (—) lead from terminal C. Check that the pinion gear remains out.
If the clutch pinion gear returns inward, replace the magnetic switch assembly.

3. INSPECT CLUTCH PINION GEAR RETURN

Disconnect the negative (—) lead from the switch body.
Check that the clutch pinion gear returns inward.
If the clutch pinion gear does not return, replace the magnetic switch assembly.

4. PERFORM NO—LOAD PERFORMANCE TEST

(a) Connect the battery and ammeter to the starter as shown.

(b) Check that the starter rotates smoothly and steadily with the pinion gear moving out. Check that the ammeter shows the specified current.

Specified current:

120 A or less at 11.5 V

STARTER (2.7 kW)

COMPONENTS FOR DISASSEMBLY AND ASSEMBLY

ST00W-0E

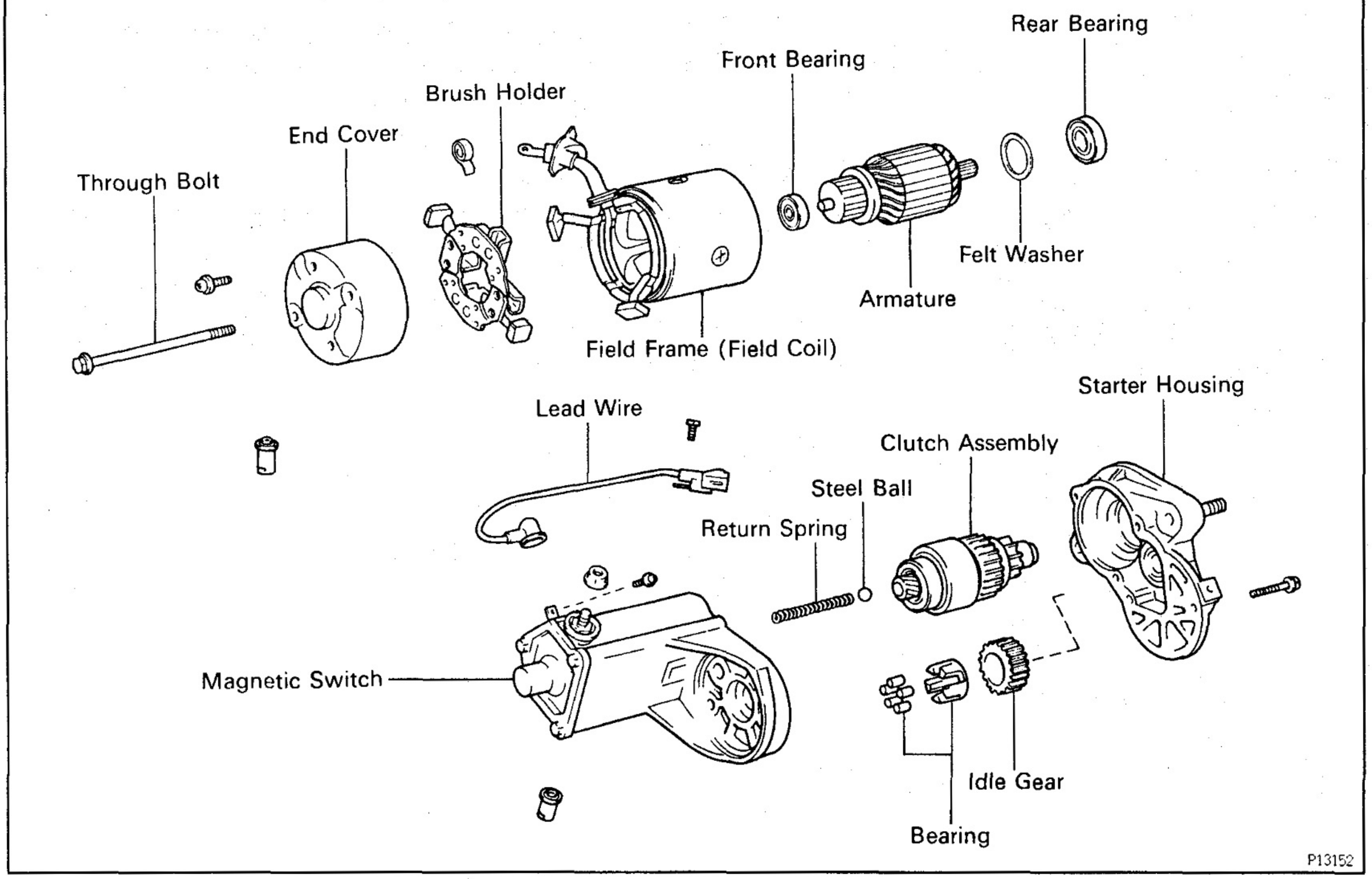

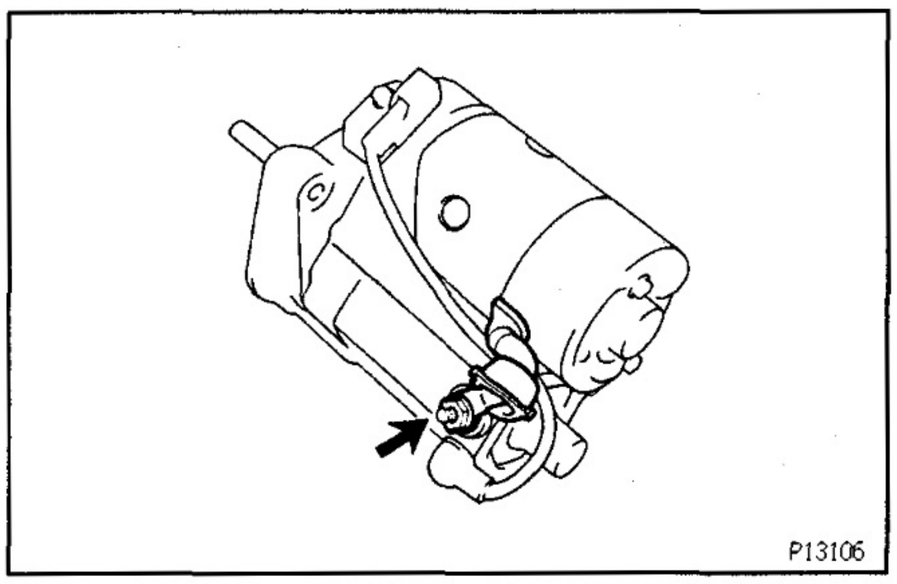

ST05V-01

STARTER DISASSEMBLY

1. REMOVE FIELD FRAME WITH ARMATURE FROM MAGNETIC SWITCH ASSEBLY

(a) Remove the nut, and disconnect the lead wire from the magnetic switch terminal.

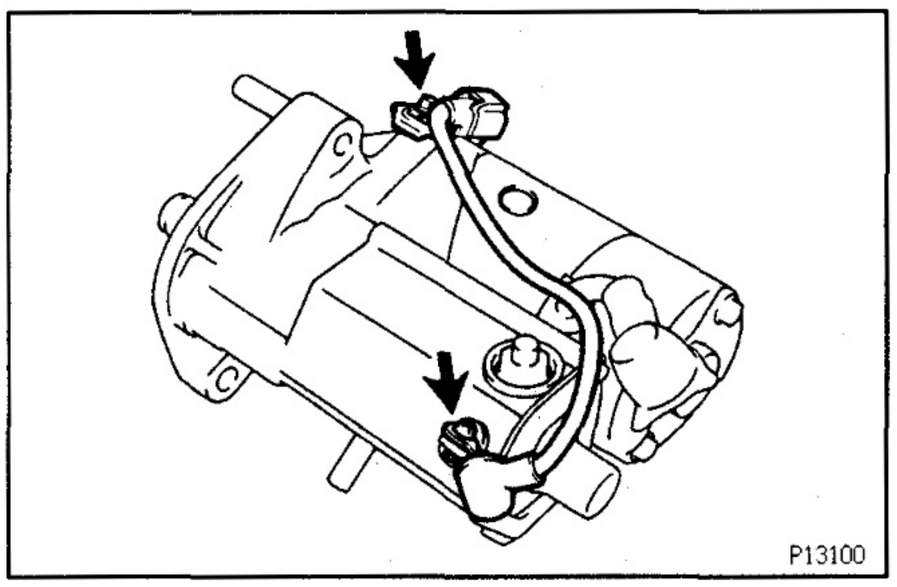

(b) Remove the bolt, screw and the lead wire from the terminal 50 and starter housing.

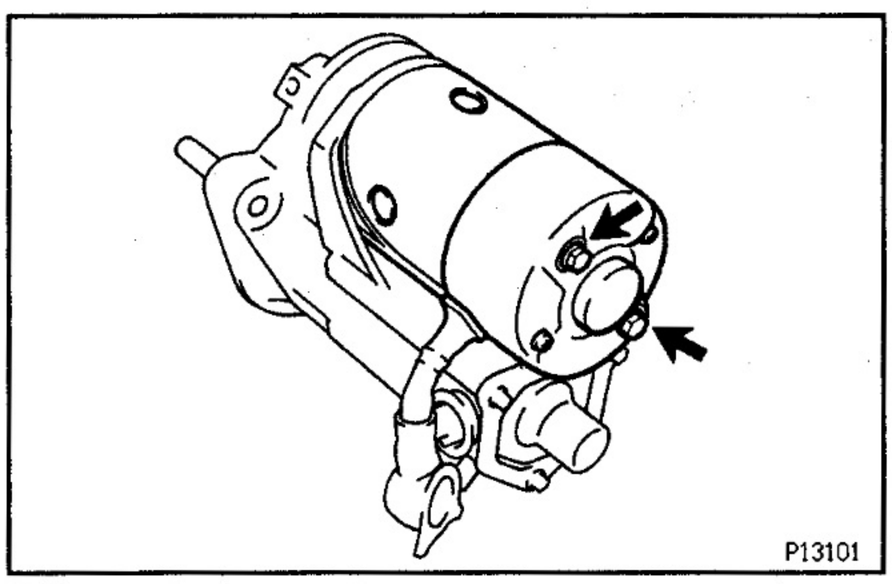

(c) Remove the 2 through bolts.
(d) Pull out the field frame with the armature from the magnetic switch assembly.

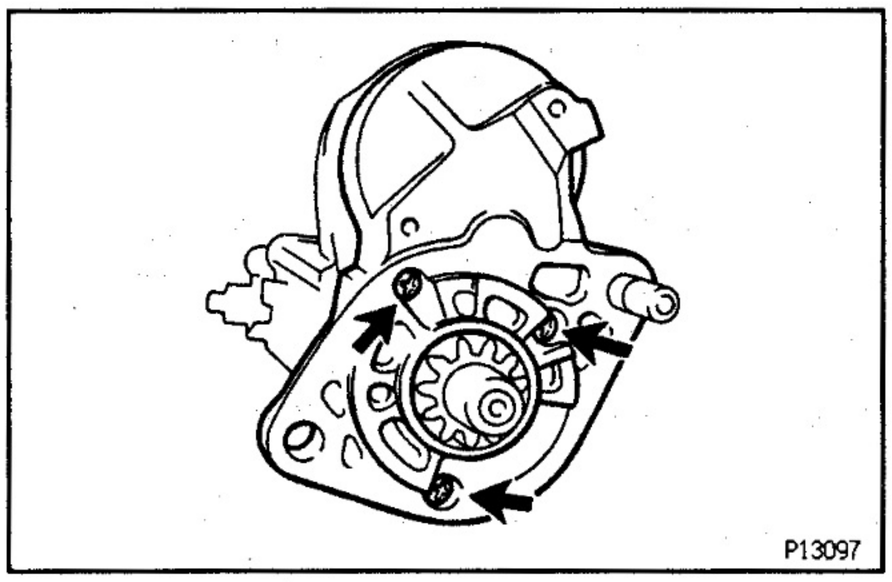

2. REMOVE STARTER HOUSING, CLUTCH ASSEMBLY AND GEARS

(a) Remove the 3 screws.

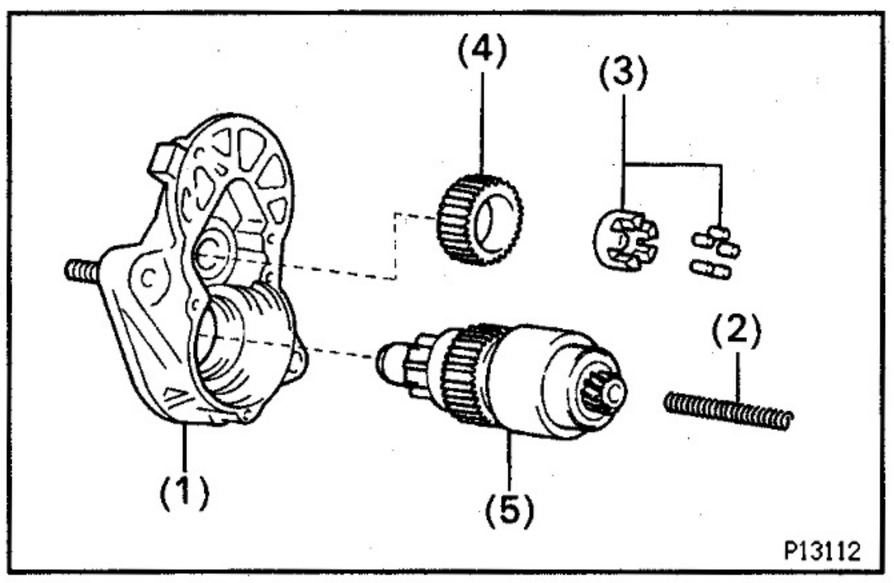

(b) Remove the following parts from the magnetic switch assembly:
(1) Starter housing
(2) Return spring
(3) Bearing
(4) Idler gear
(5) Clutch assembly

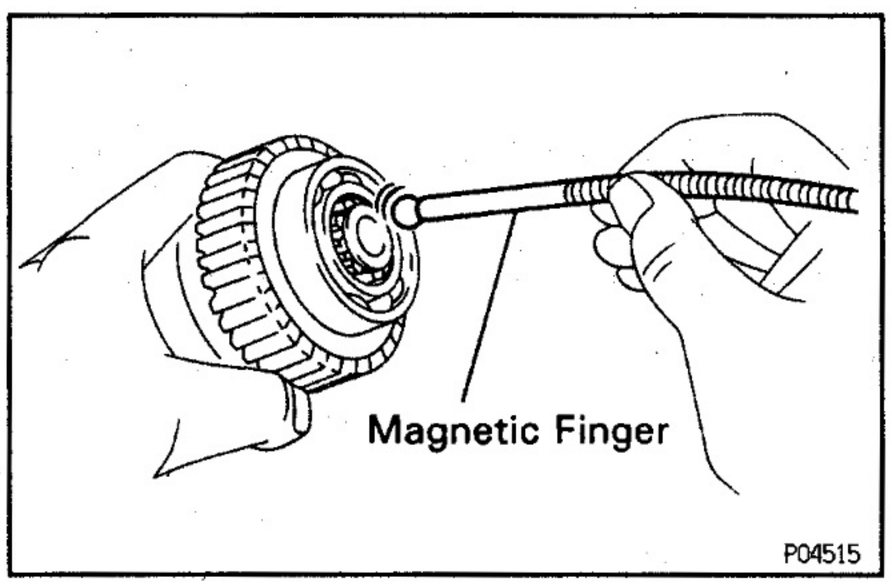

3. REMOVE STEEL BALL

Using a magnetic finger, remove the steel ball from the clutch shaft hole.

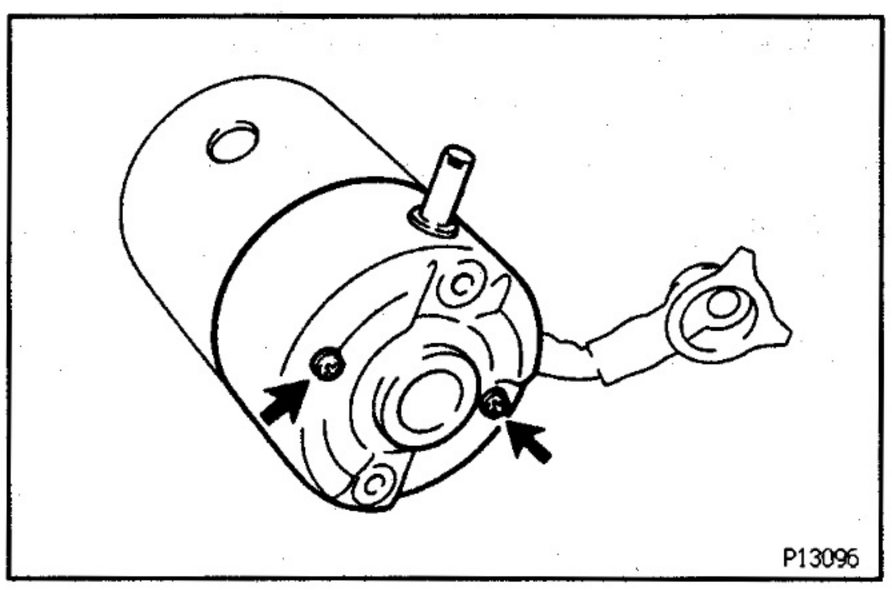

4. REMOVE BRUSH HOLDER

(a) Remove the 2 screws and end cover from the field frame.

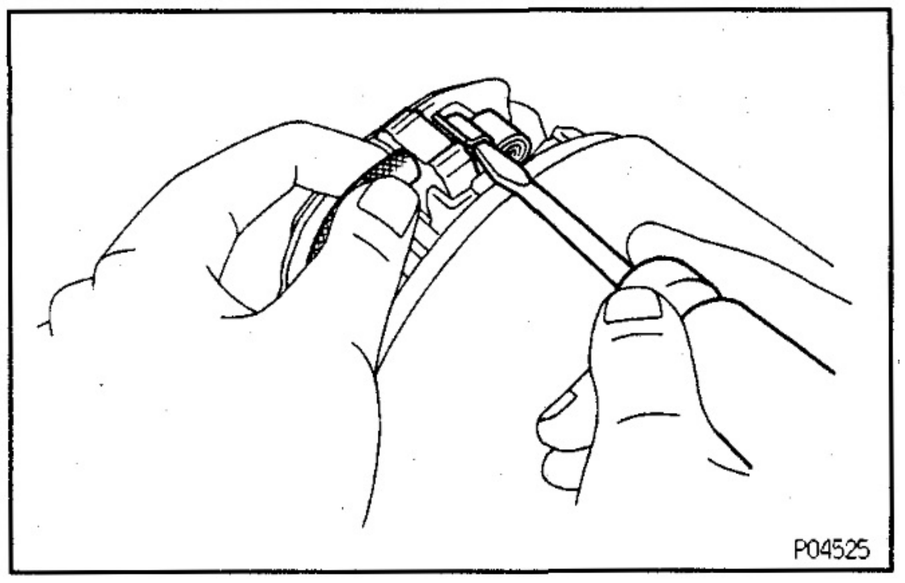

(b) Using a screwdriver, hold the spring tank back and disconnect the brush from the brush holder.
(c) Disconnect the 4 brushes and remove the brush holder.

5. REMOVE ARMATURE FROM FIELD FRAME

ST05W–01

STARTER INSPECTION AND REPAIR

Armature Coil

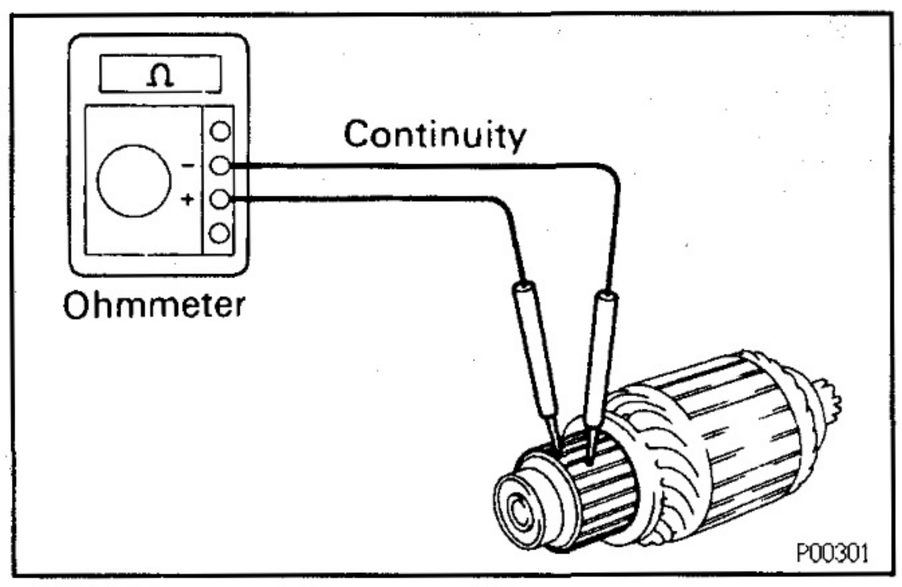

1. INSPECT COMMUTATOR FOR OPEN CIRCUIT

Using an ohmmeter, check that there is continuity between the segments of the commutator.
If there is no continuity between any segment, replace the armature.

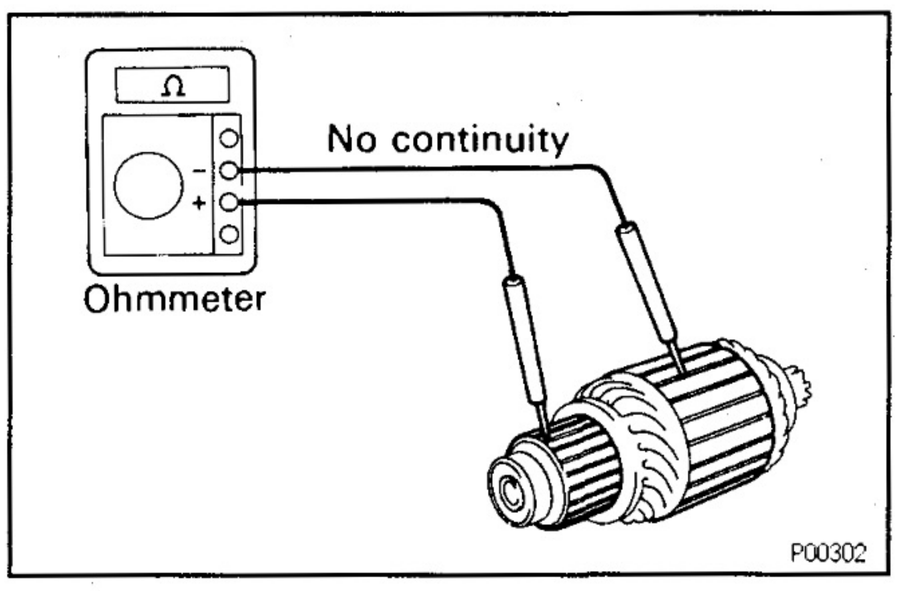

2. INSPECT COMMUTATOR FOR GROUND

Using an ohmmeter, check that there is no continuity between the commutator and armature coil core.
If there is continuity, replace the armature.

Commutator

1. INSPECT COMMUTATOR FOR DIRTY AND BURNT SURFACES

If the surface is dirty or burnt, correct it with sandpaper (No. 400) or on a lathe.

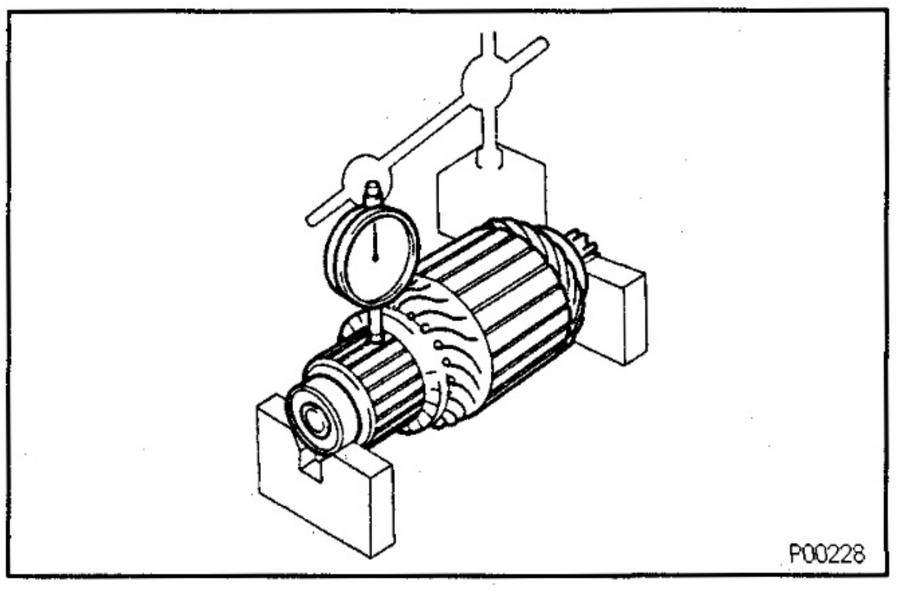

2. INSPECT COMMUTATOR CIRCLE RUNOUT

(a) Place the commutator on V–blocks.
(b) Using a dial gauge, measure the circle runout.

Maximum circle runout:

0.05 mm (0.0020 in.)

If the circle runout is greater than maximum, correct it on a lathe.

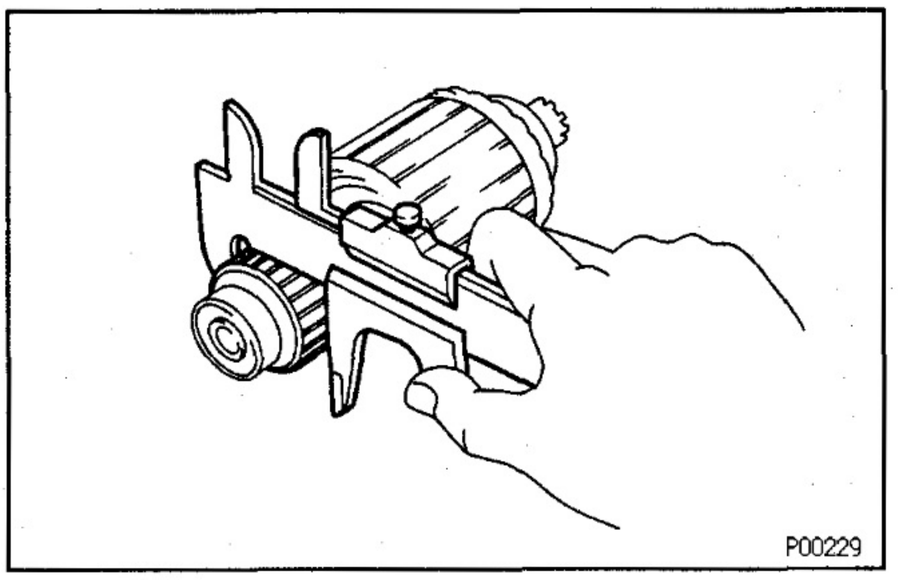

3. INSPECT COMMUTATOR DIAMETER

Using a vernier caliper, measure the commutator diameter.

Standard diameter:

36 mm (1.42 in.)

Minimum diameter:

35 mm (1.38 in.)

If the diameter is less than minimum, replace the armature.

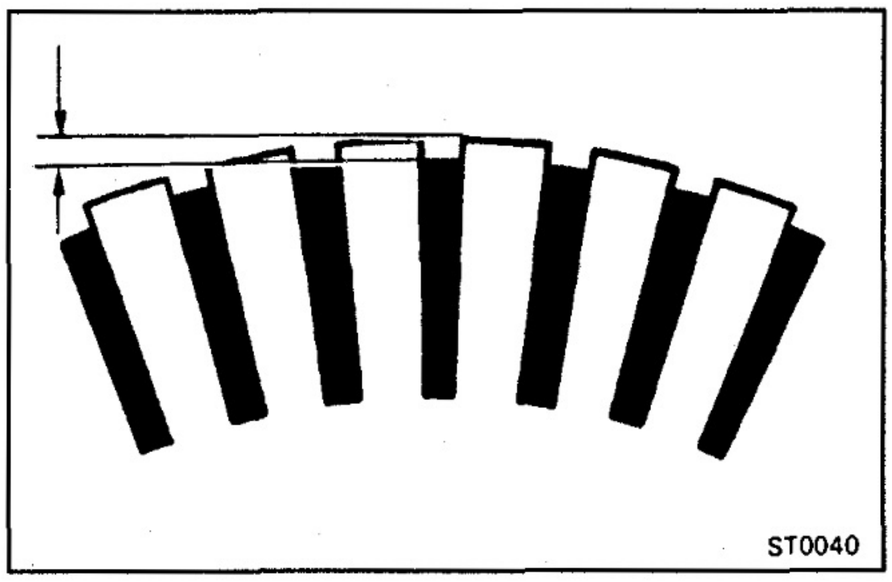

4. INSPECT UNDERCUT DEPTH

Check that the undercut depth is clean and free of foreign materials. Smooth out the edge.

Standard undercut depth:

0.7 – 0.9 mm (0.028 – 0.035 in.)

Minimum undercut depth:

0.2 mm (0.008 in.)

If the undercut depth is less than minimum, correct it with a hacksaw blade.

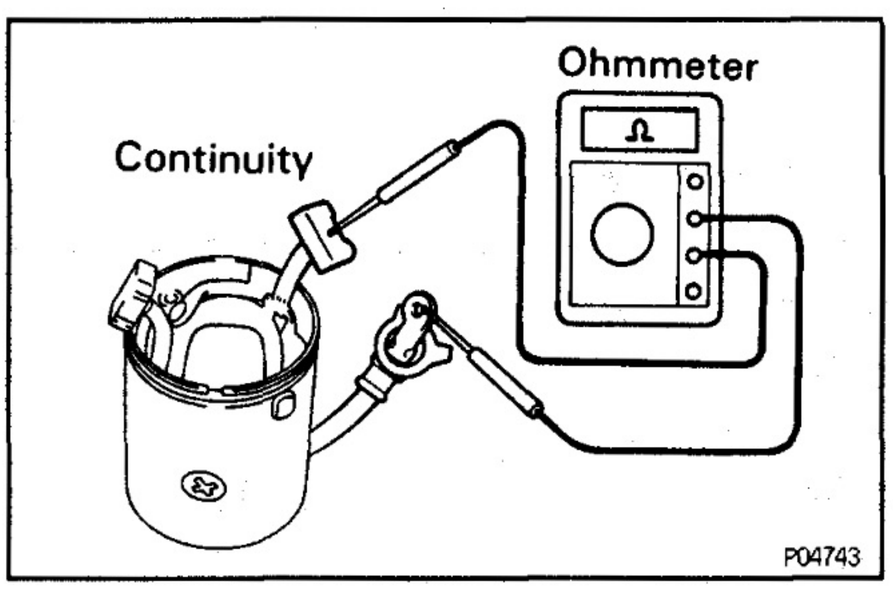

Field Frame (Field Coil)

1. INSPECT FIELD COIL FOR OPEN CIRCUIT

Using an ohmmeter, check that there is continuity between the lead wire and field coil brush lead.

If there is no continuity, replace the field frame.

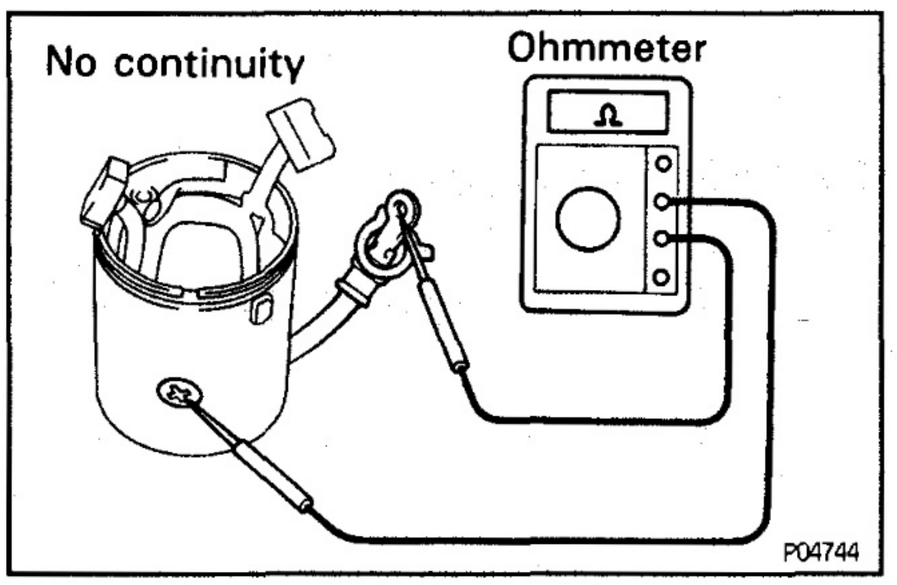

2. INSPECT FIELD COIL FOR GROUND

Using an ohmmeter, check that there is no continuity between the field coil end and field frame.

If there is continuity, repair or replace the field frame.

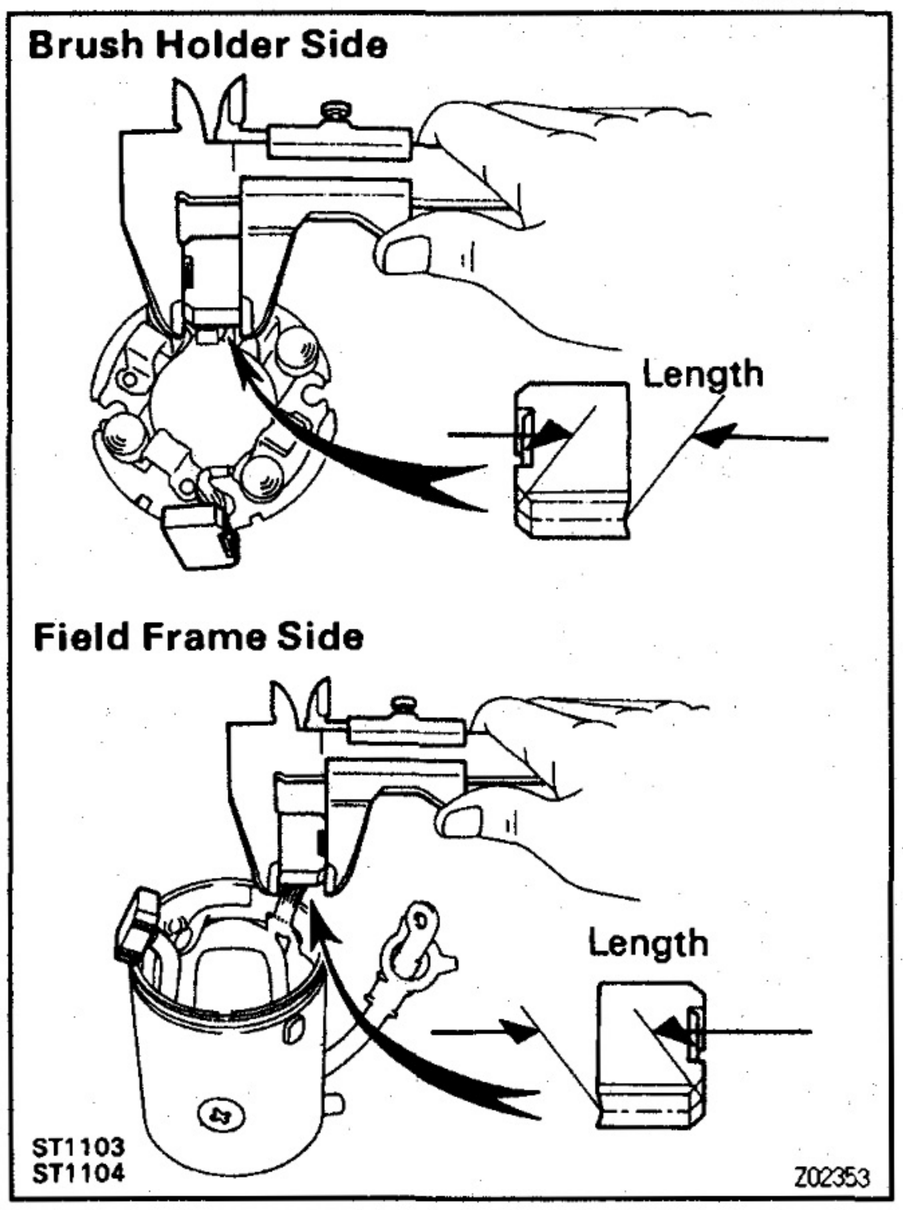

Brushes

INSPECT BRUSH LENGTH

Using a vernier caliper, measure the brush length.

Standard length:

20.5 – 21.0 mm (0.807 – 0.827 in.)

Minimum length:

13.5 mm (0.531 in.)

If the length is less than minimum, replace the brush holder and field frame.

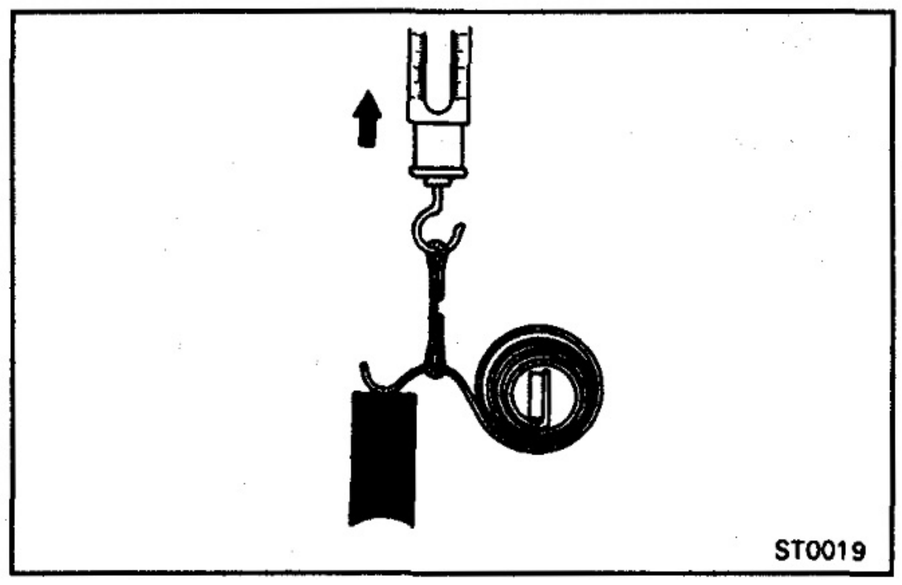

Brush Springs

INSPECT BRUSH SPRING LOAD

Take the pull scale reading the instant the brush spring separates from the brush.

Spring installed load:

32 – 38 N (3.3 – 3.9 kgf, 7.3 – 8.5 lbf)

If the installed load is not within specification, replace the brush springs.

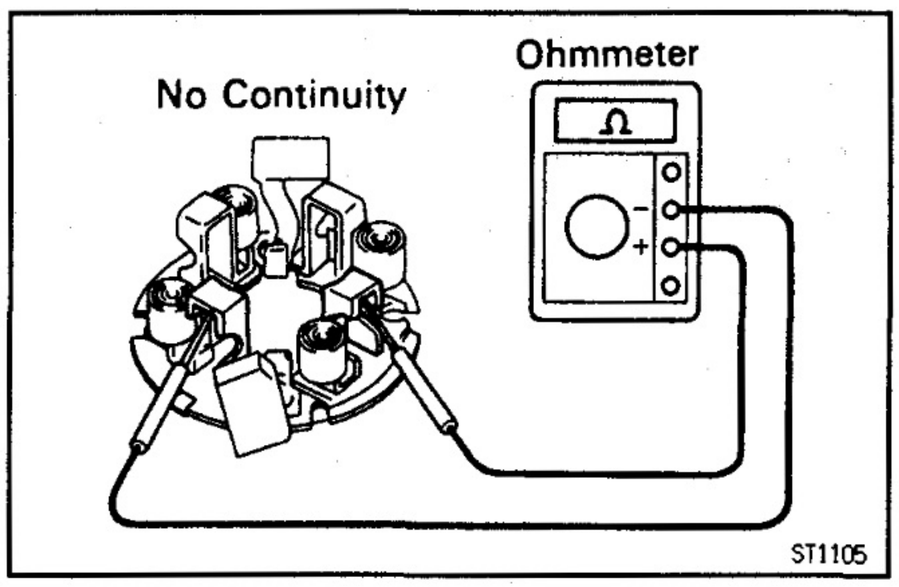

Brush Holder

INSPECT BRUSH HOLDER INSULATION

Using an ohmmeter, check that there is no continuity between the positive (+) and negative (–) brush holders.

If there is continuity, repair or replace the brush holder.

Clutch and Gears

1. **INSPECT GEAR TEETH**

   Check the gear teeth on the pinion gear, idle gear and clutch assembly for wear or damage.

   If damaged, replace the gear or clutch assembly.

   If damaged, also check the drive plate ring gear for wear or damage.

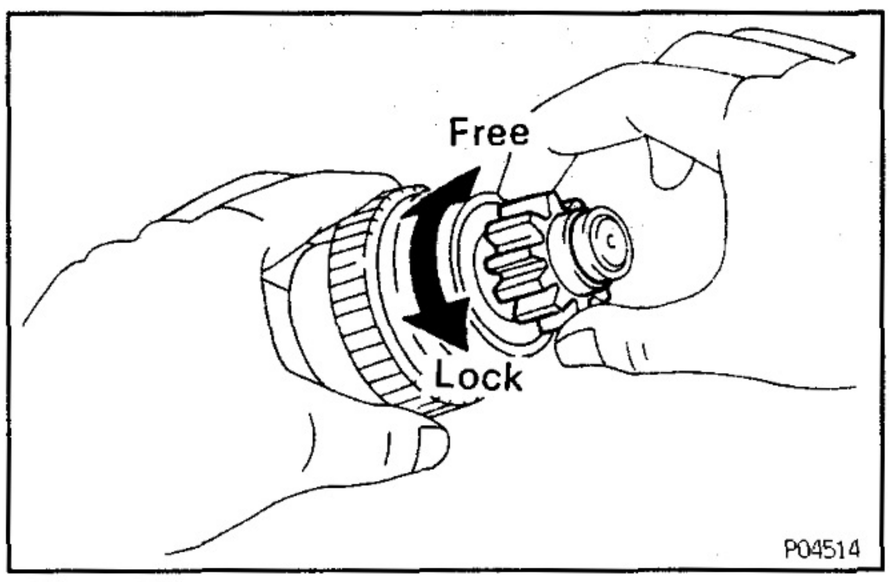

2. INSPECT CLUTCH PINION GEAR

Hold the starter clutch and rotate the pinion gear clockwise, and check that it turns freely. Try to rotate the pinion gear counterclockwise and check that it locks.

If necessary, replace the clutch assembly.

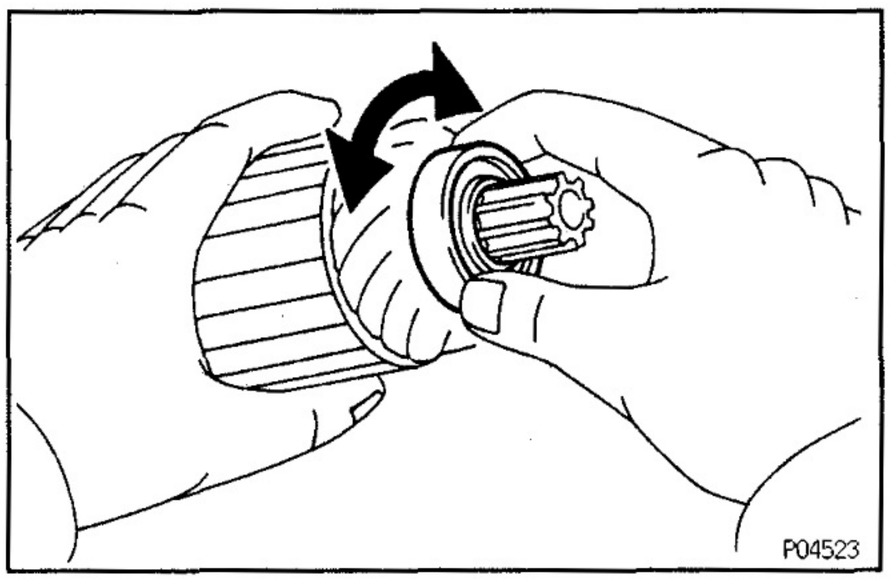

Bearings

1. INSPECT BEARINGS

Turn the bearing by hand while applying inward force.

If resistance is felt or the bearing sticks, replace the bearing.

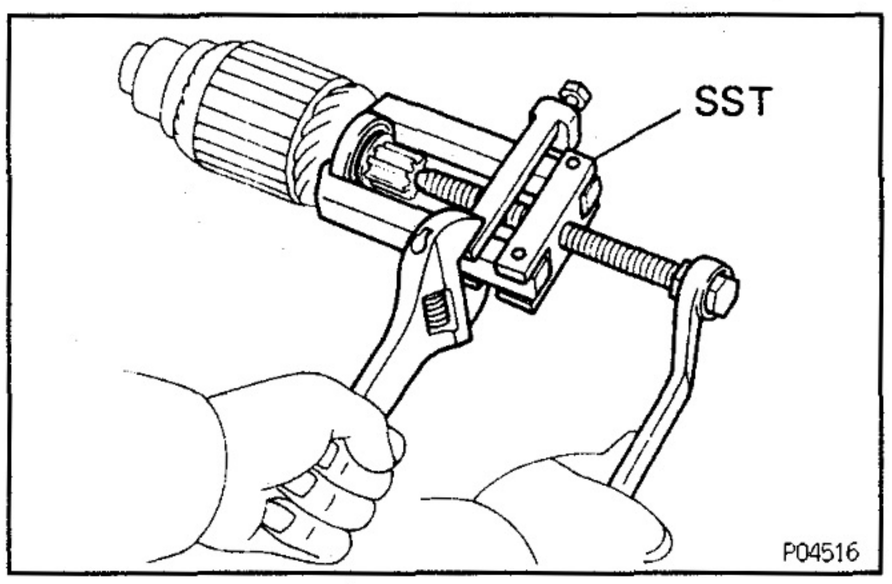

2. IF NECESSARY, REPLACE BEARINGS

(a) Using SST, remove the bearing.
SST 09286–46011

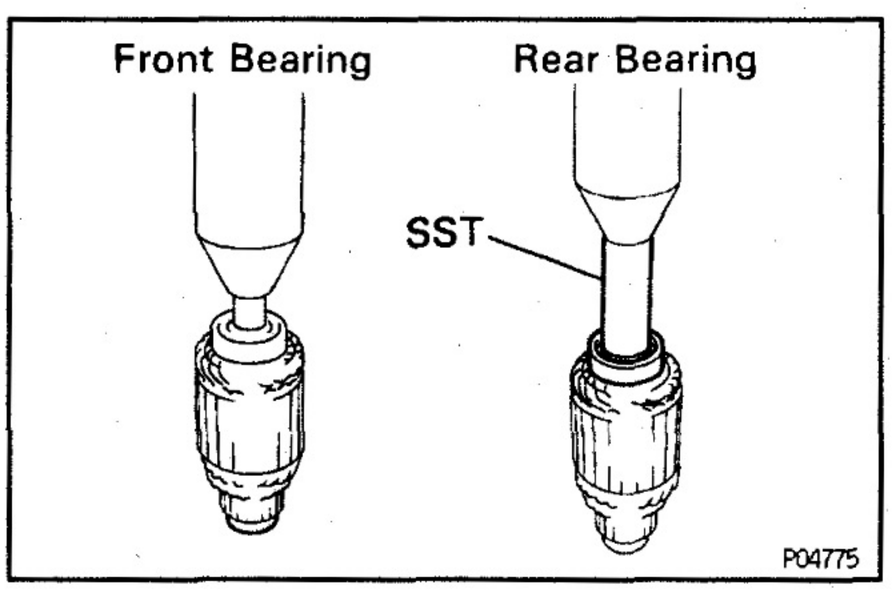

(b) Using a press, press in a new front bearing.

(c) Using SST and a press, press in a new rear bearing.
SST 09820–00030

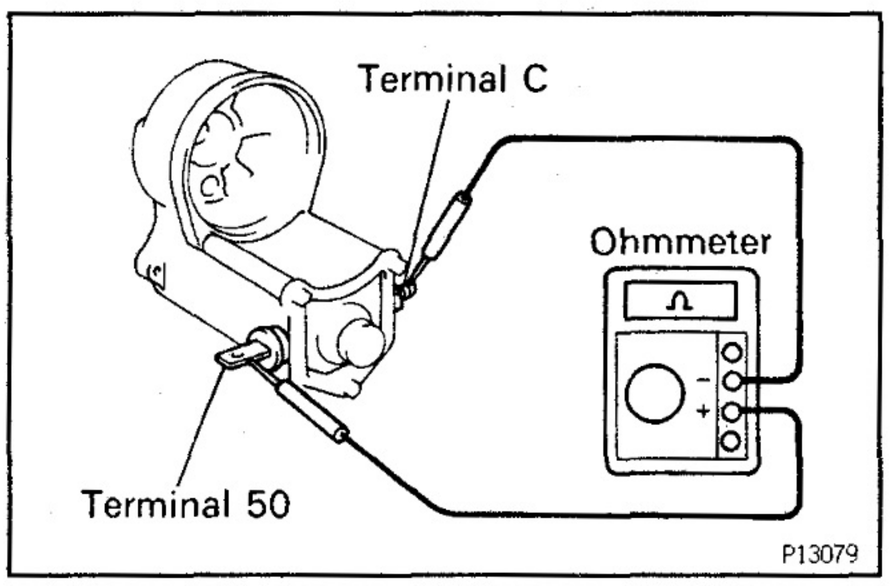

Magnetic Switch

1. PERFORM PULL–IN COIL OPEN CIRCUIT TEST

Using an ohmmeter, check that there is continuity between terminals 50 and C.

If there is no continuity, replace the magnetic switch.

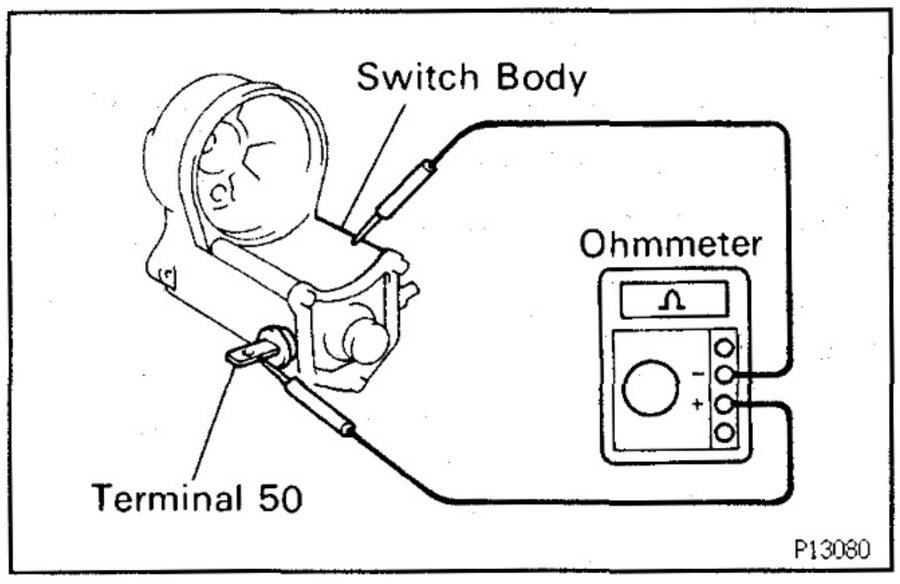

2. PERFORM HOLD–IN COIL OPEN CIRCUIT TEST

Using an ohmmeter, check that there is continuity between terminal 50 and the switch body.

If there is no continuity, replace the magnetic switch.

ST05X–01

STARTER ASSEMBLY

(See Components for Disassembly and Assembly)

HINT: Use high–temperature grease to lubricate the bearings and gears when assembling the starter.

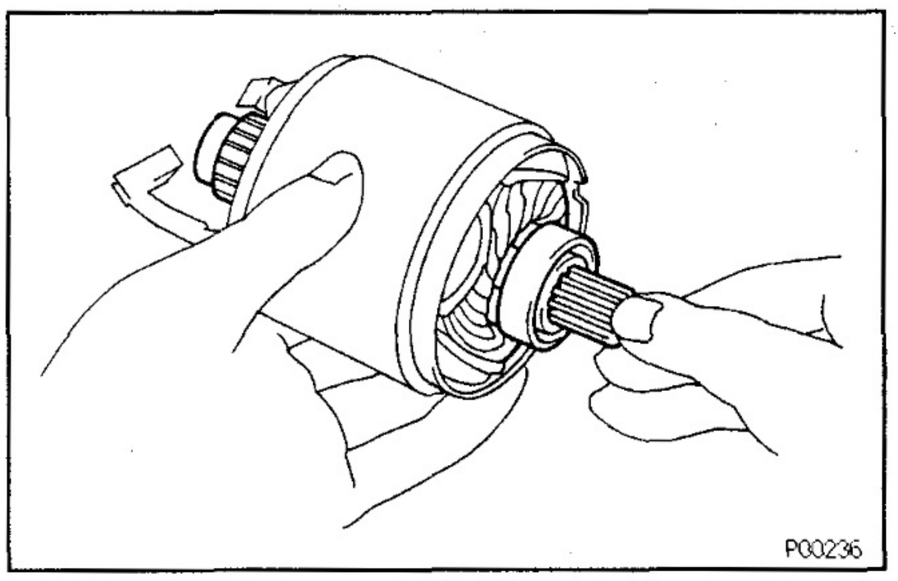
P00236

1. PLACE ARMATURE INTO FIELD FRAME

Apply grease to the armature bearings, and insert the armature into the field frame.

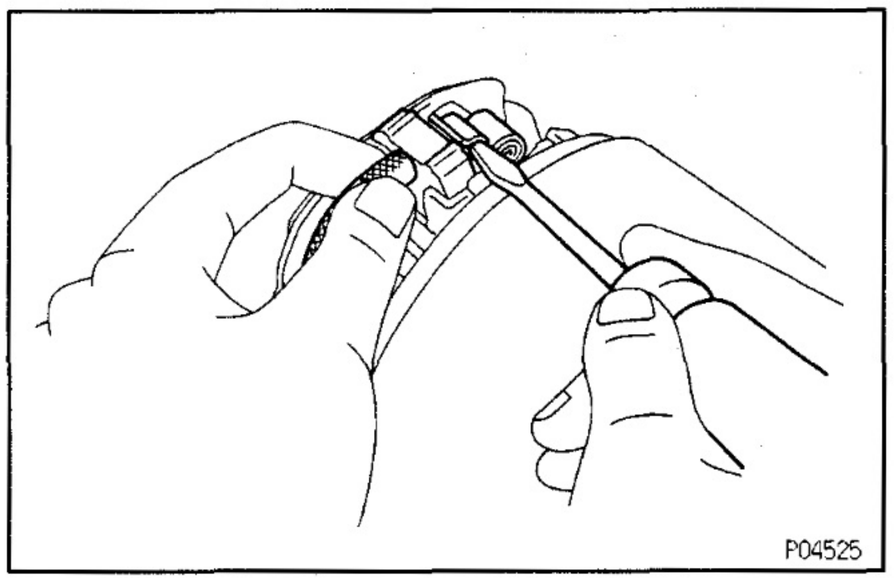
P04525

2. INSTALL BRUSH HOLDER

(a) Place the brush holder on the armature.

(b) Using a screwdriver, hold the brush spring back, and connect the brush into the brush holder. Connect the four brushes.

NOTICE: Check that the positive (+) lead wires are not grounded.

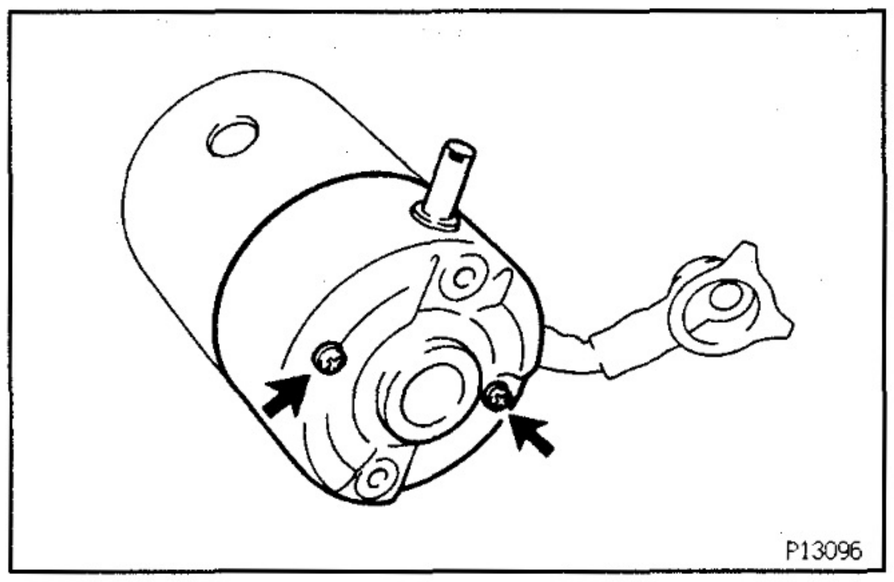
P13096

(c) Install the end cover to the field frame with the 2 screws.

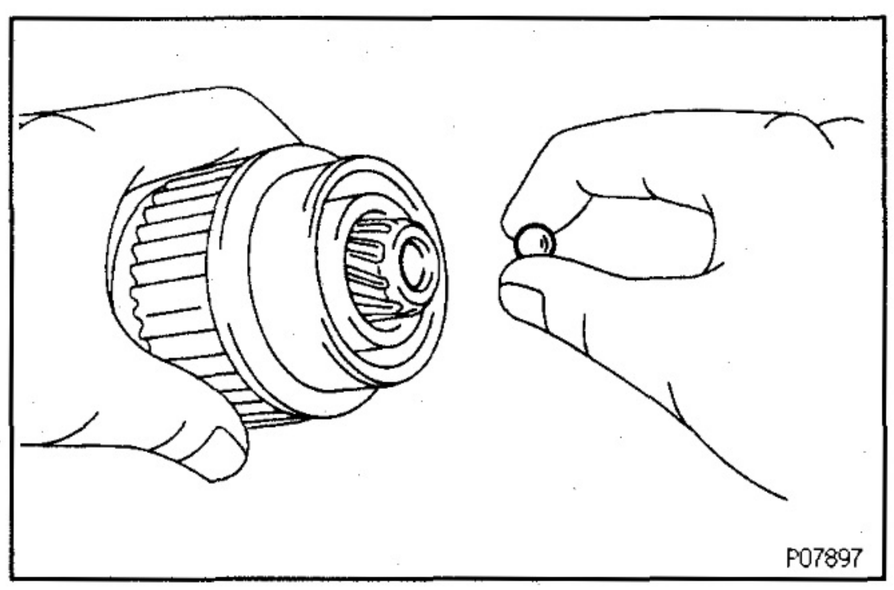
P07897

3. INSERT STEEL BALL INTO CLUTCH SHAFT HOLE

(a) Apply grease to the steel ball.

(b) Insert the steel ball into the clutch shaft hole.

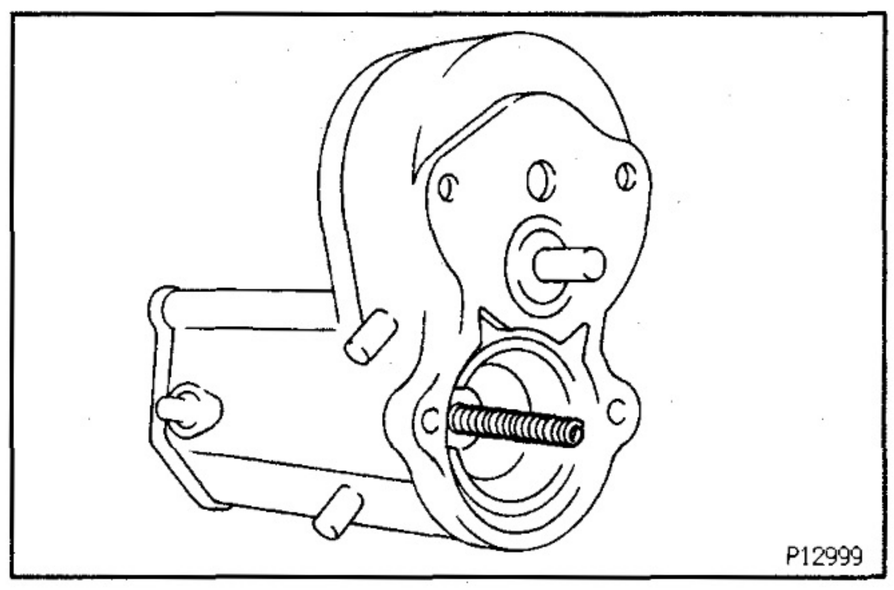
P12999

4. INSTALL STARTER HOUSING, CLUTCH ASSEMBLY AND GEAR

(a) Apply grease to the return spring.

(b) Insert the return spring into the magnetic switch hole.

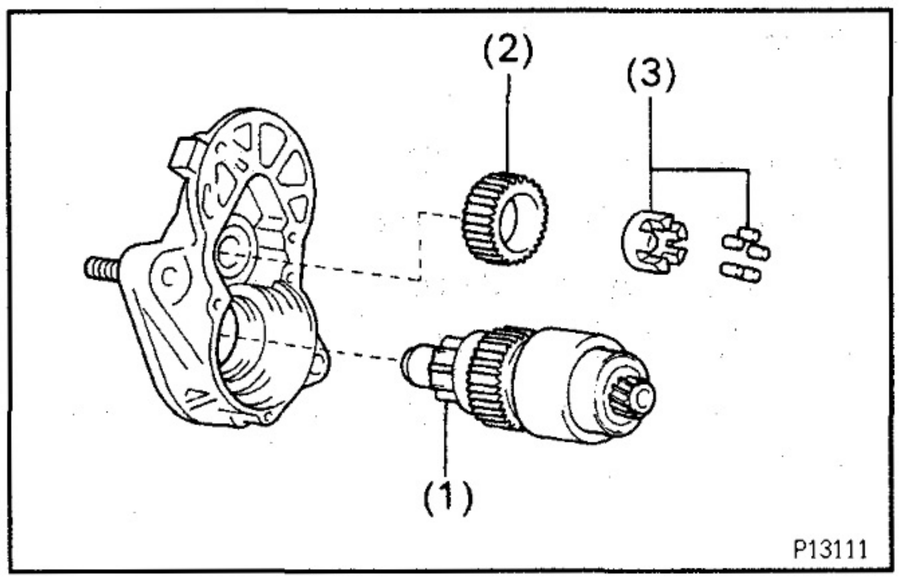

(c) Place the following parts in position on the starter housing:
(1) Clutch assembly
(2) Idler gear
(3) Bearing

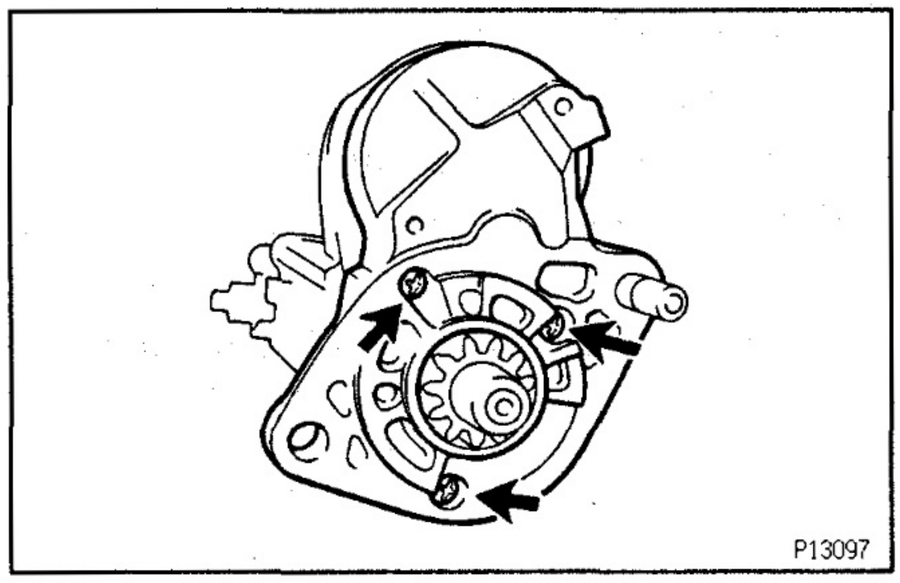

(d) Assemble the starter housing and magnetic switch assembly and install the 2 screws.

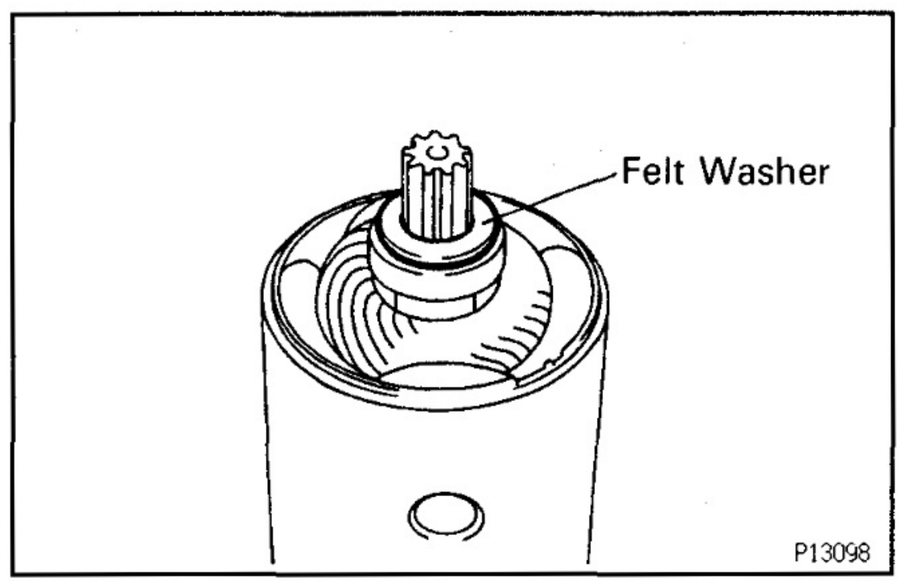

5. INSTALL FIELD FRAME WITH ARMATURE TO MAGNETIC SWITCH ASSEMBLY

(a) Install a new felt washer to the armature.

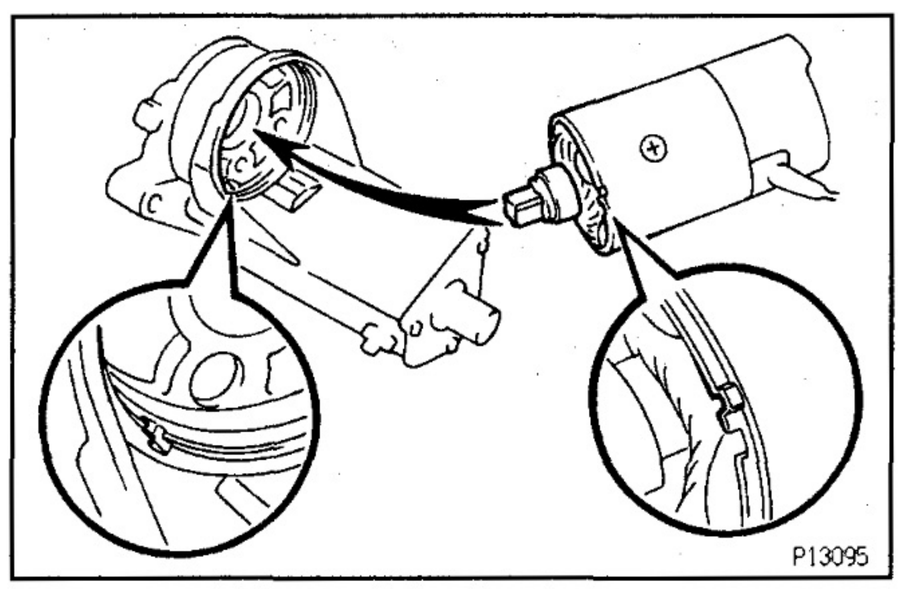

(b) Align the protrusion of the field frame with the cutout of the magnetic switch.

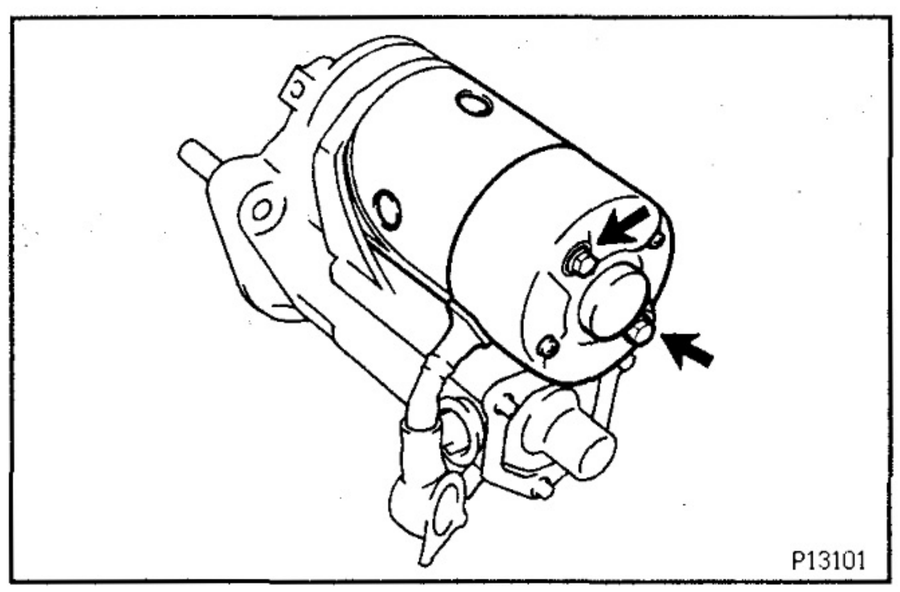

(c) Install the field frame and armature assembly with the 2 through bolts.
Torque: 9.3 N·m (95 kgf·cm, 82 in.·lbf)

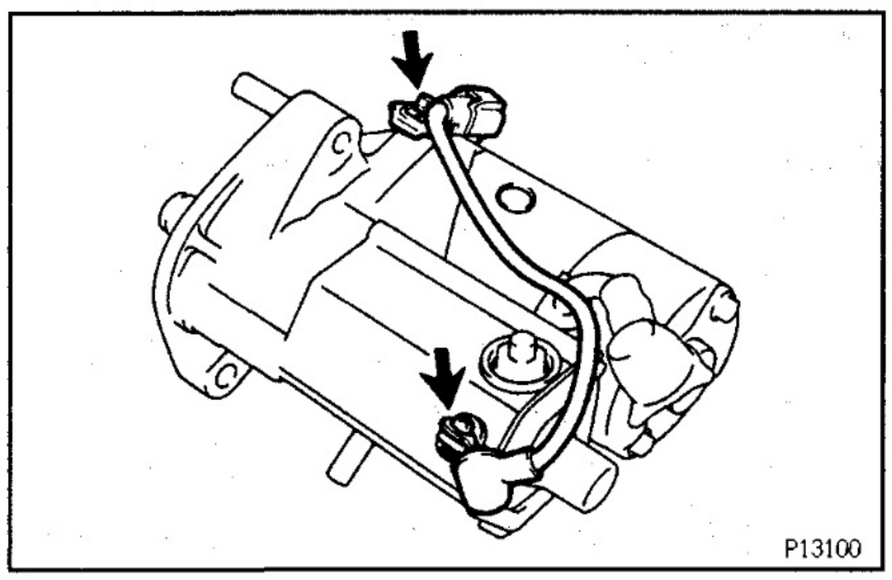

(d) Install the lead wire to terminal 50 and starter housing with the bolt and screw.
Torque: 3.6 N·m (41 kgf·cm, 32 in.·lbf)

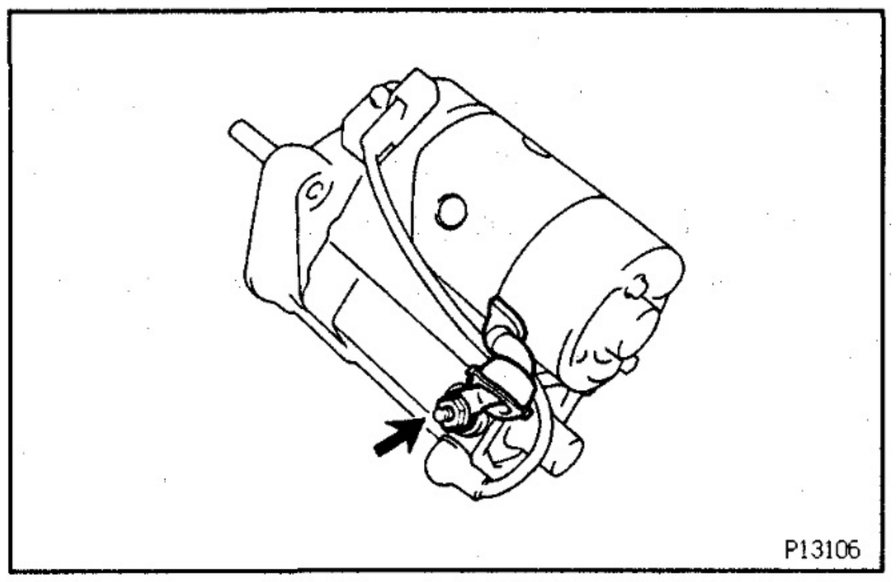

(e) Connect the lead wire to terminal C, and install the nut.
Torque: 21.1 N·m (215 kgf·cm, 16 ft·lbf)

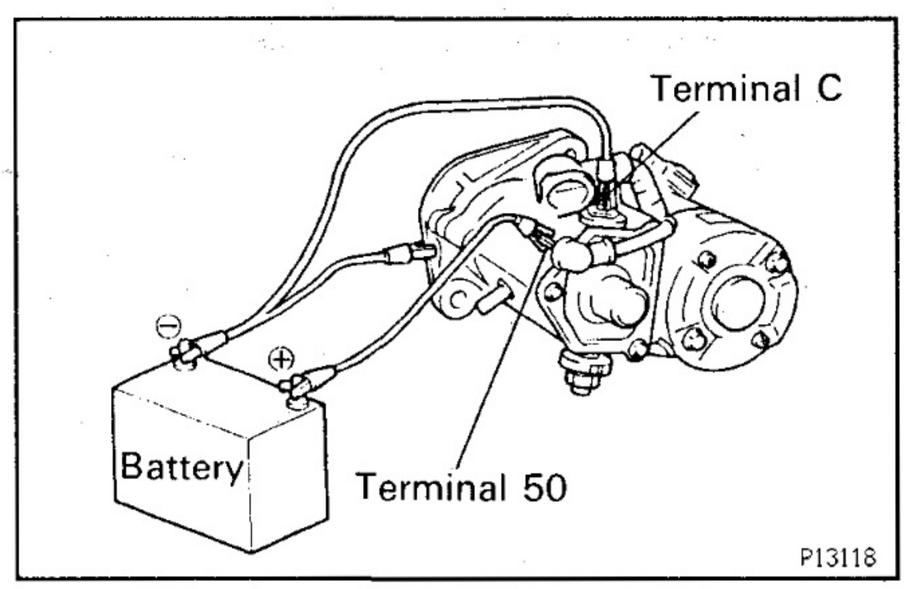

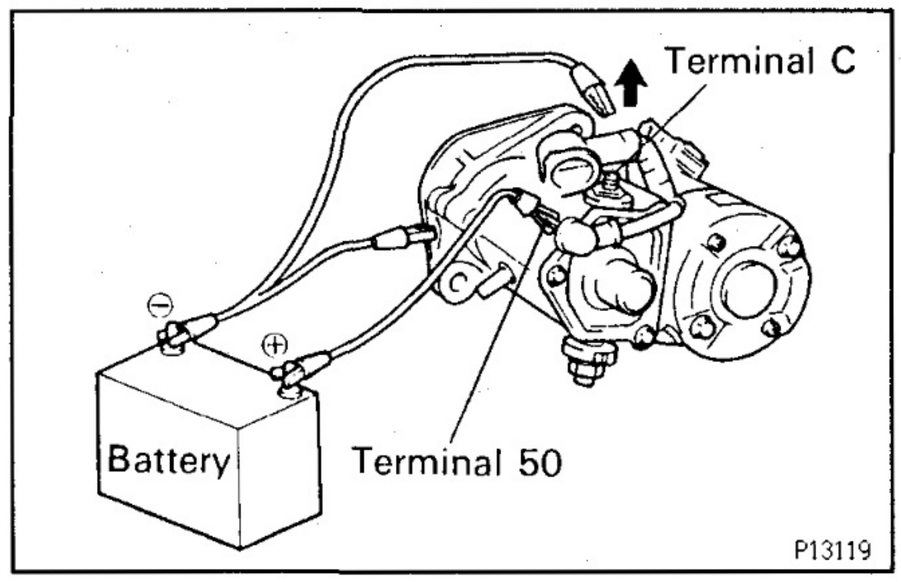

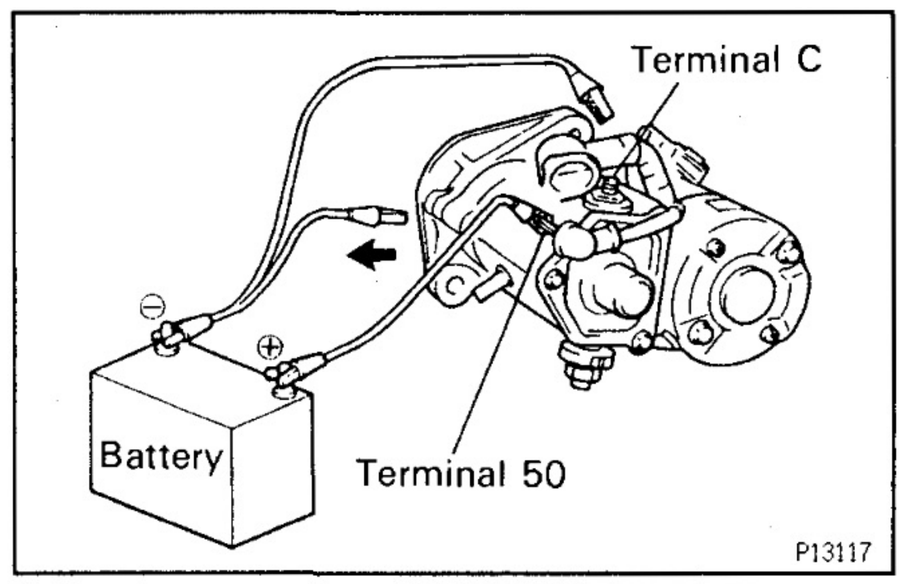

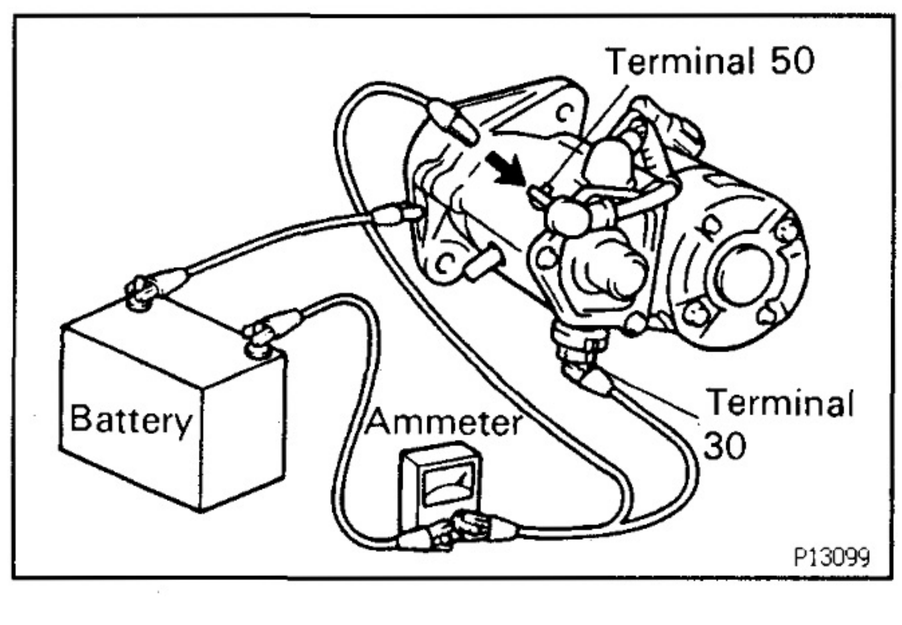

STARTER PERFORMANCE TEST

ST010–0C

NOTICE: These tests must be performed within 3 to 5 seconds to avoid burning out the coil.

1. PERFORM PULL–IN TEST

(a) Disconnect the field coil lead wire from terminal C.

(b) Connect the battery to the magnetic switch as shown. Check that the clutch pinion gear moves outward.
If the clutch pinion gear does not move, replace the magnetic switch assembly.

2. PERFORM HOLD–IN TEST

With battery connected as above with the clutch pinion gear out, disconnect the negative (–) lead from terminal C. Check that the pinion gear remains out.
If the clutch pinion gear returns inward, replace the magnetic switch assembly.

3. INSPECT CLUTCH PINION GEAR RETURN

Disconnect the negative (–) lead from the switch body.
Check that the clutch pinion gear returns inward.
If the clutch pinion gear does not return, replace the magnetic switch assembly.

4. PERFORM NO–LOAD PERFORMANCE TEST

(a) Connect the battery and ammeter to the starter as shown.

(b) Check that the starter rotates smoothly and steadily with the pinion gear moving out. Check that the ammeter shows the specified current.

Specified current:

180 A or less at 11.0 V

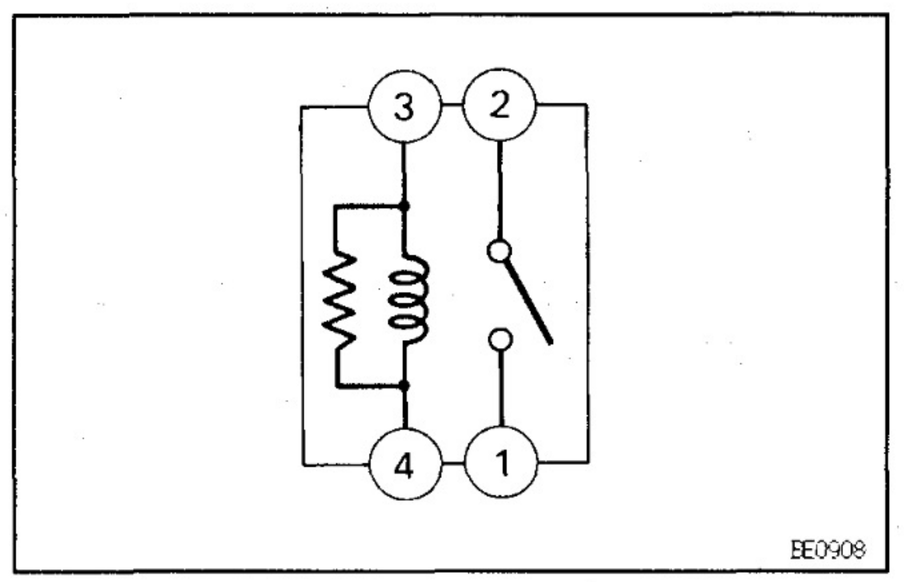

STARTER RELAY

ST05Y-01

STARTER RELAY INSPECTION

1. REMOVE STARTER RELAY
2. INSPECT STARTER RELAY

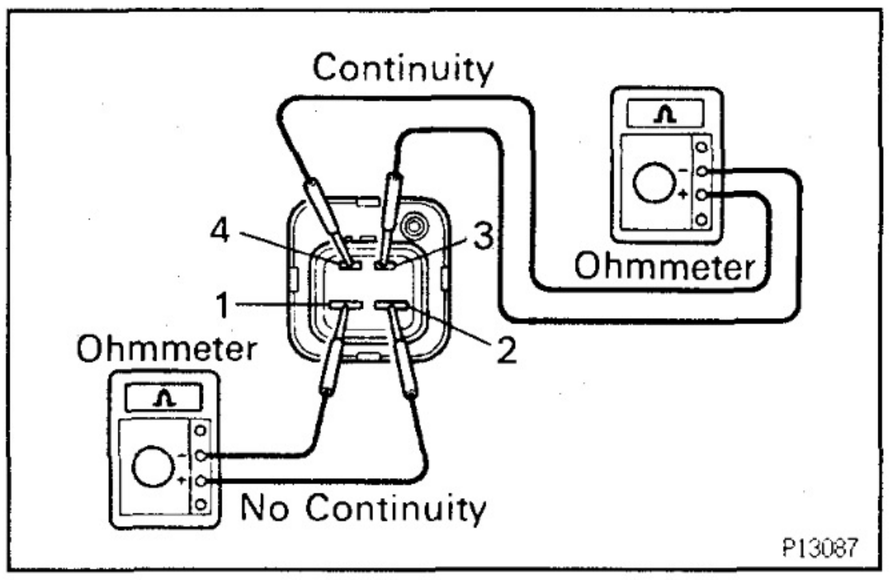

3. INSPECT RELAY CONTINUITY

(a) Using an ohmmeter, check that there is continuity between terminals 3 and 4.

(b) Check that there is no continuity between terminals 1 and 2.

If continuity is not as specified, replace the relay.

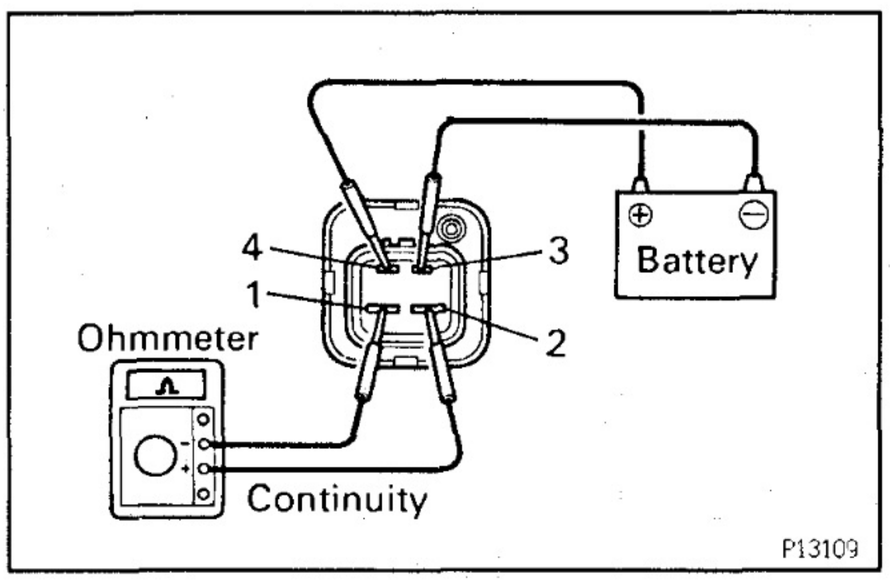

4. INSPECT RELAY OPERATION

(a) Apply battery voltage across terminals 3 and 4.

(b) Using an ohmmeter, check that there is continuity between terminals 1 and 2.

If operation is not as specified, replace the relay.

5. REINSTALL STARTER RELAY

PRE–HEATING SYSTEM

ST05N–01

DESCRIPTION

PRE–HEATING TIMER

Newly developed ceramic glow plugs are used to greatly reduce pre–heating time and simplify the system. The glow plugs are computer controlled for optimum efficiency.

GLOW PLUG

This engine uses ceramic glow plugs. The heater element consists of a glow filament made from conductive ceramic, an insulator made from insulating ceramic, and a tungsten wire.

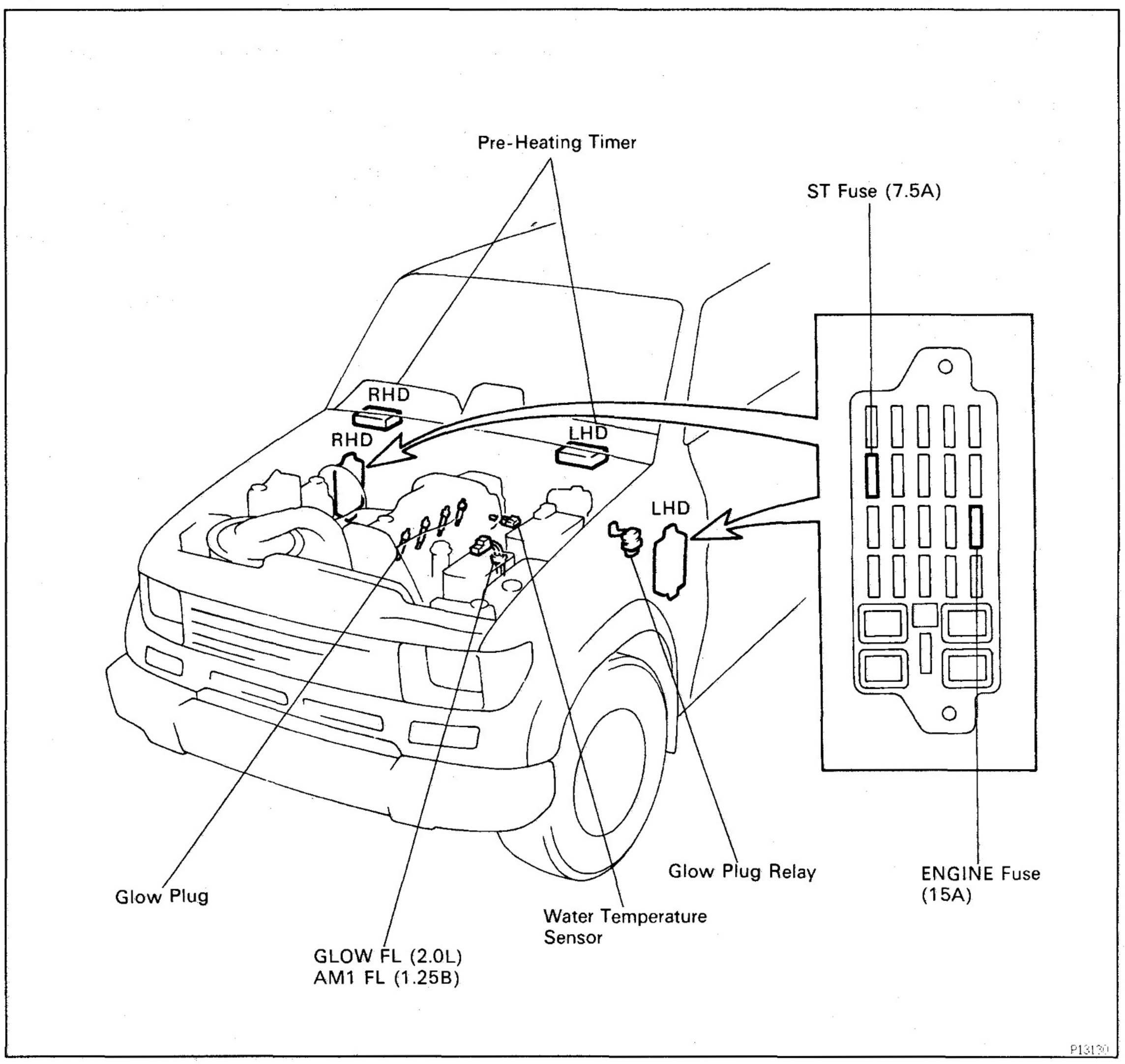

ST05P–01

SYSTEM CIRCUIT

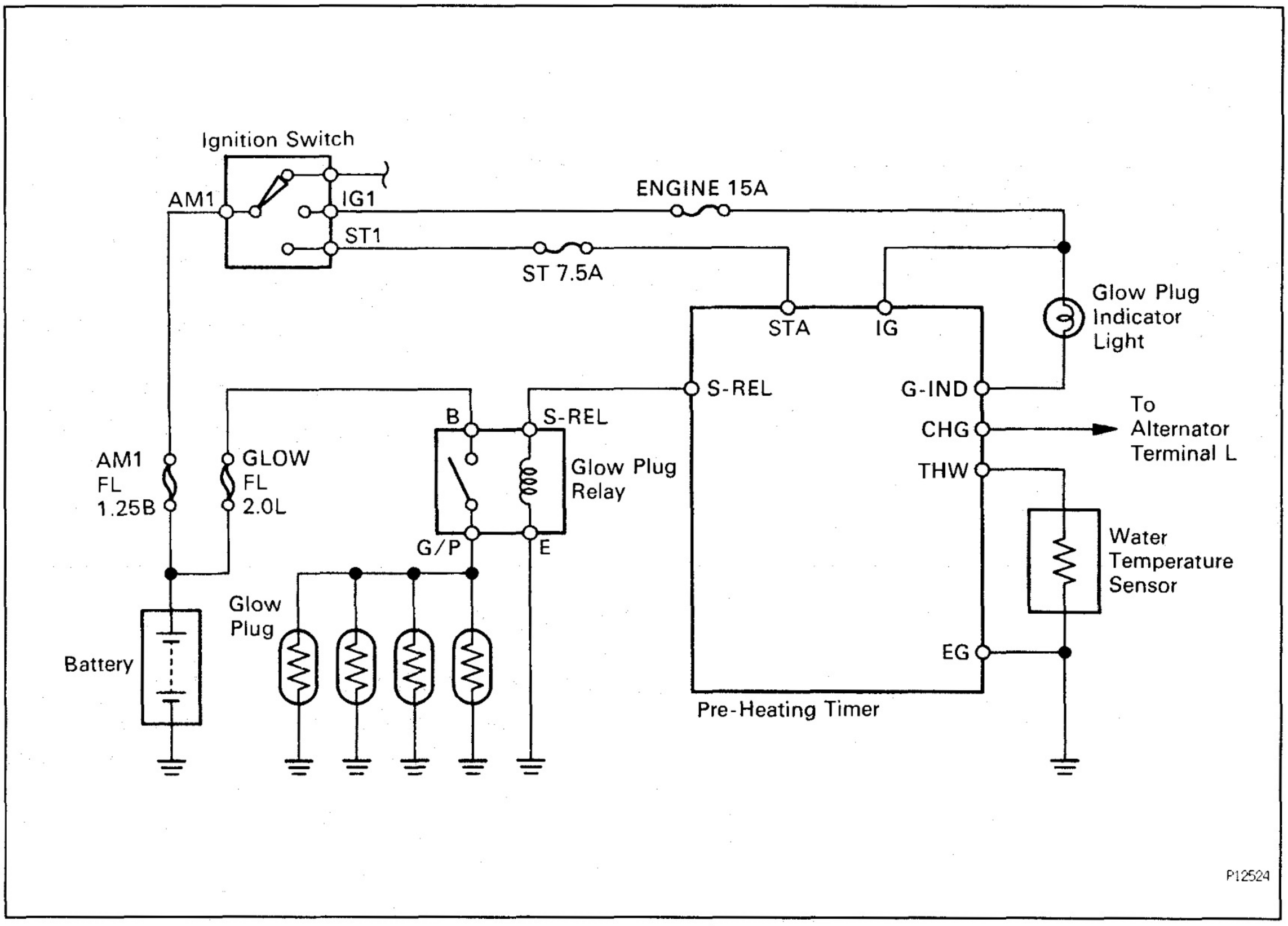

ST05Q–01

ON–VEHICLE INSPECTION

HINT: Refer to Diesel Electrical System Diagnosis for inspection procedures. (See page EG–11)

1. **INSPECT LIGHTING TIME OF GLOW INDICATOR LIGHT**

Turn the ignition switch "ON", measure the lighting time.

Light lighting time:

Refer to the chart graph

2. **INSPECT AFTER GLOW TIME**

Turn the ignition switch "ON", measure the time battery voltage is applied to terminal S–REL of the pre–heating timer.

After glow time:

Refer to the chart graph

Pre-Heating Timer

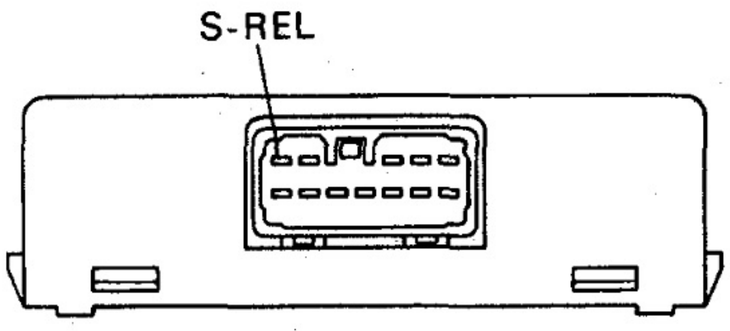

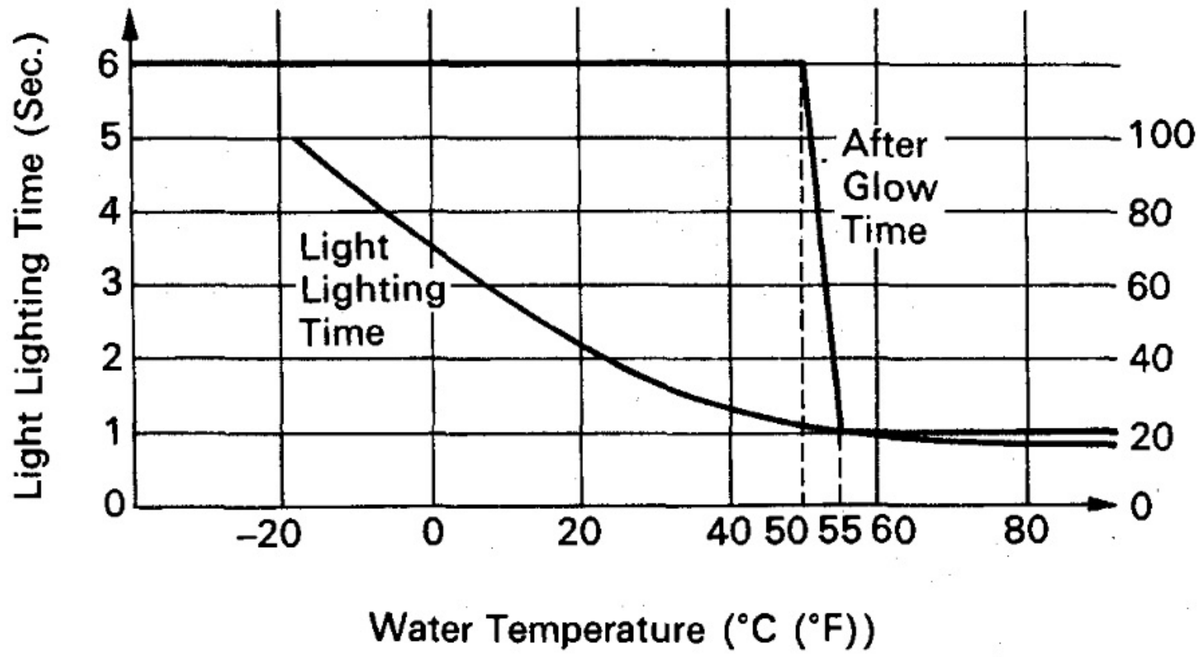

P08055 P13107

Z09484

ST05R–01

PRE–HEATING TIMER INSPECTION

INSPECT PRE–HEATING TIMER CIRCUIT

Disconnect the connector(s) from the pre–heating timer, and check the connector on the wire harness side as shown in the following chart:

Check for	Tester connection	Condition	Specified value
Voltage	G-IND – Ground	Ignition switch OFF	No voltage
		Ignition switch ON	Battery voltage
Voltage	IG – Ground	Ignition switch OFF	No voltage
		Ignition switch ON	Battery voltage
Voltage	STA – Ground	Ignition switch OFF	No voltage
		Ignition switch START	Battery voltage
Continuity	S-REL – Ground	–	Continuity
Continuity	THW – EG	–	Continuity

Wire Harness Side of Pre-Heating Timer

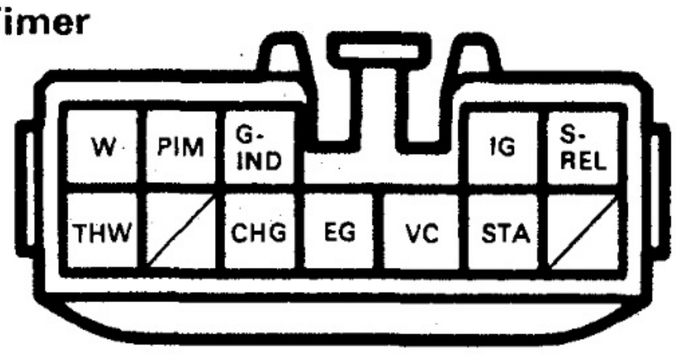

e-12-1

V03856

ST04R–02

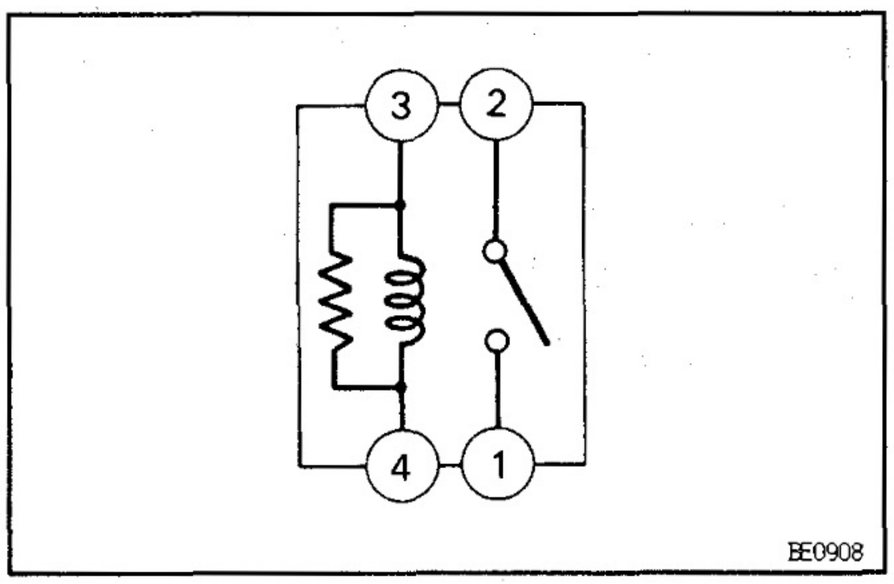

GLOW PLUG RELAY INSPECTION

1. **REMOVE GLOW PLUG RELAY**
2. **INSPECT GLOW PLUG RELAY**

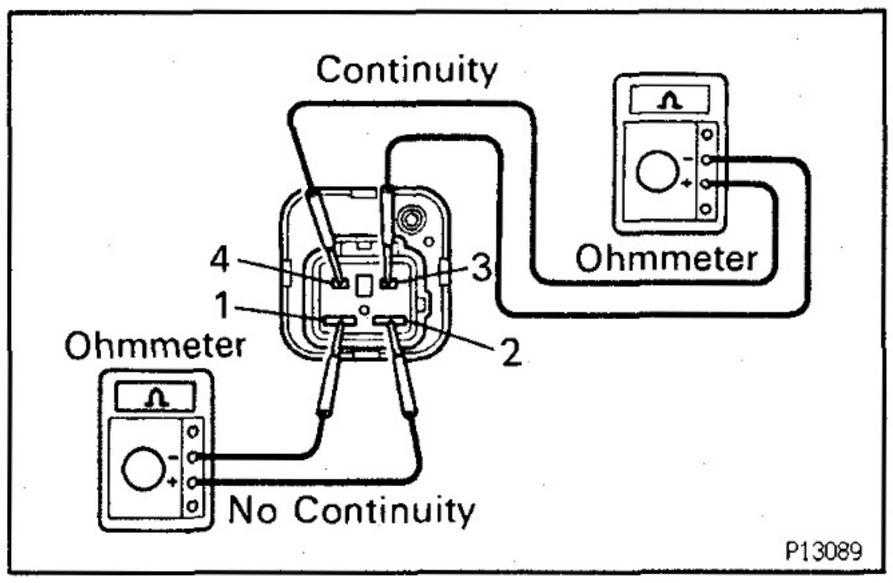

3. **INSPECT RELAY CONTINUITY**

(a) Using an ohmmeter, check that there is continuity between terminals 3 and 4.

(b) Check that there is no continuity between terminals 1 and 2.

If continuity is not as specified, replace the relay.

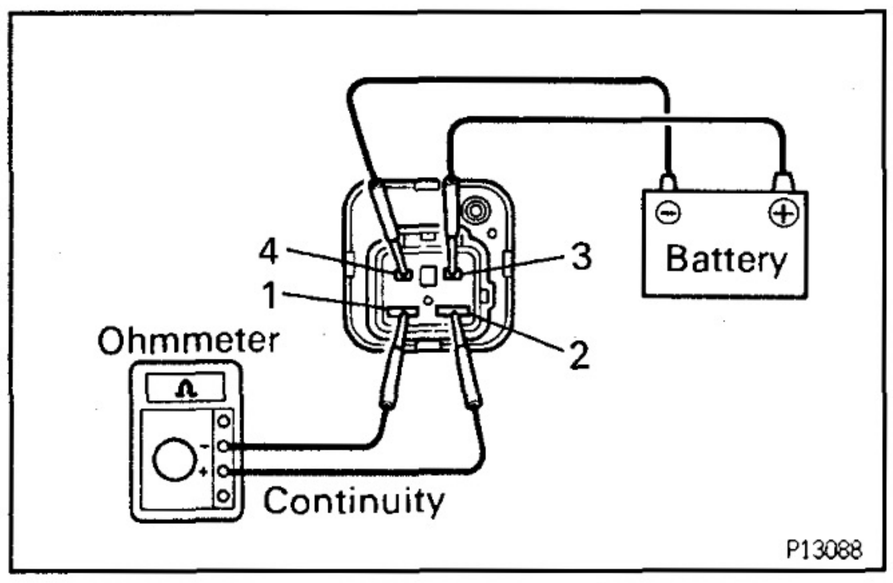

4. **INSPECT RELAY OPERATION**

(a) Apply battery voltage across terminals 3 and 4.

(b) Using an ohmmeter, check that there is continuity between terminals 1 and 2.

If operation is not as specified, replace the relay.

5. **REINSTALL GLOW PLUG RELAY**

EG2A1–02

WATER TEMPERATURE SENSOR INSPECTION

1. **REMOVE WATER TEMPERATURE SENSOR**
2. **INSPECT WATER TEMPERATURE SENSOR**

   Using an ohmmeter, measure the resistance between the terminals.

   Resistance:

   Refer to the chart graph

   If the resistance is not as specified, replace the water temperature sensor.
3. **REINSTALL WATER TEMPERATURE SENSOR**

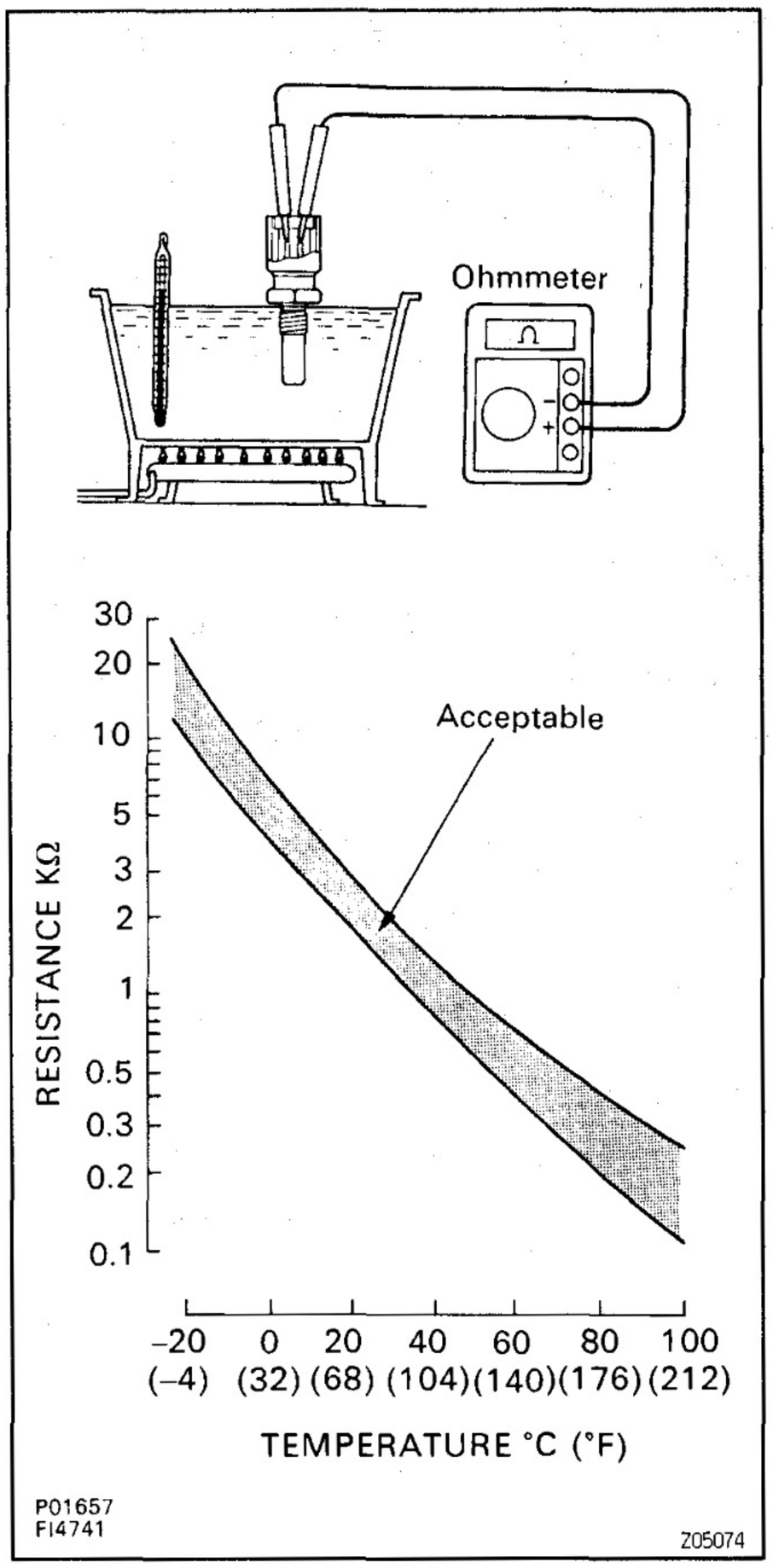

GLOW PLUG

COMPONENTS FOR REMOVAL AND INSTALLATION

ST05Z-01

NOTICE:

- **The cylinder head and glow plug hole can seize up with carbon deposits. And if the glow plug is forcefully twisted when you remove it, the torsion can crack the ceramic. So keep removal of the glow plugs to a minimum.**
- **The heater element is ceramic. So if you drop or knock a glow plug even once, replace the glow plug. Replace it regardless of it being new or used, having a normal resistance value and no sign of external damage.**

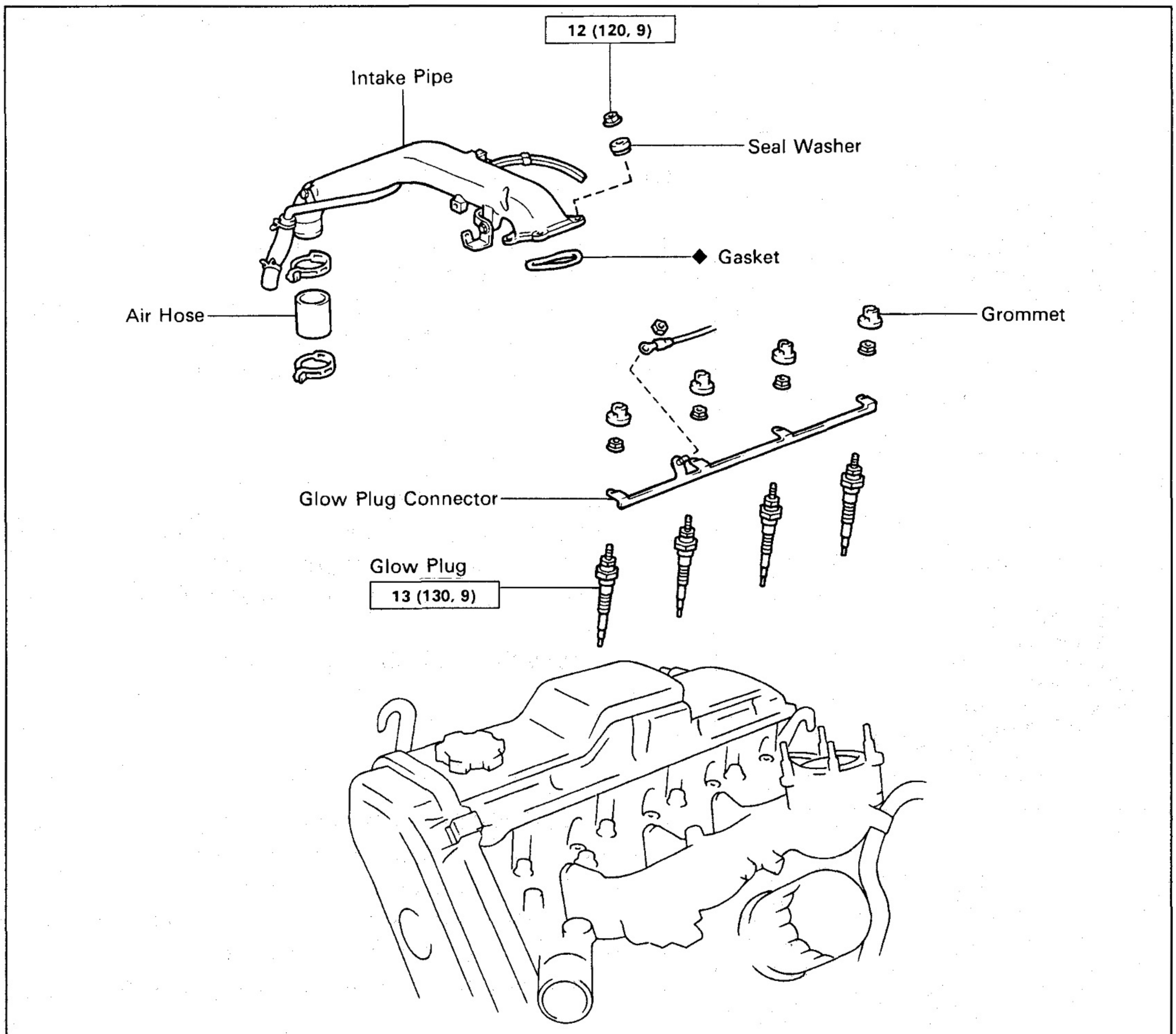

N·m (kgf·cm, ft·lbf) : Specified torque

◆ Non-reusable part

P13129

ST060-01

ON–VEHICLE INSPECTION

NOTICE: When checking the resistance of the glow plugs, do it with the engine installed. Keep removal and installation of the glow plugs to a minimum.

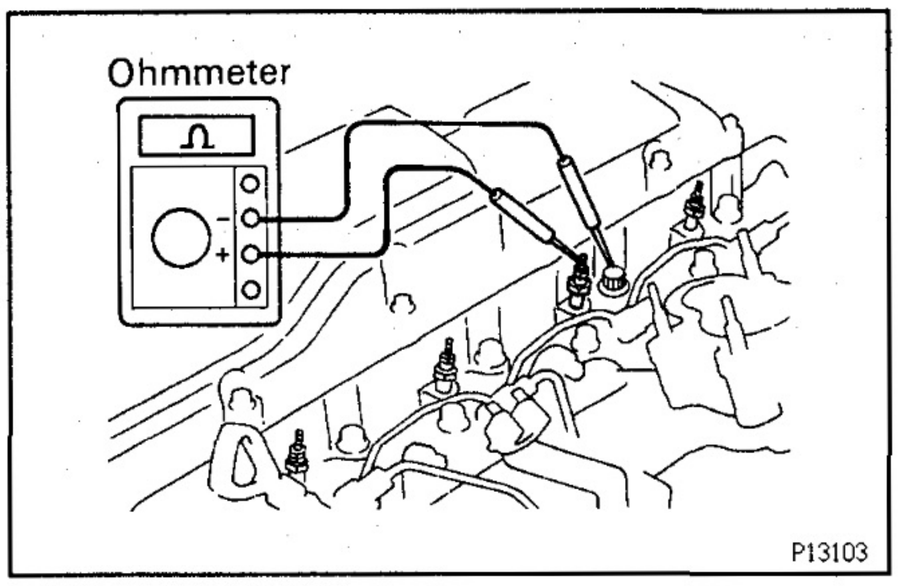

INSPECT GLOW PLUGS

Using an ohmmeter, check that there is continuity between the glow plug terminal and ground.

Resistance (Cold):

Approx. 0.65 Ω

If the resistance exceeds 1.0 Ω, replace the glow plug.

ST061-01

GLOW PLUGS REMOVAL

(See Components for Removal and Installation)

1. REMOVE INTAKE PIPE

(a) Disconnect the VSV connector and 2 vacuum hoses.

(b) Disconnect the 2 wire harness clamps.

(c) Remove the 4 nuts and seal washers.

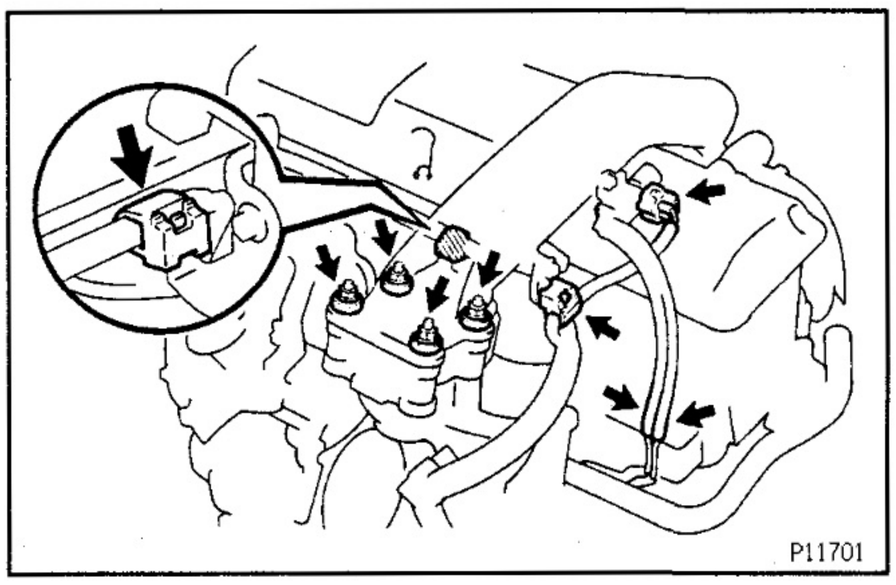

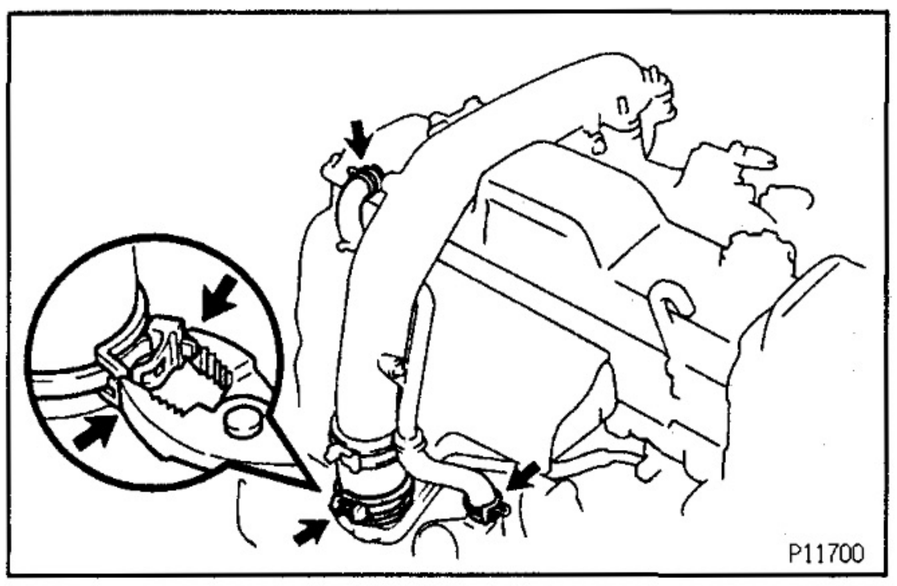

(d) Disconnect the 2 PCV hoses.

(e) Use pliers to pinch the ends of the clamp together until the lock plate engages the catch.
Make sure the lock plate and catch are engaged securely.

(f) Remove the intake pipe and gasket.

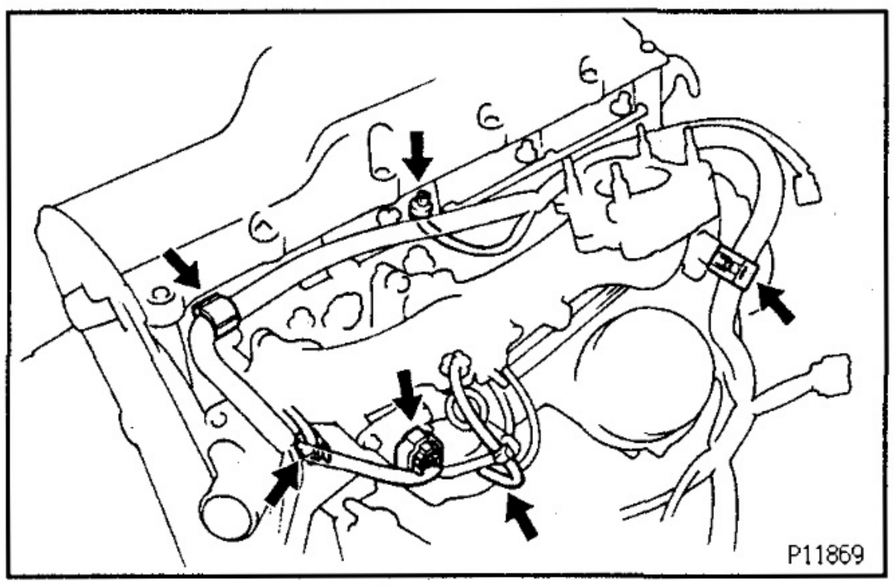

2. DISCONNECT ENGINE WIRE

(a) Disconnect the following connectors:
- Turbo pressure sensor connector
- Water temperature sender gauge connector

(b) Remove the grommet, nut and wire.

(c) Disconnect the 2 engine wire harness clamps.

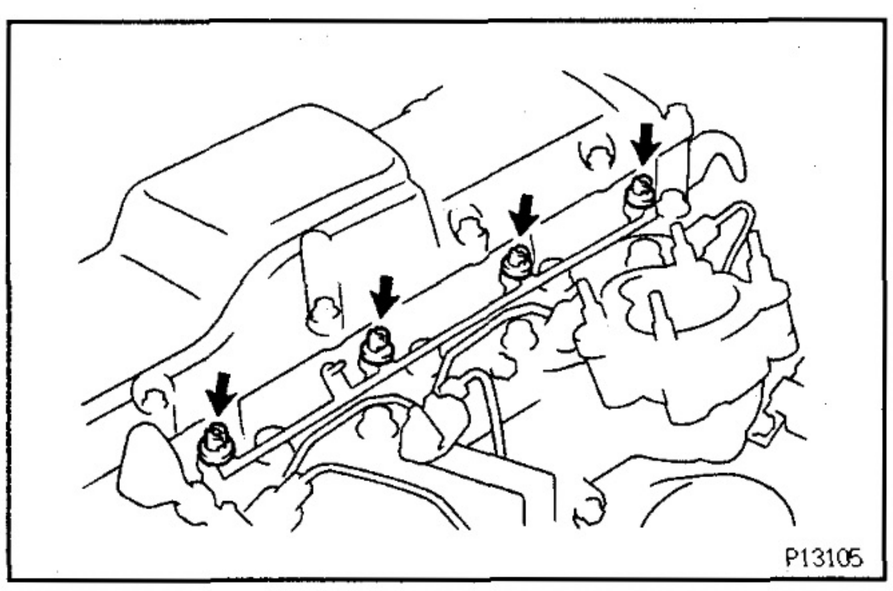

3. REMOVE GLOW PLUGS

(a) Remove the 4 screw grommets.

(b) Remove the 4 nuts and glow plug connector.

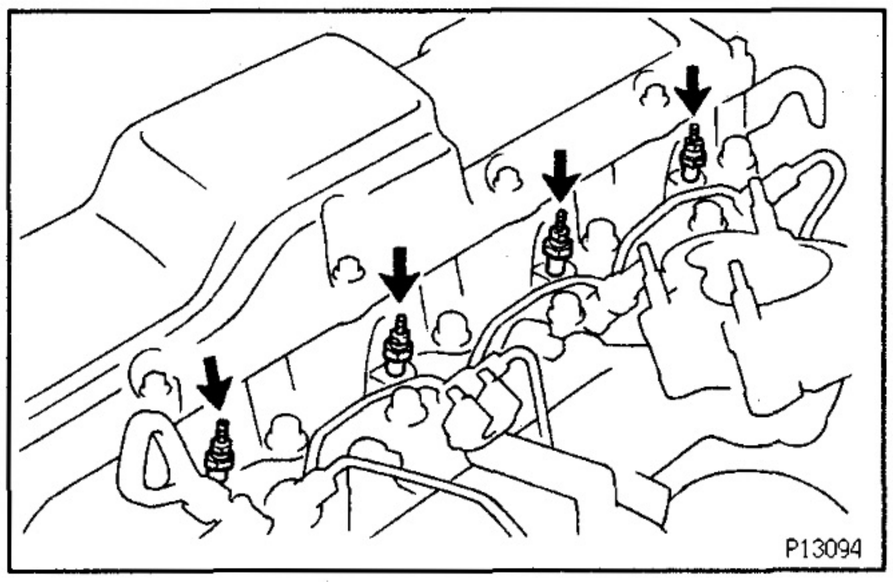

(c) Using a 12 mm deep socket wrench, remove the 4 glow plugs.

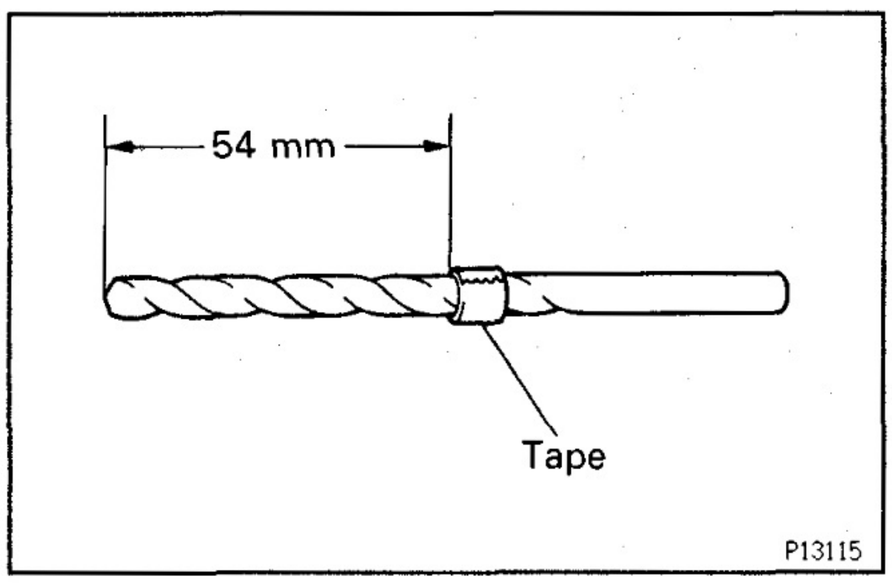

GLOW PLUGS INSTALLATION

ST062-01

(See Components for Removal and Installation)

NOTICE: Before reinstalling glow plugs, always first remove the carbon from the glow plug hole according to the following procedure.

1. INSTALL GLOW PLUGS

(a) Wind tape back for 54 mm from the tip of a 6 mm drill.

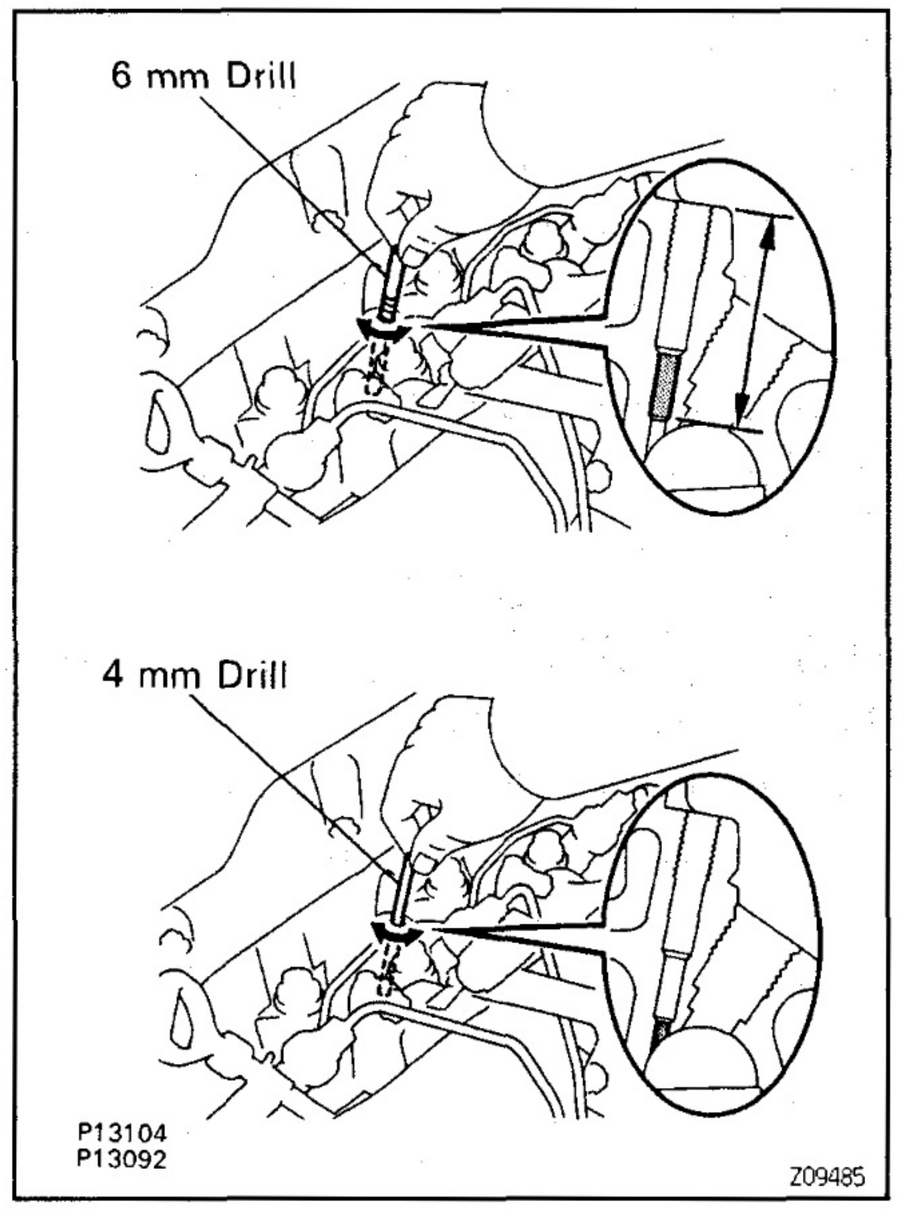

(b) Insert the taped 54 mm of the drill into the plug hole and turn the drill by hand to remove the carbon.

(c) Insert a 4 mm drill into the glow plug hole and turn the drill by hand to remove the carbon from the tip of the plug hole.

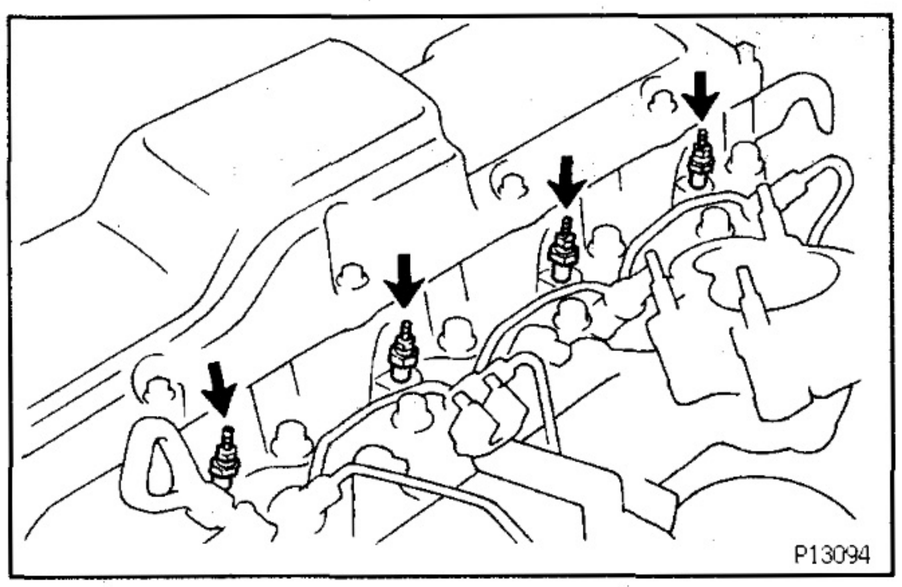

(d) Using a 12 mmdeep socket wrench, install the 4 glow plugs.
Torque: 13 N·m (130 kgf·cm, 9 ft·lbf)

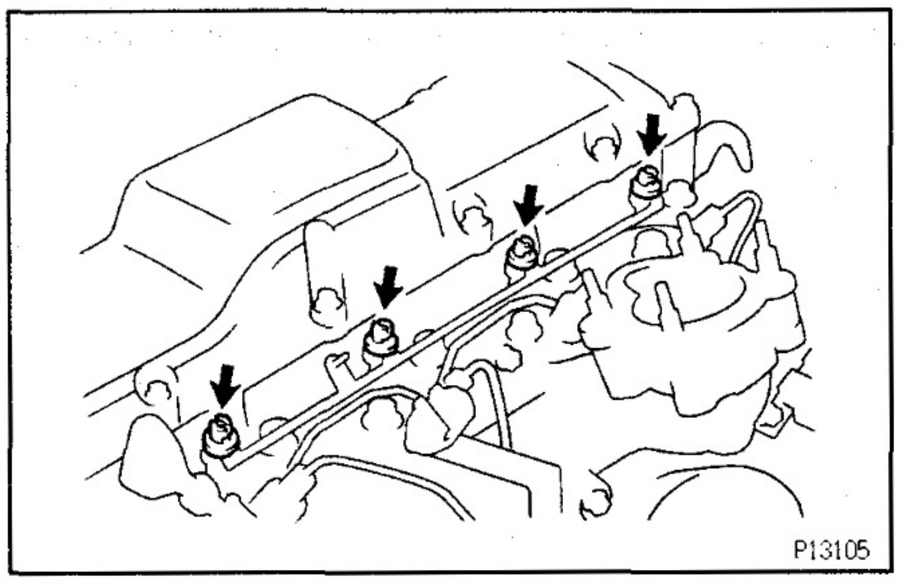

(e) Install glow plug connector with the 4 nuts.
(f) Install the 4 screw grommets.

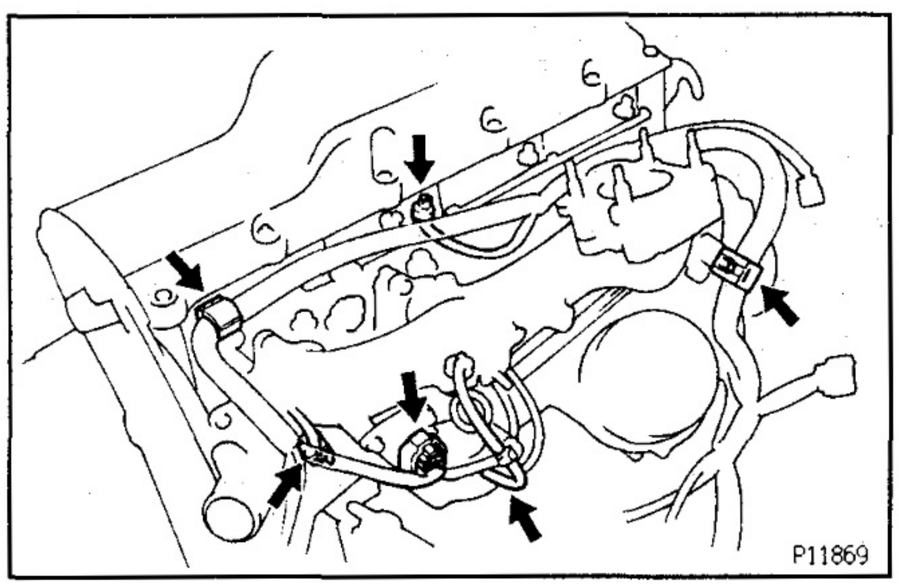

2. CONNECT ENGINE WIRE

(a) Connect the 2 engine wire harness clamps.
(b) Install the wire, nut and grommet.
(c) Connect the following connectors:
- Turbo pressure sensor connector
- Water temperature sender gauge connector

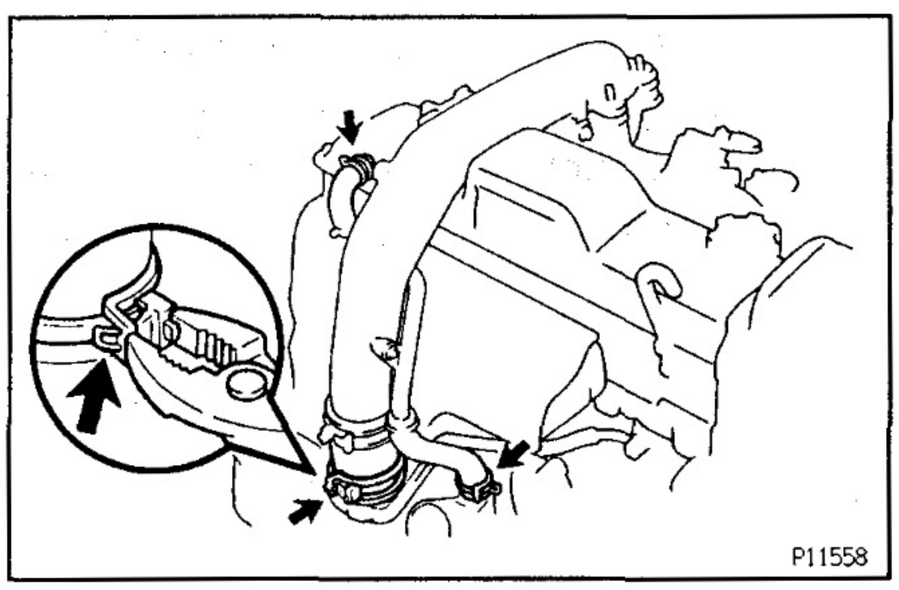

3. INSTALL INTAKE PIPE

(a) Place a new gasket on the intake manifold.
(b) Connect the air hose and install the intake pipe.
(c) Press the clamp lock together with pliers and press down the tip of the lock plate. Carefully let the lock spread apart.
Take care not to let the pliers slip.
(d) Connect the 2 PCV hoses.

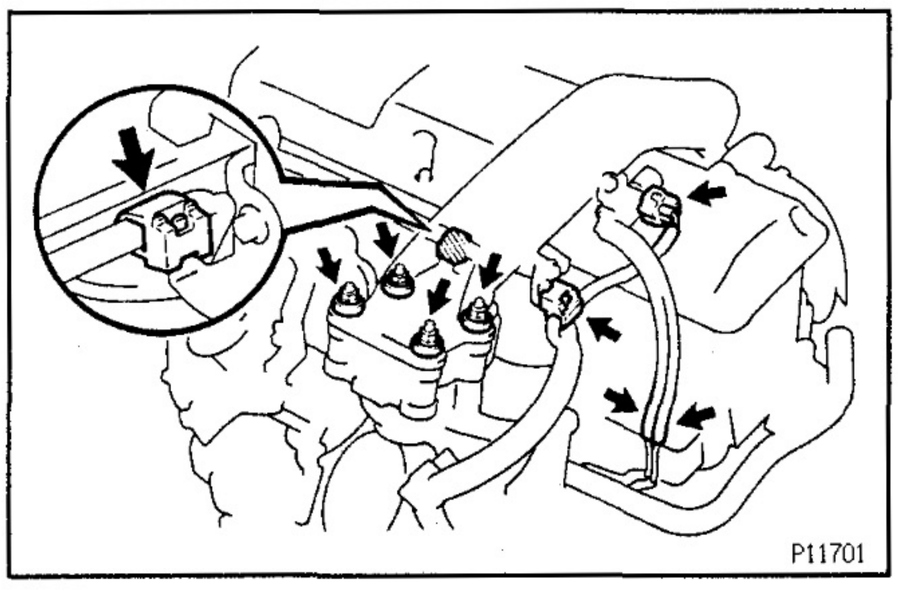

(e) Install the 4 seal washers and nuts.
Torque: 12 N·m (120 kgf·cm, 9 ft·lbf)
(f) Connect the 2 wire harness clamps.
(g) Connect the VSV connector and 2 vacuum hoses.

SERVICE SPECIFICATIONS

SERVICE DATA

ST015-0A

Starter (2.2 kW type)	Rated voltage and output power	12 V 2.2 kW
	No-load characteristics (Current)	120 A or less at 11.5 V
	No-load characteristics (rpm)	4,000 rpm or more
	Brush length (STD)	16.5 — 17.0 mm (0.650 — 0.669 in.)
	Brush length (Minimum)	9.0 mm (0.354 in.)
	Spring installed load	26 — 32 N (2.7 — 3.3 kgf, 6.0 — 7.3 lbf)
	Commutator	
	Diameter (STD)	35 mm (1.38 in.)
	Diameter (Minimum)	34 mm (1.34 in.)
	Undercut depth (STD)	0.6 mm (0.025 in.)
	Undercut depth (Minimum)	0.2 mm (0.008 in.)
	Circle runout (Maximum)	0.05 mm (0.0020 in.)
Starter (2.7 kW type)	Rated voltage and output power	12 V 2.7 kW
	No-load characteristics (Current)	180 A or less at 11.0 V
	No-load characteristics (rpm)	3,500 rpm or more
	Brush length (STD)	20.5 — 21.0 mm (0.807 — 0.827 in.)
	Brush length (Minimum)	13.5 mm (0.531 in.)
	Spring installed load	32 — 38 N (3.3 — 3.9 kgf, 7.3 — 8.5 lbf)
	Commutator	
	Diameter (STD)	36 mm (1.42 in.)
	Diameter (Minimum)	35 mm (1.38 in.)
	Undercut depth (STD)	0.7 — 0.9 mm (0.028 — 0.035 in.)
	Undercut depth (Minimum)	0.2 mm (0.008 in.)
	Circle runout (Maximum)	0.05 mm (0.0020 in.)
Glow plug	Resistance (Cold)	Approx. 0.65 Ω

TORQUE SPECIFICATIONS

ST016-06

Part tightened	N·m	kgf·cm	ft·lbf
Field frame x armature (2.2 kW type)	12.7	130	9
Field frame x armature (2.7 kW type)	9.3	95	82 in.·lbf
Starter x lead wire	3.6	41	35 in.·lbf
Nut for terminal C (2.2 kW type)	5.4	51	44 in.·lbf
Nut for terminal C (2.7 kW type)	21.1	215	16
Glow plug x cylinder head	13	130	9
Intake pipe x intake manifold	12	120	9

CHARGING SYSTEM

DESCRIPTION ..... CH– 2
PRECAUTION ..... CH– 2
SYSTEM CIRCUIT ..... CH– 3
OPERATION ..... CH– 3
PREPARATION ..... CH– 4
ON–VEHICLE INSPECTION ..... CH– 5
ALTERNATOR ..... CH– 8
SERVICE SPECIFICATIONS ..... CH– 19

DESCRIPTION

CH00G–08

The alternator is a small, high rpm, high performance type with an IC regulator incorporated. The IC regulator uses integrated circuits and controls the voltage produced by the alternator.

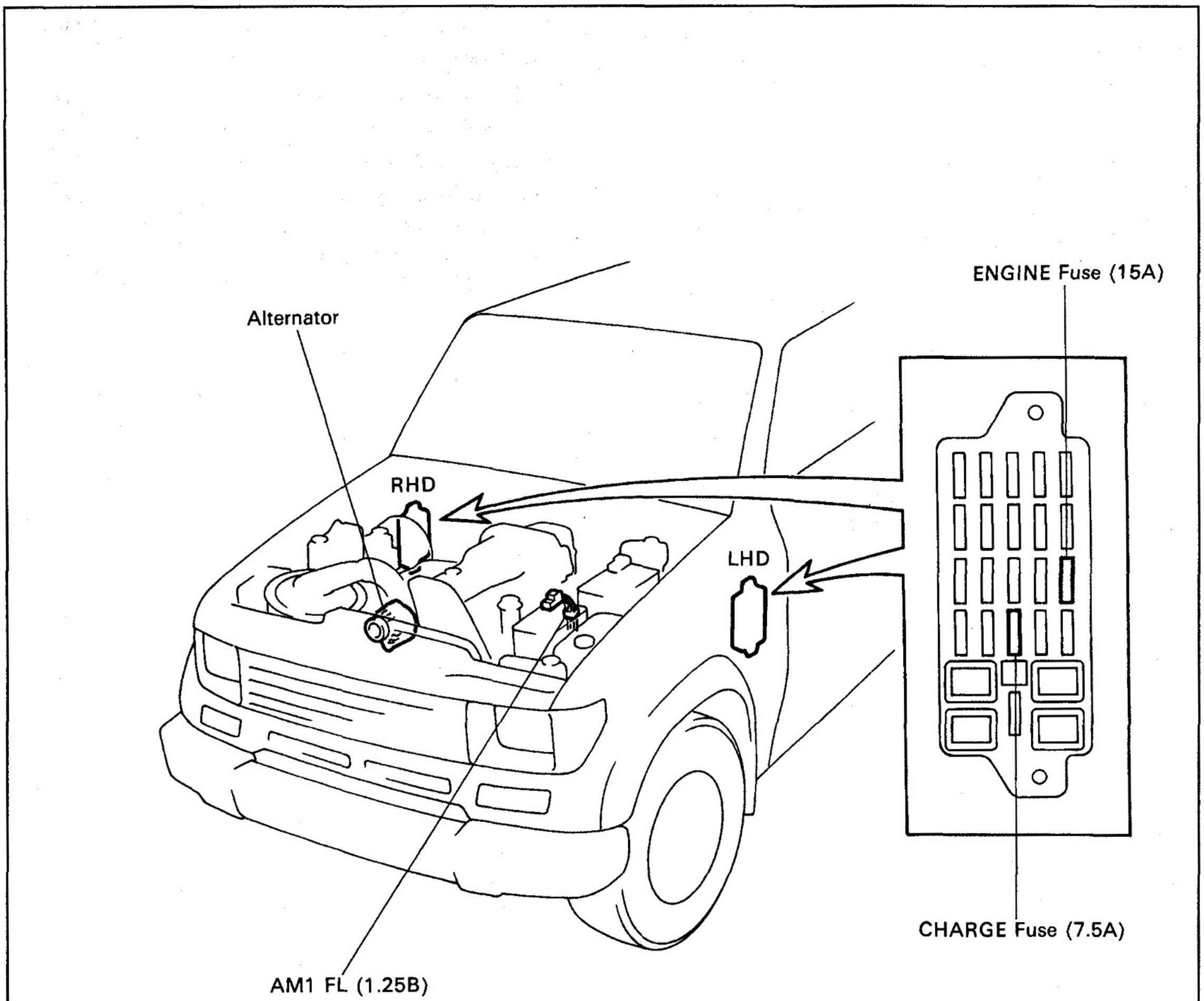

PRECAUTION

CH00J–02

1. Check that the battery cables are connected to the correct terminals.
2. Disconnect the battery cables when the battery is given a quick charge.
3. Do not perform tests with a high voltage insulation resistance tester.
4. Never disconnect the battery while the engine is running.

SYSTEM CIRCUIT

CH00L–0C

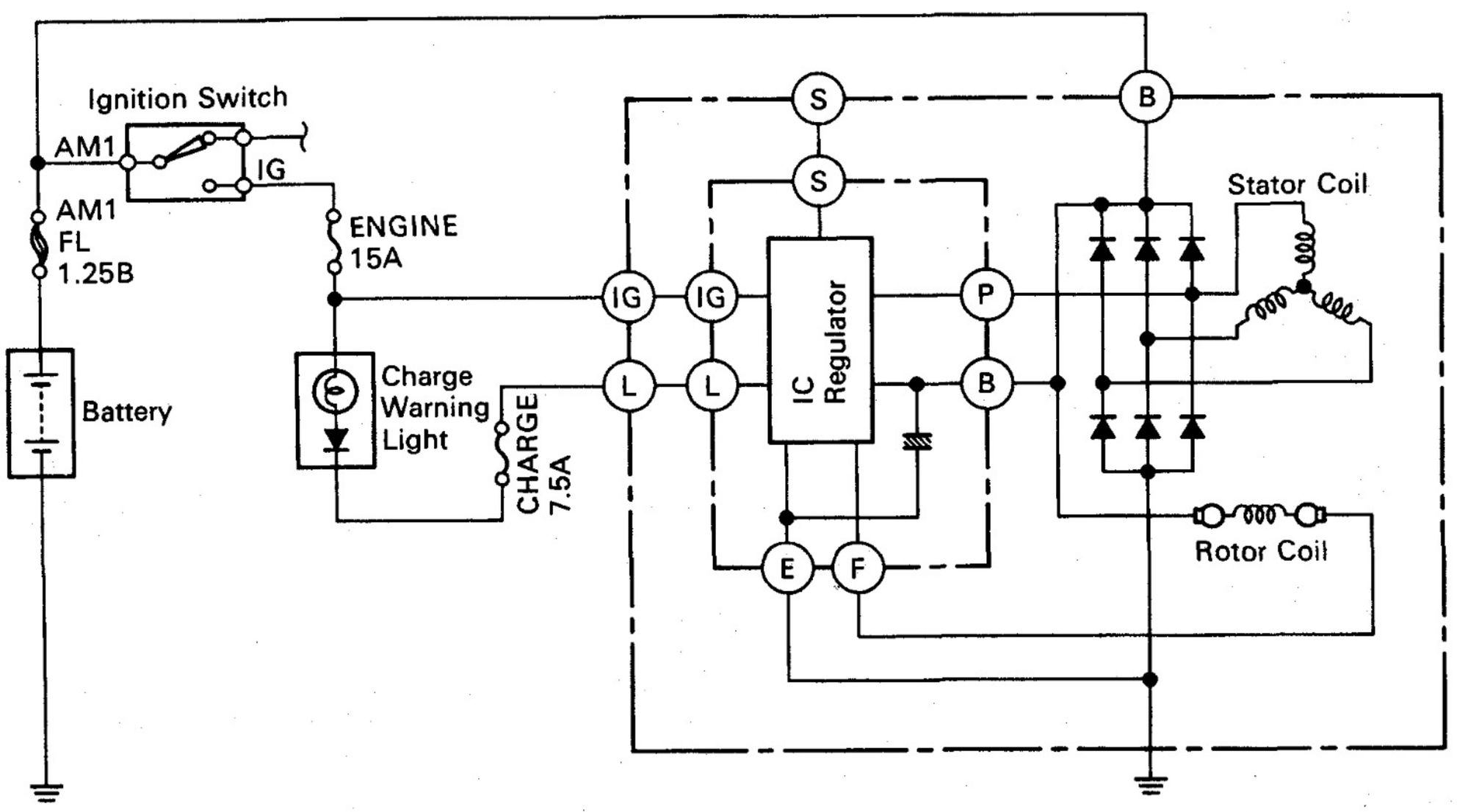

P12523

OPERATION

CH00N–02

When the ignition switch is turned ON, current from the battery flows from terminal L of the alternator through the IC regulator to terminal E, causing the discharge warning light to light up. Then when the engine is started, the voltage output increases as the alternator rpm increases. When the voltage output becomes greater than the battery voltage, current for recharging flows from terminal B. Simultaneously, voltage at terminal L increases and the potential difference between battery and terminal L disappears, causing the discharge warning light to go off. When the voltage output exceeds the regulator adjustment voltage, the transistor inside the IC regulator regulates the voltage so that the voltage from the alternator remains constant.

PREPARATION

SST (SPECIAL SERVICE TOOLS)

CH00Q–05

	09285–76010	Injection Pump Camshaft Bearing Cone Replacer	Rotor rear bearing cover
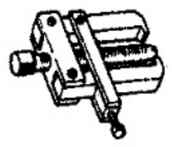	09286–46011	Injection Pump Spline Shaft Puller	Rectifier end frame
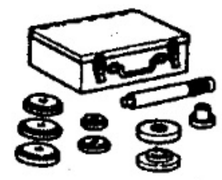	09608–20012	Front Hub & Drive Pinion Bearing Tool Set	
	(09608–00030)	Replacer	Rotor front bearing
	(09608–00080)	Replacer	Rotor front bearing
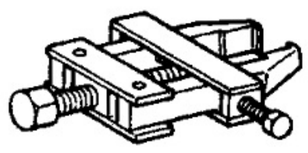	09820–00021	Alternator Rear Bearing Puller	
	09820–00030	Alternator Rear Bearing Replacer	Rotor rear bearing
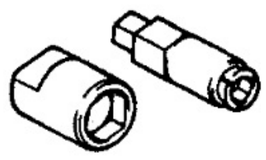	09820–63010	Alternator Pulley Set Nut Wrench Set	

CH00S–01

RECOMMENDED TOOLS

	09082–00015	TOYOTA Electrical Tester	

CH00U–02

EQUIPMENT

Battery specific gravity gauge	
Belt tension gauge	
Torque wrench	
Vernier calipers	Rotor (Slip ring), Brush

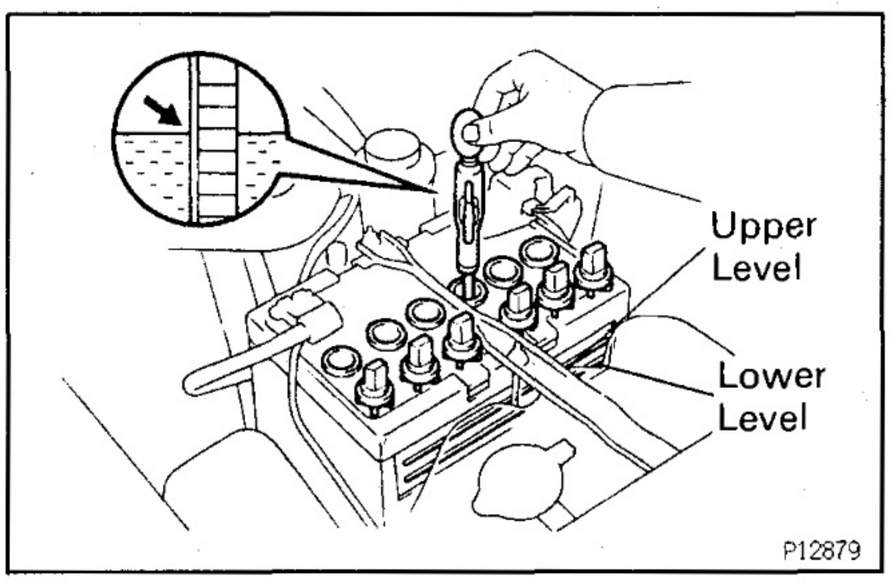

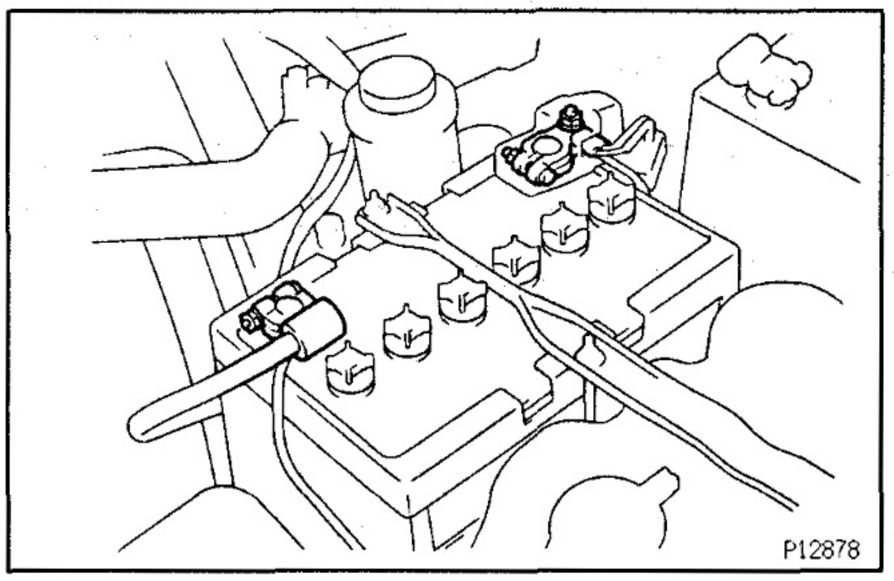

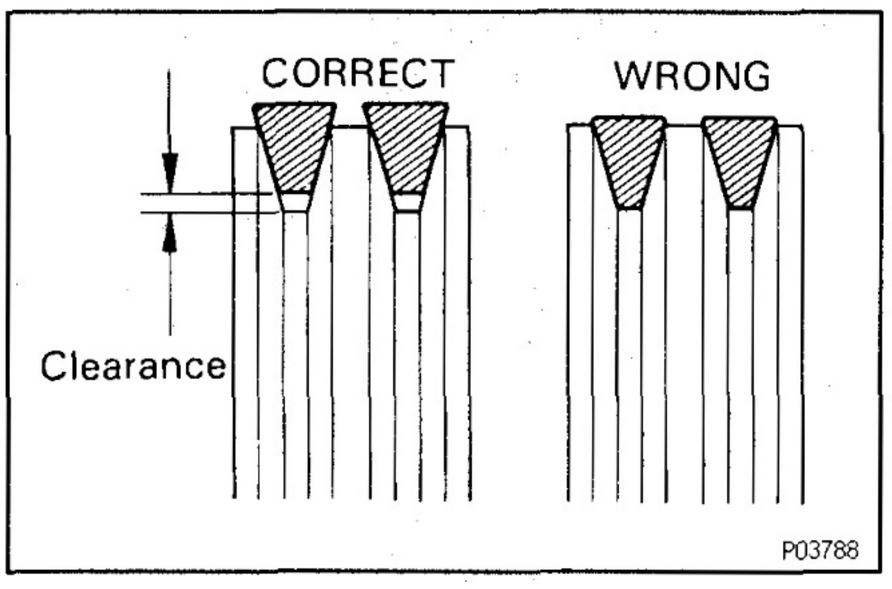

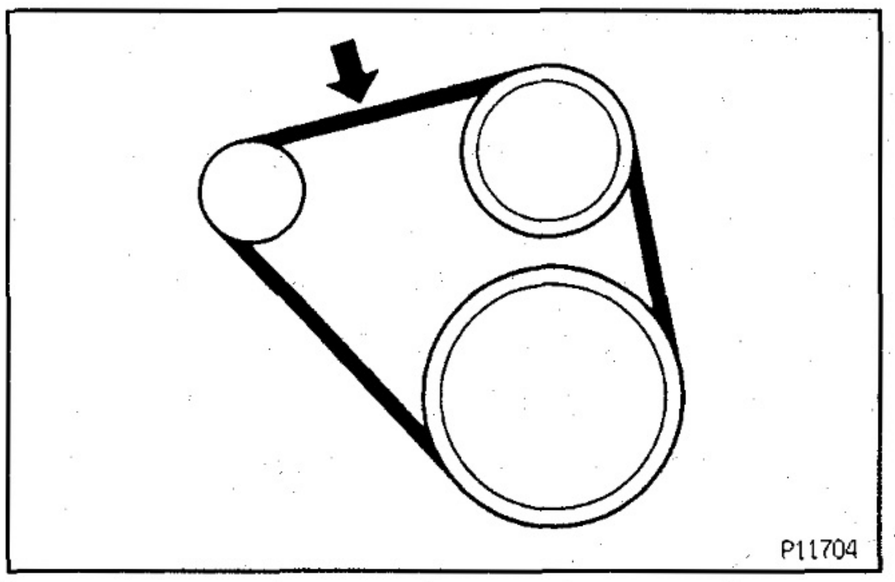

ON–VEHICLE INSPECTION

CH05D–01

1. CHECK BATTERY SPECIFIC GRAVITY AND ELECTROLYTE LEVEL

(a) Check the electrolyte quantity of each cell.
If insufficient, refill with distilled (or purified) water.

(b) Check the specific gravity of each cell.
Standard specific gravity at 20°C (68°F):
1.27 – 1.29 105D31L Battery
If the gravity is less than specification, charge the battery.

2. CHECK BATTERY TERMINALS, FUSIBLE LINK AND FUSES

(a) Check that the battery terminals are not loose or corroded.

(b) Check the fusible link and fuses for continuity.
Fusible link:
AM1 1.25 B
Fuse:
ENGINE 15 A
CHARGE 7.5 A

3. INSPECT DRIVE BELTS

(a) Visually check the drive belt for cracks, oiliness or wear. Check that the belt does not touch the bottom of the pulley groove.
If necessary, replace the drive belts as a set.

(b) Check the drive belt deflection by pressing on the belt at the points indicated in the illustration with 98 N (10 kgf, 22 lbf) of pressure.
Drive belt deflection:
New belt
6 – 8 mm (0.24 – 0.31 in.)
Used belt
8 – 12 mm (0.31 – 0.47 in.)
If necessary, adjust the drive belt deflection.

HINT:
- "New belt" refers to a belt which has been used less than 5 minutes on a running engine.
- "Used belt" refers to a belt which has been used on a running engine for 5 minutes or more.
- After installing a new belt, run the engine for about 5 minutes and recheck the deflection.

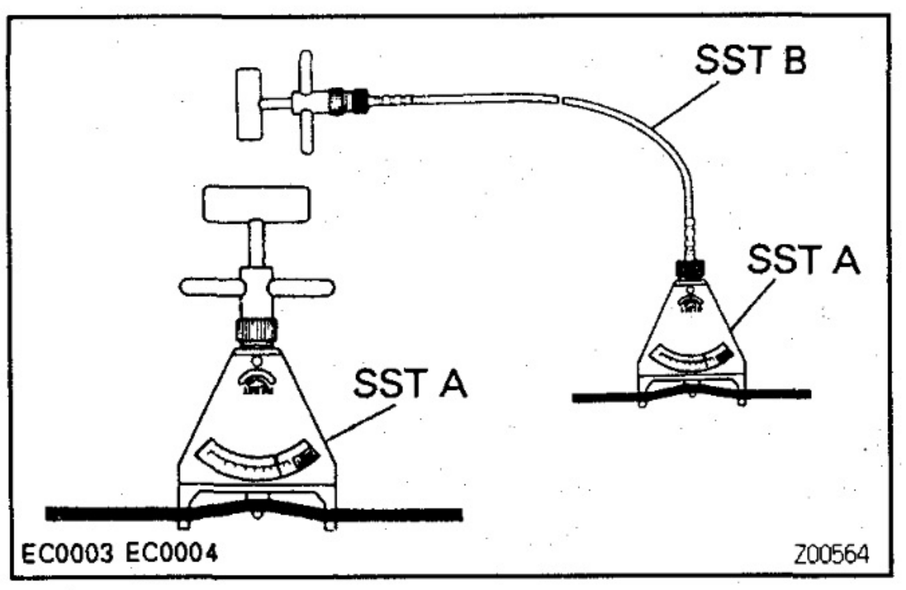

Reference

Using SST, check the drive belt tension.

SST A 09216—00020

SST B 09216—00030

Drive belt tension:

New belt

45 — 55 kgf

Used belt

20 — 35 kgf

If the belt tension is not as specified, adjust it.

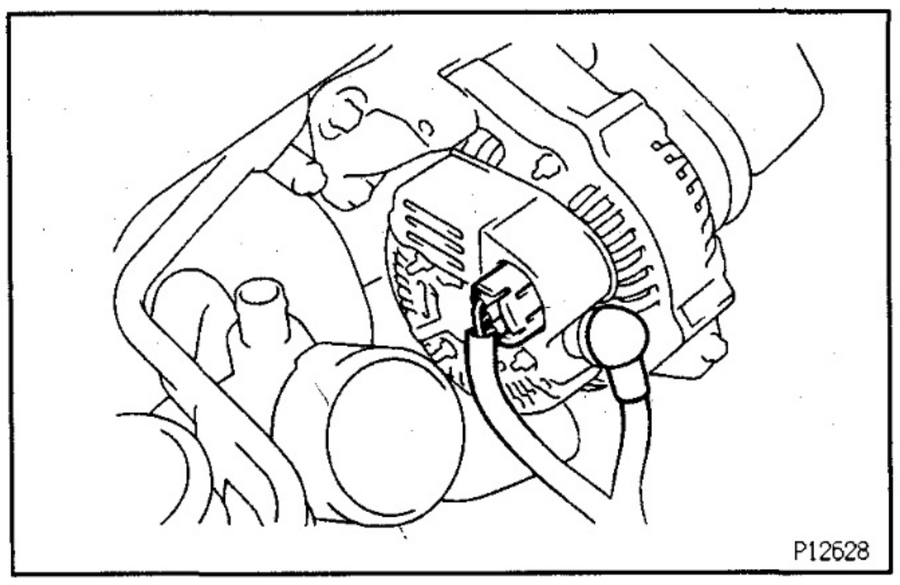

4. VISUALLY CHECK ALTERNATOR WIRING AND LISTEN FOR ABNORMAL NOISES

(a) Check that the wiring is in good condition.

(b) Check that there is no abnormal noise from the alternator while the engine is running.

5. INSPECT DISCHARGE WARNING LIGHT CIRCUIT

(a) Turn the ignition switch "ON". Check that the discharge warning light comes on.

(b) Start the engine. Check that the light goes off.

If the light does not operate as specified, troubleshoot the discharge warning light circuit.

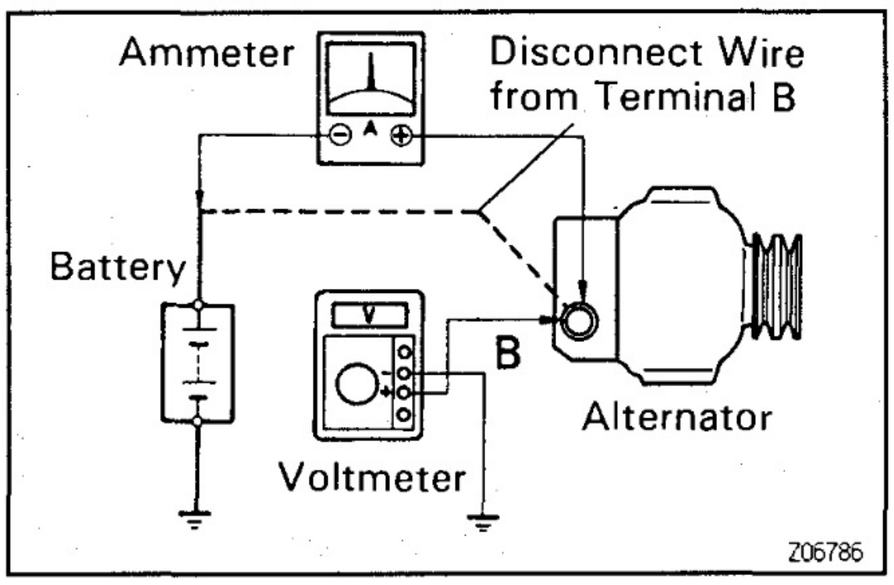

6. INSPECT CHARGING CIRCUIT WITHOUT LOAD

HINT: If a battery/alternator tester is available, connect the tester to the charging circuit as per the manufacturer's instructions.

(a) If a tester is not available, connect a voltmeter and ammeter to the charging circuit as follows:

- Disconnect the wire from terminal B of the alternator and connect it to the negative (—) lead of the ammeter.
- Connect the positive (+) lead of the ammeter to terminal B of the alternator.
- Connect the positive (+) lead of the voltmeter to terminal B of the alternator.
- Ground the negative (—) lead of the voltmeter.

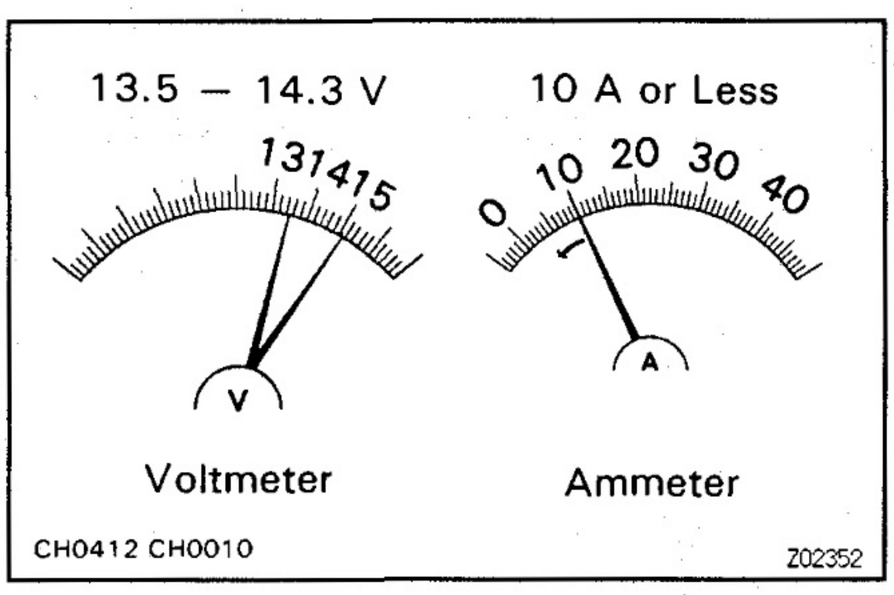

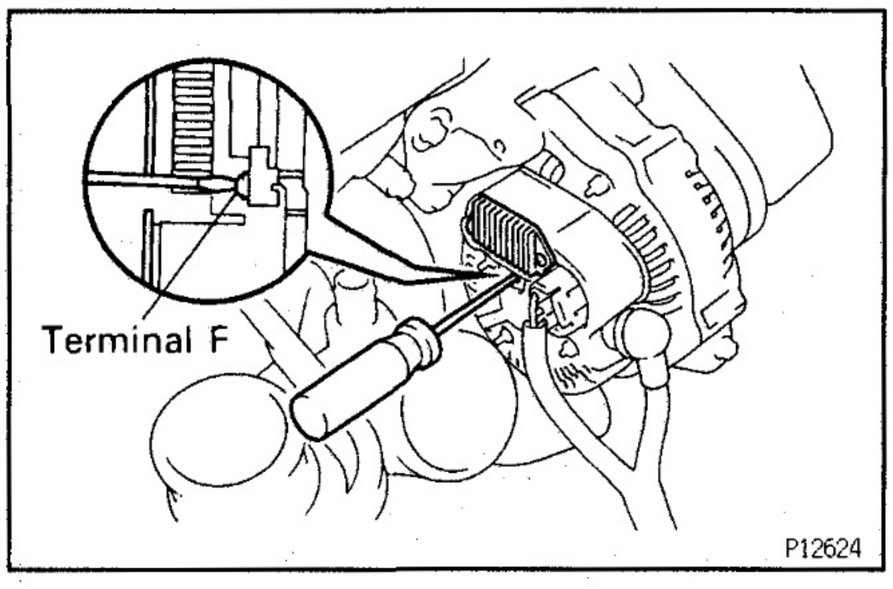

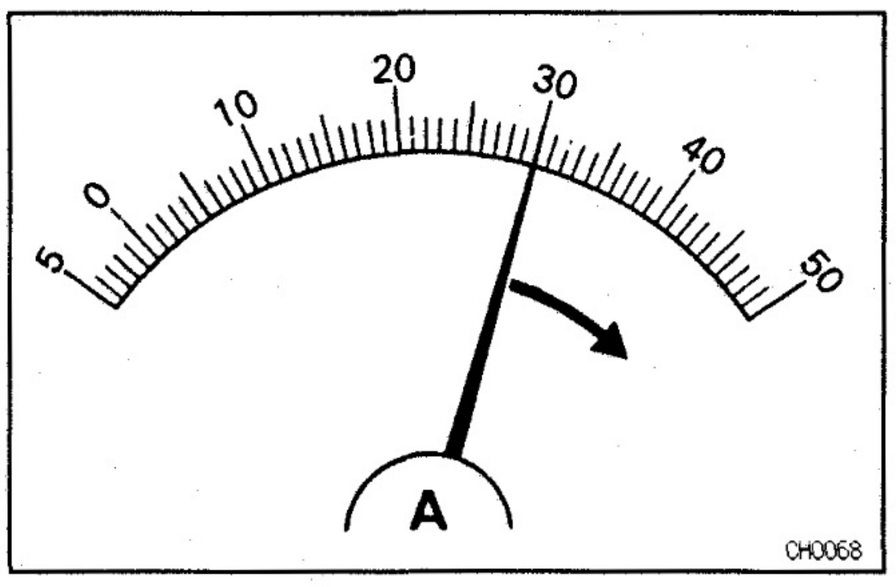

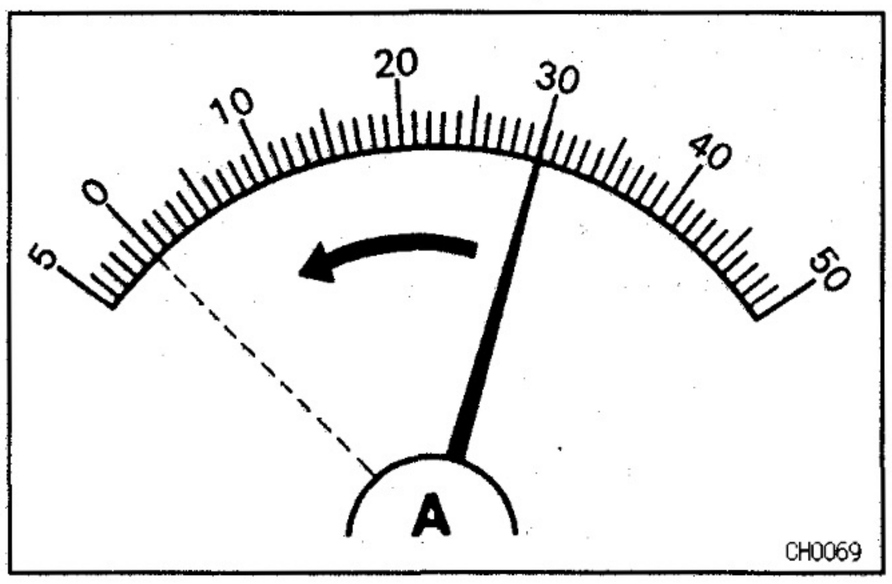

(b) Check the charging circuit as follows:
With the engine running from idle to 2,000 rpm, check the reading on the ammeter and voltmeter.

Standard amperage:

10 A or less

Standard voltage:

14.0 — 15.0 V at 25°C (77°F)

13.5 — 14.3 V at 115°C (239°F)

If the voltmeter reading is more than standard voltage, replace the IC regulator.

If the voltmeter reading is less than the standard voltage, check the IC regulator and alternator as follows:

- With terminal F grounded, start the engine and check the voltmeter reading of terminal B.
- If the voltmeter reading is more than standard voltage, replace the IC regulator.
- If the voltmeter reading is less than standard voltage, check the alternator.

7. INSPECT CHARGING CIRCUIT WITH LOAD

(a) With the engine running at 2,000 rpm, turn on the high beam headlights and place the heater blower switch at "HI".

(b) Check the reading on the ammeter.

Standard amperage:

30 A or more

If the ammeter reading is less than standard amperage, repair the alternator.

HINT: If the battery is fully charged, the indication will sometimes be less than standard amperage.

ALTERNATOR

COMPONENTS FOR DISASSEMBLY AND ASSEMBLY

CH010–0A

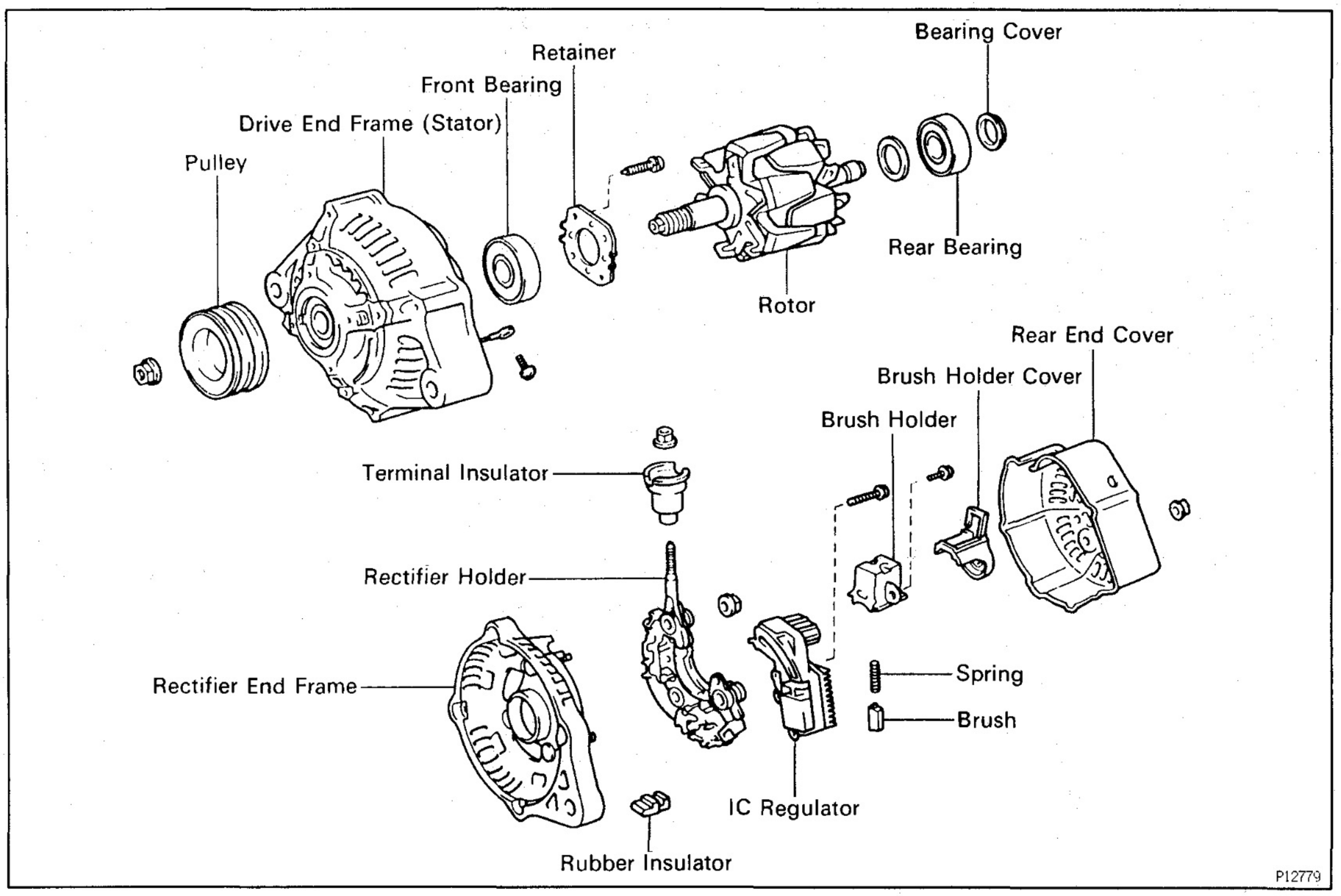

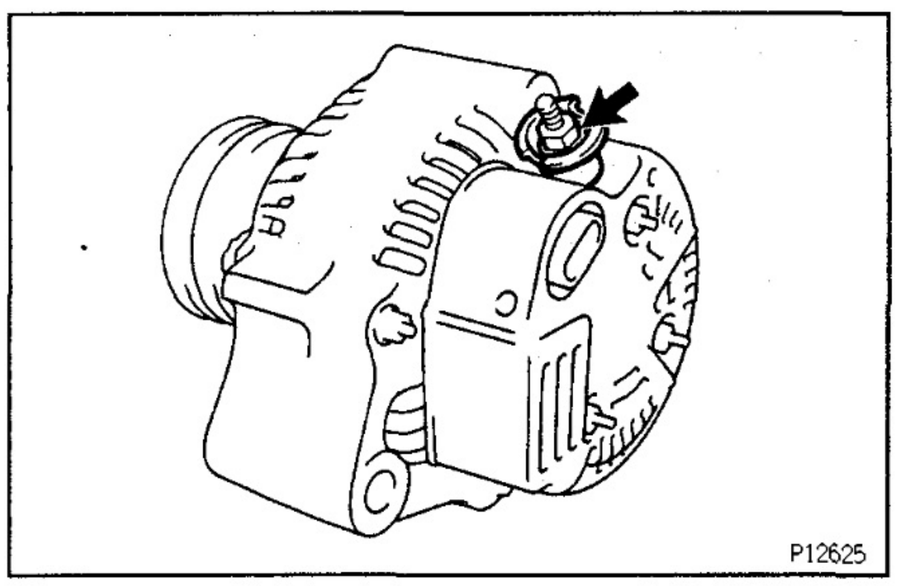

CH04E–02

ALTERNATOR DISASSEMBLY

(See Components for Disassembly and Assembly)

1. REMOVE REAR END COVER

(a) Remove the nut and terminal insulator.

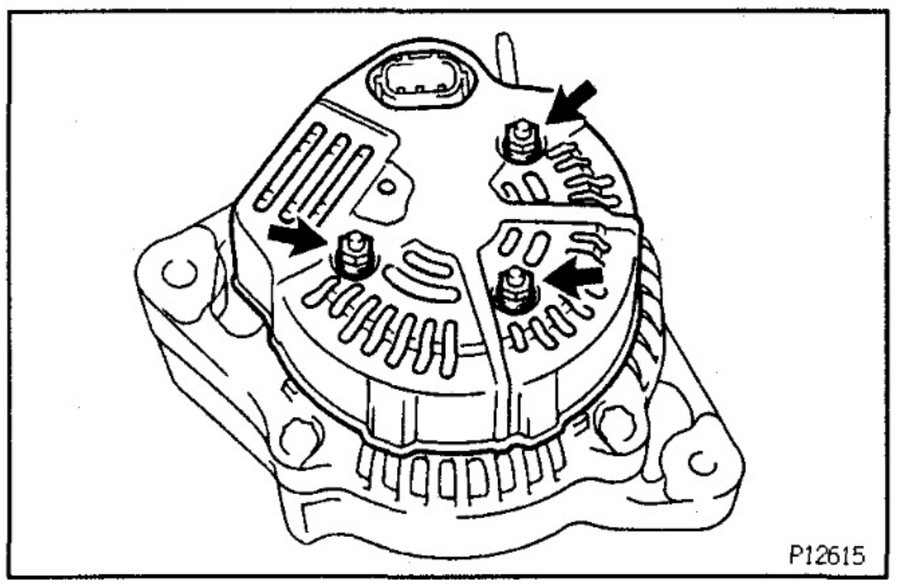

(b) Remove the 3 nuts and end cover.

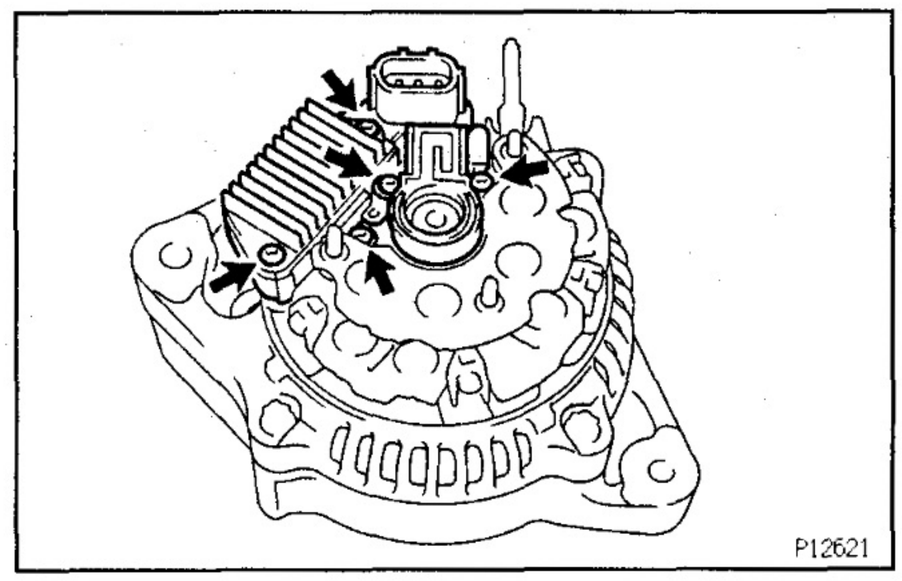

2. REMOVE BRUSH HOLDER AND IC REGULATOR

(a) Remove the 5 screws, brush holder and IC regulator.

(b) Remove the brush holder cover from the brush holder.

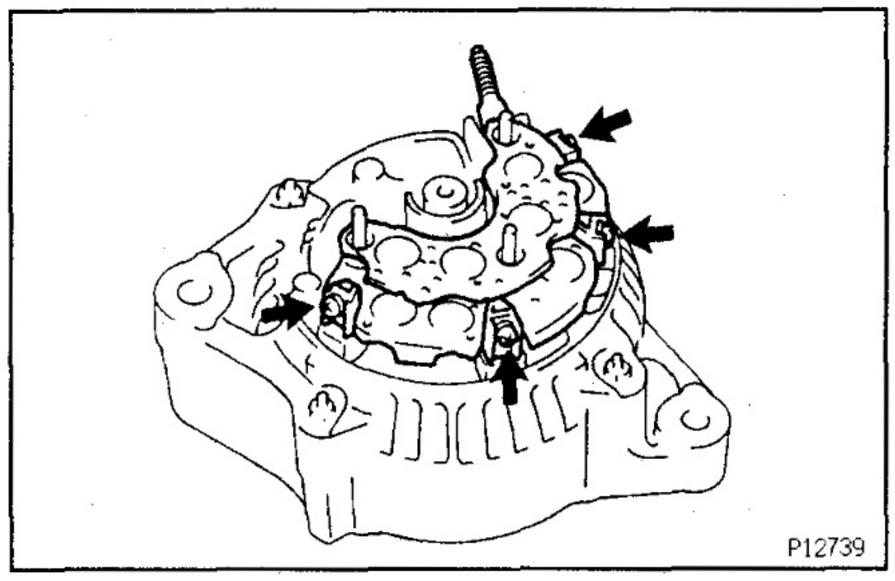

3. REMOVE RECTIFIER HOLDER

(a) Remove the 4 screws and rectifier holder.

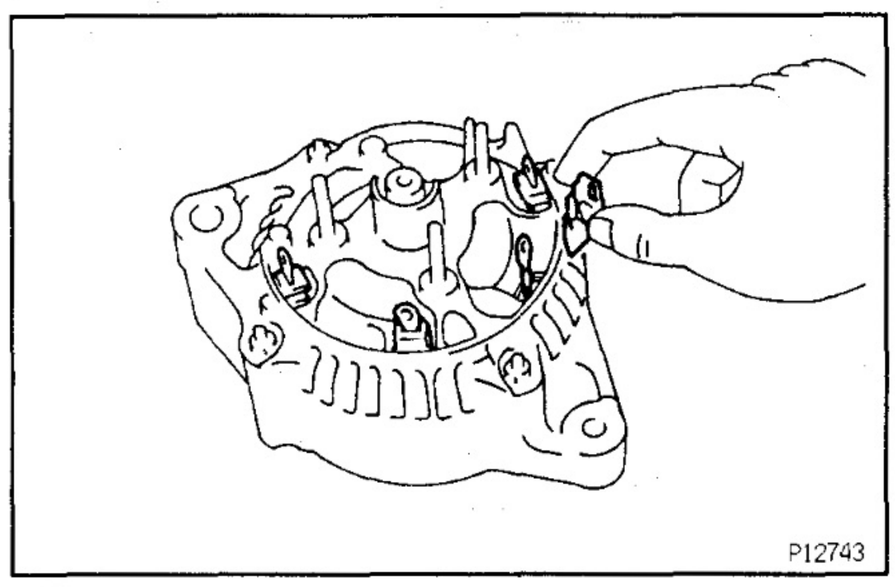

(b) Remove the 4 rubber insulators.

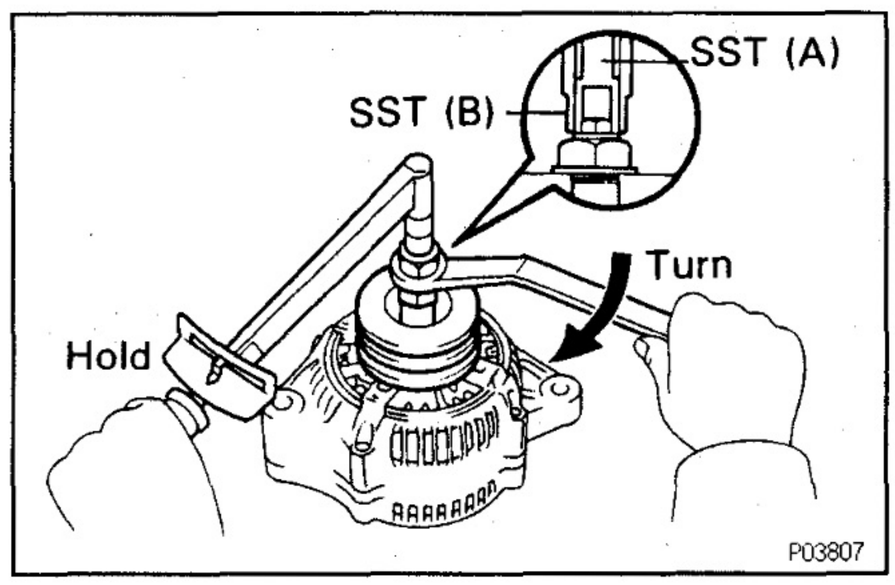

4. REMOVE PULLEY

(a) Hold SST (A) with a torque wrench, and tighten SST (B) clockwise to the specified torque.
SST 09820–63010
Torque: 39 N·m (400 kgf·cm, 29 ft·lbf)

(b) Check that SST (A) is secured to the rotor shaft.

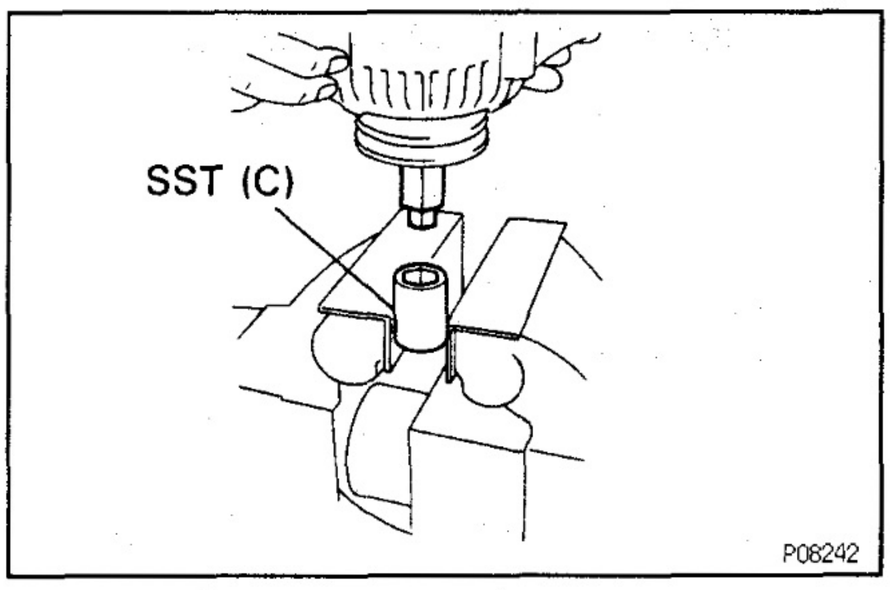

(c) Mount SST (C) in a vise.

(d) Install the pulley nut to SST (C).

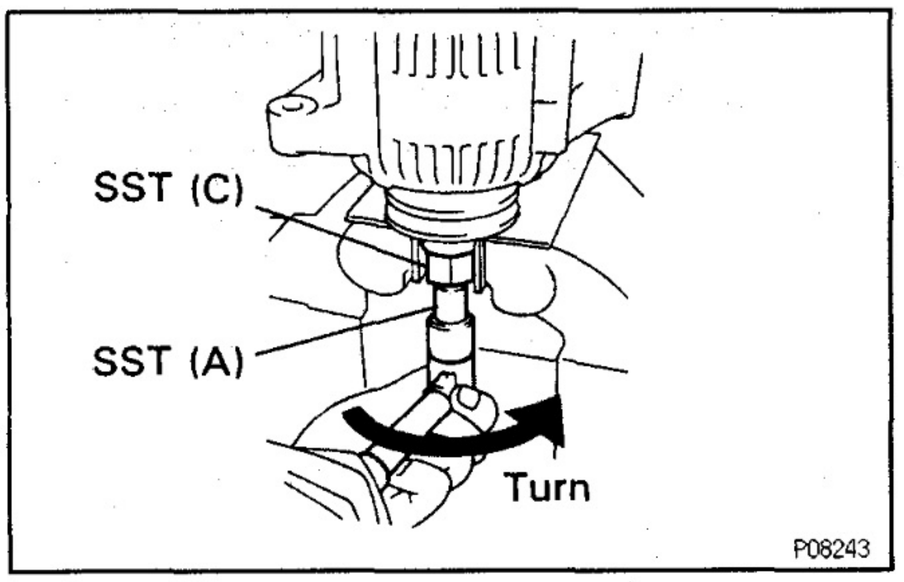

(e) To loosen the pulley nut, turn SST (A) in the direction shown in the illustration.
NOTICE: To prevent damage to the rotor shaft, do not loosen the pulley nut more than one–half of a turn.

(f) Remove the alternator from SST (C).

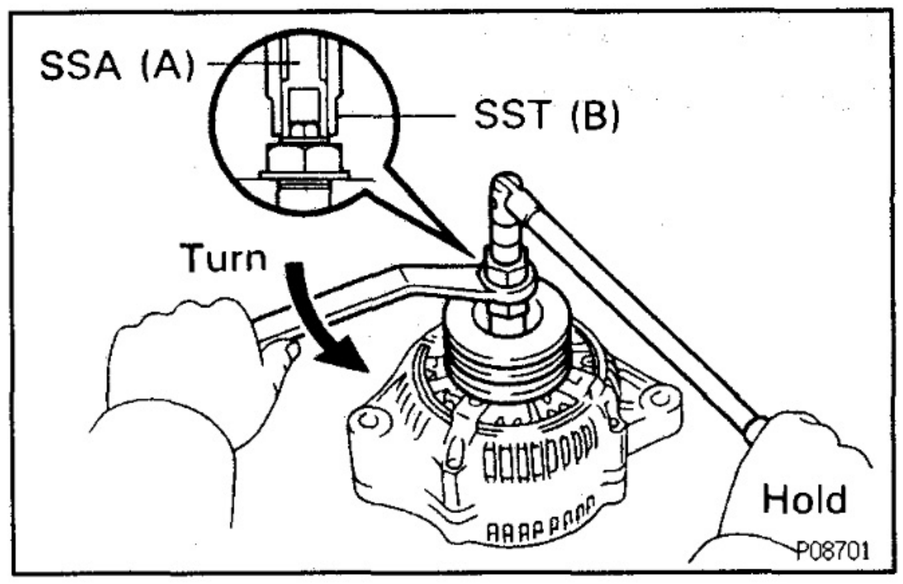

(g) Turn SST (B), and remove SST (A and B).

(h) Remove the pulley nut and pulley.

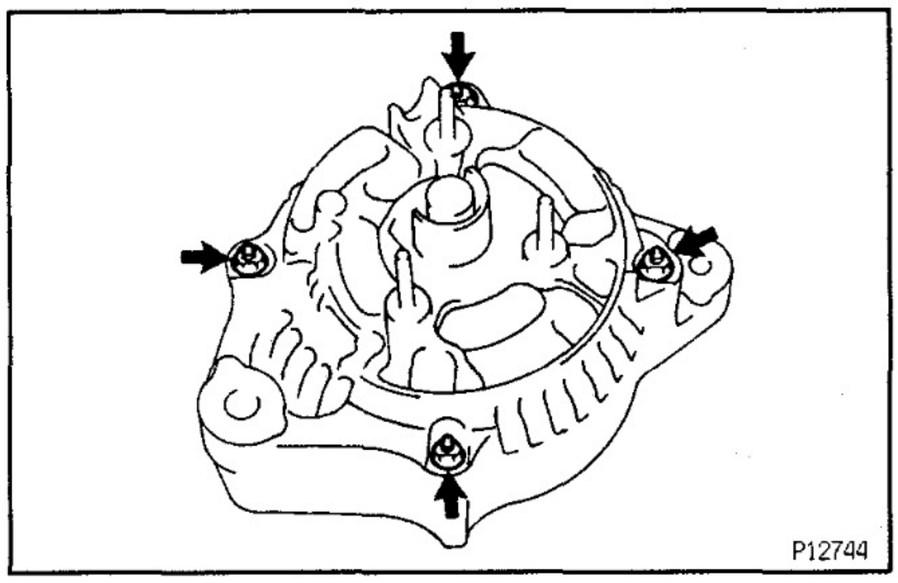

5. REMOVE RECTIFIER END FRAME

(a) Remove the 4 nuts.

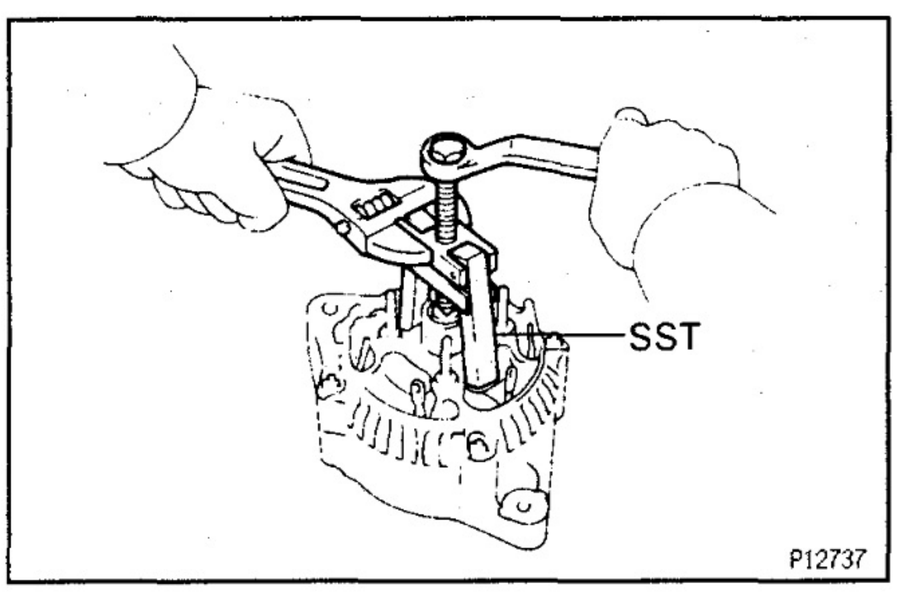

(b) Using SST, remove the rectifier end frame.
SST 09286–46011

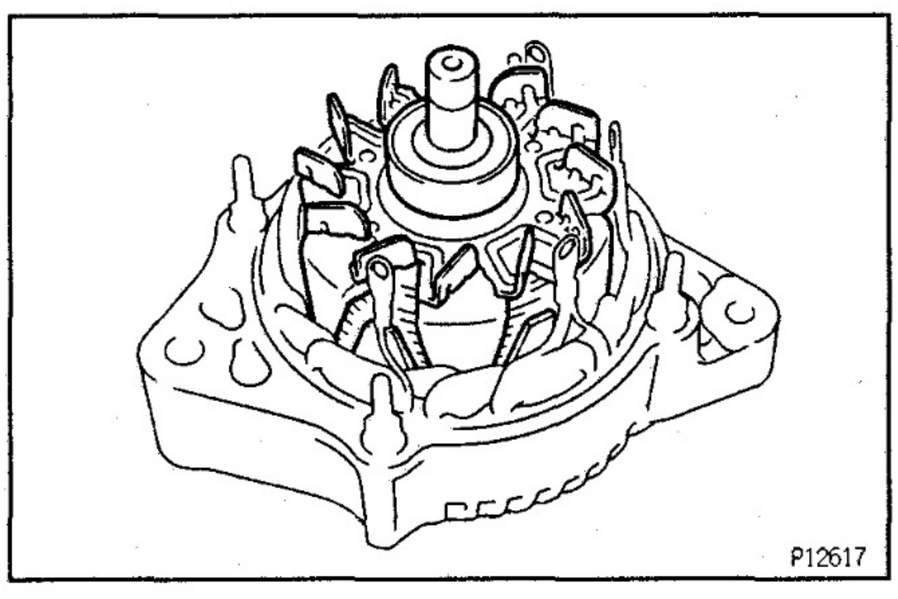

6. REMOVE ROTOR FROM DRIVE END FRAME

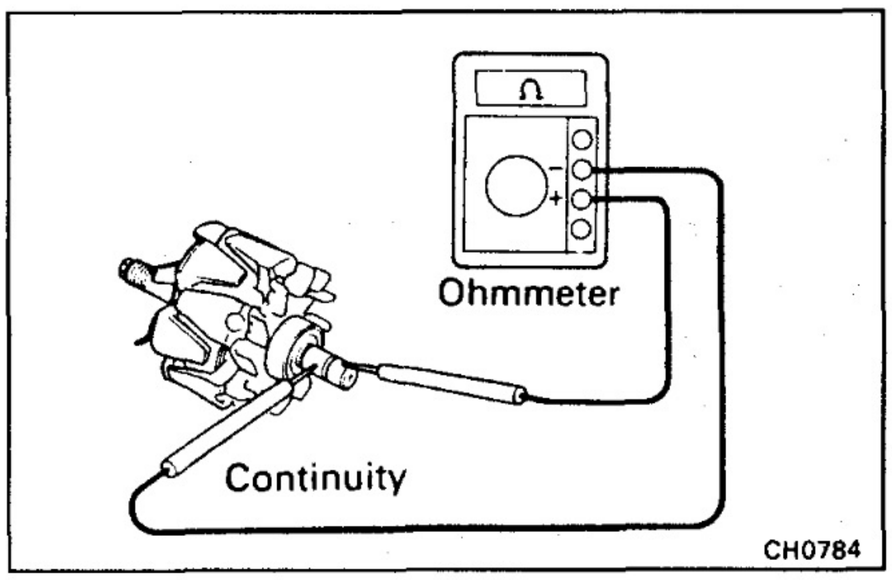

ALTERNATOR INSPECTION AND REPAIR

CH048–02

Rotor

1. INSPECT ROTOR FOR OPEN CIRCUIT

Using an ohmmeter, check that there is continuity between the slip rings.

Standard resistance (Cold):

2.7 – 3.1 Ω

If there is no continuity, replace the rotor.

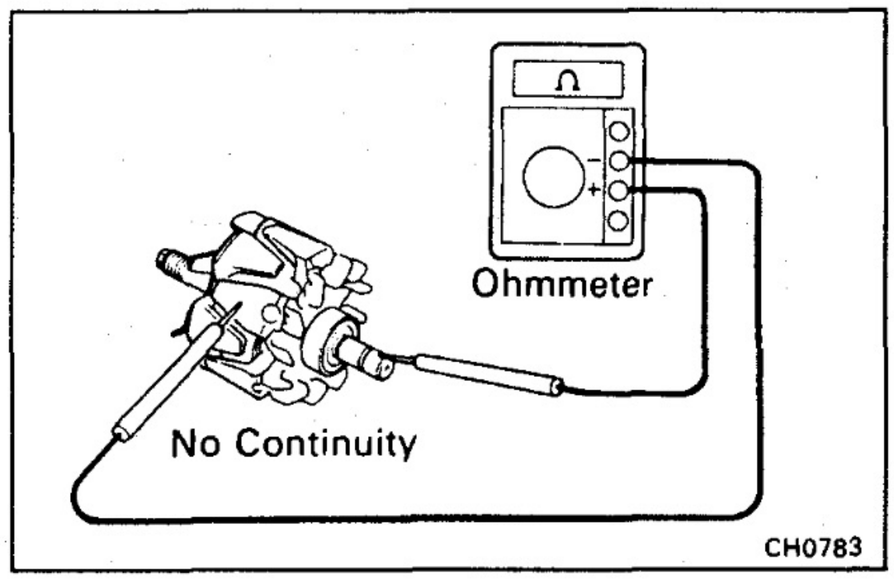

2. INSPECT ROTOR FOR GROUND

Using an ohmmeter, check that there is no continuity between the slip ring and rotor.

If there is continuity, replace the rotor.

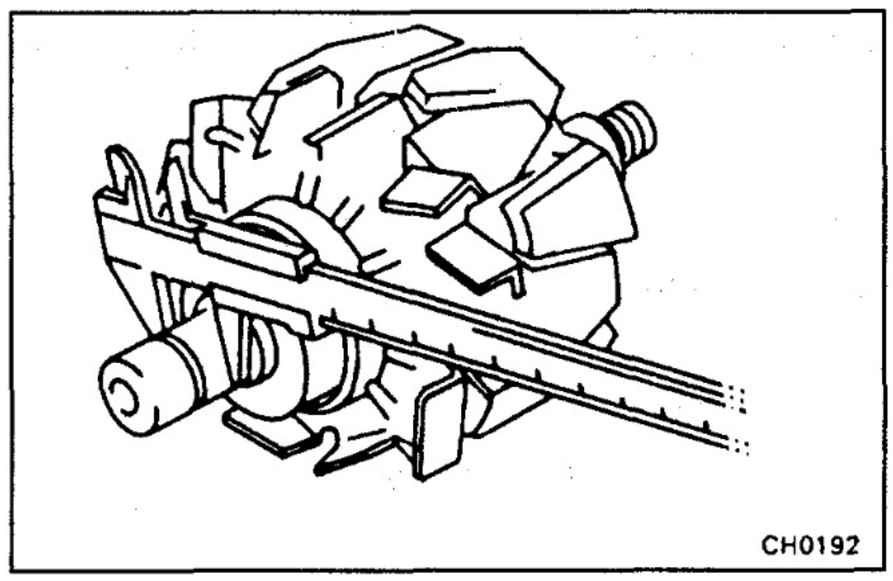

3. INSPECT SLIP RINGS

(a) Check that the slip rings are not rough or scored.

If rough or scored, replace the rotor.

(b) Using a vernier caliper, measure the slip ring diameter.

Standard diameter:

14.2 – 14.4 mm (0.559 – 0.567 in.)

Minimum diameter:

12.8 mm (0.504 in.)

If the diameter is less than minimum, replace the rotor.

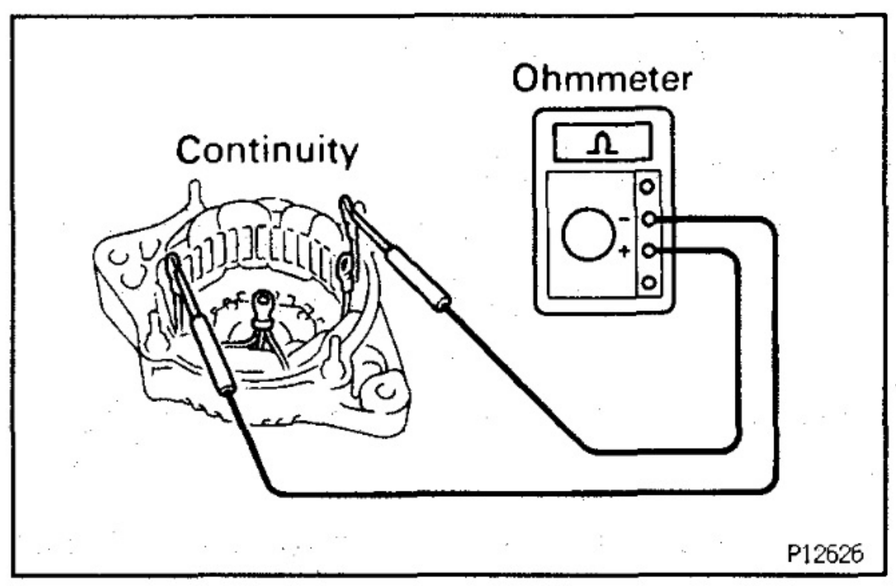

Stator (Drive End Frame)

1. INSPECT STATOR FOR OPEN CIRCUIT

Using an ohmmeter, check that there is continuity between the coil leads.

If there is no continuity, replace the drive end frame assembly.

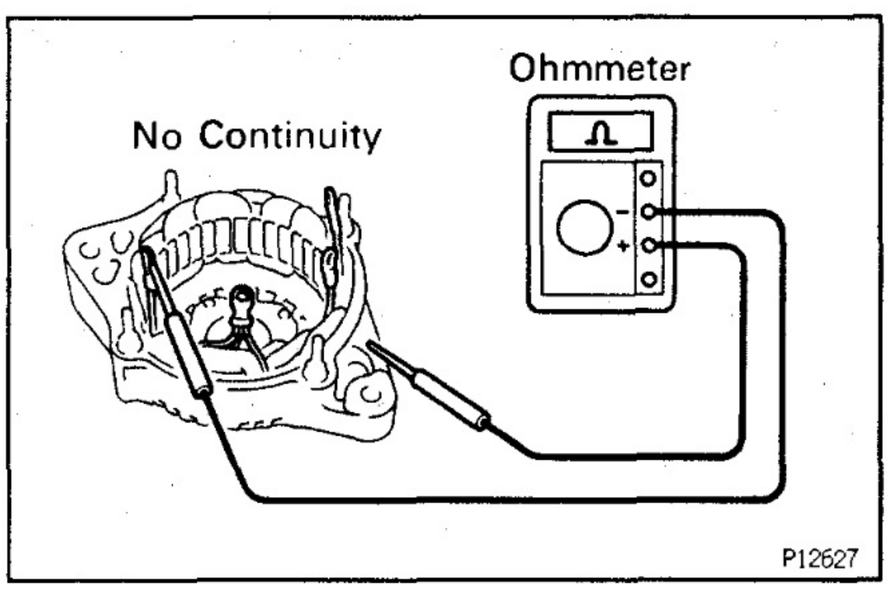

2. INSPECT STATOR FOR GROUND

Using an ohmmeter, check that there is no continuity between the coil lead and drive end frame.

If there is continuity, replace the drive end frame assembly.

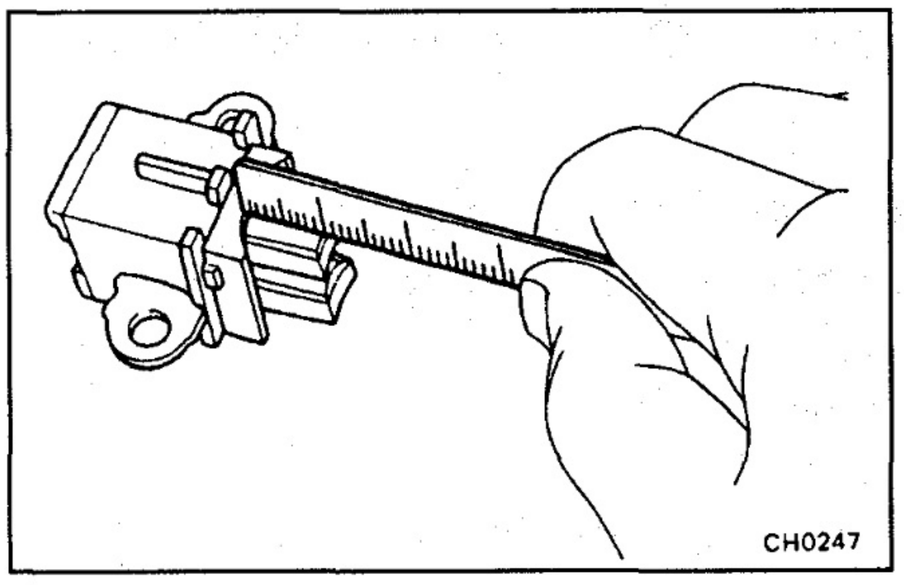

Brushes

1. INSPECT EXPOSED BRUSH LENGTH

Using a scale, measure the exposed brush length.

Standard exposed length:

10.5 mm (0.413 in.)

Minimum exposed length:

1.5 mm (0.059 in.)

If the exposed length is less than minimum, replace the brushes.

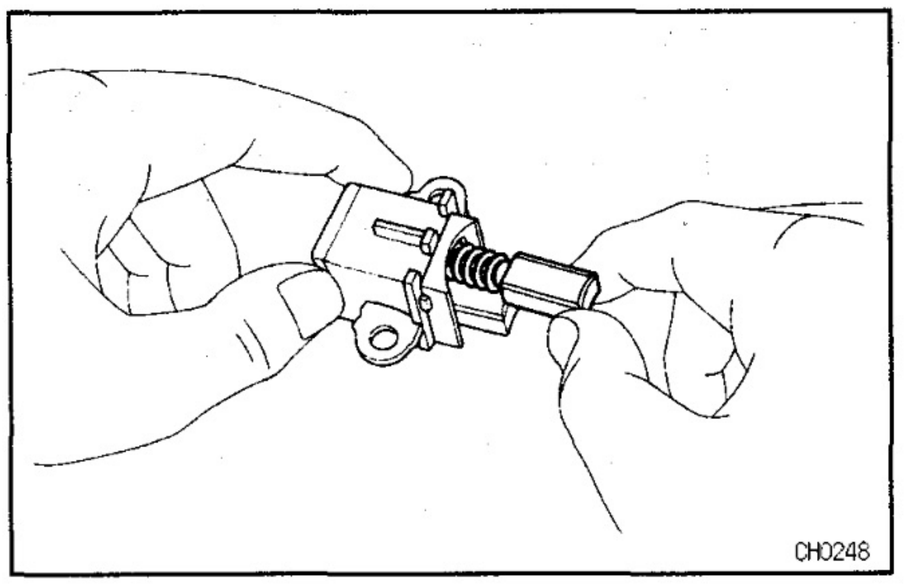

2. IF NECESSARY, REPLACE BRUSHES

(a) Unsolder and remove the brush and spring.

(b) Run the wire of a new brush through the spring and the hole in the brush holder, and insert the spring and brush into the brush holder.

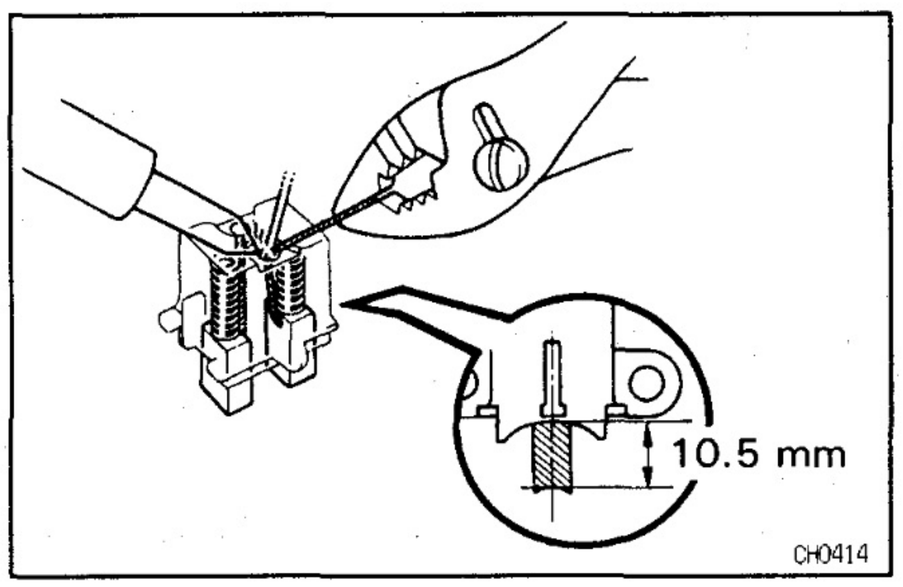

(c) Solder the brush wire to the brush holder at specified exposed length.

Exposed length:

10.5 mm (0.413 in.)

(d) Check that the brush moves smoothly in the brush holder.

(e) Cut off the excess wire.

(f) Apply insulation paint to the soldered area.

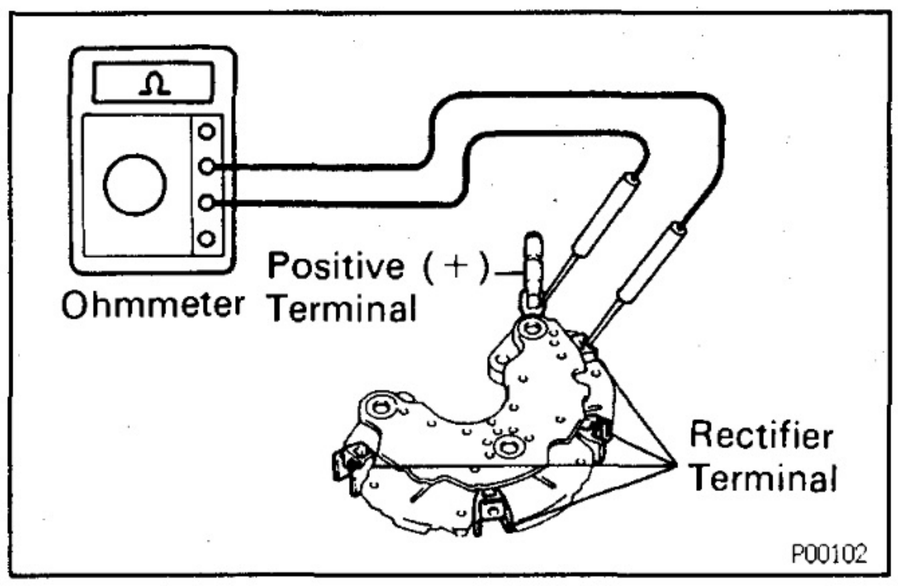

Rectifiers (Rectifier Holder)

1. INSPECT POSITIVE RECTIFIER

(a) Using an ohmmeter, connect one tester probe to the positive (+) terminal and the other to each rectifier terminal.

(b) Reverse the polarity of the tester probes and repeat step (a).

(c) Check that one shows continuity and the other shows no continuity.

If continuity is not as specified, replace the rectifier holder.

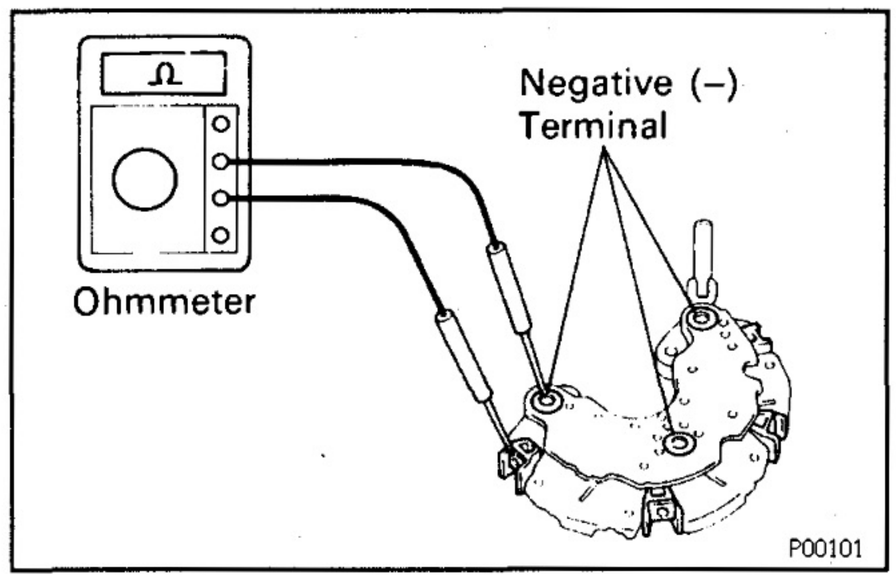

2. INSPECT NEGATIVE RECTIFIER

(a) Using an ohmmeter, connect one tester probe to each negative (–) terminal and the other to each rectifier terminal.

(b) Reverse the polarity of the tester probes and repeat step (a).

(c) Check that one shows continuity and the other shows no continuity.
If continuity is not as specified, replace the rectifier holder.

Bearings

1. INSPECT FRONT BEARING

Check that the bearing is not rough or worn.

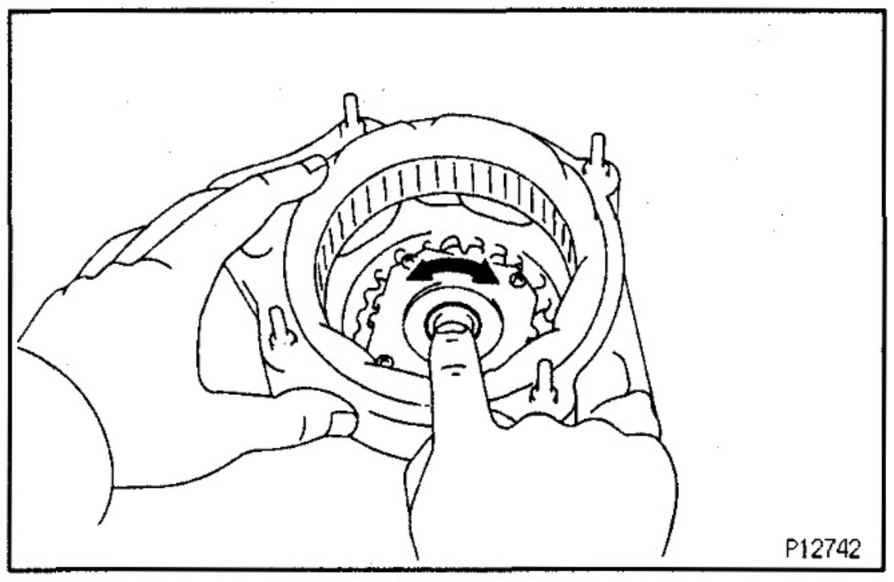

2. IF NECESSARY, REPLACE FRONT BEARING

(a) Remove the 4 screws, bearing retainer and bearing.

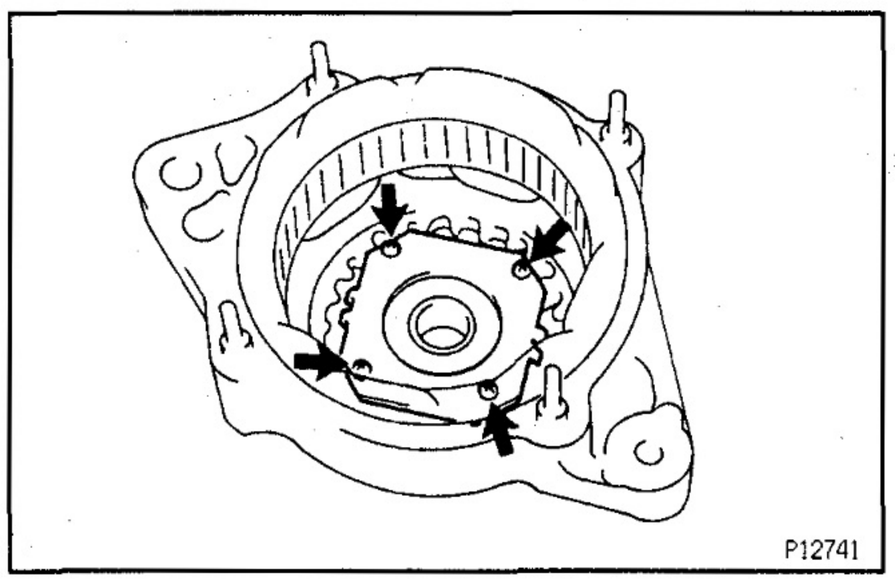

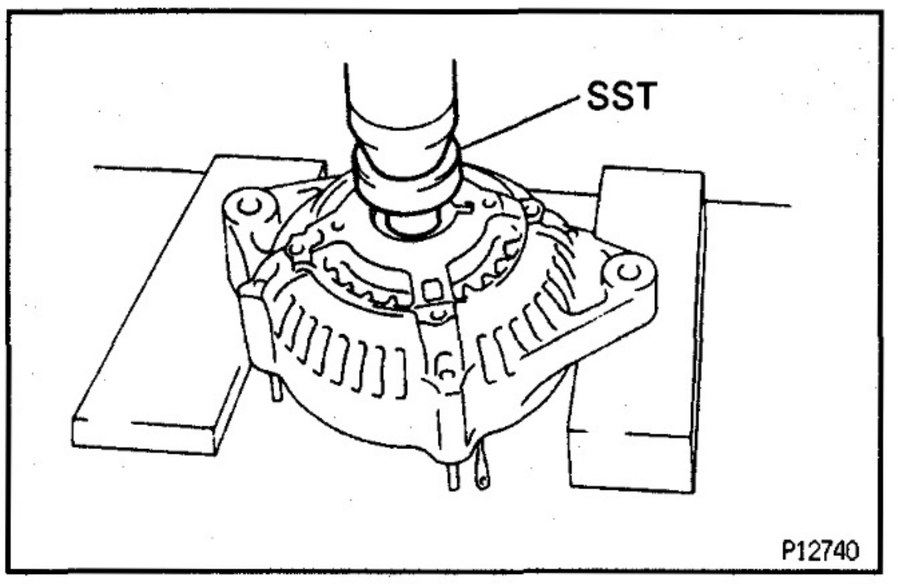

(b) Using SST and a press, press out the bearing.
SST 09608–20012 (09608–00080)

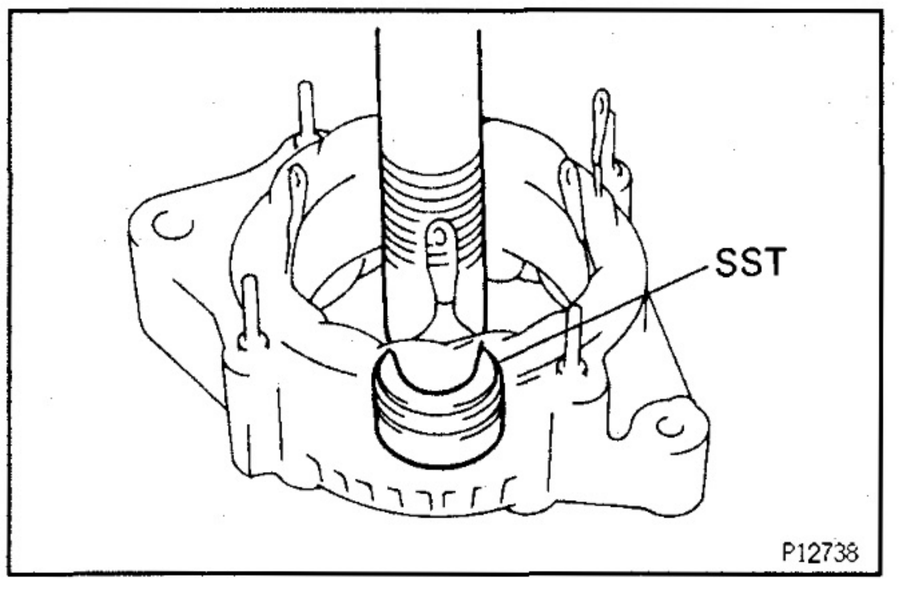

(c) Using SST and a press, press in a new bearing.
SST 09608–20012 (09608–00030)

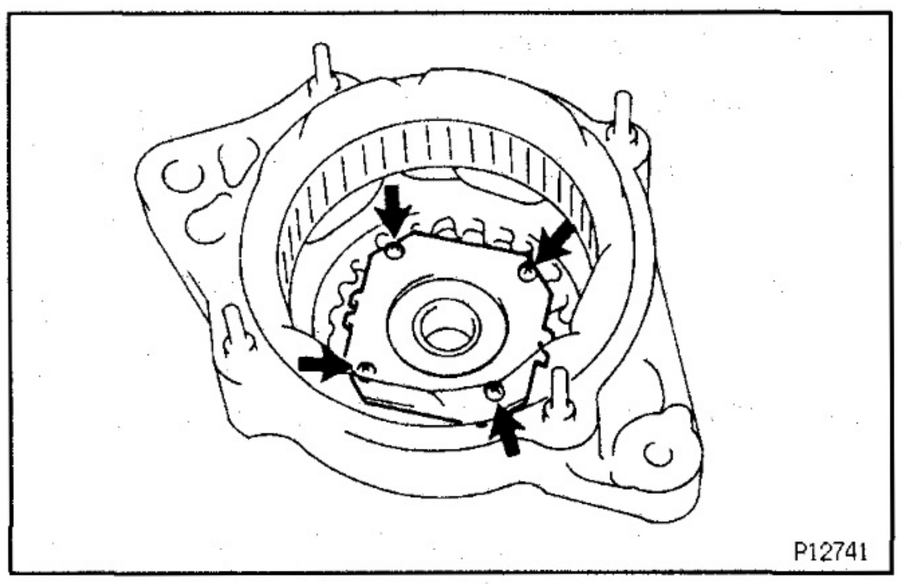

(d) Install the bearing retainer with the 4 screws.

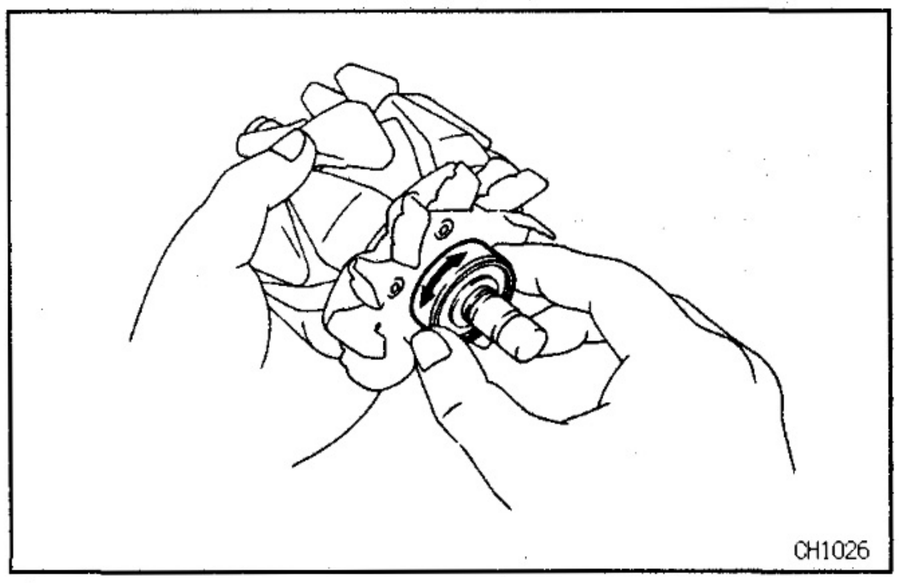

3. INSPECT REAR BEARING

Check that the bearing is not rough or worn.

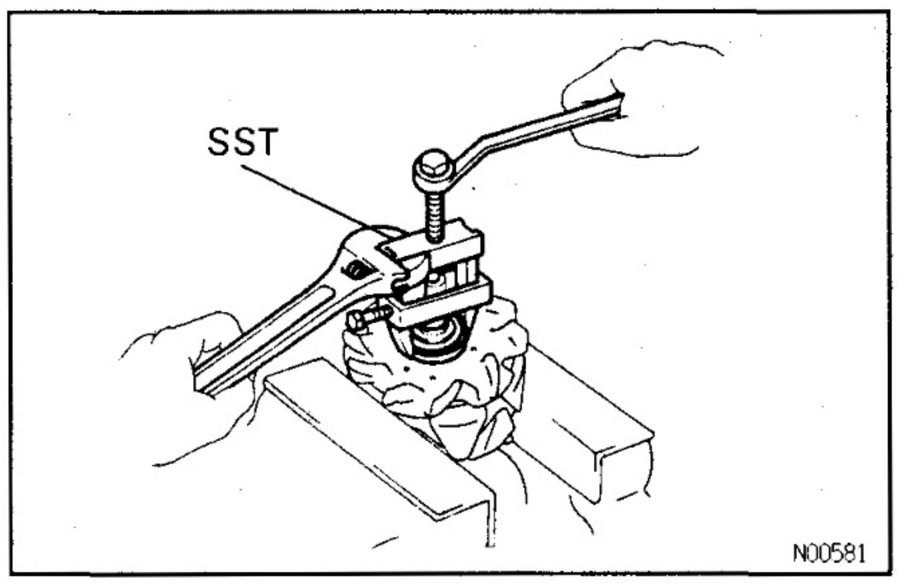

4. IF NECESSARY, REPLACE REAR BEARING

(a) Using SST, remove the bearing cover and bearing.
SST 09820–00021

NOTICE: Be careful not to damage the fan.

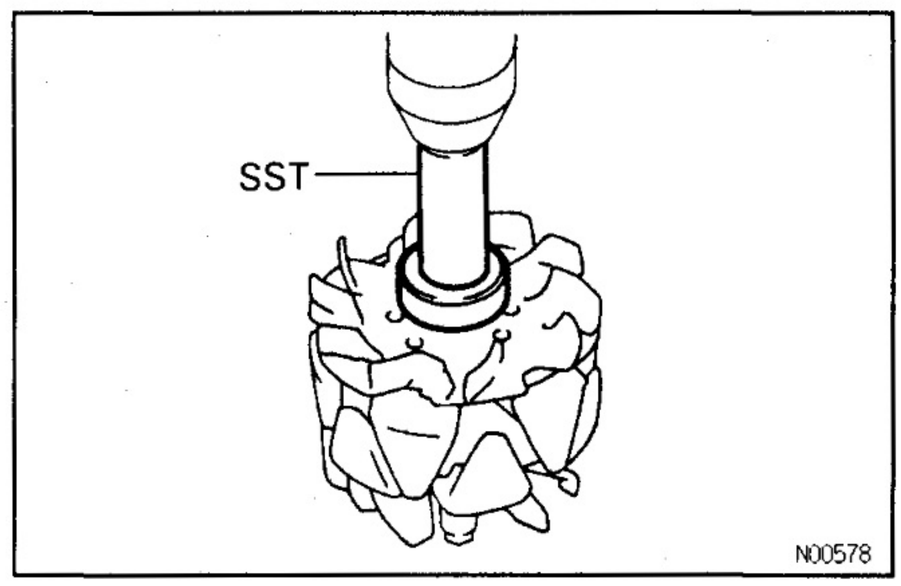

(b) Using SST and a press, press in a new bearing.
SST 09820–00030

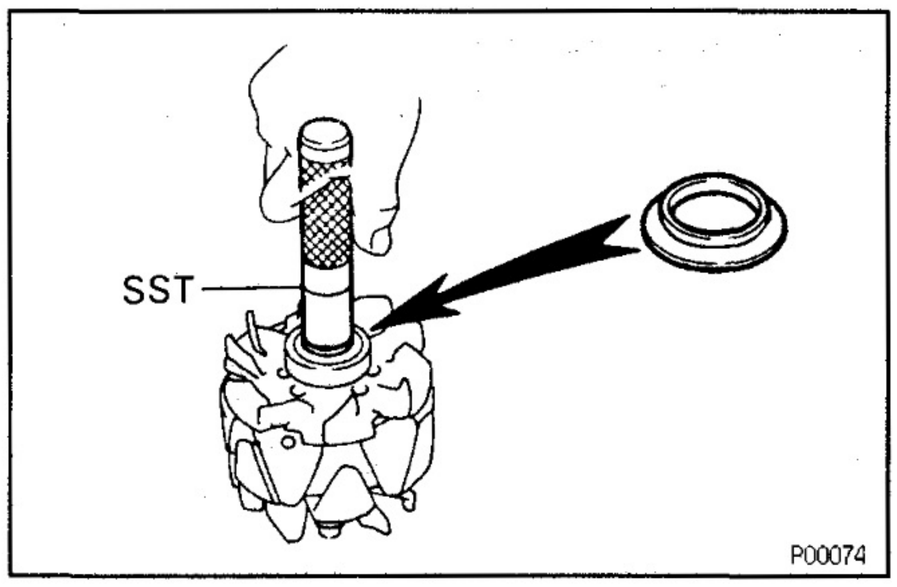

(c) Using SST, push in the bearing cover.
SST 09285–76010

CH04F–02

ALTERNATOR ASSEMBLY

(See Components for Disassembly and Assembly)

1. PLACE RECTIFIER END FRAME ON PULLEY

2. INSTALL ROTOR TO DRIVE END FRAME

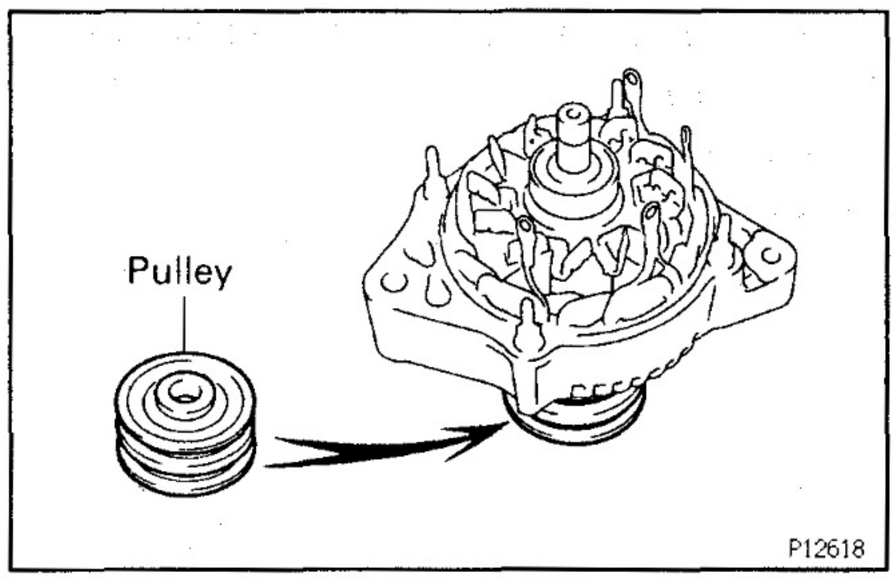

3. INSTALL RECTIFIER END FRAME

(a) Using a 30 mm socket wrench and press, slowly press in the rectifier end frame.

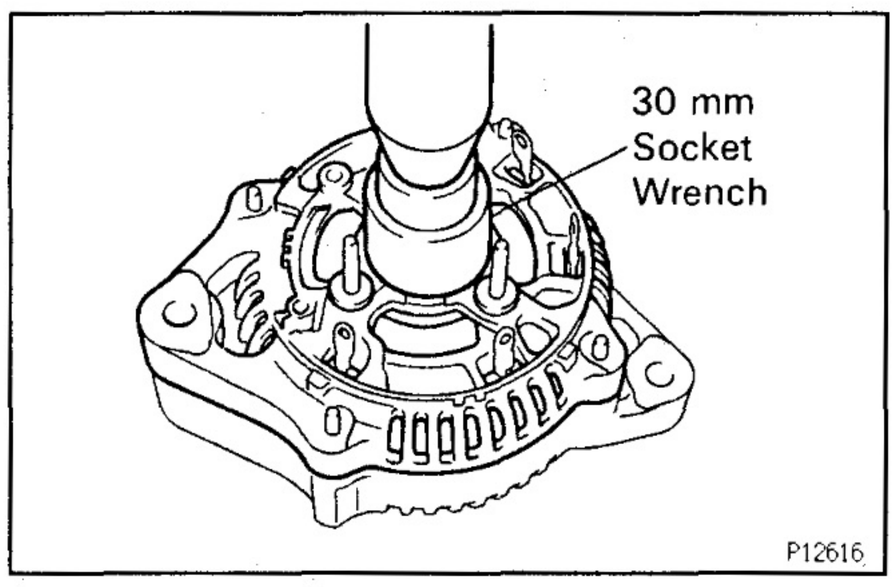

(b) Install the 4 nuts.

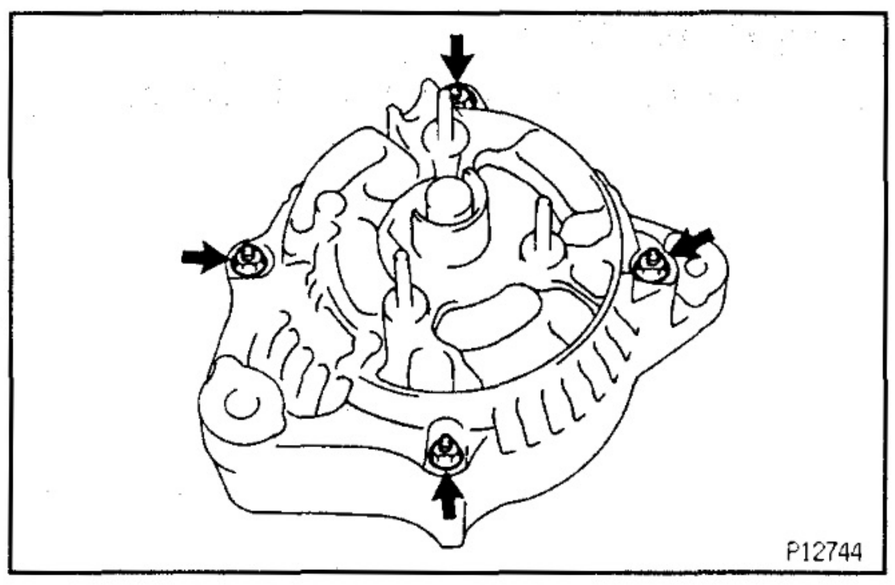

4. INSTALL PULLEY

(a) Install the pulley to the rotor shaft by tightening the pulley nut by hand.

(b) Hold SST (A) with a torque wrench, and tighten SST (B) clockwise to the specified torque.
SST 09820–63010
Torque: 39 N·m (400 kgf·cm, 29 ft·lbf)

(c) Check that SST (A) is secured to the pulley shaft.

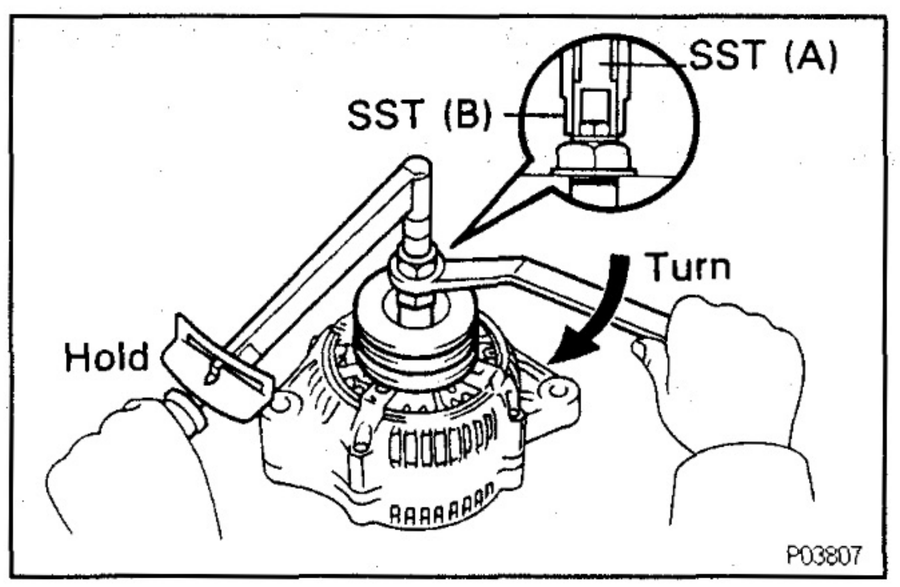

(d) Mount SST (C) in a vise.

(e) Install the pulley nut to SST (C).

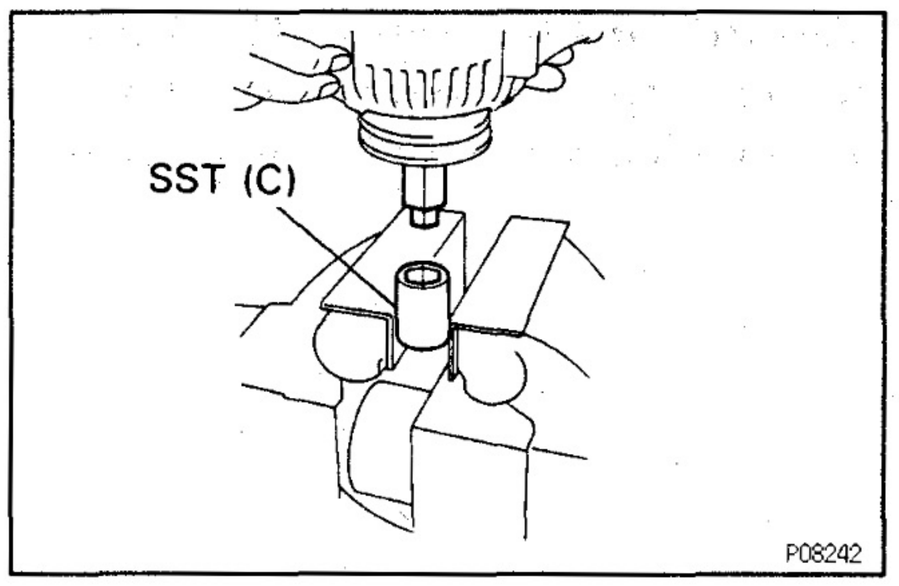

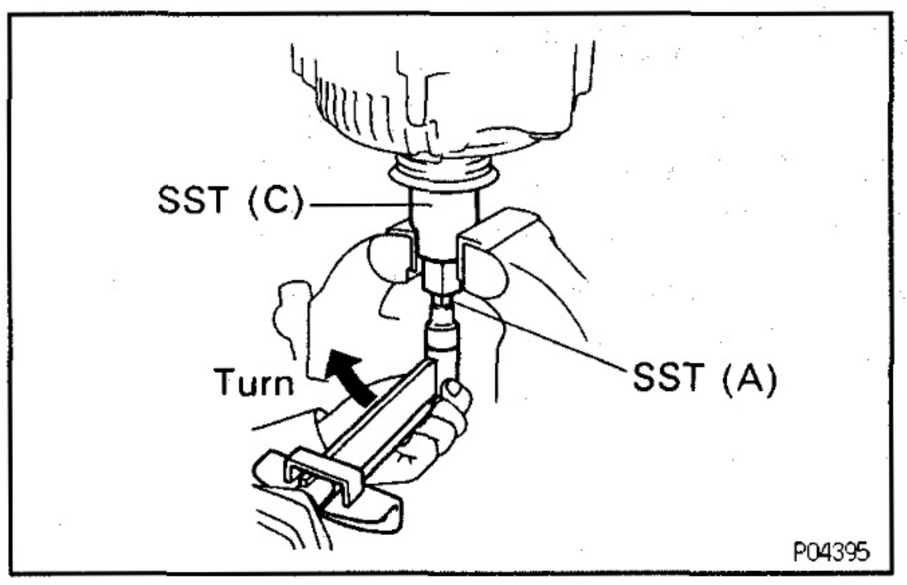

(f) To torque the pulley nut turn SST (A) in the direction shown in the illustration.
Torque: 110 N·m (1,125 kgf·cm, 81 ft·lbf)

(g) Remove the alternator from SST (C).

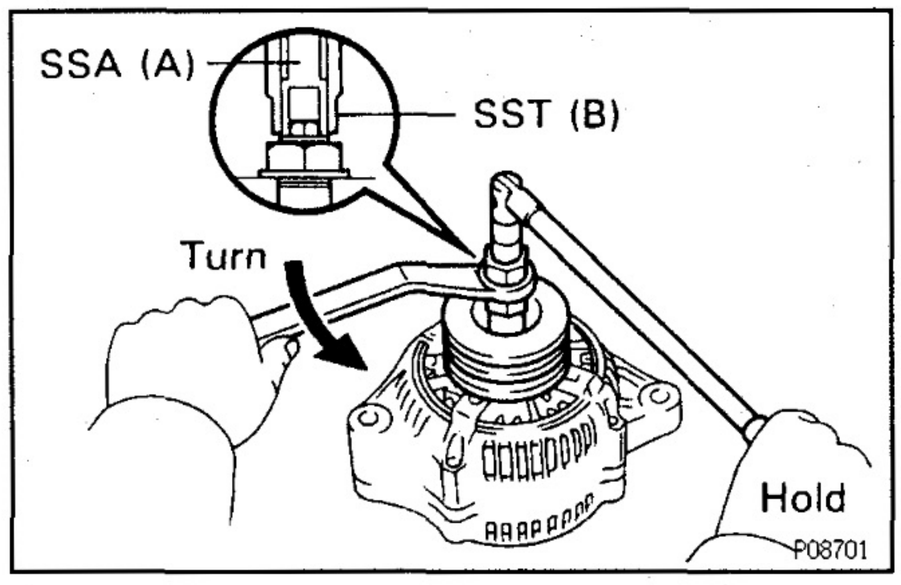

(h) Turn SST (B) and remove SST (A and B).

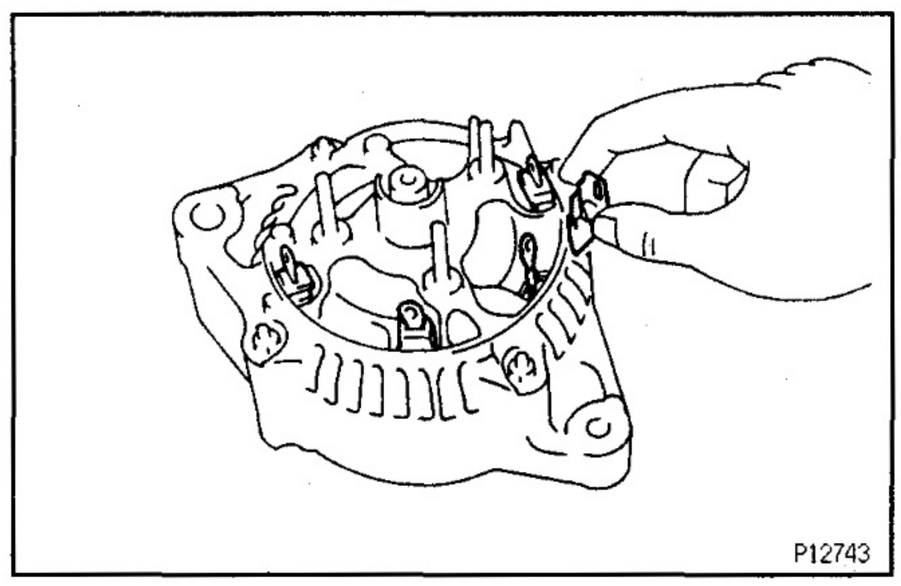

5. INSTALL RECTIFIER HOLDER

(a) Install the 4 rubber insulators on the lead wires.

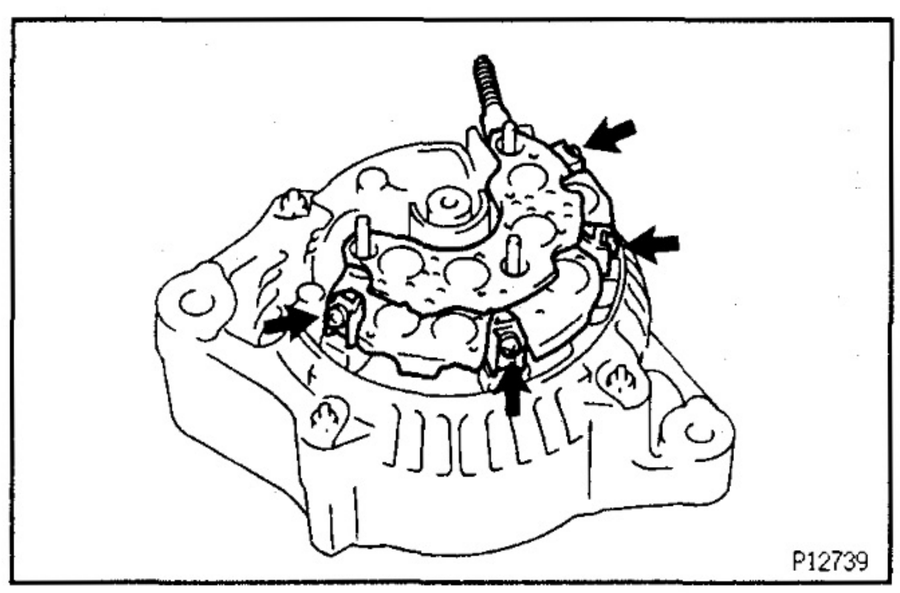

(b) Install the rectifier holder while pushing it with the 4 screws.
Torque: 1.96 N·m (20 kgf·cm, 17 in.·lbf)

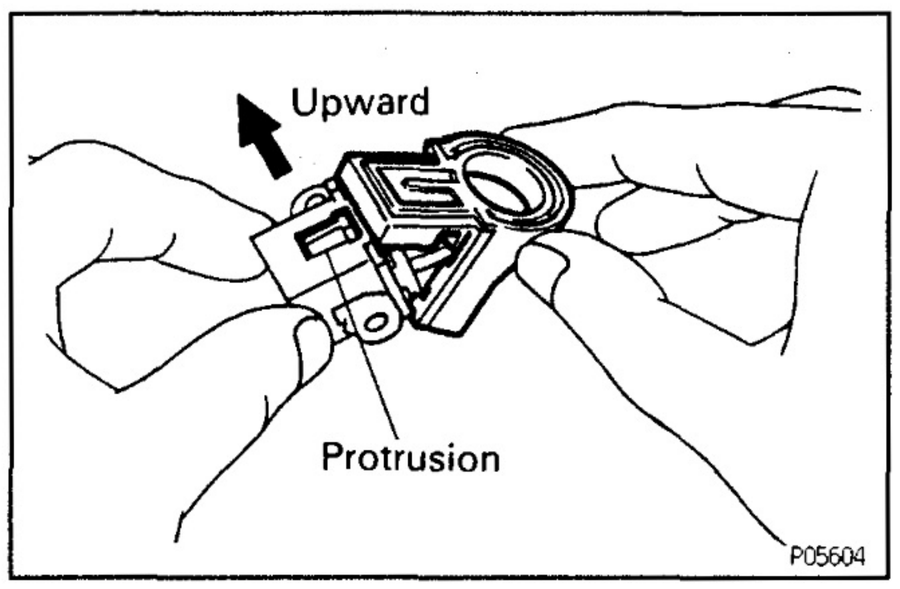

6. INSTALL IC REGULATOR AND BRUSH HOLDER

(a) Install the brush holder cover to the brush holder.
NOTICE: Be careful of the holder installation direction.

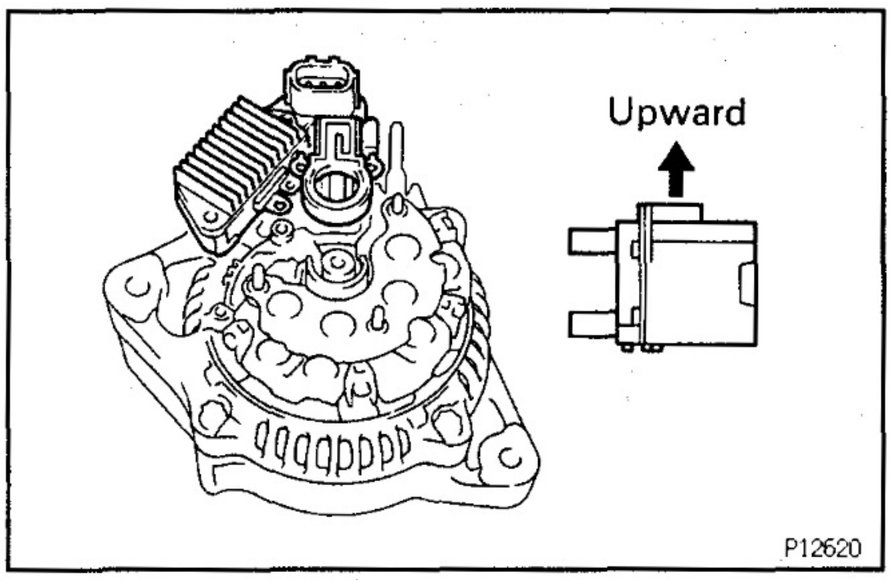

(b) Place the IC regulator together with the brush holder horizontally on the rectifier end frame.

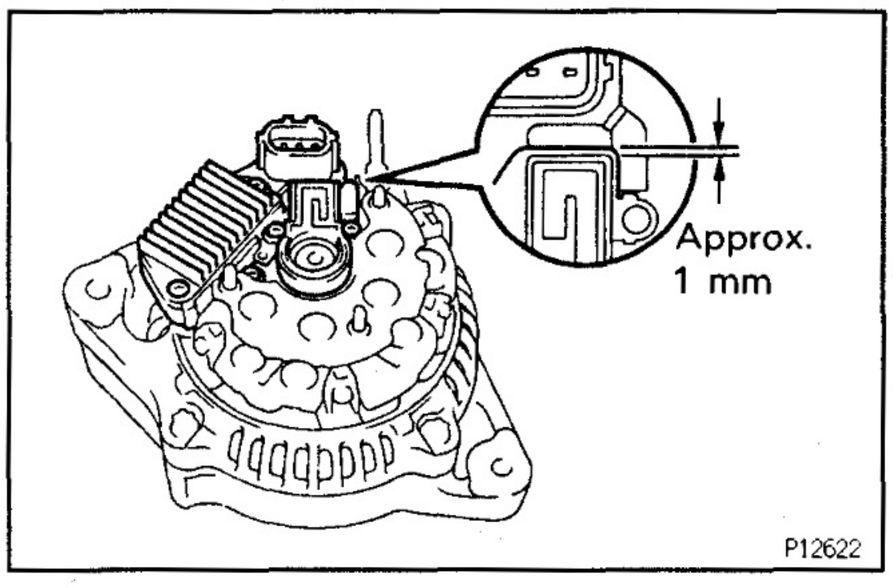

(c) Install the 5 screws until there is a clearance of approx. 1 mm (0.04 in.) between the brush holder and connector.

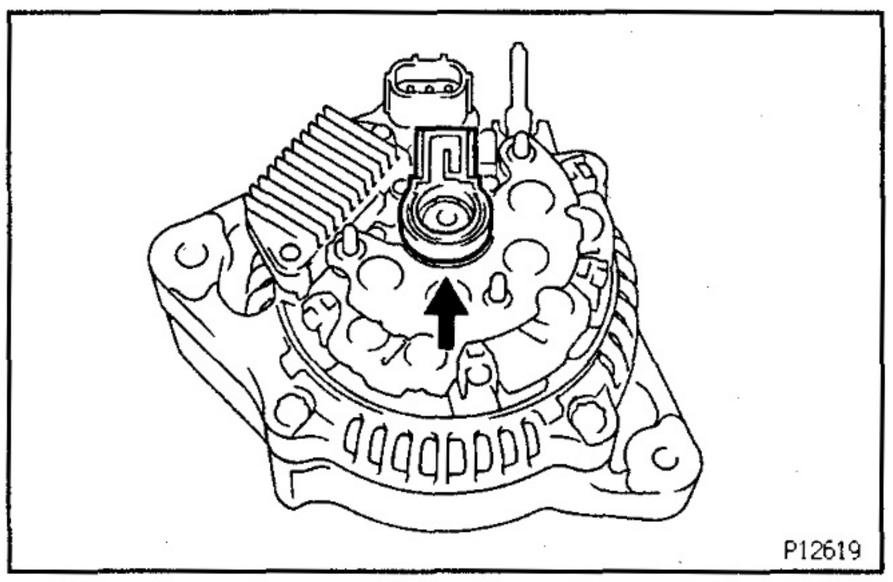

(d) Fit the brush holder cover.

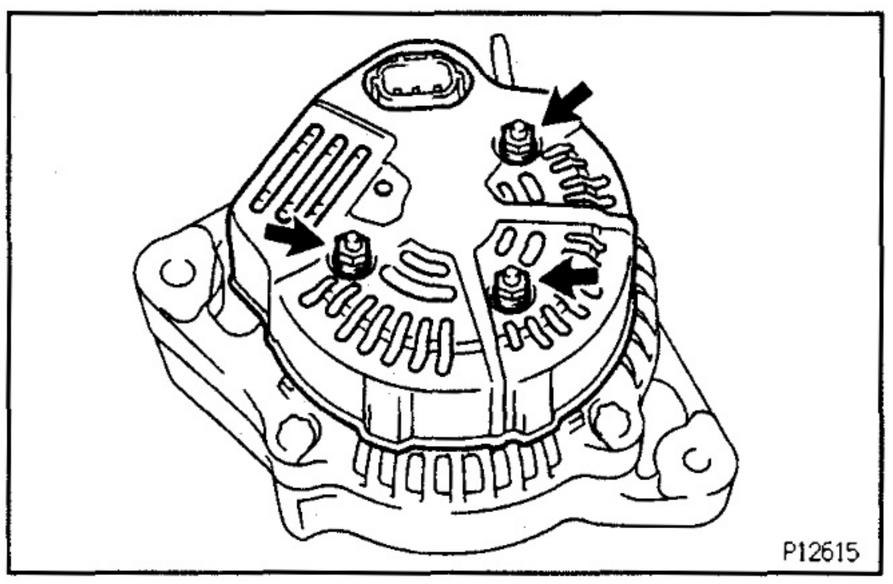

7. INSTALL REAR END COVER

(a) Install the end cover with the 3 nuts.
Torque: 4.5 N·m (46 kgf·cm, 40 in.·lbf)

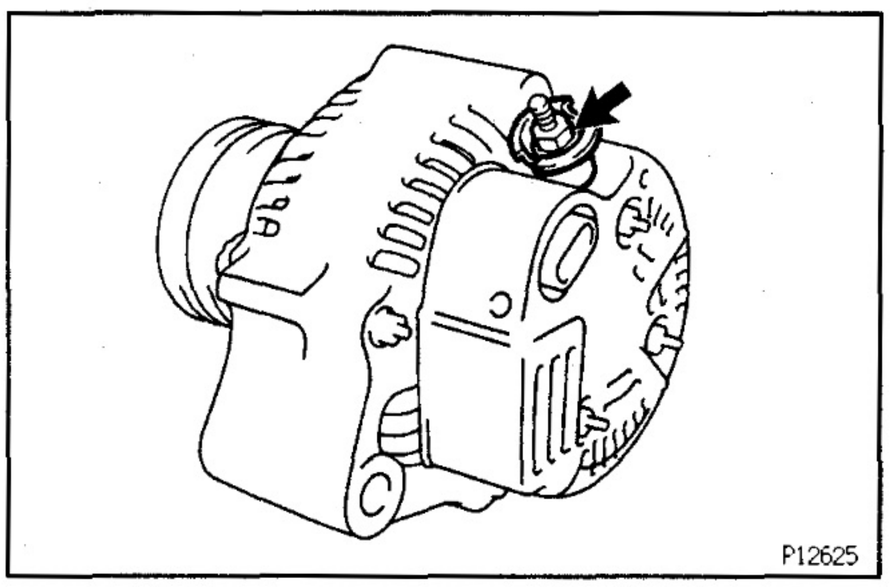

(b) Install the terminal insulator with the nut.
Torque: 4.1 N·m (42 kgf·cm, 36 in.·lbf)

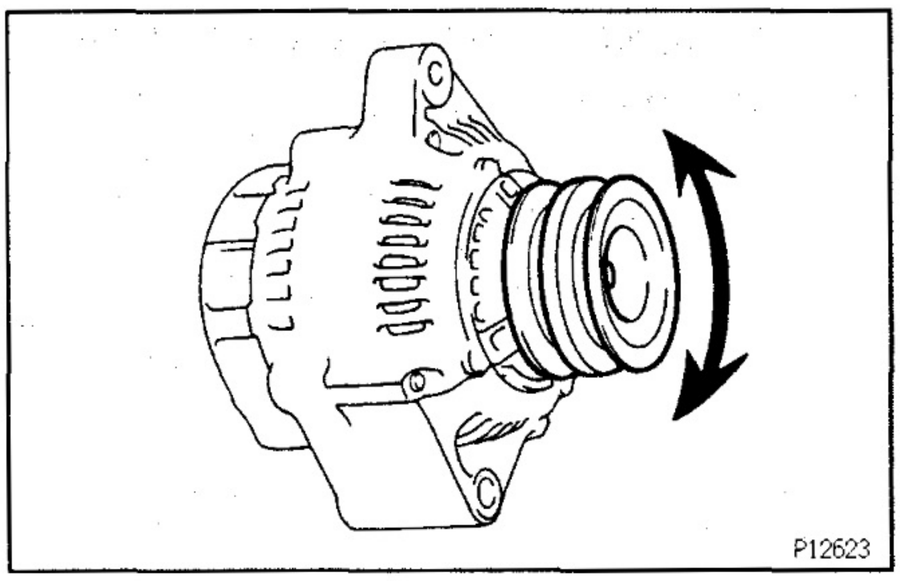

8. CHECK THAT ROTOR ROTATES SMOOTHLY

SERVICE SPECIFICATIONS

SERVICE DATA

CH01A–08

Battery	Specific gravity (When fully charge at 20°C (68°F))	1.27 — 1.29
Drive belt	Deflection — New belt	6 — 8 mm (0.24 — 0.31 in.)
	Deflection — Used belt	8 — 12 mm (0.31 — 0.47 in.)
	Tension — New belt	45 — 55 kgf
	Tension — Used belt	20 — 35 kgf
Alternator	Rated output	12 V — 55 A
	Rotor coil resistance	2.7 — 3.1 Ω
	Slip ring diameter (STD)	14.2 mm — 14.4 mm (0.559 — 0.567 in.)
	Slip ring diameter (Minimum)	12.8 mm (0.504 in.)
	Brush exposed length (STD)	10.5 mm (0.413 in.)
	Brush exposed length (Minimum)	1.5 mm (0.059 in.)
Alternator regulator (IC)	Regulating voltage at 25°C (77°F)	14.0 — 15.0 V
	Regulating voltage at 115°C (239°F)	13.5 — 14.3 V

TORQUE SPECIFICATIONS

CH01C–07

Part tightened	N·m	kgf·cm	ft·lbf
Alternator pulley x Rotor	110	1,125	81
Rectifier end frame x Drive end frame	1.96	20	17 in.·lbf
Rear end cover x Alternator	4.5	46	40 in.·lbf
Nut for terminal B	4.1	42	36 in.·lbf