TOYOTA

B, 3B, 11B, 13B, 13B-T

ENGINE

REPAIR MANUAL

Mar., 1986

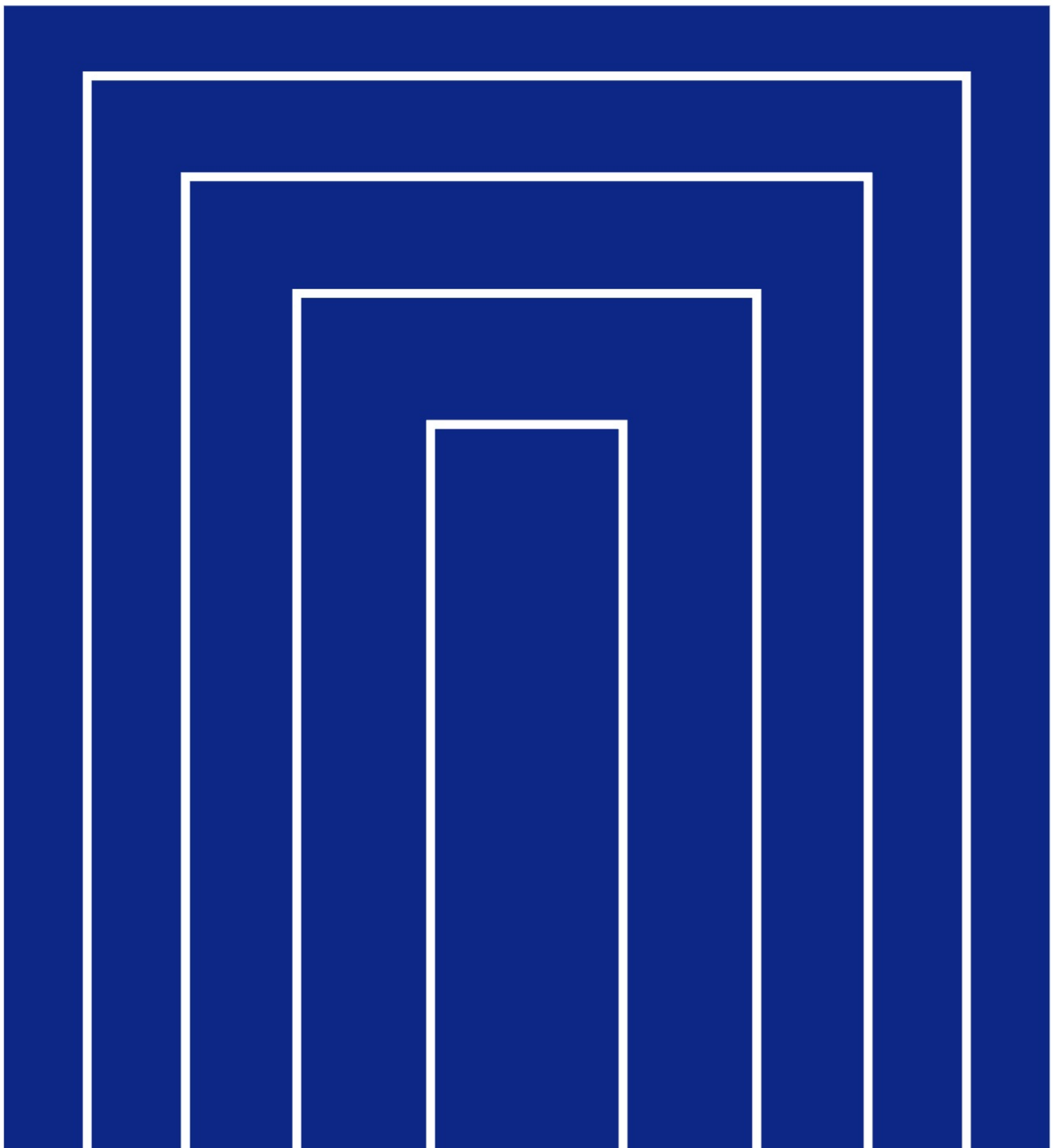

Pub. No. RM035E

FOREWORD

This repair manual has been prepared to provide information covering general service repairs for the B, 3B, 11B, 13B and 13B-T engines mounted on the TOYOTA LAND CRUISER, DYNA and COASTER.

Applicable models:
BJ60, 70, 71, 73, 74, 75 series
BU60, 61, 62, 63, 65, 70, 75, 76, 80, 81, 82, 85, 86,
BY33, 42 series
BB20, 22, 30 series

All information in this manual is based on the latest product information at the time of publication. However specifications and procedures are subject to change without prior notice.

TOYOTA MOTOR CORPORATION

TOYOTA
B, 3B, 11B, 13B, 13B-T ENGINE
REPAIR MANUAL

INTRODUCTION IN
ENGINE MECHANICAL EM
FUEL SYSTEM FU
COOLING SYSTEM CO
LUBRICATION SYSTEM LU
STARTING SYSTEM ST
CHARGING SYSTEM CH
SERVICE SPECIFICATIONS A
STANDARD BOLT TORQUE SPECIFICATIONS B
SST AND SSM C

© 1986 TOYOTA MOTOR CORPORATION
All rights reserved. This book may not be reproduced or copied, in whole or in part, without the written permission of Toyota Motor Corporation.

INTRODUCTION

	Page
HOW TO USE THIS MANUAL	IN-2
IDENTIFICATION INFORMATION	IN-4
GENERAL REPAIR INSTRUCTIONS	IN-4
ABBREVIATIONS USED IN THIS MANUAL	IN-7

HOW TO USE THIS MANUAL

To assist in finding your way through this manual, the Section Title and major heading are given at the top of every page.

An **INDEX** is provided on the 1st page of each section to guide you to the item to be repaired.

At the beginning of each section, **PRECAUTIONS** are given that pertain to *all* repair operations contained in that section. *Read these precautions before starting any repair task.*

TROUBLESHOOTING tables are included for each system to help you diagnose the system problem and find the cause. The repair for each possible cause is referenced in the remedy column to quickly lead you to the solution.

REPAIR PROCEDURES

Most repair operations begin with an overview illustration. It identifies the components and shows how the parts fit together.

Example:

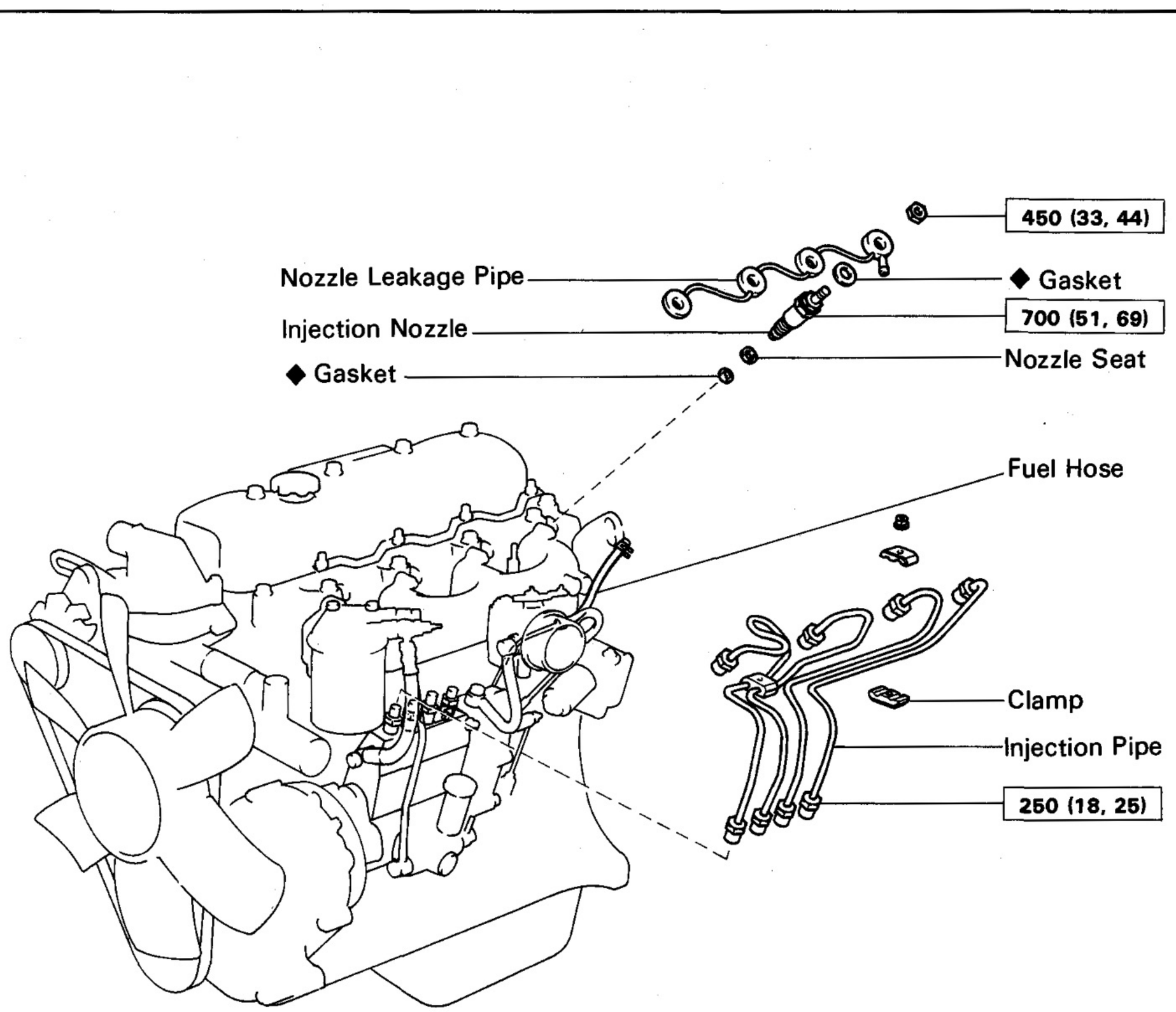

kg-cm (ft-lb, N·m) : Specified torque

◆ Non-reusable part

FU1609

The procedures are presented in a step-by-step format:

- The illustration shows *what* to do and *where* to do it.
- The task heading tells *what* to do.
- The detailed text tells *how* to perform the task and gives other information such as specifications and warnings.

Example:

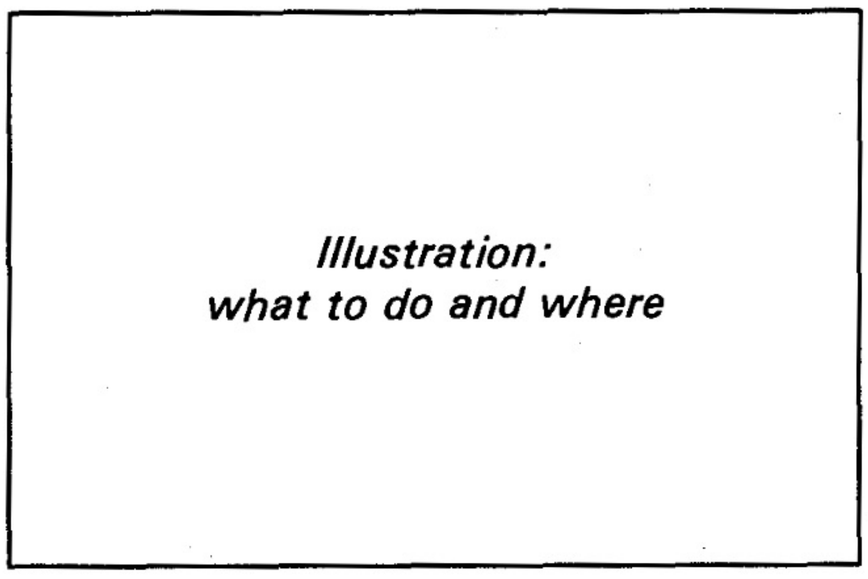

Task heading: what to do

REMOVE INJECTION NOZZLES

Using SST, remove the four nozzles, seats and gaskets.

SST 09260-46012 (09268-46012, 09268-46021)

Set part No. *Components part No.*

Install and torque the four nozzles. ← *Detailed text: how to do task*

Torque: 750 kg-cm (54 ft-lb, 74 N·m)

Torque Specification

This format enables the experienced technician with a FAST TRACK to the information needed. The upper case heading can be read at a glance and only when necessary, the test below it provides detailed information. Important specifications and warnings always stand out in bold type.

REFERENCES

References have been kept to a minimum. However, when they are required you are given the *page* to go to.

SPECIFICATIONS

Specifications are presented in bold type throughout the text in the applicable step. You never have to leave the procedure to look up your specs. All specifications are also found in Appendix A, specifications, for quick reference.

WARNINGS, CAUTIONS, NOTES:

- WARNINGS are presented in bold type, and indicate there is a possibility of injury to you or other people.
- CAUTIONS are also presented in bold type and indicate there is a possibility of damage to the components being repaired.
- NOTES are separated from the text but do not appear in bold. They provide additional information to help you efficiently perform the repair.

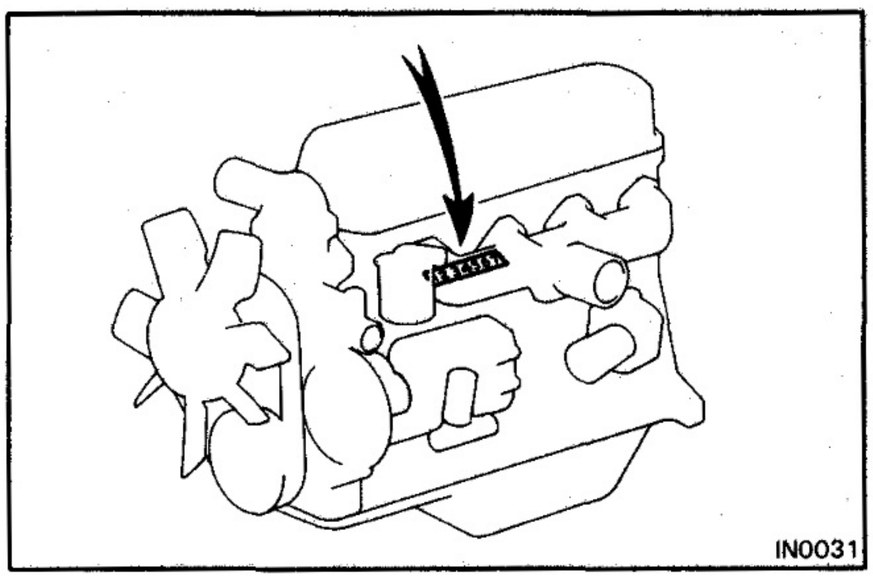

IDENTIFICATION INFORMATION

ENGINE SERIAL NUMBER

The engine serial number is stamped on the left side of the cylinder block.

GENERAL REPAIR INSTRUCTIONS

1. Use fender, seat and floor covers to keep the vehicle clean and prevent damage.
2. During disassembly, keep parts in order to facilitate reassembly.
3. Observe the following:
   (a) Before performing electrical work, disconnect the negative cable from the battery terminal.
   (b) If it is necessary to disconnect the battery for inspection or repair, always disconnect the cable from the negative (–) terminal which is grounded to the vehicle body.
   (c) To prevent damage to the battery terminal post, loosen the terminal nut and raise the cable straight up without twisting or prying it.
   (d) Clean the battery terminal posts and cable terminal with a shop rag. Do not scrape them with a file or other abrasive object.
   (e) Install the cable terminal to the battery post with the nut loose and tighten the nut after installation. Do not use a hammer to tap the terminal onto the post.
   (f) Be sure the cover for the positive (+) terminal is properly in place.
4. Check hose and wiring connectors to make sure they are securely and correctly connected.
5. Non-reusable parts
   (a) Always replace cotter pins gaskets, O-rings, oil seals, etc. with new ones.
   (b) Non-reusable parts are indicated in the component illustrations by the "◆" symbol.

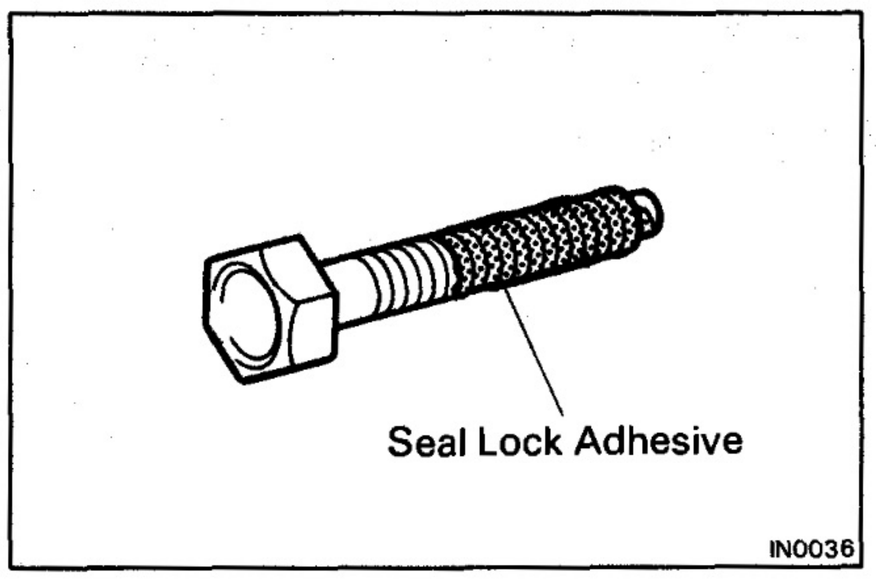

6. Precoated Parts

   Precoated parts are the bolts, nuts, etc. Which are coated with a seal lock adhesive at the factory.

   (a) If a precoated part is tightened, loosened or caused to move in any way, it must be recoated with the specified adhesive.

   (b) Recoating of Precoating Parts

      (1) Clean off the old adhesive from the bolt, nut or installation part threads.

      (2) Dry with compressed air.

      (3) Apply the specified seal lock adhesive to the bolt or nut threads.

   (c) Precoated parts are indicated in the component illustrations by the "★" symbol.

7. When necessary, use a sealer on gaskets to prevent leaks.

8. Carefully observe all specifications for bolt tightening torques. Always use a torque wrench.

9. Use of special service tools (SST) and special service materials (SSM) may be required depending on the nature of the repair. Be sure to use SST and SSM where specified and follow the proper work procedure. A list of SST and SSM can be found at the back of this manual.

10. When replacing fuses, be sure the new fuse is the correct amperage rating. DO NOT exceed the fuse amp rating or use one of a lower rating.

11. Care must be taken when jacking up and supporting the vehicle. Be sure to lift and support the vehicle at the proper locations.

   (a) If the vehicle is to be jacked up only at the front or rear end, be sure to block the wheels in order to ensure safety.

   (b) After the vehicle is jacked up, be sure to support it on stands. It is extremely dangerous to do any work on the vehicle raised on one jack alone, even for a small job that can be finished quickly.

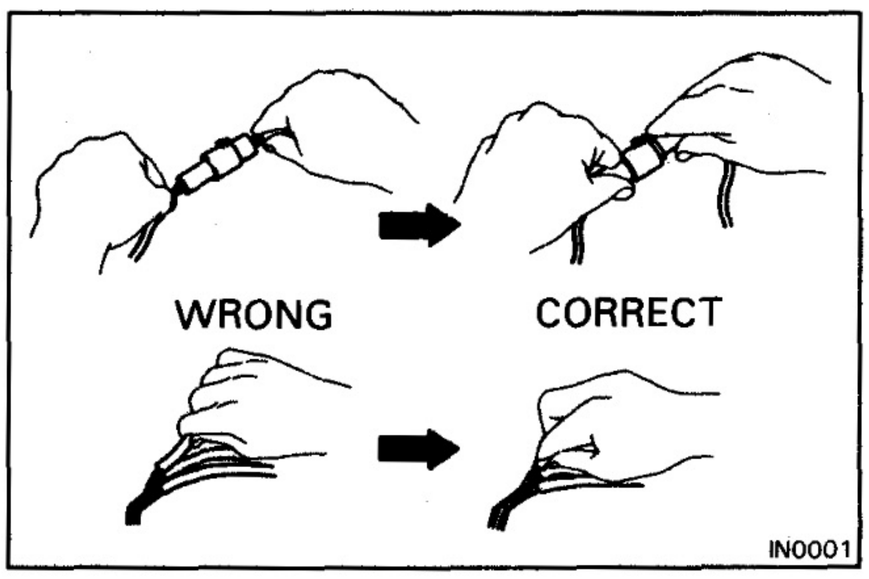

12. Observe the following precautions to avoid damage the parts:

   (a) To disconnect vacuum hoses, pull on the end, not the middle of the hose.

   (b) To pull apart electrical connectors, pull on the connector itself, not the wires.

   (c) Be careful not to drop electrical components, such as sensors or relays. If they are dropped on a hard floor, they should be replaced and not reused.

(d) When steam cleaning an engine, protect the air filter and injection pump from water.

(e) Never use an impact wrench to remove or install thermo switches or thermo sensors.

(f) When checking continuity at the wire connector, insert the tester probe carefully to prevent terminals from bending.

(g) When using a vacuum gauge, never force the hose onto a connector that is too large. Use a step-down adapter instead. Once the hose has been stretched, it may leak.

13. After removing and reinstalling the injection pump and fuel hoses, clean off the fuel on engine components. In particular, be sure to check the radiator hose and by-pass hose, because they deteriorate easily if they come into contact with fuel.

ABBREVIATIONS USED IN THIS MANUAL

A/C	Air Conditioner
A/T	Automatic Transmission
ATDC	After Top Dead Center
BDC	Bottom Dead Center
BTDC	Before Top Dead Center
DP	Dash Pot
EDIC	Electrical Diesel Injection Control
EX	Exhaust
Ex.	Except
HAC	High Altitude Compensator
IN	Intake
MP	Multipurpose
M/T	Manual Transmission
O/S	Oversize
PCV	Positive Crankcase Ventilation
PS	Power Steering
SSM	Special Service Materials
SST	Special Service Tools
STD	Standard
TDC	Top Dead Center
U/S	Undersize
VSV	Vacuum Switching Valve
w/	With
w/o	Without

ENGINE MECHANICAL

	Page
DIESEL ENGINE DIAGNOSIS	EM-2
DIESEL ELECTRICAL SYSTEM DIAGNOSIS [3B]	EM-11
DIESEL ELECTRICAL SYSTEM DIAGNOSIS [11B, 13B and 13B-T]	EM-13
TURBOCHARGER DIAGNOSIS [13B-T]	EM-17
TURBOCHARGER ELECTRICAL SYSTEM DIAGNOSIS [13B-T]	EM-19
ENGINE TUNE-UP	EM-20
COMPRESSION CHECK [B and 3B]	EM-32
COMPRESSION CHECK [11B, 13B and 13B-T]	EM-33
TURBOCHARGER [13B-T]	EM-34
CYLINDER HEAD	EM-41
TIMING GEARS AND CAMSHAFT	EM-63
CYLINDER BLOCK	EM-79

DIESEL ENGINE DIAGNOSIS

1. GENERAL

Diesel engine problems are usually caused by the engine or fuel system. The injection pump is very rarely the cause of fuel system problems.

Before beginning fuel system tests, first check that the engine compression, valve timing and other major systems are within specifications.

2. PRELIMINARY CHECKS

(a) Before performing fuel system checks, insure that the engine is in good running condition. If necessary, first check the compression, timing and major components or systems.

(b) Check the air filter and clean or replace as necessary.

(c) Check for sufficient fuel in the tank.

(d) Check if the fuel is contaminated with gasoline or other foreign elements. Only high-quality diesel fuel should be used.

(e) Bleed air from the system by pumping the priming pump.

(f) Check for water in the sedimenter and fuel tank, and drain as necessary.

(g) If the engine will not crank or if it cranks slowly, troubleshoot the electrical system.

PRECAUTION:

1. The basic troubleshooting procedures for the diesel engine (valve clearance, compression, bearings, valves, pistons, etc.) are the same checks you would make for a gasoline engine.
2. The repair of the injection pump requires considerable skill and use of a special test bench.

ENGINE WILL NOT CRANK

(Possible Cause)	(Check Procedure and Correction Method)
1. LOOSE OR CORRODED BATTERY CABLES	Check cables from battery to starter and make necessary repairs.
2. DISCHARGED BATTERY	Check the alternator output and the drive belt. Repair as necessary. (See page CH-6)
3. INOPERATIVE STARTER	Check for battery voltage at starter terminals 30 and 50. If Okay, see STARTING SYSTEM page (ST-15) for repair procedure.

ENGINE CRANKS SLOWLY-WILL NOT START

NOTE: Minimum cranking speed: Cold M/T 100 rpm
A/T 110 rpm
Hot 150 rpm

(Possible Cause)	(Check Procedure and Correction Method)
1. LOOSE OR CORRODED BATTERY CABLES	
2. DISCHARGED BATTERY	Refer to items 1 and 2 of ENGINE WILL NOT CRANK.
3. IMPROPER ENGINE OIL	Check engine oil. If improper viscosity, drain and refill with oil of a viscosity recommended by manufacturer. (See page LU-3)

ENGINE CRANKS NORMALLY BUT WILL NOT START

(Possible Cause)	(Check Procedure and Correction Method)
1. NO FUEL TO INJECTION NOZZLE	Loosen any one injection pipe union nut from its nozzle. Crank the engine for about 5 seconds while confirming that fuel is being discharged from the pipe. If fuel is coming out, begin diagnosis from item 4. If not, begin from item 2.
2. NO FUEL INTO INJECTION PUMP	Disconnect inlet hoses to the feed pump and feed clean fuel from separate container directly into feed pump. If engine starts, either the sedimenter or fuel line between the fuel tank and feed pump is clogged and should be repaired. If the engine still does not start, check the fuel filter or line between feed pump and injection pump. If normal, the feed pump or injection pump is faulty and should be repaired. **NOTE: When feeding fuel directly into pump, keep container at same level as vehicle fuel tank.**
3. FUEL LEAKAGE FROM INJECTION PIPE	Check for loose unions or cracks. If leaking, tighten to specified torque or, if necessary, replace pipe(s).
4. [B AND 3B] INOPERATIVE PRE-HEATING OPERATION	With the ignition switch turned ON and the glow plug indicator light illuminated, check that there is voltage applied to the glow plug. If not, refer to ELECTRICAL DIAGNOSIS and repair as necessary. (See page EM-11)
5. [11B, 13B AND 13B-T] INOPERATIVE PRE-HEATING OPERATION	With the ignition switch turned ON and the intake heater indicator light illuminated, check that there is voltage applied to the intake heater. It not, refer to ELECTRICAL DIAGNOSIS and repair as necessary. (See page EM-13)
6. [B AND 3B] FAULTY GLOW PLUG OPERATION	Check the glow plug for continuity. (See page ST-5) If no continuity, a broken wire is indicated and the glow plug should be replace.
7. [11B, 13B AND 13B-T] FAULTY INTAKE HEATER OPERATION	Check the intake heater continuity. (See page ST-13) If no continuity, a broken wire is indicated and intake heater should be replaced.

8. IMPROPER INJECTION TIMING	Check the injection timing. (See page EM-23) **Injection timing:** **B and 3B — 14°BTDC** **11B (w/ HAC) and 13B (w/ HAC) — 14°BTDC** **11B (w/o HAC) and 13B (w/o HAC) — 11°BTDC** **13B-T — 11°BTDC** If not as specified, injection timing must be readjusted.
9. FAULTY INJECTION NOZZLE	Check the injection pressure with nozzle tester. (See page FU-5 or 11) **Opening pressure:** **B and 3B — 105 – 125 kg/cm² (1,493 – 1,778 psi) (10,296 – 12,258 kPa)** **11B, 13B and 13B-T — 180 – 210 kg/cm² (2,560 – 2,987 psi) (17,652 – 20,594 kPa)** It not within specification, nozzle adjustment is improper and pressure should be readjusted. If pressure cannot be adjust to specification, replace nozzle.

ROUGH IDLE WITH WARM ENGINE

(Possible Cause)	(Check Procedure and Correction Method)
1. IMPROPER ADJUSTMENT OF ACCELERATOR CABLE	With the accelerator pedal released, check that the adjusting lever is in contact with the idle adjusting screw. Also, check if the accelerator cable is catching on something. If necessary, adjust so lever is in contact with the screw, or make other required repairs.
2. IDLE SPEED TOO LOW	Check the idle speed as specified below. (See page EM-25 or 27) **Idle speed: M/T — 650 rpm** **A/T (13B) — 770 rpm** **A/T (13B-T) — 820 rpm** If not, adjust with the idle adjusting screw. **NOTE: If less than specified, idling would normally be rough.**

3. FUEL LEAKAGE	Check for leaks in the injection pump connections, feed pump, nozzle holder and delivery valve. Tighten any loose connections to specified torque or replace parts as necessary.
4. IMPROPER INJECTION TIMING	Refer to item 6 of ENGINE CRANKS NORMALLY BUT WILL NOT START, above.
5. IMPROPER OPERATION OF INJECTION NOZZLE OR DELIVERY VALVE	With the engine idling, loosen the injection pipe to each cylinder in order, and check if the idle speed changes. If no change, a faulty cylinder is indicated. Check according to the following procedure. ● Faulty Nozzle Check the nozzle with nozzle tester. (See page FU-5 or 11) **Opening pressure:** **B and 3B: 105 – 125 kg/cm² (1,493 – 1,778 psi) (10,296 – 12,258 kPa)** **11B, 13B and 13B-T: 180 – 210 kg/cm² (2,560 – 2,987 psi) (17,652 – 20,594 kPa)** If not within specification, the nozzle is faulty and injection pressure should be readjusted. ● Faulty Delivery Valve If injection pressure is within specification, the delivery valve is defective and should be replaced.

ENGINE SUDDENLY STOPS

(Possible Cause)	(Check Procedure and Correction Method)
1. ENGINE WILL NOT RE-START	Check to see if engine re-starts according to prescribed procedure. If not, refer to ENGINE CRANKS NORMALLY BUT WILL NOT START, above, and repair as necessary.
2. ROUGH IDLE	If idle is not stable, refer to ROUGH IDLE WITH WARM ENGINE and repair accordingly.
3. NO FUEL INTO INJECTION PUMP	Refer to item 2 of ENGINE CRANKS NORMALLY BUT WILL NOT START, above.

LACK OF POWER

NOTE:
1. First check that the air cleaner is not clogged or the engine overheating.
2. Not applicable if the customer desires an output power higher than specified for that vehicle. For accuracy, adjust with a chassis dynamo.

(Possible Cause)	(Check Procedure and Correction Method)
1. IMPROPER ACCELERATOR CABLE ADJUSTMENT	With accelerator fully depressed, check that the adjusting lever is in contact with the maximum speed adjusting screw. (See page EM-25 or 27) If not, adjust accordingly.
2. INSUFFICIENT MAXIMUM SPEED	Start engine, depress the accelerator pedal to the floor and check that maximum speed is as specified below. (See page EM-25 or 27) **Maximum speed: 4,100 rpm** If not, adjust with the maximum speed adjusting screw.
3. FUEL LEAKAGE	Refer to item 3 of ROUGH IDLE WITH WARM ENGINE.
4. CLOGGED FUEL FILTER	Disconnect the injection pump inlet hose and outlet pipe of the feed pump, and connect directly with a suitable pipe. Then pour clean fuel into the inlet side of the feed pump. If the engine condition improves, the fuel filter is clogged and should be replaced. (See page FU-2) **NOTE: When feeding fuel directly into the pump, keep container at same level as vehicle fuel tank.** If no increase in engine condition after replacing the fuel filter, check the feed pump or perform other necessary repairs.
5. IMPROPER INJECTION TIMING	Refer to item 8 of ENGINE CRANKS NORMALLY BUT WILL NOT START.
6. FAULTY INJECTION NOZZLE	Refer to item 9 of ENGINE CRANKS NORMALLY BUT WILL NOT START.

EXCESSIVE EXHAUST SMOKE

NOTE:
1. Check that the air cleaner is not clogged.
2. Check with the customer whether or not oil consumption has been excessive.

(Possible Cause)	(Check Procedure and Correction Method)
1. IMPROPER INJECTION TIMING	Refer to item 8 of ENGINE CRANKS NORMALLY BUT WILL NOT START. **NOTE: Black smoke indicates advanced timing while white smoke indicates retarded timing. Adjustments should be made accordingly.**
2. CLOGGED FUEL FILTER	Refer to item 5 of LACK OF POWER. **NOTE: At high speed (2,000 — 3,000 rpm), a clogged filter tends to make the exhaust smoke white.**
3. FAULTY INJECTION NOZZLE	Refer to item 9 of ENGINE CRANKS NORMALLY BUT WILL NOT START. **NOTE: Excessive exhaust smoke is often caused by nozzle pressure being too low.**

EXCESSIVE FUEL CONSUMPTION

NOTE: Check whether the clutch slips, brakes grab, whether the tires are the wrong size or the air filter is clogged.

(Possible Cause)	(Check Procedure and Correction Method)
1. FUEL LEAKAGE	Refer to item 3 of ROUGH IDLE WITH WARM ENGINE.
2. IDLE SPEED TOO HIGH	After sufficiently warming up engine, check that idle speed is as specified below. (See page EM-25 or 27) **Idle speed: M/T 650 rpm** **A/T (13B) 770 rpm** **A/T (13B-T) 820 rpm** If not, adjust with the idle adjusting screw.
3. MAXIMUM SPEED TOO HIGH	Start engine, depress the accelerator pedal to the floor and check that maximum speed is as specified below. (See page EM-25 or 27) **Maximum speed: 4,100 rpm** If not, adjust with maximum speed adjusting screw.

4. IMPROPER INJECTION TIMING	Refer to item 8 of ENGINE CRANKS NORMALLY BUT WILL NOT START.
5. FAULTY INJECTION NOZZLE	Refer to item 9 of ENGINE CRANKS NORMALLY BUT WILL NOT START.

ENGINE NOISE WHEN WARM

(Cranking Noise with Excessive Vibration)

(Possible Cause)	(Check Procedure and Correction Method)
1. COOLANT TEMPERATURE TOO LOW	Check coolant temperature with coolant temperature gauge. If not sufficiently warm, thermostat is faulty and should be replaced.
2. IMPROPER INJECTION TIMING	Refer to item 8 of ENGINE CRANKS NORMALLY BUT WILL NOT START.
3. FAULTY INJECTION NOZZLE	Refer to item 9 of ENGINE CRANKS NORMALLY BUT WILL NOT START.

ENGINE WILL NOT RETURN TO IDLE

(Possible Cause)	(Check Procedure and Correction Method)
BINDING ACCELERATOR CABLE	Operate adjusting lever on side of injection pump and check if engine returns to idle. If so, the accelerator cable is binding or improperly adjusted and should be repaired accordingly. If engine does not return to idle, the injection pump is faulty and should be repaired.

ENGINE WILL NOT SHUT OFF WITH STOP BUTTON OR KEY

(Possible Cause)	(Check Procedure and Correction Method)
1. [B AND 3B (w/ STOP BUTTON)] BINDING STOP CABLE	Operate stop lever (adjusting lever) on side of injection pump and check if engine stops. If so, stop cable is binding or maladjusted and should be repaired accordingly. If engine does not stop, injection pump is faulty and should be replaced. (See page FU-27)
2. [B AND 3B (w/ EDIC SYSTEM)] IMPROPER EDIC SYSTEM	Operate stop lever (adjusting lever) on side of injection pump and check if engine stops. If so, EDIC system is faulty and should be repaired. (See page ST-26) If engine does not stop, injection pump is faulty and should be repaired. (See page FU-27)
3. [B (w/ FUEL CUT DIAPHRAGM)] IMPROPER FUEL CUT DIAPHRAGM OPERATION	Operate stop lever (adjusting lever) on side of injection pump and check if engine stops. If so, fuel cut diaphragm system is faulty and should be repaired. (See page ST-28) If engine does not stop, injection pump is faulty and should be repaired. (See page FU-27)
4. [11B, 13B AND 13B-T] IMPROPER INTAKE SHUTTER OPERATION	Close the intake shutter and check if engine stops. If it does, the intake shutter system is faulty and should be repaired. (See page EM-30)

DIESEL ELECTRICAL SYSTEM DIAGNOSIS [3B]

ENGINE DOES NOT START COLD

NOTE:
1. **Battery voltage at least 12 volts (or 24 volts) — ignition switch OFF.**
2. **Engine cranks normally.**
3. **Fusible link okay.**
4. **Check the voltage marked with an asterisk(*) just as the ignition switch is placed at ON because the voltage will change with elapse of time.**

Pre-heating System [Super Glow Type]

Check if indicator light lights up with ignition switch ON.
Coolant temp. Approx. 20°C (68°F):
Approx. 2 seconds

No → Check ENGINE fuse.

Fuse Blown → Check for short circuit and repair if necessary.

Fuse OK → Check indicator light bulb.

Bulb No Good → Replace bulb.

Bulb OK → Check for battery voltage to terminal 3 of pre-heating timer connector (on wire harness side).
If okay, pre-heating timer is faulty and should be replaced.

Yes → Ignition switch OFF.

* Check for battery voltage to terminal 1 of pre-heating timer with ignition switch ON.

No Voltage → Check that is 1V between terminals 9 and 12.
If faulty, repair glow plug current sensor.
If okay, timer is faulty and should be replaced.

Voltage → Check if voltage to terminal 1 of pre-heating timer is terminated after engine is started.

No → Start the engine and check/if there is a voltage at terminal 9 of pre-heating timer.
If faulty, repair charging system as necessary.
If okay, timer is faulty and should be replaced.

Yes → Ignition switch OFF.

CONTINUED ON PAGE EM-12

Pre-heating Timer

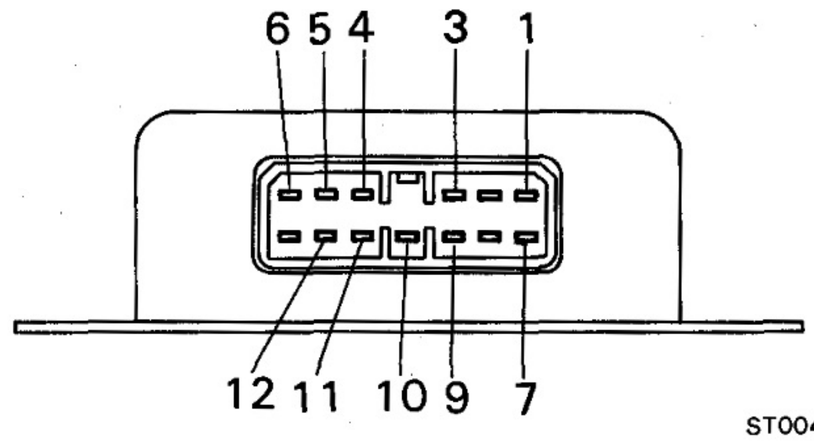

CONTINUED FROM PAGE EM-11

Place ignition switch at ON and check if current flow to terminal 5 of timer is in accordance with coolant temperature (See Timer characteristics Diagram on page ST-9).

- OK
- No Voltage → Timer is faulty and should be replaced.
- Pre-heating Duration is Quite Different Than That Specification → Timer is faulty and should be replaced.

After completion of pre-heating, check for voltage at terminal 5 again when ignition switch is placed at ST.

- Voltage
- No Voltage → Timer is faulty and should be replaced.

Ignition switch OFF.

Place ignition switch at ON and check for voltage to glow plug a few seconds later. Thereafter, voltage should drop about 1/2.

- OK
- No Voltage at All → Check for battery voltage at plus side of glow plug current sensor (Resister side).
  - If okay, replace sensor.
  - If no voltage, No. 1 glow plug relay is faulty and should be replaced.
- No 1 1/2 Voltage Thereafter → Check for battery voltage to plus side of resistor (Intake manifold side).
  - If okay, replace resistor.
  - If no voltage, No. 2 glow plug relay is faulty and should be replaced.

Measure glow plug resistance.

- Approx. 0 Ω
- Infinity → Glow plug is faulty and should be replaced.

Glow plug okay

DIESEL ELECTRICAL SYSTEM DIAGNOSIS [11B, 13B and 13B-T]

ENGINE DOES NOT START WHEN COLD

NOTE: 1. Battery voltage at least 12 volts (or 24 volts) — ignition switch OFF.
2. Engine cranks normally.
3. Water temperature sensor okay. (See page ST-9)

Pre-heating System [w/ Intake Heater]

1. INSPECT POWER SUPPLY SECTION

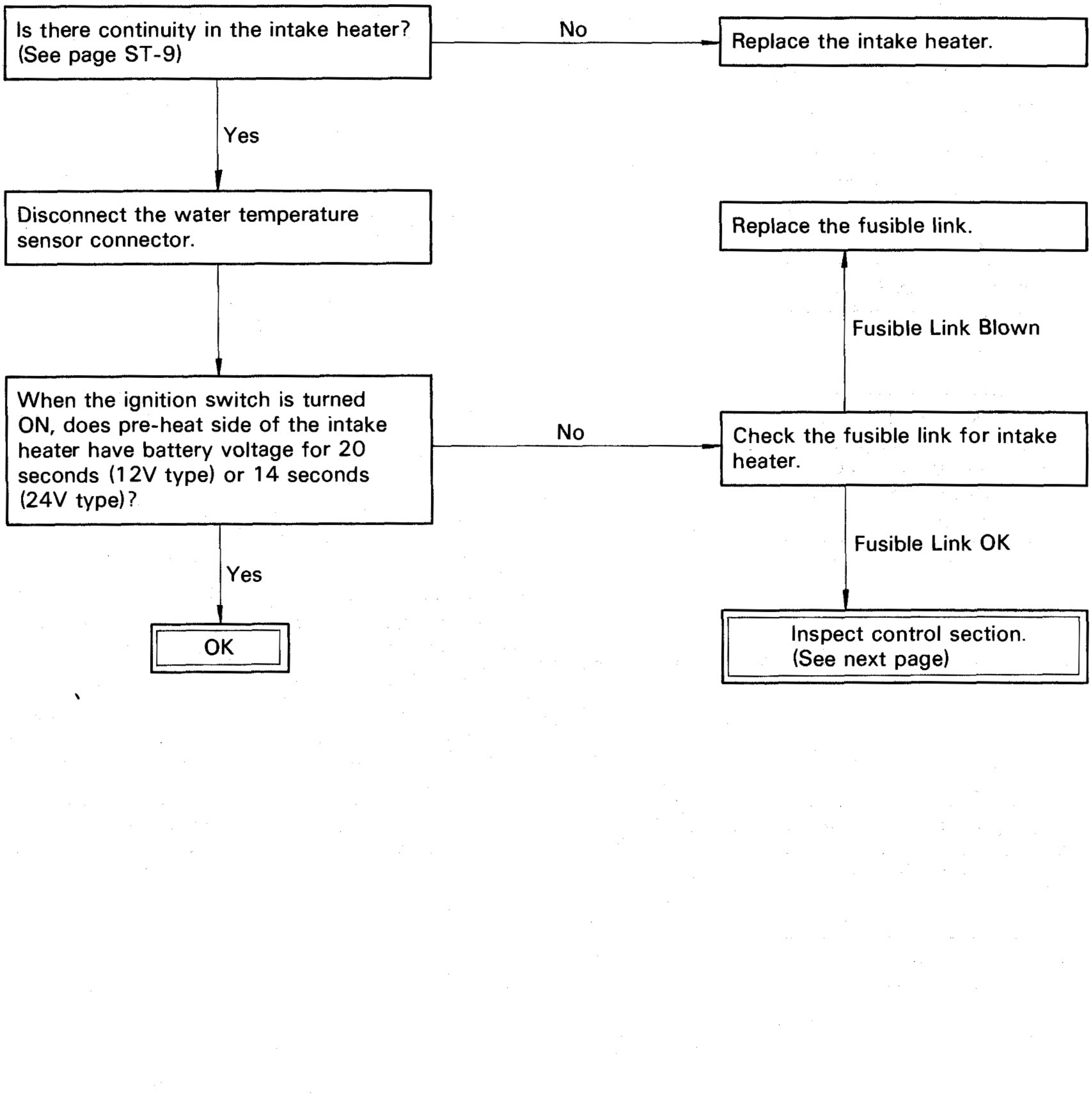

2. INSPECTION CONTROL SECTION

NOTE: Perform this inspection with the intake heater connector fully connected.

Disconnect the water temperature sensor connector.

Pre-heating Timer

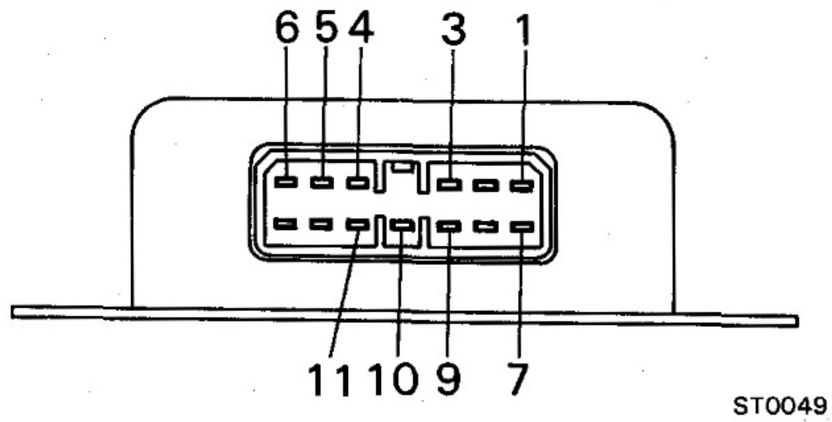

When the ignition switch is turned ON, does the indicator light light? (Measure the time lighted)

No → Is the ENGINE fuse (BJ) or G fuse (BB and BU) Okay?

No → Replace the fuse.

Yes

Is the indicator light bulb Okay?

No → Replace the bulb.

Yes

Is terminal 10 of the pre-heating timer grounded?

No → Open circuit or ground faulty in wire harness between terminal 10 of the timer and body ground.

Yes

Is there battery voltage to terminal 3 of the timer (on wire harness side)?

Yes → Replace the timer.

No → Open circuit in wire harness between terminal 3 of the timer and indicator light.

Is the lighting time correct?
12V type: 20 seconds
24V type: 14 seconds

No → Replace the timer.

Yes

CONTINUED ON PAGE EM-15

Yes

CONTINUED FROM PAGE EM-14

When the ignition switch is turned ON, is voltage between terminals G1 of the intake heater relay (BB and BJ) or terminal G of the No. 1 intake heater relay (BU) and body ground battery voltage for 20 seconds (12V type) or 14 seconds (24V type)?

No → Did intake heater relay (BB and BJ) or No. 1 intake heater relay (BU) check out okay? (See page ST-4 or 6)

No → Replace the intake heater relay (BB and BJ) or No. 1 intake heater relay (BU).

Yes

Yes

When the ignition switch is turned ON, does terminal 1 of the intake heater timer have battery voltage for 20 seconds (12 V type) or 14 seconds (24 V type)?

No → Replace the timer.

Yes

- Open circuit in wire harness between terminal 1 of the timer and terminal g1 of the intake heater relay (BB and BJ) or terminal g of the No. 1 intake heater relay (BU).
- Open circuit or ground faulty in wire harness between terminal e of the intake heater relay (BB and BJ) or terminal E of the No. 1 intake heater relay (BU) and body ground.

With the engine started, is there battery voltage between terminal G2 of the intake heater relay (BB and BJ) or terminal G of the No. 2 intake heater relay (BU) and body ground? (Measure the time too)

No → Did intake heater relay (BB and BJ) or No. 2 intake heater relay (BU) check out okay? (See page ST-4 or 6)

No → Replace the intake heater relay (BB and BJ) or No. 1 intake heater relay (BU).

Yes

Yes

NOTE: Refer to ST-4 or 6 for intake heater relay terminal location.

CONTINUED ON PAGE EM-16

Yes CONTINUED FROM PAGE EM-15

Yes

With the engine started, does terminal 5 of the pre-heating timer have battery voltage for 70 seconds?

Yes

No

Is terminal 9 of the pre-heating timer grounded?

No

When the ignition switch is turned ON, does the charge warning light light?

Yes

No

Yes

Replace the timer.

Open circuit in wire harness between terminal 9 of the timer and charge warning light.

- Inspect CHARGE fuse.
- Inspect alternater regulator.

- Open circuit in wire harness between terminal 5 of the timer and terminal g2 of the intake heater relay (BB and BJ) or terminal g of the No. 2 intake heater relay (BU).
- Open circuit or ground faulty in wire harness between terminal e of the intake heater relay (BB and BJ) or terminal E of the No. 2 intake heater relay (BU) and body ground.

Is time normal?
After heat time:
Approx. 70 seconds

No

Replace the timer.

Yes

Inspect power supply section.
(See page EM-13)

TURBOCHARGER DIAGNOSIS [13B-T]

NOTE: Before troubleshooting the turbocharger, first check the engine itself. (Valve clearance, engine compression, injection timing, etc.)

INSUFFICIENT ACCELERATION, LACK OF POWER OR EXCESSIVE FUEL CONSUMPTION

(Possible Cause)	(Check Procedure and Correction Method)
1. TURBOCHARGING PRESSURE TOO LOW	Check turbocharging pressure. (See page EM-35) **Turbocharging pressure:** **0.42 — 0.56 kg/cm^2** **(6.0 — 8.0 psi, 41 — 55 kPa)** If the pressure is below specification, begin diagnosis from item 2.
2. RESTRICTED INTAKE AIR SYSTEM	Check intake air system, and repair or replace parts as necessary. (See page EM-35)
3. LEAK IN INTAKE AIR SYSTEM	Check intake air system, and repair or replace parts as necessary. (See page EM-35)
4. RESTRICTED EXHAUST SYSTEM	Check exhaust system, and repair or replace parts as necessary. (See page EM-35)
5. LEAK IN EXHAUST SYSTEM	Check exhaust system, and repair or replace parts as necessary. (See page EM-35)
6. ERRATIC TURBOCHARGER OPERATION	Check rotation of impeller wheel. If it does not turn or turns with a heavy drag, replace the turbocharger assembly. Check axial play of bearing shaft. (See page EM-38) **Axial play: 0.13 mm (0.0051 in.) or less** If not within specification, replace the turbocharger assembly.

ABNORMAL NOISE

(Possible Cause)	(Check Procedure and Correction Method)
1. TURBOCHARGING HEAT INSULATOR RESONNANCE	Check for loose, improperly installed or deformed insulator mount bolts, and repair or replace as necessary.
2. EXHAUST PIPE LEAKING OR VIBRATING	Check for deformed exhaust pipe, loose mount bolts or damaged gasket, and repair or replace as necessary.
3. ERRATIC TURBOCHARGER OPERATION	Refer to Item 6 of INSUFFICIENT ACCELERATION, LACK OF POWER OR EXCESSIVE FUEL CONSUMPTION.

EXCESSIVE OIL CONSUMPTION OR WHITE EXHAUST

(Possible Cause)	(Check Procedure and Correction Method)
FAULTY TURBOCHARGER SEAL	Check for oil leakage in exhaust system. ● Remove the turbine elbow from the turbocharger and check for excessive carbon deposits on the turbine wheel. Excessive carbon deposits indicate a faulty turbocharger. Check for oil leakage in intake air system. ● Check for axial play in impeller wheel, and replace the turbocharger if necessary. (See page EM-38) **Axial play: 0.13 mm (0.0051 in.) or less** **CAUTION: There is some oil mist from the PCV in the blowby gas so care must be taken not to diagnosis this as an oil leakage from the turbocharger.**

TURBOCHARGER ELECTRICAL SYSTEM DIAGNOSIS [13B-T]

Troubleshooting of Turbocharger Indicator Light and Warning Light Operation

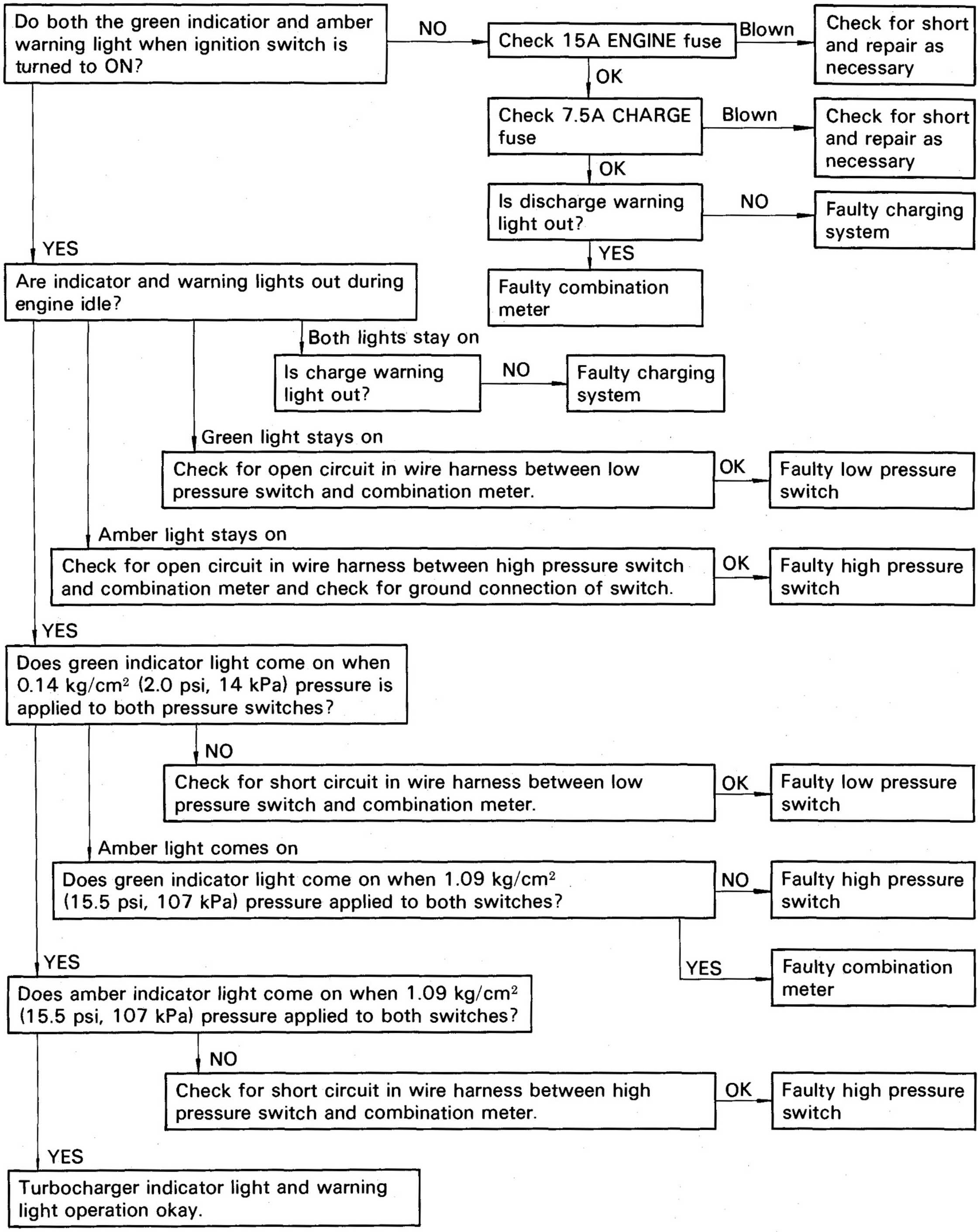

ENGINE TUNE-UP

INSPECTION OF ENGINE COOLANT

(See page CO-3)

INSPECTION OF ENGINE OIL

(See page LU-3)

INSPECTION OF BATTERY

(See page CH-6)

Standard specific gravity:
1.25 – 1.27 when fully charged at 20°C (68°F)

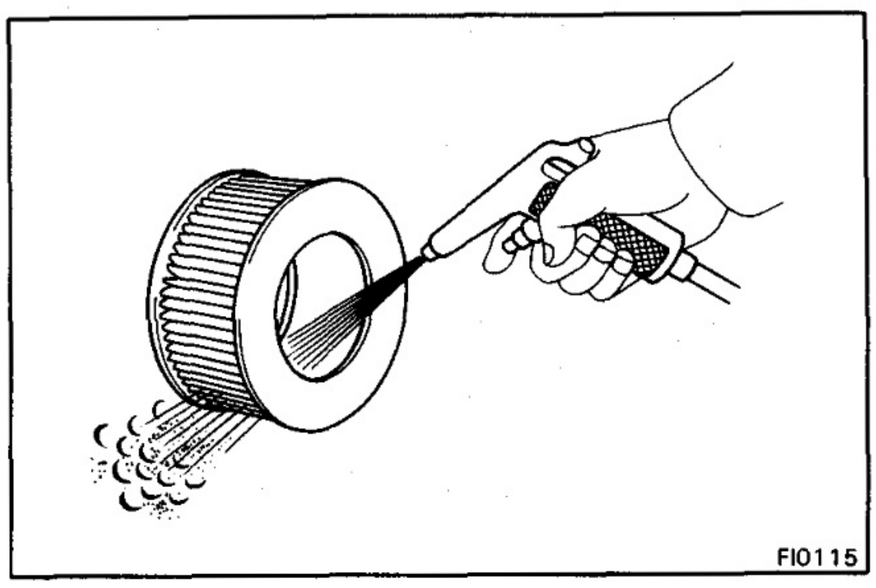

CLEANING OF AIR FILTER

[Paper Filter Type]

CLEAN AIR FILTER

Clean the element with compressed air.
First blow from the inside thoroughly. Then blow off the outside of the element.

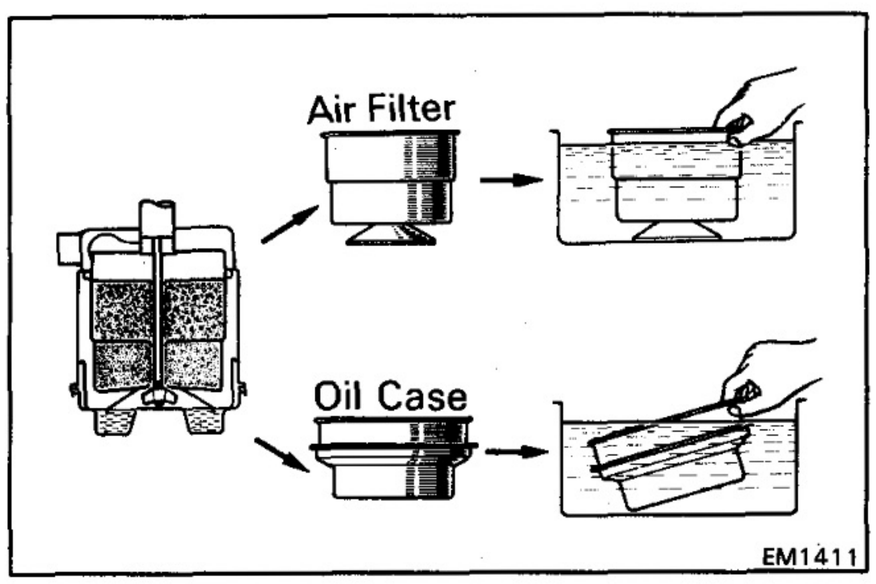

[Oil Bath Type]

CLEAN AIR FILTER

(a) Wash the oil case and air filter in kerosine by agitating and rubbing.

(b) Wipe the oil case and air filter with a clean rag.

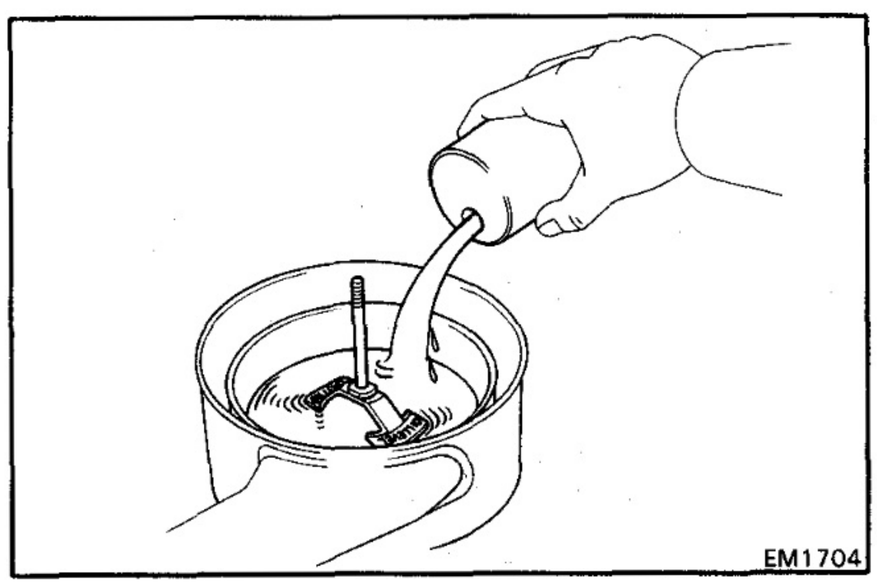

(c) Place the oil case on a level work stand.

(d) Pour in clean engine oil until it reaches the "OIL LEVEL" mark.

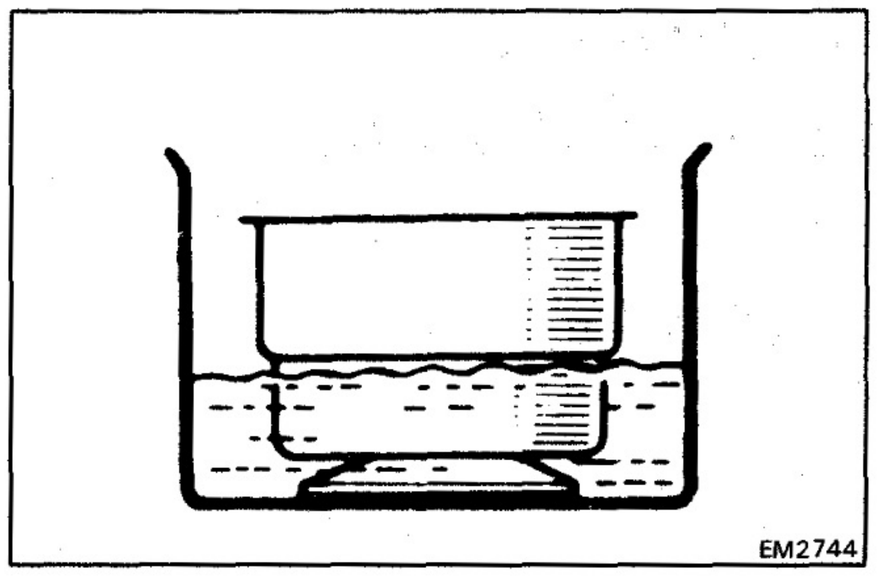

(e) Place the air filter on the tray.

(f) Saturate the air filter with clean engine oil.

INSPECTION OF ALTERNATOR DRIVE BELT

(See page CH-6)

Drive belt tension (Canada):
- New belt 145 ± 25 lb
- Used belt 100 ± 20 lb

Drive belt deflection (Others):
- Single belt type
  - New belt 8 – 12 mm (0.31 – 0.47 in.)
  - Used belt 11 – 16 mm (0.43 – 0.63 in.)
- Double belt type
  - New belt 12 – 15 mm (0.47 – 0.59 in.)
  - Used belt 14 – 20 mm (0.55 – 0.79 in.)

Drive belt tension (Reference):
- Single belt type
  - New belt 55 – 65 kg
  - Used belt 30 – 45 kg
- Double belt type
  - New belt 45 – 55 kg
  - Used belt 20 – 35 kg

INSPECTION OF GLOW PLUGS [B and 3B]

(See page ST-6 or 8)

INSPECTION OF INTAKE HEATER [11B, 13B and 13B-T]

(See page ST-9)

INSPECTION OF INJECTION NOZZLES

(See pages FU-5 and 6) B and 3B
(See pages FU-11 and 12) 11B, 13B and 13B-T

Opening pressure (B and 3B)
- New nozzle 115 – 125 kg/cm² (1,636 – 1,778 psi) (11,278 – 12,258 kPa)
- Reused nozzle 105 – 125 kg/cm² (1,493 – 1,778 psi) (10,296 – 12,258 kPa)

Opening pressure (11B, 13B and 13B-T)
- New nozzle 200 – 210 kg/cm² (2,845 – 2,987 psi) (19,613 – 20,594 kPa)
- Reused nozzle 180 – 210 kg/cm² (2,560 – 2,987 psi) (17,652 – 20,594 kPa)

ADJUSTMENT OF VALVE CLEARANCES

1. WARM UP ENGINE

Allow the engine to reach normal operating temperature.

2. [13B-T]
REMOVE INTAKE AIR CONNECTOR PIPE
(See page EM-36)

3. REMOVE CYLINDER HEAD COVER

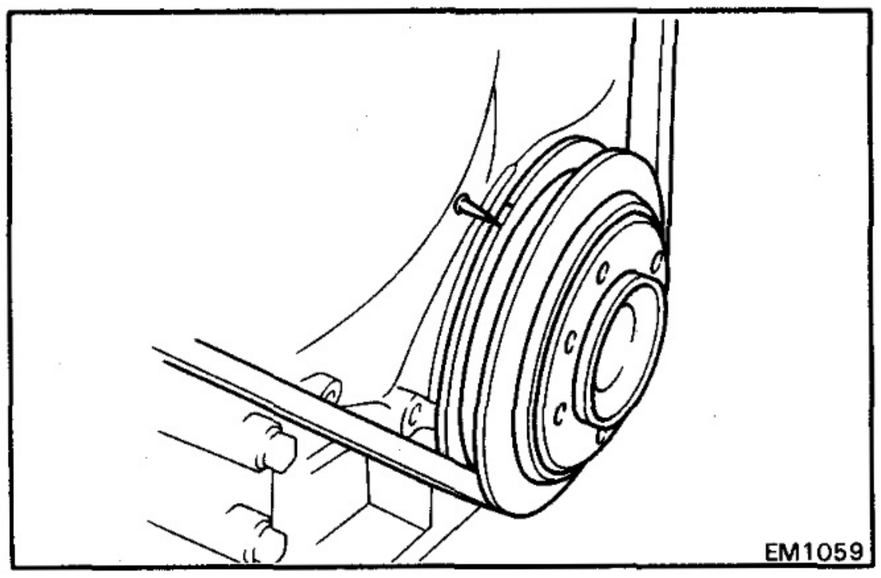

4. SET NO. 1 CYLINDER TO TDC/COMPRESSION

(a) Align the groove on the pulley with the timing pointer by turning the crankshaft clockwise with a wrench.

(b) Check that the rocker arms on the No. 1 cylinder are loose and rocker arms on the No. 4 cylinder are tight.

If not, turn the crankshaft one revolution (360°) and align the mark as above.

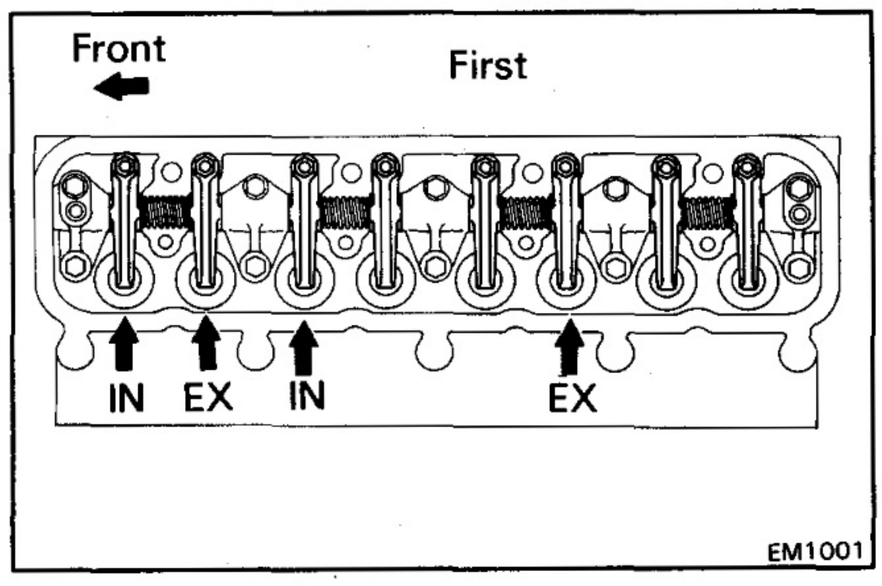

5. ADJUST VALVE CLEARANCES

(a) Measure only those valves indicated by arrows.

Valve clearance (Hot):

Intake	**0.20 mm (0.008 in.)**
Exhaust	**0.36 mm (0.014 in.)**

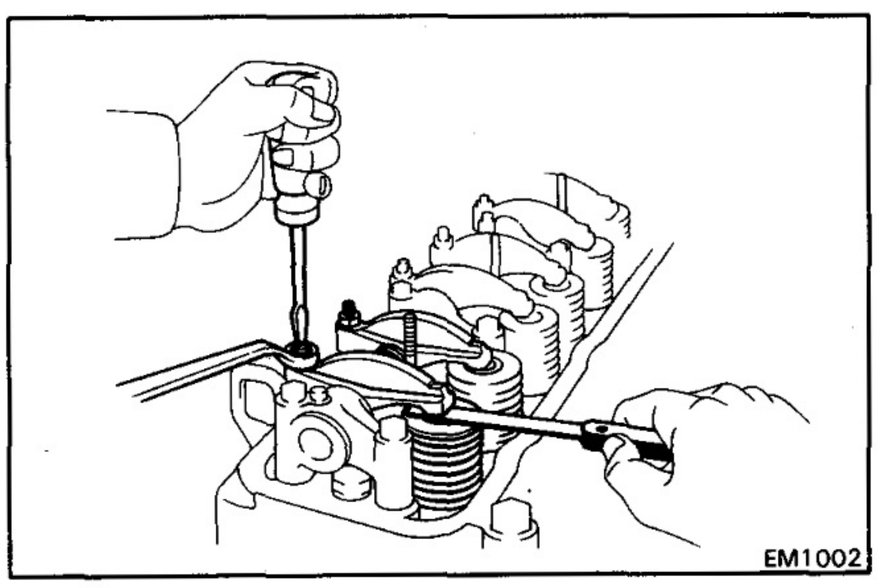

- Using a feeler gauge, measure the valve clearance between the valve stem and rocker arm. Loosen the lock nut and turn the adjusting screw to set the proper clearance. Hold the adjusting screw in position and tighten the lock nut.
- Recheck the valve clearance. The feeler gauge should slide with a very slight drag.

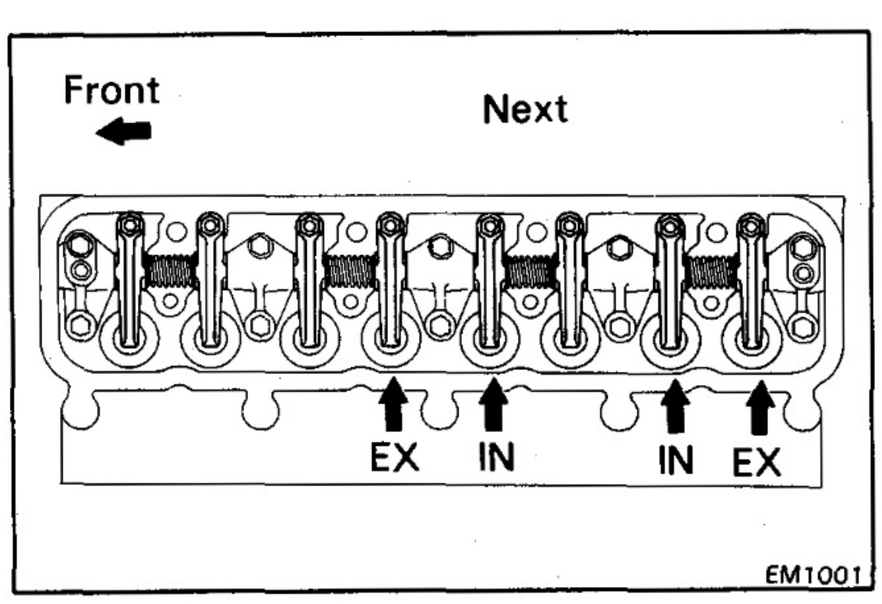

(b) Turn the crankshaft one revolution (360°) and align the mark as above.
Adjust only the valves indicated by arrows.

6. INSTALL CYLINDER HEAD COVER

7. [13B-T]
INSTALL INTAKE AIR CONNECTOR PIPE
(See page EM-40)

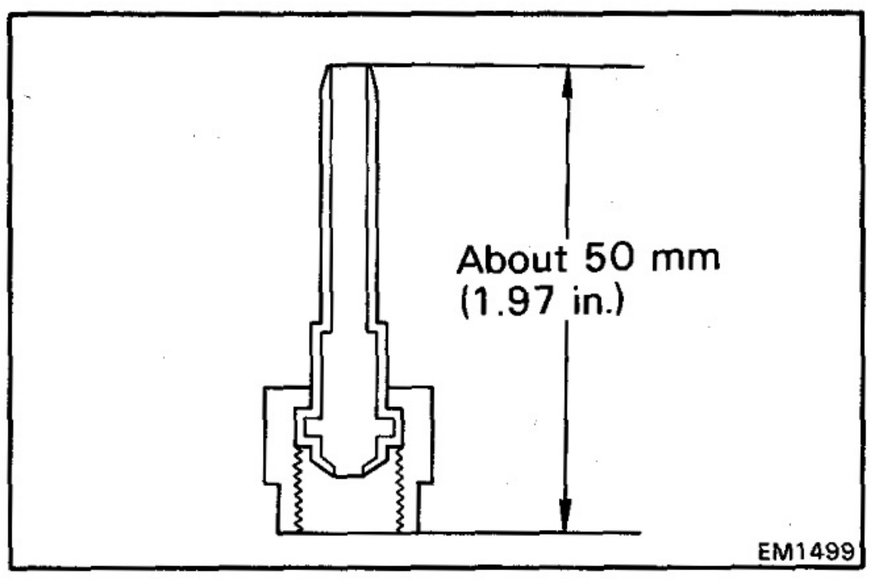

ADJUSTMENT OF INJECTION TIMING

1. PREPARE INSPECTION PIPE

Make an inspection pipe with a injection pipe as shown.

2. [13B-T]
REMOVE INTAKE AIR CONNECTOR PIPE
(See page EM-36)

3. REMOVE CYLINDER HEAD COVER

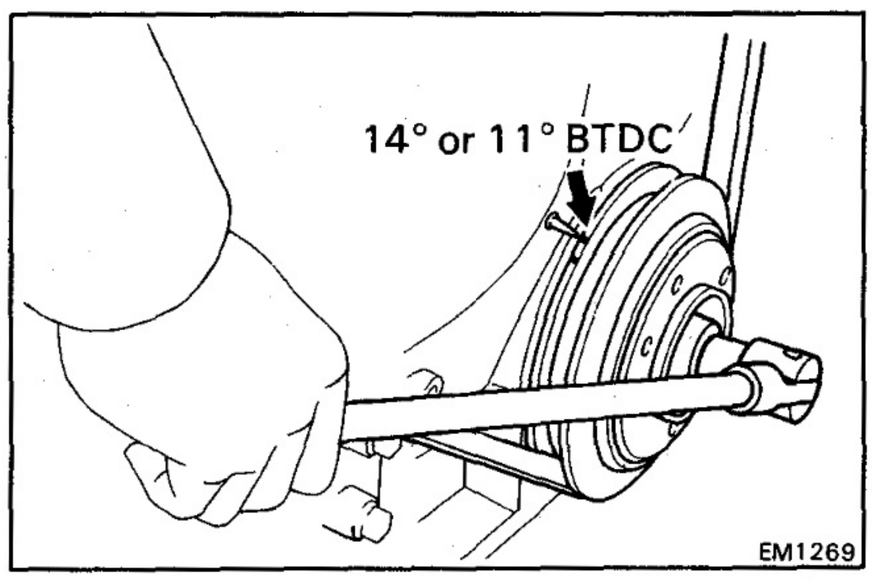

4. SET NO. 1 CYLINDER TO 14° [B, 3B, 11B (w/ HAC) and 13B (w/ HAC)] or 11° [11B (w/o HAC), 13B (w/o HAC) and 13B-T] BTDC/COMPRESSION

(a) Align the groove on the pulley with the timing pointer by turning the crankshaft clockwise with a wrench.

(b) Check that the rocker arms on the No. 1 cylinder are loose and rocker arms on the No. 4 cylinder are tight.

If not turn the crankshaft one revolution (360°) and align the marks as above.

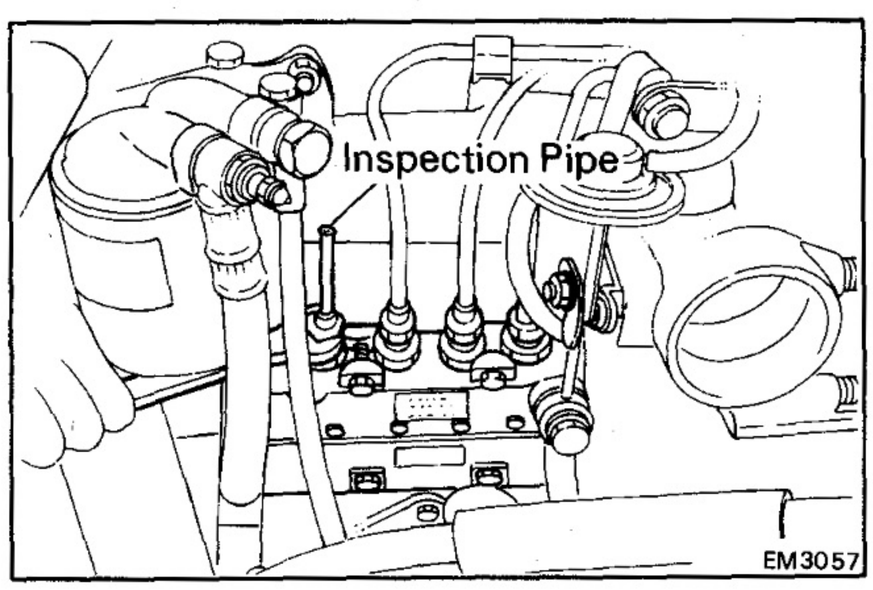

5. ADJUST INJECTION TIMING

(a) Remove the No. 1 injection pipe and install the inspection pipe on the No. 1 delivery valve holder.

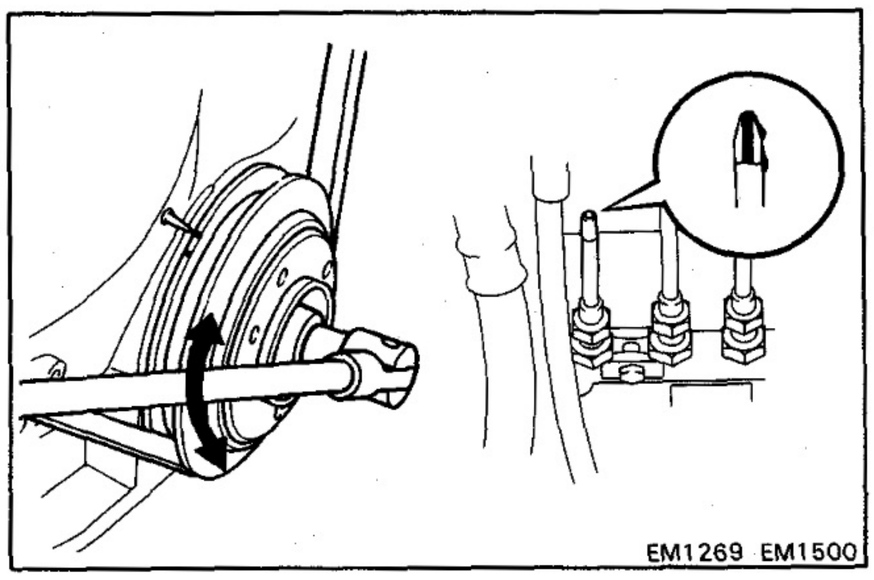

(b) Turn the crankshaft slightly to left and right until fuel surfaces from the inspection pipe.

(c) Turn the crankshaft counterclockwise, set the No. 1 cylinder just before the 14° [B, 3B, 11B (w/ HAC) and 13B (w/ HAC)] or 11° [11B (w/o HAC), 13B (w/o HAC) and 13B-T] BTDC/compression.

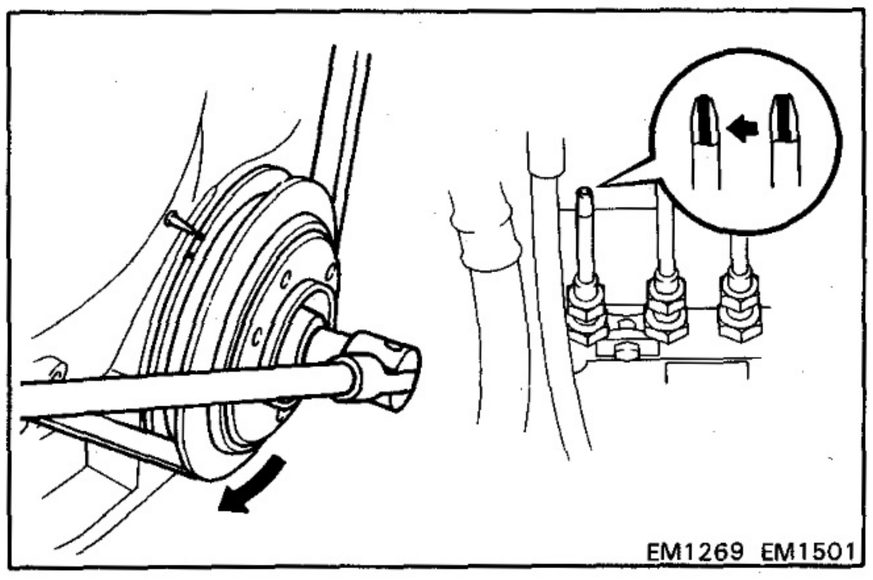

(d) Slowly turn the crankshaft clockwise.

(e) Check the crankshaft pulley position (injection timing position) when the fuel level in the inspection pipe rises.

Injection timing:

B and 3B	**14° BTDC**
11B (w/ HAC) and 13B (w/ HAC)	**14° BTDC**
11B (w/o HAC) and 13B (w/o HAC)	**11° BTDC**
13B-T	**11° BTDC**

NOTE: This operation should be repeated at least two or three times.

(f) Loosen the other injection pipe union nuts, fuel pipe and oil pipe union bolt at the injection pump side.

(g) [B and 3B]
Loosen the nut holding the injection pump stay to the stay.

(h) [11B, 13B and 13B-T]
Loosen the nut holding the injection pump to pump stay.

(i) Loosen the four nuts holding the injection pump to the retainer.

NOTE: If it is difficult to loosen the pump mounting nuts, remove the fuel filter.

(j) Adjust the injection timing by slightly tilting the injection pump body.

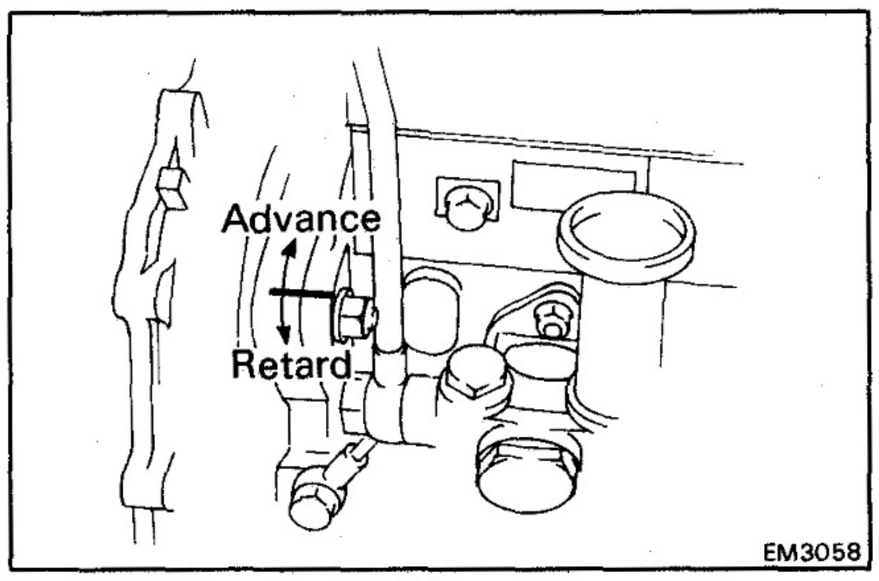

If the injection timing is retarded, advance it by tilting the pump toward the engine.

If the injection timing is advanced, retard it by tilting the pump away from the engine.

(k) Tighten the four nuts holding the injection pump to the retainer.

Torque: 375 kg-cm (27 ft-lb, 37 N·m)

(l) [B and 3B]
Tighten the nut holding the injection pump stay to the stay.

Torque: 185 kg-cm (13 ft-lb, 18 N·m)

(m) [11B, 13B and 13B-T]
Tighten the nut holding the injection pump to pump stay.

Torque: 375 kg-cm (27 ft-lb, 37 N·m)

(n) Recheck the injection timing.

(o) Remove the inspection pipe and install the No. 1 injection pipe.

(p) Tighten the injection pipe union nuts, oil pipe union bolt and fuel pipe union bolt.

Torque:

Injection pipe	**250 kg-cm (18 ft-lb, 25 N·m)**
Oil pipe	**110 kg-cm (8 ft-lb, 11 N·m)**
Fuel pipe	**375 kg-cm (27 ft-lb, 37 N·m)**

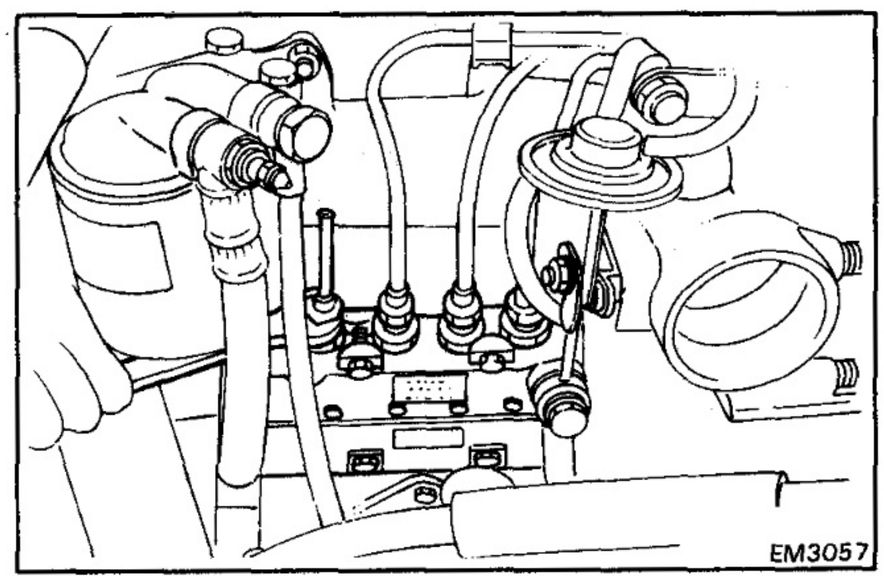

6. INSTALL CYLINDER HEAD COVER

7. [13B-T]
INSTALL INTAKE AIR CONNECTOR PIPE
(See page EM-40)

8. START ENGINE AND CHECK FOR LEAKS

ADJUSTMENT OF IDLE SPEED AND MAXIMUM SPEED [B and 3B]

1. INITIAL CONDITIONS

(a) Air cleaner installed

(b) Normal operating coolant temperature

(c) All accessories switched off

(d) All vacuum lines connected

(e) Valve clearances set correctly

(f) Injection timing set correctly

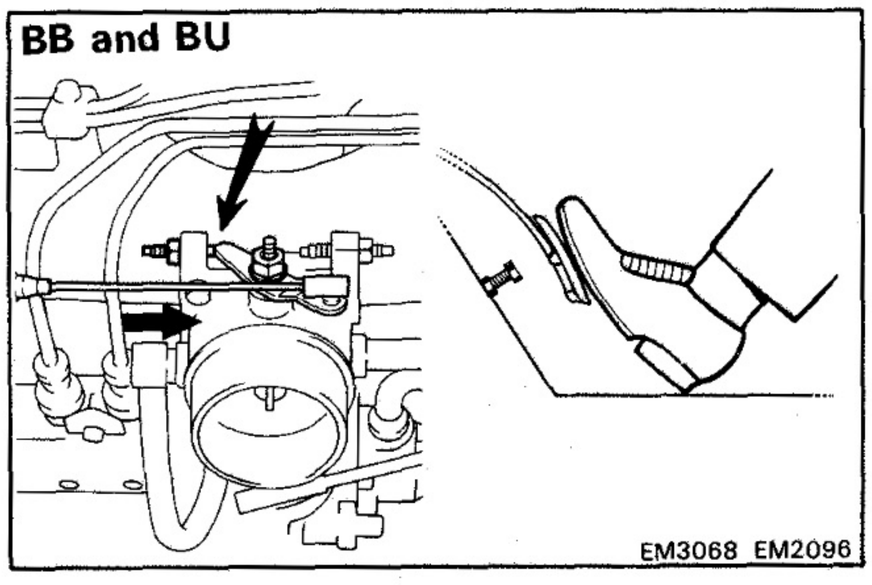

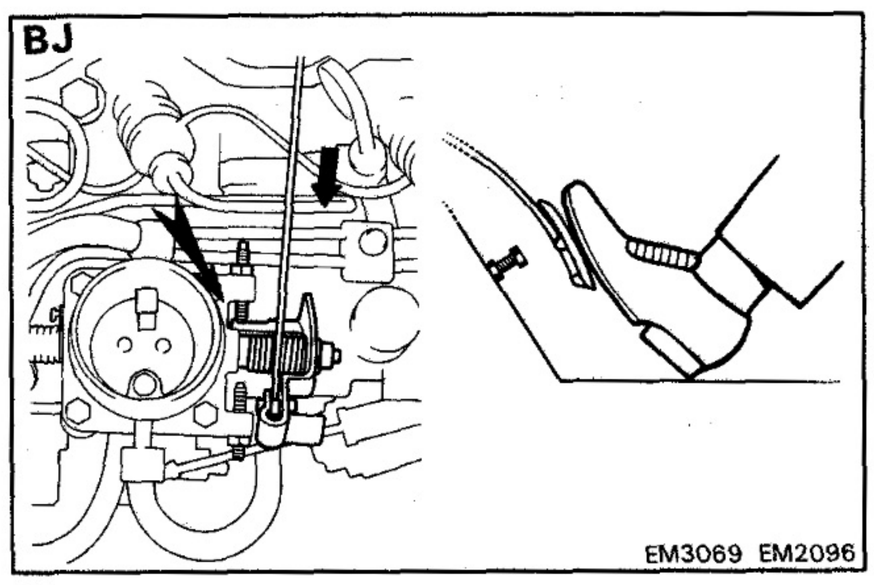

2. CONNECT TACHOMETER

3. ADJUST IDLE SPEED

(a) Check that the adjusting lever touches the idle speed (throttle valve) adjusting screw when the accelerator pedal is released.

If not, adjust the accelerator linkage.

(b) Start the engine.

(c) Check the idle speed.

Idle speed: 650 rpm

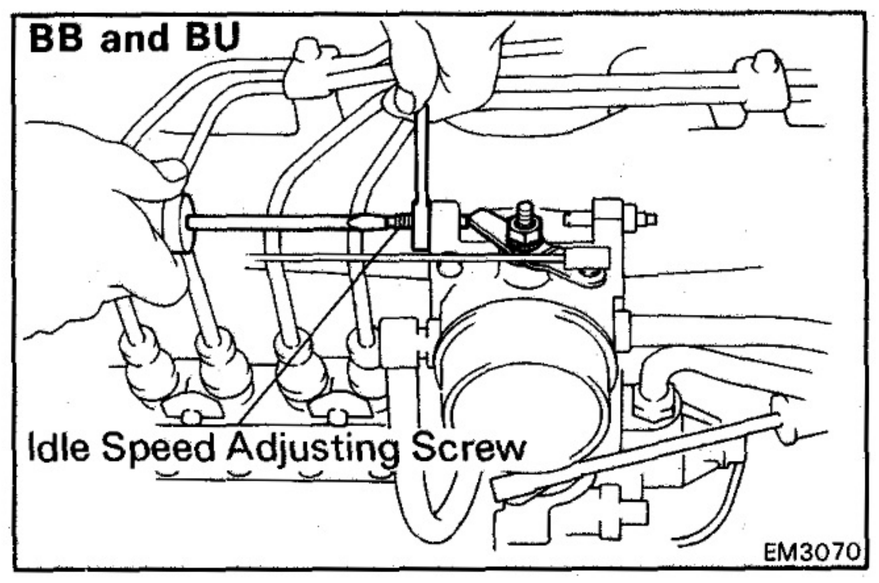

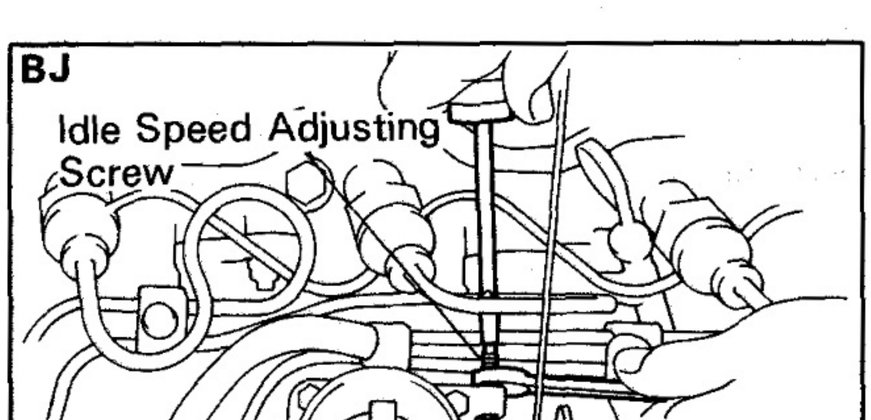

(d) Adjust the idle speed.

- Disconnect the accelerator linkage.
- Loosen the lock nut of the idle speed (throttle valve) adjusting screw.
- Adjust the idle speed by turning the IDLE SPEED ADJUSTING SCREW.
- Securely tighten the lock nut and recheck the idle speed.
- Connect the accelerator linkage.
- After adjustment, adjust the accelerator linkage.

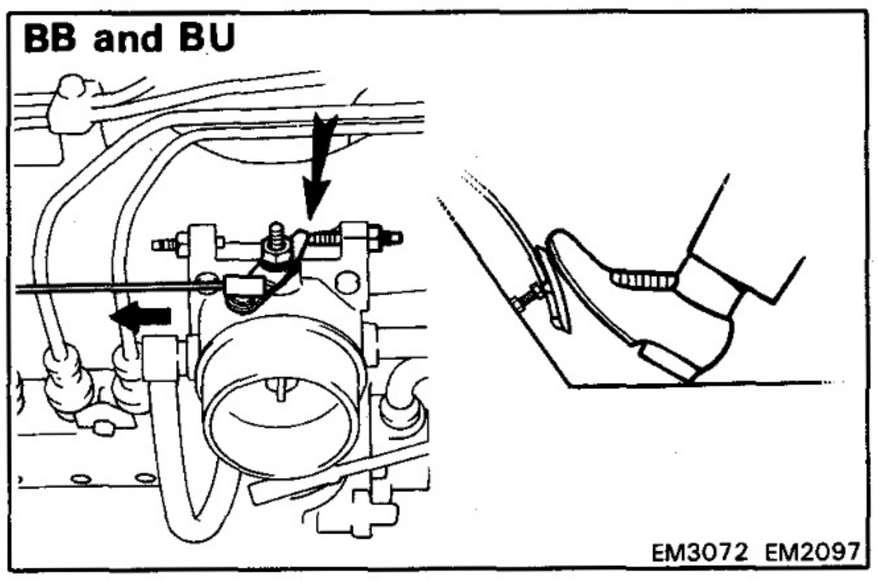

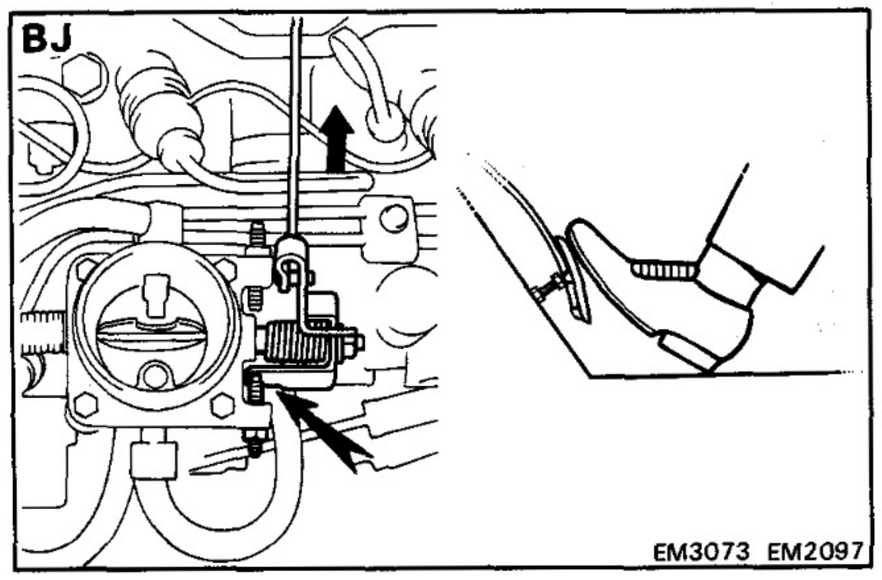

4. ADJUST MAXIMUM SPEED

(a) Check that the adjusting lever touches the throttle valve adjusting screw when the accelerator pedal is depressed all the way.

If not, adjust the accelerator linkage.

(b) Start the engine.

(c) Depress the accelerator pedal all the way.

(d) Check the maximum speed.

Maximum speed: 4,100 rpm

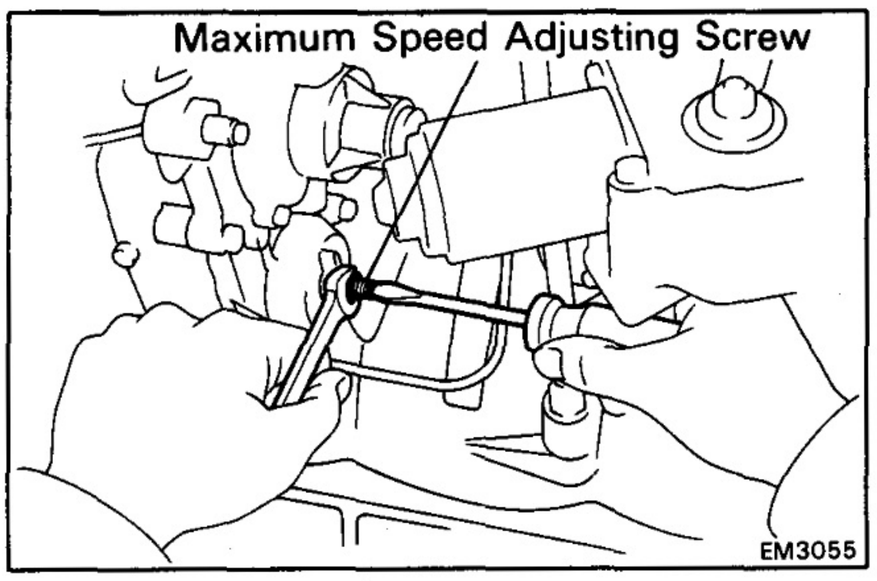

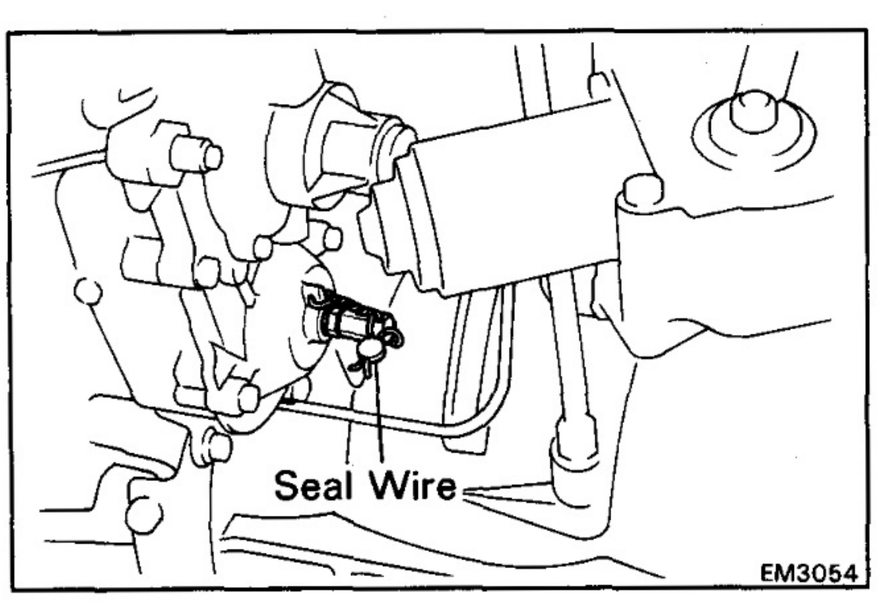

(e) Adjust the maximum speed.

- Disconnect the accelerator linkage.
- Cut out the maximum speed speed adjusting (speed control) screw seal wire.
- Loosen the lock nut of the maximum speed adjusting screw.
- Adjust the maximum speed by turning the MAXIMUM SPEED ADJUSTING SCREW.

NOTE: Adjust at idle speed. Then, raise engine speed and reckeck the maximum speed.

- Securely tighten the lock nut and recheck the maximum speed.
- Seal the maximum speed adjusting screw with a new seal wire.

ADJUSTMENT OF IDLE SPEED AND MAXIMUM SPEED [11B, 13B and 13B-T]

1. INITIAL CONDITIONS

(a) Air cleaner installed

(b) Normal operating coolant temperature

(c) All accessories switched off

(d) All vacuum lines connected

(e) Valve clearances set correctly

(f) Injection timing set correctly

(g) Transmission in N range

2. CONNECT TACHOMETER

3. ADJUST IDLE SPEED

(a) Check that the adjusting lever touches the idle speed adjusting bolt when the accelerator pedal is released.

If not, adjust the accelerator linkage.

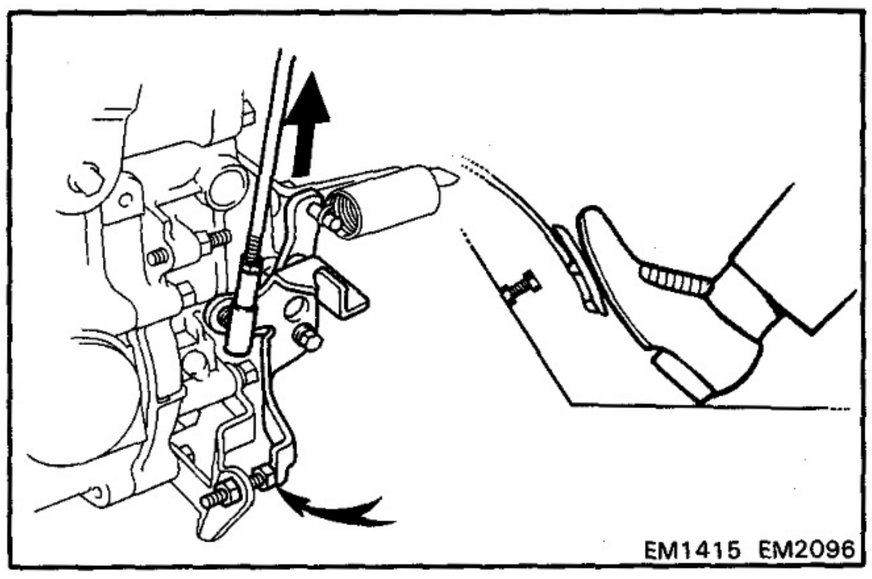

(b) Start the engine.

(c) Check the idle speed.

Idle speed:

M/T	**650 rpm**
A/T (13B)	**770 rpm**
A/T (13B-T)	**820 rpm**

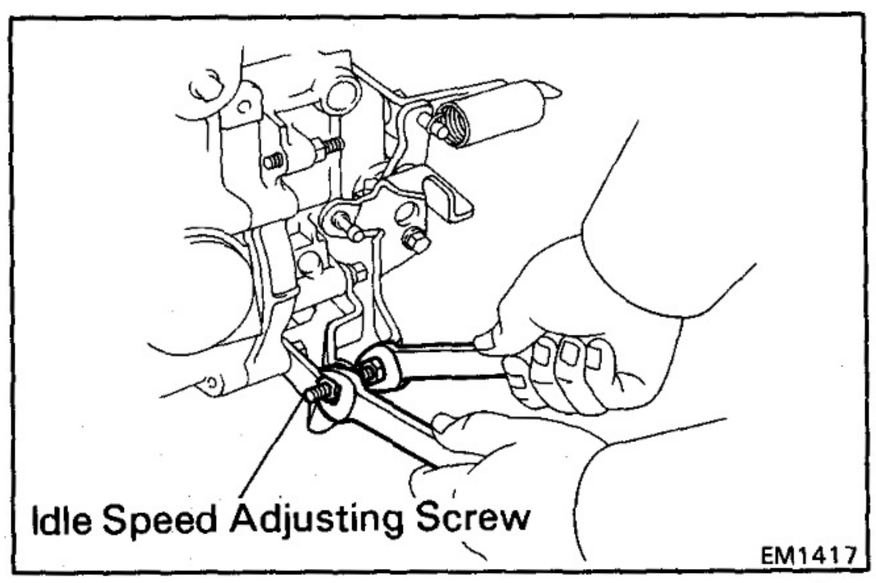

(d) Adjust the idle speed.

- Disconnect the accelerator linkage.
- Loosen the lock nut of the idle speed adjusting bolt.
- Adjust the idle speed by turning the IDLE SPEED ADJUSTING SCREW.
- Securely tighten the lock nut and recheck the idle speed.
- Connect the accelerator linkage.
- After adjustment, adjust the accelerator linkage.

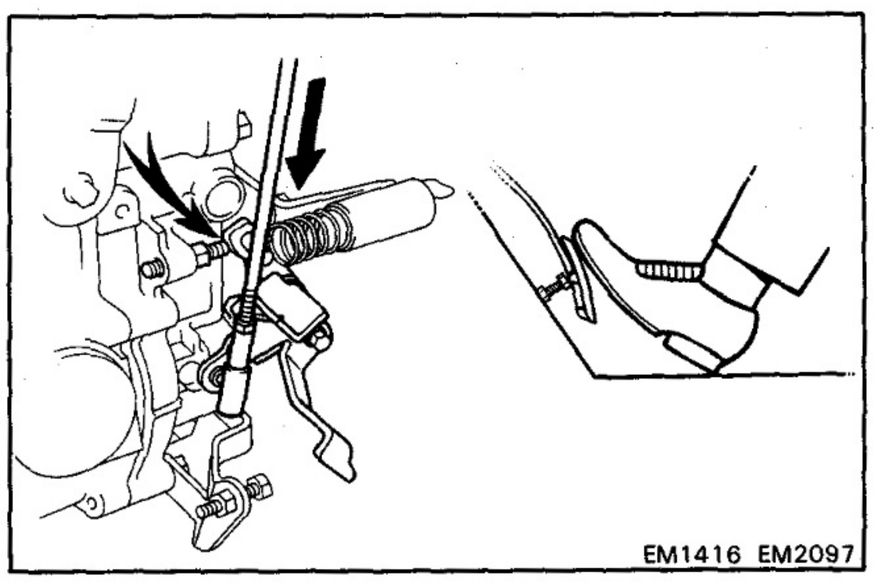

4. ADJUST MAXIMUM SPEED

(a) Check that the adjusting lever touches the maximum speed adjusting bolt when the accelerator pedal is depressed all the way.

If not, adjust the accelerator linkage.

(b) Start the engine.

(c) Depress the accelerator pedal all the way.

(d) Check the maximum speed.

Maximum speed: 4,100 rpm

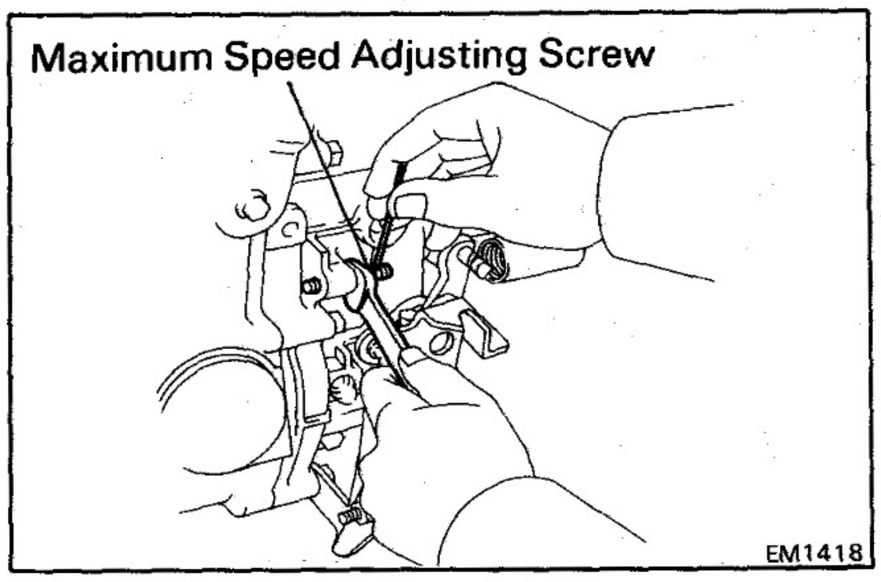

(e) Adjust the maximum speed.

- Disconnect the accelerator linkage.
- Cut out the seal wire of the maximum speed adjusting screw.
- Loosen the lock nut of the maximum speed adjusting bolt.
- Adjust the maximum speed by turning the MAXIMUM SPEED ADJUSTING SCREW.

NOTE: Adjust at idle speed. Then, raise engine speed and recheck the maximum speed.

- Securely tighten the lock nut and recheck the maximum speed.
- Seal the maximum speed adjusting screw with a new seal wire.

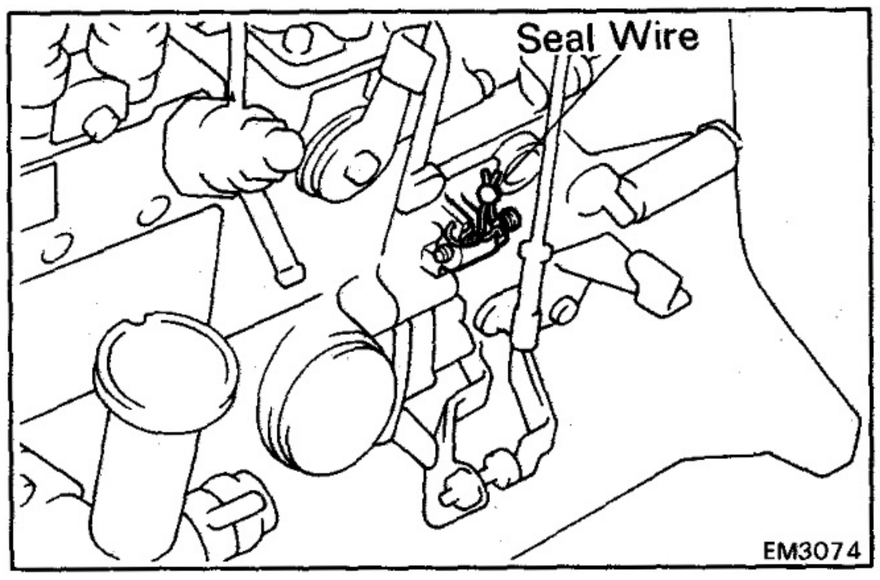

ADJUSTMENT OF AIR CONDITIONER IDLE-UP SETTING SPEED [B and 3B]

1. INITIAL CONDITIONS

(a) Air cleaner installed
(b) Normal operating coolant temperature
(c) All accessories switched off
(d) All vacuum lines connected
(e) Valve clearances set correctly
(f) Injection timing set correctly
(g) Idle speed set correctly

2. CONNECT TACHOMETER

3. ADJUST AIR CONDITIONER (A/C) IDLE-UP SETTING SPEED

(a) Start the engine.
(b) Disconnect the vacuum hose from the idle-up actuator and plug the hose end.
(c) Apply vacuum to the idle-up actuator.
(d) Race the engine to 2,500 rpm a few seconds, release throttle and check the A/C idle-up setting speed.

A/C idle-up setting speed:

BB	**750 rpm**
BJ and BU	**950 rpm**

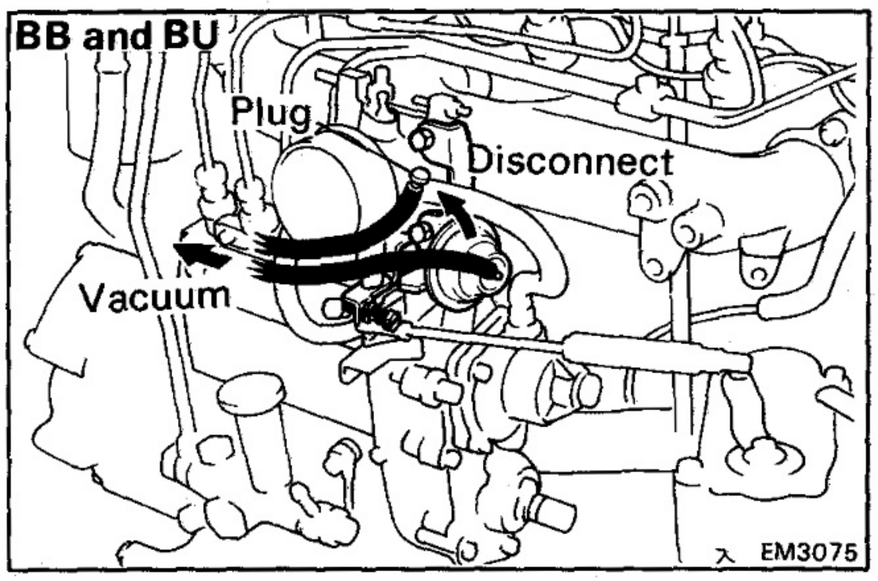

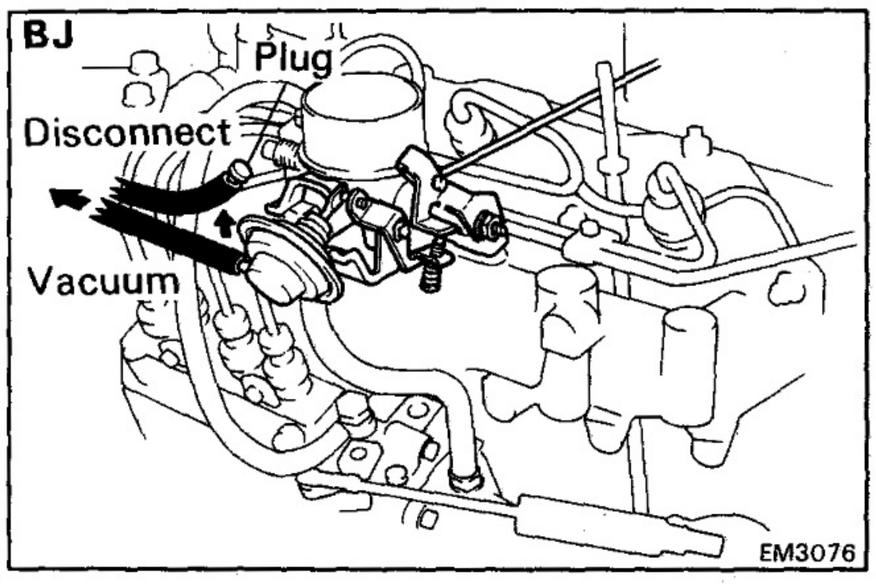

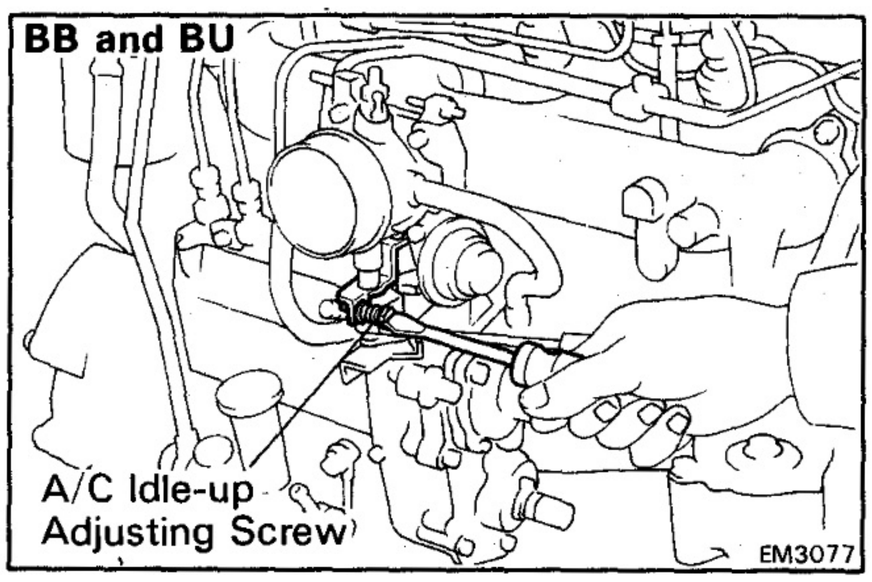

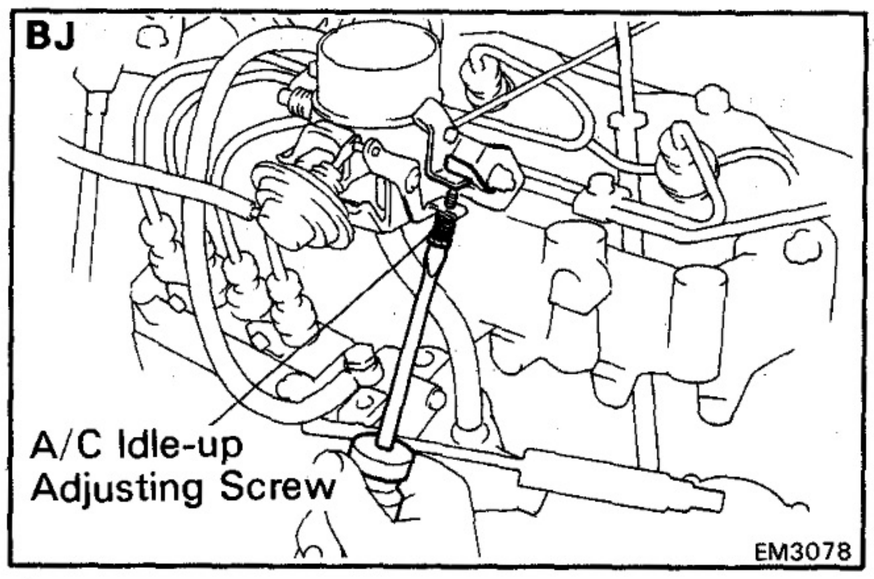

(e) Adjust the A/C idle-up setting speed by turning the A/C IDLE-UP ADJUSTING SCREW.

(f) Race the engine to 2,500 rpm a few seconds, release the throttle and recheck the A/C idle-up setting speed.

(g) Reconnect the vacuum hose to the idle-up actuator.

ADJUSTMENT OF AIR CONDITIONER IDLE-UP SETTING SPEED [11B, 13B and 13B-T]

1. INITIAL CONDITIONS

(a) Air clear installed

(b) Normal operating coolant temperature

(c) All accessories switched off

(d) Valve clearances set correctly

(e) Injection timing set correctly

(f) Idle speed set correctly

(g) Transmission in N range

2. CONNECT TACHOMETER

3. ADJUST AIR CONDITIONER (A/C) IDLE-UP SETTING SPEED

(a) Start the engine.

(b) Disconnect the vacuum hose from the idle-up actuator and plug the hose end.

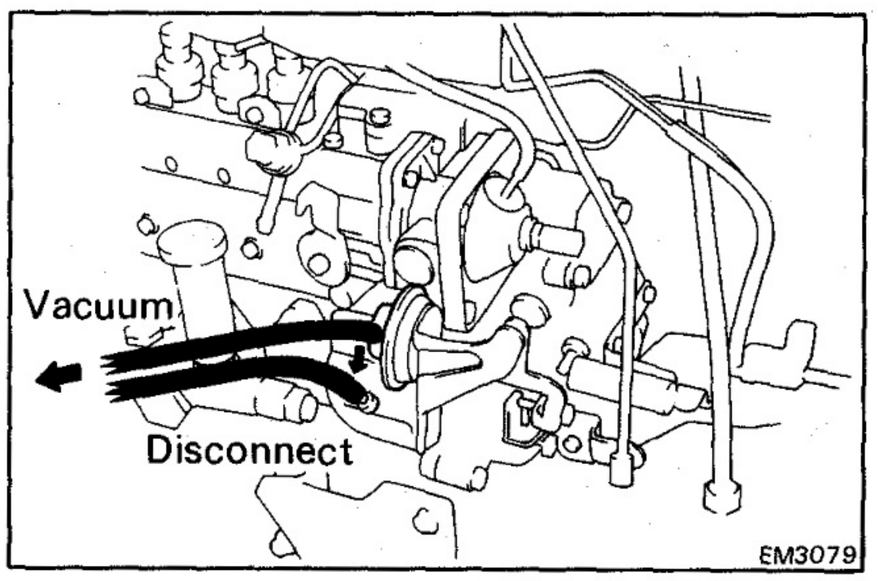

(c) Apply vacuum to the idle-up actuator.

(d) Race the engine to 2,500 rpm a few seconds, release the throttle and check the A/C idle-up setting speed.

A/C idle-up setting speed:

BB	**750 rpm**
BJ and BU	**950 rpm**

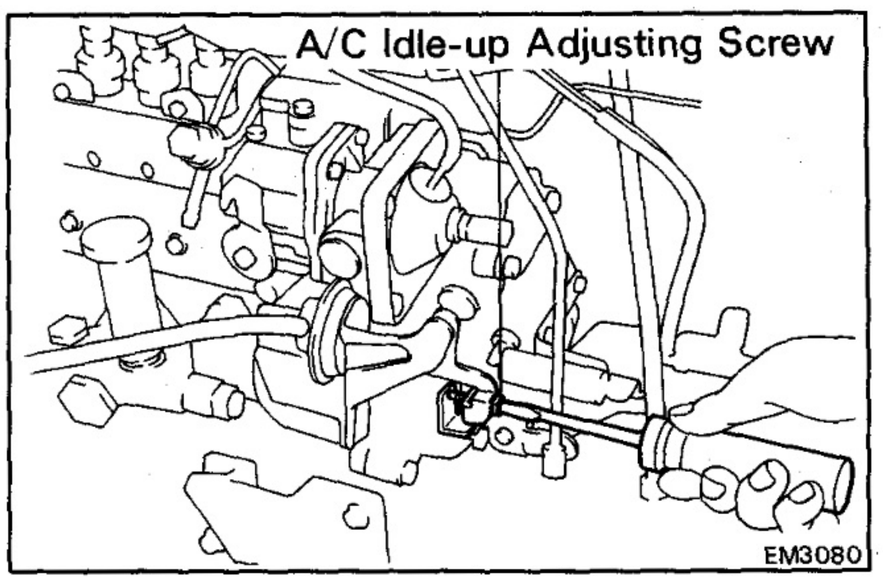

(e) Adjust the A/C idle-up setting speed by turning the A/C IDLE-UP ADJUSTING SCREW.

(f) Race the engine to 2,500 rpm a few seconds, release the throttle and recheck the A/C idle-up setting speed.

(g) Reconnect the vacuum hose to the idle-up actuator.

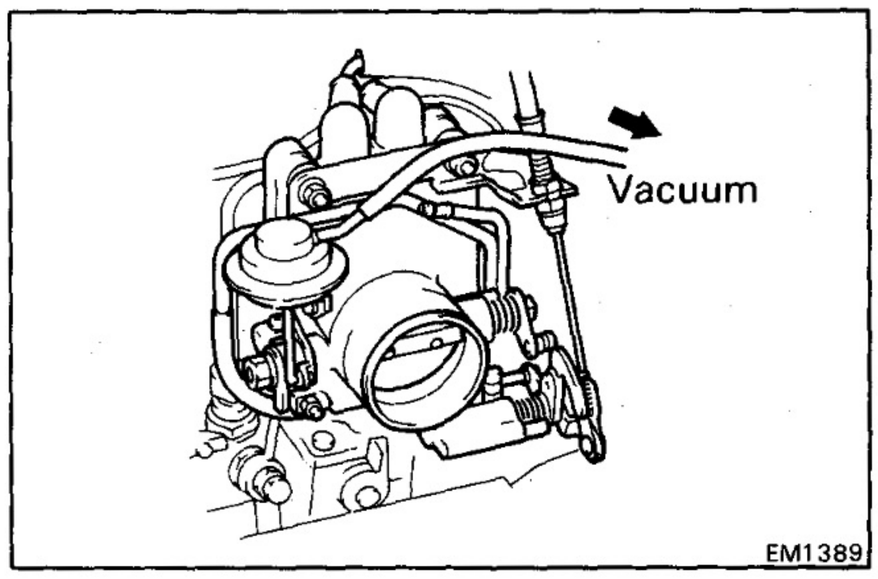

INSPECTION AND ADJUSTMENT OF INTAKE SHUTTER [11B, 13B and 13B-T]

1. INSPECT AND ADJUST INTAKE SHUTTER

(a) Apply at least 300 mmHg (11.81 in.Hg, 40.0 kPa) of vacuum to the actuator.

(b) Check that the throttle valve moves smoothly to the fully closed position.

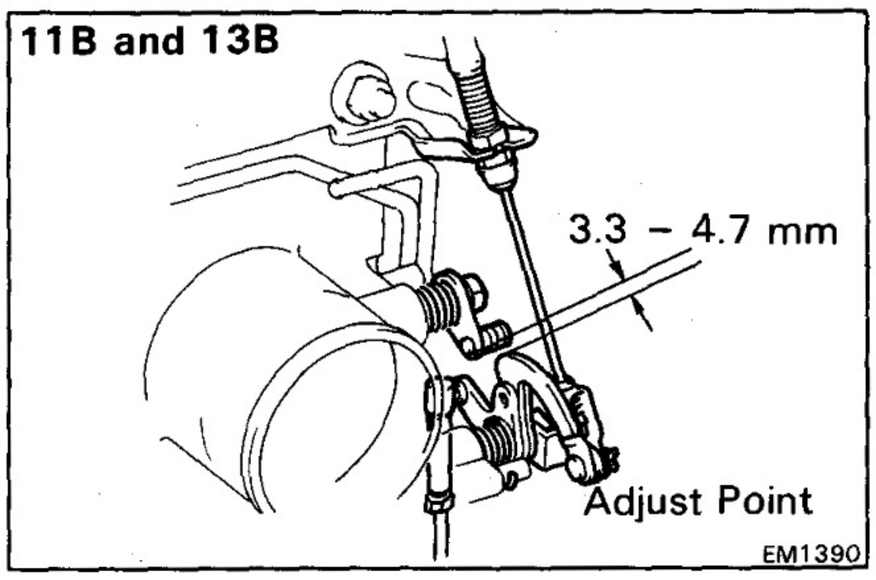

(c) [11B and 13B]
Measure the clearance between the throttle lever and intake shutter lever.

Clearance: 3.3 – 4.7 mm (0.130 – 0.185 in.)

(d) [11B and 13B]
Adjust by turning the accelerator connecting rod.

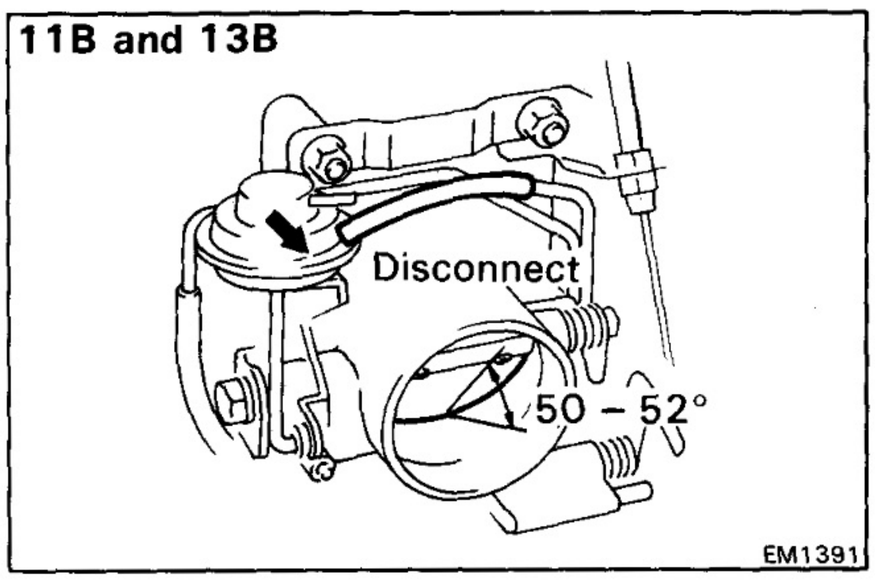

(e) [11B and 13B]
Disconnect the vacuum hose of the actuator.

(f) [11B and 13B]
Check the throttle valve angle.

Standard angle: 50 – 52° from horizontal

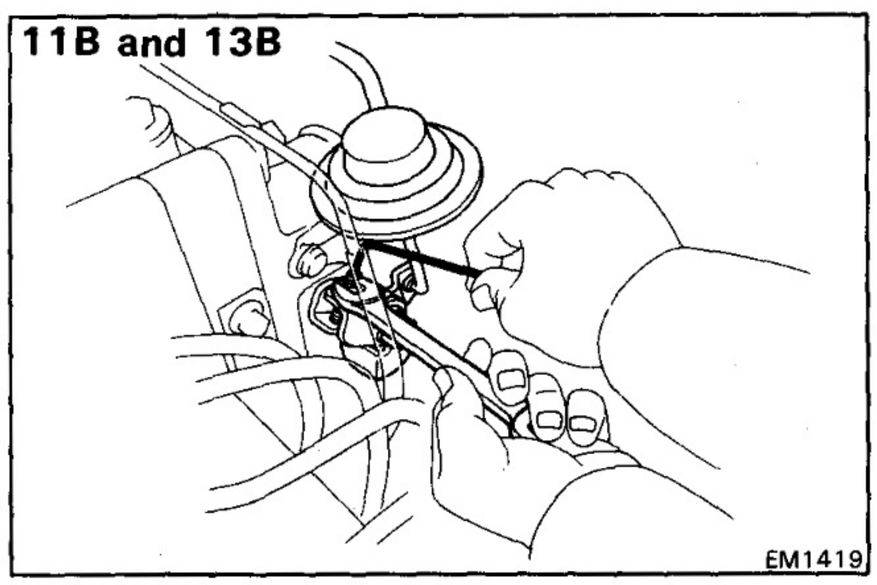

(g) [11B and 13B]
Using a hexagon wrench, adjust by turning the adjusting screw.

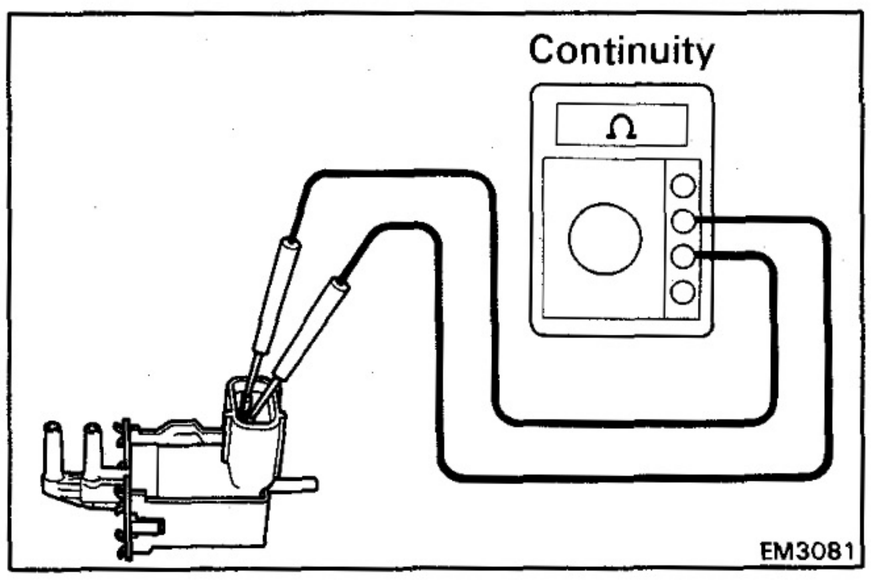

2. INSPECT VACUUM SWITCHING VALVE (VSV)

A. Inspect VSV for open circuit

Using an ohmmeter, check that there is continuity between the terminals.

Resistance:

12V type	**33 – 39 Ω**	**at 20°C (68°F)**
24V type	**135 – 155 Ω**	**at 20°C (68°F)**

If there is no continuity, replace the VSV.

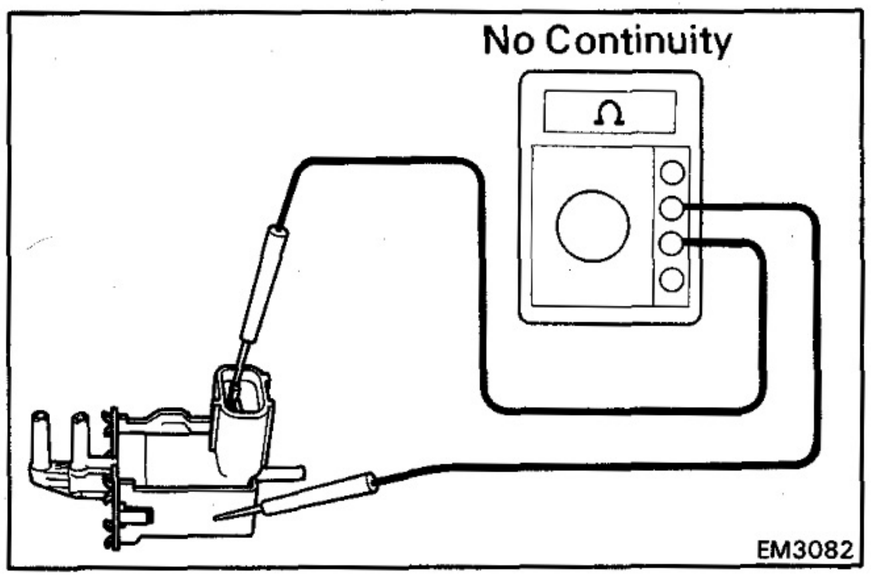

B. Inspect VSV for ground

Using an ohmmeter, check that there is no continuity between each terminal and the VSV body.

If there is continuity, replace the VSV.

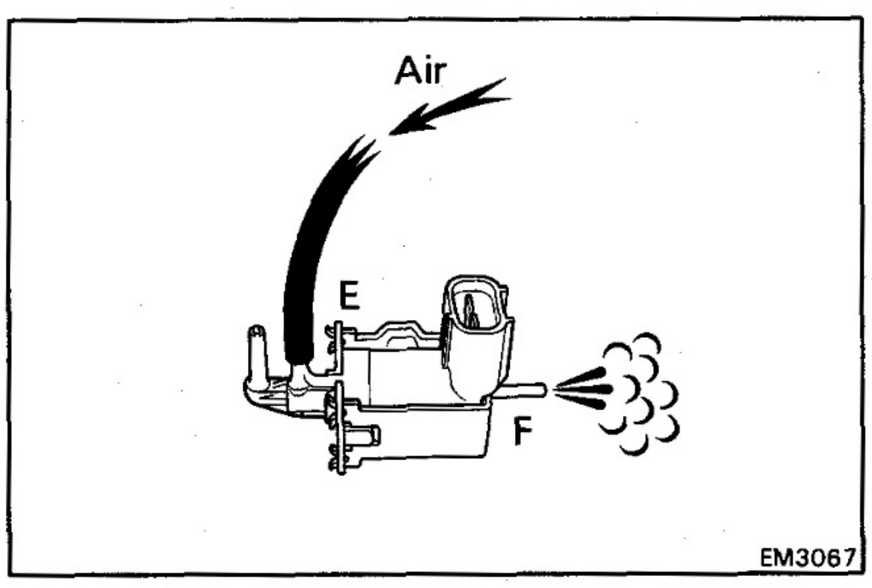

C. Inspect VSV operation

(a) Check that air flows from pipe E to pipe F.

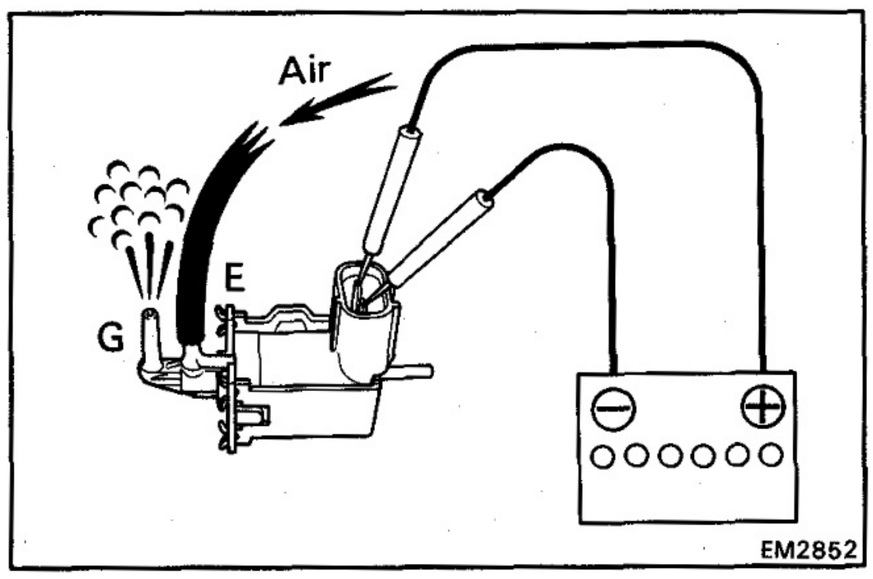

(b) Apply battery voltage (12V or 24V) across the terminals.

(c) Check that air flows from pipe E to pipe G.

If operation is not as specified, replace the VSV.

COMPRESSION CHECK [B and 3B]

NOTE: If there is lack of power, excessive oil consumption or poor fuel economy, measure the cylinder compression pressure.

1. **WARM UP AND STOP ENGINE**

2. **REMOVE GLOW PLUGS (See page EM-44)**

   CAUTION: Make sure the load wire is not grounded.

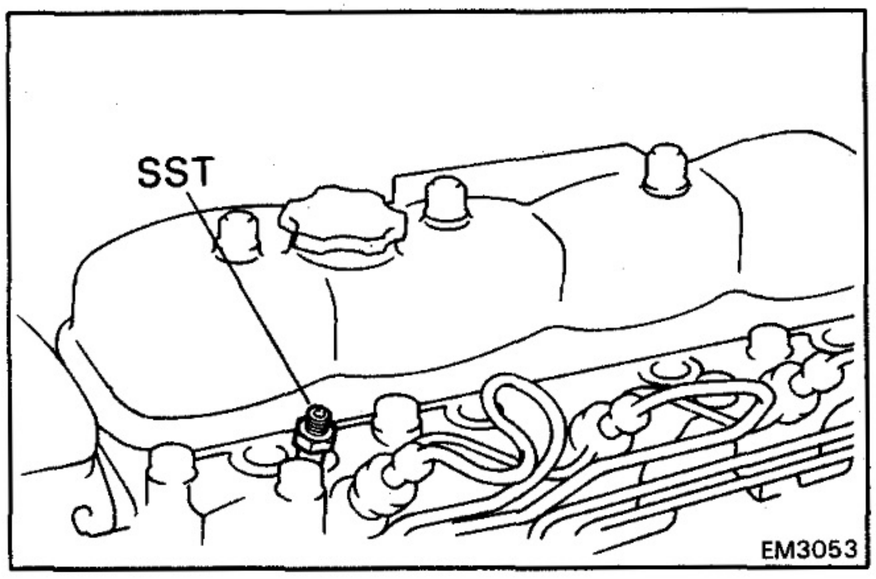

3. **CHECK CYLINDER COMPRESSION PRESSURE**

   (a) Install SST (gauge adapter) to the glow plug hole.

   SST 09992-00023

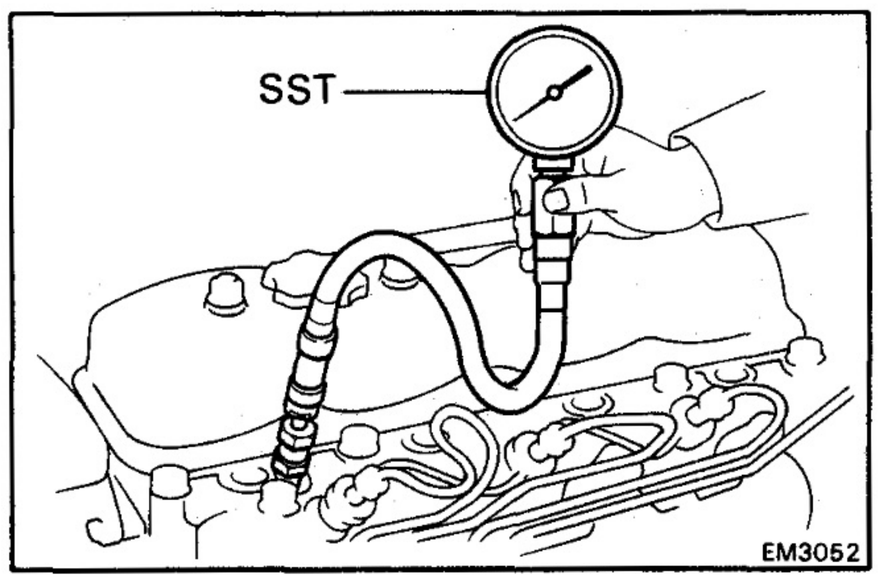

   (b) Connect SST (compression gauge) to SST (gauge adapter).

   SST 09992-00023

   (c) Fully open the throttle valve.

   (d) While cranking the engine with the starter, measure the compression pressure.

   NOTE: Always use a fully charged battery to obtain engine revolutions of more than 250 rpm.

   (e) Repeat steps (a) through (d) for each cylinder.

   Compression pressure:
   30.0 kg/cm² (427 psi, 2,942 kPa) or more
   Minimum pressure:
   20.0 kg/cm² (284 psi, 1,961 kPa)
   Difference between each cylinder:
   2.0 kg/cm² (28 psi, 196 kPa) or less

   (f) If the cylinder compression in one or more cylinders is low, pour a small amount of engine oil into the cylinder through the glow plug hole and repeat steps (a) through (d) for the cylinder with low compression.

   - If adding oil helps the compression, chances are that the piston rings and/or cylinder bore are worn or damaged.
   - If pressure stays low, a valve may be sticking or seating improperly, or there may be leakage past the gasket.

4. **INSTALL GLOW PLUGS (See page EM-62)**

COMPRESSION CHECK [11B, 13B and 13B-T]

NOTE: If there is lack of power, excessive oil consumption or poor fuel economy, measure the cylinder compression pressure.

1. **WARM UP AND STOP ENGINE**

2. **REMOVE INJECTION NOZZLES (See page FU-10)**

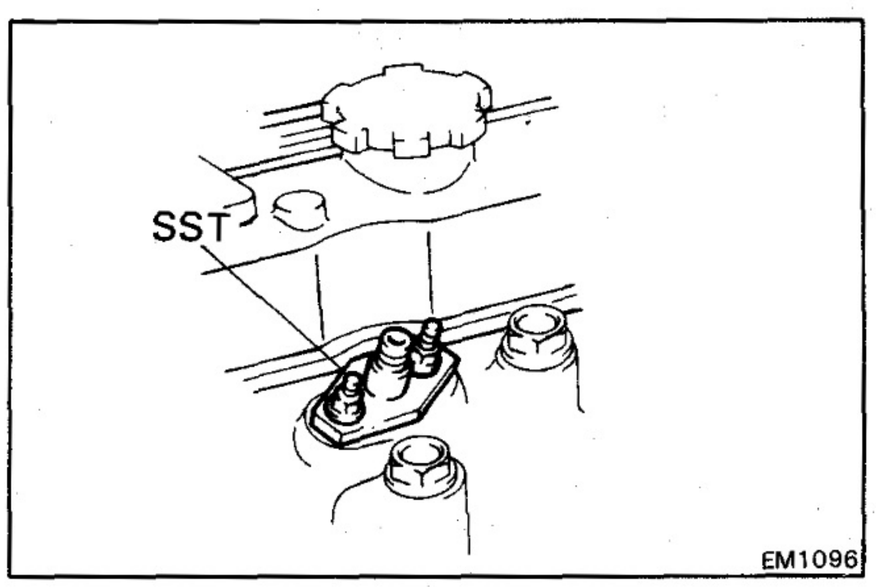

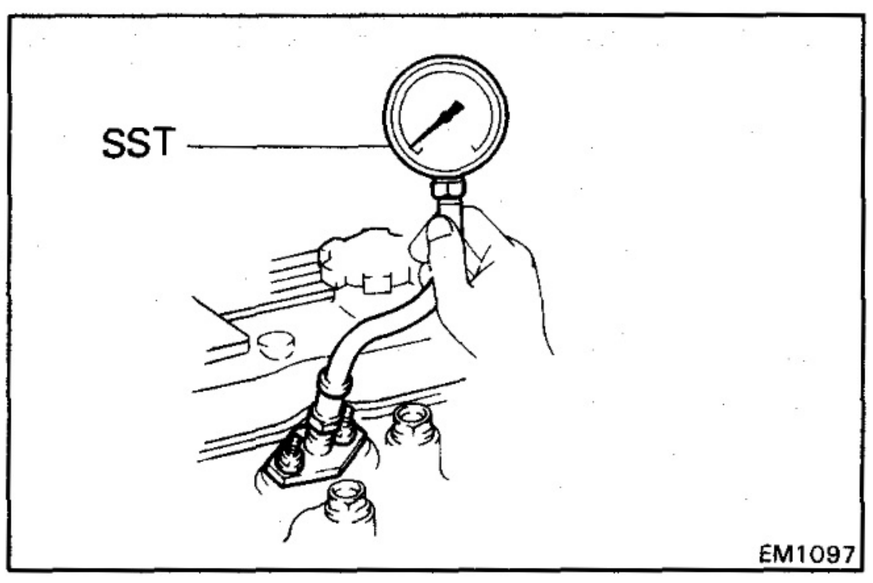

3. **CHECK CYLINDER COMPRESSION PRESSURE**

(a) Install SST (gauge adapter) to the injection nozzle hole.

SST 09992-00023

(b) Connect SST (compression gauge) to SST (gauge adapter).

SST 09992-00023

(c) Fully open the throttle valve.

(d) While cranking the engine with the starter, measure the compression pressure.

NOTE: Always use a fully charged battery to obtain engine revolutions of more than 250 rpm.

(e) Repeat steps (a) through (d) for each cylinder.

Compression pressure:
30.0 kg/cm² (427 psi, 2,942 kPa) or more
Minimum pressure:
20.0 kg/cm² (284 psi, 1,961 kPa)
Difference between each cylinder:
2.0 kg/cm² (28 psi, 196 kPa) or less

(f) If the cylinder compression in one or more cylinders is low, pour a small amount of engine oil into the cylinder through the injection nozzle hole and repeat steps (a) through (d) for the cylinder with low compression.

- If adding oil helps the compression, chances are that the piston rings and/or cylinder bore are worn or damaged.
- If pressure stays low, a valve may be sticking or seating improperly, or there may be leakage past the gasket.

4. **INSTALL INJECTION NOZZLES (See page FU-15)**

TURBOCHARGER [13B-T]

CAUTION:

- **Do not stop the engine immediately after pulling a trailer or high speed or uphill driving. Idle the engine 20 – 120 seconds, depending on the severity of the driving condition.**
- **Avoid sudden racing or acceleration immediately after starting a cold engine.**
- **If the engine is run with the air cleaner removed, foreign material entering will damage the wheels which run at extremely high speed.**
- **If the turbocharger is defective and must be replaced, first check for the cause of the defect in reference to the following items and replace parts if necessary:**

  Engine oil level and quality

  Conditions under which the turbocharger was used

  Oil lines leading to the turbocharger

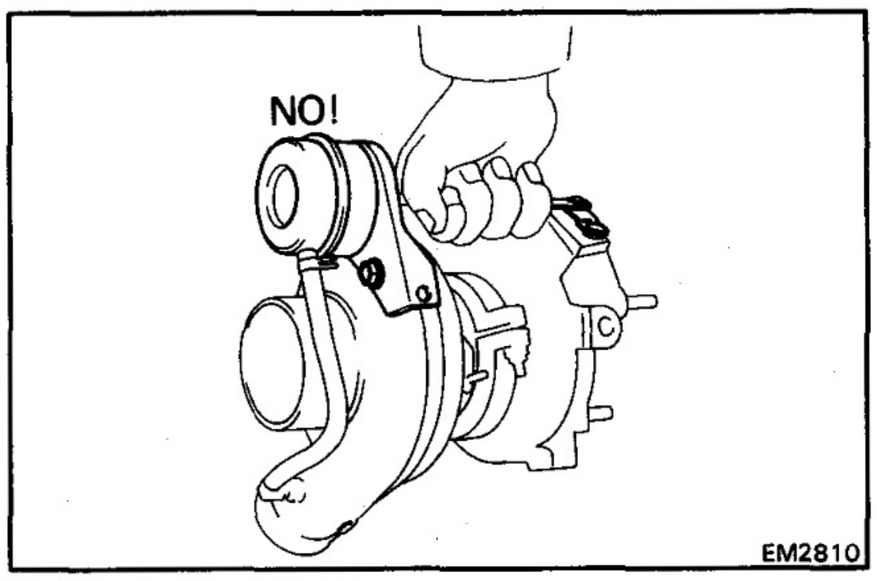

EM2810

- **Use caution when removing and reinstalling the turbocharger assembly. Do not drop it or bang it against anything or grasp it by easily-deformed parts, such as the actuator or rod, when moving.**
- **Before removing the turbocharger, plug the intake and exhaust ports and oil inlet to prevent entry of dirt or other foreign material.**

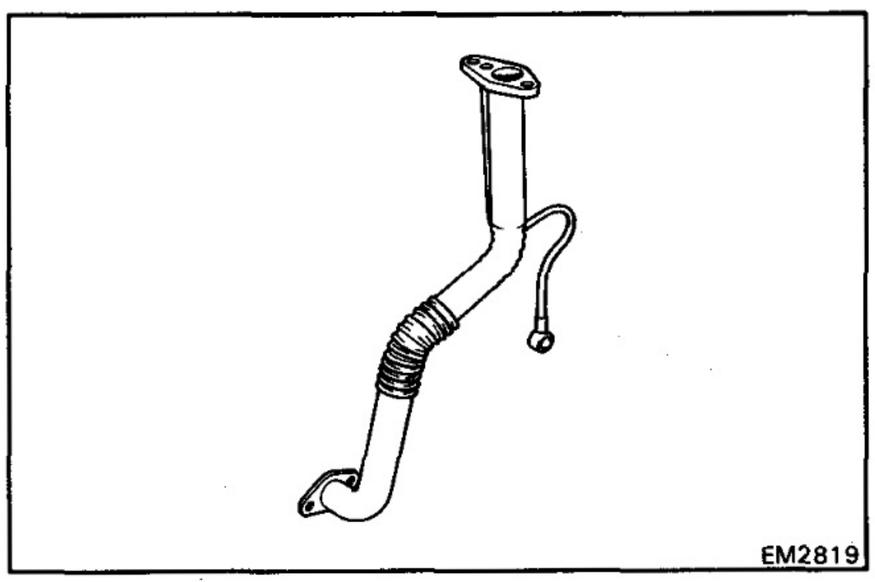
EM2819

- **If replacing the turbocharger, check for accumulation of sludge particles in the oil pipes and, if necessary, replace the oil pipes.**
- **Completely remove the gaskets adhered to the lubrication oil pipe flange and turbocharger oil flange.**
- **If replacing bolts or nuts, do so only with the specified new ones to guard against breakage or deformation.**

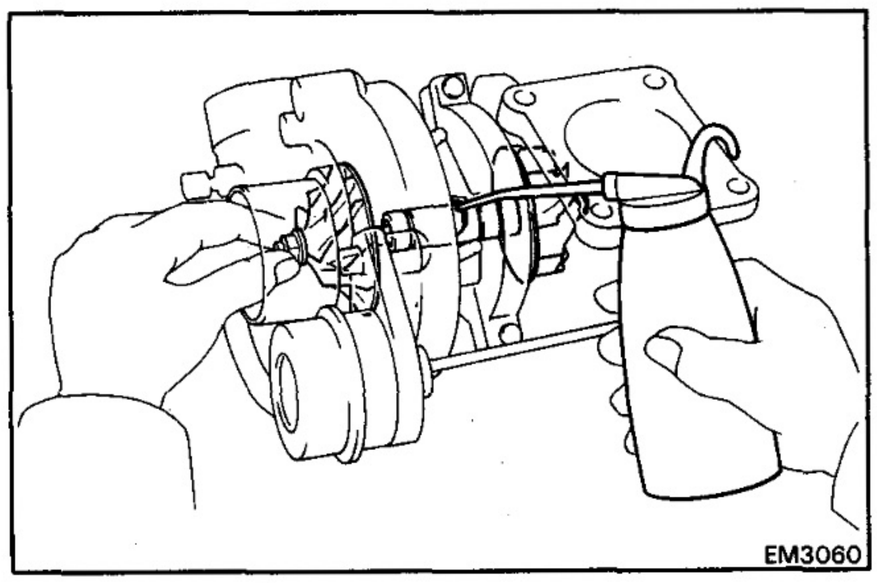
EM3060

- **If replacing the turbocharger, put 20 cc (1.2 cu in.) of oil into the turbocharger oil inlet and turn the impeller wheel by hand to spread oil to the bearing.**
- **If overhauling or replacing the engine, cut the fuel supply after reassembly and crank the engine for 30 seconds to distribute oil throughout the engine. Then allow the engine to idle for 60 seconds.**

ON-VEHICLE INSPECTION OF TURBOCHARGER

1. INSPECT INTAKE AIR SYSTEM

Check for leakage or clogging between the air cleaner and turbocharger inlet and between the turbocharger outlet and cylinder head.

- Clogged air cleaner ..... Clean or replace the element
- Hoses collapsed or deformed ..... Check each connection and repair
- Cracks in components ..... Check and replace

2. INSPECT EXHAUST SYSTEM

Check for leakage or clogging between the cylinder head and turbocharger inlet and between the turbocharger outlet and exhaust pipe.

- Deformed components ..... Repair or replace
- Foreign material in passages ..... Remove
- Leakage from components ..... Repair or replace
- Cracks in components ..... Check and replace

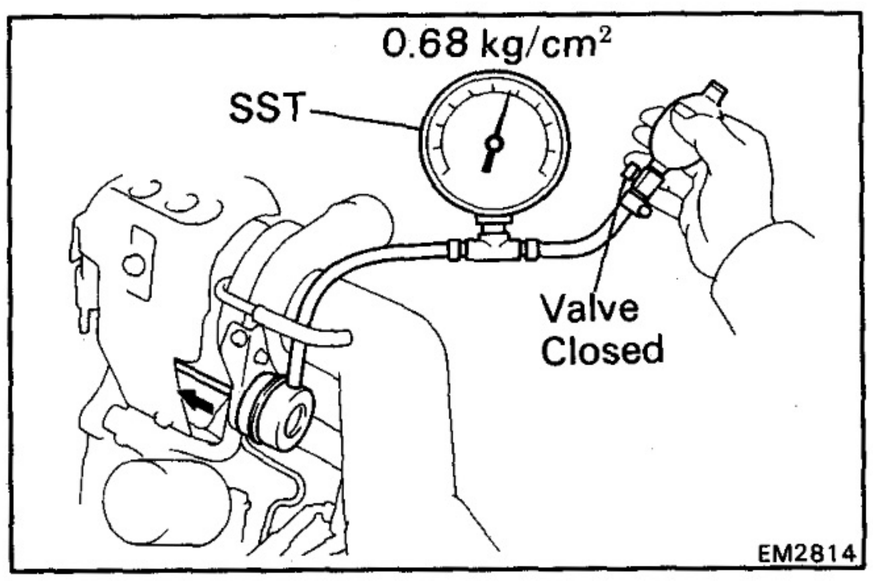

3. INSPECT OPERATION OF ACTUATOR AND WASTE GATE VALVE

(a) Disconnect the actuator hose.

(b) Using SST (turbocharger pressure gauge), apply about 0.68 kg/cm² (9.7 psi, 67 kPa) of pressure to the actuator and check that the rod moves.

SST 09992-00240

CAUTION: Never apply more than 0.8 kg/cm² (11.4 psi, 78 kPa) of pressure to the actuator.

If the rod does not move, replace the turbocharger assembly.

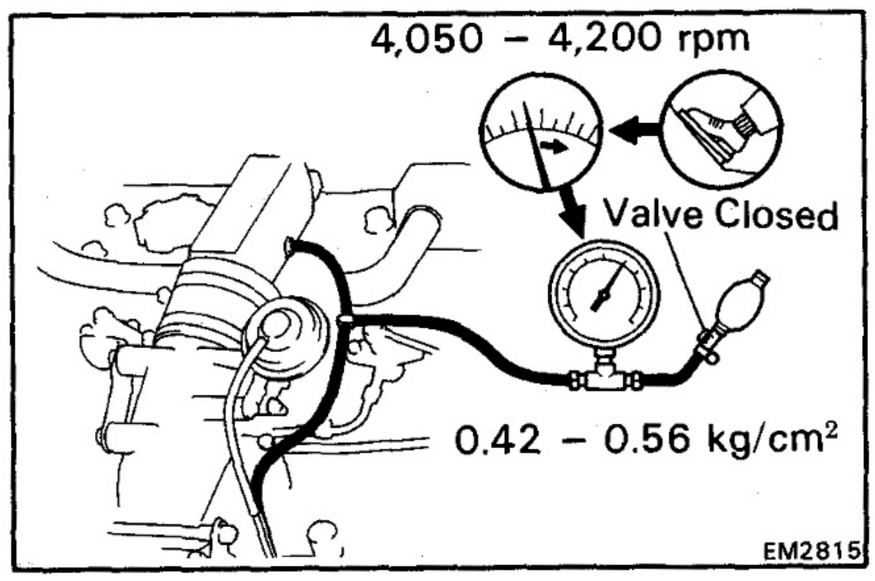

4. INSPECT TURBOCHARGING PRESSURE

(a) Warm up the engine.

(b) Using a 3-way union, connect SST (turbocharger pressure gauge) to the hose leading to the air intake connector.

SST 09992-00240

(c) Press in the clutch pedal, then press the accelerator pedal down as far as it will go. Measure the turbocharging pressure at maximum speed (4,050 – 4,200 rpm).

Turbocharging pressure: 0.42 – 0.56 kg/cm² (6.0 – 8.0 psi, 41 – 55 kPa)

If the pressure is less than that specified, check the intake air and exhaust systems for leakage. If there is no leakage, replace the turbocharger assembly.

If the pressure is above specification, check if the actuator hose is disconnected or cracked. If not, replace the turbocharger assembly.

5. INSPECT IMPELLER WHEEL ROTATION

(See page EM-38)

COMPONENTS

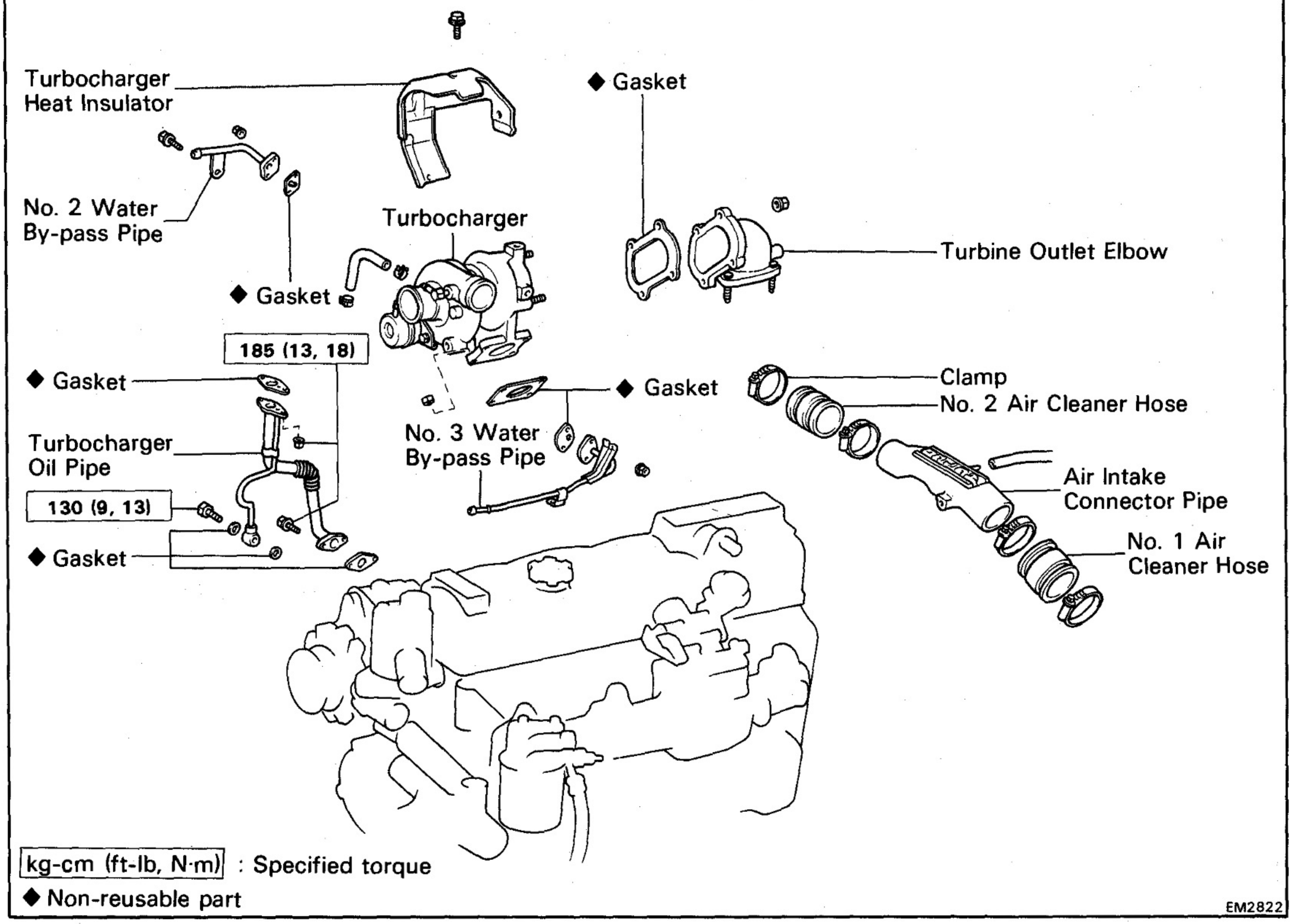

kg-cm (ft-lb, N·m) : Specified torque
◆ Non-reusable part

EM2822

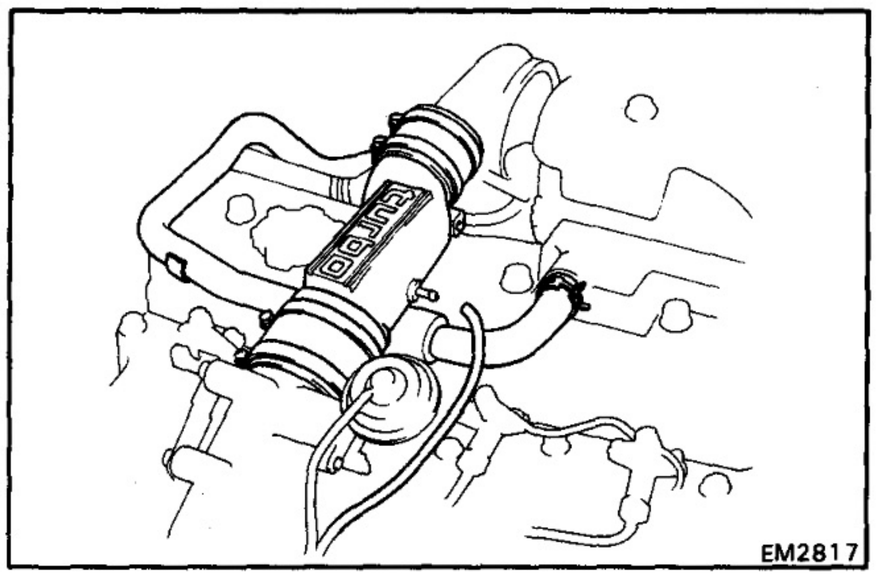

EM2817

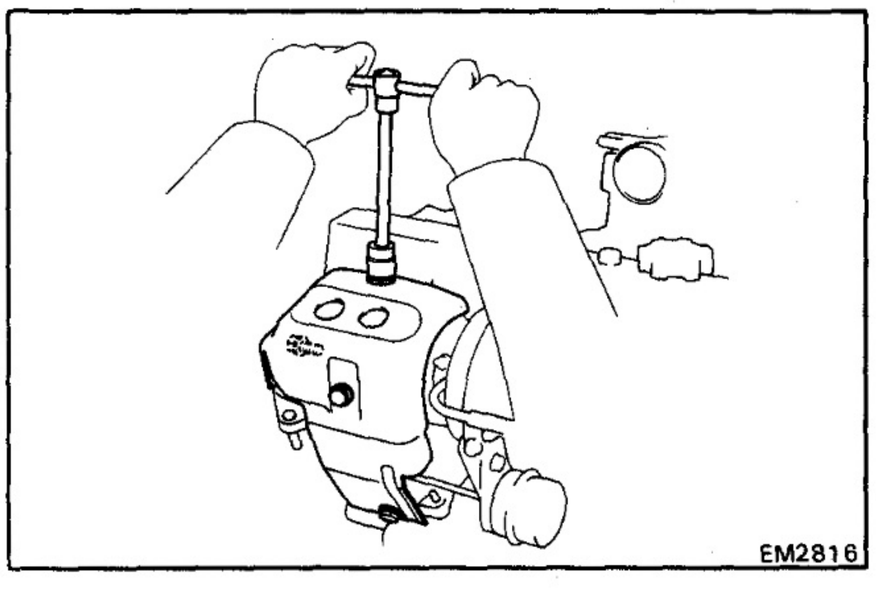

EM2816

REMOVAL OF TURBOCHARGER

1. **DRAIN ENGINE COOLANT (See page CO-3)**

2. **REMOVE POSITIVE CRANKCASE VENTILATION (PCV) HOSE AND INTAKE AIR CONNECTOR PIPE**
   (a) Disconnect the PCV hose from the cylinder head.
   (b) Disconnect the vacuum hose from the intake air connector.
   (c) Loosen the four clamps, and remove the intake air connector pipe, No. 1 air cleaner hose, No. 2 air cleaner hose and PCV hose.

3. **REMOVE TURBOCHARGER HEAT INSULATOR**
   Remove the four bolts and heat insulator.

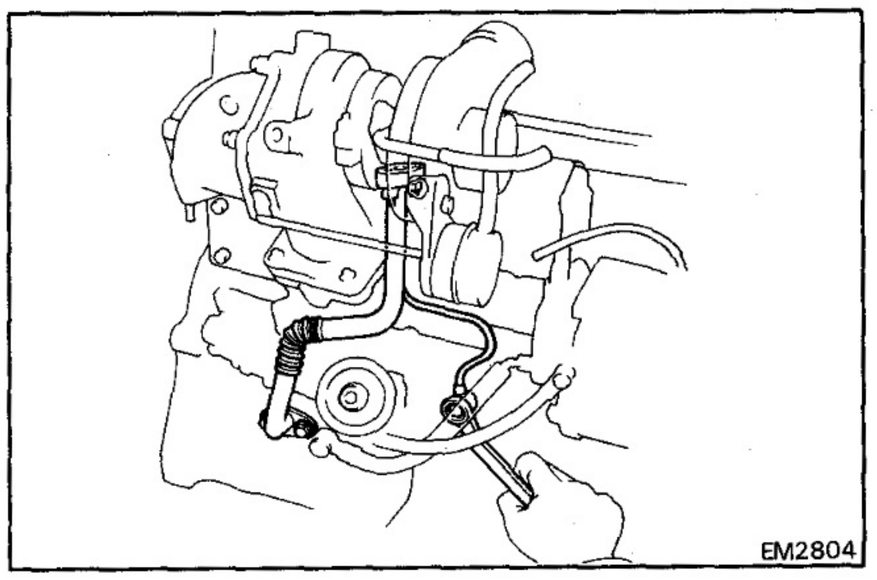

4. REMOVE OIL FILTER (See page LU-3)

5. REMOVE TURBOCHARGER OIL PIPE

(a) Remove the union bolt and two gaskets from the oil cooler case.

(b) Remove the two bolts, two nuts, turbocharger oil pipe.

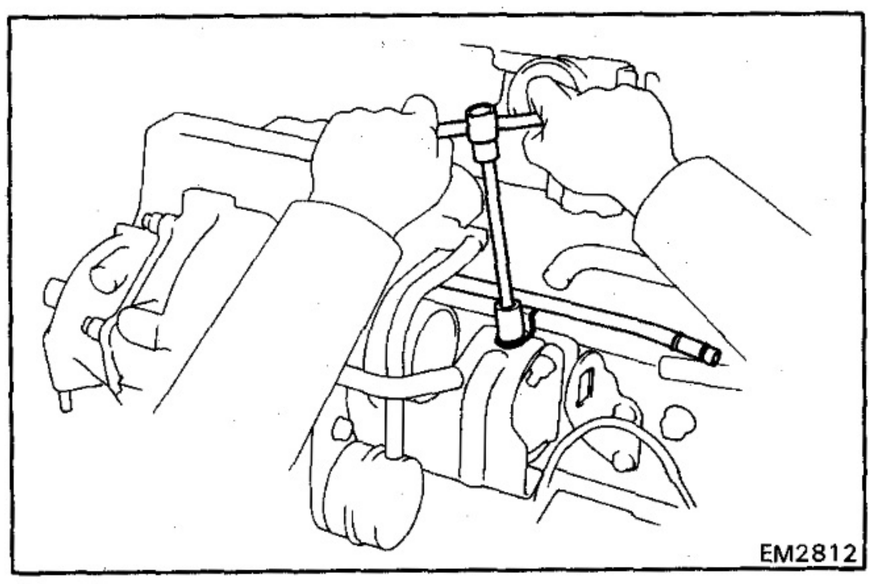

6. DISCONNECT WATER BY-PASS HOSE FROM NO. 3 WATER BY-PASS PIPE

7. REMOVE NO. 3 WATER BY-PASS PIPE CLAMP BOLT

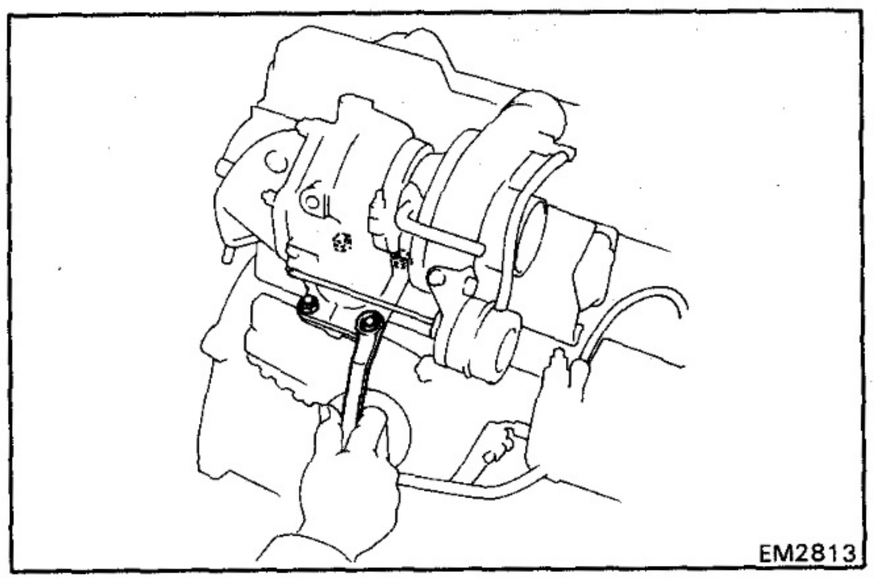

8. REMOVE TURBOCHARGER FROM EXHAUST MANIFOLD

Remove the four nuts, turbocharger and gasket.

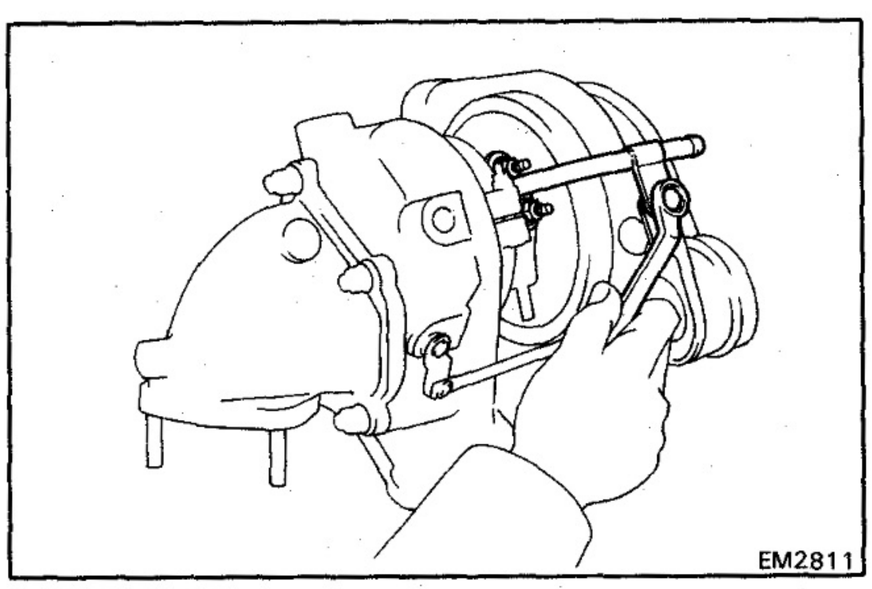

9. REMOVE NO. 2 WATER BY-PASS PIPE

Remove the bolt, two nuts, No. 2 water by-pass pipe and gasket.

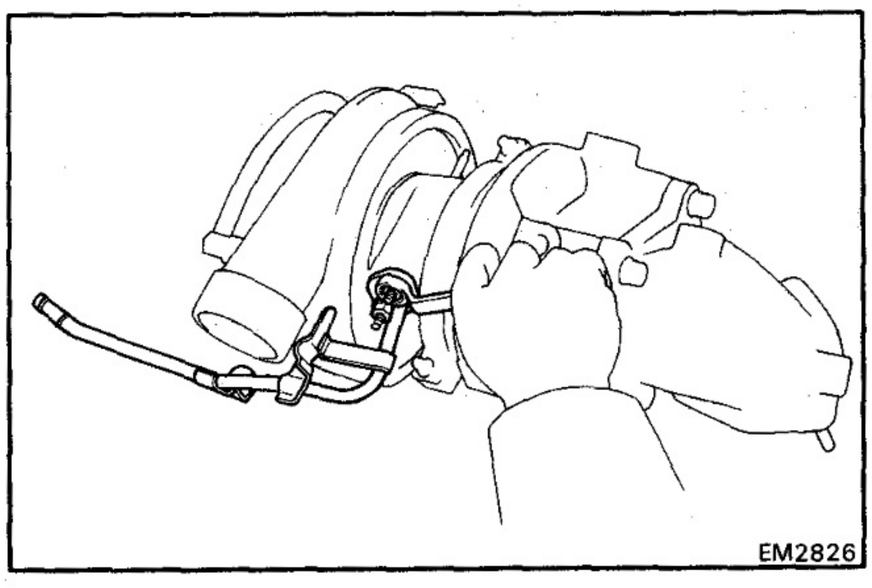

10. REMOVE NO. 3 WATER BY-PASS PIPE

Remove the two nuts, No. 3 water by-pass pipe and gasket.

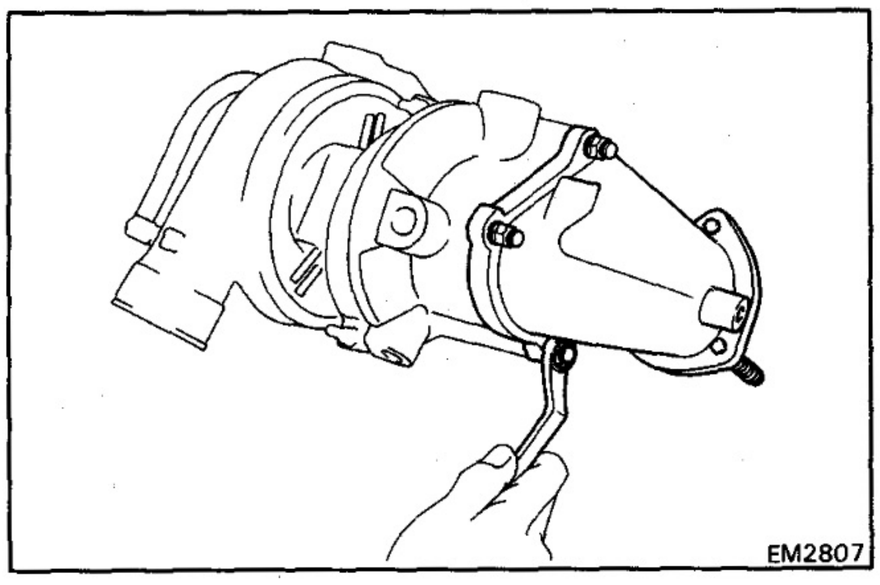

11. REMOVE TURBINE OUTLET ELBOW

Remove the four nuts, turbine outlet elbow and gasket.

12. REMOVE ACTUATOR HOSE

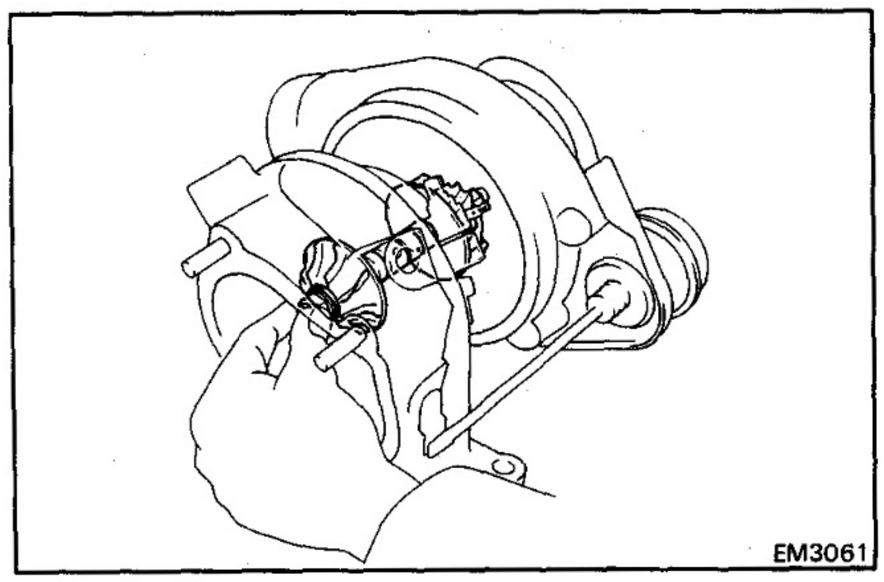

INSPECTION OF TURBOCHARGER

1. INSPECT IMPELLER WHEEL ROTATION

Grasp the edge of the turbine wheel and turn it. Check that the impeller wheel turns smoothly.

If the impeller wheel does not turn or if it turns with a drag, replace the turbocharger assembly.

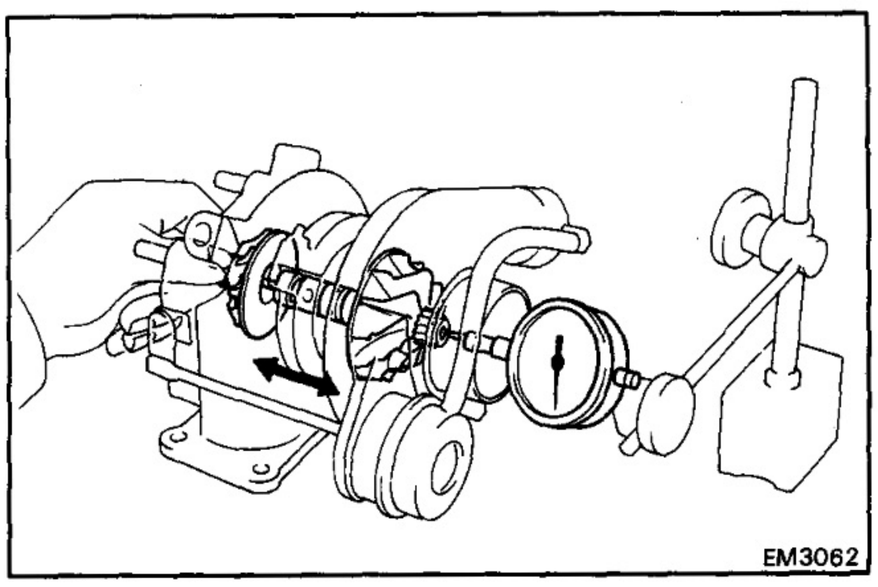

2. INSPECT AXIAL PLAY OF IMPELLER WHEEL

Insert a dial indicator into the exhaust side, hold the turbine wheel edge by hand and check the axial play.

Axial play: 0.13 mm (0.0051 in.) or less

If the axial play is not within specification, replace the turbocharger assembly.

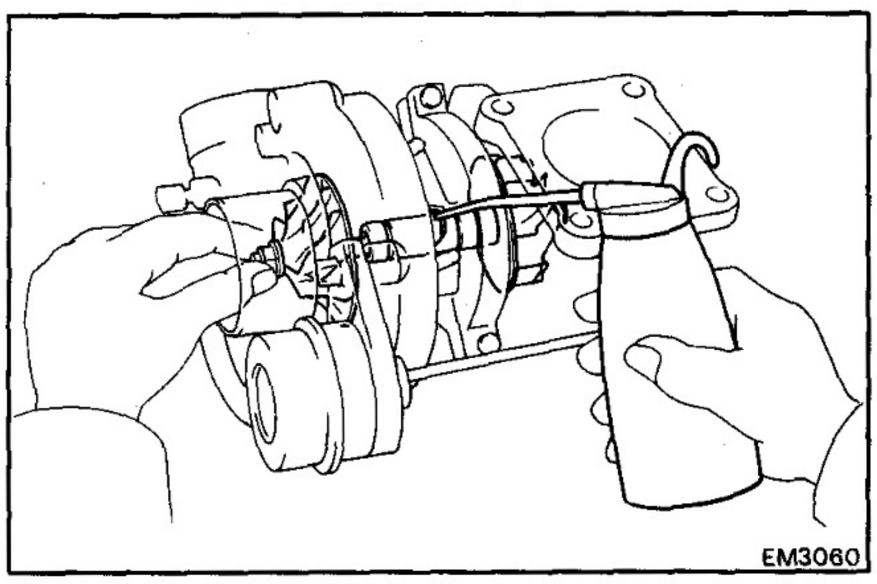

INSTALLATION OF TURBOCHARGER

(See page EM-36)

CAUTION: After replacing a turbocharger assembly, pour about 20 cc (1.2 cu in.) of new oil into the oil inlet and then turn the impeller wheel by hand to splash oil on the bearing.

1. INSTALL ACTUATOR HOSE

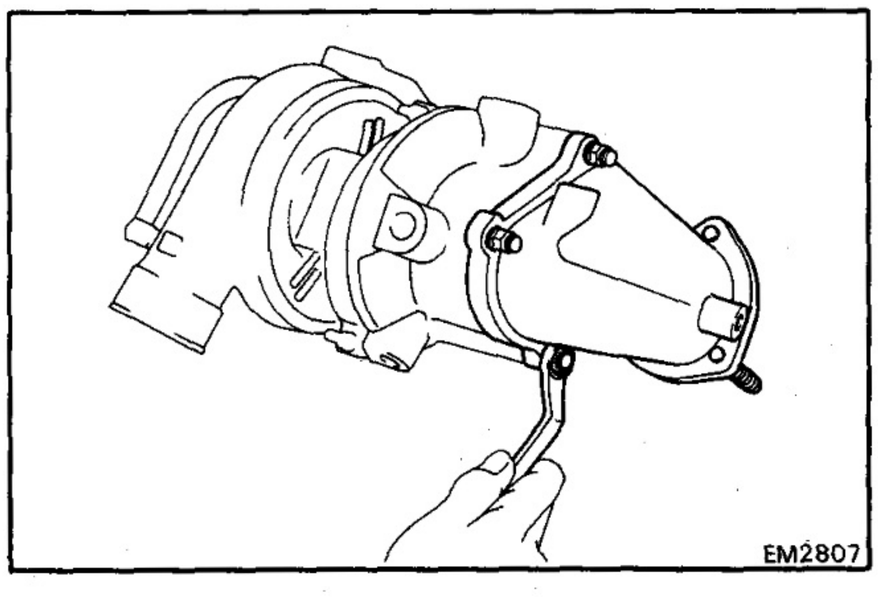

2. INSTALL TURBINE OUTLET ELBOW

Install the gasket and turbine outlet elbow with the four nuts.

Torque: 375 kg-cm (27 ft-lb, 37 N·m)

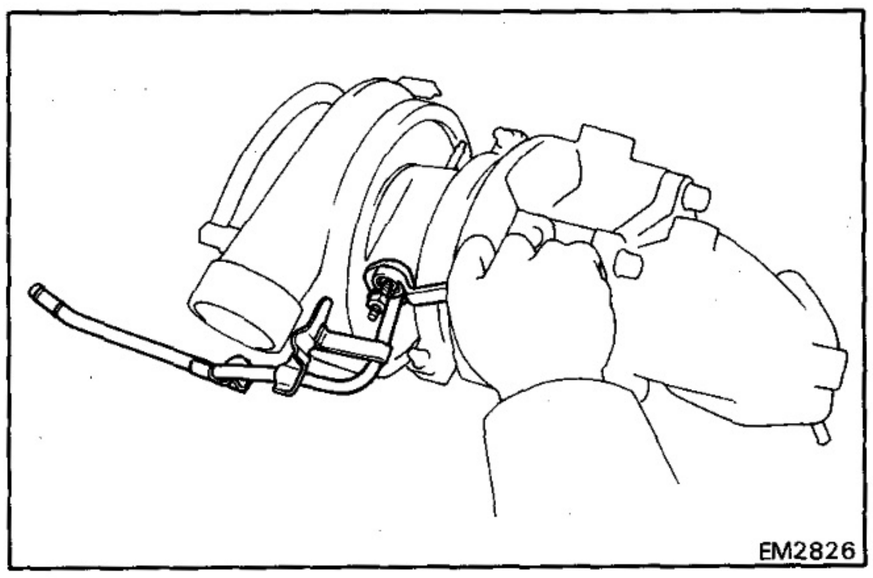

3. INSTALL NO. 3 WATER BY-PASS PIPE

Install a new gasket and No. 3 water by-pass pipe with the two nuts.

Torque: 75 kg-cm (65 in.-lb, 7.1 N·m)

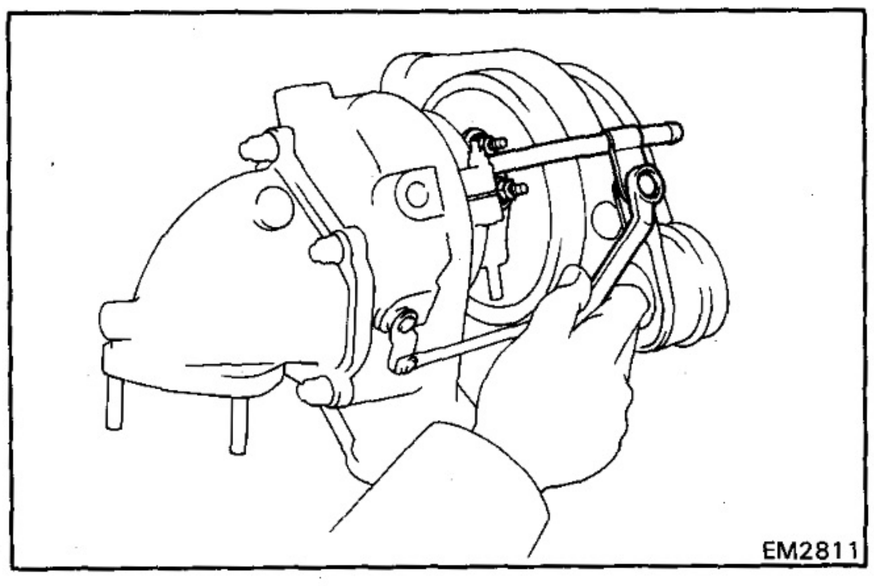

4. INSTALL NO. 2 WATER BY-PASS PIPE

Install a new gasket and No. 2 water by-pass pipe with the bolt and two nuts.

Torque:

Bolt 185 kg-cm (13 ft-lb, 18 N·m)
Nut 75 kg-cm (65 ft-lb, 7.1 N·m)

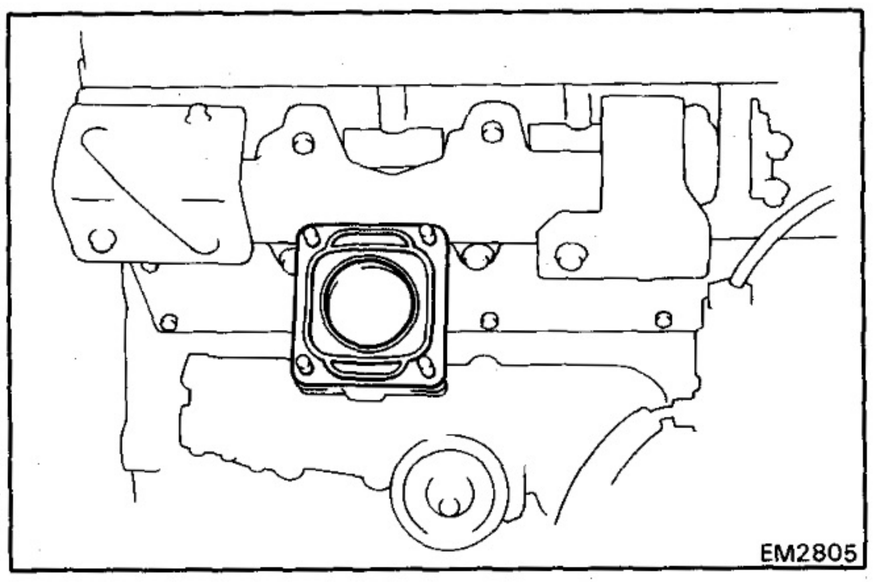

5. INSTALL TURBOCHARGER TO EXHAUST MANIFOLD

(a) Place a new gasket on the manifold with the groove of the gasket facing upward (turbocharger side).

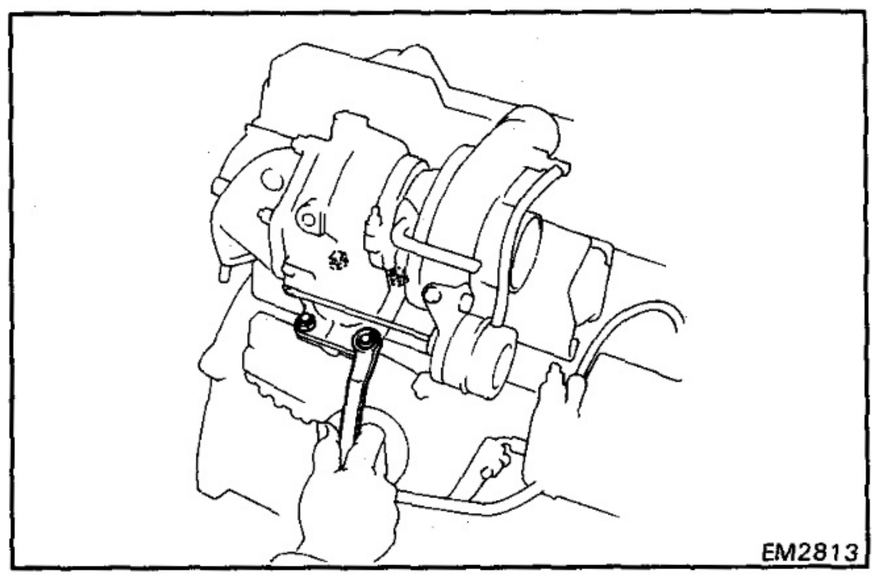

(b) Install the turbocharger with the four nuts.

Torque: 465 kg-cm (34 ft-lb, 46 N·m)

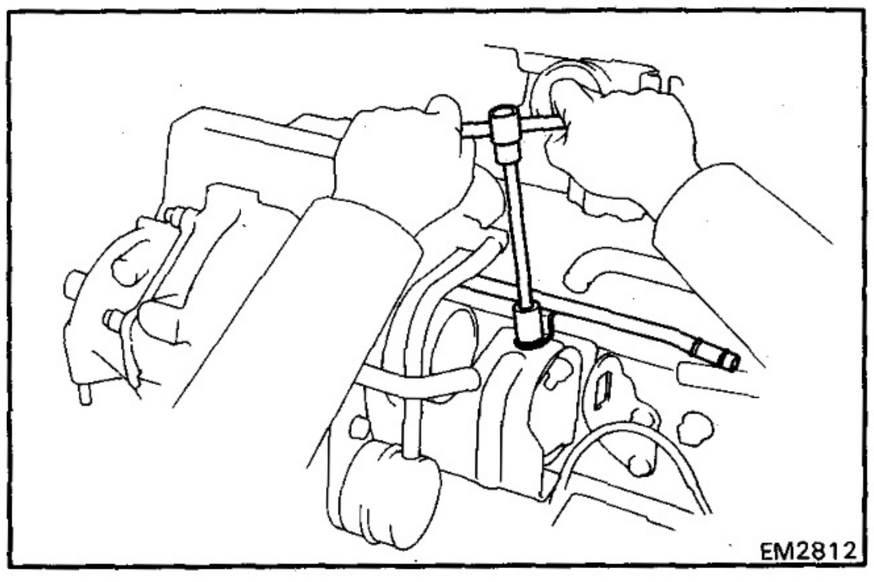

6. INSTALL NO. 3 WATER BY-PASS PIPE CLAMP BOLT

7. CONNECT WATER BY-PASS HOSE TO NO. 3 WATER BY-PASS PIPE

Torque: 185 kg-cm (13 ft-lb, 18 N·m)

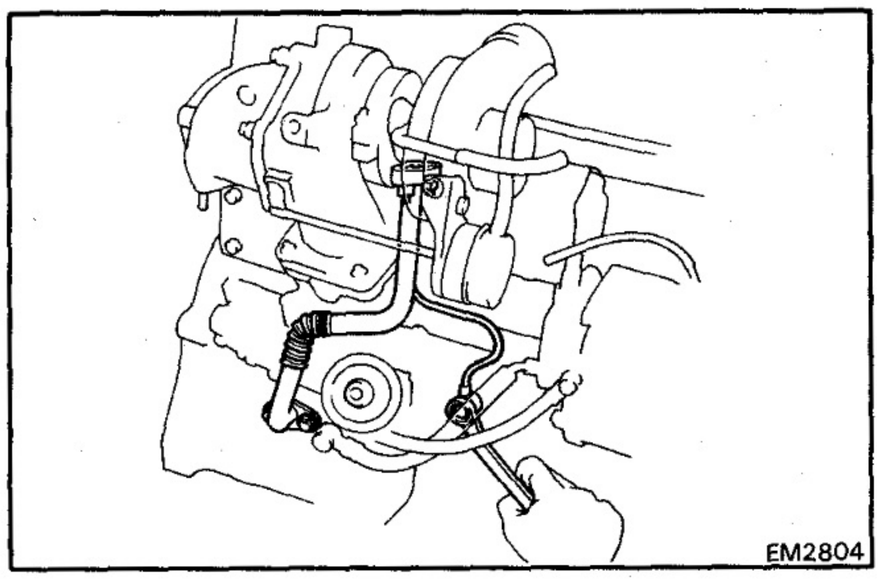

8. INSTALL TURBOCHARGER OIL PIPE

Install the turbocharger oil pipe with the two bolts, two nuts, union bolt and gaskets. Torque the bolts and nuts.

Torque:

Bolt and nut	**185 kg-cm (13 ft-lb, 18 N·m)**
Union bolt	**130 kg-cm (9 ft-lb, 13 N·m)**

9. INSTALL OIL FILTER (See page LU-3)

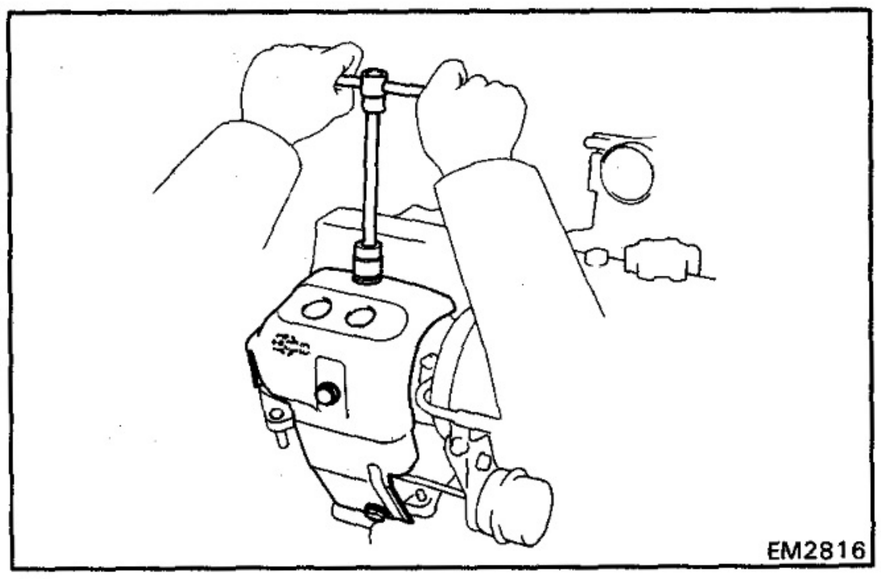

10. INSTALL TURBOCHARGER HEAT INSULATOR

Install the heat insulator with the four bolts.

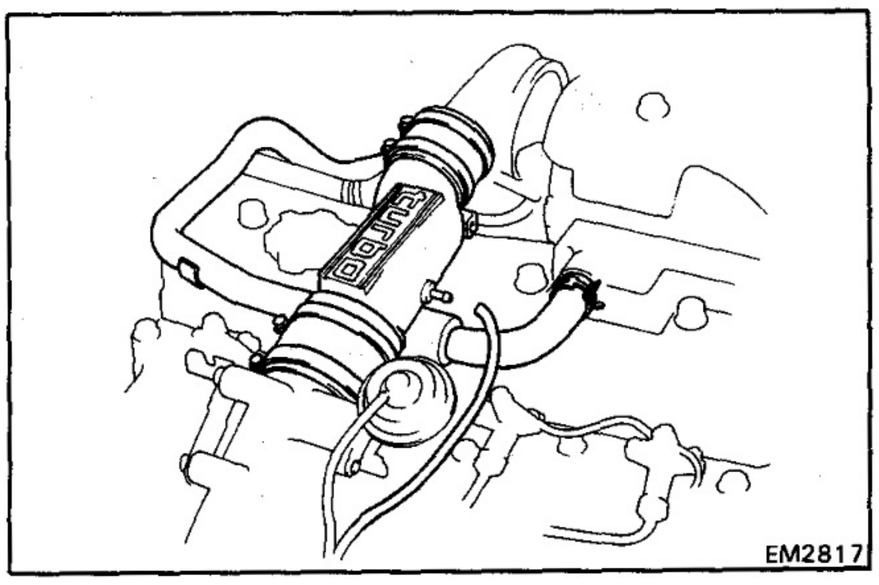

11. INSTALL POSITIVE CRANKCASE VENTILATION (PCV) HOSE AND INTAKE AIR CONNECTOR PIPE

12. FILL WITH ENGINE COOLANT (See page CO-3)

13. START ENGINE AND CHECK FOR LEAKS

14. CHECK ENGINE OIL LEVEL (See page LU-2)

CYLINDER HEAD

COMPONENTS

B and 3B

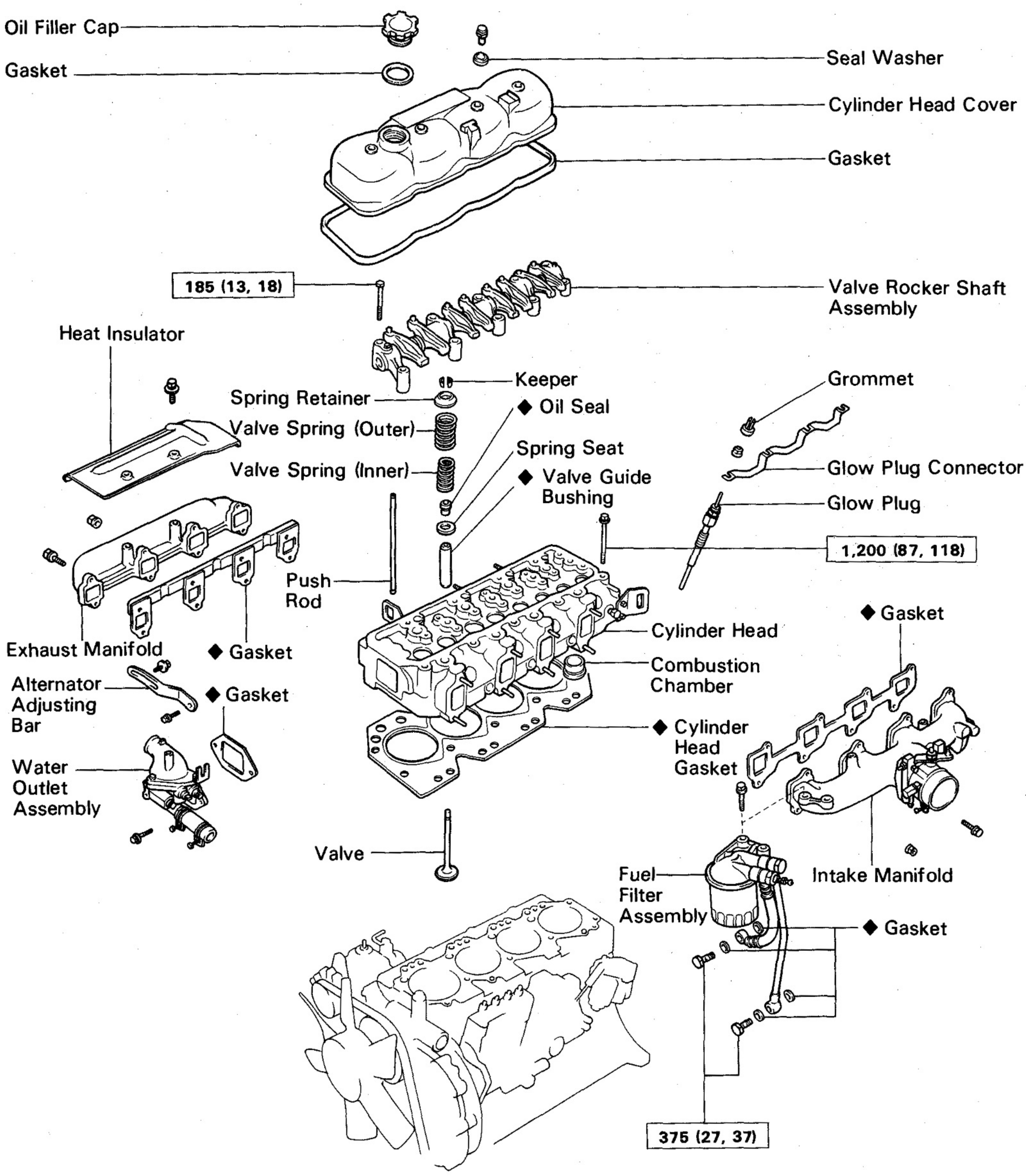

kg-cm (ft-lb, N·m) : Specified torque

◆ Non-reusable part

EM3084

COMPONENTS (Cont'd)

11B and 13B

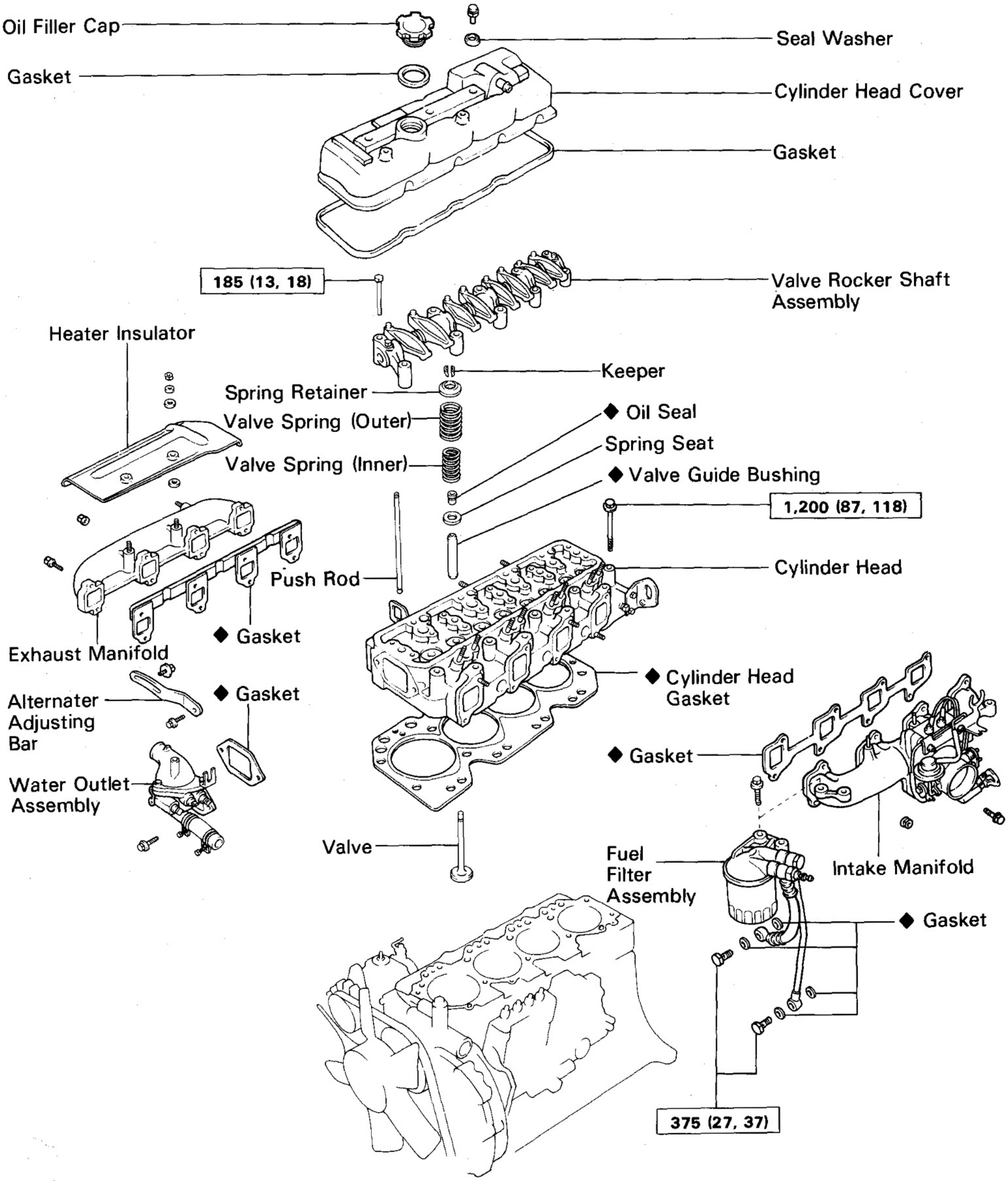

kg-cm (ft-lb, N·m) : Specified torque

◆ Non-reusable part

EM3085

COMPONENTS (Cont'd)

13B-T

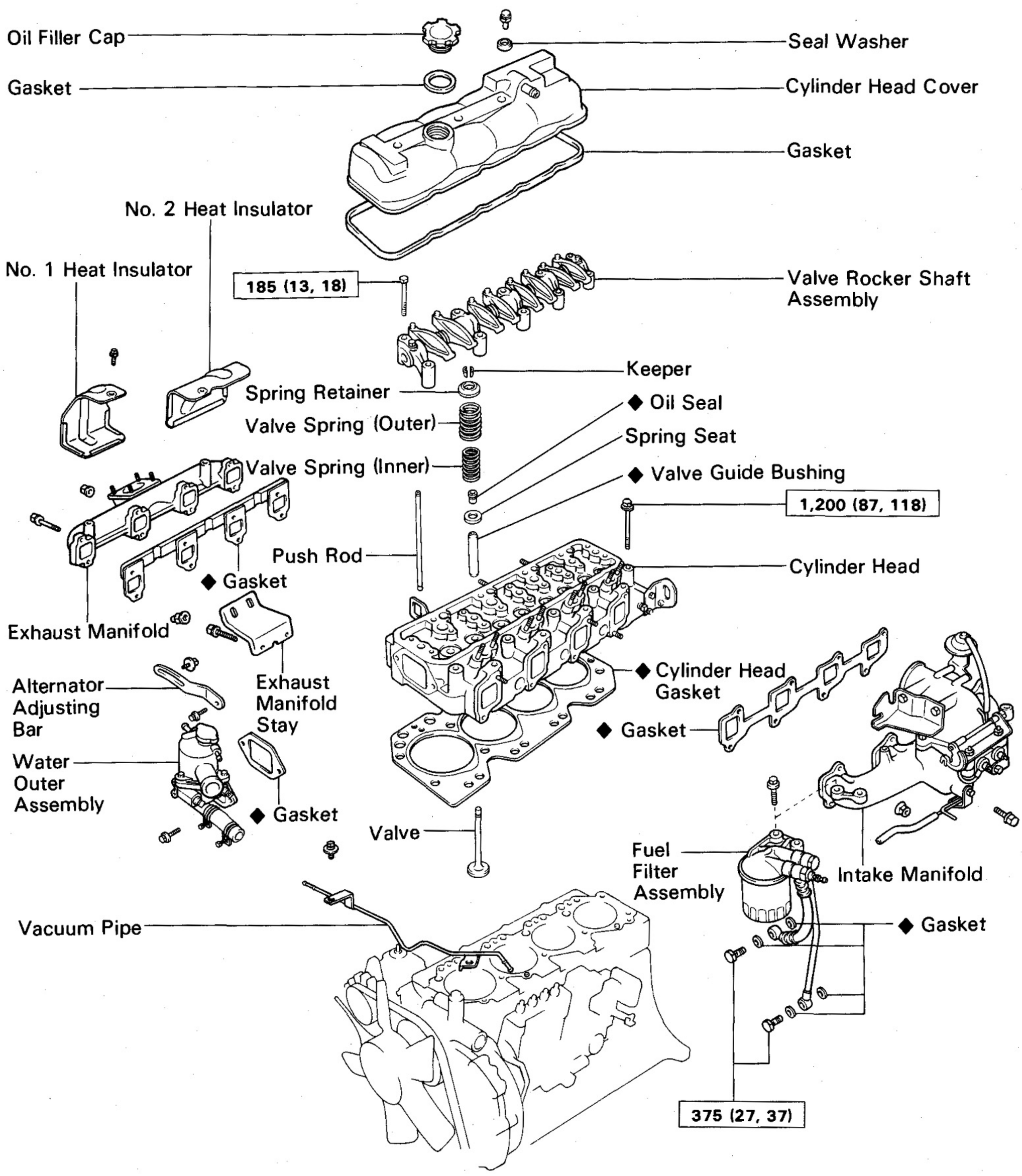

kg-cm (ft-lb, N·m) : Specified torque

◆ Non-reusable part

EM3086

REMOVAL OF CYLINDER HEAD

(See page EM-41) B and 3B
(See page EM-42) 11B and 13B
(See page EM-43) 13B-T

1. DRAIN ENGINE COOLANT (See page CO-3)

2. [13B-T]
REMOVE TURBOCHARGER
(See steps 2 to 8 on pages EM-36 and 37)

B and 3B

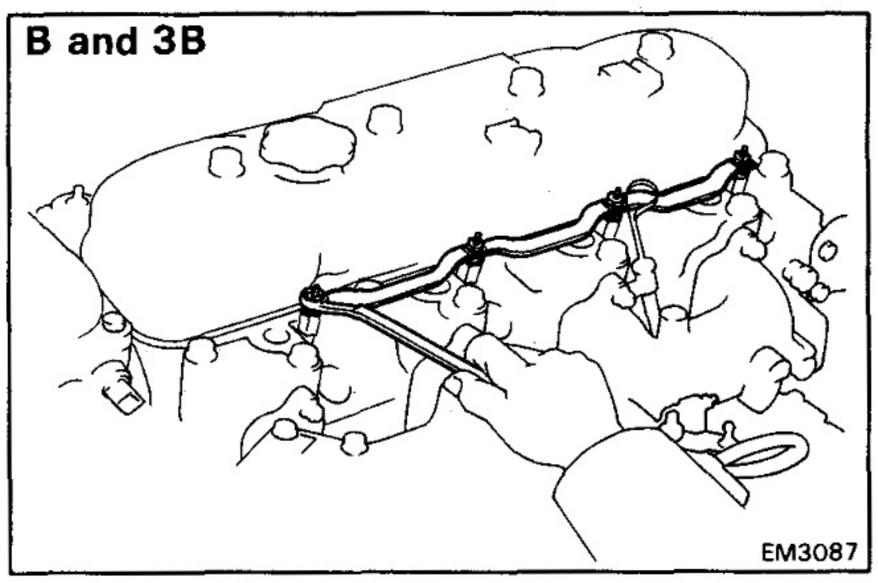

3. REMOVE INJECTION NOZZLES
(See page FU-4) B and 3B
(See page FU-10) 11B, 13B and 13B-T

4. [B AND 3B]
REMOVE GLOW PLUGS

(a) Remove the four screw grommets.

(b) [Pre-heating System (Super Glow Type)]
Remove the current sensor plate.

(c) Remove the four nuts and glow plug connector.

(d) Remove the four glow plugs.

B and 3B

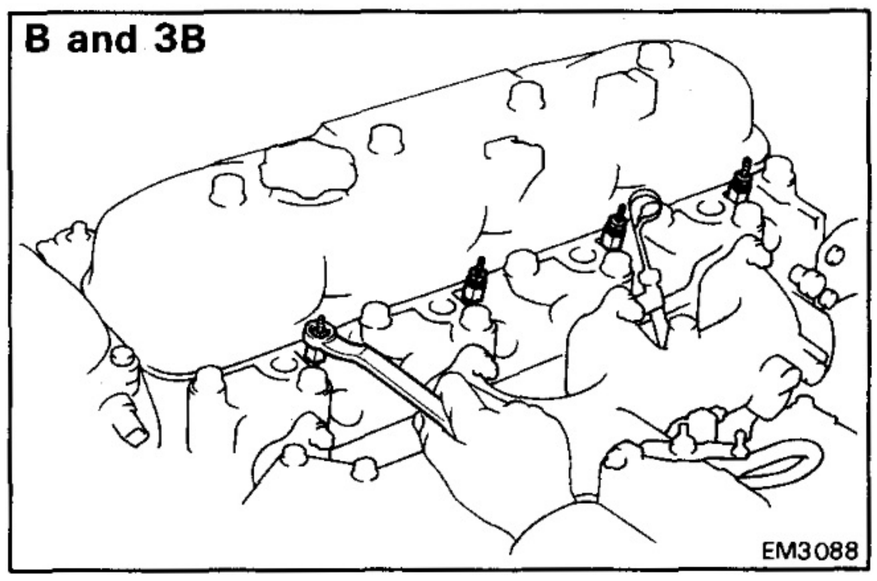

13B-T

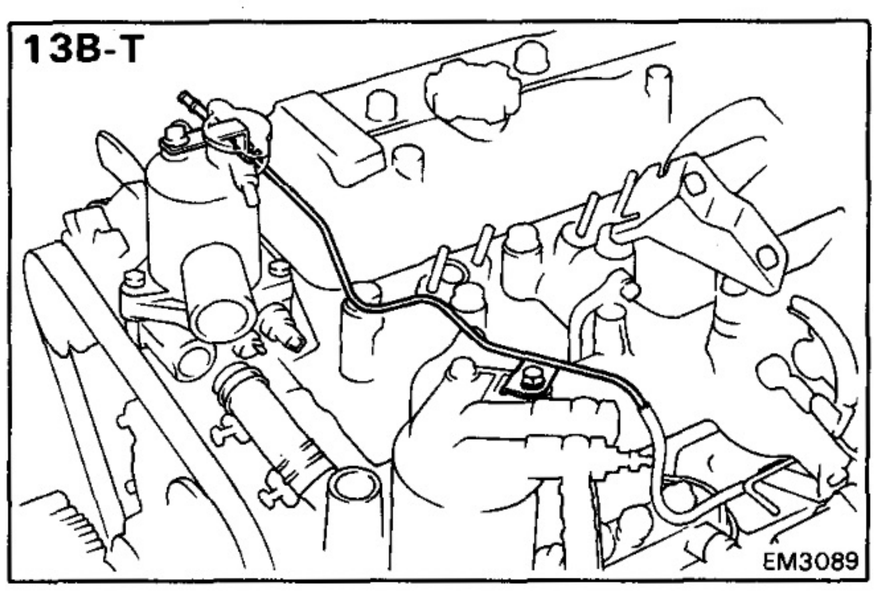

5. [13B-T]
REMOVE VACUUM PIPE

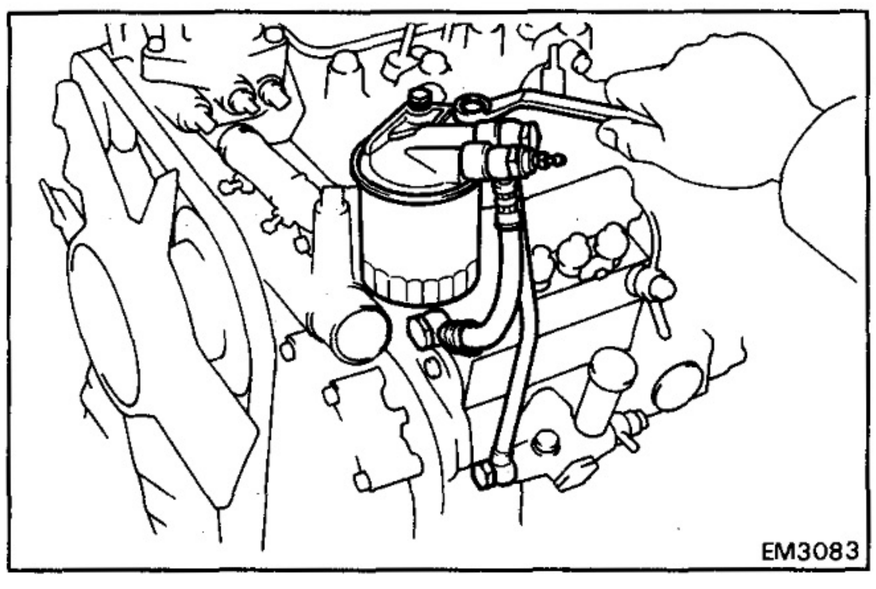

6. REMOVE FUEL FILTER ASSEMBLY

(a) Remove the two union bolts and four gaskets, and disconnect the fuel hose and pipe from the injection pump.

(b) Remove the two bolts and the fuel filter together with the hose and pipe.

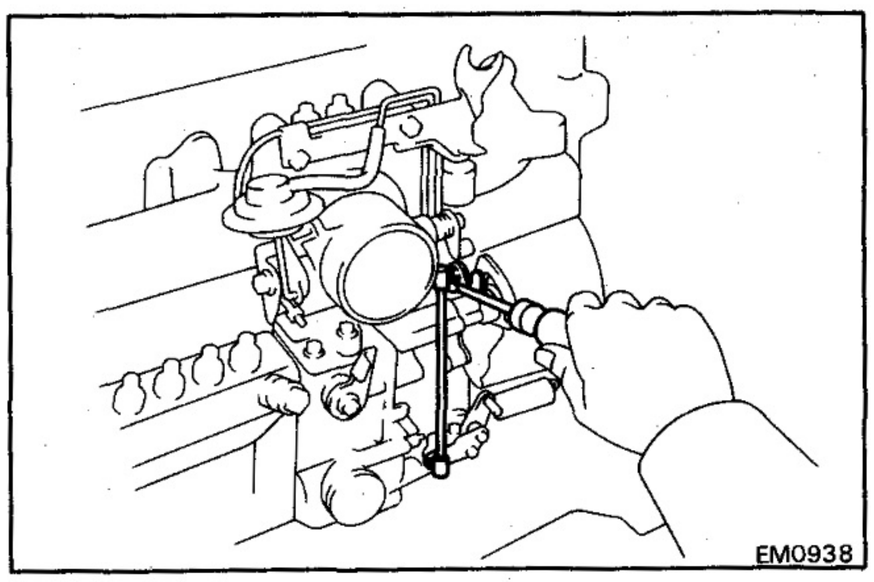

**7. [11B, 13B AND 13B-T]
REMOVE ACCELERATOR CONNECTING ROD**

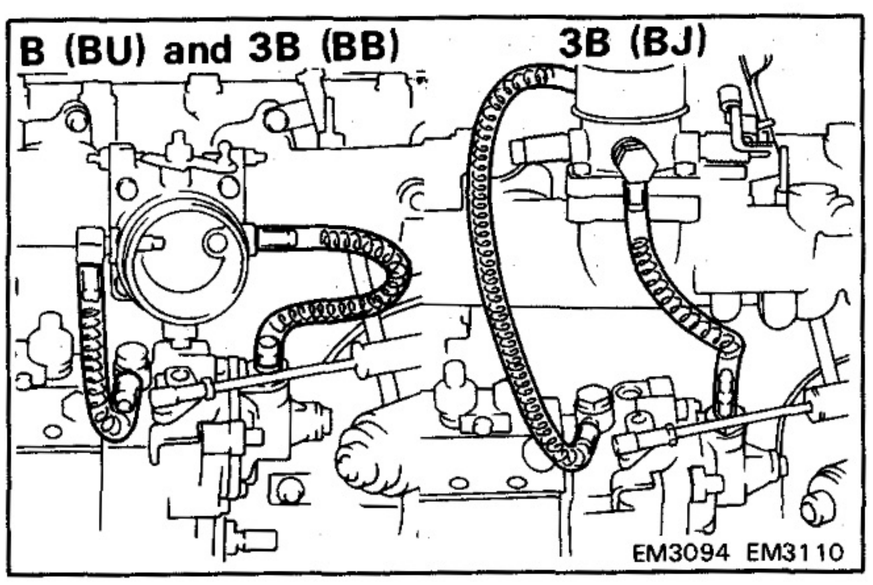

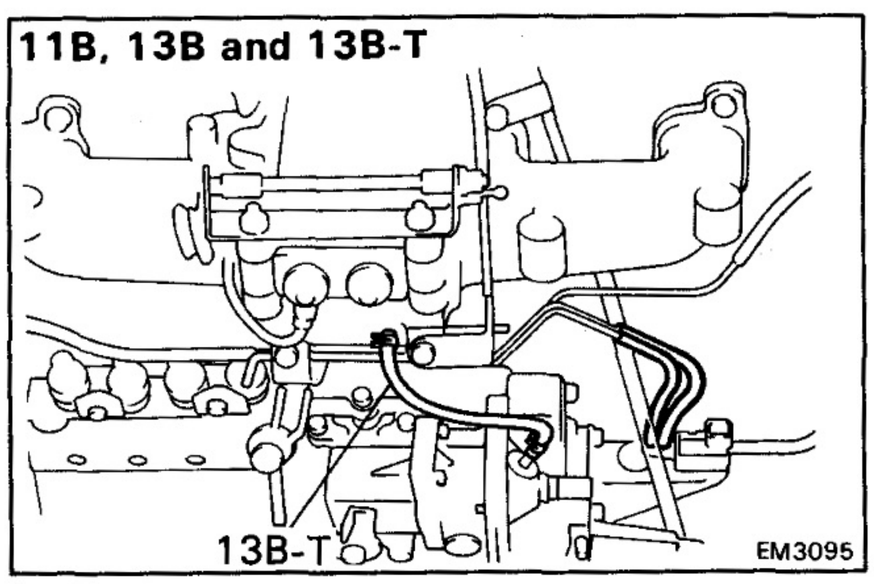

8. REMOVE INTAKE MANIFOLD

(a) Remove the vacuum hoses.

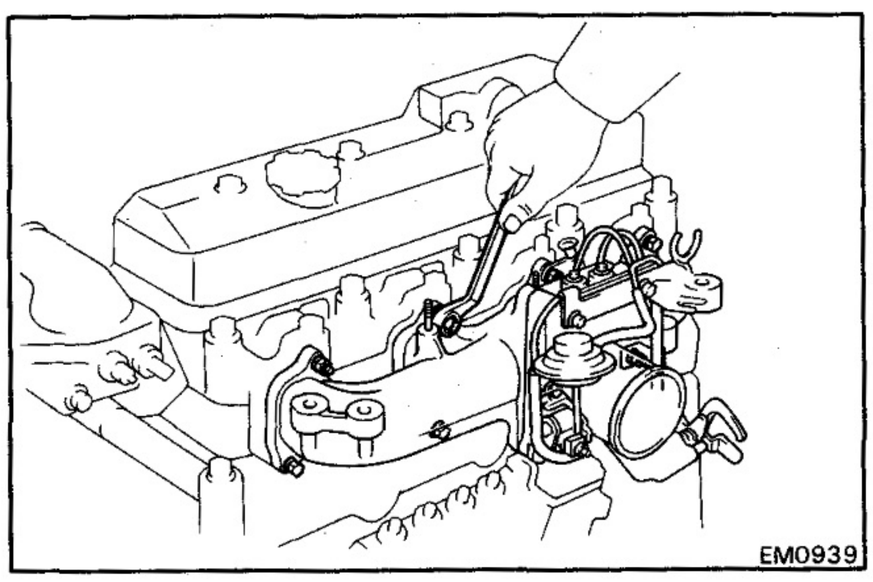

(b) Remove the five bolts and three nuts holding the level gauge clamp, No. 2 leakage pipe clamps and intake manifold to the cylinder head.

NOTE: If necessary, remove the union bolt of the No. 2 leakage pipe.

(c) Remove the intake manifold and gasket.

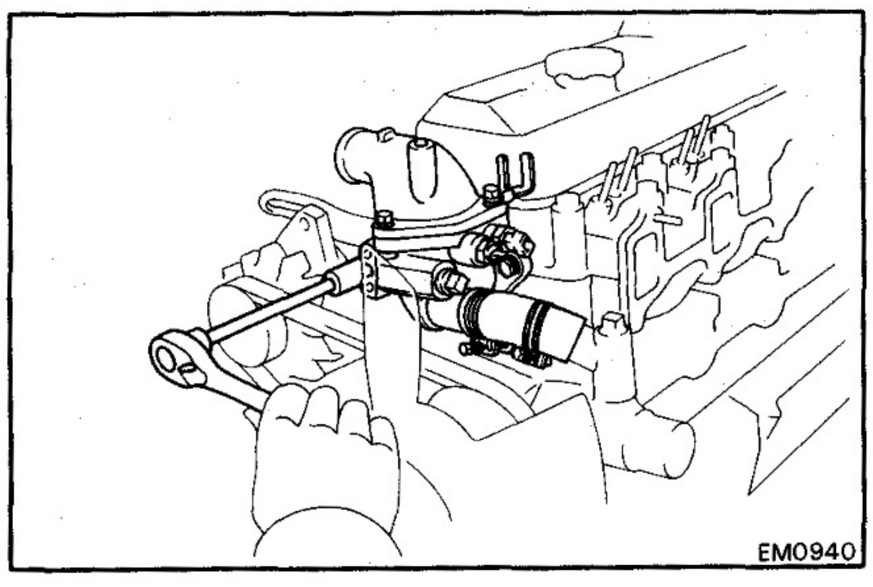

9. REMOVE WATER OUTLET ASSEMBLY

(a) Remove the two bolts holding the water outlet housing to the cylinder head.

(b) Disconnect the water by-pass hose from the water pump, and remove the water outlet assembly and gasket together with the by-pass hose.

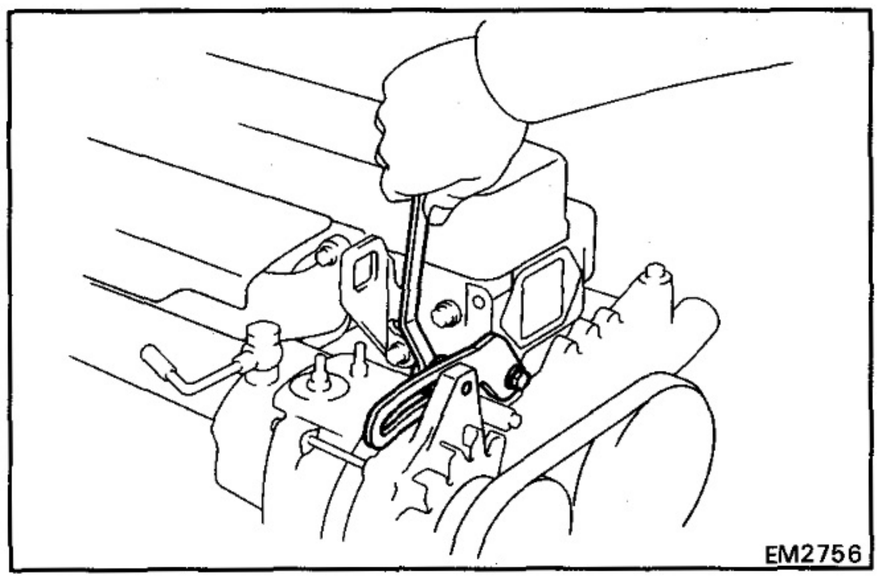

10. REMOVE DRIVE BELT ADJUSTING BAR

Remove the two bolts and adjusting bar.

11. REMOVE EXHAUST MANIFOLD

(a) [B, 3B, 11B and 13B (Bolt tightening type)]
Remove the three bolts and heat insulator.

(b) [11B and 13B (Nut tightening type)]
Remove the three nuts, plate washers, heat insulator and six spacers.

B, 3B, 11B and 13B

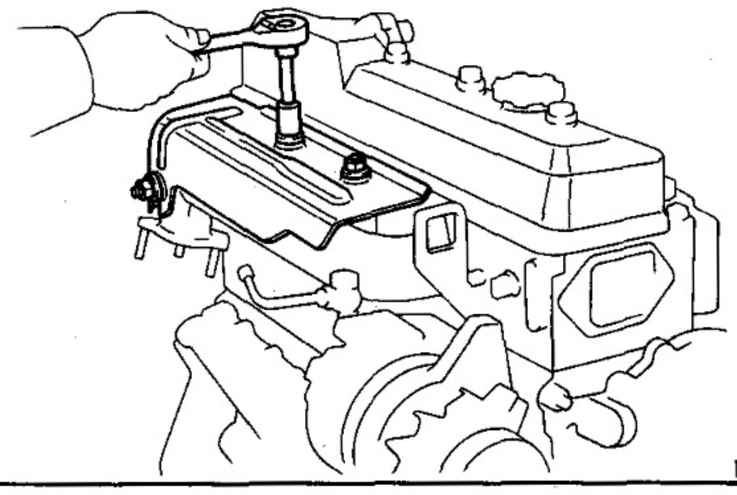

13B-T

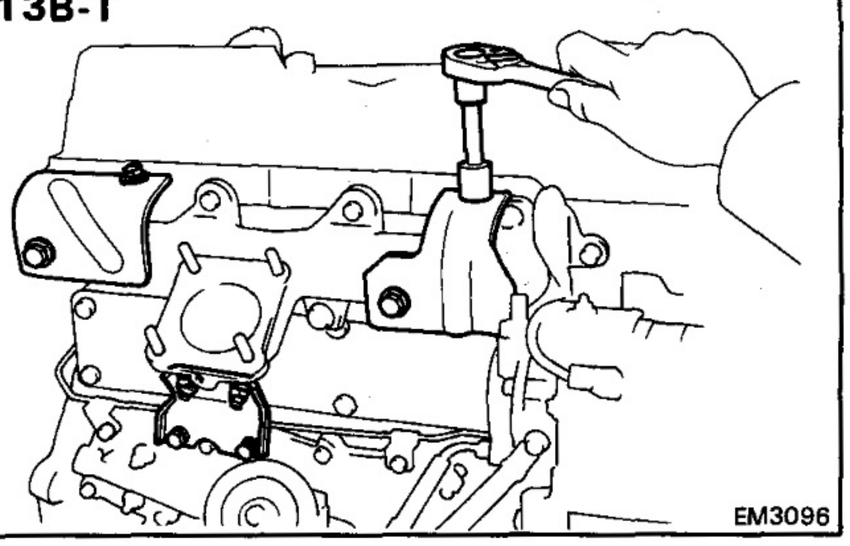

(c) [13B-T]
Remove the four bolts, No. 1 and No. 2 heat insulators.

(d) [13B-T]
Remove the two bolts, nuts and exhaust manifold stay.

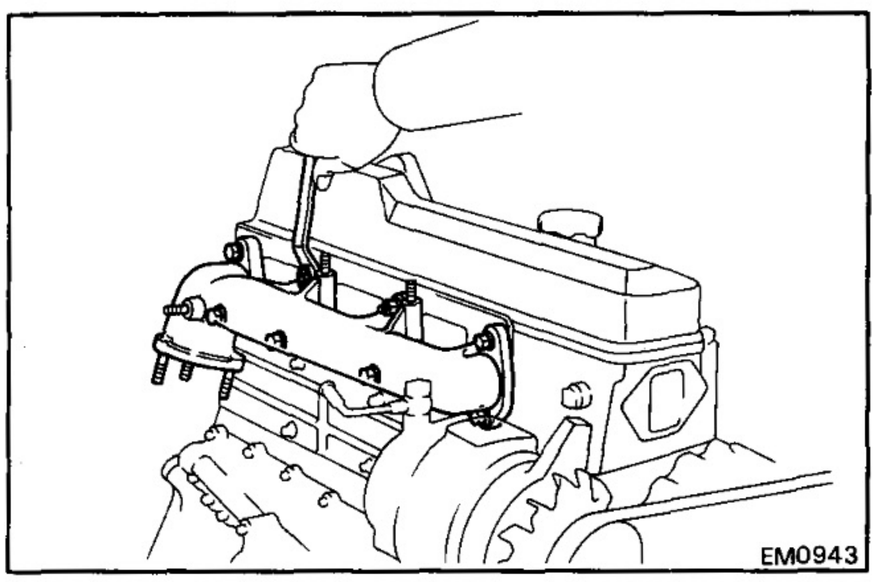

(e) Remove the six bolts, two nuts, exhaust manifold and gasket.

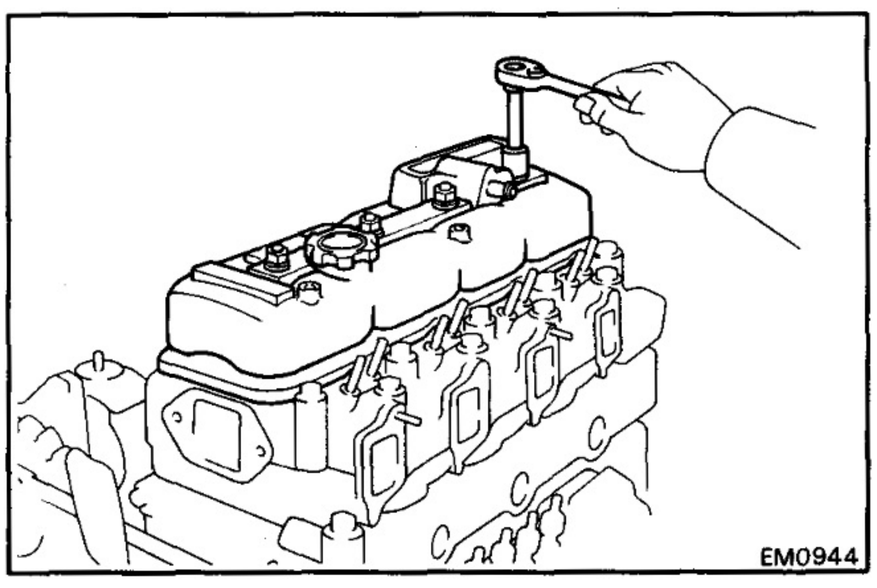

12. REMOVE CYLINDER HEAD COVER

Remove the four cap nuts, seal washers, cylinder head cover and gasket.

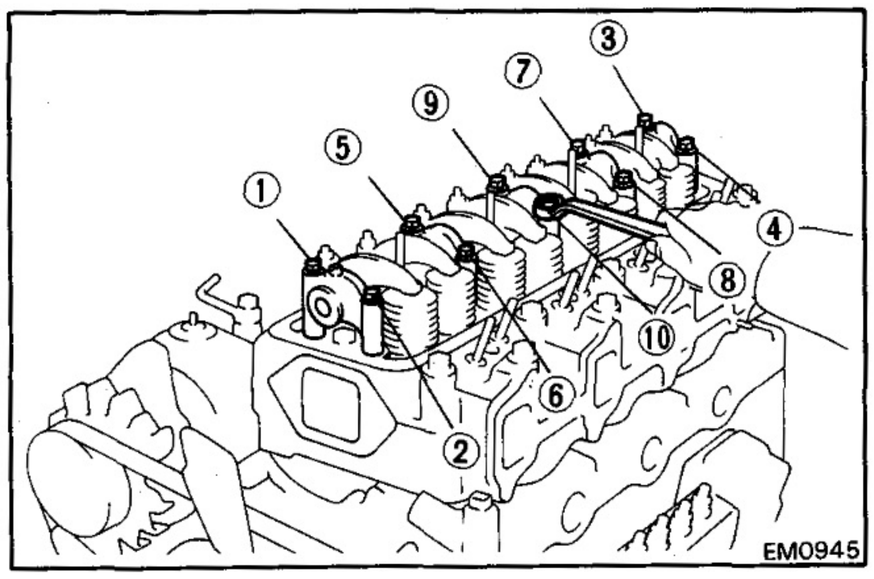

13. REMOVE VALVE ROCKER SHAFT ASSEMBLY

(a) Uniformly loosen and remove the ten bolts in several passes, in the sequence shown.

(b) Remove the rocker shaft assembly.

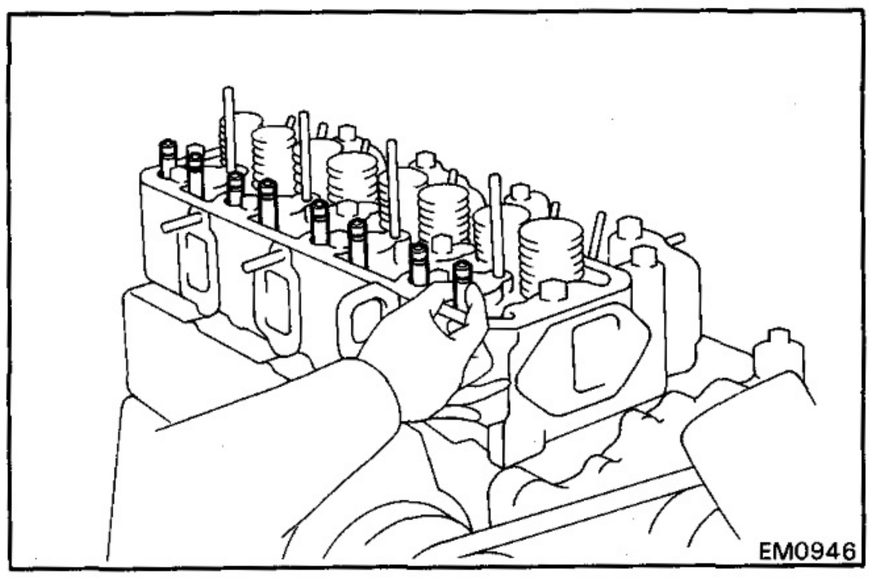

14. REMOVE PUSH RODS

Remove the eight push rods in order, beginning from the No. 1 push rod.

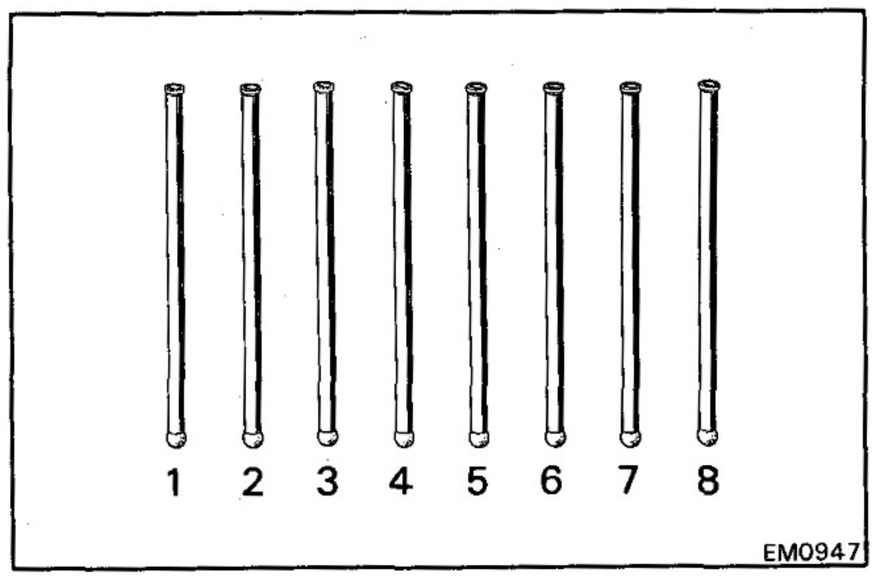

NOTE: Arrange the push rods in correct order.

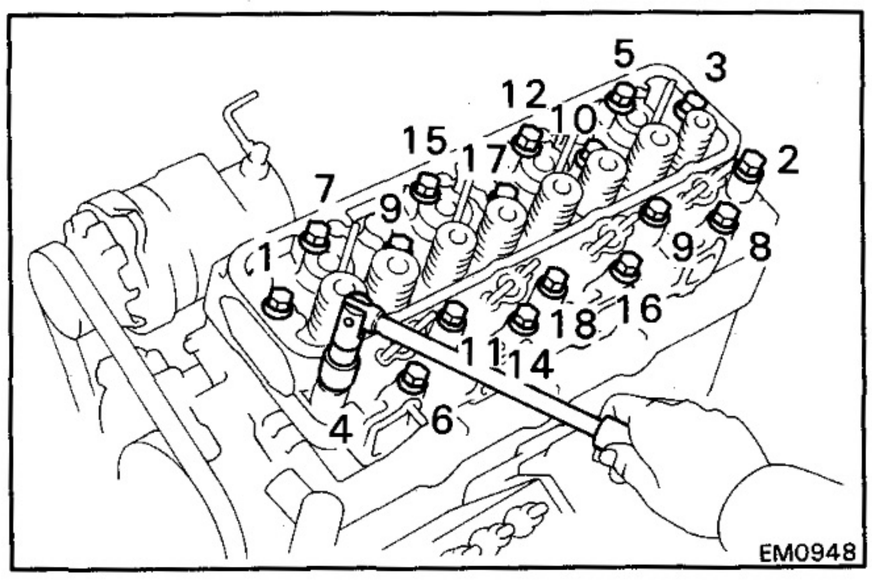

15. REMOVE CYLINDER HEAD

(a) Uniformly loosen and remove the eighteen head bolts in several passes, in the sequence shown.

CAUTION: Head warpage or cracking could result from removing bolts in incorrect order.

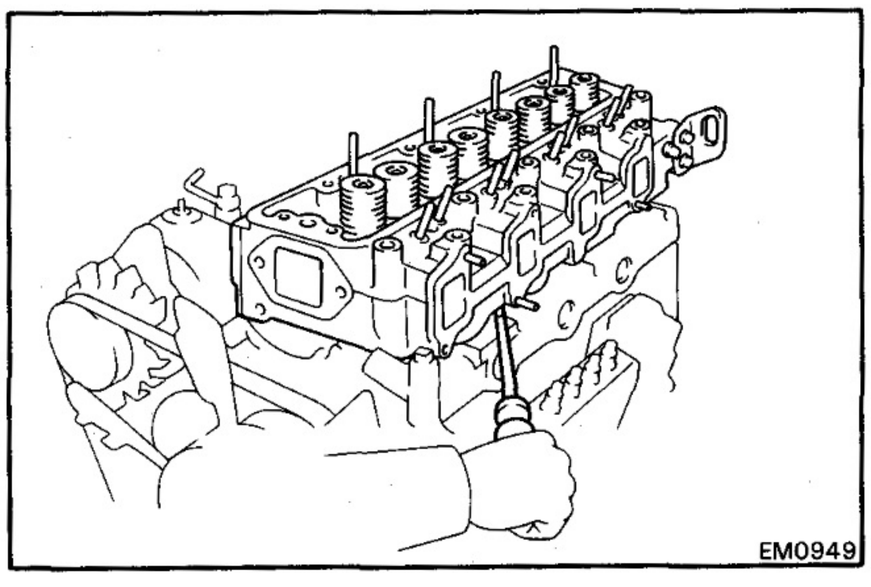

(b) Lift the cylinder head from the dowels on the cylinder block and place the head on wooden blocks on a bench.

NOTE: If the cylinder head is difficult to lift off, pry with a screwdriver between the cylinder head and block saliences.

CAUTION: Be careful not to damage the cylinder head and block surface on the cylinder and head gasket sides.

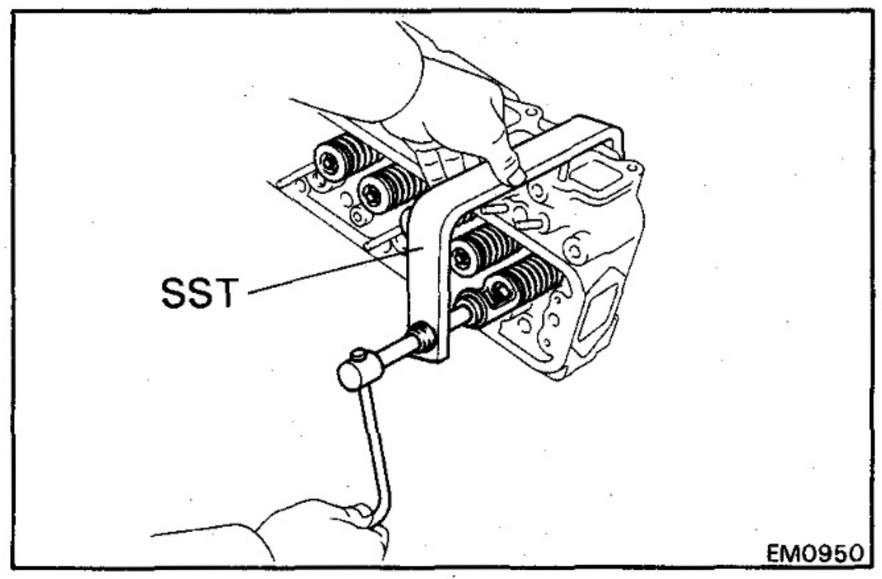

DISASSEMBLY OF CYLINDER HEAD

(See page EM-41) B and 3B
(See page EM-42) 11B and 13B
(See page EM-43) 13B-T

1. REMOVE VALVES

(a) Using SST, compress the valve spring and remove the two keepers.

SST 09202-43013

(b) Remove the spring retainer, valve springs and valve.

(c) Using pliers, pry out the oil seal.

(d) Remove the spring seat.

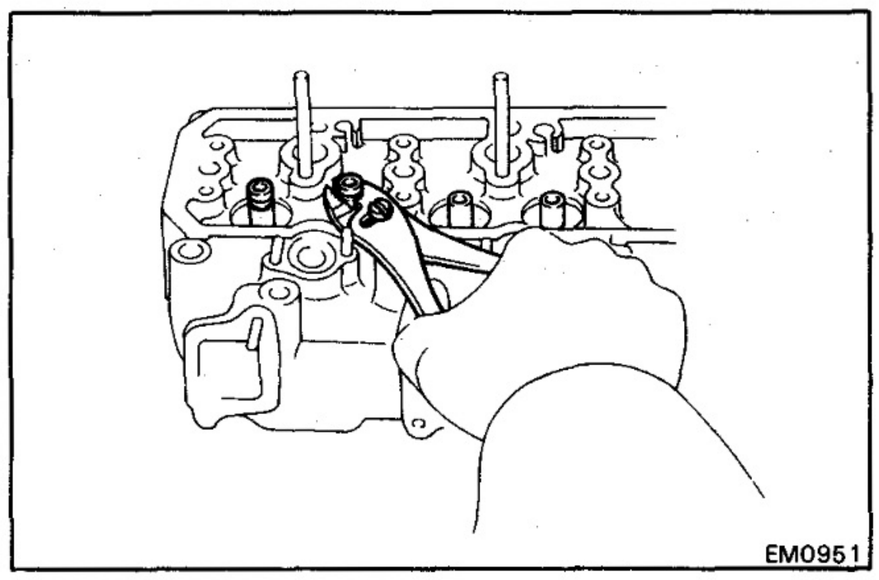

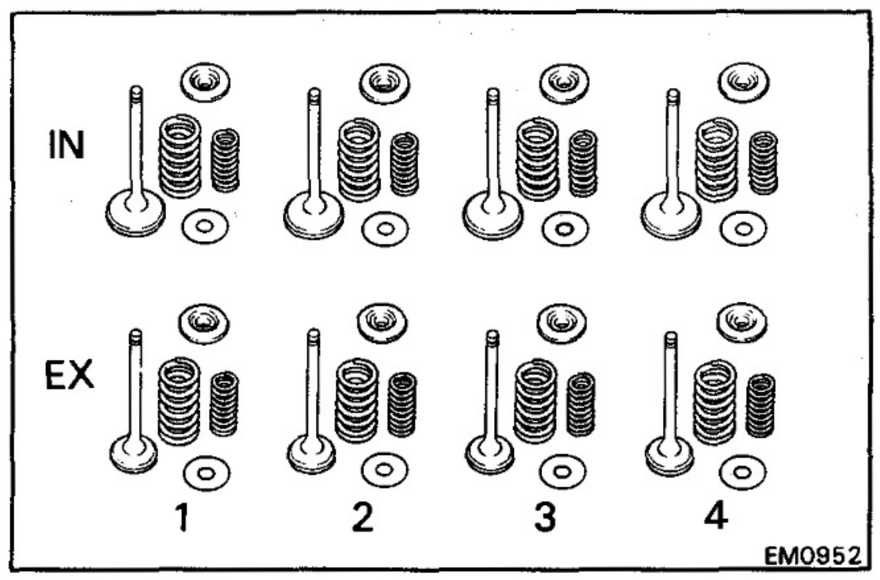

NOTE: Arrange the valves, spring seats, springs and retainers in correct order.

2. [B AND 3B] REMOVE COMBUSTION CHAMBERS

Using SST, remove the four combustion chambers.

SST 09208-48010

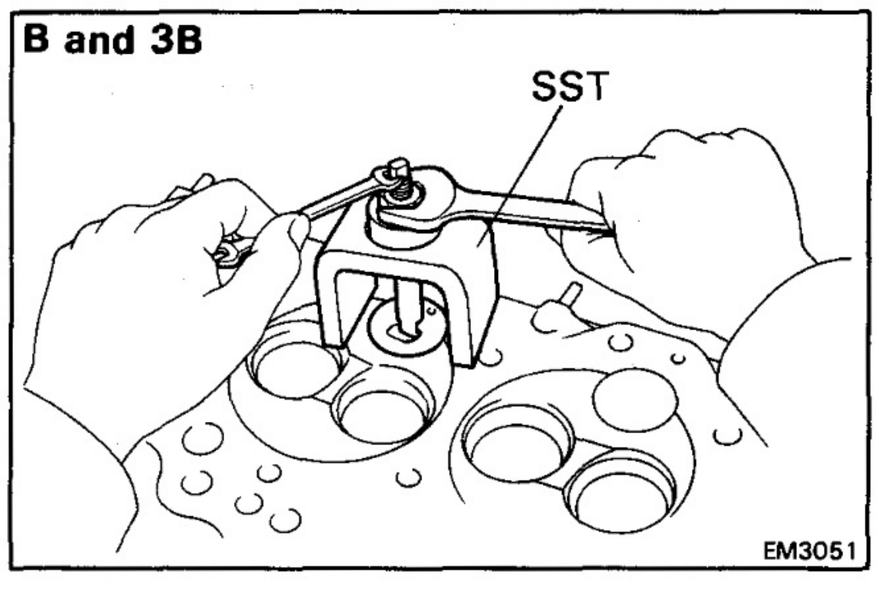

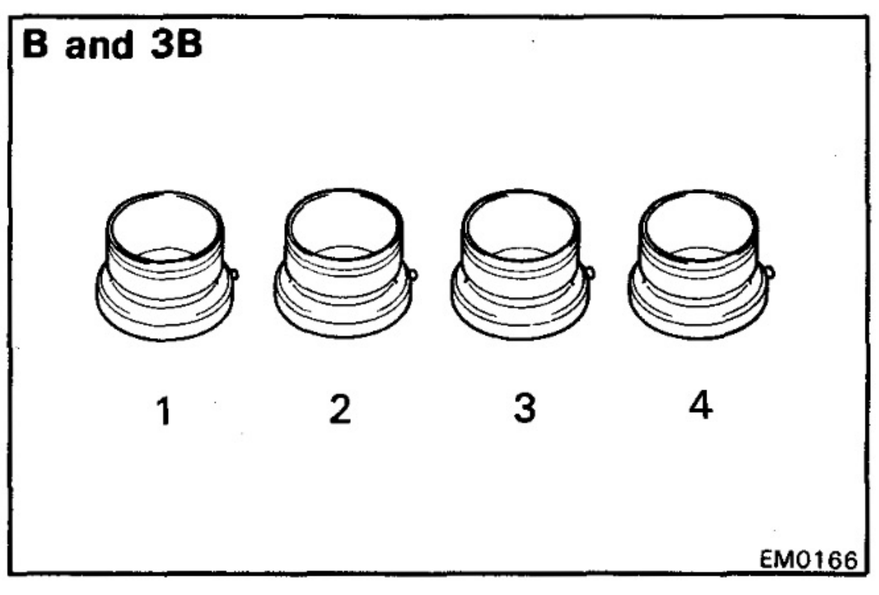

NOTE: Arrange the combustion chambers in correct order.

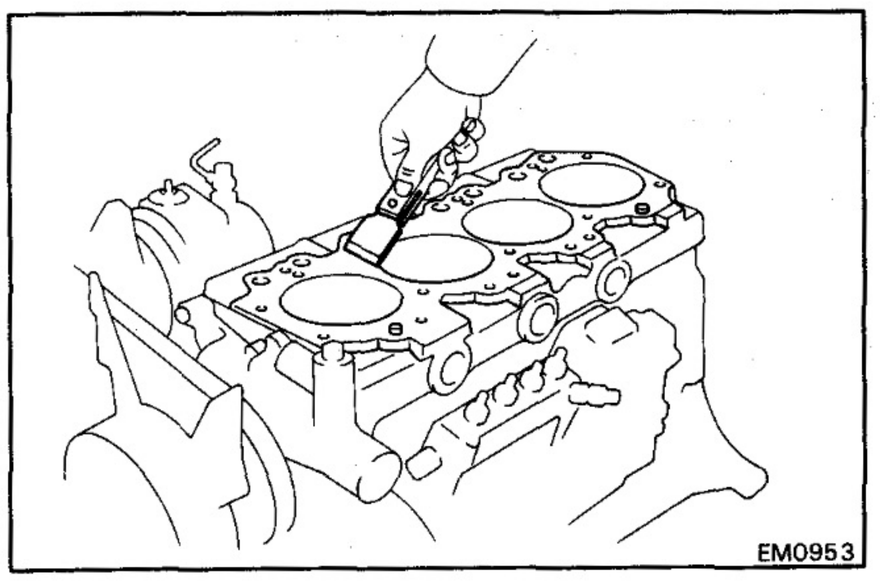
EM0953

INSPECTION, CLEANING AND REPAIR OF CYLINDER HEAD COMPONENTS

1. CLEAN TOP OF PISTONS AND TOP OF BLOCK

(a) Turn the crankshaft and bring each piston to top dead center. Using a gasket scraper, remove all the carbon from the piston top.

(b) Remove all the gasket material from the top of the block.

(c) Blow carbon and oil from the bolt holes.

WARNING: Protect your eyes when using high pressure air.

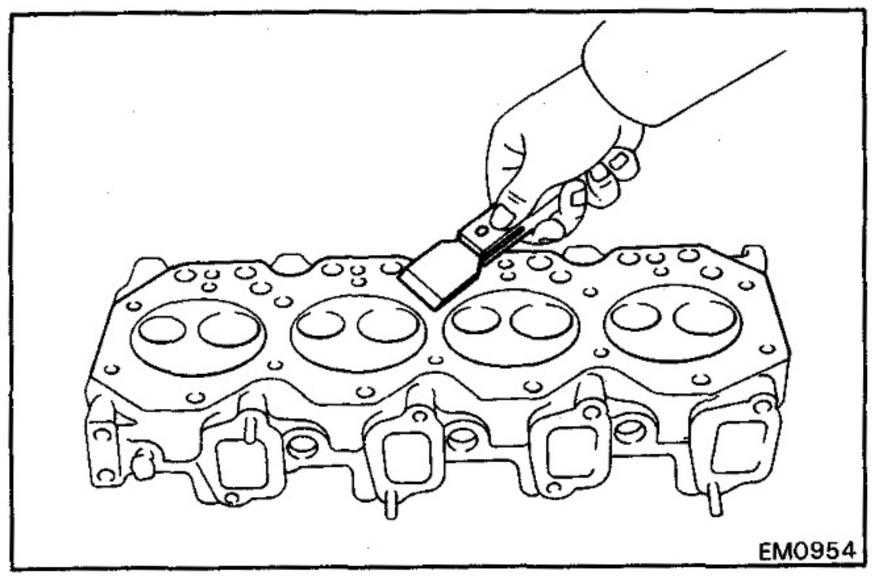
EM0954

2. REMOVE GASKET MATERIAL

Using a gasket scraper, remove all the gasket material from the manifold and head surface.

CAUTION: Be careful not to scratch the surfaces.

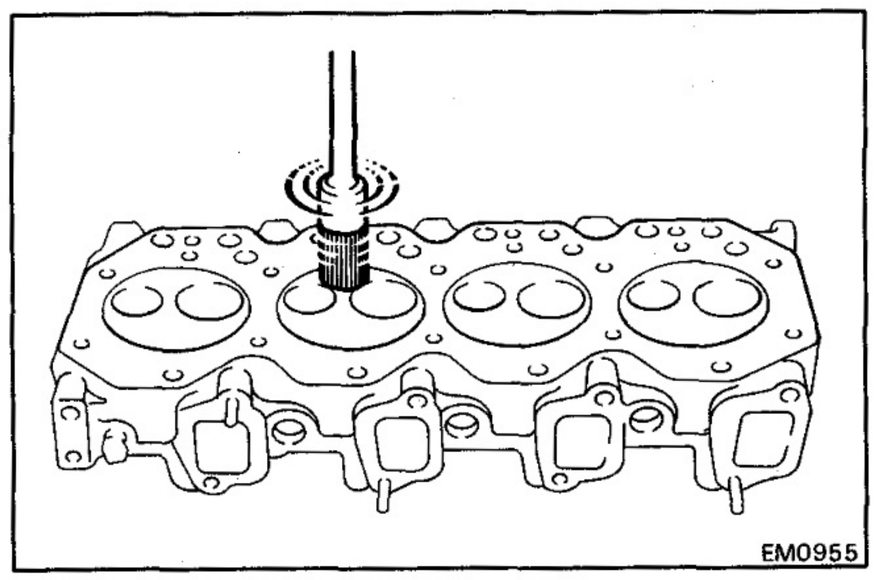
EM0955

3. CLEAN COMBUSTION CHAMBERS

Using a wire brush, remove all the carbon from the combustion chambers.

CAUTION: Be careful not to scratch the head gasket contact surface.

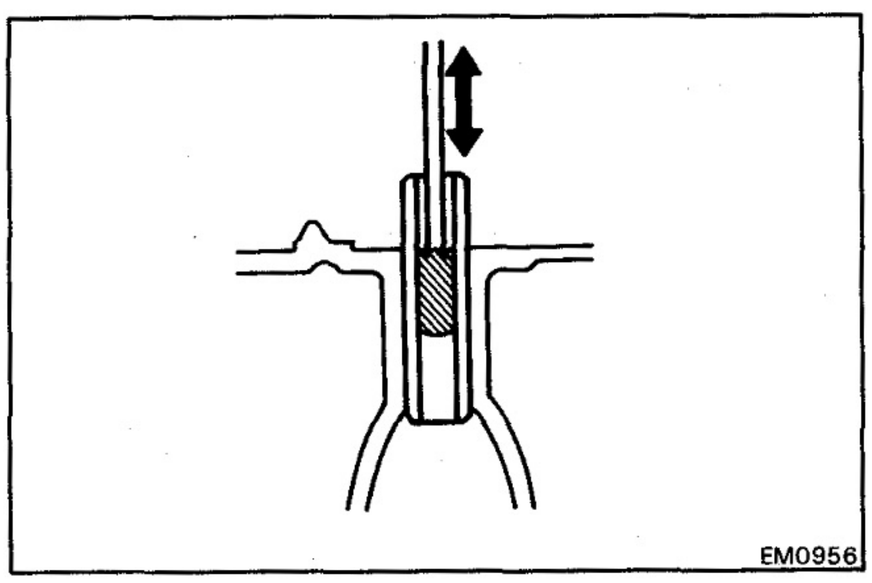
EM0956

4. CLEAN VALVE GUIDE BUSHINGS

Using a valve guide bushing brush and solvent, clean all the guide bushings.

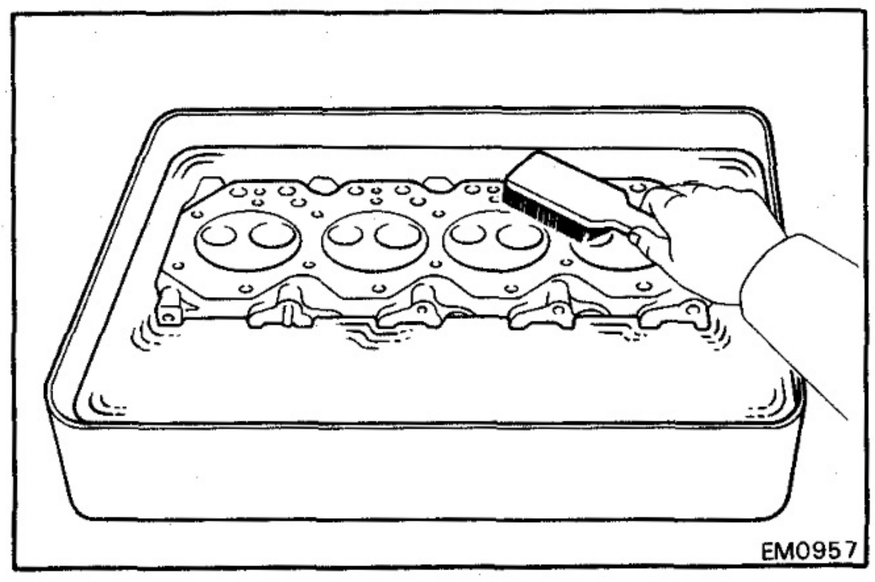
EM0957

5. CLEAN CYLINDER HEAD

Using a soft brush and solvent, thoroughly clean the head.

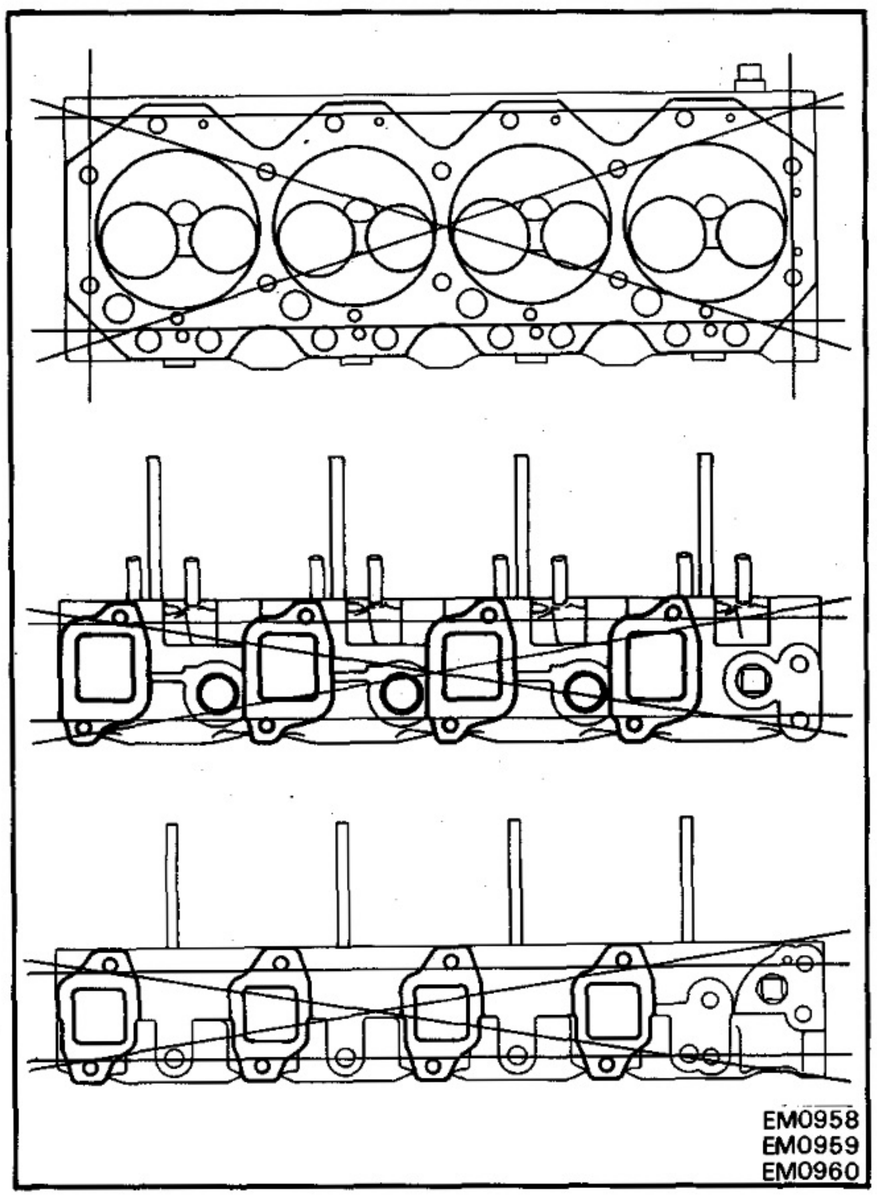

6. INSPECT CYLINDER HEAD FOR FLATNESS

Using a precision straight edge and feeler gauge, measure the surfaces contacting the cylinder block and manifolds for warpage.

Maximum warpage:

Cylinder block side	**0.20 mm (0.0079 in.)**
Manifold side	**0.20 mm (0.0079 in.)**

If warpage is greater than maximum, replace the head.

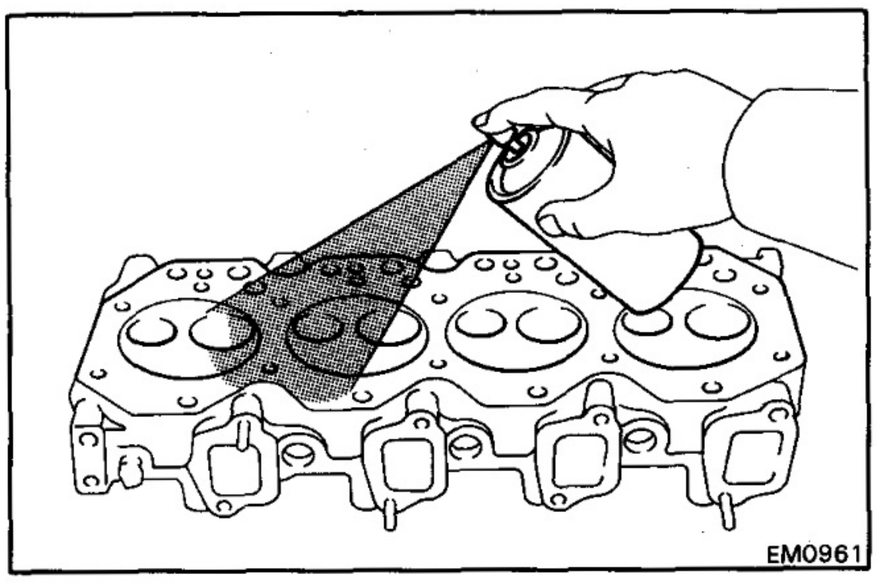

7. INSPECT CYLINDER HEAD FOR CRACKS

Using a dye penetrant, check the combustion chamber, intake and exhaust ports, head surface and the top of the head for cracks.

If cracked, replace the head.

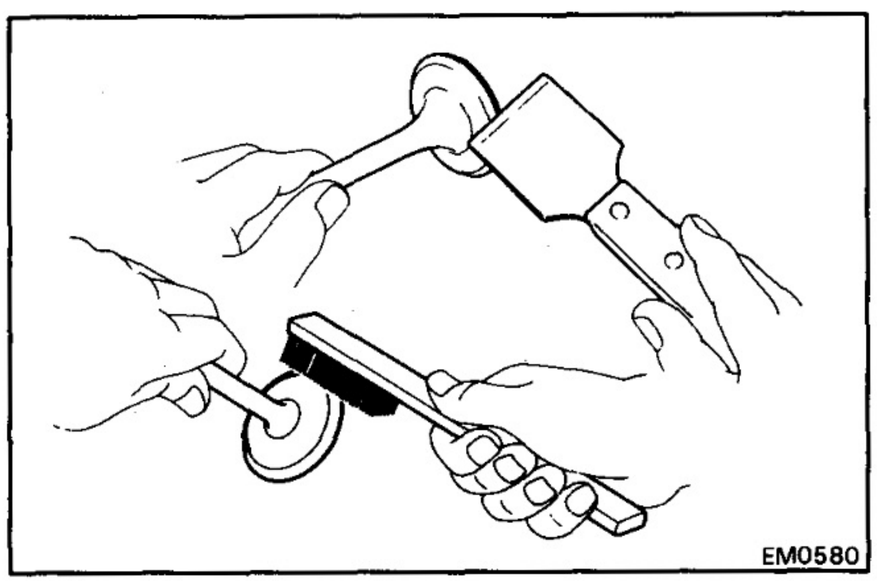

8. CLEAN VALVES

(a) Using a gasket scraper, chip any carbon from the valve head.

(b) Using a wire brush, thoroughly clean the valve.

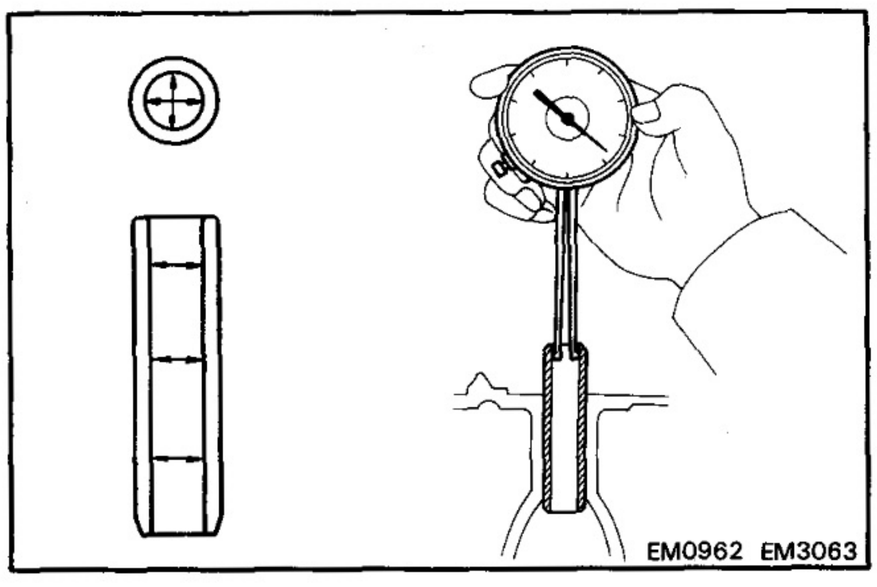

9. INSPECT VALVE STEM AND VALVE GUIDE BUSHING

(a) Using a caliper gauge or telescoping gauge, measure the inside diameter of the valve guide bushing.

Bushing inside diameter:
9.010 – 9.030 mm (0.3547 – 0.3555 in.)

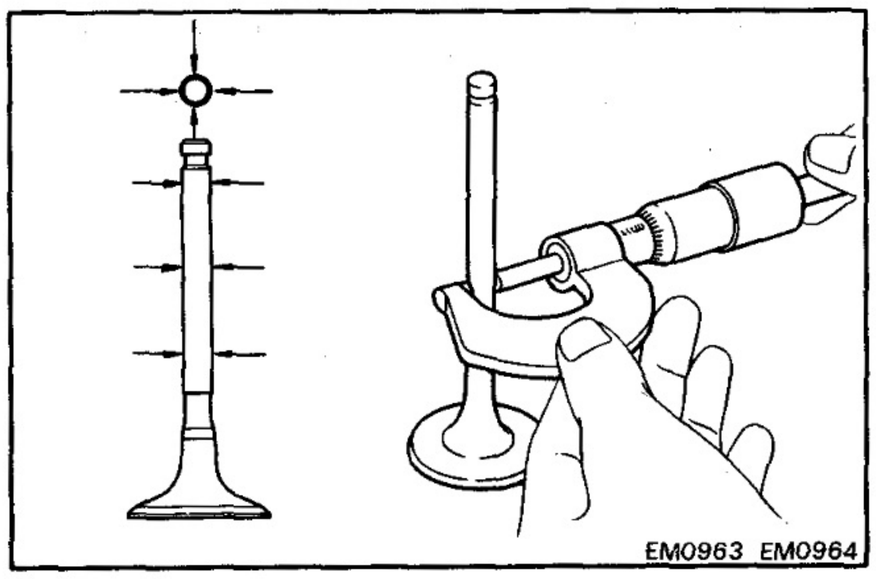
EM0963 EM0964

(b) Using a micrometer, measure the diameter of the valve stem.

Stem diameter:

Intake		**8.968 – 8.984 mm (0.3531 – 0.3537 in.)**
Exhaust	**B, 3B, 11B and 13B**	**8.954 – 8.970 mm (0.3525 – 0.3531 in.)**
	13B-T	**8.940 – 8.956 mm (0.3520–0.3526 in.)**

(c) Subtract the valve stem diameter measurement from the valve guide bushing inside diameter measurement.

Standard oil clearance:

Intake		**0.026 – 0.062 mm (0.0010 – 0.0024 in.)**
Exhaust	**B, 3B, 11B and 13B**	**0.040 – 0.076 mm (0.0016 – 0.0030 in.)**
	13B-T	**0.054 – 0.090 mm (0.0021 – 0.0035 in.)**

Maximum oil clearance:

Intake		**0.10 mm (0.039 in.)**
Exhaust	**B, 3B, 11B and 13B**	**0.12 mm (0.0047 in.)**
	13B-T	**0.13 mm (0.0051 in.)**

If the clearance is greater than maximum, replace the valve and guide bushing.

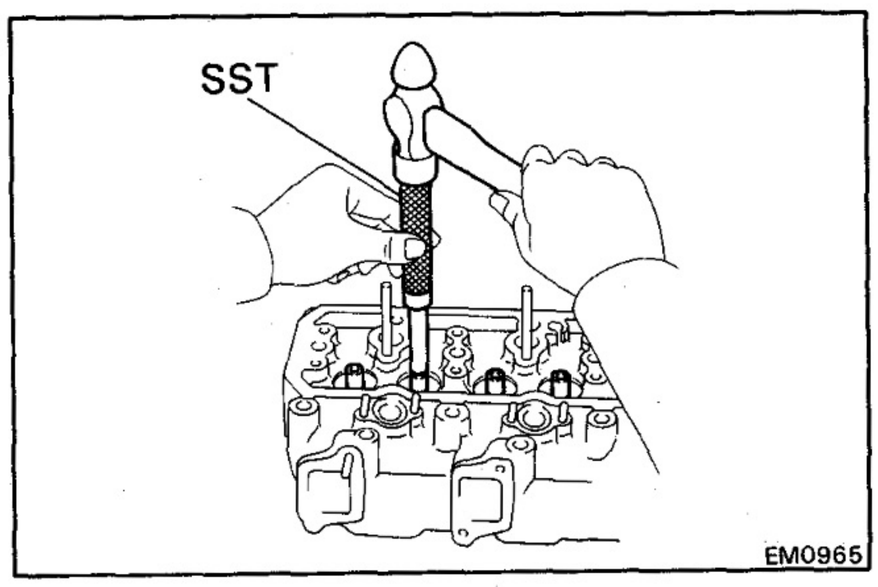

EM0965

10. IF NECESSARY, REPLACE VALVE GUIDE BUSHING

(a) Using SST and a hammer, tap out the valve guide bushing.

SST 09201-60011

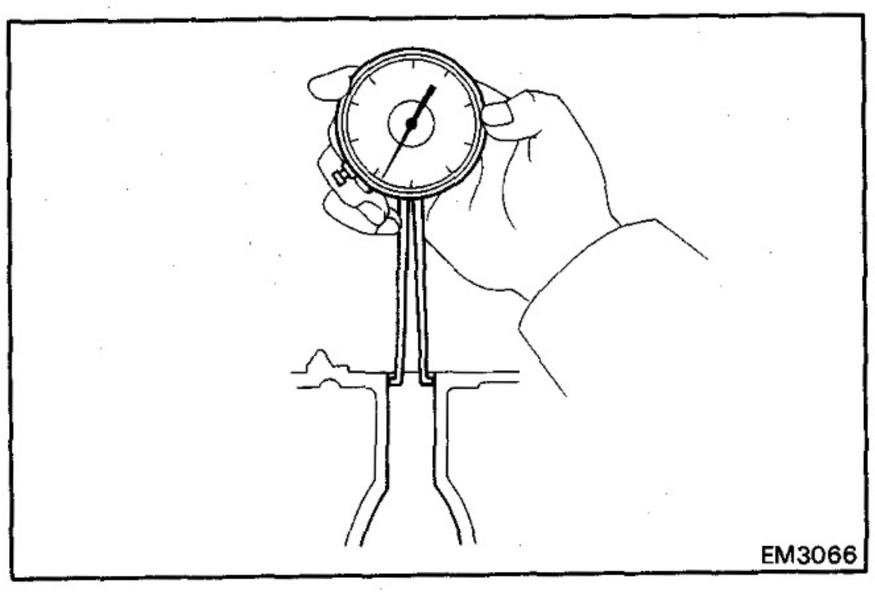
EM3066

(b) Using a caliper gauge, measure the bushing bore diameter of the cylinder head.

If the bushing bore diameter of cylinder head is more then 14.018 mm (0.5519 in.), replace the cylinder head.

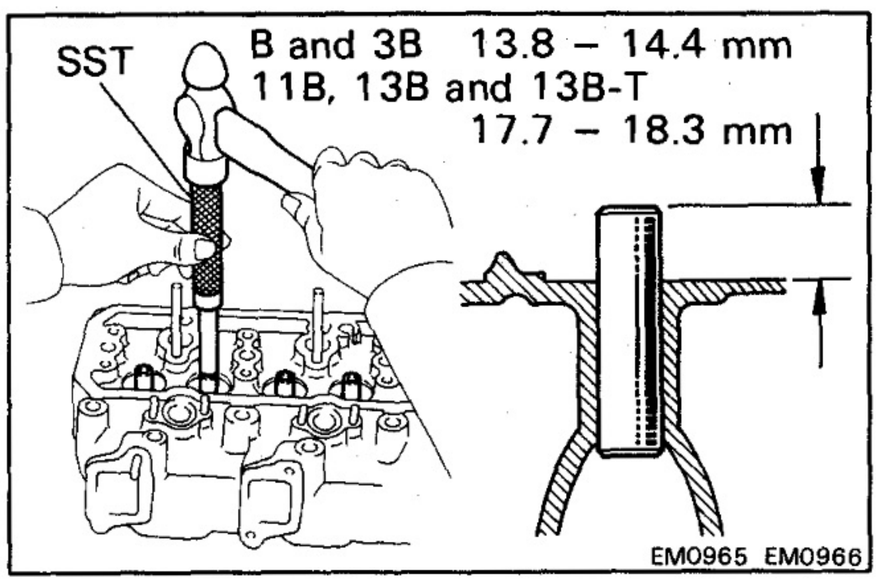

(c) Using SST and a hammer, drive in a new valve guide bushing to where there is 13.8 – 14.4 mm (0.543 – 0.567 in.) or 17.7 – 18.3 mm (0.697 – 0.720 in.) protruding from the cylinder head.

SST 09201-60011

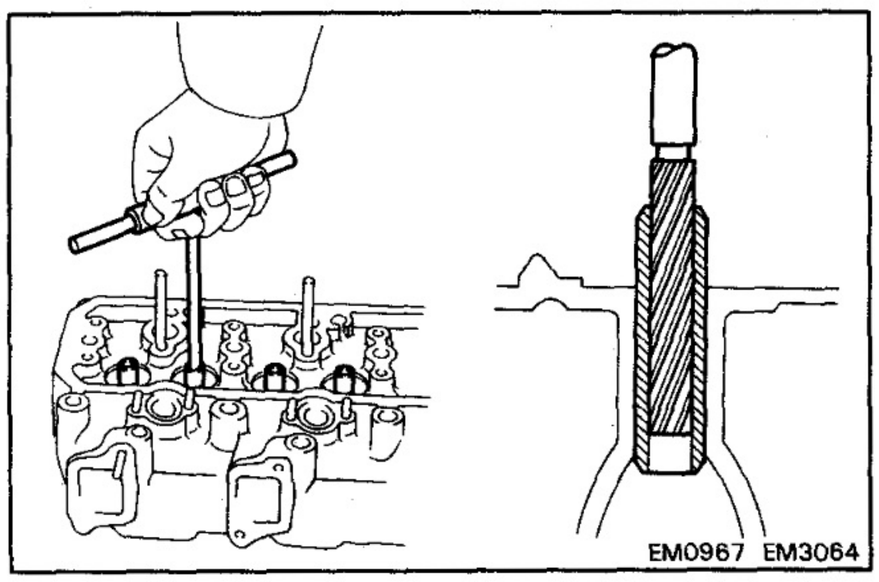

(d) Using a sharp 9.0 mm reamer, ream the valve guide bushing to obtain the standard specified clearance (See page EM-59) between the valve guide bushing and new valve stem.

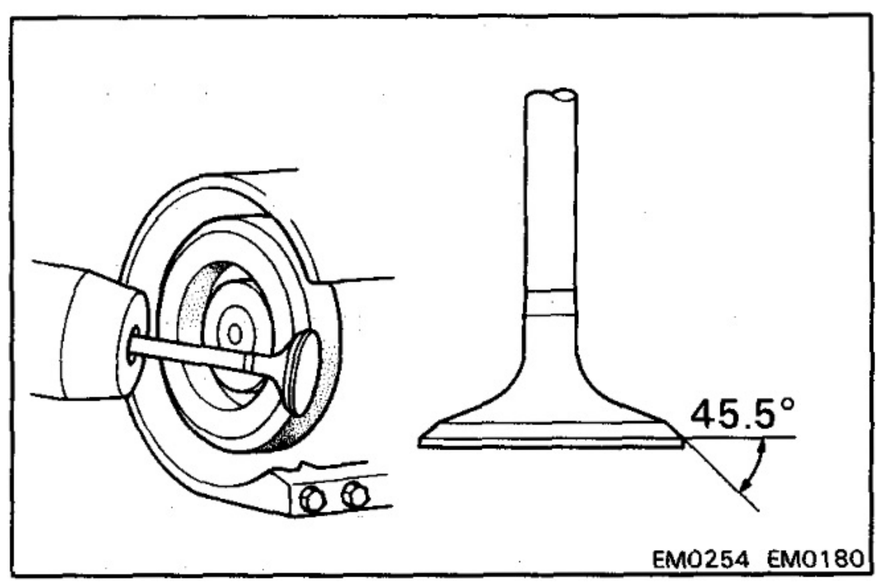

11. INSPECT AND GRIND VALVES

(a) Grind the valve only enough to remove pits and carbon.

(b) Check that the valve is ground to the correct valve face angle.

Valve face angle: 45.5°

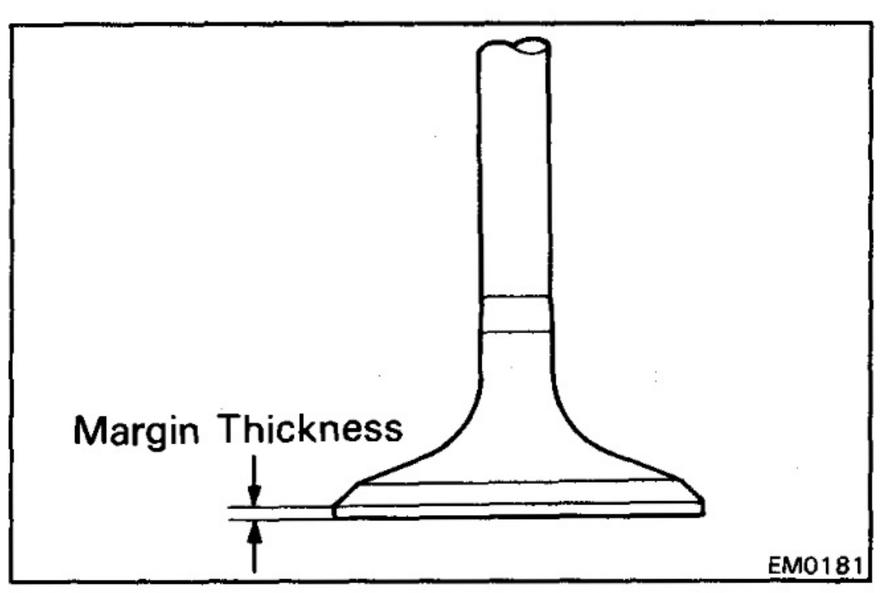

(c) Check the valve head margin thickness.

Standard margin thickness:

Intake		**1.4 mm (0.055 in.)**
Exhaust	**B and 3B**	**1.8 mm (0.071 in.)**
	11B	**1.3 mm (0.051 in.)**
	13B and 13B-T	**1.7 mm (0.067 in.)**

Minimum margin thickness:

Intake		**0.9 mm (0.035 in.)**
Exhaust	**B and 3B**	**1.3 mm (0.051 in.)**
	11B	**0.8 mm (0.031 in.)**
	13B and 13B-T	**1.2 mm (0.047 in.)**

If the valve head margin thickness is less than minimum, replace the valve.

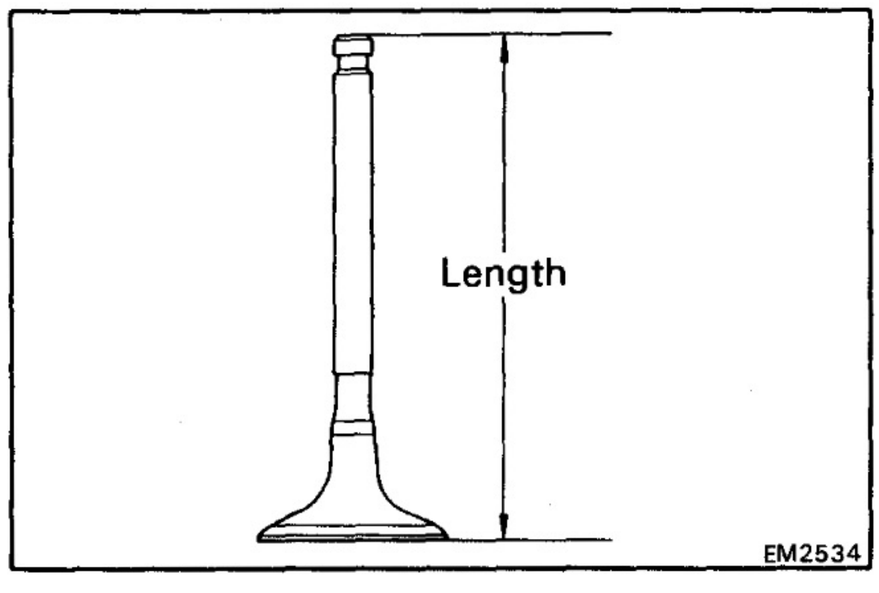

(d) Check the valve overall length.

Standard overall length:

Intake		**127.95 mm (5.0374 in.)**
Exhaust	**B and 3B**	**127.75 mm (5.0295 in.)**
	11B, 13B and 13B-T	**127.95 mm (5.0374 in.)**

Minimum overall length:

Intake		**127.45 mm (5.0177 in.)**
Exhaust	**B and 3B**	**127.25 mm (5.0098 in.)**
	11B, 13B and 13B-T	**127.45 mm (5.0177 in.)**

If the valve overall length is less than minimum, replace the valve.

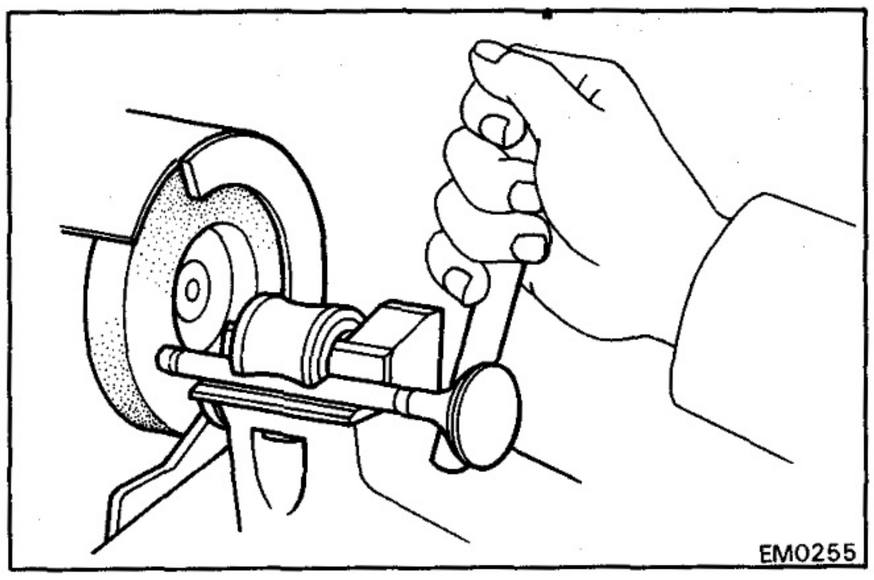

(e) If the valve stem tip is worn, resurface the tip with a grinder or replace the valve.

CAUTION: Do not grind off more than the minimum amount.

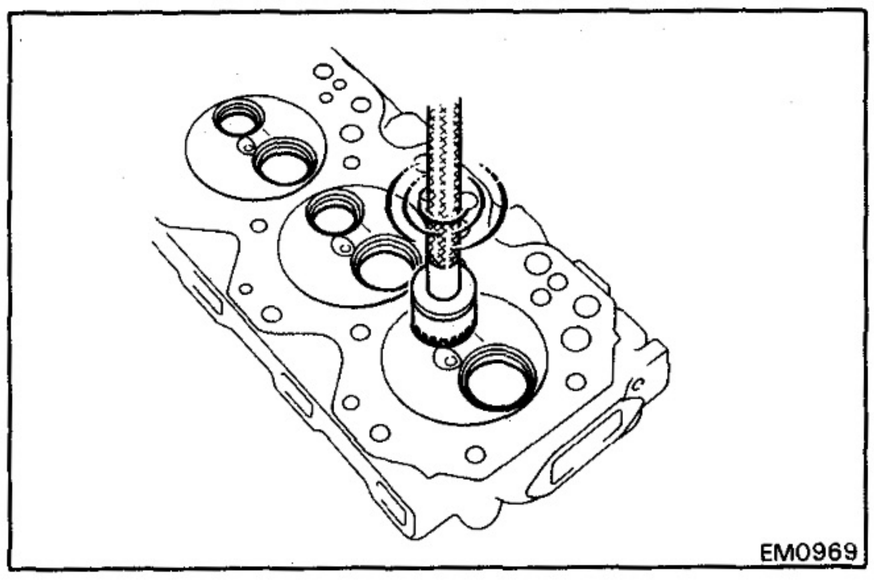

12. INSPECT AND CLEAN VALVE SEATS

(a) Using a 45° carbide cutter, resurface the valve seats. Remove only enough metal to clean the seats.

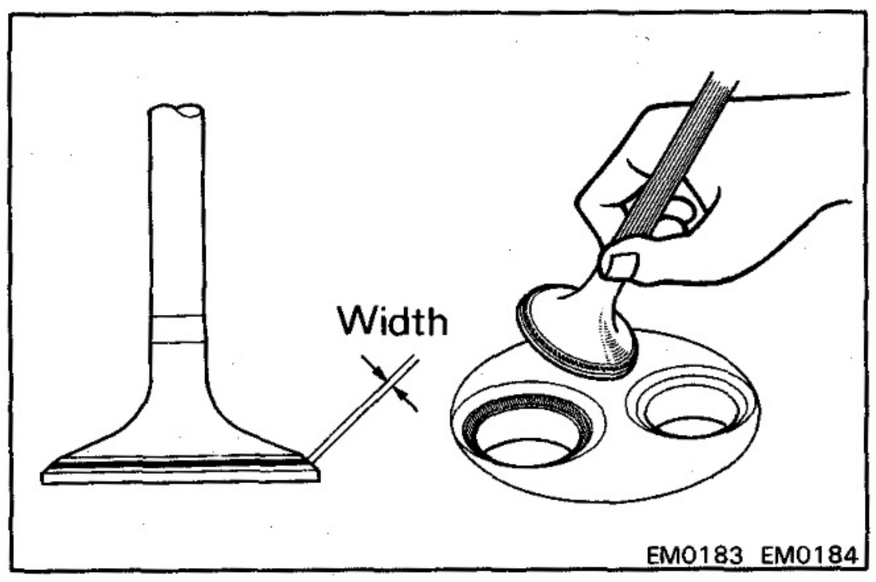

(b) Check the valve seating position.

Apply a thin coat of prussian blue (or white lead) to the valve face. Install the valve. While applying light pressure to the valve, rotate the valve against the seat.

(c) Check the valve face and seat for the following:

- If blue appears 360° around the face, the valve is concentric. If not, replace the valve.
- If blue appears 360° around the valve seat, the guide and seat are concentric. If not, resurface the seat.
- Check that the seat contact is on the middle of the valve face with the following width:

1.9 – 2.3 mm (0.075 – 0.091 in.)

If not, correct the valve seat as follows:

(1) If the seating is too high on the valve face, use 30° and 45° cutters to correct the seat.

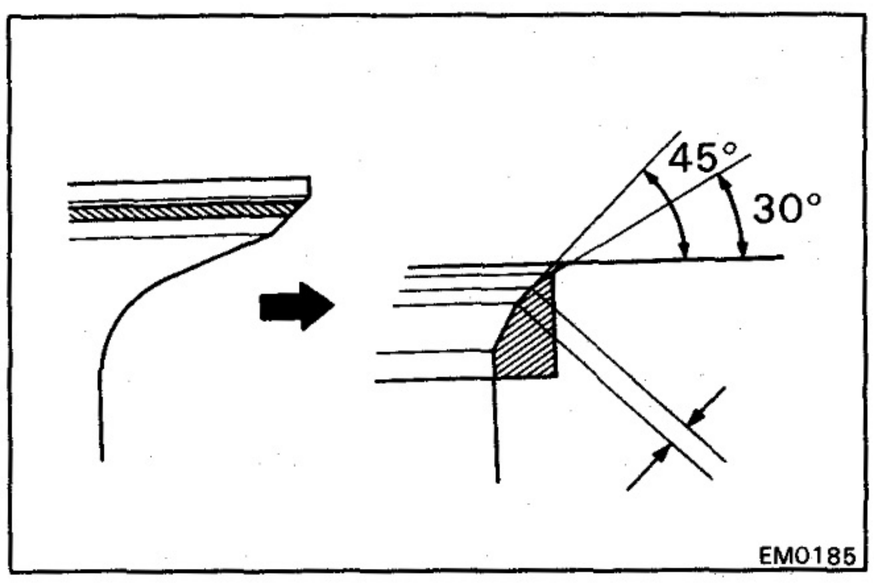

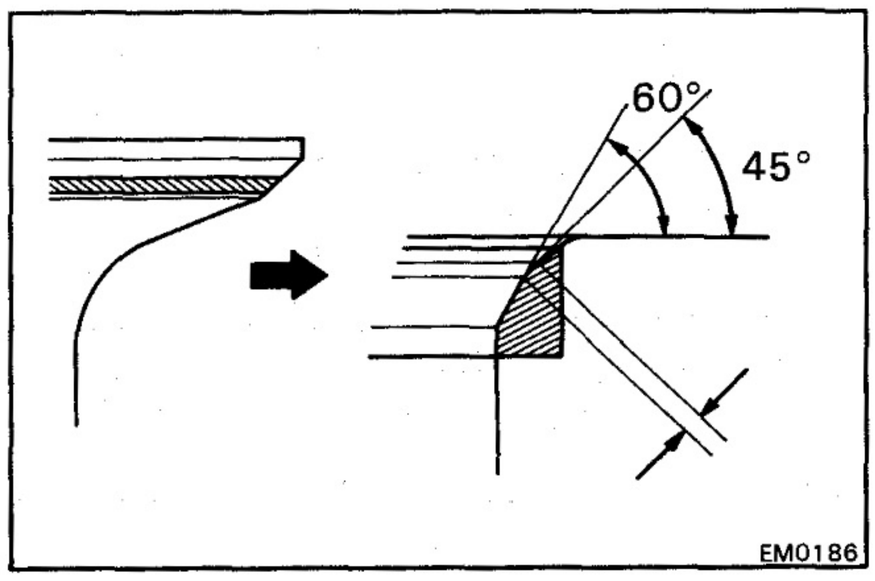

(2) If seating is too low on the valve face, use 60° and 45° cutters to correct the seat.

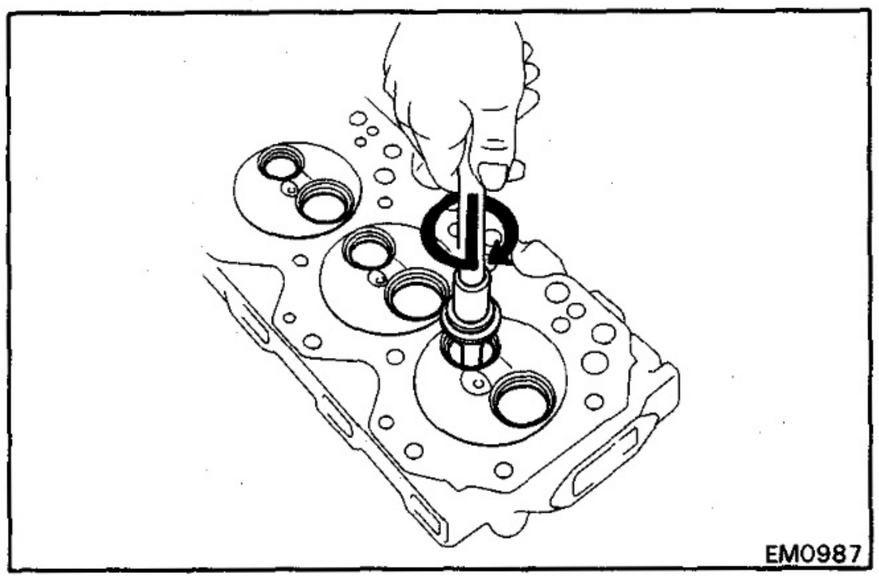

(d) Hand-lap the valve and valve seat with an abrasive compound.

(e) After hand-lapping, clean the valve and valve seat.

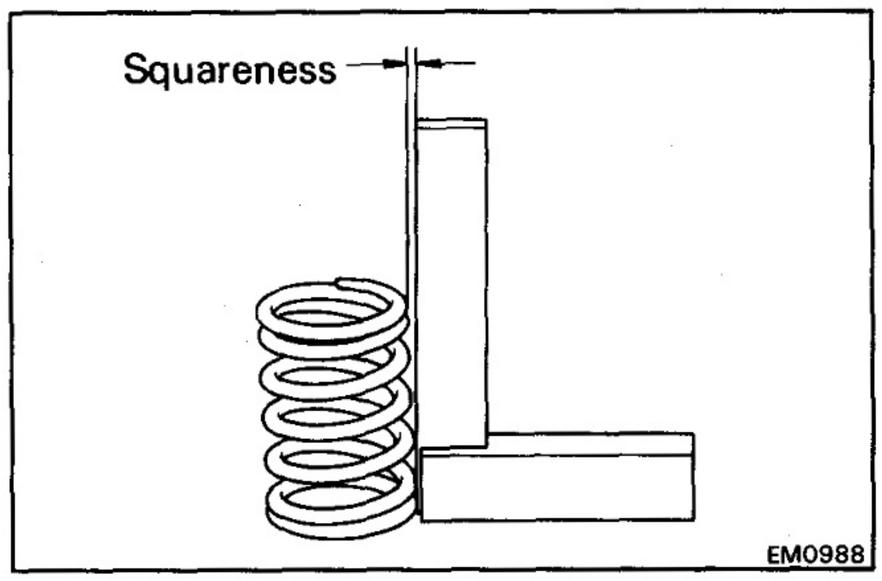

13. INSPECT VALVE SPRINGS

(a) Using a steel square, check the squareness of the valve spring.

Maximum squareness: 2.0 mm (0.079 in.)

If squareness is greater than maximum, replace the valve spring.

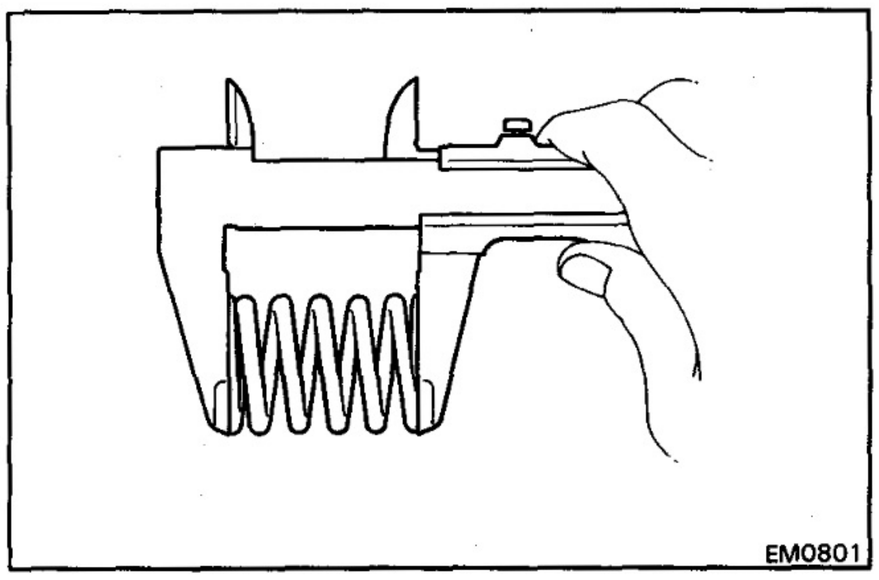

(b) Using calipers, measure the free length of the valve spring.

Free length:

Inner spring

B and 3B	**45.50 mm (1.7913 in.)**
11B, 13B and 13B-T	**54.84 mm (2.1591 in.)**

Outer spring

B and 3B	**47.52 mm (1.8709 in.)**
11B, 13B and 13B-T	**58.30 mm (2.2953 in.)**

If the free length is not as specified, replace the valve spring.

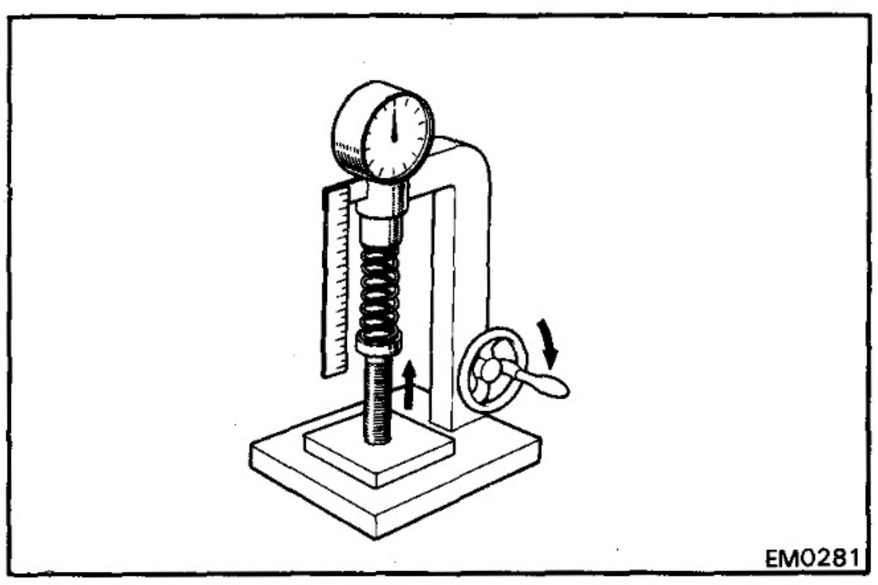

(c) Using a spring tester, measure the tension of the valve spring at the specified installed length.

Installed tension:

Inner spring

B and 3B	**5.95 kg (13.1 lb, 58 N) at 36.05 mm (1.4193 in.)**
11B, 13B and 13B-T	**14.2 kg (31.3 lb, 139 N) at 42.25 mm (1.6634 in.)**

Outer spring

B and 3B	**25.53 kg (56.3 lb, 250 N) at 39.55 mm (1.5571 in.)**
11B, 13B and 13B-T	**27.8 kg (61.2 lb, 273 N) at 44.75 mm (1.7618 in.)**

If the installed tension is not as specified, replace the valve spring.

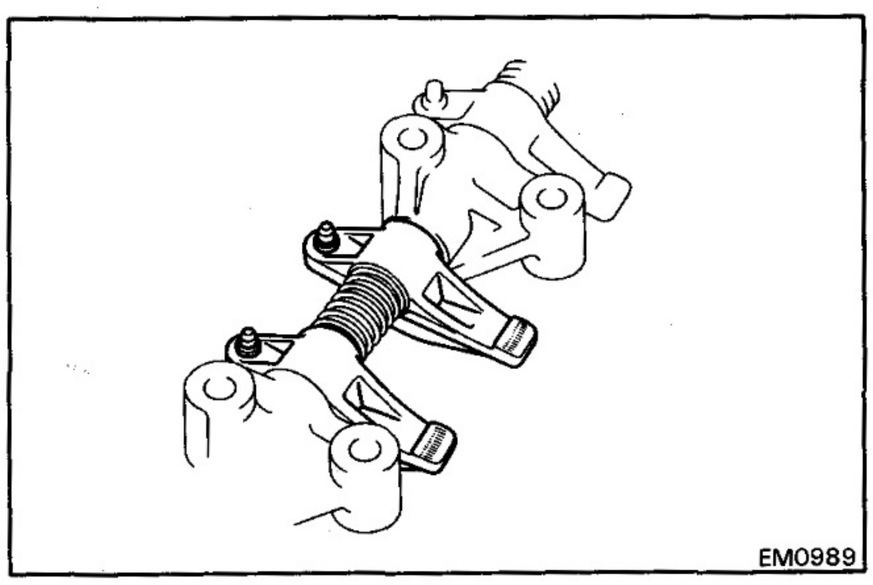

14. INSPECT VALVE ROCKER SHAFT ASSEMBLY

(a) Check the valve stem contacting surface of the rocker arm for wear.

If the valve stem contact surface is worn, disassemble and replace the rocker arm.

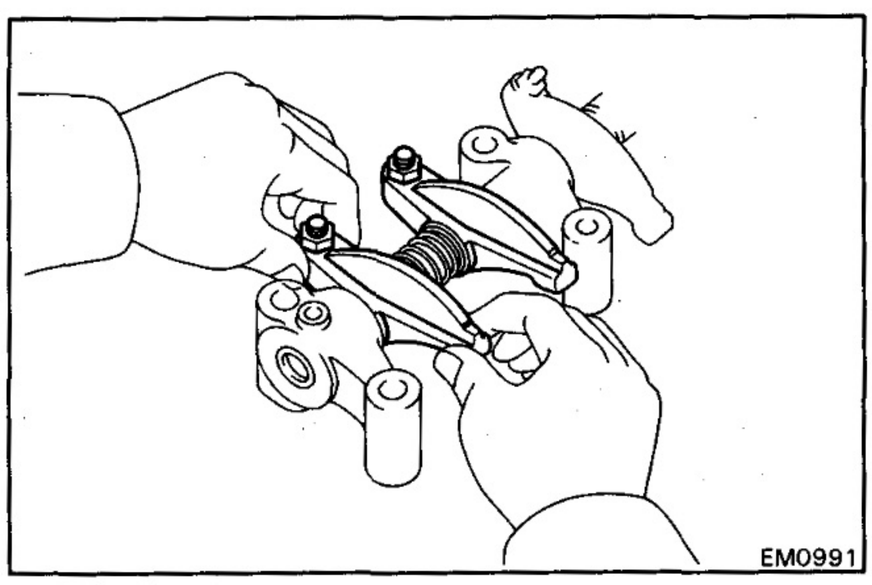

(b) Check the clearance between the rocker arms and shaft by moving the rocker arms as shown. Little or no movement should be felt.

If movement is felt, disassemble and check the oil clearance.

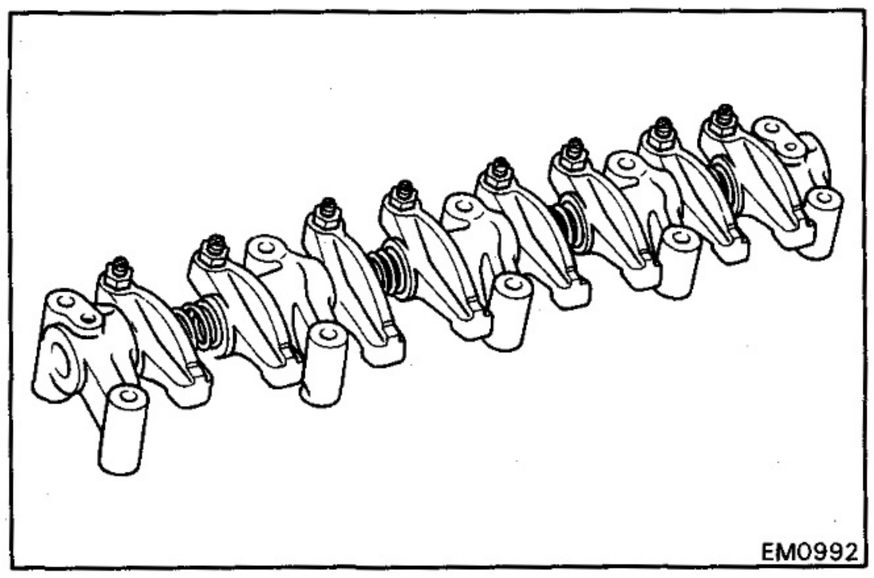

(c) Disassemble the rocker shaft assembly.

NOTE: Arrange the rocker arms, spring and rocker supports in correct order.

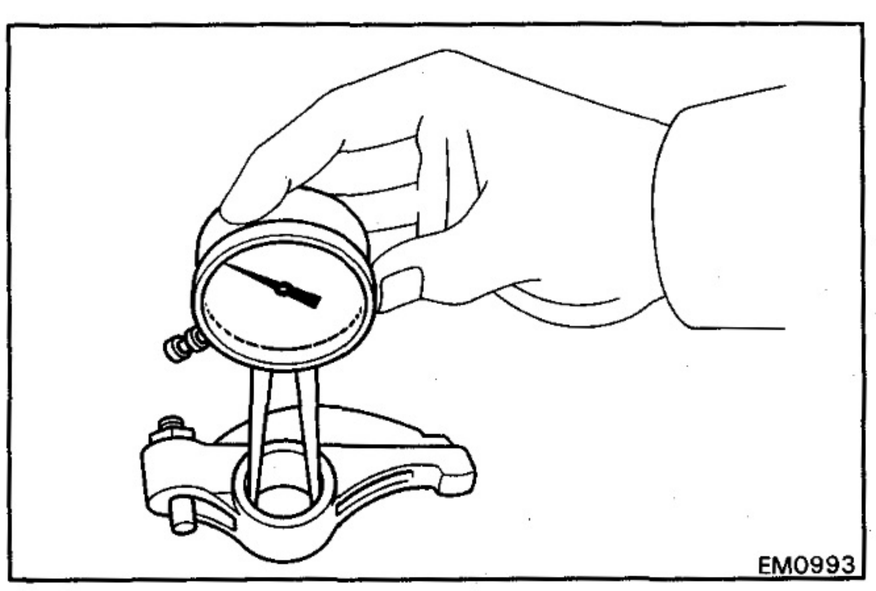

(d) Check the oil clearance between the rocker arm and shaft.

- Using a caliper gauge, measure the inside diameter of the rocker arm.

Rocker arm inside diameter:
18.512 – 18.533 mm (0.7288 – 0.7296 in.)

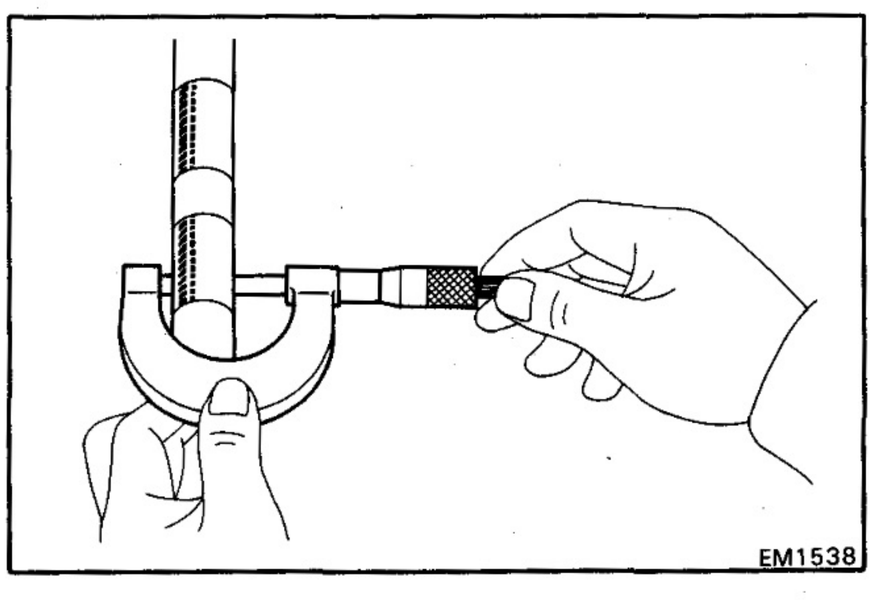

- Using a micrometer, measure the diameter of the rocker shaft.

Rocker shaft diameter:
18.472 – 18.493 mm (0.7272 – 0.7281 in.)

- Subtract the rocker shaft diameter measurement from the inside diameter measurement of the rocker arm.

Standard oil clearance: **0.019 — 0.061 mm (0.0007 — 0.0024 in.)**
Maximum oil clearance: **0.10 mm (0.0039 in.)**

If the clearance is greater than maximum, replace the rocker arm and shaft.

(e) Assemble the valve rocker shaft assembly as shown.

B and 3B

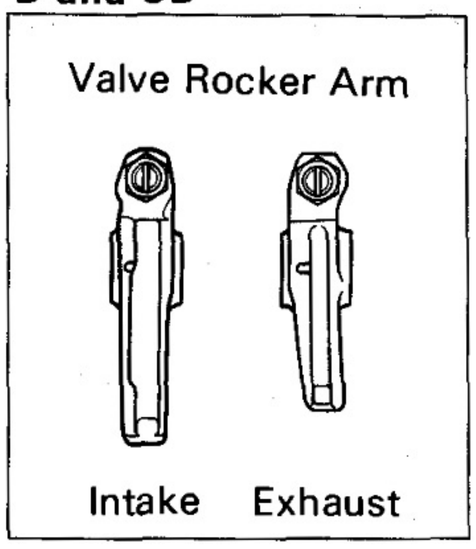

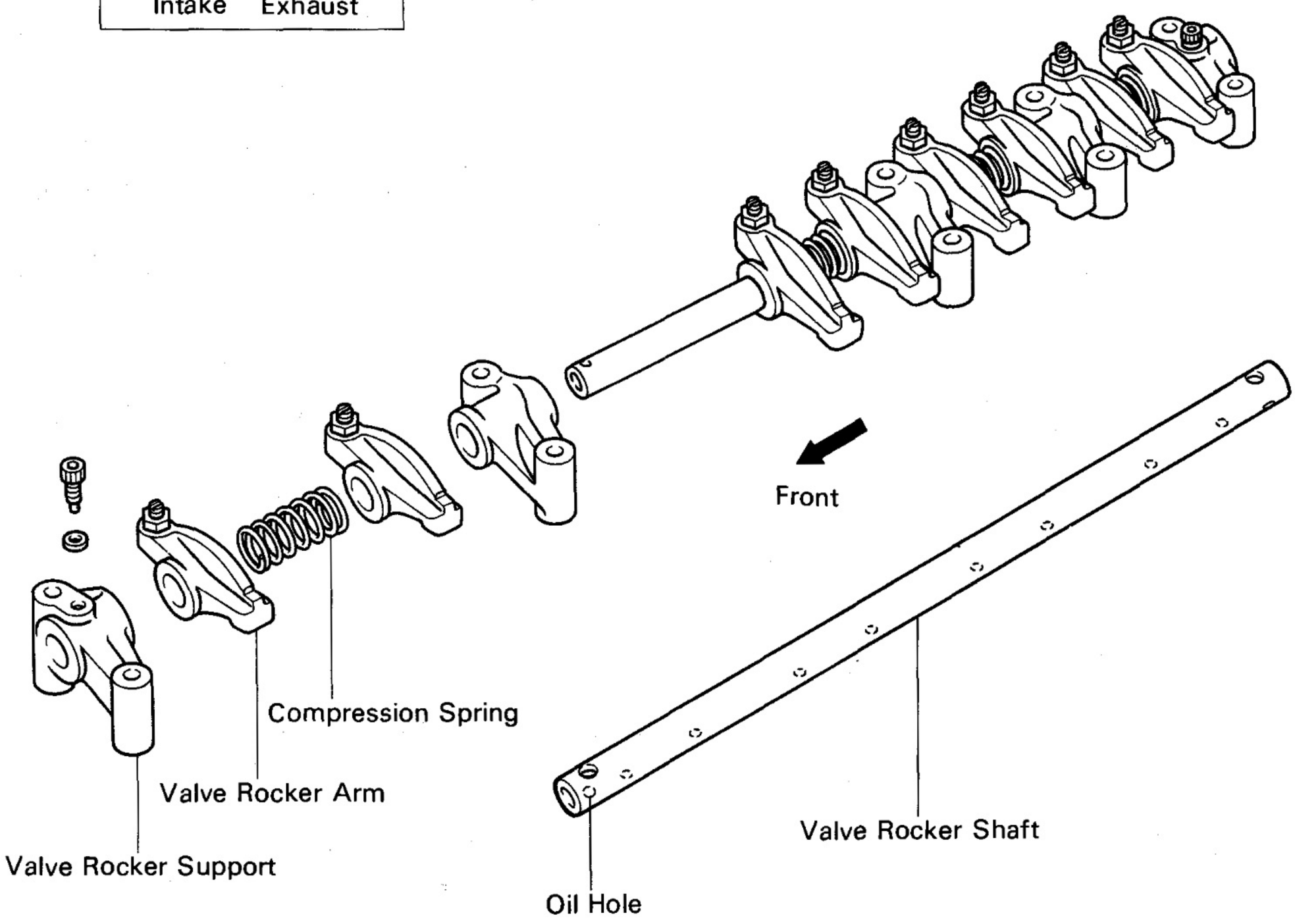

EM3097
EM0994

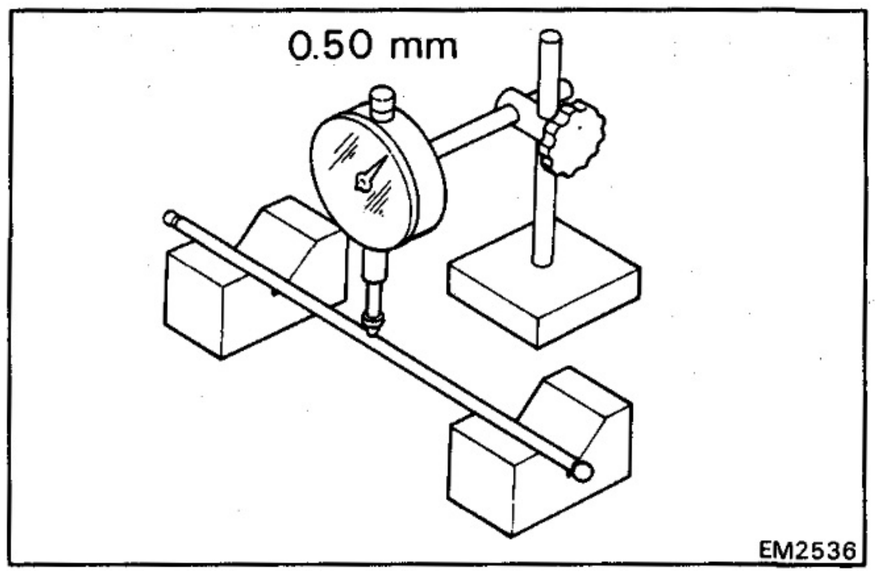

15. INSPECT PUSH RODS

(a) Place the push rod on V-blocks.

(b) Using a dial indicator, measure the circle runout at the center of the push rod.

Maximum circle runout: 0.50 mm (0.0197 in.)

If the circle runout is greater than maximum, replace the push rod.

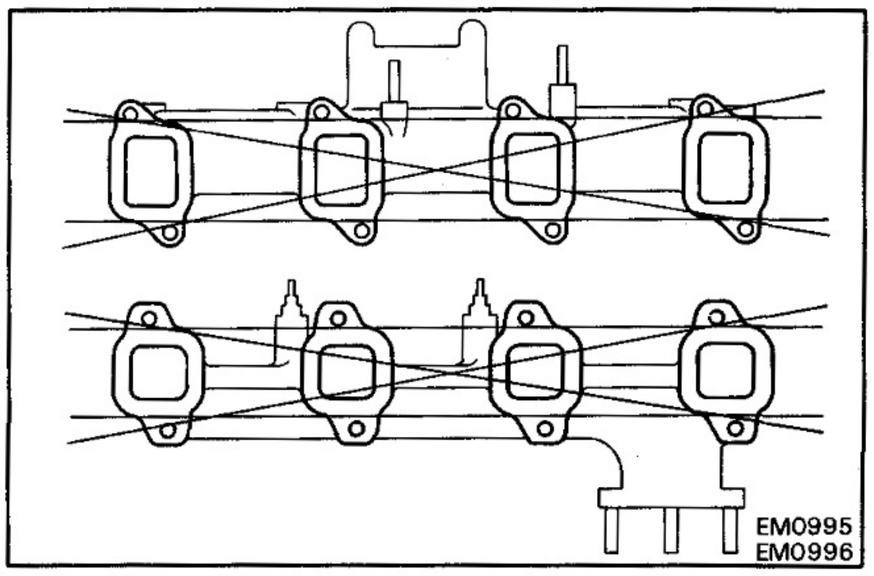

16. INSPECT INTAKE AND EXHAUST MANIFOLDS

Using a precision straight edge and feeler gauge, measure the surface contacting the cylinder head for warpage.

Maximum warpage: 0.20 mm (0.0079 in.)

If warpage is greater than maximum, replace the manifold.

ASSEMBLY OF CYLINDER HEAD

(See page EM-41) B and 3B
(See page EM-42) 11B and 13B
(See page EM-43) 13B-T

NOTE:

- Throughly clean all parts to be assembled.
- Before installing the parts, apply new engine oil to all sliding and rotating surfaces.
- Replace all gaskets and oil seals with new ones.

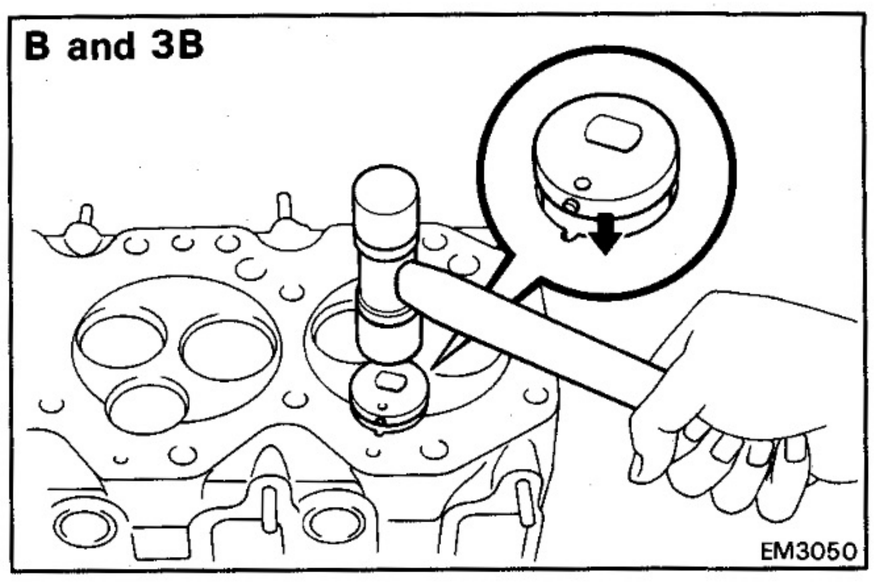

1. [B AND 3B] INSTALL COMBUSTION CHAMBERS

(a) Align the combustion chamber knock pin with the cylinder head notch.

(b) Using a plastic-faced hammer, tap in the combustion chamber.

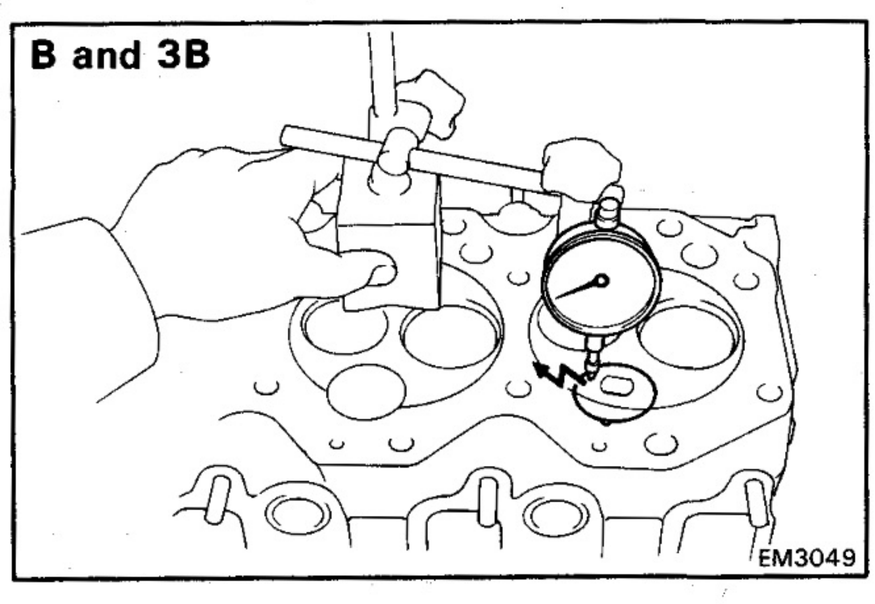

(c) Using a dial indicator, check the combustion chamber protrusion.

Combustion chamber protrusion:
Minus 0.05 — Plus 0.05 mm
(Minus 0.0020 — Plus 0.0020 in.)

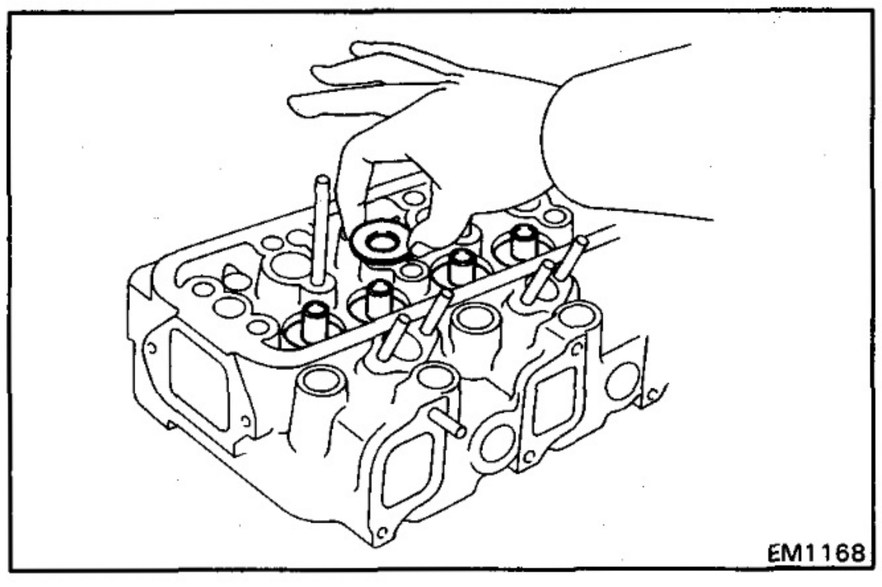

2. INSTALL VALVES

(a) Place the spring seat on the cylinder head.

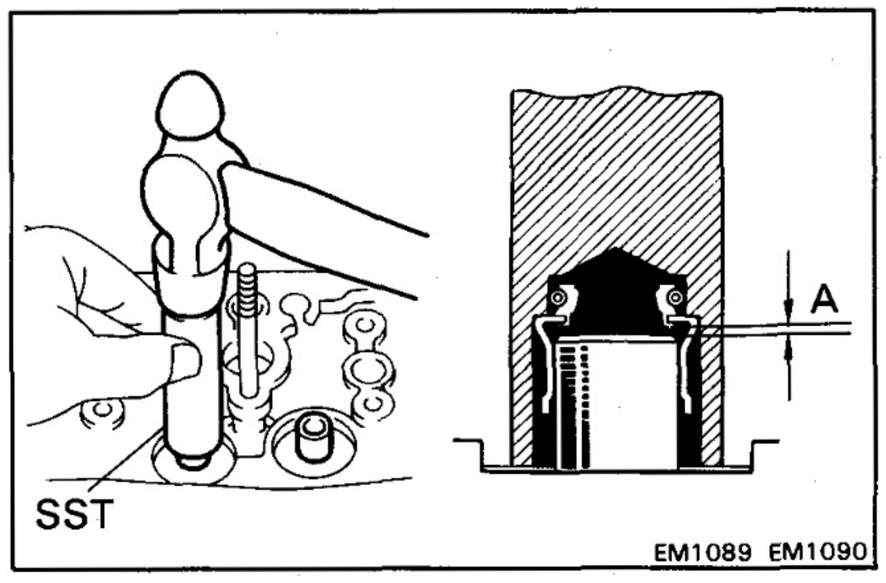

(b) Apply engine oil to a new oil seal lip.

(c) Using SST and a hammer, tap in a new oil seal.

SST B and 3B 09201-56010
11B, 13B, 13B-T 09201-58010

NOTE: There should be clearance A in the figure.

(d) Install the valve, valve springs and spring retainer.

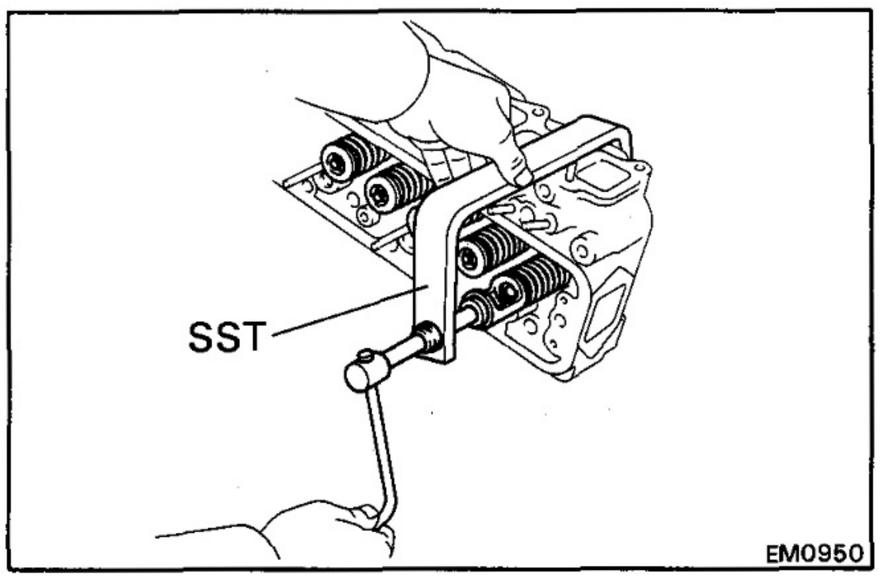

(e) Using SST, compress the valve springs and place the two keepers around the valve stem.

SST 09202-43013

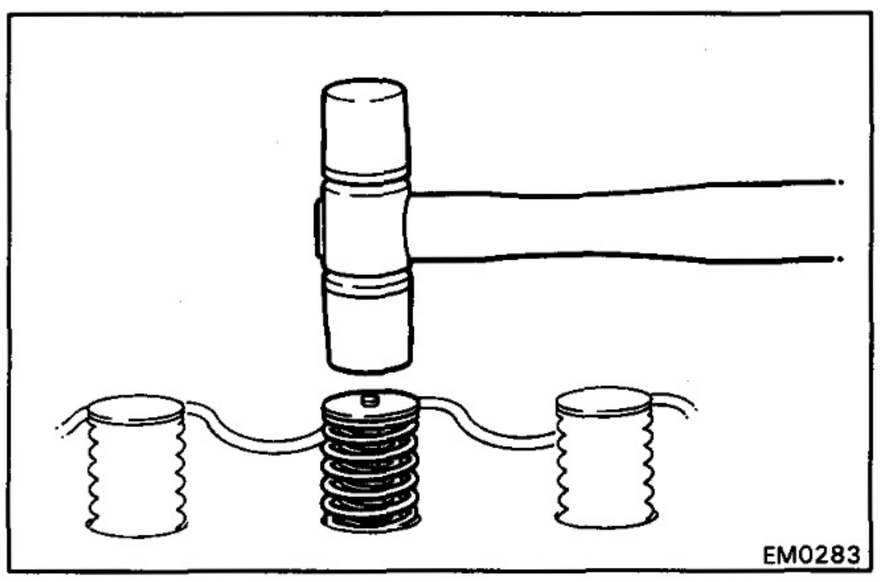

(f) Using a plastic-faced hammer, lightly tap the stem to assure proper fit.

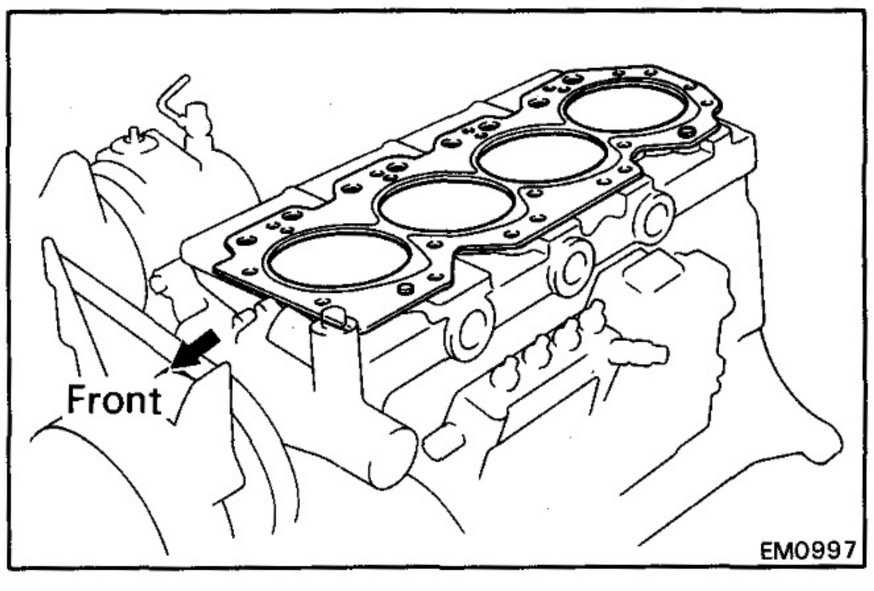

INSTALLATION OF CYLINDER HEAD [2H]

(See page EM-41) B and 3B
(See page EM-42) 11B and 13B
(See page EM-43) 13B-T

1. INSTALL CYLINDER HEAD

(a) Place a new cylinder head gasket on the cylinder block.

CAUTION: Be careful of the installation direction.

(b) Place the cylinder head on the cylinder head gasket.

(c) Apply a light coat of engine oil on the threads and under the cylinder head bolts.

(d) Install and uniformly tighten the eighteen cylinder head bolts in several passes, in the sequence shown.

Torque: 1,200 kg-cm (87 ft-lb, 118 N·m)

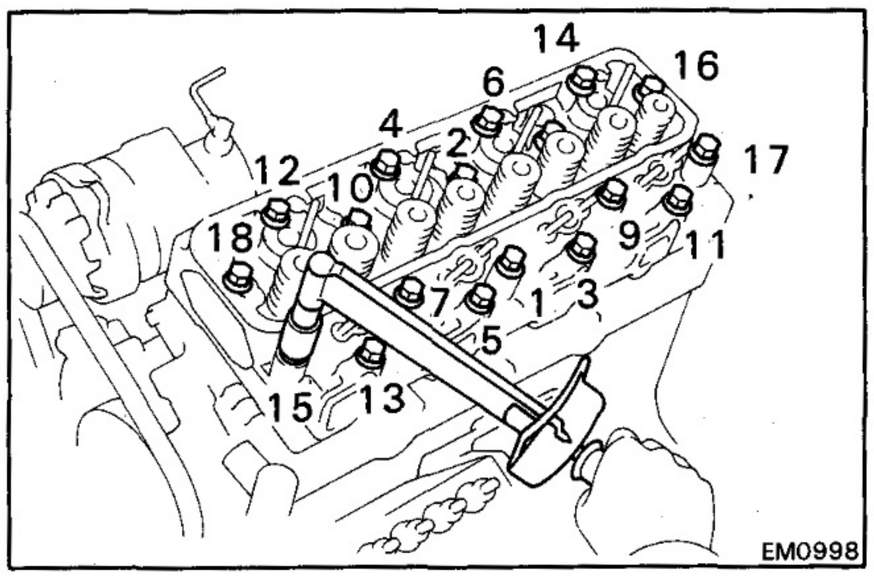

2. INSTALL PUSH RODS

Install the eight push rods.

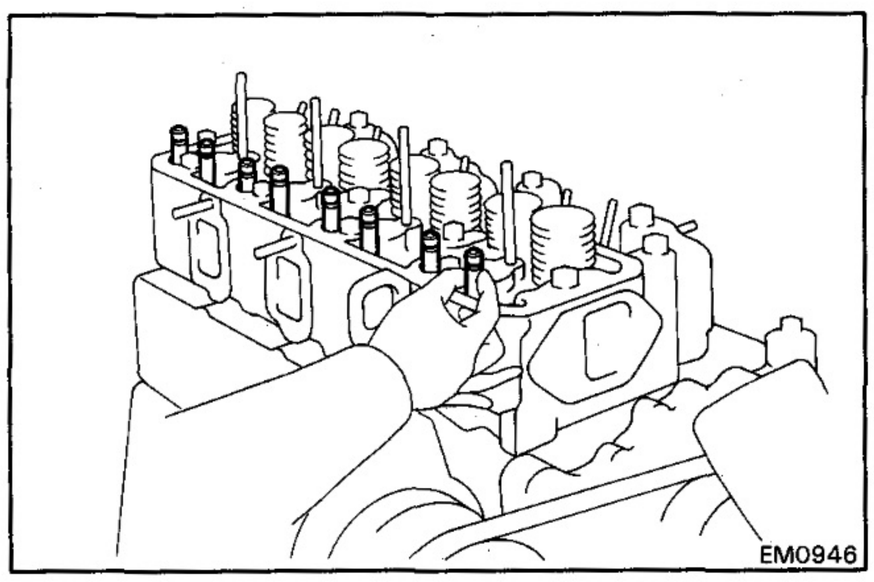

3. INSTALL VALVE ROCKER SHAFT ASSEMBLY

(a) Place the rocker shaft assembly on the cylinder head.

(b) Align the rocker arm adjusting screws with the heads of the push rods.

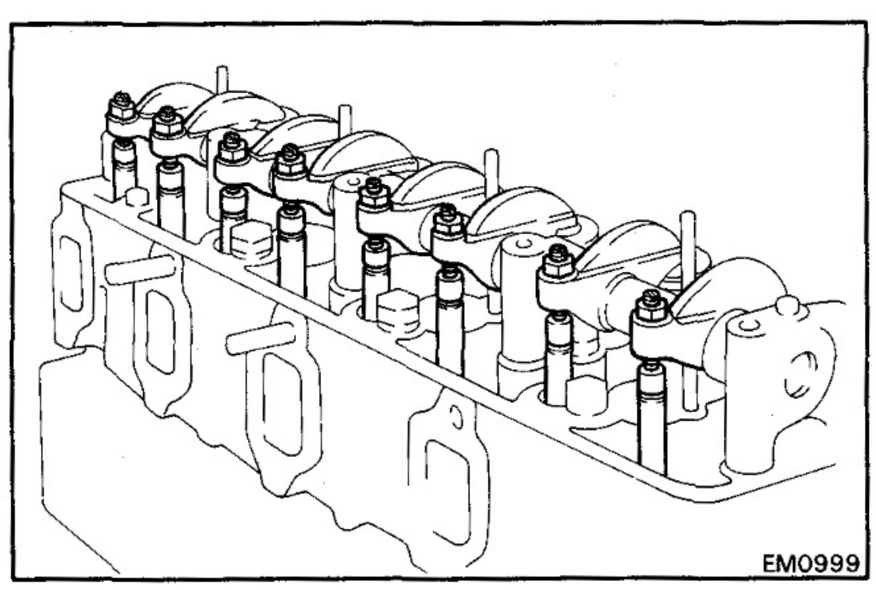

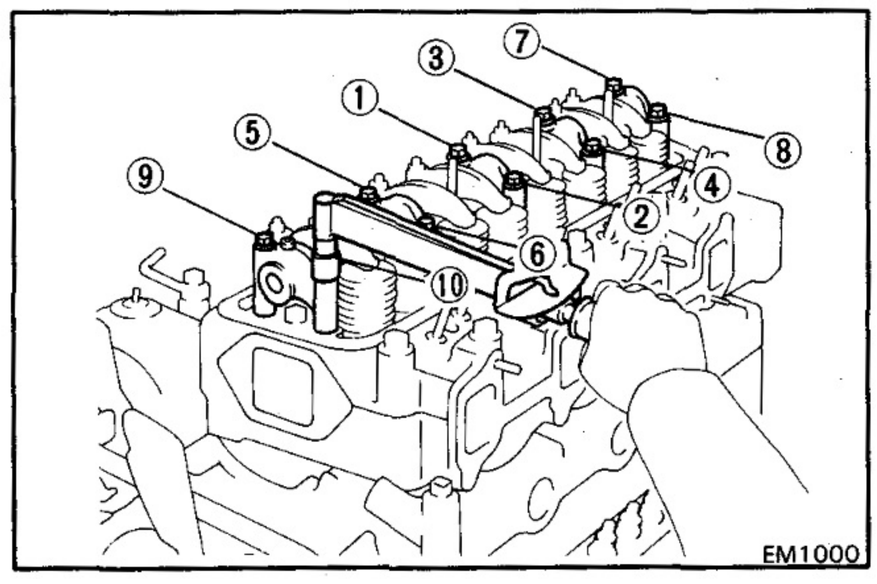

(c) Install and uniformly tighten the fourteen bolts in several passes, in the sequence shown.

Torque: 185 kg-cm (13 ft-lb, 18 N·m)

4. ADJUST VALVE CLEARANCES
(See steps 4 and 5 on page EM-22)

Valve clearance (Cold):
Intake 0.25 mm (0.010 in.)
Exhaust 0.40 mm (0.016 in.)

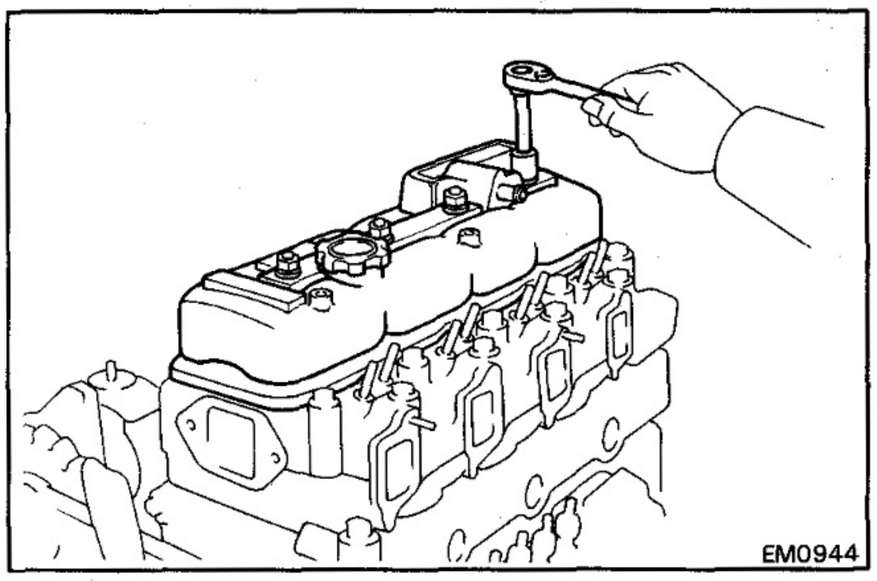

5. INSTALL CYLINDER HEAD COVER

(a) Install a new gasket to the cylinder head cover.

(b) Install the cylinder head cover with the four seal washers and cap nuts.

Torque: 125 kg-cm (9 ft-lb, 12 N·m)

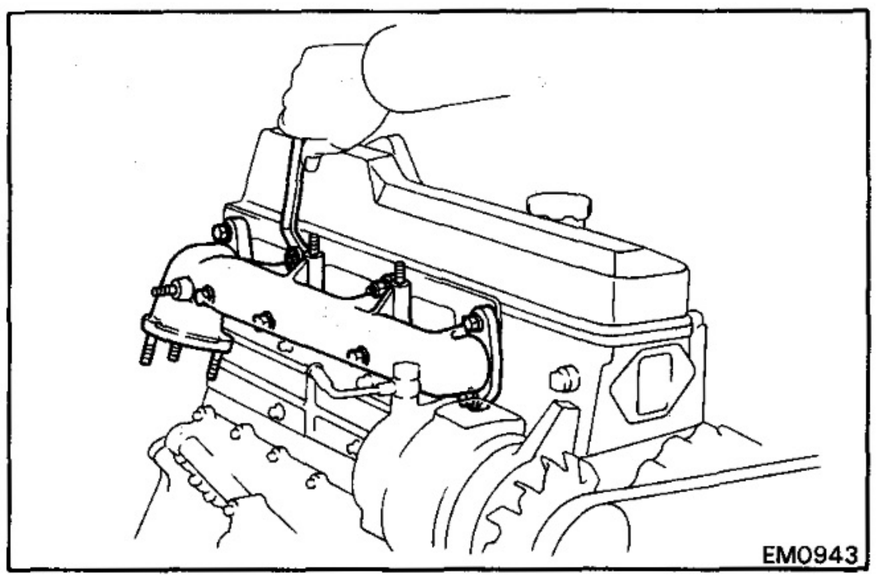

6. INSTALL EXHAUST MANIFOLD

(a) Install a new gasket, the exhaust manifold and No. 2 heat insulator (BU) with the six bolts and two nuts. Torque the bolts and nuts.

Torque: 475 kg-cm (34 ft-lb, 47 N·m)

B, 3B, 11B and 13B

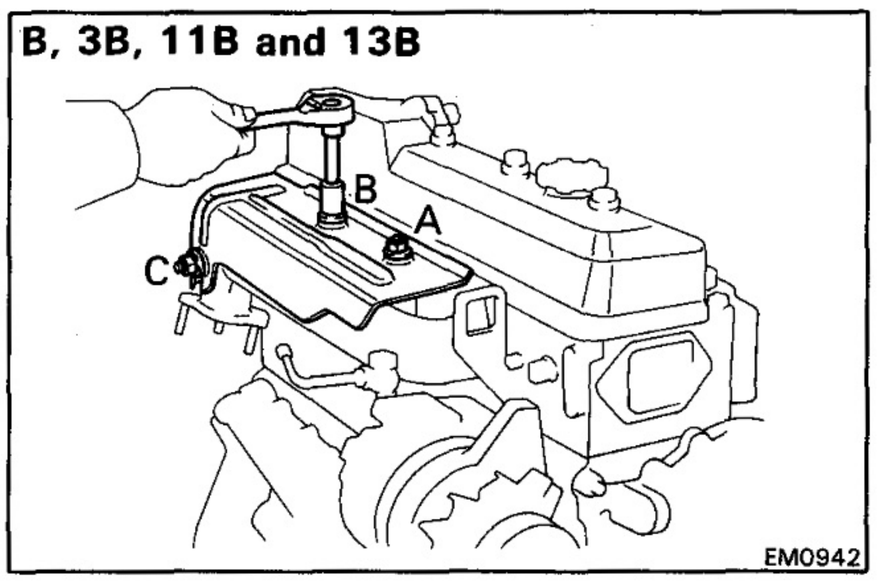

(b) [11B and 13B (Nut tightening type)]
Place the three spacers, heat insulator, three spacers and three plate washers on the exhaust manifold.

(c) [B, 3B, 11B and 13B (Bolt tightening type)]
Place the heat insulator on the exhaust manifold.

(d) [B, 3B, 11B and 13B]
Install and tighten the three nuts or bolts with the following order.
Fist, temporarily tighten nuts or bolts A and B. Then fully tighten nuts or bolts C, A and B.

13B-T

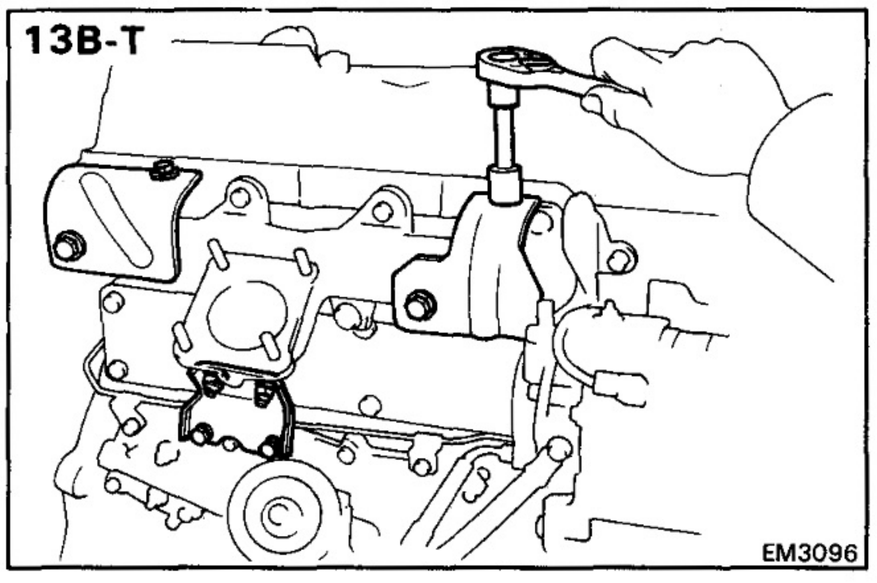

(e) [13B-T]
Install the exhaust manifold stay with the two bolts and nuts.

(f) [13B-T]
Install the No. 1 and No. 2 heat insulators with the four bolts.

Torque: 185 kg-cm (13 ft-lbs, 18 N·m)

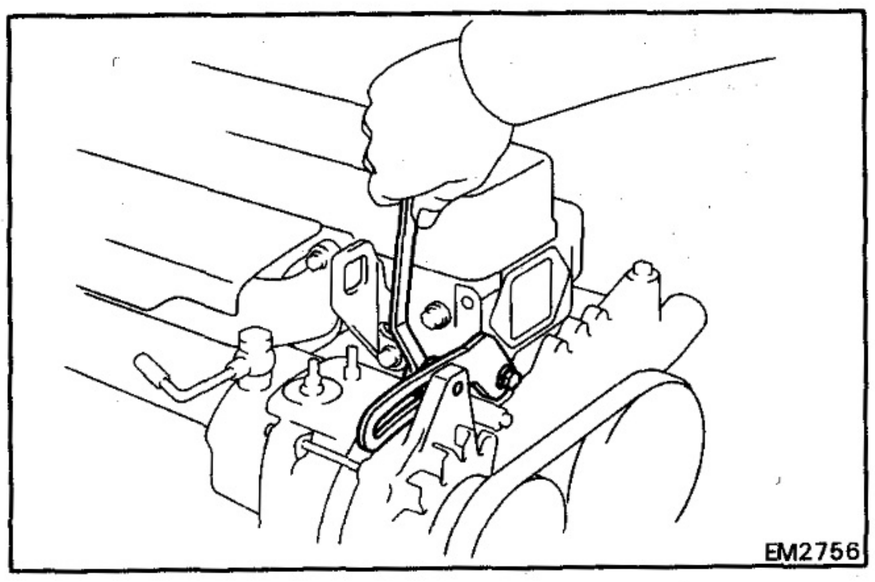

7. INSTALL DRIVE BELT ADJUSTING BAR

8. ADJUST DRIVE BELT (See page CH-7)

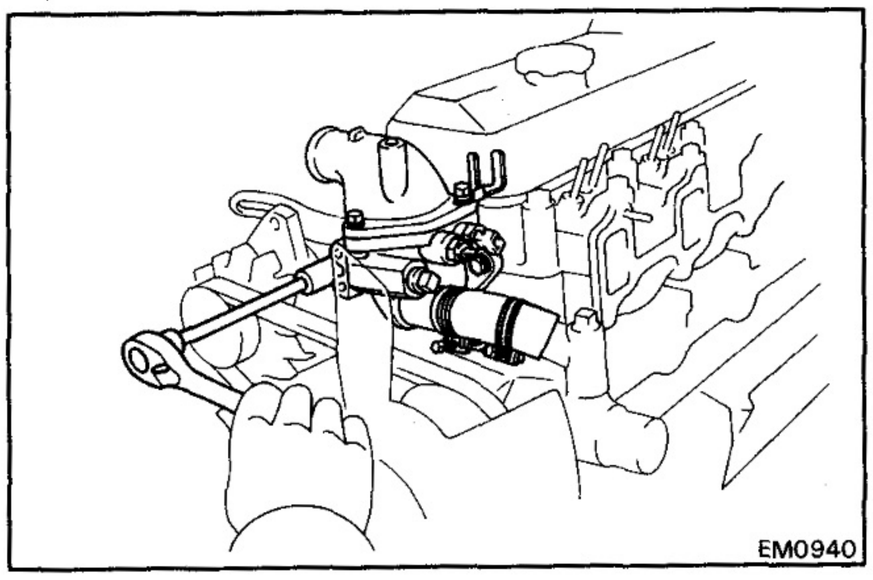

9. INSTALL WATER OUTLET ASSEMBLY

Connect the water by-pass hose to the water pump, and install a new gasket and the water outlet assembly with the three bolts.

Torque: 185 kg-cm (13 ft-lb, 18 N·m)

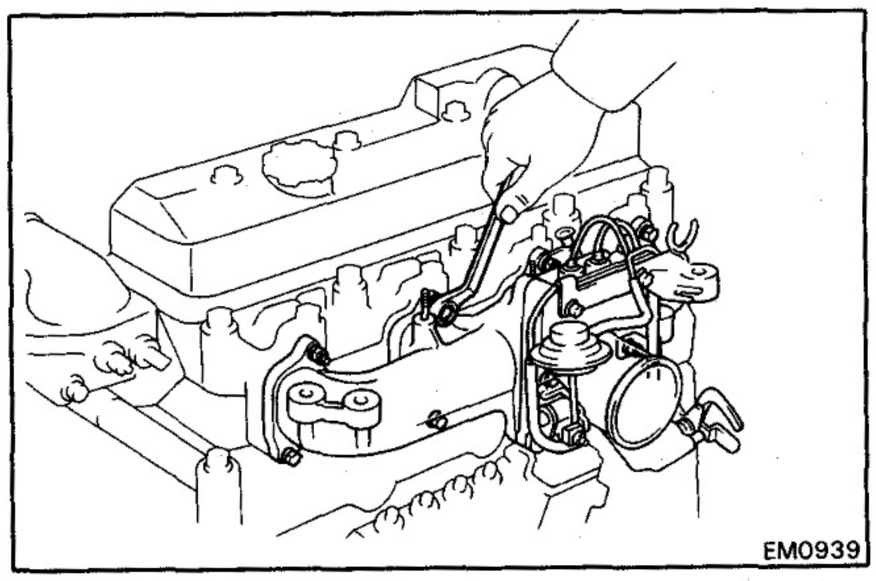

10. INSTALL INTAKE MANIFOLD

(a) Install a new gasket to the intake manifold.

(b) Install the intake manifold, level gauge clamp and No. 2 leakage pipe clamps with the five bolts and three nuts. Torque the bolts and nuts.

Torque: 185 kg-cm (13 ft-lb, 18 N·m)

(c) Install the oil level gauge quide.

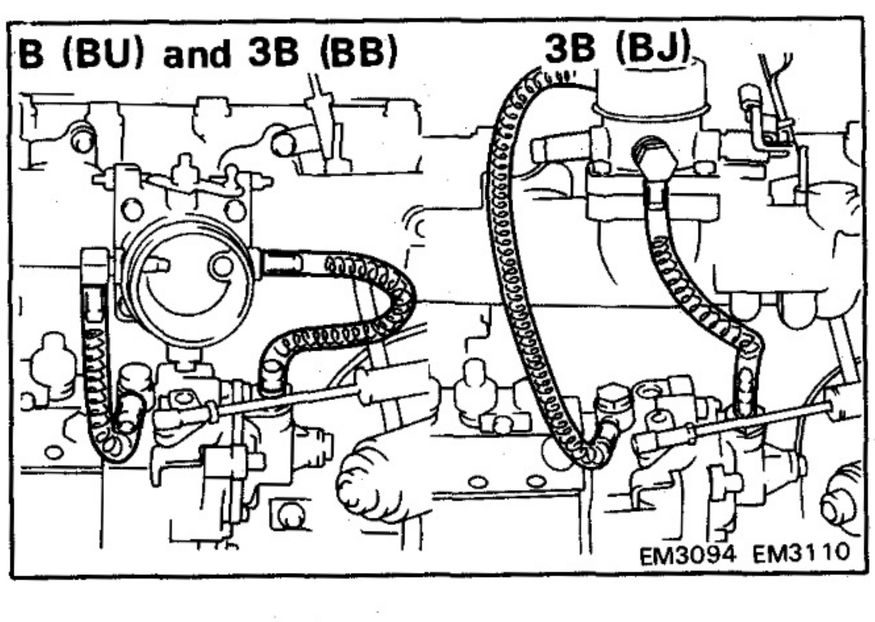

(d) Install the vacuum hoses.

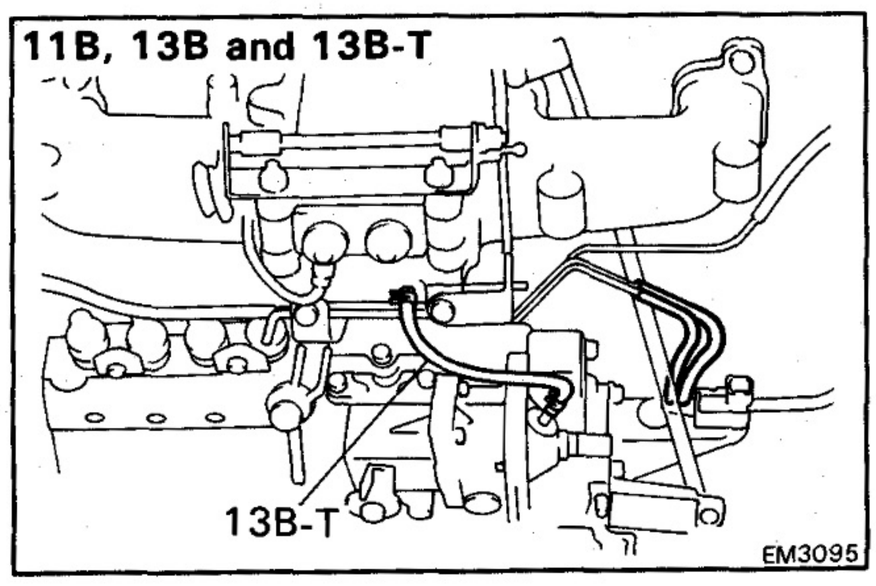

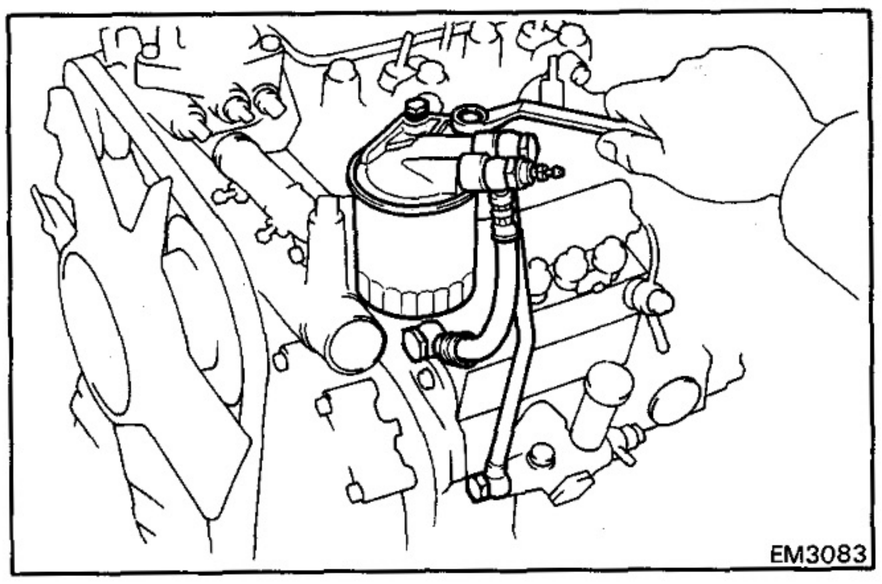

11. [11B, 13B AND 13B-T]
INSTALL ACCELERATOR CONNECTING ROD

12. INSTALL FUEL FILTER ASSEMBLY

(a) Install the fuel filter assembly with the two bolts.

Torque: 375 kg-cm (27 ft-lb, 37 N·m)

(b) Connect the fuel pipe and hose to the injection pump with new four gaskets and the two union bolts. Torque the union bolts.

Torque: 375 kg-cm (27 ft-lb, 37 N·m)

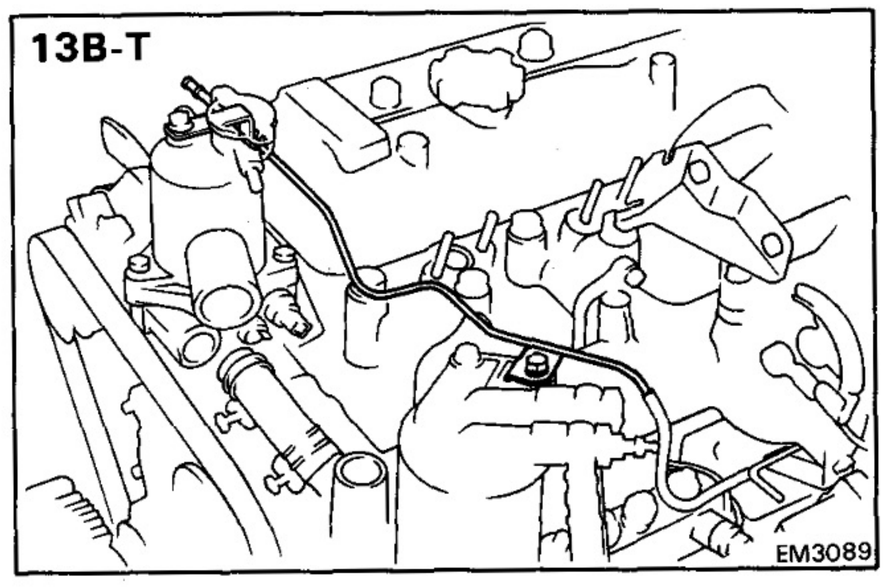

13. [13B-T]
INSTALL VACUUM PIPE

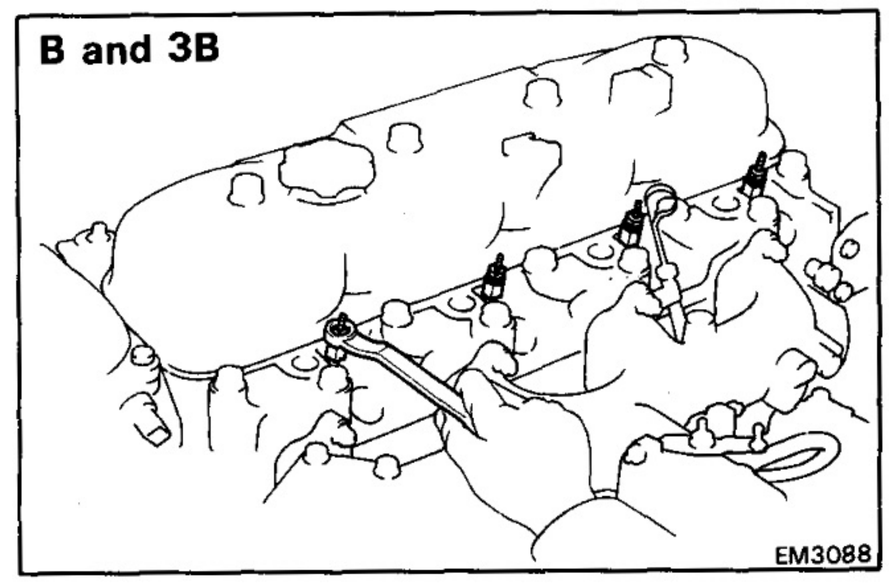

14. [B AND 3B]
INSTALL GLOW PLUGS

(a) Install the four glow plugs.

Torque: 125 kg-cm (9 ft-lb, 12 N·m)

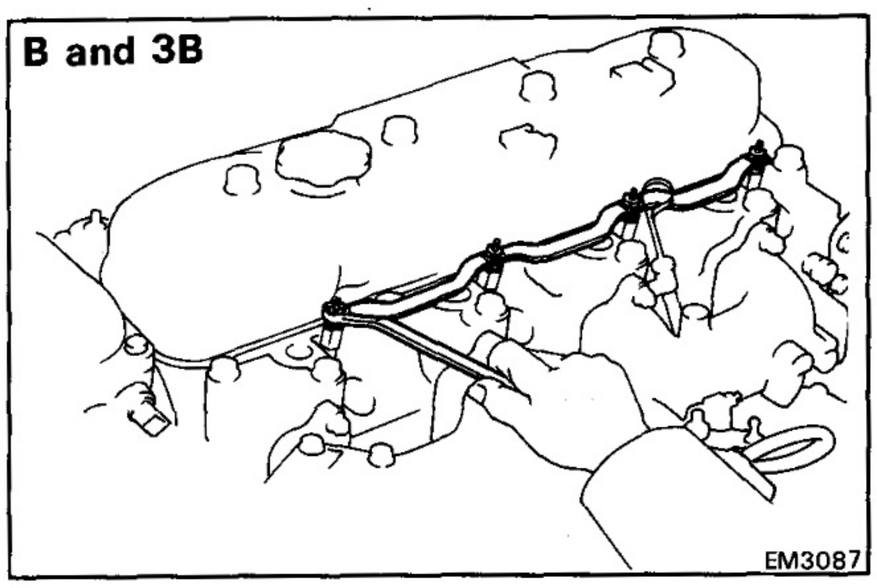

(b) Install the glow plug connector with the four nuts.

(c) [Pre-heating System (Supper Glow Type)]
Install the current sensor plate.

(d) Install the four screw grommets.

15. INSTALL INJECTION NOZZLES
(See page FU-9) B and 3B
(See page FU-15) 11B, 13B and 13B-T

16. [13B-T]
INSTALL TURBOCHARGER
(See steps 5 to 11 on pages EM-39 and 40)

17. FILL WITH ENGINE COOLANT (See page CO-3)

18. START ENGINE AND CHECK FOR LEAKS

19. CHECK ENGINE OIL LEVEL (See page LU-3)

20. READJUST VALVE CLEARANCES (See page EM-22)

Valve clearance (Hot):

Intake	**0.20 mm (0.008 in.)**
Exhaust	**0.36 mm (0.014 in.)**

TIMING GEARS AND CAMSHAFT

COMPONENTS

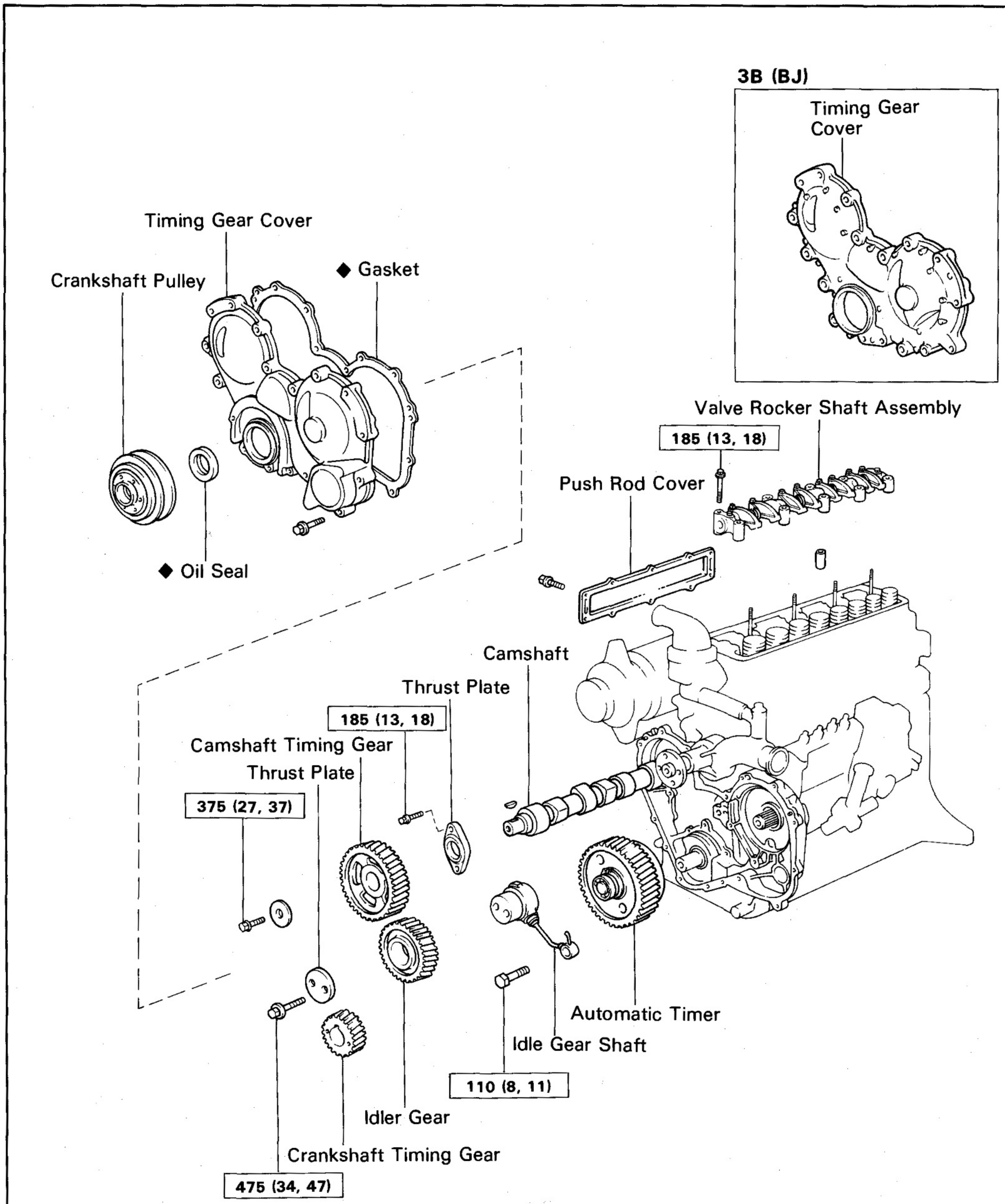

kg-cm (ft-lb, N·m) : Specified torque

◆ Non-reusable part

EM3098

REMOVAL OF TIMING GEARS AND CAMSHAFT

(See page EM-63)

1. SET NO. 1 CYLINDER TO TDC/COMPRESSION
(See page EM-22)

2. REMOVE DRIVE BELT

3. REMOVE FAN AND WATER PUMP PULLEY
(See page CO-5)

4. [13B-T]
REMOVE TURBOCHARGER
(See steps 2 to 8 on page EM-36 and 37)

5. REMOVE VALVE ROCKER SHAFT ASSEMBLY
(See steps 12 to 14 on pages EM-46 and 47)

6. REMOVE EXHAUST MANIFOLD (See page EM-46)

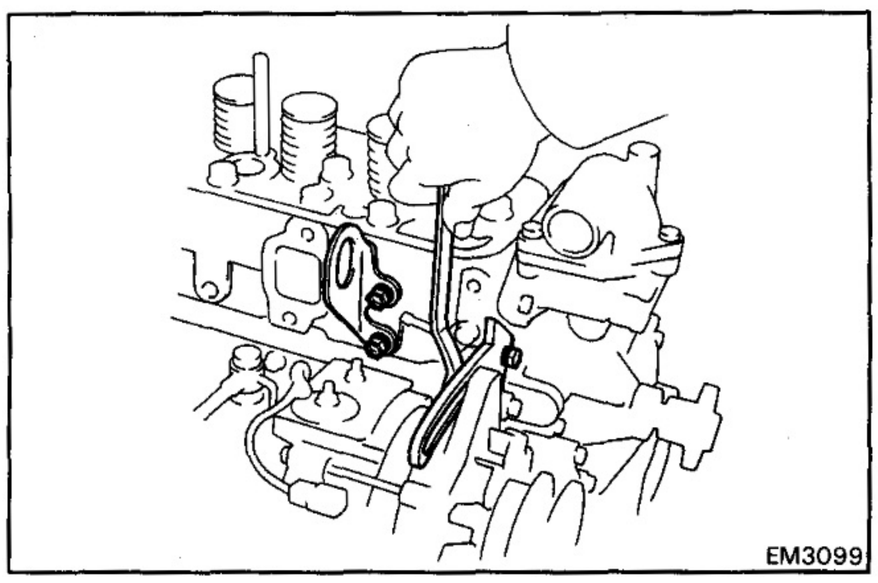
EM3099

7. REMOVE NO. 1 ENGINE HANGER AND DRIVE BELT ADJUSTING BAR

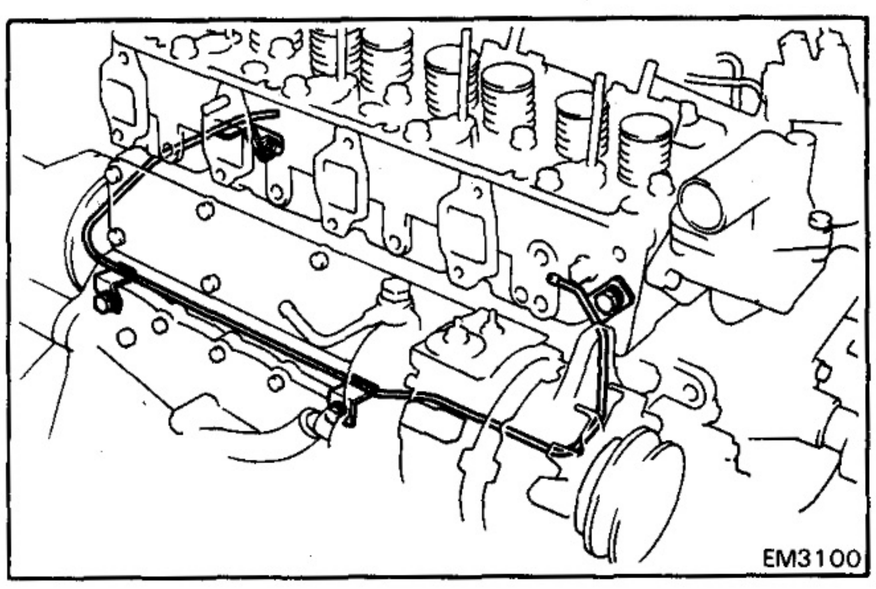
EM3100

8. [11B, 13B AND 13B-T]
REMOVE VACUUM PIPE

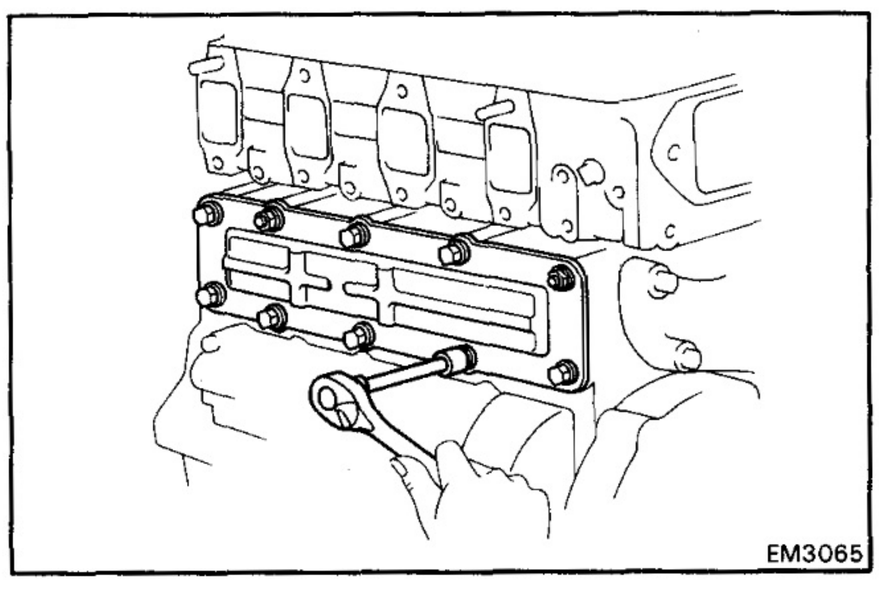
EM3065

9. REMOVE PUSH ROD COVER

(a) Remove the eight bolts and two nuts.

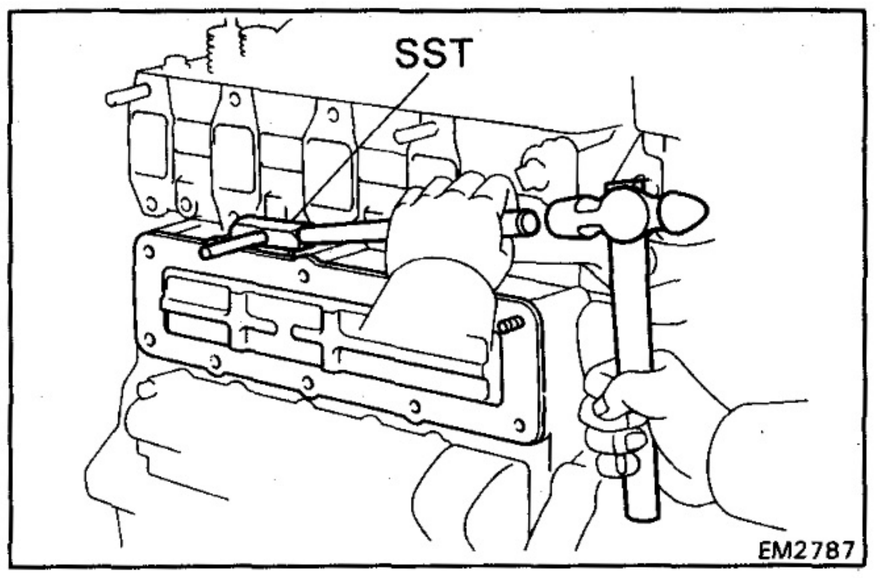

(b) Insert the SST blade between the cylinder block and push rod cover, cut off applied sealer, and remove the push rod cover with a screwdriver.

SST 09032-00100

CAUTION: Be careful not to damage the flange of the push rod cover.

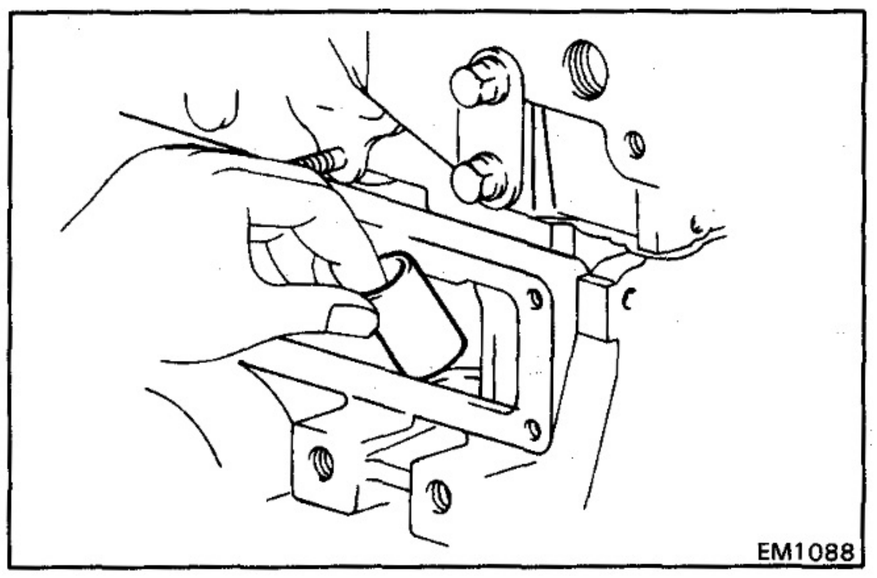

10. REMOVE VALVE LIFTERS

Remove the eight valve lifters in order, beginning from the No. 1 valve lifter.

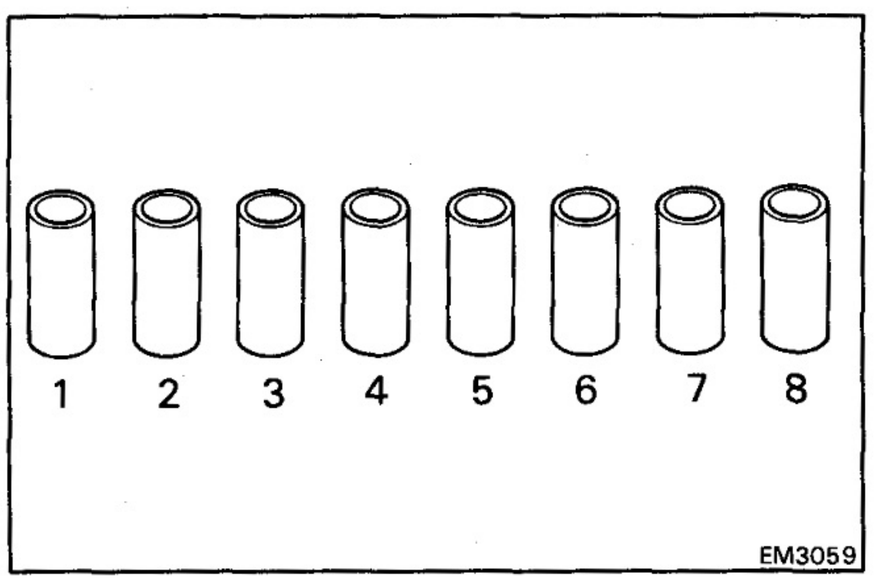

NOTE: Arrange the valve lifters in correct order.

11. REMOVE CRANKSHAFT PULLEY

(a) Using SST, remove the mount bolts.

SST 09213-58011 and 09330-00021

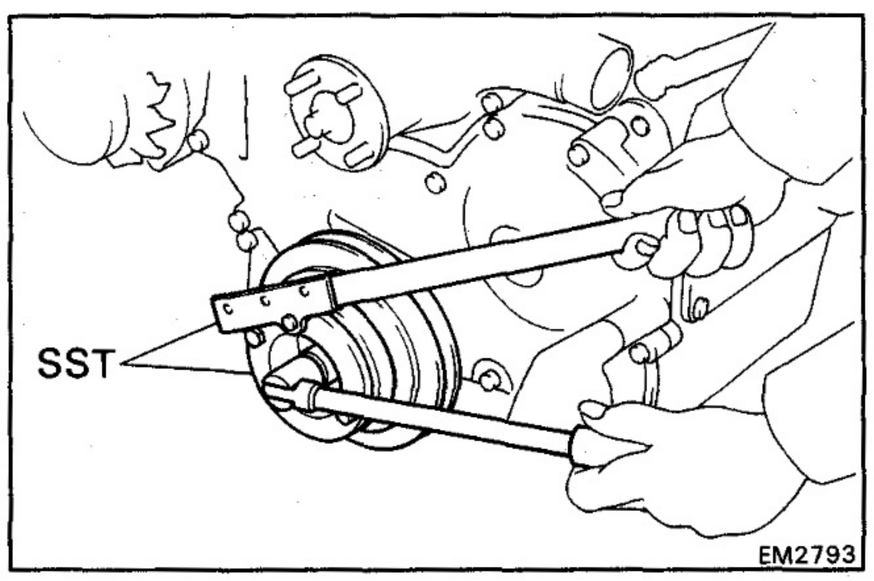

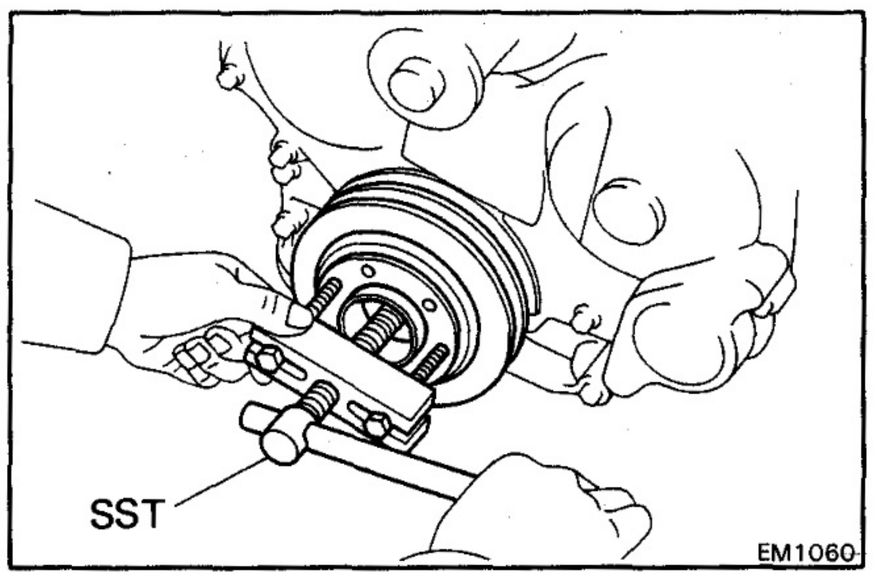

(b) Using SST, remove the pulley.

SST 09213-60017

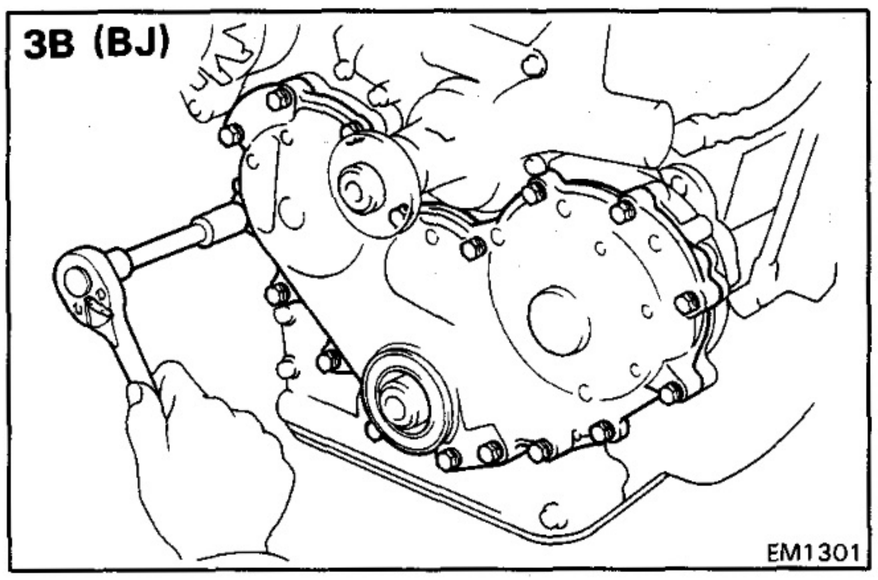

12. REMOVE TIMING GEAR COVER

(a) Remove the seventeen mount bolts.

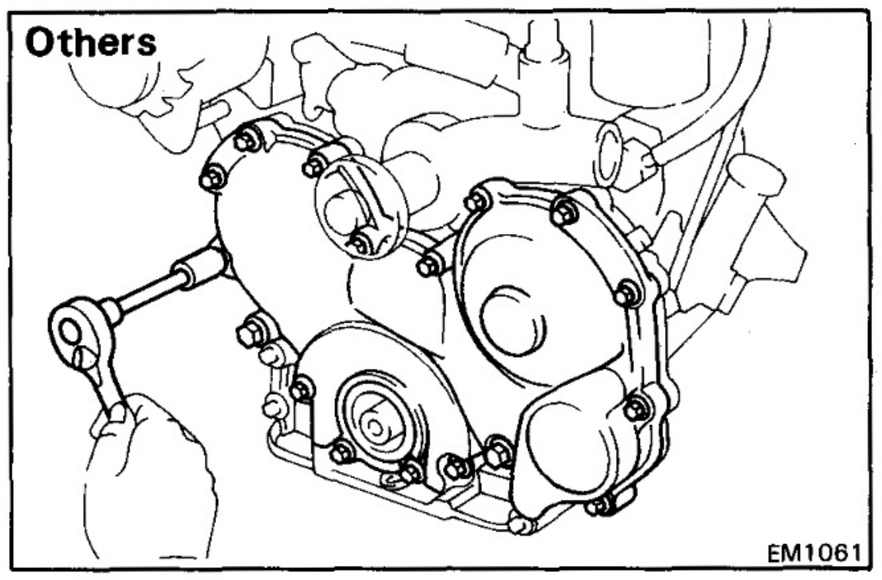

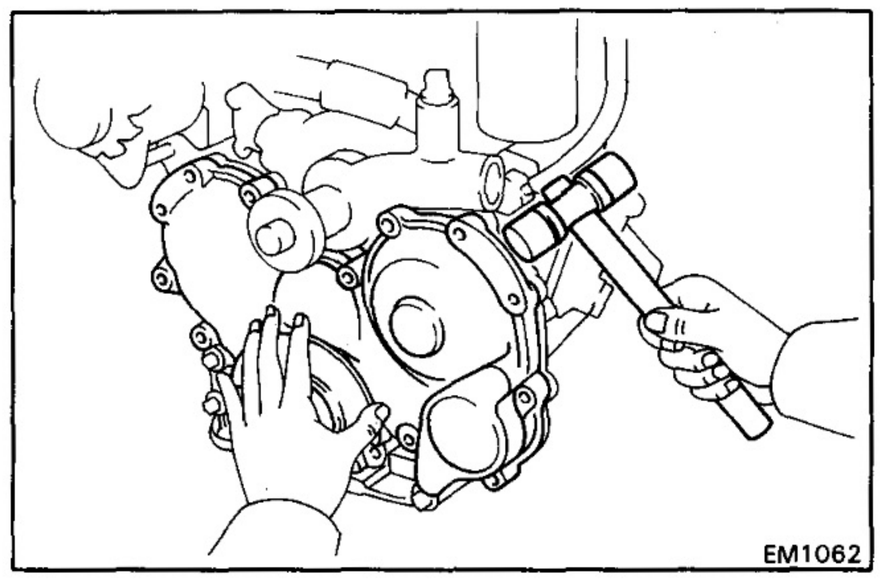

(b) Using a plastic-faced hammer, lightly tap out the gear cover.

(c) Remove the cover gasket.

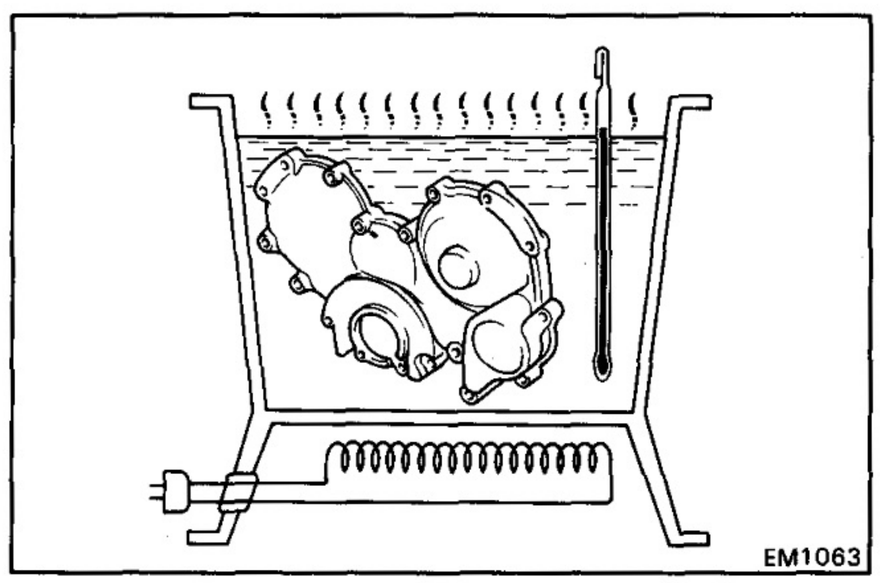

13. REMOVE AUTOMATIC TIMER FROM TIMING GEAR COVER

Heat the timing gear cover with the automatic timer to about 60°C (140°F) and remove the timer.

NOTE: For disassembly and assembly of the automatic timer, refer to the FUEL SYSTEM section.
(See page FU-21)

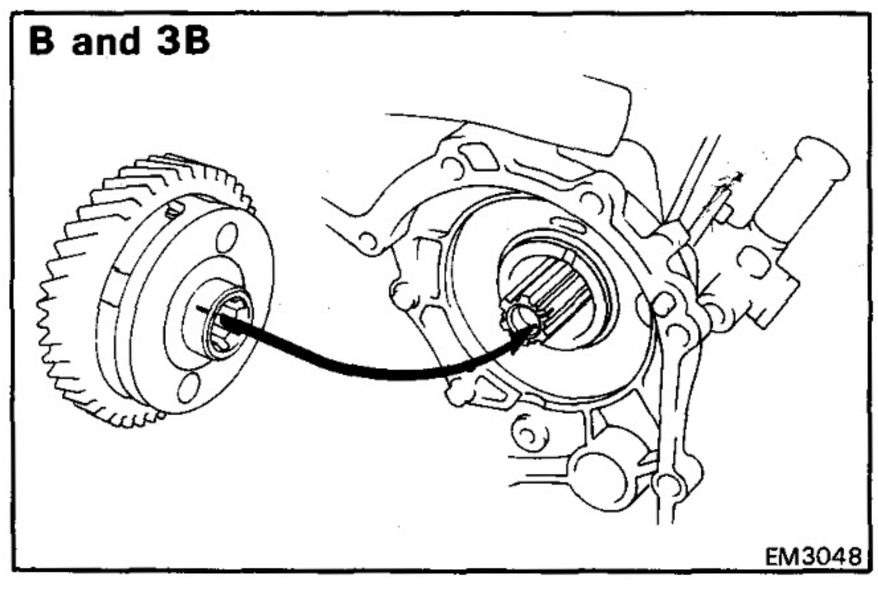

14. CHECK TIMING GEAR BACKLASH

(a) [B and 3B]
Align the marks of the automatic timer hub and injection pump spline, and install the timer.

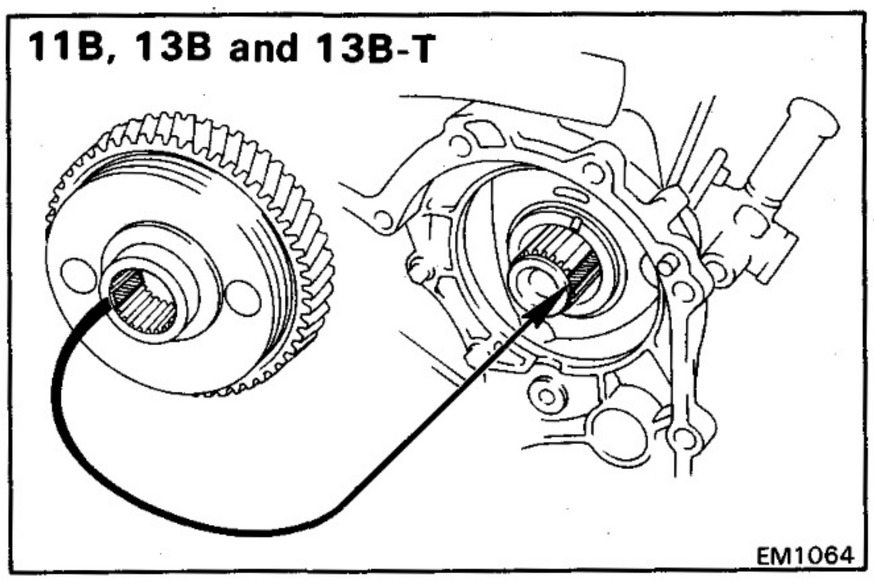

(b) [11B, 13B and 13B-T]
Align the spline toothless portions of the automatic timer hub and injection pump, and install the timer.

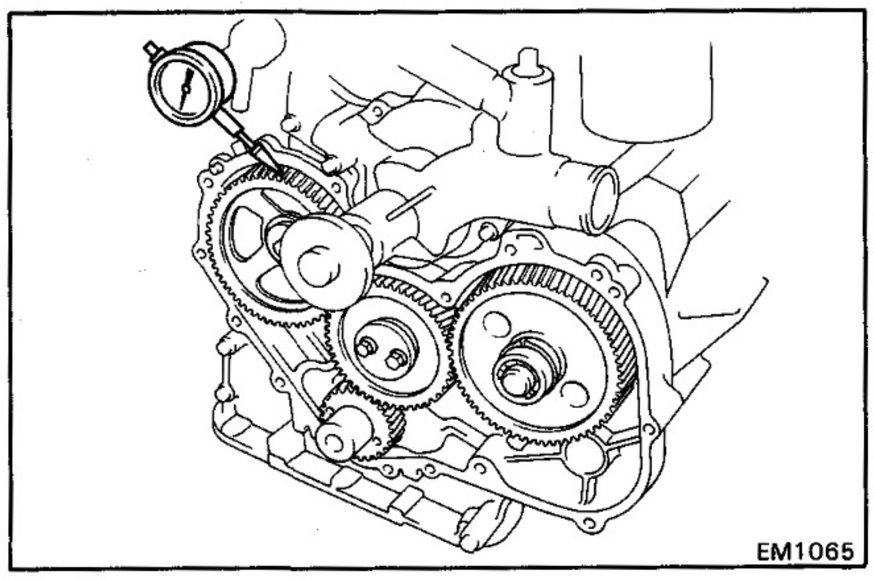

(c) Using a dial indicator, measure the backlash between each gear.

Standard backlash: 0.058 – 0.162 mm (0.0023 – 0.0064 in.)
Maximum backlash: 0.30 mm (0.0118 in.)

If the backlash is greater than maximum, replace the gears as a set.

(d) Remove the automatic timer.

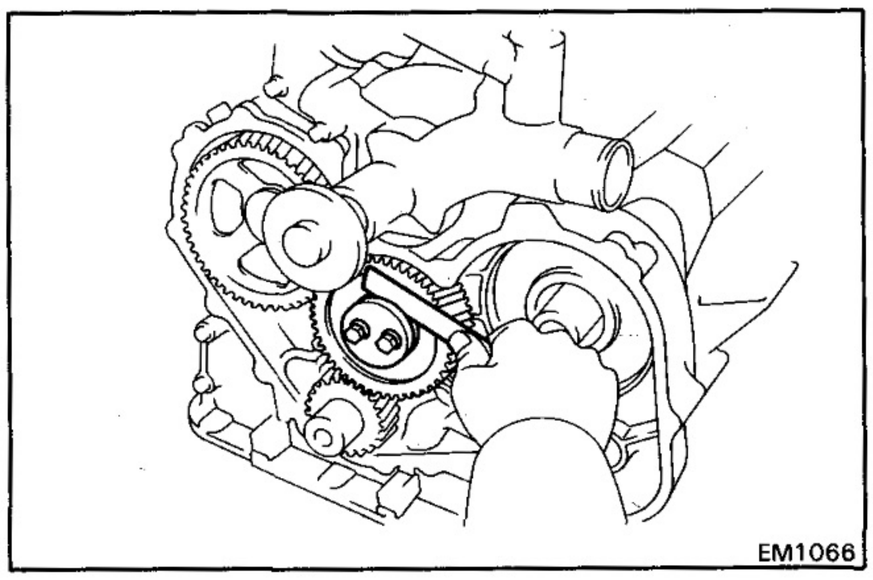

15. CHECK IDLE GEAR THRUST CLEARANCE

Using a feeler gauge, measure the idle gear thrust clearance.

Standard thrust clearance: 0.06 – 0.17 mm (0.0024 – 0.0067 in.)
Maximum thrust clearance: 0.30 mm (0.0118 in.)

If the thrust clearance is greater than maximum, replace the thrust plate.

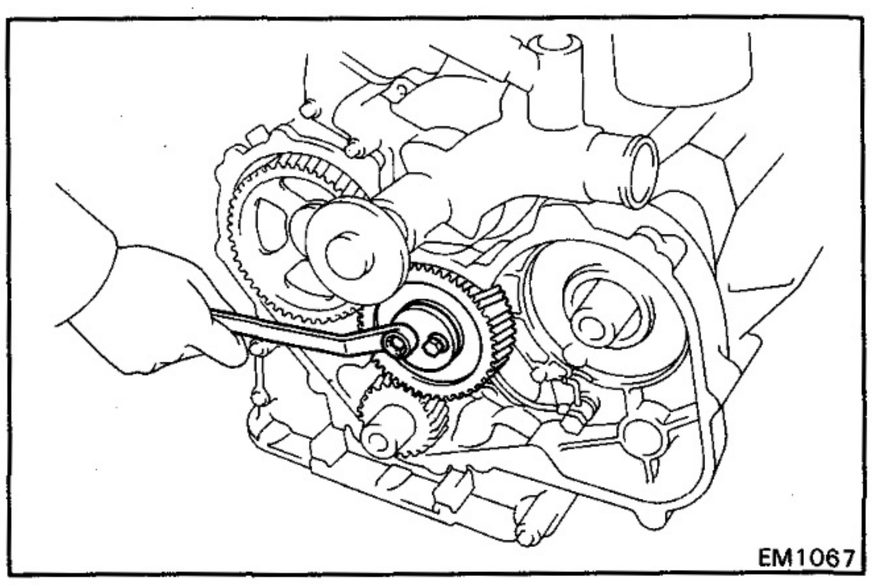

16. REMOVE IDLE GEAR

Remove the two bolts, thrust plate and idle gear.

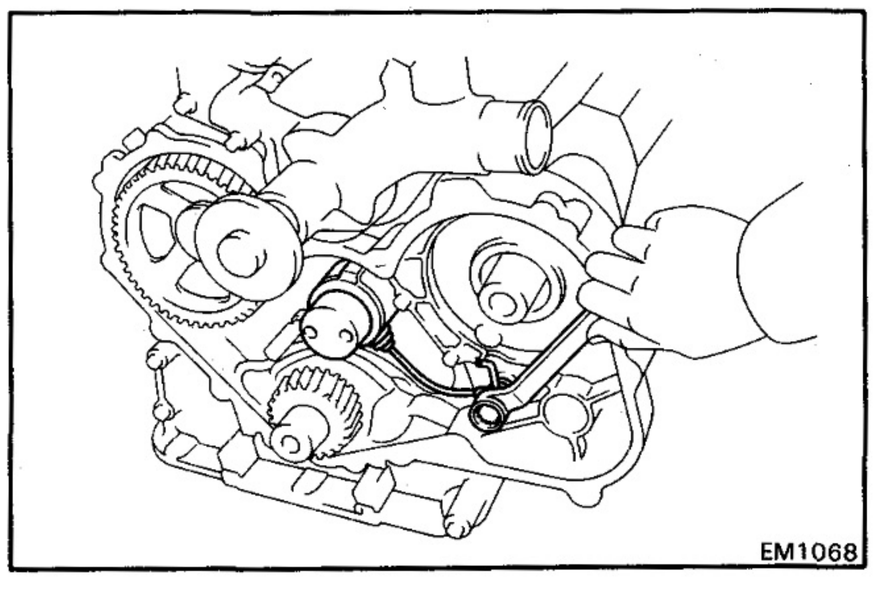

17. REMOVE IDLE GEAR SHAFT

Remove the union bolt and idle gear shaft.

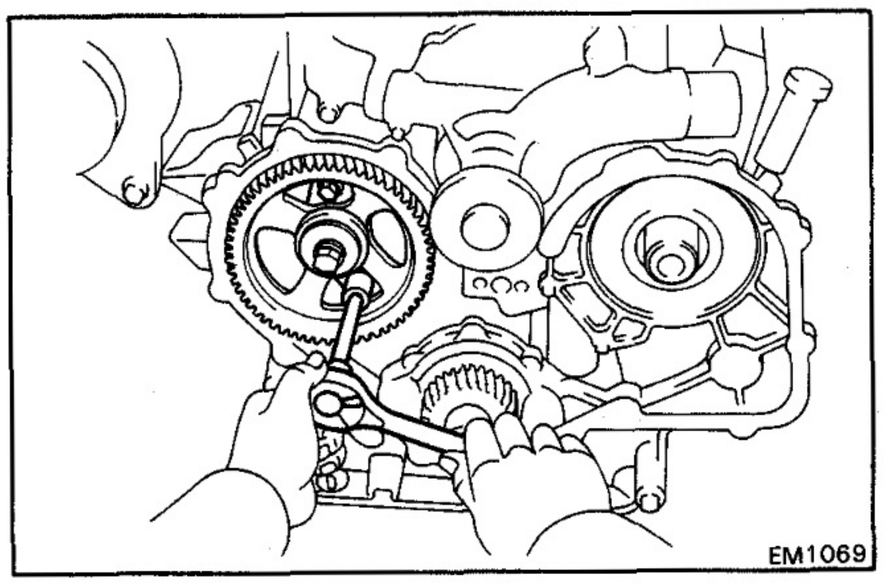

18. REMOVE CAMSHAFT TIMING GEAR AND CAMSHAFT ASSEMBLY

(a) Remove the two bolts holding the thrust plate to the cylinder block.

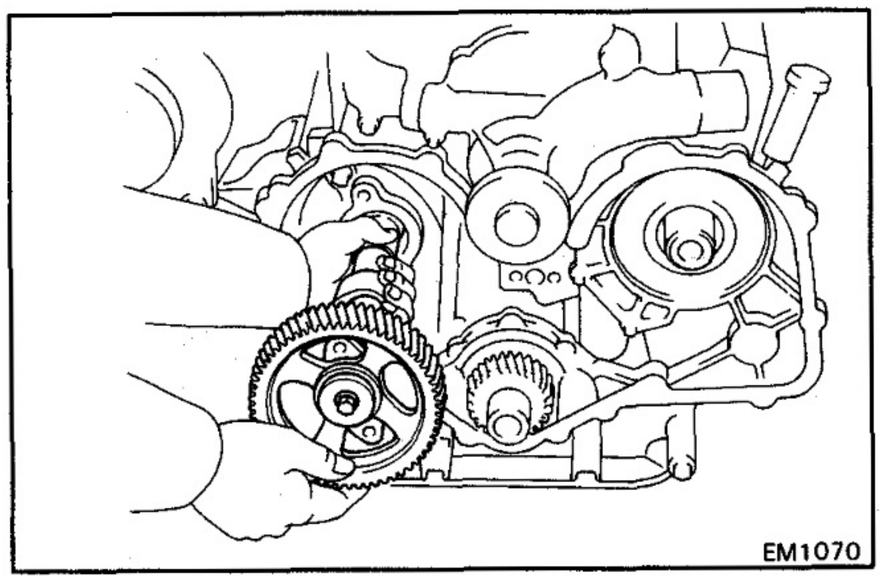

(b) Carefully pull out the camshaft and timing gear assembly.

CAUTION: Be careful not to damage the camshaft bearings.

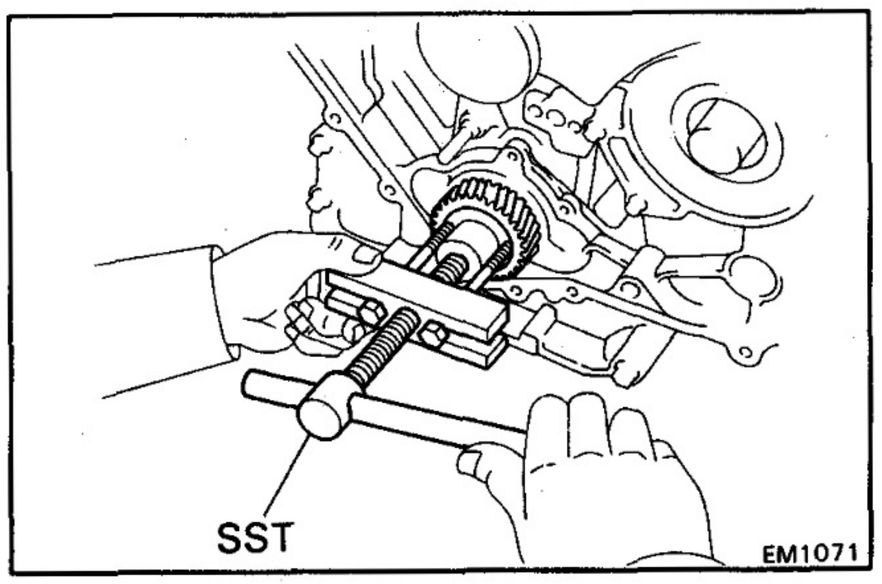

19. REMOVE CRANKSHAFT TIMING GEAR

Using SST, remove the timing gear.

SST 09213-60017

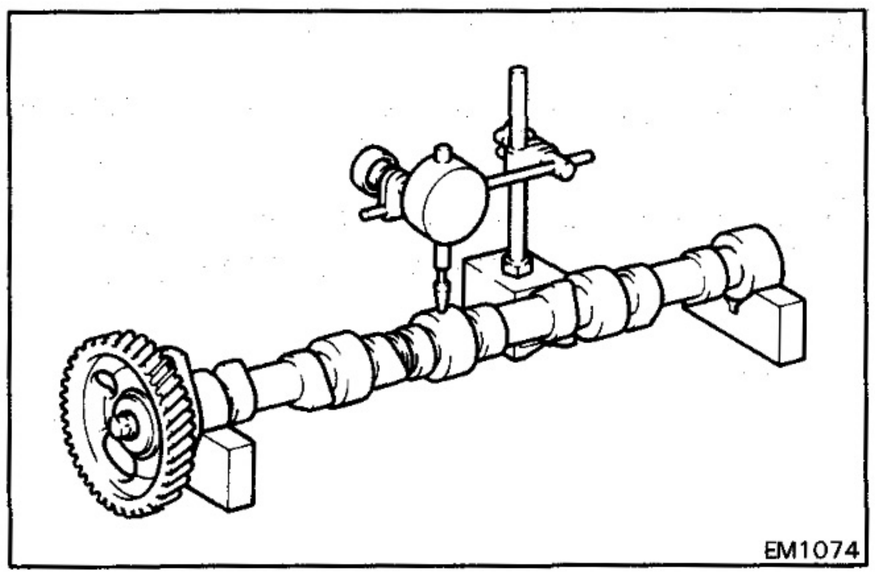
EM1074

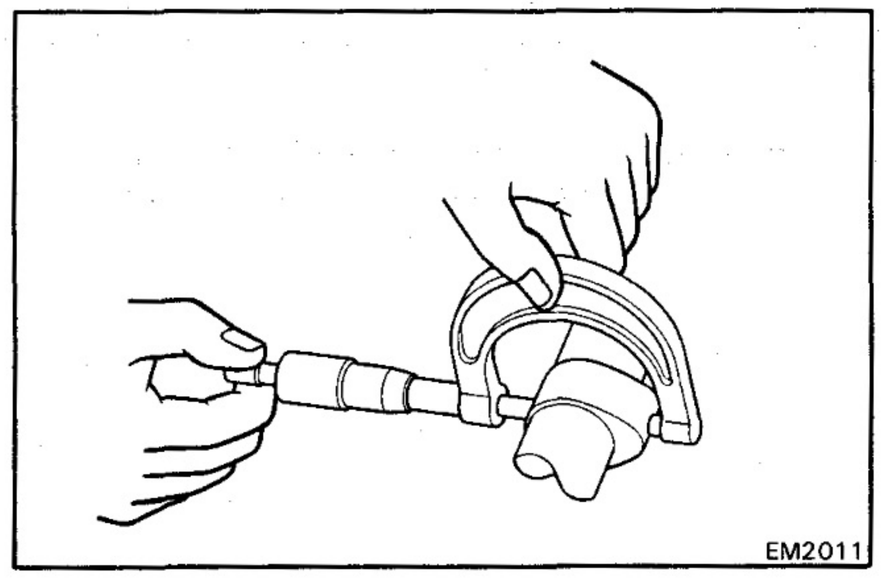
EM2011

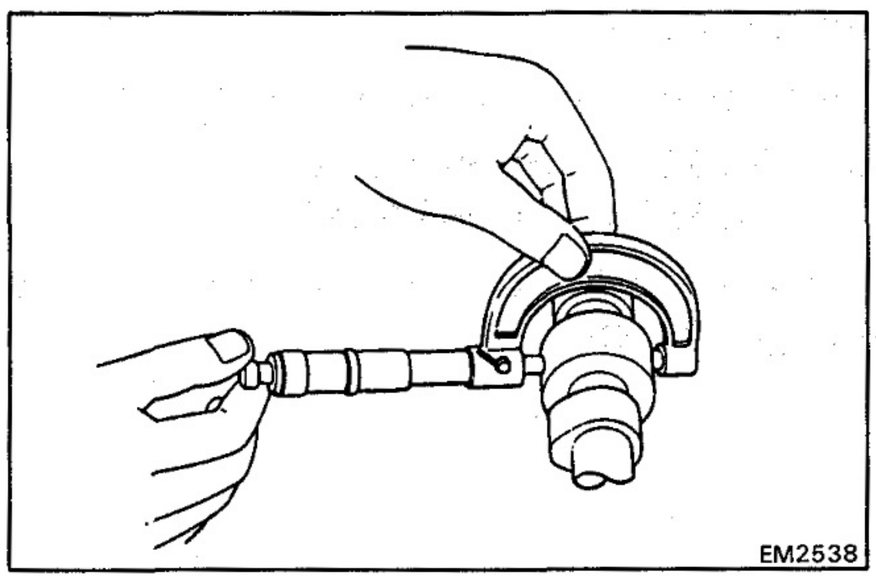
EM2538

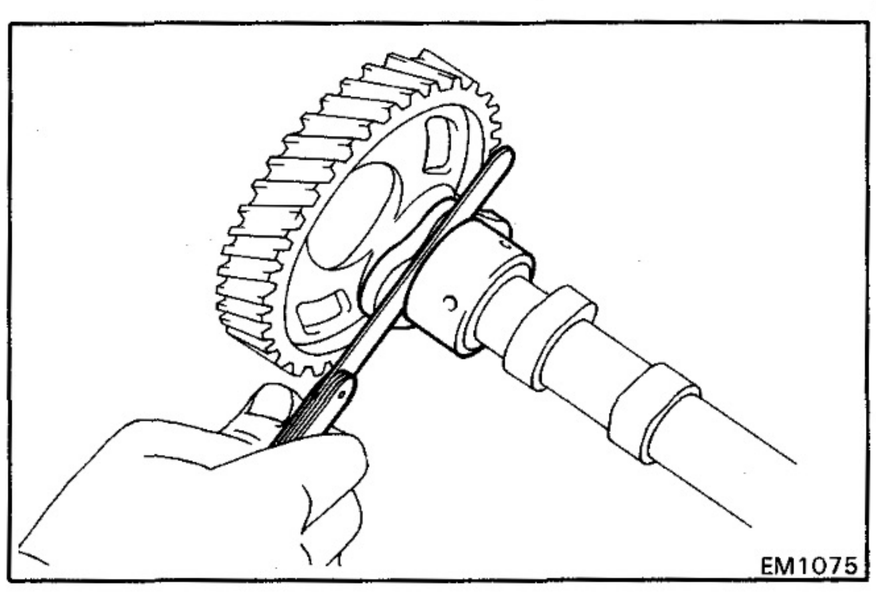
EM1075

INSPECTION OF TIMING GEARS AND CAMSHAFT

1. INSPECT CAMSHAFT

(a) Place the camshaft on V-blocks and, using a dial indicator, measure the circle runout at the center journal.

Maximum circle runout: 0.06 mm (0.0024 in.)

If the circle runout is greater than maximum, replace the camshaft.

(b) Using a micrometer, measure the cam lobe height.

Standard cam lobe height:

Intake	B and 3B	45.067 – 45.157 mm (1.7743 – 1.7778 in.)
	11B and 13B	44.705 – 44.795 mm (1.7600 – 1.7636 in.)
	13B-T	44.909 – 44.999 mm (1.7681 – 1.7716 in.)
Exhaust	B and 3B	45.065 – 45.155 mm (1.7742 – 1.7778 in.)
	11B, 13B and 13B-T	44.774 – 44.864 mm (1.7628 – 1.7663 in.)

Minimum cam lobe height:

Intake	B and 3B	44.63 mm (1.7571 in.)
	11B and 13B	44.27 mm (1.7429 in.)
	13B-T	44.47 mm (1.7508 in.)
Exhaust	B and 3B	44.63 mm (1.7571 in.)
	11B, 13B and 13B-T	44.34 mm (1.7457 in.)

If the lobe height is less than minimum, replace the camshaft.

(c) Using a micrometer, measure the journal diameter.

Journal diameter (from front side):

No. 1	53.459 – 53.475 mm (2.1047 – 2.1053 in.)
No. 2	53.209 – 53.225 mm (2.0948 – 2.0955 in.)
No. 3	52.959 – 52.975 mm (2.0850 – 2.0856 in.)
No. 4	52.709 – 52.725 mm (2.0752 – 2.0758 in.)
No. 5	52.459 – 52.475 mm (2.0653 – 2.0659 in.)

If the journal diameter is not within specification, check the oil clearance. (See page EM-97)

(d) Using a feeler gauge, measure the thrust clearance between the camshaft and thrust plate.

Standard clearance: 0.06 – 0.13 mm (0.0024 – 0.0051 in.)

Maximum clearance: 0.30 mm (0.0118 in.)

If the thrust clearance is is greater than maximum, replace the thrust plate. If necessary, replace the camshaft. (See page EM-71)

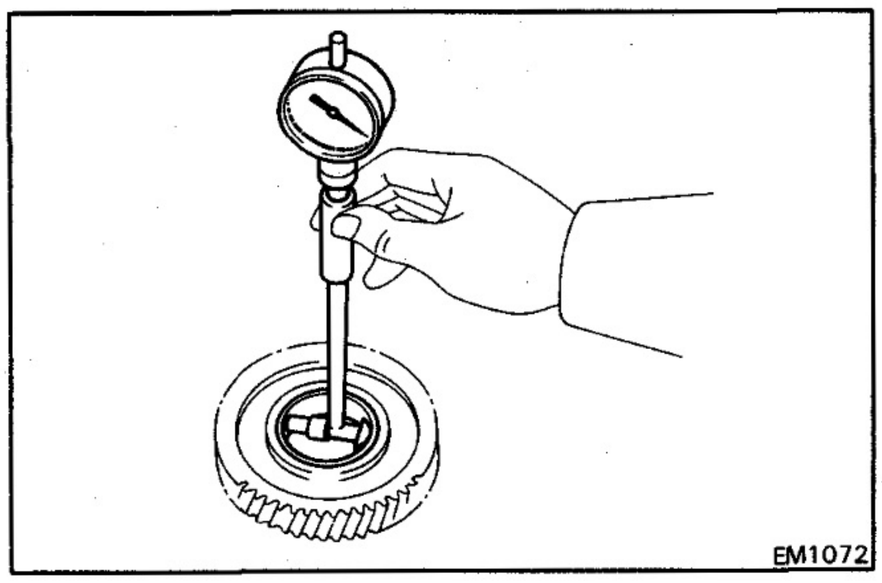

2. INSPECT IDLE GEARS

(a) Using a cylinder gauge, measure the inside diameter of the idle gear.

Idle gear inside diameter: 44.969 – 44.995 mm (1.7704 – 1.7715 in.)

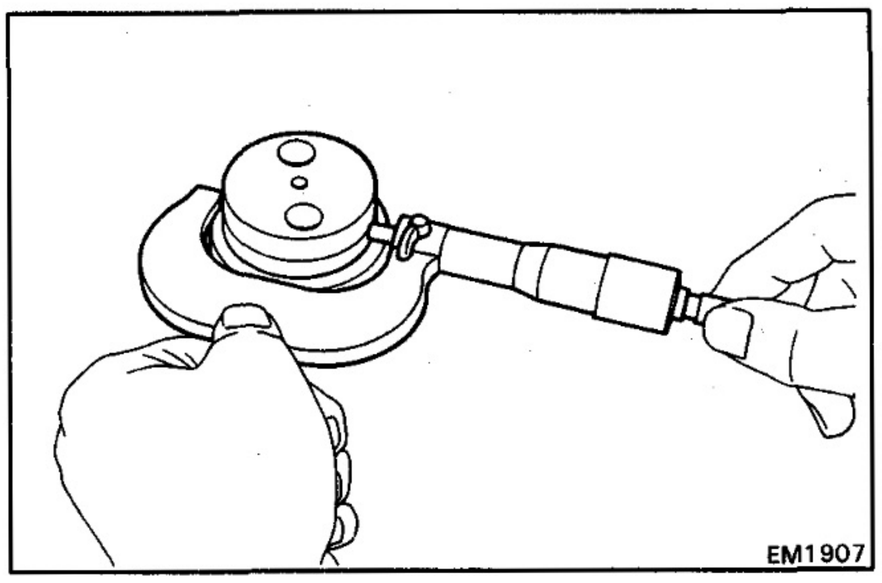

(b) Using a micrometer, measure the diameter of the idle gear shaft.

Idle gear shaft diameter: 44.935 – 44.955 mm (1.7691 – 1.7699 in.)

(c) Subtract the idle gear shaft diameter measurement from the idle gear inside diameter measurement.

Standard oil clearance: 0.014 – 0.060 mm (0.0006 – 0.0024 in.)

Maximum oil clearance: 0.15 mm (0.0059 in.)

If the clearance is greater than maximum, replace the gear and shaft.

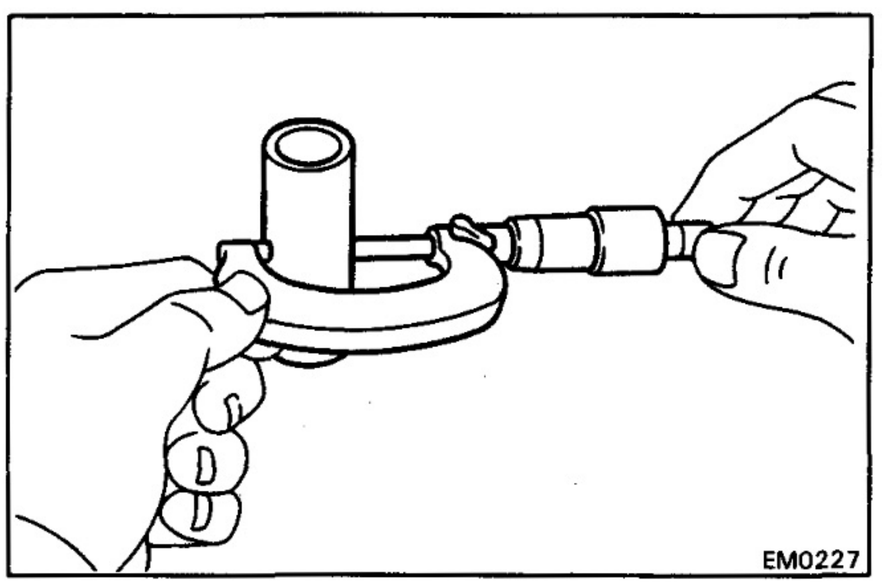

3. INSPECT VALVE LIFTERS

Using a micrometer, measure the valve lifter diameter.

Lifter diameter: 26.972 – 26.985 mm (1.0619 – 1.0624 in.)

If the diameter is not within specification, check the oil clearance. (See page EM-98)

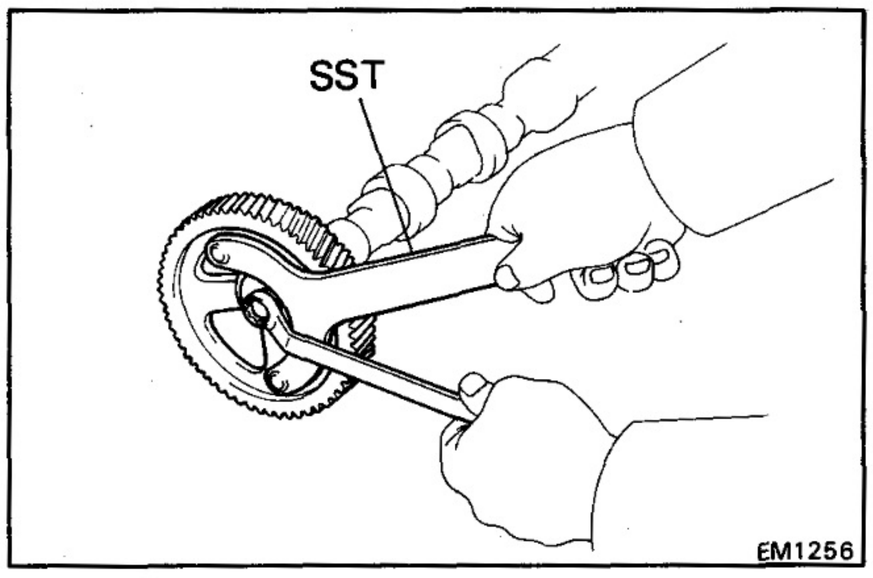

REPLACEMENT OF CAMSHAFT (OR CAMSHAFT TIMING GEAR)

1. REMOVE CAMSHAFT

(a) Using SST, remove the bolt and plate washer.

SST 09278-54012

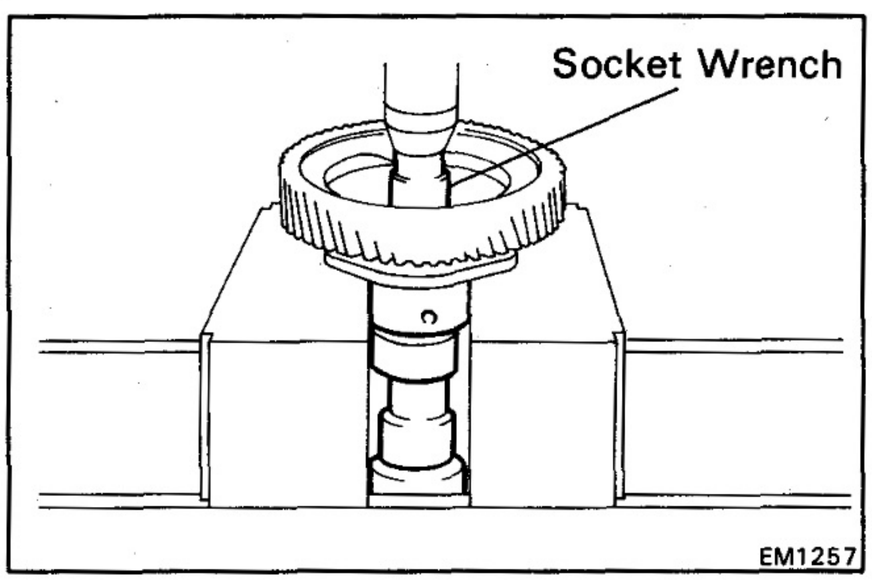

(b) Using a 19 mm socket wrench and press, press out the camshaft.

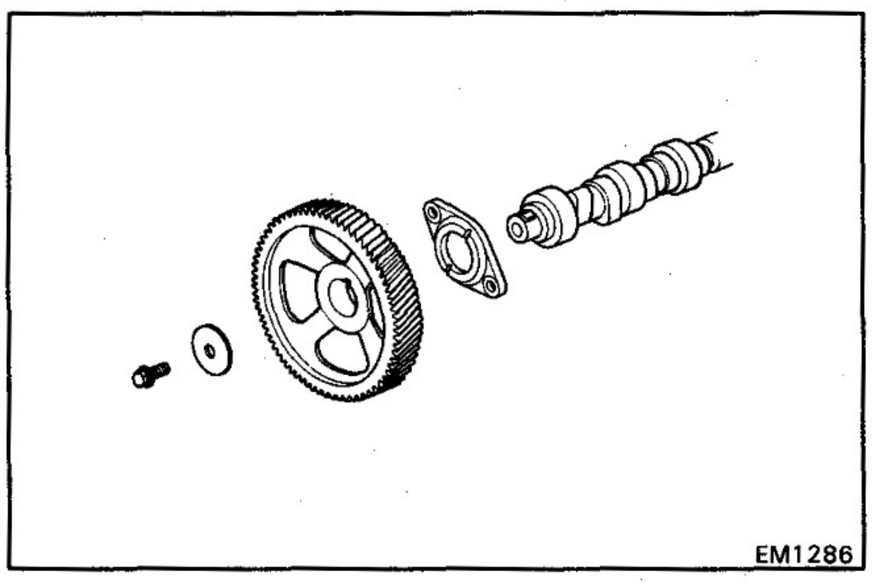

2. INSTALL NEW CAMSHAFT

(a) Install the timing gear set key to the camshaft.

(b) Assembly the camshaft, thrust plate and timing gear as shown.

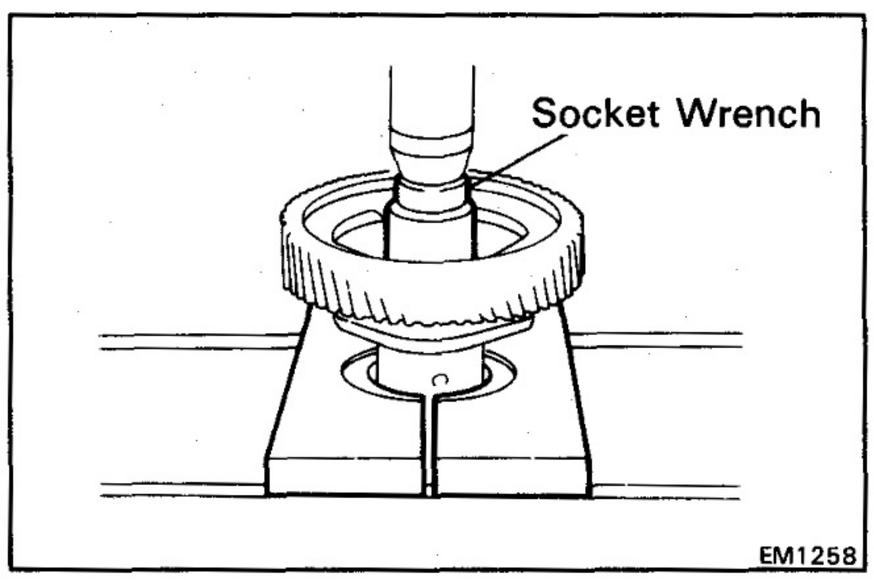

(c) Using a 29 mm socket wrench and press, align the timing gear set key with the key groove of the timing gear, and press in the camshaft timing gear.

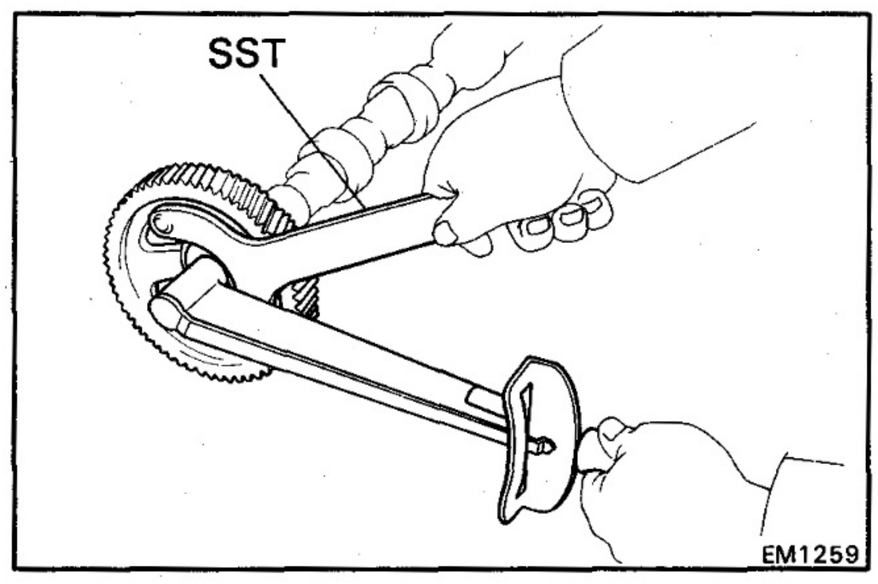

(d) Using SST, install the plate washer and bolt. Torque the bolt.

SST 09278-54012

Torque: 375 kg-cm (27 ft-lb, 37 N·m)

3. CHECK CAMSHAFT THRUST CLEARANCE (See page EM-69)

Standard thrust clearance: 0.06 – 0.13 mm (0.0024 – 0.0051 in.)

Maximum thrust clearance: 0.30 mm (0.0118 in.)

REPLACEMENT OF CRANKSHAFT FRONT OIL SEAL

REPLACE CRANKSHAFT FRONT OIL SEAL

NOTE: There are two methods (A and B) to replace the oil seal as follows.

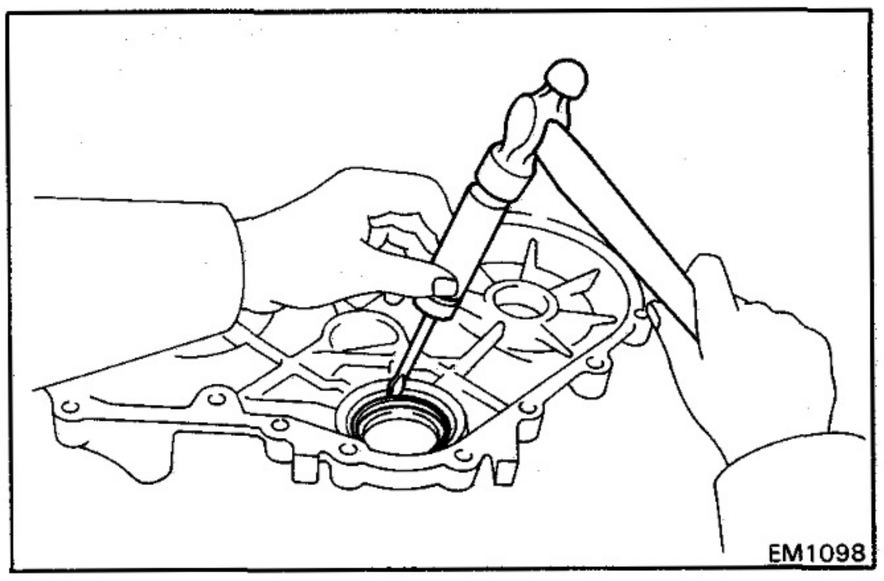

A. If timing gear cover is removed from cylinder block:

(a) Using a screwdriver and hammer, tap out the oil seal.

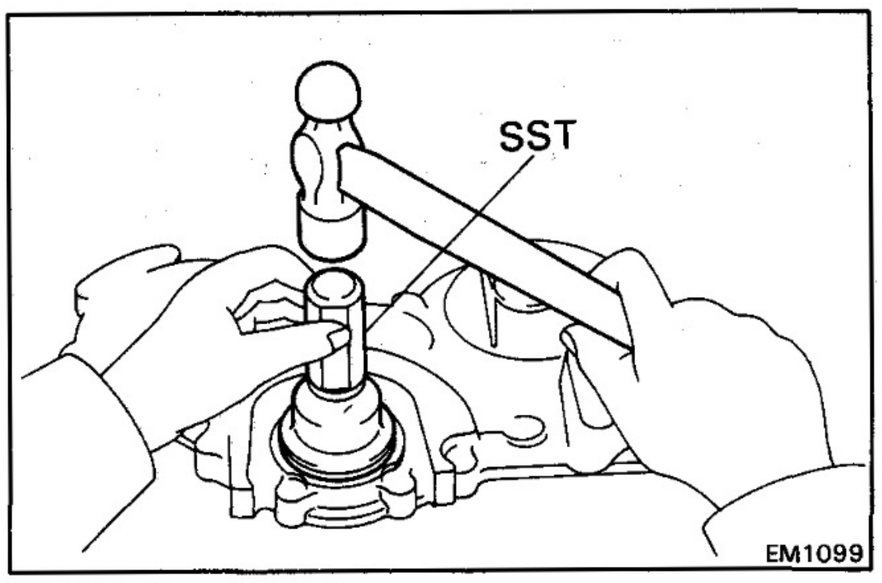

(b) Using SST and a hammer, tap in a new oil seal until its surface is flush with the timing gear cover edge.

SST 09223-46011

(c) Apply MP grease to the oil seal lip.

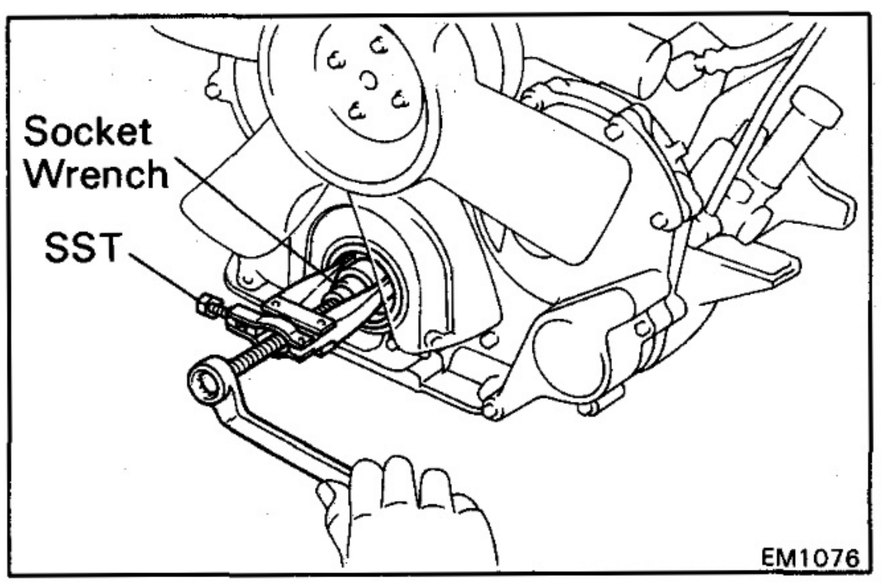

B. If timing gear cover is installed to cylinder block:

(a) Using SST and a socket wrench, remove the oil seal.

SST 09308-10010

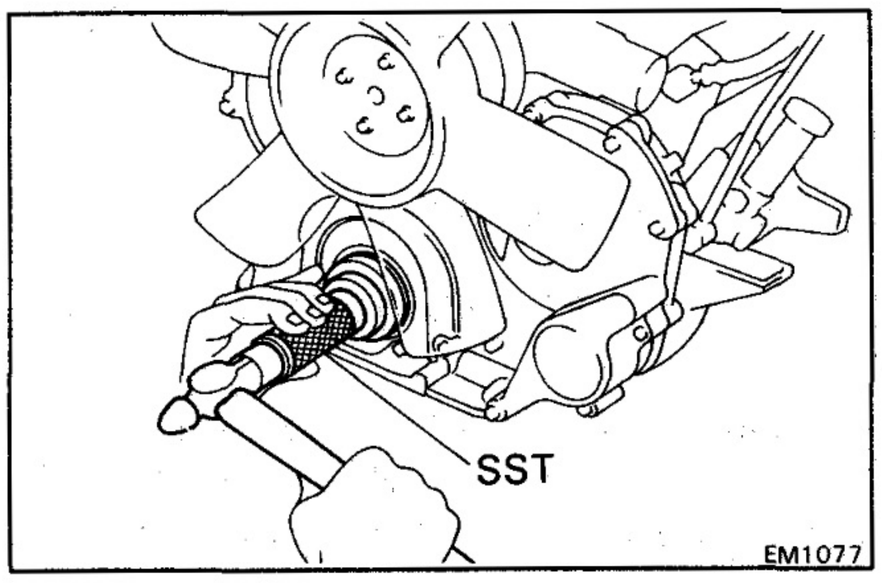

(b) Apply MP grease to a new oil seal lip.

(c) Using SST and a hammer, tap in the oil seal until its surface is flush with the timing gear cover edge.

SST 09223-46011

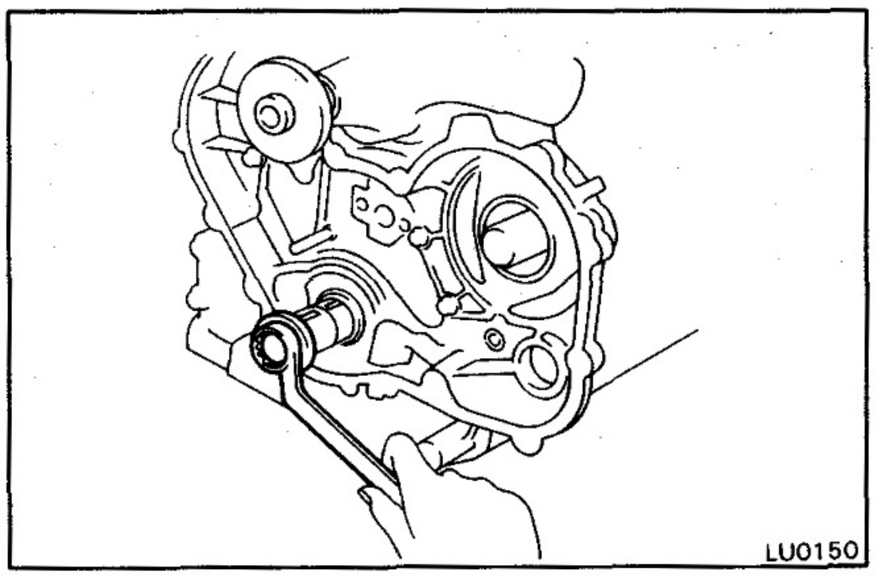

INSTALLATION OF TIMING GEARS AND CAMSHAFT

(See page EM-63)

1. INSTALL CRANKSHAFT TIMING GEAR

(a) Check the set key on crankshaft facing upward.

If not, then turn the crankshaft with a crankshaft pulley mount bolt.

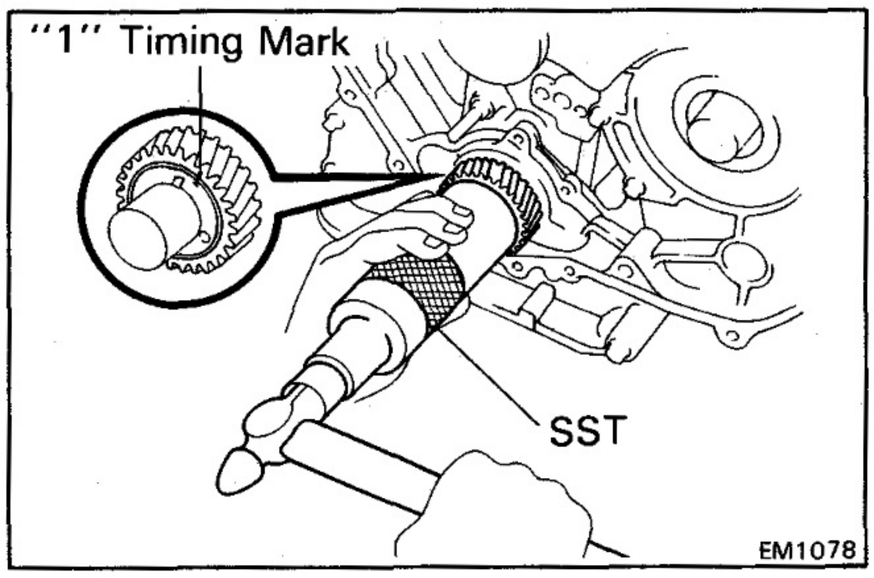

(b) Put the timing gear on the crankshaft with the "1" timing mark of the timing gear facing forward.

(c) Align the timing gear set key with the key groove of the timing gear.

(d) Using SST and a hammer, tap in the timing gear.

SST 09608-35014 (09608-06040)

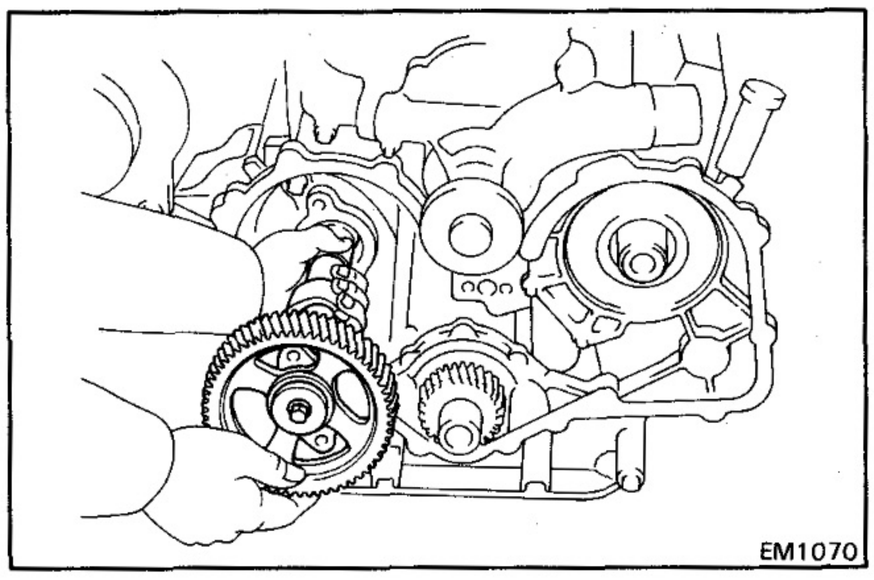

2. INSTALL CAMSHAFT TIMING GEAR AND CAMSHAFT ASSEMBLY

(a) Insert the camshaft into the cylinder block.

CAUTION: Be careful not to damage the camshaft bearings.

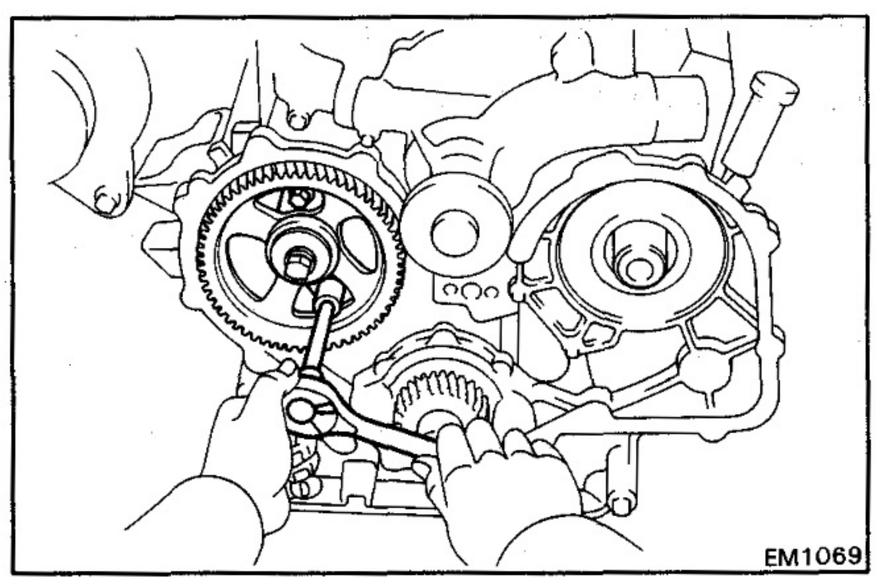

(b) Install and torque the two bolts.

Torque: 185 kg-cm (13 ft-lb, 18 N·m)

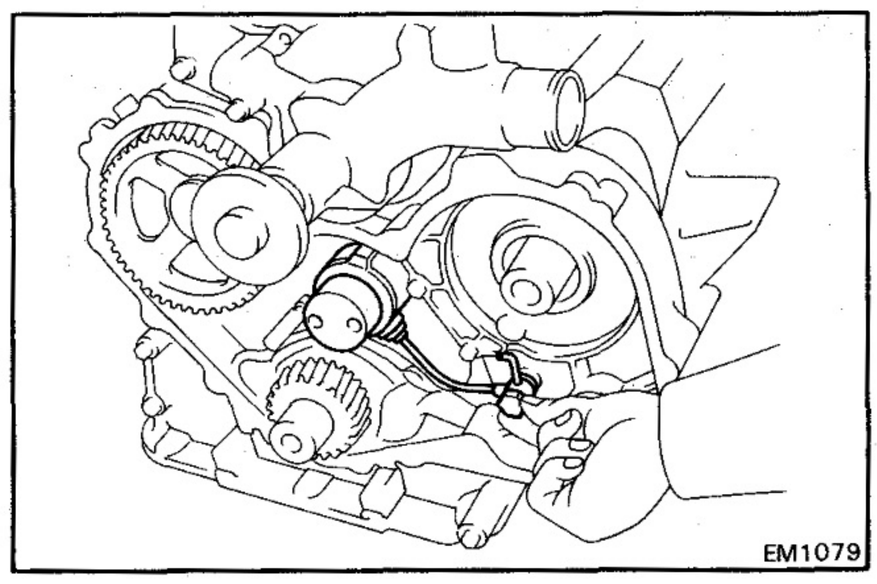

3. INSTALL IDLE GEAR SHAFT

Temporarily install the idle gear with the union bolt.

CAUTION: Do not tighten the union bolt.

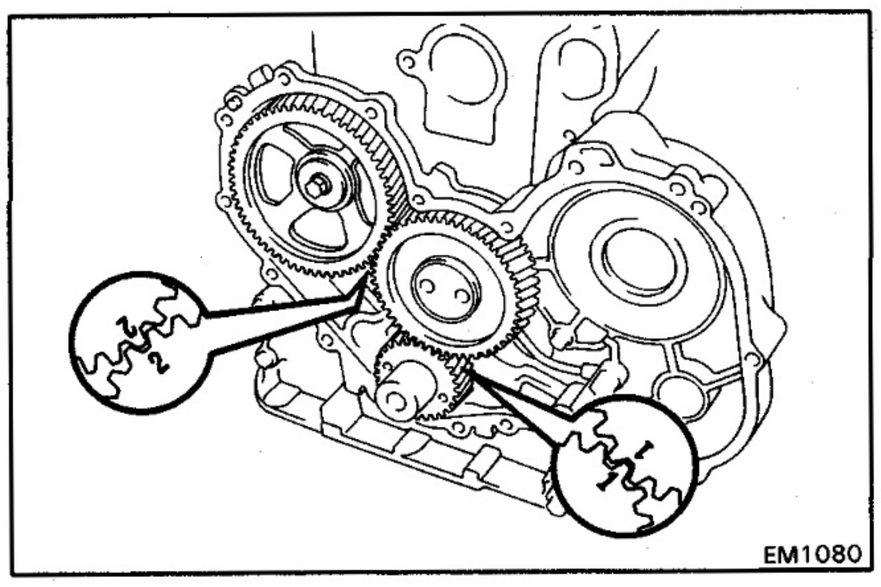

4. INSTALL IDLE GEAR

(a) Align the idle gear timing marks "1" and "2" with the crankshaft gear timing mark "1" and camshaft gear timing mark "2" respectively, and mesh the gears.

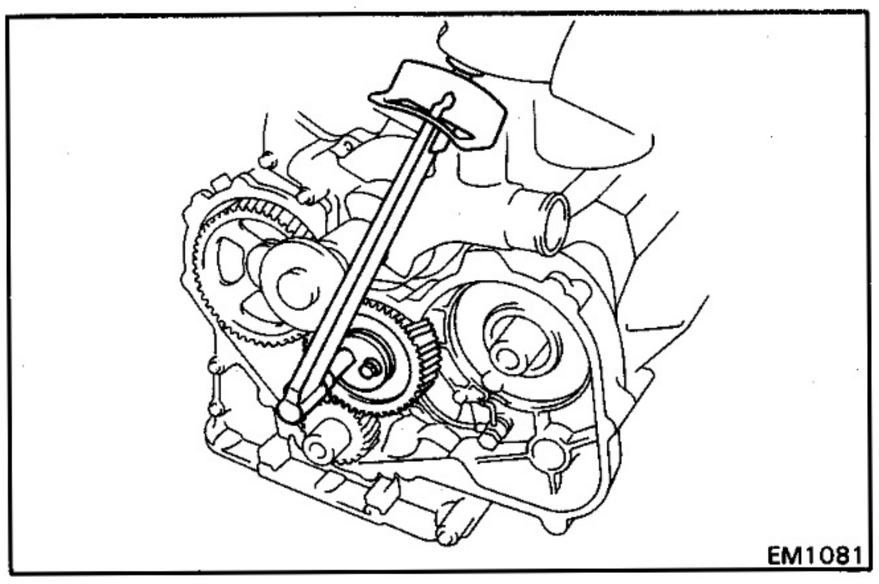

(b) Apply a light coat of engine oil on the threads and under the bolt heads.

(c) Install the thrust plate with the two bolts. Torque the bolts.

Torque: 475 kg-cm (34 ft-lb, 47 N·m)

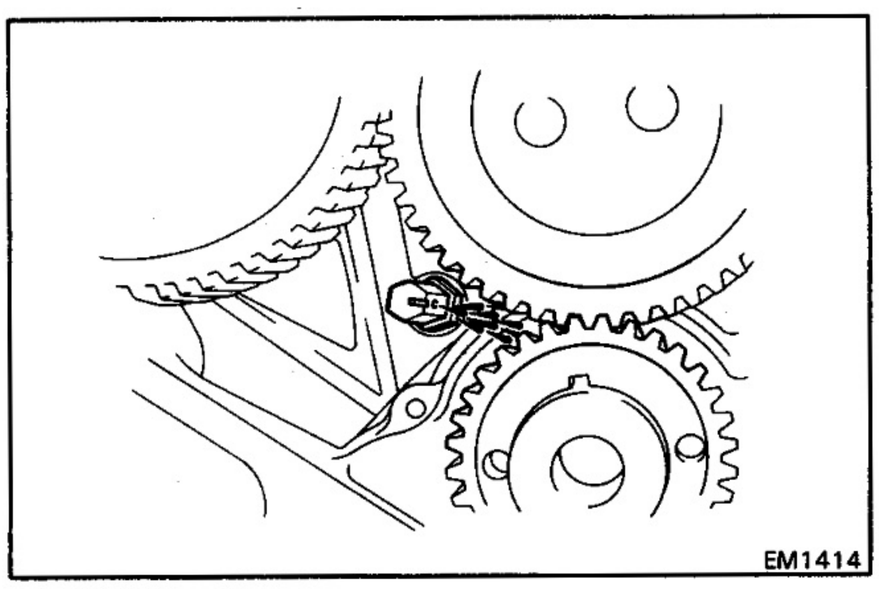

(d) Check that the oil nozzle is in the position shown.

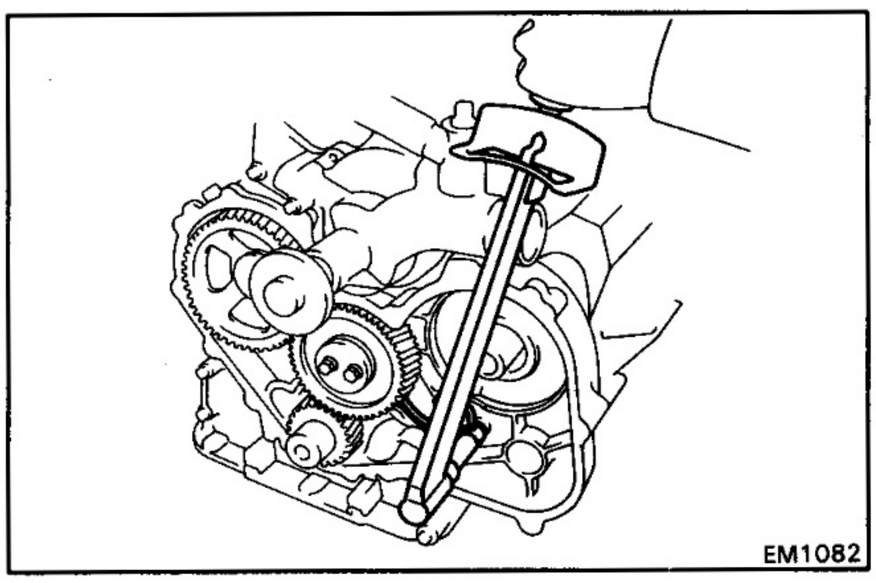

5. TORQUE IDLE GEAR SHAFT UNION BOLT

Torque: 110 kg-cm (8 ft-lb, 11 N·m)

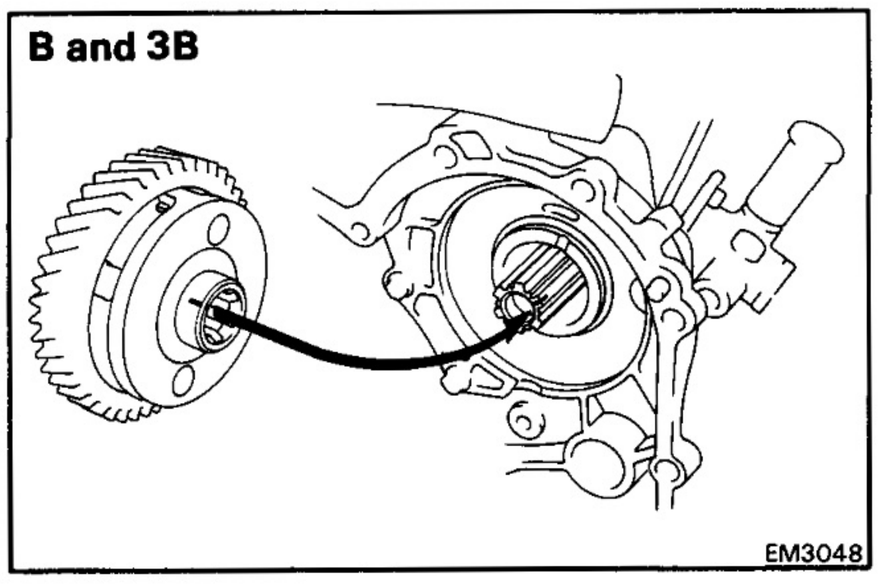

6. INSTALL AUTOMATIC TIMER

(a) Apply MP grease to the timer hub spline, bearing and injection pump spline.

(b) [B and 3B]
Align the marks of the automatic timer hub and injection pump spline, and install the timer.

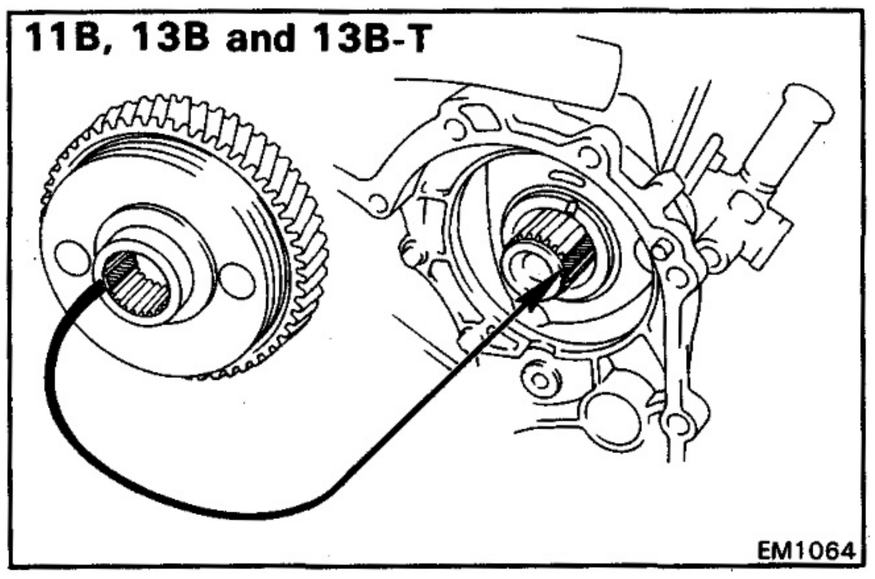

(c) [11B, 13B and 13B-T]
Align the spline toothless portions of the automatic timer hub and injection pump, and install the timer.

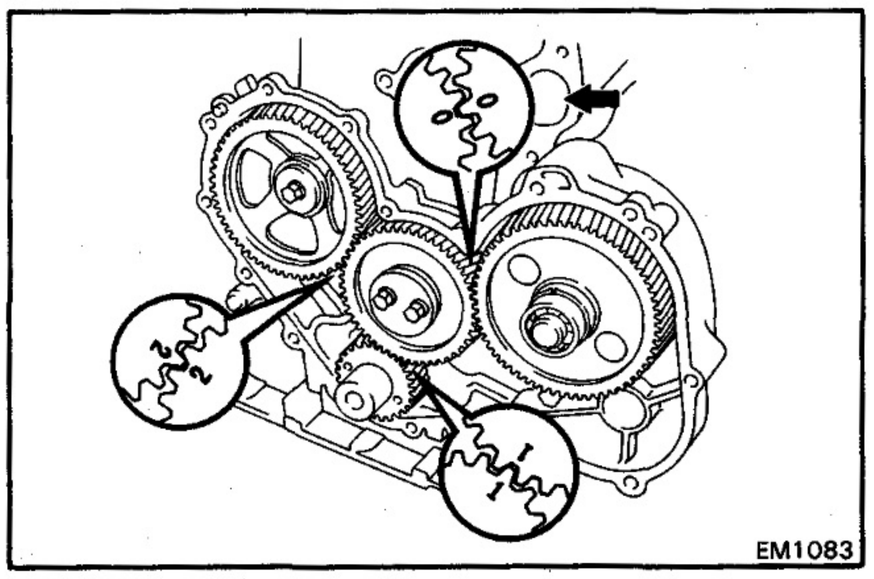

(d) Align the idle gear timing mark 0 with the timer drive gear timing mark 0, and mesh the gears.

7. CHECK TIMING GEAR BACKLASH
(See page EM-67)

Standard backlash:	**0.058 – 0.162 mm (0.0023 – 0.0064 in.)**
Maximum backlash:	**0.30 mm (0.0118 in.)**

8. CHECK IDLE GEAR THRUST CLEARANCE
(See page EM-67)

Standard thrust clearance:	**0.06 – 0.17 mm (0.0024 – 0.0067 in.)**
Maximum thrust clearance:	**0.30 mm (0.0118 in.)**

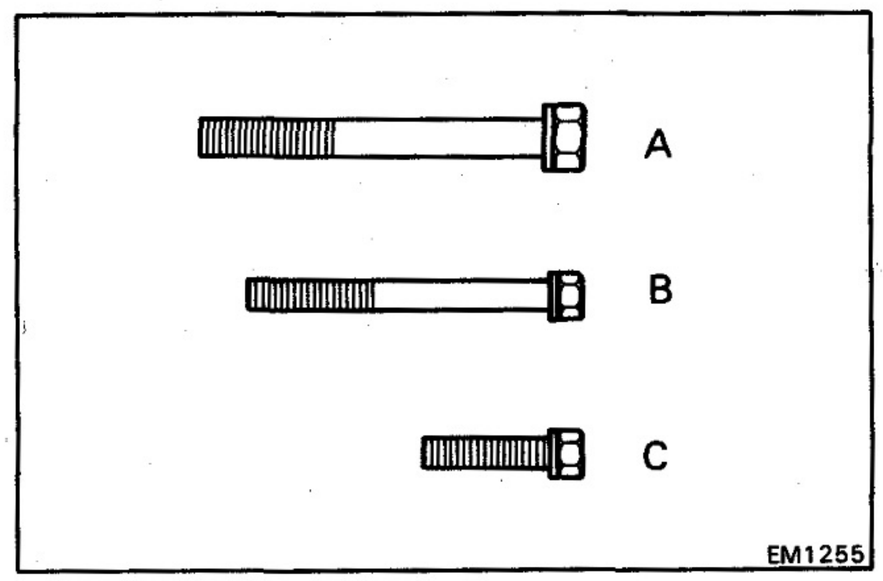

9. INSTALL TIMING GEAR COVER

NOTE: Use the bolts indicated by A, B and C.

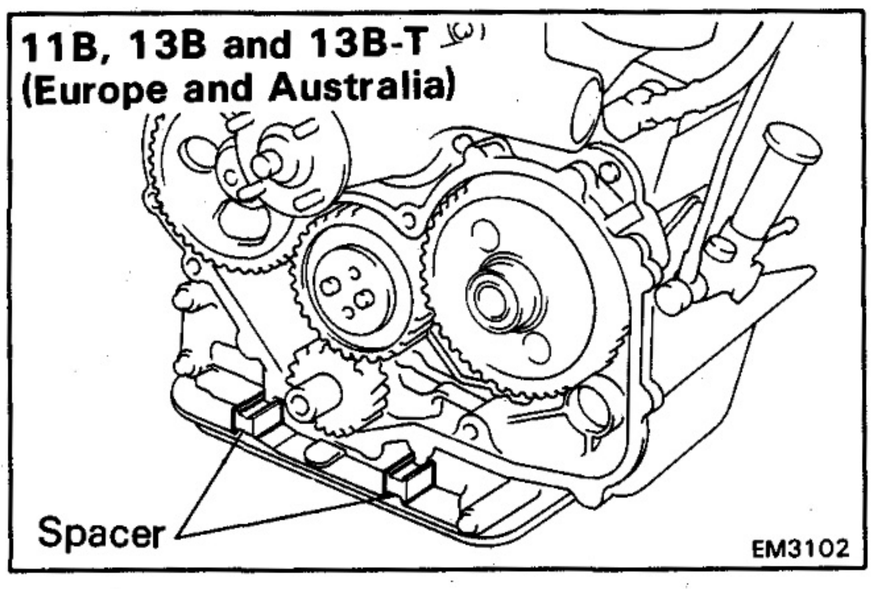

(a) [11B, 13B and 13B-T (Europe and Australia)]
Place the spacer in position on the timing gear case. Apply adhesive to the contacting surfaces of the timing gear case or cover.

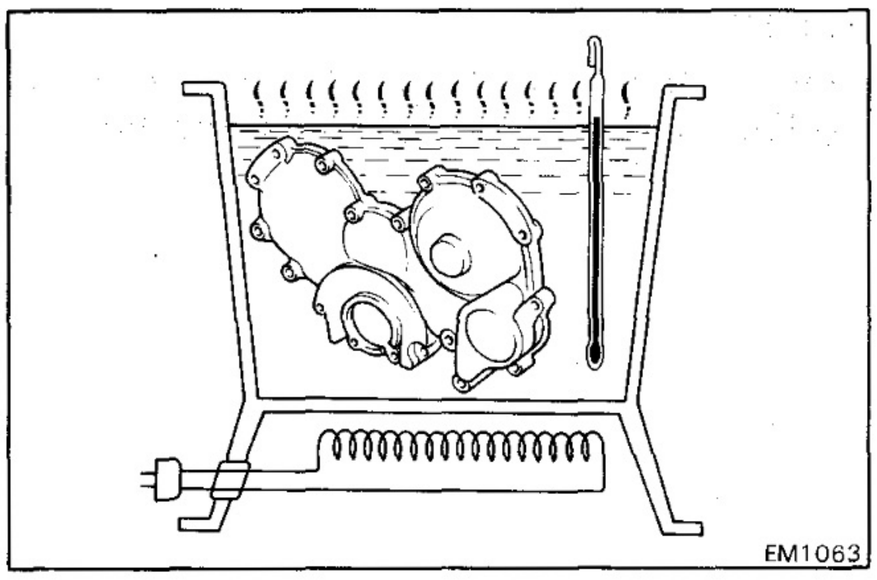

(a) Gradually heat the timing gear cover to about 60°C (140°F).

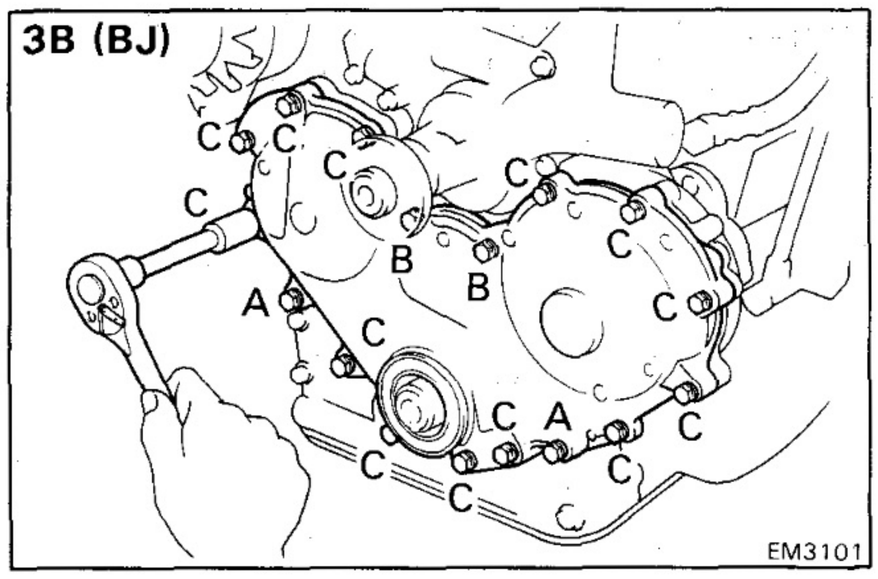

(b) Install a new gasket and the warmed gear cover with seventeen bolts.

Torque: A 375 kg-cm (27 ft-lb, 37 N·m)
B and C 185 kg-cm (13 ft-lb, 18 N·m)

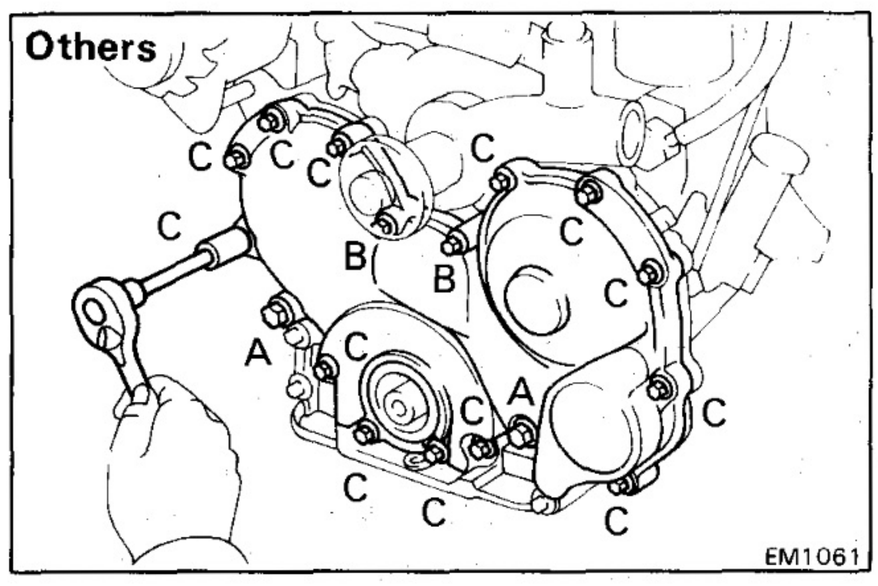

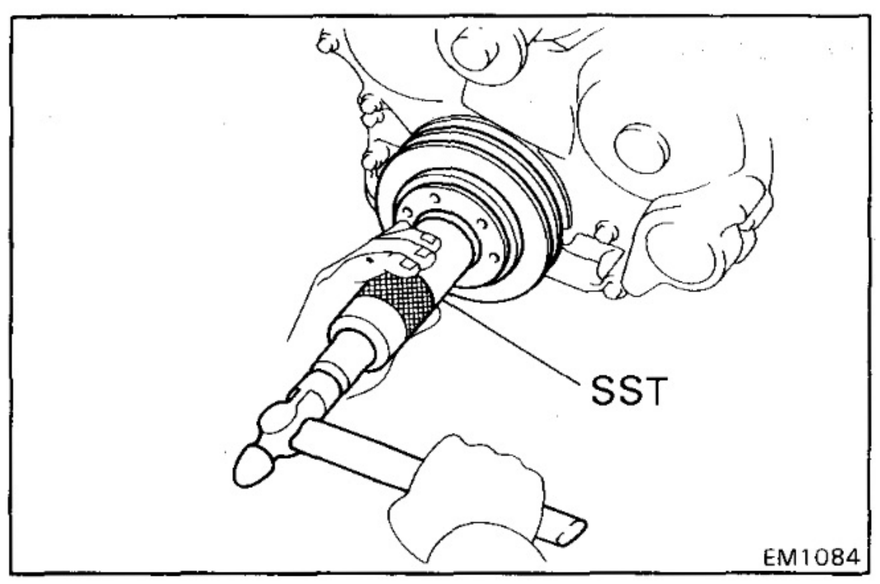

10. INSTALL CRANKSHAFT PULLEY

(a) Align the pulley set key with the key groove of the pulley.

(b) Using SST and a hammer, tap in the pulley.

SST 09608-35014 (09608-06040)

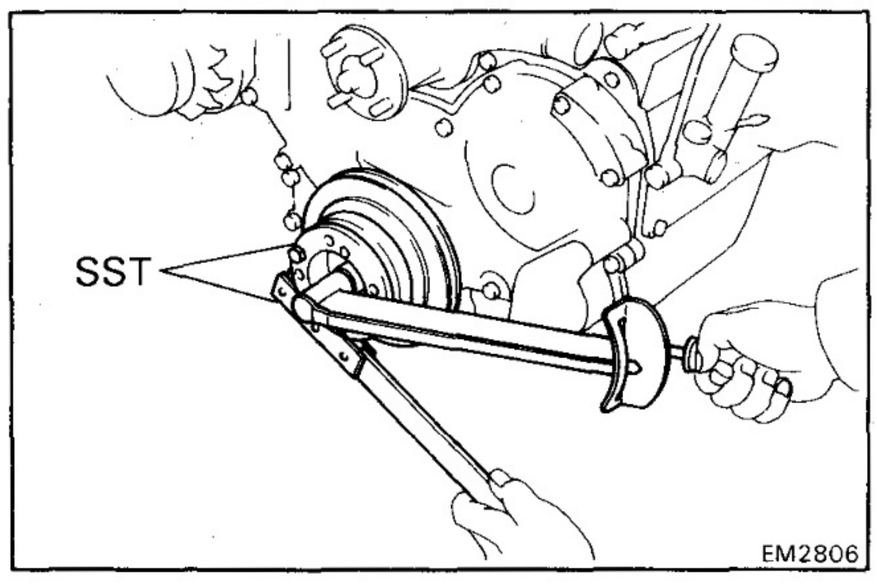

(c) Apply a light coat of engine oil on the threads and under the bolt head.

(d) Using SST, install and torque the pulley mount bolt.

SST 09213-58011 and 09330-00021

Torque: 2,450 kg-cm (177 ft-lb, 240 N·m)

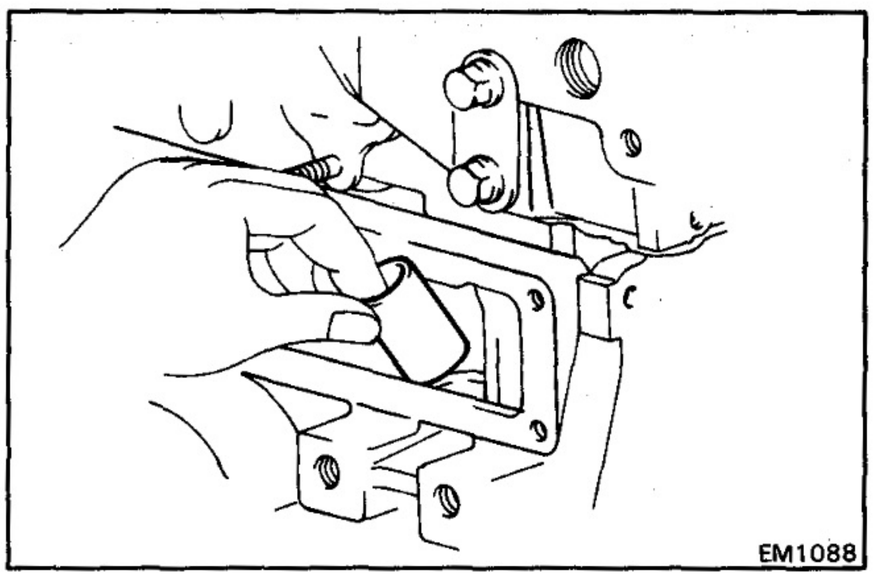
EM1088

11. INSTALL VALVE LIFTERS

Carefully insert the eight lifters into the lifter bores.

12. INSTALL PUSH ROD COVER

(a) Remove any old packing (FIPG) material and be careful not to drop any oil on the contact surfaces of the push rod cover and cylinder block.

- Using a razor blade and gasket scraper, remove all the residual packing (FIPG) material from the gasket surfaces and sealing groove.
- Thoroughly clean all components to remove all the loose material.
- Clean both sealing surfaces with a non-residue solvent.

CAUTION: Do not use a solvent which will affect the painted surfaces.

(b) Apply seal packing to the push rod cover as shown in the figure.

Seal packing: Part No. 08826-00080 or equivalent

- Install a nozzle that has been cut to a 3 mm (0.12 in.) opening.

NOTE: Avoid applying an excess amount to the surface.

- Parts must be assembled within 3 minutes of application. Otherwise, the material must be removed and reapplied.
- Immediately remove nozzle from tube and reinstall cap.

(c) Install the push rod cover with the eight bolts and two nuts.

Torque: 185 kg-cm (13 ft-lb, 18 N·m)

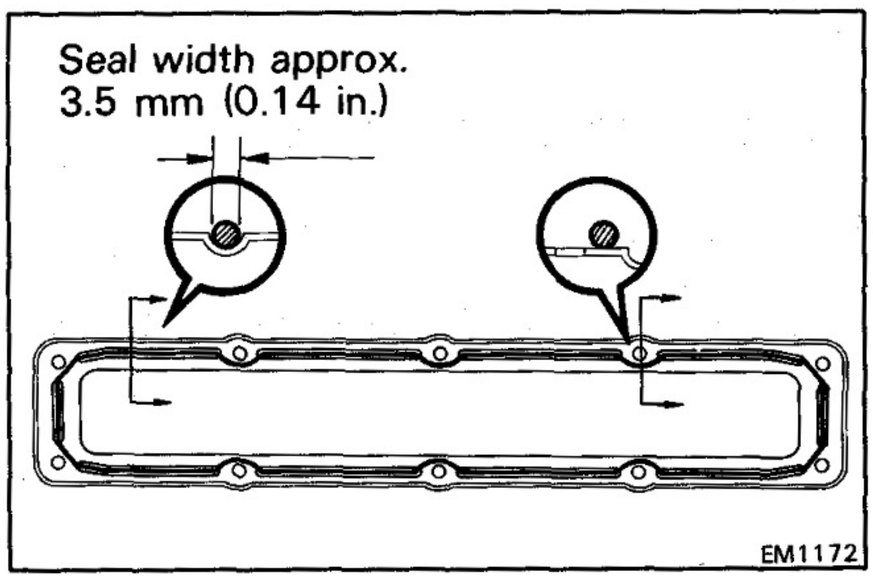

EM1172

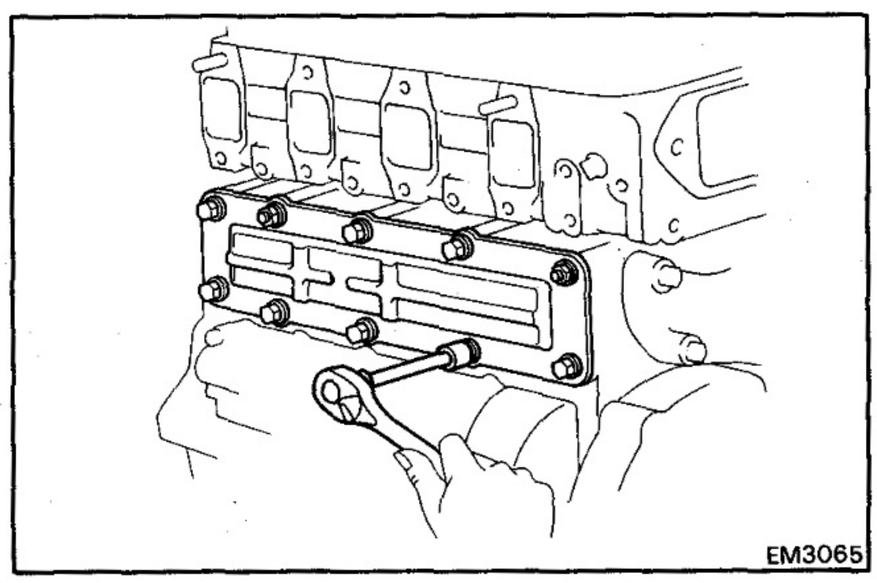
EM3065

11B, 13B and 13B-T

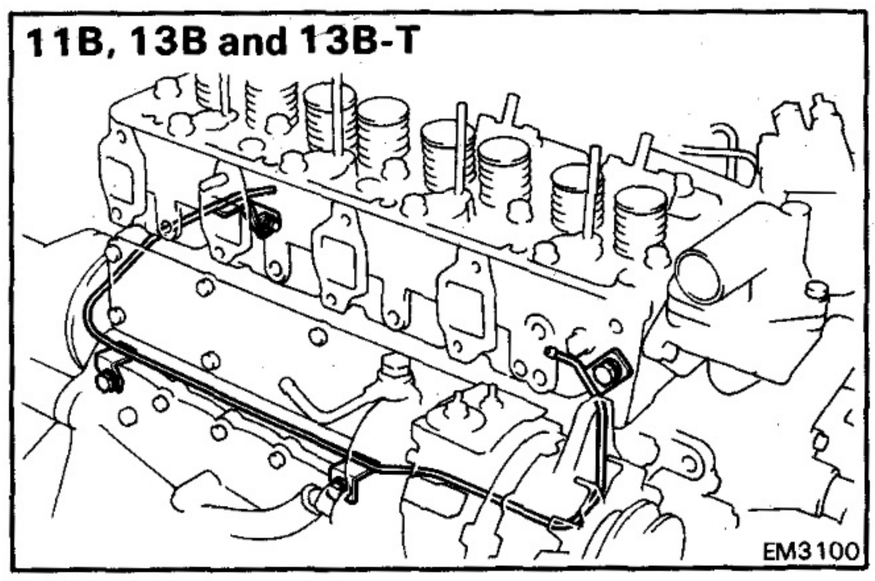
EM3100

13. [11B, 13B AND 13B-T] INSTALL VACUUM PIPE

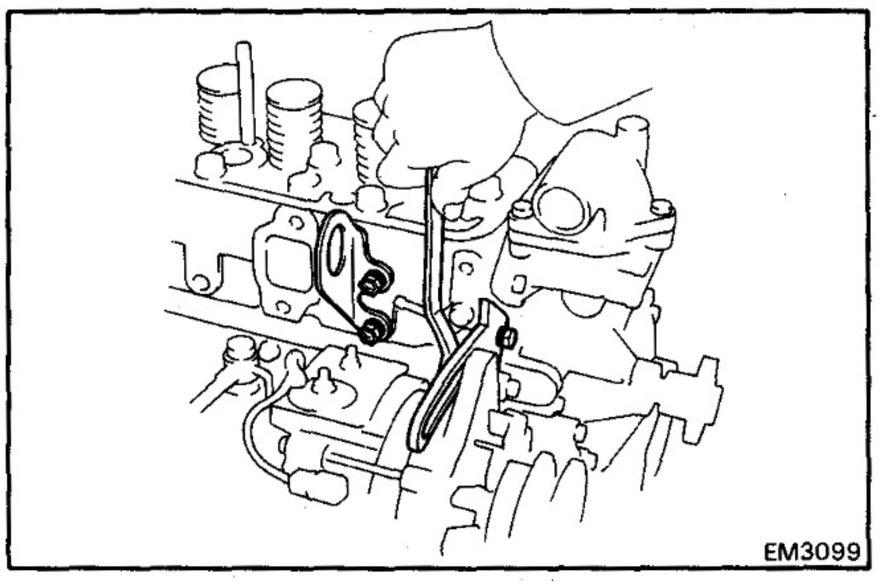

14. **INSTALL NO. 1 ENGINE HANGER AND DRIVE BELT ADJUSTING BAR**

15. **INSTALL EXHAUST MANIFOLD (See page EM-60)**

16. **INSTALL VALVE ROCKER SHAFT ASSEMBLY (See steps 2 to 5 on pages EM-59 and 60)**

17. **[13B-T]**
INSTALL TURBOCHARGER
(See steps 5 to 11 on pages EM-39 and 40)

18. **INSTALL WATER PUMP PULLEY AND FAN (See page CO-10)**

19. **INSTALL AND ADJUST DRIVE BELT (See page CH-7)**

20. **START ENGINE AND CHECK FOR LEAKS**

21. **CHECK ENGINE OIL LEVEL (See page LU-2)**

22. **READJUST VALVE CLEARANCES (See page EM-22)**

CYLINDER BLOCK

COMPONENTS

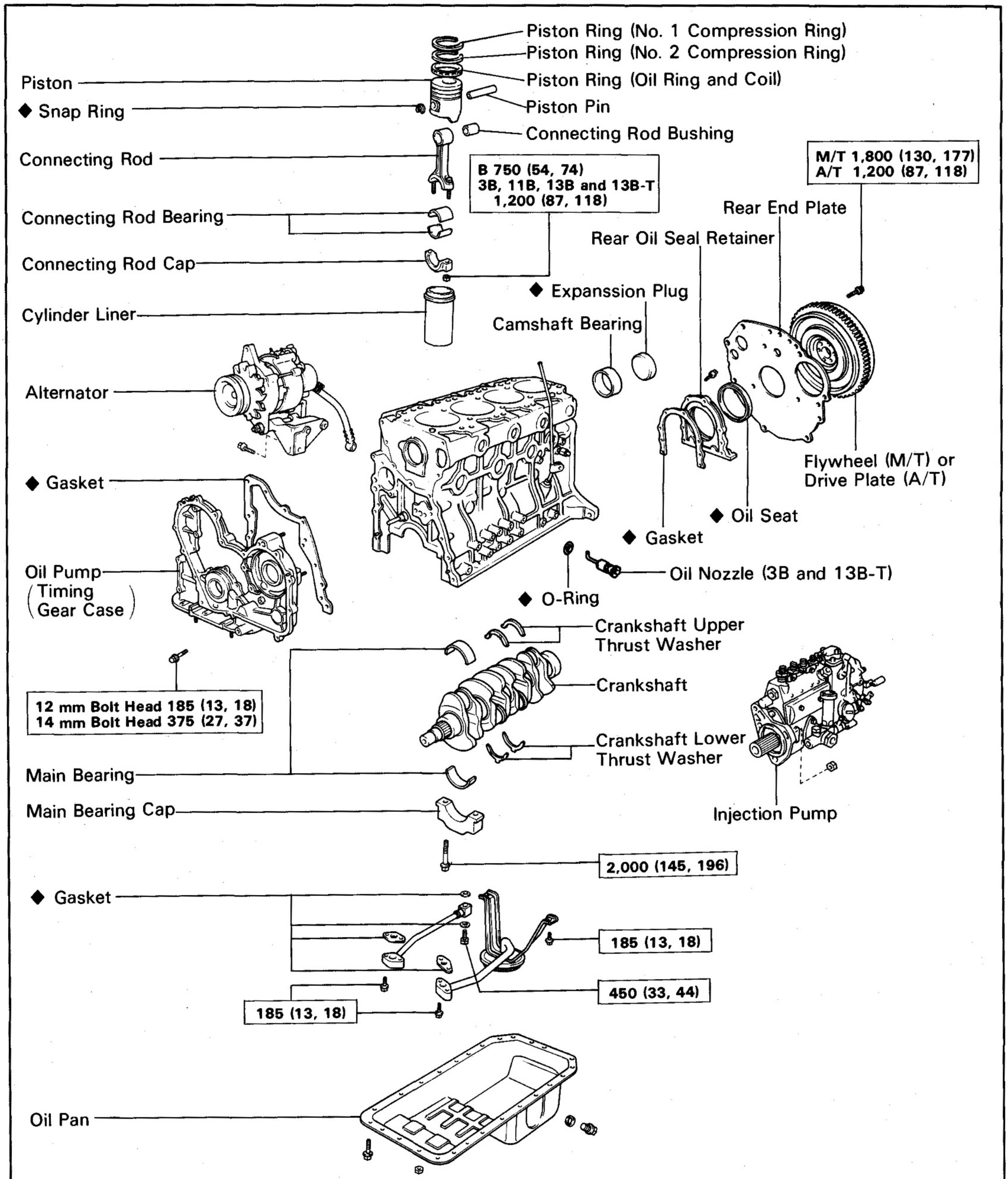

kg-cm (ft-lb, N·m) : Specified torque

◆ Non-reusable part

EM3103

DISASSEMBLY OF CYLINDER BLOCK

(See page EM-79)

1. [M/T]
   REMOVE FLYWHEEL
2. [A/T]
   REMOVE DRIVE PLATE
3. REMOVE REAR END PLATE
4. INSTALL ENGINE TO ENGINE STAND FOR DISASSEMBLY
5. [13B-T]
   REMOVE TURBOCHARGER (See page EM-36)
6. REMOVE INJECTION PIPES
   (See page FU-4) B and 3B
   (See page FU-10) 11B, 13B and 13B-T
7. REMOVE ALTERNATOR
8. REMOVE CYLINDER HEAD (See page EM-44)
9. REMOVE TIMING GEARS AND CAMSHAFT
   (See pages EM-64)
10. REMOVE INJECTION PUMP (See page FU-27)
11. REMOVE OIL PAN AND OIL PUMP (See page LU-5)

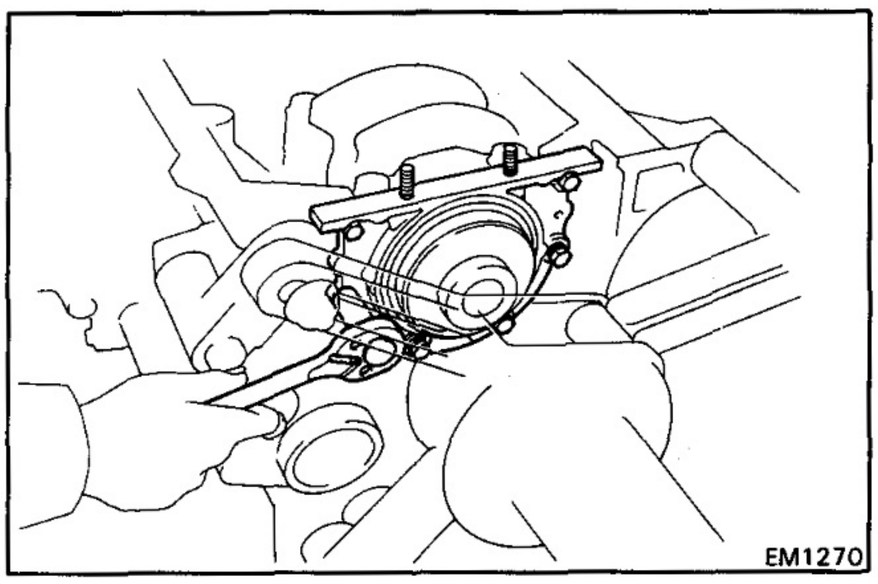

12. REMOVE REAR OIL SEAL RETAINER
    Remove the six bolts, retainer and gasket.

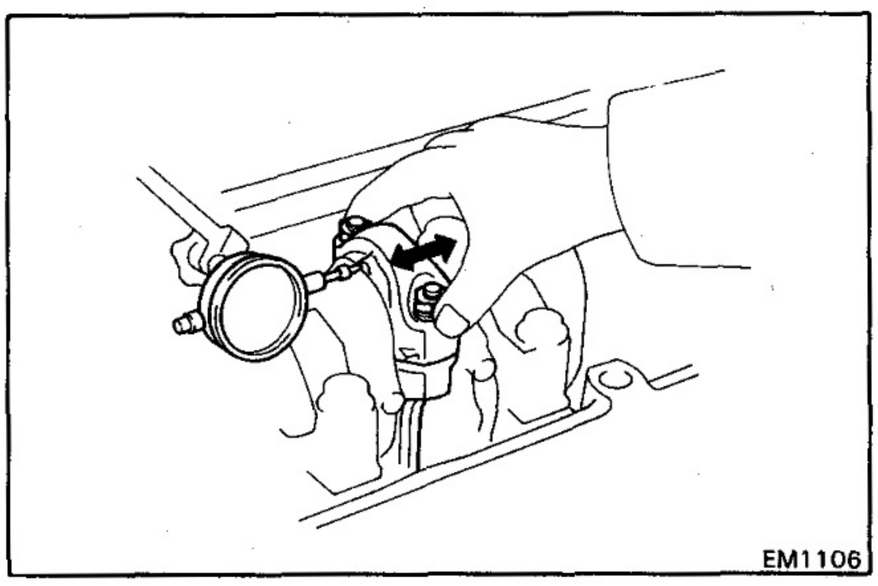

13. CHECK CONNECTING ROD THRUST CLEARANCE
    Using a dial indicator, measure the thrust clearance while moving the rod back and forth.

    Standard thrust clearance: **0.200 — 0.320 mm (0.0079 — 0.0126 in.)**
    Maximum thrust clearance: **0.40 mm (0.0157 in.)**

    If the clearance is greater than maximum, replace the connecting rod assembly. If necessary, replace the crankshaft.

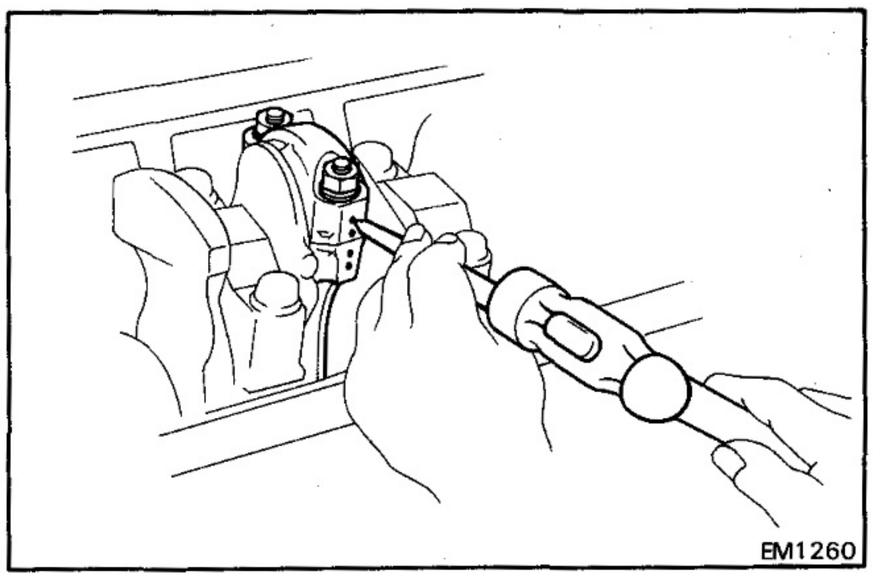
EM1260

14. REMOVE CONNECTING ROD CAPS AND CHECK OIL CLEARANCE

(a) Using a punch or numbering stamp, place match-marks on the connecting rod and cap to ensure correct reassembly.

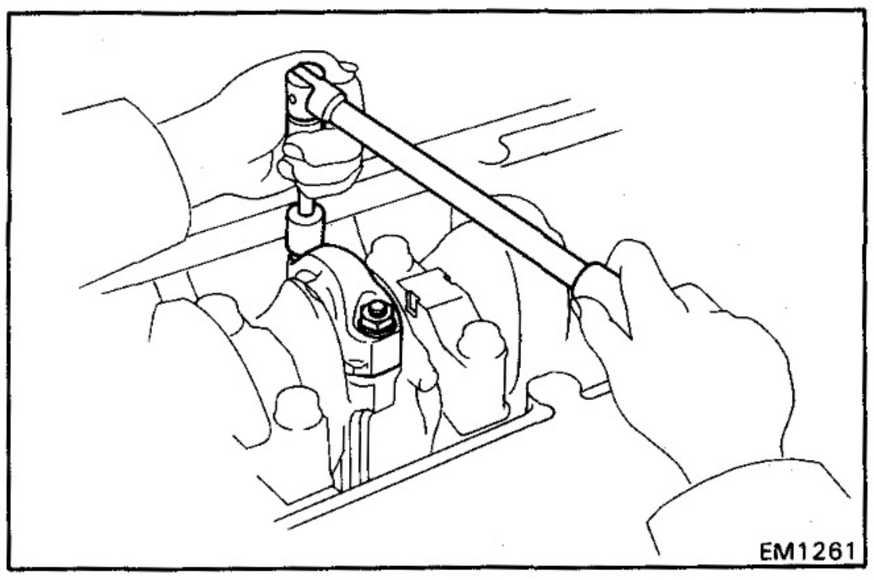
EM1261

(b) Remove the connecting rod cap nuts.

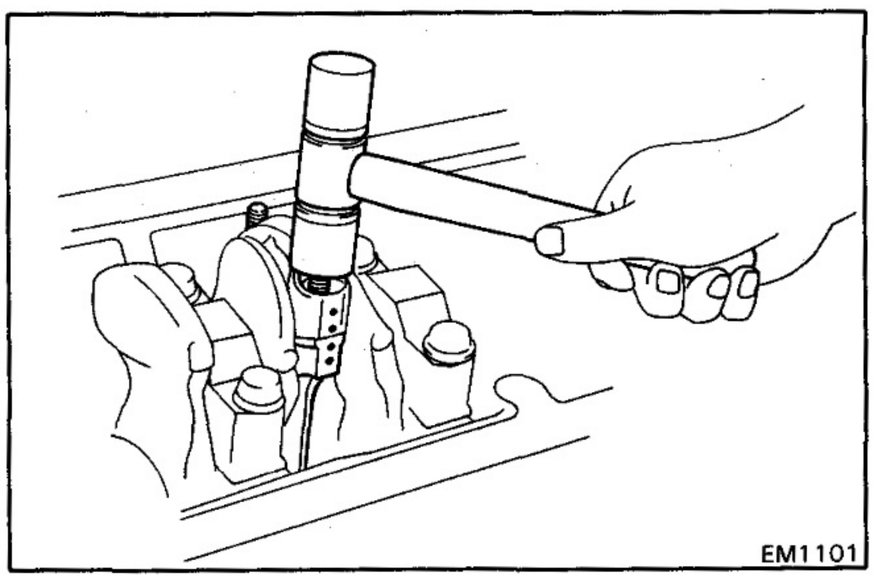
EM1101

(c) Using a plastic-faced hammer, lightly tap the connecting rod bolts and lift off the connecting rod cap.

NOTE: Keep the lower bearing inserted with the connecting rod cap.

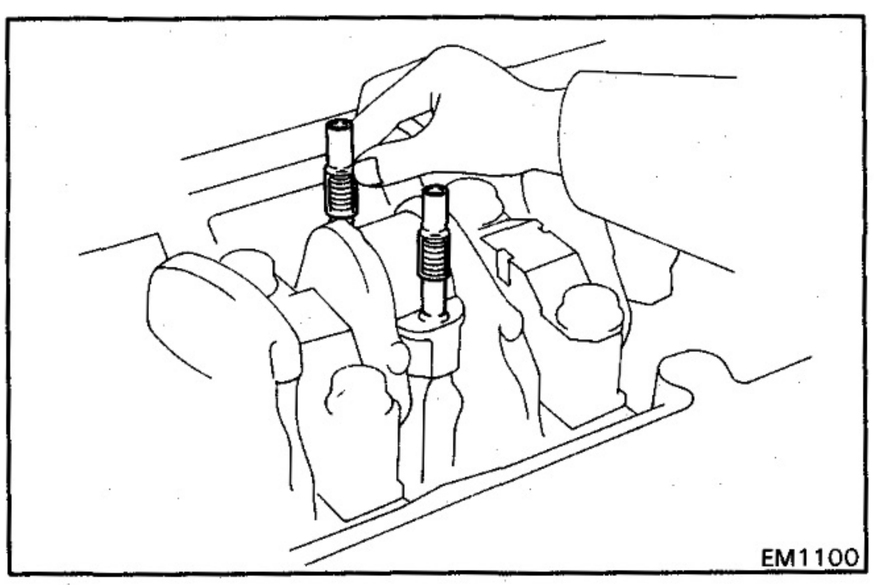
EM1100

(d) Cover the connecting rod bolts with a short piece of hose to protect the crankshaft from damage.

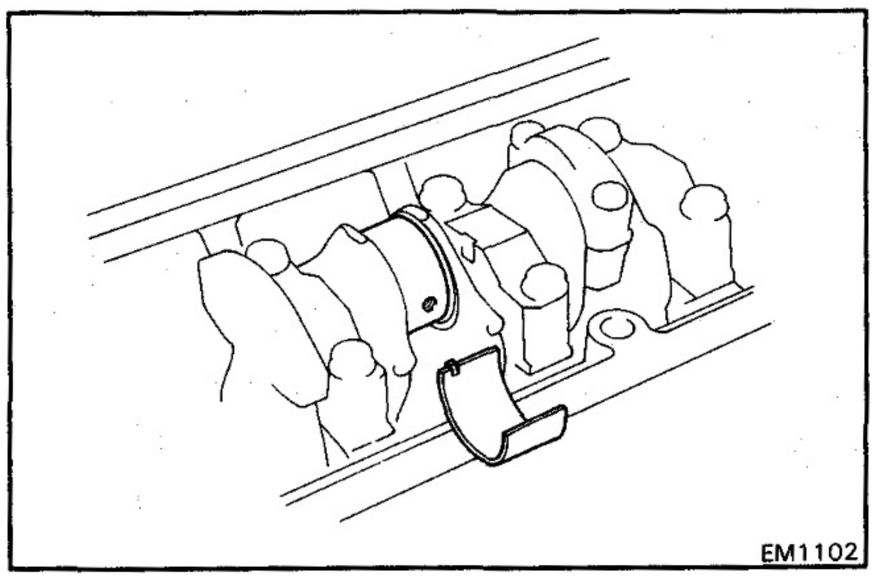
EM1102

(e) Clean the crank pin and bearing.

(f) Check the crank pin and bearing for pitting and scratches.

If the crank pin or bearing are damaged, replace the bearings. If necessary, grind or replace the crankshaft.

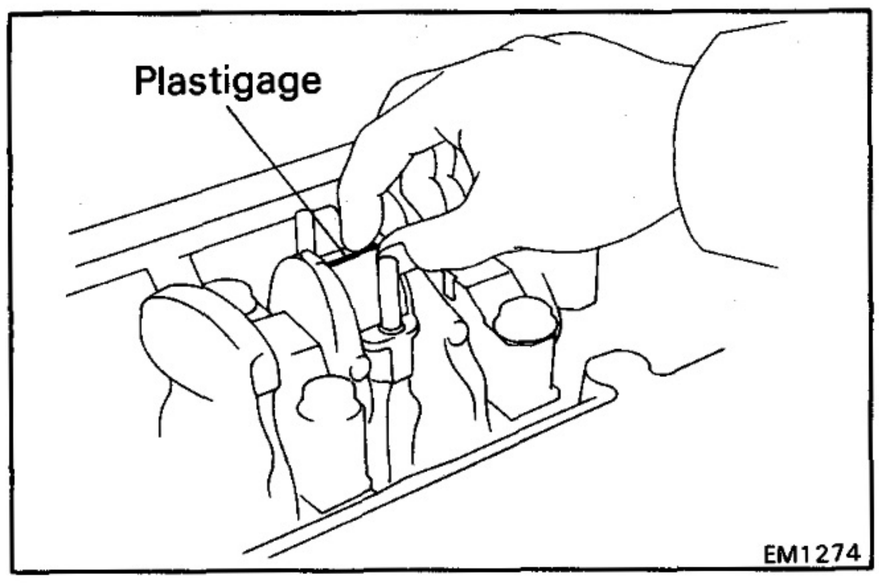

(g) Lay a strip of Plastigage across the crank pin.

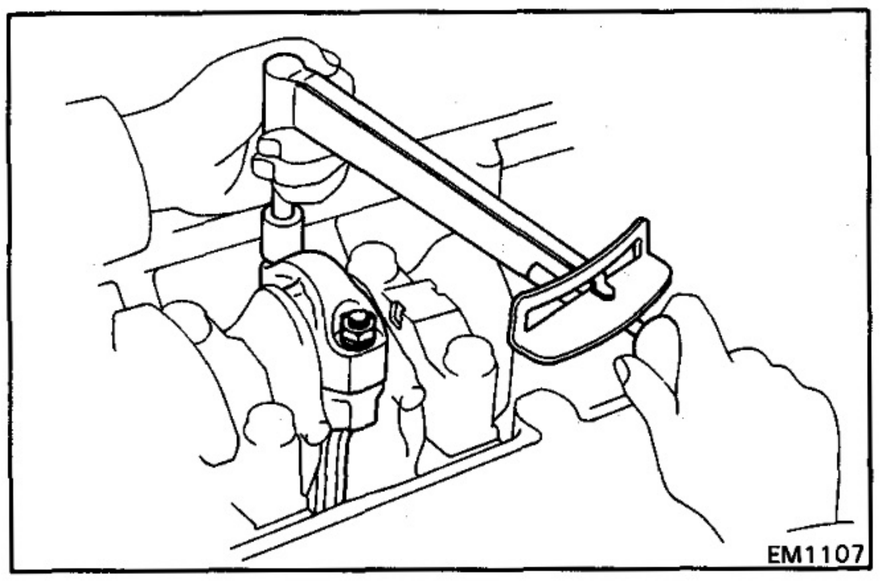

(h) Install the connecting rod cap. (See page EM-103)

Torque: B 750 kg-cm (54 ft-lb, 74 N·m)
3B, 11B, 13B and 13B-T
1,200 kg-cm (87 ft-lb, 118 N·m)

NOTE: Do not turn the crankshaft.

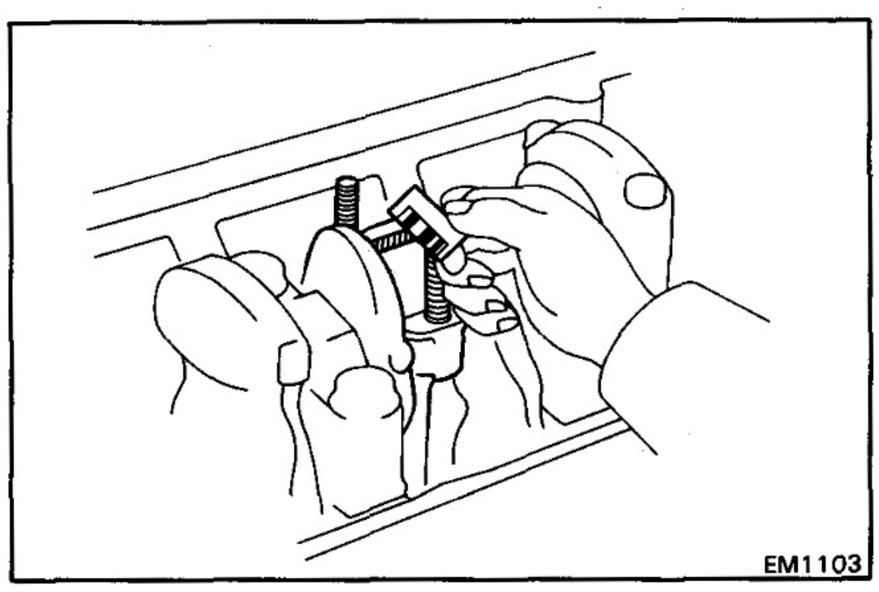

(i) Remove the connecting rod cap.

(j) Measure the Plastigage at its widest point.

Standard oil clearance: 0.030 — 0.070 mm
(0.0012 — 0.0028 in.)
Maximum oil clearance: 0.15 mm (0.0059 in.)

If the clearance is greater than maximum, replace the bearing. If necessary, grind or replace the crankshaft.

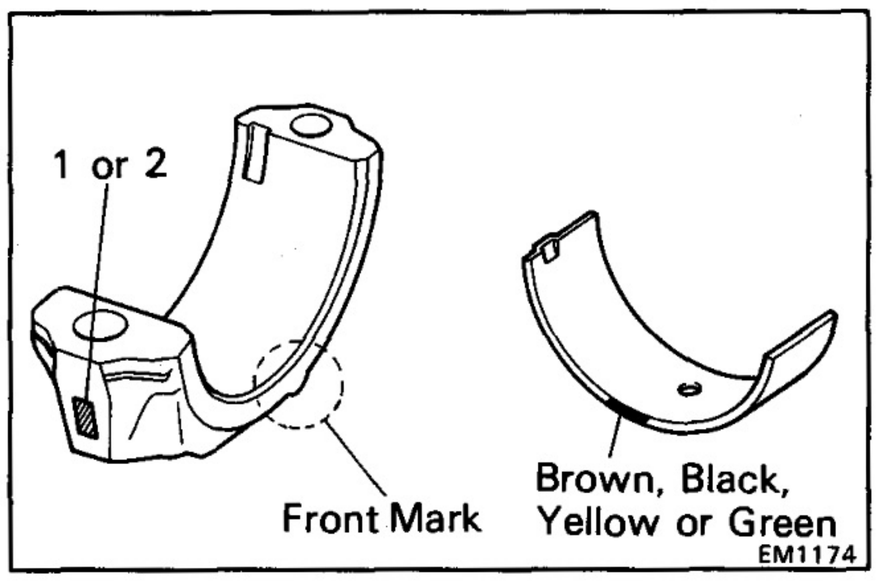

NOTE: There are two sizes of standard bearings, colored brown and black (B), yellow and green (3B, 11B, 13B and 13B-T). If using a standard bearing, select one having the color corresponding to the number on the bearing cap:

1 with Brown (B) or Yellow (3B, 11B, 13B and 13B-T)

2 with Black (B) or Green (3B, 11B, 13B and 13B-T)

Standard bearing thickness (at center wall):
STD size Brown or Yellow
1.480 — 1.485 mm (0.0583 — 0.0585 in.)
STD size Black or Green
1.485 — 1.490 mm (0.0585 — 0.0587 in.)

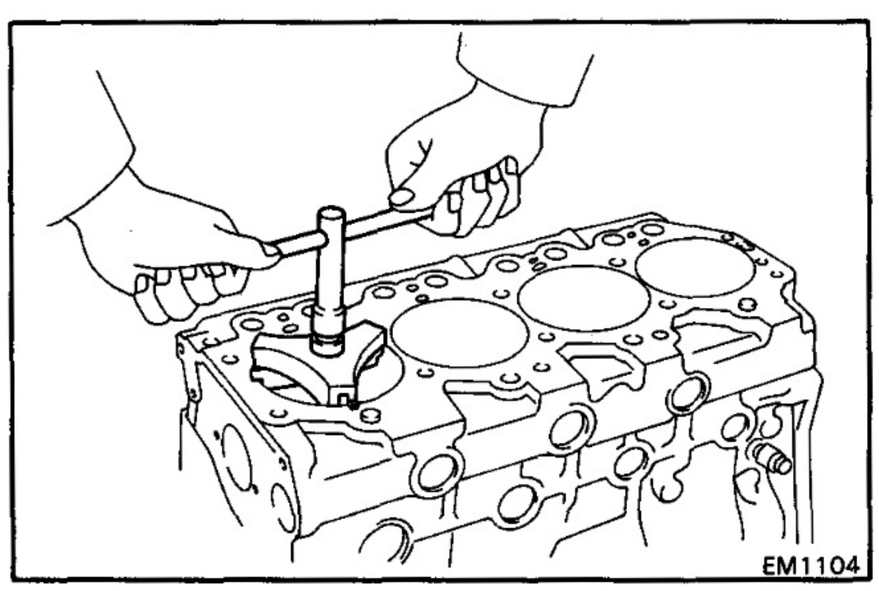

(k) Completely remove the Plastigage.

15. REMOVE PISTON AND CONNECTING ROD ASSEMBLIES

(a) Remove all the carbon from the piston ring ridge.

(b) Cover the connecting rod bolts. (See page EM-96)

(c) Push the piston, connecting rod assembly and upper bearing out through the tap of the cylinder.

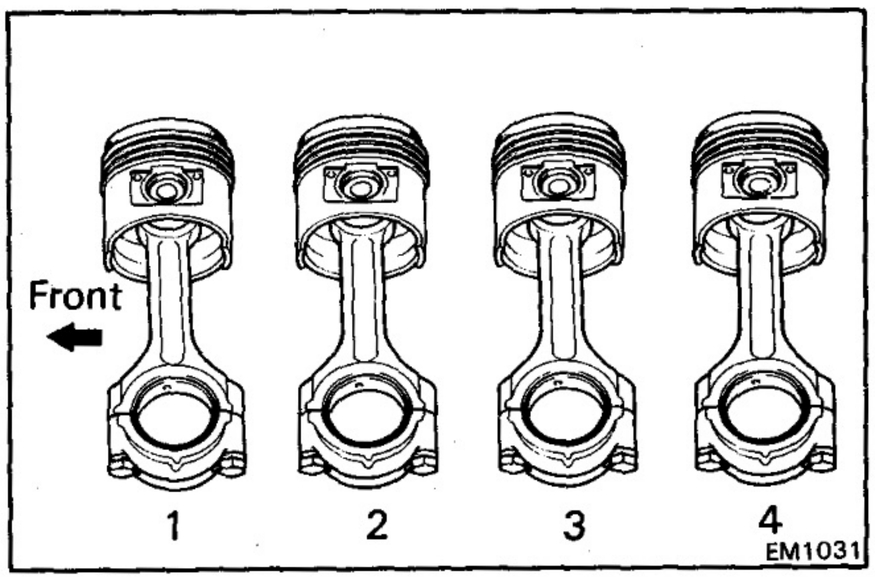

NOTE:

- Keep the bearings, connecting rod and cap together.
- Arrange the piston and connecting rod assemblies in correct order.

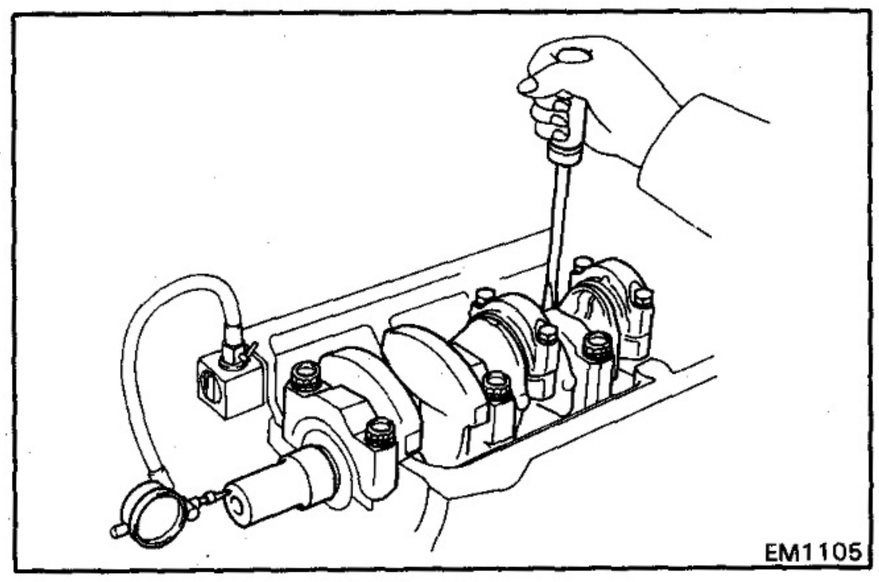

16. CHECK CRANKSHAFT THRUST CLEARANCE

Using a dial indicator, measure the thrust clearance while prying the crankshaft back and forth with a screwdriver.

Standard thrust clearance: 0.040 – 0.250 mm (0.0016 – 0.0098 in.)
Maximum thrust clearance: 0.40 mm (0.0157 in.)

If the clearance is greater than maximum, replace the thrust washers as a set.

Thrust washer thickness:

STD size	**2.430 – 2.480 mm (0.0957 – 0.0976 in.)**
O/S 0.125	**2.493 – 2.543 mm (0.0981 – 0.1001 in.)**
O/S 0.250	**2.555 – 2.605 mm (0.1006 – 0.1026 in.)**

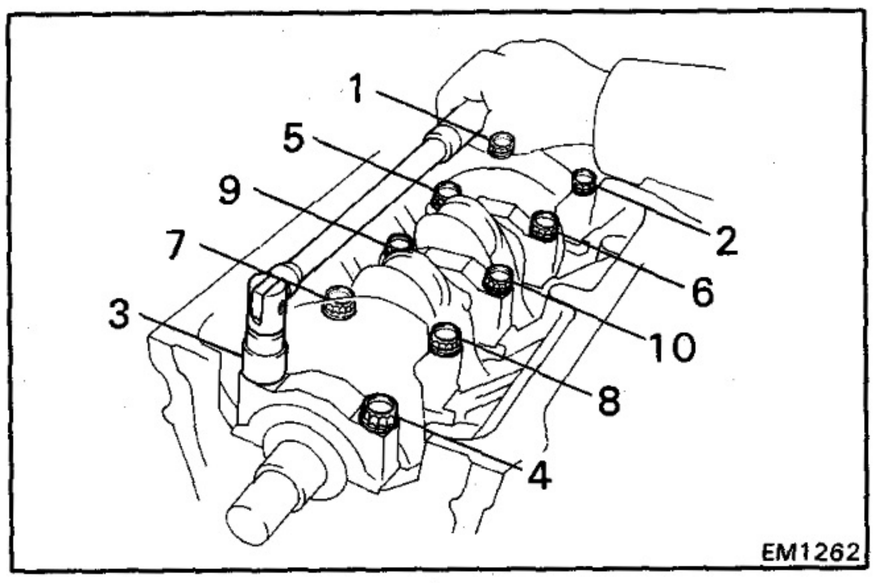

17. REMOVE MAIN BEARING CAPS AND CHECK OIL CLEARANCE

(a) Remove the main bearing cap bolts.

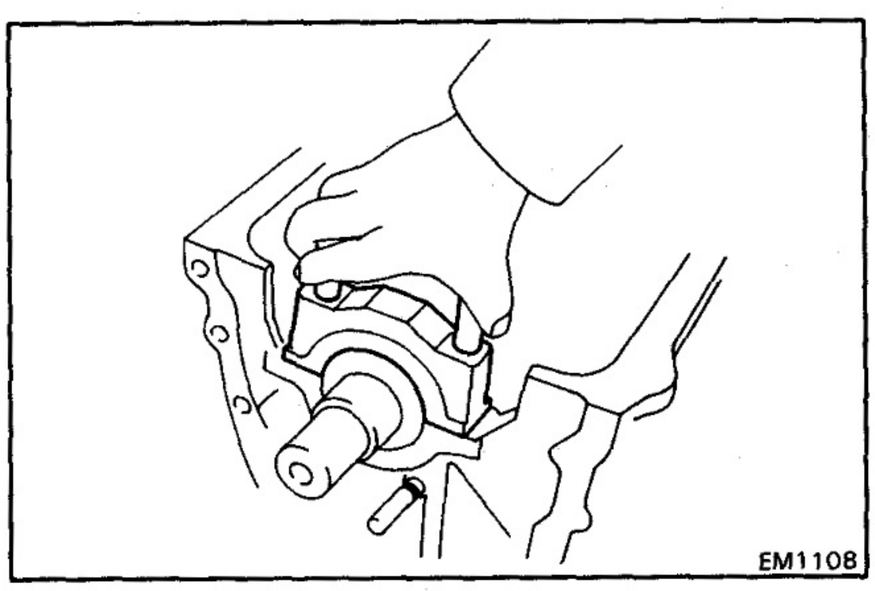

(b) Using the removed main bearing cap bolts, pry the cap back and forth, and remove the main bearing caps, lower bearings and lower thrust washers (No. 3 main bearing cap only).

NOTE:

- Keep the lower bearing and main bearing cap together.
- Arrange the main bearing cap and lower thrust washers in correct order.

(c) Lift out the crankshaft.

NOTE: Keep the upper bearing and upper thrust washers together with the cylinder block.

(d) Clean each main journal and bearing.

(e) Check each main journal and bearing for pitting and scratches.

If the journal or bearing are damaged, replace the bearing. If necessary, grind or replace the crankshaft.

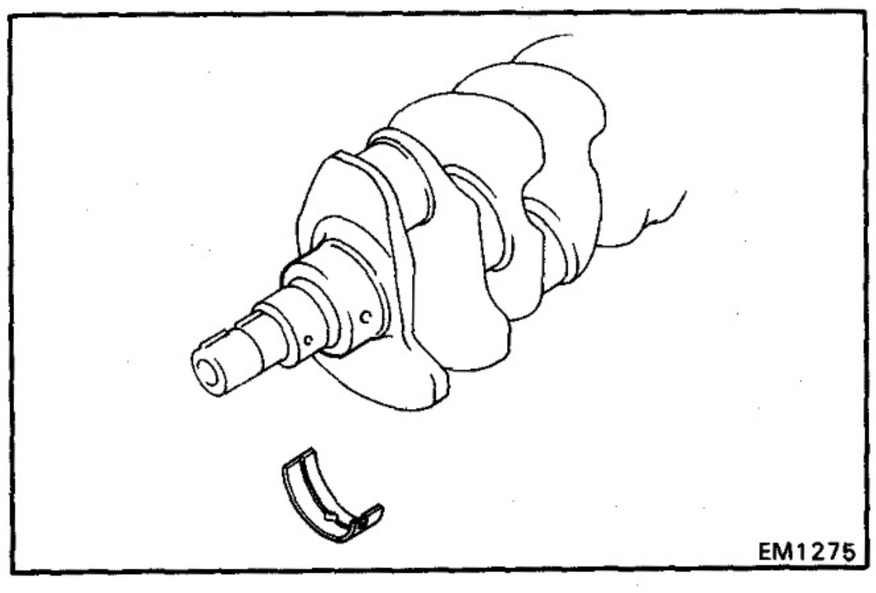

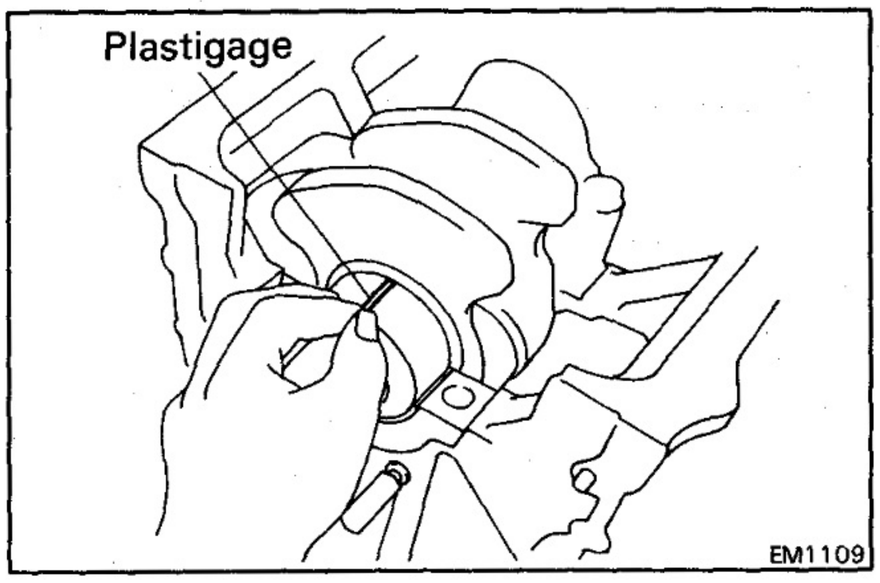

(f) Place the crankshaft on the cylinder block.

(g) Lay a strip of Plastigage across each of the main journal.

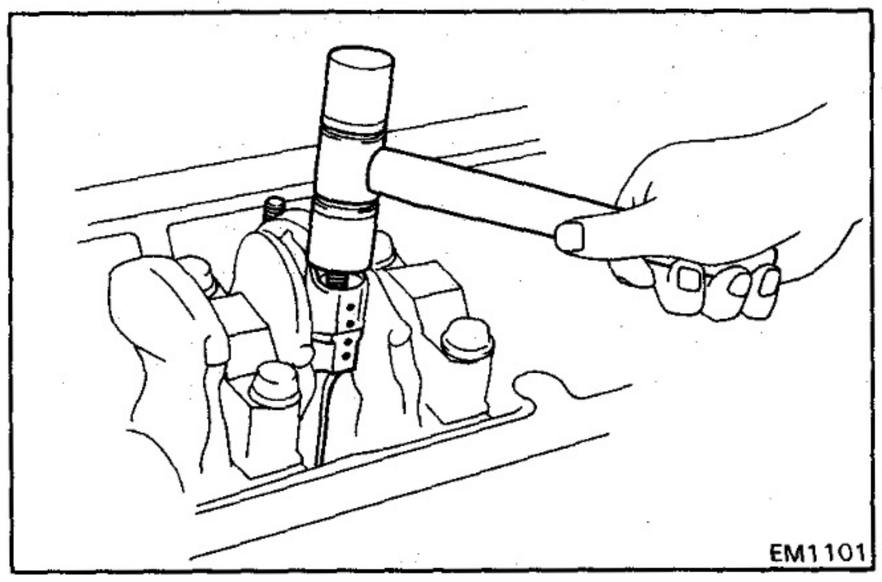

(h) Install the main bearing caps. (See page EM-102)

Torque: 2,000 kg-cm (145 ft-lb, 196 N·m)

NOTE: Do not turn the crankshaft.

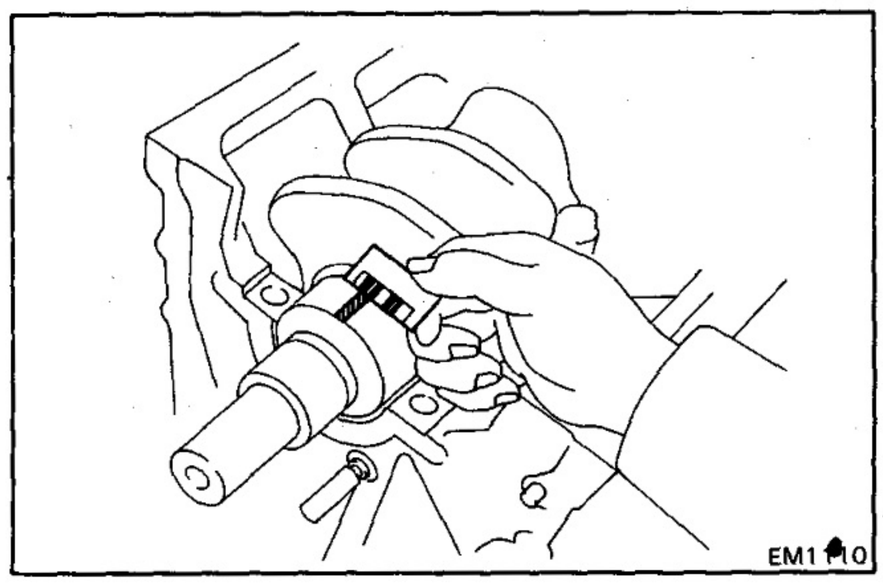

(i) Remove the main bearing caps.

(j) Measure the Plastigage at its widest point.

Standard oil clearance: 0.030 — 0.074 mm (0.0012 — 0.0029 in.)

Maximum oil clearance: 0.15 mm (0.0059 in.)

If the clearance is greater than maximum, replace the main bearing. If necessary, grind or replace the crankshaft.

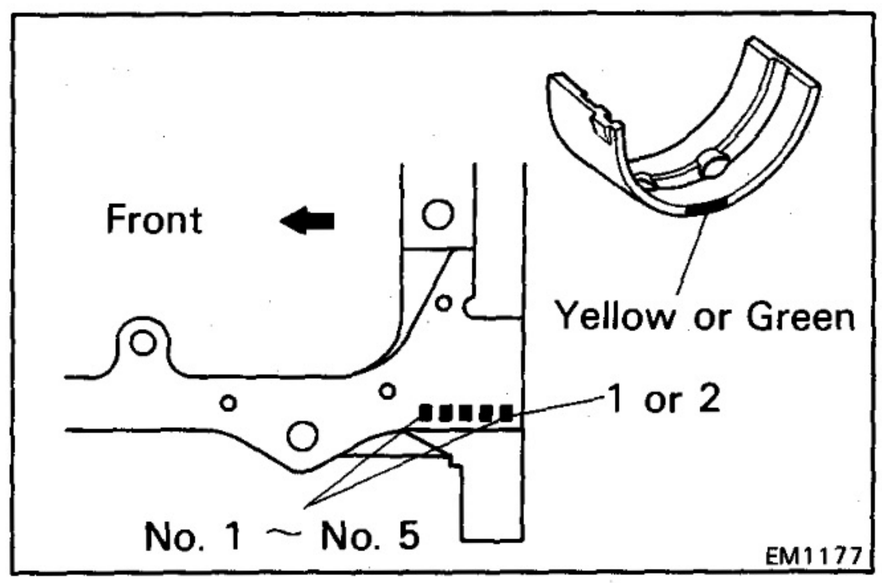

NOTE: There are two sizes of standard bearings, colored yellow and green. If using a standard bearing, select one having the color corresponding to the number on the cylinder block:

1 with Yellow
2 with Green

Standard bearing thickness (at center wall):

STD size Yellow 2.480 — 2.485 mm (0.0976 — 0.0978 in.)

STD size Green 2.485 — 2.490 mm (0.0978 — 0.0980 in.)

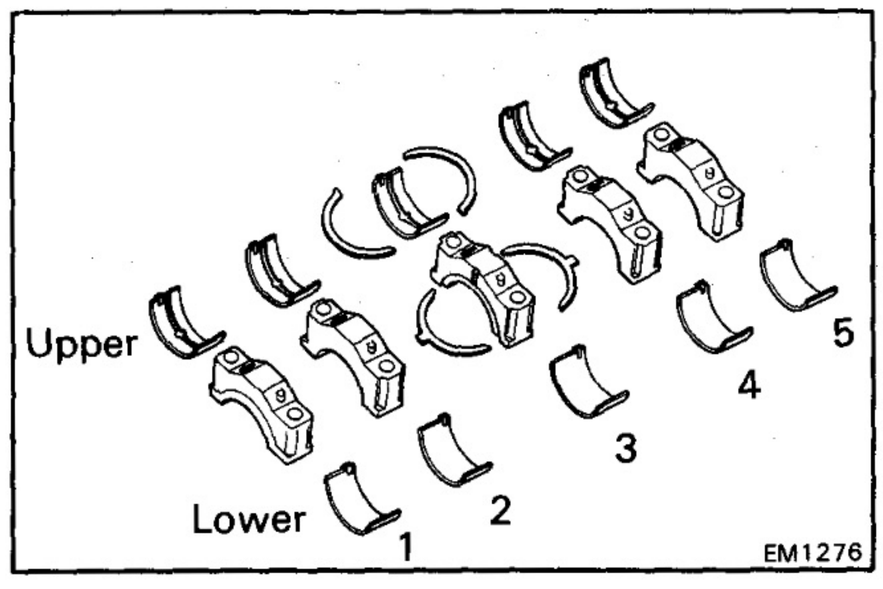

(k) Completely remove the Plastigage.

18. REMOVE CRANKSHAFT

(a) Lift out the crankshaft.

(b) Remove the upper bearings and upper thrust washers from the cylinder block.

NOTE: Arrange the main bearing caps, bearings and thrust washers in correct order.

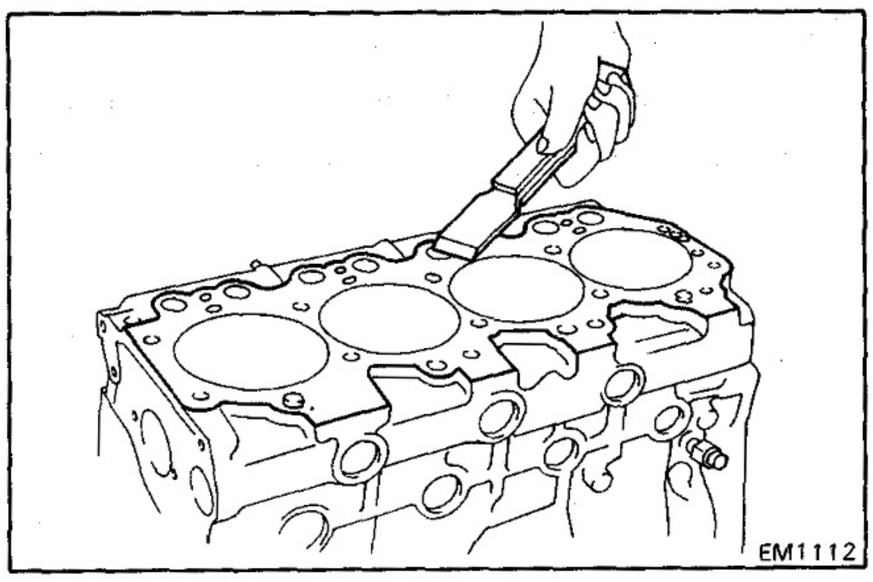

INSPECTION OF CYLINDER BLOCK

1. REMOVE GASKET MATERIAL

Using a gasket scraper, remove all the gasket material from the cylinder block surface.

2. CLEAN CYLINDER BLOCK

Using a soft brush and solvent, clean the block.

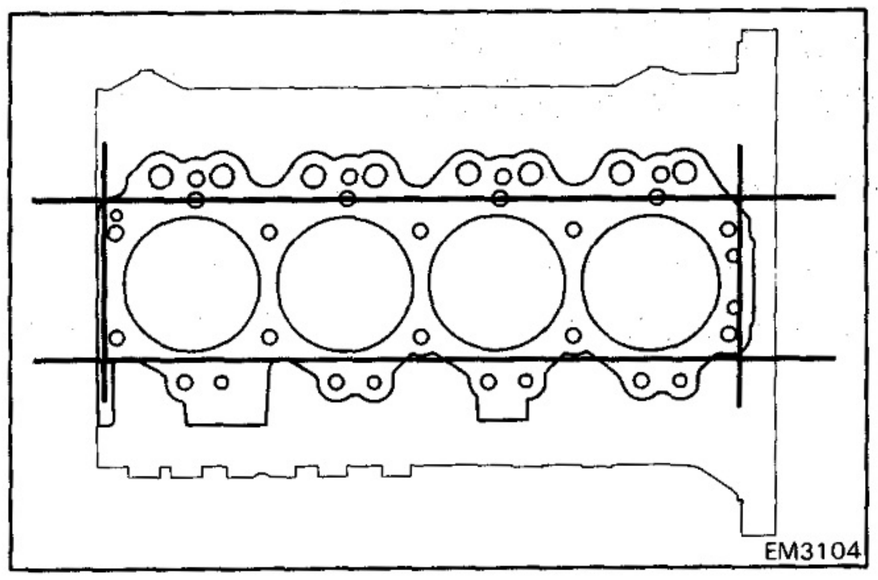

3. INSPECT TOP OF CYLINDER BLOCK FOR FLATNESS

Using a precision straight edge and feeler gauge, measure the surfaces contacting the cylinder head gasket for warpage.

Maximum warpage: 0.20 mm (0.0079 in.)

If warpage is greater than maximum, replace the cylinder block.

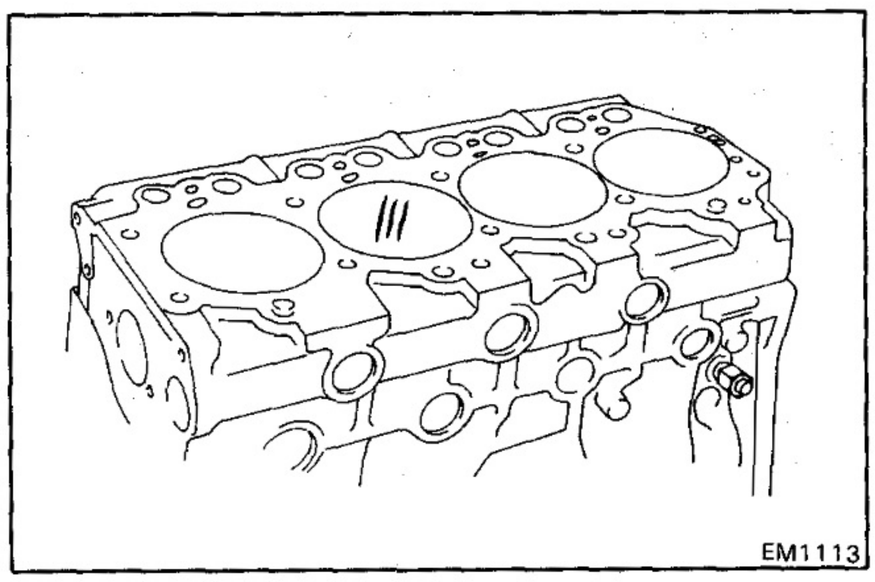

4. INSPECT CYLINDER FOR VERTICAL SCRATCHES

Visually check the cylinder for vertical scratches.

If deep scratches are present, replace the all four cylinder liners.

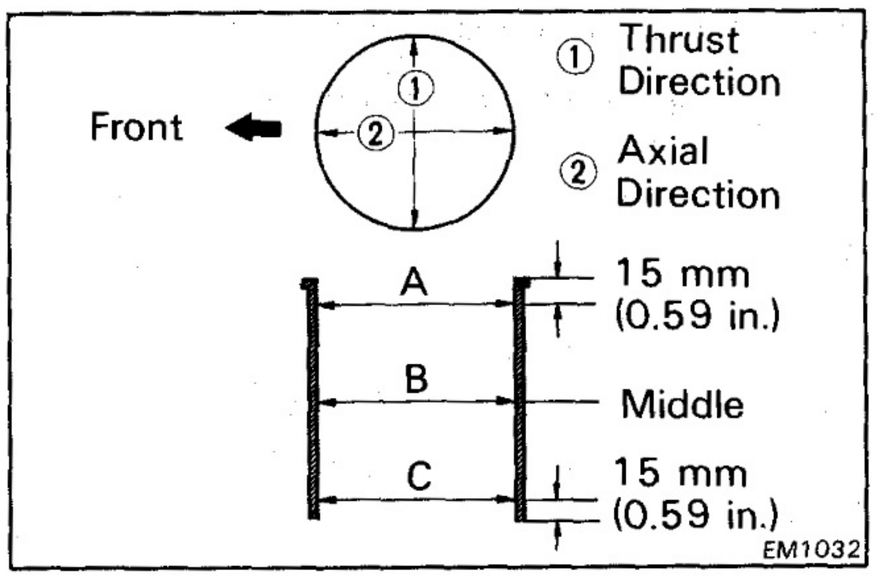

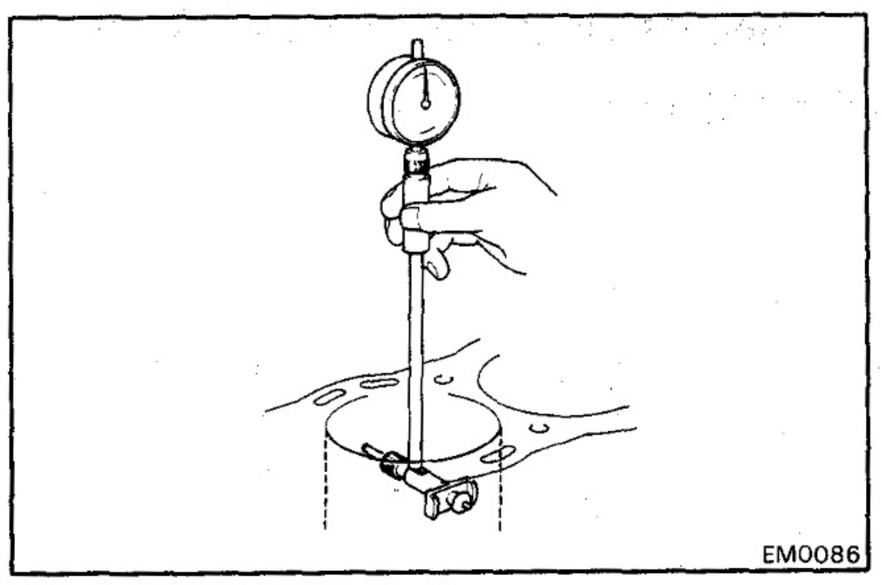

5. INSPECT CYLINDER BORE DIAMETER

Using a cylinder gauge, measure the cylinder bore diameter at positions A, B and C in the thrust and axial directions.

Standard diameter:

B and 11B	**95.00 — 95.03 mm (3.7402 — 3.7413 in.)**
3B, 13B and 13B-T	**102.00 — 102.03 mm (4.0157 — 4.0169 in.)**

Maximum diameter:

B and 11B	**95.23 mm (3.7492 in.)**
3B, 13B and 13B-T	**102.23 mm (4.0248 in.)**

If the diameter is greater than maximum, replace all four cylinder liners.

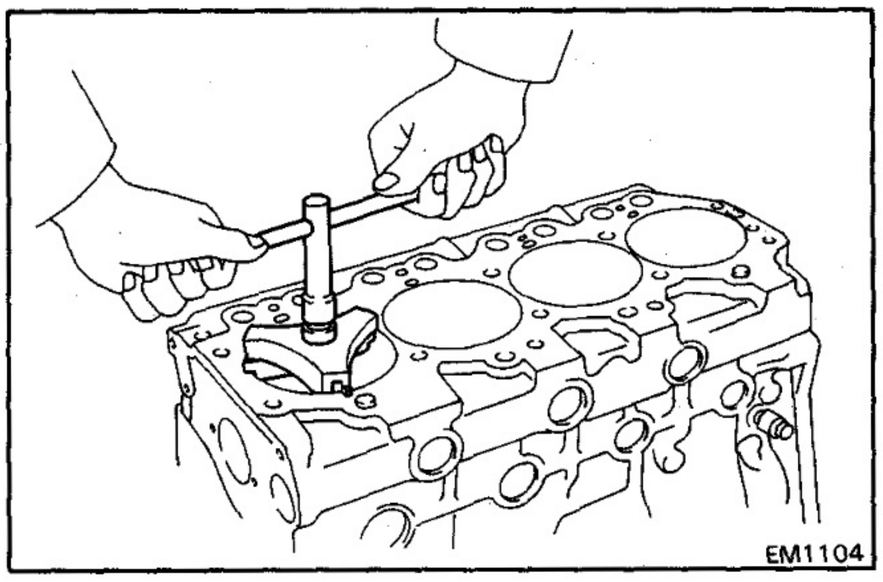

6. REMOVE CYLINDER RIDGE

If the wear is less than 0.2 mm (0.008 in.), use a ridge reamer to machine the piston ring ridge at the top of the cylinder.

DISASSEMBLY OF PISTON AND CONNECTING ROD ASSEMBLIES

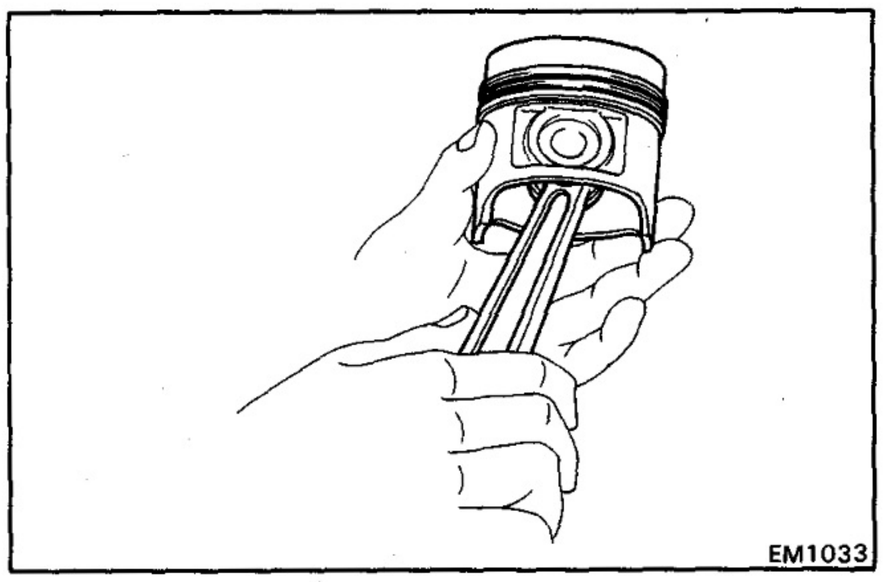

1. CHECK FIT BETWEEN PISTON AND PIN

Try to move the piston back and forth on the piston pin.

If any movement is felt, replace the piston and pin as a set.

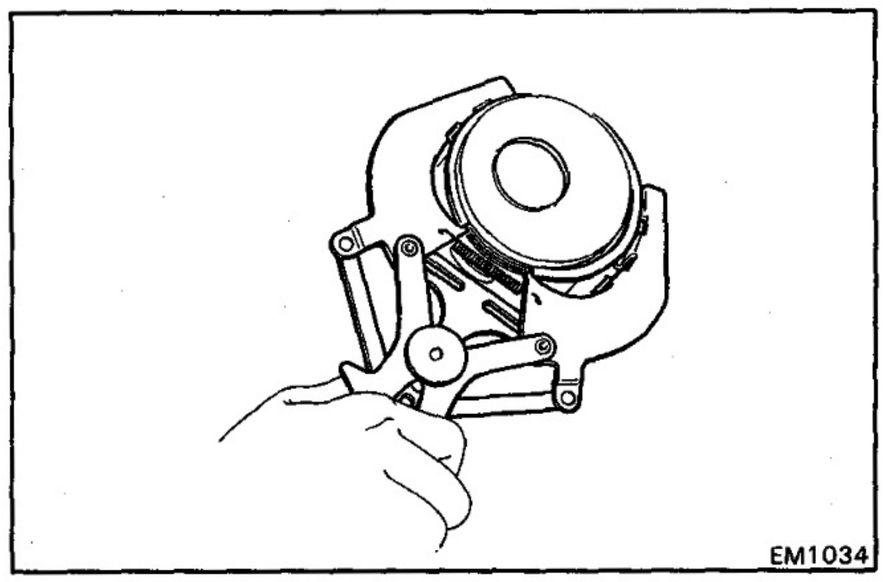

2. REMOVE PISTON RINGS

(a) Using a piston ring expander, remove the two compression rings.

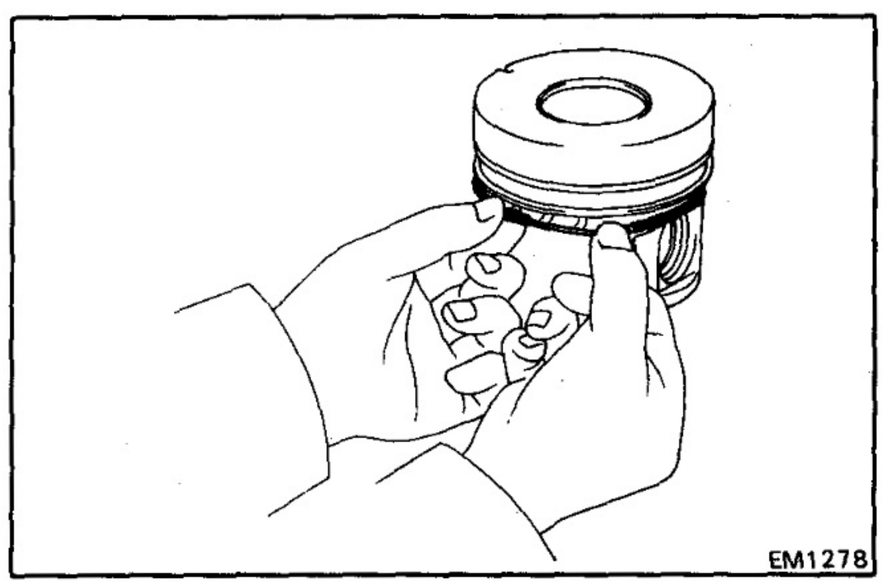

(b) Remove the oil ring and coil by hand.

NOTE: Arrange the rings in correct order only.

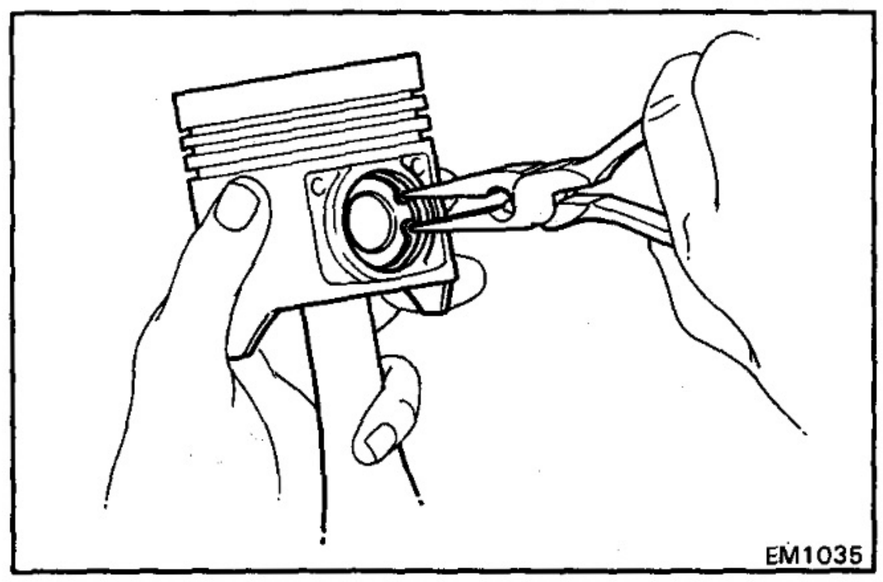

3. DISCONNECT CONNECTING ROD FROM PISTON

(a) Using needle-nose pliers, remove the snap rings.

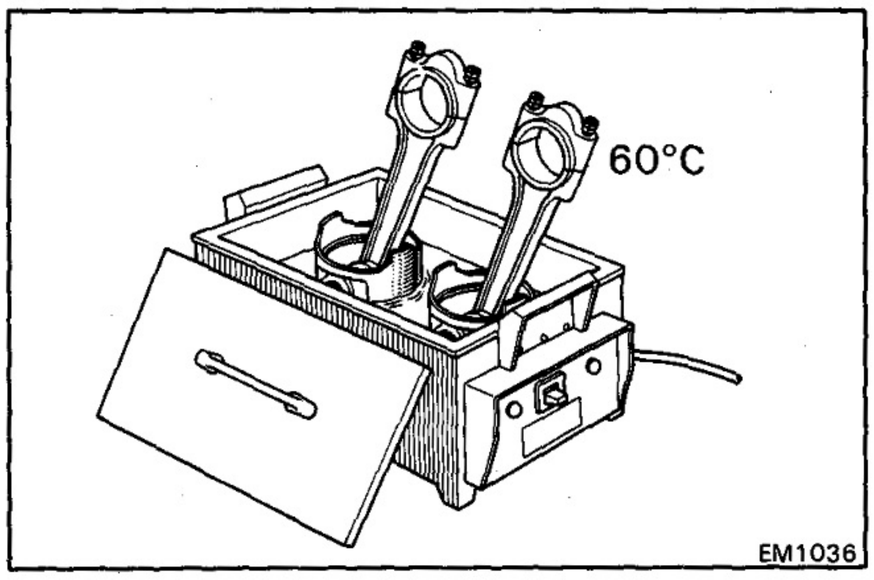

(b) Gradually heat the piston to approx. 60°C (140°F).

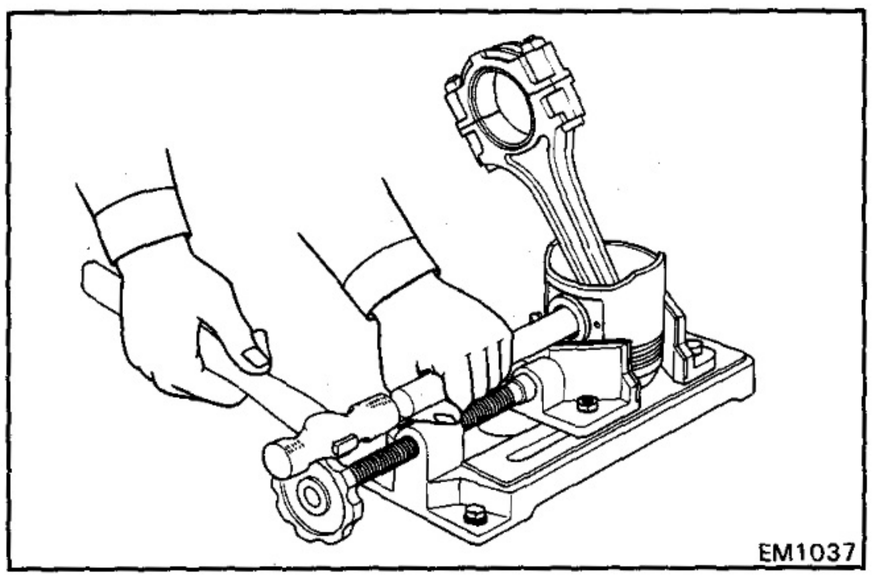

(c) Using a plastic-faced hammer and driver, lightly tap out the piston pin and remove the connecting rod.

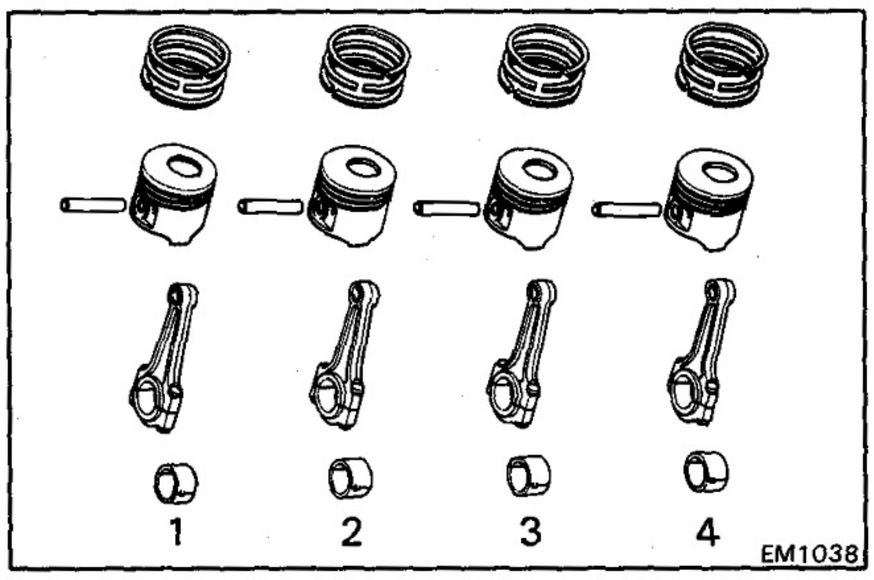

NOTE:

- The piston and pin are a matched set.
- Arrange the pistons, pins, rings, connecting rods and bearings in correct order.

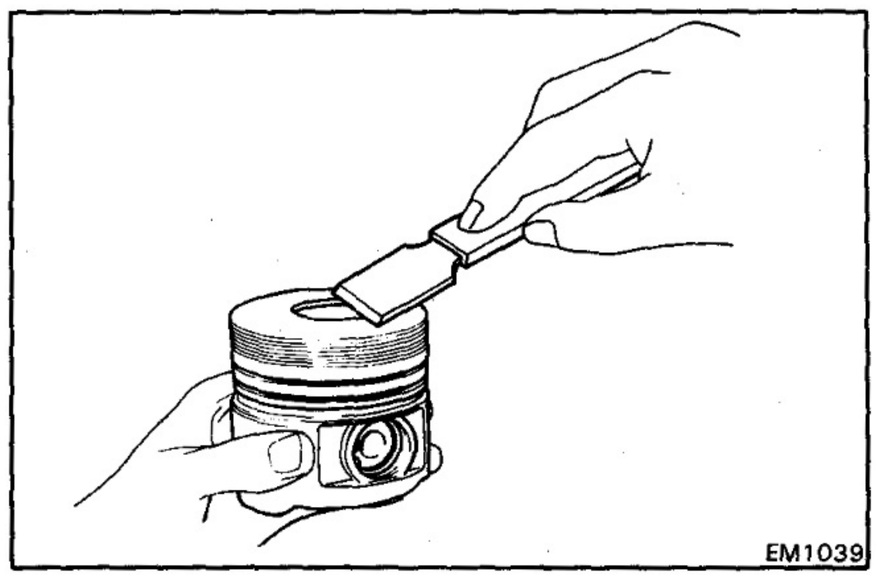

INSPECTION AND REPAIR OF PISTON AND CONNECTING ROD ASSEMBLIES

1. CLEAN PISTON

(a) Using a gasket scraper, remove the carbon from the piston top.

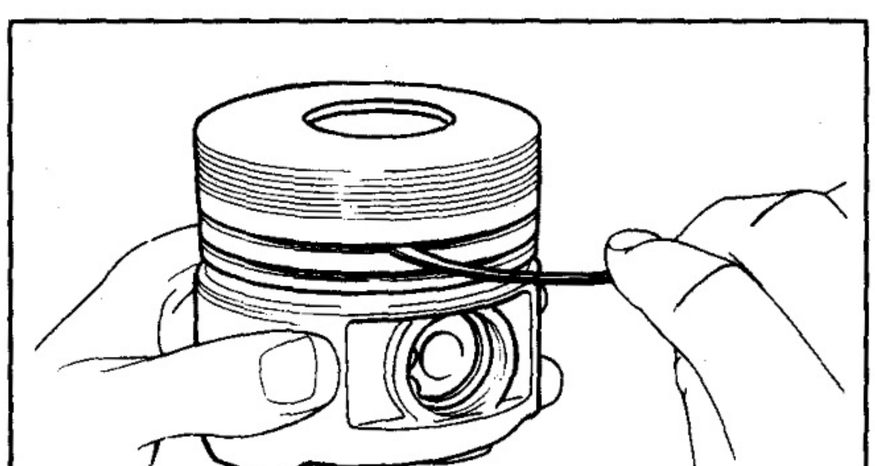

(b) Using a groove cleaning tool or broken ring, clean the ring grooves.

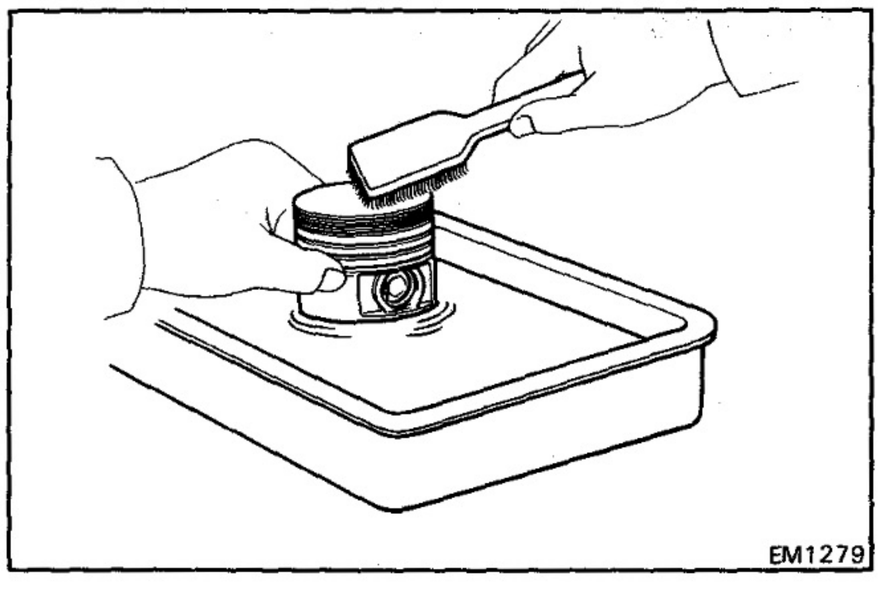
EM1279

(c) Using solvent and a brush, thoroughly clean the piston.

CAUTION: Do not use a wire brush.

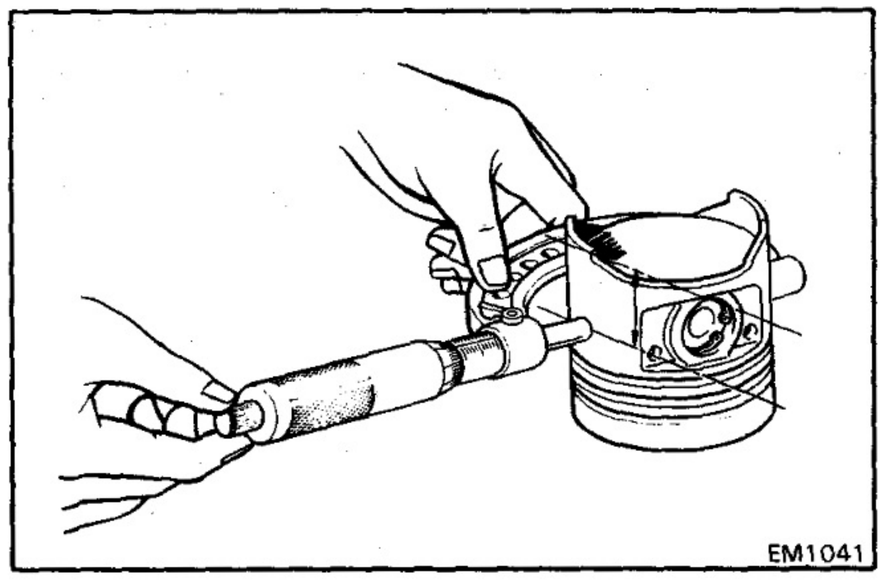
EM1041

2. INSPECT PISTON DIAMETER AND OIL CLEARANCE

(a) Using a micrometer, measure the piston diameter at a right angle to the piston pin hole center line, the indicated distance below the skirt bottom edge.

Distance:

B and 3B	**15.5 – 30.5 mm (0.610 – 1.201 in.)**
11B and 13B-T	**14.0 mm (0.551 in.)**
13B	**20.0 mm (0.787 in.)**

Piston diameter:

B	**94.90 – 94.93 mm (3.7362 – 3.7374 in.)**
3B	**101.90 – 101.93 mm (4.0118 – 4.0130 in.)**
11B	**94.94 – 94.97 mm (3.7378 – 3.7390 in.)**
13B	**101.93 – 101.96 mm (4.0130 – 4.0142 in.)**
13B-T	**101.92 – 101.95 mm (4.0126 – 4.0138 in.)**

(b) Measure the cylinder bore diameter in the thrust directions (See page EM-85) and subtract the piston diameter measurement from the cylinder bore diameter measurement.

Standard oil clearance:

B and 3B	**0.09 – 0.11 mm (0.0035 – 0.0043 in.)**
11B	**0.05 – 0.07 mm (0.0020 – 0.0028 in.)**
13B	**0.06 – 0.08 mm (0.0024 – 0.0031 in.)**
13B-T	**0.07 – 0.09 mm (0.0028 – 0.0035 in.)**

Maximum diameter: 0.15 mm (0.0059 in.)

If the clearance is greater than maximum, replace all four pistons. If necessary, replace all four cylinder liners.

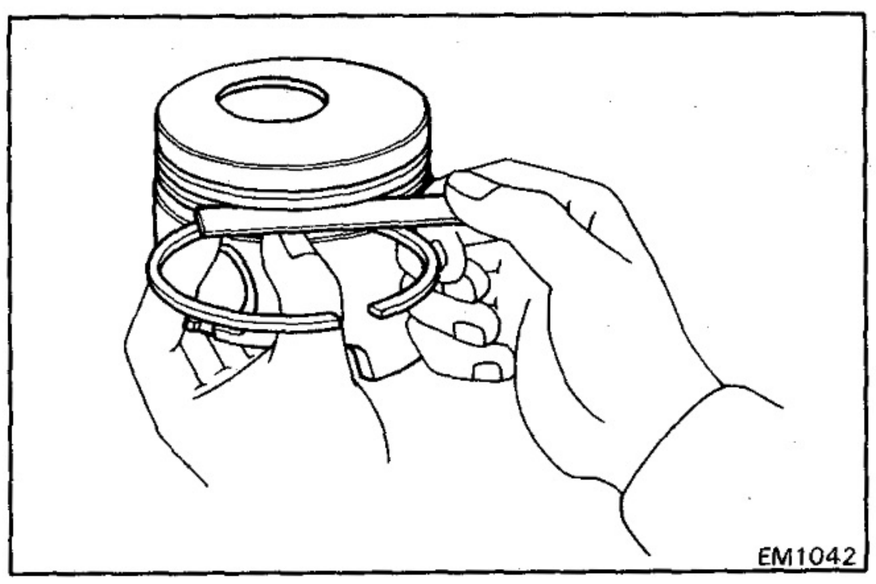
EM1042

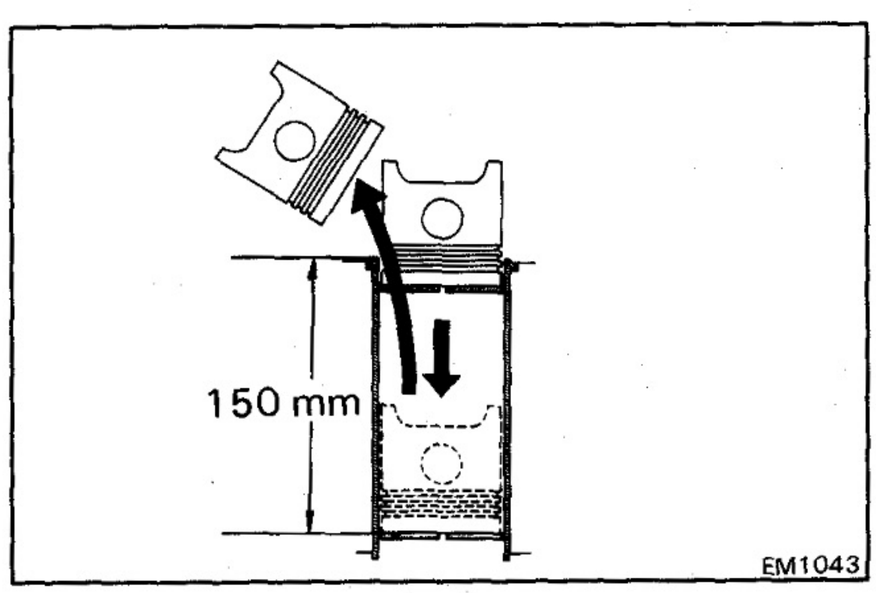

EM1043

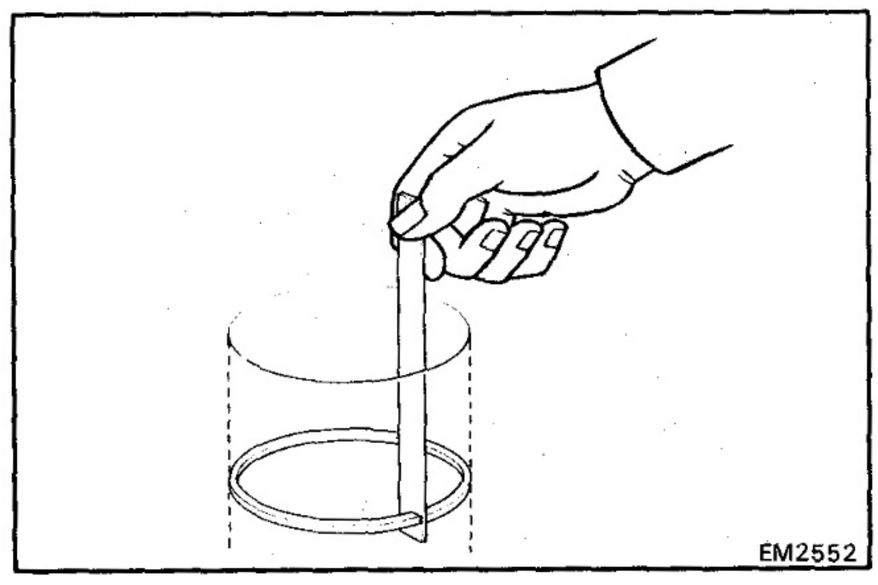
EM2552

3. INSPECT CLEARANCE BETWEEN WALL OF PISTON RING GROOVE AND NEW PISTON RING

Using a feeler gauge, measure the clearance between new piston ring and the wall of the piston ring groove.

Ring groove clearance:

No. 1	**(11B and 13B)**	**0.08 — 0.12 mm (0.0031 — 0.0047 in.)**
No. 2	**B, 3B, 11B and 13B**	**0.04 — 0.08 mm (0.0016 — 0.0031 in.)**
	13B-T	**0.06 — 0.10 mm (0.0024 — 0.0039 in.)**
	Oil	**0.03 — 0.07 mm (0.0012 — 0.0028 in.)**

If the clearance is not within specification, replace the piston.

4. INSPECT PISTON RING END GAP

(a) Insert the piston ring into the cylinder bore.

(b) Using a piston, push the piston ring a little beyond the bottom of the ring travel, 150 mm (5.91 in.) from the top of the cylinder block.

(c) Using a feeler gauge, measure the end gap.

Standard end gap:

No. 1	**B**	**0.35 — 0.64 mm (0.0138 — 0.0252 in.)**
	3B, 11B, 13B and 13B-T	**0.30 — 0.54 mm (0.0118 — 0.0213 in.)**
No. 2	**B and 11B**	**0.35 — 0.64 mm (0.0138 — 0.0252 in.)**
	3B, 13B and 13B-T	**0.45 — 0.69 mm (0.0177 — 0.0272 in.)**
Oil	**B and 11B**	**0.35 — 0.64 mm (0.0138 — 0.0252 in.)**
	3B, 13B and 13B-T	**0.40 — 0.69 mm (0.0157 — 0.0272 in.)**

Maximum end gap:

No. 1	**B**	**1.44 mm (0.0567 in.)**
	3B, 11B, 13B and 13B-T	**1.34 mm (0.0528 in.)**
No. 2	**B and 11B**	**1.44 mm (0.0567 in.)**
	3B, 13B and 13B-T	**1.49 mm (0.0587 in.)**
Oil	**B and 11B**	**1.44 mm (0.0567 in.)**
	3B, 13B and 13B-T	**1.49 mm (0.0587 in.)**

If the gap is greater than maximum, replace the piston ring.

If the gap is greater than maximum, even with a new piston ring, replace the cylinder liner.

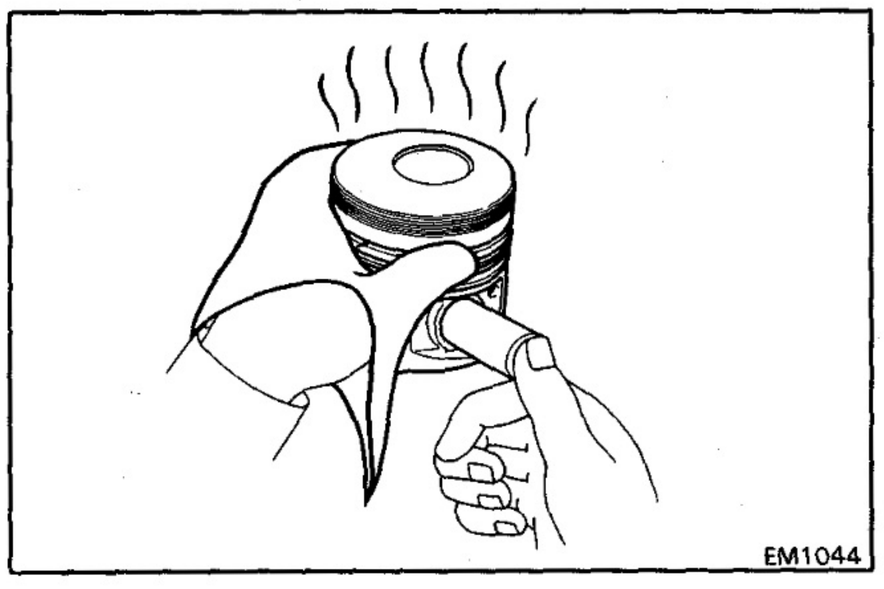

5. CHECK PISTON PIN FIT

At 60°C (140°F) you should be able to push the pin into the piston with thumb.

If the pin can be installed at a lower temperature, replace the piston and pin as a set.

6. INSPECT CONNECTING RODS

(a) Using a rod aligner, check the connecting rod alignment.

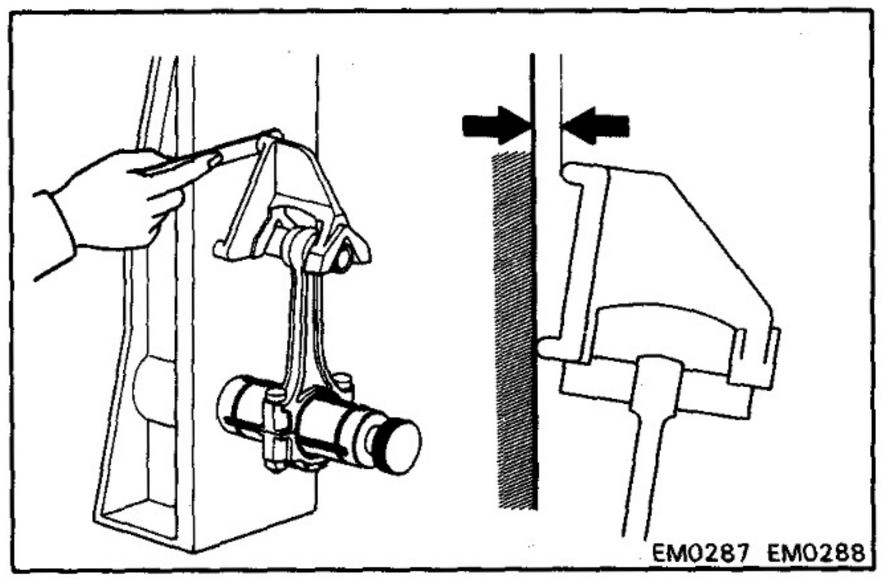

- Check for bend.

Maximum bend:
0.05 mm (0.0020 in.) per 100 mm (3.94 in.)

If bend is greater than maximum, replace the connecting rod assembly.

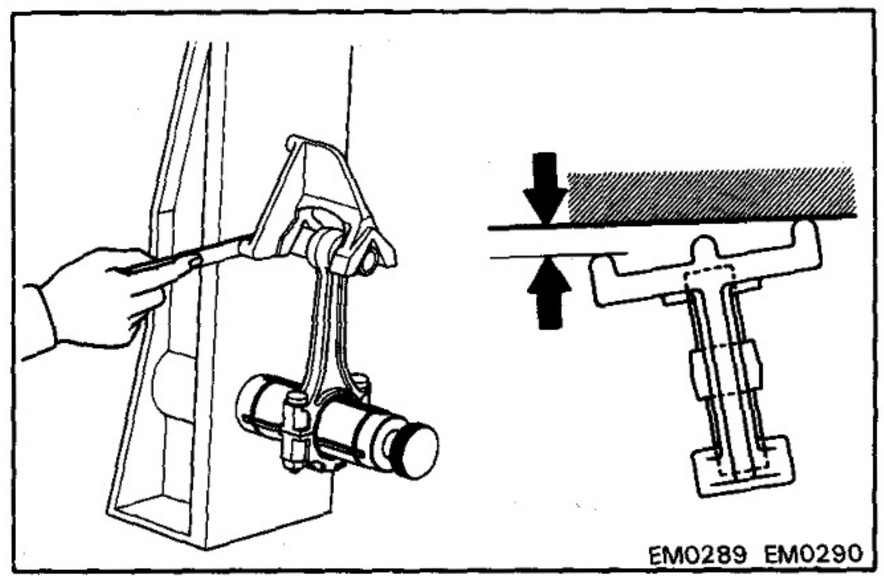

- Check for twist.

Maximum twist:
0.05 mm (0.0020 in.) per 100 mm (3.94 in.)

If twist is greater than maximum, replace the connecting rod assembly.

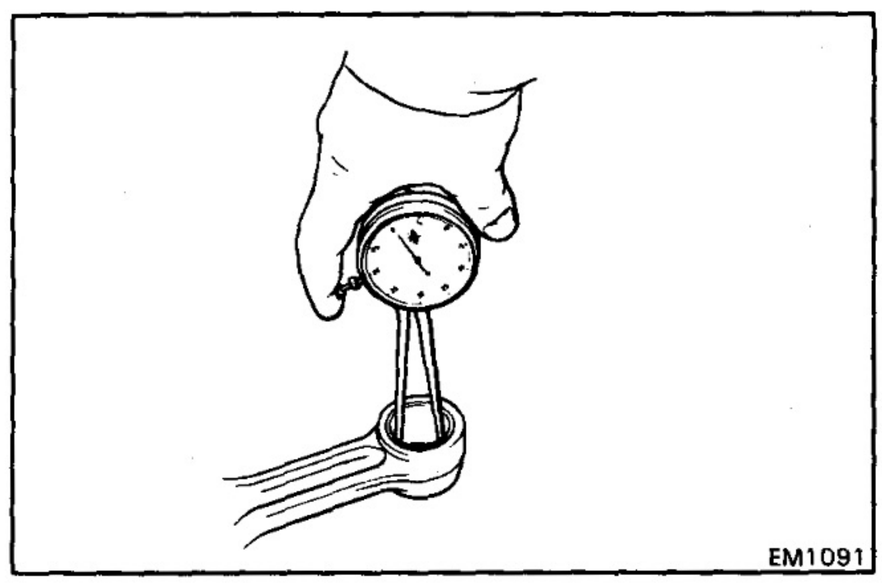

(b) Using a caliper gauge, measure the inside diameter of the connecting rod bushing.

Bushing inside diameter:

B	**29.009 – 29.019 mm (1.1421 – 1.1425 in.)**
3B	**32.009 – 32.019 mm (1.2602 – 1.2606 in.)**
11B, 13B and 13B-T	**34.009 – 34.019 mm (1.3389 – 1.3393 in.)**

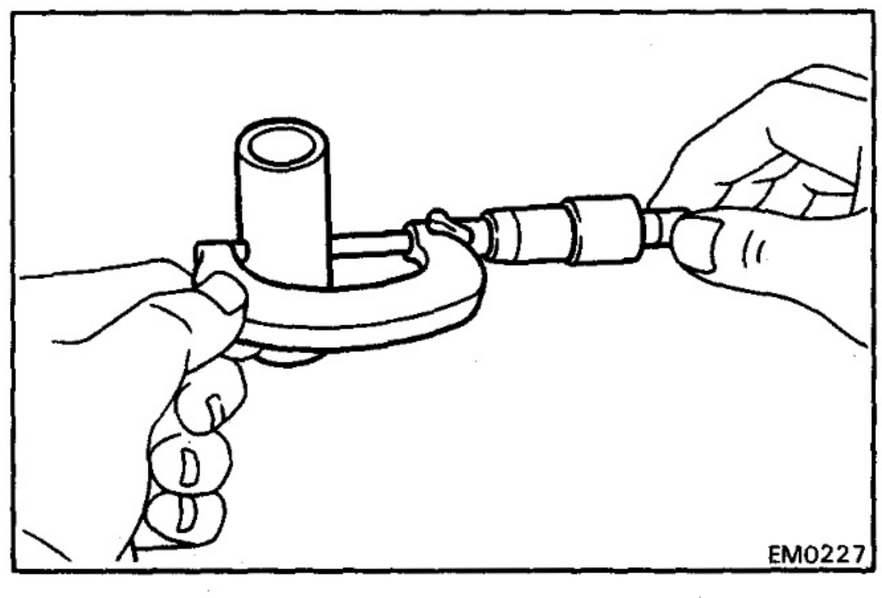

(c) Using a micrometer, measure the diameter of the piston pin.

Piston pin diameter:

B	**29.000 – 29.010 mm (1.1417 – 1.1421 in.)**
3B	**32.000 – 32.010 mm (1.2598 – 1.2602 in.)**
11B, 13B and 13B-T	**34.000 – 34.010 mm (1.3386 – 1.3390 in.)**

(d) Subtract the piston pin diameter measurement from the bushing inside diameter measurement.

Standard oil clearance: 0.004 – 0.014 mm (0.0002 – 0.0006 in.)
Maximum oil clearance: 0.05 mm (0.0020 in.)

If the clearance is greater than maximum, replace the connecting rod bushing. If necessary, replace the piston and piston pin assembly.

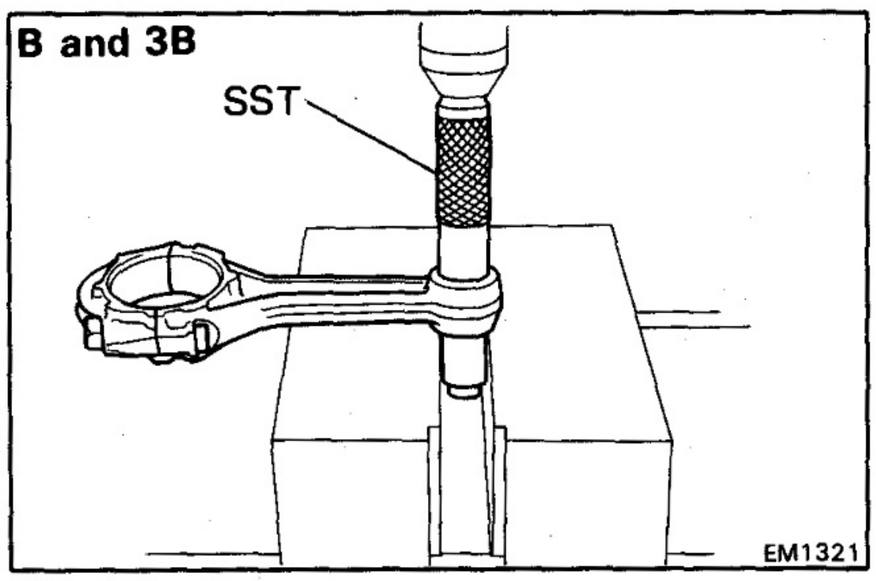

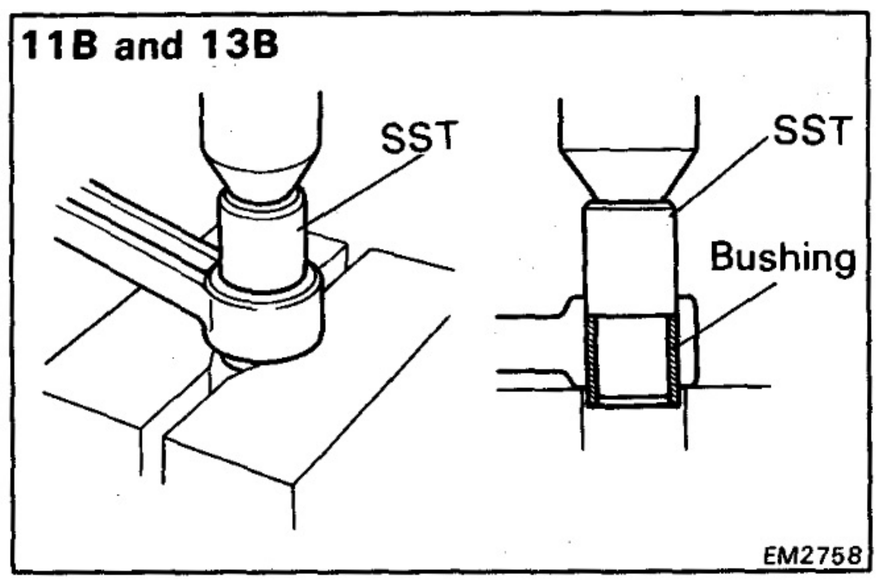

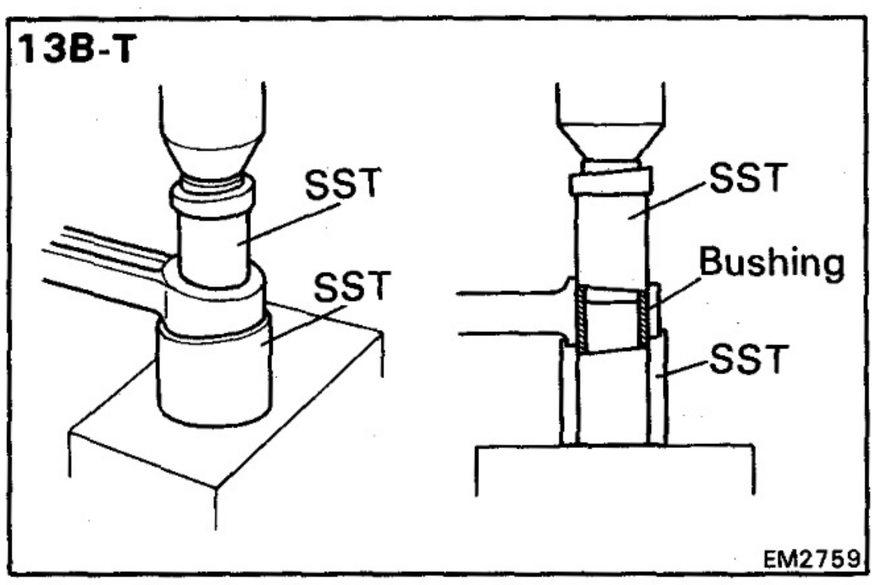

7. IF NECESSARY, REPLACE CONNECTING ROD BUSHINGS

A. Remove connecting rod bushing

Using SST and a press, press out the bushing.

SST B and 3B 09222-66010
11B and 13B 09222-76012
13B-T 09222-58010
(09222-01020, 09222-01040)

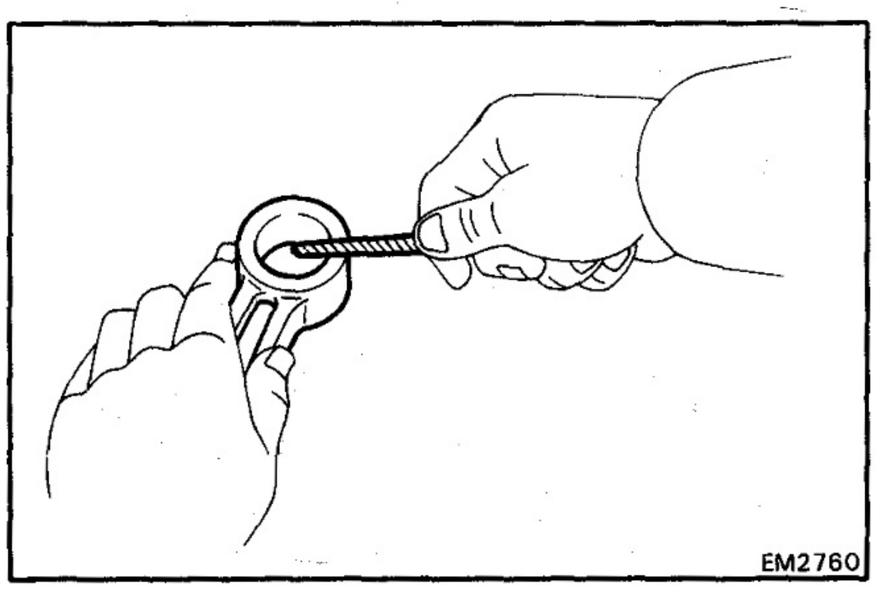

B. Install new connecting rod bushings

(a) Using a round file, lightly file off any roughness from the small end of the connecting rod as shown in the illustration.

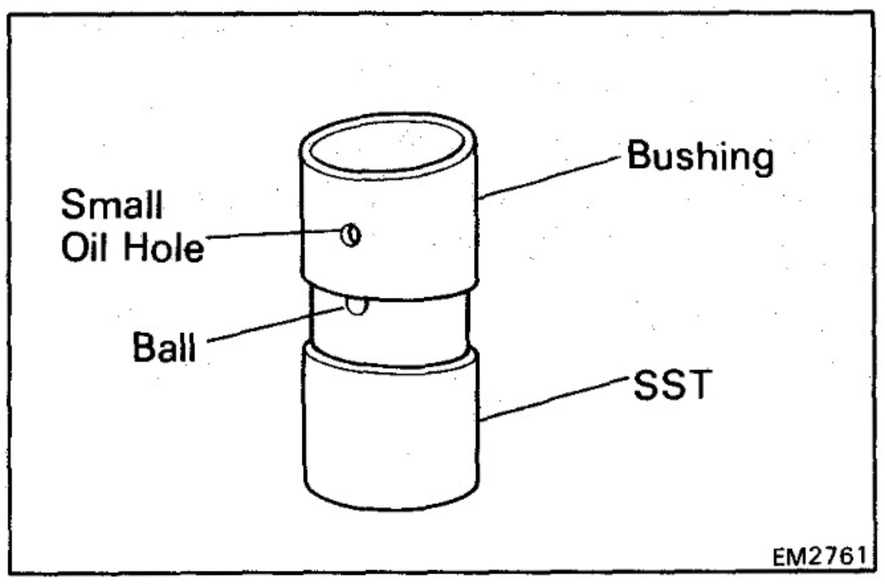

(b) [13B-T]
Attach the bushing to the SST with the ball of the SST inside the small oil hole of the bushing.

SST 09222-58010 (09222-01030)

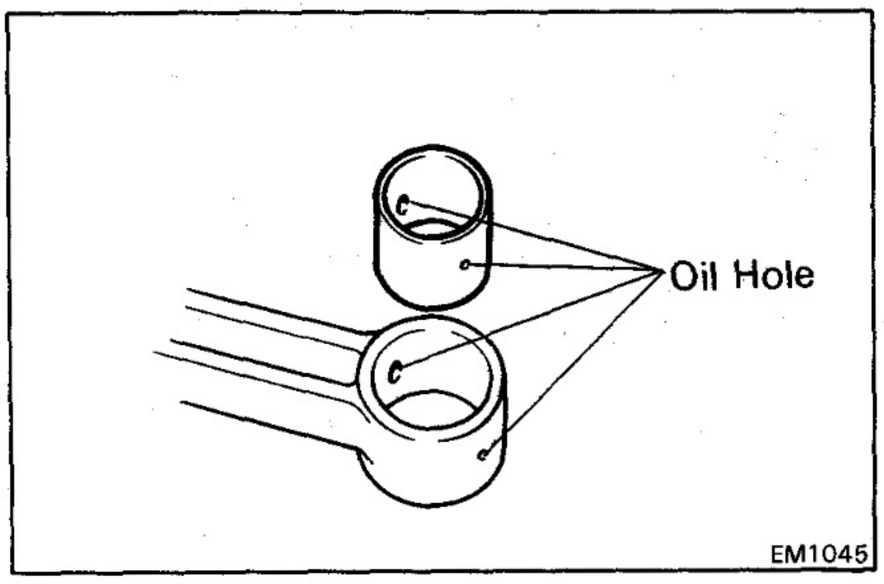

(c) Align the oil holes of the bushing and connecting rod.

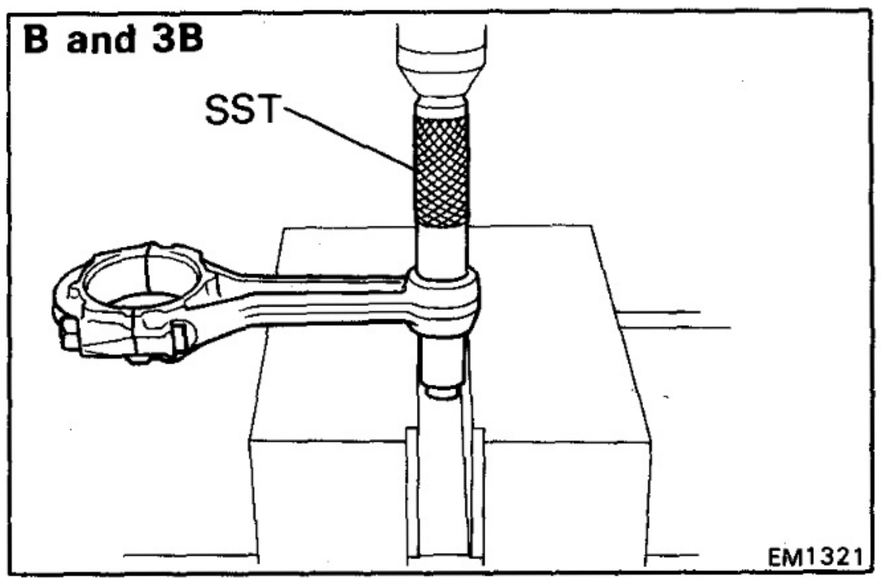

(d) Using SST and a press, press in the bushing.

SST B and 3B 09222-66010
11B and 13B 09222-76012
13B-T 09222-58010 (09222-01020, 09222-01030, 09222-01040)

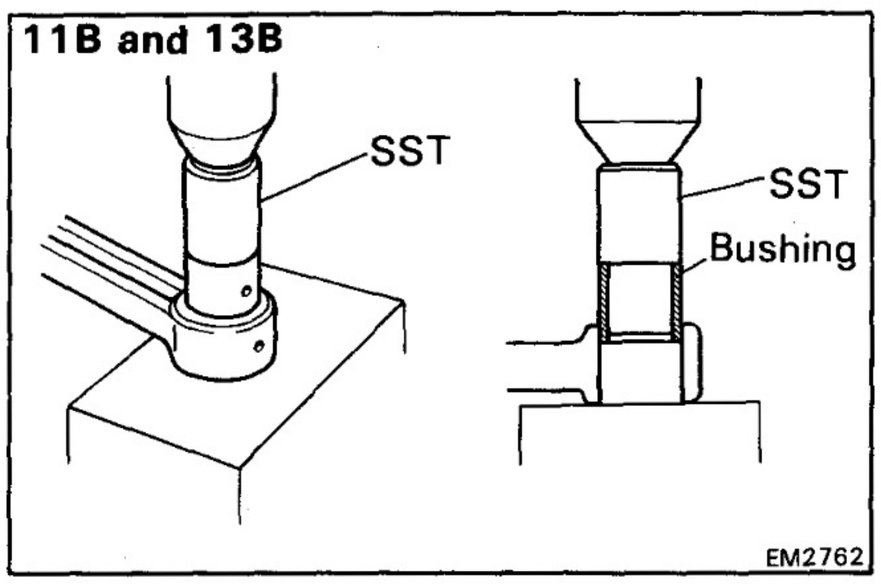

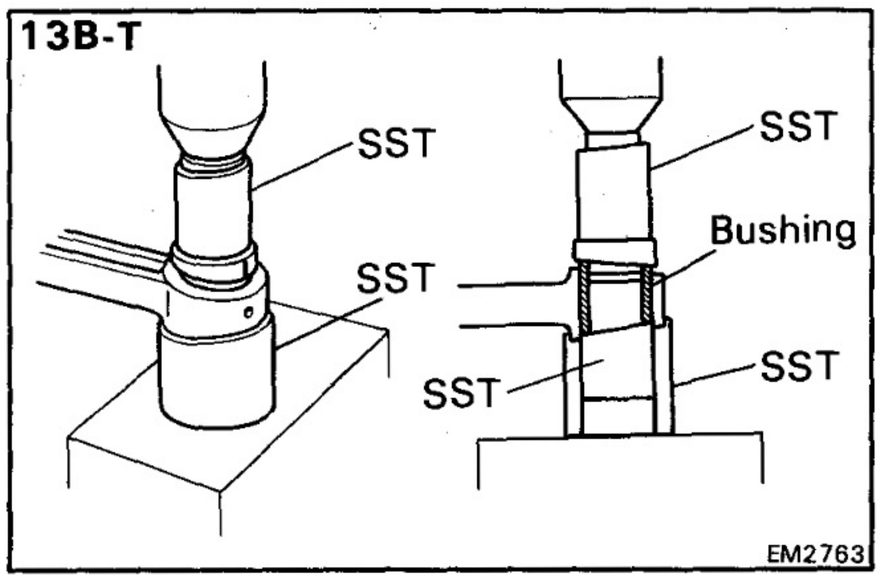

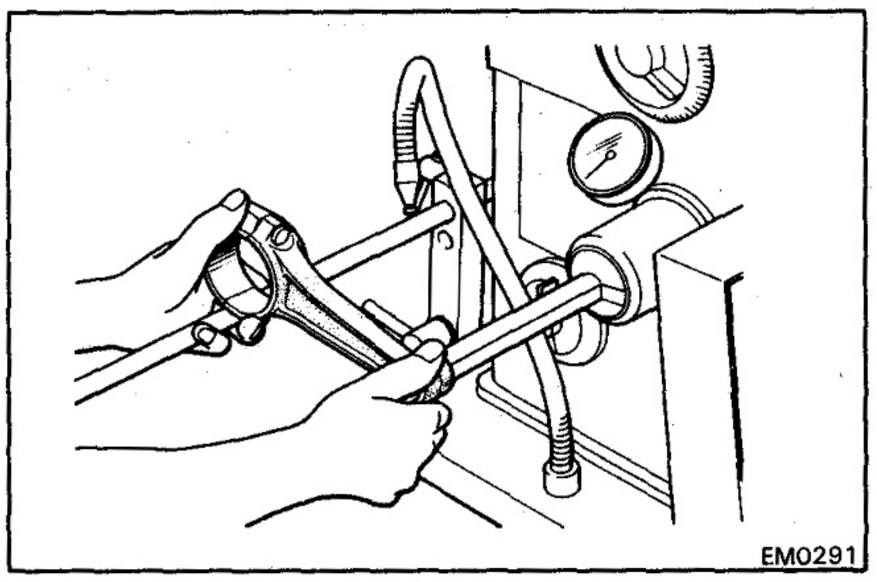

C. Hone connecting rod bushing and check piston pin fit in connecting rod

(a) Using a pin hole grinder, hone the bushing to obtain the standard specified clearance (See page EM-105) between the bushing and piston pin.

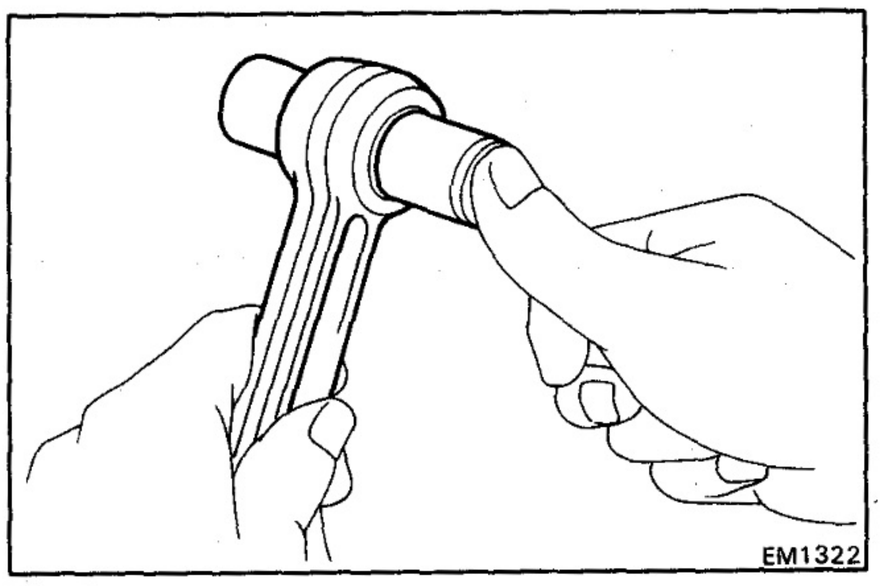

(b) Check the piston pin fit at normal room temperature. Coat the piston pin with engine oil and push it into the rod with your thumb.

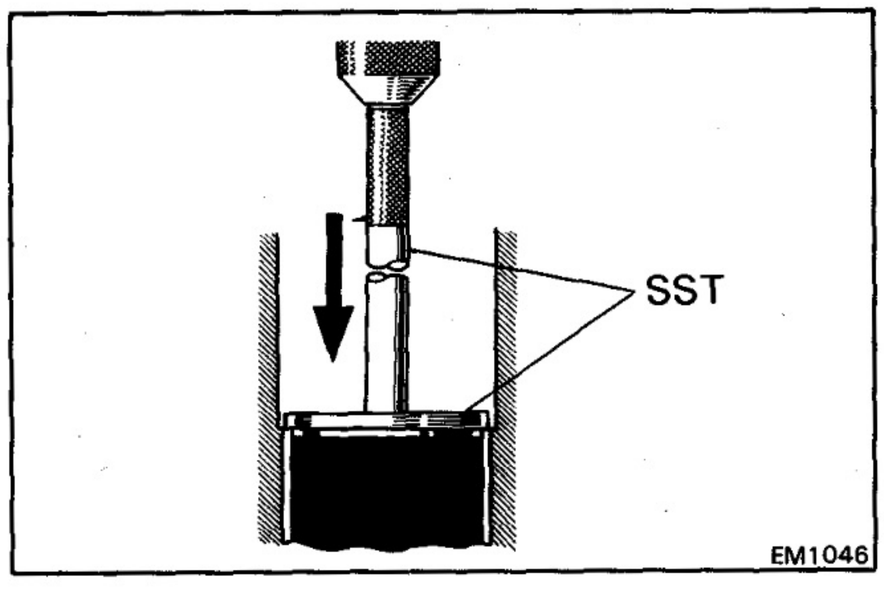

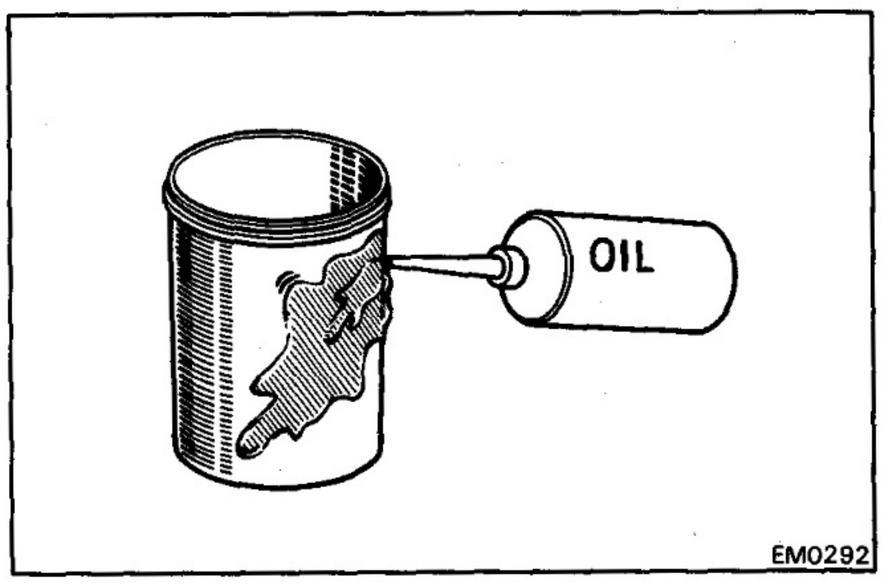

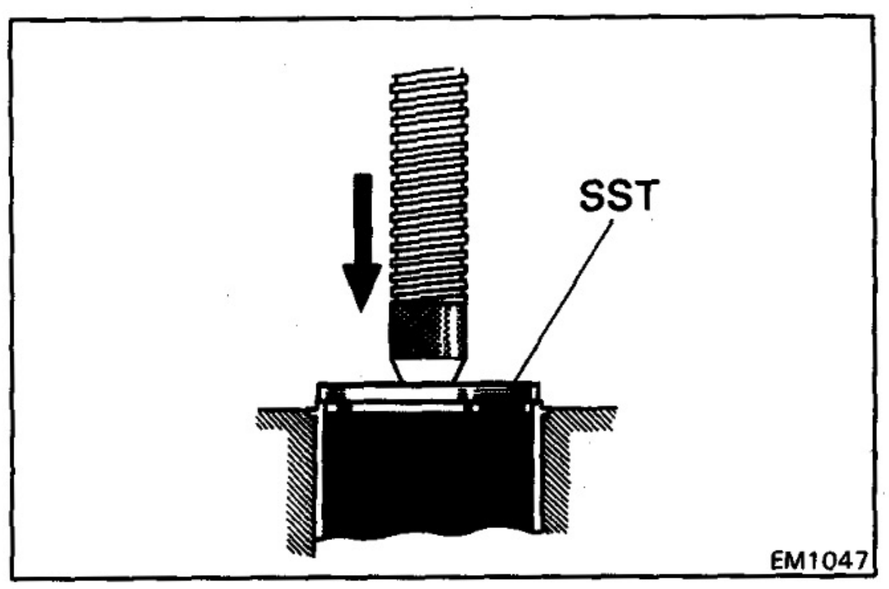

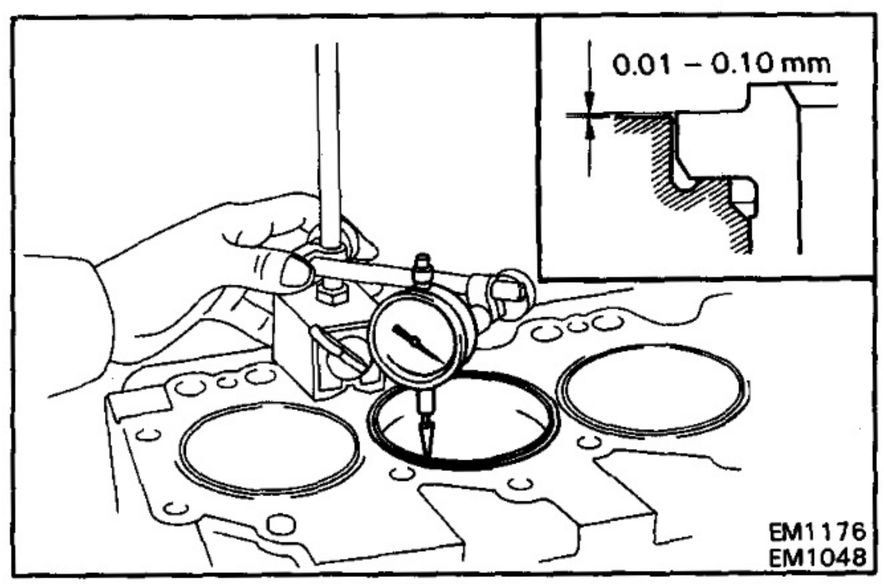

REPLACEMENT OF CYLINDER LINERS

1. **[3B AND 13B-T]**
   REMOVE OIL NOZZLE (See page LU-21)

2. **REMOVE CYLINDER LINER**

   Using SST and a press, press out the liner with 2,000 – 3,000 kg (4,409 – 6,614 lb, 19,613 – 29,420 N) pressure.

   SST B and 11B 09218-56020 and
   09608-12010 (09608-00020)
   3B, 13B and 13B-T
   09218-56030 and
   09608-12010 (09608-00020)

3. **INSTALL NEW CYLINDER LINER**

   (a) Apply engine oil to the outside surface of the cylinder liner.

   (b) Using SST and a press, press in the cylinder liner with the shim using 2,000 – 3,000 kg (4,409 – 6,614 lb, 19,613 – 29,420 N) of pressure.

   SST B and 11B 09218-56020 and
   09608-12010 (09608-00020)
   3B, 13B and 13B-T
   09218-56030 and
   09608-12010 (09608-00020)

4. **CHECK CYLINDER LINER RIDGE PROTRUSION**

   Using a dial indicator, measure the ridge protrusion of the cylinder liner.

   Ridge protrusion: 0.01 – 0.10 mm (0.0004 – 0.0039 in.)

5. **BORE CYLINDER LINER (See page EM-95)**

6. **[3B AND 13B-T]**
   INSTALL OIL NOZZLE (See page LU-22)

BORING OF CYLINDER LINERS

1. KEEP NEW PISTON

Piston diameter:

B	**94.90 – 94.93 mm (3.7362 – 3.7374 in.)**
3B	**101.90 – 101.93 mm (4.0118 – 4.0130 in.)**
11B	**94.94 – 94.97 mm (3.7378 – 3.7390 in.)**
13B	**101.93 – 101.96 mm (4.0130 – 4.0142 in.)**
13B-T	**101.92 – 101.95 mm (4.0126 – 4.0138 in.)**

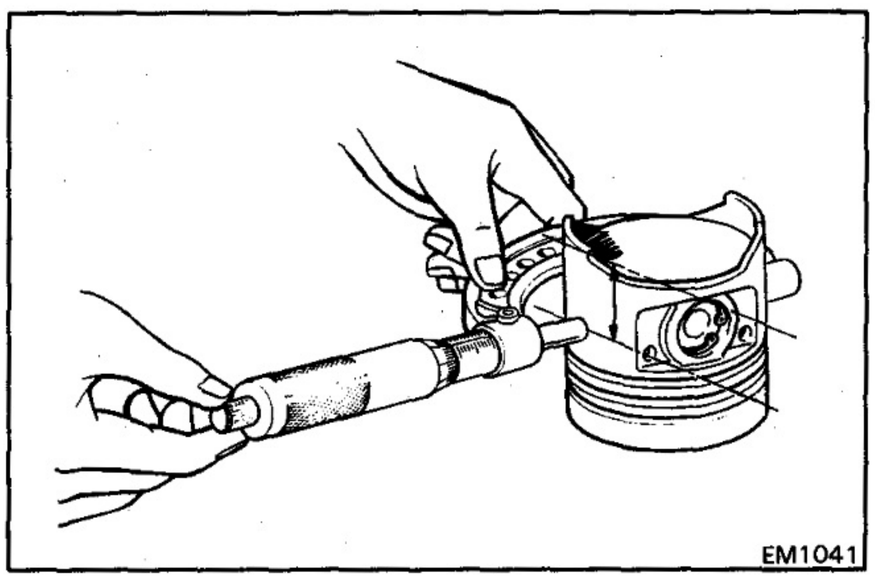
EM1041

2. CALCULATE AMOUNT TO BORE CYLINDER LINER

(a) Using a micrometer, measure the piston diameter at a right angle to the piston pin hole center line, the indicated distance below the skirt bottom edge.

Distance:

B and 3B	**15.5 – 30.5 mm (0.610 – 1.201 in.)**
11B and 13B-T	**14.0 mm (0.551 in.)**
13B	**20.0 mm (0.787 in.)**

(b) Calculate the amount each cylinder is to be rebored as follows:

Size to be rebored = P + C – H

P = Piston diameter

C = Piston clearance

B and 3B	**0.09 – 0.11 mm (0.0035 – 0.0043 in.)**
11B	**0.05 – 0.07 mm (0.0020 – 0.0028 in.)**
13B	**0.06 – 0.08 mm (0.0024 – 0.0031 in.)**
13B-T	**0.07 – 0.09 mm (0.0028 – 0.0035 in.)**

H = Allowance for honing

0.02 mm (0.0008 in.) or less

3. BORE AND HOSE CYLINDERS TO CALCULATED DIMENSIONS

Maximum honing: 0.02 mm (0.0008 in.)

CAUTION: Excess honing will destroy the finished roundness.

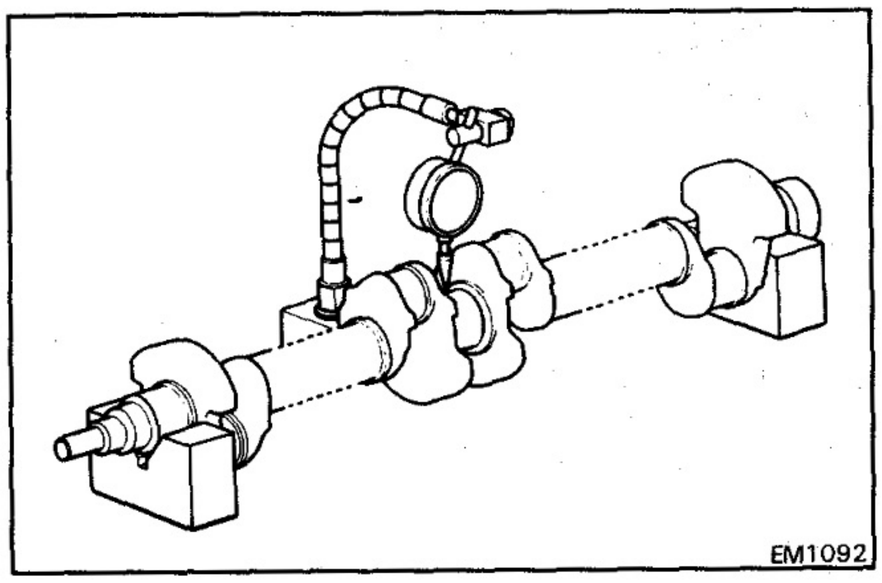

INSPECTION AND REPAIR OF CRANKSHAFT

1. INSPECT CRANKSHAFT FOR RUNOUT

(a) Place the crankshaft on V-blocks.

(b) Using a dial indicator, measure the circle runout at the center journal.

NOTE: Use a long spindle on the dial indicator.

Maximum circle runout: 0.08 mm (0.0031 in.)

If the circle runout is greater than maximum, replace the crankshaft.

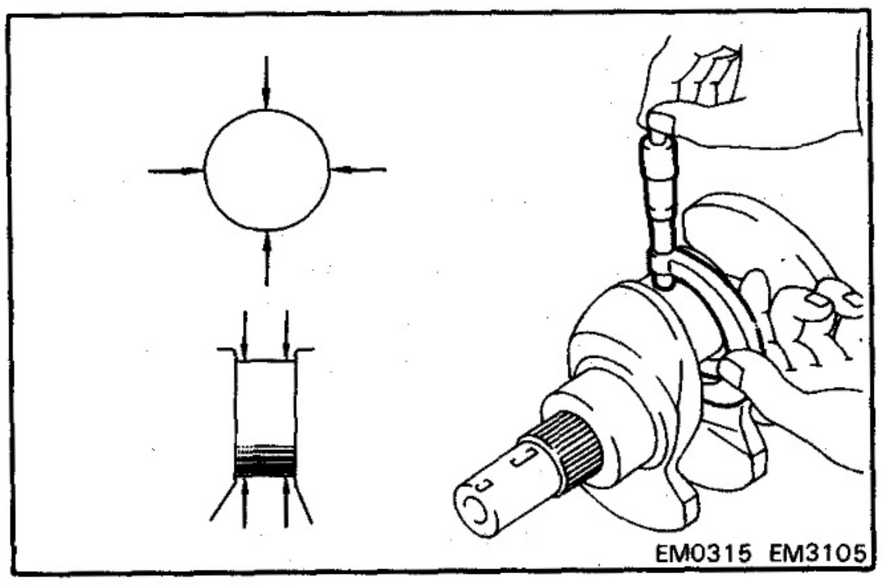

2. INSPECT MAIN JOURNALS AND CRANK PINS

(a) Using a micrometer, measure the diameter of the main journal and crank pin.

Main journal diameter:

STD size	**69.98 – 70.00 mm (2.7551 – 2.7559 in.)**
U/S 0.25	**69.74 – 69.75 mm (2.7457 – 2.7461 in.)**
U/S 0.50	**69.49 – 69.50 mm (2.7358 – 2.7362 in.)**
U/S 1.00	**68.99 – 69.00 mm (2.7161 – 2.7165 in.)**

Crank pin diameter:

B	**STD size**	**58.98 – 59.00 mm (2.3220 – 2.3228 in.)**
	U/S 0.25	**58.74 – 58.75 mm (2.3126 – 2.3130 in.)**
	U/S 0.50	**58.49 – 58.50 mm (2.3028 – 2.3031 in.)**
	U/S 1.00	**57.99 – 58.00 mm (2.2831 – 2.2835 in.)**
3B, 11B, 13B and 13B-T		
	STD size	**60.98 – 61.00 mm (2.4008 – 2.4016 in.)**
	U/S 0.25	**60.74 – 60.75 mm (2.3913 – 2.3917 in.)**
	U/S 0.50	**60.49 – 60.50 mm (2.3815 – 2.3819 in.)**
	U/S 1.00	**59.99 – 60.00 mm (2.3618 – 2.3622 in.)**

If the diameter is not within specification, check the oil clearance. If necessary, grind or replace the crankshaft.

(b) Check each main journal and crank pin for taper and out-of-round as shown.

Maximum taper and out-of-round: 0.02 mm (0.0008 in.)

If taper and out-of-round is greater than maximum, replace the crankshaft.

3. IF NECESSARY, GRIND AND HONE MAIN JOURNALS AND/OR CRANK PINS

Grind and hone the main journals and/or crank pins to the undersized finished diameter. (See procedure step 2)

Install new main journal and/or crank pin undersize bearings.

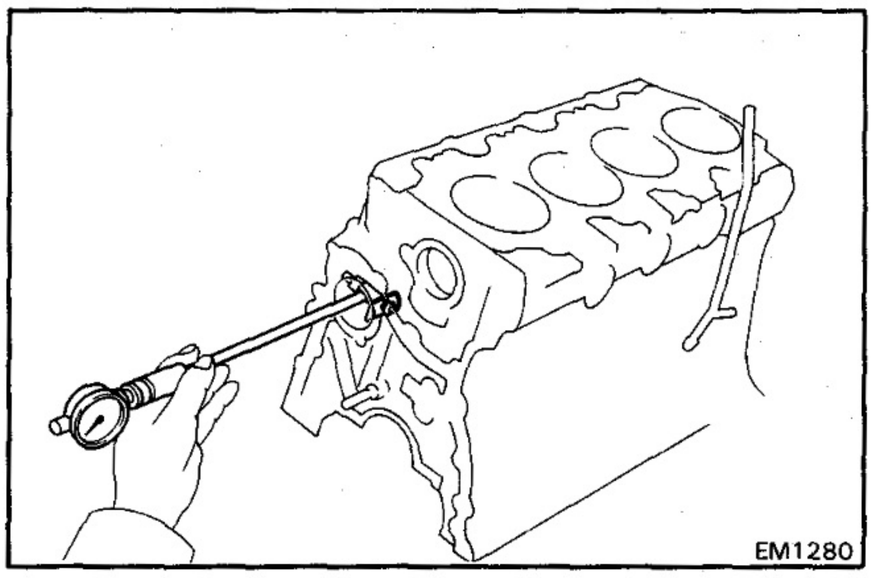
EM1280

INSPECTION AND REPAIR OF CAMSHAFT BEARINGS AND CAMSHAFT

1. INSPECT CAMSHAFT OIL CLEARANCE

(a) Using a cylinder gauge, measure the inside diameter of the camshaft bearing.

Baring inside diameter (from front side):

No. 1 53.495 – 53.568 mm (2.1061 – 2.1090 in.)
No. 2 53.245 – 53.318 mm (2.0963 – 2.0991 in.)
No. 3 52.995 – 53.068 mm (2.0864 – 2.0893 in.)
No. 4 52.745 – 52.818 mm (2.0766 – 2.0794 in.)
No. 5 52.495 – 52.568 mm (2.0667 – 2.0696 in.)

(b) Subtract the journal diameter measurement (See page EM-69) from the bearing inside diameter measurement.

Standard oil clearance: 0.020 – 0.109 mm (0.0008 – 0.0043 in.)
Maximum oil clearance: 0.15 mm (0.0059 in.)

If the clearance is greater than maximum, replace the camshaft bearings. If necessary, replace the camshaft.

2. IF NECESSARY, REPLACE CAMSHAFT BEARINGS

A. Remove expansion plug

Using SST and a hammer, tap out the expansion plug.

SST 09215-00100 (09215-00130, 09215-00150, 09215-00210)

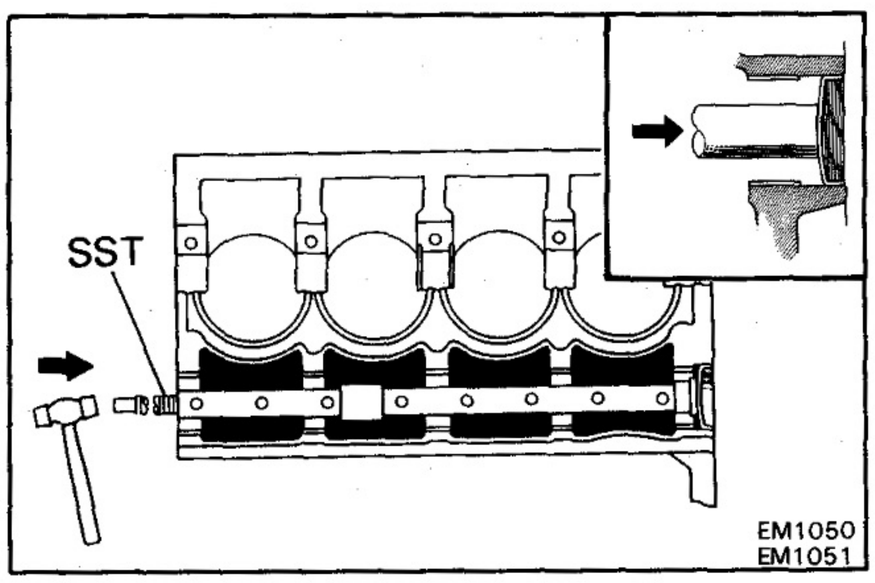

EM1050
EM1051

B. Remove camshaft bearings

Using SST, remove the camshaft bearings.

SST 09215-00012 (09215-00020, 09215-00440, 09215-00470) and
09215-00100 (09215-00130, 09215-00140, 09215-00150, 09215-00160)

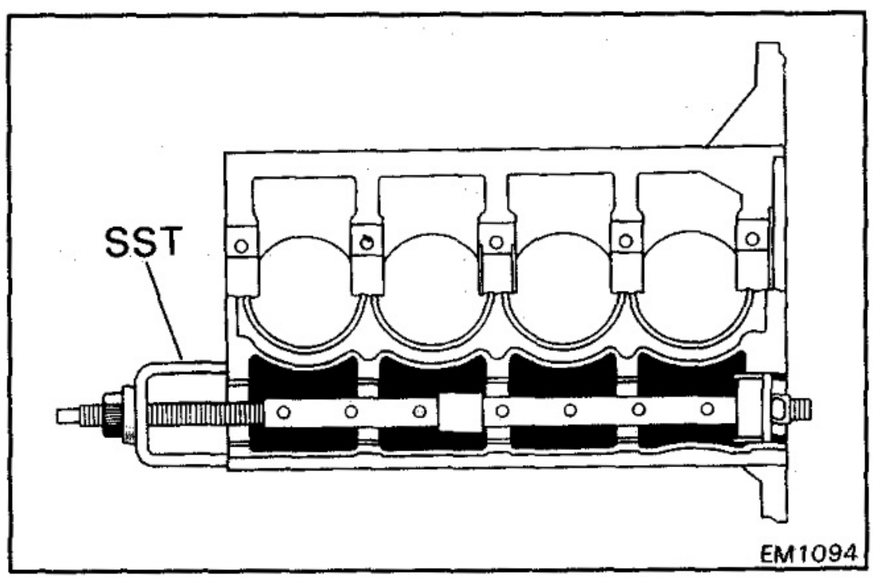

EM1094

C. Install new camshaft bearings

(a) Install new bearings in their proper location.

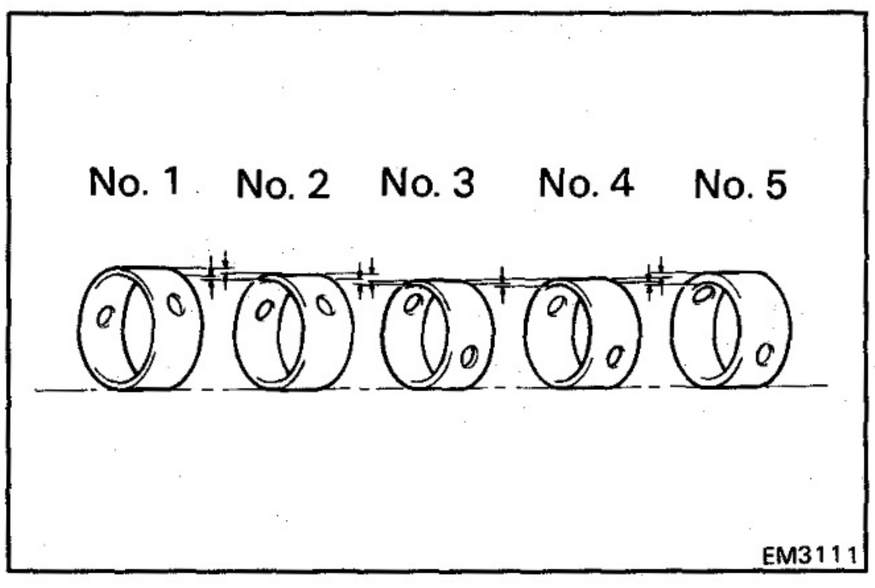

EM3111

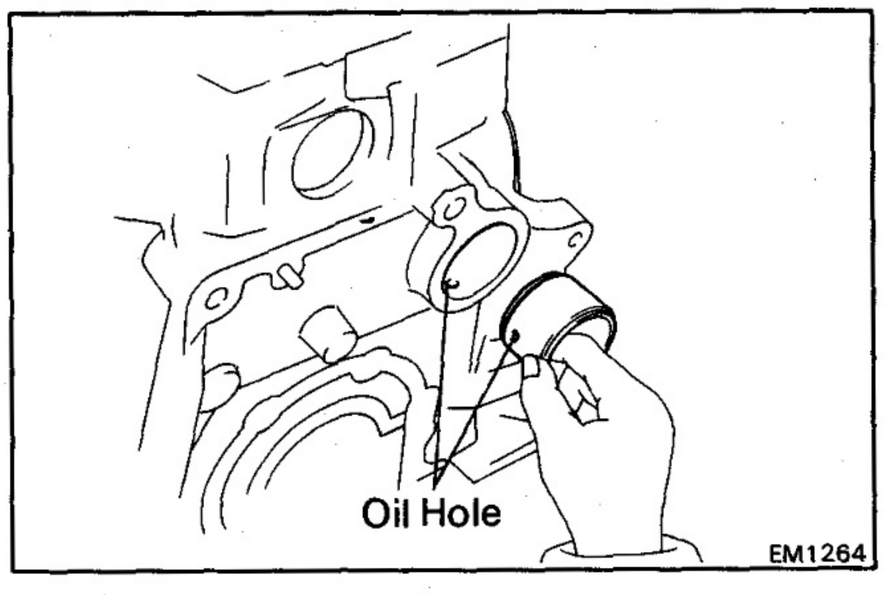

(b) Align the oil holes of the bearing and cylinder block.

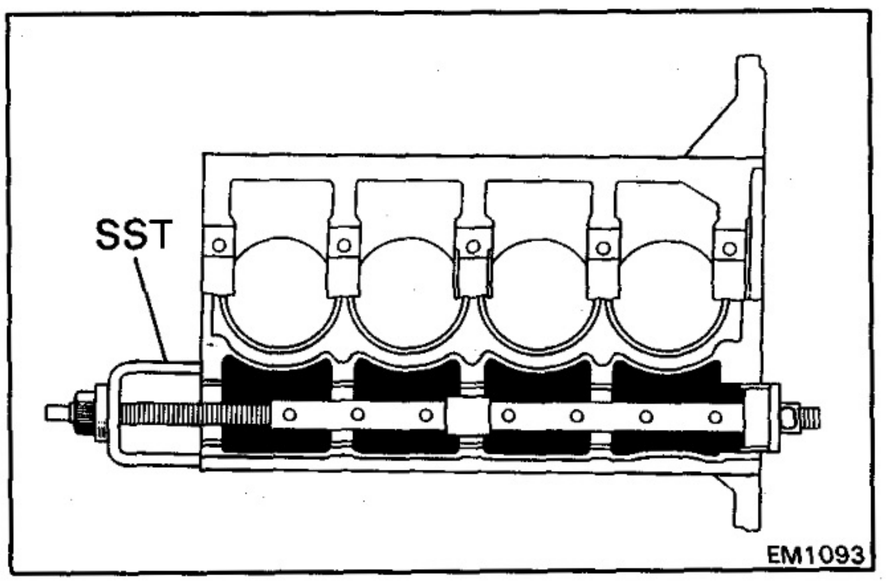

(c) Using SST, install the camshaft bearings.

SST 09215-00012 (09215-00020, 09215-00440, 09215-00470) and
09215-00100 (09215-00130, 09215-00140, 09215-00150, 09215-00160)

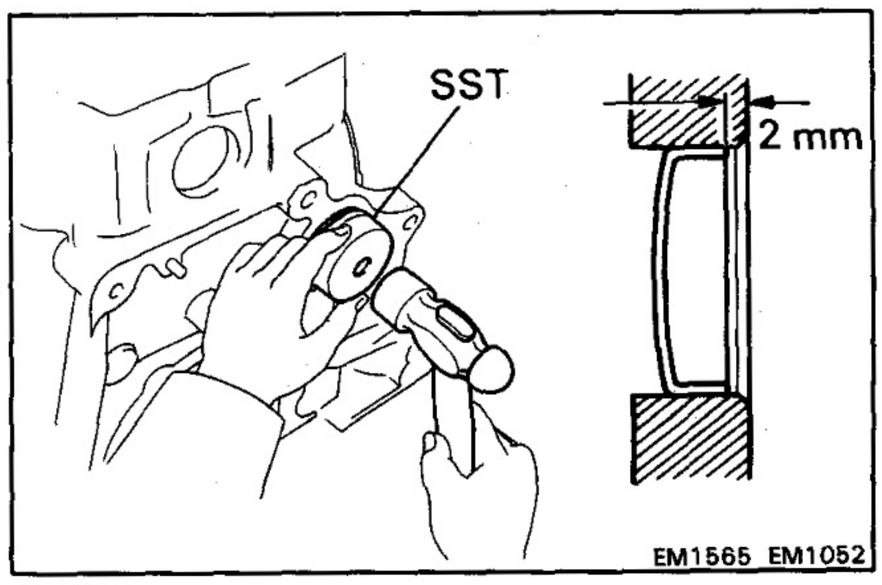

D. Check camshaft oil clearance (See page EM-79)

E. Install expansion plug

(a) Apply liquid sealer to the expansion plug surface of the cylinder block.

(b) Using SST and a hammer, drive in the expansion plug to a distance of 2 mm (0.08 in.) from the cylinder block edge.

SST 09215-00012 (09215-00470)

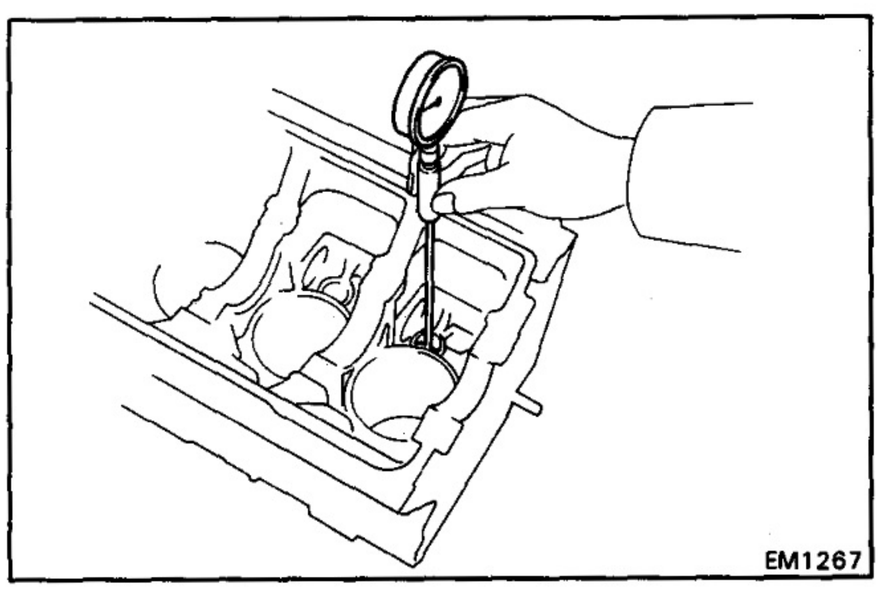

INSPECTION OF VALVE LIFTERS AND VALVE LIFTER BORES

INSPECT VALVE LIFTER OIL CLEARANCE

(a) Using a cylinder gauge, measure the valve lifter bore diameter.

Bore diameter: 27.010 – 27.030 mm (1.0634 – 1.0642 in.)

(b) Subtract the valve lifter diameter measurement (See page EM-70) from the valve lifter bore diameter measurement.

Standard oil clearance: 0.025 – 0.065 mm (0.0010 – 0.0026 in.)
Maximum oil clearance: 0.10 mm (0.0039 in.)

If the oil clearance is greater than maximum, replace the valve lifters.

REPLACEMENT OF CRANKSHAFT REAR OIL SEAL

NOTE: There are two methods (A and B) to replace the oil seal as follows.

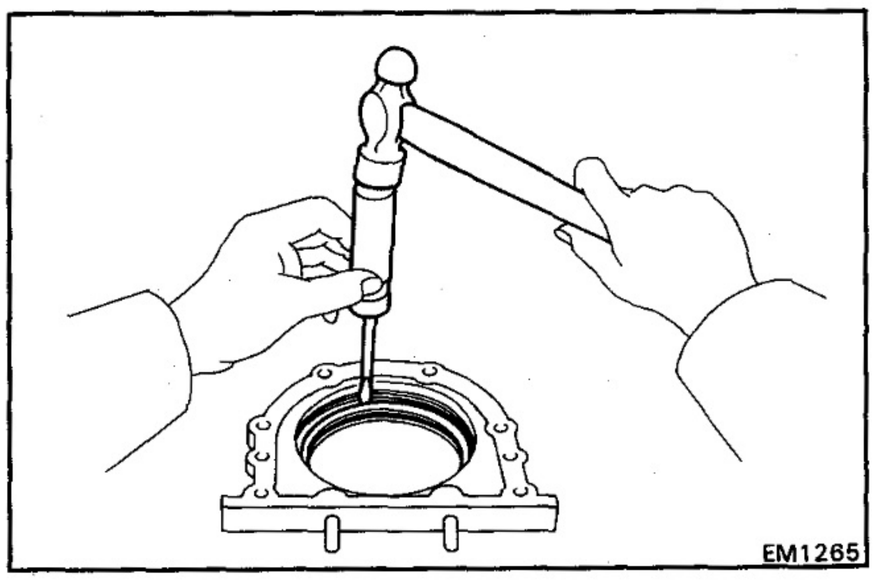

REPLACE CRANKSHAFT REAR OIL SEAL

A. If rear oil seal retainer is removed from cylinder block:

(a) Using a screwdriver and hammer, tap out the oil seal.

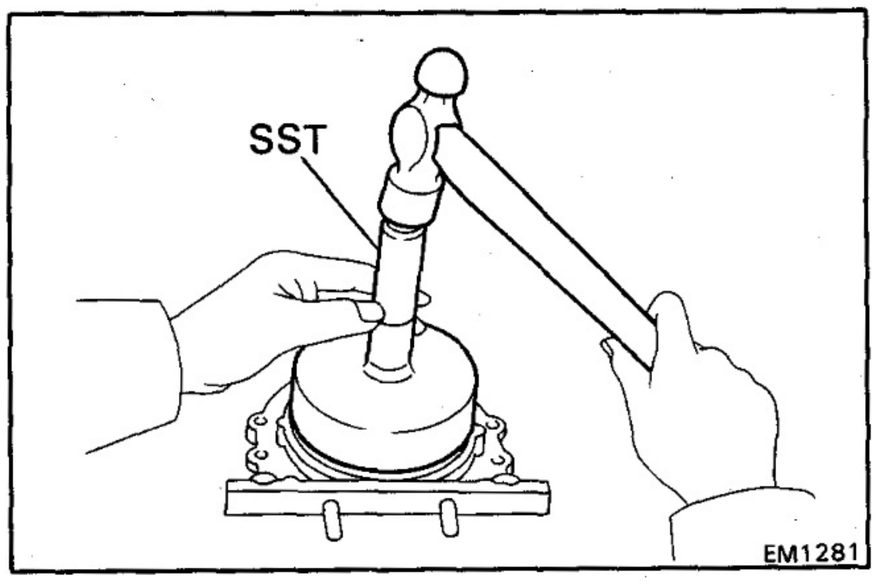

(b) Using SST and a hammer, tap in the oil seal until its surface is flush with the rear oil seal retainer edge.

SST 09223-56010

(c) Apply MP grease to a new oil seal.

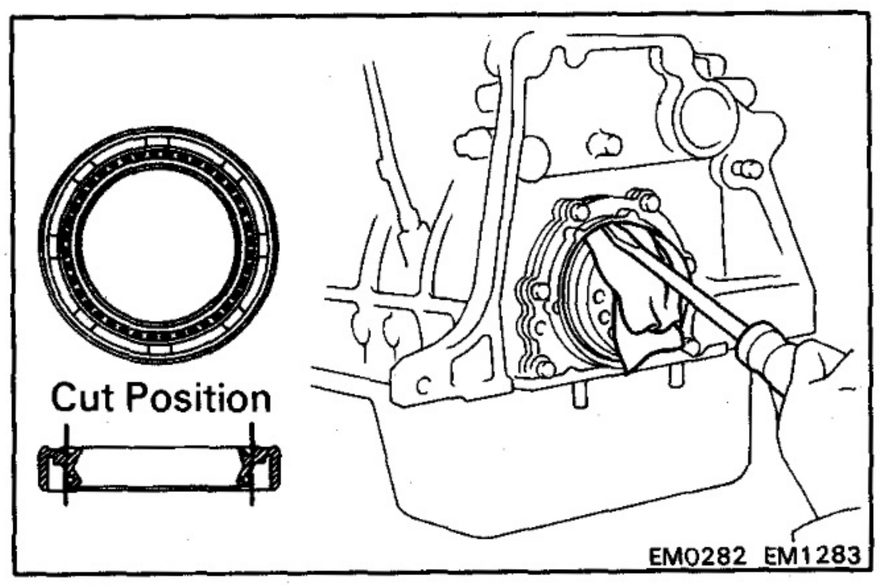

B. If rear oil seal retainer is installed to cylinder block:

(a) Using a knife, cut off the oil seal lip.

(b) Using a screwdriver, Pry out the oil seal.

CAUTION: Be careful not to damage the crankshaft. Tape the screwdriver.

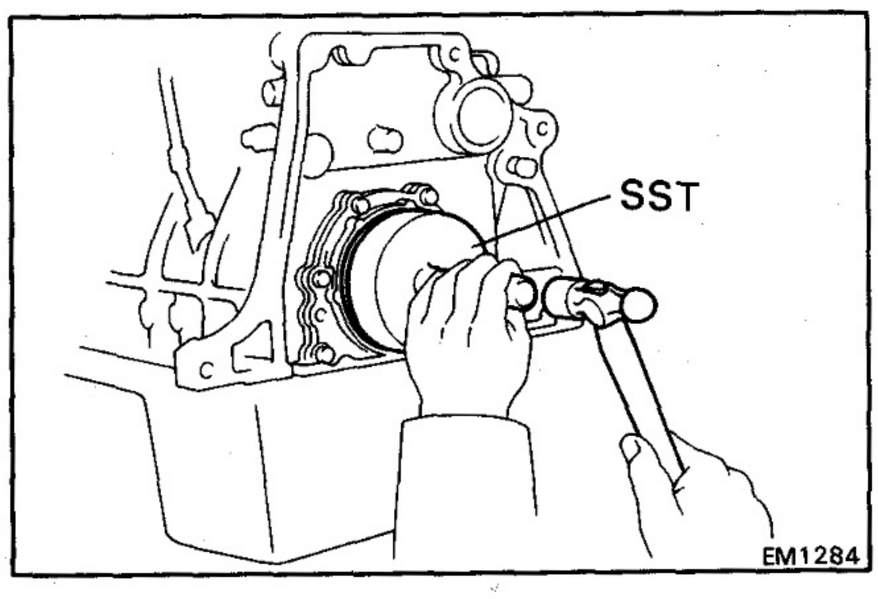

(c) Apply MP grease to a new oil seal.

(d) Using SST and a hammer, tap in the oil seal until its surface is flush with the rear oil seal retainer edge.

SST 09223-56010

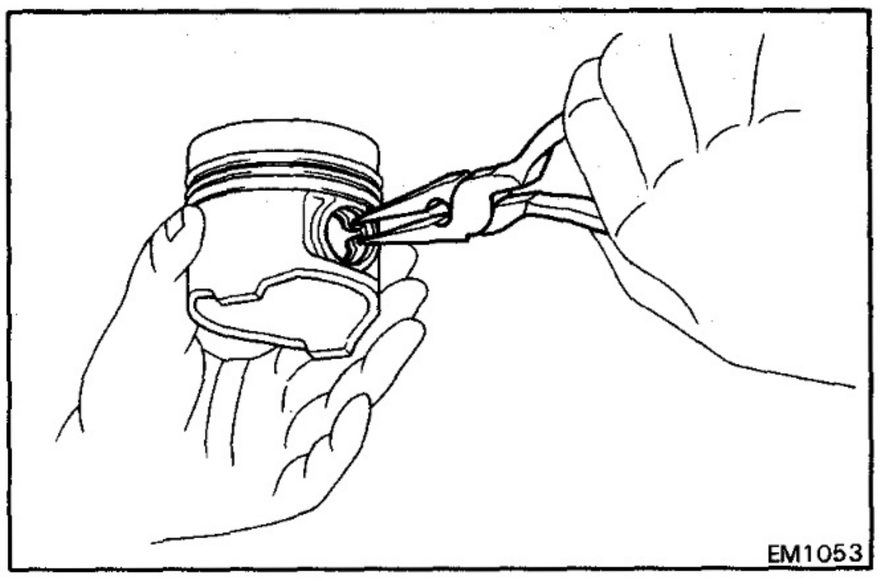

ASSEMBLY OF PISTON AND CONNECTING ROD ASSEMBLIES

1. ASSEMBLE PISTON AND CONNECTING ROD

(a) Install a new snap ring on one side of the piston pin hole.

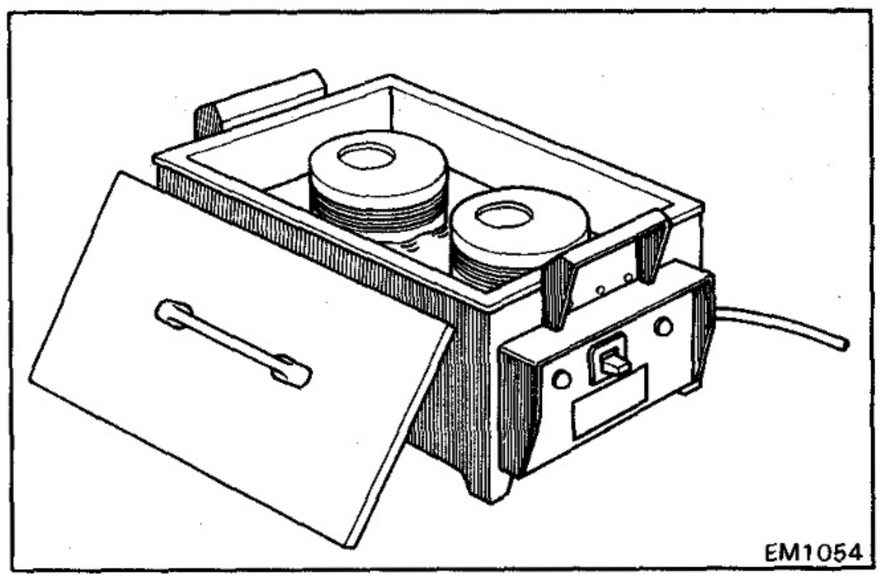

(b) Gradually heat the piston to about 60°C (140°F).

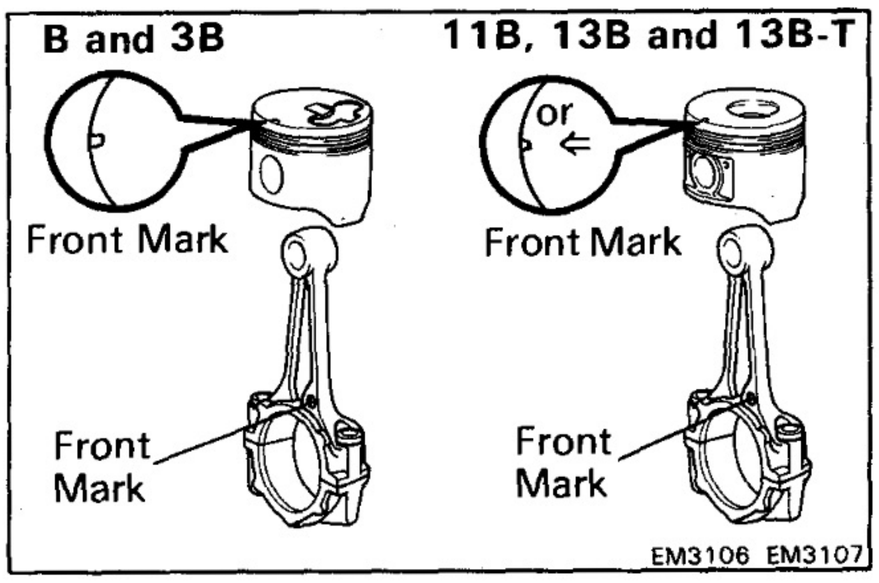

(c) Align the front marks of the piston and connecting rod, and push in the piston pin with your thumb.

(d) Install a new snap ring on the other side of the pin hole.

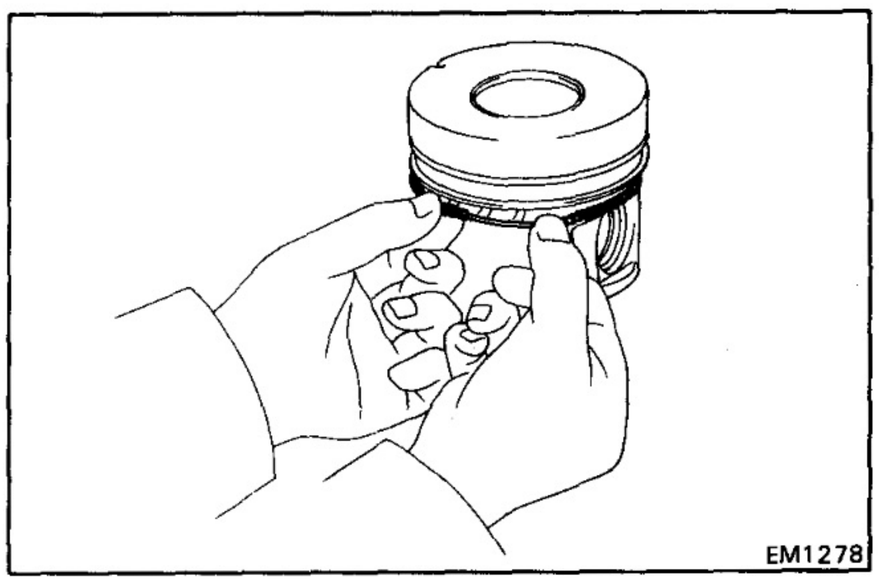

2. INSTALL PISTON RINGS

(a) Install the coil and oil ring by hand.

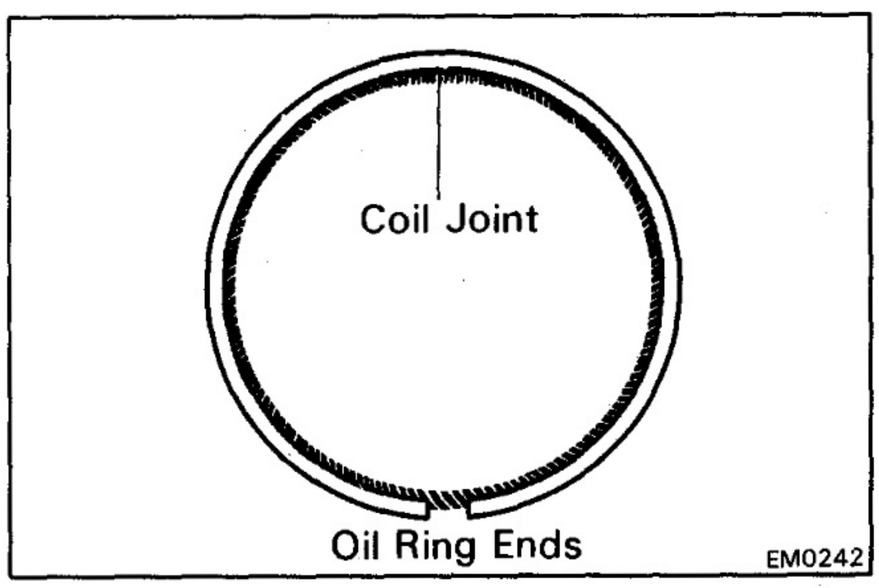

NOTE: Face the end gap of the oil ring in the opposite direction of the coil joint.

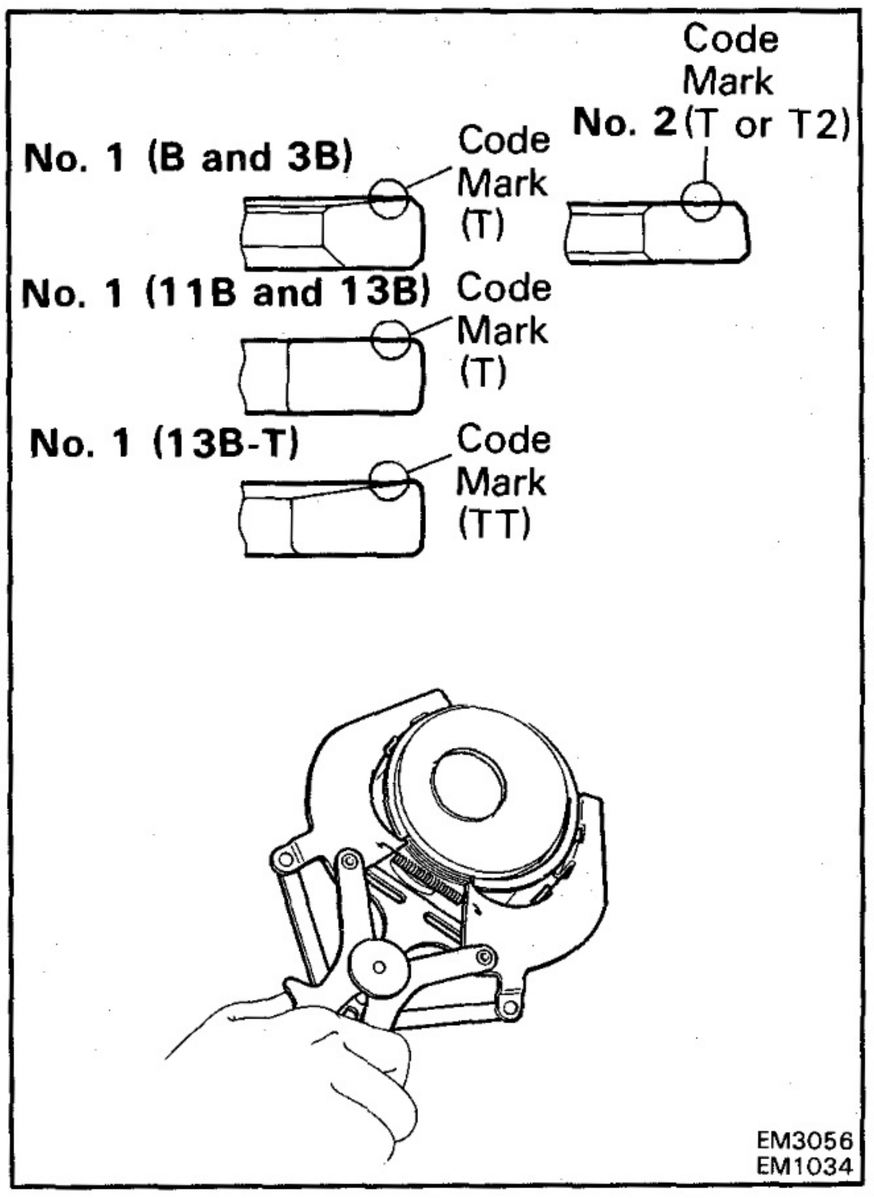

(b) Using a piston ring expander, install the two compression rings with the code mark facing upward.

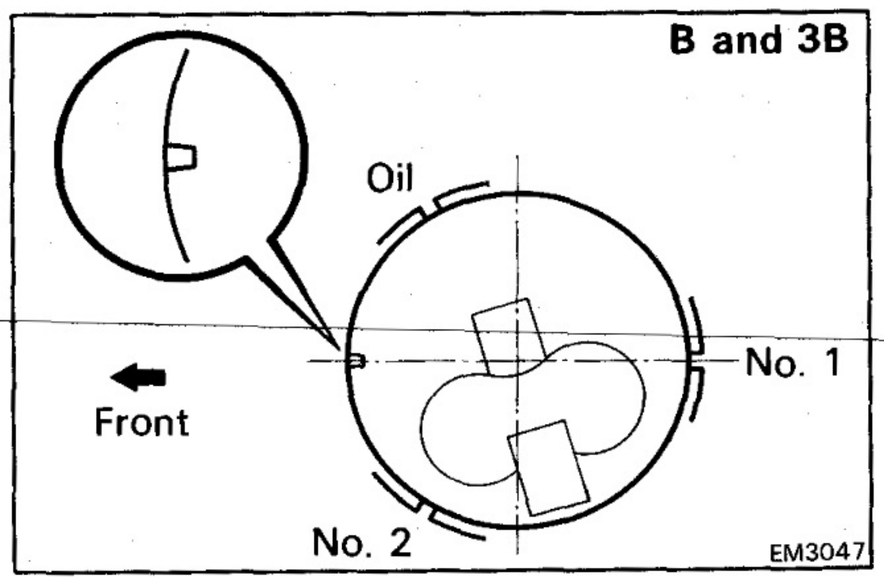

(c) Position the piston rings so that the ring end gaps are as shown.

CAUTION: Do not align the end gaps.

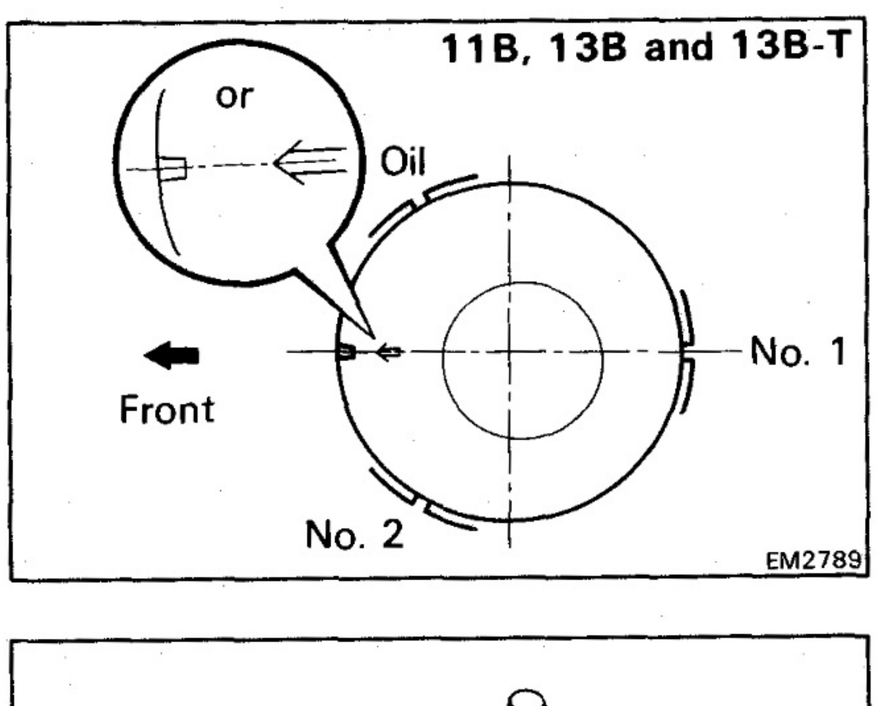

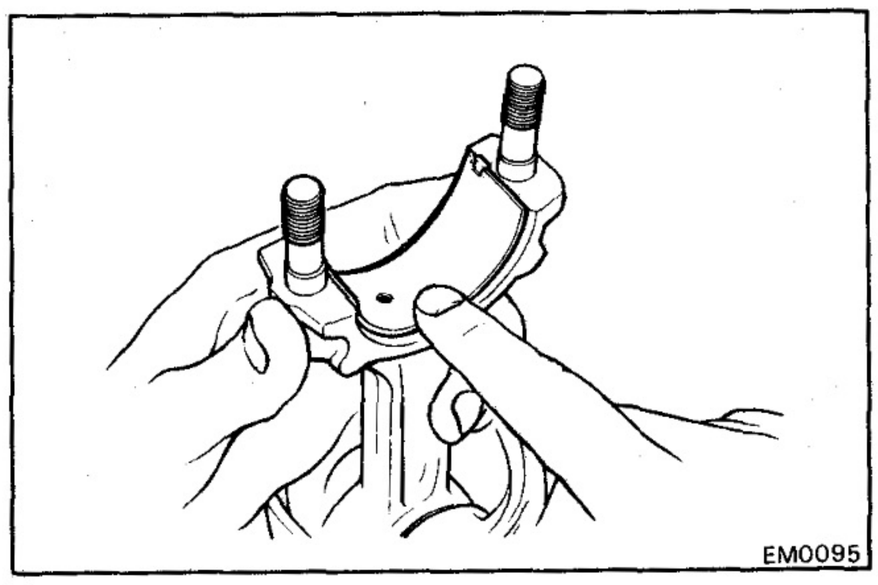

3. INSTALL BEARINGS

(a) Align the bearing claw with the claw groove of the connecting rod or connecting rod cap.

(b) Install the bearings in the connecting rod and connecting rod cap.

ASSEMBLY OF CYLINDER BLOCK

(See page EM-79)

NOTE:

- Thoroughly clean all parts to be assembled.
- Before installing the parts, apply new engine oil to all sliding and rotaing surfaces.
- Replace all gaskets, and oil seals with new parts.

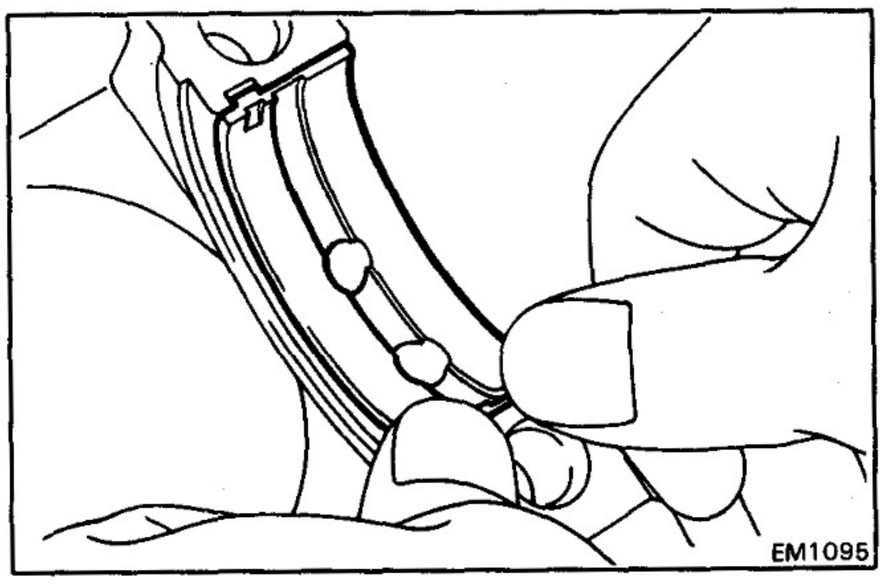

1. INSTALL MAIN BEARINGS

(a) Align the bearing claw with the claw groove of the main bearing cap or cylinder block.

(b) Install the bearing in the cylinder block and main bearing caps in the proper location.

CAUTION: Install the bearing with the oil hole in the cylinder block.

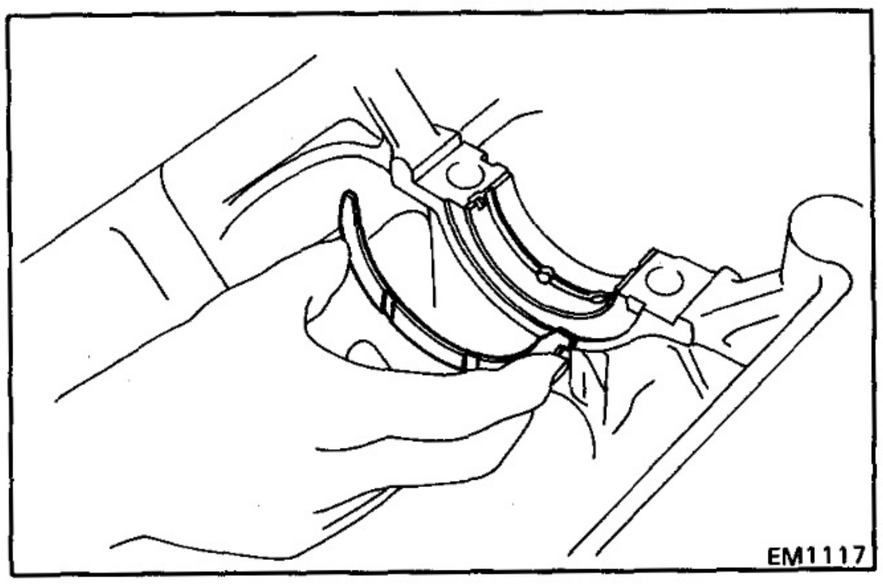

2. INSTALL UPPER THRUST WASHERS

Install the thrust washers under the No. 3 main bearing cap position of the block with the oil grooves facing outward.

3. PLACE CRANKSHAFT ON CYLINDER BLOCK

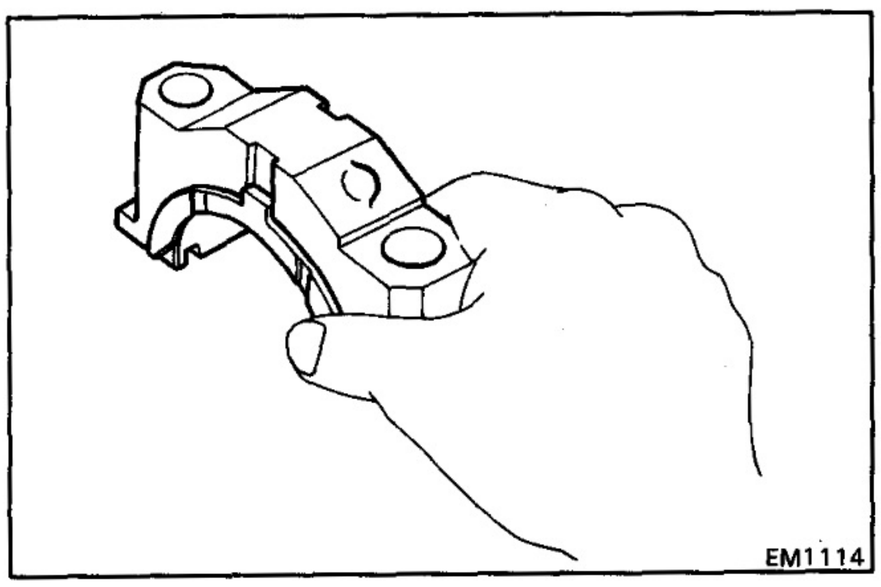

4. INSTALL MAIN BEARING CAPS AND LOWER THRUST WASHERS

(a) Install the lower thrust washers on the No. 3 main bearing cap with the oil grooves facing outward.

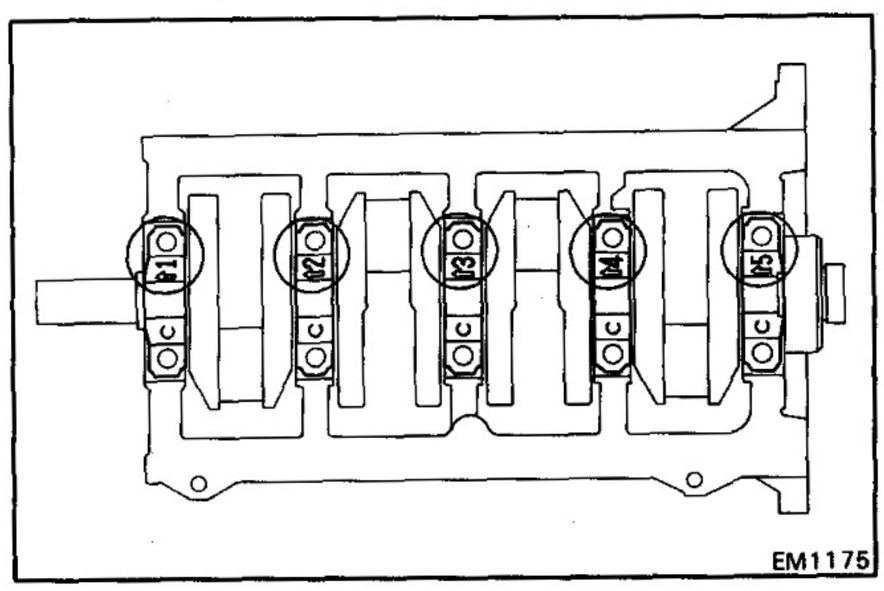

(b) Install the main bearing caps in their proper locations.

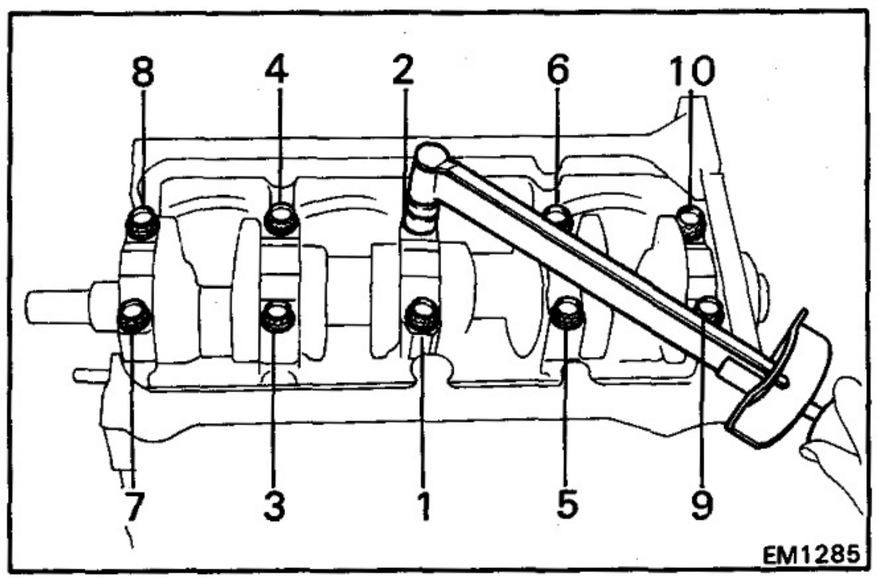

(c) Apply a light coat of the engine oil on the threads and under the bolt heads of the main bearing caps.

(d) Install and uniformly tighten the fourteen bolts of the main bearing caps in several passes, in the sequence shown.

Torque: 2,000 kg-cm (145 ft-lb, 196 N·m)

(e) Check that the crankshaft turns smoothly.

(f) Check the crankshaft thrust clearance. (See page EM-83)

5. INSTALL PISTON AND CONNECTING ROD ASSEMBLIES

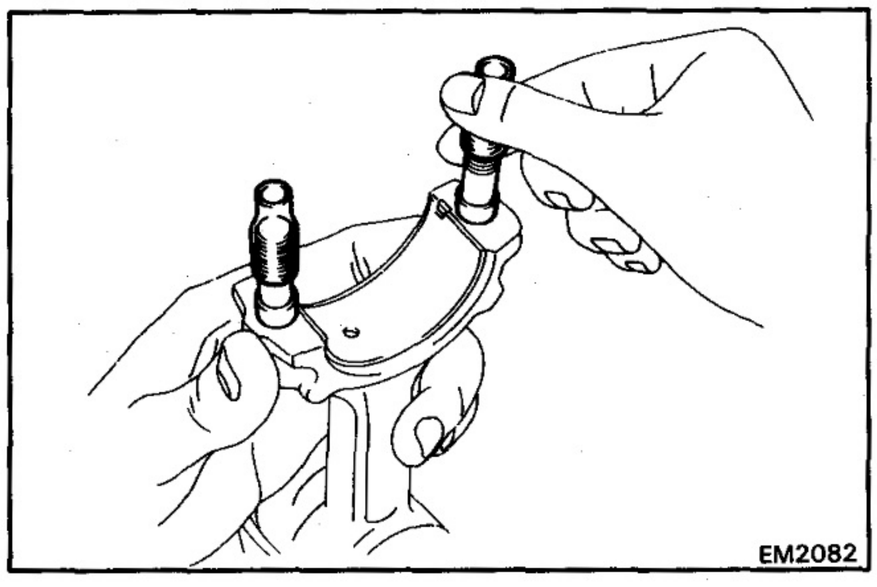

(a) Cover the connecting rod bolts with a short piece of hose to protect the crankshaft and cylinder bore from damage.

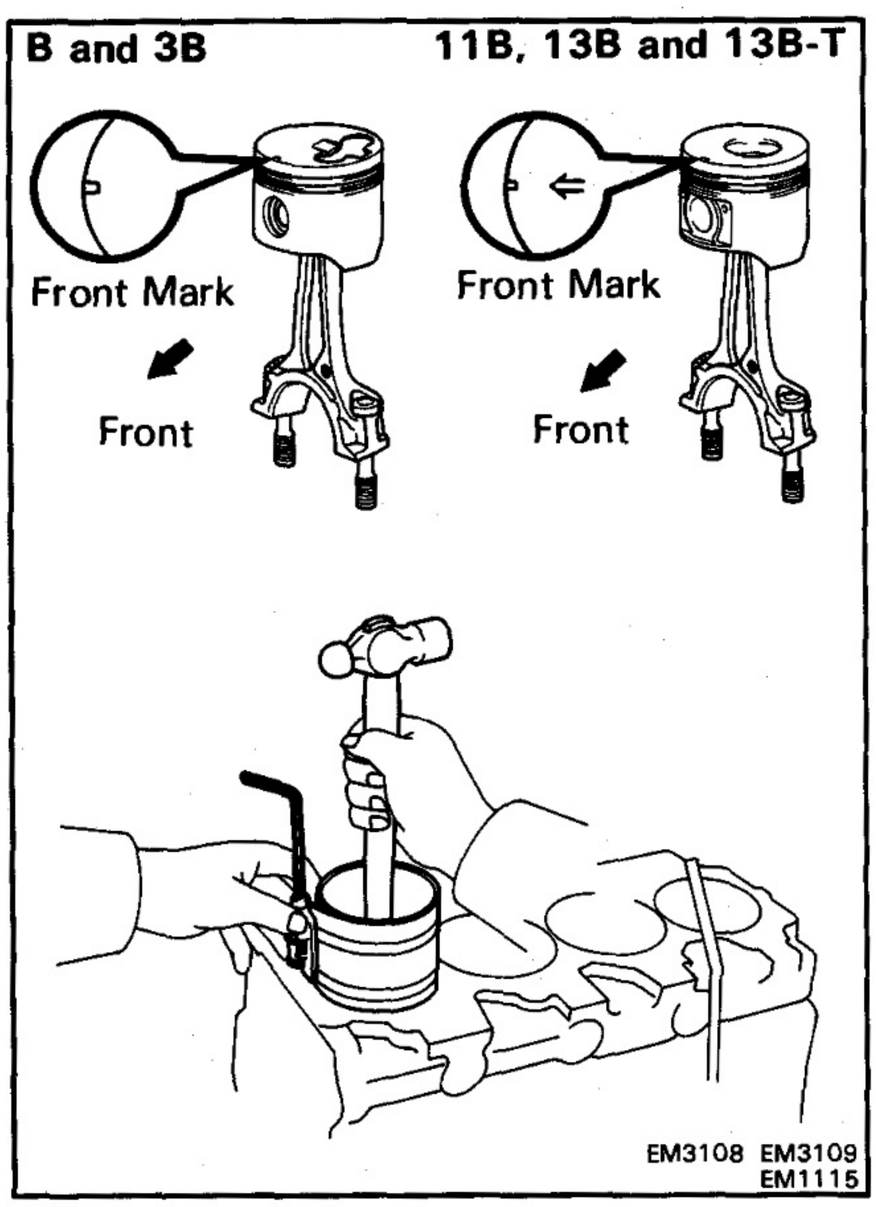

(b) Using a piston ring compressor, push the correctly numbered piston and connecting rod assembly into the cylinder with the front mark of the piston facing forward.

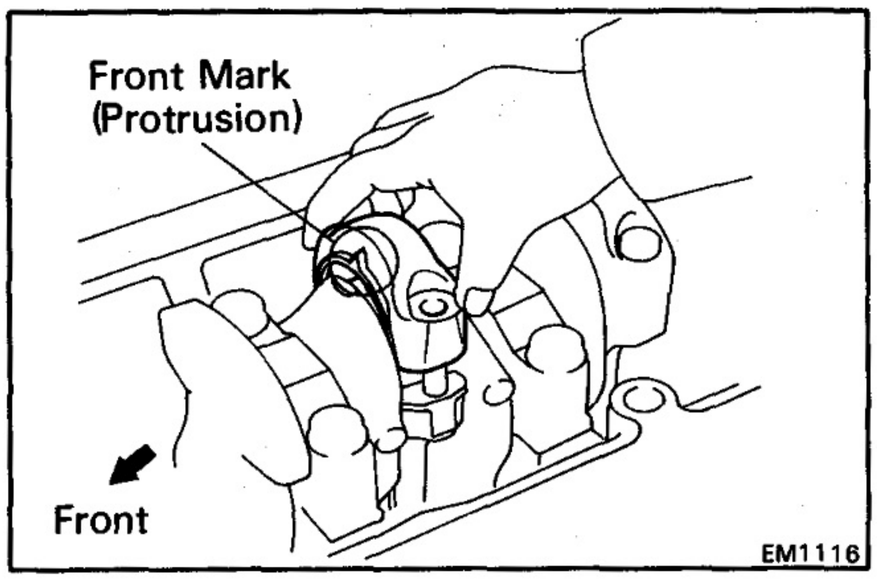

6. INSTALL CONNECTING ROD CAPS

(a) Match the numbered cap with the numbered connecting rod.

(b) Install the connecting rod cap with the front mark facing forward.

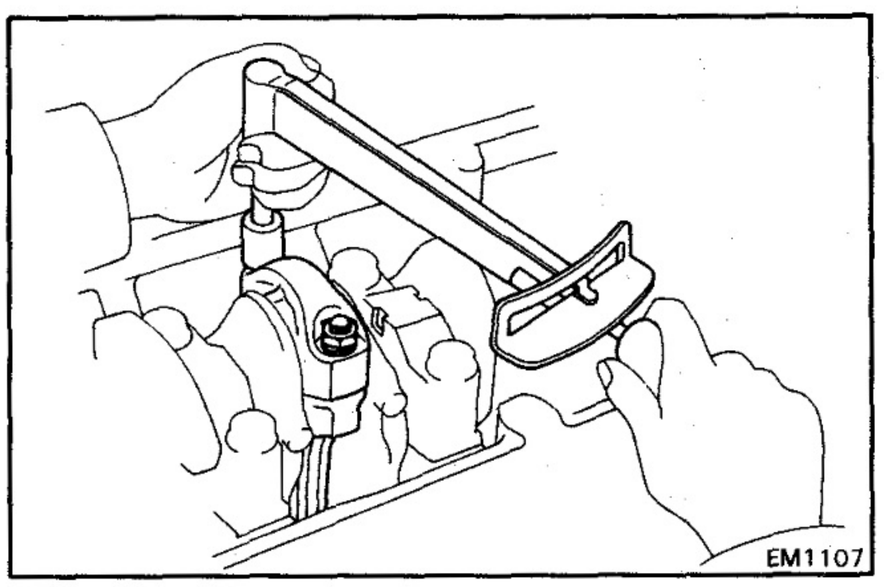

(c) Apply a light coat of engine oil on the threads and under the nuts of the connecting rod cap.

(d) Install and alternately tighten the nuts of the connecting rod cap in several passes.

Torque: B 750 kg-cm (54 ft-lb, 74 N·m)
3B, 11B, 13B and 13B-T
1,200 kg-cm (87 ft-lb, 118 N·m)

(e) Check that the crankshaft turns smoothly.

(f) Check the connecting rod thrust clearance.
(See page EM-80)

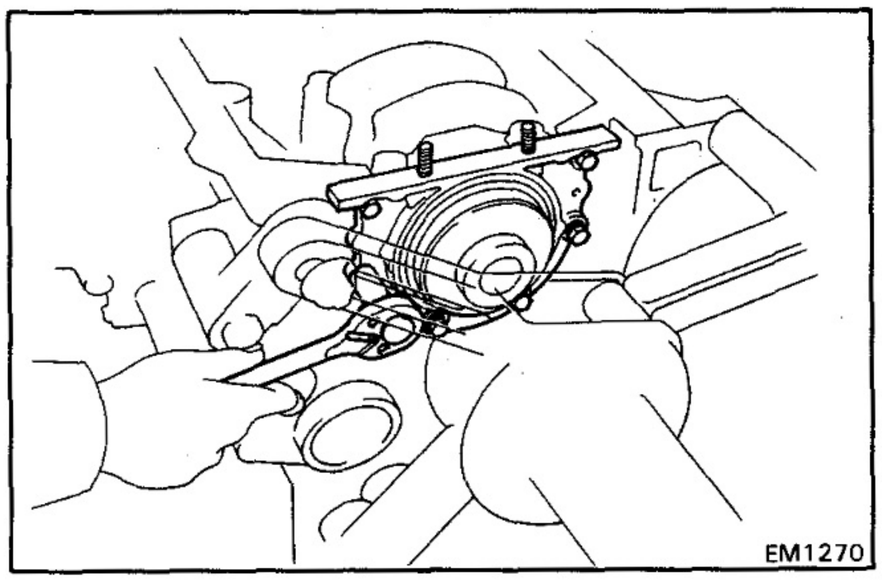

7. INSTALL REAR OIL SEAL RETAINER

Install a new gasket and the retainer with the six bolts.

Torque: 185 kg-cm (13 ft-lb, 18 N·m)

8. INSTALL OIL PUMP AND OIL PAN (See page LU-13)

9. INSTALL INJECTION PUMP (See page FU-99)

10. INSTALL TIMING GEARS AND CAMSHAFT (See page EM-73)

11. INSTALL CYLINDER HEAD (See page EM-59)

12. INSTALL ALTERNATOR

13. INSTALL INJECTION PIPES
(See page FU-9) B and 3B
(See page FU-15) 11B, 13B and 13B-T

14. [13B-T]
INSTALL TURBOCHARGER (See page EM-39)

15. REMOVE ENGINE STAND

16. INSTALL REAR END PLATE

17. [M/T]
INSTALL FLYWHEEL

(a) Apply a light coat of engine oil on the threads and under the bolt heads.

(b) Install the flywheel on the crankshaft.

(c) Install and uniformly tighten the six bolts in several passes, in the sequence shown.

Torque: 1,800 kg-cm (130 ft-lb, 177 N·m)

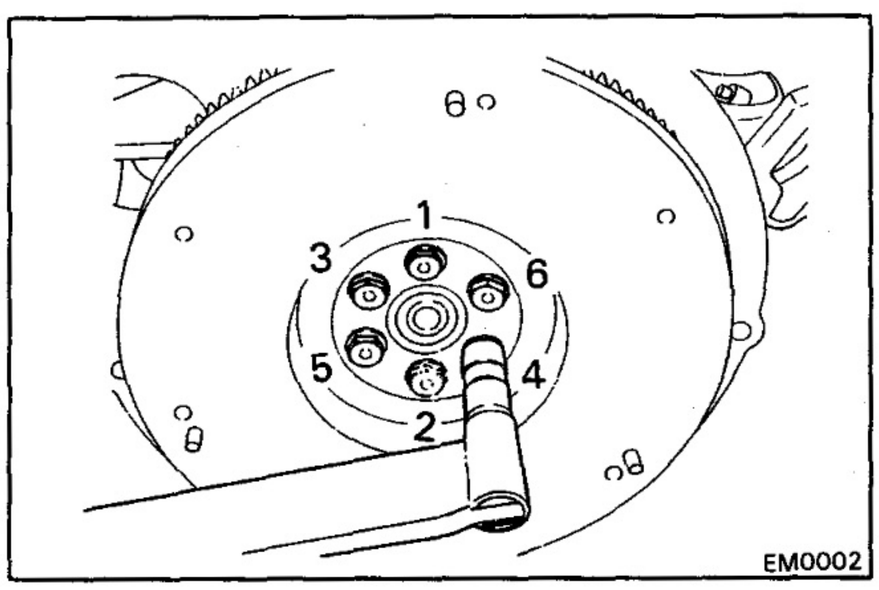

18. [A/T]
INSTALL DRIVE PLATE (See procedure step 16)

Torque: 1,200 kg-cm (87 ft-lb, 118 N·m)

FUEL SYSTEM

NOTE: For troubleshooting procedures, refer to DIESEL ENGINE DIAGNOSIS (EM Section).

	Page
REPLACEMENT OF FUEL FILTER	FU-2
INJECTION NOZZLES [B and 3B]	FU-4
INJECTION NOZZLES [11B, 13B and 13B-T]	FU-10
FUEL FEED PUMP	FU-16
AUTOMATIC TIMER	FU-21
INJECTION PUMP	FU-27

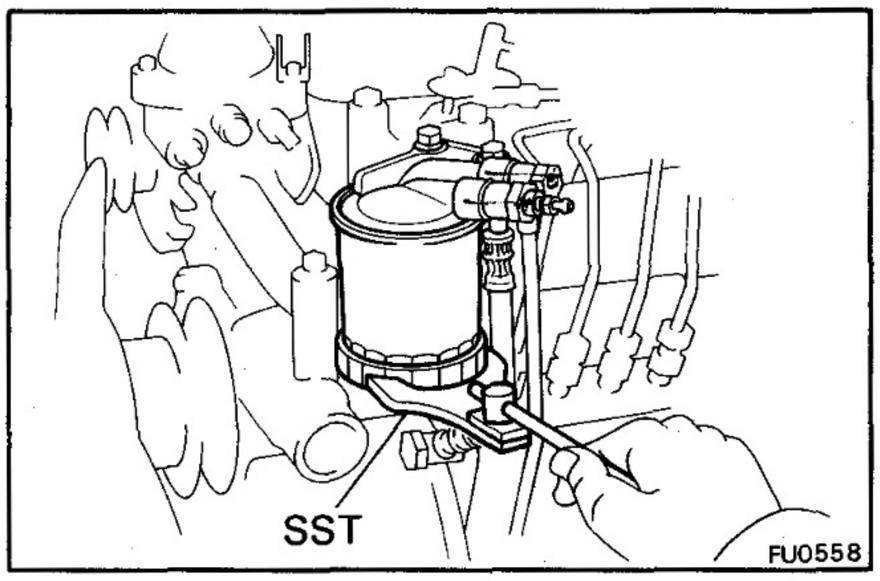

REPLACEMENT OF FUEL FILTER

1. REPLACE FUEL FILTER

[Cartridge Type]

(a) Using SST, remove the fuel filter and O-ring.

SST 09228-34010

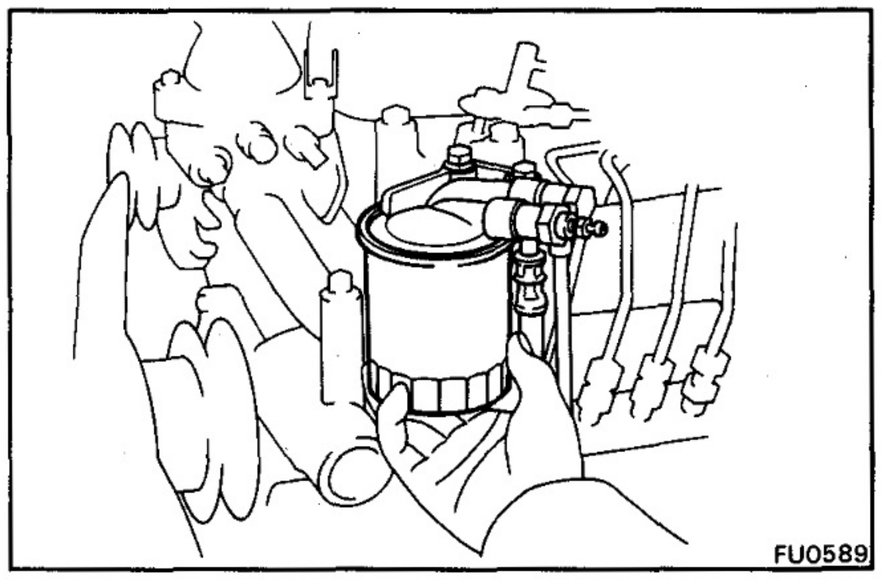

(b) Install a new fuel filter with a new O-ring.

- Put a light coat of fuel on the O-ring.
- Hand tighten only. DO NOT use SST to tighten the filter.

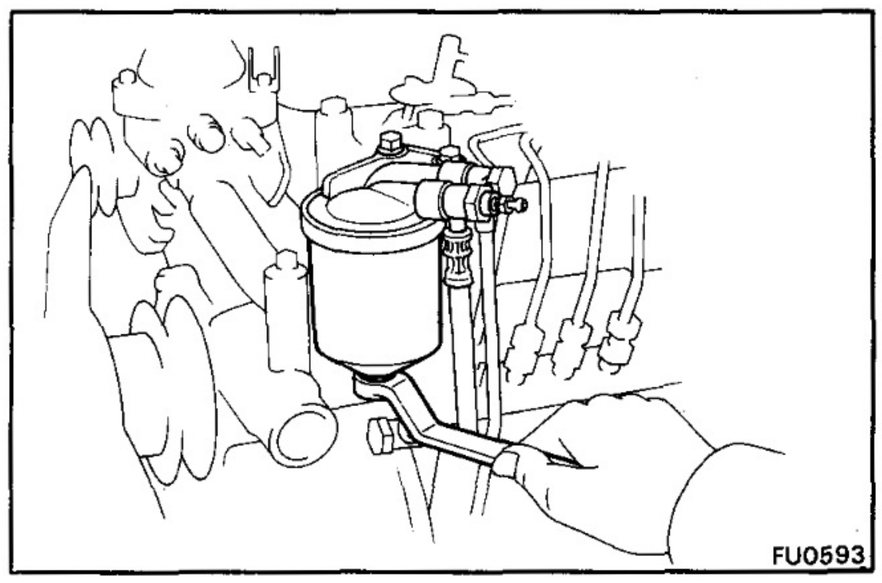

[Paper Element Type]

(a) Loosen the center bolt and remove the bolt with the fuel filter lower body assembly.

(b) Remove the upper body gasket from the fuel filter upper body.

(c) Remove the rubber gaskets, element, spring plate and spring from the lower body.

(d) Remove the O-ring from the center bolt.

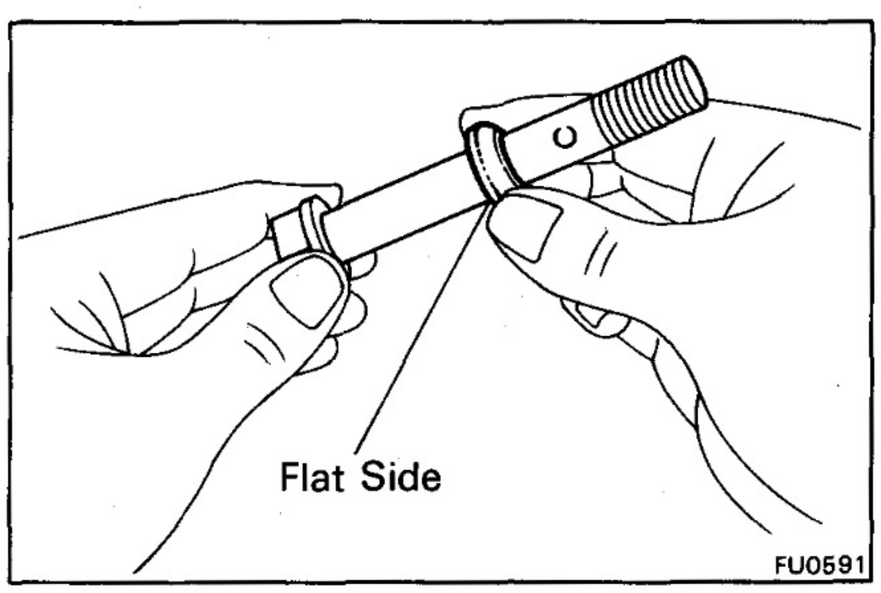

(e) Install a new O-ring facing its flat side toward the center bolt head.

- Put a light coat of fuel on the O-ring.

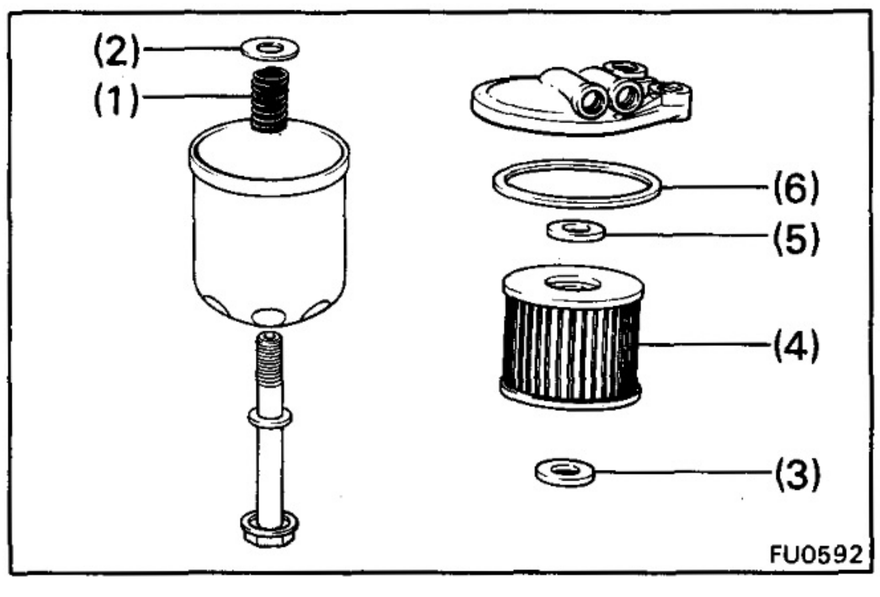

(f) Install the spring (1), spring plate (2), a new rubber gasket (3), a new element (4) and a new rubber gasket (5) to the lower body.

(g) Install a new upper body gasket (6) to the upper body.

- Put a light coat of fuel on the body gasket.

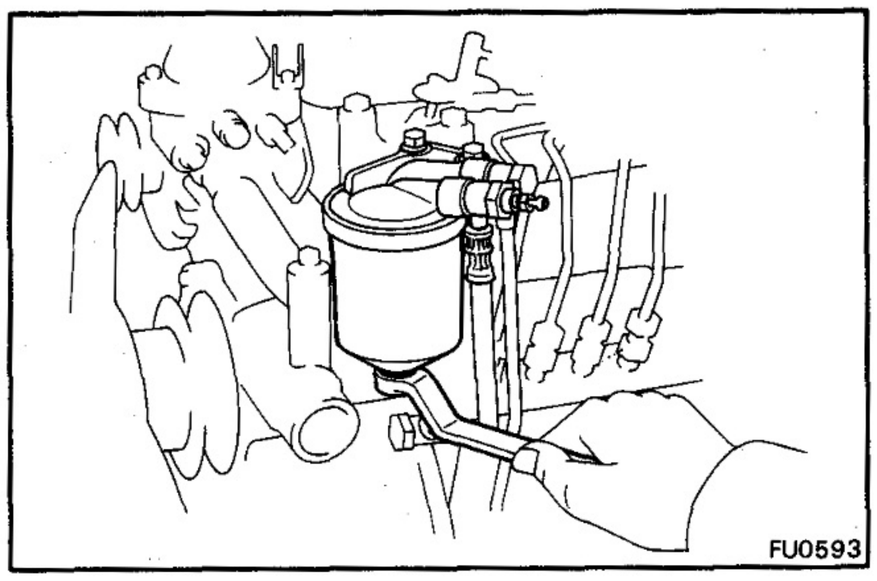

(h) Install the fuel filter lower body assembly with the center bolt.

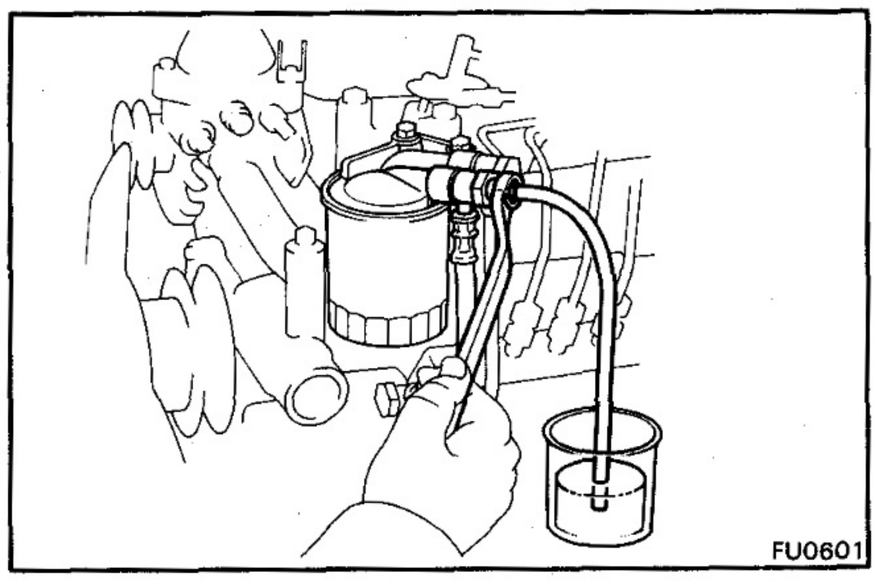

2. BLEED FUEL FILTER

(a) Connect a vinyl tube to the fuel filter bleeder plug.

(b) Insert other end of the tube in a container of fuel.

(c) Loosen the fuel filter bleeder plug.

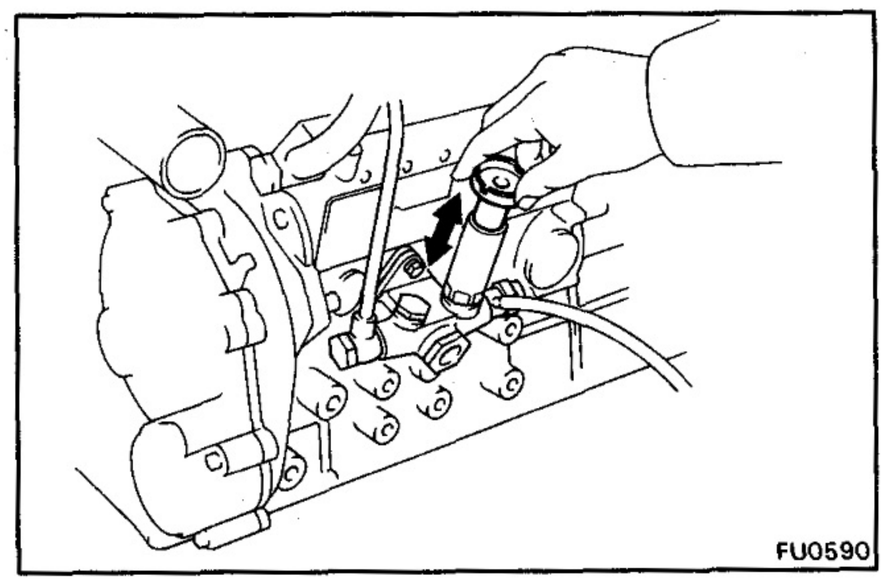

(d) Turn the priming pump handle counterclockwise to free it.

(e) Operate the priming pump handle until there are no air bubbles emitted from the fuel filter bleeder plug.

(f) Turn the priming pump handle clockwise and tighten it.

(g) Tighten the fuel filter bleeder plug.

3. START ENGINE AND CHECK FOR FUEL LEAKS

INJECTION NOZZLES [B and 3B]

REMOVAL AND TEST OF INJECTION NOZZLES

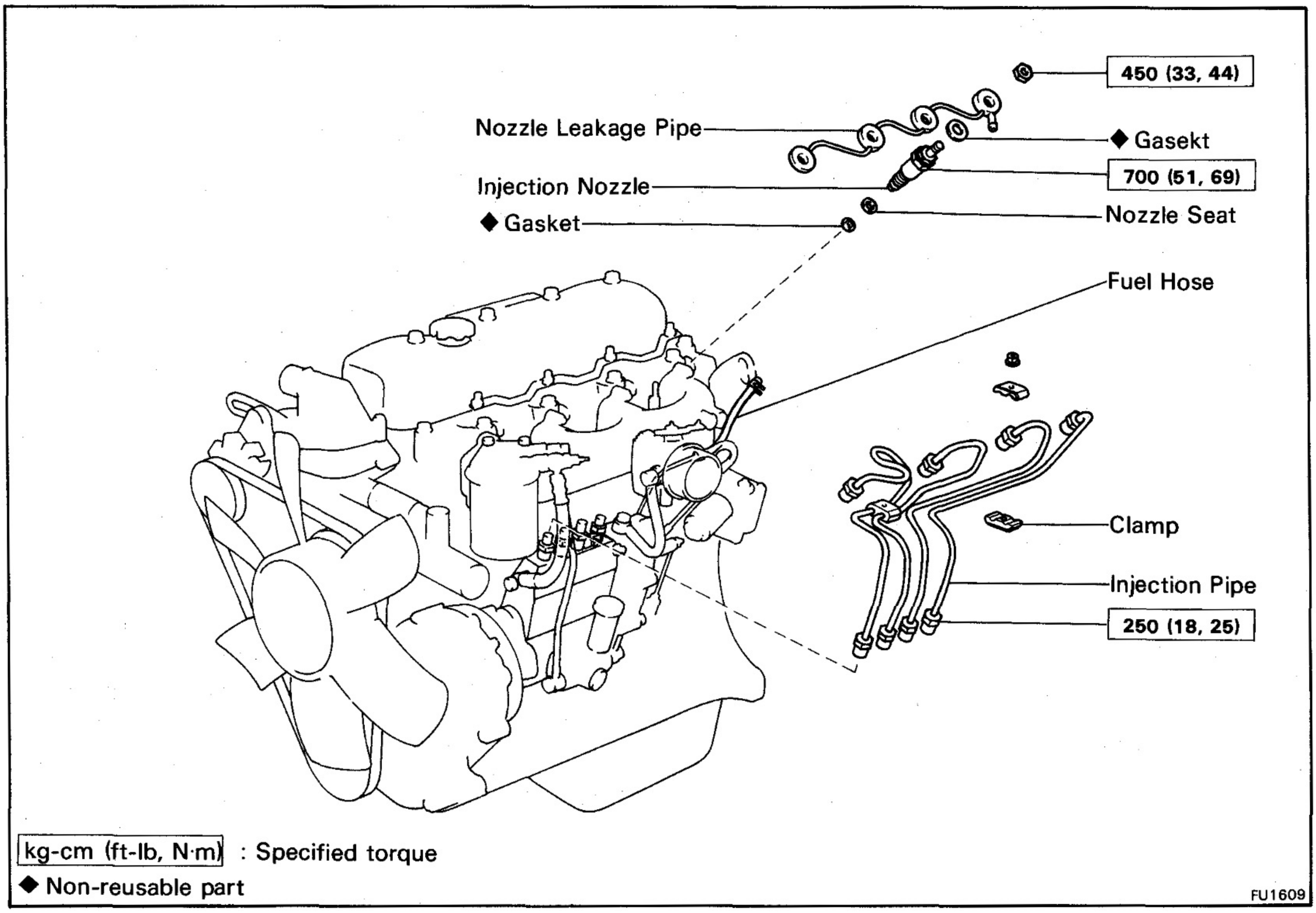

kg-cm (ft-lb, N·m) : Specified torque

◆ Non-reusable part

FU1609

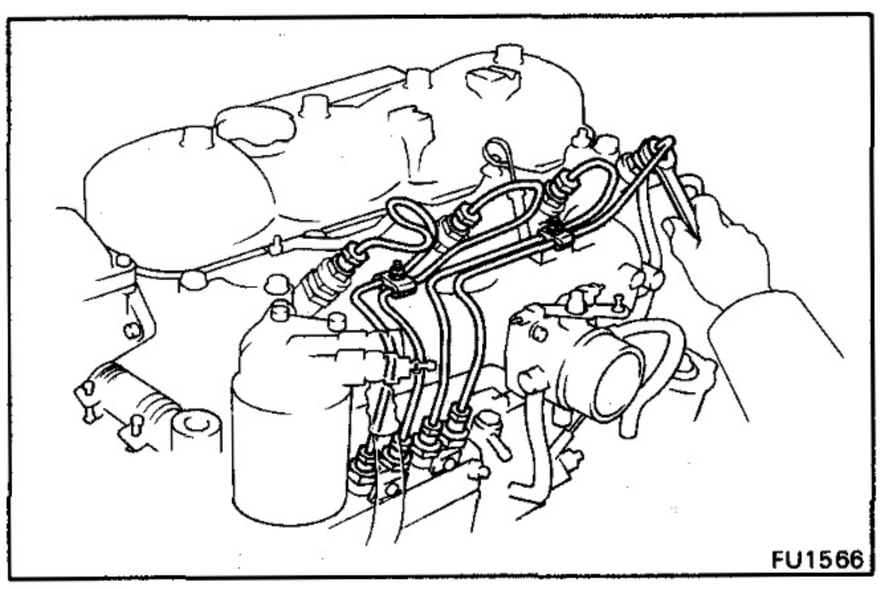

FU1566

1. REMOVE INJECTION PIPES

(a) Loosen the union nuts of the four injection pipes.

(b) Remove the two bolts, four injection pipes and clamps.

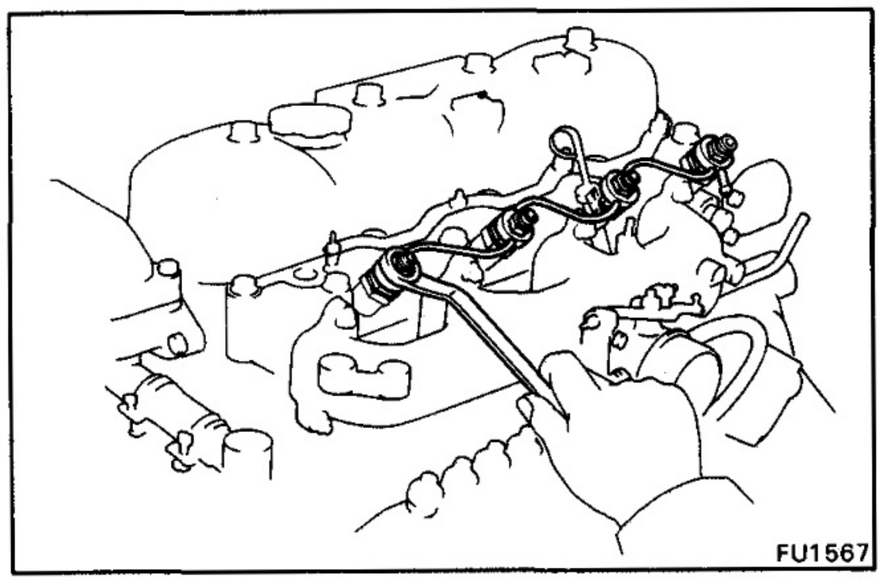

FU1567

2. REMOVE NOZZLE LEAKAGE PIPE

(a) Disconnect the fuel hose from the leakage pipe.

(b) Remove the four nuts, leakage pipe and four gaskets.

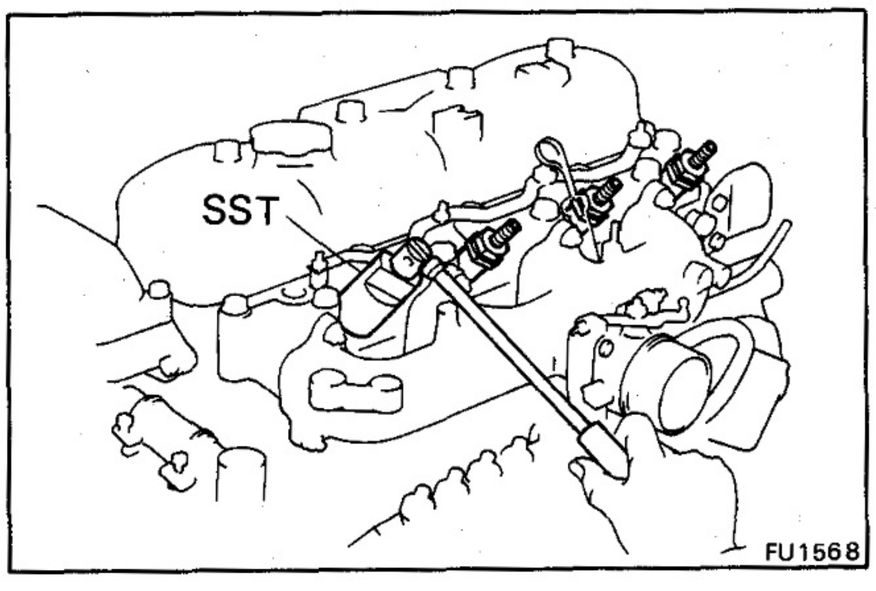

3. REMOVE INJECTION NOZZLES

Using SST, remove the four nozzles, seats and gaskets.
SST 09260-46012 (09268-46012, 09268-46021)

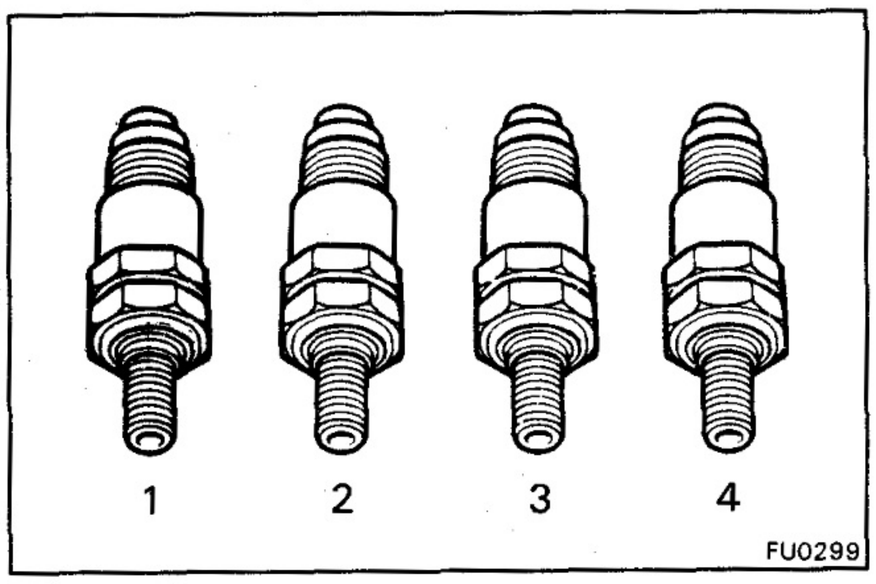

NOTE: Arrange the nozzles in correct order.

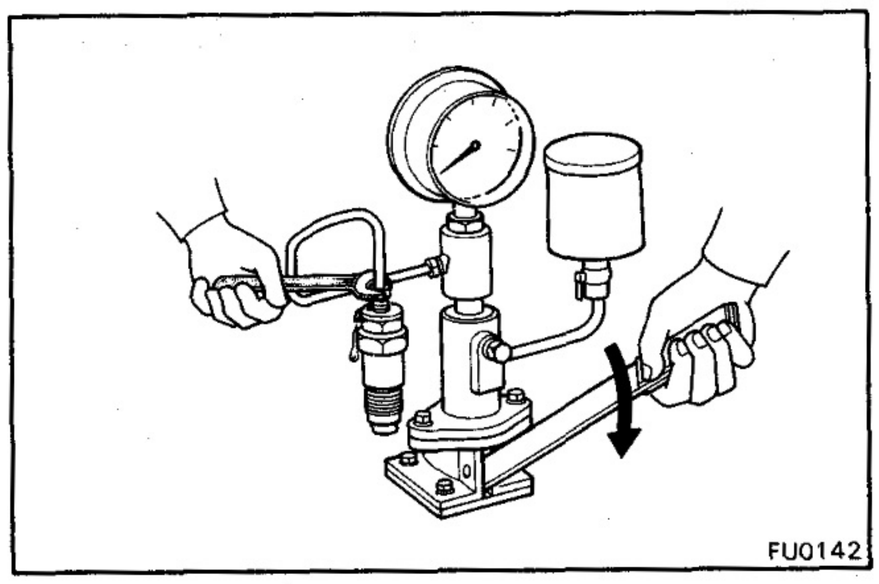

4. INJECTION PRESSURE TEST

(a) Install the nozzle to an injection nozzle hand tester and bleed the air from the union nut.

WARNING: Do not place your finger over the nozzle injection hole.

(b) Pump the tester handle a few times as fast as possible by hand to discharge the carbon from the injection hole.

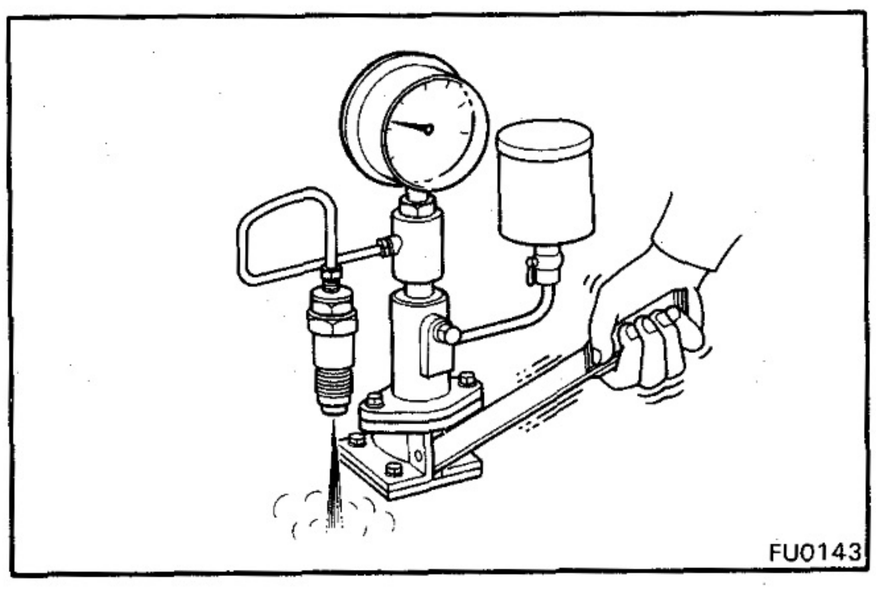

(c) Pump the tester handle slowly and observe the pressure gauge.

(d) Read the pressure gauge when the injection pressure just begins to drop.

Opening pressure:

New nozzle	**115 – 125 kg/cm² (1,636 – 1,778 psi) (11,278 – 12,258 kPa)**
Reused nozzle	**105 – 125 kg/cm² (1,493 – 1,778 psi) (10,296 – 12,258 kPa)**

NOTE: Proper nozzle operation can be determined by a swishing sound.

If the opening pressure is not within specification, disassemble the nozzle and change the adjusting shim on the top of the pressure spring.

Adjusted opening pressure: 105 – 125 kg/cm² (1,493 – 1,778 psi) (10,296 – 12.258 kPa)

Adjusting shim thickness mm (in.)	
1.00 (0.0394)	1.50 (0.0591)
1.05 (0.0413)	1.55 (0.0610)
1.10 (0.0433)	1.60 (0.0630)
1.15 (0.0453)	1.65 (0.0650)
1.20 (0.0472)	1.70 (0.0669)
1.25 (0.0492)	1.75 (0.0689)
1.30 (0.0512)	1.80 (0.0709)
1.35 (0.0531)	1.85 (0.0728)
1.40 (0.0551)	1.90 (0.0748)
1.45 (0.0571)	1.95 (0.0768)

NOTE:
- Varying the adjusting shim thickness by 0.05 mm (0.0020 in.) changes the injection pressure by about 6.4 kg/cm² (91 psi, 628 kPa).
- Only one adjusting shim should be used.

(e) There should be no dripping after injection.

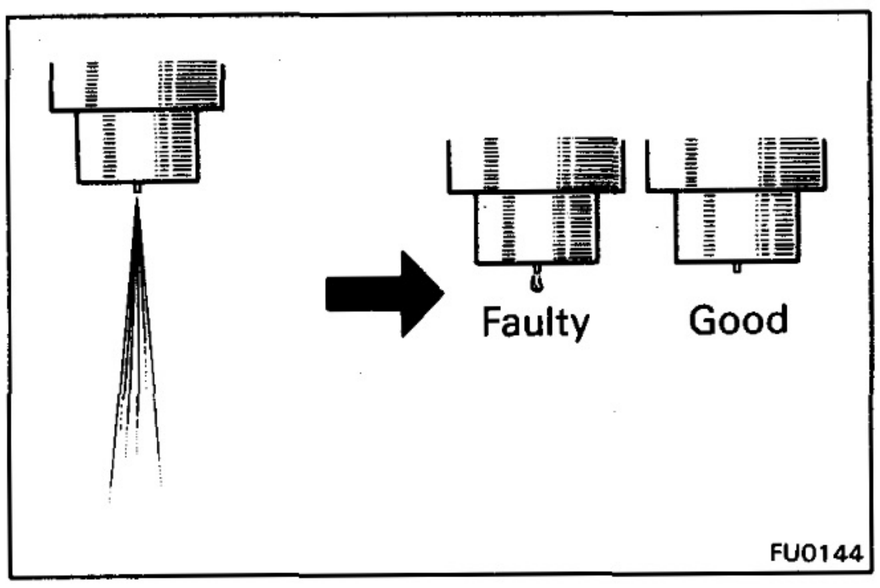

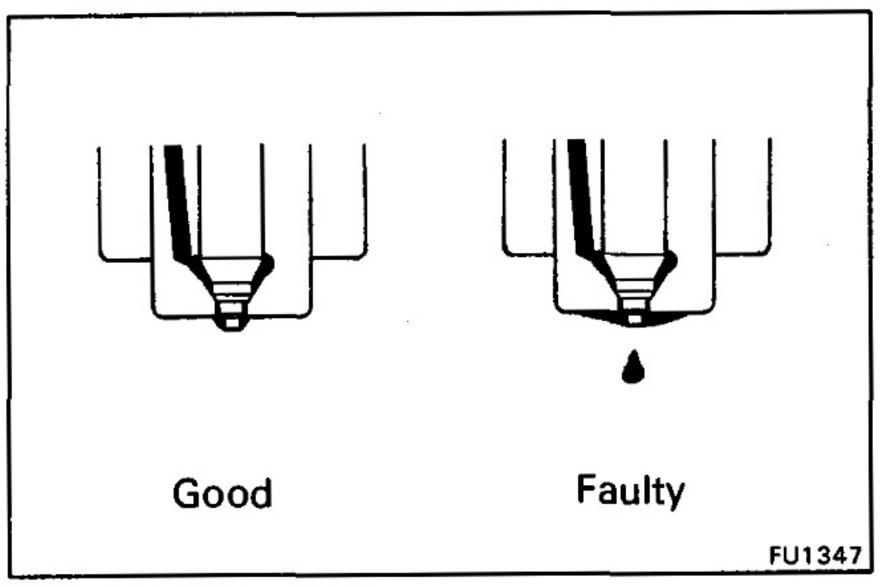

5. LEAKAGE TEST

While maintaining pressure at about 10.0 – 20.0 kg/cm² (142 – 284 psi, 981 – 1,961 kPa) below opening pressure (adjust by tester handle), check that there is no dripping for 10 seconds from the injection hole or around the retaining nut.

If the nozzle drips within 10 seconds, replace it or clean and overhaul the nozzle assembly.

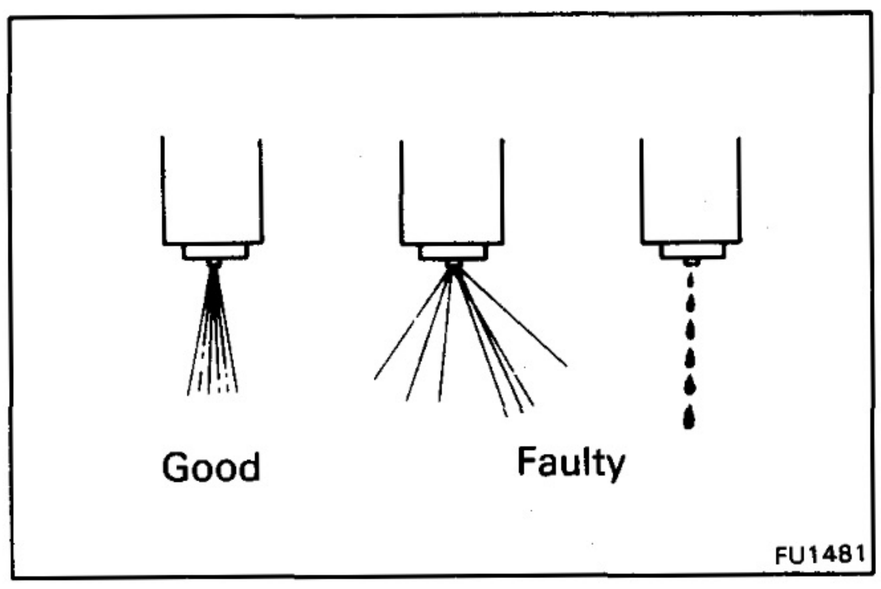

6. SPRAY PATTERN TEST

(a) The injection nozzle should shudder at a pumping speed between 15 – 60 times (old nozzle) or 30 – 60 times (new nozzle) per minute.

(b) Check the spray pattern during shuddering.

If the spray pattern is not correct during shuddering, the nozzle must be replaced or cleaned.

COMPONENTS

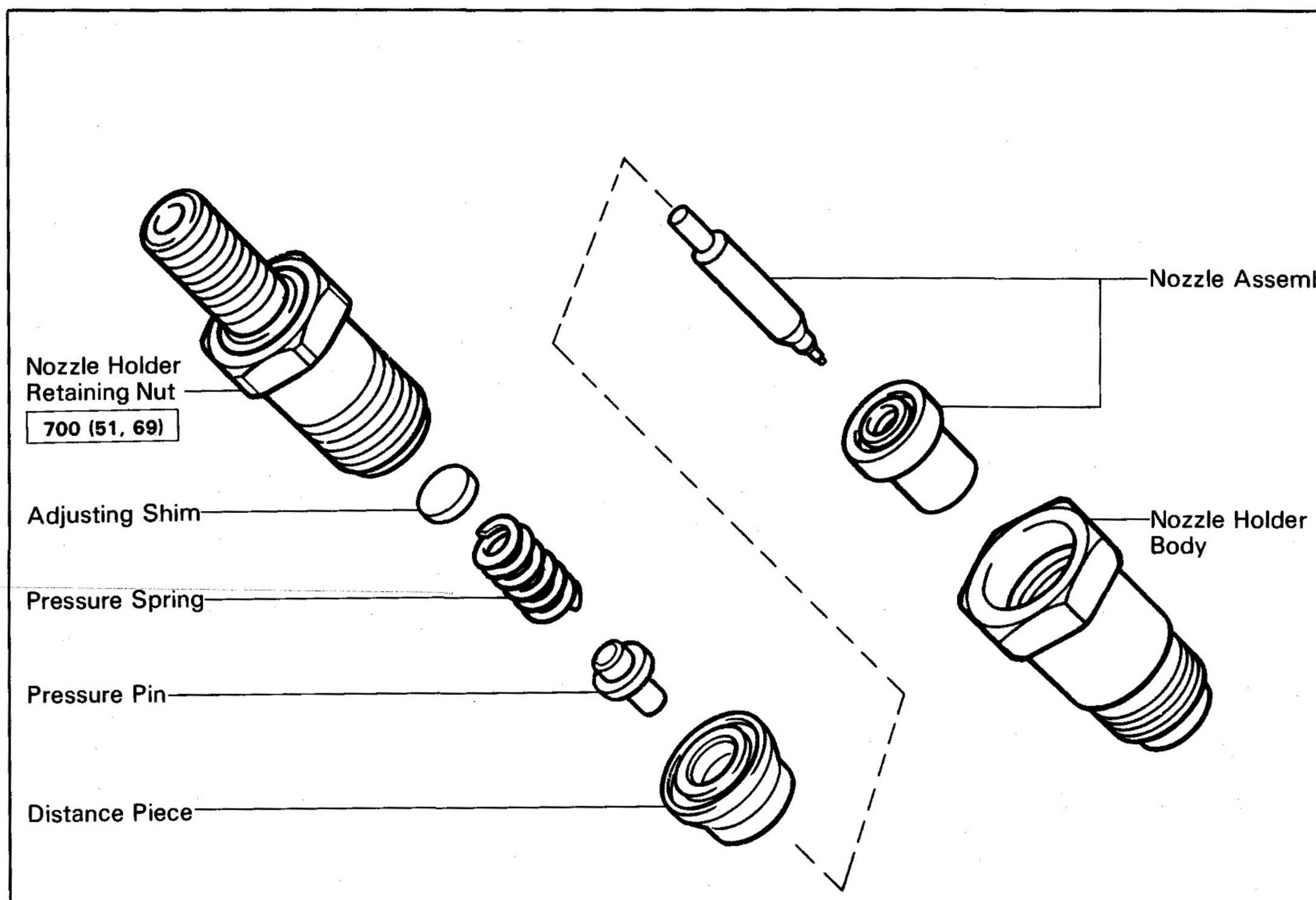

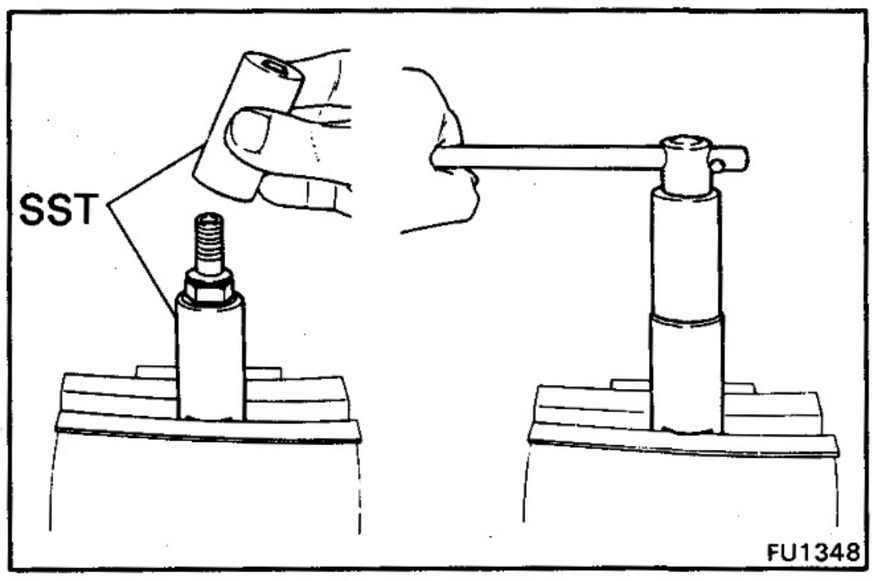

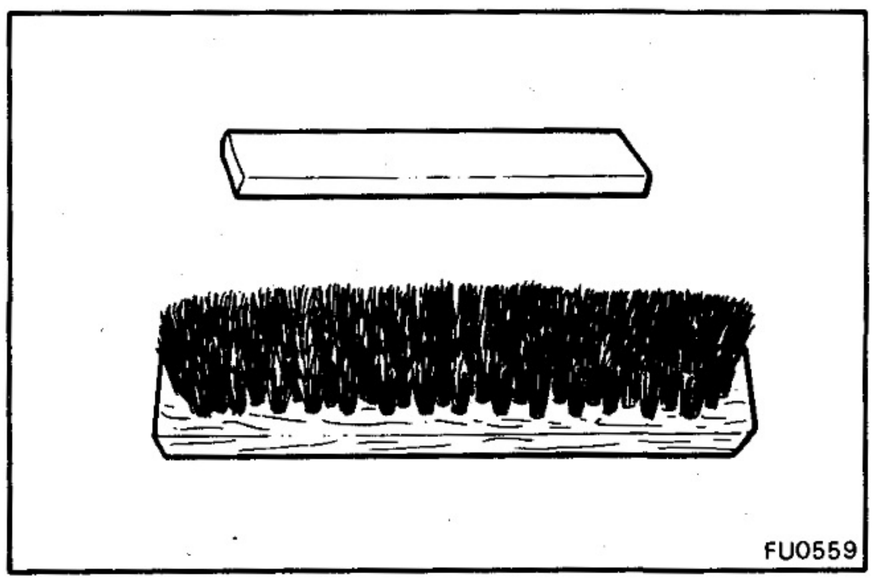

DISASSEMBLY, CLEANING AND TEST OF INJECTION NOZZLE

1. DISASSEMBLE INJECTION NOZZLE

(a) Using SST, unscrew the nozzle holder retaining nut.

SST 09260-46012 (09268-46012, 09268-46021)

CAUTION: When disassembling the nozzle, be careful not to drop the inner parts.

(b) Remove the adjusting shim, pressure spring, pressure pin, distance piece and the nozzle assembly.

2. NOZZLE CLEANING

(a) To wash the nozzles, use a wooden stick and brass brush. Wash in clean diesel fuel.

NOTE: Do not touch the nozzle mating surfaces with your fingers.

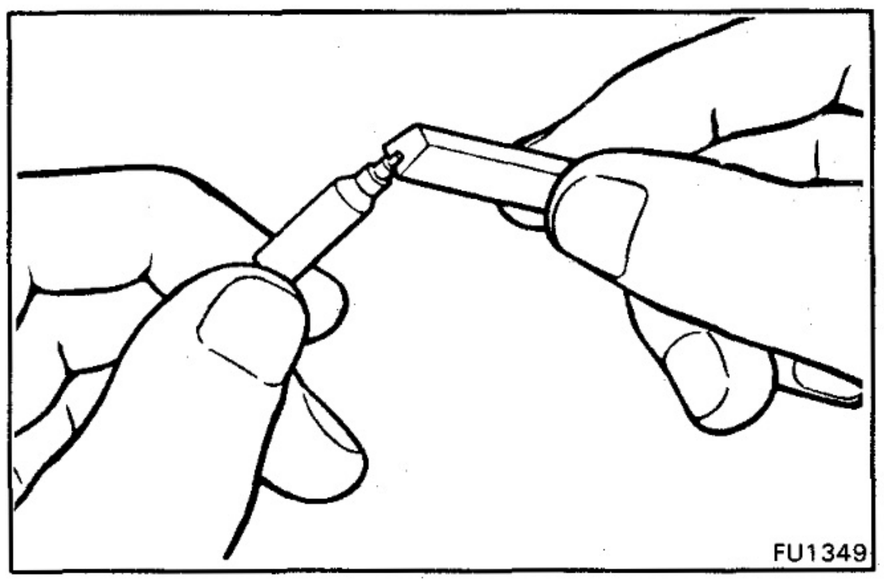

(b) Using a wooden stick, remove the carbon adhering to the nozzle needle tip.

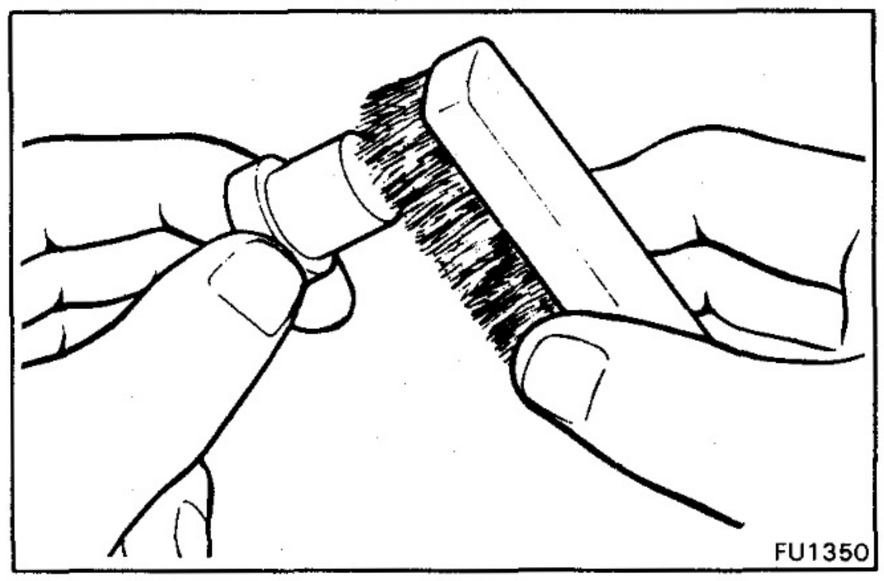

(c) Using a brass brush, remove the carbon from the exterior of the nozzle body.

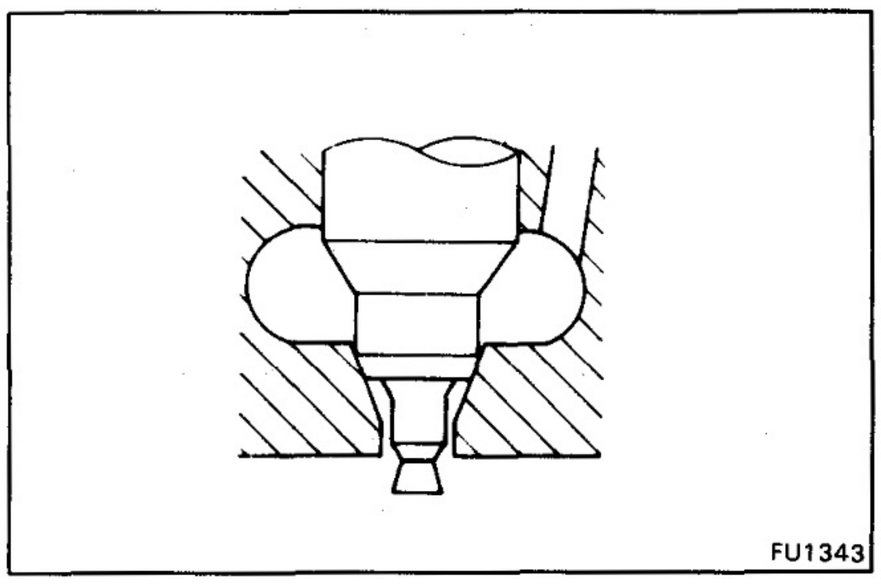

(d) Check the seat of the nozzle body for burns or corrosion.

(e) Check the nozzle needle tip for damage or corrosion.

If any of these conditions are present, replace the nozzle assembly.

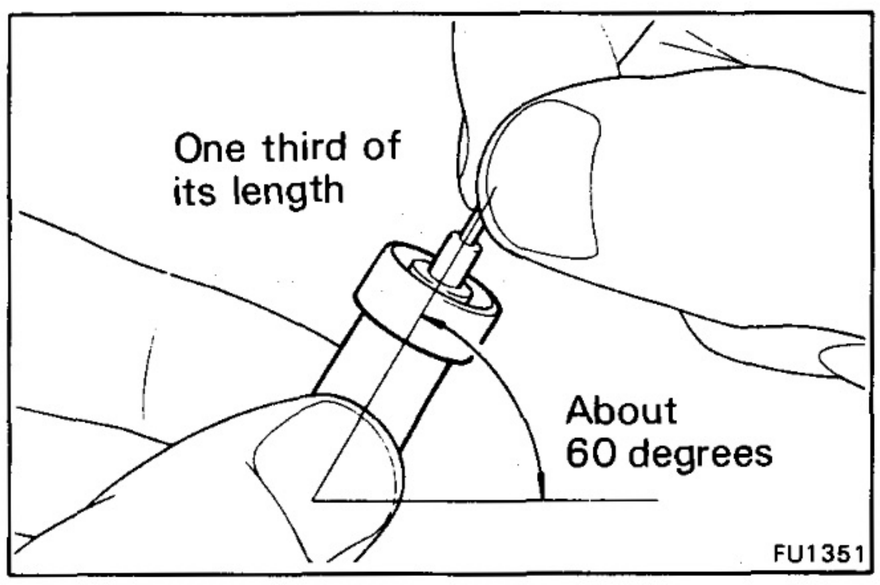

3. SINKING TEST

(a) Wash the nozzle in clean diesel fuel.

NOTE: Do not touch the nozzle mating surfaces with your fingers.

(b) Tilt the nozzle body about 60 degrees and pull the needle out about one third of its length.

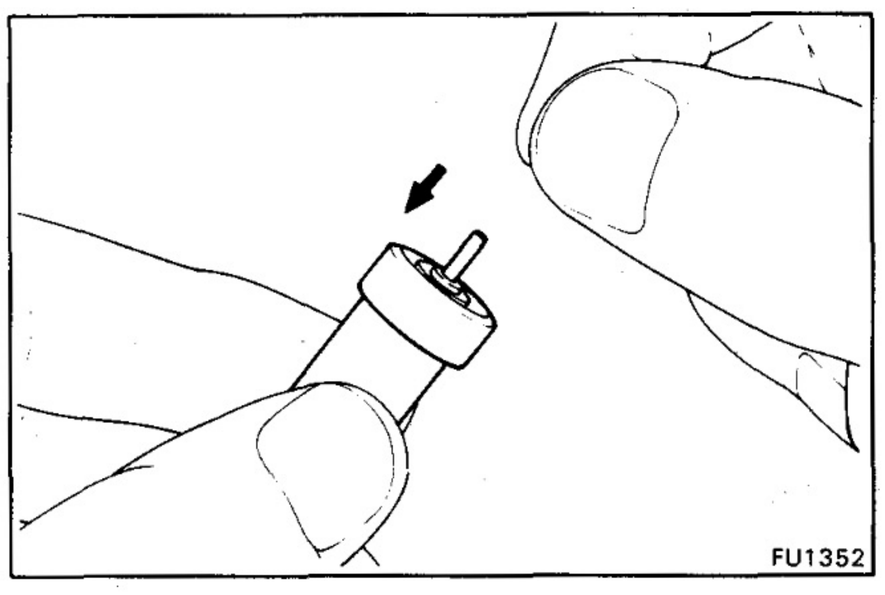

(c) When released, the needle should sink down into the body vent smoothly by its own weight.

(d) Repeat this test, rotating the needle slightly each time.

If the needle does not sink freely, replace the nozzle assembly.

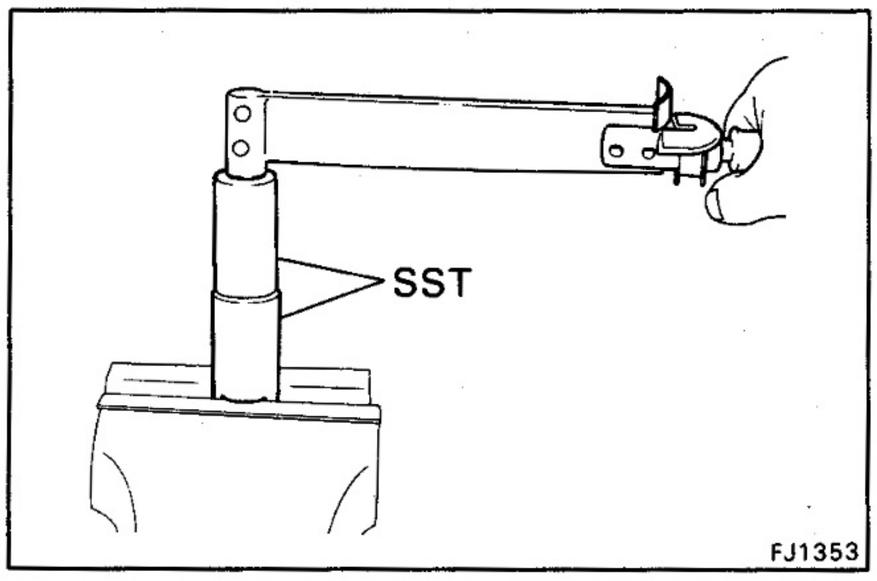

ASSEMBLY OF INJECTION NOZZLES

(See page FU-7)

1. ASSEMBLE INJECTION NOZZLES

(a) Assemble the nozzle holder body, the nozzle assembly, distance piece, pressure pin, pressure spring, adjusting shim and nozzle holder retaining nut, and finger tighten the nut.

(b) Using SST, torque the retaining nut.

SST 09260-46012 (09268-46012, 09268-46021)

Torque: 700 kg-cm (51 ft-lb, 69 N·m)

2. PERFORM PRESSURE AND SPRAY PATTERN TEST

(See steps 4 to 6 on pages FU-4 and 5)

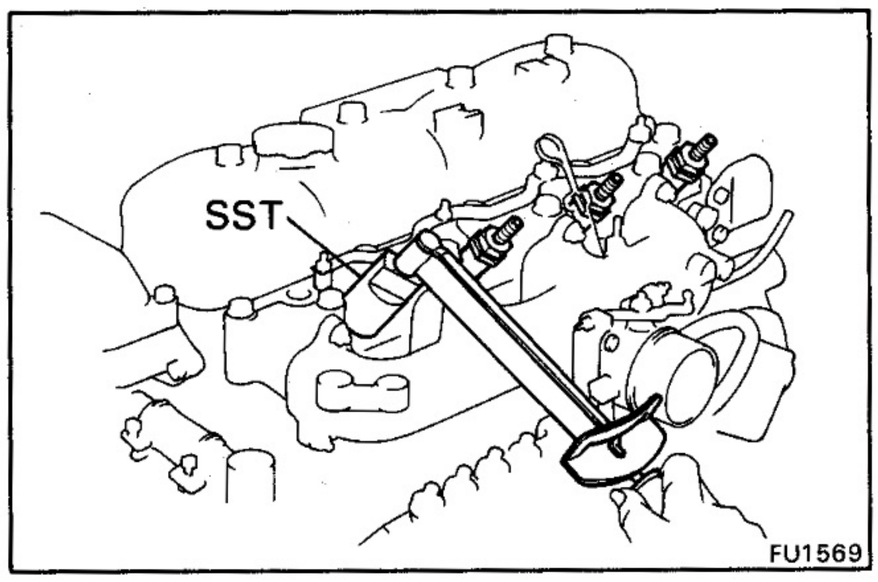

INSTALLATION OF INJECTION NOZZLES

(See page FU-4)

1. INSTALL INJECTION NOZZLES

(a) Place new four gaskets and the four nozzle seats in the cylinder head.

(b) Using SST, install and torque the four nozzles.

SST 09260-46012 (09268-46012, 09268-46021)

Torque: 700 kg-cm (51 ft-lb, 69 N·m)

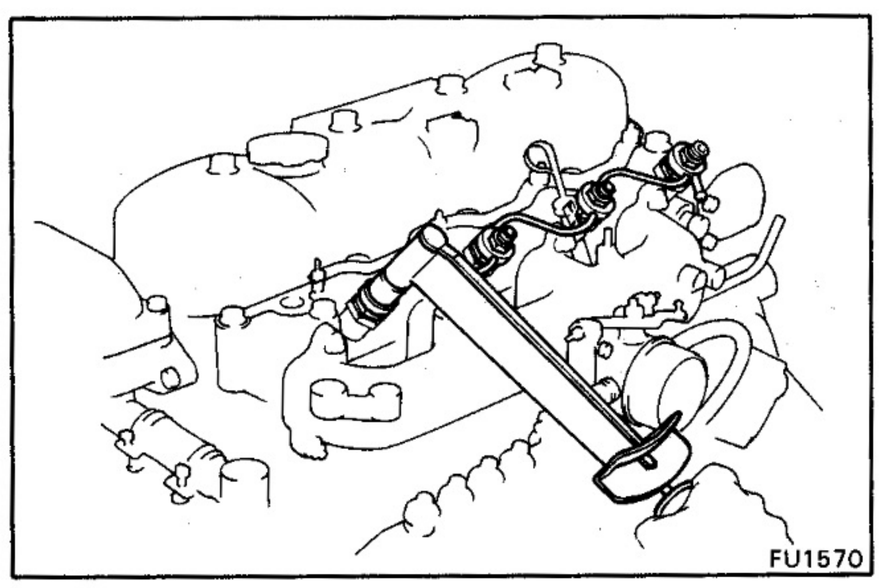

2. INSTALL NOZZLE LEAKAGE PIPE

(a) Install new four gaskets and the leakage pipe with the four nuts. Torque the nuts.

Torque: 450 kg-cm (33 ft-lb, 44 N·m)

(b) Connect the fuel hose to the leakage pipe.

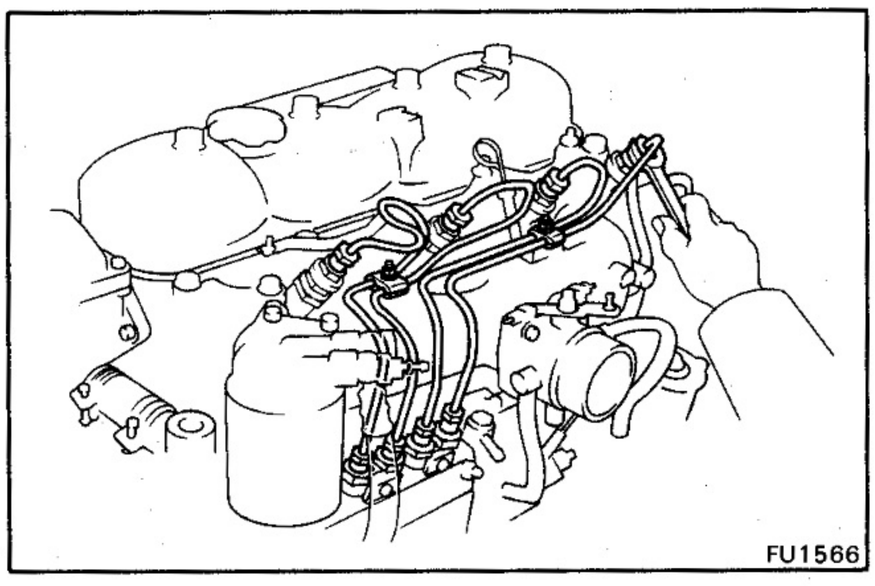

3. INSTALL INJECTION PIPES

(a) Place the two lower clamps in position on the intake manifold.

(b) Install the four injection pipes. Torque the union nuts.

Torque: 250 kg-cm (18 ft-lb, 25 N·m)

(c) Secure the injection pipes with the two upper clamps and nuts.

4. START ENGINE AND CHECK FOR LEAKS

INJECTION NOZZLES [11B, 13B and 13B-T]

REMOVAL AND TEST OF INJECTION NOZZLES

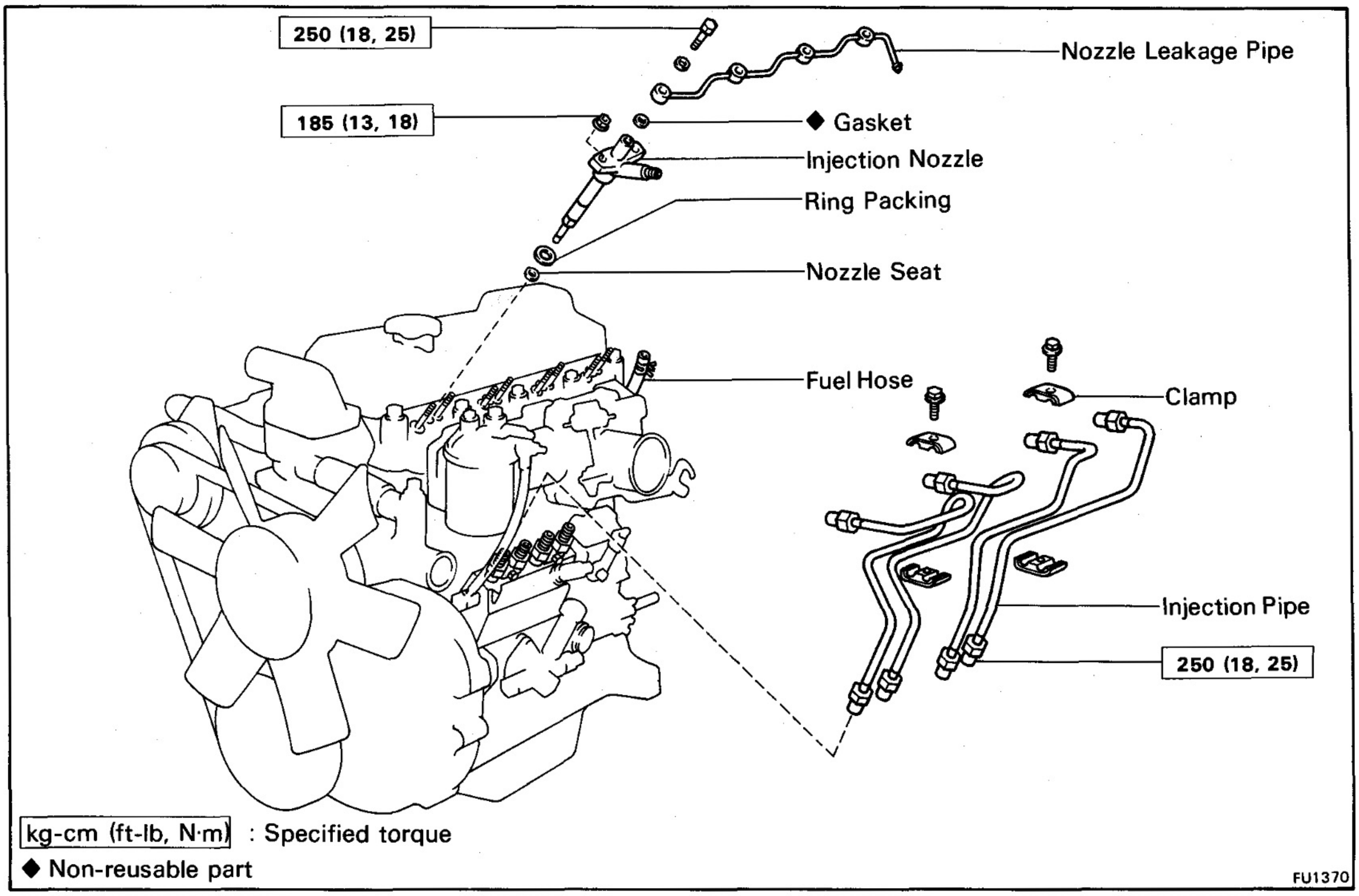

kg-cm (ft-lb, N·m) : Specified torque

◆ Non-reusable part

FU1370

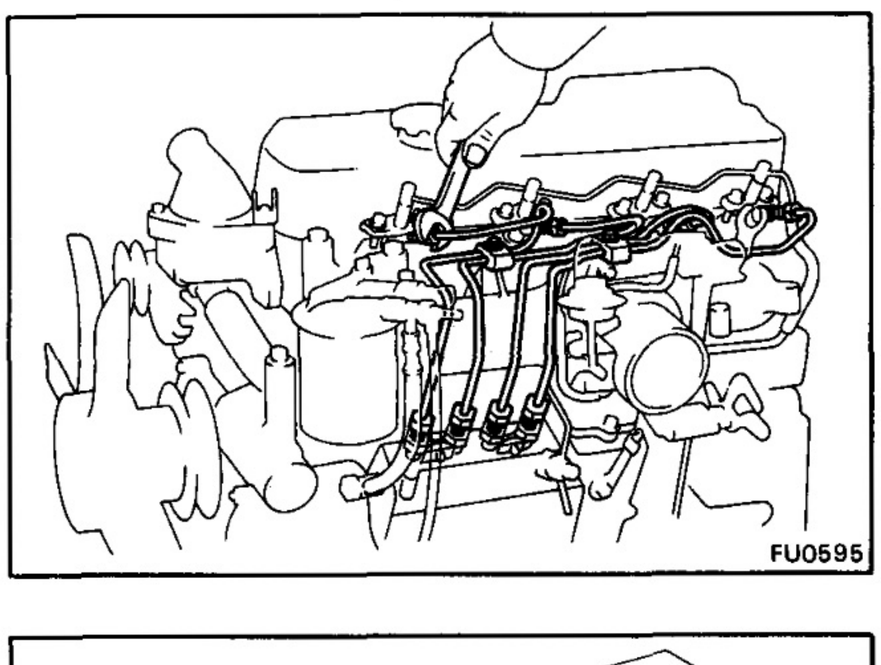

FU0595

1. **[13B-T]**
   REMOVE INTAKE AIR CONNECTOR PIPE

2. **REMOVE INJECTION PIPES**
   (a) Loosen the union nuts of the four injection pipes.
   (b) Remove the two bolts, four injection pipes and clamps.

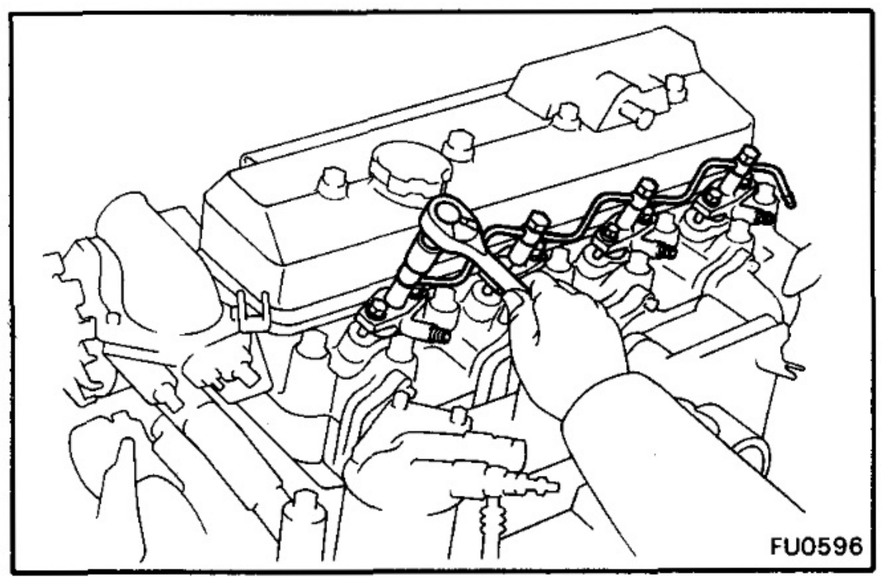

FU0596

3. **REMOVE NOZZLE LEAKAGE PIPE**
   (a) Disconnect the fuel hose from the leakage pipe.
   (b) Remove the four hollow bolts, leakage pipe and eight gaskets.

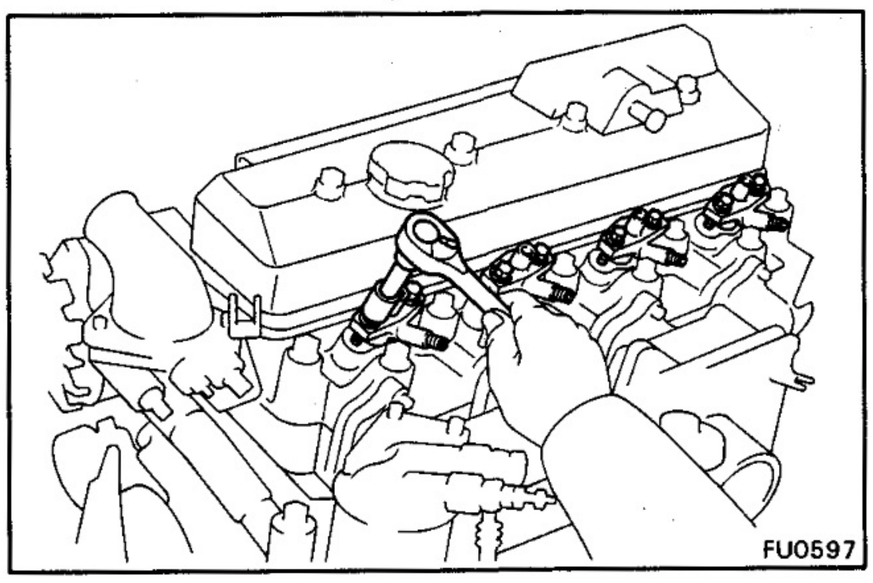

4. REMOVE INJECTION NOZZLES

Remove the two bolts, nozzle, ring packing and seat.
Remove the four nozzles.

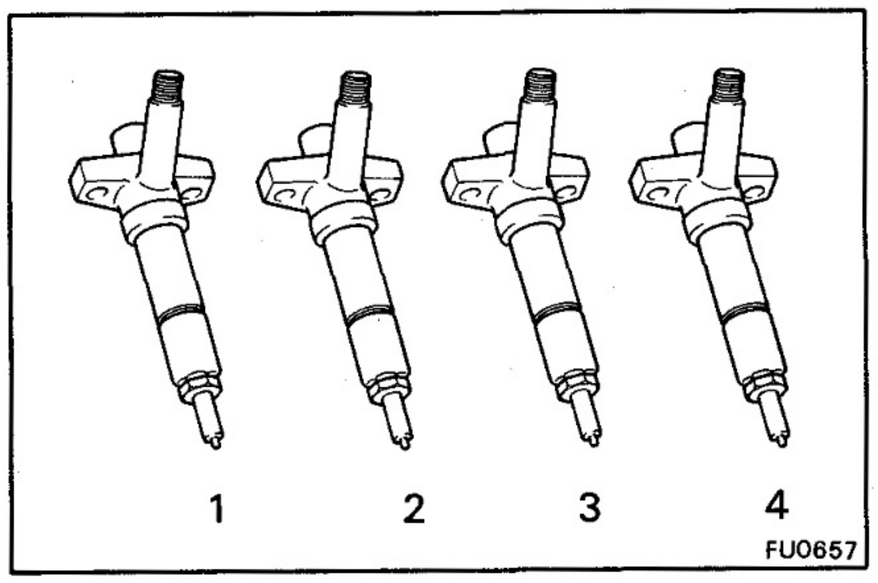

NOTE: Arrange the nozzles in correct order.

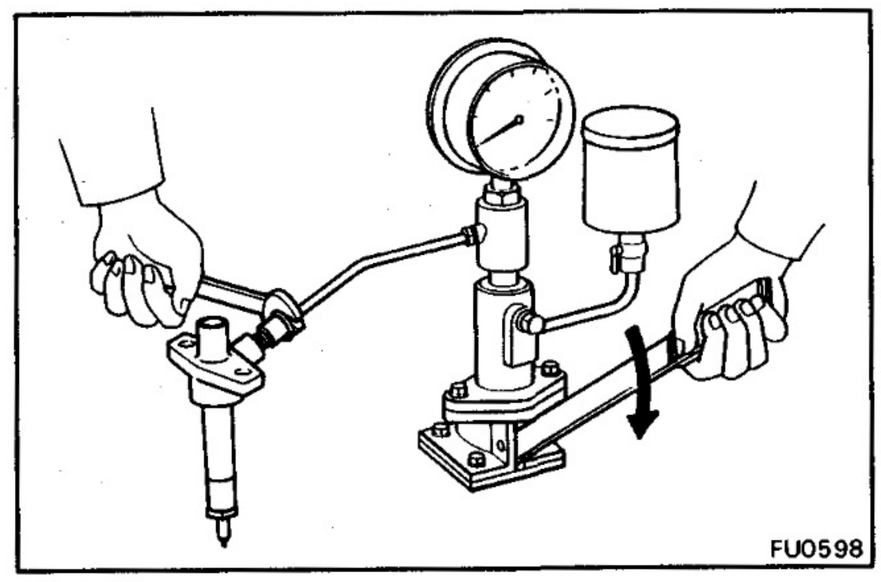

5. INJECTION PRESSURE TEST

(a) Install the nozzle to an injection nozzle hand tester and bleed the air from the union nut.

WARNING: Do not place your finger over the nozzle injection hole.

(b) Pump the tester handle a few times as fast as possible by hand discharge the carbon from the injection hole.

(c) Pump the tester handle slowly and observe the pressure gauge.

(d) Read the pressure gauge when the injection pressure just begins to drop.

Opening pressure:

New nozzle	**200 – 210 kg/cm² (2,845 – 2,987 psi) (19,613 – 20,594 kPa)**
Reused nozzle	**180 – 210 kg/cm² (2,560 – 2,987 psi) (17,652 – 20,594 kPa)**

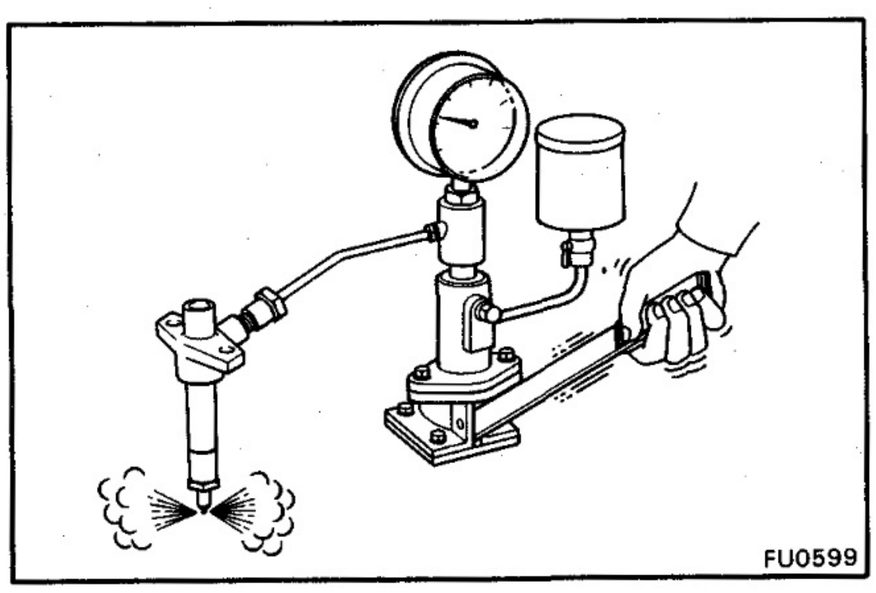

NOTE: Proper nozzle operation can be determined by a swishing sound.

If the opening pressure is not within specification, disassemble the nozzle and change the adjusting shim on the top of the pressure spring.

Adjusting opening pressure: 180 — 210 kg/cm² (2,560 — 2,987 psi) (17,652 — 20,594 kPa)

Adjusting shim thickness mm (in.)	
0.700 (0.0276)	1.250 (0.0492)
0.750 (0.0295)	1.275 (0.0502)
0.800 (0.0315)	1.300 (0.0512)
0.850 (0.0335)	1.325 (0.0522)
0.900 (0.0354)	1.350 (0.0531)
0.950 (0.0374)	1.375 (0.0541)
0.975 (0.0384)	1.400 (0.0551)
1.000 (0.0394)	1.425 (0.0561)
1.025 (0.0404)	1.450 (0.0571)
1.050 (0.0413)	1.475 (0.0581)
1.075 (0.0423)	1.500 (0.0591)
1.100 (0.0433)	1.550 (0.0610)
1.125 (0.0443)	1.600 (0.0630)
1.150 (0.0453)	1.650 (0.0650)
1.175 (0.0463)	1.700 (0.0669)
1.200 (0.0472)	1.750 (0.0689)
1.225 (0.0482)	1.800 (0.0709)

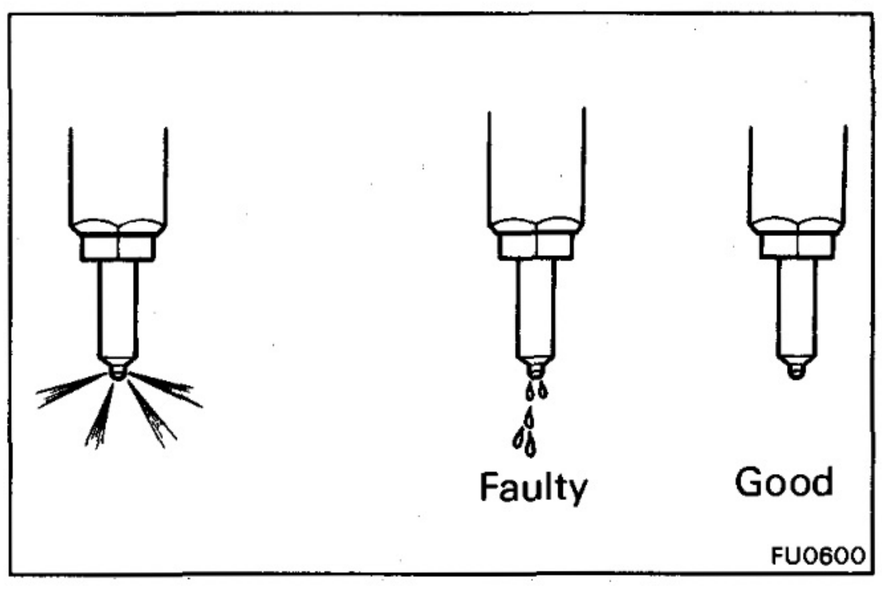

NOTE:
- Varying the adjusting shim thickness by 0.025 mm (0.0010 in.) changes the injection pressure by about 3.8 kg/cm² (54 psi, 373 kPa).
- Only one adjusting shim should be used.

(e) There should be no dripping after injection.

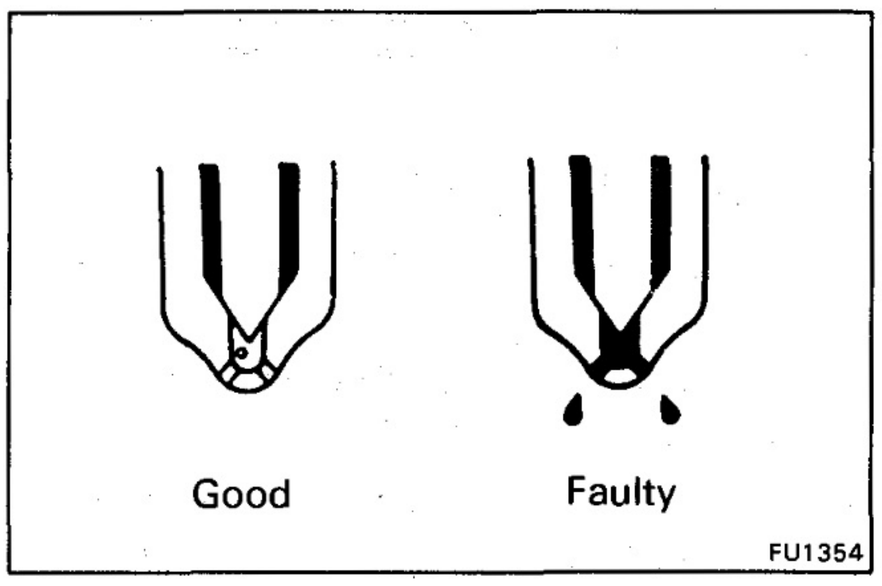

6. LEAKAGE TEST

While maintaining pressure at about 10.0 — 20.0 kg/cm² (142 — 284 psi, 981 — 1,961 kPa) below opening pressure (adjust by tester handle), check that there is no dripping for 10 seconds from the injection hole or around the retaining nut.

If the nozzle drips within 10 seconds, replace it or clean and overhaul the nozzle assembly.

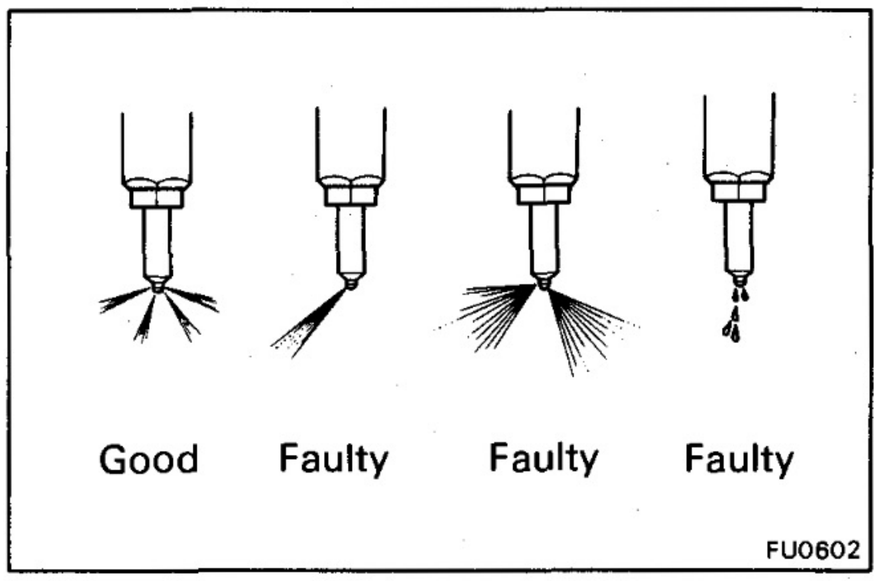

7. SPRAY PATTERN TEST

(a) The injection nozzle should shudder at a pumping speed between 15 — 60 times (old nozzle) or 30 — 60 times (new nozzle) per minute.

(b) Check the spray pattern during shuddering.

If the spray pattern is not correct, the nozzle must be cleaned or replaced.

NOTE: The 11B engine has 5 spray orifices and the 13B and 13B-T engines have 4 spray orifices.

COMPONENTS

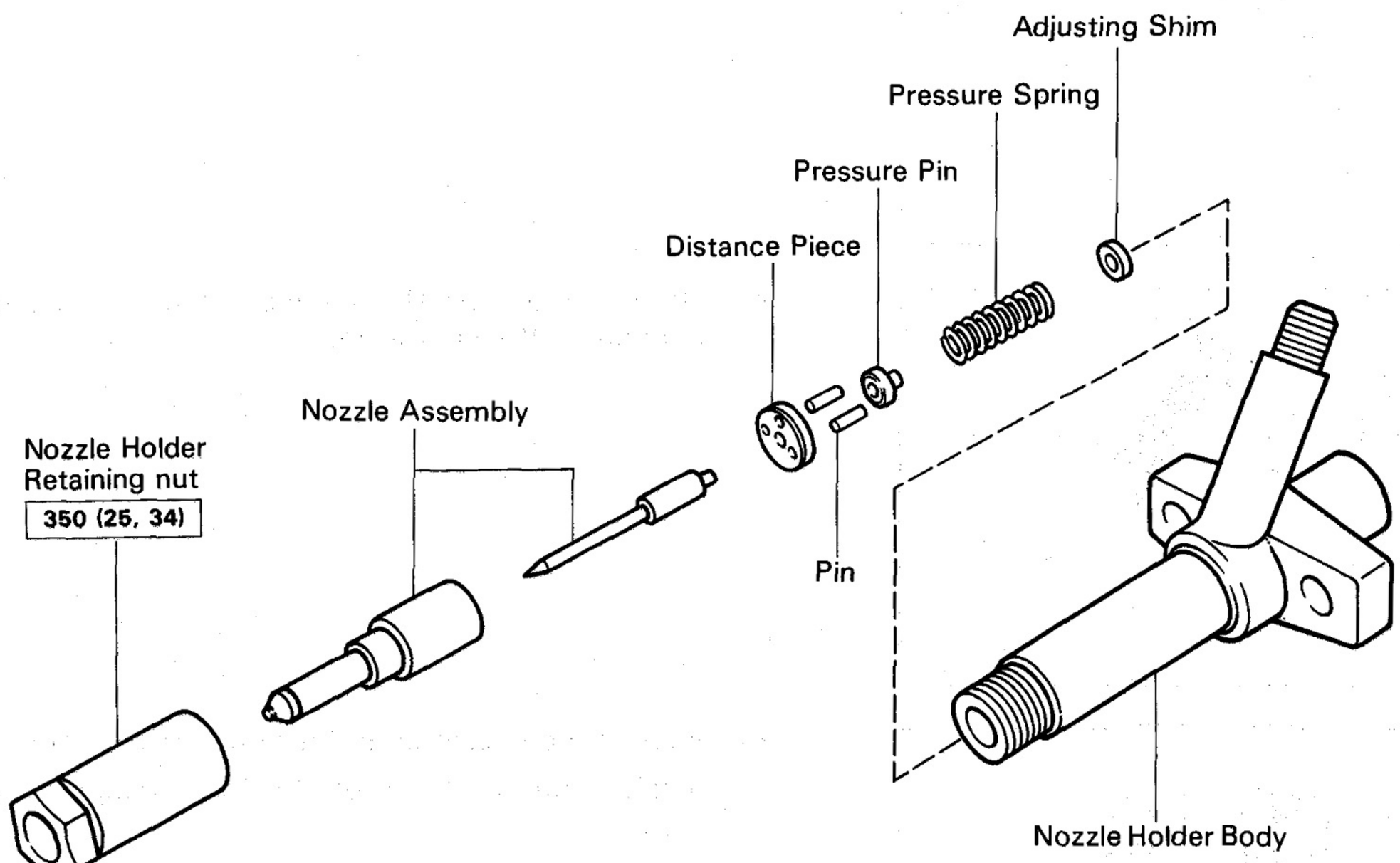

kg-cm (ft-lb, N·m) : Specified torque

FU1369

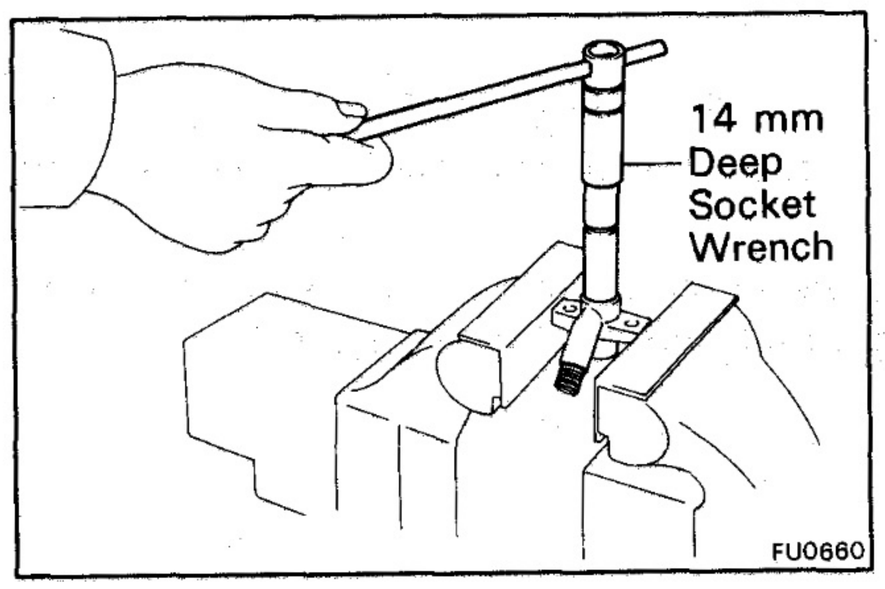

DISASSEMBLY, CLEANING AND TEST OF INJECTION NOZZLE

1. DISASSEMBLE INJECTION NOZZLE

(a) Using a 14 mm deep socket wrench, unscrew the nozzle holder retaining nut.

CAUTION: When disassembling the nozzle holder, be careful not to drop the inner parts.

(b) Remove the pressure spring, adjusting shim, pressure pin, pin, distance piece and the nozzle assembly.

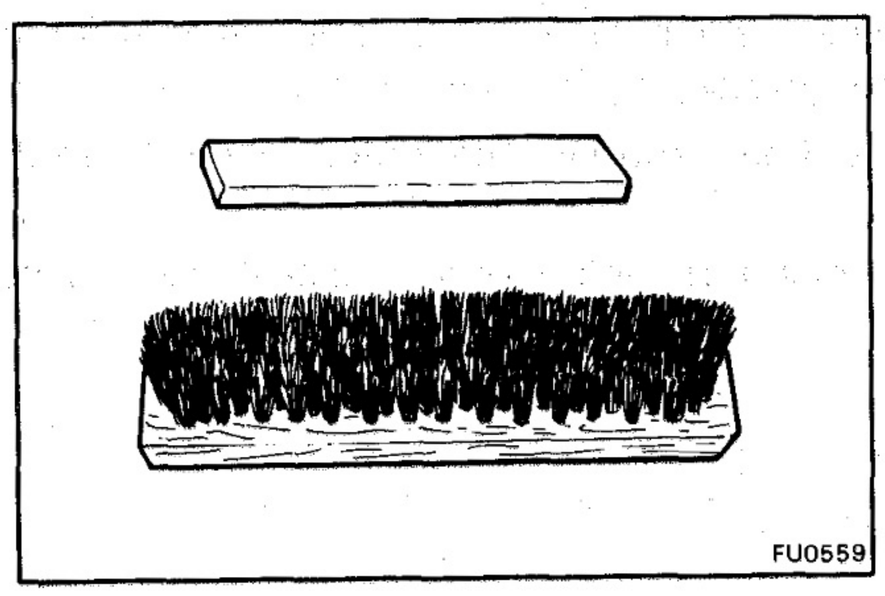

2. NOZZLE CLEANING

(a) To wash the nozzles, use a wooden stick and brass brush. Wash in clean diesel fuel.

NOTE: Do not touch the nozzle mating surfaces with your fingers.

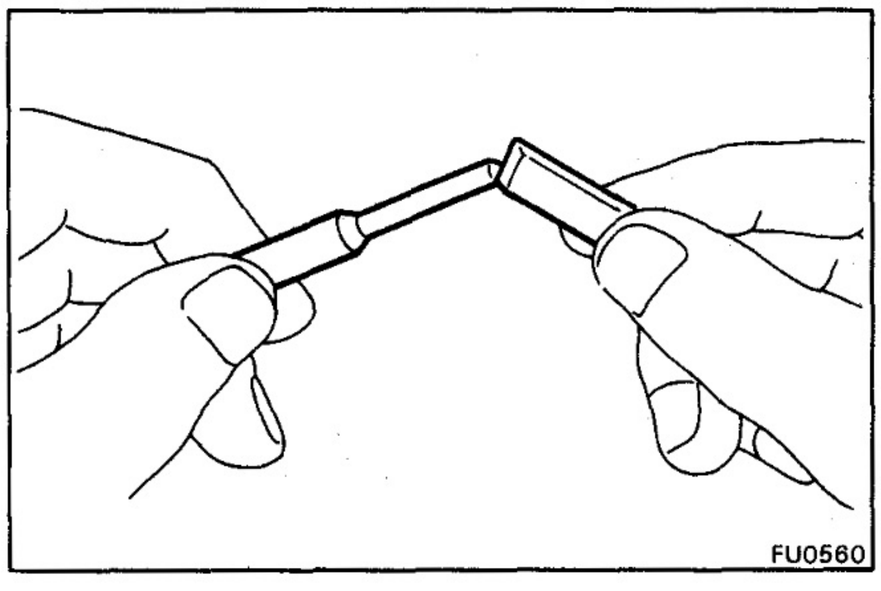

(b) Using a wooden stick, remove the carbon adhering to the nozzle needle tip.

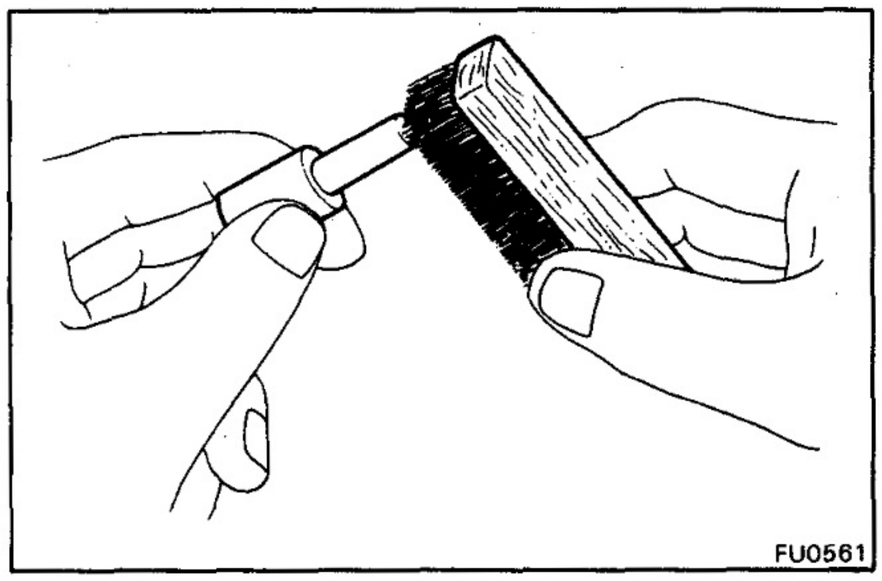

(c) Using a brass brush, remove the carbon from the exterior of the nozzle body.

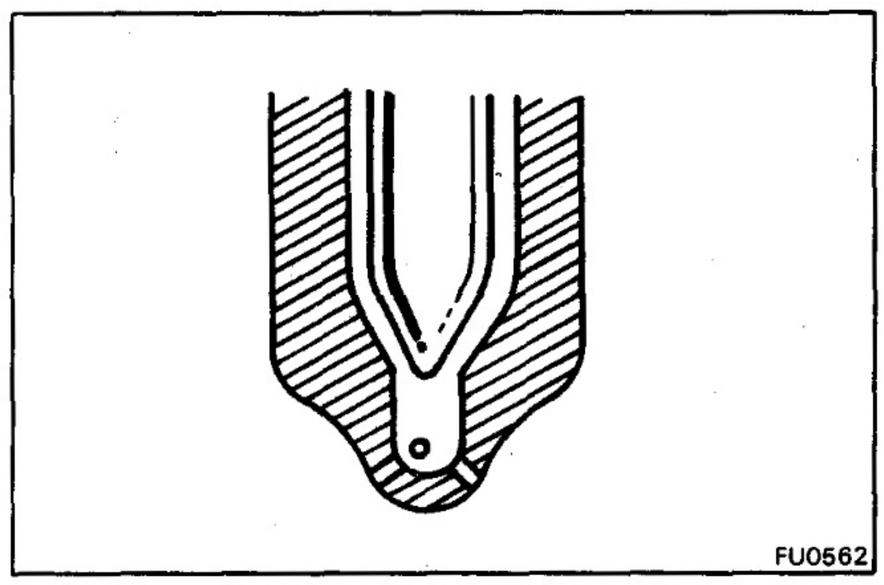

(d) Inspect the nozzle body for burns or corrosion.

(e) Inspect the nozzle needle tip for damage or corrosion.

If any of these conditions are present, replace the nozzle assembly.

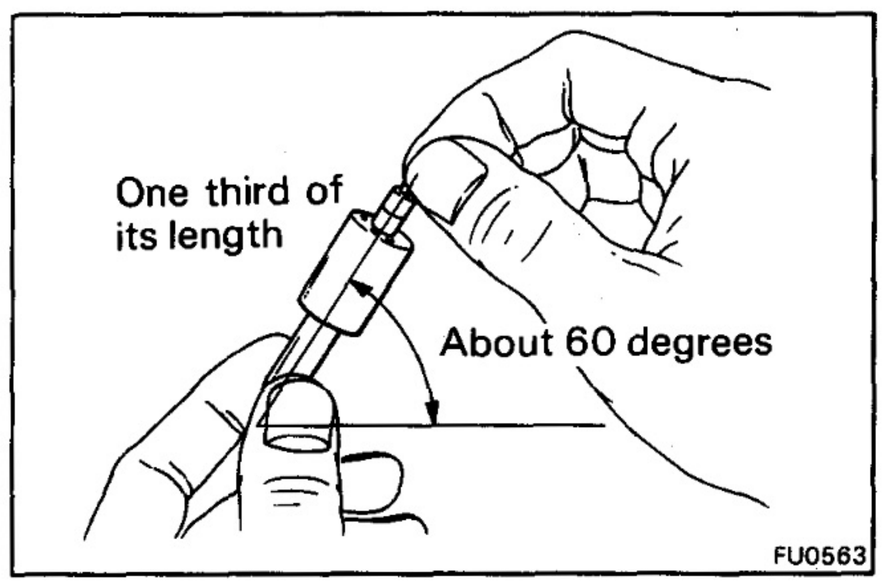

3. SINKING TEST

(a) Wash the nozzle in clean diesel fuel.

NOTE: Do not touch the nozzle mating surfaces with your fingers.

(b) Tilt the nozzle body about 60 degrees and pull the needle out about one third of its length.

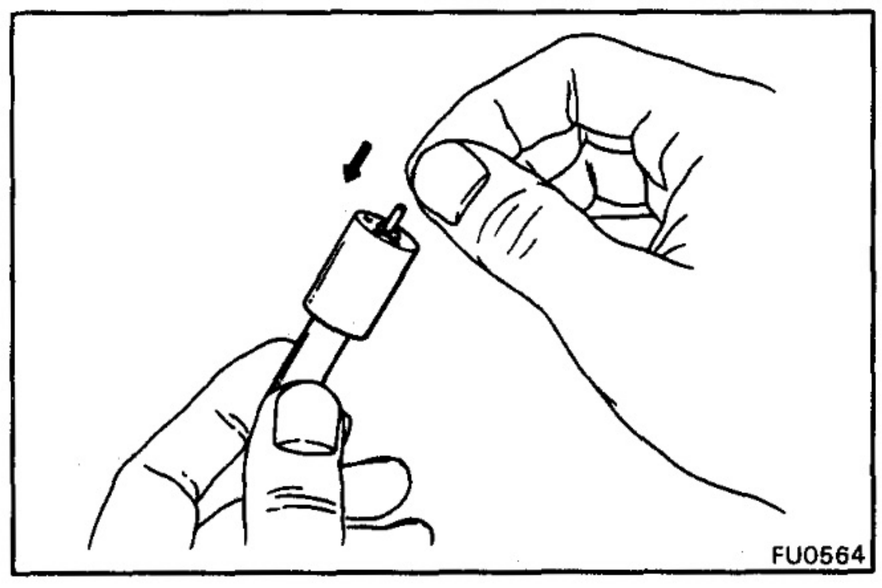

(c) When released, the needle should sink down into the body vent smoothly by its own weight.

(d) Repeat this test, rotating the needle slightly each time.

If the needle does not sink freely, replace the nozzle assembly.

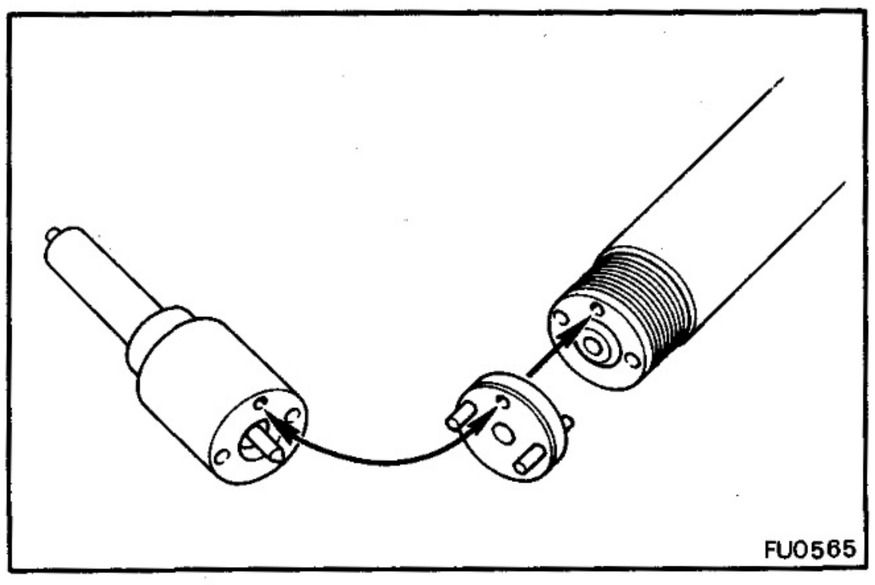

ASSEMBLY OF INJECTION NOZZLES

(See page FU-13)

1. ASSEMBLE INJECTION NOZZLES

(a) Assemble the nozzle holder body, adjusting shim, pressure spring, pressure pin, distance piece, the nozzle assembly and nozzle holder retaining nut, and finger tighten the nut.

NOTE: Align the holes of the nozzle body, distance piece and nozzle holder body.

(b) Using a 14 mm deep socket wrench, torque the retaining nut.

Torque: 350 kg-cm (25 ft-lb, 34 N·m)

2. PERFORM PRESSURE AND SPRAY PATTERN TEST

(See steps 6 to 8 on pages FU-10 and 11)

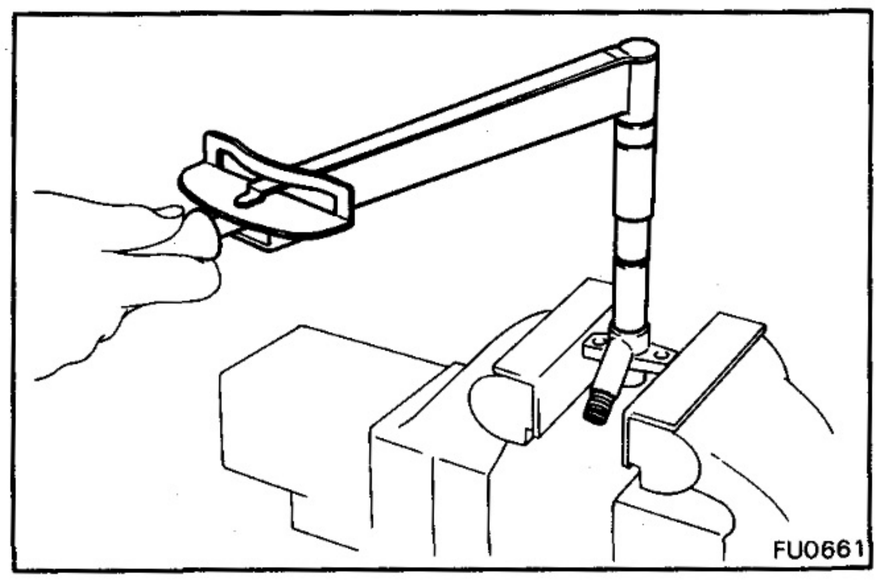

INSTALLATION OF INJECTION NOZZLES

(See page FU-10)

1. INSTALL INJECTION NOZZLES

Install the nozzle seat, ring packing and injection nozzle with the two nuts. Install the four injection nozzles. Torque the nuts.

Torque: 185 kg-cm (13 ft-lb, 18 N·m)

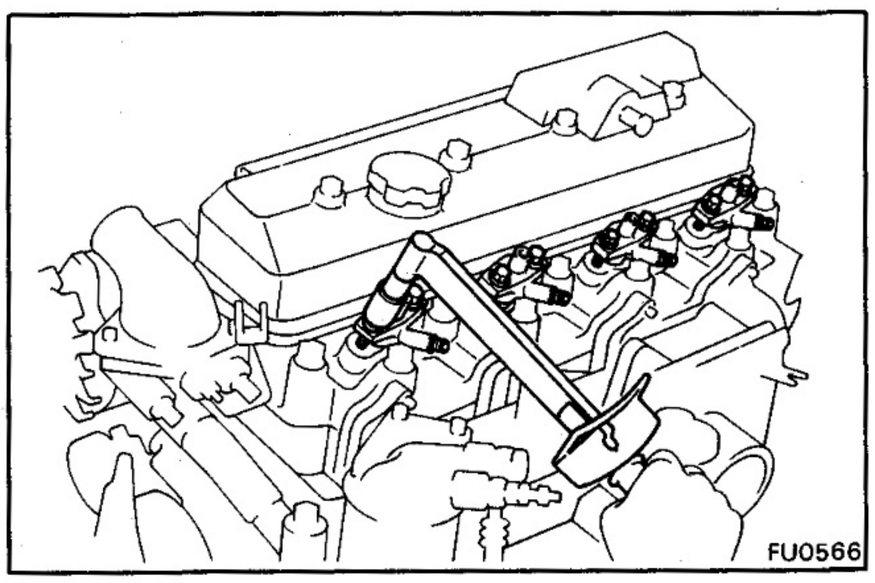

2. INSTALL NOZZLE LEAKAGE PIPE

(a) Install new eight gaskets, and the leakage pipe with the four hollow bolts. Torque the hollow bolts.

Torque: 250 kg-cn (18 ft-lb, 25 N·m)

(b) Connect the fuel hose to the leakage pipe.

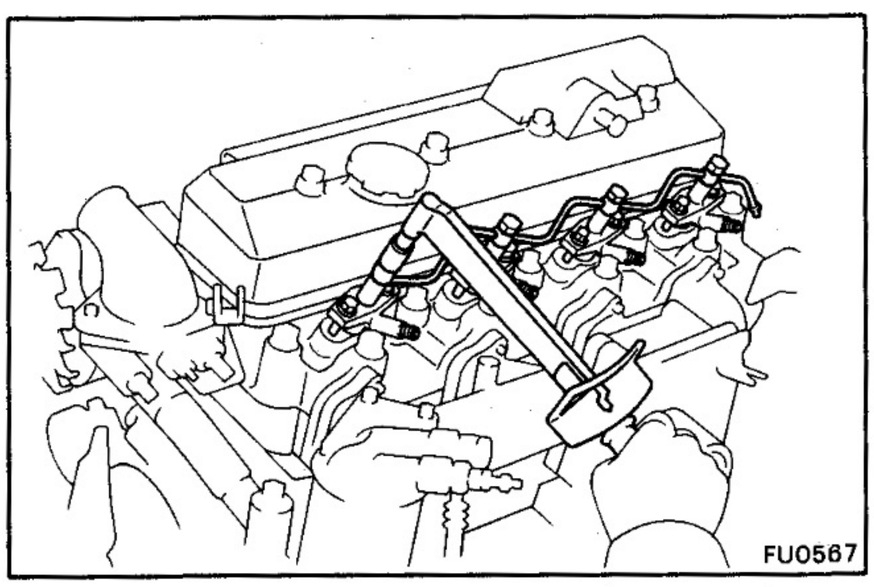

3. INSTALL INJECTION PIPES

(a) Place the two lower clamps in position of the intake manifold.

(b) Install the four injection pipes. Torque the union nuts.

Torque: 250 kg-cm (18 ft-lb, 25 N·m)

(c) Secure the injection pipes with the two upper clamps and bolts.

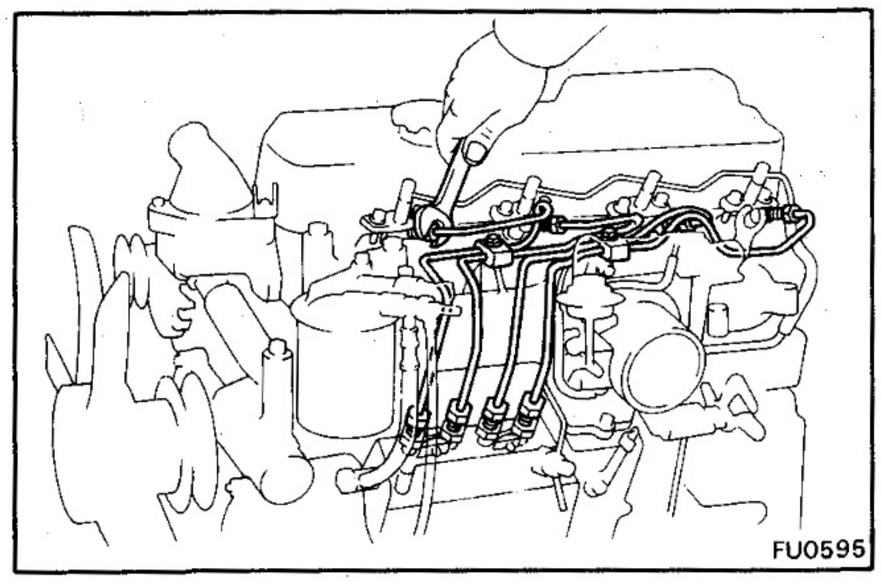

4. START ENGINE AND CHECK FOR FUEL LEAKS

5. [13B-T] INSTALL INTAKE AIR CONNECTOR PIPE

FUEL FEED PUMP

REMOVAL AND TEST OF FUEL FEED PUMP

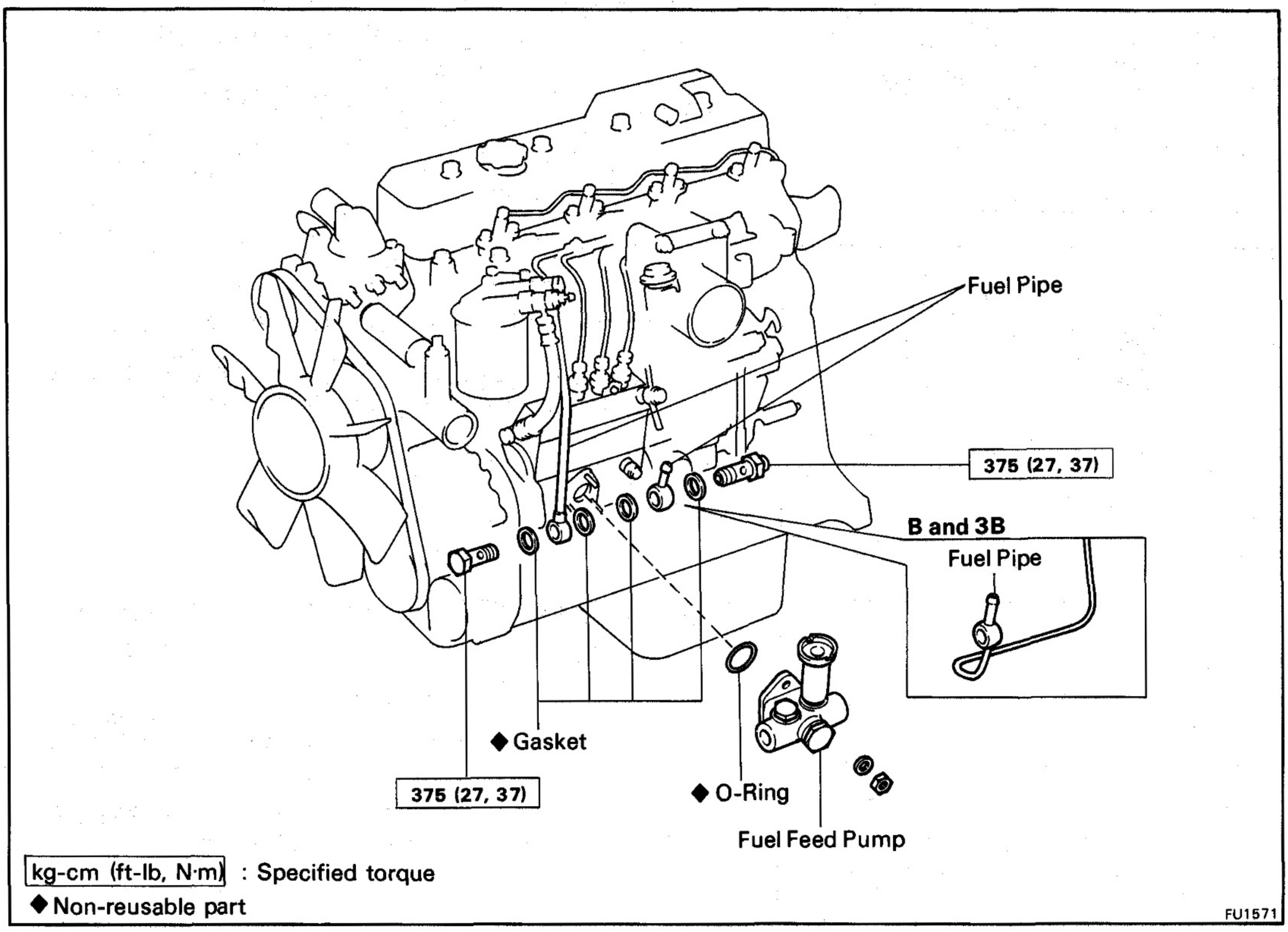

kg-cm (ft-lb, N·m) : Specified torque
◆ Non-reusable part

FU1571

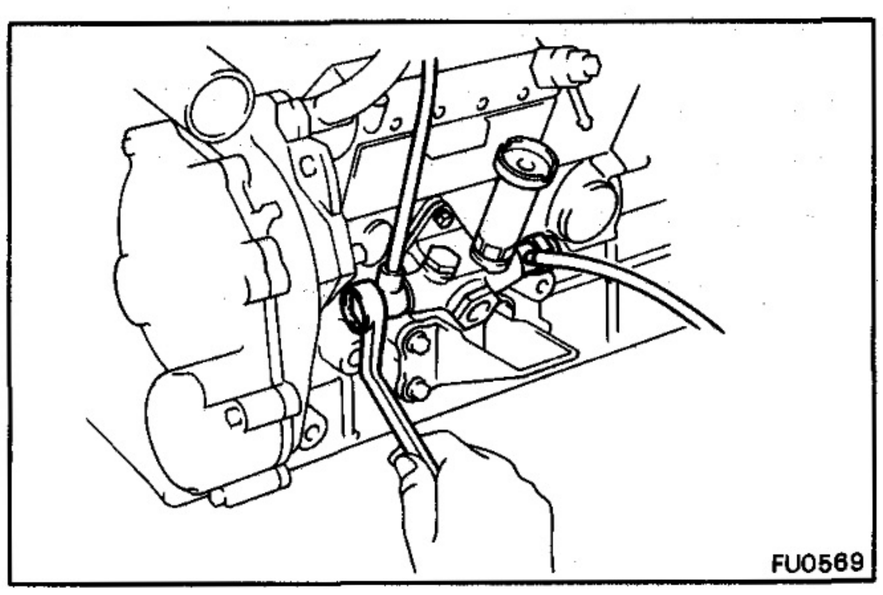

1. DISCONNECT INLET AND OUTLET PIPES FROM FEED PUMP

[13B-T]

Remove the two union bolt and four gasket, and disconnect the fuel pipes.

[11B, 13B and 13B-T]

(a) Remove the union bolt, two gaskets and inlet fuel pipe.

(b) Remove the union bolt and two gasket, and disconnect the outlet fuel pipe.

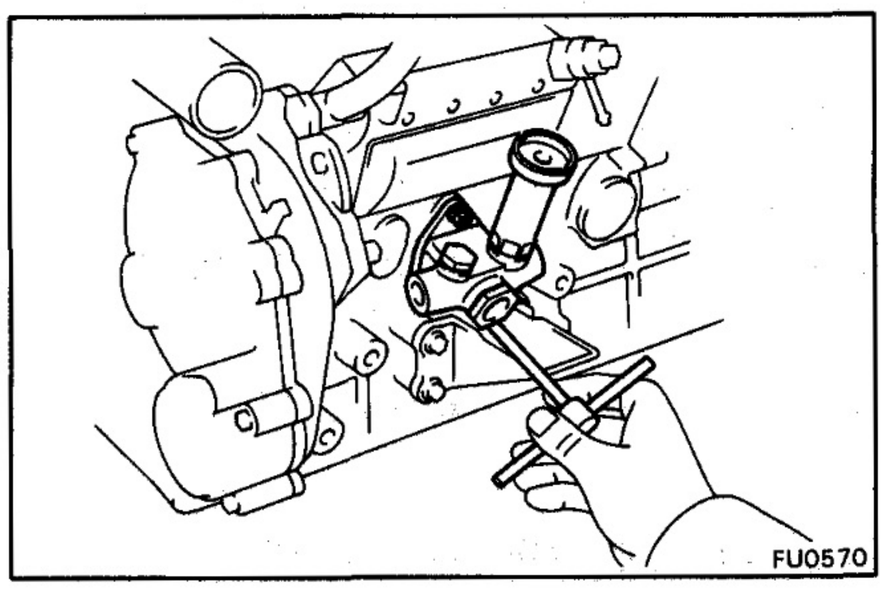

2. REMOVE FEED PUMP FROM INJECTION PUMP

Remove the three nuts, spring washers and feed pump.

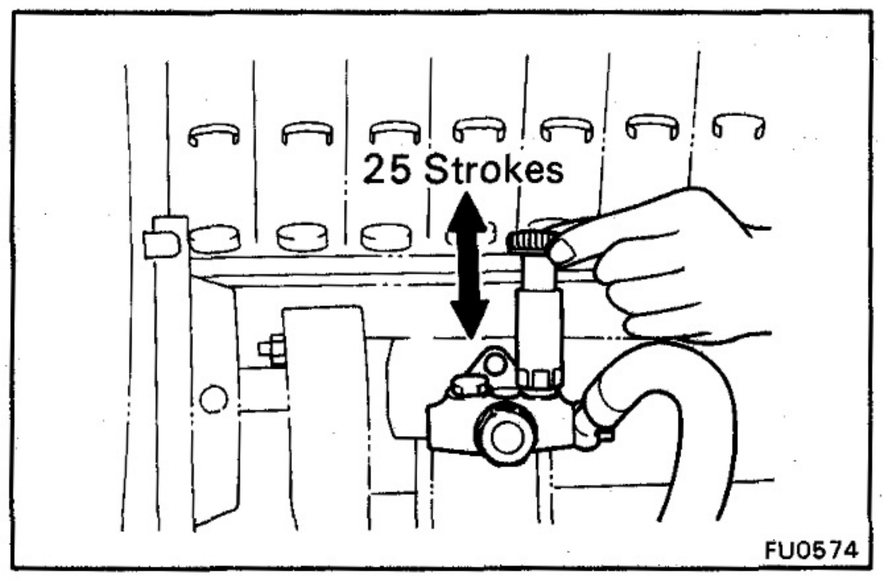

3. SUCTION TEST

(a) Mount the feed pump on the pump tester.

(b) Connect a suction pipe with the following specifications:

Pipe inner diameter: 8 mm (0.31 in.)
Pipe length: 2 m (78.7 in.)
Suction height: 1 m (39.4 in.)

(c) Operate the priming pump 60 strokes per minute and count the number of strokes before fuel is discharged.

Fuel must discharge within 25 strokes

(d) Drain any fuel from the feed pump.

(e) Operate the feed pump at 150 rpm and check the amount of time until fuel is discharged.

Fuel must discharge within 40 seconds

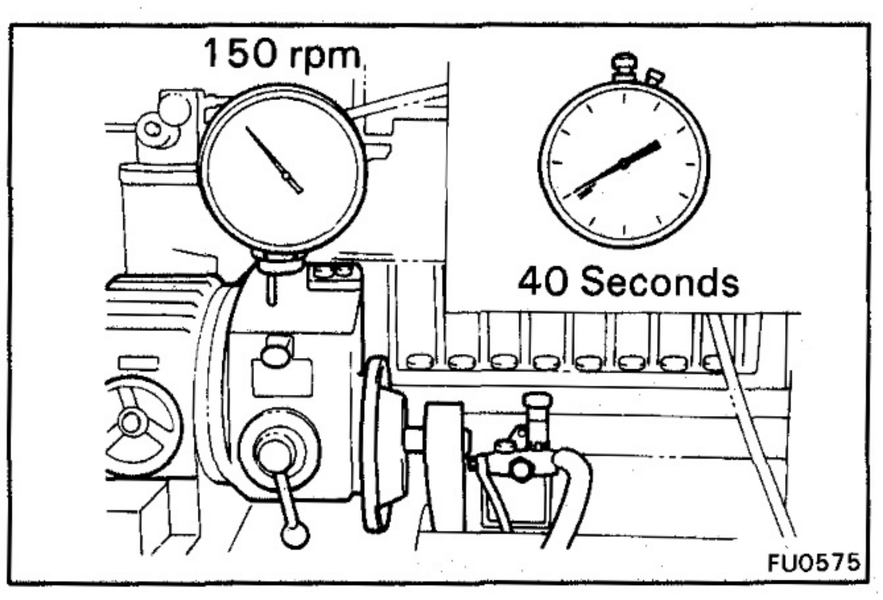

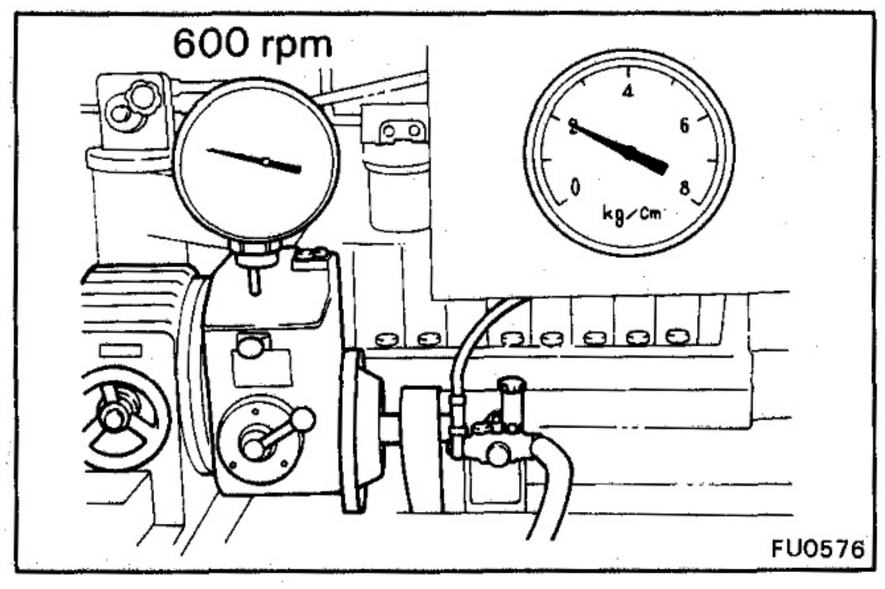

4. DISCHARGE TEST

(a) Install the pressure gauge to the feed pump discharge side.

(b) Operate the feed pump at 600 rpm and check the discharge pressure.

Discharge pressure:
1.8 – 2.2 kg/cm² (26 – 31 psi, 177 – 216 kPa)

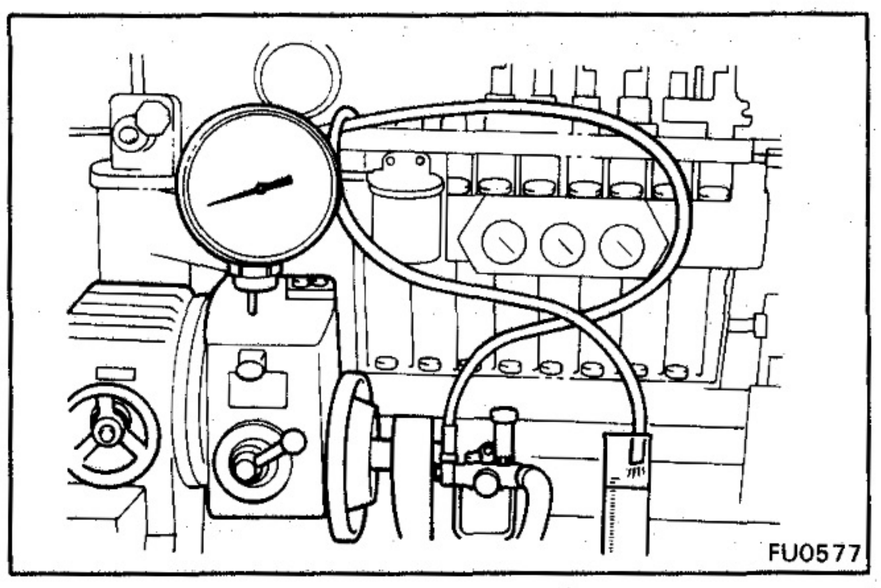

(c) Install a 1.54 mm (0.0606 in.) nozzle to the feed pump discharge side.

(d) Operate the feed pump at 1,000 rpm, and measure discharge volume.

Discharge volume:
900 cc/min (54.9 cu in./min.) or more

COMPONENTS

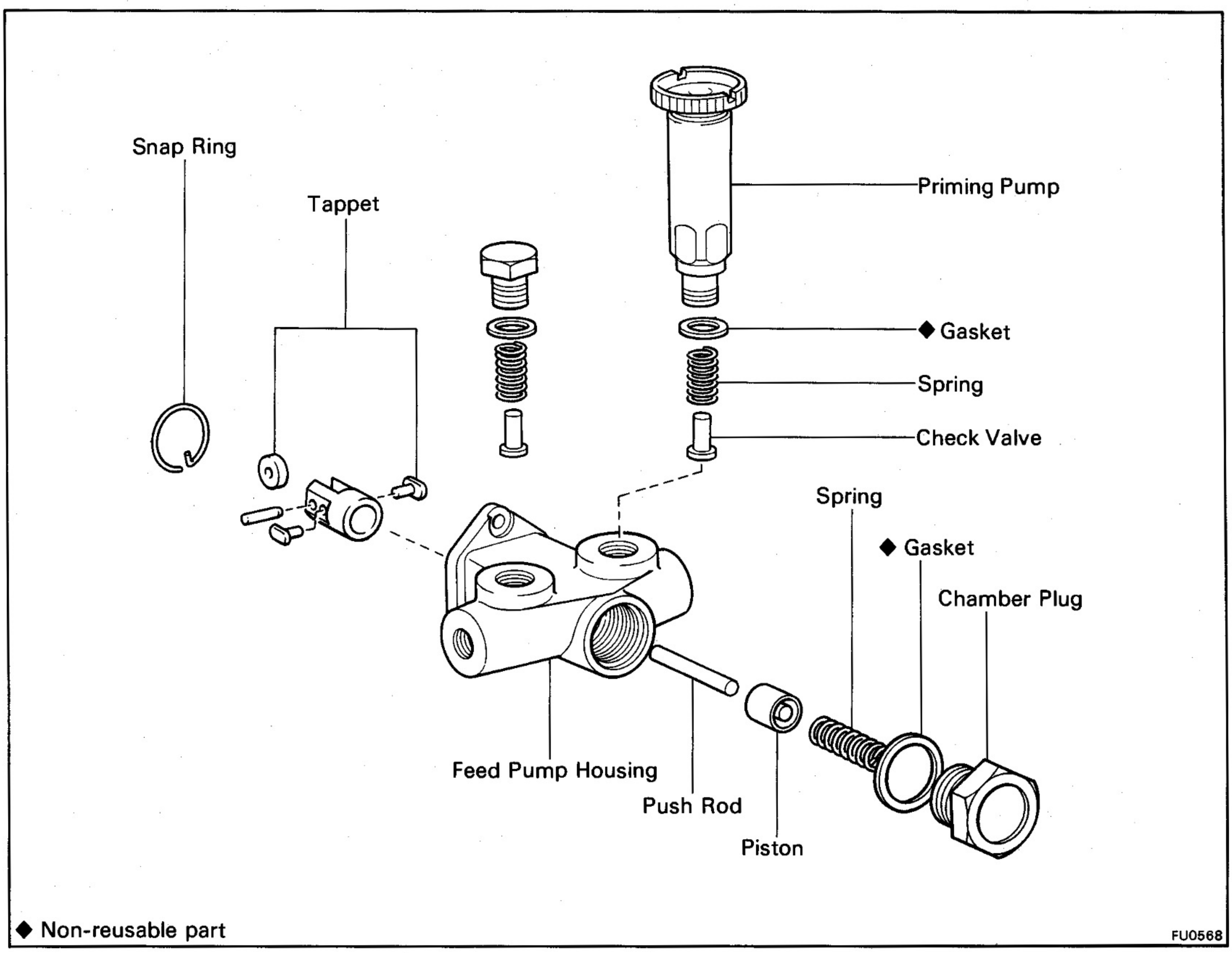

◆ Non-reusable part

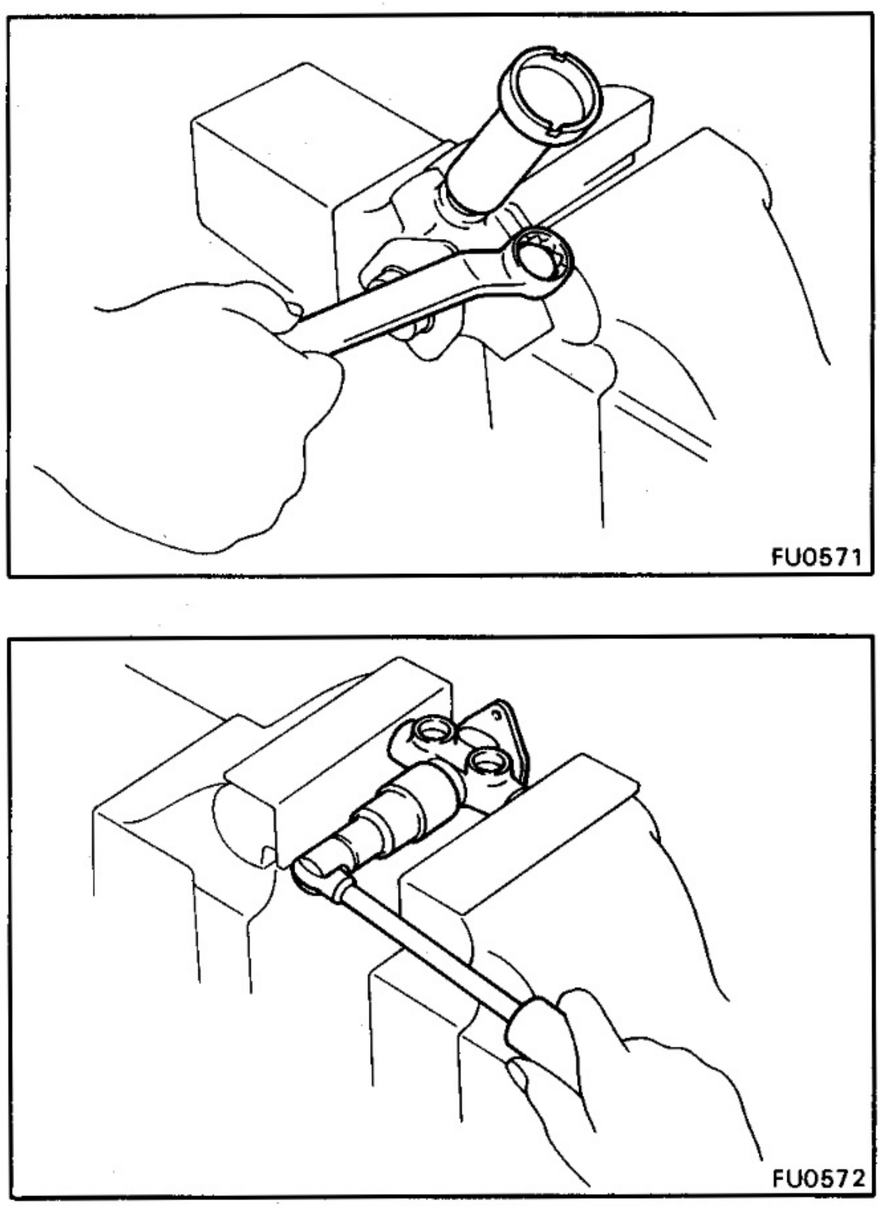

DISASSEMBLY OF FUEL FEEL PUMP

1. REMOVE PRIMING PUMP AND CHECK VALVES

(a) Remove the chamber plug, gasket, spring and check valve.

(b) Remove the priming pump, gasket, spring and check valve.

2. REMOVE FEED PUMP PISTON

Remove the chamber plug, gasket, spring and piston.

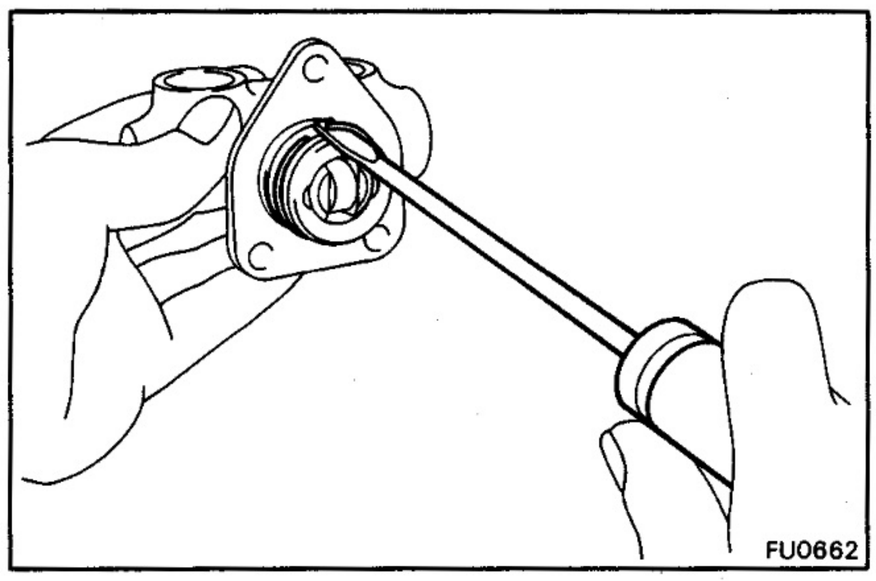

3. REMOVE FEED PUMP TAPPET

Remove the snap ring, and pull out the tappet.

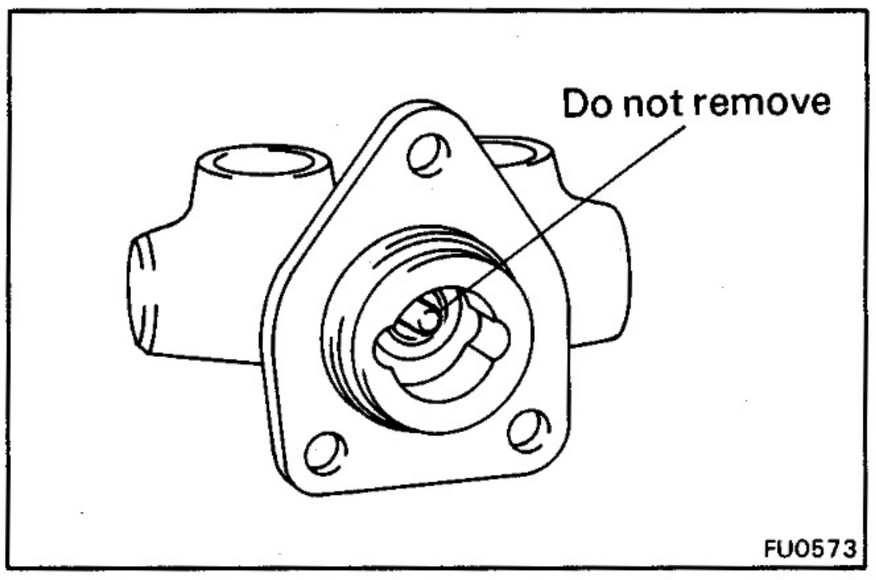

NOTE: Since the push rod is precisely fitted into the feed pump housing, do not remove the push rod unless necessary.

If removed, be sure to confirm assembly direction.

INSPECTION OF FUEL FEED PUMP

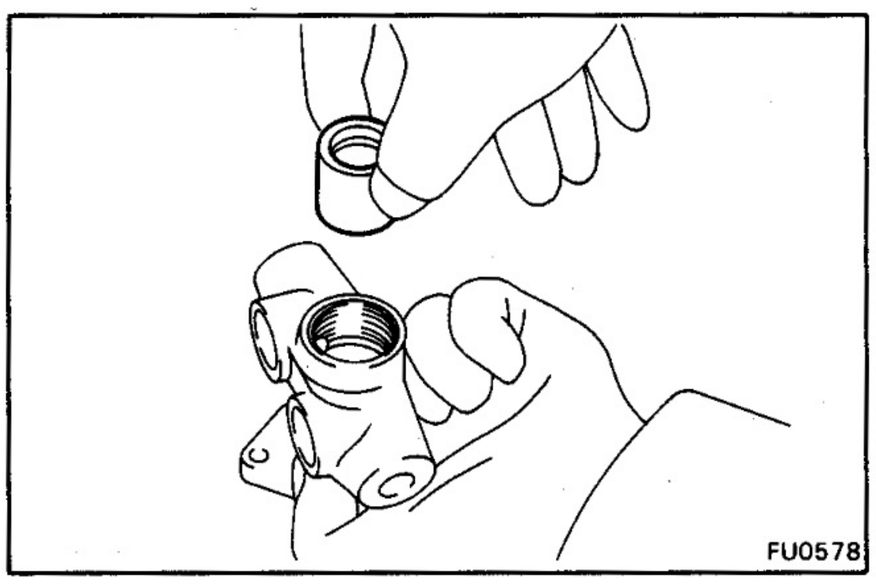

1. INSPECT FEED PUMP PISTON

Check that the piston smoothly falls into the piston hole by its own weight.

If abnormal, replace the piston. If necessary, replace the feed pump assembly.

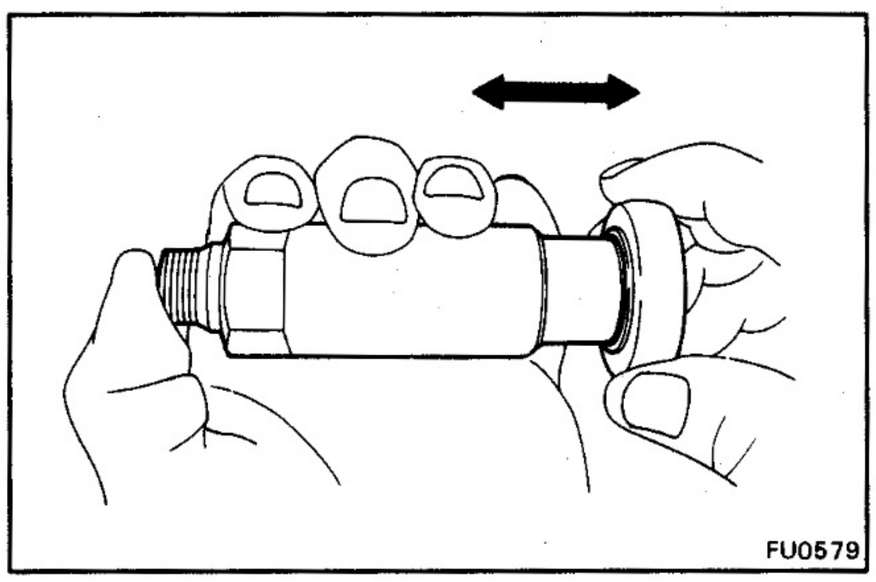

2. INSPECT PRIMING PUMP

Firmly block the priming pump inlet port with your finger and check that pressure and vacuum are created when the pump is operated.

If abnormal, replace the priming pump.

ASSEMBLY OF FUEL FEED PUMP

(See page FU-18)

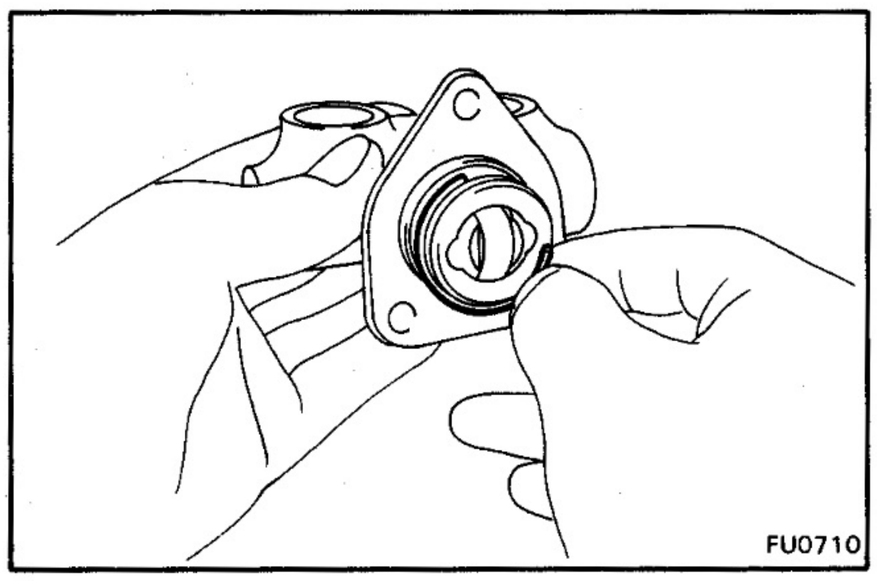

1. INSTALL FEED PUMP TAPPET

Insert the tappet into the housing, and secure it with the snap ring.

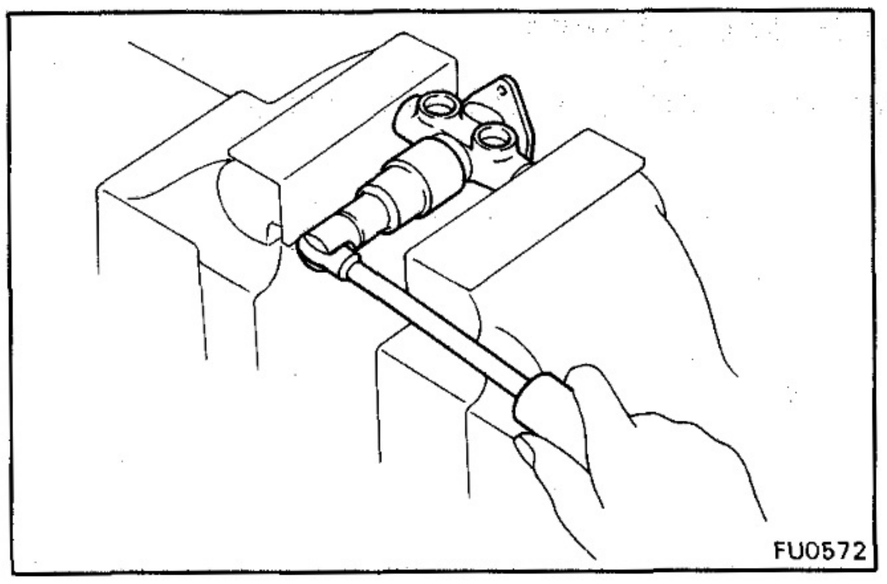

2. INSTALL FEED PUMP PISTON

Install the piston, spring, a new gasket and the chamber plug.

Torque: 1,500 kg-cm (109 ft-lb, 147 N·m)

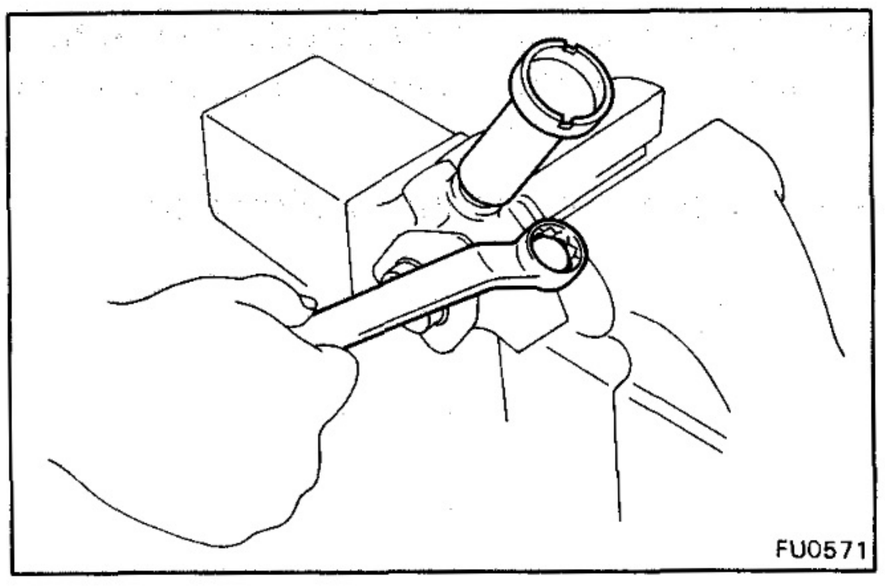

3. INSTALL PRIMING PUMP AND CHECK VALVES

(a) Install the check valve, spring, a new gasket and the priming pump.

Torque: 500 kg-cm (36 ft-lb, 49 N·m)

(b) Install the check valve, spring, a new gasket and the plug.

Torque: 500 kg-cm (36 ft-lb, 49 N·m)

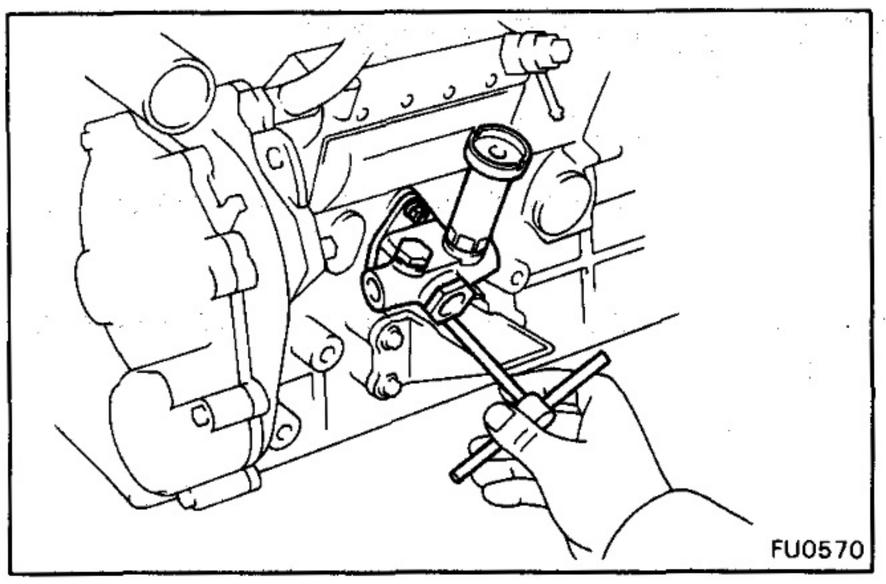

INSTALLATION OF FUEL FEED PUMP

(See page FU-16)

1. INSTALL FEED PUMP

(a) Place a new O-ring in position on the injection pump housing.

(b) Install the feed pump with the three spring washers and nuts.

Torque: 95 kg-cm (82 in.-lb, 9.3 N·m)

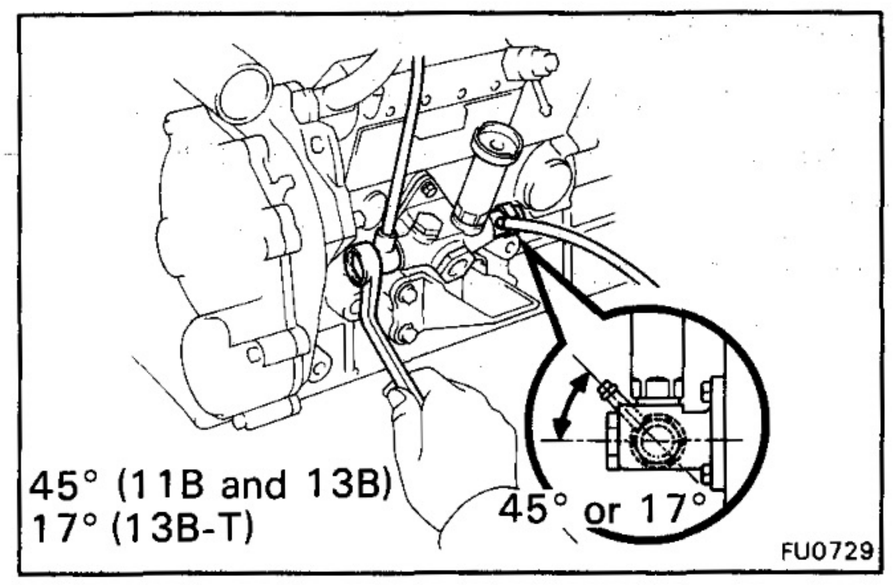

2. INSTALL INLET AND OUTLET FUEL PIPES

[B and 3B]

Connect the fuel pipe with new two gaskets and the union bolt. Connect the two fuel pipes. torque the union bolts.

Torque: 375 kg-cm (27 ft-lb, 37 N·m)

[11B, 13B and 13B-T]

Install the inlet fuel pipe with new two gaskets and the union bolt. Connect the outlet fuel pipe with new two gaskets and the union bolt. Torque the union bolts.

Torque: 375 kg-cm (27 ft-lb, 37 N·m)

3. BLEED FUEL FEED PUMP (See step 2 on page FU-3)

4. START ENGINE AND CHECK FOR FUEL LEAKS

AUTOMATIC TIMER

COMPONENTS

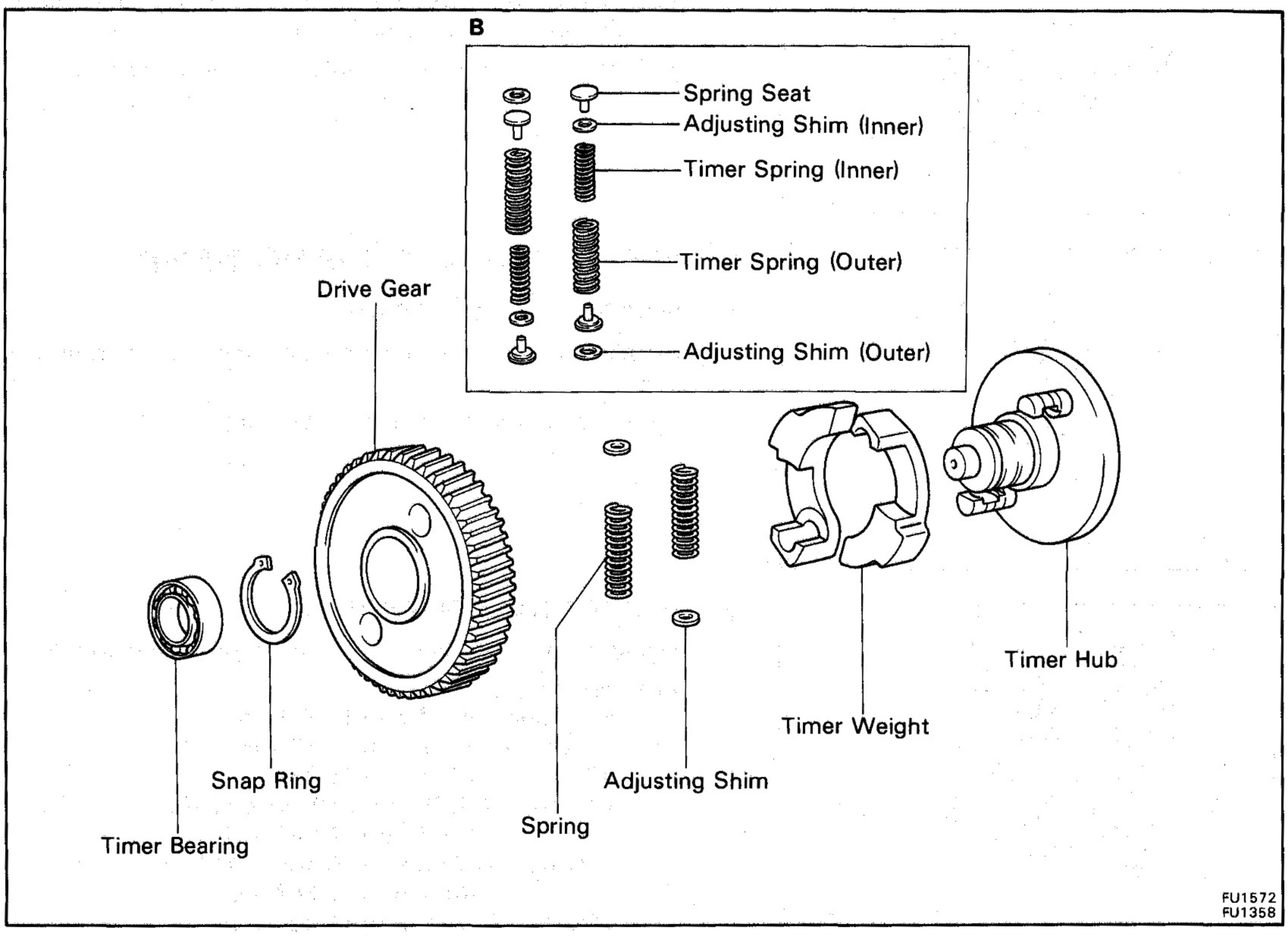

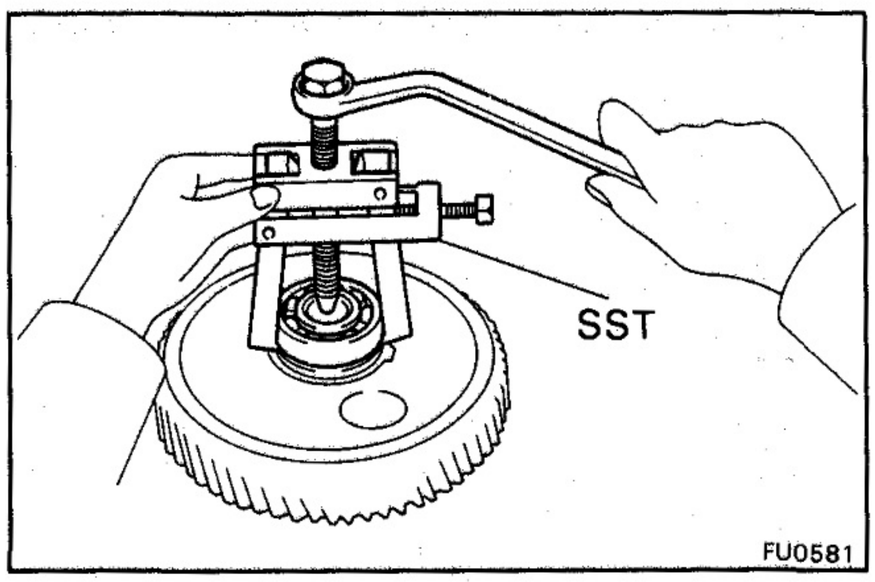

REMOVAL OF AUTOMATIC TIMER

(See steps 1, 3 and 11 to 13 on pages EM-64 to 66)

DISASSEMBLY OF AUTOMATIC TIMER

1. REMOVE TIMER BEARING

Using SST, remove the timer bearing.

SST 09286-46011

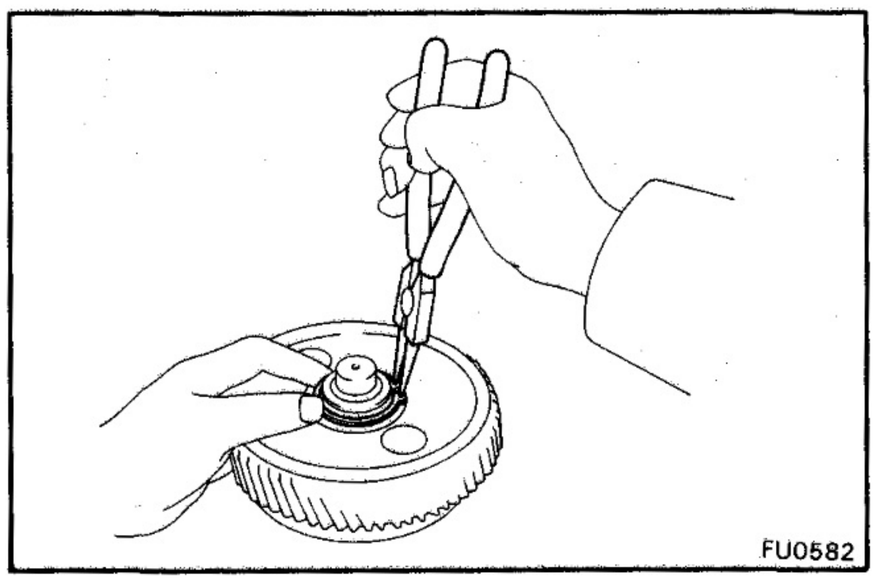

2. DISASSEMBLY AUTOMATIC TIMER

(a) Using snap ring pliers, remove the snap ring.

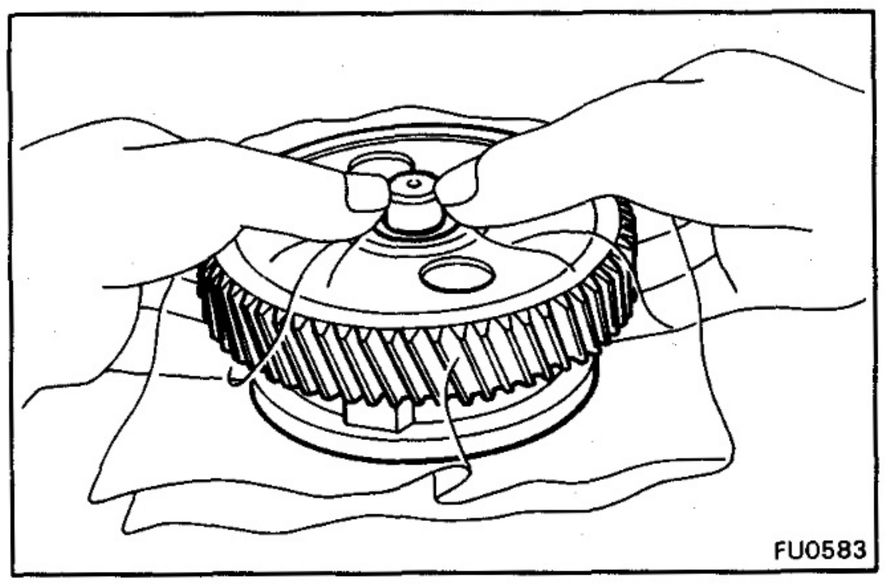

(b) Cover the timer with a shop towel to prevent the spring seats (B), springs and adjusting shims from flying out.

(c) Pull up the drive gear, and remove the spring seats (B), springs and adjusting shims.

(d) Remove the timer weights from the timer hub.

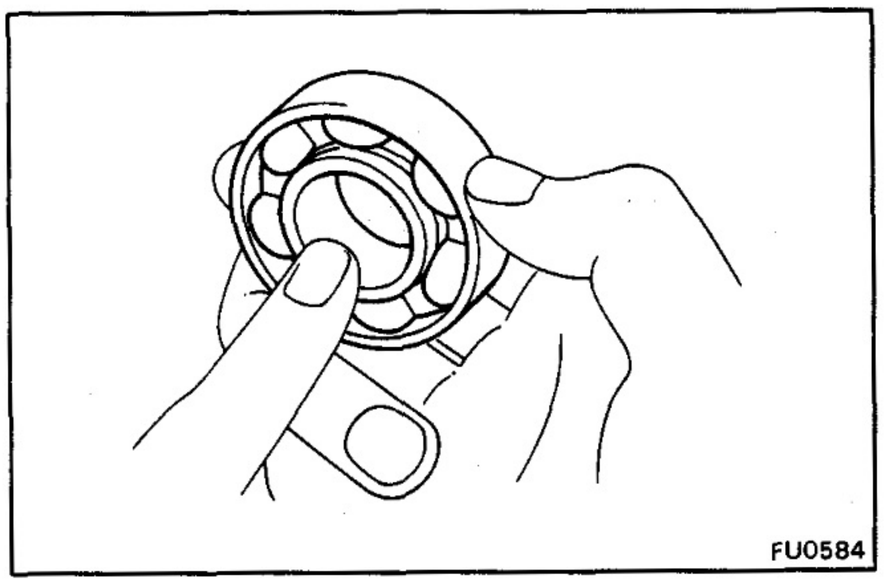

INSPECTION OF AUTOMATIC TIMER

1. INSPECT TIMER BEARING

Check that the timer bearing operation is not rough or noisy.

If necessary, replace the timer bearing.

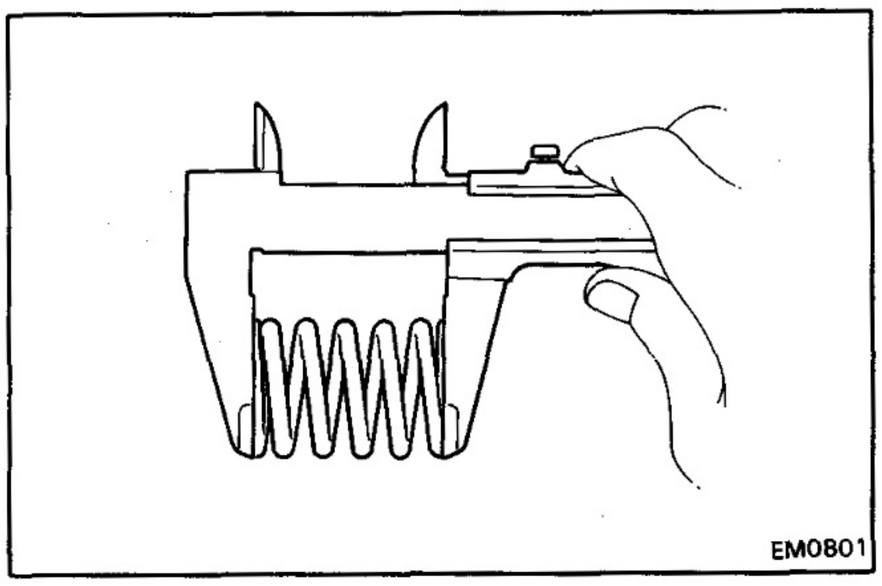

2. INSPECT TIMER SPRINGS

Using calipers, measure the free length of the spring.

Free length:

B	**Inner**	**43.7 mm (1.720 in.)**
	Outer	**54.2 mm (2.134 in.)**
3B		**50.7 mm (1.996 in.)**
11B (w/o HAC) and 13B (w/o HAC)		**50.3 mm (1.980 in.)**
11B (w/ HAC) and 13B (w/ HAC)		**44.4 mm (1.748 in.)**
13B-T		**48.5 mm (1.909 in.)**

If the free length is not as specified, replace the spring.

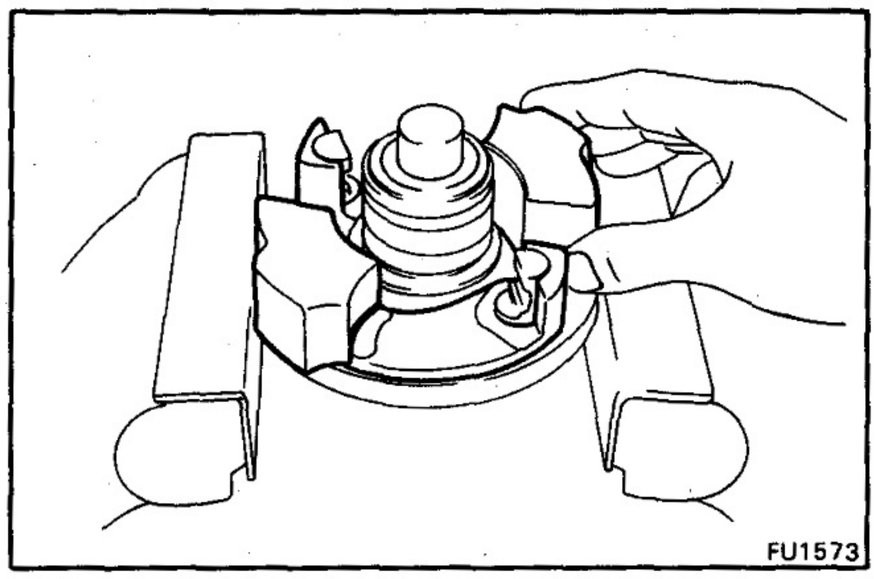
FU1573

ASSEMBLY OF AUTOMATIC TIMER

(See page FU-21)

1. ASSEMBLE AUTOMATIC TIMER

(a) Mount the timer hub in a soft jaw vise.

(b) Install the timer weights to the timer hub.

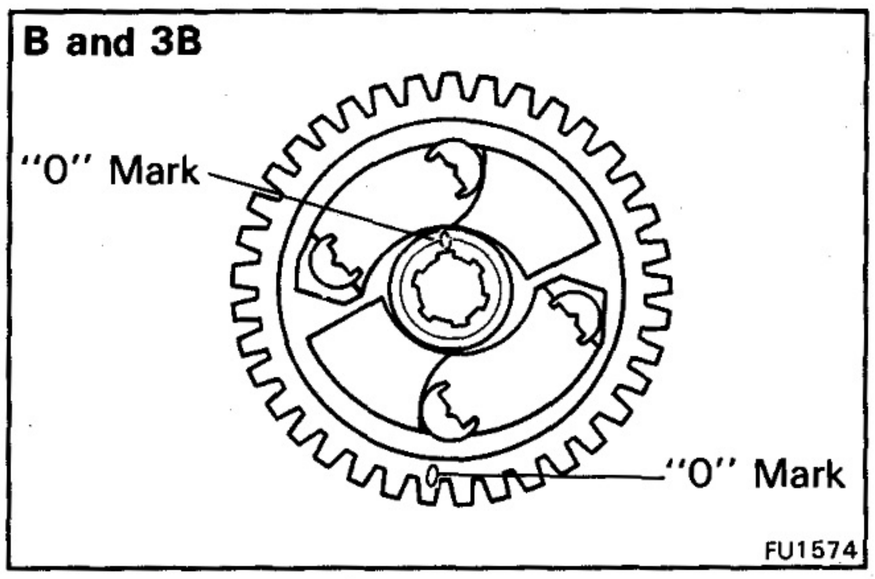

(c) Assembly the timer hub and drive gear as shown.

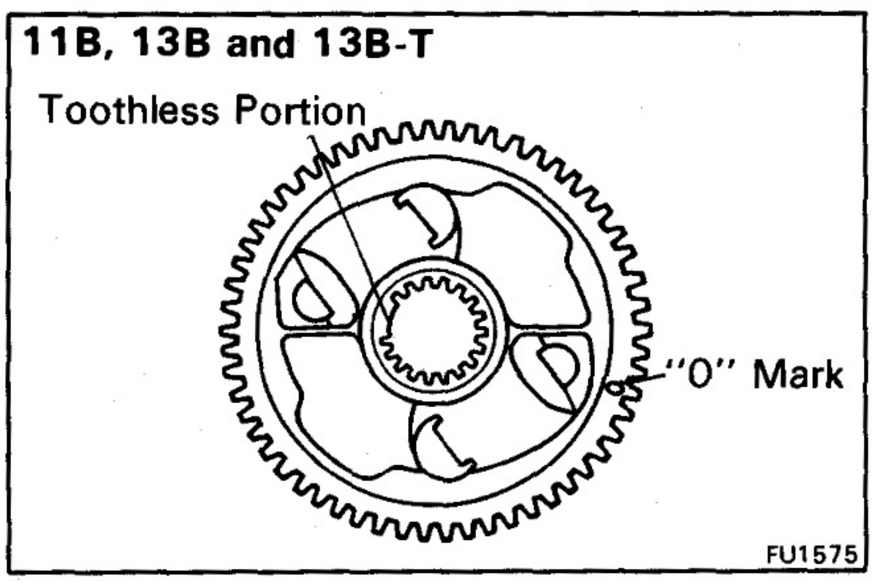

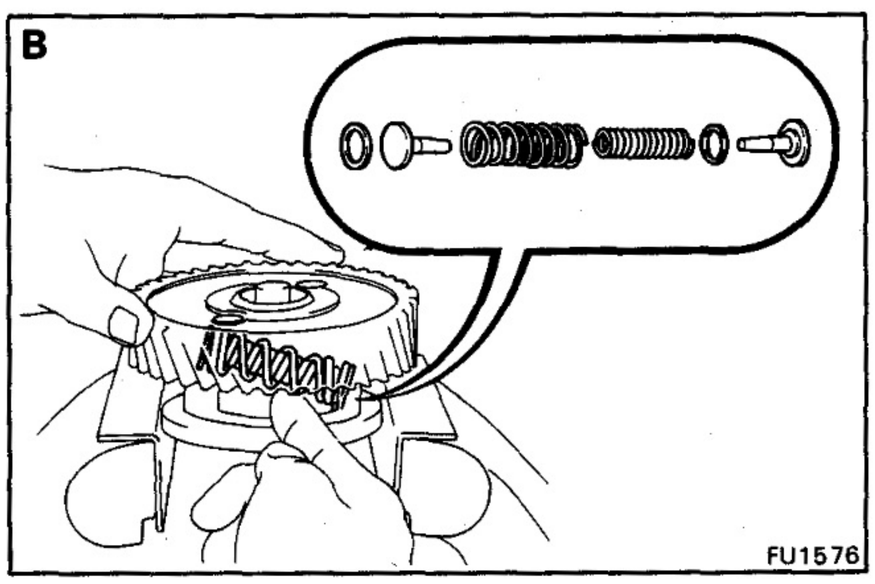

(d) [B]
Install the spring seats, timer springs and adjusting shims (inner and outer).

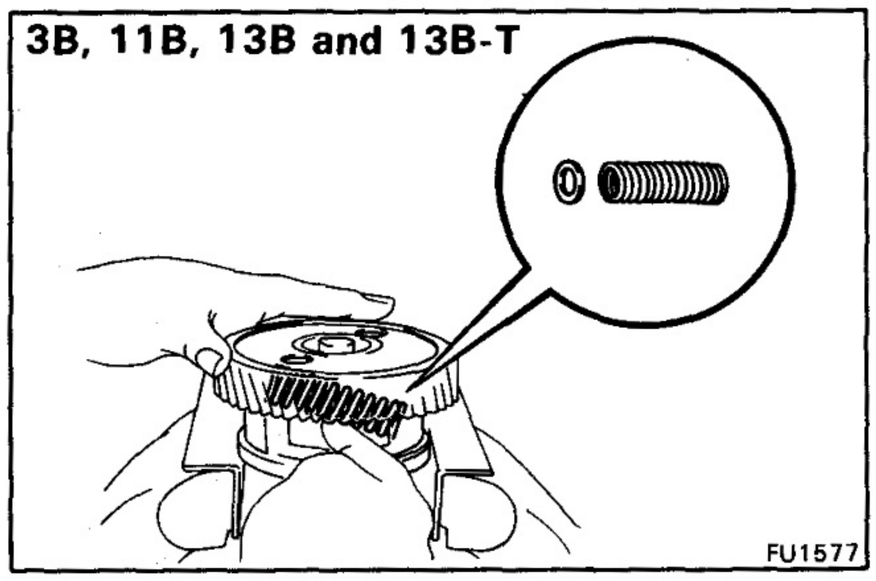

(e) [3B, 11B, 13B and 13B-T]
Install the timer springs and adjusting shims.

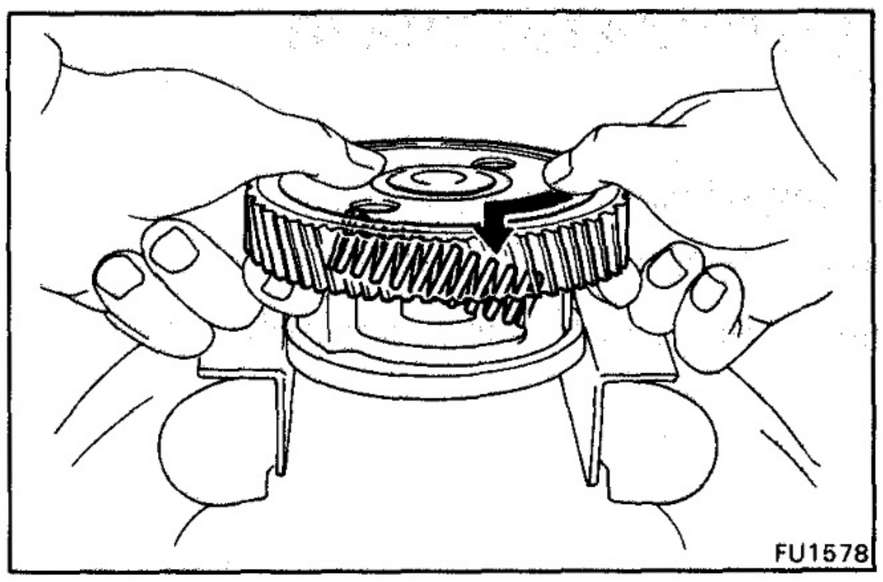

(f) Turn and push and drive gear onto the timer hub.

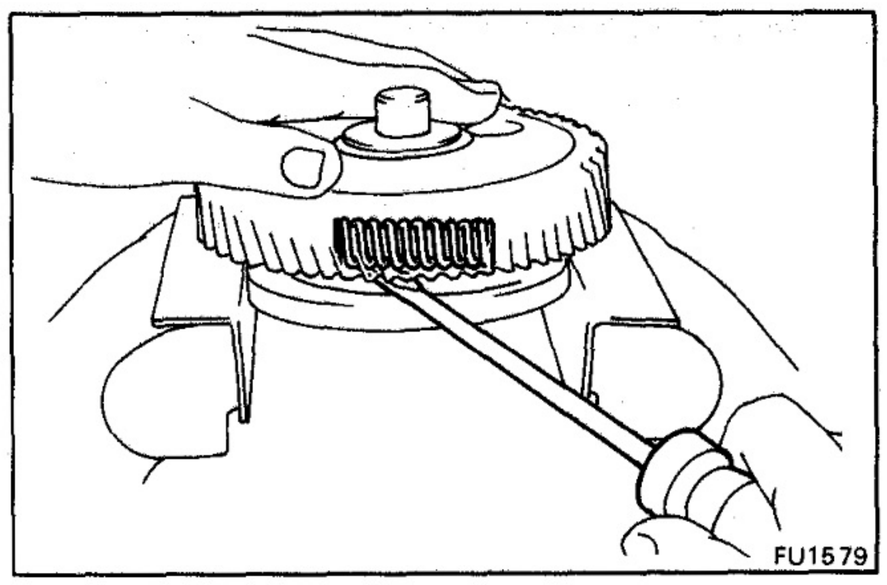

(g) Using a screwdriver, snugly seat the spring seats (B), springs and adjusting shims.

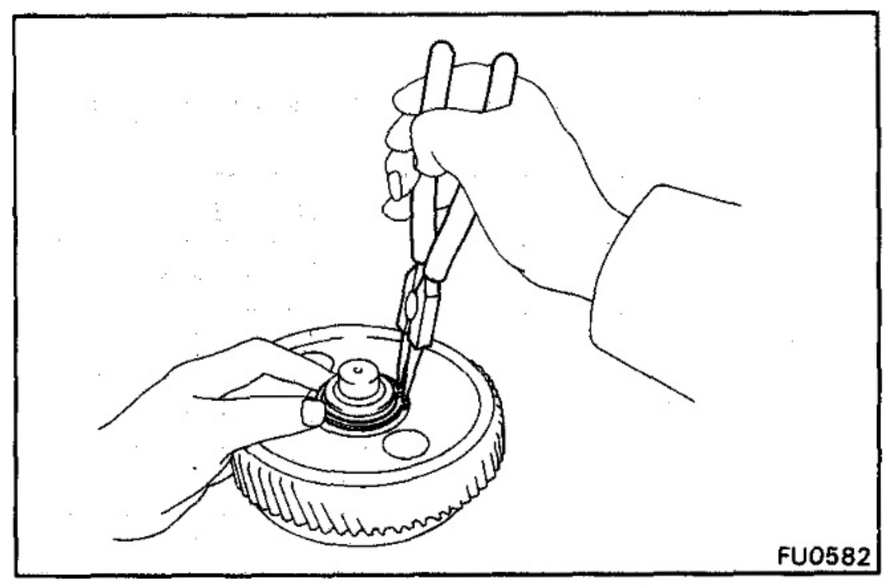

(h) Using snap ring pliers, install the snap ring.

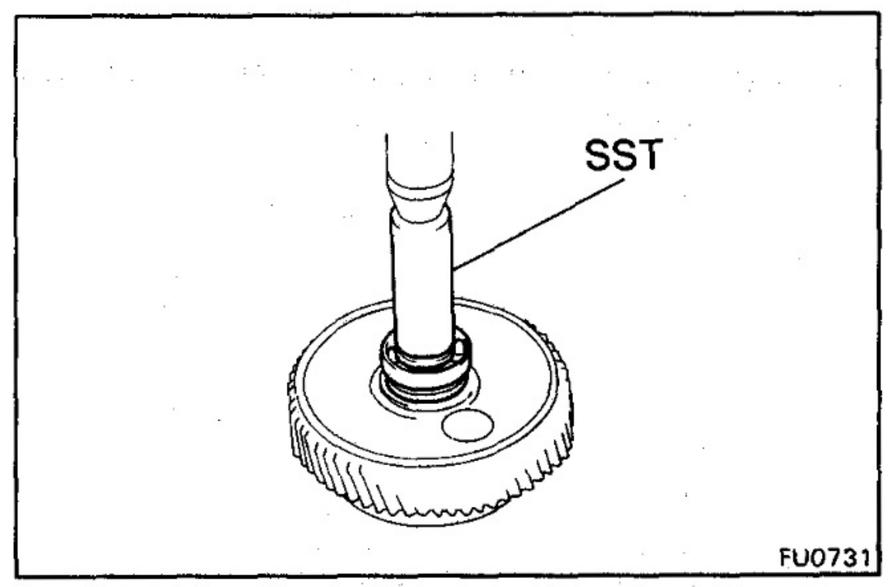

2. INSTALL TIMER BEARING

Using SST and a press, press in the bearing.

SST B and 3B 09620-30010 (09623-30010)
11B, 13B and 13B-T
09260-58010 (09285-76020)

ADJUSTMENT OF AUTOMATIC TIMER

1. PREPARATION

(a) Remove the injection pump without disconnecting the feed pump. (See page FU-27)

(b) Install the automatic timer to the injection pump.

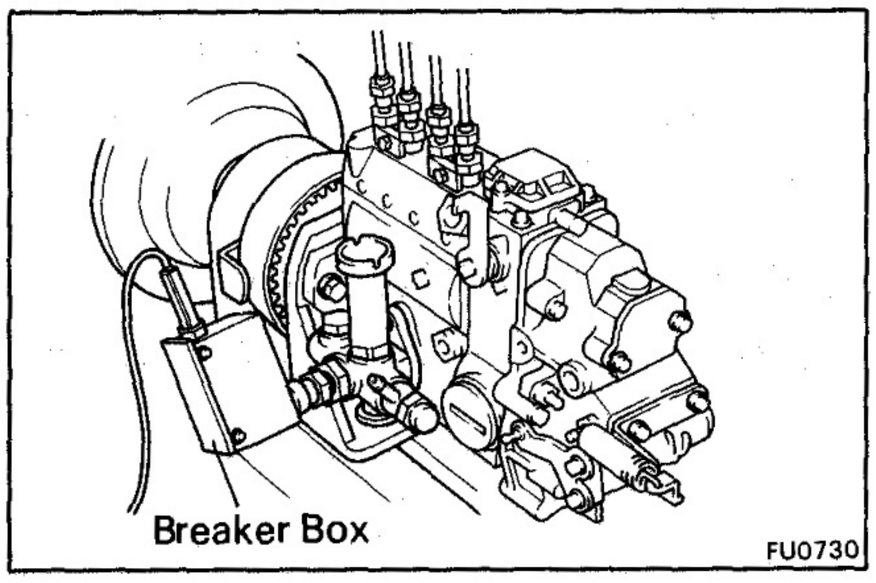

(c) Mount the injection pump on the pump tester.

(d) Fill the camshaft chamer of the injection pump with engine oil.

(e) Install the timer breaker box to the piston bore of the feed pump.

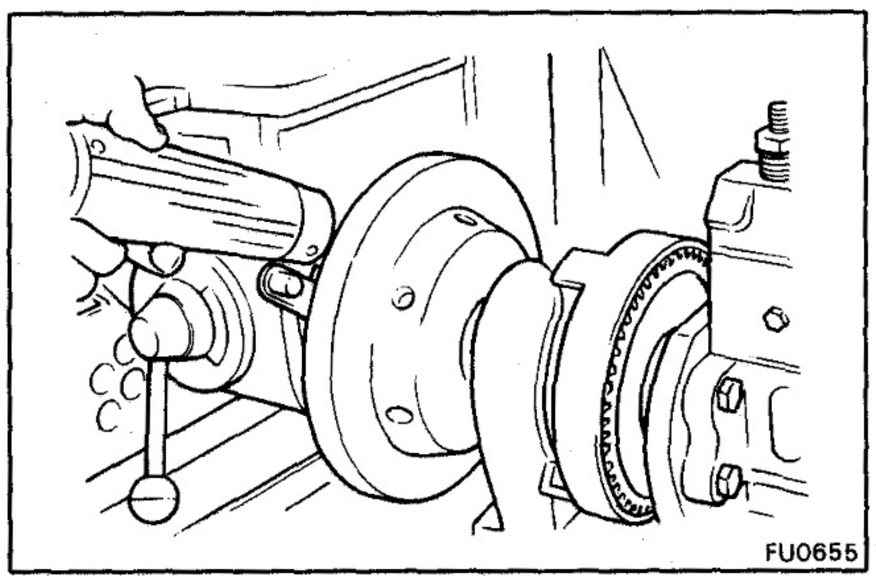

2. ADJUST ADVANCE ANGLE

(a) Using a timing light, measure the advance angle.

Item	Pump rpm	Advance angle
B	700	0.5° or less
	750	0.3 – 1.3°
	900	2.7 – 3.7°
	1,100	3.5 – 4.5°
	1,400	4.8 – 5.8°
	1,750	6.0 – 7.0°
	1,850	6.0 – 7.0°
3B	700	0.5° or less
	800	0.2 – 1.1°
	1,000	1.3 – 2.3°
	1,400	3.8 – 4.8°
	1,750	6.0 – 7.0°
	1,900	6.0 – 7.0°
11B (w/o HAC)	1,450	0.5° or less
	1,750	4.5 – 5.5°
13B (w/o HAC)	1,400	0.5° or less
	1,700	4.5 – 5.5°
11B (w/ HAC) 13B (w/ HAC)	1,000	0.5° or less
	1,700	3.0 – 4.0°
13B-T	1,400	0.5° or less
	1,700	3.5 – 4.5°

(b) Disassemble the automatic timer, and adjusting by changing the adjusting shim.

Adjusting shim thickness:

B (Inner and Outer) and 3B	
	0.1 mm (0.004 in.)
	0.2 mm (0.008 in.)
	0.5 mm (0.020 in.)
11B, 13B and 13B-T	**0.5 mm (0.020 in.)**
	0.6 mm (0.024 in.)
	0.7 mm (0.028 in.)
	0.8 mm (0.031 in.)
	0.9 mm (0.035 in.)
	1.0 mm (0.039 in.)

NOTE: The advance angle will advance with a reduction in shim thickness and retard with an increase.

INSTALLATION OF AUTOMATIC TIMER

(See steps 6 to 10 and 18 on pages EM-74 to 76 and 78)

INJECTION PUMP

REMOVAL OF INJECTION PUMP

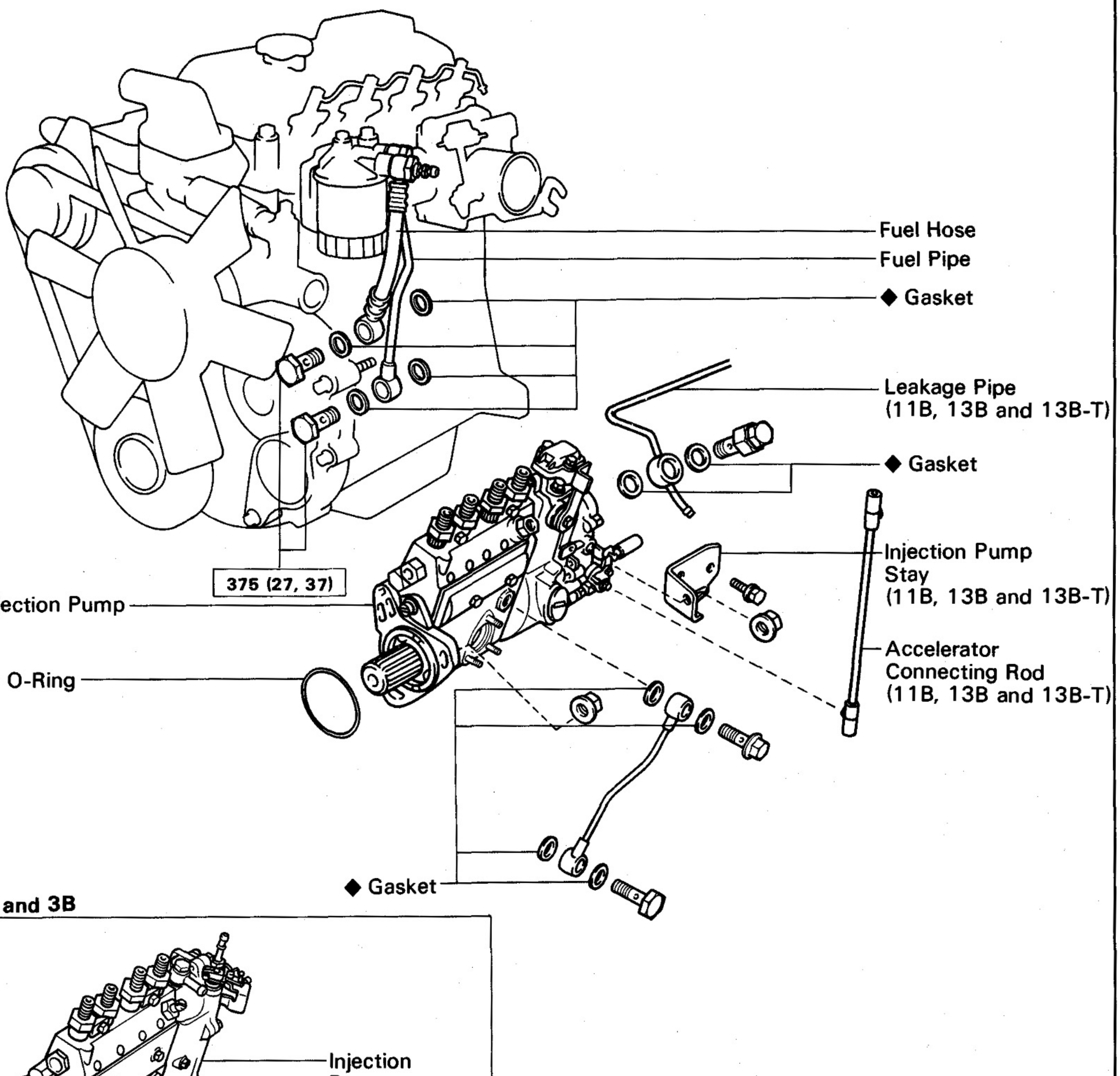

kg-cm (ft-lb, N·m) : Specified torque

◆ Non-reusable part

FU1580

1. REMOVE INJECTION PIPES
(See step 1 on page FU-4) B and 3B
(See steps 1 and 2 on page FU-10) 11B, 13B and 13B-T

2. REMOVE FUEL FEED PUMP
(See steps 1 and 2 on page FU-16)

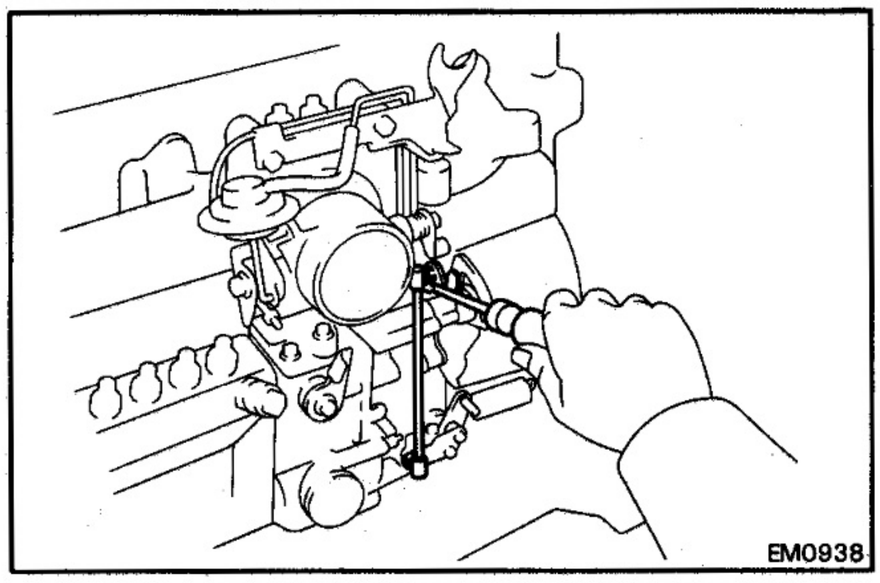

3. REMOVE PARTS

(a) [B and 3B (w/ EDIC System)]
Connecting rod of EDIC motor

(b) [B (w/o EDIC system)]
Connecting rod of fuel cut diaphragm

(c) [3B (w/o EDIC System)]
Connecting wire of overinjection magnet

(d) [11B, 13B and 13B-T]
Accelerator connecting rod

B (BU) and 3B (BB)

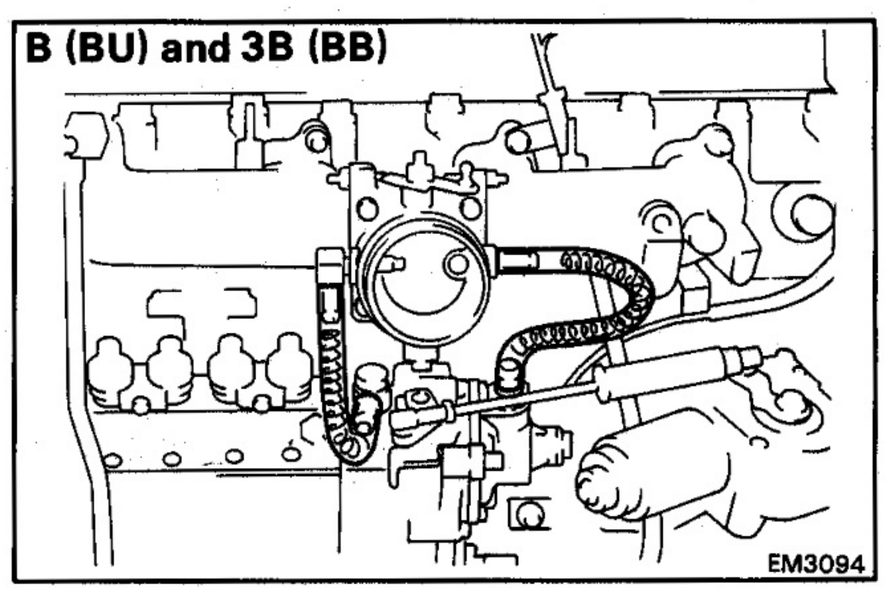

(e) [B, 3B and 13B-T]
Vacuum hose(s)

3B (BJ)

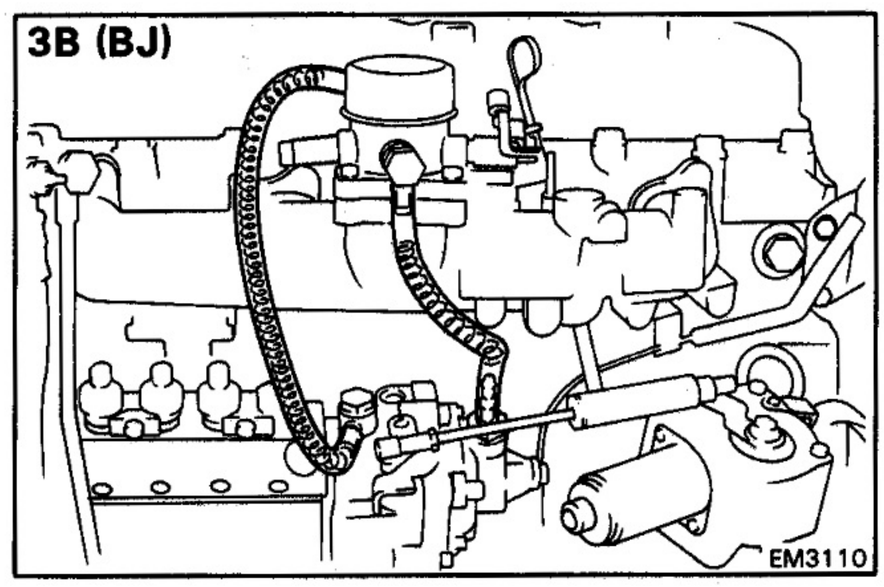

13B-T (BJ)

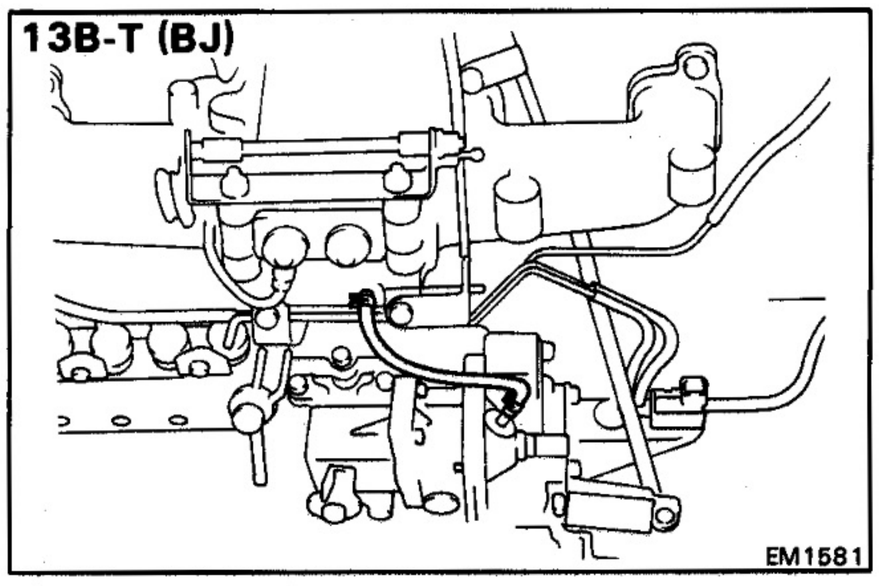

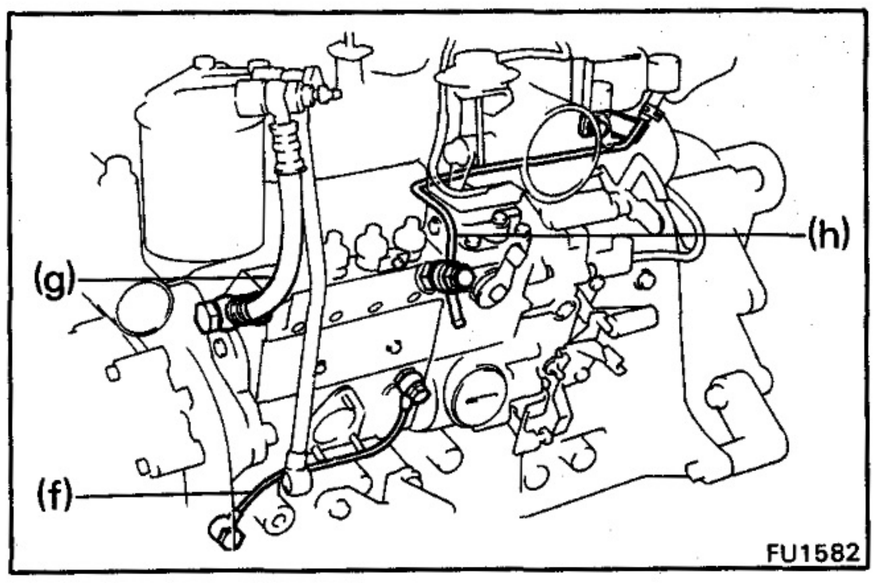

(f) Oil pipe
(g) Fuel hose
(h) [11B, 13B and 13B-T]
Leakage pipe

4. REMOVE INJECTION PUMP

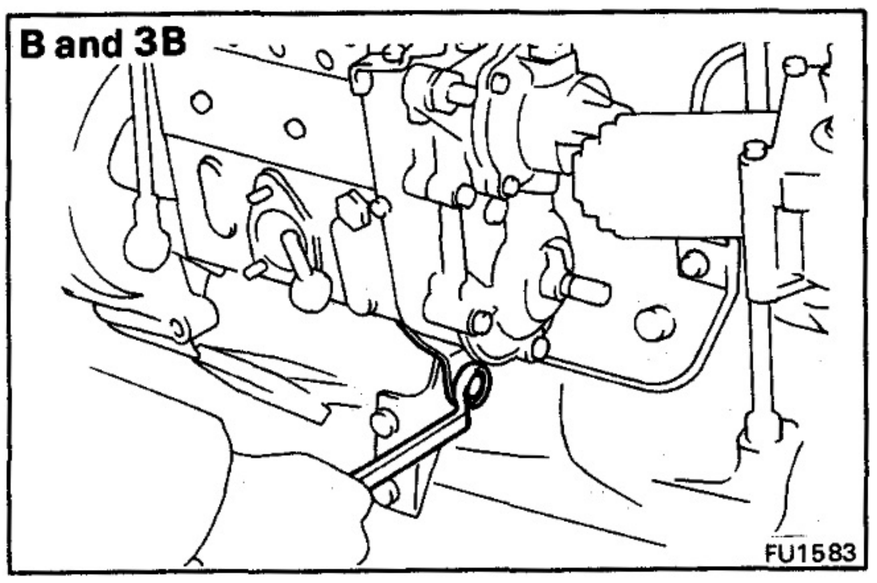

(a) [B and 3B]
Remove the bolt holding the injection pump stay to the stay.

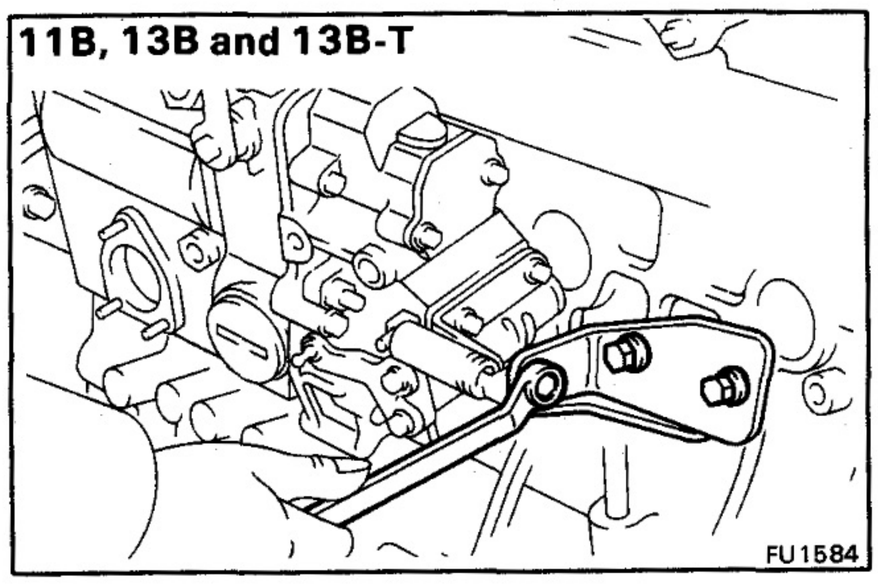

(b) [11B, 13B and 13B-T]
Remove the nut, two bolts and injection pump stay.

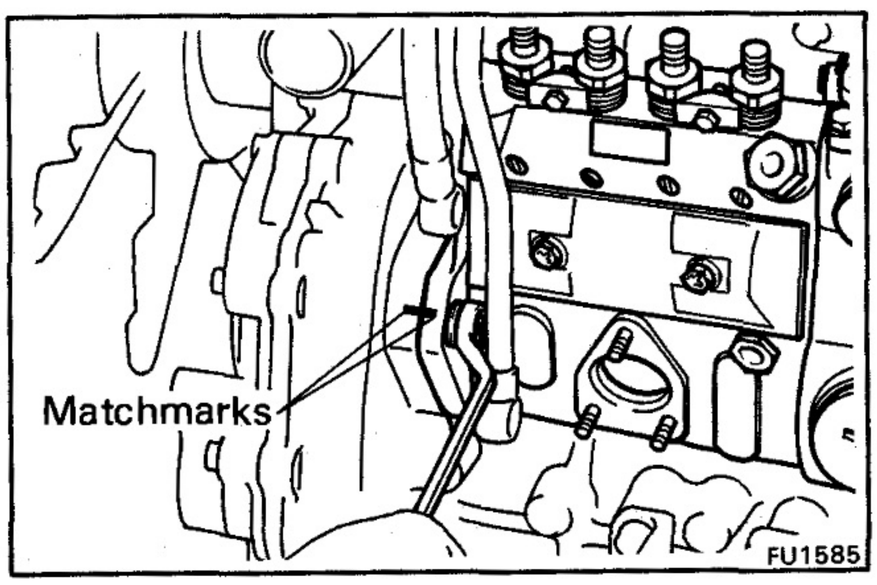

(c) Before removing the injection pump, check if the matchmarks are aligned. If not, place new matchmarks for reinstallation.

(d) Remove the three nuts, injection pump and heat insulator (13B-T).

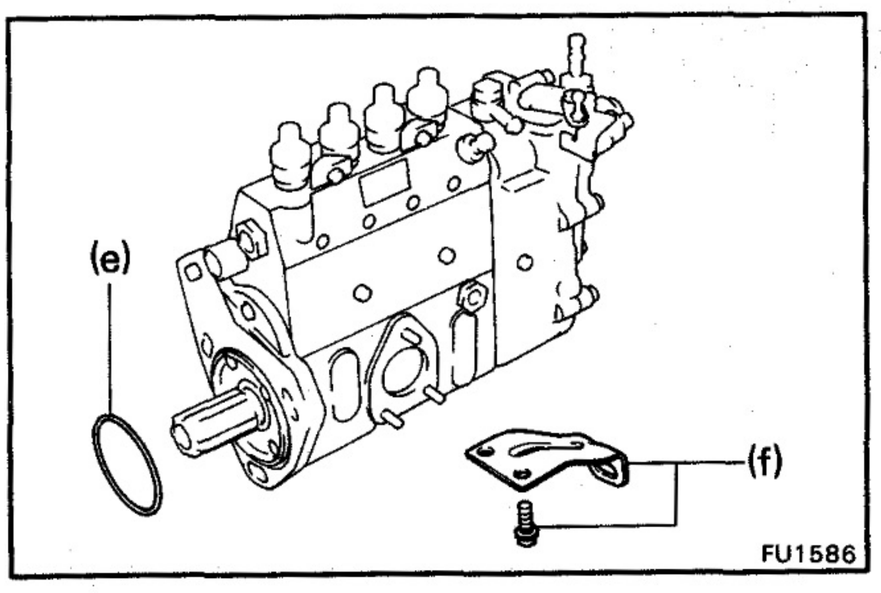

(e) Remove the O-ring from the injection pump flange.

(f) [B and 3B]
Remove the two bolts and pump stay from the injection pump.

COMPONENTS

Governor (B and 3B)

w/ HAC

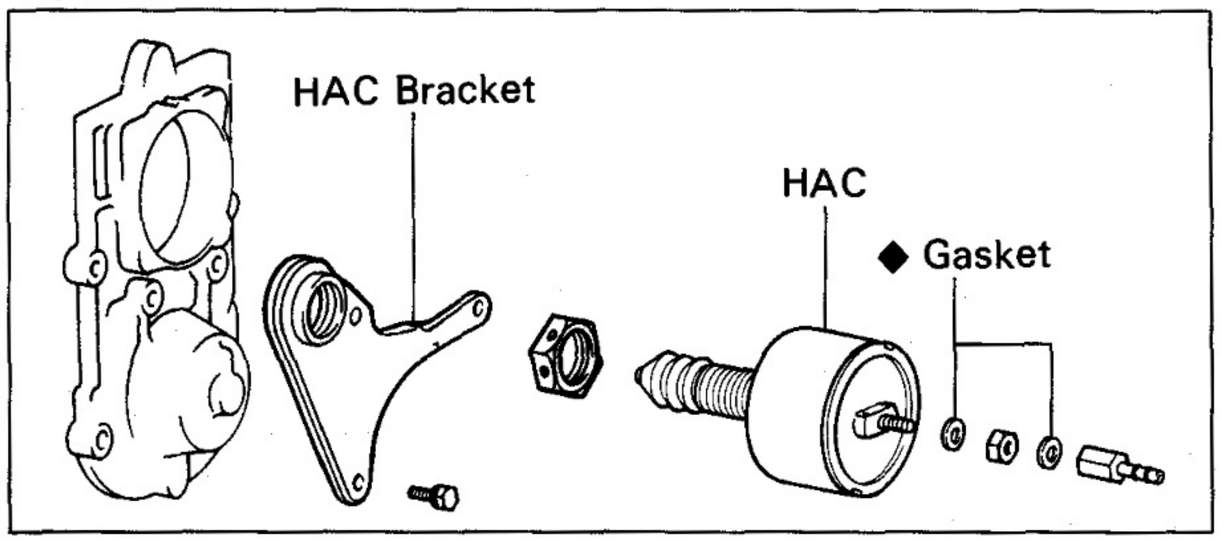

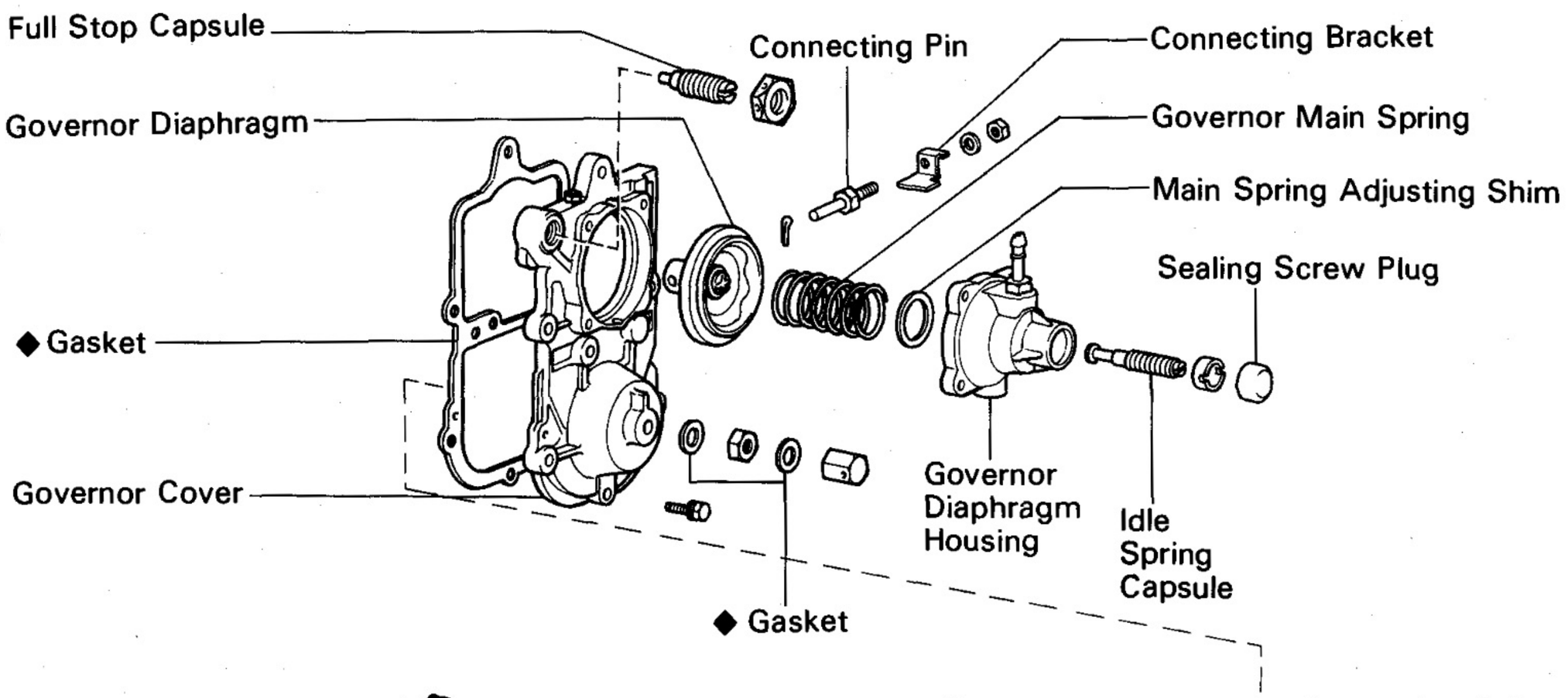

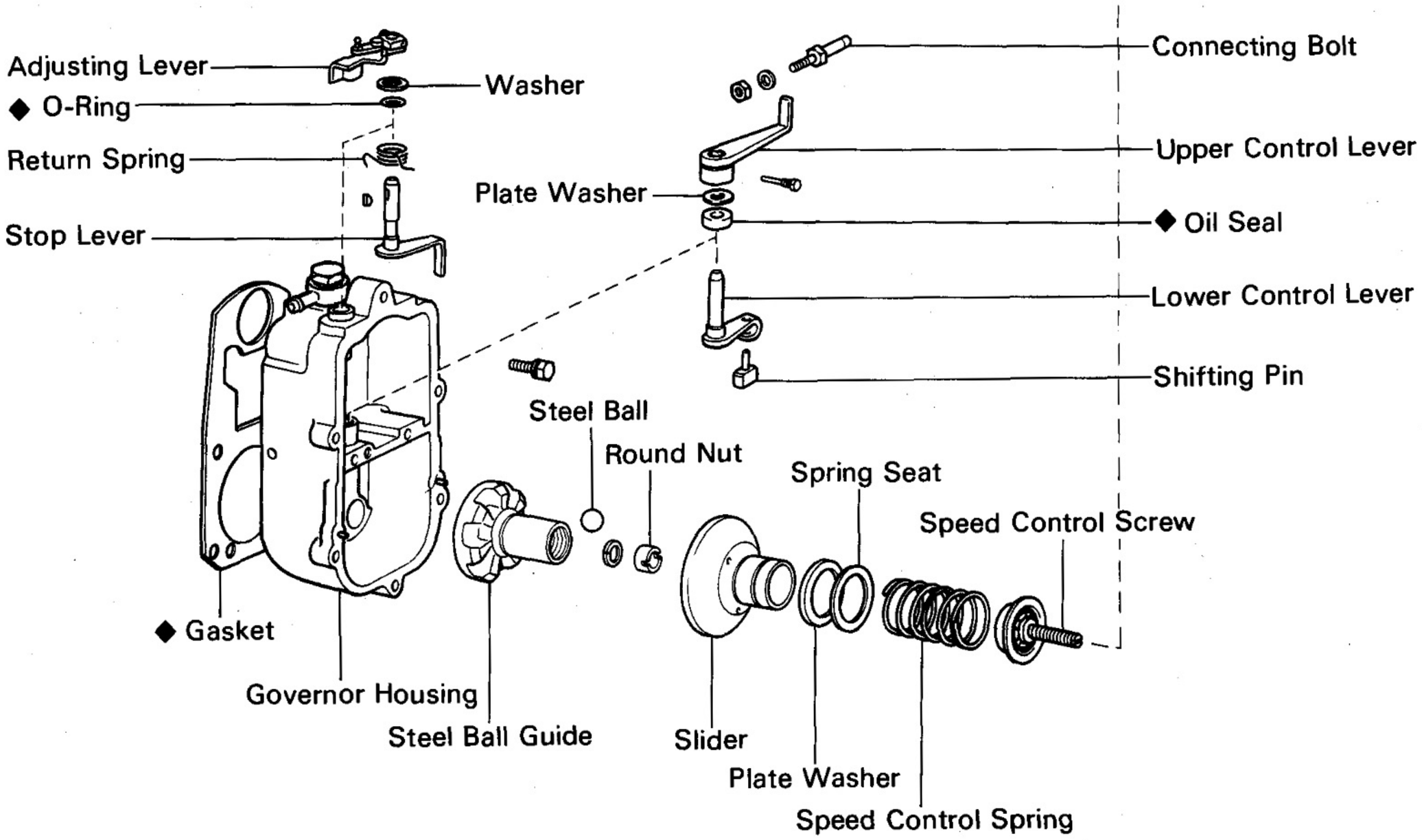

◆ Non-reusable part

FU1587

COMPONENTS (Cont'd)

Governor (11B, 13B and 13B-T)

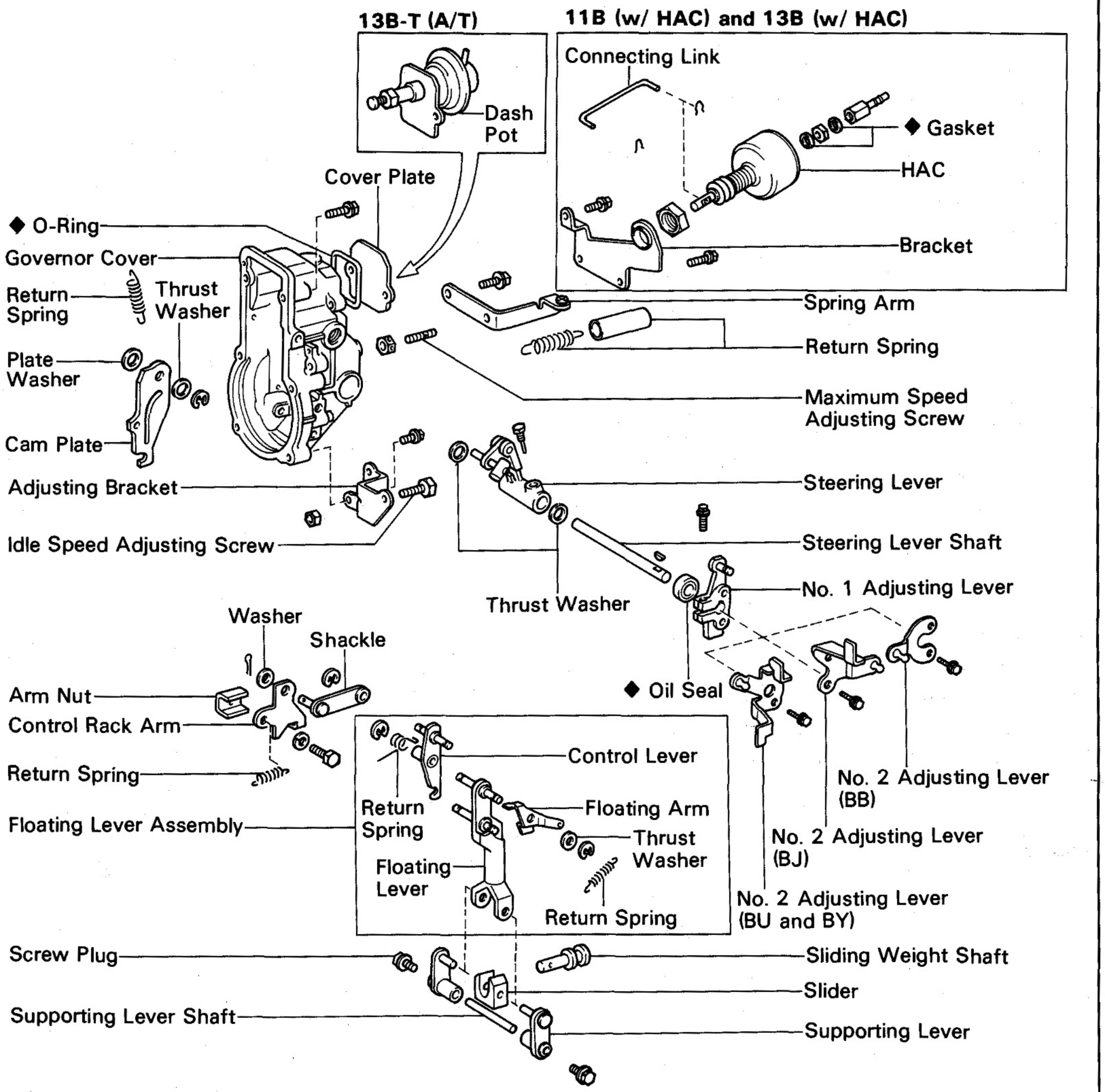

◆Non-reusable part

FU1588

COMPONENTS (Cont'd)

Governor (11B and 13B)

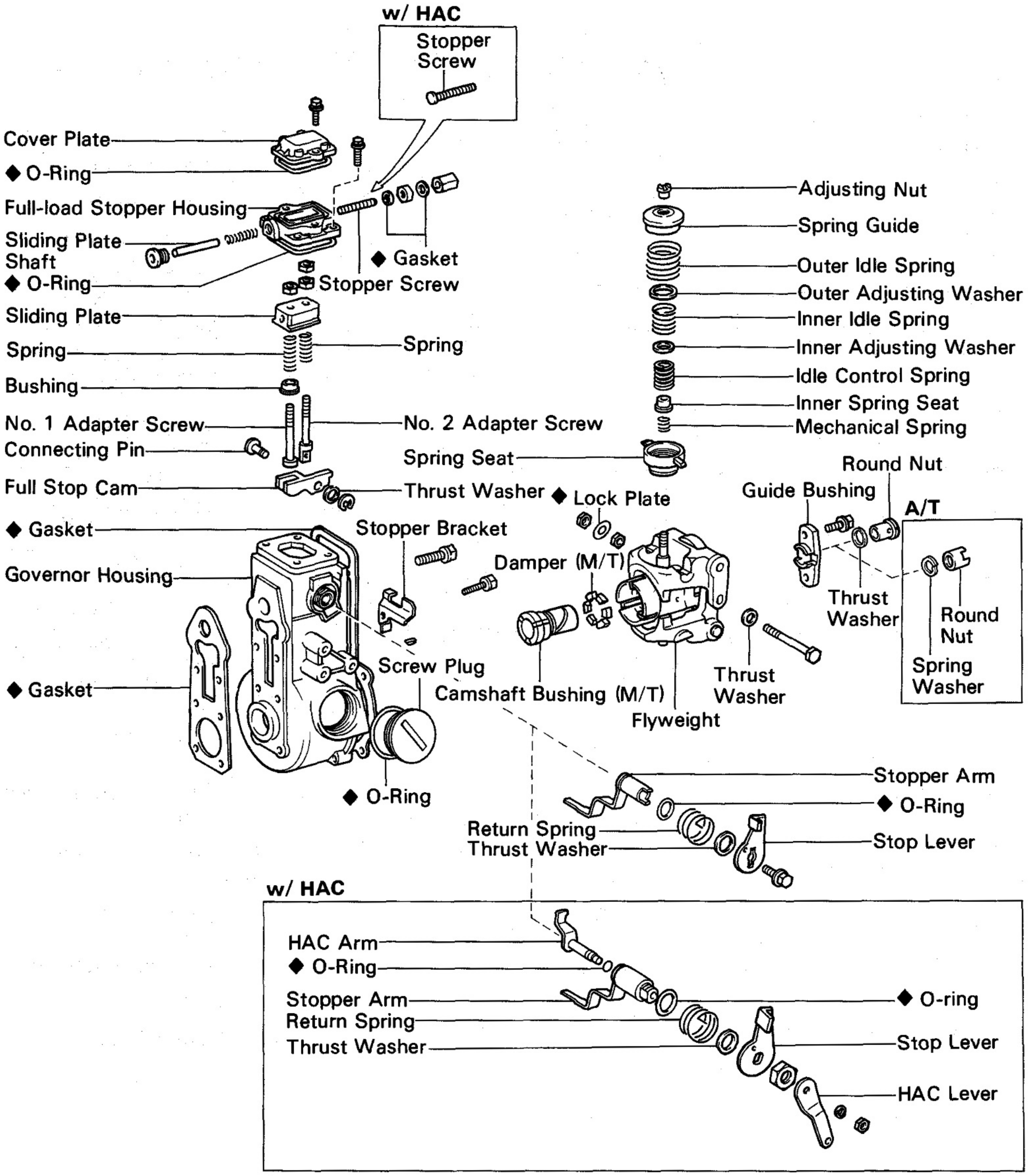

◆ Non-reusable part

FU1589

COMPONENTS (Cont'd)

Governor (13B-T)

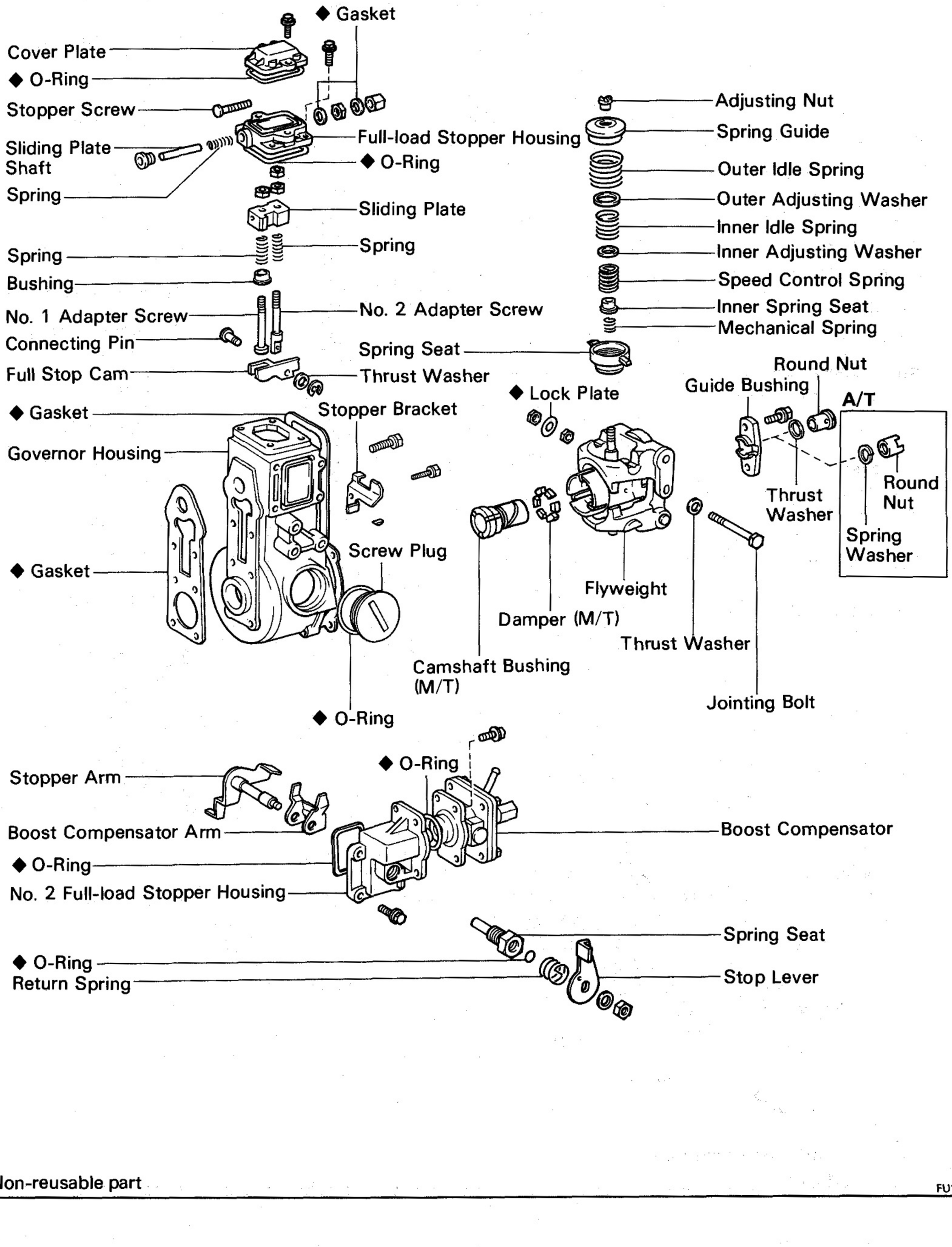

◆ Non-reusable part

FU1590

COMPONENTS

Pump Body

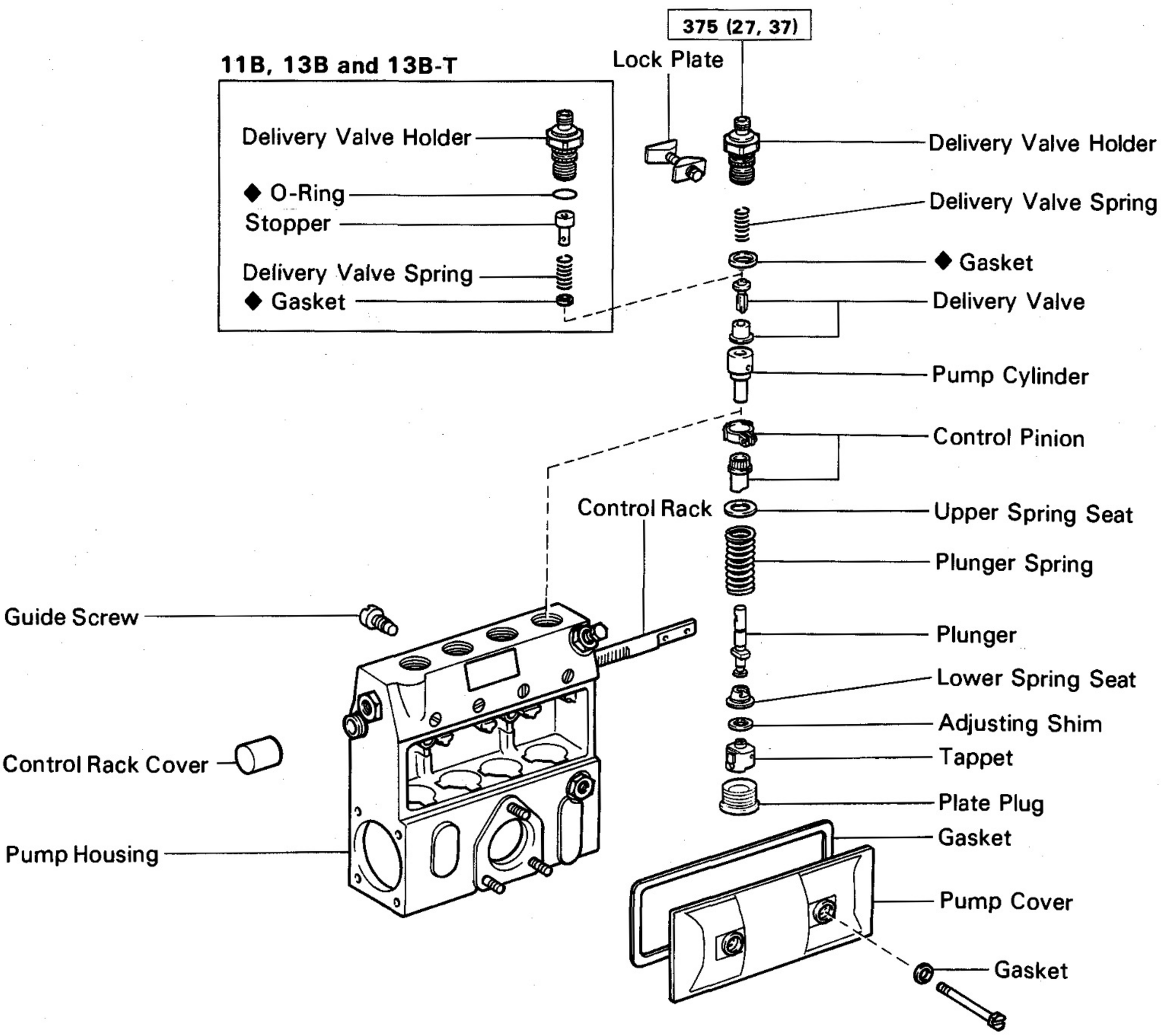

kg-cm (ft-lb, N·m) : Specified torque

◆ Non-reusable part

FU1591

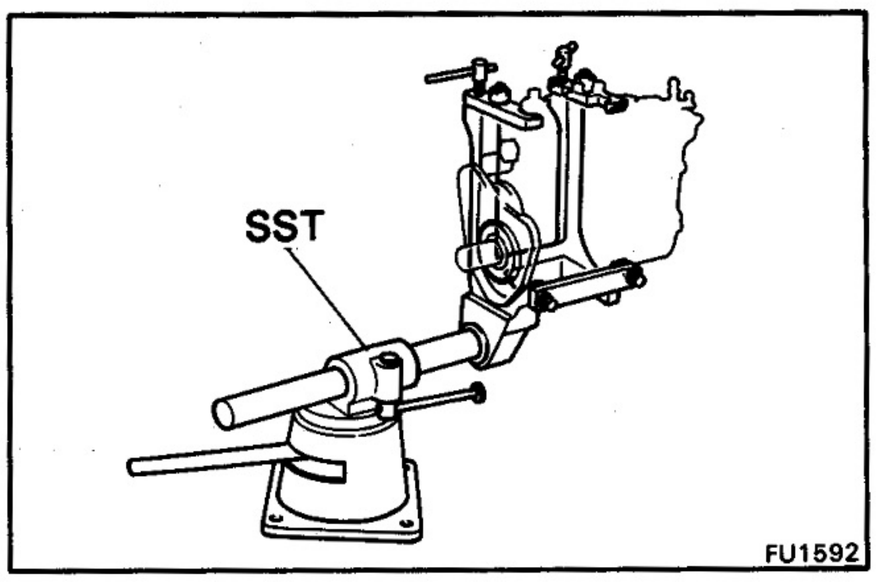

DISASSEMBLY OF INJECTION PUMP

Disassembly of Governor [B and 3B]

(See page FU-30)

1. MOUNT PUMP ASSEMBLY TO SST (STAND)

SST 09241-76022

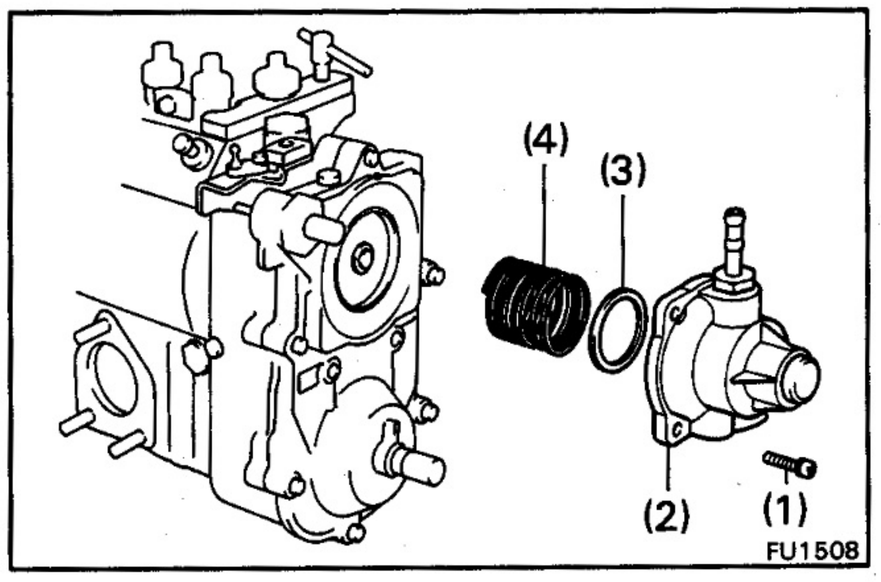

2. REMOVE GOVERNOR DIAPHRAGM HOUSING AND MAIN SPRING

Remove the following parts:

(1) Four screws
(2) Governor diaphragm housing
(3) Adjusting shim(s)
(4) Governor main spring

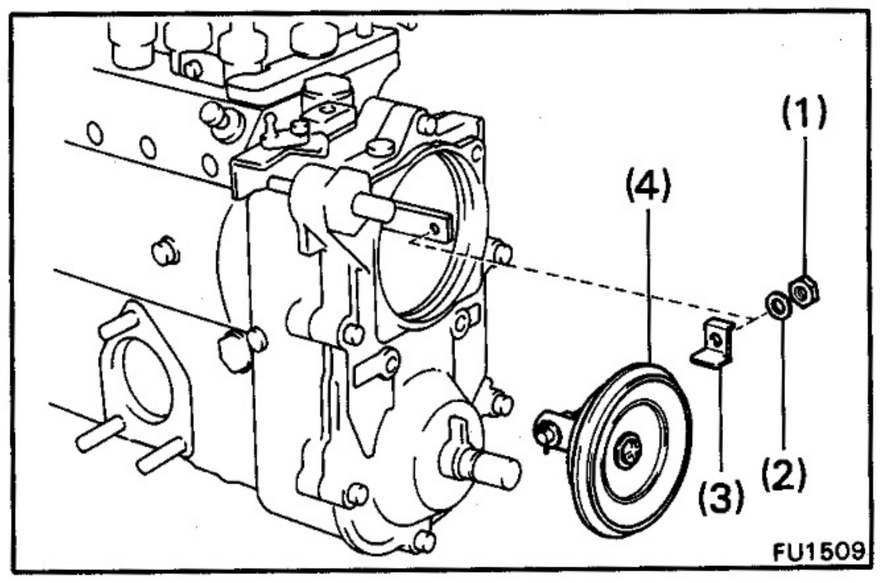

3. REMOVE GOVERNOR DIAPHRAGM

Remove the following parts:

(1) Nut
(2) Spring washer
(3) Connecting bracket
(4) Governor diaphragm

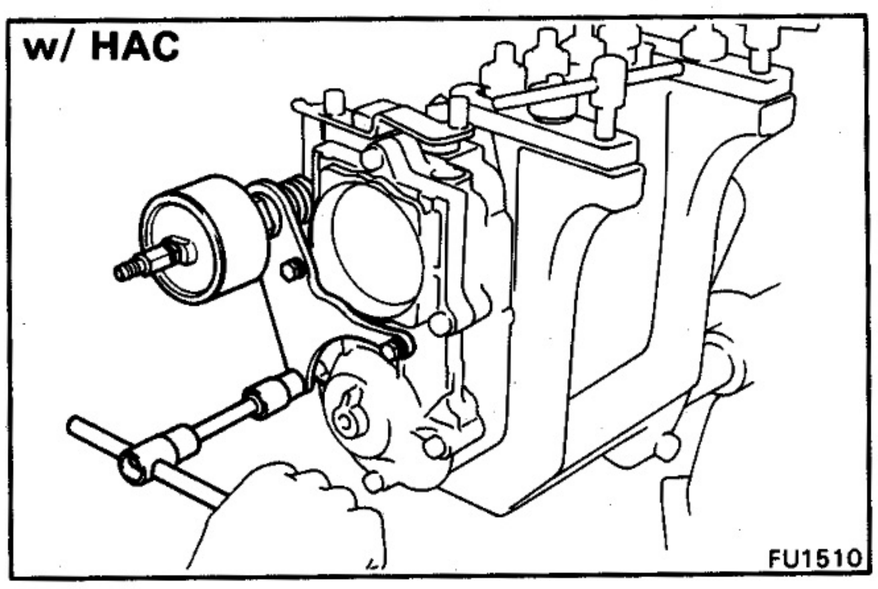

4. [w/ HAC]
REMOVE HIGH ALTITUDE COMPENSATOR (HAC)

Remove the three bolts and HAC.

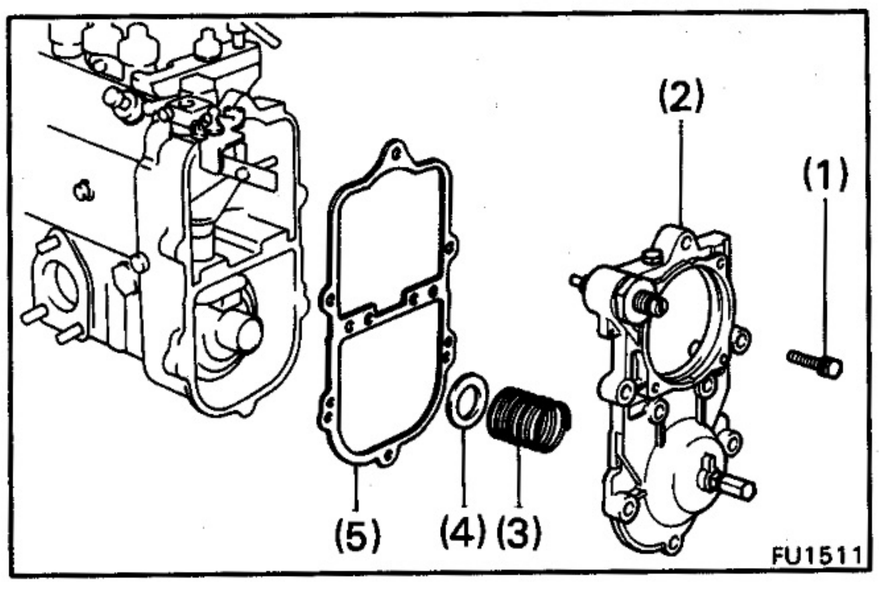

5. REMOVE GOVERNOR COVER AND SPEED CONTROL SPRING

Remove the following parts:

(1) Six bolts
(2) Governor cover
(3) Speed control spring
(4) Spring seat
(5) Gasket

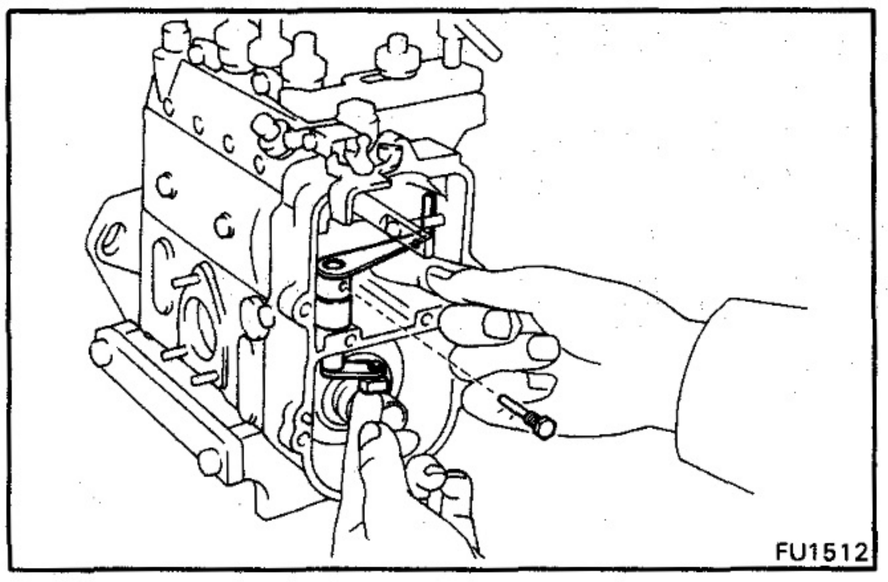

6. REMOVE CONTROL RACK LEVERS

Remove bolt, shifting pin, lower control lever, upper control lever and plate washer.

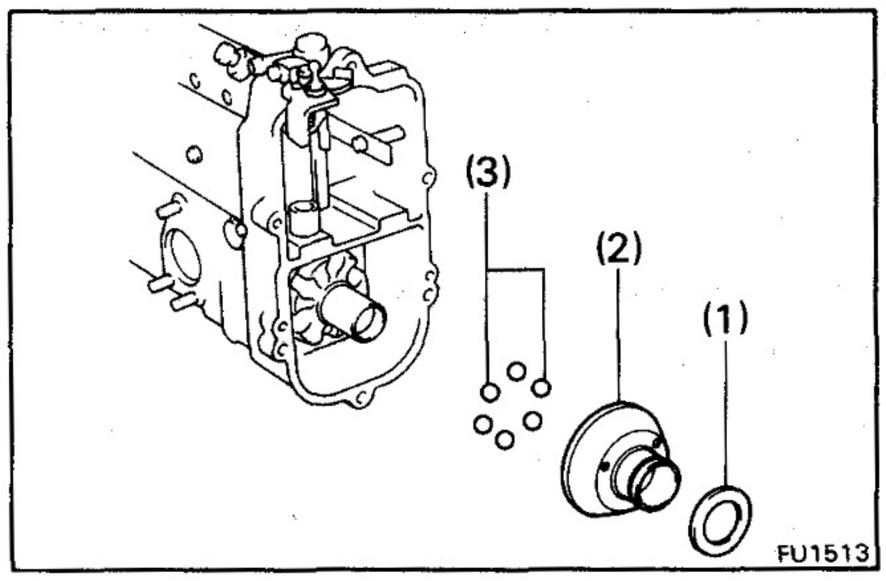

7. REMOVE SLIDER AND STEEL BALLS

Remove the following parts:

(1) Plate washer
(2) Slider
(3) Six steel balls

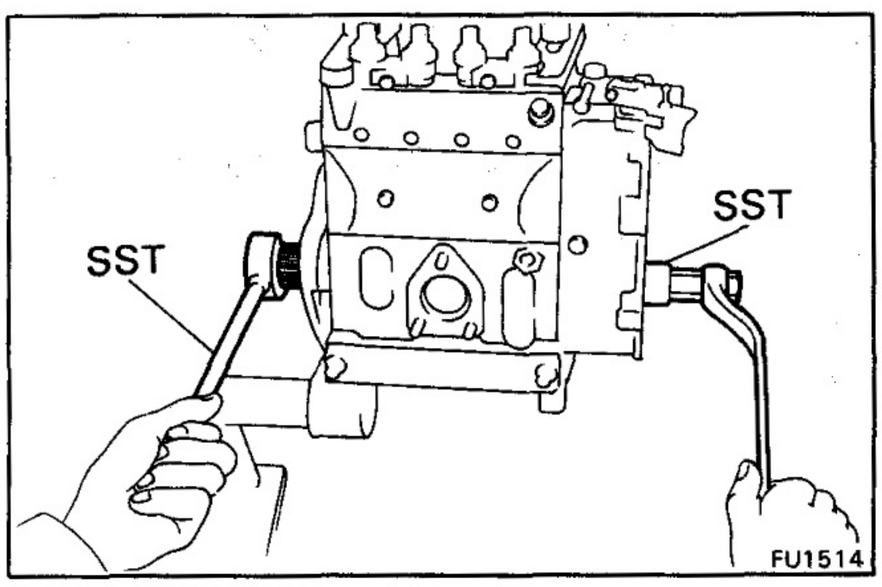

8. REMOVE STEEL BALL GUIDE

(a) Using SST, remove the round nut and spring washer.

SST 09260-46012 (09278-46010) and
09260-76017 (09266-67011)

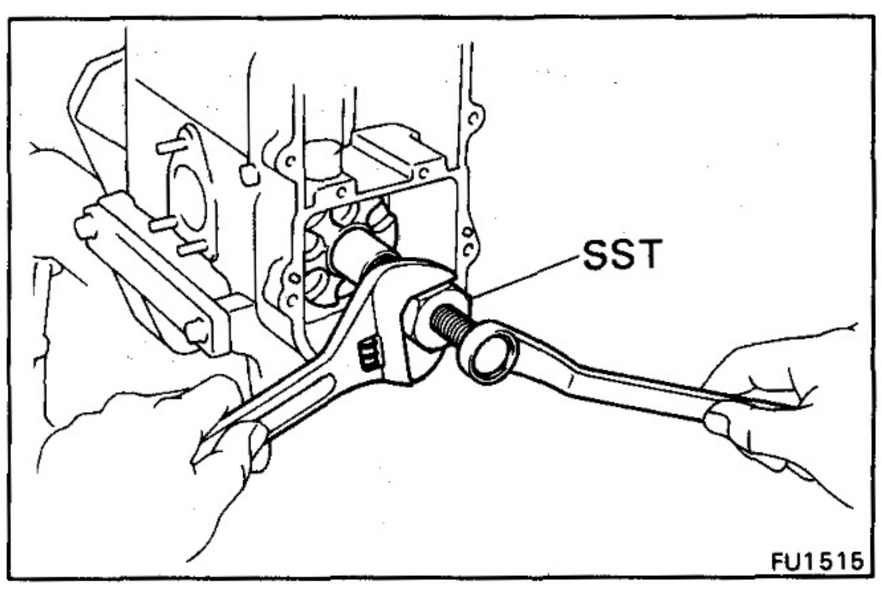

(b) Using SST, remove the ball guide.

SST 09260-76017 (09267-76011)

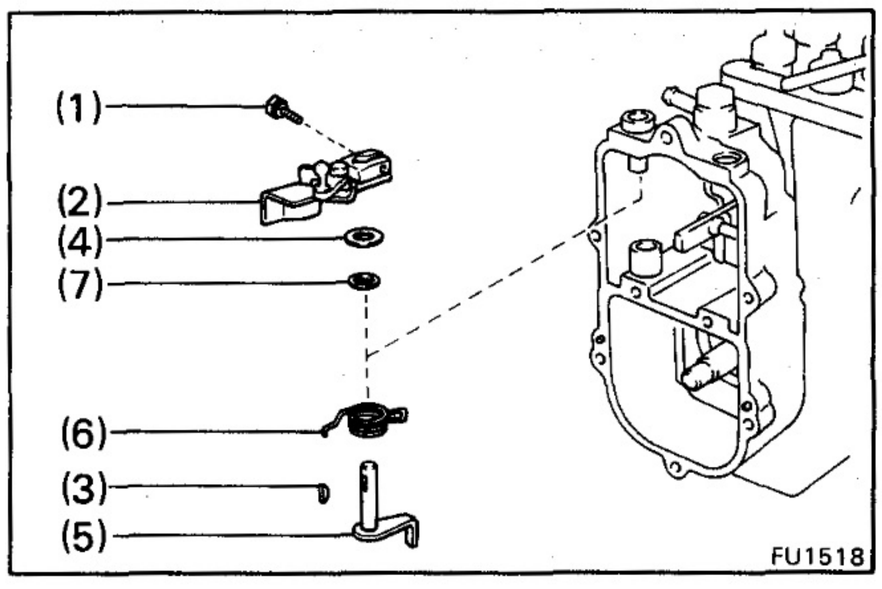

9. REMOVE ADJUSTING AND STOP LEVERS

Remove the following parts:

(1) Bolt
(2) Adjusting lever
(3) Set key
(4) Washer
(5) Stop lever
(6) Return spring
(7) O-ring

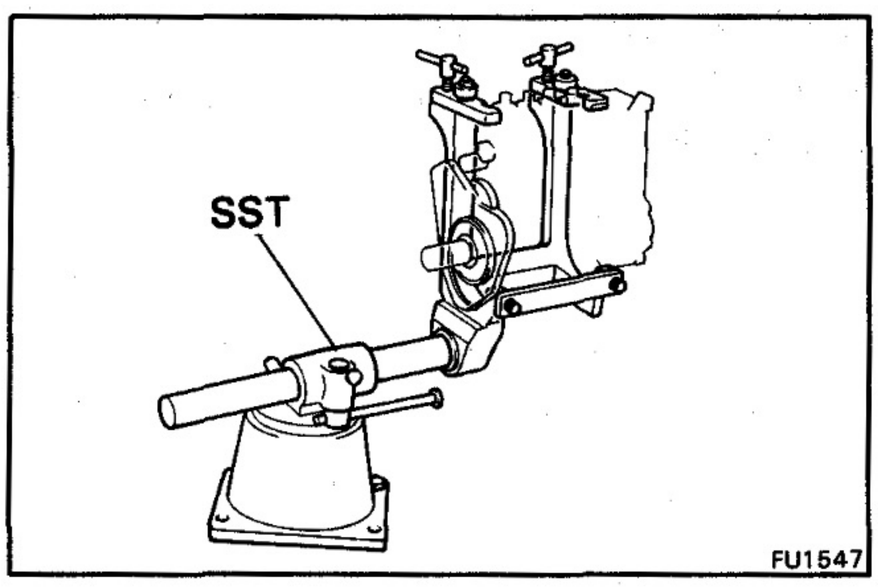

Disassembly of Governor [11B, 13B and 13B-T]

(See page FU-31 and 32) 11B and 13B
(See page FU-31 and 33) 13B-T

1. MOUNT PUMP ASSEMBLY TO SST (STAND)

SST 09241-76022

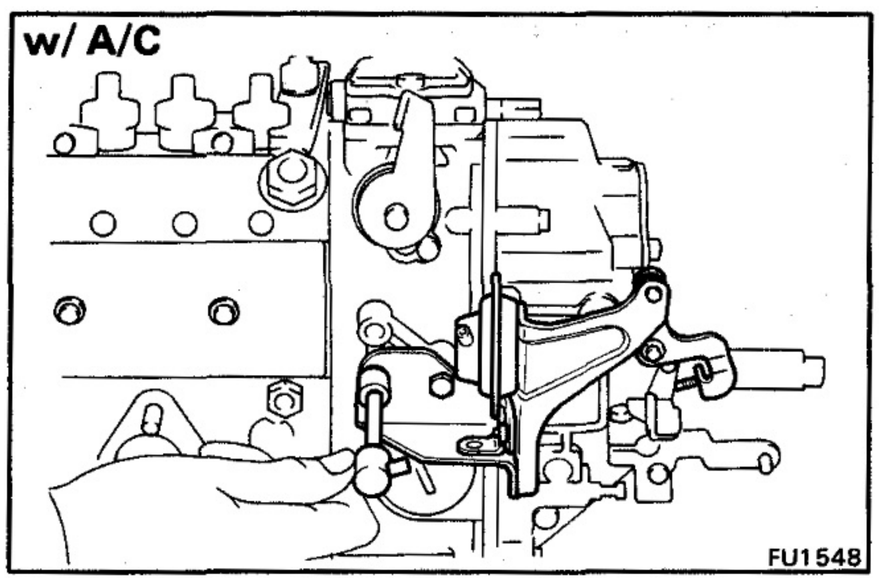

2. [w/ A/C]
REMOVE IDLE-UP ACTUATOR

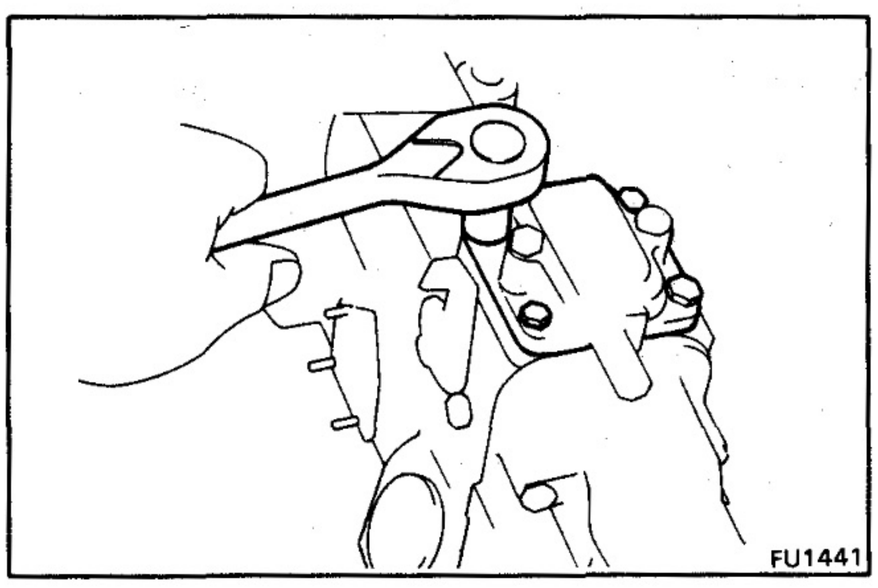

3. REMOVE FULL-LOAD STOPPER HOUSING ASSEMBLY

Remove the four bolts, the stopper housing assembly and O-ring.

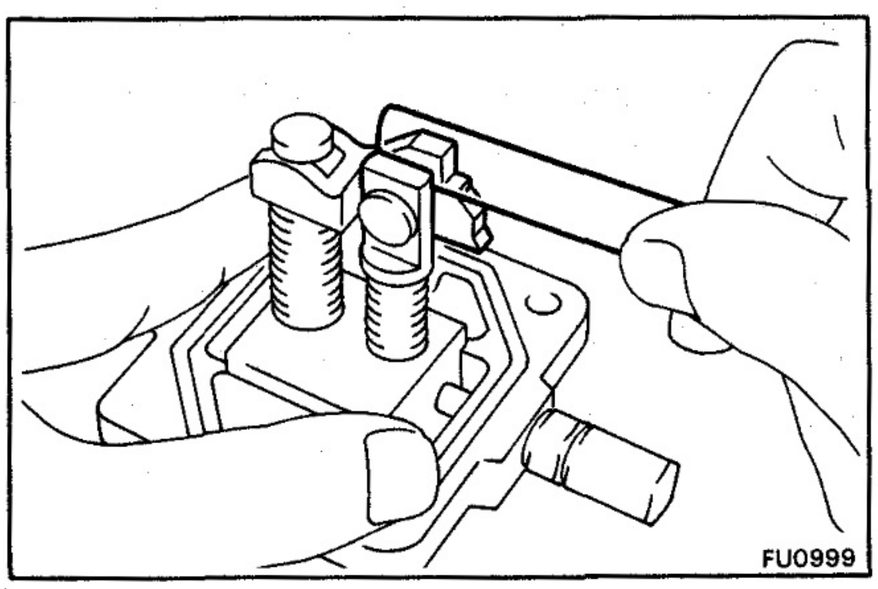

4. CHECK THRUST CLEARANCE OF FULL STOP CAM

Using a feeler gauge, measure the thrust clearance between the full stop cam and No. 2 adapter screw.

Thrust clearance: 0.03 – 0.08 mm (0.0012 – 0.0032 in.)

If the clearance is not within specification, replace the thrust washer.

Thrust washer thickness: 0.05 mm (0.0020 in.)
0.10 mm (0.0039 in.)
0.20 mm (0.0079 in.)

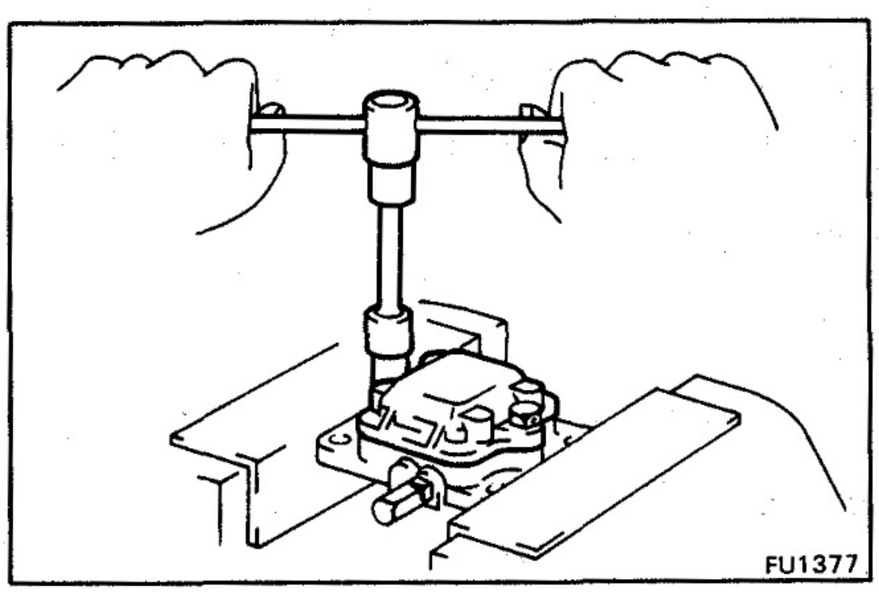

5. DISASSEMBLE FULL-LOAD STOPPER HOUSING ASSEMBLY

(a) Remove the two bolts, cover plate and O-ring.

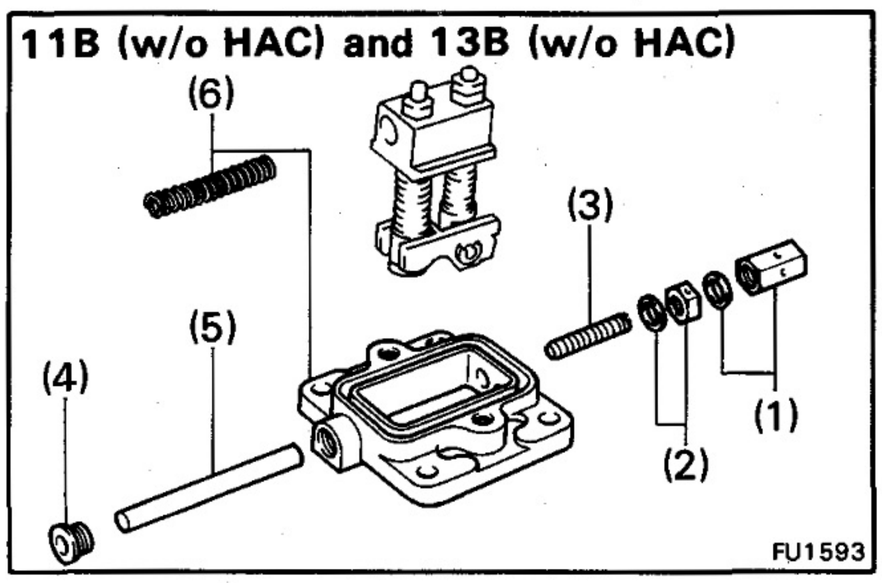

(b) [11B (w/o HAC) and 13B (w/o HAC)]
Disassemble the following parts:

(1) Cap nut and gasket
(2) Lock nut and gasket
(3) Stopper screw
(4) Screw plug
(5) Sliding plate shaft
(6) Full-load stopper housing and spring

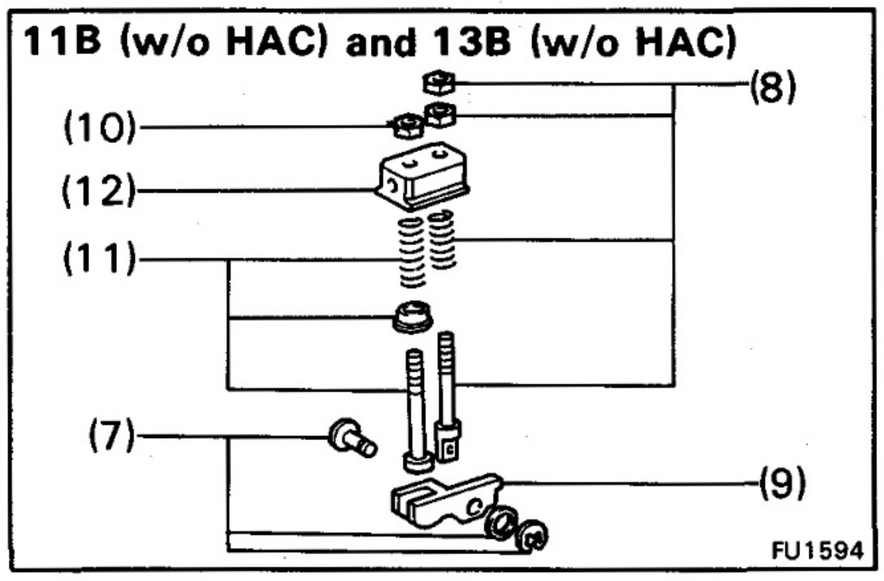

(7) E-ring, thrust washer and connecting pin
(8) Two lock nuts, No. 2 adaptor screw and spring
(9) Full stop cam
(10) Lock nut
(11) No. 1 adaptor screw, bushing and spring
(12) Sliding plate

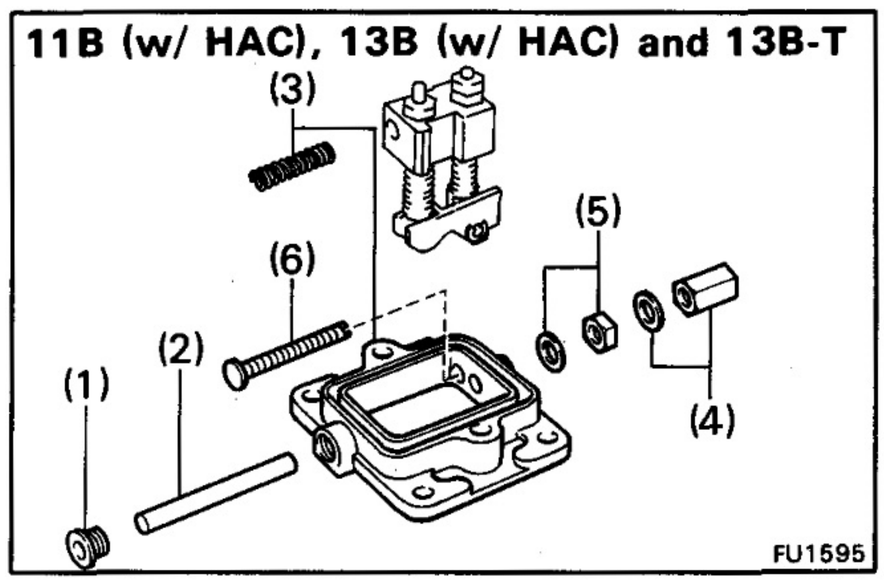

(c) [11B (w/ HAC), 13B (w/ HAC) and 13B-T]
Disassemble the following parts:

(1) Screw plug
(2) Sliding plate shaft
(3) Full-load stopper housing and spring
(4) Cap nut and gasket
(5) Lock nut and gasket
(6) Stopper screw

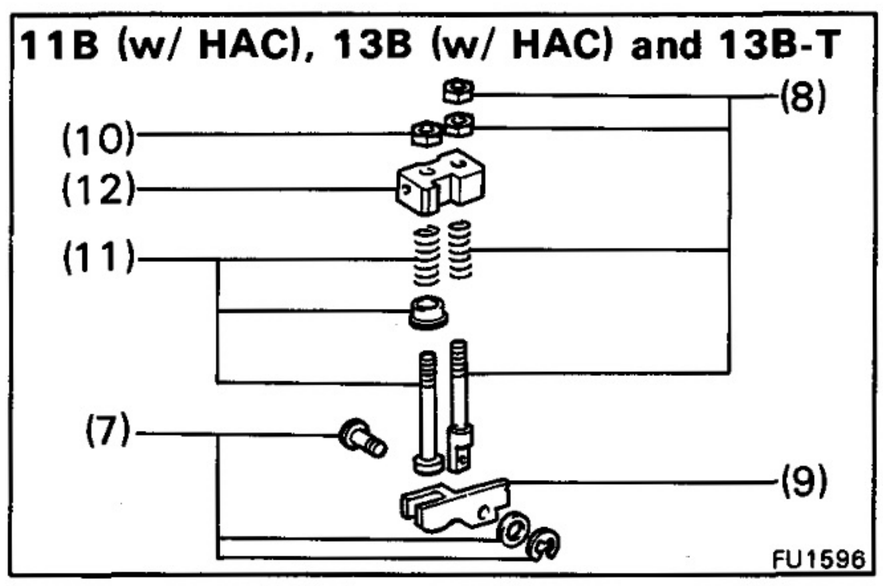

(7) E-ring, thrust washer and connecting pin
(8) Two lock nuts, collar, No. 2 adaptor screw and spring
(9) Full stop cam
(10) Lock nut
(11) No. 1 adaptor screw, bushing and spring
(12) Sliding plate

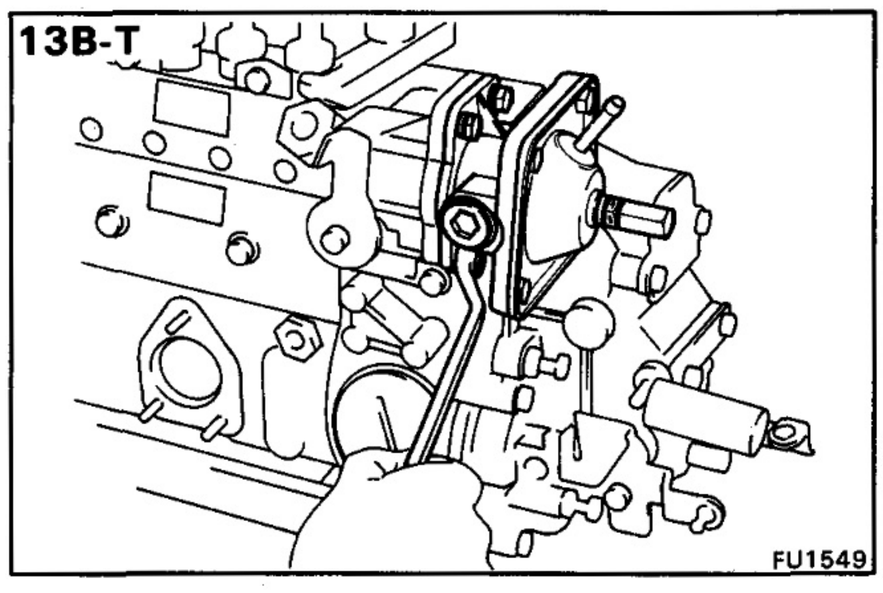

6. [13B-T]
REMOVE BOOST COMPENSATOR

Remove the four bolts, boost compensator and O-ring.

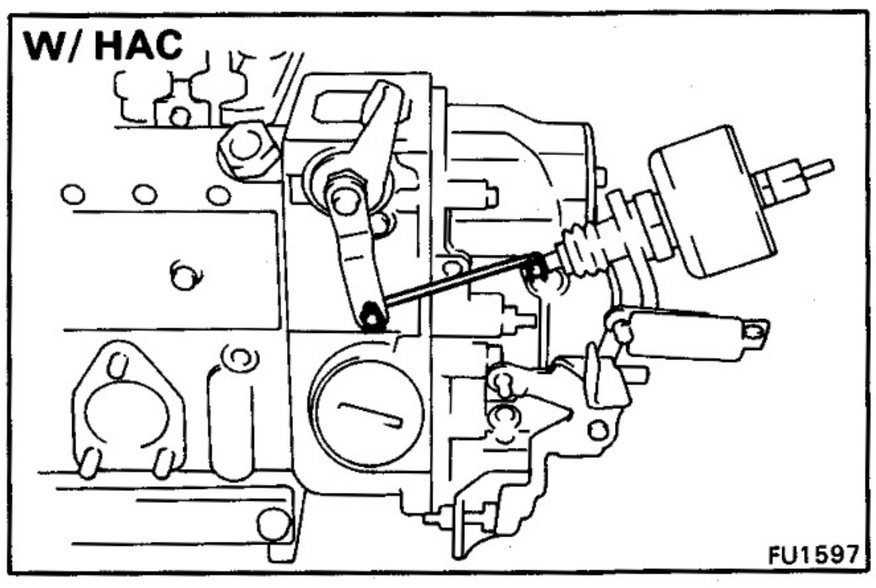

7. [w/ HAC]
REMOVE CONNECTING LINK OF HIGH ALTITUDE COMPENSATOR (HAC)

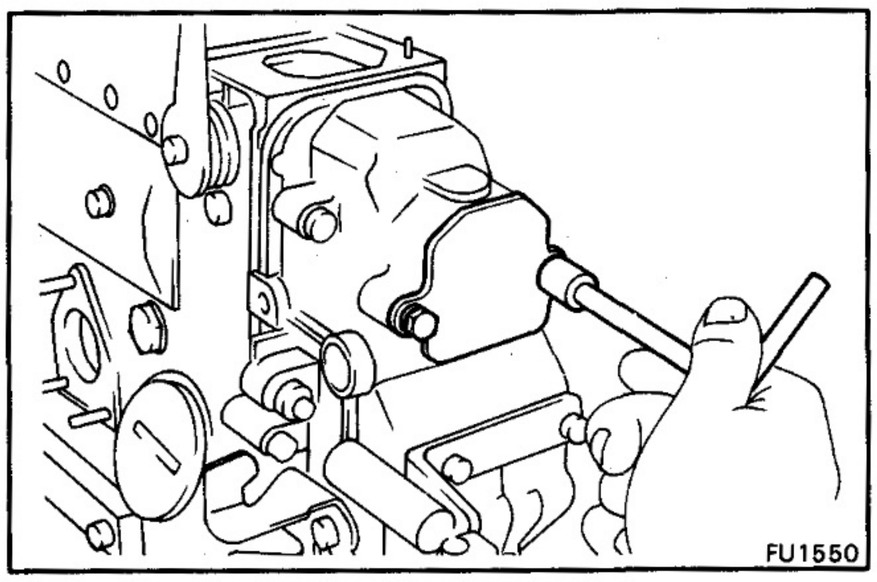

8. **REMOVE GOVERNOR COVER ASSEMBLY**

(a) Remove the two bolts, cover plate or dash pot and O-ring.

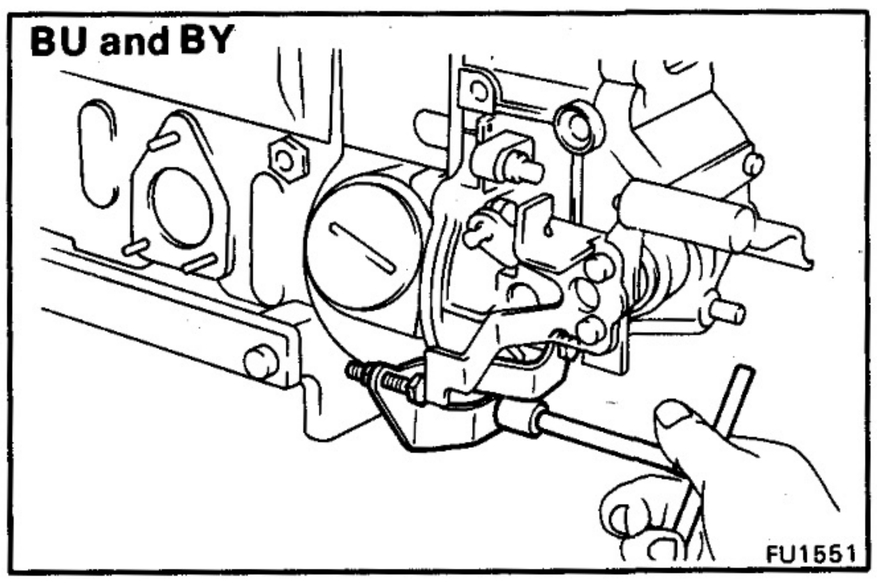

(b) [BU and BY]
Remove the two bolts and adjusting bracket.

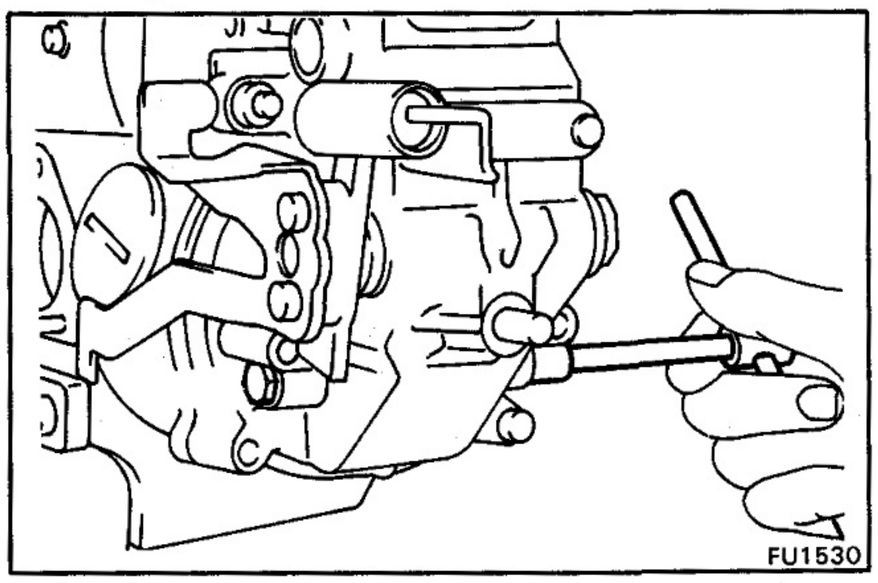

(c) Remove the two screw plugs.

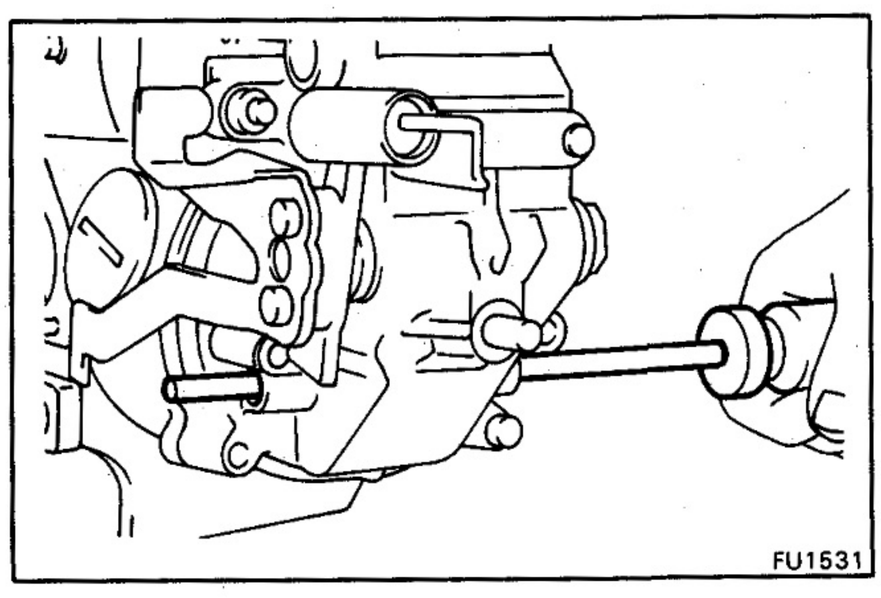

(b) Using a screwdriver, push out the supporting lever shaft from the governor cover.

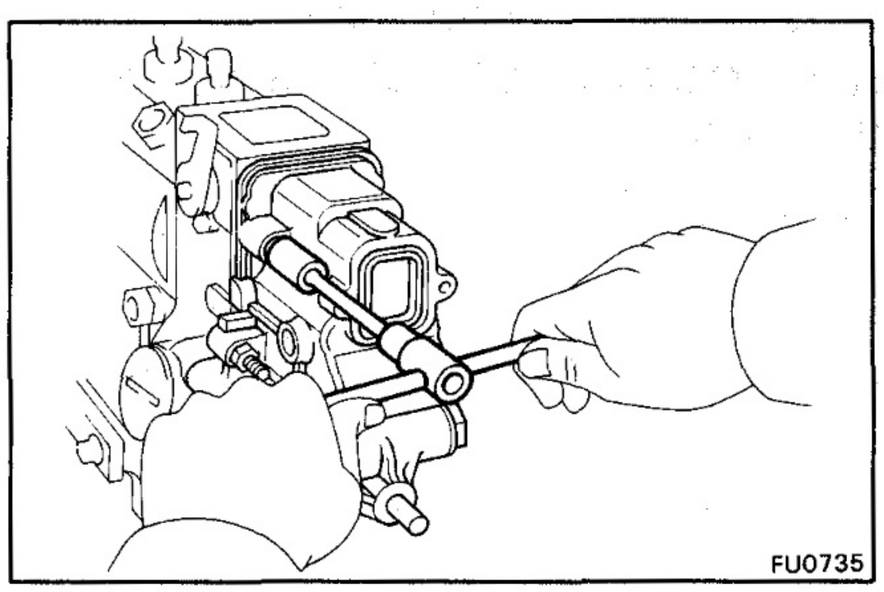
FU0735

(e) Remove the six bolts.

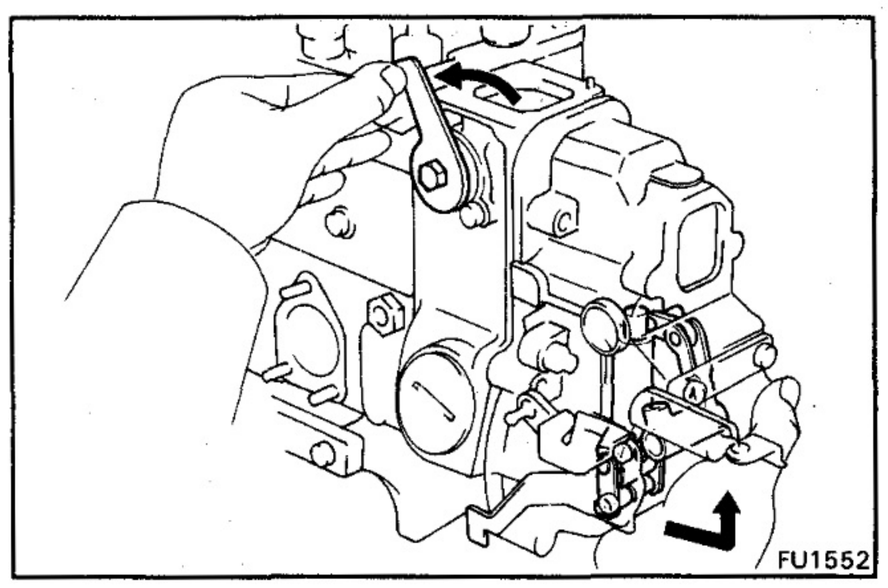
FU1552

(f) Turn the stop lever, and disconnect the sliding block of the steering lever from the floating lever hole. Remove the governor cover assembly and gasket.

CAUTION: Be careful not drop the supporting levers and slider.

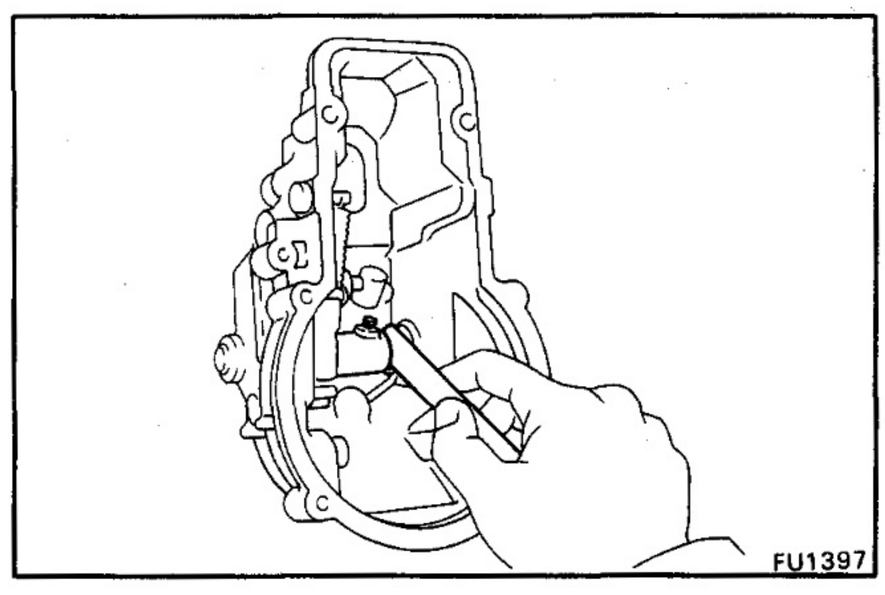
FU1397

9. CHECK THRUST CLEARANCE OF STEERING LEVER

Using a feeler gauge, measure the thrust clearance between the steering lever and governor cover.

Thrust clearance: 0.05 — 0.20 mmm (0.0020 — 0.0079 in.)

If the clearance is not within specification, replace the thrust washer.

Thrust washer thickness:
0.50 mm (0.0197 in.)
0.55 mm (0.0217 in.)
0.60 mm (0.0236 in.)
0.65 mm (0.0256 in.)
0.70 mm (0.0276 in.)
0.75 mm (0.0295 in.)
0.80 mm (0.0315 in.)

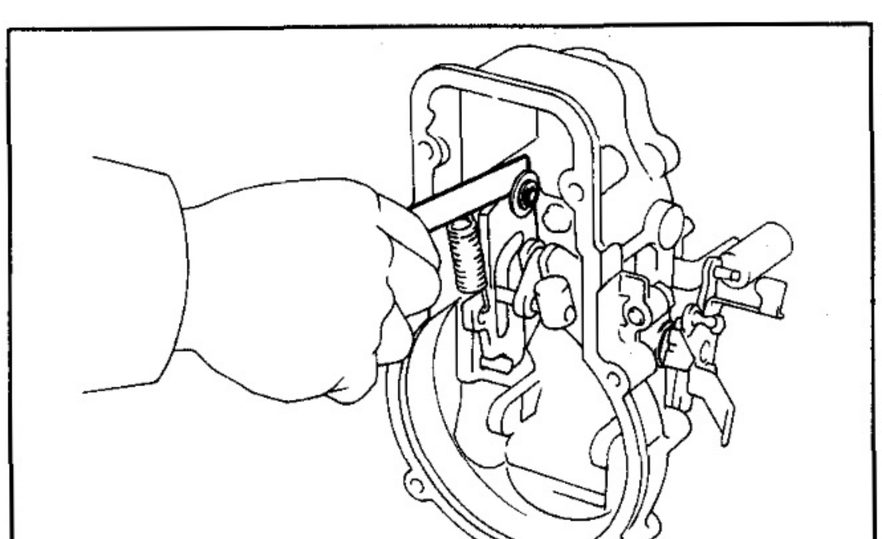
FU1533

10. CHECK THRUST CLEARANCE OF CAM PLATE

Using a feeler gauge, measure the thrust clearance between the cam plate and governor cover.

Thrust clearance: 0.08 — 0.12 mm (0.0031 — 0.0047 in.)

If the clearance is not within specification, replace the thrust washer.

Thrust washer thickness:
0.2 mm (0.008 in.)
0.3 mm (0.012 in.)
0.4 mm (0.016 in.)
0.5 mm (0.020 in.)

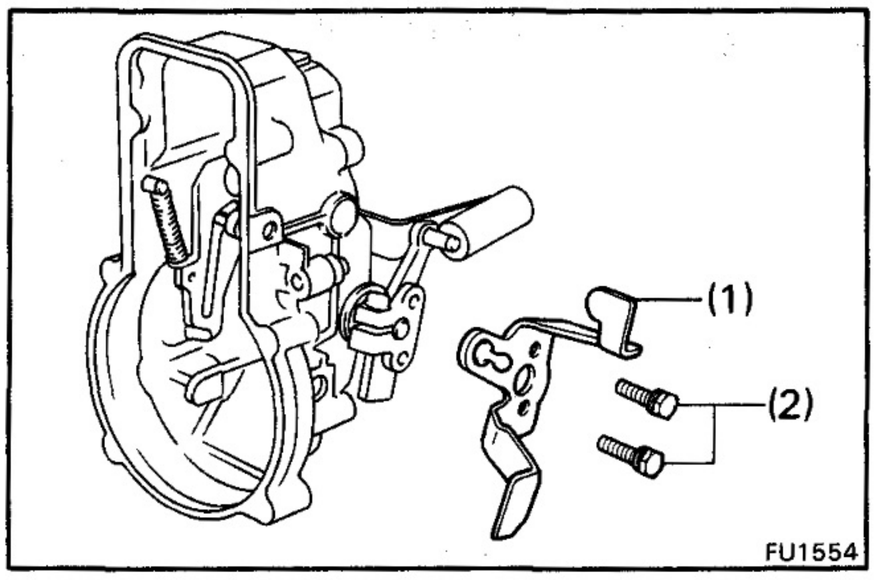

11. DISASSEMBLE GOVERNOR COVER ASSEMBLY

Remove the following parts:

(1) Two bolts
(2) No. 2 adjusting lever

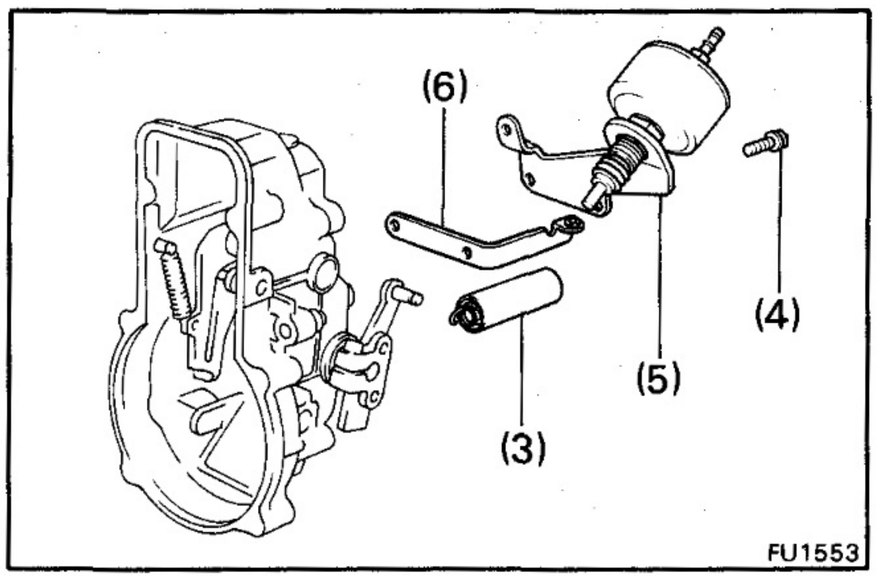

(3) Return spring
(4) Two bolts
(5) [w/ HAC]
HAC with bracket
(6) Spring arm

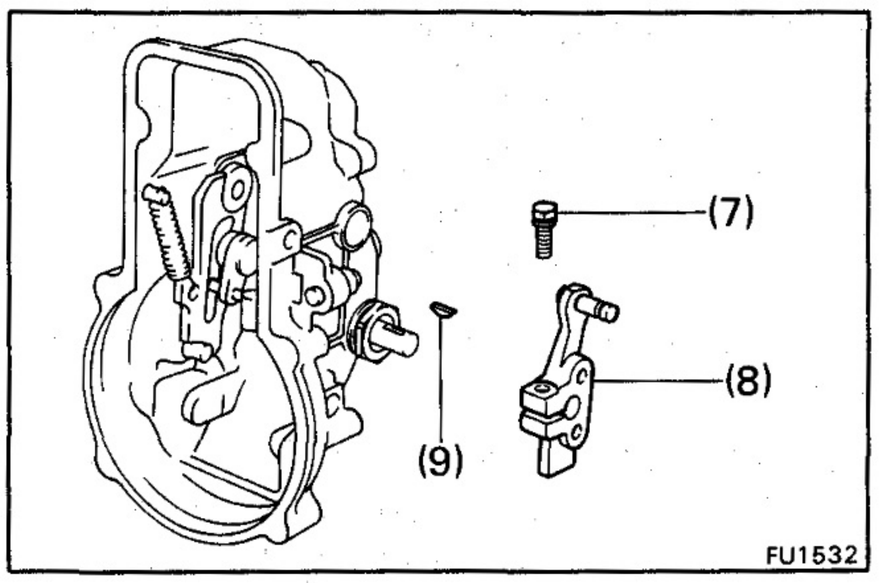

(7) Bolt
(8) No. 1 adjusting lever
(9) Set key

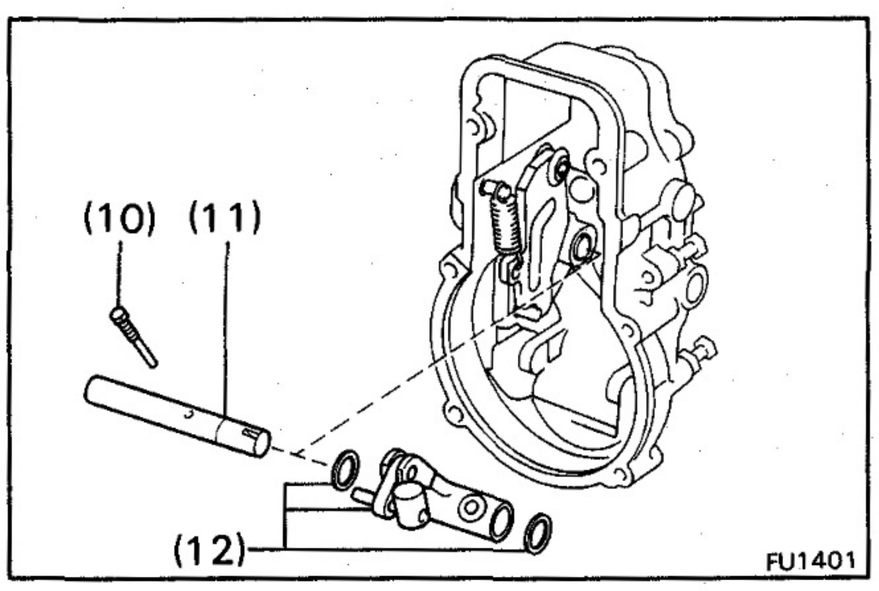

(10) Bolt
(11) Steering lever shaft
(12) Steering lever and thrust washers

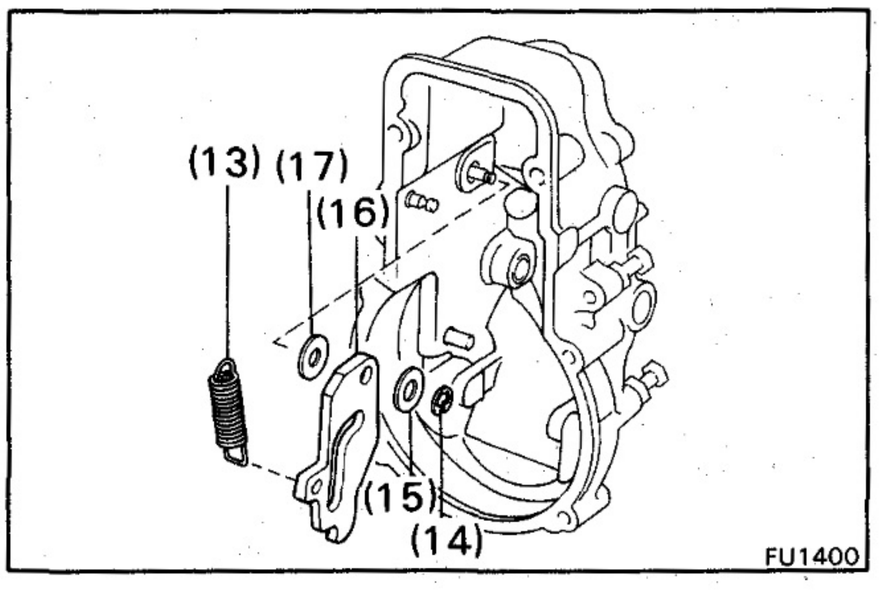

(13) Return spring
(14) E-ring
(15) Thrust washer
(16) Cam plate
(17) Plate washer

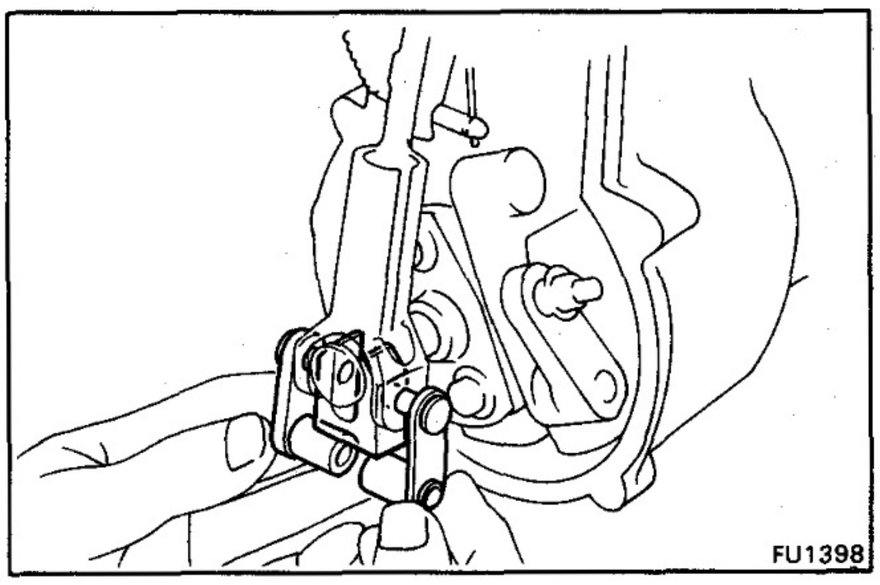

12. REMOVE SUPPORTING LEVERS AND SLIDER

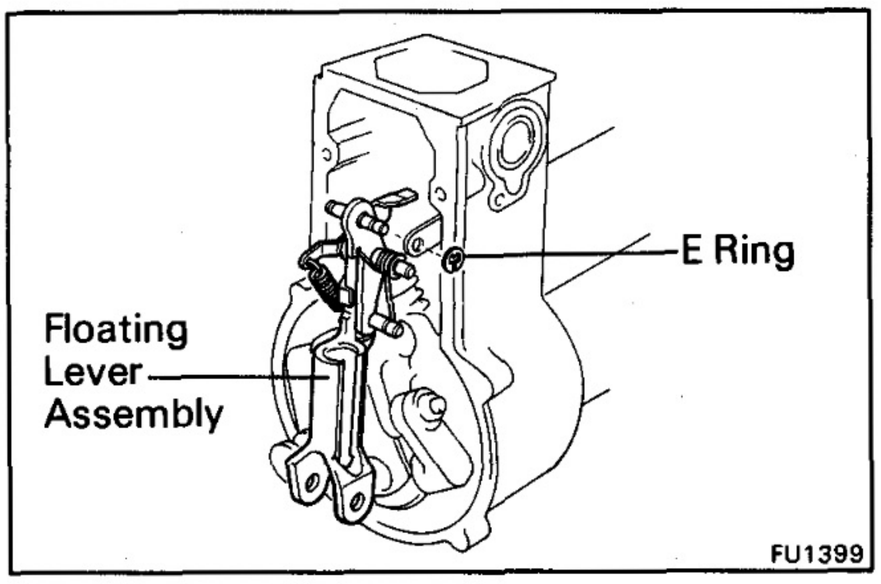

13. REMOVE FLOATING LEVER ASSEMBLY

Remove the E-ring and the floating lever assembly.

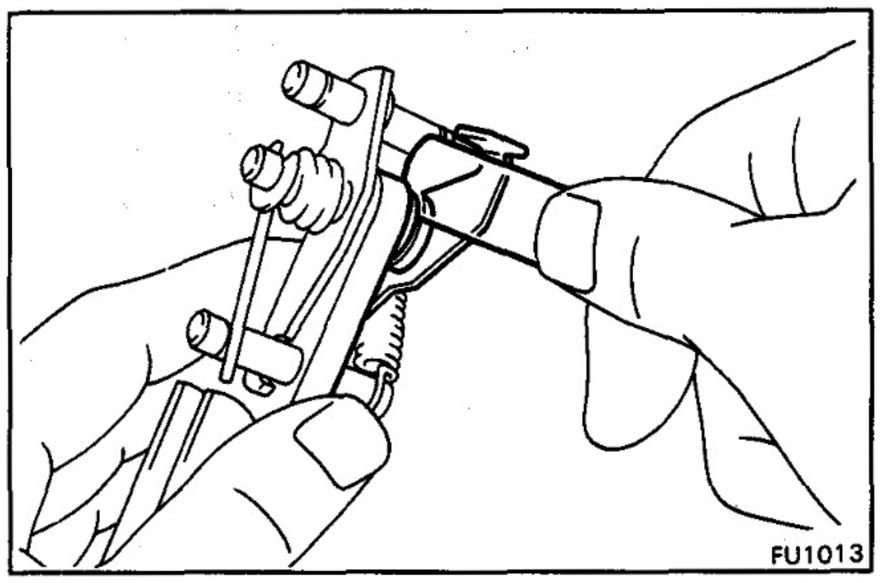

14. CHECK THRUST CLEARANCE OF FLOATING ARM

Using a feer gauge, measure the thrust clearance between the floating arm and floating lever.

Thrust clearance: 0.05 – 0.12 mm (0.0020 – 0.0047 in.)

If the clearance is not within specification, replace the thrust washer.

Thrust washer thickness: 0.05 mm (0.0020 in.)
0.10 mm (0.0039 in.)
0.20 mm (0.0079 in.)
0.40 mm (0.0157 in.)

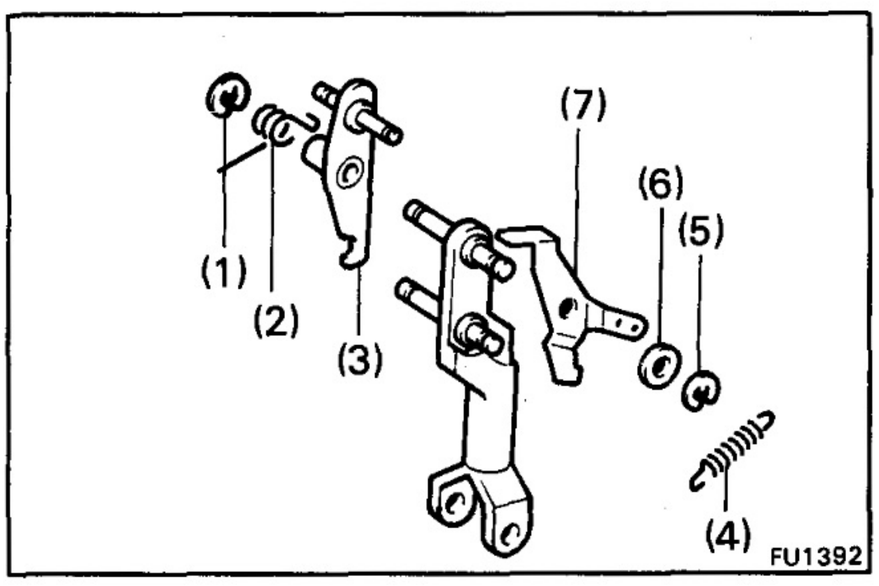

15. DISASSEMBLE FLOATING LEVER ASSEMBLY

Remove the following parts:

(1) E-ring
(2) Return spring
(3) Control lever
(4) Return spring
(5) E-ring
(6) Thrust washer
(7) Floating arm

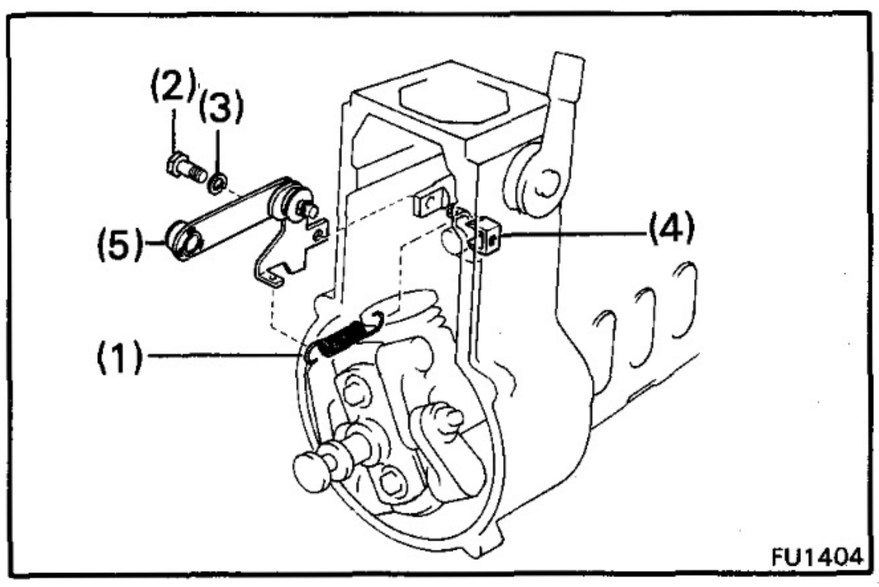

16. REMOVE SHACKLE AND CONTROL RACK ARM ASSEMBLY

Remove the following parts:

(1) Return spring
(2) Bolt
(3) Spring washer
(4) Arm nut
(5) Shackle and arm assembly

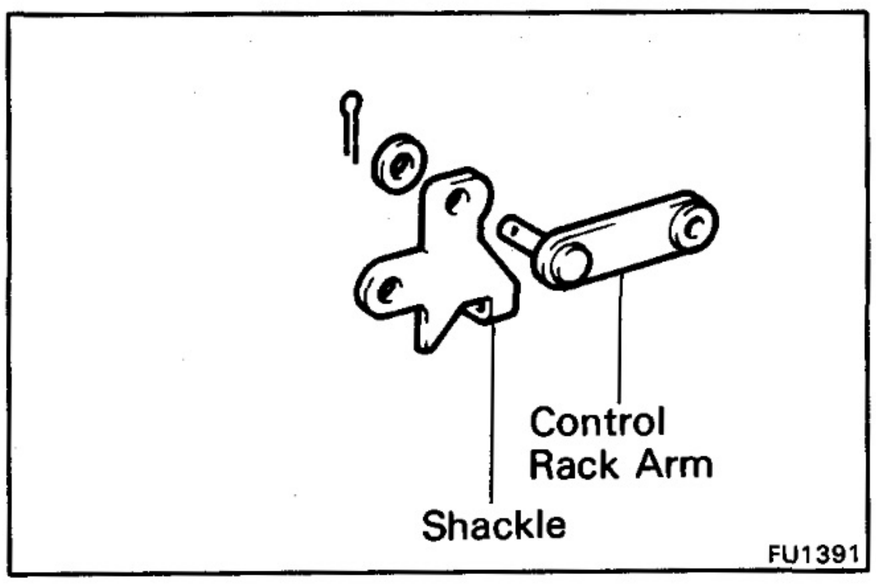

17. SEPARATE SHACKLE AND CONTROL RACK ARM

Remove the cotter pin and washer, and separate the shackle and arm.

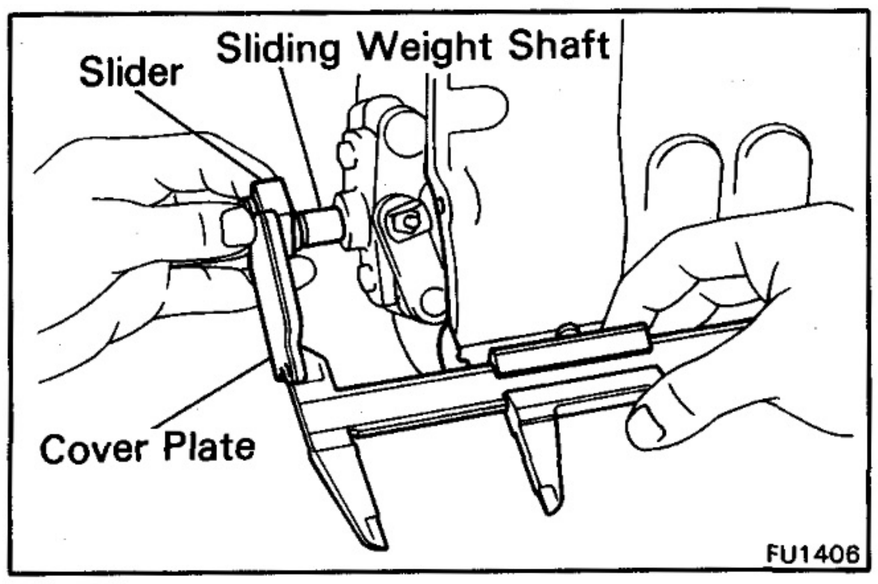

18. CHECK FITTING DIMENSIONS OF SLIDING WEIGHT SHAFT

While pulling on the sliding weight shaft, measure the fitting dimensions with calipers as shown.

Fitting dimensions: 49.7 – 50.1 mm (1.957 – 1.972 in.)

If the dimensions are not within specification, replace the sliding weight shaft.

Sliding weight shaft length: 30.7 mm (1.209 in.)
30.9 mm (1.217 in.)
31.1 mm (1.224 in.)
31.3 mm (1.232 in.)
31.5 mm (1.240 in.)
31.7 mm (1.248 in.)
31.9 mm (1.256 in.)

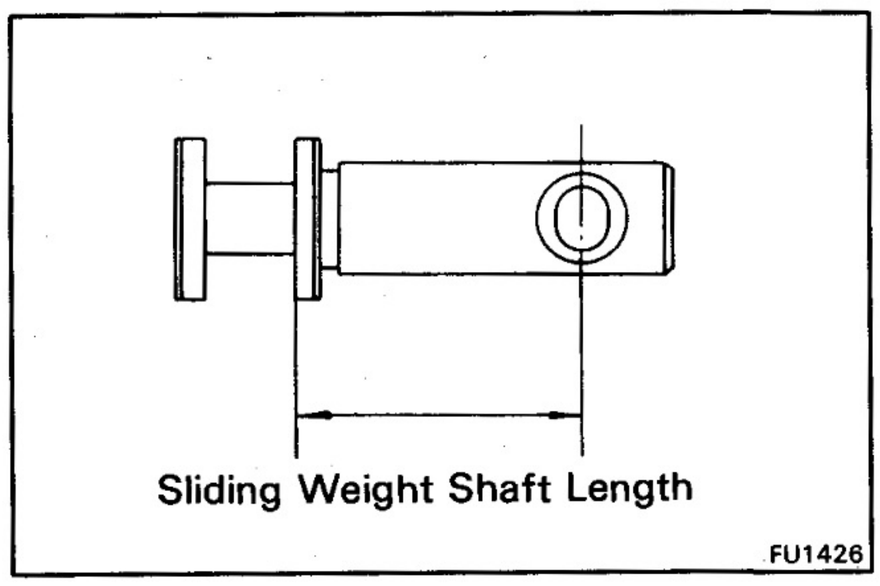

19. CHECK THRUST CLEARANCE OF JOINTING BOLT (See pge FU-80)

Thrust clearance: 1.5 – 2.0 mm (0.059 – 0.079 in.)

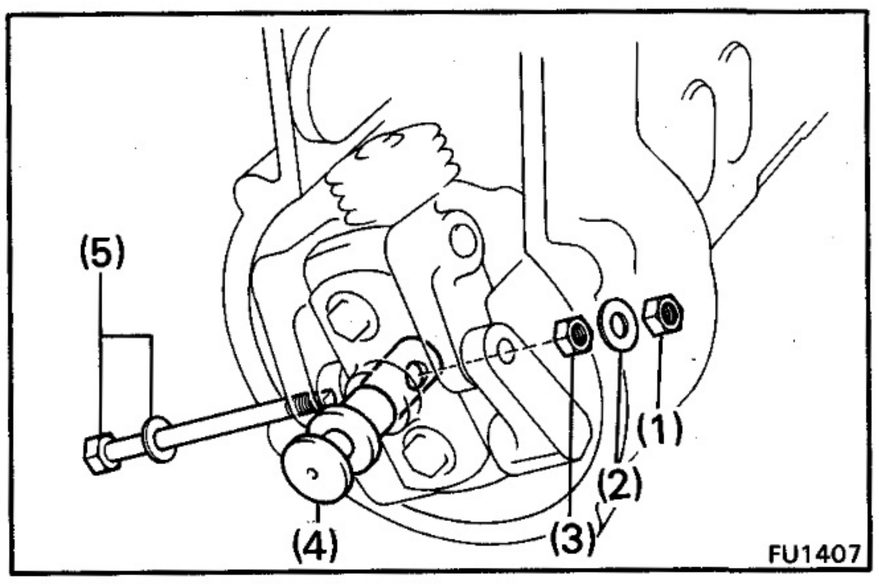

20. REMOVE SLIDING WEIGHT SHAFT

(a) Unstake the lock washer.
(b) Remove the following parts:
  (1) Lock nut
  (2) Lock washer
  (3) Lock nut
  (4) Jointing bolt with thrust washer
  (5) Sliding weight shaft

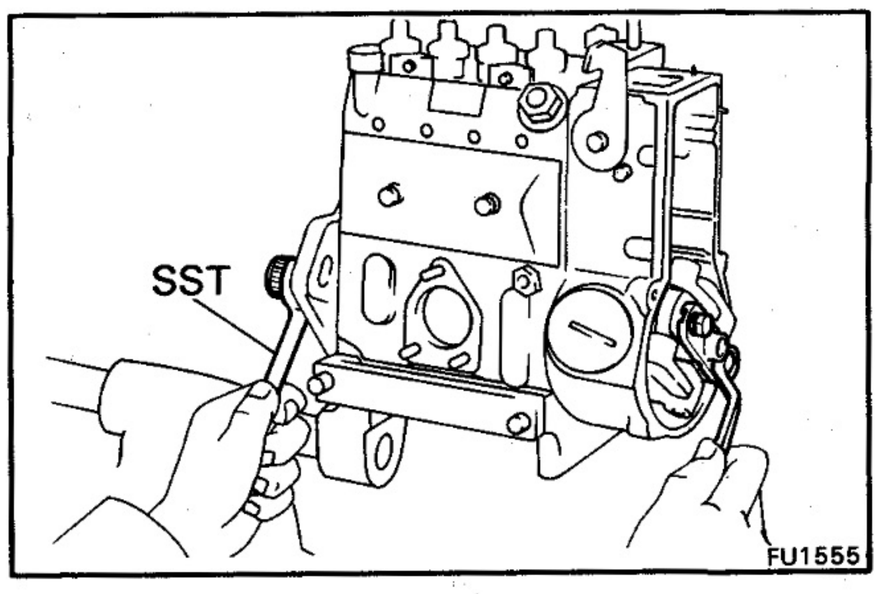

21. REMOVE GUIDE BUSHING

Using SST, remove the two bolts and guide bushing.
SST 09260-58010 (09278-46020)

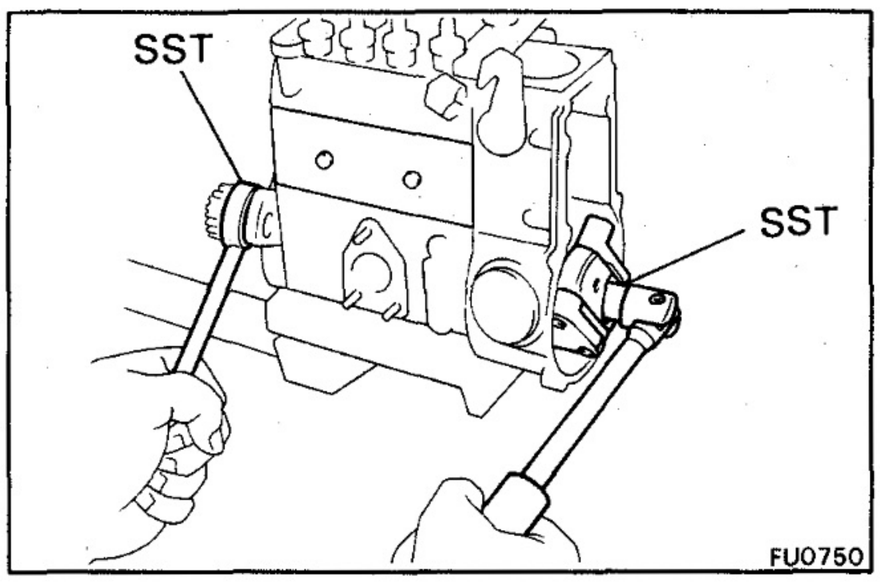

22. REMOVE FLYWEIGHT ASSEMBLY

(a) Using SST, remove the round nut.

SST 09260-58010 (09260-78010, 09278-46020)

(b) [A/T]
Remove the spring washer.

(c) [M/T]
Remove the thrust washer and the flyweight assembly.

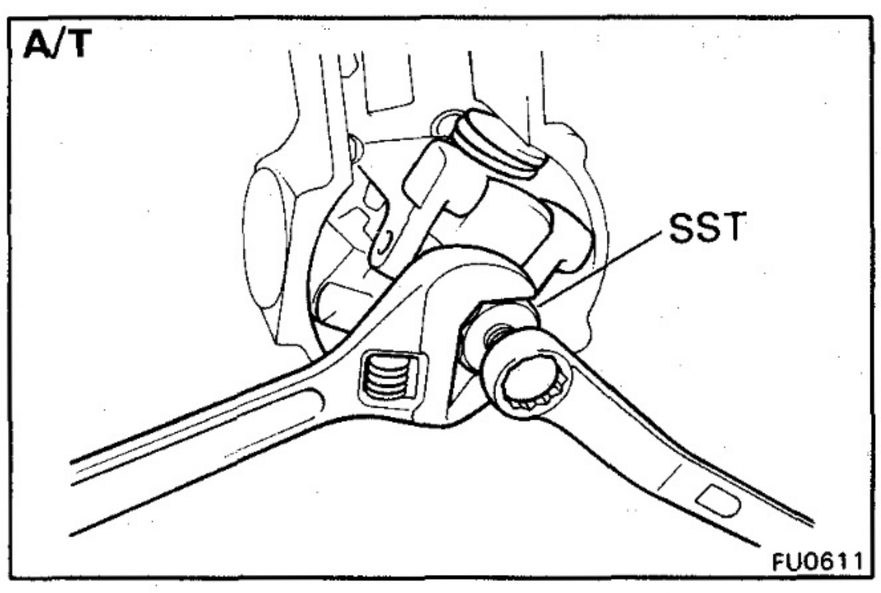

(d) [A/T]
Using SST, remove the flyweight assembly.

SST 09260-58010 (09267-76011)

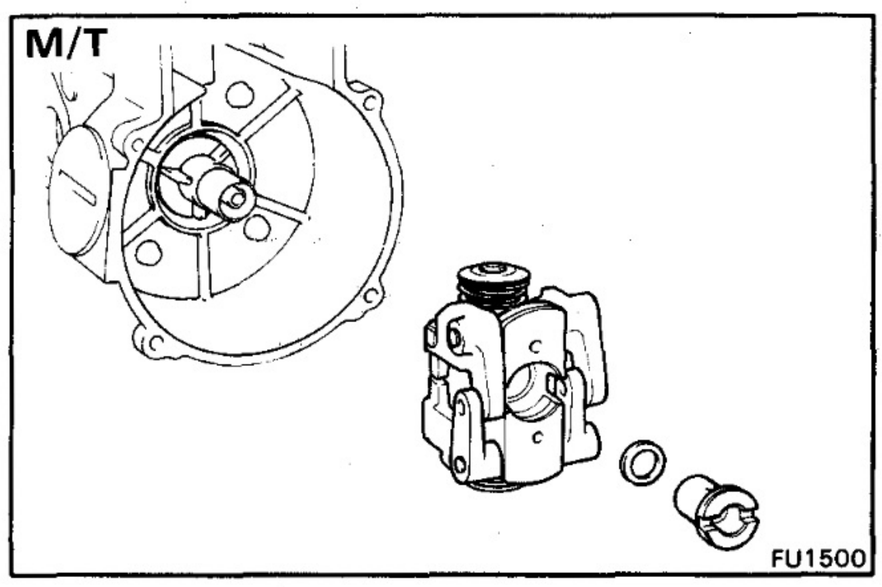

23. [M/T] CHECK THRUST CLEARANCE OF FLYWEIGHT

(a) Install the flyweight without the dampers.

(b) Install the thrust washer and round nut.

Torque: 525 kg-cm (38 ft-lb, 51 N·m)

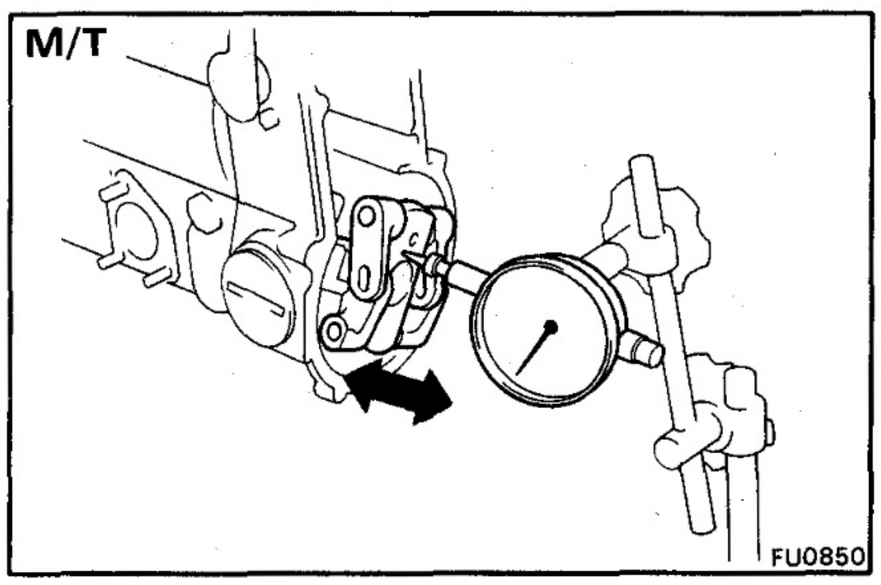

(c) Using a dial indicator, measure the thrust clearance between the flyweight and camshaft bushing.

Thrust clearance: 0.02 — 0.10 mm (0.0008 — 0.0039 in.)

If the clearance is not with specification, replace the thrust washer.

Thrust washer thickness:
1.60 mm (0.0630 in.)
1.65 mm (0.0650 in.)
1.70 mm (0.0670 in.)
1.75 mm (0.0689 in.)
1.80 mm (0.0709 in.)
1.85 mm (0.0728 in.)
1.90 mm (0.0748 in.)
1.95 mm (0.0768 in.)
2.00 mm (0.0787 in.)
2.10 mm (0.0827 in.)
2.20 mm (0.0866 in.)
2.30 mm (0.0906 in.)

(d) Remove the flyweight assembly.

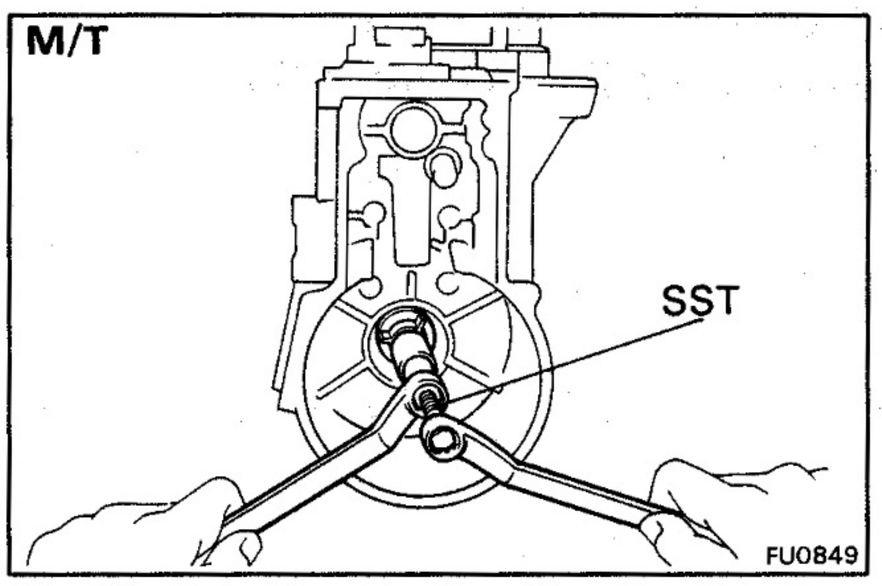

24. [M/T]
REMOVE CAMSHAFT BUSHING

Using SST, remove the camshaft bushing.

SST 09260-58010 (09267-76030)

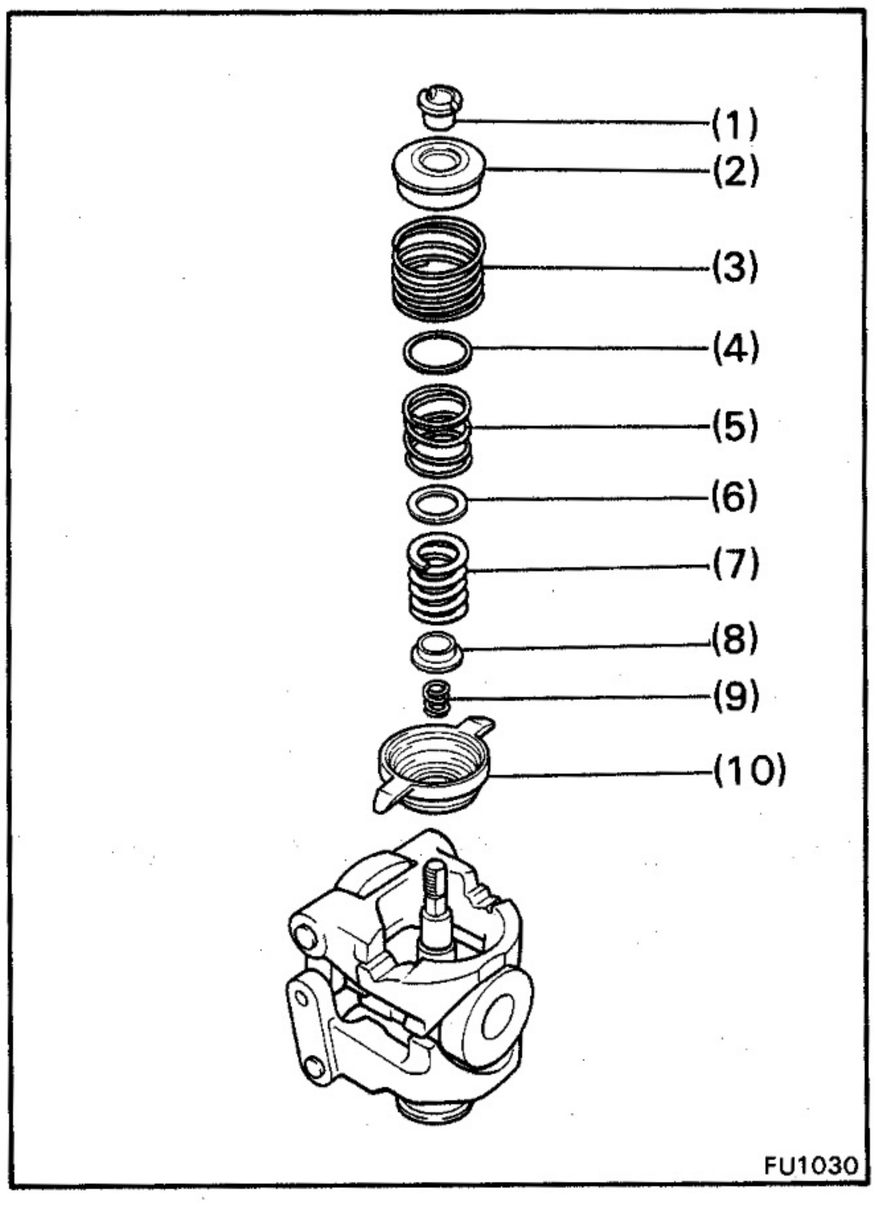

25. DISASSEMBLE FLYWEIGHT ASSEMBLY

Remove the following parts:

(1) Adjusting nut
(2) Spring guide
(3) Outer idle spring
(4) Outer adjusting washer
(5) Inner idle spring
(6) Inner adjusting washer
(7) Speed control spring
(8) Inner spring seat
(9) Mechanical spring
(10) Spring seat

CAUTION: Be careful not to get these parts mixed up.

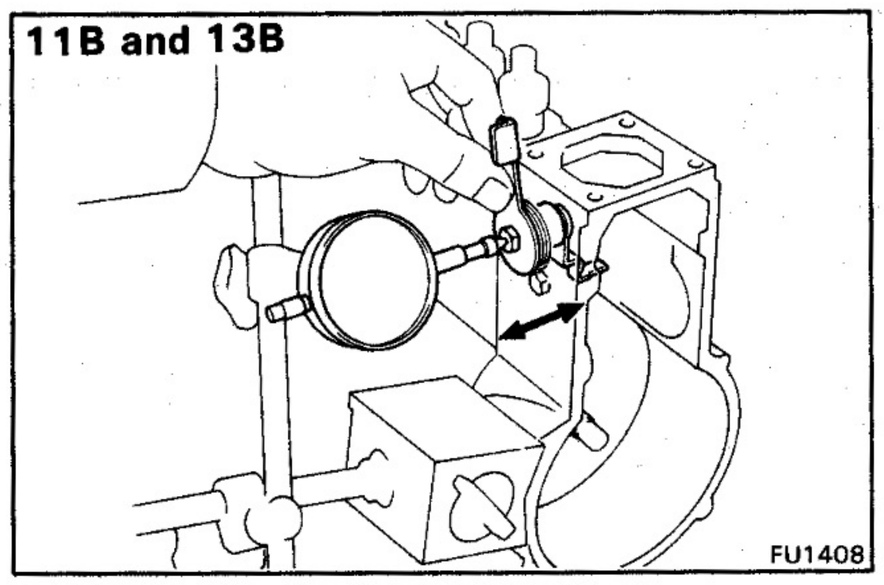

26. [11B AND 13B]
CHECK THRUST CLEARANCE OF STOPPER ARM

Using a dial indicator, measure the thrust clearance between the stopper arm and governor housing.

Thrust clearance: 0.05 — 0.20 mm (0.0020 — 0.0079 in.)

If the clearance is not within specification, replace the thrust washer.

Thrust washer thickness: 0.1 mm (0.004 in.)
0.2 mm (0.008 in.)
0.5 mm (0.020 in.)

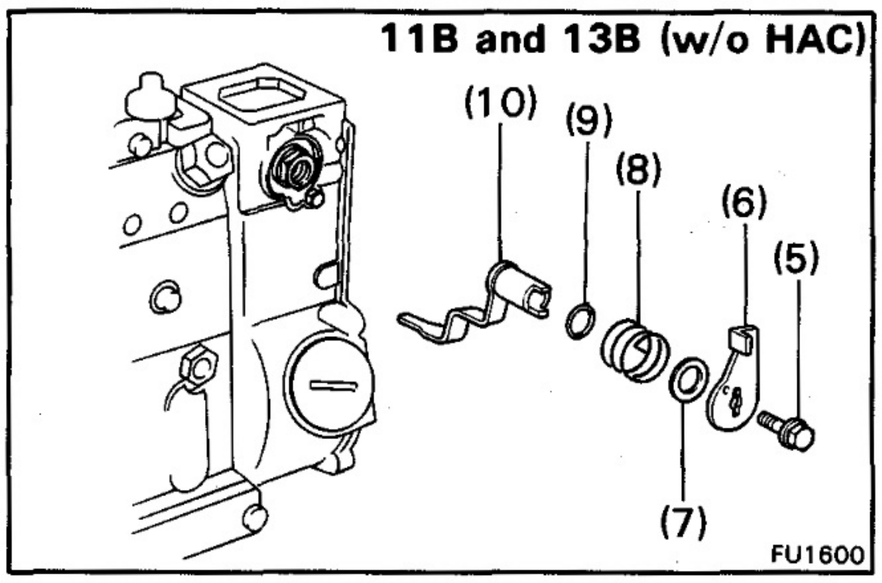

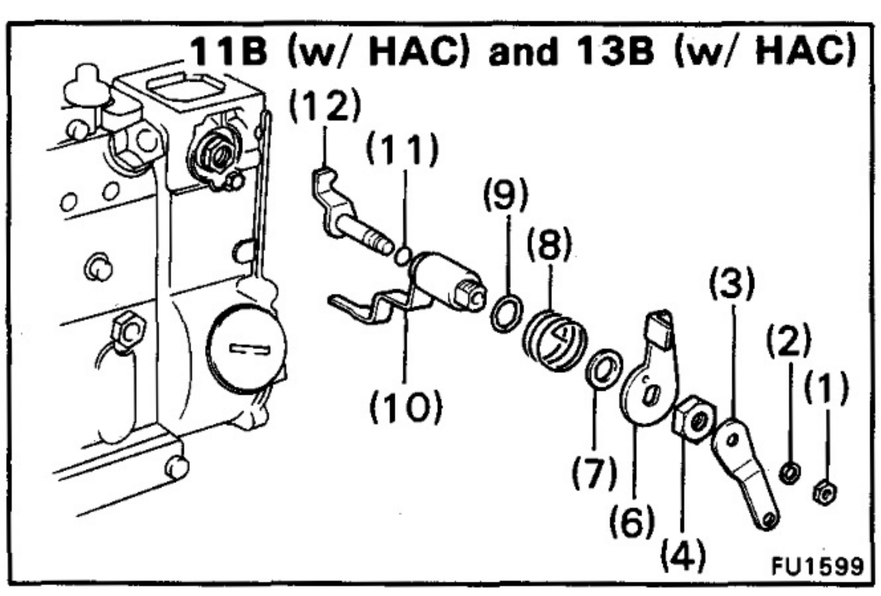

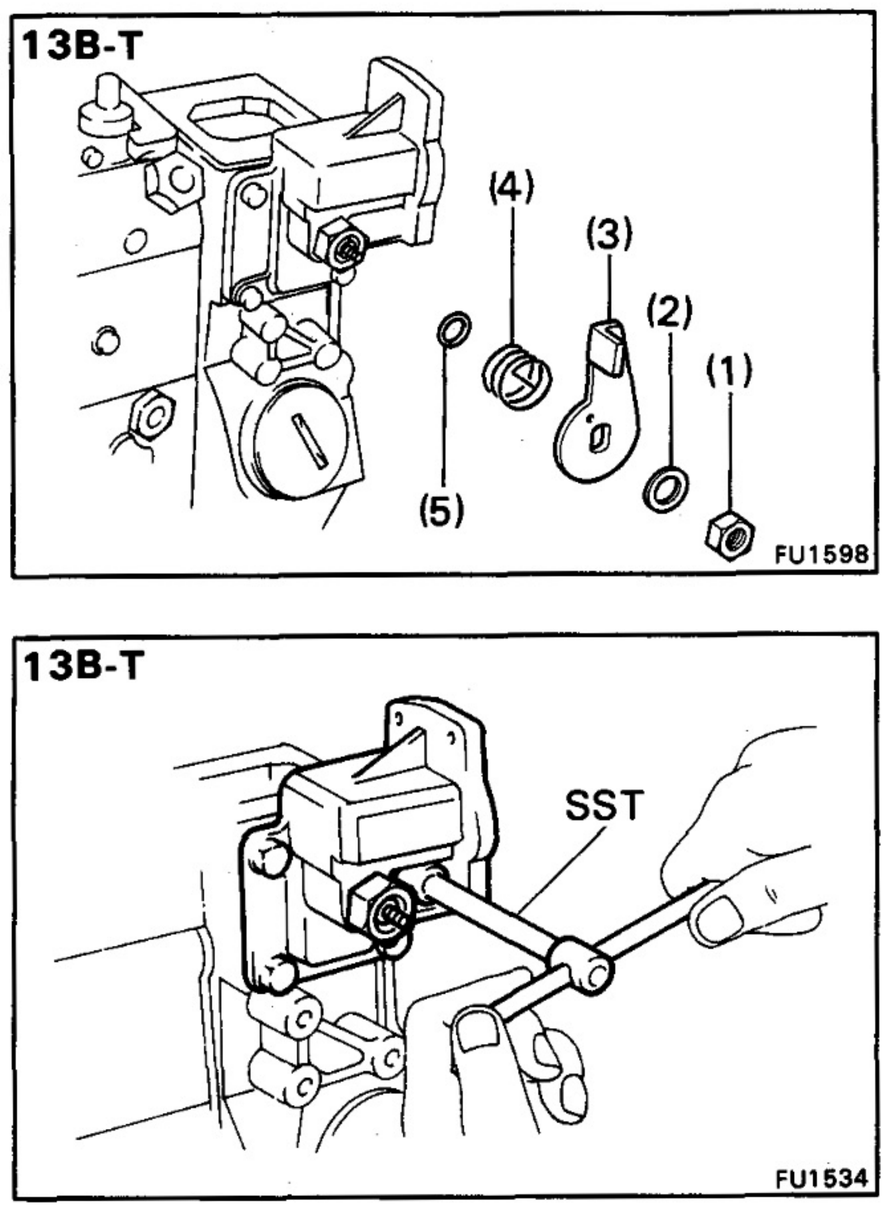

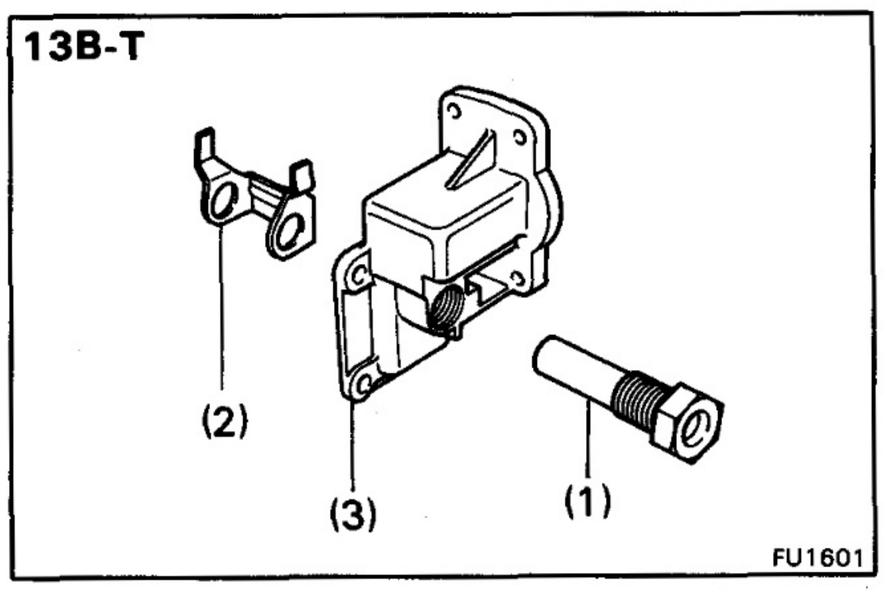

27. [11B AND 13B]
REMOVE STOP LEVER AND STOPPER ARM

Remove the following parts:

(1) [w/ HAC]
Nut

(2) [w/ HAC]
Spring washer

(3) [w/ HAC]
HAC lever

(4) [w/ HAC]
Nut

(5) [w/o HAC]
Bolt

(6) Stop lever

(7) Thrust washer

(8) Return spring

(9) O-ring

(10) Stopper arm

(11) [w/ HAC]
O-ring

(12) [w/ HAC]
HAC arm

28. [13B-T]
REMOVE NO. 2 FULL-LOAD STOPPER HOUSING

(a) Remove the following parts:
(1) Nut
(2) Spring washer
(3) Stop lever
(4) Return spring
(5) O-ring

(b) Using SST, remove the four bolts, stopper housing and stopper arm.

SST 09260-58010 (09276-76010)

(c) Disassemble the following parts:
(1) Spring seat
(2) Boost compensator arm
(3) No. 2 full-load stopper housing

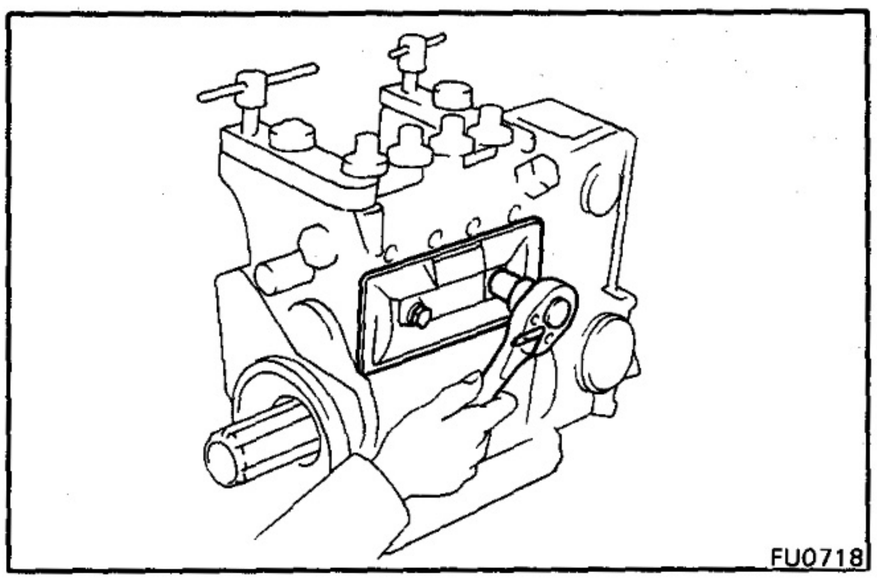

Disassembly of Pump Body

(See page FU-30 and 34) B and 3B
(See page FU-31, 32 and 34) 11B and 13B
(See page FU-31, 33 and 34) 13B-T

1. REMOVE PUMP COVER

Remove the two bolts, pump cover and gaskets.

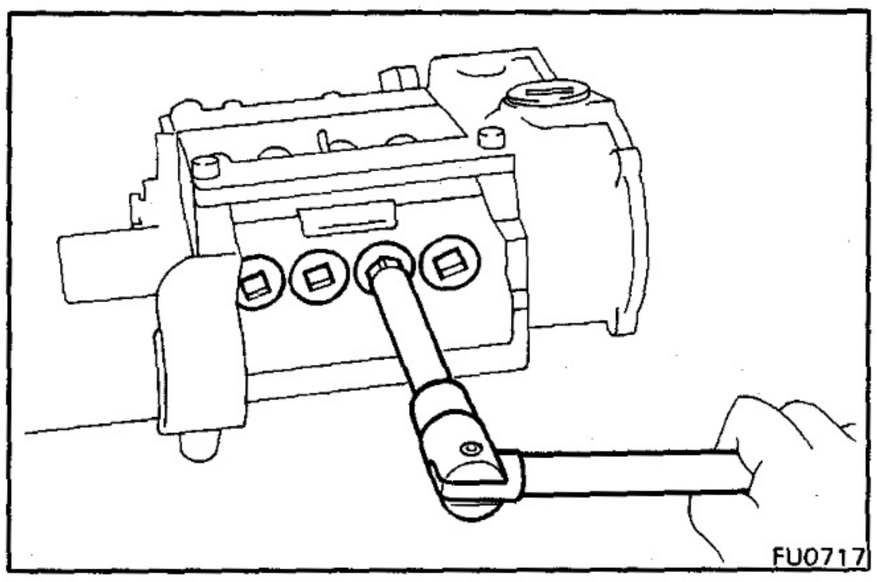

2. REMOVE PLATE PLUGS

Remove the four plate plugs.

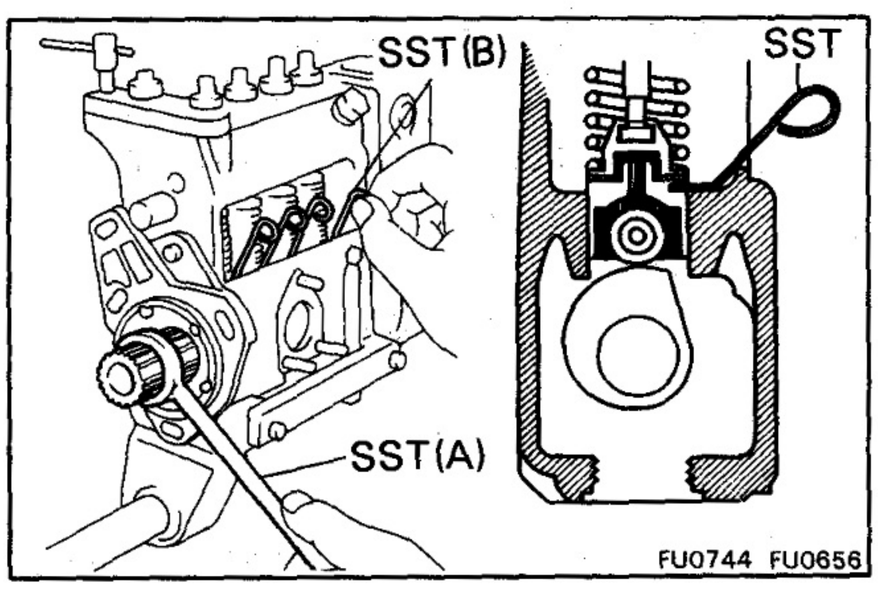

3. INSTALL SST TO TAPPET SERVICE HOLES

Using SST(A), turn the camshaft and insert SST(B) into each tappet service hole when the tappets are at their hightest positions.

SST B and 3B 09260-46012
(09274-46011, 09278-46010)
11B, 13B and 13B-T
09260-58010
(09274-46011, 09278-46020)

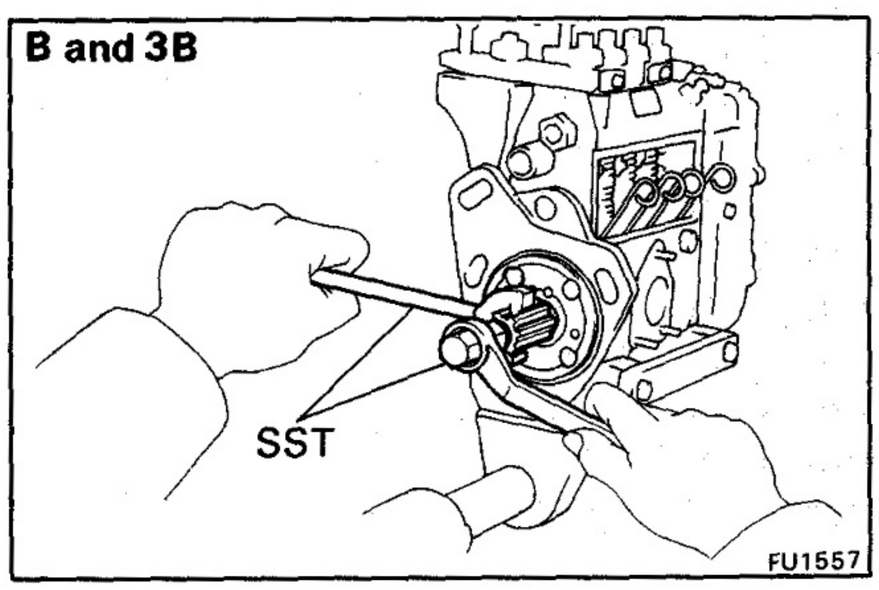

4. REMOVE SPLINE SHAFT

(a) Using SST, remove the round nut and spring washer.

SST B and 3B 09260-46012
(09266-46011, 09278-46010)
11B, 13B and 13B-T
09260-58010
(09266-76011, 09278-46020)

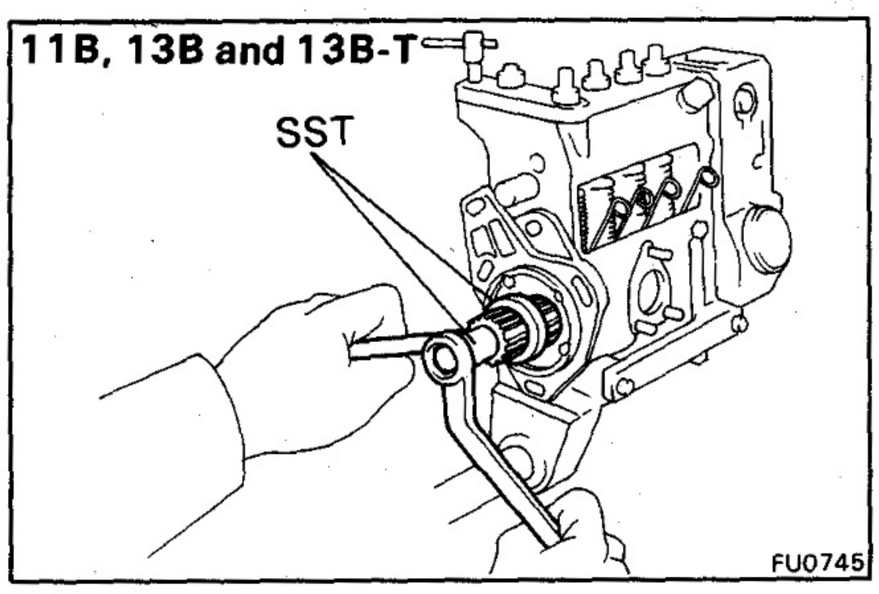

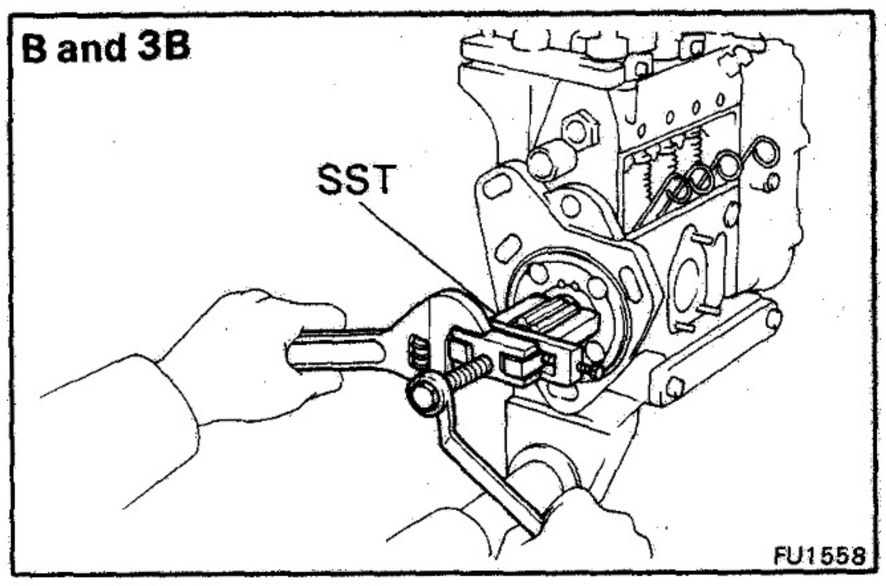

(b) Using SST, remove the spline shaft.

SST B and 3B 09286-46011
11B, 13B and 13B-T
09260-58010 (09267-76011)

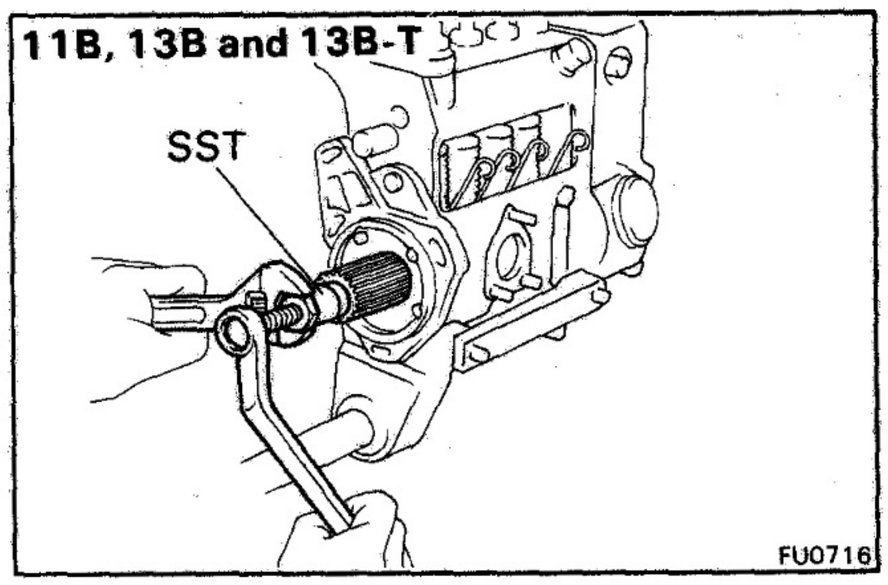

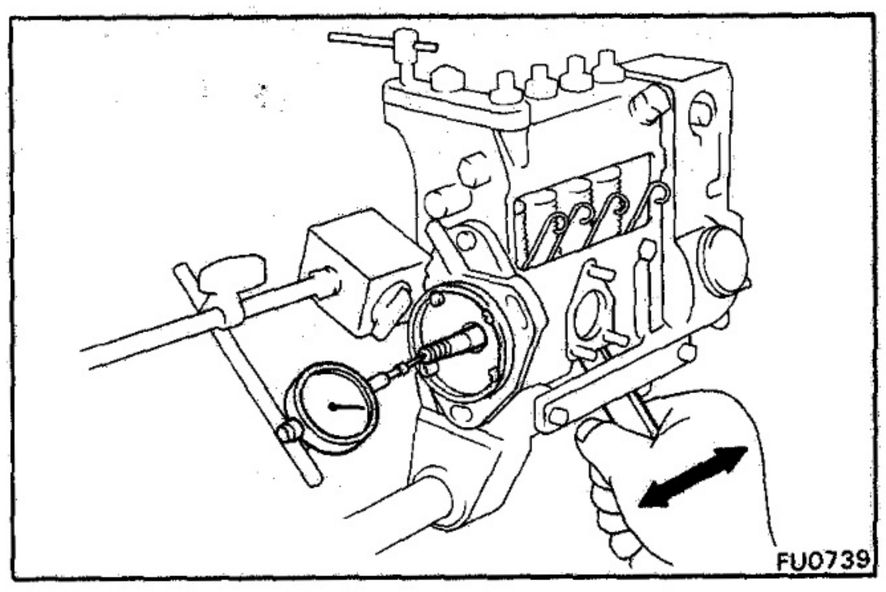

5. CHECK CAMSHAFT THRUST CLEARANCE

Using a dial indicator, measure the thrust clearance while moving the camshaft back and forth with a wooden stick.

Standard clearance: **0.03 — 0.05 mm (0.0012 — 0.0020 in.)**
Maximum clearance: **0.1 mm (0.004 in.)**

If the clearance is greater than maximum, replace the thrust washer.

Thrust washer thickness:

B, 3B (Front and rear), 11B, 13B and 13B-T (Front)
0.10 mm (0.0039 in.)
0.12 mm (0.0047 in.)
0.14 mm (0.0055 in.)
0.16 mm (0.0063 in.)
0.18 mm (0.0071 in.)
0.50 mm (0.0197 in.)

11B, 13B and 13B-T (Rear)
0.10 mm (0.0039 in.)
0.15 mm (0.0059 in.)
0.30 mm (0.0118 in.)
0.50 mm (0.0197 in.)

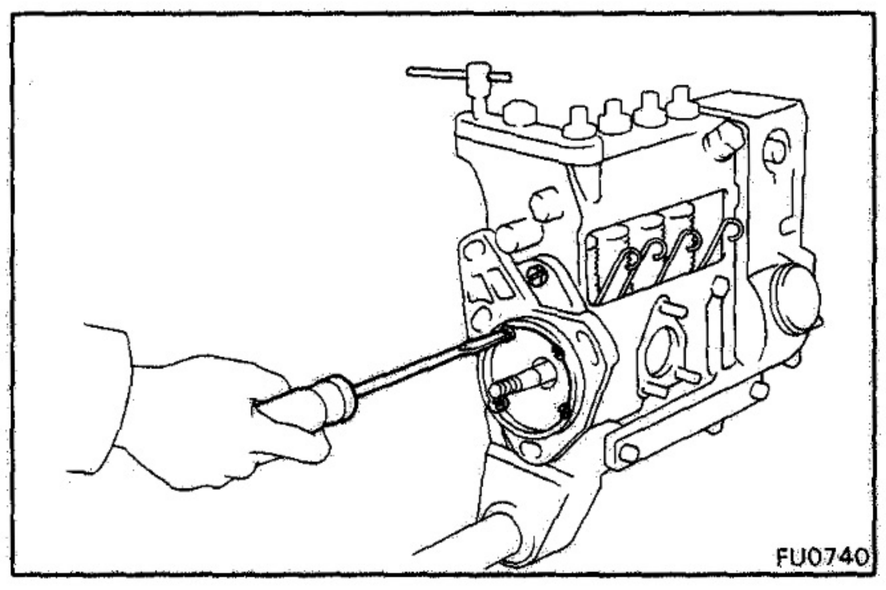

6. REMOVE PUMP FLANGE AND CAMSHAFT

(a) Remove the five screws.

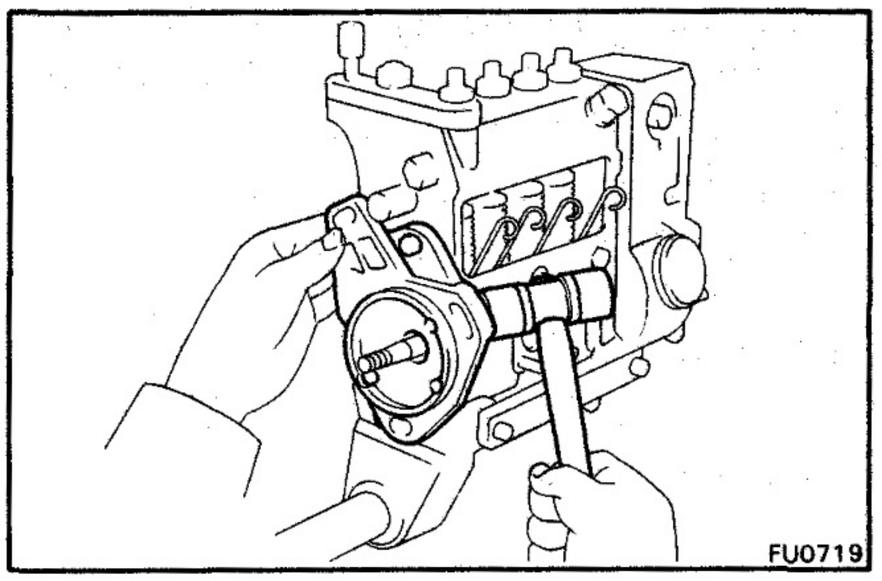

(b) Using a plastic-faced hammer, lightly tap out the pump flange.

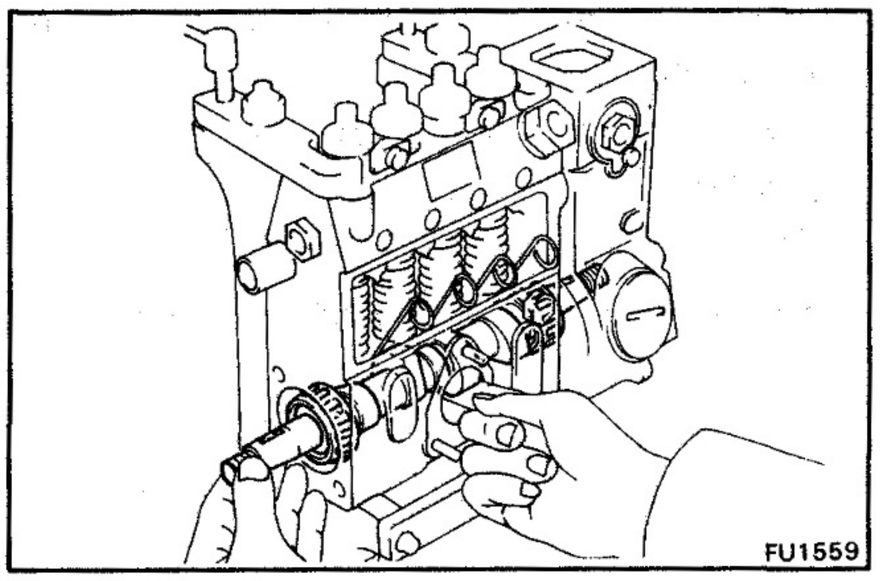

(c) Remove the camshaft.

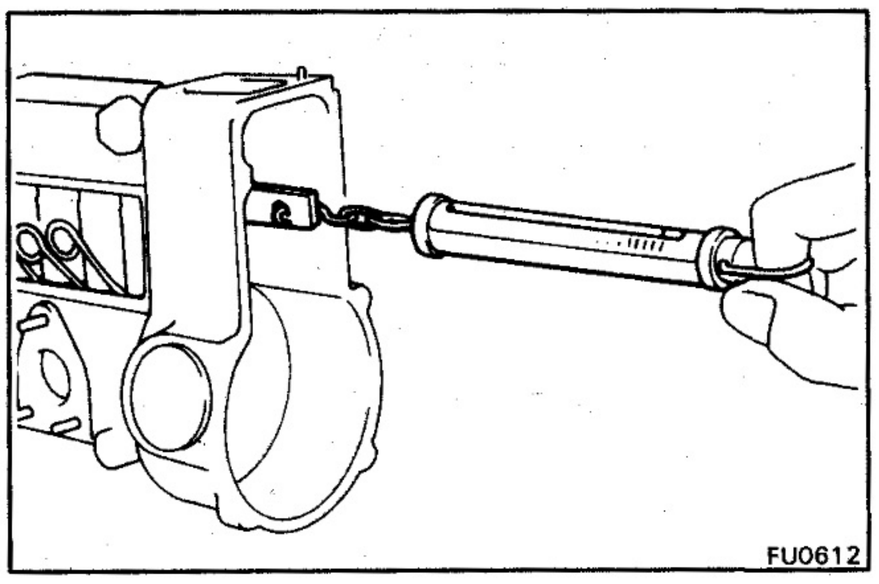

7. CHECK SLIDING RESISTANCE OF CONTROL RACK

Using a spring tension gauge, measure the sliding resistance. The rack should move smoothly.

Sliding resistance: 120 g (4.2 oz) or less

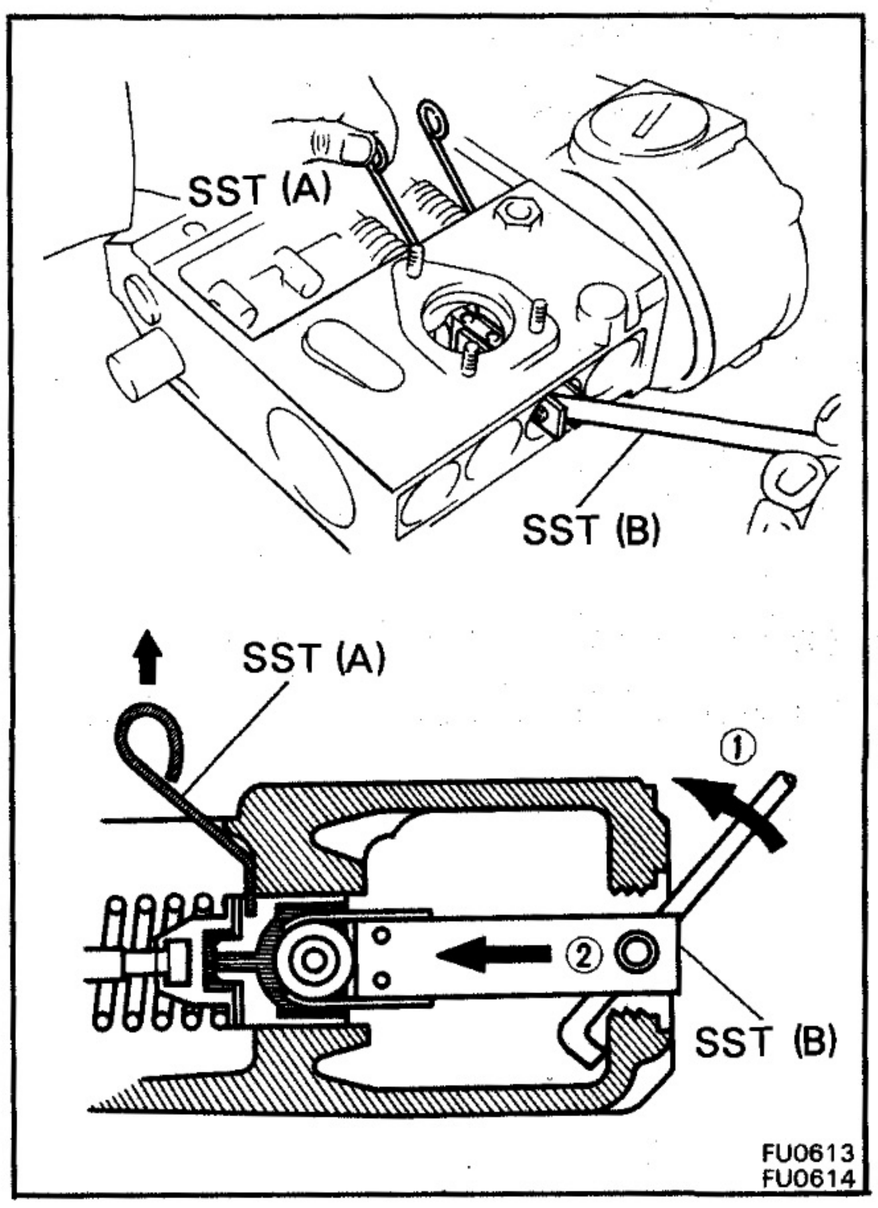

8. REMOVE TAPPETS, PLUNGERS AND PINIONS

(a) Using SST (B), push the tappet to remove SST (A).

SST B and 3B 09260-46012 (09274-46011) and
09260-76017 (09272-76011)
11B, 13B and 13B-T
09260-58010
(09272-76011, 09274-46011)

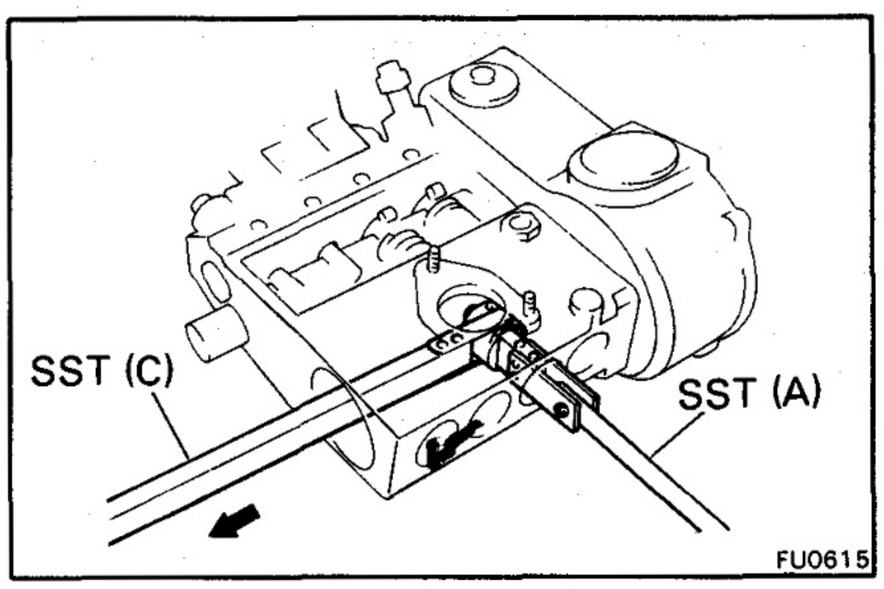

(b) Using SST (B), hold the tappet in the camshaft chamber and take out the tappet through the camshaft bearing hole with SST (C).

SST B and 3B 09260-76017
(09272-76011, 09273-76011)
11B, 13B and 13B-T
09260-58010
(09272-76011, 09273-76011)

(c) Remove the adjusting shim(s).

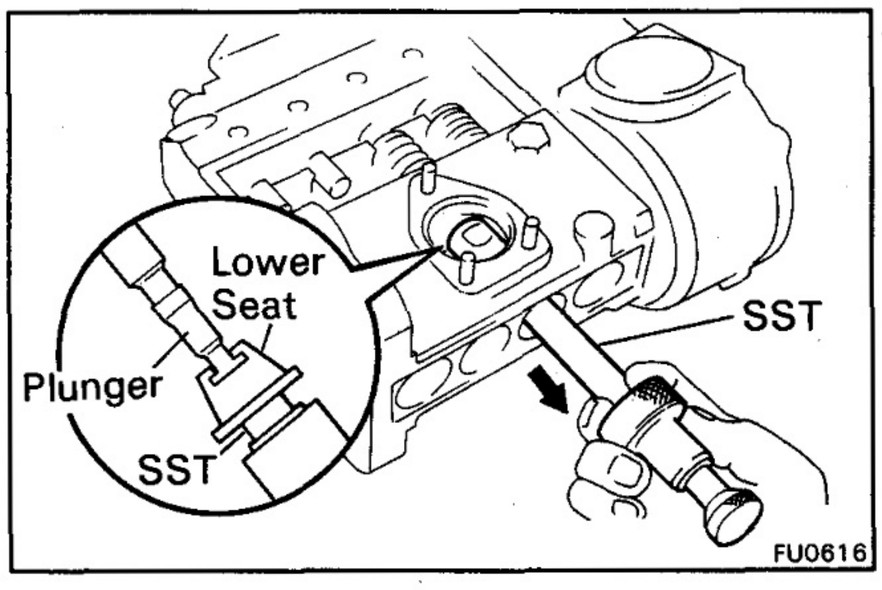

(d) Using SST, hold the lower spring seat and take it out together with the plunger.

SST B and 3B 09260-46012 (09275-46010)
11B, 13B and 13B-T
09260-58010 (09275-46010)

(e) Remove the spring, upper spring seat and pinion.

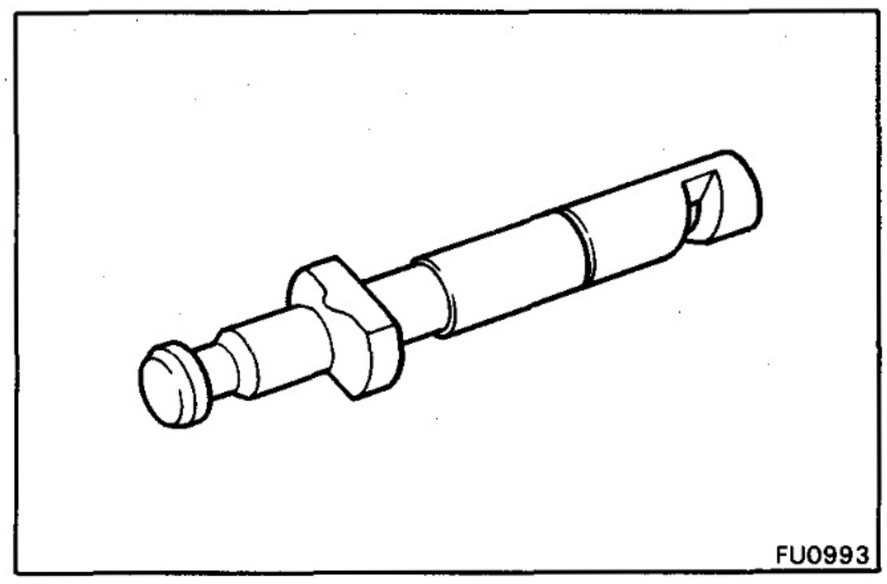

NOTE:
- Do not touch the sliding surfaces of the plunger with your hand.

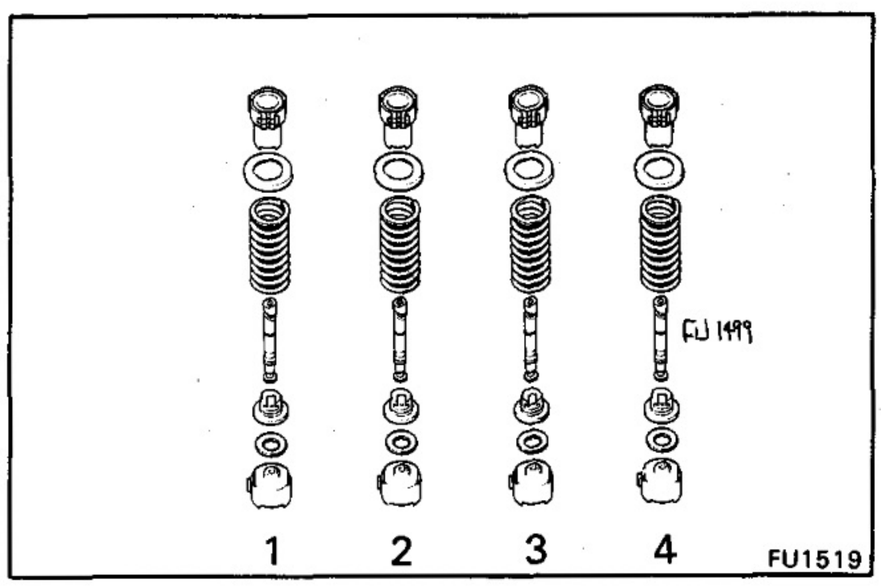

- Arrange all parts in correct order.

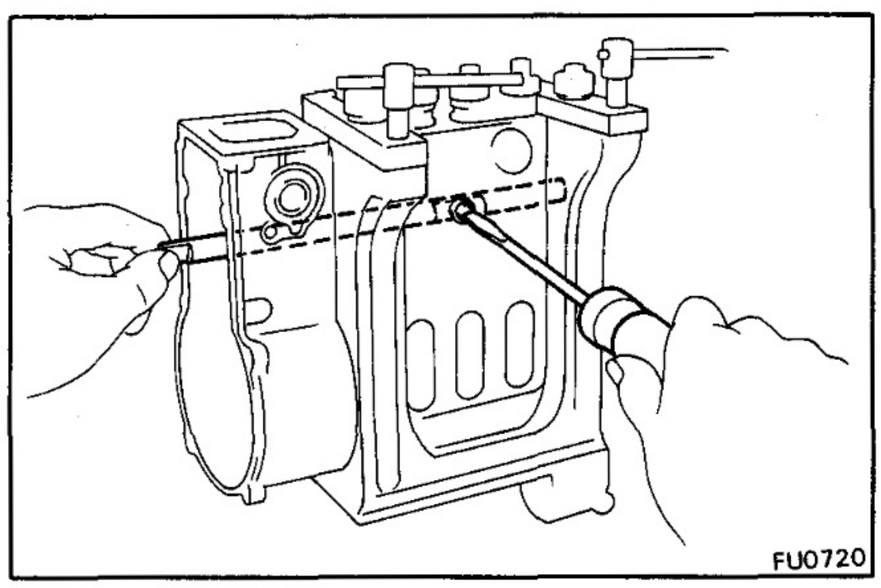

9. REMOVE CONTROL RACK

Remove the guide screw and pull out the control rack.

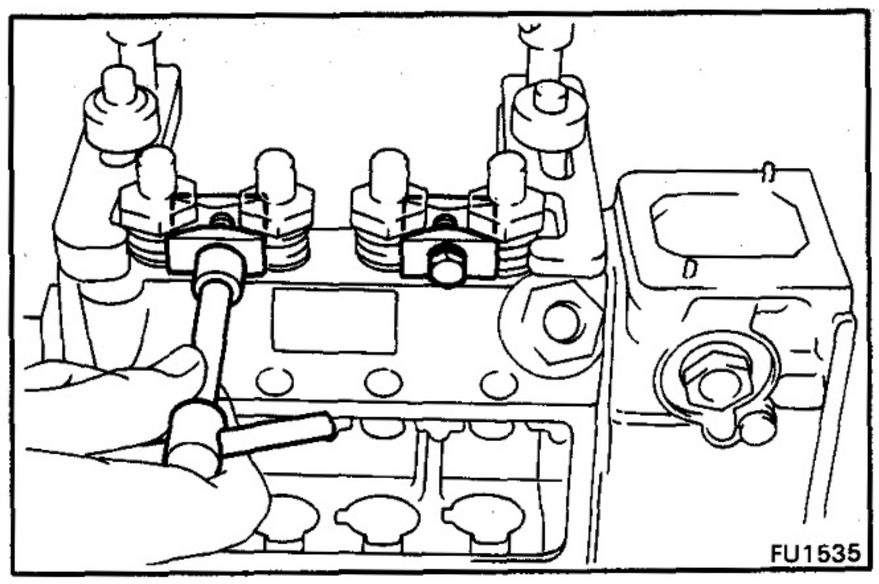

10. REMOVE DELIVERY VALVES AND PUMP CYLINDERS

(a) Remove the two lock plates.

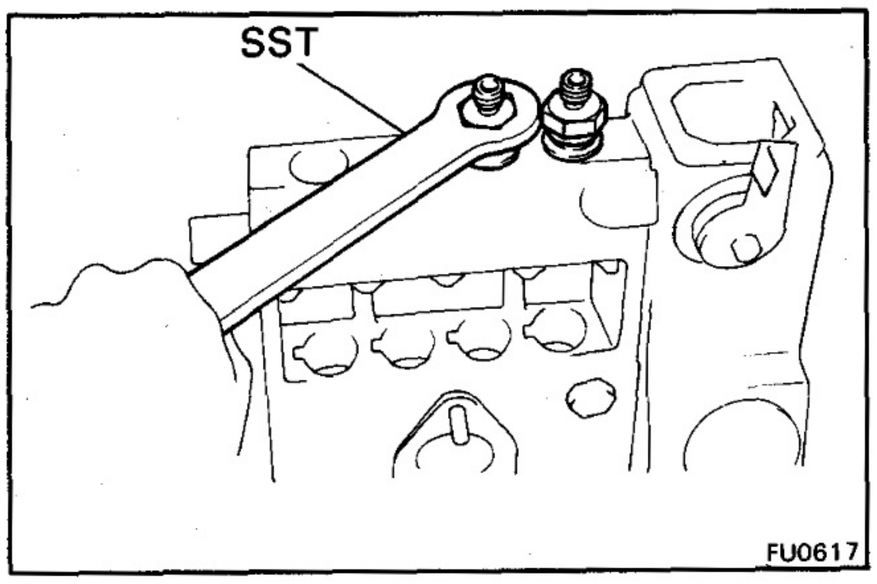

(b) [B and 3B]
Using SST, remove the delivery valve holder and spring.

SST 09260-76017 (09270-76010)

(c) [11B, 13B and 13B-T]
Using SST, remove the delivery valve holder, O-ring, stopper, spring and gasket.

SST 09260-58010 (09270-76010)

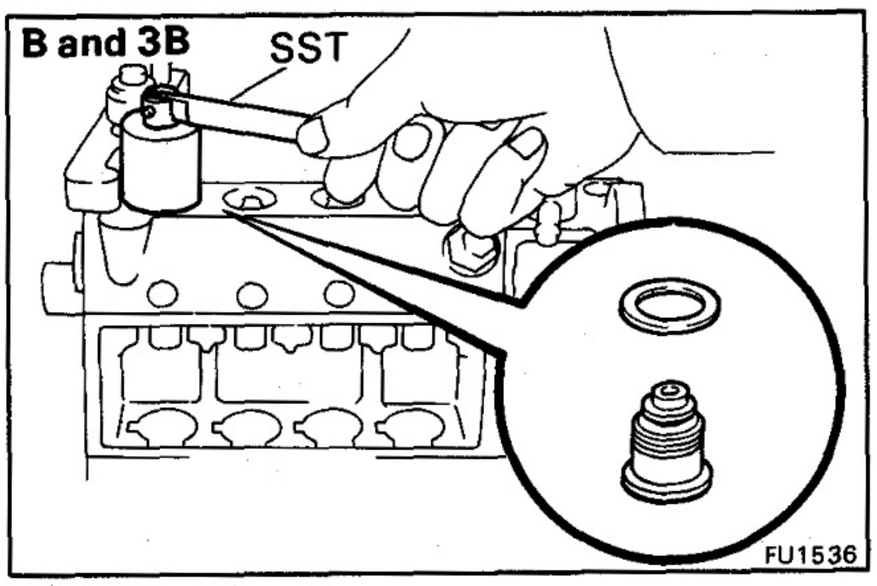

(d) [B and 3B]
Using SST, remove the delivery valve and gasket.

SST 09260-76017 (09271-76011)

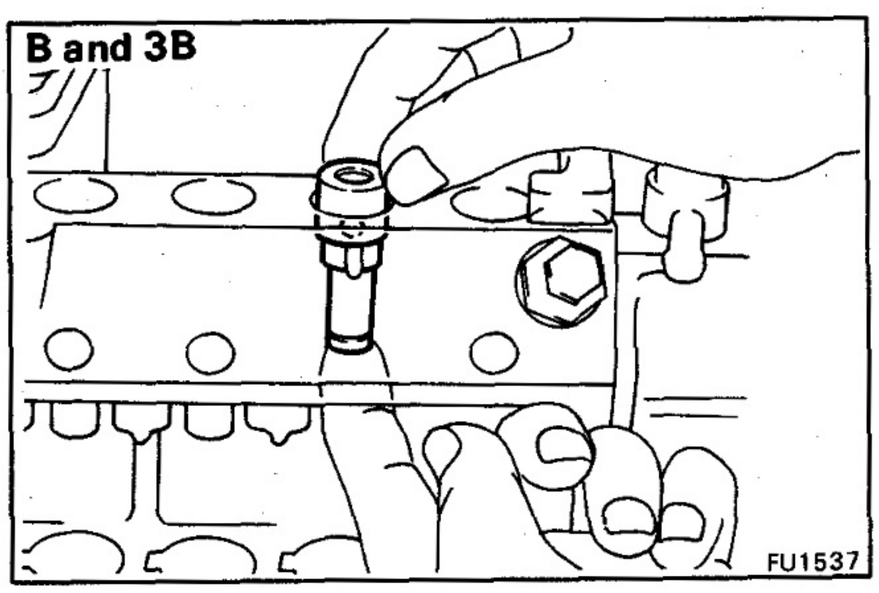

(e) [B and 3B]
Raise the pump cylinder with your forefinger, and remove it.

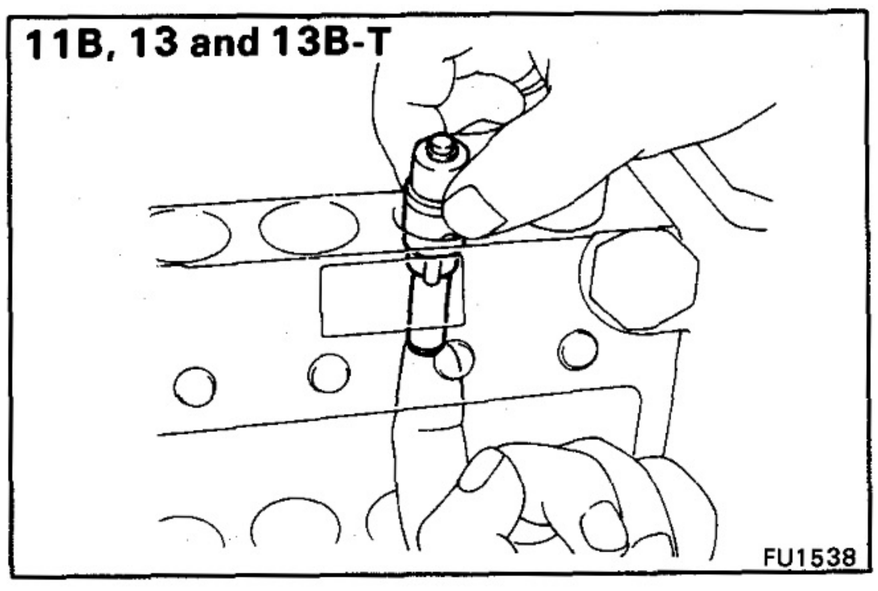

(f) [11B, 13B and 13B-T]
Raise the pump cylinder with your forefinger, and remove it together with the delivery valve.

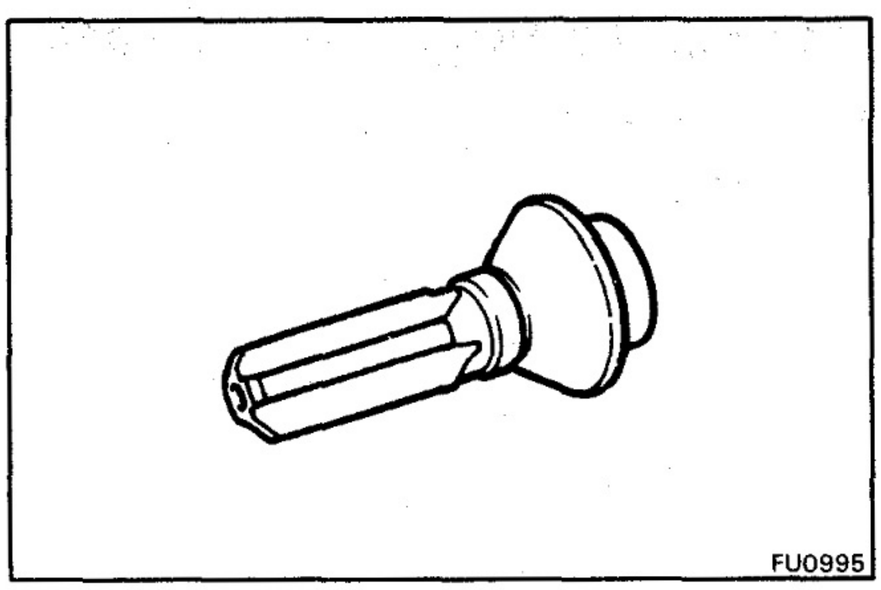
FU0995

NOTE:
- Do not touch the sliding surfaces of the delivery valve with your hand.
- Arrange all parts in correct order.

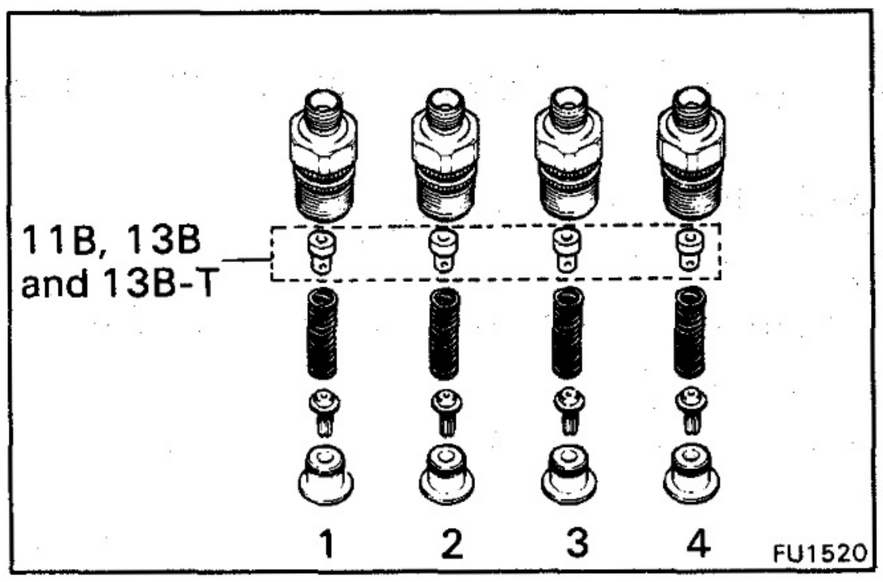

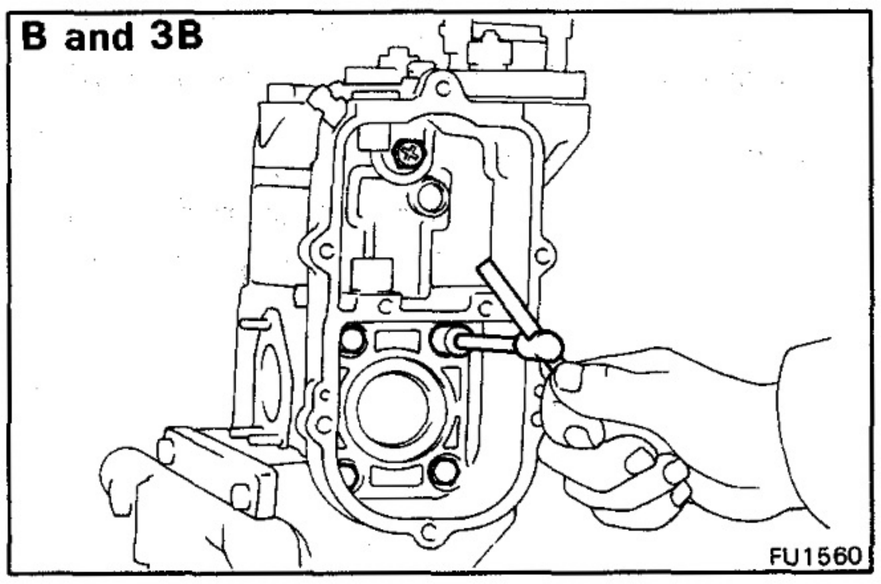

11. REMOVE GOVERNOR HOUSING

[B and 3B]

Remove the five bolts, governor housing and gasket.

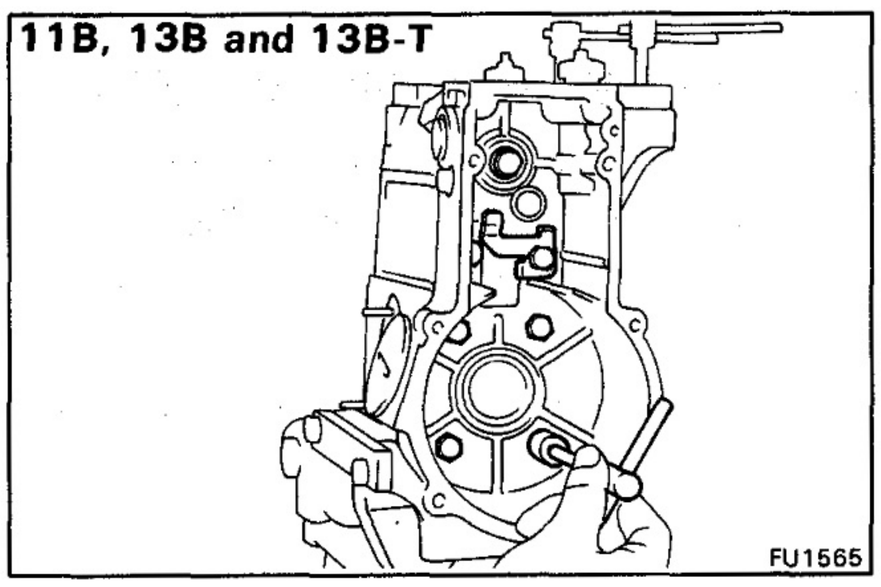

[11B, 13B and 13B-T]

Remove the seven bolts, stopper bracket, governor housing and gasket.

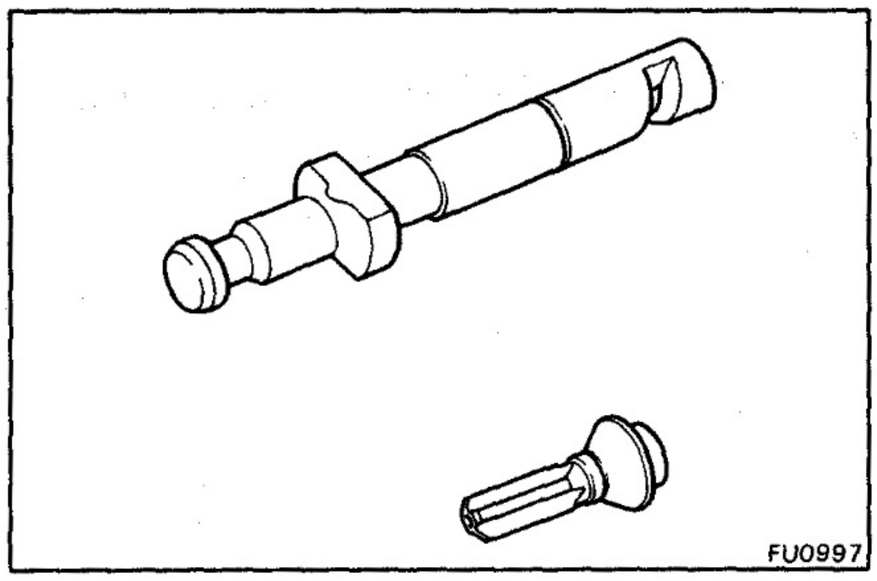

INSPECTION INJECTION PUMP

NOTE: Do not touch the sliding surfaces of the pump plunger and delivery valves.

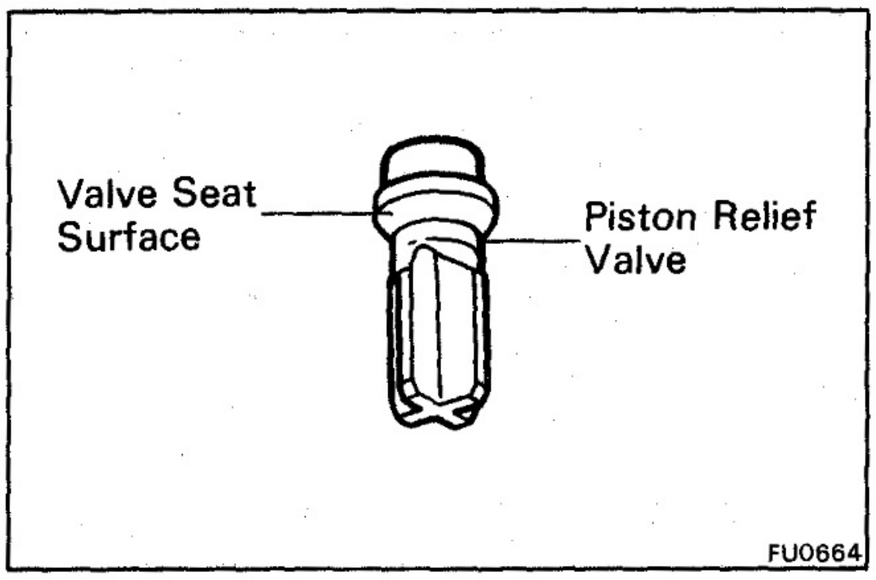

1. INSPECT DELIVERY VALVES

(a) Check the valve seat surface and piston relief valve for scratches.

If necessary, replace the valve as a set.

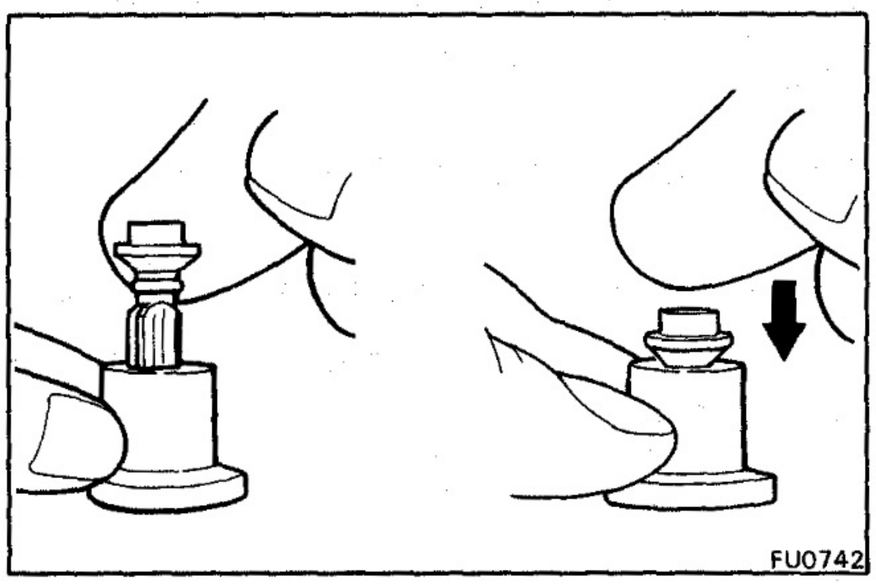

(b) Pull up the valve and release it. Check that it sinks smoothly to the valve seat.

If not, replace the valve as a set.

NOTE: Before using a new valve set, wash off the rust prevention compound with diesel fuel and perform the above test.

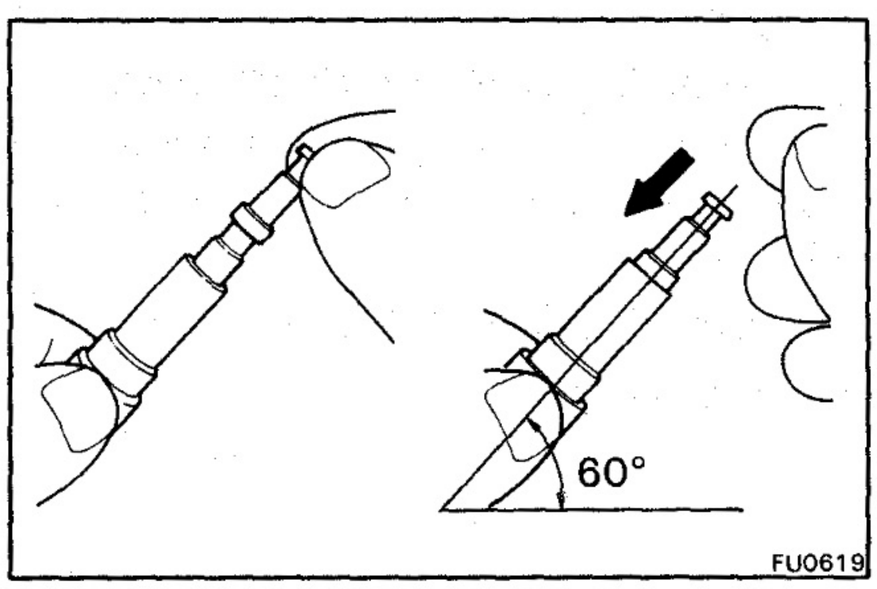

2. INSPECT PUMP PLUNGERS

(a) Tilt the cylinder slightly and pull out the plunger.

(b) When released, the plunger should sink down smoothly into the cylinder by its own weight.

(c) Rotate the plunger and repeat the test at various positions.

If the plunger sticks at any position, replace it as a set.

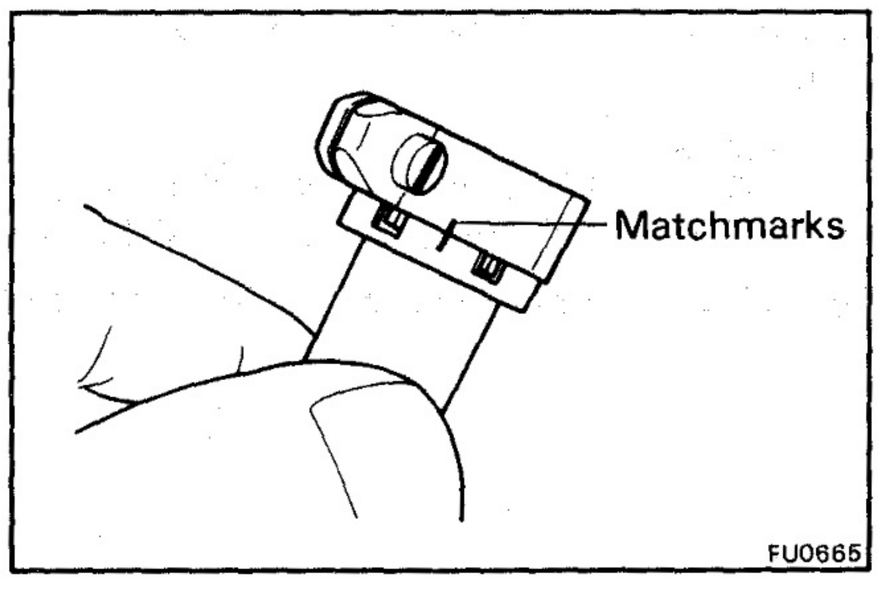

3. INSPECT CONTROL RACK AND PINION

Check the tooth surfaces of the control rack and pinion for wear or damage.

NOTE: Before disassembling the pinion, check that the matchmarks of the pinion and sleeve are aligned.

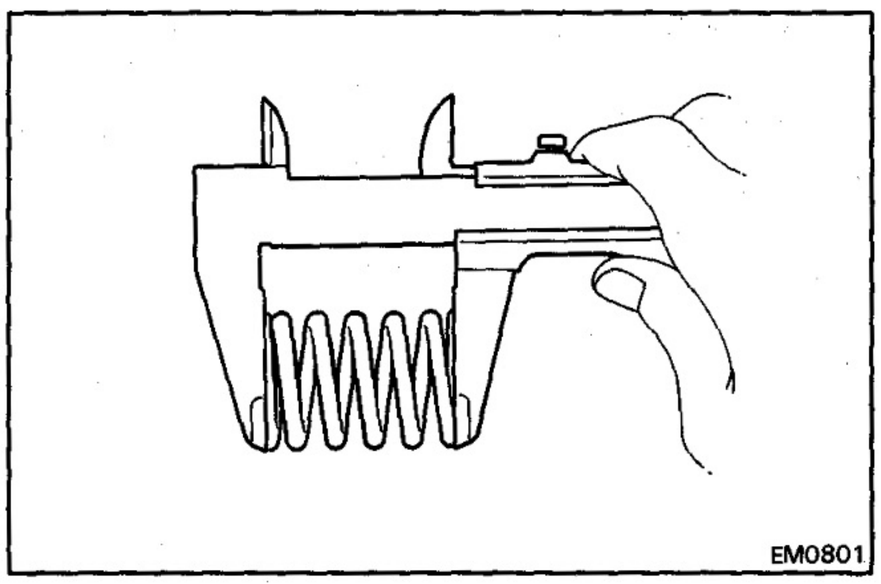

4. INSPECT SPRINGS

Using calipers, measure the free length of the spring.

Item	Free length (Approx.) mm (in.)						
	Delivery valve spring	Plunger spring	Governor main spring	Mechanical governor spring	Speed control spring	Inner idling spring	Outer idling spring
B	37.0 (1.457)	49.4 (1.945)	45.6 (1.795)		38.0 (1.496)		
3B	37.0 (1.457)	49.4 (1.945)	51.6 (2.031)		38.0 (1.496)		
11B, 13B (M/T) and 13B-T (M/T)	19.8 (0.780)	49.4 (1.945)		10.2 (0.402)	24.0 (0.945)	26.0 (1.024)	23.8 (0.937)
13B (A/T) and 13B-T (A/T)	19.8 (0.780)	49.4 (1.945)		10.2 (0.402)	24.0 (0.945)	24.4 (0.961)	23.8 (0.937)

If the free length is not as specified, replace the spring.

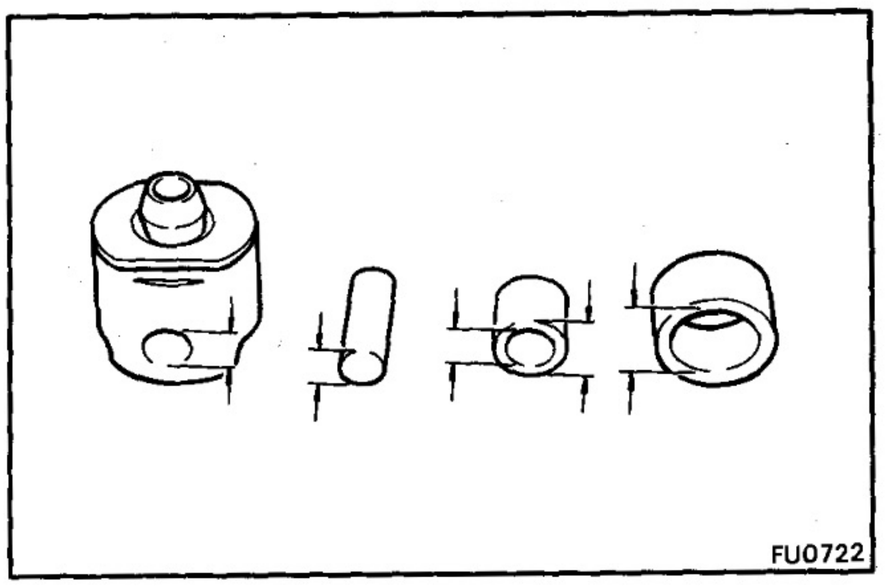

5. INSPECT TAPPETS

Measure the combined looseness with the tappet roller when assembled.

Maximum combined looseness: 0.3 mm (0.012 in.)

If the combined looseness is greater than maximum, replace the tappet assembly.

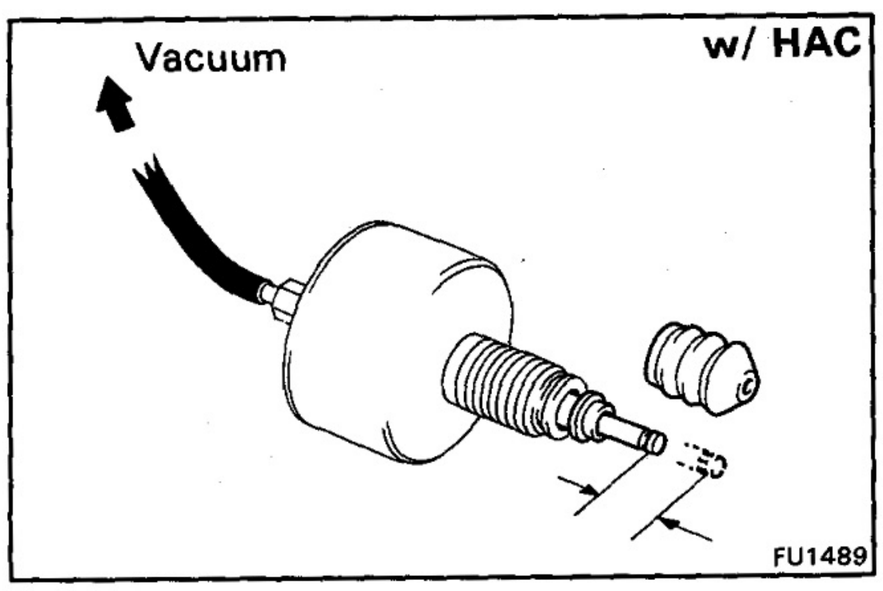

6. [w/ HAC]
INSPECT HIGH ALTITUDE COMPENSATOR (HAC)

(a) Apply 370 – 700 mmHg (14.57 – 27.56 in. Hg, 49.3 – 93.3 kPa) of vacuum to the HAC, and check that push rod moves.

Stroke: 3.1 – 3.6 mm (0.122 – 0.142 in.)

If abnormal, replace the HAC.

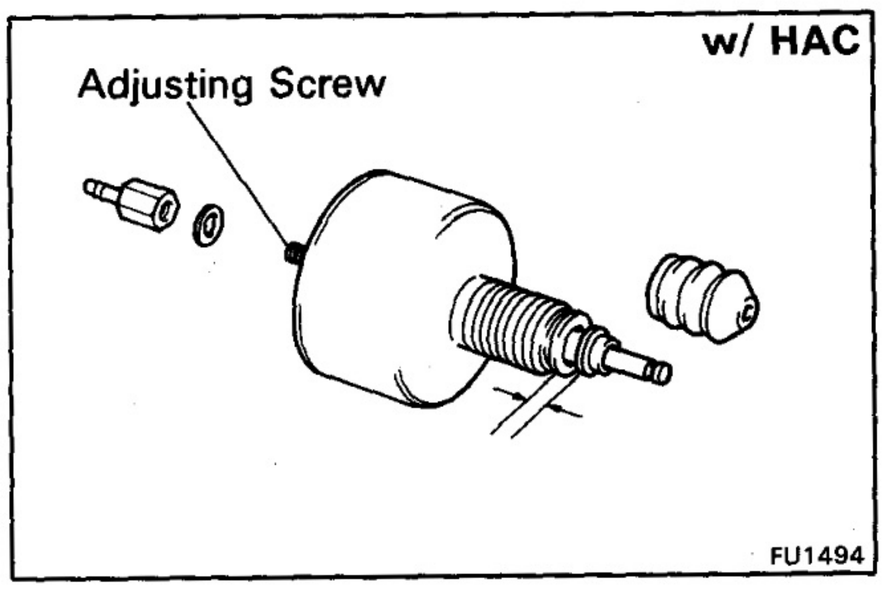

(b) Measure the clearance between the push rod flange and HAC body.

Clearance (at sea level):
B and 3B 0.1 – 0.3 mm (0.004 – 0.012 in.)
11B and 13B 0.2 – 0.5 mm (0.008 – 0.020 in.)

If the clearance is not within specification, adjust with the adjusting screw.

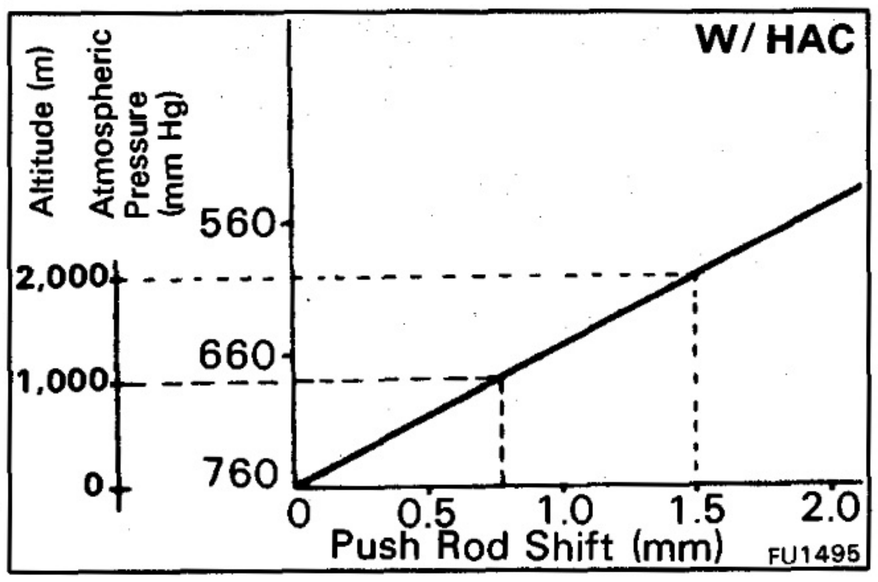

NOTE: Since the position of the push rod depends on altitude, the clearance mentioned above must be 0.1 – 0.3 mm (0.004 – 0.012 in.) or 0.2 – 0.5 mm (0.008 – 0.020 in.) plus the amount of push rod shift as shown in the figure.

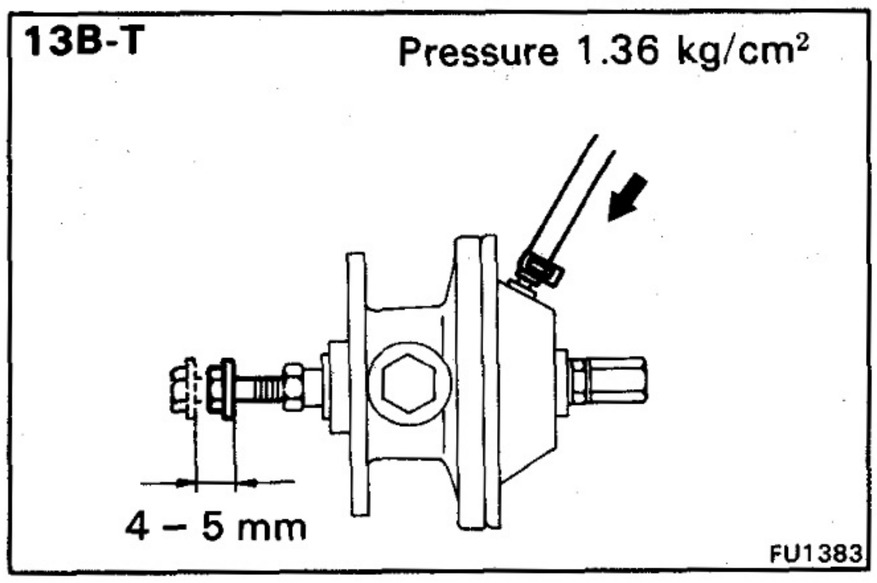

7. **[13B-T]**
INSPECT BOOST COMPENSATOR

(a) Apply 1.36 kg/cm² (19.3 psi, 133 kPa) of pressure to the boost compensator.

(b) Measure the push rod stroke.

Push rod stroke: 4.0 – 5.0 mm (0.157 – 0.197 in.)

If the stroke is not within specification, replace the boost compensator.

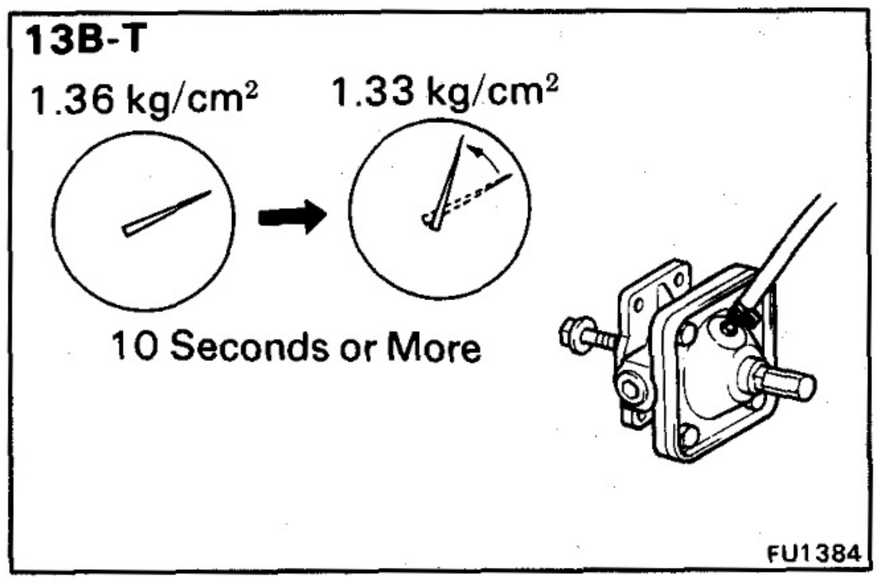

(c) Apply 1.36 kg/cm² (19.3 psi, 133 kPa) of pressure to the boost compensator.

(d) Measure the time it takes for the pressure to drop to 1.33 kg/cm² (18.9 psi, 130 kPa).

Pressure drop: 10 seconds or more

If the pressure drops in less time than specified, replace the boost compensator.

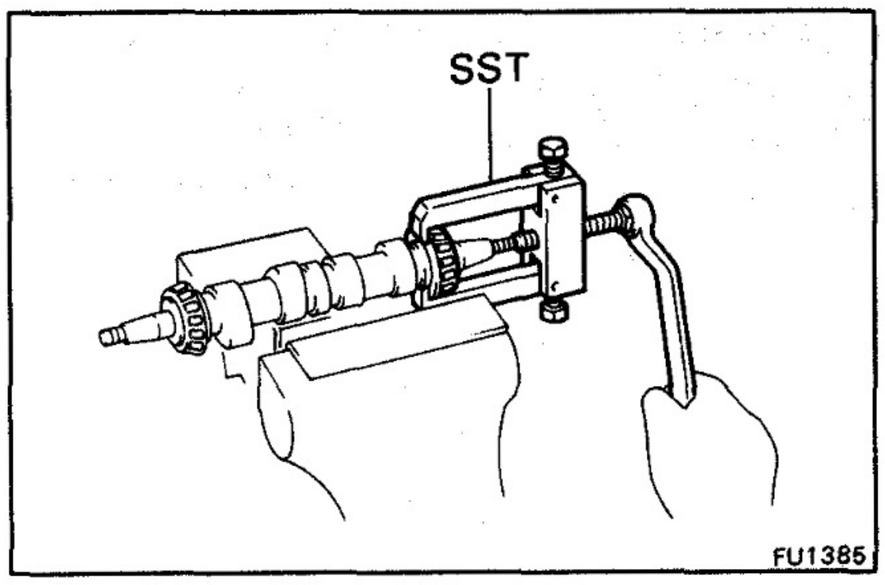

REPLACEMENT OF BEARINGS AND OIL SEALS

1. REPLACE CAMSHAFT BEARINGS

[Front and Rear Bearings]

(a) Using SST, remove the bearings.

SST B and 3B 09950-20017
11B, 13B and 13B-T
09950-58010 (09287-58010)

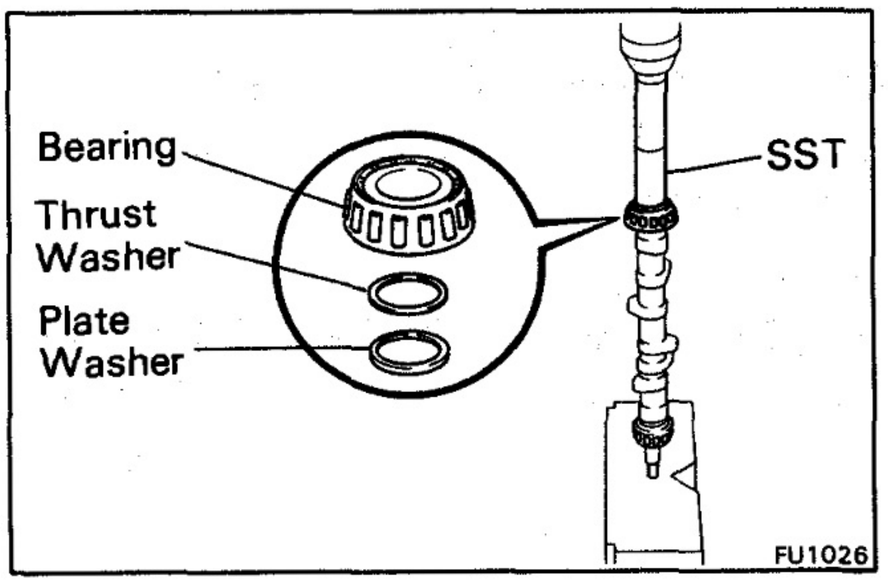

(b) Using SST and a press, press in a new bearing together with the plate washer and thrust washer(s).

SST B and 3B 09285-76010
11B, 13B and 13B-T
09260-58010 (09285-76020)

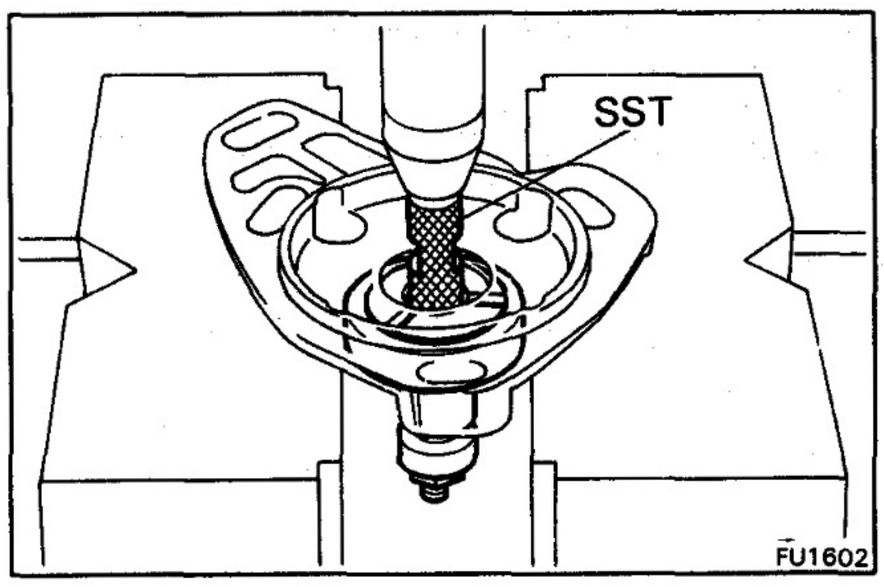

[Outer Race of Front Bearing]

(a) Using SST and a press, press out the outer race.

SST B and 3B 09286-76011
11B, 13B and 13B-T
09260-58010 (09286-78010)

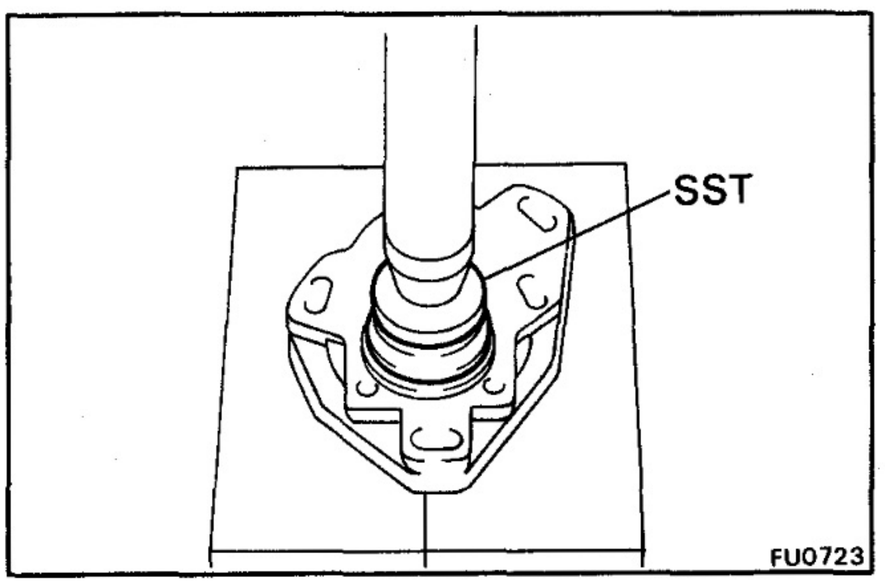

(b) Using SST and a press, press in a new outer race.

SST B and 3B 09608-12010 (09608-00040)
11B, 13B and 13B-T
09260-58010 (09289-00010)

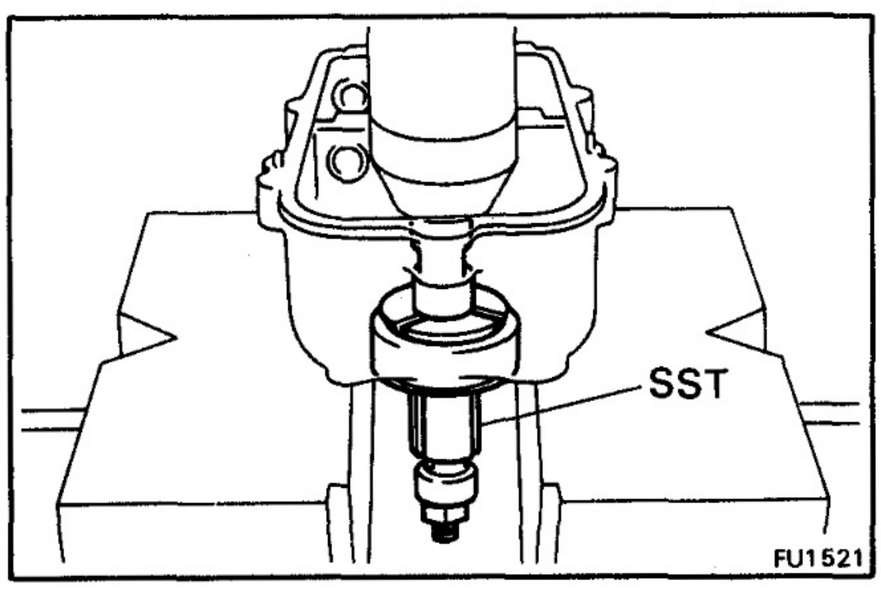

[Outer Race of Rear Bearing]

(a) Using SST and a press, press out the outer race.

SST B and 3B 09286-76011
11B, 13B and 13B-T
09260-58010 (09286-76011)

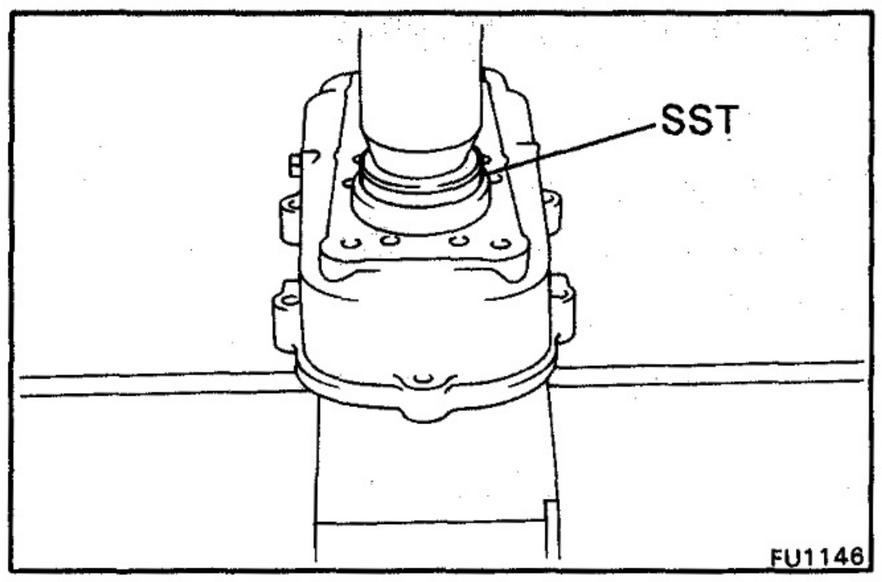

(b) Using SST and a press, press in a new outer race.
SST 09608-12010 (09608-00040)

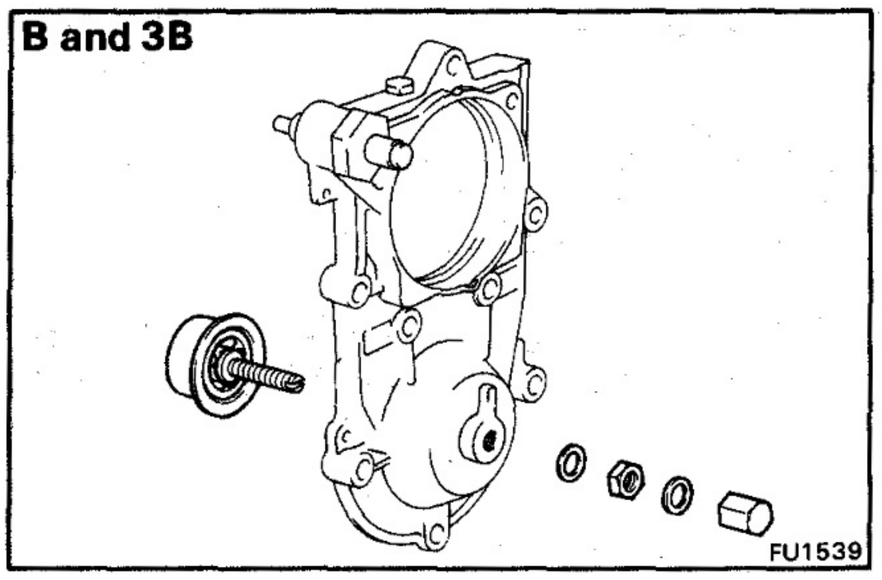

2. [B AND 3B]
REPLACE BEARING OF SPEED CONTROL SCREW

Install new gaskets.

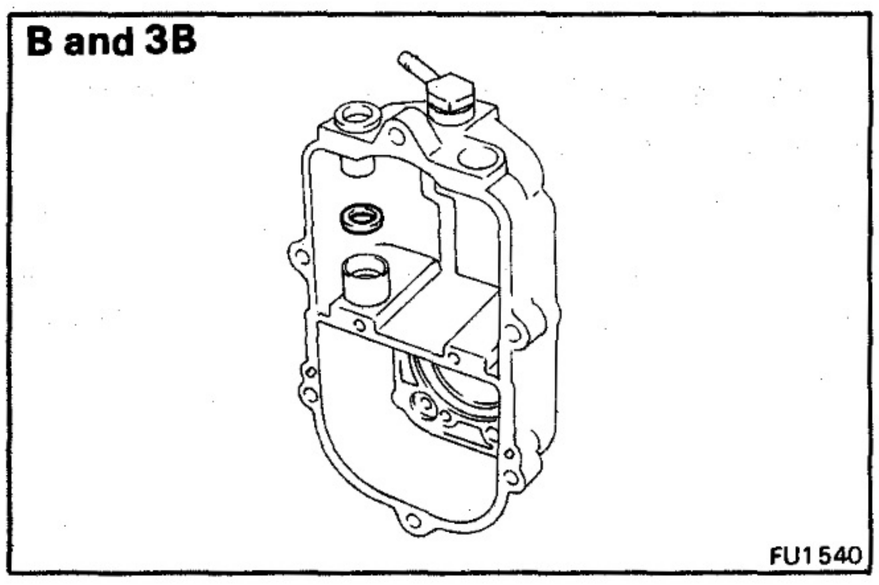

3. REPLACE OIL SEAL OF LEVER SHAFT

Apply MP grease to a new oil seal lip.

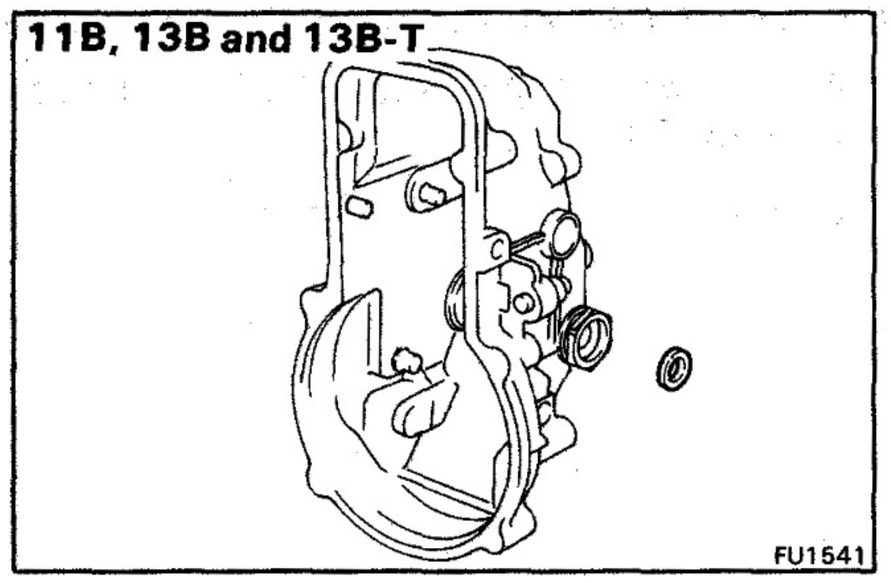

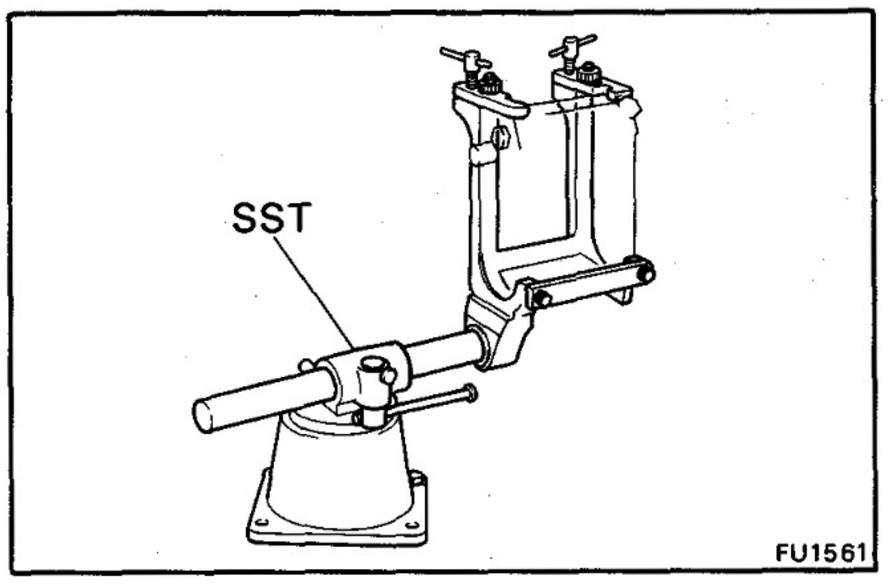

ASSEMBLY OF INJECTION PUMP

Assembly of Pump Body

(See pages FU-30 and 34) B and 3B
(See pages FU-31, 32 and 34) 11B and 13B
(See pages FU-31, 33 and 34) 13B-T

1. MOUNT PUMP HOUSING TO SST (STAND)

SST 09241-76022

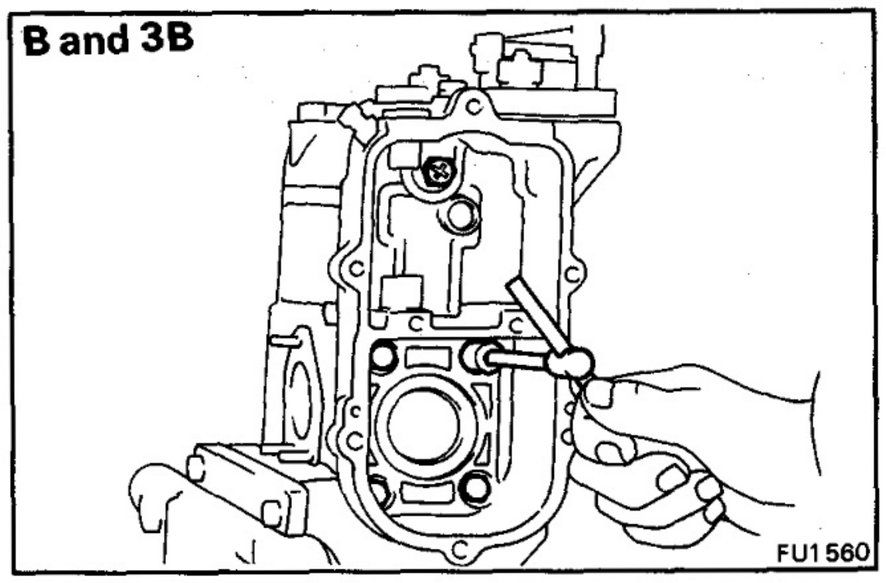

2. INSTALL GOVERNOR HOUSING

[B and 3B]

Install a new gasket and the governor housing with the five bolts.

Torque:

10 mm bolt head	**85 kg-cm (74 in.-lb 8.3 N·m)**
12 mm bolt head	**190 kg-cm (14 ft-lb, 19 N·m)**

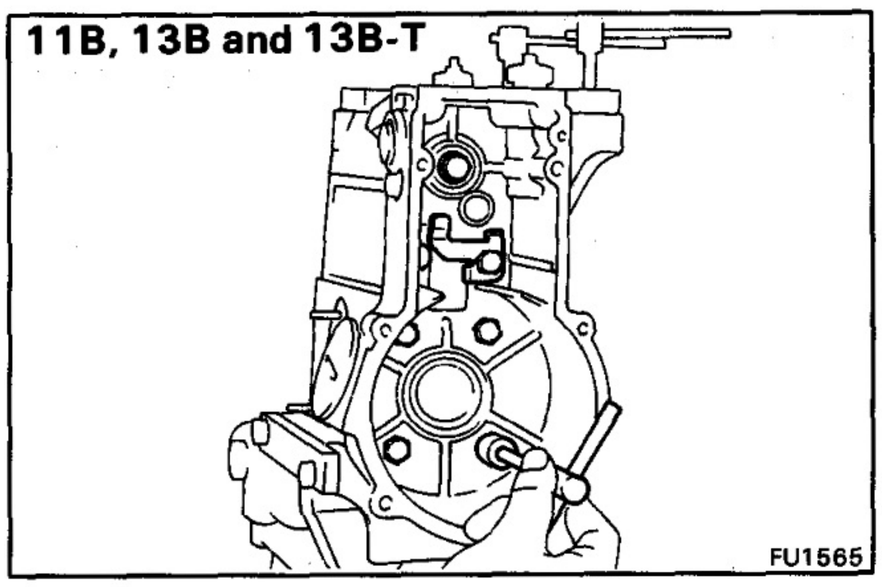

[11B, 13B and 13B-T]

Install a new gasket, the governor housing and stopper bracket with the seven screws.

Torque:

10 mm bolt head	**85 kg-cm (74 in.-lb 8.3 N·m)**
12 mm bolt head	**190 kg-cm (14 ft-lb, 19 N·m)**

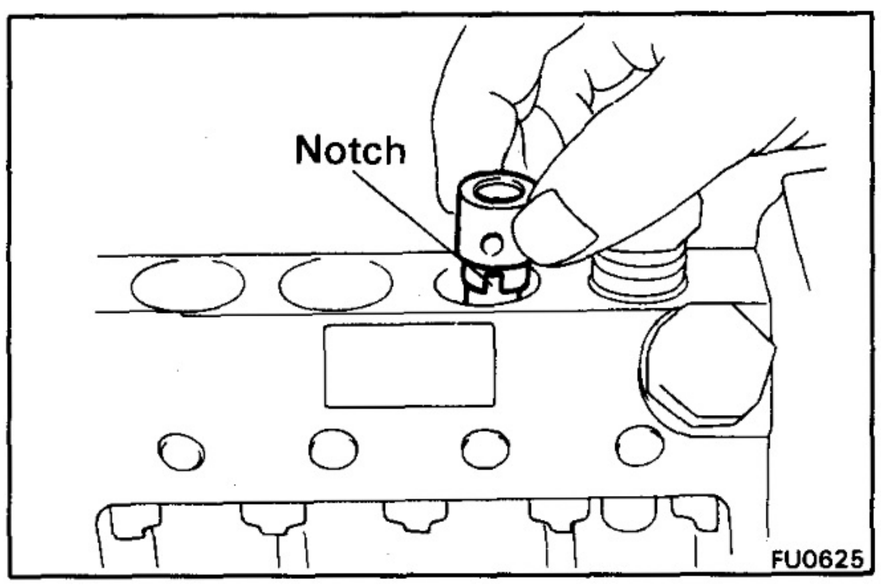

3. INSTALL PUMP CYLINDERS AND DELIVERY VALVES

(a) Align the notch of the pump cylinder with the knock pin of the pump housing.

(b) Install the pump cylinder.

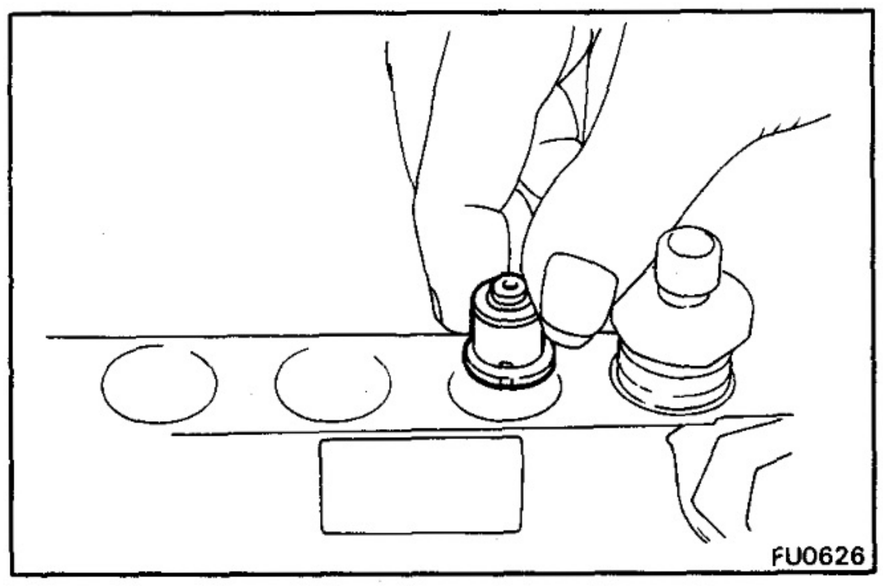

(b) Install the delivery valve.

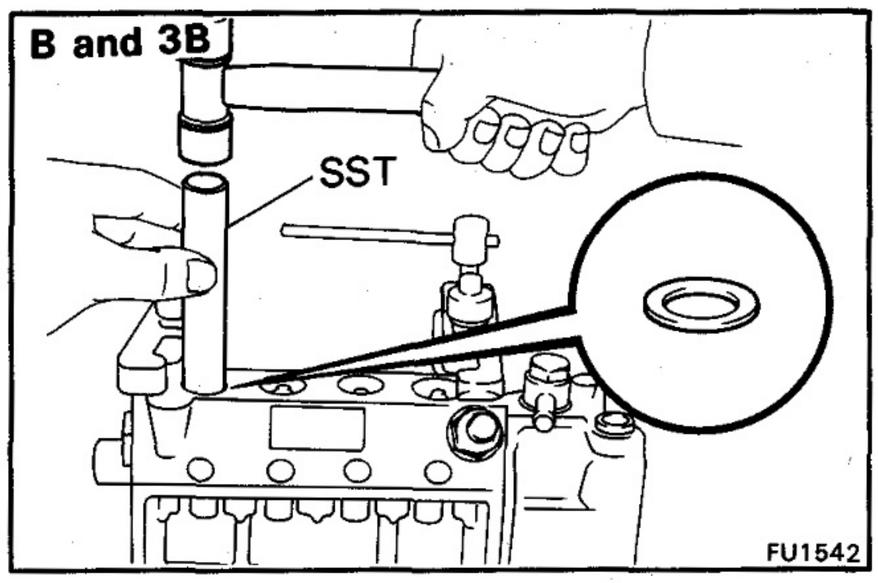

(d) [B and 3B]
Using SST and a plastic-faced hammer, lightly tap in a new gasket.

SST 09260-76017 (09262-76010)

(e) [11B, 13B and 13B-T]
Install a new gasket.

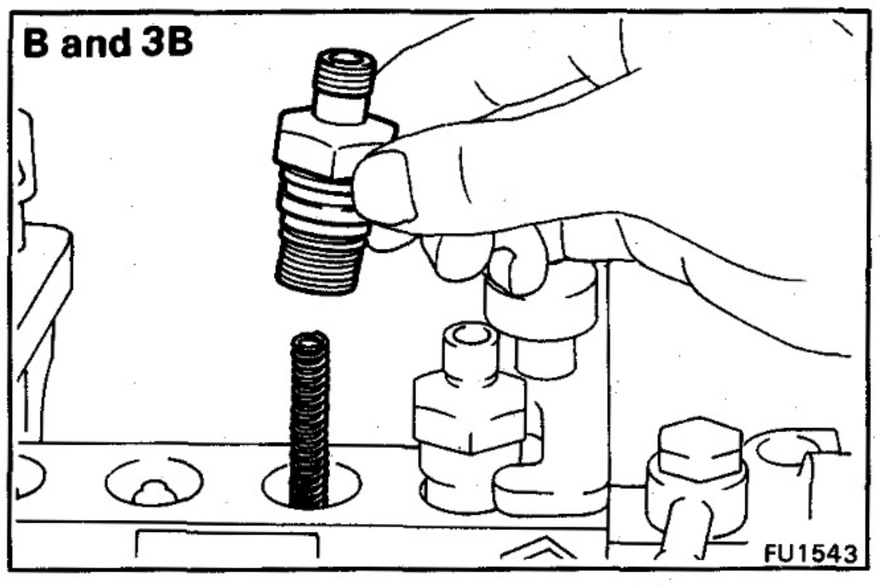

(f) [B and 3B]
Install the delivery valve spring and holder. Do not torque the delivery valve holder yet.

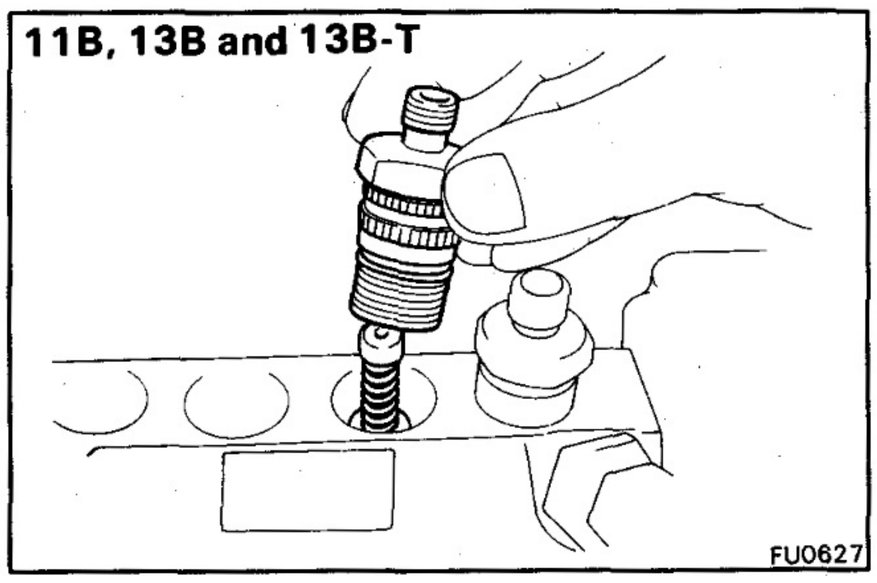

(g) [11B, 13B and 13B-T]
Install a new O-ring to the delivery valve holder. Install the delivery valve spring, stopper and holder. Do not torque the delivery valve holder yet.

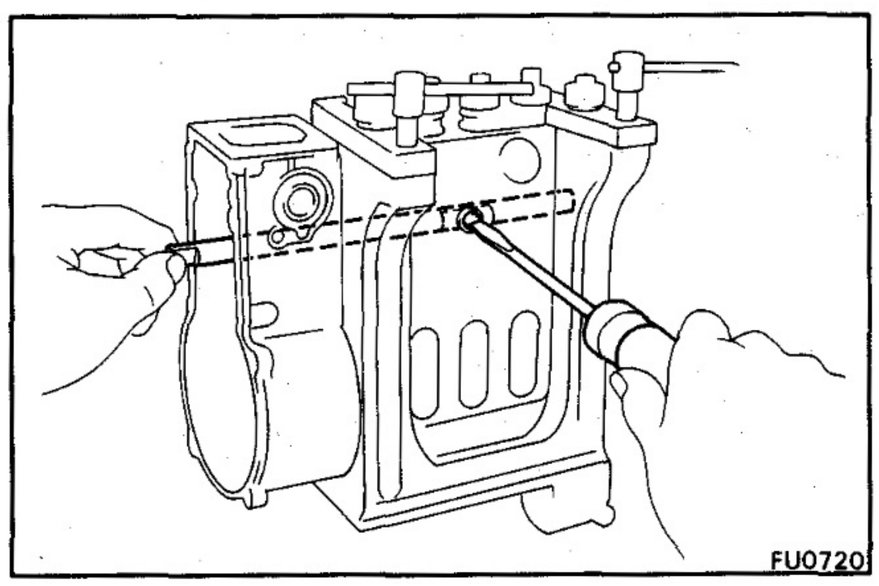

4. INSTALL CONTROL RACK AND PINIONS

(a) Install the control rack with the guide screw.

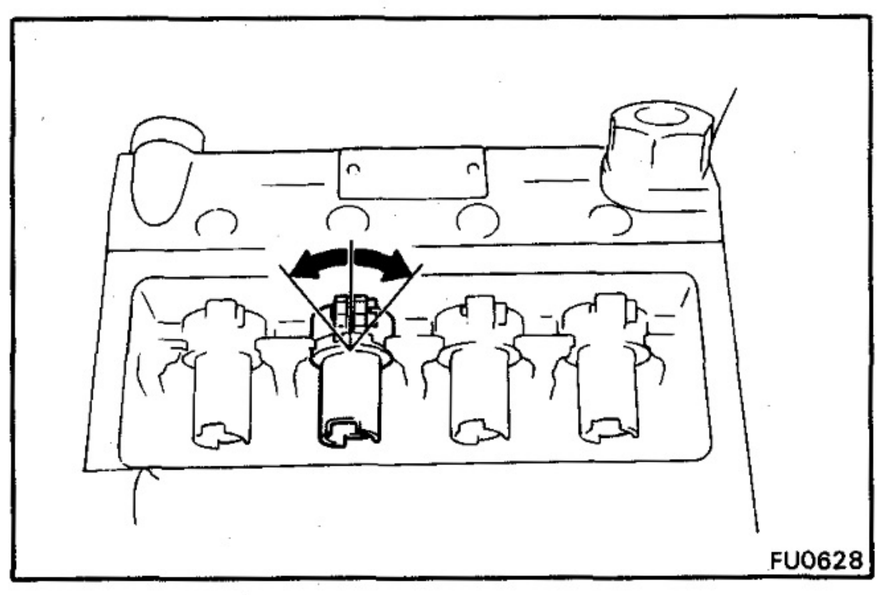

(b) Assemble so that the pinion with the sleeve swings evenly left and right when the rack is moved to the right and left.

(c) When installing the pinion to each pump cylinder, check the control rack for smooth and effortless movement.

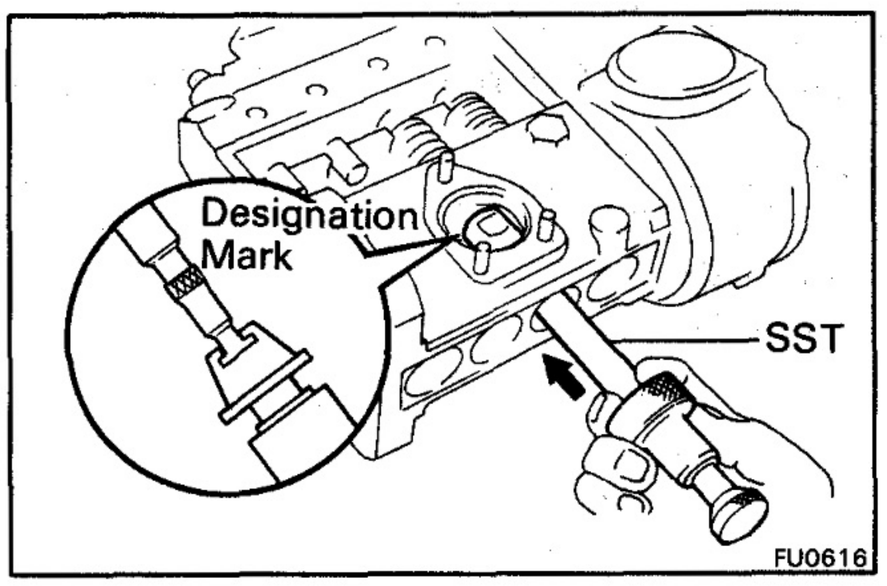

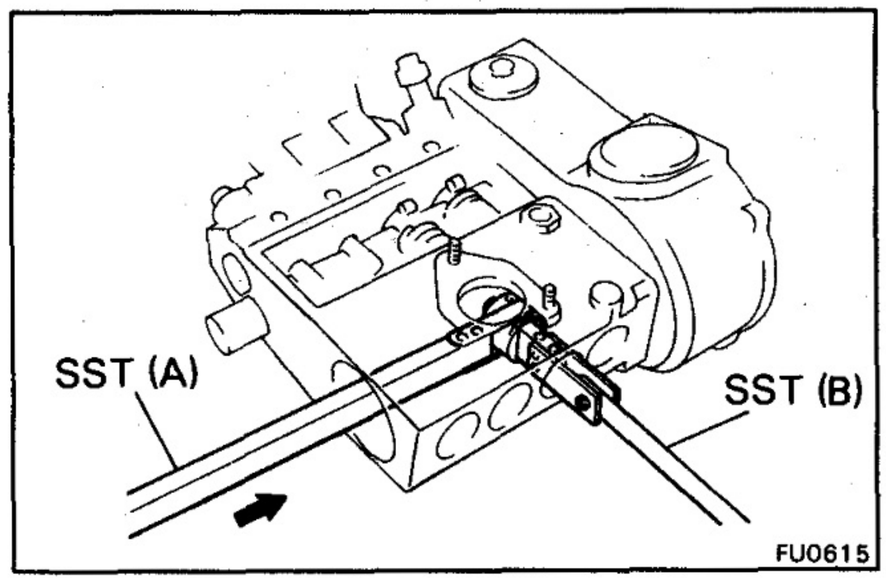

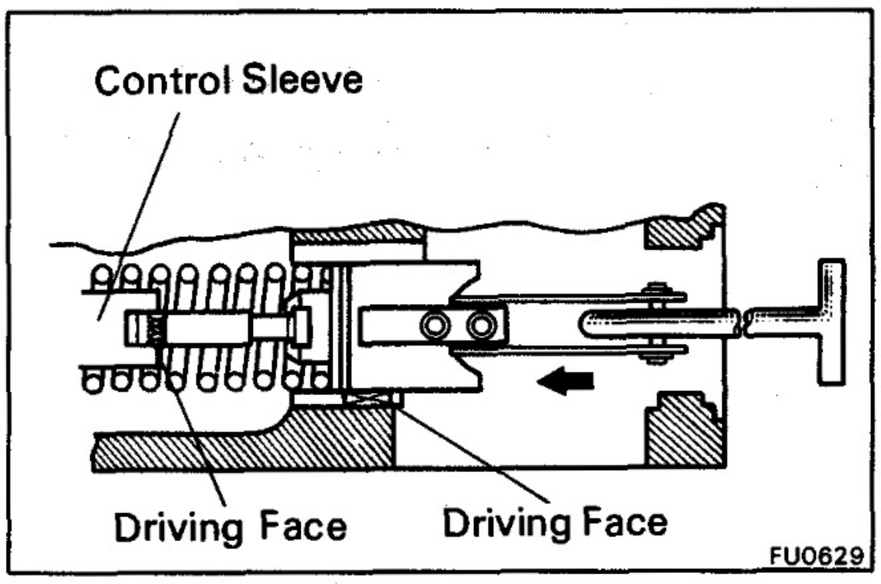

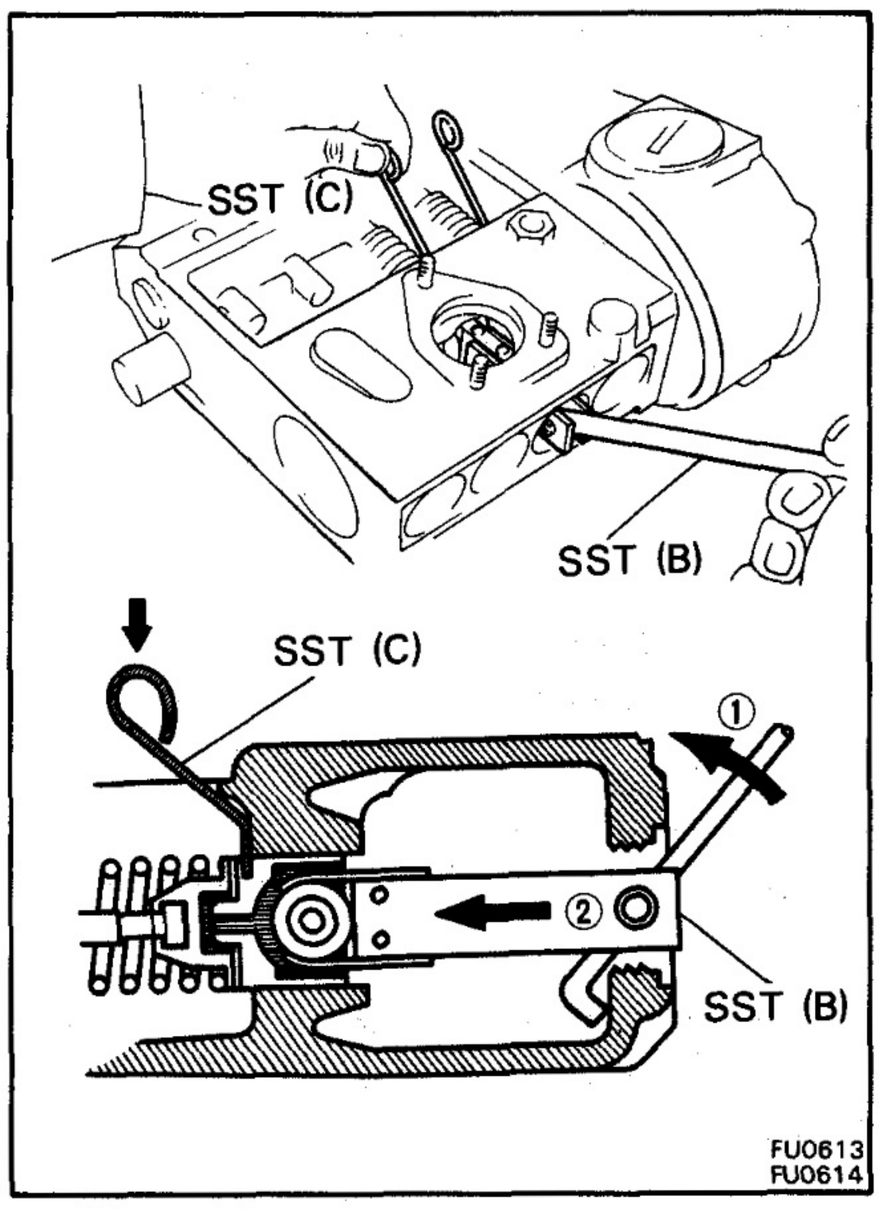

5. INSTALL PLUNGERS AND TAPPETS

(a) Install the upper spring seat and plunger spring.

(b) Assemble the plunger and lower spring seat.

(c) Using SST, insert the plunger and lower seat assembly with the designation mark of the plunger driving face facing pump cover side.

SST B and 3B 09260-46012 (09275-46010)
11B, 13B and 13B-T
09260-58010 (09275-46010)

Designation mark (Example): 5,799

NOTE: After inserting the plunger, turn the lower spring seat a half turn to position the notch facing downward so the plunger will not slip out.

(d) Using SST (A), insert the tappet together with the adjusting shim through the camshaft bearing hole and hold the tappet to SST (B).

SST B and 3B 09260-76017
(09272-76011, 09273-76011)
11B, 13B and 13B-T
09260-58010
(09272-76011, 09273-76011)

(e) Align the driving face of the tappet with the groove of the pump housing.

(f) Align the driving face of the plunger with the groove the control sleeve.

(g) Using SST (B), press in the tappet and insert SST (C) into the tappet service hole.

SST B and 3B 09260-46012 (09274-46011) and
09260-76017 (09272-76011)
11B, 13B and 13B-T
09260-58010
(09272-76011, 09274-46011)

(h) When installing each plunger and tappet, check the control rack for smooth and effortless movement.

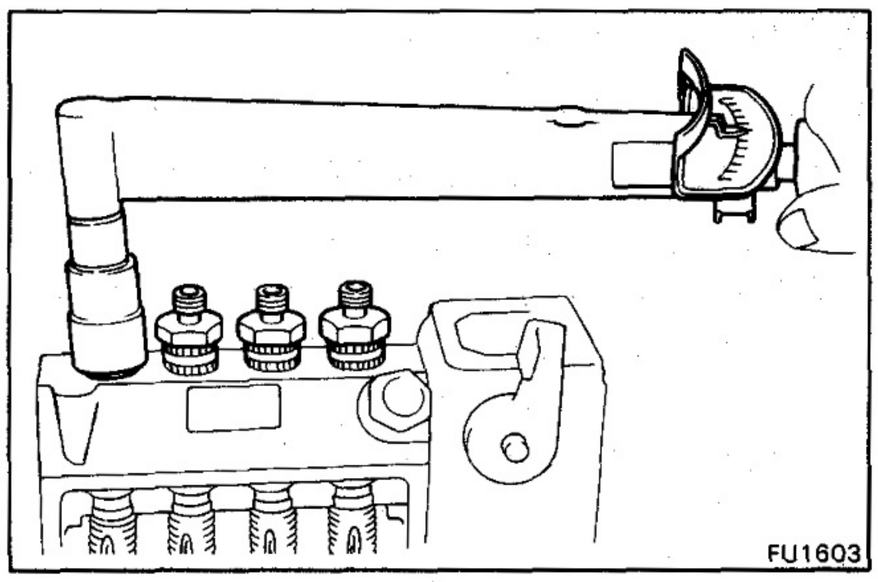

6. TORQUE DELIVERY VALVE HOLDERS

(a) Torque the four delivery valve holders.

Torque: 375 kg-cm (27 ft-lb, 37 N·m)

NOTE: When one delivery valve holder is tightened, move the control rack to the right and left and check the tightness of the rack.

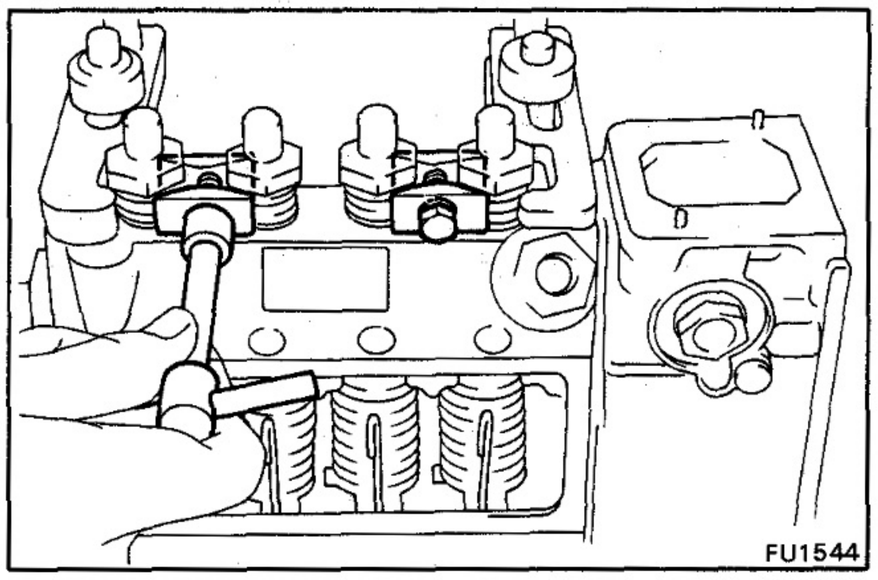

7. CHECK SLIDING RESISTANCE OF CONTROL RACK (See page FU-49)

Sliding resistance: 120 g (4.2 oz) or less

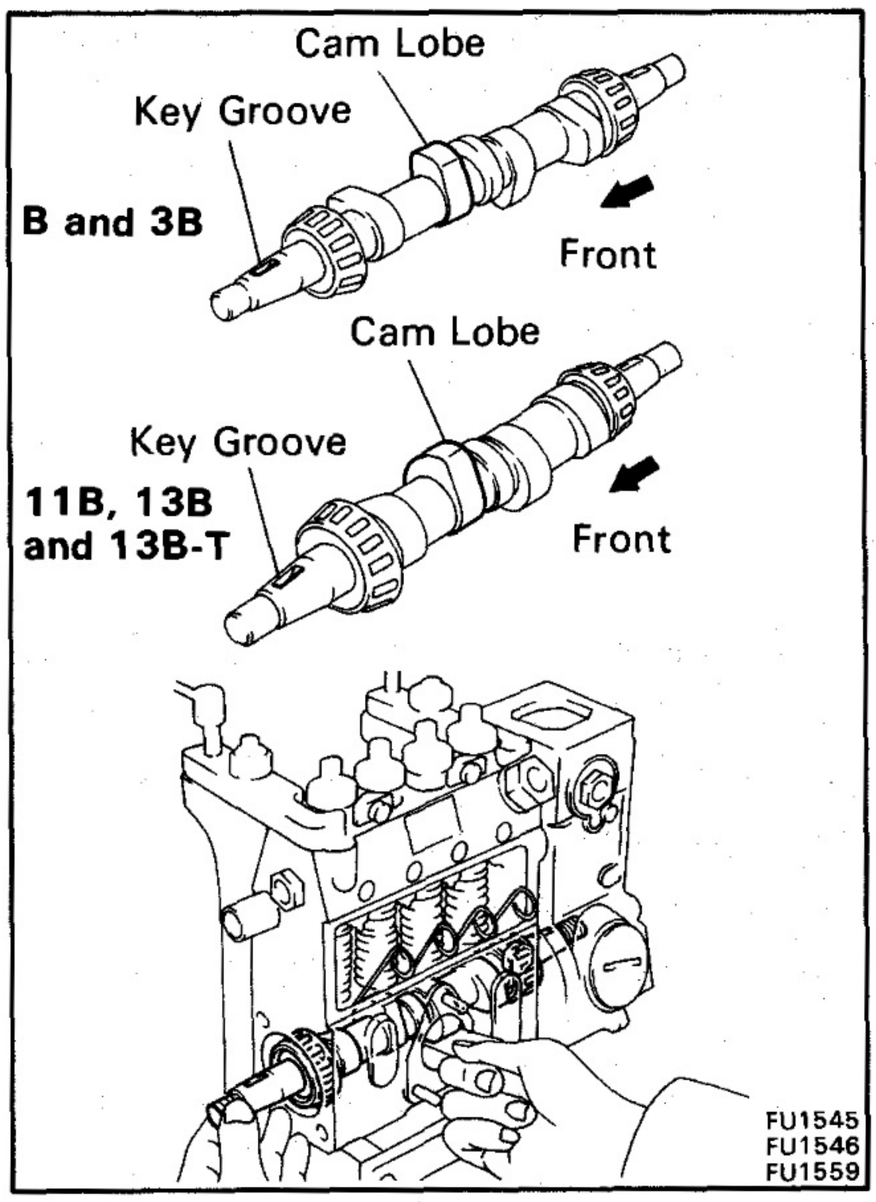

8. INSTALL CAMSHAFT

(a) Insert the camshaft into the pump housing.

CAUTION: Be careful of the installation direction.

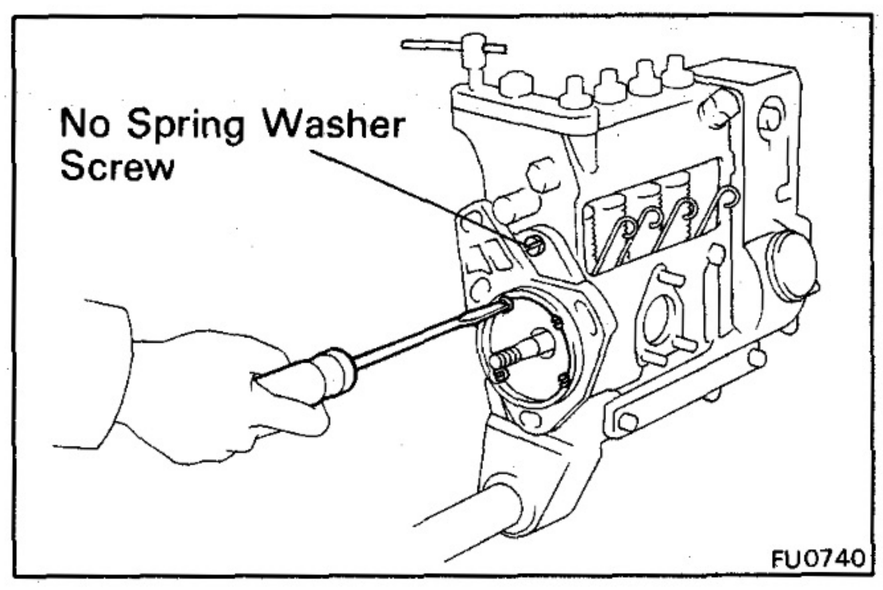

(b) Apply liquid sealer to the screw without the spring washer.

(c) Install a new gasket and the pump flange with the five screws.

9. CHECK CAMSHAFT THRUST CLEARANCE (See page FU-48)

Standard clearance: 0.03 — 0.05 mm (0.0012 — 0.0020 in.)

Maximum clearance: 0.1 mm (0.004 in.)

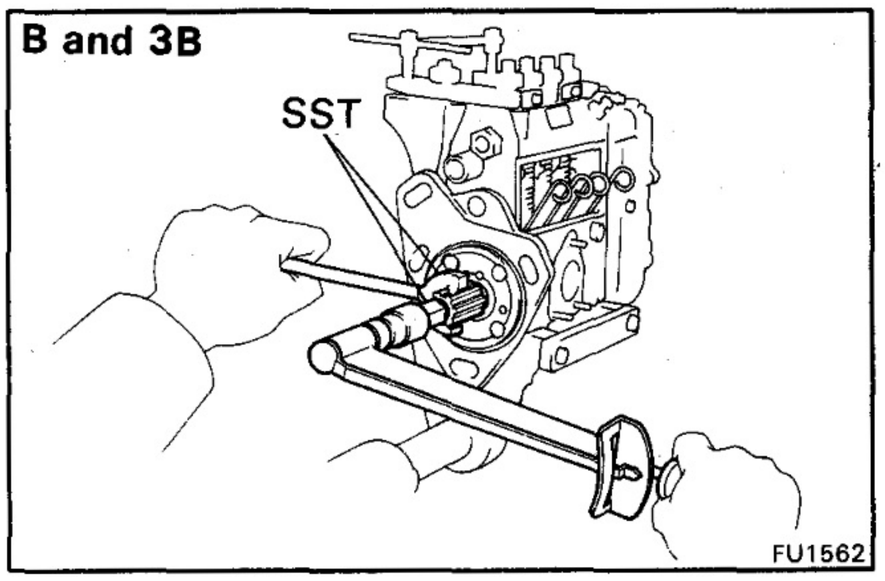

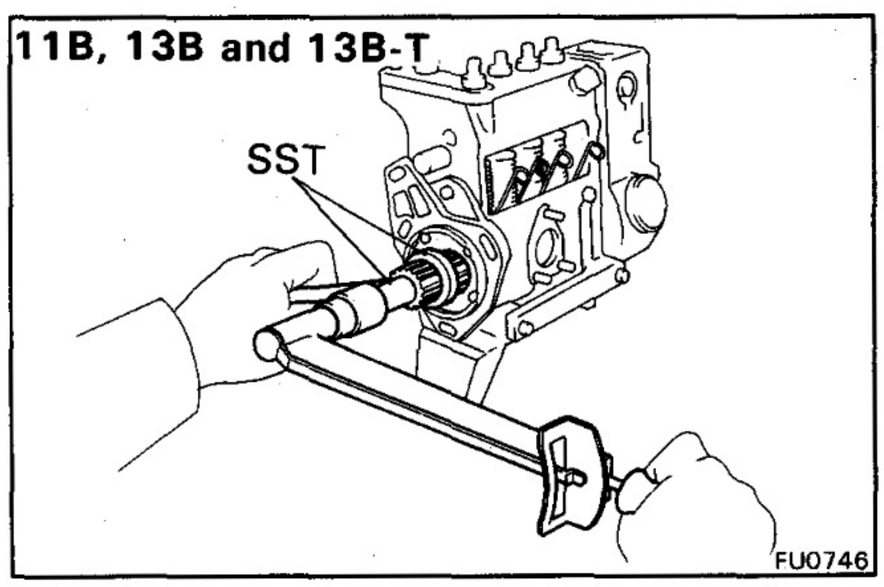

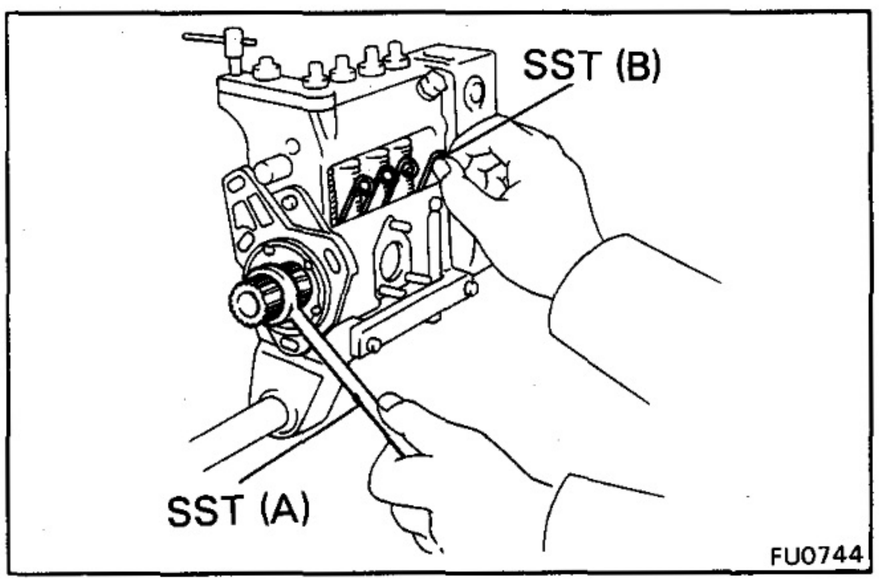

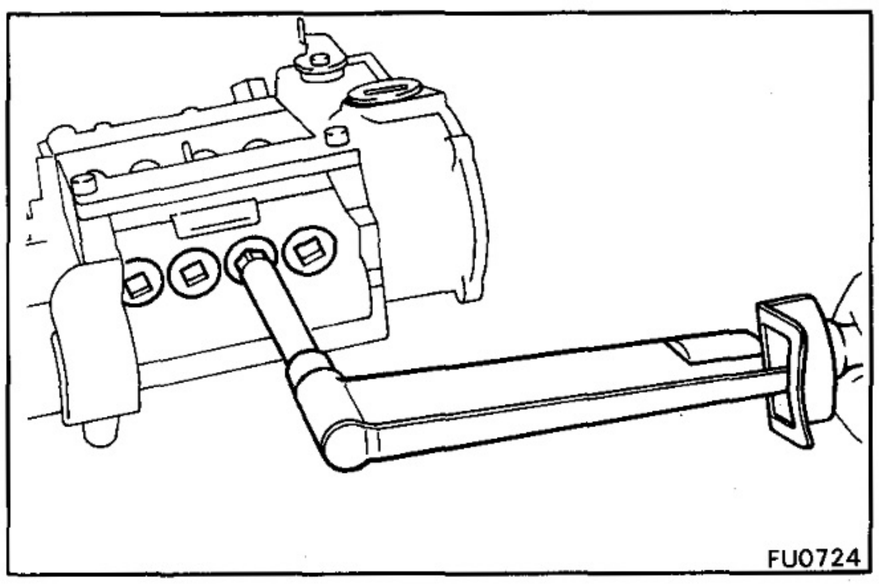

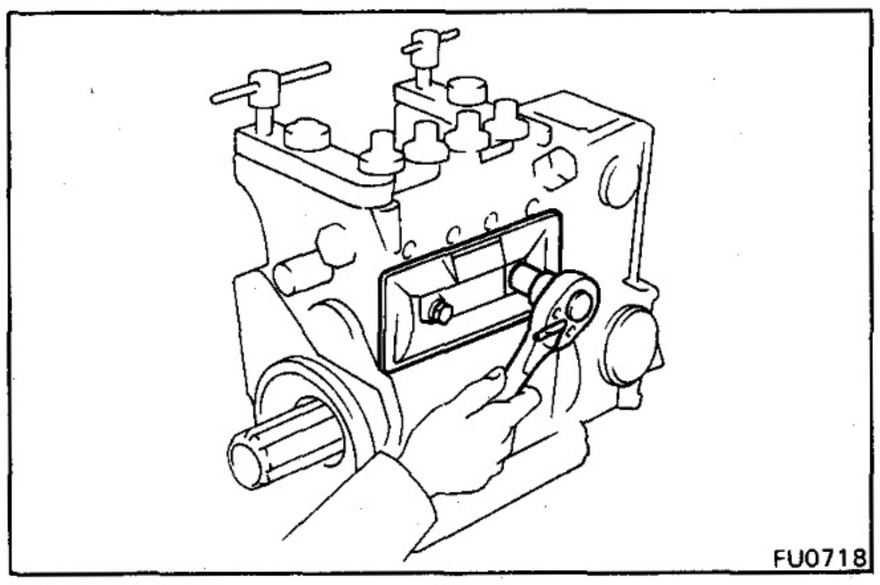

10. INSTALL SPLINE SHAFT

(a) Install the set key on the camshaft.

(b) Align the set key groove of the spline shaft with the set key.

(c) Using SST, install the spline shaft with the spring washer and round nut.

SST B and 3B 09260-46012
(09266-46011, 09278-46010)
11B, 13B and 13B-T
09260-58010
(09266-76011, 09278-46020)

Torque:

B and 3B	**650 kg-cm (47 ft-lb, 64 N·m)**
11B, 13B and 13B-T	**925 kg-cm (69 ft-lb, 91 N·m)**

11. REMOVE SST FROM TAPPET SERVICE HOLES

Using SST (A), turn the camshaft and remove the SST (B).

SST B and 3B 09260-46012
(09274-46011, 09278-46010)
11B, 13B and 13B-T
09260-58010
(09274-46011, 09278-46020)

12. INSTALL PLATE PLUGS

(a) Apply liquid sealer on the threads and under the plate plug heads.

(b) Install the four plate plugs.

Torque: 650 kg-cm (47 ft-lb, 64 N·m)

13. INSTALL PUMP COVER

Install the gasket and pump cover with the two gaskets and bolts.

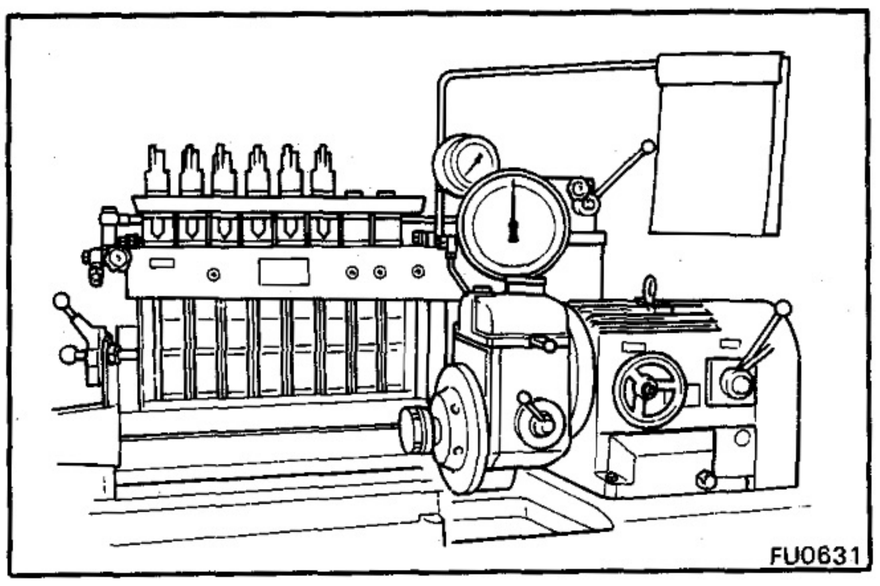
FU0631

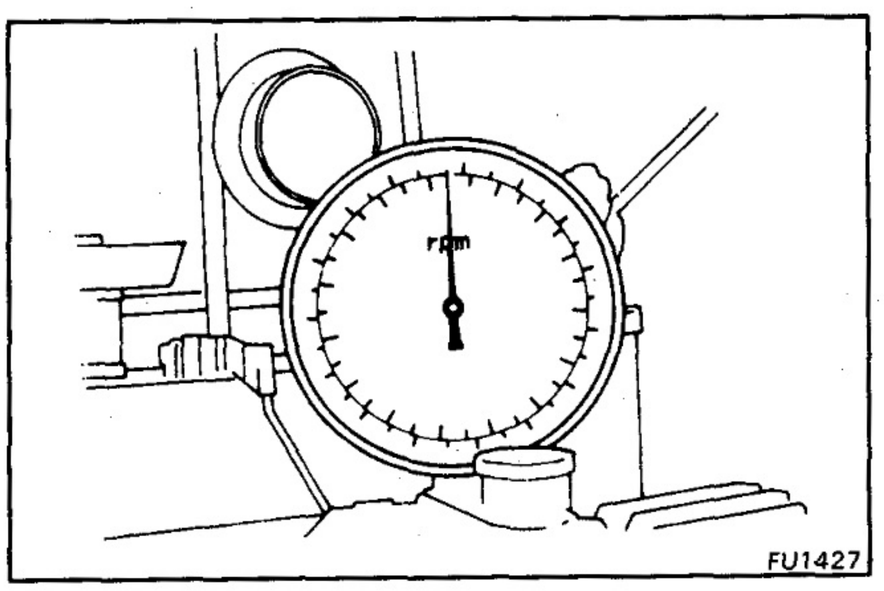

FU1427

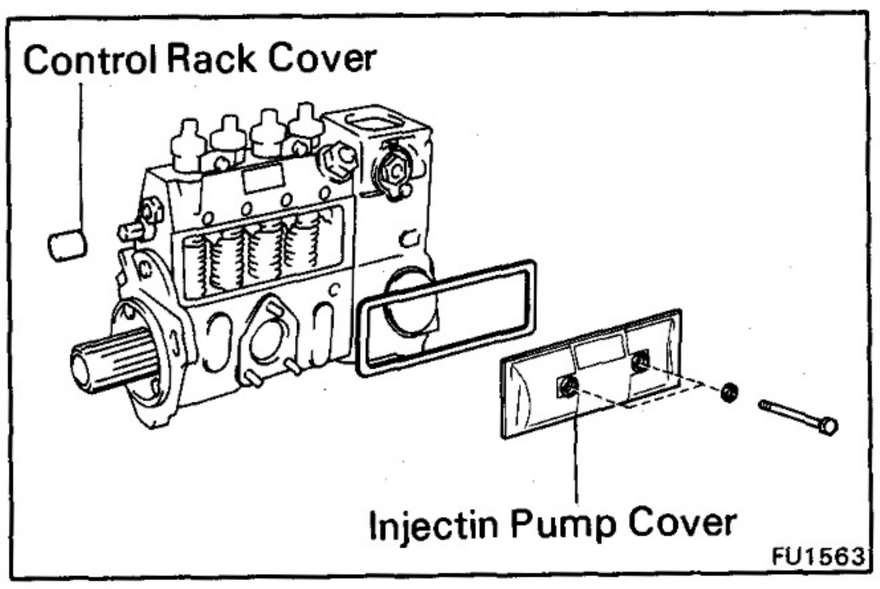

FU1563

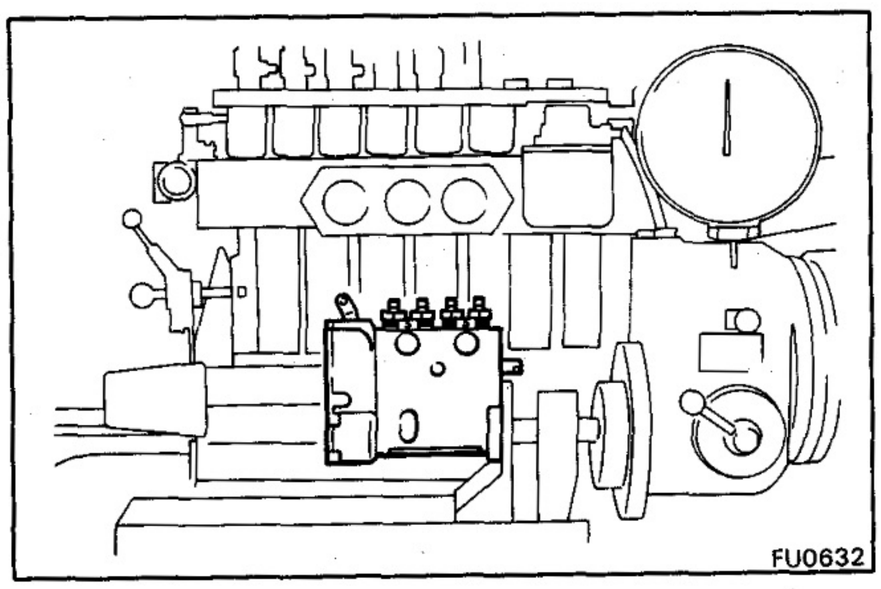
FU0632

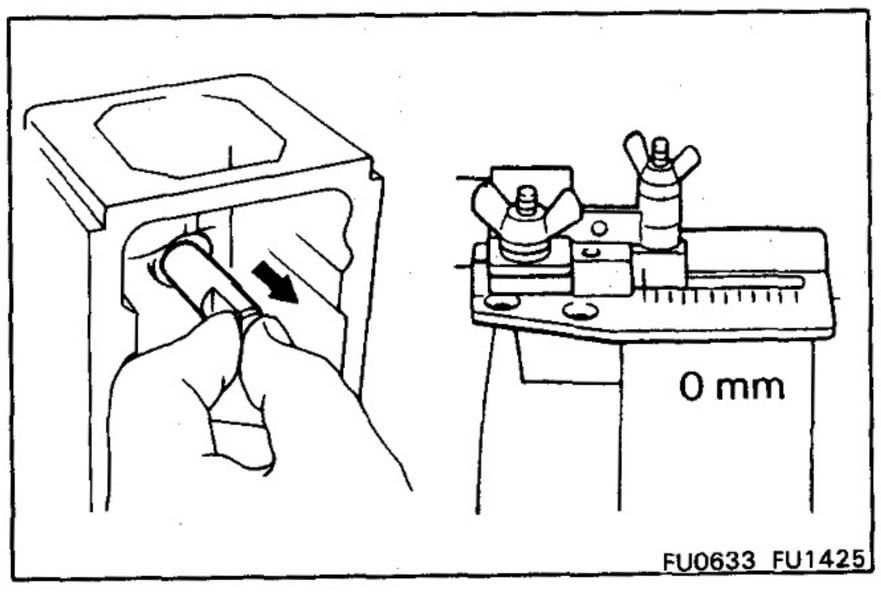

FU0633 FU1425

Adjustment of Pump Body

1. PRE-TEST CHECK AND PREPARATION

(a) The specifications for test nozzles and nozzle holders are as follows:

Test nozzle:

B	**DN 4 SD 24 ND 80**
3B	**DN4 SDND 135**
11B, 13B and 13B-T	**DN 12 SD 12A**

Test nozzle holder valve opening pressure;

B and 3B	**115 – 125 kg/cm² (1,636 – 1,778 psi) (11,278 – 12,258 kPa)**
11B, 13B and 13B-T	**170 – 180 kg/cm² (2,418 – 2,560 psi) (16,671 – 17,651 kPa)**

(b) Check the accuracy of the tachometer.

Allowable error: ± 40 rpm at 2,000 rpm

(c) Remove the injection pump and control rack covers.

(d) Mount the injection pump body on the pump tester.

(e) Rotate the pump by hand and check that it turns smoothly.

(f) Install the rack scale so that its zero point is at the position where the control rack is pulled fully toward the governor side, and set it to allow easy reading of the scale graduations.

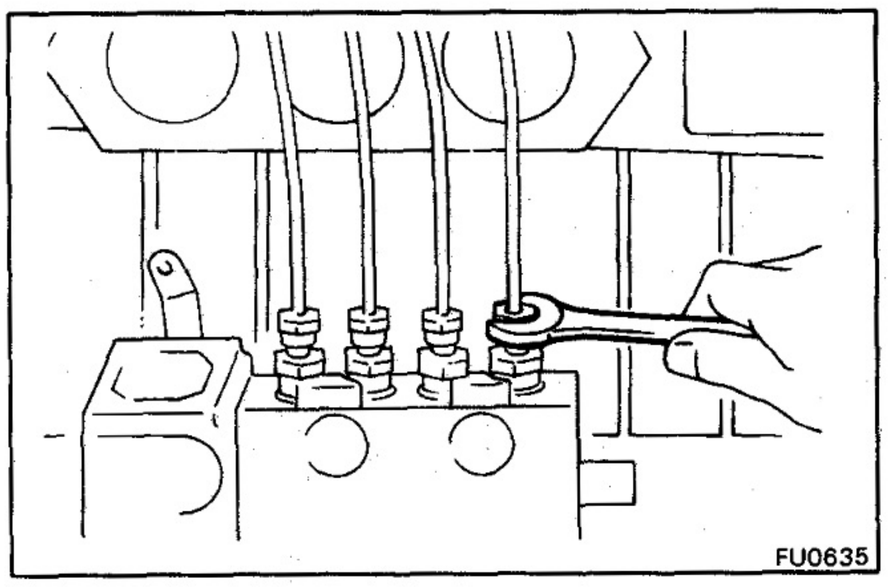

(g) Install the injection pipe with the following specifications:

Outer diameter:	**6.0 mm (0.236 in.)**
Inner diameter:	**2.0 mm (0.079 in.)**
Length:	**600 mm (23.62 in.)**
Minimum bending radius:	**25 mm (0.98 in.) or more**

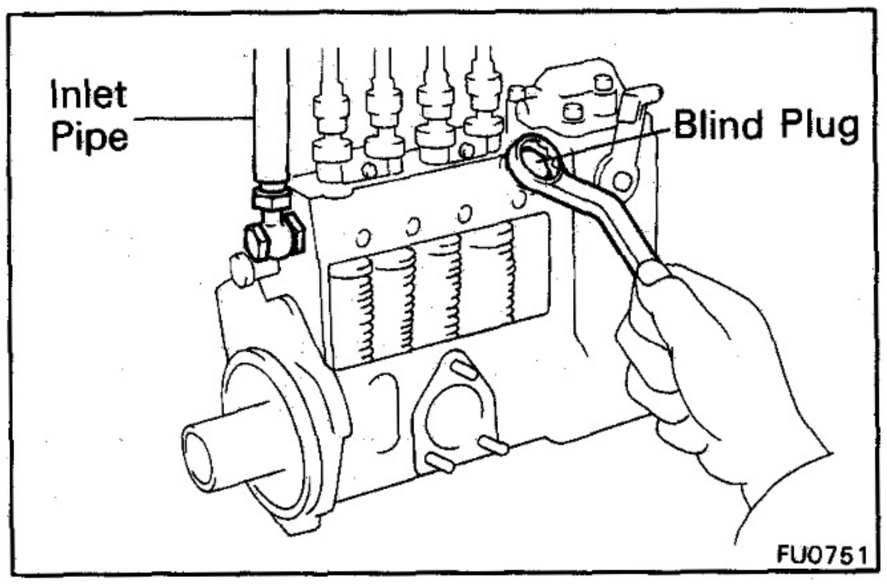

(h) Connect the fuel inlet pipe.

(i) Install the blind plug to the bleeder hole.

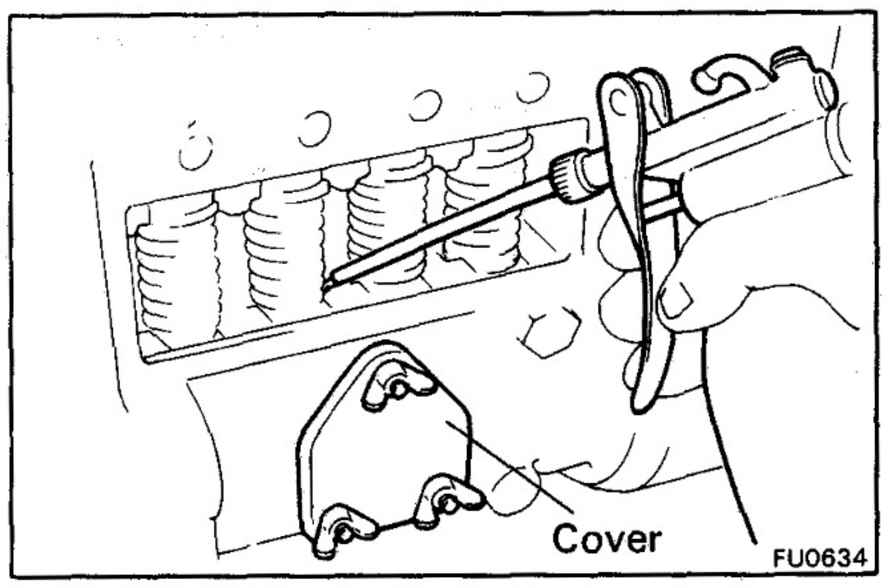

(j) Install the cover to the feed pump installation surface, and fill the pump camshaft chamber with engine oil.

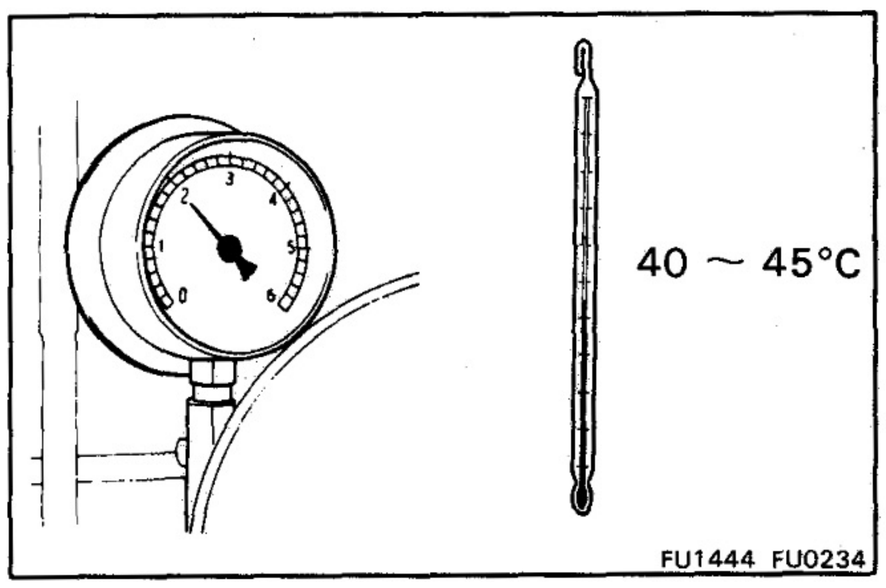

(k) [B and 3B]
Fuel feeding pressure to injection pump should be 0.5 kg/cm² (7.1 psi, 49 kPa).

(l) [11B, 13B and 13B-T]
Fuel feeding pressure to injection pump should be 2.0 kg/cm² (28 psi, 196 kPa).

(m) Fuel temperature for pump testing should be 40 – 45°C (104 – 113°F).

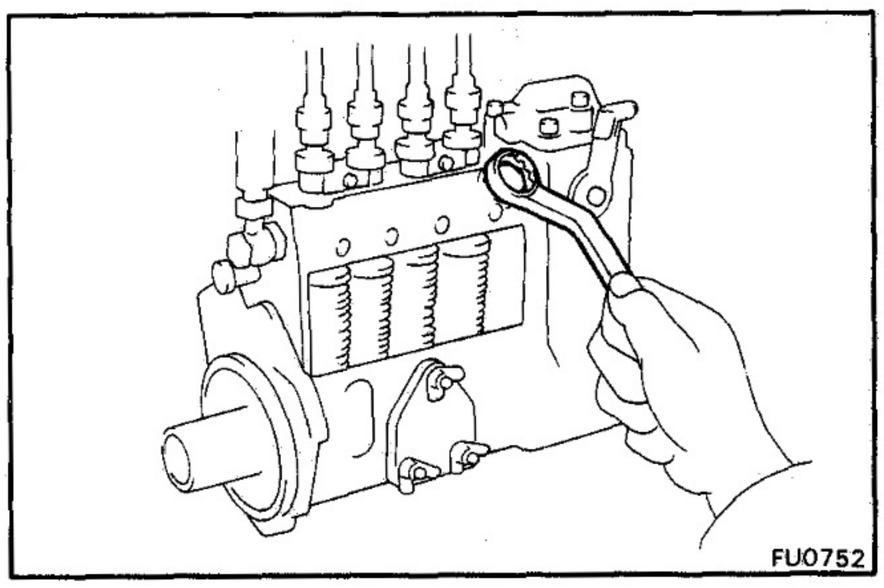

(n) Bleed the air from the pump housing.

NOTE: Be careful that fuel does not enter the pump housing during bleeding.

(o) Race the injection pump to 1,000 rpm for 5 minutes.

CAUTION: Check that there is no fuel leakage or abnormal noise.

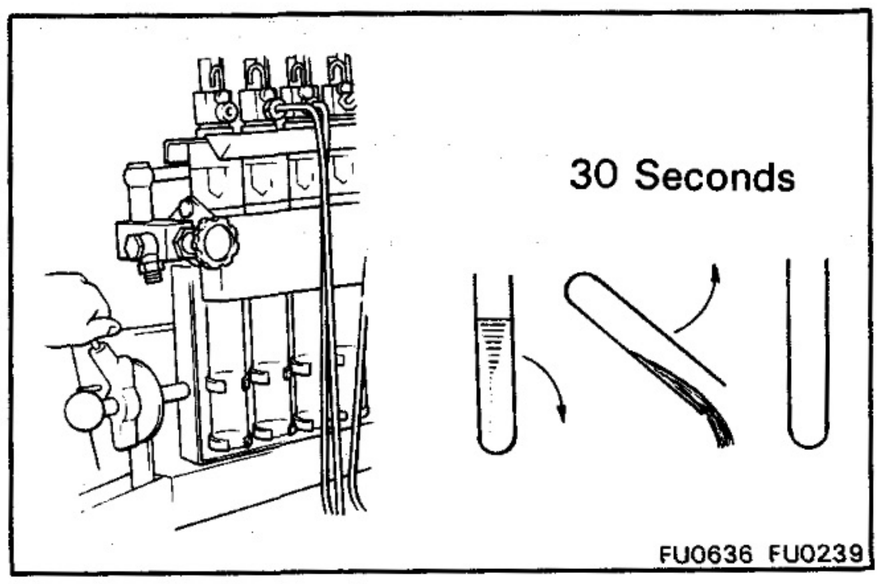

NOTE:
- Measure the volume of each injection cylinder with a measuring cylinder.
- Tilt the measuring cylinder for 30 seconds and pour out the fuel. Then, raise the cylinder upright and measure the next one.
- To obtain an accurate reading, wait until the bubbles in the graduated cylinder disappear before measuring.

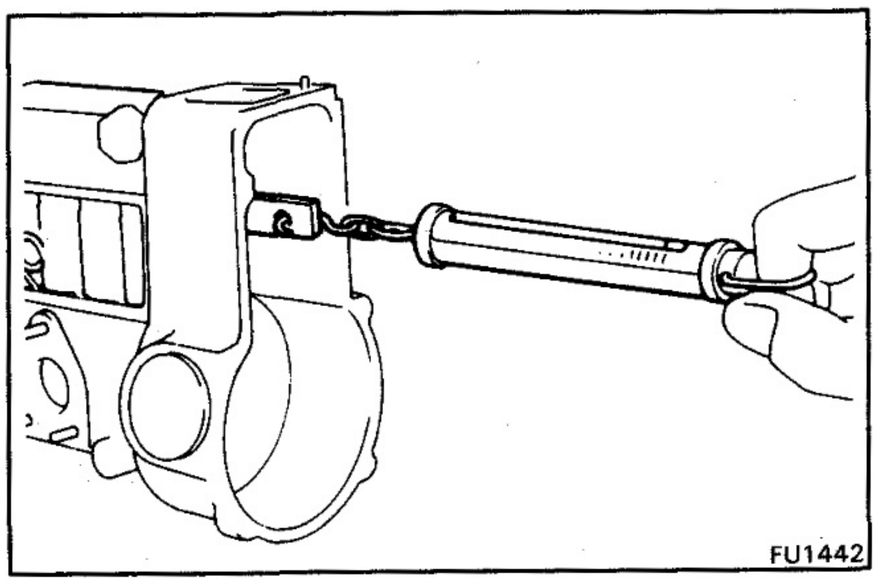

2. CHECK SLIDING RESISTANCE OF CONTROL RACK

Using a spring tension gauge, measure the sliding resistance.

Pump rpm	Sliding resistance g (oz)
0	120 (4.2) or less
1,000	50 (1.8) or less

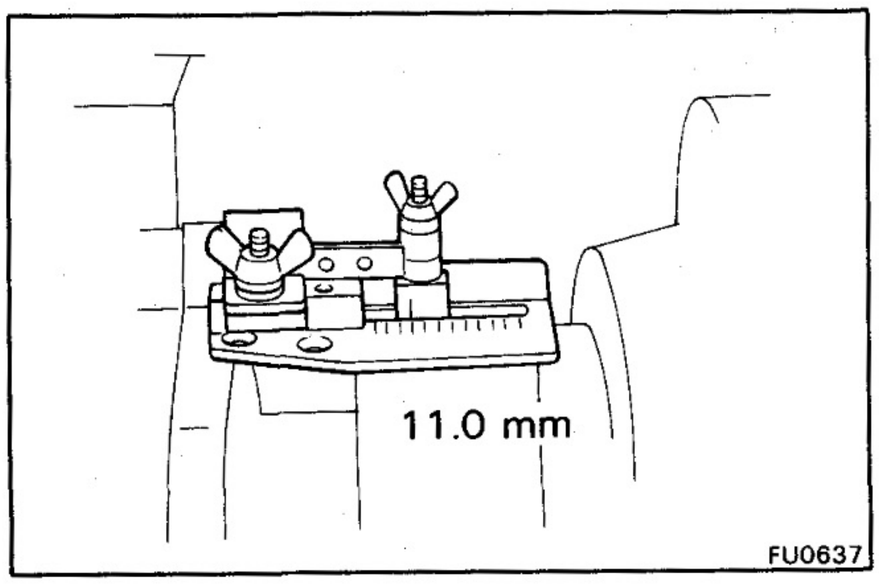

3. ADJUST INJECTION TIMING

A. Adjust pre-stroke for No. 1 Plunger

(a) Set the control rack position at 11.0 mm (0.433 in.).

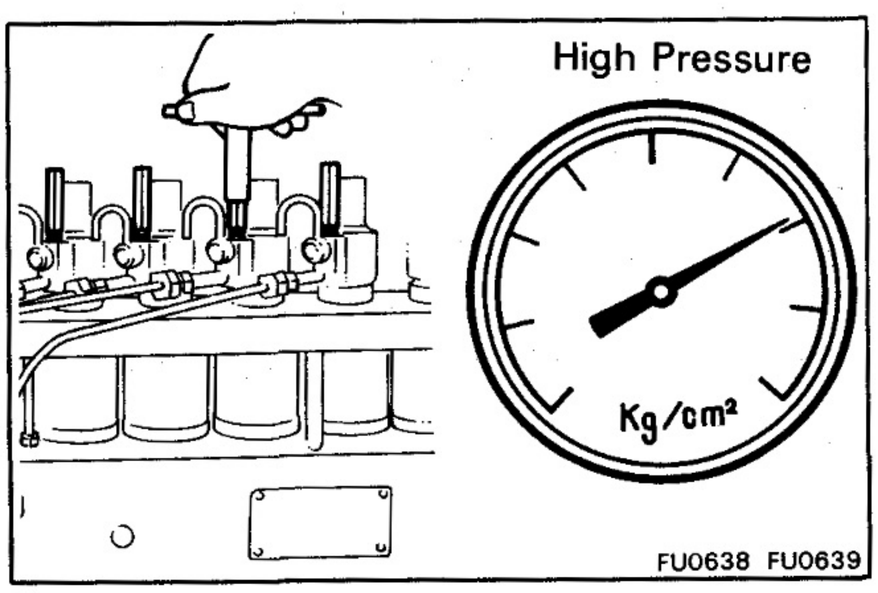

(b) Loosen the overflow cock of the pump tester bench nozzle holder.

(c) Fuel feeding pressure to the injection pump should be on the high side.

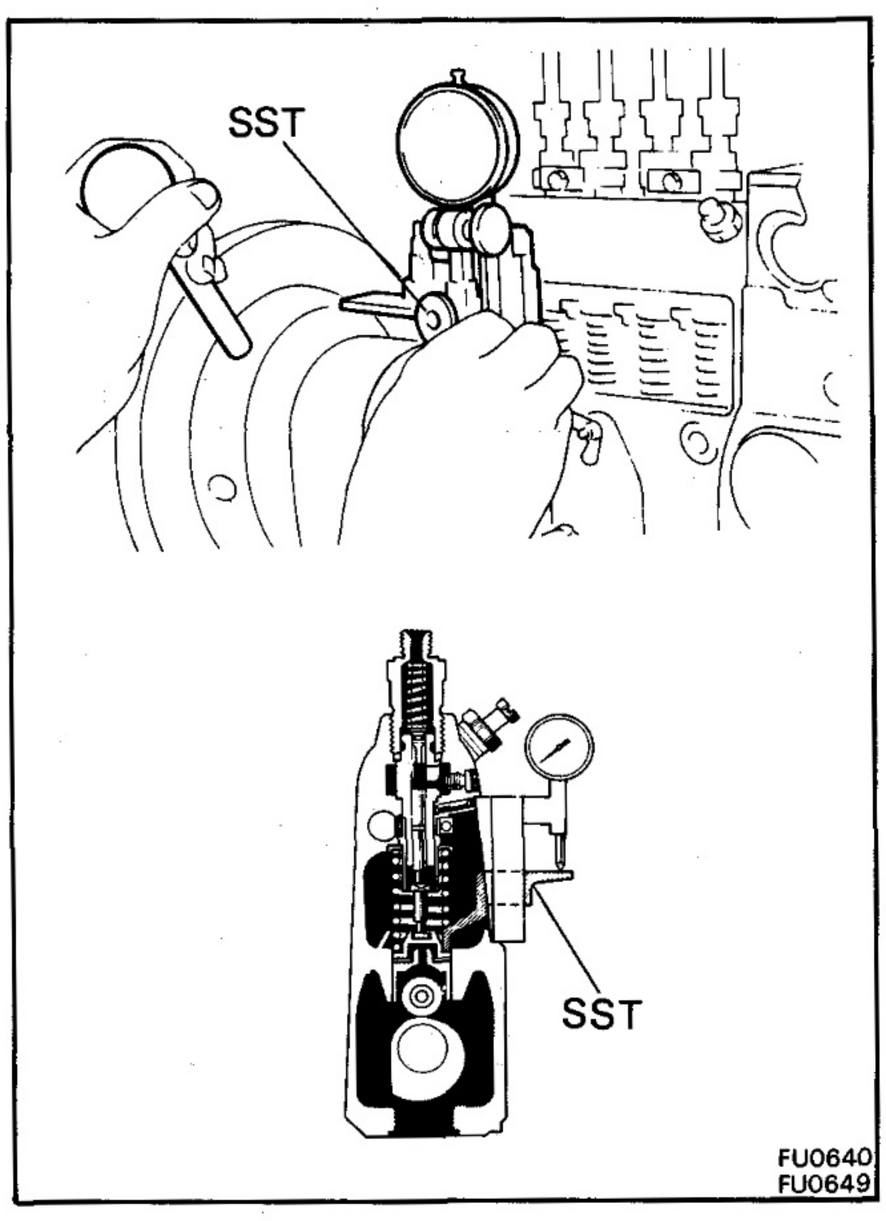

(d) Using SST, set the No. 1 tappet to BDC position, and then set the dial gauge on the No. 1 tappet.

SST B and 3B 09260-46012 (09283-46010)
11B, 13B and 13B-T
09260-58010 (09283-46010)

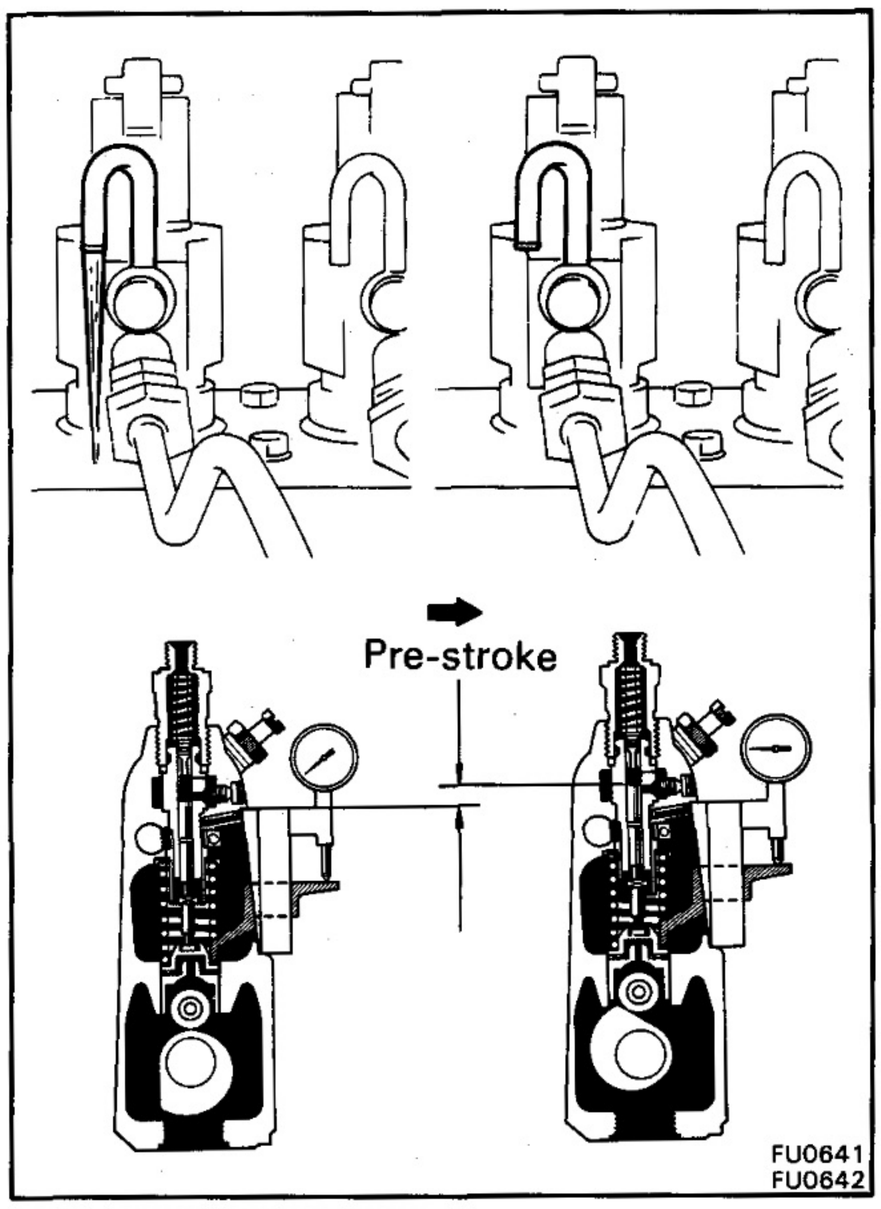

(e) Rotate the camshaft clockwise, and measure the lift of the No. 1 plunger when it moves from BDC to the injection starting position (the point where fuel flowing from the overflow pipe stops).

Pre-stroke:

B and 3B	**1.90 — 2.00 mm (0.0748 — 0.0787 in.)**
11B, 13B and 13B-T	**3.05 — 3.15 mm (0.1201 — 0.1240 in.)**

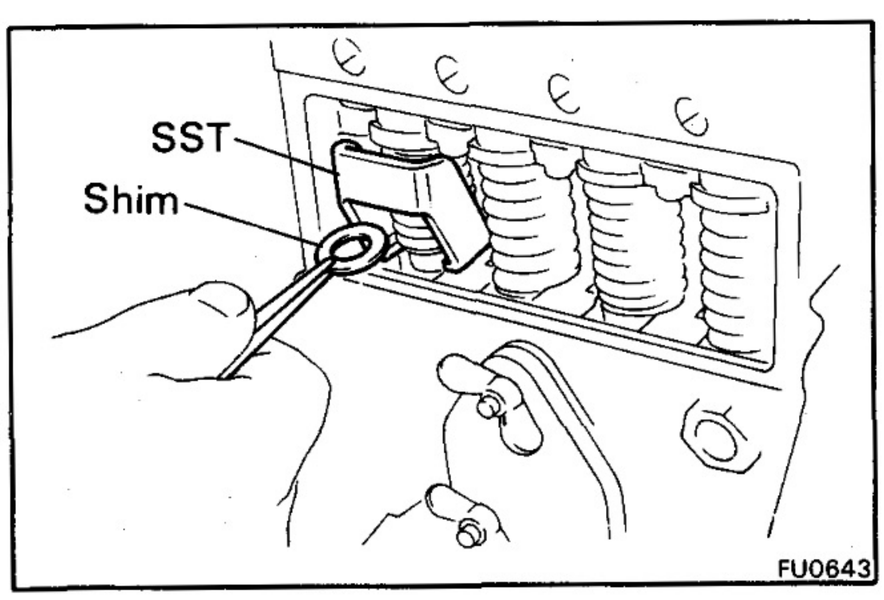

(f) Using SST, adjust by changing the adjusting shim.

SST B and 3B 09260-46012 (09280-46010)
11B, 13B and 13B-T
09260-58010 (09280-46010)

Adjusting shim thickness:

0.10 mm (0.0039 in.)
0.15 mm (0.0059 in.)
0.20 mm (0.0079 in.)
0.30 mm (0.0118 in.)
0.40 mm (0.0158 in.)
0.50 mm (0.0197 in.)

Adjusting shim thickness (cont'd):
0.60 mm (0.0236 in.)
0.70 mm (0.0276 in.)
0.80 mm (0.0315 in.)
0.90 mm (0.0354 in.)
1.00 mm (0.0394 in.)
1.10 mm (0.0433 in.)
1.20 mm (0.0472 in.)
1.30 mm (0.0519 in.)
1.40 mm (0.0551 in.)

NOTE:
- The pre-stroke will increase with a decrease in shim thickness and decrease with an increase.
- When adjusting the pre-stroke, the matchmarks placed on the pump and pump retainer during disassembly may not align. Therefore, make a note of the pre-stroke value for installation of the pump retainer.

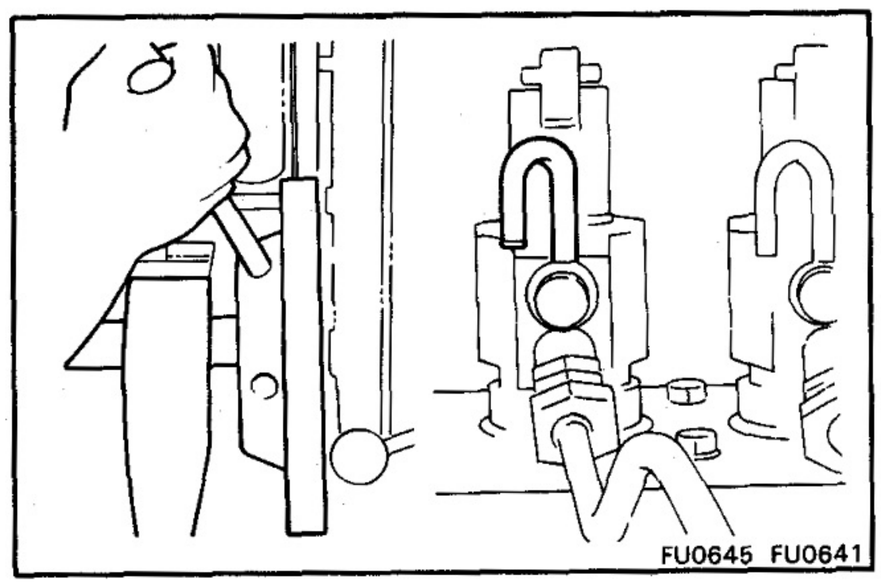
FU0645 FU0641

B. Adjust Injection Interval

(a) Using the No. 1 cylinder injection starting time position as a base, measure the injection starting angles in the order of injection.

Cylinder No.	Injection starting angle
1	0°
3	89°30′ – 90°30′
4	179°30′ – 180°30′
2	269°30′ – 270°30′

(b) Adjust by using the same procedure as pre-stroke adjustment.

NOTE: The injection starting angle will change about 30′ with 0.1 mm (0.004 in.) change is shim thickness.

C. Adjust Tappet Clearance

(a) Using SST (A), Insert the 0.2 mm (0.008 in.) gauge of SST (B) between the spring lower seat and adjusting shim, and rotate the camshaft slowly.

SST B and 3B 09260-46012 (09280-46010) and 09288-46011
11B, 13B and 13B-T
09260-58010 (09280-46010) and 09288-46011

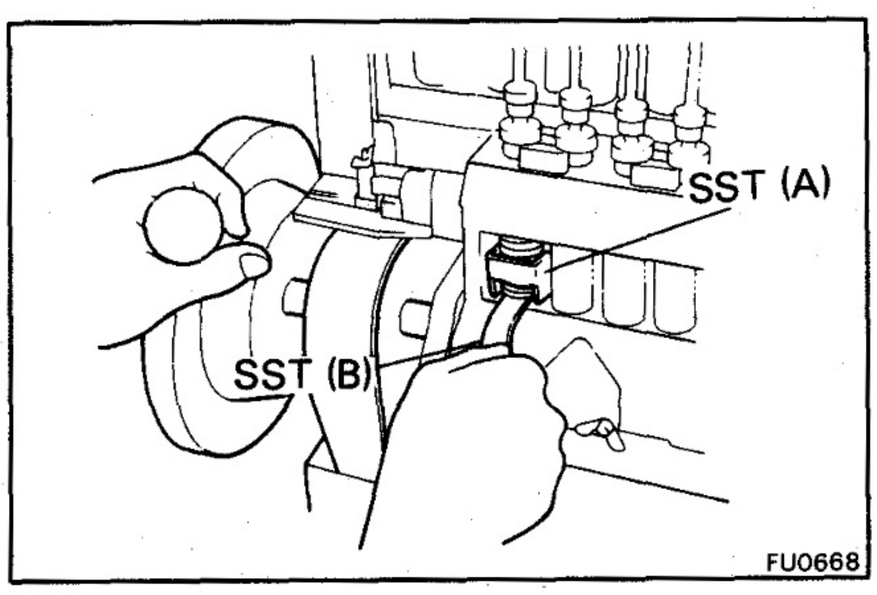

FU0668

Tappet clearance: 0.2 mm (0.008 in.) or more

CAUTION: If there is interference between the plunger driving face and lower portion of the cylinder, or if resistance is felt while rotating the camshaft, it indicates that there is less than 0.2 mm (0.008 in.) clearance so/do not rotate it any further.

(b) If the tappet clearance is less than specification recheck the pre-stroke.

Pre-stroke:

B and 3B	**1.90 – 2.00 mm (0.0748 – 0.0787 in.)**
11B, 13B and 13B-T	**3.05 – 3.15 mm (0.1201 – 0.1240 in.)**

(c) Recheck the injection interval.

Cylinder No.	Injection starting angle
1	0°
3	89°30′ – 90°30′
4	179°30′ – 180°30′
2	269°30′ – 270°30′

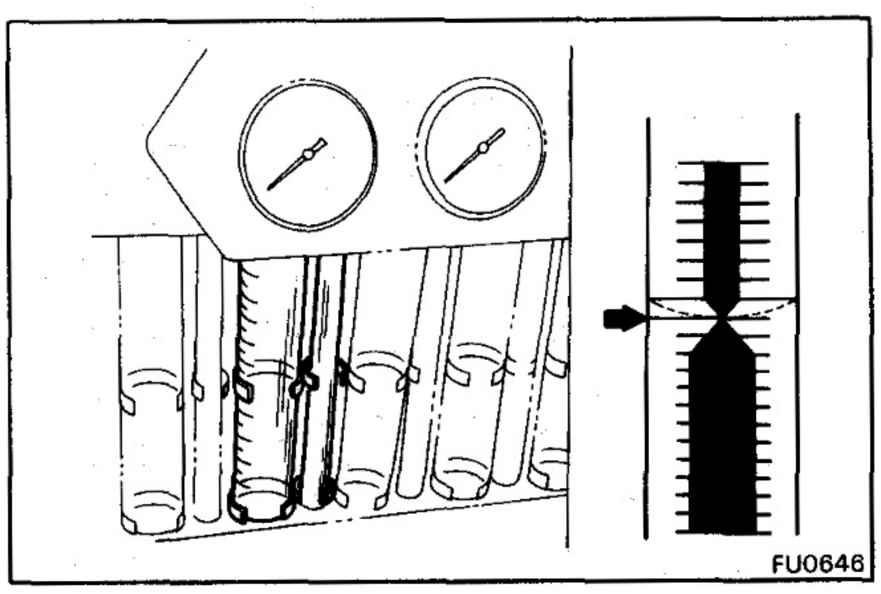

4. ADJUST INJECTION VOLUME

(a) Remove the blind plug from the bleeder hole and install an overflow valve.

(b) Measure each injection volume.

Item	Control rack position mm (in.)	Pump rpm	Measuring stroke	Injection volume of each cylinder cc (cu in.)	Variation limit cc (cu in.)
B	16.0 (0.630)	100	200	14.0 – 16.0 (0.85 – 0.98)	1.2 (0.07)
	8.6 (0.339)	1,000	200	4.6 – 5.6 (0.28 – 0.34)	0.4 (0.02)
	11.7 (0.460)	1,100	200	10.0 – 10.6 (0.61 – 0.65)	0.4 (0.02)
	11.7 (0.460)	1,700	200	10.4 – 11.4 (0.63 – 0.70)	0.6 (0.04)
	6.5 (0.256)	325	500	2.5 – 4.5 (0.15 – 0.34)	1.0 (0.06)
3B (Cold weather spec. Part No. 22100-58022)	17.5 (0.689)	100	200	13.5 – 16.5 (0.82 – 1.01)	1.8 (0.11)
	8.0 (0.315)	1,000	200	4.3 – 5.1 (0.26 – 0.31)	0.6 (0.04)
	12.9 (0.508)	1,100	200	11.1 – 11.7 (0.68 – 0.71)	0.6 (0.04)
	12.9 (0.508)	1,700	200	11.3 – 12.3 (0.69 – 0.75)	0.9 (0.05)
	6.5 (0.256)	325	500	2.0 – 5.0 (0.12 – 0.31)	1.5 (0.09)
3B (Others)	17.5 (0.689)	100	200	14.0 – 16.0 (0.85 – 0.98)	1.2 (0.07)
	8.0 (0.315)	1,000	200	4.3 – 5.1 (0.26 – 0.31)	0.4 (0.02)
	12.9 (0.508)	1,100	200	11.1 – 11.7 (0.68 – 0.71)	0.4 (0.02)
	12.9 (0.508)	1,700	200	11.3 – 12.3 (0.69 – 0.75)	0.6 (0.04)
	6.5 (0.256)	325	500	2.5 – 4.5 (0.15 – 0.34)	1.0 (0.06)

Cont'd

Item	Control rack position mm (in.)	Pump rpm	Measuring stroke	Injection volume of each cylinder cc (cu in.)	Variation limit cc (cu in.)
11B (w/o HAC)	16.0 (0.630)	100	200	10.0 – 14.0 (0.61 – 0.85)	1.6 (0.10)
	10.4 (0.409)	1,100	200	10.1 – 11.5 (0.62 – 0.70)	0.9 (0.05)
	10.2 (0.402)	1,800	200	8.9 – 10.1 (0.54 – 0.62)	1.2 (0.07)
	Approx. 9.1 (0.358)	325	500	3.5 – 6.5 (0.21 – 0.40)	1.5 (0.09)
11B (w/ HAC)	16.0 (0.630)	100	200	10.0 – 14.0 (0.61 – 0.85)	1.6 (0.10)
	10.4 (0.409)	1,100	200	9.5 – 10.1 (0.58 – 0.62)	0.9 (0.05)
	10.3 (0.406)	1,800	200	9.3 – 10.5 (0.57 – 0.64)	1.2 (0.07)
	Approx. 9.1 (0.358)	325	500	3.5 – 6.5 (0.21 – 0.40)	1.5 (0.09)
13B M/T (w/o HAC)	16.0 (0.630)	100	200	12.4 – 16.4 (0.76 – 1.00)	1.6 (0.10)
	10.5 (0.413)	1,100	200	11.2 – 11.8 (0.68 – 0.72)	0.9 (0.05)
	10.3 (0.406)	1,700	200	10.8 – 12.0 (0.66 – 0.73) *10.8 – 12.2 (0.66 – 0.74)	1.2 (0.07)
	Approx. 9.1 (0.358)	325	500	3.5 – 6.5 (0.21 – 0.40)	1.5 (0.09)
13B M/T (w/ HAC)	16.0 (0.630)	100	200	12.4 – 16.4 (0.76 – 1.00)	1.6 (0.10)
	10.5 (0.413)	1,100	200	11.2 – 11.8 (0.68 – 0.72)	0.9 (0.05)
	10.4 (0.409)	1,700	200	11.3 – 12.3 (0.69 – 0.75)	1.2 (0.07)
	Approx. 9.1 (0.358)	325	500	3.5 – 6.5 (0.21 – 0.40)	1.5 (0.09)
13B A/T	16.0 (0.630)	100	200	18.8 – 22.8 (1.15 – 1.39)	1.6 (0.10)
	10.2 (0.402)	1,100	200	11.2 – 11.8 (0.68 – 0.72)	0.9 (0.05)
	10.0 (0.393)	1,700	200	10.6 – 11.8 (0.65 – 0.72)	1.2 (0.07)
	8.4 (0.331)	400	500	4.25 – 7.25 (0.26 – 0.44)	1.5 (0.09)
13B-T M/T	16.0 (0.630)	100	200	12.4 – 16.4 (0.76 – 1.00)	1.6 (0.10)
	11.1 (0.437)	1,100	200	13.5 – 14.3 (0.82 – 0.87)	0.9 (0.05)
	10.9 (0.429)	1,700	200	12.9 – 13.9 (0.79 – 0.85)	1.2 (0.07)
	Approx. 9.1 (0.358)	325	500	3.5 – 6.5 (0.21 – 0.40)	1.5 (0.09)
13B-T A/T	16.0 (0.630)	100	200	17.6 – 22.8 (1.07 – 1.39)	1.6 (0.10)
	10.8 (0.425)	1,100	200	12.8 – 13.6 (0.78 – 0.83)	0.9 (0.05)
	10.9 (0.429)	1,700	200	13.6 – 14.6 (0.83 – 0.89)	1.2 (0.07)
	8.4 (0.331)	400	500	4.25 – 7.25 (0.26 – 0.44)	1.5 (0.09)

* BB

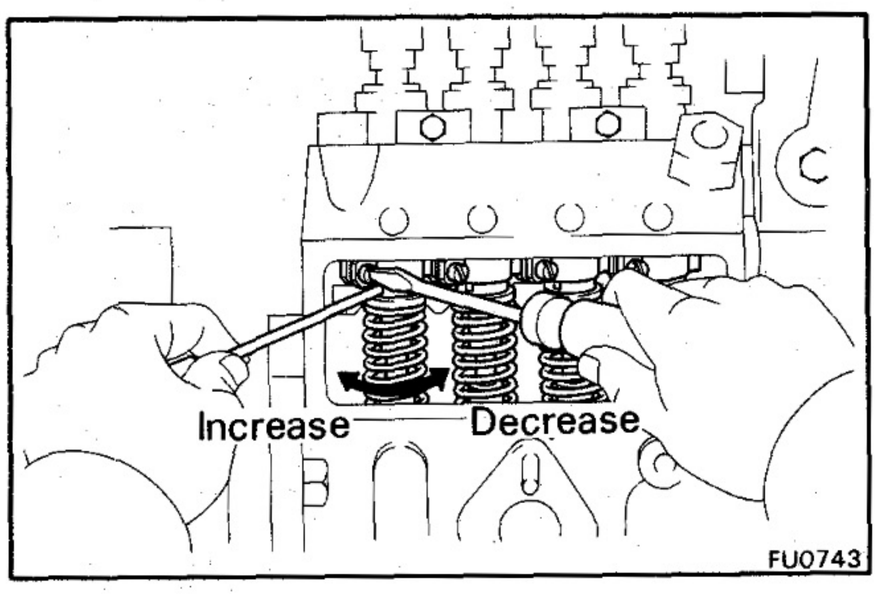

(c) Loosen the clamp screw of the control pinion, and adjust by rotating the control sleeve.

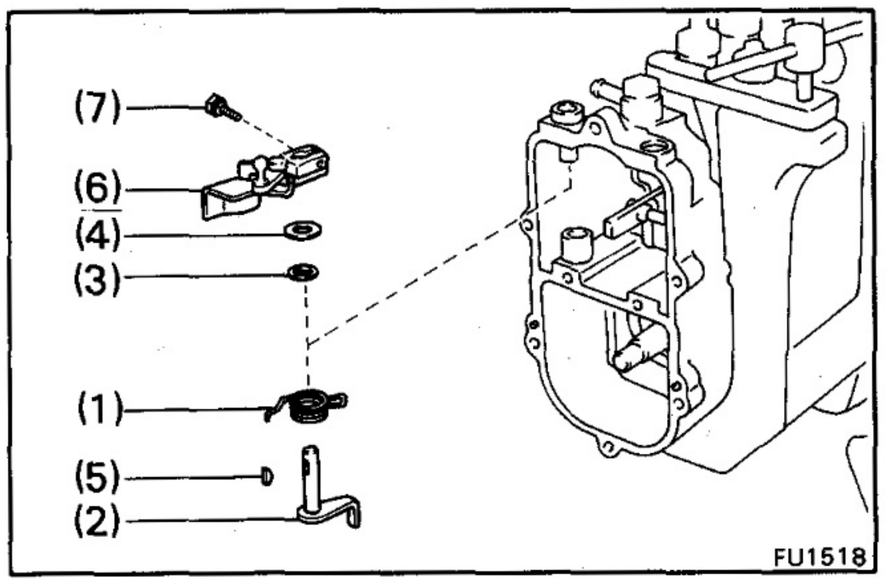

Assembly of Governor [B and 3B]

(See page FU-32)

1. INSTALL STOP AND ADJUSTING LEVERS

(a) Install the following parts:

(1) Return spring
(2) Stop lever
(3) O-ring
(4) Washer
(5) Set key
(6) Adjusting lever
(7) Bolt

Torque: 85 kg-cm (74 in.-lb, 8.3 N·m)

(b) Hook the return spring to the stop lever.

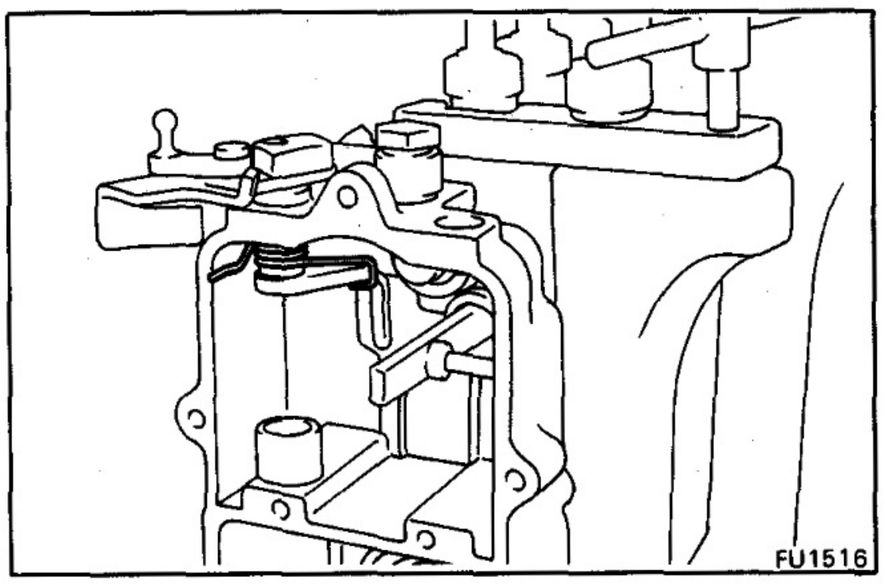

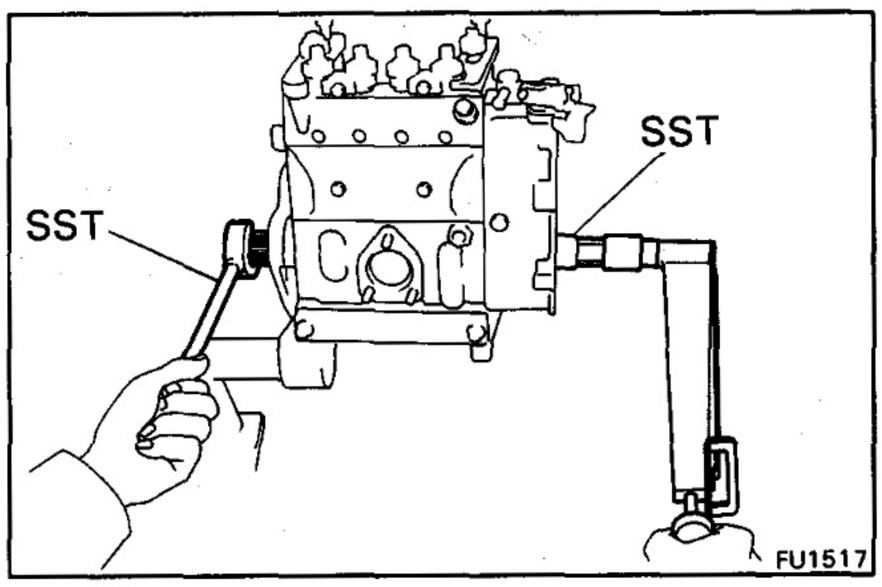

2. INSTALL STEEL BALL GUIDE

Using SST, install the ball guide with the spring washer and round nut.

SST 09260-46012 (09278-46010) and
09260-76017 (09266-67011)

Torque: 550 kg-cm (40 ft-lb, 54 N·m)

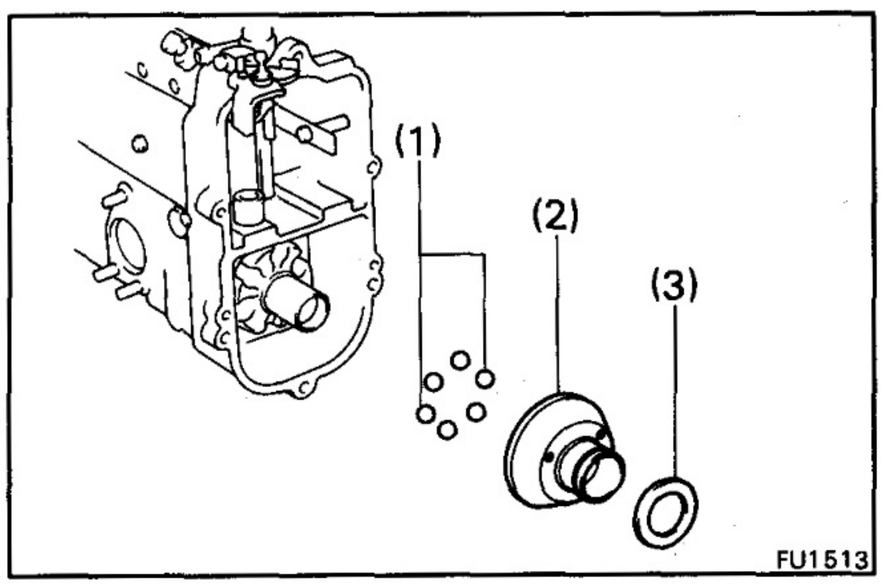

3. INSTALL STEEL BALLS AND SLIDER

Install the following parts:

(1) Six steel balls
Apply MP grease to the steel balls.
(2) Slider
(3) Plate washer (thick)

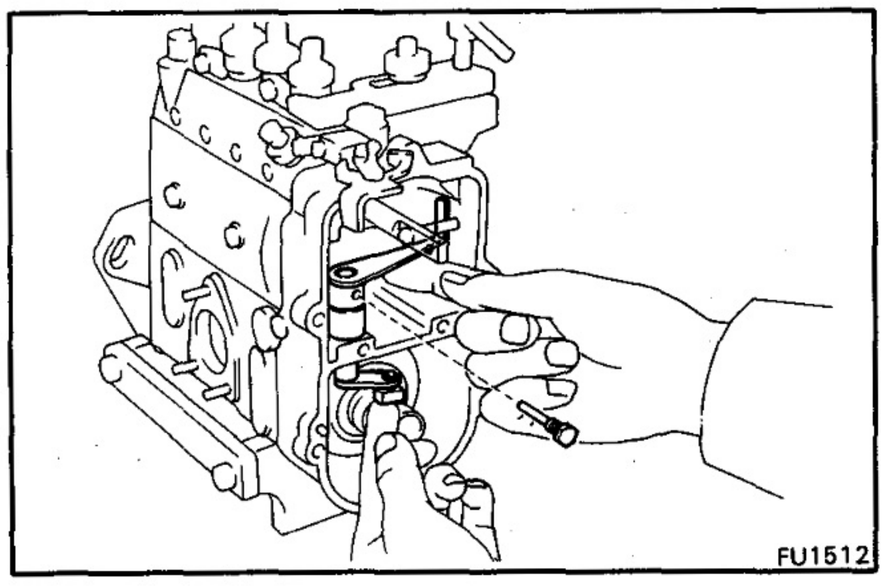

4. INSTALL CONTROL RACK LEVERS

(a) Install the upper control lever, plate washer and lower control lever.

(b) Install the shifting pin.

(c) Install the bolt.

Torque: 55 kg-cm (48 in.-lb, 5.4 N·m)

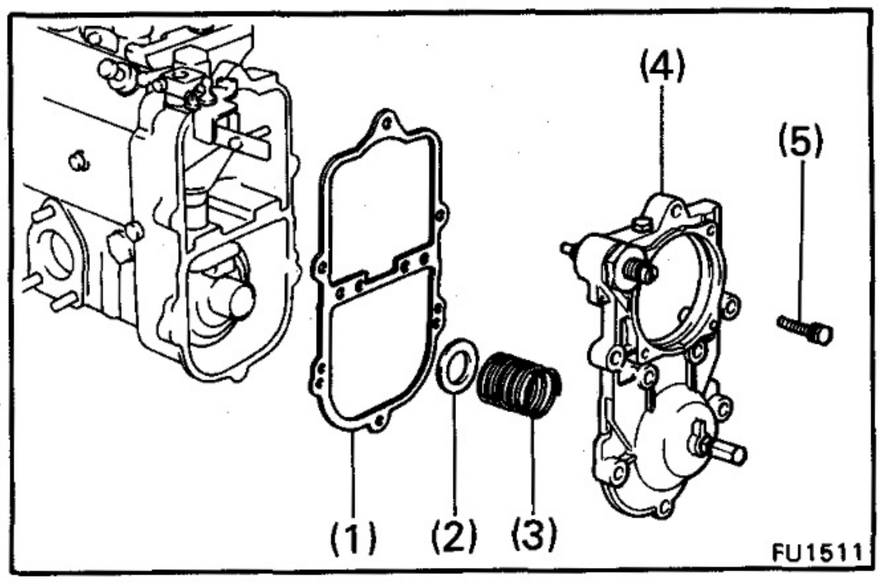

5. INSTALL SPEED CONTROL SPRING AND GOVERNOR COVER

Install the following parts:

(1) New gasket
(2) Spring seat (thin)
(3) Speed control spring
(4) Governor cover
(5) Six bolts

Torque: 85 kg-cm (74 in.-lb, 8.3 N·m)

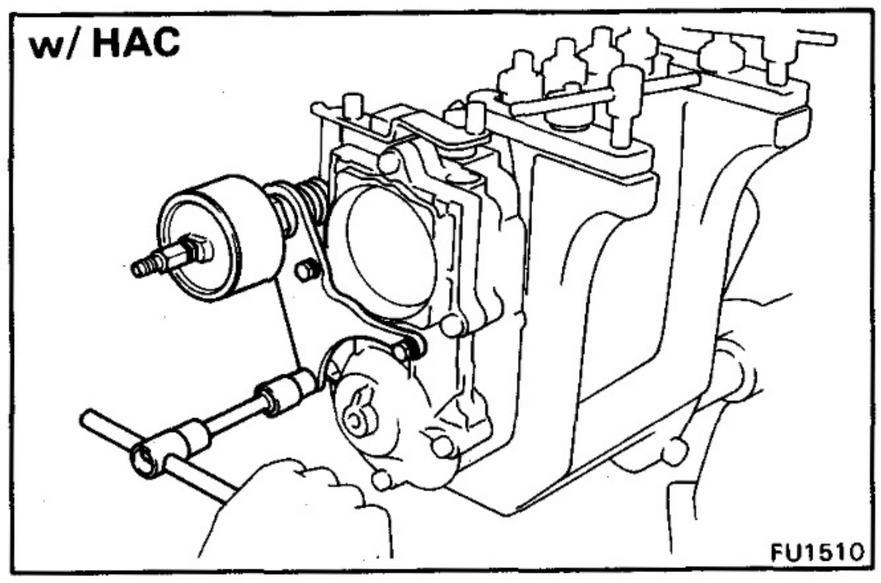

6. [w/ HAC]
INSTALL HIGH ALTITUDE COMPENSATOR (HAC)

Install the HAC with the three bolts.

Torque: 85 kg-cm (74 in.-lb, 8.3 N·m)

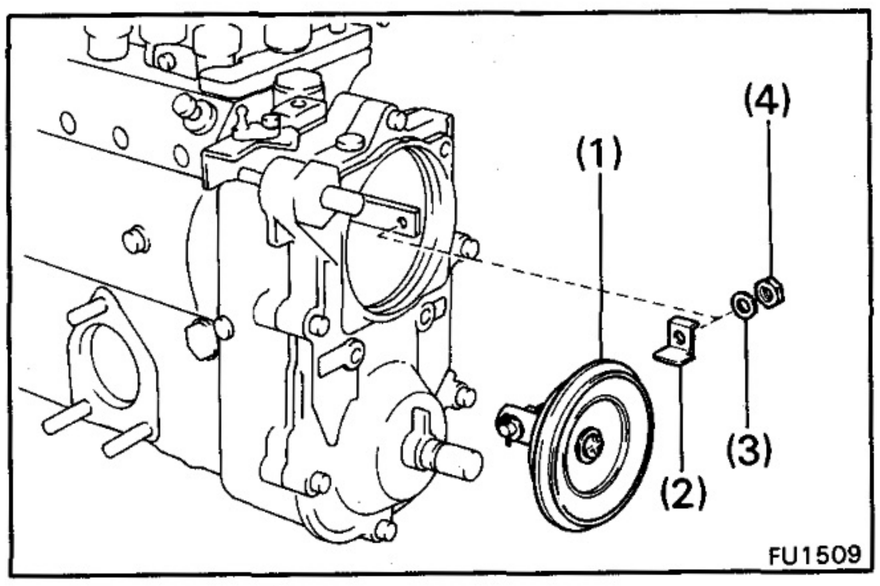

7. INSTALL GOVERNOR DIAPHRAGM

(a) Install the following parts:

(1) Governor diaphragm
(2) Connecting bracket
(3) Spring washer
(4) Nut

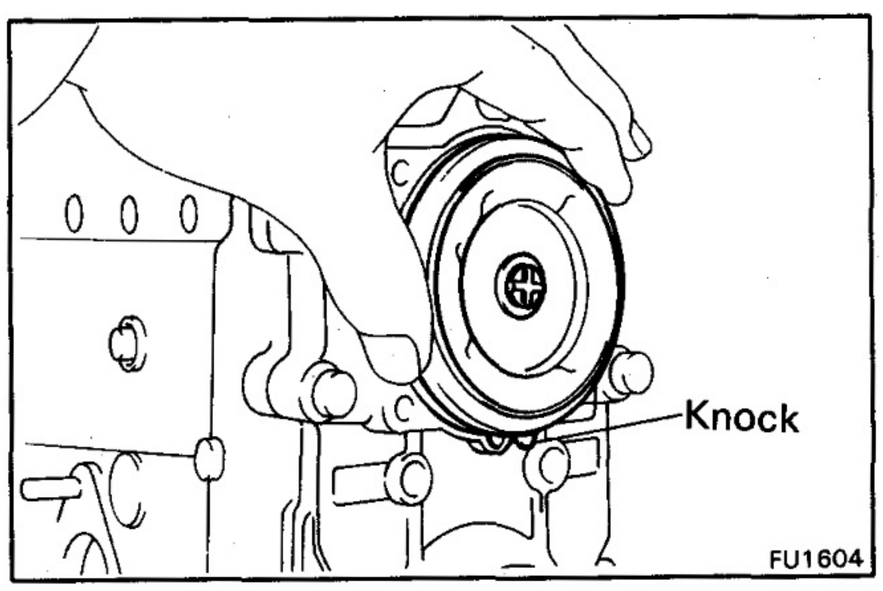

(b) Align the knock of the governor diaphragm with the knock groove of the governor cover.

(c) Insert the governor diaphragm into the governor cover.

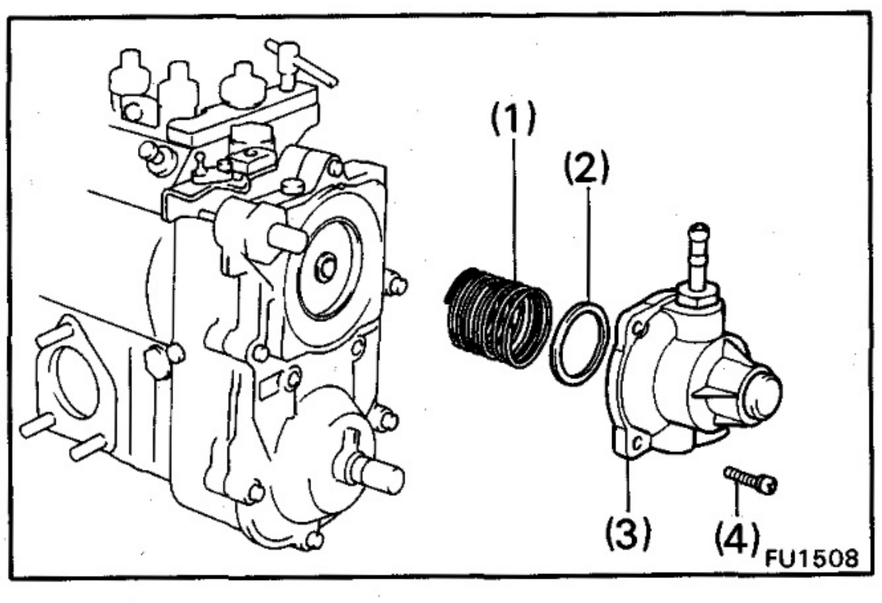

8. INSTALL GOVERNOR MAIN SPRING AND GOVERNOR DIAPHRAGM HOUSING

Install the following parts:

(1) Governor main spring
(2) Adjusting shim(s)
(3) Governor diaphragm housing
(4) Four screws

Adjustment of Governor [B and 3B]

Governor Charactecristic Diagram

B

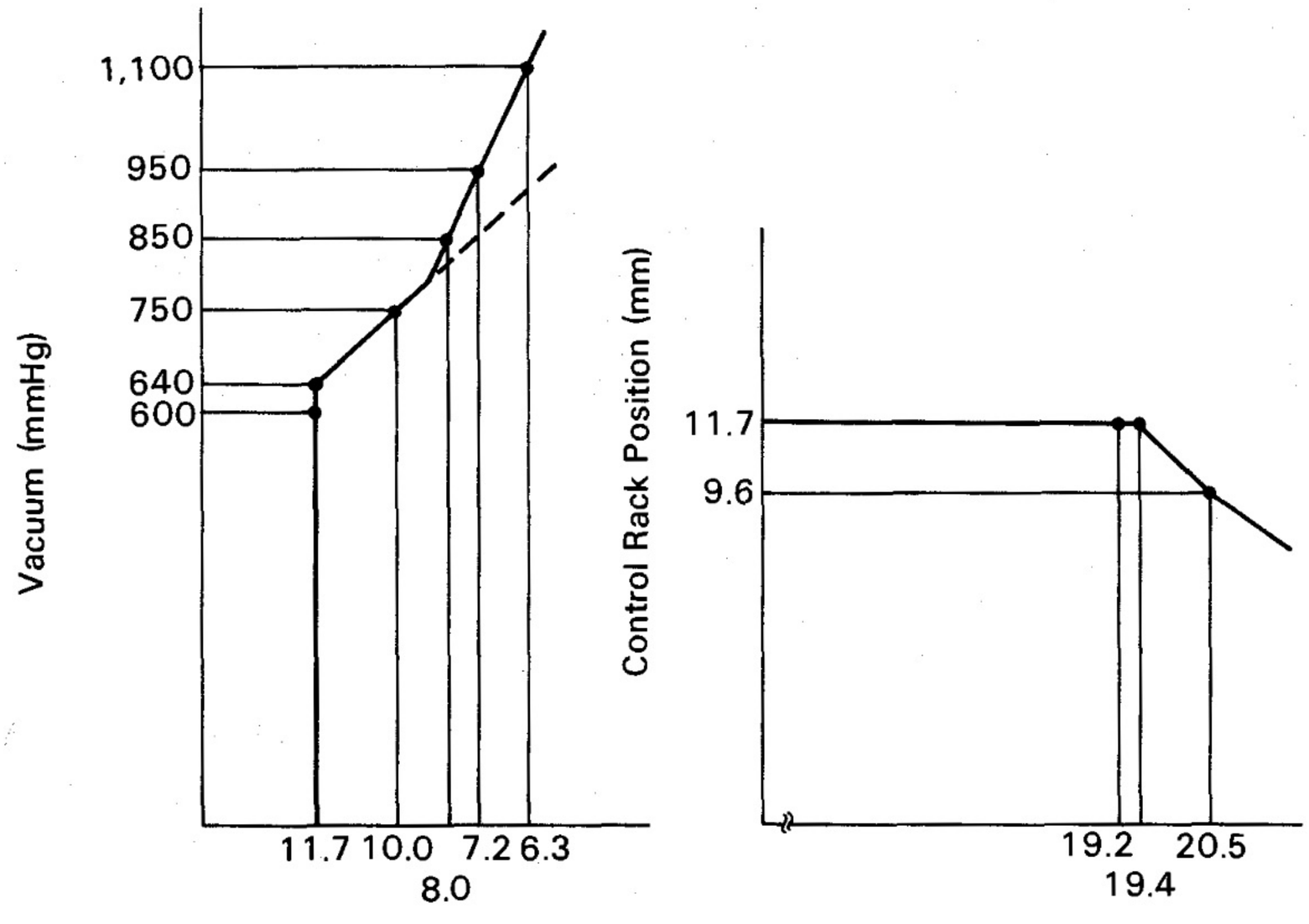

3B

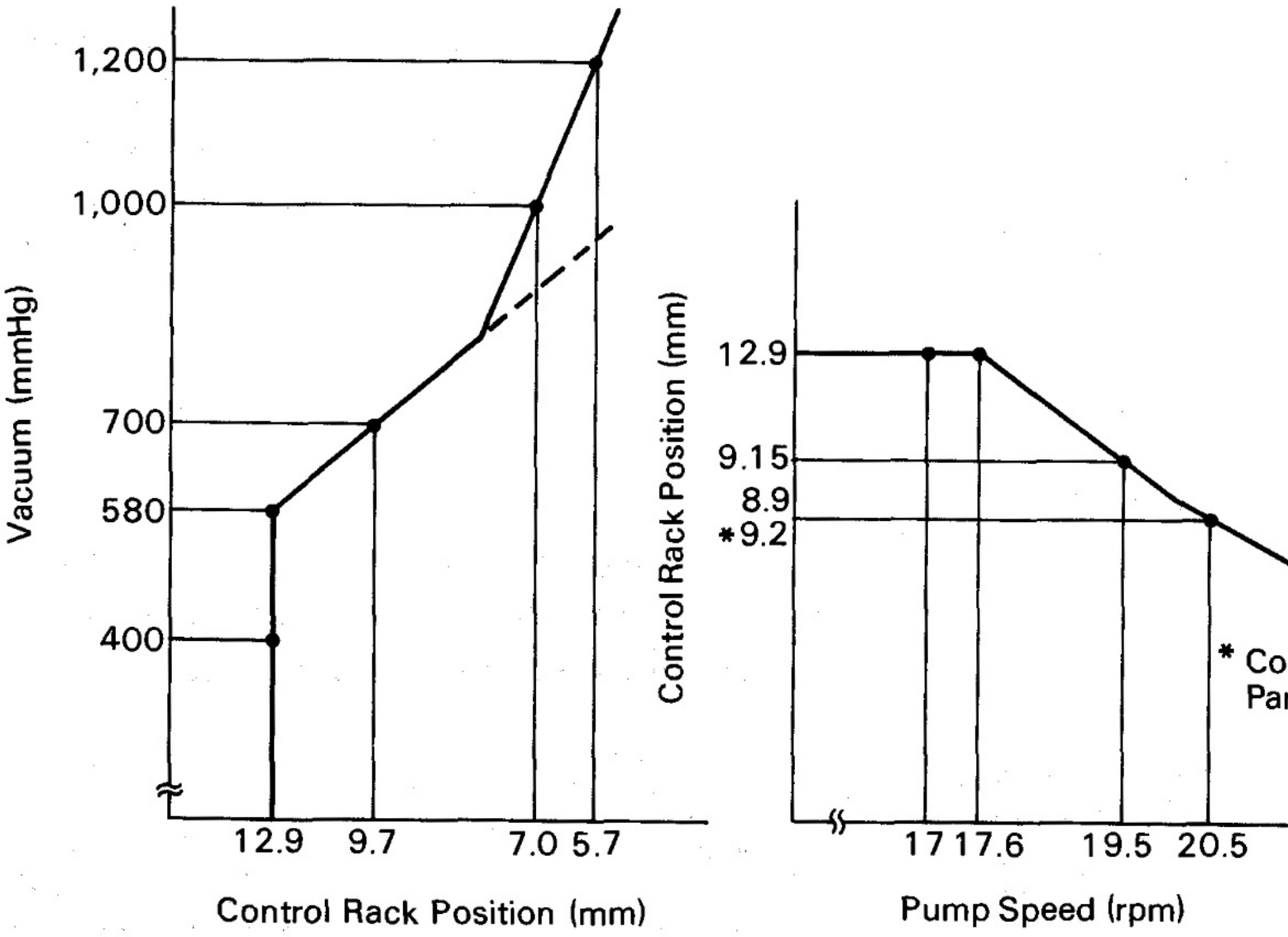

FU1501
FU1502

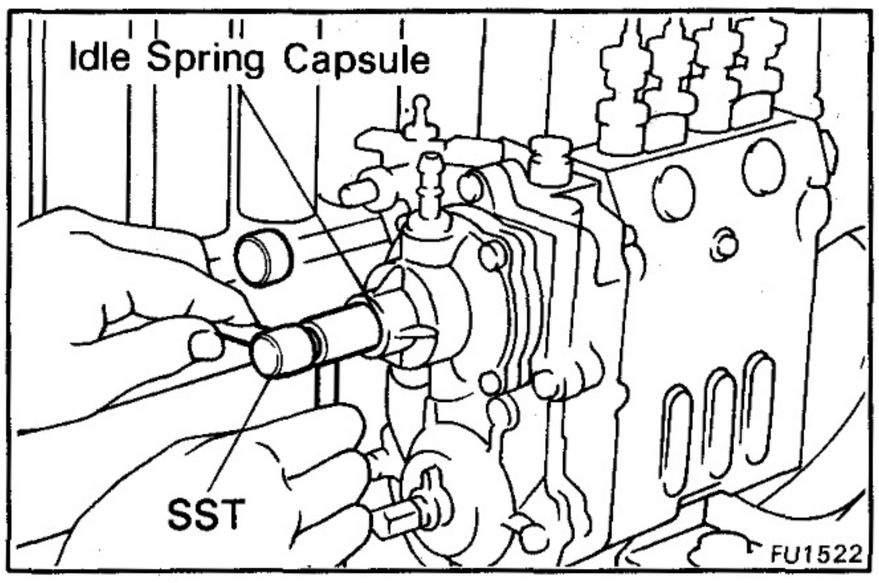

1. PRE-TEST CHECK AND PREPARATION
(See page FU-63)

2. PREPATATION

(a) Remove the sealing screw plug.

(b) Using SST, loosen the idle spring capsule to keep it inoperative.

SST 09260-76017 (09282-76010)

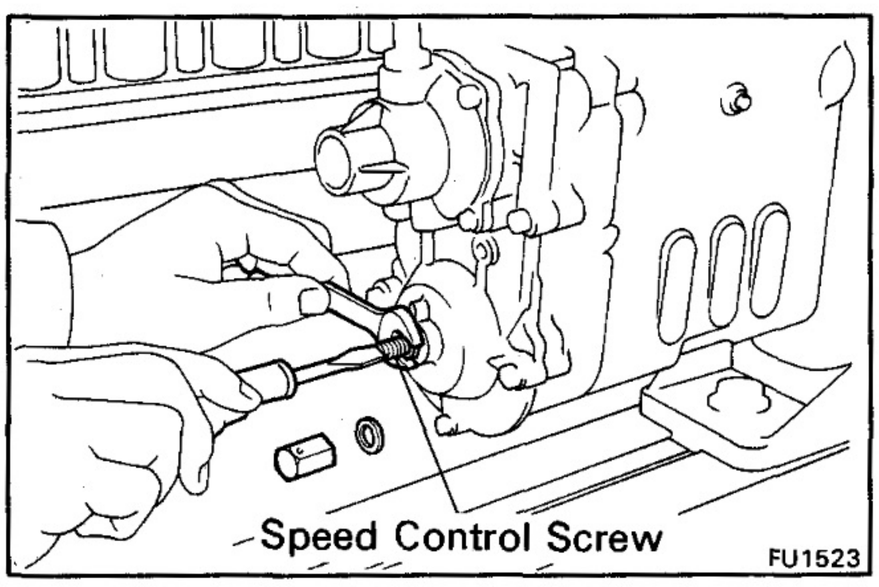

(c) Remove the cap nut and gasket.

(d) Fully tighten the speed control screw.

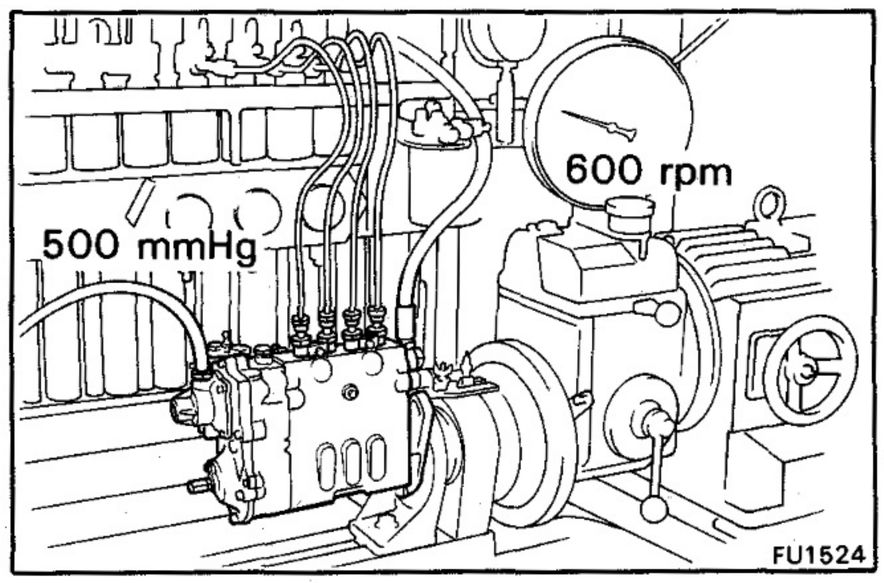

3. CHECK AIR-TIGHT OF VACUUM CHAMBER

(a) Set the pump speed at 600 rpm.

(b) Apply 500 mmHg (19.69 in.Hg, 66.7 kPa) of vacuum to vacuum chamber.

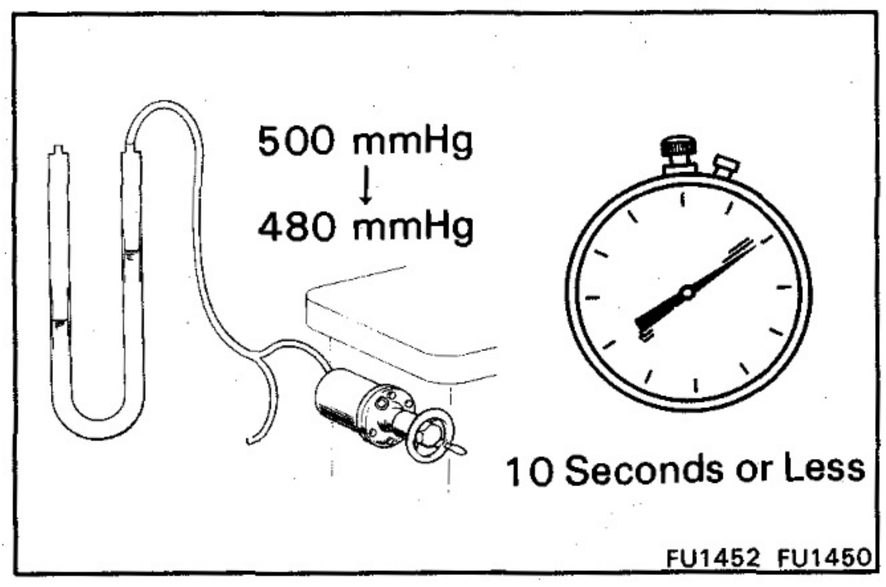

(c) Measure the time it takes for the vacuum to drop to 480 mmHg (18.9 in.Hg, 64.0 kPa).

Pressure drop: 10 seconds or more

If the pressure is less than specification, retighten the screws of the governor diaphragm housing. If necessary, replace the grovernor diaphragm.

4. ADJUST PNEUMATIC GOVERNOR SECTION

A. Adjust initial position of control rack

(a) Measure the control rack position.

Item	Pump rpm	Vacuum mmHg (in.Hg, kPa)	Control rack position mm (in.)
B	600	600 (23.62, 80.0)	11.7 (0.461)
3B	600	400 (15.75, 53.3)	12.9 (0.508)

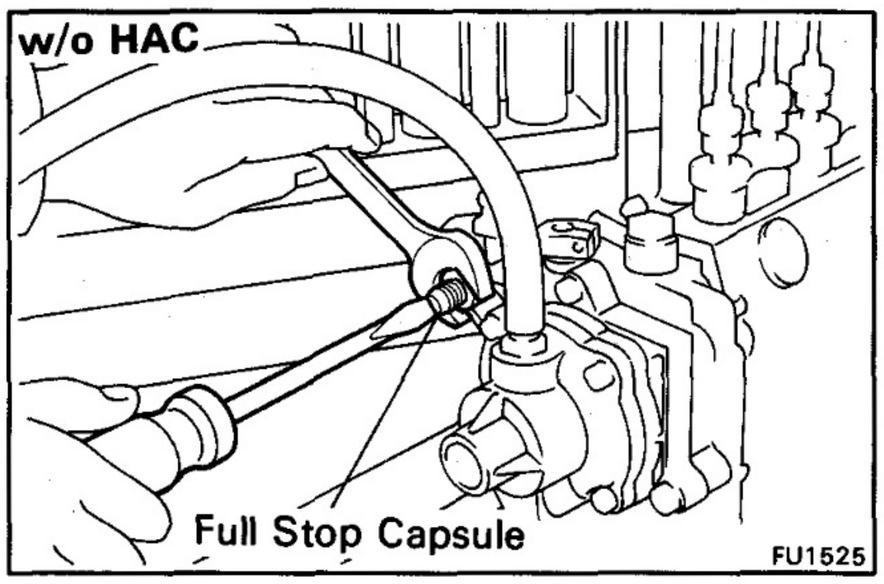

(b) [w/o HAC]
Adjust by turning the full stop capsule.

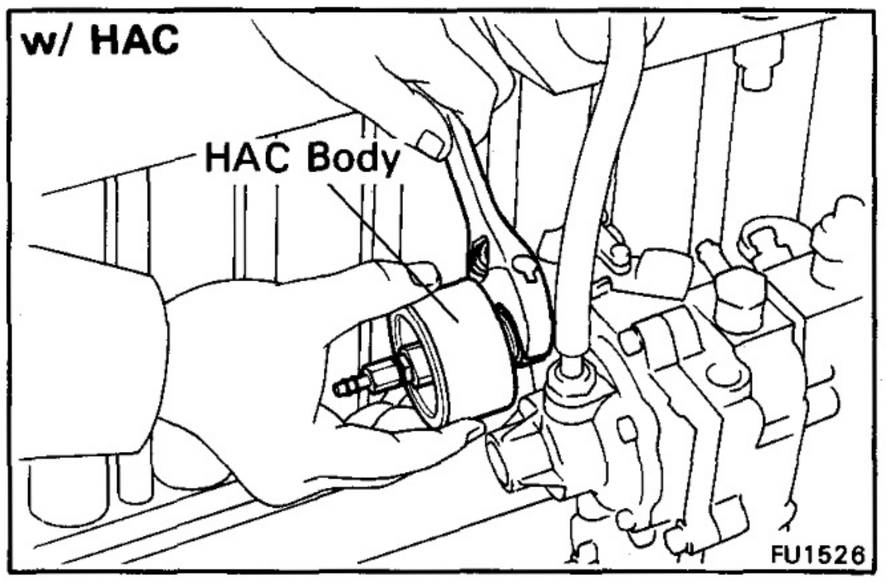

(c) [w/ HAC]
Adjust by turning the HAC body.

B. Adjust governor main spring

(a) Measure the control rack position.

Item	Pump rpm	Vacuum mmHg (in.Hg, kPa)	Control rack position mm (in.)
B	600	600 (23.62, 80.0)	11.7 (0.461)
		640 (25.20, 85.3)	11.4 – 11.7 (0.449 – 0.461)
		750 (29.53, 100.0)	9.3 – 10.7 (0.366 – 0.421)
3B (Cold weather spec. Part No. 22100-58022)	600	400 (15.75, 53.3)	12.7 – 13.1 (0.500 – 0.516)
		580 (22.83, 77.3)	12.3 – 13.2 (0.484 – 0.520)
		700 (27.56, 93.3)	8.7 – 10.7 (0.343 – 0.421)
3B (Others)	600	400 (15.75, 53.3)	12.9 (0.508)
		580 (22.83, 77.3)	12.5 – 12.9 (0.492 – 0.508)
		700 (27.56, 93.3)	8.9 – 10.5 (0.350 – 0.413)

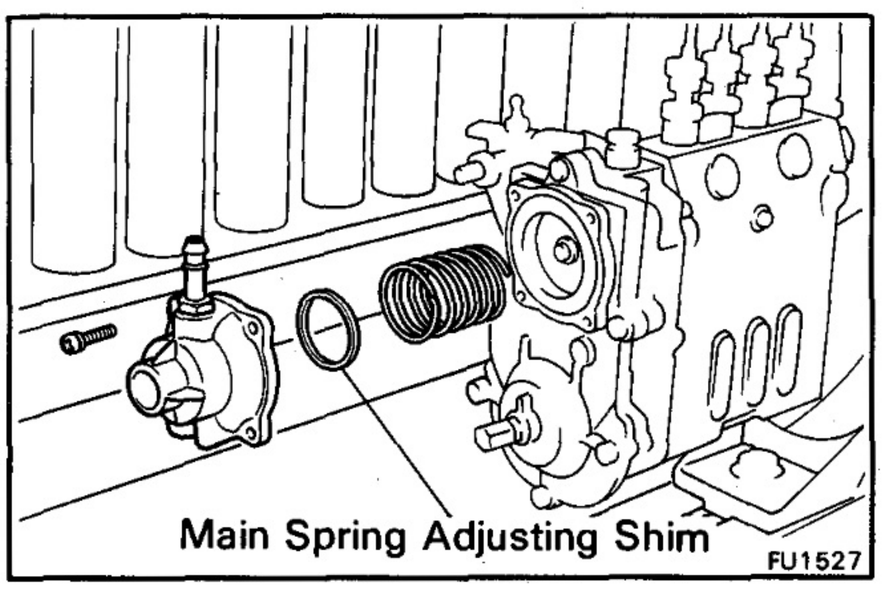

(b) Remove the governor diaphragm housing, and adjust by changing the main spring adjusting shim.

Adjusting shim thickness: 0.5 mm (0.020 in.)
1.0 mm (0.039 in.)
2.0 mm (0.079 in.)
3.0 mm (0.118 in.)

NOTE: The control rack position will increase with a decrease in shim thickness and decrease with an increase.

(c) Recheck the initial position of the control rack.

C. Adjust idling spring

(a) Measure the control rack position.

Item	Pump rpm	Vacuum mmHg (in.Hg, kPa)	Control rack position mm (in.)
B	600	850 (33.46, 113.3)	7.5 – 8.5 (0.295 – 0.335)
		950 (37.40, 126.6)	7.1 – 7.3 (0.280 – 0.287)
		1,100 (43.31, 146.6)	5.3 – 7.3 (0.209 – 0.287)
3B (Cold weather spec. Part No. 22100-58022)	600	1,000 (39.37, 133.3)	6.7 – 7.3 (0.264 – 0.287)
		1,200 (47.24, 160.0)	5.0 – 6.4 (0.197 – 0.252)
3B (Others)	600	1,000 (39.37, 133.3)	6.9 – 7.1 (0.272 – 0.280)
		1,200 (47.24, 160.0)	5.2 – 6.2 (0.205 – 0.244)

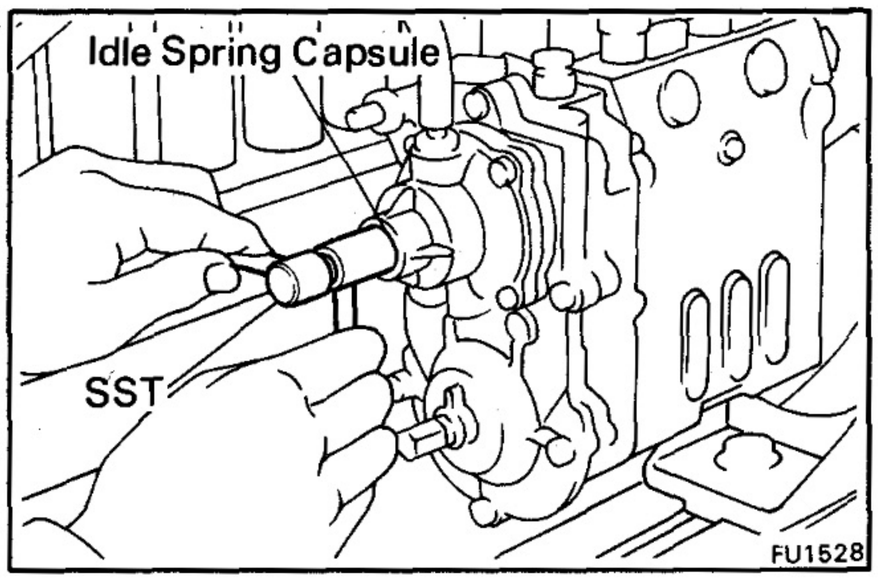

(b) Using SST, adjust by turning the idling spring capsule.

SST 09260-76017 (09282-76010)

5. ADJUST MECHANICAL GOVERNOR SECTION

Adjust speed control spring

(a) Measure the control rack position.

Item	Pump rpm	Vacuum mmHg (in.Hg, kPa)	Control rack position mm (in.)
B	1,920	450 (17.72, 60.0)	11.7 (0.461)
	1,940	450 (17.72, 60.0)	11.5 – 11.7 (0.453 – 0.461)
	2,050	450 (17.72, 60.0)	8.8 – 10.4 (0.346 – 0.409)
3B (Cold weather spec. Part No. 22100-58022)	1,700	400 (15.75, 53.3)	12.5 – 13.3 (0.492 – 0.524)
	1,760	400 (15.75, 53.3)	12.3 – 13.3 (0.484 – 0.524)
	1,950	400 (15.75, 53.3)	7.7 – 10.6 (0.303 – 0.417)
	2,050	400 (15.75, 53.3)	9.2 (0.362) or less
3B (Others)	1,700	400 (15.75, 53.3)	12.7 – 13.1 (0.500 – 0.516)
	1,760	400 (15.75, 53.3)	12.5 – 12.9 (0.492 – 0.508)
	1,950	400 (15.75, 53.3)	7.9 – 10.4 (0.311 – 0.409)
	2,050	400 (15.75, 53.3)	8.9 (0.350) or less

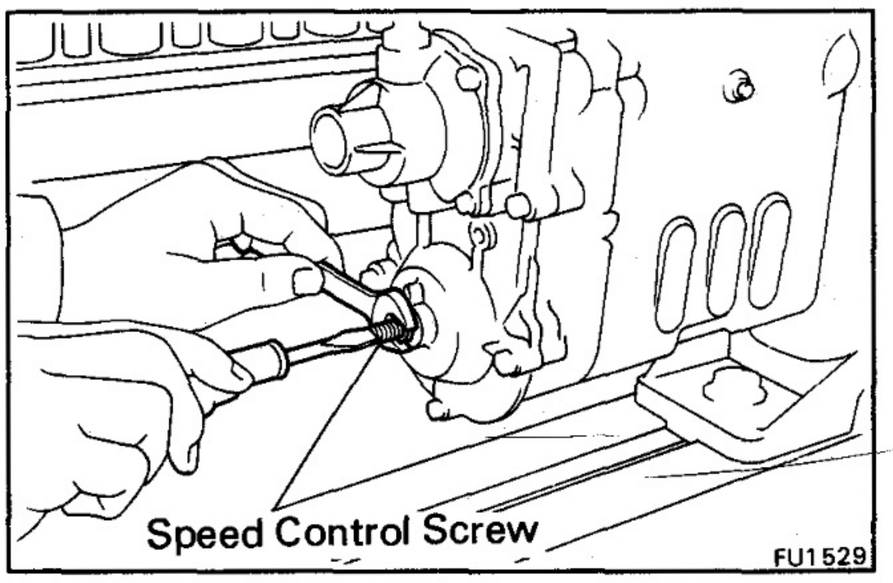

(b) Adjust by turning the speed control screw.

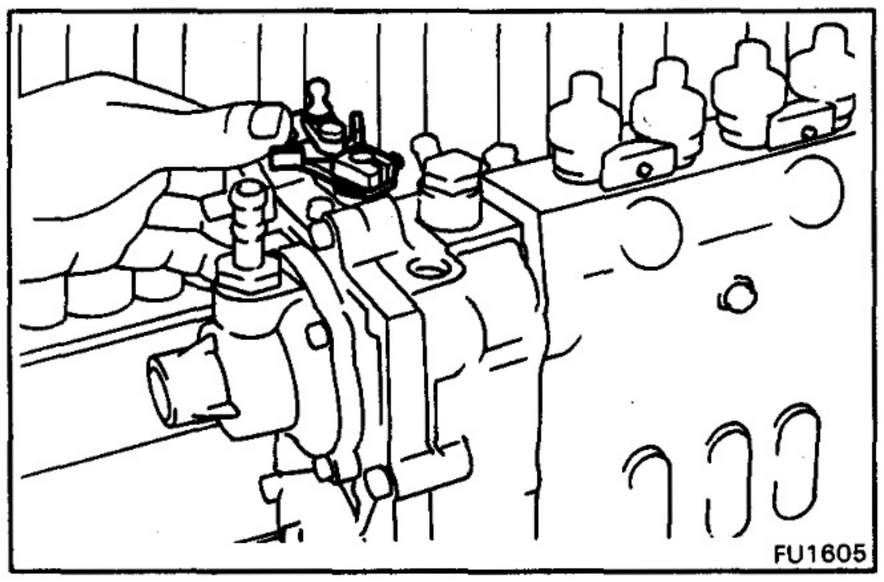

6. ADJUST TOTAL INJECTION VOLUME

(a) Operate the adjusting lever in several times in order to stabilize the injection pump.

(b) Measure the total injection volume.

Item	Pump rpm	Vacuum mmHg (in.Hg, kPa)	Measuring stroke	Total injection volume of each cylinder cc (cu in.)
B w/o HAC	700	120 (4.72, 16.0)	1,000	182.0 – 198.0 (11.1 – 12.1)
	1,100	120 (4.72, 16.0)	1,000	202.0 – 210.0 (12.3 – 12.8)
	1,700	120 (4.72, 16.0)	1,000	210.0 – 226.0 (12.8 – 13.8)
B w/ HAC (w/o Tachometer)	700	120 (4.72, 16.0)	1,000	190.0 – 206.0 (11.6 – 12.6)
	1,100	120 (4.72, 16.0)	1,000	202.0 – 210.0 (12.3 – 12.8)
	1,700	120 (4.72, 16.0)	1,000	212.0 – 228.0 (12.9 – 13.9)
B w/ HAC (w/ Tachometer)	700	150 (5.91, 20.0)	1,000	190.0 – 206.0 (11.6 – 12.6)
	1,100	300 (11.81, 40.0)	1,000	202.0 – 210.0 (12.3 – 12.8)
	1,700	450 (17.72, 60.0)	1,000	212.0 – 228.0 (12.9 – 13.9)
3B w/o HAC (Cold weather spec. Part No. 22100-58022)	700	150 (5.91, 20.0)	1,000	198.0 – 222.0 (12.1 – 13.5)
	1,100	260 (10.24, 34.7)	1,000	222.0 – 234.0 (13.5 – 14.3)
	1,700	400 (15.75, 53.3)	1,000	226.0 – 250.0 (13.8 – 15.3)
3B w/o HAC (Others)	700	150 (5.91, 20.0)	1,000	202.0 – 218.0 (12.3 – 13.3)
	1,100	260 (10.24, 34.7)	1,000	224.0 – 232.0 (13.7 – 14.2)
	1,700	400 (15.75, 53.3)	1,000	230.0 – 246.0 (14.0 – 15.0)
3B w/ HAC	700	150 (5.91, 20.0)	1,000	206.0 – 222.0 (12.6 – 13.5)
	1,100	260 (10.24, 34.7)	1,000	224.0 – 232.0 (13.7 – 14.2)
	1,700	400 (15.75, 53.3)	1,000	226.0 – 242.0 (13.8 – 14.8)

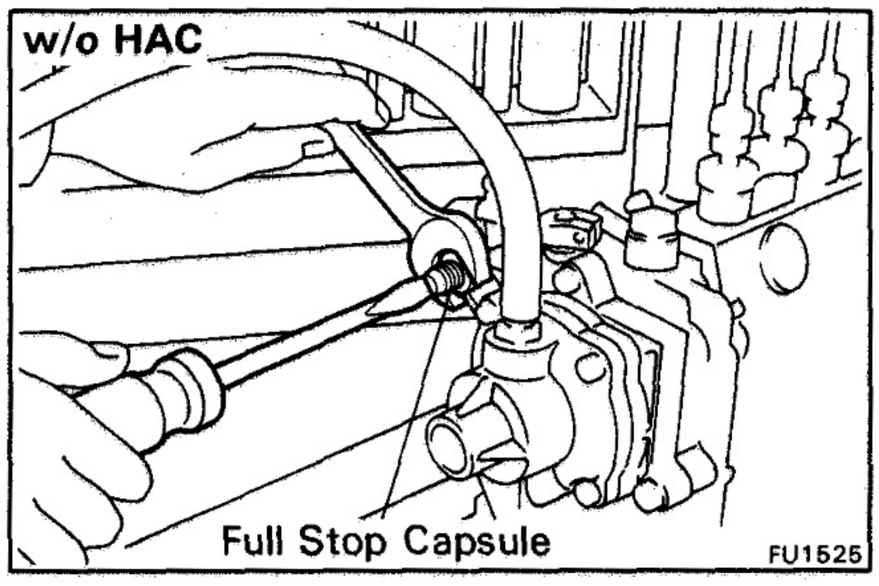

(c) [w/o HAC]
Adjust by turning the full stop capsule.

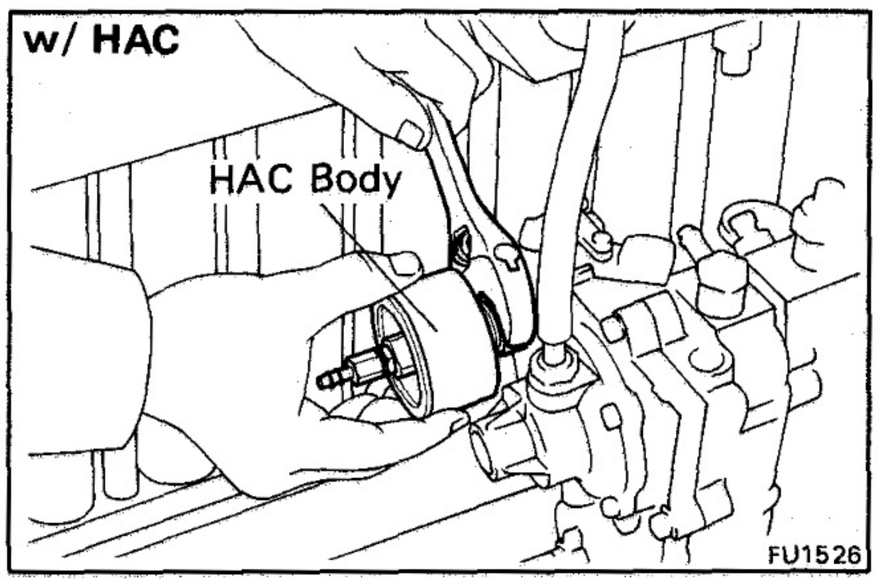

(d) [w/ HAC]
Adjust by turning the HAC body.

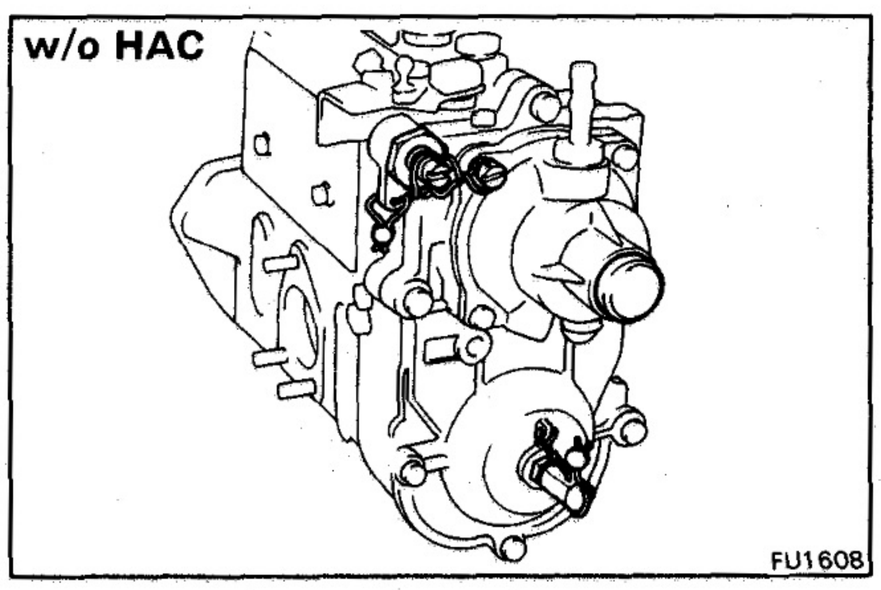

7. SEAL PARTS

Seal with new seal wire, lead seal and sealing screw plug as shown.

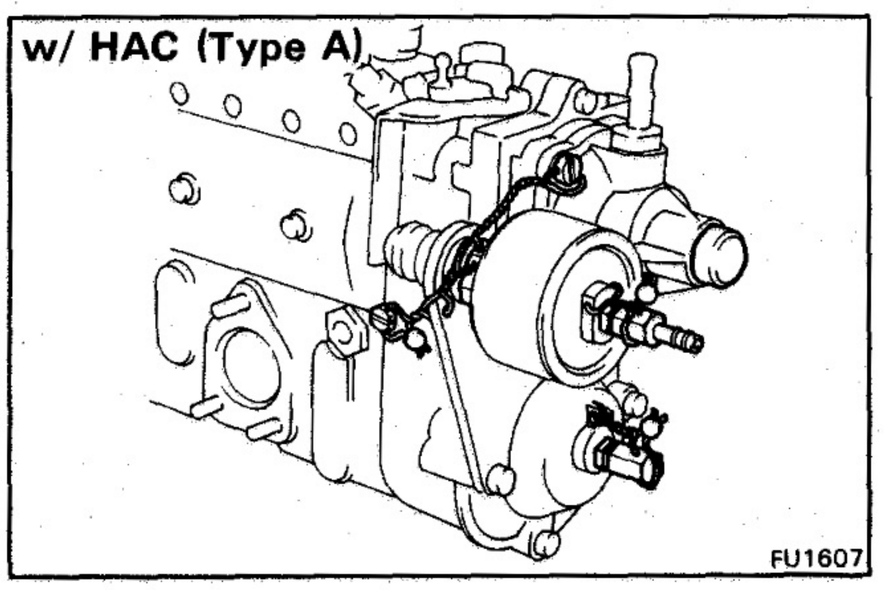

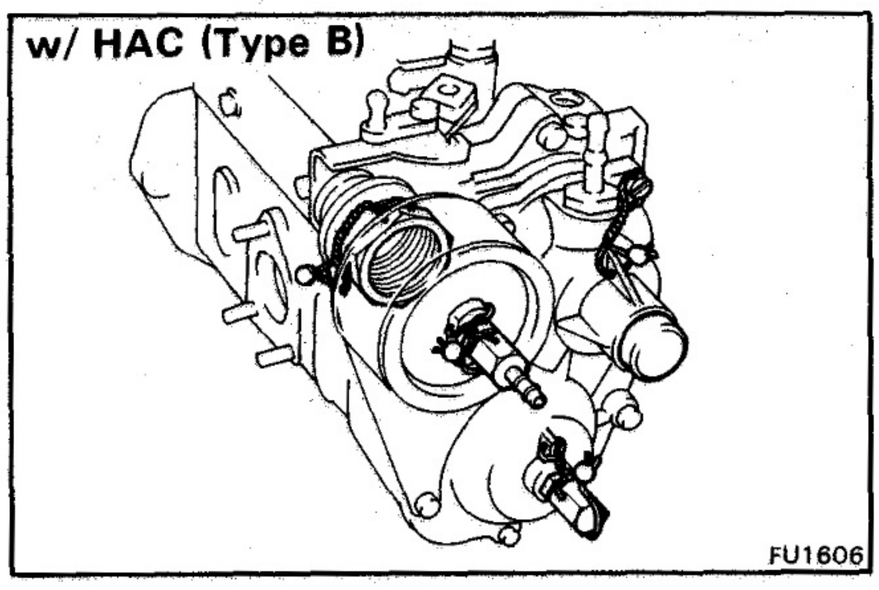

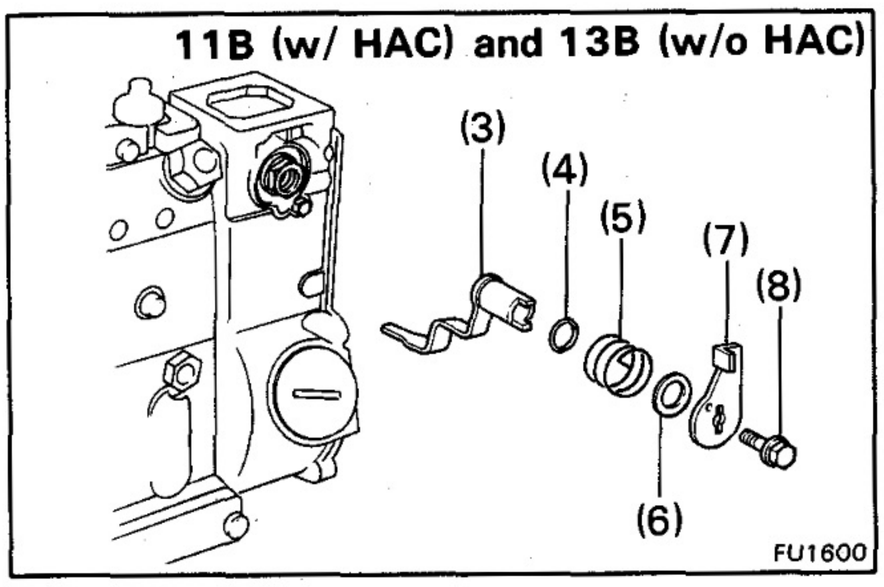

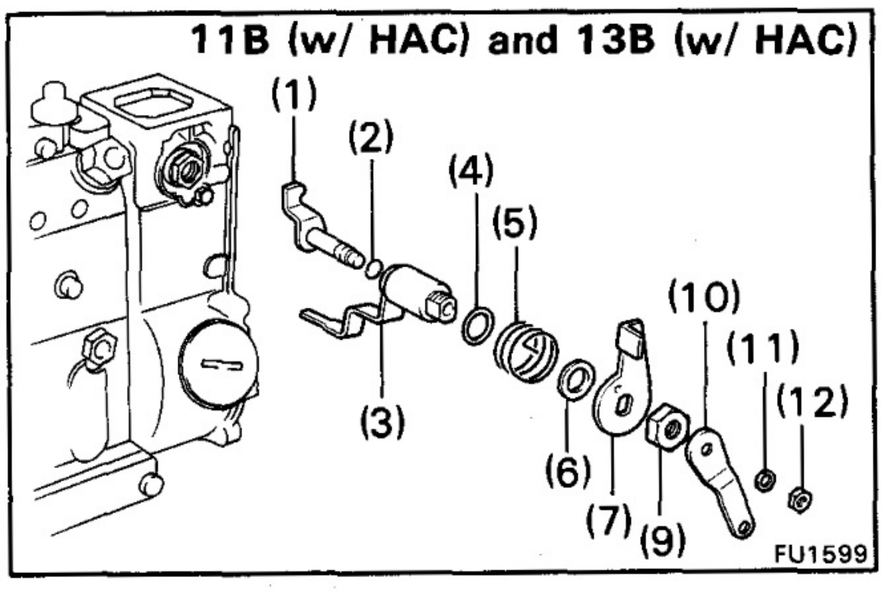

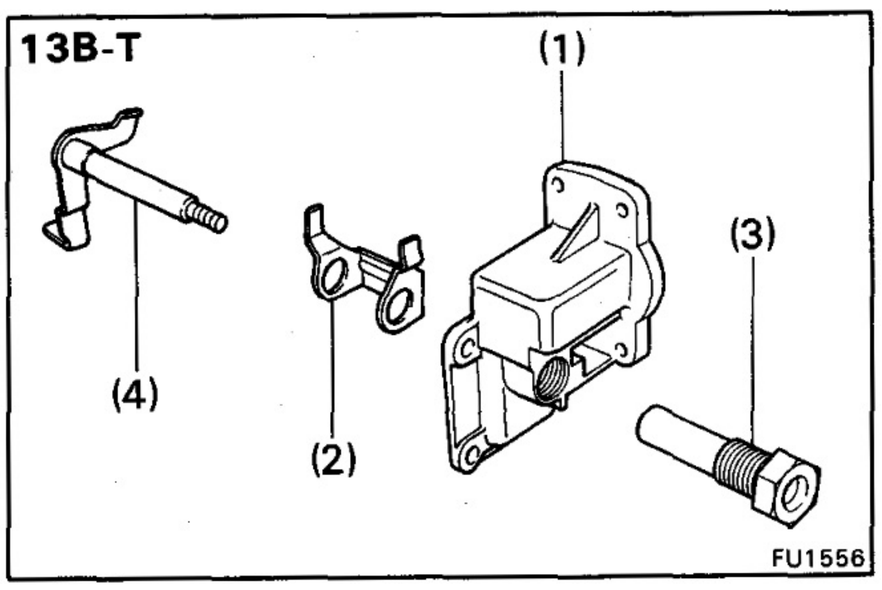

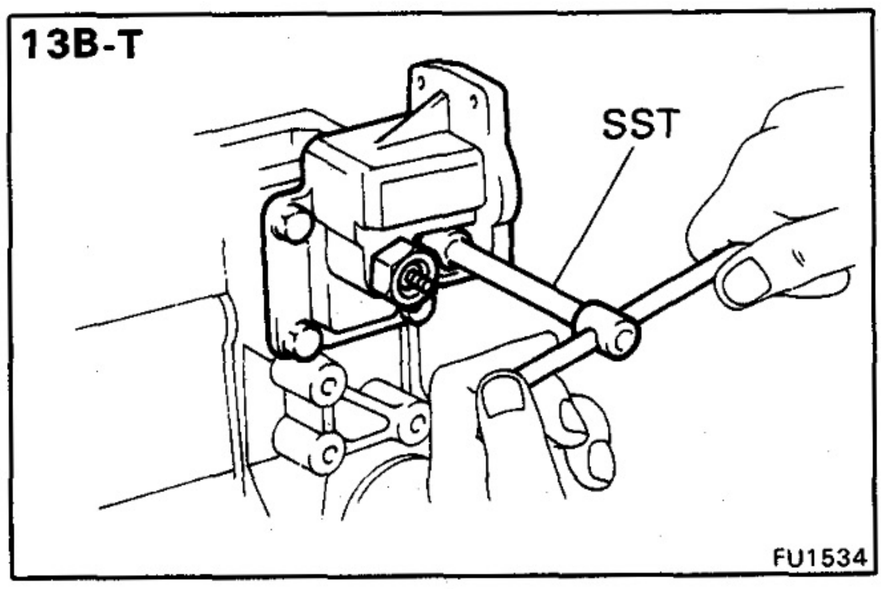

Assembly of Governor [11B, 13B and 13B-T]

(See pages FU-31 and 32) 11B and 13B
(See pages FU-31 and 33) 13B-T

1. [11B AND 13B]
INSTALL STOPPER ARM AND STOP LEVER

Install the following parts:

(1) [w/ HAC]
HAC arm
(2) [w/ HAC]
New O-ring
(3) Stopper arm
(4) New O-ring
(5) Return spring
(6) Thrust washer
(7) Stop lever
(8) [w/o HAC]
Bolt
(9) [w/ HAC]
Nut
(10) [w/ HAC]
HAC lever
(11) [w/ HAC]
Spring washer
(12) [w/ HAC]
Nut

2. [11B AND 13B]
CHECK THRUST CLEARANCE OF STOPPER ARM
(See page FU-45)

Thrust clearance: 0.05 – 0.20 mm (0.0020 – 0.0079 in.)

3. [13B-T]
INSTALL NO.2 FULL-LOAD STOPPER HOUSING

(a) Assemble following parts:
(1) No. 2 Full-load stopper housing
(2) Boost compensator arm
(3) Spring seat

Torque: 190 kg-cm (14 ft-lb, 19 N·m)

(4) Stopper arm

(b) Using SST, install a new O-ring and the No. 2 stopper housing with the four bolts.

SST 09260-58010 909276-76010)

Torque: 85 kg-cm (74 in.-lb, 8.3 N·m)

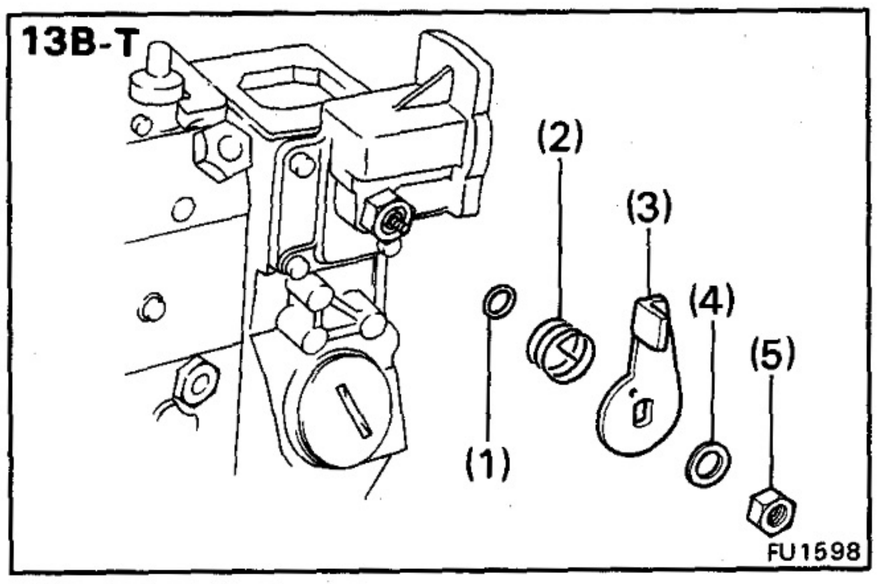

(c) Install the following parts:
- (1) New O-ring
- (2) Return spring
- (3) Stop lever
- (4) Spring washer
- (5) Nut

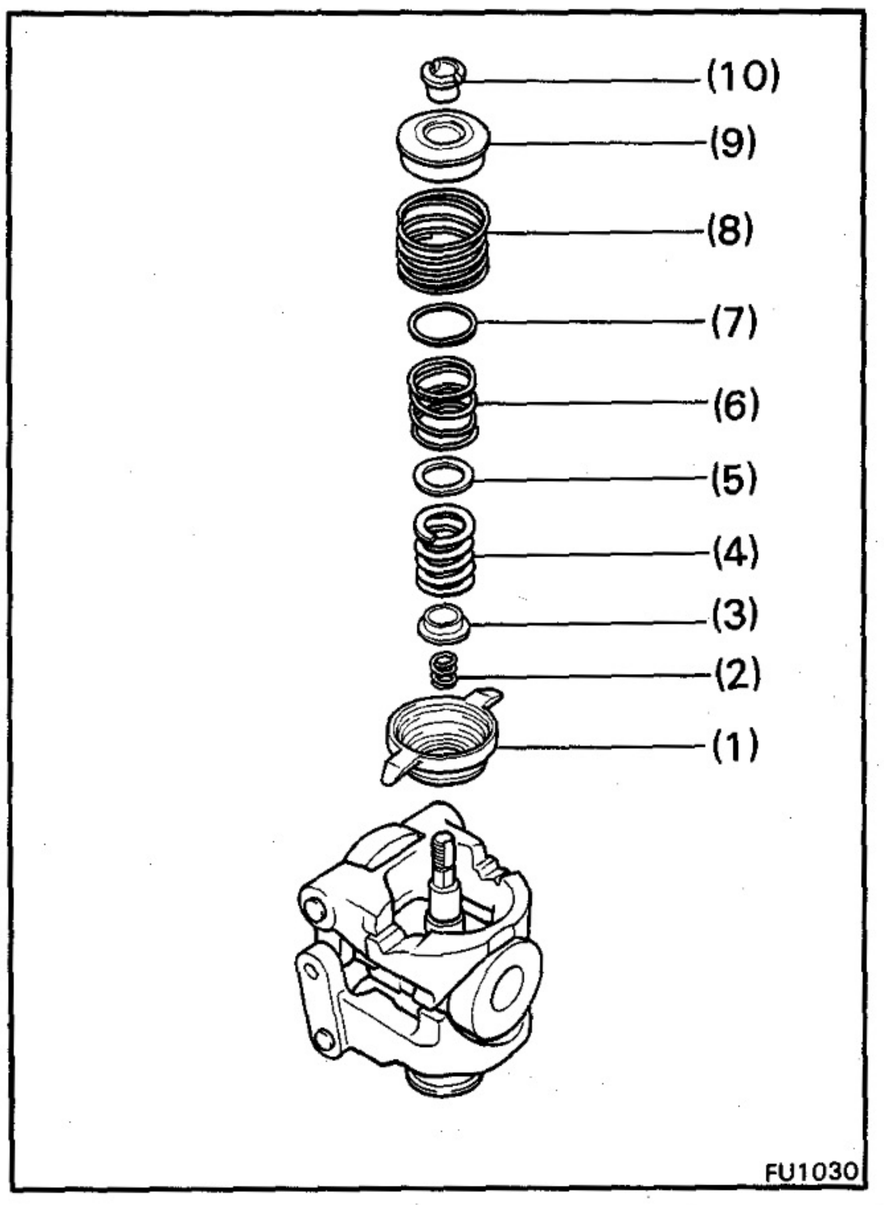

4. ASSEMBLY FLYWEIGHT

(a) Install the following parts:
- (1) Spring seat
- (2) Mechanical spring
- (3) Inner spring seat
- (4) Speed control spring
- (5) Inner adjusting washer
- (6) Inner idle spring
- (7) Outer adjusting washer
- (8) Outer idle spring
- (9) Spring guide
- (10) Adjusting nut

CAUTION: Install the adjusting washers on the guide sleeve side.

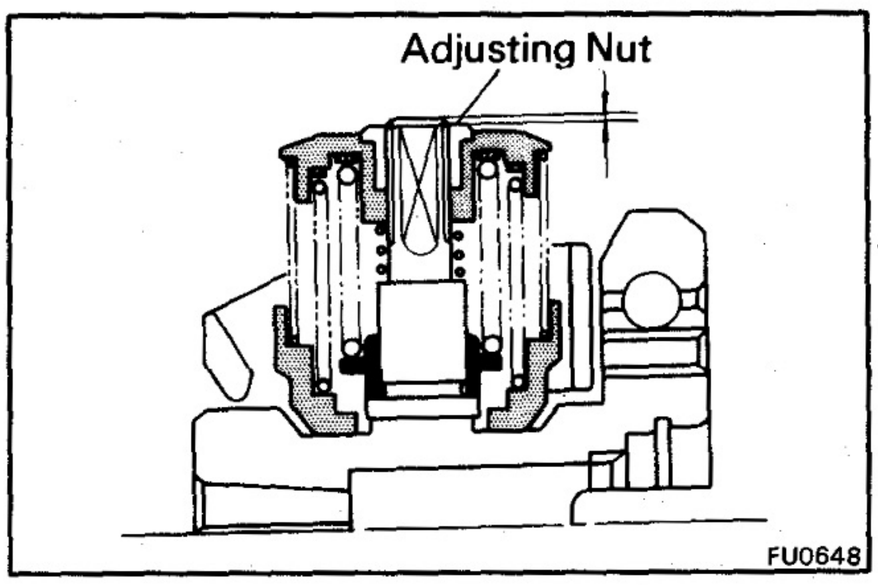

(b) Preset the protrusion of the adjusting nut.

Protrusion: Minus 0.4 — Plus 0.2 mm (Minus 0.016 — Plus 0.008 in.)

CAUTION: If the protrusion is too large, the adjusting nut will contact the governor housing.

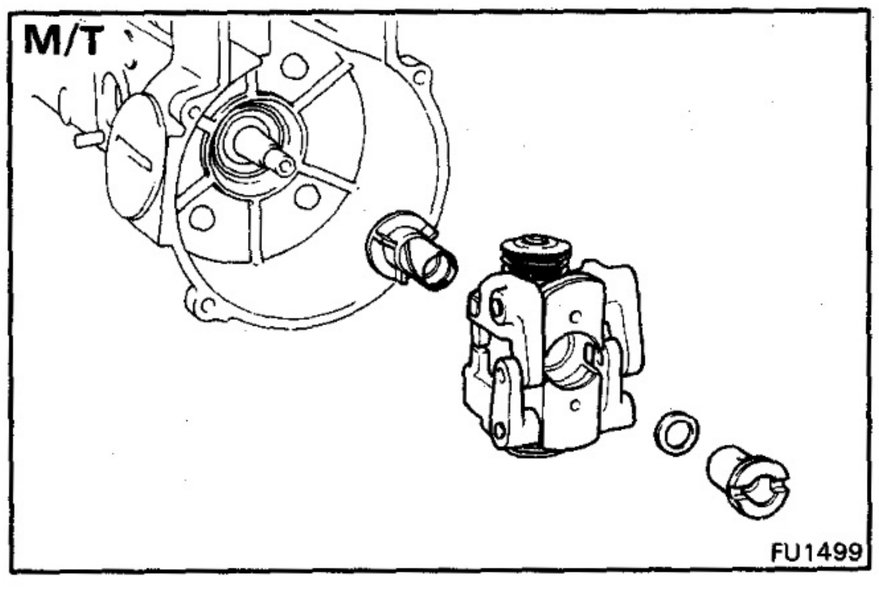

5. [M/T] CHECK THRUST CLEARANCE OF DAMPER

(a) Install the camshaft bushing and flyweight without the dampers.

(b) Install the thrust washer and round nut.

Torque: 525 kg-cm (38 ft-lb, 51 N·m)

(c) Measure the thrust clearance. (See page FU-47)

Thrust clearance: 0.02 — 0.10 mm (0.0008 — 0.0039 in.)

(d) Remove the flyweight assembly and camshaft bushing. (See page FU-44)

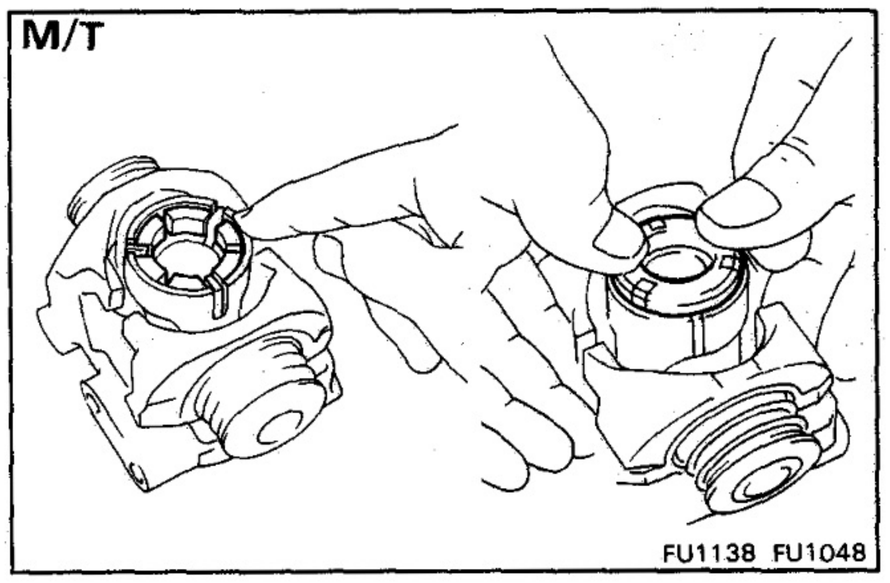

6. [M/T]
INSTALL DAMPERS AND CAMSHAFT BUSHING

(a) Place the six dampers in position into the flyweight holder.

(b) Push in the camshaft bushing.

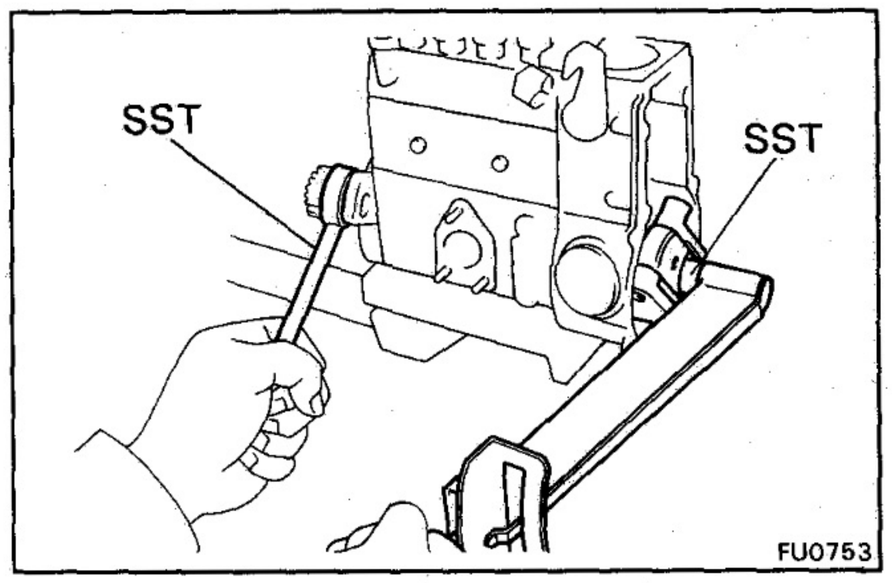

7. **INSTALL FLYWEIGHT ASSEMBLY**

(a) [A/T]
Install the set key to the camshaft.

(b) [A/T]
Align the set key with the flyweight key groove.

(c) Slide the flyweight assembly onto the camshaft.

(d) [A/T]
Install the spring washer.

(e) [M/T]
Install the thrust washer.

(f) Using SST, install the round nut.

SST 09260-58010 (09260-78010, 09278-46020)

Torque: M/T 525 kg-cm (38 ft-lb, 51 N·m)
A/T 550 kg-cm (40 ft-lb, 54 N·m)

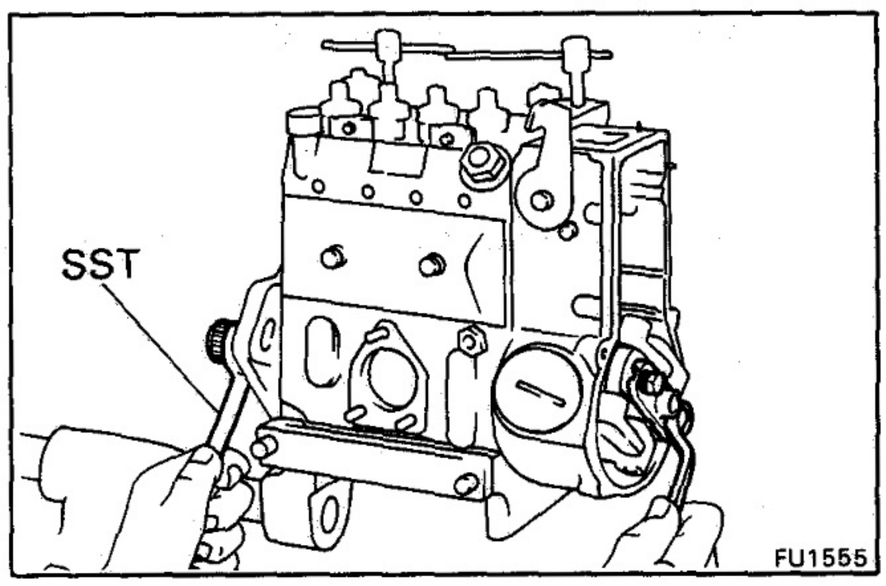

8. **INSTALL GUIDE BUSHING**

Using SST, install the guide bushing with the two bolts.

Torque: 80 kg-cm (69 in.-lb, 7.8 N·m)

SST 09260-58010 (09278-46020)

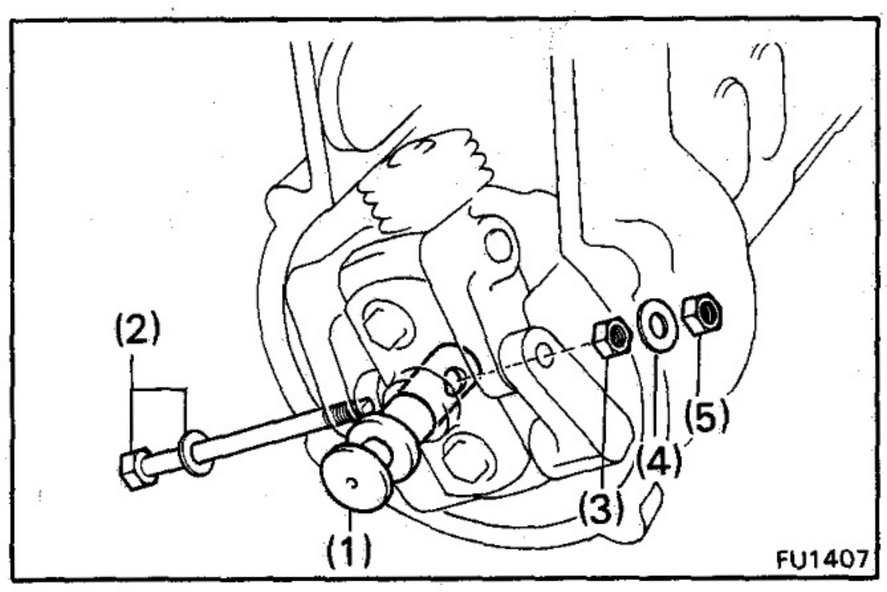

9. **INSTALL SLIDING WEIGHT SHAFT**

(a) Install the following parts:

(1) Sliding weight shaft
Check that the sliding weight shaft slides lightly.

(2) Jointing bolt with thrust washer

(3) Lock nut

(4) Lock washer

(5) Lock nut

(b) Adjust the thrust clearance of the jointing bolt.
Using a feeler gauge, measure the thrust clearance between the jointing bolt and flyweight.

Thrust clearance: 1.5 — 2.0 mm (0.059 — 0.079 in.)

If the thrust clearance is not within specification, adjust with the two lock nuts. If necessary, adjust by increasing the thrust washer.

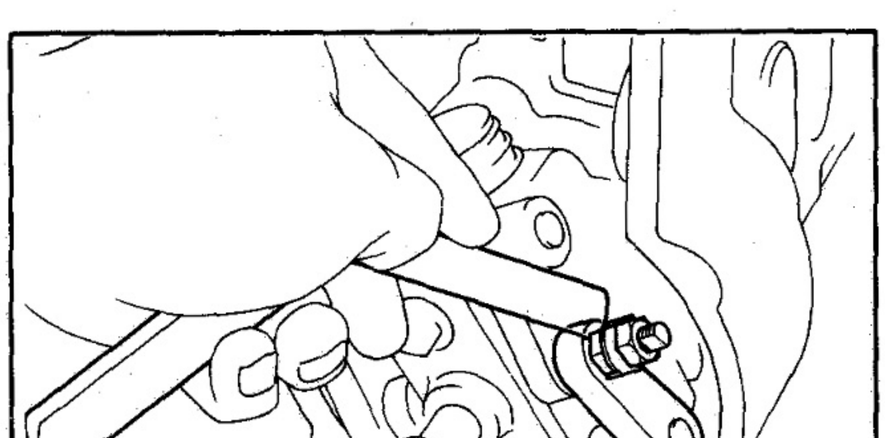

(c) Check the fitting dimensions of the sliding weight shaft. (See page FU-43)

Fitting dimensions: 49.7 — 50.1 mm (1.957 — 1.972 in.)

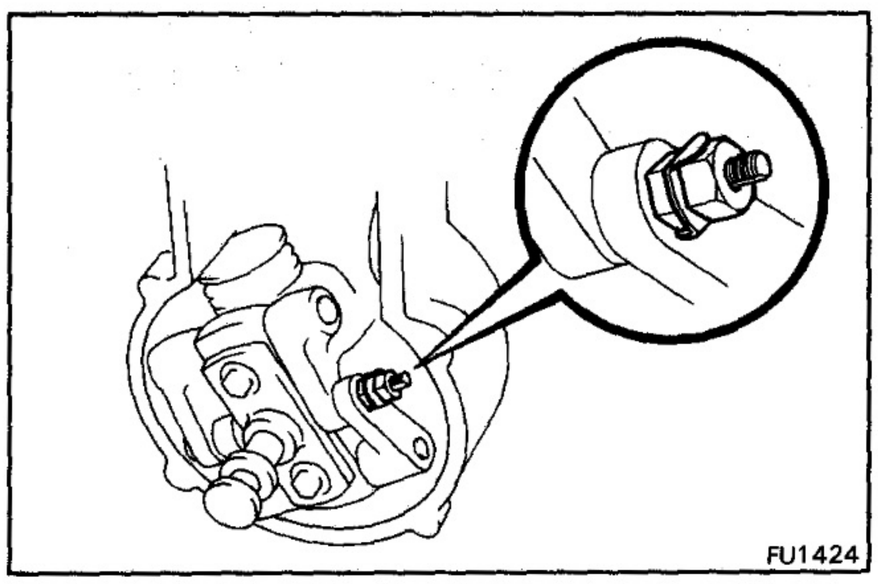

(d) Stake the lock washer.

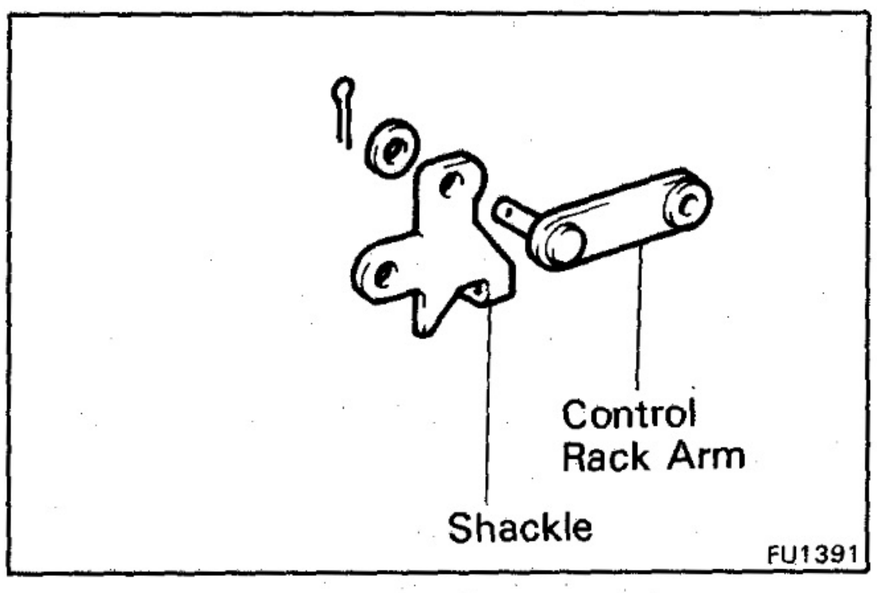

10. ASSEMBLE SHACKLE AND CONTROL RACK ARM

Assemble the shackle and arm with the E-ring.

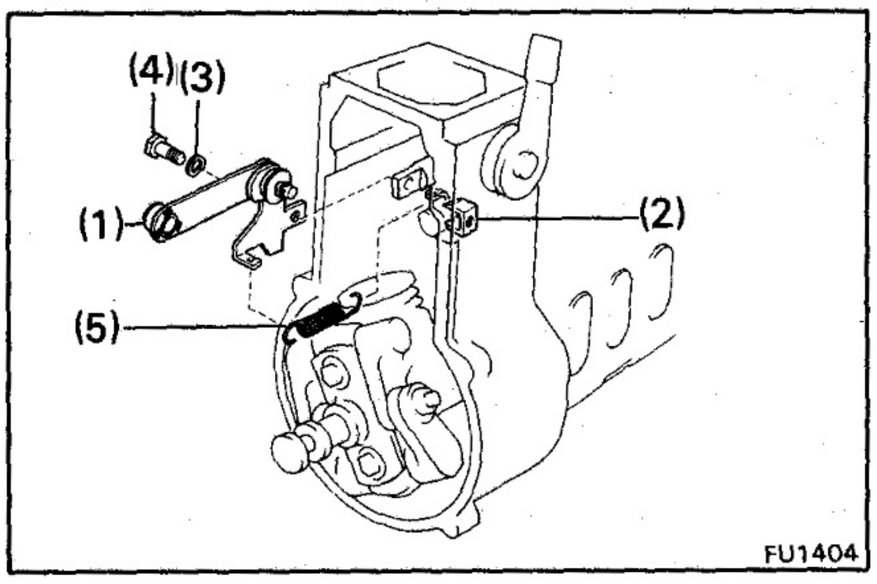

11. INSTALL SHACKLE AND CONTROL RACK ARM ASSEMBLY

Install the following parts:

(1) Shackle and arm assembly
(2) Arm nut
(3) Spring washer
(4) Bolt
(5) Return Spring

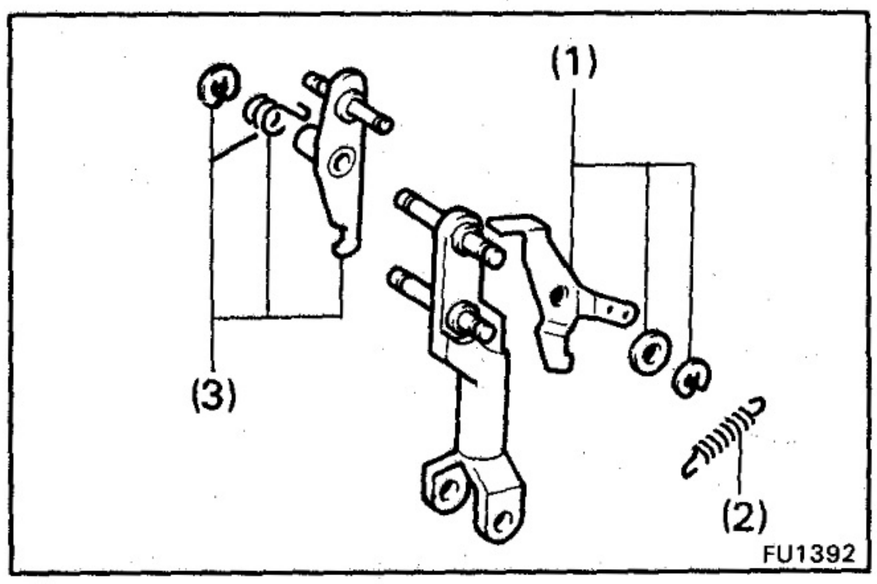

12. ASSEMBLE FLOATING LEVER

(a) Install the following parts:

(1) Floating arm, thrust washer and E-ring
Check the thrust clearance of the floating lever arm. (See page FU-42)

Thrust clearance: 0.05 — 0.20 mm (0.0020 — 0.0079 in.)

(2) Return spring

(3) Control lever, return spring and E-ring

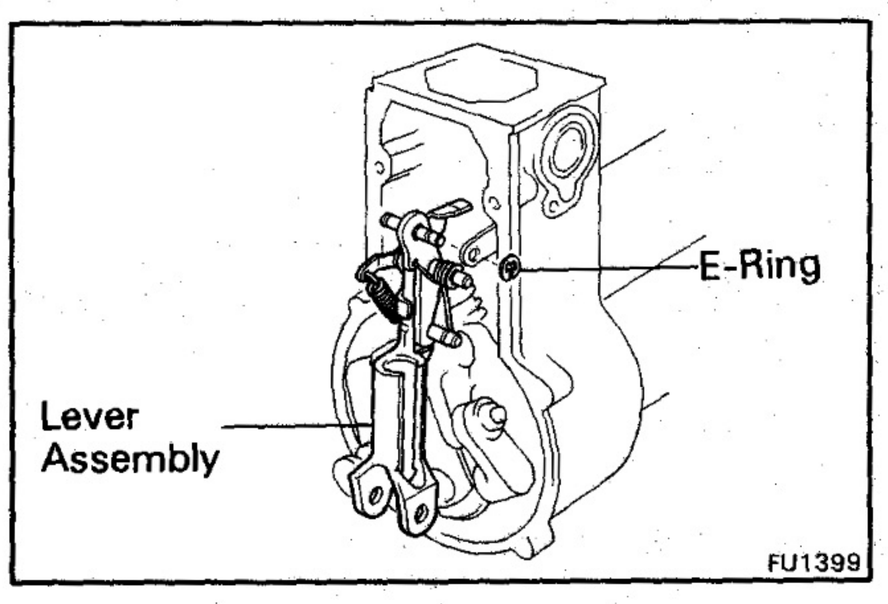

13. INSTALL FLOATING LEVER ASSEMBLY

Install the floating lever assembly with the E-ring.

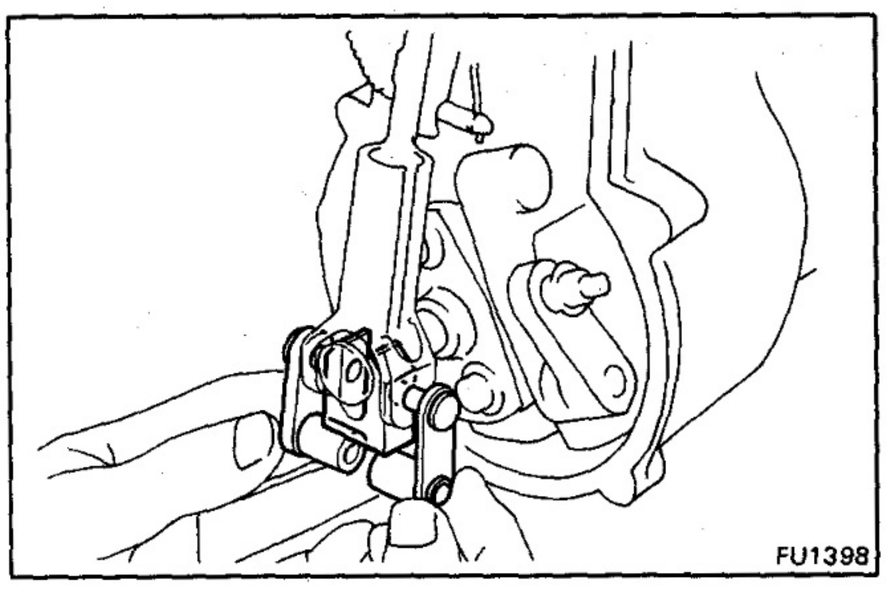

14. INSTALL SLIDER AND SUPPORTING LEVERS

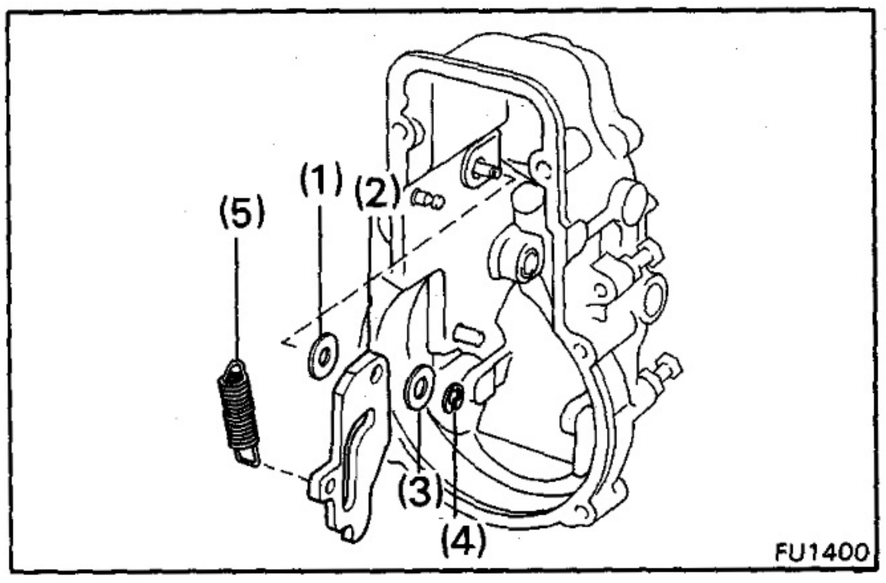

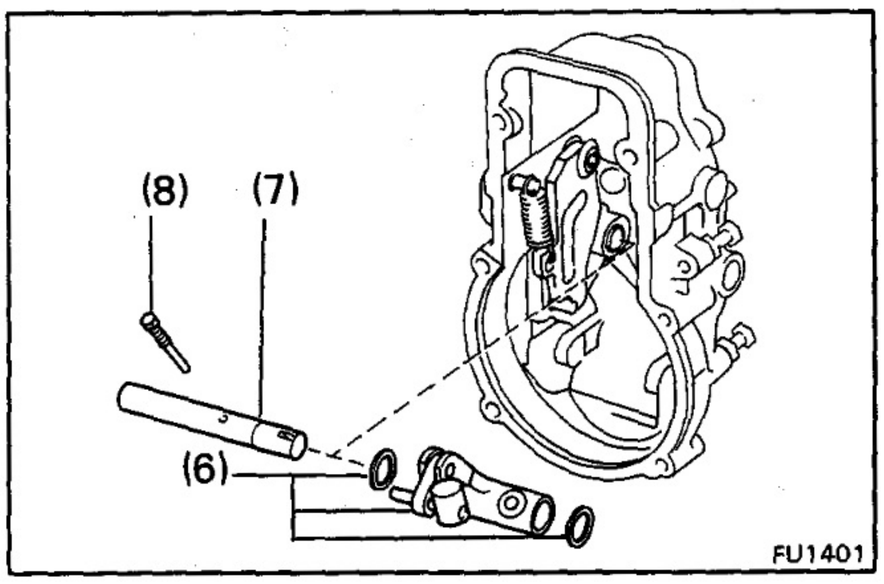

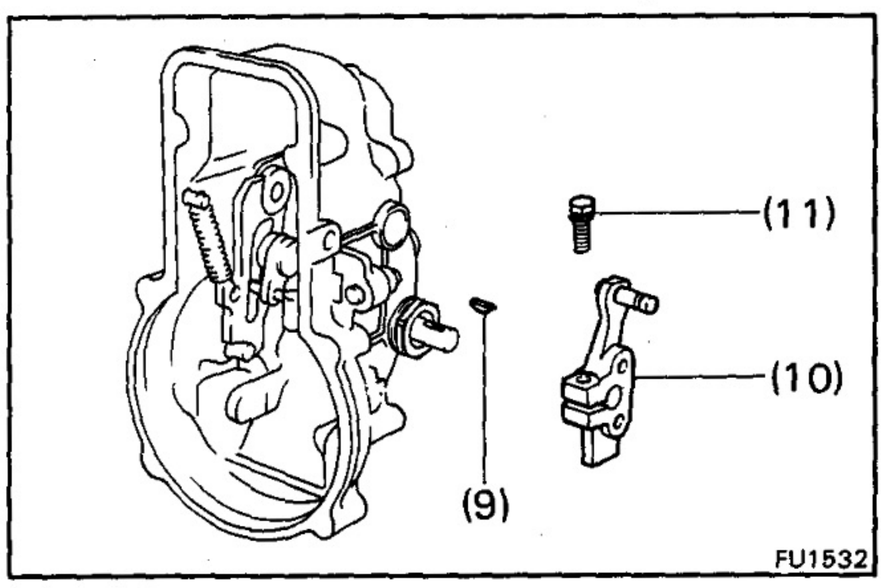

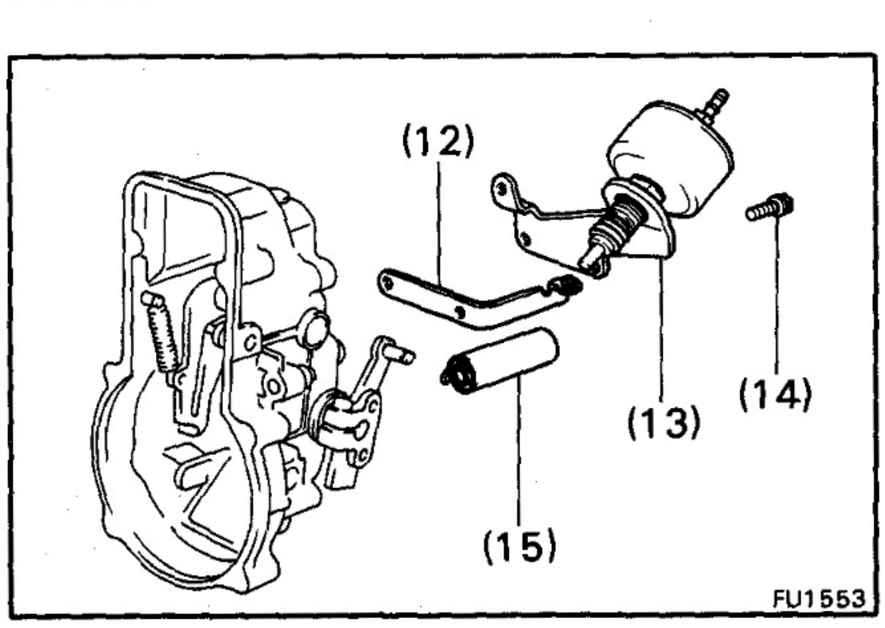

15. ASSEMBLE GOVERNOR COVER

Install the following parts:

(1) Plate washer

(2) Cam plate

(3) Thrust washer

(4) E-ring
Check the thrust clearance of the cam plate.
(See page FU-40)

Thrust clearance: 0.08 – 0.12 mm (0.0031 – 0.0047 in.)

(5) Return spring

(6) Steering lever and thrust washers

(7) Steering lever shaft
Check the thrust clearance of the steering lever.
(See page FU-40)

Thrust clearance: 0.05 – 0.20 mm (0.0020 – 0.0079 in.)

(8) Tapered bolt
Position the key groove of the steering lever upward, and install the tappred bolt.

Torque: 55 kg-cm (48 in.-lb, 5.4 N·m)

(9) Set key

(10) No. 1 adjusting lever

(11) Bolt

Torque: 85 kg-cm (74 in.-lb, 8.3 N·m)

(12) Spring arm

(13) [W/ HAC]
HAC with bracket

(14) Two bolts

Torque: 85 kg-cm (74 in.-lb, 8.3 N·m)

(15) Return spring

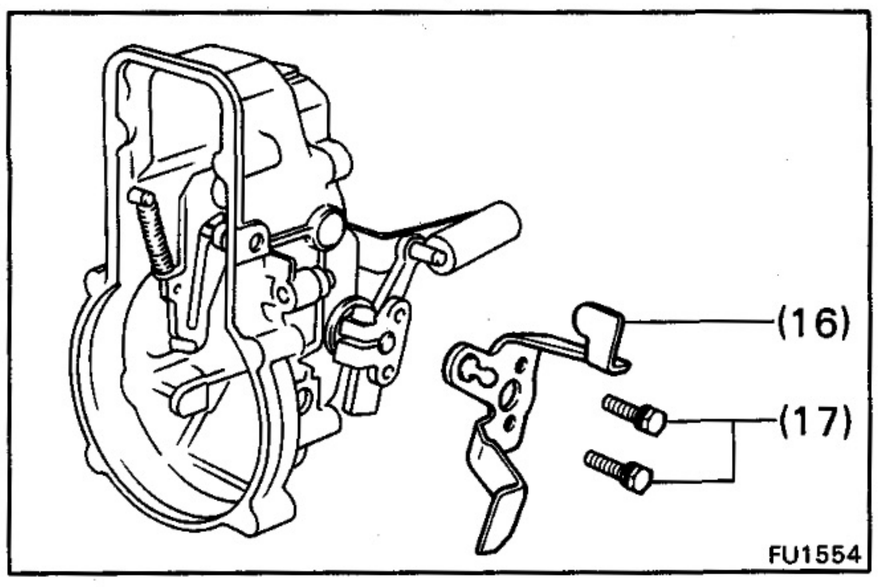

(16) No. 2 adjusting lever

Torque: 85 kg-cm (74 in.-lb, 8.3 N·m)

(17) Two bolts

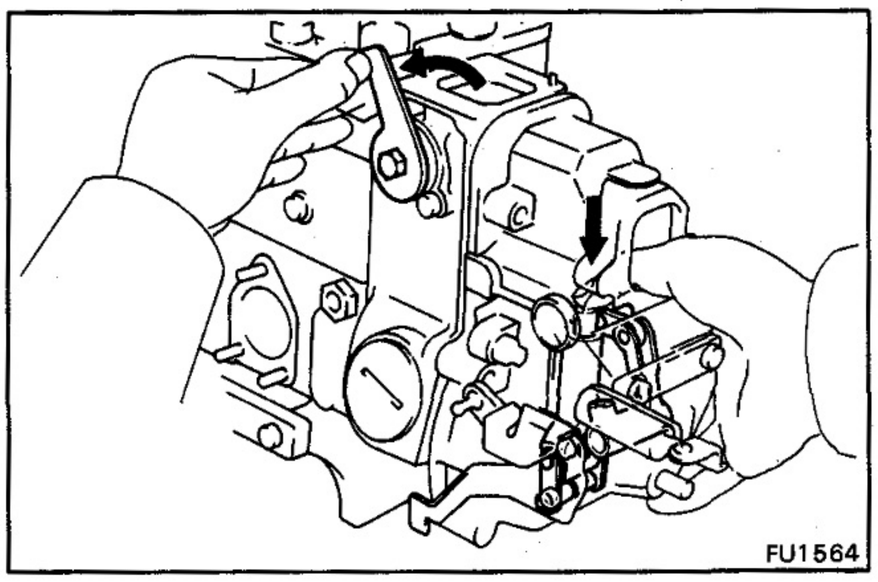

16 INSTALL GOVERNOR COVER ASSEMBLY

(a) Place a new gasket in position on the governor housing.

(b) Turn the stop lever clockwise.

(c) Support the sliding block with your finger, and insert it into the floating lever hole.

CAUTION: Position the long end of the sliding block upward.

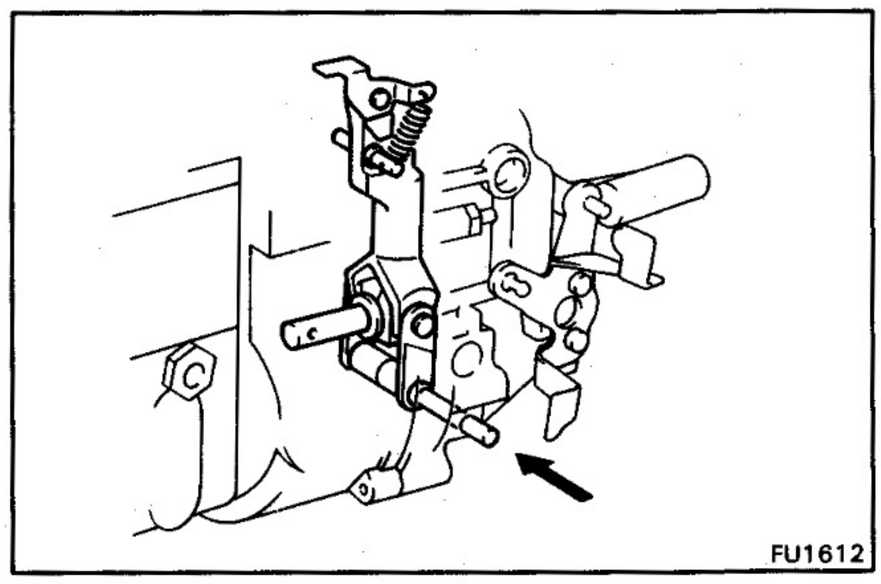

(d) Using a small screwdriver, align the shaft holes of the supporting levers and governor cover.

(e) Push in the supporting lever shaft.

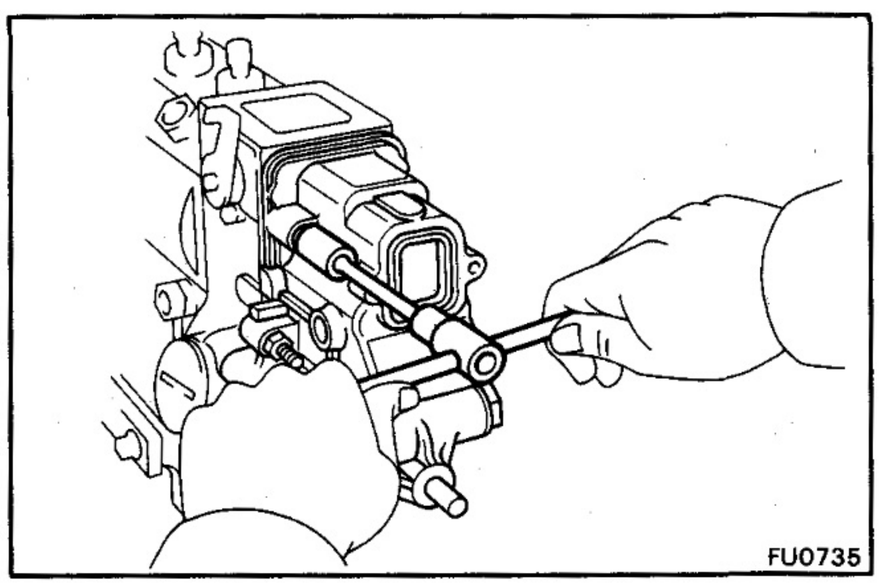

(f) Install the governor cover with the six bolts.

Torque: 85 kg-cm (74 in.-lb, 8.3 N·m)

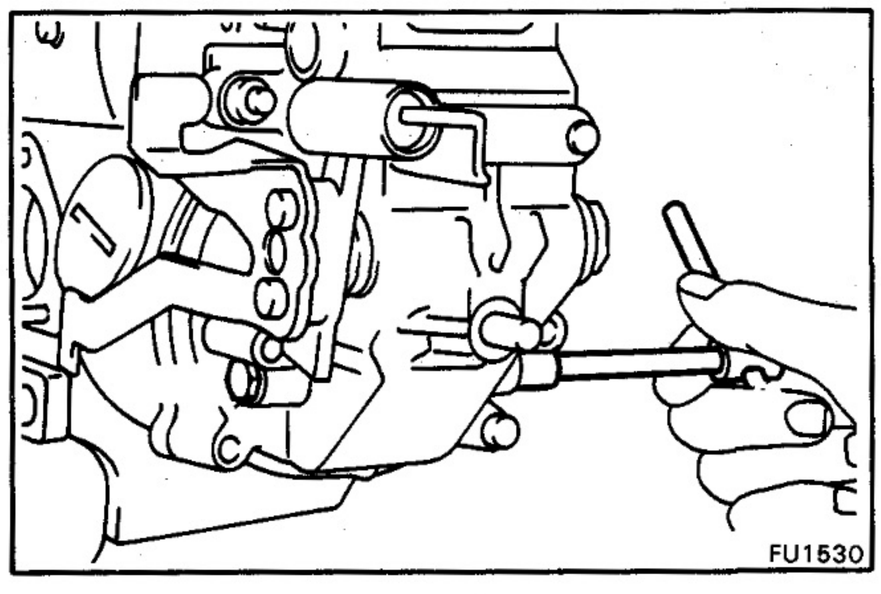

(g) Apply liquid sealer on the threads and under the screw plug heads.

(h) Install the two screw plugs.

Torque: 120 kg-cm (9 ft-lb, 12 N·m)

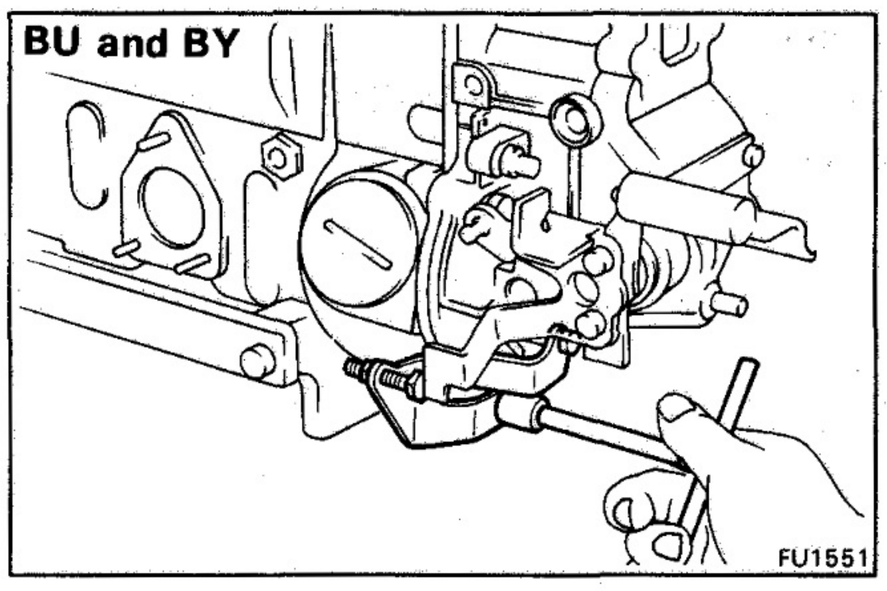

(i) [BU and BY]
Adjusting bracket with the two bolts.

Torque: 85 kg-cm (74 in.-lb, 8.3 N·m)

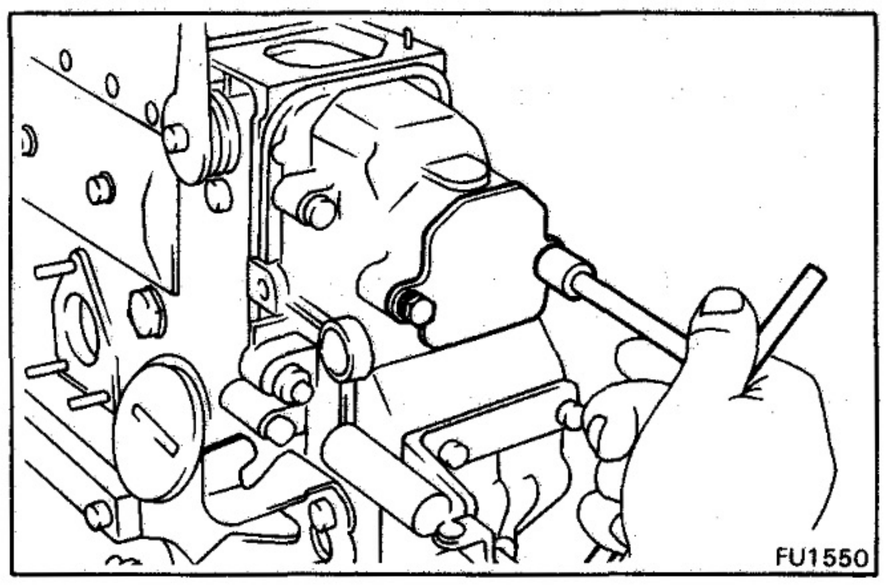

(j) Install a new O-ring and the cover plate or dash pot with the two bolts.

Torque: 85 kg-cm (74 in.-lb, 8.3 N·m)

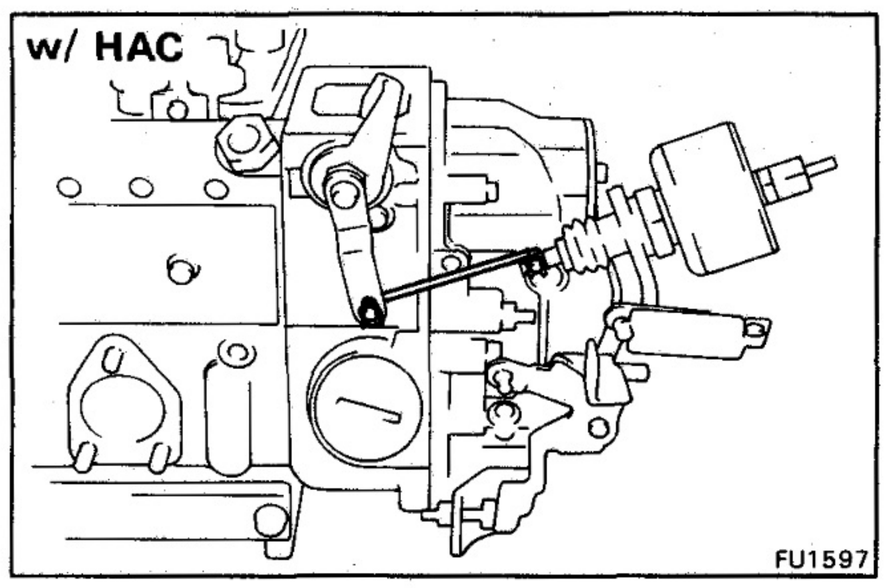

17. [w/ HAC]
INSTALL CONNECTING LINK OF HIGH ALTITUDE COMPENSATOR (HAC)

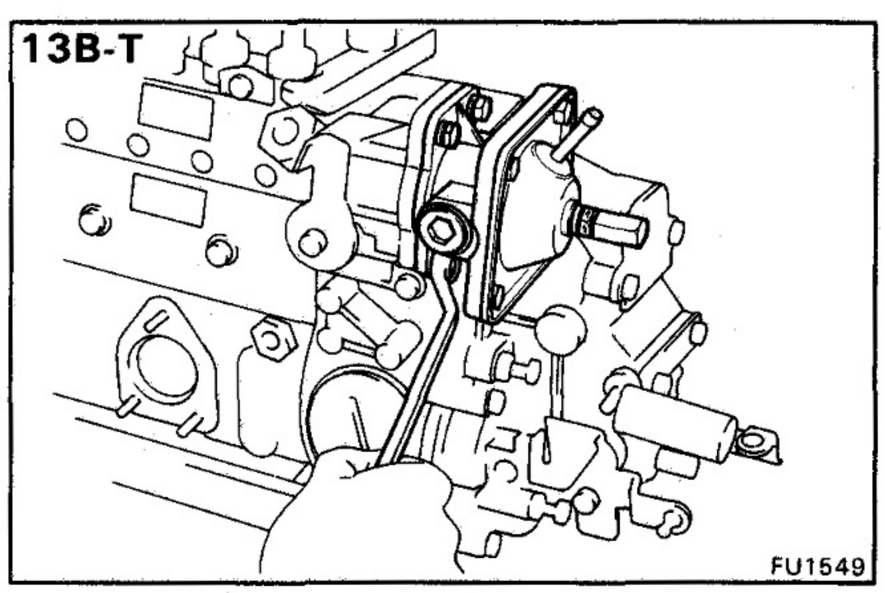

18. [13B-T]
INSTALL BOOST COMPENSATOR

Install a new O-ring and the boost compensator with the four bolts.

Torque: 85 kg-cm (74 in.-lb, 8.3 N·m)

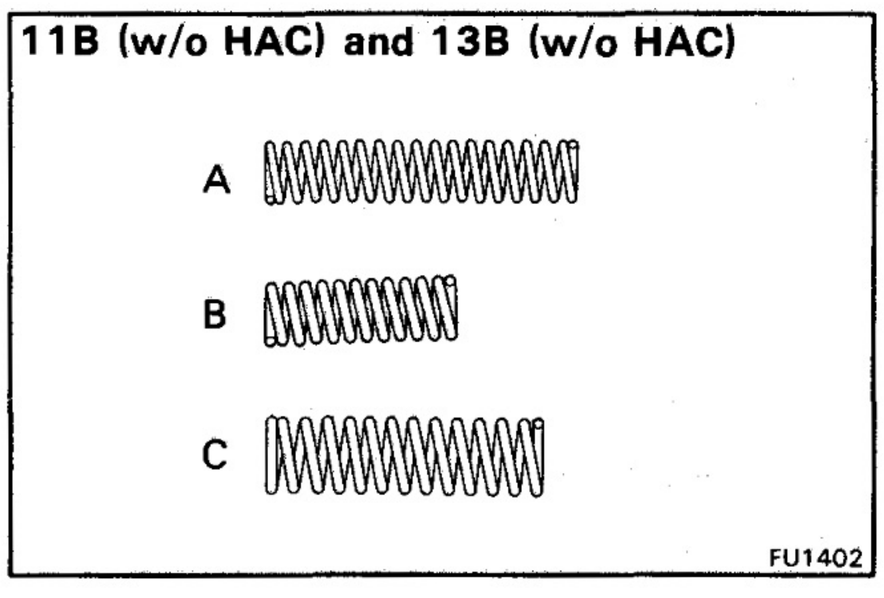

19. ASSEMBLE FULL-LOAD STOPPER HOUSING

(a) [11B (w/o HAC) and 13B (w/o HAC)]
Assemble the following parts:

NOTE: Use the spring indicated "A," "B" and "C."

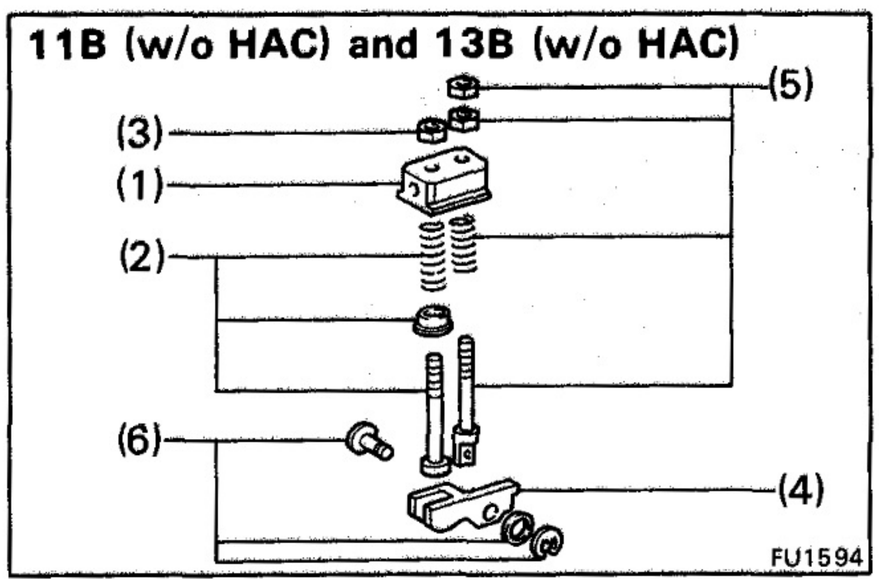

(1) Sliding plate
(2) No.1 adapter screw, bushing and "B" spring
(3) Lock nut
(4) Full stop cam
(5) No. 2 adaptor screw, "C" spring and two lock nuts
(6) Connecting pin, thrust washer and E-ring
Check the thrust clearance of the full stop cam. (See page FU-37)

Thrust clearance: 0.03 – 0.08 mm (0.0012 – 0.0032 in.)

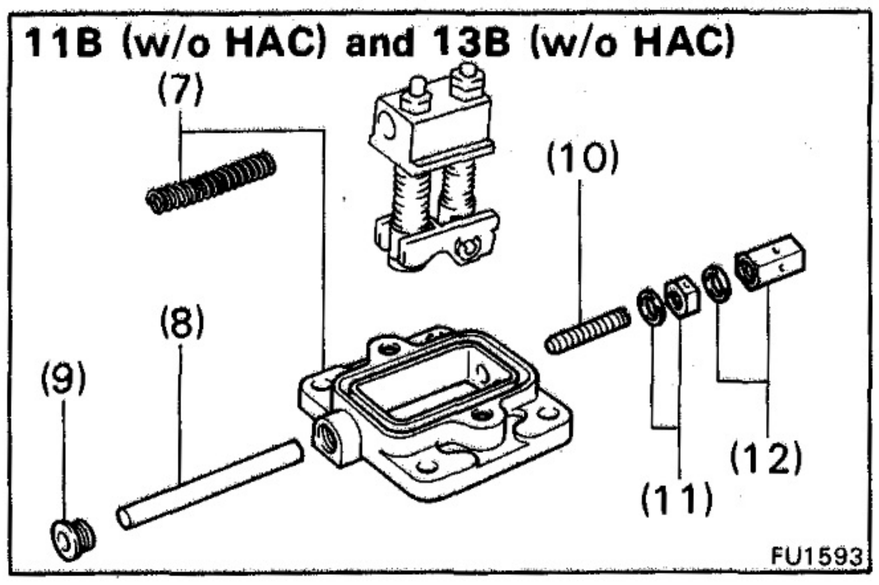

(7) "A" spring and full-load stopper housing
(8) Sliding plate shaft
(9) Screw plug
Apply liquid sealer on the threads and under the screw plug head.
(10) Stopper screw
(11) New gasket and nut
(12) New gasket and cap nut

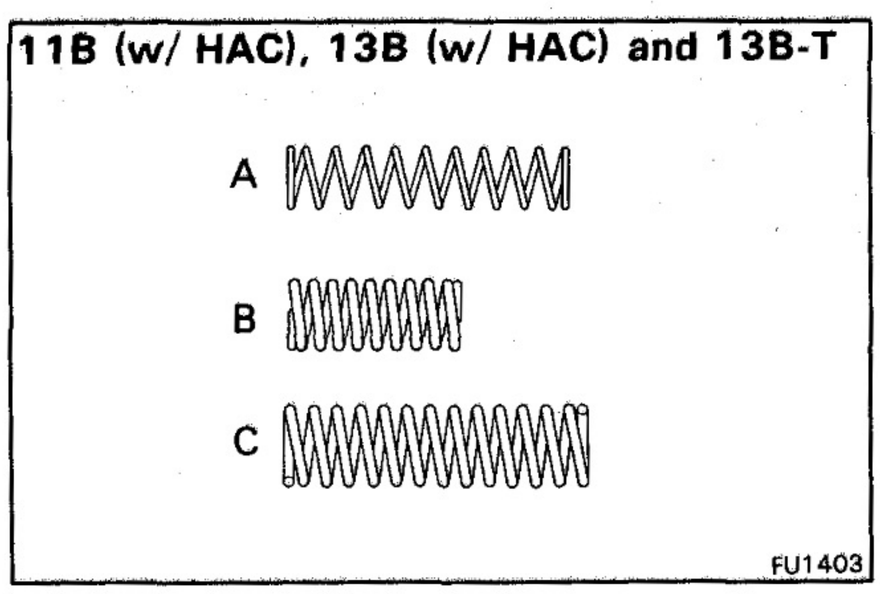

(b) [11B (w/ HAC), 13B (w/ HAC) and 13B-T]
Assemble the following parts:

NOTE: Use the spring indicated "A," "B" and "C."

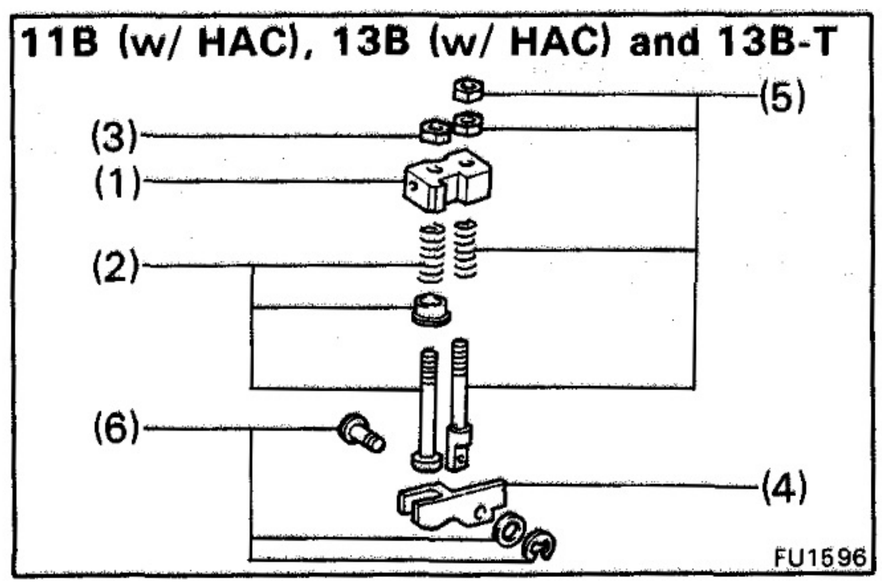

(1) Sliding plate
(2) No. 1 adaptor screw, bushing and "B" spring
(3) Lock nut
(4) Full stop cam
(5) No. 2 adaptor screw, "C" spring and two lock nuts
(6) Connecting pin, thrust washer and E-ring
Check the thrust clearance of the full stop cam. (See page FU-37)

Thrust clearance: 0.03 – 0.08 mm (0.0012 – 0.0032 in.)

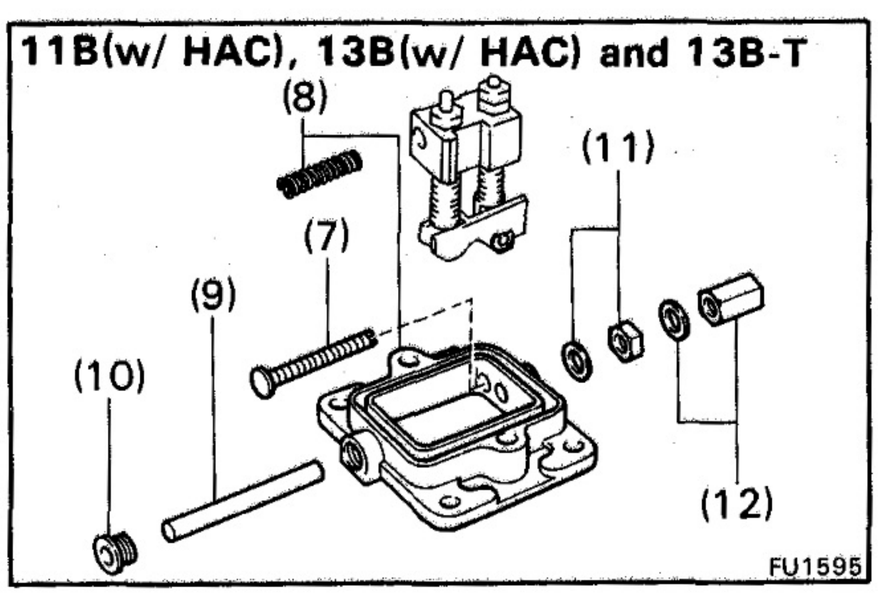

(7) Stopper screw
(8) "A" spring and full-load stopper housing
(9) Sliding plate shaft
(10) Screw plug
Apply liquid sealer on the threads and under the screw plug head.
(11) New gasket and nut
(12) New gasket and cap nut

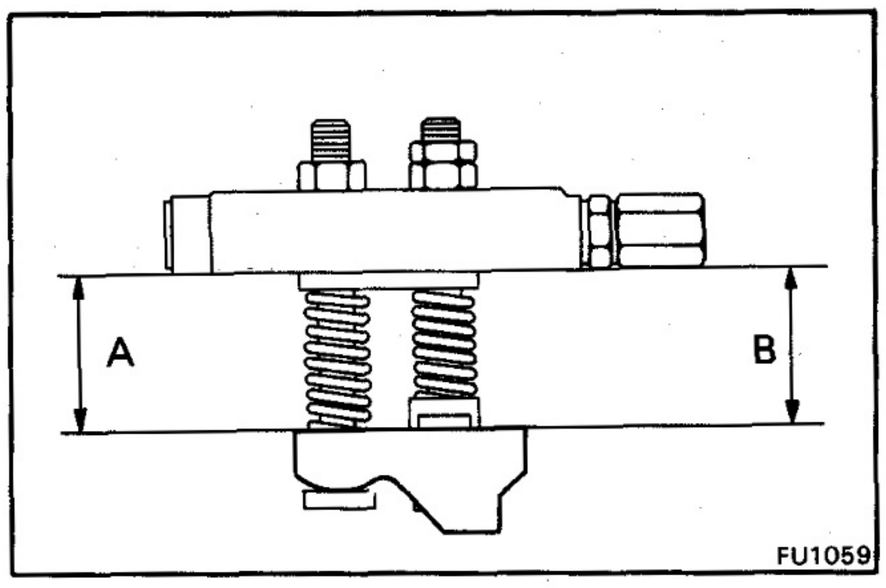

(c) Preset the full stop cam position with the No. 1 and No. 2 adaptor screws.

Distance (A and B):
11B (w/o HAC) and 13B (w/o HAC)
Approx. 27.0 mm (1.063 in.)
11B (w/ HAC), 13B (w/ HAC) and 13B-T
Approx. 22.5 mm (0.886 in.)

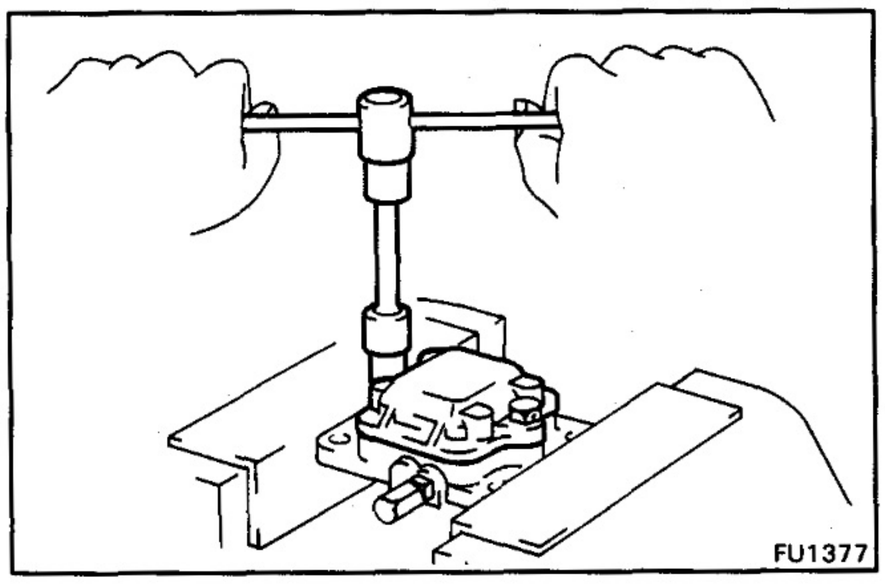

(d) Install a new O-ring and the cover plate with the two bolts.

Torque: 85 kg-cm (74 in.-lb, 8.3 N·m)

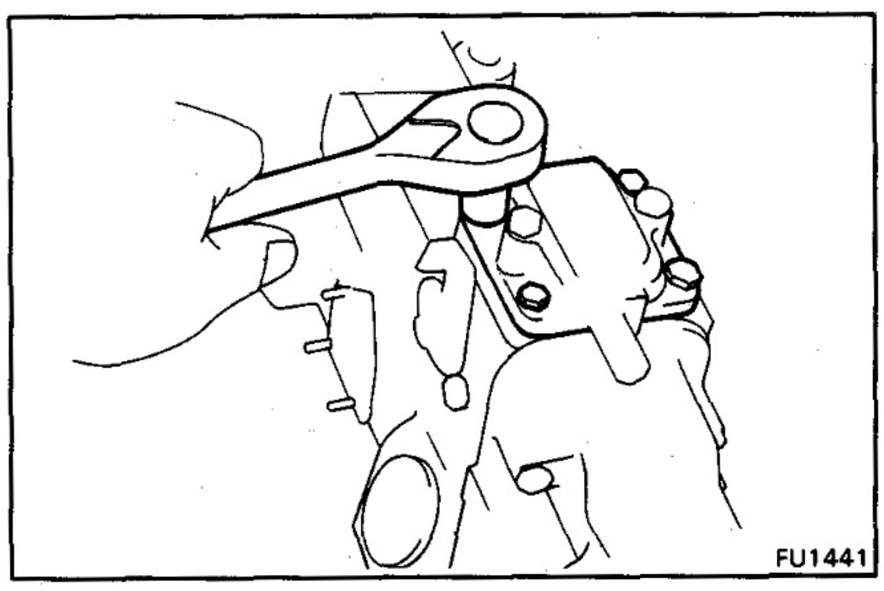

20. INSTALL FULL-LOAD STOPPER HOUSING ASSEMBLY

Install a new O-ring and the stopper housing assembly with the four bolts.

Torque: 85 kg-cm (74 in.-lb, 8.3 N·m)

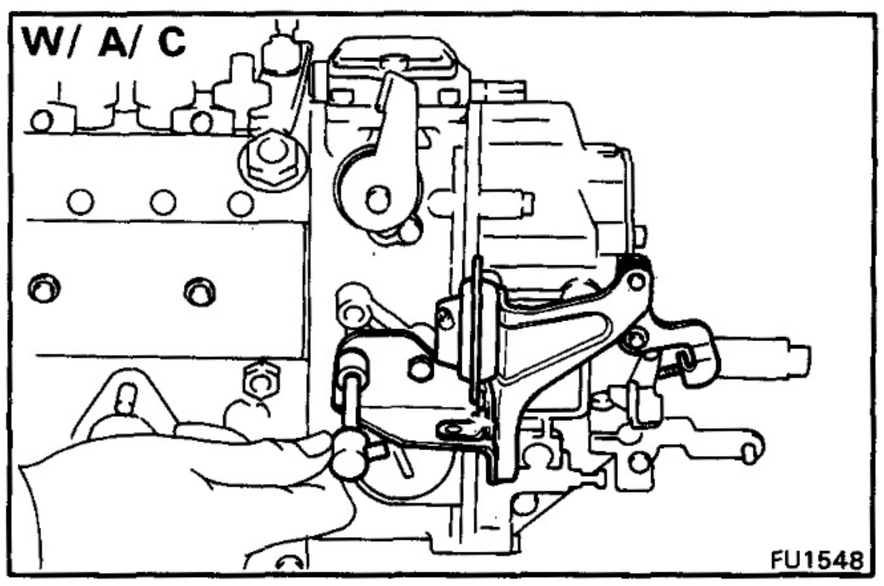

21. [w/ A/C]
INSTALL IDLE-UP ACTUATOR

Adjustment of Governor [11B, 13B and 13B-T]

Governor Characteristic Diagram

11B (w/o HAC)

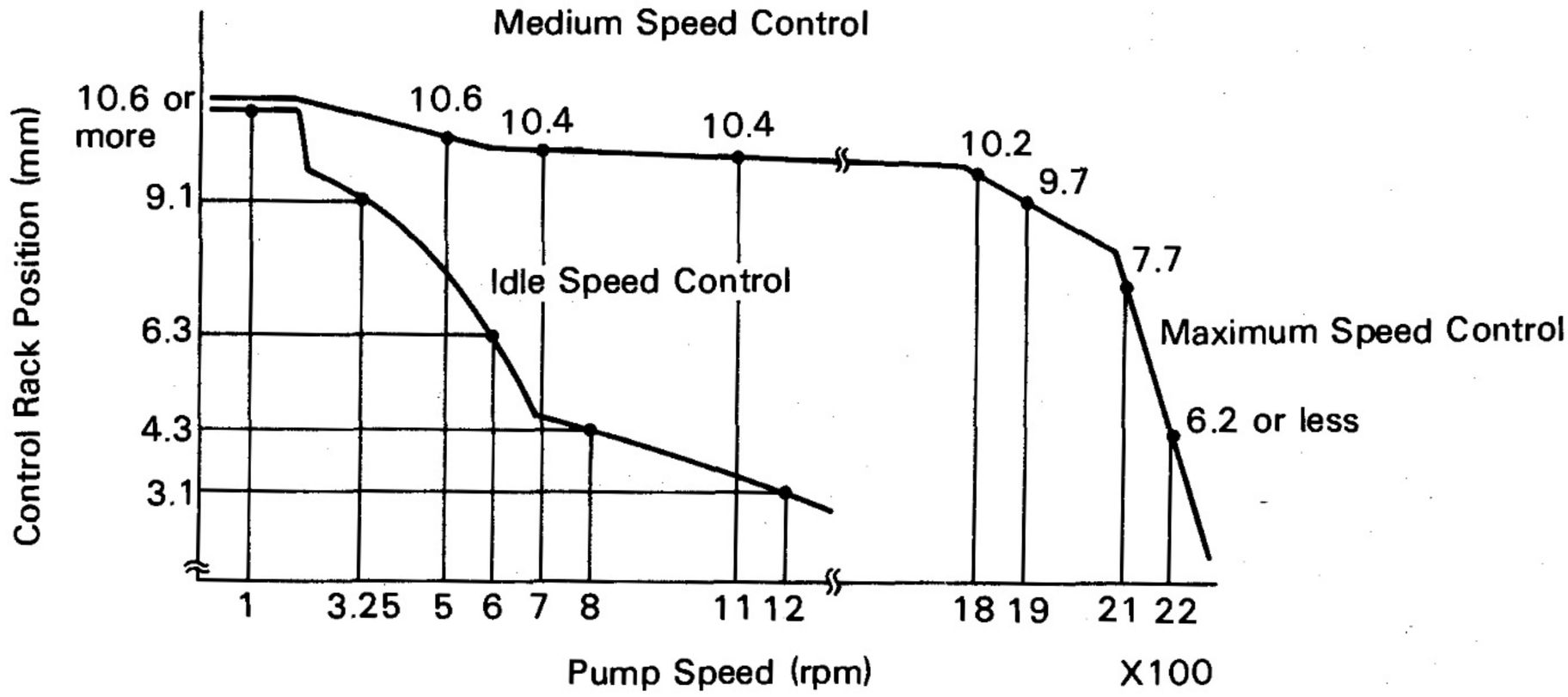

11B (w/ HAC)

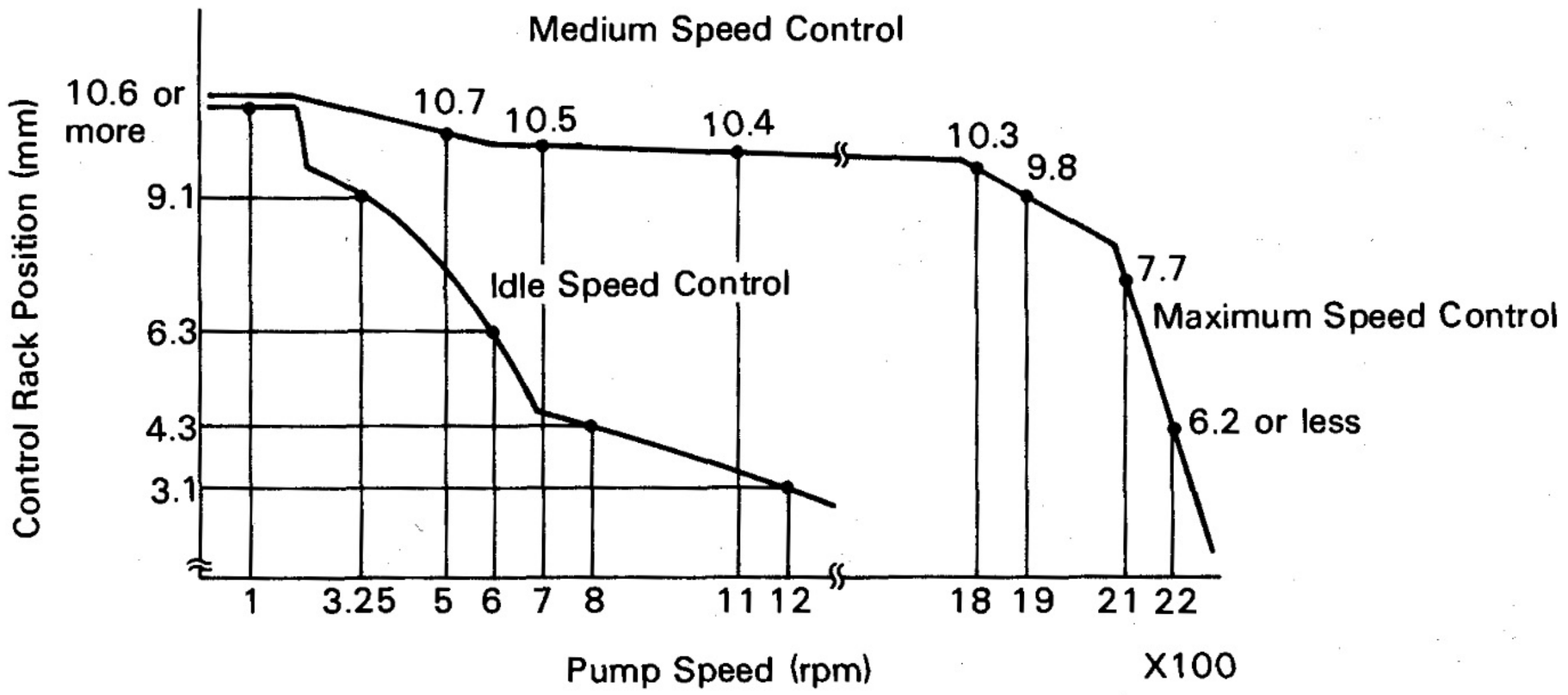

13B M/T (w/o HAC) BB

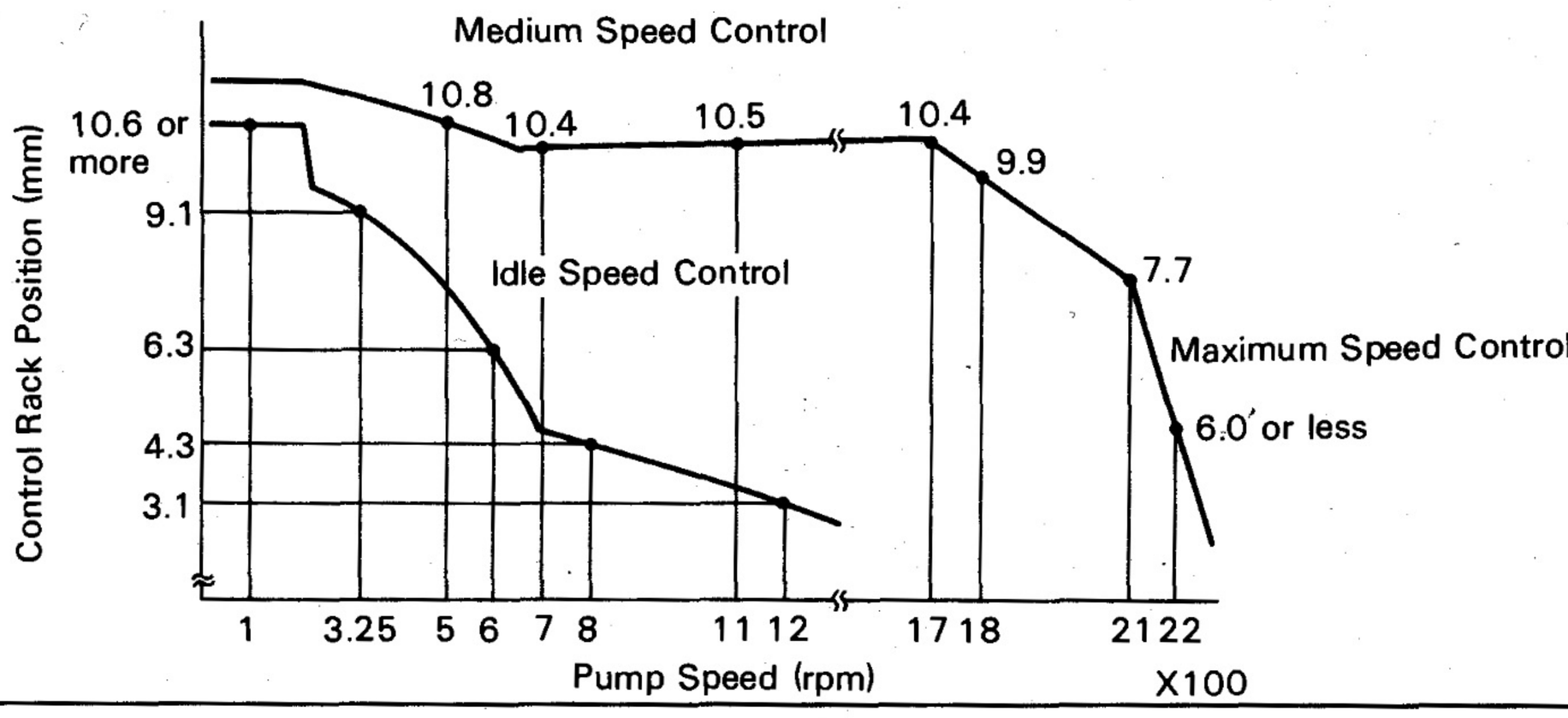

FU1503
FU1503
FU1504

Governor Characteristic Diagram (Cont'd)

13B M/T (w/o HAC) BU and BY

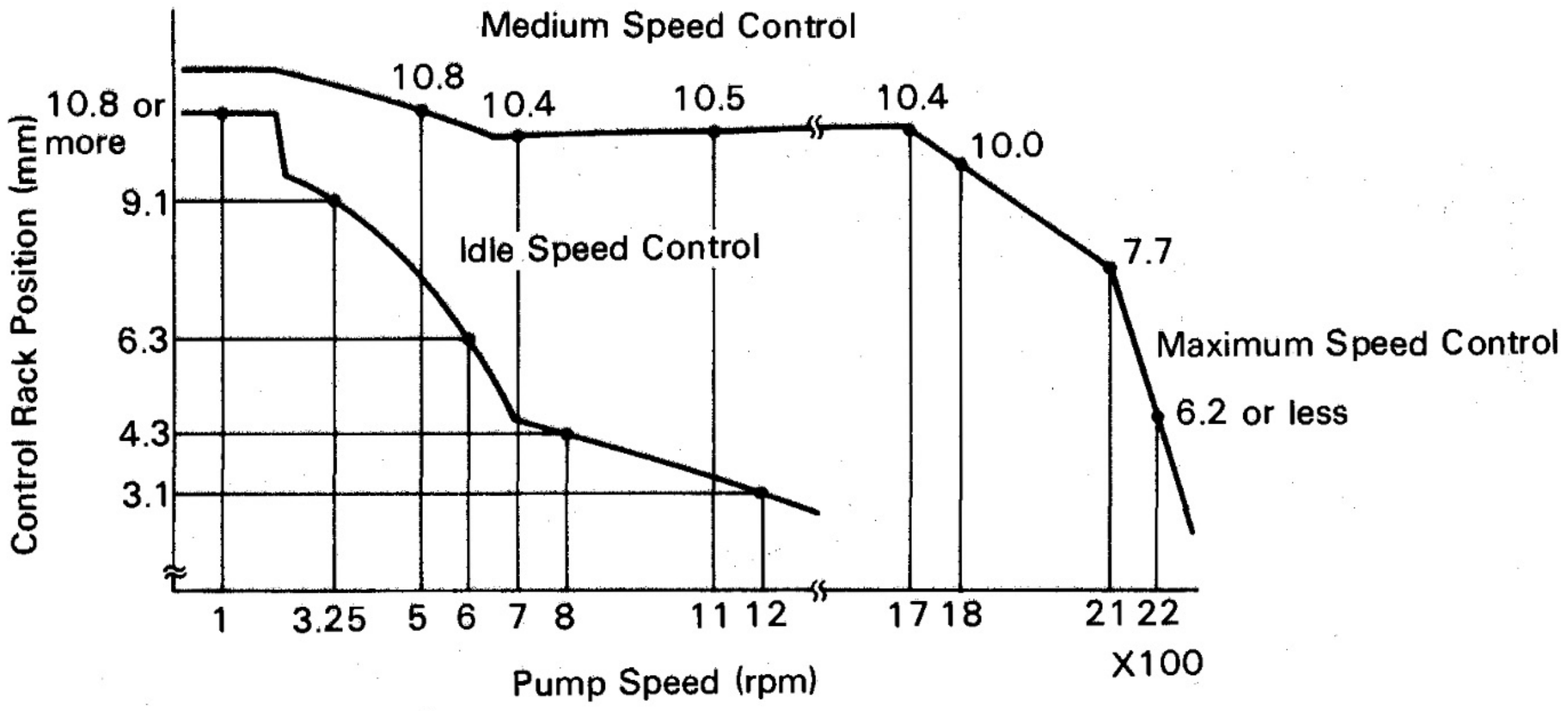

13B M/T (w/ HAC)

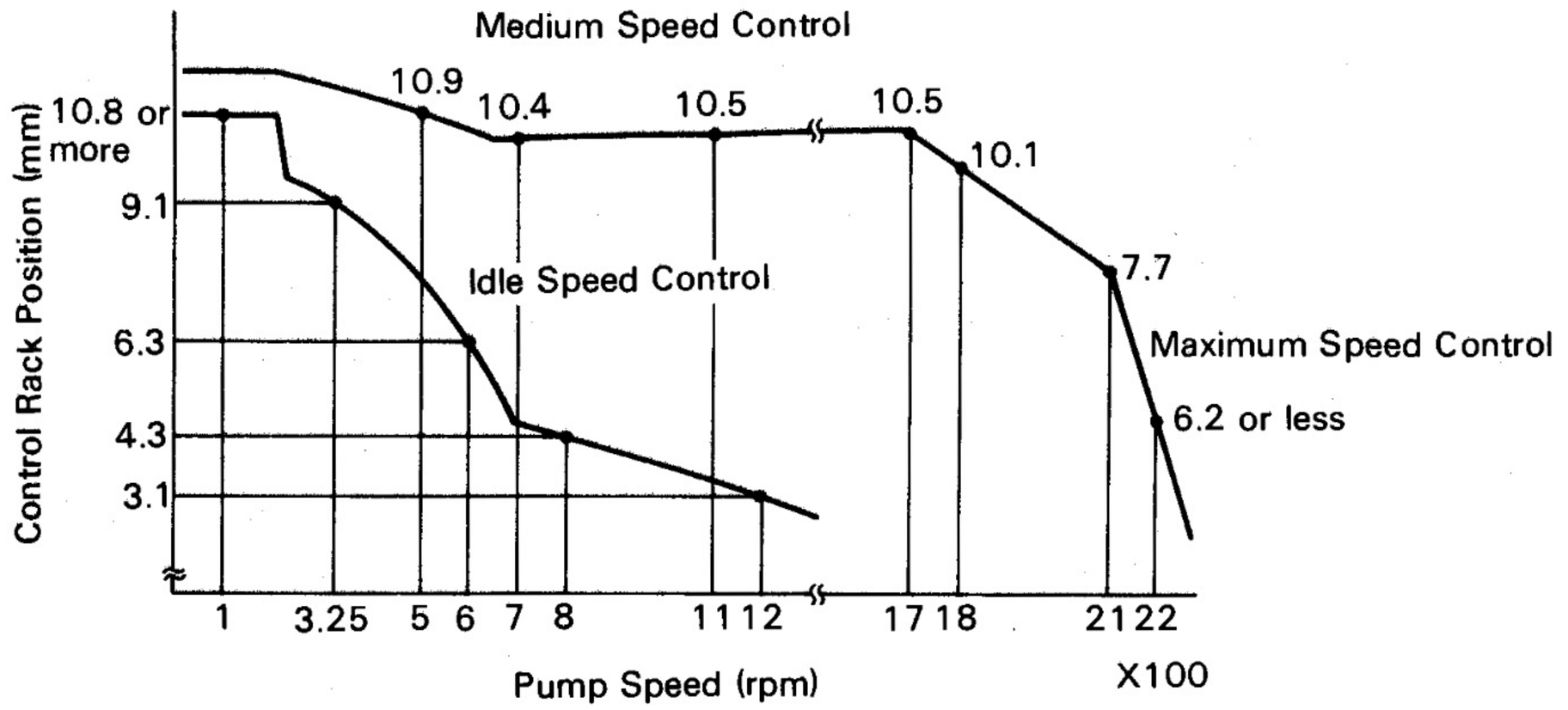

13B A/T

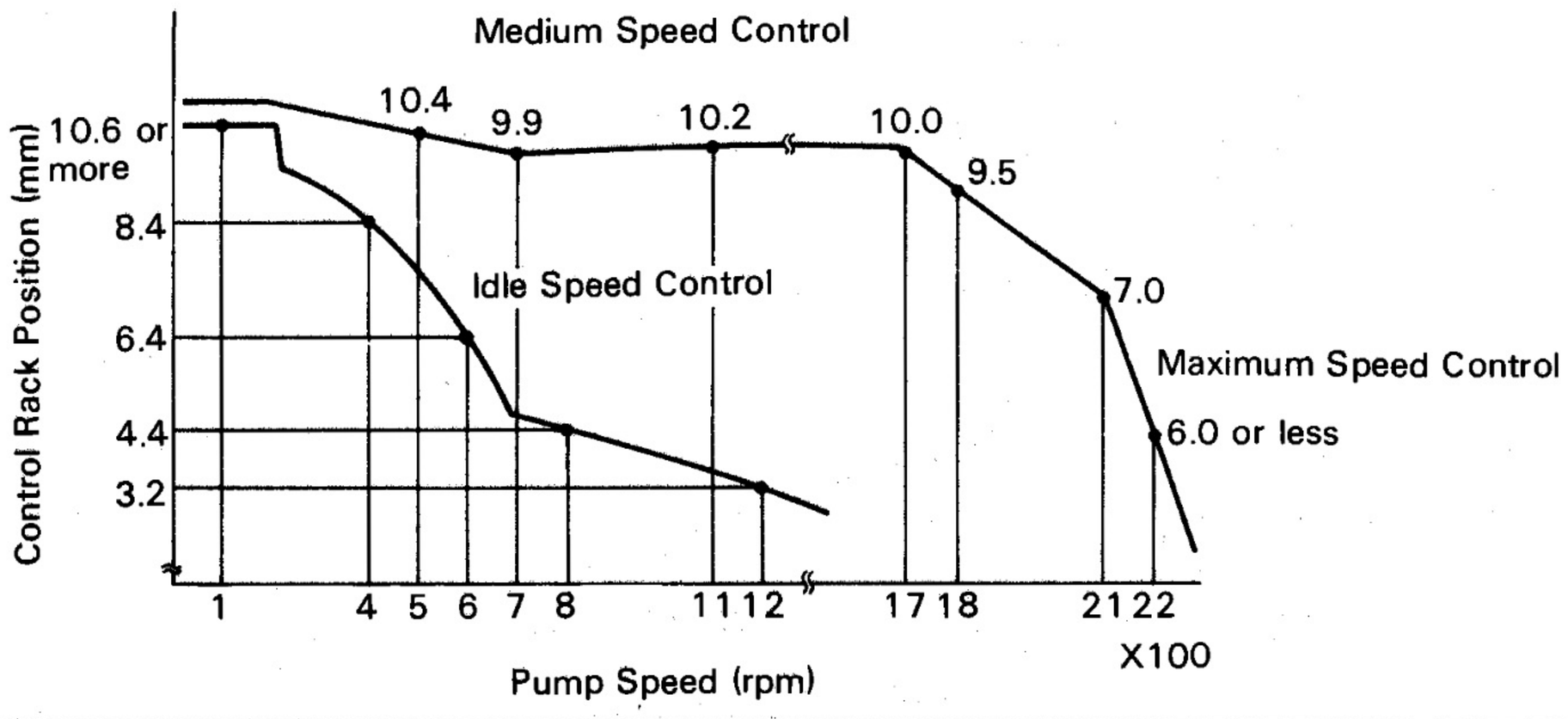

FU1504
FU1504
FU1505

Governor Characteristic Diagram (Cont'd)

13B-T M/T

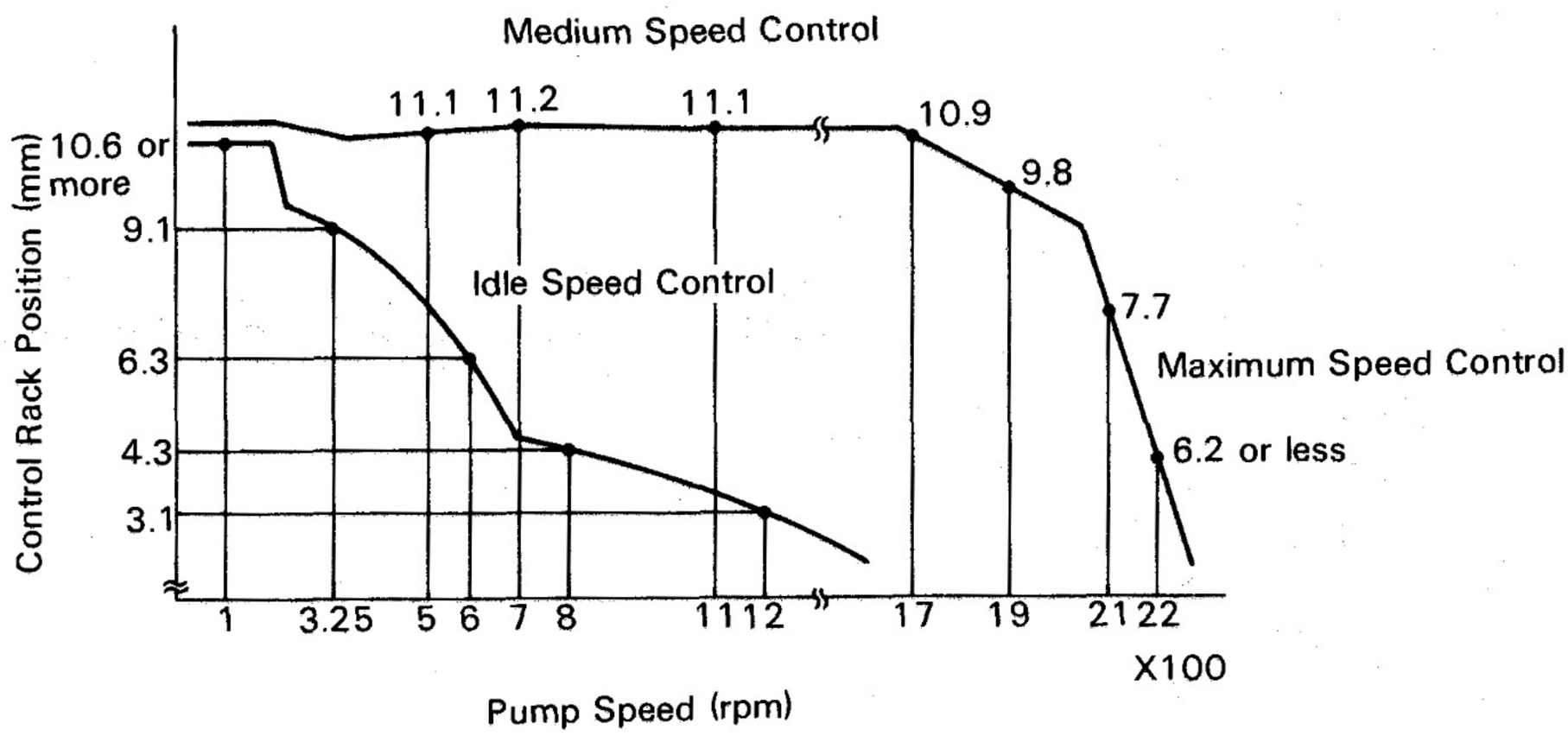

13B-T A/T

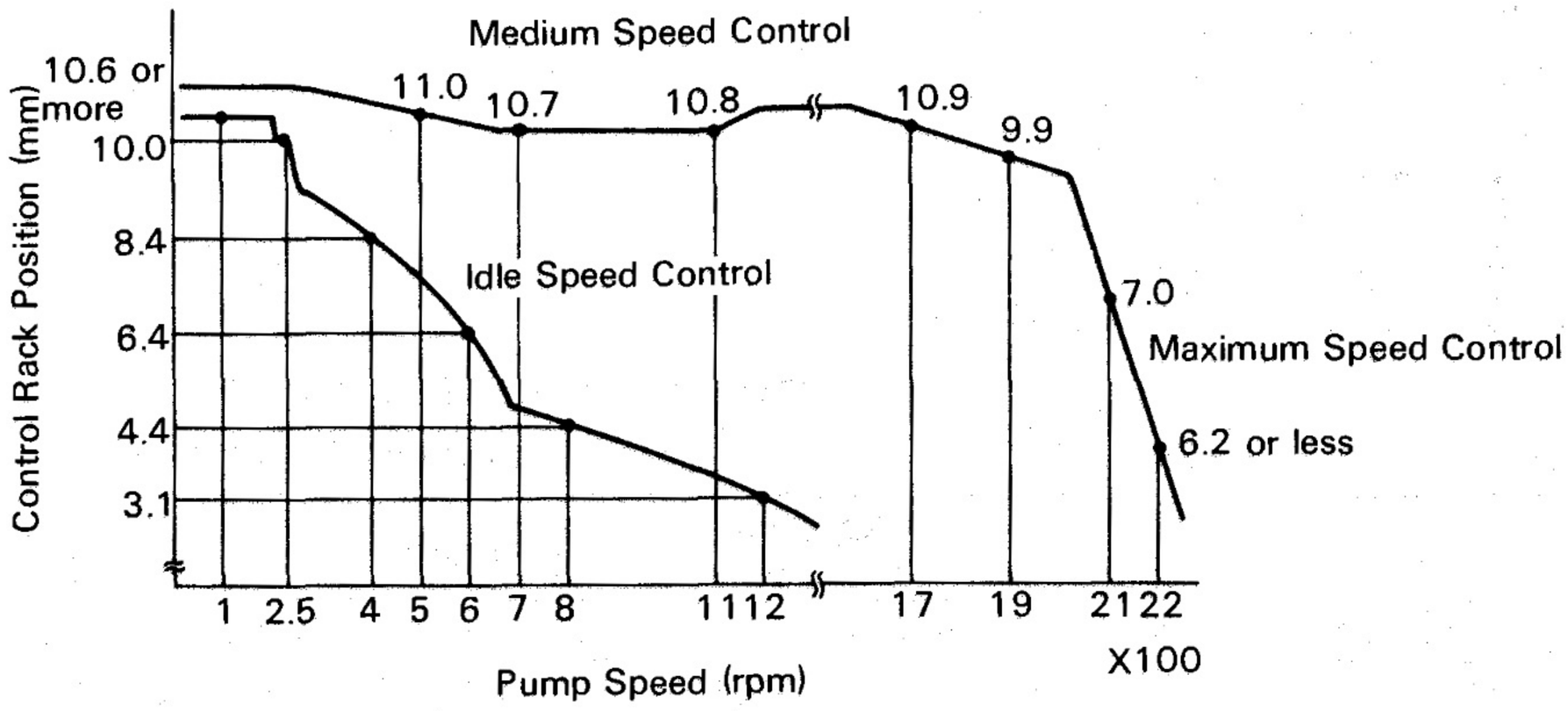

FU1506
FU1507

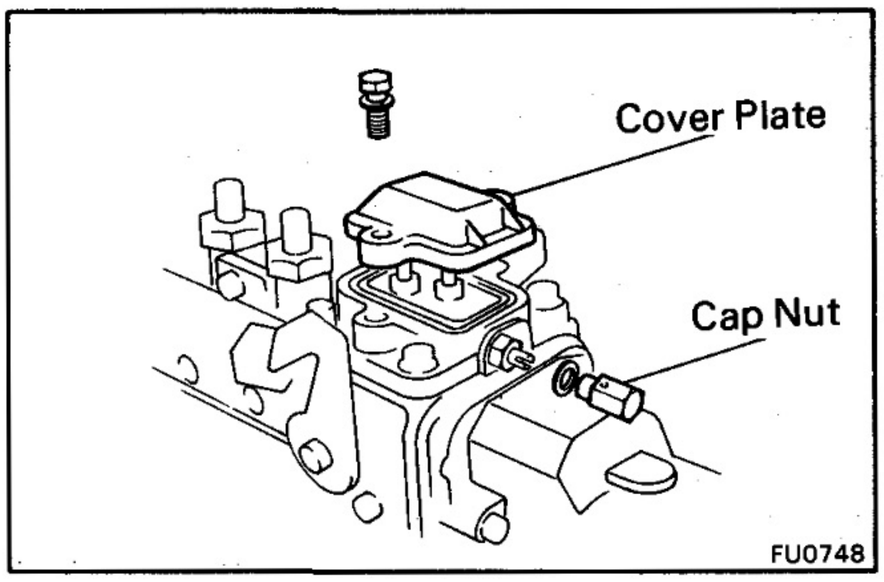

1. PRE-TEST CHECK AND PREPARATION
(See page FU-63)

2. REMOVE CAP NUT AND COVER PLATE

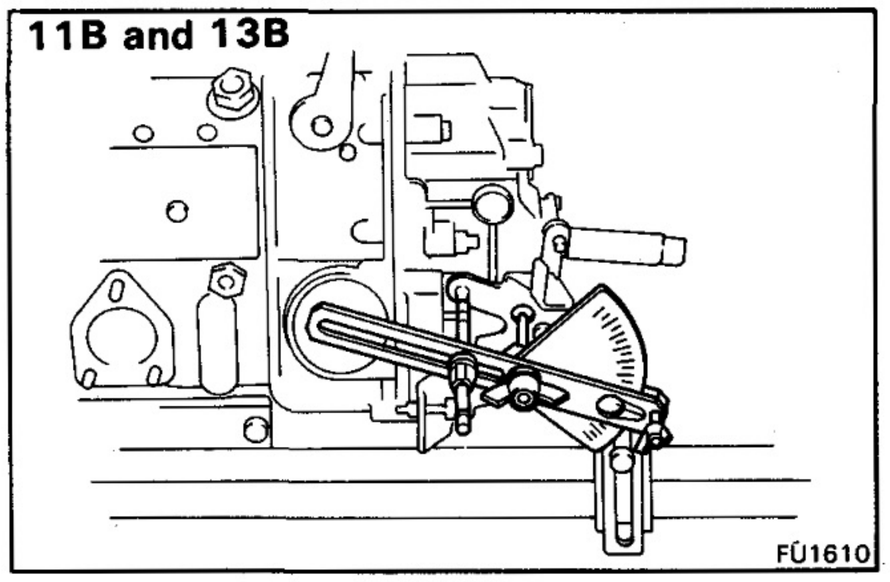

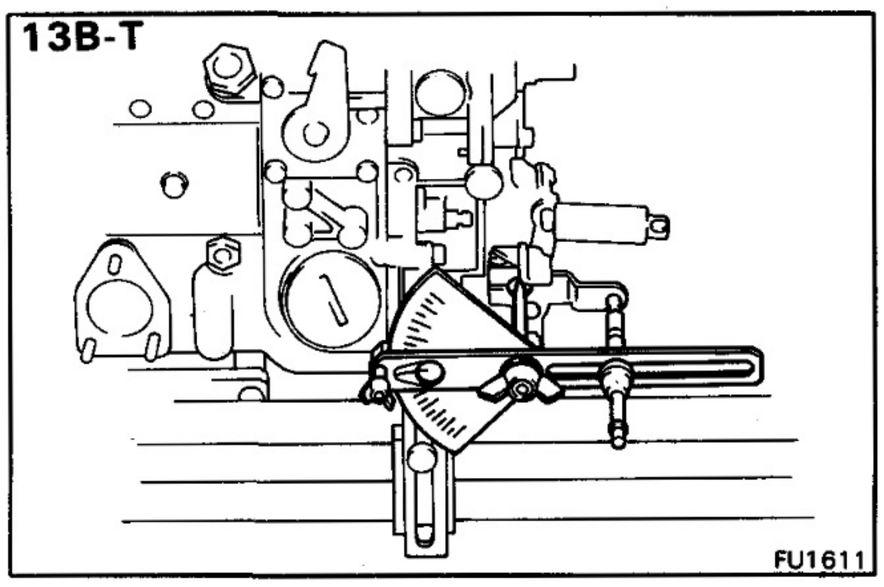

3. INSTALL ANGLE GAUGE TO ADJUSTING LEVER

4. PRESET IDLE SPEED CONTROL

(a) Measure the control rack position.

Item	Adjusting lever position	Adjusting lever angle	Pump rpm	Control rack position mm (in.)
11B M/T and 13B M/T	Idle	Approx. 23.5°	325	8.8 – 9.4 (0.346 – 0.370)
13B A/T	Idle	Approx. 23.5°	400	8.1 – 8.7 (0.319 – 0.343)
13B-T M/T	Idle	Approx. 0°	325	8.8 – 9.4 (0.346 – 0.370)
13B-T A/T	Idle	Approx. 0°	400	8.1 – 8.7 (0.319 – 0.343)

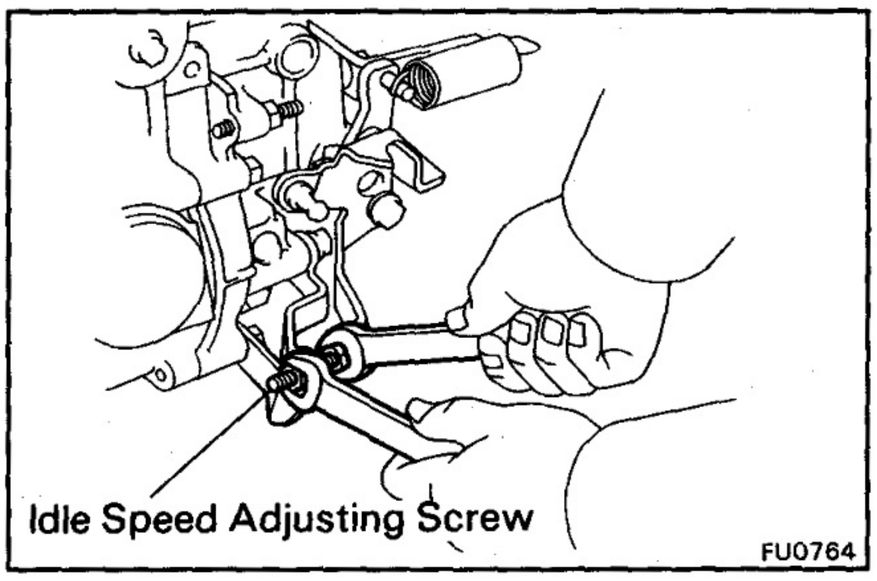

(b) Adjust by turning the idle speed adjusting screw.

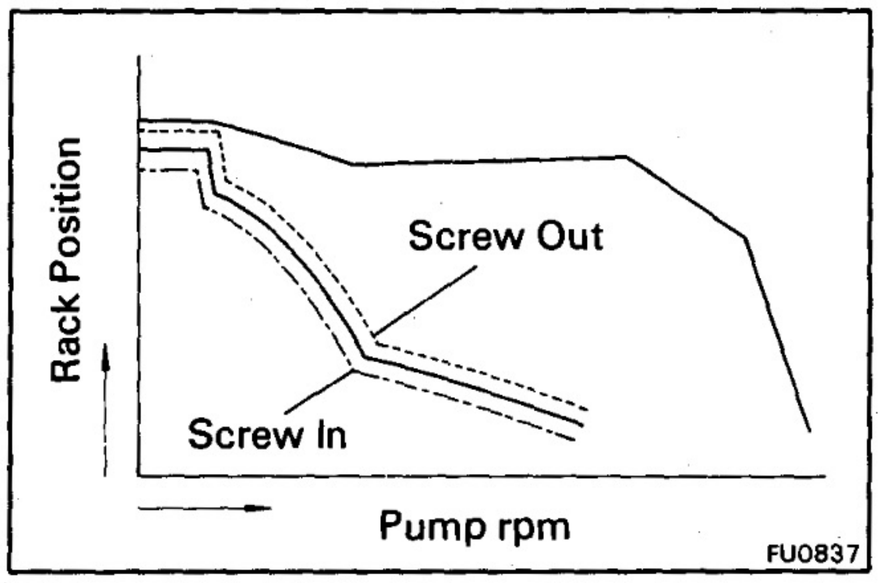

NOTE: The idle adjusting screw will change the governor characteristic as shown in the illustration.

5. ADJUST IDLE SPEED CONTROL

(a) Measure the control rack position.

Item	Adjusting lever position	Pump rpm	Control rack position mm (in.)	Adjusting point
11B M/T 13B M/T 13B-T M/T	Idle	100	10.6 (0.417) or more	–
		325	8.8 – 9.4 (0.346 – 0.370)	Idle speed adjusting screw
		600	5.6 – 7.0 (0.220 – 0.276)	Adjusting nut or washer (A)
		800	3.9 – 4.7 (0.154 – 0.185)	Adjusting nut or washer (B)
		1,200	2.4 – 3.8 (0.094 – 0.150)	–
13B A/T	Idle	100	10.6 (0.417) or more	–
		400	8.1 – 8.7 (0.319 – 0.343)	Idle speed adjusting screw
		600	5.7 – 7.1 (0.224 – 0.280)	Adjusting nut or washer (A)
		800	4.0 – 4.8 (0.157 – 0.189)	Adjusting nut or washer (B)
		1,200	2.5 – 3.9 (0.098 – 0.154)	–
13B-T A/T	Idle	100	10.6 (0.417) or more	–
		250	9.1 – 11.1 (0.390 – 0.437)	–
		400	8.1 – 8.7 (0.319 – 0.343)	Idle speed adjusting screw
		600	5.7 – 7.1 (0.224 – 0.280)	Adjusting nut or washer (A)
		800	4.0 – 4.8 (0.157 – 0.189)	Adjusting nut or washer (B)
		1,200	2.4 – 3.8 (0.094 – 0.150)	

(b) Adjust by turning the idle speed adjusting screw.

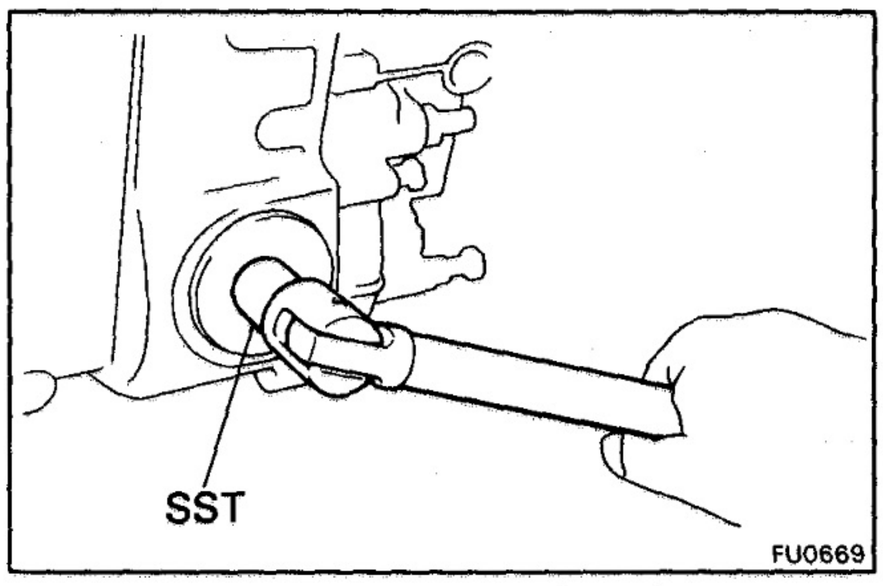

(c) Using SST, remove the screw plug and adjust by turning the adjusting nut or changing the adjusting washers.

SST 09260-58010 (09260-78020)

Adjusting washer thickness:

0.2 mm (0.008 in.)	**Outer**
0.4 mm (0.016 in.)	**Inner and outer**
0.5 mm (0.20 in.)	**Outer**
0.55 mm (0.022 in.)	**Inner**
0.6 mm (0.024 in.)	**Inner and outer**

CAUTION:

- **To insure that there is no interference between the adjusting nut and housing, set the amount of protrusion within minus 0.4 mm (0.016 in.) to plus 0.2 mm (0.08 in.).**
- **Be sure to assemble the adjusting washers on the guide sleeve side.**

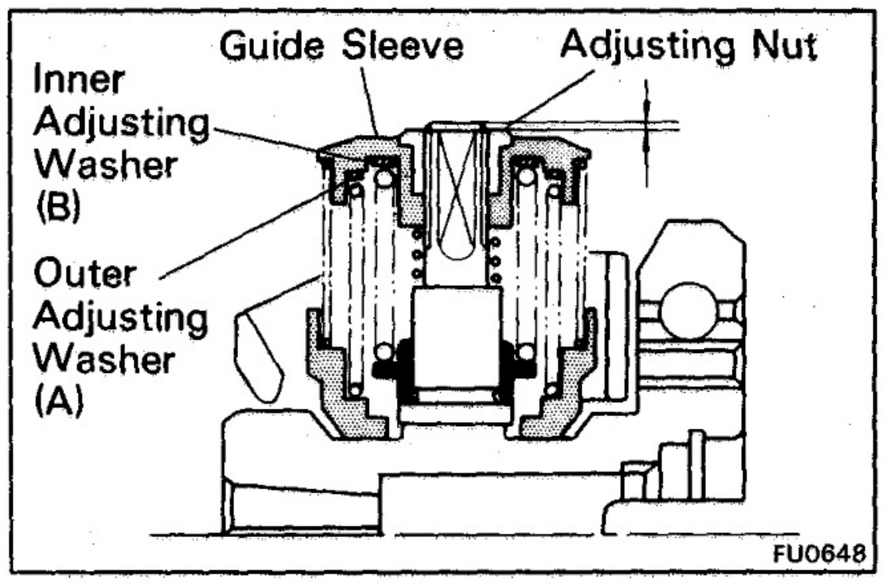

NOTE:

- By adding a thicker adjusting washer, the governor characteristic will change as shown in the illustration.

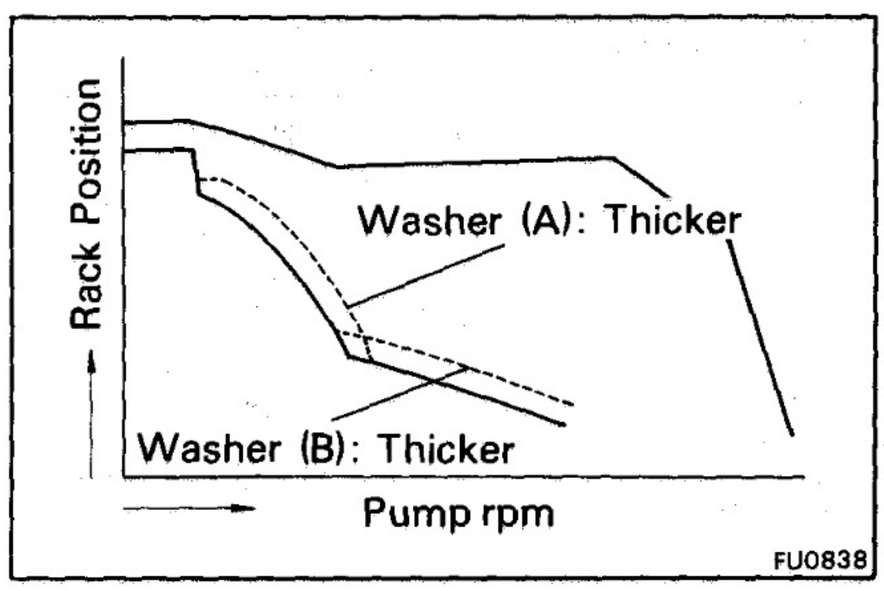

- The adjusting nut will change the governor characteristic as shown in the illustration.

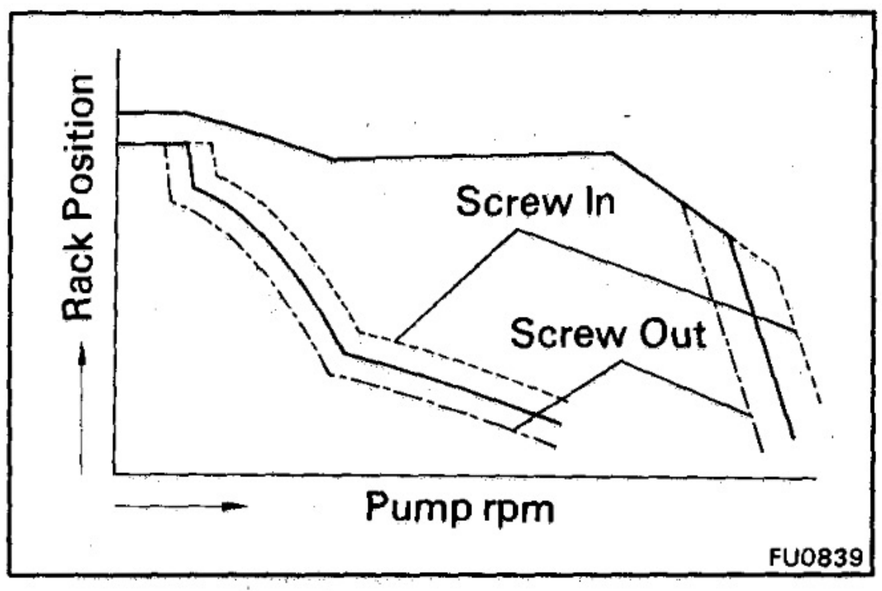

6. PRESET MAXIMUM SPEED CONTROL

(a) [13B-T]
Apply 0.27 kg/cm² (3.9 psi, 26 kPa) of pressure to the boost compensator.

(b) Measure the control rack position.

Item	Adjusting lever position	Adjusting lever angle	Pump rpm	Control rack position mm (in.)
11B M/T and 13B M/T	Maximum	Approx. 23.5°	2,100	7.0 – 8.4 (0.276 – 0.331)
13B A/T	Maximum	Approx. 23.5°	2,100	6.3 – 7.7 (0.248 – 0.303)
13B-T M/T	Maximum	Approx. 0°	2,100	7.0 – 8.4 (0.276 – 0.331)
13B-T A/T	Maximum	Approx 0°	2,100	6.3 – 7.7 (0.248 – 0.303)

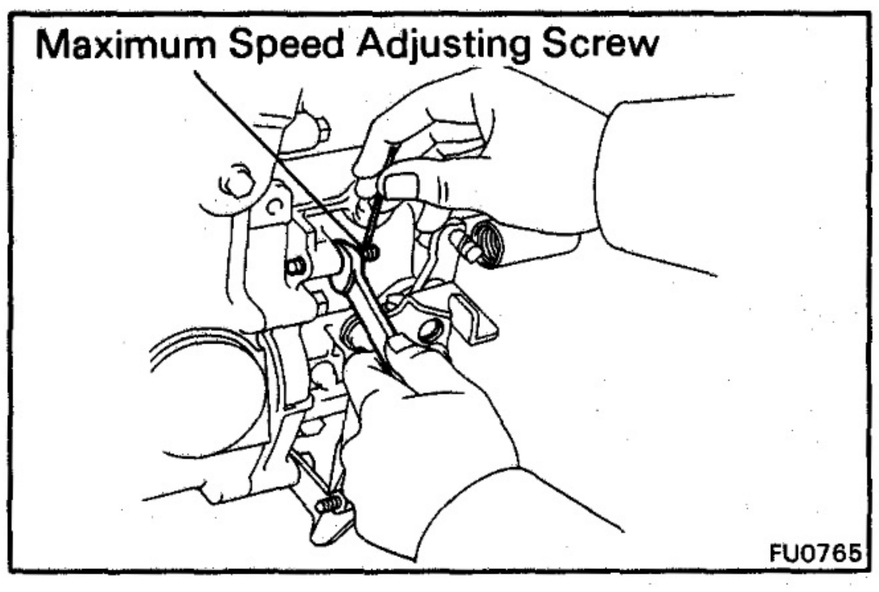

(c) Adjust by turning the maximum speed adjusting screw.

7. ADJUST MEDIUM SPEED CONTROL

(a) [13B-T]
Apply 0.27 kg/cm² (3.9 psi, 26 kPa) of pressure to the boost compensator.

(b) Raise the pump speed above 600 rpm.

(c) Move the adjusting lever to idle speed side, and then set it to maximum speed side.

(d) Measure the control rack position.

Item	Adjusting lever position	Pump rpm	Control rack position mm (in.)	Adjusting point
11B (w/o HAC)	Maximum	500	10.0 – 11.0 (0.394 – 0.435)	No. 1 adapter screw
		700	10.0 – 10.8 (0.394 – 0.425)	–
		1,100	10.1 – 10.7 (0.398 – 0.421)	Full-load stopper screw
		1,800	9.6 – 10.6 (0.378 – 0.417)	No. 1 and No. 2 adapter screws
		1,900	9.3 – 10.1 (0.366 – 0.398)	–
11B (w/ HAC)	Maximum	500	10.1 – 11.1 (0.398 – 0.437)	No. 1 adapter screw
		700	10.1 – 10.9 (0.398 – 0.429)	–
		1,100	10.1 – 10.7 (0.398 – 0.421)	Full-load stopper screw
		1,800	9.7 – 10.7 (0.382 – 0.421)	No. 1 and No. 2 adapter screws
		1,900	9.4 – 10.2 (0.370 – 0.402)	–
13B M/T (w/o HAC)	Maximum	500	10.2 – 11.2 (0.402 – 0.441)	No. 1 adapter screw
		700	10.0 – 10.8 (0.394 – 0.425)	–
		1,100	10.2 – 10.8 (0.402 – 0.425)	Full-load stopper screw
		1,700	10.0 – 10.7 (0.394 – 0.421)	No. 1 and No. 2 adapter screws
		1,800	9.4 – 10.4 (0.370 – 0.409) * 9.3 – 10.3 (0.366 – 0.406)	–
13B M/T (w/ HAC)	Maximum	500	10.3 – 11.3 (0.406 – 0.445)	No. 1 Adapter screw
		700	10.0 – 10.8 (0.394 – 0.425)	–
		1,100	10.2 – 10.8 (0.402 – 0.425)	Full-load stopper screw
		1,700	9.9 – 10.9 (0.390 – 0.429)	No. 1 and No. 2 adapter screws
		1,800	9.7 – 10.5 (0.382 – 0.413)	–
13B A/T	Maximum	500	Approx. 10.4 (0.409)	No. 1 adapter screw
		700	9.5 – 10.3 (0.374 – 0.406)	–
		1,100	9.9 – 10.5 (0.390 – 0.413)	Full-load stopper screw
		1,700	9.6 – 10.3 (0.378 – 0.405)	No. 1 and No. 2 adapter screws
		1,800	8.9 – 9.9 (0.350 – 0.390)	–

* BB

Cont'd

Item	Adjusting lever position	Pump rpm	Control rack position mm (in.)	Adjusting point
13B-T M/T	Maximum	500	10.7 – 11.5 (0.421 – 0.453)	No. 1 adapter screw
		700	10.8 – 11.6 (0.425 – 0.457)	–
		1,100	10.8 – 11.4 (0.425 – 0.449)	Full-load stopper screw
		1,700	10.5 – 11.3 (0.413 – 0.445)	No. 1 and No. 2 adapter screws
		1,900	9.4 – 10.2 (0.370 – 0.402)	–
13B-T A/T	Maximum	500	10.6 – 11.4 (0.417 – 0.449)	No. 1 adapter screw
		700	10.3 – 11.1 (0.406 – 0.437)	–
		1,100	10.5 – 11.1 (0.413 – 0.437)	Full-load stopper screw
		1,700	10.5 – 11.3 (0.413 – 0.445)	No. 1 and No. 2 adapter screws
		1,900	9.5 – 10.3 (0.374 – 0.406)	–

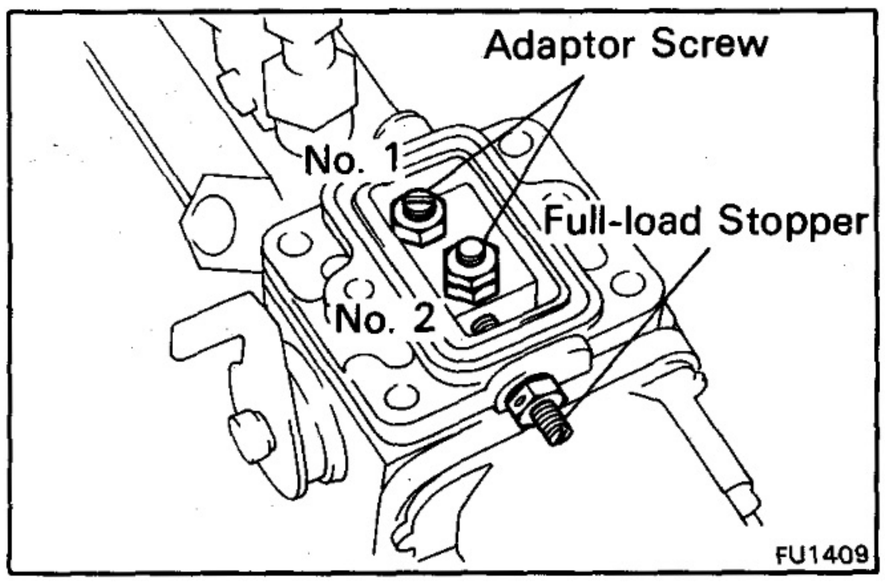

(e) Adjust by turning the full-load stopper and adapter screws.

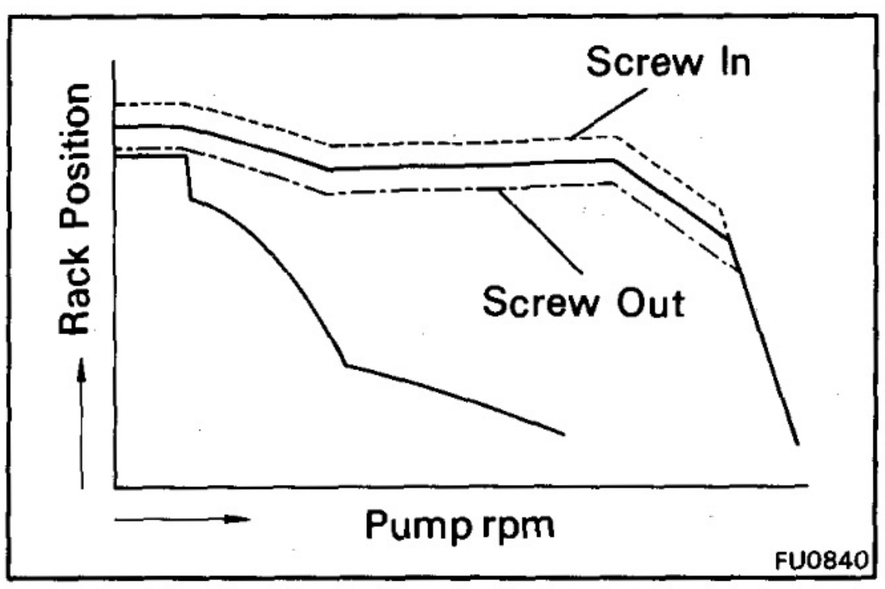

NOTE:

- The full-load stopper will change the governor characteristic as shown in the illustration.

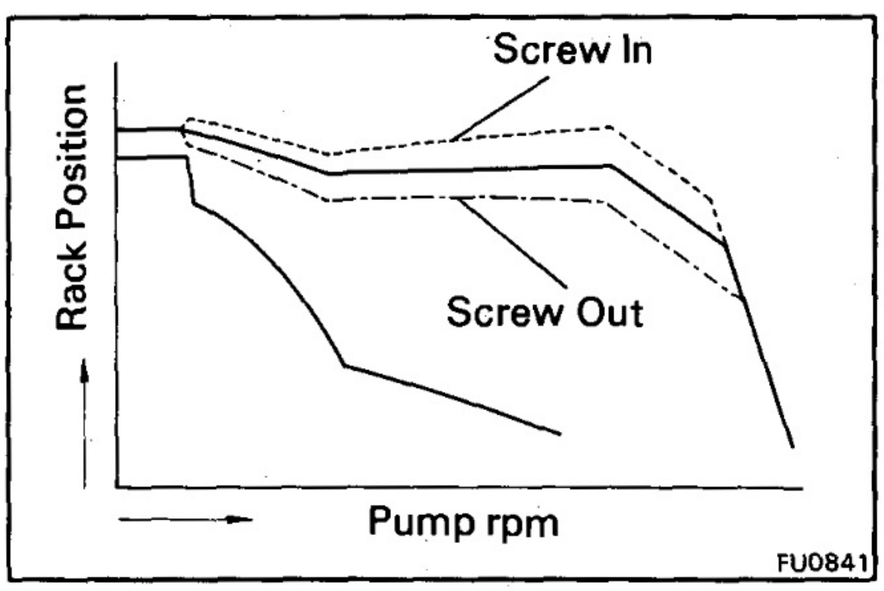

- The No. 1 adaptor screw will change the governor characteristic as shown in the illustration.

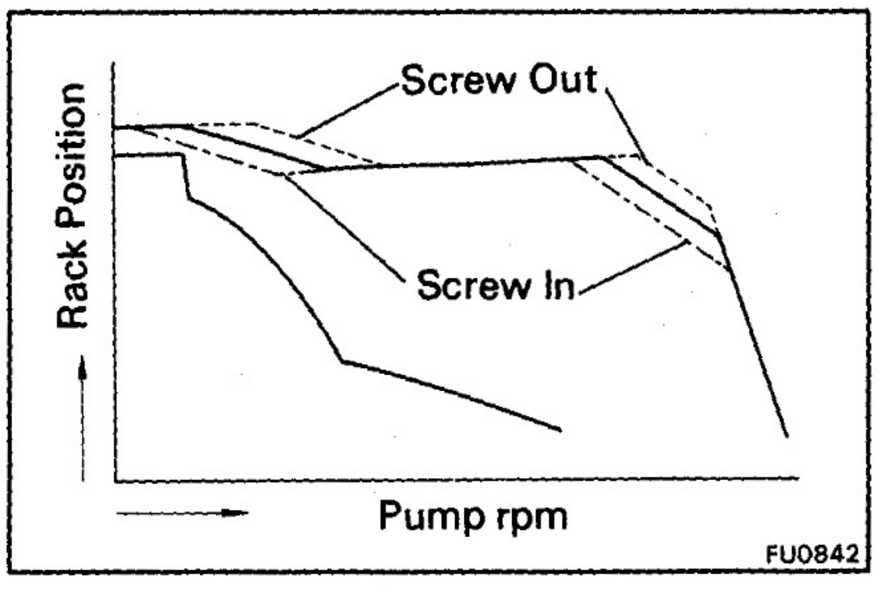

- By turning adaptor screws No. 1 and No. 2 together, the governor characteristic will change as shown in the illustration.

8. ADJUST MAXIMUM SPEED CONTROL

(a) [13B-T]
Apply 0.27 kg/cm² (3.9 psi, 26 kPa) of pressure to the boost compensator.

(b) Measure the control rack position.

Item	Adjusting lever position	Pump rpm	Control rack position mm (in.)	Adjusting point
11B 13B M/T (w/ HAC) 13B-T M/T	Maximum	2,100	7.0 – 8.4 (0.276 – 0.331)	Maximum adjusting screw
		2,200	6.2 (0.244) or less	–
	Idle → Maximum	0	Approx. 16.0 (0.630)	*
13B M/T (w/o HAC)	Maximum	2,100	7.0 – 8.4 (0.276 – 0.331)	Maximum adjusting screw
		2,200	6.0 (0.236) or less	–
	Idle → Maximum	0	Approx. 16.0 (0.630)	*
13B A/T	Maximum	2,100	6.3 – 7.7 (0.248 – 0.303)	Maximum adjusting screw
		2,200	6.0 (0.236) or less	–
	Idle → Maximum	0	Approx. 16.0 (0.630)	*
13B-T A/T	Maximum	2,100	6.3 – 7.7 (0.248 – 0.303)	Maximum adjusting screw
		2,200	6.2 (0.244) or less	–
	Idle → Maximum	0	Approx. 16.0 (0.630)	*

* With the pump not moving (0 rpm), move the stop lever and return it. change the adjusting lever position from idle to maximum position.

(c) Adjust by turning the maximum speed adjusting screw. (See page FU-93)

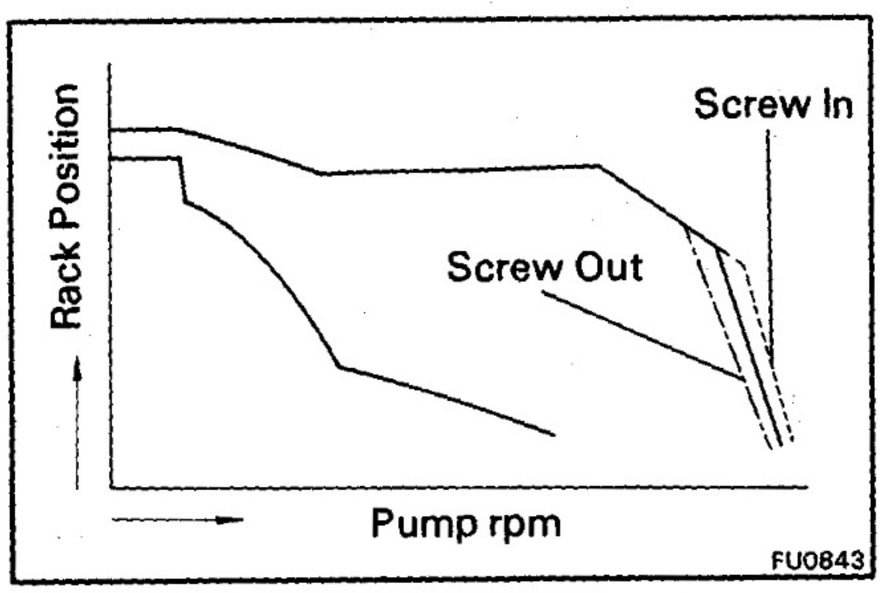

NOTE: The maximum speed adjusting screw will change the governor characteristic as shown in the illustration.

9. [13B-T] ADJUST BOOST COMPENSATOR

(a) Measure the control rack position.

Item	Adjusting lever position	Pump rpm	Boost compensator pressure kg/cm² (psi, kPa)	Control rack position mm (in.)	Adjusting point
13B-T M/T	Maximum	500	0	10.3 – 10.9 (0.406 – 0.429)	Stop screw
			0.12 (1.7, 12)	10.7 – 11.5 (0.421 – 0.453)	Guide bushing
13B-T A/T	Maximum	500	0	10.45 – 11.05 (0.411 – 0.435)	Stop screw
			0.12 (1.7, 12)	10.6 – 11.4 (0.417 – 0.449)	Guide bushing

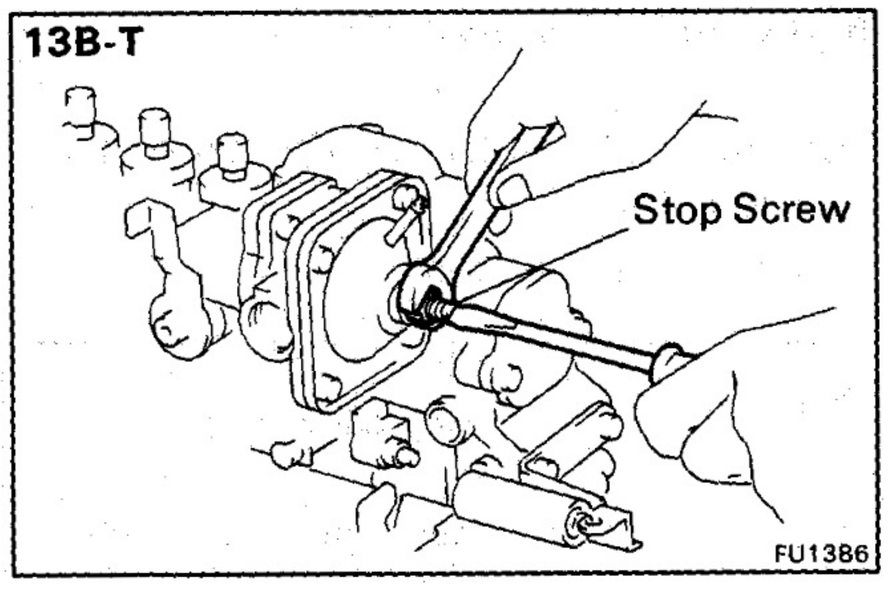

(b) Adjust the stop screw.
Remove the cap nut, adjust by turning the stop screw.

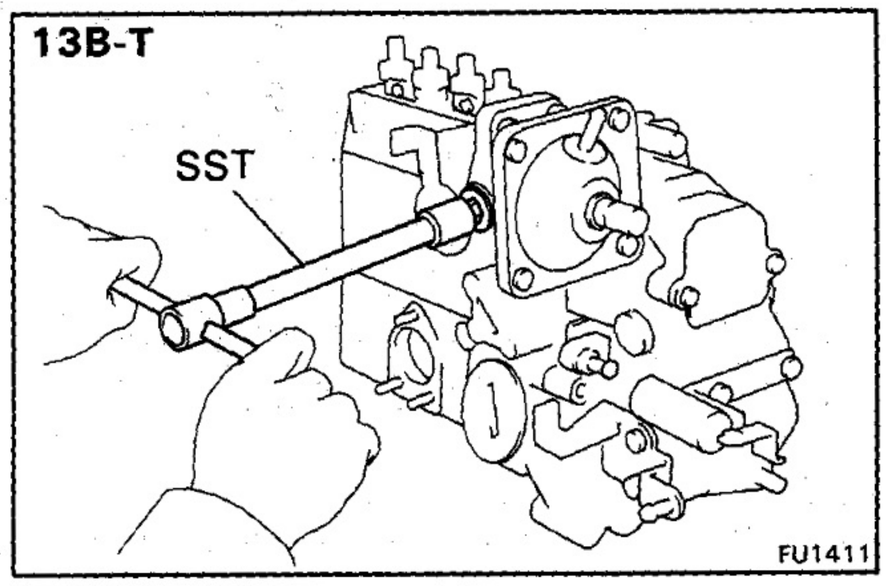

(c) Adjust the guide bushing.

(1) Using SST, remove the screw plug.

SST 09043-38100

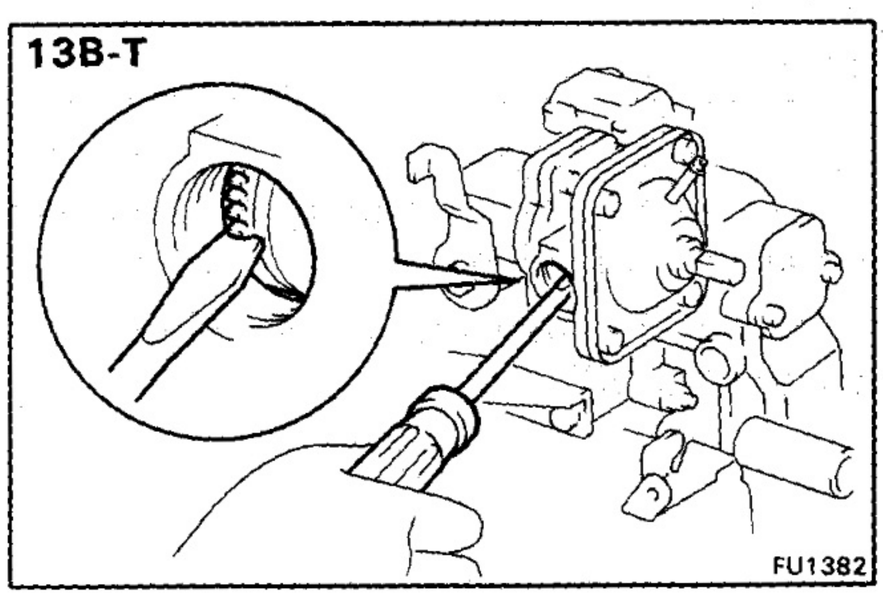

(2) Adjust by turning the guide bushing.

10. ADJUST TOTAL INJECTION VOLUME

(a) Measure the total injection volume.

Item	Adjusting lever position	Boost compensator pressure kg/cm² (psi, kPa)	Pump rpm	Measuring stroke	Total injection volume of each cylinder cc (cu in.)
11B (w/o HAC)	Maximum	–	500	1,000	124.0 – 160.0 (7.57 – 9.76)
			1,100	1,000	190.0 – 202.0 (11.59 – 12.33)
			1,800	1,000	178.0 – 202.0 (10.86 – 12.33)

Cont'd

Item	Adjusting lever position	Boost compensator pressure kg/cm² (psi, kPa)	Pump rpm	Measuring stroke	Total injection volume of each cylinder cc (cu in.)
11B (w/ HAC)	Maximum	–	500	1,000	132.0 – 168.0 (8.06 – 10.25)
			1,100	1,000	190.0 – 202.0 (11.59 – 12.33)
			1,800	1,000	186.0 – 210.0 (11.35 – 12.82)
13B M/T (w/o HAC)	Maximum	–	500	1,000	154.0 – 190.0 (9.40 – 11.59)
			1,100	1,000	224.0 – 236.0 (13.67 – 14.40)
			1,700	1,000	216.0 – 240.0 (13.18 – 14.65)
13B M/T (w/ HAC)	Maximum	–	500	1,000	162.0 – 198.0 (9.89 – 12.08)
			1,100	1,000	224.0 – 236.0 (13.67 – 14.40)
			1,700	1,000	224.0 – 248.0 (13.67 – 15.13)
13B A/T	Maximum	–	700	1,000	156.0 – 180.0 (9.52 – 10.98)
			1,100	1,000	224.0 – 236.0 (13.67 – 14.40)
			1,700	1,000	212.0 – 236.0 (12.94 – 14.40)
13B-T M/T	Maximum	0.27 (3.9, 26)	500	1,000	182.0 – 218.0 (11.11 – 13.30)
		0.27 (3.9, 26)	1,100	1,000	272.0 – 284.0 (16.60 – 17.33)
		0.27 (3.9, 26)	1,700	1,000	256.0 – 280.0 (15.62 – 17.09)
		0	500	1,000	158.0 – 170.0 (9.64 – 10.37)
13B-T A/T	Maximum	0.27 (3.9, 26)	500	1,000	190.0 – 226.0 (11.59 – 13.79)
		0.27 (3.9, 26)	1,100	1,000	258.0 – 270.0 (15.74 – 16.48)
		0.27 (3.9, 26)	1,700	1,000	270.0 – 294.0 (16.48 – 17.94)
		0	500	1,000	188.0 – 200.0 (11.47 – 12.20)

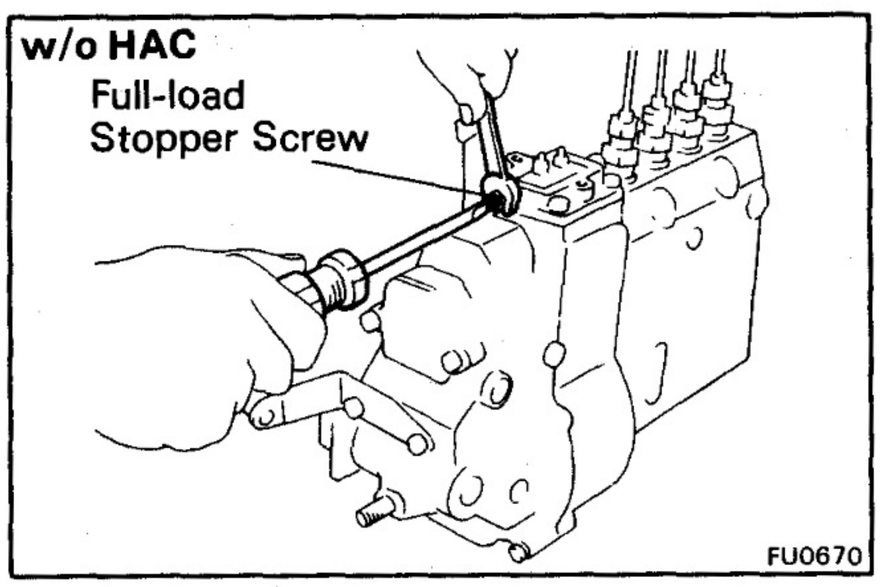

(b) [w/o HAC]
Adjust by turning the full-load stopper screw.

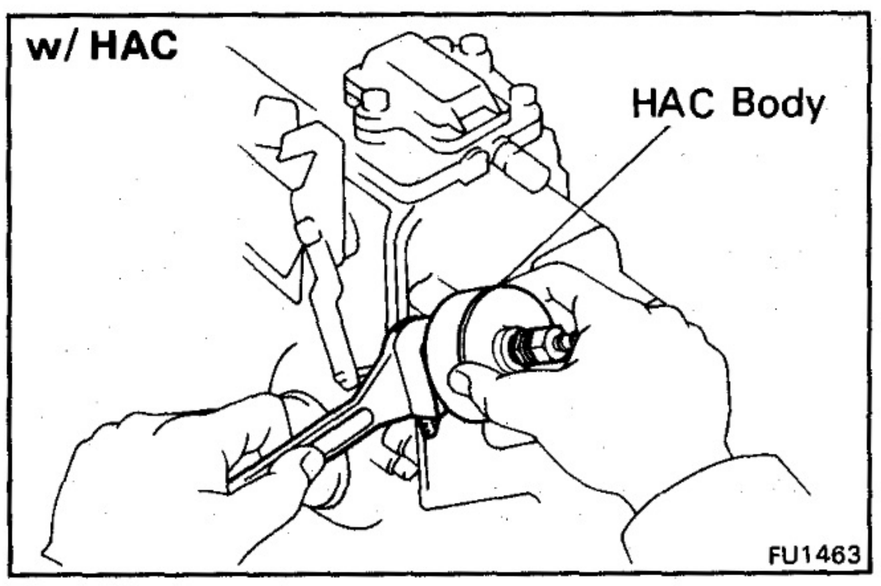

(c) [w/ HAC]
Adjust by turning the HAC body.

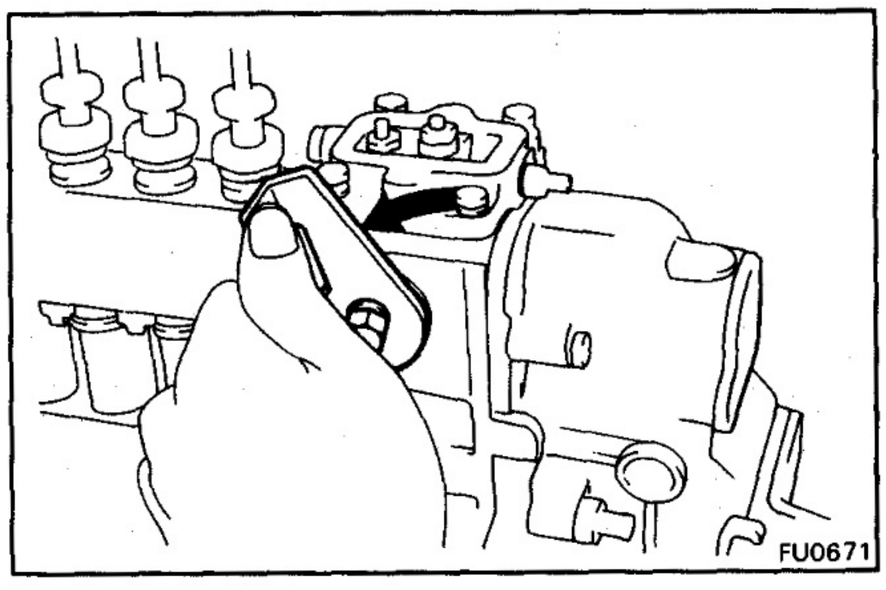

11. CHECK STOP LEVER OPERATION

Measure the control rack position when the stop lever operates.

Adjusting lever position	Pump rpm	Control rack position mm (in.)
Idle	0	5.5 (0.217) or less

12. INSTALL CAP NUTS AND COVER PLATE

13. SEAL PARTS

Seal with new wire and lead seal as shown.

11B (w/o HAC) and 13B (w/o HAC)

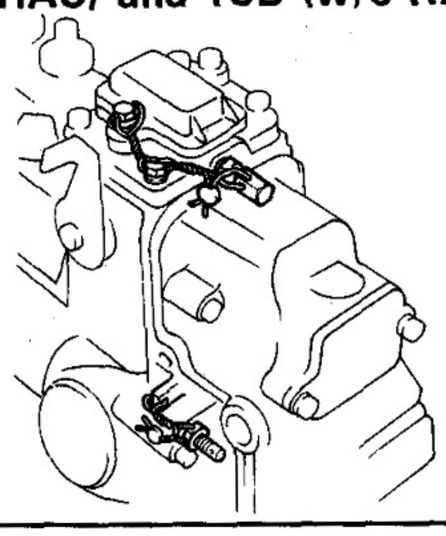

11B (w/ HAC) and 13B (w/ HAC)

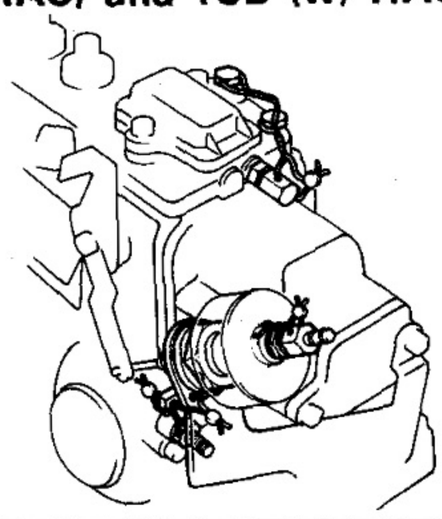

13B-T

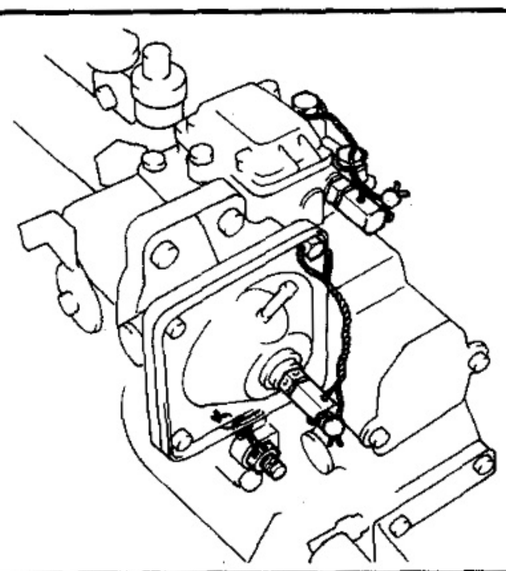

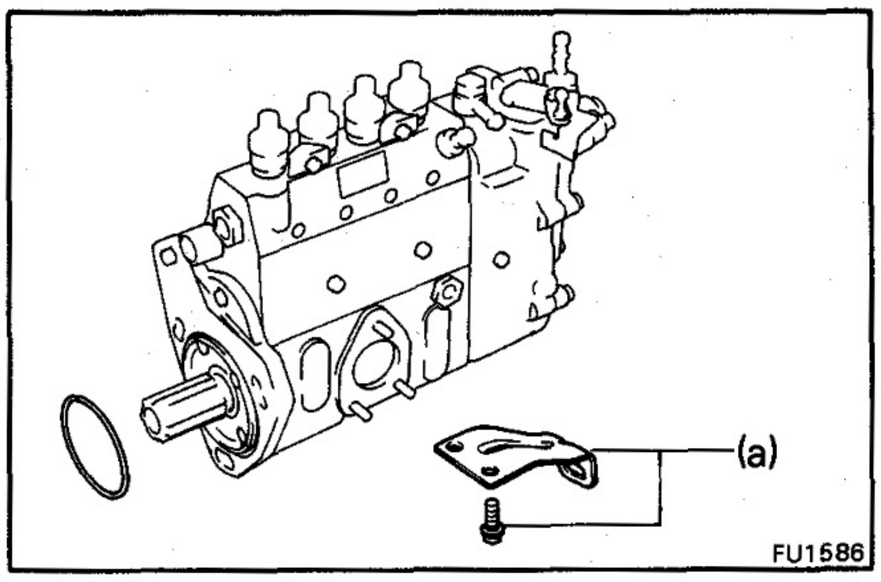

INSTALLATION OF INJECTION PUMP

(See page FU-27)

1. INSTALL INJECTION PUMP

(a) [B and 3B]
Install the injection pump stay with the two bolts.

Torque: 185 kg-cm (13 ft-lb, 18 N·m)

(b) Install a new O-ring to the injection pump flange.

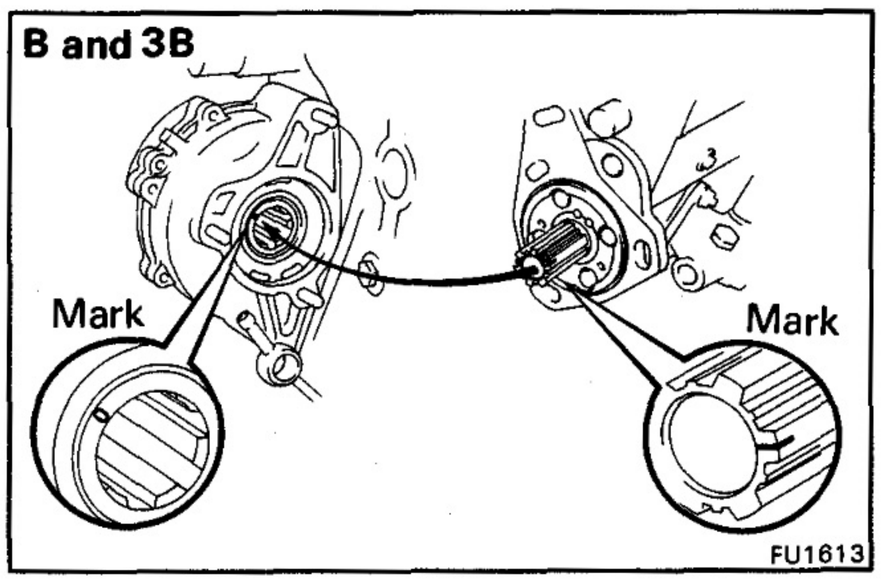

(c) [B and 3B]
Align the marks of the injection pump spline and automatic timer hub, and install the injection pump.

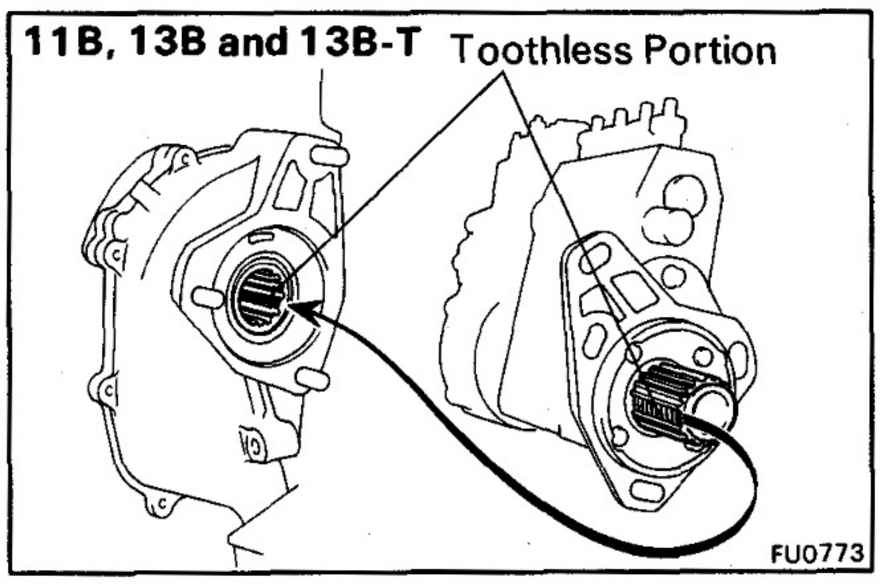

(d) [11B, 13B and 13B-T]
Align the spline toothless portions of the injection pump and automatic timer hub, and install the injection pump.

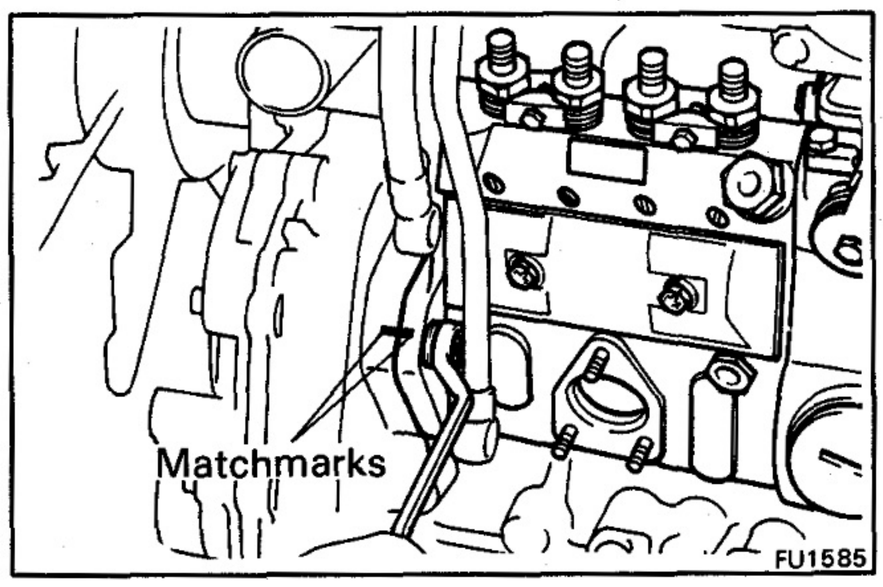

(e) [13B-T]
Place the heat insulator in position between the injection pump and cylinder block.

(f) Align the matchmark of the injection pump flange and timing gear case.

(g) Install the injection pump with the three nuts.

Torque: 375 kg-cm (27 ft-lb, 37 N·m)

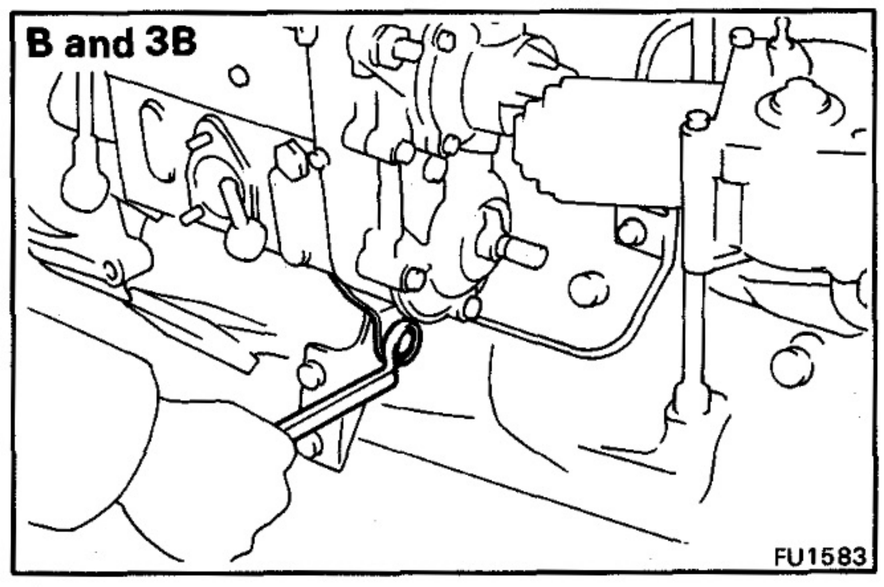

(h) [B and 3B]
Install the bolt holding the injection pump stay to the stay.

Torque: 185 kg-cm (13 ft-lb, 18 N·m)

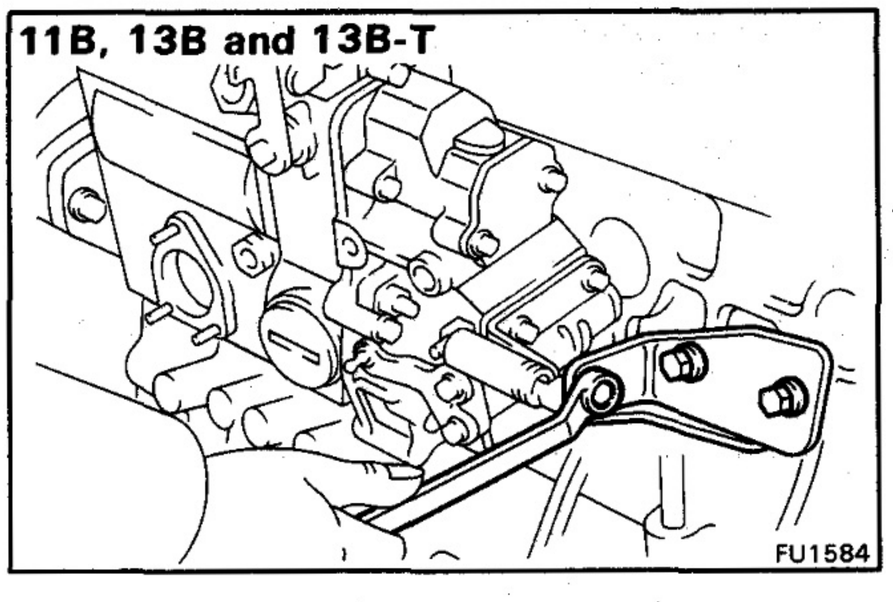

(i) [11B, 13B and 13B-T]
Install the injection pump stay with the two bolts and nut.

Torque: Bolt 185 kg-cm (13 ft-lb, 18 N·m)
Nut 375 kg-cm (27 ft-lb, 37 N·m)

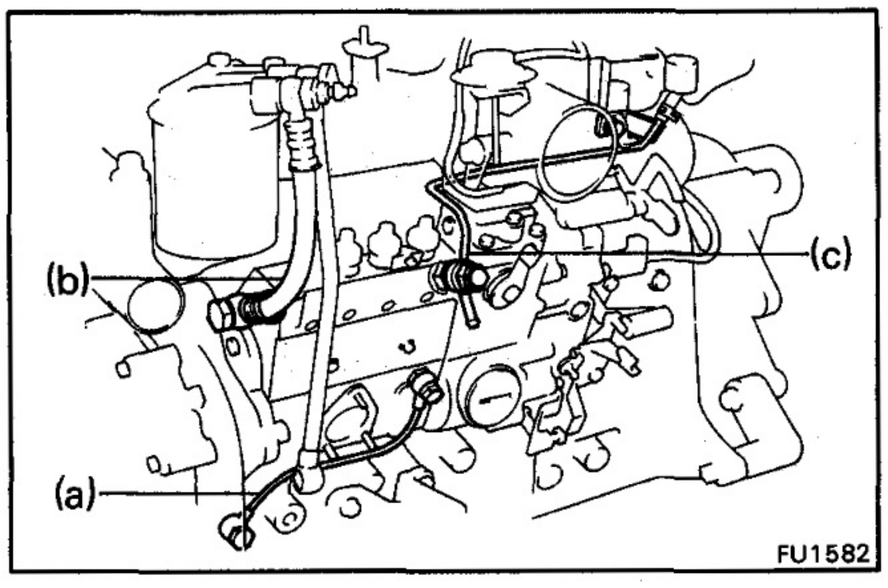

2. INSTALL PARTS

(a) Oil pipe

(b) Fuel hose

(c) [11B, 13B and 13B-T]
Leakage pipe

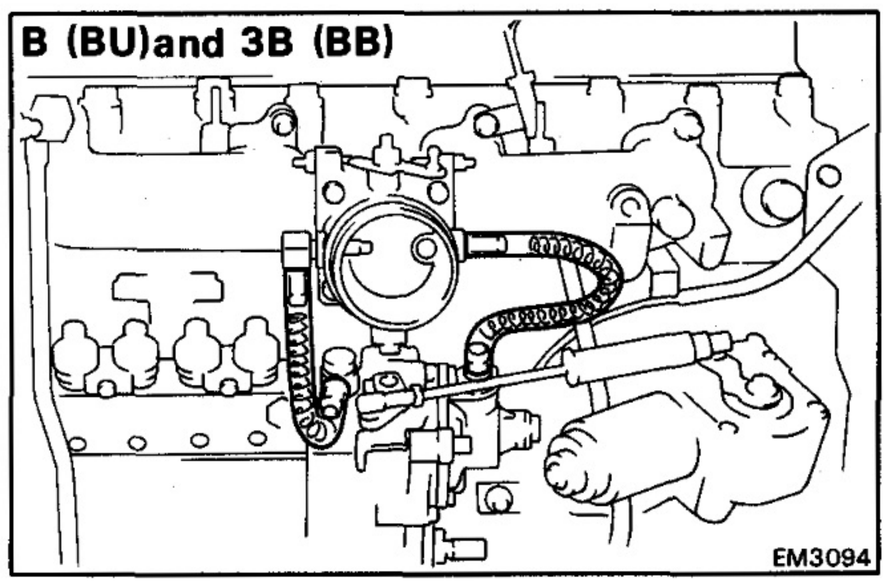

(d) [B, 3B and 13B-T]
Vacuum hose(s)

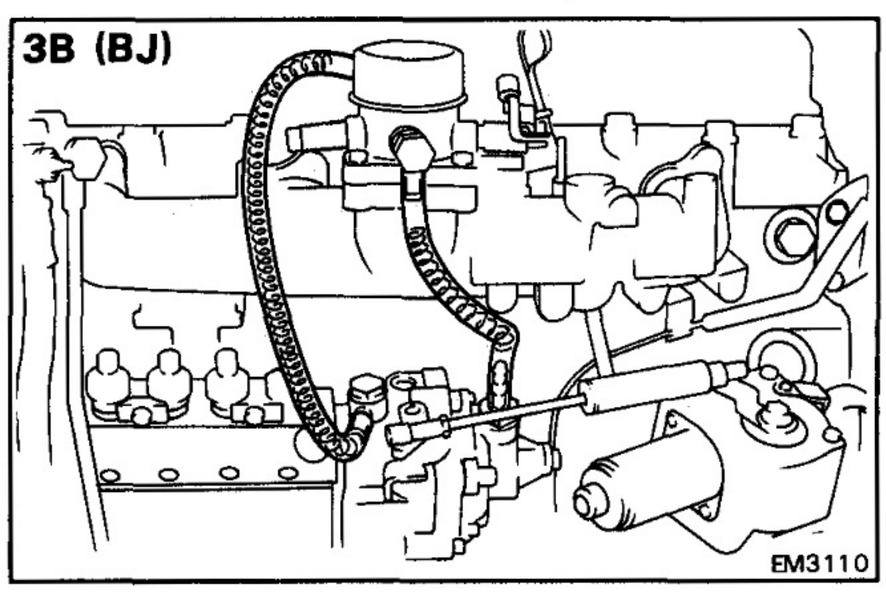

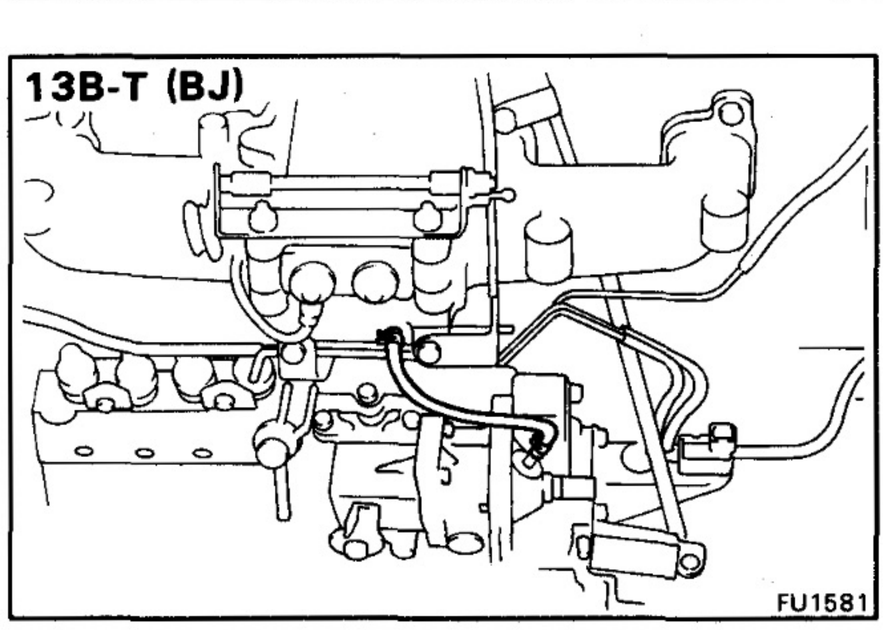

(e) [B and 3B (w/ EDIC System)]
Connecting rod of EDIC motor

(f) [B (w/o EDIC System)]
Connecting rod of fuel cut diaphragm

(g) [3B (w/o EDIC System)]
Connecting wire of overinjection magnet

(h) [11B, 13B and 13B-T]
Accelerator connecting rod

3. **INSTALL FUEL FEED PUMP**
(See step 1 and 2 on page FU-20)

4. **INSTALL INJECTION PIPES**
(See step 3 on page FU-9) B and 3B
(See step 3 on page FU-15) 11B, 13B and 13B-T

5. **BLEED FUEL LINE (See step 2 on page FU-3)**

6. **START ENGINE AND CHECK FOR LEAKS**

7. **CHECK ENGINE OIL LEVEL (See page LU-2)**

COOLING SYSTEM

	Page
TROUBLESHOOTING	CO-2
CHECK AND REPLACEMENT OF ENGINE COOLANT	CO-2
WATER PUMP	CO-4
THERMOSTAT	CO-10
RADIATOR	CO-12

TROUBLESHOOTING

Problem	Possible cause	Remedy	Page
Engine overheats	Fan belt loose or missing	Adjust or replace belt	CH-7
	Dirt, leaves or insects in radiator or condenser	Clean radiator or condenser	CO-12
	Hoses, water pump, thermostat housing, radiator, heater, core plugs or head gasket leakage	Repair as necessary	
	Thermostat faulty	Check thermostat	CO-10
	Injection timing retarded	Adjust timing	EM-23
	Fluid coupling faulty	Replace fluid coupling	CO-4
	Radiator hose plugged or rotted	Replace hose	
	Water pump faulty	Replace water pump	CO-4
	Radiator plugged or cap faulty	Check radiator	CO-12
	Cylinder head or block cracked or plugged	Repair as necessary	

NOTE: If the engine tends to overheat, removal of the thermostat will adversely effect cooling efficiency.

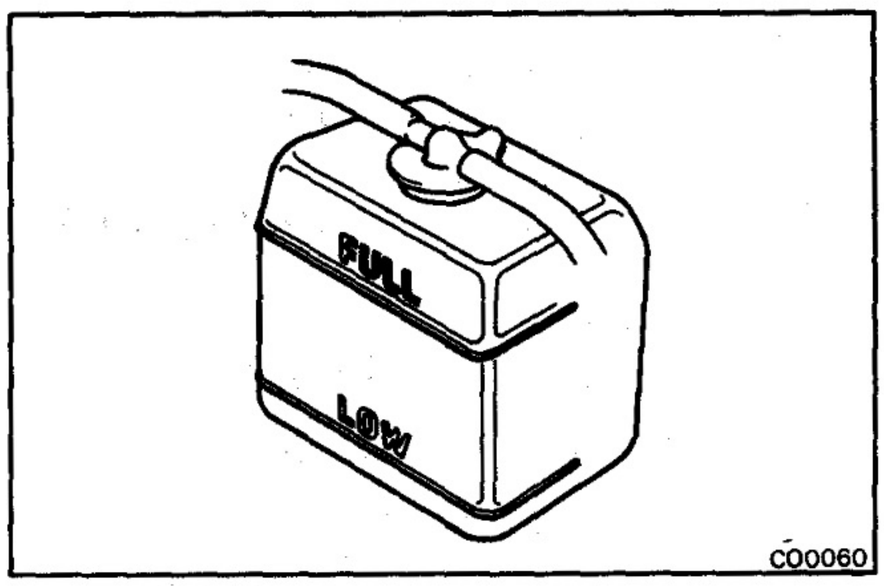

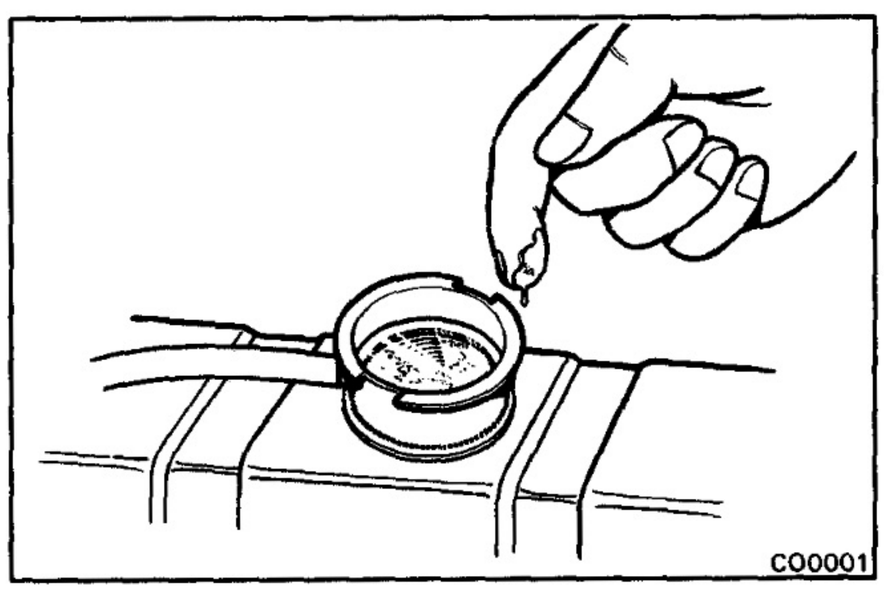

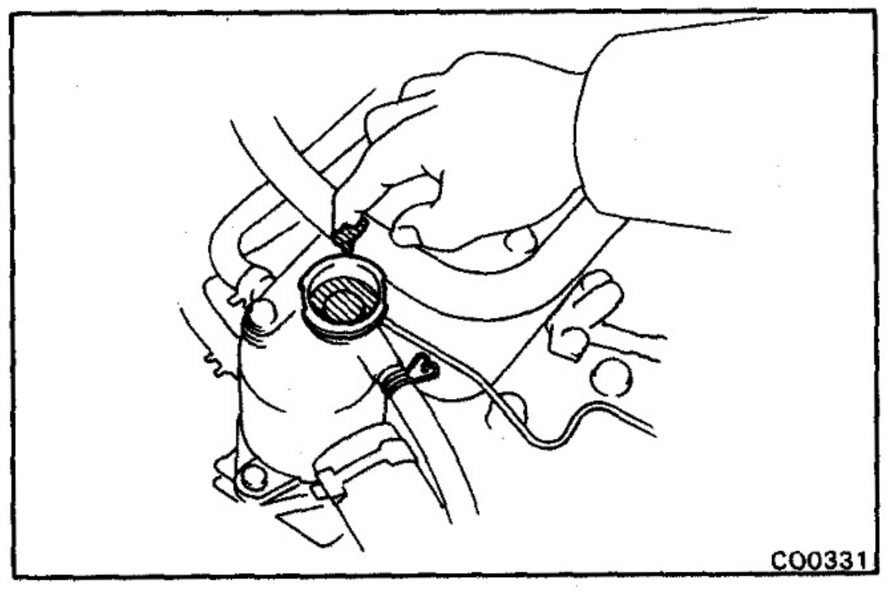

CHECK AND REPLACEMENT OF ENGINE COOLANT

1. CHECK ENGINE COOLANT LEVEL AT RESERVE TANK

The coolant level should be between the "LOW" and "FULL" lines.

If low, check for leaks and add coolant up to the "FULL" line.

2. CHECK ENGINE COOLANT QUALITY

There should not be any excessive deposits of rust or scales around the radiator cap (water outlet cap) or radiator filler hole (water filler hole), and the coolant should be free from oil.

If excessively dirty, replace the coolant.

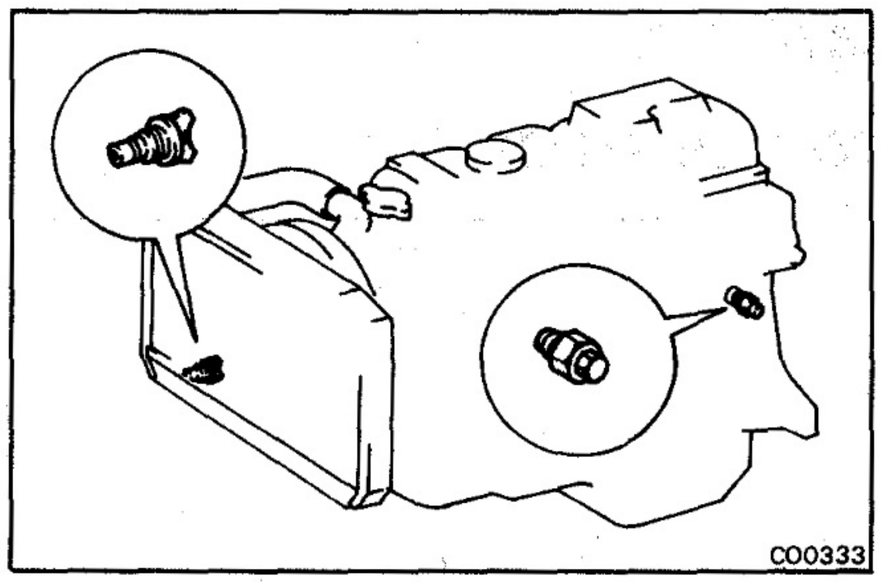

3. REPLACE ENGINE COOLANT

(a) Remove the radiator cap.

(b) Drain the coolant from radiator and engine drain cocks. (Engine drain cock is at left front of engine block.)

(c) Close the drain cocks.

(d) Fill the system with coolant.

Use a good brand of ethylene-glycol base coolant, mixed according to the manufacturer's directions.

Capacity (w/ Heater)

BB20, 22, 30	**15.0 liter (15.9 US qts, 13.2 Imp. qts)**
BJ60	**13.3 liter (14.1 US qts, 11.7 Imp. qts)**
BJ70, 71, 73, 74, 75	
3B	**13.8 liter (14.6 US qts, 12.1 Imp. qts)**
13B-T M/T	**14.2 liters (15.0 US qts, 12.5 Imp. qts)**
13B-T A/T	**13.6 liter (14.4 liter, 12.0 Imp.)**
BU60, 61, 62, 63, 65, 70, 75, 76, 80, 81, 82, 85, 86	
Regular cab	**12.5 liters (13.2 US qts, 11.0 Imp. qts)**
Wide cab	**13.0 liters (13.7 US qts, 11.4 Imp. qts)**
BY33, 42 (w/o Heater)	**12.2 liters 12.9 US qts, 10.7 Imp. qts)**

(e) Install the radiator cap (water outlet cap).

(f) Start the engine and check for leaks.

(g) Recheck the coolant level and refill as necessary.

WATER PUMP

REMOVAL OF WATER PUMP

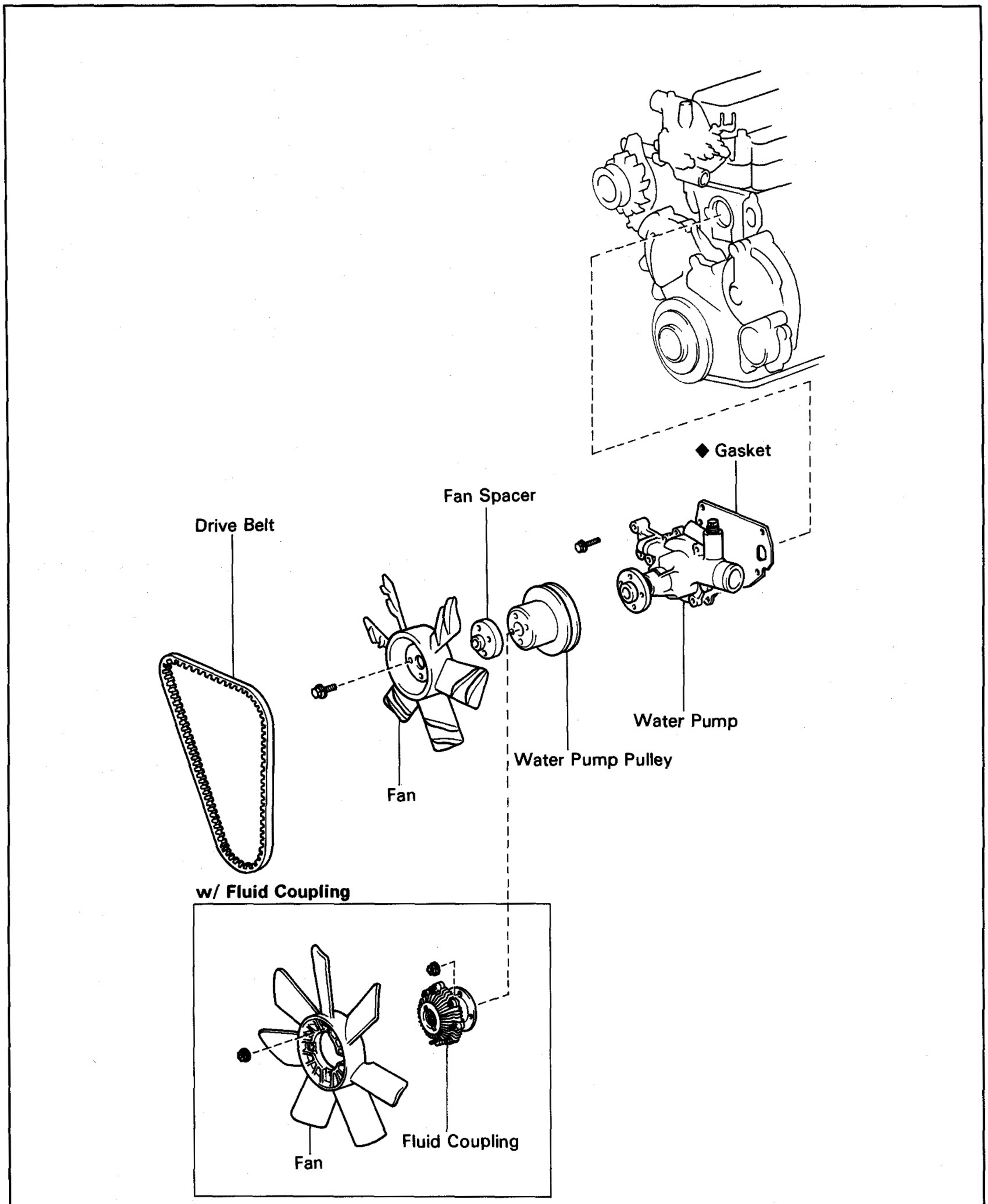

◆ Non-reusable part

CO0366

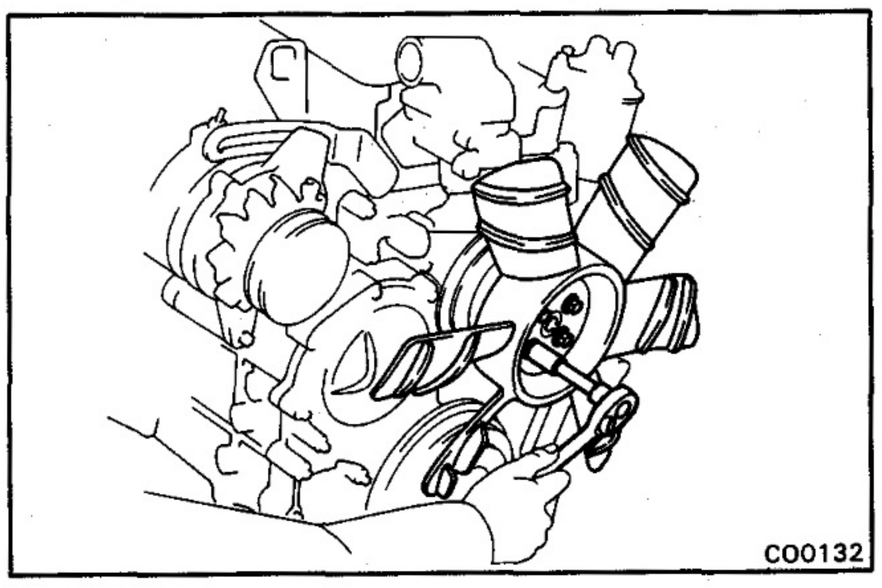
CO0132

1. **DRAIN ENGINE COOLANT (See page CO-3)**

2. **REMOVE DRIVE BELT**

3. **REMOVE FAN AND WATER PUMP PULLEY**

   [w/o Fluid Coupling]

   Remove the four bolts holding the fan to the pulley seat, and remove the fan, fan spacer and pump pulley.

   [w/ Fluid Coupling]

   Remove the four nuts holding the fluid coupling to the pulley seat, and remove the fan and fluid coupling assembly and the pump pulley.

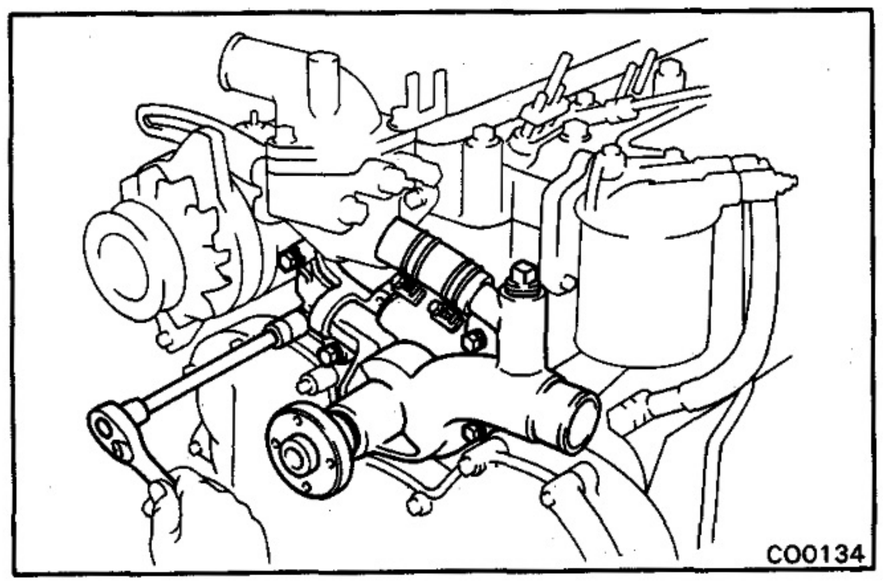
CO0134

4. **REMOVE WATER PUMP**

   (a) Remove the five bolts.

   (b) Disconnect the water by-pass hose, and remove the water pump and gasket.

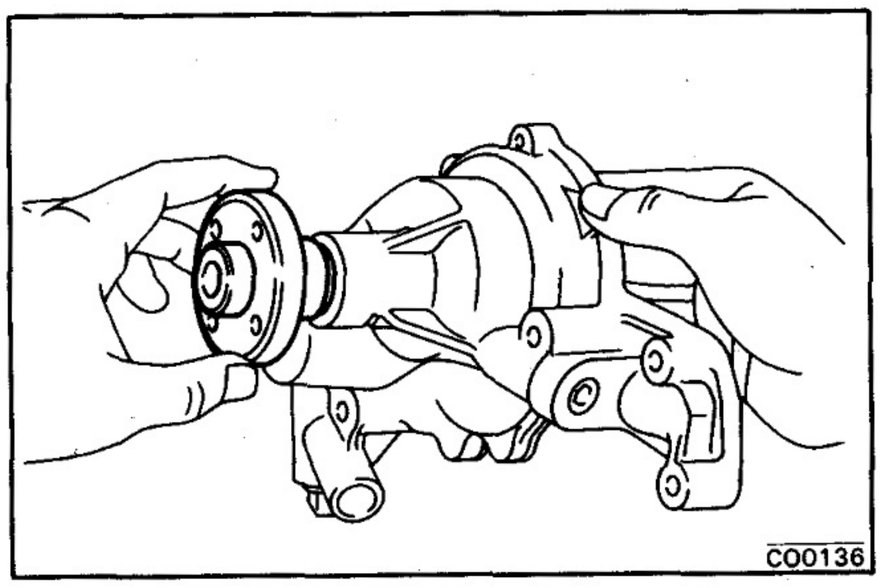
CO0136

INSPECTION OF WATER PUMP COMPONENTS

1. **INSPECT WATER PUMP**

   Turn the pulley seat and check that the water pump bearing moves smoothly and quietly.

   If necessary, replace the water pump bearing.

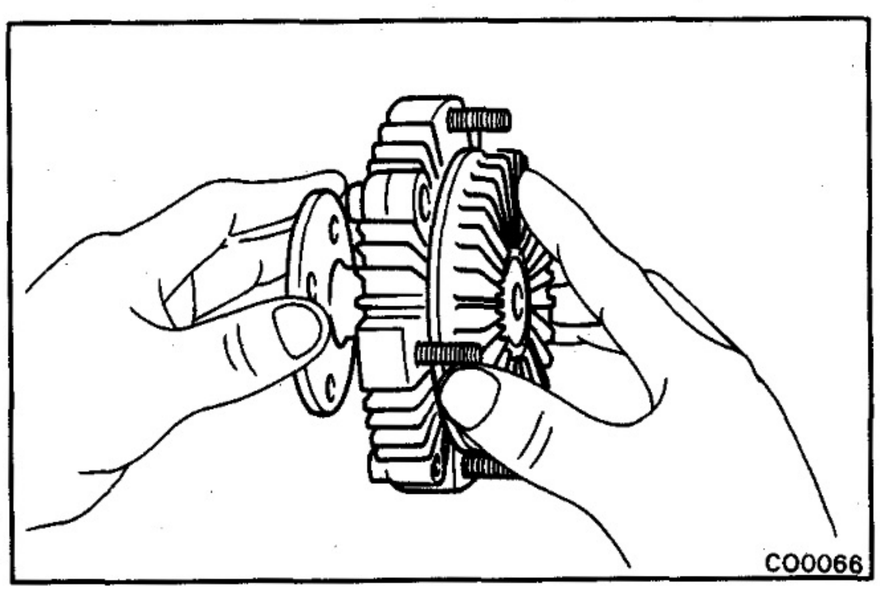
CO0066

2. **INSPECT FLUID COUPLING**

   Check that the fluid coupling for damage and silicon oil leakage.

   If necessary, replace the fluid coupling.

COMPONENTS

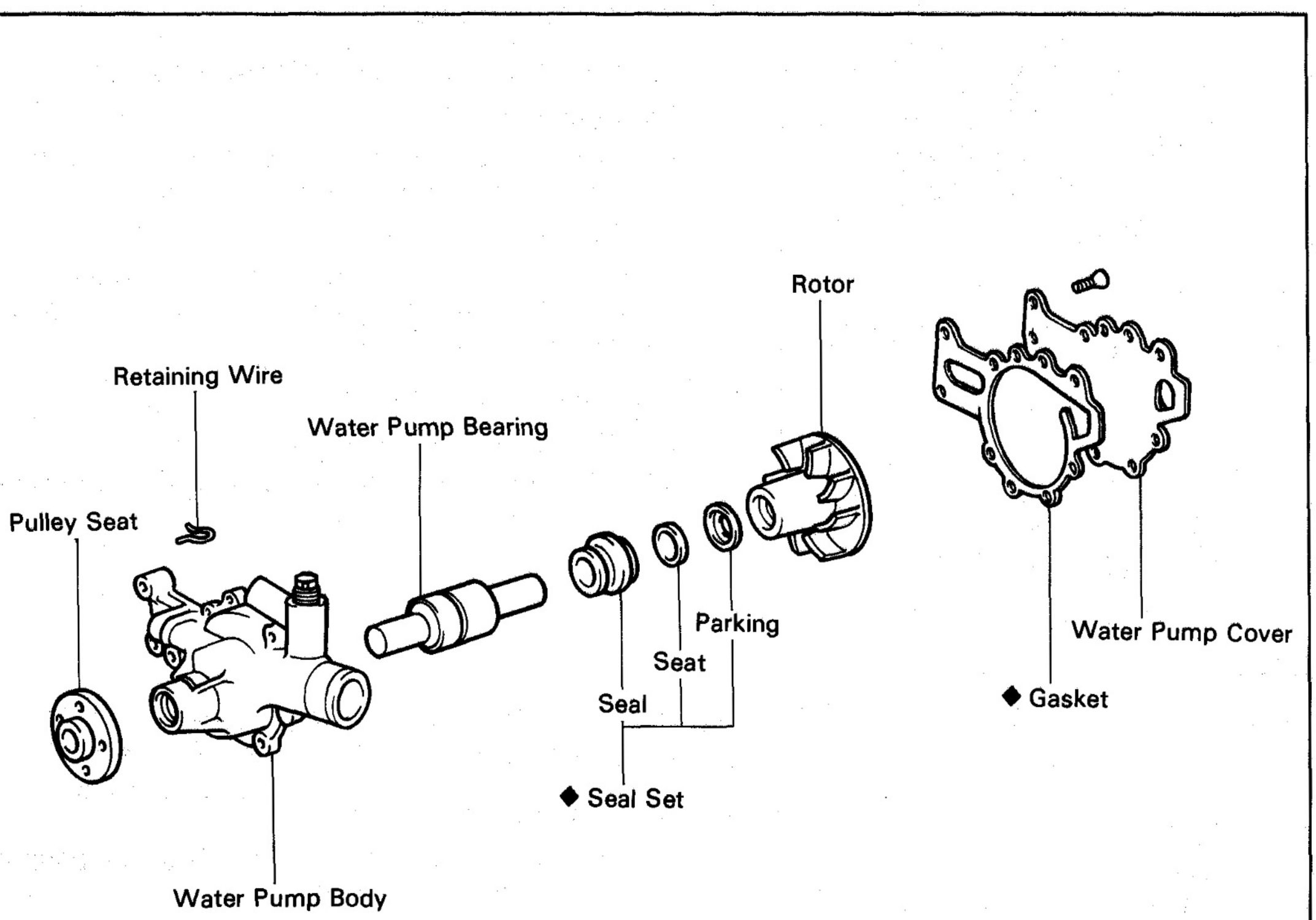

◆ Non-reusable part

CO0365

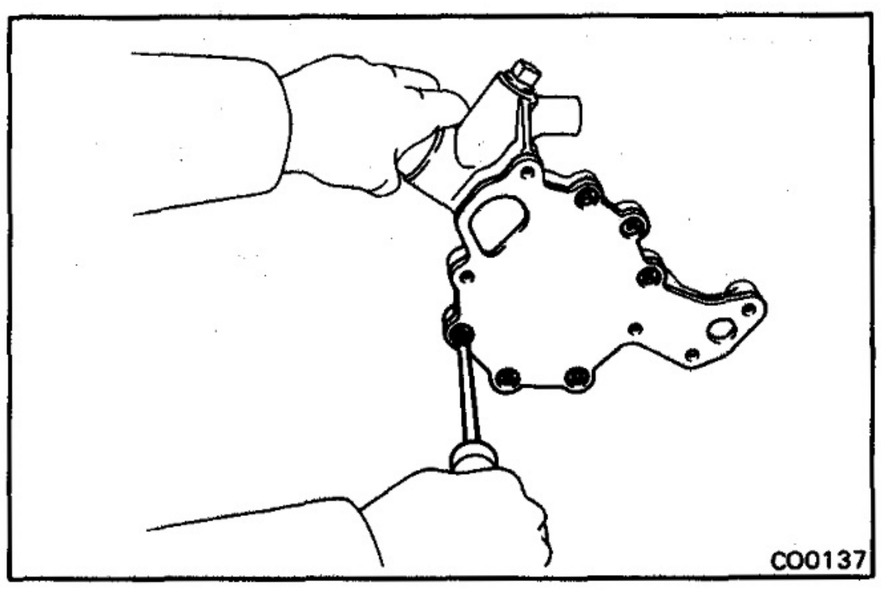

CO0137

DISASSEMBLY OF WATER PUMP

1. **[w/ FLUID COUPLING]**
   REMOVE STUD BOLTS FROM PULLEY SEAT

2. **REMOVE WATER PUMP COVER**

   Remove the six screws, cover and gasket.

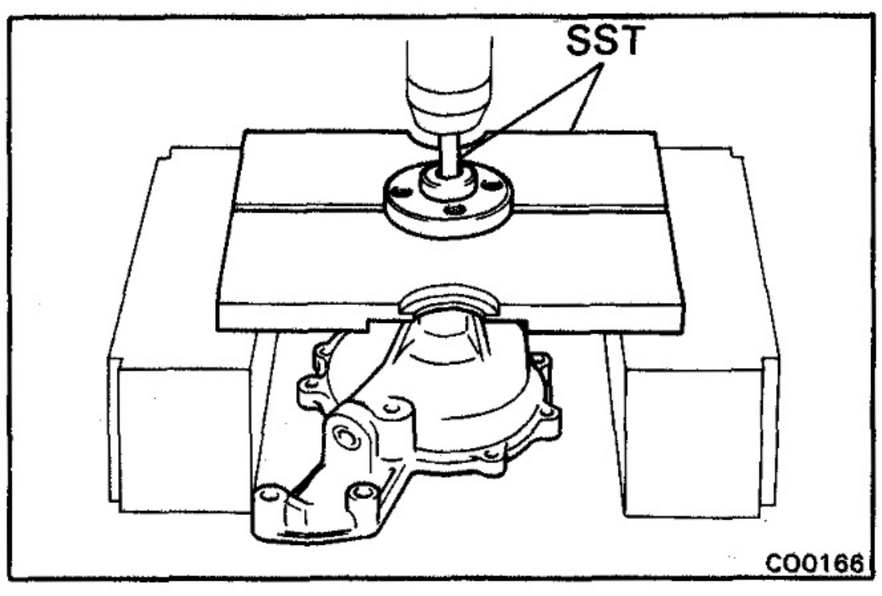

CO0166

3. **REMOVE PULLEY SEAT**

   Using SST and a press, press the shaft of the bearing and remove the pulley seat.

   SST 09236-00101 (09237-00010 and 09237-00050)

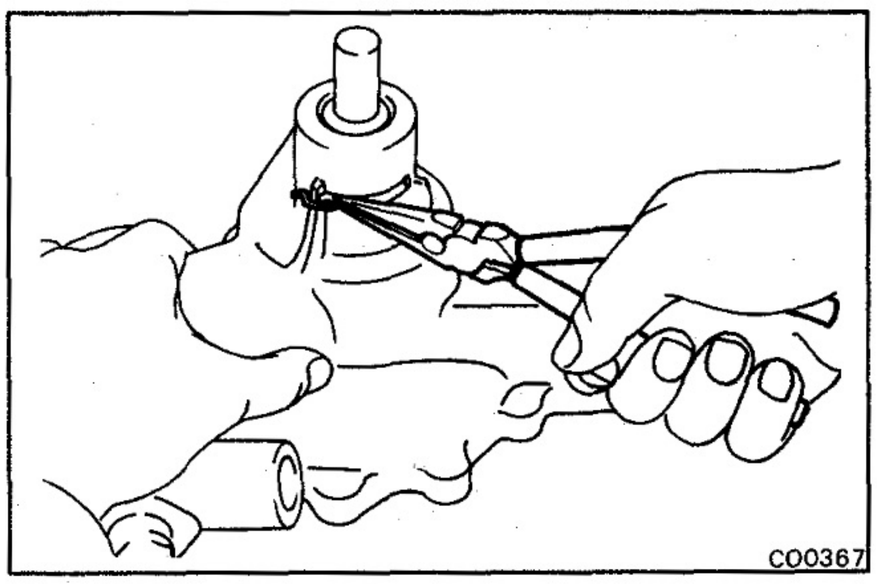

4. REMOVE RETAINING WIRE

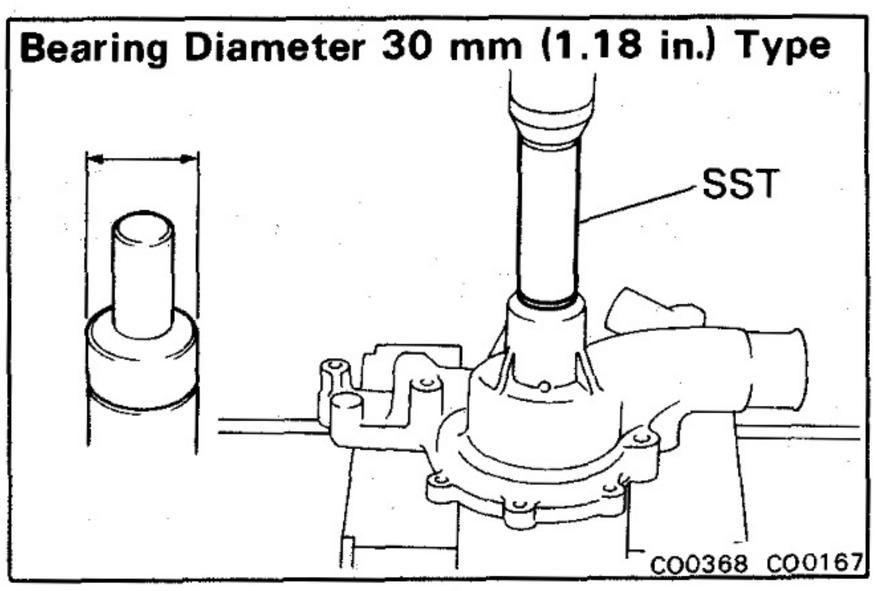

5. [BEARING DIAMETER 30 mm (1.18 in.) TYPE] REMOVE WATER PUMP BEARING

Using SST and a press, press the outer race of the bearing and remove the bearing together with the rotor.

SST 09236-00101 (09237-00030)

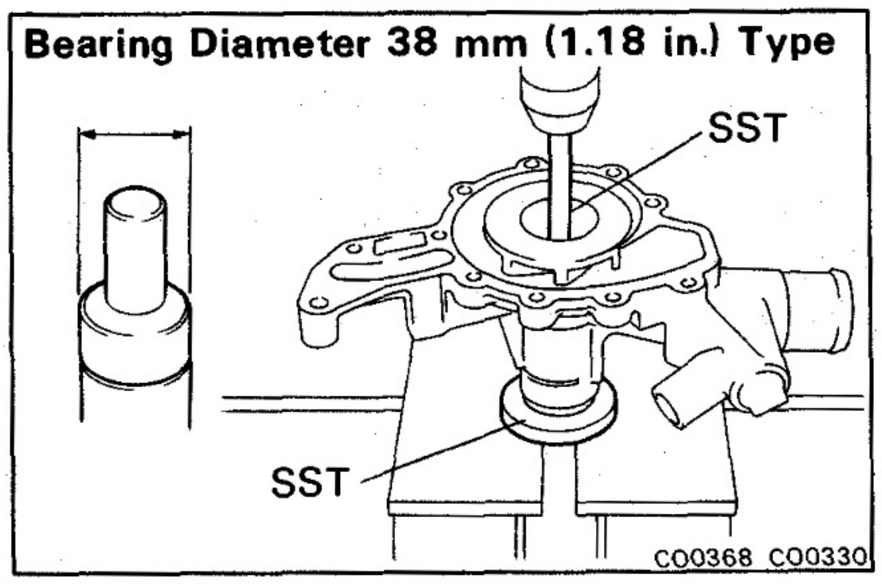

6. [BEARING DIAMETER 38 mm (1.50 in.) TYPE] REMOVE WATER PUMP ROTOR AND BEARING

Using SST and a press, press the shaft of the bearing and remove the rotor and bearing.

SST 09236-00101 (09237-00070) and 09506-35010

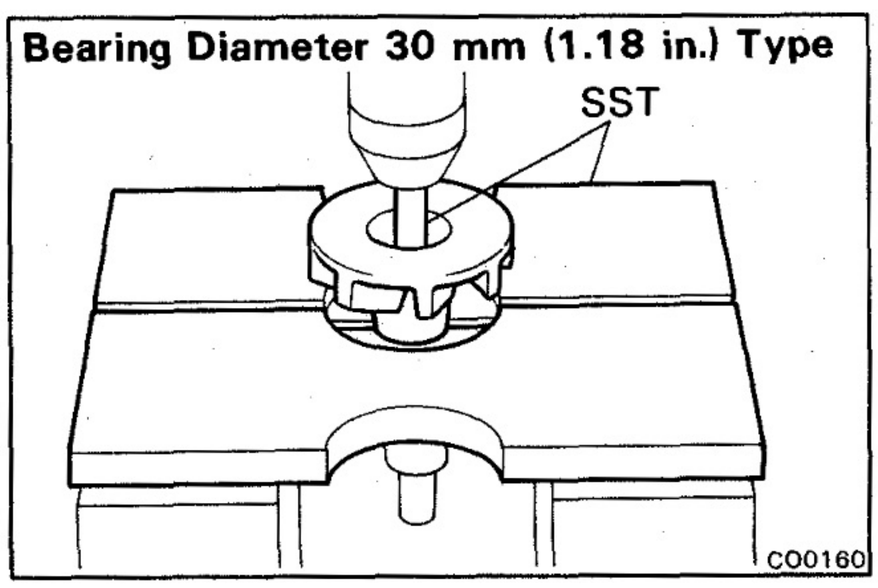

7. [BEARING DIAMETER 30 mm (1.18 in.) TYPE] REMOVE ROTOR

Using SST and a press, press the shaft of the bearing and remove the rotor.

SST 09236-00101 (09237-00010 and 09237-00050)

8. REMOVE SEAL, SEAT AND PACKING

ASSEMBLY OF WATER PUMP

(See page CO-6)

CAUTION: When installing the water pump, clear away any rust or foreign material which may enter the seal.

NOTE:
[Bearing Diameter 30 mm (1.18 in.) Type]
Always assemble the water pump with a new seal set.
[Bearing Diameter 38 mm (1.50 in.) Type]
Always assemble the water pump with a new seal set and a new bearing.

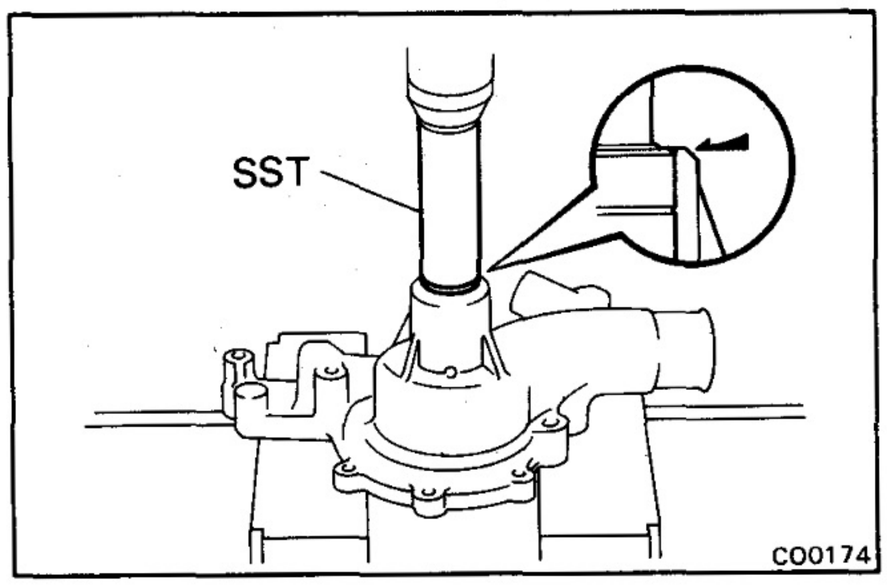

1. INSTALL WATER PUMP BEARING

Using SST and a press, press the outer race of the bearing until its surface is flush with the water pump body edge.

SST Bearing diameter 30 mm (1.18 in.) type
09236-00101 (09237-00030)
Bearing diameter 38 mm (1.50 in.) type
09236-00101 (09237-00020)

Bearing Diameter 30 mm (1.18 in.) Type

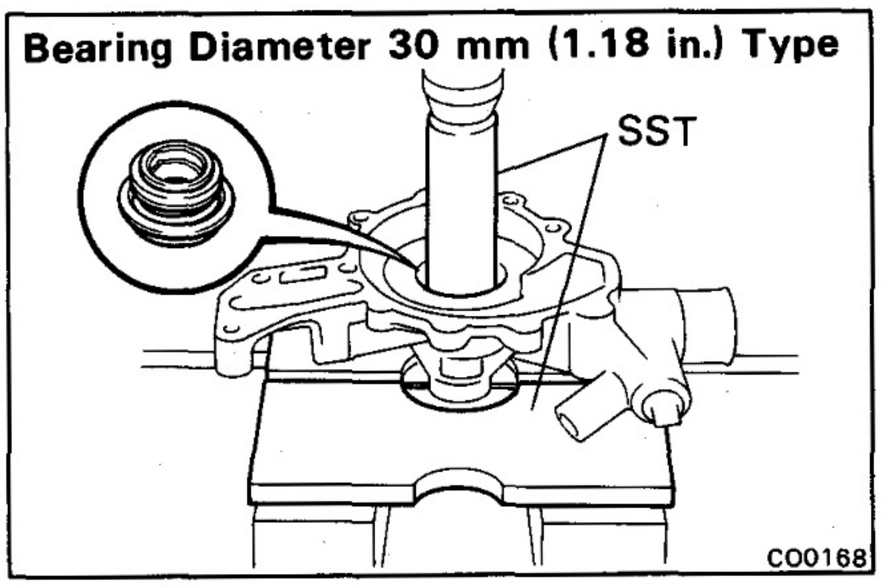

2. INSTALL SEAL

Using SST and a press, press in a new seal.

SST Bearing diameter 30 mm (1.18 in.) type
09236-00101 (09237-00010, 09237-00020)
Bearing diameter 38 mm (1.50 in.) type
09238-47012 and 09506-35010

Bearing Diameter 38 mm (1.50 in.) Type

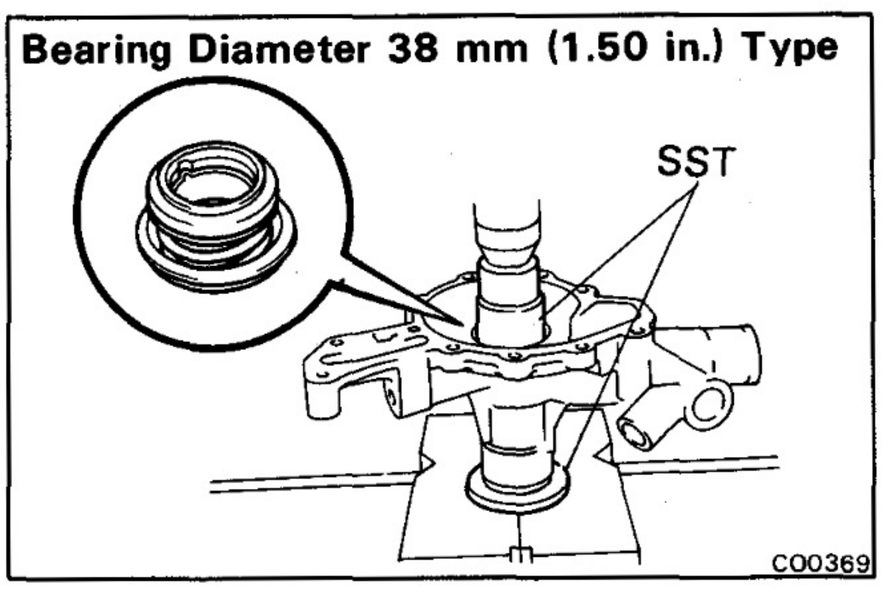

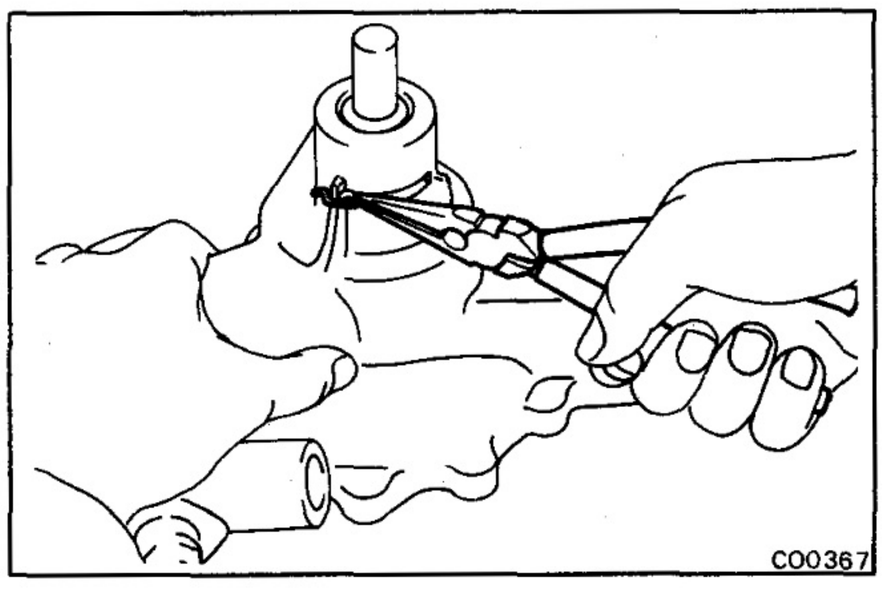

3. INSTALL RETAINING WIRE

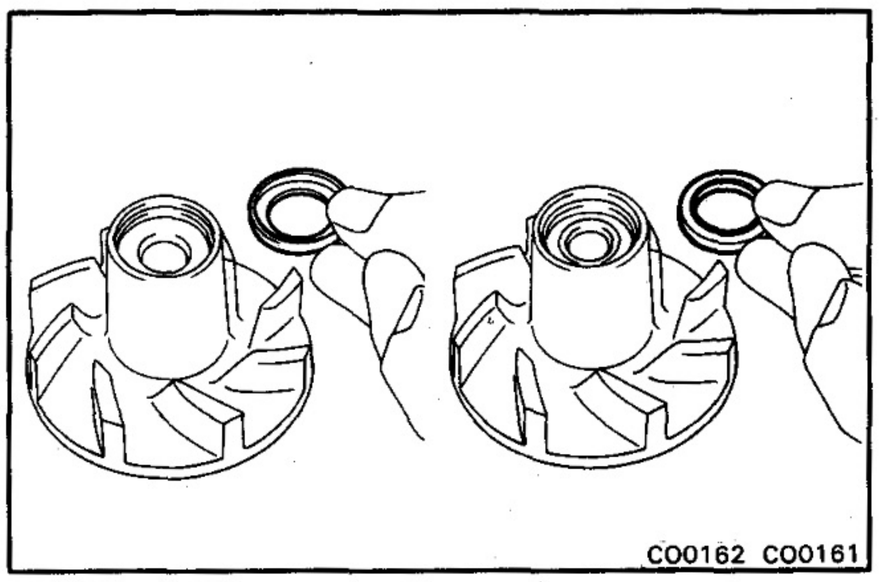

4. INSTALL ROTOR

(a) Install new packing and seat into the rotor.

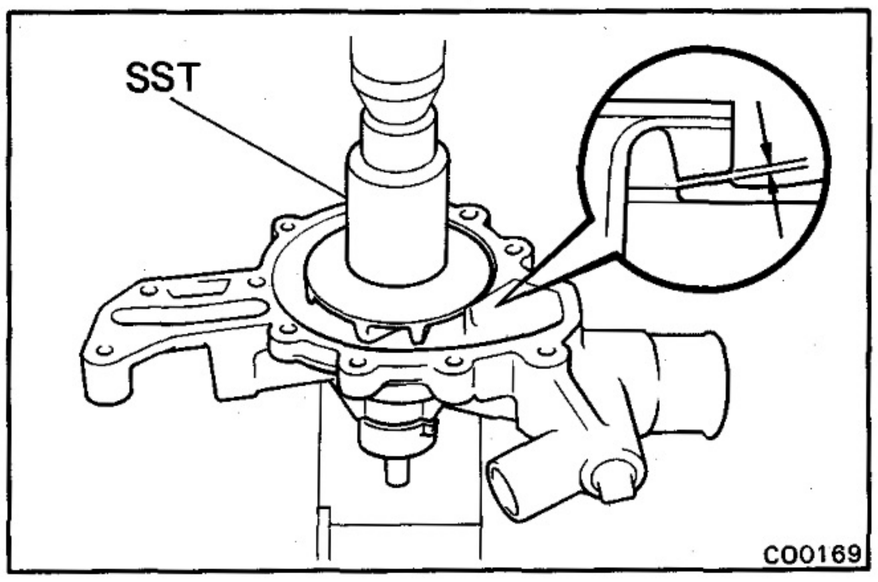

(b) Using SST and a press, press in the rotor to a clearance of 0.4 – 1.1 mm (0.016 – 0.043 in.) between the rotor and pump body.

SST 09236-00101 (09238-40010)

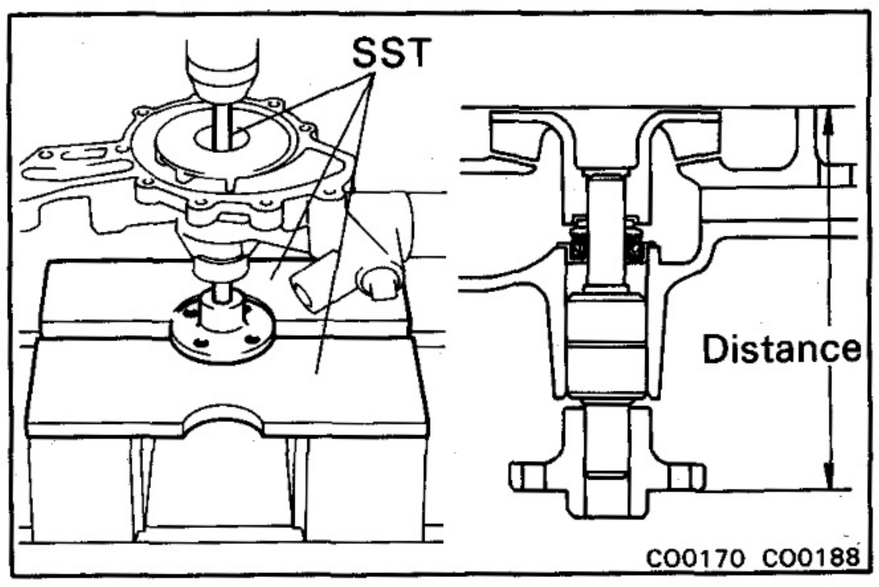

5. INSTALL PULLEY SEAT

Using SST and a press, press the shaft of the bearing and install the pulley seat to the indicated distance between the pump body and pulley seat in the figure.

SST 09236-00101 (09237-00010, 09237-00070)

Distance between the pump body and pulley seat:

w/ Fluid coupling

BB and BJ	**133.6 – 135.0 mm (5.260 – 5.315 in.)**
BU	**117.1 – 118.5 mm (4.610 – 4.665 in.)**

w/o Fluid coupling

141.2 – 142.6 mm (5.559 – 5.614 in.)

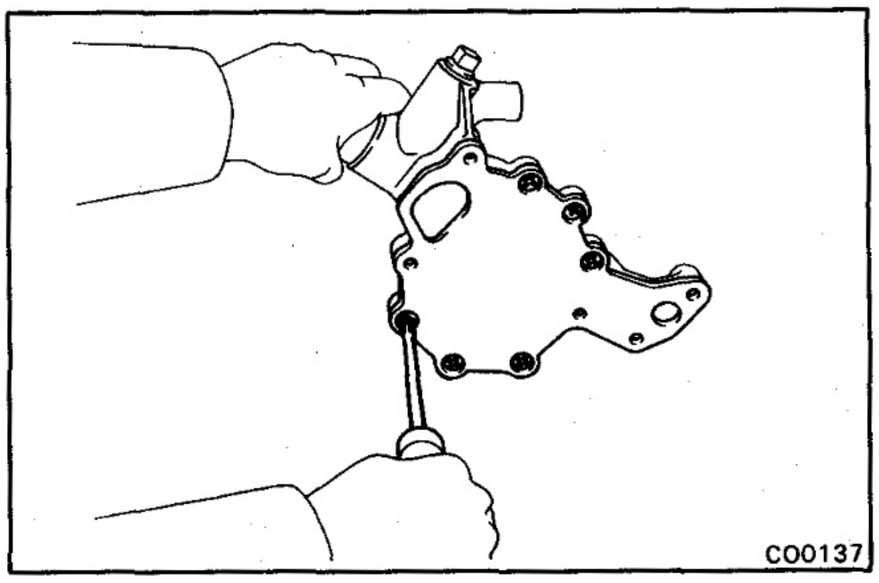

6. INSTALL WATER PUMP COVER

Install a new gasket and the cover with the six screws.

7. [w/ FLUID COUPLING] INSTALL STUD BOLTS TO PULLEY SEAT

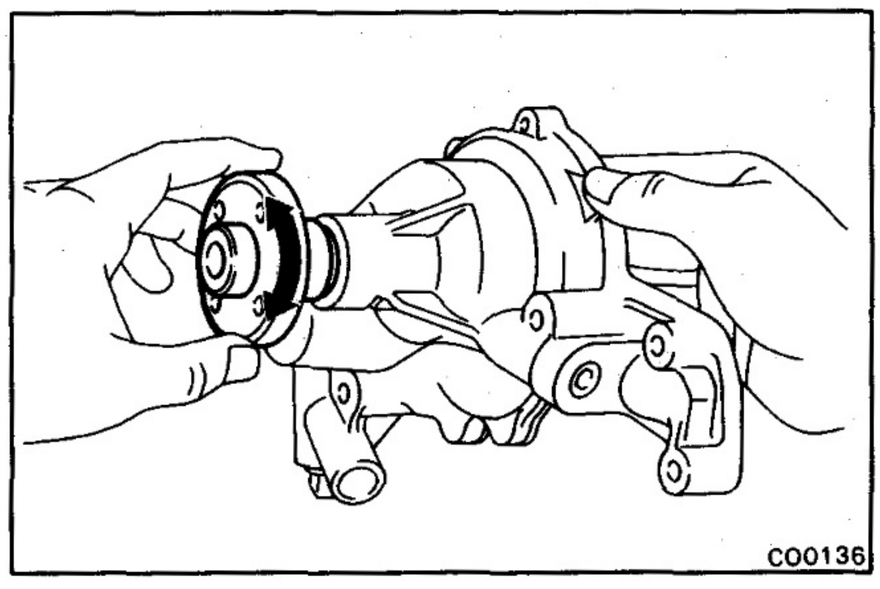

8. CHECK WATER PUMP BEARING ROTATES SMOOTHLY

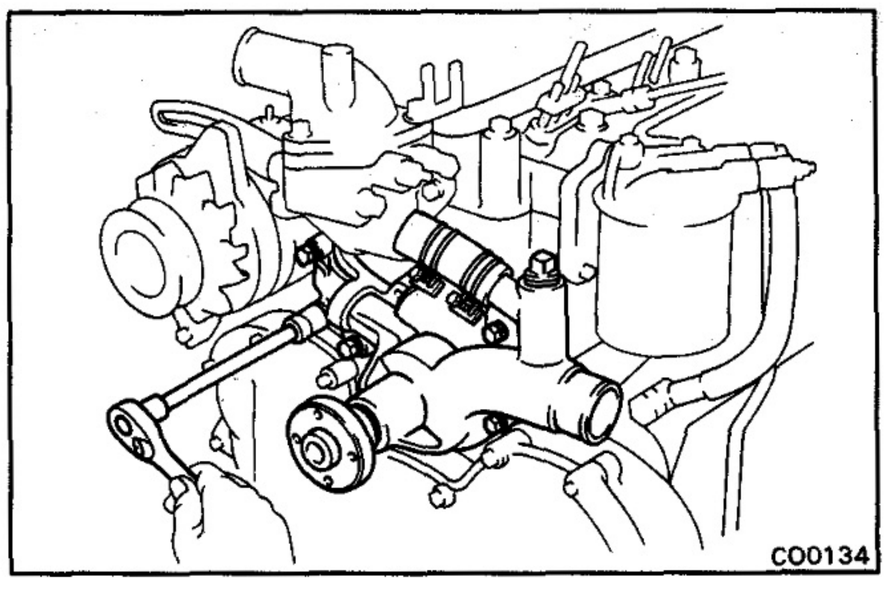

INSTALLATION OF WATER PUMP

(See page CO-4)

1. INSTALL WATER PUMP

Connect the water by-pass hose, install a new gasket and the water pump with the five bolts.

Torque: 250 kg-cm (18 ft-lb, 25 N·m)

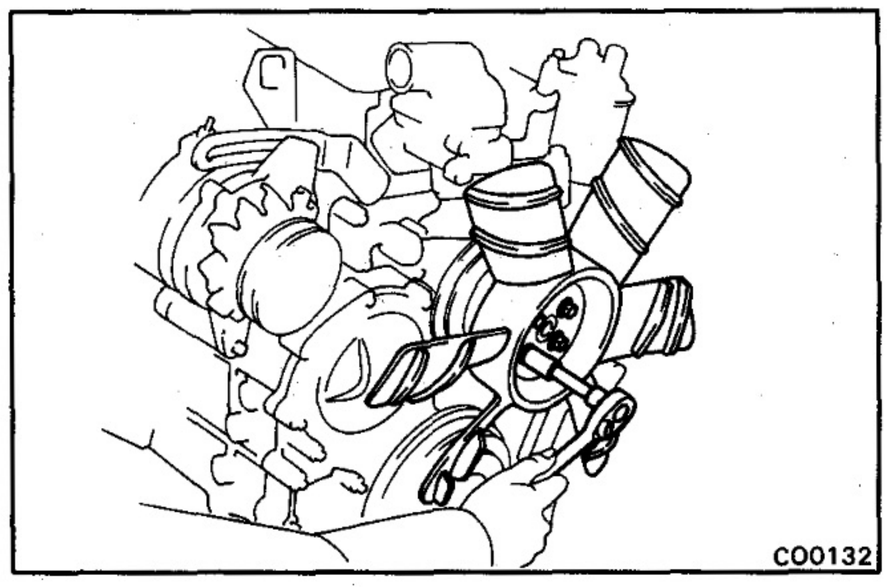

2. INSTALL WATER PUMP PULLEY AND FAN

[w/o Fluid Coupling]

Install the pump pulley and the drive shaft and fan assembly with the four bolts.

[w/ Fluid Coupling]

Install the pump pulley and the fluid coupling and fan assembly with the four nuts.

3. INSTALL AND ADJUST DRIVE BELT
(See page CH-7)

4. REFILL WITH COOLANT **(See page CO-3)**

5. START ENGINE AND CHECK FOR LEAKS

THERMOSTAT

REMOVAL OF THERMOSTAT

1. DRAIN ENGINE COOLANT **(See page CO-3)**

2. DISCONNECT RADIATOR INLET HOSE FROM WATER OUTLET

3. [13B-T]
DISCONNECT VACUUM PIPE FROM WATER OUTLET

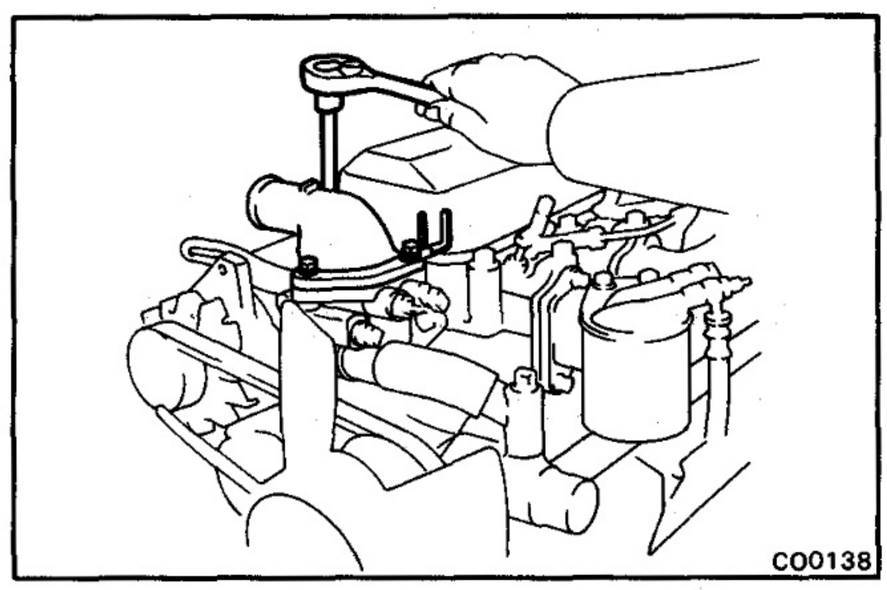

4. [WATER OUTLET CAP TYPE]
DISCONNECT COOLANT RESERVOIR HOSE AND WATER BY-PASS HOSE(S) FROM WATER OUTLET

5. REMOVE WATER OUTLET

Remove the three bolts, water outlet and gasket.

6. REMOVE THERMOSTAT

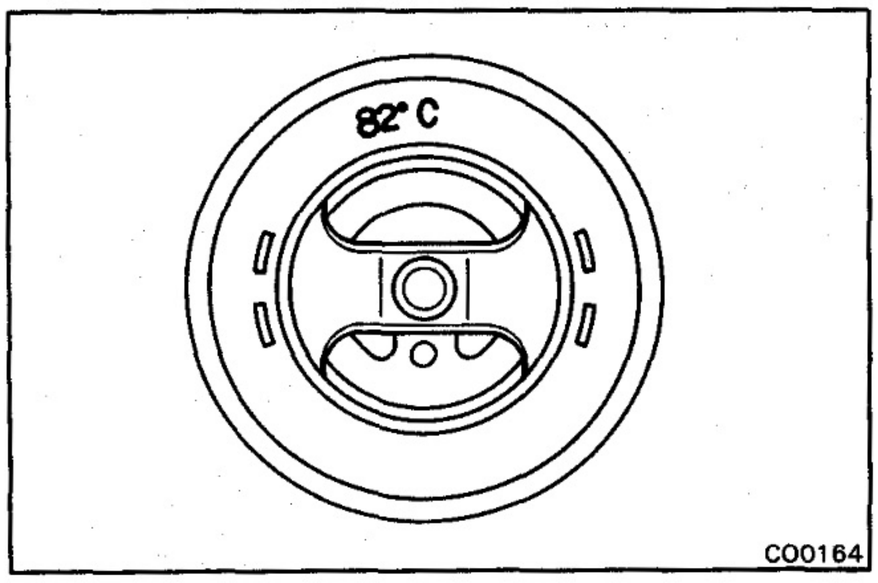

INSPECTION OF THERMOSTAT

NOTE: The thermostat is numbered with the valve opening temperature.

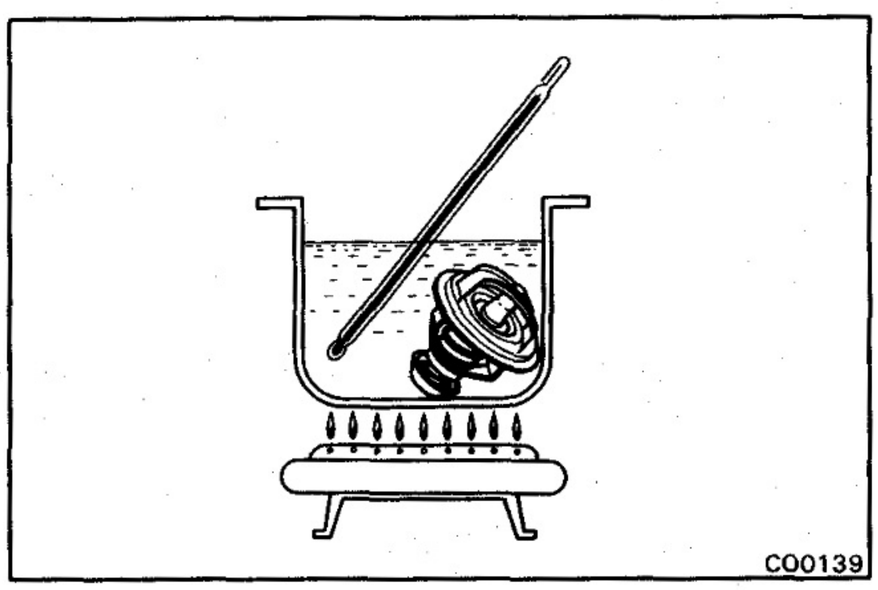

(a) Immerse the thermostat in water and gradually heat the water.

(b) Check the valve opening temperature.

Valve opening temperature:
82°C type 80 — 84°C (176 — 183°F)
88°C type 86 — 90°C (187 — 194°F)

If the valve opening temperature is not within specification, replace the thermostat.

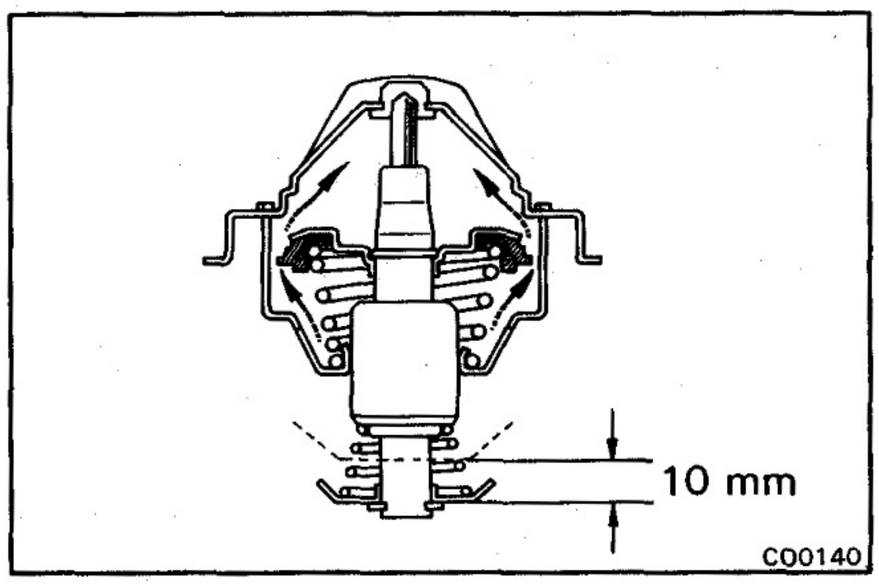

(c) Check the valve lift.

Valve lift:
82°C type
10 mm (0.39 in.) or more at 95°C (203°F)
88°C type
10 mm (0.39 in.) or more at 100°C (212°F)

If the valve lift is less than specification, replace the thermostat.

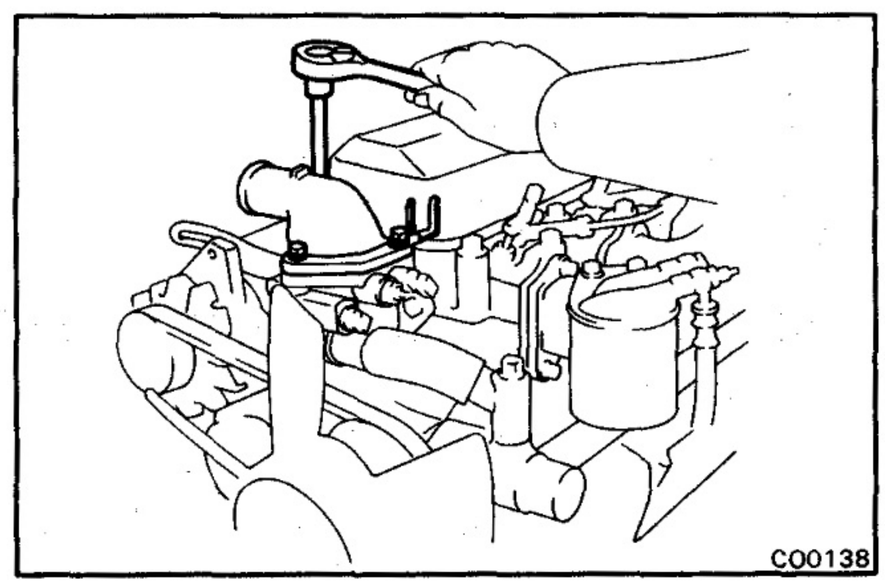

INSTALLATION OF THERMOSTAT

1. **PLACE THERMOSTAT IN WATER INLET**

2. **INSTALL WATER OUTLET**

   Install a new gasket and the water outlet with the three bolts. Torque the bolts.

   Torque: 185 kg-cm (13 ft-lb, 18 N·m)

3. **[WATER OUTLET CAP TYPE]**
   CONNECT COOLANT RESERVOIR HOSE AND WATER BY-PASS HOSE(S)

4. **[13B-T]**
   INSTALL VACUUM PIPE

5. **CONNECT RADIATOR INLET HOSE**

6. **FILL ENGINE WITH COOLANT (See page CO-3)**

7. **START ENGINE AND CHECK FOR LEAKS**

RADIATOR

CLEANING OF RADIATOR

Using water or steam cleaner, remove any mud and dirt from the radiator core.

CAUTION: If using a high pressure type cleaner, be careful not to deform the fins of the radiator core. If the cleaner nozzle pressure is 30 — 35 kg/cm² (427 — 498 psi, 2,942 — 3,432 kPa), keep a distance of at least 40 — 50 cm (15.75 — 19.69 in.) between the radiator core and cleaner nozzle.

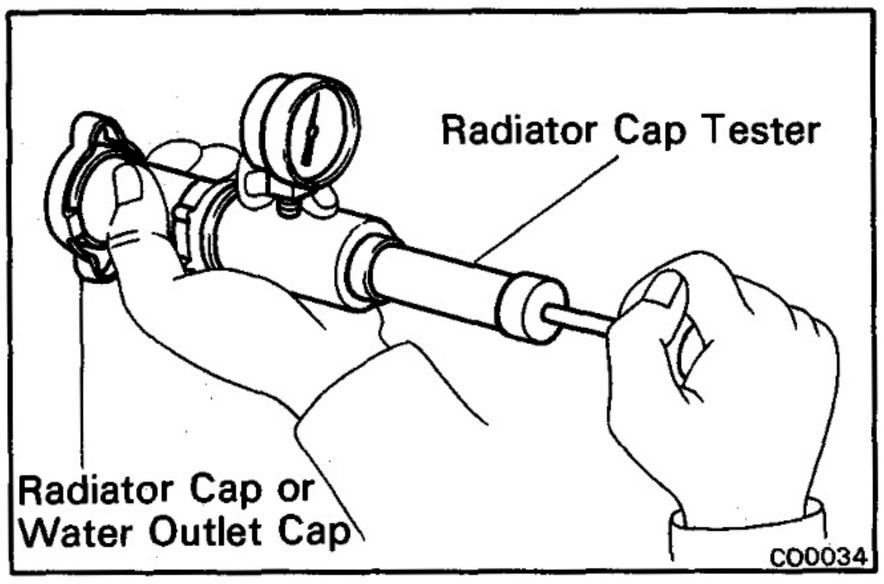

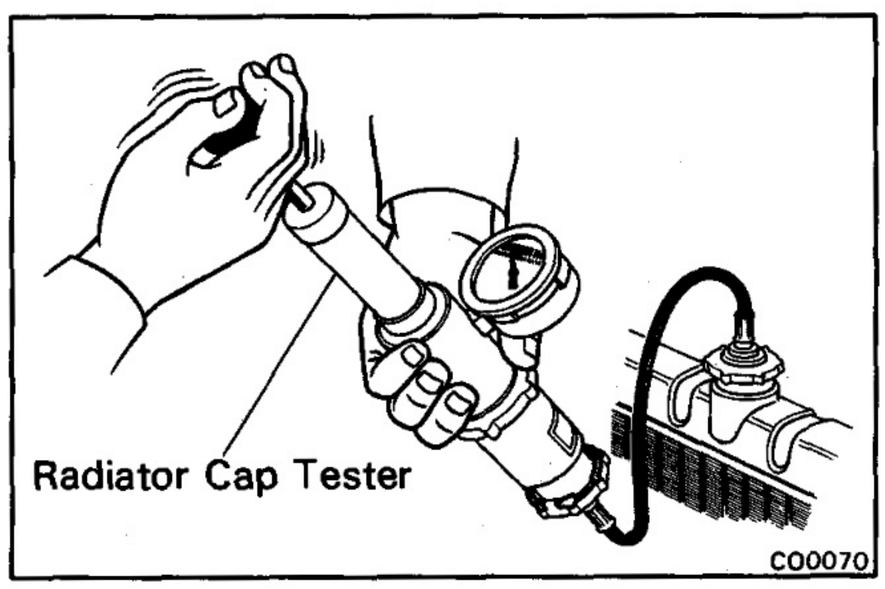

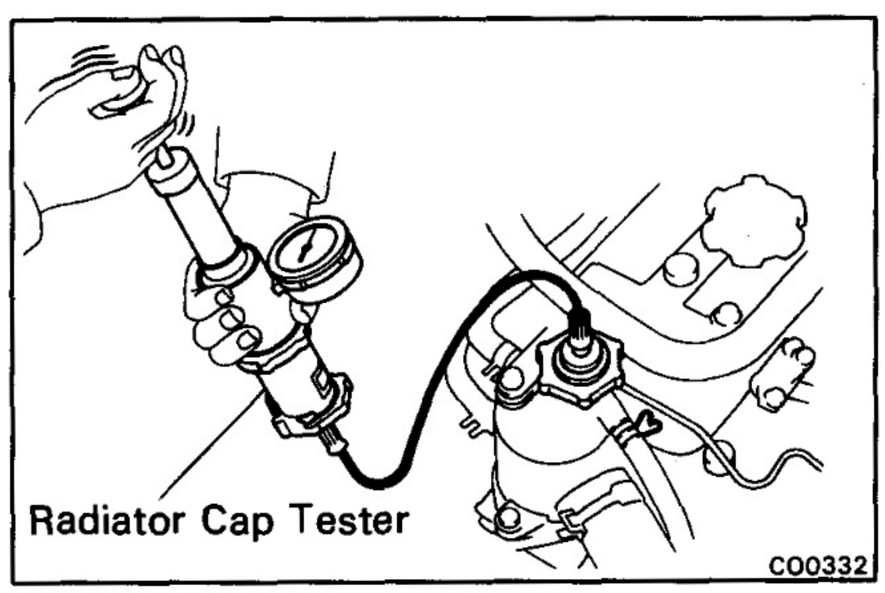

INSPECTION OF RADIATOR

1. INSPECT RADIATOR CAP OR WATER OUTLET CAP

Using a radiator cap tester, pump the tester until the relief valve opens. Check that the valve opens between 0.75 kg/cm² (10.7 psi, 74 kPa) and 1.05 kg/cm² (14.9 psi, 103 kPa).

Check that the pressure does not drop rapidly when pressure on the cap is below 0.6 kg/cm² (8.5 psi, 59 kPa).

If either check is not within limits, replace the cap.

2. INSPECT COOLING SYSTEM FOR LEAKS

(a) Fill the radiator with coolant and attach a pressure tester.

(b) Warm up the engine.

(c) Pump it to 1.2 kg/cm² (17 psi, 118 kPa), check that pressure does not drop.

If the pressure drops, check for leaks from the hoses, radiator or water pump. If no external leaks are found, check the heater core, cylinder block and head.

LUBRICATION SYSTEM

	Page
TROUBLESHOOTING	LU-2
OIL PRESSURE CHECK	LU-2
REPLACEMENT OF ENGINE OIL AND OIL FILTER	LU-3
OIL PUMP	LU-5
OIL COOLER AND RELIEF VALVE	LU-16
OIL NOZZLES AND CHECK VALVE [3B and 13B-T]	LU-21

TROUBLESHOOTING

Problem	Possible cause	Remedy	Page
Oil leakage	Cylinder head, cylinder block or oil pump body damaged or cracked	Repair as necessary	
	Oil seal faulty	Replace oil seal	EM-72 or EM-99
	Gasket faulty	Replace gasket	
Low oil pressure	Oil leakage	Repair as necessary	
	Relief valve faulty	Repair relief valve	LU-5
	Oil pump faulty	Repair oil pump	LU-5
	Engine oil poor quality	Replace engine oil	LU-3
	Crankshaft bearing faulty	Replace bearing	EM-79
	Connecting rod bearing faulty	Replace bearing	EM-79
	Oil filter clogged	Replace oil filter	LU-3
High oil pressure	Relief valve faulty	Repair relief valve	LU-5

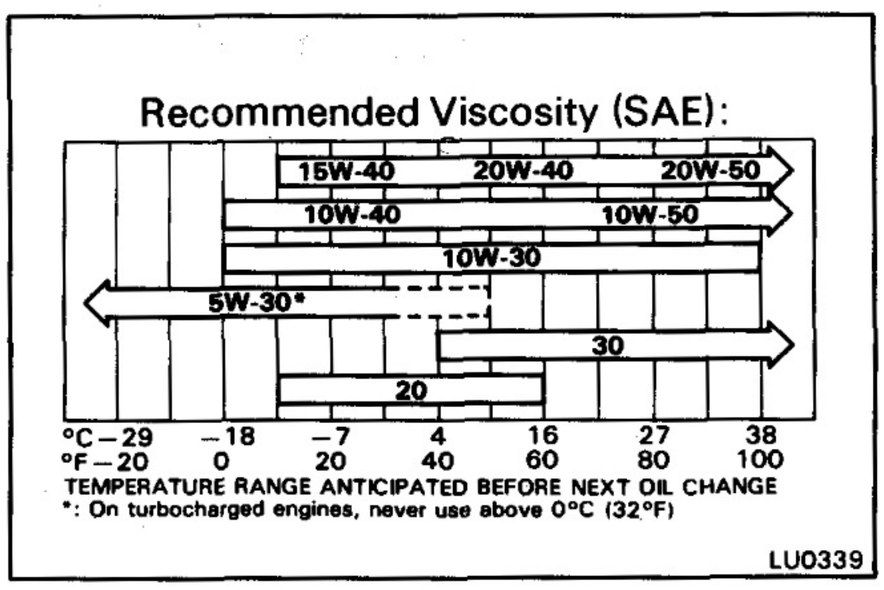

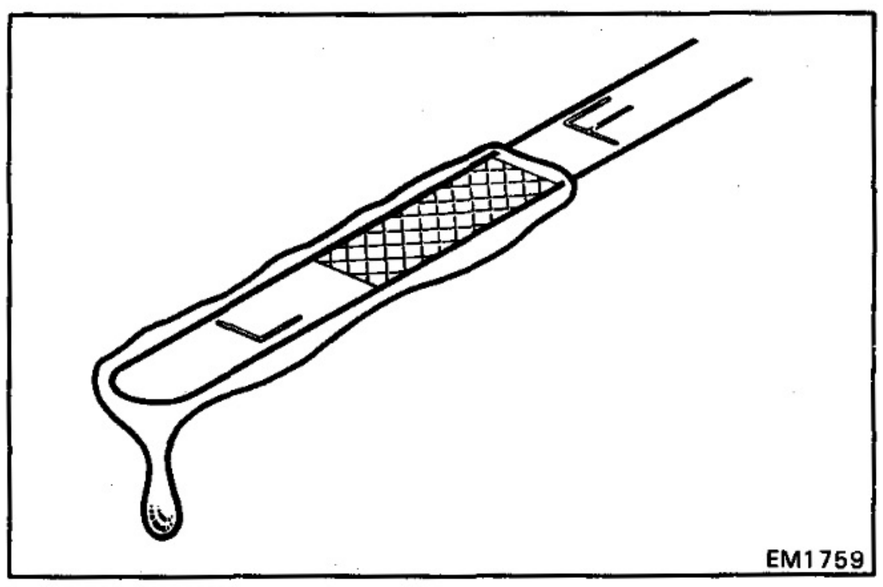

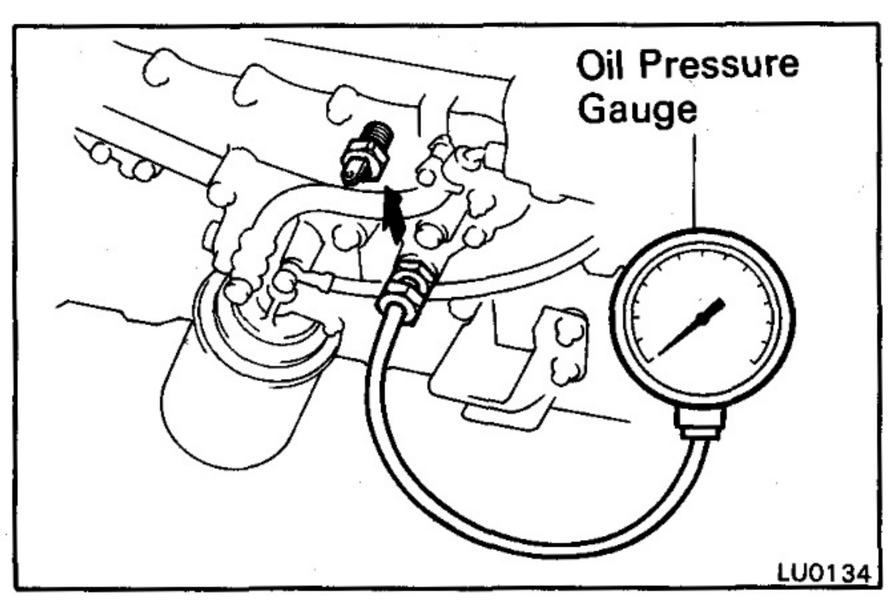

OIL PRESSURE CHECK

1. CHECK ENGINE OIL QUALITY

Check the oil for deterioration, entry of water, discoloring or thinning.

If the quality is poor, replace the oil.

Use API grade CC, CD or better and recommended viscosity oil.

NOTE: Be sure to use CD type or better for vehicles with turbocharger.

2. CHECK ENGINE OIL LEVEL

The oil level should be between the "L" and "F" marks on the level gauge.

If low, check for leakage and add oil up to the "F" mark.

3. REMOVE OIL PRESSURE SWITCH OR SCREW PLUG

4. INSTALL OIL PRESSURE GAUGE

5. START ENGINE

Start the engine and warm it up to normal operating temperature.

6. CHECK OIL PRESSURE

Oil pressure:

At idle	**0.3 kg/cm² (4.3 psi, 29 kPa) or more**
At 3,000 rpm	**2.5 — 6.0 kg/cm² (36 — 85 psi, 245 — 588 kPa)**

NOTE: Check for oil leakage after reinstalling the pressure switch or screw plug.

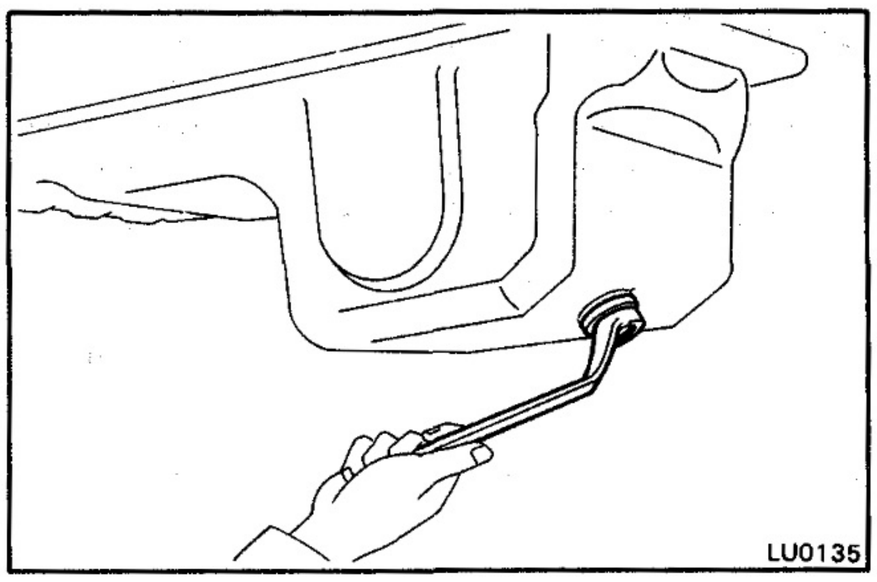

REPLACEMENT OF ENGINE OIL AND OIL FILTER

1. DRAIN ENGINE OIL

(a) Remove the oil filler cap.

(b) Remove the oil drain plug and drain the oil into a container.

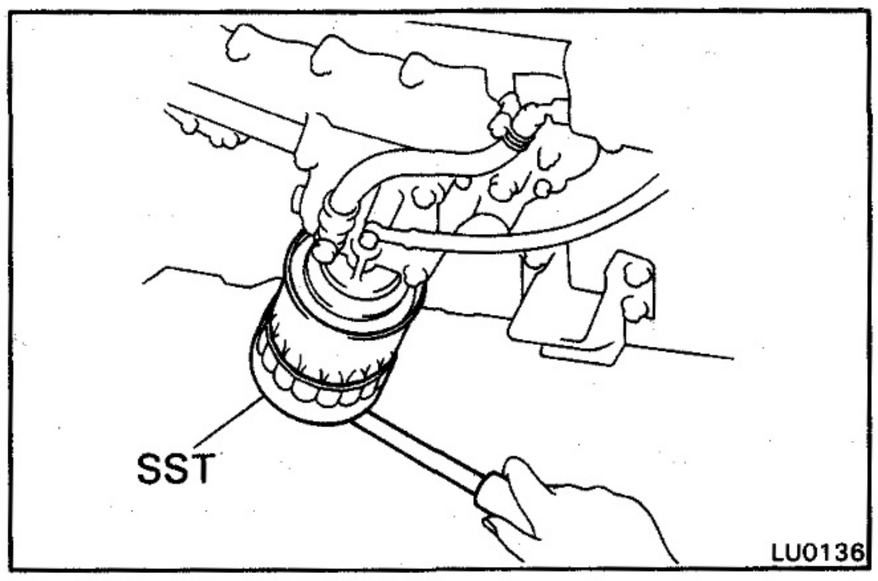

2. REPLACE OIL FILTER

[Cartridge Type]

(a) Using SST, remove the oil filter.

SST 09228-44011

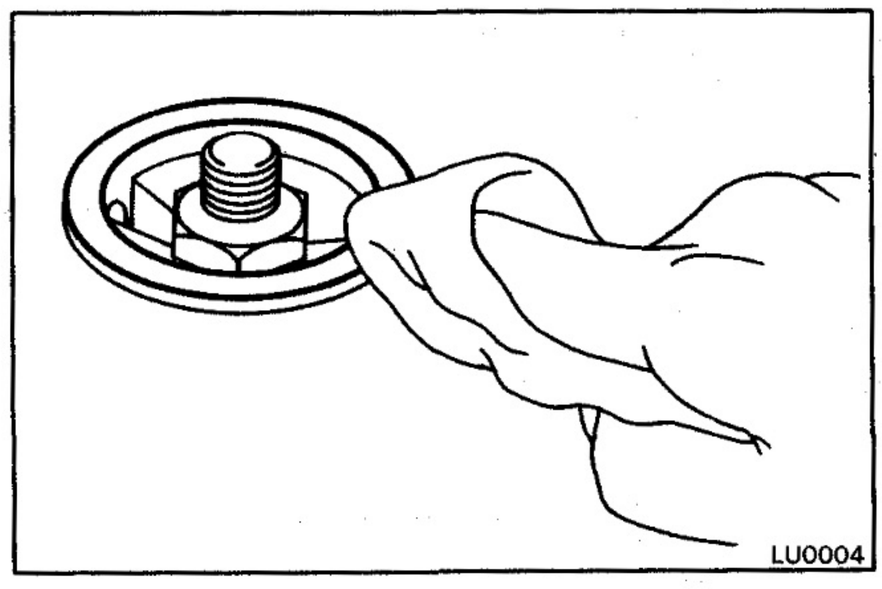

(b) Inspect and clean the oil filter installation surface.

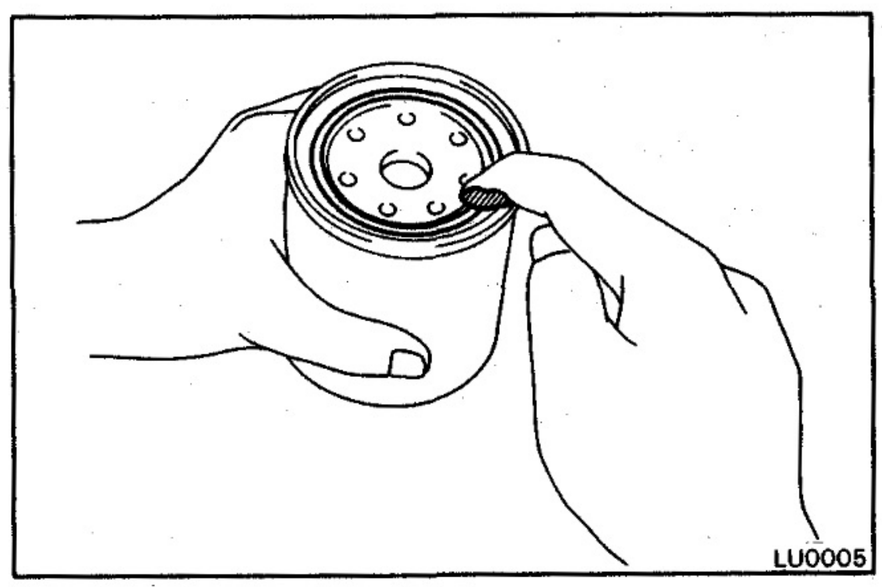

(c) Apply clean engine oil to the gasket of a new oil filter.

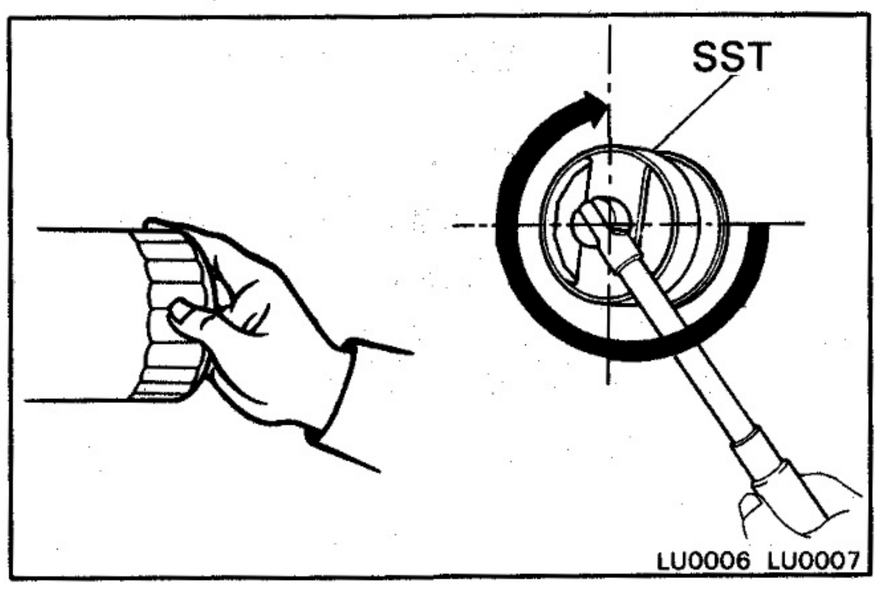

(d) Lightly screw in the oil filter until you feel resistance.

(e) Using SST, tighten the oil filter an extra 3/4 turn.

SST 09228-44011

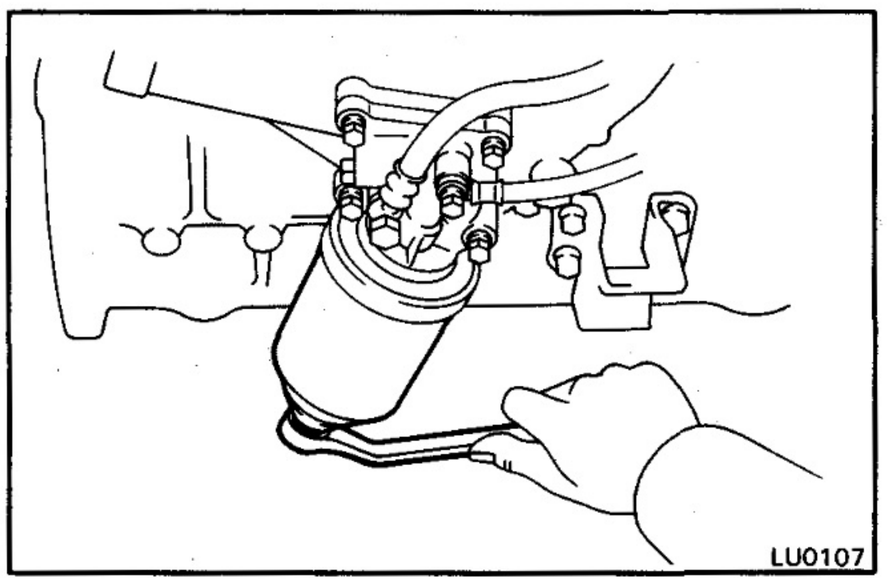

[Paper Element Type]

(a) Remove the guide bolt and oil filter assembly.

(b) Remove the rubber gasket, element, rubber gasket, plate washer and spring from the oil filter case.

(c) Remove the O-ring from the guide bolt.

(d) Remove the oil filter bracket gasket from the oil filter bracket.

(e) Clean the filter case and guide bolt.

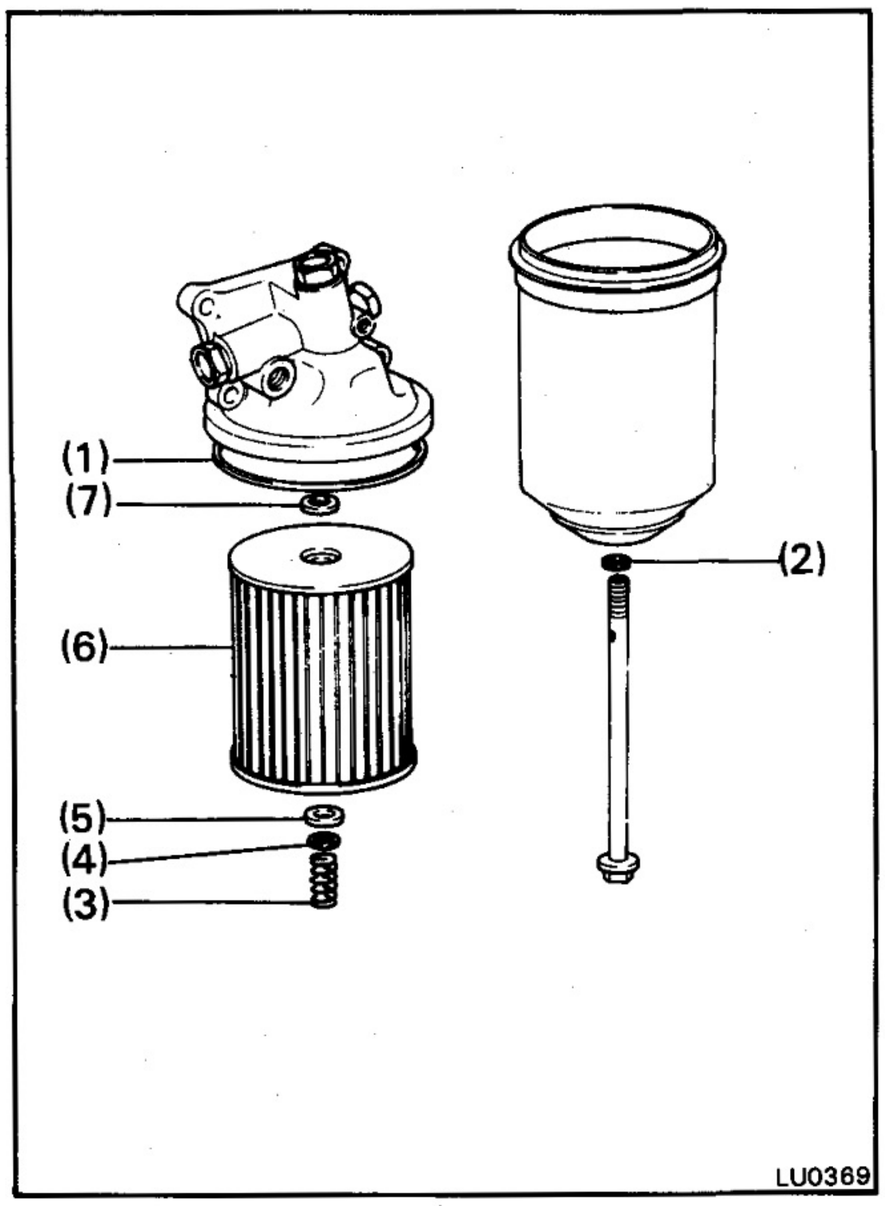

(f) Install a new oil filter bracket gasket (1) to the oil filter bracket.

(g) Install a new O-ring (2) to the guide bolt.

- Put a light coat of engine oil on the O-ring.

(h) Install the spring (3), plate washer (4), new rubber gasket (5), element (6) and rubber gasket (7) to the oil filter case.

(i) Install the oil filter assembly with the guide bolt.

3. FILL WITH ENGINE OIL

(a) Clean and install the oil drain plug with a new gasket. Torque the drain plug.

Torque: 350 kg-cm (25 ft-lb, 34 N·m)

(b) Fill the engine with new oil, API grade CC, CD or better.

NOTE: Be sure to use CD type or better for vehicles with turbocharger.

Capacity:

Drain and refill

w/o Oil filter change

5.8 liters (6.1 US qts, 5.1 Imp. qts)

w/ Oil filter change

6.7 liters (7.1 US qts, 5.9 Imp. qts)

Dry fill 7.3 liters (7.7 US qts, 6.4 Imp. qts)

(c) Install the oil filler cap with the gasket.

4. START ENGINE AND CHECK FOR LEAKS

5. RECHECK OIL LEVEL

Recheck the engine oil level and refill as necessary.

OIL PUMP

REMOVAL OF OIL PUMP

NOTE: When repairing the oil pump, the oil pan and strainer should be removed and cleaned.

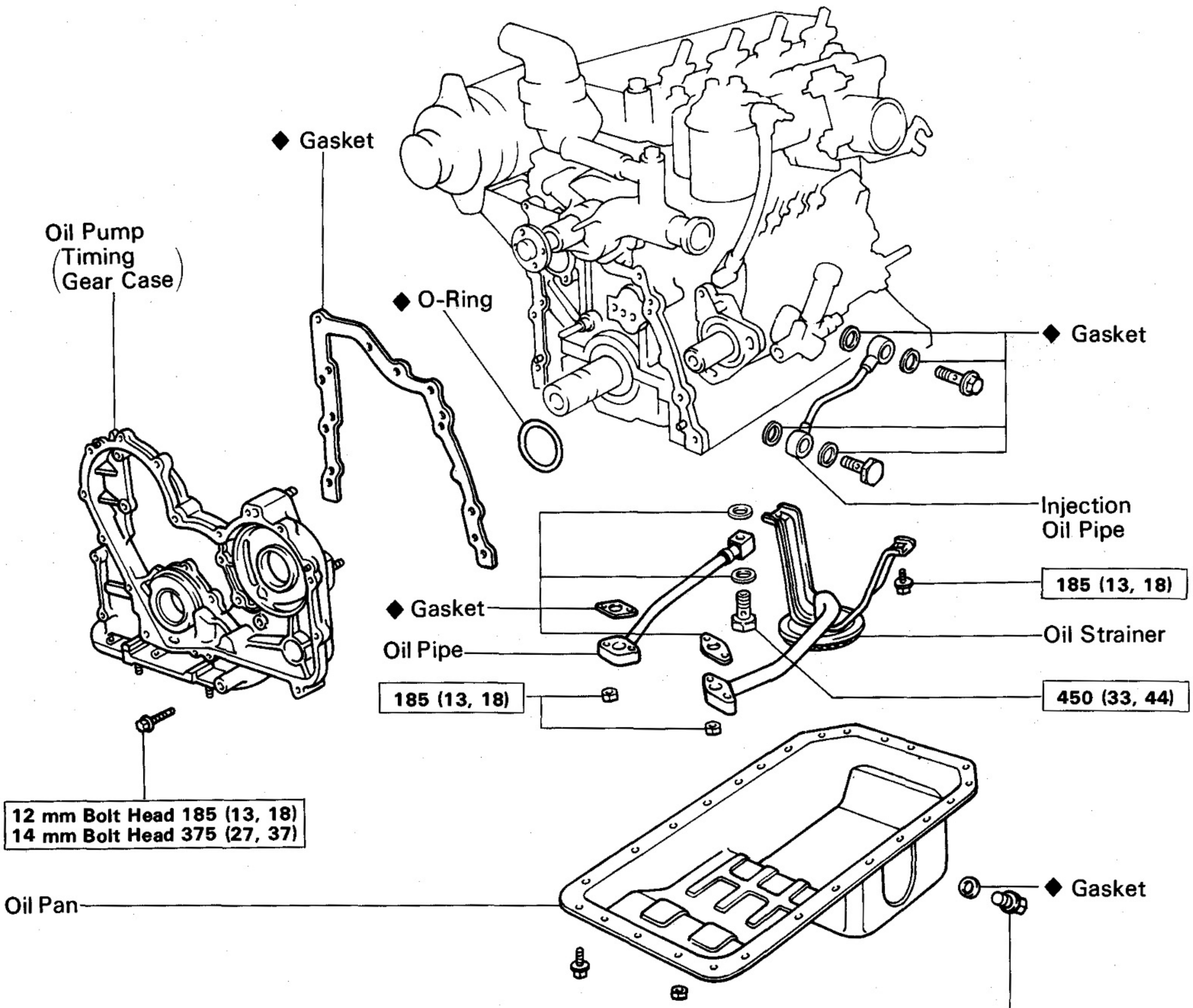

kg-cm (ft-lb, N·m) : Specified torque
◆ Non-reusable part

LU0371

1. **SET NO. 1 CYLINDER TO TDC/COMPRESSION**
(See page EM-22)

2. **DRAIN ENGINE OIL (See page LU-3)**

3. **REMOVE DRIVE BELT**

4. **REMOVE FAN AND WATER PUMP PULLEY**
(See page CO-5)

5. **REMOVE CRANKSHAFT PULLEY AND TIMING GEAR COVER**
(See steps 11 to 13 on pages EM-65 and 66)

6. **REMOVE IDLE GEAR AND CRANKSHAFT TIMING GEAR**
(See steps 16, 17 and 19 on pages EM-67 and 68)

7. **REMOVE CAMSHAFT TIMING GEAR**

(a) Using SST, remove the mount bolt and plate washer.

SST 09278-54012

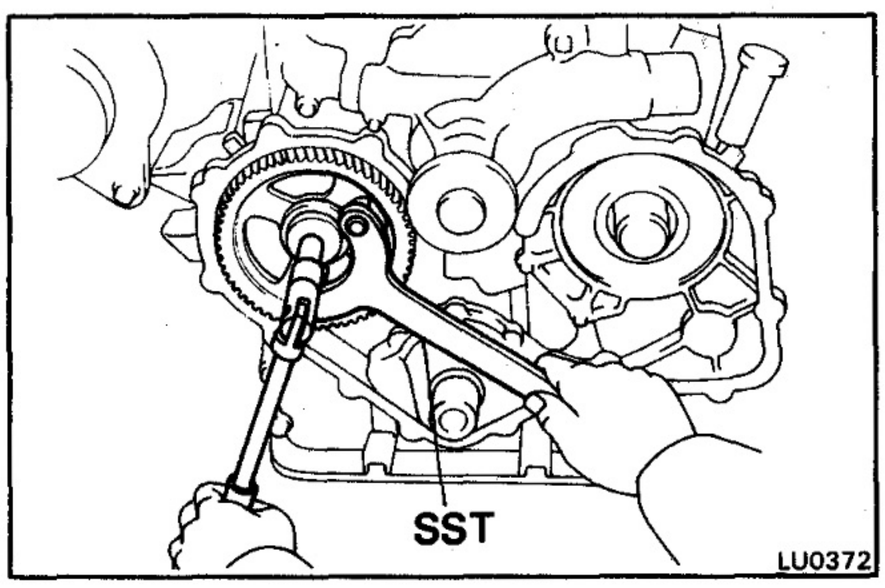

(b) Using SST, remove the timing gear.

SST 09950-20017

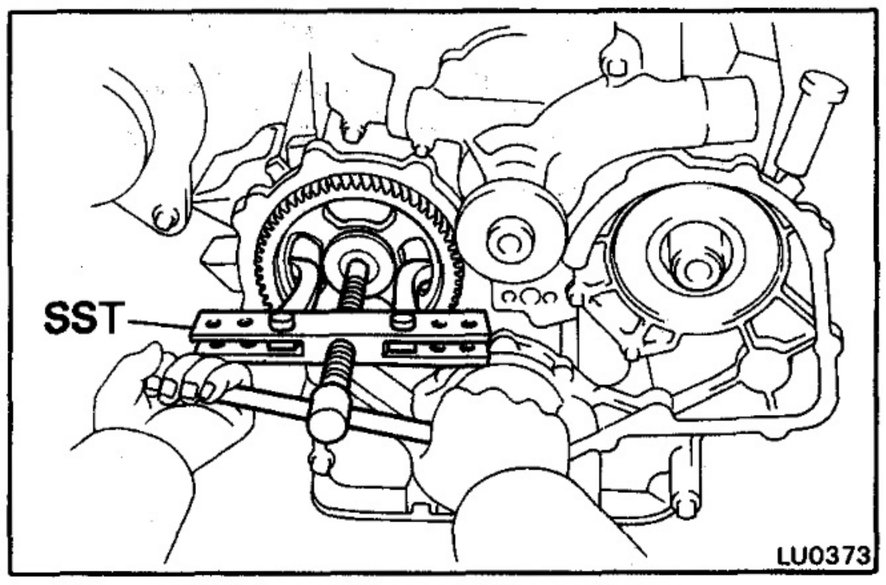

8. **REMOVE OIL PAN**

(a) Remove the twenty-three bolts and four nuts.

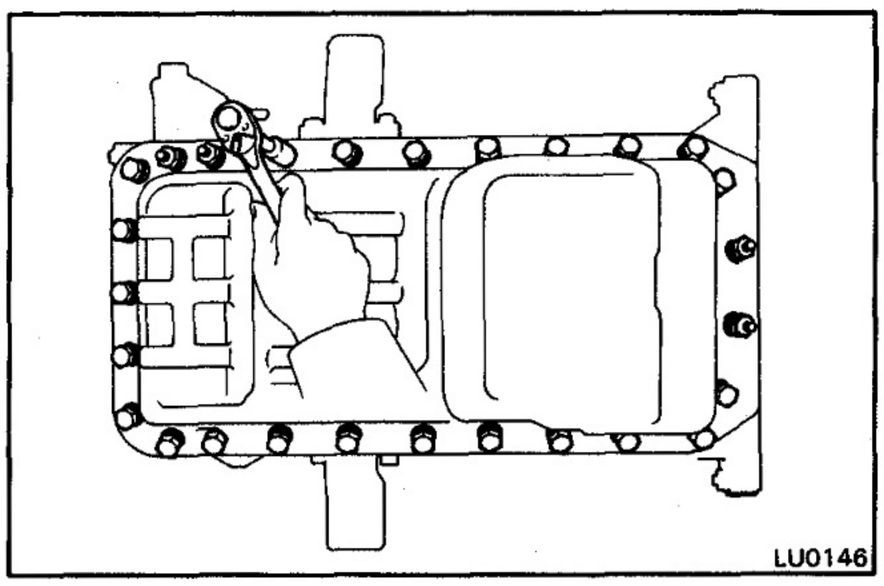

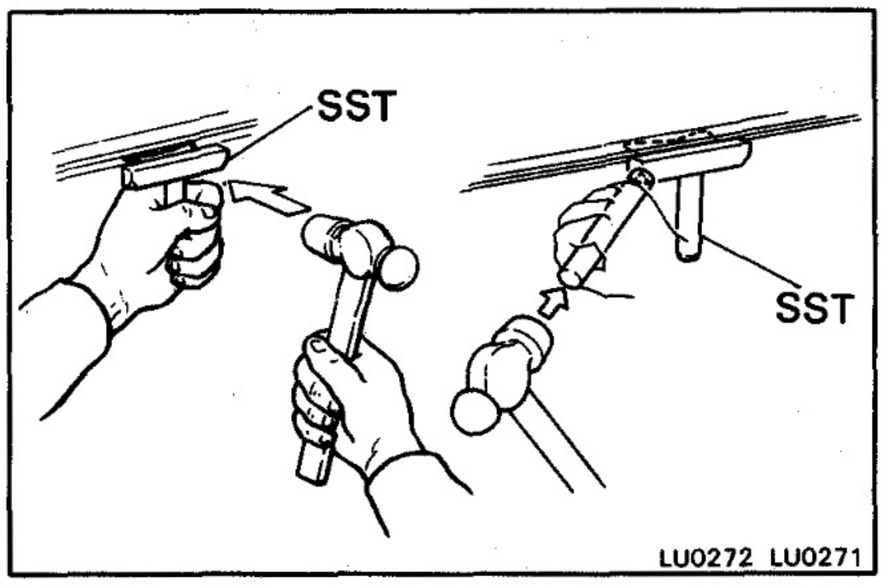

(b) Insert the SST blade between the cylinder block and oil pan, cut off applied sealer and remove the oil pan.

SST 09032-00100

CAUTION:

- **Do not use SST for the timing gear case side and rear oil seal retainer side.**
- **Be careful not to damage the oil pan flange.**

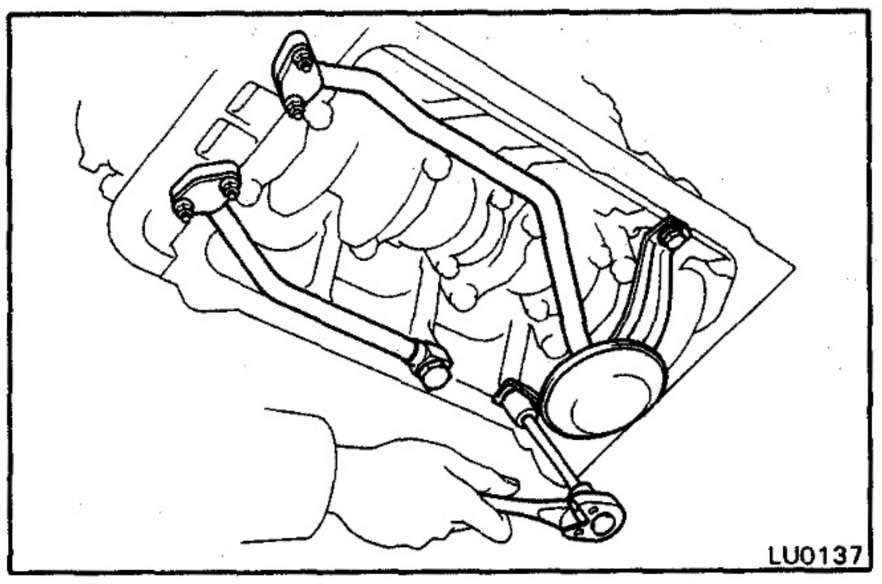

9. REMOVE OIL STRAINER AND OIL PIPE

(a) Remove the two bolts, two nuts, oil strainer and gasket.

(b) Remove the union bolt, two nuts, oil pipe and three gaskets.

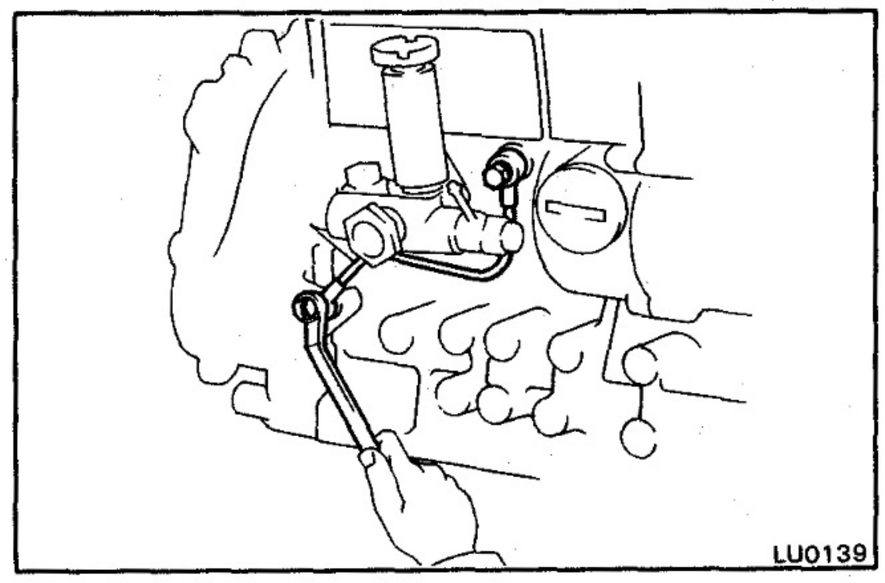

10. REMOVE OIL PUMP (TIMING GEAR CASE)

(a) Remove the union bolt and two gaskets, and disconnect the injection oil pipe from the timing gear case.

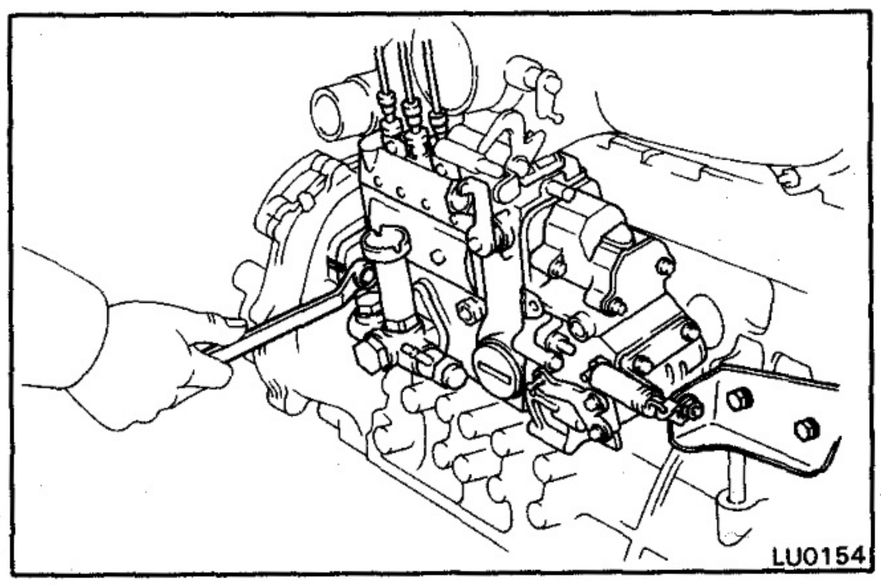

(b) Before removing the three nuts holding the injection pump flange to the timing gear case, check if the matchmarks are aligned. If not, place new matchmarks for reinstallation.

(c) Remove the three nuts.

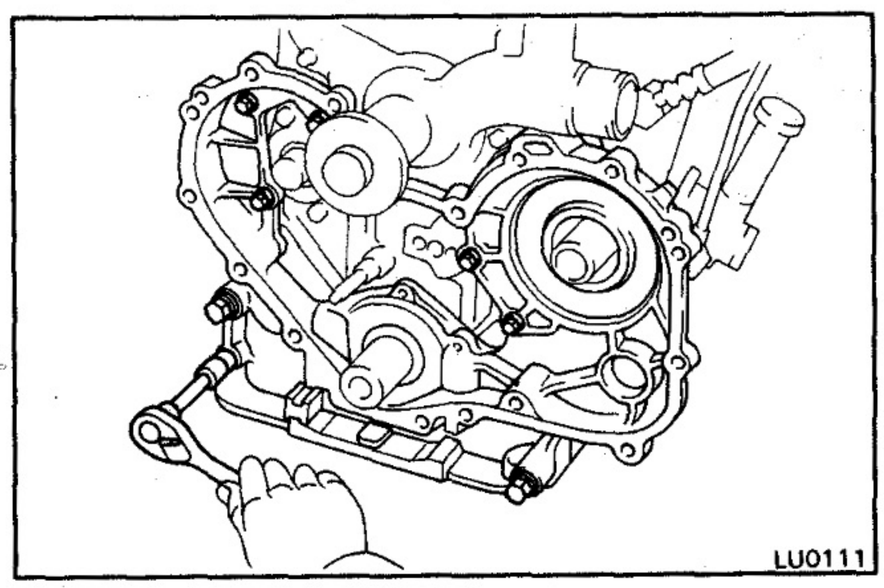

(d) Remove the eight bolts.

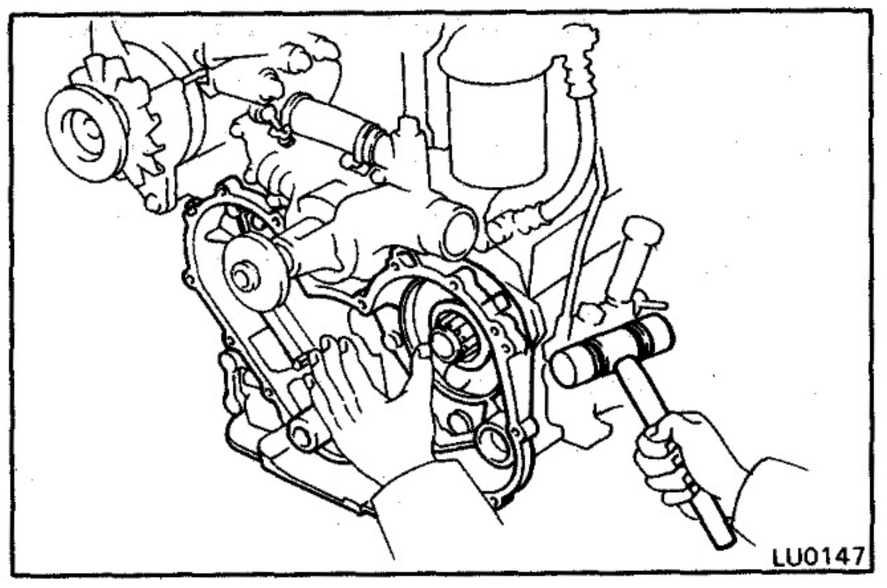

(e) Using a plastic-faced hammer, lightly tap out the timing gear case and gasket.

COMPONENTS

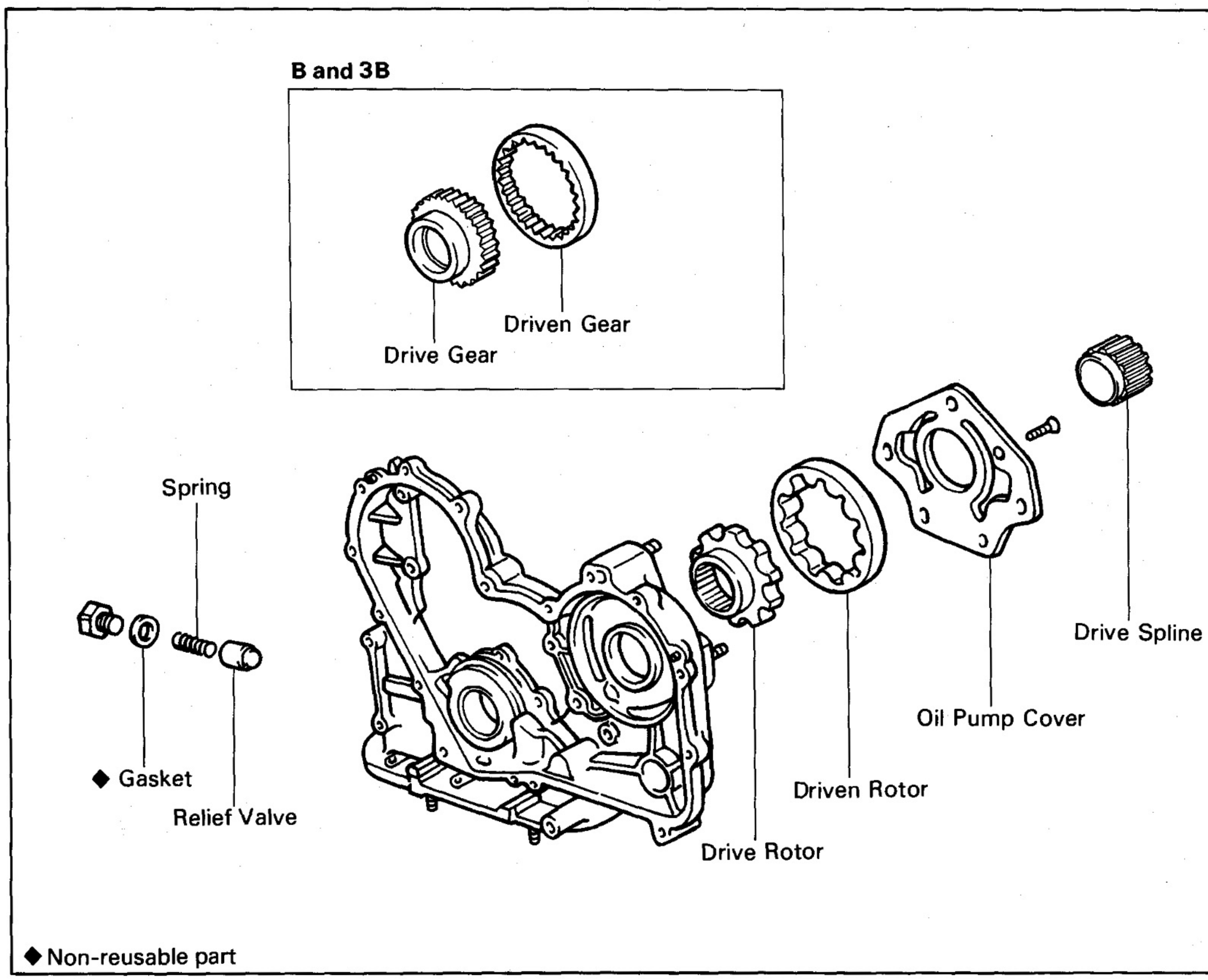

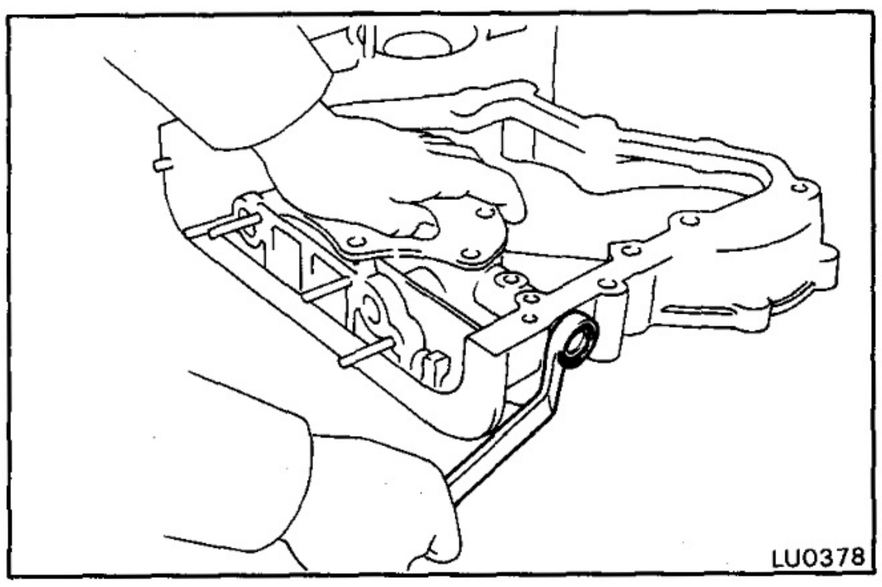

DISASSEMBLY OF OIL PUMP

1. REMOVE RELIEF VALVE

Remove the plug, gasket, spring and relief valve.

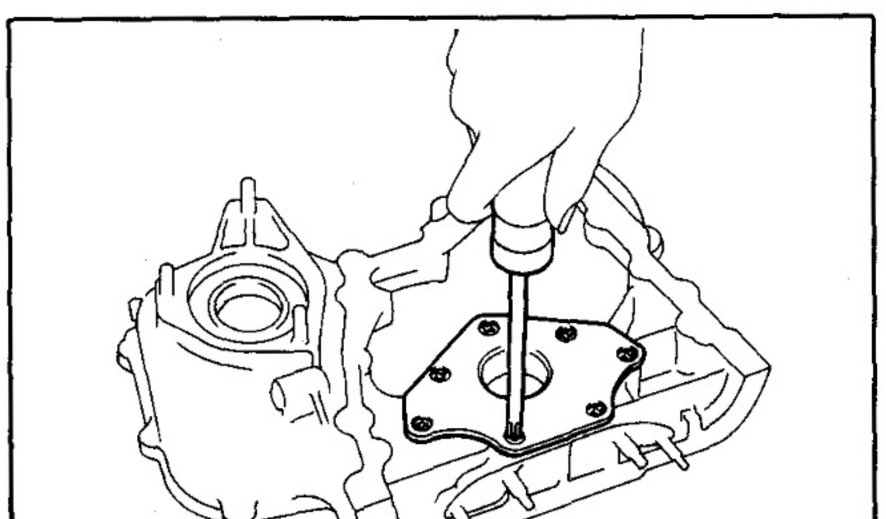

2. REMOVE DRIVE AND DRIVEN GEARS (B AND 3B) OR ROTORS (11B, 13B AND 13B-T)

(a) Remove the seven screws and oil pump cover.

(b) Remove the gears (B and 3B) or rotors (11B, 13B and 13B-T).

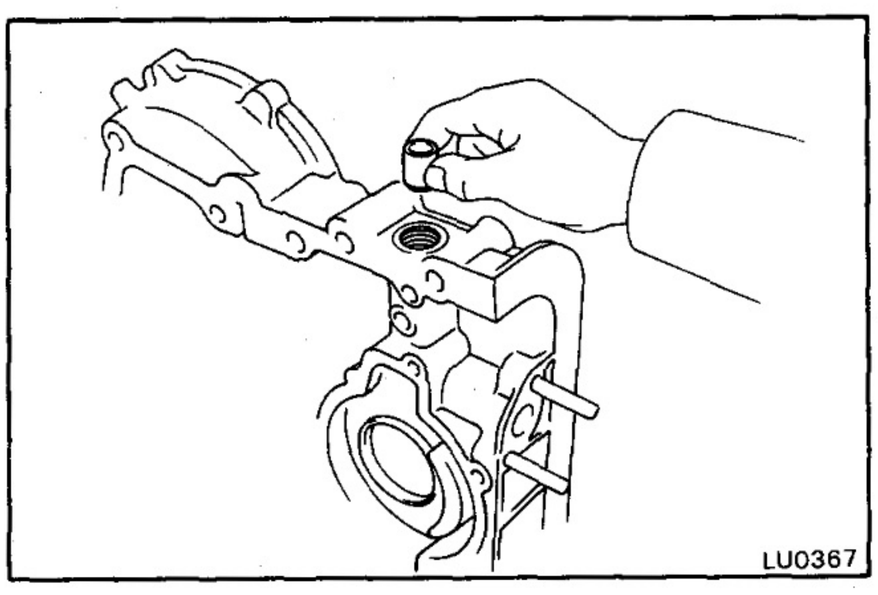
LU0367

INSPECTION OF OIL PUMP [B and 3B]

1. INSPECT RELIEF VALVE

Coat the valve with engine oil and check that it falls smoothly into the valve hole by its own weight.

If is not, replace the relief valve. If necessary, replace the oil pump assembly.

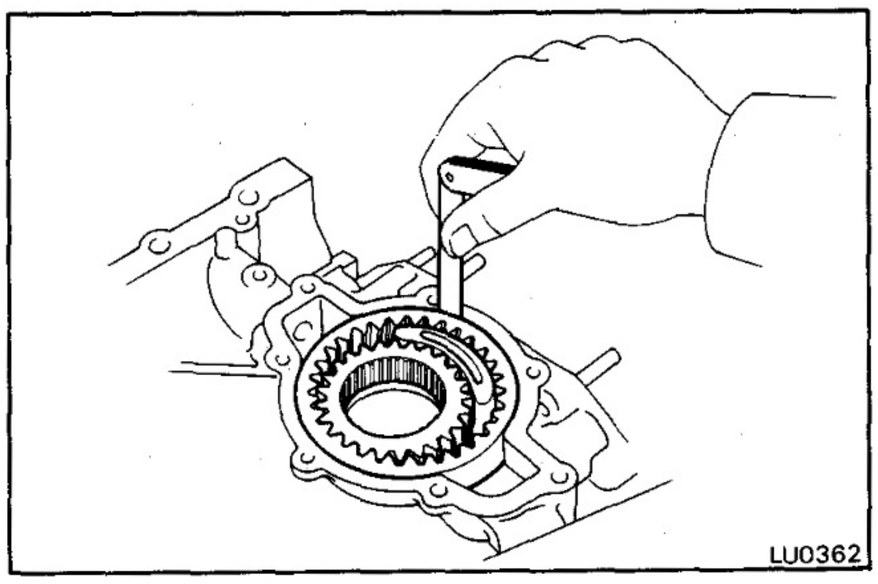
LU0362

2. INSPECT DRIVE AND DRIVEN GEARS

A. Inspect Gear Body Clearance

Using a feeler gauge, measure the clearance between the driven gear and body.

Standard body clearance: 0.090 — 0.150 mm (0.0035 — 0.0059 in.)
Maximum body clearance: 0.30 mm (0.0118 in.)

If the clearance is greater than maximum, replace gears. If necessary, replace the oil pump assembly.

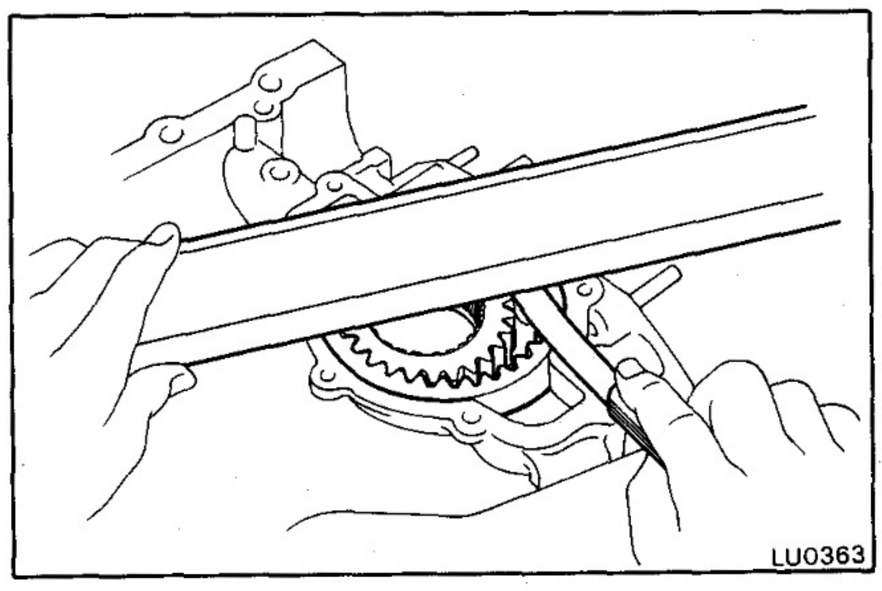
LU0363

B. Inspect Gear Side Clearance

Using a feeler gauge and precision straight edge, measure the clearance between the gear and precision straight edge.

Standard side clearance: 0.030 — 0.095 mm (0.0012 — 0.0037 in.)
Maximum side clearance: 0.15 mm (0.0059 in.)

If the clearance is greater than maximum, replace the gears.

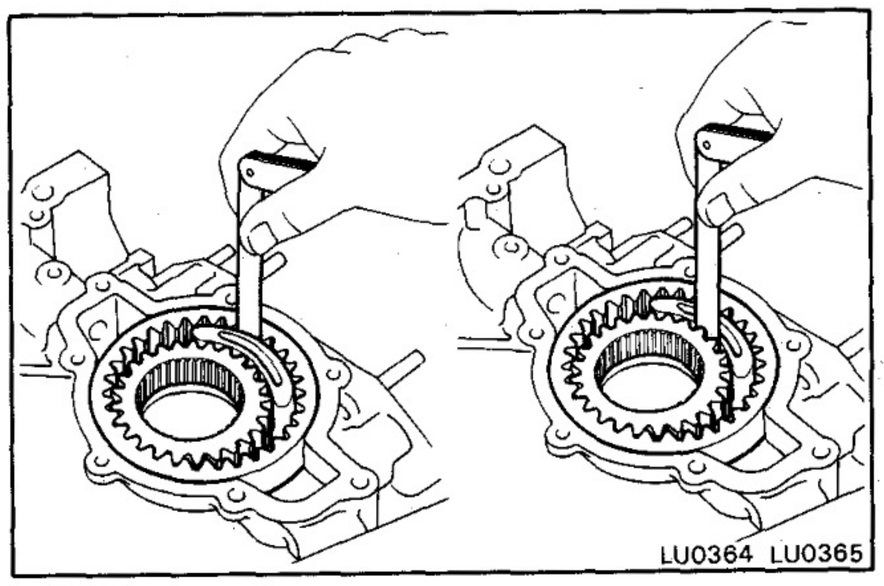
LU0364 LU0365

C. Inspect Gear Tip Clearance

Using a feeler gauge, measure the clearance between the gear and cresent.

Standard clearance:
Driven gear to cresent 0.393 — 0.476 mm (0.0155 — 0.0187 in.)
Drive gear to cresent 0.477 — 0.567 mm (0.0188 — 0.0223 in.)

Maximum clearance:
Driven gear to cresent 0.55 mm (0.0217 in.)
Drive gear to cresent 0.65 mm (0.0256 in.)

If the clearance is greater than maximum, replace the gears. If necessary, replace the oil pump assembly.

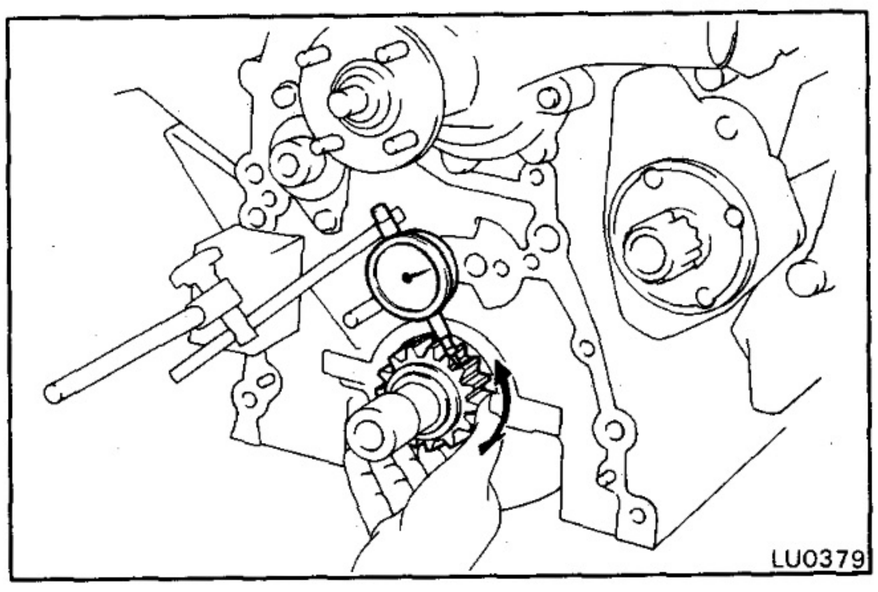
LU0379

3. INSPECT DRIVE SPLINE

Using a dial indicator, measure the backlash while turning the drive gear clockwise and counterclockwise in several places.

Standard backlash: 0.541 — 0.790 mm (0.0213 — 0.0311 in.)
Maximum backlash: 1.00 mm (0.0394 in.)

If the backlash is greater than maximum, replace the gear and spline.

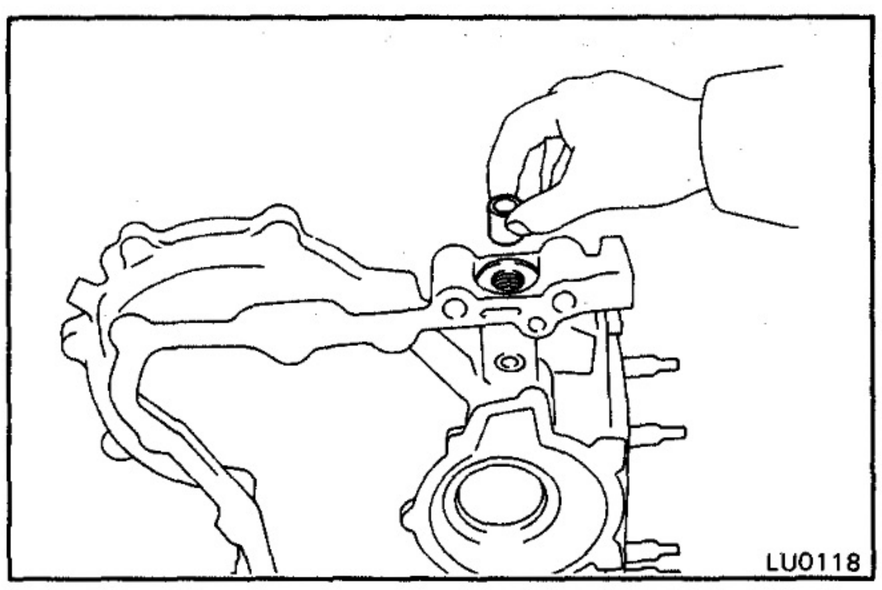

INSPECTION OF OIL PUMP [11B, 13B and 13B-T]

1. INSPECT RELIEF VALVE

Coat the valve with engine oil and check that it falls smoothly into the valve hole by its own weight.

If is not, replace the relief valve. If necessary, replace the oil pump assembly.

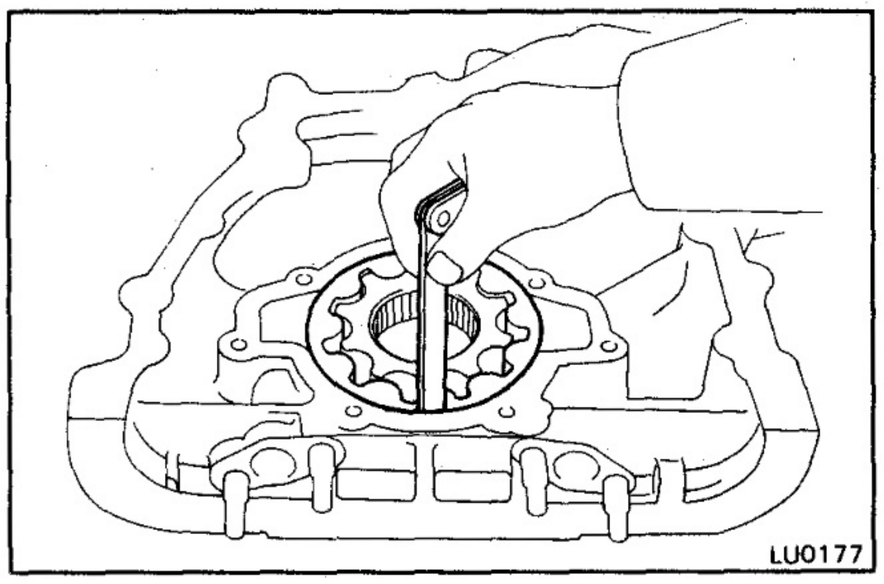

2. INSPECT DRIVE AND DRIVEN ROTORS

A. Inspect Rotor Body Clearance

Using a feeler gauge, measure the clearance between the driven rotor and body.

Standard body clearance: **0.140 – 0.220 mm (0.0055 – 0.0087 in.)**
Maximum body clearance: **0.40 mm (0.0157 in.)**

If the clearance is greater than maximum, replace rotors. If necessary, replace the oil pump assembly.

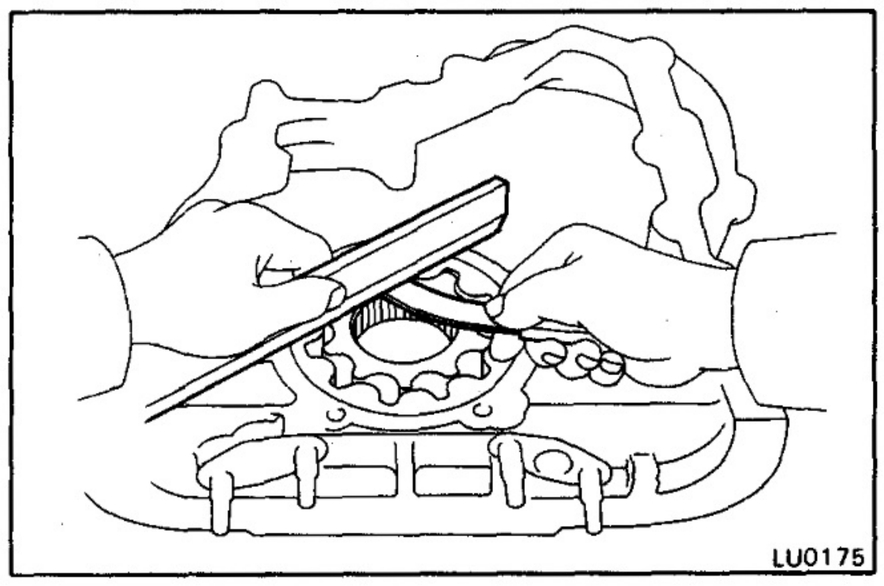

B. Inspect Rotor Side Clearance

Using a feeler gauge and precision straight edge, measure the clearance between the rotor and precision straight edge.

Standard side clearance: **0.035 – 0.090 mm (0.0014 – 0.0035 in.)**
Maximum side clearance: **0.15 mm (0.0059 in.)**

If the clearance is greater than maximum, replace the rotors. If necessary, replace the oil pump assembly.

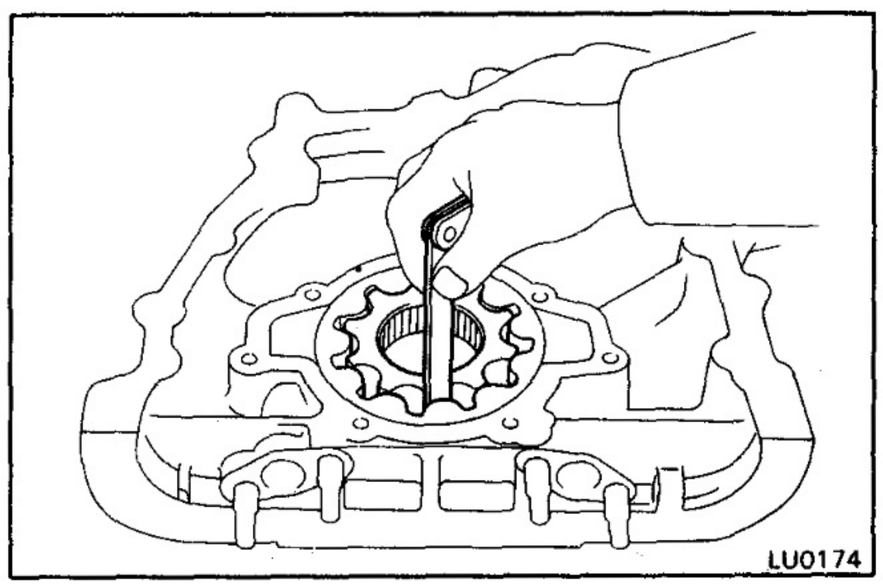

C. Inspect Rotor Tip Clearance

Using a feeler gauge, measure the clearance between the drive and driven rotors.

Standard tip clearance: **0.110 – 0.240 mm (0.0043 – 0.0094 in.)**
Maximum tip clearance: **0.30 mm (0.0118 in.)**

If the clearance is greater than maximum, replace the rotors.

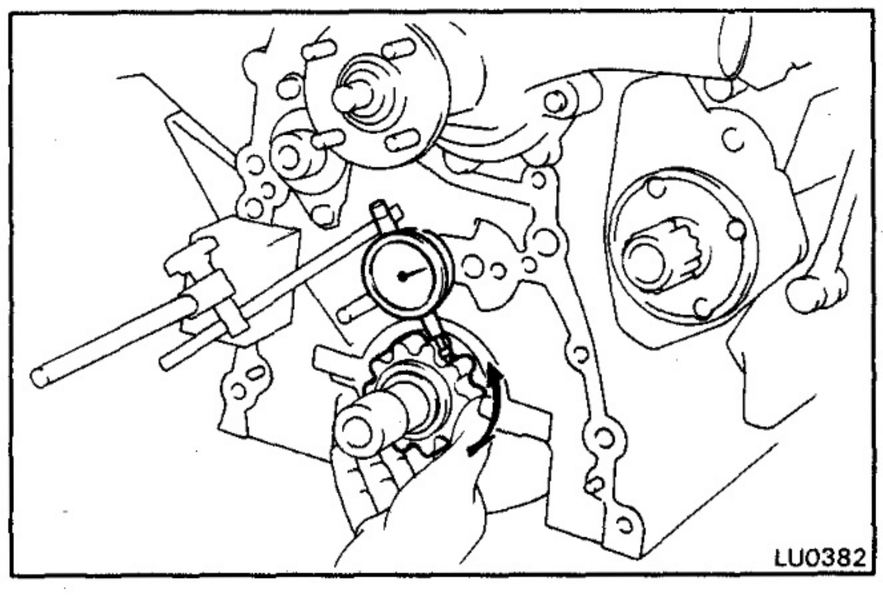

3. INSPECT DRIVE SPLINE

Using a dial indicator, measure the backlash while turning the drive rotor clockwise and counterclockwise in several places.

Standard backlash: **0.541 – 0.790 mm (0.0213 – 0.0311 in.)**
Maximum backlash: **1.00 mm (0.0394 in.)**

If the backlash is greater than maximum, replace the rotor and spline.

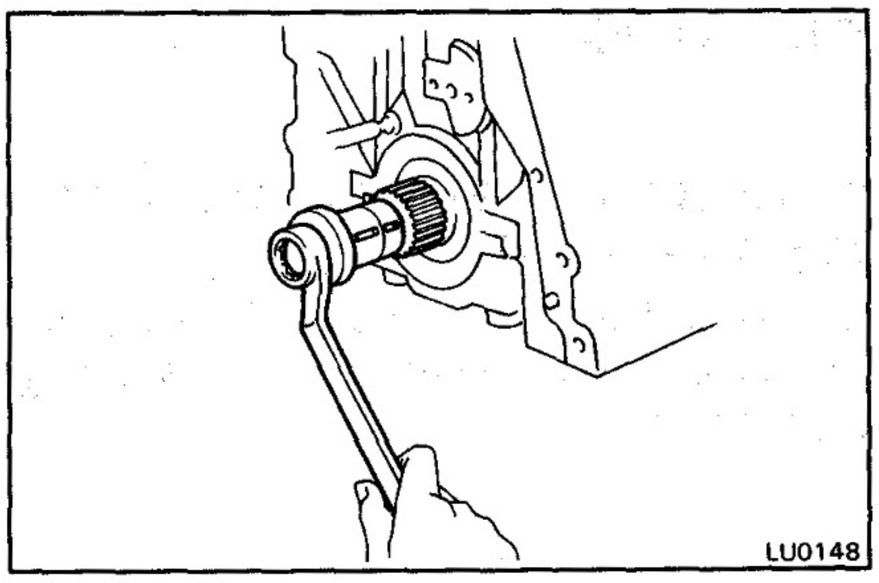

REPLACEMENT OF DRIVE SPLINE

1. REMOVE DRIVE SPLINE

(a) Remove the two set keys.

(b) Set the drive spline with the hole facing downward by turning the crankshaft.

CAUTION: Do not turn the crankshaft more than 1/4 revolution.

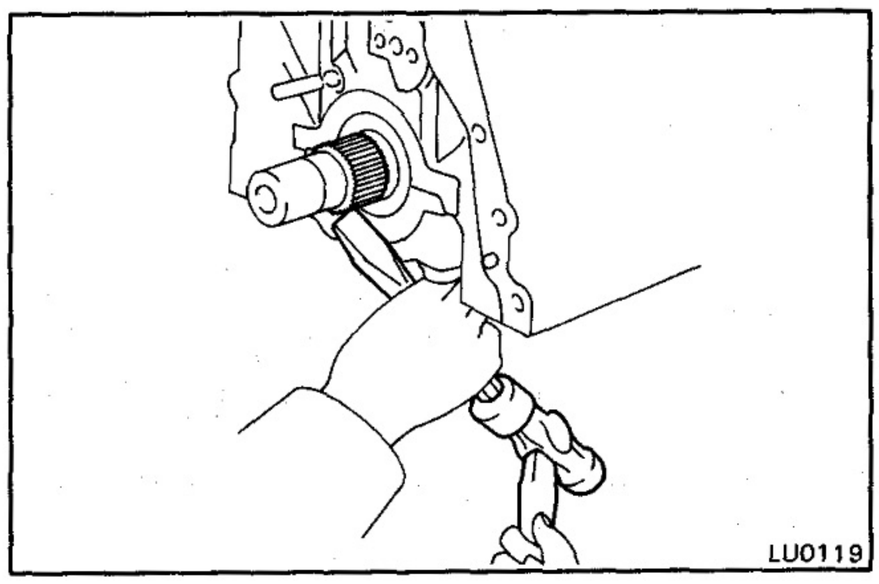

(c) Using a chisel and hammer, tap the drive spline out of the hole until SST can be hooked to spline's end.

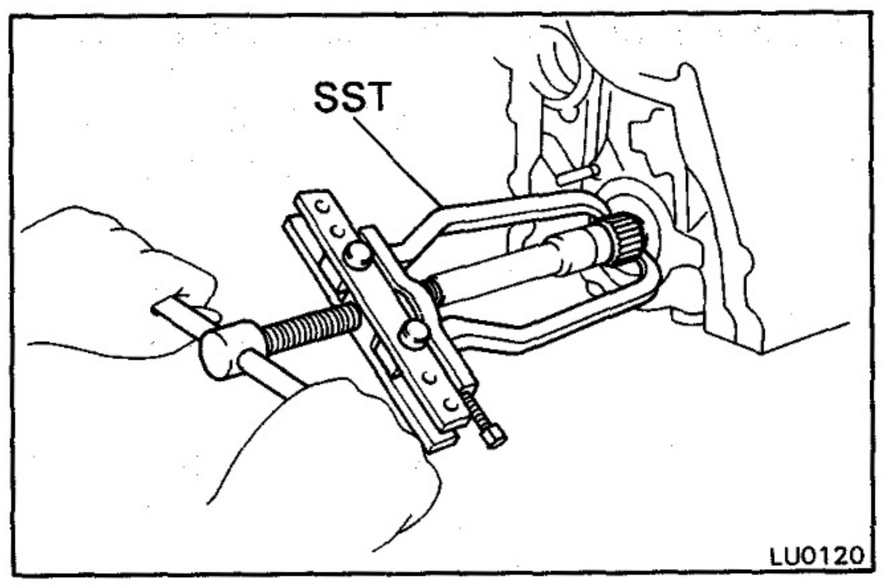

(d) Using SST, remove the drive spline.

SST 09950-20017

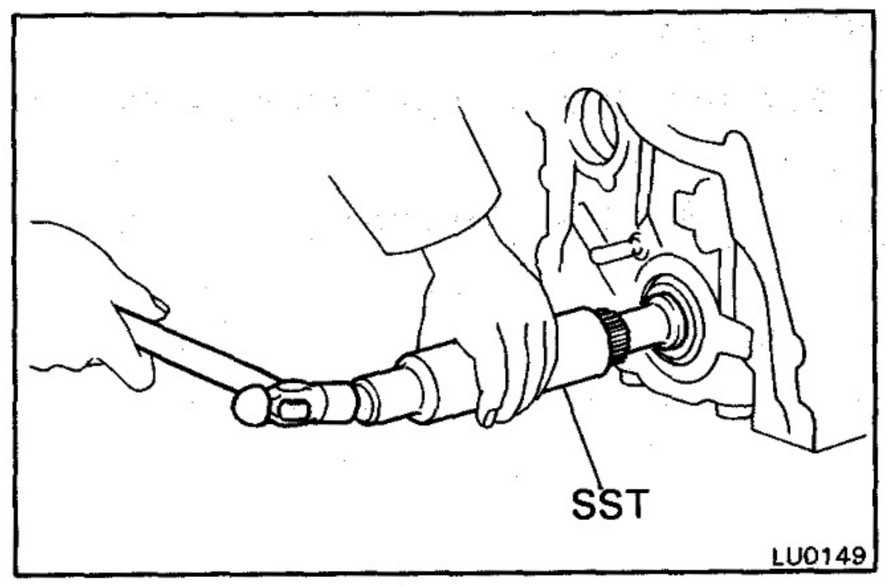

2. INSTALL NEW DRIVE SPLINE

(a) Using SST and a hammer, tap in the drive spline.

SST 09608-35014 (09608-06040)

(b) Install the two set keys.

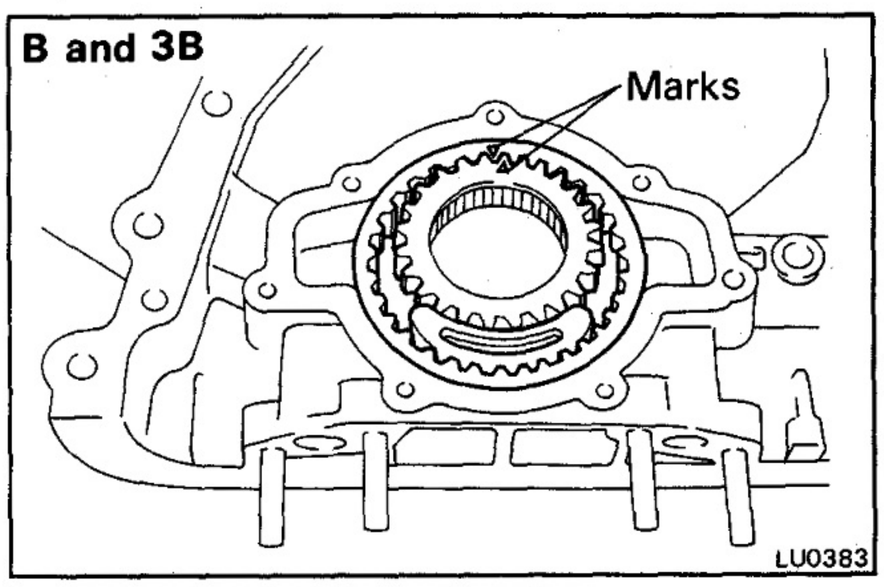

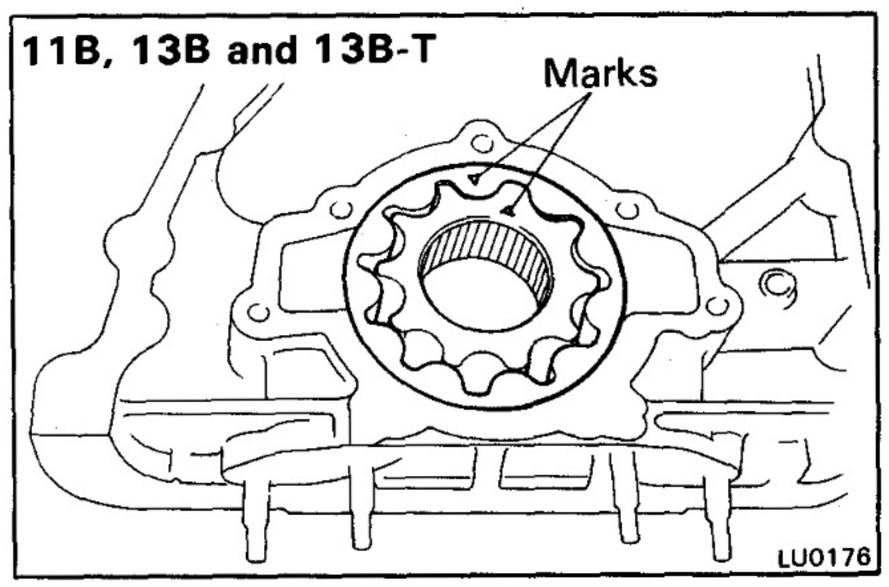

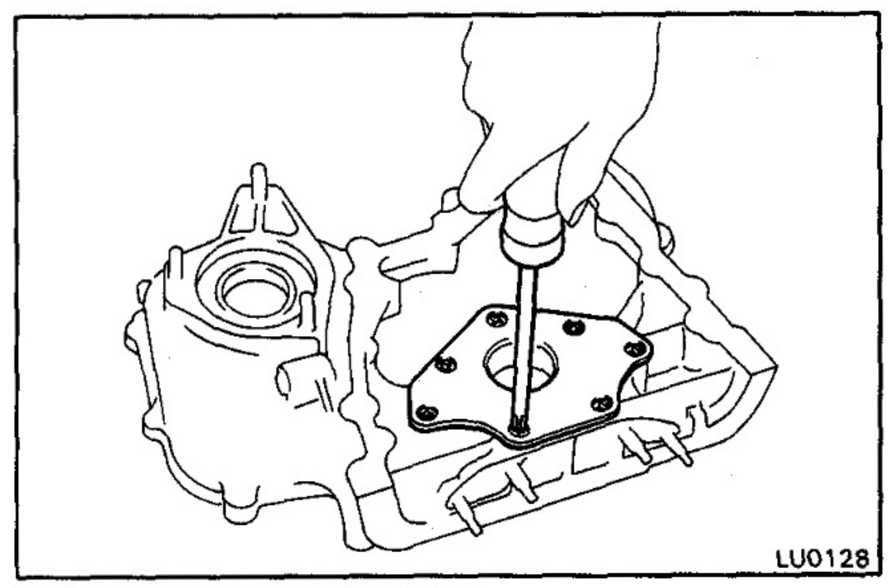

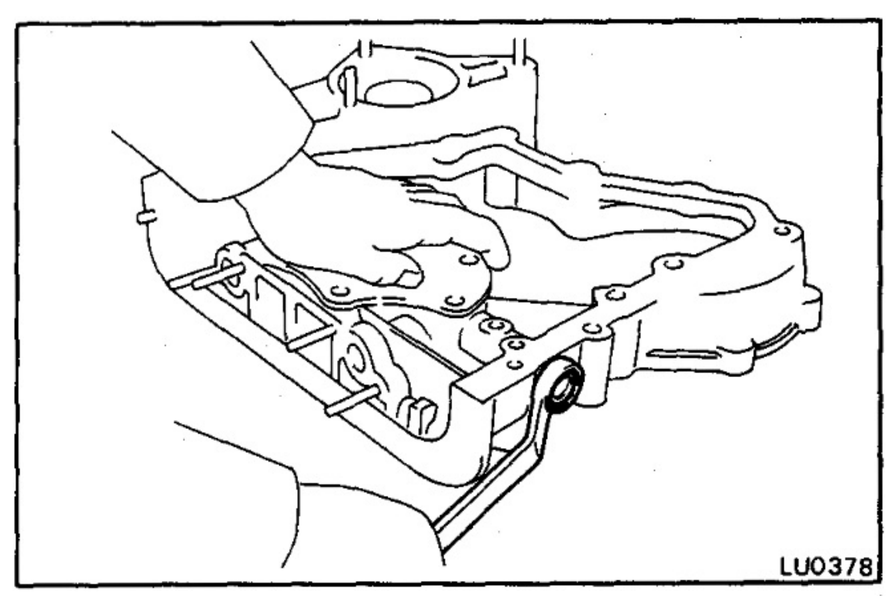

ASSEMBLY OF OIL PUMP

(See page LU-8)

1. INSTALL DRIVE AND DRIVEN GEAR (BAND 3B) OR ROTORS (11B, 13B AND 13B-T)

(a) Insert the gear (B and 3B) or rotors (11B, 13B and 13B-T) into the oil pump body with the marks facing the oil pump cover side.

(b) Install the oil pump cover with the seven screws.

2. INSTALL RELIEF VALVE

Install the relief valve and spring with a new gasket and the plug.

Torque: 500 kg-cm (36 ft-lb, 49 N·m)

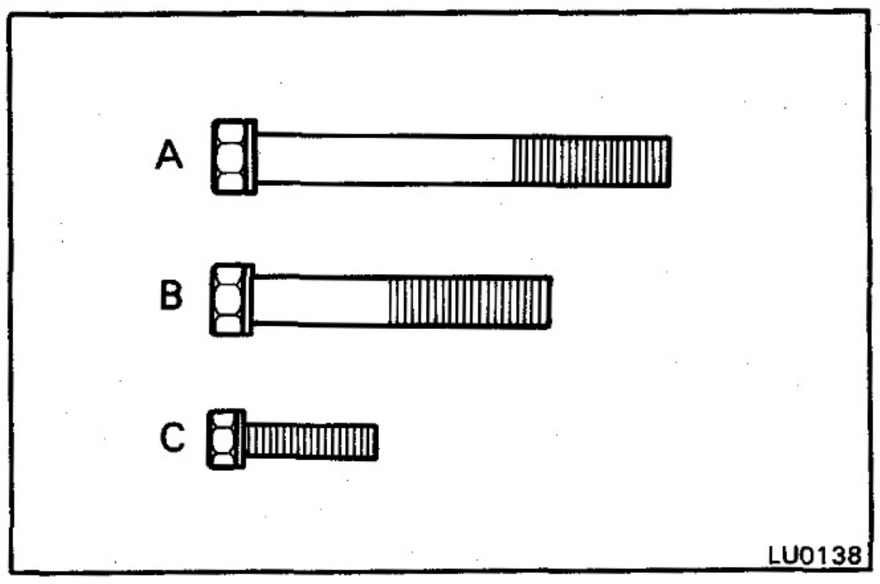

INSTALLATION OF OIL PUMP

(See page LU-5)

1. INSTALL OIL PUMP (TIMING GEAR CASE)

NOTE: Use the bolts indicated "A" "B," and "C."

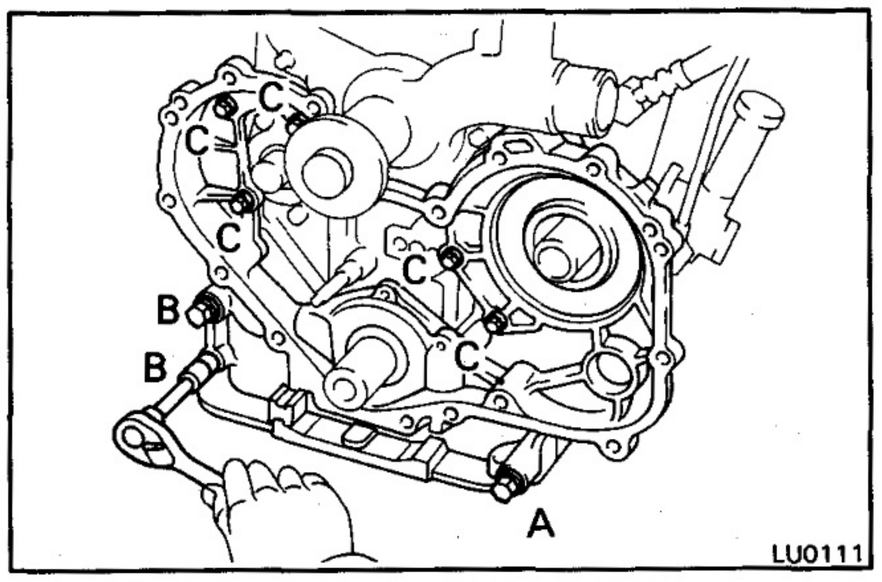

(a) Place a new gasket and the timing gear case in position.

(b) Install and uniformly tighten the eight bolts in several passes.

Torque: A and B 375 kg-cm (27 ft-lb, 37 N·m)
C 185 kg-cm (13 ft-lb, 18 N·m)

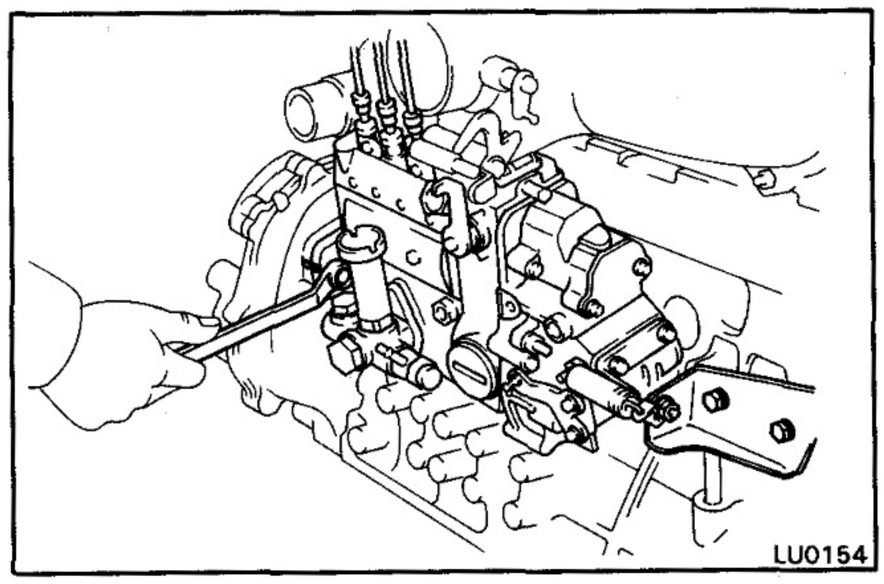

(c) Align the matchmarks on the injection pump and timing gear case.

(d) Install the three nuts holding the injection pump flange to the timing gear case.

Torque: 375 kg-cm (27 ft-lb, 37 N·m)

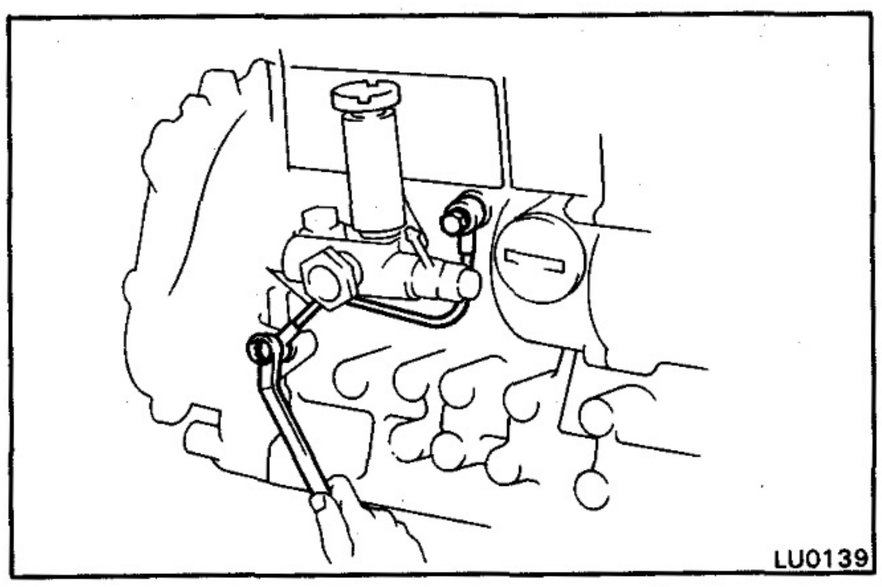

(e) Connect the injection oil pipe with the union bolt and new two gaskets.

Torque: 110 kg-cm (8 ft-lb, 11 N·m)

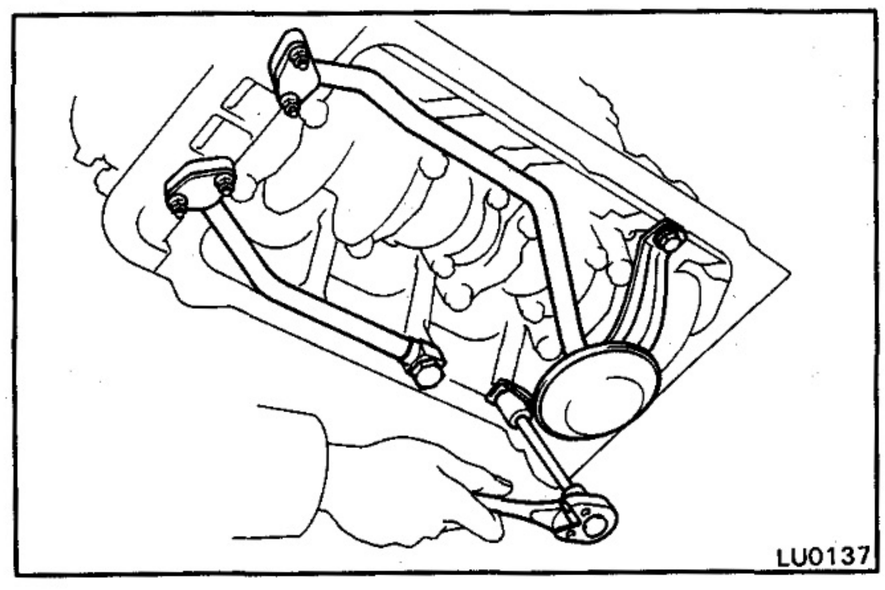

2. INSTALL OIL STRAINER AND OIL PIPE

(a) Install a new gasket and oil strainer with the two bolts and two nuts. Torque the bolts and nuts.

Torque: 185 kg-cm (13 ft-lb, 18 N·m)

(b) Install new three gaskets and oil pipe with the union bolt and two nuts. Torque the union bolt and nuts.

Torque:
Union bolt 450 kg-cm (33 ft-lb, 44 N·m)
Nut 185 kg-cm (13 ft-lb, 18 N·m)

3. INSTALL OIL PAN

(a) Remove any oil packing material and be careful not to drop any oil on the contacting surfaces of the oil pan and cylinder block.

- Using a razor blade and gasket scraper, remove all the old packing (FIPG) material from the gasket surfaces and sealing groove.
- Thoroughly clean all components to remove all the loose material.
- Clean both sealing surfaces with a non-residue solvent.

CAUTION: Do not use a solvent which will affect the painted surfaces.

(b) Apply seal packing to the oil pan as shown in the figure.

Seal packing: Part No. 08826-00080 or equivant

- Install a nozzle that has been cut to the 4 mm (0.16 in.) opening.

NOTE: Avoid applying an excess amount to the surface. Be especially careful near oil passages.

- Parts must be assembled within 15 minutes of application. Otherwise, the material must be removed and reapplied.
- Immediately remove nozzle from tube and reinstall cap.

(c) Install the oil pan with the twenty-three and four nuts.

Torque: 185 kg-cm (13 ft-lb, 18 N·m)

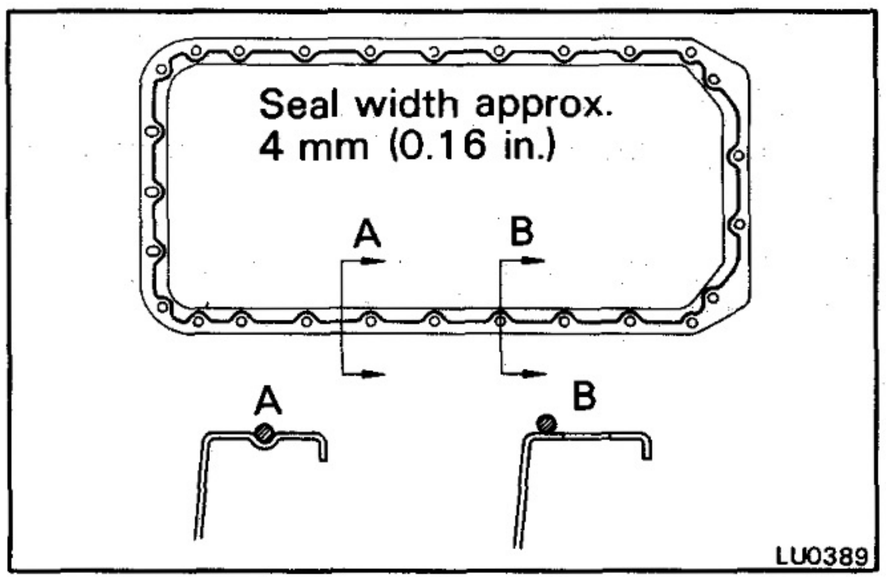

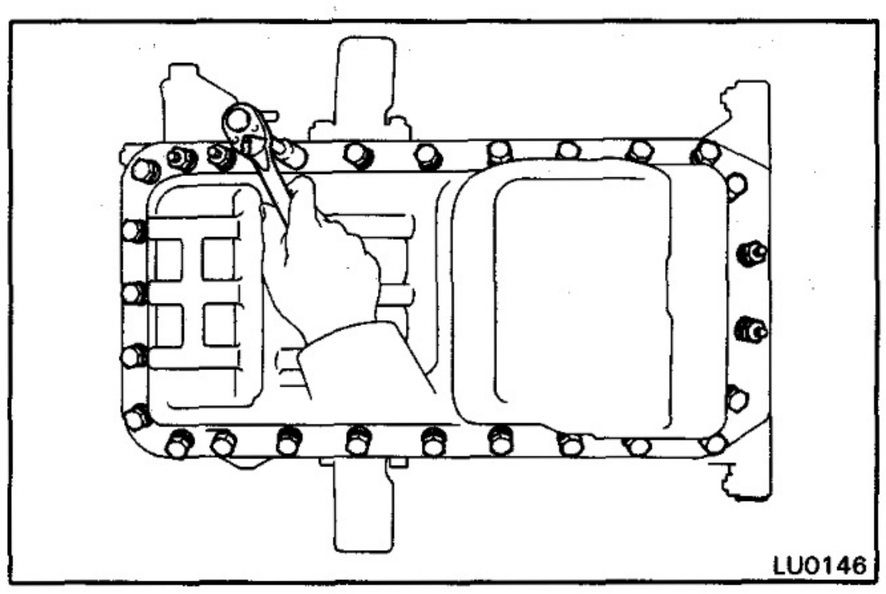

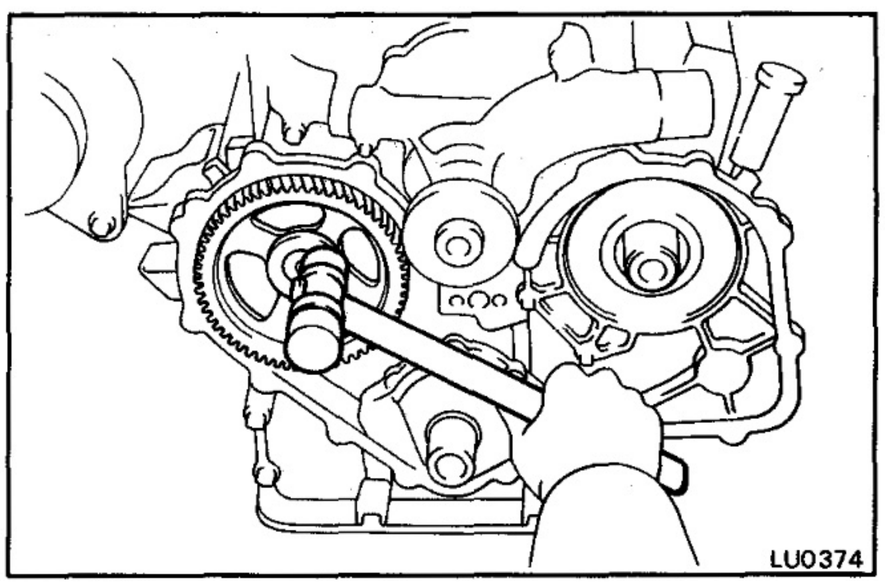

4. INSTALL CAMSHAFT TIMING GEAR

(a) Align the timing gear set key with the key groove of the timing gear.

(b) Using a plastic-faced hammer, lightly tap in the timing gear.

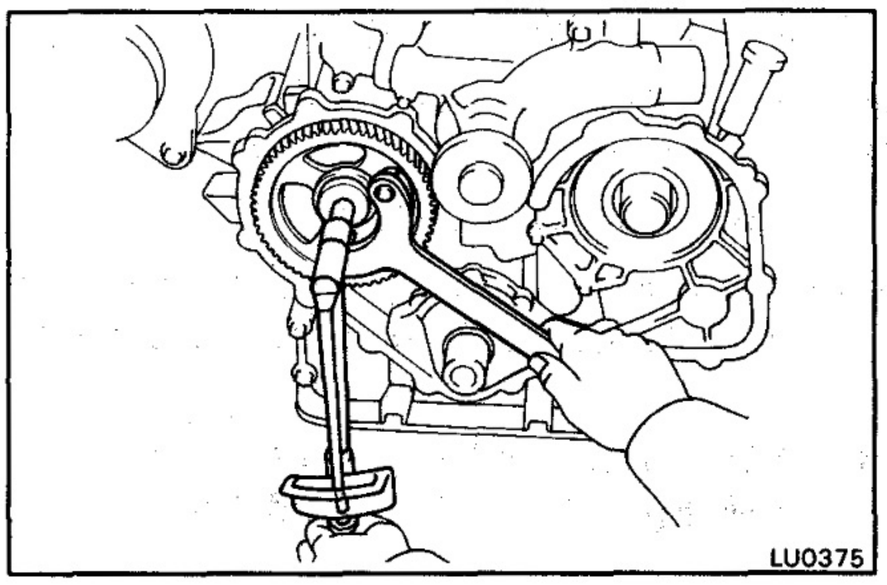

(c) Using SST, install the plate washer and mount bolt. Torque the bolt.

SST 09278-54012

Torque: 375 kg-cm (27 ft-lb, 37 N·m)

5. **INSTALL CRANKSHAFT TIMING GEAR, IDLE GEAR AND AUTOMATIC TIMER**
(See steps 1, 3 to 6 on pages EM-73 to 75)

6. **INSTALL TIMING GEAR COVER AND CRANKSHAFT PULLEY**
(See steps 9 and 10 on pages EM-75 and 76)

7. **INSTALL WATER PUMP PULLEY AND FAN**
(See page CO-10)

8. **INSTALL AND ADJUST DRIVE BELT**
(See page CH-7)

9. **FILL WITH ENGINE OIL (See page LU-4)**

10. **START ENGINE AND CHECK FOR LEAKS**

11. **RECHECK ENGINE OIL LEVEL (See page LU-2)**

OIL COOLER AND RELIEF VALVE

COMPONENTS

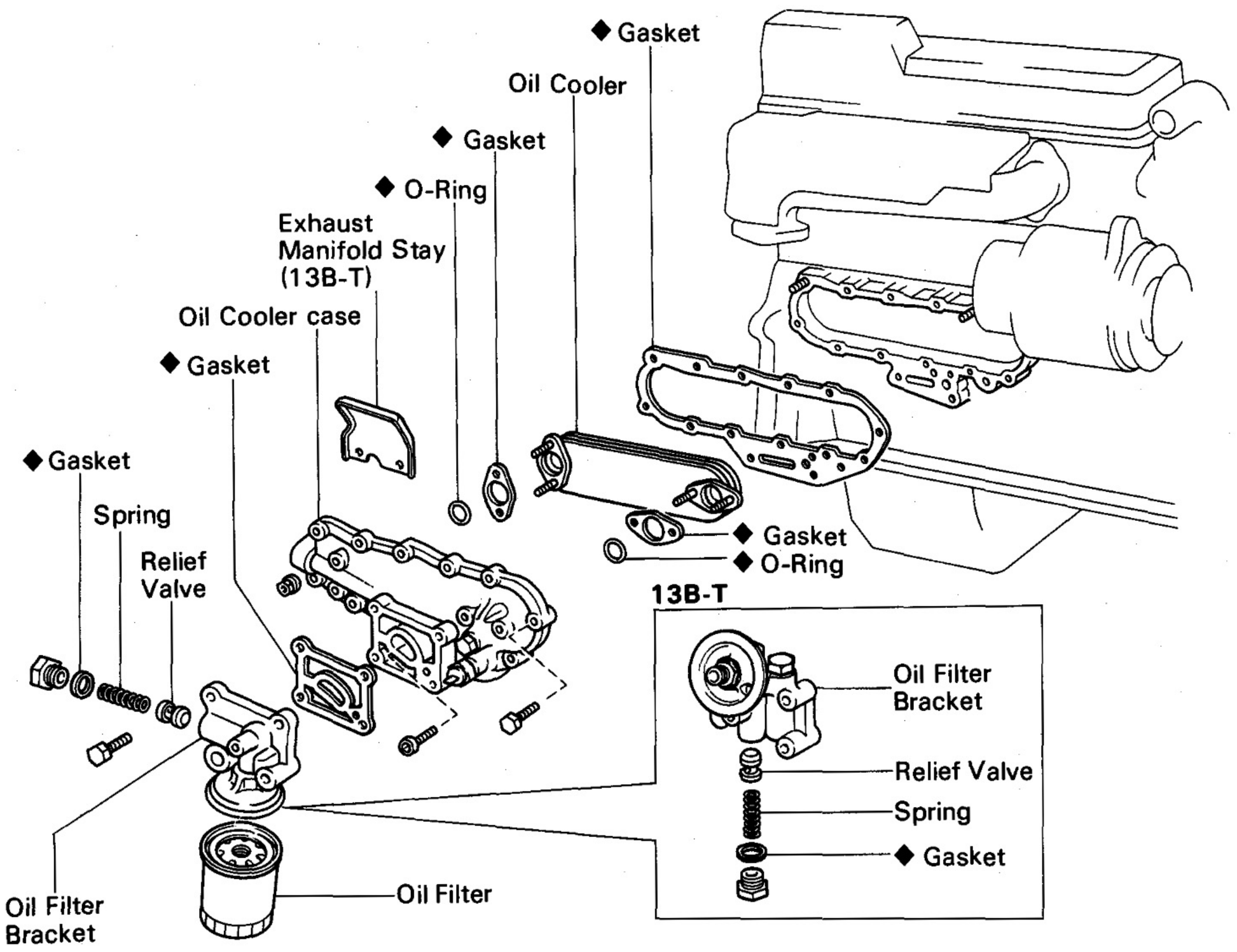

kg-cm (ft-lb, N·m) : Specified torque

◆ Non-reusable part

LU0340

REMOVAL OF OIL COOLER AND RELIEF VALVE

(See page LU-16)

1. DRAIN ENGINE COOLANT (See page CO-3)

2. REMOVE OIL FILTER (See pages LU-3 or 4)

3. [13B-T]
REMOVE TURBOCHARGER OIL PIPE
(See page EM-37)

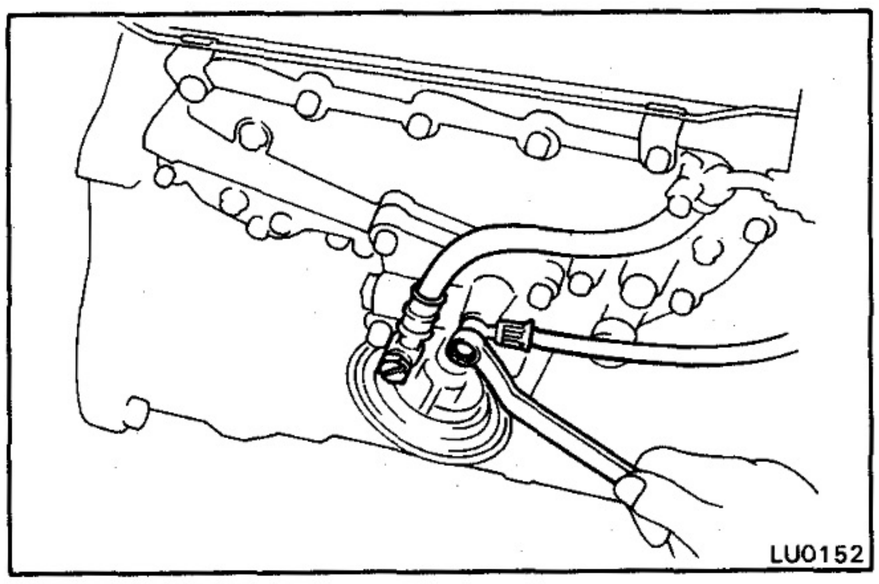

4. DISCONNECT ALTERNATOR OIL HOSES

Remove the two union bolts and four gaskets from the oil filter bracket.

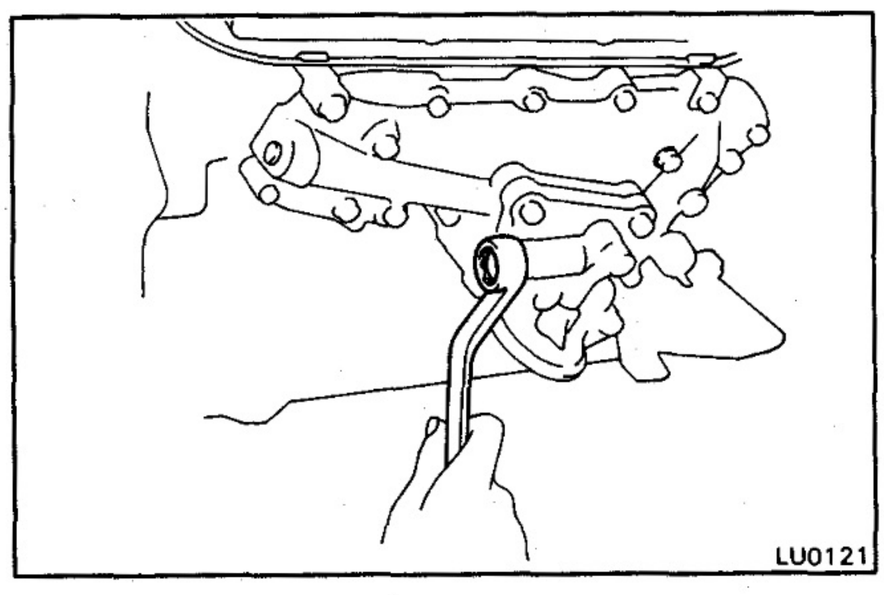

5. REMOVE RELIEF VALVE

Remove the plug, gasket, spring and relief valve.

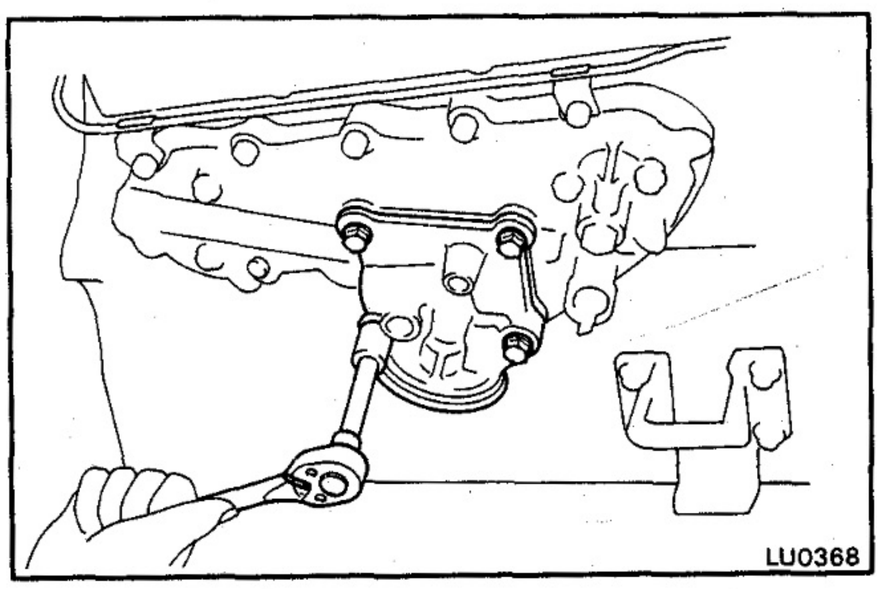

6. REMOVE OIL FILTER BRACKET

Remove the four bolts, bracket and gasket.

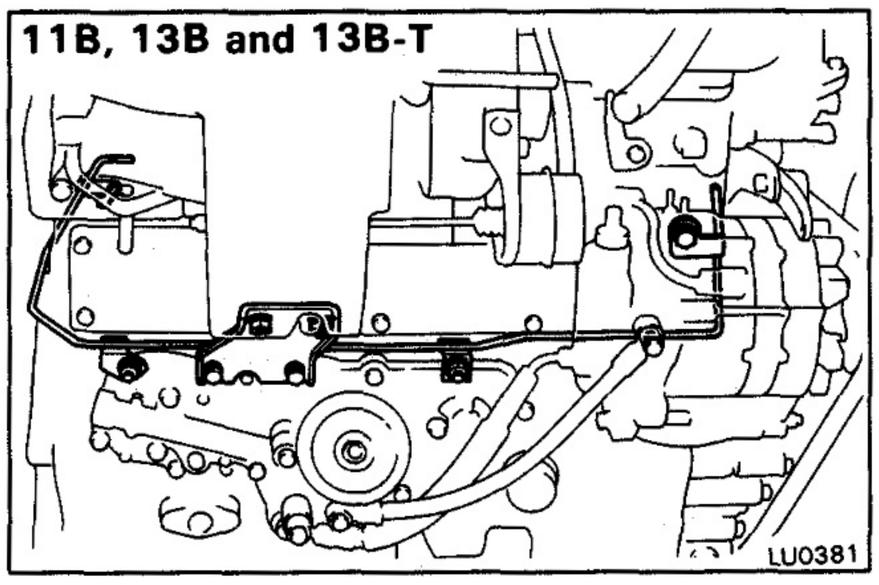

7. [13B-T]
REMOVE EXHAUST MANIFOLD STAY

8. [11B, 13B AND 13B-T]
REMOVE VACUUM PIPE

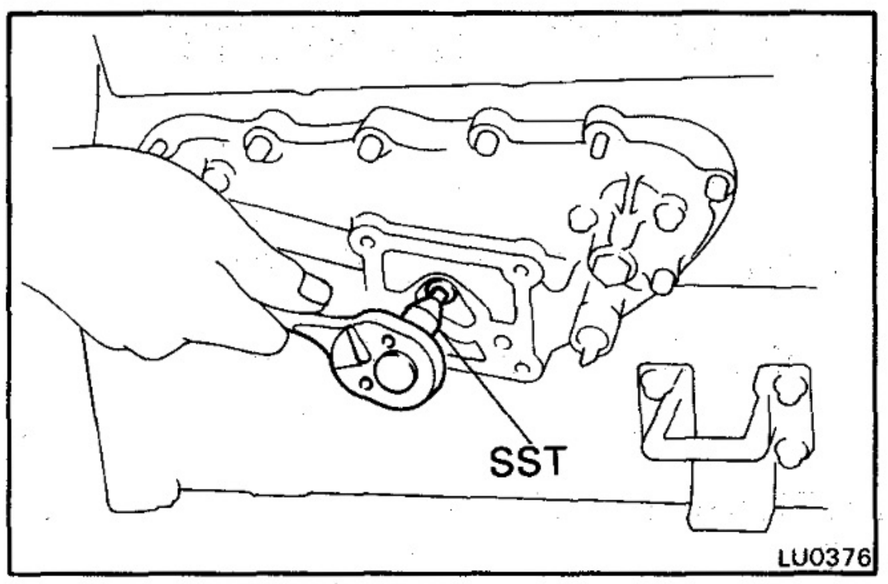

9. REMOVE OIL COOLER COVER WITH OIL COOLER

(a) Using SST, remove the bolt holding the oil cooler cover to cylinder block as shown.

SST 09313-30021

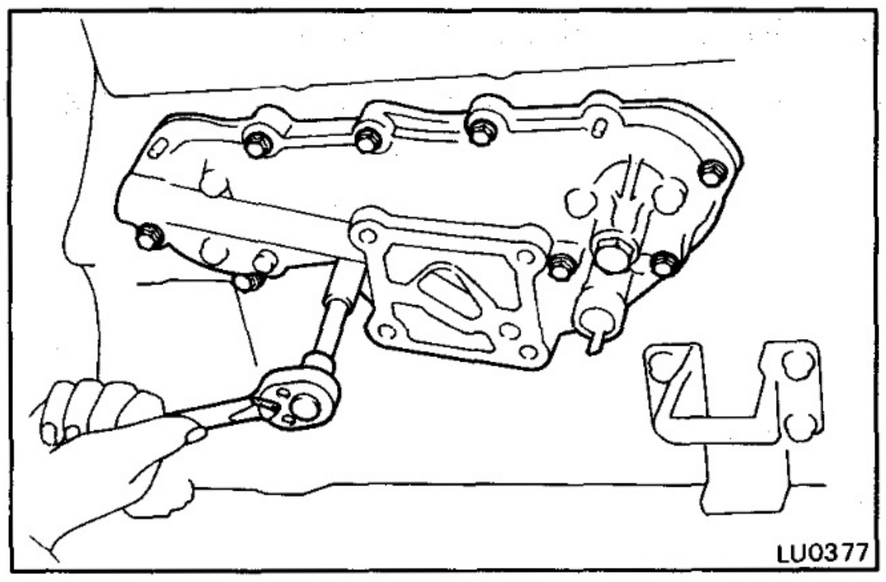

(b) Remove the nine bolts, two nuts, oil cooler cover with the oil cooler and gasket.

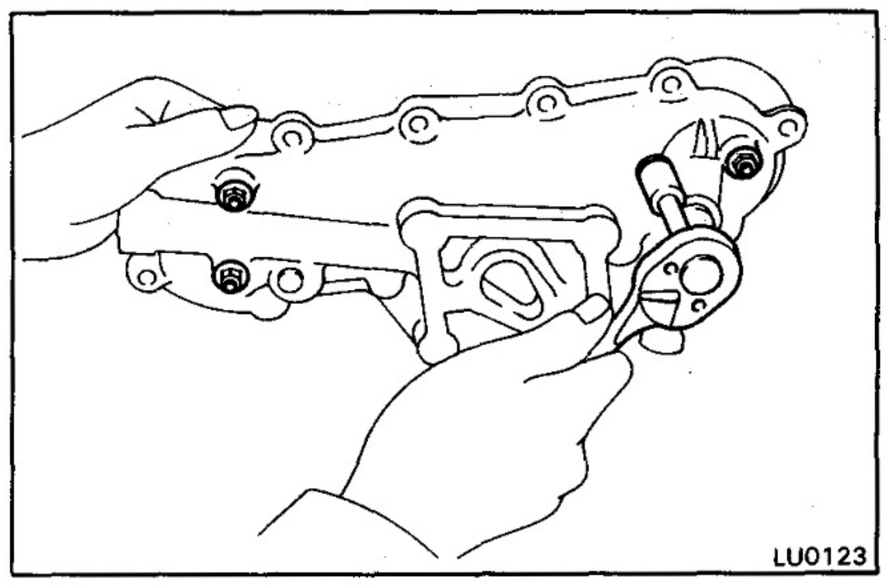

10. SEPARATE OIL COOLER AND OIL COOLER CASE

Remove the four nuts, oil cooler, two O-rings and gaskets.

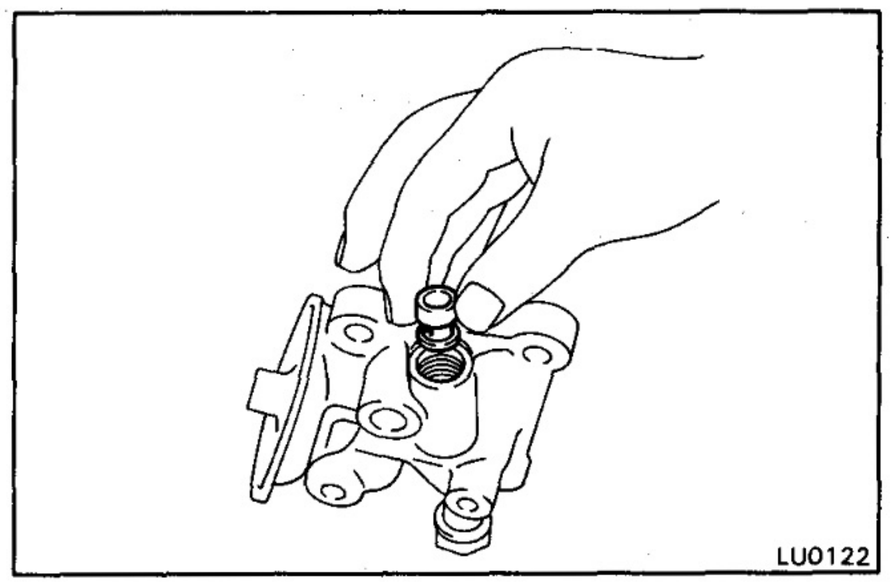

INSPECTION OF OIL COOLER AND RELIEF VALVE

1. INSPECT RELIEF VALVE

Coat the valve with engine oil and check that it falls smoothly into the valve hole by its own weight.

If is not, replace the relief valve. If necessary, replace the oil filter bracket.

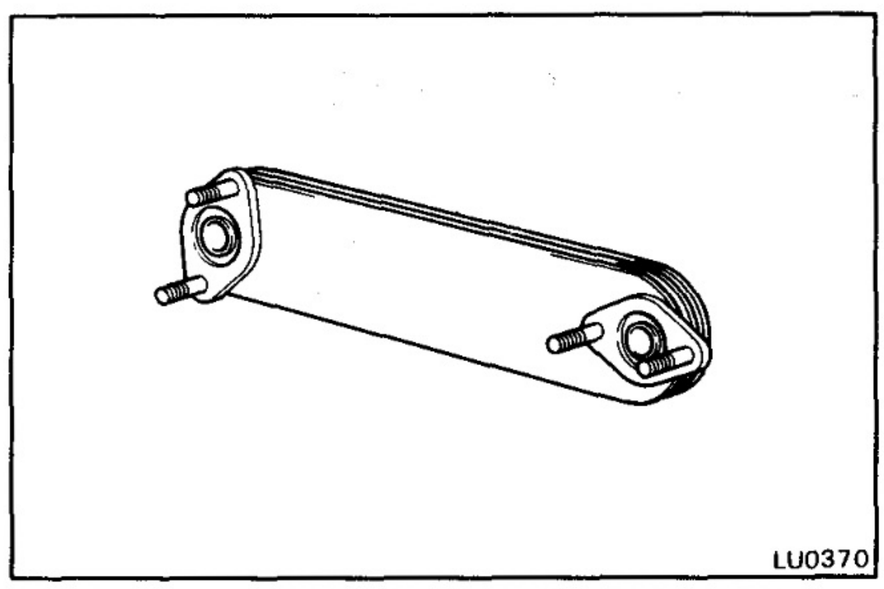

2. INSPECT OIL COOLER

Check the oil cooler for damage or clogging.

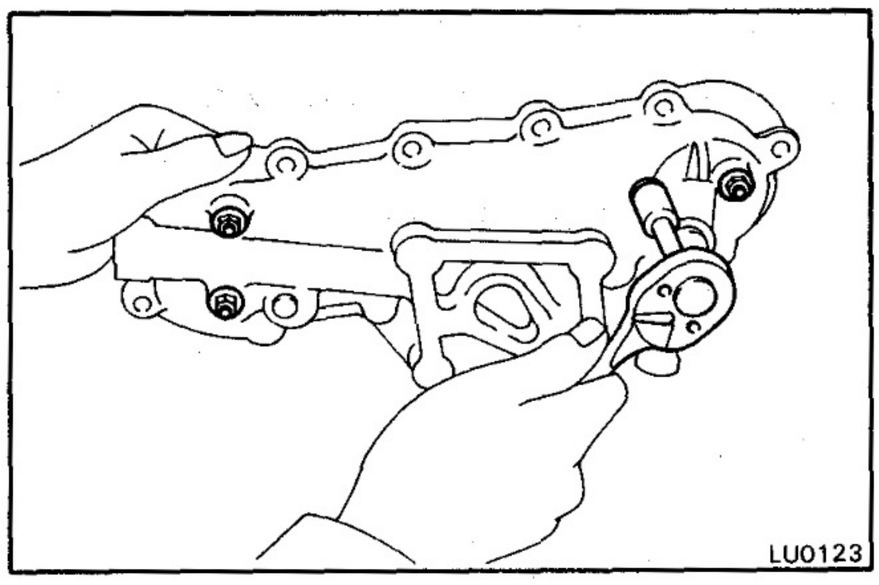

INSTALLATION OF OIL COOLER AND RELIEF VALVE

(See page LU-16)

1. ASSEMBLE OIL COOLER AND OIL COOLER CASE

Assemble the oil cooler and oil cooler case together with new two gaskets and O-rings. Install the four nuts.

Torque: 130 kg-cm (9 ft-lb, 13 N·m)

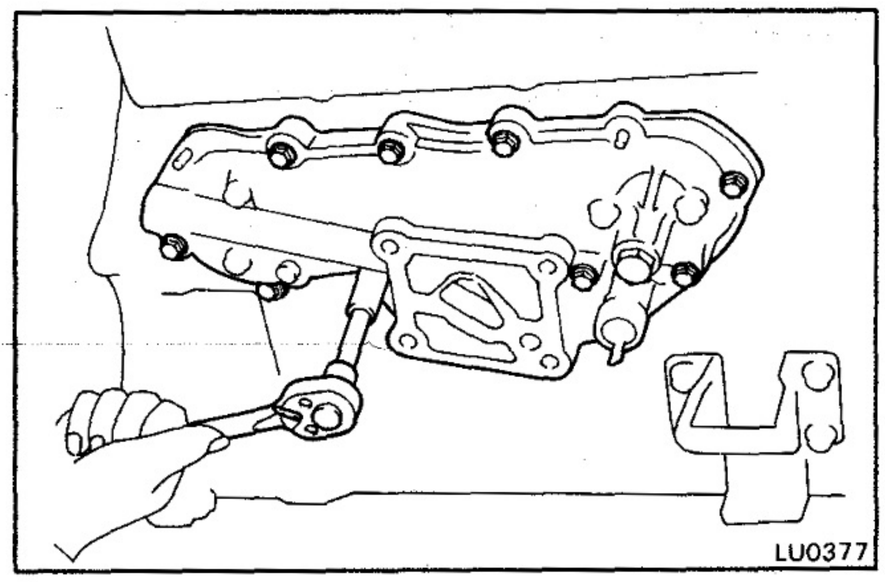

2. INSTALL OIL COOLER CASE AND OIL COOLER ASSEMBLY

(a) Install a new gasket, the oil cooler and oil cooler assembly with the nine bolts and two nuts.

Torque: 185 kg-cm (13 ft-lb, 18 N·m)

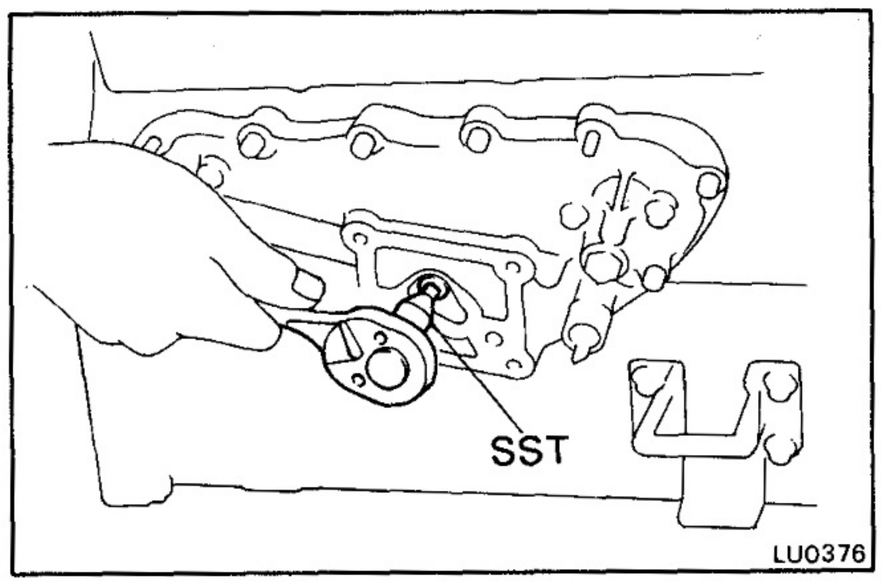

(d) Using SST, install the bolt holding the oil cooler case to the cylinder block.

SST 09313-30021

Torque: 185 kg-cm (13 ft-lb, 18 N·m)

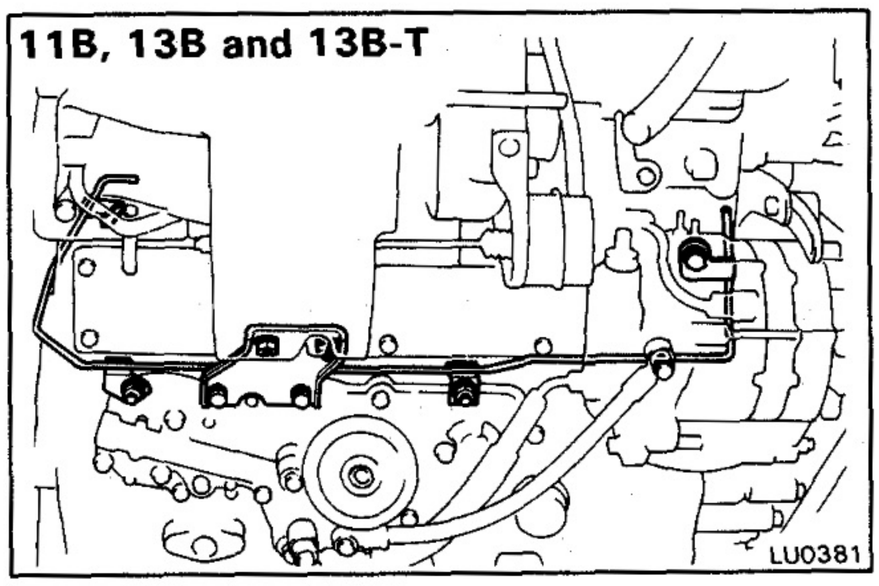

3. [11B, 13B AND 13B-T] INSTALL VACUUM PIPE

4. [13B-T] INSTALL EXHAUST MANIFOLD STAY

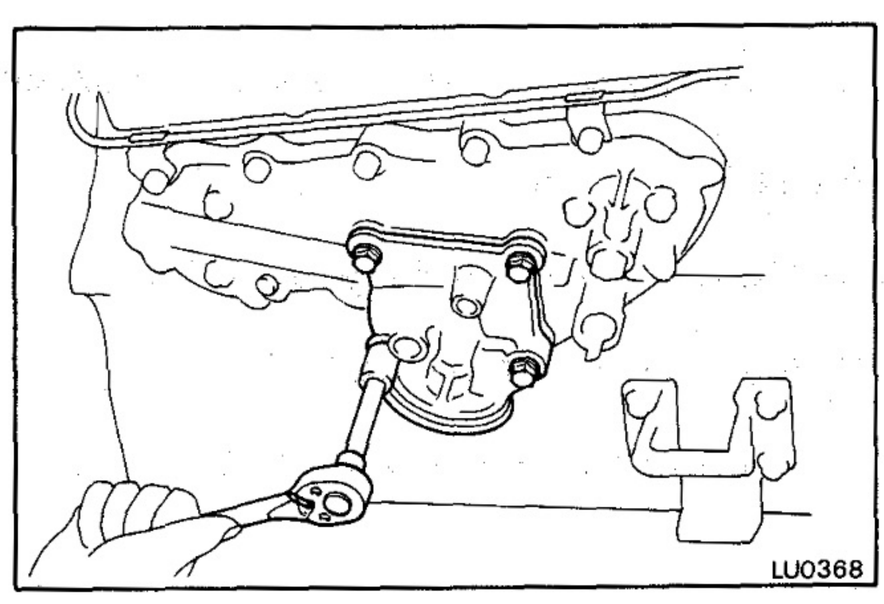

5. INSTALL OIL FILTER BRACKET

Install a new gasket, the oil filter bracket with the four bolts.

Torque: 375 kg-cm (27 ft-lb, 37 N·m)

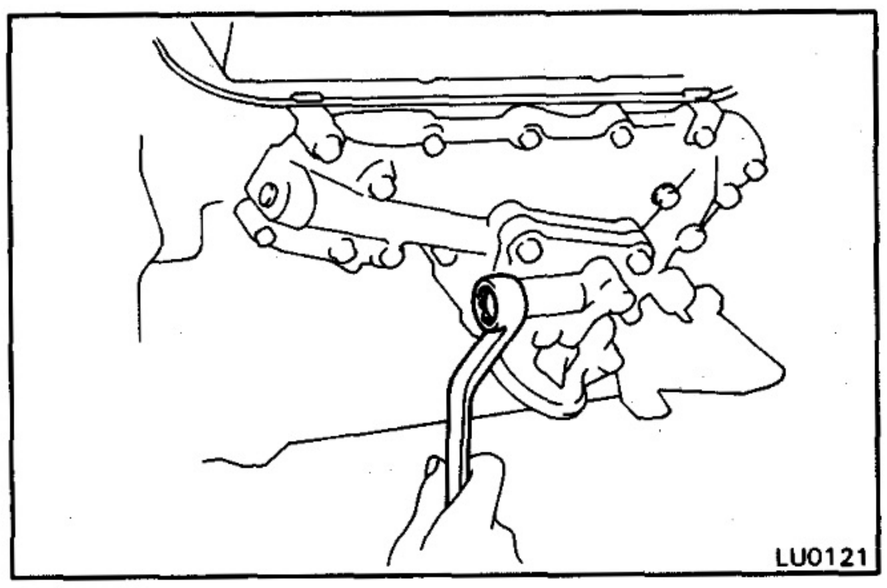

6. INSTALL RELIEF VALVE

Install the relief valve and spring with a new gasket and the plug.

Torque: 500 kg-cm (36 ft-lb, 49 N·m)

Cartridge Type (B, 3B, 11B and 13B)

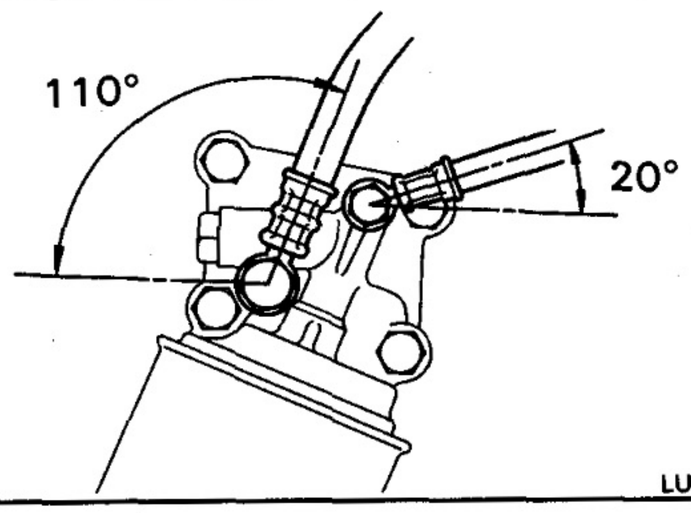

Cartride Type (13B-T)

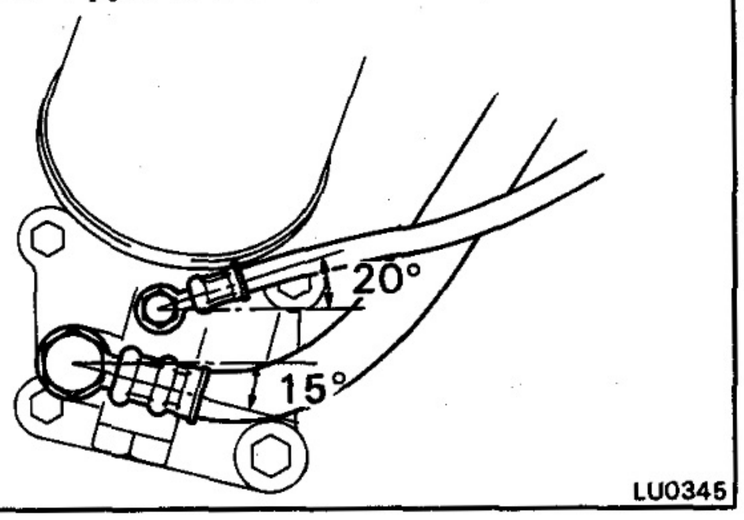

Paper Element Type

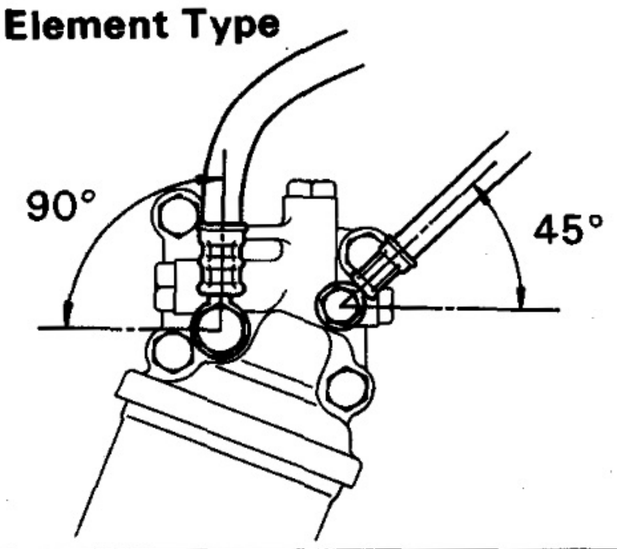

7. CONNECT ALTERNATOR OIL PIPES

Connect the alternator oil pipes with new four gaskets and two union bolts as shown.

8. [13B-T]
INSTALL TURBOCHARGER OIL PIPE (See page EM-40)

9. INSTALL OIL FILTER (See page LU-3 or 4)

10. FILL WITH ENGINE COOLANT (See page CO-3)

11. START ENGINE AND CHECK FOR LEAKS

12. CHECK ENGINE OIL LEVEL (See page LU-2)

OIL NOZZLES AND CHECK VALVE [3B and 13B-T]

COMPONENTS

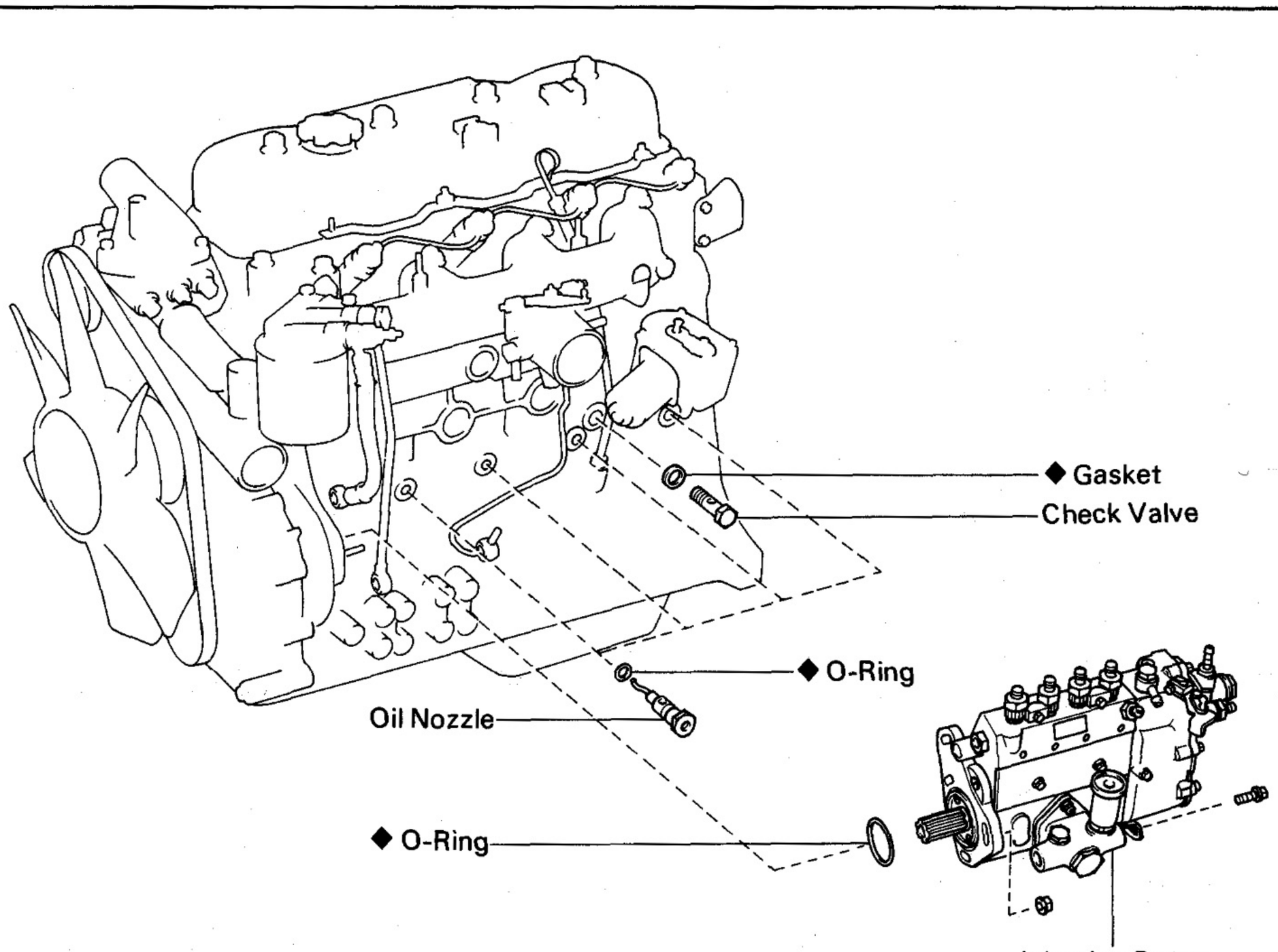

kg-cm (ft-lb, N·m) : Specified torque
◆ Non-reusable part

LU0384

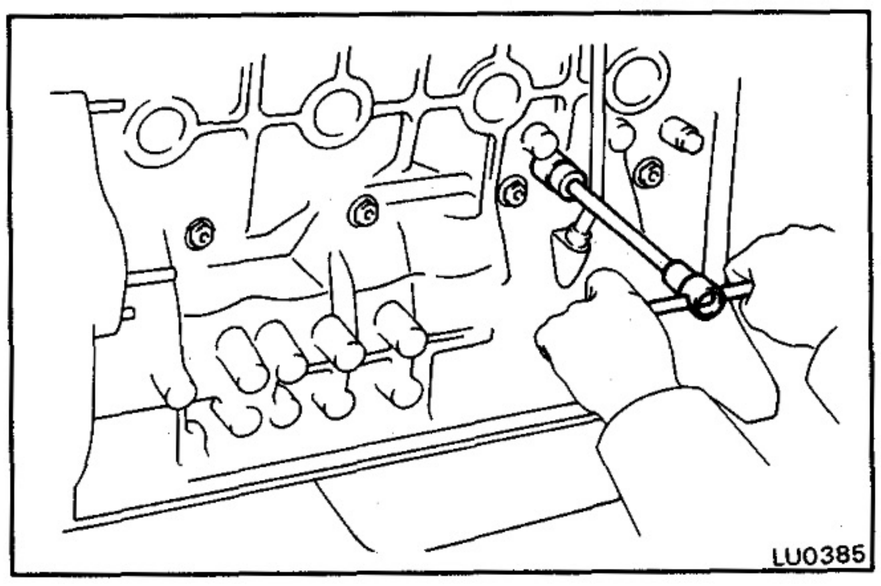

LU0385

REMOVAL OF OIL NOZZLES AND CHECK VALVE

1. **REMOVE INJECTION PUMP (See page FU-27)**

2. **REMOVE CHECK VALVE**

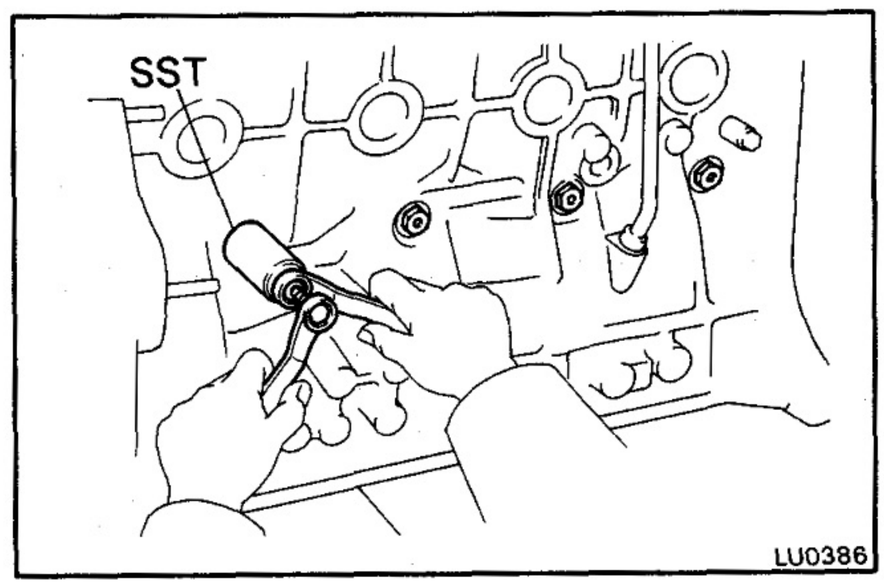

LU0386

3. **REMOVE OIL NOZZLES**

Using SST, remove the oil nozzles.
SST 09219-56010

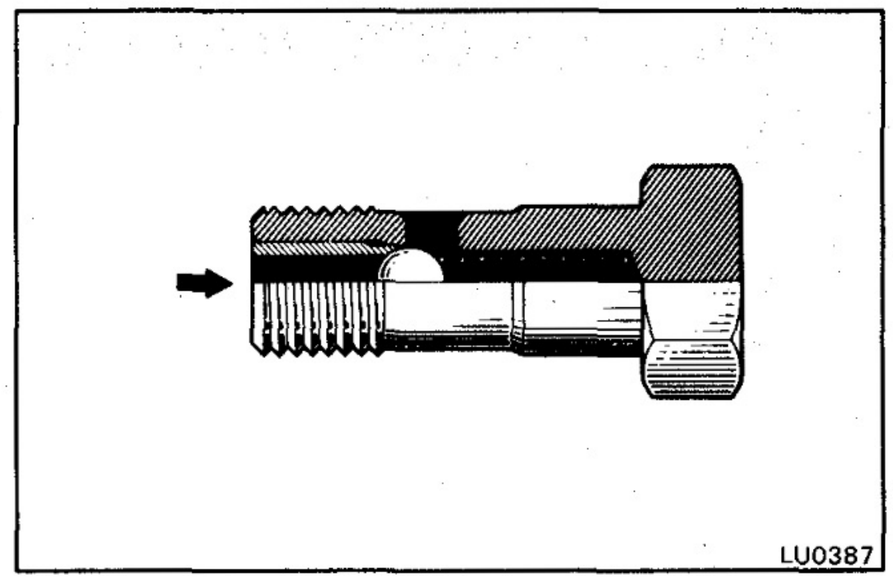
LU0387

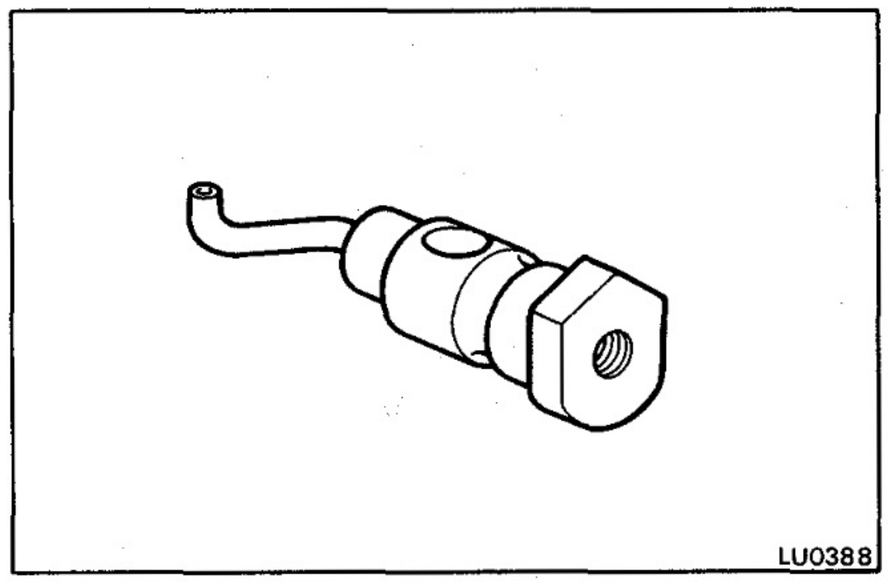
LU0388

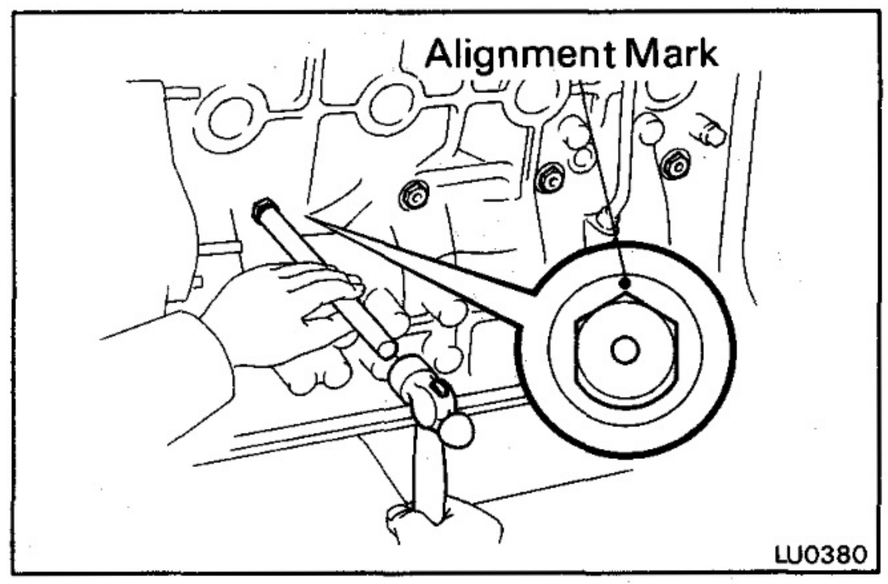

LU0380

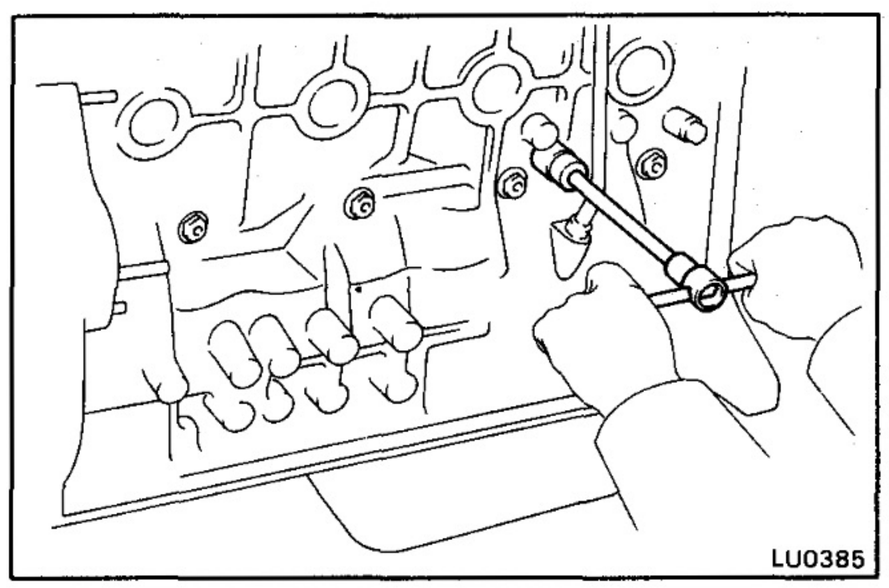
LU0385

INSPECTION OF OIL NOZZLE AND CHECK VALVE

1. INSPECT CHECK VALVE

Push the valve with a wooden stick to check to check if it is stuck.

If stuck, replace the check valve.

2. INSPECT OIL NOZZLES

Check the oil nozzle for damage or clogging.

INSTALLATION OF OIL NOZZLES AND CHECK VALVE

(See page LU-21)

1. INSTALL OIL NOZZLES

(a) Install a new O-ring to the oil nozzle.

(b) Apply a light coat of engine oil on the O-ring.

(c) Align the head point of the oil nozzle with the alignment mark of the cylinder block.

(d) Using a brass bar and hammer, tap in the four nozzles.

2. INSTALL CHECK VALVE

Install a new gasket and the check valve.

Torque: 350 kg-cm (25 ft-lb, 34 N·m)

STARTING SYSTEM

	Page
PRE-HEATING SYSTEM [B and 3B]	ST-2
PRE-HEATING SYSTEM [11B, 13B and 13B-T] ..	ST-9
TROUBLESHOOTING	ST-14
STARTING SYSTEM CIRCUIT	ST-14
STARTER	ST-15
STARTER RELAY [BB, BU and BY]	ST-24
STARTER RELAY [BJ]	ST-25
ELECTRICAL DIESEL INJECTION CONTROL (EDIC) SYSTEM [B and 3B (w/ EDIC System)] .	ST-26
FUEL CUT DIAPHRAGM [B (w/o EDIC System)]	ST-28
OVERINJECTION MAGNET [3B (w/o EDIC System)]	ST-30

PRE-HEATING SYSTEM [B and 3B]
Super Glow Type
SYSTEM CIRCUIT

BJ70, 73, 75

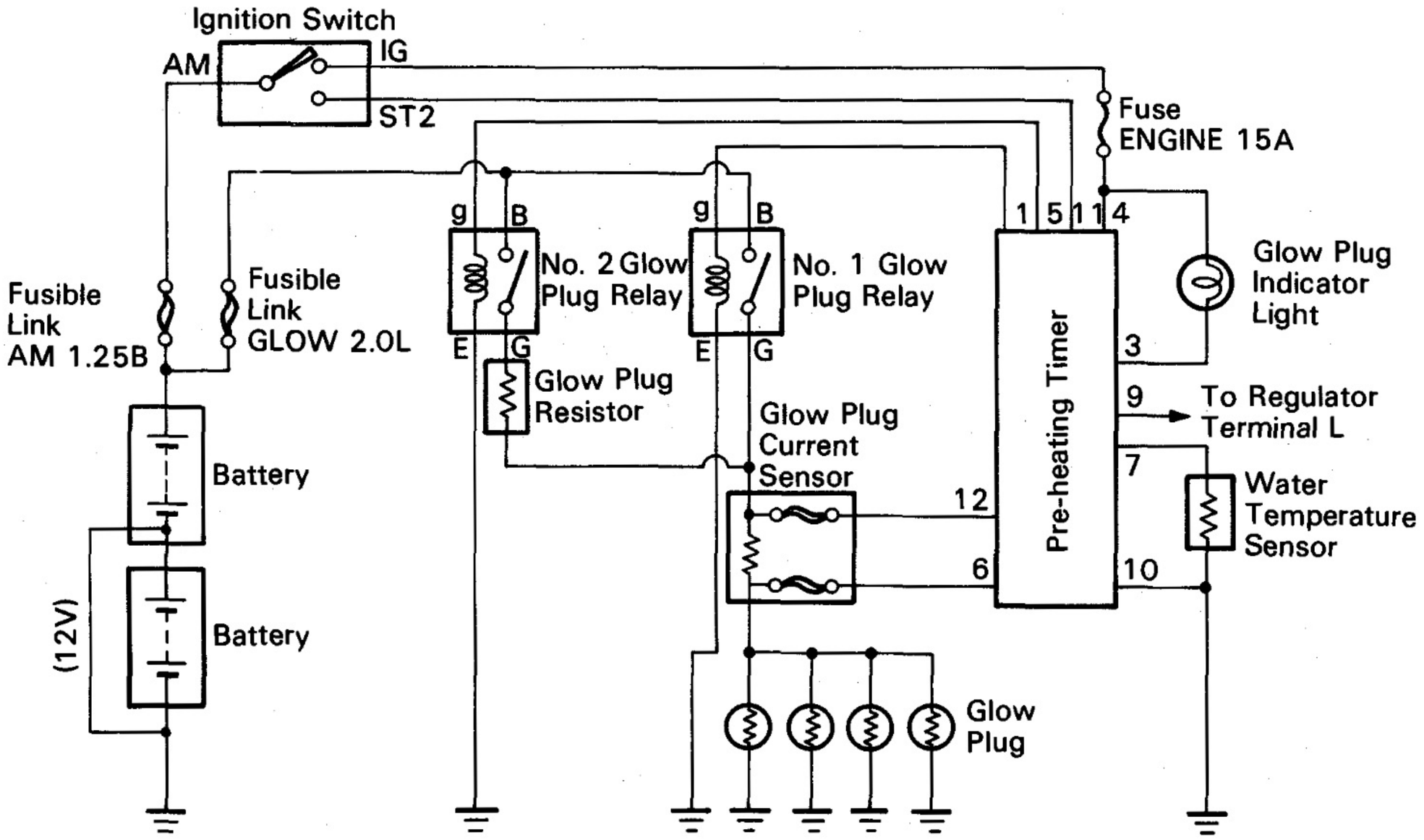

ST0376

TIMER CHARACTERISTIC DIAGRAM

12V Type

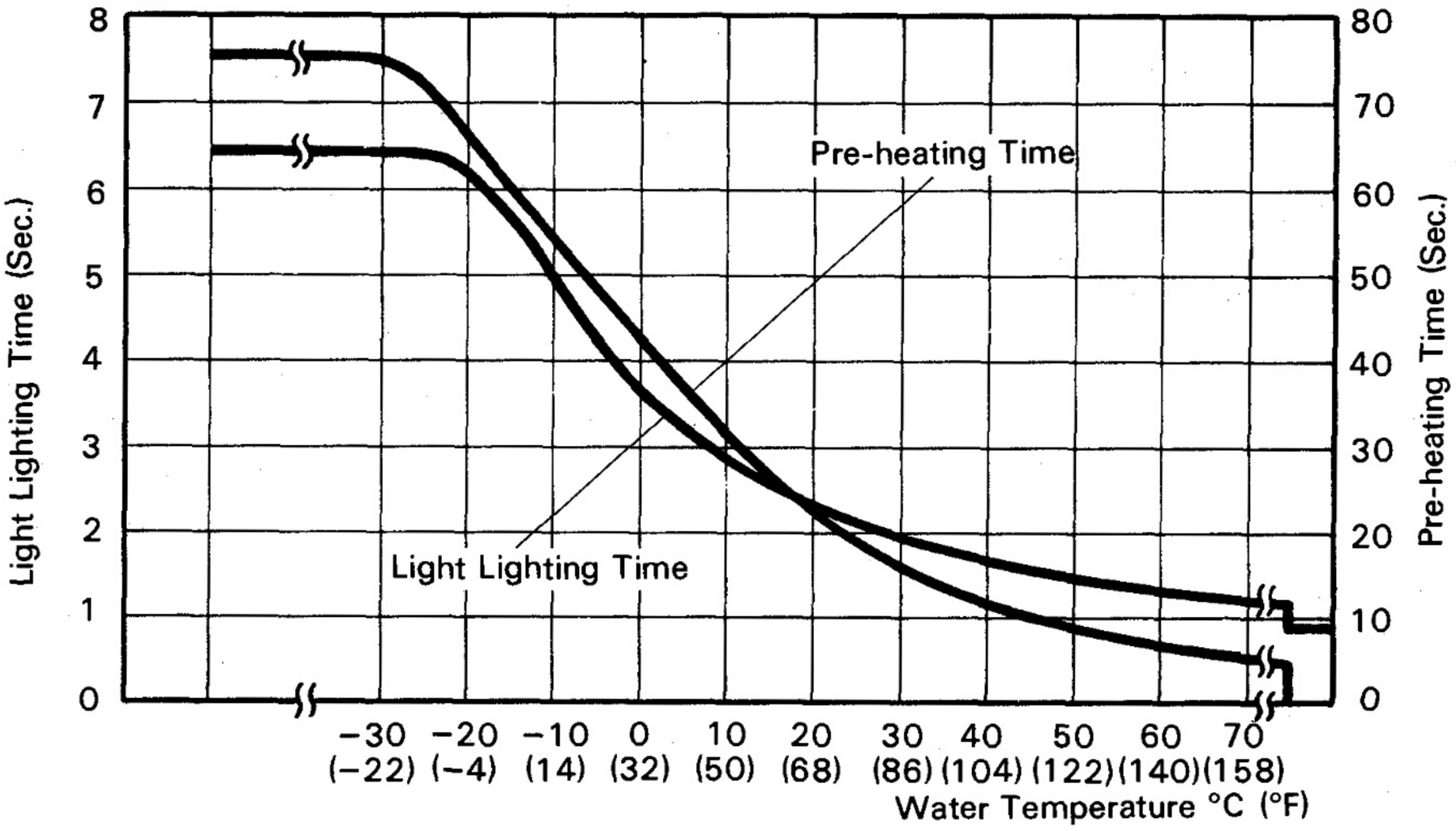

24V Type

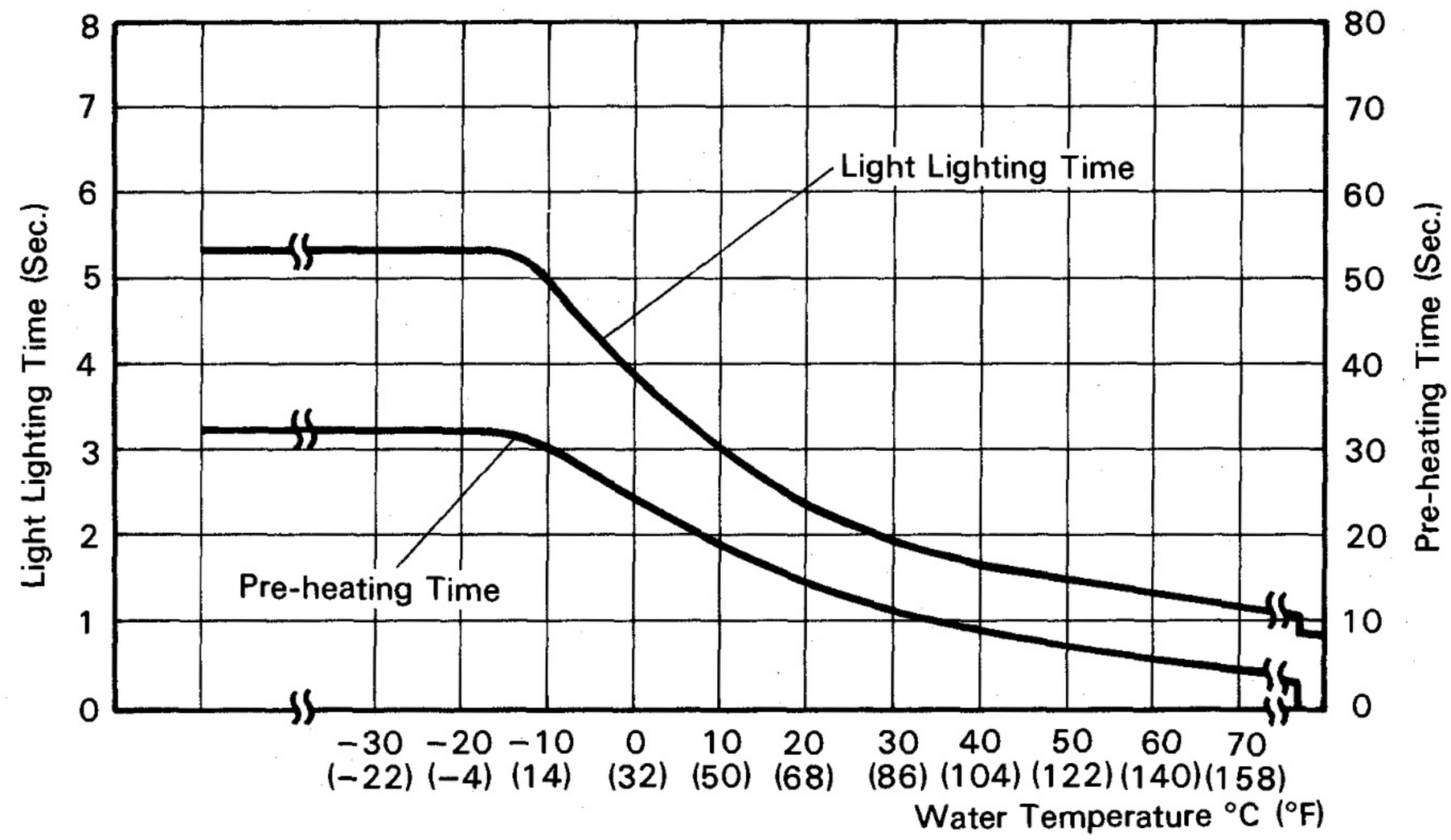

ST0390
ST0295

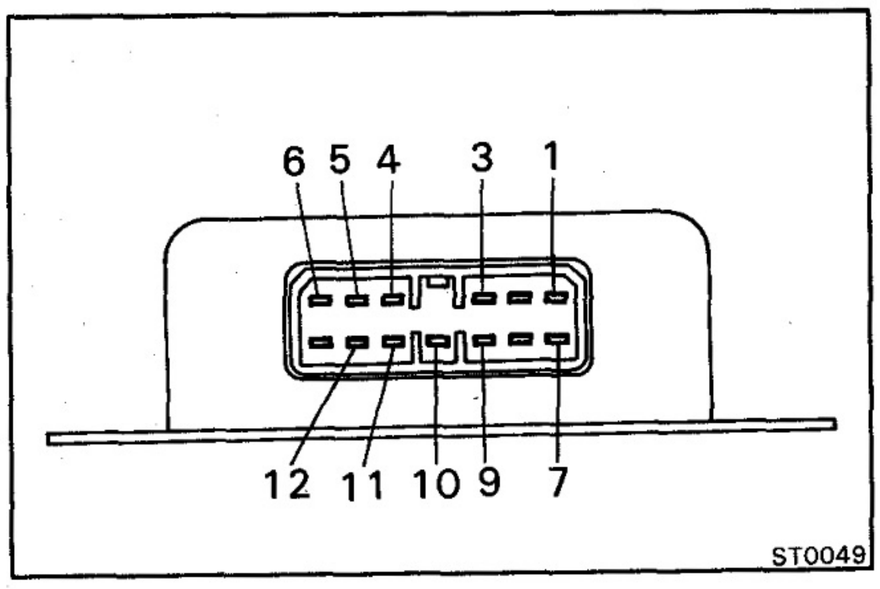

ST0049

INSPECTION OF COMPONENTS

Pre-heating Timer

LOCATION: Under the instrument panel on the passenger side.

Refer to Diesel Electrical System Diagnosis for inspection procedures. (See page EM-11)

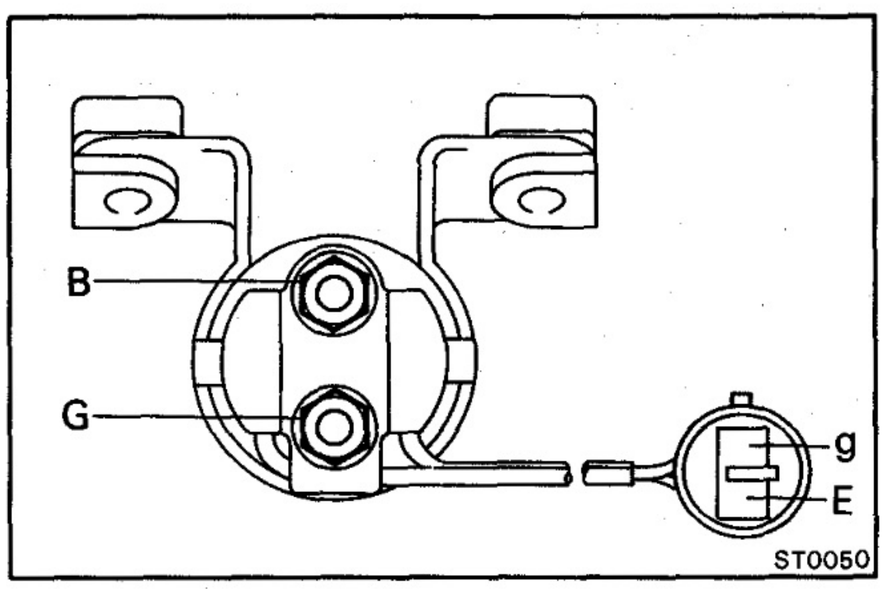

No. 1 Glow Plug Relay

LOCATION: On the fender apron in the engine compartment.

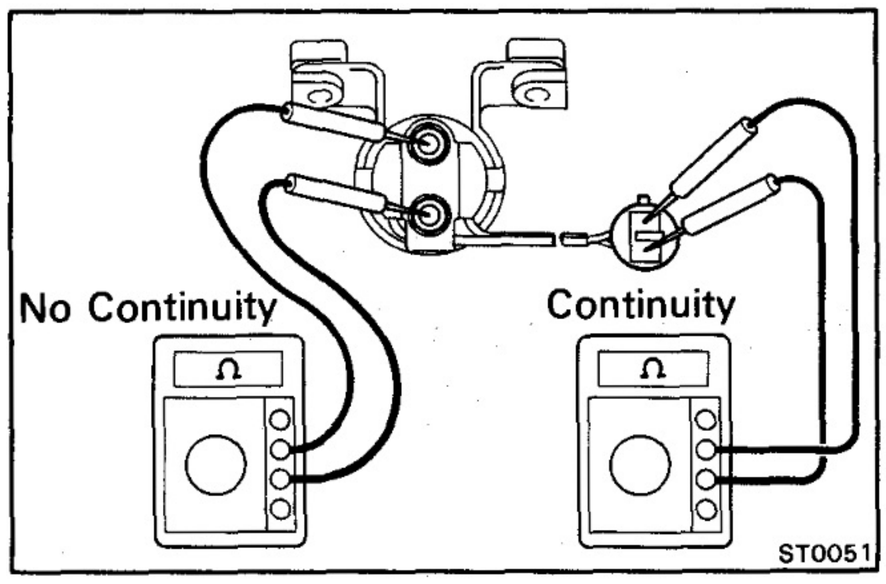

1. INSPECT RELAY CONTINUITY

(a) Check that there is continuity between terminals E and g.

(b) Check that there is no continuity between terminals B and G.

If continuity is not as specified, replace the relay.

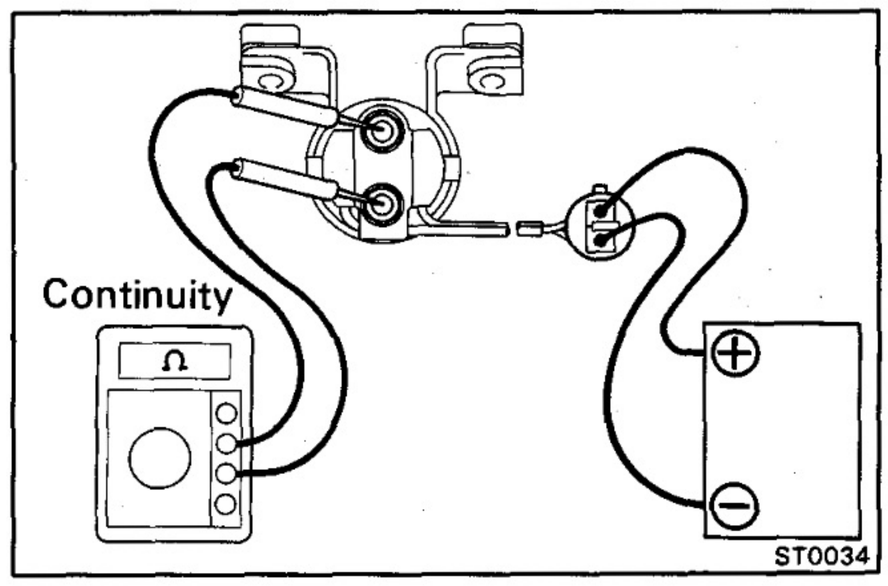

2. INSPECT RELAY OPERATION

(a) Apply battery voltage across terminals E and g.

(b) Check that there is continuity between terminals B and G.

If operation is not as specified, replace the relay.

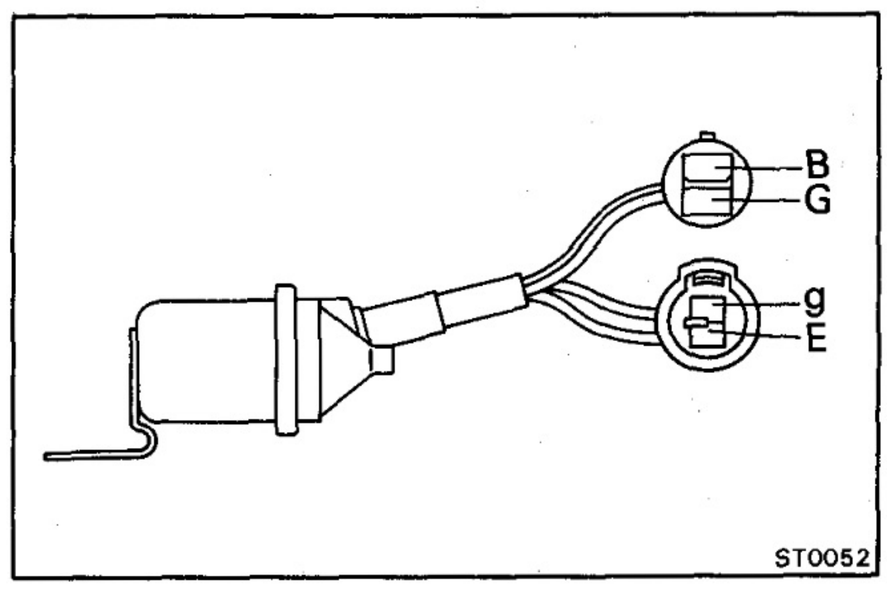

No. 2 Glow Plug Relay

LOCATION: On the fender apron in the engine compartment.

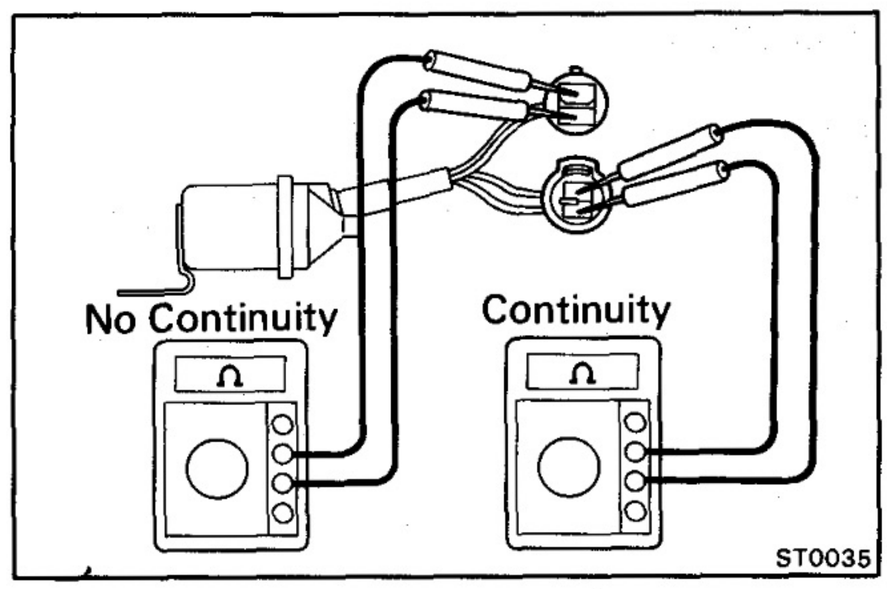

1. INSPECT RELAY CONTINUITY

(a) Check that there is continuity between terminals E and g.

(b) Check that there is no continuity between terminals B and G.

If continuity is not as specified, replace the relay.

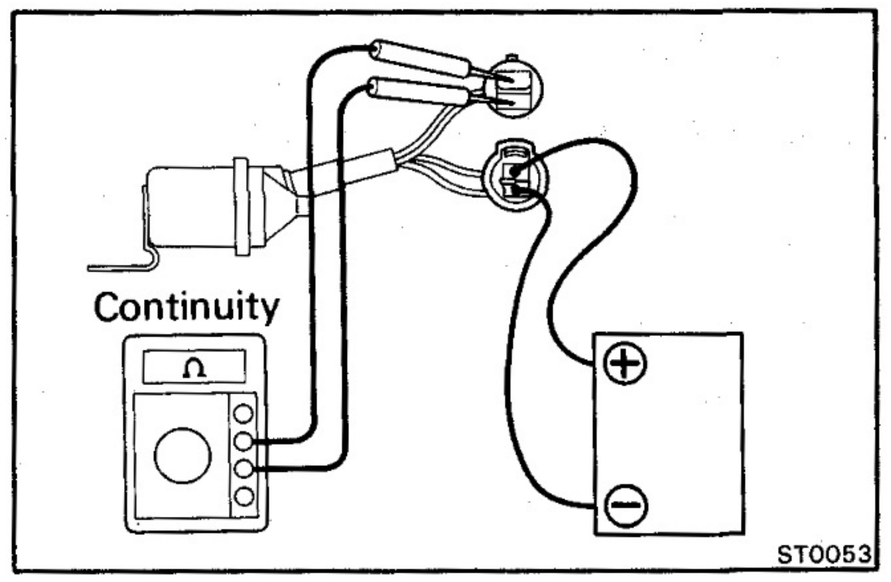

2. INSPECT RELAY OPERATION

(a) Apply battery voltage across terminals E and g.

(b) Check that there is continuity between terminals B and G.

If operation is not as specified, replace the relay.

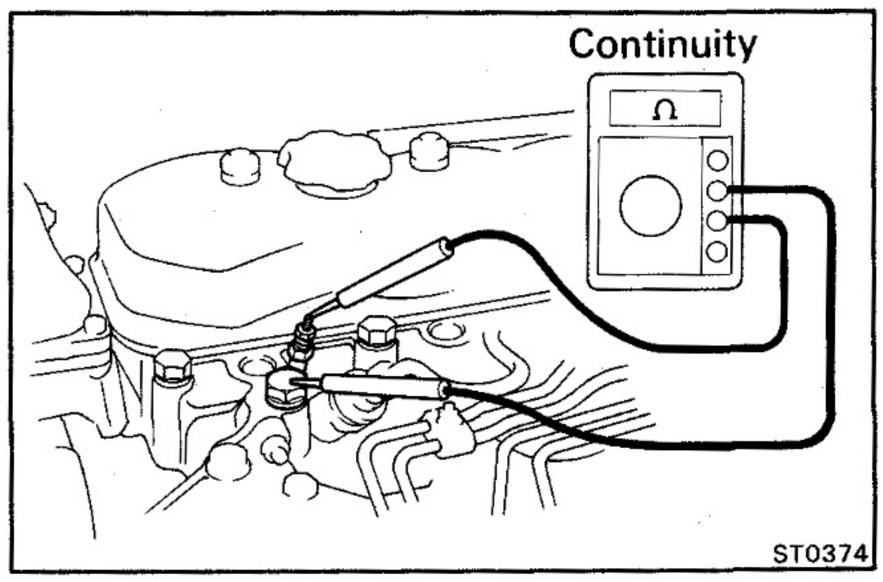

Glow Plug

INSPECT GLOW PLUG

Using an ohmmeter, check that there is continuity between the glow plug terminal and ground.

If there is no continuity, replace the glow plug.

NOTE:

- Be careful not to damage the glow plug pipes as it could cause an open circuit or shorten the life of the plugs.
- Avoid getting oil and gasoline on the glow plugs when cleaning.
- During inspection, use a cloth be sure to wipe any oil off the glow plug terminals and bakelite washer.
- Be careful not to apply more than 7 volts to the glow plug as it could cause an open circuit.

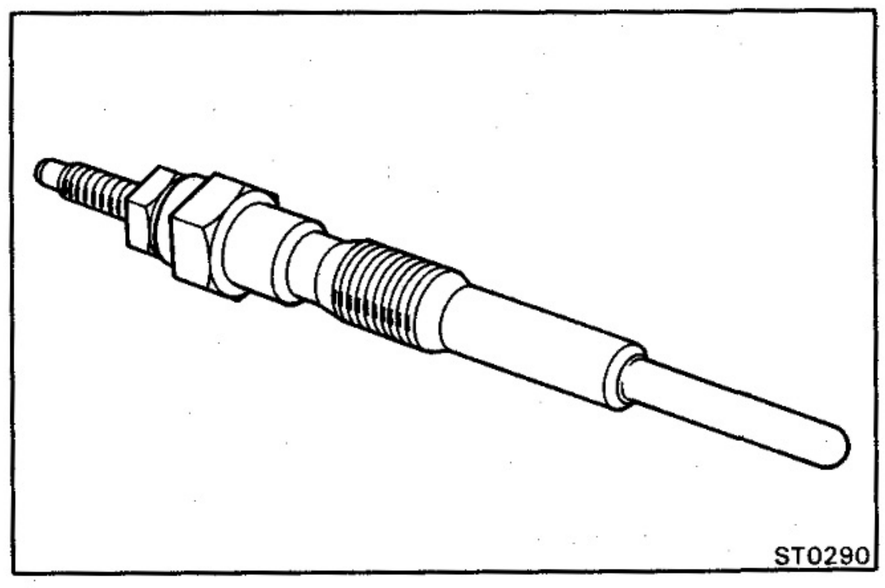

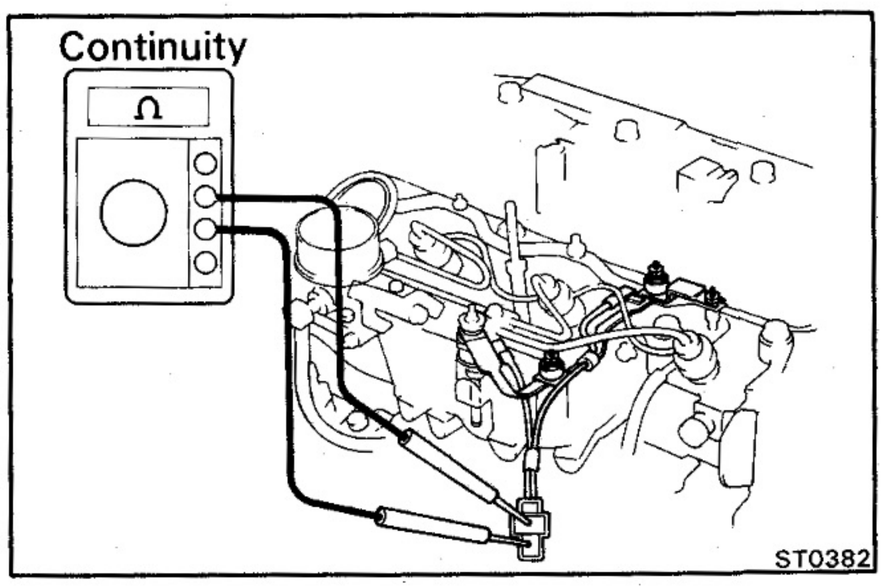

Glow Plug Current Sensor

INSPECT GLOW PLUG CURRENT SENSOR

Using an ohmmeter, check that there is continuity between the current sensor terminals.

If there is no continuity, replace the current sensor.

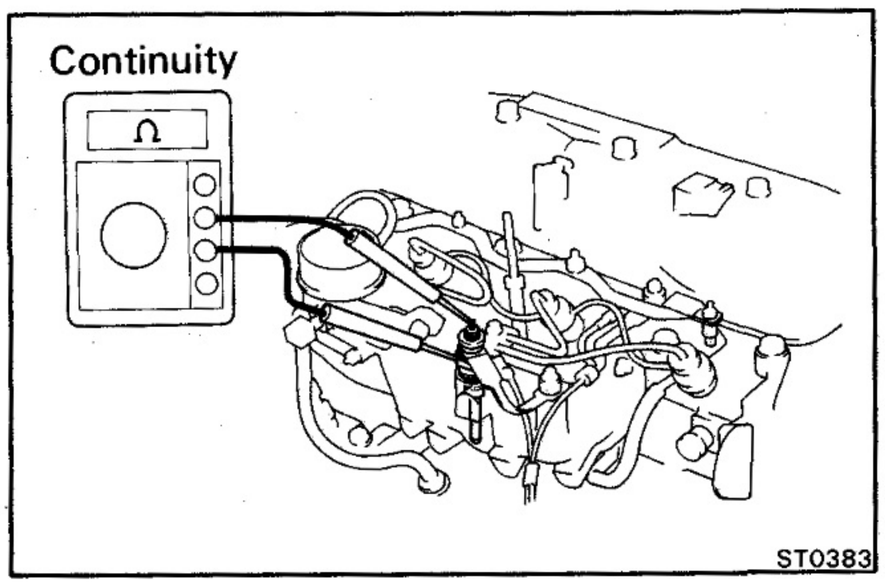

Glow Plug Resistor

INSPECT GLOW PLUG RESISTOR

Using an ohmmeter, check that there is continuity between the resistor terminals.

If there is no continuity, replace the resistor.

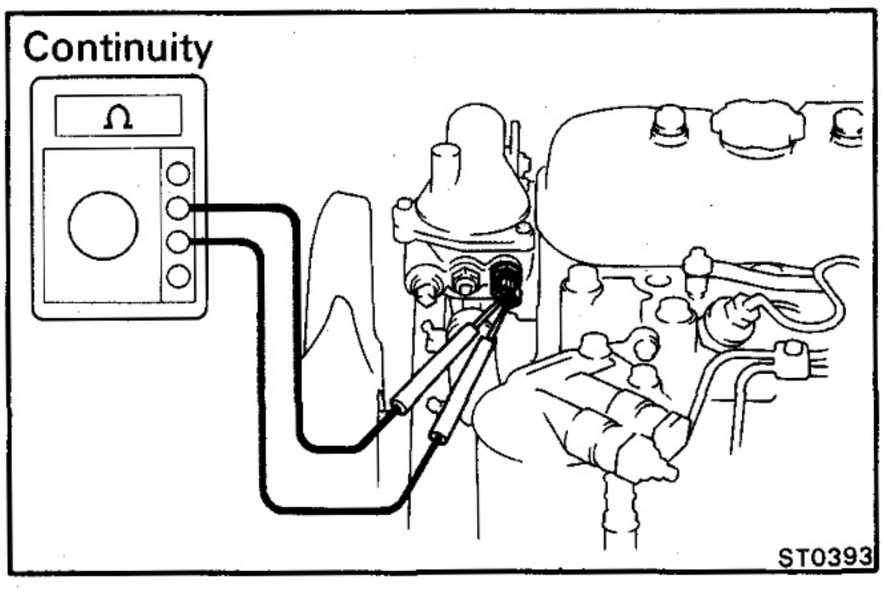

Water Temperature Sensor

INSPECT WATER TEMPERATURE SENSOR

Using an ohmmeter, check the resistance between the water temperature sensor terminals.

Resistance: Refer to the chart.

If the resistance is not as specified, replace the water temperature sensor.

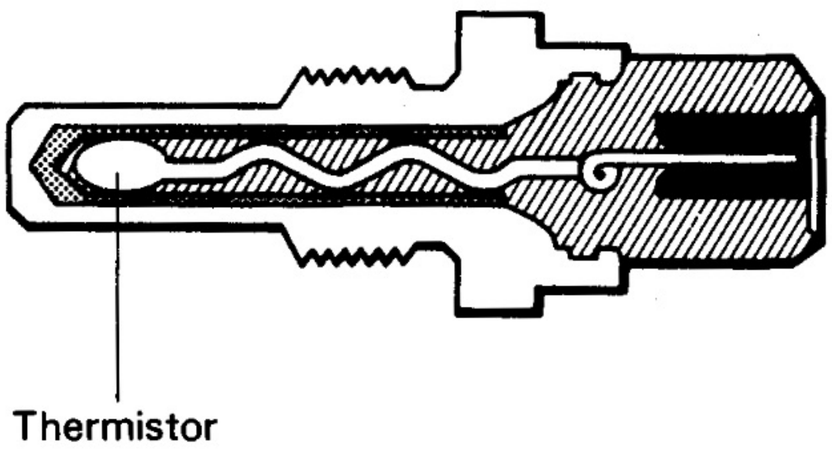

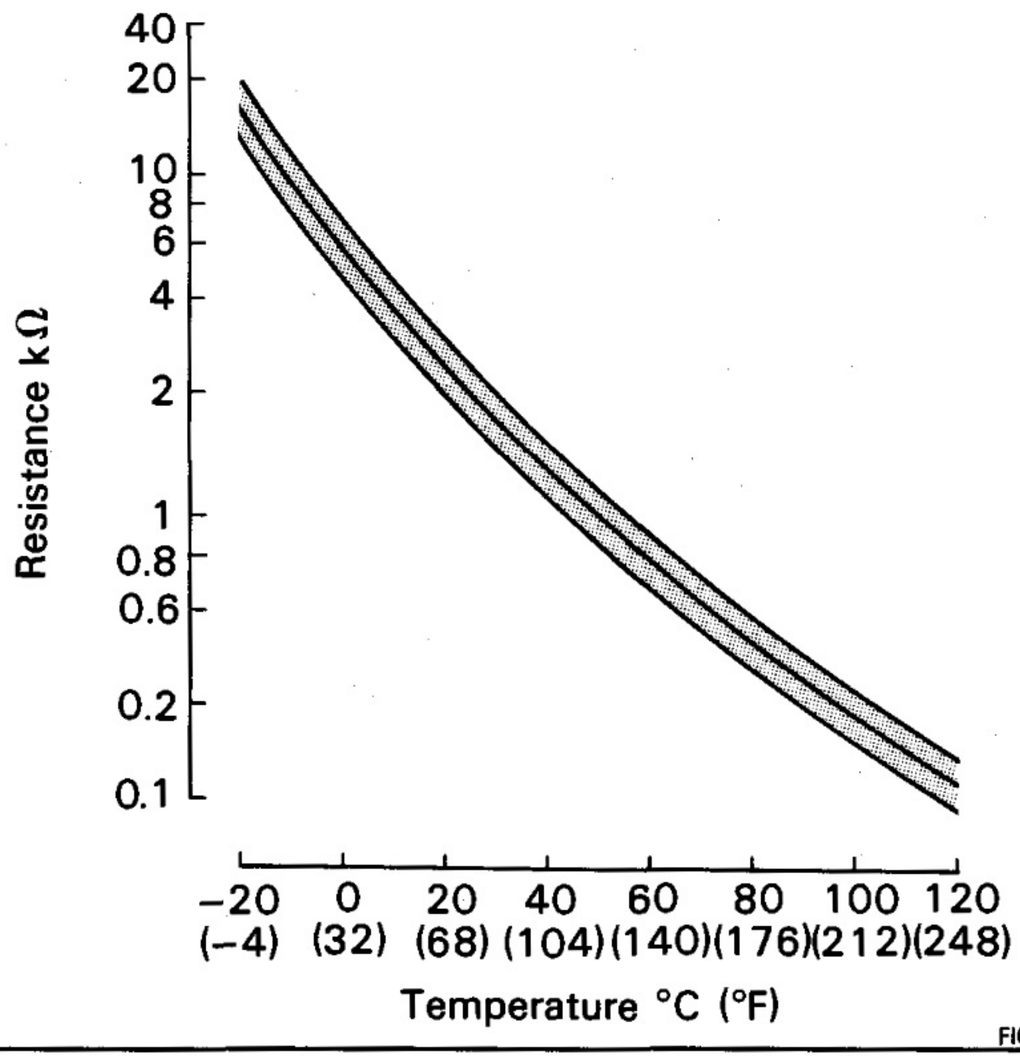

Fixed Delay Type

SYSTEM CIRCUIT

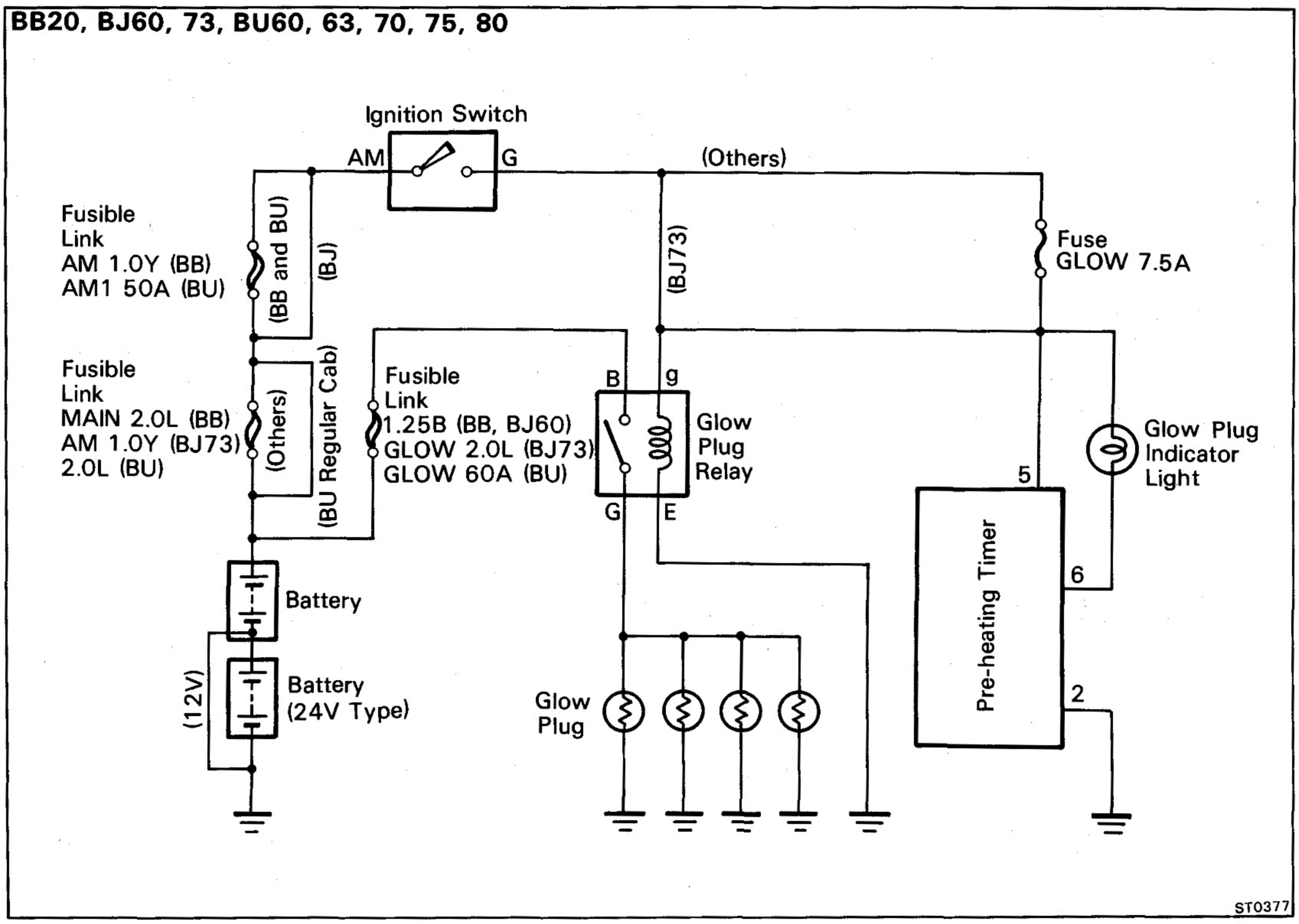

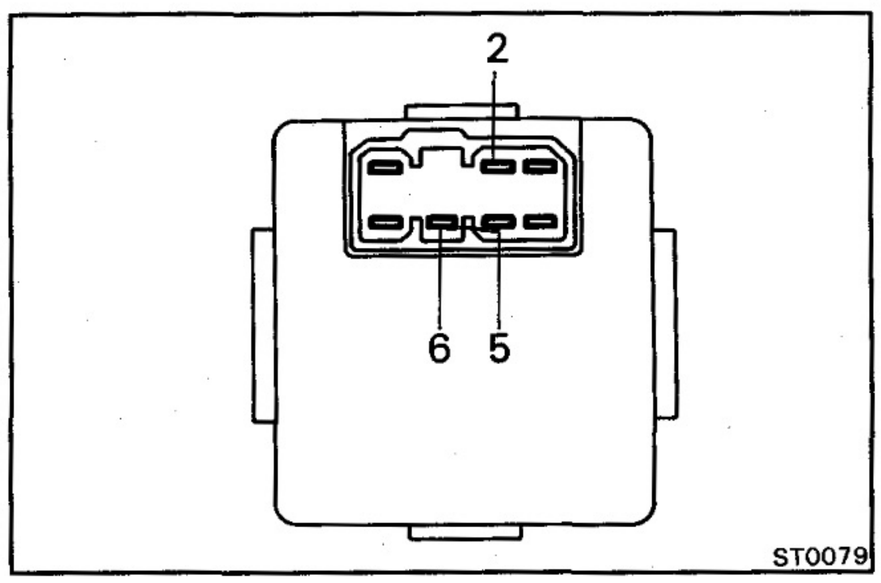

INSPECTION OF COMPONENTS

Pre-Heating Timer

LOCATION

BB: Under the instrument panel center.

BJ60: In the cowl on the passenger side.

BJ73: Under the instrument panel on the passenger side.

BU: Under the instrument panel on the driver's side.

INSPECT PRE-HEATING TIMER

(a) Turn the ignition switch to G and measure the lighting time of the glow indicator light.

Light lighting time: 15 — 19.5 seconds

(b) Check that there is voltage at terminal 5 of the preheating timer when the ignition switch is turned to G.

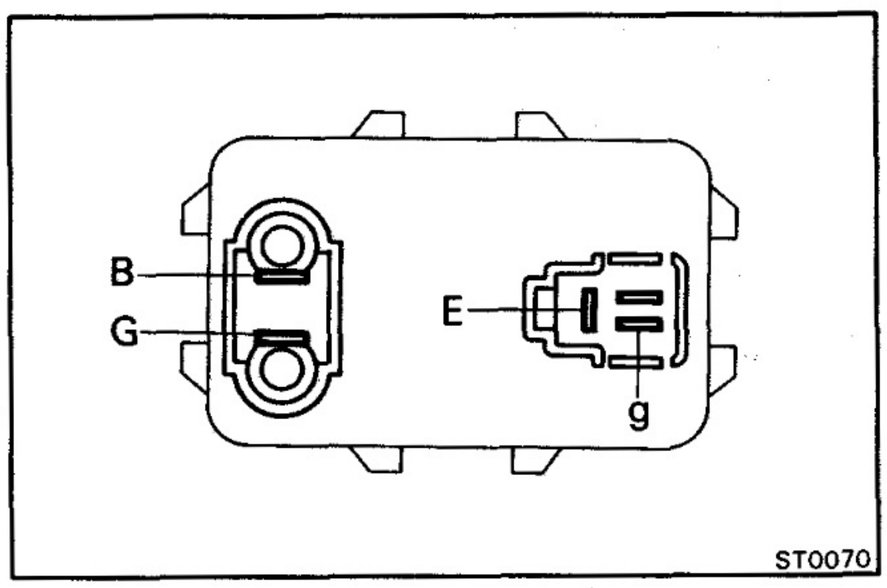

Glow Plug Relay [BB and BU]

LOCATION

BB: Below the left fender apron.

BU: In the cowl on the passenger side.

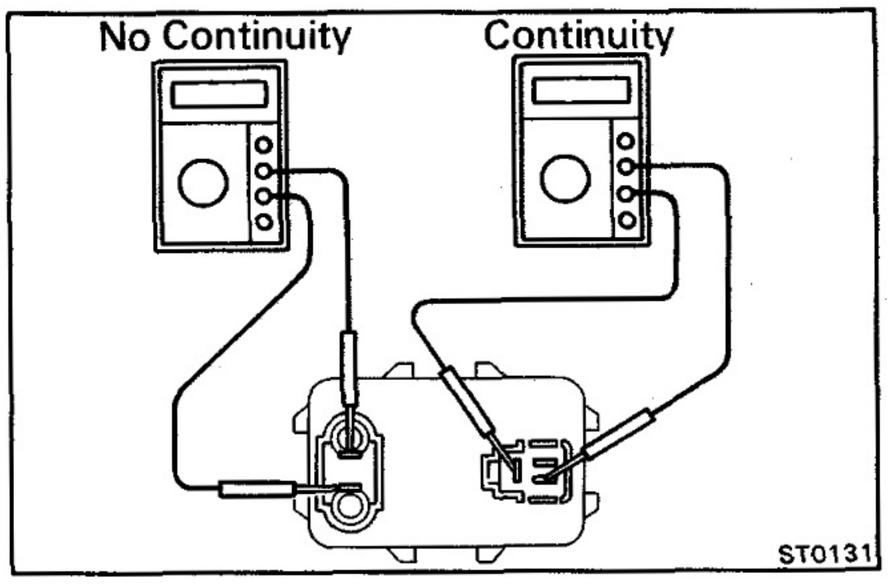

1. **INSPECT RELAY CONTINUITY**

(a) Check that there is continuity between terminals E and g.

(b) Check that there is no continuity between terminals B and G.

If continuity is not as specified, replace the relay.

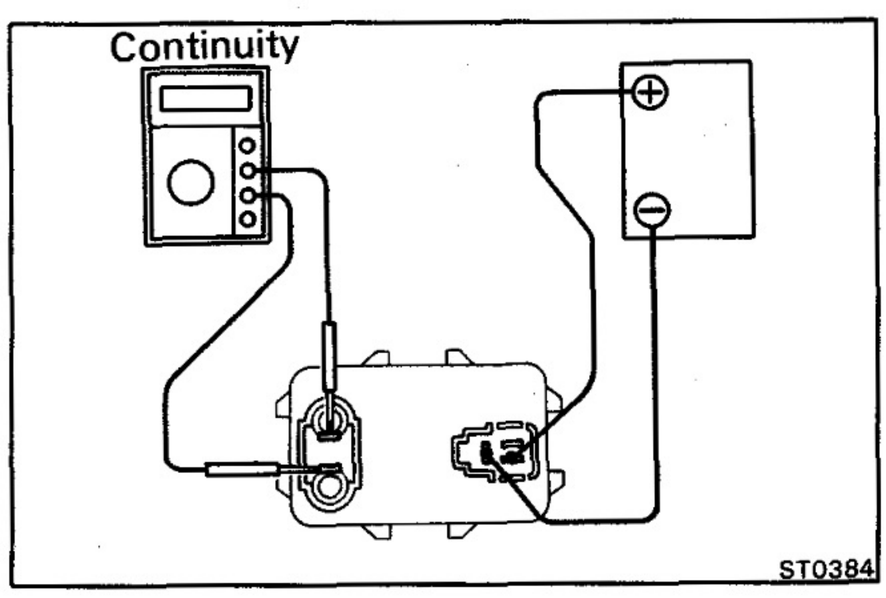

2. **INSPECT RELAY OPERATION**

(a) Apply battery voltage across terminals E and g.

(b) Check that there is continuity between terminals B and G.

If operation is not as specified, replace the relay.

Glow Plug Relay [BJ]

(See No. 2 Glow Plug Relay on page ST-4)

LOCATION: On the fender apron in the engine compartment.

Glow Plug

(See page ST-5)

PRE-HEATING SYSTEM [11B, 13B and 13B-T]

SYSTEM CIRCUIT

BB22, BJ71, 74 Series

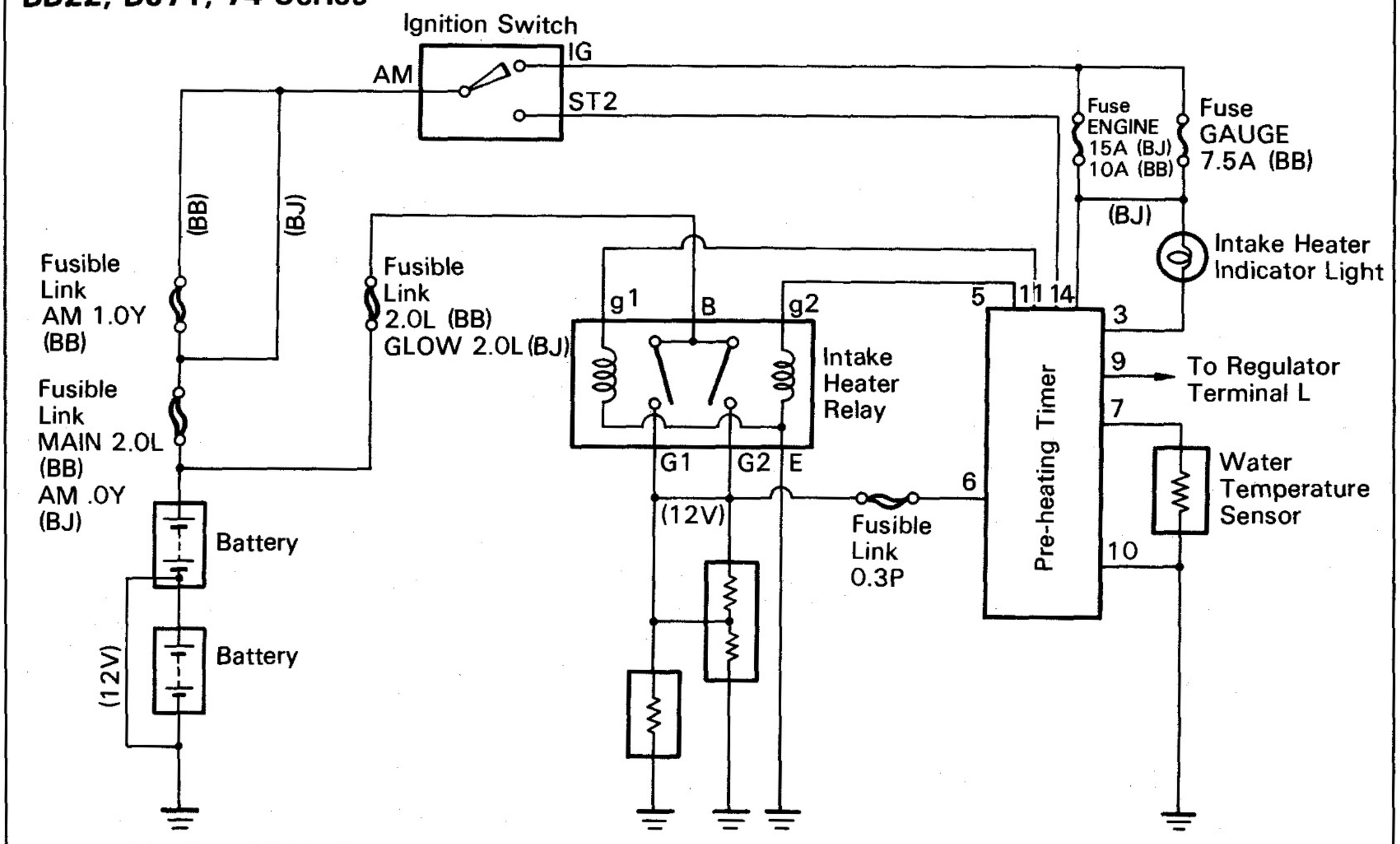

BU61, 62, 65, 85 Series

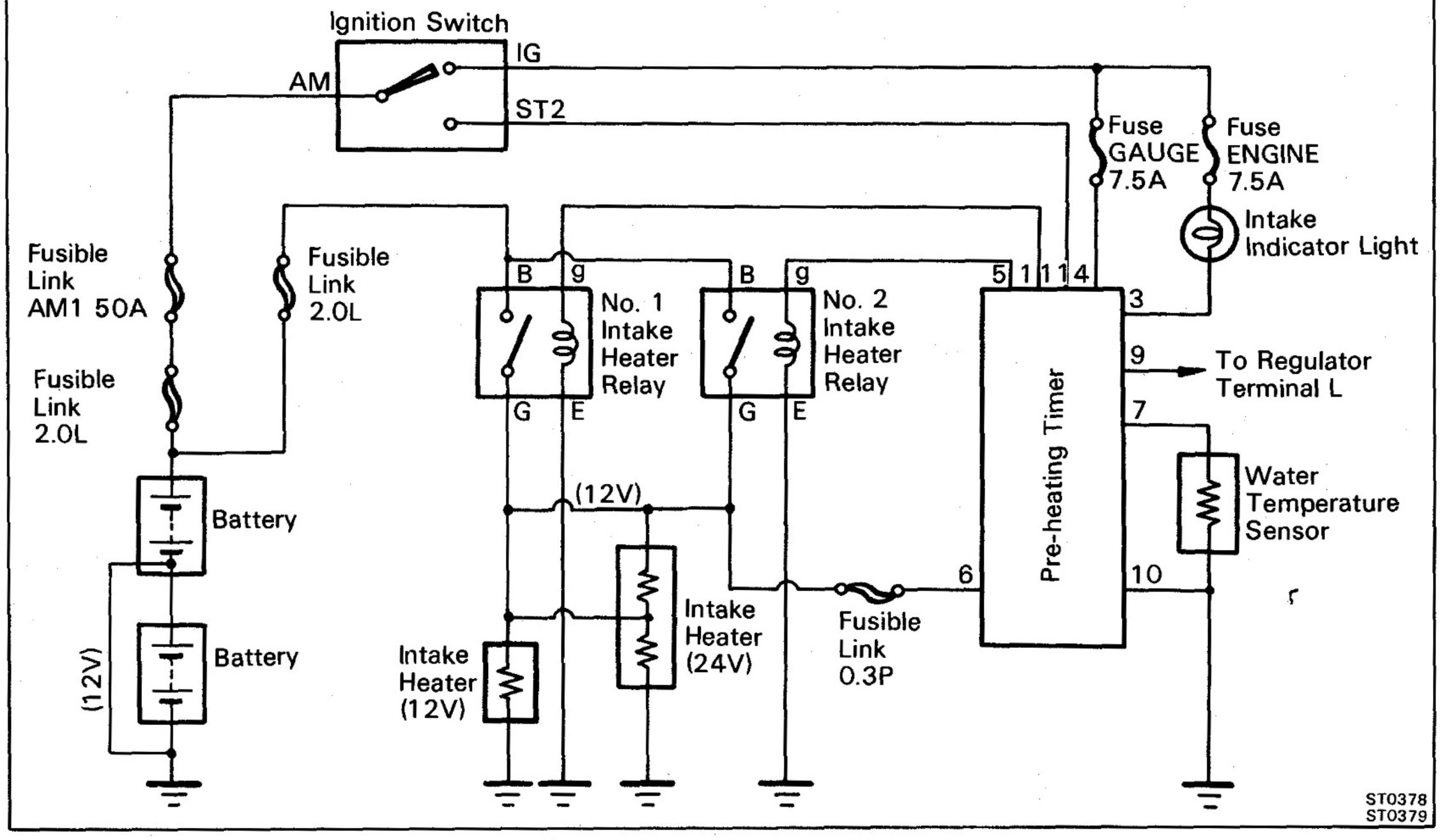

ST0378
ST0379

TIMER CHARACTERISTIC DIAGRAM

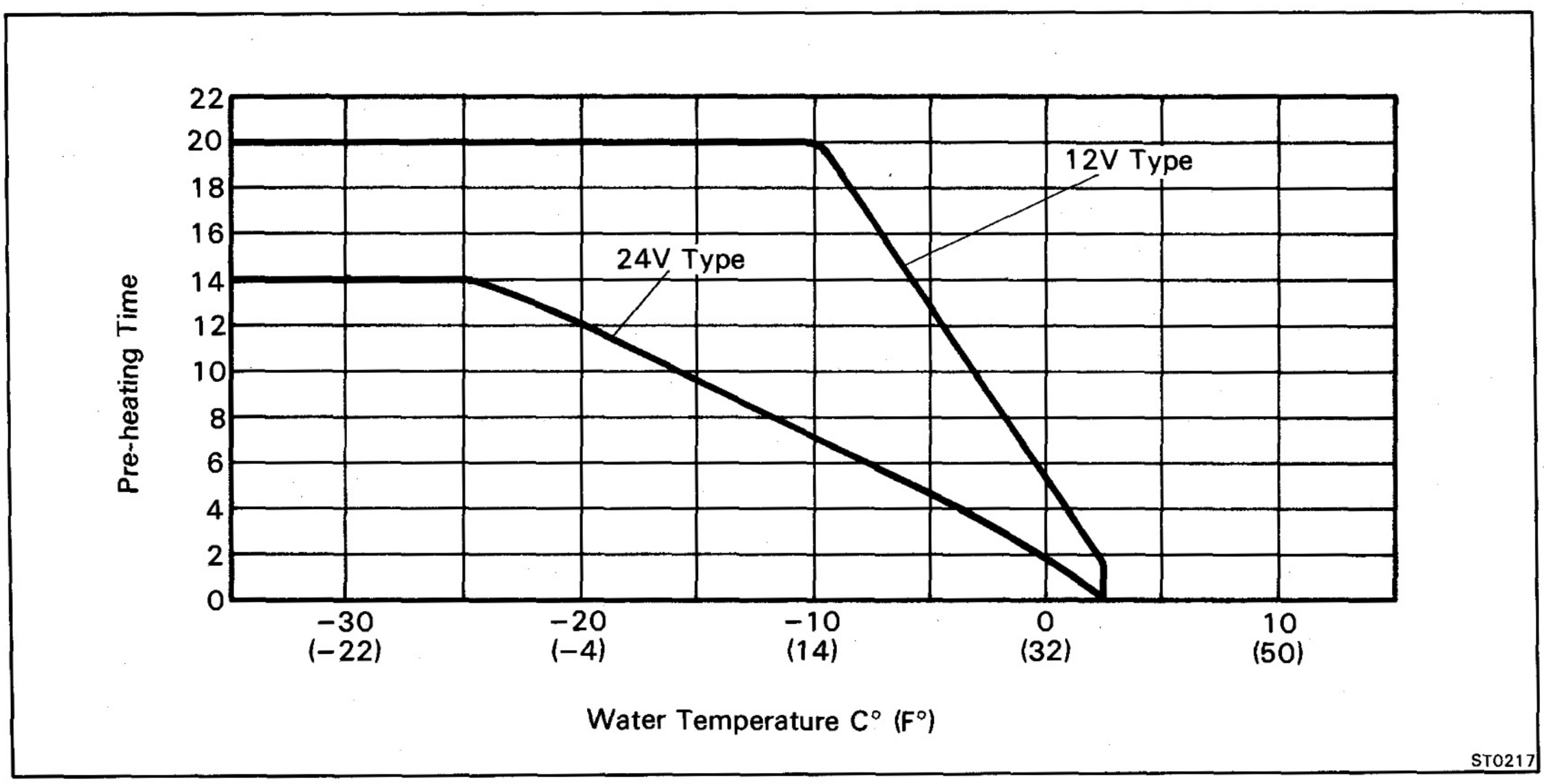

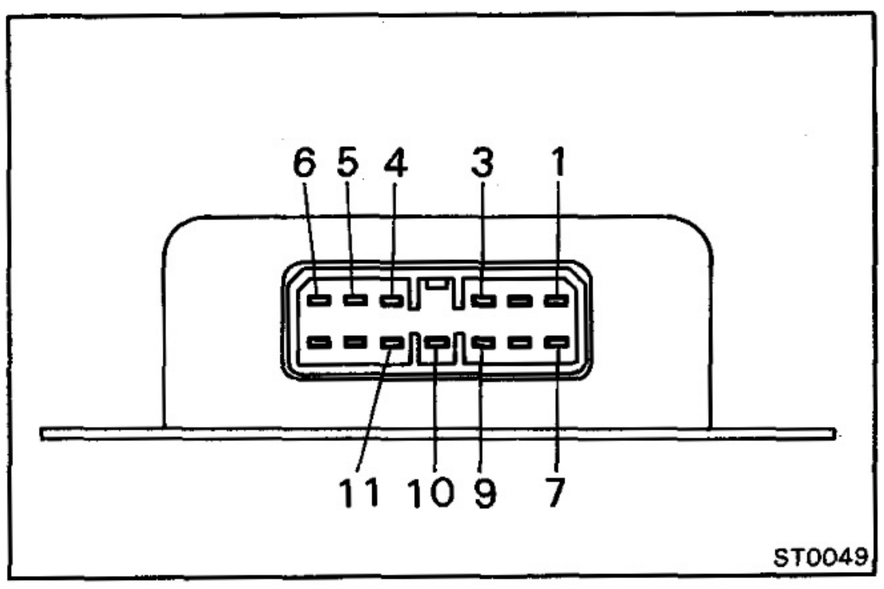

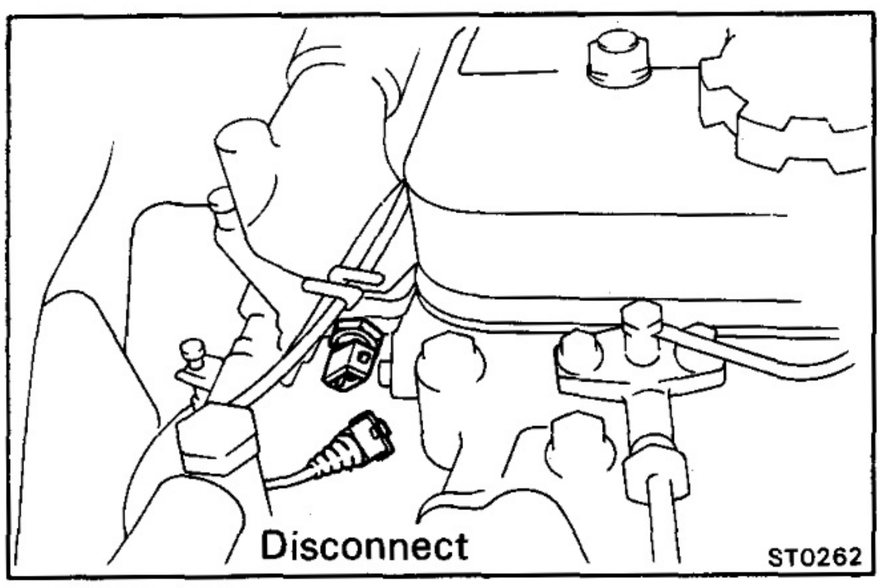

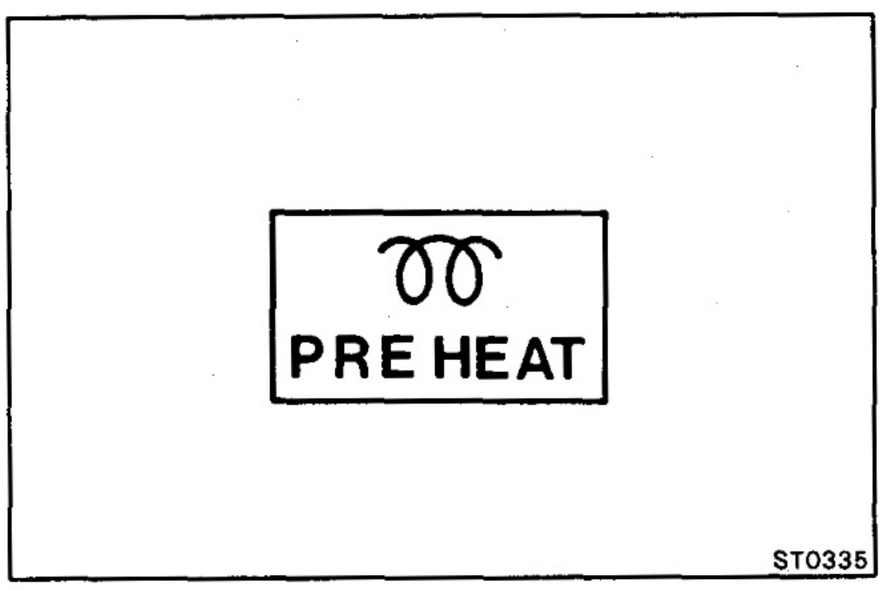

INSPECTION OF COMPONENTS

Pre-heating Timer

LOCATION

BB: Under the instrument panel center.

BJ: Under the instrument panel on the passenger side.

BU: Under the instrument panel on the driver's side.

INSPECT PRE-HEATING TIMER

(a) Disconnect the water temperature sensor connector.

(b) Turn the ignition switch to "ON," and measure the time the pre-heating indicator is lit.

Light lighting time:

12V type Approx. 20 seconds

24V type Approx. 14 seconds

CAUTION: Since power consumption is high, perform this check as few times as possible.

(c) Turn the ignition switch to "START," and then check that there is voltage at terminal 5 of the pre-heating timer.

After-heating time: Approx. 70 seconds

CAUTION: Since power consumption is high, perform this check as few times as possible.

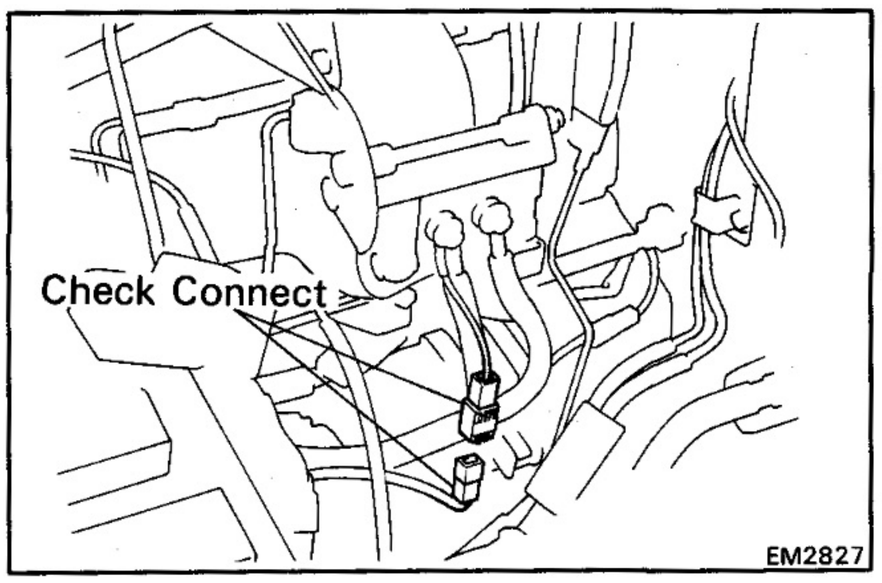

(d) Turn the ignition switch to "START."

(e) [BJ and BB]
Disconnect the MALFUNCTION CHECK connector of the intake heater, and check that the "PREHEAT" light comes on when the after-heating is finished.

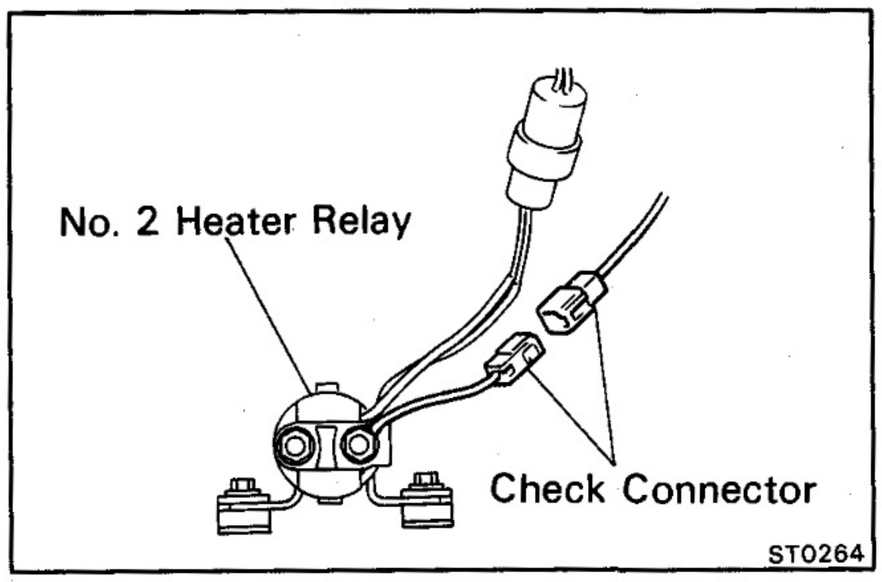

(f) [BU]
Disconnect the MALFUNCTION CHECK connector of the No. 2 heater relay, and check that the "PREHEAT" light comes on when the after-heating is finished.

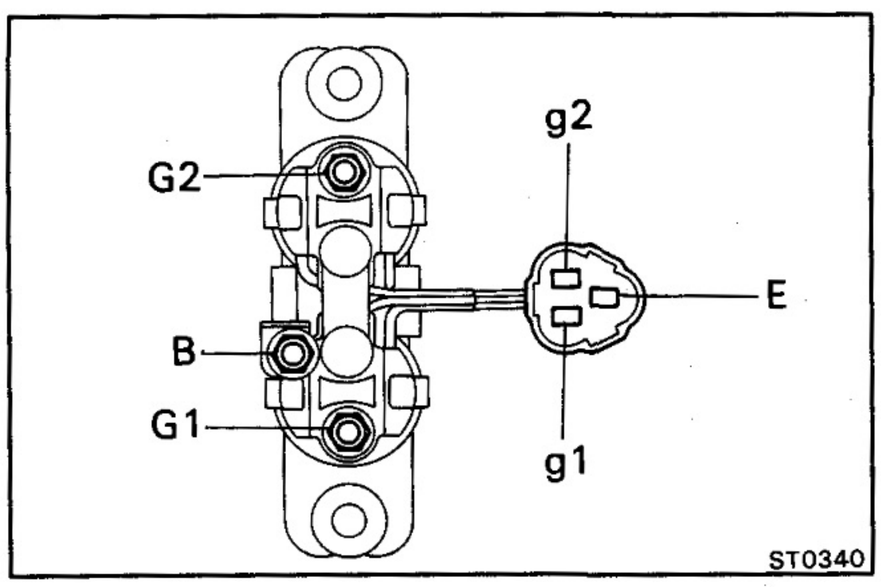

Intake Heater Relay [BB]

LOCATION: Below the left fender apron.

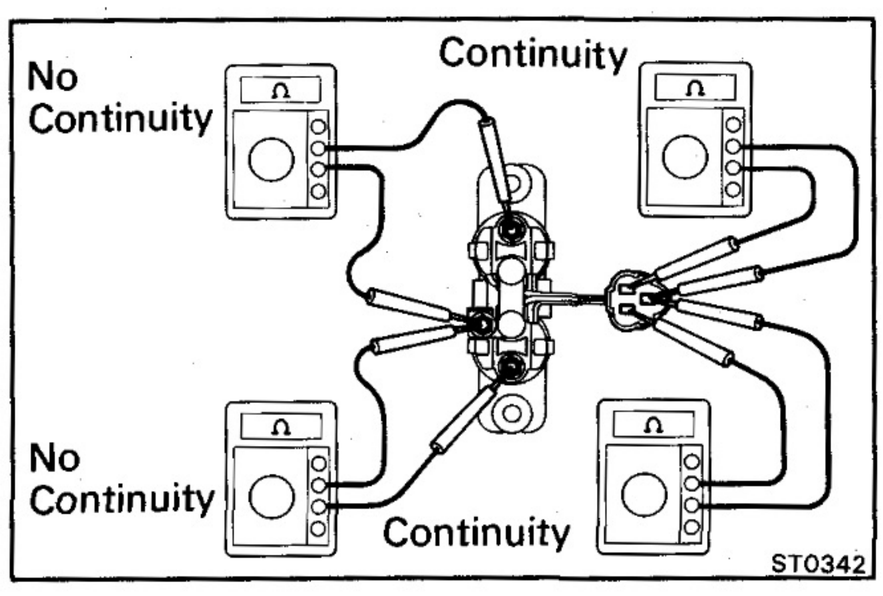

1. INSPECT RELAY CONTINUITY

(a) Check that there is continuity between terminals E and g1.

(b) Check that there is continuity between terminals E and g2.

(c) Check that there is no continuity between terminals B and G1.

(d) Check that there is no continuity between terminals B and G2.

If continuity is not as specified, replace the relay.

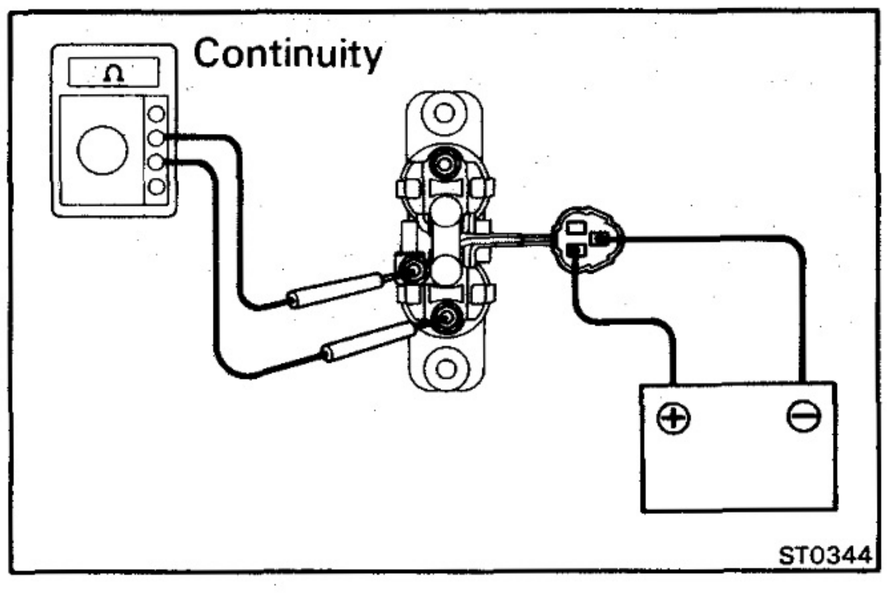

2. INSPECT RELAY OPERATION

(a) Apply battery voltage across terminals E and g1.

(b) Check that there is continuity between terminals B and G1.

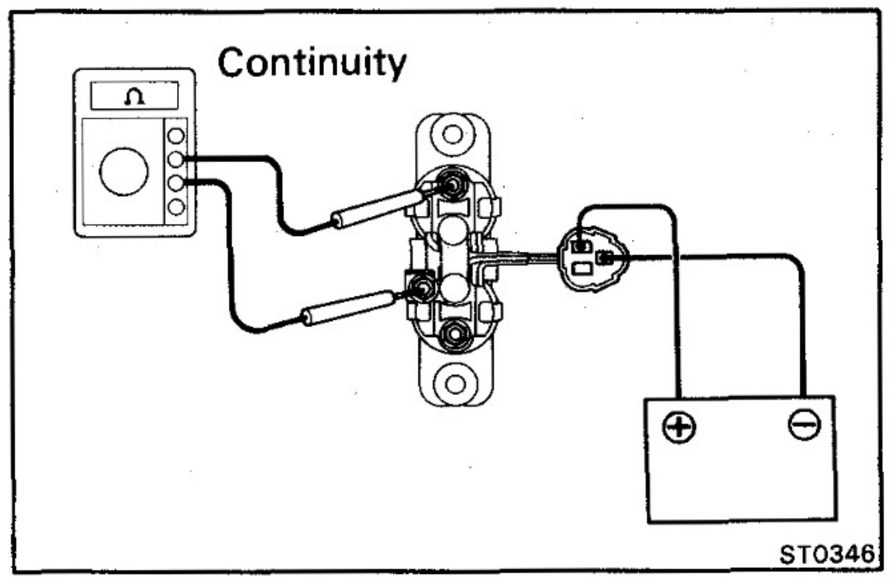

(c) Apply battery voltage across terminals E and g2.

(d) Check that there is continuity between terminals B and G2.

If operation is not as specified, replace the relay.

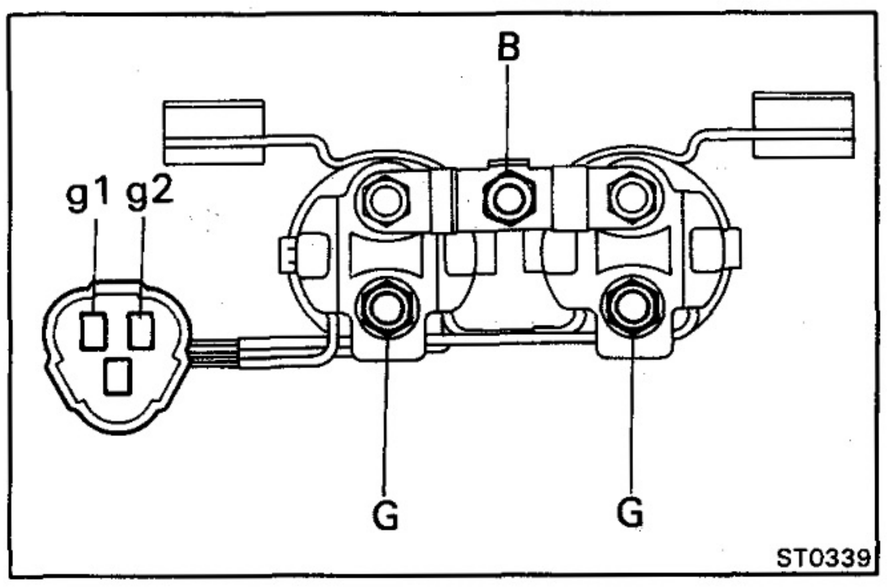

Intake Heater Relay [BJ]

LOCATION: In front of the battery.

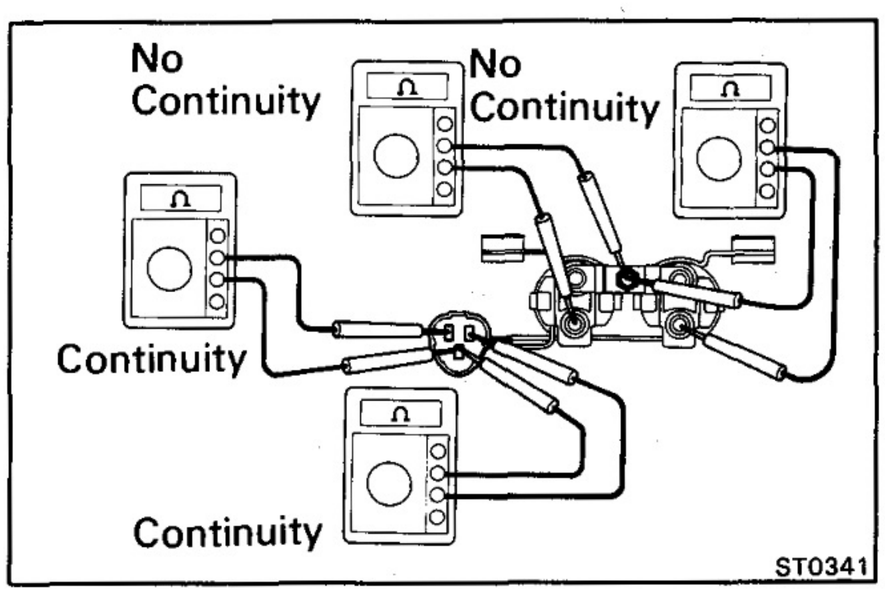

1. INSPECT RELAY CONTINUITY

(a) Check that there is continuity between terminals E and g1.

(b) Check that there is continuity between terminals E and g2.

(c) Check that there is no continuity between terminals B and G1.

(d) Check that there is no continuity between terminals B and G2.

If continuity is not as specified, replace the relay.

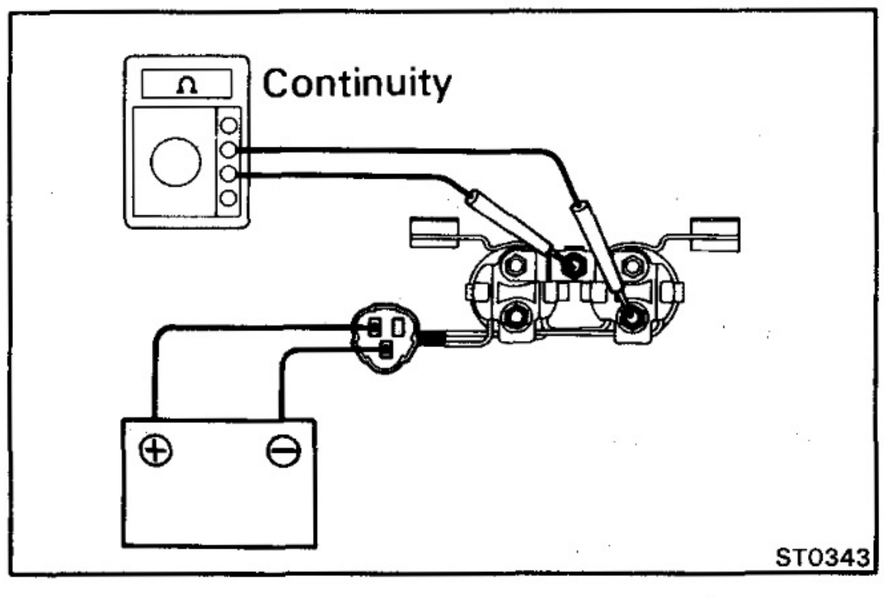

2. INSPECT RELAY OPERATION

(a) Apply battery voltage across terminals E and g1.

(b) Using an ohmmeter, check that there is continuity between terminals B and G1.

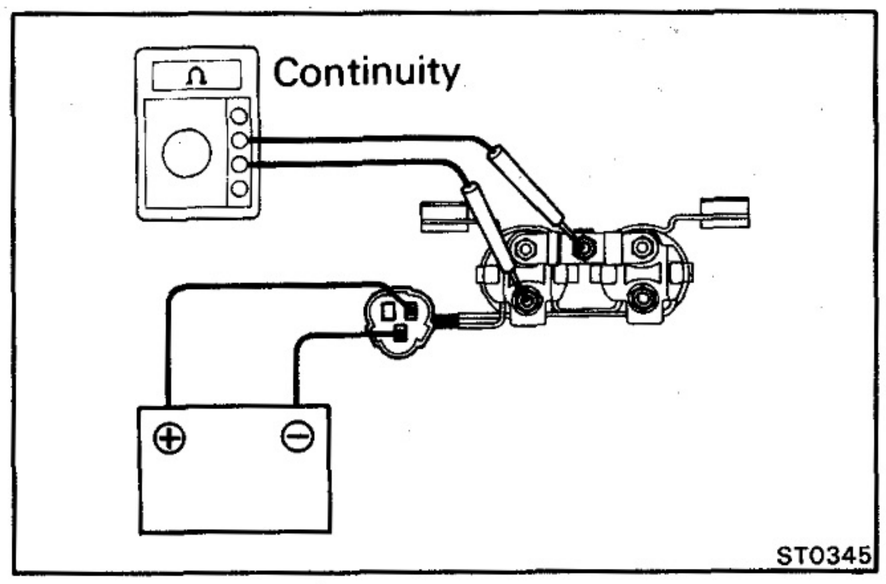

(c) Apply battery voltage across terminals E and g2.

(d) Using an ohmmeter, check that there is continuity between terminals B and G2.

If operation is not as specified, replace the relay.

No. 1 and No. 2 Intake Heater Relays [BU]

(See No. 1 Glow Plug Relay on page ST-4)

LOCATION: On the frame at the rear of the engine.

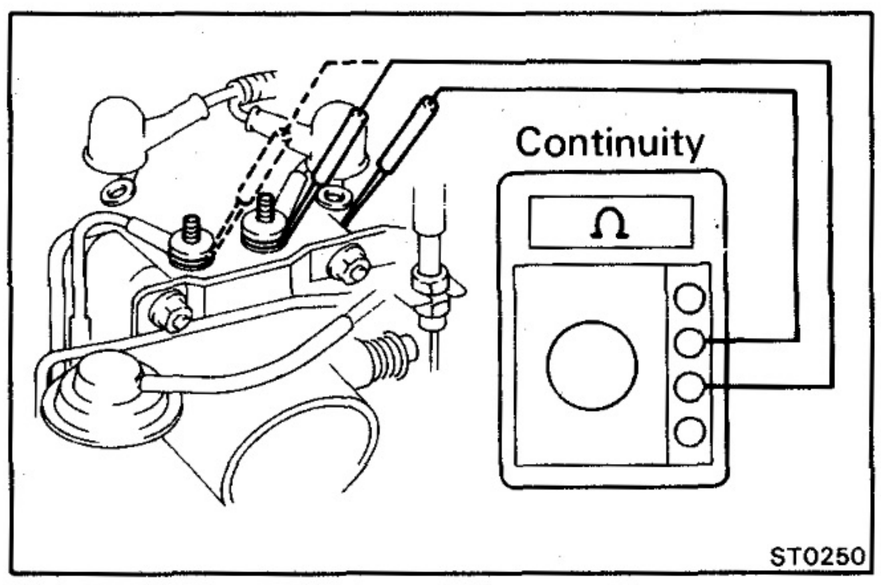

Intake Heater

INSPECT INTAKE HEATER

Using an ohmmeter, check that there is continuity between each terminal of the intake heater and ground.

If there is no continuity, replace the intake heater.

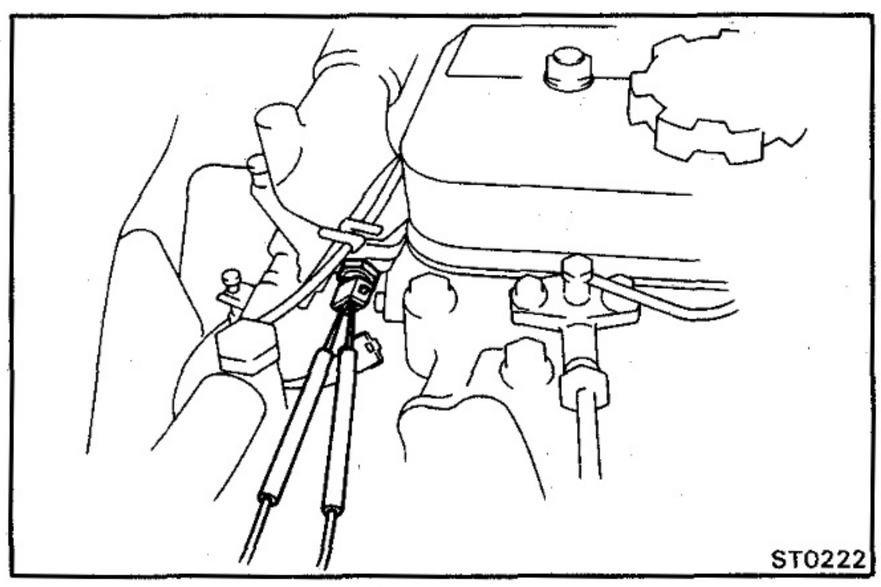

Water Temperature Sensor

(See page ST-6)

TROUBLESHOOTING

Problem	Possible cause	Remedy	Page
Engine will not crank	Battery charge low	Check battery specific gravity Charge or replace battery	CH-7
	Battery cables loose, corroded or worn	Repair or replace cables	
	Neutral start switch faulty (A/T only)	Replace switch	
	Fusible link blown	Replace usible link	
	Starter faulty	Repair starter	ST-15
	Ignition switch faulty	Replace ignition switch	
Engine cranks slowly	Battery charge low	Check battery specific gravity Charge or replace battery	CH-7
	Battery cables loose, corroded or worn	Repair or replace cables	
	Starter faulty	Repair starter	ST-15
Starter keeps running	Starter faulty	Repair starter	ST-15
	Ignition switch faulty	Replace ignition switch	
	Short in wiring	Repair wiring	
Starter spins but engine will not crank	Pinion gear teach broken or faulty starter	Repair starter	ST-15
	Flywheel teeth broken	Replace flywheel	

STARTING SYSTEM CIRCUIT

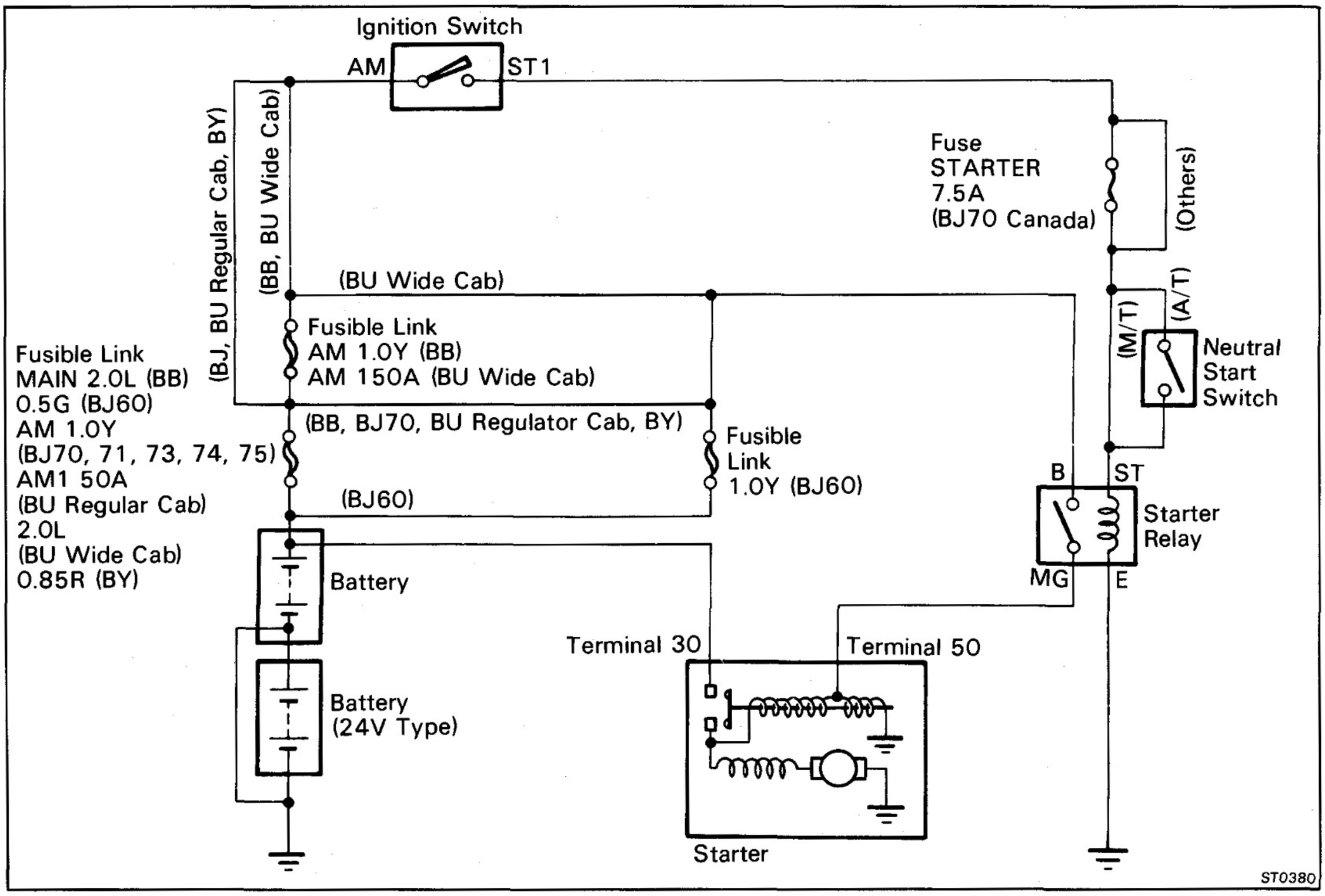

STARTER

COMPONENTS

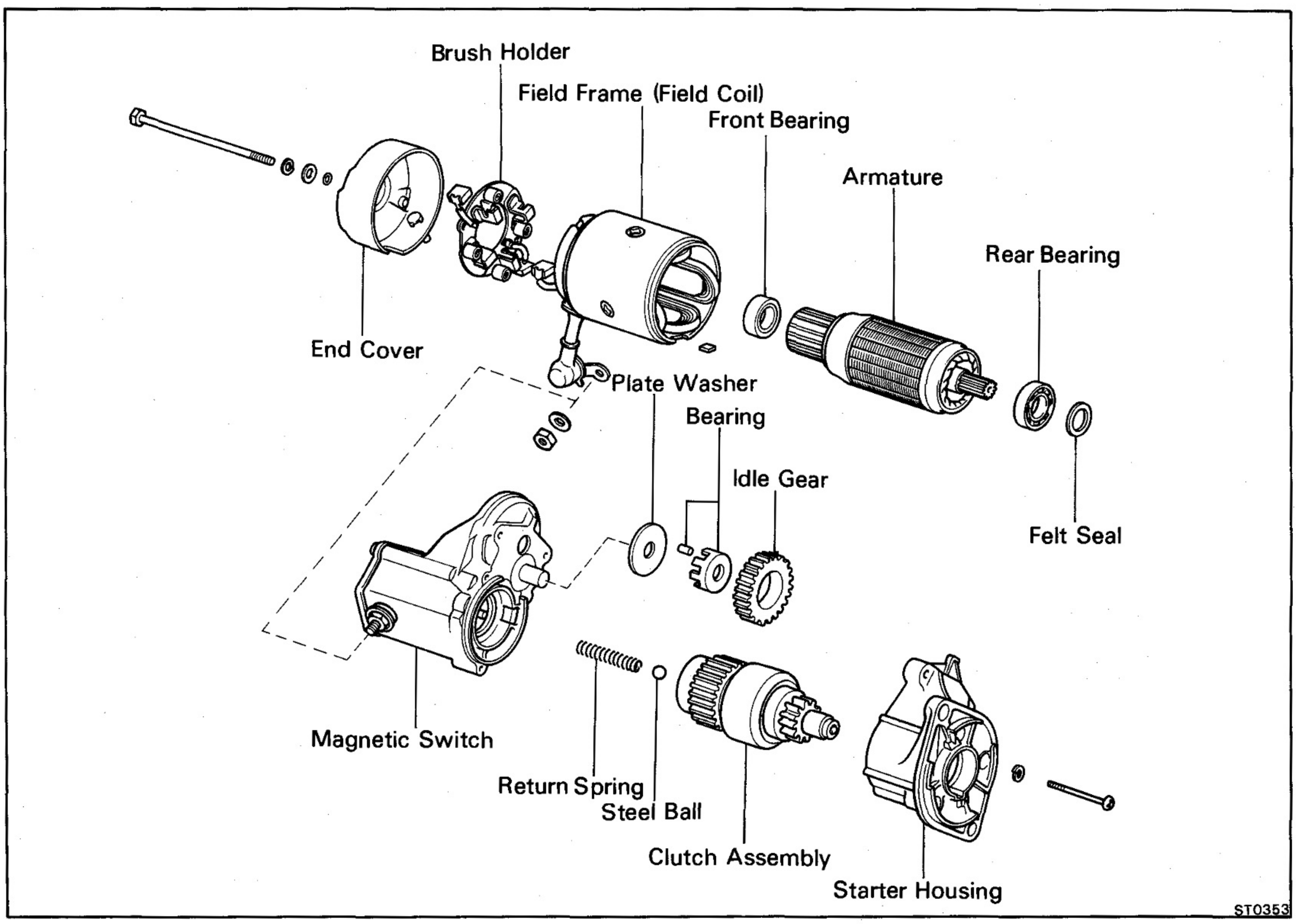

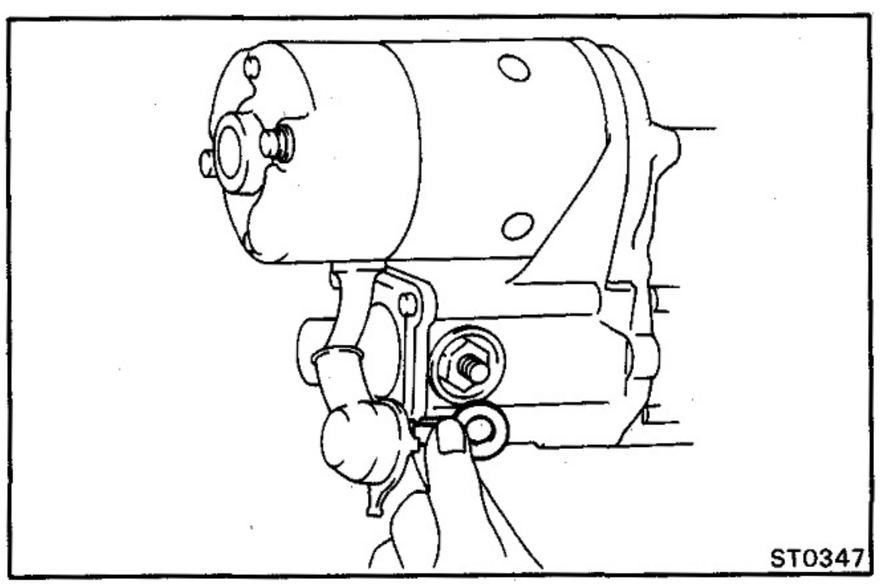

DISASSEMBLY OF STARTER

1. REMOVE FIELD FRAME AND ARMATURE ASSEMBLY

(a) Remove the nut and disconnect the lead wire from the magnetic switch terminal.

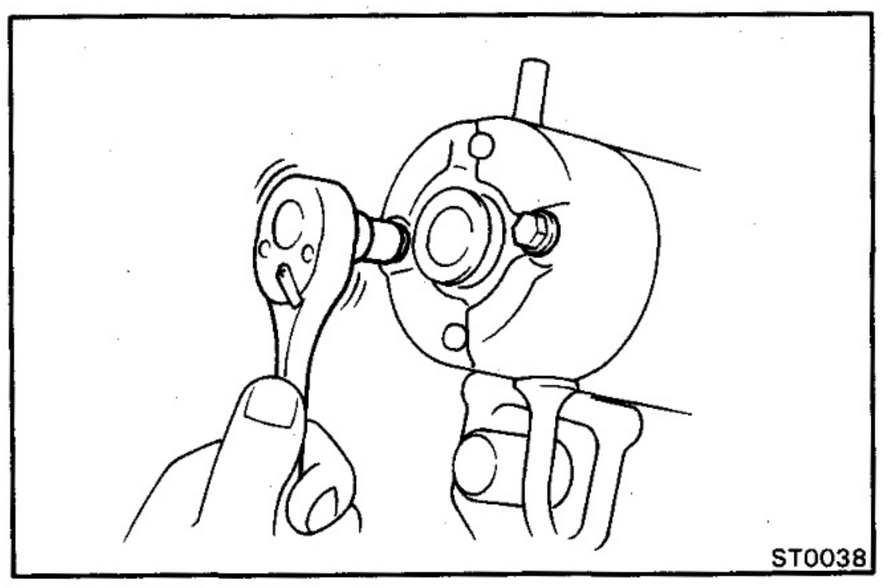

(b) Remove the two through bolts.

(c) Pull out the field frame together with the armature.

(d) Remove the felt seal and lock plate.

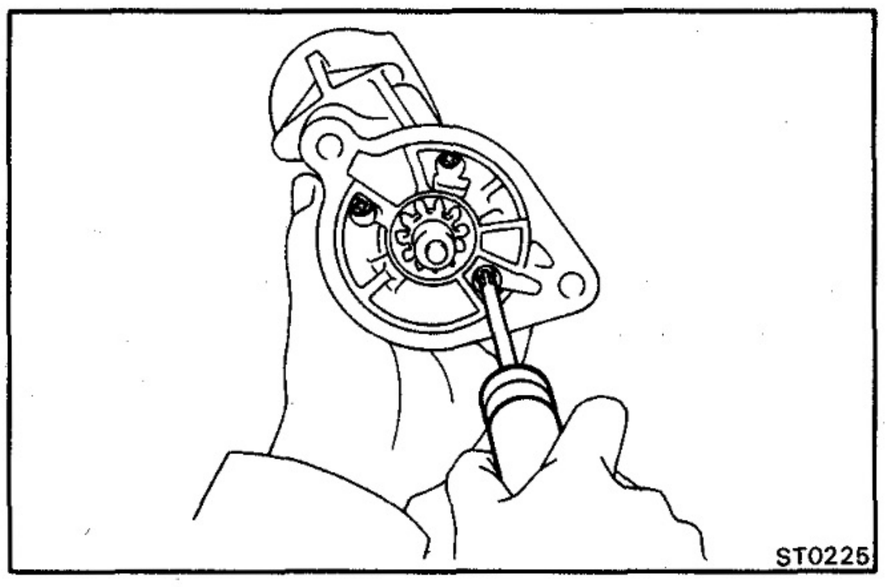

2. REMOVE STARTER HOUSING, CLUTCH ASSEMBLY AND GEAR

(a) Remove the three screws.

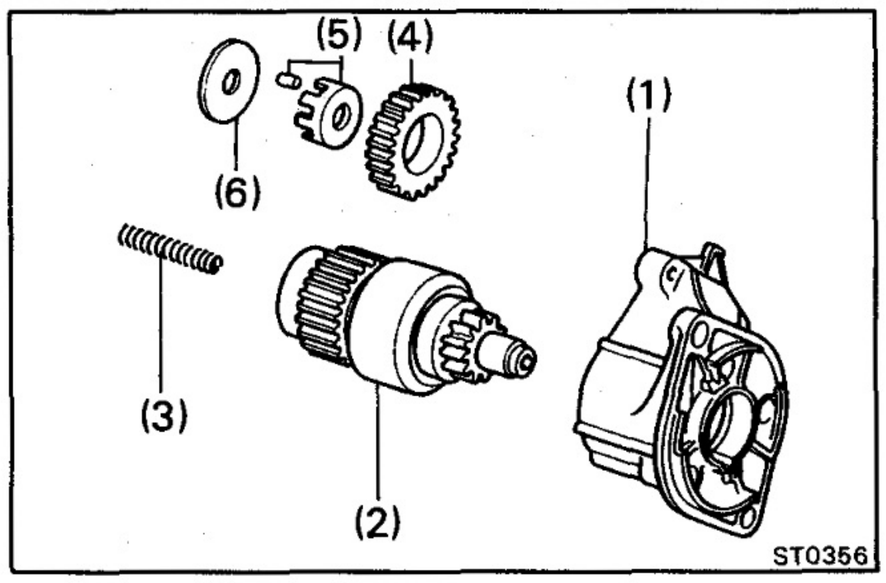

(b) Remove the following parts from the magnetic switch:

(1) Starter housing
(2) Clutch assembly
(3) Return spring
(4) Idle gear
(5) Bearing
(6) Plate washer

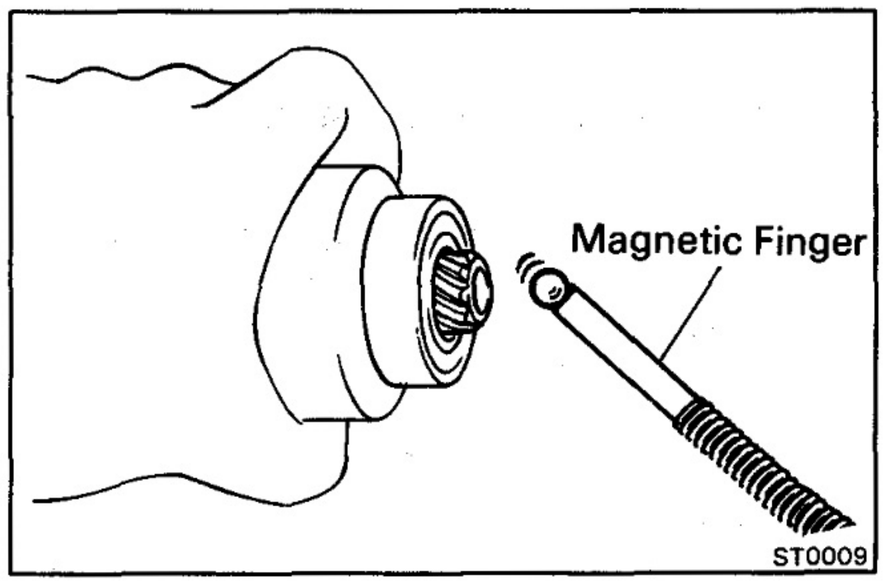

3. REMOVE STEEL BALL

Using a magnetic finger, remove the steel ball from the clutch shaft hole.

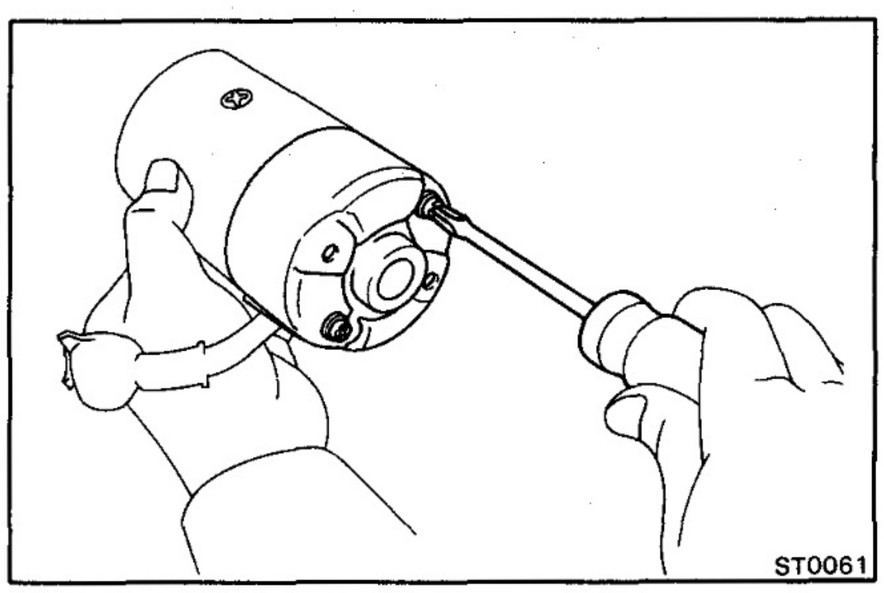

4. REMOVE BRUSH HOLDER

(a) Remove the two screws and end cover from the field frame.

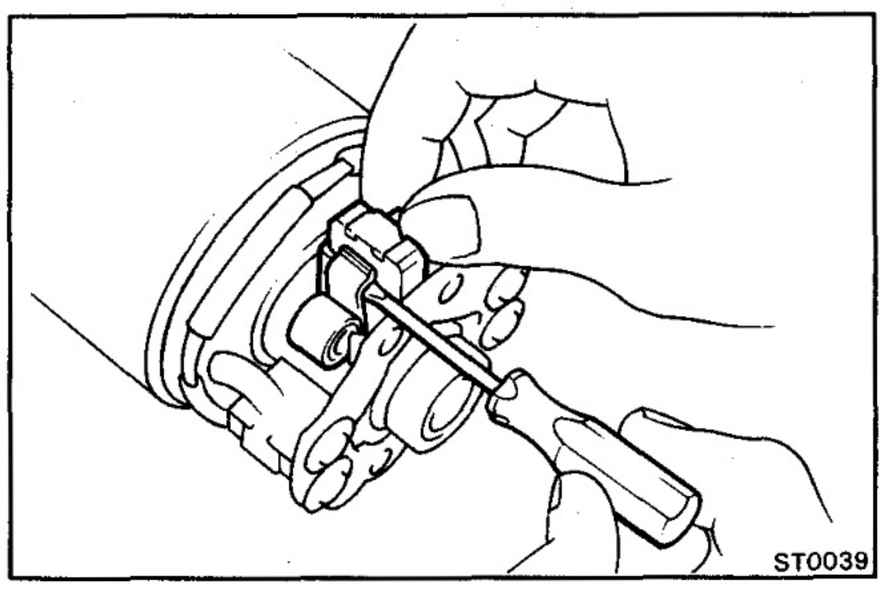

(b) Using a screwdriver, hold the spring back and disconnect the brush from the brush holder. Disconnect the four brushes and remove the brush holder.

5. REMOVE ARMATURE FROM FIELD FRAME

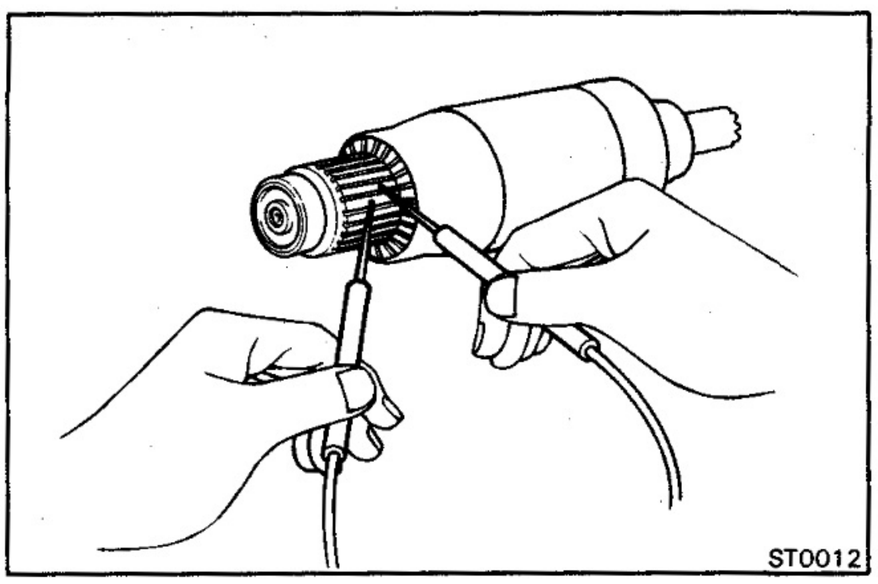

INSPECTION OF STARTER

Armature Coil

1. INSPECT COMMUTATOR FOR OPEN CIRCUIT

Using an ohmmeter, check that there is continuity between the segments of the commutator.

If there is no continuity, replace the armature.

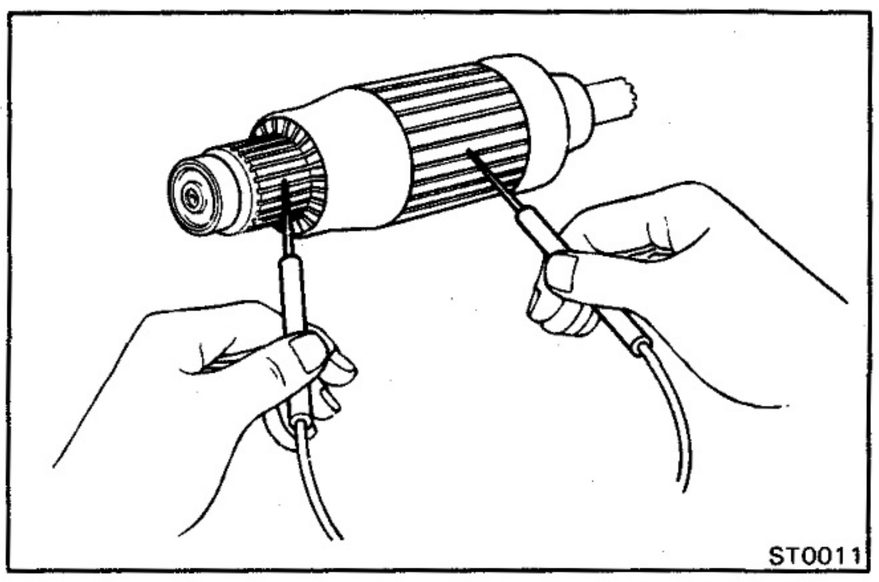

2. INSPECT COMMUTATOR FOR GROUND

Using an ohmmeter, check that there is no continuity between the commutator and armature coil core.

If there is continuity, replace the armature.

Commutator

1. INSPECT COMMUTATOR FOR DIRTY AND BURNT SURFACE

If the surface is dirty or burnt, correct with sandpaper (No. 400) or on a lathe.

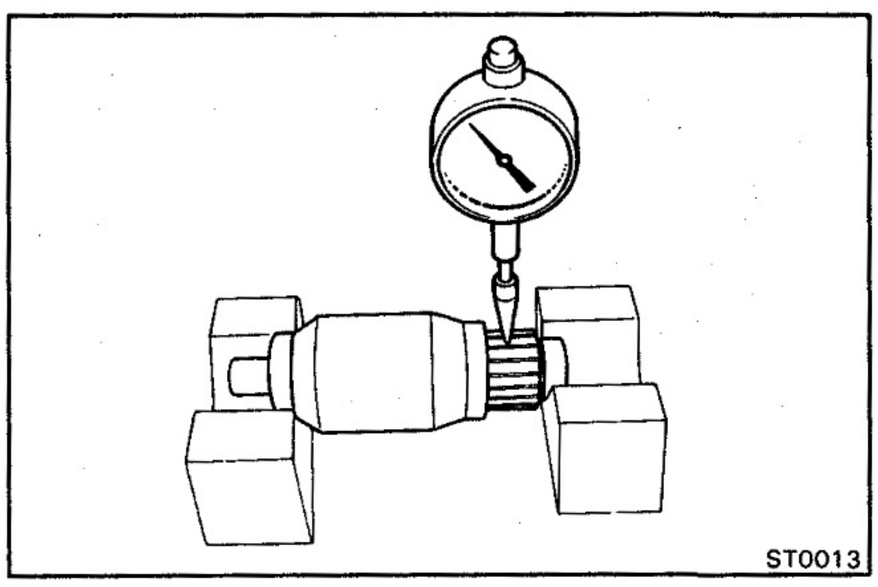

2. INSPECT COMMUTATOR CIRCLE RUNOUT

Maximum circle runout: 0.05 mm (0.0020 in.)

If the circle runout is greater than maximum, correct on a lathe.

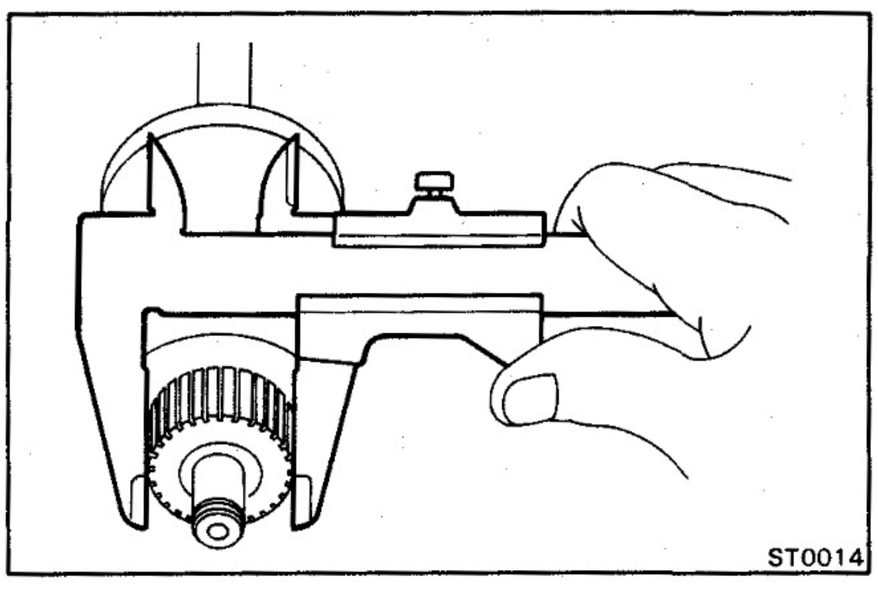

3. INSPECT DIAMETER OF COMMUTATOR

Standard diameter: 36 mm (1.42 in.)
Minimum diameter: 35 mm (1.38 in.)

If the diameter is less than minimum, replace the armature.

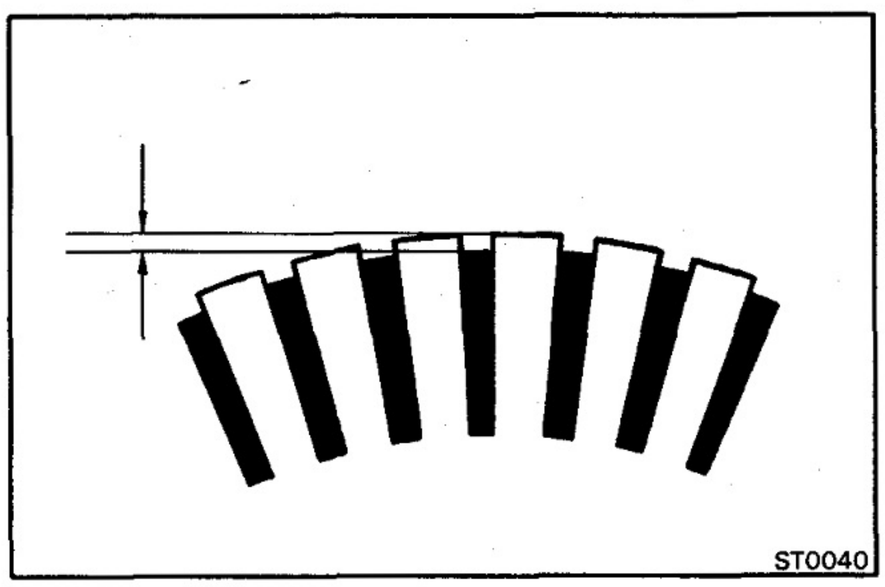

4. INSPECT UNDERCUT DEPTH

Check that the undercut depth is clean and free of foreign material. Smooth out the edge.

Standard undercut depth: 0.7 mm (0.028 in.)
Minimum undercut depth: 0.2 mm (0.008 in.)

If the undercut depth is less than minimum, correct it with a hacksaw blade.

Field Coil (Field Frame)

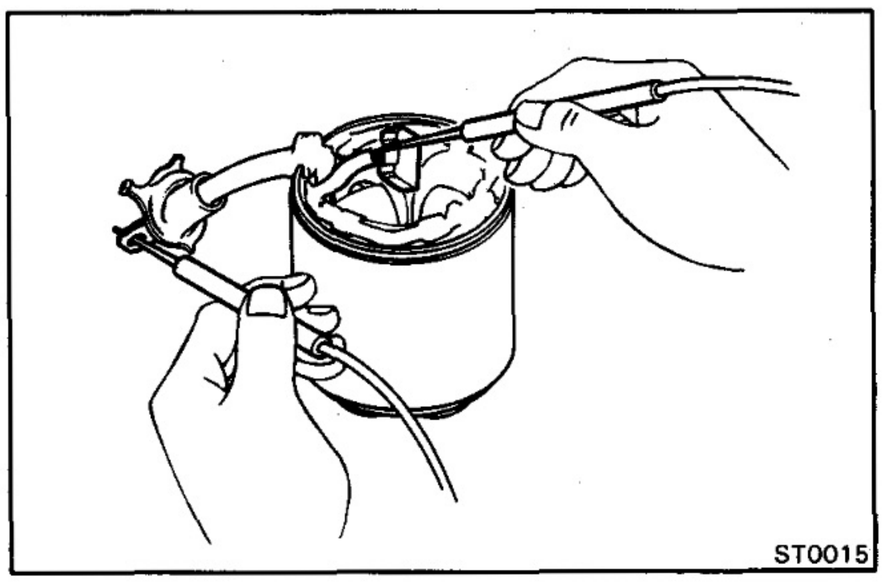

1. INSPECT FIELD COIL FOR OPEN CIRCUIT

Using an ohmmeter, check that there is continuity between the lead wire and field coil brush lead.

If there is no continuity, replace the field frame.

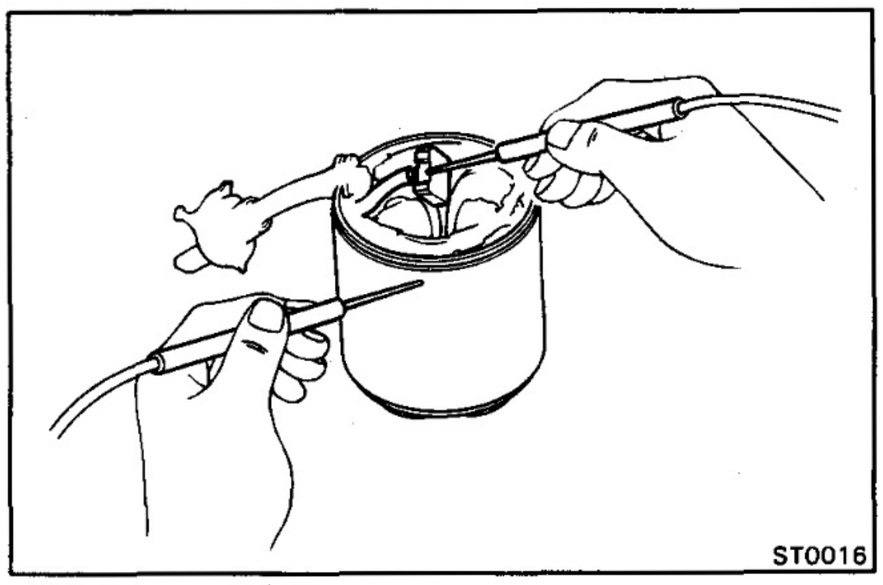

2. INSPECT FIELD COIL FOR GROUND

Using an ohmmeter, check that there is no continuity between the field coil end and field frame.

If there is continuity, repair or replace the field frame.

Brushes

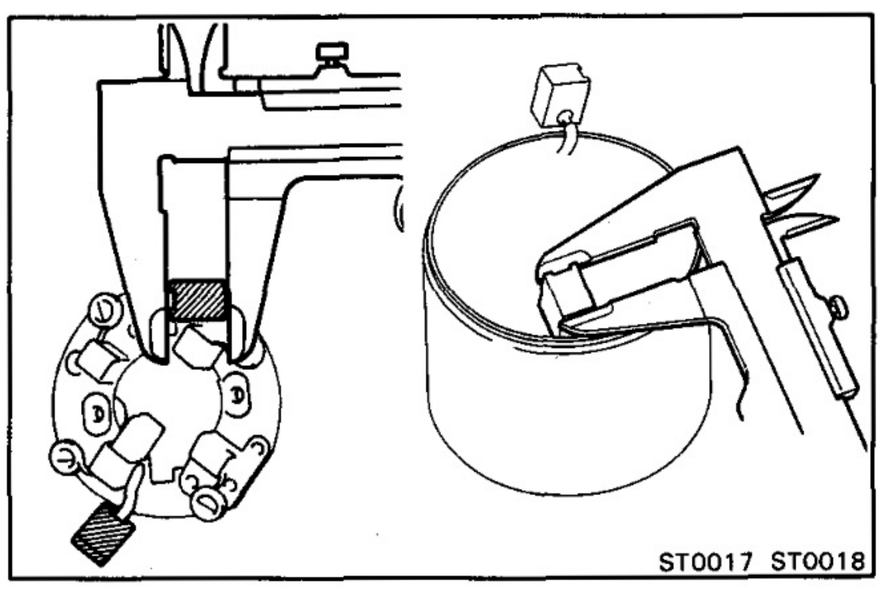

INSPECT BRUSH LENGTH

Using calipers, measure the brush length.

Standard length: 20.5 mm (0.807 in.)
Minimum length: 13.0 mm (0.512 in.)

If the length is less than minimum, replace the brush holder and field frame.

Brush Springs

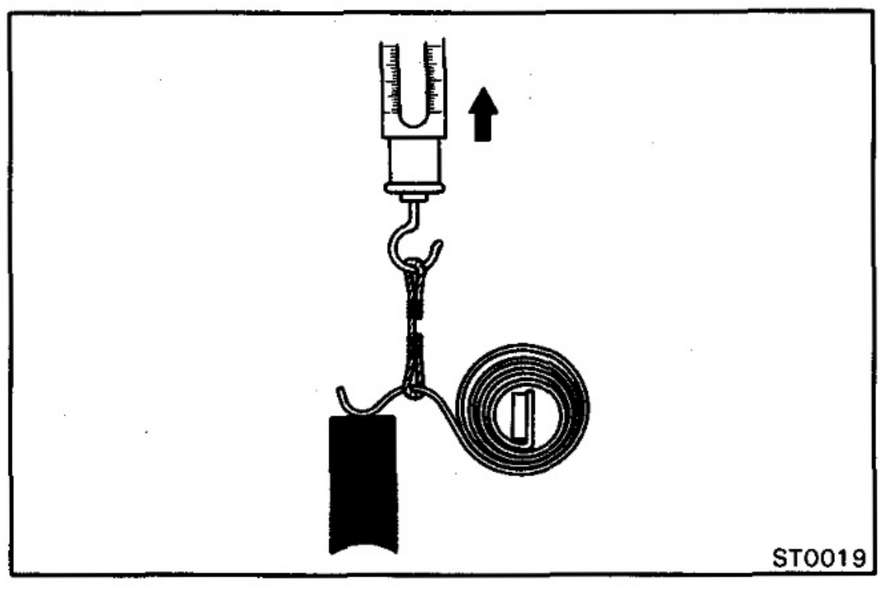

INSPECT BRUSH SPRING LOAD

Take the pull scale reading the instant the brush spring separates from the brush.

Spring installed load:
3.2 – 4.0 kg (7.1 – 8.8 lb, 31 – 39 N)

If the reading is not within specification, replace the brush springs.

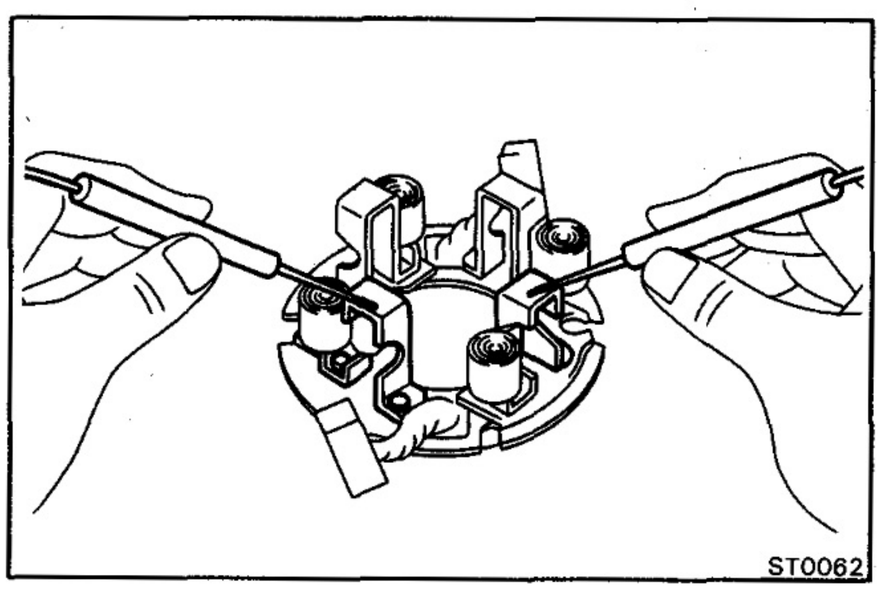

Brush Holder

INSPECT INSULATION OF BRUSH HOLDER

Using an ohmmeter, check that there is no continuity between the positive (+) and negative (−) brush holders.

If there is continuity, repair or replace the brush holder.

Clutch and Gears

1. INSPECT GEAR TEETH

Check the gear teeth on the pinion gear, idler gear and clutch assembly for wear or damage. Replace if damaged.

If damaged, also check the flywheel ring gear for wear or damage.

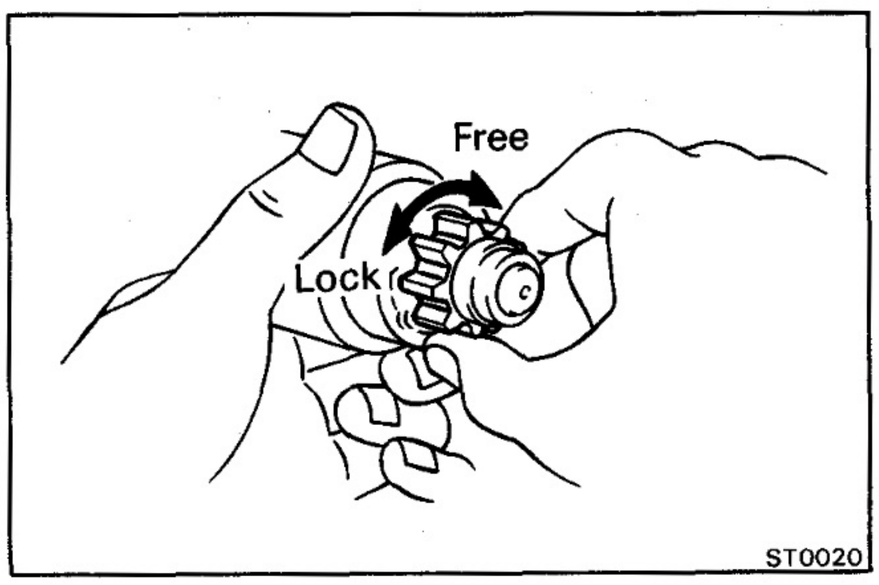

2. INSPECT CLUTCH PINION GEAR

Rotate the pinion gear clockwise and check that it turns freely. Try to rotate the pinion gear counterclockwise and check that it locks.

If necessary, replace the clutch assembly.

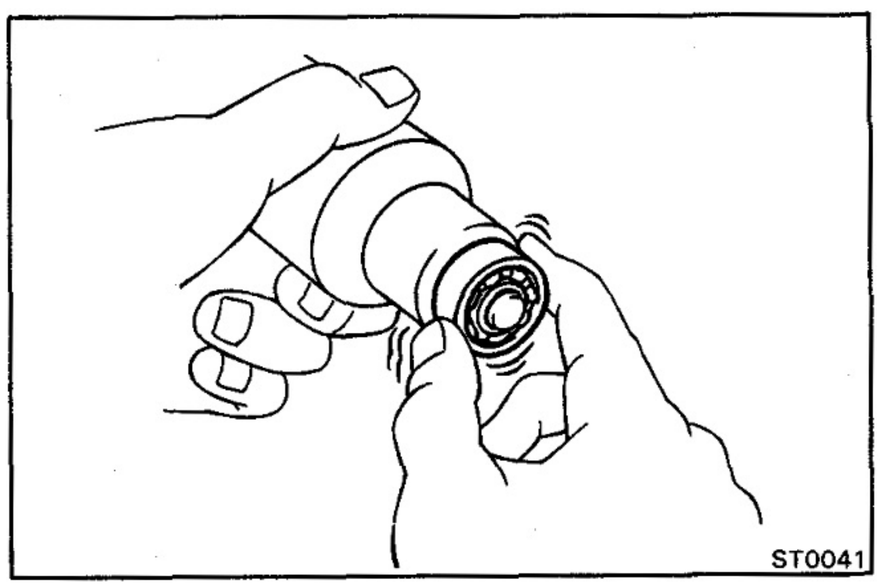

Bearings

1. INSPECT BEARINGS

Turn each bearing by hand while applying inward force.

If resistance is felt or if the bearing sticks, replace the bearing.

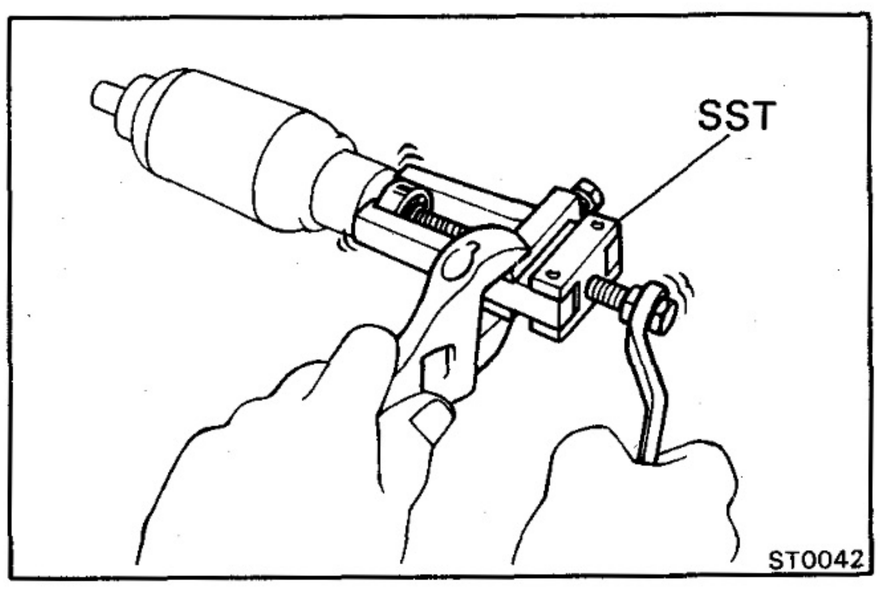

2. IF NECESSARY, REPLACE BEARINGS

(a) Using SST, remove the bearing.

SST 09286-46011

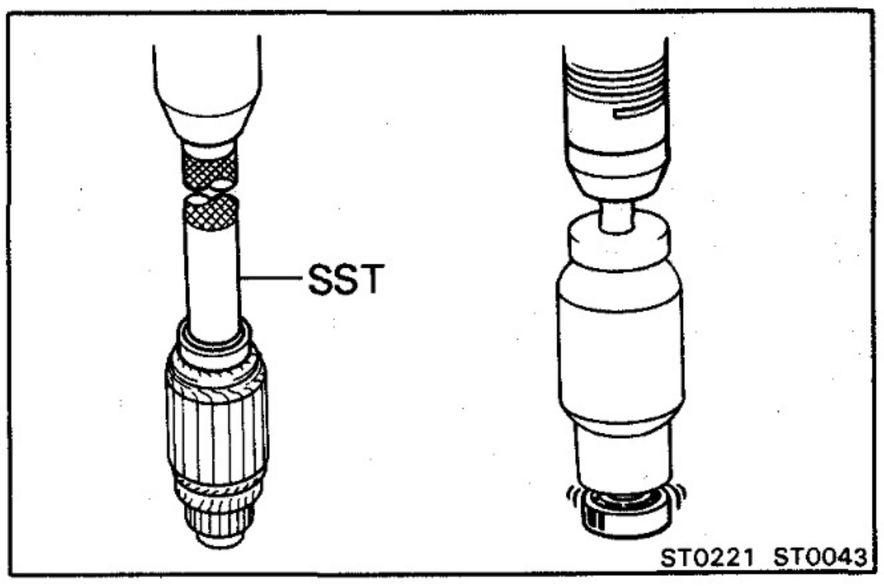

(b) Using SST and a press, press in a new front bearing.

SST 09285-76010

(c) Using a press, press in a new rear bearing.

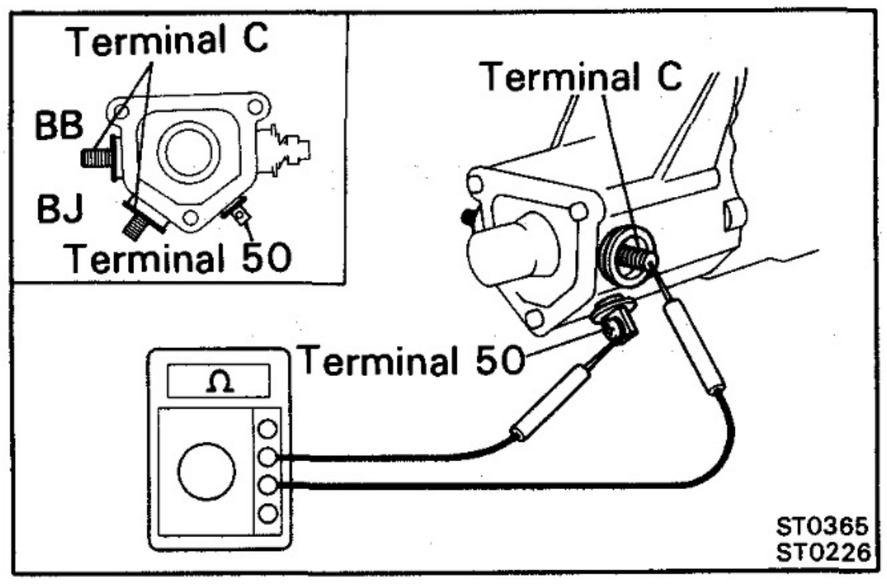

Magnetic Switch

1. PERFORM PULL-IN COIL OPEN CIRCUIT TEST

Using an ohmmeter, check that there is continuity between terminals 50 and C.

If there is no continuity, replace the magnetic switch.

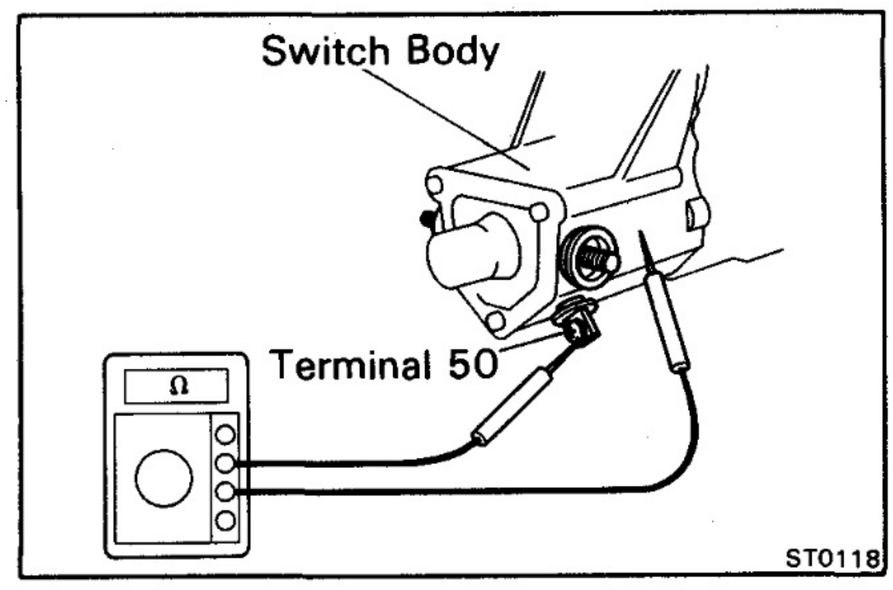

2. PERFORM HOLD-IN COIL OPEN CIRCUIT TEST

Using an ohmmeter, check that there is continuity between terminal 50 and the switch body.

If there is no continuity, replace the magnetic switch.

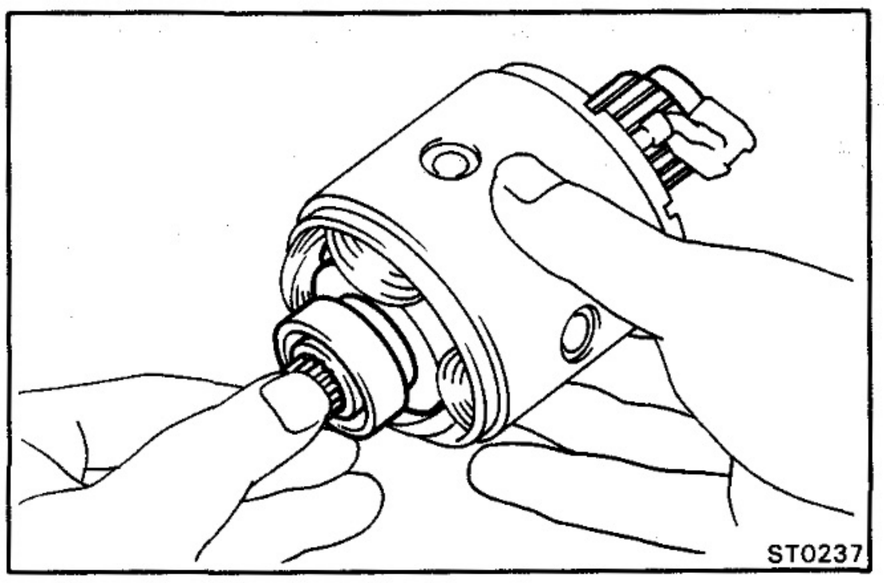

ASSEMBLY OF STARTER

(See page ST-15)

NOTE: Use high-temperature grease to lubricate the bearings and gears when assembling the starter.

1. PLACE ARMATURE INTO FIELD FRAME

Apply grease to the armature bearings and insert the armature into the field frame.

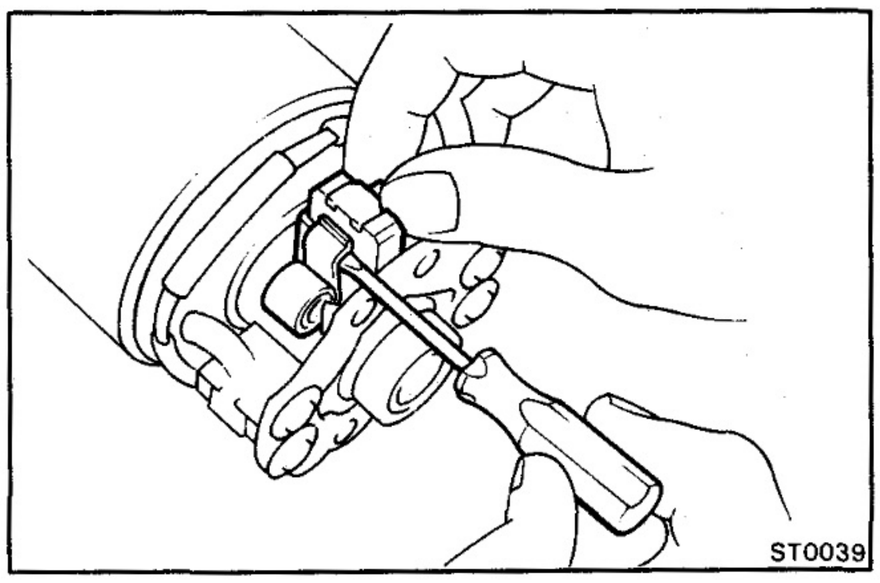

2. INSTALL BRUSH HOLDER

(a) Place the brush holder on the armature.

(b) Using a screwdriver, hold the brush spring back, and connect the brush into the brush holder. Connect the four brushes.

NOTE: Check that the positive (+) lead wires are not grounded.

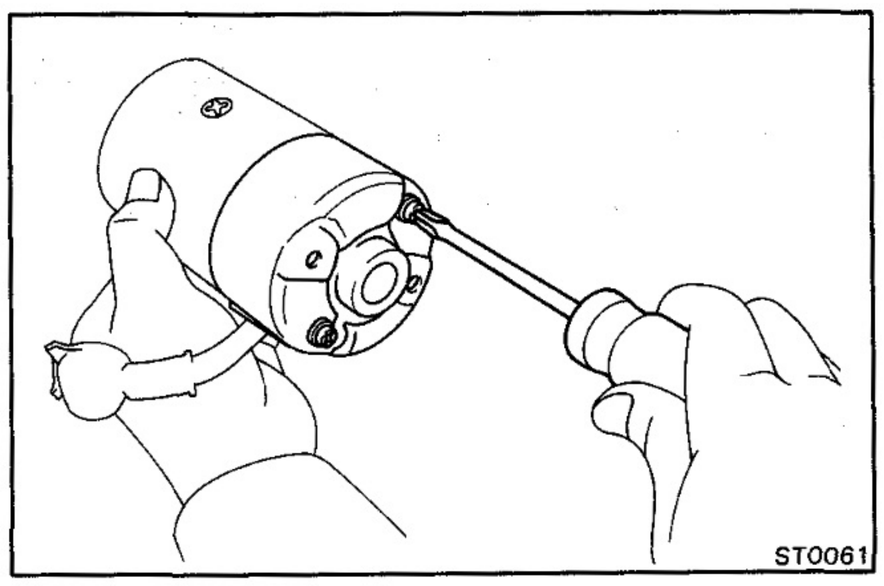

(c) Install the end cover with the two screws.

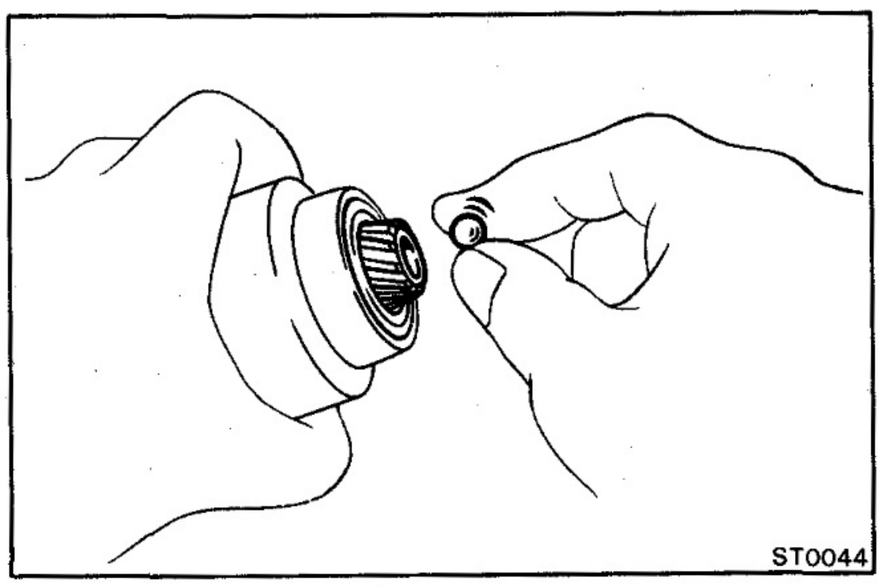

3. INSERT STEEL BALL INTO CLUTCH SHAFT HOLE

(a) Apply grease to the steel ball.

(b) Insert the steel ball into the clutch shaft hole.

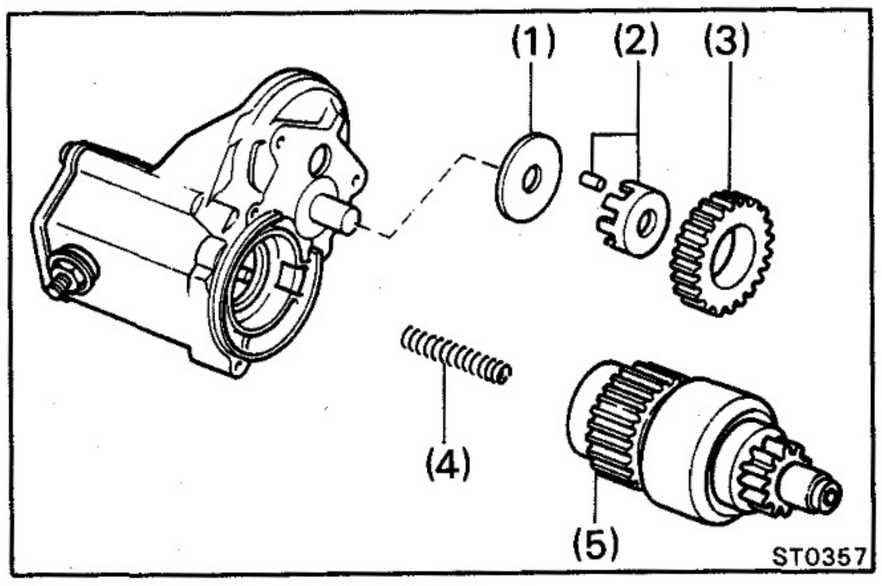

4. INSTALL CLUTCH ASSEMBLY AND GEAR

(a) Place the following parts in position on the magnetic switch:

(1) Plate washer

(2) Bearing

(3) Idle gear

(4) Return spring

(5) Clutch assembly

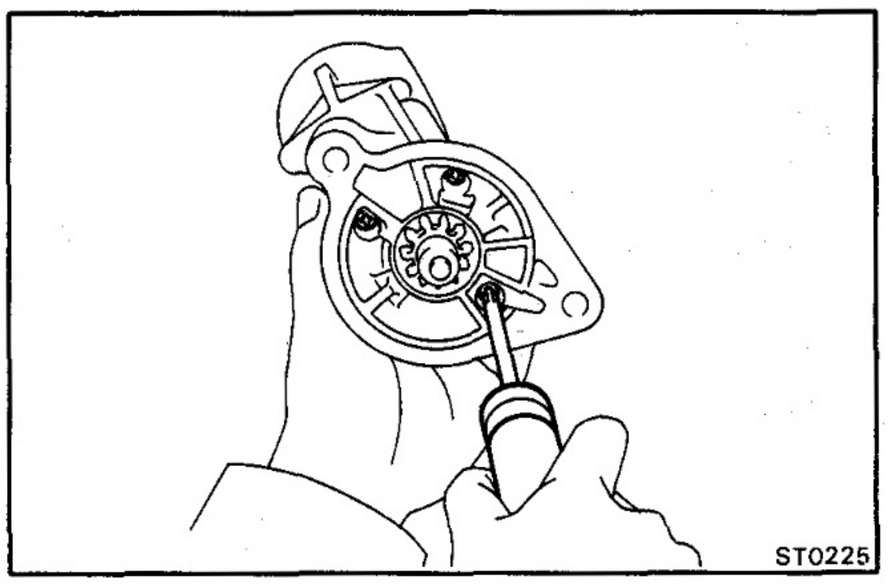

(b) Assemble the starter housing and magnetic switch with the three screws.

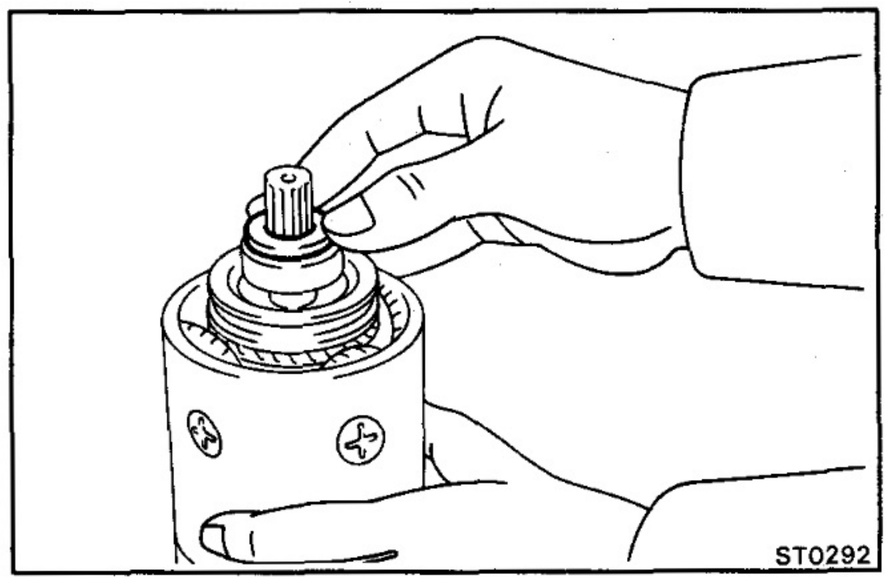

5. INSTALL FIELD FRAME AND ARMATURE ASSEMBLY

(a) Place the felt seal in position on the armature shaft.

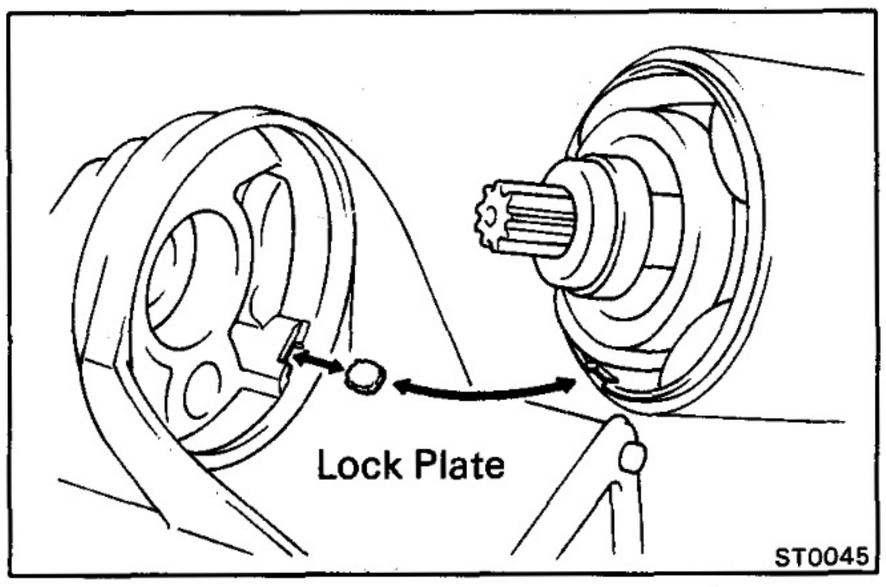

(b) Align the lock plate with the notch on the field frame.

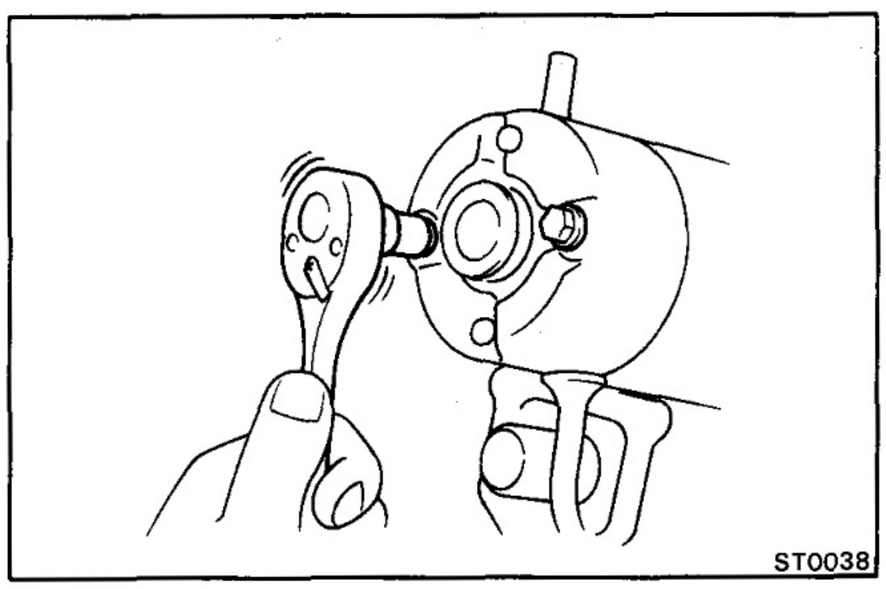

(c) Install the field frame and armature assembly with the two throught bolts.

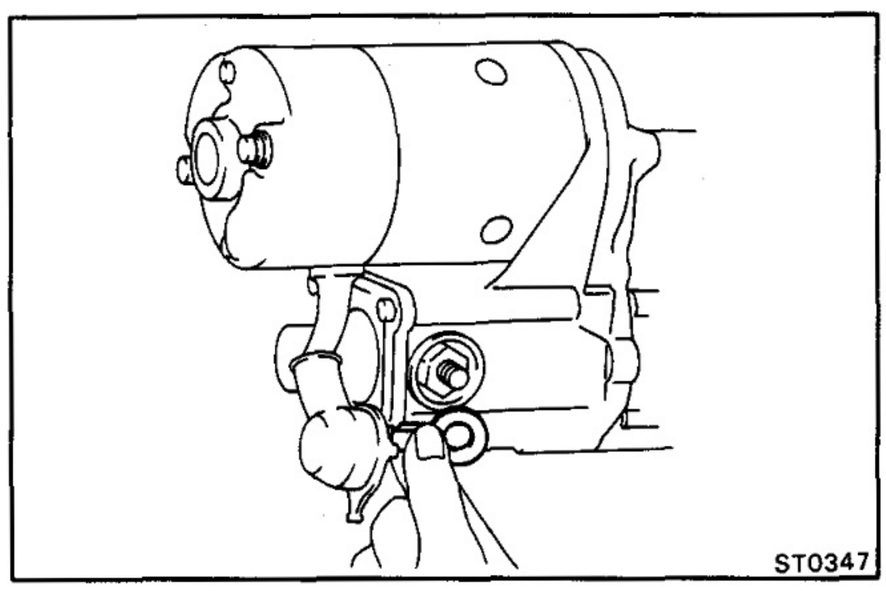

(d) Connect the lead wire to the magnetic switch terminal, and install the nut.

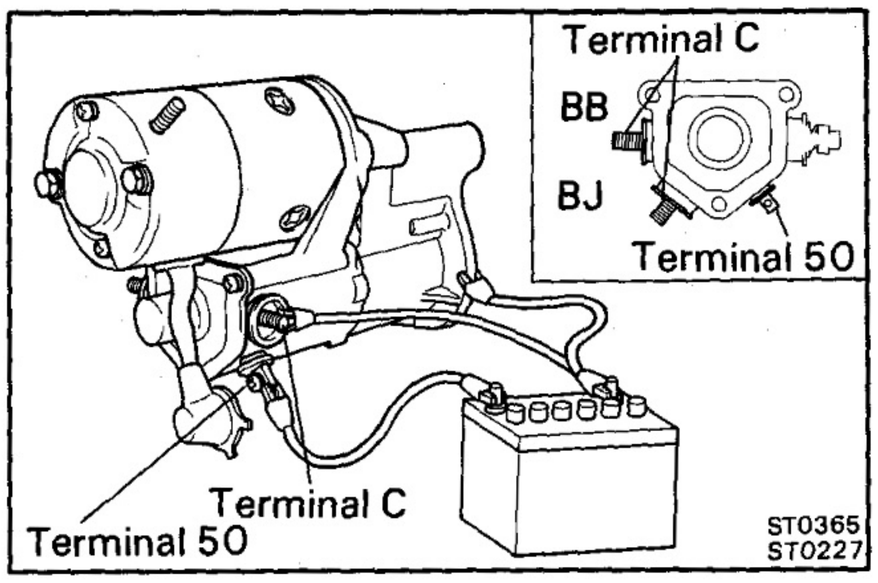

PERFORMANCE TEST OF STARTER

CAUTION: These tests must be performed within 3 to 5 seconds to avoid burning out the coil.

1. PERFORM PULL-IN TEST

(a) Disconnect the field coil lead from terminal C.

(b) Connect the battery to the magnetic switch as shown. Check that the pinion gear moves outward.

If the pinion gear does not move, replace the magnetic switch assembly.

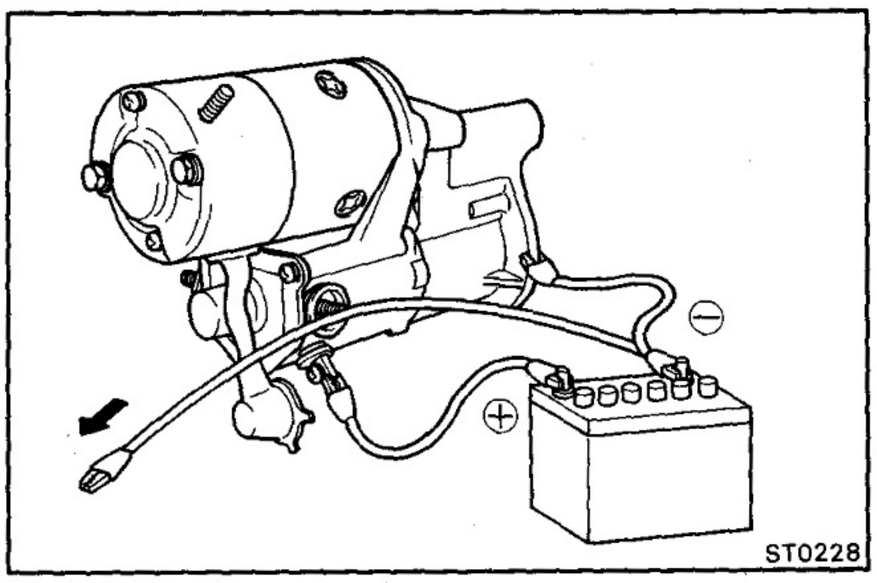

2. PERFORM HOLD-IN TEST

While connected as above with the pinion gear out, disconnect the negative (–) lead from terminal C. Check that the pinion gear remains out.

If the pinion gear returns inward, replace the magnetic switch assembly.

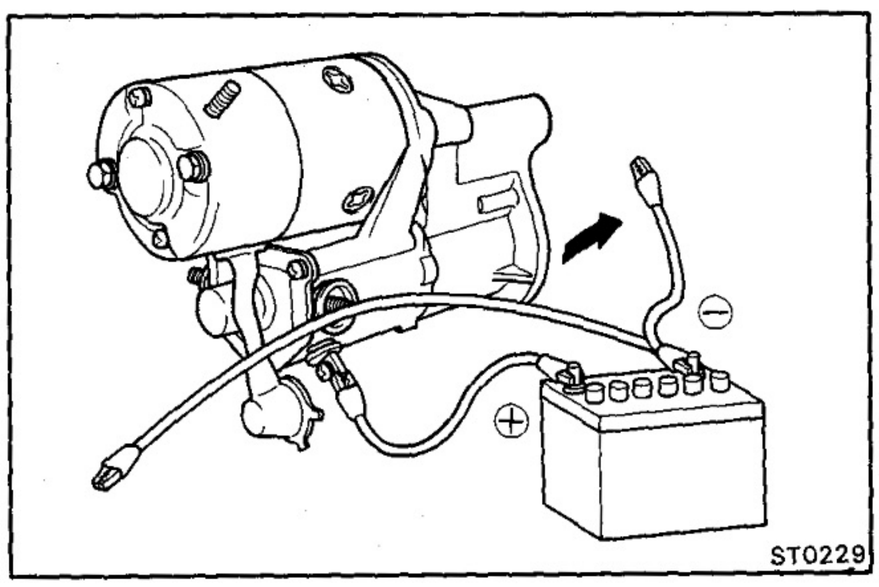

3. INSPECT PLUNGER RETURN

Disconnect the negative (–) lead from the switch body. Check that the pinion gear returns inward.

If the pinion gear does not return, replace the magnetic switch assembly.

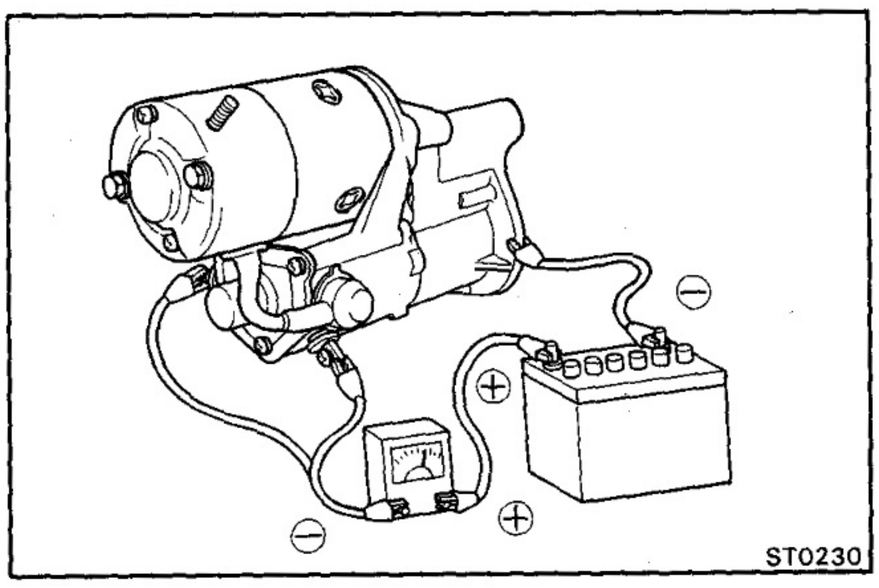

4. PERFORM NO-LOAD PERFORMANCE TEST

(a) Connect the battery and ammeter to the starter as shown.

(b) Check that the starter rotates smoothly and steadily with the pinion gear moving out. Check that the ammeter reads the specified current.

Specified current:

12V Type 180 A or less at 11 V
24V Type 90 A or less at 23 V

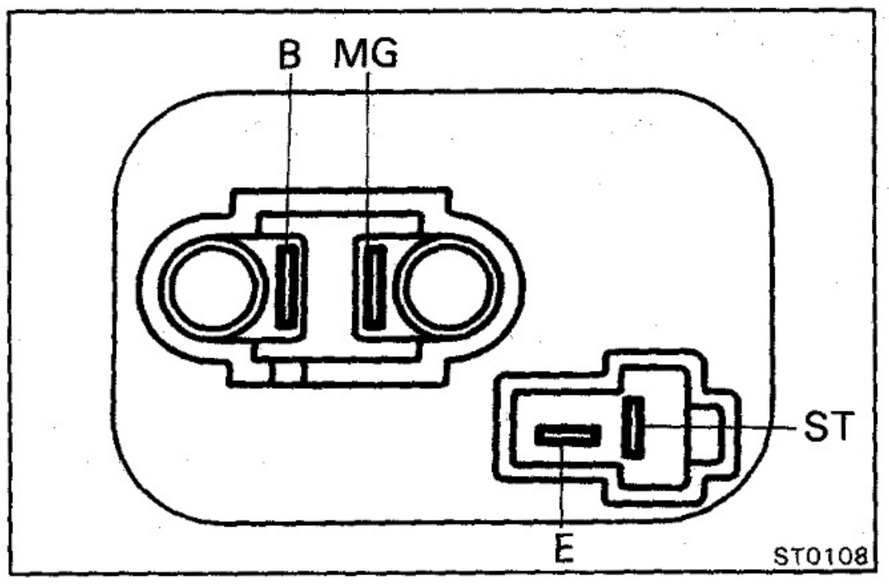

STARTER RELAY [BB, BU and BY]

LOCATION:

BY: Under the instrument panel on the driver's side.

BU: Under the instrument panel center.

BB: Inside wall adjacent to passenger door.

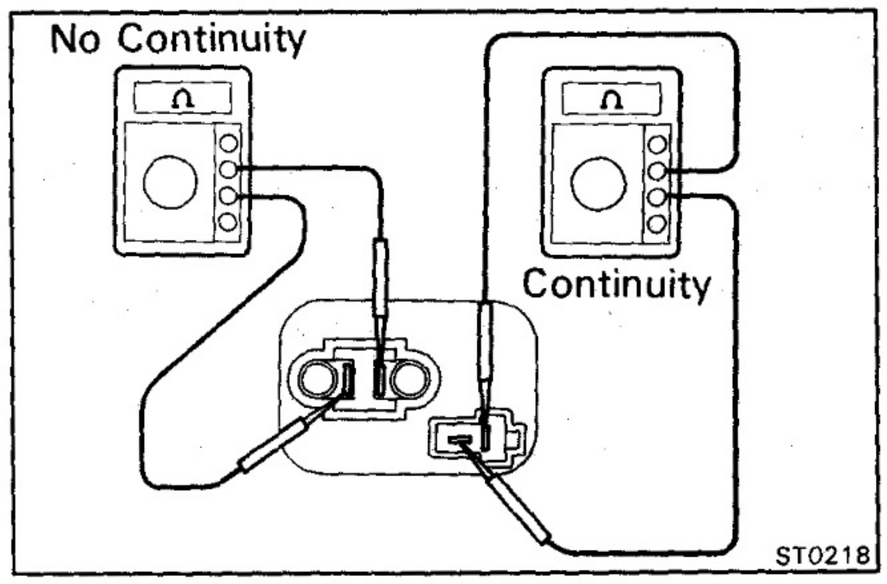

INSPECTION OF STARTER RELAY

1. INSPECT RELAY CONTINUITY

(a) Check that there is continuity between terminals E and ST.

(b) Check that there is no continuity between terminal B and MG.

If continuity is not as specified, replace the relay.

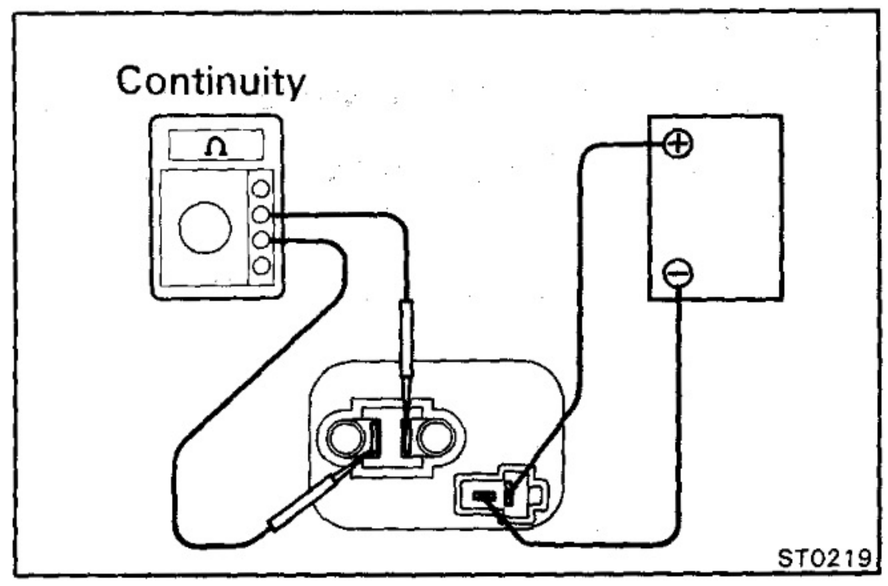

2. INSPECT RELAY OPERATION

(a) Apply battery voltage across terminals E and ST.

(b) Check that there is continuity between terminals B and MG.

If operation is not as specified, replace the relay.

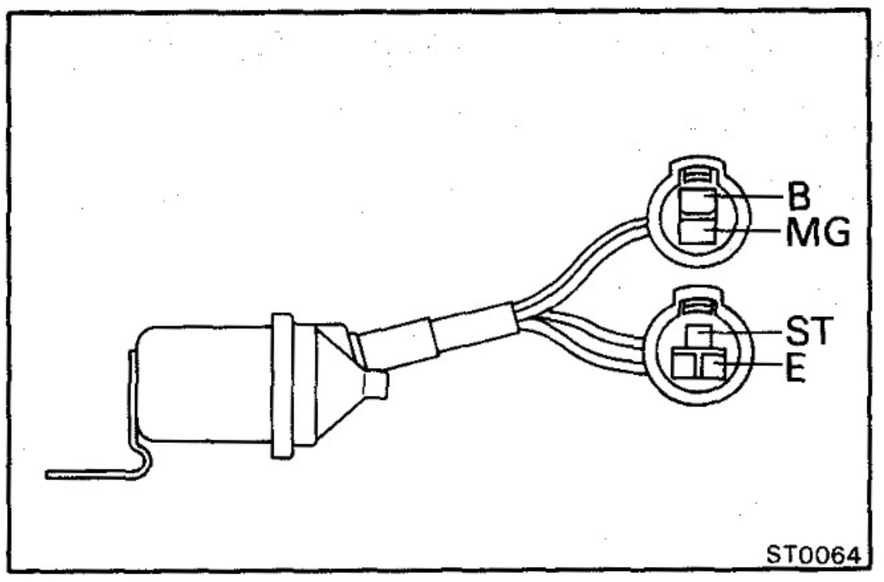

STARTER RELAY [BJ]

LOCATION: On the fender apron in the engine compartment.

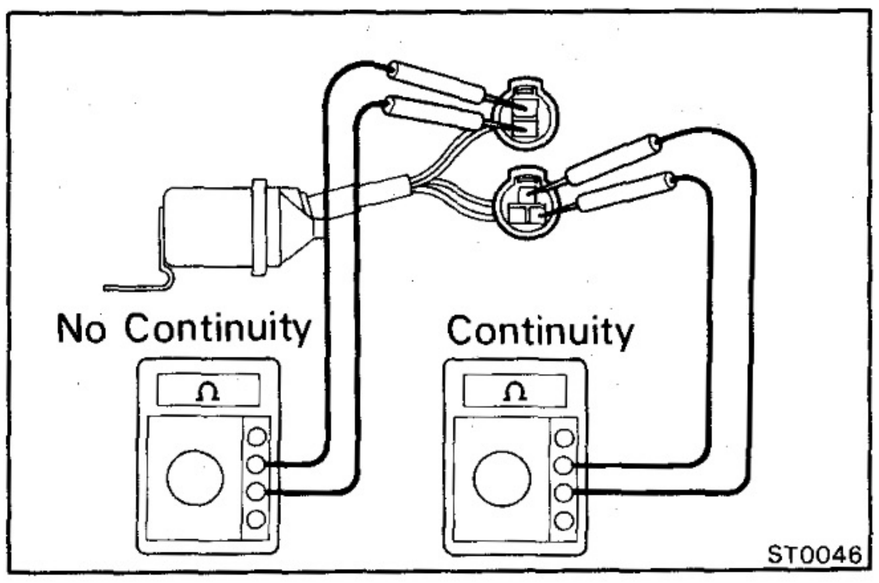

INSPECTION OF STARTER RELAY

1. INSPECT RELAY CONTINUITY

(a) Check that there is continuity between terminals E and ST.

(b) Check that there is no continuity between terminal B and MG.

If continuity is not as specified, replace the relay.

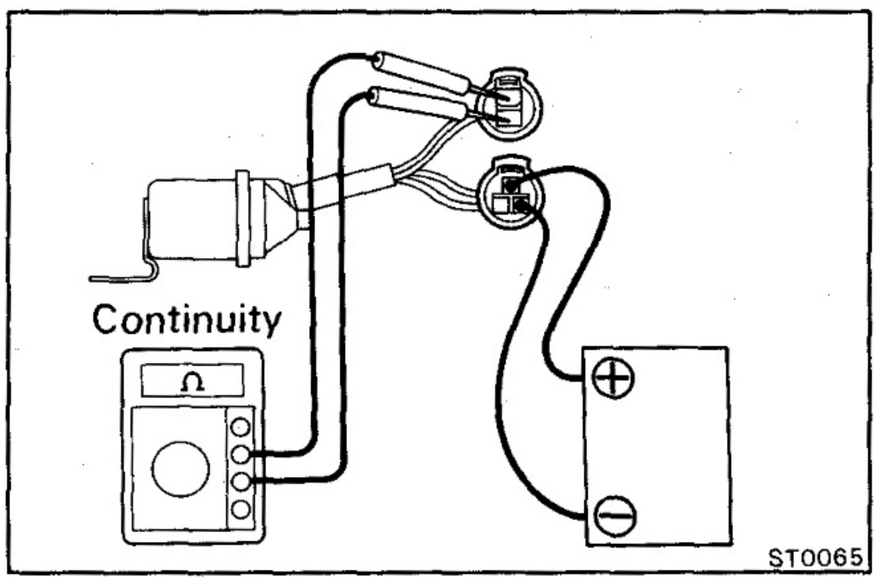

2. INSPECT RELAY OPERATION

(a) Apply battery voltage across terminals E and ST.

(b) Check that there is continuity between terminals B and MG.

If operation is not as specified, replace the relay.

ELECTRICAL DIESEL INJECTION CONTROL (EDIC) SYSTEM [B and 3B (w/ EDIC System)]

SYSTEM CIRCUIT

BB20, 30, BJ60, 70, 73, 75, BU60, 75, 80

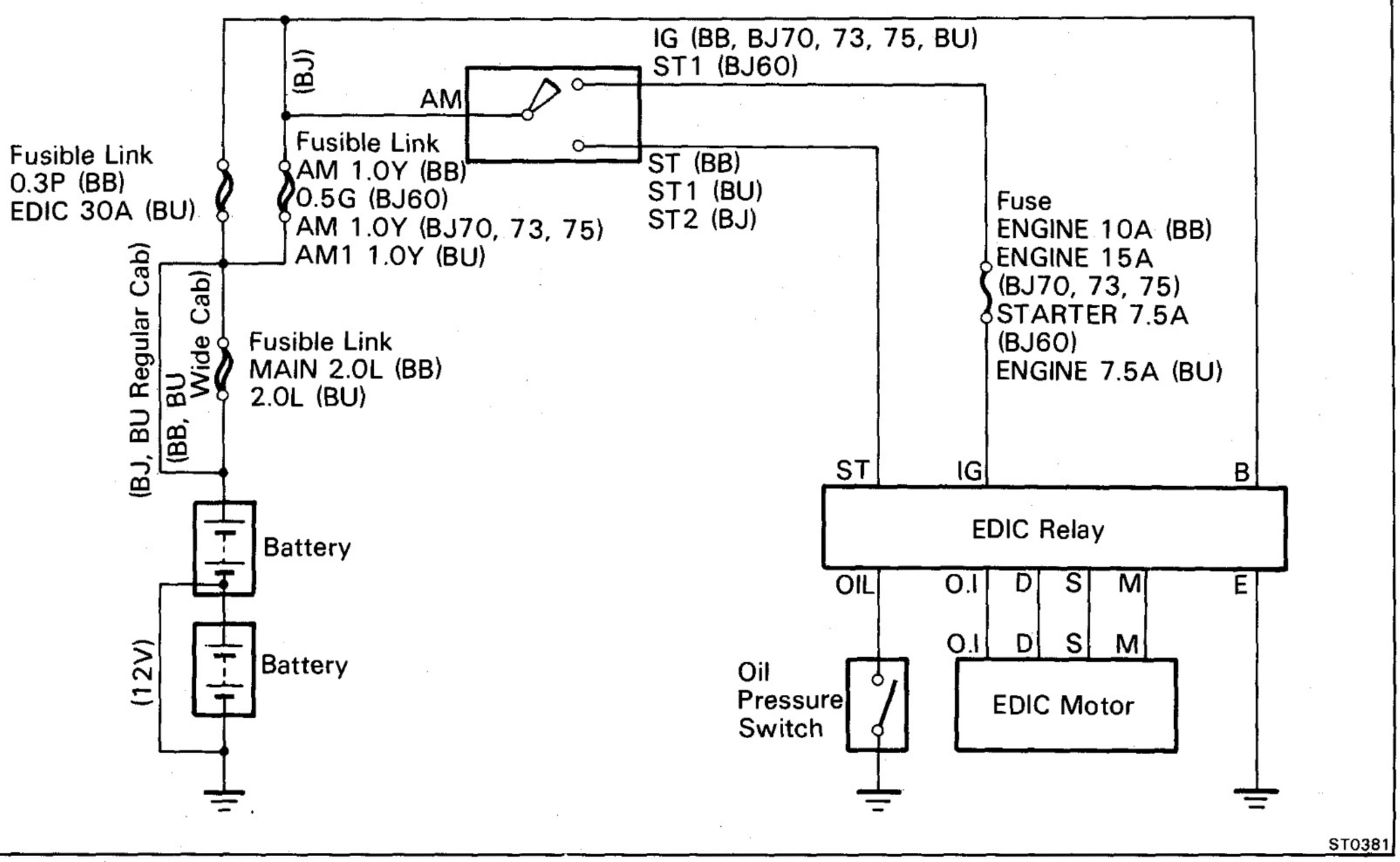

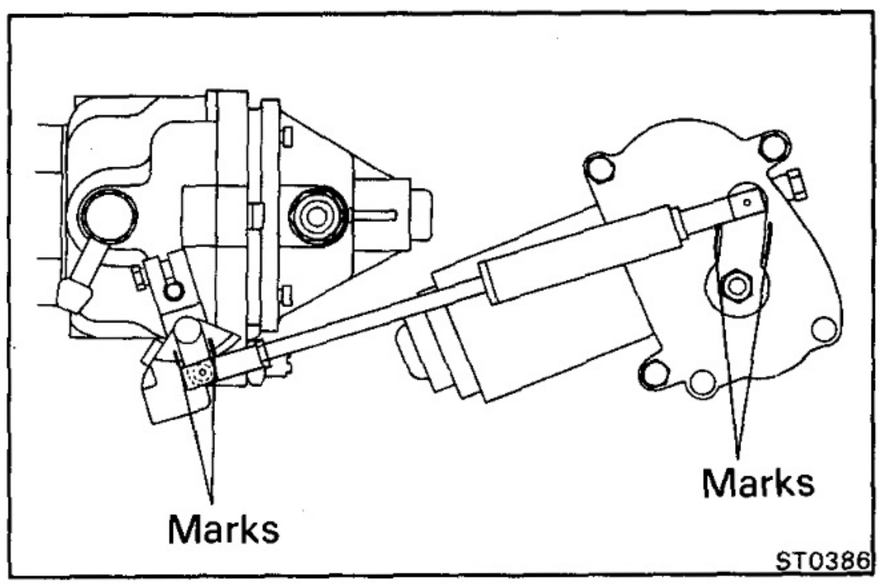

ON-VEHICLE INSPECTION

1. INSPECT LEVER DRIVE POSITION

After starting the engine, the fuel control motor lever and pump adjusting lever should be positioned between the marks.

If necessary, adjust with the connecting rod.

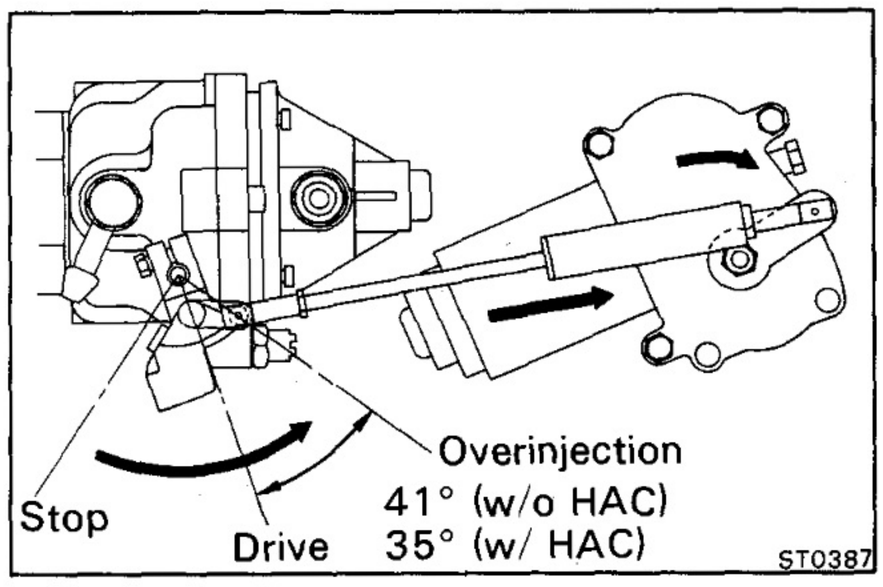

2. INSPECT LEVER OPERATION

A. Starting Overinjection (Overinjection Position)

When the ignition switch is turned to "START," the pump adjusting lever should move to the overinjection position.

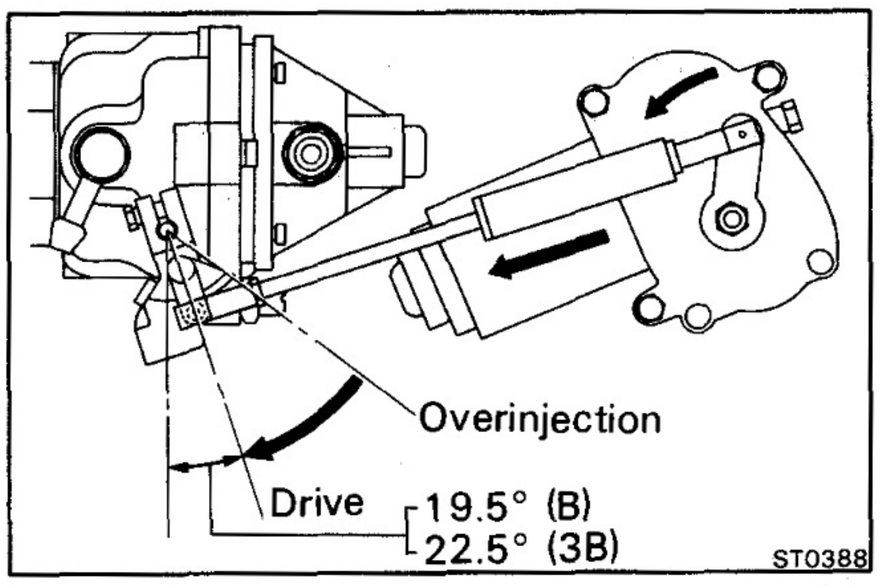

B. After starting (Drive Position)

After starting the engine, the pump adjusting lever should be positioned to the drive position.

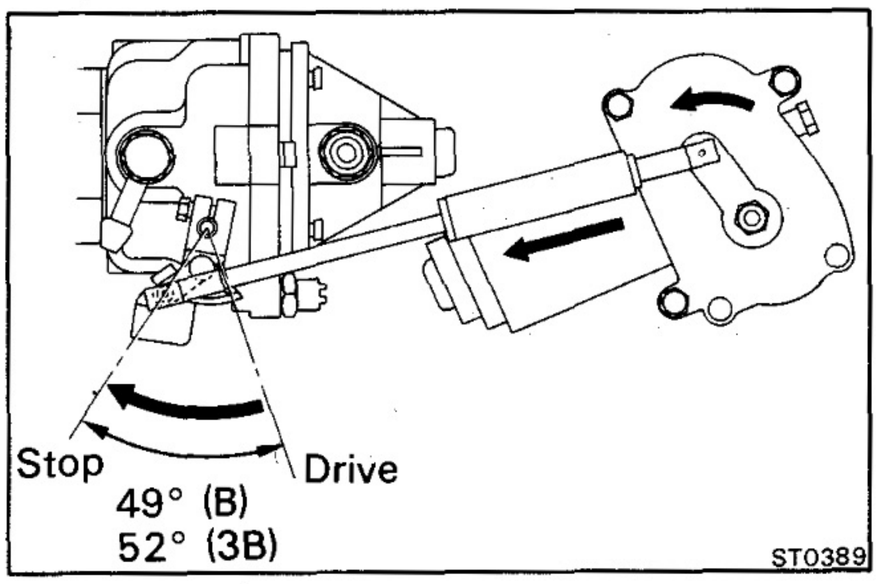

C. Engine Stopping Action (Stop Position)

When the ignition switch is turned to "OFF," the pump adjusting lever should move to the stop position and the engine should stop.

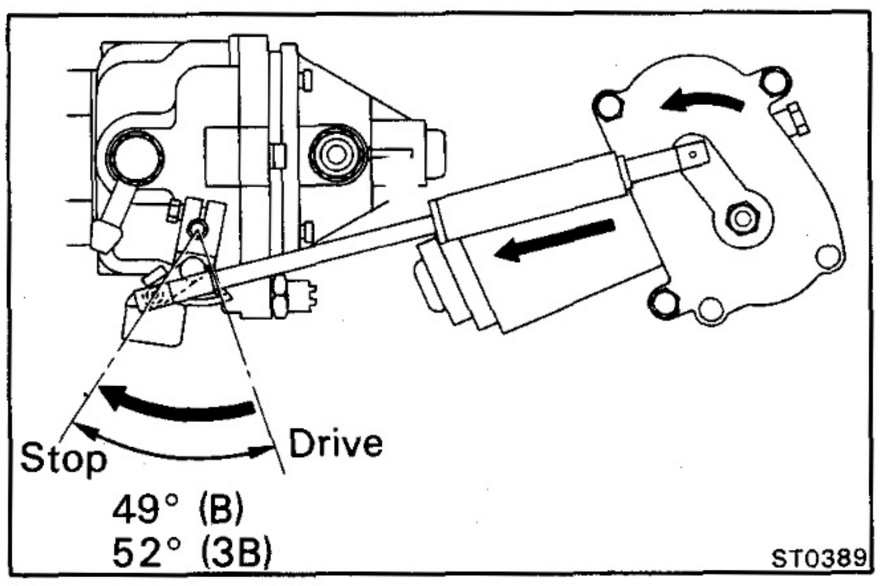

D. Reverse Rotation Prevention

Start the engine, and ground the oil pressure switch connector. Then the pump adjusting lever should move to the stop position and the engine should stop.

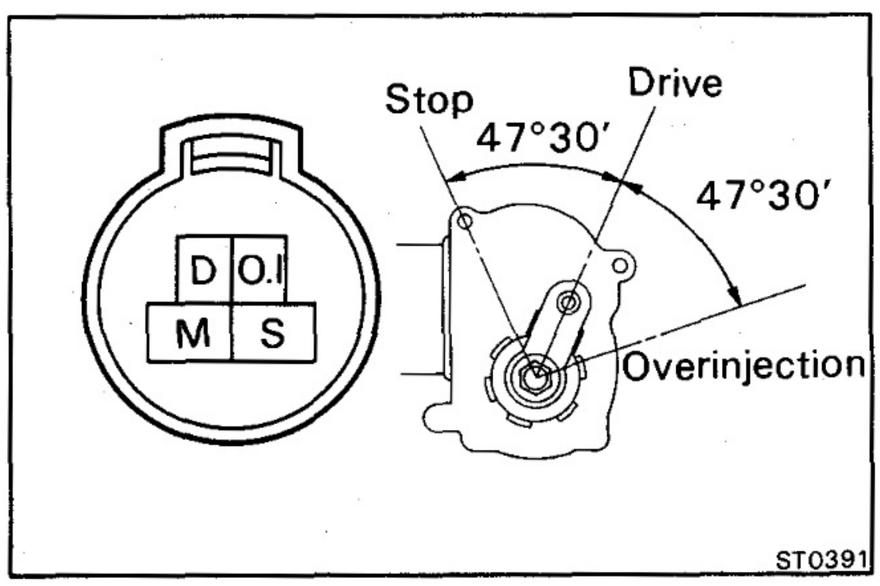

INSPECTION OF COMPONENTS

EDIC Motor

INSPECT EDIC MOTOR

Check the continuity between the terminals and body ground.

Lever Position \ Terminal	S	D	O.I	Body
Overinjection position	○	○		○
Drive position	○		○	○
Stop position		○	○	○

If continuity is not as specified, replace the motor.

Oil Pressure Switch

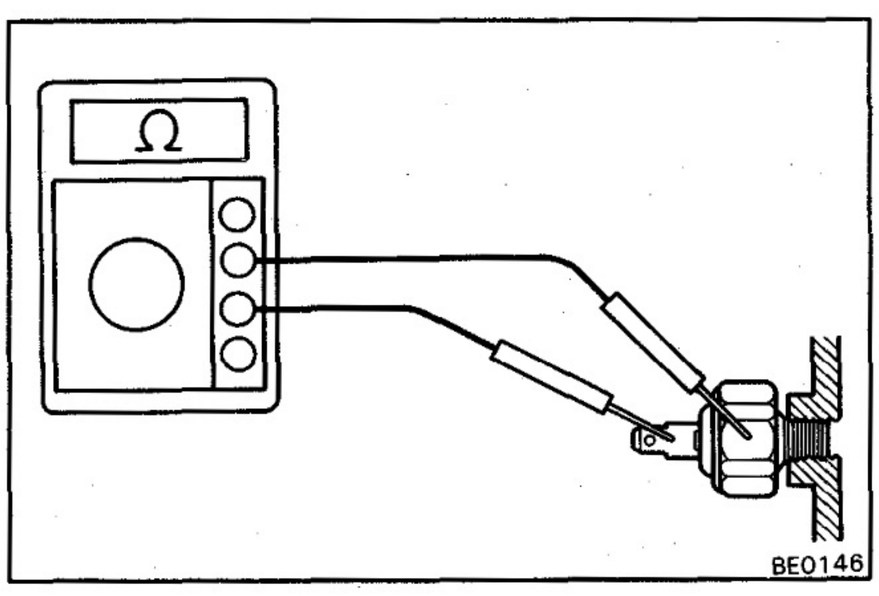

INSPECT OIL PRESSURE SWITCH

Check the continuity between the terminal and body ground.

(a) Check that there is continuity with the engine stopped.

(b) Check that there is no continuity with the engine running.

NOTE: After the engine has started, oil pressure should rise over 0.2 kg/cm² (2.8 psi, 20 kPa).

If operation is not correct, replace the switch.

FUEL CUT DIAPHRAGM [B (w/o EDIC System)]

SYSTEM CIRCUIT

BU60, 63, 70, 75, 80

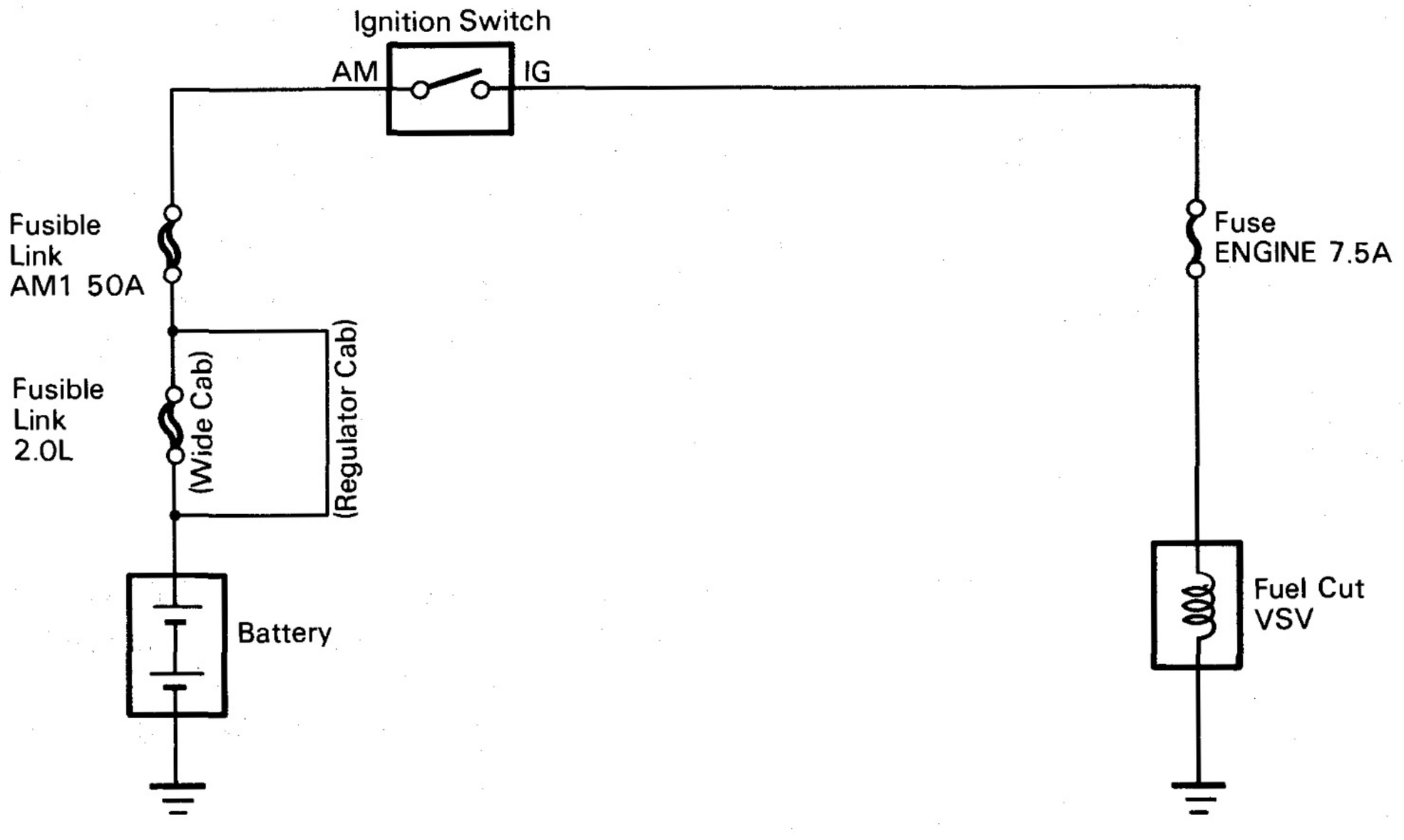

ST0392

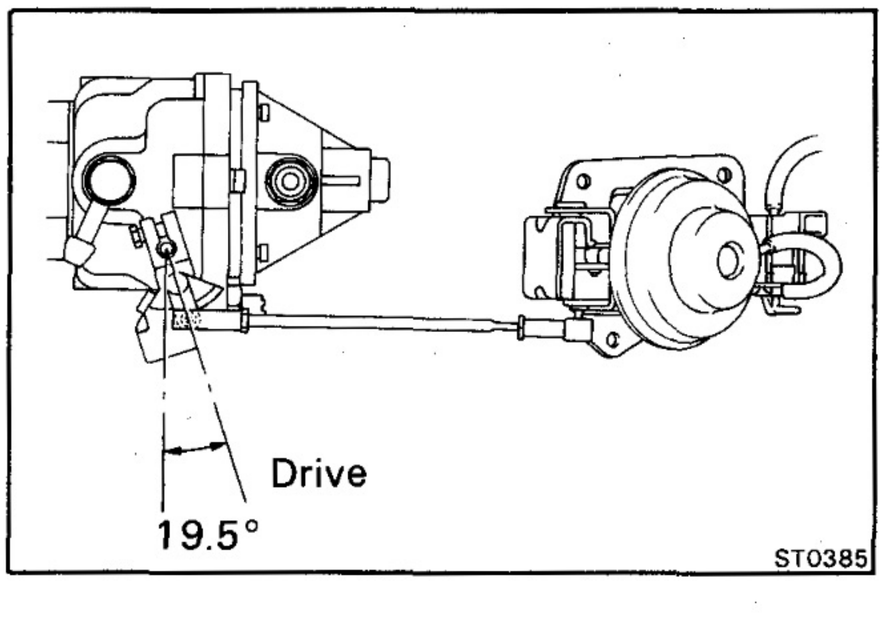

ST0385

ON-VEHICLE INSPECTION

1. INSPECT LEVER DRIVE POSITION

After starting the engine, the pump adjusting lever should be positioned as shown.

If necessary, adjust with the connecting rod.

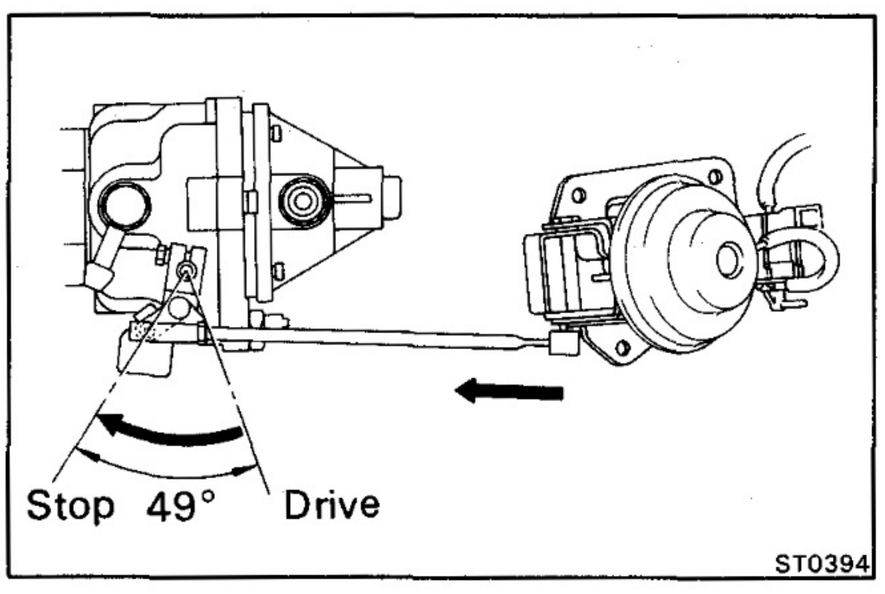

ST0394

2. INSPECT LEVER OPERATION

When the ignition switch is turned to "OFF," the pump adjusting lever should move to the stop position and the engine should stop.

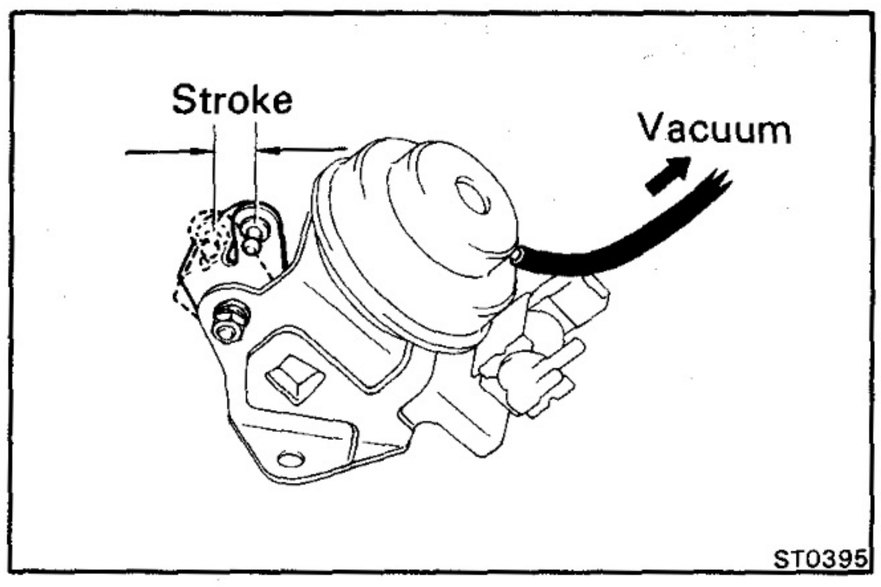

INSPECTION OF FUEL CUT DIAPHRAGM

INSPECT FUEL CUT DIAPHRAGM

A. Inspect lever stroke

(a) Apply 400 mmHg (15.75 in.Hg, 53.3 kPa) of vacuum to the diaphragm, and measure the lever stroke.

Lever stroke: 12.5 – 14.5 mm (0.492 – 0.571 in.)

If the stroke is not within specification, replace the diaphragm assembly.

(b) Check that vacuum does not drop immediately.

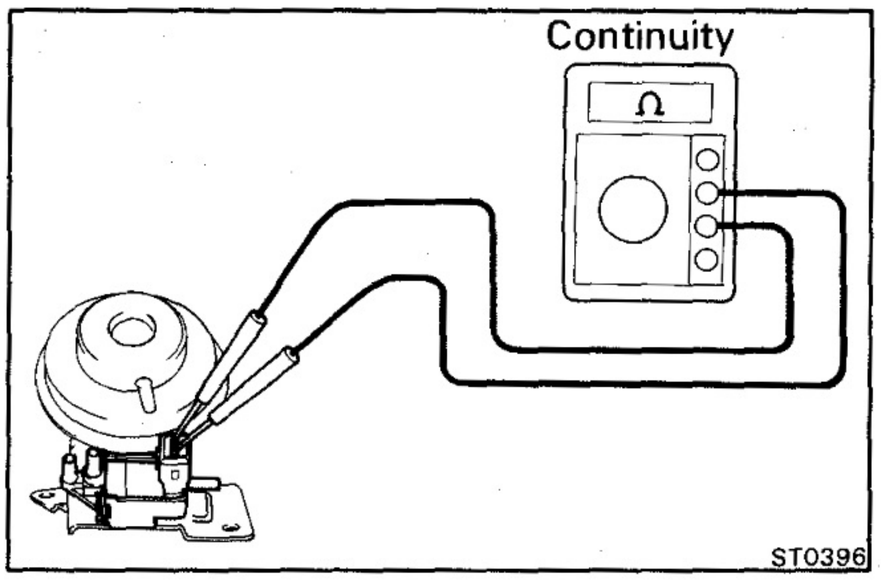

B. Inspect vacuum switching valve (VSV) for open circuit

Using an ohmmeter, check that there is continuity between the terminals.

Resistance: 38 – 44 Ω at 20°C (68°F)

If there is no continuity, replace the diaphragm assembly.

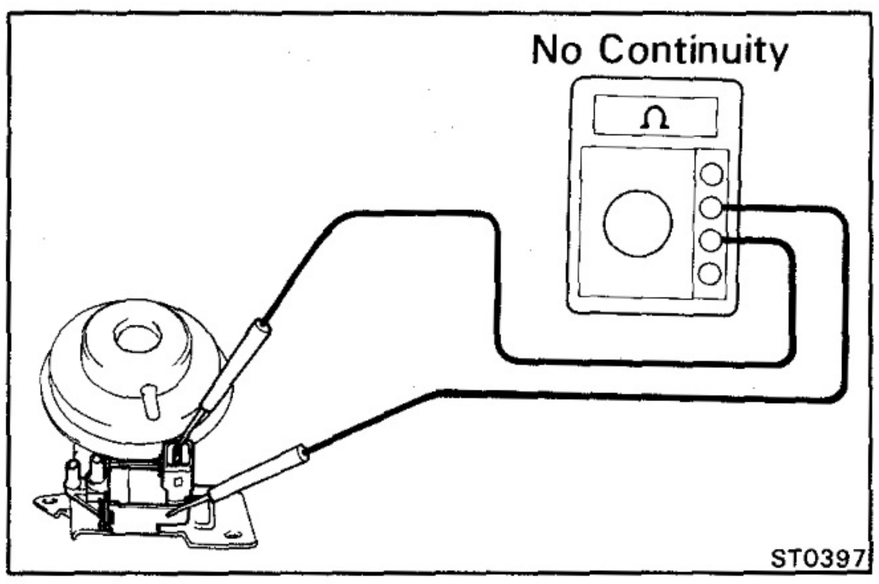

C. Inspect vacuum switching valve (VSV) for ground

Using an ohmmeter, check that there is no continuity between each terminal and the VSV body.

If there is continuity, replace the diaphragm assembly.

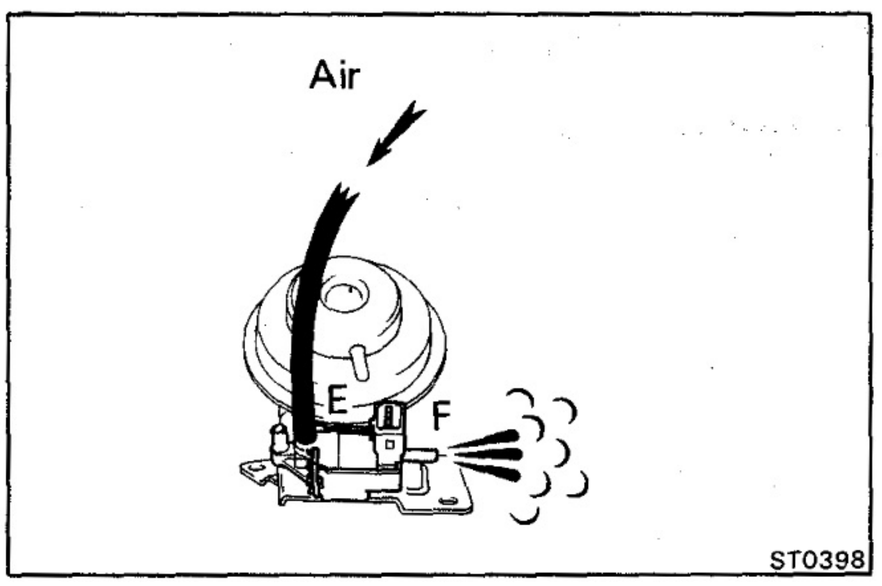

d. Inspect vacuum switching valve (VSV) operation

(a) Check that air flows from pipe E to pipe F.

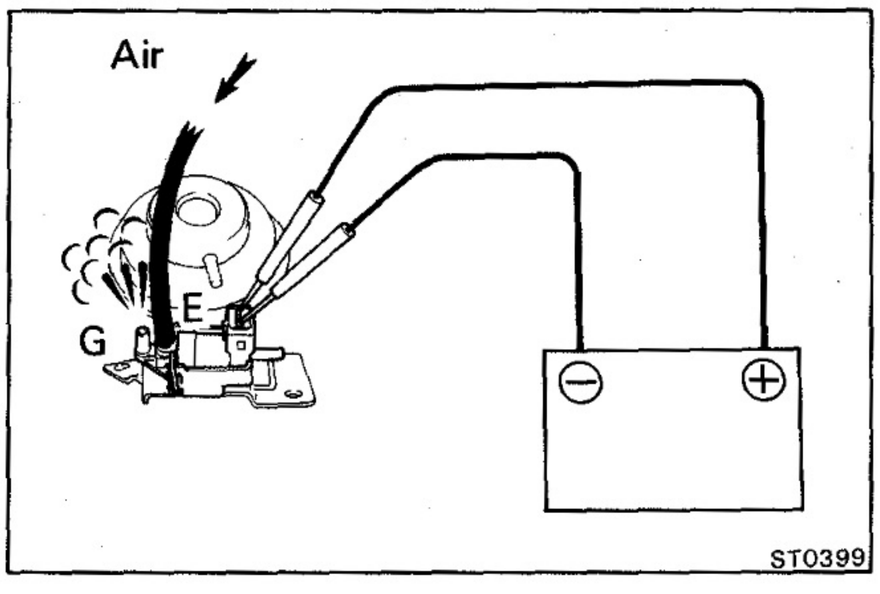

(b) Apply battery voltage across the terminals.

(c) Check that air flows from pipe E to pipe G.

If operation is not as specified, replace the diaphragm assembly.

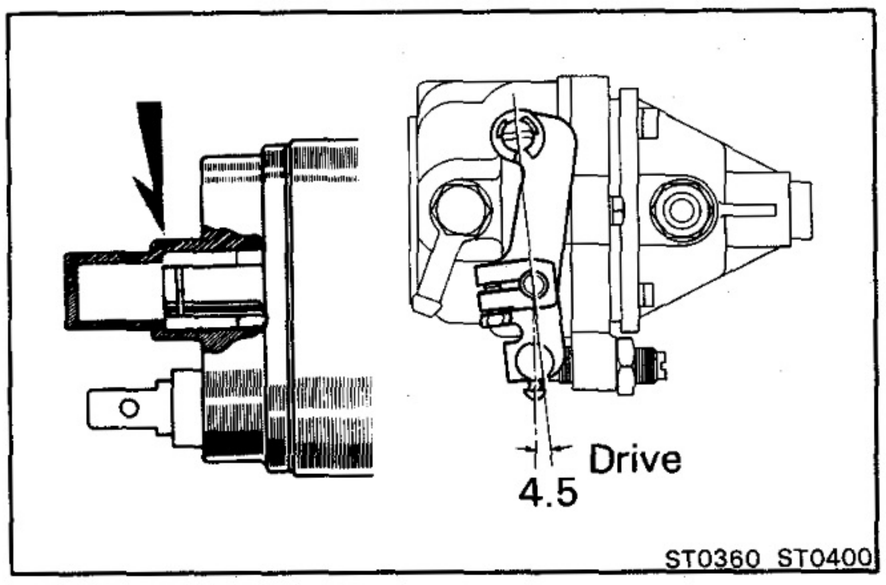

OVERINJECTION MAGNET [3B (w/o EDIC System)]

ON-VEHICLE INSPECTION

1. INSPECT LEVER DRIVE POSITION

After starting the engine, the pump adjusting lever should be positioned as shown.

If necessary, adjust with the connecting wire.

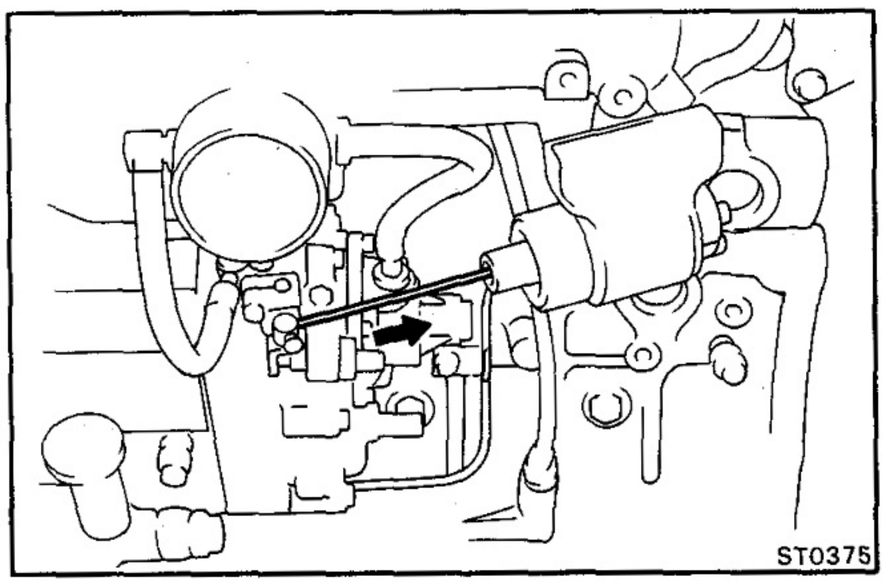

2. INSPECT LEVER OPERATION

When the ignition switch is turned to "START," the pump adjusting lever should move to the overinjection position.

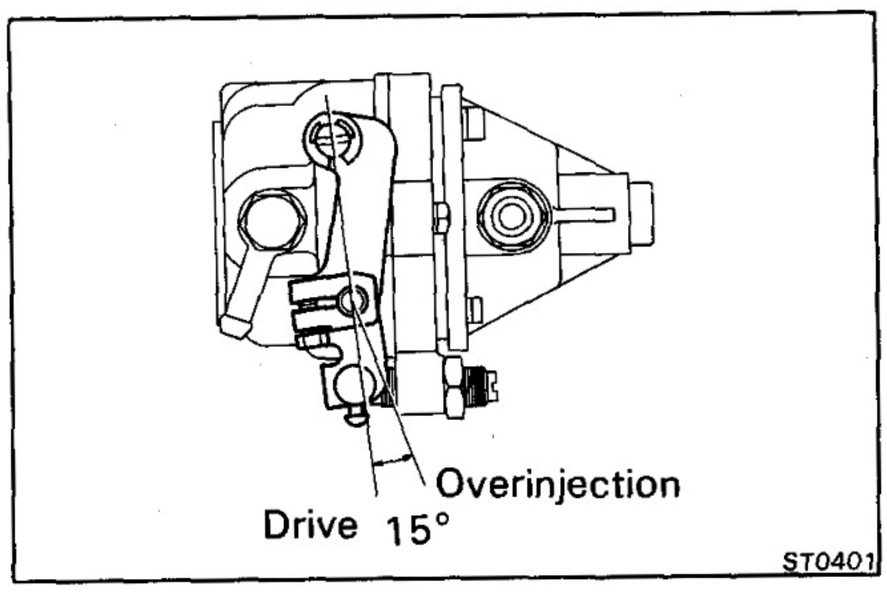

CHARGING SYSTEM

	Page
PRECAUTIONS	CH-2
TROUBLESHOOTING	CH-2
CHARGING SYSTEM CIRCUIT	CH-3
ON-VEHICLE INSPECTION	CH-7
ALTERNATOR	CH-11
ALTERNATOR REGULATOR	CH-21
CHARGE LIGHT RELAY [w/ IC Regulator (BJ73 12V Type)]	CH-23
CHARGE LIGHT RELAY [w/ IC Regulator (BB 24V Type)]	CH-24
CHARGE LIGHT RELAY [w/ IC Regulator (BJ70 24V Type)]	CH-25
IGNITION MAIN RELAY [BJ60]	CH-26

PRECAUTIONS

1. **Check that the battery cables are connected to the correct terminals.**
2. **Disconnect the battery cables when the battery is given a quick charge.**
3. **Do not perform tests with a high voltage insulation resistance tester.**
4. **Never disconnect the battery while the engine is running.**

TROUBLESHOOTING

Problem	Possible cause	Remedy	Page
Discharge warning light does not light with starter switch at "ON" and engine not running	Fuse blown	Check fuses	
	Light burned out	Replace light	
	Wiring connection loose	Tighten loose connection	
	Alternator regulator faulty	Check regulator	CH-21
	Charge light relay faulty	Check relay	CH-23
	IC regulator faulty	Replace IC regulator	CH-11
Discharge warning light does not go out with engine running (battery requires frequent recharging)	Drive belt loose or worn	Adjust or replace drive belt	CH-7
	Battery cables loose, corroded or worn	Repair or replace cables	
	Fuse blown	Check fuse	
	Ignition main relay faulty	Check relay	CH-26
	Fusible link blown	Replace fusible link	
	Alternator regulator, IC regulator, charge light relay or alternator faulty	Check charging system	CH-7
	Wiring faulty	Repair wiring	

CHARGING SYSTEM CIRCUIT

BB20 [w/o IC Regulator]

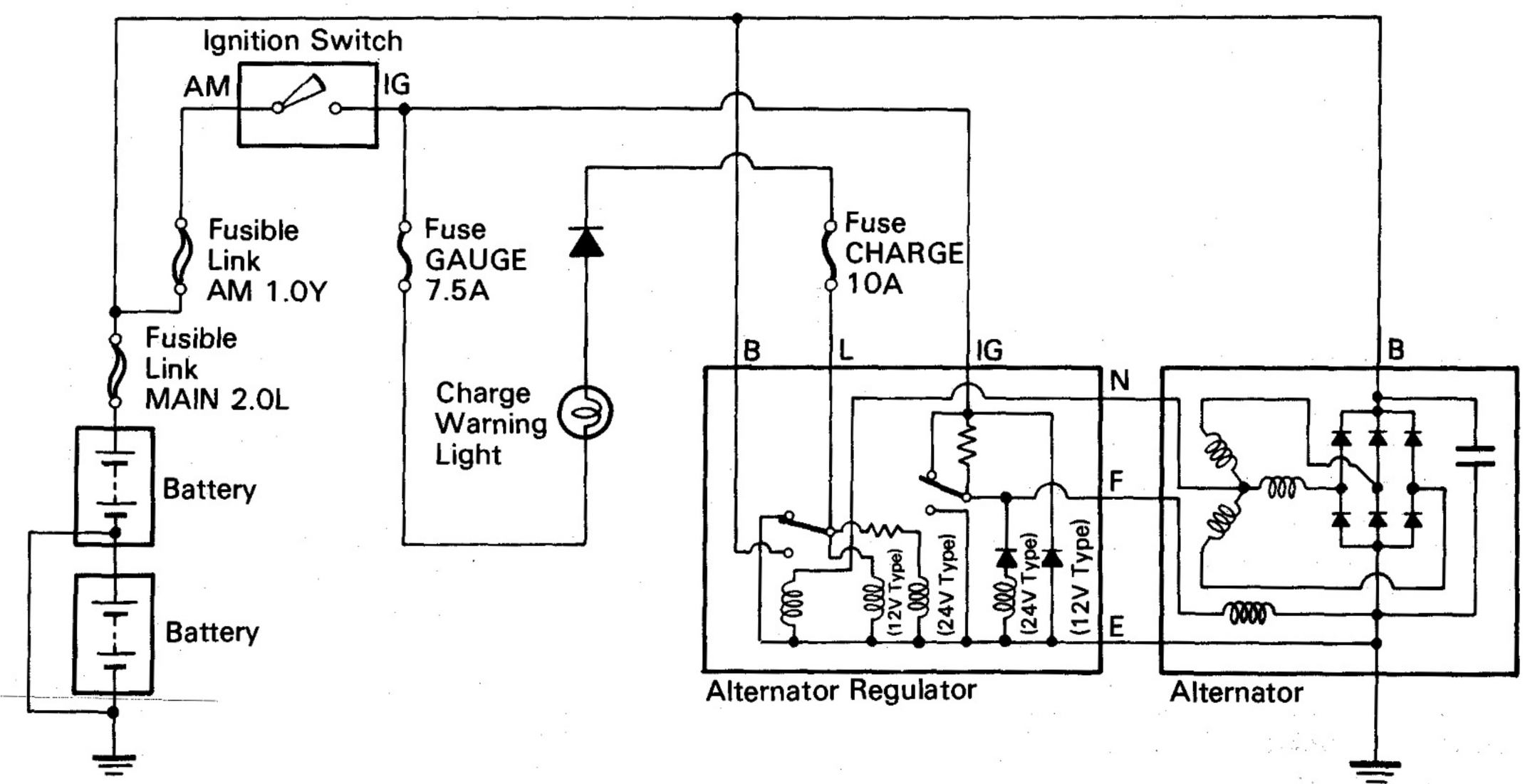

BB20, 22, 30 [w/o IC Regulator]

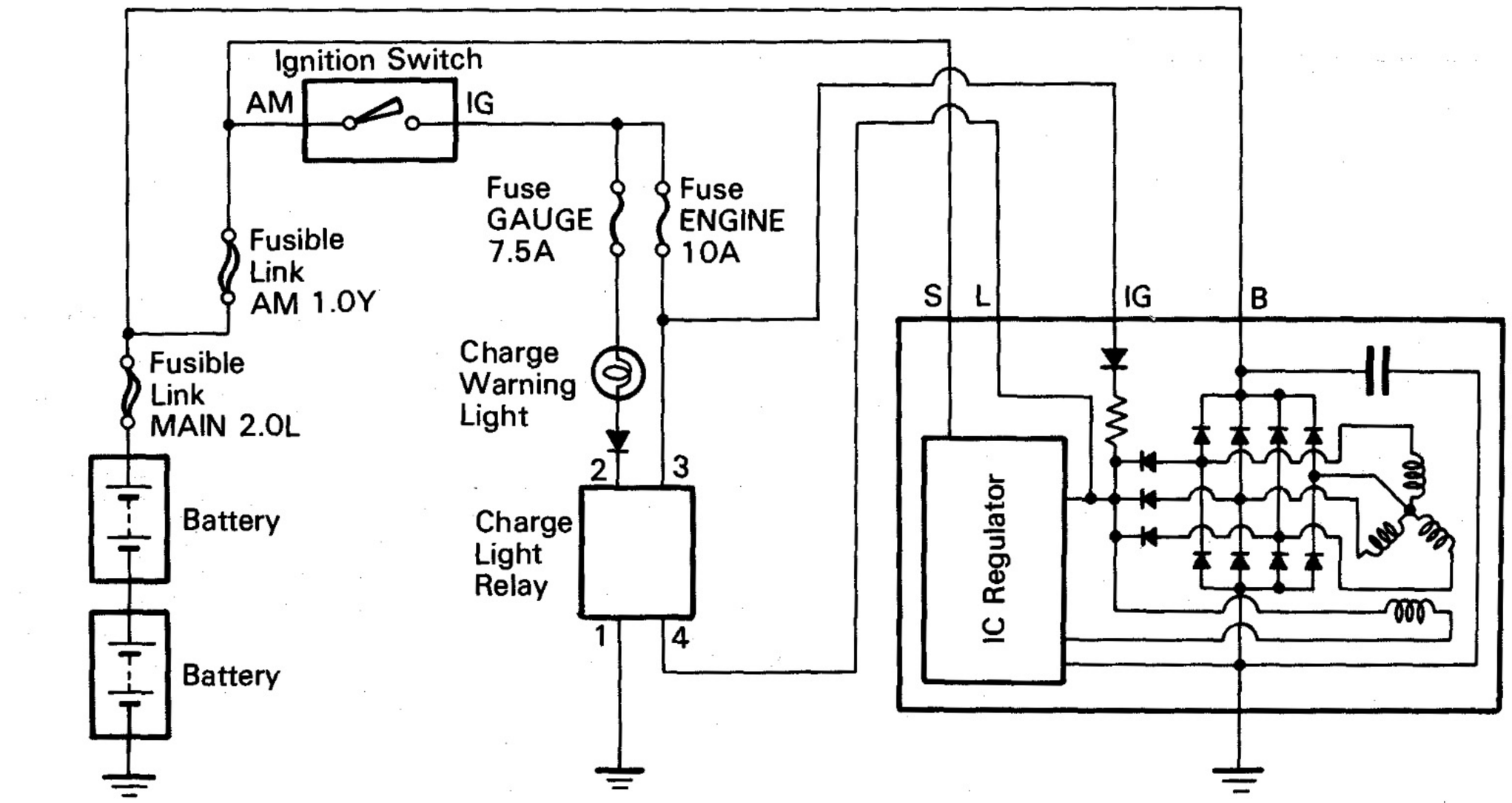

CH0478
CH0479

CHARGING SYSTEM CIRCUIT (Cont'd)

BJ60

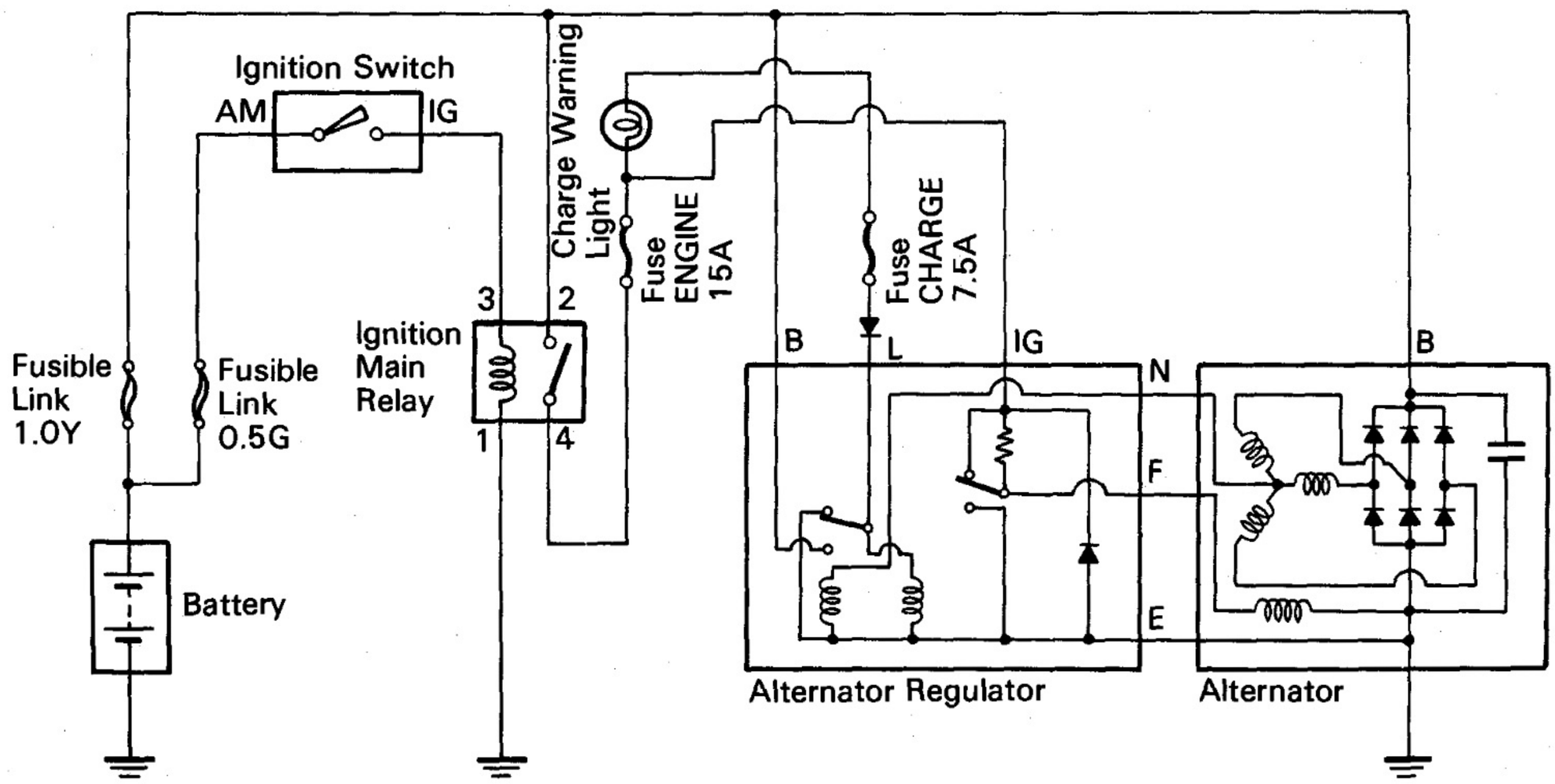

BJ70, 71, 73, 74, 75 [w/o IC Regulator]

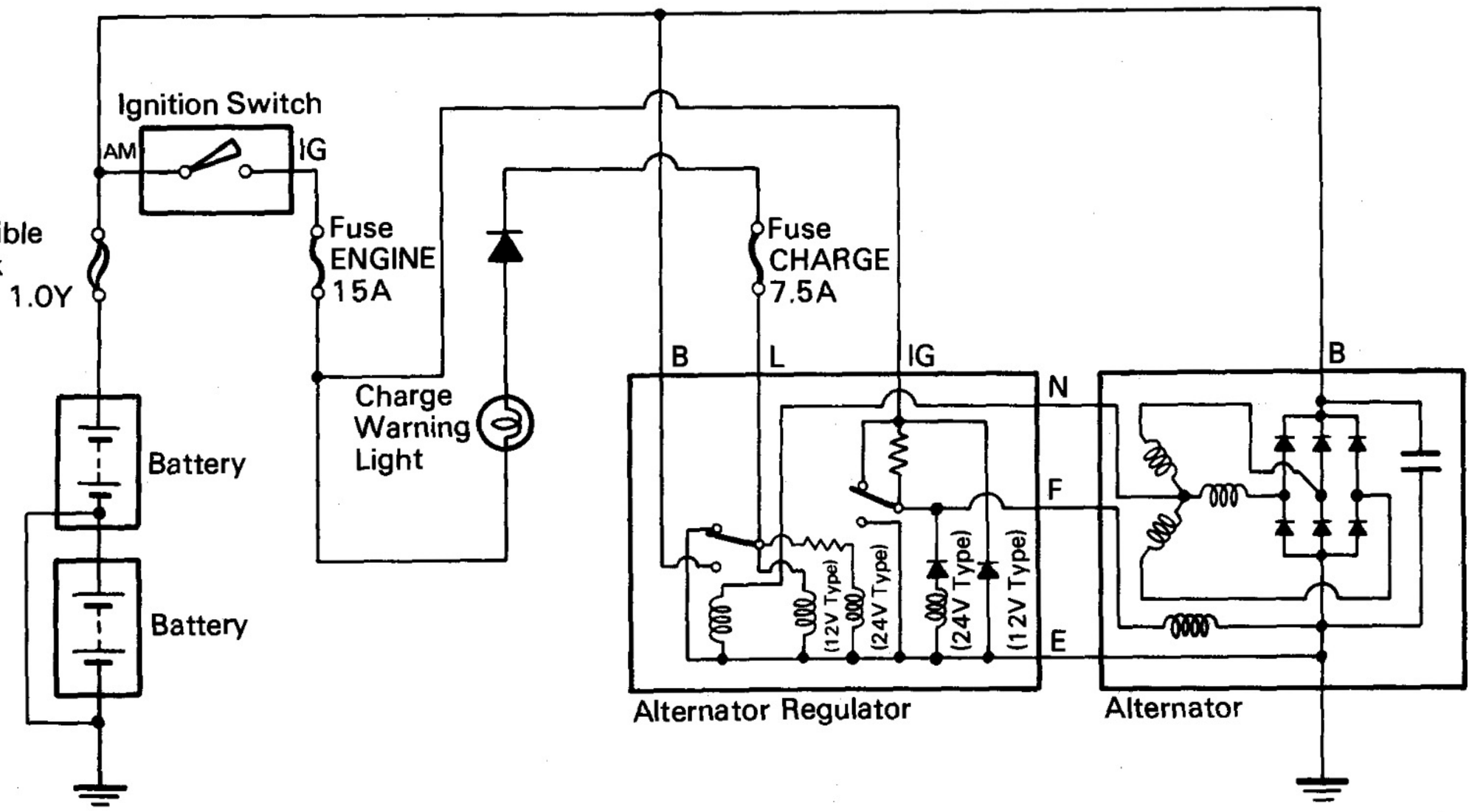

CH0480
CH0481

CHARGING SYSTEM CIRCUIT (Cont'd)

BJ73 [w/ IC Regulator (12V Type)]

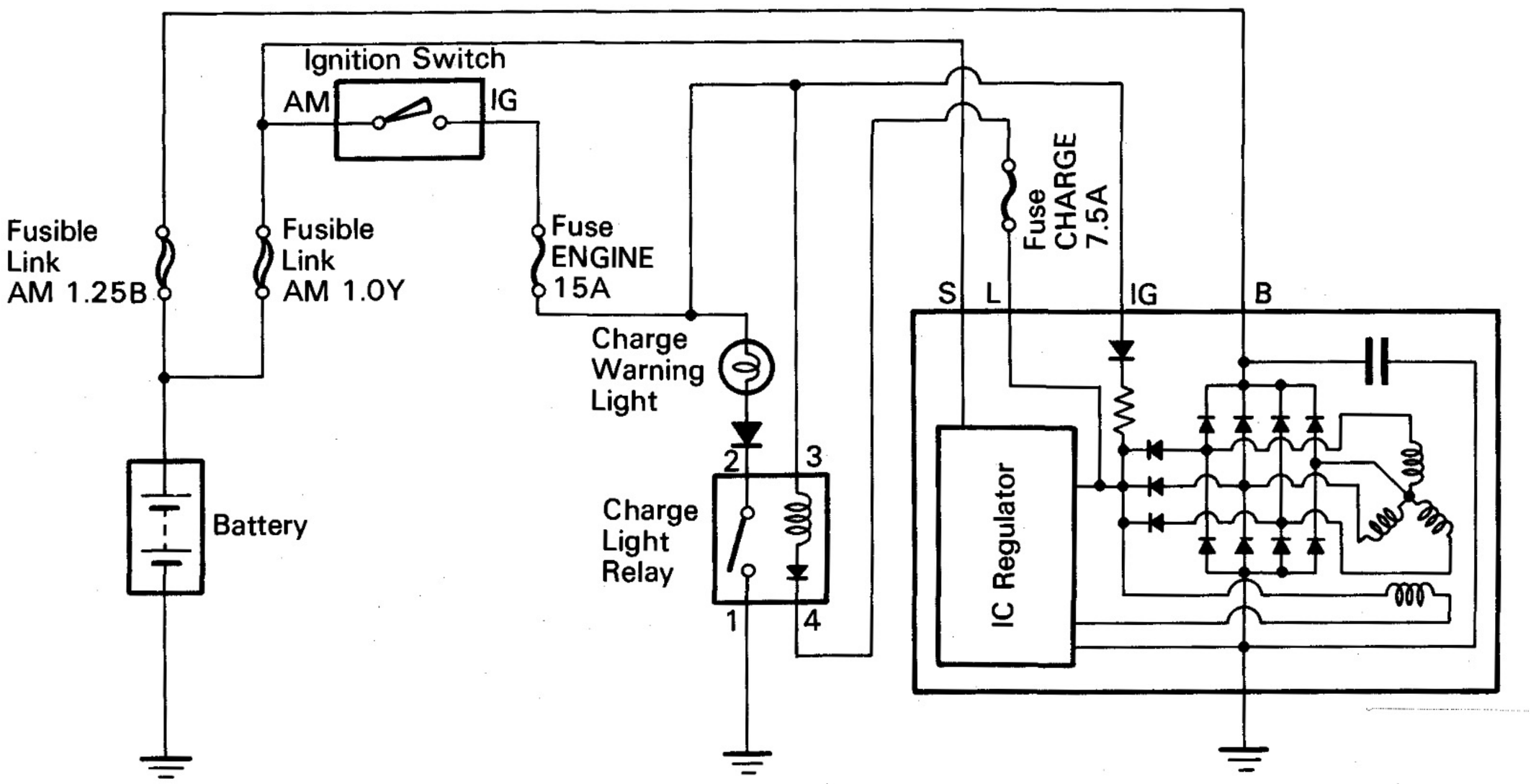

BJ70 [w/o IC Regulator (24V Type)]

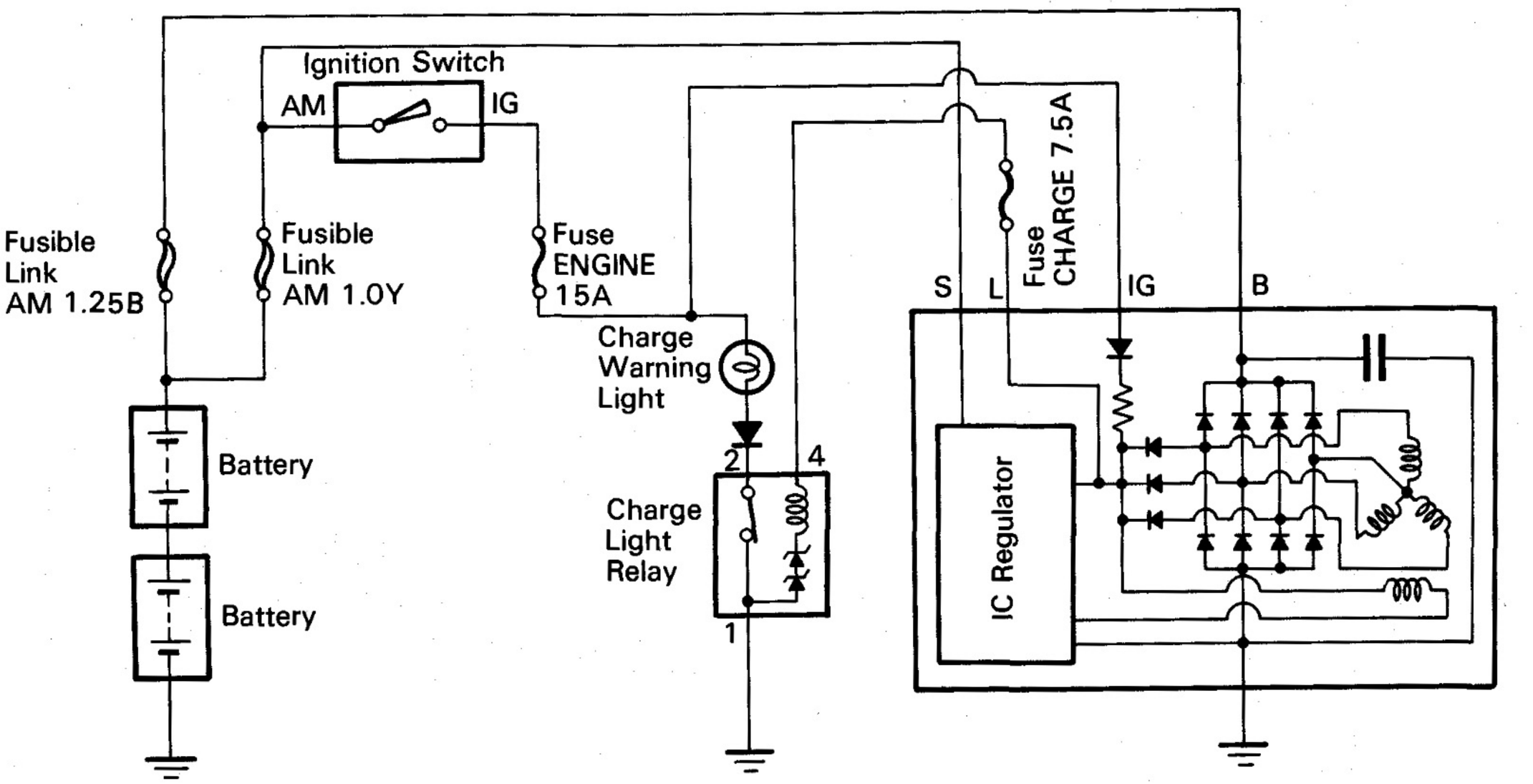

CH0436
CH0482

CHARGING SYSTEM CIRCUIT (Cont'd)

BU60, 61, 62, 63, 65, 70, 75, 76, 80, 81, 82, 85, 86

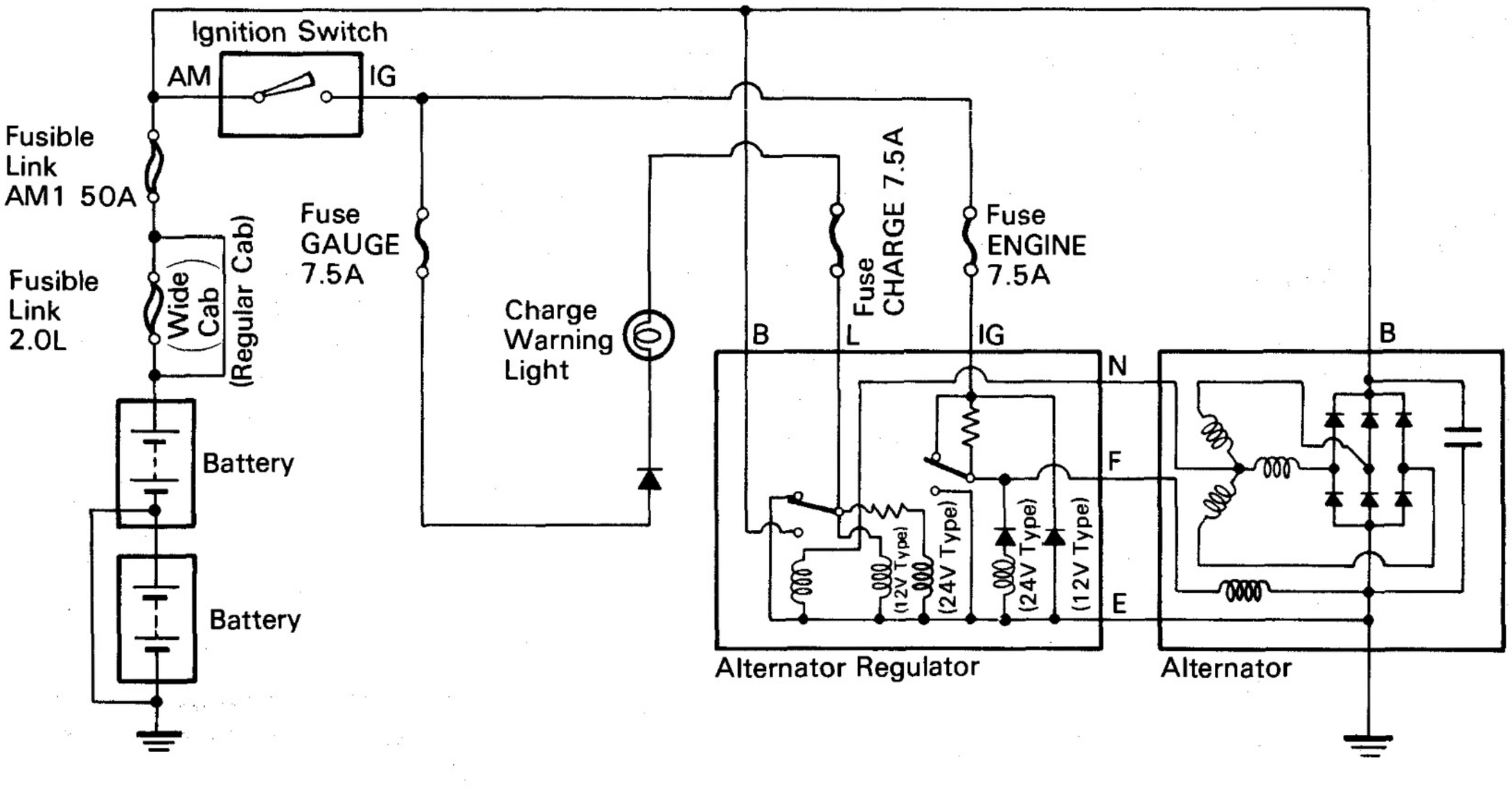

BY33, 42

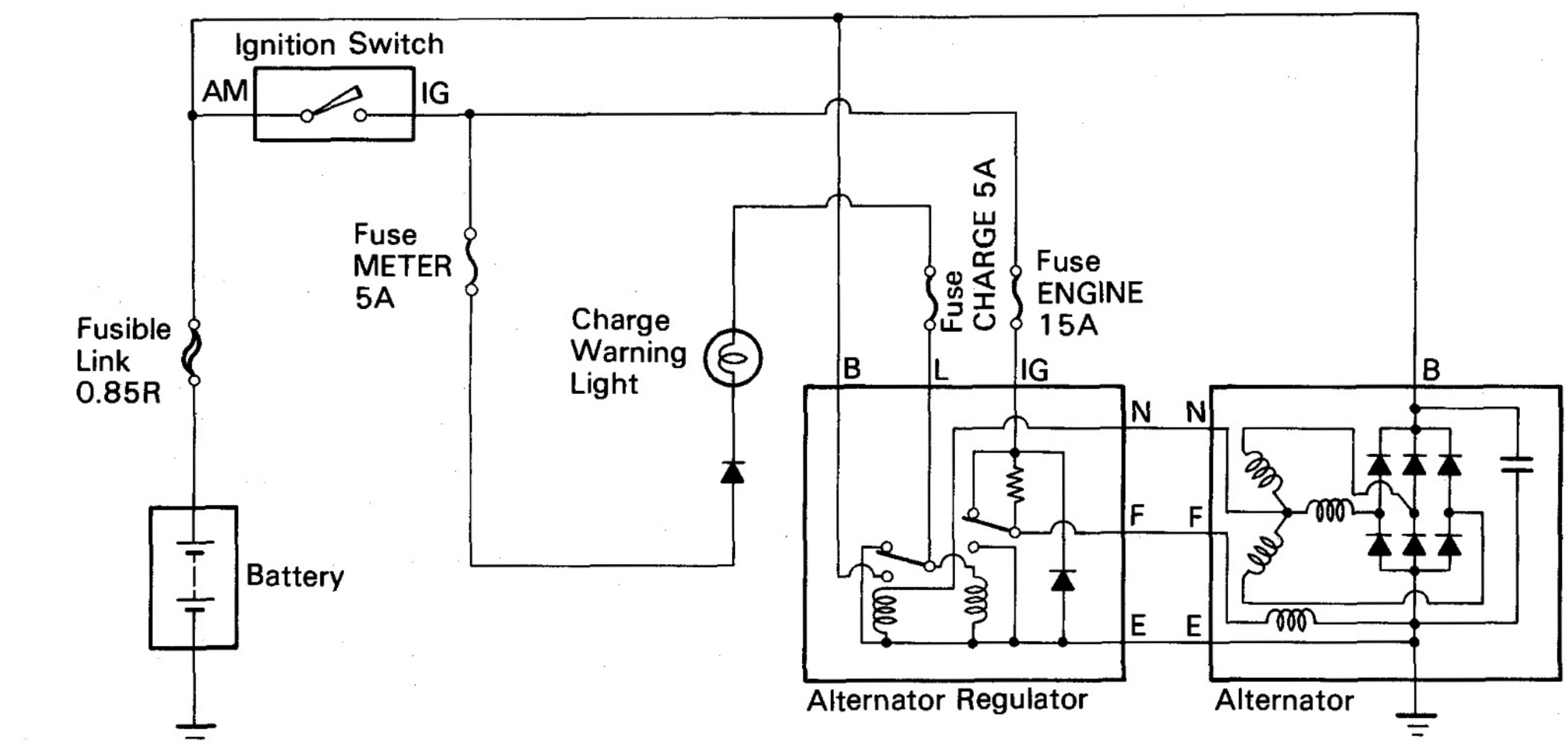

CH0483
CH0393

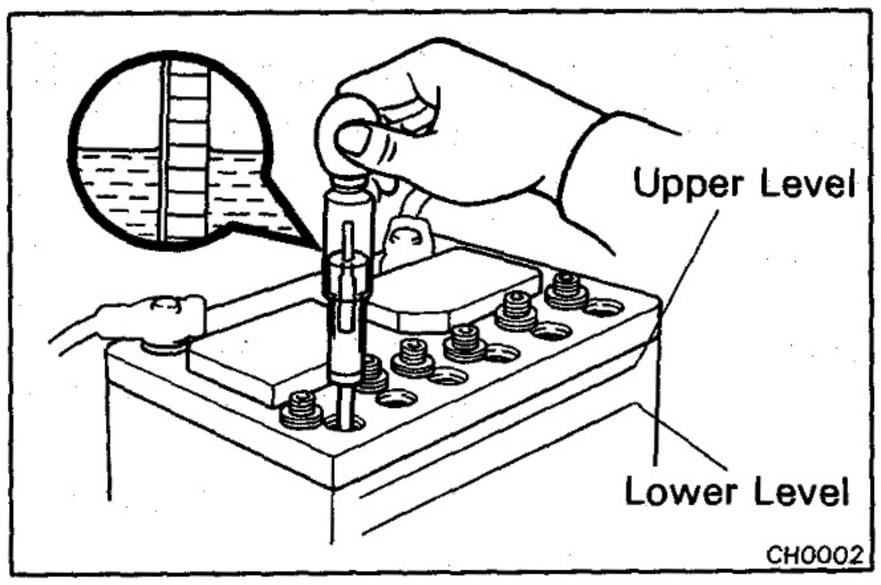

ON-VEHICLE INSPECTION

1. CHECK BATTERY SPECIFIC GRAVITY

(a) Check the specific gravity of each cell.

Standard specific gravity:
1.25 – 1.27 when fully charged at 20°C (68°F)

(b) Check the electrolyte quantity of each cell.

If insufficient, refill with distilled (or purified) water.

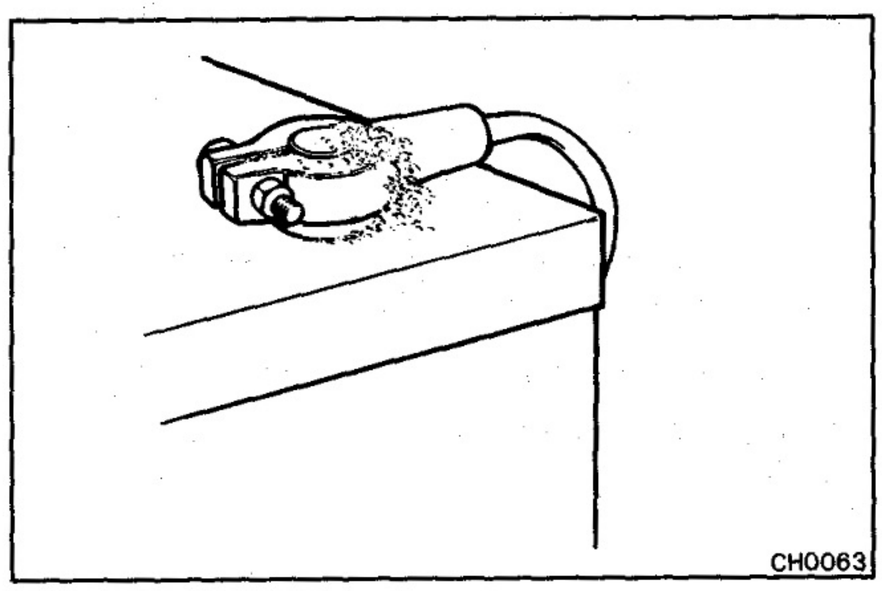

2. CHECK BATTERY TERMINALS, FUSIBLE LINKS AND FUSES

(a) Check that the battery terminals are not loose or corroded.

(b) Check the fusible link and fuses for continuity.

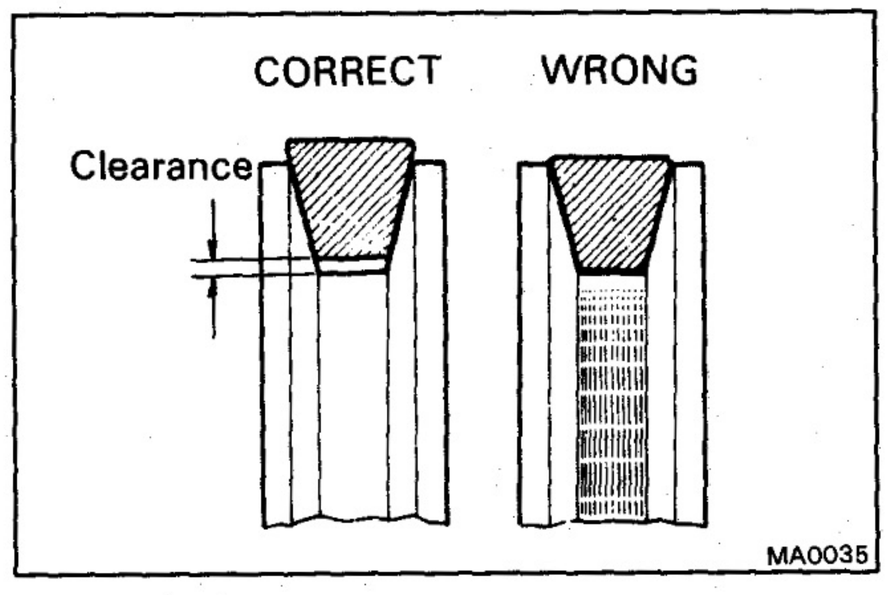

3. INSPECT DRIVE BELT

(a) Visually check the drive belt for cracks, oiliness or wear. Check that the belt does not touch the bottom of the pulley groove.

If necessary, replace the drive belt.

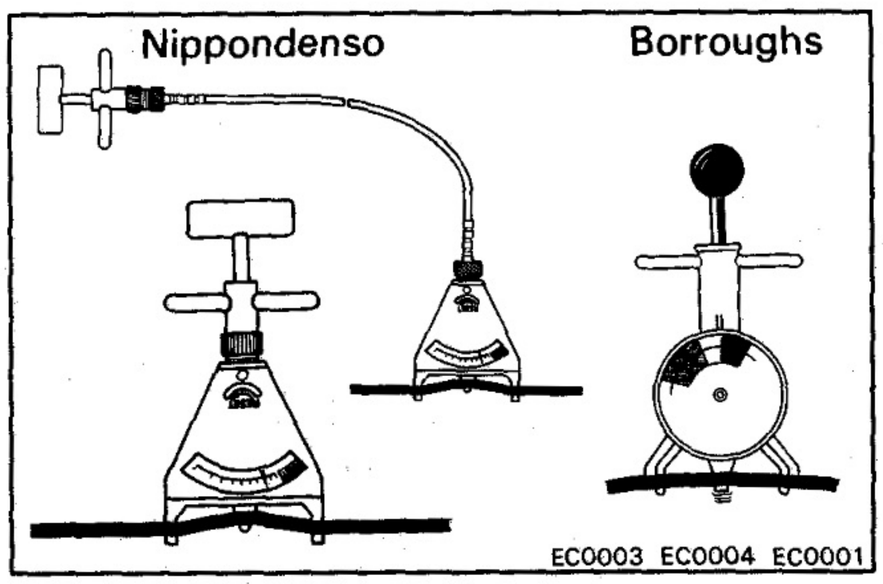

(b) [Canada]
Using a belt tension gauge, check the drive belt tension.

Belt tension gauge:
Nippondenso BTG-20 (95506-0020) or
Borroughs No. BT-33-73F

Drive belt tension: **New belt 145 ± 25 lb**
Used belt 100 ± 20 lb

If the belt tension is not within specification, adjust it.

NOTE:

- When checking the tension, be sure the gauge is on the belt protrusion.
- "New belt" refers to a belt which has been used less than 5 minutes on a running engine.
- "Used belt" refers to a belt which has been used on a running engine for 5 minutes or more.
- After installing a new belt, run the engine for about 5 minutes and recheck the deflection.

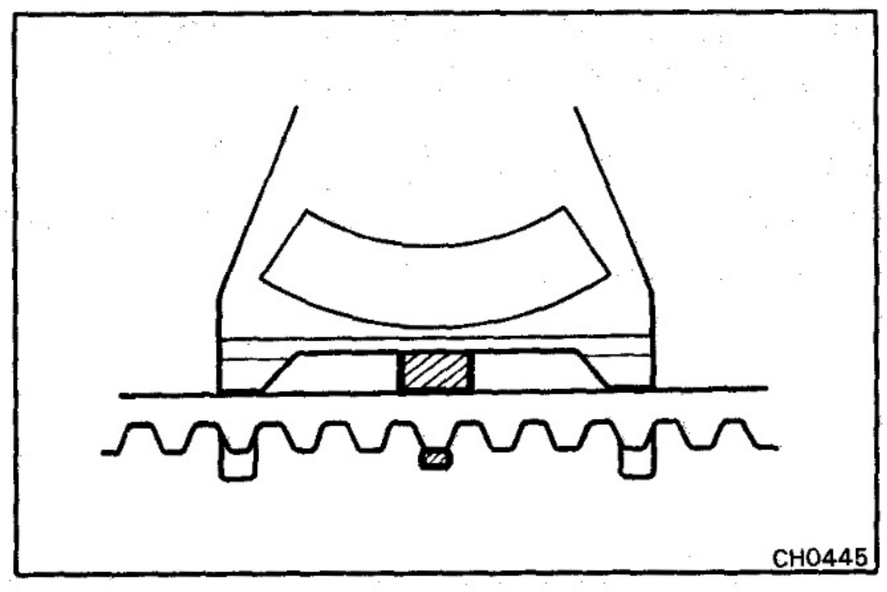

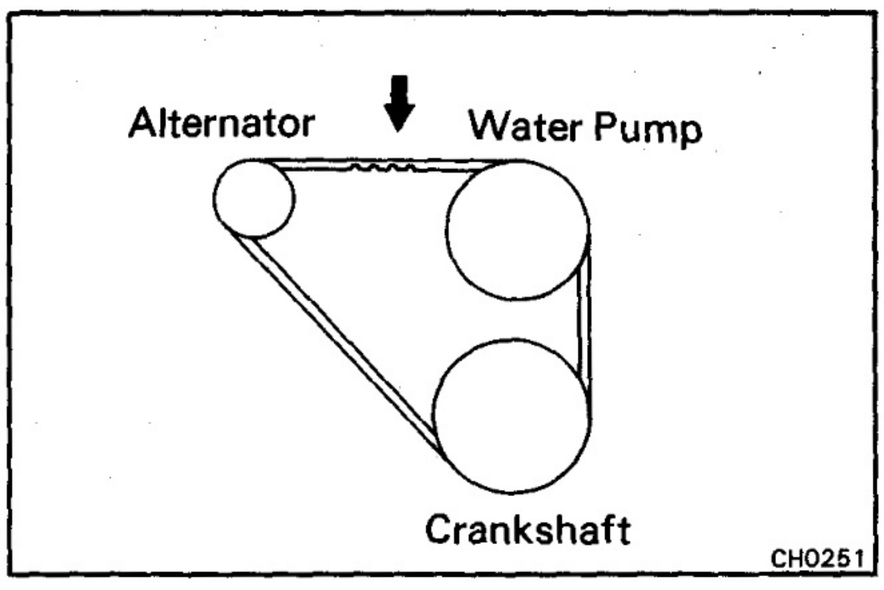

(c) [Others]
Check the drive belt deflection by pressing on the belt at the points indicated in the figure with 10 kg (22.0 lb, 98 N) of pressure.

Drive belt deflection:

Single belt type

New belt	**8 – 12 mm (0.31 – 0.47 in.)**
Used belt	**11 – 16 mm (0.43 – 0.63 in.)**

Double belt type

New belt	**12 – 15 mm (0.47 – 0.59 in.)**
Used belt	**14 – 20 mm (0.55 – 0.79 in.)**

If the belt deflection is not within specification, adjust it.

NOTE:
- "New belt" refers to a belt which has been used less than 5 minutes on a running engine.
- "Used belt" refers to a belt which has been used on a running engine for 5 minutes or more.
- After installing a new belt, run the engine for about 5 minutes and recheck the deflection.

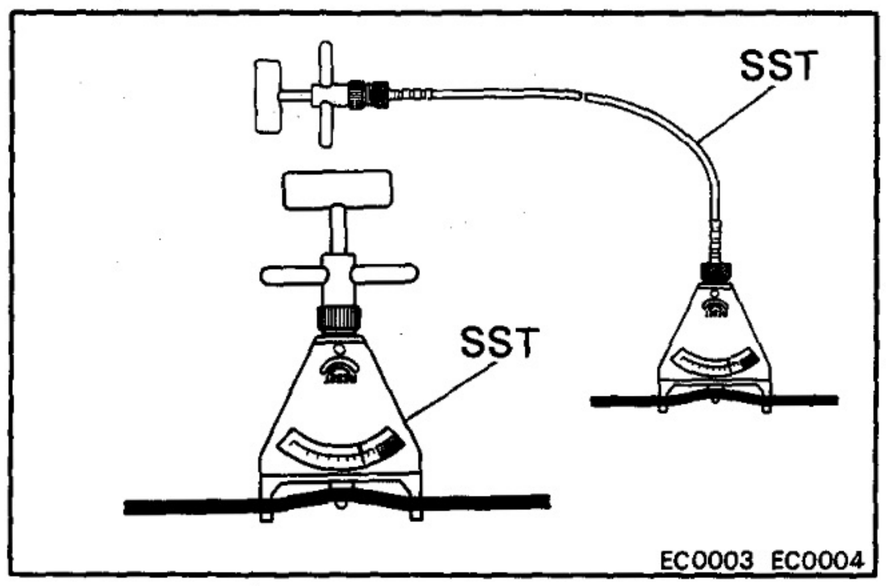

(d) [Reference]
Using SST, check the drive belt tension.

SST 09216-00020 and 09216-00030

Drive belt tension:

Single belt type

New belt	**55 – 65 kg**
Used belt	**30 – 45 kg**

Double belt type

New belt	**45 – 55 kg**
Used belt	**20 – 35 kg**

If the belt tension is not within specification, adjust it.

NOTE: When checking the tension, be sure the gauge is on the belt protrusion.

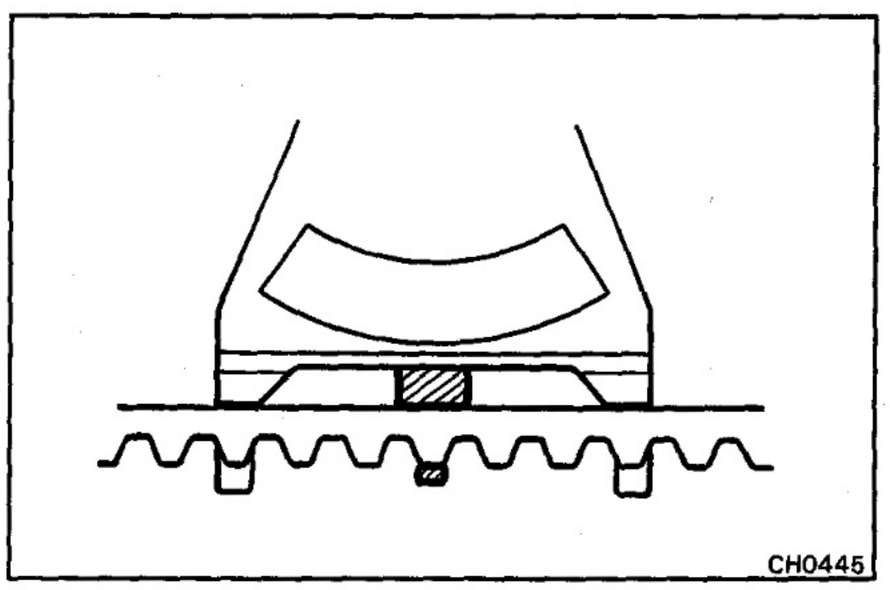

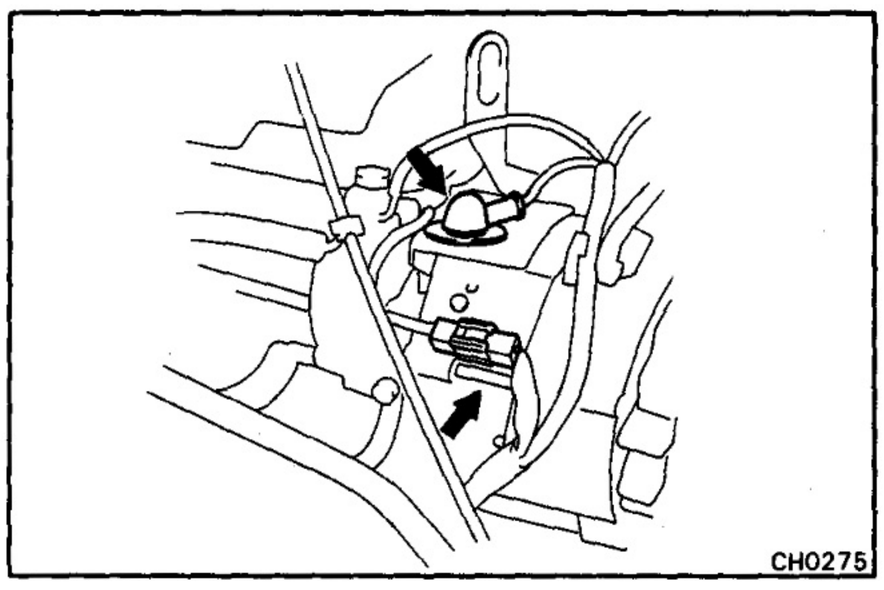

4. VISUALLY CHECK ALTERNATOR WIRING AND LISTEN FOR ABNORMAL NOISES

(a) Check that the wiring is in good condition.

(b) Check that there are no abnormal noises from the alternator while the engine is running.

5. INSPECT CHARGE WARNING LIGHT CIRCUIT

(a) Warm up the engine and then turn it off.

(b) Turn off all accessories.

(c) Turn the starter switch to "ON." Check that the charge warning light is lit.

(d) Start the engine. Check that the light goes out.

If the light does not operate as specified, troubleshoot the warning light circuit.

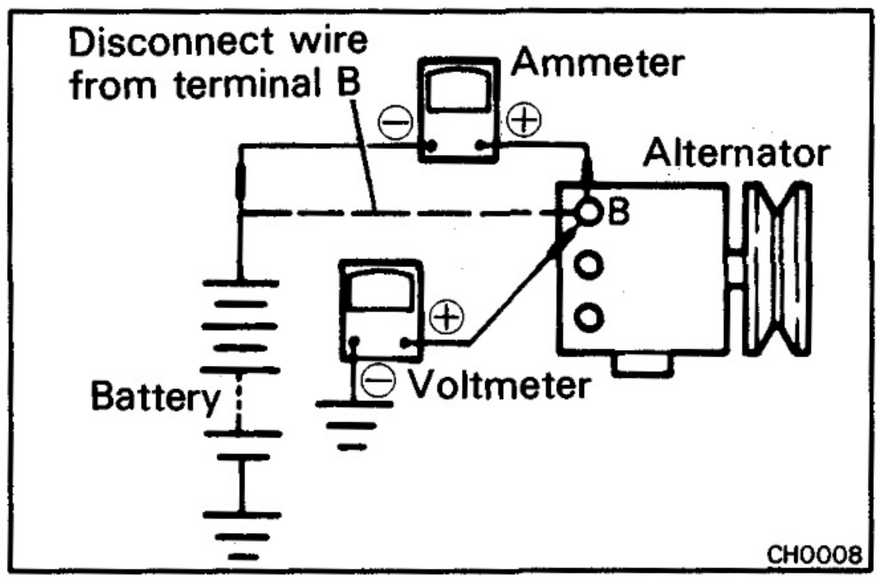

6. CHECK CHARGING CIRCUIT WITHOUT LOAD

NOTE: If a battery/alternator tester is available, connect the tester to the charging circuit as per the manufacturer's instructions.

(a) If a tester is not available, connect a voltmeter and ammeter to the charging circuit as follows:

- Disconnect the wire from terminal B of the alternator and connect it to the negative (–) probe of the ammeter.
- Connect the test probe from the positive (+) terminal of the ammeter to terminal B of the alternator.
- Connect the positive (+) probe of the voltmeter to terminal B of the alternator.
- Ground the negative (–) probe of the voltmeter.

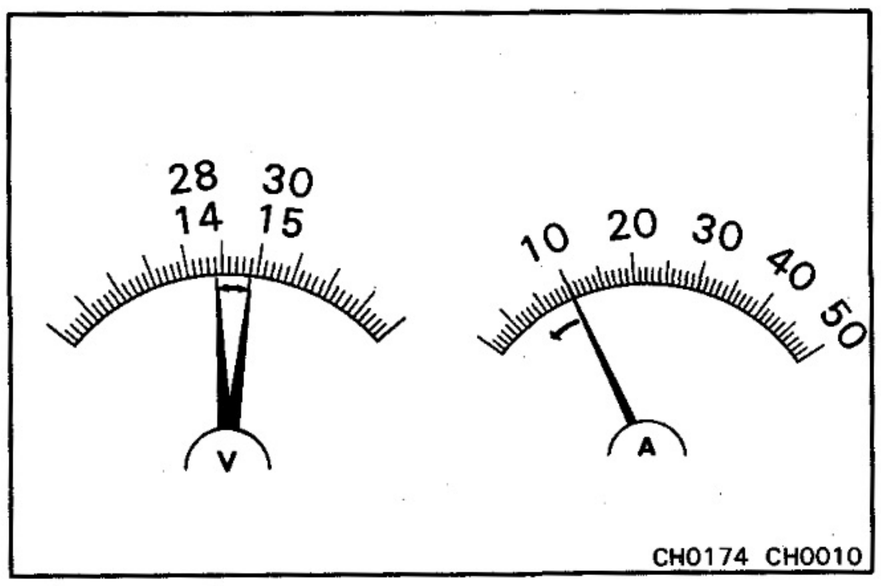

(b) Check the charging circuit as follows:

With the engine running from idle to 2,000 rpm, check the reading on the ammeter and voltmeter.

[w/o IC Regulator]

Standard amperage: 10 A or less
Standard voltage:
12V type 13.8 – 14.8 V at 25°C (77°F)
24V type 27.0 – 29.0 V at 25°C (77°F)

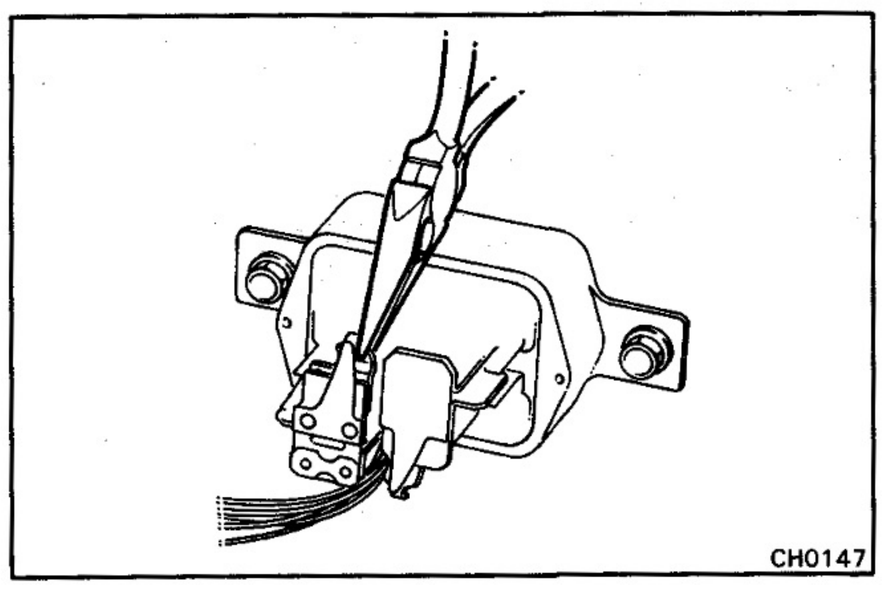

If the reading is not within standard voltage, adjust the regulator or replace it.

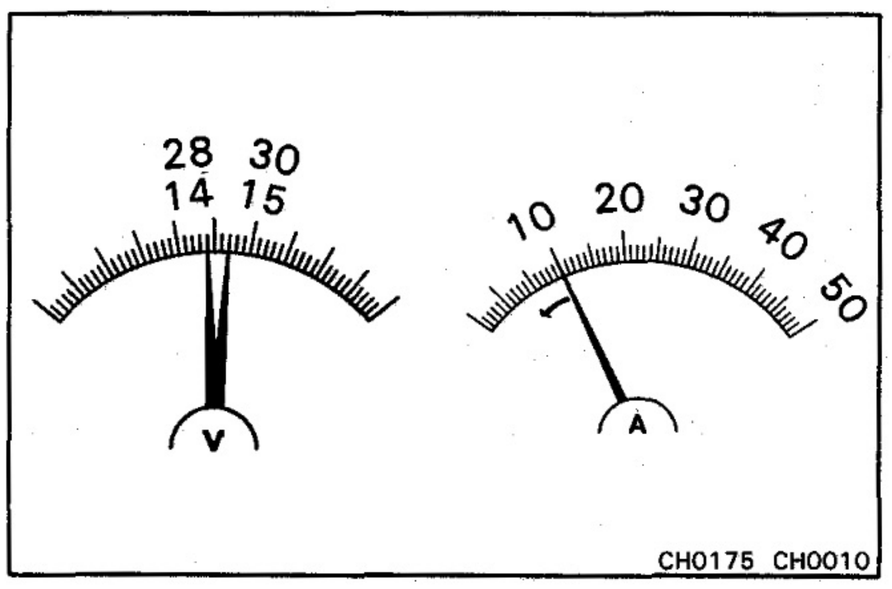

[w/ IC Regulator]

Standard amperage: 10 A or less
Standard voltage:
12V type 13.8 – 14.4 V at 25°C (77°F)
24V type 27.9 – 28.5 V at 25°C (77°F)

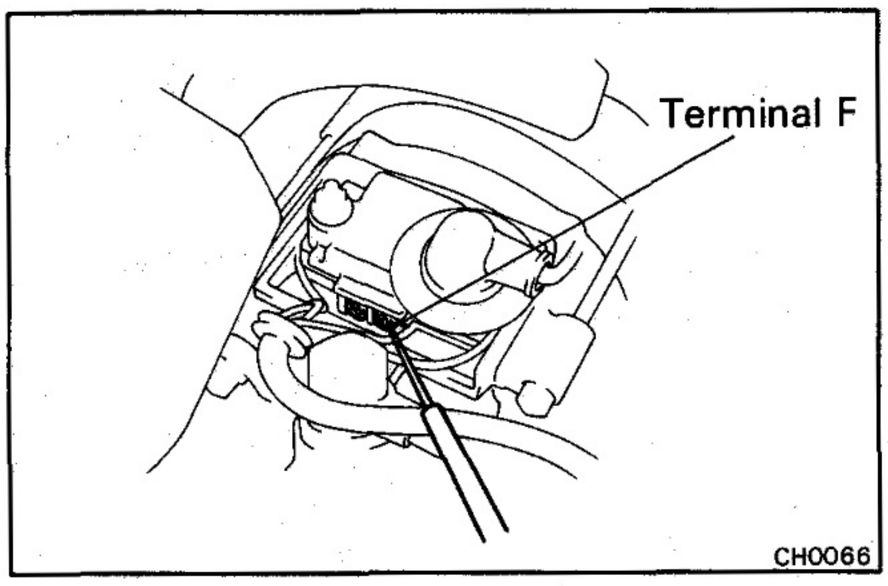

If the voltage reading is less than standard voltage, check the IC regulator and alternator as follows:

- Remove the brush holder cover and connect the terminal B wire to the original position.

CAUTION: Battery voltage is applied to terminal B, so disconnect the battery before beginning work.

- With terminal F grounded, start the engine and check the reading on the voltmeter.

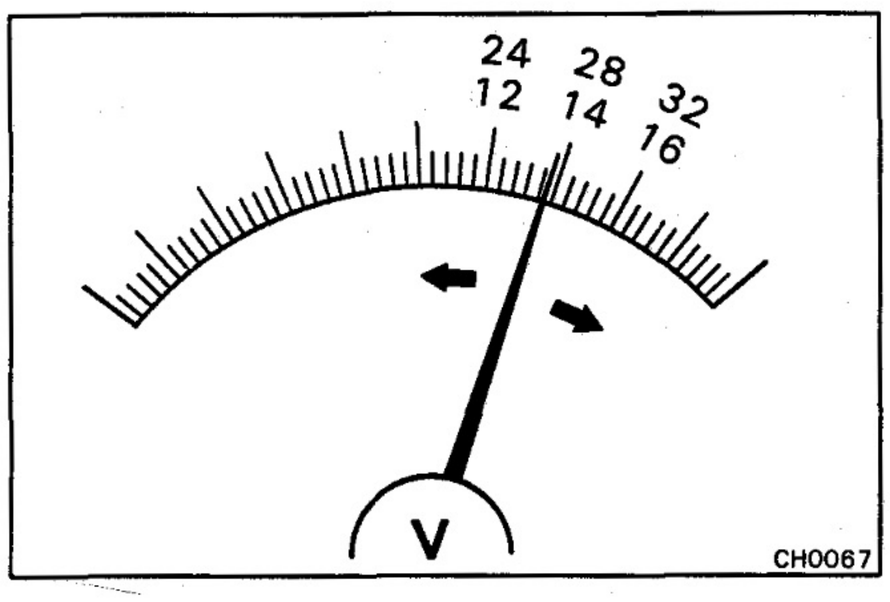

If the voltage reading is more than standard voltage, replace the IC regulator.

If the voltage reading is less than standard voltage, check the alternator.

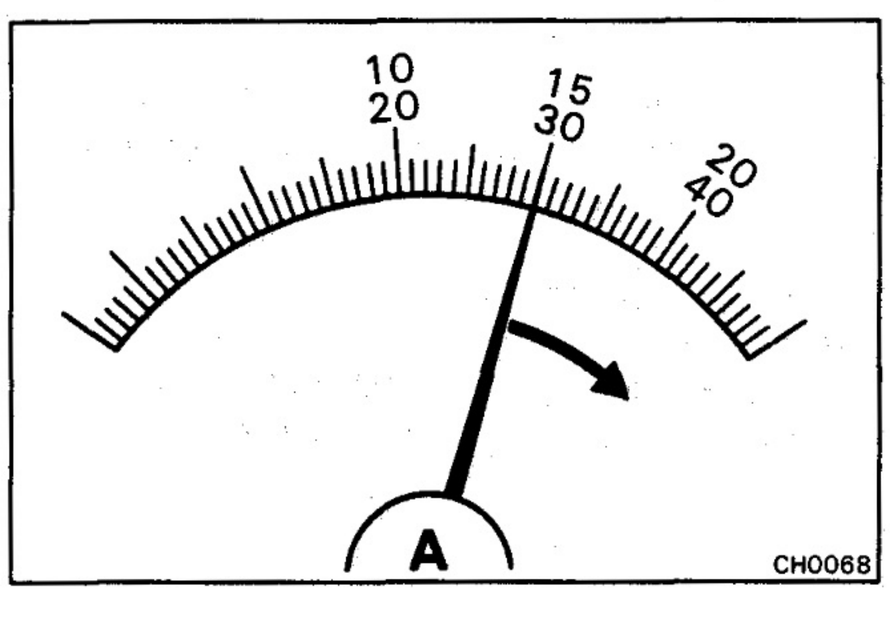

7. CHECK CHARGING CIRCUIT WITH LOAD

(a) With the engine running at 2,000 rpm, turn on the high beam headlights and place the heater fan control switch at "HI".

(b) Check the reading on the ammeter.

Standard amperage:
12V type 30 A or more
24V type 15 A or more

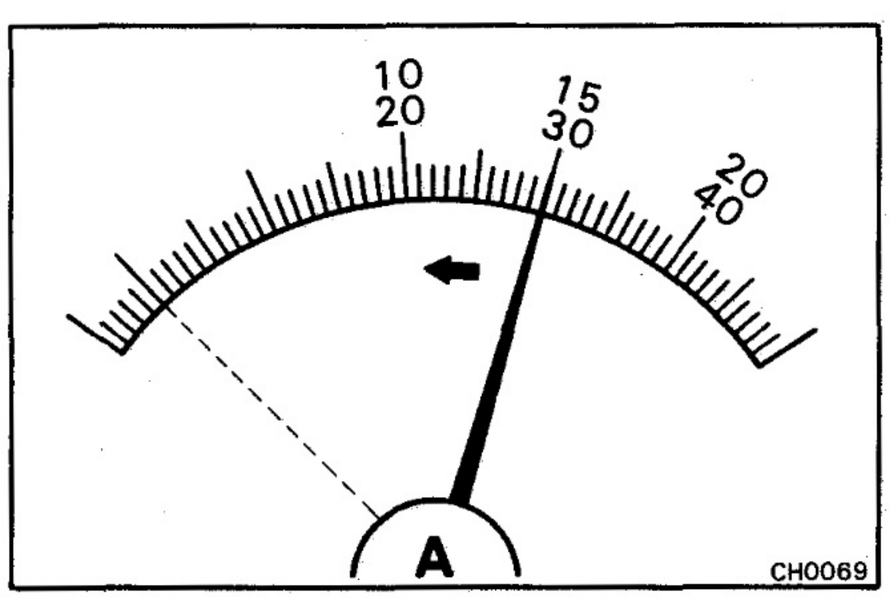

If the ammeter reading is less than standard amperage, repair the alternator. (See page CH-11)

NOTE: If the battery is fully charged, the indication will sometimes be less than standard amperage.

ALTERNATOR

COMPONENTS

w/o IC Regulator

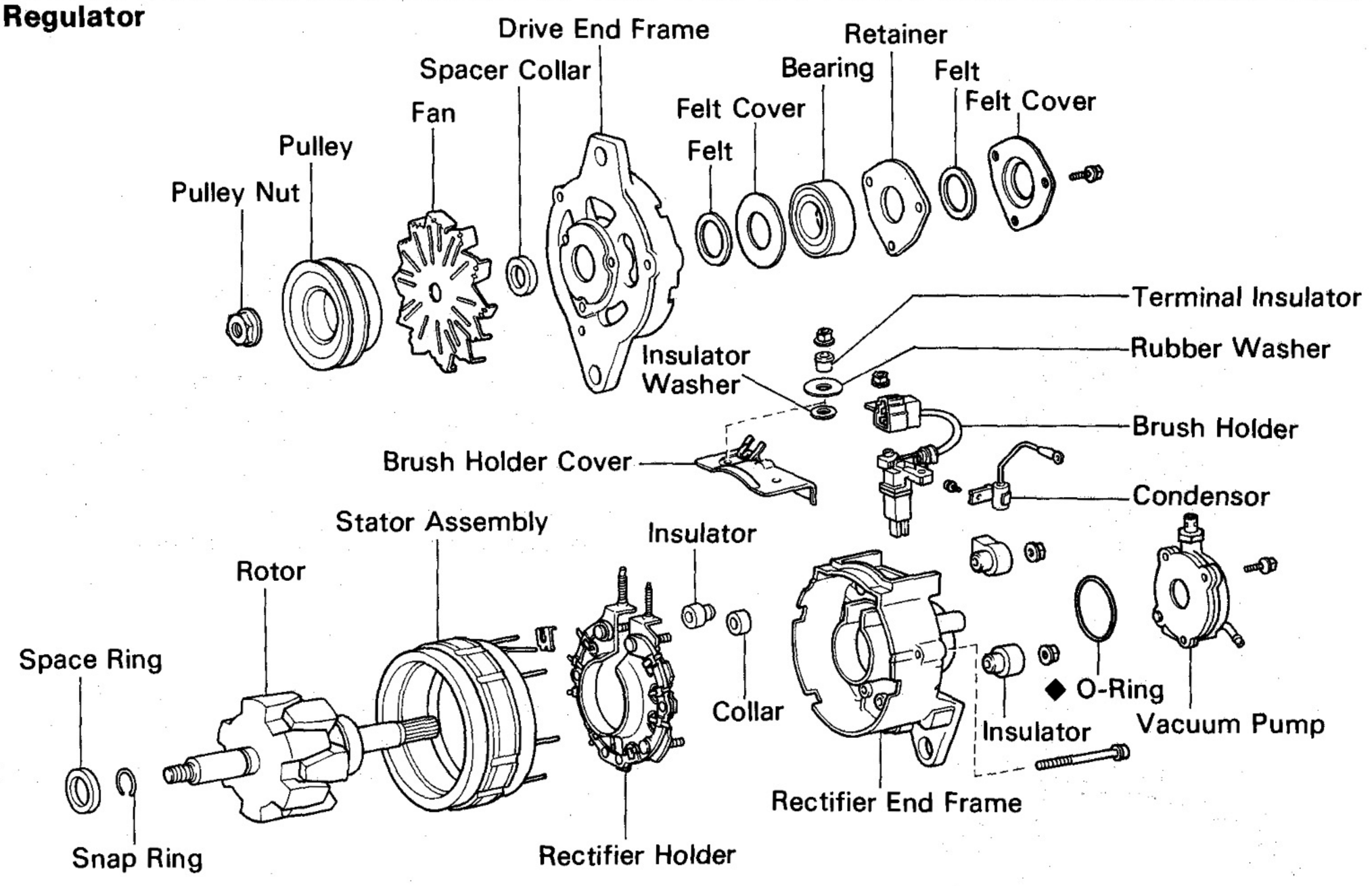

w/ IC Regulator

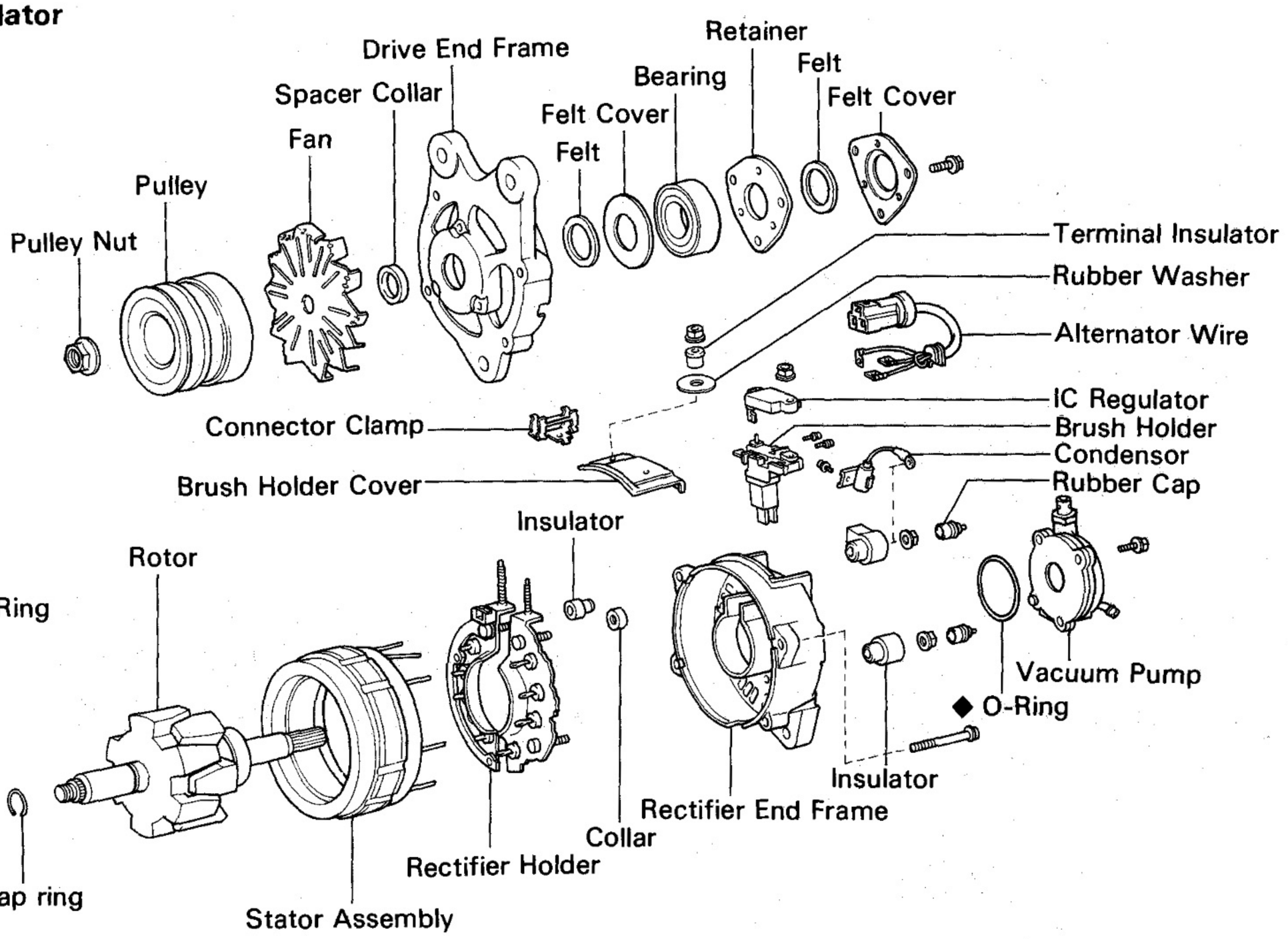

◆ Non-reusable part

CH0454
CH0455

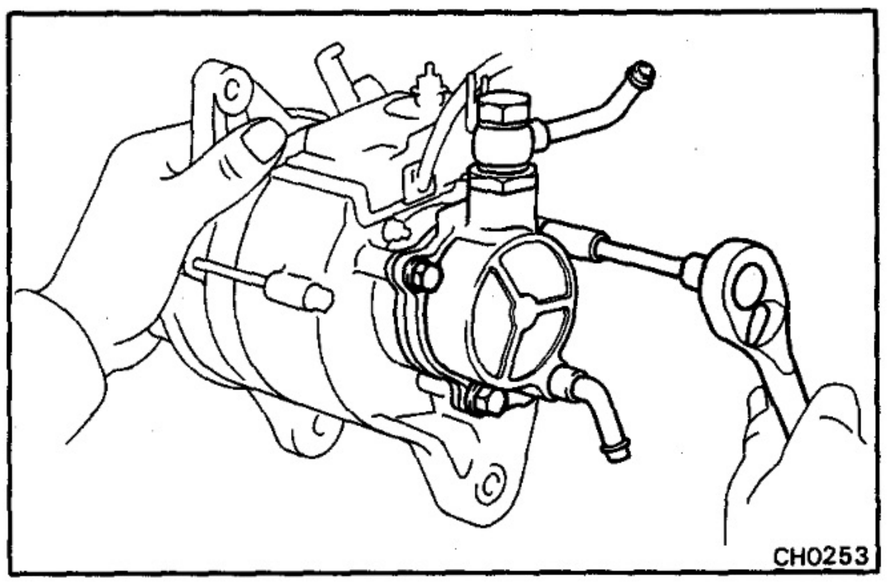

DISASSEMBLY OF ALTERNATOR

(See page CH-11)

1. REMOVE VACUUM PUMP

Remove the three bolts, vacuum pump and O-ring.

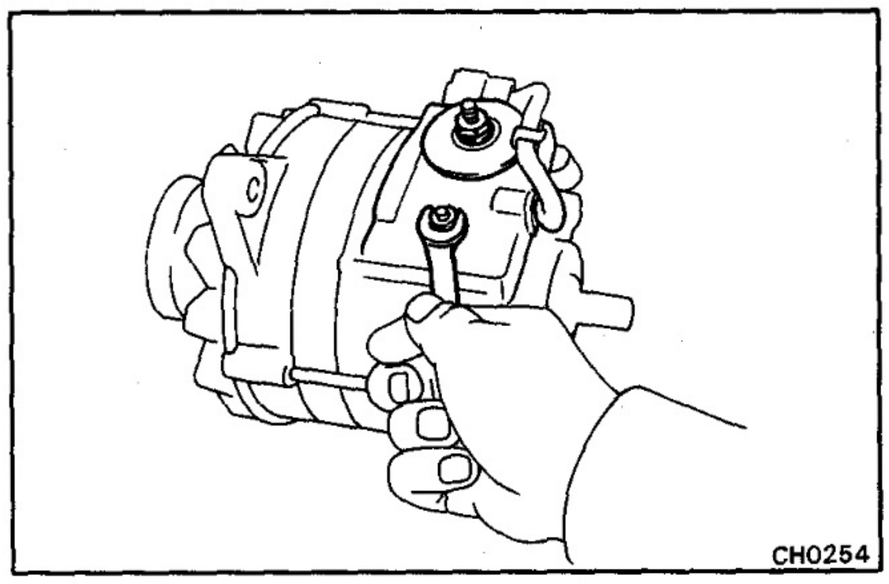

2. REMOVE BRUSH HOLDER COVER

[w/o IC Regulator]

Remove the two nuts, terminal insulator, rubber washer, brush holder cover and insulator washer.

[w/ IC Regulator]

Remove the screw, two nuts, connector clamp (BB), terminal insulator, rubber washer and brush holder cover.

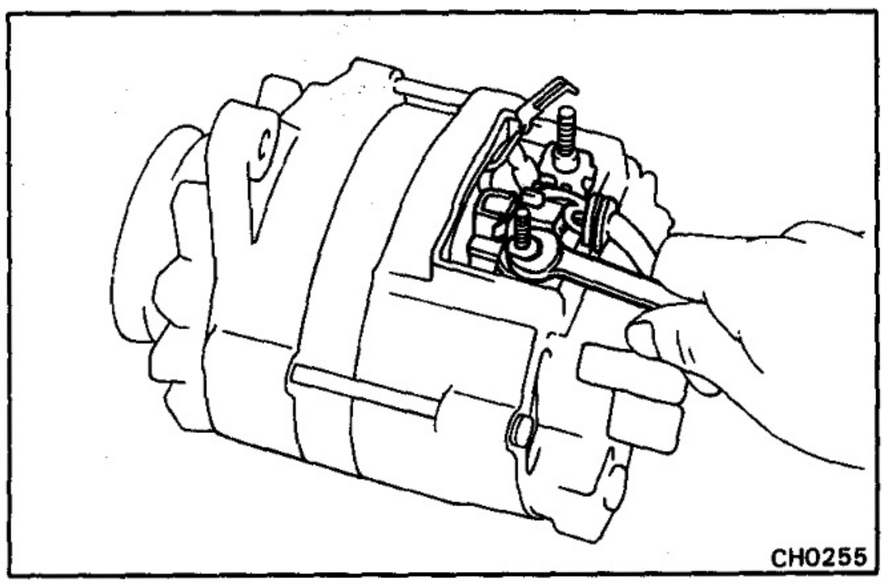

3. [w/o IC REGULATOR]
REMOVE BRUSH HOLDER

(a) Disconnect the lead wire.

(b) Remove the screw and disconnect the wire clamp of the brush holder.

(c) Remove the nut and brush holder.

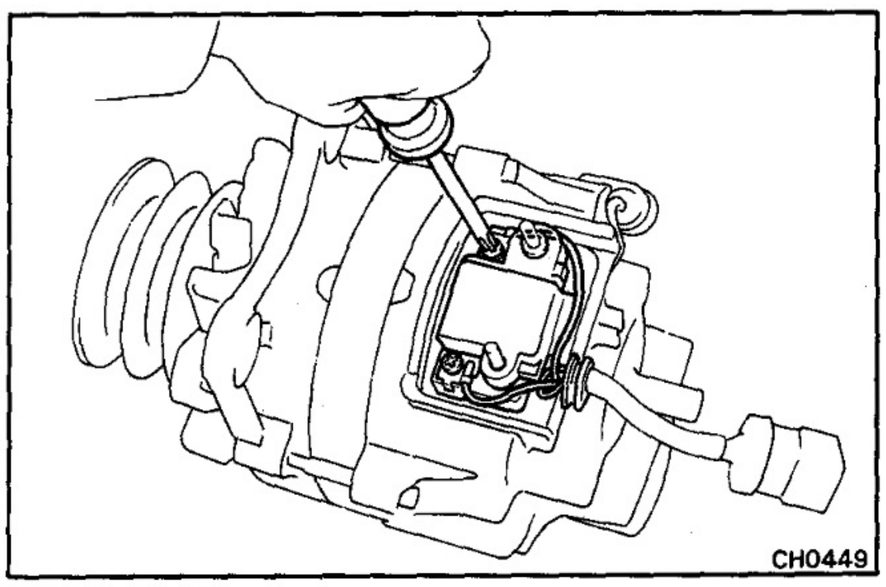

4. [w/ IC REGULATOR]
REMOVE BRUSH HOLDER AND IC REGULATOR ASSEMBLY

Remove the screw, brush holder and IC regulator assembly.

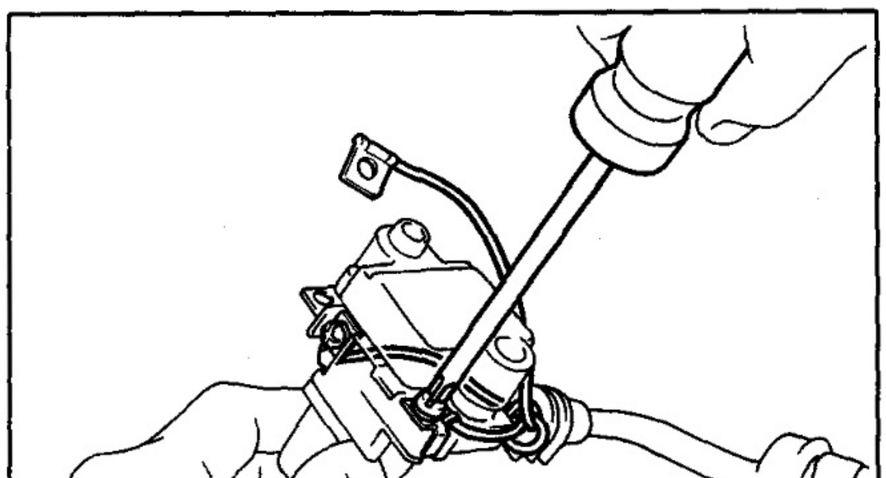

5. [w/ IC REGULATOR]
SEPARATE BRUSH HOLDER AND IC REGULATOR

(a) Remove the two screws and alternator wire connector.

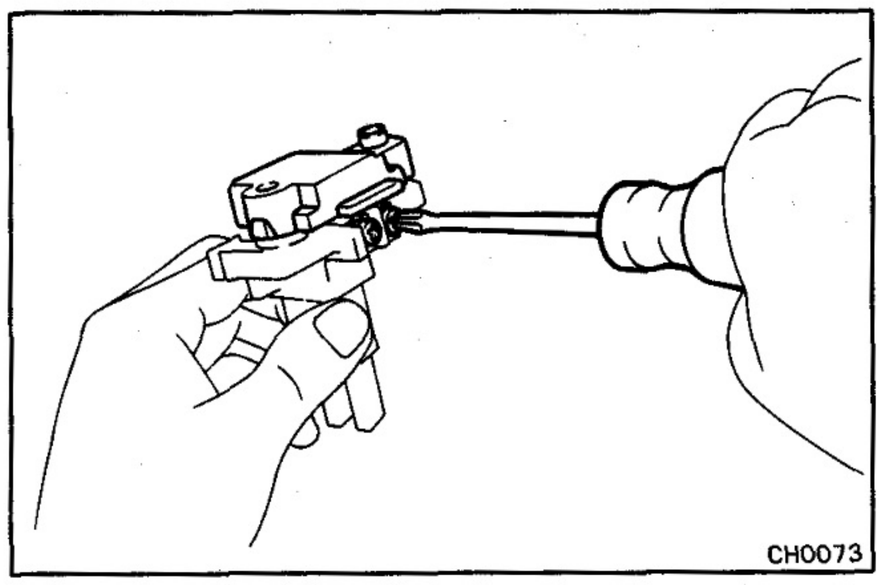

(b) Remove the two screws, and separate the brush holder and IC regulator.

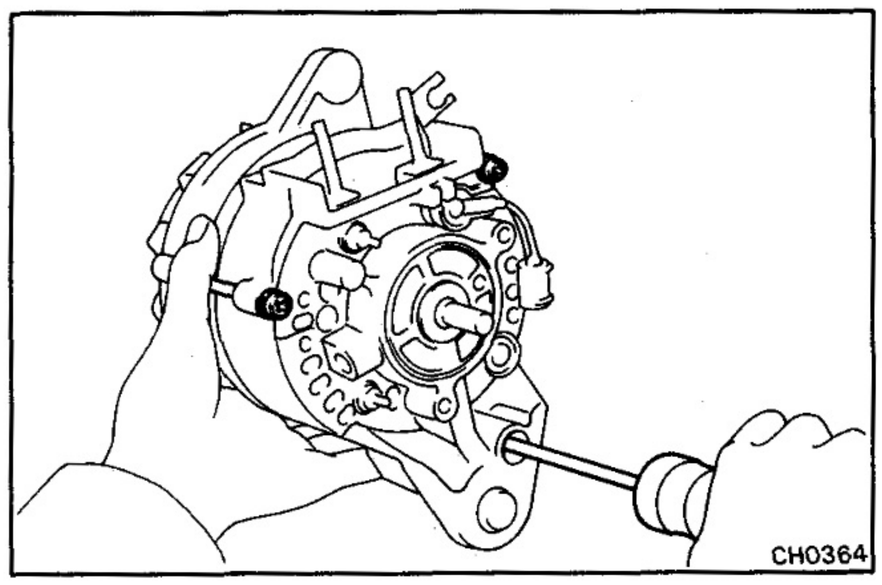

6. REMOVE DRIVE END FRAME AND ROTOR ASSEMBLY FROM STATOR

(a) [BB (w/ IC Regulator)]
Remove the four through screws.

(b) [Others]
Remove the three through screws.

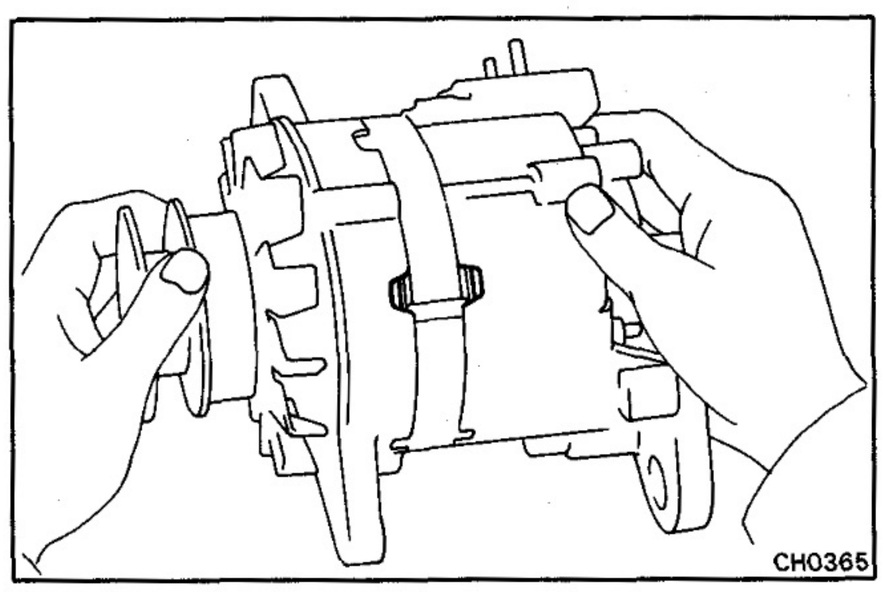

(c) Remove the drive end frame together with the rotor.

NOTE: If necessary, lightly tap the rotor shaft with a plastic-faced hammer.

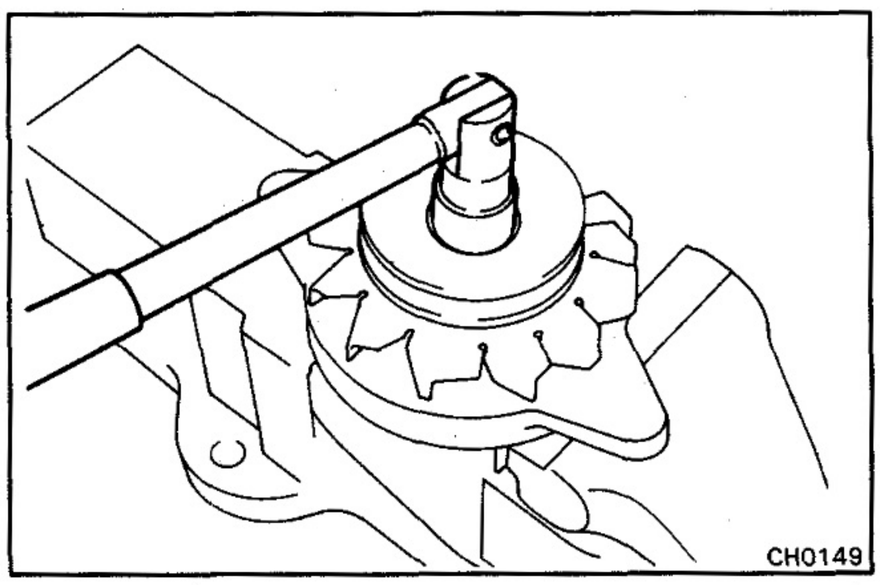

7. REMOVE PULLEY FAN FAN

(a) Mount the rotor in a soft jaw vise.

(b) Remove the nut, pulley and fan.

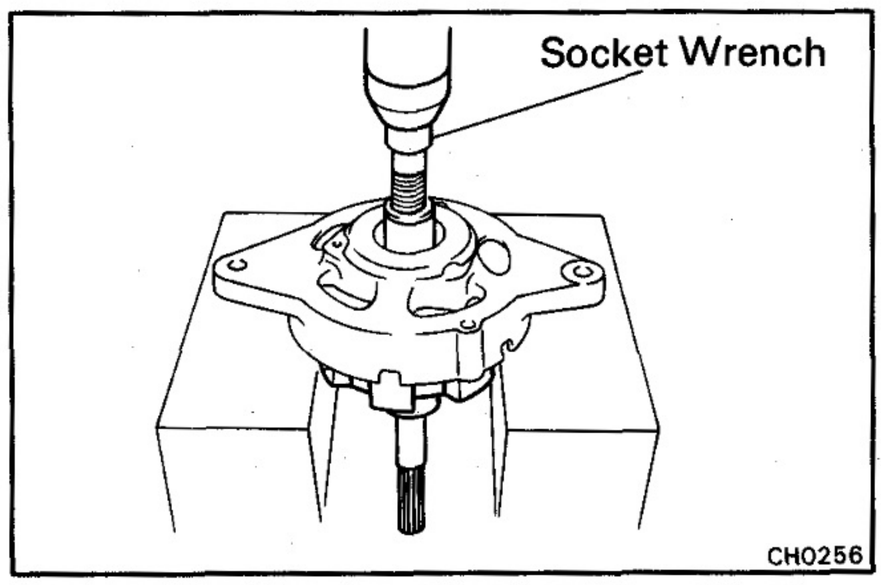

8. REMOVE ROTOR

(a) Using a socket wrench and press, press out the rotor.

(b) Remove the spacer collar from the drive end frame.

(c) Remove the spacer ring and snap ring from the rotor shaft.

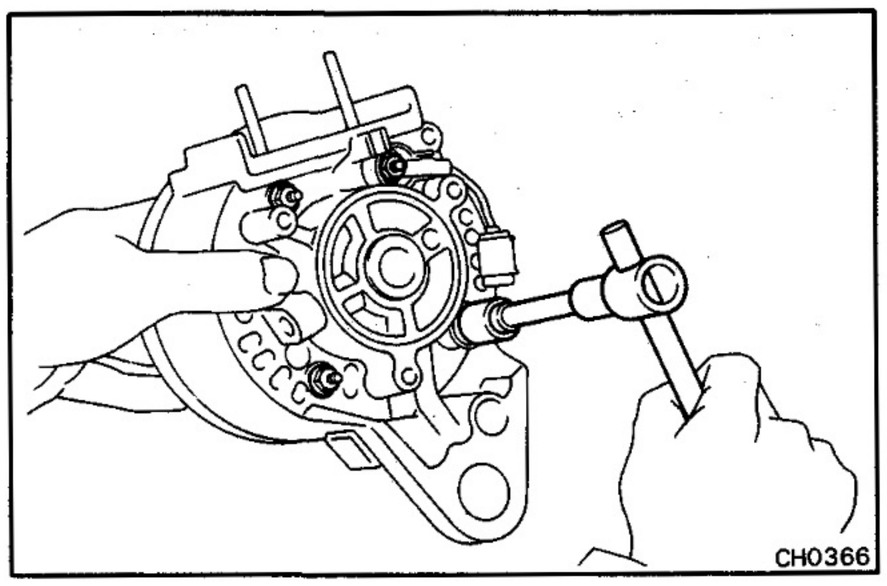

9. REMOVE RECTIFIER END FRAME

(a) [w/ IC Regulator]
Remove the two rubber caps.

(b) Remove the four nuts and two terminal insulators.

(c) Remove the rectifier end frame.

(d) Remove the two terminal bushings and collars from the rectifier holder studs.

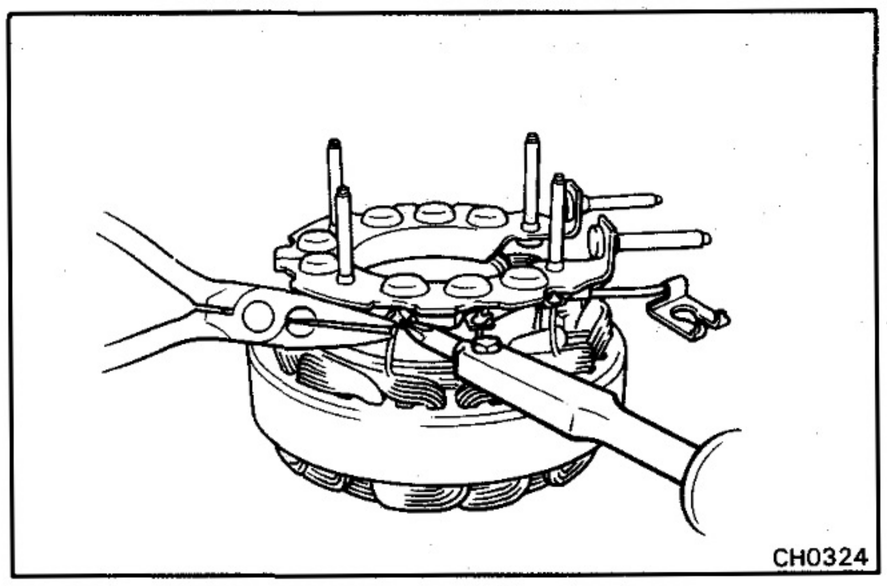

10. REMOVE RECTIFIER HOLDER

Hold the rectifier terminal with needle-nose pliers and unsolder the leads.

CAUTION: Protect the rectifiers from heat.

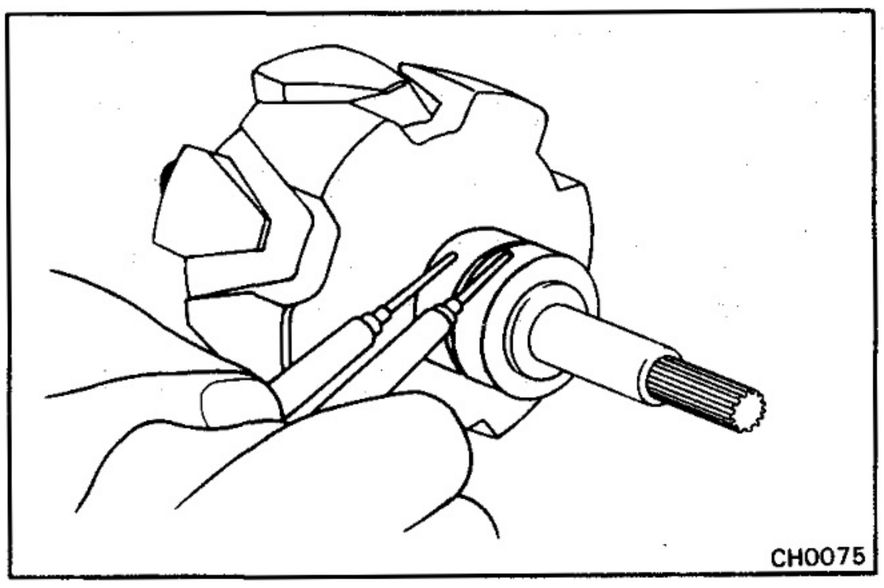

INSPECTION OF ALTERNATOR

Rotor

1. INSPECT ROTOR FOR OPEN CIRCUIT

Using an ohmmeter, check that there is continuity between the slip rings.

Standard resistance:

w/o IC regulator	**12V type**	**3.9 – 4.1 Ω**
	24V type	**18.8 – 19.2 Ω**
w/ IC regulator	**12V type**	**2.8 – 3.0 Ω**
	24V type	**8.8 – 9.2 Ω**

If there is no continuity, replace the rotor.

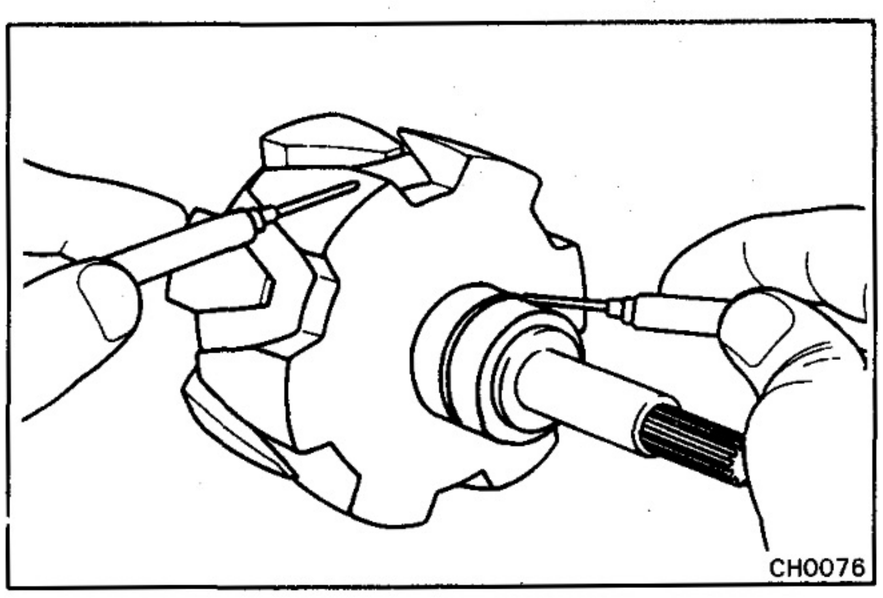

2. INSPECT ROTOR FOR GROUND

Using an ohmmeter, check that there is no continuity between the slip ring and the rotor.

If there is continuity, replace the rotor.

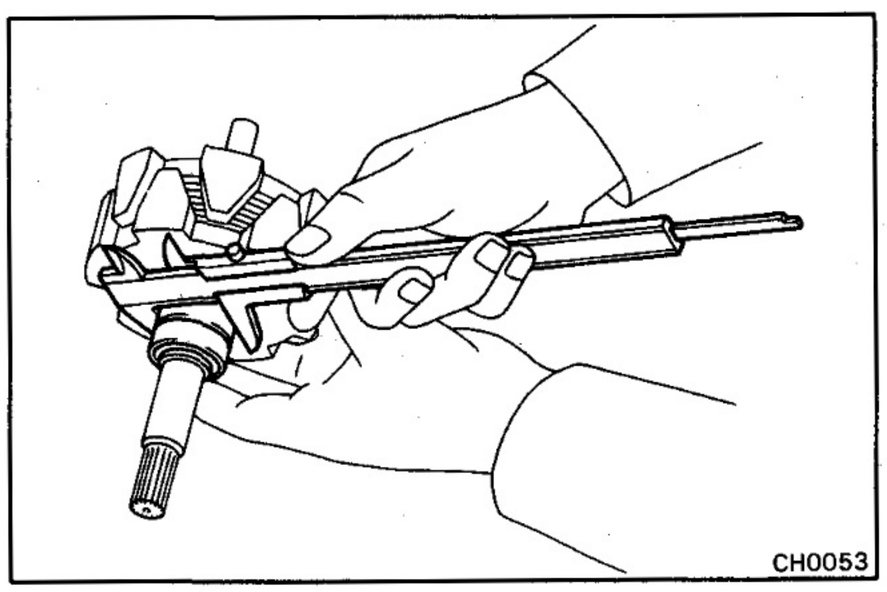

3. INSPECT SLIP RINGS

(a) Check that the slip rings are not rough or scored. If rough or scored, replace the rotor.

(b) Using calipers, measure the slip ring diameter.

Standard diameter: 32.3 – 32.5 mm (1.272 – 1.280 in.)
Minimum diameter: 32.1 mm (1.264 in.)

If the diameter is less than minimum, replace the rotor.

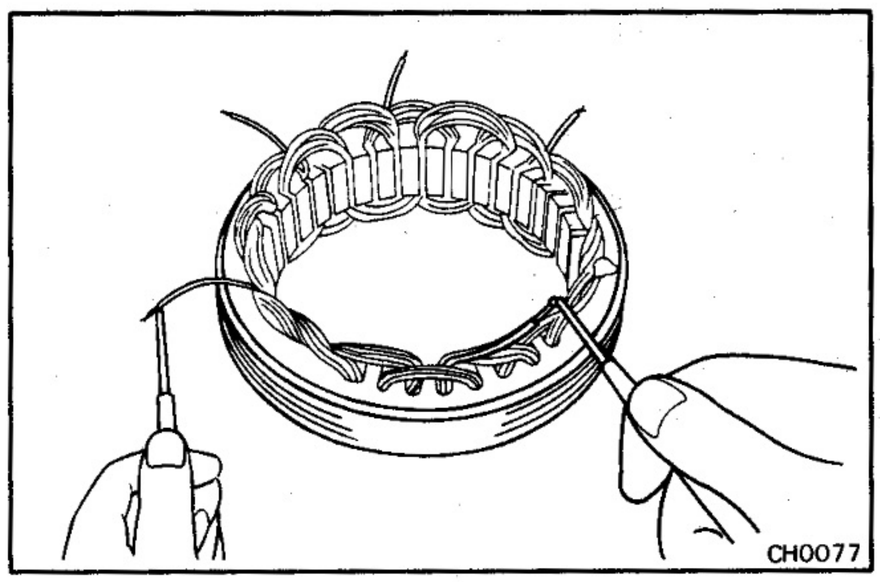

Stator

1. INSPECT STATOR FOR OPEN CIRCUIT

Using an ohmmeter, check that there is continuity between the coil leads.

If there is no continuity, replace the stator.

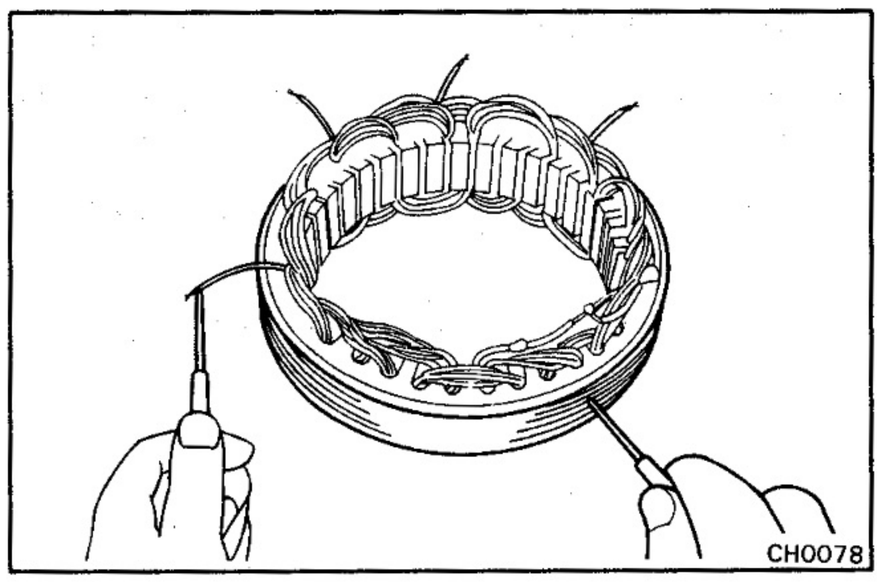

2. INSPECT STATOR FOR GROUND

Using an ohmmeter, check that there is no continuity between the coil leads and stator core.

If there is continuity, replace the stator.

Brushes

1. INSPECT EXPOSED BRUSH LENGTH

Using a scale, measure the exposed brush length.

Standard exposed length: 20.0 mm (0.787 in.)
Minimum exposed length: 5.5 mm (0.217 in.)

If the length is less than minimum, replace the brushes.

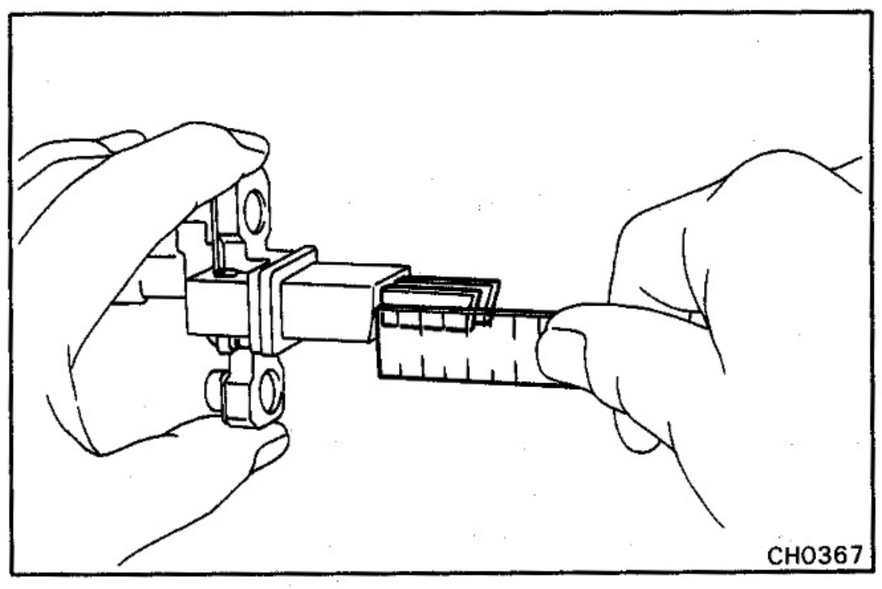

2. IF NECESSARY, REPLACE BRUSHES

(a) Unsolder and remove the brush and spring.

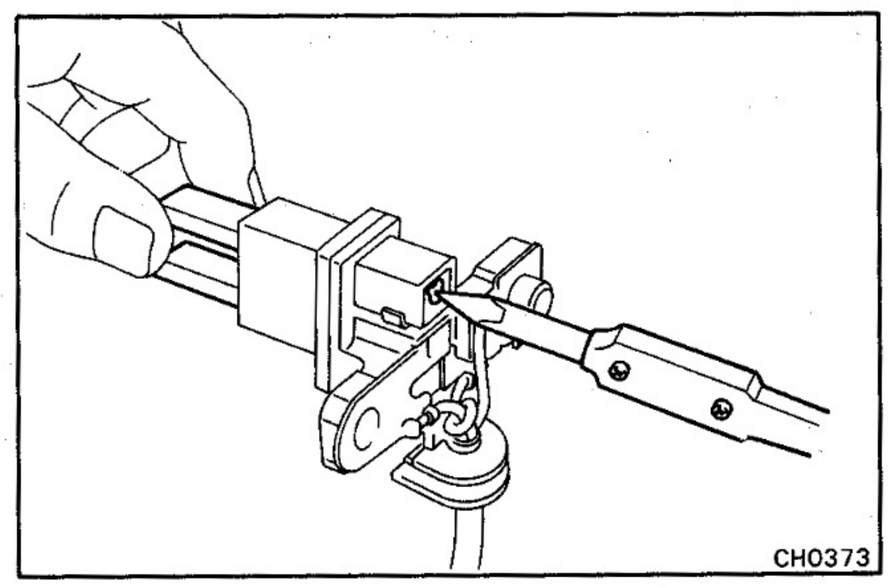

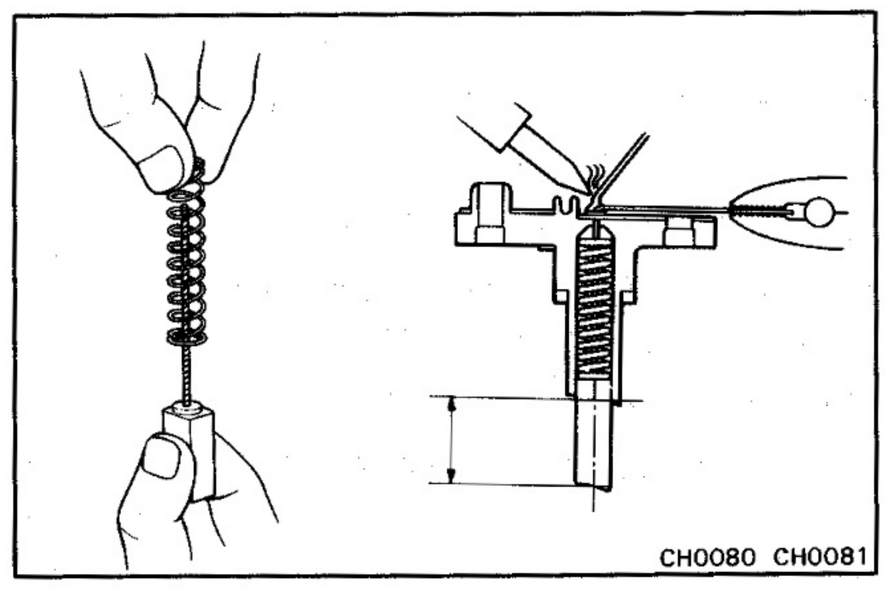

(b) Insert the brush wire through the spring.

(c) Install the brush in the brush holder.

(d) Solder the wire to the brush holder at specified exposed length.

Exposed length: 20.0 mm (0.787 in.)

(e) Check that the brush moves smoothly in the brush holder.

(f) Cut off any excess wire.

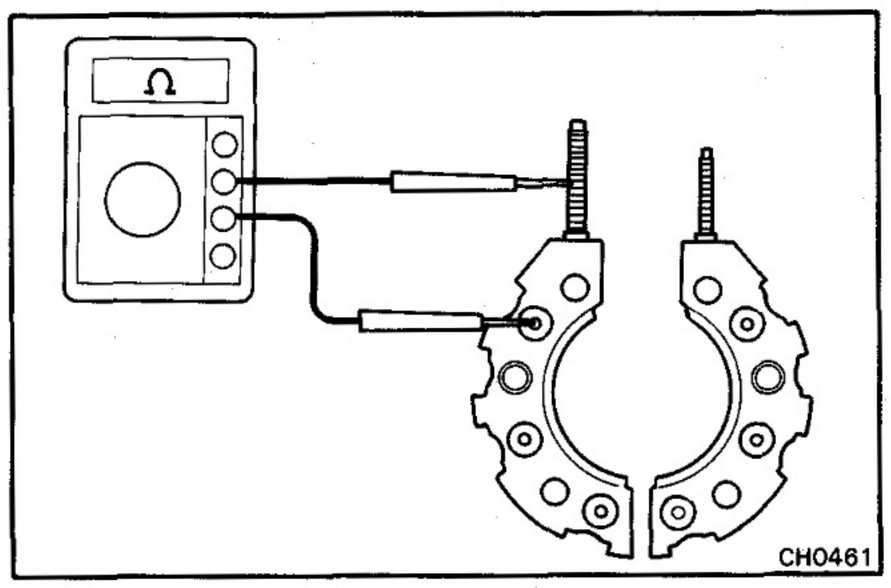

Rectifiers

1. INSPECT POSITIVE RECTIFIER

(a) Connect the ohmmeter positive (+) probe to the rectifier terminal and the negative (–) probe to the rectifier holder, and check that there is no continuity.

(b) Reverse the ohmmeter probes, and check that there is continuity.

If continuity is not as specified, replace the rectifier.

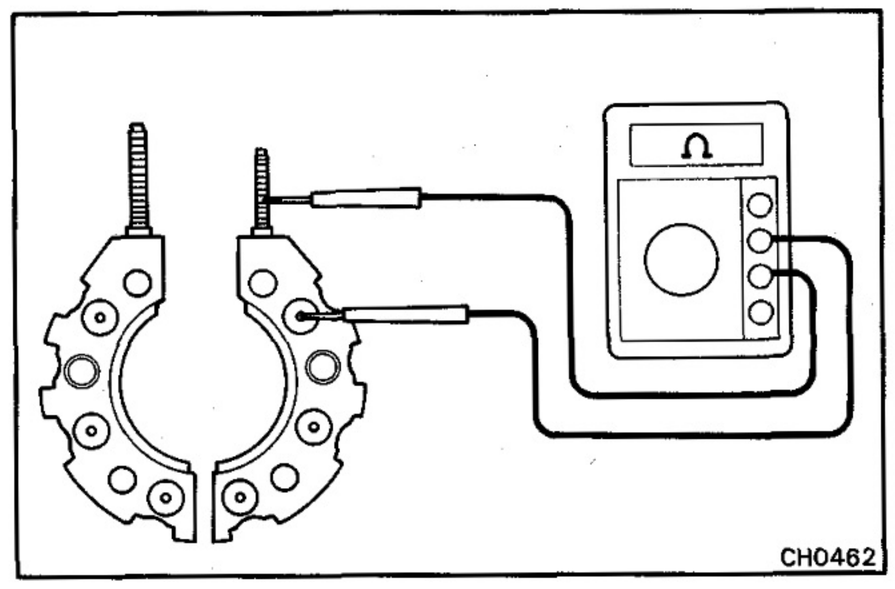

2. INSPECT NEGATIVE RECTIFIER

(a) Connect the ohmmeter positive (+) probe to the rectifier terminal and the negative (–) probe to the rectifier holder, and check that there is continuity.

(b) Reverse the ohmmeter probes, and check that there is no continuity.

If continuity is not as specified, replace the rectifier.

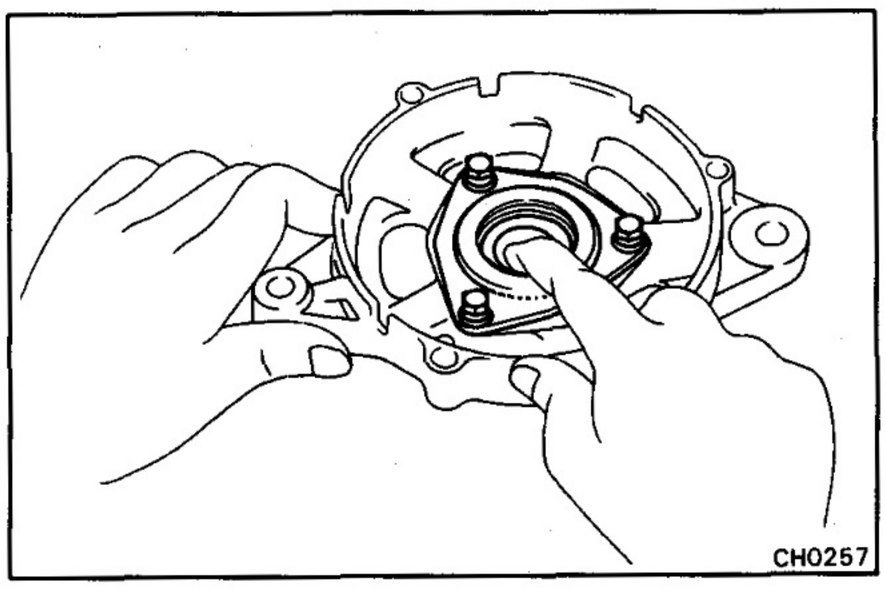

Bearings

1. INSPECT FRONT BEARING

Check that the bearing is not rough or worn.

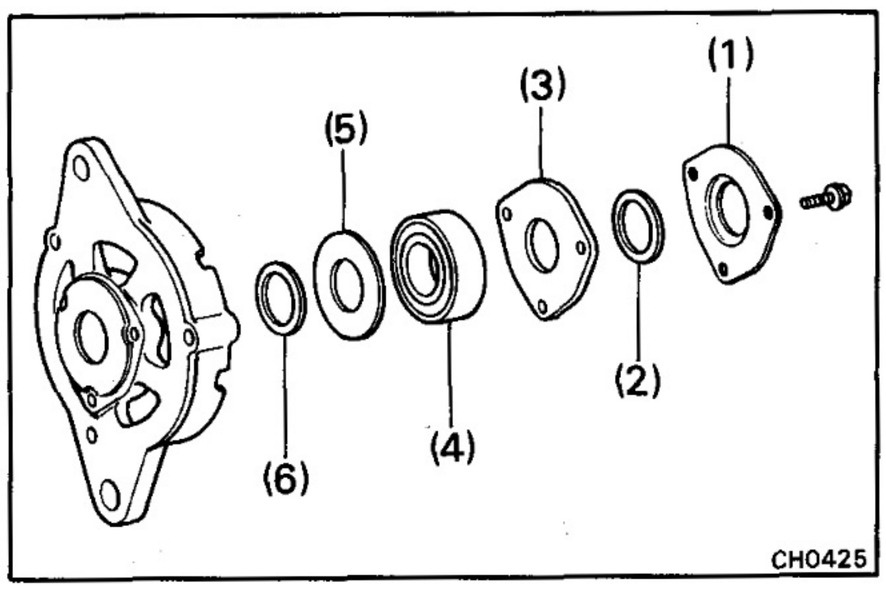

2. IF NECESSARY, REPLACE FRONT BEARING

(a) Remove the three bolts and following parts:

(1) Felt cover
(2) Felt
(3) Retainer
(4) Bearing
(5) Felt cover
(6) Felt

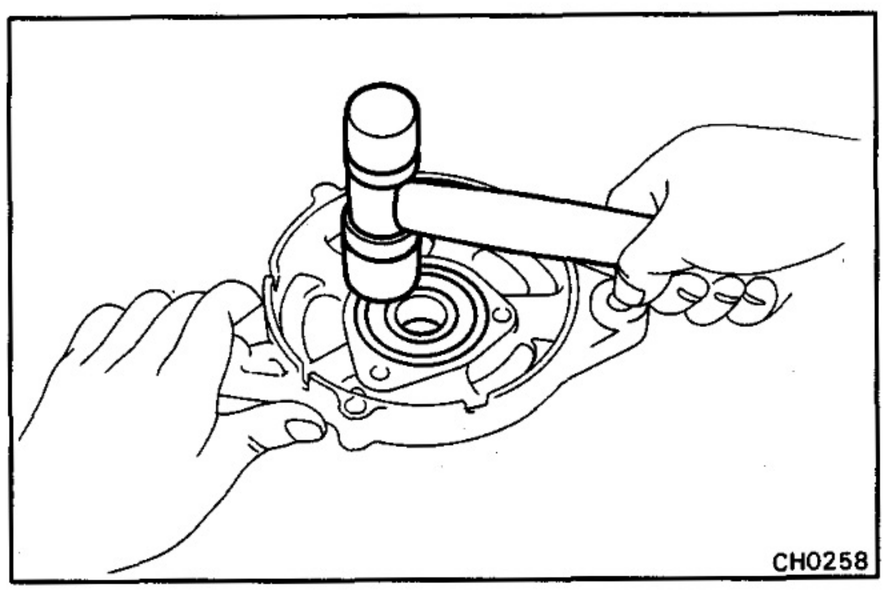

(b) Install the following parts with the three bolts:

(1) Felt
(2) Felt cover
(3) Bearing
If necessary, lightly tap the bearing with a plastic-faced hammer.
(4) Retainer
(5) Felt
(6) Felt cover

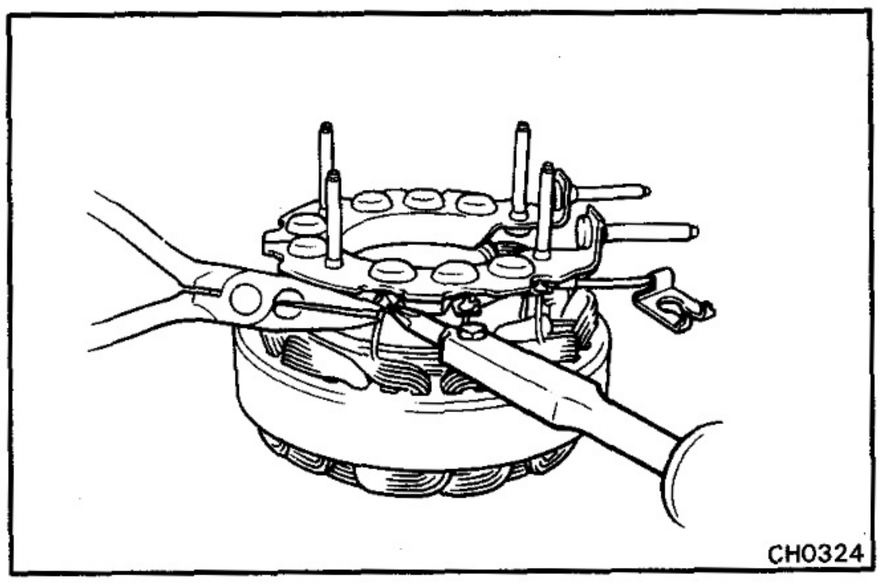

ASSEMBLY OF ALTERNATOR

(See page CH-11)

1. INSTALL RECTIFIER HOLDER TO STATOR

Hold the rectifier terminal with needle-nose pliers while soldering the leads.

CAUTION: Protect the rectifiers from heat.

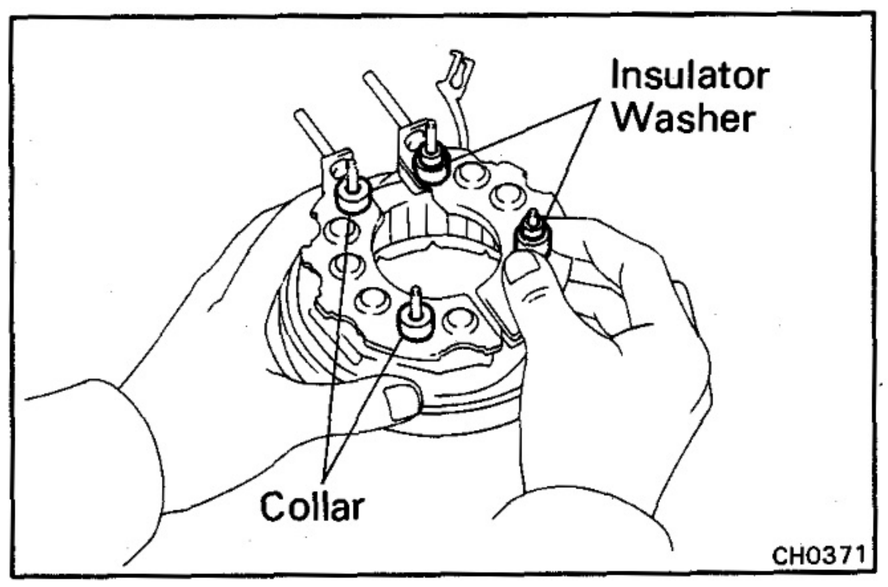

2. INSTALL RECTIFIER END FRAME TO RECTIFIER HOLDER

(a) Place the two insulator washers on the positive (+) studs of the rectifier holder.

(b) Place the two collars on the negative (–) studs of the rectifier holder.

(c) Place the rectifier end frame on the rectifier holder.

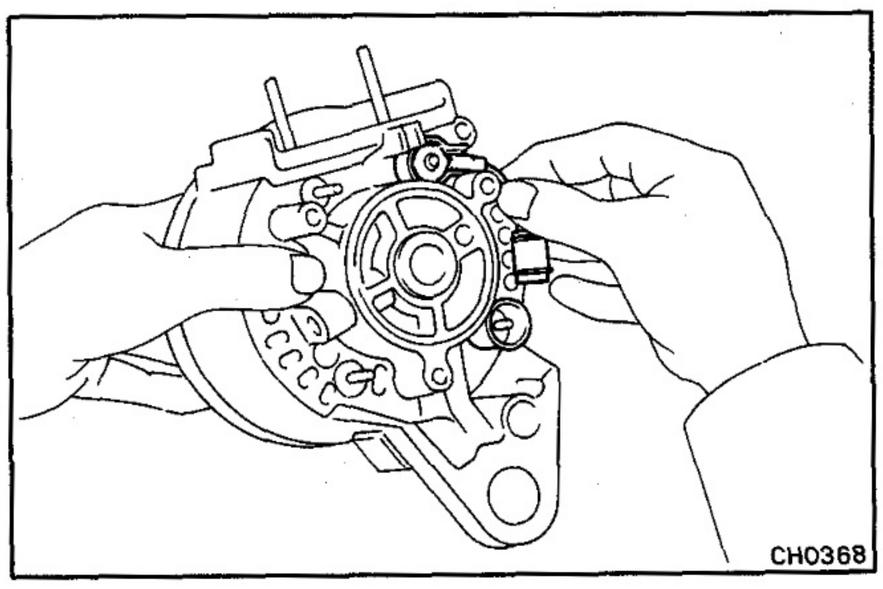

(d) Place the two terminal insulators on the positive (+) studs of the rectifier holder.

(e) Connect the lead wire of the condenser on the positive (+) stud of the rectifier holder.

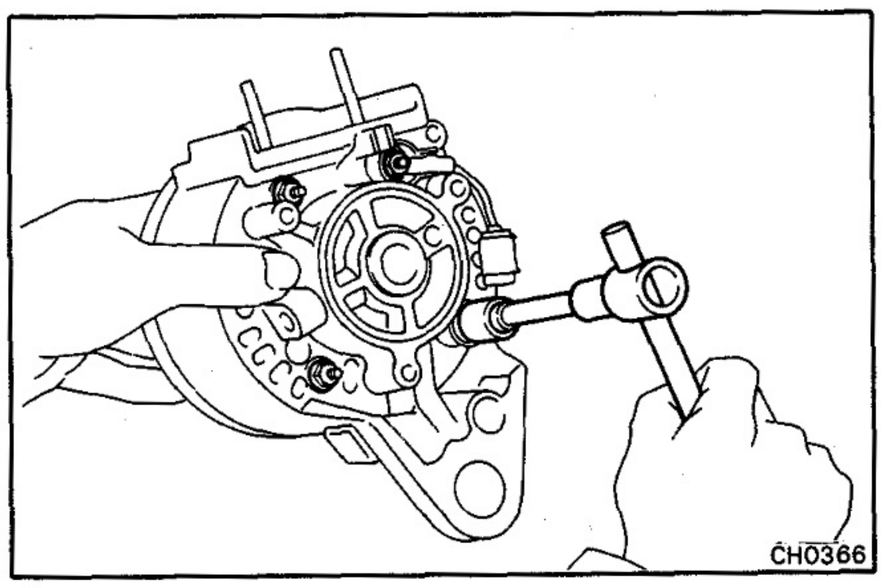

(f) Install the four nuts.

(g) Check that the wires are not touching the frame.

(h) [w/ IC Regulator]
Install the two rubber caps to the positive (+) studs of the rectifier holder.

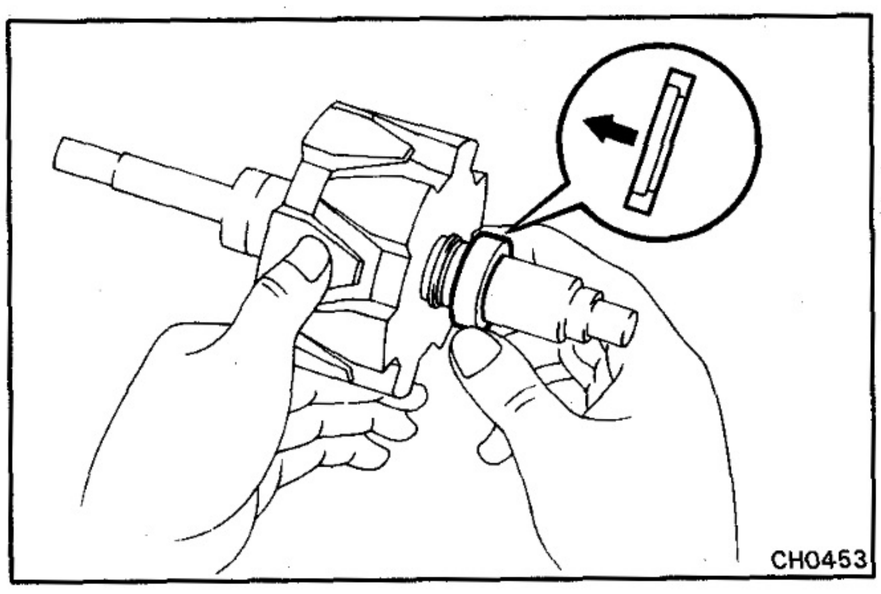

3. INSTALL ROTOR

(a) Install the snap ring on the rotor shaft groove.

(b) Slide the spacer ring onto the rotor shaft.

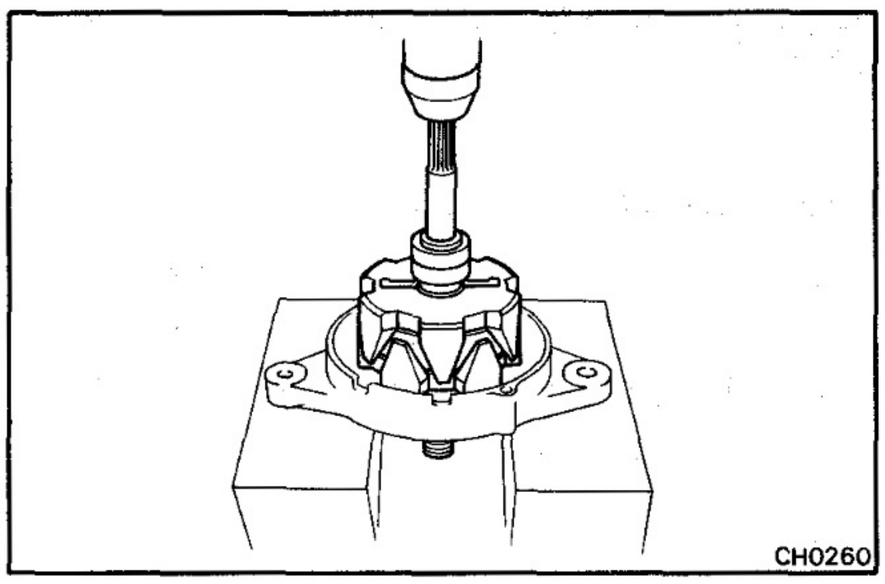
CH0260

(c) Using a press, press in the rotor.

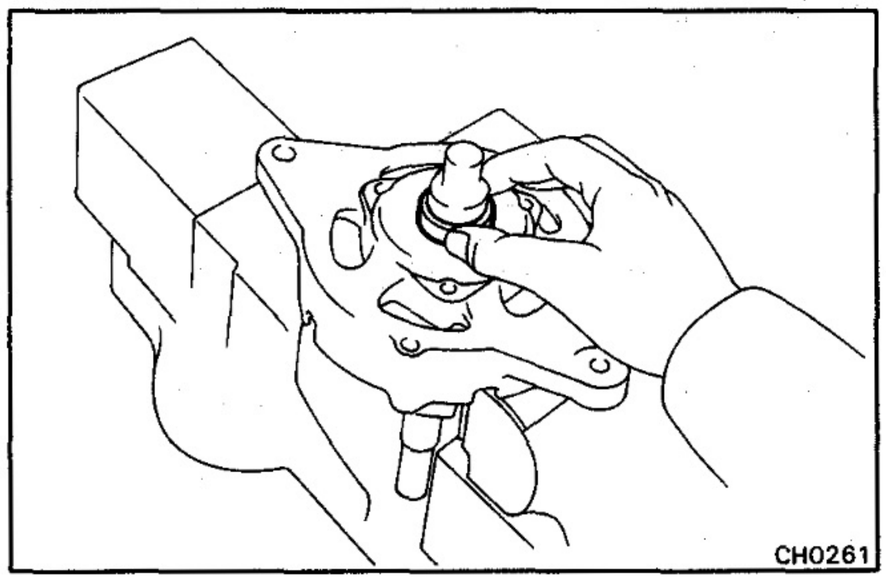
CH0261

4. INSTALL FAN AND PULLEY

(a) Mount the rotor in soft jaw vise.

(b) Slide the spacer collar onto the rotor shaft.

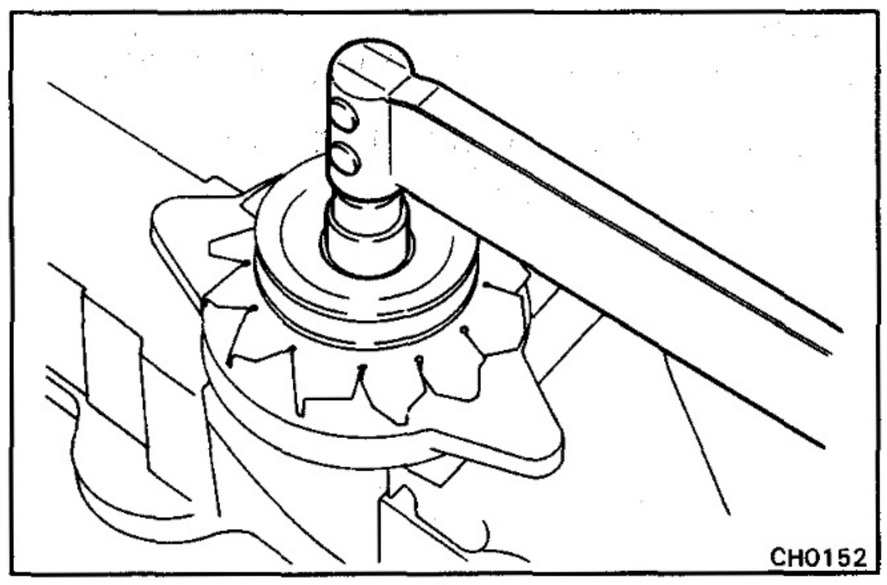
CH0152

(c) Slide the fan, pulley and spring washer onto the rotor shaft.

(d) Install the nut.

Torque: 900 kg-cm (65 ft-lb, 88 N·m)

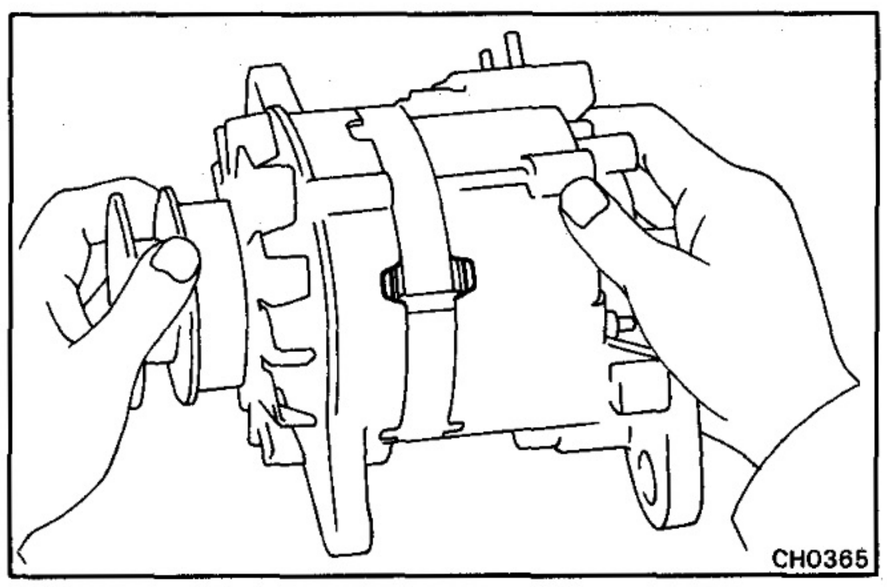
CH0365

5. ASSEMBLE DRIVE END FRAME AND RECTIFIER END FRAME

(a) Assemble the drive end frame and rectifier end frame.

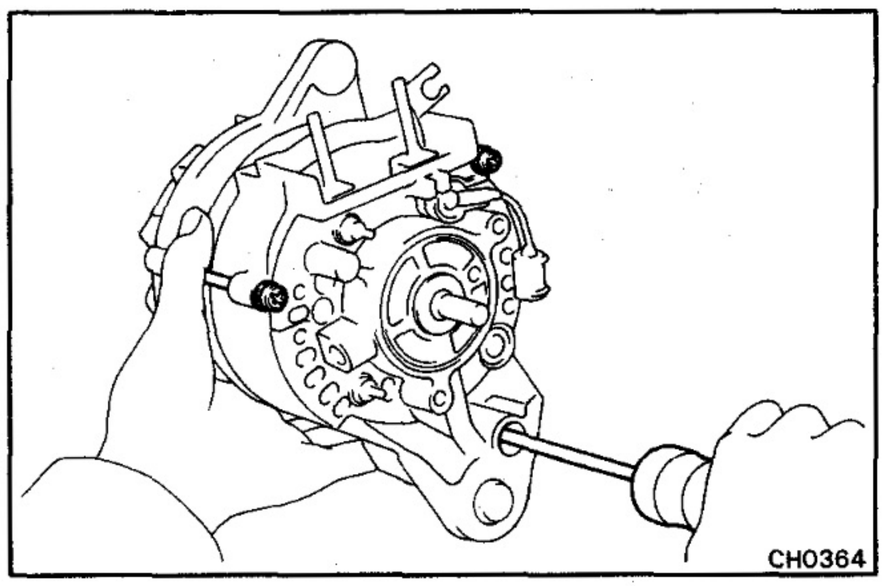
CH0364

(b) [BB (w/ IC Regulator)]
Install the four through screws.

(c) [Others]
Install the three through screws.

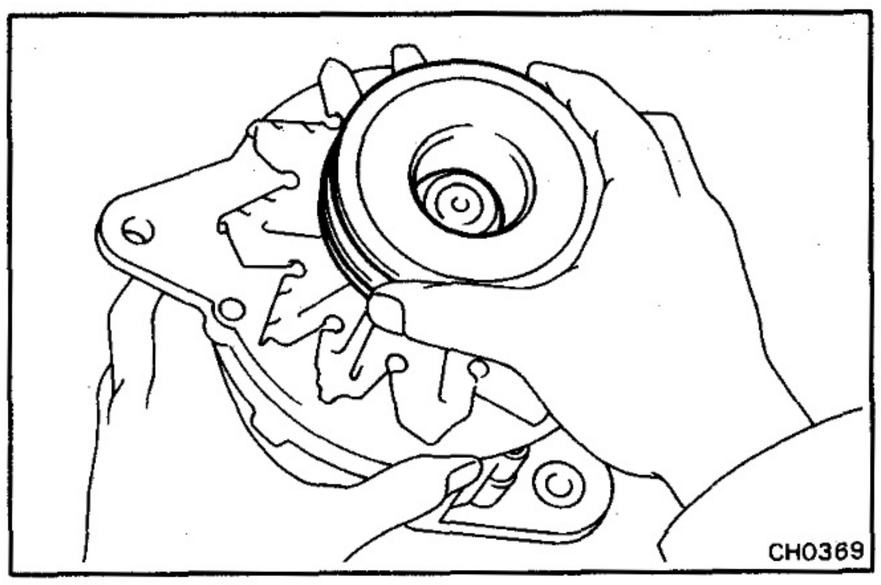

(d) Make sure the rotor rotates smoothly.

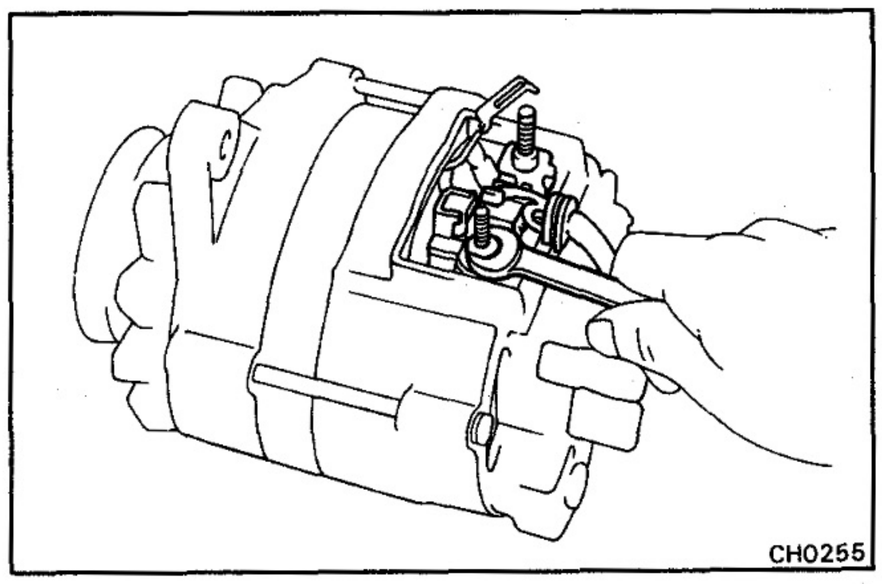

6. [w/o IC REGULATOR]
INSTALL BRUSH HOLDER

(a) Install the brush holder with the nut.

(b) Connect the brush holder wire clamp with the screw.

(c) Connect the lead wire to terminal B.

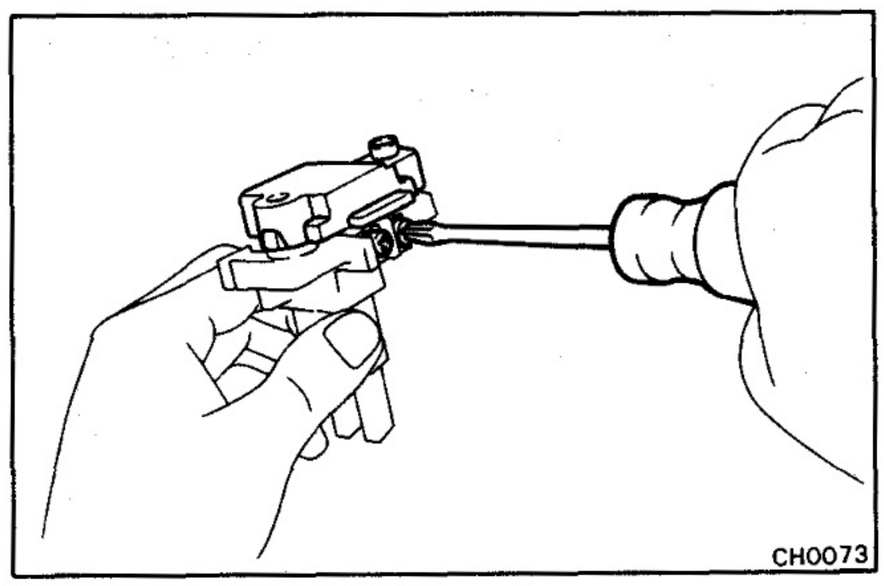

7. [W/ IC REGULATOR]
ASSEMBLE BRUSH HOLDER AND IC REGULATOR

(a) Assemble the brush holder and IC regulator with the two screws.

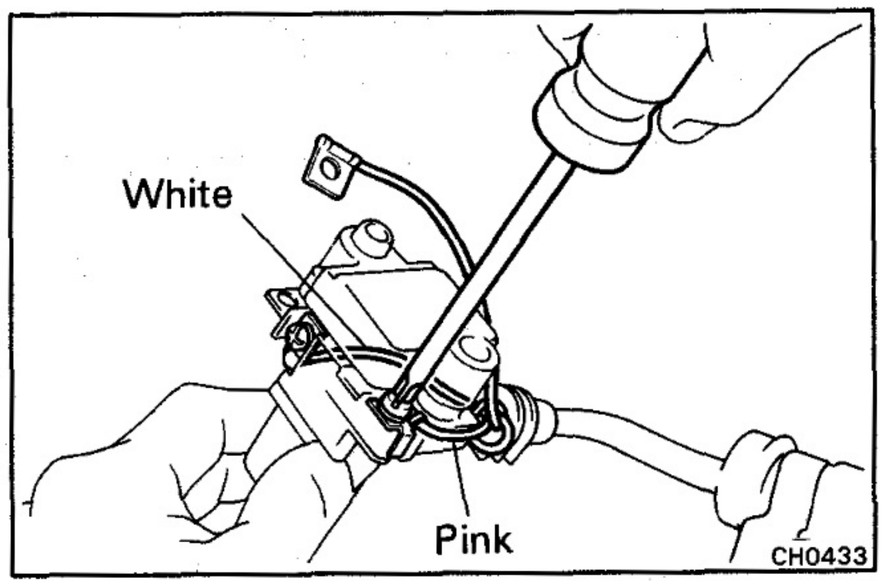

(b) Connect the two alternator wires to the terminal of the IC regulator with the two screws as shown.

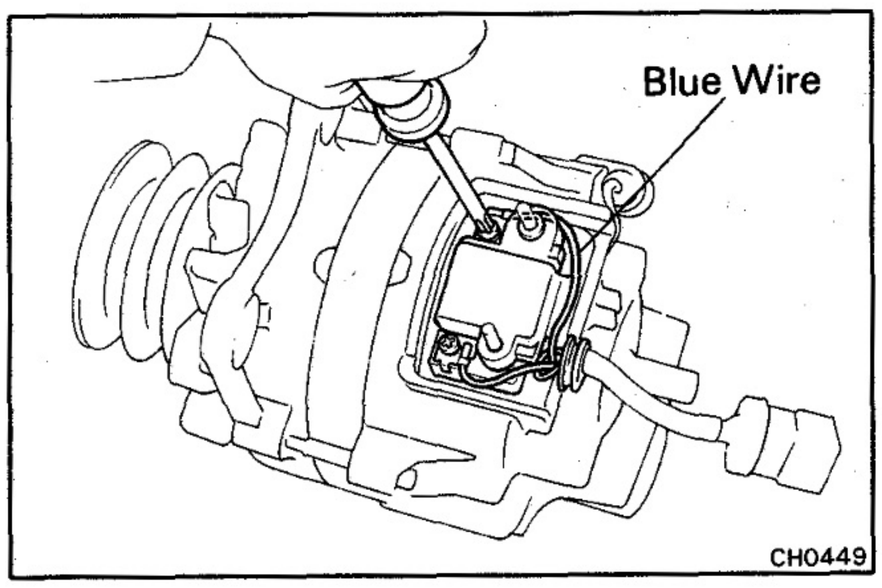

8. [w/ IC REGULATOR]
INSTALL BRUSH HOLDER AND IC REGULATOR ASSEMBLY

Install the brush holder and IC regulator assembly with the screw. Connect the alternator wire to the terminal of the IC regulator as shown.

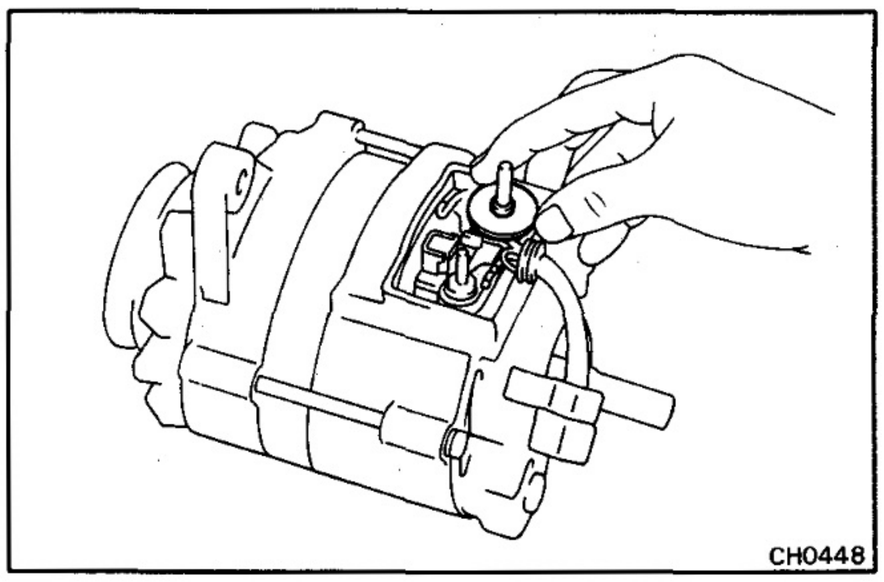

9. INSTALL BRUSH HOLDER COVER

(a) [w/o IC Regulator]
Place the insulator washer on terminal B.

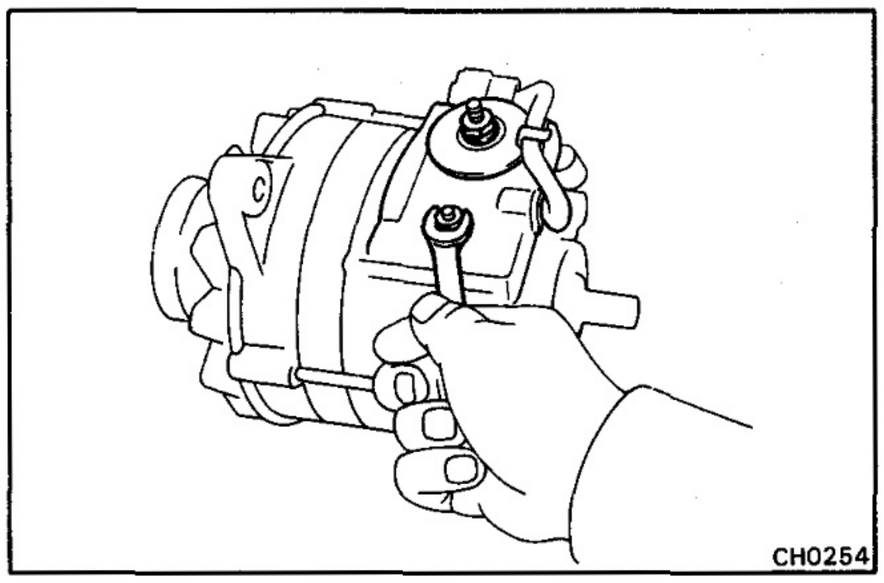

(b) Place the cover on the rectifier end frame.

(c) Place the terminal insulator and rubber washer on terminal B.

(d) [w/o IC Regulator]
Install the two nuts.

(e) [w/ IC Regulator]
Install the screw and two nuts together with the connector clamp.

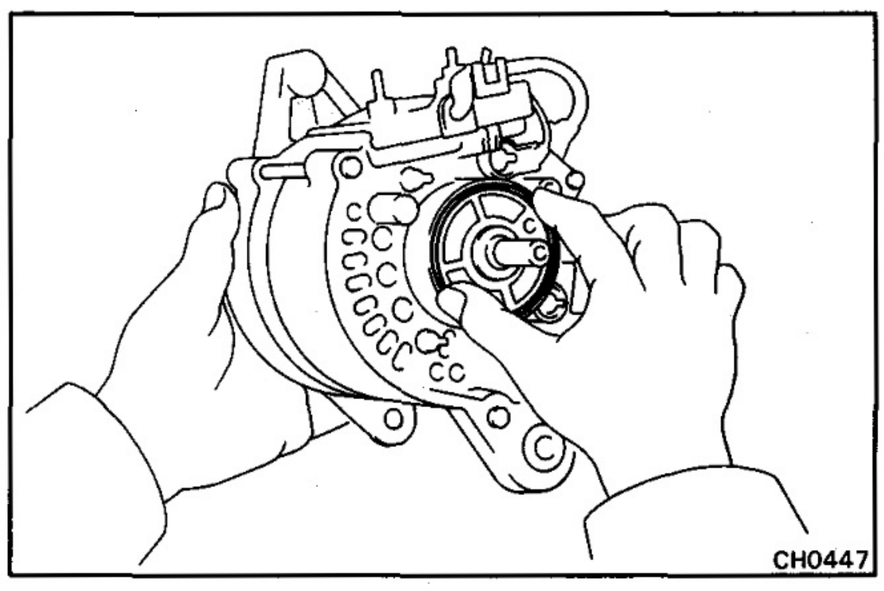

10. INSTALL VACUUM PUMP

(a) Place a new O-ring on the rectifier end frame.

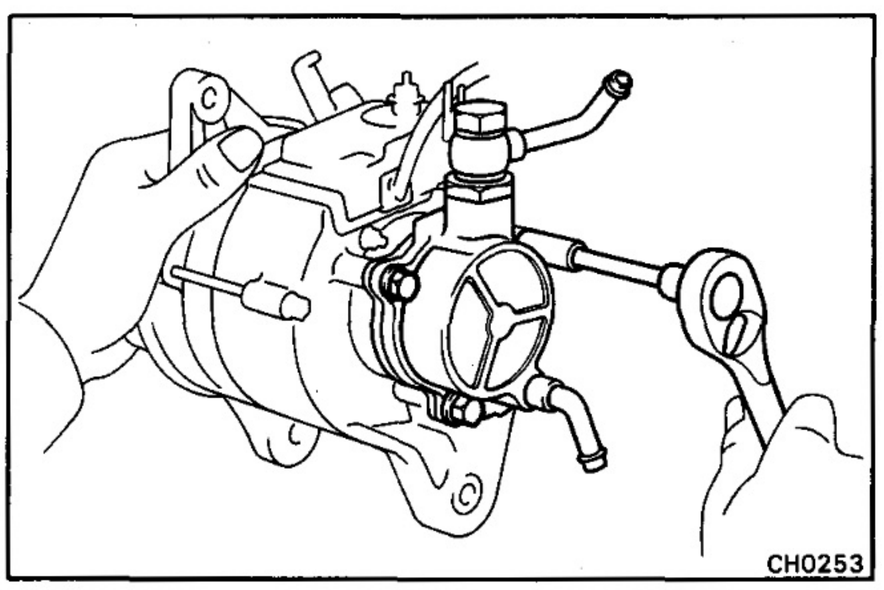

(b) Install the vacuum pump with the three bolts.

Torque: 80 kg-cm (69 in.-lb, 7.8 N·m)

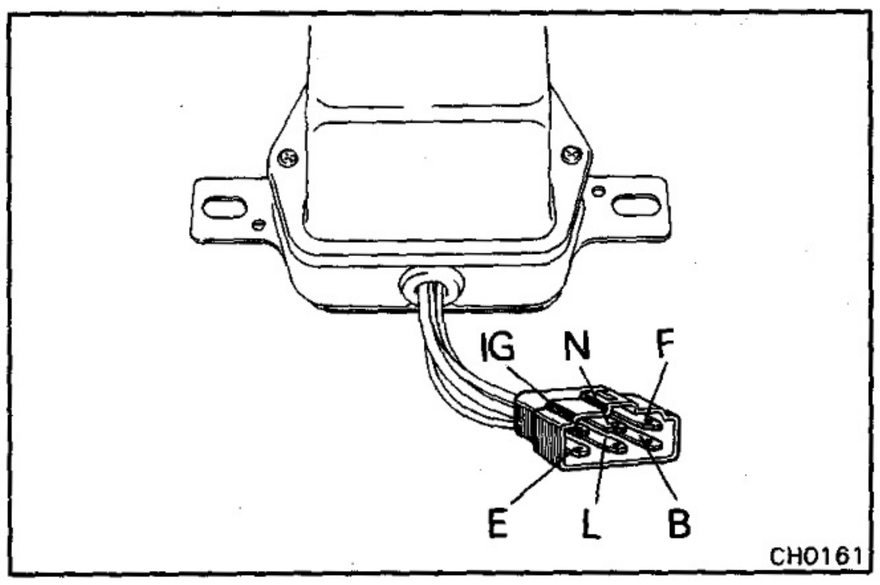

ALTERNATOR REGULATOR [w/o IC Regulator]

INSPECTION OF ALTERNATOR REGULATOR

LOCATION: On the left fender apron in the engine compartment.

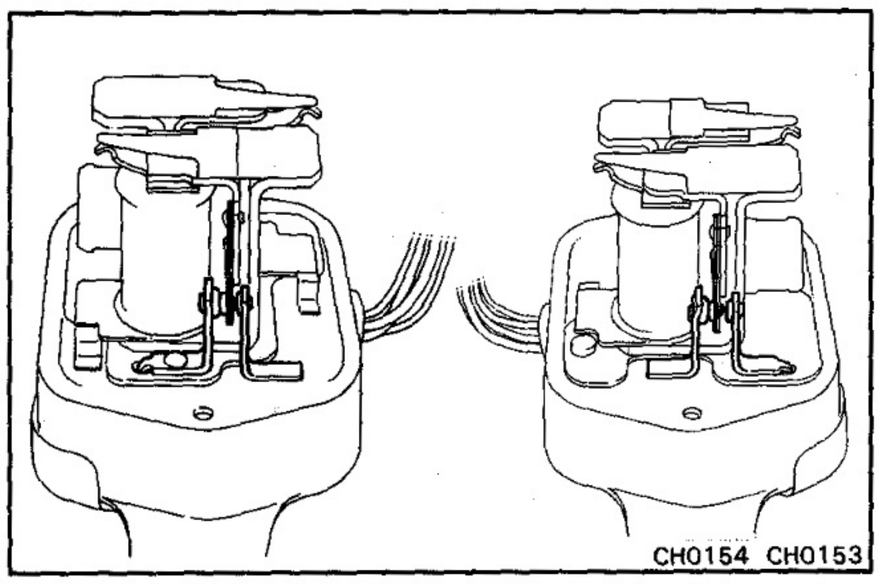

1. INSPECT POINT SURFACES FOR SEIZURE AND DAMAGE

If defective, replace the regulator.

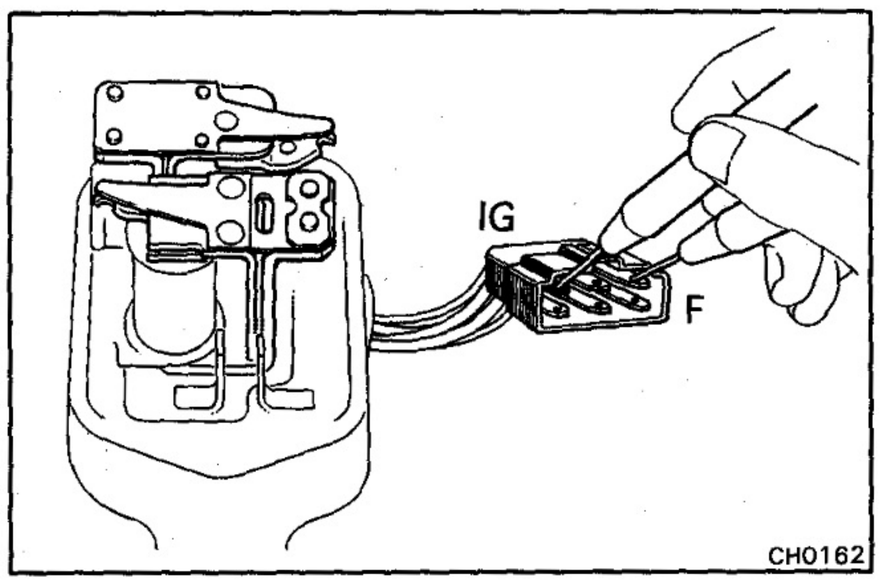

2. INSPECT RESISTANCE BETWEEN TERMINALS

(a) Using an ohmmeter, measure the resistance between terminals IG and F.

Resistance (Voltage regulator):

At rest		**0 Ω**
Pulled in	**12V type**	**Approx. 10.5 Ω**
	24V type	**Approx. 200 Ω**

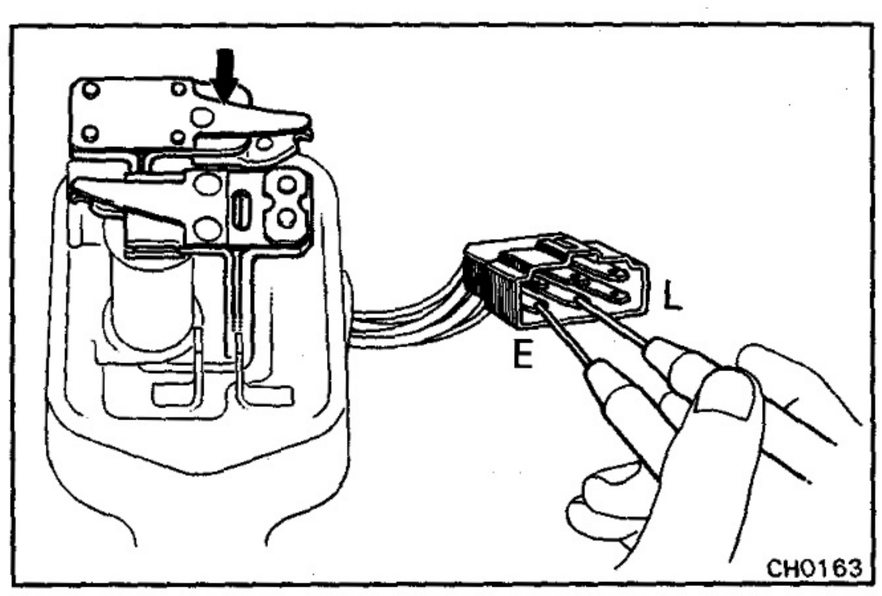

(b) Measure the resistance between terminals E and L.

Resistance (Voltage relay):

At rest		**0 Ω**
Pulled in	**12V type**	**Approx. 102 Ω**
	24V type	**Approx. 199 Ω**

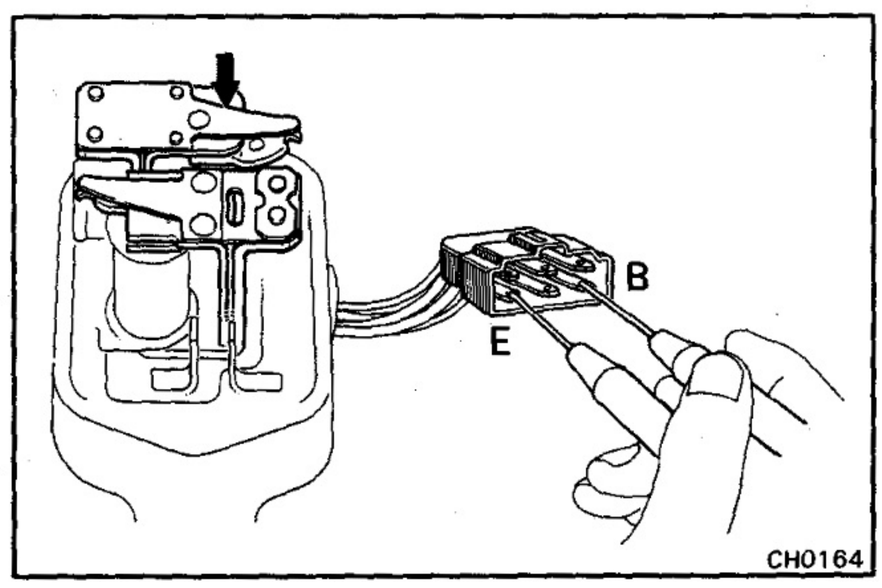

(c) Measure the resistance between terminals B and E.

Resistance (Voltage relay):

At rest		**Infinity**
Pulled in	**12V type**	**Approx. 102 Ω**
	24V type	**Approx. 199 Ω**

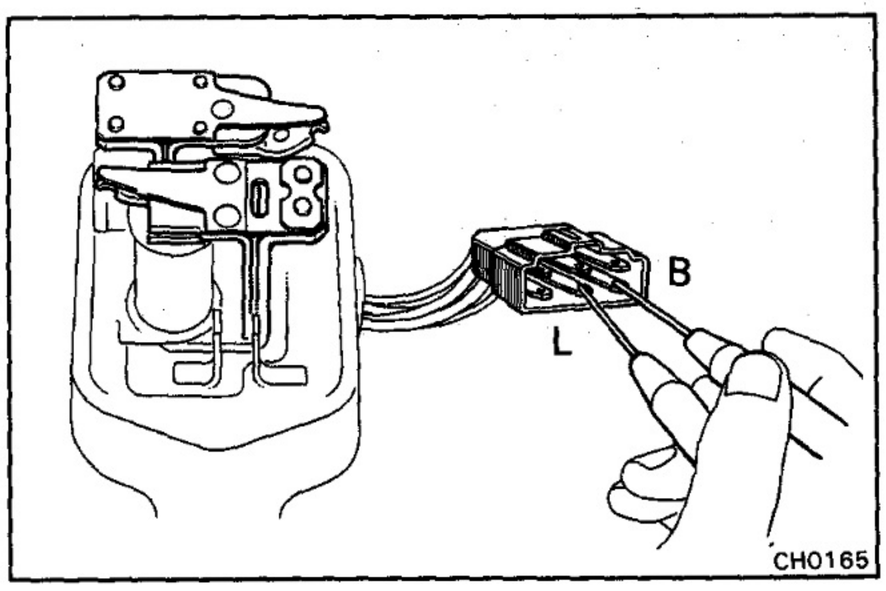

(d) Measure the resistance between terminals B and L.

Resistance (Voltage relay): At rest Infinity
Pulled in 0 Ω

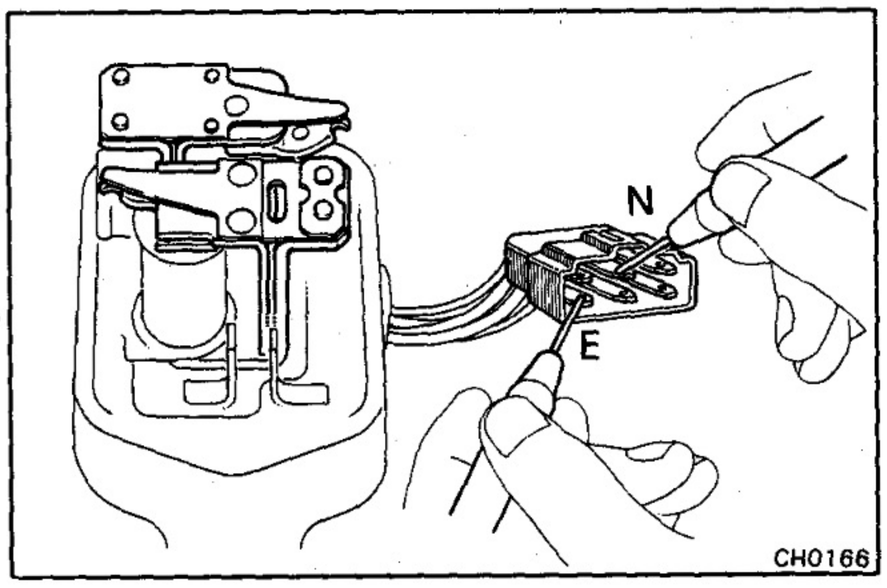

(e) Measure the resistance between terminals N and E.

Resistance:
12V type Approx. 24 Ω
24V type Approx. 102 Ω

If any of the above checks are not positive, replace the alternator regulator.

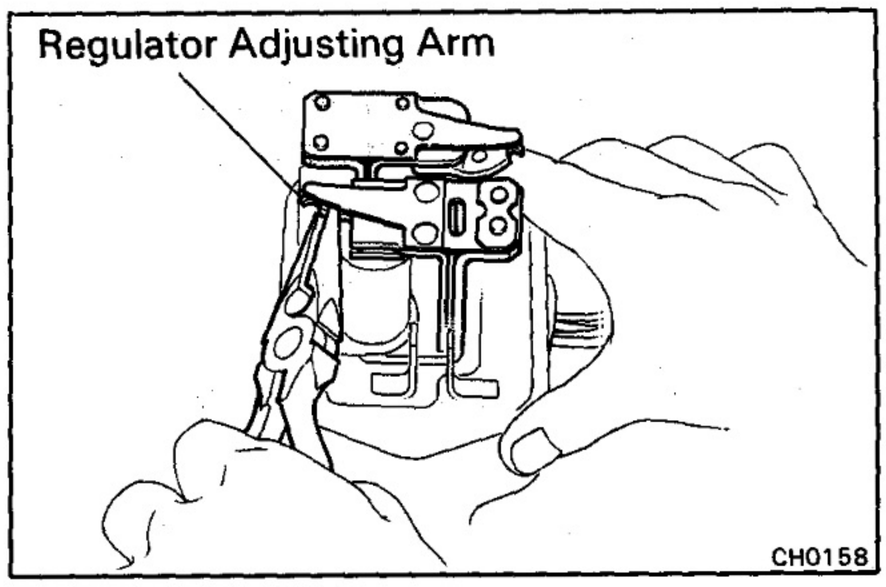

VOLTAGE ADJUSTMENT OF ALTERNATOR REGULATOR

1. ADJUST VOLTAGE REGULATOR

Bend the regulator adjusting arm to adjust.

Regulating voltage:
12V type 13.8 – 14.8 V
24V type 27.0 – 29.0 V

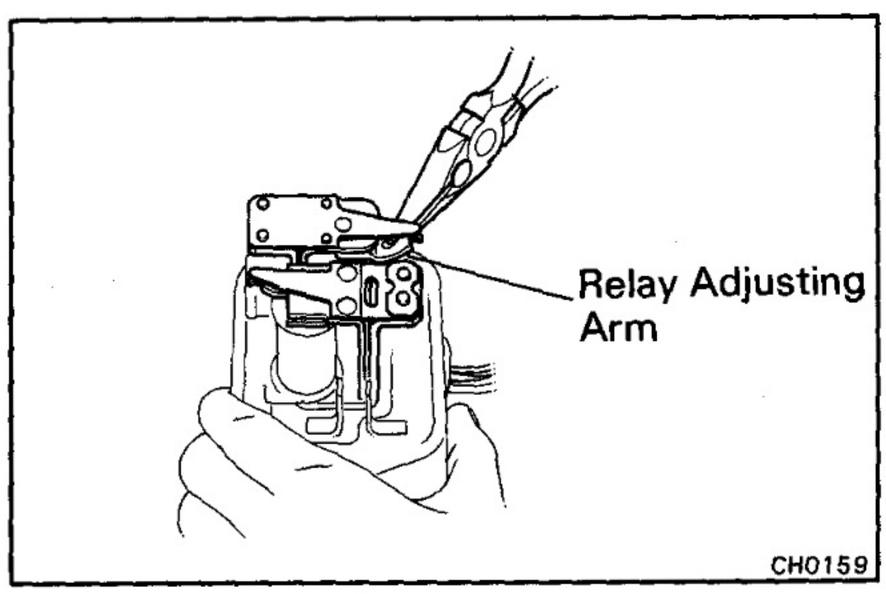

2. ADJUST VOLTAGE RELAY

Bend the relay adjusting arm to adjust.

Relay actuating voltage:
12V type 4.0 – 5.8 V
24V type 8.0 – 11.6 V

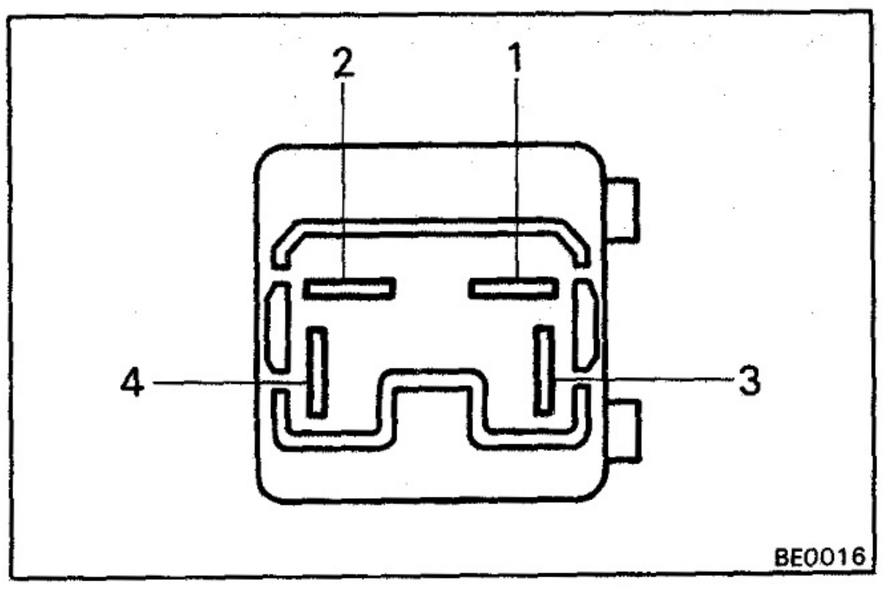

CHARGE LIGHT RELAY [w/ IC Regulator (BJ73 12V Type)]

INSPECTION OF CHARGE LIGHT RELAY

LOCATION: In the cowl on the drive side.

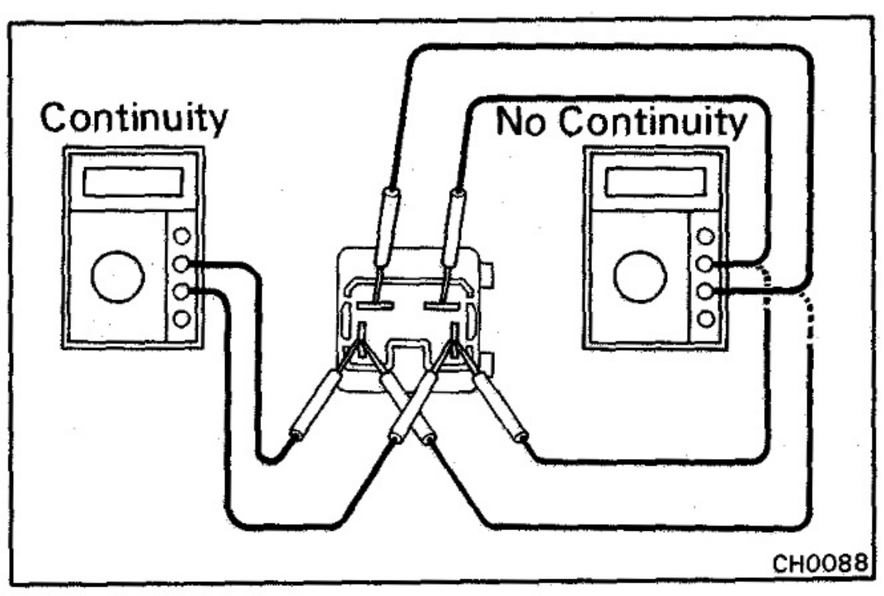

1. INSPECT RELAY CONTINUITY

(a) Connect the ohmmeter positive (+) probe to terminal 3 and the negative (–) probe to terminal 4, and check that there is continuity.

(b) Connect the ohmmeter positive (+) probe to terminal 4 and the negative (–) probe to terminal 3, and check that there is no continuity.

(c) Check that there is no continuity between terminals 1 and 2.

If continuity is not as specified, replace the relay.

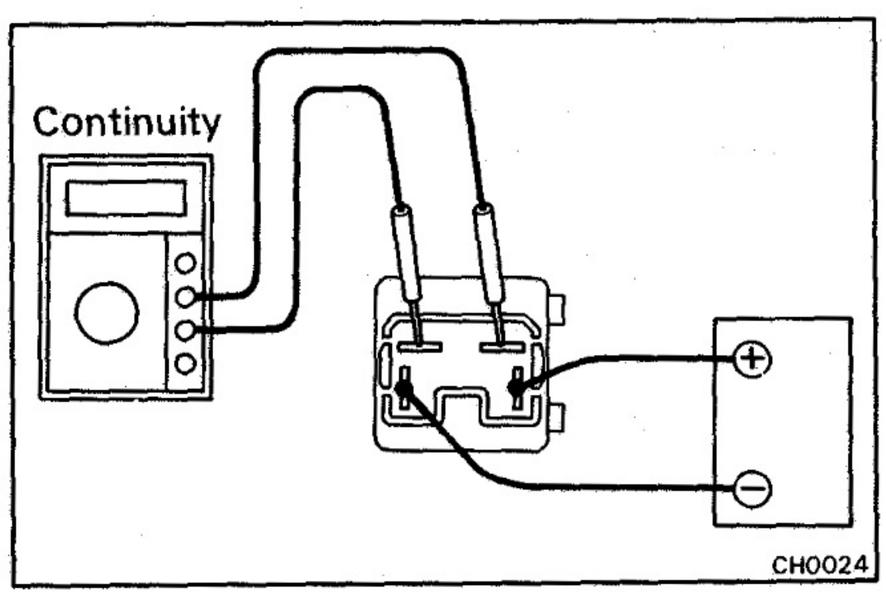

2. INSPECT RELAY OPERATION

(a) Connect the positive (+) lead from the battery to terminal 3. Connect the negative (–) lead to terminal to terminal 4.

(b) Check that there is continuity between terminals 1 and 2.

If operation is not as specified, replace the relay.

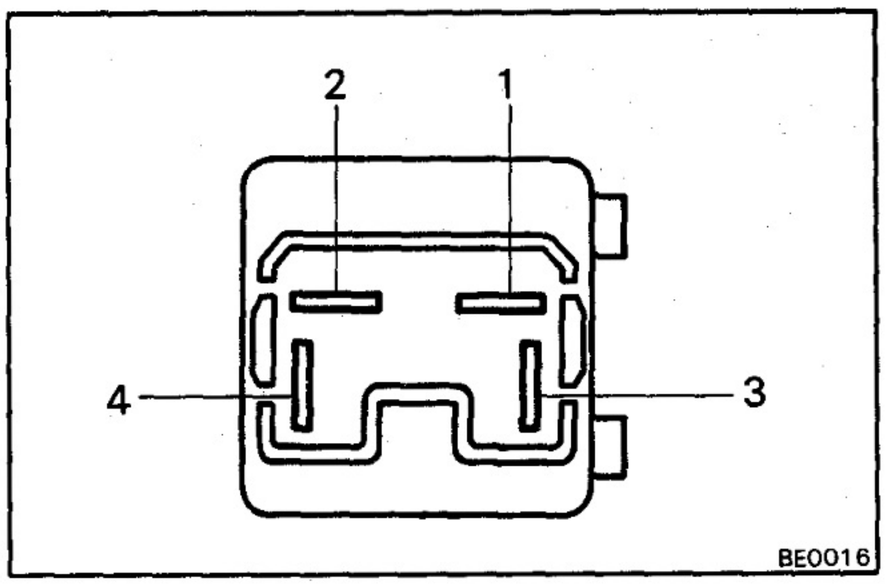

CHARGE LIGHT RELAY [w/ IC Regulator (BB 24V Type)]

INSPECTION OF CHARGE LIGHT RELAY

LOCATION: Inside wall adjacent to passenger door.

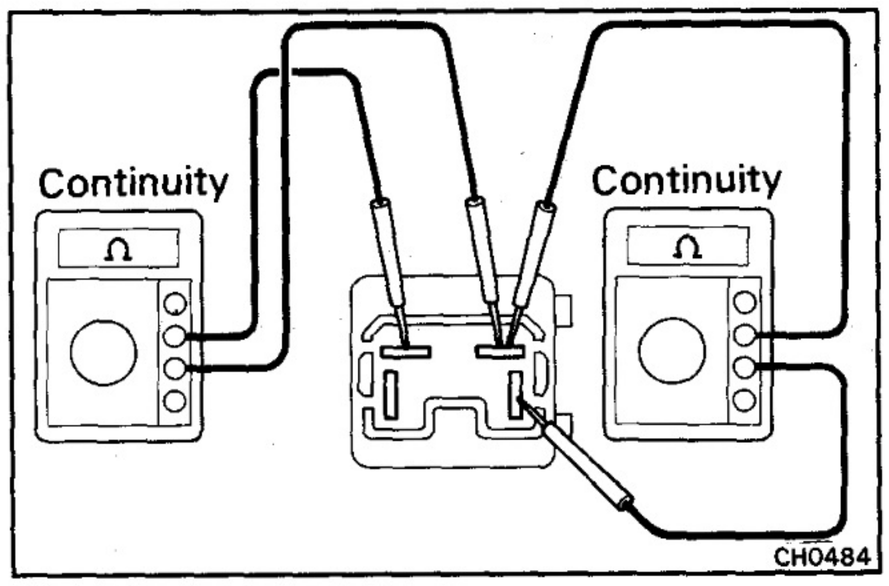

1. INSPECT RELAY CONTINUITY

(a) Connect the positive (+) test probe to terminal 2. Connect the negative (−) test probe to terminal 1. Check that there is continuity between terminals 1 and 2.

(b) Check that there is continuity between terminals 1 and 3.

If continuity is not as specified, replace the replay.

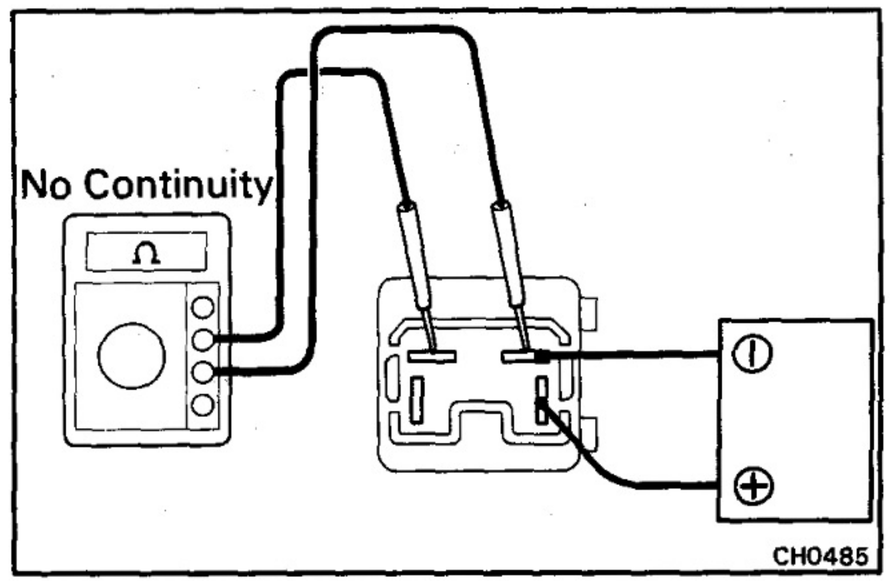

2. INSPECT RELAY OPERATION

(a) Connect the positive (+) lead from the battery (24V) to terminal 3. Connect the negative (−) lead to terminal 1.

(b) Connect the positive (+) test probe to terminal 2. Connect the negative (−) test probe to terminal 1. Check that there is no continuity between terminals 1 and 2.

If operation is not as specified, replace the relay.

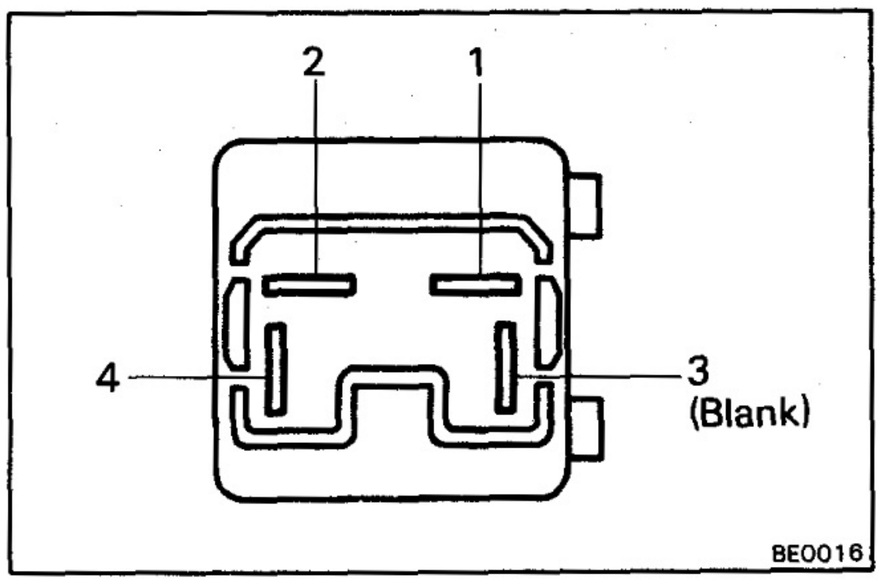

CHARGE LIGHT RELAY [w/ IC Regulator (BJ70 24V Type)]

INSPECTION OF CHARGE LIGHT RELAY

LOCATION: In the cowl on the driver side.

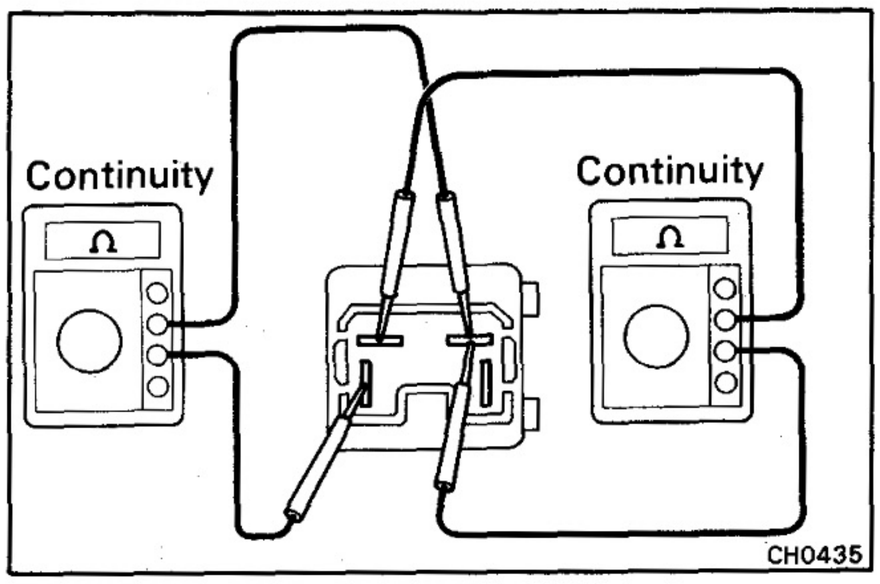

1. INSPECT RELAY CONTINUITY

(a) Check that there is continuity between terminals 1 and 2.

(b) Check that there is continuity between terminals 1 and 4.

If continuity is not as specified, replace the relay.

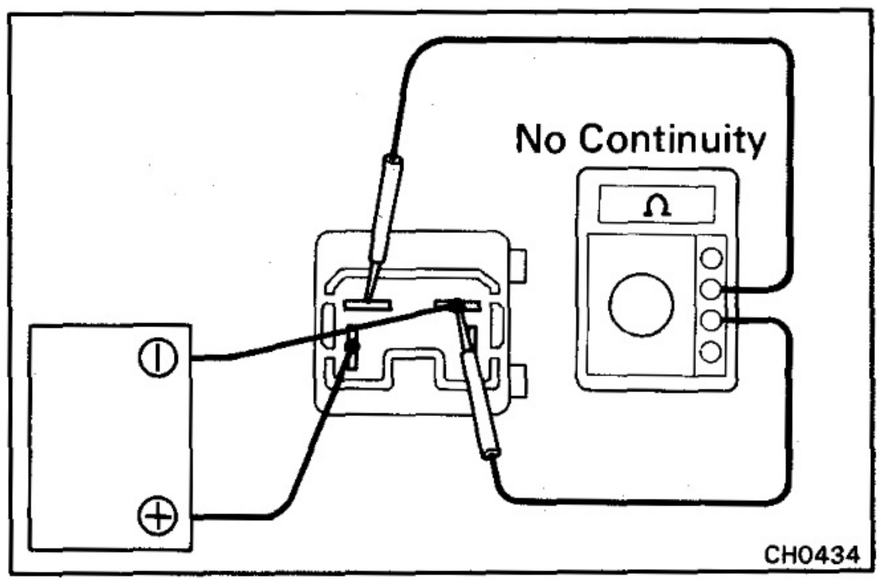

2. INSPECT RELAY OPERATION

(a) Connect the positive (+) lead from the battery (24V) to terminal 4. Connect the negative (–) lead to terminal 1.

(b) Check that there is no continuity between terminals 1 and 2.

If operation is not as specified, replace the relay.

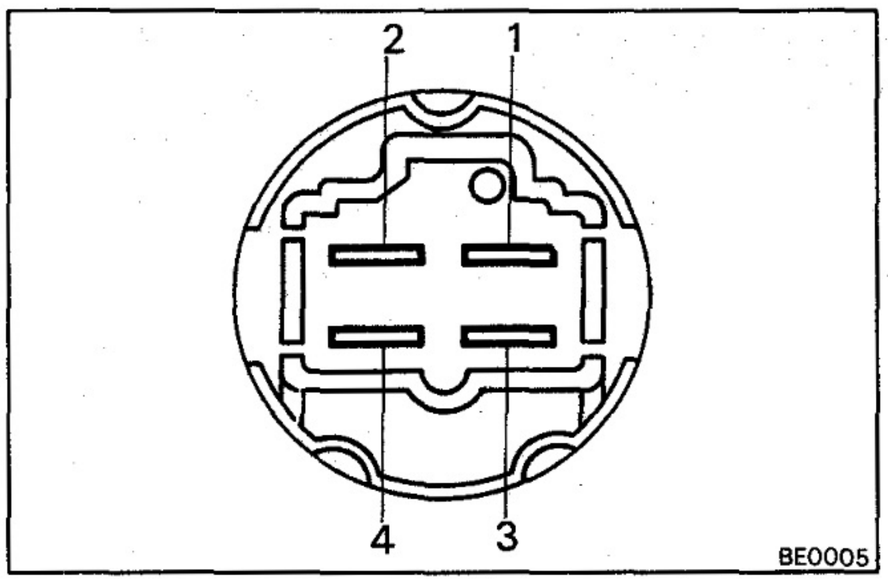

IGNITION MAIN RELAY [BJ60]

INSPECTION OF IGNITION MAIN RELAY

LOCATION: Under the instrument panel on the front drive side in the relay box.

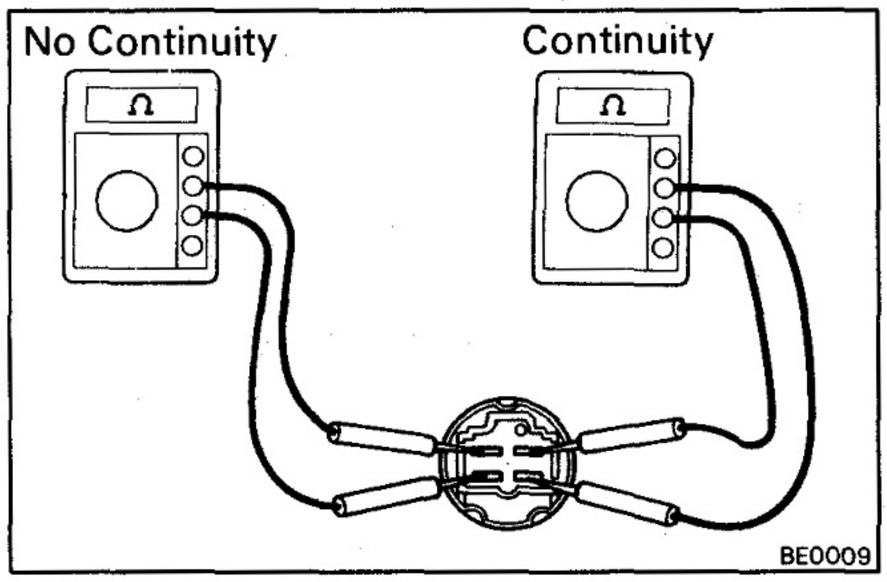

1. INSPECT RELAY CONTINUITY

(a) Check that there is continuity between terminals 1 and 3.

(b) Check that there is no continuity between terminals 2 and 4.

If continuity is not as specified, replace the relay.

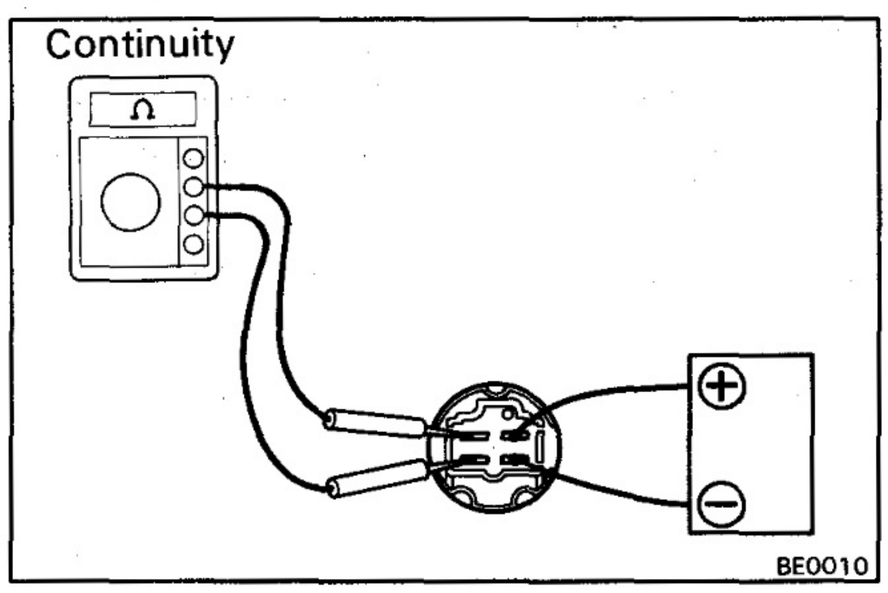

2. INSPECT RELAY OPERATION

(a) Apply battery voltage across terminals 1 and 3.

(b) Check that there is continuity between terminals 2 and 4.

If operation is not as specified, replace the relay.

SERVICE SPECIFICATIONS

	Page
ENGINE MECHANICAL	A-2
FUEL SYSTEM	A-7
COOLING SYSTEM	A-20
LUBRICATION SYSTEM	A-21
STARTING SYSTEM	A-22
CHARGING SYSTEM	A-22

ENGINE MECHANICAL

Specifications

Engine tune-up	Engine coolant capacity (w/ Heater)			
	BB20, 22, 30	15.0 liters	15.9 US qts	13.2 Imp. qts
	BJ60	13.3 liters	14.1 US qts	11.7 Imp. qts
	BJ70, 71, 73, 74, 75			
	3B	13.8 liters	14.6 US qts	12.1 Imp. qts
	13B-T M/T	14.2 liters	15.0 US qts	12.5 Imp. qts
	13B-T A/T	13.6 liters	14.4 US qts	12.0 Imp. qts
	BU60, 61, 62, 63, 65, 70, 75, 76, 80, 81, 82, 85, 86			
	Regular cap	12.5 liters	13.2 US qts	11.0 Imp. qts
	Wide cap	13.0 liters	13.7 US qts	11.4 Imp. qts
	BY33, 42	12.2 liters	12.9 US qts	10.7 Imp. qts
	Engine oil capacity			
	Drain and refill			
	w/o Oil filter change	5.8 liters	6.1 US qts	5.1 Imp. qts
	w/ Oil filter change	6.7 liters	7.1 US qts	5.9 Imp. qts
	Dry fill	7.3 liters	7.7 US qts	6.4 Imp. qts
	Battery specific gravity	1.25 – 1.27 when fully charged at 20°C (68°F)		
	Drive belt			
	Tension (Canada) New belt	145 ± 25 lb		
	Used belt	100 ± 20 lb		
	Deflection (Others)			
	Single belt New belt	8 – 12 mm	0.31 – 0.47 in.	
	Used belt	11 – 16 mm	0.43 – 0.63 in.	
	Double belt New belt	12 – 15 mm	0.47 – 0.59 in.	
	Used belt	14 – 20 mm	0.55 – 0.79 in.	
	Tension (Reference)			
	Single belt New belt	55 – 65 kg		
	Used belt	30 – 45 kg		
	Double belt New belt	45 – 55 kg		
	Used belt	20 – 35 kg		
	Injection nozzle opening pressure			
	B and 3B New nozzle	115 – 125 kg/cm² (1,636 – 1,778 psi, 11,278 – 12,258 kPa)		
	Reused nozzle	105 – 125 kg/cm² (1,493 – 1,778 psi, 10,296 – 12,258 kPa)		
	11B, 13B and 13B-T New nozzle	200 – 210 kg/cm² (2,845 – 2,987 psi, 19,613 – 20,594 kPa)		
	Reused nozzle	180 – 210 kg/cm² (2,560 – 2,987 psi, 17,652 – 20,594 kPa)		
	Valve clearance (Hot) IN INLET	0.20 mm	0.008 in.	
	EX EXHAUST	0.36 mm	0.014 in.	
	Injection timing			
	B and 3B	14° BTDC		
	11B (w/ HAC) and 13B (w/ HAC)	14° BTDC		
	11B (w/o HAC) and 13B (w/o HAC)	11° BTDC		
	13B-T	11° BTDC		
	Injection order	1–3–4–2		
	Idle speed			
	M/T	650 rpm		
	A/T (13B)	770 rpm		
	A/T (13B-T)	820 rpm		
	Maximum speed	4,100 rpm		
	A/C idle-up setting speed			
	BB	750 rpm		
	BJ and BU	950 rpm		

Specifications (Cont'd)

Compression pressure	Engine revolution at 250 rpm					
			STD		30.0 kg/cm² (427 psi, 2,942 kPa) or more	
			Limit		20.0 kg/cm² 284 psi 1,961 kPa	
	Difference of pressure between each cylinder				2.0 kg/cm² (28 psi, 196 kPa) or less	
Turbocharger	Turbocharging pressure				0.42 – 0.56 kg/cm² (6.0 – 8.0 psi, 41 – 55 kPa)	
	Impeller wheel axial play				0.13 mm (0.0051 in.) or less	
Cylinder head	Cylinder block side warpage					
			Limit		0.20 mm	0.0079 in.
	Manifold side warpage	Limit			0.20 mm	0.0079 in.
	Valve seat					
	Refacing angle				30°, 45°, 60°	
	Contacting angle				45°	
	Contacting width				1.9 – 2.3 mm	0.075 – 0.091 in.
Valve guide busing	Inner diameter				9.010 – 9.030 mm	0.3547 – 0.3555 in.
	Outer diameter				14.023 – 14.041 mm	0.5521 – 0.5528 in.
Valve	Valve overall length					
		STD	IN		127.95 mm	5.0374 in.
			EX	B, 3B	127.75 mm	5.0295 in.
				11B, 13B, 13B-T	127.95 mm	5.0374 in.
		Limit	IN		127.45 mm	5.0177 in.
			EX	B, 3B	127.25 mm	5.0098 in.
				11B, 13B, 13B-T	127.45 mm	5.0177 in.
	Valve face angle				45.5°	
	Stem diameter		IN		8.968 – 8.984 mm	0.3531 – 0.3537 in.
			EX	B, 3B, 11B, 13B	8.954 – 8.970 mm	0.3525 – 0.3531 in.
				13B-T	8.940 – 8.956 mm	0.3520 – 0.3526 in.
	Stem oil clearance					
		STD	IN		0.026 – 0.062 mm	0.0010 – 0.0024 in.
			EX	B, 3B, 11B, 13B	0.040 – 0.076 mm	0.0016 – 0.0030 in.
				13B-T	0.054 – 0.090 mm	0.0021 – 0.0035 in.
		Limit	IN		0.10 mm	0.0039 in.
			EX	B, 3B, 11B, 13B	0.12 mm	0.0047 in.
				13B-T	0.13 mm	0.0051 in.
	Margin thickness	STD	IN		1.4 mm	0.055 in.
			EX	B, 3B	1.8 mm	0.071 in.
				11B	1.3 mm	0.051 in.
				13B, 13B-T	1.7 mm	0.067 in.
		Limit	IN		0.9 mm	0.035 in.
			EX	B, 3B	1.3 mm	0.051 in.
				11B	0.8 mm	0.031 in.
				13B, 13-T	1.2 mm	0.047 in.
Valve spring	Free length	STD	Inner	B, 3B	45.50 mm	1.7913 in.
				11B, 13B, 13B-T	54.84 mm	2.1591 in.
			Outer	B, 3B	47.52 mm	1.8709 in.
				11B, 13B, 13B-T	58.30 mm	2.2953 in.
	Installed tension		Inner	B, 3B	5.95 kg (13.1 lb, 58 N) at 36.05 mm (1.4193 in.)	
				11B, 13B, 13B-T	14.2 kg (31.3 lb, 139 N) at 42.25 mm (1.6634 in.)	
			Outer	B, 3B	25.53 kg (56.3 lb, 250 N) at 39.55 mm (1.5571 in.)	
				11B, 13B, 13B-T	27.8 kg (61.2 lb, 273 N) at 44.75 mm (1.7618 in.)	
	Squareness				2.0 mm	0.079 in.

Specifications (Cont'd)

Rocker arm and shaft	Rocker arm inside diameter			18.512 – 18.533 mm	0.7288 – 0.7296 in.
	Rocker shaft diameter			18.472 – 18.493 mm	0.7272 – 0.7281 in.
	Rocker arm to shaft oil clearance				
	STD			0.019 – 0.061 mm	0.0007 – 0.0024 in.
	Limit			0.10 mm	0.0039 in.
Push rod	Circle runout			0.50 mm	0.0197 in.
Intake and exhaust manifold	Manifold surface warpage				
	Limit			0.20 mm	0.0079 in.
Combustion chamber (B, 3B)	Protrusion			Minus 0.05 – Plus 0.05 mm	Minus 0.0020 – Plus 0.0020 in.
Camshaft	Circle runout Limit			0.06 mm	0.0024 in.
	Cam lobe height				
	STD	IN	B, 3B	45.067 – 45.157 mm	1.7743 – 1.7748 in.
			11B, 13B	44.705 – 44.795 mm	1.7600 – 1.7636 in.
			13B-T	44.909 – 44.999 mm	1.7681 – 1.7716 in.
		EX	B, 3B	45.065 – 45.155 mm	1.7742 – 1.7778 in.
			11B, 13B, 13B-T	44.774 – 44.864 mm	1.7628 – 1.7663 in.
	Limit	IN	B, 3B	44.63 mm	1.7571 in.
			11B, 13B	44.27 mm	1.7429 in.
			13B-T	44.47 mm	1.7508 in.
		EX	B, 3B	44.63 mm	1.7571 in.
			11B, 13B, 13B-T	44.34 mm	1.7457 in.
	Journal diameter	No. 1		53.459 – 53.475 mm	2.1047 – 2.1053 in.
		No. 2		53.209 – 53.225 mm	2.0948 – 2.0955 in.
		No. 3		52.959 – 52.975 mm	2.0850 – 2.0856 in.
		No. 4		52.709 – 52.725 mm	2.0752 – 2.0758 in.
		No. 5		52.459 – 52.475 mm	2.0653 – 2.0659 in.
	Bearing inside diameter				
		No. 1		53.495 – 53.568 mm	2.1061 – 2.1090 in.
		No. 2		53.245 – 53.318 mm	2.0963 – 2.0991 in.
		No. 3		52.995 – 53.068 mm	2.0864 – 2.0893 in.
		No. 4		52.745 – 52.818 mm	2.0766 – 2.0794 in.
		No. 5		52.495 – 52.568 mm	2.0667 – 2.0696 in.
	Journal oil clearance		STD	0.020 – 0.109 mm	0.0008 – 0.0043 in.
			Limit	0.15 mm	0.0059 in.
	Thrust clearance		STD	0.06 – 0.13 mm	0.0024 – 0.0051 in.
			Limit	0.30 mm	0.0118 in.
Timing gear	Gear backlash (each gear)		STD	0.058 – 0.162 mm	0.0023 – 0.064 in.
			Limit	0.30 mm	0.0118 in.
	Idle gear thrust clearance		STD	0.06 – 0.17 mm	0.0024 – 0.0067 in.
			Limit	0.30 mm	0.0118 in.
	Idle gear shaft diameter			44.935 – 44.955 mm	1.7691 – 1.7699 in.
	Idle gear inside diameter			44.969 – 44.995 mm	1.7704 – 1.7715 in.
	Idle gear oil clearance		STD	0.014 – 0.060 mm	0.0006 – 0.0024 in.
			Limit	0.15 mm	0.0059 in.
Valve lifter	Valve lifter diameter			26.972 – 26.985 mm	1.0619 – 1.0624 in.
	Valve lifter bore diameter			27.010 – 27.030 mm	1.0634 – 1.0642 in.
	Oil clearance		STD	0.025 – 0.065 mm	0.0010 – 0.0026 in.
			Limit	0.10 mm	0.0039 in.

Specifications (Cont'd)

Cylinder block and cylinder	Cylinder head surface warpage				
		Limit		0.20 mm	0.0079 in.
	Cylinder bore diameter				
		STD	B, 11B	95.00 – 95.03 mm	3.7402 – 3.7413 in.
			3B, 13B, 13B-T	102.00 – 102.03 mm	4.0157 – 4.0169 in.
		Limit	B, 11B	95.23 mm	3.7492 in.
			3B, 13B, 13B-T	102.23 mm	4.0248 in.
	Cylinder liner ridge protrusion			0.01 – 0.10 mm	0.0004 – 0.0039 in.
Piston and piston ring	Piston diameter		B	94.90 – 94.93 mm	3.7362 – 3.7374 in.
			3B	101.90 – 101.93 mm	4.0118 – 4.0130 in.
			11B	94.94 – 94.97 mm	3.7378 – 3.7390 in.
			13B	101.93 – 101.96 mm	4.0130 – 4.0142 in.
			13B-T	101.92 – 101.95 mm	4.0126 – 4.0138 in.
	Piston oil clearance				
		STD	B, 3B	0.09 – 0.11 mm	0.0035 – 0.0043 in.
			11B	0.05 – 0.07 mm	0.0020 – 0.0028 in.
			13B	0.06 – 0.08 mm	0.0024 – 0.0031 in.
			13B-T	0.07 – 0.09 mm	0.0028 – 0.0035 in.
		Limit		0.15 mm	0.0059 in.
	Piston ring groove clearance				
		No. 1	11B, 13B	0.08 – 0.12 mm	0.0031 – 0.0047 in.
		No. 2	B, 3B, 11B, 13B	0.04 – 0.08 mm	0.0016 – 0.0031 in.
			13B-T	0.06 – 0.10 mm	0.0024 – 0.0039 in.
		Oil		0.03 – 0.07 mm	0.0012 – 0.0028 in.
	Piston ring end gap				
	STD	No. 1	B	0.35 – 0.64 mm	0.0138 – 0.0252 in.
			3B, 11B, 13B, 13B-T	0.30 – 0.54 mm	0.0118 – 0.0213 in.
		No. 2	B, 11B	0.35 – 0.64 mm	0.0138 – 0.0252 in.
			3B, 13B, 13B-T	0.45 – 0.69 mm	0.0177 – 0.0272 in.
		Oil	B, 11B	0.35 – 0.64 mm	0.0138 – 0.0252 in.
			3B, 13B, 13B-T	0.40 – 0.69 mm	0.0157 – 0.0272 in.
	Limit	No. 1	B	1.44 mm	0.0567 in.
			3B, 11B, 13B, 13B-T	1.34 mm	0.0528 in.
		No. 2	B, 11B	1.44 mm	0.0567 in.
			3B, 13B, 13B-T	1.49 mm	0.0587 in.
		Oil	B, 11B	1.44 mm	0.0567 in.
			3B, 13B, 13B-T	1.49 mm	0.0587 in.
Connecting rod	Thrust clearance		STD	0.200 – 0.320 mm	0.0079 – 0.0126 in.
			Limit	0.40 mm	0.0157 in.
	Bushing inside diameter		B	29.009 – 29.019 mm	1.1421 – 1.1425 in.
			3B	32.009 – 32.019 mm	1.2602 – 1.2606 in.
			11B, 13B, 13B-T	34.009 – 34.019 mm	1.3389 – 1.3393 in.
	Piston pin diameter		B	29.000 – 29.010 mm	1.1417 – 1.1421 in.
			3B	32.000 – 32.010 mm	1.2598 – 1.2602 in.
			11B, 13B, 13B-T	34.000 – 34.010 mm	1.3386 – 1.3390 in.
	Piston pin oil clearance			0.004 – 0.014 mm	0.0002 – 0.0006 in.
				0.05 mm	0.0020 in.
	Bend	Limit	per 100 mm (3.94 in.)	0.05 mm	0.0020 in.
	Twist	Limit	per 100 mm (3.94 in.)	0.05 mm	0.0020 in.

Specifications (Cont'd)

Crankshaft	Thrust clearance	STD	0.040 – 0.250 mm	0.0016 – 0.0098 in.
		Limit	0.40 mm	0.0157 in.
	Thrust washer thickness	STD size	2.430 – 2.480 mm	0.0957 – 0.0976 in.
		O/S 0.125	2.493 – 2.543 mm	0.0981 – 0.1001 in.
		O/S 0.250	2.555 – 2.605 mm	0.1006 – 0.1026 in.
	Main journal diameter	STD size	69.98 – 70.00 mm	2.7551 – 2.7559 in.
		U/S 0.25	69.74 – 69.75 mm	2.7457 – 2.7461 in.
		U/S 0.50	69.49 – 69.50 mm	2.7358 – 2.7362 in.
		U/S 1.00	68.99 – 69.00 mm	2.7161 – 2.7165 in.
	Main journal oil clearance	STD	0.030 – 0.074 mm	0.0012 – 0.0029 in.
		Limit	0.15 mm	0.0059 in.
	Main bearing thickness	at center wall		
		STD size Yellow	2.480 – 2.485 mm	0.0976 – 0.0978 in.
		STD size Green	2.485 – 2.490 mm	0.0978 – 0.0980 in.
	Crank pin diameter B	STD size	58.98 – 59.00 mm	2.3220 – 2.3228 in.
		U/S 0.25	58.74 – 58.75 mm	2.3126 – 2.3130 in.
		U/S 0.50	58.49 – 58.50 mm	2.3028 – 2.3031 in.
		U/S 1.00	57.99 – 58.00 mm	2.2831 – 2.2835 in.
	3B, 11B, 13B, 13B-T			
		STD size	60.98 – 61.00 mm	2.4008 – 2.4016 in.
		U/S 0.25	60.74 – 60.75 mm	2.3913 – 2.3917 in.
		U/S 0.50	60.49 – 60.50 mm	2.3815 – 2.3819 in.
		U/S 1.00	59.99 – 60.00 mm	2.3618 – 2.3622 in.
	Crank pin oil clearance	STD	0.030 – 0.070 mm	0.0012 – 0.0028 in.
		Limit	0.10 mm	0.0039 in.
	Crank pin (connecting rod) bearing thickness	at center wall		
		STD size Brown or Yellow	1.480 – 1.485 mm	0.0583 – 0.0585 in.
		STD size Black or Green	1.485 – 1.490 mm	0.0585 – 0.0587 in.
	Circle runout	Limit	0.08 mm	0.0031 in.
	Taper and out-of round			
	Main journal and crank pin	Limit	0.02 mm	0.0008 in.

Torque Specifications

Part tightened		kg-cm	ft-lb	N·m
Turbine outlet elbow x Turbocharger (13B-T)		375	27	37
Turbocharger x Exhaust manifold (13B-T)		465	34	46
Water by-pass pipe x Turbocharger		75	65 in.-lb	7.1
Turbocharger oil pipe x Cylinder block	Unit bolt	130	9	13
	Bolt	185	13	18
Turbocharger oil pipe x Turbocharger		185	13	18
Cylinder head x Cylinder block		1,200	87	118
Valve rocker support x Cylinder head		185	13	18
Cylinder head cover x Cylinder head		125	9	12
Exhaust manifold x Cylinder head		475	34	47
Water outlet housing x Cylinder head		185	13	18
Intake manifold x Cylinder head		185	13	18
Glow plug x Cylinder head (B, 3B)		125	9	12
Camshaft timing gear x Camshaft		375	27	37
Camshaft thrust plate x Cylinder block		185	13	18
Idle gear x Cylinder block		475	34	47
Idle gear shaft union bolt		110	8	11
Timing gear cover x Cylinder block	12 mm bolt head	185	13	18
	14 mm bolt head	375	27	37
Crankshaft pulley x Crankshaft		2,450	177	240
Push rod cover x Cylinder block		185	13	18
Main bearing cap x Cylinder block	—	2,000	145	196
Connecting rod cap x Connecting rod	B	750	54	74
	3B, 11B, 13B, 13B-T	1,200	87	118
Rear oil seal retainer x Cylinder block		185	13	18
Flywheel x Crankshaft (M/T)		1,800	130	177
Drive plate x Crankshaft (A/T)		1,200	87	118

FUEL SYSTEM

Specifications

Injection nozzle (B, 3B)	Nozzle type	B	ND-DN 4 SD 24 ND 80
		3B	ND-DN 4 SDND 135
	Nozzle opening pressure		See page A-2
	Pressure adjusting shim thickness		1.00 mm 0.0394 in.
			1.05 mm 0.0413 in.
			1.10 mm 0.0433 in.
			1.15 mm 0.0453 in.
			1.20 mm 0.0472 in.
			1.25 mm 0.0492 in.
			1.30 mm 0.0512 in.
			1.35 mm 0.0531 in.
			1.40 mm 0.0551 in.
			1.45 mm 0.0571 in.
			1.50 mm 0.0591 in.
			1.55 mm 0.0610 in.
			1.60 mm 0.0630 in.
			1.65 mm 0.0650 in.
			1.70 mm 0.0669 in.
			1.75 mm 0.0689 in.
			1.80 mm 0.0709 in.
			1.85 mm 0.0728 in.
			1.90 mm 0.0748 in.
			1.95 mm 0.0768 in.

FUEL SYSTEM

Specifications

Injection nozzle 11B, 13B, 13B-T	Nozzle type	11B	ND-DLLA 155P 16	
		13B	ND-DLLA 150P 9	
		13B-T	ND-DLLA 150P 10	
	Nozzle opening pressure		See page A-2	
	Pressure adjusting shim thickness		0.700 mm	0.0276 in.
			0.750 mm	0.0295 in.
			0.800 mm	0.0315 in.
			0.850 mm	0.0335 in.
			0.900 mm	0.0354 in.
			0.950 mm	0.0374 in.
			0.975 mm	0.0384 in.
			1.000 mm	0.0394 in.
			1.025 mm	0.0404 in.
			1.050 mm	0.0413 in.
			1.075 mm	0.0423 in.
			1.100 mm	0.0433 in.
			1.125 mm	0.0443 in.
			1.150 mm	0.0453 in.
			1.175 mm	0.0463 in.
			1.200 mm	0.0472 in.
			1.225 mm	0.0482 in.
			1.250 mm	0.0492 in.
			1.275 mm	0.0502 in.
			1.300 mm	0.0512 in.
			1.325 mm	0.0522 in.
			1.350 mm	0.0531 in.
			1.375 mm	0.0541 in.
			1.400 mm	0.0551 in.
			1.425 mm	0.0561 in.
			1.450 mm	0.0571 in.
			1.475 mm	0.0581 in.
			1.500 mm	0.0591 in.
			1.550 mm	0.0610 in.
			1.600 mm	0.0630 in.
			1.650 mm	0.0650 in.
			1.700 mm	0.0669 in.
			1.750 mm	0.0689 in.
			1.800 mm	0.0709 in.
Feed pump	Suction test			
	Suction pipe	Inner diameter	8 mm	0.31 in.
		length	2 m	78.7 in.
		Suction height	1 m	39.4 in.
	Priming pump	at 60 stroke/ min.	Fuel must discharge within 25 strokes	
	Feed pump	at 150 rpm	Fuel must discharge within 40 seconds	
	Discharge test			
	Pressure	at 600 rpm	1.8 – 2.2 kg/cm^2 (26 – 31 psi, 177 – 216 kPa)	
	Discharge nozzle diameter		1.54 mm	0.0606 in.
	Volume	at 1,000 rpm	900 cc/min. (54.9 cu in./min.) or more	

Specifications (Cont'd)

Automatic timer	Timer spring free length			
	B	Inner	43.7 mm	1.720 in.
		Outer	54.2 mm	2.134 in.
	3B		50.7 mm	1.996 in.
	11B (w/o HAC), 13B (w/o HAC)		50.3 mm	1.980 in.
	11B (w/ HAC), 13B (w/ HAC)		44.4 mm	1.748 in.
	13B-T		48.5 mm	1.909 in.
	Timer advance angle			
	B	at 700 rpm	0.5° or less	
		at 750 rpm	0.3 – 1.3°	
		at 900 rpm	2.7 – 3.7°	
		at 1,100 rpm	3.5 – 4.5°	
		at 1,400 rpm	4.8 – 5.8°	
		at 1,750 rpm	6.0 – 7.0°	
		at 1,850 rpm	6.0 – 7.0°	
	3B	at 700 rpm	0.5° or less	
		at 800 rpm	0.2 – 1.1°	
		at 1,000 rpm	1.3 – 2.3°	
		at 1,400 rpm	3.8 – 4.8°	
		at 1,750 rpm	6.0 – 7.0°	
		at 1,900 rpm	6.0 – 7.0°	
	11B (w/o HAC)	at 1,450 rpm	0.5° or less	
		at 1,750 rpm	4.5 – 5.5°	
	13B (w/o HAC)	at 1,400 rpm	0.5° or less	
		at 1,700 rpm	4.5 – 5.5°	
	11B (w/ HAC), 13B (w/ HAC)			
		at 1,000 rpm	0.5° or less	
		at 1,700 rpm	3.0 – 4.0°	
	13B-T	at 1,400 rpm	0.5° or less	
		at 1,700 rpm	3.5 – 4.5°	
	Timer adjusting shim thickness			
	B, 3B		0.1 mm	0.004 in.
			0.2 mm	0.008 in.
			0.5 mm	0.020 in.
	11B, 13B, 13B-T		0.5 mm	0.020 in.
			0.6 mm	0.024 in.
			0.7 mm	0.028 in.
			0.8 mm	0.031 in.
			0.9 mm	0.035 in.
			1.0 mm	0.039 in.

Specifications (Cont'd)

Injection pump (B, 3B)	Direction of rotation		Clockwize as seen from drive side	
	Camshaft thrust clearance	STD	0.03 – 0.05 mm	0.0012 – 0.0020 in.
		Limit	0.1 mm	0.004 in.
	Camshaft thrust washer thickness		0.10 mm	0.0039 in.
			0.12 mm	0.0047 in.
			0.14 mm	0.0055 in.
			0.16 mm	0.0063 in.
			0.18 mm	0.0071 in.
			0.50 mm	0.0197 in.
	Control rack sliding resistance		120 g (4.2 oz) or less	
	Delivery valve spring free length		37.0 mm	1.457 in.
	Plunger spring free length		49.4 mm	1.945 in.
	Governor main spring free length	B	45.6 mm	1.795 in.
		3B	51.6 mm	2.031 in.
	Speed control spring free length		38.0 mm	1.496 in.
	HAC push rod stroke (w/ HAC)		3.1 – 3.6 mm	0.122 – 0.142 in.
	HAC push rod clearance (w/ HAC) at sea level		0.1 – 0.3 mm	0.004 – 0.012 in.
Injection pump (11B, 13B, 13B-T)	Direction of rotation		Clockwise as seen from drive side	
	Full stop cam thrust clearance		0.03 – 0.08 mm	0.0012 – 0.0032 in.
	Full stop cam thrust washer thickness		0.05 mm	0.0020 in.
			0.10 mm	0.0039 in.
			0.20 mm	0.0079 in.
	Steering lever thrust clearance		0.05 – 0.20 mm	0.0020 – 0.0079 in.
	Steering lever thrust washer thickness		0.50 mm	0.0197 in.
			0.55 mm	0.0217 in.
			0.60 mm	0.0236 in.
			0.65 mm	0.0256 in.
			0.70 mm	0.0276 in.
			0.75 mm	0.0295 in.
			0.80 mm	0.0315 in.
	Cam plate thrust clearance		0.08 – 0.12 mm	0.0031 – 0.0047 in.
	Cam plate thrust washer thickness		0.2 mm	0.008 in.
			0.3 mm	0.012 in.
			0.4 mm	0.016 in.
			0.5 mm	0.020 in.
	Floating arm thrust clearance		0.05 – 0.12 mm	0.0020 – 0.0047 in.
	Floating arm thrust washer thickness		0.05 mm	0.0020 in.
			0.10 mm	0.0039 in
			0.20 mm	0.0079 in.
			0.40 mm	0.0157 in.
	Jointing bolt thrust clearance		1.5 – 2.0 mm	0.059 – 0.079 in.
	Sliding weight shaft fitting dimensions		49.7 – 50.1 mm	1.957 – 1.972 in.
	Sliding weight shaft length		30.7 mm	1.209 in.
			30.9 mm	1.217 in.
			31.1 mm	1.224 in.
			31.3 mm	1.232 in.
			31.5 mm	1.240 in.
			31.7 mm	1.248 in.
			31.9 mm	1.256 in.
	Flyweight thrust clearance (M/T)		0.02 – 0.10 mm	0.0008 – 0.0039 in.
	Flyweight thrust washer thickness (M/T)		1.60 mm	0.0630 in.
			1.65 mm	0.0650 in.
			1.70 mm	0.0670 in.
			1.75 mm	0.0689 in.
			1.80 mm	0.0709 in.

Specifications (Cont'd)

Injection pump (11B, 13B, 13B-T) (Cont'd)	Flyweight thrust washer thickness (cont'd)		1.85 mm	0.0728 in.
			1.90 mm	0.0748 in.
			1.95 mm	0.0768 in.
			2.00 mm	0.0787 in.
			2.10 mm	0.0827 in.
			2.20 mm	0.0866 in.
			2.30 mm	0.0906 in.
	Stopper arm thrust clearance		0.05 – 0.20 mm	0.0020 – 0.0079 in.
	Stopper arm thrust washer thickness		0.1 mm	0.004 in.
			0.2 mm	0.008 in.
			0.5 mm	0.020 in.
	Camshaft thrust clearance	STD	0.03 – 0.05 mm	0.0012 – 0.0020 in.
		Limit	0.1 mm	0.004 in.
	Camshaft thrust washer thickness	Front	0.10 mm	0.0039 in.
			0.12 mm	0.0047 in.
			0.14 mm	0.0055 in.
			0.16 mm	0.0063 in.
			0.18 mm	0.0071 in.
			0.50 mm	0.0197 in.
		Rear	0.10 mm	0.0039 in.
			0.15 mm	0.0059 in.
			0.30 mm	0.0118 in.
			0.50 mm	0.0197 in.
	Control rack sliding resistance		120 g (4.2 oz.) or less	
	Delivery valve spring free length		19.8 mm	0.780 in.
	Plunger spring free length		49.4 mm	1.945 in.
	Mechanical governor spring free length		10.2 mm	0.402 in.
	Speed control spring free length		24.0 mm	0.945 in.
	Inner idle spring free length	M/T	26.0 mm	1.024 in.
		A/T	24.4 mm	0.961 in.
	Outer idle spring free length		23.8 mm	0.937 in.
	HAC push rod stroke (w/ HAC)		3.1 – 3.6 mm	0.122 – 0.142 in.
	HAC push rod clearance (w/ HAC) at sea level		0.2 – 0.5 mm	0.008 – 0.020 in.
	Boost compensator push rod stroke (13B-T)		4.0 – 5.0 mm	0.157 – 0.197 in.
	Boost compensator pressure drop (13B-T)		10 seconds or more	
	Full-load stopper pre-setting			
	Stop cam to stopper housing distance			
	11B (w/o HAC), 13B (w/o HAC)		27.0 mm	1.063 in.
	11B (w/ HAC), 13B (w/ HAC), 13B-T		22.5 mm	0.886 in.

Injection Pump Adjustment (Pump Body)

Preparations of pump tester	Test nozzle type		B	DN 4 SD 24 ND 80	
			3B	DN 4 SDND 135	
			11B, 13B, 13B-T	DN 12 SD 12A	
	Test nozzle opening pressure			115 – 125 kg/cm²	
			B, 3B	(1,636 – 1,778 psi, 11,278 – 12,258 kPa)	
			11, 13B, 13B-T	170 – 180 kg/cm²	
				(2,418 – 2,560 psi, 16,671 – 17,651 kPa)	
	Injection pipe	Outer diameter		6.0 mm	0.236 in.
		Inner diameter		2.0 mm	0.079 in.
		Length		600 mm	23.62 in.
		Minimum bending radius		25 mm (0.98 in.) or more	
	Fuel temperature			40 – 45°C	104 – 113°F
	Fuel feeding pressure		B, 3B	0.5 kg/cm²	7.1 psi 49 kPa
			11B, 13B, 13B-T	2.0 kg/cm²	28 psi 196 kPa
Control Rack	Sliding resistance	Pump at 0 rpm		120 g (4.2 oz) or less	
		Pump at 1,000 rpm		50 g (1.8 oz) or less	
Injecting timing	Pre-stroke		B, 3B	1.90 – 2.00 mm	0.0748 – 0.0787 in.
			11B, 13B, 13B-T	3.05 – 3.15 mm	0.1201 – 0.1240 in.
	Injection interval			89°30′ – 90°30′	
	Tappet clearance			0.2 mm (0.008 in.) or more	
	Adjusting shim thickness			0.10 mm	0.0039 in.
				0.15 mm	0.0059 in.
				0.20 mm	0.0079 in.
				0.30 mm	0.0118 in.
				0.40 mm	0.0158 in.
				0.50 mm	0.0197 in.
				0.60 mm	0.0236 in.
				0.70 mm	0.0276 in.
				0.80 mm	0.0315 in.
				0.90 mm	0.0354 in.
				1.00 mm	0.0394 in.
				1.10 mm	0.0433 in.
				1.20 mm	0.0472 in.
				1.30 mm	0.0519 in.
				1.40 mm	0.0551 in.

Injection volume	Item	Rack position mm (in.)	Pump rpm	Measuring stroke	Injection volume cc (cu in.)	Variation limit cc (cu in.)
	B	16.0 (0.630)	100	200	14.0 – 16.0 (0.85 – 0.98)	1.2 (0.07)
		8.6 (0.339)	1,000	200	4.6 – 5.6 (0.28 – 0.34)	0.4 (0.02)
		11.7 (0.460)	1,100	200	10.0 – 10.6 (0.61 – 0.65)	0.4 (0.02)
		11.7 (0.460)	1,700	200	10.4 – 11.4 (0.63 – 0.70)	0.6 (0.04)
		6.5 (0.256)	325	500	2.5 – 4.5 (0.15 – 0.34)	1.0 (0.06)

Injection Pump Adjustment (Pump Body) (Cont'd)

Injection volume (Cont'd)	Item	Rack position mm (in.)	Pump rpm	Measuring stroke	Injection volume cc (cu in.)	Variation limit cc (cu in.)
	3B (Cold weather spec. Part No. 22100-58022	17.5 (0.689)	100	200	13.5 – 16.5 (0.82 – 1.01)	1.8 (0.11)
		8.0 (0.315)	1,000	200	4.3 – 5.1 (0.26 – 0.31)	0.6 (0.04)
		12.9 (0.508)	1,100	200	11.1 – 11.7 (0.68 – 0.71)	0.6 (0.04)
		12.9 (0.508)	1,700	200	11.3 – 12.3 (0.69 – 0.75)	0.9 (0.05)
		6.5 (0.256)	325	500	2.0 – 5.0 (0.12 – 0.31)	1.5 (0.09)
	3B (Others)	17.5 (0.689)	100	200	14.0 – 16.0 (0.85 – 0.98)	1.2 (0.07)
		8.0 (0.315)	1,000	200	4.3 – 5.1 (0.26 – 0.31)	04 (0.02)
		12.9 (0.508)	1,100	200	11.1 – 11.7 (0.68 – 0.71)	0.4 (0.02)
		12.9 (0.508)	1,700	200	11.3 – 12.3 (0.69 – 0.75)	0.6 (0.04)
		6.5 (0.256)	325	500	2.5 – 4.5 (0.15 – 0.34)	1.0 (0.06)
	11B (w/o HAC)	16.0 (0.630)	100	200	10.0 – 14.0 (0.61 – 0.85)	1.6 (1.10)
		10.4 (0.409)	1,100	200	10.1 – 11.5 (0.62 – 0.70)	0.9 (0.05)
		10.2 (0.402)	1,800	200	8.9 – 10.1 (0.54 – 0.62)	1.2 (0.07)
		Approx. 9.1 (0.358)	325	500	3.5 – 6.5 (0.21 – 0.40)	1.5 (0.09)
	11B (w/ HAC)	16.0 (0.630)	100	200	10.0 – 14.0 (0.61 – 0.85)	1.6 (0.10)
		10.4 (0.409)	1,100	200	9.5 – 10.1 (0.58 – 0.62)	0.9 (0.05)
		10.3 (0.406)	1,800	200	9.3 – 10.5 (0.57 – 0.64)	1.2 (0.07)
		Approx. 9.1 (0.358)	325	500	3.5 – 6.5 (0.21 – 0.40)	1.5 (0.09)
	13B M/T (w/o HAC)	16.0 (0.630)	100	200	12.4 – 16.4 (0.76 – 1.00)	1.6 (0.10)
		10.5 (0.413)	1,100	200	11.2 – 11.8 (0.68 – 0.72)	0.9 (0.05)
		10.3 (0.406)	1,700	200	10.8 – 12.0 (0.66 – 0.73) *10.8 – 12.2 (0.66 – 0.74)	1.2 (0.07)
		Approx. 9.1 (0.358)	325	500	3.5 – 6.5 (0.21 – 0.40)	1.5 (0.09)
	13B M/T (w/ HAC)	16.0 (0.630)	100	200	12.4 – 16.4 (0.76 – 1.00)	1.6 (0.10)
		10.5 (0.413)	1,100	200	11.2 – 11.8 (0.68 – 0.72)	0.9 (0.05)
		10.4 (0.409)	1,700	200	11.3 – 12.3 (0.69 – 0.75)	1.2 (0.07)
		Approx. 9.1 (0.358)	325	500	3.5 – 6.5 (0.21 – 0.40)	1.5 (0.09)

* BB

Injection Pump Adjustment (Pump Body) (Cont'd)

Injection volume (Cont'd)	Item	Rack position mm (in.)	Pump rpm	Measuring stroke	Injection volume cc (cu in.)	Variation limit cc (cu in.)
	13B A/T	16.0 (0.630)	100	200	18.8 – 22.8 (1.15 – 1.39)	1.6 (0.10)
		10.2 (0.402)	1,100	200	11.2 – 11.8 (0.68 – 0.72)	0.9 (0.05)
		10.0 (0.393)	1,700	200	10.6 – 11.8 (0.65 – 0.72)	1.2 (0.07)
		8.4 (0.331)	400	500	4.25 – 7.25 (0.26 – 0.44)	1.5 (0.09)
	13B-T M/T	16.0 (0.630)	100	200	12.4 – 16.4 (0.76 – 1.00)	1.6 (0.10)
		11.1 (0.437)	1,100	200	13.5 – 14.3 (0.82 – 0.87)	0.9 (0.05)
		10.9 (0.429)	1,700	200	12.9 – 13.9 (0.79 – 0.85)	1.2 (0.07)
		Approx. 9.1 (0.358)	325	500	3.5 – 6.5 (0.21 – 0.40)	1.5 (0.09)
	13B-T A/T	16.0 (0.630)	100	200	17.6 – 22.8 (1.07 – 1.39)	1.6 (0.10)
		10.8 (0.425)	1,100	200	12.8 – 13.6 (0.78 – 0.83)	0.9 (0.05)
		10.9 (0.429)	1,700	200	13.6 – 14.6 (0.83 – 0.89)	1.2 (0.07)
		8.4 (0.331)	400	500	4.25 – 7.25 (0.26 – 044)	1.5 (0.09)

Injection Pump Adjustment (Governor B and 3B)

Vacuum chamber	Pressure drop		10 seconds or more	
Governor main spring	Item	Pump rpm	Vacuum mmHg (in.Hg, kPa)	Rack position mm (in.)
	B	600	600 (23.62, 80.0)	11.7 (0.461)
			640 (25.20, 85.3)	11.4 – 11.7 (0.449 – 0.461)
			750 (29.53, 100.0)	9.3 – 10.7 (0.366 – 0.421)
	3B (Cold weather spec. Part No. 22100-58022	600	400 (15.75, 53.3)	12.7 – 13.7 (0.500 – 0.561)
			580 (22.83, 77.3)	12.3 – 13.2 (0.484 – 0.520)
			700 (27.56, 93.3)	8.7 – 10.7 (0.343 – 0.421)
	3B (Others)	600	400 (15.75, 53.3)	12.9 (0.508)
			580 (22.83, 77.3)	12.5 – 12.9 (0.492 – 0.508)
			700 (27.56, 93.3)	8.9 – 10.5 (0.350 – 0.413)
	Adjusting shim thickness		0.5 mm 1.0 mm 2.0 mm 3.0 mm	0.020 in. 0.039 in. 0.079 in. 0.118 in.
Idle spring	Item	Pump rpm	Vacuum mmHg (in.Hg, kPa)	Control rack position mm (in.)
	B	600	850 (33.46, 113.3)	7.5 – 8.5 (0.295 – 0.335)
			950 (37.40, 126.3)	7.1 – 7.3 (0.280 – 0.287)
			1,100 (43.31, 146.6)	5.3 – 7.3 (0.209 – 0.287)

Injection Pump Adjustment (Governor B and 3B) (Cont'd)

Idle spring (Cont'd)	Item	Pump rpm	Vacuum mmHg (in.Hg, kPa)	Control rack position mm (in.)
	3B (Cold weather spec. Part No. 22100-58022)	600	1,000 (39.37, 133.3)	6.7 – 7.3 (0.264 – 0.287)
			1,200 (47.24, 160.0)	5.0 – 6.4 (0.197 – 0.252)
	3B (Others)	600	1,000 (39.37, 133.3)	6.9 – 7.1 (0.272 – 0.280)
			1,200 (47.24, 160.0)	5.2 – 6.2 (0.205 – 0.244)

Speed control spring	Item	Pump rpm	Vacuum mmHg (in.Hg, kPa)	Control rack position mm (in.)
	B	1,920	450 (17.72, 60.0)	11.7 (0.461)
		1,940	450 (17.72, 60.0)	11.5 – 11.7 (0.453 – 0.461)
		2,050	450 (17.72, 60.0)	8.8 – 10.4 (0.346 – 0.409)
	3B (Cold weather spec. Part No. 22100-58022)	1,700	400 (15.75, 53.3)	12.5 – 13.3 (0.492 – 0.524)
		1,760	400 (15.75, 53.3)	12.3 – 13.3 (0.484 – 0.524)
		1,950	400 (15.75, 53.3)	7.7 – 10.6 (0.303 – 0.417)
		2,050	400 (15.75, 53.3)	9.2 (0.362) or less
	3B (Others)	1,700	400 (15.75, 53.3)	12.7 – 13.1 (0.500 – 0.516)
		1,760	400 (15.75, 53.3)	12.5 – 12.9 (0.492 – 0.508)
		1,950	400 (15.75, 53.3)	7.9 – 10.4 (0.311 – 0.409)
		2,050	400 (15.75, 53.3)	8.9 (0.350) or less

Total injection volume	Item	Pump rpm	Vacuum mmHg (in.Hg, kPa)	Measuring stroke	Total injection volume of each cylinder cc (cu in.)
	B w/o HAC	700	120 (4.72, 16.0)	1,000	182.0 – 198.0 (11.1 – 12.1)
		1,100	120 (4.72, 16.0)	1,000	202.0 – 210.0 (12.3 – 12.8)
		1,700	120 (4.72, 16.0)	1,000	210.0 – 226.0 (12.8 – 13.8)
	B w/ HAC (w/o Tachometer)	700	120 (4.72, 16.0)	1,000	190.0 – 206.0 (11.6 – 12.6)
		1,100	120 (4.72, 16.0)	1,000	202.0 – 210.0 (12.3 – 12.8)
		1,700	120 (4.72, 16.0)	1,000	212.0 – 228.0 (12.9 – 13.9)
	B w/ HAC (w/ Tachometer)	700	150 (5.91, 20.0)	1,000	190.0 – 206.0 (11.6 – 12.6)
		1,100	300 (11.81, 40.0)	1,000	202.0 – 210.0 (12.3 – 12.8)
		1,700	450 (17.72, 60.0)	1,000	212.0 – 228.0 (12.9 – 13.9)
	3B w/o HAC (Cold weather spec. Part No. 22100-58022)	700	150 (5.91, 20.0)	1,000	198.0 – 222.0 (12.1 – 13.5)
		1,100	260 (10.24, 34.7)	1,000	222.0 – 234.0 (13.5 – 14.3)
		1,700	400 (15.75, 53.3)	1,000	226.0 – 250.0 (13.8 – 15.3)
	3B w/o HAC (Others)	700	150 (5.91, 20.0)	1,000	202.0 – 218.0 (12.3 – 13.3)
		1,100	260 (10.24, 34.7)	1,000	224.0 – 232.0 (13.7 – 14.2)
		1,700	400 (15.75, 53.3)	1,000	230.0 – 246.0 (14.0 – 15.0
	3B w/ HAC	700	150 (5.91, 20.0)	1,000	206.0 – 222.0 (12.6 – 13.5)
		1,100	260 (10.24, 34.7)	1,000	224.0 – 232.0 (13.7 – 14.2)
		1,700	400 (15.75, 53.3)	1,000	226.0 – 242.0 (13.8 – 14.8)

Injection Pump Adjustment (Governor 11B, 13B and 13B-T) (Cont'd)

Idle speed control	Item	Adjusting lever position	Pump rpm	Rack position mm (in.)
	11B M/T 13B M/T 13B-T M/T	Idle	100	10.6 (0.417) or more
			325	8.8 – 9.4 (0.346 – 0.370)
			600	5.6 – 7.0 (0.220 – 0.276)
			800	3.9 – 4.7 (0.154 – 0.185)
			1,200	2.4 – 3.8 (0.094 – 0.150)
	13B A/T	Idle	100	10.6 (0.417) or more
			400	8.1 – 8.7 (0.319 – 0.343)
			600	5.7 – 7.1 (0.224 – 0.280)
			800	4.0 – 4.8 (0.157 – 0.189)
			1,200	2.5 – 3.9 (0.098 – 0.154)
	13B-T A/T	Idle	100	10.6 (0.417) or more
			250	9.9 – 11.1 (0.390 – 0.437)
			400	8.1 – 8.7 (0.319 – 0.343)
			600	5.7 – 7.1 (0.224 – 0.280)
			800	4.0 – 4.8 (0.157 – 0.189)
			1,200	2.4 – 3.8 (0.094 – 0.150)
	Adjusting washer thickness	Inner		0.4 mm 0.016 in. 0.55 mm 0.022 in. 0.6 mm 0.024 in.
		Outer		0.2 mm 0.008 in. 0.4 mm 0.016 in. 0.5 mm 0.020 in. 0.6 mm 0.024 in.

Medium speed control	Item	Adjusting lever position	Pump rpm	Rack position mm (in.)
	11B (w/o HAC)	Maximum	500	10.0 – 11.0 (0.394 – 0.435)
			700	10.0 – 10.8 (0.394 – 0.425)
			1,100	10.1 – 10.7 (0.398 – 0.421)
			1,800	9.6 – 10.6 (0.378 – 0.417)
			1,900	9.3 – 10.1 (0.366 – 0.398)
	11B (w/ HAC)	Maximum	500	10.1 – 11.1 (0.398 – 0.437)
			700	10.1 – 10.9 (0.398 – 0.429)
			1,100	10.1 – 10.7 (0.398 – 0.421)
			1,800	9.7 – 10.7 (0.382 – 0.421)
			1,900	9.4 – 10.2 (0.370 – 0.402)

Injection Pump Adjustment (Governor 11B, 13B and 13B-T) (Cont'd)

Medium speed control (Cont'd)	Item	Adjusting lever position	Pump rpm	Rack position mm (in.)
	13B M/T (w/o HAC)	Maximum	500	10.2 – 11.2 (0.402 – 0.441)
			700	10.0 – 10.8 (0.394 – 0.425)
			1,100	10.2 – 10.8 (0.402 – 0.425)
			1,700	10.0 – 10.7 (0.394 – 0.421)
			1,800	9.4 – 10.4 (0.370 – 0.409) 9.3 – 10.3 (0.366 – 0.406)
	13B M/T (w/ HAC)	Maximum	500	10.3 – 11.3 (0.406 – 0.445)
			700	10.0 – 10.8 (0.394 – 0.425)
			1,100	10.2 – 10.8 (0.402 – 0.425)
			1,700	9.9 – 10.9 (0.390 – 0.429)
			1,800	9.7 – 10.5 (0.382 – 0.413)
	13B A/T	Maximum	500	Approx. 10.4 (0.409)
			700	9.5 – 10.3 (0.374 – 0.406)
			1,100	9.9 – 10.5 (0.390 – 0.413)
			1,700	9.6 – 10.3 (0.378 – 0.406)
			1,800	8.9 – 9.9 (0.350 – 0.390)
	13B-T M/T	Maximum	500	10.7 – 11.5 (0.421 – 0.453)
			700	10.8 – 11.6 (0.425 – 0.457)
			1,100	10.8 – 11.4 (0.425 – 0.449)
			1,700	10.5 – 11.3 (0.413 – 0.445)
			1,900	9.4 – 10.2 (0.370 – 0.402)
	13B-T A/T	Maximum	500	10.6 – 11.4 (0.417 – 0.449)
			700	10.3 – 11.1 (0.406 – 0.437)
			1,100	10.5 – 11.1 (0.413 – 0.437)
			1,700	10.5 – 11.3 (0.413 – 0.445)
			1,900	9.5 – 10.3 (0.374 – 0.406)
Maximum speed control	Item	Adjusting lever position	Pump rpm	Rack position mm (in.)
	11B 13B M/T (w/ HAC) 13B-T M/T	Maximum	2,100	7.0 – 8.4 (0.276 – 0.331)
			2,200	6.2 (0.244) or less
	13B M/T (w/o HAC)	Maximum	2,100	7.0 – 8.4 (0.276 – 0.331)
			2,200	6.0 (0.236) or less
	13B A/T	Maximum	2,100	6.3 – 7.7 (0.248 – 0.303)
			2,200	6.0 (0.236) or less
	13B-T A/T	Maximum	2,100	6.3 – 7.7 (0.248 – 0.303)
			2,200	6.2 (0.244) or less

* BB

Injection Pump Adjustment (Governor 11B, 13B and 13B-T) (Cont'd)

Boost compensator (13B-T)	Item	Adjusting lever position	Pump rpm	Boost compensator pressure kg/cm² (psi, kPa)	Rack position mm (in)
	13B-T M/T	Maximum	500	0	10.3 – 10.9 (0.406 – 0.429)
				0.12 (1.7, 12)	10.7 – 11.5 (0.421 – 0.453)
	13B-T A/T	Maximum	500	0	10.45 – 11.05 (0.411 – 0.435)
				0.12 (1.7, 12)	10.6 – 11.4 (0.417 – 0.449)

Total injection volume	Item	Adjusting lever position	Boost compensator Pressure kg/cm² (psi, kPa)	Pump rpm	Measuring stroke	Total injection volume of each cylinder cc (cu in.)
	11B (w/o HAC)	Maximum	—	500	1,000	124.0 – 160.0 (7.57 – 9.76)
				1,100	1,000	190.0 – 202.0 (11.59 – 12.33)
				1,800	1,000	178.0 – 202.0 (10.86 – 12.33)
	11B (w/ HAC)	Maximum	—	500	1,000	132.0 – 168.0 (8.06 – 10.25)
				1,100	1,000	190.0 – 202.0 (11.59 – 12.33)
				1,800	1,000	186.0 – 210.0 (11.35 – 12.82)
	13B M/T (w/o HAC)	Maximum	—	500	1,000	154.0 – 190.0 (9.40 – 11.59)
				1,100	1,000	224.0 – 236.0 (13.67–14.40)
				1,700	1,000	216.0 – 240.0 (13.18 – 14.65)
	13B M/T (w/ HAC)	Maximum	—	500	1,000	162.0 – 198.0 (9.89 – 12.08)
				1,100	1,000	224.0 – 236.0 (13.67 – 14.40)
				1,700	1,000	224.0 – 248.0 (13.67 – 15.13)
	13B A/T	Maximum	—	500	1,000	156.0 – 180.0 (9.52 – 10.98)
				1,100	1,000	224.0 – 236.0 (13.67 – 14.40)
				1,700	1,000	212.0 – 236.0 (12.94 – 14.40)

Injection Pump Adjustment (Governor 11B, 13B and 13B-T) (Cont'd)

Total injection volume (Cont'd)	Item	Adjusting lever position	Boot compensator Pressure kg/cm² (psi, kPa)	Pump rpm	Measuring stroke	Total injection volume of each cylinder cc (cu in.)
	13B-T M/T	Maximum	0.27 (3.9, 26)	500	1,000	182.0 – 218.0 (11.11 – 13.30)
			0.27 (3.9, 26)	1,100	1,000	272.0 – 284.0 (16.60 – 17.33)
			0.27 (3.9, 26)	1,700	1,000	256.0 – 280.0 (15.62 – 17.09)
			0	500	1,000	158.0 – 170.0 (9.64 – 10.37)
	13B-T A/T	Maximum	0.27 (3.9, 26)	500	1,000	190.0 – 226.0 (11.59 – 13.79)
			0.27 (3.9, 26)	1,100	1,000	258.0 – 270.0 (15.74 – 16.48)
			0.27 (3.9, 26)	1,700	1,000	270.0 – 294.0 (16.48 – 17.94)
			0	500	1,000	188.0 – 200.0 (11.47 – 12.20)
Stop lever	Adjusting lever position		Pump rpm	Rack position mm (in).		
	Idle		0	5.5 (0.217) or less		

Torque Specifications

Part tightened		kg-cm	ft-lb	N·m
Nozzle holder retaining nut x Nozzle holder body				
	B, 3B	700	51	69
	11B, 13B, 13B-T	350	25	34
Injection nozzle x Cylinder head	B, 3B	700	51	69
	11B, 13B, 13B-T	185	13	18
Nozzle leakage pipe x Injection nozzle	B, 3B	450	33	44
	11B, 13B, 13B-T	250	18	25
Injection pipe x Injection nozzle		250	18	25
Chamber plug x Feed pump housing	19 mm bolt head	500	36	49
	32 mm bolt head	1,500	109	147
Priming pump x Feed pump housing		500	36	49
Feed pump x Injection pump		95	82 in.-lb	9.3
Fuel pipe x Feed pump		375	27	37
Delivery valve holder x Injection pump body		375	27	37
Spline shaft x Injection pump camshaft	B, 3B	650	47	64
	11B, 13B, 13B-T	925	69	91
Plate plug x Injection pump body		650	47	64
Steel ball guide x Injection pump camshaft (B, 3B)		550	40	54

Torque Specifications (Cont'd)

Part tightened		kg-cm	ft-lb	N·m
Flyweight x Injection pump camshaft (11B, 13B, 13B-T)	M/T	525	38	51
	A/T	550	40	54
Injection pump x Timing gear case		375	27	37
Injection pump stay x Injection pump	B, 3B	185	13	18
	11B, 13B, 13B-T	375	27	37
Injection pump stay x Stay (B, 3B)		185	185	18
Injection pump stay x Cylinder block	B, 3B	375	27	37
	11B, 13B, 13B-T	185	13	18
Fuel hose x Injection pump		375	27	37

COOLING SYSTEM

Specifications

Engine coolant capacity		See page A-2
Thermostat	Valve opening temperature	
	82°C type	80 – 84°C 176 – 183°F
	88°C type	86 – 90°C 187 – 194°F
	Valve opening travel	
	82°C type at 95°C (203°F)	10 mm (0.39 in.) or more
	88°C type at 100°C (212°F)	10 mm (0.39 in.) or more
Radiator	Relief valve opening pressure	
	STD	0.75 – 1.05 kg/cm² (10.7 – 14.9 psi, 74 – 103 kPa)
	Limit	0.6 kg/cm² 8.5 psi 59 kPa

Torque Specifications

Part tightened	kg-cm	ft-lb	N·m
Water pump x Cylinder block	250	18	25
Water outlet x Water outlet housing	185	13	18

LUBRICATION SYSTEM

Specifications

Engine oil capacity			See page A-2	
Oil pressure		at idle at 3,000 rpm	0.3 kg/cm² (4.2 psi, 29 kPa) or more 2.5 – 6.0 kg/cm² (36 – 85 psi, 245 – 588 kPa)	
Oil pump (B, 3B)	Gear body clearance	STD Limit	0.090 – 0.150 mm 0.30 mm	0.0035 – 0.0059 in. 0.0118 in.
	Gear side clearance	STD Limit	0.030 – 0.095 mm 0.15 mm	0.0012 – 0.0037 in. 0.0059 in.
	Gear tip clearance			
	Driven gear to cresent	STD Limit	0.393 – 0.476 mm 0.55 mm	0.0155 – 0.0187 in. 0.0217 in.
	Drive gear to cresent	STD Limit	0.477 – 0.567 mm 0.65 mm	0.0188 – 0.0233 in. 0.0256 in.
	Drive spline to rotor backlash	STD Limit	0.541 – 0.790 mm 1.00 mm	0.0213 – 0.0311 in. 0.0394 in.
Oil Pump (11, 13B, 13B-T)	Rotor body clearance	STD Limit	0.144 – 0.220 mm 0.40 mm	0.0057 – 0.0087 in. 0.0157 in.
	Rotor side clearance	STD Limit	0.035 – 0.090 mm 0.15 mm	0.0014 – 0.0035 in. 0.0059 in.
	Rotor tip clearance	STD Limit	0.110 – 0.240 mm 0.30 mm	0.0043 – 0.0094 in. 0.0118 in.
	Drive spline to rotor backlash		0.541 – 0.790 mm 1.00 mm	0.0213 – 0.0311 in. 0.0394 in.

Torque Specifications

Part tightened		kg-cm	ft-lb	N·m
Engine drain plug		350	25	34
Plug of oil pump relief valve		500	36	49
Timing gear case x Cylinder block	12 mm bolt head	185	13	18
	14 mm bolt head	375	27	37
Oil pipe x Timing gear case (Union bolt)		110	8	11
Oil pipe x Injection pump		110	8	11
Oil pipe x Timing gear case (Nut)		185	13	18
Oil pipe x Cylinder block		450	33	44
Oil strainer x Timing gear case		185	13	18
Oil strainer x Cylinder block		185	13	18
Oil pan x Timing gear case		185	13	18
Oil pan x Cylinder block		185	13	18
Oil pan x Rear oil seal retainer		185	13	18
Oil cooler x Oil cooler case		130	9	13
Oil cooler case x Cylinder block		185	13	18
Oil filter bracket x Cylinder block		375	27	37
Plug of oil cooler relief plug		500	36	49
Plug of oil filter relief plug		500	36	49
Oil nozzle check valve x Cylinder block		350	25	34

STARTING SYSTEM

Pre-heating system	Light lighting time 3B (Super glow type) at 20°C (68°F) B, 3B (Fixed delay type) 11B, 13B, 13B-T at water temp. sensor disconnected 12V type 24V type			 Approx. 2 seconds 15 – 19.5 seconds 20 seconds 14 seconds
Starter	Rated voltage and output power		12 V 2.5 kw	24 V 4.5 kw
	No-load characteristic	Ampere	180 A or less at 11 V	90 A or less at 23 V
		rpm	3,500 rpm or more	←
	Brush length	STD	20.5 mm 0.807 in.	←
		Limit	13.0 mm 0.512 in	←
	Spring installed load	STD	3.2 – 4.0 kg (7.1 – 8.8 lb, 31 – 39 N)	←
	Commutator			
	Outer diameter	STD	36 mm 1.42 in.	←
		Limit	35 mm 1.38 in.	←
	Undercut depth	STD	0.7 mm 0.028 in.	←
		Limit	0.2 mm 0.008 in.	←
	Circle runout	Limit	0.05 mm 0.0020 in.	←

CHARGING SYSTEM

Battery specific gravity			See page A-2	
Drive belt tension or deflection			See page A-2	
Alternator	Rated output		12 V 40 A 12 V 45 A 12 V 50 A 12 V 55 A 24 V 20 A 24 V 25 A 24 V 30 A 24 V 55 A	
	Rotor coil resistance			
	w/o IC regulator	12V type	3.9 – 4.1 Ω	
		24V type	18.8 – 19.2 Ω	
	w/ IC regulator	12V type	2.8 – 3.0 Ω	
		24V type	8.8 – 9.2 Ω	
	Slip ring diameter	STD	32.3 – 32.5 mm	1.272 – 1.280 in.
		Limit	32.1 mm	1.264 in.
	Brush exposed length	STD	20.0 mm	0.787 in.
		Limit	5.5 mm	0.217 in.
Alternator regulator	Regulating voltage at 25°C (77°F)			
	w/o IC regulator	12V type	13.8 – 14.8 V	
		24V type	27.0 – 29.0 V	
	w/ IC regulator	12V type	13.8 – 14.4 V	
		24V type	27.9 – 28.5 V	

STANDARD BOLT TORQUE SPECIFICATIONS

Page

STANDARD BOLT TORQUE SPECIFICATIONS B-2

STANDARD BOLT TORQUE SPECIFICATIONS

HOW TO DETERMINE BOLT STRENGTH

	Mark	Class		Mark	Class
Hexagon head bolt	 Bolt head No. 4–	4T	Stud bolt	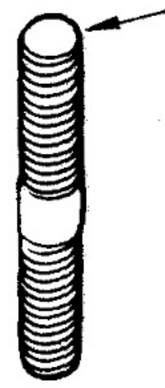 No mark	4T
	5–	5T			
	6–	6T			
	7–	7T			
	 No mark	4T			
Hexagon flange bolt w/ washer hexagon bolt	 No mark	4T		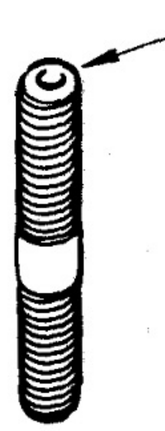 Grooved	6T
Hexagon head bolt	 Two protruding lines	5T			
Hexagon flange bolt w/ washer haxagon bolt	 Two protruding lines	6T	Welded bolt	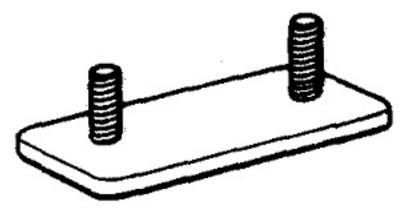	4T
Hexagon head bolt	 Three protruding lines	7T			

SPECIFIED TORQUE FOR STANDARD BOLTS

Class	Diameter mm	Pitch mm	Torque specifications					
			Hexagon head bolt			Hexagon flange bolt		
			kg-cm	ft-lb	N·m	kg-cm	ft-lb	N·m
4T	6	1	55	48 in.-lb	5.4	60	52 in.-lb	5.9
	8	1.25	130	9	13	145	10	14
	10	1.25	260	19	25	290	21	28
	12	1.25	480	35	47	540	39	53
	14	1.5	760	55	75	850	61	83
	16	1.5	1,150	83	113		–	
5T	6	1	65	56 in.-lb	6.4		–	
	8	1.25	160	12	16		–	
	10	1.25	330	24	32		–	
	12	1.25	600	43	59		–	
	14	1.5	930	67	91		–	
	16	1.5	1,400	101	137		–	
6T	6	1	80	69 in.-lb	7.8	90	78 in.-lb	8.8
	8	1.25	195	14	19	215	16	21
	10	1.25	400	29	39	440	32	43
	12	1.25	730	53	72	810	59	79
	14	1.5		–		1,250	90	123
7T	6	1	110	8	11	120	9	12
	8	1.25	260	19	25	290	21	28
	10	1.25	530	38	52	590	43	58
	12	1.25	970	70	95	1,050	76	103
	14	1.5	1,500	108	147	1,700	123	167
	16	1.5	2,300	166	226		–	

SST AND SSM

	Page
SST (SPECIAL SERVICE TOOLS)	C-2
SSM (SPECIAL SERVICE MATERIALS)	C-9

SST (SPECIAL SERVICE TOOLS)

NOTE: Classification

A = SST required for vehicle inspections and minor repairs and multipurpose SST.

B = SST required for major repairs involving disassembly of components.

C = SST required for rather special, less frequent work not of classifiable as either A or B.

Section / Classification / Part Name / Part No. / Illustration				EM	FU	CO	LU	ST	CH	Note
	09032-00100	(Oil Pan Seal Cutter)	A	●			●			
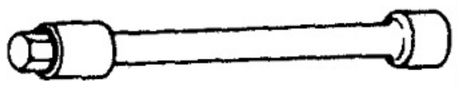	09043-38100	(Hexagon 10 mm Wrench)	A		●					13B-T only
	09201-56010	(Valve Stem Oil Seal Replacer)	B	●						B, 3B only
	09201-58010	(Valve Stem Oil Seal Replacer)	B	●						11B, 13B, 13B-T only
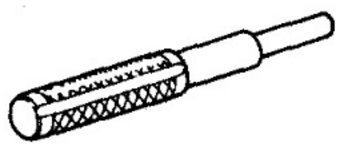	09201-60011	(Valve Guide Bushing Remover & Replacer)	A	●						
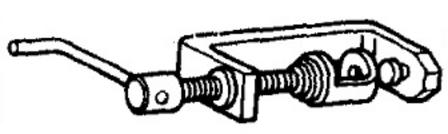	09202-43013	(Valve Spring Compressor)	A	●						
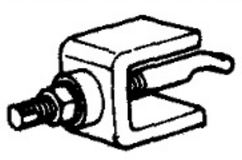	09208-48010	(Combustion Chamber Remover)	B	●						B, 3B only
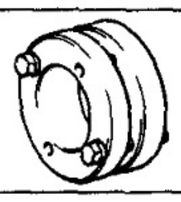	09213-58011	(Crankshaft Pulley Holding Tool)	A	●						
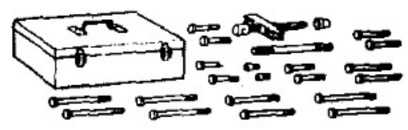	09213-60017	(Crankshaft Pulley & Gear Pulley Set)	A	●						
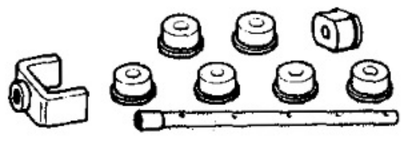	09215-00012	(Camshaft Bearing Remover & Replacer Set)	C	●						
	(09215-00020)	(Gate "B")		●						

SST (SPECIAL SERVICE TOOLS) (Cont'd)

Section / Classification / Part Name / Part No. / Illustration				EM	FU	CO	LU	ST	CH	Note
	(09215-00440)	(Camshaft Bearing Remover & Replacer)		●						
	(09215-00470)	(Camshaft Bearing Remover & Replacer)		●						
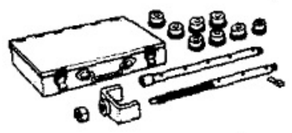	09215-00100	(Camshaft Bearing Remover & Replacer Set)	C	●						
	(09215-00130)	(Bolt)		●						
	(09215-00140)	(Nut)		●						
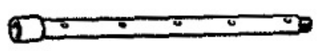	(09215-00150)	(Shaft "A")		●						
	(09215-00160)	(Pin)		●						
	(09215-00210)	(Remover & Replacer)		●						
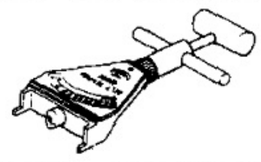	09216-00020	(Belt Tension Gauge)	A	●					●	
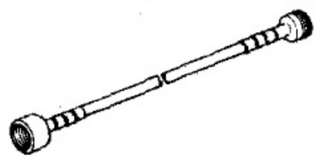	09216-00030	(Belt Tension Cable)	A	●					●	
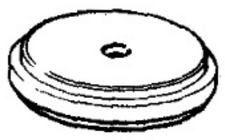	09218-56020	(Cylinder Liner Remover & Replacer)	B	●						B, 11B only
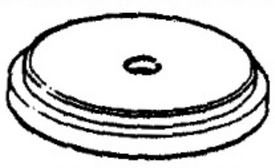	09218-56030	(Cylinder Liner Remover & Replacer)	B	●						3B, 13B, 13B-T only
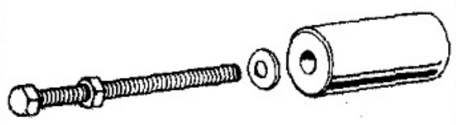	09219-56010	(Piston Cooler Remover)	B				●			3B, 13B-T only
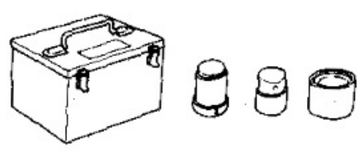	09222-58010	(Connecting Rod Bushing Remover & Replacer)	B	●						13B-T only

SST (SPECIAL SERVICE TOOLS) (Cont'd)

Section / Classification / Part Name / Part No. / Illustration			EM	FU	CO	LU	ST	CH	Note
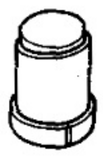	(09222-01020)	(Remover & Replacer)	●						
	(09222-01030)	(Guide)		●					
	(09222-01040)	(Base)		●					
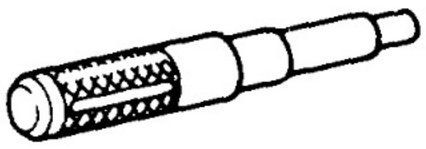	09222-66010	(Connecting Rod Bushing Remover & Replacer)	B	●					B, 3B only
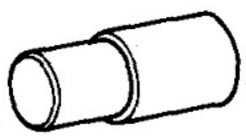	09222-76012	(Connecting Rod Bushing Remover & Replacer)	B	●					11B, 13B only
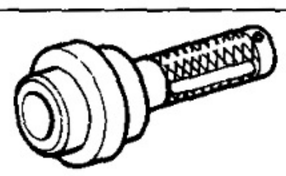	09223-46011	(Crankshaft Front Oil Seal Replacer)	B	●					
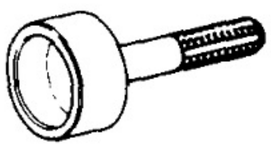	09223-56010	(Crankshaft Rear Oil Seal Replacer)	B	●					
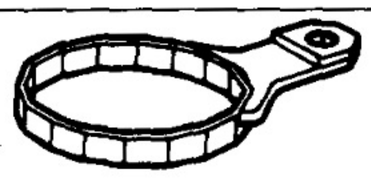	09228-34010	(Oil Filter Wrench)	A		●				
	09228-44011	(Oil Filter Wrench)	A			●			
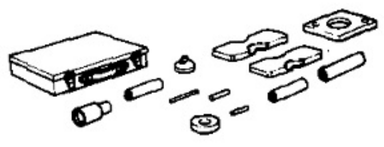	09236-00101	(Water Pump Overhaul Tool Set)	B			●			
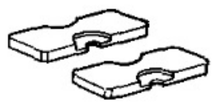	(09237-00010)	(Water Pump Bearing Remover & Replacer)				●			
	(09237-00020)	(Bearing Stay)				●			
	(09237-00030)	(Bearing Stay)				●			
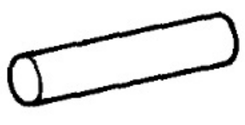	(09237-00050)	(Shaft "B")				●			

SST (SPECIAL SERVICE TOOLS) (Cont'd)

Section / Classification / Part Name / Part No. / Illustration				EM	FU	CO	LU	ST	CH	Note
	(09237-00070)	(Shaft "C")					●			
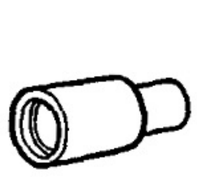	(09238-40010)	(Water Pump Bearing Remover & Replacer)					●			
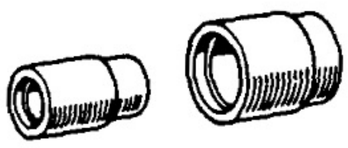	09238-47012	(Water Pump Bearing Remover & Replacer)	B				●			
	09241-76022	(Injection Pump Stand Set	C		●					
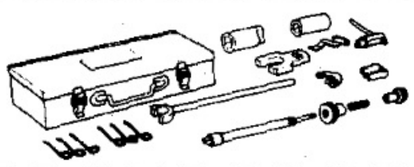	09260-46012	(Injection Pump Tool Set)	C		●					B, 3B only
	(09266-46011)	(Round Nut Wrench)			●					
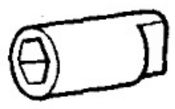	(09268-46012)	(Nozzle Holder Body Wrench)			●					
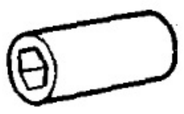	(09268-46021)	(Nozzle Holder Retaining Nut Wrench)			●					
	(09274-46011)	(Tappet Insert)			●					
	(09275-46010)	(Plunger Clamp)			●					
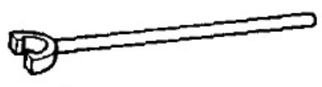	(09278-46010)	(Spline Shaft Holding Tool)			●					
	(09280-46010)	(Plunger Spring Holder)			●					
	(09283-46010)	(Tappet Gauge Holder Attachment)			●					
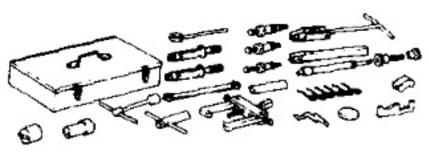	09260-58010	(Injection Pump Tool Set)	C		●					11B, 13B, 13B-T only

SST (SPECIAL SERVICE TOOLS) (Cont'd)

Section / Classification / Part Name / Part No. / Illustration			EM	FU	CO	LU	ST	CH	Note
	(09260-78010)	(Round Nut Wrench)		●					
	(09260-78020)	(Screw Plug Wrench)		●					
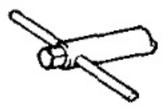	(09266-76011)	(Automatic Timer Set Nut Wrench)		●					
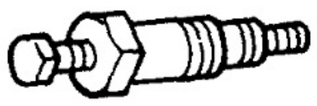	(09267-76011)	(Automatic Timer Extractor)		●					
	(09267-76020)	(Automatic Timer Remover)		●					
	(09267-76030)	(Camshaft Bushing Remover)		●					
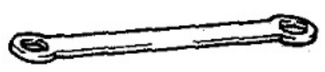	(09270-76010)	(Delivery Valve Holder Wrench)		●					
	(09272-76011)	(Tappet Roller Clamp)		●					
	(09273-76011)	(Tappet Clamp)		●					
	(09274-46011)	(Tappet Insert)		●					
	(09275-46010)	(Plunger Clamp)		●					
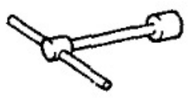	(09276-76010)	(T Type Box 10 mm Wrench)		●					
	(09278-46020)	(Spline Shaft Holding Tool)		●					
	(09280-46010)	(Plunger Spring Holder)		●					

SST (SPECIAL SERVICE TOOLS) (Cont'd)

Section / Classification / Part Name / Part No. / Illustration				EM	FU	CO	LU	ST	CH	Note
	(09283-46010)	(Tappet Gauge Holder Attachment)			●					
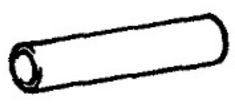	(09285-76020)	(Injection Pump Camshaft Bearing Cone Replacer)			●					
	(09286-76011)	(Injection Pump Camshaft Bearing Cup Puller)			●					
	(09286-78010)	(Bearing Cup Remover)			●					
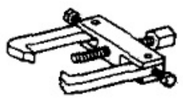	(09287-58010)	(Injection Pump Camshaft Bearing Puller)			●					
	(09289-00010)	(Injection Pump Camshaft Bearing Cup Replacer)			●					
	09260-76017	(Injection Pump Tool Set)	C		●					B, 3B only
	(09262-76010)	(Delivery Valve Gasket Replacer)			●					
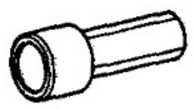	(09266-67011)	(Round Nut Wrench)			●					
	(09267-76011)	(Automatic Timer Extractor)			●					
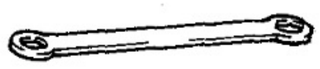	(09270-76010)	(Delivery Valve Holder Wrench)			●					
	(09271-76011)	(Delivery Valve Extractor)			●					
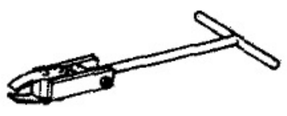	(09272-76011)	(Tappet Roller Clamp)			●					
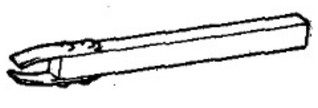	(09273-76011)	(Tappet Clamp)			●					

SST (SPECIAL SERVICE TOOLS) (Cont'd)

Section / Classification / Part Name / Part No. / Illustration				EM	FU	CO	LU	ST	CH	Note
	(09276-76010)	(T Type Box 10 mm Wrench			●					
	(09282-76010)	(Idle Adjusting Wrench)			●					
	09278-54012	(Drive Shaft Holding Tool	A	●			●			
	09285-76010	(Injection Pump Camshaft Bearing Cone Replacer	C		* ●			●		* B, 3B only
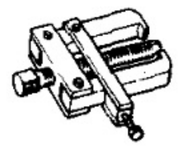	09286-46011	(Injection Pump Spline Shaft Puller	C		●			●		
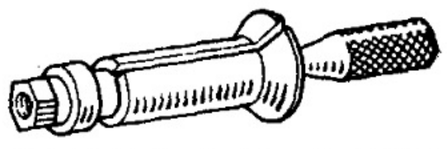	09286-76011	(Injection Pump Camshaft Bearing Cup Puller	C		●					B, 3B only
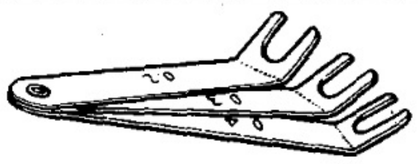	09288-46011	(Tappet Adjusting Gauge	C		●					
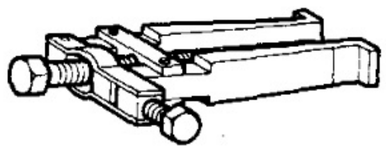	09308-10010	(Oil Seal Puller)	A	●						
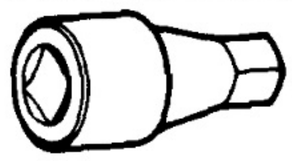	09313-30021	(Detent Ball Plug Socket	A				●			
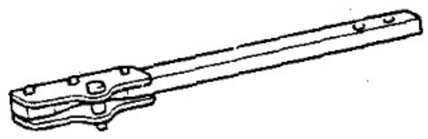	09330-00021	(Companion Flange Holding Tool	A	●						
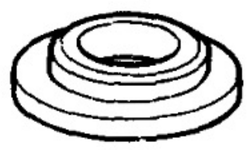	09506-35010	(Differential Drive Pinion Rear Bearing Replacer	B			●				
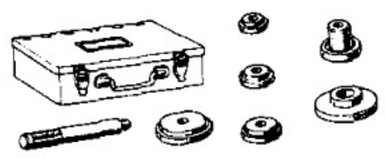	09608-12010	(Front Hub & Drive Pinion Bearing Replacer Set	B	●	●					
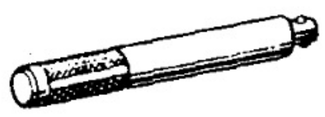	(09608-00020)	(Remover & Replacer Handle		●						
	(09608-00040)	(Front Hub Outer Bearing Cup Replacer			●					

SST (SPECIAL SERVICE TOOLS) (Cont'd)

Section / Classification / Part Name / Part No. / Illustration				EM	FU	CO	LU	ST	CH	Note
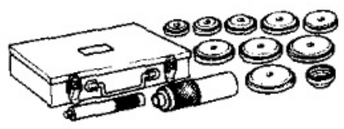	09608-35014	(Axle Hub & Drive Pinion Bearing Tool Set)	B	●			●			
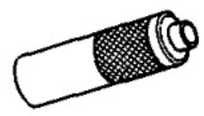	(09608-06040)	(Front Hub Inner Bearing Cone Replacer)		●			●			
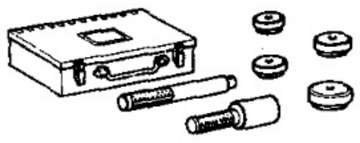	09620-30010	(Steering Gear Box Replacer Set)	B		●					
	(09623-30010)	(Steering Worm Bearing & Oil Seal Replacer)			●					B, 3B only
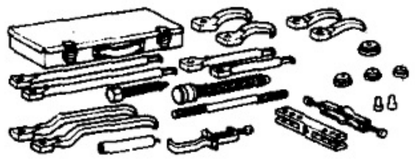	09950-20017	(Universal Puller)	A	●	●*		●			* B, 3B only
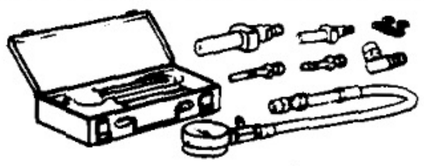	09992-00023	(Cylinder Compression Check Gauge Set)	A	●						
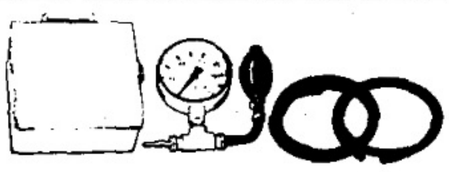	09992-00240	(Turbocharger Pressure Gauge)	C	●						13B-T only

SSM (SPECIAL SERVICE MATERIALS)

Part Name	Part No.	Sec.	Use etc.
Seal packing black	08826-00080	EM LU	Push rod cover Oil pan