TOYOTA

REPAIR MANUAL SUPPLEMENT

FOR CHASSIS & BODY

LAND CRUISER

(Hardtop/Canvas Top/Station Wagon)

RJ7_ series
LJ7_ series
FZJ7_, 80 series
PZJ7_ series
HZJ7_, 80 series
HDJ80 series

Aug., 1992

Pub. No. RM315E

FOREWORD

This supplement has been prepared to provide information covering general service repairs for the chassis and body of the TOYOTA LAND CRUISER (Hardtop, Canvas Top and Station Wagon) which underwent changes in August, 1992.

Applicable models:

Hardtop & Canvas Top	RJ70, 73, 77 series LJ70, 72, 73, 77, 79 series FZJ70, 73, 75 series PZJ70, 73, 75 series HZJ70, 73, 75 series
Station Wagon	FZJ80 series HZJ80 series HDJ80 series

For the service specifications and repair procedures of the above model other than those listed in this supplement, refer to the following manuals.

Manual Name	Pub. No.
• Land Cruiser (Hardtop and Canvas Top) Chassis and Body Repair Manual	RM183E
• Land Cruiser (Station Wagon) Chassis and Body Repair Manual	RM184E
• Land Cruiser (4-Door Hardtop) Chassis and Body Repair Manual Supplement	RM192E
• Land Cruiser (Hardtop/Canvas Top/Station Wagon) Chassis and Body Repair Manual Supplement	RM290E
• 21R, 22R Engine Repair Manual	RM053E
• 22R-E Engine Repair Manual Supplement	RM138E
• 2L, 3L Engine Repair Manual	RM123E
• 2L-T, 3L Engine Repair Manual Supplement	RM169E
• 1FZ-F, 1FZ-FE Engine Repair Manual	RM321E
• 1PZ, 1HZ, 1HD-T Engine Repair Manual	RM172E
• A441L, A440F, A442F Automatic Transmission Repair Manual	RM188E
• A442F Automatic Transmission Repair Manual	RM314E
• Land Cruiser Hardtop/Canvas Top Electrical Wiring Diagram	EWD168F
• Land Cruiser Station Wagon Electrical Wiring Diagram	EWD169F

All information in this manual is based on the latest product information at the time of publication. However, specifications and procedures are subject to change without notice.

©1992 TOYOTA MOTOR CORPORATION
All rights reserved. This book may not be reproduced or copied, in whole or in part, without the written permission of Toyota Motor Corporation.

TOYOTA MOTOR CORPORATION

INTRODUCTION IN
CLUTCH CL
MANUAL TRANSMISSION MT
AUTOMATIC TRANSMISSION AT
TRANSFER TR
PROPELLER SHAFT PR
SUSPENSION AND AXLE SA
BRAKE SYSTEM BR
BODY ELECTRICAL SYSTEM BE
AIR CONDITIONING SYSTEM AC
ELECTRICAL WIRING DIAGRAMS EWD

INTRODUCTION

HOW TO USE THIS MANUAL ····· IN-2
IDENTIFICATION INFORMATION ····· IN-5
GENERAL REPAIR INSTRUCTIONS ····· IN-6
PRECAUTION ····· IN-9
VEHICLE LIFT AND SUPPORT LOCATIONS ·· IN-16
Hardtop & Canvas Top ····· IN-16
Station Wagon ····· IN-18
ABBREVIATIONS USED IN THIS MANUAL ··· IN-19
STANDARD BOLT TORQUE
SPECIFICATIONS ····· IN-20

HOW TO USE THIS MANUAL

IN002-09

INDEX

An INDEX is provided on the first page of each section to guide you to the item to be repaired. To assist you in finding your way through the manual, the Section Title and major heading are given at the top of every page.

GENERAL DESCRIPTION

At the beginning of each section, a General Description is given that pertains to all repair operations contained in that section.
Read these precautions before starting any repair task.

TROUBLESHOOTING

TROUBLESHOOTING tables are included for each system to help you diagnose the problem and find the cause.

PREPARATION

Preparation lists the SST (Special Service Tools), recommended tools, equipment, lubricant and SSM (Special Service Materials) which should be prepared before beginning the operation and explains the purpose of each one.

REPAIR PROCEDURES

Most repair operations begin with an overview illustration. It identifies the components and shows how the parts fit together.
Example:

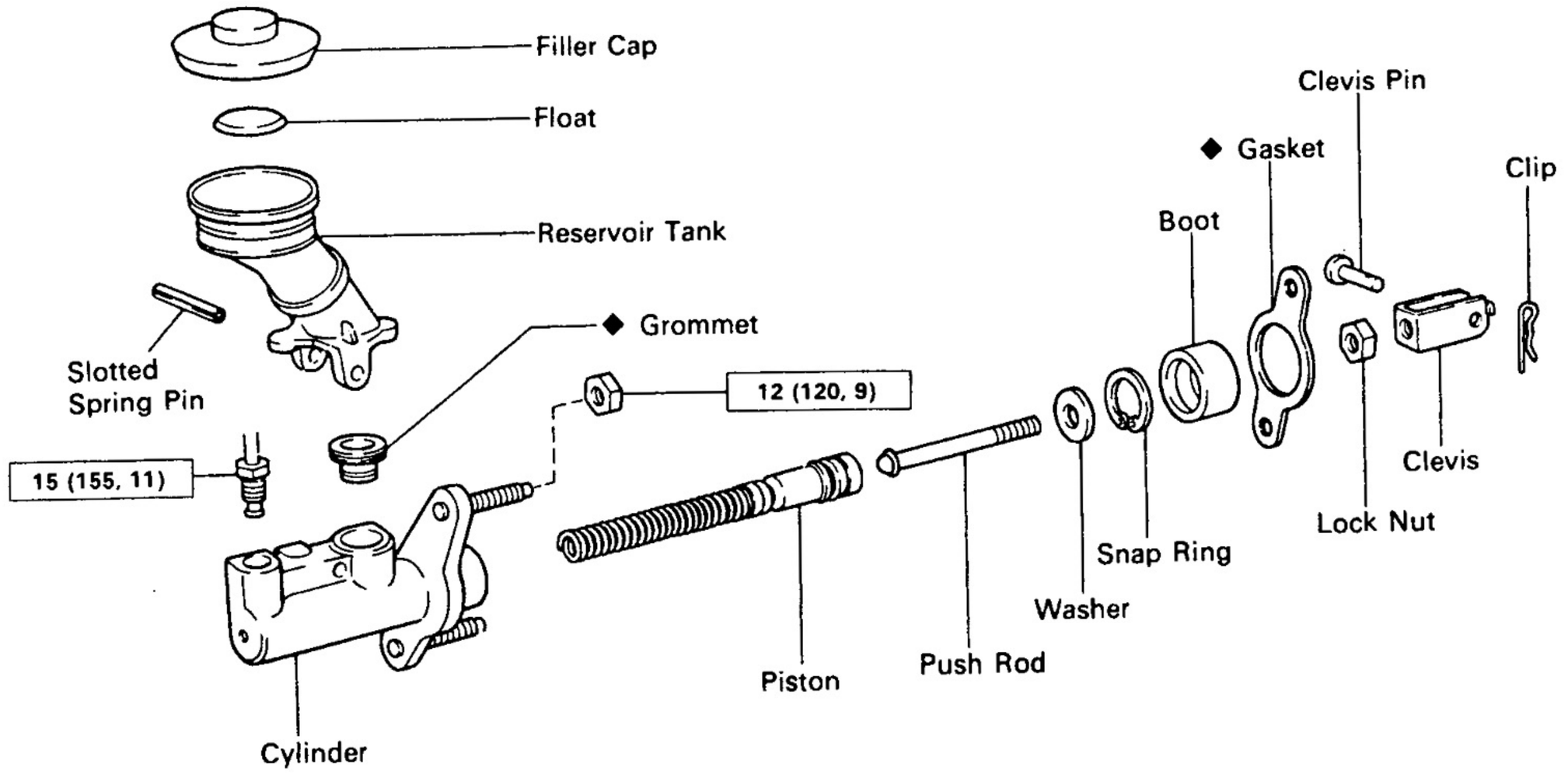

N·m (kgf·cm, ft·lbf) : Specified torque
◆ Non-reusable part

N01204

The procedures are presented in a step–by–step format:

- The illustration shows what to do and where to do it.
- The task heading tells what to do.
- The detailed text tells how to perform the task and gives other information such as specifications and warnings.

Example:

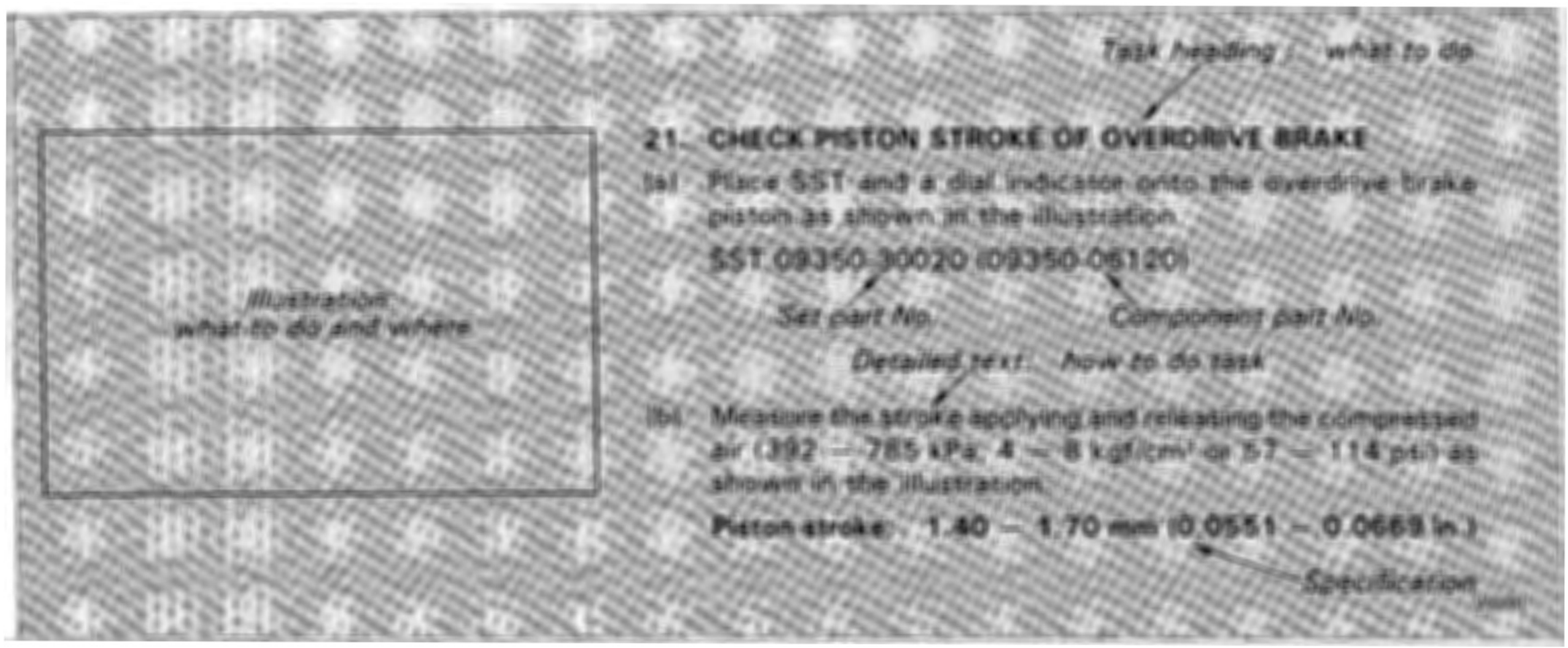

This format provides the experienced technician with a FAST TRACK to the information needed. The upper case task heading can be read at a glance when necessary, and the text below it provides detailed information. Important specifications and warnings always stand out in bold type.

REFERENCES

References have been kept to a minimum. However, when they are required you are given the page to refer to.

SPECIFICATIONS

Specifications are presented in bold type throughout the text where needed. You never have to leave the procedure to look up your specifications. They are also found at the end of each section, for quick reference.

CAUTIONS, NOTICES, HINTS:

- CAUTIONS are presented in bold type, and indicate there is a possibility of injury to you or other people.
- NOTICES are also presented in bold type, and indicate the possibility of damage to the components being repaired.
- HINTS are separated from the text but do not appear in bold. They provide additional information to help you perform the repair efficiently.

SI UNIT

The UNITS given in this manual are primarily expressed according to the SI UNIT(International System of Unit), and alternately expressed in the metric system and in the English System.

Example:

Torque: 30 N·m (310 kgf·cm, 22 ft·lbf)

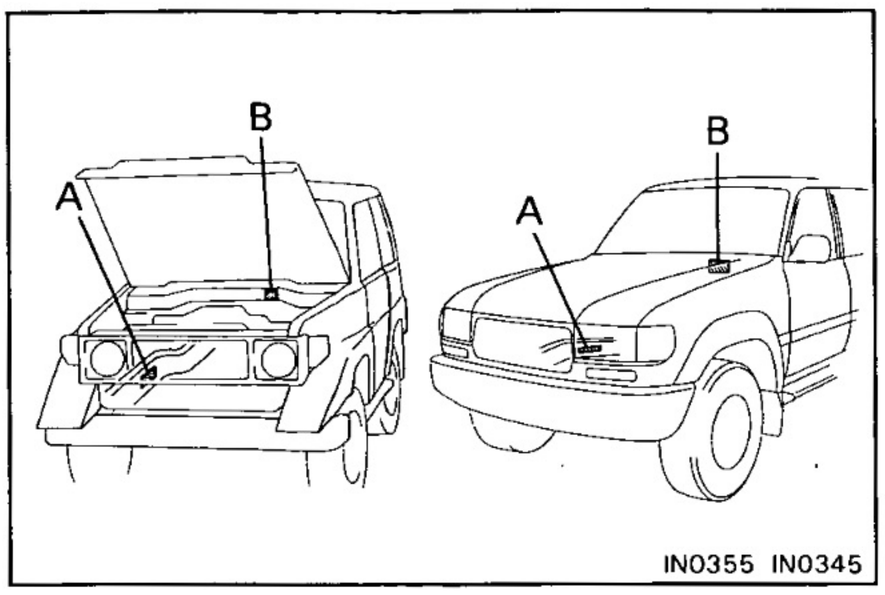

IDENTIFICATION INFORMATION

VEHICLE IDENTIFICATION NUMBER

The vehicle identification number is stamped on the outer surface of the front right side frame. This number is also stamped on the manufacturer's name plate.

A: Vehicle Identification Number
B: Manufacturer's Name Plate

ENGINE SERIAL NUMBER

The engine serial number is stamped on the right side of the cylinder block.

22R & 22R-E Engines

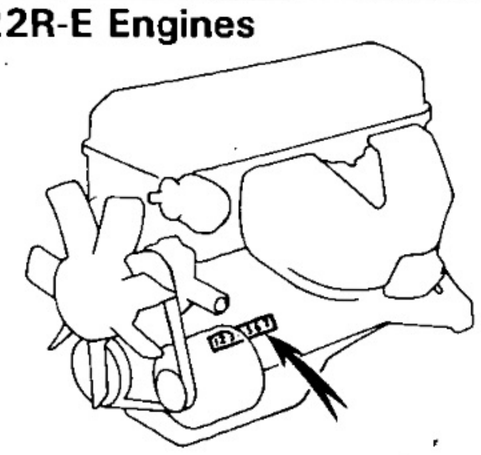

2L-T & 3L Engines

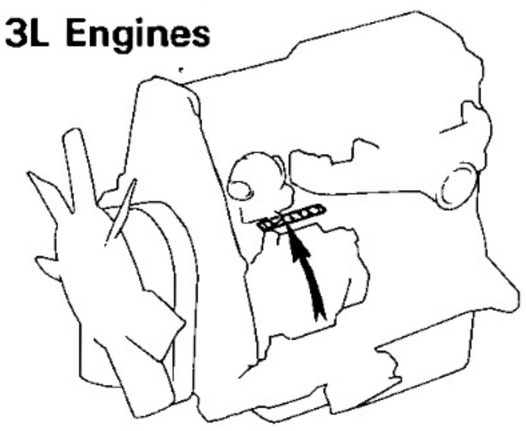

1FZ-F & 1FZ-FE Engines

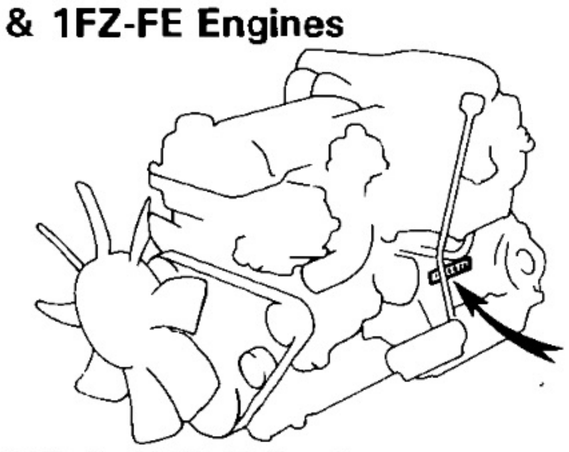

1PZ, 1HZ & 1HD-T Engines

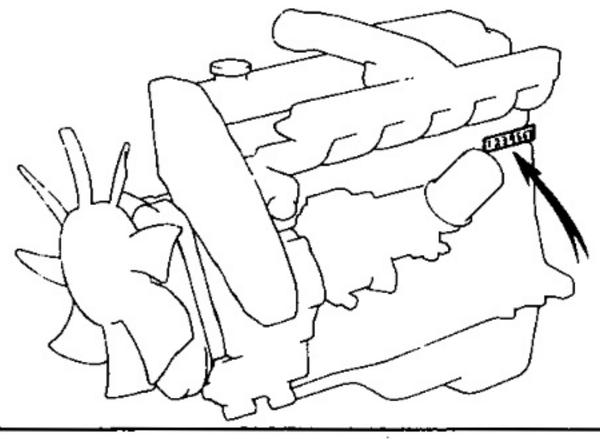

IN0007
IN0209
P03780
IN0294

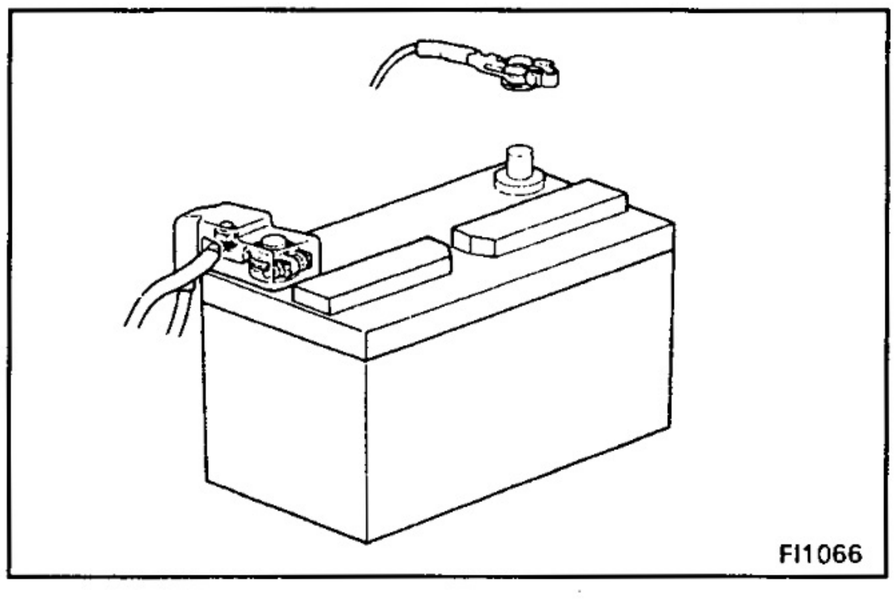
FI1066

GENERAL REPAIR INSTRUCTIONS

IN005–09

1. Use fender, seat and floor covers to keep the vehicle clean and prevent damage.
2. During disassembly, keep parts in the appropriate order to facilitate reassembly.
3. Observe the following:
   (a) Before performing electrical work, disconnect the negative cable from the battery terminal.
   (b) If it is necessary to disconnect the battery for inspection or repair, always disconnect the cable from the negative (−) terminal which is grounded to the vehicle body.
   (c) To prevent damage to the battery terminal post, loosen the terminal nut and raise the cable straight up without twisting or prying it.
   (d) Clean the battery terminal posts and cable terminals with a clean shop rag. Do not scrape them with a file or other abrasive objects.
   (e) Install the cable terminal to the battery post with the nut loose, and tighten the nut after installation. Do not use a hammer to tap the terminal onto the post.
   (f) Be sure the cover for the positive (+) terminal is properly in place.
4. Check hose and wiring connectors to make sure that they are secure and correct.
5. Non−reusable parts
   (a) Always replace cotter pins, gaskets, O−rings and oil seals etc. with new ones.
   (b) Non−reusable parts are indicated in the component illustrations by the "◆" symbol.

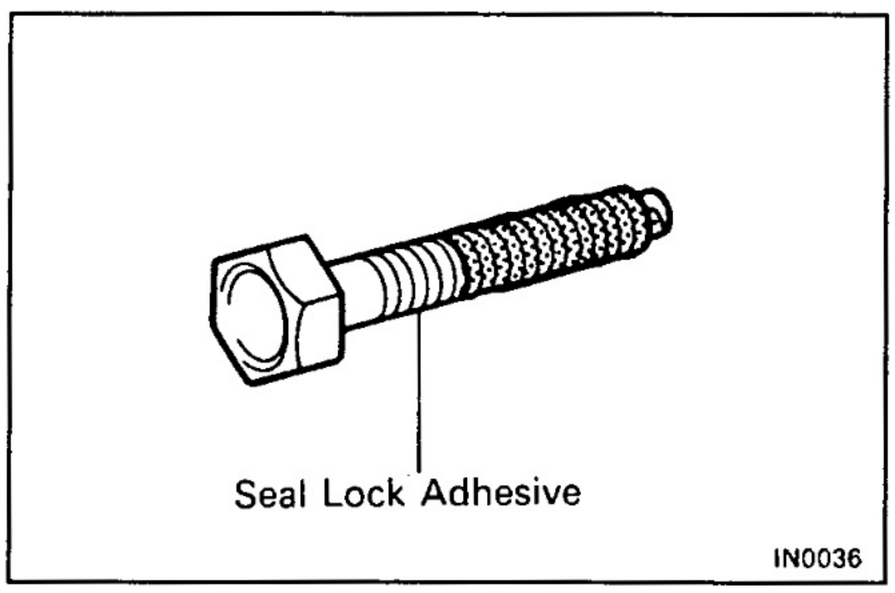

IN0036

6. Precoated parts
   Precoated parts are bolts and nuts, etc. that are coated with a seal lock adhesive at the factory.
   (a) If a precoated part is retightened, loosened or caused to move in any way, it must be recoated with the specified adhesive.

(b) When reusing precoated parts, clean off the old adhesive and dry with compressed air. Then apply the specified seal lock adhesive to the bolt, nut or threads.
(c) Precoated parts are indicated in the component illustrations by the "★" symbol.

7. When necessary, use a sealer on gaskets to prevent leaks.
8. Carefully observe all specifications for bolt tightening torques. Always use a torque wrench.
9. Use of special service tools (SST) and special service materials (SSM) may be required, depending on the nature of the repair. Be sure to use SST and SSM where specified and follow the proper work procedure. A list of SST and SSM can be found in the preparation part at the front of each section in this manual.

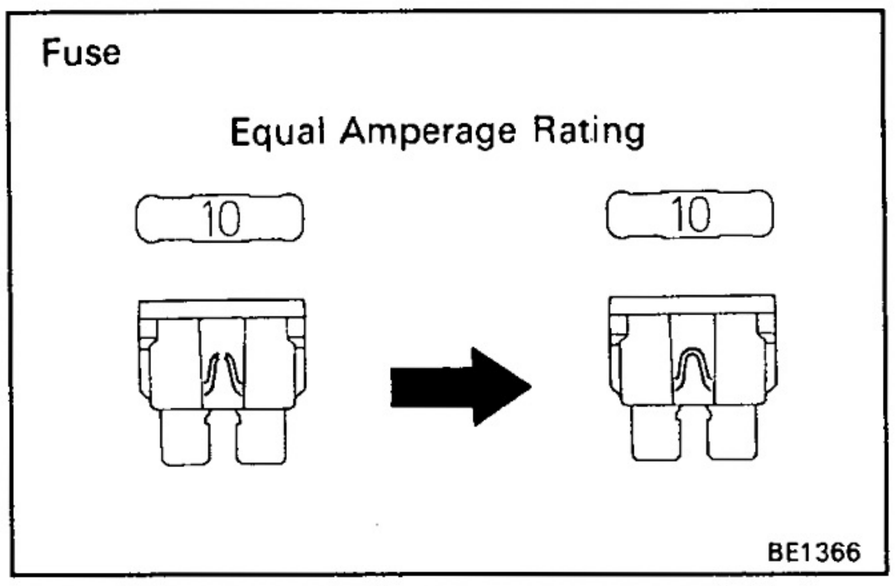

10. When replacing fuses, be sure the new fuse has the correct amperage rating. DO NOT exceed the rating or use one with a lower rating.

Illustration	Symbol	Part Name	Abbreviation
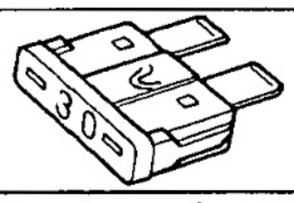 BE5594	 IN0365	FUSE	FUSE
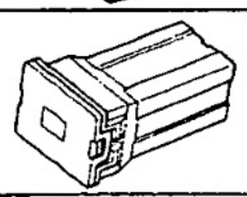 BE5595	 IN0366	MEDIUM CURRENT FUSE	M-FUSE
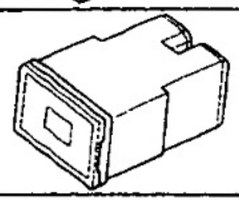 BE5596	 IN0367	HIGH CURRENT FUSE	H-FUSE
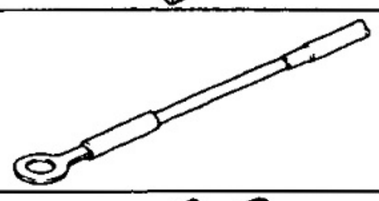 BE5597	 IN0367	FUSIBLE LINK	FL
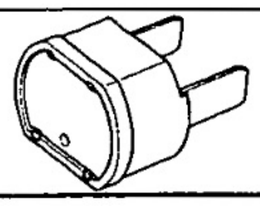 BE5598	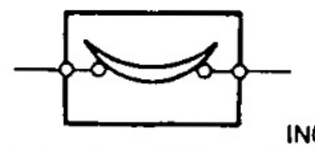 IN0368	CIRCUIT BREAKER	CB

11. Care must be taken when jacking up and supporting the vehicle. Be sure to lift and support the vehicle at the proper locations (See pages IN—16 to 18).
    (a) If the vehicle is to be jacked up only at the front or rear end, be sure to block the wheels at the opposite end in order to ensure safety.
    (b) After the vehicle is jacked up, be sure to support it on stands. It is extremely dangerous to do any work on a vehicle raised on a jack alone, even for a small job that can be finished quickly.
12. Observe the following precautions to avoid damage to the parts:
    (a) Do not open the cover or case of the ECU unless absolutely necessary. (If the IC terminals are touched, the IC may be destroyed by static electricity.)

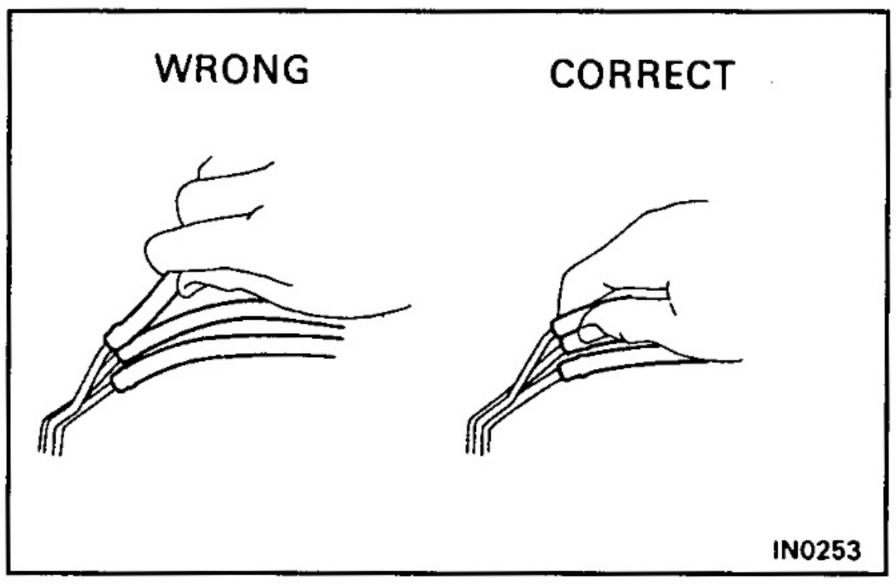

    (b) To disconnect vacuum hoses, pull on the end, not the middle of the hose.
    (c) To pull apart electrical connectors, pull on the connector itself, not the wires.
    (d) Be careful not to drop electrical components, such as sensors or relays. If they are dropped on a hard floor, they should be replaced and not reused.
    (e) When steam cleaning an engine, protect the distributor, air filter, and VCV from water.
    (f) Never use an impact wrench to remove or install temperature switches or temperature sensors.
    (g) When checking continuity at the wire connector, insert the tester probe carefully to prevent terminals from bending.
    (h) When using a vacuum gauge, never force the hose onto a connector that is too large. Use a step—down adapter instead. Once the hose has been stretched, it may leak.

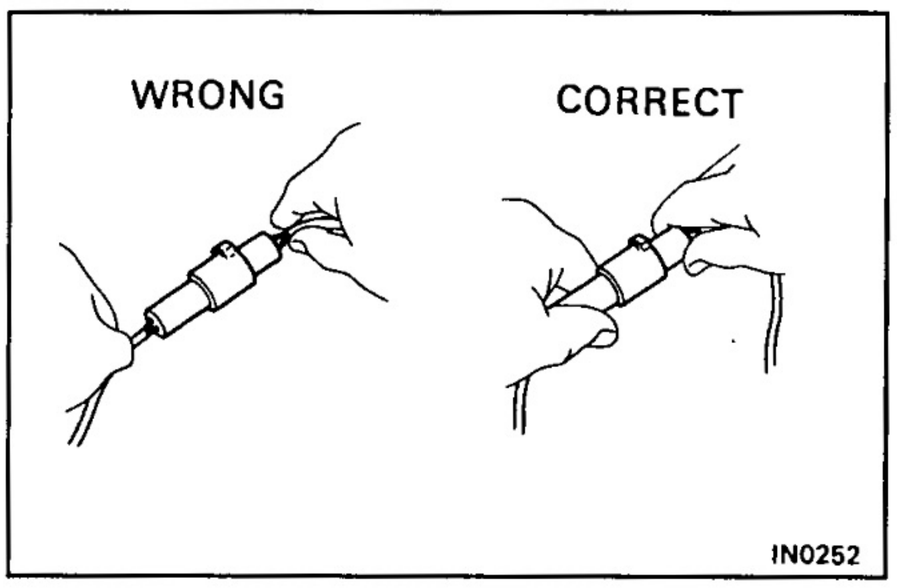

13. Tag hoses before disconnecting them:
    (a) When disconnecting vacuum hoses, use tags to identify how they should be reconnected.
    (b) After completing a job, double check that the vacuum hoses are properly connected. A label under the hood shows the proper layout.

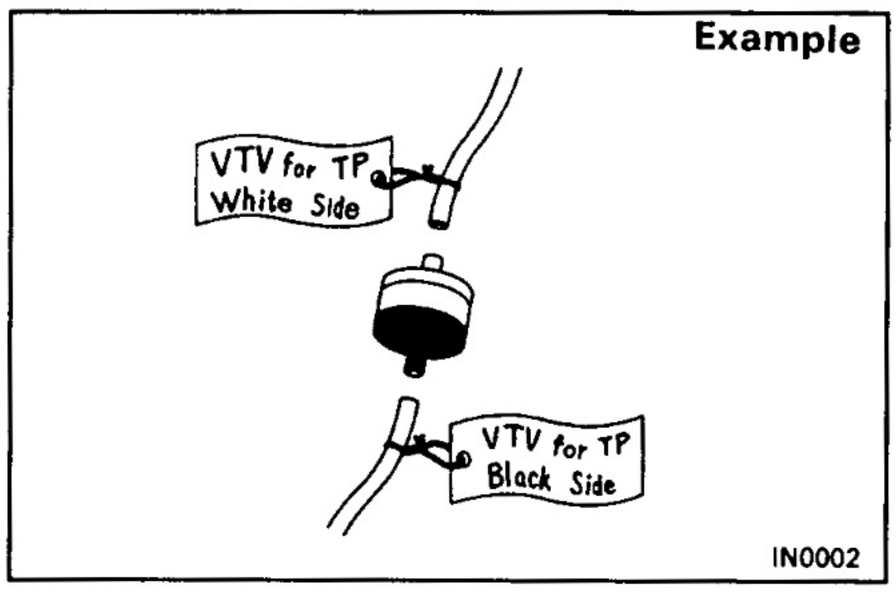

PRECAUTION

FOR VEHICLES EQUIPPED WITH A CATALYTIC CONVERTER

IN006–01

CAUTION: If large amounts of unburned gasoline flow into the converter, it may overheat and create a fire hazard. To prevent this, observe the following precautions and explain them to your customer.

1. **Use only unleaded gasoline.**
2. **Avoid prolonged idling.**
   Avoid running the engine at idle speed for more than 20 minutes.
3. **Avoid spark jump test.**

(a) Perform spark jump test only when absolutely necessary. Perform this test as rapidly as possible.
(b) While testing, never race the engine.

4. **Avoid prolonged engine compression measurement.**
   Engine compression tests must be done as rapidly as possible.
5. **Do not run engine when fuel tank is nearly empty.**
   This may cause the engine to misfire and create an extra load on the converter.
6. **Avoid coasting with ignition turned off and prolonged braking.**
7. **Do not dispose of used catalyst along with parts contaminated with gasoline or oil.**

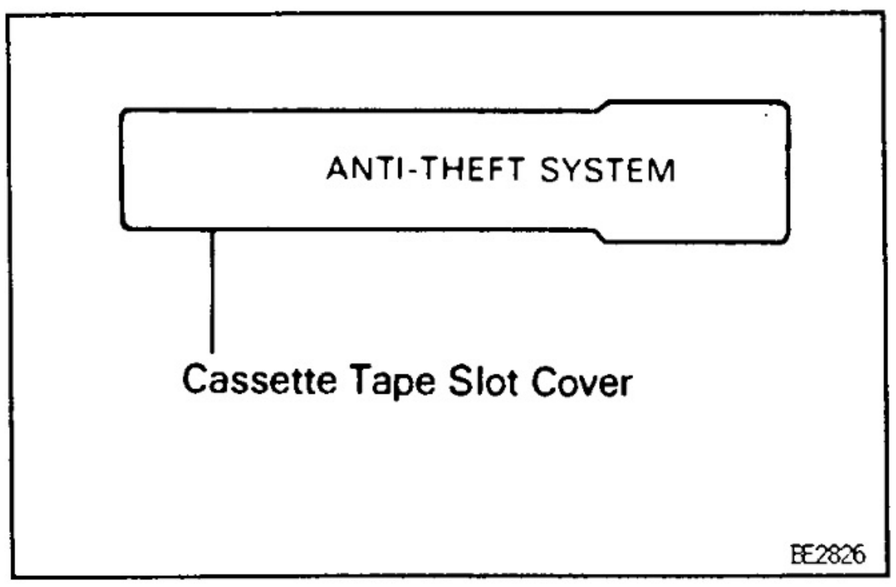

FOR VEHICLES WITH AN AUDIO SYSTEM WITH BUILT–IN ANTI–THEFT SYSTEM

IN00C–01

Audio System displaying the sign "ANTI – THEFT SYSTEM" shown on the left has a built–in anti–theft system which makes the audio system soundless if stolen.

If the power source for the audio system is cut even once, the anti–theft system operates so that even if the power source is reconnected, the audio system will not produce any sound unless the ID number selected by the customer is input again. Accordingly, when performing repairs on vehicles equipped with this system, before disconnecting the battery terminals or removing the audio system the customer should be asked for the ID number so that the technician can input the ID number afterwards, or else a request made to the customer to input the ID number. For the method to input the ID number or cancel the anti–theft system, refer to the Owner's Manual.

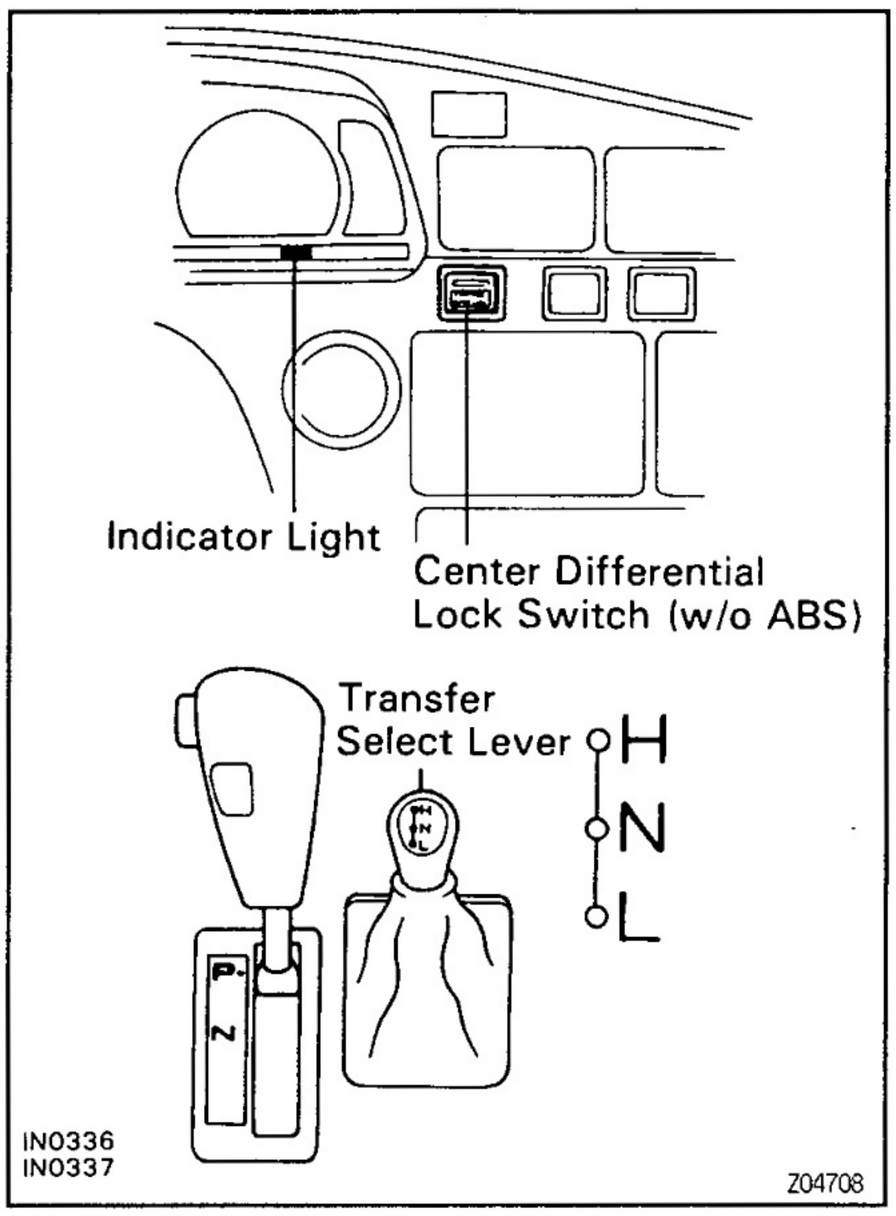

IN01W–01

WHEN SERVICING FULL–TIME 4WD VEHICLES

The full–time 4WD Land Cruiser Station Wagon is equipped with the mechanical lock type center differential system. When carrying out any kind of servicing or testing on a full–time 4WD in which the front or rear wheels are made to rotate (braking test, speedometer test, on–vehicle wheel balancing, etc.), or when towing the vehicle, be sure to observe the precautions given below. If incorrect preparations or test procedures are used, the test cannot be successfully carried out, and may be dangerous as well. Therefore, before beginning any such servicing or test, be sure to check the following items:

(1) Center differential lock type
(2) (w/o ABS)
Center differential mode position (FREE or LOCK)
(3) Whether wheels should be touching ground or jacked up
(4) Transmission gear position
(5) Transfer gear position (H or L)
(6) Maximum testing vehicle speed
(7) Maximum testing time

Also be sure to observe the following cautions:

(1) Never accelerate or decelerate the vehicle suddenly.
(2) Observe the other cautions given for each individual test.

Before Beginning Test

During tests with a brake tester or chassis dynamometer, such as braking force tests or speedometer tests, if only the front or rear wheels are to be rotated, it is necessary to set the position of the center differential to the FREE position or to the LOCK position depending on the type of test being performed.

(1) (w/o ABS)
Select the position of the center differential by pushing the center differential lock switch with the transfer select lever to "H" position.
(2) After selecting the position, confirm the operation of indicator light.

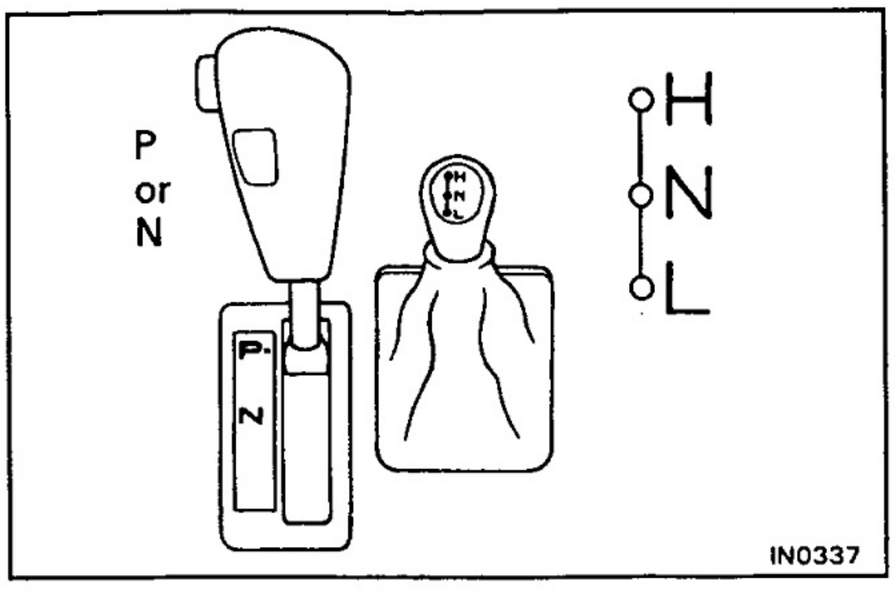

HINT:

- (w/o ABS)
  Move the vehicle backward or forward slightly if the indicator light does not operate correctly when the center differential lock switch is turned ON or OFF.
- When the transfer select lever is put in "L" position, the center differential is put in LOCK condition regardless of the position of the center differential lock switch.
- Transfer H ↔ L Gear Shifting Procedure:
  When shifting, always put the shift lever of the automatic transmission in P or N range. In other ranges, the gears of the transfer clash, and switching cannot occur.

(w/o ABS)

CAUTIONS WHEN CENTER DIFFERENTIAL CONTROL SWITCH IS TURNED ON

- Operate the switch only when all four wheels are stopped or when driving with the wheels in a straight line.
- Never operate the switch under the following conditions.

(1) When any tire is slipping.
(2) When any tire is spinning freely.
(3) When swerving or cornering.

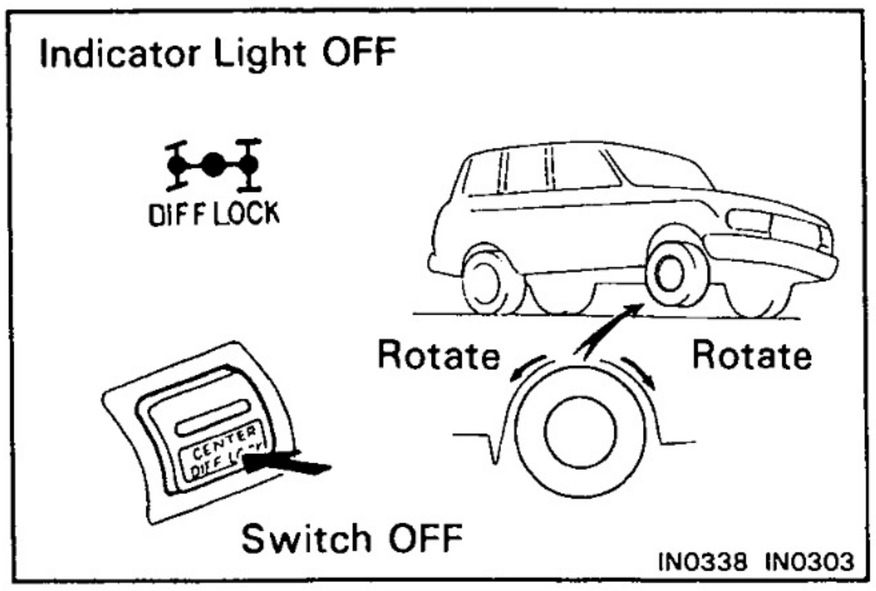

FREE Position

Center Differential Lock		Transfer Select Lever	Wheel
Control Switch	Indicator Light		
OFF	OFF	H	A lifted wheel can be rotated even if only one wheel is lifted up, as long as transmission is in N range.

V00598

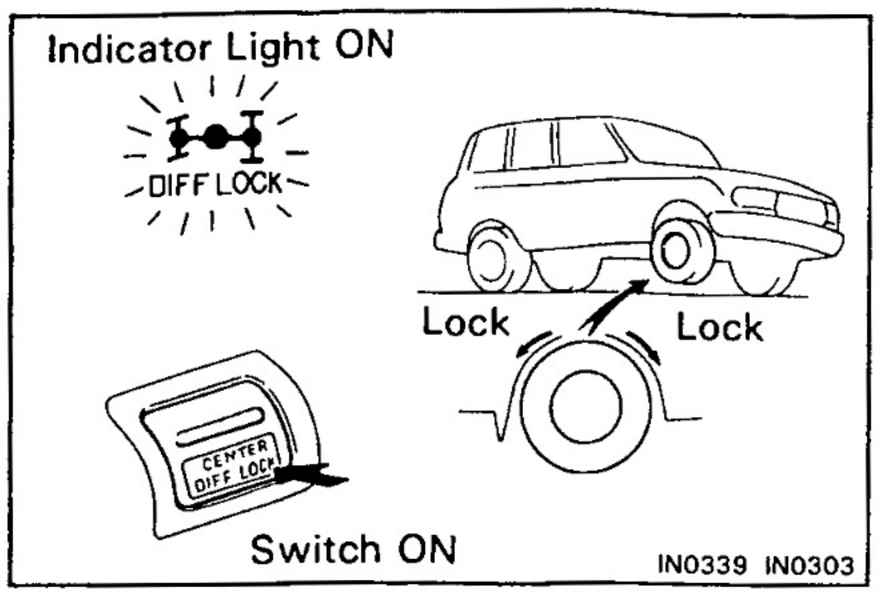

LOCK Position

Center Differential Lock		Transfer Select Lever	Wheel
Control Switch	Indicator Light		
ON	ON	H	A lifted wheel cannot be rotated if only one wheel is lifted up, even if transmission is in N range.
OFF	ON	L	

V00599

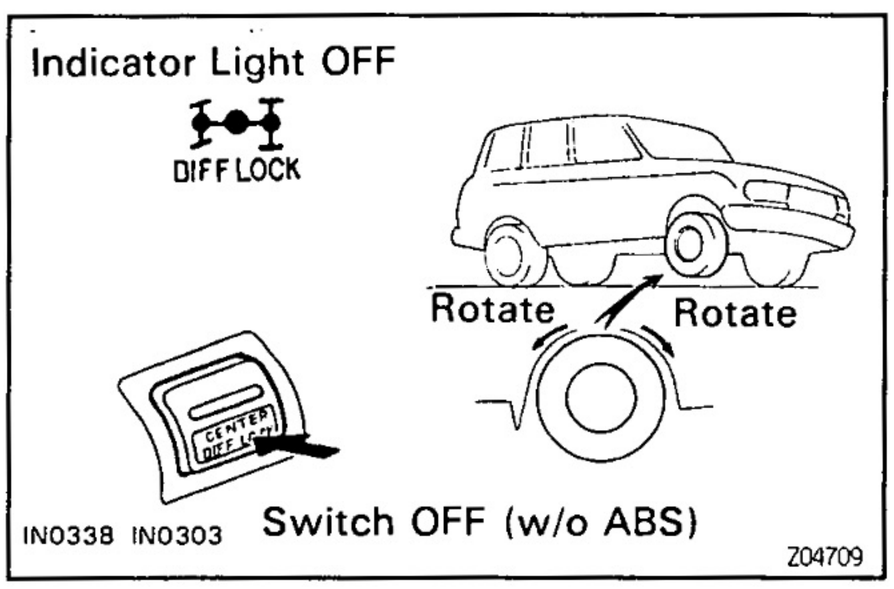

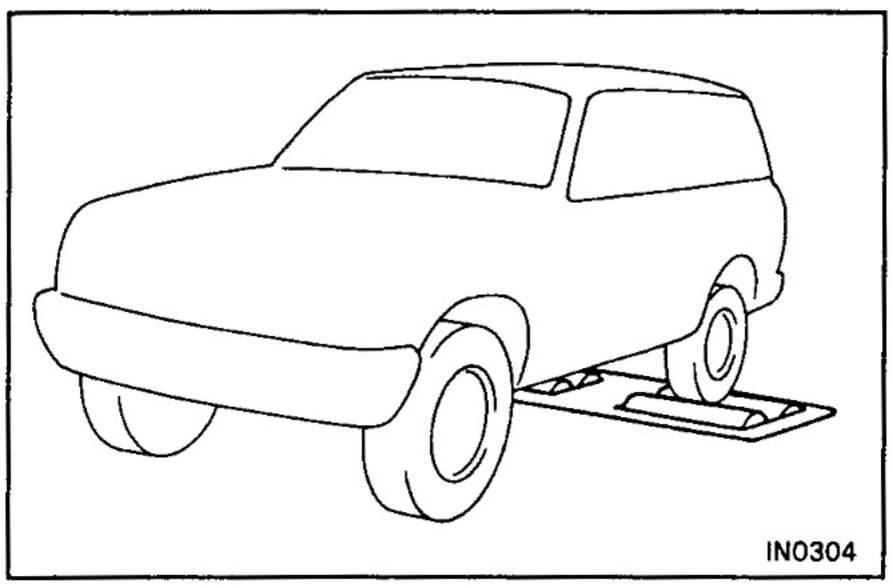

Braking Force Test (Vehicle Speed: Below 0.5 km/h or 0.3 mph)

When performing low – speed type brake tester measurements, observe the following instructions.

(1) Put the center differential in FREE position.
- Shift the transfer select lever to H position.
- (w/o ABS)
  Turn the center differential lock switch to OFF and check that the center differential lock indicator light goes off.

(2) Shift the transmission shift lever to N range.
(3) Idle the engine, operate the brake booster and perform the test.

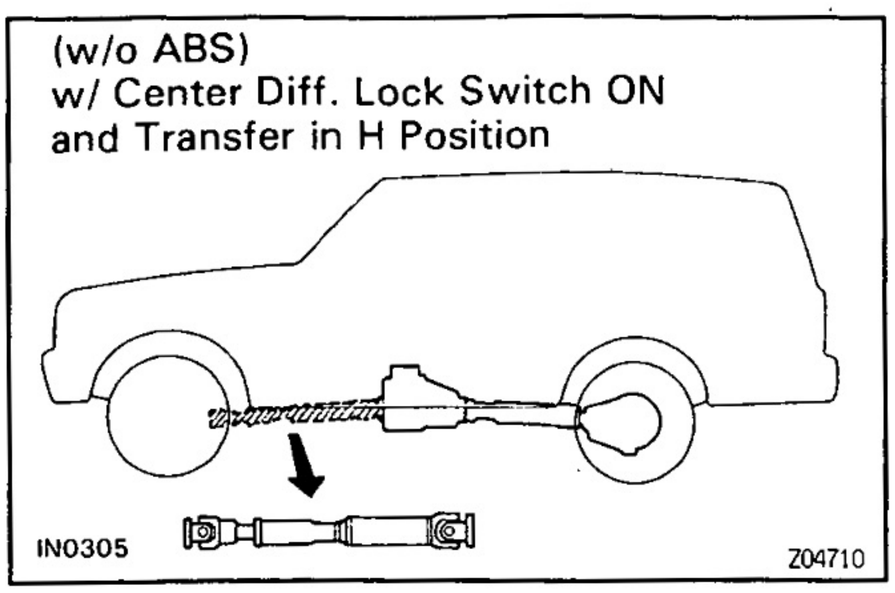

Speedometer Test or Other Tests (Using Speedometer Tester or Chassis Dynamometer)

(1) (w/o ABS)
Remove the front propeller shaft, put the center differential in LOCK position, then put the rear wheels on the tester roller and perform the test.

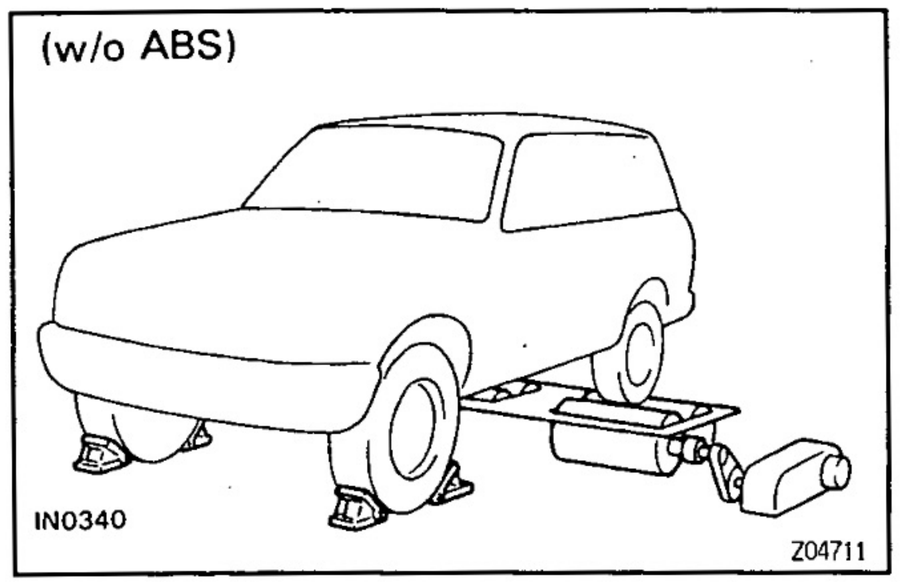

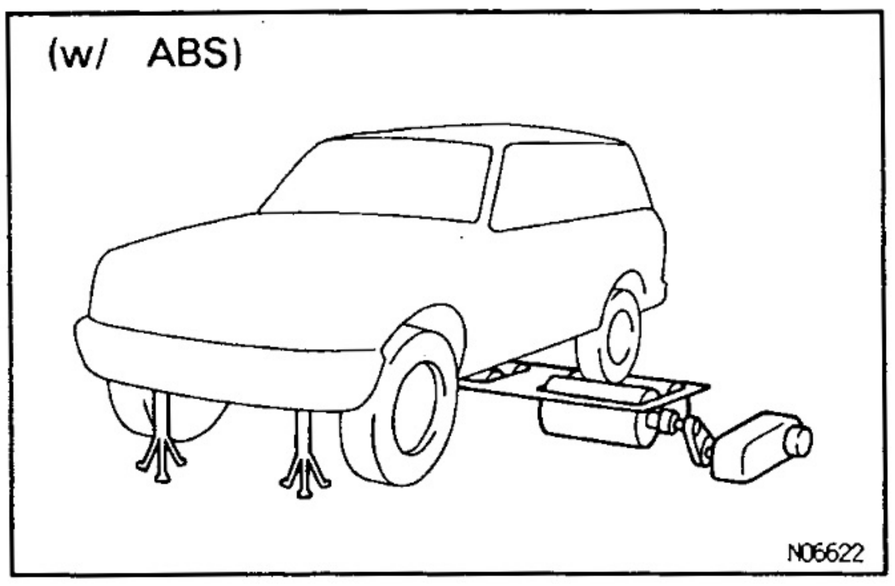

(2) (w/ ABS)
Shift the transfer select lever to H position, jack up the front wheels, then put the rear wheels on the tester roller and perform the test.

(3) When performing tests, observe the following precautions.

- (w/o ABS)
  Check that the center differential is securely in LOCK condition.
- Confirm that the vehicle is securely immobilised.
- Never operate the brakes suddenly, suddenly drive the wheels, or suddenly decelerate.

On–Vehicle Wheel Balancing

When doing on–vehicle wheel balancing on a full–time 4WD vehicle, to prevent the wheels from rotating at different speeds or in different directions from each other (which could lead to damage to the center differential or transfer gears), always be sure to observe the following precautions:

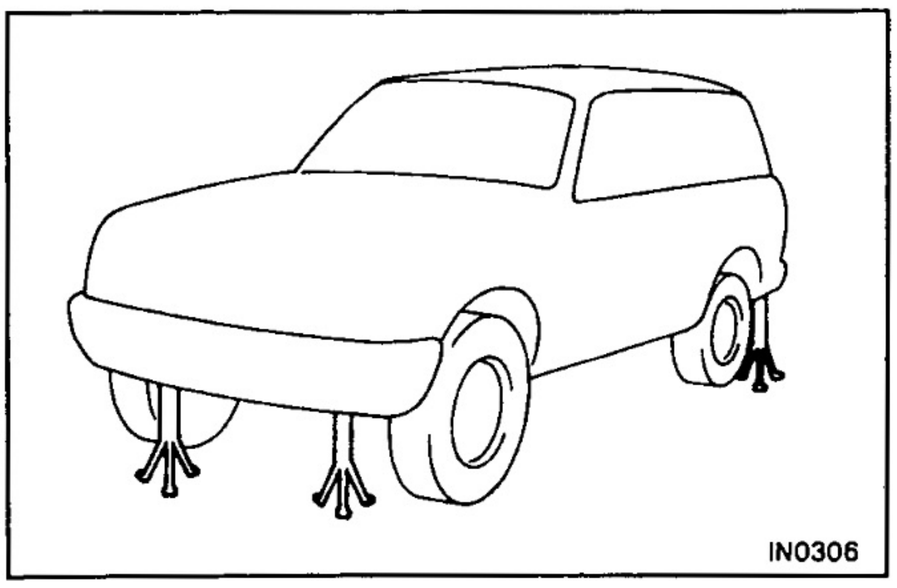

(1) All four wheels should be jacked up, clearing the ground completely.

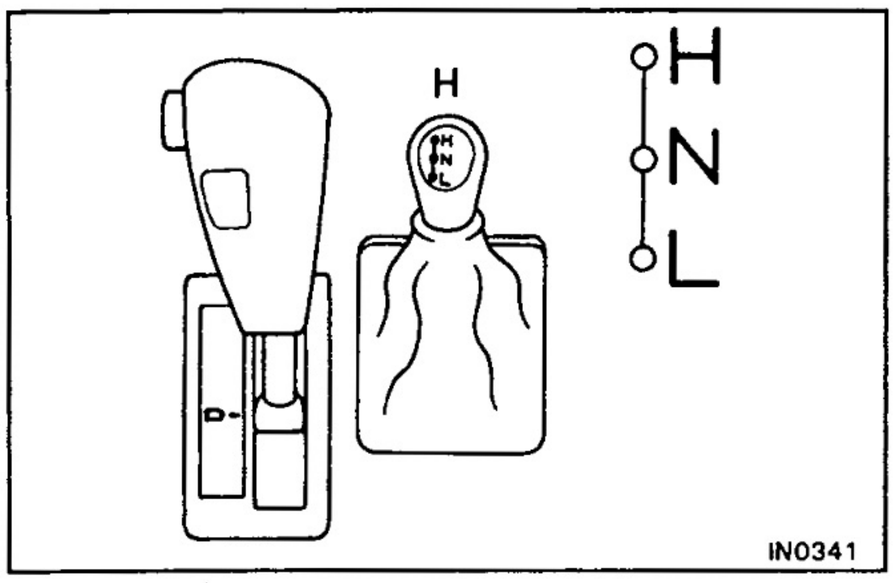

(2) (w/o ABS)
The center differential should be in the LOCK position with the transfer gear in H position.

(3) (w/ ABS)
Shift the transfer select lever to H position.

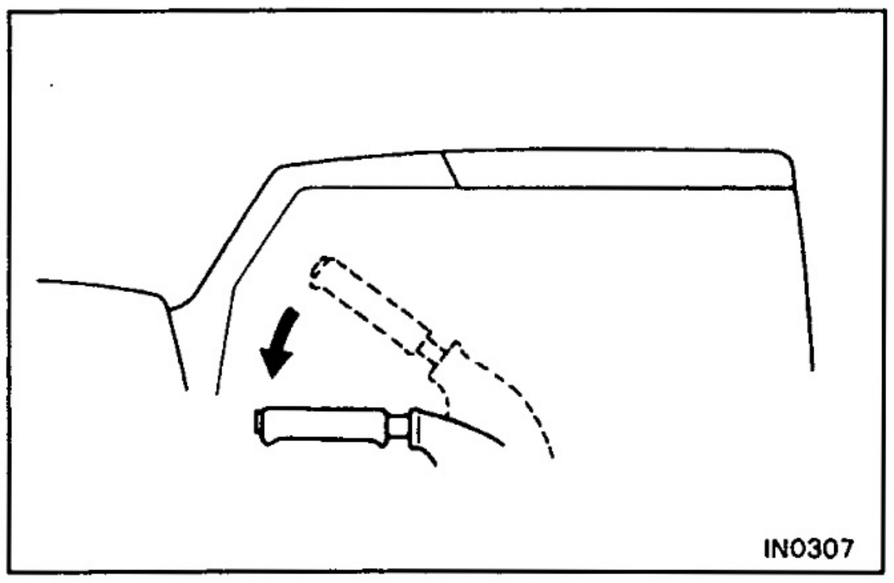

(4) The parking brake lever should be fully released.

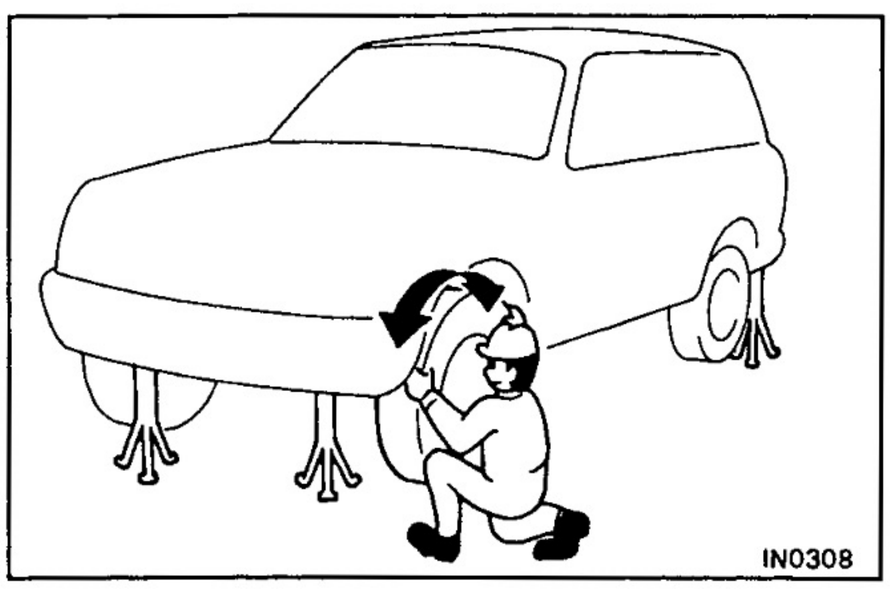

(5) None of the brakes should be allowed to drag.

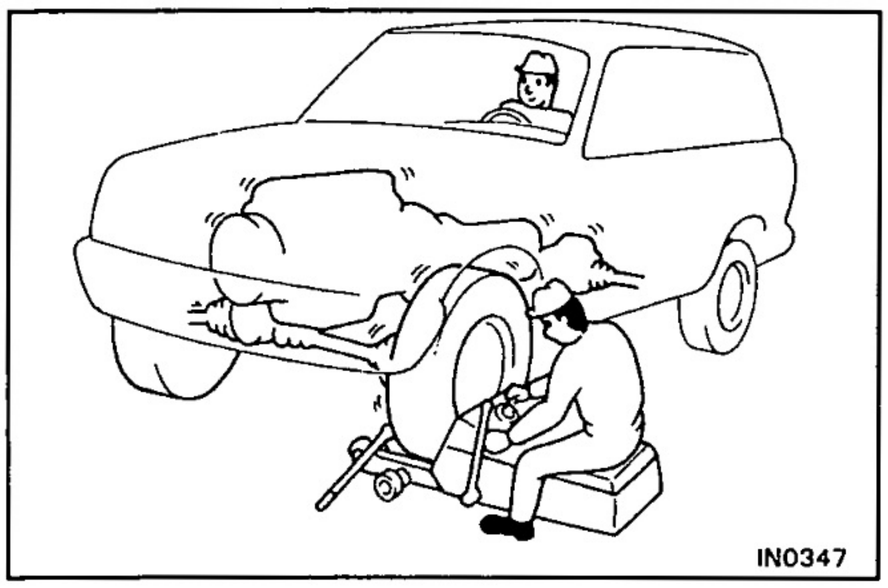

(6) The wheels should be driven with both the engine and the wheel balancer.
HINT: When doing this, be careful of the other wheels, which will rotate at the same time.

(7) Avoid sudden acceleration, deceleration and braking.

(8) Carry out the wheel balancing with the transmission in "D" or "3" range.

INOOY–01

WHEN TOWING FULL–TIME 4WD VEHICLES

1. Use one of the methods shown below to tow the vehicle.
2. When there is trouble with the chassis and drive train, use method ① (flat bed truck) or method ② (sling type tow truck with dollies)
3. Recommended Methods: No. ①, ② or ③
   Emergency Method: No. ④

Towing Method \ Condition	Parking Brake	Transmission Shift Lever Position	Transfer Shift Lever Position	(w/o ABS) Center Differential Lock Switch	Center Differential
① Flat Bed Truck 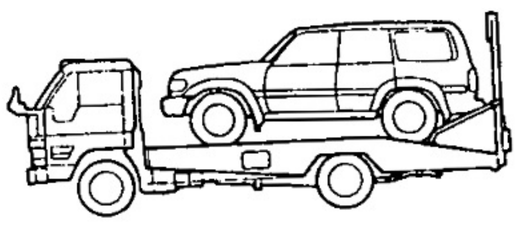 IN0309	Applied	"P" Range	"H" Position	OFF	FREE (Normal Driving)
② Sling-Type Tow Truck with Dollies 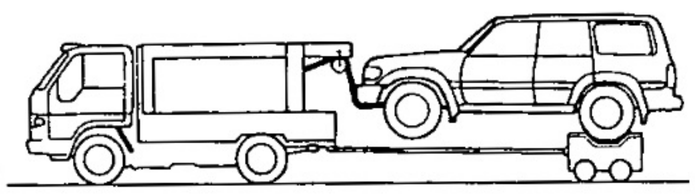 IN0310					
③ Sling-Type Tow Truck (Front wheels must be able to rotate freely) 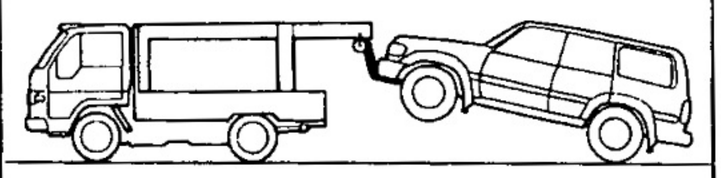 IN0311	Released	"N" Range	"N" Position	OFF	↑
④ Towing with Rope 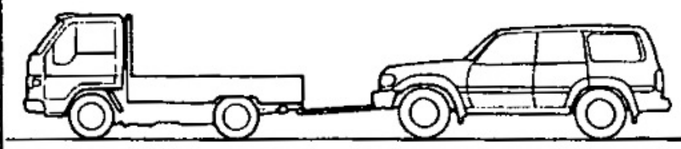 IN0312	Released	"N" Range	"N" Position	OFF	↑
	HINT: Do not tow the vehicle at a speed faster than 45 km/h (30 mph) or a distance greater than 80 km (50 miles).				

HINT: **Do not use any towing methods other than those shown above.**

For example, the towing method shown below is dangerous, so do not use it.

NO 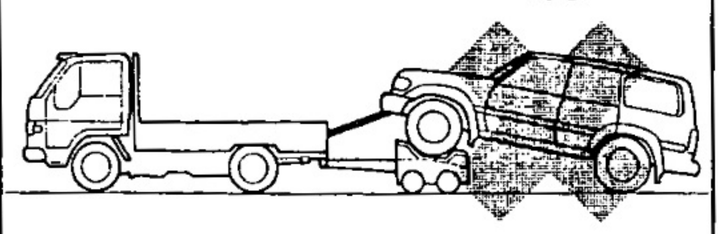 IN0313	During towing with this towing method, there is a danger of the drive train heating up and causing breakdown, or of the front wheels flying off the dolly.

V02129

VEHICLE LIFT AND SUPPORT LOCATIONS
(Hardtop & Canvas Top)

Coil Spring Type (LJ and RJ series)

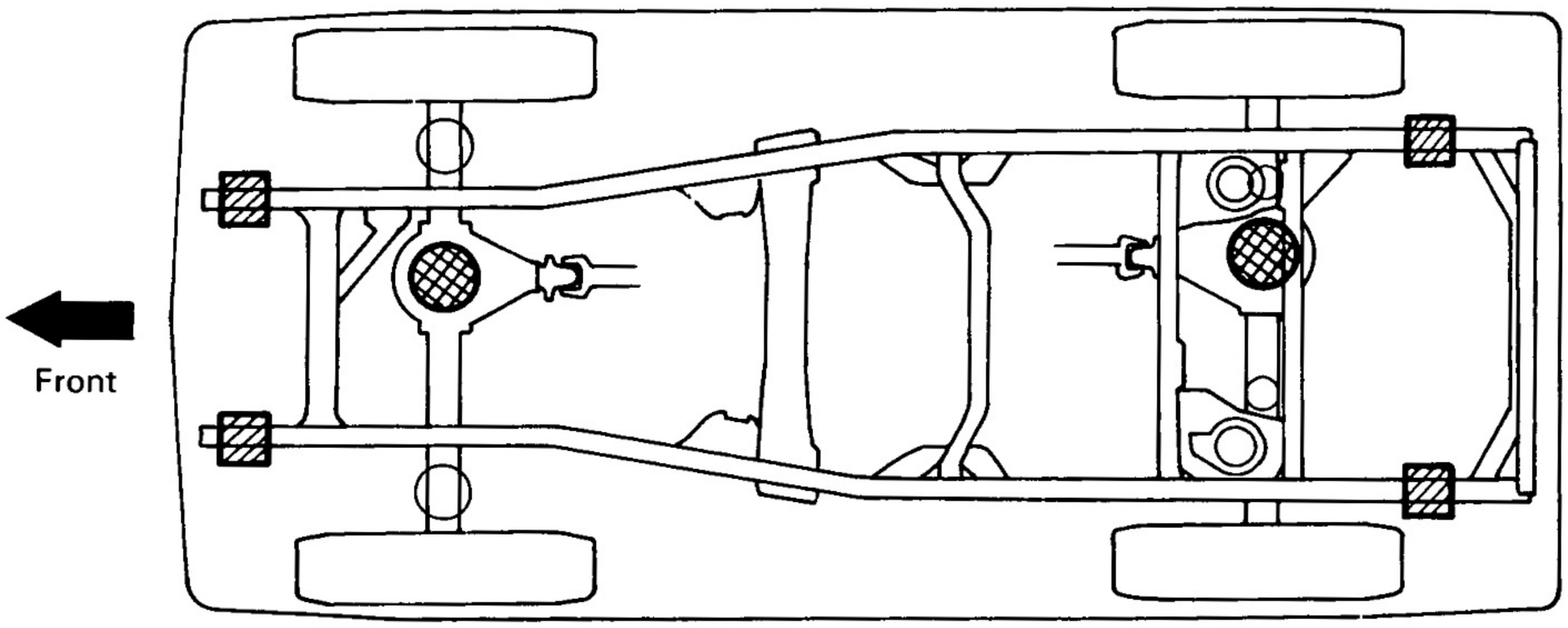

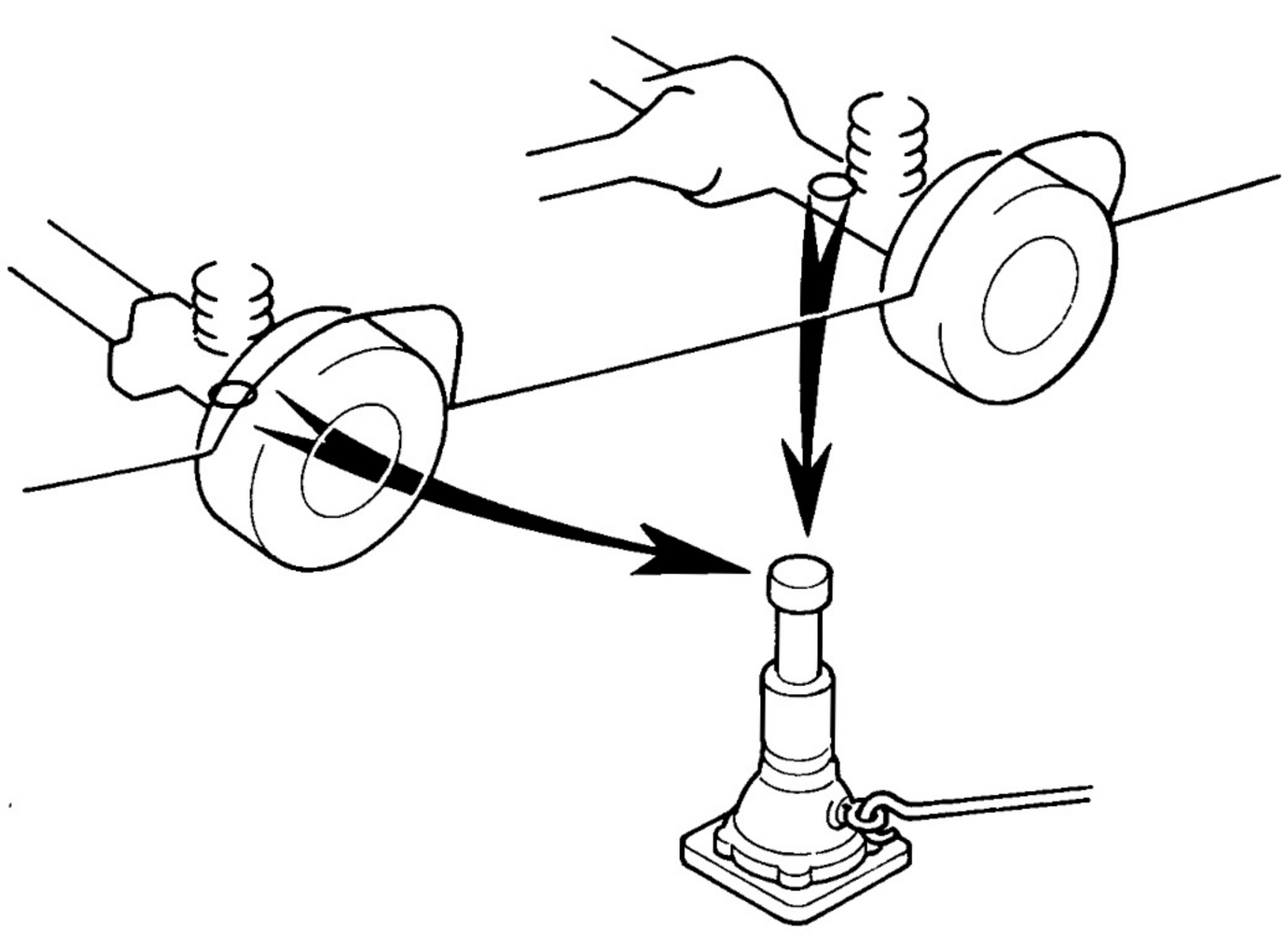

JACK POSITION ——————————

Front ..... Under the front differential
Rear ..... Under the rear differential

SUPPORT POSITION

Safety stand .....

SCREW TYPE JACK POSITION .....

IN0040
IN0352

Leaf Spring Type (PZJ, HZJ and FZJ series)
70 series (short) and 73 series (middle)

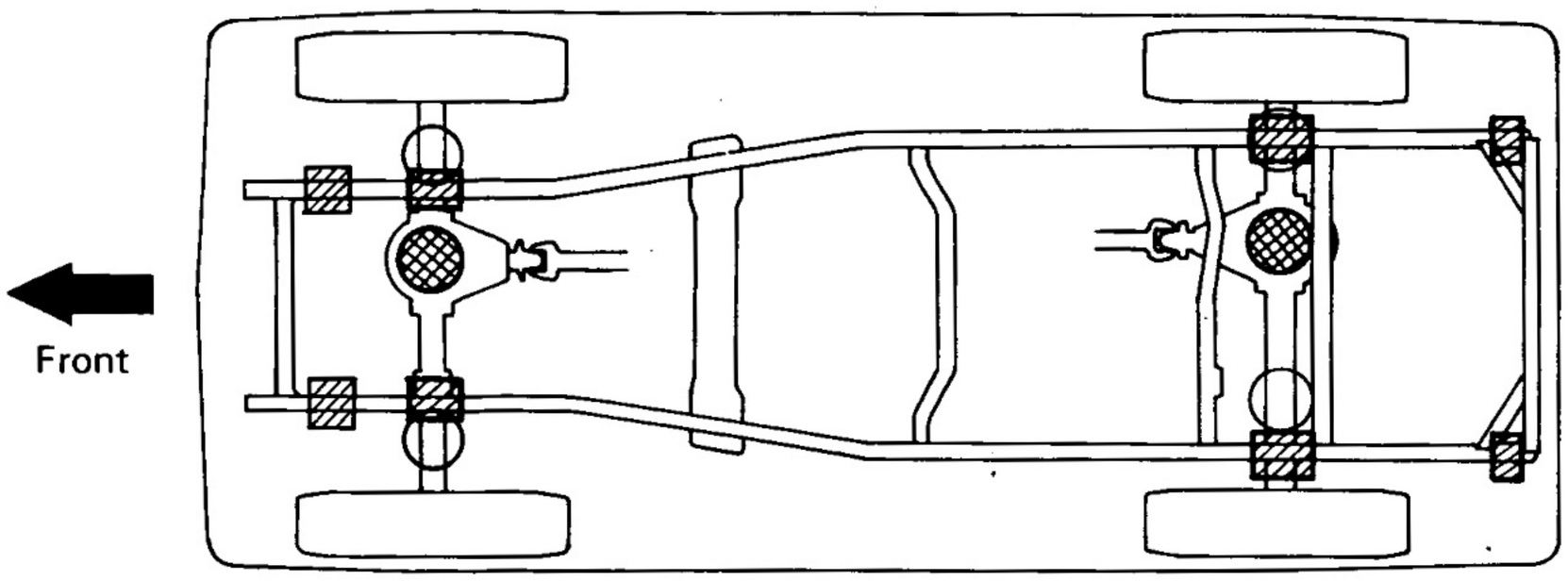

75 series (long)

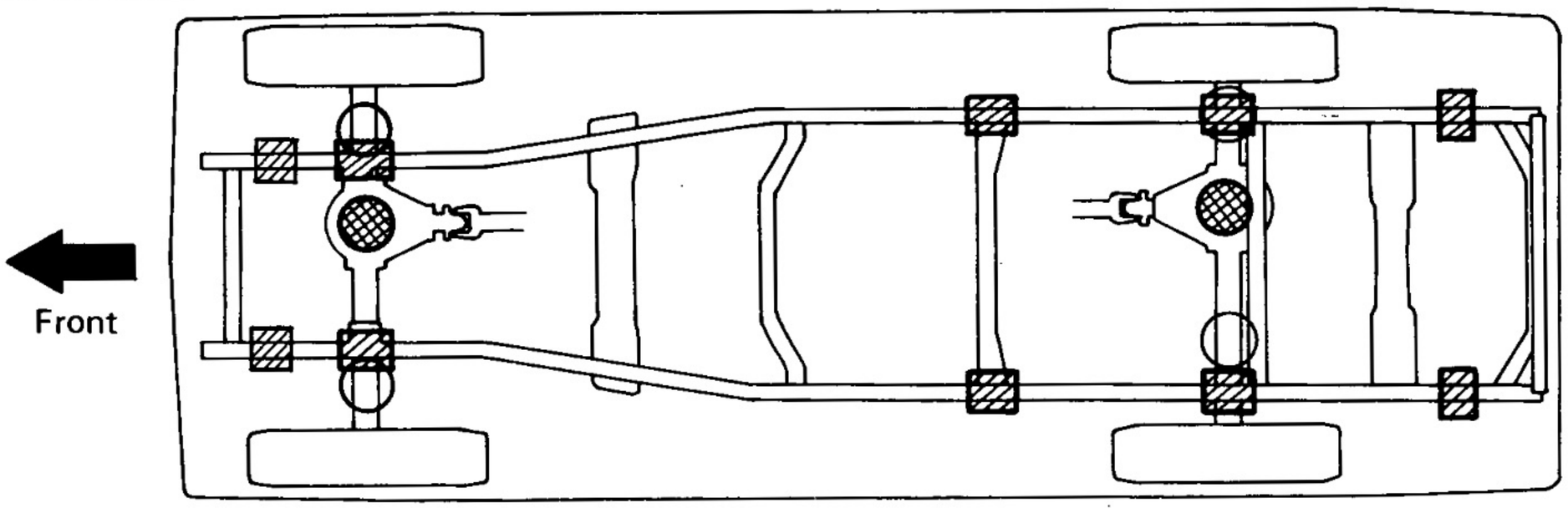

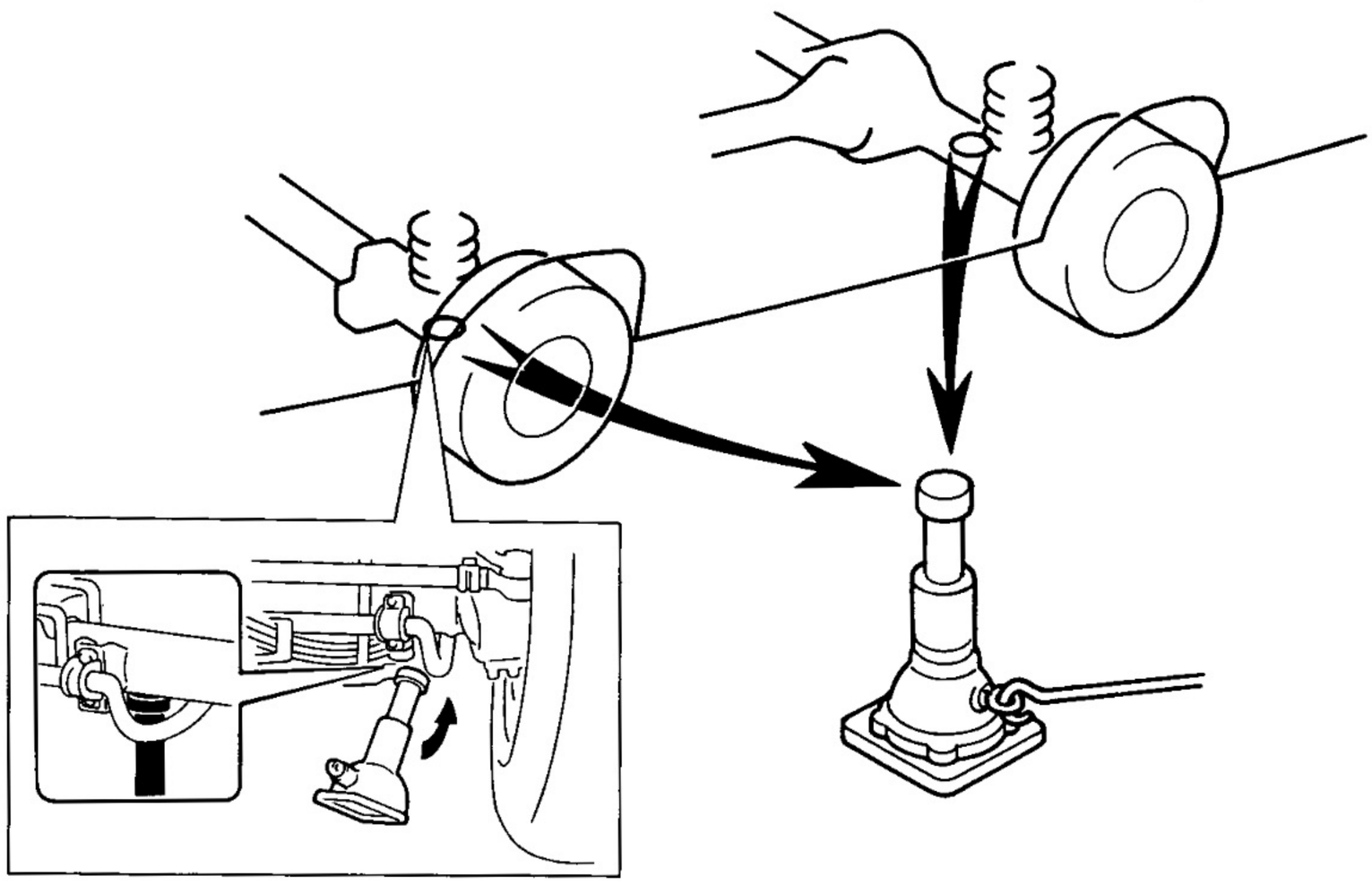

JACK POSITION ——— ●

Front ..... Under the front differential
Rear ..... Under the rear differential

SUPPORT POSITION

Safety stand ..... ▨

SCREW TYPE JACK POSITION ..... ○

IN0043
IN0044
IN0352 IN0346

VEHICLE LIFT AND SUPPORT LOCATIONS
(Station Wagon)

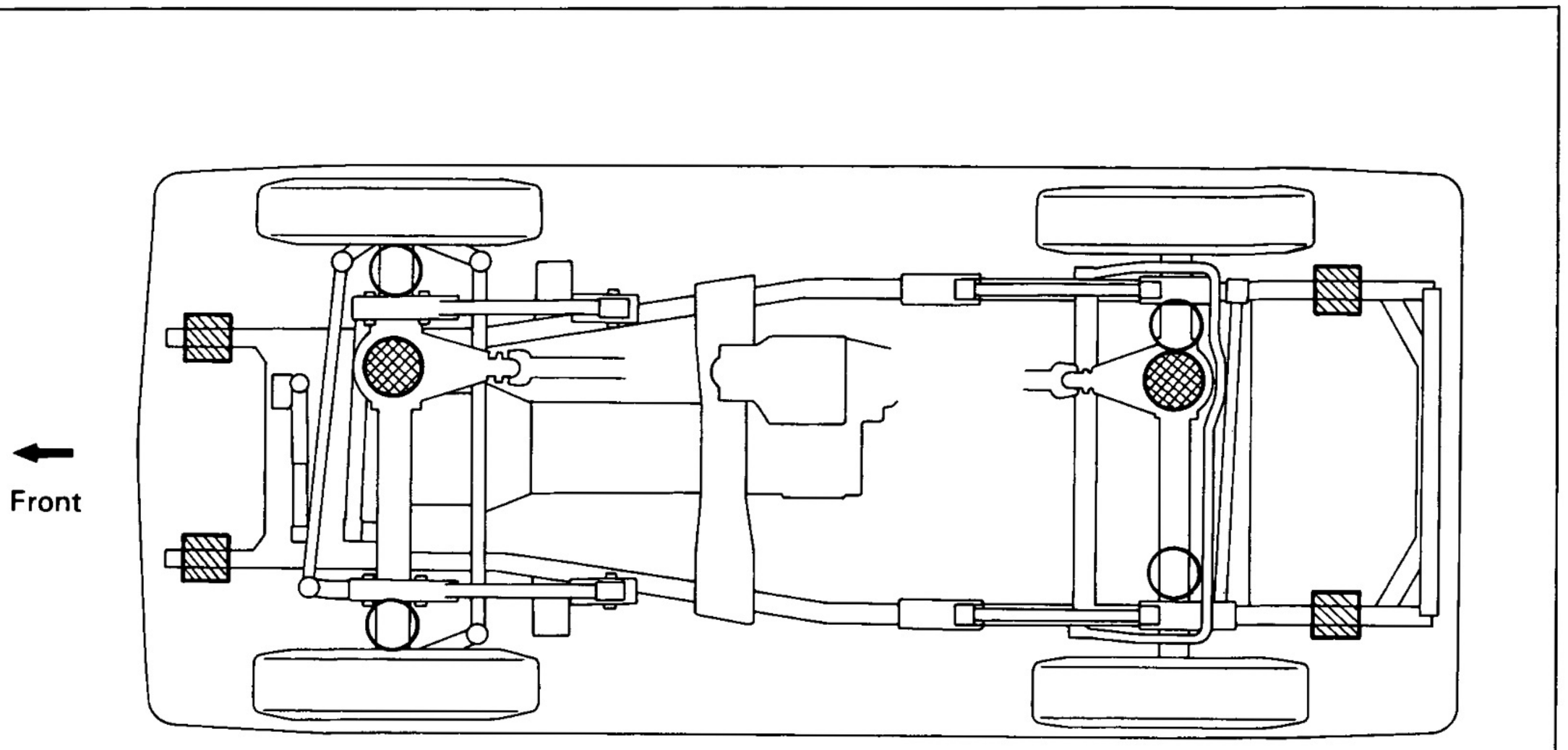

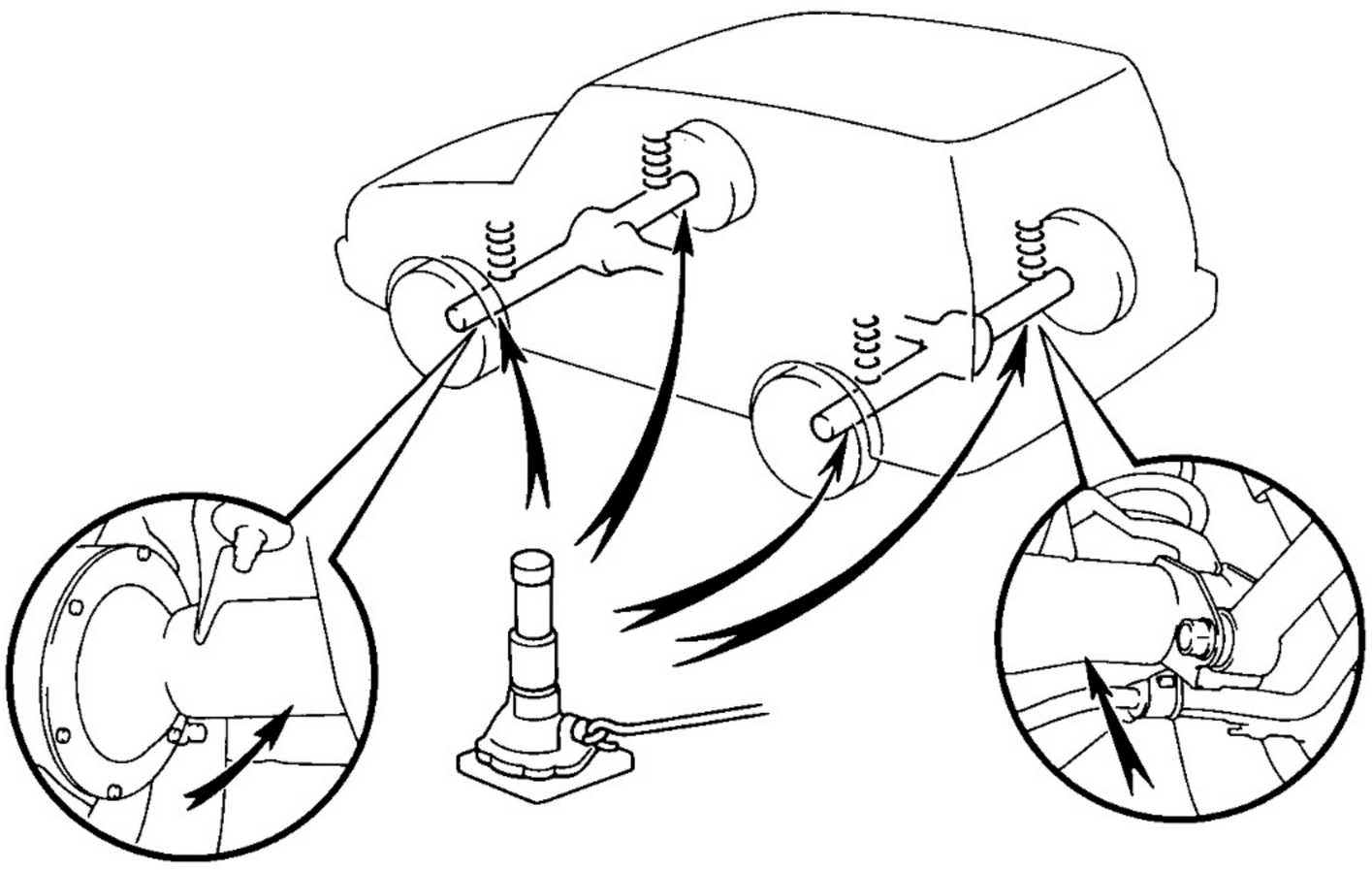

JACK POSITION ——————————

Front ..... Under the front differential
Rear ..... Under the rear differential

SCREW TYPE JACK POSITION ——————

SUPPORT POSITION

Safety stand .....

IN0314
IN0342

ABBREVIATIONS USED IN THIS MANUAL

ABS	Anti-Lock Brake System
A/C	Air Conditioner
A/T	Automatic Transmission
CB	Circuit Breaker
CCS	Cruise Control System
CD	Compact Disc
ECU	Electronic Control Unit
EFI	Electronic Fuel Injection
ELR	Emergency Locking Retractor
Ex.	Except
FIPG	Formed on Place Gasket
FL	Fusible Link
IG	Ignition
LED	Light Emitting Diode
LH	Left-Hand
LHD	Left-Hand Drive
LSD	Limited Slip Differential
M/T	Manual Transmission
MP	Multipurpose
PTO	Power Take-Off
RH	Right-Hand
RHD	Right-Hand Drive
SSM	Special Service Materials
SST	Special Service Tools
STD	Standard
SW	Switch
VSV	Vacuum Switching Valve
w/	With
w/o	Without
2WD	Two Wheel Drive Vehicles (4 × 2)
4WD	Four Wheel Drive Vehicles (4 × 4)

STANDARD BOLT TORQUE SPECIFICATIONS

IN008-01

HOW TO DETERMINE BOLT STRENGTH

	Mark	Class		Mark	Class
Hexagon head bolt		4T 5T 6T 7T 8T 9T 10T 11T	Stud bolt	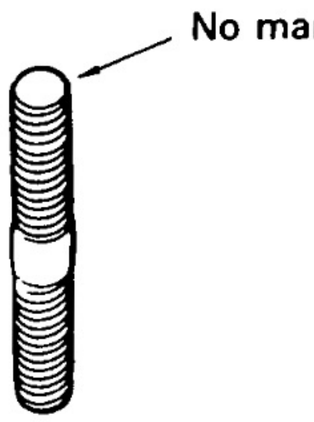	4T
	 No mark	4T		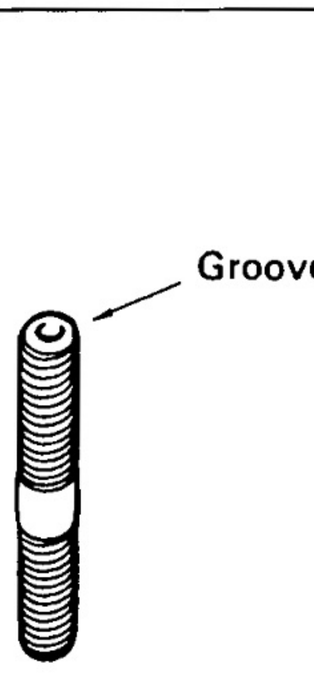	6T
Hexagon flange bolt w/ washer hexagon bolt	 No mark	4T			
Hexagon head bolt	 Two protruding lines	5T			
Hexagon flange bolt w/ washer hexagon bolt	 Two protruding lines	6T	Welded bolt	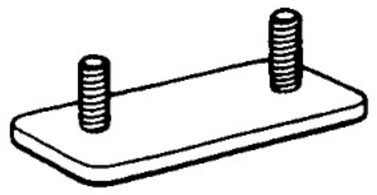	4T
Hexagon head bolt	 Three protruding lines	7T			
Hexagon head bolt	 Four protruding lines	8T			

V00078

SPECIFIED TORQUE FOR STANDARD BOLTS

Class	Diameter mm	Pitch mm	Specified torque					
			Hexagon head bolt			Hexagon flange bolt		
			N·m	kgf·cm	ft·lbf	N·m	kgf·cm	ft·lbf
4T	6	1	5	55	48 in.·lbf	6	60	52 in.·lbf
	8	1.25	12.5	130	9	14	145	10
	10	1.25	26	260	19	29	290	21
	12	1.25	47	480	35	53	540	39
	14	1.5	74	760	55	84	850	61
	16	1.5	115	1,150	83	—	—	—
5T	6	1	6.5	65	56 in.·lbf	7.5	75	65 in.·lbf
	8	1.25	15.5	160	12	17.5	175	13
	10	1.25	32	330	24	36	360	26
	12	1.25	59	600	43	65	670	48
	14	1.5	91	930	67	100	1,050	76
	16	1.5	140	1,400	101	—	—	—
6T	6	1	8	80	69 in.·lbf	9	90	78 in.·lbf
	8	1.25	19	195	14	21	210	15
	10	1.25	39	400	29	44	440	32
	12	1.25	71	730	53	80	810	59
	14	1.5	110	1,100	80	125	1,250	90
	16	1.5	170	1,750	127	—	—	—
7T	6	1	10.5	110	8	12	120	9
	8	1.25	25	260	19	28	290	21
	10	1.25	52	530	38	58	590	43
	12	1.25	95	970	70	105	1,050	76
	14	1.5	145	1,500	108	165	1,700	123
	16	1.5	230	2,300	166	—	—	—
8T	8	1.25	29	300	22	33	330	24
	10	1.25	61	620	45	68	690	50
	12	1.25	110	1,100	80	120	1,250	90
9T	8	1.25	34	340	25	37	380	27
	10	1.25	70	710	51	78	790	57
	12	1.25	125	1,300	94	140	1,450	105
10T	8	1.25	38	390	28	42	430	31
	10	1.25	78	800	58	88	890	64
	12	1.25	140	1,450	105	155	1,600	116
11T	8	1.25	42	430	31	47	480	35
	10	1.25	87	890	64	97	990	72
	12	1.25	155	1,600	116	175	1,800	130

V00079

CLUTCH

REFER TO FOLLOWING REPAIR MANUALS:

Manual Name	Pub. No.
• Land Cruiser (Station Wagon) Chassis and Body Repair Manual	RM184E
• Land Cruiser (Hardtop, Canvas Top and Station Wagon) Chassis and Body Repair Manual Supplement	RM290E

NOTE: The following pages contain only the points which differ from the above listed manuals.

(STATION WAGON)
CLUTCH MASTER CYLINDER ····· CL-2

CLUTCH MASTER CYLINDER

COMPONENTS

1FZ–FE Engine

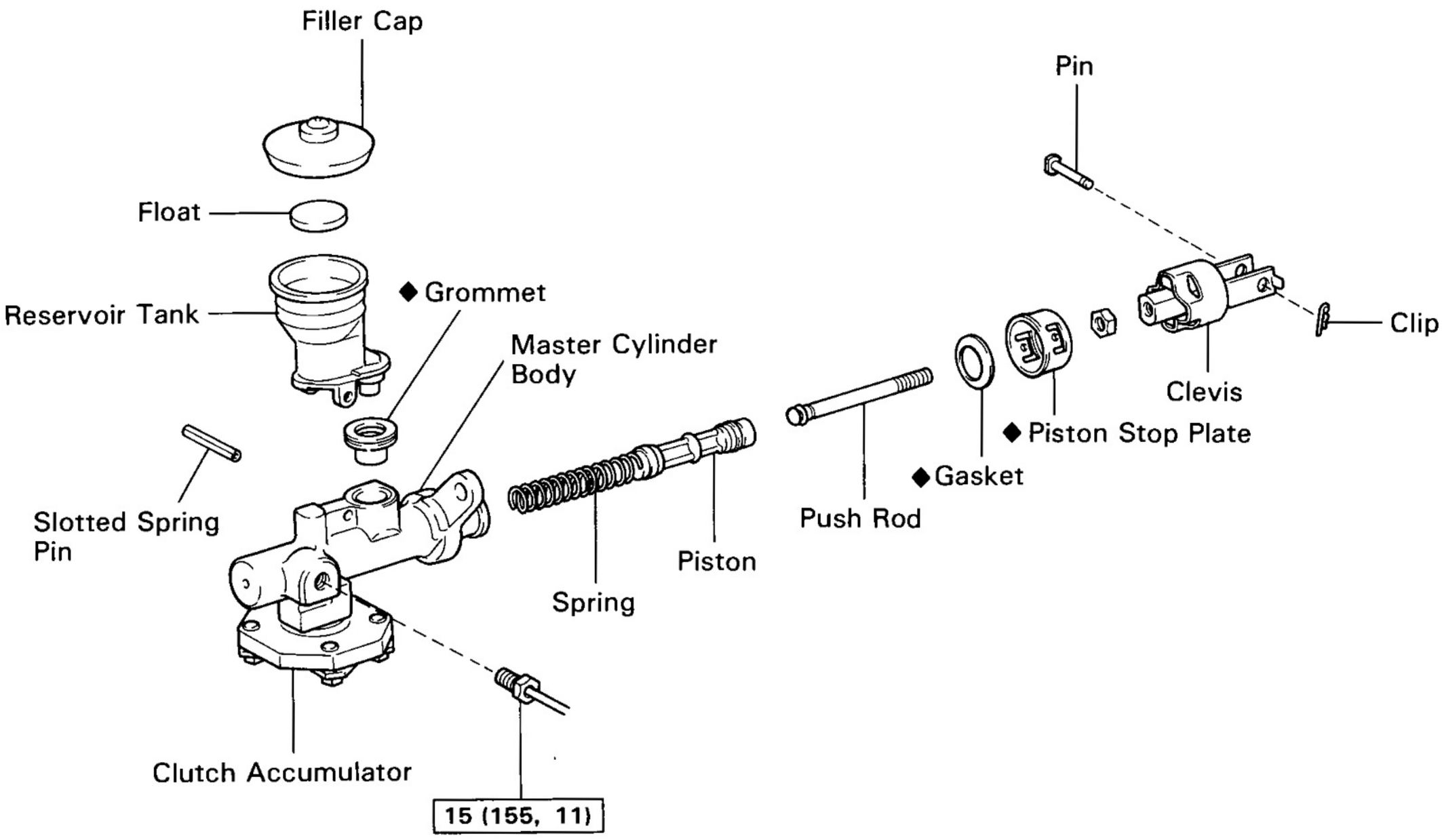

N·m (kgf·cm, ft·lbf) : Specified torque

◆ Non-reusable part

Q03157

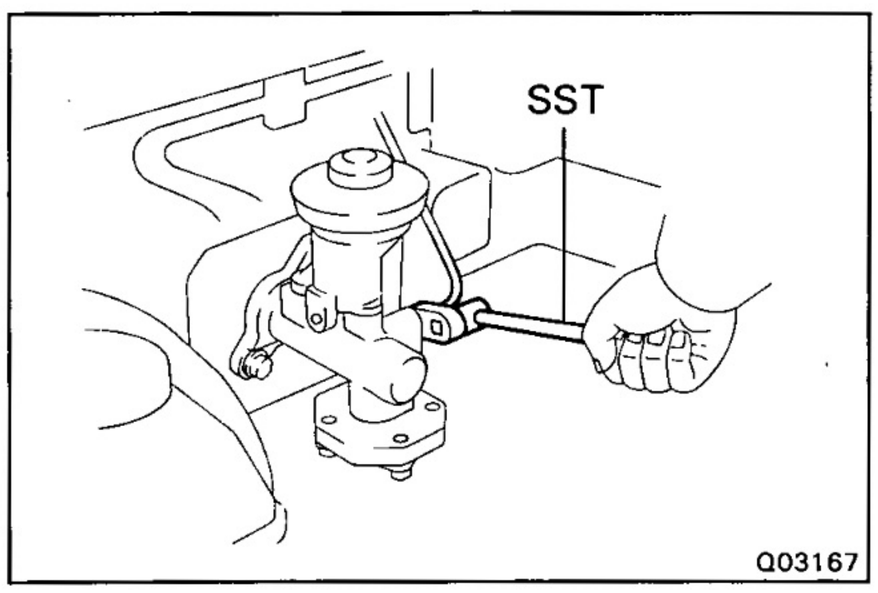

Q03167

CLUTCH MASTER CYLINDER REMOVAL

REMOVE MASTER CYLINDER

(a) Draw out fluid with syringe.

(b) Using SST, disconnect the clutch tube.
SST 09023-00100

(c) Remove the clip, clevis pin and return spring.

(d) Remove the nut from the room side.

(e) Remove the nut from the engine room side.

(f) Pull out the master cylinder.

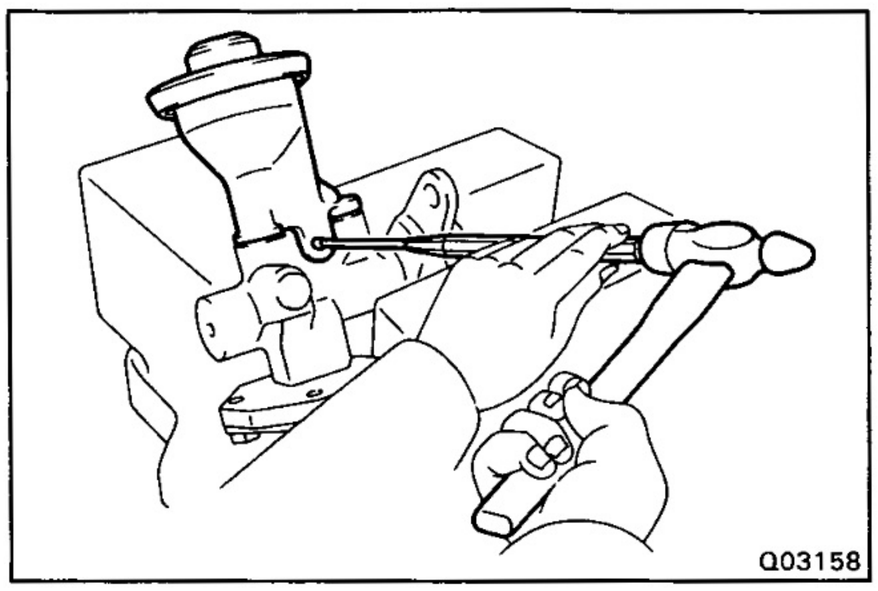

MASTER CYLINDER DISASSEMBLY

1. REMOVE RESERVOIR TANK

(a) Using a pin punch and a hammer, drive out the slotted spring pin.

(b) Remove reservoir tank and grommet.

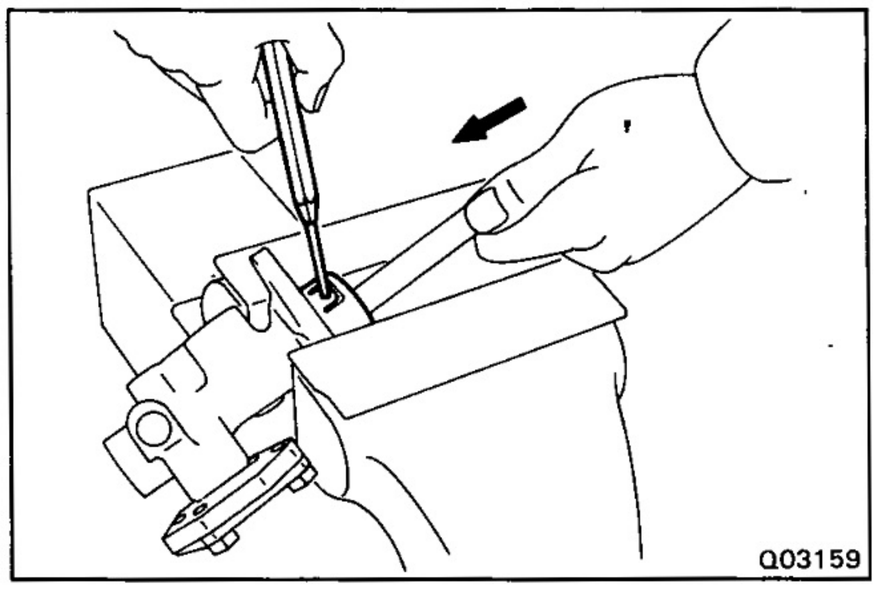

2. REMOVE PUSH ROD

(a) Using a pin punch, loosen the staked part of the plate.

(b) Remove the piston stop plate, gasket and the push rod.

3. REMOVE PISTON

MASTER CYLINDER INSPECTION

HINT: Clean the disassembled parts with compressed air.

1. INSPECT MASTER CYLINDER BORE FOR SCORING OR CORROSION

If a problem is found, clean or replace the cylinder.

2. INSPECT PISTON AND CUPS FOR WEAR, SCORING, CRACKS OR SWELLING

If either one requires replacement, use the parts from the cylinder kit.

3. INSPECT PUSH ROD FOR WEAR OR DAMAGE

If necessary, replace the push rod.

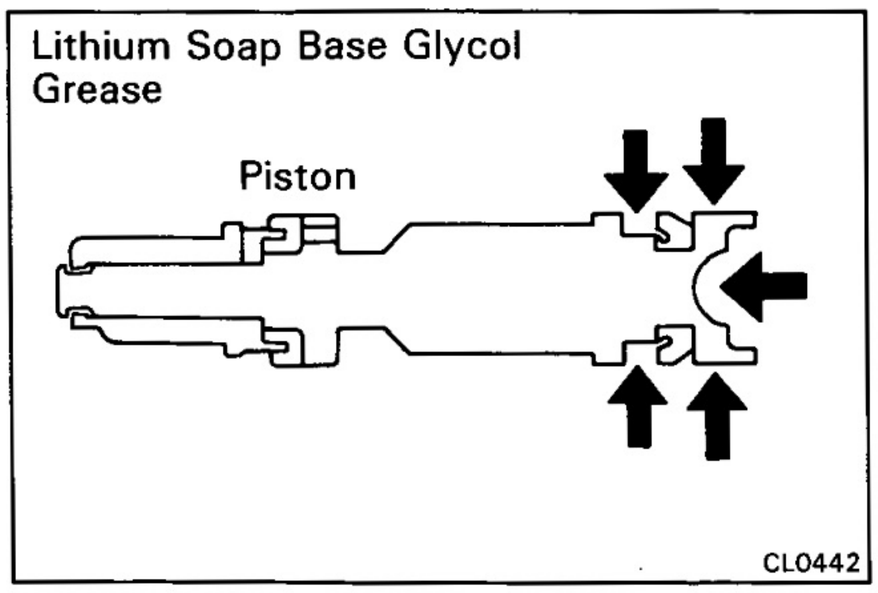

MASTER CYLINDER ASSEMBLY

1. COAT PARTS WITH LITHIUM SOAP BASE GLYCOL GREASE AS SHOWN

2. INSERT PISTON INTO CYLINDER

3. INSTALL PUSH ROD ASSEMBLY WITH NEW STOP PLATE AND NEW GASKET

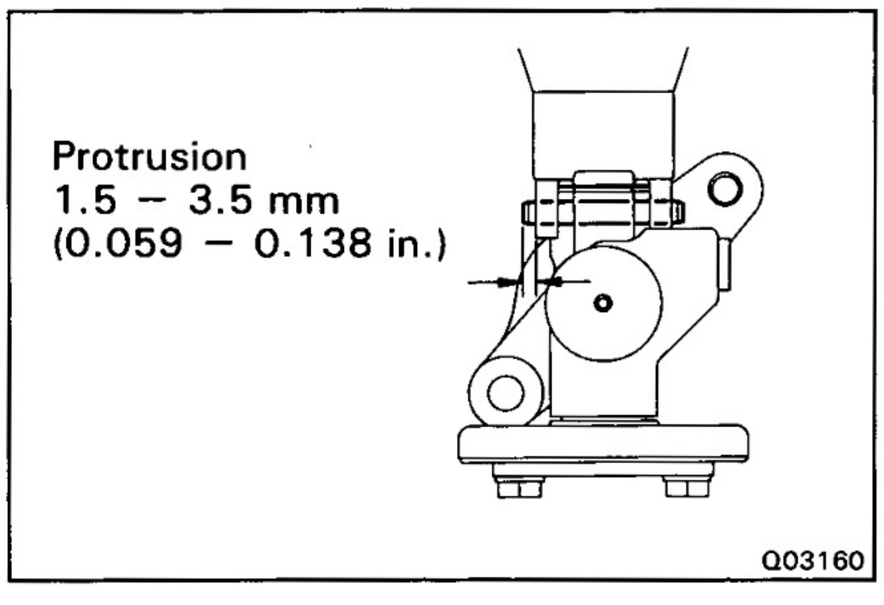

4. INSTALL RESERVOIR TANK

(a) Install reservoir tank and new grommet.

(b) Using a pin punch and a hammer, drive in the slotted spring pin.

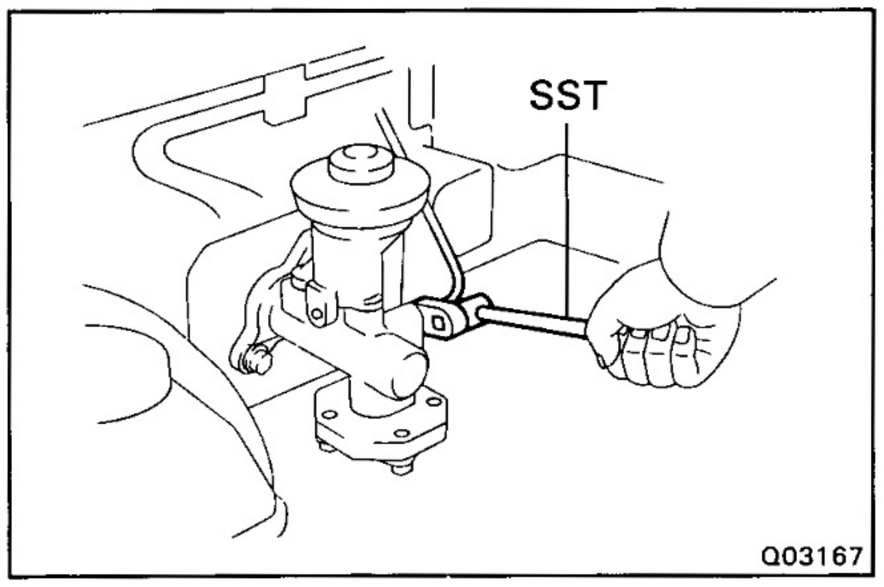

MASTER CYLINDER INSTALLATION

1. INSTALL MASTER CYLINDER

Install the mounting nut, and torque them.

Torque: 7.8 N·m (80 kgf·cm, 69 in.·lb)

2. CONNECT CLUTCH LINE UNION

Using SST, connect the union.

SST 09023-00100

3. CONNECT PUSH ROD AND INSTALL PIN

Install the clip in the push rod pin.

4. BLEED SYSTEM AND ADJUST CLUTCH PEDAL

MANUAL TRANSMISSION

REFER TO FOLLOWING REPAIR MANUALS:

Manual Name	Pub. No.
• Land Cruiser (Hardtop and Canvas Top) Chassis and Body Repair Manual	RM183E
• Land Cruiser (Station Wagon) Chassis and Body Repair Manual	RM184E
• Land Cruiser (Hardtop, Canvas Top and Station Wagon) Chassis and Body Repair Manual Supplement	RM290E

NOTE: The following pages contain only the points which differ from the above listed manuals.

(HARDTOP & CANVAS TOP)
DESCRIPTION ····· MT-2
PREPARATION ····· MT-3
TRANSMISSION REMOVAL AND INSTALLATION ····· MT-4
OUTPUT SHAFT ····· MT-13
SERVICE SPECIFICATIONS ····· MT-24
(STATION WAGON)
DESCRIPTION ····· MT-26
PREPARATION ····· MT-27
OUTPUT SHAFT ····· MT-28
SERVICE SPECIFICATIONS ····· MT-40

MT

DESCRIPTION

PRECAUTIONS

When working with FIPG material, you must be observe the following.

- Using a razor blade and gasket scraper, remove all the old sealant (FIPG) material from the gasket surfaces.
- Throughly clean all components to remove all the loose material.
- Clean both sealing surfaces with a non-residue solvent.
- Apply the sealant in approx. 1 mm (0.04 in.) bead along the sealing surface.
- Parts must be assembled within 10 minutes of application. Otherwise, the sealant (FIPG) material must be removed and reapplied.

DESCRIPTION

- Transaxle type H150F and H151F are constant mesh synchronizers for forward gears, and a sliding mesh reverse gear.
- A triple - cone type synchromesh mechanism is used in the second gear to improve the shift feeling characteristics. This helps to reduce the shifting effort, provide smoothly shifting.
- The input shaft is composed of the 1st and 2nd speed gears and the reverse drive gear, and the output shaft is composed of the drive gear (for use with the ring gear).

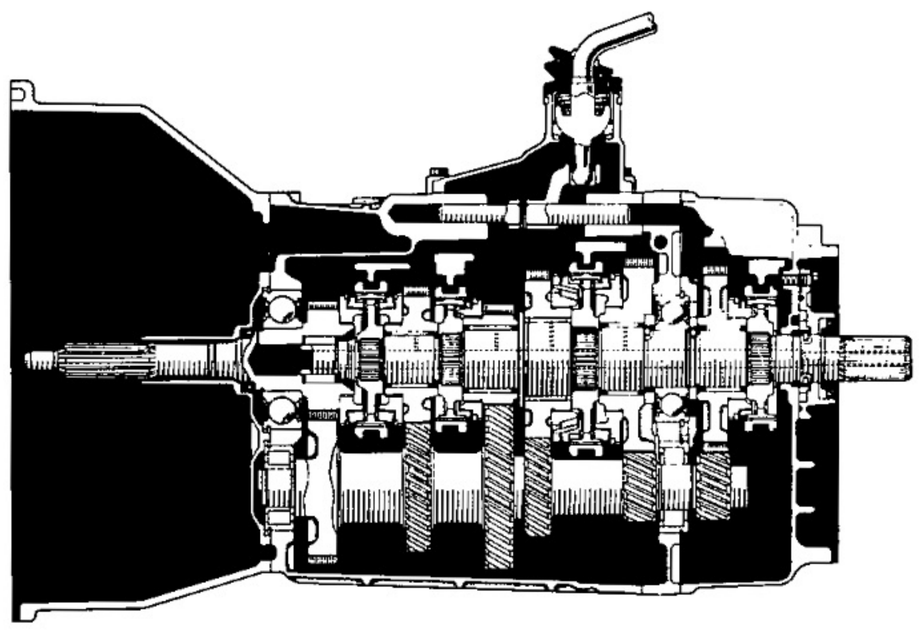

Q03143

Type of Transmission		H150F	H151F
Type of Engine		1FZ-F, 1FZ-FE	
Gear Ratio	1st	4.529	4.081
	2nd	2.464	2.294
	3rd	1.490	←
	4th	1.000	←
	5th	0.881	←
	Reverse	4.313	←
Oil Capacity		2.7 liters (2.6 US qts, 3.1 Imp. qts)	
Oil Vicosity		SAE 75W-90	
Oil Grade		API GL-4 or GL-5	

PREPARATION

SST (SPECIAL SERVICE TOOLS)

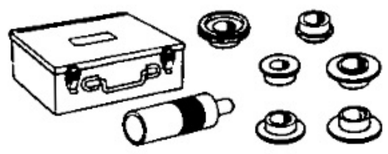	**09316-60010**	Transmission & Transfer Bearing Replacer	
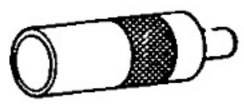	**(09316-00010)**	Replacer Pipe	
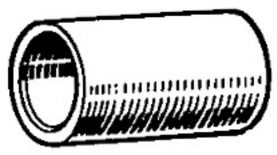	**09523-36010**	Rear Axle Hub Guide Tool	Output shaft rear ball bearing
	**09555-55010**	Differential Drive Pinion Bearing Replacer	
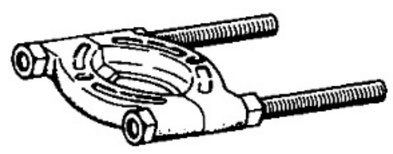	**09950-00020**	Bearing Remover	

TRANSMISSION REMOVAL AND INSTALLATION

COMPONENTS

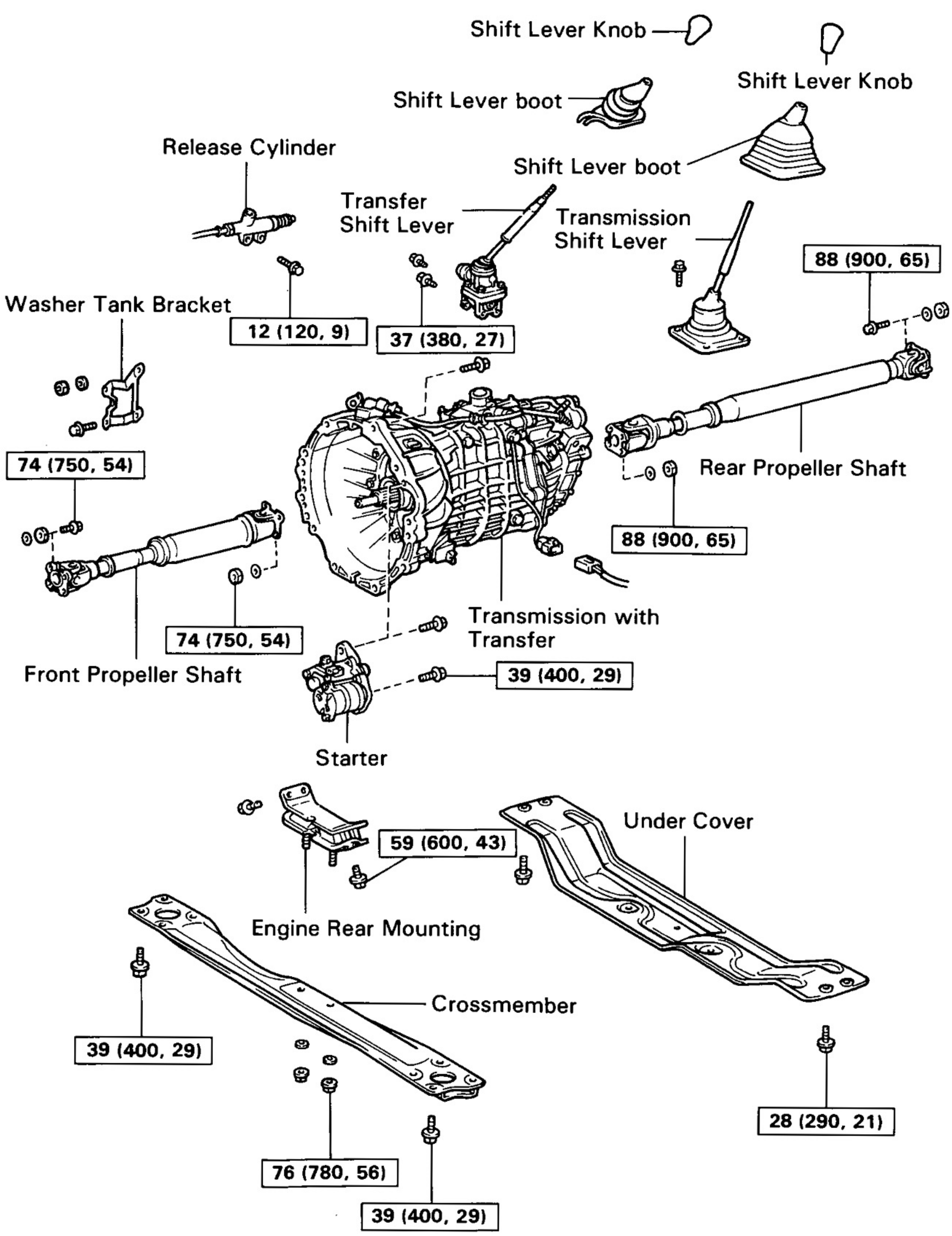

N·m (kgf·cm, ft·lbf) : Specified torque

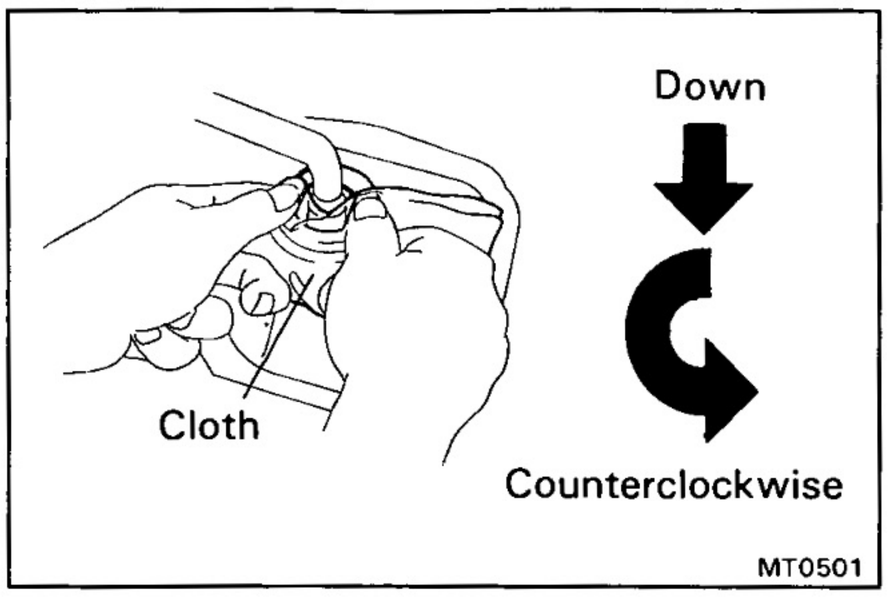

TRANSMISSION REMOVAL

1. DISCONNECT BATTERY CABLE FROM NEGATIVE TERMINAL

2. REMOVE TRANSMISSION SHIFT LEVER FROM INSIDE OF VEHICLE

(a) Remove the transmission shift lever knob.

(b) Remove the four screws and remove the shift lever boot retainer.

(c) Pull up the shift lever boot.

(d) Cover the shift lever cap with cloth.

(e) Then, pressing down on the shift lever cap, rotate it countercrockwise to remove.

(f) Remove the shift lever.

3. REMOVE TRANSFER SHIFT LEVER

(a) Remove the transfer shift lever knob.

(b) Remove the four screws and remove the boot.

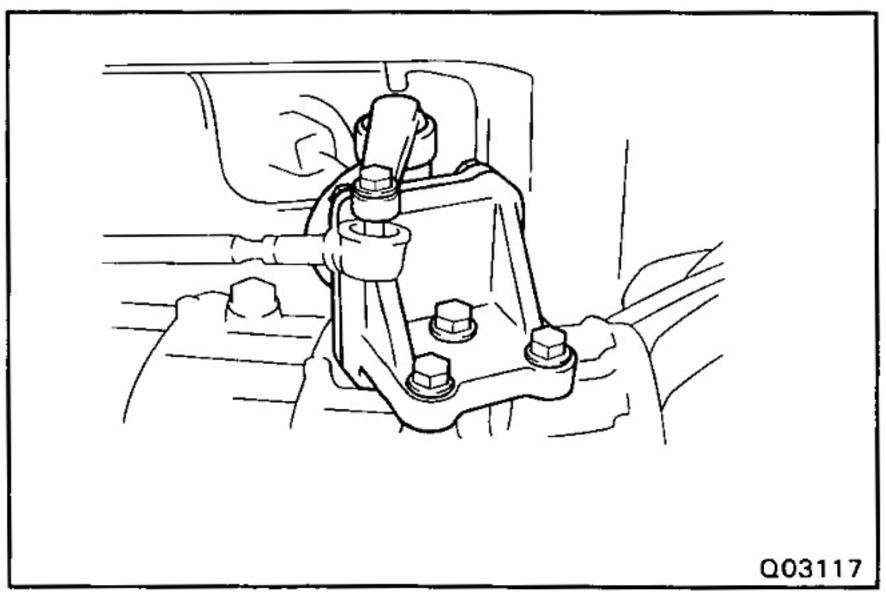

(c) Remove the nut and washer and the link.

(d) Remove the three bolts and the transfer shift lever.

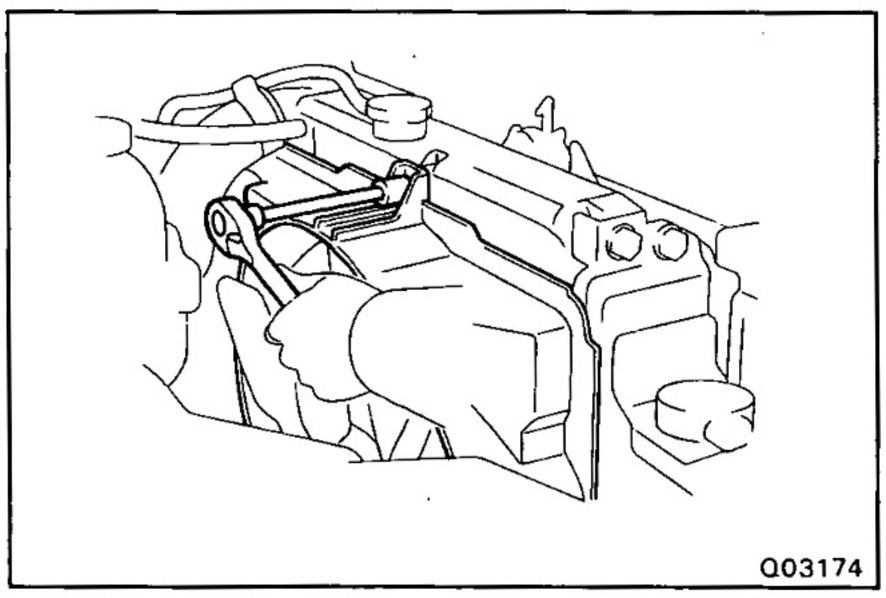

4. LOOSEN FAN SHROUD OF COOLING FAN TO AVOID DAMAGE TO FAN

5. RAISE VEHICLE AND DRAIN TRANSMISSION OIL

NOTICE: Be sure the vehicle is securely supported.

6. REMOVE TRANSFER UNDER COVER

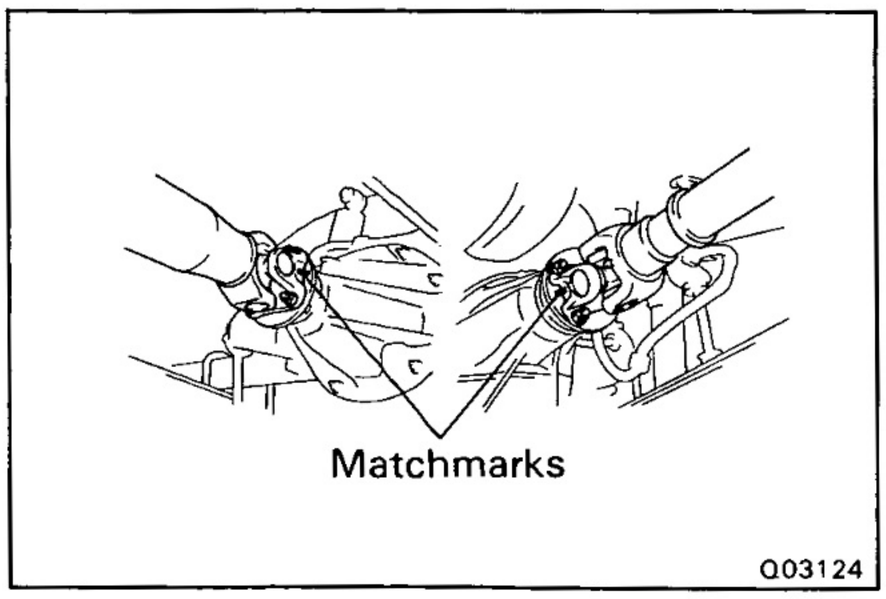

7. DISCONNECT FRONT AND REAR PROPELLER SHAFT FLANGES FROM COMPANION FLANGE ON DIFFERENTIAL

(a) Put matchmarks on the flanges.

(b) Remove the four bolts and nuts.

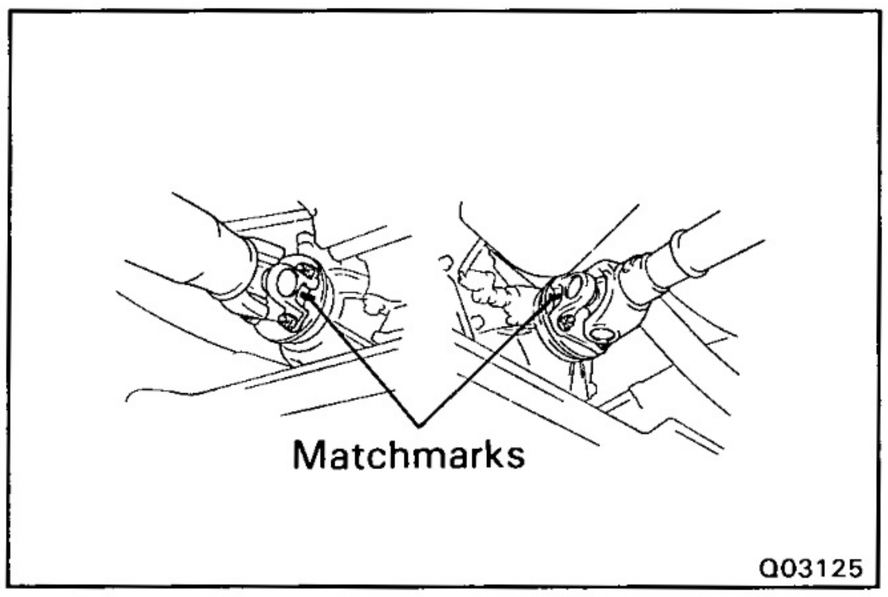

8. DISCONNECT FRONT AND REAR PROPELLER SHAFT FLANGES FROM COMPANION FLANGE ON TRANSFER

(a) Put matchmarks on the flange.

(b) Remove the four nuts.

(c) Remove the propeller shaft.

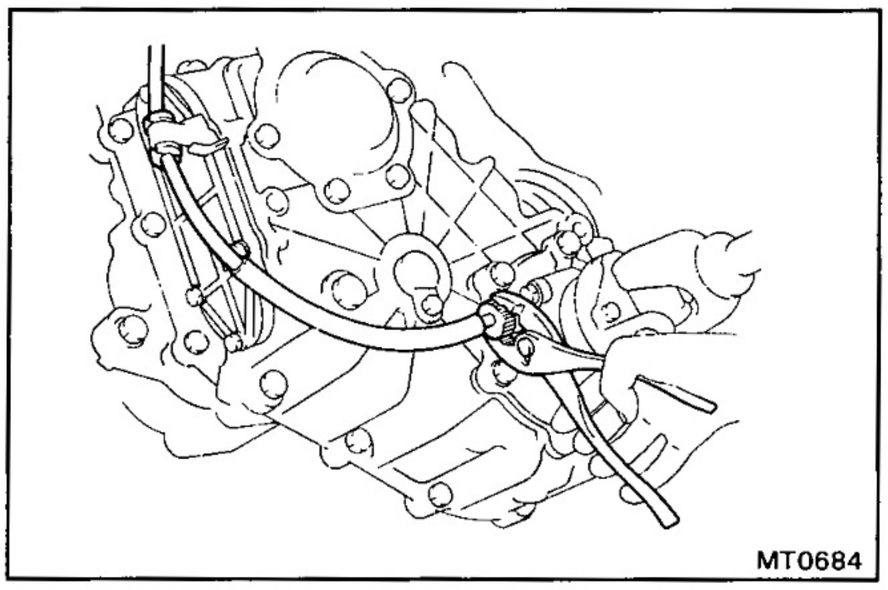

9. REMOVE SPEEDOMETER CABLE

Using pliers, remove the speedometer cable.

10. DISCONNECT BACK-UP LIGHT SWITCH CONNECTOR

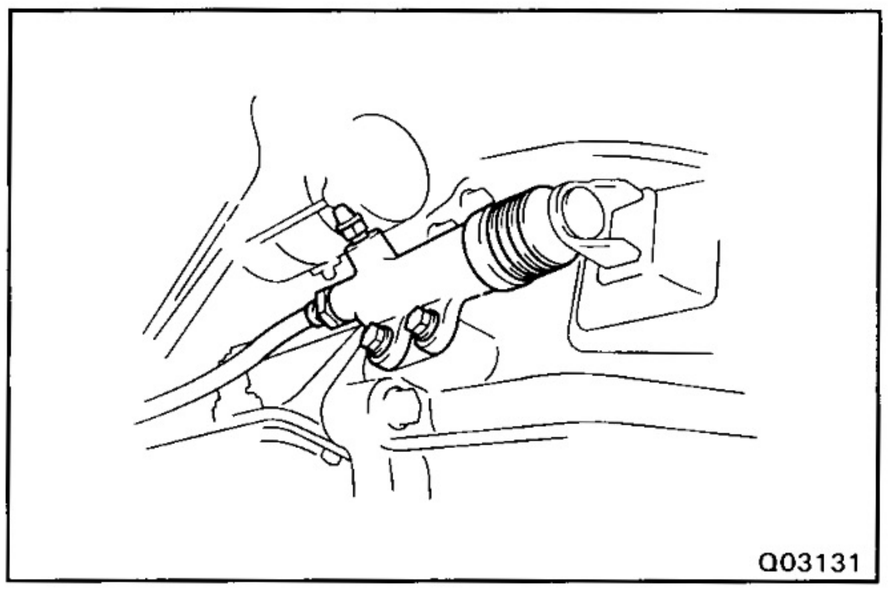

11. REMOVE CLUTCH RELEASE CYLINDER

Remove the two bolts and release cylinder.

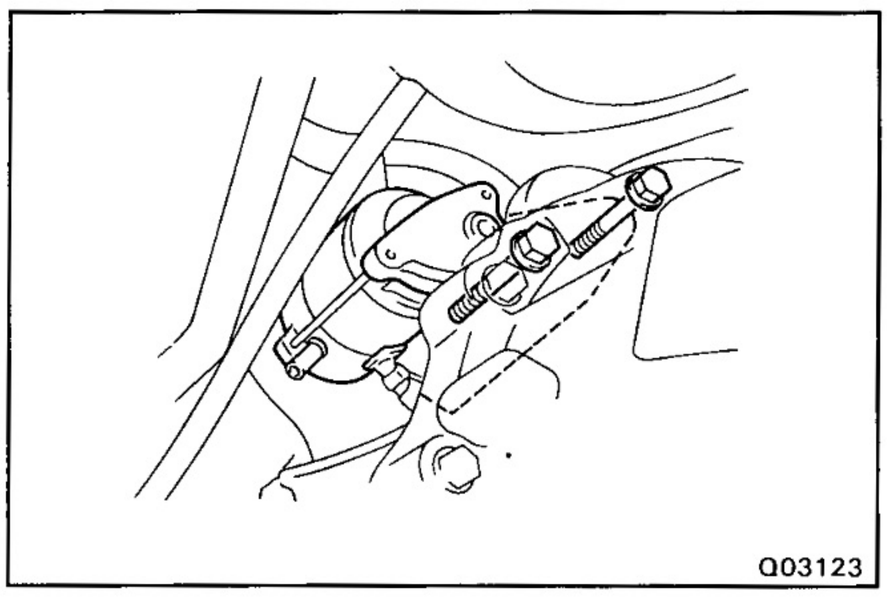

12. REMOVE STARTER

(a) Disconnect the connector and wire from the starter.

(b) Remove the two bolts and starter.

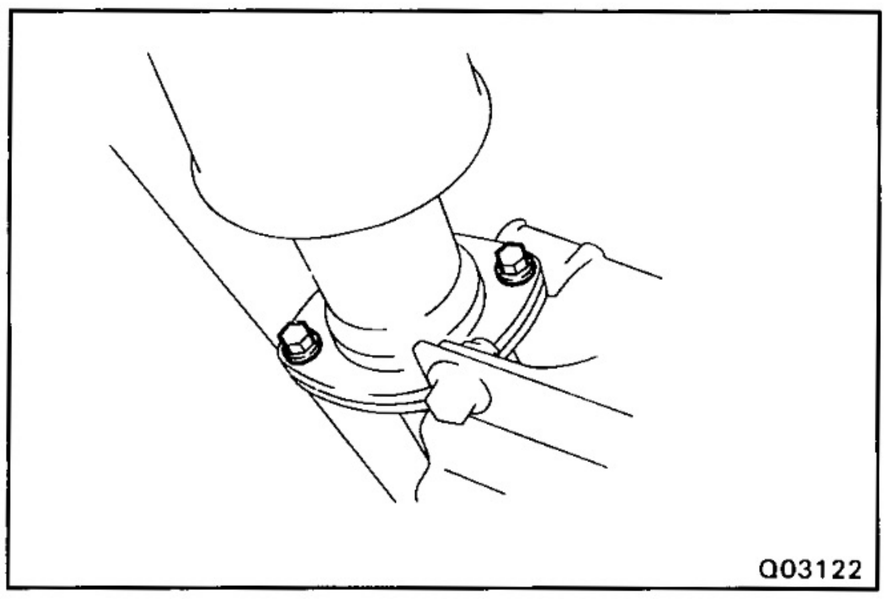

13. REMOVE FRONT EXHAUST PIPE

(a) Disconnect the oxygen sensor connector.

(b) Remove the two bolts, bracket and a gasket.

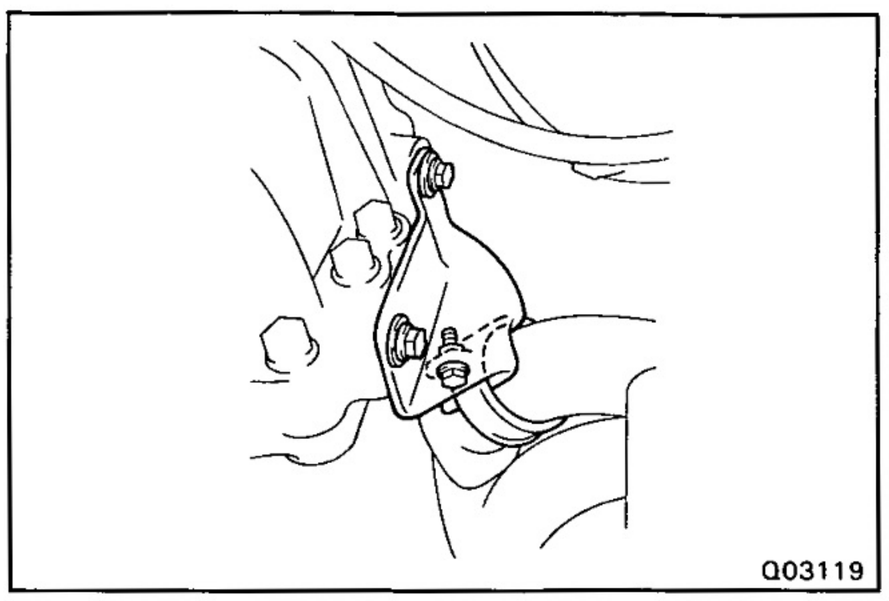
Q03119

(c) Remove the exhaust pipe clamp from the bracket.

(d) Remove the two bolts and exhaust pipe bracket from the clutch housing.

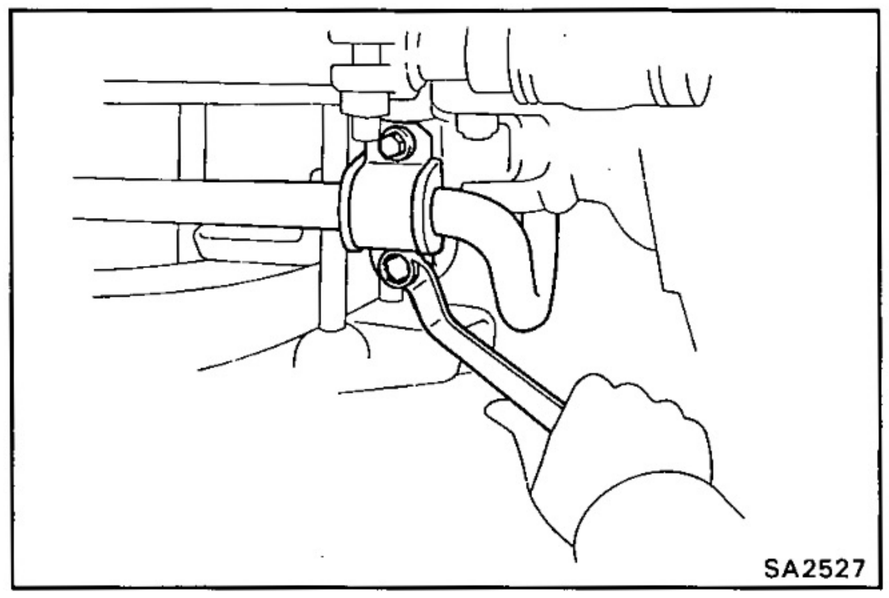
SA2527

14. REMOVE STABILIZER BRAKET SET BOLTS

Remove four stabilizer bracket set bolts.

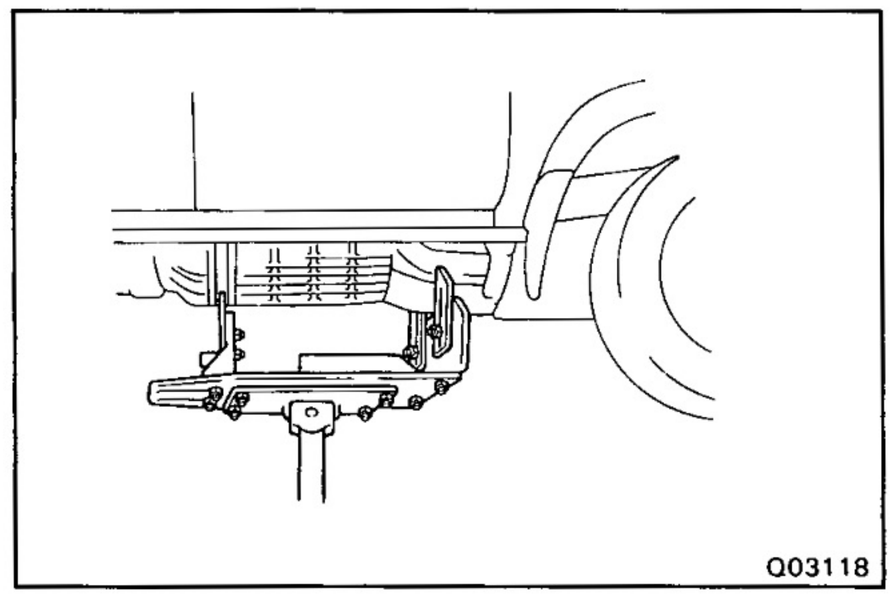
Q03118

15. SUPPORT TRANSMISSION

Remove the transmission enough to remove the weight from the rear support.

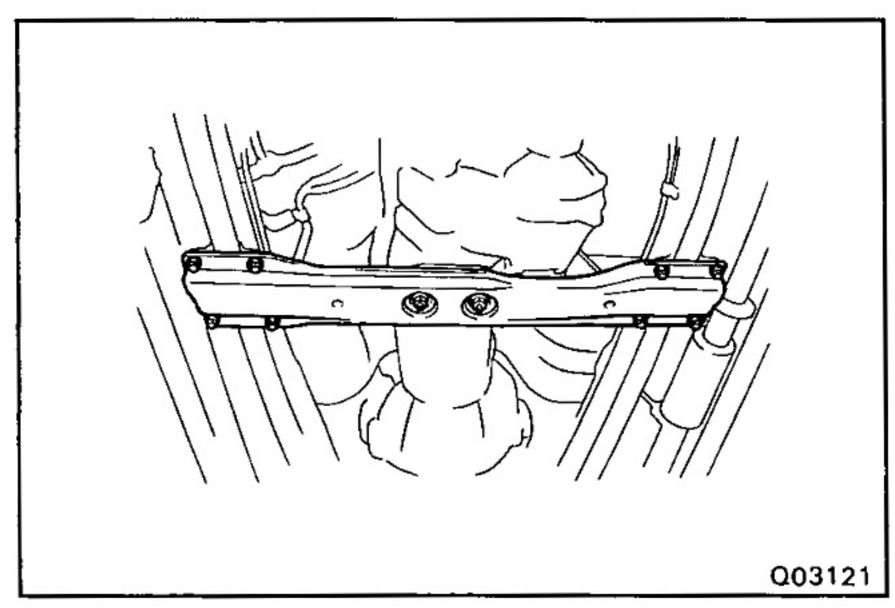
Q03121

16. REMOVE CROSSMEMBER

(a) Raise the transmission slightly with a jack.

(b) Remove the eight bolts, two nuts and crossmember.

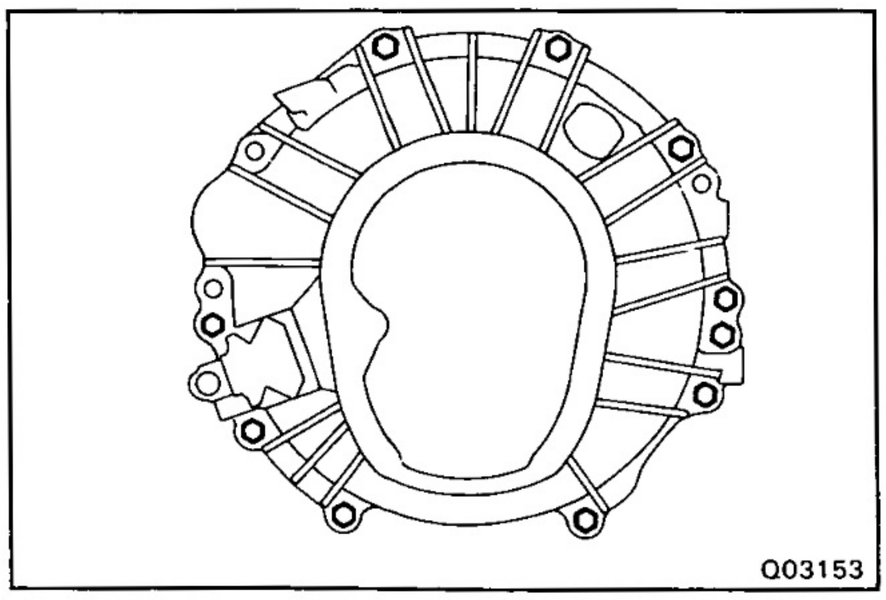
Q03153

17. REMOVE TRANSMISSION

(a) Remove the transmission mounting bolts from the engine.

(b) Pull out the transmission down and toward the rear.

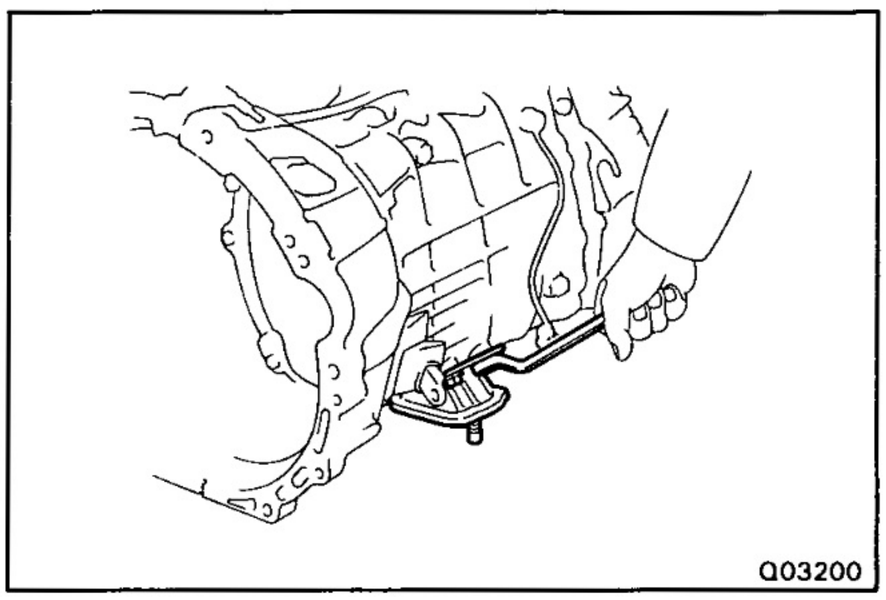
Q03200

18. REMOVE ENGINE REAR MOUNTING

Remove the four bolts and engine rear mounting from the transmission.

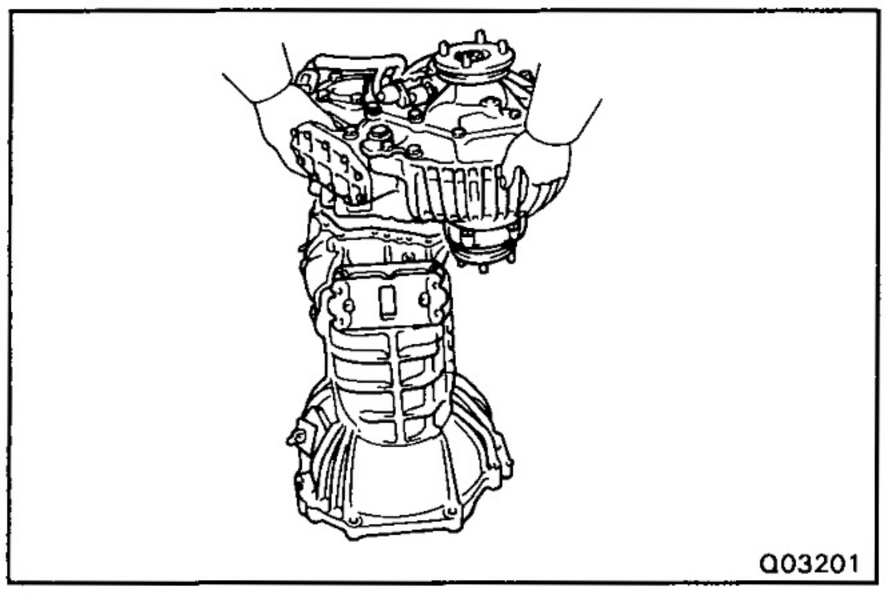
Q03201

19. REMOVE TRANSFER FROM TRANSMISSION

(a) Remove the transfer adaptor rear mounting bolts.

(b) Pull the transfer straight up and remove it from the transmission.

HINT: Take care not to damage the adaptor rear oil seal with the transfer input gear spline.

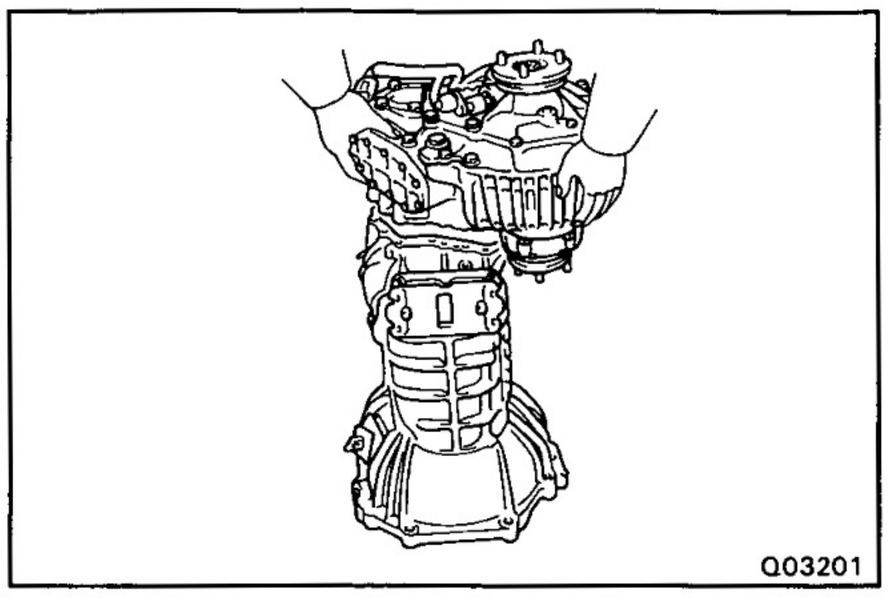
Q03201

TRANSMISSION INSTALLATION (See page MT-4)

1. INSTALL TRANSFER TO TRANSMISSION

(a) Apply MP grease to the adaptor oil seal.

(b) Install the transfer to the transmission.

HINT: Take care not to damage the oil seal by the input gear spline when installing the transfer.

(c) Install and torque the bolts.

Torque: 37 N·m (380 kgf·cm, 27 ft·lbf)

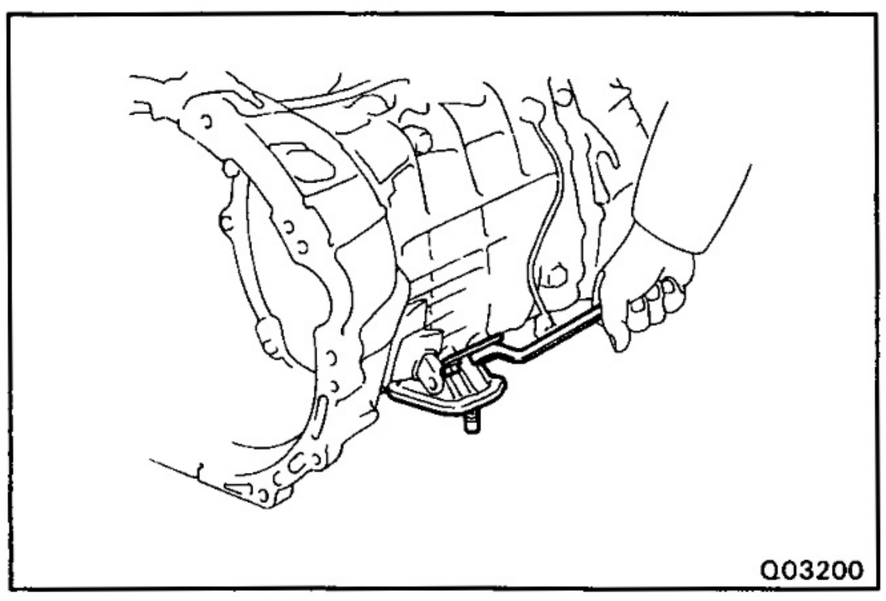
Q03200

2. INSTALL ENGINE REAR MOUNTING

Install the engine rear mounting and torque the four bolts.

Torque: 59 N·m (600 kgf·cm, 43 ft·lbf)

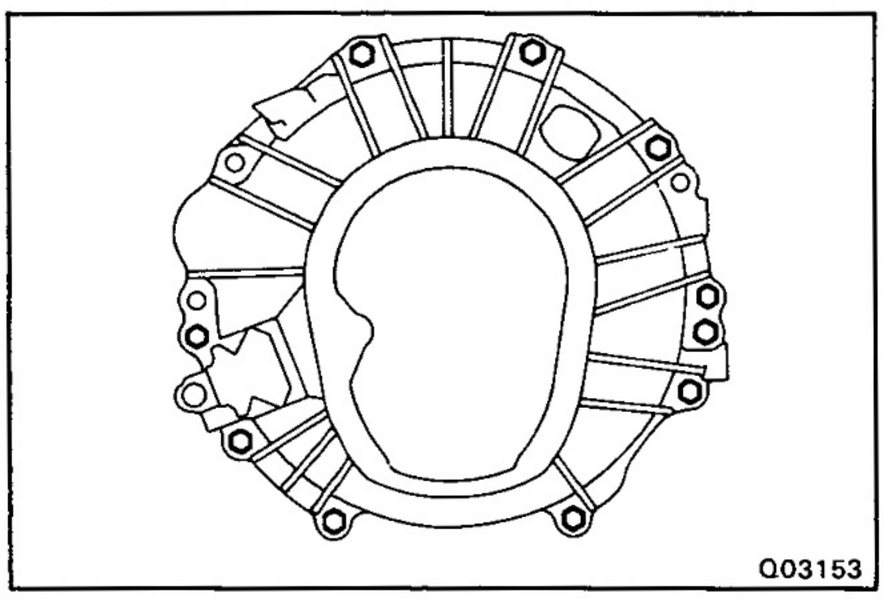
Q03153

3. INSTALL TRANSMISSION TO ENGINE

(a) Align the input shaft spline with the clutch disc and install the transmission to the engine.

(b) Install and torque the ten bolts.

Torque: 72 N·m (730 kgf·cm, 53 ft·lbf)

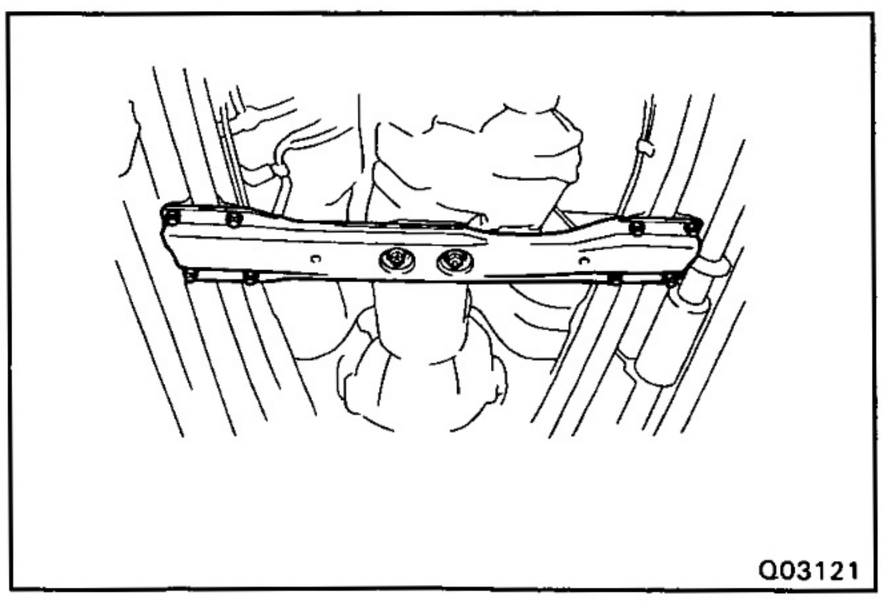
Q03121

4. INSTALL CROSSMEMBER

(a) Raise the transmission slightly with a jack.

(b) Install the crossmember with eight bolts and two nuts.

Torque: BOLT 39 N·m (400 kgf·cm, 29 ft·lbf)
NUT 76 N·m (780 kgf·cm, 56 ft·lbf)

(c) Remove the jack.

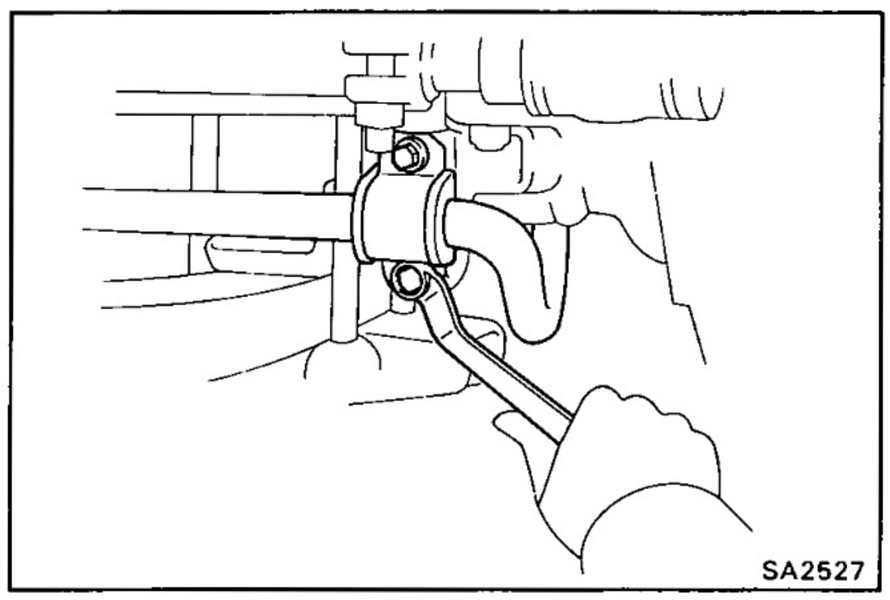

5. INSTALL STABILIZER BRACKET SET BOLTS

Install the stabirizer bracket with four bolts.

Torque: 28 N·m (290 kgf·cm, 21 ft·lbf)

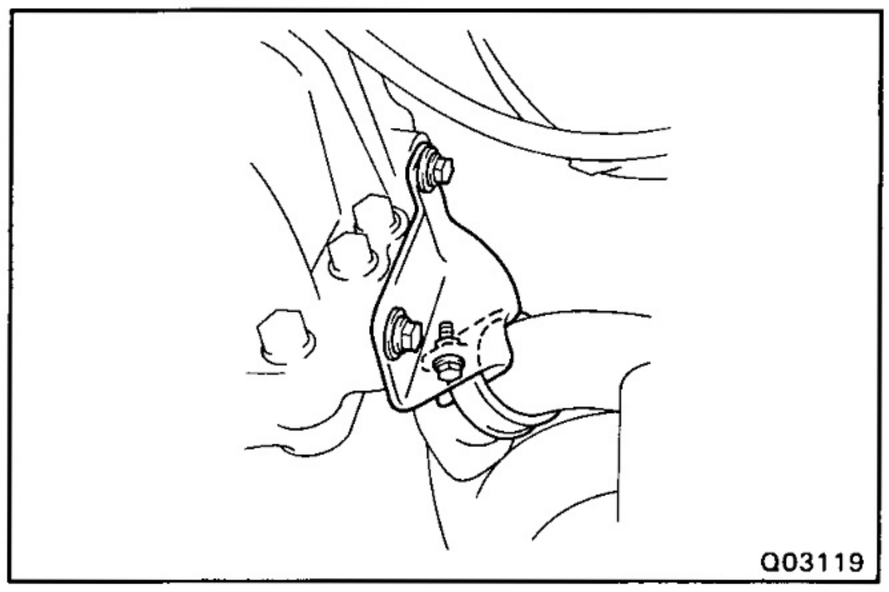

6. INSTALL FRONT EXHAUST PIPE

(a) Install the exhaust pipe bracket and two bolts to the clutch housing.

Torque: 39 N·m (400 kgf·cm, 29 ft·lbf)

(b) Install the exhaust pipe clamp.

Torque: 19 N·m (195 kgf·cm, 14 ft·lbf)

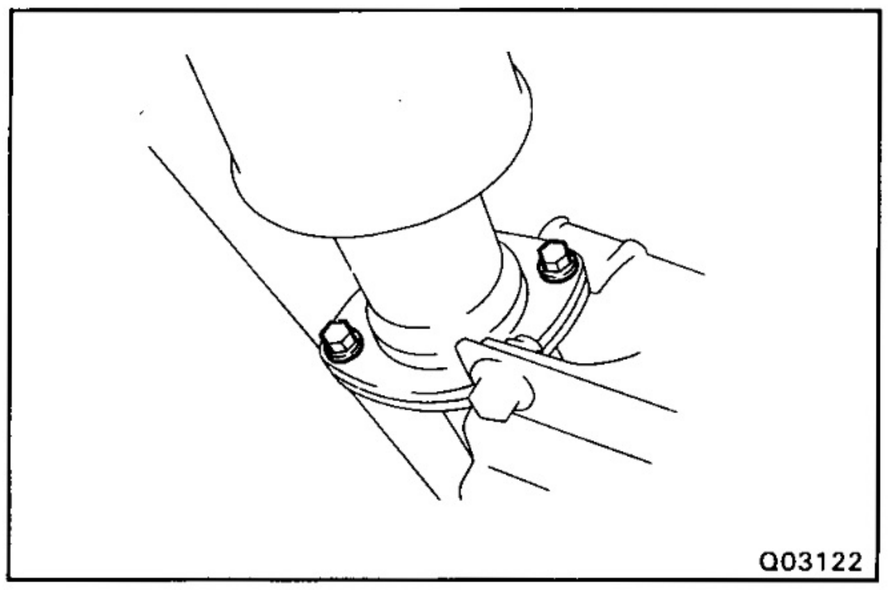

(c) Install a new gasket, bracket and torque the two bolts.

Torque: 39 N·m (400 kgf·cm, 29 ft·lbf)

(d) Connect the oxygen sensor connector.

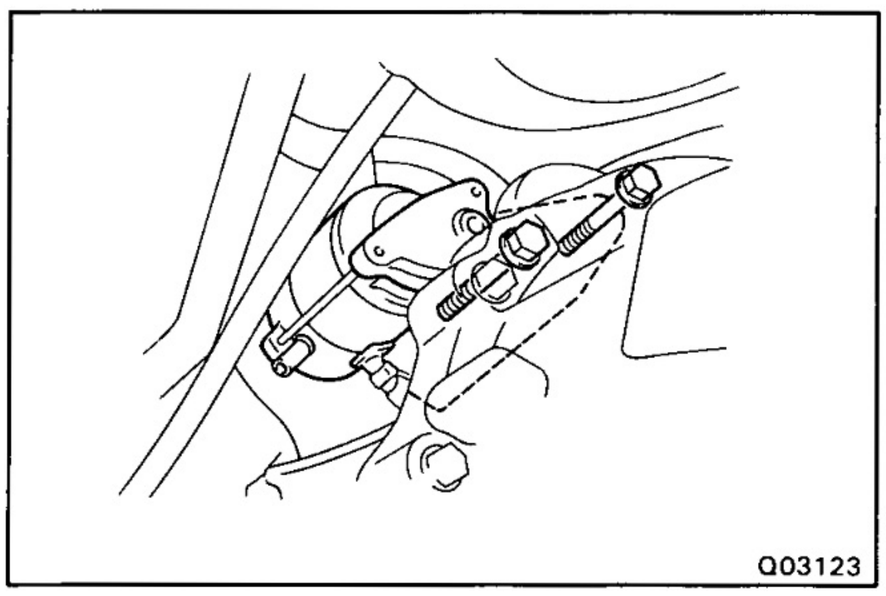

7. INSTALL STARTER

(a) Install the starter with two bolts.

Torque: 39 N·m (400 kgf·cm, 29 ft·lbf)

(b) Connect the connector and wire to the starter.

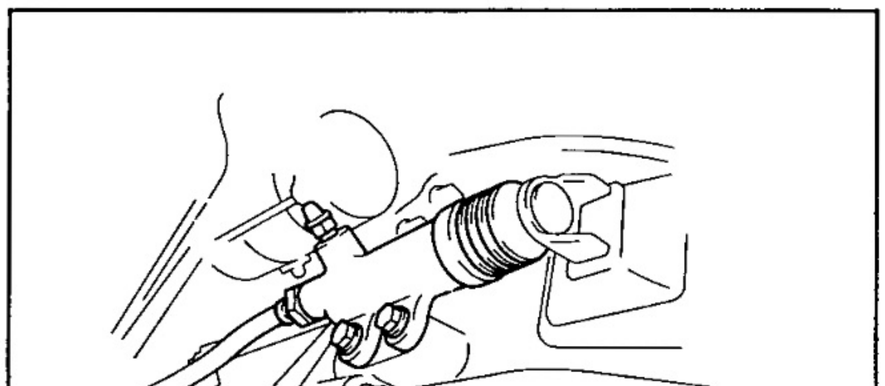

8. INSTALL CLUTCH RELEASE CYLINDER

Install the clutch release cylinder with two bolts.

Torque: 12 N·m (120 kgf·cm, 9 ft·lbf)

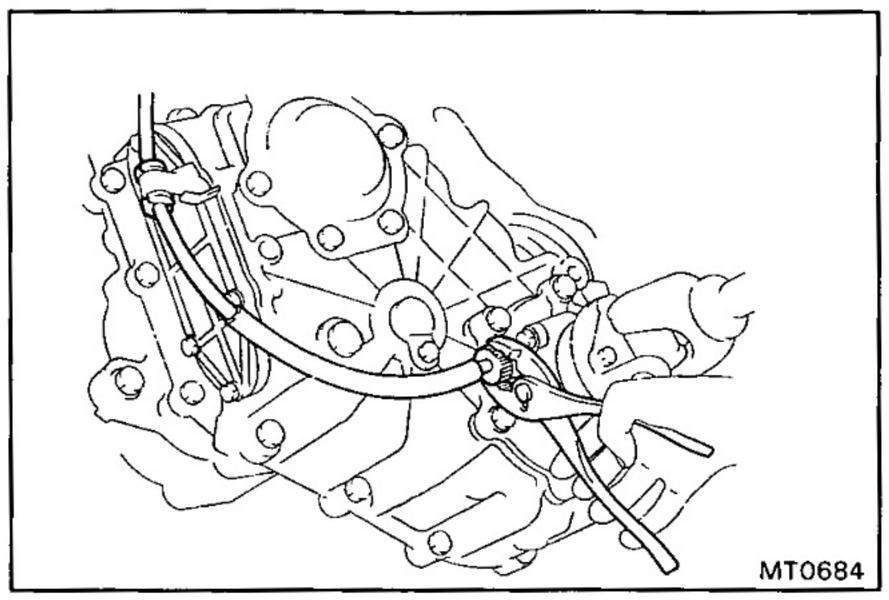
MT0684

9. INSTALL SPEEDOMETER CABLE

Using pliers, install the speedometer cable.

10. CONNECT BACK-UP LIGHT SWITCH CONNECTOR

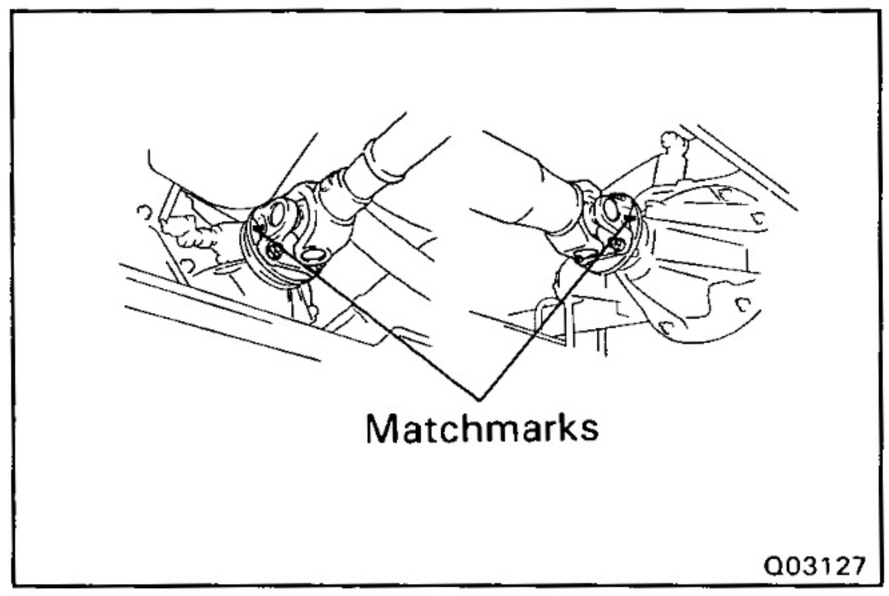
Matchmarks
Q03127

11. CONNECT PROPELLER SHAFT FLANGE TO COMPANION FLANGE ON TRANSFER

(a) Align the matchmarks on the flanges and connect the flanges with four nuts.

(b) Torque the nuts.

Torque:
Front Propeller Shaft
74 N·m (750 kgf·cm, 54 ft·lb)
Rear Propeller Shaft
88 N·m (900 kgf·cm, 65 ft·lb)

HINT: When installing the washers, put them properly in place.

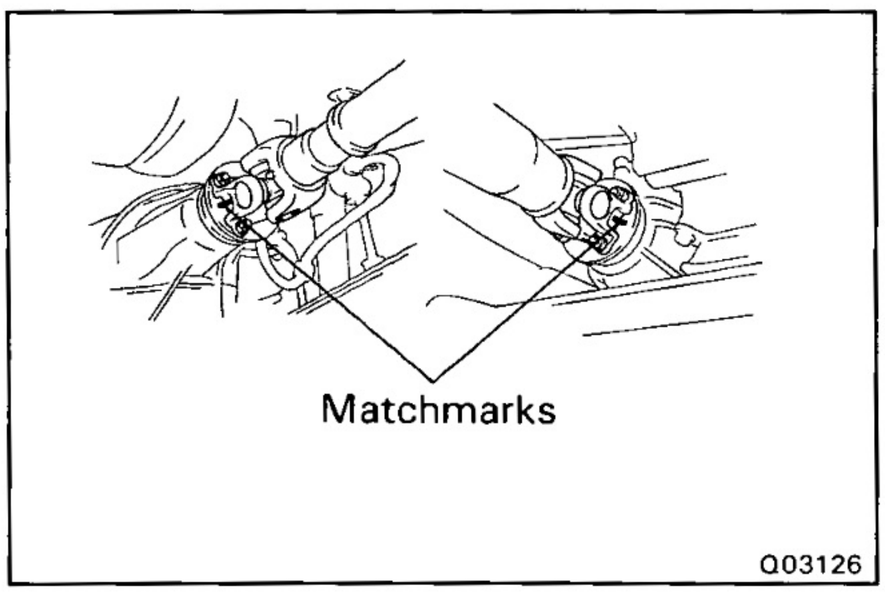
Matchmarks
Q03126

12. CONNECT PROPELLER SHAFT FLANGE ON DIFFERENTIAL

(a) Align the matchmarks on the flanges and connect the flanges with four bolts and nuts.

(b) Torque the bolts and nuts.

Torque:
Front Propeller Shaft
74 N·m (750 kgf·cm, 54 ft·lb)
Rear Propeller Shaft
88 N·m (900 kgf·cm, 65 ft·lb)

HINT: When installing the washers, put them properly in place.

13. INSTALL TRANSFER UNDER COVER

14. FILL TRANSMISSION WITH GEAR OIL

Oil grade:
API GL — 4 or GL — 5

Viscosity:
SAE 75W — 90

Capacity:
2.7 liters (2.6 US qts, 3.1 Imp.qts)

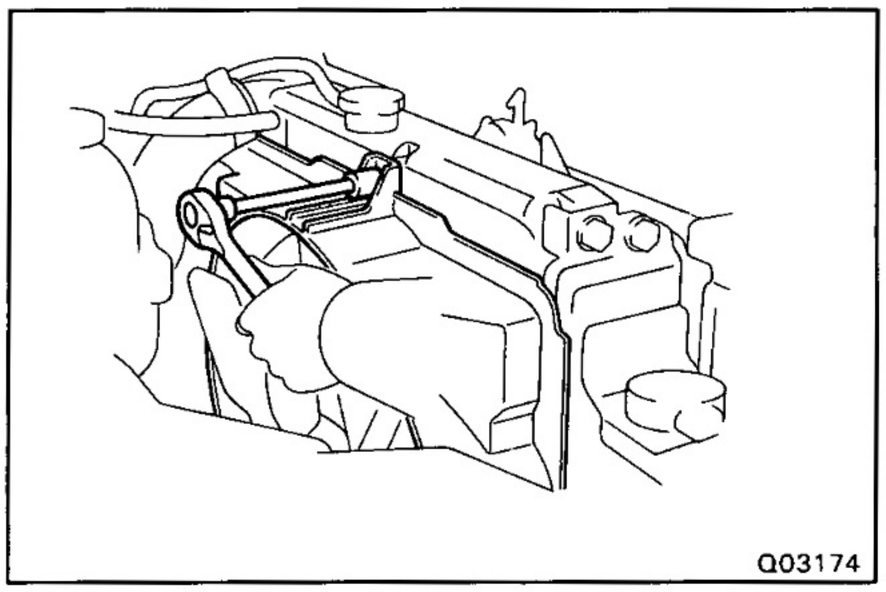
Q03174

15. TIGHTEN FAN SHROUD

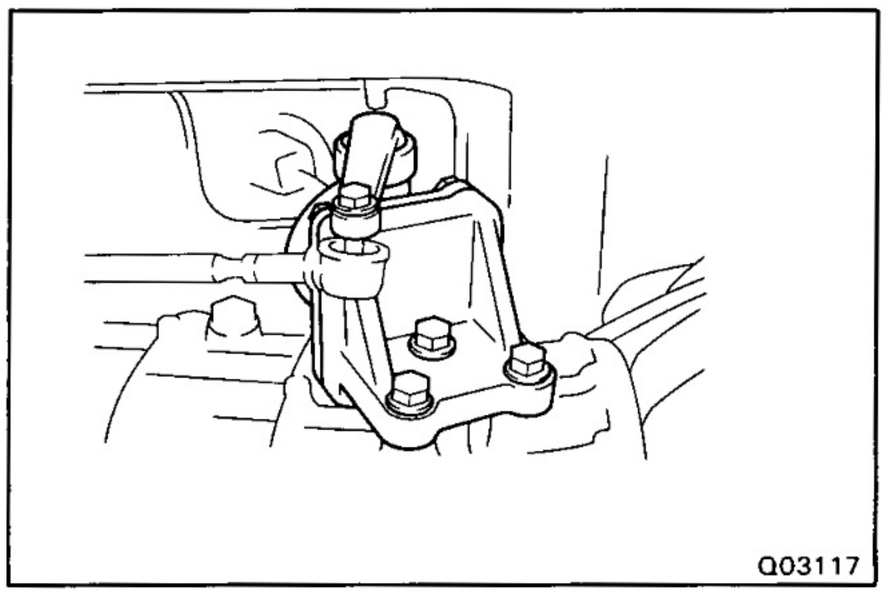
Q03117

16. INSTALL TRANSFER SHIFT LEVER

(a) Install the link with the washer and nut.
(b) Install the transfer shift lever and the three bolts.
(c) Install the boot and four screws.
(d) Install the transfer shift lever knob.

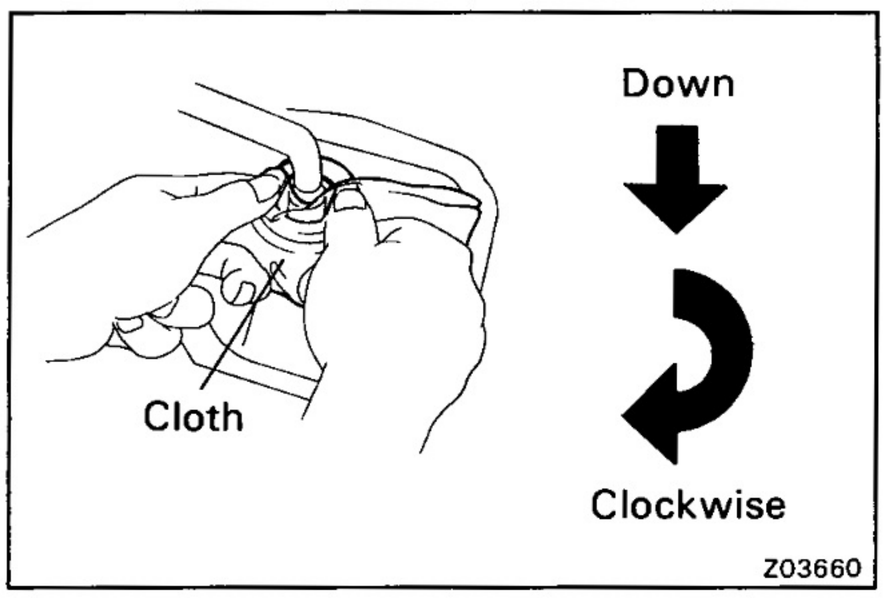

Z03660

17. INSTALL TRANSMISSION SHIFT LEVER

(a) Apply MP grease to the transmission shift lever.
(b) Align the groove of the shift lever cap and the pin part of the case cover.
(c) Cover the shift lever cap with a cloth.
(d) Then, pressing down on the shift lever cap, rotate it clockwise to install.
(e) Install the shift lever boot.
(f) Install the transmission shift lever knob.

18. INSTALL NEGATIVE BATTERY CABLE

19. PERFORM ROAD TEST

Check for abnormal noise and smooth shifting.

OUTPUT SHAFT

COMPONENTS

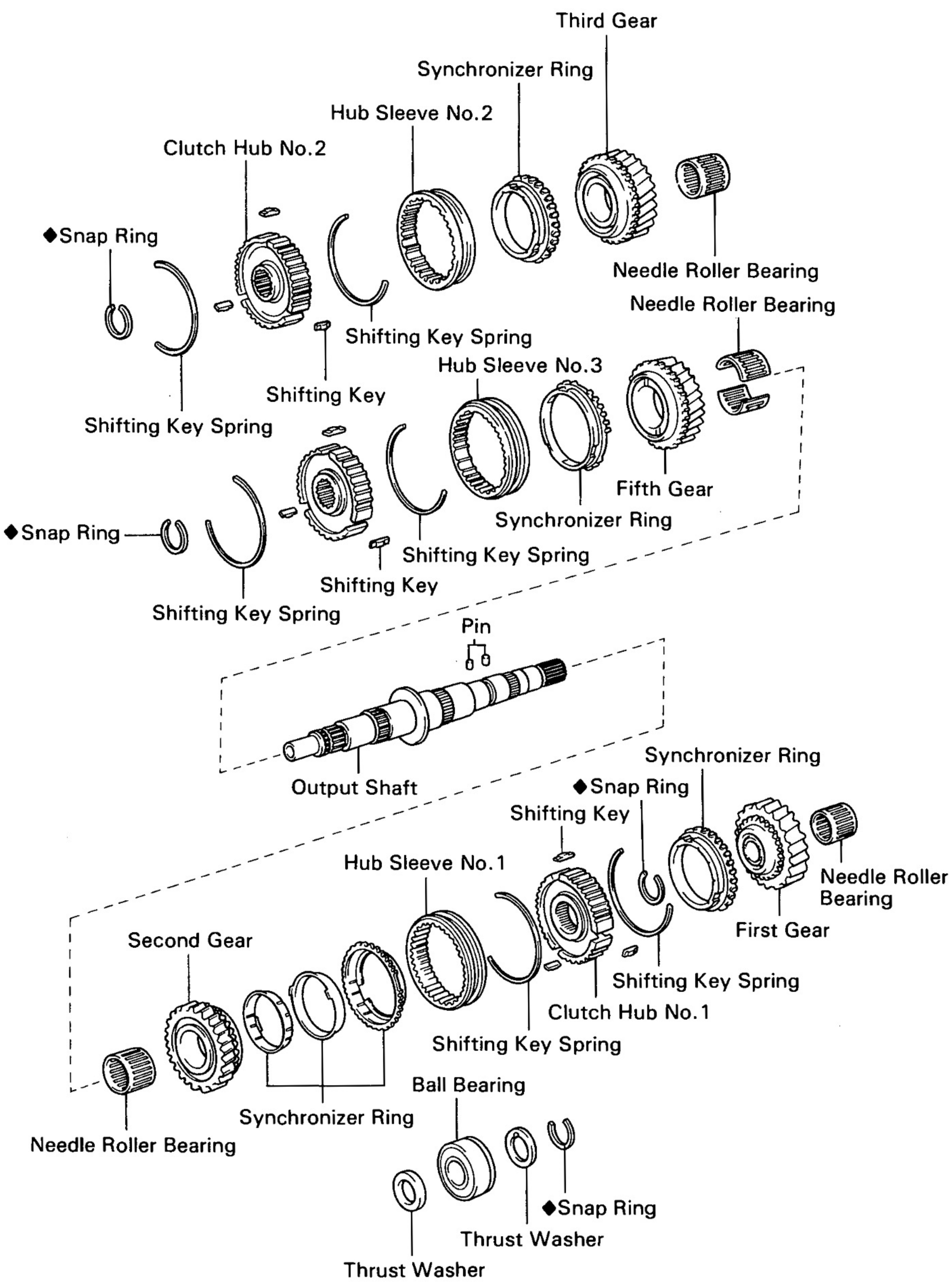

◆ Non-reusable part

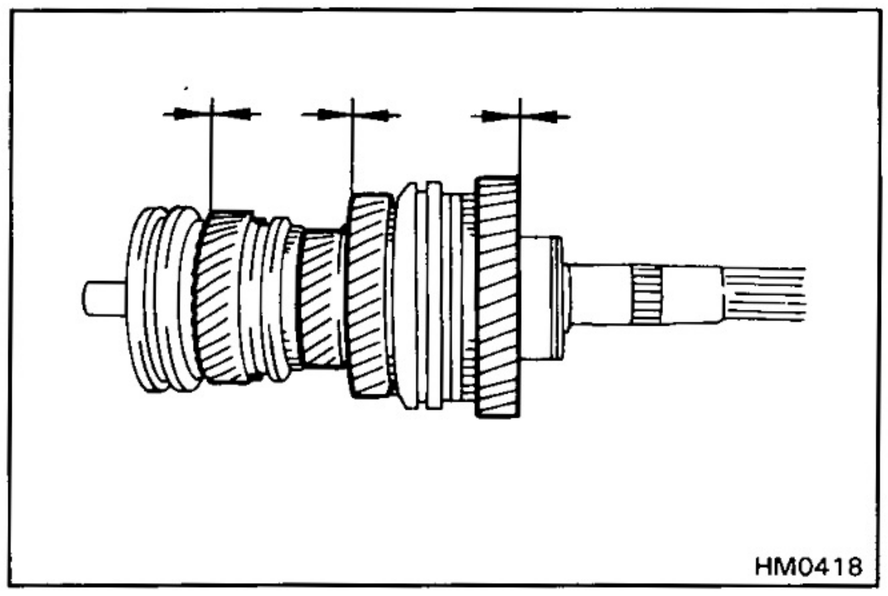
HM0418

OUTPUT SHAFT DISASSEMBLY

1. INSPECT EACH GEAR THRUST CLEARANCE

Measure the thrust clearance of each gear.

Standard clearance:

1st and 3rd gear	**0.1 — 0.45 mm (0.0039 — 0.0177 in.)**
2nd and 5th gear	**0.1 — 0.35 mm (0.0039 — 0.0138 in.)**

Maximum clearnace:

1st and 3rd gear	**0.45 mm (0.0177 in.)**
2nd and 5th gear	**0.35 mm (0.0138 in.)**

2. INSPECT EACH GEAR OIL CLEARANCE

Using a dial indicator, measure the oil clearance of each gear.

Standard clearance:

1st and 3rd gear	**0.020 — 0.073 mm (0.0008 — 0.0029 in.)**
2nd and 5th gear	**0.015 — 0.068 mm (0.0006 — 0.0027 in.)**

Maximum clearance:

1st and 3rd gear	**0.073 mm (0.0029 in.)**
2nd and 5th gear	**0.068 mm (0.0027 in.)**

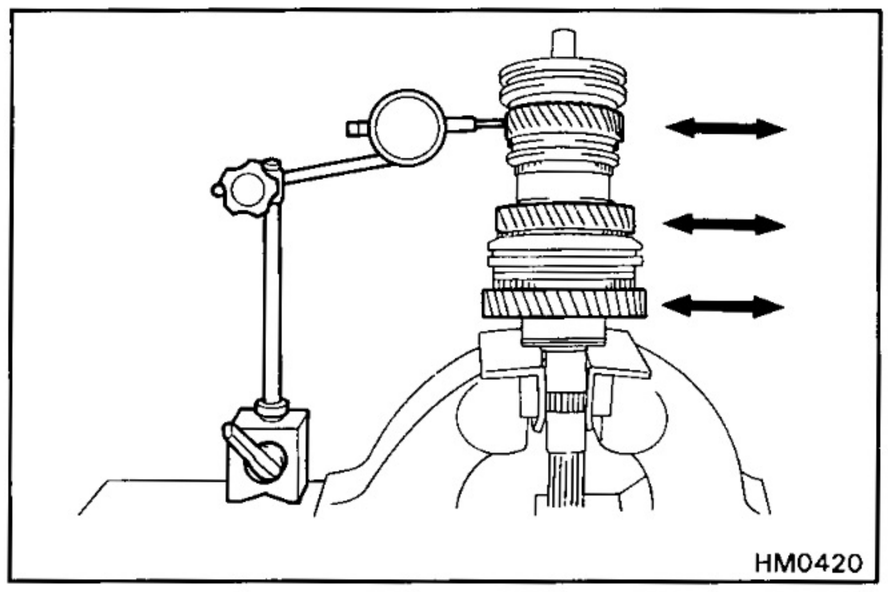
HM0420

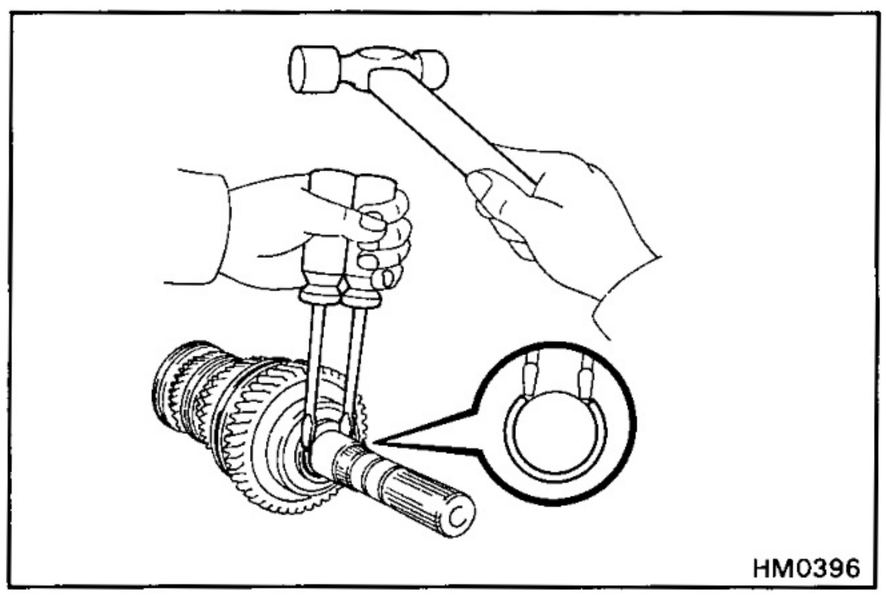
HM0396

3. REMOVE BALL BEARING AND FIRST GEAR

(a) Using two screwdrivers and a hammer, drive out the snap ring.

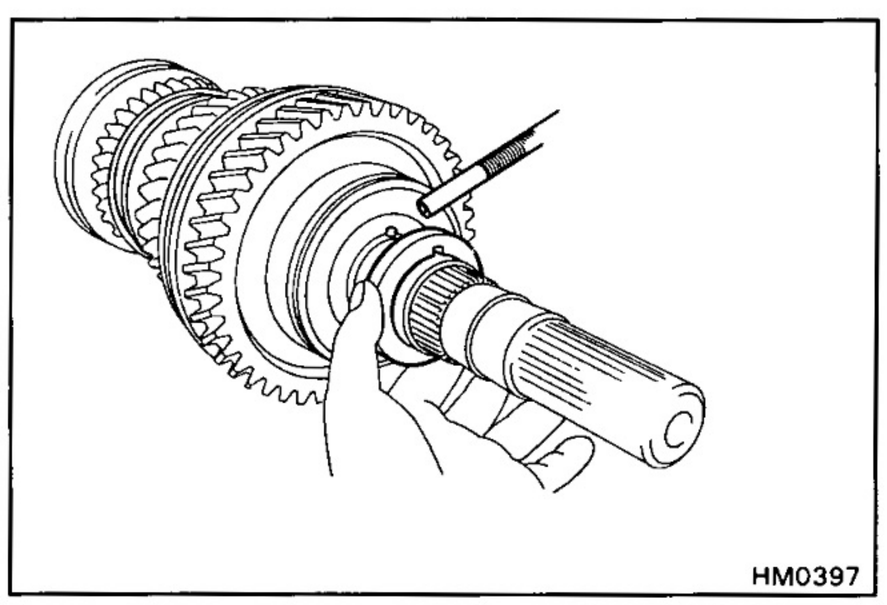
HM0397

(b) Remove the thrust washer and pin.

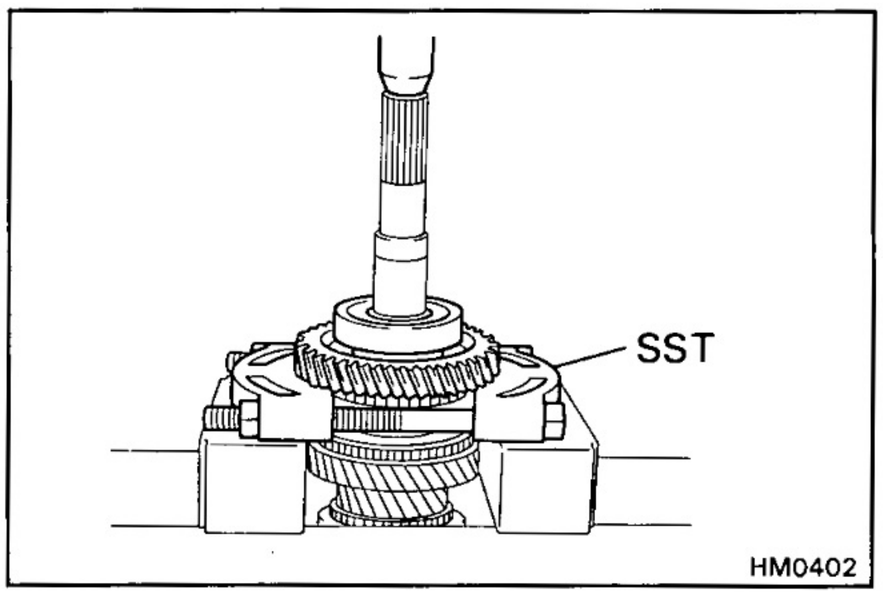

HM0402

(c) Using SST and a press, remove the ball bearing, thrust washer, first gear and synchronizer rings.

SST 09555-55010

(d) Remove the pin and needle roller bearing.

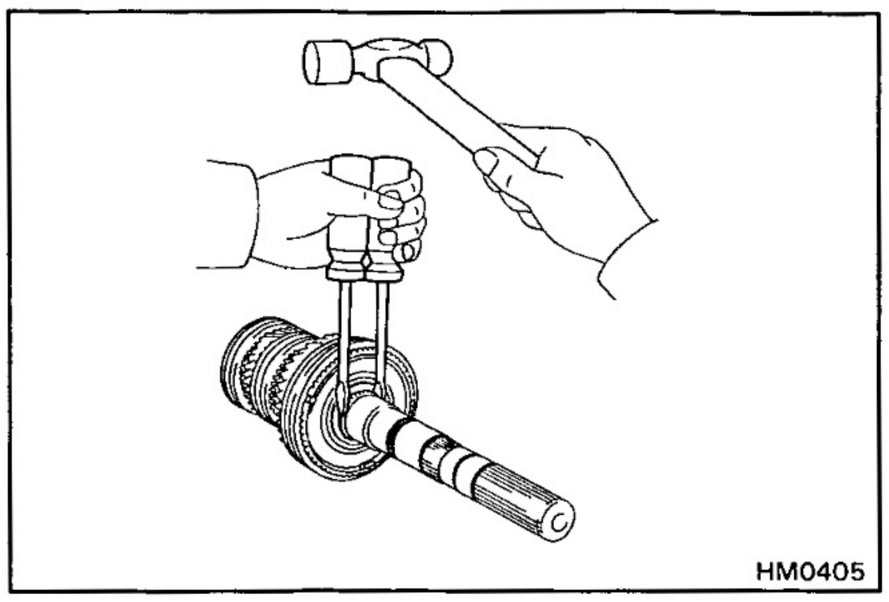
HM0405

4. REMOVE HUB SLEEVE NO.1 ASSEMBLY, SYNCHRONIZER RING, SECOND GEAR AND NEEDLE ROLLER BEARING

(a) Using two screwdrivers and a hammer, drive out the snap ring.

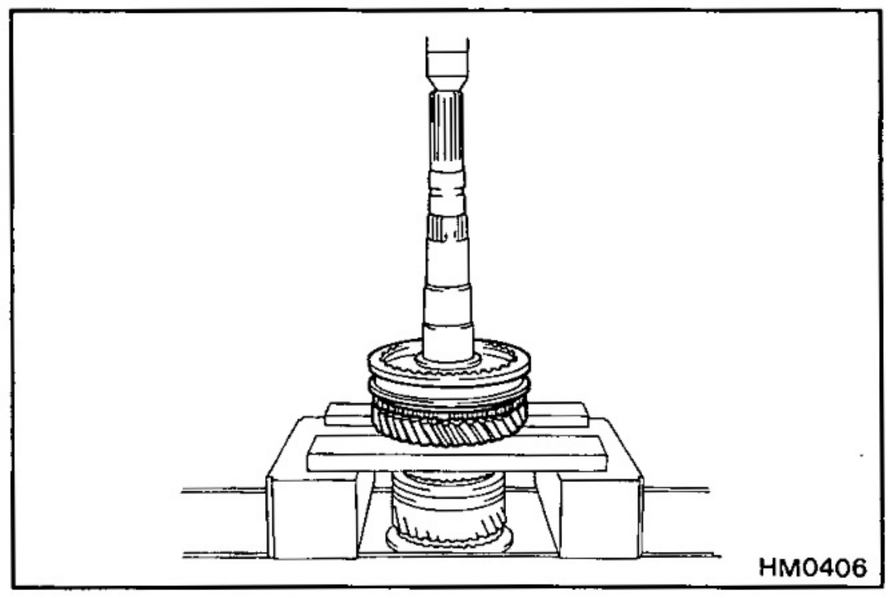
HM0406

(b) Using a press, remove the hub sleeve No.1 assembly, synchronizer rings, and second gear.

(c) Remove the needle roller bearing.

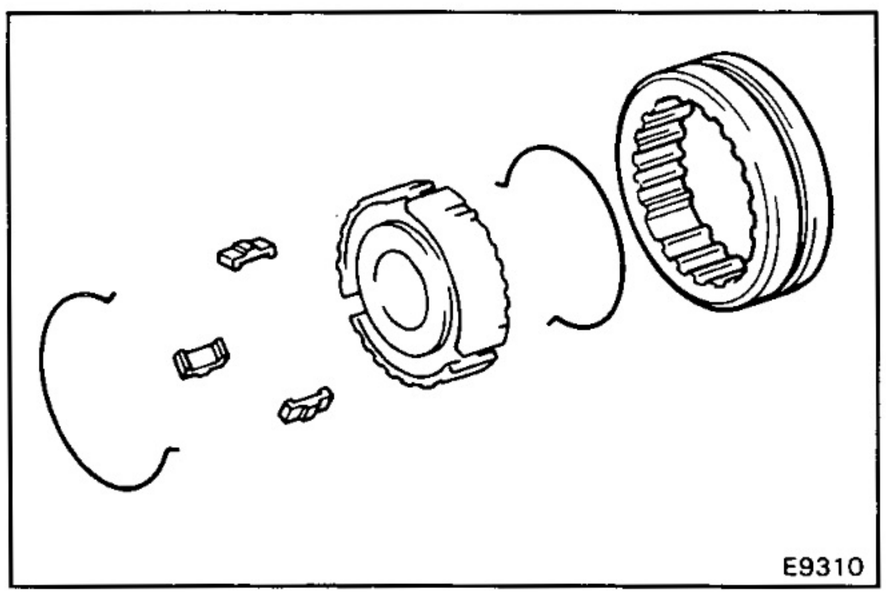
E9310

5. REMOVE HUB SLEEVE NO.1, SHIFTING KEYS AND SPRING FROM CLUTCH HUB NO.1

Using a screwdriver, remove the three shifting keys and two springs from the clutch hub No.1.

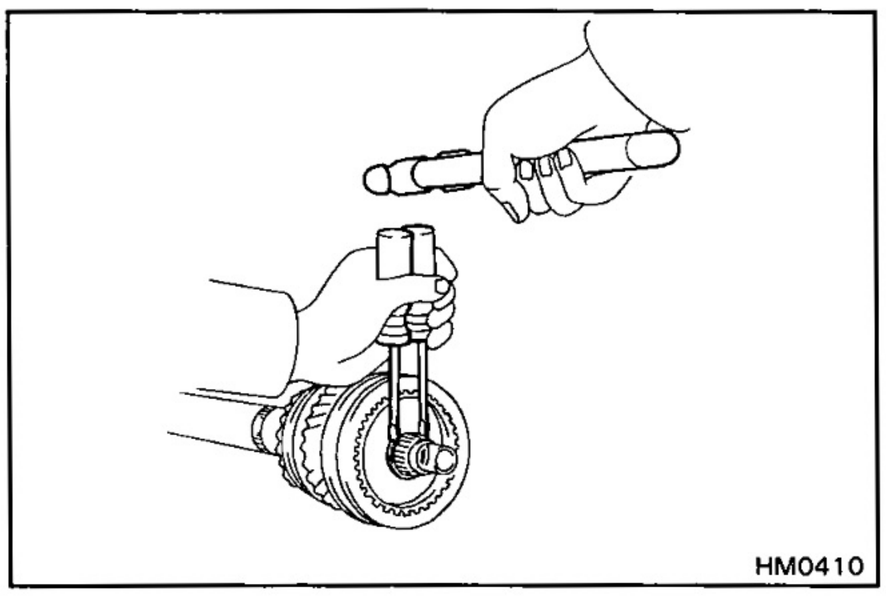
HM0410

6. REMOVE HUB SLEEVE NO.2 ASSEMBLY, SYNCHRONIZER RINGS, THIRD GEAR AND NEEDLE ROLLER BEARING

(a) Remove two screwdrivers and a hammer, drive out the snap ring.

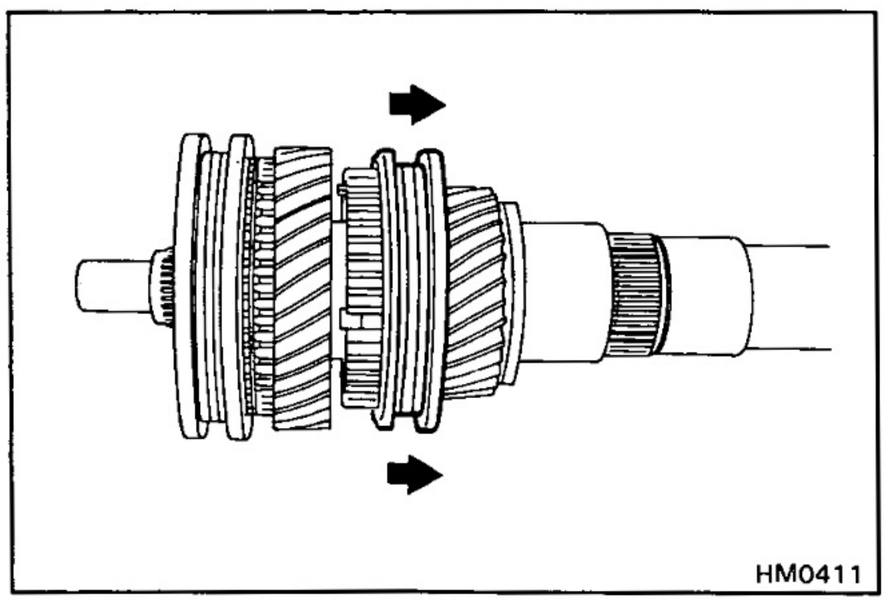
HM0411

(b) Shift hub sleeve No.3 onto the fifth gear.

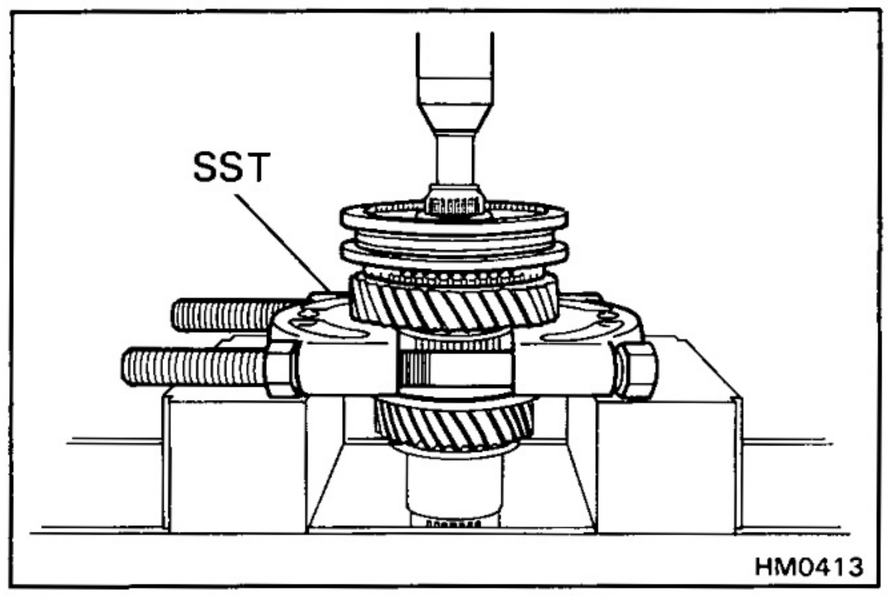

(c) Using SST and a press, remove the hub sleeve No.2 assembly, synchronizer ring and third gear.

SST 09555-55010

(d) Remove the needle roller bearing.

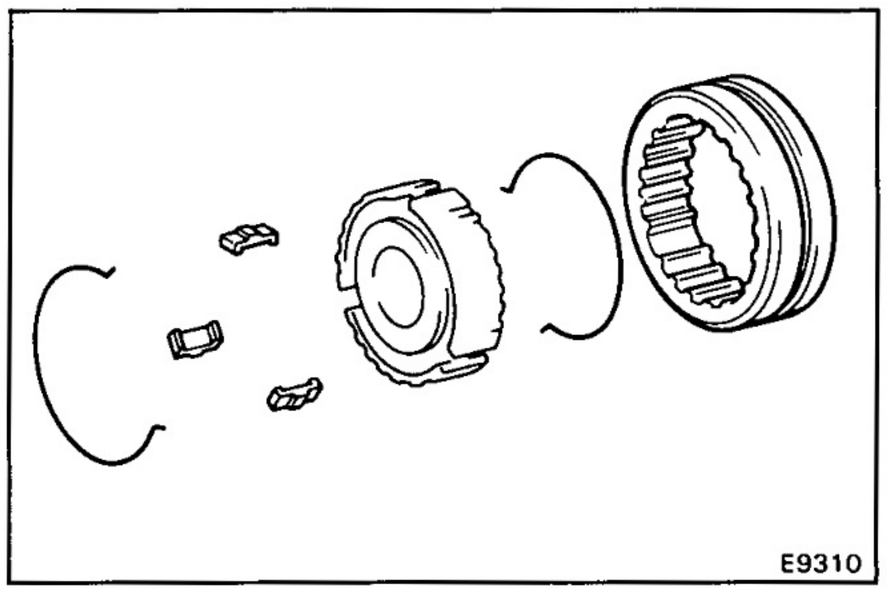

7. REMOVE HUB SLEEVE NO.2, SHIFTING KEYS AND SPRINGS FROM CLUTCH HUB NO.2

Using a screwdriver, remove the three shifting keys and two springs from the clutch hub No.2.

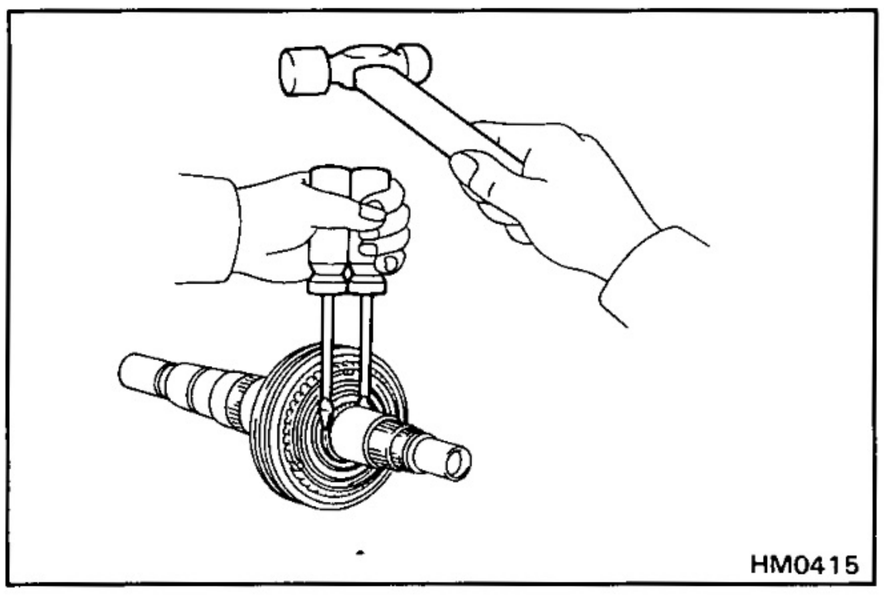

8. REMOVE HUB SLEEVE NO.3 ASSEMBLY, SYNCHRONIZER RING, FIFTH GEAR AND NEEDLE ROLLER BEARING

(a) Using two screwdriver, and a hammer, drive out the snap ring.

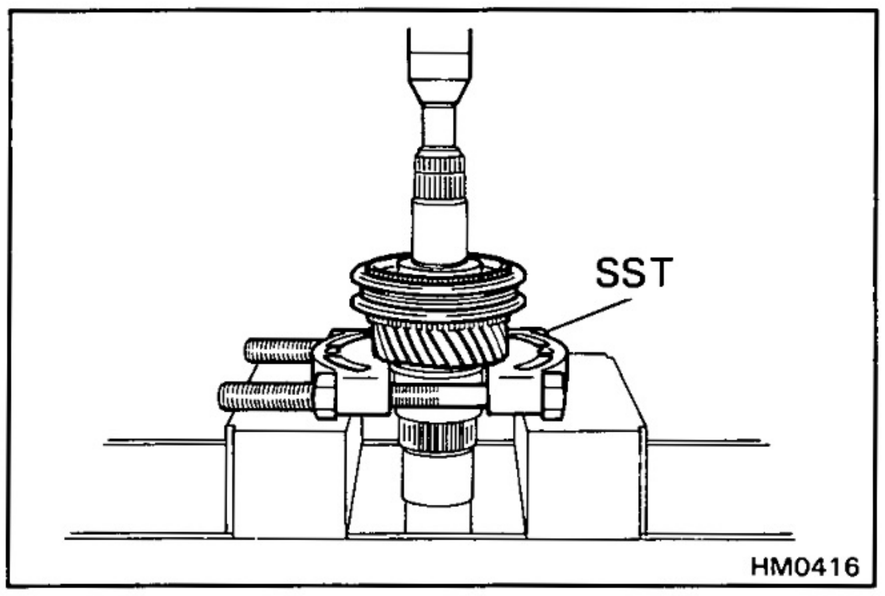

(b) Using SST and a press, remove the hub sleeve No.3 assembly and synchronizer ring.

SST 09950-00020

(c) Remove the needle roller bearing.

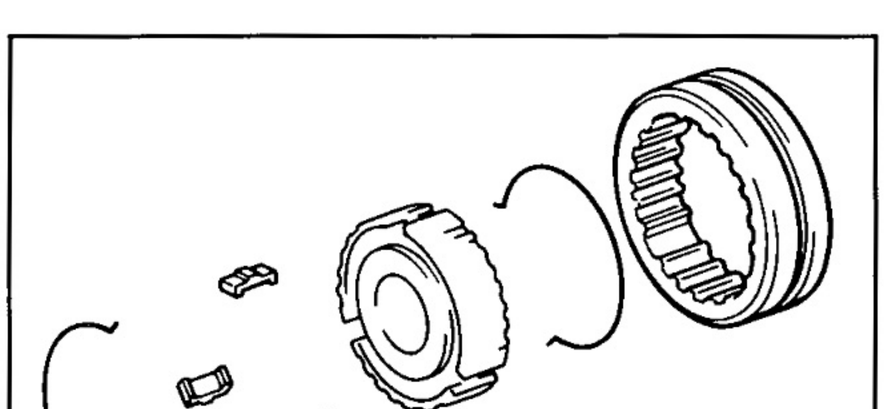

9. REMOVE HUB SLEEVE NO.3 SHIFTING KEYS AND SPRINGS FROM CLUTCH HUB NO.3

Using a screwdriver, remove the three shifting keys and two springs from the clutch hub No.3.

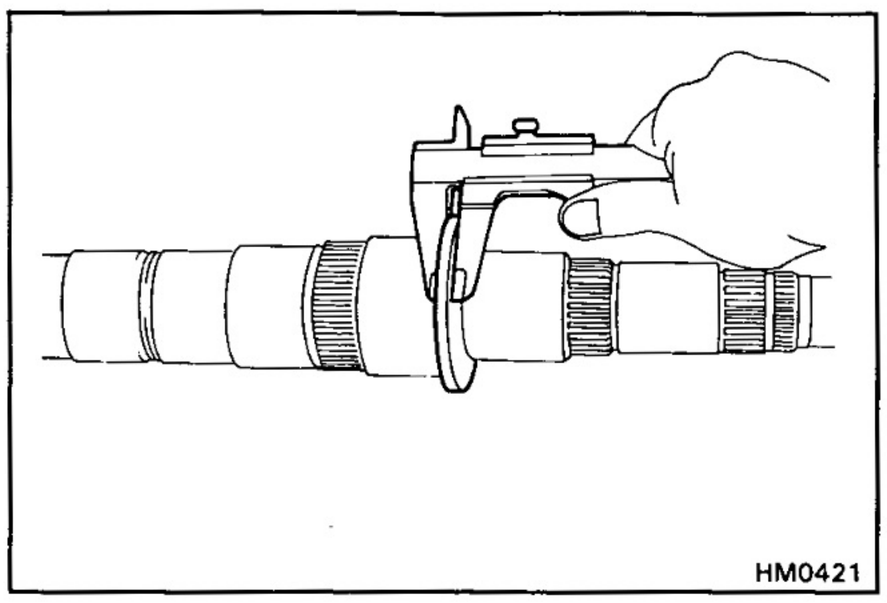
HM0421

OUTPUT SHAFT ASSEMBLY INSPECTION

INSPECT OUTPUT SHAFT

(a) Using calipers, measure the output shaft flange thickness.

Minimum thickness:
4.725 mm (0.1860 in.)

If the thickness is less than the minimum, replace the output shaft.

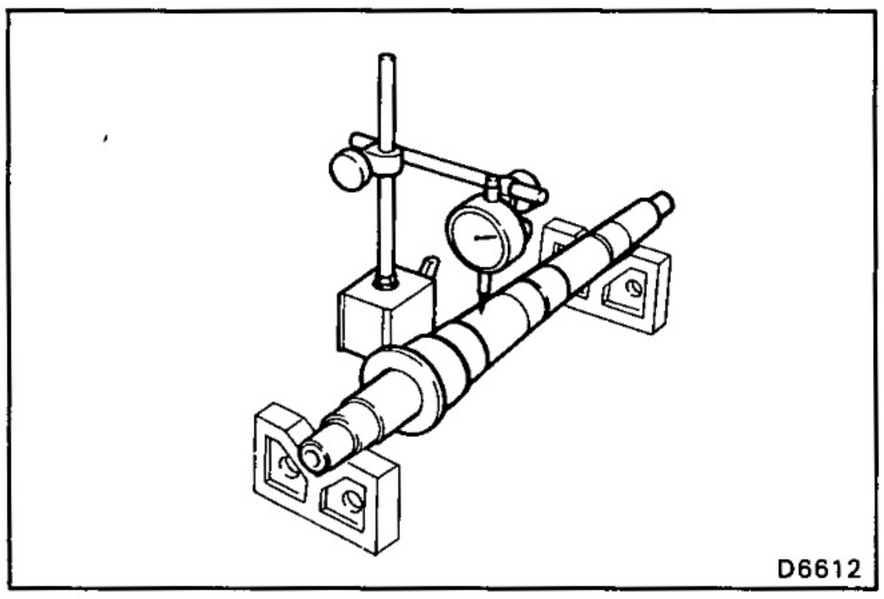
D6612

(b) Using a dial indicator, check the shaft runout.

Maximum runout:
0.03 mm (0.0020 in.)

If the run out exceeds the maximum, replace the output shaft.

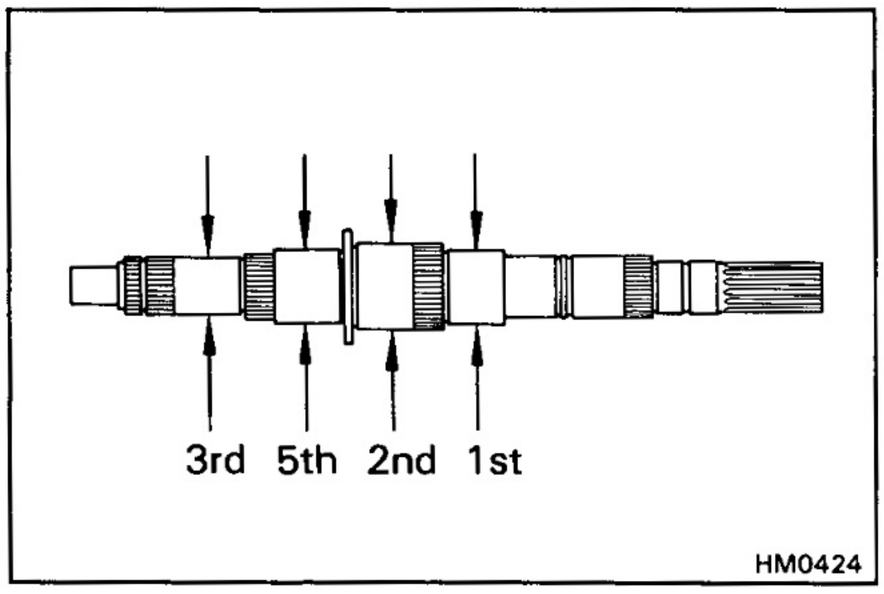

HM0424

(c) Using a micrometer, measure the outer diameter of the output shaft journal.

Minimum outer diameter:
1st 49.979 mm (1.9677 in.)
2nd 57.984 mm (2.2828 in.)
3rd 37.979 mm (1.4952 in.)
5rh 45.984 mm (1.8104 in.)

If the outer diameter is less than the minimum, replace the output shaft.

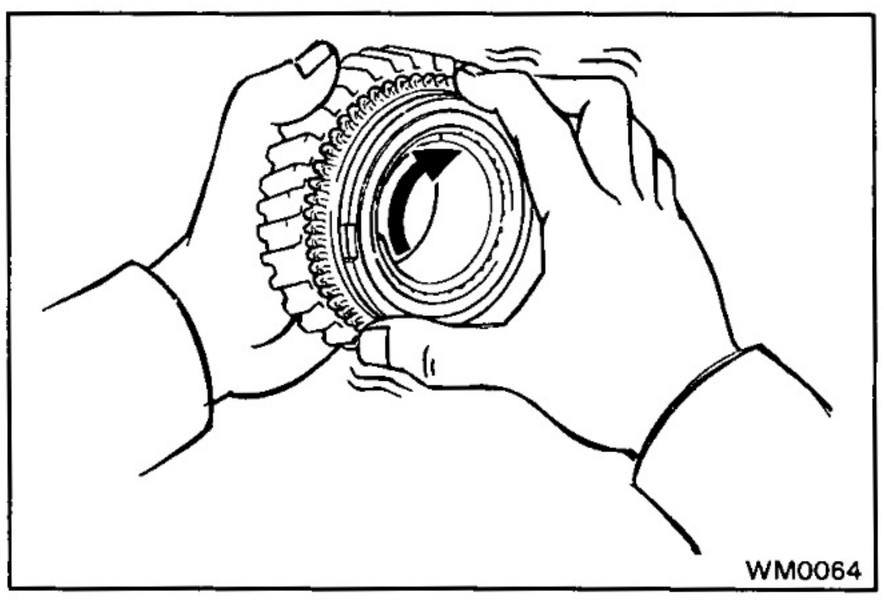
WM0064

OUTPUT SHAFT COMPONENT PARTS INSPECTION

1. INSPECT SYNCHRONIZER RINGS FOR 1st AND 3rd GEAR

(a) Check for wear or damage.

(b) Check the braking effect of the synchronizer ring. Turn the synchronizer ring in one direction while pushing it to the gear cone and check that the ring is locked. If the braking effect is insufficient, lightly rub the synchronizer ring and gear cone by applying a small amount of fine lapping compound.

NOTICE:
- **Wash off completely the fine lapping compound after rubbing.**
- **Check again the braking effect of the synchronizer ring.**

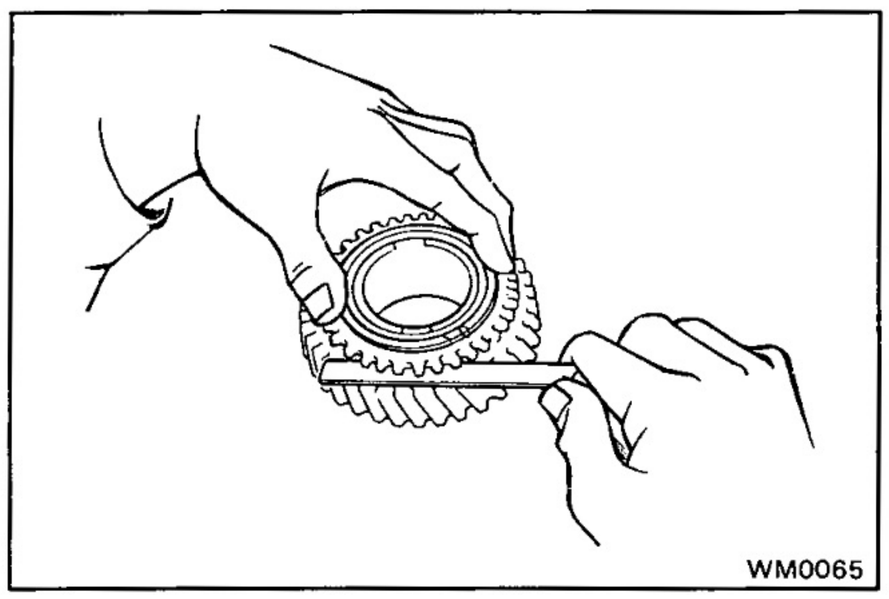
WM0065

(c) Using a feeler gauge, measure the clearance between the synchronizer ring back and the gear spline end.

Minimum clearance:

1st gear	**1.1 mm (0.0433 in.)**
3rd gear	**0.8 mm (0.0315 in.)**

HINT:

- When replacing either a synchronizer ring or gear, apply a small amount of fine lapping compound between the synchronizer ring and gear cone. Lightly rub the synchronizer ring and gear together.
- When replacing both the synchronizer ring and gear, there is no need to apply any compound or to rub them together.

NOTICE: Wash off completely the fine lapping compound after rubbing.

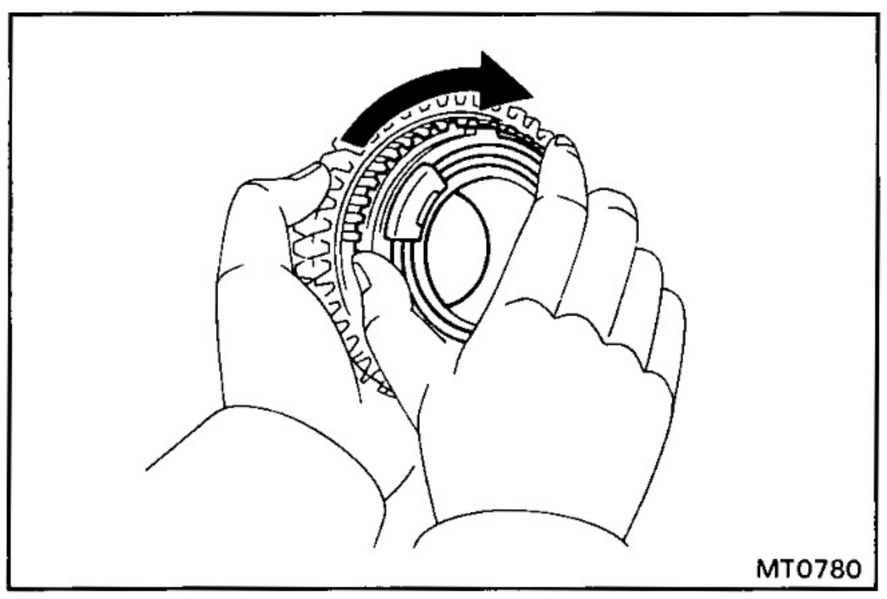
MT0780

2. INSPECT SYNCHRONIZER RING FOR 2nd GEAR

(a) Check for wear or damage.

(b) Check the braking effect of the synchronizer direction while pushing it to the gear cone and check that the ring is locked. If the braking effect is insufficient, replace the synchronizer ring.

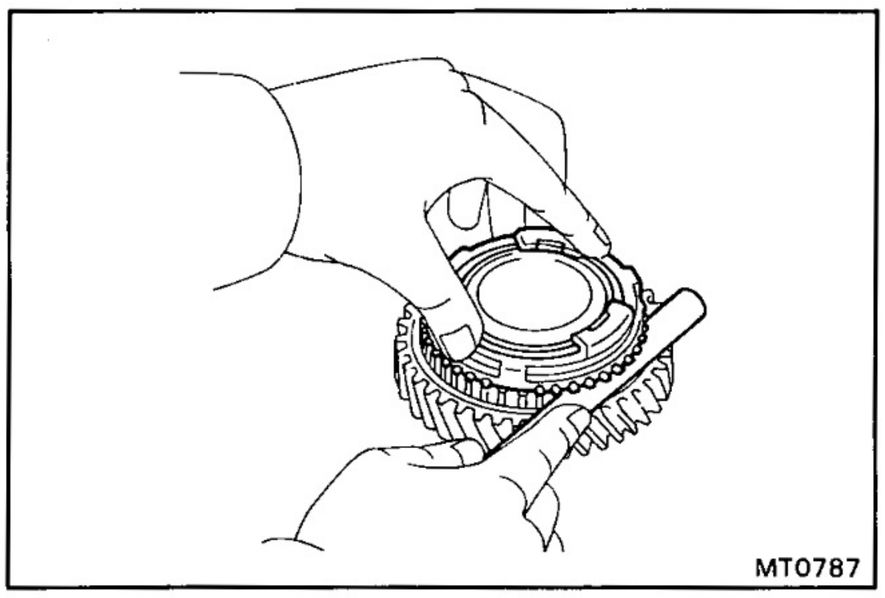
MT0787

(c) Measure the clearance between the synchronizer ring back and gear spline end.

Minimum clearance:

0.85 mm (0.0335 in.)

If the clearance is less than the limit, replace the synchronizer ring.

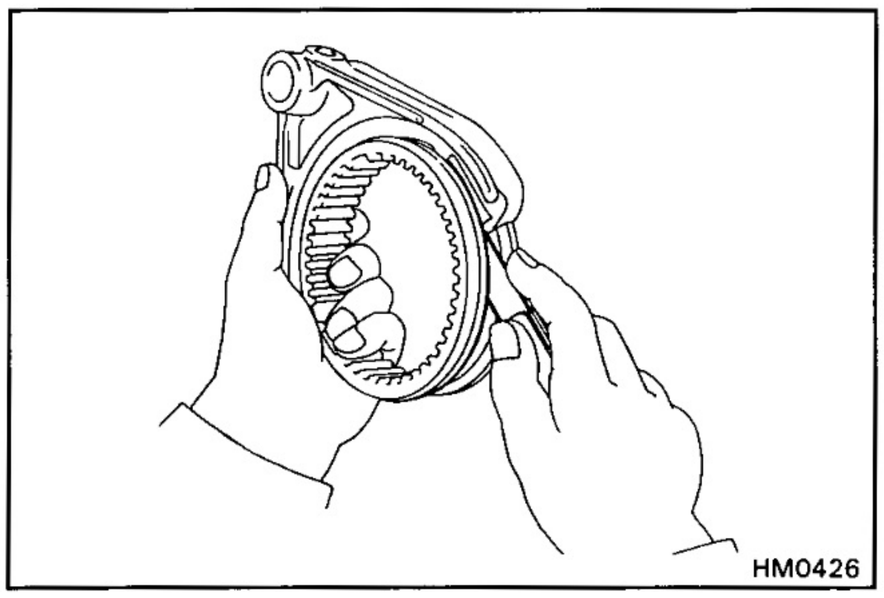
HM0426

3. INSPECT CLEARNACE OF SHIFT FORKS AND HUB SLEEVES

Using a feeler gauge, measure the clearance between the hub sleeve and shift fork.

Maximum clearance:

0.35 mm (0.0138 in.)

If the clearance exceeds the maximum, replace the shift fork or hub sleeve.

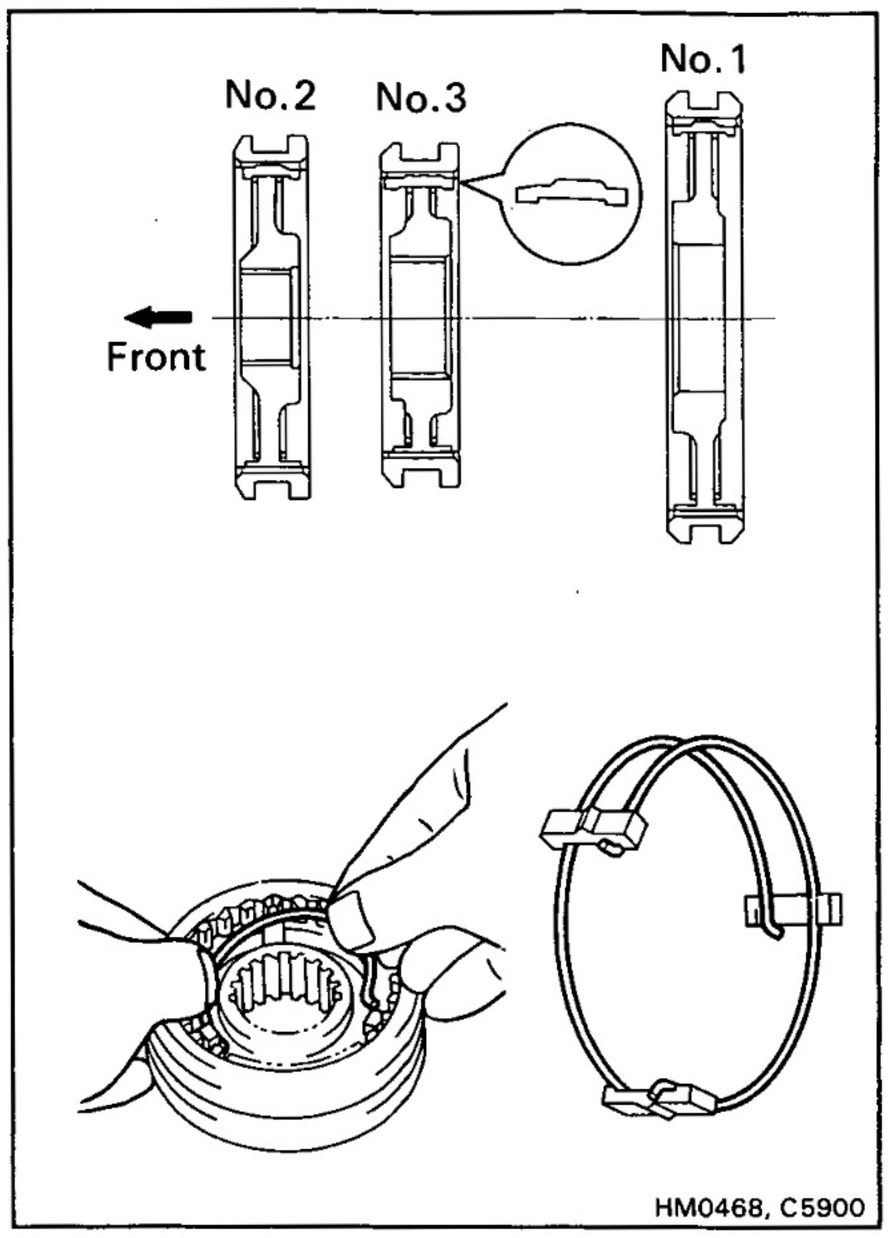

OUTPUT SHAFT ASSEMBLY

1. INSTALL CLUTCH HUB NO.1, NO.2 AND NO.3 INTO HUB SLEEVE

(a) Install the clutch hub and shifting keys to the hub sleeve.

(b) Install the springs under the shifting keys.

NOTICE: Install the key springs positioned so that their end gaps are not in line.

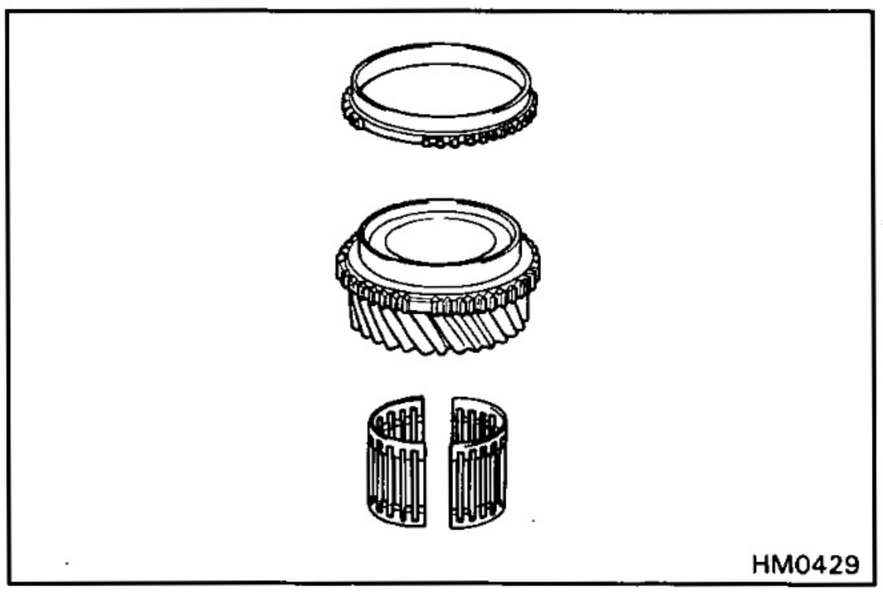

2. INSTALL FIFTH GEAR AND HUB SLEEVE NO.3 ASSEMBLY ON OUTPUT SHAFT

(a) Apply gear oil to the shaft and needle roller bearing.

(b) Place the synchronizer ring on the gear and align the ring slots with the shifting keys.

(c) Install the needle roller bearing in the fifth gear.

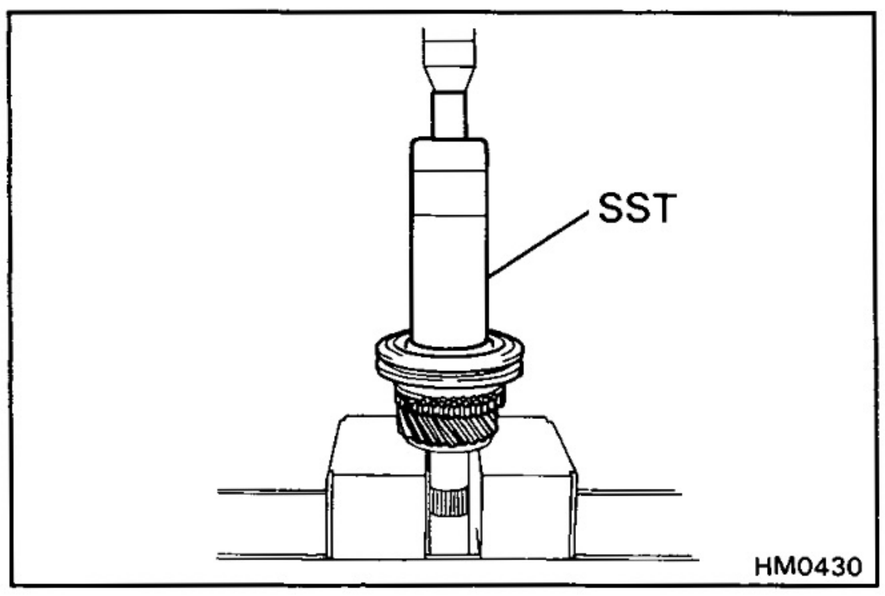

(d) Using SST and a press, install the fifth gear and hub sleeve No.3.

SST 09316-60010 (09316-00010)

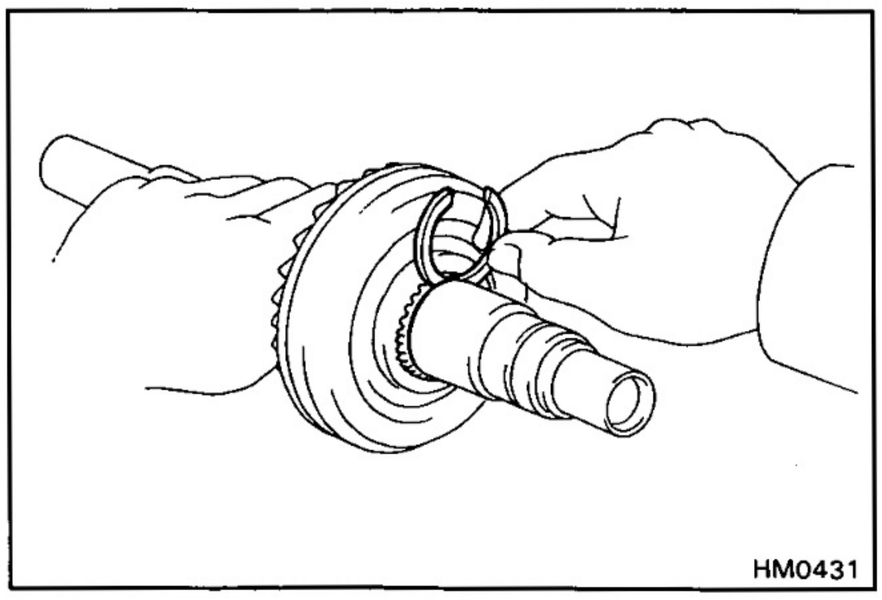

3. INSTALL SNAP RING

(a) Select a snap ring that will allow minimum axial play.

Mark	Thickness mm (in.)
A	2.40 — 2.45 (0.0945 — 0.0965)
B	2.45 — 2.50 (0.0965 — 0.0984)
C	2.50 — 2.55 (0.0984 — 0.1004)
D	2.55 — 2.60 (0.1004 — 0.1024)
E	2.60 — 2.65 (0.1024 — 0.1044)
F	2.65 — 2.70 (0.1044 — 0.1063)

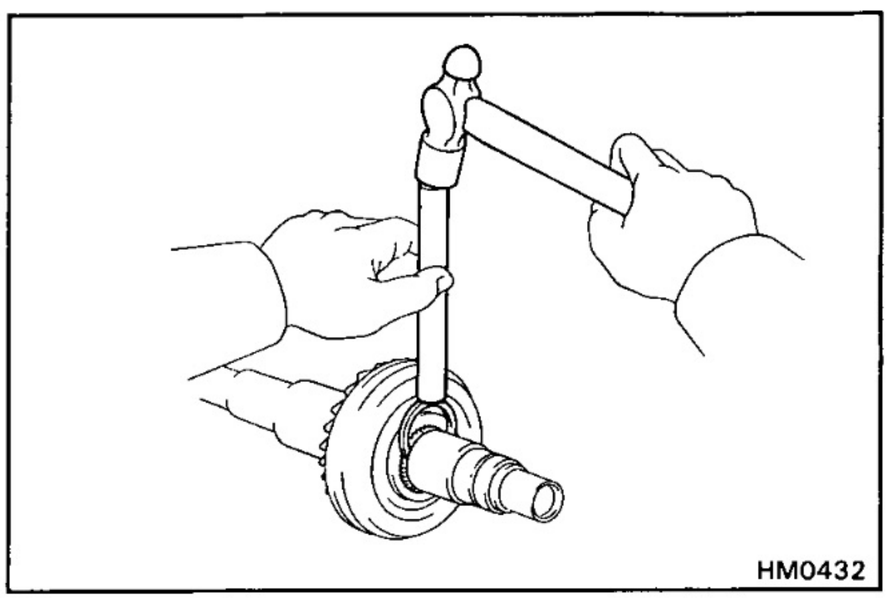
HM0432

(b) Using a brass bar and hammer, drive in the snap ring.

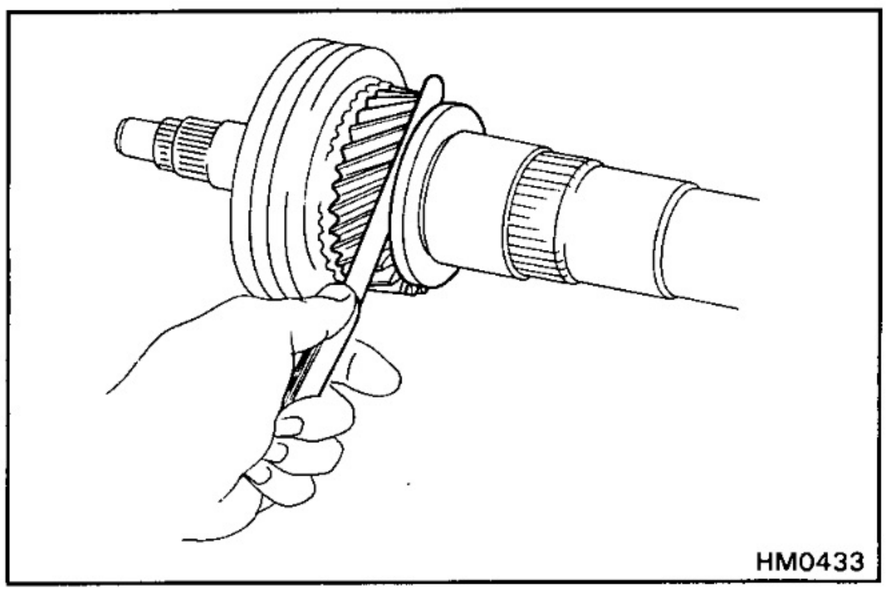
HM0433

4. INSPECT FIFTH GEAR THRUST CLEARANCE

Using a feeler gauge, measure the fifth gear thrust clearance.

Standard clearance:
0.1 — 0.35 mm (0.0039 — 0.0138 in.)

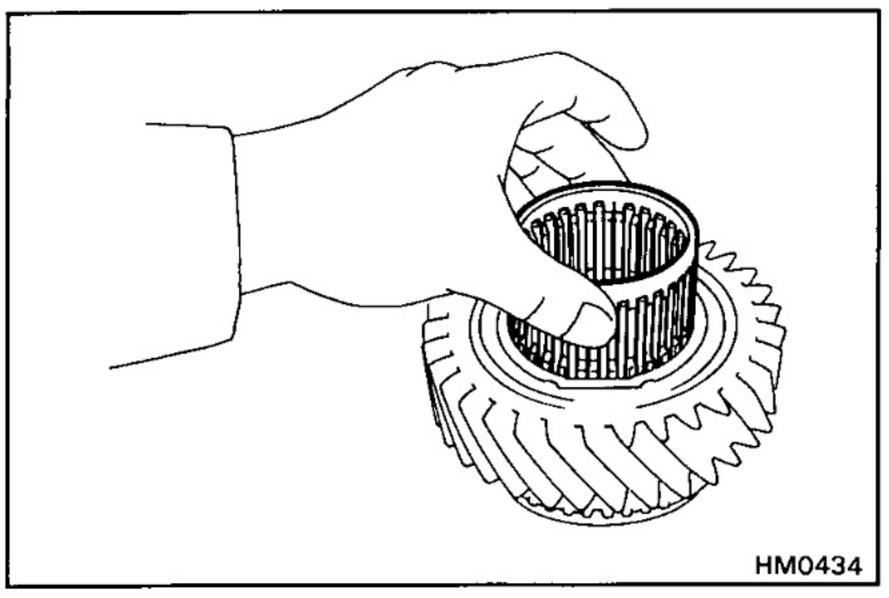
HM0434

5. INSTALL THIRD GEAR AND HUB SLEEVE NO.2 ASSEMBLY

(a) Apply gear oil to the shaft and needle roller bearing.

(b) Place the synchronizer ring on the gear and align the ring slots with the shifting keys.

(c) Install the needle roller bearing in the third gear.

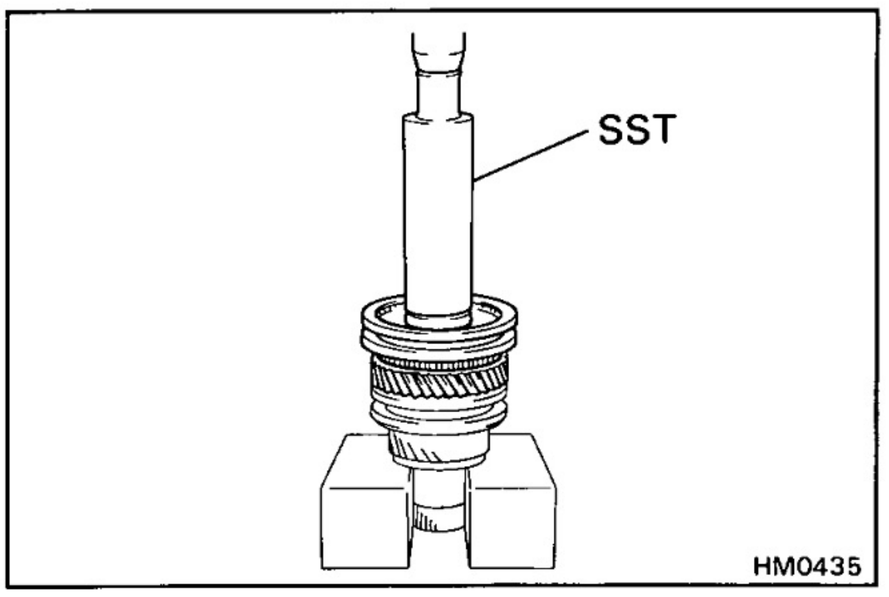

HM0435

(d) Using SST and a press, install the third gear and hub sleeve No.2.

SST 09316-60010 (09316-00010)

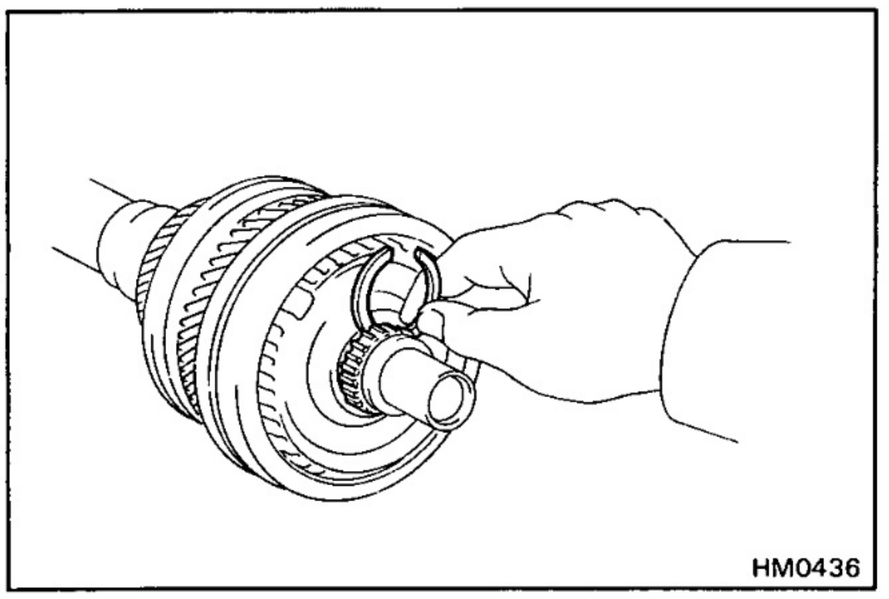
HM0436

6. INSTALL SNAP RING

(a) Select a snap ring that will allow minimum axial play.

Mark	Thickness mm (in.)
4	1.90 — 1.95 (0.0748 — 0.0768)
5	1.95 — 2.00 (0.0768 — 0.0787)
6	2.00 — 2.05 (0.0787 — 0.0807)
7	2.05 — 2.10 (0.0807 — 0.0827)
8	2.10 — 2.15 (0.0827 — 0.0847)
9	2.15 — 2.20 (0.0847 — 0.0866)

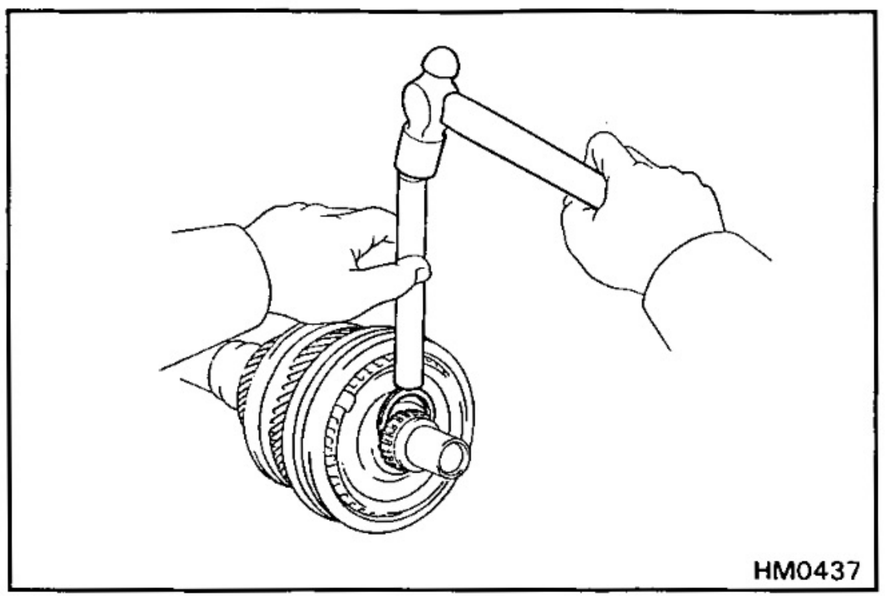
HM0437

(b) Using a brass bar and hammer, drive in a new snap ring.

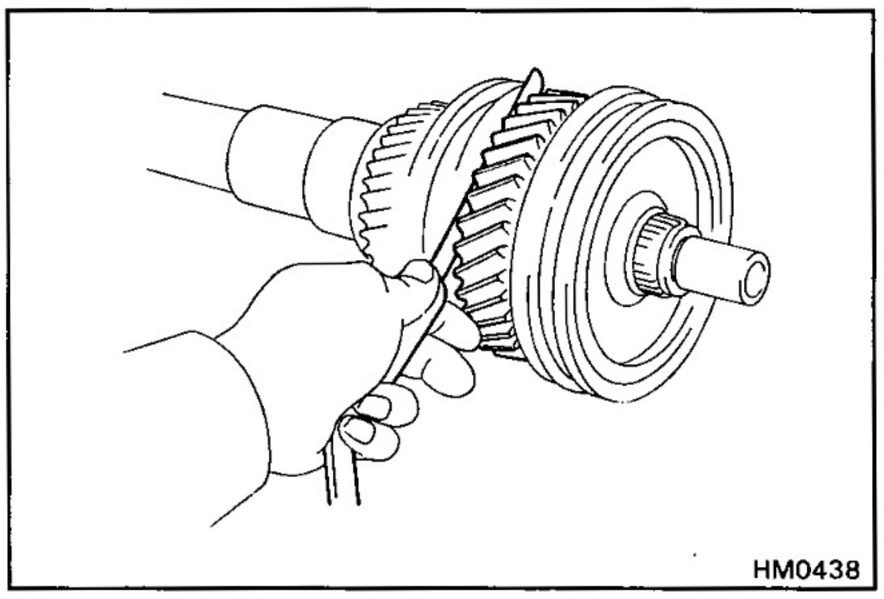
HM0438

7. INSPECT THIRD GEAR THRUST CLEARANCE

Using a feeler gauge, measure the third gear thrust clearance.

Standard clearance:
0.1 — 0.45 mm (0.0039 — 0.0138 in.)

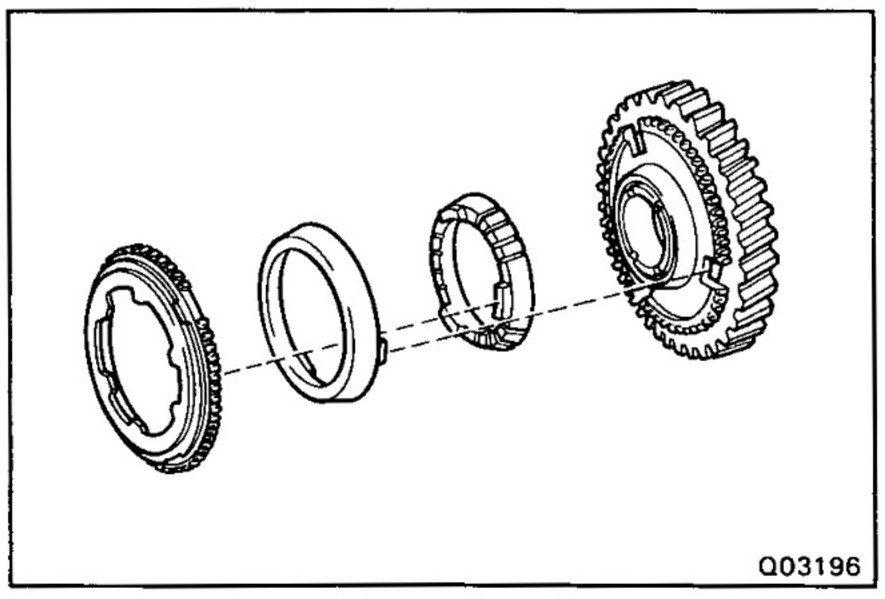
Q03196

8. INSTALL SECOND GEAR AND HUB SLEEVE NO.1 ASSEMBLY

(a) Place the synchronizer rings on the 2nd gear.

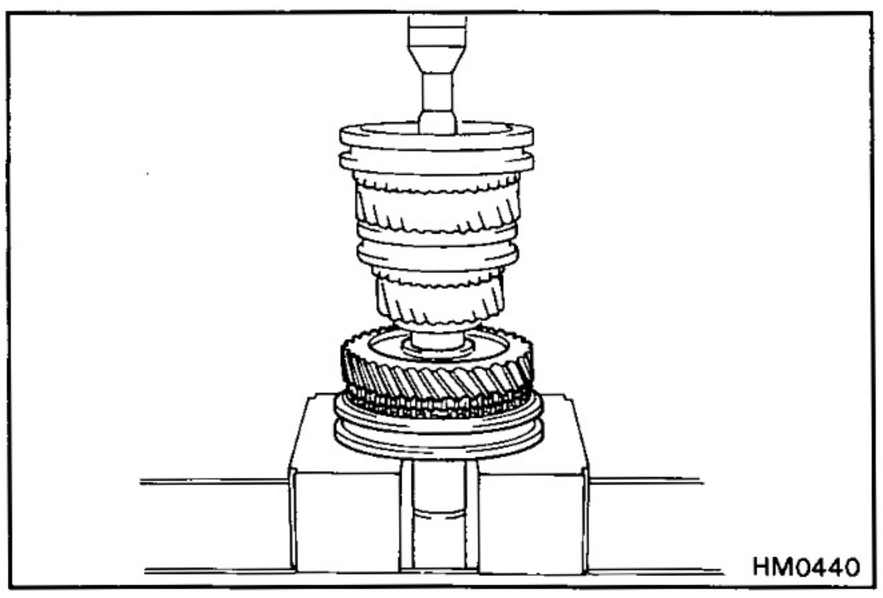
HM0440

(b) Apply gear oil to the shaft and needle roller bearing.

(c) Install the needle roller bearing in the second gear.

(d) Using a press, install the second gear and hub sleeve No.1 assembly.

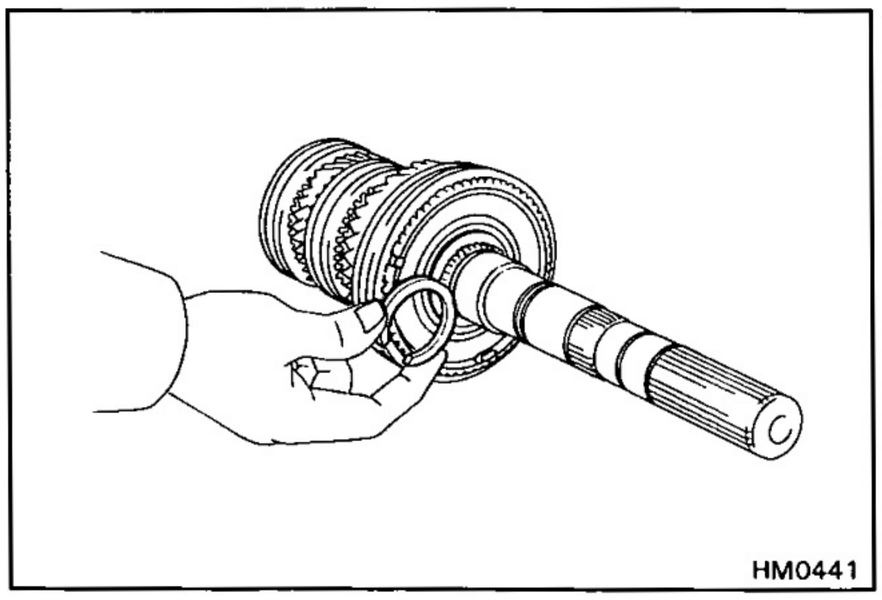
HM0441

9. INSTALL SNAP RING

(a) Select a snap ring that will allow minimum axial play.

Mark	Thickness mm (in.)
A	2.90 — 2.95 (0.1142 — 0.1162)
B	2.95 — 3.00 (0.1162 — 0.1181)
C	3.00 — 3.05 (0.1181 — 0.1201)
D	3.05 — 3.10 (0.1201 — 0.1220)
E	3.10 — 3.15 (0.1220 — 0.1240)
F	3.15 — 3.20 (0.1240 — 0.1260)

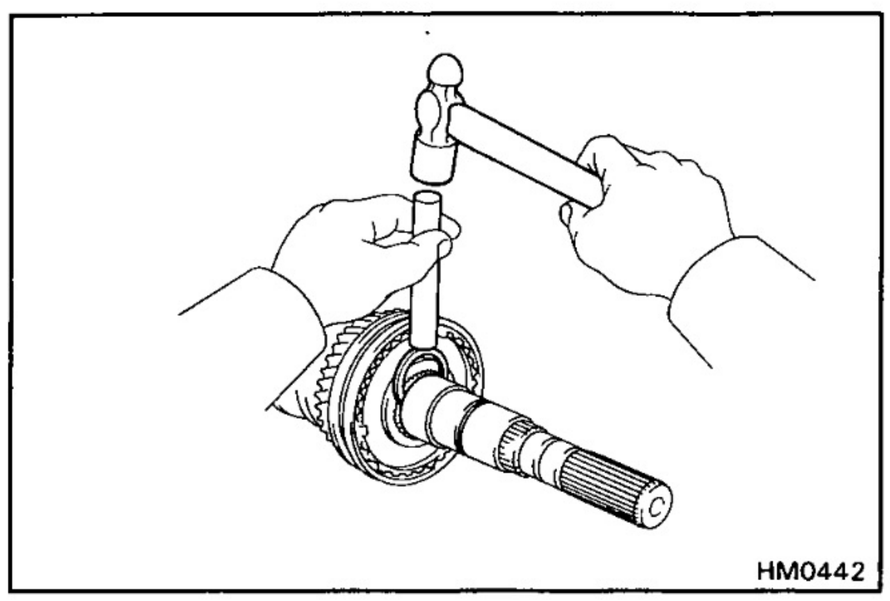

(b) Using a brass bar and hammer, drive in a new snap ring.

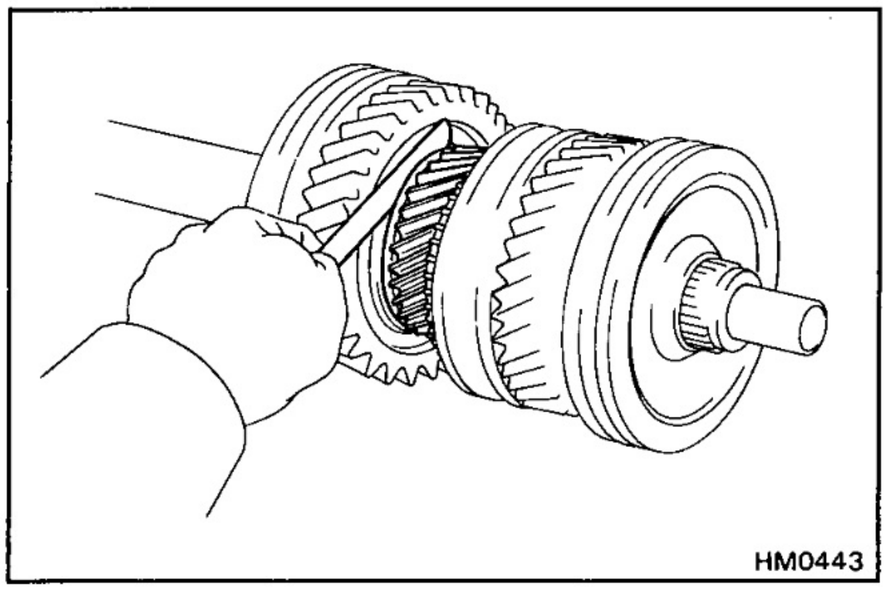

10. INSPECT SECOND GEAR THRUST CLEARANCE

Using a feeler gauge, measure the second gear thrust clearance.

Standard clearance:
0.1 — 0.35 mm (0.0039 — 0.0138 in.)

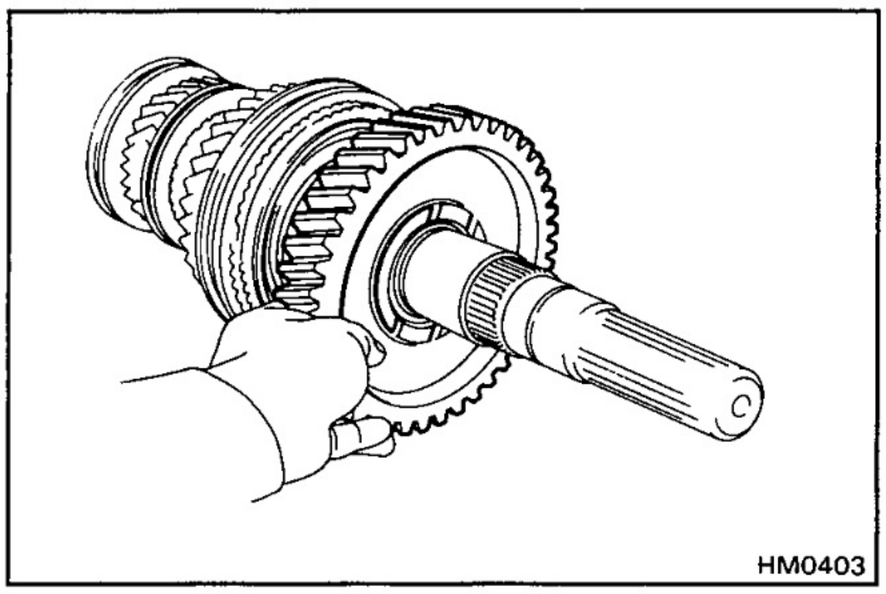

11. INSTALL FIRST GEAR

(a) Apply gear oil to the shaft and needle roller bearing.

(b) Place the synchronizer ring on the gear and align the ring slots with the shifting keys.

(c) Install the needle roller bearing in the first gear.

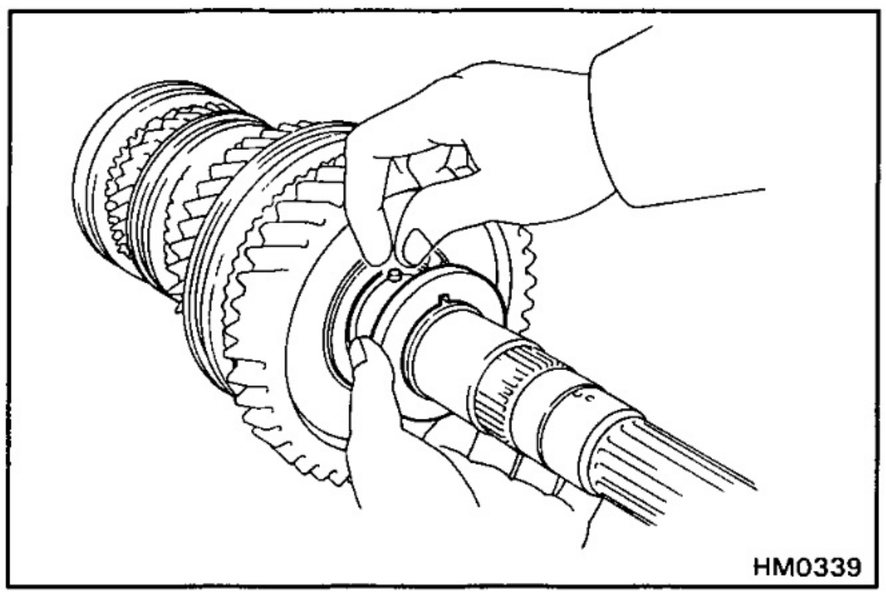

12. INSTALL BALL BEARING

(a) Install the pin and thrust washer.

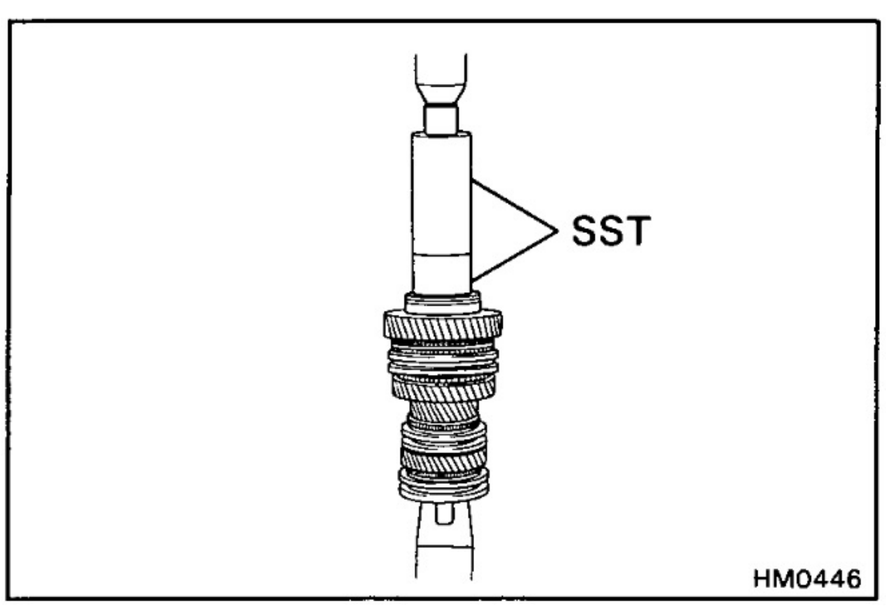

(b) Using SST and a press, install the ball bearing.
SST 09316-60010 (09316-00010), 09523-36010

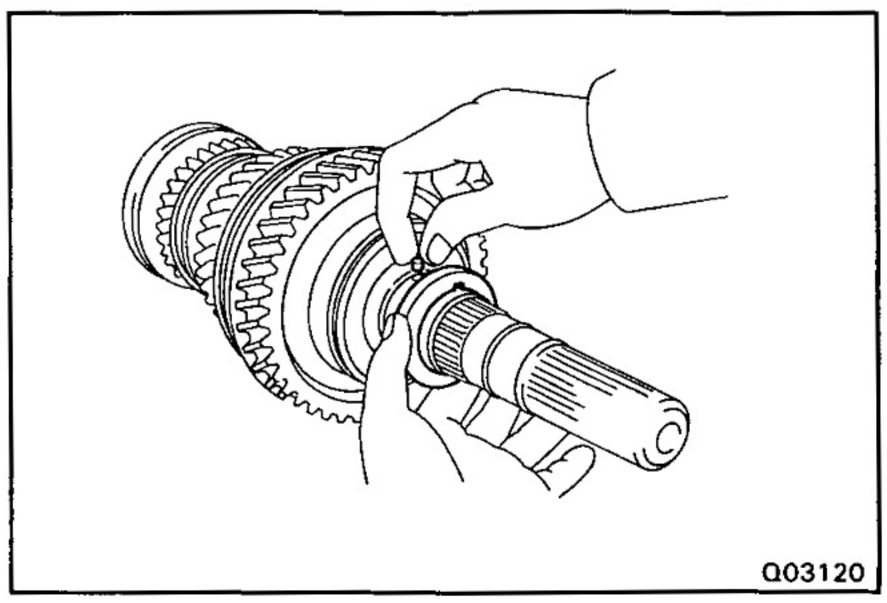
Q03120

(c) Install the pin and thrust washer.

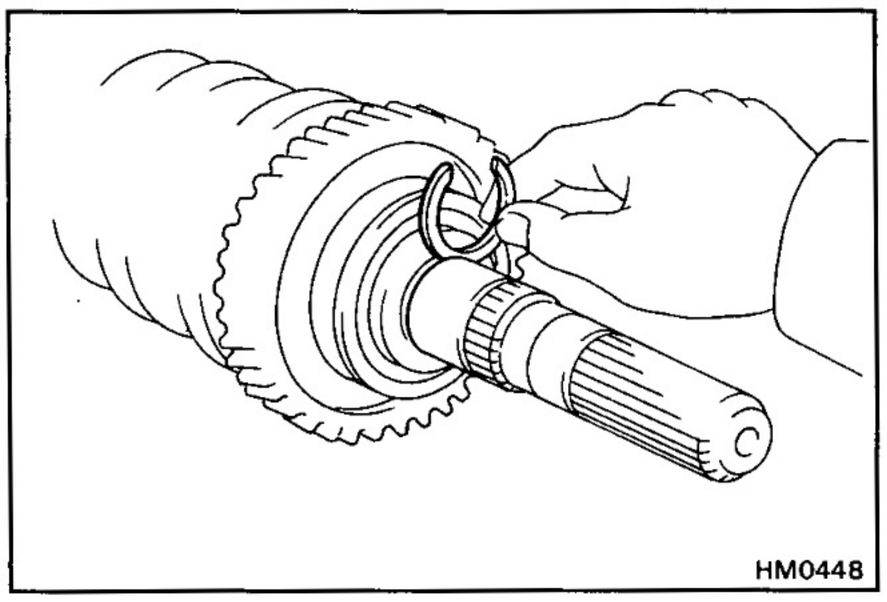
HM0448

13. INSTALL SNAP RING

(a) Select a snap ring that will allow minimum axial play.

Mark	Thickness mm (in.)
A	2.40 — 2.45 (0.0945 — 0.0965)
B	2.45 — 2.50 (0.0965 — 0.0984)
C	2.50 — 2.55 (0.0984 — 0.1004)
D	2.55 — 2.60 (0.1004 — 0.1024)
E	2.60 — 2.65 (0.1024 — 0.1044)
F	2.65 — 2.70 (0.1044 — 0.1063)
G	2.70 — 2.75 (0.1063 — 0.1083)
H	2.75 — 2.80 (0.1083 — 0.1102)

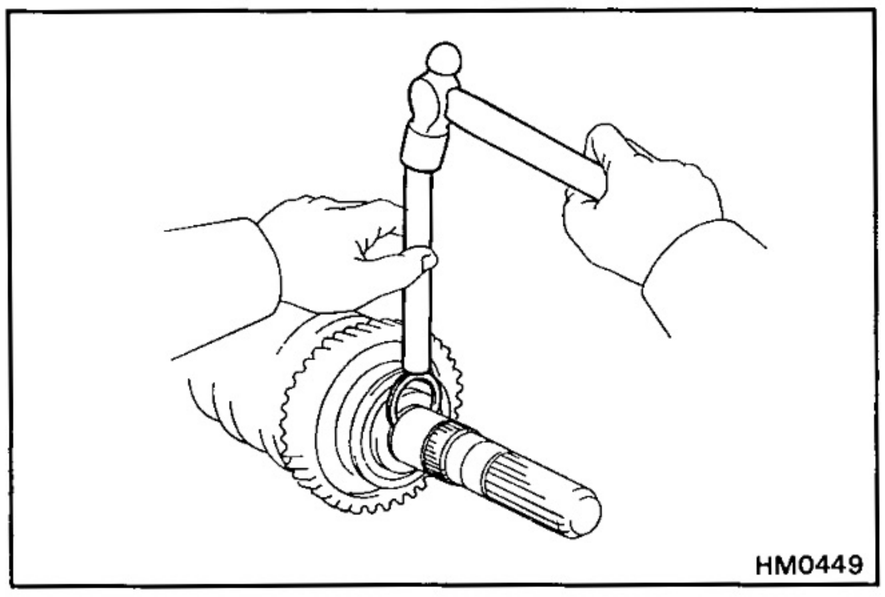
HM0449

(b) Using a brass bar and a hammer, drive in a new snap ring.

SERVICE SPECIFICATIONS

SERVICE DATA

Output shaft 1st gear journal diameter			
	Limit	49.979 mm	1.9177 in.
Output shaft 2nd gear journal diameter			
	Limit	57.984 mm	2.2828 in.
Output shaft 3rd gear journal diameter			
	Limit	37.979 mm	1.4952 in.
Output shaft 5th gear journal diameter			
	Limit	45.984 mm	1.8104 in.
Output shaft Frange thickness			
	Limit	4.725 mm	0.1860 in.
Output shaft Runout			
	Limit	0.03 mm	0.0012 in.
Gear thrust clearance 1st and 3rd			
	STD	0.1 — 0.45 mm	0.0039 — 0.0177 in.
Gear thrust clearance 2nd and 5th			
	STD	0.1 — 0.35 mm	0.0039 — 0.0138 in.
Gear oil clearance 1st and 3rd			
	STD	0.020 — 0.073 mm	0.0008 — 0.0029 in.
Gear oil clearance 2nd and 5th			
	STD	0.015 — 0.068 mm	0.0006 — 0.0027 in.
Synchronizer ring for 1st gear clearance			
	Limit	1.1 mm	0.04331 in.
Synchronizer ring for 2nd gear clearance			
	Limit	0.85 mm	0.0335 in.
Synchronizer ring for 3rd gear clearance			
	Limit	0.8 mm	0.0315 in.
Output shaft snap ring thickness			
No.3 Hub sleeve	Mark A	2.40 — 2.45 mm	0.0945 — 0.0965 in.
No.3 Hub sleeve	Mark B	2.45 — 2.50 mm	0.0965 — 0.0984 in.
No.3 Hub sleeve	Mark C	2.50 — 2.55 mm	0.0984 — 0.1004 in.
No.3 Hub sleeve	Mark D	2.55 — 2.60 mm	0.1004 — 0.1024 in.
No.3 Hub sleeve	Mark E	2.60 — 2.65 mm	0.1024 — 0.1044 in.
No.3 Hub sleeve	Mark F	2.65 — 2.70 mm	0.1044 — 0.1063 in.
No.2 Hub sleeve	Mark 4	1.90 — 1.95 mm	0.0748 — 0.0768 in.
No.2 Hub sleeve	Mark 5	1.95 — 2.00 mm	0.0768 — 0.0787 in.
No.2 Hub sleeve	Mark 6	2.00 — 2.05 mm	0.0787 — 0.0807 in.
No.2 Hub sleeve	Mark 7	2.05 — 2.10 mm	0.0807 — 0.0827 in.
No.2 Hub sleeve	Mark 8	2.10 — 2.15 mm	0.0827 — 0.0847 in.
No.2 Hub sleeve	Mark 9	2.15 — 2.20 mm	0.0847 — 0.0866 in.
No.1 Hub sleeve	Mark A	2.90 — 2.95 mm	0.1142 — 0.1162 in.
No.1 Hub sleeve	Mark B	2.95 — 3.00 mm	0.1162 — 0.1181 in.
No.1 Hub sleeve	Mark C	3.00 — 3.05 mm	0.1181 — 0.1201 in.
No.1 Hub sleeve	Mark D	3.05 — 3.10 mm	0.1201 — 0.1220 in.
No.1 Hub sleeve	Mark E	3.10 — 3.15 mm	0.1220 — 0.1240 in.
No.1 Hub sleeve	Mark F	3.15 — 3.20 mm	0.1240 — 0.1260 in.
Rear bearing	Mark A	2.40 — 2.45 mm	0.0945 — 0.0965 in.
Rear bearing	Mark B	2.45 — 2.50 mm	0.0965 — 0.0984 in.
Rear bearing	Mark C	2.50 — 2.55 mm	0.0984 — 0.1004 in.
Rear bearing	Mark D	2.55 — 2.60 mm	0.1004 — 0.1024 in.
Rear bearing	Mark E	2.60 — 2.65 mm	0.1024 — 0.1044 in.
Rear bearing	Mark F	2.65 — 2.70 mm	0.1044 — 0.1063 in.
Rear bearing	Mark G	2.70 — 2.75 mm	0.1063 — 0.1083 in.
Rear bearing	Mark H	2.75 — 2.80 mm	0.1083 — 0.1102 in.

TORQUE SPECIFICATIONS

Part tightened	N·m	kgf·cm	ft·lbf
Transfer x Transmission	69	700	51
Engine rear mounting x Transfer adapter	59	600	43
Transmission x Engine	72	730	53
Crossmember x Body	39	400	29
Crossmember x Engine rest mounting	76	780	56
Stabirizer bracket x Axle housing	28	290	21
Exhaust pipe bracket x Clutch housing	39	400	29
Exhaust pipe clamp	19	195	14
Exhaust center pipe	39	400	29
Transmission x Starter	39	400	29
Clutch release cylinder set bolt	12	120	9
Shift lever control retainer x Transmission case	17	170	12
Front propeller shaft x Front differential	74	750	54
Front propeller shaft x Transfer	74	750	54
Rear propeller shaft x Rear differential	88	900	65
Rear propeller shaft x Transfer	88	900	65

DESCRIPTION

PRECAUTIONS

When working with FIPG material, you must be observe the following.

- Using a razor blade and gasket scraper, remove all the old sealant (FIPG) material from the gasket surfaces.
- Throughly clean all components to remove all the loose material.
- Clean both sealing surfaces with a non-residue solvent.
- Apply the sealant in approx. 1 mm (0.04 in.) bead along the sealing surface.
- Parts must be assembled within 10 minutes of application. Otherwise, the sealant (FIPG) material must be removed and reapplied.

DESCRIPTION

- Transaxle type H150F and H151F are constant mesh synchronizers for forward gears, and a sliding mesh reverse gear.
- (H150F) A triple-cone type synchromesh mechanism is used in the second gear to improve the shift feeling characteristics. This helps to reduce the shifting effort, provide smoothly shifting.
- (H151F) A triple-cone type synchromesh mechanism is used in the first, second and third gears to improve the shift feeling characteristics. This helps to reduce the shifting effort, provide smoothly shifting.
- The input shaft is composed of the 1st and 2nd speed gears and the reverse drive gear, and the output shaft is composed of the drive gear (for use with the ring gear).

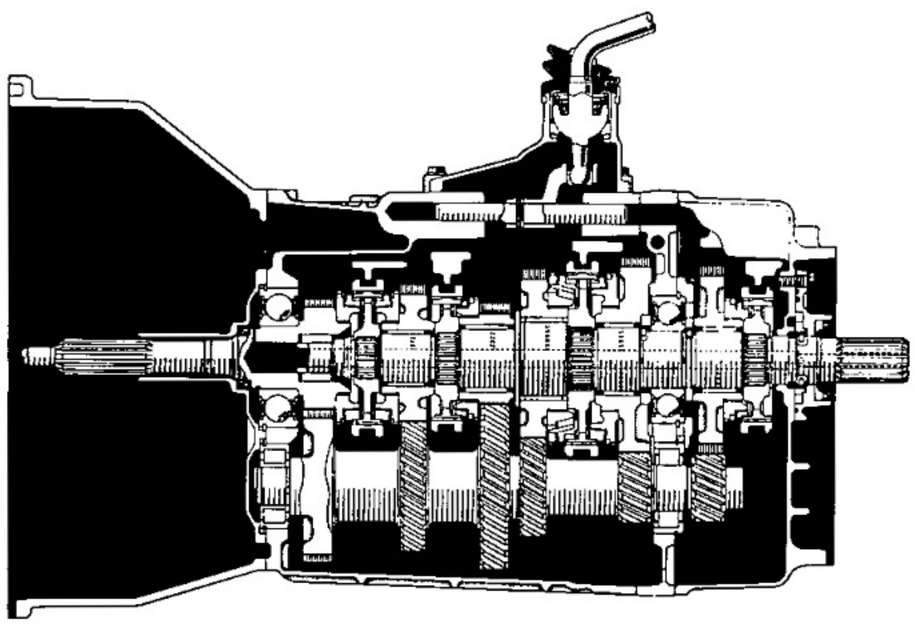

Q03143

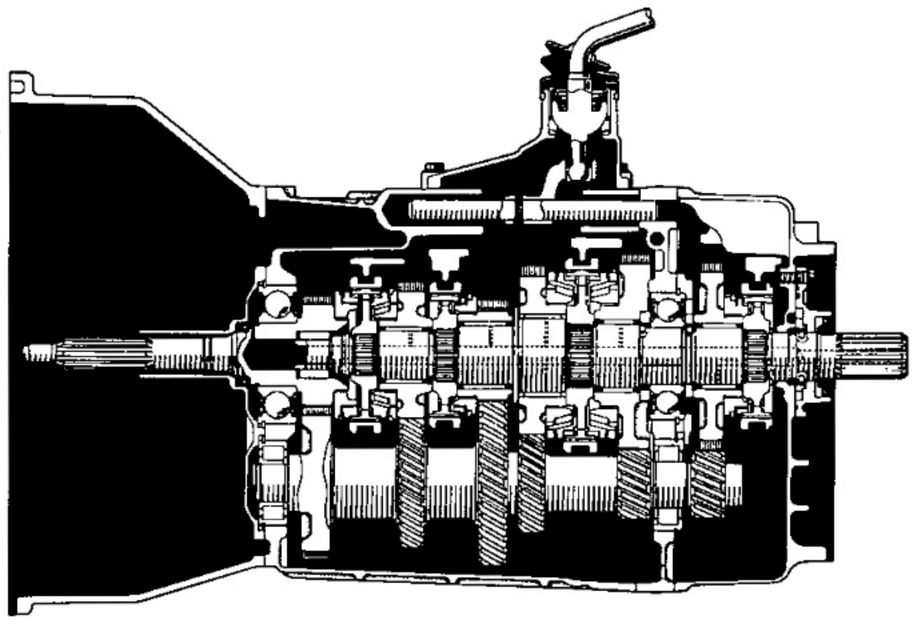

Q03145

Type of Transmission		H150F	H151F
Type of Engine		1HZ	1HD-T, 1FZ-F, 1FZ-FE
Gear Ratio	1st	4.529	4.081
	2nd	2.464	2.294
	3rd	1.490	←
	4th	1.000	←
	5th	0.881	←
	Reverse	4.313	←
Oil Capacity		2.7 liters (2.6 US qts, 3.1 Imp.qts)	
Oil Vicosity		SAE75W — 90	
Oil Grade		API GL-4 or GL-5	

PREPARATION

SST (SPECIAL SERVICE TOOLS)

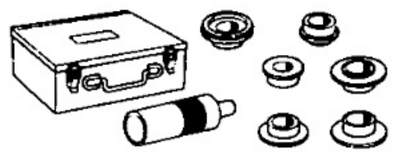	**09316-60010**	Transmission & Transfer Bearing Replacer	
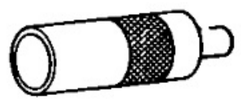	**(09316-00010)**	Replacer Pipe	
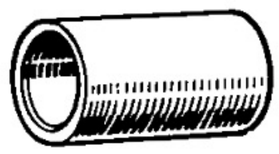	**09523-36010**	Rear Axle Hub Guide Tool	Output shaft rear ball bearing
	**09555-55010**	Differential Drive Pinion Bearing Replacer	
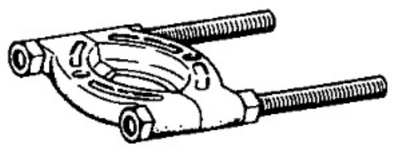	**09950-00020**	Bearing Remover	

OUTPUT SHAFT

COMPONENTS

H150F

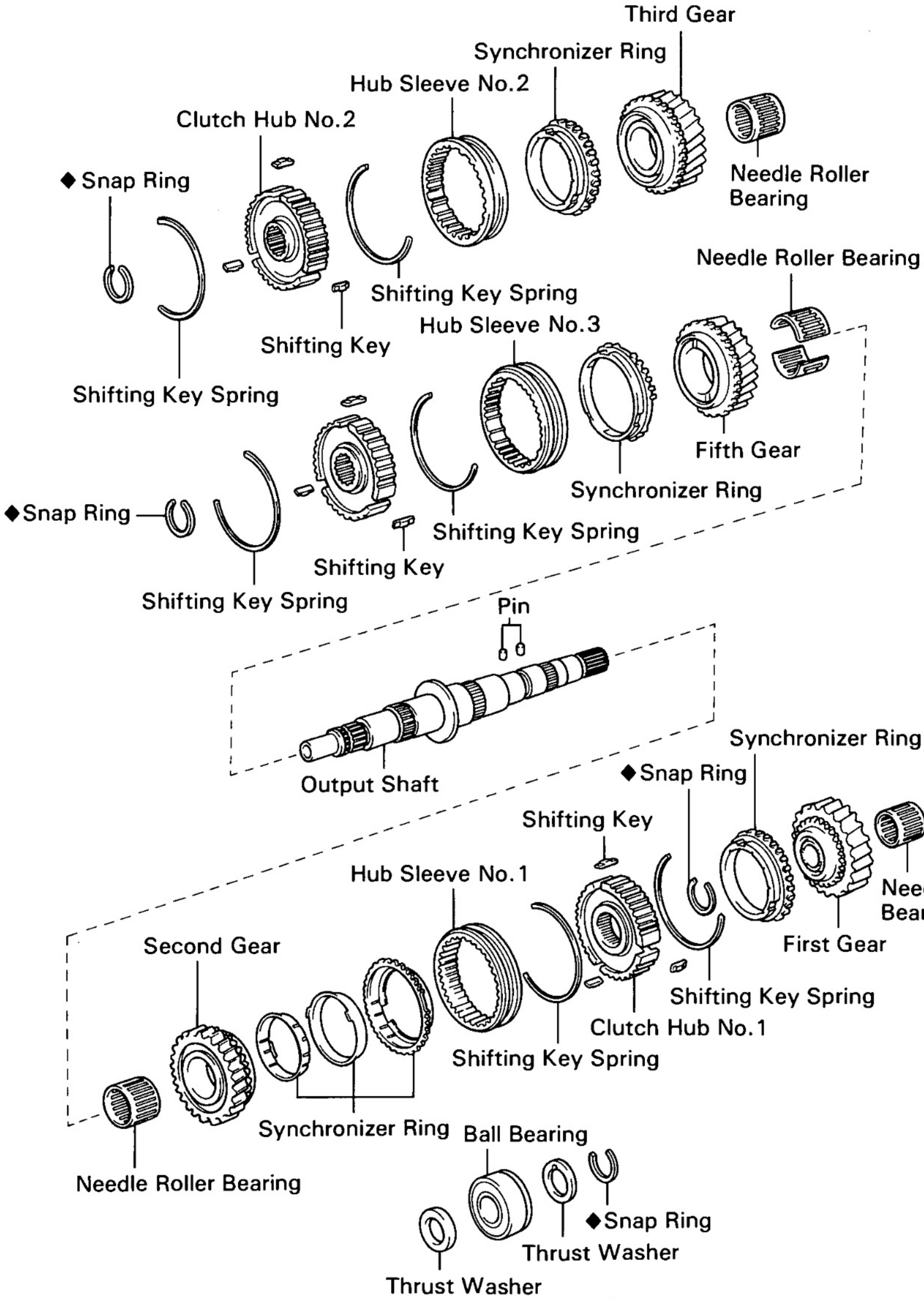

◆ Non-reusable part

Q03128

H151F

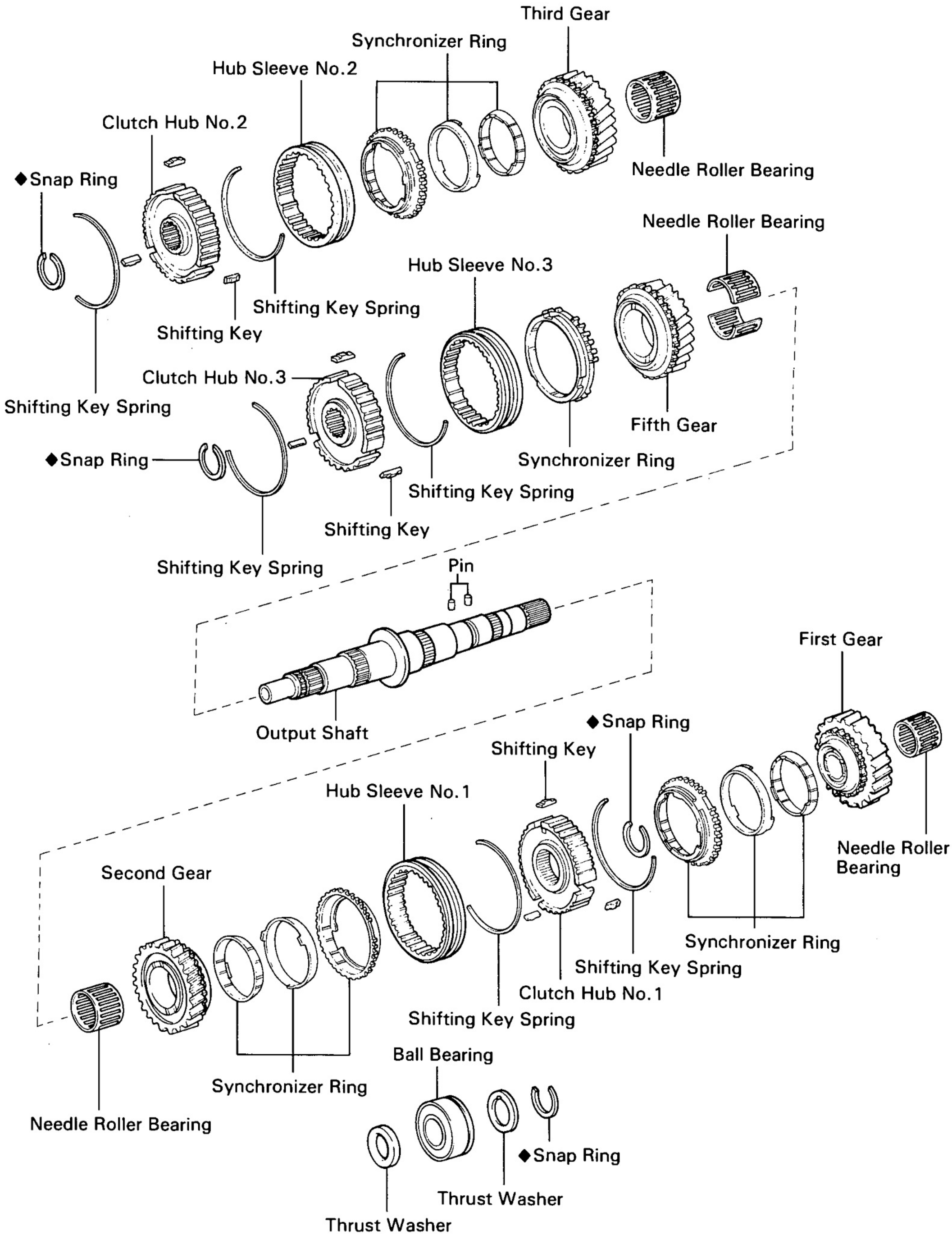

◆ Non-reusable part

HM0527

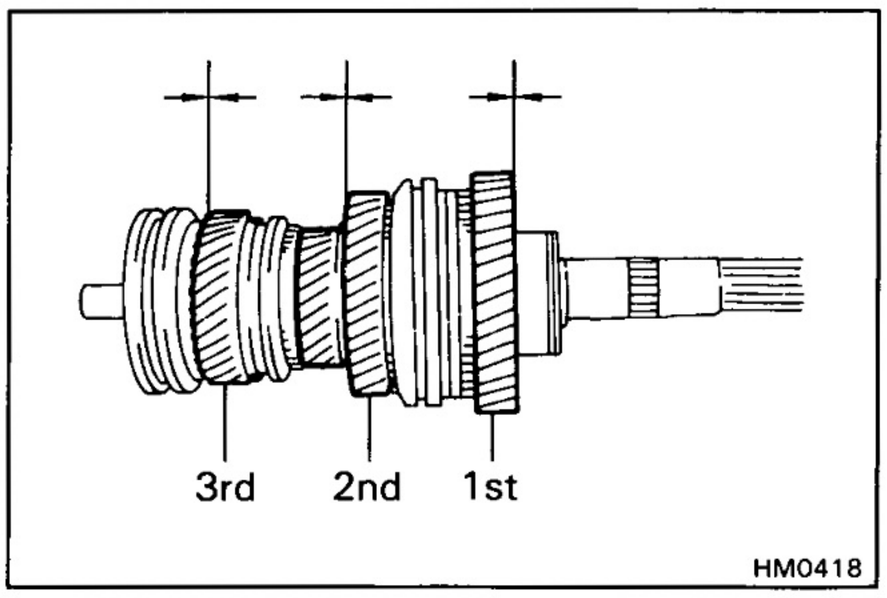

OUTPUT SHAFT DISASSEMBLY

1. INSPECT EACH GEAR THRUST CLEARANCE

Measure the thrust clearance of each gear.

Standard clearance:

1st and 3rd gear	**0.1 — 0.45 mm (0.0039 — 0.0177 in.)**
2nd and 5th gear	**0.1 — 0.35 mm (0.0039 — 0.0138 in.)**

Maximum clearance:

1st and 3rd gear	**0.45 mm (0.0177 in.)**
2nd and 5th gear	**0.35 mm (0.0138 in.)**

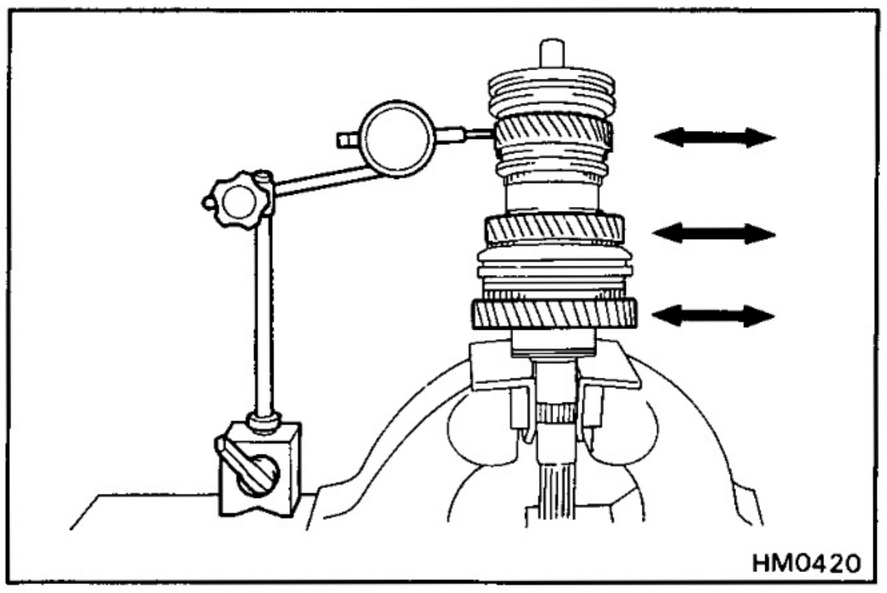

2. INSPECT EACH GEAR OIL CLEARANCE

Using a dial indicator, measure the oil clearance of each gear.

Standard clearance:

1st and 3rd gear	**0.020 — 0.073 mm (0.0008 — 0.0029 in.)**
2nd and 5th gear	**0.015 — 0.068 mm (0.0006 — 0.0027 in.)**

Maximum clearance:

1st and 3rd gear	**0.073 mm (0.0029 in.)**
2nd and 5th gear	**0.068 mm (0.0027 in.)**

3. REMOVE BALL BEARING AND FIRST GEAR

(a) Using two screwdrivers and a hammer, drive out the snap ring.

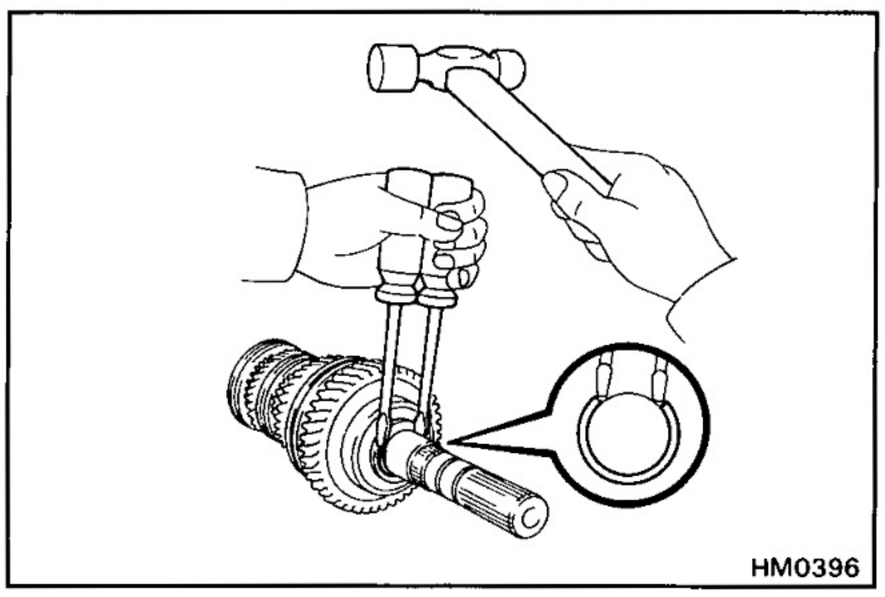

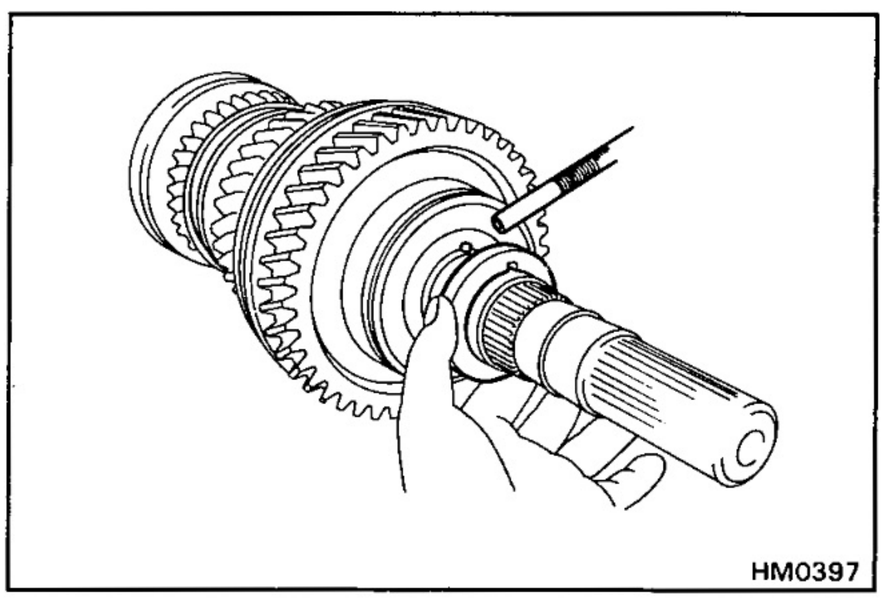

(b) Remove the thrust washer and pin.

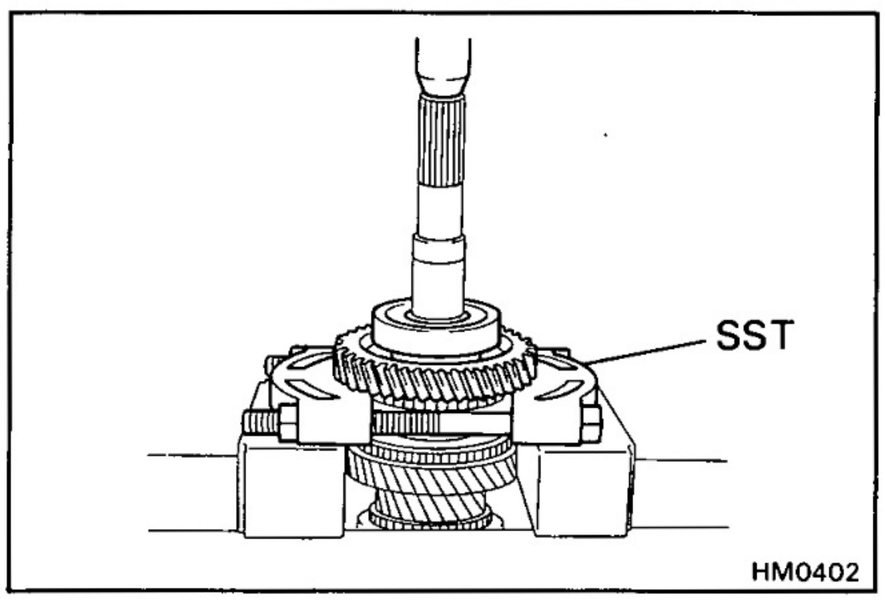

(c) Using SST and a press, remove the ball bearing, thrust washer, first gear and synchronizer ring.

H150F — Single Synchronizer ring

H151F — Triple Synchronizer rings

SST 09555-55010

(d) Remove the pin and needle roller bearing.

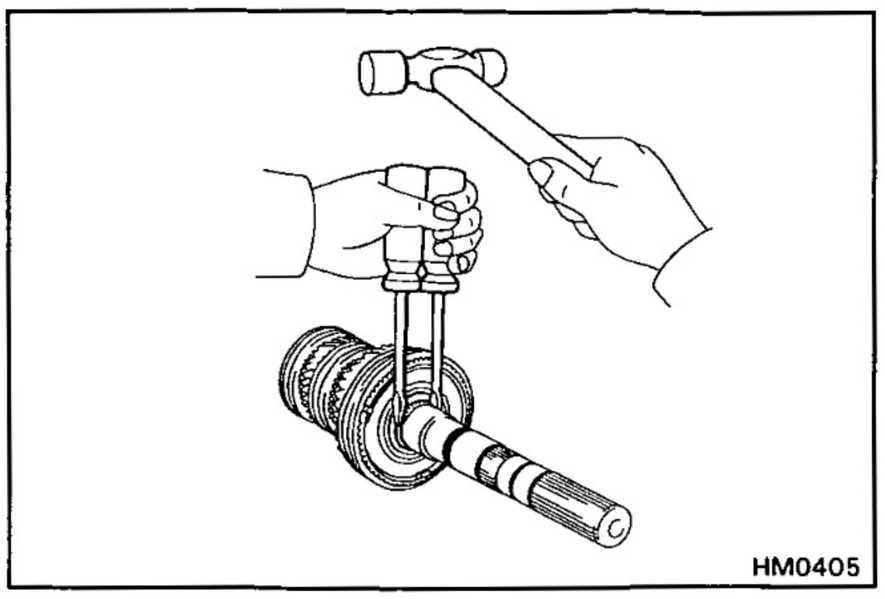
HM0405

4. REMOVE HUB SLEEVE NO.1 ASSEMBLY, SYNCHRONIZER RING, SECOND GEAR AND NEEDLE ROLLER BEARING

(a) Using two screwdrivers and a hammer, drive out the snap ring.

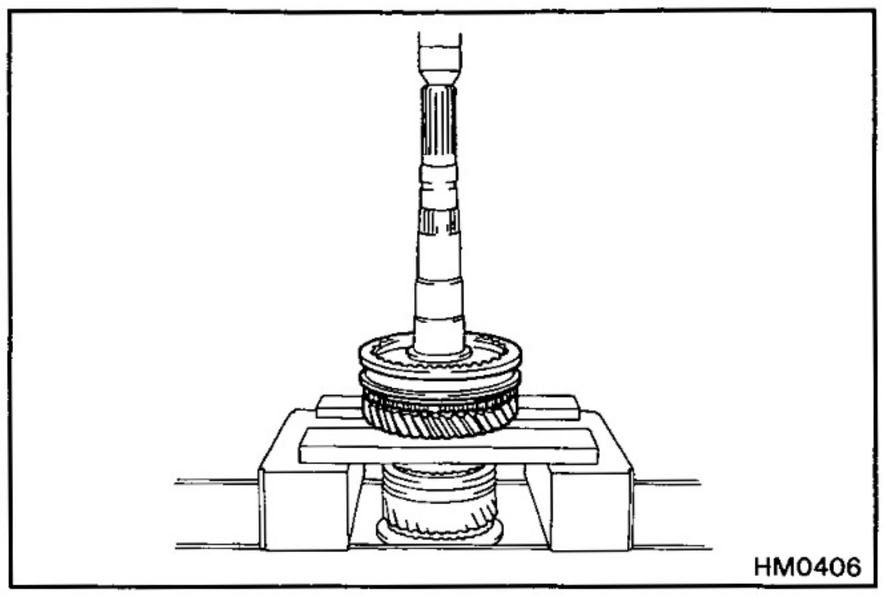
HM0406

(b) Using a press, remove the hub sleeve No.1 assembly, synchronizer rings, and second gear.

(c) Remove the needle roller bearing.

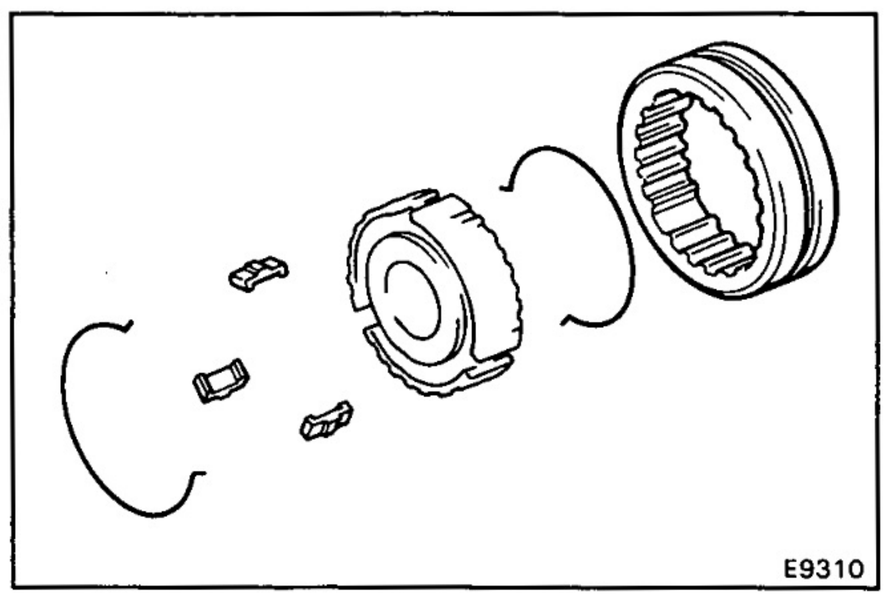
E9310

5. REMOVE HUB SLEEVE NO.1, SHIFTING KEYS AND SPRINGS FROM CLUTCH HUB NO.1

Using a screwdriver, remove the three shifting keys and two springs from the clutch hub No.1.

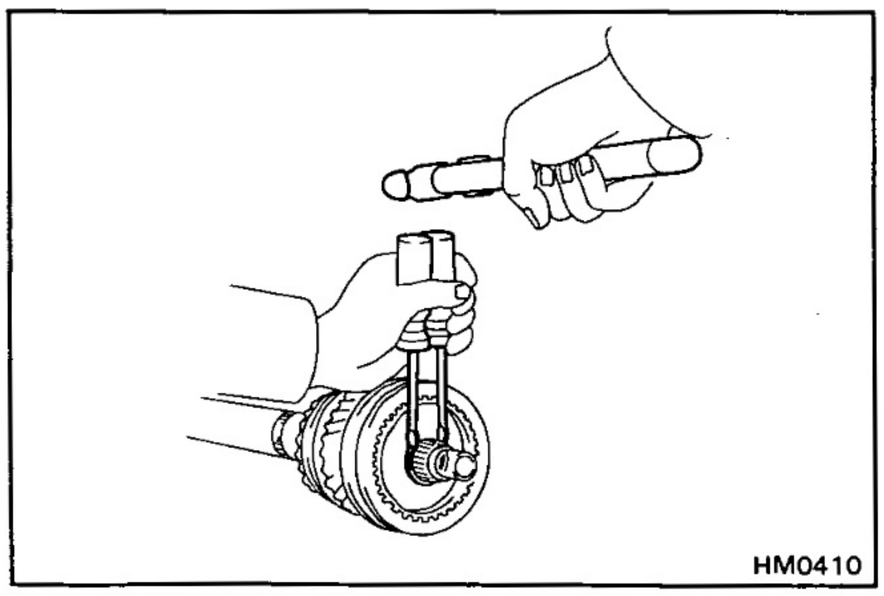
HM0410

6. REMOVE HUB SLEEVE NO.2 ASSEMBLY, SYNCHRONIZER RING, THIRD GEAR AND NEEDLE ROLLER BEARING

(a) Remove two screwdrivers and a hammer, drive out the snap ring.

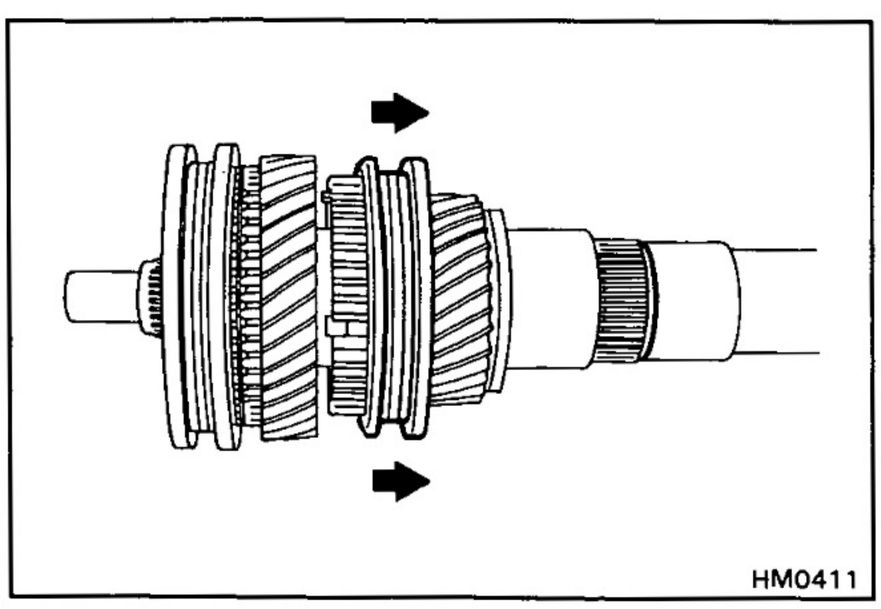
HM0411

(b) Shift hub sleeve No.3 onto the fifth gear.

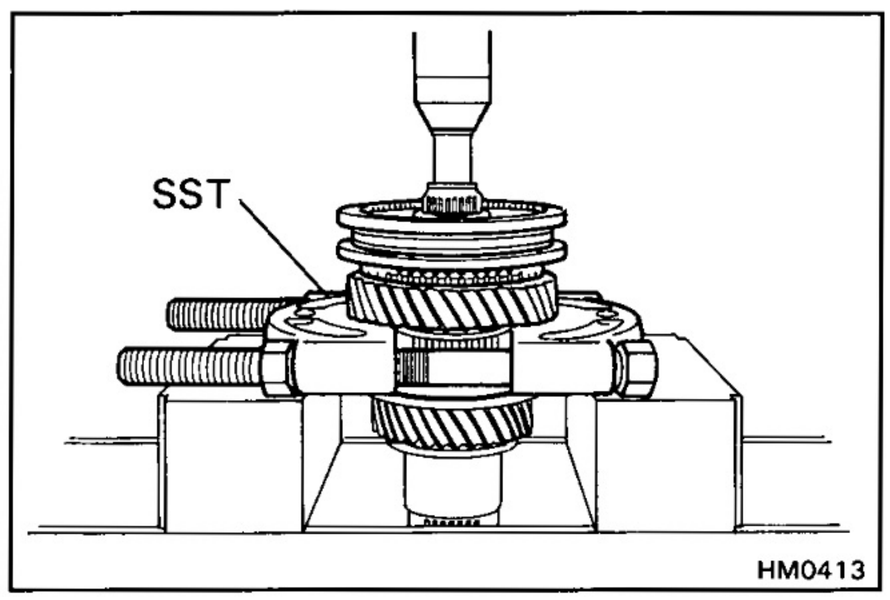

(c) Using SST and a press, remove the hub sleeve No.2 assembly, synchronizer ring and third gear.

H150F — Single Synchronizer ring

H151F — Triple Synchronizer rings

SST 09555-55010

(d) Remove the needle roller bearing.

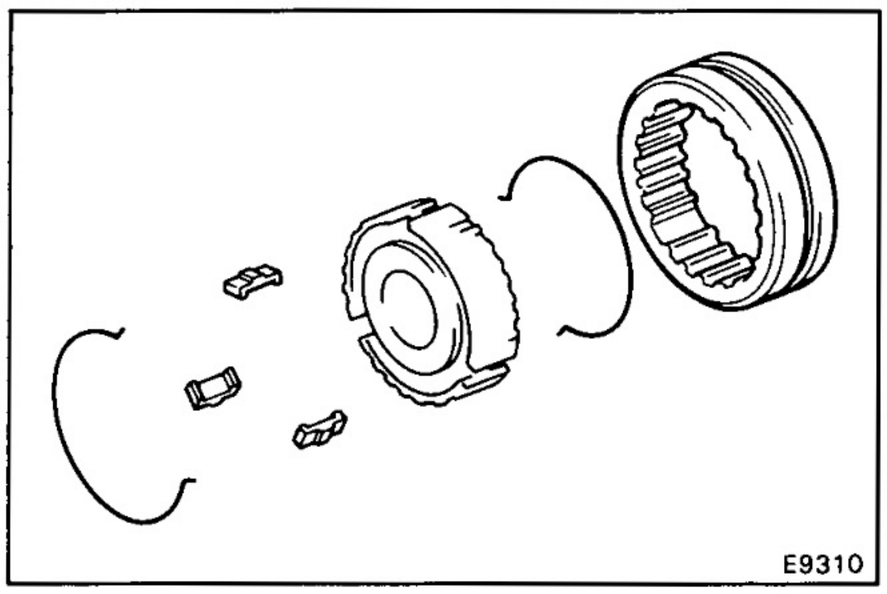

7. REMOVE HUB SLEEVE NO.2, SHIFTING KEYS AND SPRINGS FROM CLUTCH HUB NO.2

Using a screwdriver, remove the three shifting keys and two springs from the clutch hub No.2.

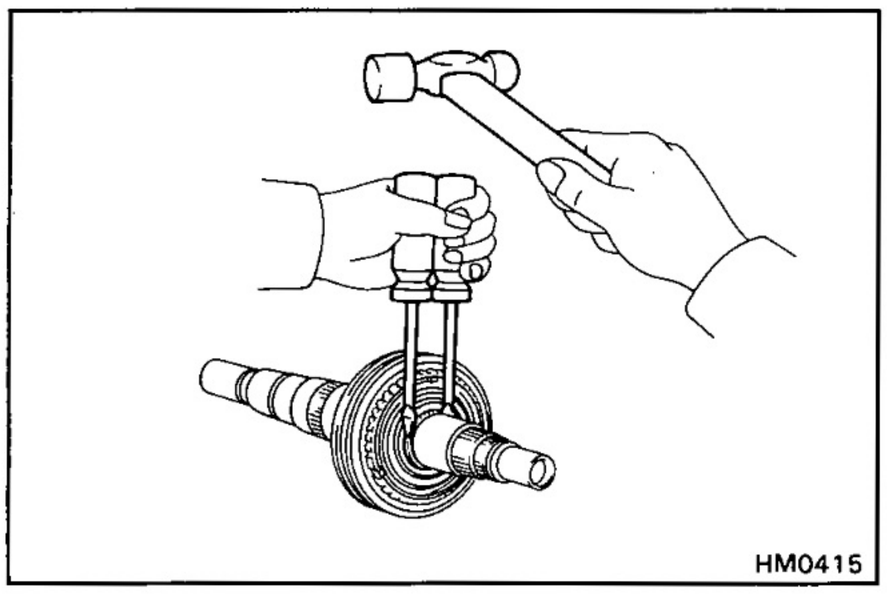

8. REMOVE HUB SLEEVE NO.3 ASSEMBLY, SYNCHRONIZER RING, FIFTH GEAR AND NEEDLE ROLLER BEARING

(a) Using two screwdriver, and a hammer, drive out the snap ring.

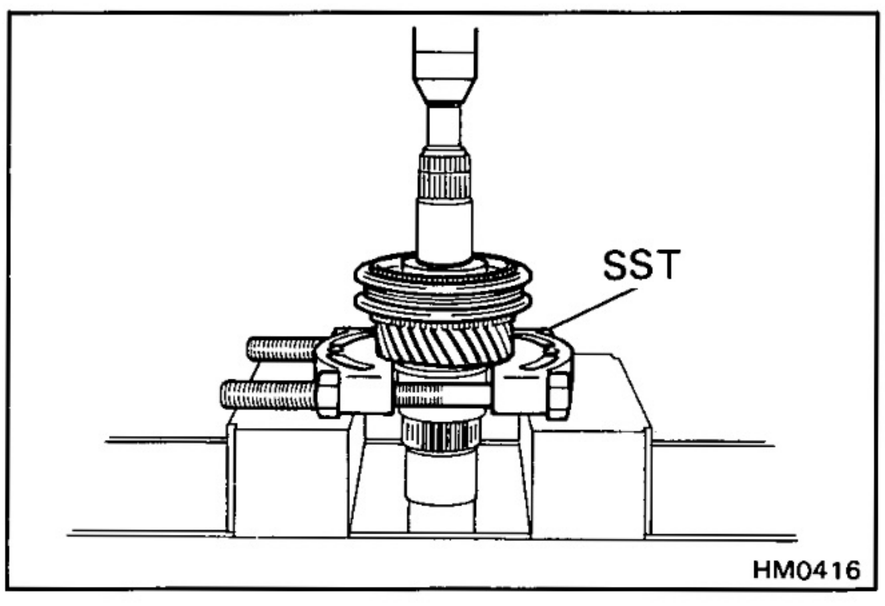

(b) Using SST and a press, remove the hub sleeve No.3 assembly and synchronizer ring.

SST 09950-00020

(c) Remove the needle roller bearing.

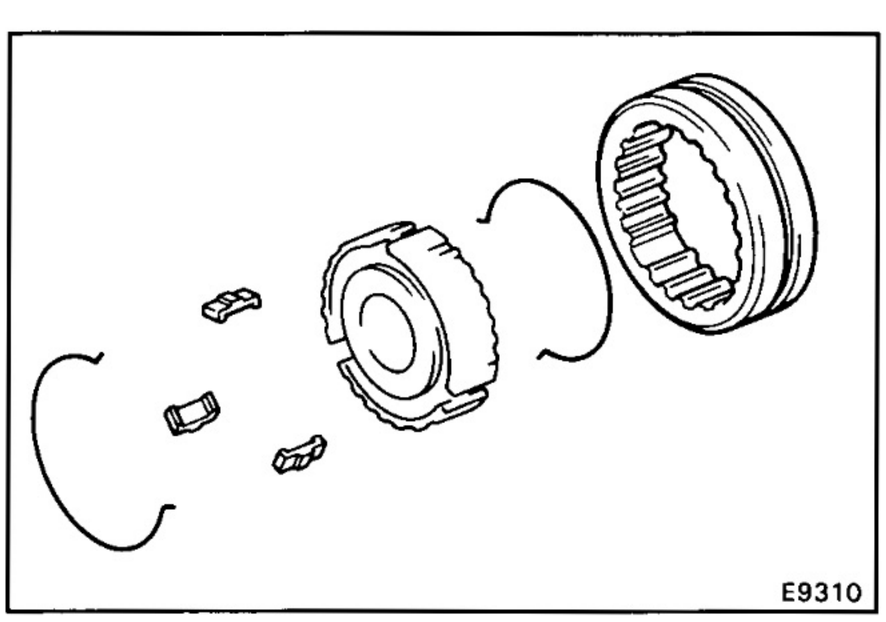

9. REMOVE HUB SLEEVE NO.3 SHIFTING KEYS AND SPRINGS FROM CLUTCH HUB NO.3

Using a screwdriver, remove the three shifting keys and two springs from the clutch hub No.3.

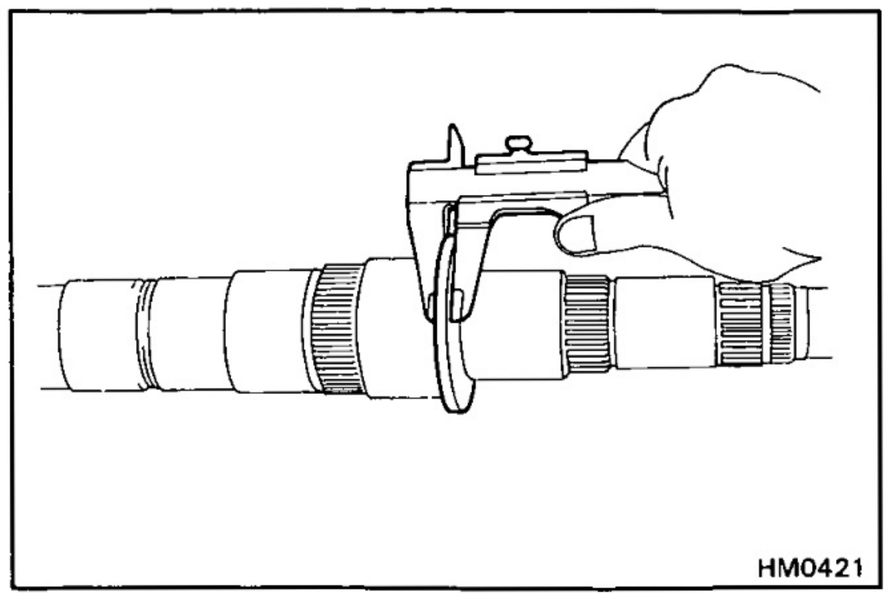
HM0421

OUTPUT SHAFT ASSEMBLY INSPECTION

1. INSPECT OUTPUT SHAFT

(a) Using calipers, measure the output shaft flange thickness.

Minimum thickness:
4.725 mm (0.1860 in.)

If the thickness is less than the minimum, replace the output shaft.

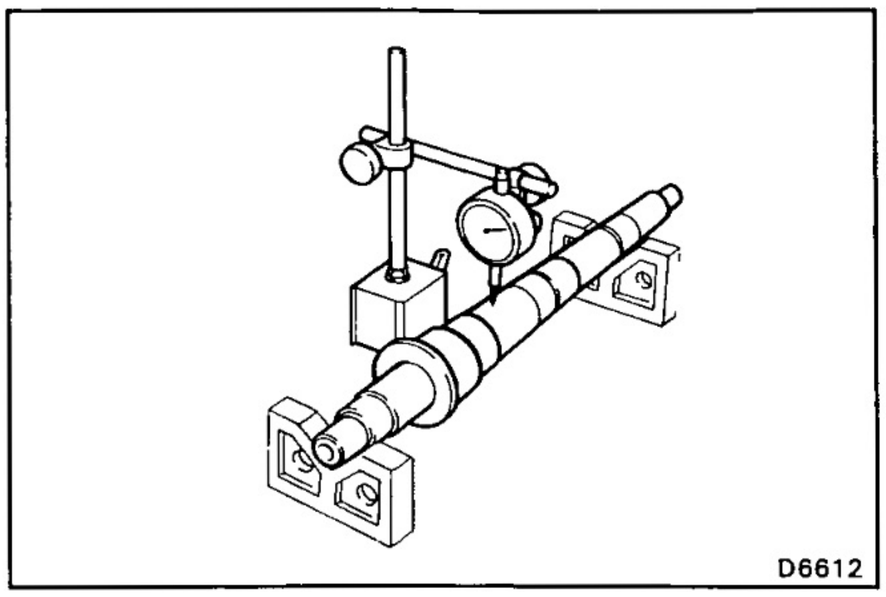
D6612

(b) Using a dial indicator, check the shaft runout.

Maximum runout:
0.03 mm (0.0020 in.)

If the runout exceeds the maximum, replace the output shaft.

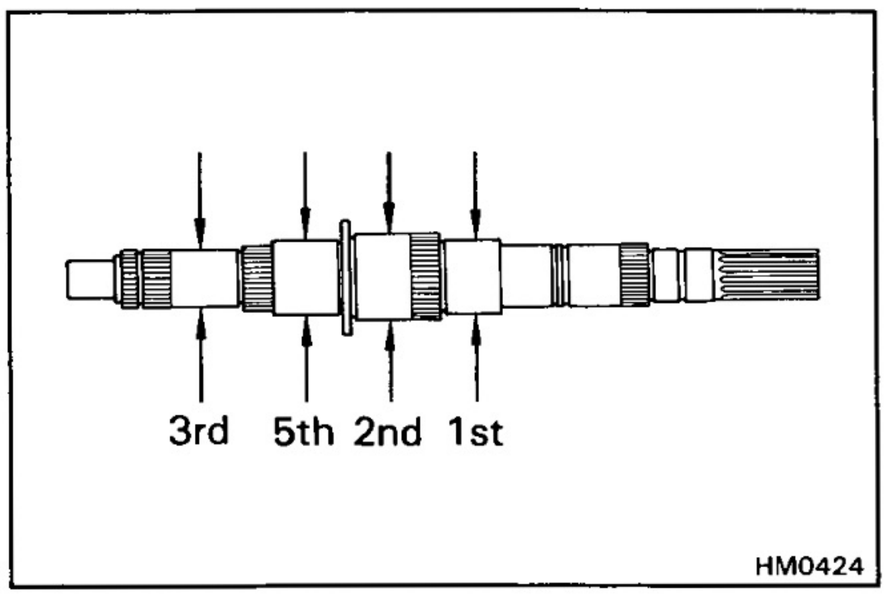

HM0424

(c) Using a micrometer, measure the outer diameter of the output shaft journal.

Minimum outer diameter:

1st	**49.979 mm (1.9677 in.)**
2nd	**57.984 mm (2.2828 in.)**
3rd	**37.979 mm (1.4952 in.)**
5th	**45.984 mm (1.8104 in.)**

If the outer diameter is less than the minimum, replace the output shaft.

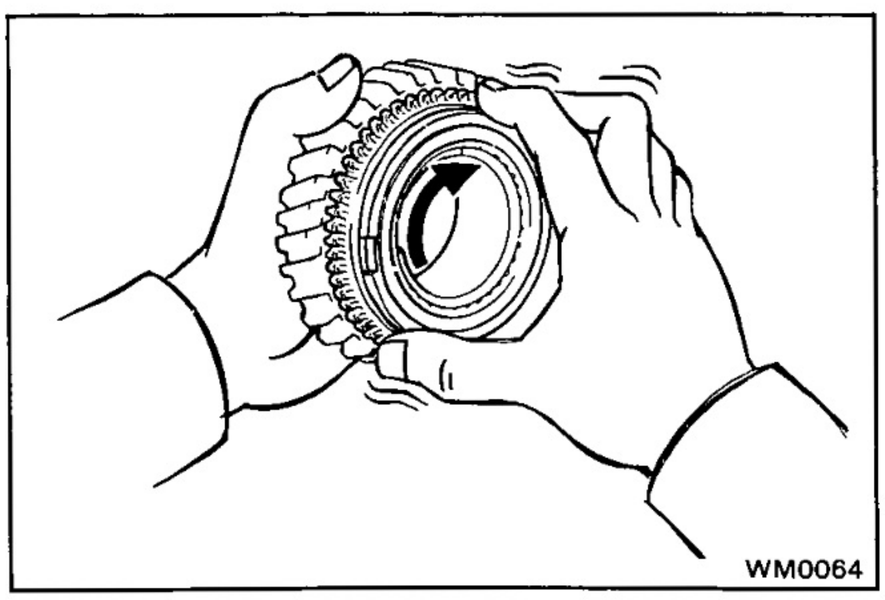
WM0064

2. INSPECT SYNCHRONIZER RINGS

H150F — FOR FIRST, THIRD AND FIFTH GEARS

H151F — FOR FIFTH GEARS

(a) Check for wear or damage.

(b) Check the braking effect of the synchronizer ring. Turn the synchronizer ring in one direction while pushing it to the gear cone and check that the ring is locked. If the braking effect is insufficient, lightly rub the synchronizer ring and gear cone by applying a small amount of fine lapping compound.

NOTICE:

- **Wash off completely the fine lapping compound after rubbing.**
- **Check again the braking effect of the synchronizer ring.**

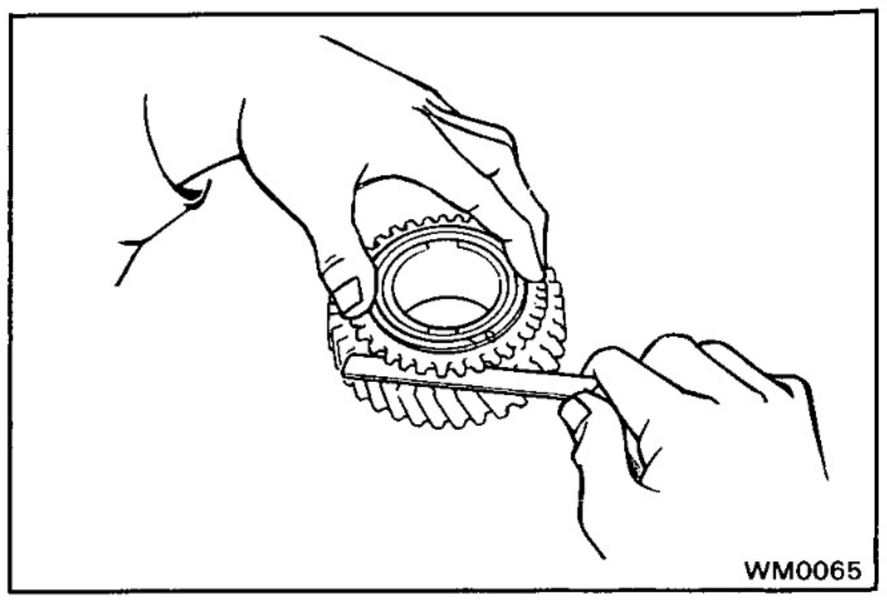
WM0065

(c) Using a feeler gauge, measure the clearance between the synchronizer ring back and the gear spline end.

Minimum clearance:

1st gear	**1.1 mm (0.0433 in.)**
3rd and 5th gear	**0.8 mm (0.0315 in.)**

HINT:

- When replacing either a synchronizer ring or gear, apply a small amount of fine lapping compound between the synchronizer ring and gear cone.Lightly rub the synchronizer ring and gear together.
- When replacing both the synchronizer ring and gear, there is no need to apply any compound or to rub them together.

NOTICE: Wash off completely the fine lapping compound after rubbing.

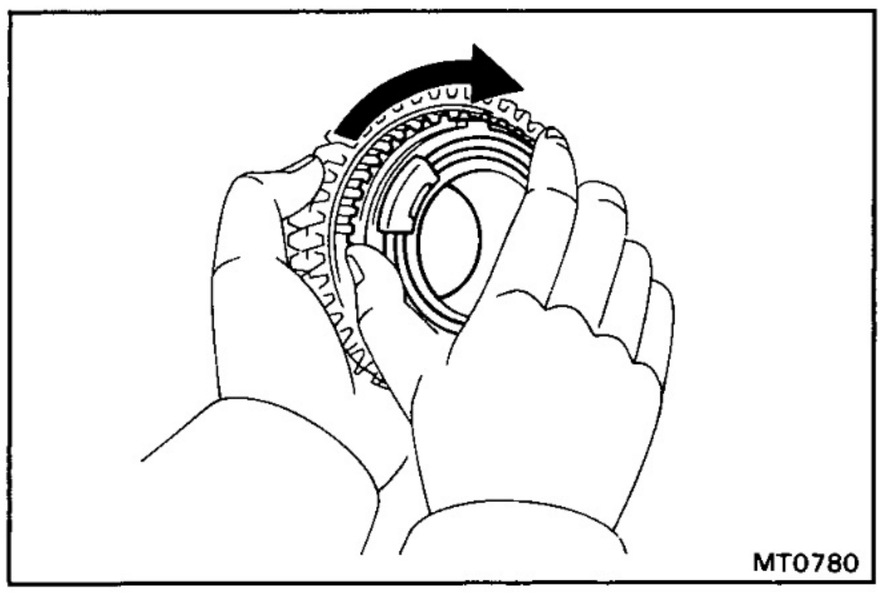
MT0780

3. INSPECT SYNCHRONIZER RING

H150F – FOR SECOND GEARS

H151F – FOR FIRST SECOND AND THIRD GEARS

(a) Check for wear or damage.

(b) Check the braking effect of the synchronizer direction while pushing it to the gear cone and check that the ring is locked. If the braking effect is insufficient, replace the synchronizer ring.

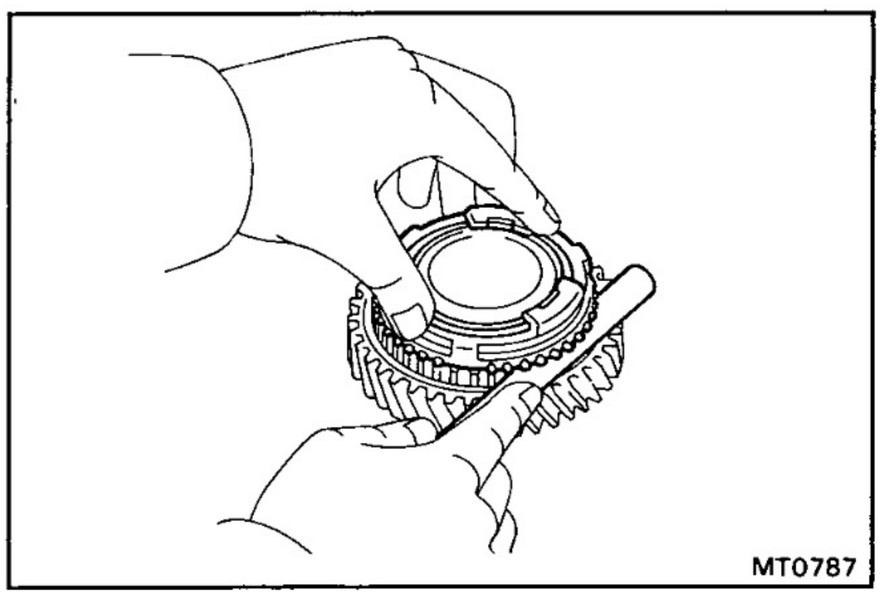
MT0787

(c) Measure the clearance between the synchronizer ring back and gear spline end.

Minimum clearance:

1st and 2nd gear	**0.85 mm (0.0335 in.)**
3rd gear	**0.75 mm (0.0295 in.)**

If the clearance is less than the limit, replace the synchronizer ring.

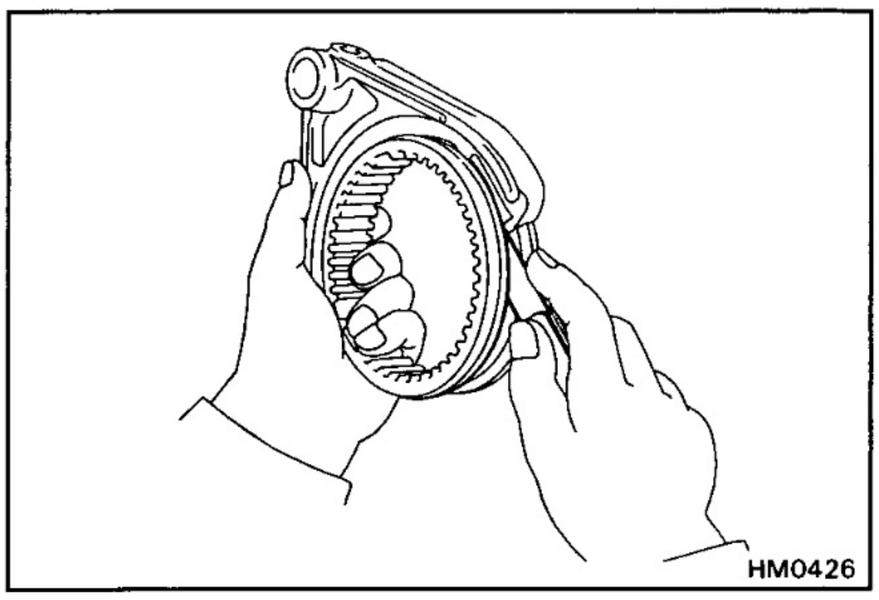
HM0426

4. INSPECT CLEARANCE OF SHIFT FORKS AND HUB SLEEVES

Using a feeler gauge, measure the clearance between the hub sleeve and shift fork.

Maximum clearance:

0.35 mm (0.0138 in.)

If the clearance exceeds the maximum, replace the shift fork or hub sleeve.

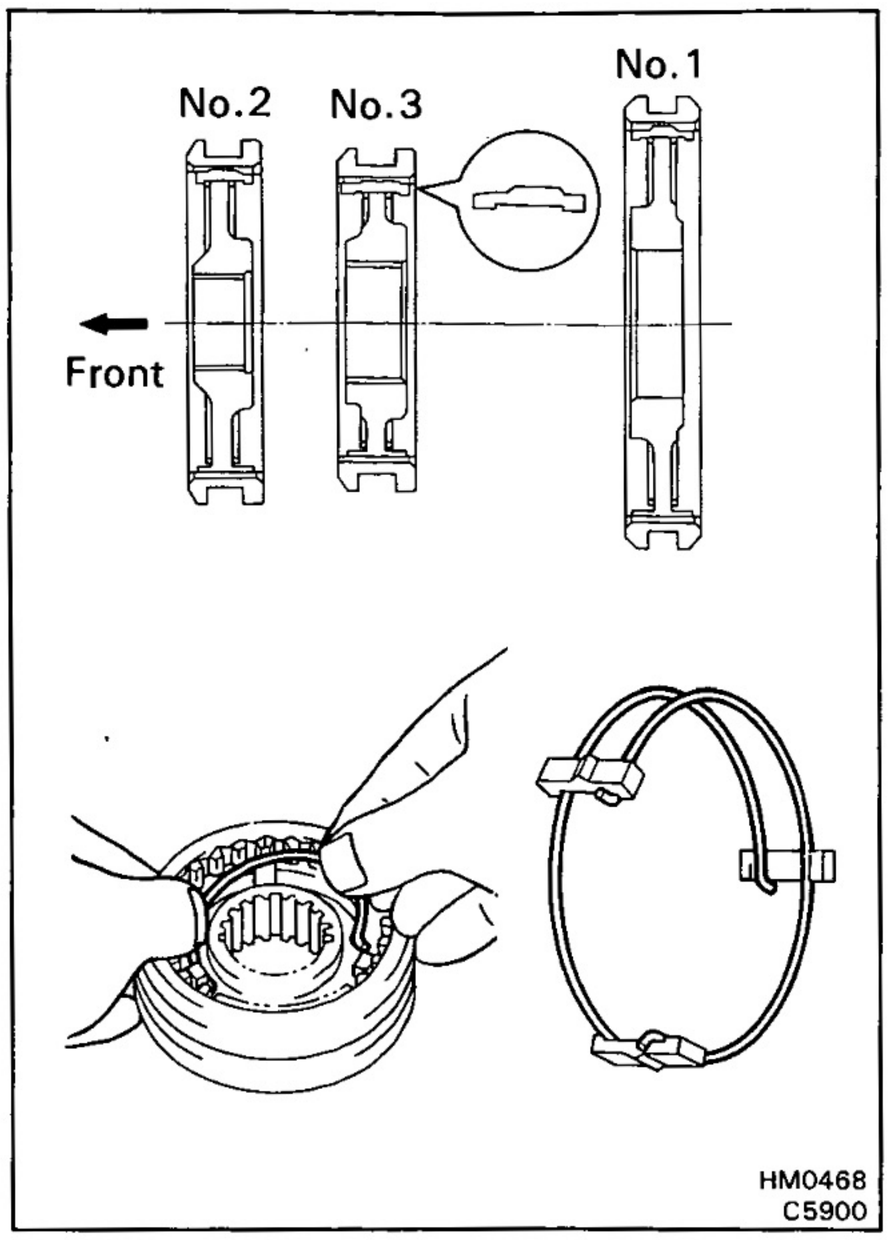

OUTPUT SHAFT ASSEMBLY

1. INSTALL CLUTCH HUB NO.1, NO.2 AND NO.3 INTO HUB SLEEVE

(a) Install the clutch hub and shifting keys to the hub sleeve.

(b) Install the springs under the shifting keys.

NOTICE: Install the key springs positioned so that their end gaps are not in line.

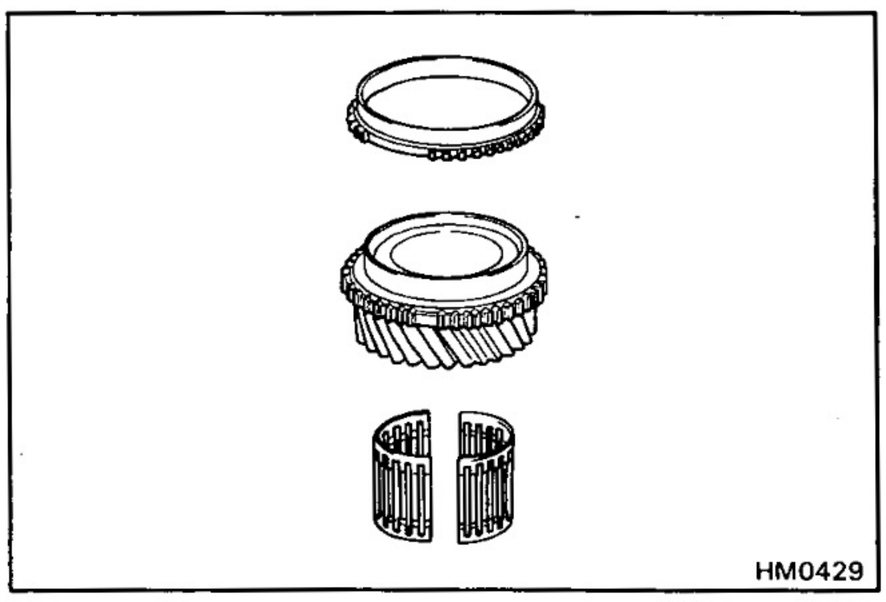

2. INSTALL FIFTH GEAR AND HUB SLEEVE NO.3 ASSEMBLY ON OUTPUT SHAFT

(a) Apply gear oil to the shaft and needle roller bearing.

(b) Place the synchronizer ring on the gear and align the ring slots with the shifting keys.

(c) Install the needle roller bearing in the fifth gear.

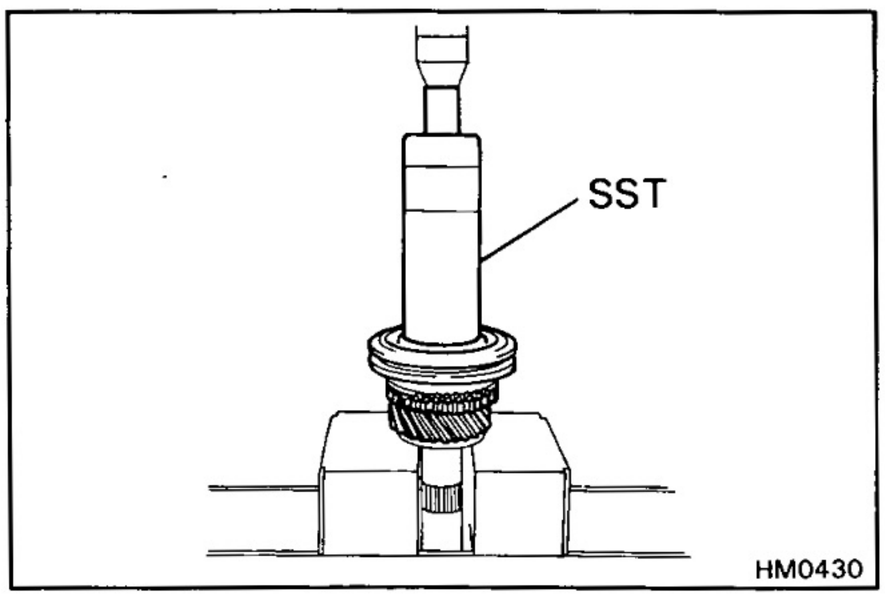

(d) Using SST and a press, install the fifth gear and hub sleeve No.3.

SST 09316-60010 (09316-00010)

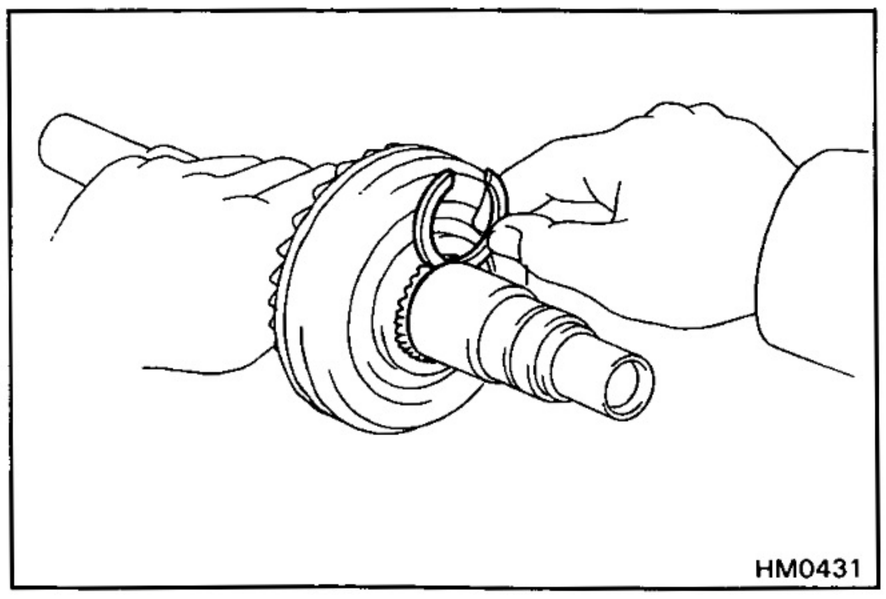

3. INSTALL SNAP RING

(a) Select a snap ring that will allow minimum axial play.

Mark	Thickness mm (in.)
A	2.40 — 2.45 (0.0945 — 0.0965)
B	2.45 — 2.50 (0.0965 — 0.0984)
C	2.50 — 2.55 (0.0984 — 0.1004)
D	2.55 — 2.60 (0.1004 — 0.1024)
E	2.60 — 2.65 (0.1024 — 0.1044)
F	2.65 — 2.70 (0.1044 — 0.1063)

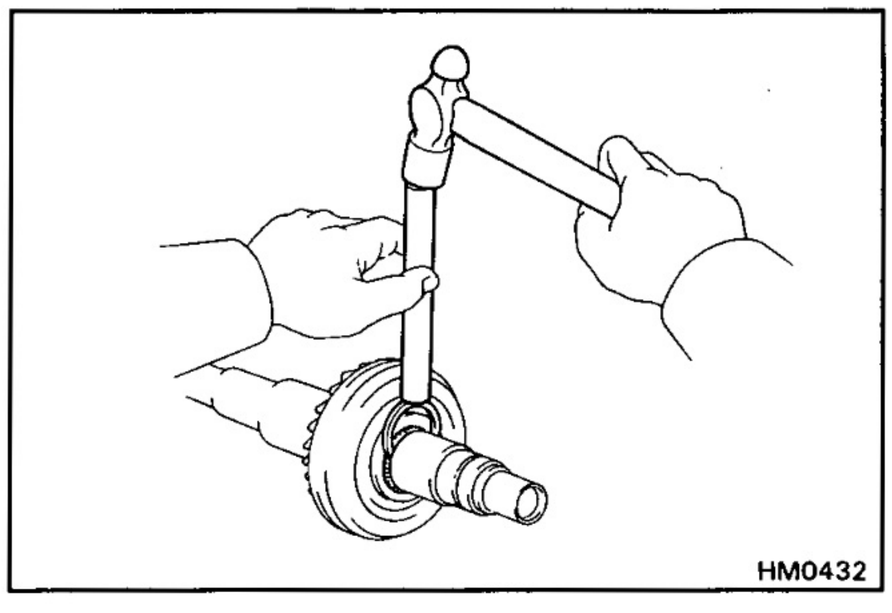

(b) Using a brass bar and hammer, drive in the snap ring.

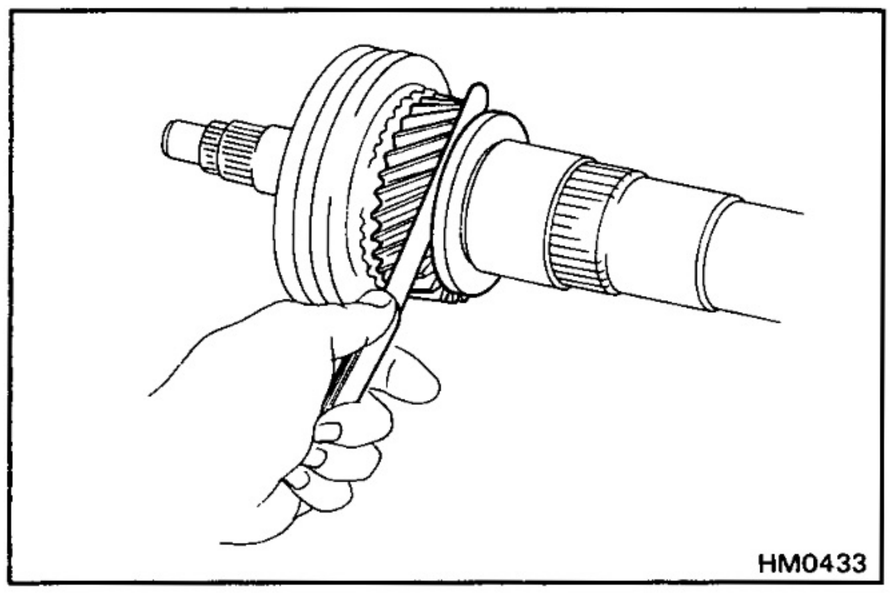

4. INSPECT FIFTH GEAR THRUST CLEARANCE

Using a feeler gauge, measure the fifth gear thrust clearance.

Standard clearance:
0.1 — 0.35 mm (0.0039 — 0.0138 in.)

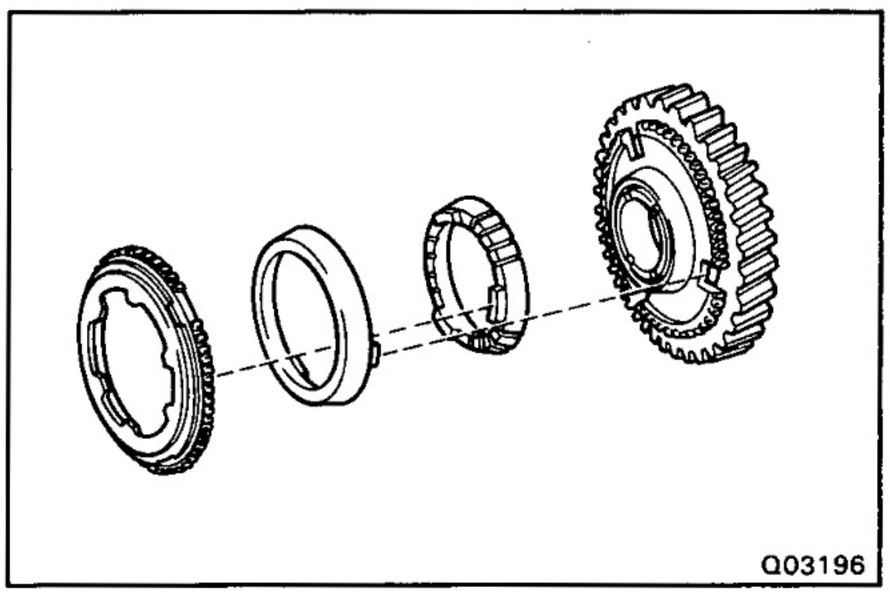

5. INSTALL THIRD GEAR AND HUB SLEEVE NO.2 ASSEMBLY

(H151F)

(a) Place the synchronizer rings on the 3rd gear.

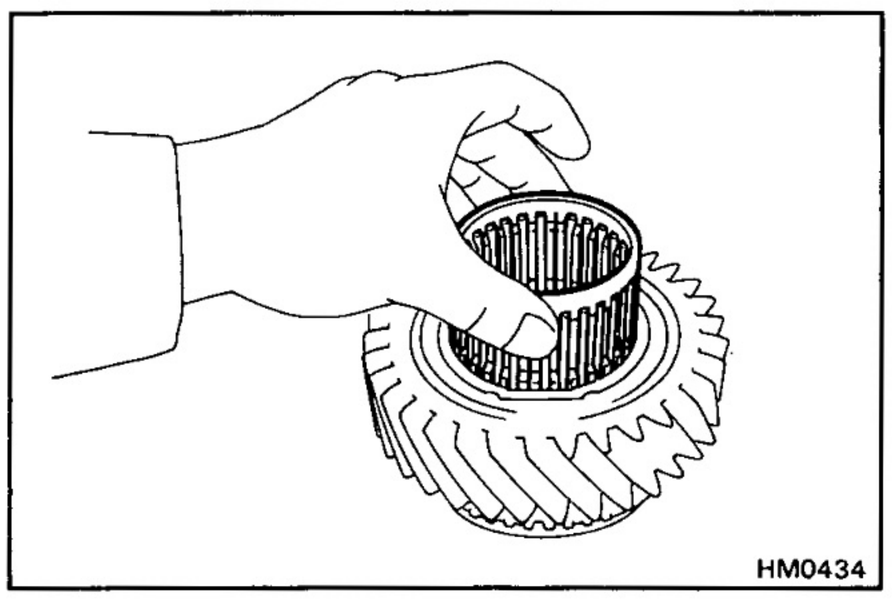

(b) Apply gear oil to the shaft and needle roller bearing.

(H150F)

(c) Place the synchronizer ring on the gear and align the ring slots with the shifting keys.

(d) Install the needle roller bearing in the third gear.

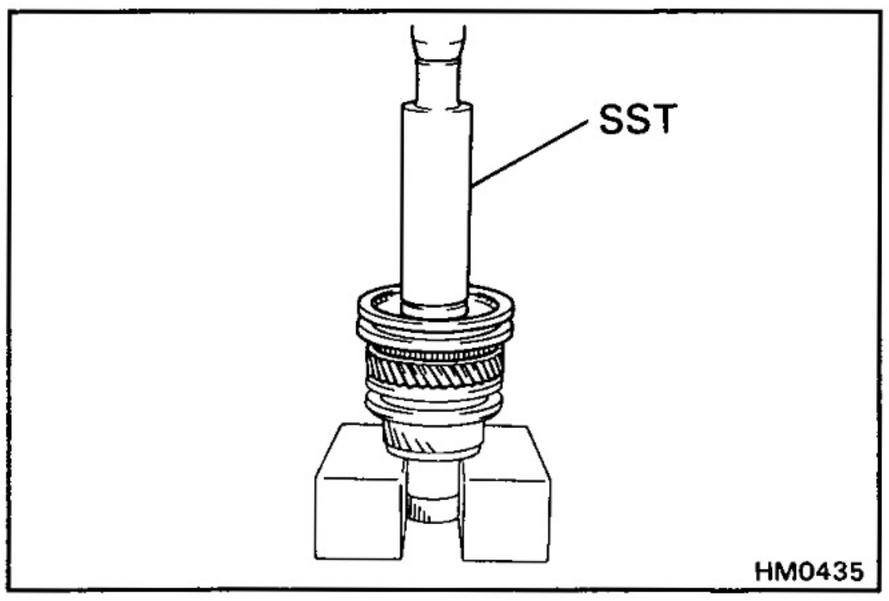

(e) Using SST and a press, install the third gear and hub sleeve No.2.

SST 09316-60010 (09316-00010)

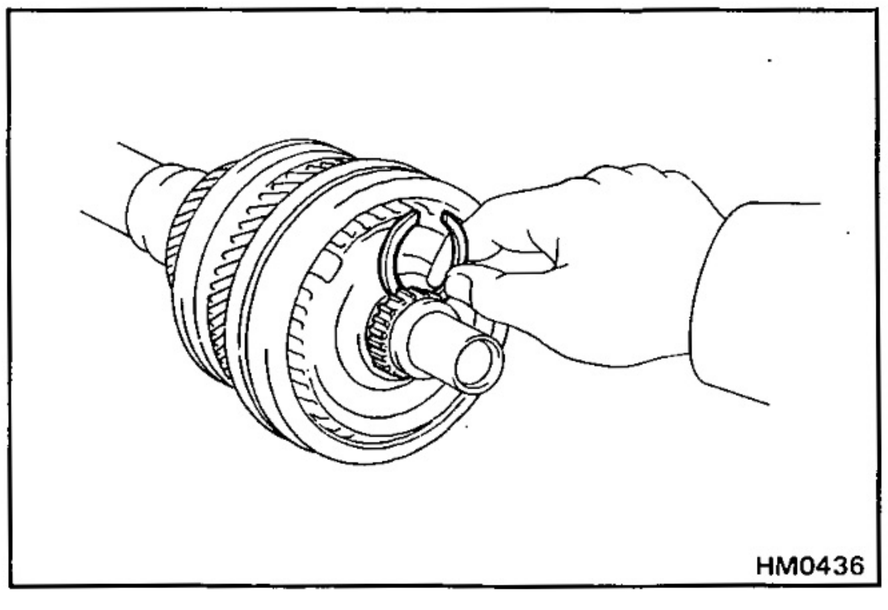
HM0436

6. INSTALL SNAP RING

(a) Select a snap ring that will allow minimum axial play.

Mark	Thickness mm (in.)
4	1.90 — 1.95 (0.0748 — 0.0768)
5	1.95 — 2.00 (0.0768 — 0.0787)
6	2.00 — 2.05 (0.0787 — 0.0807)
7	2.05 — 2.10 (0.0807 — 0.0827)
8	2.10 — 2.15 (0.0827 — 0.0847)
9	2.15 — 2.20 (0.0847 — 0.0866)

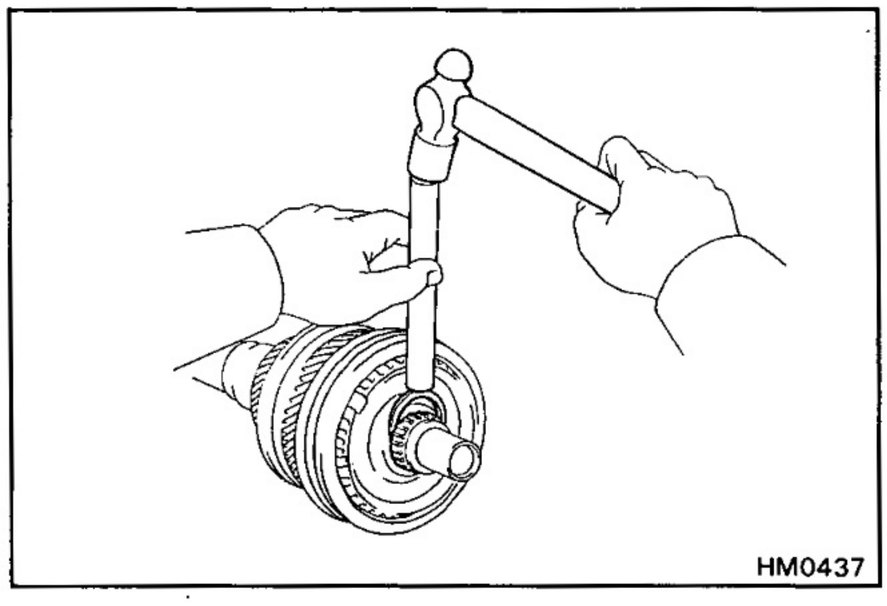
HM0437

(b) Using a brass bar and a hammer, drive in a new snap ring.

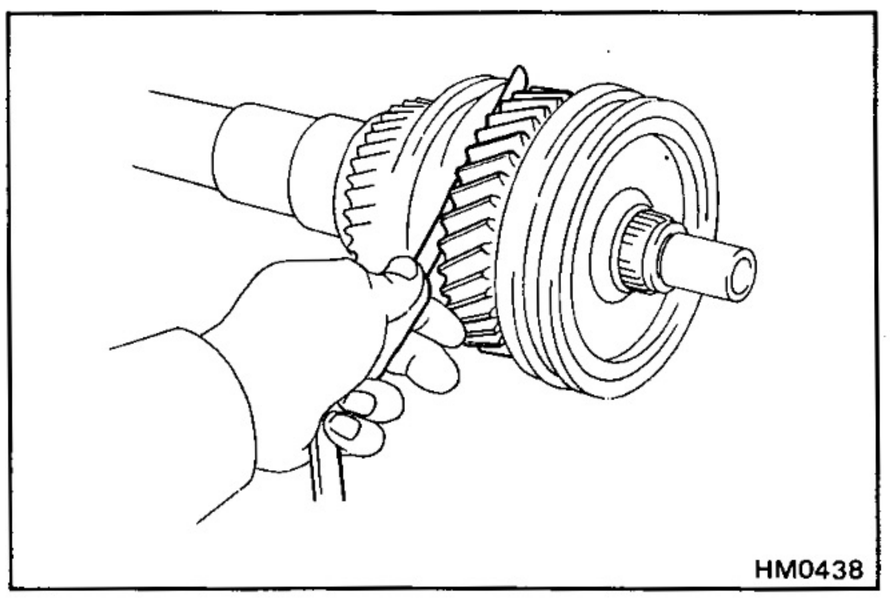
HM0438

7. MEASURE THIRD GEAR THRUST CLEARANCE

Using a feeler gauge, measure the third gear thrust clearance.

Standard clearance:
0.1 — 0.45 mm (0.0039 — 0.0138 in.)

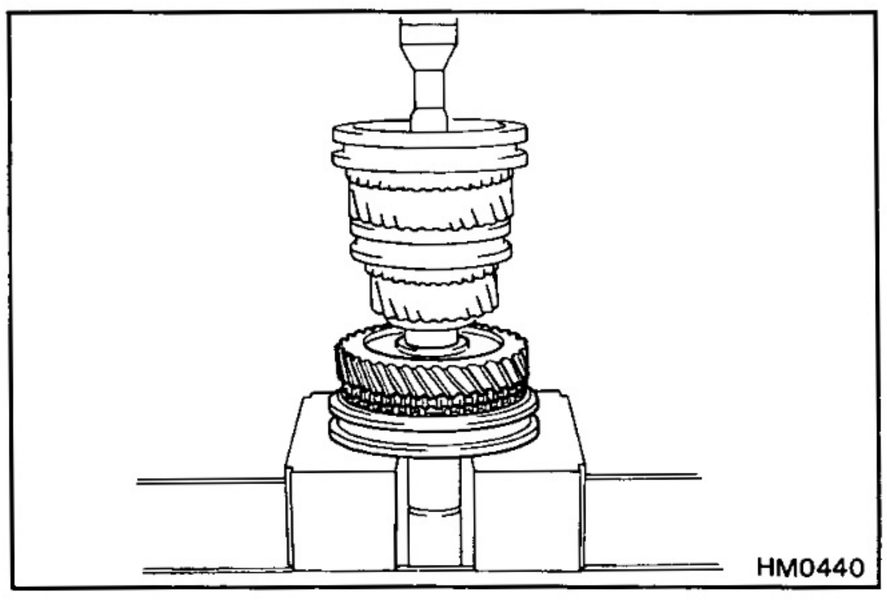
HM0440

8. INSTALL SECOND GEAR AND HUB SLEEVE NO.1 ASSEMBLY

(a) Apply gear oil to the shaft and needle roller bearing.

(b) Place the synchronizer rings on the gear and align the ring slots with the shifting keys.

(c) Install the needle roller bearing in the second gear.

(d) Using a press, install the second gear and hub sleeve No.1 assembly.

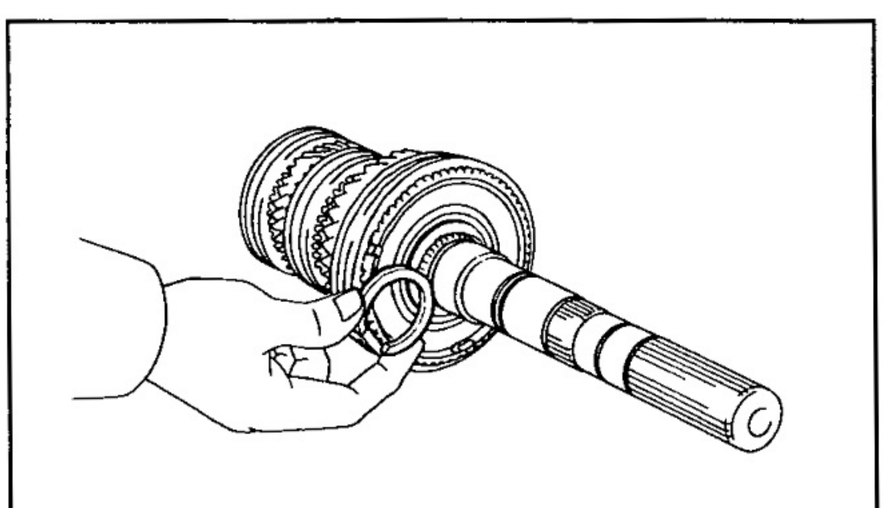
HM0441

9. INSTALL SNAP RING

(a) Select a snap ring that will allow minimum axial play.

Mark	Thickness mm (in.)
A	2.90 — 2.95 (0.1142 — 0.1162)
B	2.95 — 3.00 (0.1162 — 0.1181)
C	3.00 — 3.05 (0.1181 — 0.1201)
D	3.05 — 3.10 (0.1201 — 0.1220)
E	3.10 — 3.15 (0.1220 — 0.1240)
F	3.15 — 3.20 (0.1240 — 0.1260)

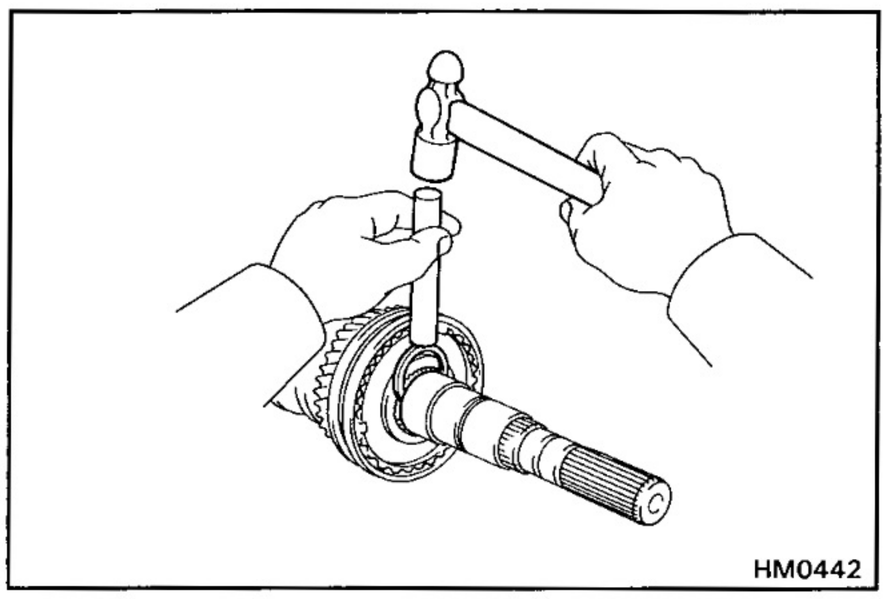
HM0442

(b) Using a brass bar and a hammer, drive in a new snap ring.

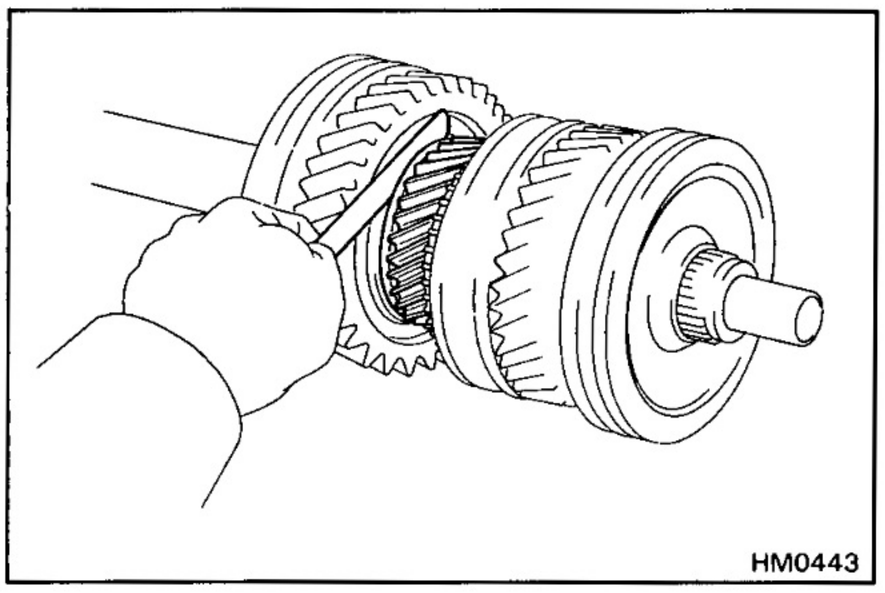
HM0443

10. INSPECT SECOND GEAR THRUST CLEARANCE

Using a feeler gauge, measure the second gear thrust clearance.

Standard clearance:
0.1 — 0.35 mm (0.0039 — 0.0138 in.)

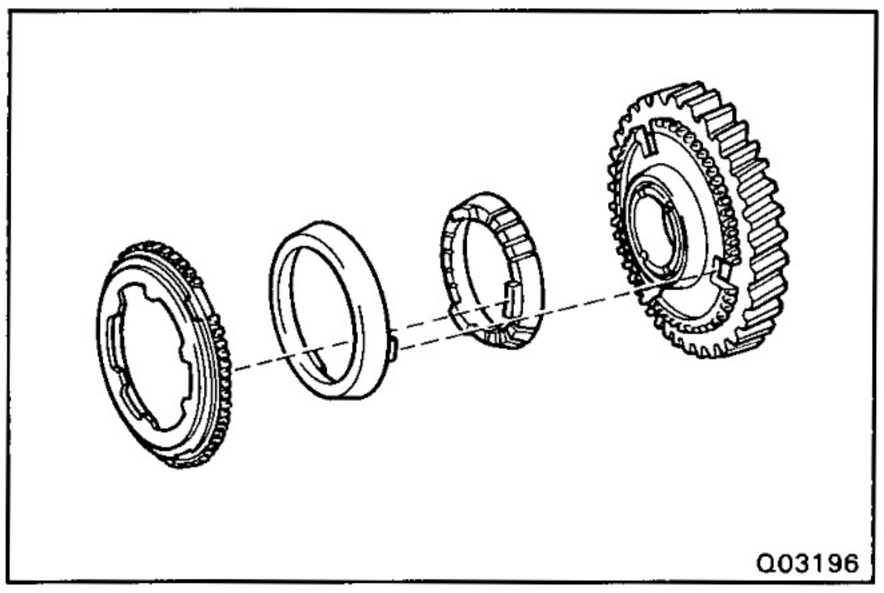
Q03196

11. INSTALL FIRST GEAR

(H151F)

(a) Place the synchronizer rings on the 1st gear.

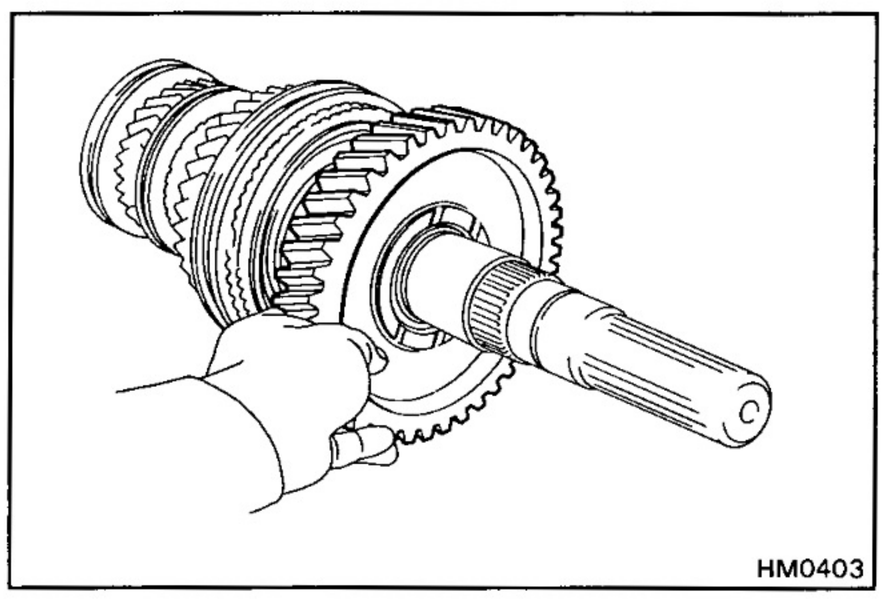
HM0403

(b) Apply gear oil to the shaft and needle roller bearing.

(H150F)

(c) Place the synchronizer ring on the gear and align the ring slots with the shifting keys.

(d) Install the needle roller bearing in the first gear.

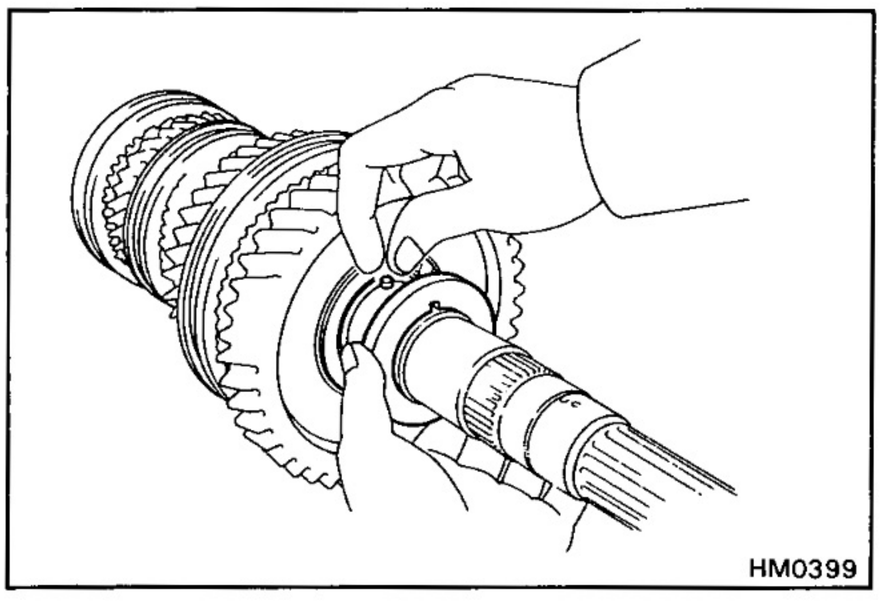
HM0399

12. INSTALL BALL BEARING

(a) Install the pin and thrust washer.

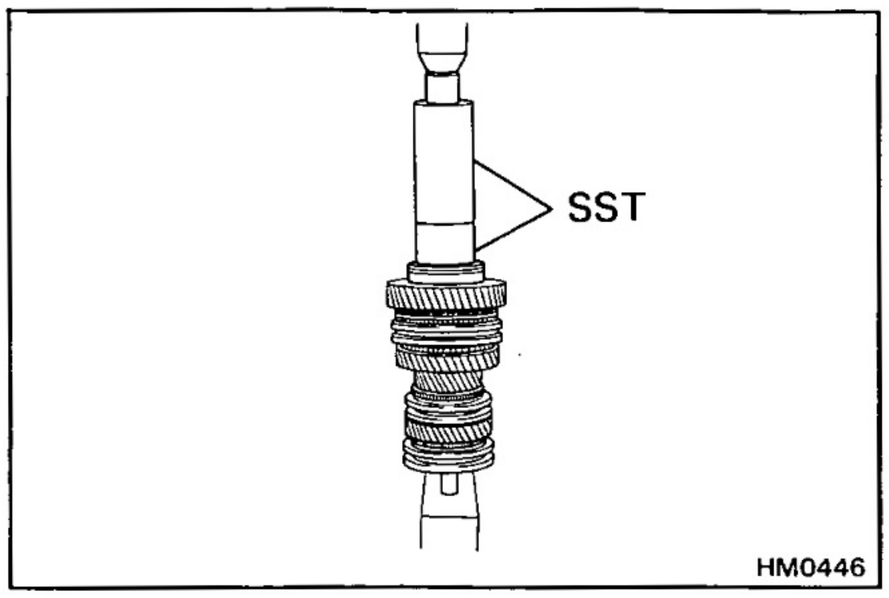

(b) Using SST and a press, install the ball bearing.
SST 09316-60010 (09316-00010), 09523-36010

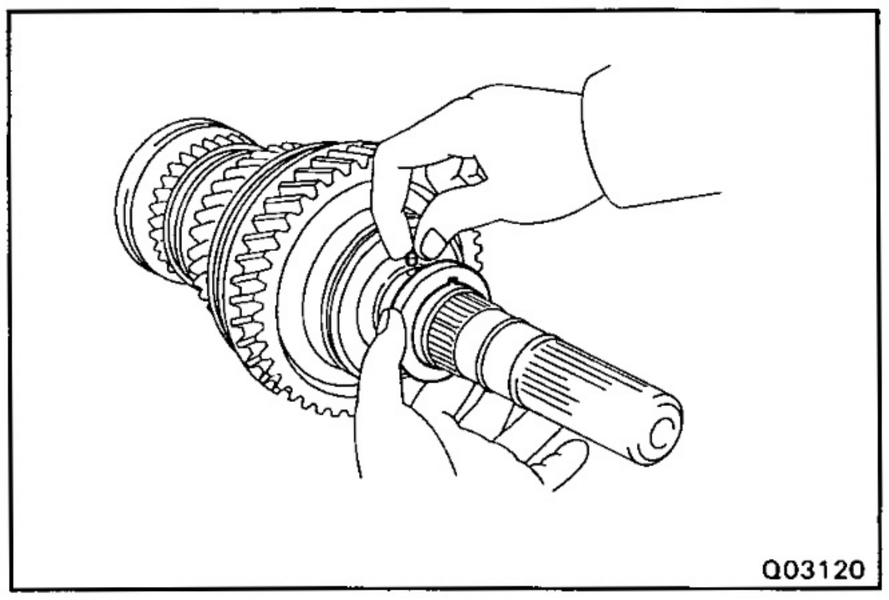

(c) Install the pin and thrust washer.

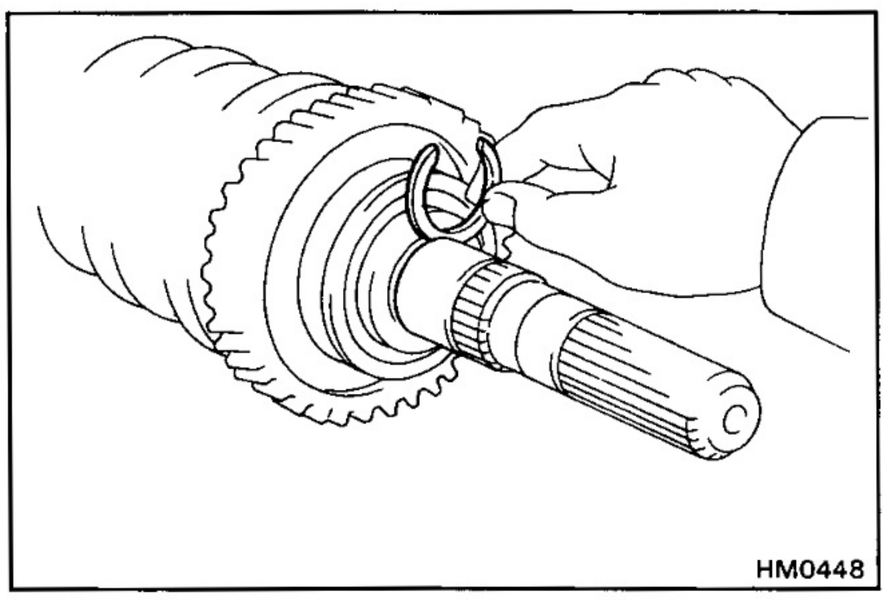

13. INSTALL SNAP RING

(a) Select a snap ring that will allow minimum axial play.

Mark	Thickness mm (in.)
A	2.40 — 2.45 (0.0945 — 0.0965)
B	2.45 — 2.50 (0.0965 — 0.0984)
C	2.50 — 2.55 (0.0984 — 0.1004)
D	2.55 — 2.60 (0.1004 — 0.1024)
E	2.60 — 2.65 (0.1024 — 0.1044)
F	2.65 — 2.70 (0.1044 — 0.1063)
G	2.70 — 2.75 (0.1063 — 0.1083)
H	2.75 — 2.80 (0.1083 — 0.1102)

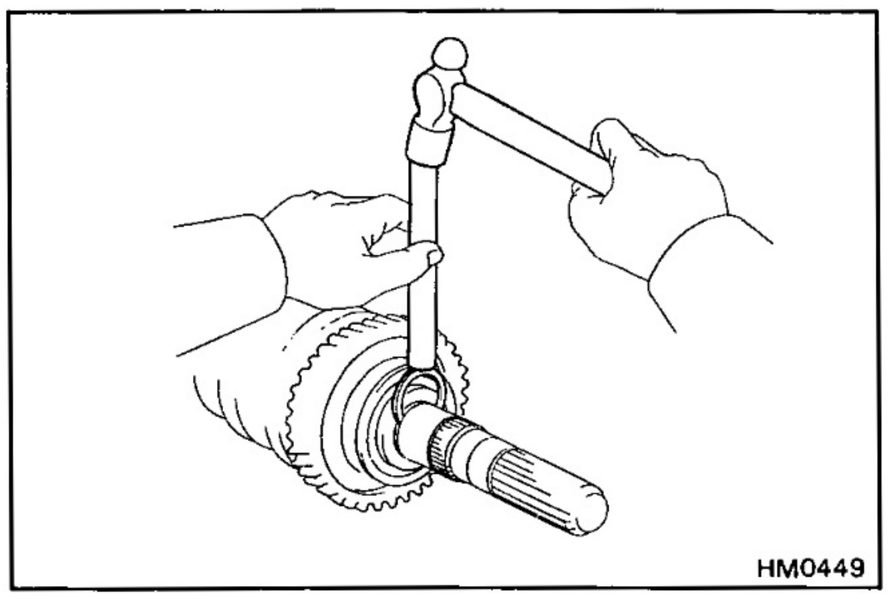

(b) Using a brass bar and a hammer, drive in a new snap ring.

SERVICE SPECIFICATIONS

SERVICE DATA

Output shaft 1st gear journal diameter	Limit	49.979 mm	1.9677 in.
Output shaft 2nd gear journal diameter	Limit	57.984 mm	2.2828 in.
Output shaft 3rd gear journal diameter	Limit	37.979 mm	1.4952 in.
Output shaft 5th gear journal diameter	Limit	45.984 mm	1.8104 in.
Output shaft Frange thickness	Limit	4.725 mm	0.1860 in.
Output shaft Runout	Limit	0.05 mm	0.0020 in.
Gear thrust clearance 1st and 3rd	STD	0.1 — 0.45 mm	0.0039 — 0.0177 in.
Gear thrust clearance 2nd and 5th	STD	0.1 — 0.35 mm	0.0039 — 0.0138 in.
Gear oil clearance 1st and 3rd	STD	0.020 — 0.073 mm	0.0008 — 0.0029 in.
Gear oil clearance 2nd and 5th	STD	0.015 — 0.068 mm	0.0006 — 0.0027 in.
Synchronizer ring for 1st gear clearance			
(H150F)			
	Limit	1.1 mm	0.0433 in.
Synchronizer ring for 2nd gear clearance			
(H150F)			
	Limit	0.85 mm	0.0335 in.
Synchronizer ring for 3rd gear clearance			
(H150F)			
	Limit	0.8 mm	0.0315 in.
Synchronizer ring for 1st and 2nd gear clearance			
(H151F)			
	Limit	0.85 mm	0.0335 in.
Synchronizer ring for 3rd gear clearance			
(H151F)			
	Limit	0.75 mm	0.0295 in.
Output shaft snap ring thickness			
No.3 Hub sleeve	Mark A	2.40 — 2.45 mm	0.0945 — 0.0965 in.
No.3 Hub sleeve	Mark B	2.45 — 2.50 mm	0.0965 — 0.0984 in.
No.3 Hub sleeve	Mark C	2.50 — 2.55 mm	0.0984 — 0.1004 in.
No.3 Hub sleeve	Mark D	2.55 — 2.60 mm	0.1004 — 0.1024 in.
No.3 Hub sleeve	Mark E	2.60 — 2.65 mm	0.1024 — 0.1044 in.
No.3 Hub sleeve	Mark F	2.65 — 2.70 mm	0.1044 — 0.1063 in.
No.2 Hub sleeve	Mark 4	1.90 — 1.95 mm	0.0748 — 0.0768 in.
No.2 Hub sleeve	Mark 5	1.95 — 2.00 mm	0.0768 — 0.0787 in.
No.2 Hub sleeve	Mark 6	2.00 — 2.05 mm	0.0787 — 0.0807 in.
No.2 Hub sleeve	Mark 7	2.05 — 2.10 mm	0.0807 — 0.0827 in.
No.2 Hub sleeve	Mark 8	2.10 — 2.15 mm	0.0827 — 0.0847 in.
No.2 Hub sleeve	Mark 9	2.15 — 2.20 mm	0.0847 — 0.0866 in.
No.1 Hub sleeve	Mark A	2.90 — 2.95 mm	0.1142 — 0.1162 in.
No.1 Hub sleeve	Mark B	2.95 — 3.00 mm	0.1162 — 0.1181 in.
No.1 Hub sleeve	Mark C	3.00 — 3.05 mm	0.1181 — 0.1201 in.
No.1 Hub sleeve	Mark D	3.05 — 3.10 mm	0.1201 — 0.1220 in.
No.1 Hub sleeve	Mark E	3.10 — 3.15 mm	0.1220 — 0.1240 in.
No.1 Hub sleeve	Mark F	3.15 — 3.20 mm	0.1240 — 0.1260 in.

Output shaft snap ring thickness			
Rear bearing	Mark A	2.40 — 2.45 mm	0.0945 — 0.0965 in.
Rear bearing	Mark B	2.45 — 2.50 mm	0.0965 — 0.0984 in.
Rear bearing	Mark C	2.50 — 2.55 mm	0.0984 — 0.1004 in.
Rear bearing	Mark D	2.55 — 2.60 mm	0.1004 — 0.1024 in.
Rear bearing	Mark E	2.60 — 2.65 mm	0.1024 — 0.1044 in.
Rear bearing	Mark F	2.65 — 2.70 mm	0.1044 — 0.1063 in.
Rear bearing	Mark G	2.70 — 2.75 mm	0.1063 — 0.1083 in.
Rear bearing	Mark H	2.75 — 2.80 mm	0.1083 — 0.1102 in.

AUTOMATIC TRANSMISSION

REFER TO LAND CRUISER (STATION WAGON) REPAIR MANUAL FOR CHASSIS AND BODY (Pub. No. RM184E)

NOTE: The following pages contain only the points which differ from the above listed manual.

AT

(STATION WAGON)

DESCRIPTION AT-2
OPERATION AT-4
PREPARATION AT-12
TROUBLESHOOTING AT-14
VALVE BODY AT-58
THROTTLE CABLE AT-63
ASSEMBLY REMOVAL AND INSTALLATION AT-66
SERVICE SPECIFICATIONS AT-86

DESCRIPTION

GENERAL DESCRIPTION

The A442F automatic transmission is a four-speed automatic transmission with a four-speed transfer, developed with the aim of producing an easy-driving 4WD vehicle. A lock-up mechanism is built into the torque converter.
The A442F transmission is mainly composed of the torque converter, the overdrive (hereafter called O/D) planetary gear unit, 3-speed planetary gear unit, 4-speed transfer, hydraulic control system and an electronic control system.

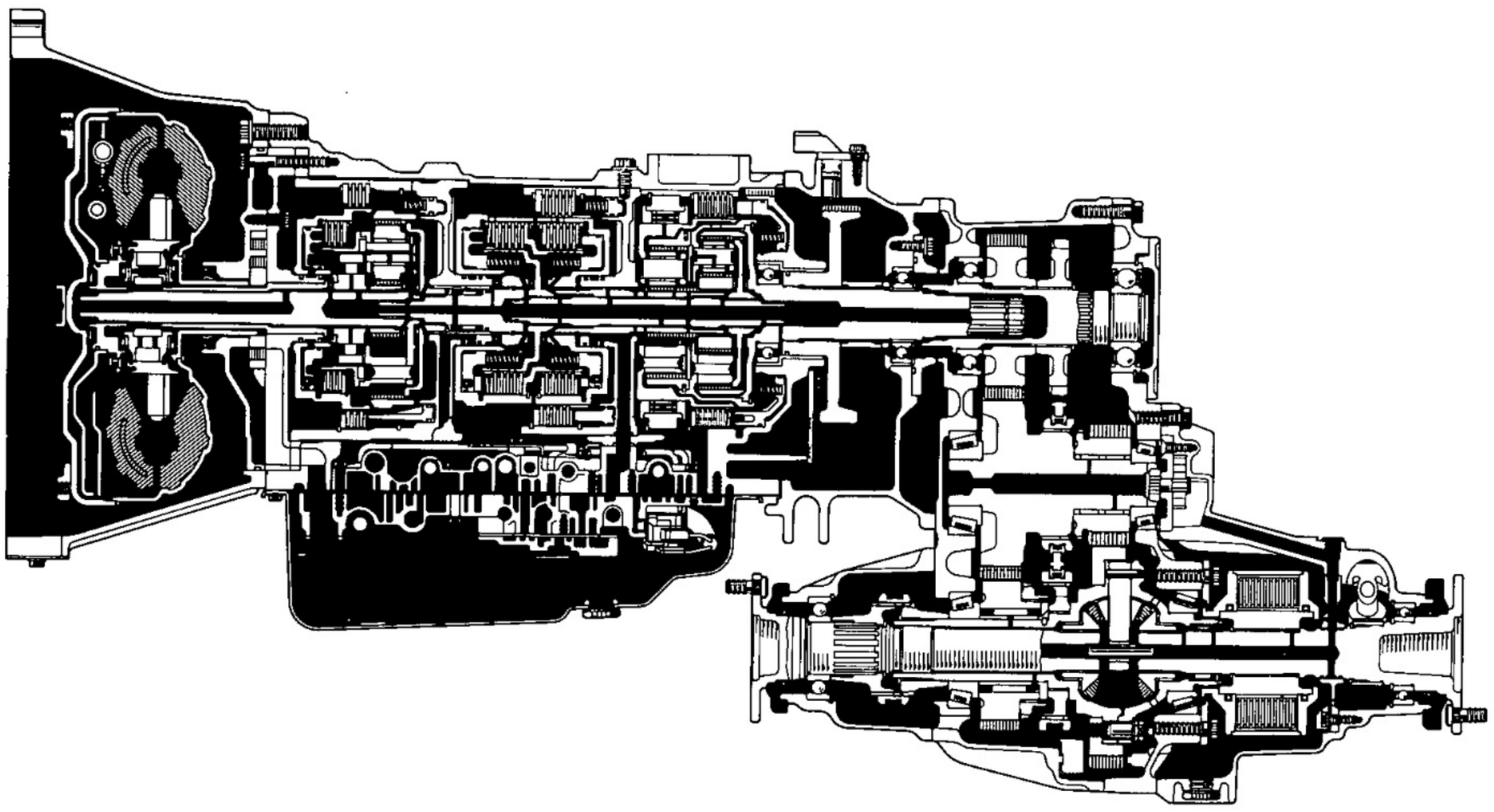

Q02509

GENERAL SPECIFICATIONS

Type of Transmission		A442F	←
Type of Engine		1FZ-FE	1HD-T
Torque Converter Stall Torque Ratio		1.8 : 1	2.0 : 1
Lock-up Mechanism		Equipped	←
Gear Ratio	1st Gear	2.950	←
	2nd Gear	1.530	←
	3rd Gear	1.000	←
	O/D Gear	0.765	←
	Reverse Gear	2.678	←
Number of Discs and Plates	(Disc and Plate)		
	Front Clutch (C_1)	6/6	7/7
	Rear Clutch (C_2)	5/5	←
	O/D Direct Clutch (C_0)	3/3	←
	2nd Brake (B_1)	5/5	←
	1st and Reverse Brake (B_2)	6/6	←
	O/D Brake (B_0)	3/3	←
ATF Type		ATF DEXRON® II	←
Capacity (US pts, Imp. qts)	Total		
	w/ Oil Cooler	15.4 (16.3, 13.6)	←
	w/o Oil Cooler	15.0 (15.9, 13.2)	←
	Drain & Refill	6.0 (6.3, 5.3)	←

OPERATION

OPERATION

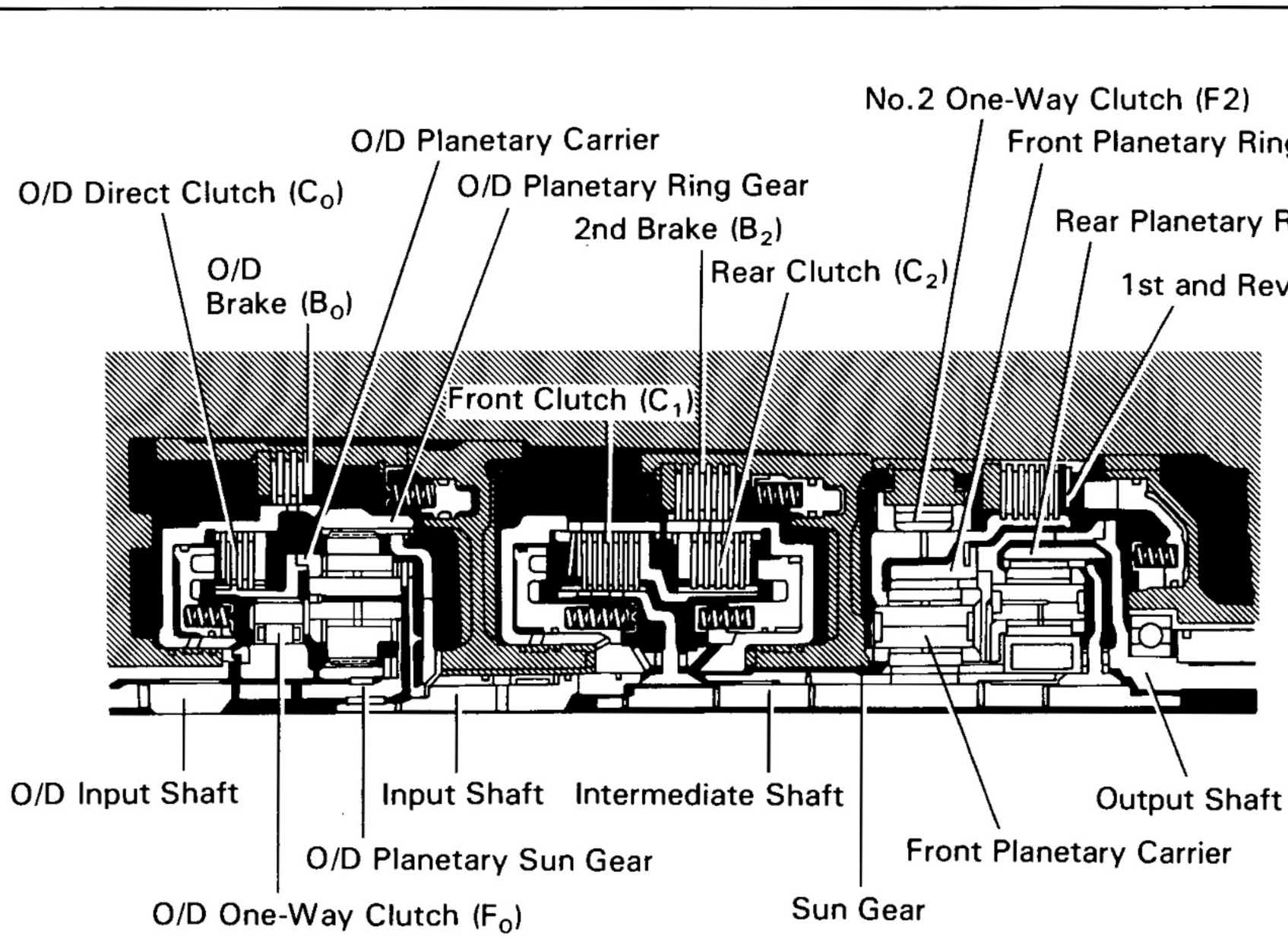

Q03056

○....Operating

Shift lever position	Gear position	C_0	C_1	C_2	B_0	B_2	B_3	F_0	F_2
P	Parking	○						○	
R	Reverse	○		○			○	○	
N	Neutral	○						○	
D	1st	○	○					○	○
	2nd		○			○		○	
	3rd	○	○	○				○	
	O/D		○	○	○				
2	2nd	○	○			○		○	
L	1st	○	○				○	○	○

V01579

1. FUNCTION OF COMPONENTS

COMPONENT	FUNCTION
O/D Direct Clutch (C_0)	Connects overdrive sun gear and overdrive carrier
O/D Brake (B_0)	Prevents overdrive sun gear from turning either clockwise or counterclockwise
O/D One-Way Clutch (F_0)	When transmission is being driven by engine, connects overdrive sun gear and overdrive carrier
Front Clutch (C_1)	Connects input shaft and intermediate shaft
Rear Clutch (C_2)	Connects input shaft and front & rear planetary sun gear
2nd Brake (B_1)	Prevents front & rear planetary sun gear from turning either clockwise or counter-clockwise
1st & Reverse Brake (B_2)	Prevents front planetary carrier from turning either clockwise or counterclockwise
No.2 One-Way Clutch (F_2)	Prevents front planetary carrier from turning counterclockwise

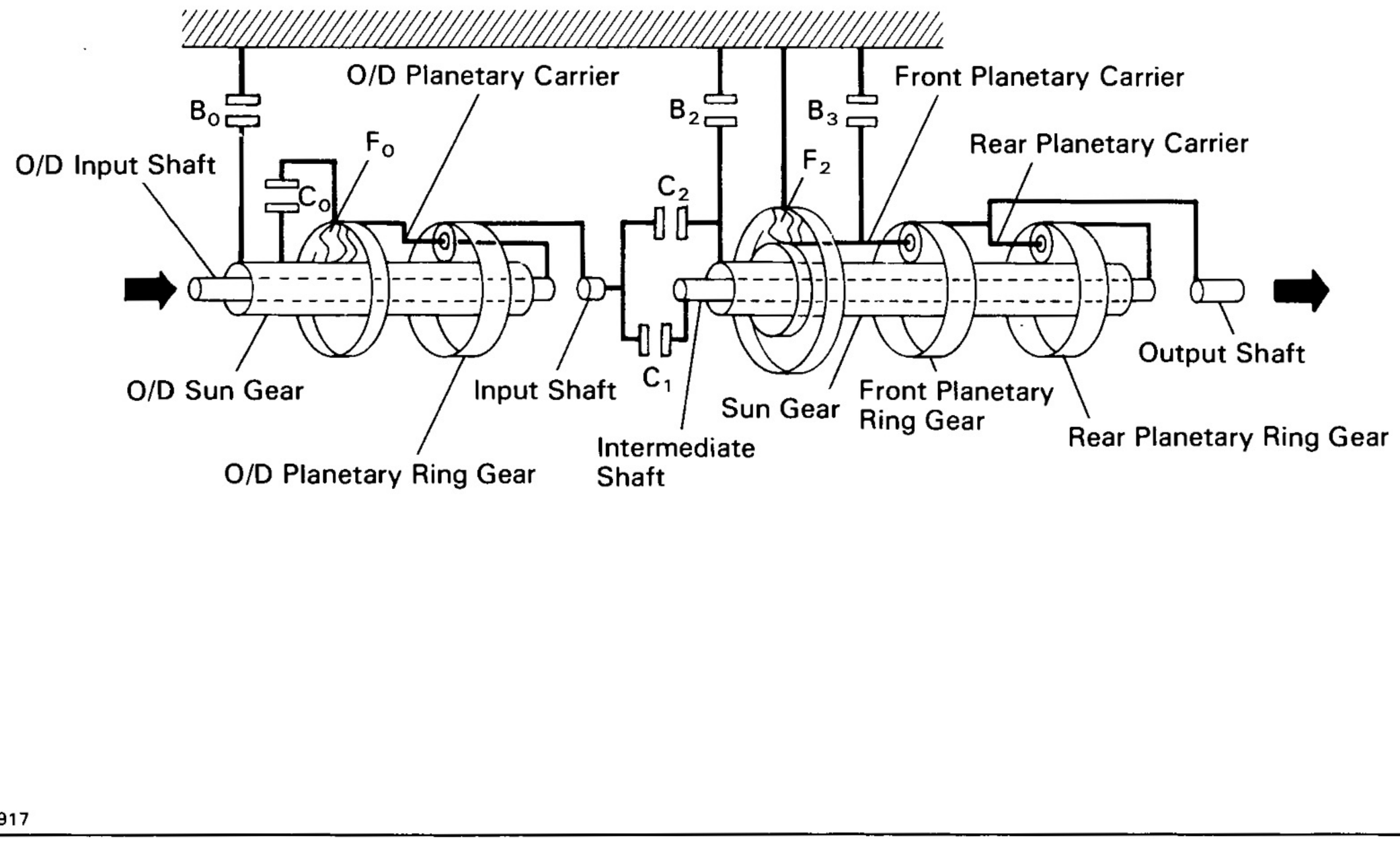

The conditions of operation for each gear position are shown on the following illustration:

D Range 1st Gear

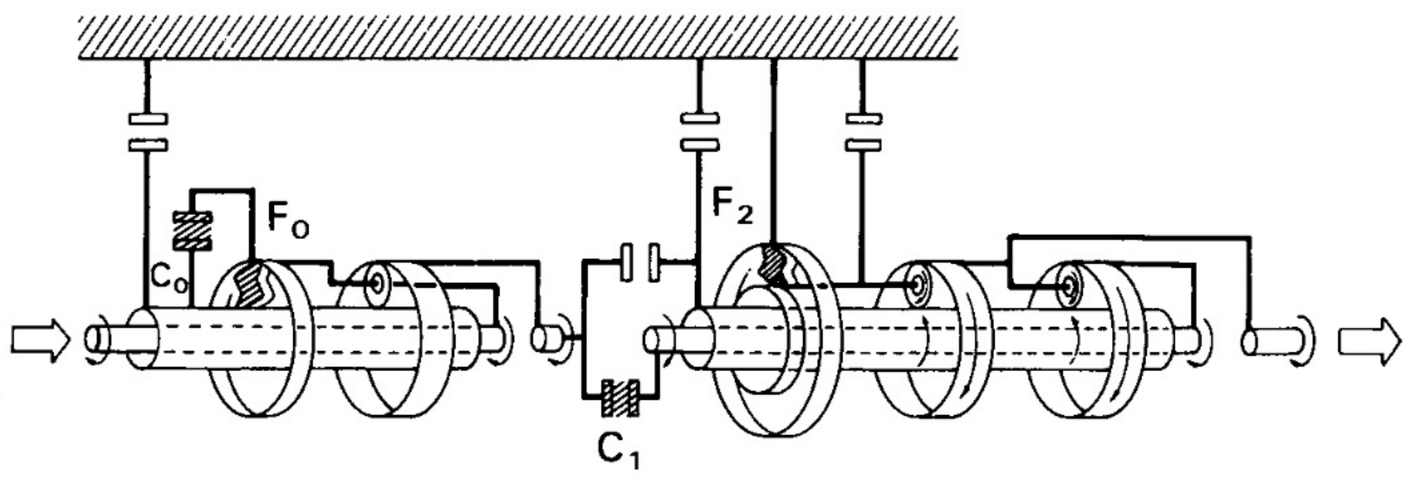

AT5949

D Range 2nd Gear

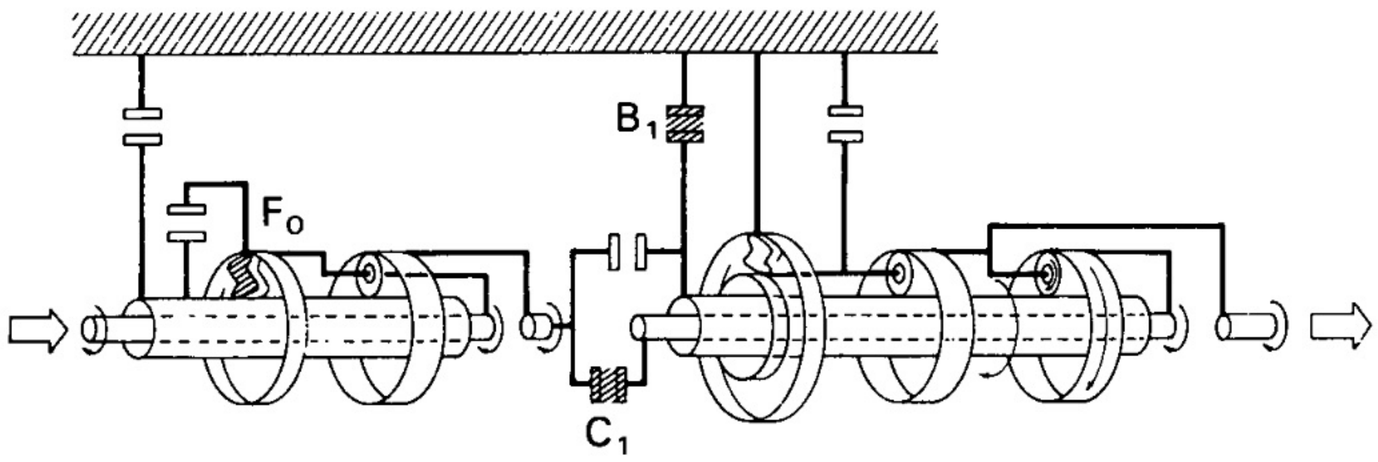

AT5950

D Range 3rd Gear

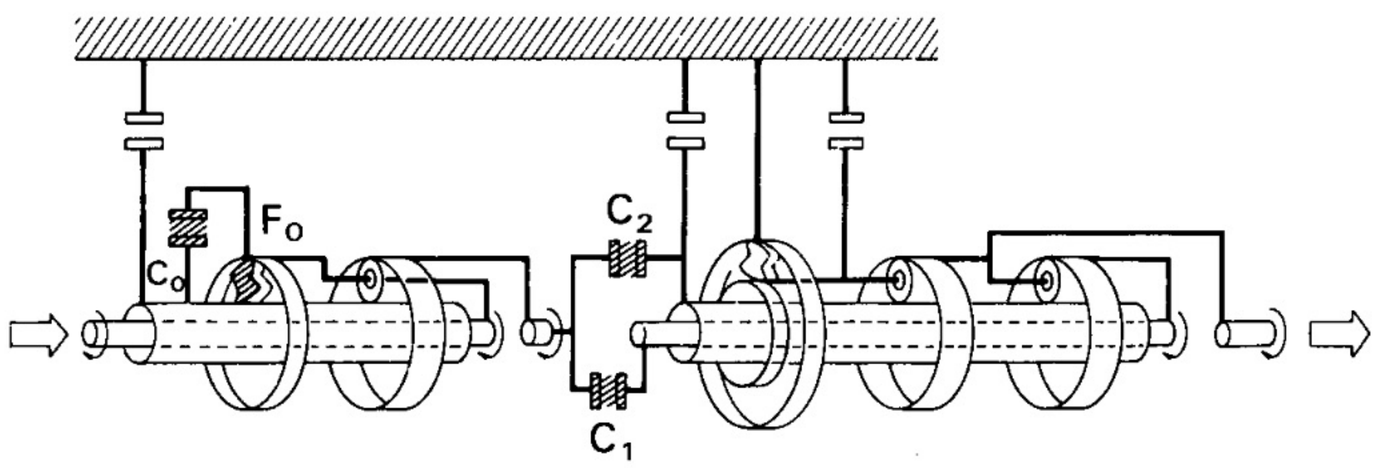

AT5951

D Range O/D

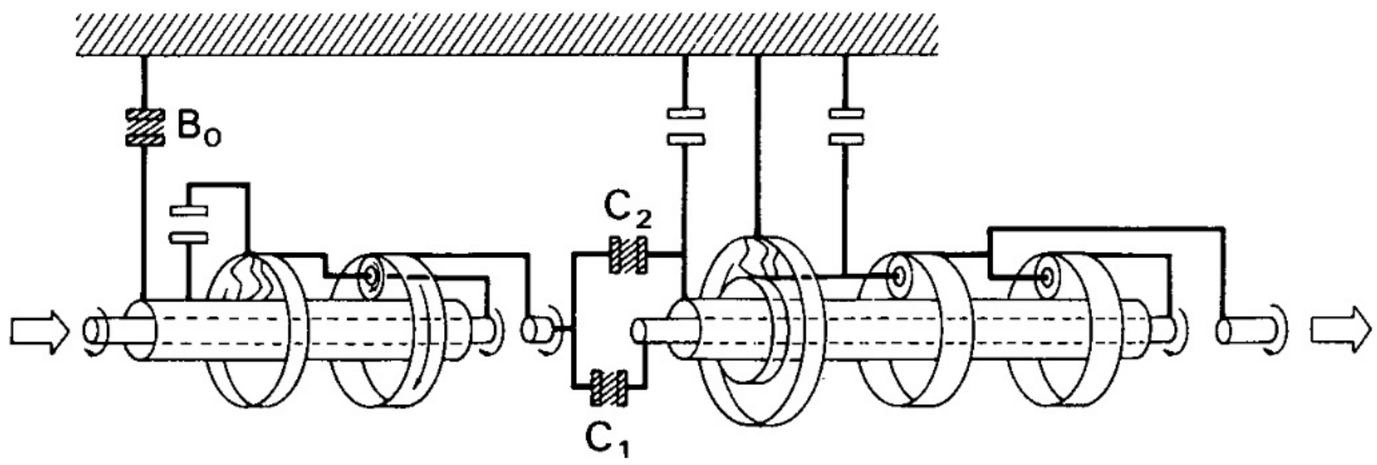

AT5952

2 Range 2nd Gear

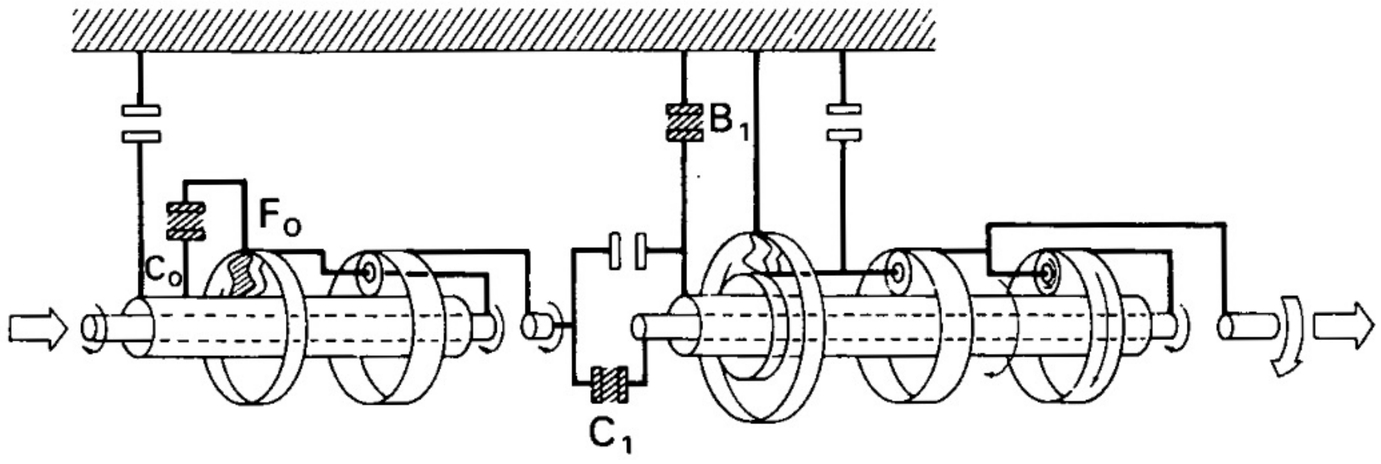

AT5953

L Range 1st Gear

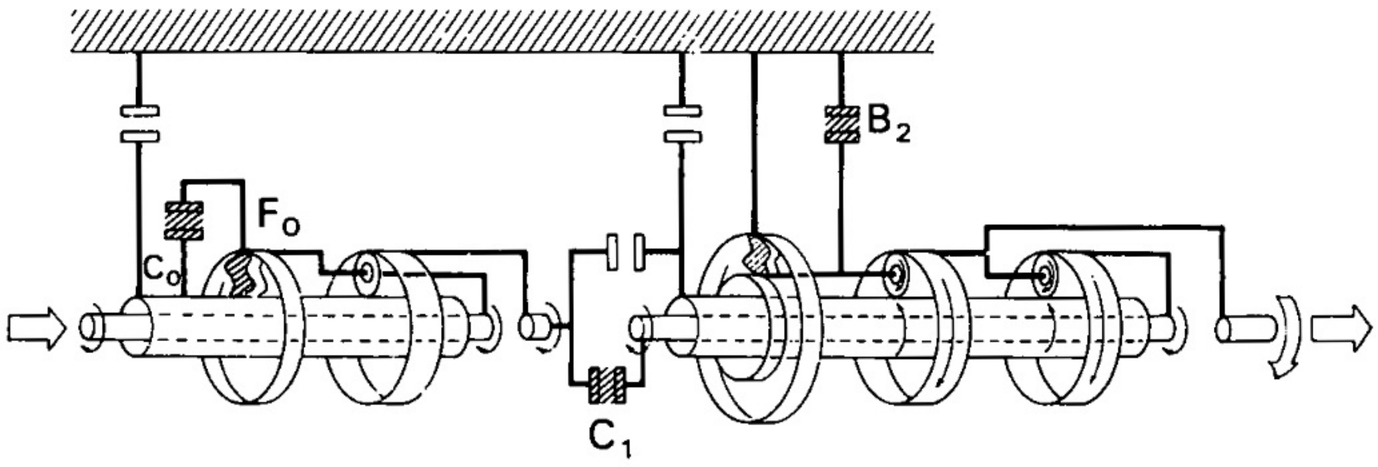

AT5954

R Range Reverse Gear

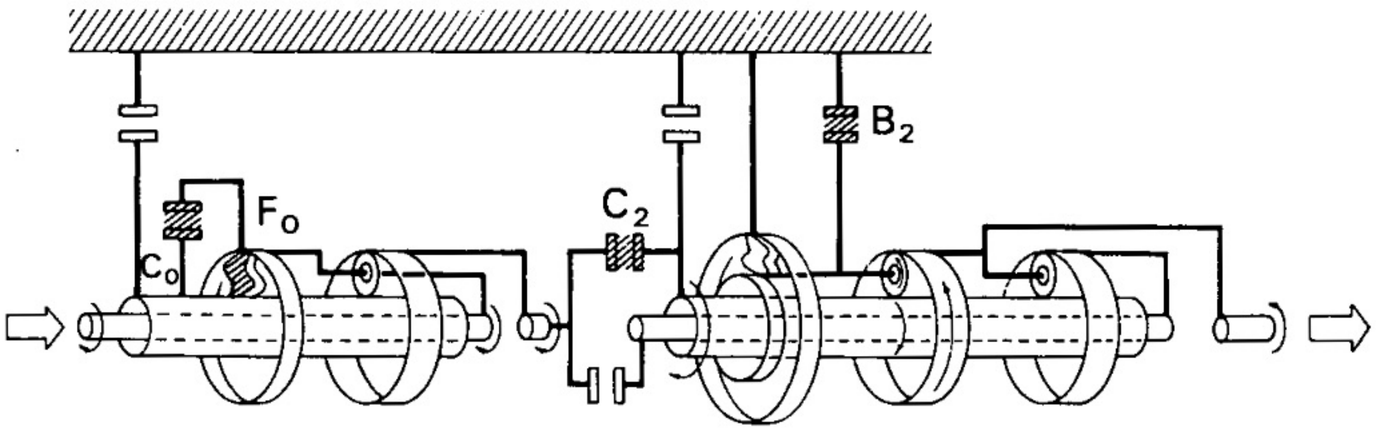

AT5955

2. HYDRAULIC CONTROL SYSTEM

The hydraulic control system is composed of the oil pump, the valve body, the solenoid valves, the accumulators, the clutches and brakes, as well as the fluid passages which connect all of these components.

Based on the hydraulic pressure created by the oil pump, the hydraulic control system governs the hydraulic pressure acting on the torque converter, clutches and brakes in accordance with the vehicle driving condition.

There are four solenoid valves on the valve body.

These solenoid valves are turned on and off by signals from ECU to operate the shift valves.
These shift valves then switch the fluid passages so that fluid goes to the torque converter and planetary gear units.

(Except for the solenoid valves, the hydraulic control system of the electronically controlled transmission (hereafter called ECT) is basically the same as that of the fully hydraulic controlled automatic transmission.)

HYDRAULIC CONTROL SYSTEM

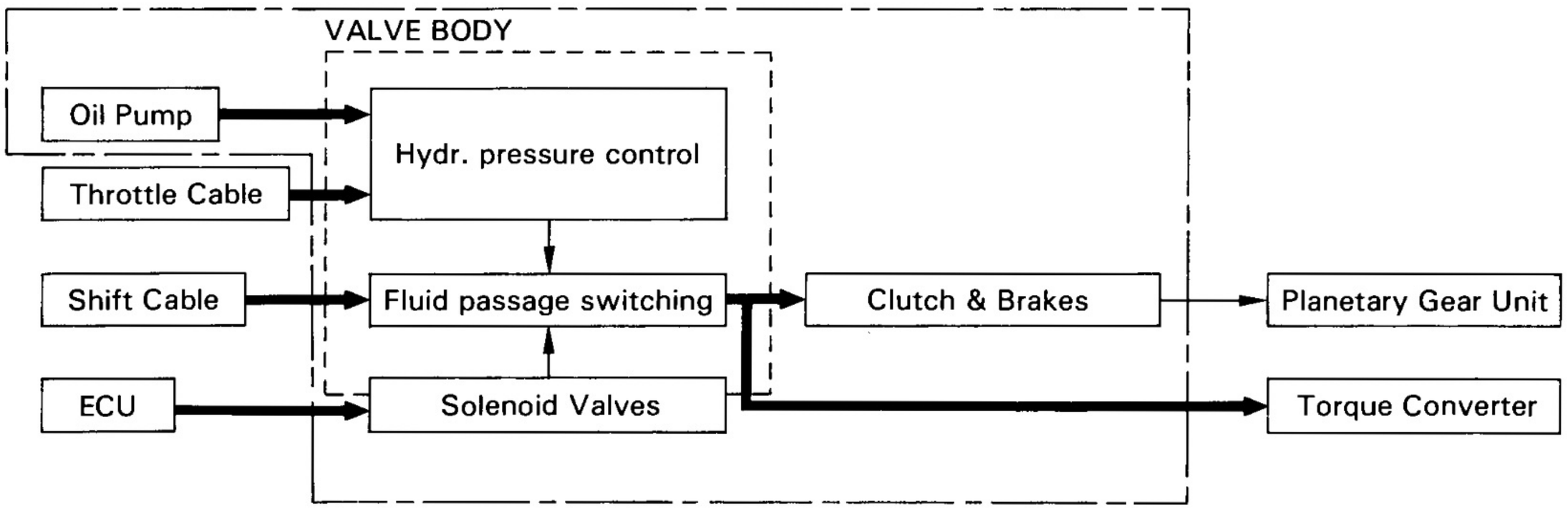

3. ELECTRONIC CONTROL SYSTEM

The electronic control system for the A442F automatic transmission provide extremely precise control of the gear shift timing and lock-up timing in response to driving conditions as sensed by various sensors located throughout the vehicle and in response to the engine's running condition.

At the same time, the ECT ECU control reduces vehicle squat when the vehicle starts out and gear shift shock.

The electronic control system for controlling the shift timing and the operation of the lock-up clutch is composed of the following three parts:

(a) Sensors: These sense the vehicle speed and throttle position and send this data to the ECT ECU in the form of electronic signals.

(b) ECT ECU: This determines the shift and lock-up timing based upon the signals from the sensors.

(c) Actuators: Solenoid valves divert hydraulic pressure from one circuit of the hydraulic control unit to another thus controlling shifting and lock-up timing.

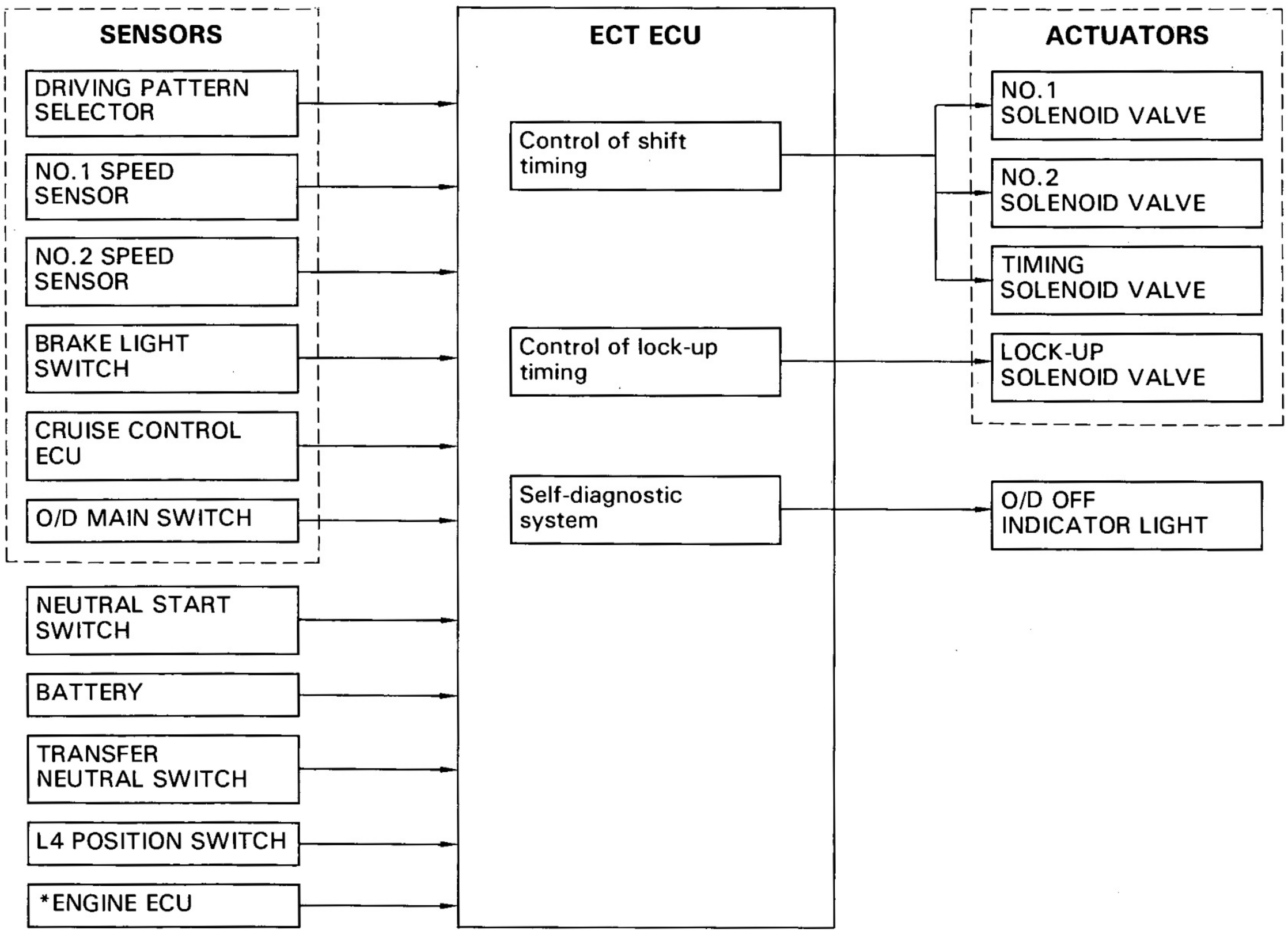

*: 1FZ-FE engine only

4. FUNCTION OF TCM

• Control of Shift Timing

The ECU has programmed into its memory the optimum shift pattern for each shift lever position (D, 2, L ranges) and driving mode (Normal or Power).

Based on the appropriate shift pattern, the ECU turns No.1, No.2 and timing solenoid valves on or off in accordance with the vehicle speed signal from the speed sensor and the throttle opening signal from the throttle position sensor. In this manner, the ECU operates each shift valve, opening or closing the fluid passages to the clutches and brakes to permit up-shift or down-shift of the transmission.

HINT: The electronic control system provides shift timing and lock-up control only while the vehicle is traveling forward. In REVERSE, and NEUTRAL, the transmission is mechanically, not electronically controlled.

• Control of Overdrive

Driving in overdrive is possible if the O/D main switch is on and the shift lever is in the D range. However, when the vehicle is being driven using the cruise control system (CCS), if the actual vehicle speed drops to about 4 km/h (2 mph) below the set speed while the vehicle is running in overdrive, the CCS ECU sends a signal to the ECT ECU to release the overdrive and prevent the transmission from shifting back into overdrive until the actual vehicle speed reaches the speed set in the CCS memory.

On this model, if the coolant temperature falls below 55°C (131°F), the engine ECU sends a signal to the ECT ECU, preventing the transmission from up-shifting into overdrive.

• Control of Lock-Up System

The ECT ECU has programmed in its memory a lock-up clutch operation pattern for each driving mode (Normal or Power). Based on this lock-up pattern, the ECU turns lock-up solenoid valve on or off in accordance with the vehicle speed signals received from the speed sensor and the throttle opening signals from the the throttle position sensor.

Depending on whether lock-up solenoid valve is on or off, the lock-up relay valve performs changeover of the fluid passages for the converter pressure acting on the torque converter to engage or disengage the lock-up clutch.

(Mandatory Cancellation of Lock-Up System)

If any of the following conditions exist, the ECU turns off lock-up solenoid valve to disengage the lock-up clutch.

(1) The brake light switch comes on (during braking).

(2) The IDL points of the throttle position sensor close (throttle valve fully closed.).

(3) The vehicle speed drops 4 km/h (2 mph) or more below the set speed while the cruise control system is operating.

(4) The coolant temperature falls below 70°C (158°F).

The purpose of (1) and (2) above is to prevent the engine from stalling if the rear wheels lock up.

The purpose of (3) is to cause the torque converter operate to obtain torque multiplication.

The purpose of (4) is both to improve general driveability, and to speed up transmission warm-up.

Also, while the lock-up system is in operation, the ECU will temporarily turn it off during up-shift or down-shift in order to decrease shifting shock.

5. A/T. FLUID TEMPERATURE WARNING SYSTEM

The ECT ECU detects the A/T fluid temperature by means of a fluid temperature sensor fitted to the union. The A/T fluid may become extremely when the vehicle is under and extreme load, as when driving on sand or climbing uphill. Should the fluid temperature increase above 150°C (302°F), the ECT ECU lights the warning light located in the combination meter. The light goes off when temperature falls below 120°C (248°F).

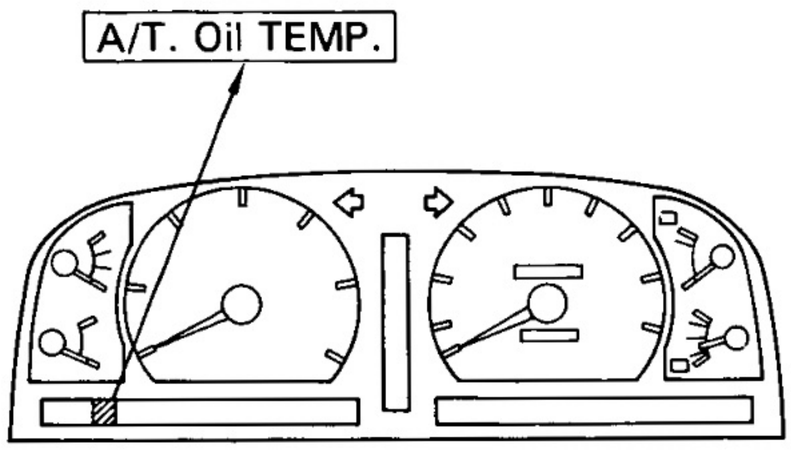

AT6023

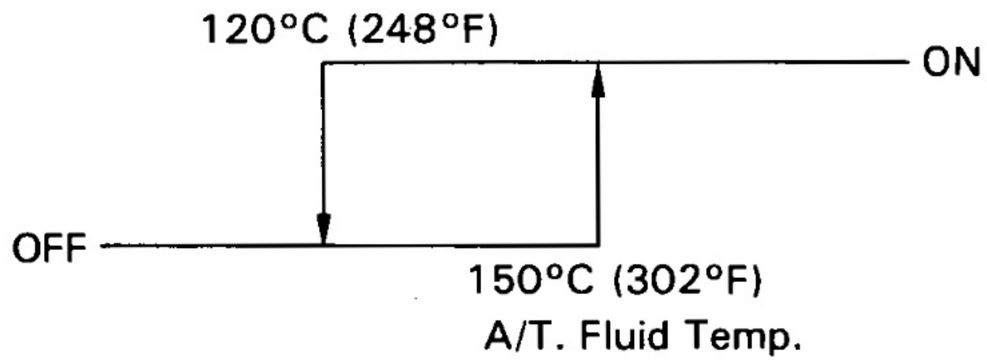

V01585

6. A/T. P. (Automatic Transmission Parking) INDICATOR

The propeller shaft and wheels are free even when the transmission shift lever is set to ''P'' as long as the transfer shift lever is in ''neutral'' position. The A/T.P. indicator lights up to warn the driver that the propeller shaft and wheels are not locked. If the A/T.P. indicator light goes on, the transfer shift lever should be shifted to out of ''N'' position.

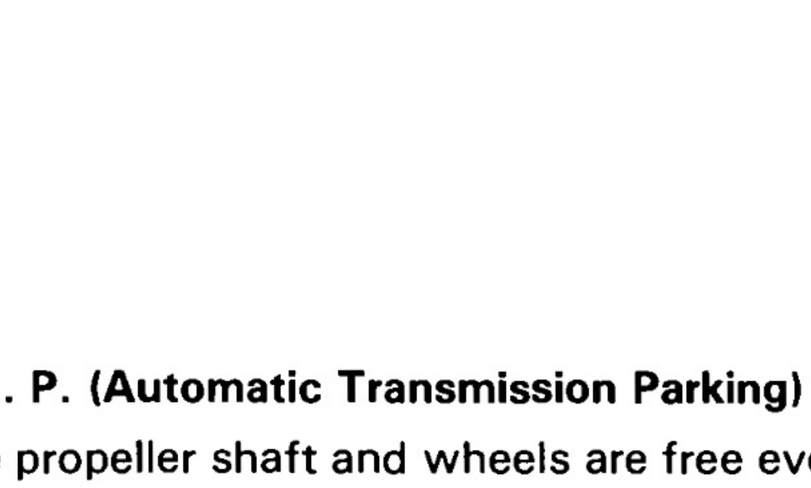

AT6024

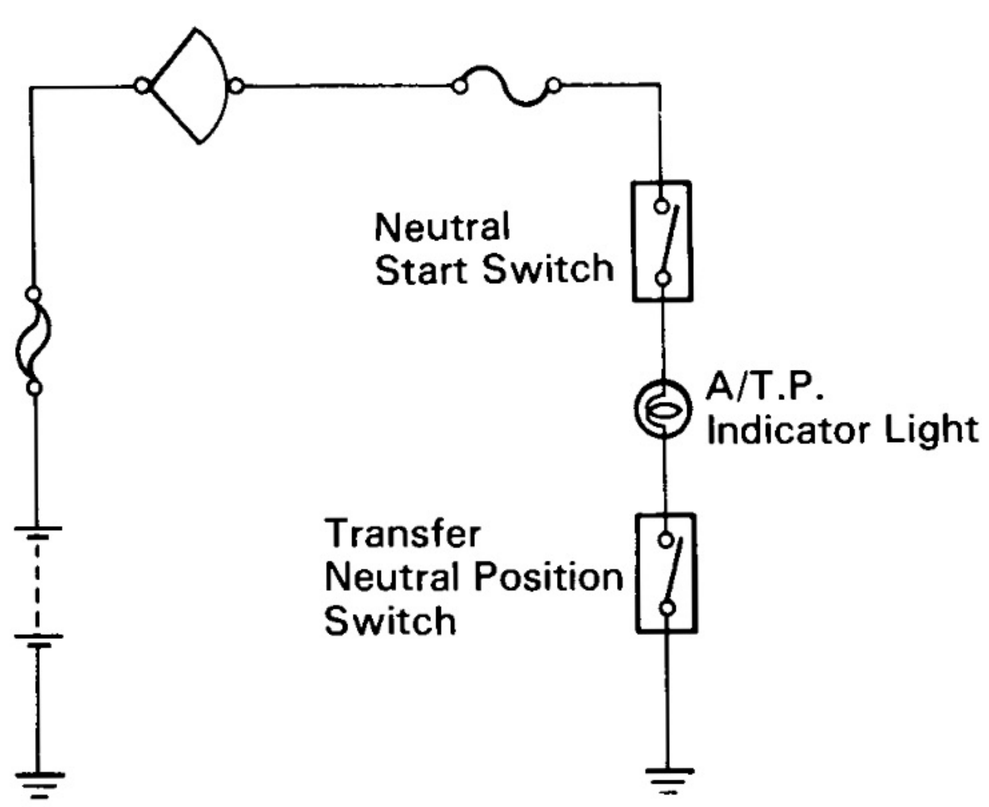

AT3920

PREPARATION

SST (SPECIAL SERVICE TOOLS)

	**09032-00100**	Oil Pan Seal Cutter	
	**09350-30020**	TOYOTA Automatic Transmission Tool Set	
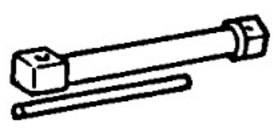	**(09351-32010)**	One-way Clutch Test Tool	
	**(09351-32020)**	Stator Stopper	
	**09843-18020**	Diagnosis Check Wiring	
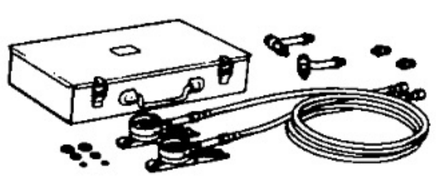	**09992-00094**	Automatic Transmission Oil Pressure Gauge Set	

EQUIPMENT

Ohmmeter	
Voltmeter	
Torque wrench	
Dial indicator with magneticbase	Check drive plate runout.
Vernier calipers	Check torque converter installation.
Straight edge	Check torque converter installation.

LUBRICANT

Item	Capacity	Classification
Automatic transmission fluid Dry fill w/ Oil cooler w/o Oil cooler Drain and refill	 15.4 liter (16.3 US qts, 13.6 Imp.qts) 15.0 liter (15.9 US qts, 13.2 Imp.qts) 6.0 liters (6.3 US qts, 5.3 Imp.qts)	ATF DEXRON® II

SSM (SPECIAL SERVICE MATERIALS)

08826-00090	Seal Packing 1281, Three bond 1281 or equivalent	Oil pan

TROUBLESHOOTING

Trouble occurring in the ECT can stem from one of three sources: the engine, the ECT electronic control unit or the transmission itself. Before troubleshooting, determine in which these three sources the problem lies, and begin troubleshooting with the simplest operation, gradually working up in order or difficulty.

BASIC TROUBLESHOOTING

Before troubleshooting an ECT, first determine whether the problem is electrical or mechanical. To do this, just refer to the basic troubleshooting flow-chart provided below.

If the cause is already known, using the basic troubleshooting chart below a long with the general troubleshooting chart on the following pages should speed the procedure.

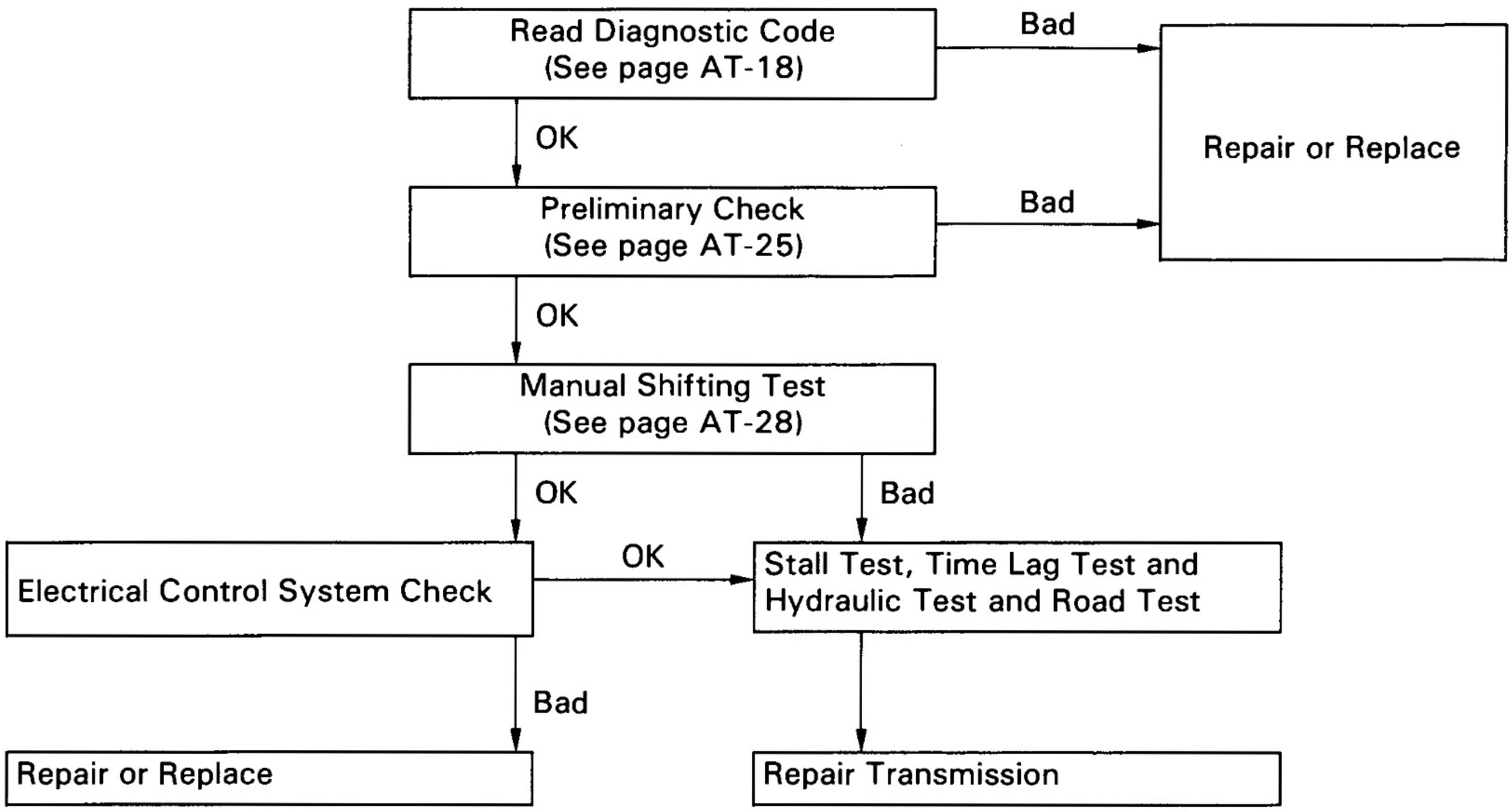

NOTICE: Refer to A442F Automatic Transmission Repair Manual (Pub. No. RM314E) when ★ mark appears in the column for page numbers.

Problem	Possible cause	Remedy	Page
Fluid discolored or smells burnt	Fluid contaminated	Replace fluid	AT-25
	Torque converter faulty	Replace torque converter	AT-76
	Transmission faulty	Disassemble and inspect transmission	★
Vehicle does not move in any forward range or reverse	Manual linkage out of adjustment	Adjust linkage	AT-26
	Valve body or primary regulator faulty	Inspect valve body	★
	Parking lock pawl faulty	Inspect parking lock pawl	★
	Torque converter faulty	Replace torque converter	AT-76
	Converter drive plate broken	Replace drive plate	AT-76
	Oil pump intake screen blocked	Clean screen	★
	Transmission faulty	Disassemble and inspect transmssion	★
Shift lever position incorrect	Manual linkage out of adjustment	Adjust linkage	AT-26
	Manual valve and lever faulty	Inspect valve body	★
	Transmission faulty	Disassemble and inspect transmission	★
Harsh engagement into any drive position	Throttle cable out of adjustment	Adjust throttle cable	AT-26
	Valve body or primary regulator faulty	Inspect valve body	★
	Accumulator pistons faulty	Inspect accumulator pistons	★
	Transmission faulty	Disassemble and inspect transmission	★
Delayed 1 — 2, 2 — 3 or 3 — O/D up-shift, or down-shift from O/D — 3 or 3 — 2 and shifts back to O/D or 3	Electronic control faulty	Inspect electronic control	AT-29
	Valve body faulty	Inspect valve body	★
	Solenoid valve faulty	Inspect solenoid valve	AT-40
Slips on 1 — 2, 2 — 3 or 3 — O/D up-shift, or shps or shudders on acceleration	Manual linkage out of adjustment	Adjust linkage	AT-26
	Throttle cable out of adjustment	Adjust throttle cable	AT-26
	Valve body faulty	Inspect valve body	★
	Solenoid valve faulty	Inspect solenoid valve	AT-40
	Transmission faulty	Disassemble and inspect transmission	★
Drag, binding or tie-up on 1 — 2, 2 — 3 or 3 — O/D up-shift	Manual linkage out of adjustment	Adjust linkage	AT-26
	Valve body faulty	Inspect valve body	★
	Transmission faulty	Disassemble and inspect transmission	★

NOTICE: Refer to A442F Automatic Transmission Repair Manual (Pub. No. RM314E) when ★ mark appears in the column for page numbers.

Problem	Possible cause	Remedy	Page
No lock-up in 3rd or O/D	Electronic control faulty	Inspect electronic control	AT-29
	Valve body faulty	Inspect valve body	★
	Solenoid valve faulty	Inspect solenoid valve	AT-40
	Transmission faulty	Disassemble and inspect transmission	★
Harsh down-shift	Throttle cable out of adjustment	Adjust throttle cable	AT-26
	Throttle cable and cam faulty	Inspect throttle cable and cam	AT-26
	Accumulator pistons faulty	Inspect accumulator pistons	★
	Valve body faulty	Inspect valve body	★
	Transmission faulty	Disassemble and inspect transmission	★
No down-shift when coasting	Valve body faulty	Inspect valve body	★
	Solenoid valve faulty	Inspect solenoid valve	AT-40
	Electronic control faulty	Inspect electronic control	AT-29
Down-shift occurs too quickly or too late while coasting	Throttle cable faulty	Inspect throttle cable	AT-26
	Valve body faulty	Inspect valve body	★
	Transmission faulty	Disassemble and inspect transmission	★
	Solenoid valve faulty	Inspect solenoid valve	AT-40
	Electronic control faulty	Inspect electronic control	AT-29
No O/D — 3, 3 — 2 or 2 — 1 kick-down	Solenoid valve faulty	Inspect solenoid valve	AT-40
	Electronic control faulty	Inspect eletronic control	AT-29
	Valve body faulty	Inspect valve body	★
No engine braking 2 or L range	Solenoid valve faulty	Inspect solenoid valve	AT-40
	Electronic control faulty	Inspect electronic control	AT-29
	Valve body faulty	Inspect valve body	★
	Transmission faulty	Disassemble and inspect transmission	★
Vehicle does not hold in P	Manual linkage out of adjustment	Adjust linkage	AT-26
	Parking lock pawl cam and spring faulty	Inspect cam and spring	AT-26

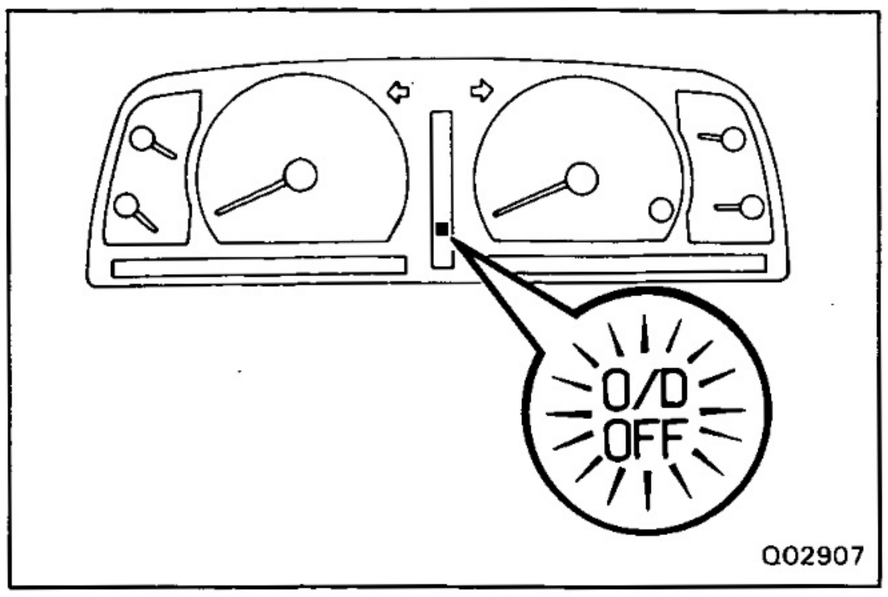

DIAGNOSIS SYSTEM

DESCRIPTION

1. A self-diagnosis function is built into the electrical control system. Warning is indicated by the overdrive OFF indicator light.

   HINT: Warning and diagnostic codes can be read only when the overdrive switch is ON. If OFF, the overdrive OFF light is lit continuously and will not blink.

(a) If a malfunction occurs within the speed sensors (No.1 or 2), throttle sensor or engine speed signal, the overdrive OFF indicator light will blink to warn the driver.

However, there will be no warning of a malfunction with lock-up solenoid.

(b) The diagnostic code can be read by the number of blinks of the overdrive OFF indicator light when terminals T_T and E_1 are connected. (See page AT-20)

(c) The throttle position sensor or brake signal are not indicated, but inspection can be made by checking the voltage at terminal T_T of the check connector.

(d) The signals to each gear can be checked by measuring the voltage at terminal T_T of the check connector while driving.

2. The diagnostic code is retained in memory by the ECT ECU and due to back-up voltage, is not canceled out when the engine is turned off. Consequently, after repair, it is necessary to turn the ignition switch off and remove the DOME fuse (10 A) or disconnect the ECT ECU connector to cancel out the diagnostic code. (See page AT-20)

HINT:

- Low battery voltage will cause faulty operation of the diagnosis system. Therefore, always check the battery first.
- Use a voltmeter and ohmmeter that have an impedance of at least 10 kΩ/V.

Diagnostic Code Output

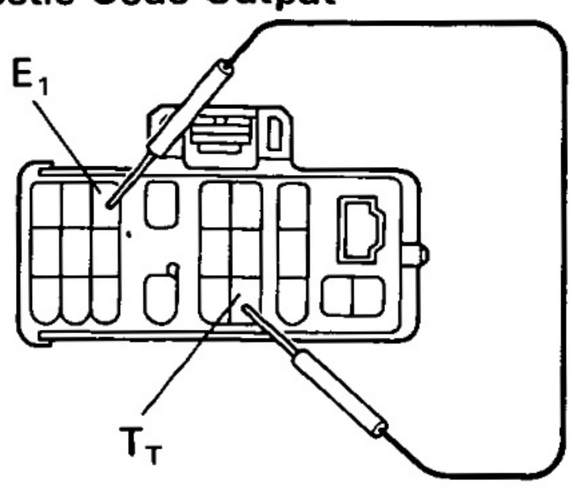

Voltage Check

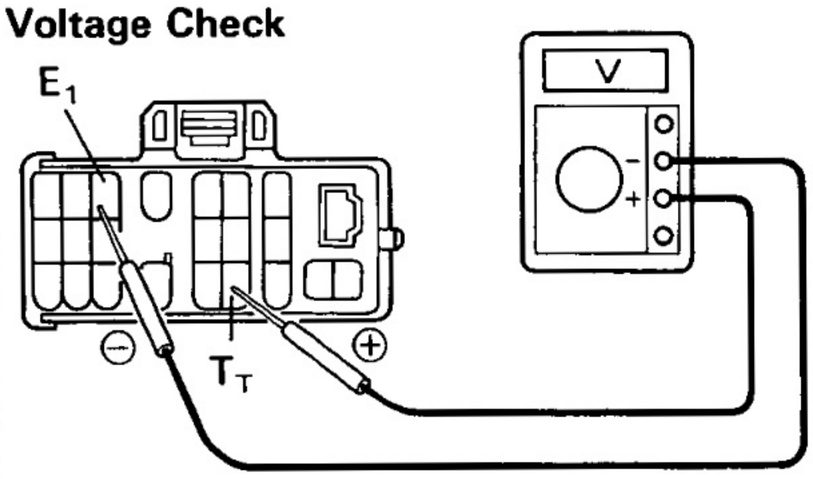

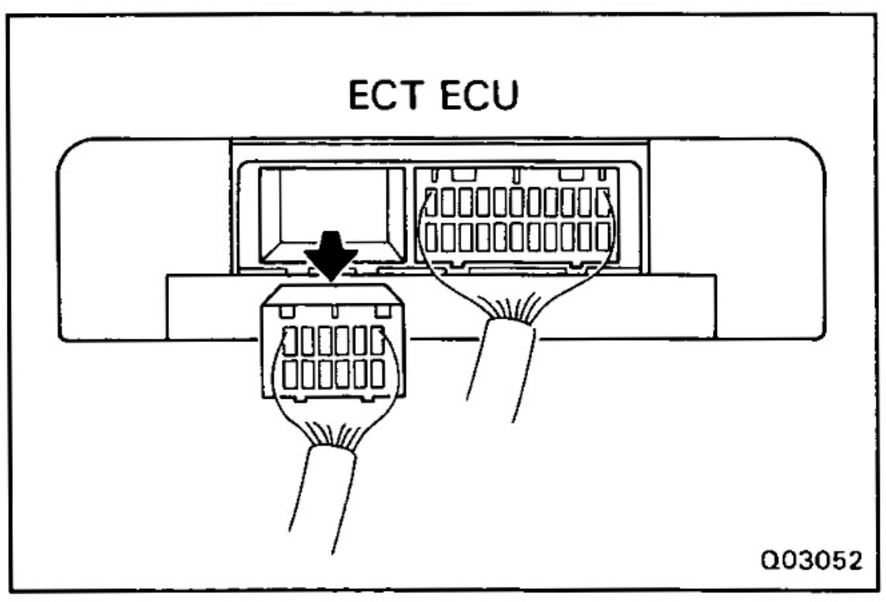

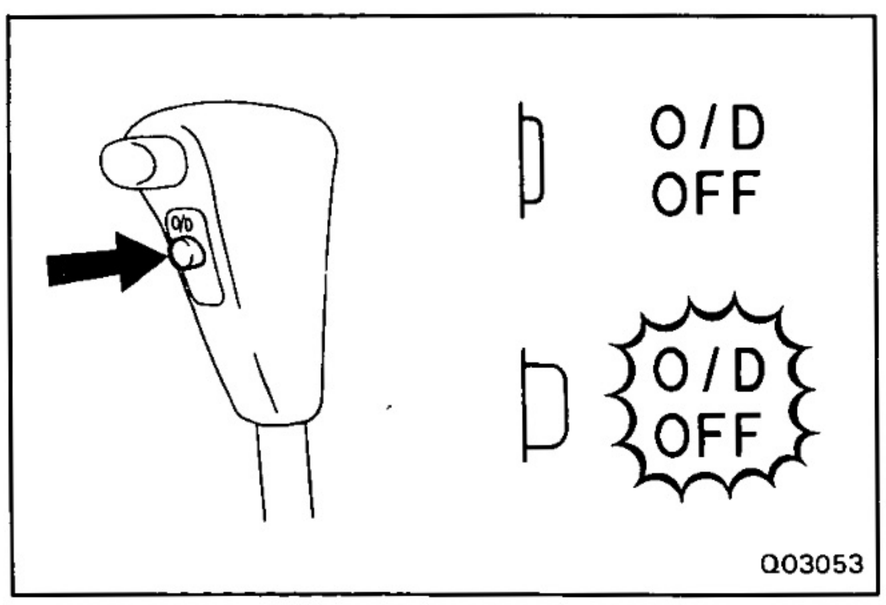

CHECK "O/D OFF" INDICATOR LIGHT

1. Turn the ignition switch ON.
2. The "O/D OFF" light will come on when the O/D switch is placed at OFF.
3. When the O/D switch is set to ON, the "O/D OFF" light should go out.

   If the "O/D OFF" light flashes when the O/D switch is set to ON, the electronic control system is faulty.

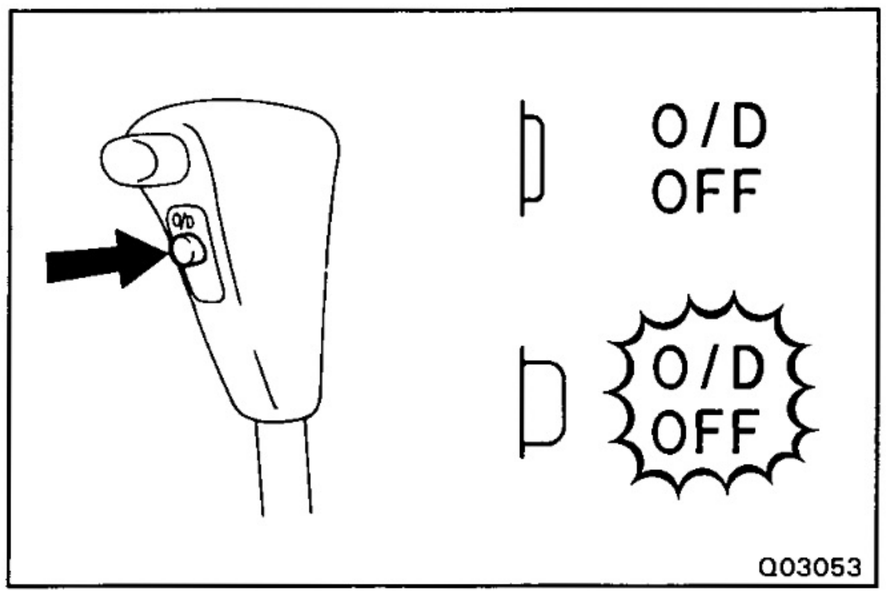

READ DIAGNOSTIC CODE

1. TURN IGNITION SWITCH AND O/D SWITCH TO ON

Do not start the engine.

HINT: Warning and diagnostic codes can be read only when the overdrive switch is ON. If OFF, the overdrive OFF light willl light continuously and will not blink.

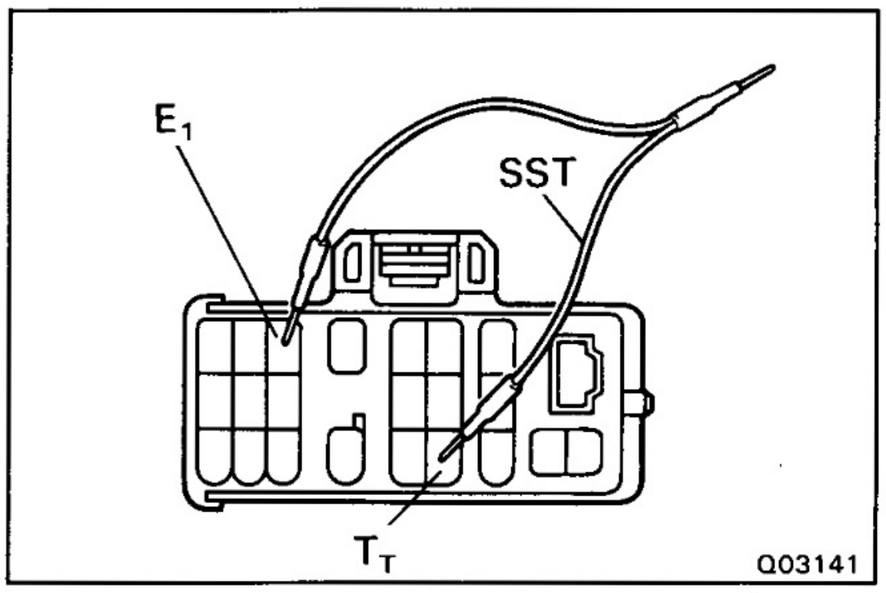

2. CONNECT T_T AND E_1 TERMINALS OF CHECK CONNECTOR

Using SST, connect terminals T_T and E_1 of the check connector.

SST 09843-18020

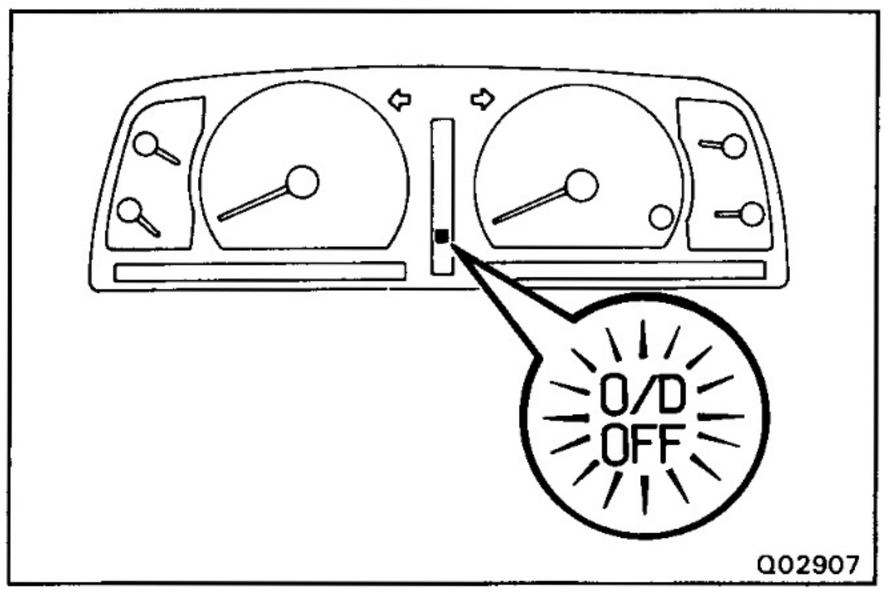

3. READ DIAGNOSTIC CODE

Read the diagnostic code as indicated by the number of times the O/D OFF light flashes.

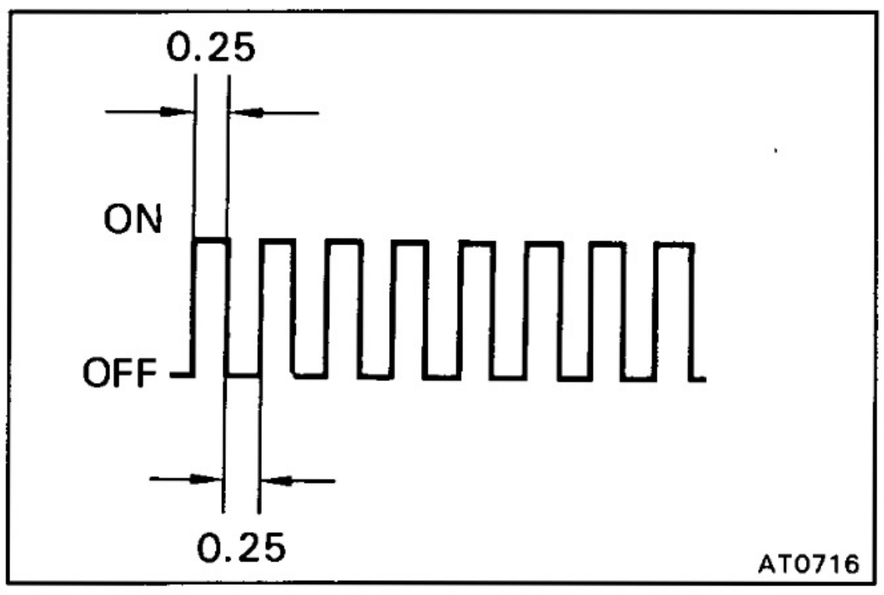

(Diagnostic Code Indication)

- If the system is operating normally, the light will flash 2 times par second.
- In the event of a malfunction, the light will flash 1 time par second. The number of blinks will equal the first number and, after 1.5 seconds pause, the second number of the two digit diagnostic code. If there are two or more codes, there will be a 2.5 seconds pause between each.

HINT: In the event of several trouble codes occurring simultaneously, indication will began from the smaller value and continue to the larger.

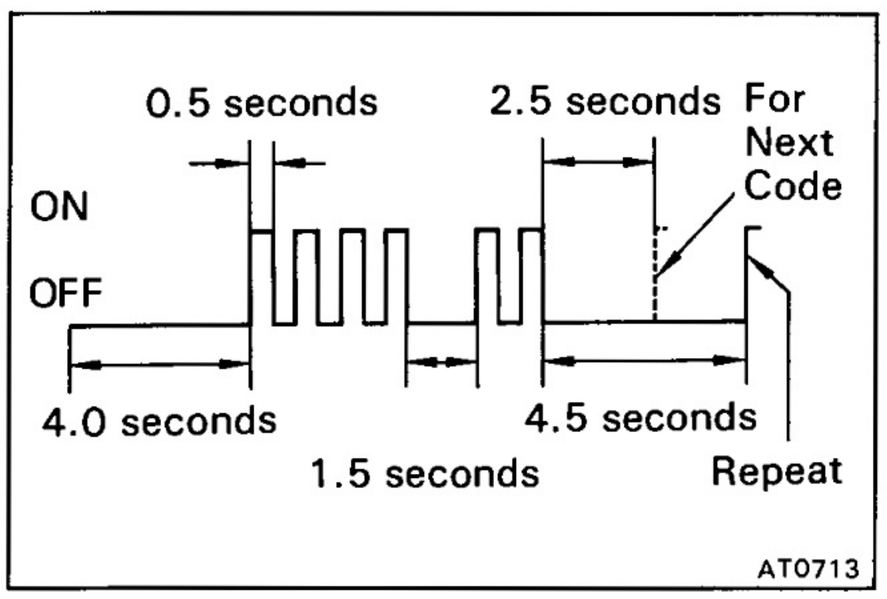

4. REMOVE SST

DIAGNOSTIC CODES

Code No.	Light Pattern	Diagnosis System
—	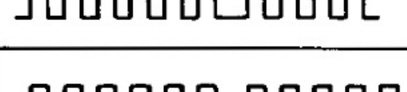	Normal
41	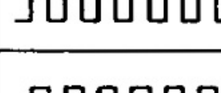	Severed throttle position sensor or short circuit— severed wire harness or short circuit
42	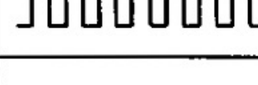	Defective No. 1 speed sensor (in combination meter)— severed wire harness or short circuit
61		Defective No. 2 speed sensor (in ATM)— severed wire harness or short circuit
62		Severed No. 1 solenoid or short circuit— severed wire harness or short circuit
63		Severed No. 2 solenoid or short circuit— severed wire harness or short circuit
64		Severed lock-up solenoid or short circuit— severed wire harness or short circuit
65		Severed timing solenoid or short circuit— severed wire harness or short circuit
86		Severed engine speed sensor or short circuit— severed wire harness or short circuit
*88		Severed engine ECU and ECT ECU or short circuit— severed wire harness or short circuit

*: 1FZ-FE engine only

Q03076

HINT: If codes 62, 63, 64, or 65 appear, there is an electrical malfunction in the solenoid. Causes due to mechanical failure, such as a stuck valve, will not appear.

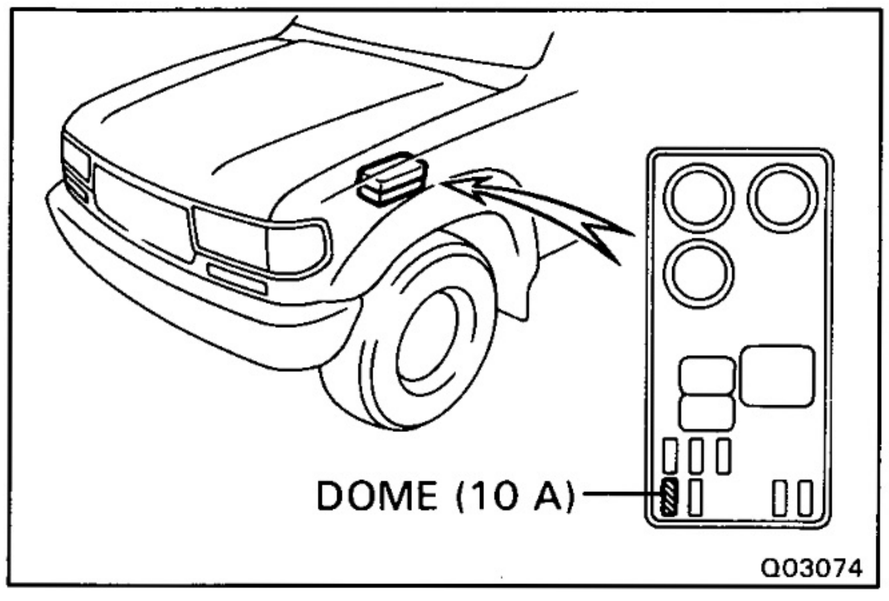

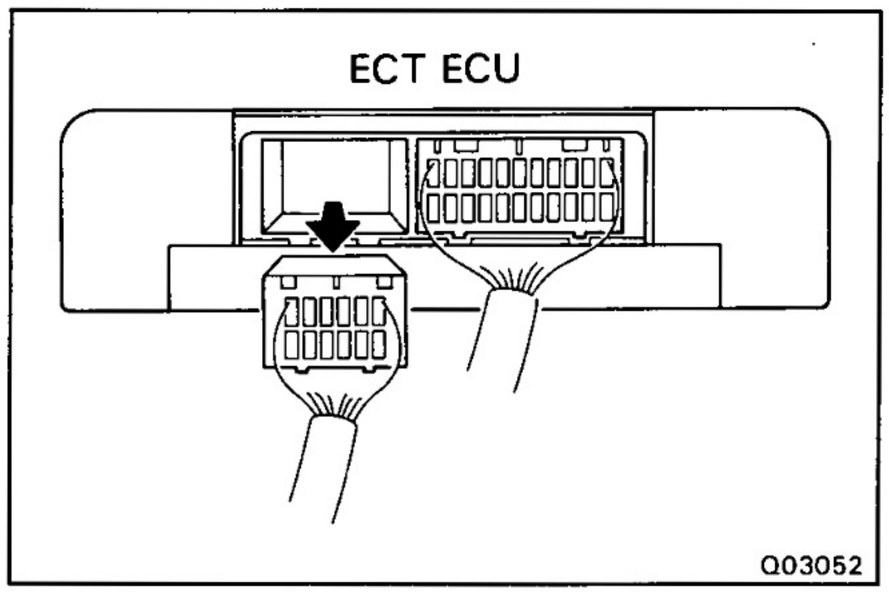

CANCEL OUT DIAGNOSTIC CODE

1. After repair of the trouble area, the diagnostic code retained in memory by the ECT ECU must be canceled by removing the DOME fuse (10 A) for 10 seconds or more, depending on ambient temperature (the lower the termperature, the longer the fuse must be left out) with the ignition switch OFF.

   HINT:
   - Cancellation can be also done by removing the battery negative (—) terminal, but in this case other memory systems will be also canceled out.
   - The diagnostic code can be also canceled out by disconnecting the ECT ECU connector.
   - If the diagnostic trouble is not canceled out, it will be retained by the ECT ECU and appear along with a new code in event of future trouble.

2. After cancellation, perform a road test to confirm that a "normal code" is now read on the O/D OFF light.

TROUBLESHOOTING FLOW-CHART

HINT:

- If diagnostic code Nos.41, 42, 61, 62, 63, 64, 65, 86, 88 (1FZ-FE engine only) and are output, the overdrive OFF indicator light will begin to blink immediately to warn the driver. However, an impact or shock may cause the blinking to stop; but the code will still be retained in the ECT ECU memory until canceled out.
- There is no warning for diagnostic code No.64 and 65.
- In the event of a simultaneous malfunction of both No.1 and No.2 speed sensors, no diagnostic code will appear and the fail-safe system will not function. However, when driving in the D range, the transmission will not up-shift from first gear, regardless of the vehicle speed.

Diagnostic Code 41 (Throttle position sensor circuitry) (1FZ-FE engine)

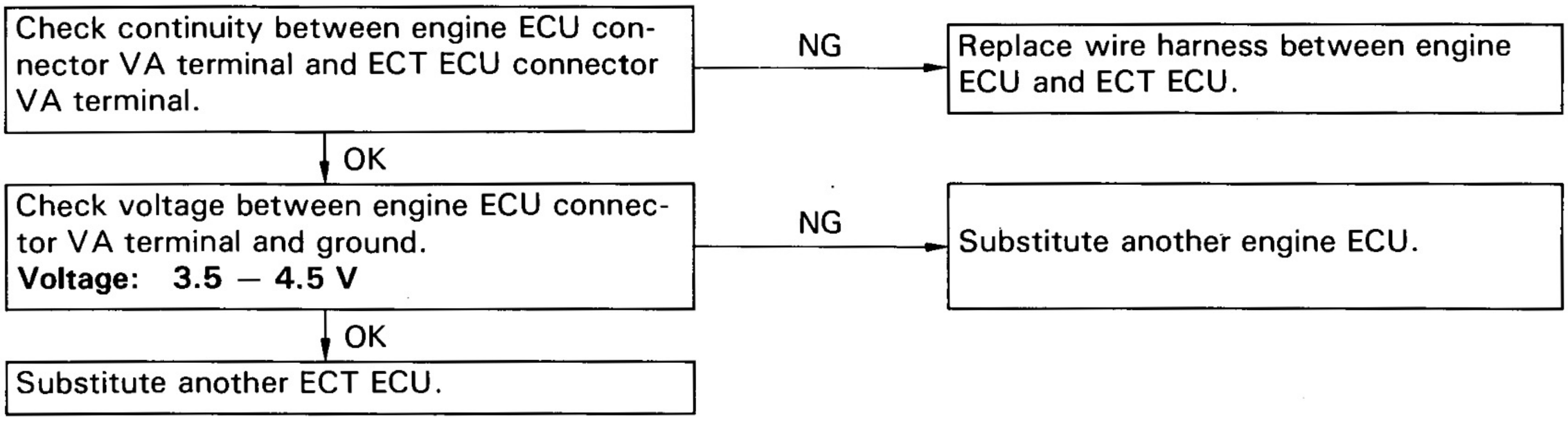

Diagnostic trouble Code 41 (Throttle position sensor circuitry) (1HD-T engine)

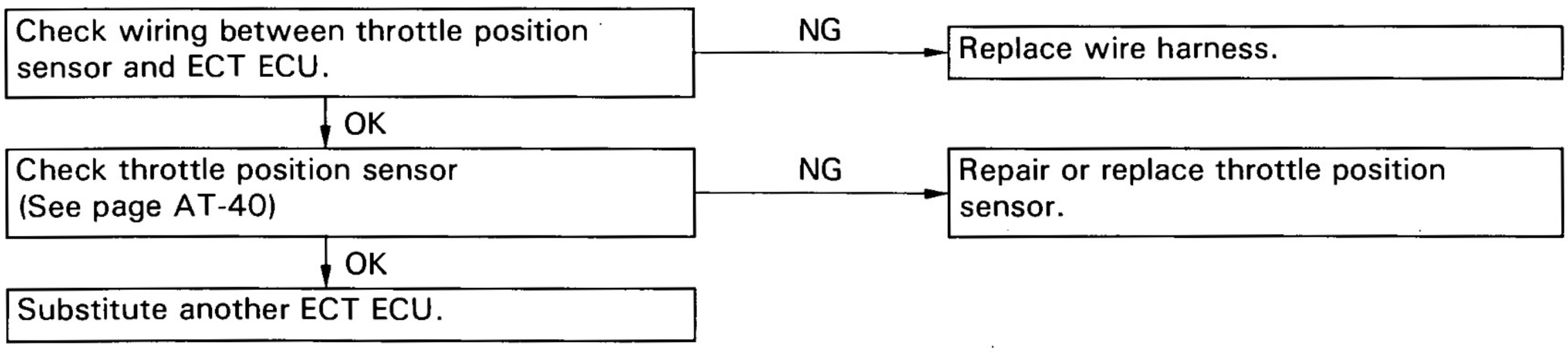

Diagnostic Code 42 (No. 1 speed sensor circuitry)

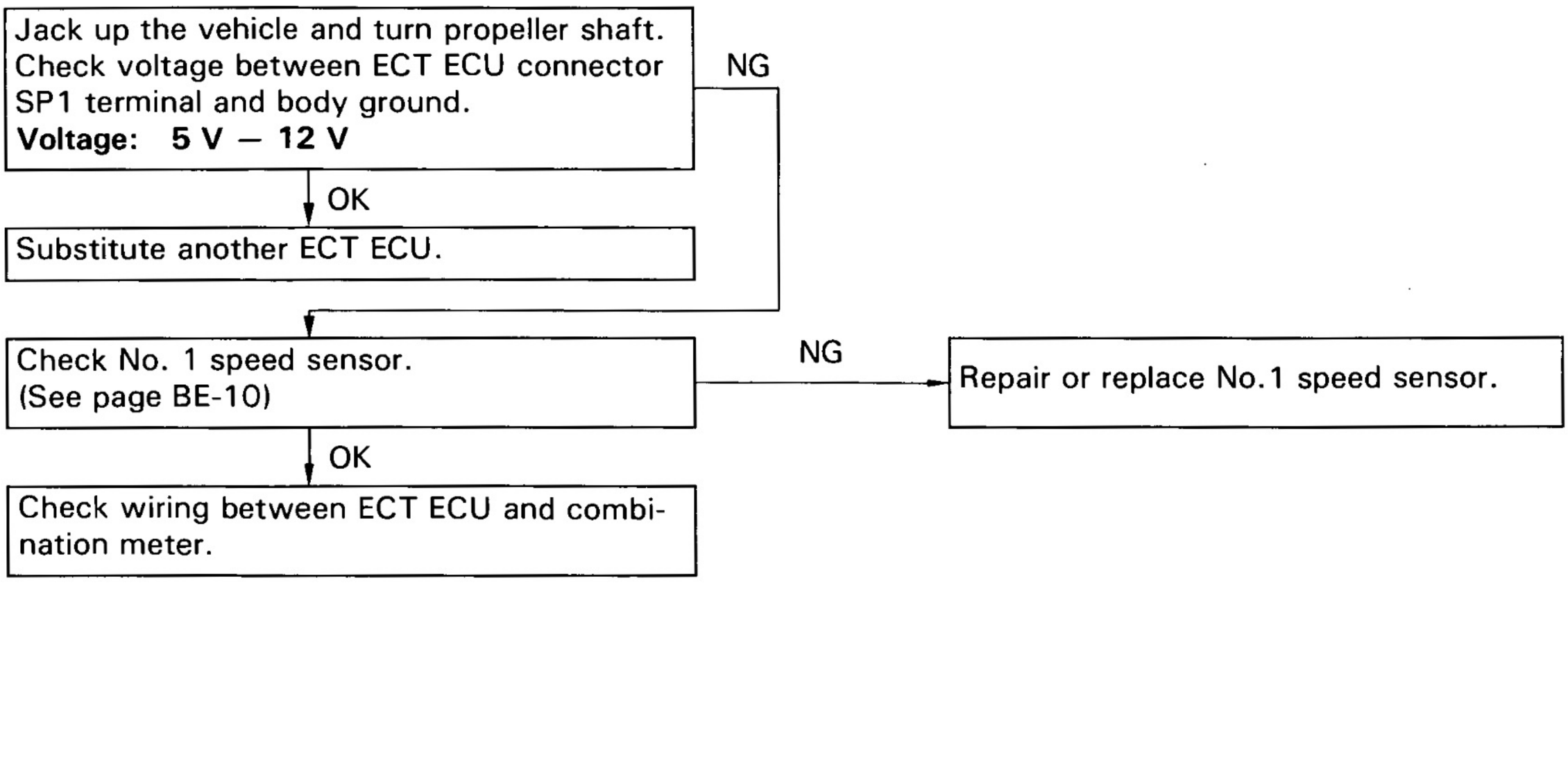

Diagnostic Code 61 (No.2 speed sensor circuitry)

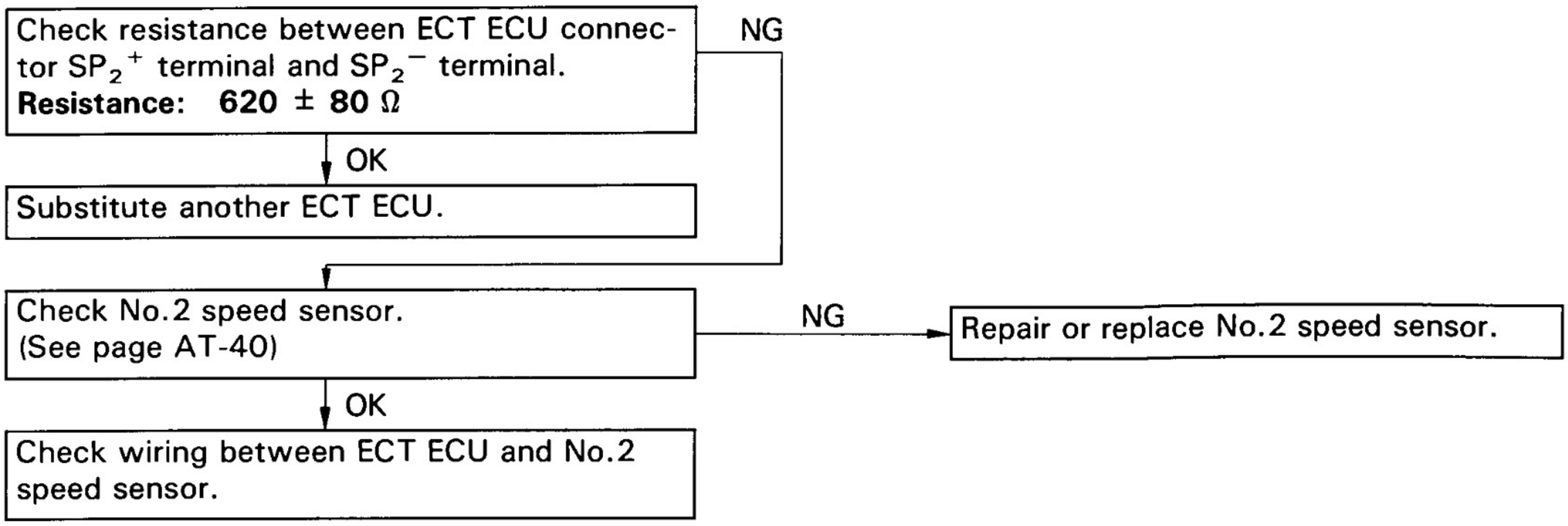

Diagnostic Code 62 (No.1 solenoid valve circuitry)

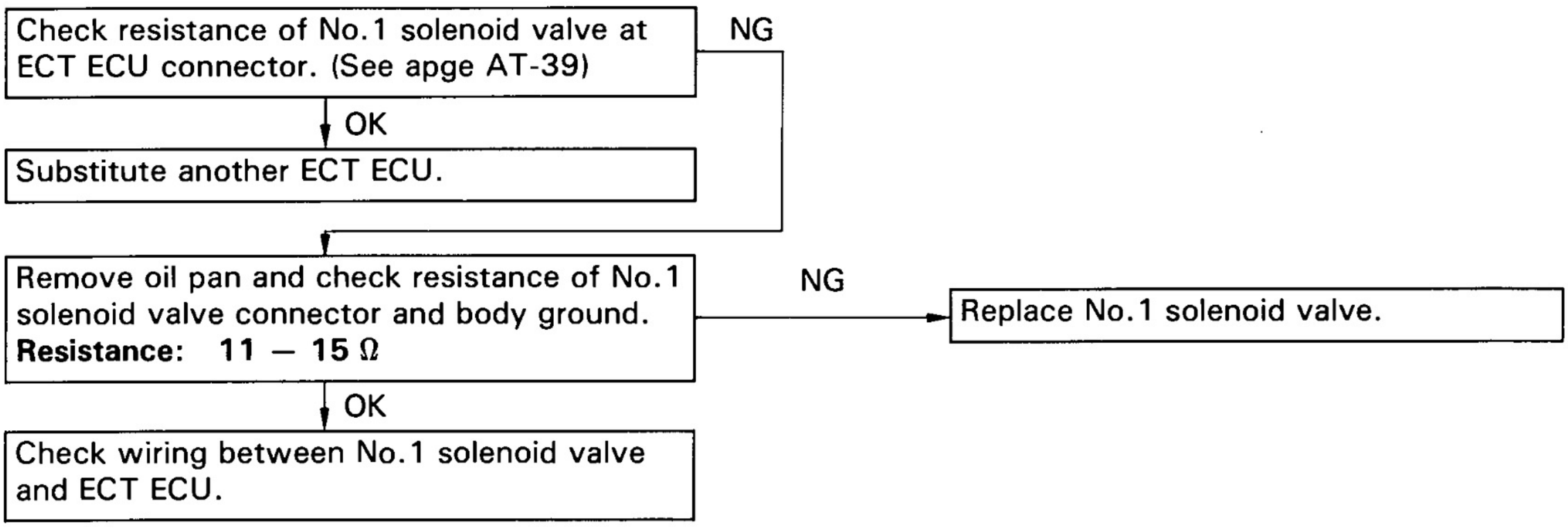

Diagnostic Code 63 (No. 2 solenoid valve circuitry)

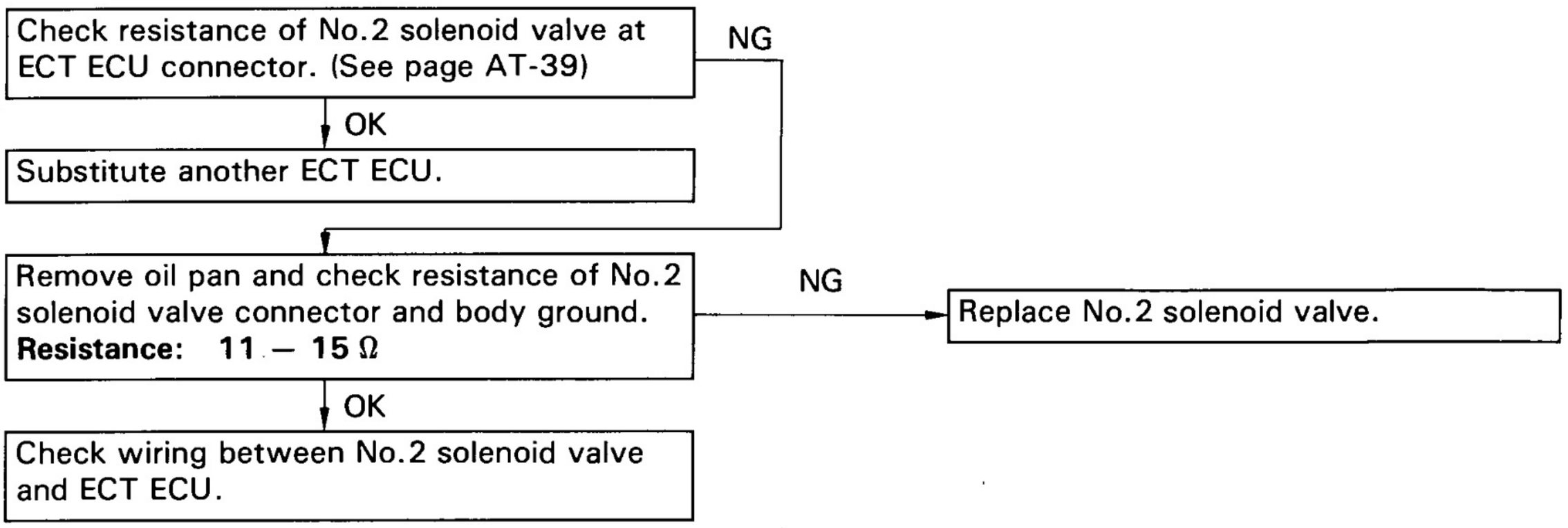

Diagnostic Code 64 (Lock-up solenoid valve circuitry)

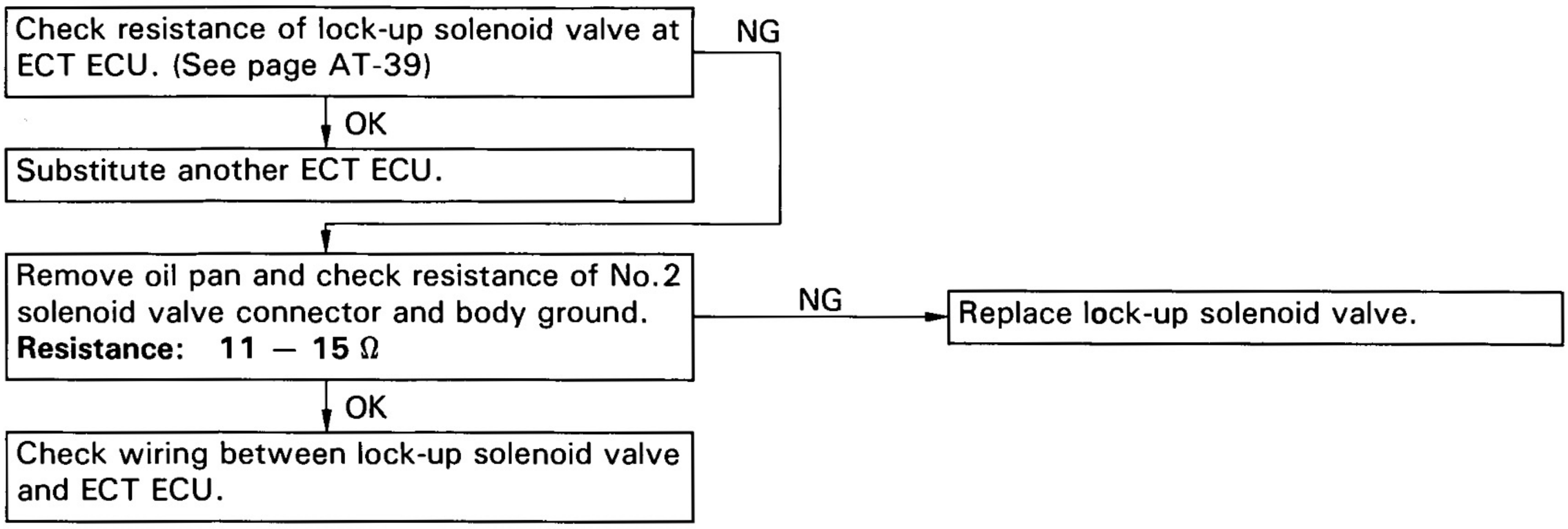

Diagnostic Code 65 (Timing solenoid valve circuitry)

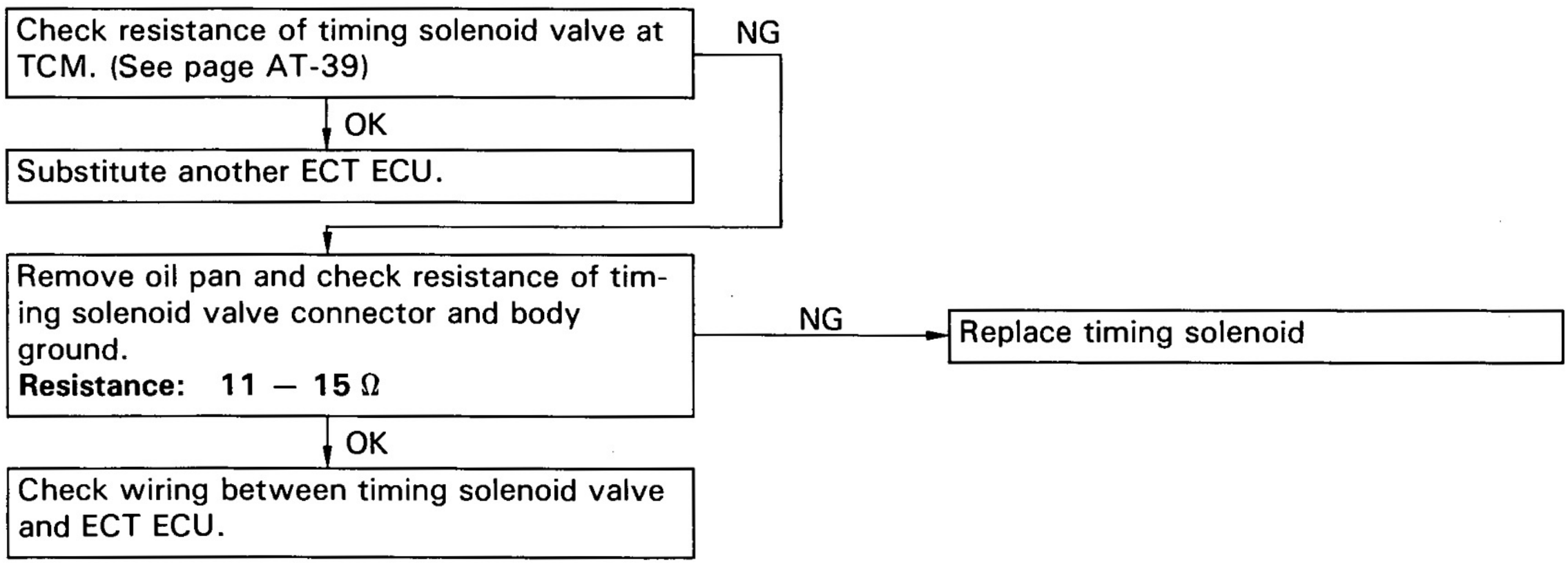

Diagnostic Code 86 (Engine speed sensor circuitry) (1FZ-FE engine)

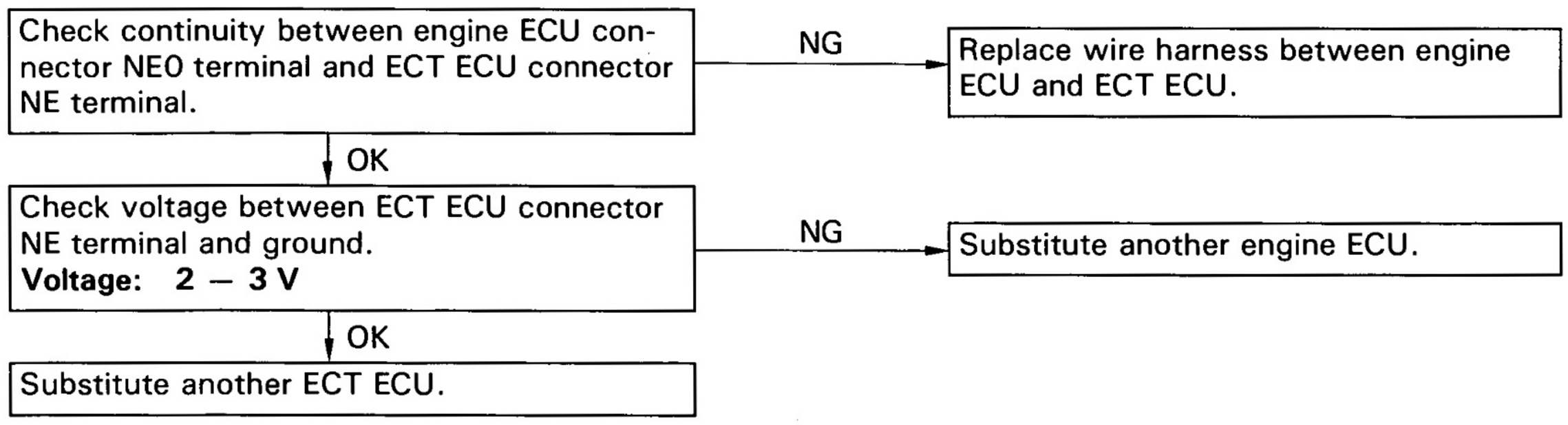

Diagnostic Code 86 (Engine speed sensor circuitry) (1HD-T engine)

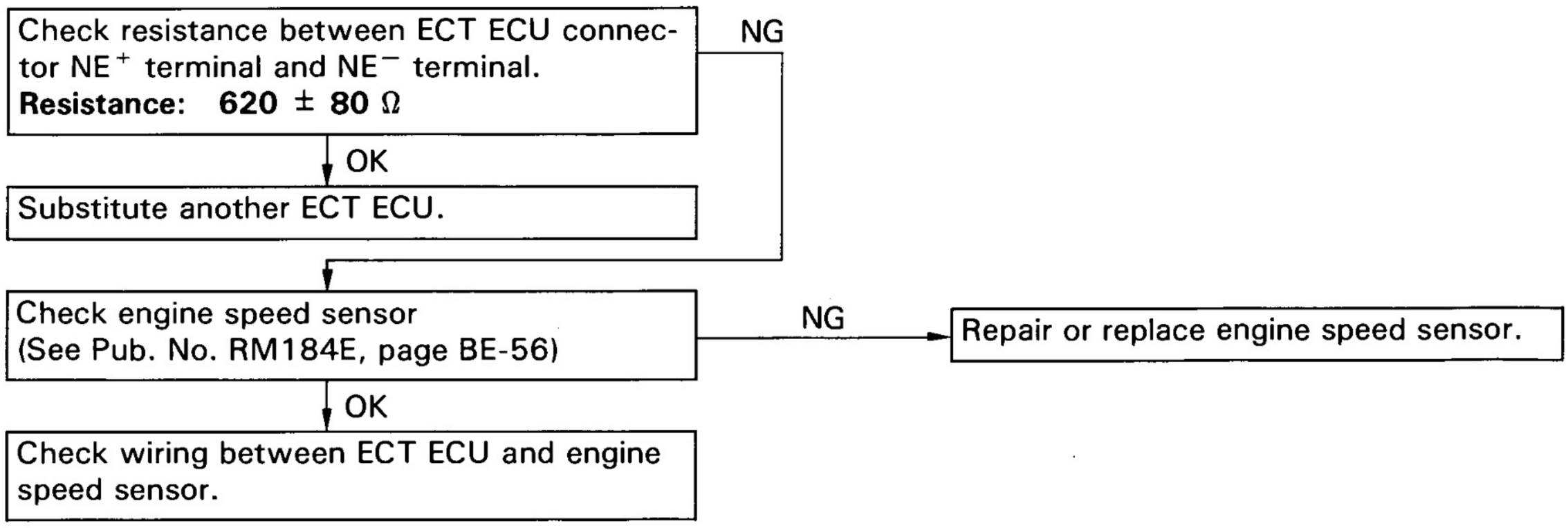

(1FZ-FE engine only)
Diagnostic Code 88 (Timing retard demand signal and fail safe signal circuitry)

(Timing retard demand signal)

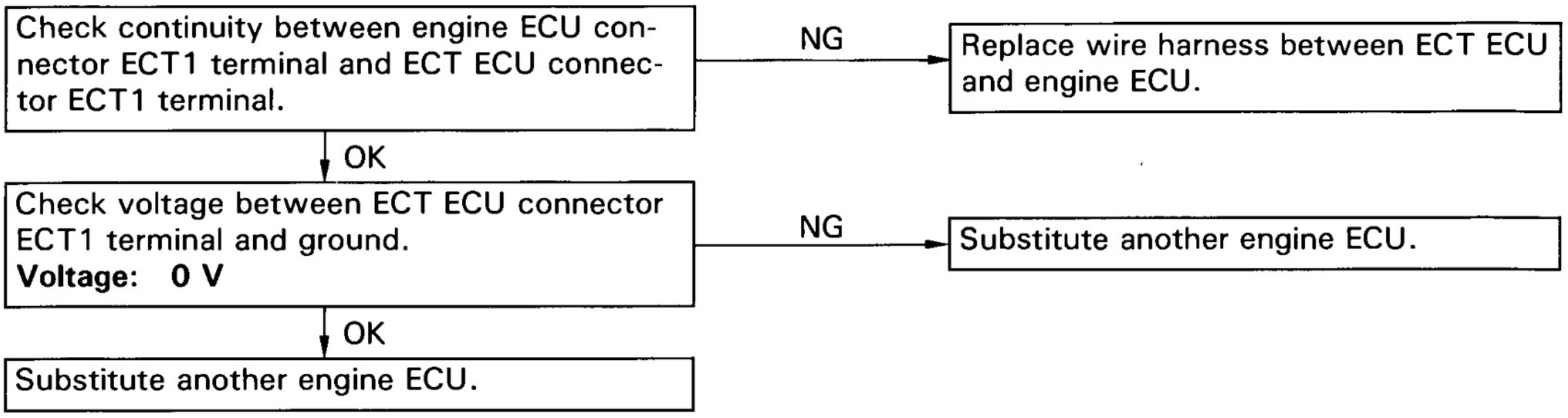

(Fail safe singal)

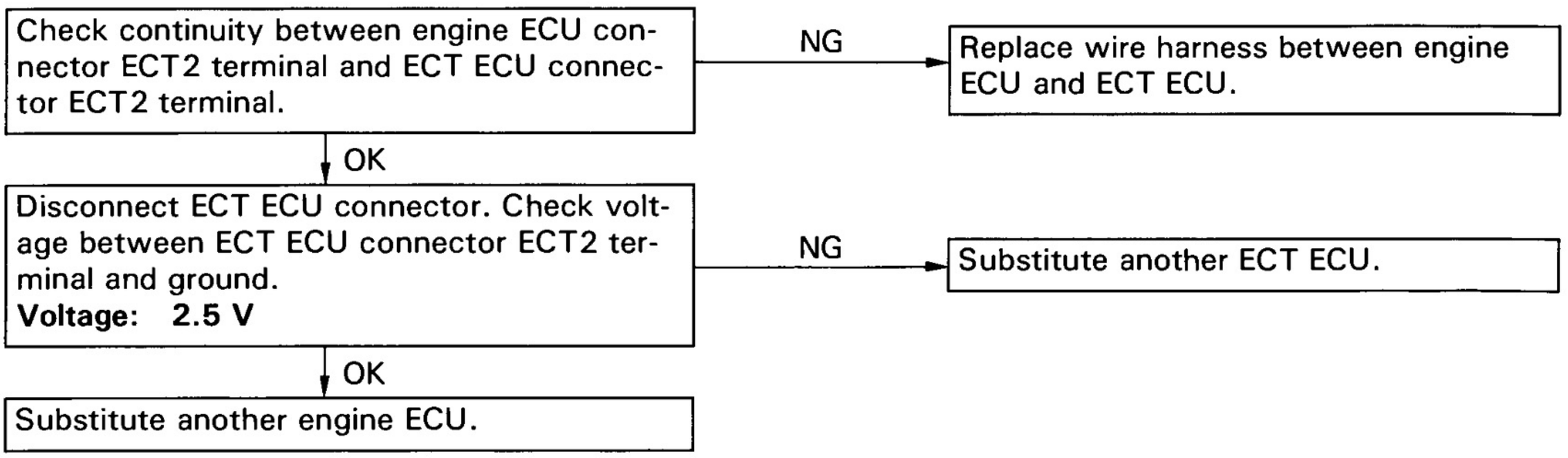

PRELIMINARY CHECK

1. CHECK FLUID LEVEL

HINT:

- The vehicle must have driven so that the engine and transmission are at normal operating temperature.

(Fluid temperature: 70 — 80°C or 158 — 176°F)

- Only use the COOL range on the dipstick as a rough reference when the fluid is replaced or the engine does not run.

(a) Park the vehicle on a level surface, set the parking brake.

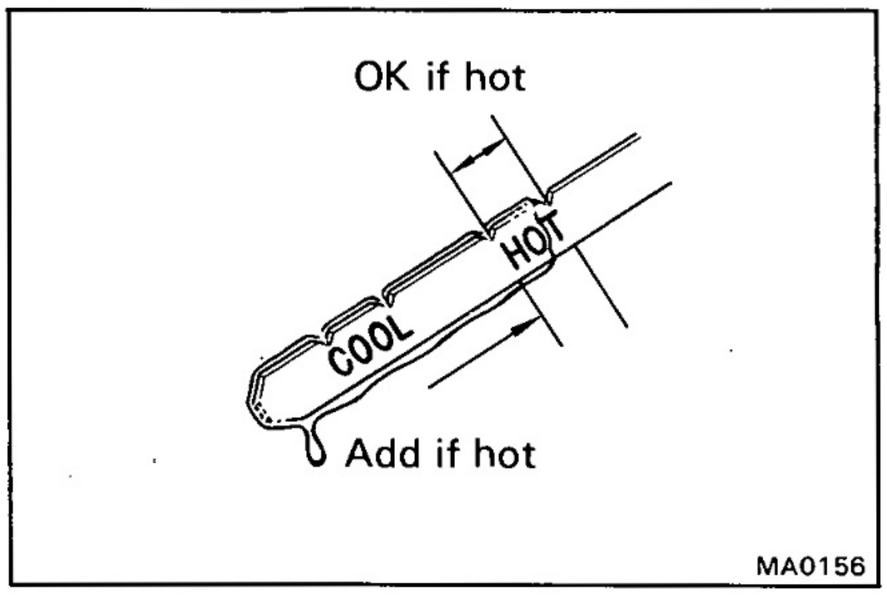

(b) With the engine idling, shift the shift lever into all positions from P to L range and return to P range.

(c) Pull out the transmission dipstick and wipe it clean.

(d) Push it back fully into the tube.

(e) Pull it out and check that the fluid level is on the HOT range.

If the level is at the low side, add fluid.

Fluid type:

ATF DEXRON® II

NOTICE: Do not overfill.

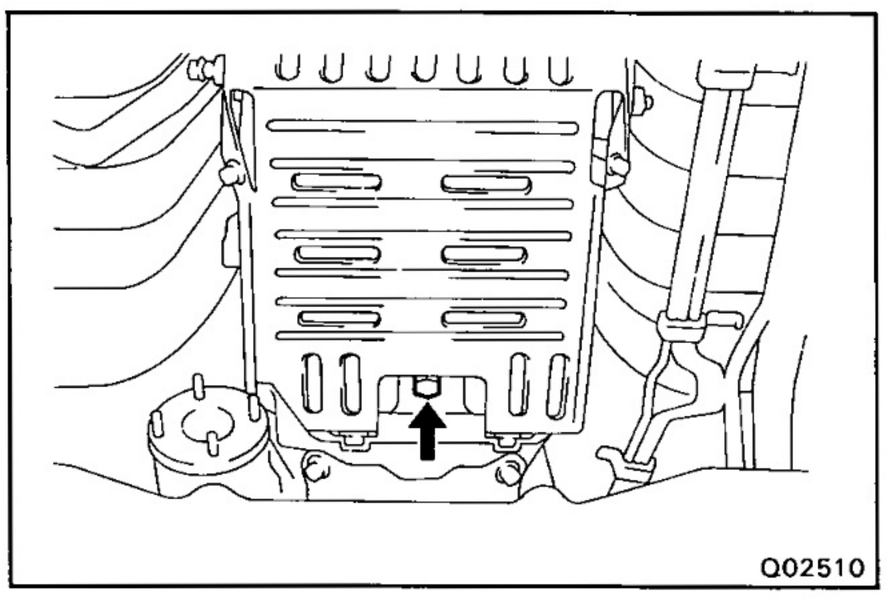

2. CHECK FLUID CONDITION

If the fluid smells burnt or is black, replace it in the following procedure.

(a) Remove the drain plug and drain the fluid.

(b) Reinstall the drain plug securely.

Torque: 27 N·m (280 kgf·cm, 20 ft·lbf)

(c) With the engine OFF, add new fluid through the oil filler tube.

Fluid type:

ATF DEXRON® II

Capacity:

Total

(w/o Oil cooler)
15.4 litters (16.3 US qts, 13.6 Imp.qts)
(w/o Oil cooler)
15.0 liters (15.9 US qts, 13.2 Imp.qts)

Drain and refill

6.0 litters (6.3 US qts, 5.3 Imp.qts)

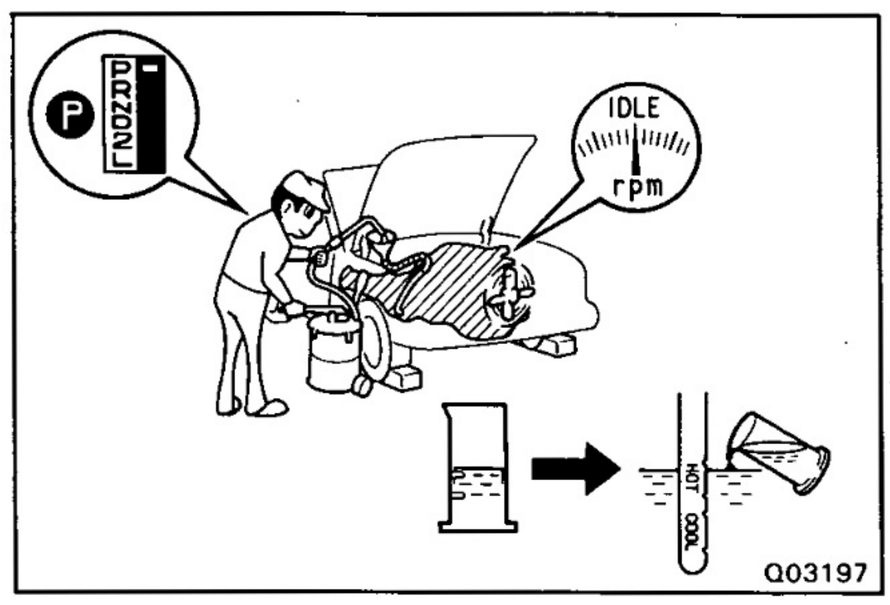

(d) Start the engine and shift the shift lever into all positions from P to L range and then shift into P range.

(e) With the engine idling, check the fluid level. Add fluid up to the COOL level on the dipstick.

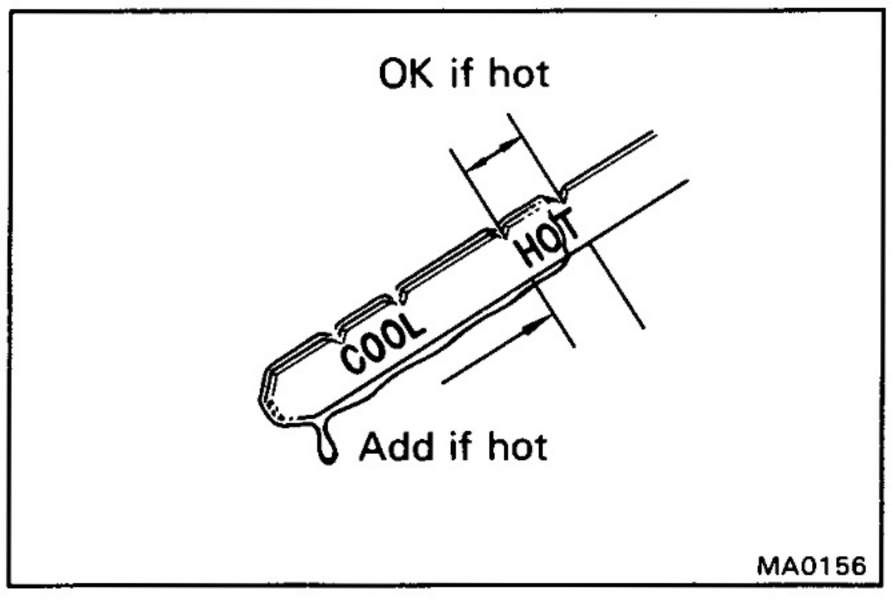

(f) Check the fluid level with the normal operating temperature (70 — 80°C or 158 — 176°F) and add as necessary.

NOTICE: Do not overfill.

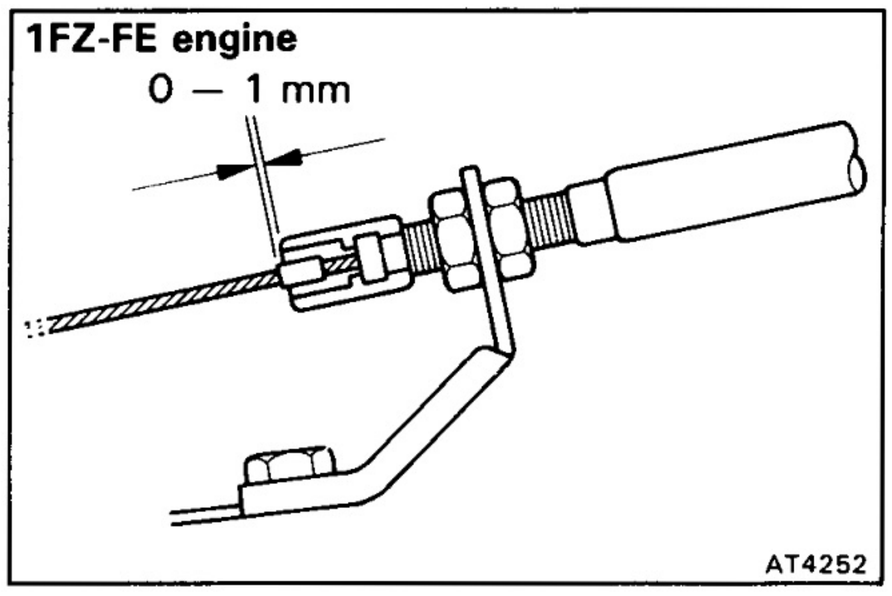

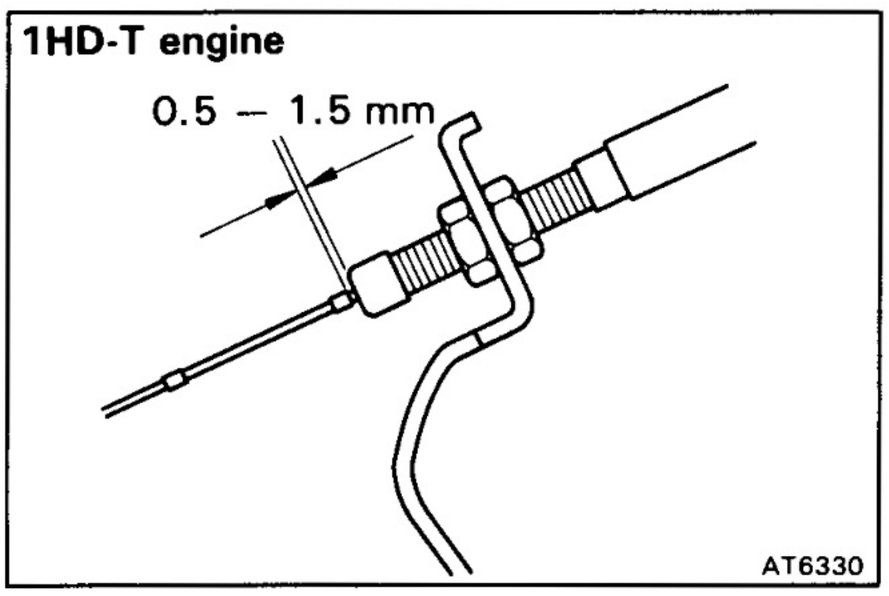

3. INSPECT THROTTLE CABLE

(a) Check that the throttle cable is installed correctly and not bent.

(b) With the throttle valve fully closed, measure the distance between the end of the boot and stopper on the cable.

Standard distance:

(1FZ-FE engine) 0 — 1 mm (0 — 0.04 in.)
(1HD-T engine) 0.5 — 1.5 mm (0.020 — 0.059 in.)

If the distance is not standard, adjust the cable by the adjusting nuts.

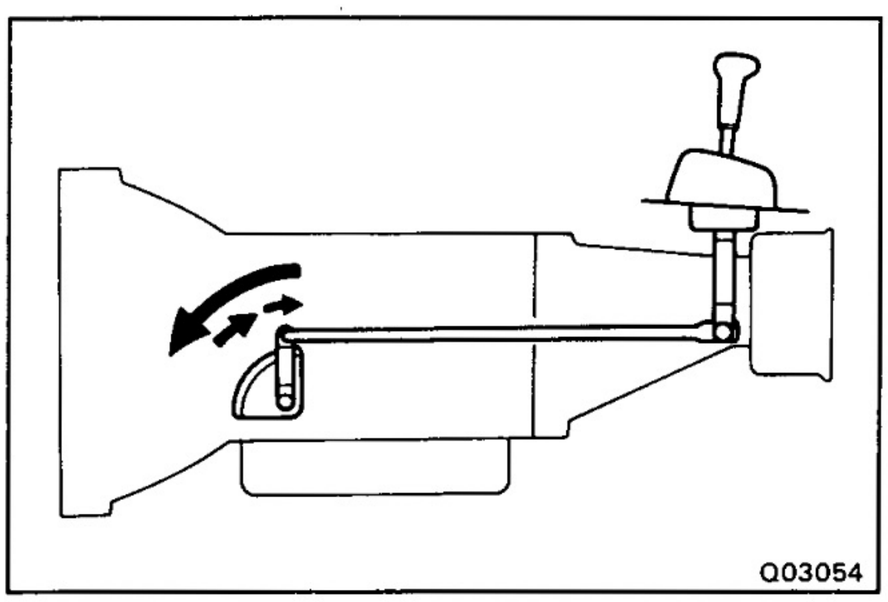

4. INSPECT TRANSMISSION SHIFT LEVER RANGE

When shifting the shift lever from the N range to other ranges, check that the lever can be shifted smoothly and accurately to each range and that the position indicator correctly indicates the position.

If the indicator is not aligned with the correct position, carry out the following adjustment procedures.

(a) Loosen the nut on the control rod.

(b) Push the control shaft lever fully toward the rear of the vehicle.

(c) Return the control shaft lever two notches to N range.

(d) Set the shift lever to N range.

(e) While holding the shift lever lightly toward the R range side, tighten the control rod nut.

(f) Start the engine and make sure that the vehicle moves forward when shifting the lever from the N to D range and reverse when shifting it to the R range.

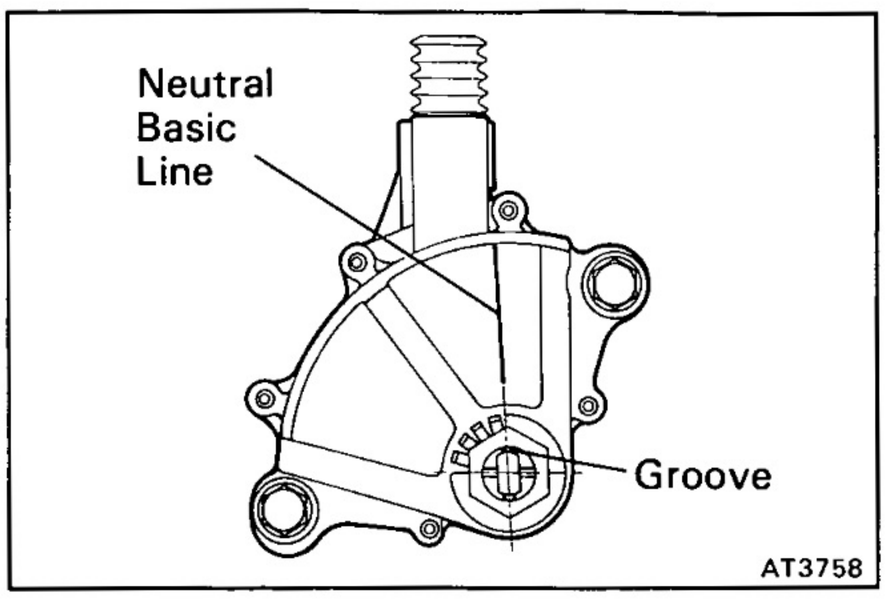

5. INSPECT NEUTRAL START SWTICH

Check that the engine can be started with the shift lever only in the N or P range, but not in other ranges.

If not as started above, carry out the following adjustment procedures.

(a) Loosen the neutral start switch bolts and set the shift lever to the N range.

(b) Align the groove and neutral basic line.

(c) Hold in position and tighten the bolts.

Torque: 13 N·m (130 kgf·cm, 9 ft·lbf)

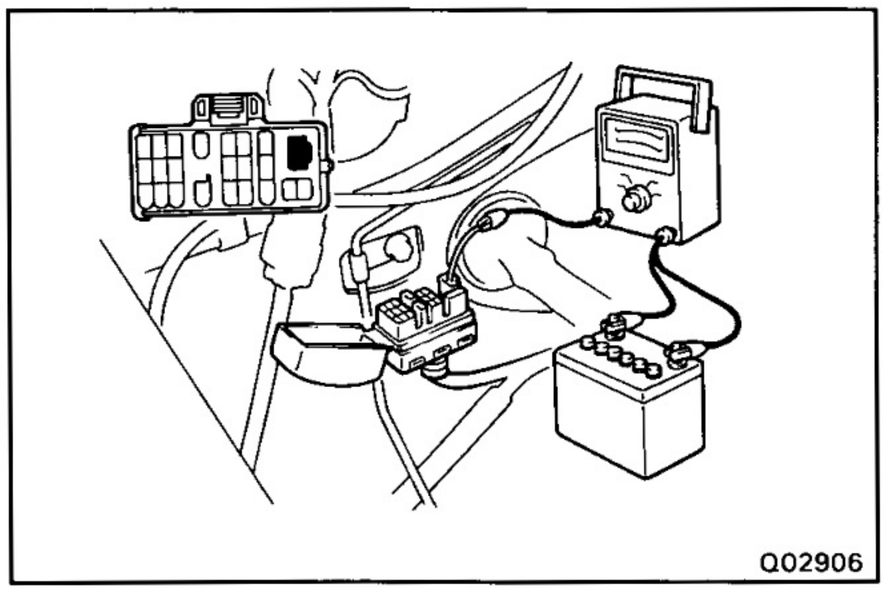

6. INSPECT IDLE SPEED (N RANGE)

Connect tachometer test probe to the check connector terminal IG ⊖, inspect the idle speed.

Idle speed:

650 rpm

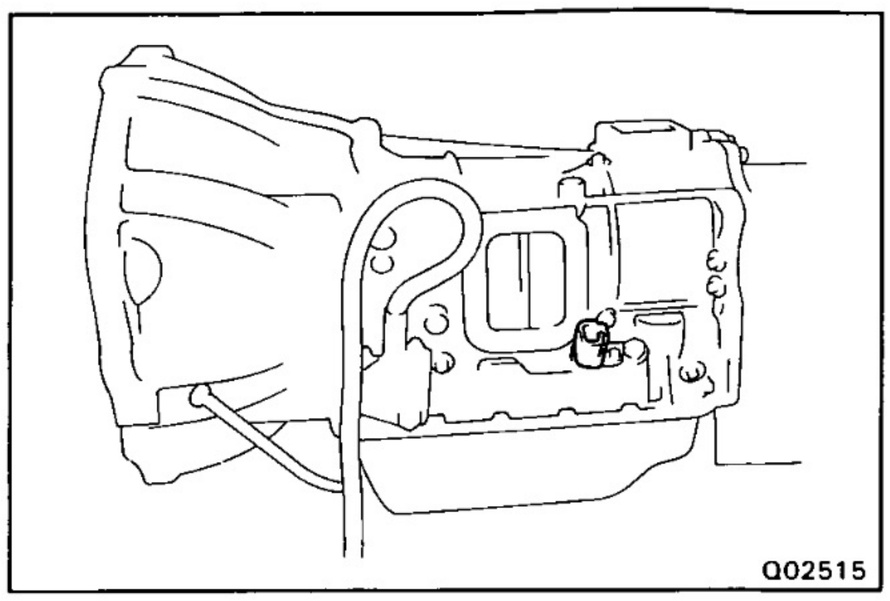

MANUAL SHIFTING TEST

HINT: With this test, it can be determine whether the trouble lies within the electrical circuit or is a mechanical problem in the transmission.

1. DISCONNECT SOLENOID WIRE

2. INSPECT MANUAL DRIVING OPERATION

Check that the shift and gear position correspond with the table below.

HINT: If the L, 2 and D range gear position are difficult to distinguish, perform the following road test.

- While driving, shift through the L, 2 and D ranges. Check that the gear change corresponds to the shift position.
- If any abnormality is found in the above test, the problem lies in transmission ifself.

3. CONNECT SOLENOID WIRE

4. CANCEL OUT DIAGNOSTIC CODE
(See page AT-20)

REFERANCE: Possible gear position in accordance with solenoid operating conditions.

Range	NORMAL			NO.1 SOLENOID MALFUNCTIONING			NO.2 SOLENOID MALFUNCTIONING			BOTH SOLENOIDS MALFUNCTIONING		
	Solenoid Valve		Gear Position	Solenoid Valve		Gear Position	Solenoid Valve		Gear Position	Solenoid Valve		Gear Position
	No.1	No.2		No.1	No.2		No.1	No.2		No.1	No.2	
D range	ON	OFF	1st	x	ON (OFF)	3rd (O/D)	ON	x	1st	x	x	O/D
	ON	ON	2nd	x	ON	3rd	OFF (ON)	x	O/D (1st)	x	x	O/D
	OFF	ON	3rd	x	ON	3rd	OFF	x	O/D	x	x	O/D
	OFF	OFF	O/D	x	OFF	O/D	OFF	x	O/D	x	x	O/D
2 range	ON	OFF	1st	x	ON (OFF)	3rd (O/D)	ON	x	1st	x	x	3rd
	ON	ON	2nd	x	ON	3rd	OFF (ON)	x	3rd (1st)	x	x	3rd
	OFF	ON	3rd	x	ON	3rd	OFF	x	3rd	x	x	3rd
L range	ON	OFF	1st	x	OFF	1st	ON	x	1st	x	x	1st
	ON	ON	2nd	x	ON	2nd	ON	x	1st	x	x	1st

( ): No fail-safe function x: Malfunctions

ELECTRONIC CONTROL SYSTEM

PRECAUTION

Do not open the cover or the case of the TCM and various computer unless absolutely necessary. (If the IC terminals are touched, the IC may be destroyed by static electricity.)

ELECTRONIC CONTROL CIRCUIT

1FZ-FE engine

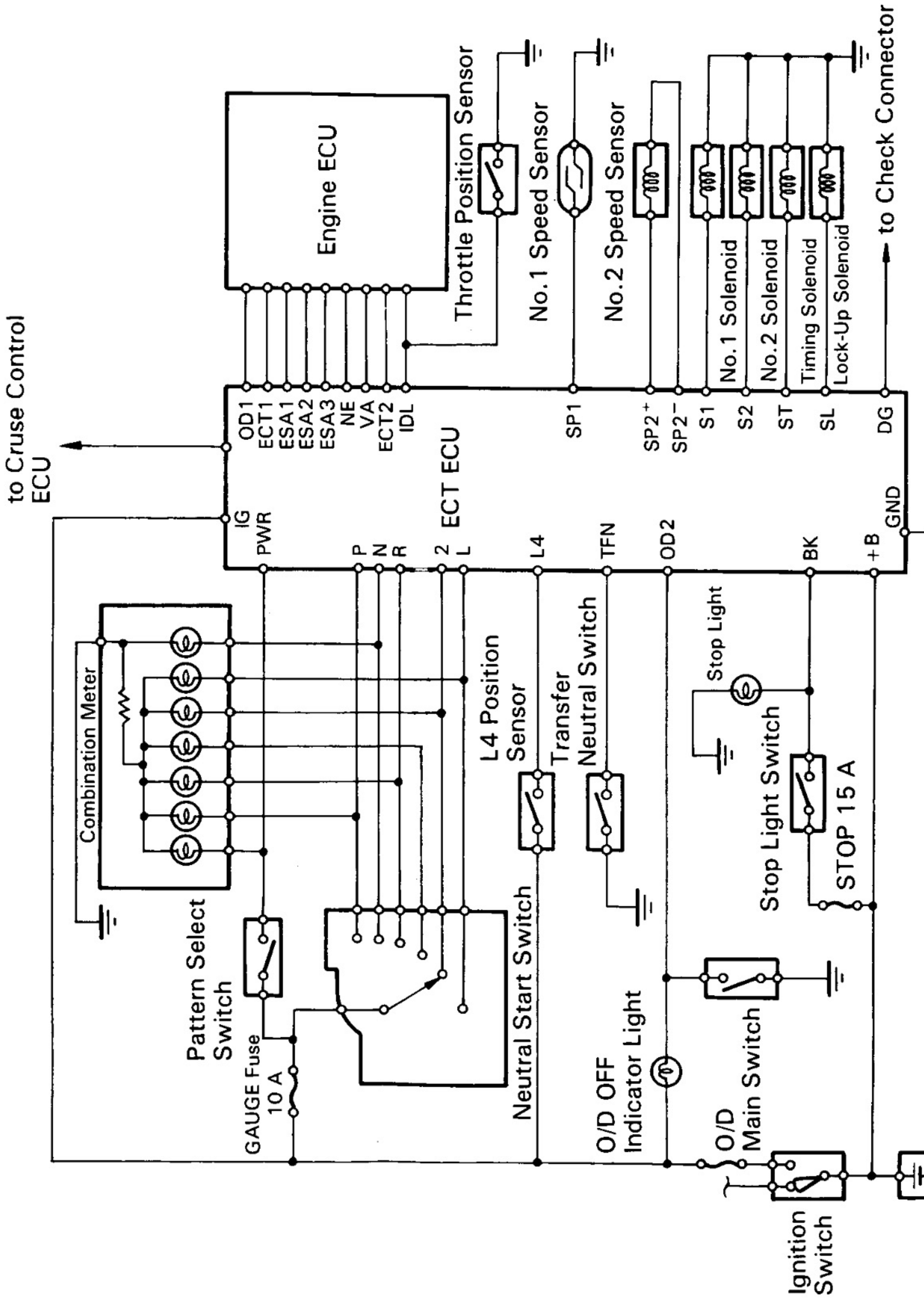

Q03072

1HD-T engine

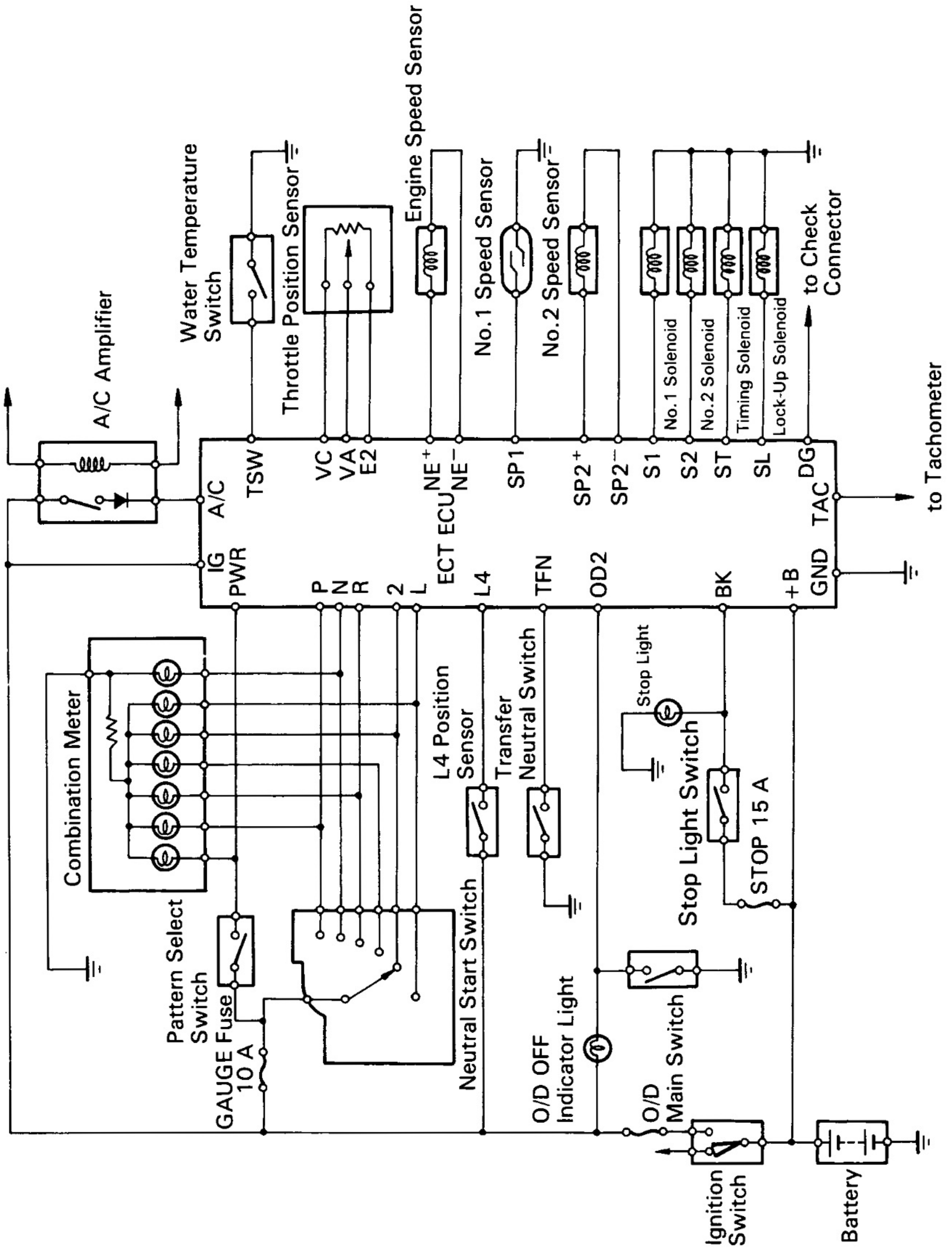

Q03193

ELECTRONIC CONTROL COMPONENTS

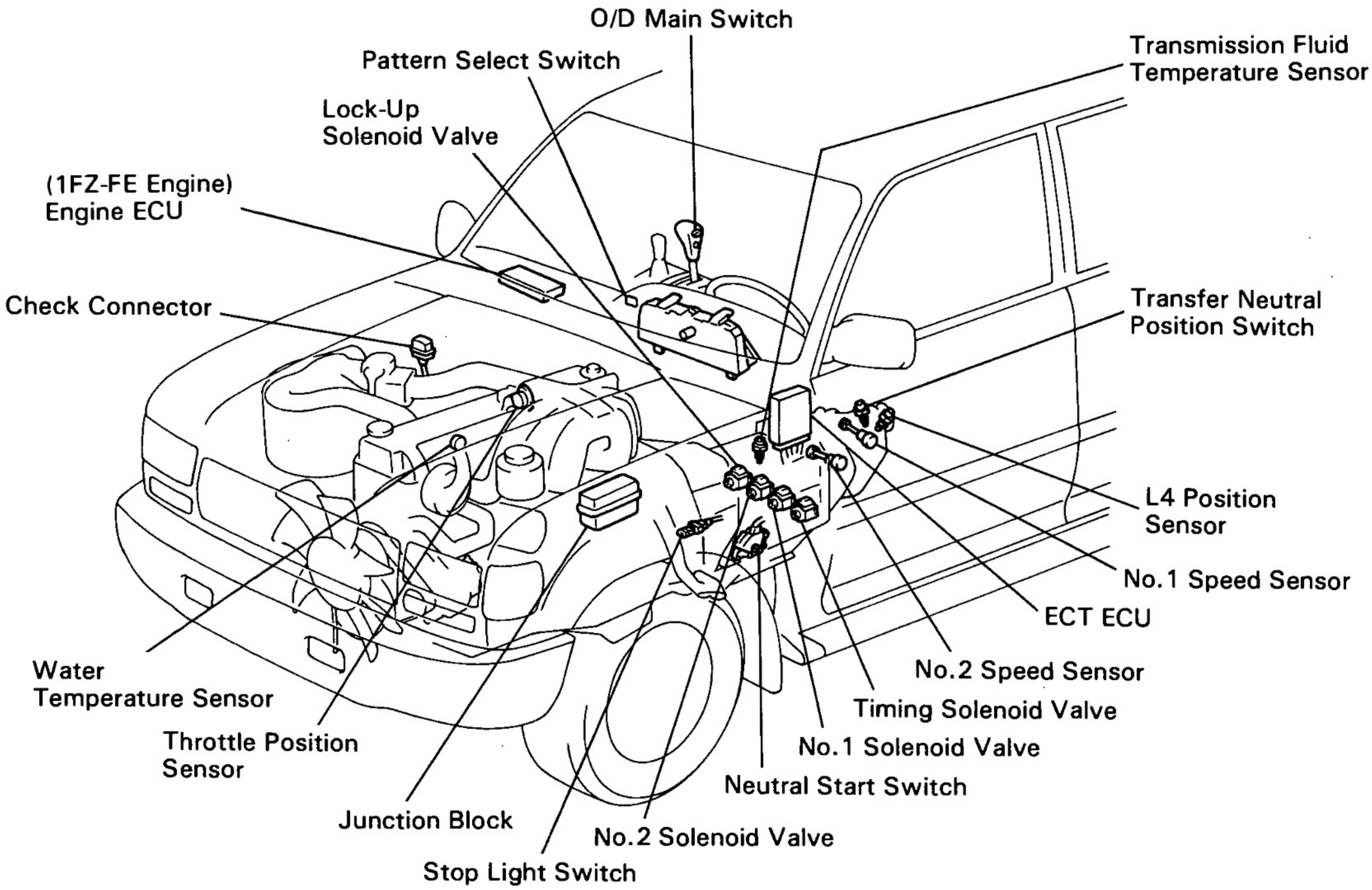

Q03073

TROUBLESHOOTING FLOW — CHART

Trouble No.1 No Shifting

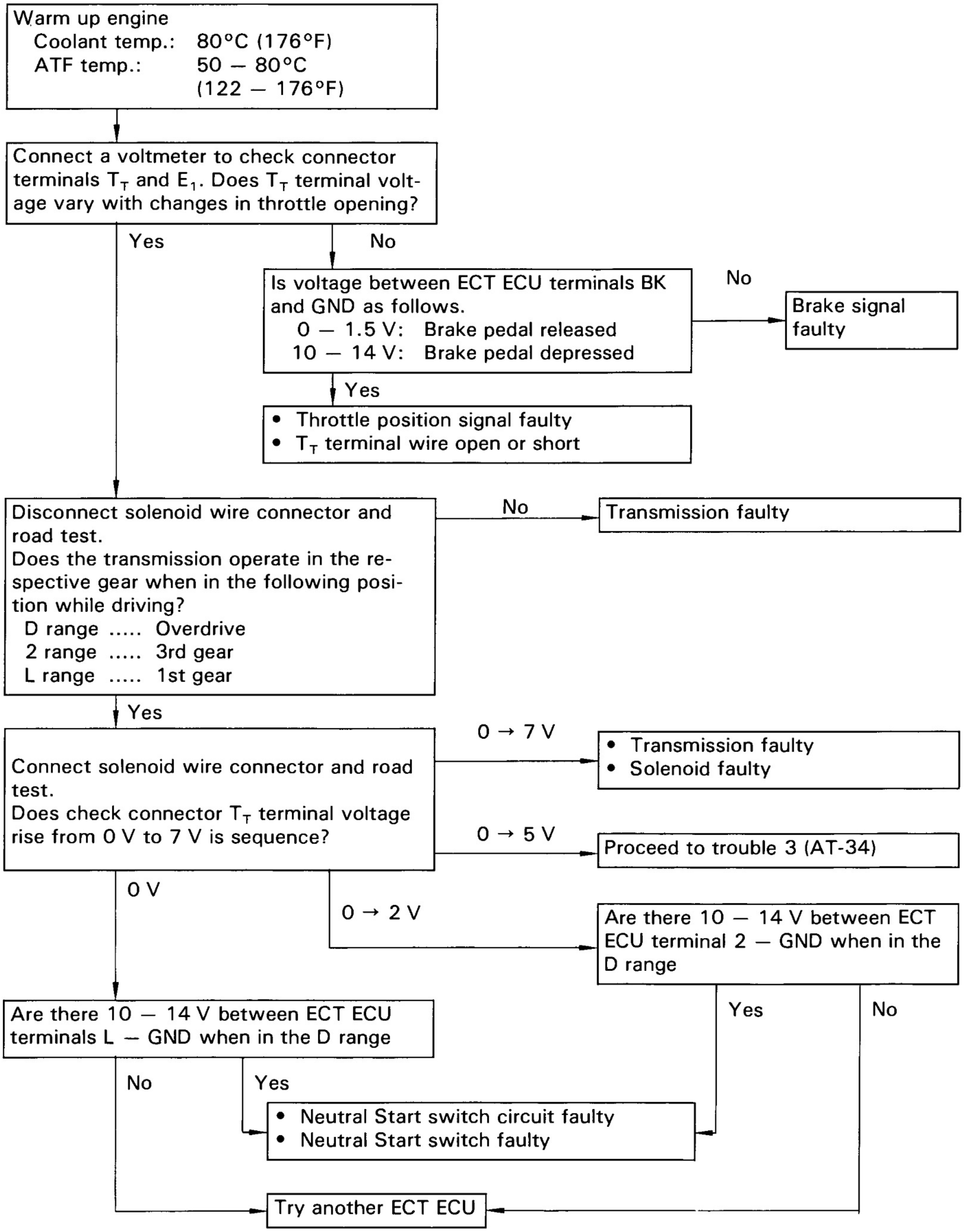

Trouble No.2 Shift point too high or too low

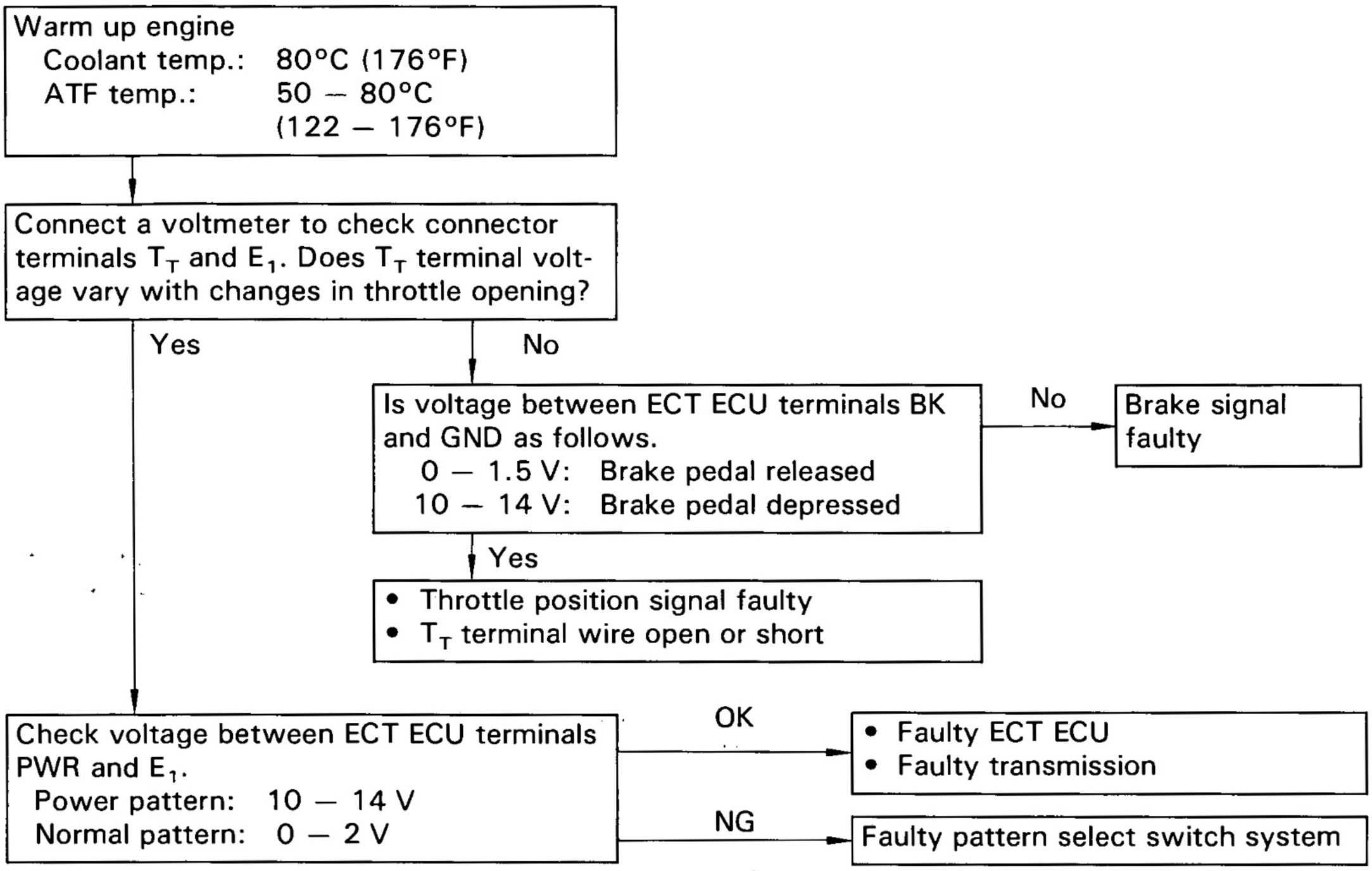

Trouble No.3 No up-shift to overdrive (After warm-up)

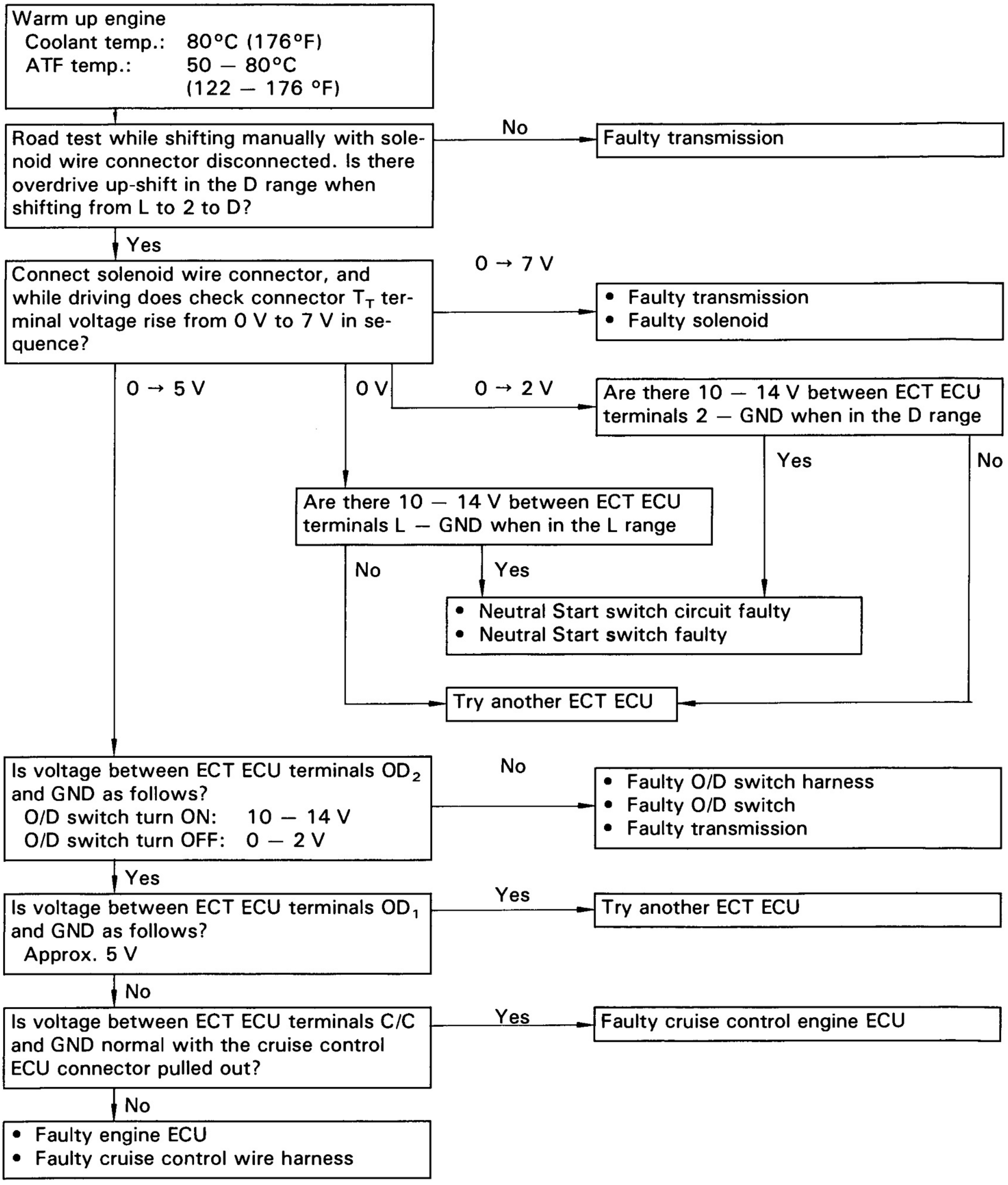

Trouble No.4 No lock-up (After warm-up)

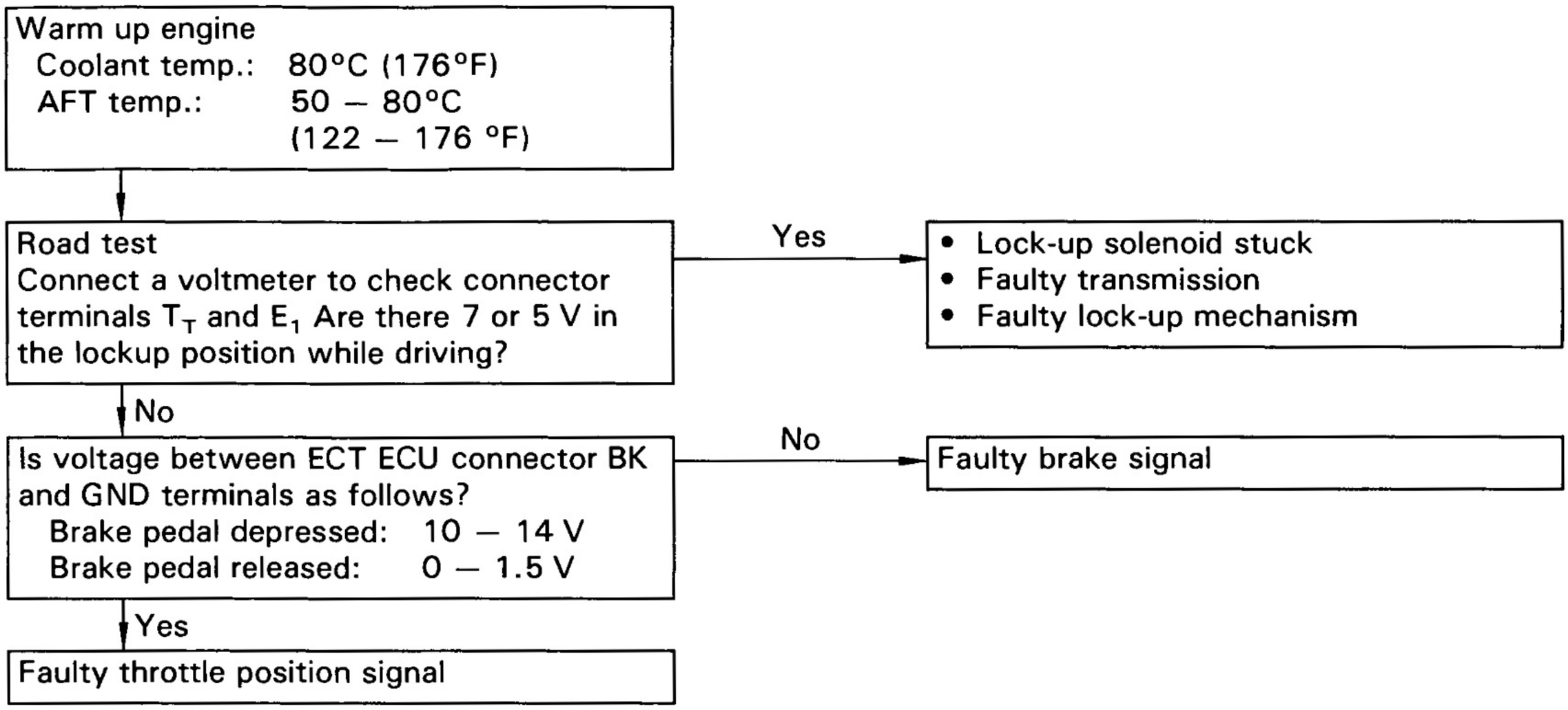

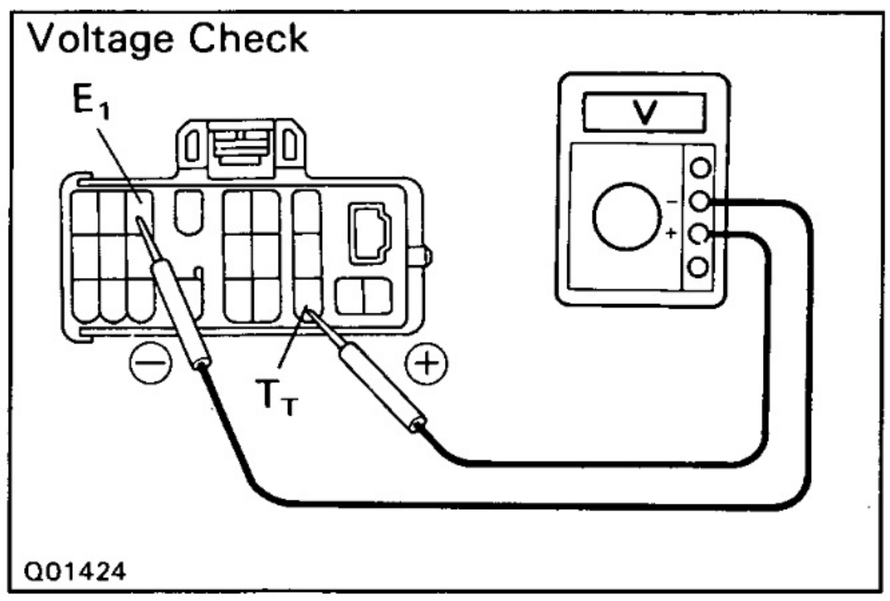

T_T TERMINAL VOLTAGE INSPECTION

1. INSPECT THROTTLE POSITION SENSOR SIGNAL

(a) Turn the ignition switch to ON. Do not start the engine.

(b) Connect a voltmeter to check connector terminals T_T and E_1.

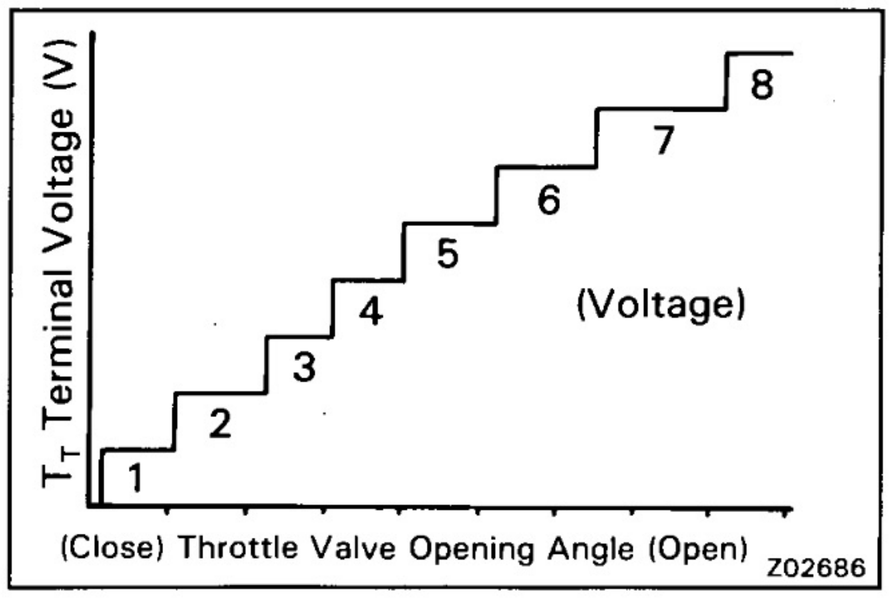

(c) While slowly depressing the accelerator pedal, check that T_T terminal voltage rises in sequence.

If the voltage does not change in proportion to the throttle opening angle, there is a malfunction in the throttle position sensor or circuit.

2. INSPECT BRAKE SIGNAL

(a) Depress the accelerator pedal until the T_T terminal indicates 8 V.

(b) Depress the brake pedal and check the voltage reading from the T_T terminal.

Brake pedal depressed ..... 0 V

Brake pedal released ..... 8 V

If not as indicated, there is a malfunction in either the stop light switch or circuit.

3. INSPECT EACH UP-SHIFT POSITION

(a) Warm up the engine.

Coolant temperature:
80°C (176 °F)

(b) Turn the O/D switch to "ON".

(c) Place the pattern select switch in "Normal" and the shift lever into the D range.

(d) During a road test (about 10 km/h or 6 mph) check that voltage at the T_T terminal is as indicated below for each up—shift position.

If the voltage rises from 0 V to 7 V in the sequence shown, the control system is okay.

The chart on the left shows the voltmeter reading and corresponding gears.

HINT: Determine the gear position by a light shock or change in engine rpm when shifting. The lock-up clutch will turn ON only infrequently during normal 2nd and 3rd gear operation. To trigger this action, press the accelerator pedal to 50% or more of its stroke. At more than 50%, the voltage may change in the sequence 2 V — 4 V — 6 V — 7 V.

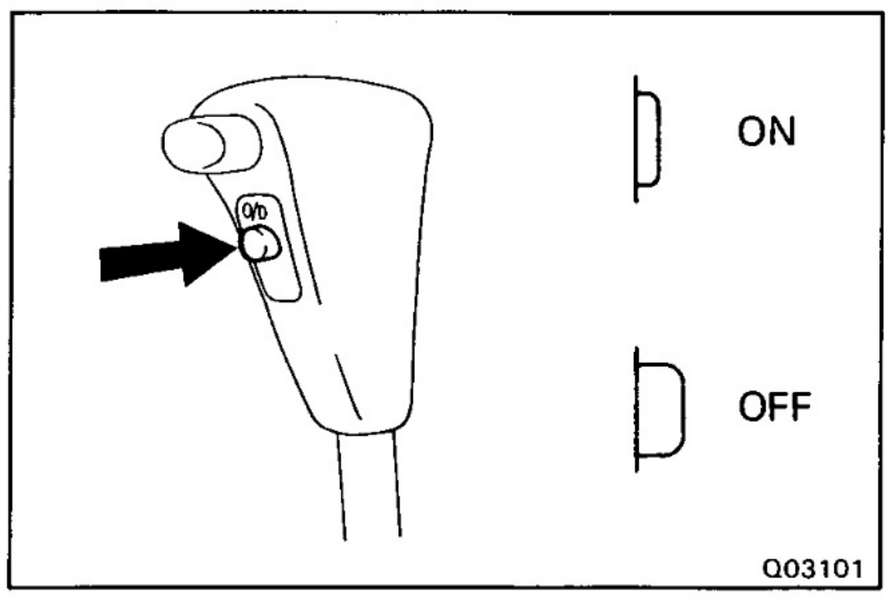

T_T Terminal (V)	Gear Position
0	1st
2	2nd
4	3rd
5	3rd Lock-up
6	O/D
7	O/D Lock-up

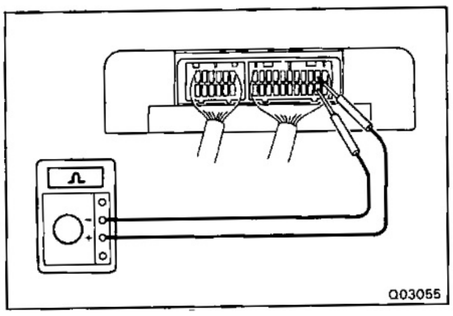

ELECTRONIC CONTROL COMPONENETS INSPECTION

1. INSPECT VOLTAGE OF ECT ECU

(a) Turn on the ignition switch.

(b) Measure the voltage at each terminal.

ELECTRONIC CONTROL COMPONENTS INSPECTION

1. INSPECT VOLTAGE OF ECT ECU

(a) Turn on the ignition switch.

(b) Measure the voltage at each terminal.

(1FZ-FE Engine)

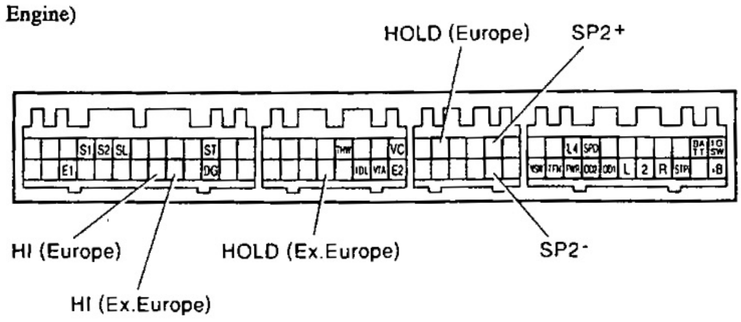

Terminal	Measuring Condition	Voltage (V)
S1 - GND	Stop vehicle	9 - 14
S2 - GND	Stop vehicle	0 - 1.5
SL - GND	Stop vehicle	0 - 1.5
ST - GND	Stop vehicle	0 - 1.5
STP - GND	Brake pedal is depressed	7.5 - 14
	Brake pedal is released	0 - 1.5
TFN - GND	Transfer position is N range	0 - 3
	Transfer position is except N range	9 - 14

continued overleaf
Page 55

Terminal	Measuring Condition	Voltage (V)
THW - GND	Engine coolant temp. 80°C (176°F)	0 - 1.5
2 - GND	2 range	7.5 - 14
	Except 2 range	0 - 1.5
NSW - GND	P or N range	0 - 3
	Except P and N range	7.5 - 14
L - GND	L range	7.5 - 14
	Except L range	0 - 1.5
R - GND	R range	7.5 - 14
	Except R range	0 - 1.5
DG - GND	Ignition switch at ON position	0 - 1.5
PWR - GND	PWR pattern	7.5 - 14
	NORM pattern	0 - 1.5
L4 - GND	Transfer position is L4 position	7.5 - 14
	Transfer position is except L4 position	0 - 1.5
HI - GND	Ignition switch at ON position	7.5 - 14
HOLD - GND	2nd start switch ON	9 - 14
	2nd start switch OFF	0 - 1.5
BATT - GND	Stop engine and ignition switch ON	9 - 14
IGSW - GND	Stop engine and ignition switch ON	9 - 141
OD2 - GND	O/D main switch turned ON (O/D ON)	9 - 14
	O/D main switch turned OFF (O/D OFF)	0 - 3
OD1 - GND	Washer temperature 55°C (131°F) more than	9 - 14
	Washer temperature 55°C (131°F) or less	0 - 3
$SP2^+$ - $SP2^-$	Vehicle moving	Pulse generation
SPD - GND	Vehicle moving	Pulse generation
IDL - GND	Accel. pedal is released	0 - 3
	Accel. pedal as depressed	9 - 14
VTA - GND	Accel. pedal is released	0.3 - 0.8
	Accel. pedal is depressed	3.2 - 4.9

Terminal	Measuring condition	Voltage (V)
2 — GND	2 range	7.5 — 14
	Except 2 range	0 — 1.5
P — GND	P range	7.5 — 14
	Except P range	0 — 1.5
L — GND	L range	7.5 — 14
	Except L range	0 — 1.5
N — GND	N range	7.5 — 14
	Except N range	0 — 1.5
R — GND	R range	7.5 — 14
	Except R range	0 — 1.5
DG — GND	Engine stop and place ignition key at ON position	0 — 1.5
ECT2 — GND	Engine coolant temperature 80°C (176°F) more than	2 — 3
PWR — GND	PWR pattern	7.5 — 14
	NORM pattern	0 — 1.5
ESA1 — GND	Engine idling speed (Engine start after 10 second)	4.5 — 5.5
ESA2 — GND	Engine idling speed (Engine start after 10 second)	4.5 — 5.5
ESA3 — GND	Engine idling speed (Engine start after 10 second)	4.5 — 5.5
L4 — GND	Transfer position is L4 position	7.5 — 14
	Transfer position is except L4 position	0 — 15

(1HD-T Engine)

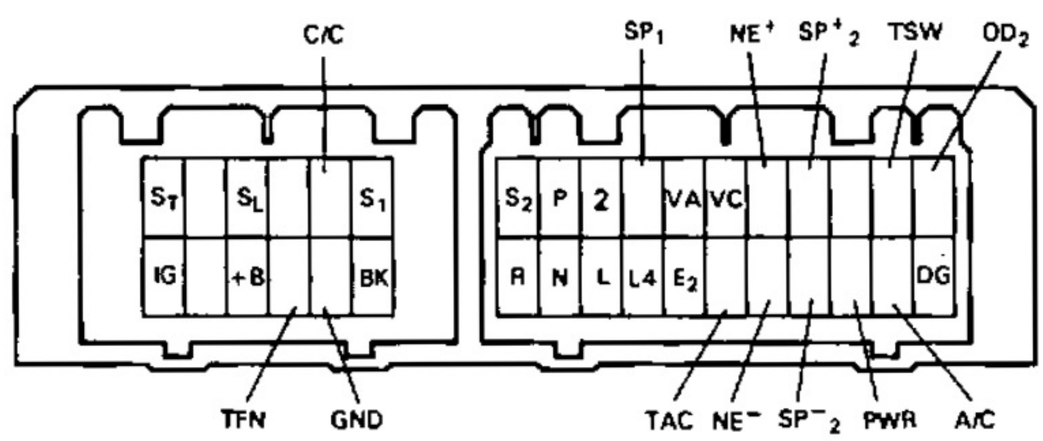

Q03115

Terminal	Measuring condition		Voltage (V)
S1 — GND	Stop Vehicle	N range	9 — 14
		D range	9 — 14
S2 — GND	Stop vehicle		0 — 1.5
SL — GND	Stop vehicle		0 — 1.5
ST — GND	Stop vehicle		0 — 1.5
BK — GND	Brake pedal is depressed		7.5 — 14
	Brake pedal is released		0 — 1.5
TFN — GND	Transfer position is N range		0 — 3
	Transfer position is except N range		9 — 14
+B — GND	Stop engine and ignition switch ON		9 — 14
IG — GND	Stop engine and ignition switch ON		9 — 14
OD_2 — GND	O/D main switch turned ON		9 — 14
	O/D main switch turned OFF		0 — 3

Terminal	Measuring condition	Voltage (V)
2 — GND	2 range	7.5 — 14
	Except 2 range	0 — 1.5
P — GND	P range	7.5 — 14
	Except P range	0 — 1.5
L — GND	L range	7.5 — 14
	Except L range	0 — 1.5
N — GND	N range	7.5 — 14
	Except N range	0 — 1.5
R — GND	R range	7.5 — 14
	Except R range	0 — 1.5
DG — GND	Engine stop and place ignition key at ON position	0 — 1.5
VC — GND	Ignition switch ON	4.5 — 5.5
TAC — GND	Engine idling speed	Pulse generation
TSW — GND	Water temperature 55°C (131°F) more than	9 — 14
	Water temperature 43°C (109°F) or less	0 — 3
$SP2^+$ — $SP2^-$	Vehicle moving	Pulse generation
SP1 — GND	Vehicle moving	Pulse generation
NE^+ — NE^-	Enigne idling speed	Pulse generation
A/C — GND	A/C control switch ON (Engine idling speed)	7.5 — 14
	A/C control switch OFF	0 — 1.5
VA — GND	Throttle valve fully closed (Warm up engine and A/C control switch OFF)	2.8 — 33
	Throttle valve fully open (Warm up engine and A/C control switch OFF)	0.3 — 0.8
PWR — GND	PWR pattern	7.5 — 14
	NORM pattern	0 — 1.5
L4 — GND	Transfer position is L4 range	7.5 — 14
	Transfer position is except L4 range	0 — 15

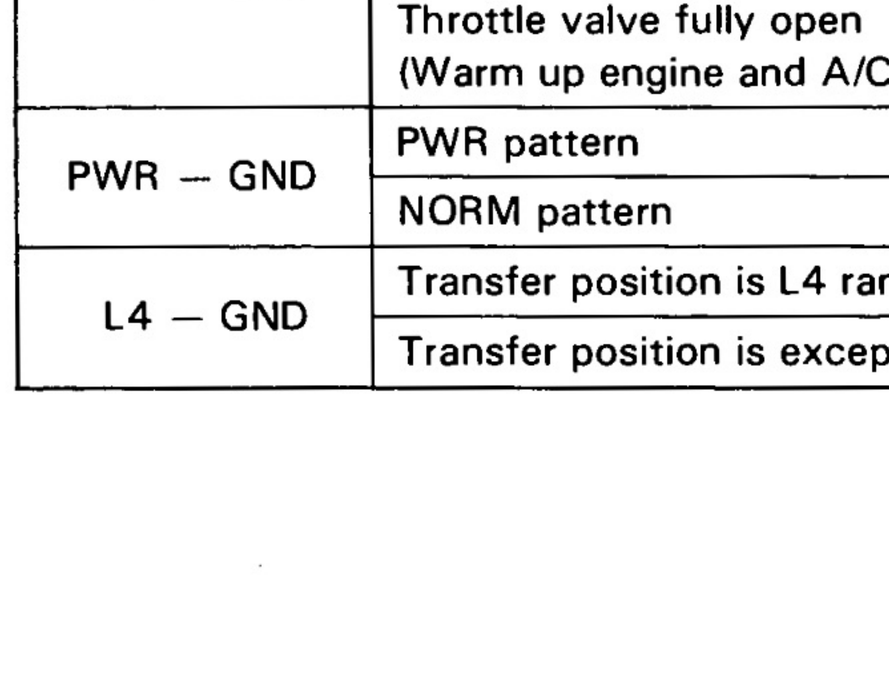

2. INSPECT SOLENOID

(a) Disconnect the connector from ECT ECU.

(b) Measure the resistance between S_1, S_2, S_L, S_T and ground.

Resistance:

11-15 Ω

(c) Apply battery voltage to each terminal. Check that an operation noise can be heard from the solenoid.

No.1, No.2 and Timing Solenoid Valve

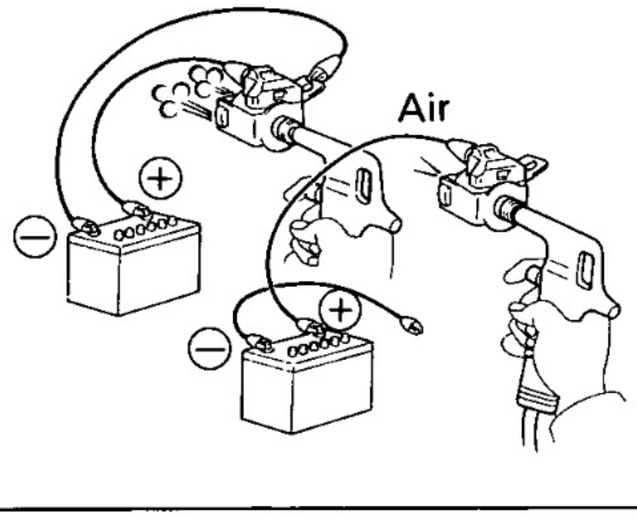

Lock-Up Solenoid Valve

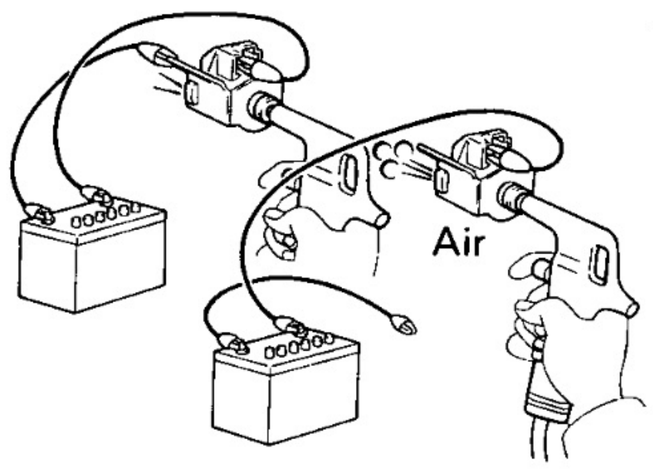

(1FZ-FE engine)

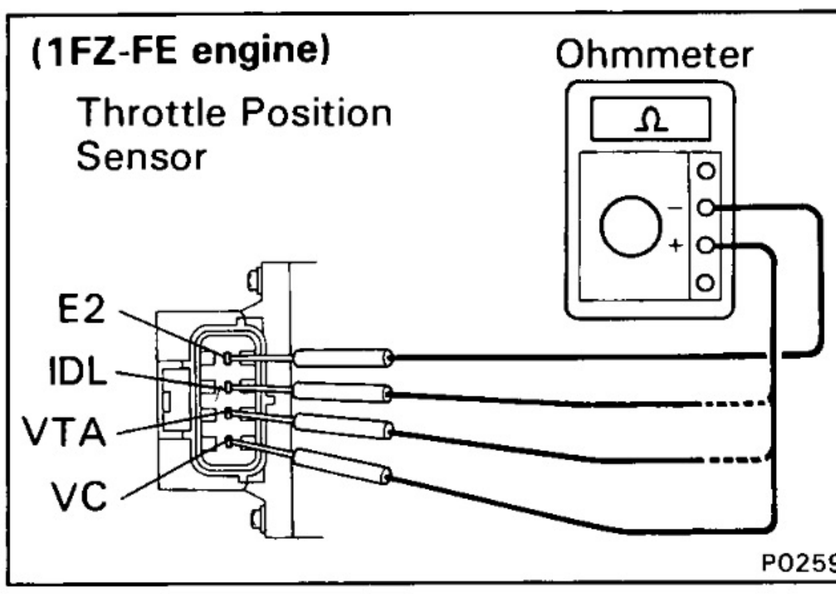

(1HD-T engine)

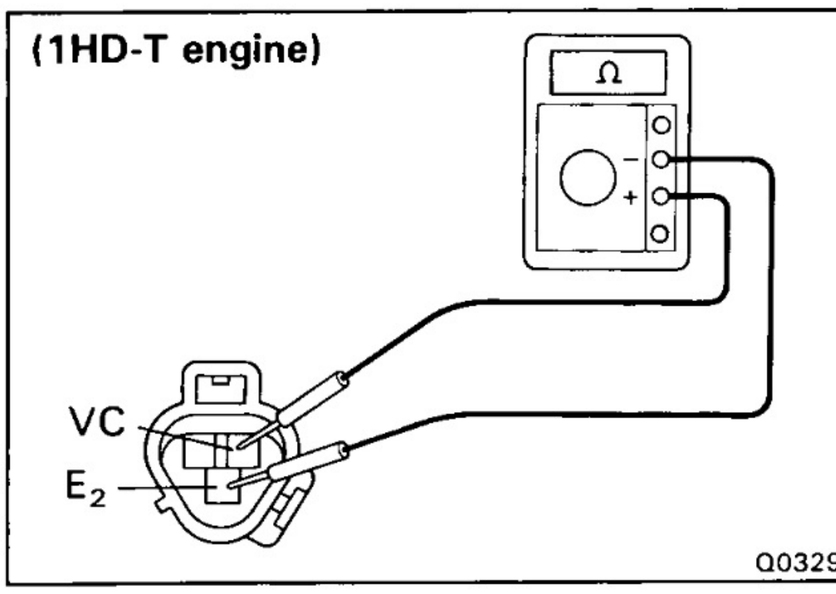

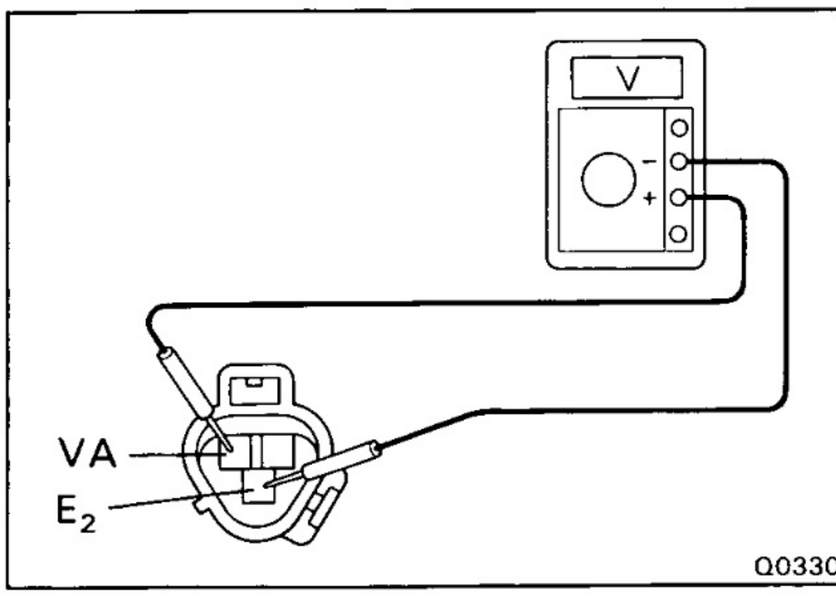

3. CHECK SOLENOID SEALS

If there is foreign material in the solenoid valve, there will be no fluid control even with sloenoid operation.

(a) Check No.1, No.2 and timing solenoid valves.

- Check that the solenoid valves do not leak when low-pressure compressed air is applied.
- When supply battery voltage to the solenoids, check that the solenoid valves open.

(b) Check the lock-up solenoid valve.

- Apply 490 kPa (5 kgf/cm^2, 71 psi) of compressed air, check that the solenoid valve opens.
- When supply battery voltage to the solenoid, check that the solenoid valve does not leak the air.

If malfunction is found during voltage inspection (step 1.), inspect the components listed below.

4. INSPECT THROTTLE POSITION SENSOR

(a) Using an ohmmeter, check the resistance between terminals.

(1FZ-FE)

Terminal	Throttle valve condition	Resistance (kΩ)
IDL – E_2	Fully closed	2.3 kΩ or less
	Open	Infinity
VC – E_2	—	2.5 – 5.9
VTA – E_2	Fully closed	0.2 – 5.7
	Fully open	2.0 – 10.2

(1HD-T)

Terminal	Throttle valve condition	Resistance (kΩ)
VC – E_2	Fully open	1.84 – 3.42

(b) (1HD-T engine)
When supply 5V to the between VC terminal and E_2 terminal, using a voltmeter, check the voltage between terminals.

Terminal	Throttle valve condition	Voltage (V)
VA – E_2	Fully open	0.96

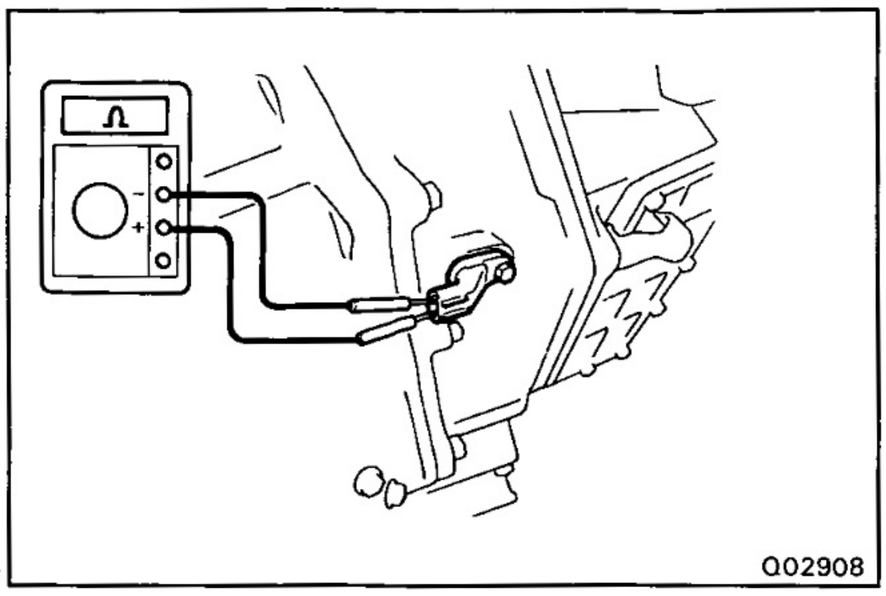

5. INSPECT NO.2 SPEED SENSOR

(a) Jack up the rear wheel on one side.

(b) Connect an ohmmeter between the terminals.

(c) Spin the wheel and check that the meter needle defects from 0 to ∞ Ω.

6. INSPECT NO.1 SPEED SENSOR

(See page BE-10)

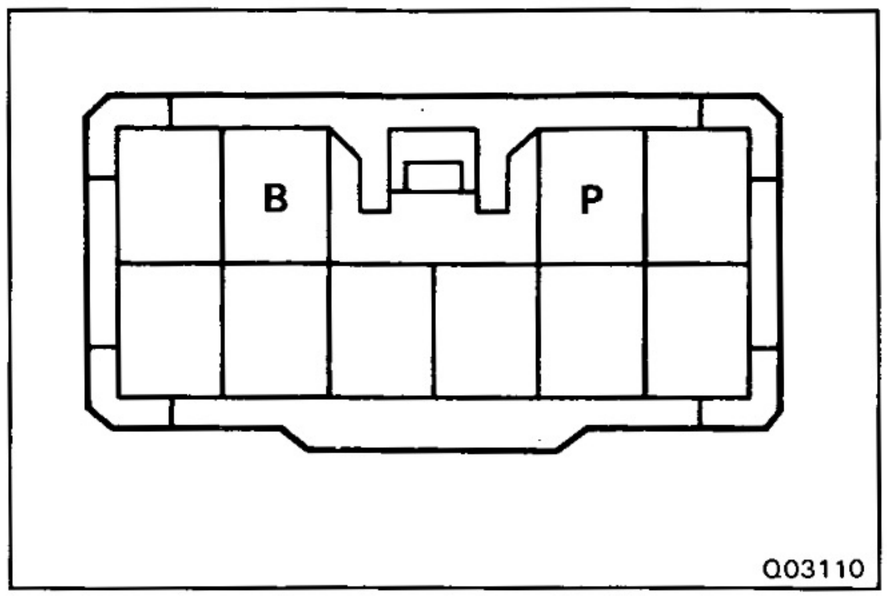

7. INSPECT PATTERN SELECT SWITCH

Using an ohmmeter, check the continuity of terminals for each switch position.

HINT: As there are diodes inside, be careful of the tester probe polarity.

Pattern \ Terminal	B	P
PWR	○——	——○
NORM		

V02104

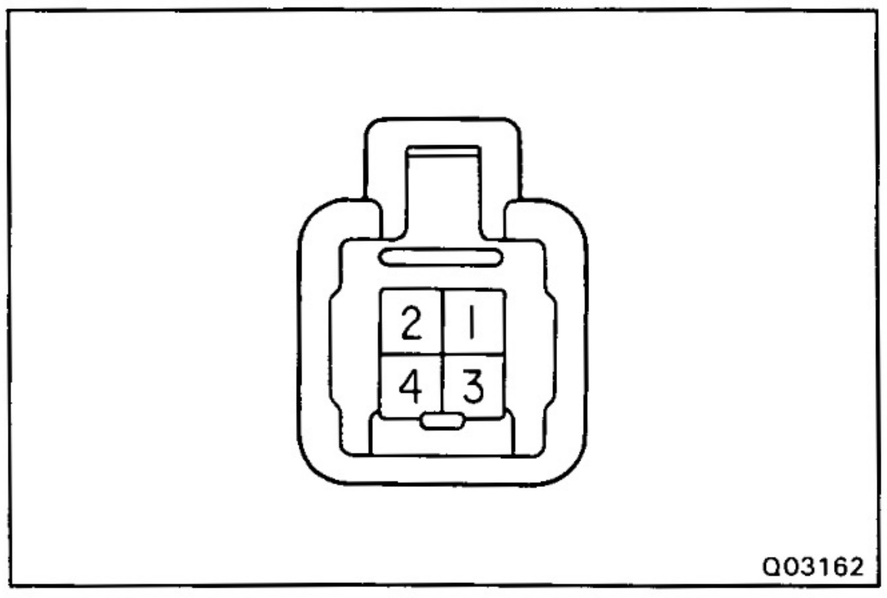

8. INSPECT O/D SWITCH

Using an ohmmeter, check the continuity of the terminals for each switch position.

SW position \ Terminal	2	4
ON		
OFF	○——	——○

V02105

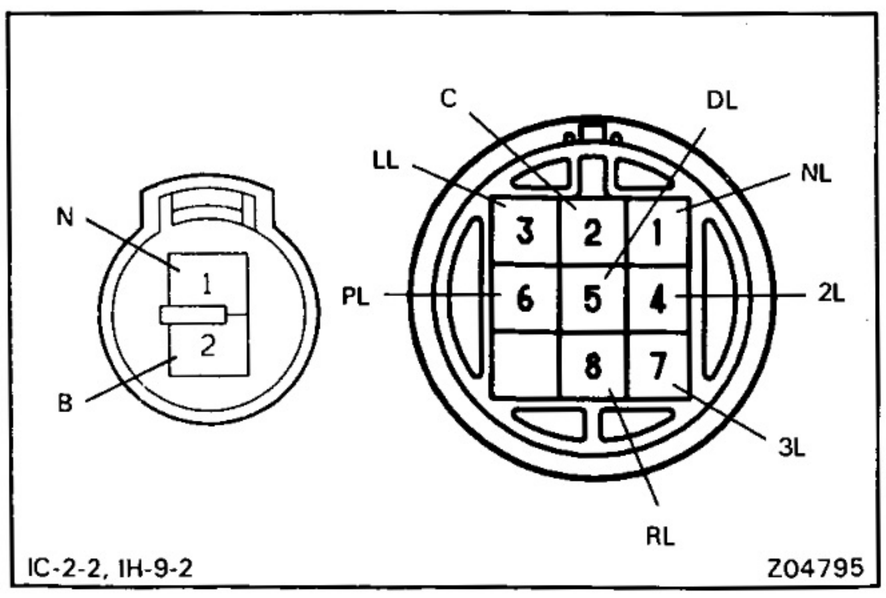

9. INSPECT NEUTRAL START SWITCH

Check that there is continuity between terminals.

○—○ : Continuity

Shift range \ Terminal	B	N	C	PL	RL	NL	DL	3I	2L
P	○—○		○—○						
R			○—	—○					
N	○—○		○—	—	—	—○			
D			○—	—	—	—	—○		
2			○—	—	—	—	—	—○	
L			○—	—	—	—	—	—	—○

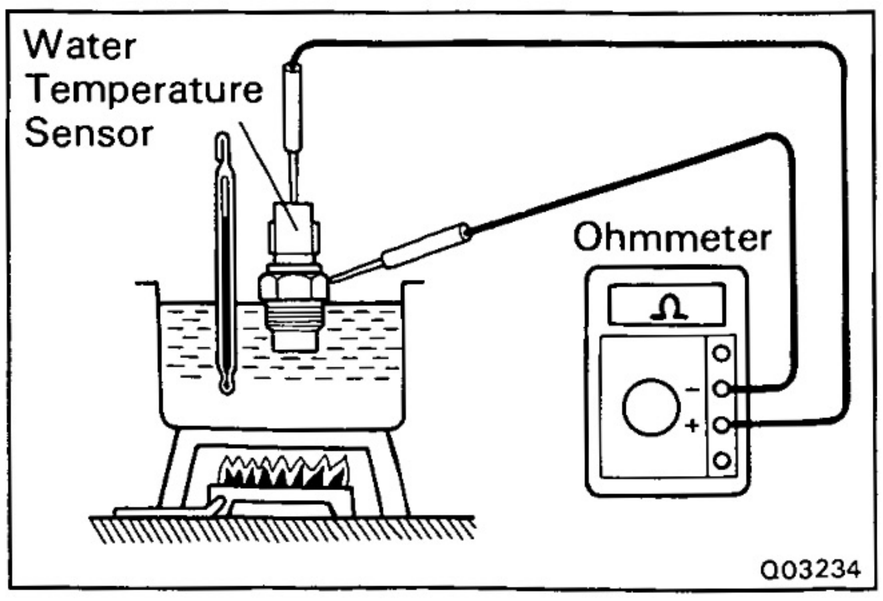

10. (1HD-T engine)
INSPECT WATER TEMPERATURE SWITCH

Check that there is continuity at the temperature of 45°C — 55°C (113°F — 131°F).

If continuity is not as specified, replace the switch.

A/T FLUID TEMPERATURE WARNING SYSTEM CIRCUIT

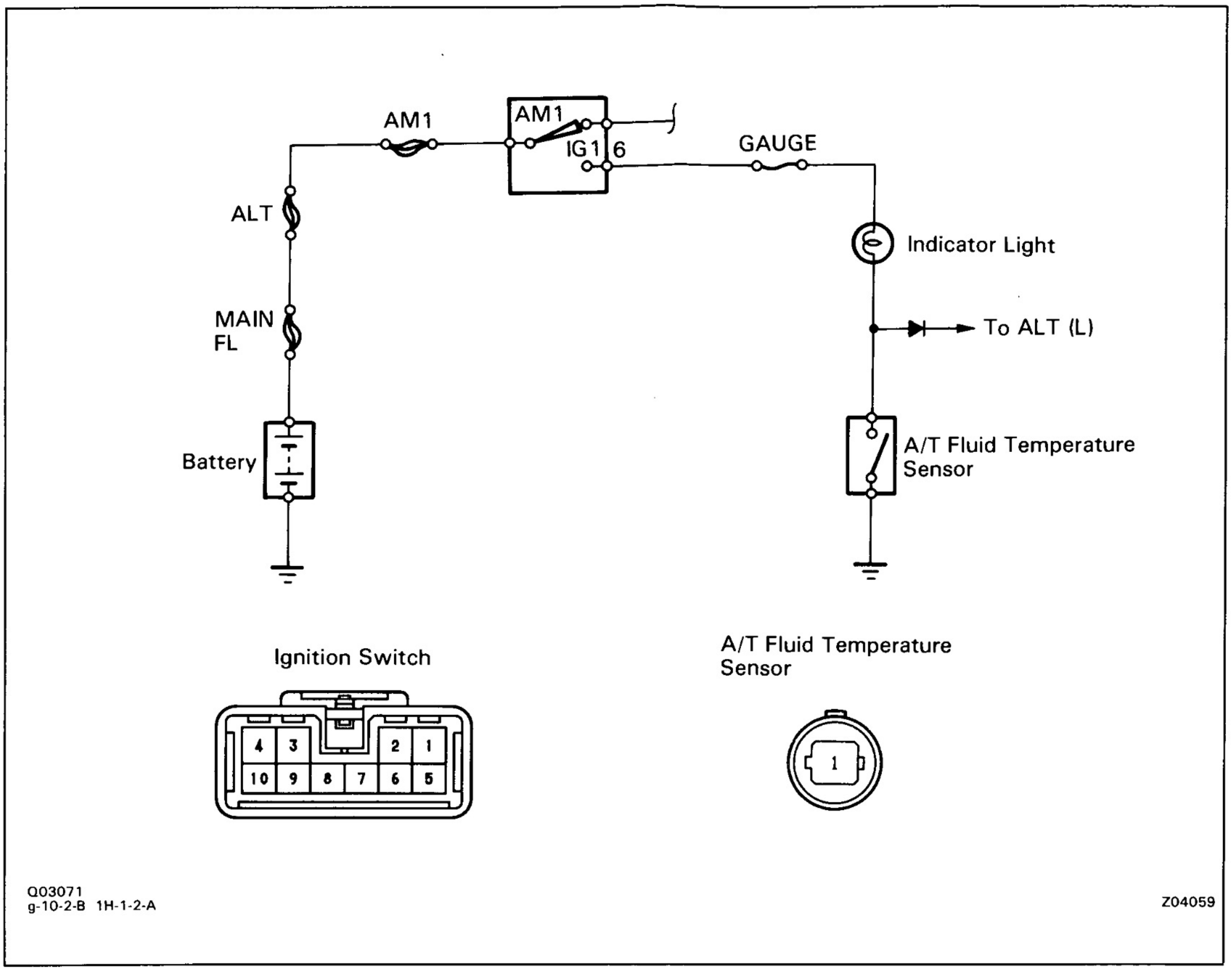

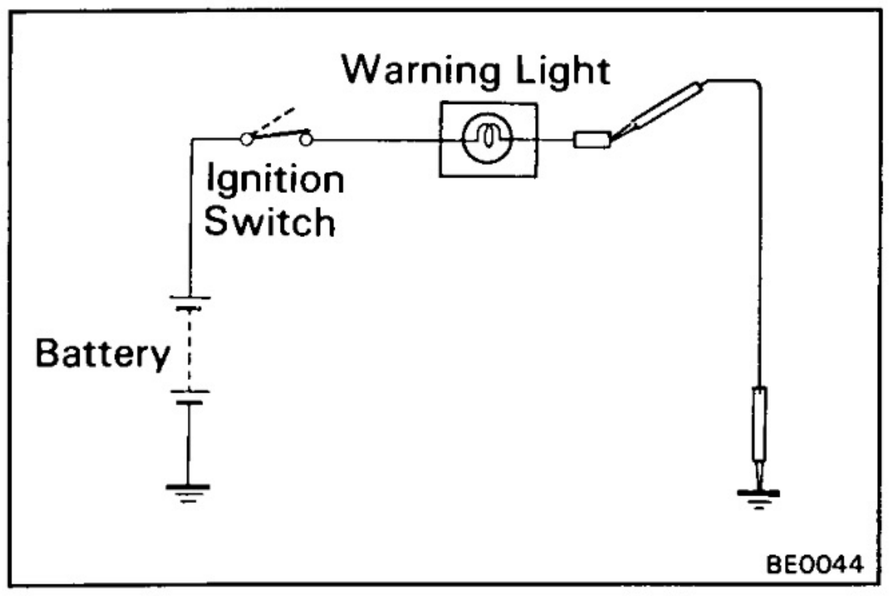

11. INSPECT A/T FLUID TEMPERATURE WARNING LIGHT

(a) Disconnect the connector from the temperature sensor. Connecct terminal of the wire harness side connector and body ground.

(b) Turn the ignition switch ON, check that the light go on.

If warning light does not light, test the bulb.

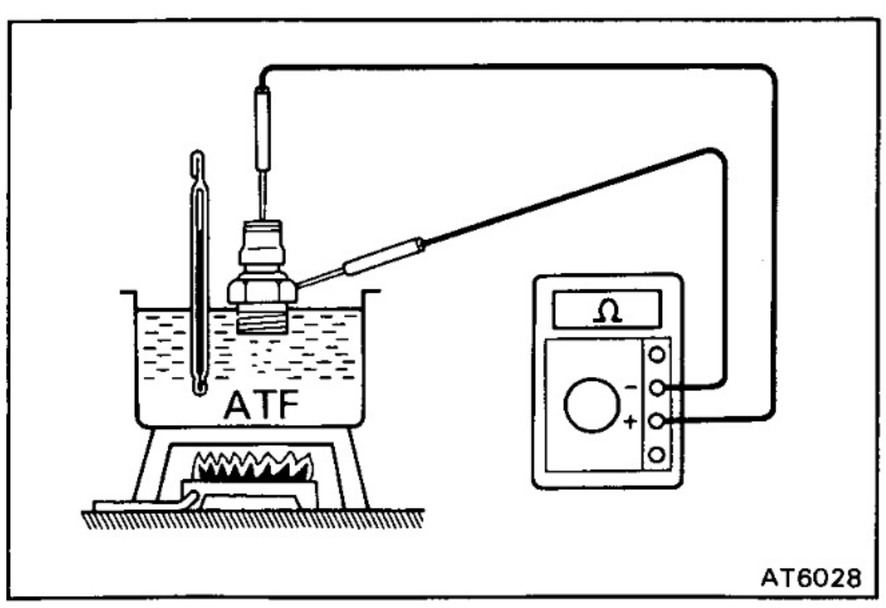

12. INSPECT A/T FLUID TEMPERATURE SENSOR

Check that there is continuity at the temperature of 145°C — 155°C (325°F — 343°F).

If continuity is not as specified, replace the sensor.

STALL TEST

The objective of this test is to check the overall performance of the transmission and engine by measuring the stall speeds in the D and R ranges.

NOTICE:

- **Perform the test at normal operating fluid temperature (50 — 80°C, or 122 — 176°F).**
- **Do not continuously run this test longer than 5 seconds.**
- **To ensure safety, conduct this test in a wide, clear, level area, which provides good traction.**
- **The stall test should always be carried out in pairs. One should observe the conditions of wheels or wheel stoppers outside the vehicle while the other is performing the test.**

MEASURE STALL SPEED

(a) Warm up the transmission fluid.

(b) Check the front and rear wheels.

(c) Connect a tachometer to the engine.

(d) Fully apply the parking brake.

(e) Keep your left foot pressed firmly on the brake pedal.

(f) Start the engine.

(g) Shift into the D range. Step all the way down on the accelerator pedal with your right foot. Quickly read the stall speed at this time.

NOTICE: Release the accelerator pedal and stop test if the rear wheels begin to rotate before the engine speed reaches specified stall speed.

Stall speed:

(1FZ-FE engine)	**2,150 ± 150 rpm**
(1HD-T engine)	**1,950 ± 150 rpm**

(h) Perform the same test in R range.

EVALUATION

(a) If the stall speed is the same for both positions but lower than specified value:

- Engine output may be insufficient
- Stator one-way clutch is not operating properly

HINT: If more than 600 rpm below the specified value, the torque converter clutch could be faulty.

(b) If the stall speed in D range is higher than specified:

- Line pressure too low
- Forward clutch slipping
- No.2 one-way clutch not operating properly
- O/D one-way clutch not operating properly

(c) If the stall speed in R range is higher than specified:

- Line pressure too low
- Direct clutch slipping
- First and reverse brake slipping
- O/D one-way clutch not operating properly

(d) If the stall speed in both R and D ranges are higher than specified:

- Line pressure too low
- Improper fluid level
- O/D one-way clutch not operating properly

STALL TEST

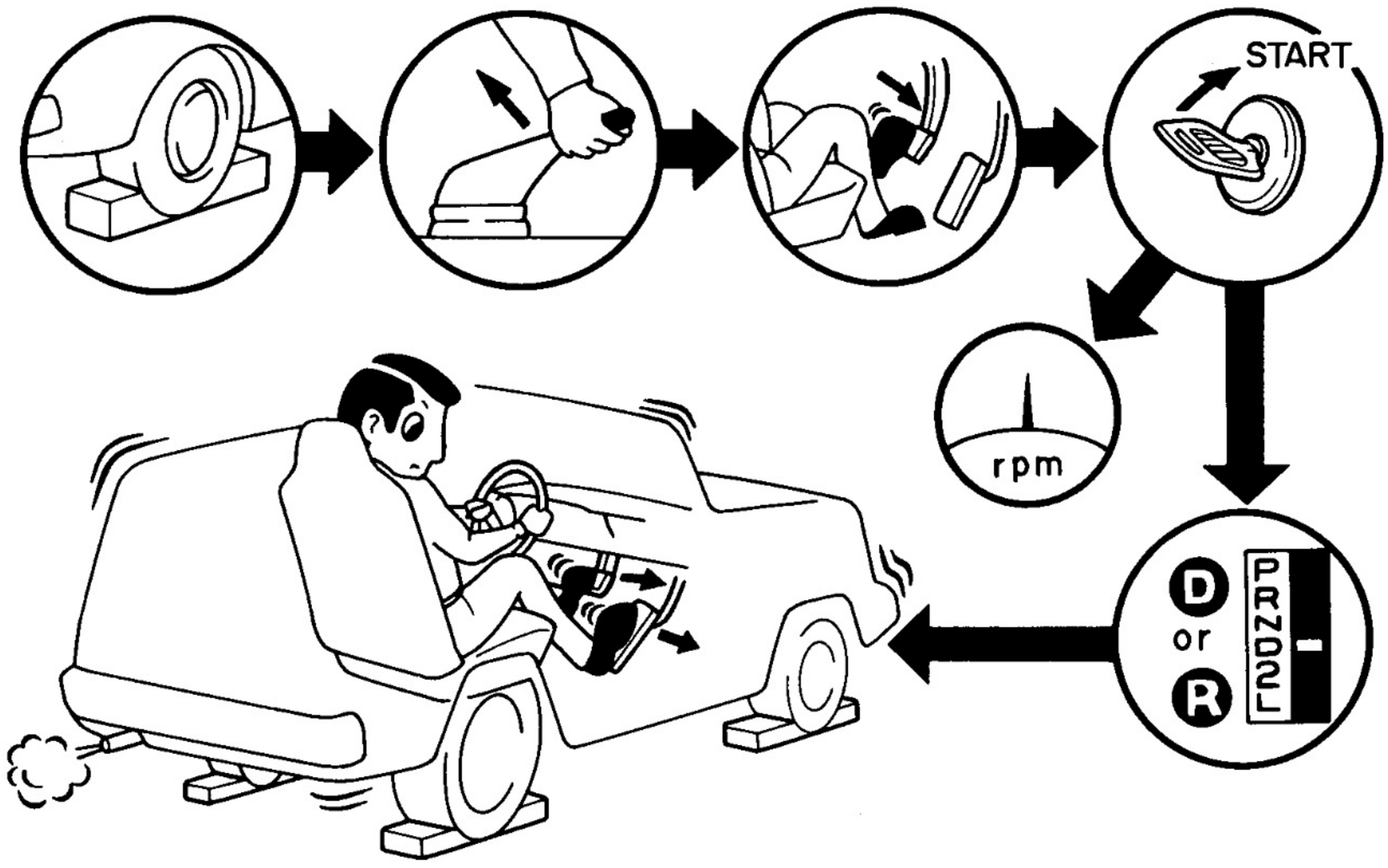

Q03057

TIME LAG TEST

When the shift lever is shifted while the engine is idling, there will be a certain time elapse or lag before the shock can be felt. This is used for checking the condition of the O/D direct clutch, forward clutch, direct clutch and first and reverse brake.

NOTICE:

- **Perform the test at normal operating fluid temperature (50 — 80°C or 122 — 176°F).**
- **Be sure to allow one minute interval between tests.**
- **Make three measurements and take the average value.**

MEASURE TIME LAG

(a) Fully apply the parking brake.

(b) Start the engine and check the idle speed.

Idle speed:
650 rpm (N range)

(c) Shift the shift lever from N to D range. Using a stop watch, measure the time it takes from shifting the lever until the shock is felt.

Time lag:
Less than 1.0 seconds

(d) In same manner, measure the time lag for N → R.

Time lag:
Less than 1.5 seconds

EVALUATION

(a) If N → D time lag is longer than specified:
- Line pressure too low
- Forward clutch worn
- O/D one-way clutch not operating properly

(b) If N → R time lag is longer than specified:
- Line pressure too low
- Direct clutch worn
- First and reverse brake worn
- O/D one-way clutch not operating properly

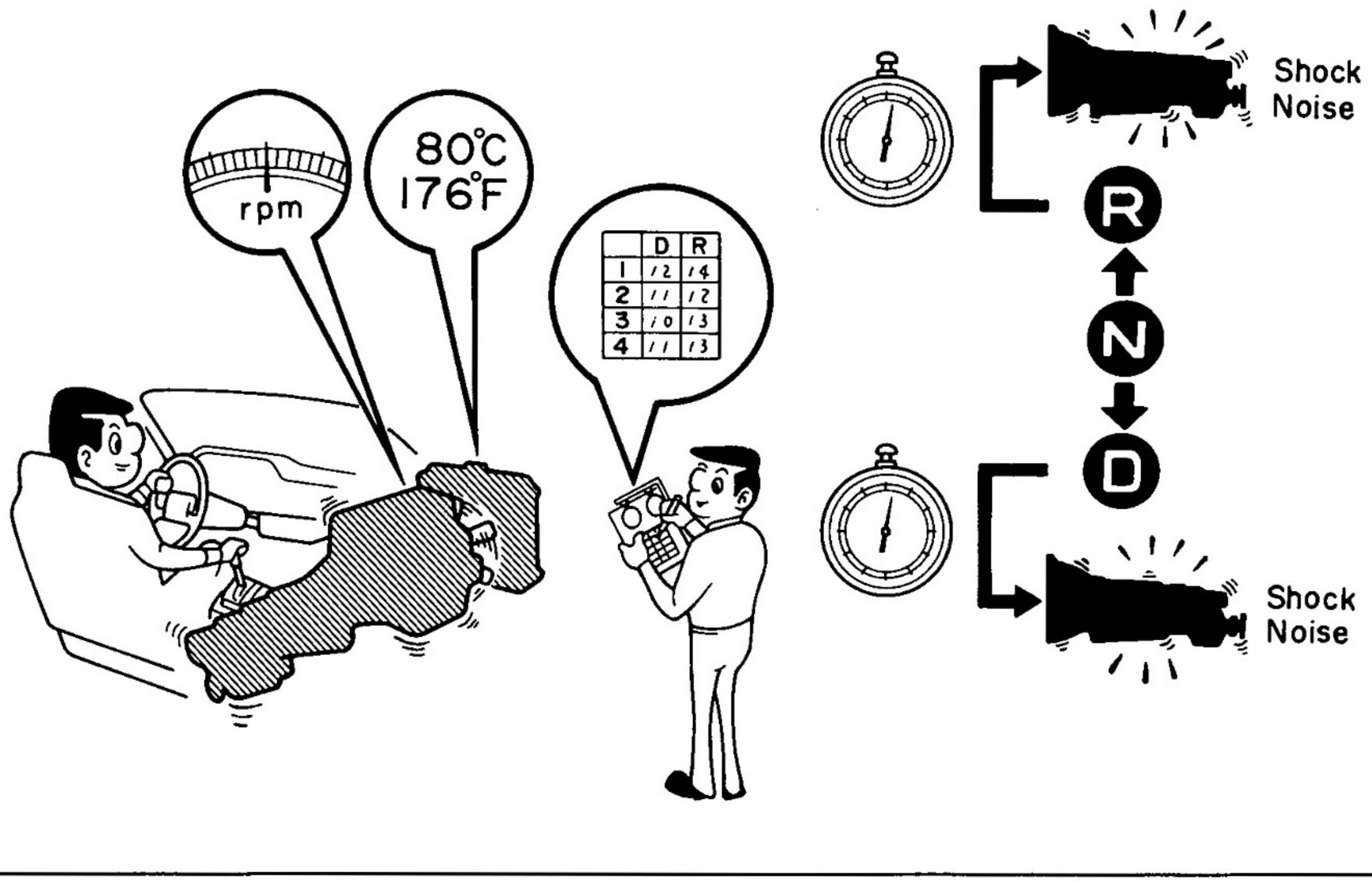
rpm
80°C
176°F
D R
1 12 14
2 11 12
3 10 13
4 11 13
Shock
Noise
R
N
D
Shock
Noise
Q03198

HYDRAULIC TEST

PREPARATION

(a) Warm up the transmission fluid.

(b) Remove the transmission case test plug and connect the hydraulic pressure gauge.

SST 09992-00094 (Oil pressure gauge)

NOTICE:

- **Perform the test at normal operating fluid temperature (50 — 80°C or 122 — 176°F).**
- **The line pressure test should always be carried out in pairs. One should observe the conditions of wheels or wheel stoppers outside the vehicle while the other is performing the test.**

MEASURE LINE PRESSURE

(a) Fully apply the parking brake and chock the four wheels.

(b) Start the engine and check idling rpm.

(c) Keep your left foot pressed firmly on the brake pedal and shift into D range.

(d) Measure the line pressure when the engine is idling.

(e) Press the accelerator pedal all the way down. Quickly read the highest line pressure when engine speed reaches stall speed.

NOTICE: Release the accelerator pedal and stop test if the rear wheels begin to rotate before the engine speed reaches specified stall speed.

(f) In the same manner, perform the test in R range.

(1FZ-FE engine) kPa (kgf/cm^2, psi)

D range		R range	
Idling	Stall	Idling	Stall
461 — 520 (4.7 — 5.3, 68 — 77)	971 — 1,226 (9.9 — 12.5, 144 — 181)	657 — 843 (6.7 — 8.6, 97 — 125)	1,648 — 1,853 (16.8—18.9, 244—274)

(1HD-T engine)

D range		R range	
Idling	Stall	Idling	Stall
431 — 510 (4.4 — 5.2, 63 — 74)	971 — 1,226 (9.9 — 12.5, 141 — 178)	637 — 843 (6.5 — 8.6, 92 — 122)	1,608 — 1,853 (16.4—18.9, 233—269)

If the measured pressures are not up to specified values, recheck the throttle cable adjustment and perform a retest.

EVALUATION

(a) If the measured values at all positions are higher than specified:
- Throttle cable out of adjustment
- Throttle valve defective
- Regulator valve defective

(b) If the measured values at all positions are lower than specified:
- Throttle cable out of adjustment
- Throttle valve defective
- Regulator valve defetive
- Oil pump defective
- O/D direct clutch defective

(c) If pressure is low in the D range only:
- D range circuit fluid leakage
- Forward clutch defective

(d) If pressure is low in the R range only:
- R range circuit fluid leakage
- Direct clutch defective
- First and reverse brake defective

HYDRAULIC TEST

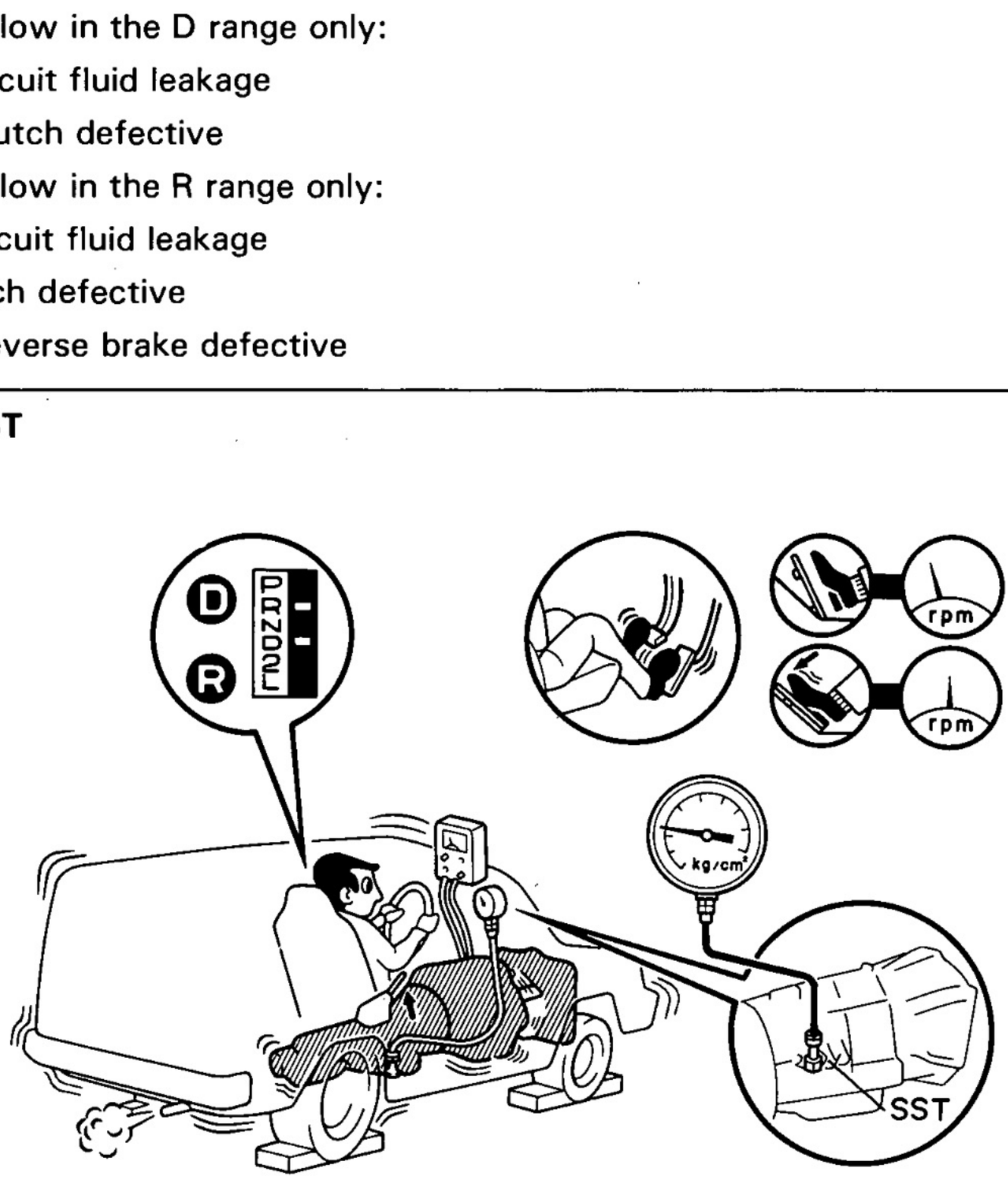

Q03199

ROAD TEST

NOTICE: Perform the test at normal operating fluid temperature (50 — 80°C or 122 — 176°F).

1. D RANGE TEST IN NORM AND PWR PATTERN RANGES

Shift into the D range and hold the accelerator pedal constant at the full throttle valve opening position.

Check the following:

(a) 1 — 2, 2 — 3 and 3 — O/D up-shifts should take place, and shift points should conform to those shown in the automatic shift schedule.

Conduct a test under both Normal and Power patterns.

HINT: There is no O/D up-shift or lock-up when the coolant temperature is below 55°C (131°F).

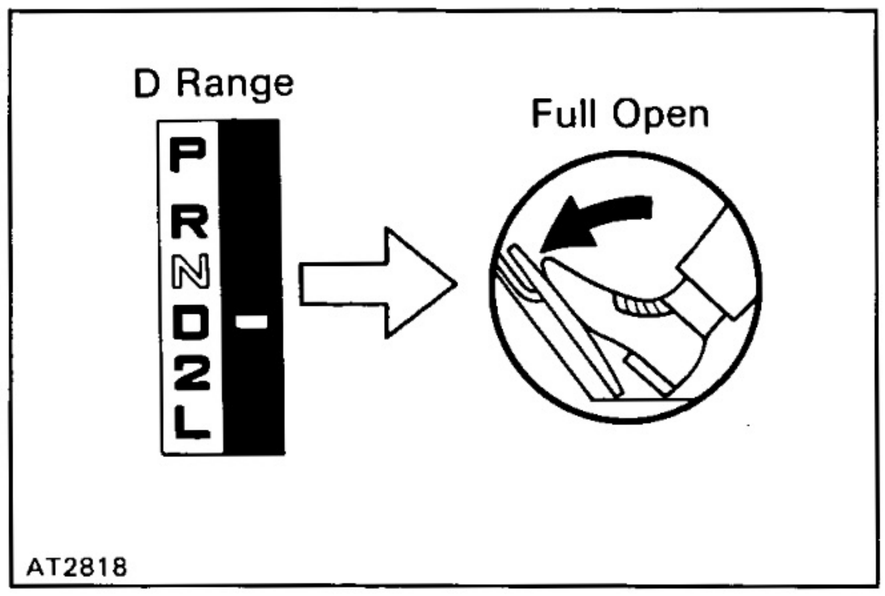

EVALUATION

(1) If there is no 1 → 2 up-shift:
- No.2 solenoid is stuck.
- 1 — 2 shift valve is stuck.

(2) If there is no 2 → 3 up-shift:
- No.1 solenoid is stuck.
- 2 — 3 shift valve is stuck.

(3) If there is no 3 → O/D up-shift:
- 3 — 4 shift valve is stuck.

(4) If the shift point is defective:
- Throttle valve, 1 — 2 shift valve, 2 — 3 shift valve, 3 — 4 shift valve etc., are defective.

(5) If the lock-up is defective:
- Lock-up solenoid is stuck.
- Lock-up relay valve is stuck.

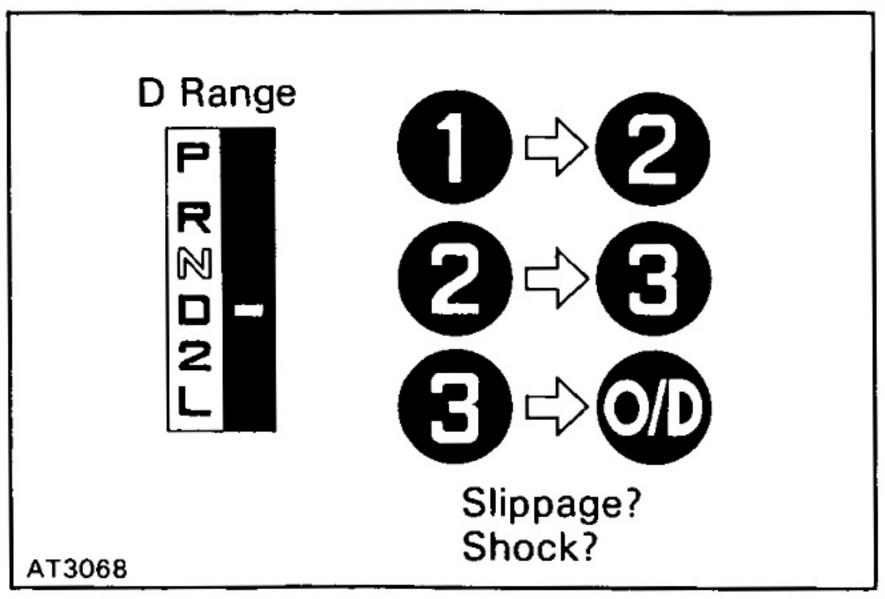

(b) In the same manner, check the shock and slip at the 1 → 2, 2 → 3, and 3 → O/D up-shifts.

EVALUATION

If the shock is excessive:
- Line pressure is too high.
- Accumulator is defective.
- Check ball is defective.

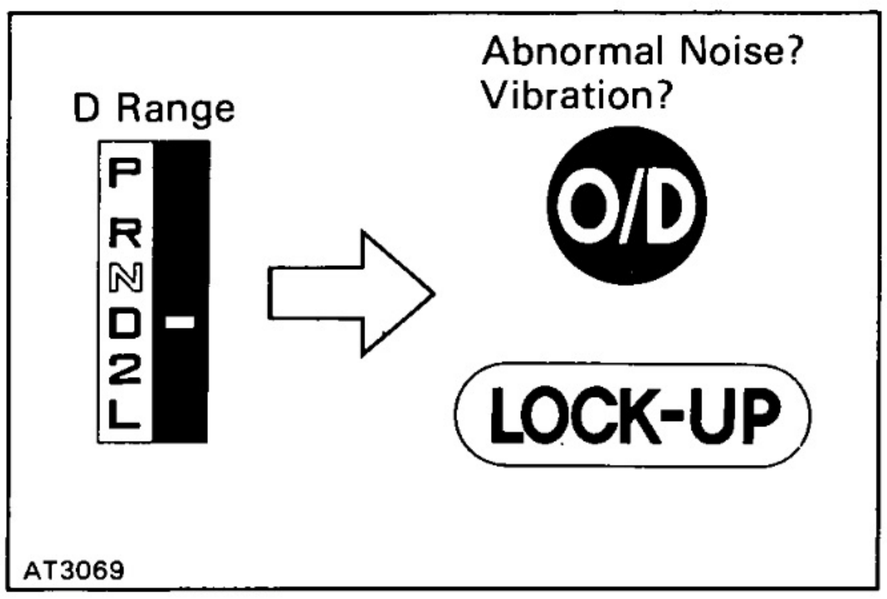

(c) Run at the D Range lock-up or O/D gear and check for abnormal noise and vibration.

HINT: The check for the cause of abnormal noise and vibration must be made with extreme care as it could also be due to loss of balance in the propeller shaft, differential, torque converter, etc.

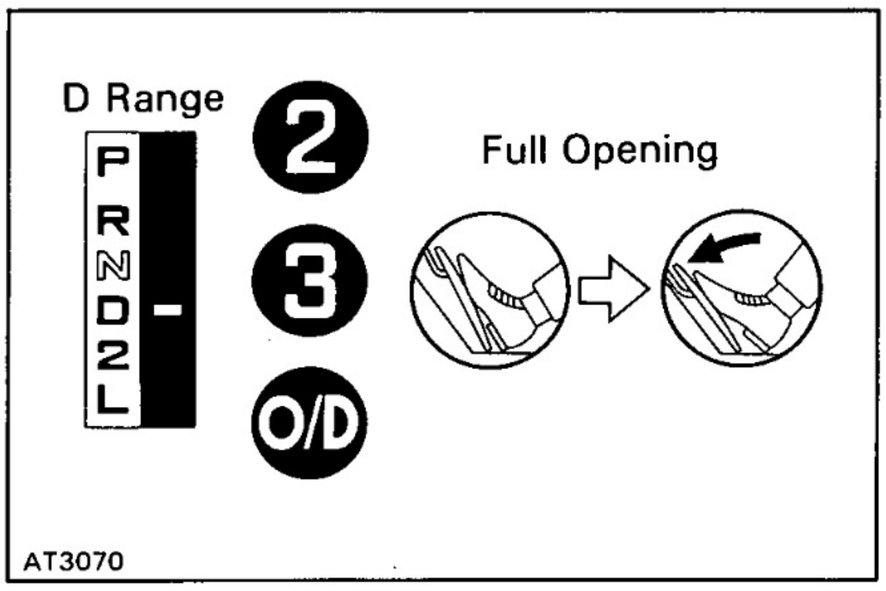

(d) While running in the D range, 2nd, 3rd and O/D gears, check to see that the possible kick-down vehicle speed limits for 2 → 1, 3 → 2 and O/D → 3 kick-downs conform to those indicated on the automatic shift schedule.

(e) Check for abnormal shock and slip at kick-down.

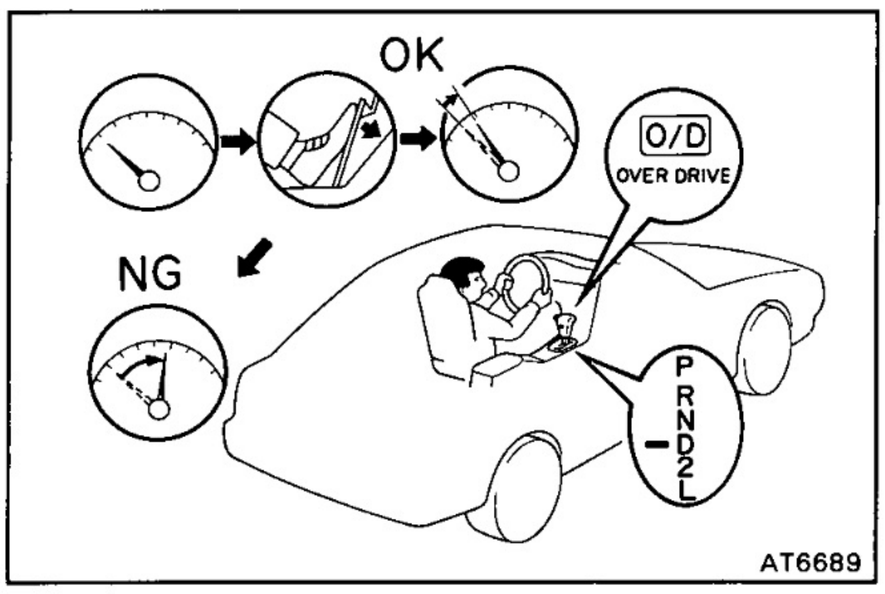

(f) Check for the lock-up mechanism.

(1) Drive in D position, O/D gear, at a steady speed (lock-up ON) of about 95 km/h (59 mph).

(2) Lightly depress the accelerator pedal and check that the engine rpm does not change abruptly.

If there is a big jump in engine rpm, there is no lock-up.

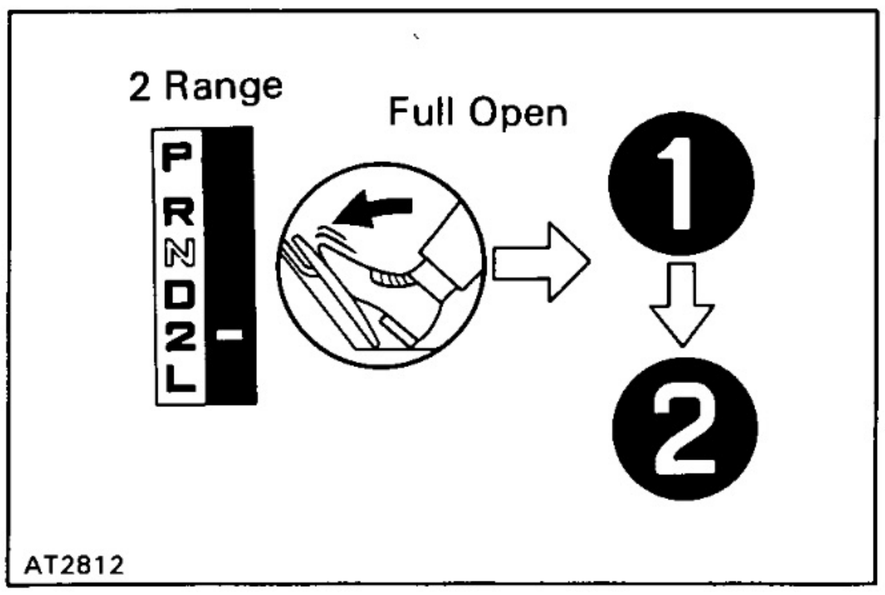

2. 2 RANGE TEST

Shift into the 2 range and, while driving with the accelerator pedal held constantly at the full throttle valve opening position, push in one of the pattern selectors and check on the following points.

(a) Check to see that the 1 → 2 up-shift takes place and that the shift point conforms to it shown on the automatic shift schedule.

HINT: There is no O/D up-shift and lock-up in the 2 position.

(b) While running in the 2 range and 2nd gear, release the acclerator pedal and check the engine braking effect.

EVALUATION

If there is no engine braking effect:

- Second coast brake is defective.

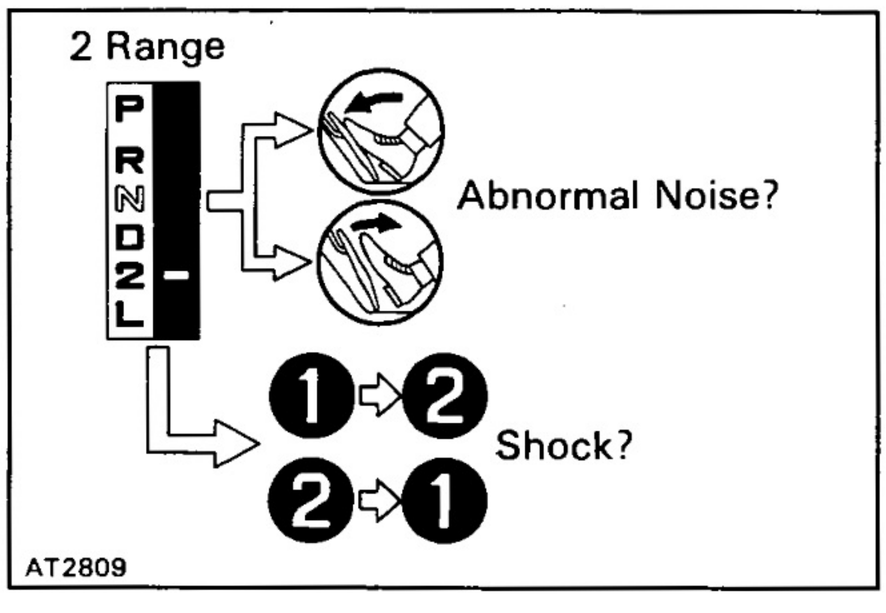

(c) Check for abnormal noise at acceleration and deceleration, and for shock at up-shift and down-shift.

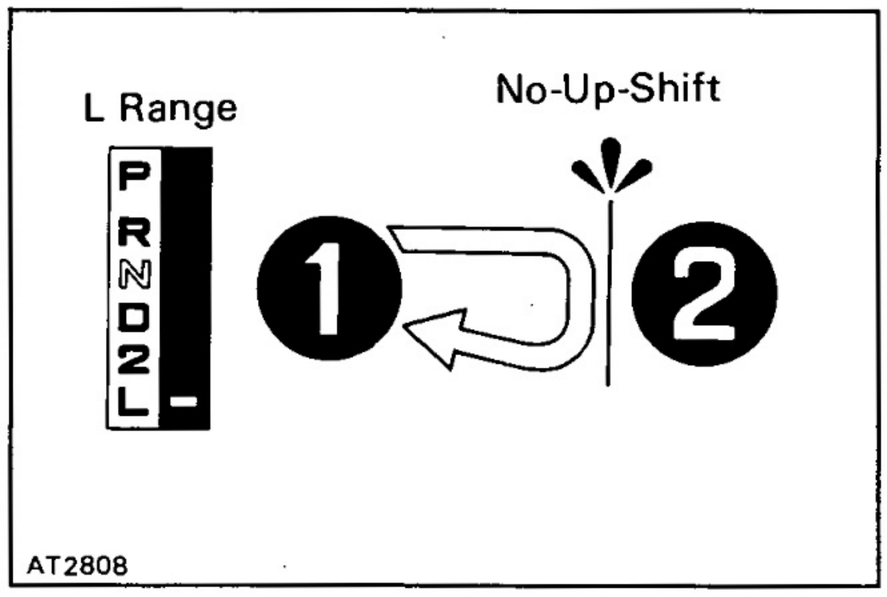

3. L RANGE TEST

(a) While running in the L range, check to see that there is no up-shift to 2nd gear.

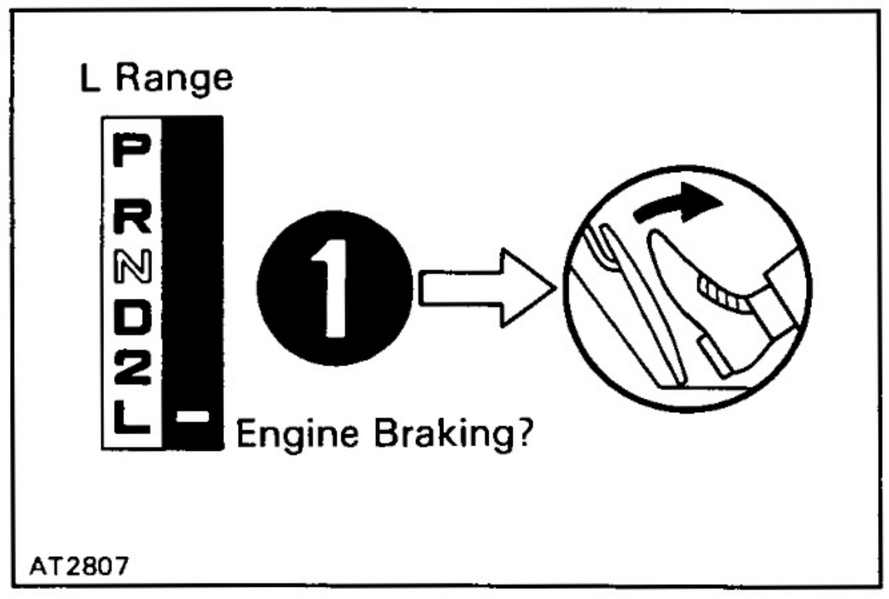

(b) While running in the L range, release the accelerator pedal and check the engine braking effect.

EVALUATION

If there is no engine braking effect:

- First and reverse brake is defective.

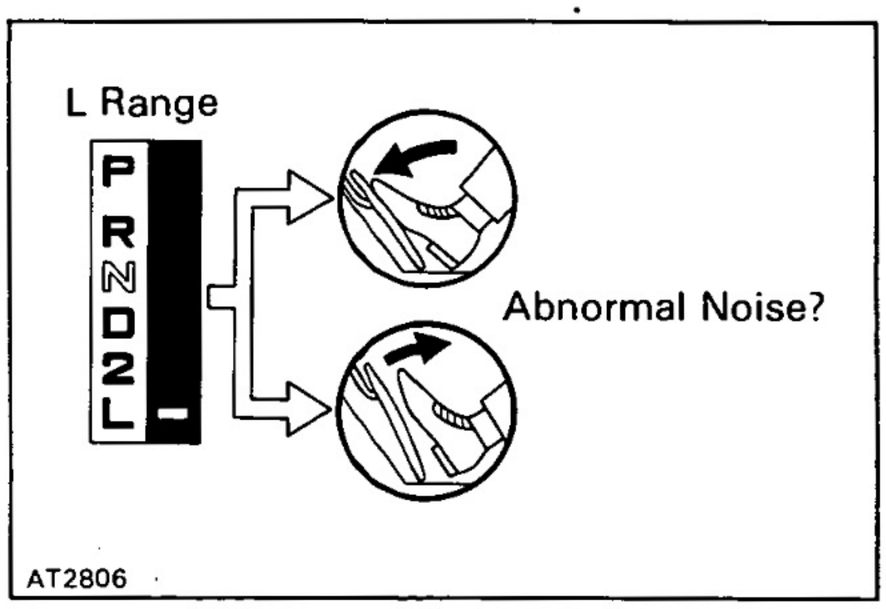

(c) Check for abnormal noise during acceleration and deceleration.

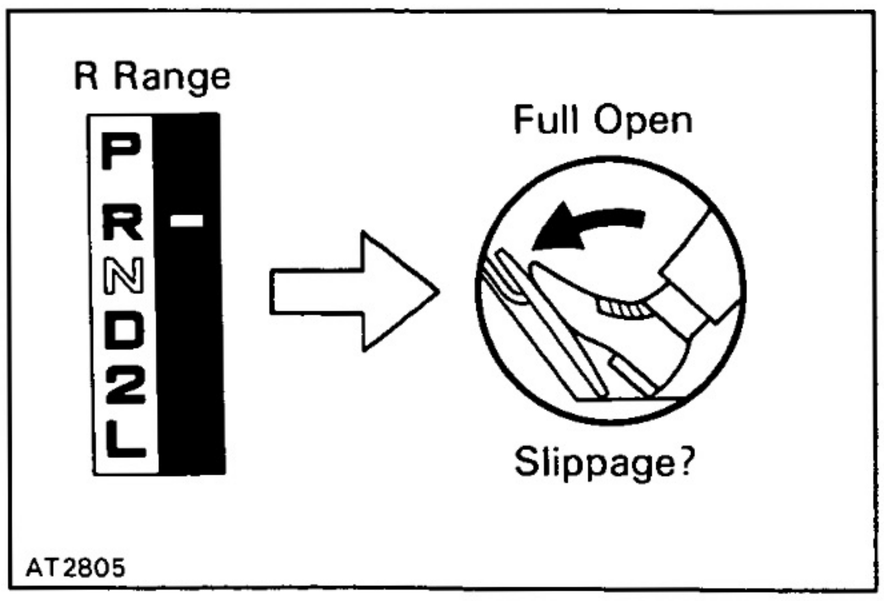

4. R RANGE TEST

Shift into the R range and, while starting at full throttle, check for slipping.

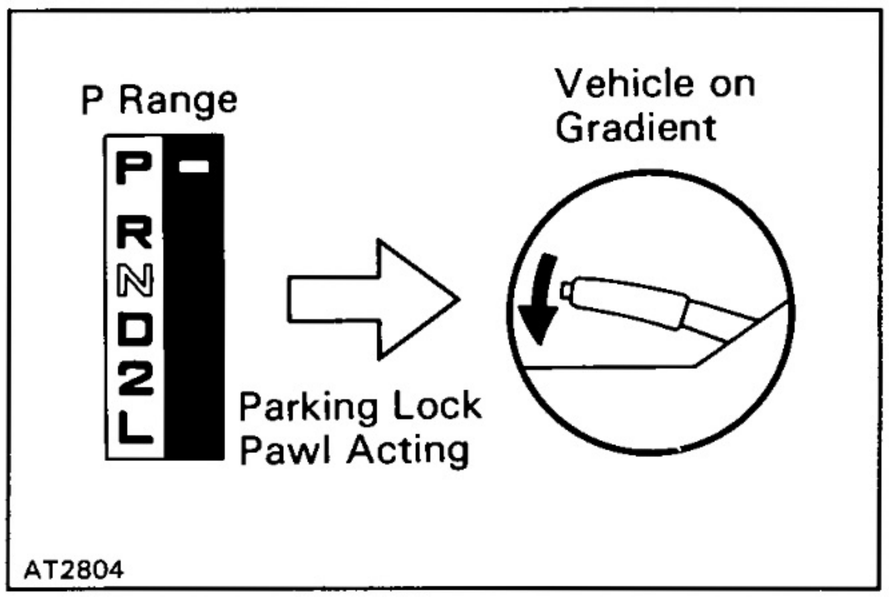

5. P RANGE TEST

Stop the vehicle on a gradient (more than 5°) and after shifting into the P range, release the parking brake. Then check to see that the parking lock pawl holds the vehicle in place.

AUTOMATIC SHIFT SCHEDULE

Engine: 1FZ-FE
Tire size: 7.50R16-6

km/h (mph)

Throttle valve opening		100 %			5 %		100 %		
Gear position		1 → 2	2 → 3	3 → O/D	Lock-up ON	Lock-up OFF	O/D → 3	3 → 2	2 → 1
D position	Normal mode	53—60 (33—37)	108—122 (67—76)	153—170 (95—106)	61—69 (38—43)	55—63 (34—39)	147—163 (91—101)	99—109 (62—68)	42—49 (26—30)
	Power mode	53—60 (33—37)	108—122 (67—76)	153—170 (95—106)	89—99 (55—62)	73—80 (45—50)	147—163 (91—101)	99—109 (62—68)	42—49 (26—30)
2 position	Normal mode Power mode	—	—	—	—	—	—	118—132 (73—82)	—
L position	Normal mode Power mode	—	—	—	—	—	—	—	60—68 (37—42)

Engine: 1FZ-FE
Tire size: 245/85-R16

km/h (mph)

Throttle valve opening		100 %			5 %		100 %		
Gear position		1 → 2	2 → 3	3 → O/D	Lock-up ON	Lock-up OFF	O/D → 3	3 → 2	2 → 1
D position	Normal mode	56—62 (35—39)	114—125 (71—78)	161—174 (100—108)	64—70 (40—43)	58—64 (36—40)	154—167 (96—103)	105—112 (65—70)	44—48 (27—30)
	Power mode	56—62 (35—39)	114—125 (71—78)	161—174 (100—108)	93—100 (58—62)	73—80 (45—50)	154—167 (96—103)	105—112 (65—70)	44—48 (27—30)
2 position	Normal mode Power mode	—	—	—	—	—	—	124—135 (77—84)	—
L position	Normal mode Power mode	—	—	—	—	—	—	—	63—69 (39—43)

Engine: 1FZ-FE
Tire size: 215/80-R16

km/h (mph)

Throttle valve opening		100 %			5 %		100 %		
Gear position		1 → 2	2 → 3	3 → O/D	Lock-up ON	Lock-up OFF	O/D → 3	3 → 2	2 → 1
D position	Normal mode	49—54 (30—34)	101—111 (63—69)	143—153 (89—95)	63—69 (39—43)	57—63 (35—39)	137—147 (85—91)	93—99 (58—62)	40—45 (25—28)
	Power mode	49—54 (30—34)	101—111 (63—69)	143—153 (89—95)	83—89 (52—55)	72—78 (45—48)	137—147 (85—91)	93—99 (58—62)	40—45 (25—28)
2 position	Normal mode Power mode	—	—	—	—	—	—	110—119 (68—74)	—
L position	Normal mode Power mode	—	—	—	—	—	—	—	56—61 (34—38)

Engine: 1FZ-FE
Tire size: 275/70-R16

km/h (mph)

Throttle valve opening		100 %			5 %		100 %		
Gear position		1 → 2	2 → 3	3 → O/D	Lock-up ON	Lock-up OFF	O/D → 3	3 → 2	2 → 1
D position	Normal mode	52—58 (32—36)	106—117 (66—73)	152—163 (94—101)	60—66 (37—41)	55—60 (34—37)	145—156 (90—97)	98—104 (61—65)	42—47 (26—29)
	Power mode	52—58 (32—36)	106—117 (66—73)	152—163 (94—101)	88—94 (55—58)	68—74 (42—46)	145—156 (90—97)	98—104 (61—65)	42—47 (26—29)
2 position	Normal mode Power mode	—	—	—	—	—	—	116—127 (72—79)	—
L position	Normal mode Power mode	—	—	—	—	—	—	—	59—65 (37—40)

Engine: 1HD-T
Tire size: 7.50R16-6

km/h (mph)

Throttle valve opening		100 %			5 %		100 %		
Gear position		1 → 2	2 → 3	3 → O/D	Lock-up ON	Lock-up OFF	O/D → 3	3 → 2	2 → 1
D position	Normal mode	41—47 (25—29)	81—90 (50—56)	122—136 (76—85)	56—64 (35—40)	50—58 (31—36)	115—129 (71—80)	75—82 (47—51)	33—39 (21—24)
	Power mode	41—47 (25—29)	81—90 (50—56)	122—136 (76—85)	78—87 (48—54)	72—80 (45—50)	115—129 (71—80)	75—82 (47—51)	34—41 (21—25)
2 position	Normal mode Power mode	—	—	—	—	—	—	89—98 (55—61)	—
L position	Normal mode Power mode	—	—	—	—	—	—	—	38—45 (24—28)

Engine: 1HD-T
Tire size: 245/85-R16

km/h (mph)

Throttle valve opening		100 %			5 %		100 %		
Gear position		1 → 2	2 → 3	3 → O/D	Lock-up ON	Lock-up OFF	O/D → 3	3 → 2	2 → 1
D position	Normal mode	43—49 (27—30)	85—92 (53—57)	129—140 (80—87)	59—65 (37—40)	53—59 (33—36)	121—132 (75—82)	75—82 (47—51)	34—40 (21—25)
	Power mode	43—49 (27—30)	85—92 (53—57)	129—140 (80—87)	82—89 (51—55)	75—82 (47—51)	121—132 (75—82)	75—82 (47—51)	36—42 (22—26)
2 position	Normal mode Power mode	—	—	—	—	—	—	93—100 (58—62)	—
L position	Normal mode Power mode	—	—	—	—	—	—	—	40—46 (25—29)

Engine: 1HD-T
Tire size: 215/80-R16

km/h (mph)

Throttle valve opening		100 %			5 %		100 %		
Gear position		1 → 2	2 → 3	3 → O/D	Lock-up ON	Lock-up OFF	O/D → 3	3 → 2	2 → 1
D position	Normal mode	37—42 (23—26)	76—81 (47—50)	113—123 (70—76)	53—58 (33—36)	47—52 (29—32)	108—117 (67—73)	67—72 (42—44)	30—35 (19—22)
	Power mode	37—42 (23—26)	76—81 (47—50)	113—123 (70—76)	73—79 (45—49)	66—72 (41—45)	108—117 (67—73)	67—72 (42—44)	32—37 (20—23)
2 position	Normal mode Power mode	—	—	—	—	—	—	83—89 (52—55)	—
L position	Normal mode Power mode	—	—	—	—	—	—	—	35—40 (22—25)

Engine: 1HD-T
Tire size: 275/70-R16

km/h (mph)

Throttle valve opening		100 %			5 %		100 %		
Gear position		1 → 2	2 → 3	3 → O/D	Lock-up ON	Lock-up OFF	O/D → 3	3 → 2	2 → 1
D position	Normal mode	41—46 (25—29)	80—86 (50—53)	120—131 (75—81)	56—61 (35—38)	50—55 (31—34)	114—124 (71—77)	70—76 (43—47)	32—37 (20—23)
	Power mode	41—46 (25—29)	80—86 (50—53)	120—131 (75—81)	77—83 (48—52)	70—76 (43—47)	114—124 (71—77)	70—76 (43—47)	34—39 (21—24)
2 position	Normal mode Power mode	—	—	—	—	—	—	88—94 (55—58)	—
L position	Normal mode Power mode	—	—	—	—	—	—	—	38—43 (24—27)

TROUBLESHOOTING MATRIX CHART

You will find the troubles easier using the table will shown below. In this table, each number shows the priority of cause in troubles. Check each part in order. If necessary, replace these parts.

(ON — VEHICLE)

Trouble \ Parts Name		1—2 shift valve	2—3 shift valve	3—4 shift valve	Low Coast modulator valve	Reverse control valve	Manual valve	No.1 solenoid	No.2 solenoid	Timing solenoid	Lock-up solenoid	C_o exhaust valve	B_o accumulator	C_1 accumulator	B_1 accumulator	C_2 accumulator	2—3 shift timing valve	Modulator valve	Accumulator control valve	Lock-up signal valve	Lock-up control valve	OFF-vehicle repairmatrix chart	ECT ECU	Throttle cable	Check ball
See Page		★	★	★	★	★	★	★	★	★	★	★	★	★	★	★	★	★	★	★	★	AT-57	★	★	★
Does not move in any forward range																						1			
Does not move in reverse range						3		2	2													4	1		
Does not move in any range							2															3	1		
No up-shift	1st → 2nd	3							2													4	1		
	2nd → 3rd		3					2														4	1		
	3rd → O/D			3					2													4	1		
No down-shift	O/D → 3rd			3					2													4	1		
	3rd → 2nd		3					2														4	1		
	2nd → 1st	3							2			4											1		
Shift point too high or too low																							1	2	
Harsh engagement	"N" → "R"														1			2				3			
	"N" → "D"												1					2				3			
	"N"→ "D", "N" → "R"																	3				2		1	
	1st → 2nd													4				5				6	1	2	3
	2nd → 3rd									3					5	4		6				7	1	2	
	3rd → O/D												4					5				6	1	2	3
	1st → 2nd → 3rd → O/D																	2				3		1	
	O/D → 3rd																					4	1	2	3
	3rd → 2nd									3				6		5		7				8	1	2	4
Slip	Forward & Reverse																					1			
	"R" range																					1			
	1st																					1			
	2nd																					1			
	3rd																					1			
	O/D																					1			
No engine braking	1st ("L" range)				4				2	3								5				6	1		
	2nd ("2" range)																					1			
No kick-down		4	4	4				3	3														1	2	
Poor acceleration									2			3										4	1		
No lock-up											2									3	4	5	1		

Remark ★: Refer to A442F Automatic Transmission Repair Manual. (Pub. No. RM314E)

(OFF — VEHICLE)

Trouble \ Parts Name		Torque converter	Oil pump	O/D brake (B_0)	2nd brake (B_1)	1st and reverse brake (B_2)	O/D direct clutch (C_0)	Front clutch (C_1)	Rear clutch (C_2)	O/D one-way clutch (F_0)	No.2 one-way clutch (F_2)	ON-Vehicle matrix chart	Front planetary gear	Rear planetary gear
See Page		AT-76	★	★	★	★	★	★	★	★	★	AT-56	★	★
Does not move in any forward range								1						
Does not move in reverse range						3			2			1		
Does not move in any range		1	3				2			4			5	6
No up-shift	1st → 2nd				2						3	1		
	2nd → 3rd						2	3				1		
	3rd → O/D			2								1		
No down-shift	O/D → 3rd						2			3		1		
	3rd → 2nd					2						1		
	2nd → 1st						2				3	1		
Shift point too high or too low												1		
Harsh engagement	"N" → "R"					3			2			1		
	"N" → "D"							2			3	1		
	"N" → "D", "N" → "R"						2			3		1		
	1st → 2nd				2							1		
	2nd → 3rd						3		2			1		
	3rd → O/D			2								1		
	1st → 2nd → 3rd → O/D							2				1		
	O/D → 3rd						2			3		1		
	3rd → 2nd				2							1		
Slip	Forward & Reverse	2	3							4		1		
	"R" range					2			1					
	1st							1			2			
	2nd							2						
	3rd							2	3					
	O/D			3				1	2					
No engine braking	1st ("L" range)					2						1		
	2nd ("2" range)						2					1		
No kick-down												1		
Poor acceleration		2					3					1		
No lock-up		2										1		

Remark ★: Refer to A442F Automatic Transmission Repair Manual. (Pub. No. RM314E)

VALVE BODY

VALVE BODY REMOVAL

1. REMOVE TRANSMISSION AND TRANSFER UNDER COVER

2. CLEAN TRANSMISSION EXTERIOR

To prevent contamination, clean the exterior transmission.

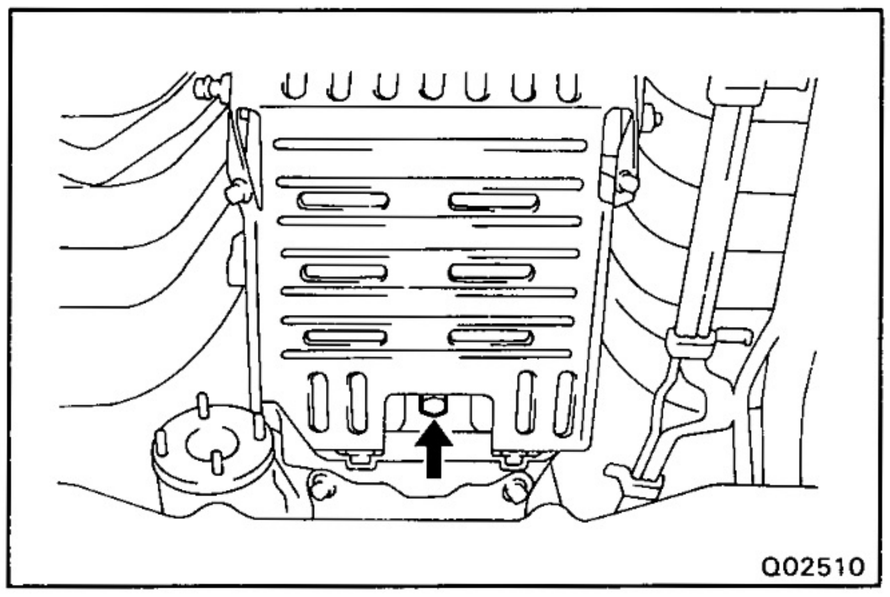

3. DRAIN TRANSMISSION FLUID

Remove the drain plug and drain fluid into a suitable container.

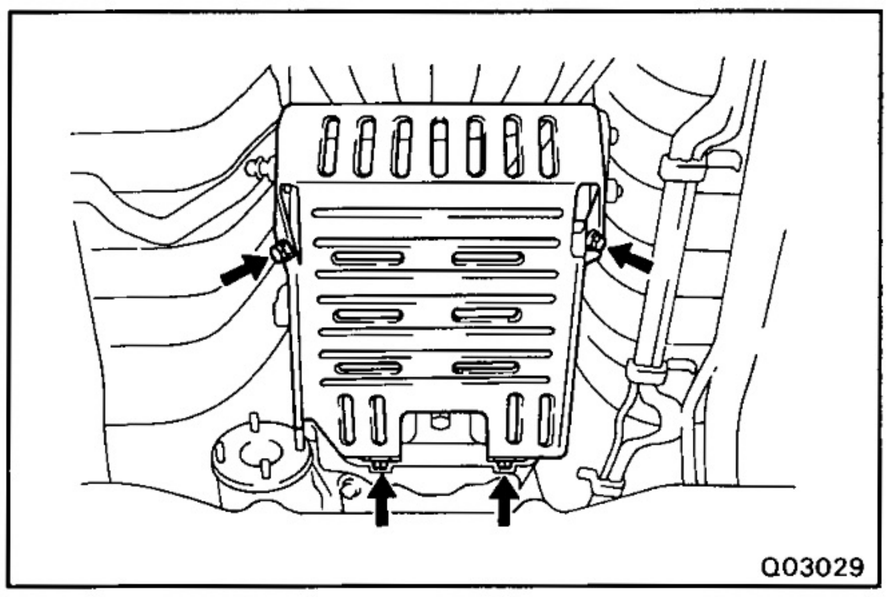

4. REMOVE OIL PAN PROTECTOR

Remove the four bolts and the oil pan protector.

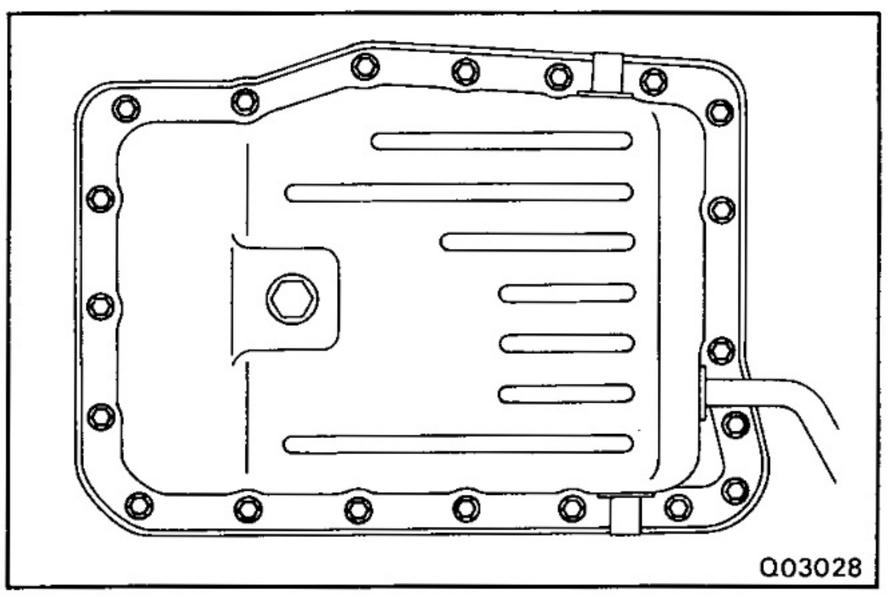

5. REMOVE OIL PAN AND GASKET

NOTICE: Some fluid will remain in the oil pan. Be careful not to damage the filler tube.

(a) Remove the twenty bolts.

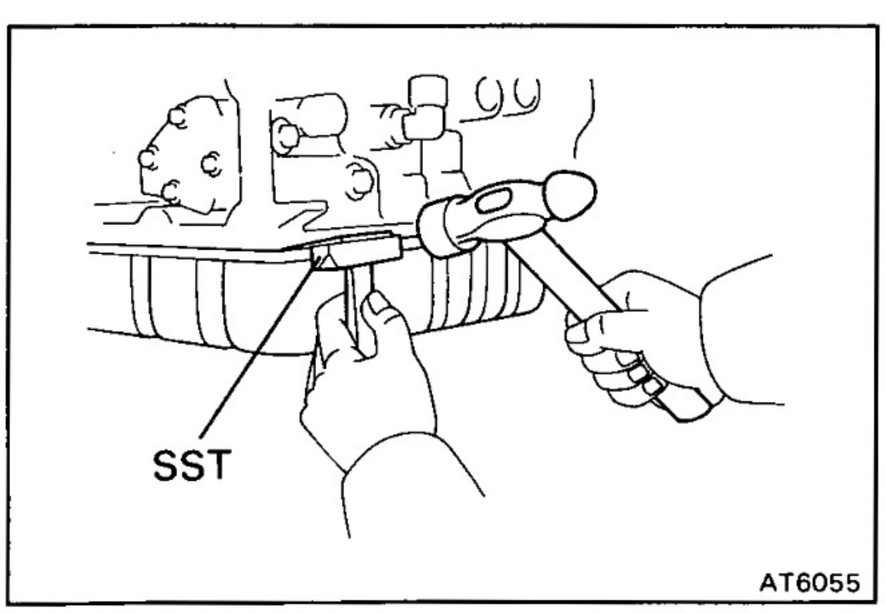

(b) Install the blade off SST between the transmission and oil pan, cut-off applied sealer.

SST 09302-00100

NOTICE: Be careful not to damage the oil pan flange.

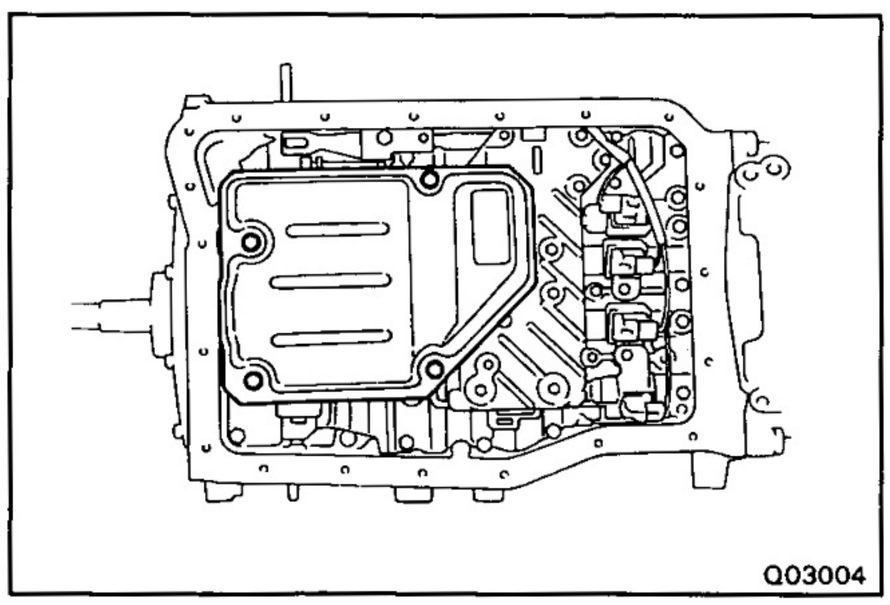
Q03004

6. REMOVE OIL STRAINER

Remove the four bolts and oil strainer.

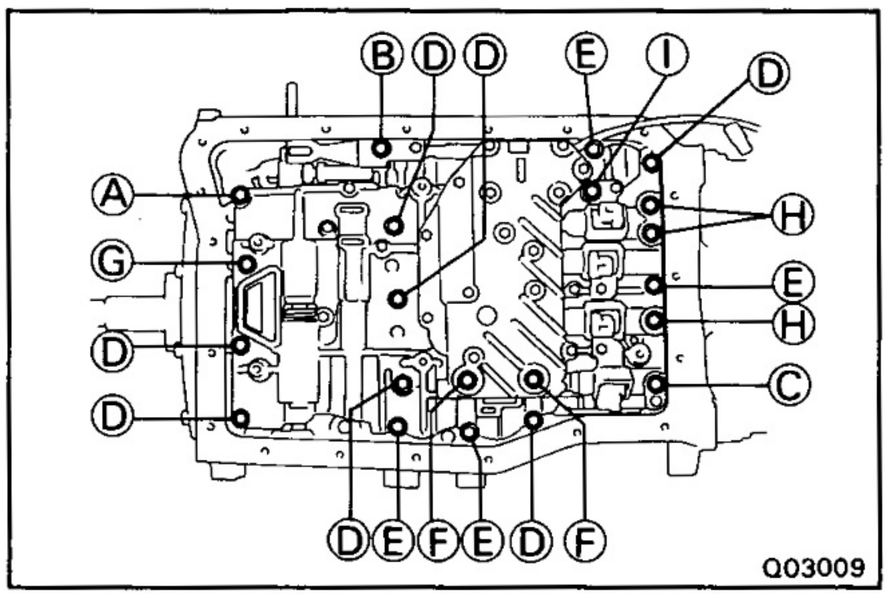

Q03009

7. REMOVE VALVE BODY

(a) Remove the twenty-one bolts.

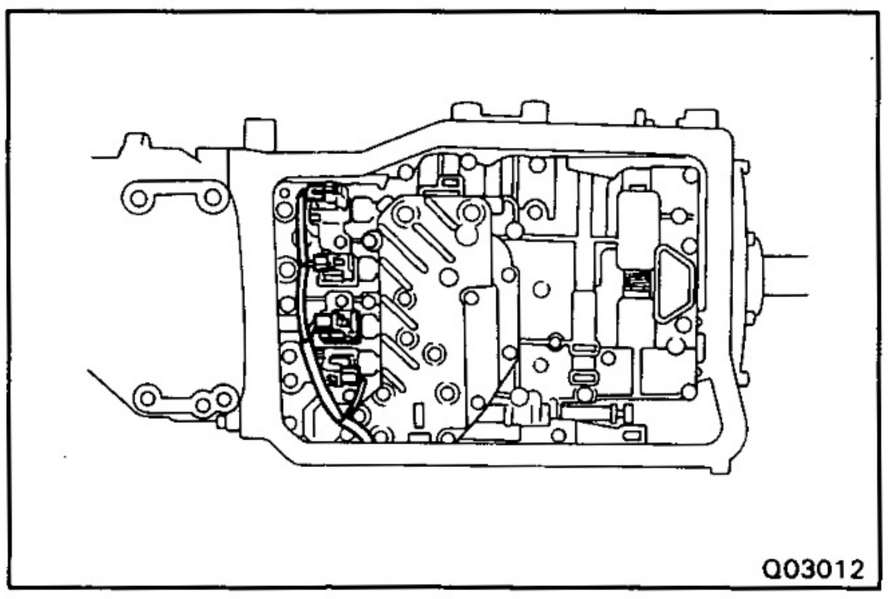
Q03012

(b) Disconnect the four connectors from the solenoids.

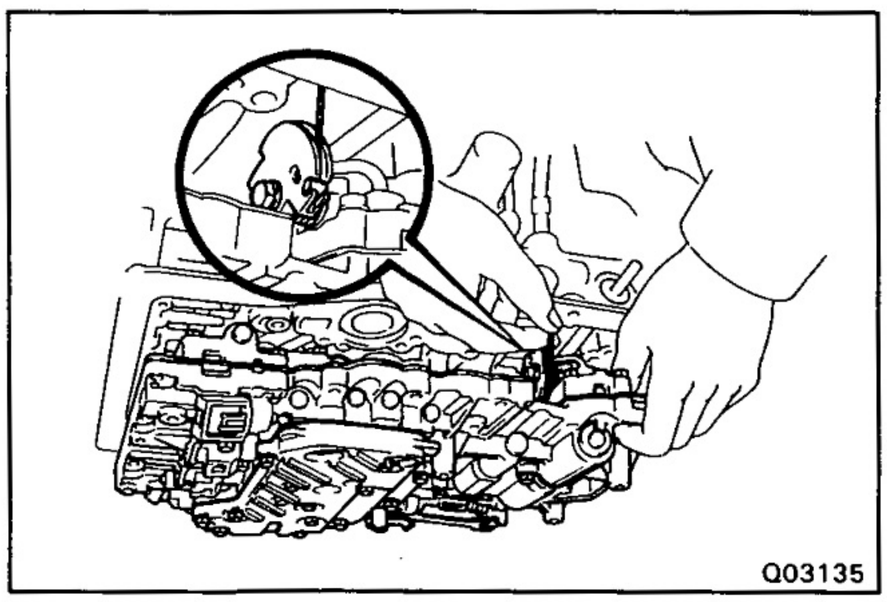
Q03135

(c) Remove the throttle cable the cam and remove the valve body.

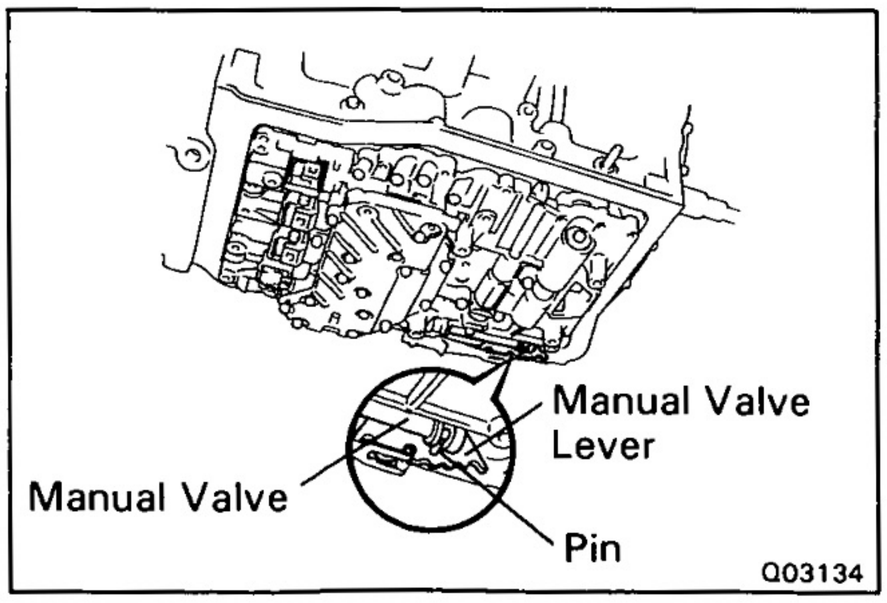

Q03134

VALVE BODY INSSTALLATION

1. INSTALL VALVE BODY

(a) Align the groove of the manual valve with the pin of the manual valve lever.

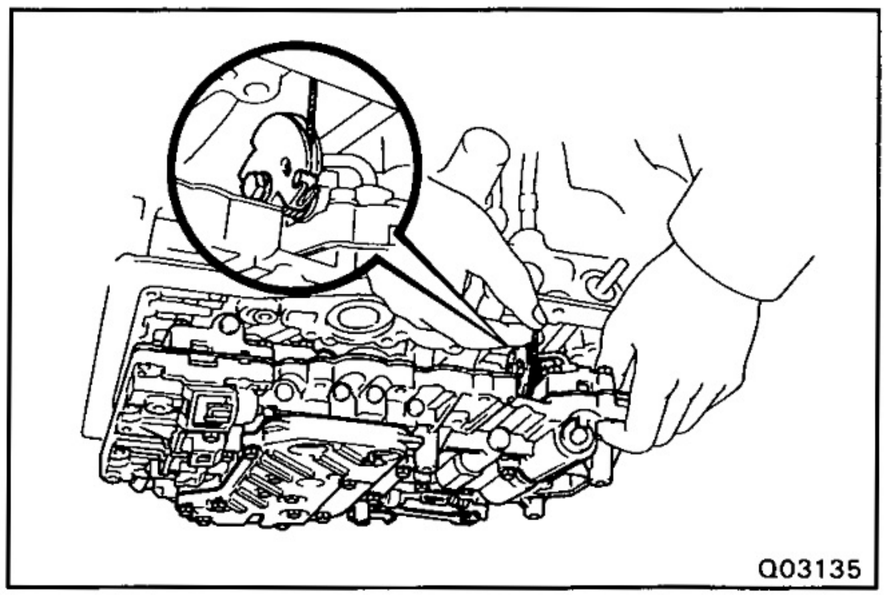
Q03135

(b) Connect the throttle cable to the cam.

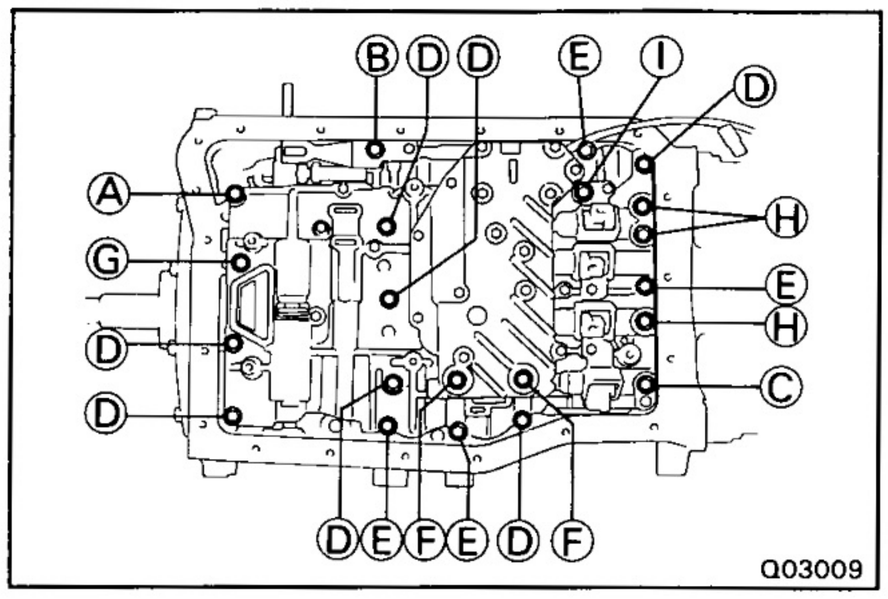

Q03009

(c) Install the other bolts.

HINT: Each bolt length is indicated below.

Bolt length:
A 41 mm (1.61 in.)
B 45 mm (1.77 in.)
C 22 mm (0.87 in.)
D 32 mm (1.26 in.)
E 28 mm (1.10 in.)
F 52 mm (2.05 in.)
G 40 mm (1.57 in.)
H 22 mm (0.87 in.)
I 42 mm (1.65 in.)

(d) Check that the manual valve lever contacts the center of the roller at the tip of the detente spring.

(e) Tighten the bolts.

Torque: 10 N·m (100 kgf·cm, 7 ft·lbf)

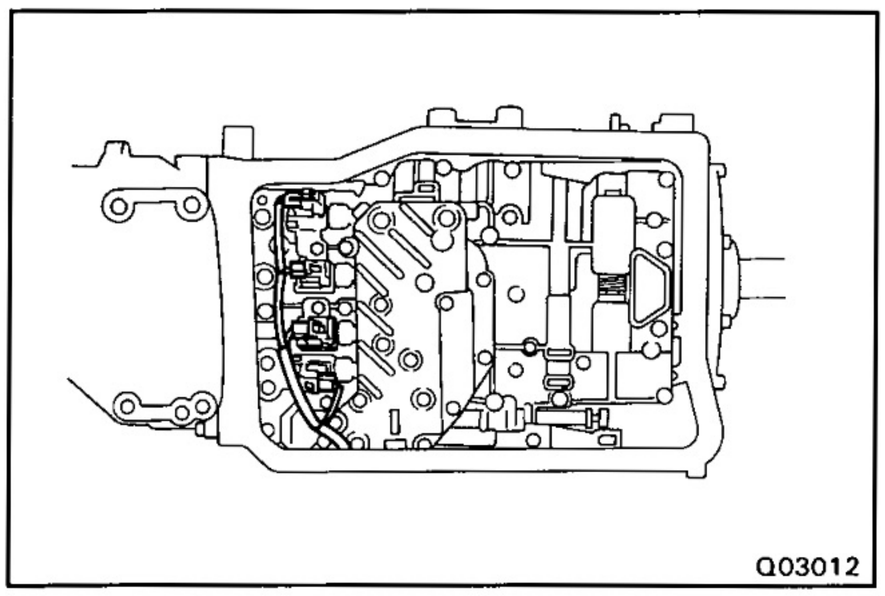
Q03012

2. CONNECT FOUR SOLENOID CONNECTORS

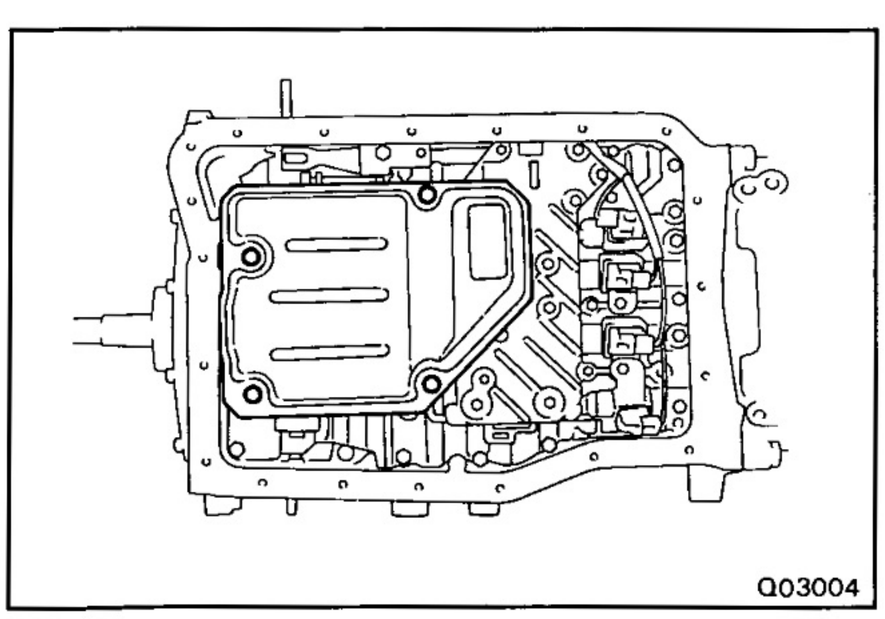
Q03004

3. INSTALL OIL STRAINER

Install a new gasket and the oil strainer with the four bolts.

Torque: 10 N·m (100 kgf·cm, 7 ft·lbf)

Bolt length:
16 mm (0.63 in.)

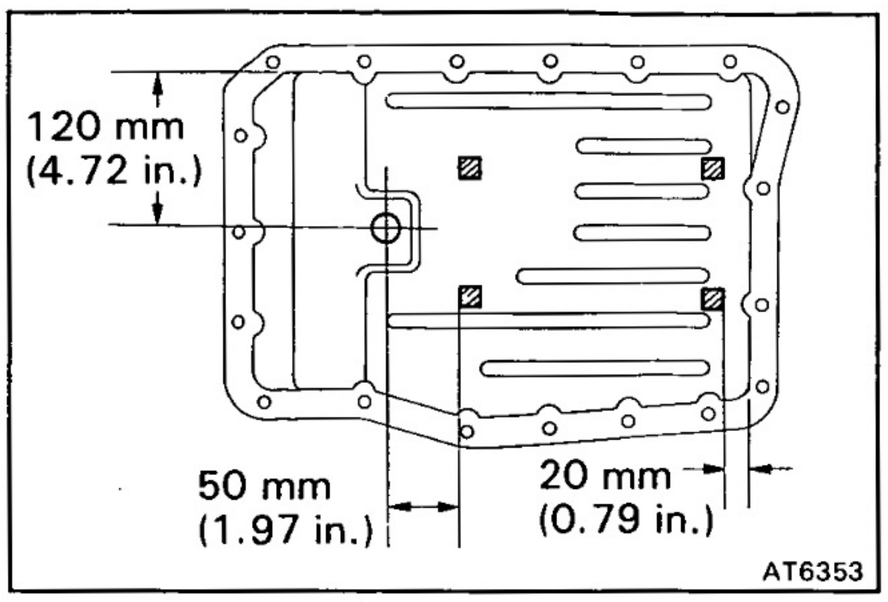

4. INSTALL MAGNETS IN PAN

Install the two magnets in the oil pan as shown in the illustration.

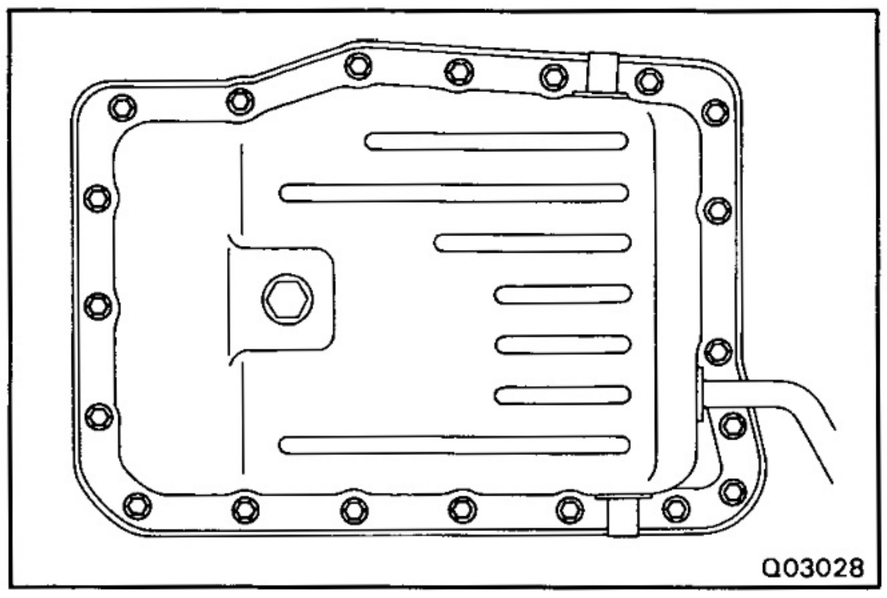

5. INSTALL OIL PAN

(a) Remove any packing material and be careful not to drop oil on the contacting surface of the transmission case and oil pan.

(b) Apply seal packing to the oil pan.

Seal packing:
Part No. 08826-00090, THREE BOND 1281B or equivalent

(c) Install and tighten the twenty bolts.

Torque: 6.9 N·m (70 kgf·cm, 61 in.·lbf)

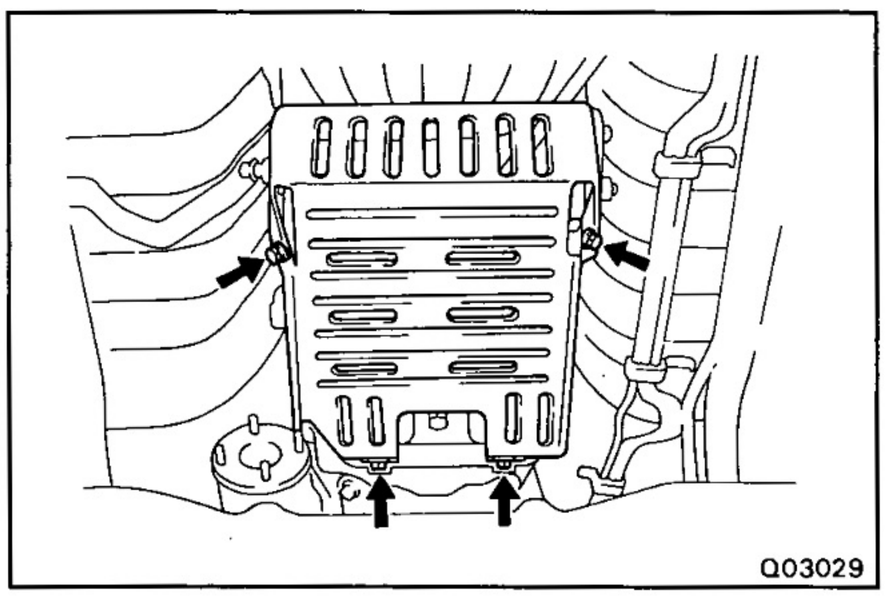

6. INSTALL OIL PAN PROTECTOR

Install the protector with the four bolts.

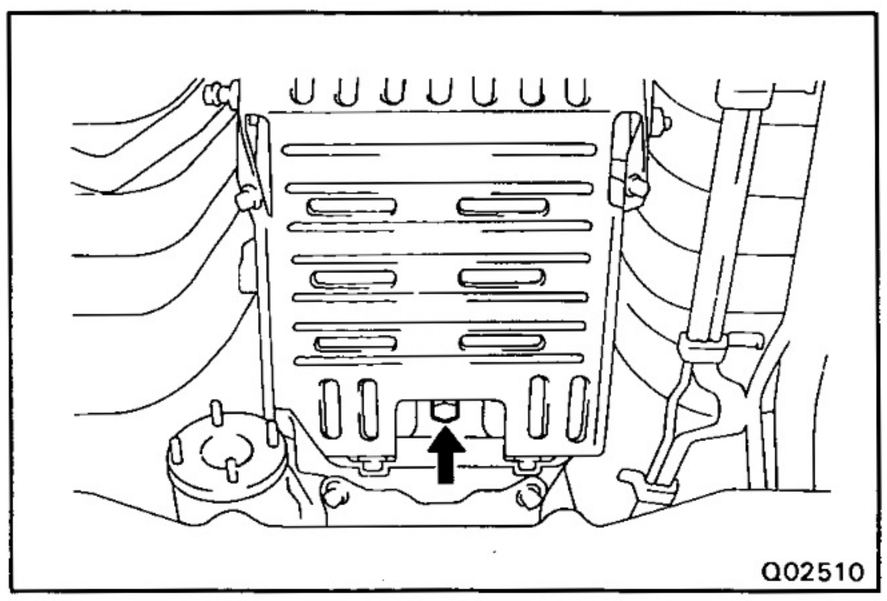

7. INSTALL DRAIN PLUG

(a) Install the drain plug with a new gasket.

(b) Torque the drain plug.

Torque: 27 N·m (280 kgf·cm, 20 ft·lbf)

8. INSTALL TRANSMISSION UNDER COVER AND TRANSFER UNDER COVER

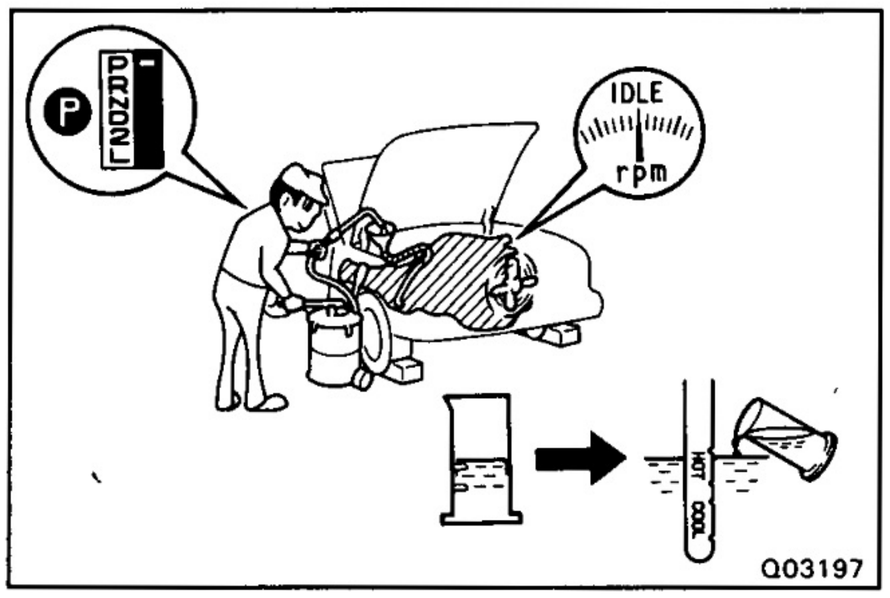

9. FILL TRANSMISSION WITH ATF

Capacity:
6.0 liters (6.3 US qts, 5.3 Imp.qts)

NOTICE: Do not overfill.

Fluid type:
ATF DEXRON® II

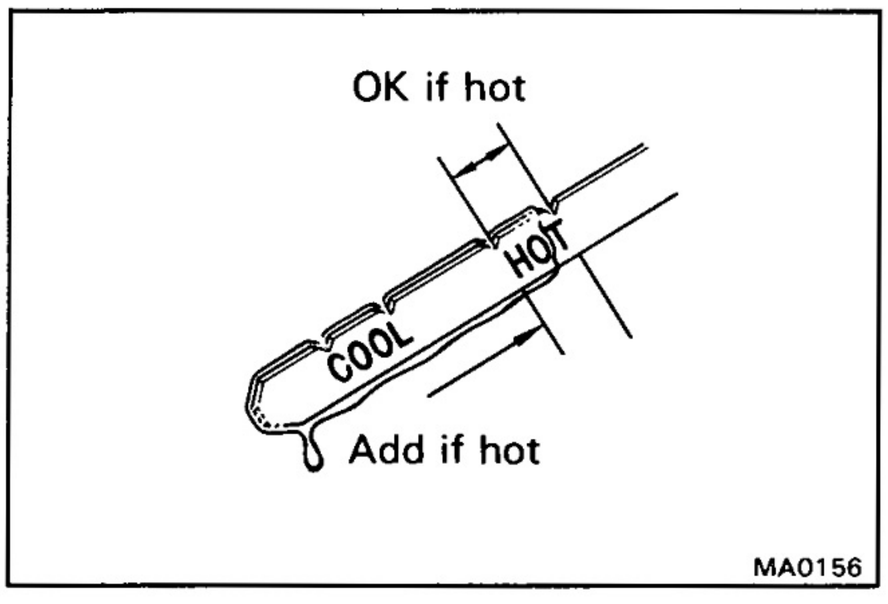

10. CHECK FLUID LEVEL
(See page AT-25)

THROTTLE CABLE

THROTTLE CABLE REMOVAL

1. REMOVE FRONT PROPELLER SHAFT
(See Pub No. RM184E, page PR-3)

2. DISCONNECT THROTTLE CABLE

(a) Disconnect the cable housing from the bracket.

(b) Disconnect the cable from the throttle linkage.

(c) Disconnect the cable from the torque converter housing.

3. REMOVE VALVE BODY
(See page AT-58)

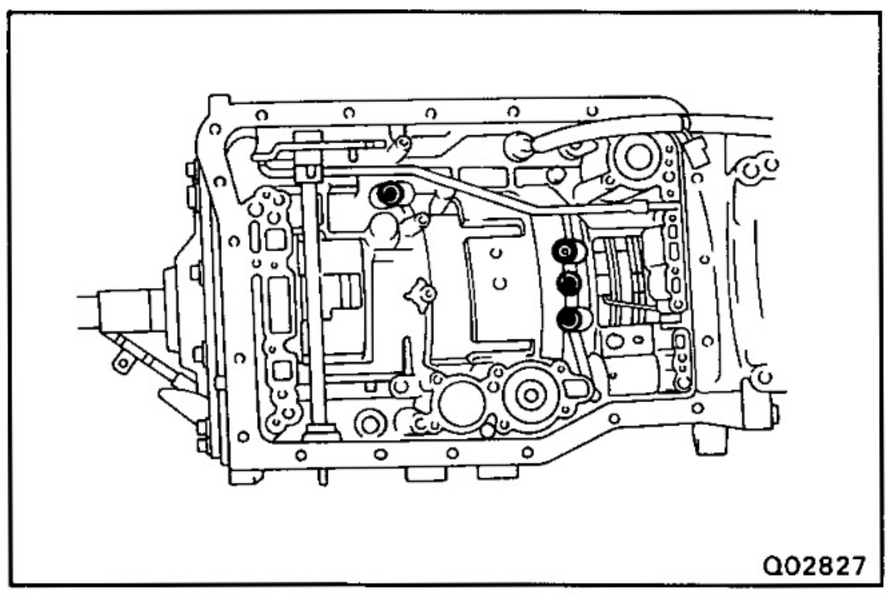
Q02827

4. REMOVE FOUR CENTER SUPPORT APPLY GASKETS

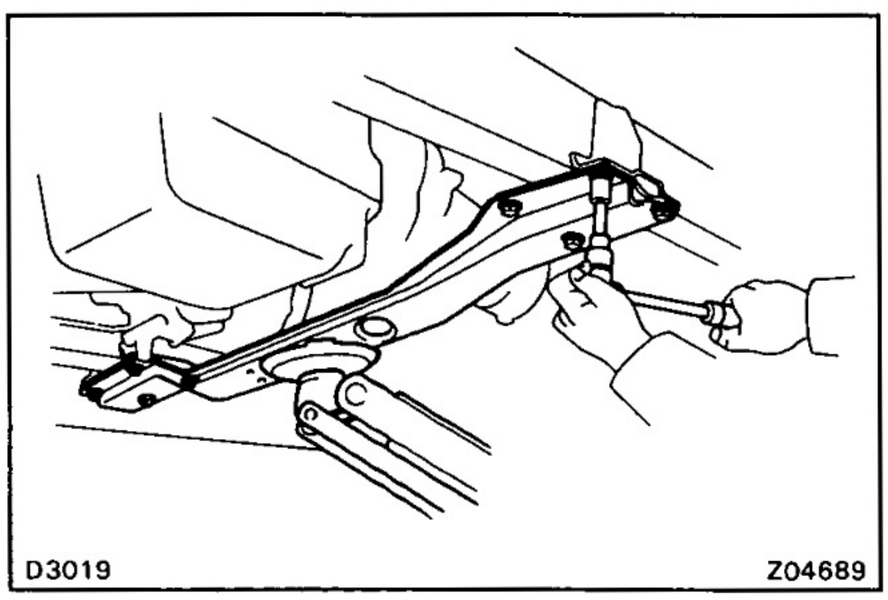
D3019 Z04689

5. REMOVE FRAME CROSSMEMBER SET BOLTS

(a) Support the frame crossmember with a jack.

(b) Remove the eight set bolts.

6. REMOVE THROTTLE CABLE CLAMP

(a) Lower the jack.

(b) Remove the cable clamp from the transmission housing.

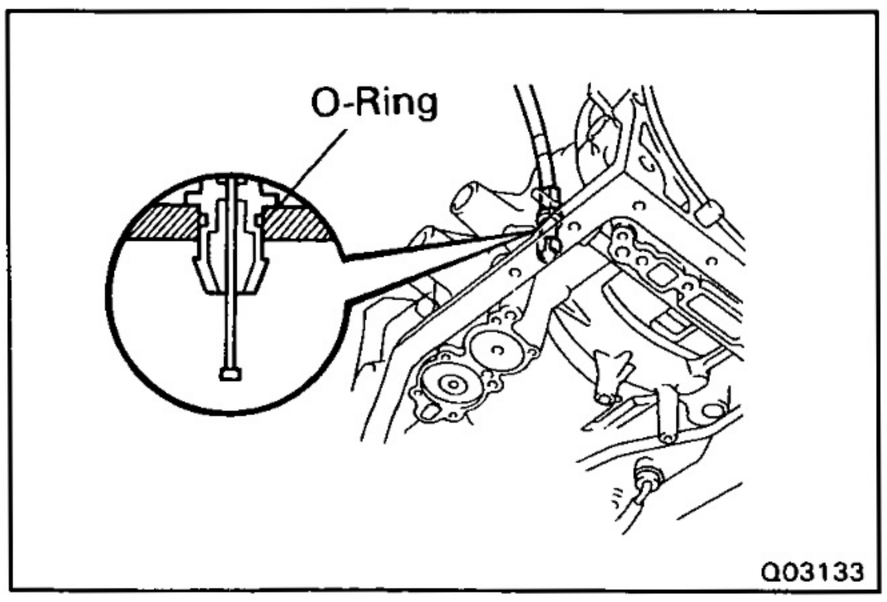

Q03133

7. REMOVE THROTTLE CABLE

Using 10 mm socket driver, remove the throttle cable by pushing the retainer portion of the throttle cable.

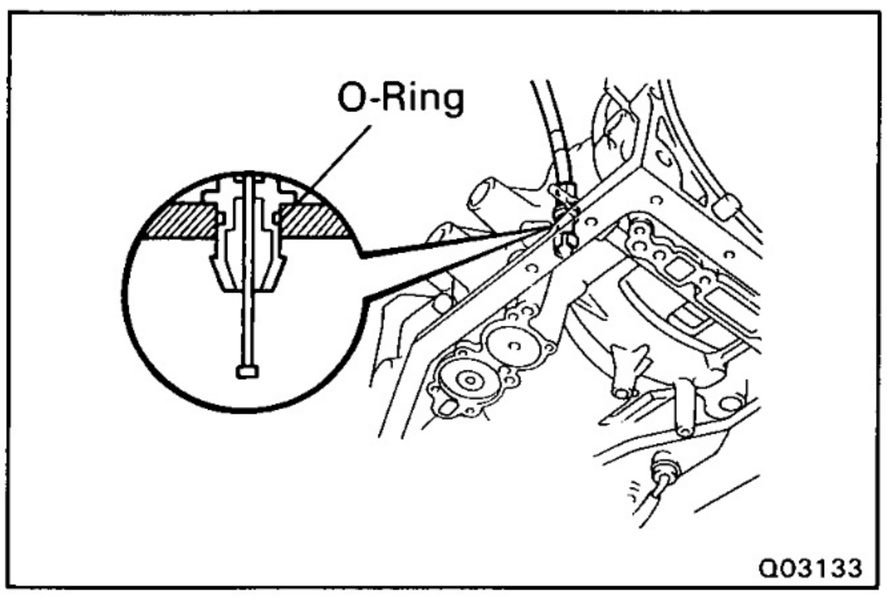

THROTTLE CABLE INSTALLATION

1. INSTALL CABLE IN TRANSMISSION CASE

(a) Coat a new O-ring with ATF, and install it to the cable.

(b) Install the cable to the transmission case.

2. INSTALL THROTTLE CABLE CLAMP TO TRANSMISSION HOUSING

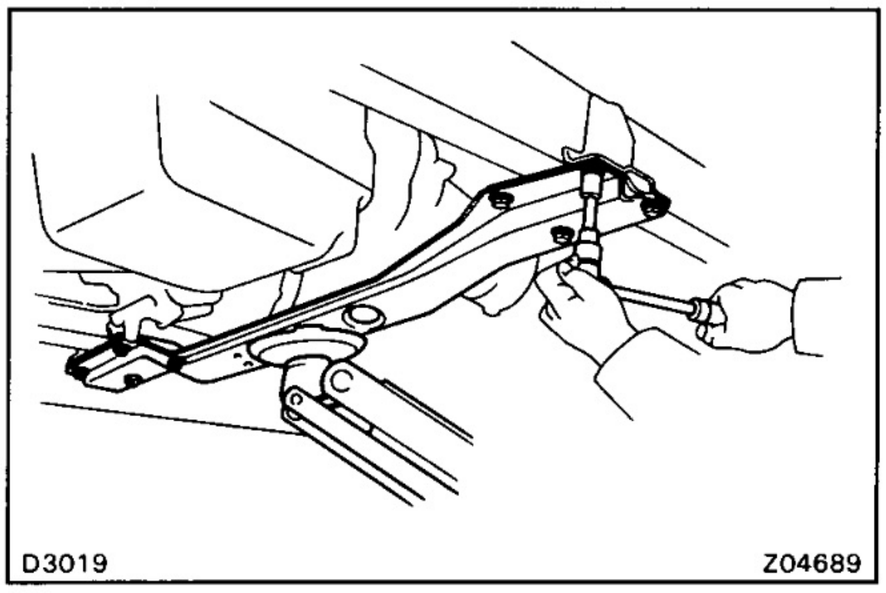

3. INSTALL FRAME CROSSMEMBER SET BOLTS

Torque: 61 N·m (620 kgf·cm, 45 ft·lbf)

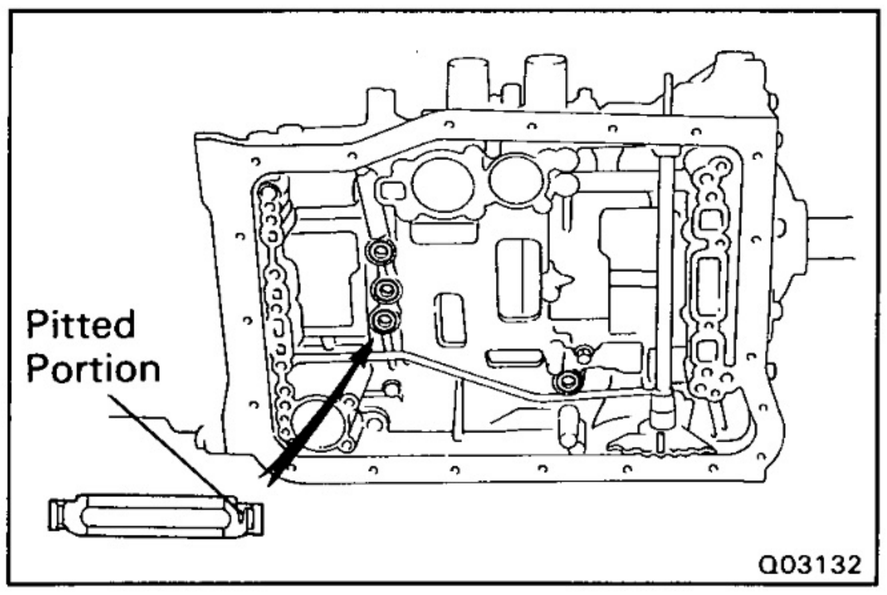

4. INSTALL FOUR CENTER SUPPORT APPLY GASKET

Install new four gaskets, facing the pitted side toward the transmission case.

5. INSTALL VALVE BODY
(See page AT-59)

6. INSTALL FRONT PROPELLER SHAFT
(See Pub No. RM184E, page PR-8)

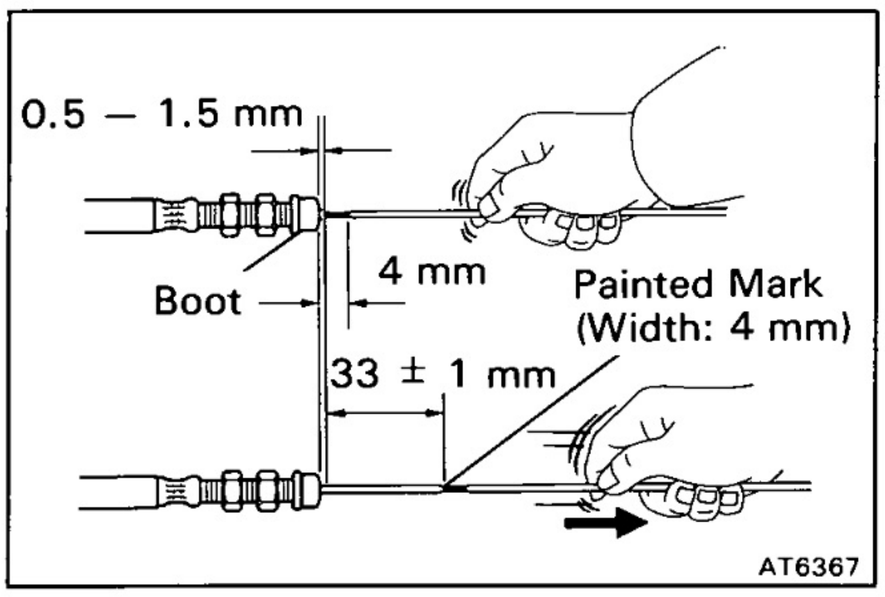

7. IF THROTTLE CABLE IS NEW, PAINT MARK ON INNER CABLE

HINT: New cable do not have a cable stopper installed. Therefore to mark adjustment possible, paint a mark as described below.

(a) Connect the throttle cable to the throttle cam of valve body.

(b) Pull the inner cable lightly until resistance is felt, and hold it.

(c) Paint a mark as shown, about 4 mm (0.16 in.) in width.

(d) Pull the inner cable fully, measure the cable stroke.

Cable stroke:
33 ± 1 mm (1.30 ± 0.04 in.)

8. CONNECT THROTTLE CABLE

(a) Connect the cable to the throttle linkage.

(b) Connect the cable housing to the bracket on the valve cover.

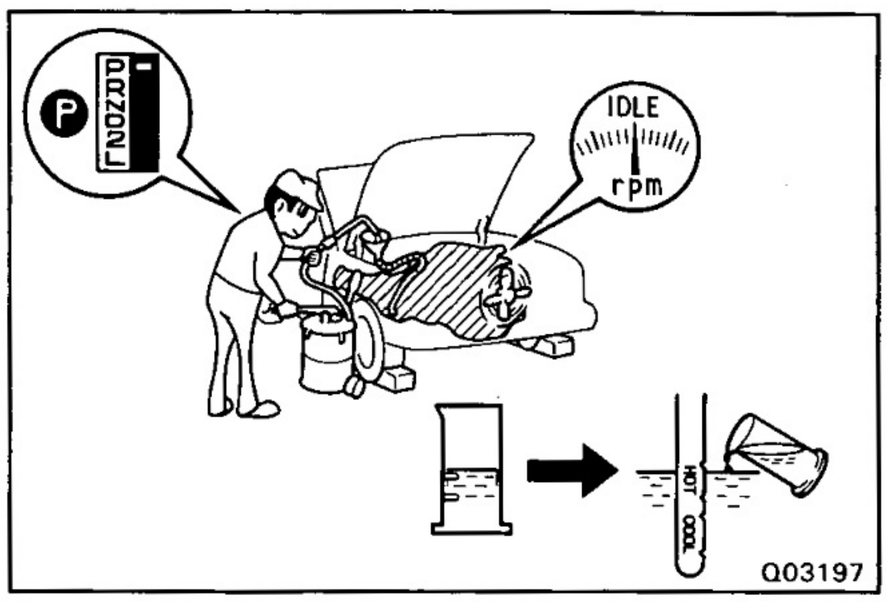

9. ADJUST THROTTLE CABLE
(See page AT-26)

10. FILL TRANSMISSION WITH ATF

Capacity:
6.0 liters (6.3 US qts, 5.3 Imp.qts)

NOTICE: Do not overfill.

Fluid type:
ATF DEXRON® II

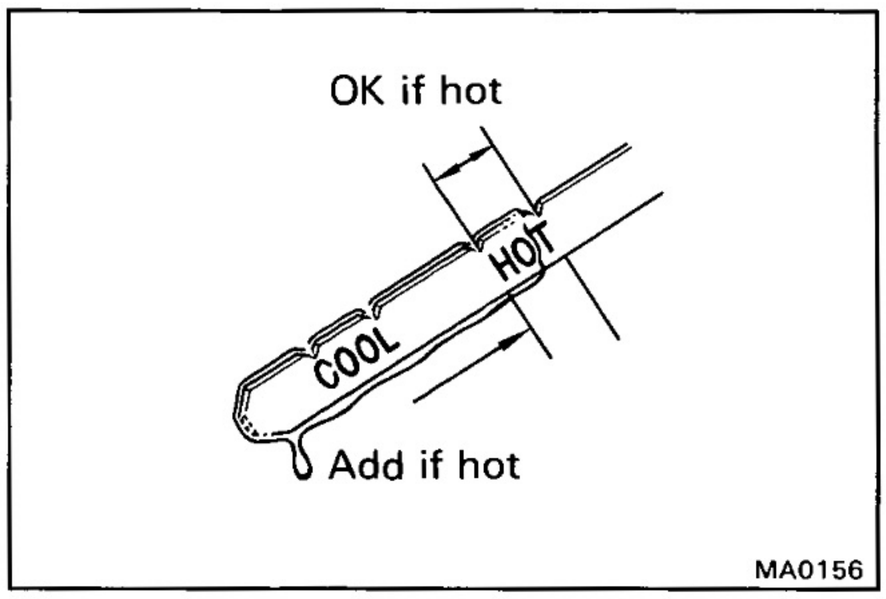

11. CHECK FLUID LEVEL
(See page AT-25)

ASSEMBLY REMOVEAL AND INSTALLATION

COMPONENTS

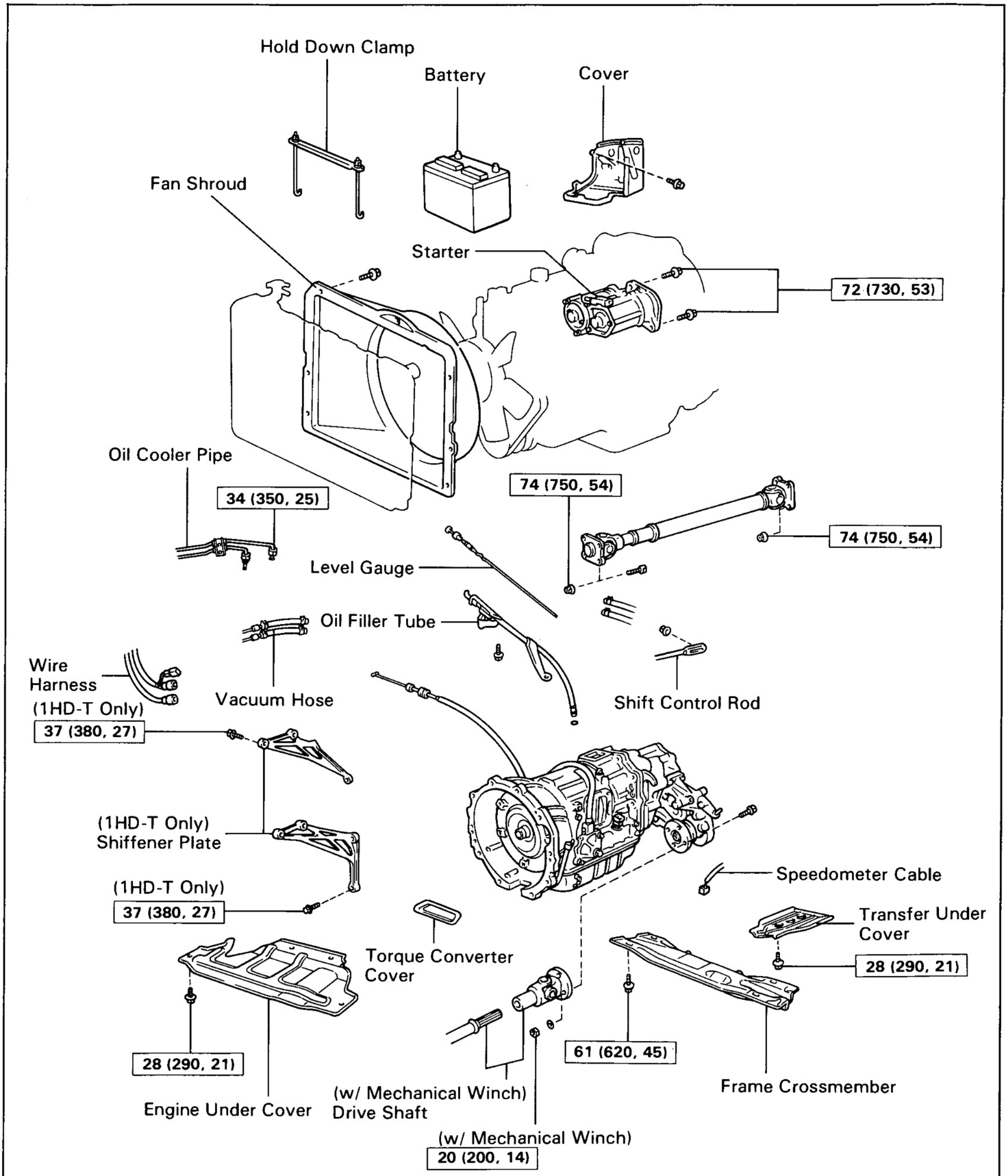

N·m (kgf·cm, ft·lbf) : Specified torque

◆ Non-reusable part

Q03192

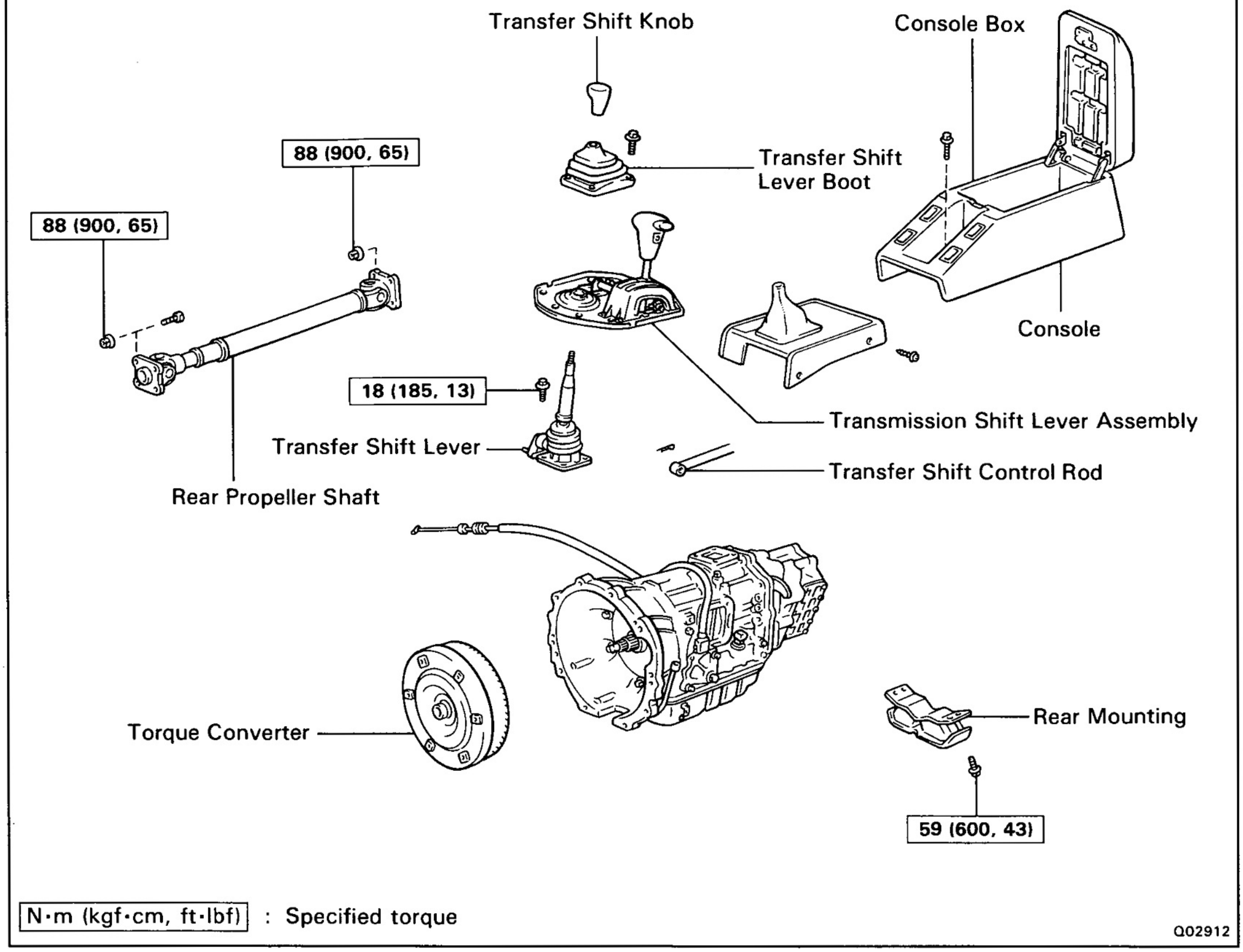

TRANSMISSION REMOVAL

1. **DISCONNECT BATTERY CABLE FROM NEGATIVE TERMINAL**

2. **REMOVE BATTERY AND COVER**

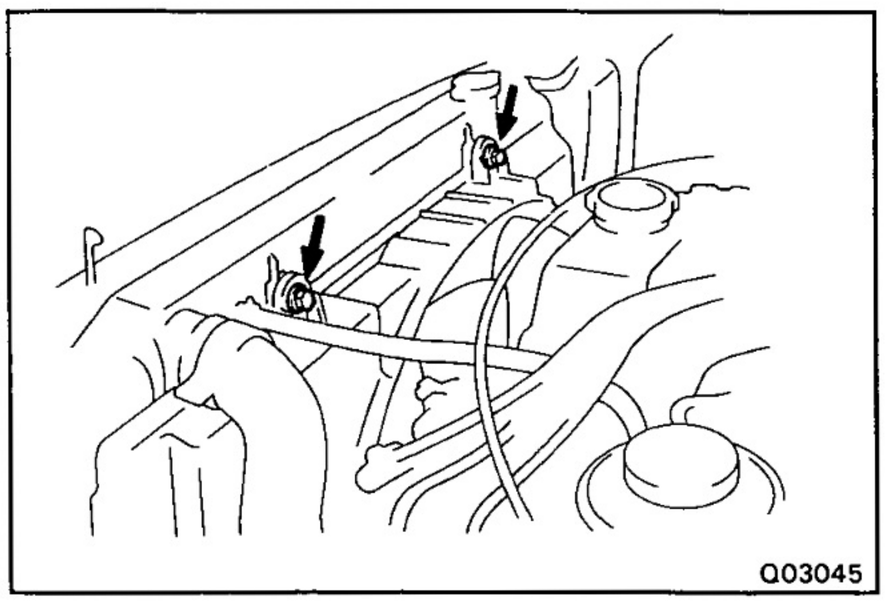

3. **LOOSEN FAN SHROUD OF COOLING FAN TO AVOID DAMAGE TO FAN**

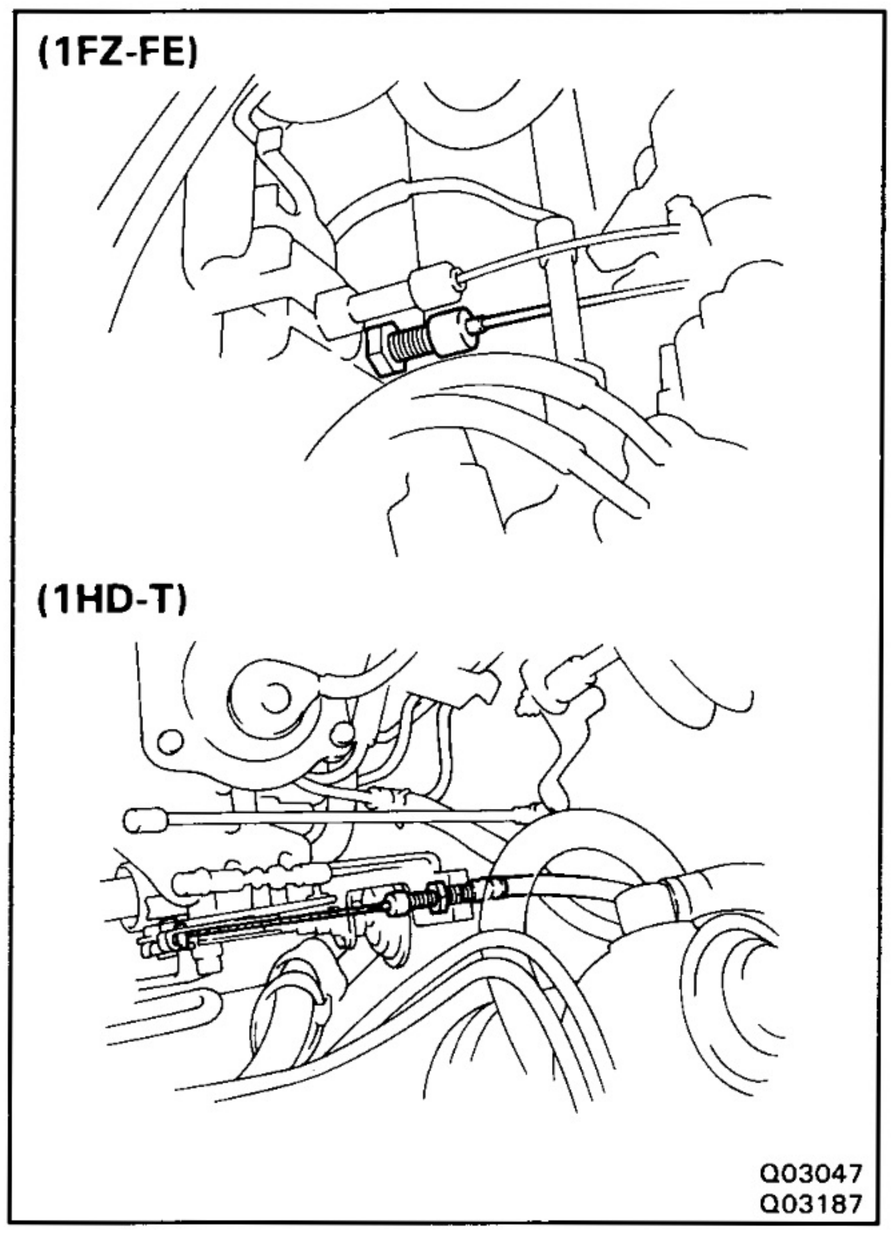

4. DISCONNECT THROTTLE CABLE

(a) Loosen the adjusting nut and disconnect the cable housing from the bracket.

(b) Disconnect the cable from the linkage.

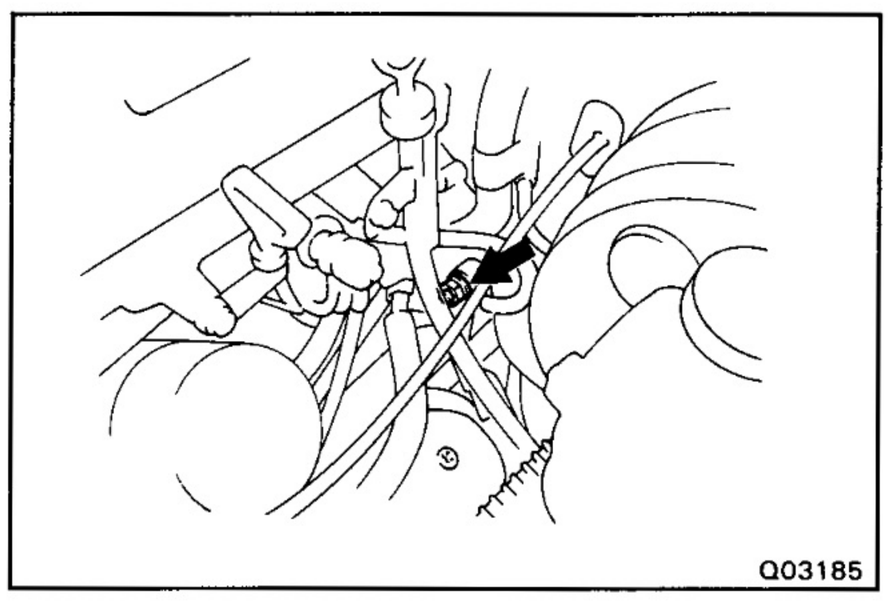

5. (1HD-T)
REMOVE STARTER MOUNTING BOLT

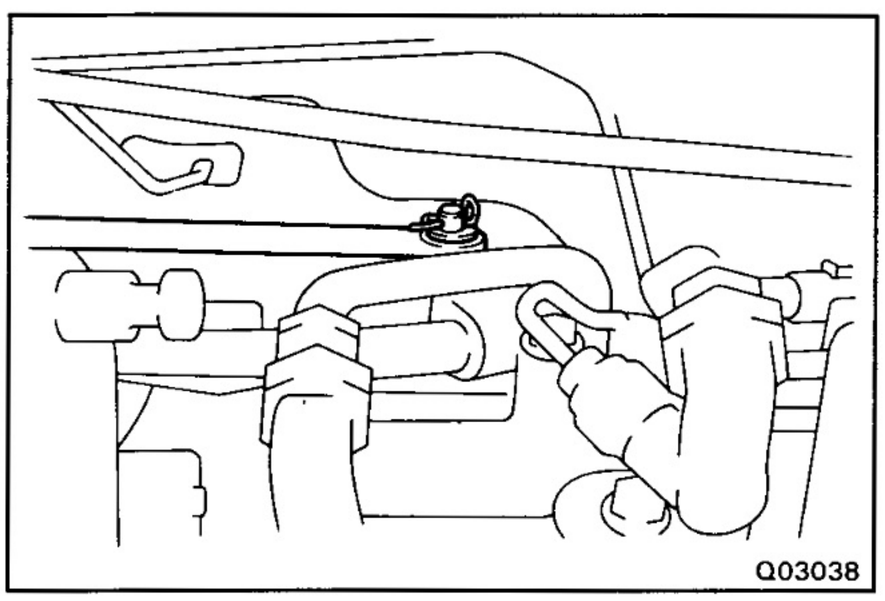

6. REMOVE TRANSMISSION SELECT LEVER AND TRANSFER SHIFT LEVER

(a) Remove the clip, washer and wave washer, and disconnect the link.

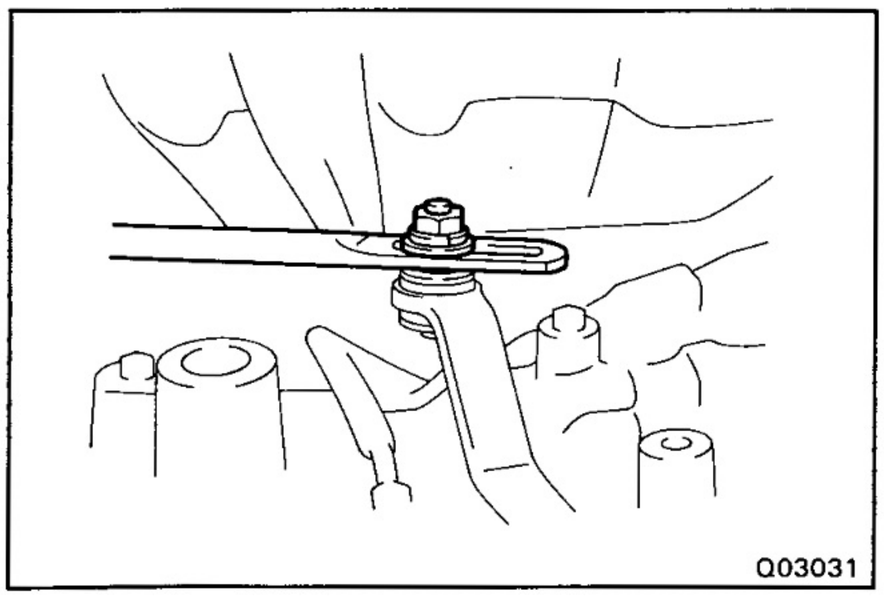

(b) Remove the nut and washer, disconnect the link.

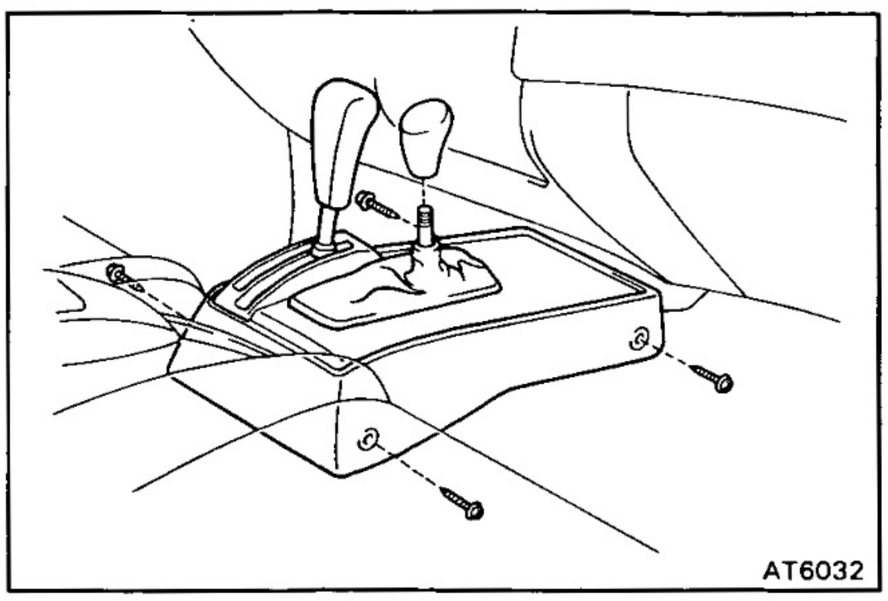

(c) Remove the transfer shift lever knob.

(d) Remove the four screws and the console.

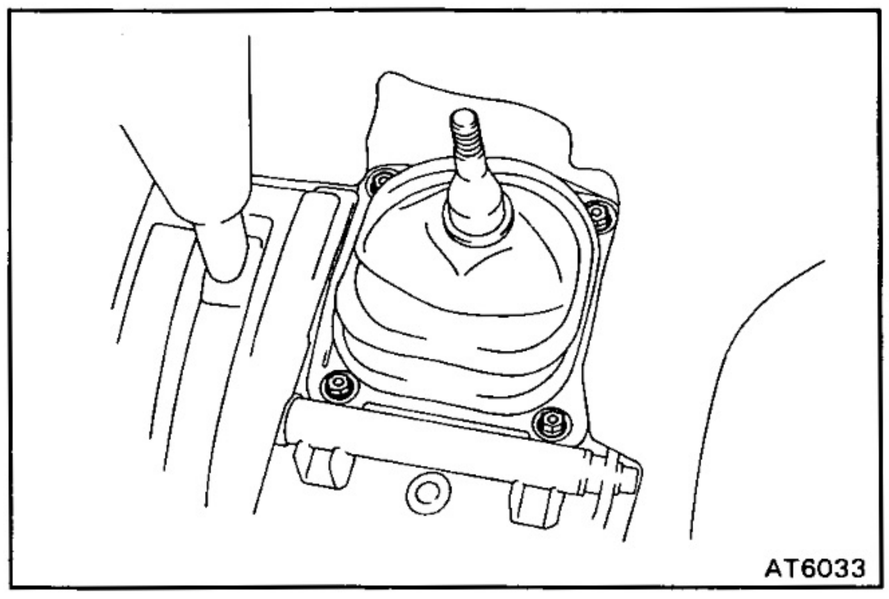

(e) Remove the four bolts and transfer shift lever bolt.

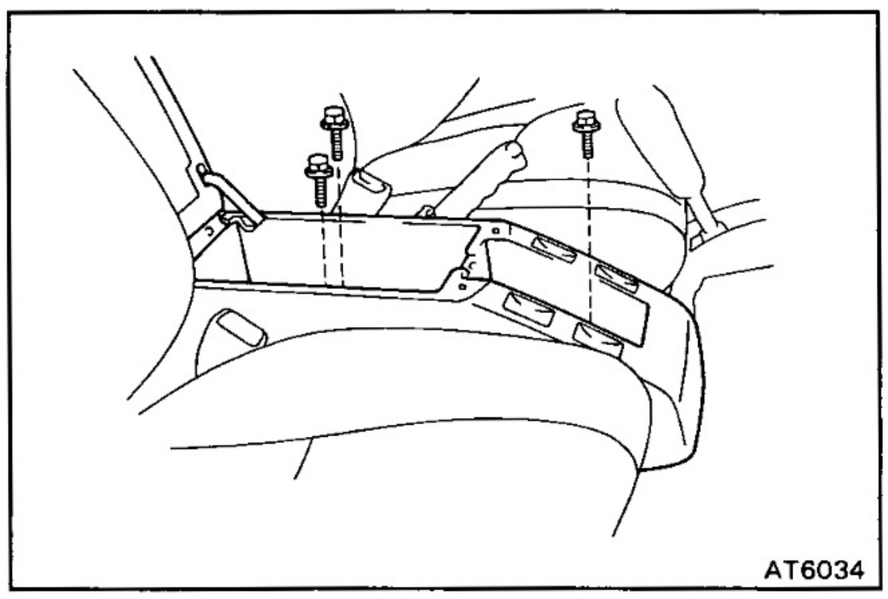

(f) Remove the three bolts and the console box.

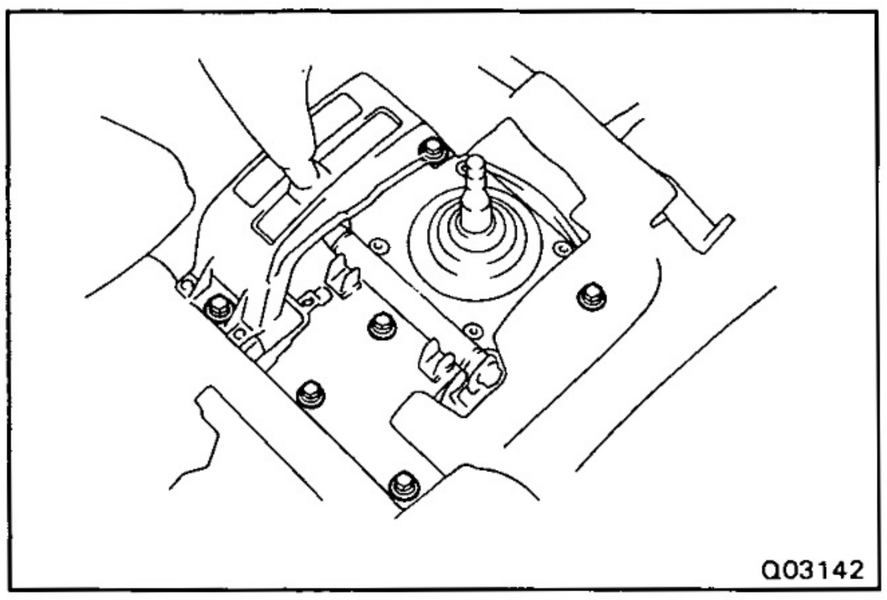

(g) Remove the six bolts and the transmission shift lever assembly.

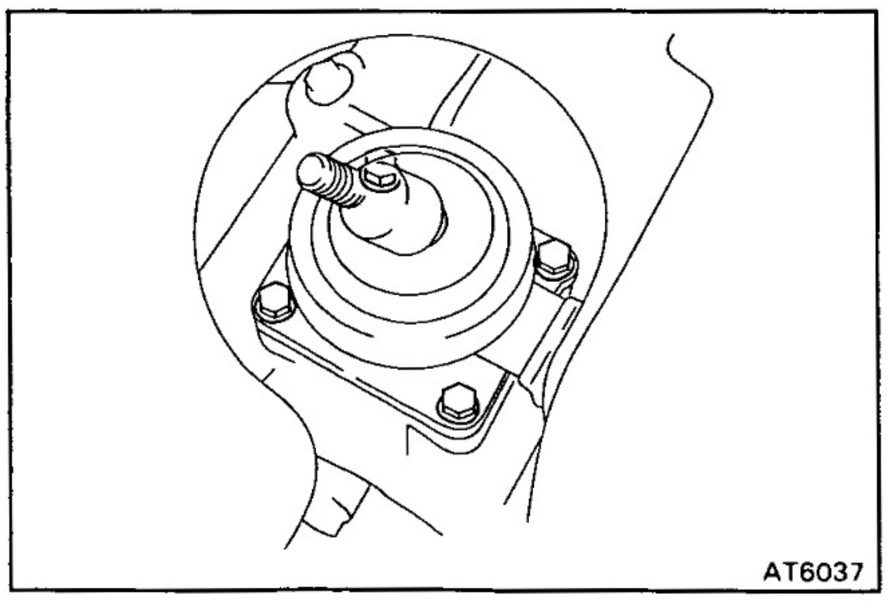

(h) Remove the four screws and the transfer shift lever.

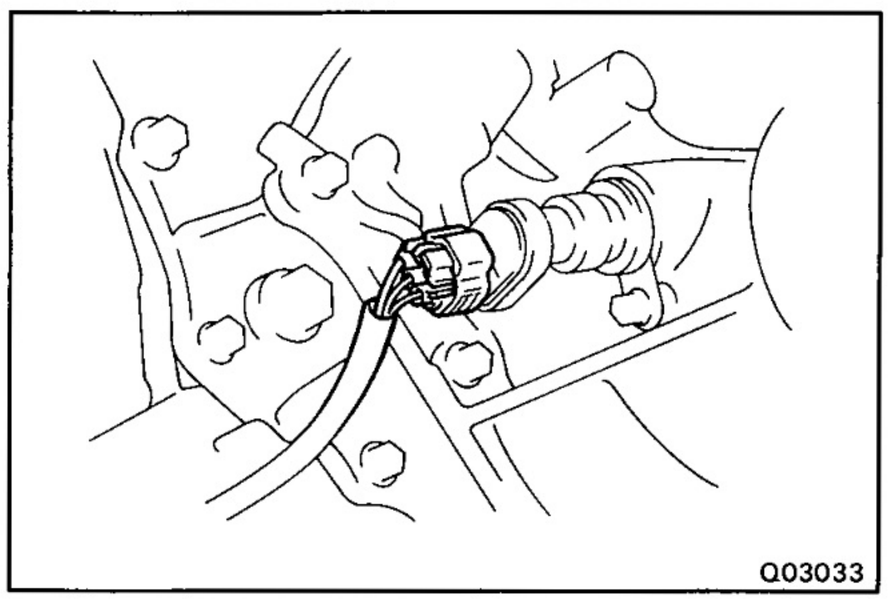
Q03033

7. REMOVE NO.1 SPEED SENSOR CONNECTOR

8. REMOVE FRONT AND REAR PROPELLER SHAFTS
(See Pub. No. RM184E, page PR-3)

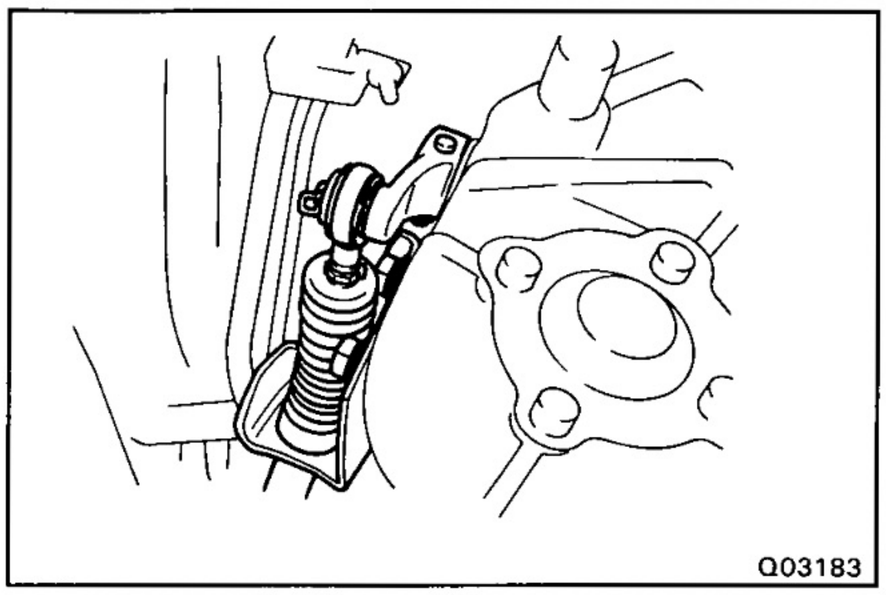
Q03183

9. (w/ MECHAICAL WINCH)
REMOVE POWER TAKE OF SHIFT CABLE

(a) Pull out the pin and disconnect the cable.

(b) Remove the two bolts and the cable bracket.

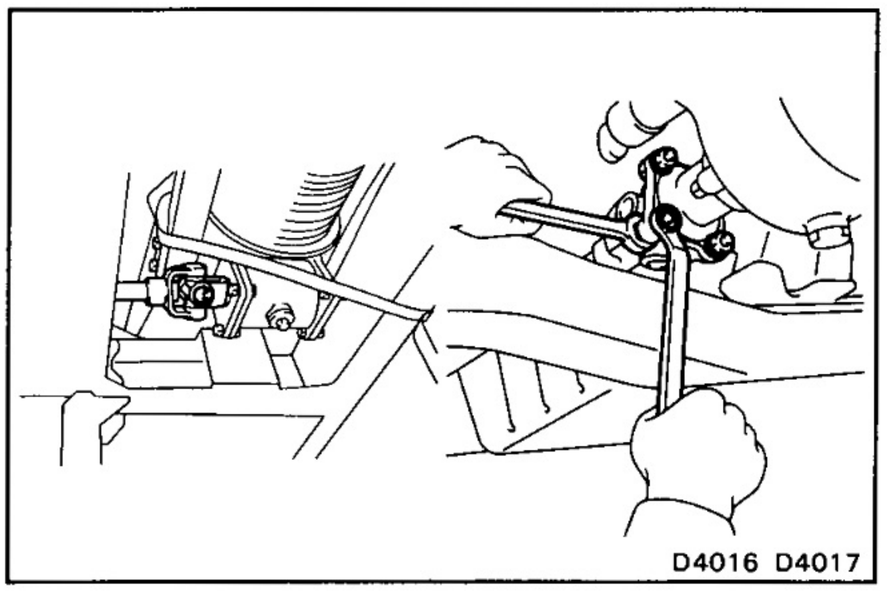
D4016 D4017

(c) Remove the engine under cover.

(d) Place matchmarks on the yoke and flange.

(e) Remove the bolts and nuts, disconnect the drive shaft from the PTO.

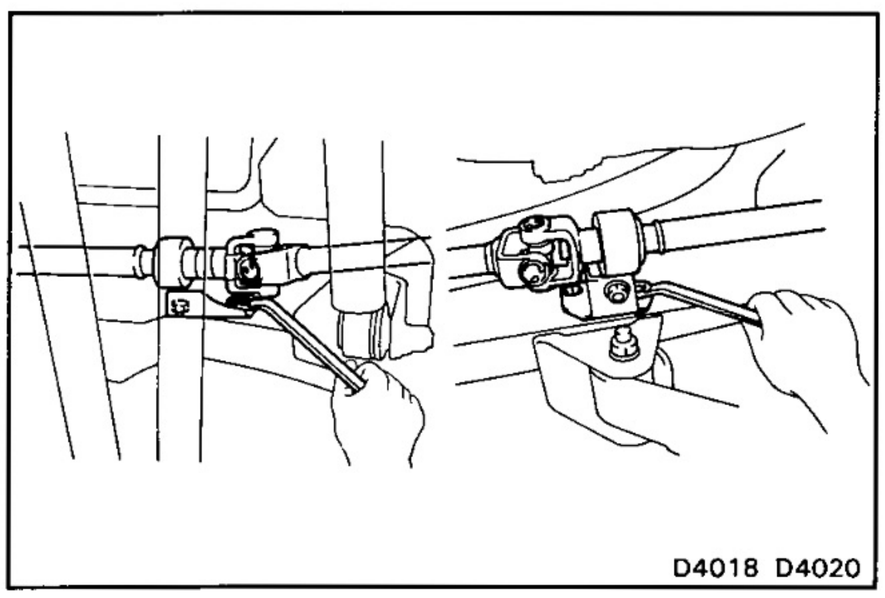
D4018 D4020

(f) Remove the front and rear bracket set bolts, and then remove the drive shaft.

(1FZ-FE)

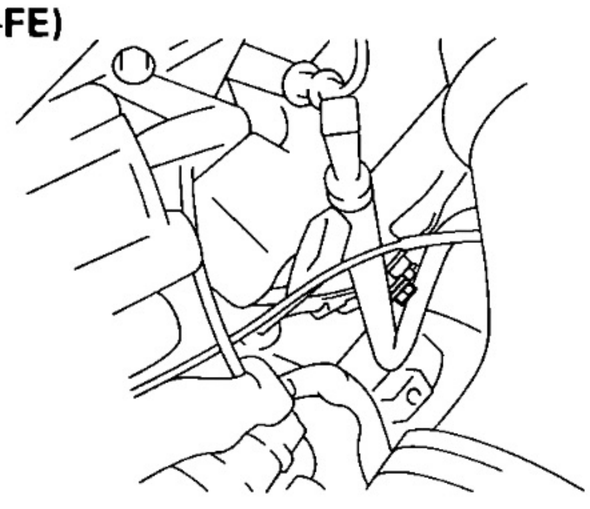
Q02632

10. REMOVE OIL FILLER TUBE

(a) Remove the level gauge.

(b) Remove the bolt.

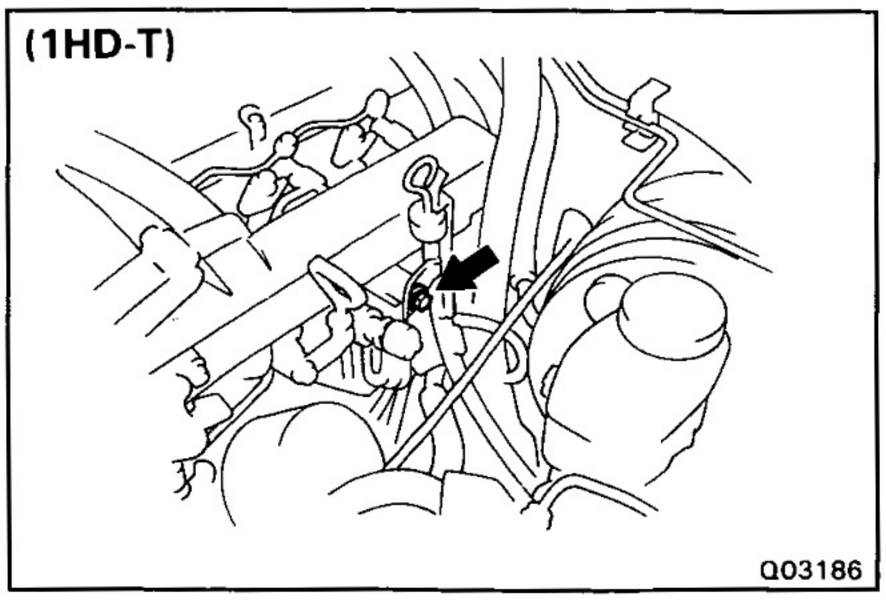



(c) Remove the bolt and the filler tube.

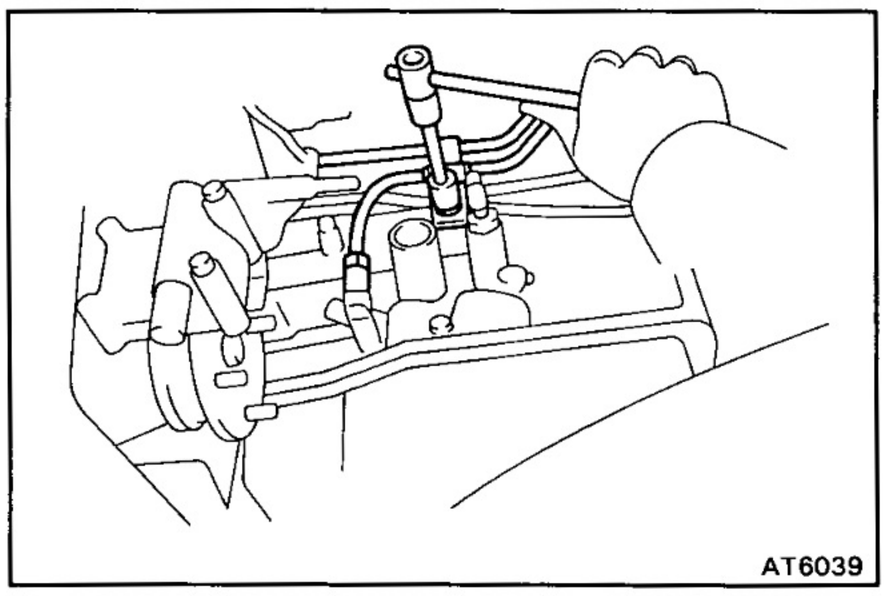

11. DISCONNECT TWO OIL COOLER TUBES

(a) Remove the bolt and clamp.

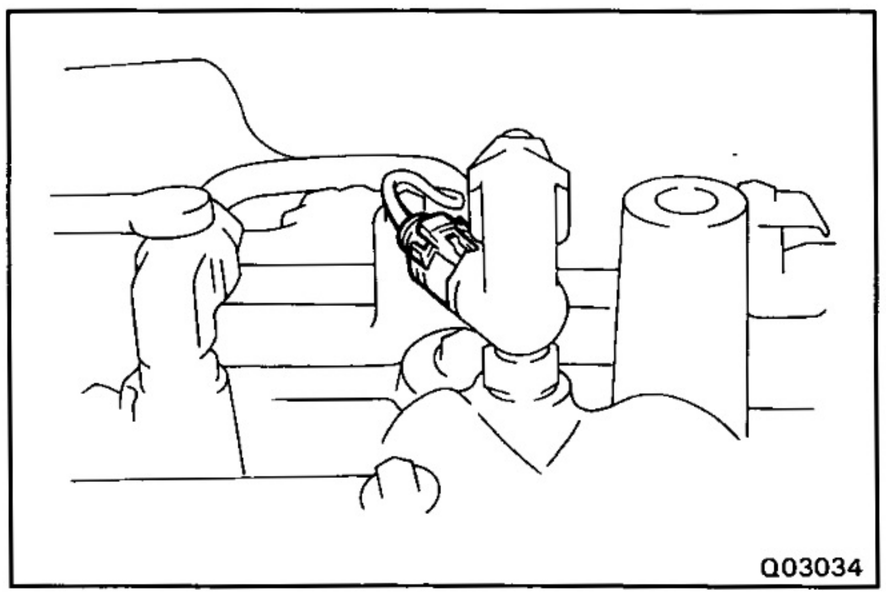

(b) Disconnect the temperature sensor connector.

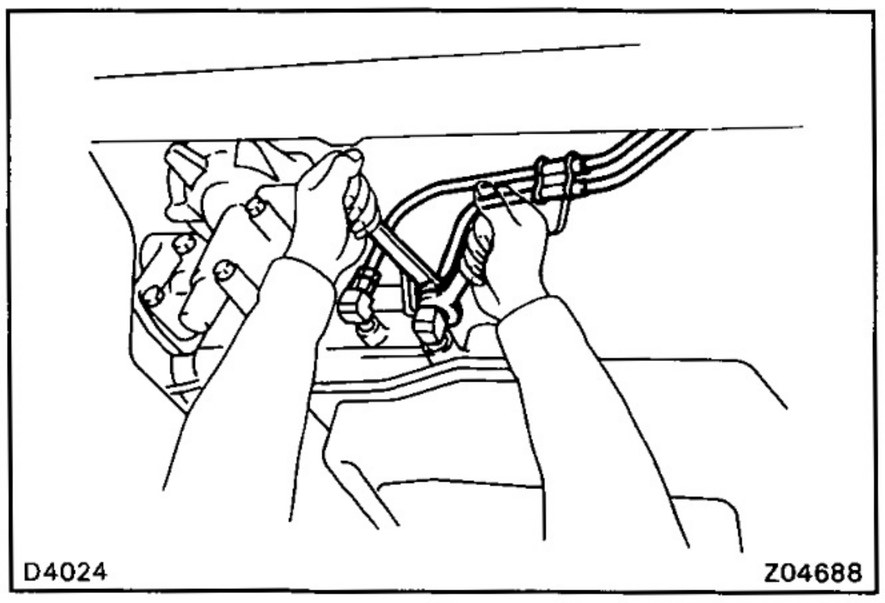

(c) Disconnect the two oil cooler tubes.

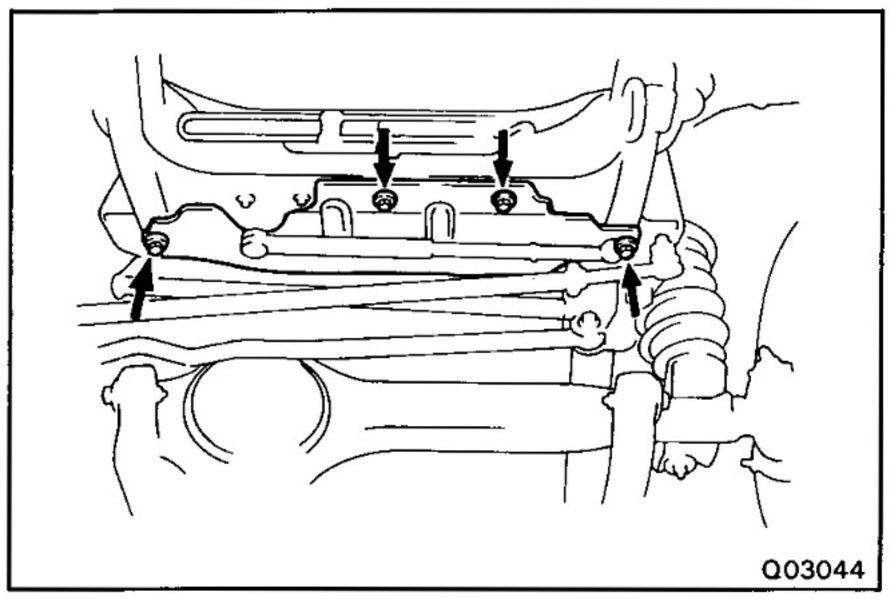
Q03044

12. REMOVE ENGINE UNDER COVER

Remove the four bolts and the cover.

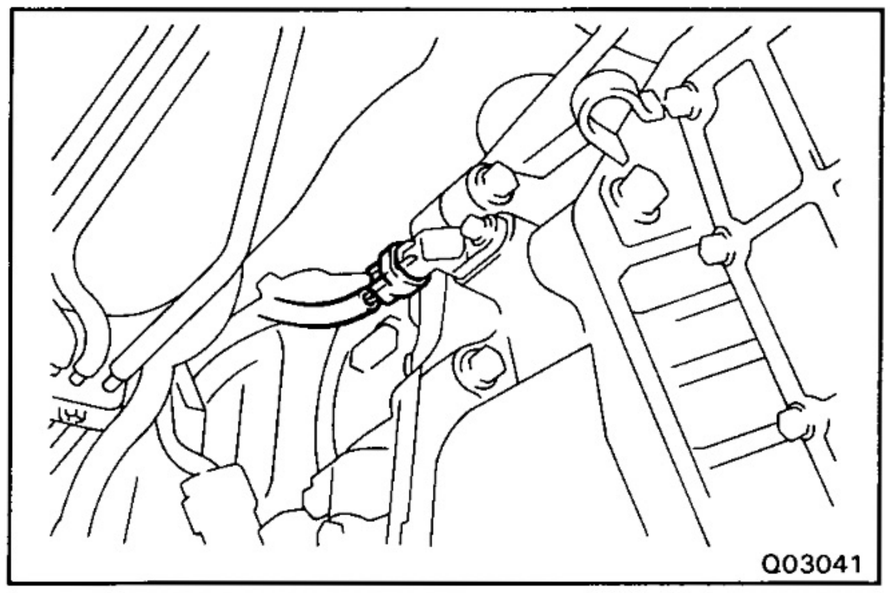
Q03041

13. DISCONNECT NO.2 SPEED SENSOR CONNECTOR

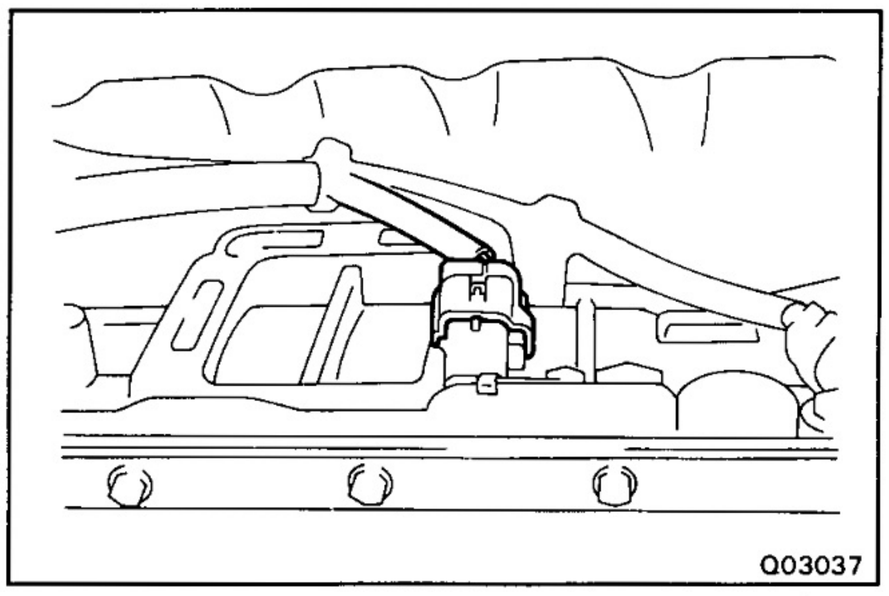
Q03037

14. DISCONNECT SOLENOID CONNECTOR

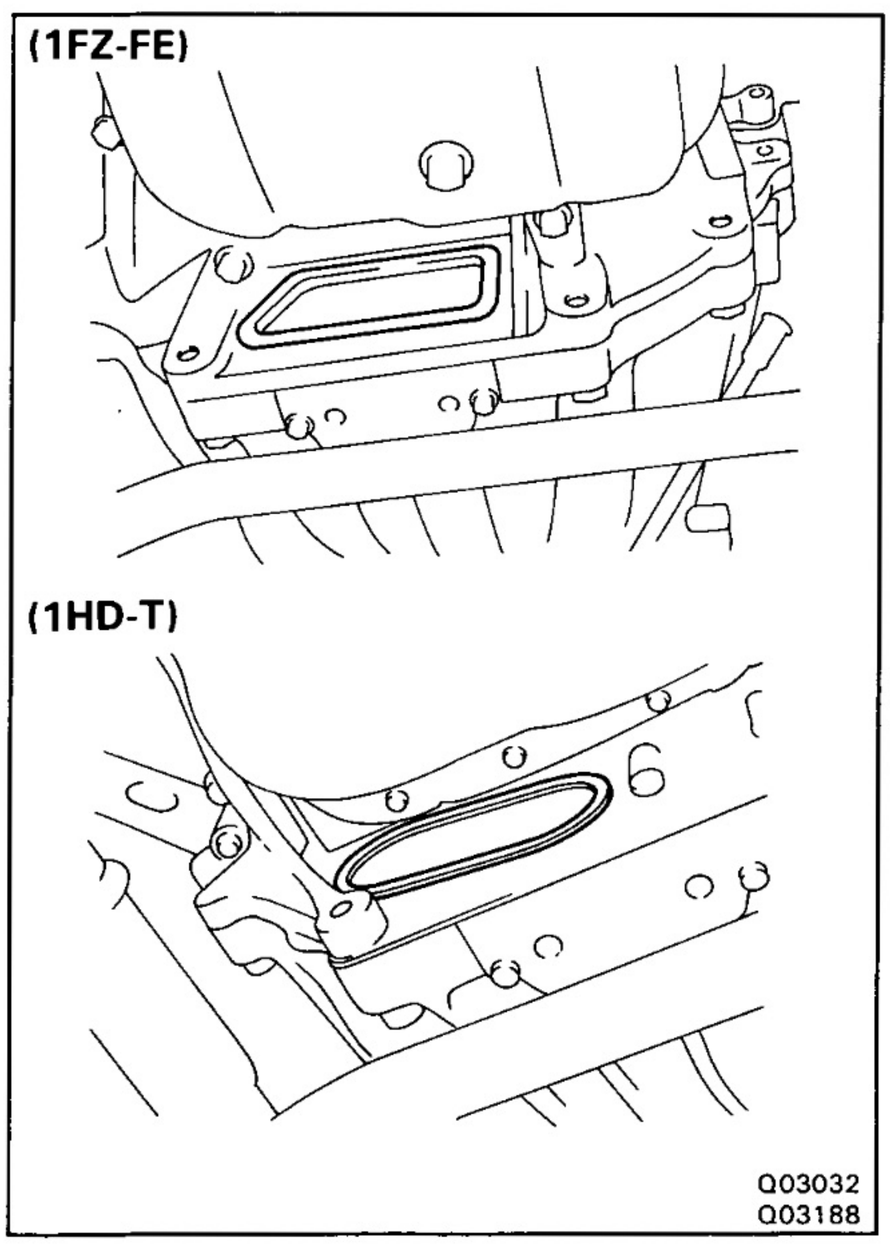

Q03032
Q03188

15. REMOVE SIX TORQUE CONVERTER MOUNTING BOLTS

(a) Remove the converter hole plug.

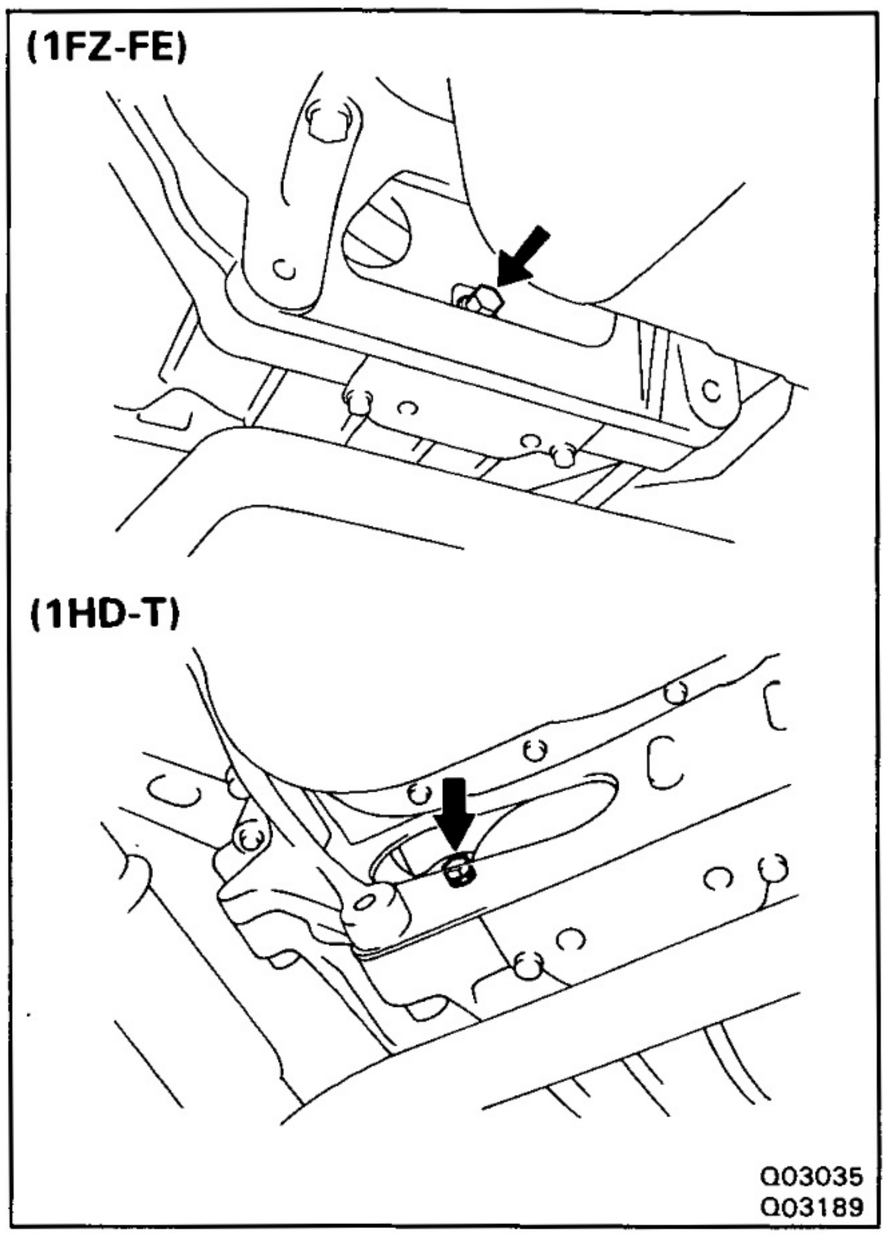

(b) Turn the crankshaft to gain access to each bolt. Remove the six bolt.

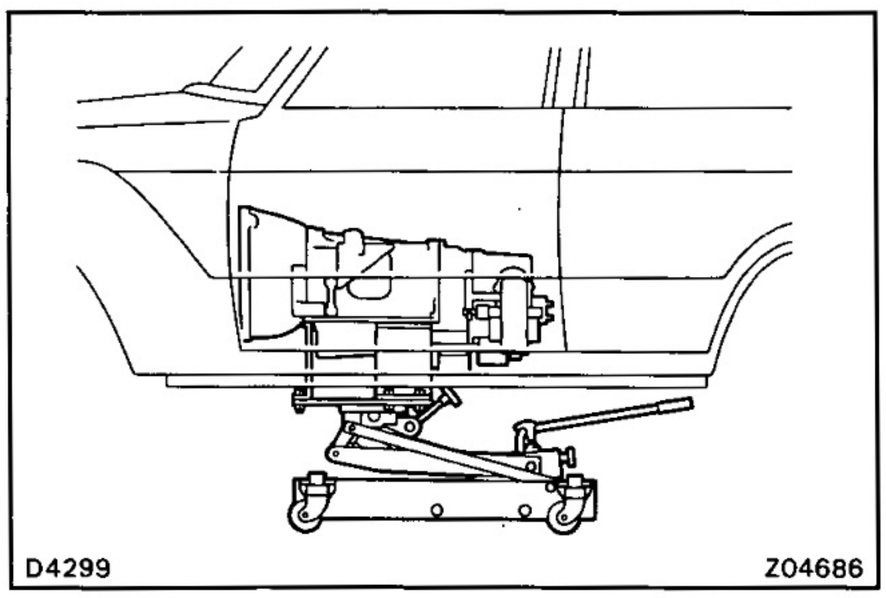

16. REMOVE CROSSMEMBER

(a) Support the transmission with the transmission jack.

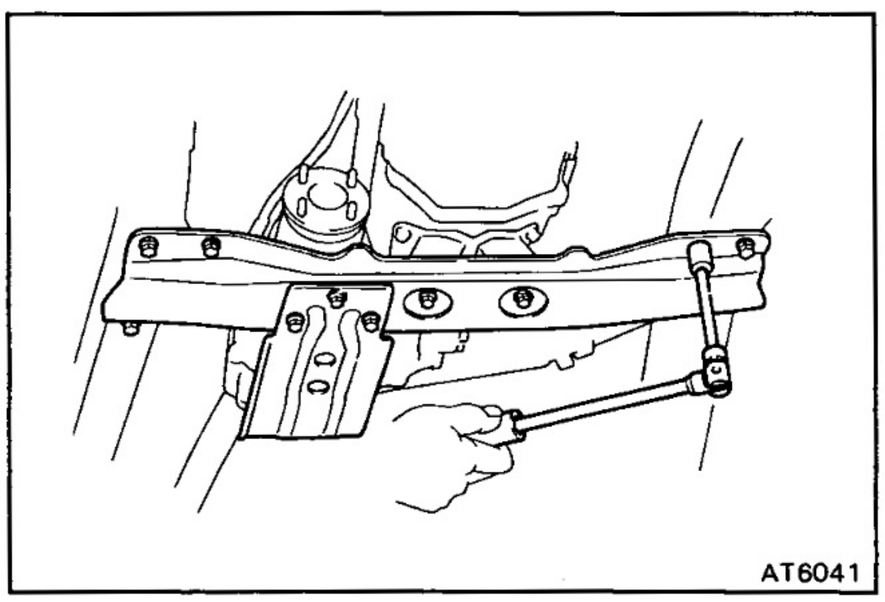

(b) Remove the eight bolts and then remove the frame crossmember.

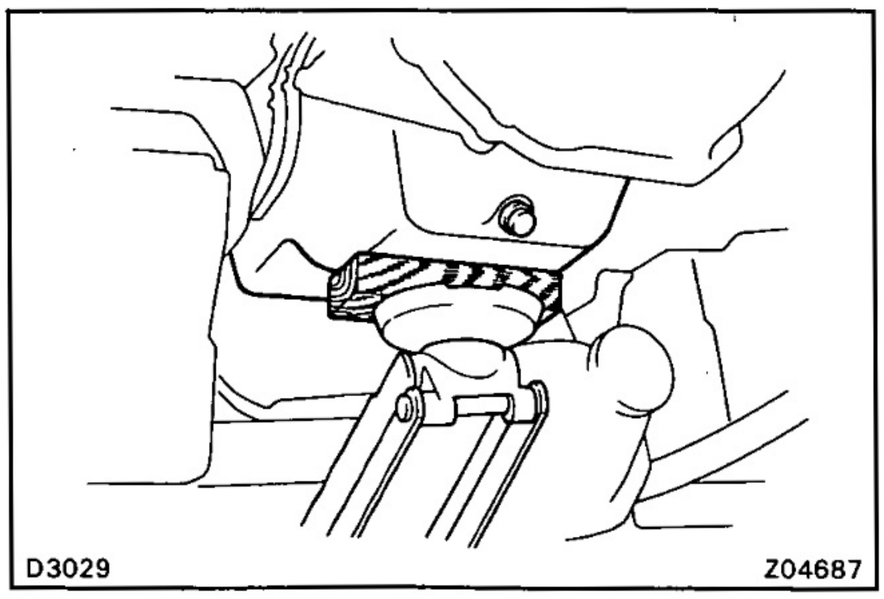

17. REMOVE TRANSMISSION ASSEMBLY

(a) Be sure to out a wooden block or equivalent between the jack and oil pan to prevent damage. Support the oil pan with a jack.

(b) Lower the rear end of transmission.

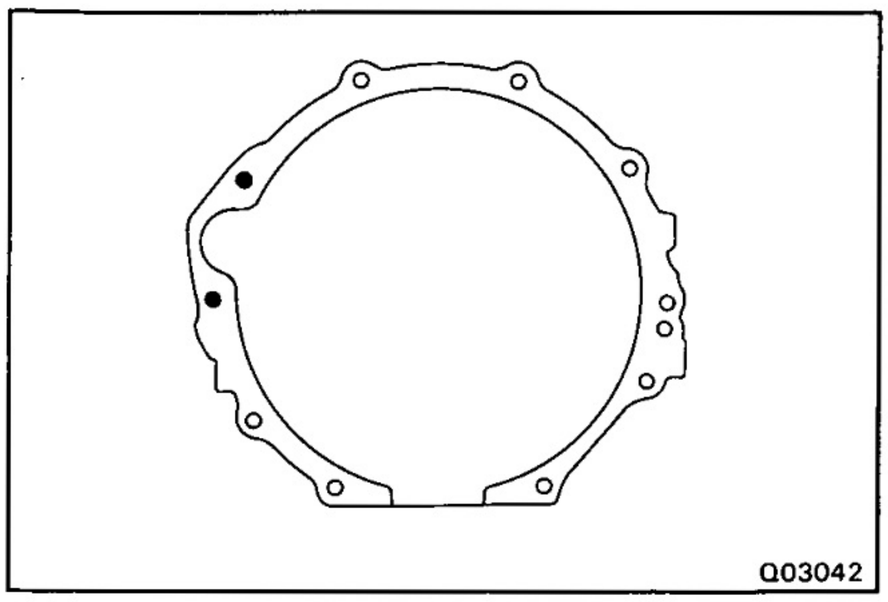

(c) (1FZ-FE)
Remove the nut and disconnect the connectors from the starter.

(d) (1FZ-FE)
Remove the two bolts and the starter.

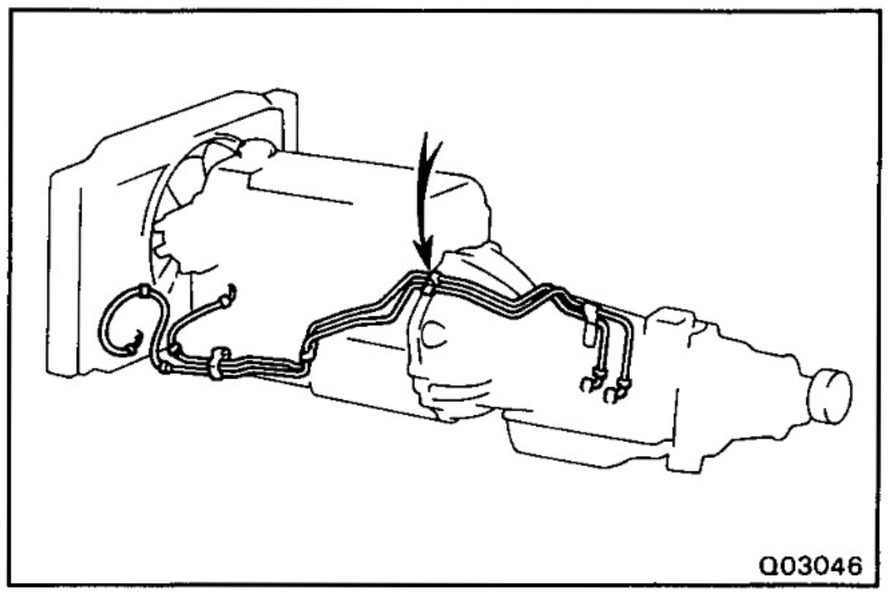

(e) Disconnect the neutral start switch connectors.

(f) Remove the bolt and disconnect the oil cooler tube clamp from the converter housing.

(g) Disconnect the connectors from the transfer.

(h) Remove the clamp and disconnect the wire harness from the transmission and transfer.

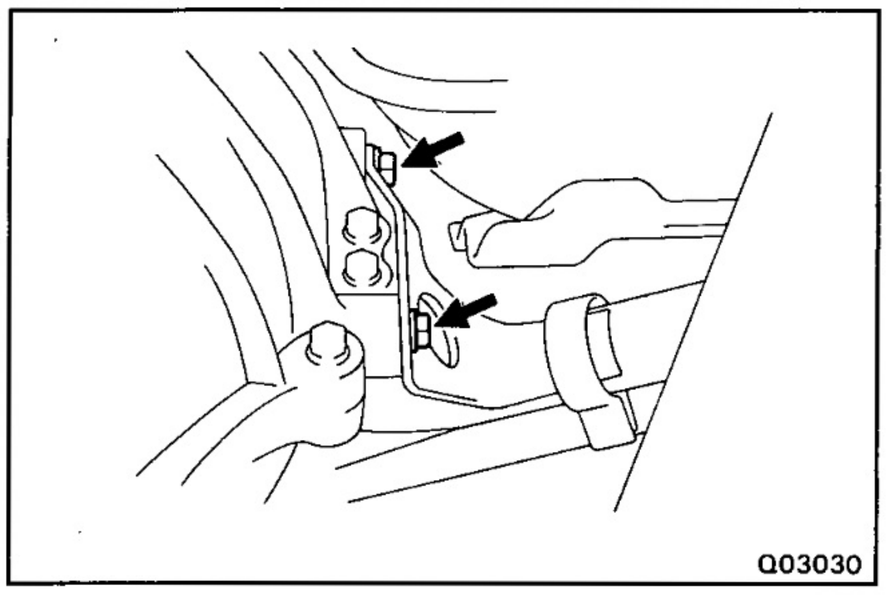

(i) Remove the two bolts and disconnect the exhaust pipe bracket from the converter housing.

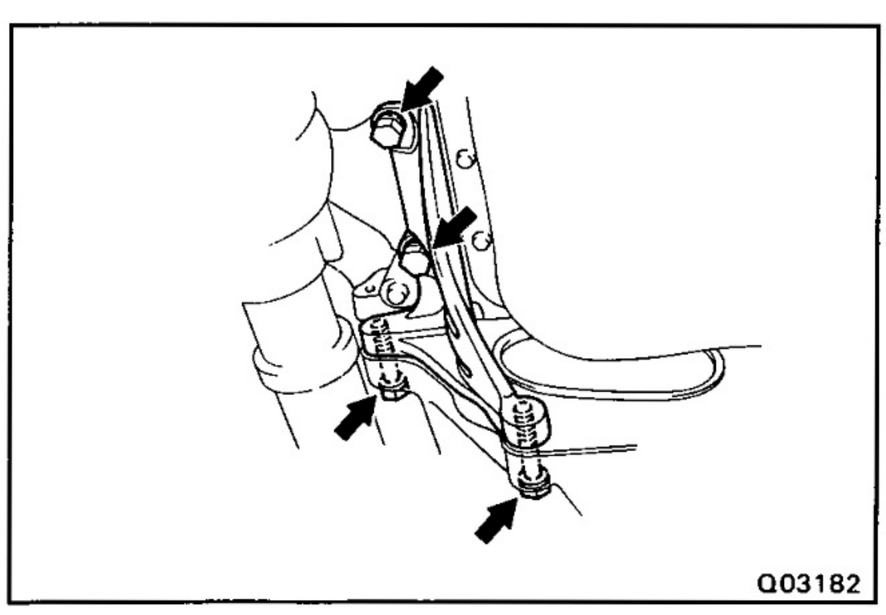

(j) (1HD-T)
Remove the four bolts and the stiffener plate.

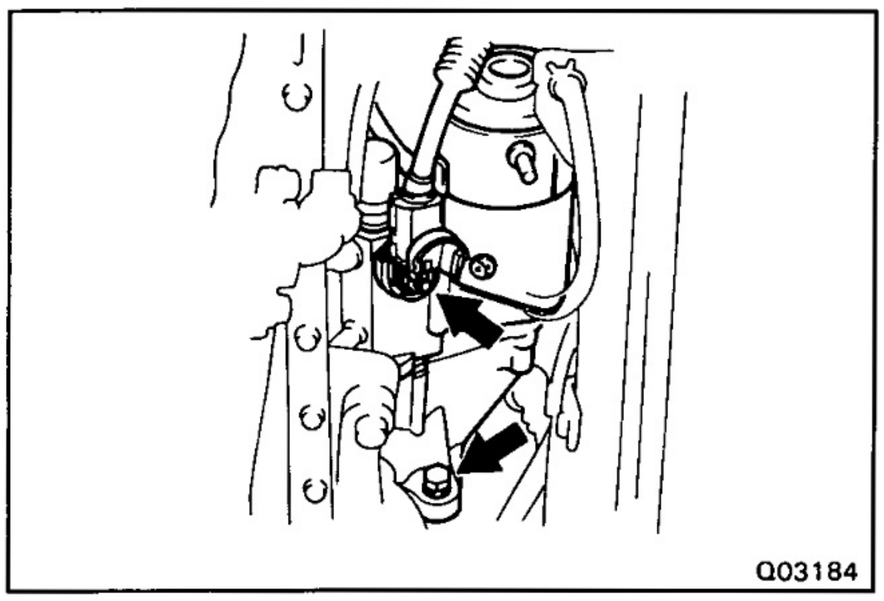

(k) (1HD-T)
Remove the nut and disconnect the connectors from the starter.

(l) (1HD-T)
Remove the nut and the starter.

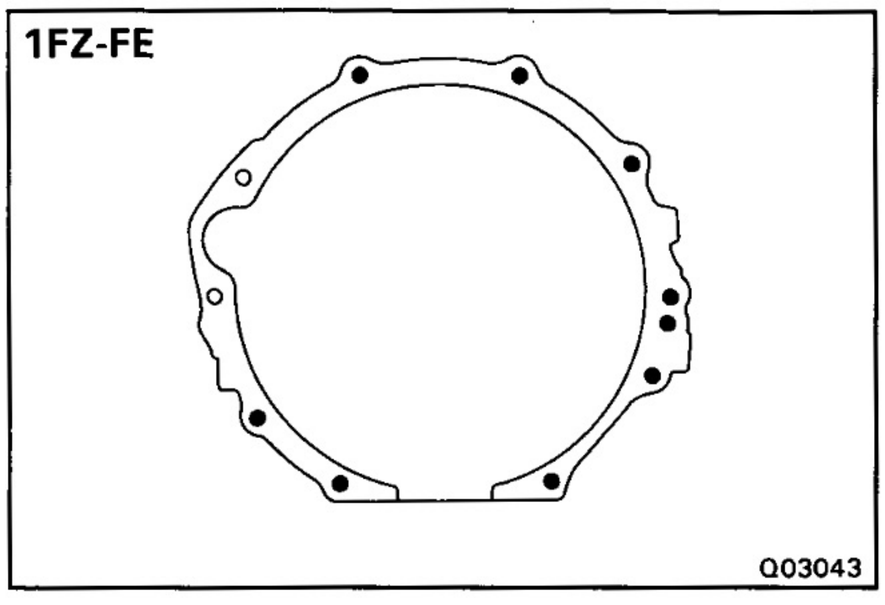

(m) Remove the bolts and the transmission.

TORQUE CONVERTER CLEANING

If the transmission is contaminated, the torque converter and transmission cooler should be thoroughly flashed with ATF.

TORQUE CONVERTER AND DRIVE PLATE INSPECTION

1. INSPECT ONE-WAY CLUTCH

(a) Install SST in the inner race of one-way clutch.

SST 09350-30020 (09351-32010)

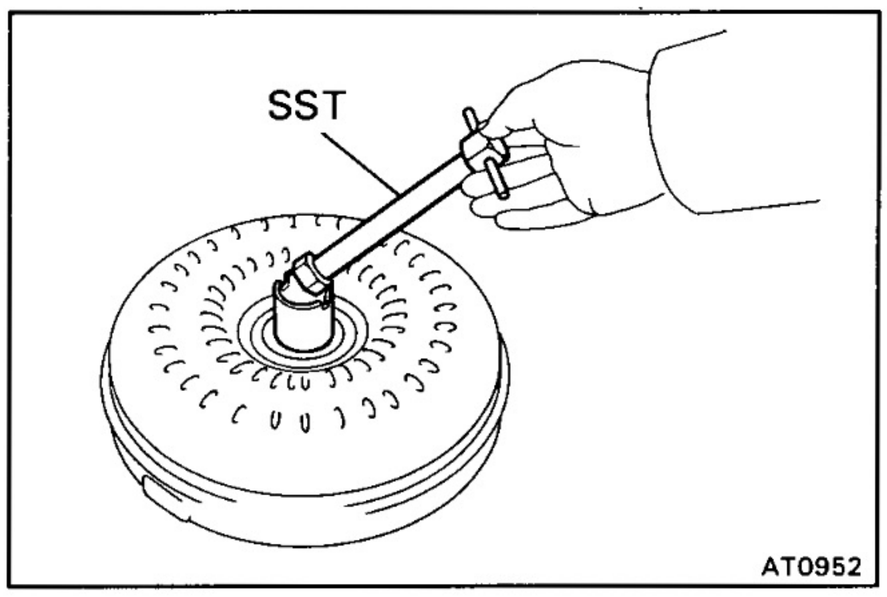

(b) Install SST so that it fits in the notch of the converter hub and outer race of the one-way clutch.

SST 09350-30020 (09351-32010)

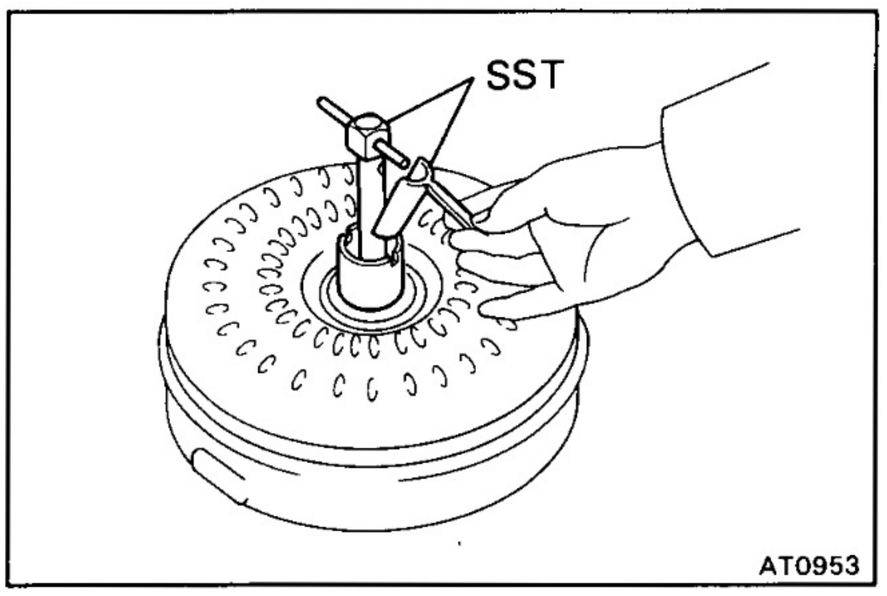

(c) With the torque converter made stand, the clutch should lock when turned counterclockwise, and rotate freely and smoothly clockwise.

If necessary, clean the converter and retest the clutch. Replace the converter if the clutch still fails the test.

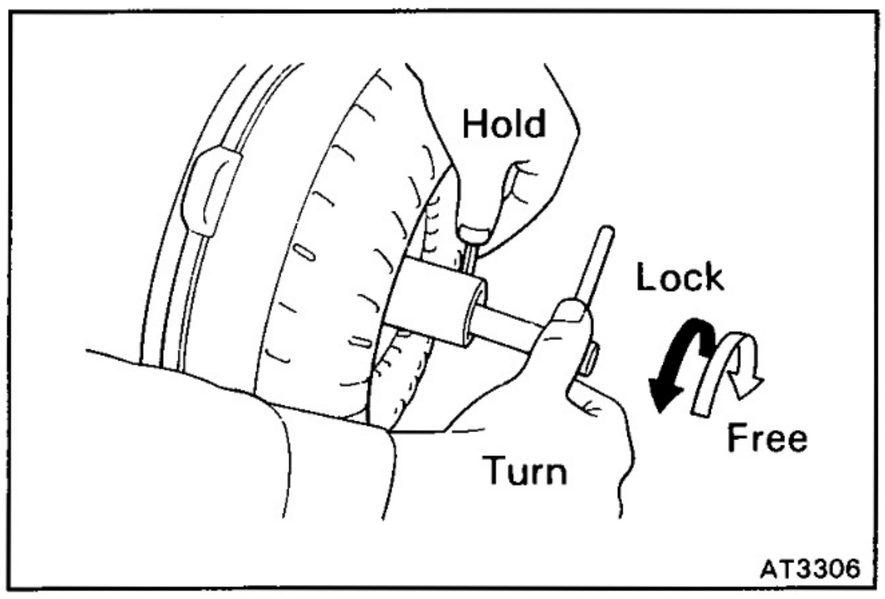

2. MEASURE DRIVE PLATE RUNOUT AND INSPECT RING GEAR

Set up a dial indicator and measure the drive plate runout. If runout exceeds 0.20 mm (0.0079 in.) or if the ring gear is damaged, replace the drive plate. If installing a new drive plate, note the orientation of spacers and tighten the bolts.

Torque: 83 N·m (850 kgf·cm, 61 ft·lbf)

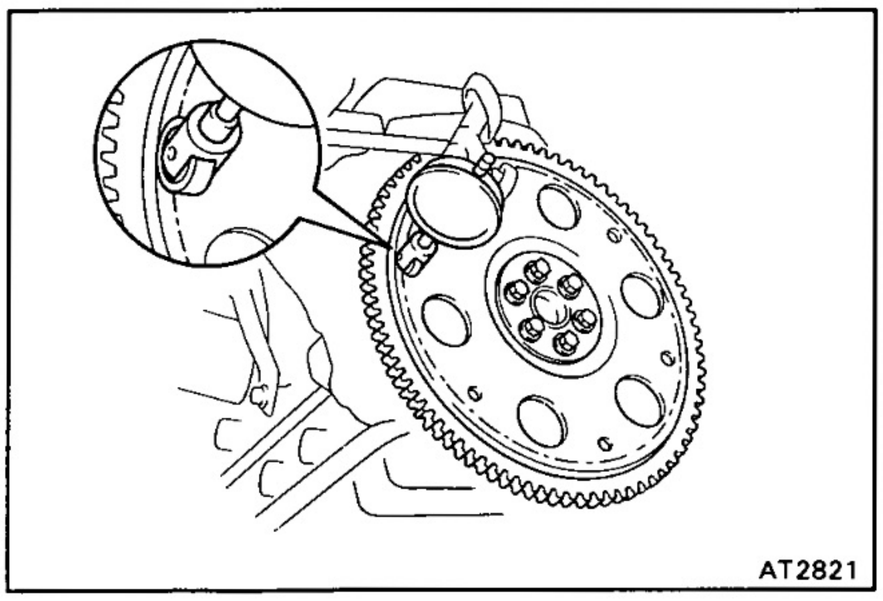

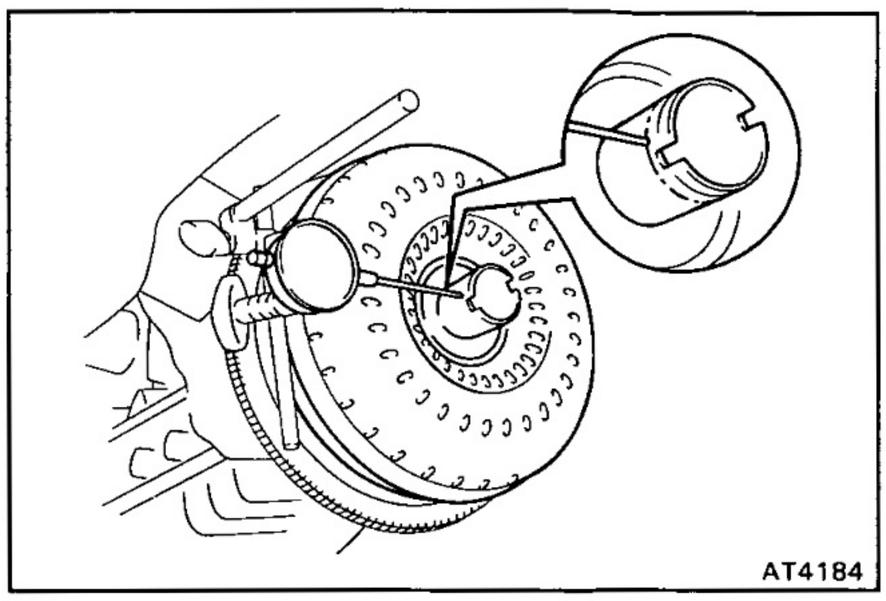
AT4184

3. MEASURE TORQUE CONVERTER SLEEVE RUNOUT

(a) Temporarily mount the torque converter to the drive plate. Set up a dial indicator.

If runout exceeds 0.30 mm (0.0118 in.), try to correct by reorienting the installation of the converter. If excessive runout cannot be corrected, replace the torque converter.

HINT: Mark the position of the converter to ensure correct installation.

(b) Remove the torque converter.

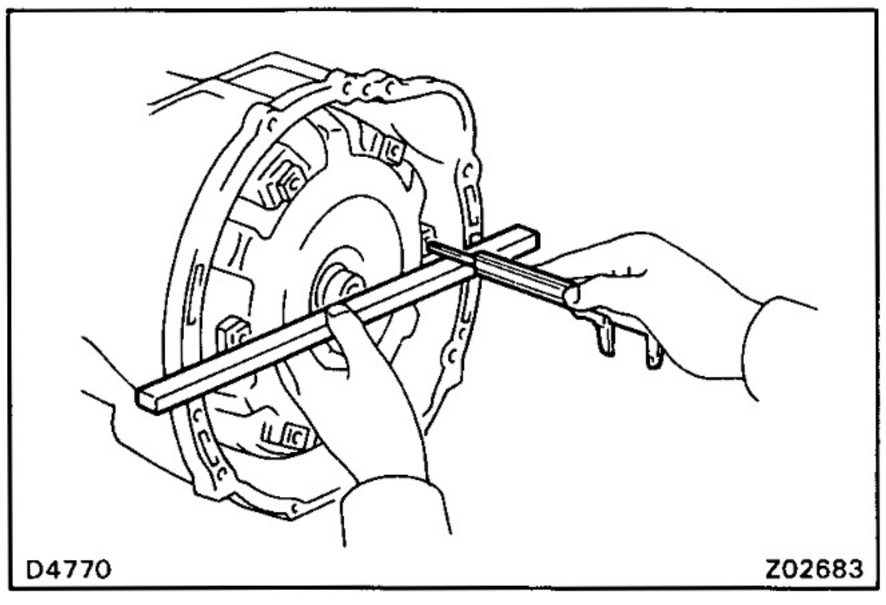
D4770 Z02683

TRANSMISSION INSTALLATION

1. INSTALL TORQUE CONVERTER IN TRANSMISSION

If the torque converter clutch has been drained and washed, refill with new ATF.

Fluid type:
AFT DEXRON® II

2. CHECK TORQUE CONVERTER INSTALLATION

Using calipers and a straight edge, measure from the installed surface to the front surface of the transmission.

Correct distance:
(1FZ-FE)
More than 37.2 mm (1.465 in.)
(1HD-T)
More than 43.8 mm (1.724 in.)

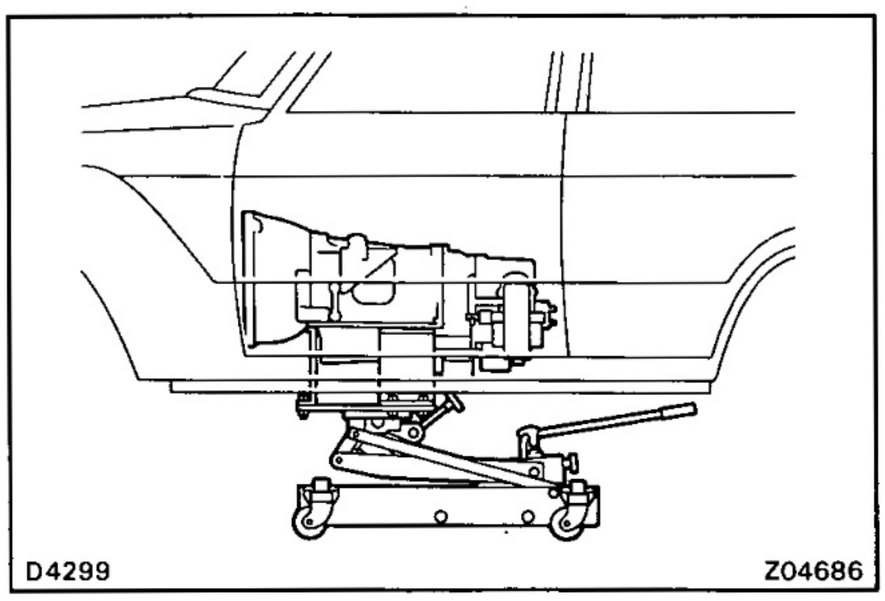
D4299 Z04686

3. PLACE TRANSMISSION AT INSTALLATION POSITION

Jack up and push the transmission fully into position.

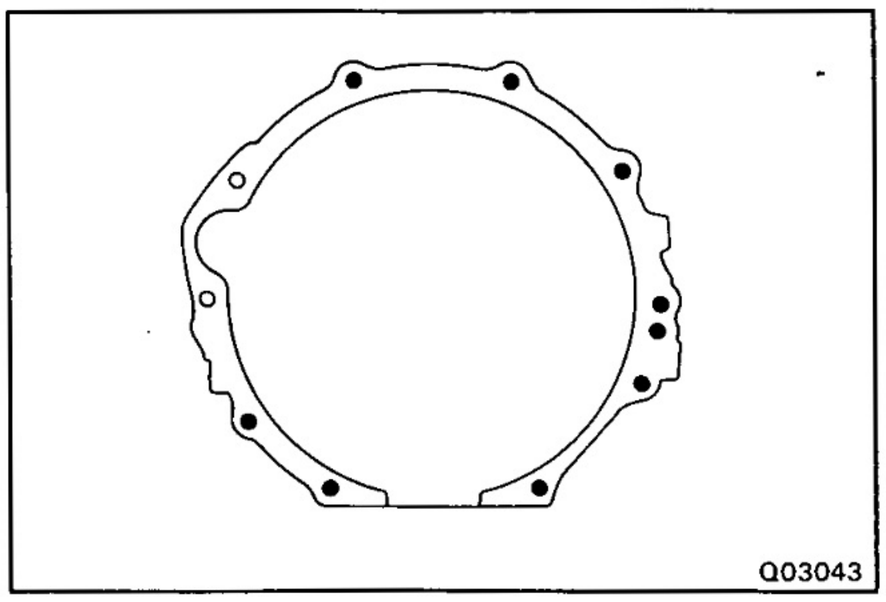
Q03043

4. INSTALL TRANSMISSION BOLTS

(a) Install the transmission with the bolts.

Torque: 72 N·m (730 kgf·cm, 53 ft·lbf)

(b) Connect the wire harness to the transmission and transfer with the clamp.

(c) Connect the connectors to the transfer.

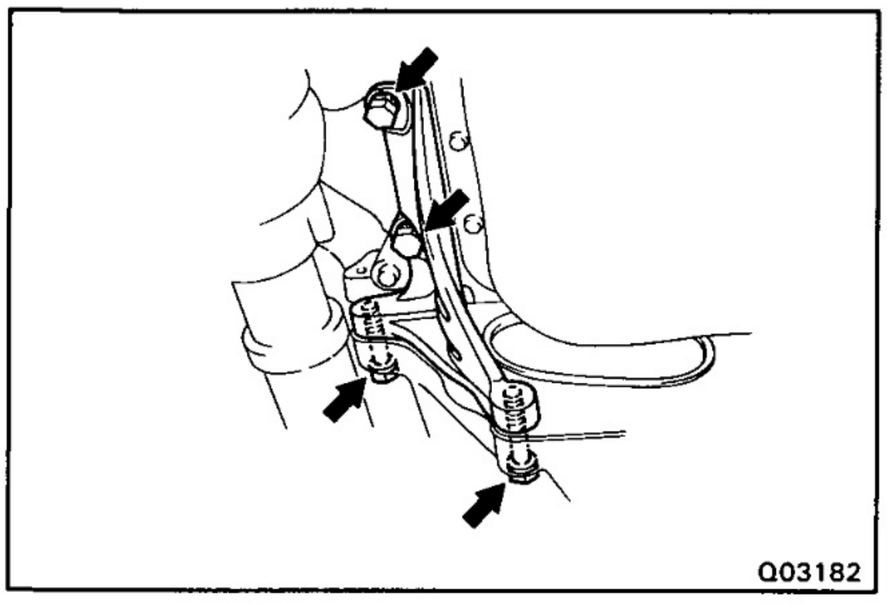
Q03182

(d) (1HD-T)
Install the left and right stiffener plates with the eight bolt.

Torque: 37 N·m (380 kgf·cm, 27 ft·lbf)

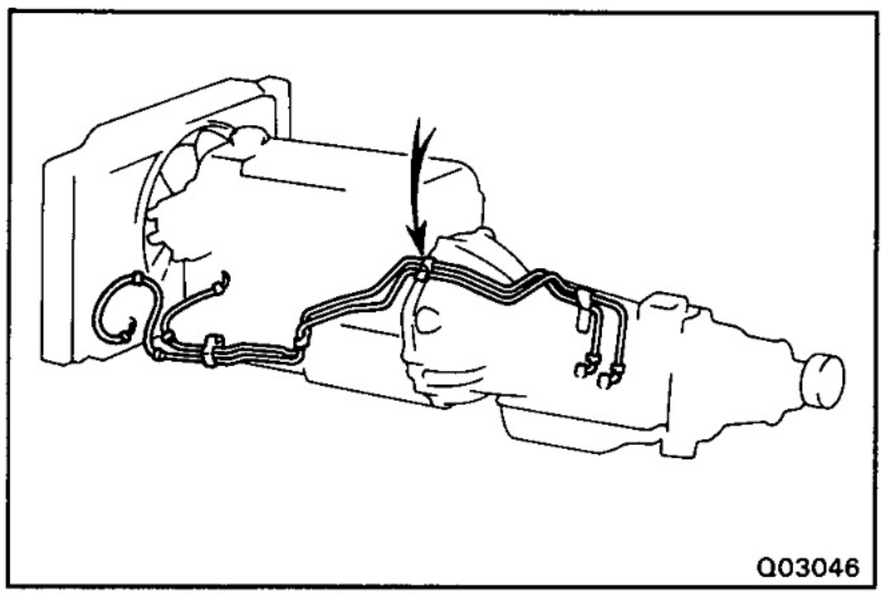
Q03046

(e) Connect the oil cooler tube clamp to the converter housing with the bolt.

(f) Connect the park/neutral position switch.

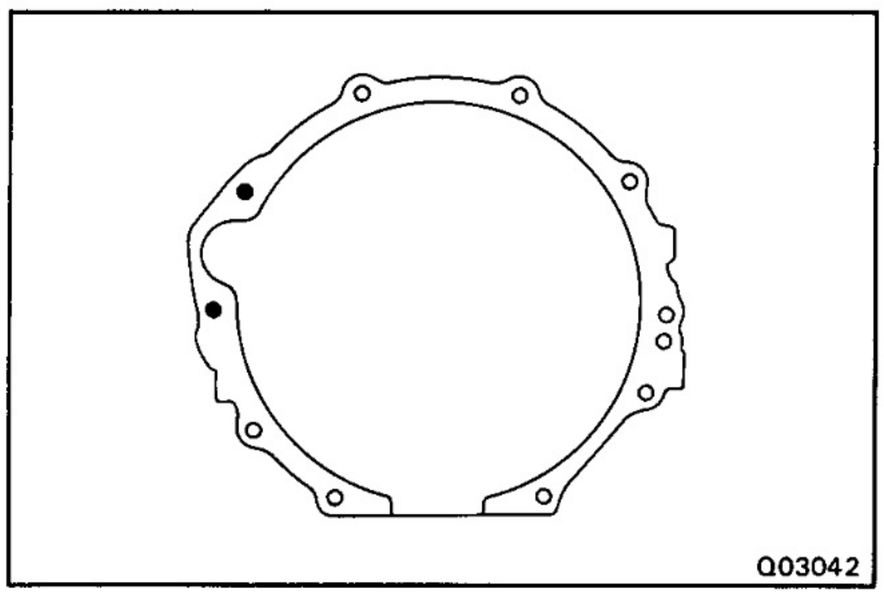
Q03042

(g) (1FZ-FE)
Install the starter with the two bolts.

Torque: 72 N·m (730 kgf·cm, 53 ft·lbf)

(h) (1FZ-FE)
Connect the connectors.

(i) Install the nut.

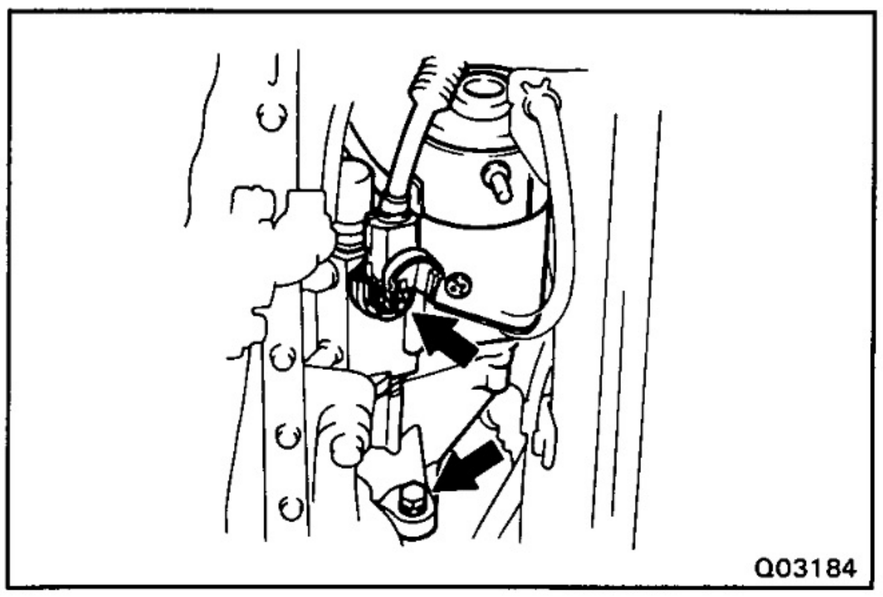
Q03184

(j) (1HD-T)
Install the starter with the bolt.

Torque: 72 N·m (730 kgf·cm, 53 ft·lbf)

(k) (1HD-T)
Connect the connectors.

(l) (1HD-T)
Install the nut.

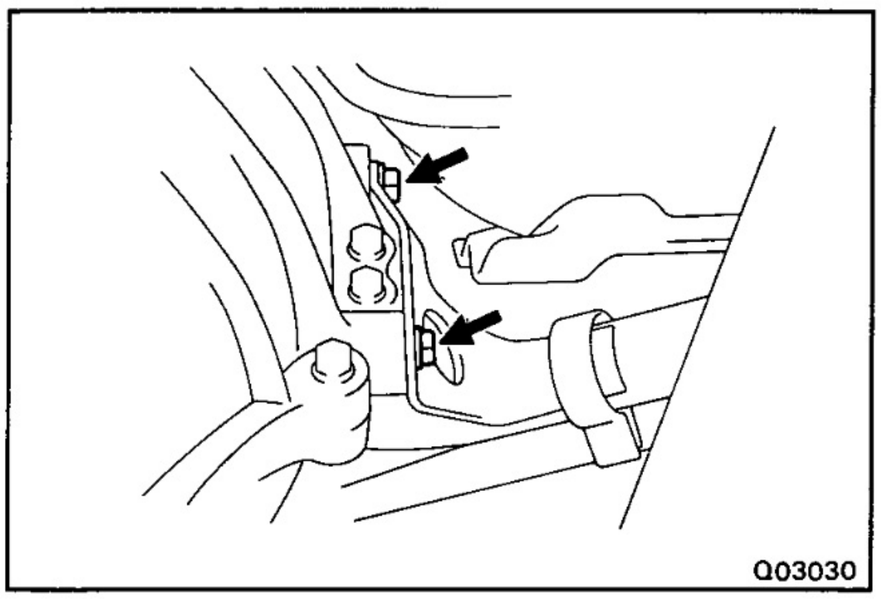
Q03030

(m) Connect the exhaust pipe bracket to the converter housing with the two bolts.

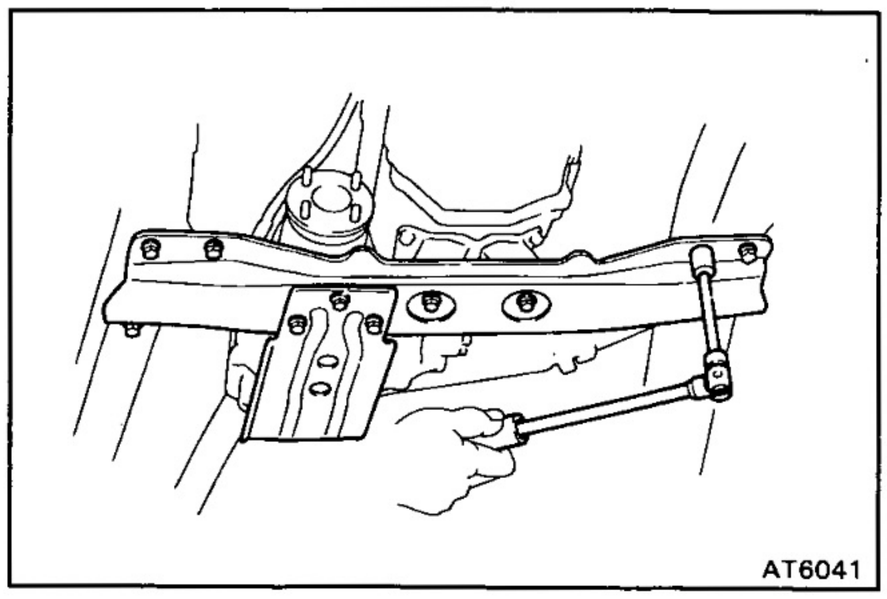

5. INSTAL CROSSMEMBER

Install the crossmember with eight bolts and two nuts.

Torque: 61 N·m (620 kgf·cm, 45 ft·lbf)

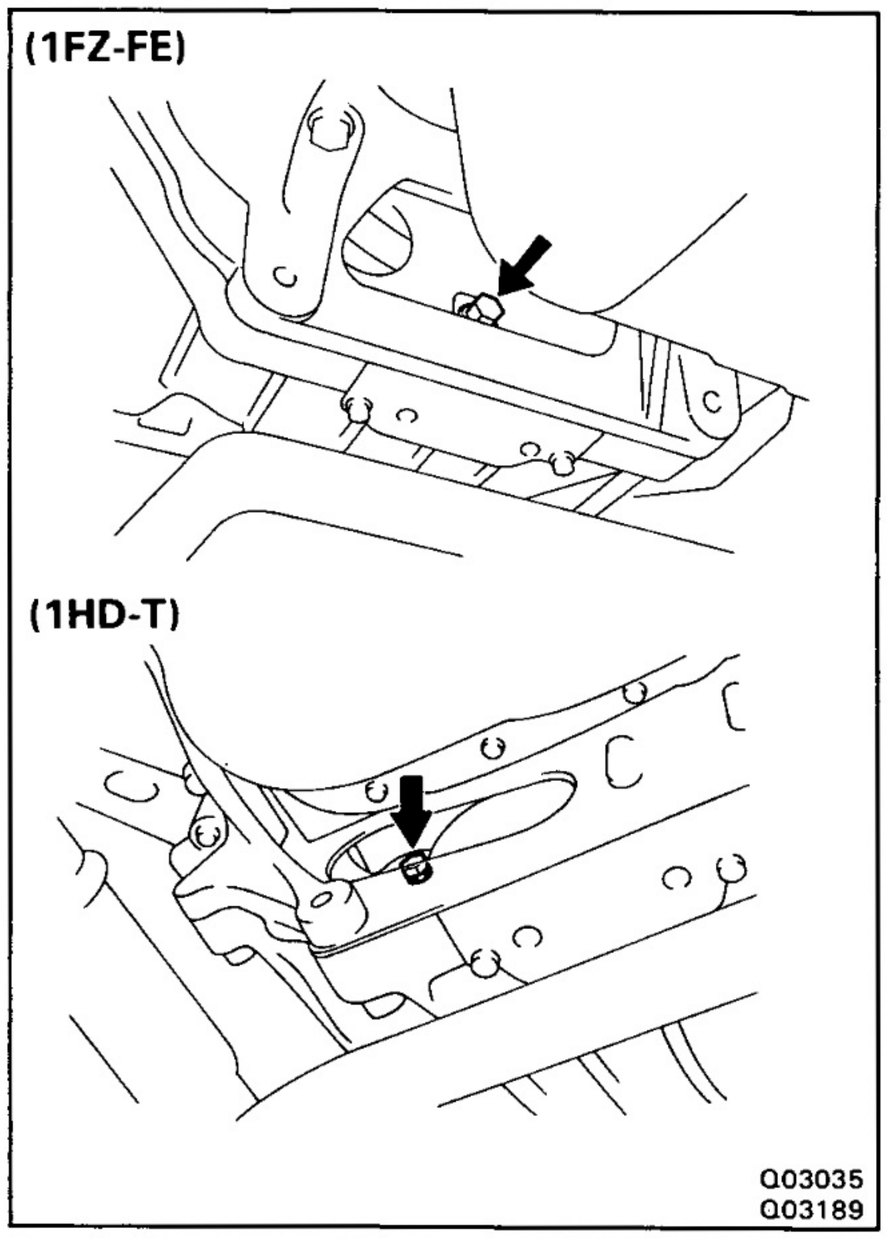

6. INSTALL TORQUE CONVERTER MOUNTING BOLTS

(a) Install the six bolts while turning the crankshaft.

Torque: 55 N·m (550 kgf·cm, 40 ft·lbf)

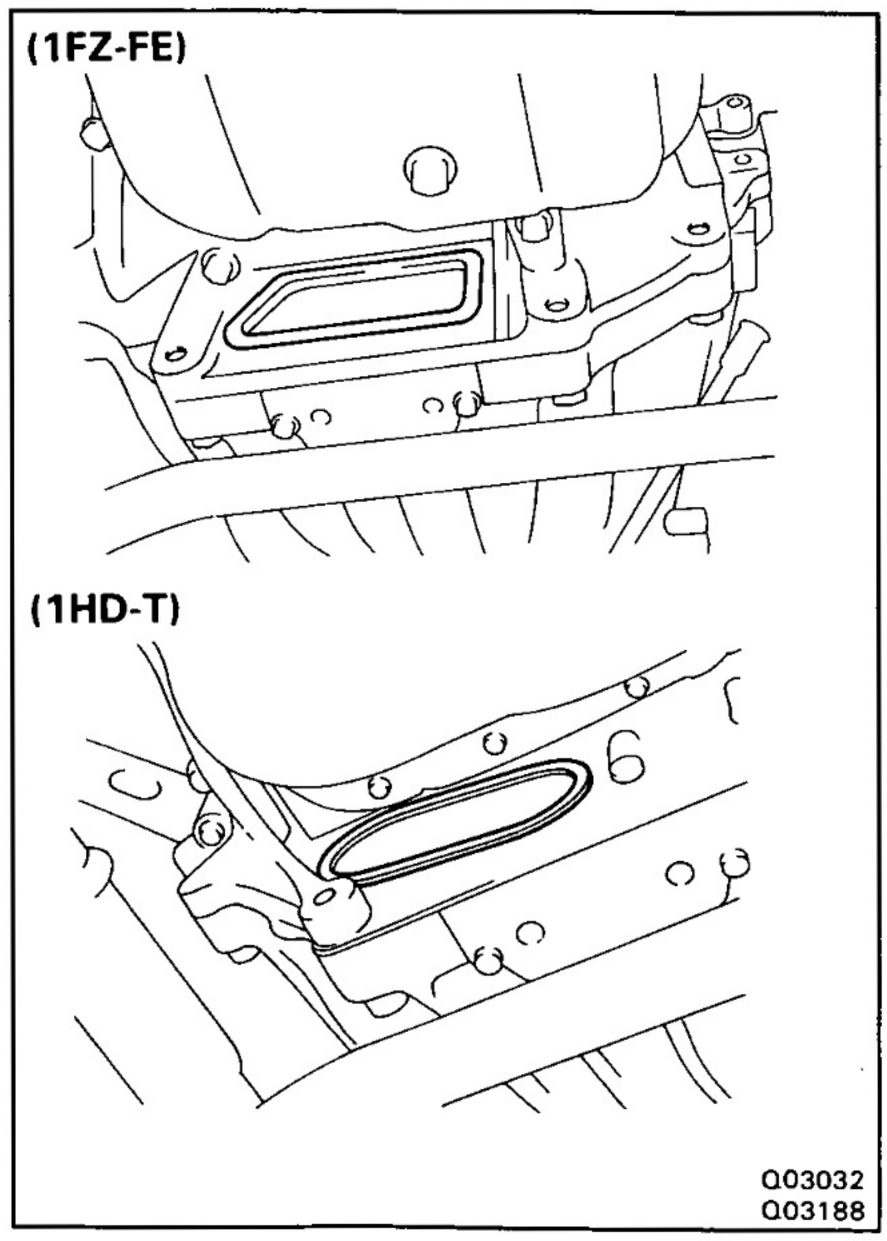

(b) Seal the converter hole plug with adhesive.

(c) Install the converter hole plug.

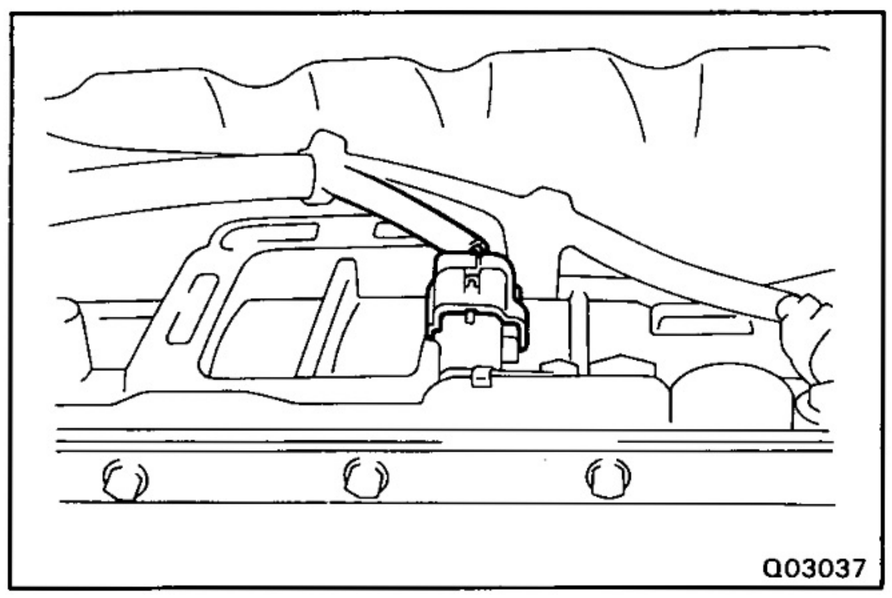
Q03037

7. CONNECT SOLENOID CONNECTOR

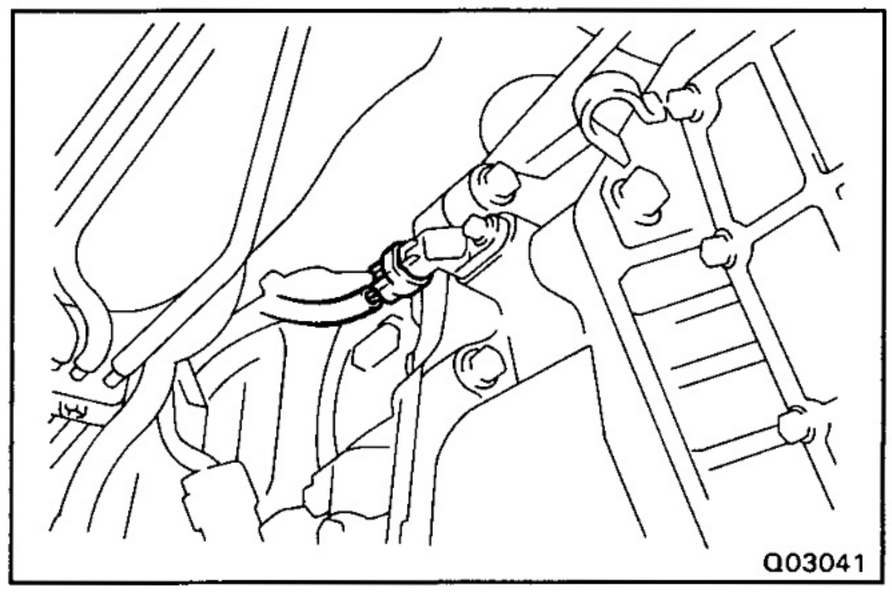
Q03041

8. CONNECT NO.2 SPEED SENSOR CONNECTOR

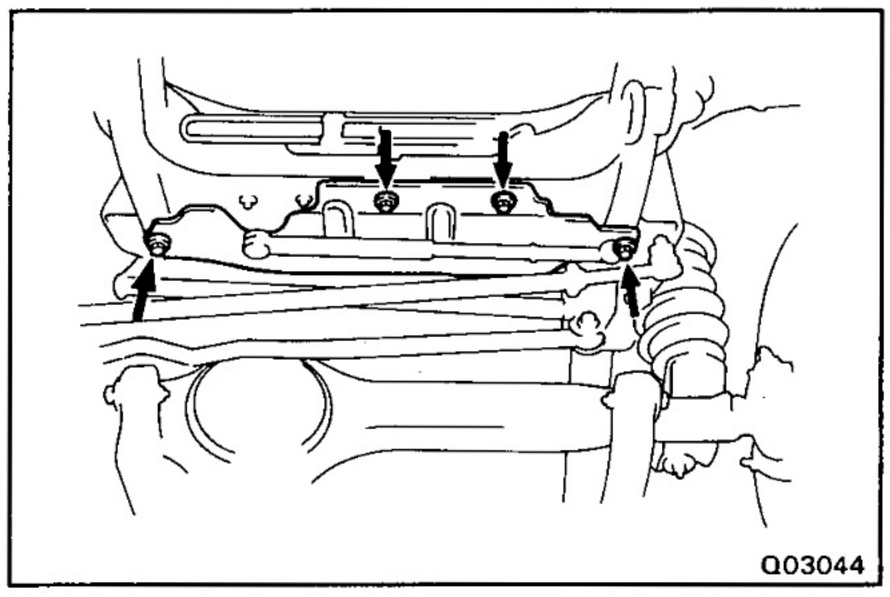
Q03044

9. INSTALL ENGINE UNDER COVER

Install the cover with the four bolts.

Torque: 28 N·m (290 kgf·cm, 21 ft·lbf)

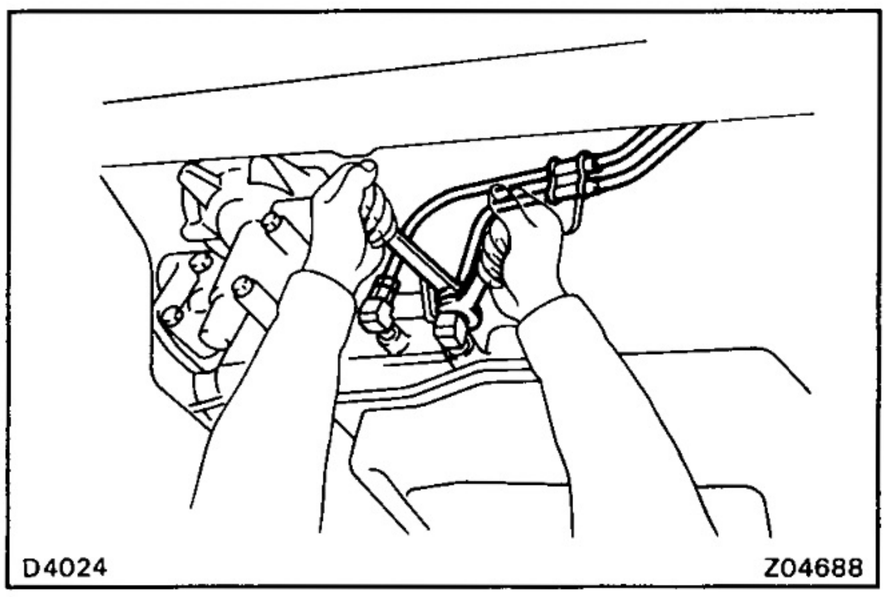
D4024 Z04688

10. CONNECT TWO OIL COOLER TUBES

(a) Connect the two oil cooler tubes.

Torque: 34 N·m (350 kgf·cm, 25 ft·lbf)

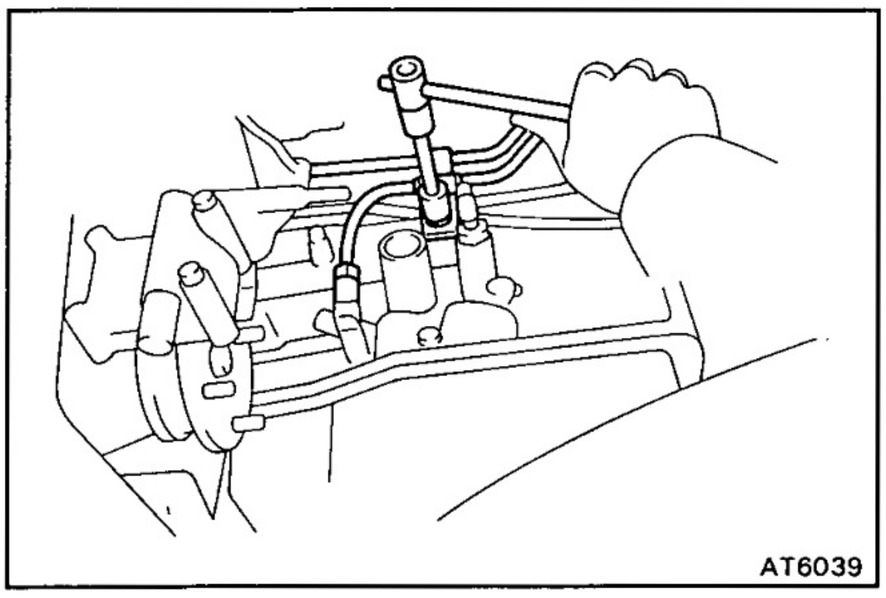
AT6039

(b) Install the cooler tube clamp.

Torque: 10 N·m (100 kgf·cm, 7 ft·lbf)

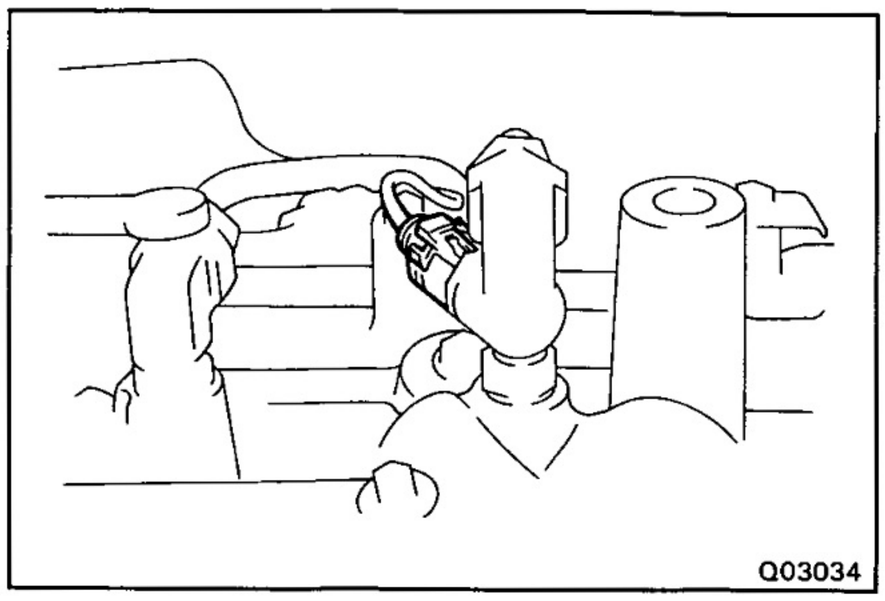
Q03034

(c) Connect the oil temperature sensor connector.


Q03036

11. REMOVE OIL FILLER TUBE

(a) Install the filler tubes with the bolt.

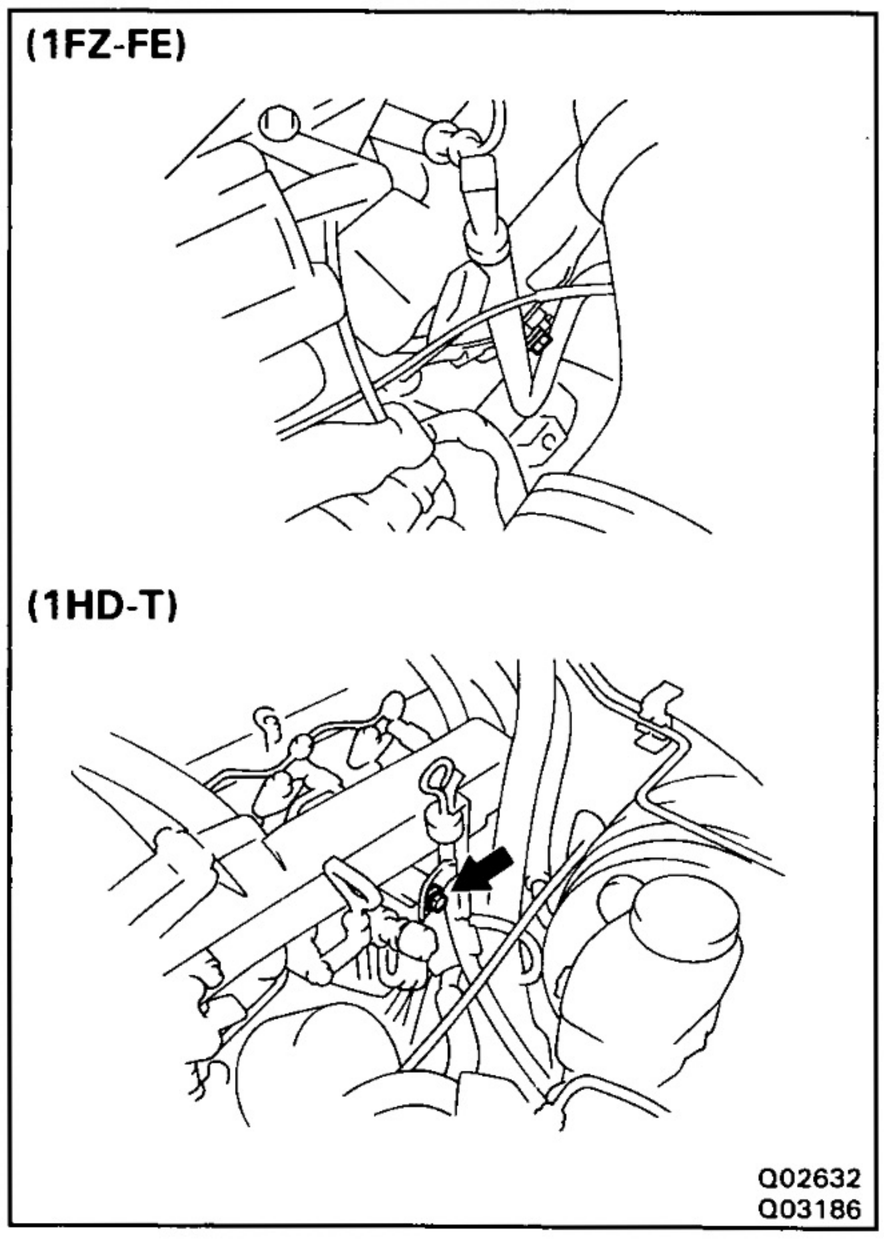

Q02632
Q03186

(b) Install the bolt.

(c) Install the level gauge.

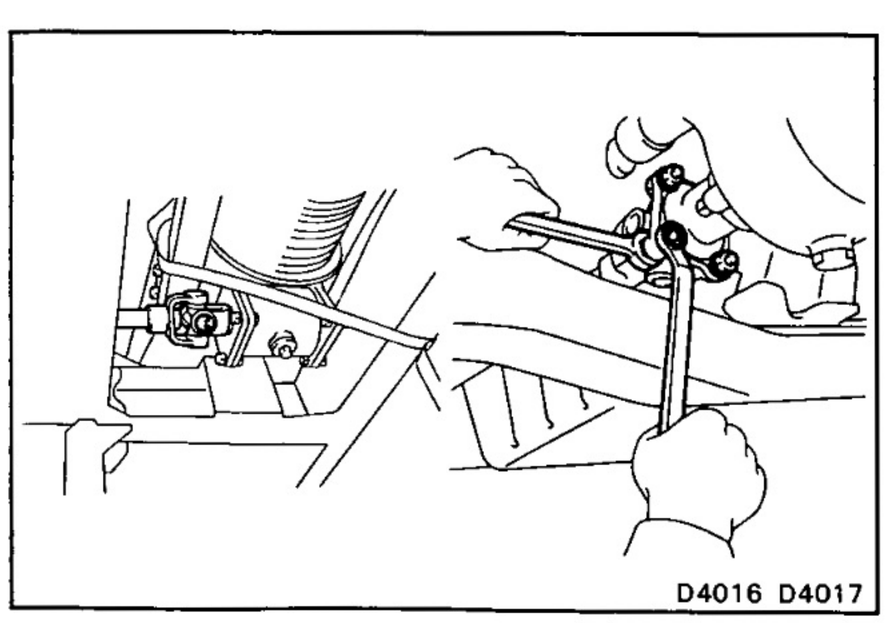
D4016 D4017

12. (w/ MECHANICAL WINCH) INSTALL POWER TAKE-OFF DRIVE SHAFT

(a) Align the matchmarks on the joint flange yoke and drive shaft.

(b) Install the drive shaft.

(c) Align the matchmarks on the drive shaft and PTO.

(d) Torque the nuts.

Torque: 20 N·m (200 kgf·cm, 14 ft·lbf)

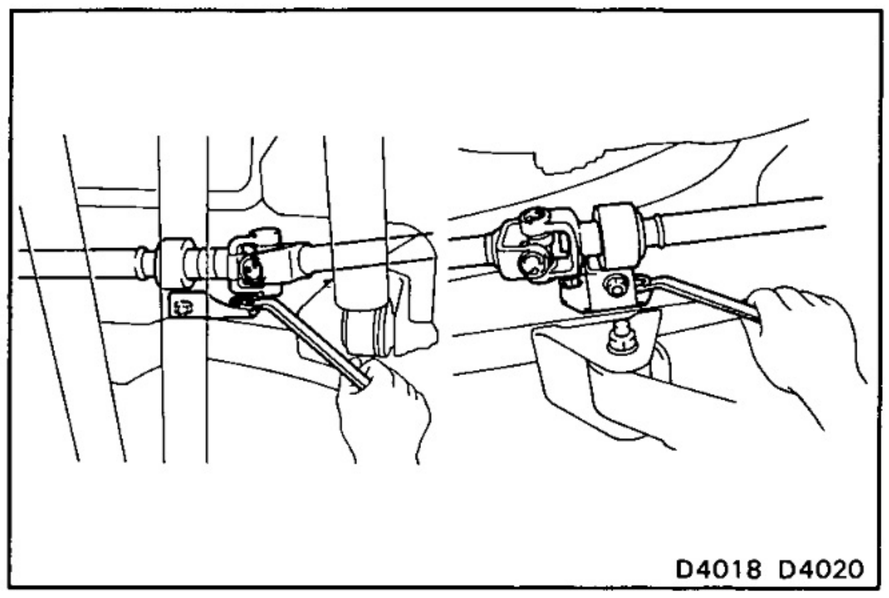
D4018 D4020

(e) Install the front and rear bracket.

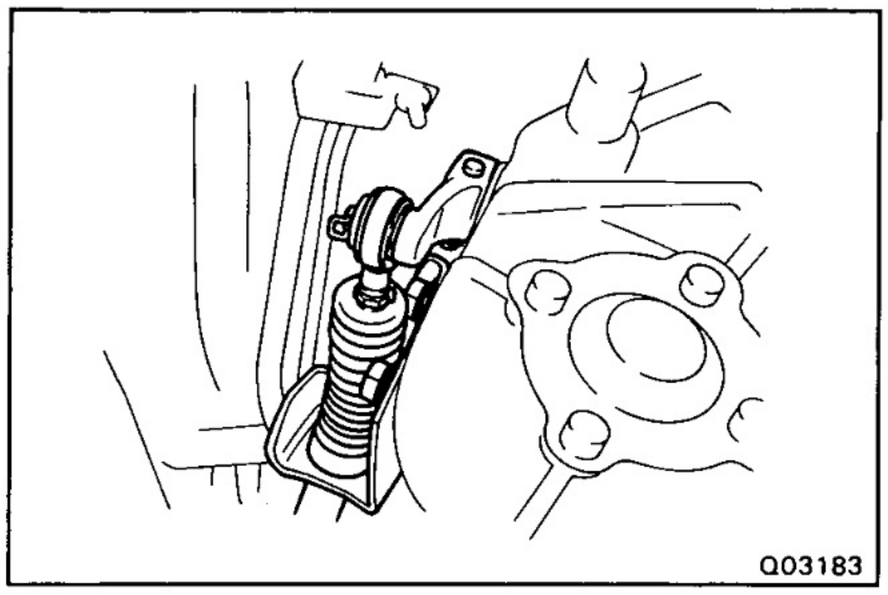
Q03183

13. (w/ MECHANICAL WINCH) INSTALL POWER TAKE-OFF SHIFT CABLE

(a) Install the two bolts and the cable bracket.

(b) Connect the cable and insert the pin.

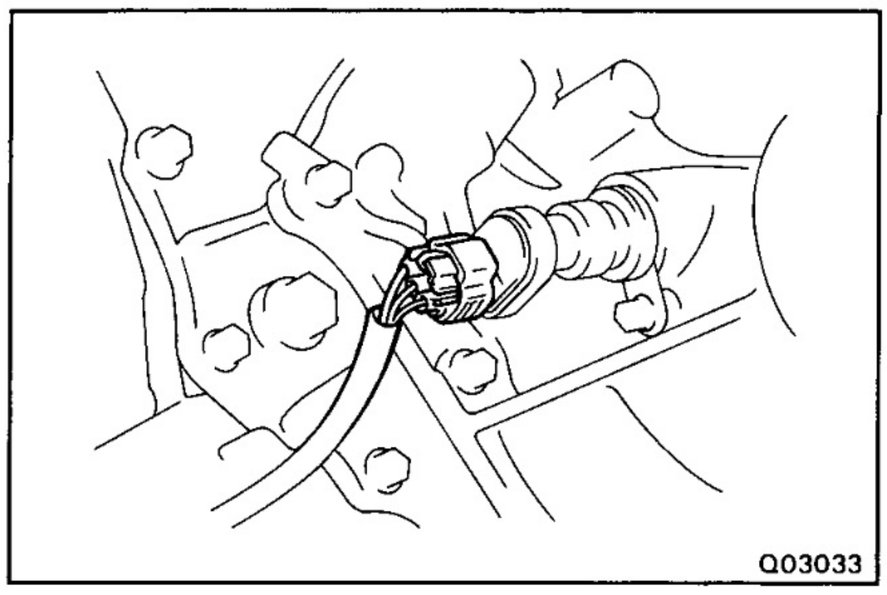
Q03033

14. CONNECT NO.1 SPEED SENSOR CONNECTOR

15. INSTALL FRONT AND REAR PROPELLER SHAFTS (See Pub. No. RM184E, page PR-8)

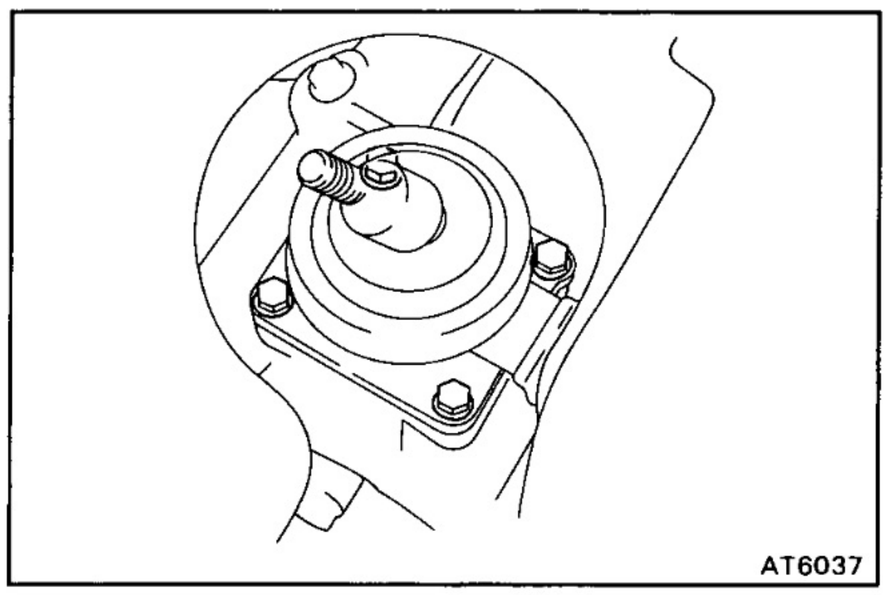
AT6037

16. INSTALL TRANSMISSION SELECT LEVER AND TRANSFER SHIFT LEVER

(a) Remove the four bolts and the transfer shift lever.

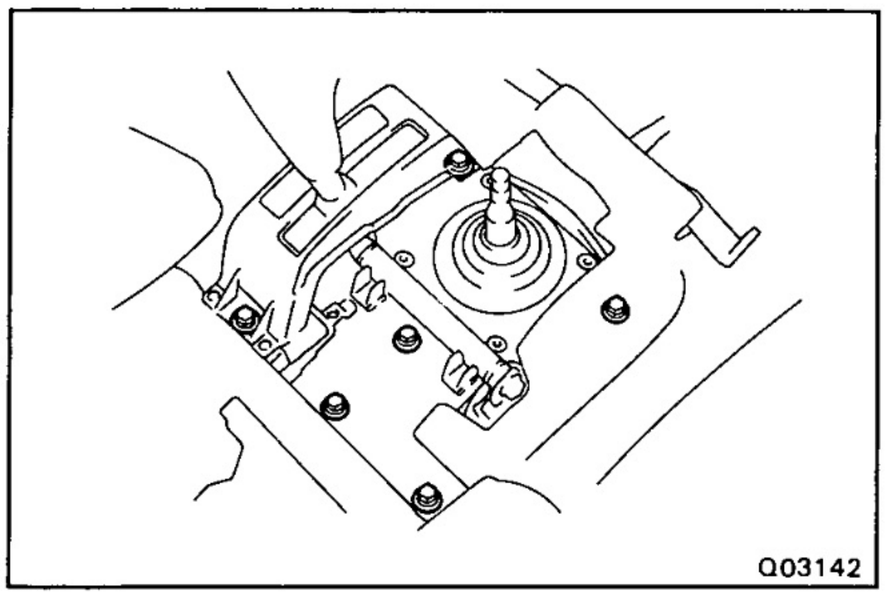
Q03142

(b) Install the transmission shift lever assembly with the six bolts.

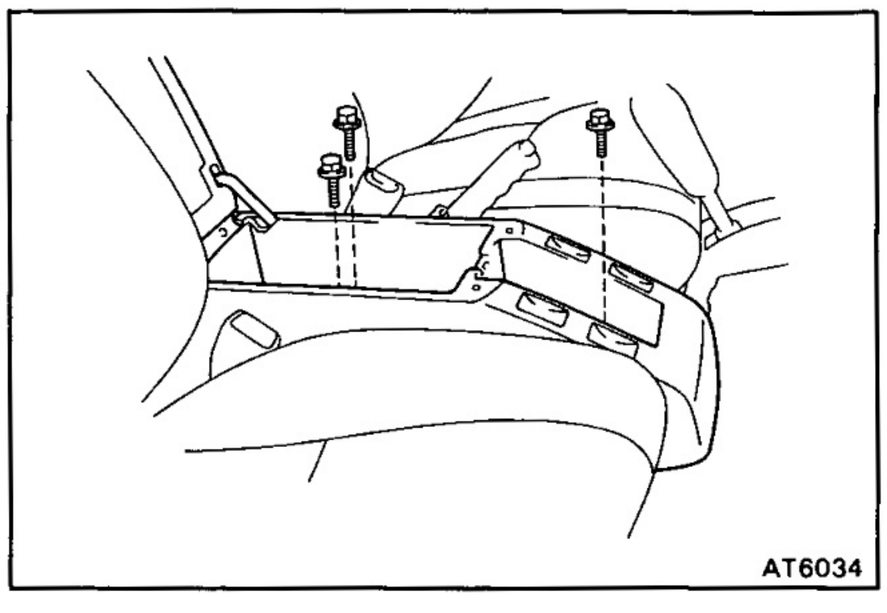
AT6034

(c) Install the console box with the three bolts.

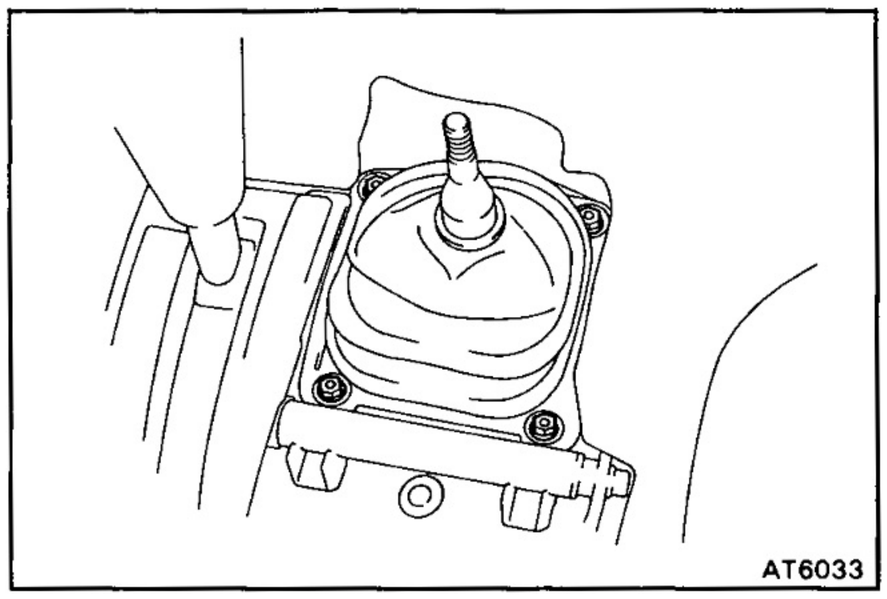
AT6033

(d) Install the transfer shift lever boot with the four bolts.

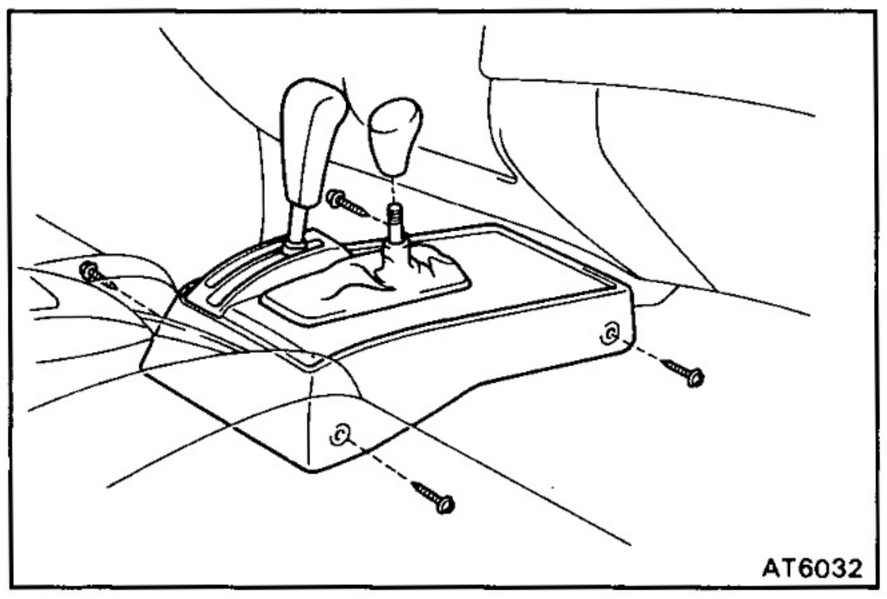
AT6032

(e) Install the four screws and the console.

(f) Install the transfer shift lever knob.

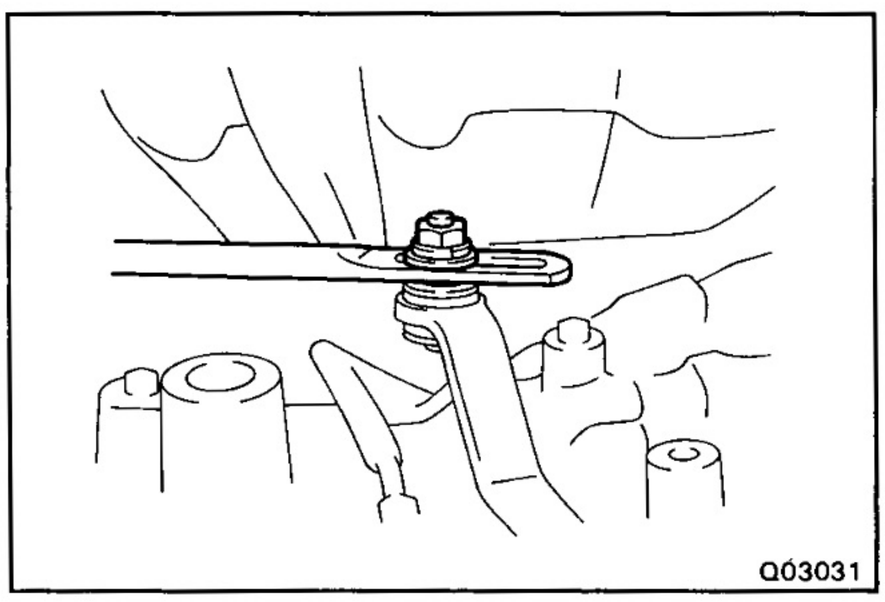
Q03031

(g) Connect the link with the washer and nut.

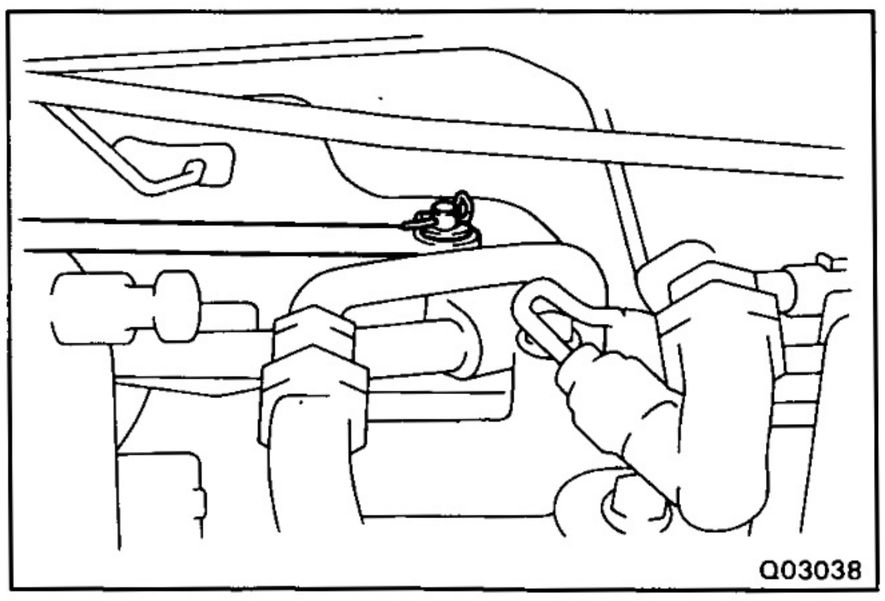
Q03038

(h) Connect the link with the wave washer, washer and clip.

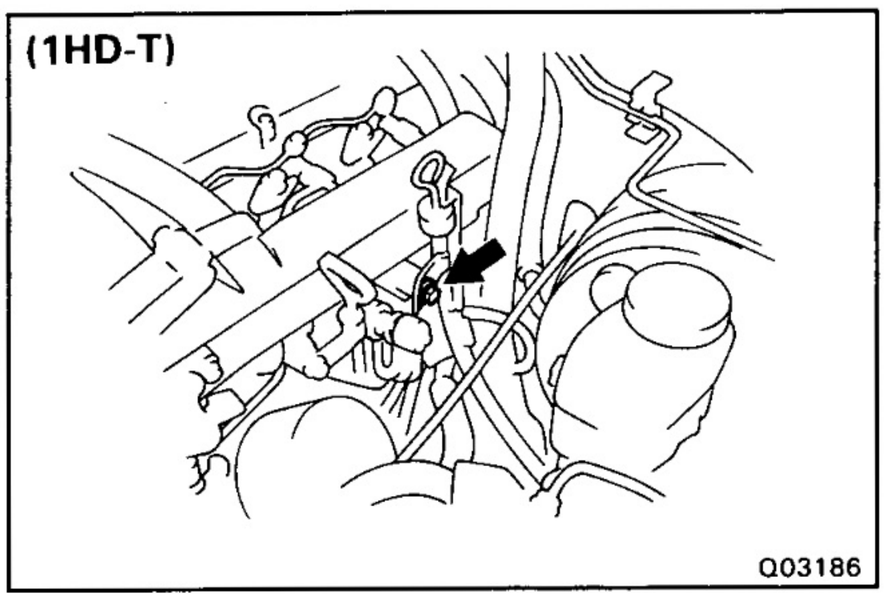

17. (1HD-T)
INSTALL STARTER MOUNT BOLT

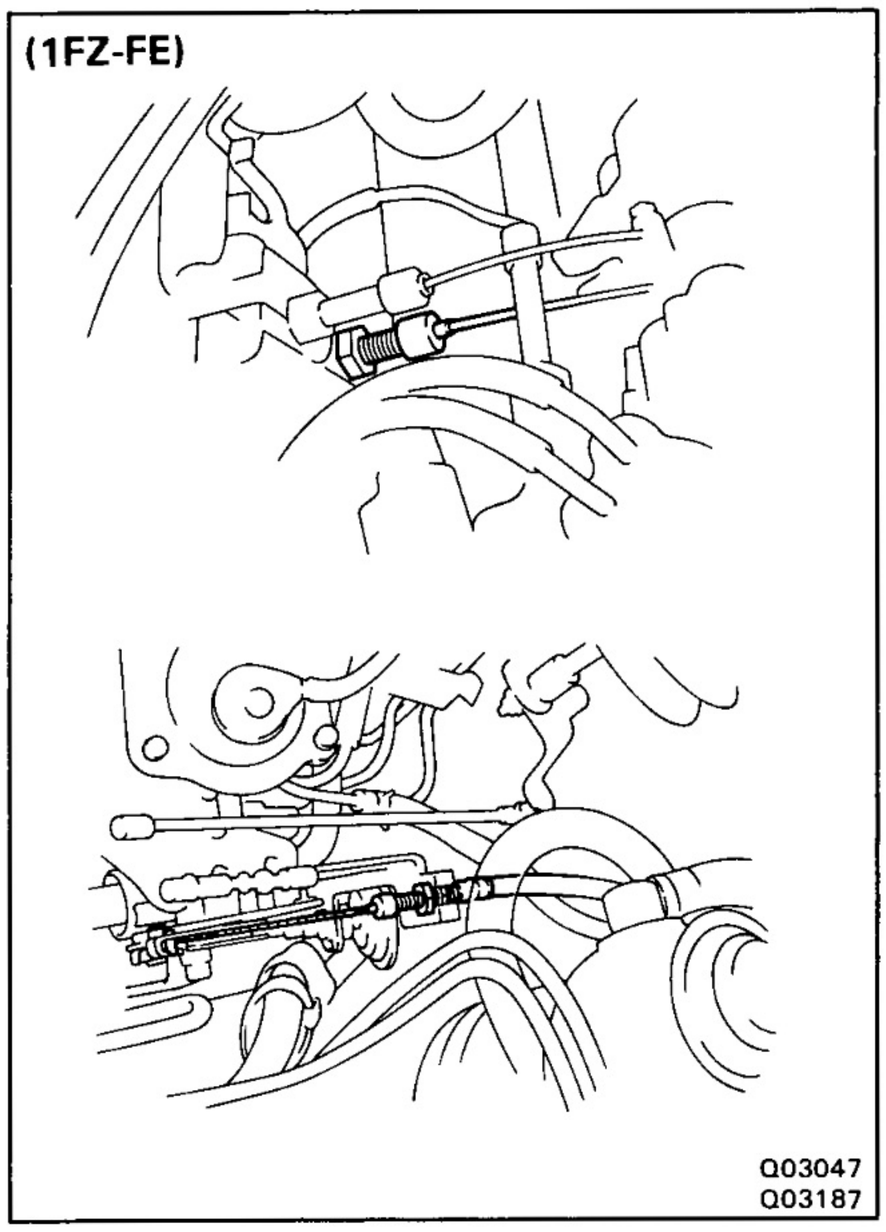

18. CONNECT THROTTLE CABLE

(a) Connect the cable from the throttle linkage.

(b) Tighten the adjusting nuts and connect the cable housing to the bracket.

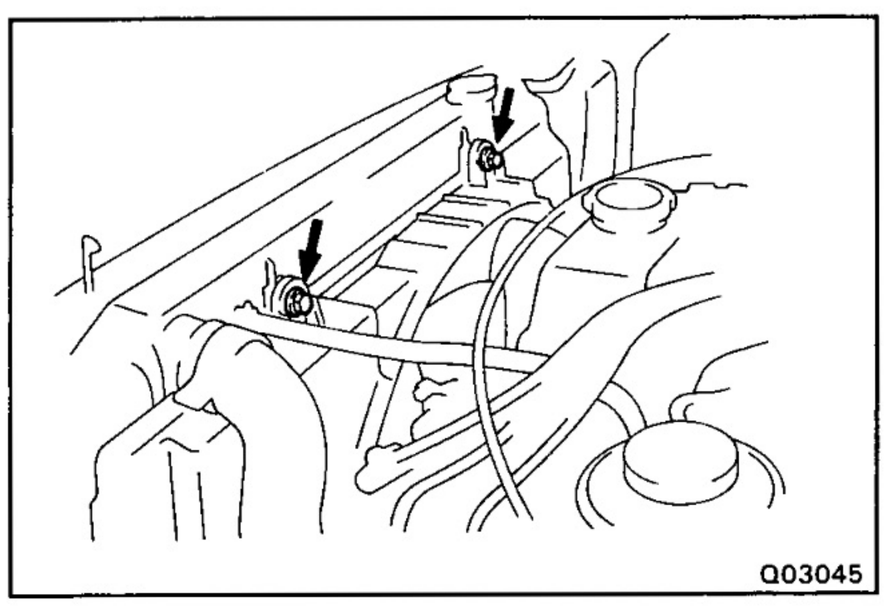

19. TIGHTEN FAN SHROUD OF COOLING FAN TO AVOID DAMAGE TO FAN

20. INSTALL BATTERY AND COVER

21. CONNECT BATTERY CABLE FROM NEGATIVE TERMINAL

22. ADJUST SHIFT CONTROL ROD
(See page AT-26)

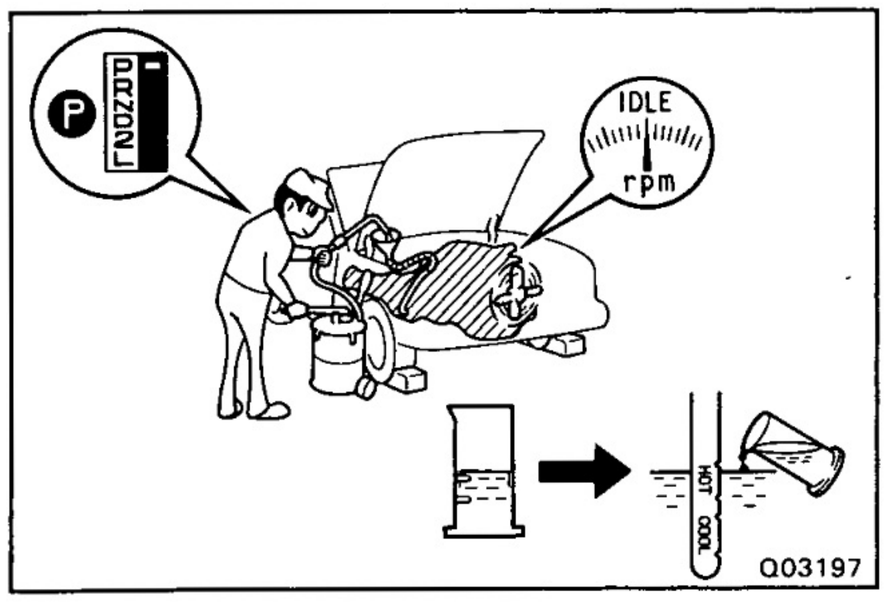

23. FILL SHIFT CONTROL ROD

Fluid type:
ATF DEXRON® II

Capacity:
6.0 liters (6.3 US qts, 5.3 Imp.qts)

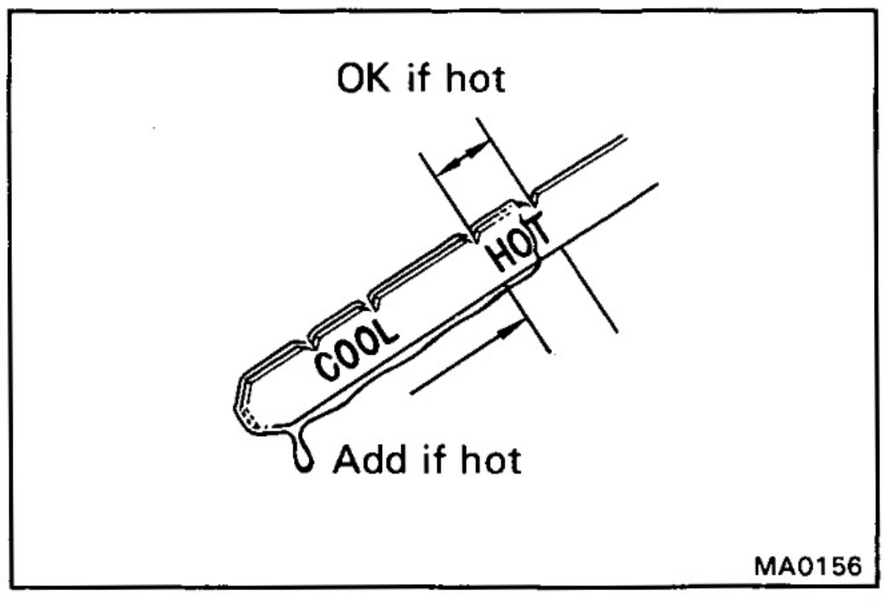

24. CHECK FLUID LEVEL
(See page AT-25)

SERVICE SPECIFICATIONS

SERVICE DATE

Engine stall revolution		1FZ-FE	2,150 ± 150 rpm		
		1HD-T	1,950 ± 150 rpm		
Engine idle speed		N range	650 rpm		
Time lag	N range → D range		Less than 1.0 seconds		
	N range → R range		Less than 1.5 seconds		
Line pressure (wheel locked)					
Engine idling	(1FZ-FE)	D range	461 — 520 kPa	4.7 — 5.3 kgf/cm²	68 — 77 psi
		R range	657 — 843 kPa	6.7 — 8.6 kgf/cm²	97 — 125 psi
	(1HD-T)	D range	431 — 510 kPa	4.4 — 5.2 kgf/cm²	63 — 74 psi
		R range	637 — 843 kPa	6.5 — 8.6 kgf/cm²	92 — 122 psi
At stall	(1FZ-FE)	D range	971 — 1,226 kPa	9.9 — 12.5 kgf/cm²	144 — 181 psi
		R range	1,648 — 1,853 kPa	16.8 — 18.9 kgf/cm²	244 — 274 psi
	(1HD-T)	D range	971 — 1,226 kPa	9.9 — 12.5 kgf/cm²	144 — 181 psi
		R range	1,608 — 1,853 kPa	16.4 — 18.9 kgf/cm²	233 — 274 psi
Throttle cable adjustment					
Throttle valve fully closed			Between boot end and inner cable stopper		
		(1FZ-FE)	0 — 1 mm	0 — 0.04 in.	
		(1HD-T)	0.5 — 1.5 mm	0.020 — 0.059 in.	
Throttle valve fully opened			32 — 34 mm	1.26 — 1.34 in.	
Torque convertor correct distance		(1FZ-FE)	37.2 mm (1.465 in.) or more		
		(1HD-T)	43.8 mm (1.724 in.)		
Torque convertor sleeve runout		Limit	0.30 mm	0.0118 in.	
Drive plate runout		Limit	0.20 mm	0.0079 in.	

Shift point schedule

km/h (mph)

		Throttle valve opening		100 %			5 %		100 %		
Engine	Tire size	Gear range		1 → 2	2 → 3	3 → O/D	Lock-up ON	Lock-up OFF	O/D → 3	3 → 2	2 → 1
1FZ-FE	7.50R16-6	D range	Normal mode	53—60 (33—37)	108—122 (67—76)	153—170 (95—106)	61—69 (38—43)	55—63 (34—39)	147—163 (91—101)	99—109 (62—68)	42—49 (26—30)
			Power mode	53—60 (33—37)	108—122 (67—76)	153—170 (95—106)	89—99 (55—62)	73—80 (45—50)	147—163 (91—101)	99—109 (62—68)	42—49 (26—30)
		2 range	Normal mode Power mode	—	—	—	—	—	—	118—132 (73—82)	—
		L range	Normal mode Power mode	—	—	—	—	—	—	—	60—68 (37—42)
	245/85-R16	D range	Normal mode	56—62 (35—39)	114—125 (71—78)	161—174 (100—108)	64—70 (40—43)	58—64 (36—40)	154—167 (96—103)	105—112 (65—70)	44—48 (27—30)
			Power mode	56—62 (35—39)	114—125 (71—78)	161—174 (100—108)	93—100 (58—62)	73—80 (45—50)	154—167 (96—103)	105—112 (65—70)	44—48 (27—30)
		2 range	Normal mode Power mode	—	—	—	—	—	—	124—135 (77—84)	—
		L range	Normal mode Power mode	—	—	—	—	—	—	—	63—69 (39—43)
	215/80-R16	D range	Normal mode	49—54 (30—34)	101—111 (63—69)	143—153 (89—95)	63—69 (39—43)	57—63 (35—39)	137—147 (85—91)	93—99 (58—62)	40—45 (25—28)
			Power mode	49—54 (30—34)	101—111 (63—69)	143—153 (89—95)	83—89 (52—55)	72—78 (45—48)	137—147 (85—91)	93—99 (58—62)	40—45 (25—28)
		2 range	Normal mode Power mode	—	—	—	—	—	—	110—119 (68—74)	—
		L range	Normal mode Power mode	—	—	—	—	—	—	—	56—61 (34—38)
	275/70-R16	D range	Normal mode	52—58 (32—36)	106—117 (66—73)	152—163 (94—101)	60—66 (37—41)	55—60 (34—37)	145—156 (90—97)	98—104 (61—65)	42—47 (26—29)
			Power mode	52—58 (32—36)	106—117 (66—73)	152—163 (94—101)	88—94 (55—58)	68—74 (42—46)	145—156 (90—97)	98—104 (61—65)	42—47 (26—29)
		2 range	Normal mode Power mode	—	—	—	—	—	—	116—127 (72—79)	—
		L range	Normal mode Power mode	—	—	—	—	—	—	—	59—65 (37—40)

		Throttle valve opening		100 %			5 %		100 %		
Engine	Tire size	Gear range		1 → 2	2 → 3	3 → O/D	Lock-up ON	Lock-up OFF	O/D → 3	3 → 2	2 → 1
1HD-T	7.50R16-6	D range	Normal mode	41—47 (25—29)	81—90 (50—56)	122—136 (76—85)	56—64 (35—40)	50—58 (31—36)	115—129 (71—80)	75—82 (47—51)	33—39 (21—24)
			Power mode	41—47 (25—29)	81—90 (50—56)	122—136 (76—85)	78—87 (48—54)	72—80 (45—50)	115—129 (71—80)	75—82 (47—51)	34—41 (21—25)
		2 range	Normal mode Power mode	—	—	—	—	—	—	89—98 (55—61)	—
		L range	Normal mode Power mode	—	—	—	—	—	—	—	38—45 (24—28)
	245/85-R16	D range	Normal mode	43—49 (27—30)	85—92 (53—57)	129—140 (80—87)	59—65 (37—40)	53—59 (33—36)	121—132 (75—82)	75—82 (47—51)	34—40 (21—25)
			Power mode	43—49 (27—30)	85—92 (53—57)	129—140 (80—87)	82—89 (51—55)	75—82 (47—51)	121—132 (75—82)	75—82 (47—51)	36—42 (22—26)
		2 range	Normal mode Power mode	—	—	—	—	—	—	93—100 (58—62)	—
		L range	Normal mode Power mode	—	—	—	—	—	—	—	40—46 (25—29)
	215/80-R16	D range	Normal mode	37—42 (23—26)	76—81 (47—50)	113—123 (70—76)	53—58 (33—36)	47—52 (29—32)	108—117 (67—73)	67—72 (42—44)	30—35 (19—22)
			Power mode	37—42 (23—26)	76—81 (47—50)	113—123 (70—76)	73—79 (45—49)	66—72 (41—45)	108—117 (67—73)	67—72 (42—44)	32—37 (20—23)
		2 range	Normal mode Power mode	—	—	—	—	—	—	83—89 (52—55)	—
		L range	Normal mode Power mode	—	—	—	—	—	—	—	35—40 (22—25)
	275/70-R16	D range	Normal mode	41—46 (25—29)	80—86 (50—53)	120—131 (75—81)	56—61 (35—38)	50—55 (31—34)	114—124 (71—77)	70—76 (43—47)	32—37 (20—23)
			Power mode	41—46 (25—29)	80—86 (50—53)	120—131 (75—81)	77—83 (48—52)	70—76 (43—47)	114—124 (71—77)	70—76 (43—47)	34—39 (21—24)
		2 range	Normal mode Power mode	—	—	—	—	—	—	88—94 (55—58)	—
		L range	Normal mode Power mode	—	—	—	—	—	—	—	38—43 (24—27)

TORQUE SPECIFICATION

Part tightened		N·m	kgf·cm	ft·lbf
Engine × Transmission	14 mm (0.55 in.) head bolt	37	380	27
Engine × Transmission	17 mm (0.67 in.) head bolt	72	730	53
Torque converter × Drive plate		55	550	40
Frame crossmember set bolt		61	620	45
Frame crossmember set nut		59	600	43
Oil cooler pipe union nut		34	350	25
Oil cooler pipe tube clamp × Transmission		10	100	7
Front differentail × Front propeller shaft		74	750	54
Transfer × Front propeller shaft		74	750	54
Transfer × Rear propeller shaft		88	900	65
Rear differentail × Rear propeller shaft		88	900	65
Crank shaft × Drive plate		100	1,000	72
Engine under cover × Frame		28	290	21
Transfer shift lever × Transmission		18	185	13
Oil pan set bolt		6.9	70	61 in.·lbf
Drain plug		27	280	20
Vaive body × Transmission case		10	100	7
Transfer under cover × Frame		28	290	21

TRANSFER

REFER TO LAND CRUISER (STATION WAGON) REPAIR MANUAL FOR CHASSIS AND BODY (Pub. No. RM184E)

NOTE: The following pages contain only the points which differ from the above listed manual.

(HF2AV FOR STATION WAGON WITH ABS)

DESCRIPTION ····· TR-2
PRECAUTIONS ····· TR-3
TROUBLESHOOTING ····· TR-3
COMPONENTS ····· TR-4
TRANSFER DISASSEMBLY ····· TR-5
COMPONENT PARTS ····· TR-12
Input Shaft Assembly ····· TR-12
Idler Gear Assembly ····· TR-16
Center Differential Assembly ····· TR-19
Front Extension Housing Assembly ····· TR-28
Rear Extension Housing Assembly ····· TR-32
TRANSFER ASSEMBLY ····· TR-41
MOTOR SHIFT CONTROL SYSTEM ····· TR-49
SERVICE SPECIFICATIONS ····· TR-51

DESCRIPTION

The transfer transmits the drive force from the transmission to the front and rear wheels.

The specifications and cross-section diagrams are as shown.

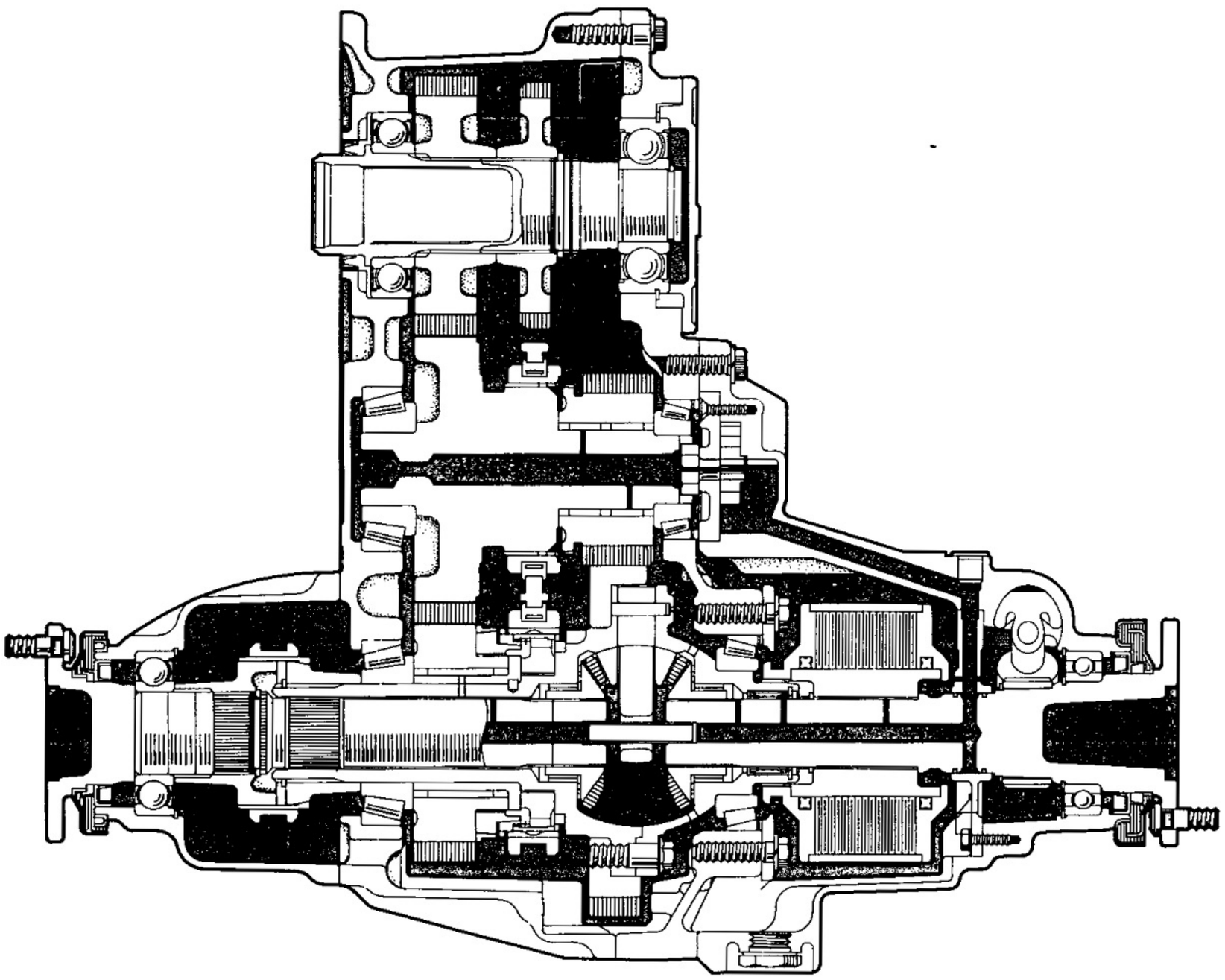

HF2AV TRANSFER

V01733

Specifications

Type of Transfer		HF2AV	
Type of Transmission		H150F	H151F, A442F
Type of Engine		1HZ	1FZ-FE, 1HD-T
Gear Ratio	High Speed Range	1.000	
	Low Speed Range	2.488	
Oil Capacity Liters (US qts. Imp. qts.)	w/o PTO	1.7 (1.8, 1.5)	
	w/ PTO	1.8 (1.9, 1.6)	
Type of Oil		API GL-4 or GL-5 SAE 75W-90	

PRECAUTIONS

When working with FIPG material, you must be observe the following.

- Using a razor blade and gasket scraper, remove all the old packing (FIPG) material from the gasket surfaces.
- Thoroughly clean all components to remove all the loose material.
- Clean both sealing surfaces with a non-residue solvent.
- Apply the seal packing in approx. 1 mm (0.04 in.) bead along the sealing surface.
- Parts must be assembled within 10 minutes of application. Otherwise, the packing (FIPG) material must be removed and reapplied.

TROUBLESHOOTING

Problem	Possible cause	Remedy	Page
Hard to shift or will not shift	Transfer faulty	Disassemble and inspect transfer	TR-4 TR-49
Transfer jumps out of gear	Transfer faulty	Disassemble and inspect transfer	TR-4
Noise	Transfer faulty	Disassembly and inspect transfer	TR-4
	Wrong oil grade	Replace oil	TR-2
	Oil level low	Add oil	TR-2
Oil leakage	Oil level too high	Drain oil	TR-2
	Oil seal, O-ring or gasket worn or damaged	Replace oil seal, O-ring or gasket	TR-4
Tight corner braking	Center differential or transfer faulty	Replace center differential or transfer	RM184E MT-5

COMPONENTS

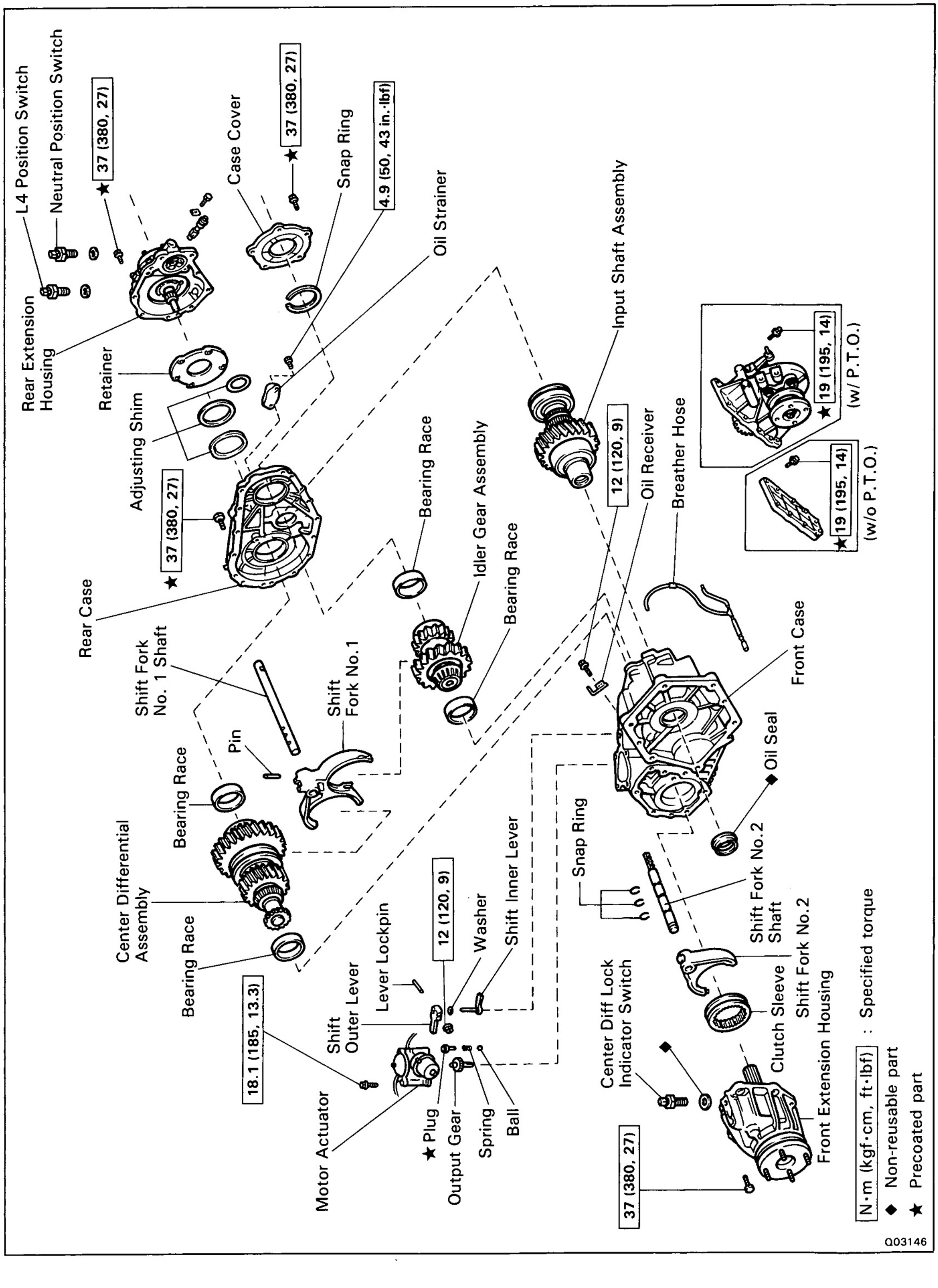
L4 Position Switch
Neutral Position Switch
37 (380, 27)
Case Cover
37 (380, 27)
Snap Ring
4.9 (50, 43 in.·lbf)
Oil Strainer
Input Shaft Assembly
Rear Extension Housing
Retainer
Adjusting Shim
37 (380, 27)
Bearing Race
Idler Gear Assembly
Bearing Race
12 (120, 9)
Oil Receiver
Breather Hose
19 (195, 14)
(w/ P.T.O.)
19 (195, 14)
(w/o P.T.O.)
Rear Case
Shift Fork No. 1 Shaft
Shift Fork No.1
Pin
Bearing Race
Center Differential Assembly
Bearing Race
Front Case
Oil Seal
Snap Ring
Shift Fork No.2 Shaft
Shift Fork No.2
Center Diff Lock Indicator Switch
Clutch Sleeve
Front Extension Housing
37 (380, 27)
18.1 (185, 13.3)
Shift Outer Lever
Lever Lockpin
12 (120, 9)
Washer
Shift Inner Lever
Motor Actuator
Plug
Output Gear
Spring
Ball
N·m (kgf·cm, ft·lbf) : Specified torque
◆ Non-reusable part
★ Precoated part
Q03146

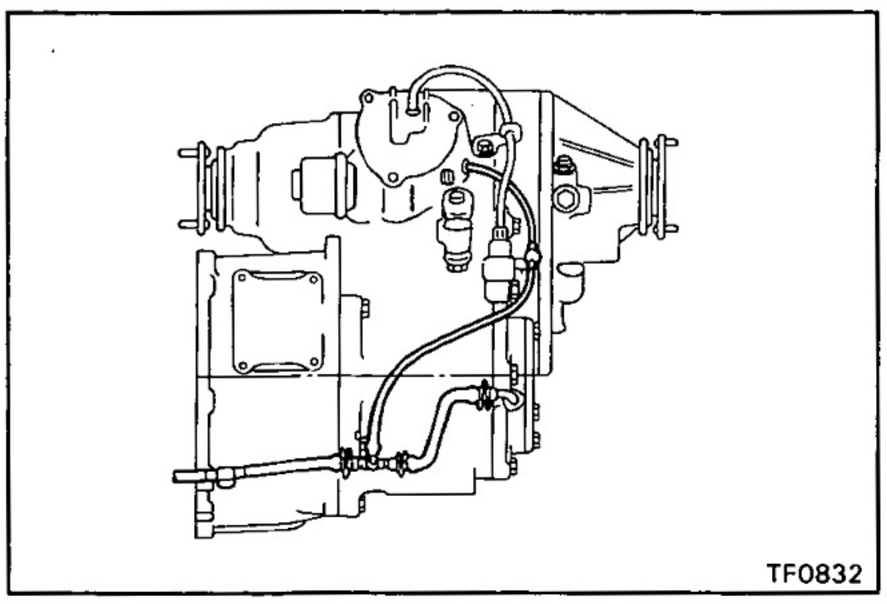

TRANSFER DISASSEMBLY

(See page TR-4)

1. REMOVE BREATHER HOSE

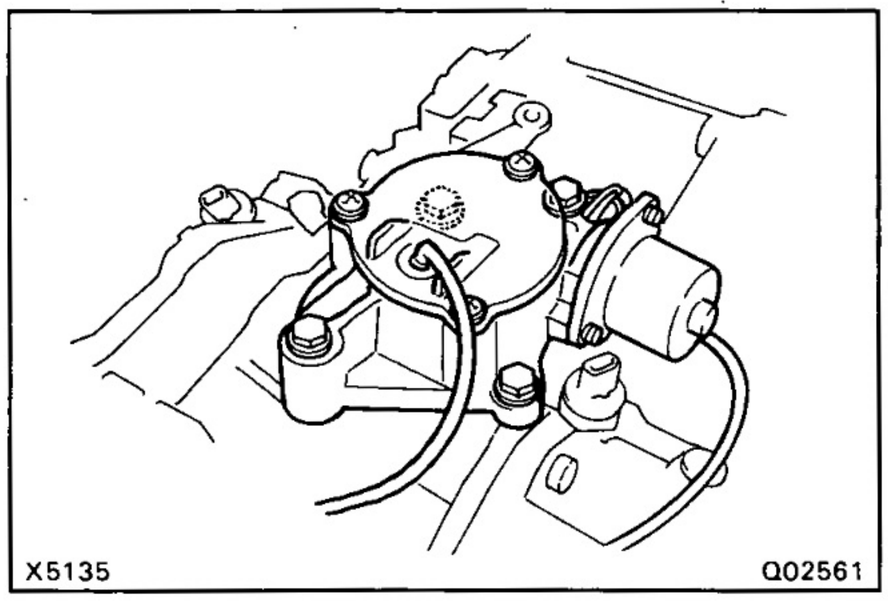

2. REMOVE MOTOR ACTUATOR

Remove the four bolts and motor actuator.

HINT: Remove the motor actuator in differential lock condition.

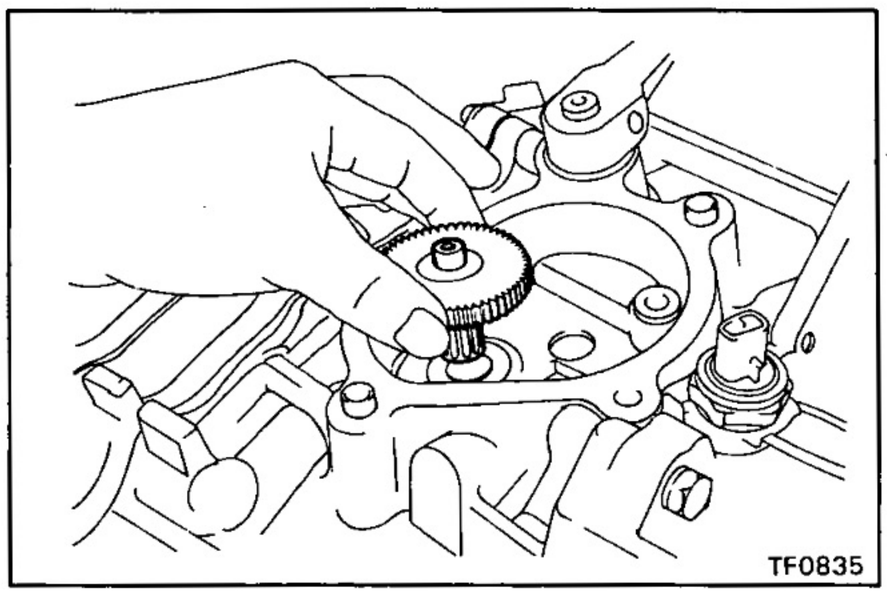

3. REMOVE OUTPUT GEAR

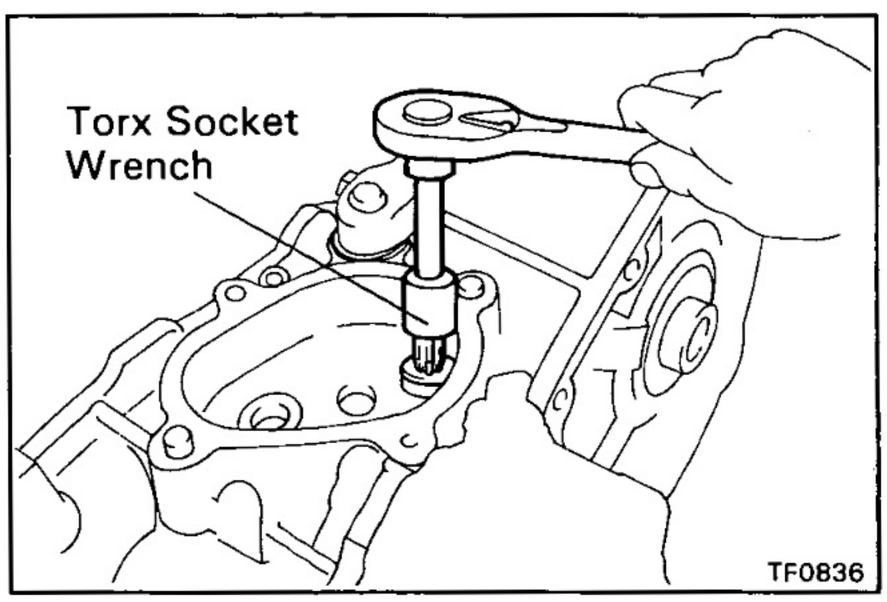

4. REMOVE SCREW PLUG, SPRING AND BALL

(a) Using a torx socket wrench, remove the screw plug. (Torx socket wrench T40 09042-00020)

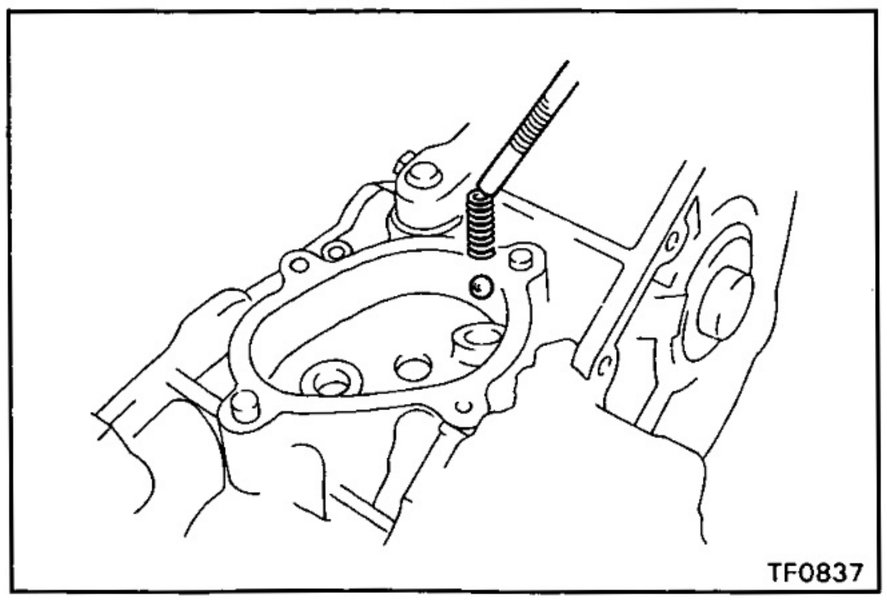

(b) Using a magnetic finger, remove the spring and ball.

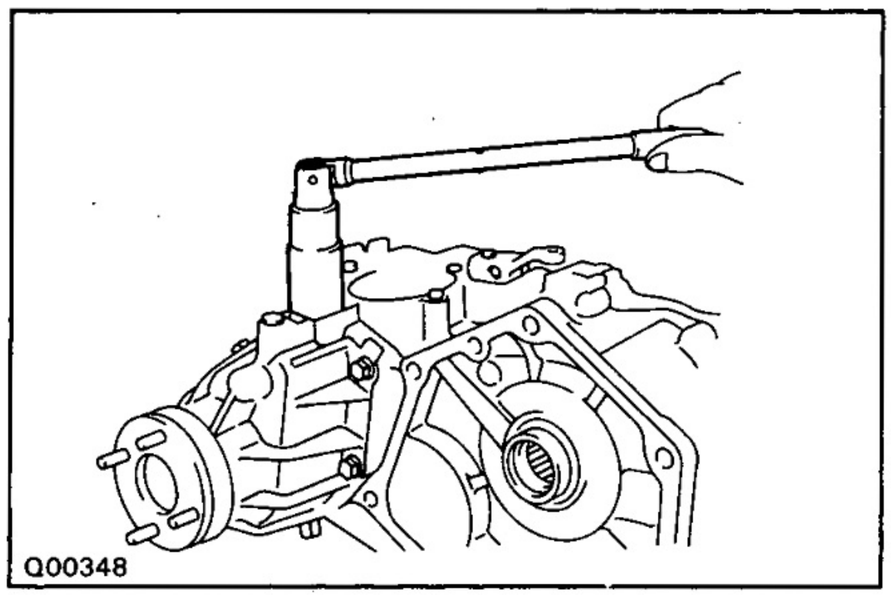

5. REMOVE TRANSFER INDICATOR SWITCHES

Remove the Center Diff Lock indicator switch, L4 position switch and neutral position switch.

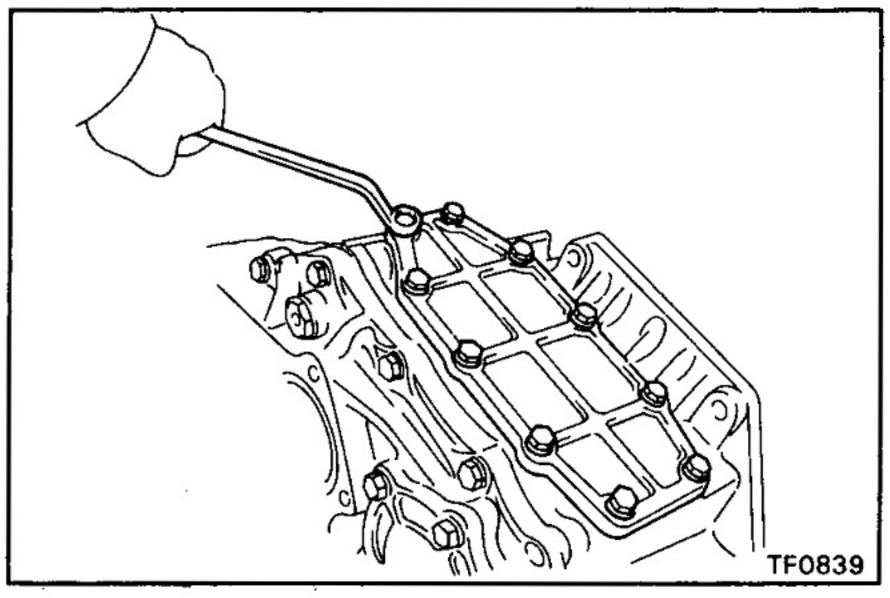

6. (w/o POWER TAKE-OFF)
REMOVE POWER TAKE-OFF COVER

Remove the ten bolts, power take-off cover and gasket.

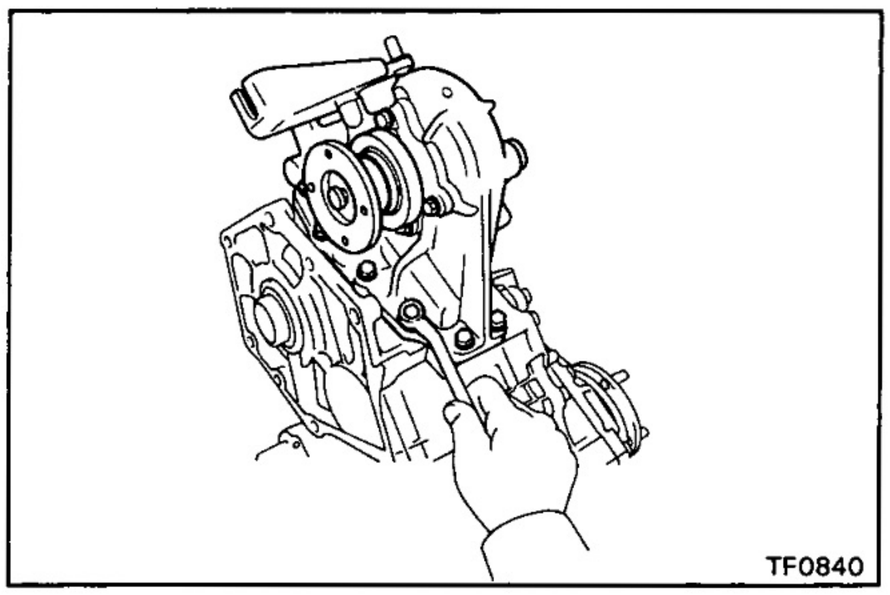

7. (w/ POWER TAKE-OFF)
REMOVE POWER TAKE-OFF CASE

Remove the ten bolts, power take-off case and gasket.

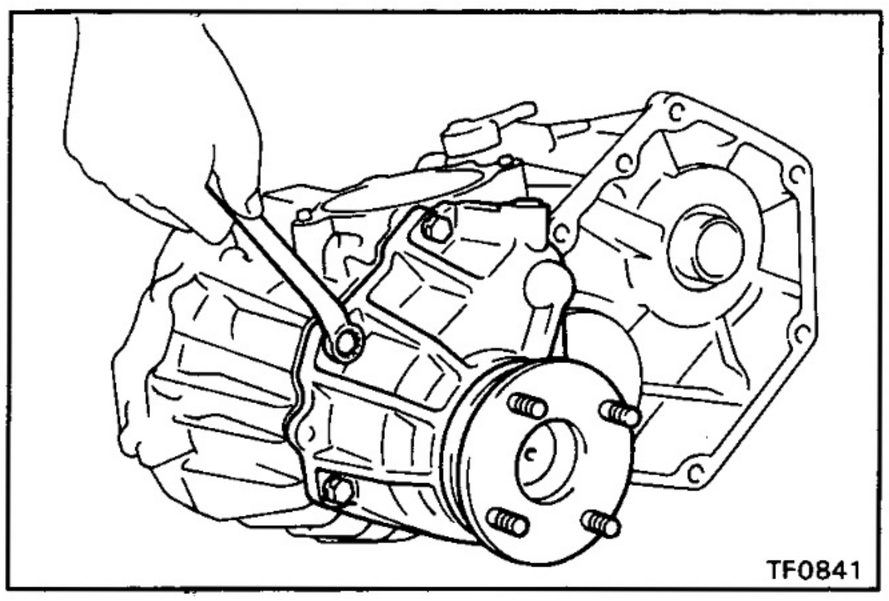

8. REMOVE FRONT EXTENSION HOUSING

(a) Remove the six bolts.

(b) If necessary, tap the front extension housing with a plastic hammer.

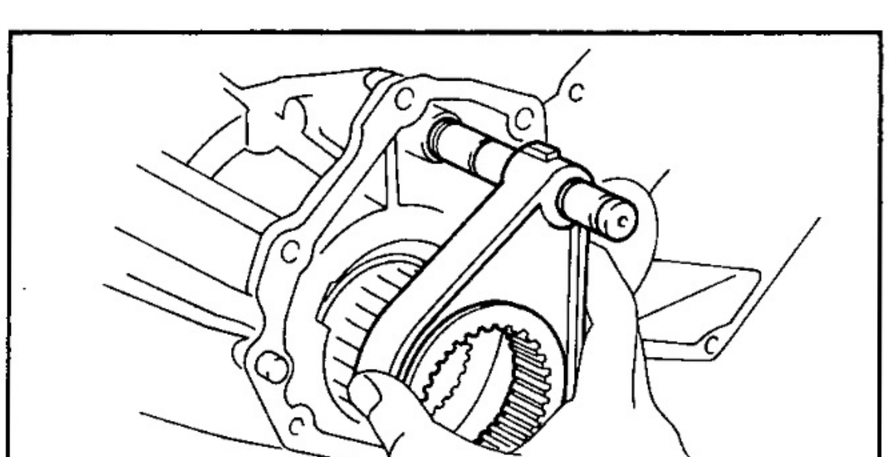

9. REMOVE CLUTCH SLEEVE, SHIFT FORK NO.2 AND FORK SHAFT

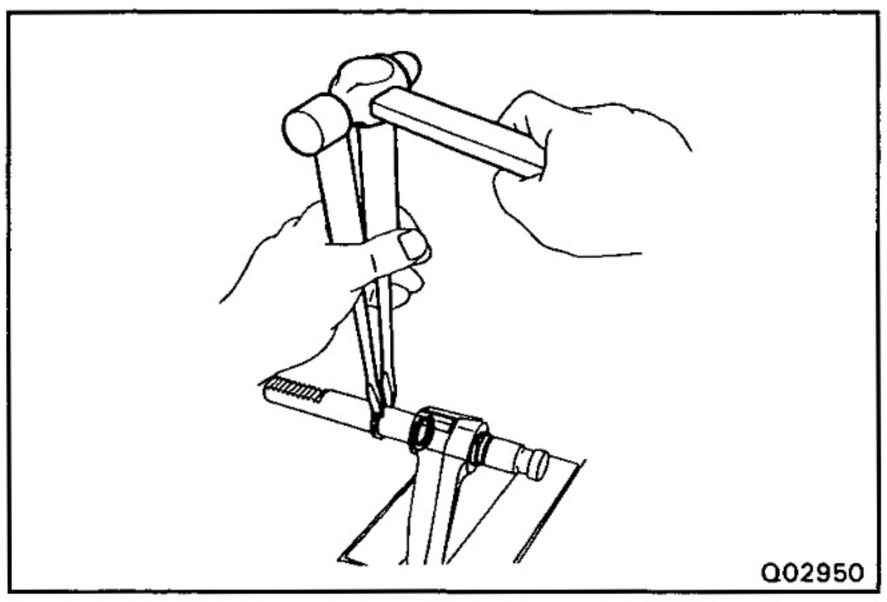

10. SEPARATE SHIFT FORK NO.2 AND FORK SHAFT

(a) Using two screwdrivers and a hammer, tap out the three snap rings.

(b) Separate the shift fork No.2 and fork shaft.

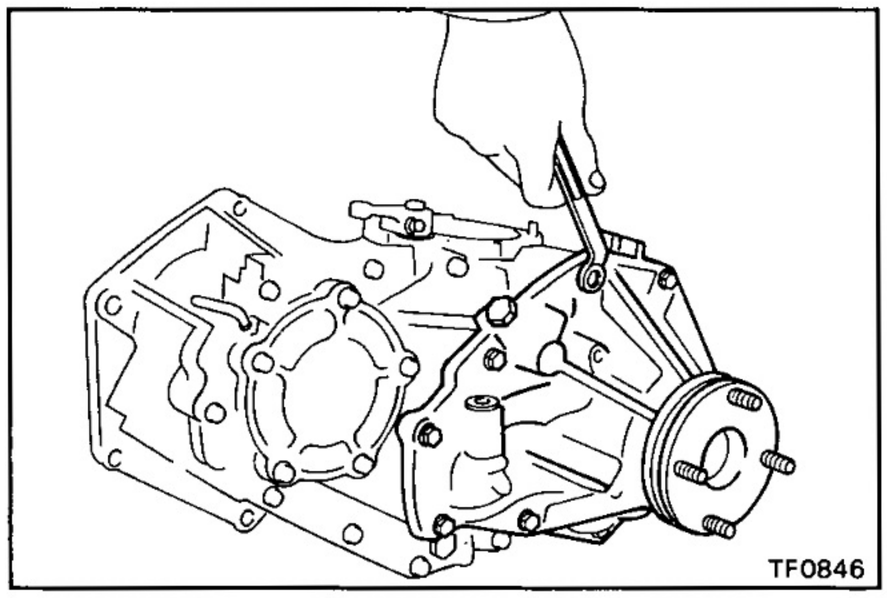

11. REMOVE REAR EXTENSION HOUSING

Remove the nine bolts and rear extension housing.

HINT: If necessary, tap the rear extension housing with a plastic hammer.

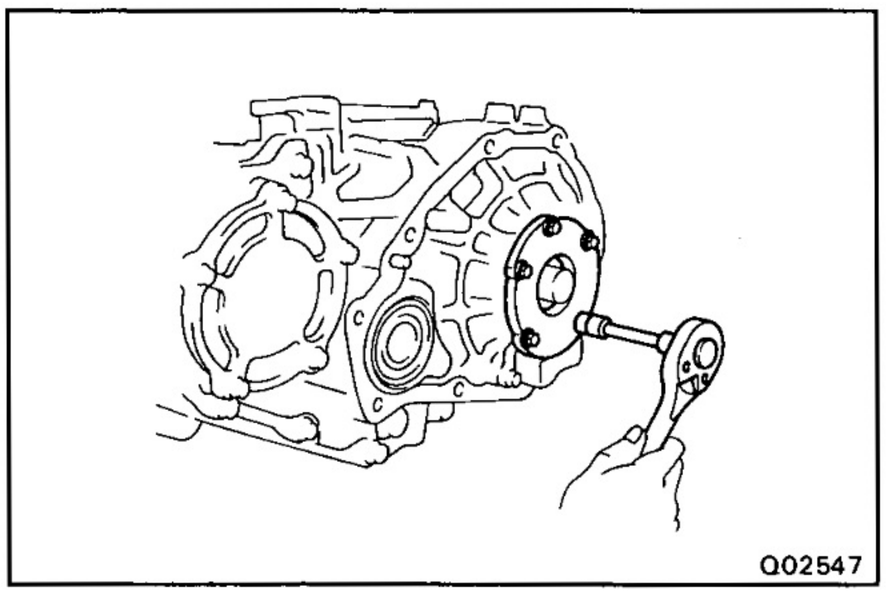

12. REMOVE RETAINER

Remove the five bolts and retainer.

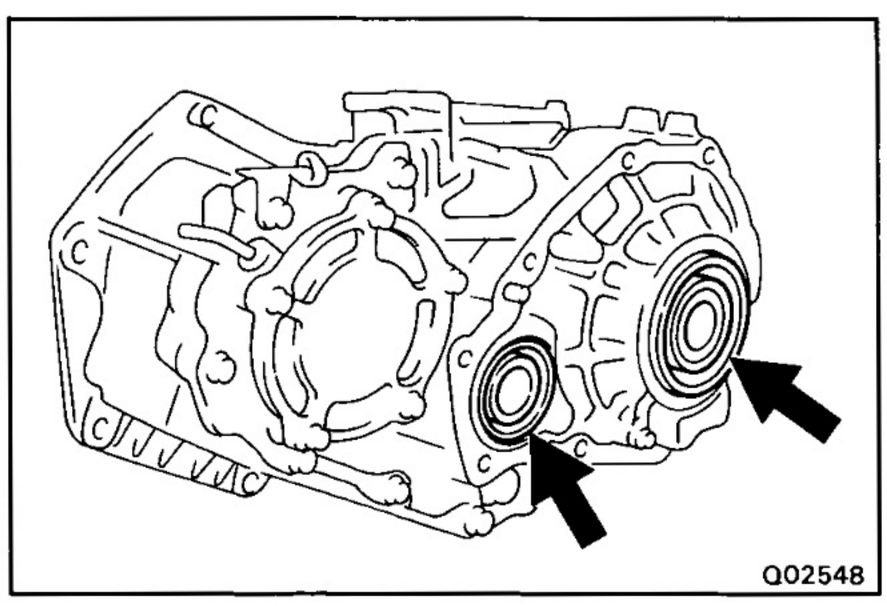

13. REMOVE ADJUSTING SHIMS

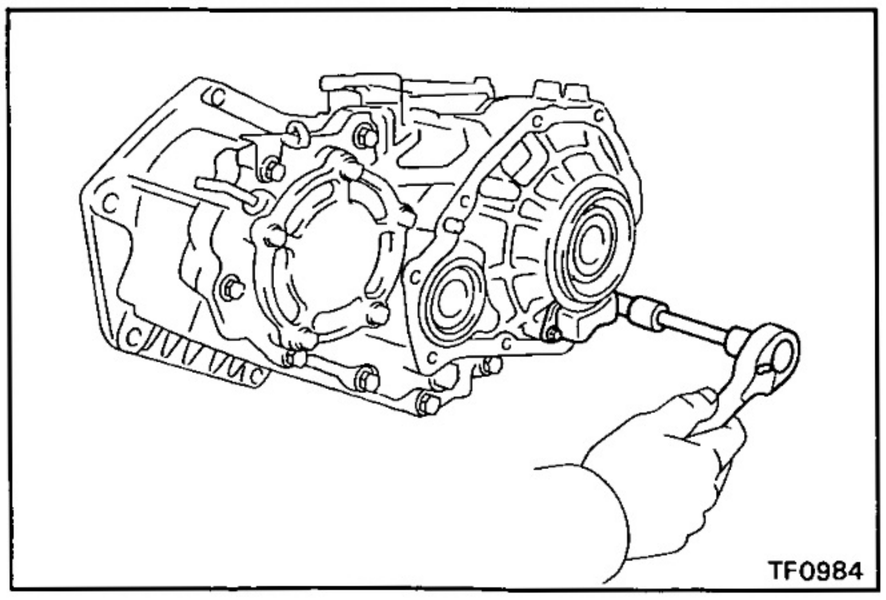

14. REMOVE OIL STRAINER FROM REAR CASE

Remove the two set bolts and oil strainer.

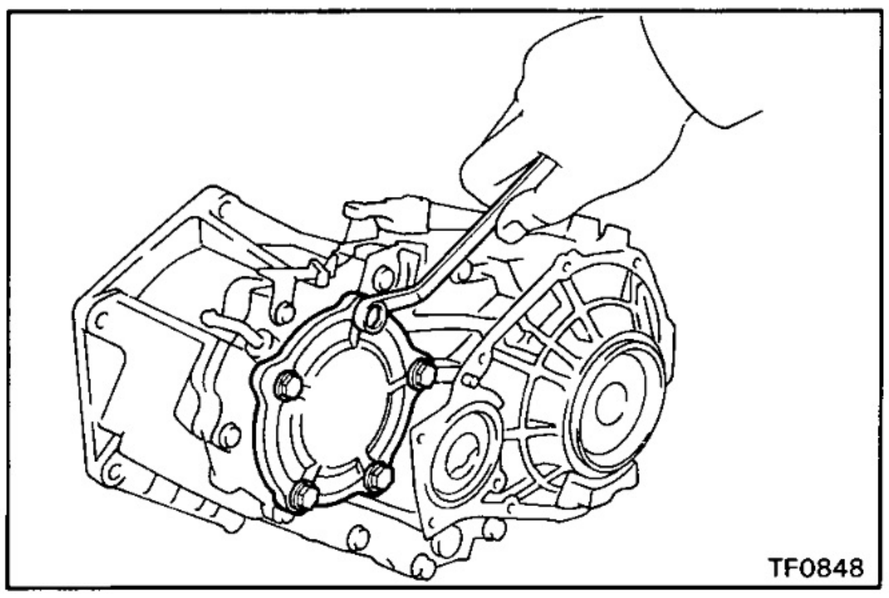
TF0848

15. REMOVE CASE COVER

(a) Remove the five bolts.

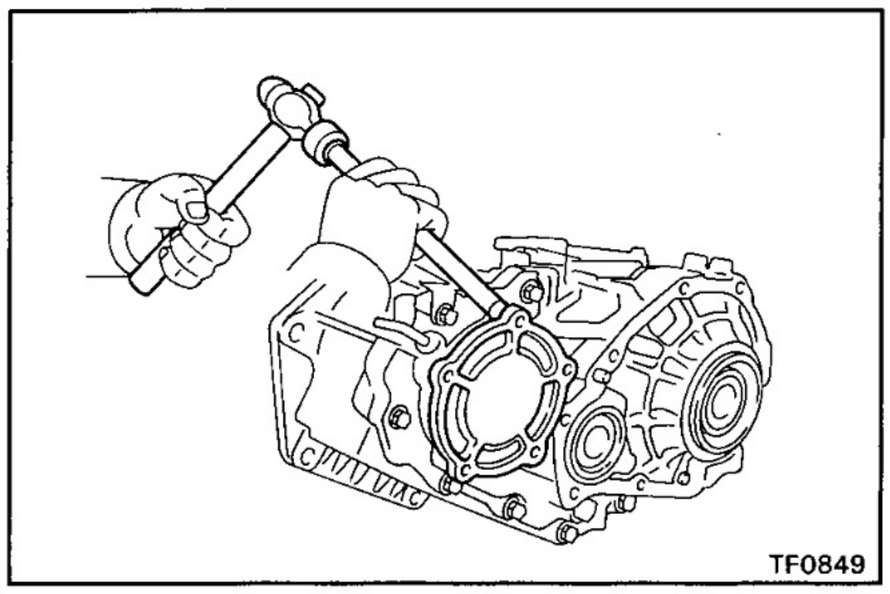
TF0849

(b) Using a brass bar and hammer, tap the case cover and remove it.

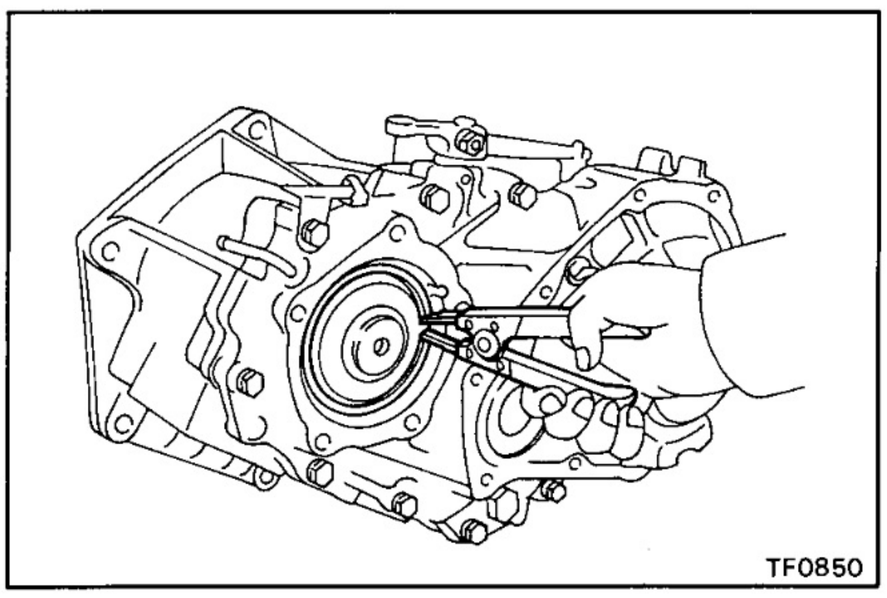
TF0850

16. SEPARATE FRONT CASE AND REAR CASE

(a) Using snap ring pliers, remove the snap ring.

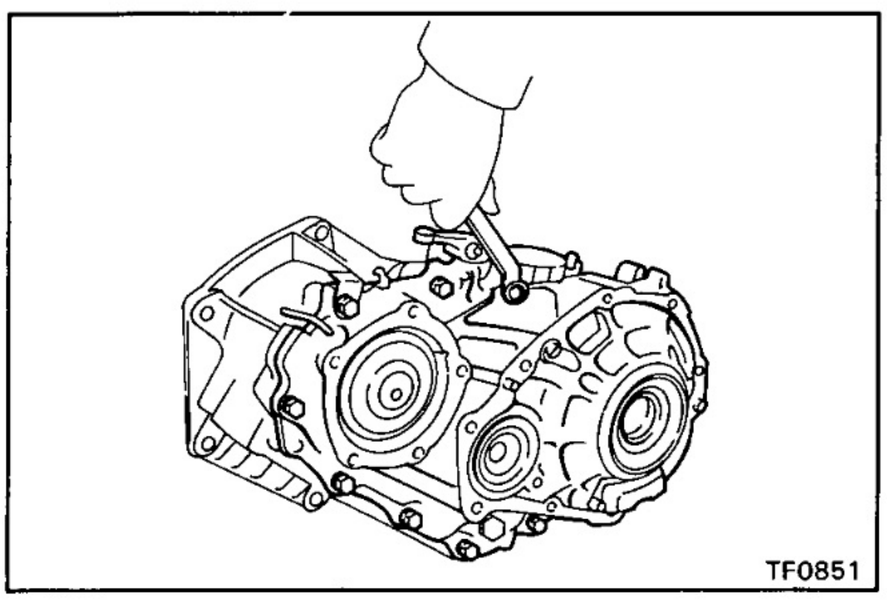
TF0851

(b) Remove the eight bolts.

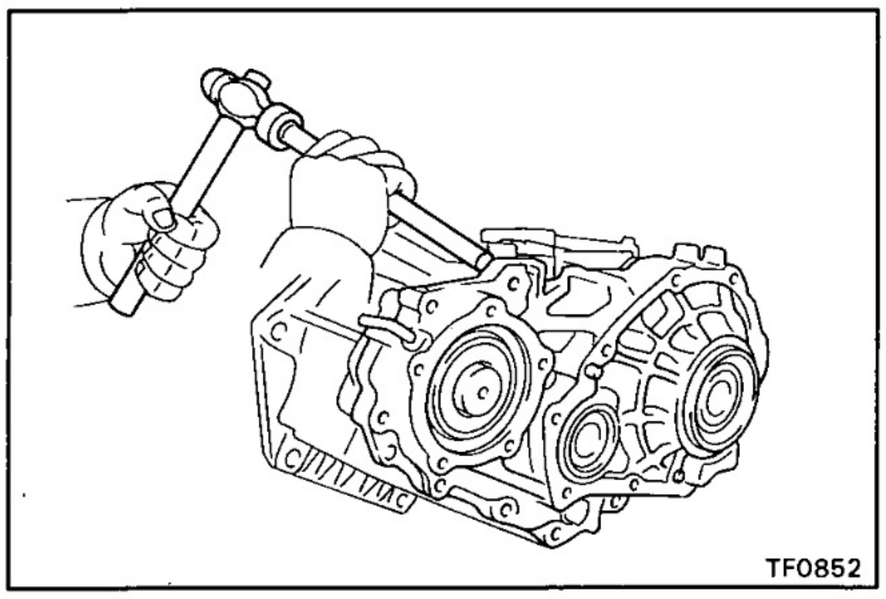
TF0852

(c) Using a brass bar and hammer, tap the rear case and separate it.

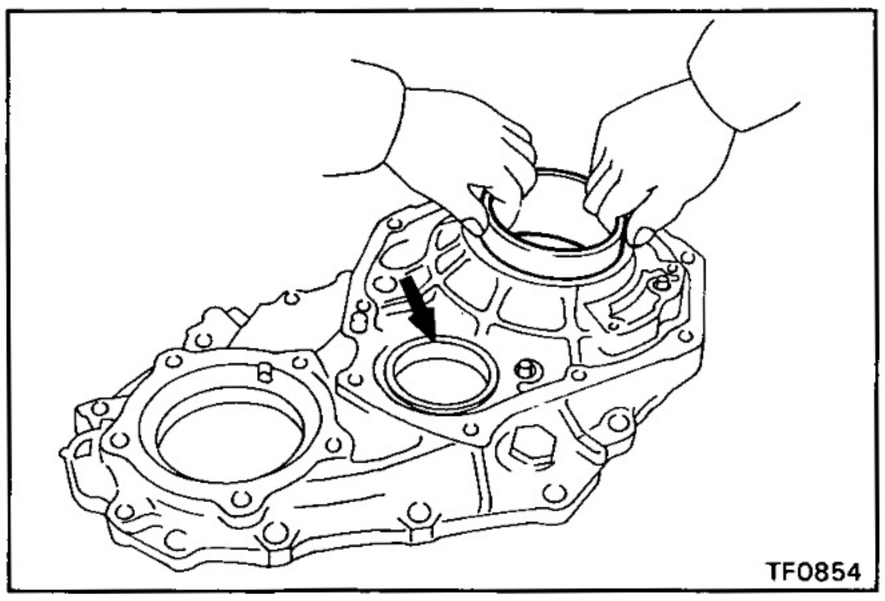

17. REMOVE TWO BEARING RACES FROM REAR CASE

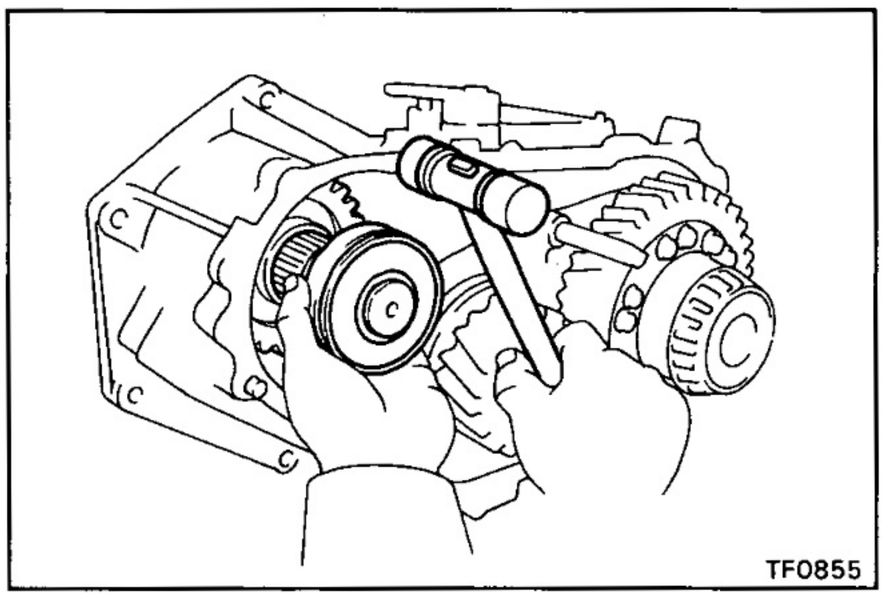

18. REMOVE INPUT SHAFT ASSEMBLY

Using a plastic hammer, remove the input shaft assembly.

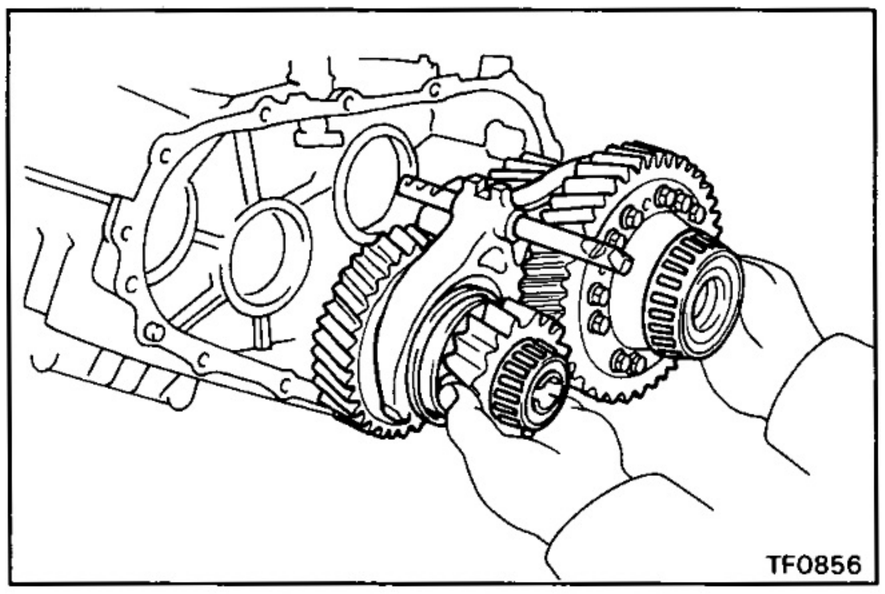

19. REMOVE IDLE GEAR ASSEMBLY, CENTER DIFFERENTIAL ASSEMBLY AND HIGH AND LOW SHIFT FORK ASSEMBLY

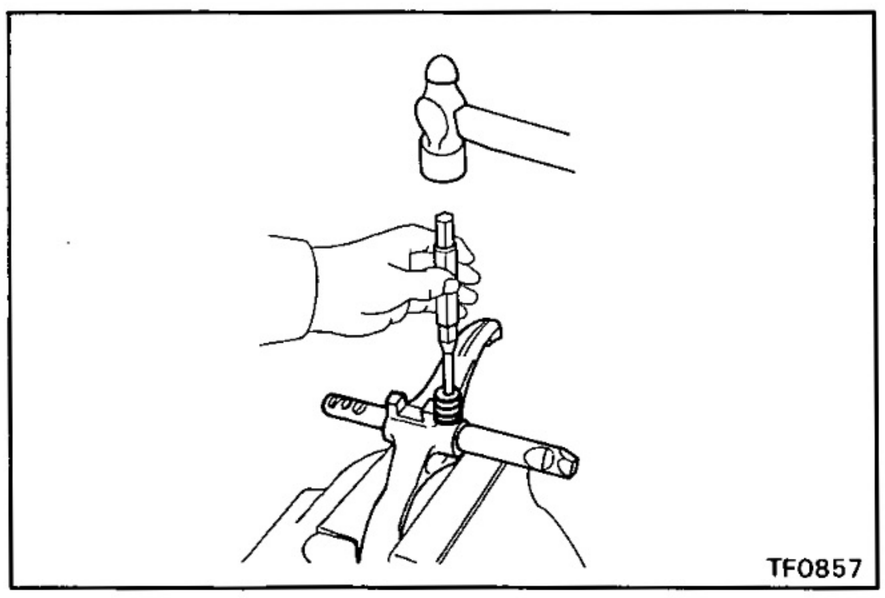

20. SEPARATE SHIFT FORK NO.1 AND FORK SHAFT

(a) Using a pin punch and hammer, drive out the slotted spring pin.

(b) Separate the shift fork No.1 and fork shaft.

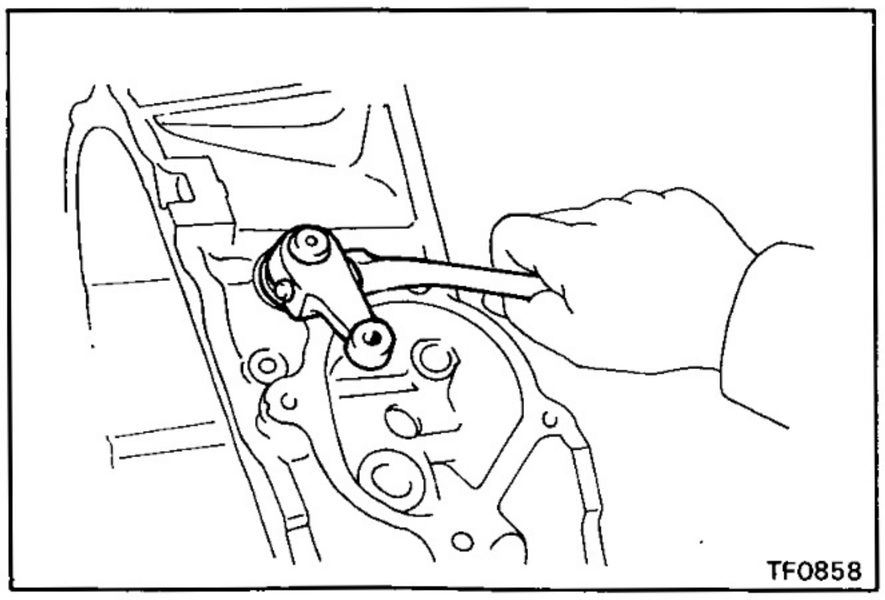

21. REMOVE SHIFT OUTER LEVER AND INNER LEVER

(a) Remove the nut and washer.

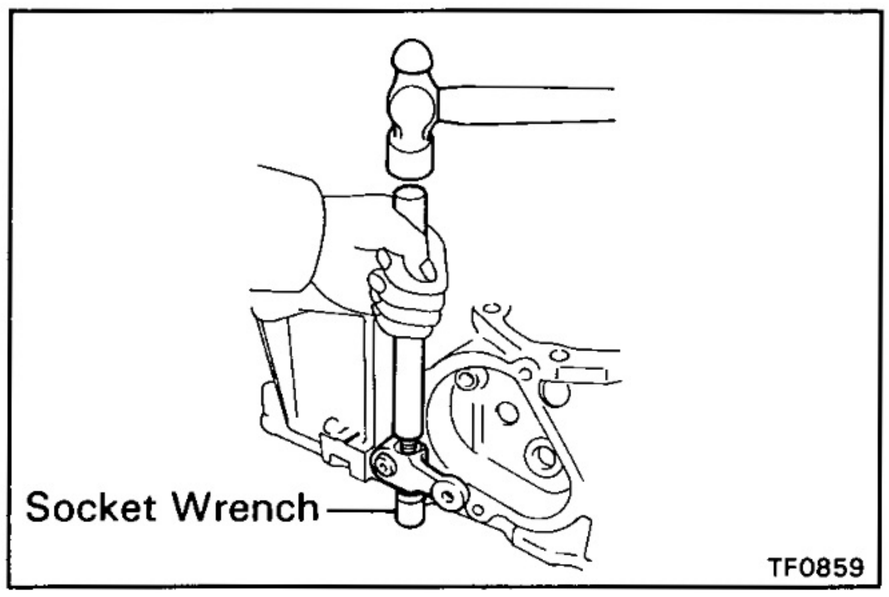

(b) Using a brass bar, hammer and socket wrench, tap out the lever lock pin.

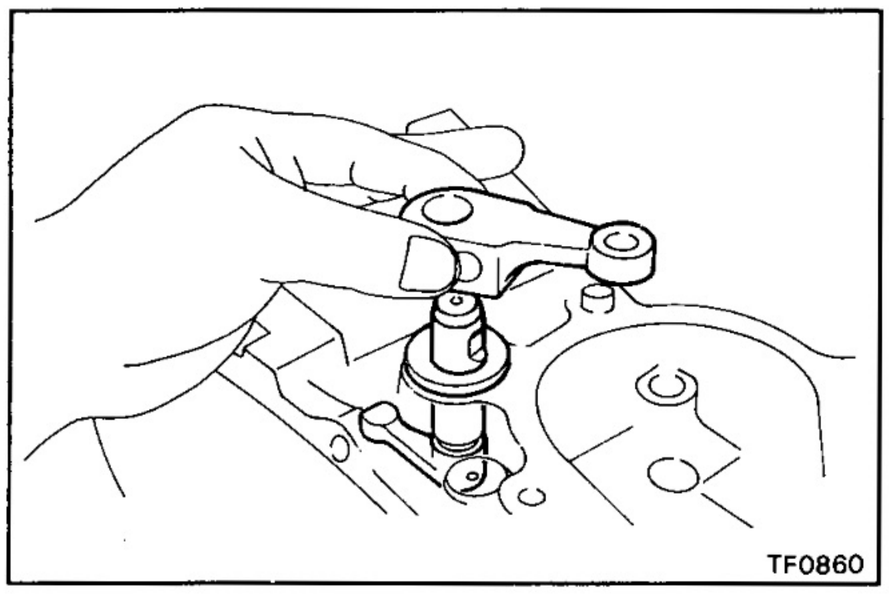

(c) Remove the shift outer lever and inner lever.

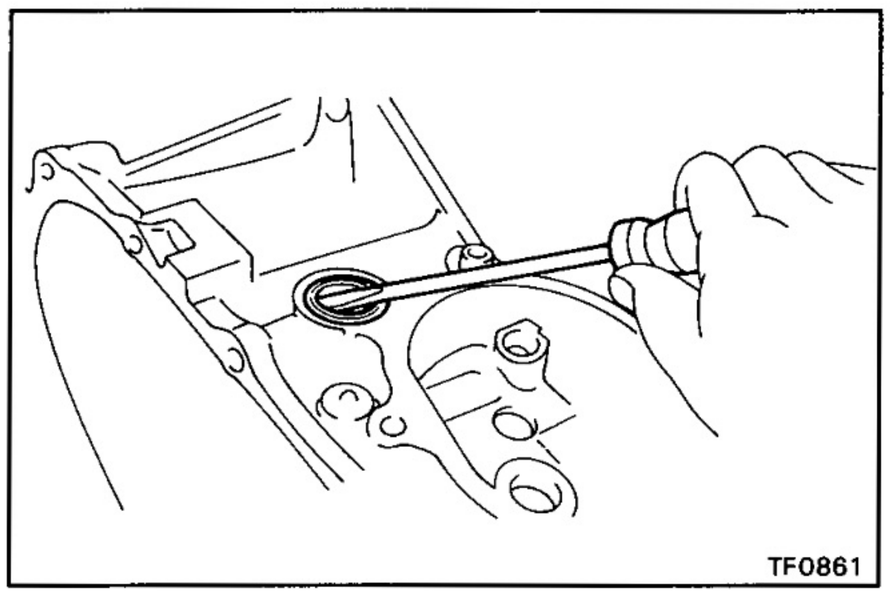

22. IF NECESSARY, REPLACE SHIFT LEVER OIL SEAL

(a) Using a screwdriver, pry out the oil seal.

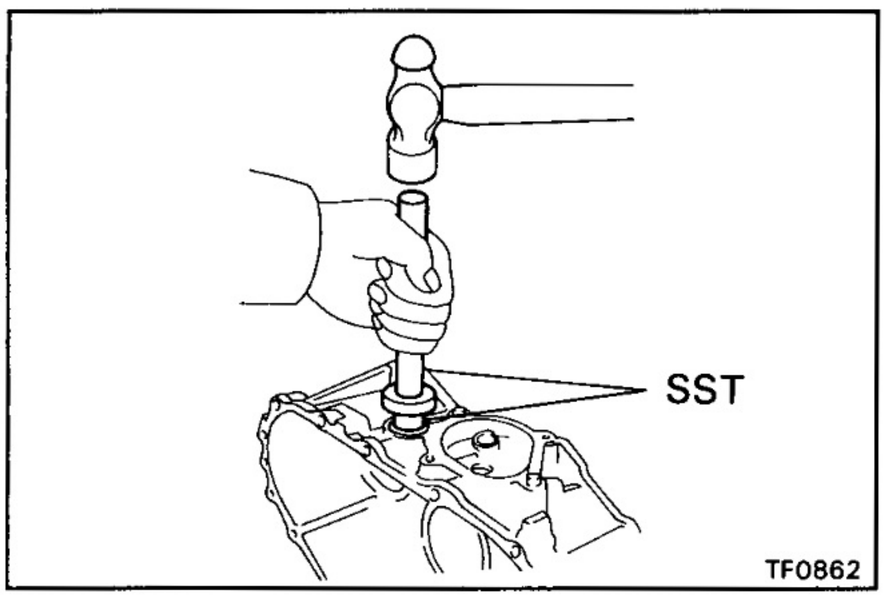

(b) Using SST and a hammer, drive in a new oil seal.

SST 09608-20012 (09608-00080, 09608-03020)

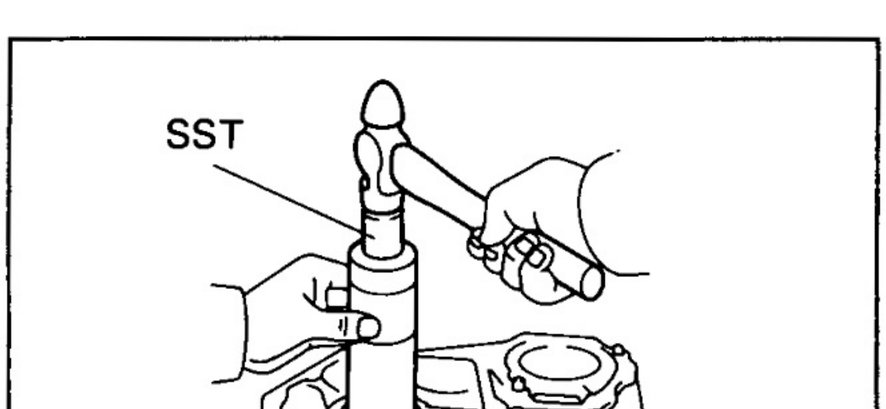

23. IF NECESSARY, REPLACE INPUT SHAFT OIL SEAL

(a) Using SST and a hammer, drive out the oil seal.

SST 09316-60010 (09316-00010)

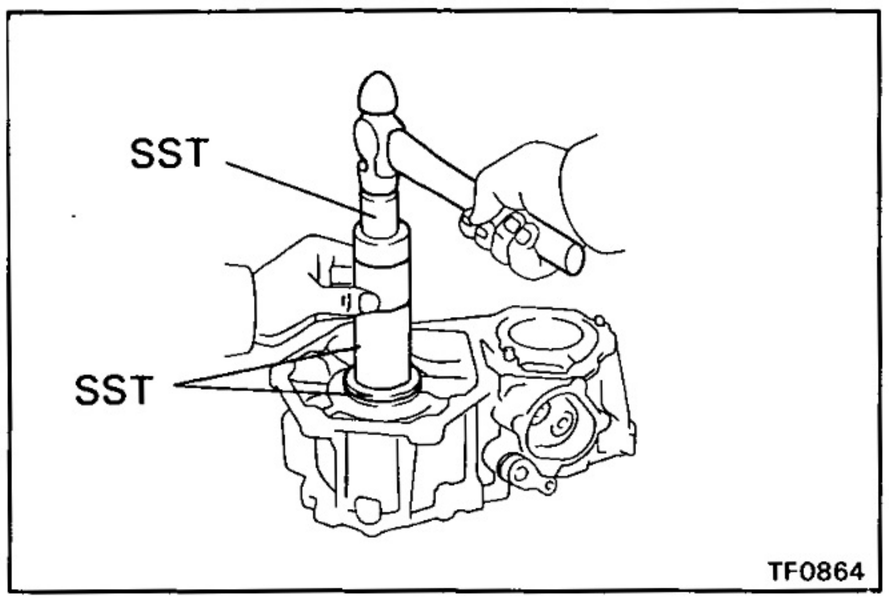

(b) Using SST and a hammer, drive in a new oil seal.
SST 09316-60010 (09316-00010, 09316-00030)

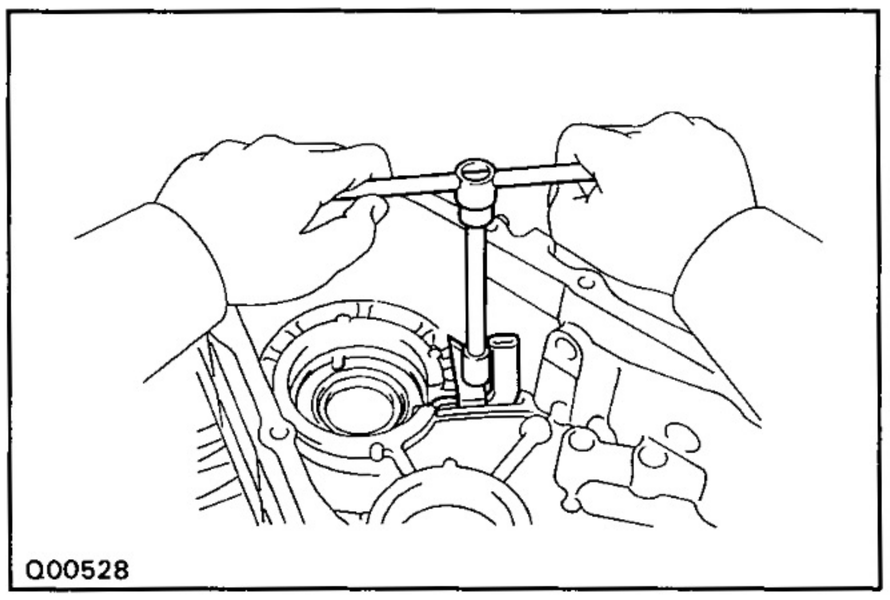

24. REMOVE OIL RECEIVER FROM FRONT CASE

Remove the set bolt and oil receiver.

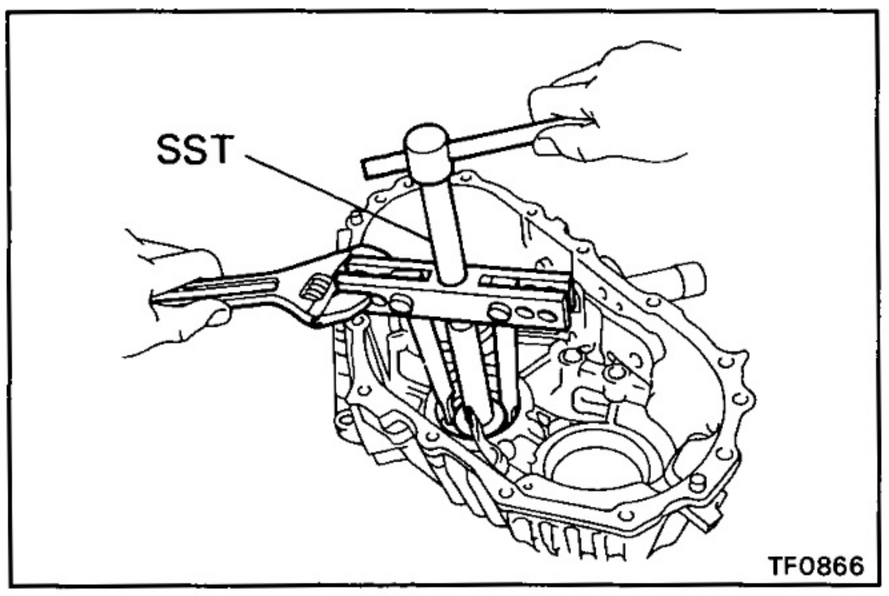

25. REMOVE TWO BEARING RACES FROM FRONT CASE

(a) Using SST, remove the bearing race.
SST 09950-20017

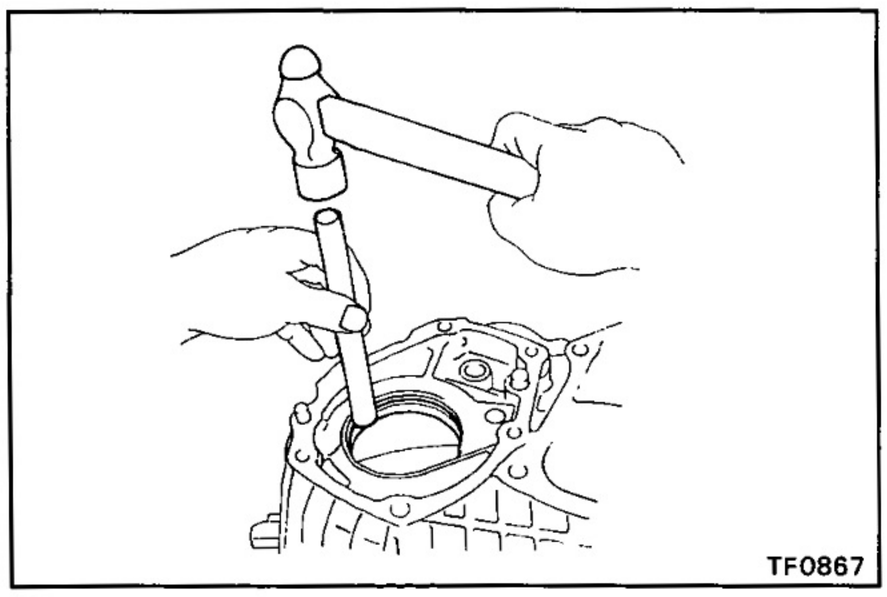

(b) Using a brass bar and hammer, remove the bearing race.

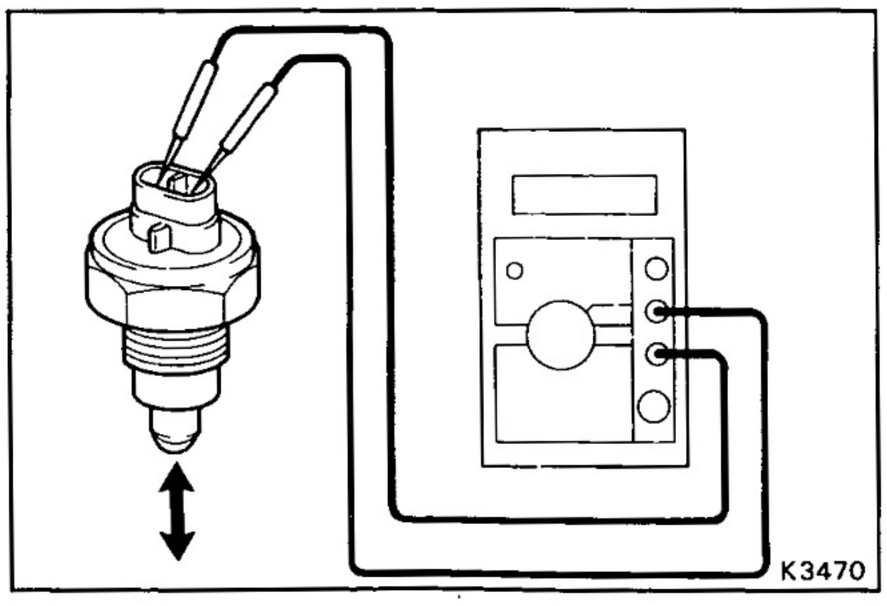

26. INSPECTION OF TRANSFER INDICATOR SWITCHES

Check that there is continuity between terminals as shown.

Switch Position	Specified
Push	Continuity
Free	No continuity

If continuity is not as specified, replace the switch.

COMPONENT PARTS

Input Shaft Assembly

COMPONENTS

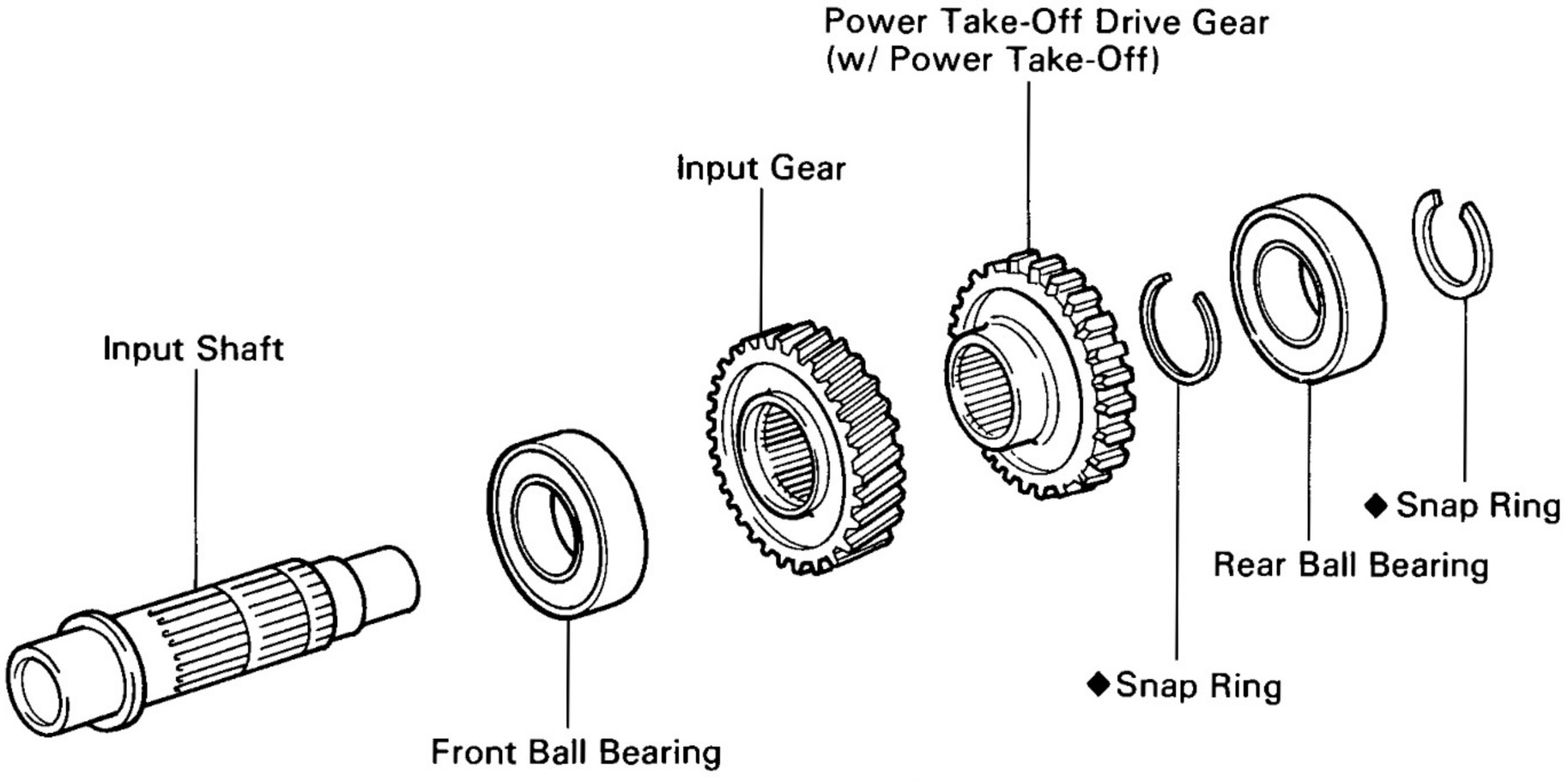

◆ Non-reusable part

TF0868

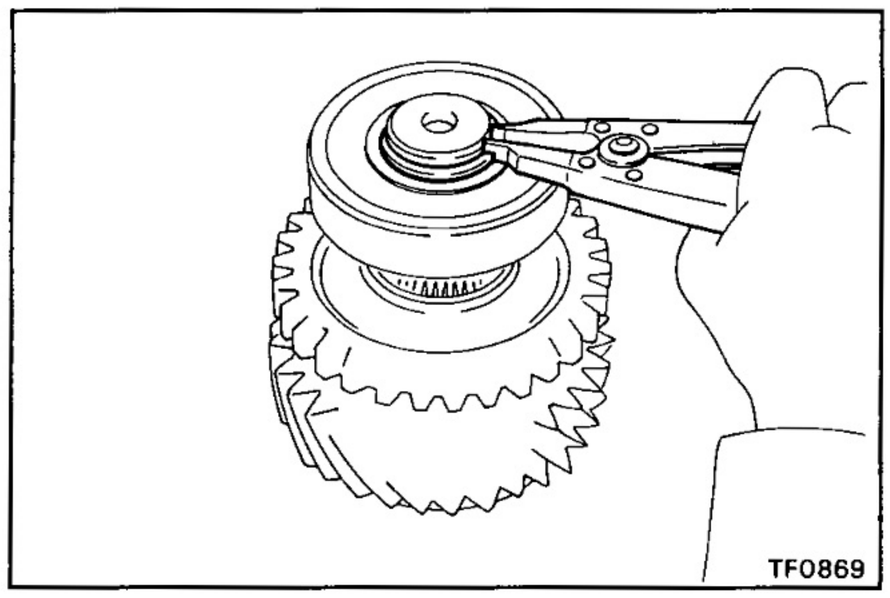

TF0869

DISASSEMBLY OF INPUT SHAFT ASSEMBLY

1. REMOVE REAR BALL BEARING

(a) Using snap ring pliers, remove the snap ring.

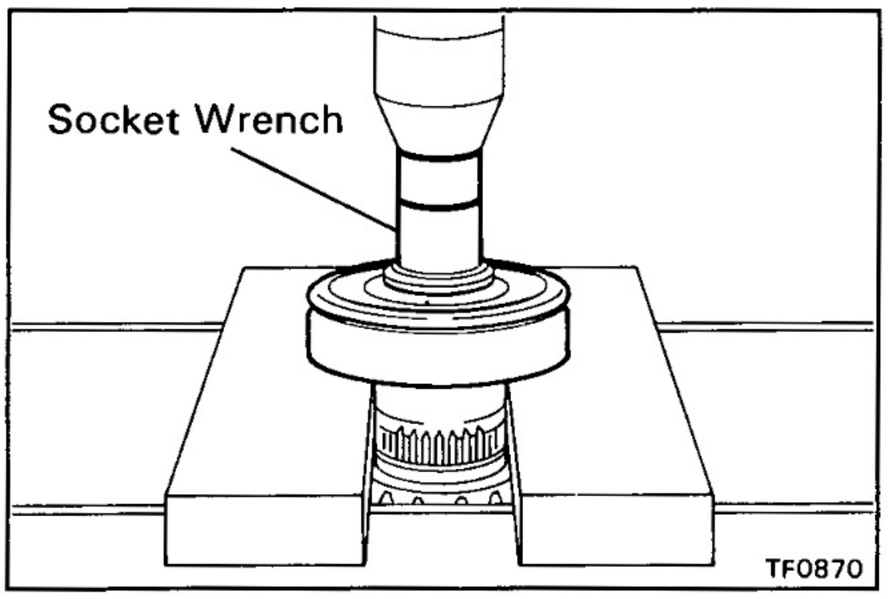

TF0870

(b) Using a press and socket wrench, remove the rear ball bearing.

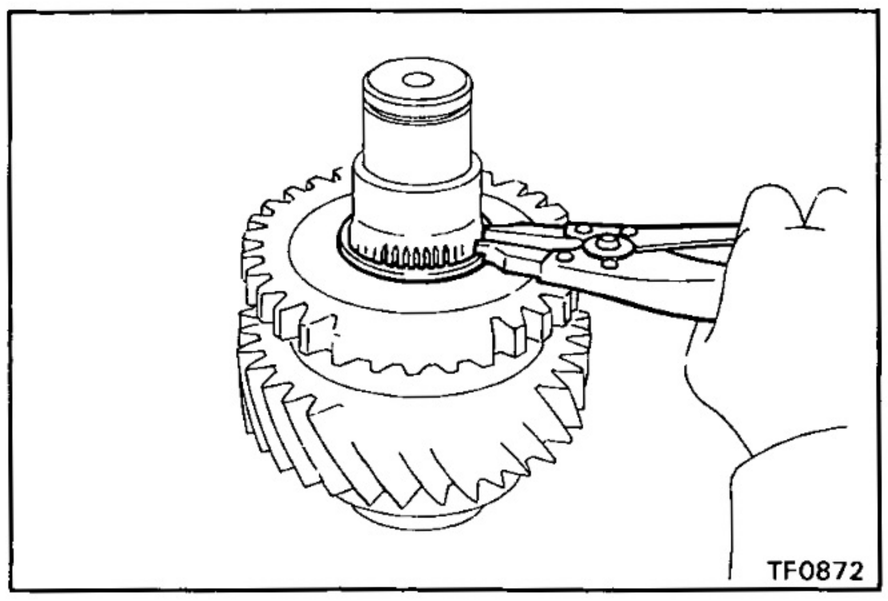

**2. (w/ POWER TAKE-OFF)
REMOVE POWER TAKE-OFF DRIVE GEAR**

(a) Using snap ring pliers, remove the snap ring.

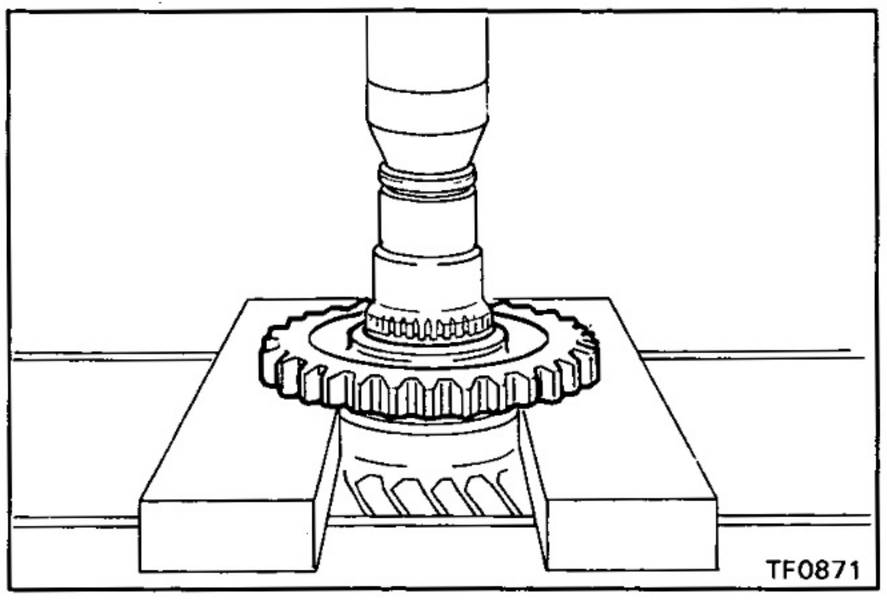

(b) Using a press, remove the power take-off drive gear.

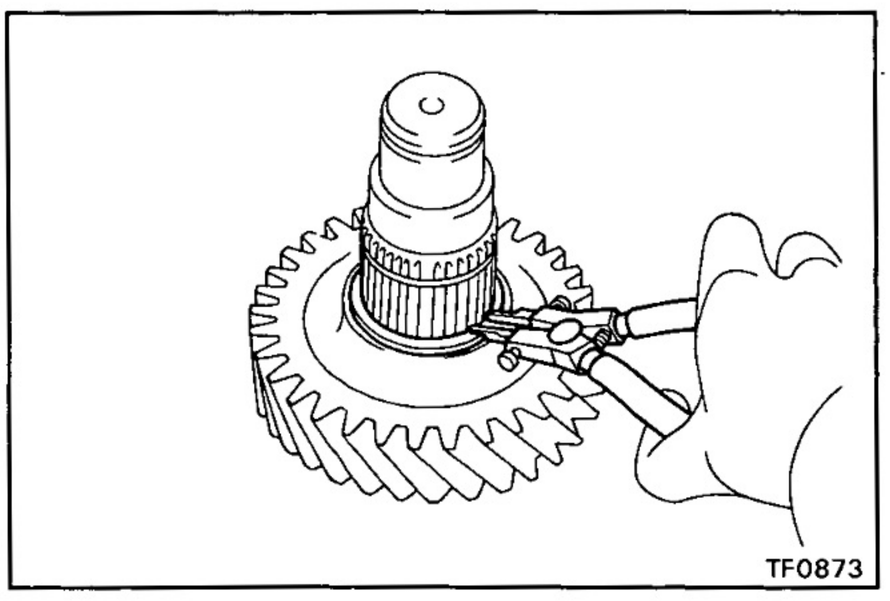

3. REMOVE INPUT GEAR

(a) (w/o Power take-off)
Using snap ring pliers, remove the snap ring.

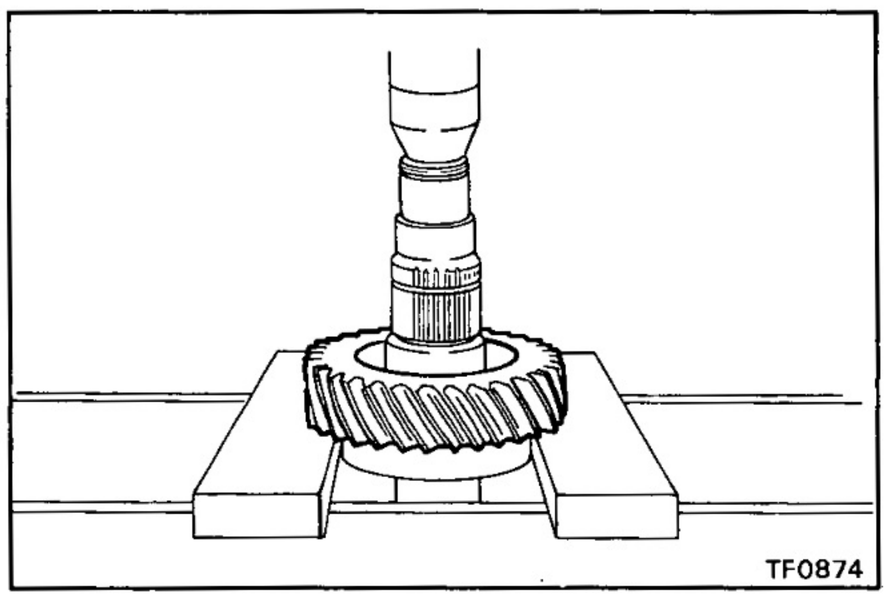

(b) Using a press, remove the input gear.

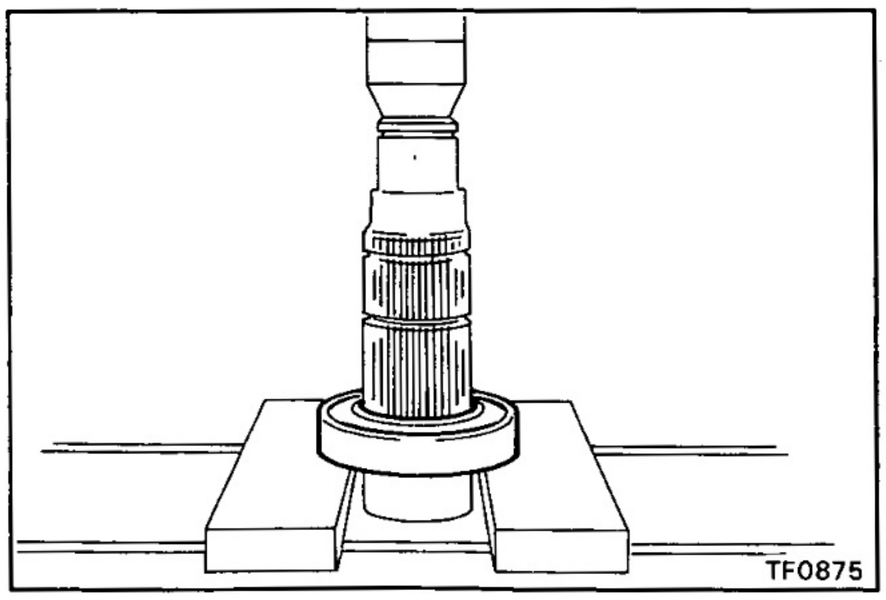

4. REMOVE FRONT BALL BEARING

Using a press, remove the front ball bearing.

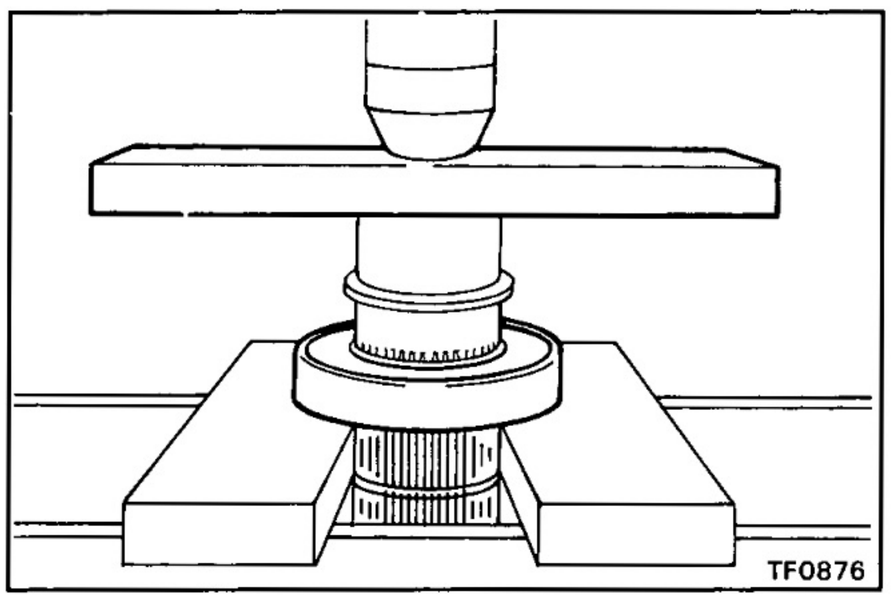

ASSEMBLY OF INPUT SHAFT ASSEMBLY

1. INSTALL FRONT BALL BEARING

Using a press, install the front ball bearing.

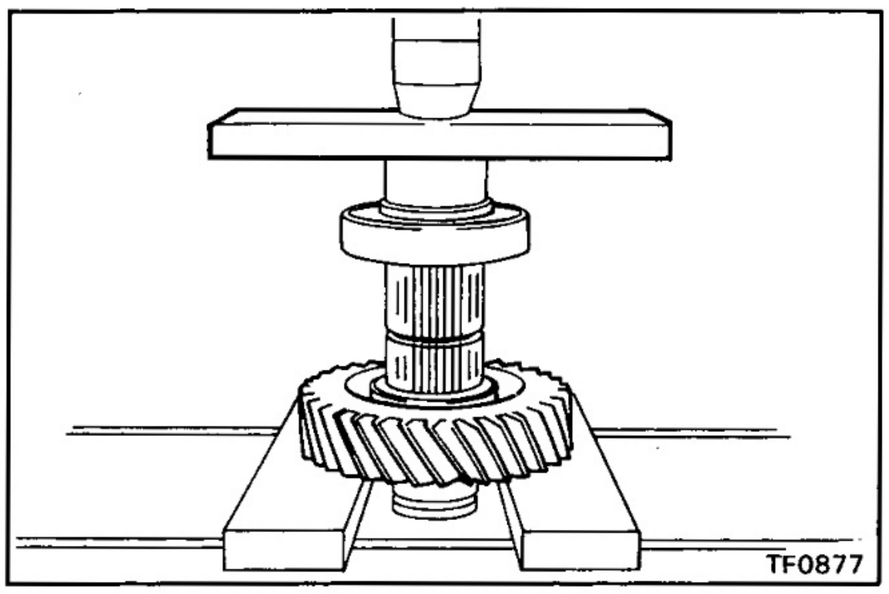

2. INSTALL INPUT GEAR

(a) Using a press, install the input gear.

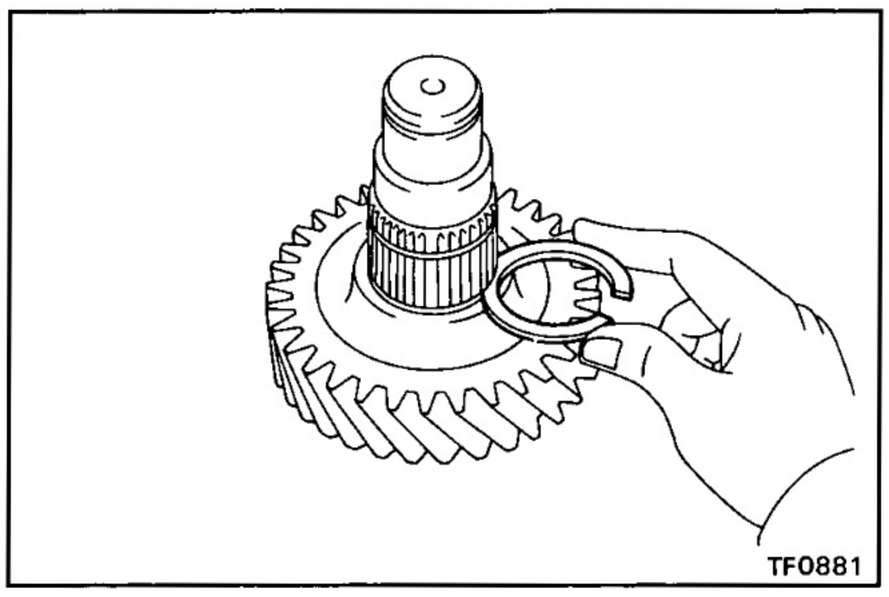

(b) (w/o Power take-off)
Select a snap ring that will allow minimum axial play and install it on the shaft.

Mark	Thickness mm (in.)
A	2.0 (0.0787)
B	2.1 (0.0827)
C	2.2 (0.0866)
D	2.3 (0.0906)
E	2.4 (0.0945)
F	2.5 (0.0984)
G	2.6 (0.1024)
H	2.7 (0.1063)
J	2.8 (0.1102)

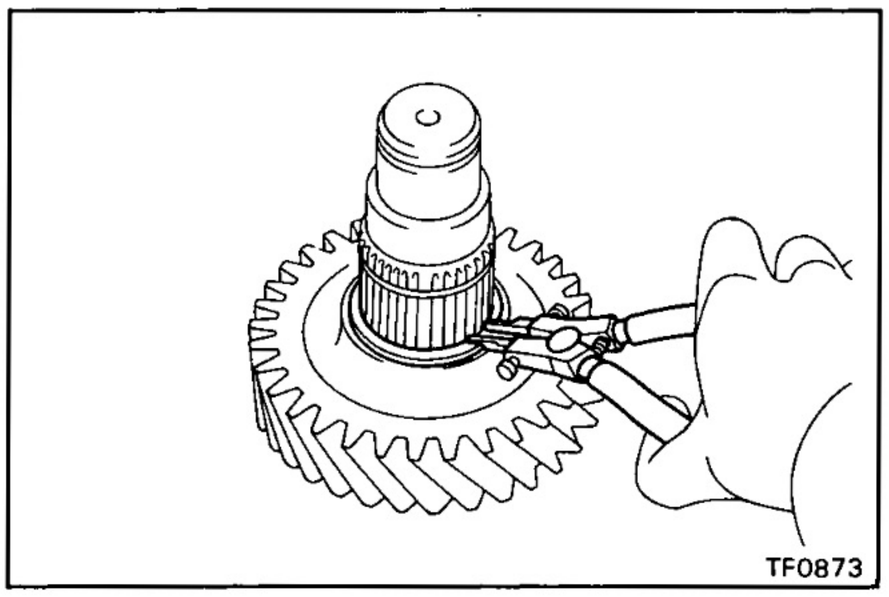

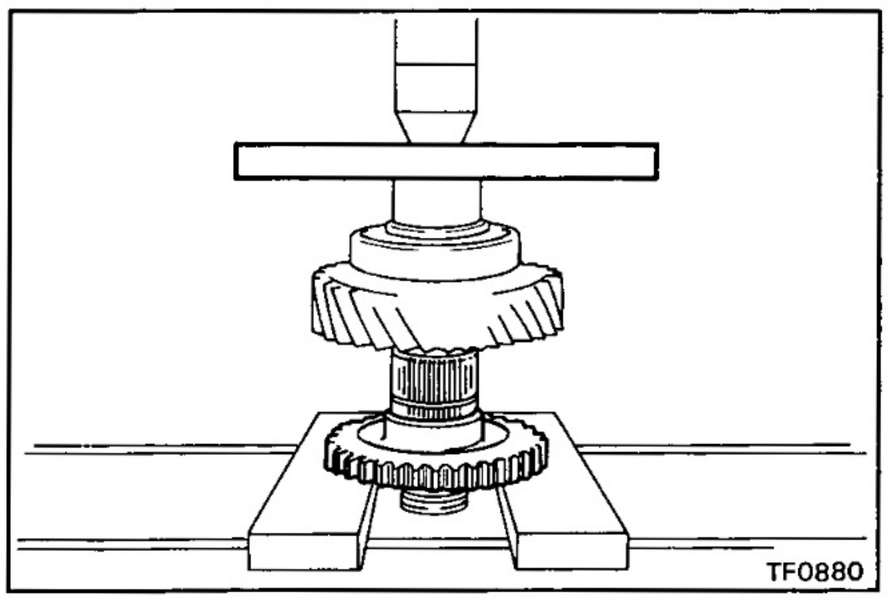

3. (w/ POWER TAKE-OFF)
INSTALL POWER TAKE-OFF GEAR

(a) Using a press, install the power take-off gear.

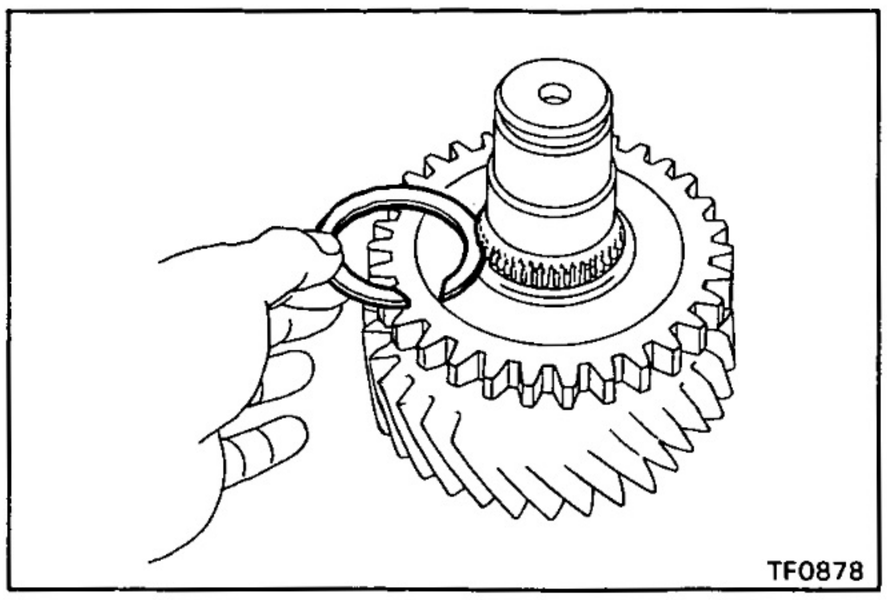
TF0878

(b) Select a snap ring that will allow minimum axial play and install it on the shaft.

Mark	Thickness mm (in.)
A	2.0 (0.0787)
B	2.1 (0.0827)
C	2.2 (0.0866)
D	2.3 (0.0906)
E	2.4 (0.0945)
F	2.5 (0.0984)
G	2.6 (0.1024)
H	2.7 (0.1063)
J	2.8 (0.1102)

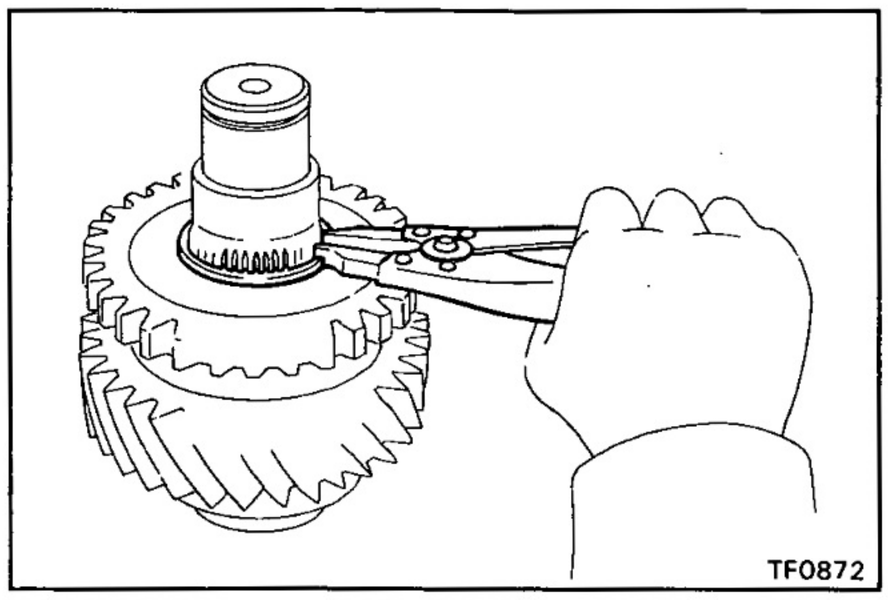
TF0872

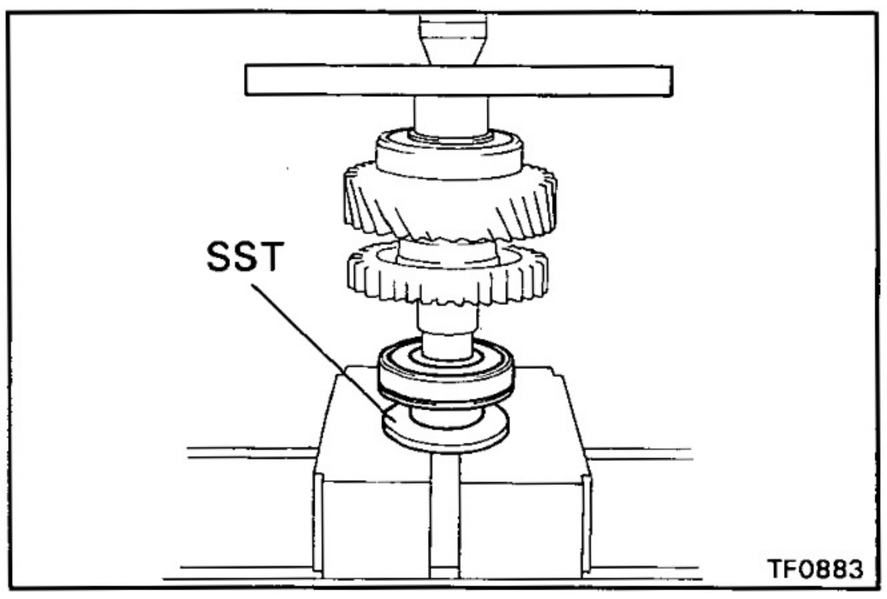

TF0883

4. INSTALL REAR BALL BEARING

(a) Using SST and a press, install the rear ball bearing.
SST 09316-60010 (09316-00030)

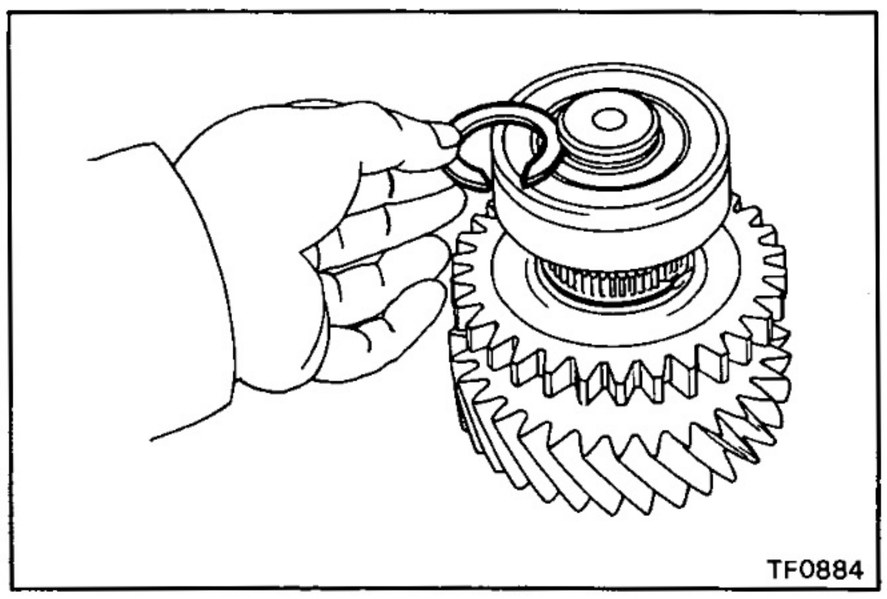
TF0884

(b) Select a snap ring that will allow minimum axial play.

Mark	Thickness mm (in.)
A	2.0 (0.0787)
B	2.1 (0.0827)
C	2.2 (0.0866)
D	2.3 (0.0906)
E	2.4 (0.0945)

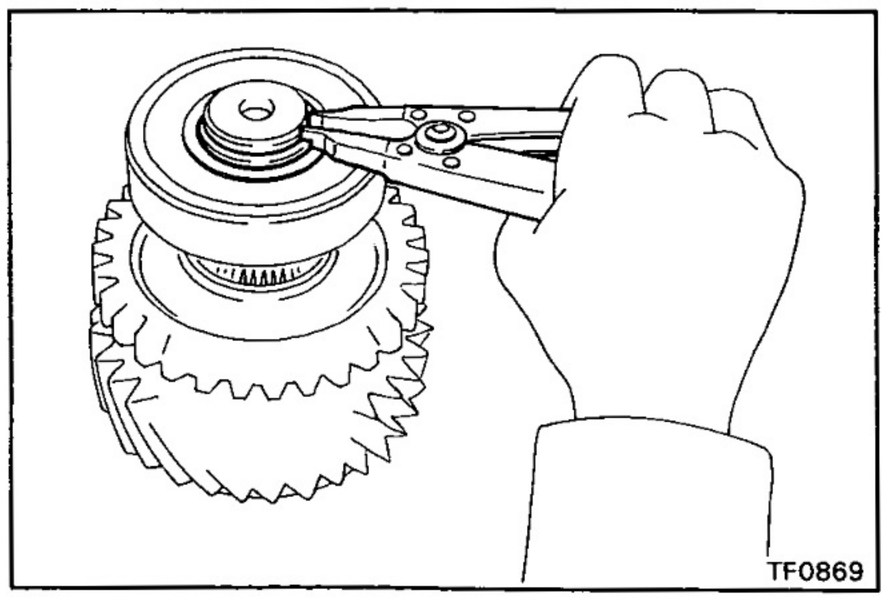
TF0869

(c) Using snap ring pliers, install the snap ring.

Idler Gear Assembly

COMPONENTS

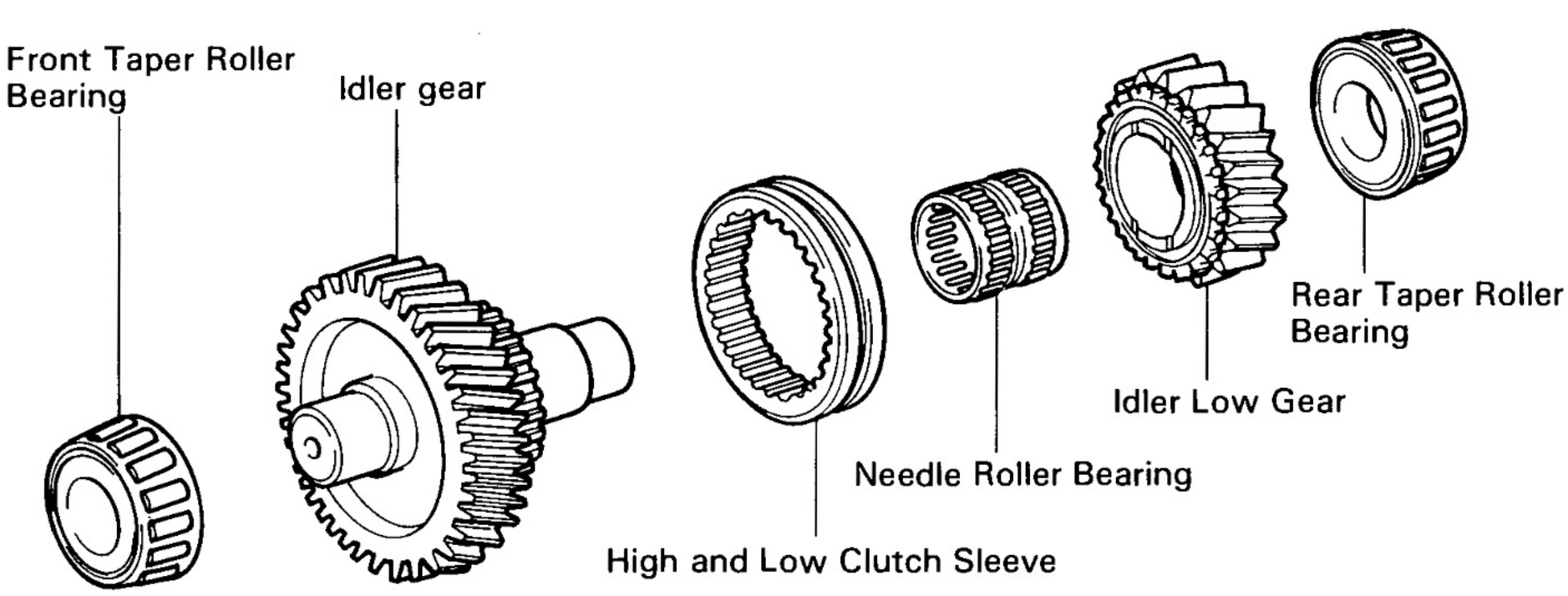

TF0886

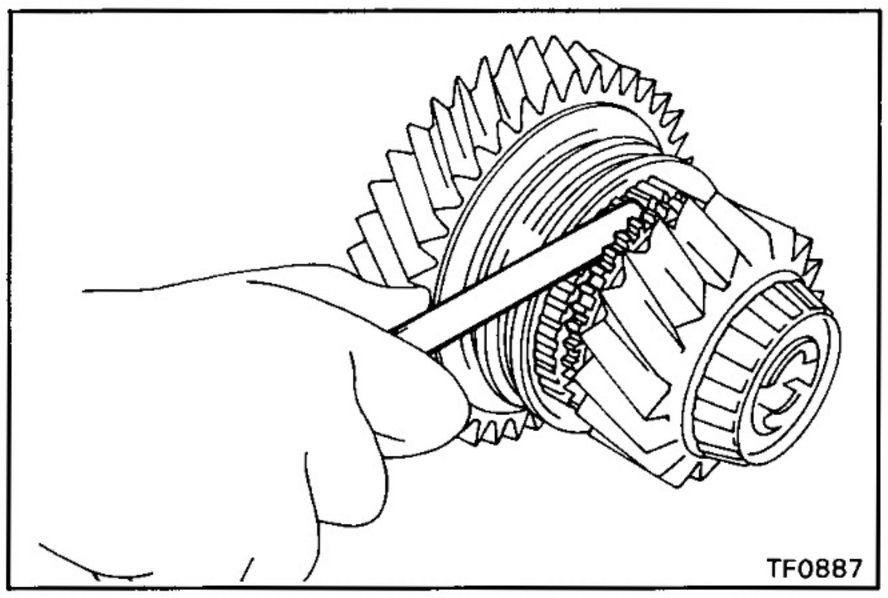

TF0887

DISASSEMBLY OF IDLER GEAR ASSEMBLY

1. CHECK OIL CLEARANCE AND THRUST CLEARANCE OF IDLER LOW GEAR

(a) Using a feeler gauge, measure the idler low gear thrust clearance.

Standard clearance: 0.125 — 0.275 mm (0.0049 — 0.0108 in.)

Maximum clearance: 0.275 mm (0.0108 in.)

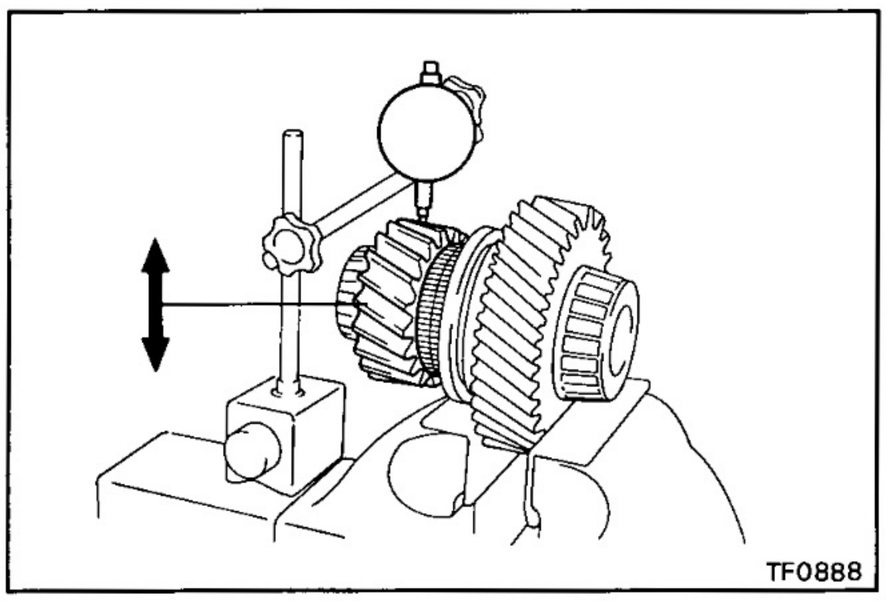

TF0888

(b) Using a dial indicator, measure the idler low gear oil clearance.

Standard clearance: 0.015 — 0.068 mm (0.0006 — 0.0027 in.)

Maximum clearance: 0.068 mm (0.0027 in.)

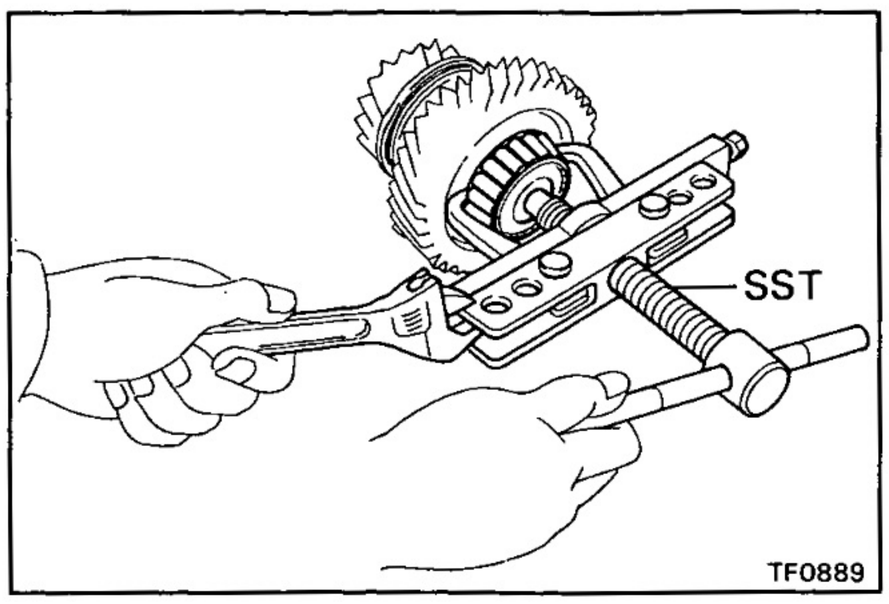

2. REMOVE FRONT TAPER ROLLER BEARING

Using SST, remove the front taper roller bearing.

SST 09950-20017

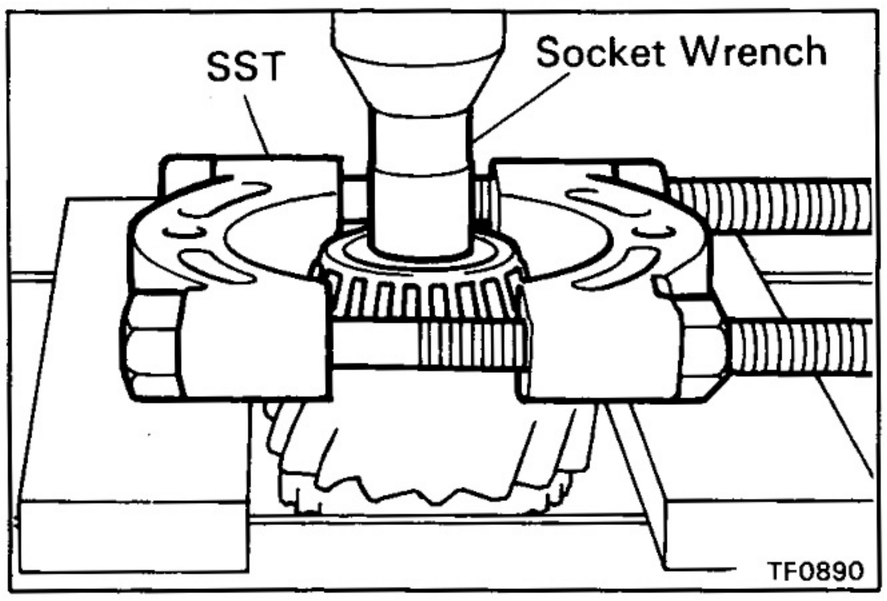

3. REMOVE REAR TAPER ROLLER BEARING

Using SST, press and socket wrench, remove the rear taper roller bearing.

SST 09950-00020

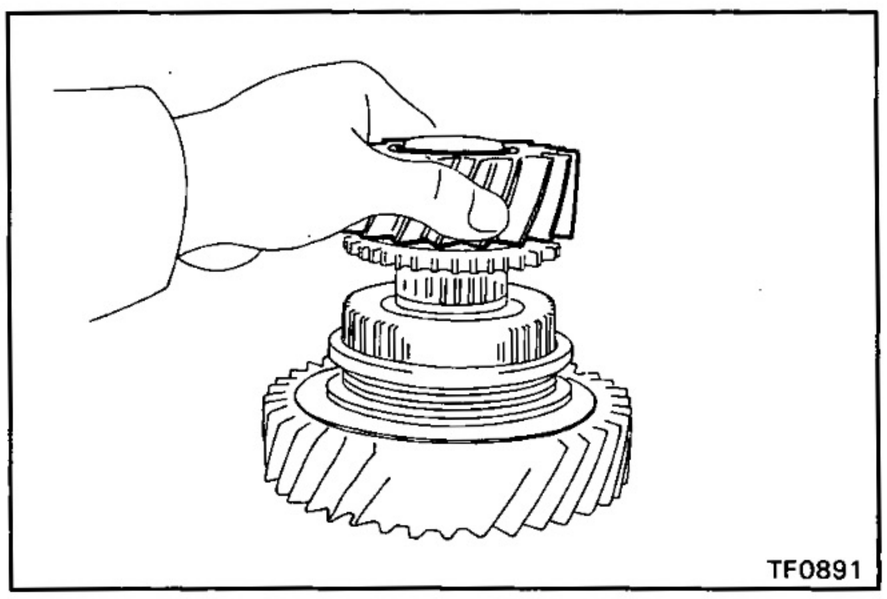

4. REMOVE IDLER LOW GEAR AND NEEDLE ROLLER BEARING

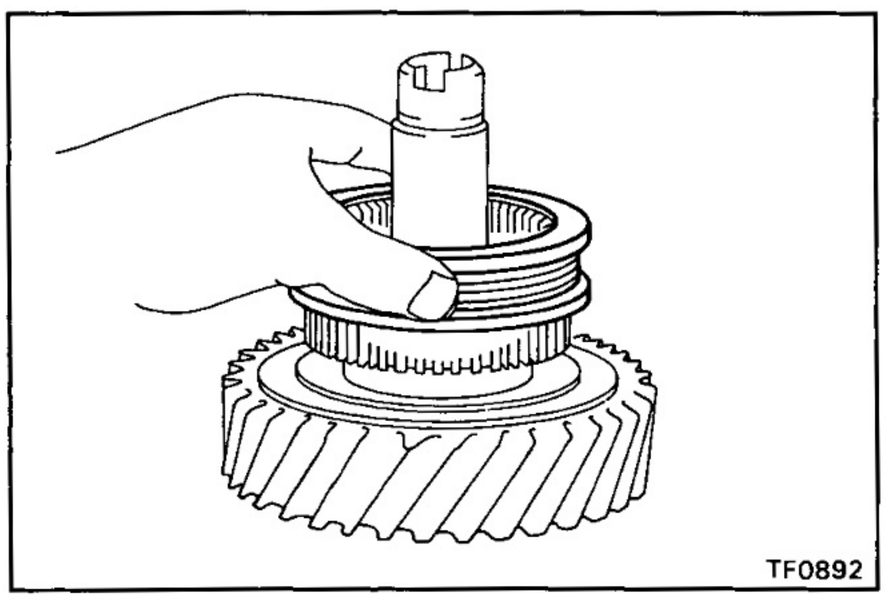

5. REMOVE HIGH AND LOW CLUTCH SLEEVE

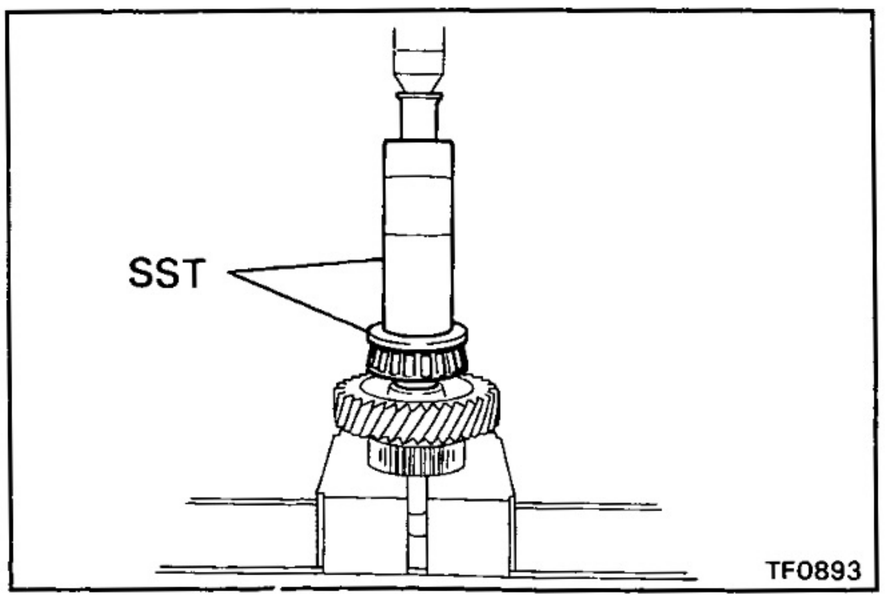

ASSEMBLY OF IDLER GEAR ASSEMBLY

1. INSTALL FRONT TAPER ROLLER BEARING

Using SST and a press, install the front taper roller bearing.

SST 09316-60010 (09316-00010, 09316-00030)

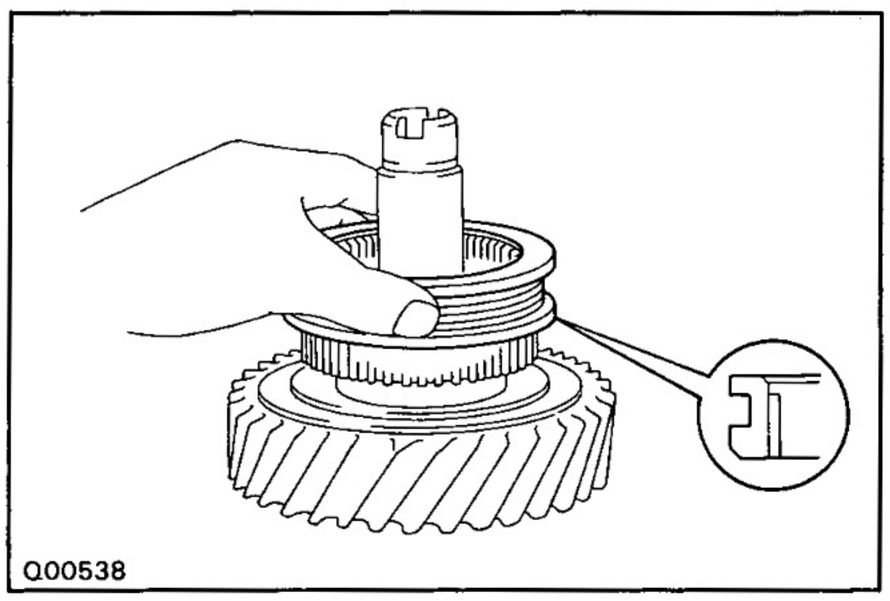
Q00538

2. INSTALL HIGH AND LOW CLUTCH SLEEVE

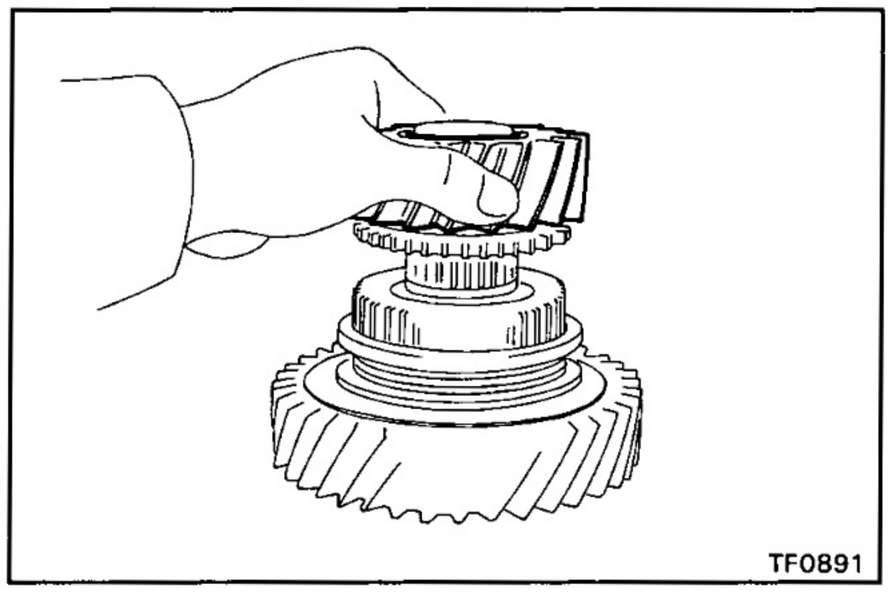
TF0891

3. INSTALL NEEDLE ROLLER BEARING AND IDLER LOW GEAR

(a) Apply gear oil to the needle roller bearing.

(b) Install the needle roller bearing and idler low gear.

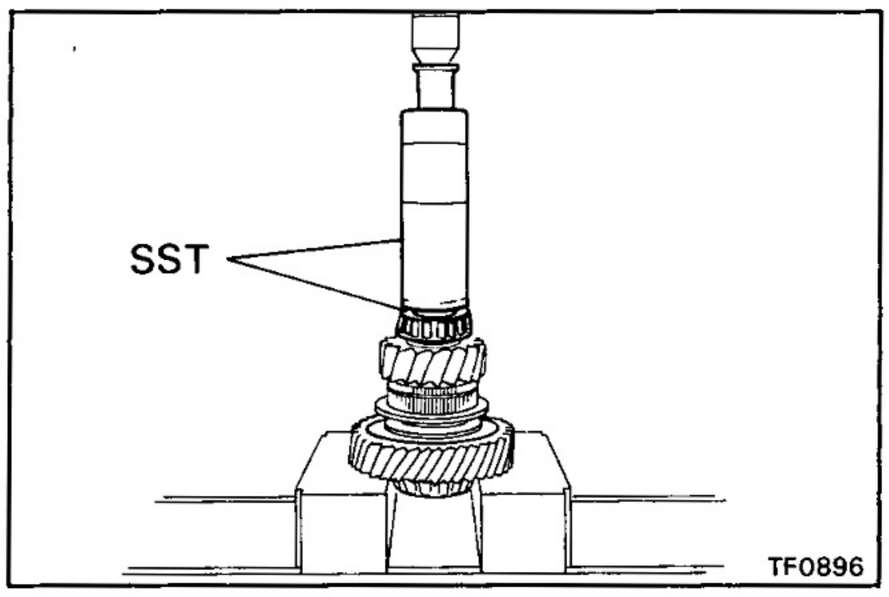

TF0896

4. INSTALL REAR TAPER ROLLER BEARING

Using SST and a press, install the rear taper roller bearing.

SST 09316-60010 (09316-00010, 09316-00070)

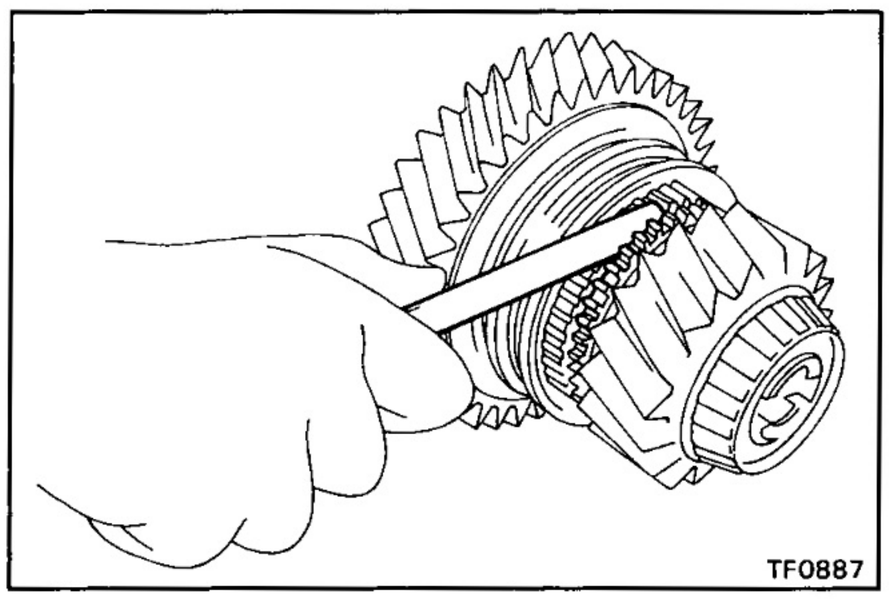
TF0887

5. MEASURE OIL CLEARANCE AND THRUST CLEARANCE OF IDLE LOW GEAR

(a) Using a feeler gauge, measure the idler low gear thrust clearance.

Standard clearance: **0.125 — 0.275 mm (0.0049 — 0.0108 in.)**

Maximum clearance: **0.275 mm (0.0108 in.)**

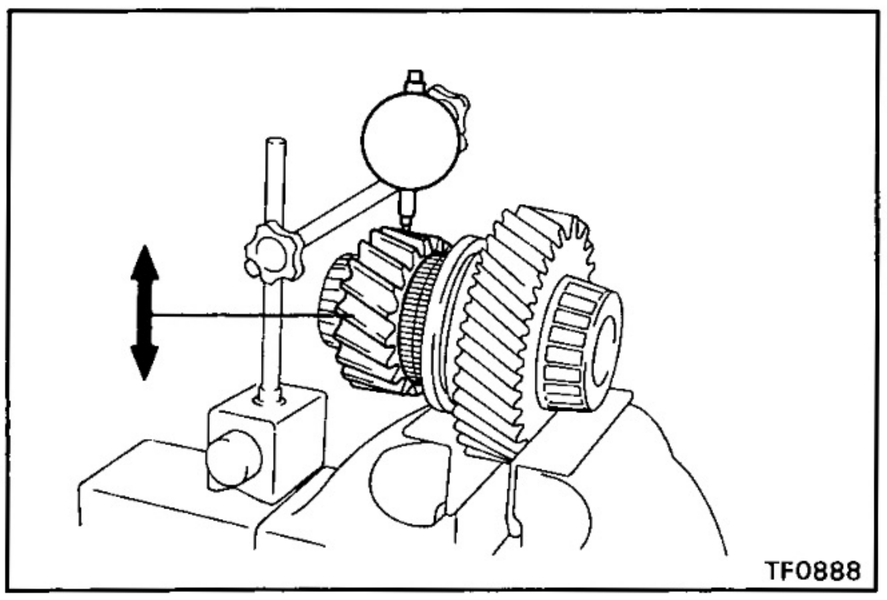
TF0888

(b) Using a dial indicator, measure the idler low gear oil clearance.

Standard clearance: **0.015 — 0.068 mm (0.0006 — 0.0027 in.)**

Maximum clearance: **0.068 mm (0.0027 in.)**

Center Differential Assembly

COMPONENTS

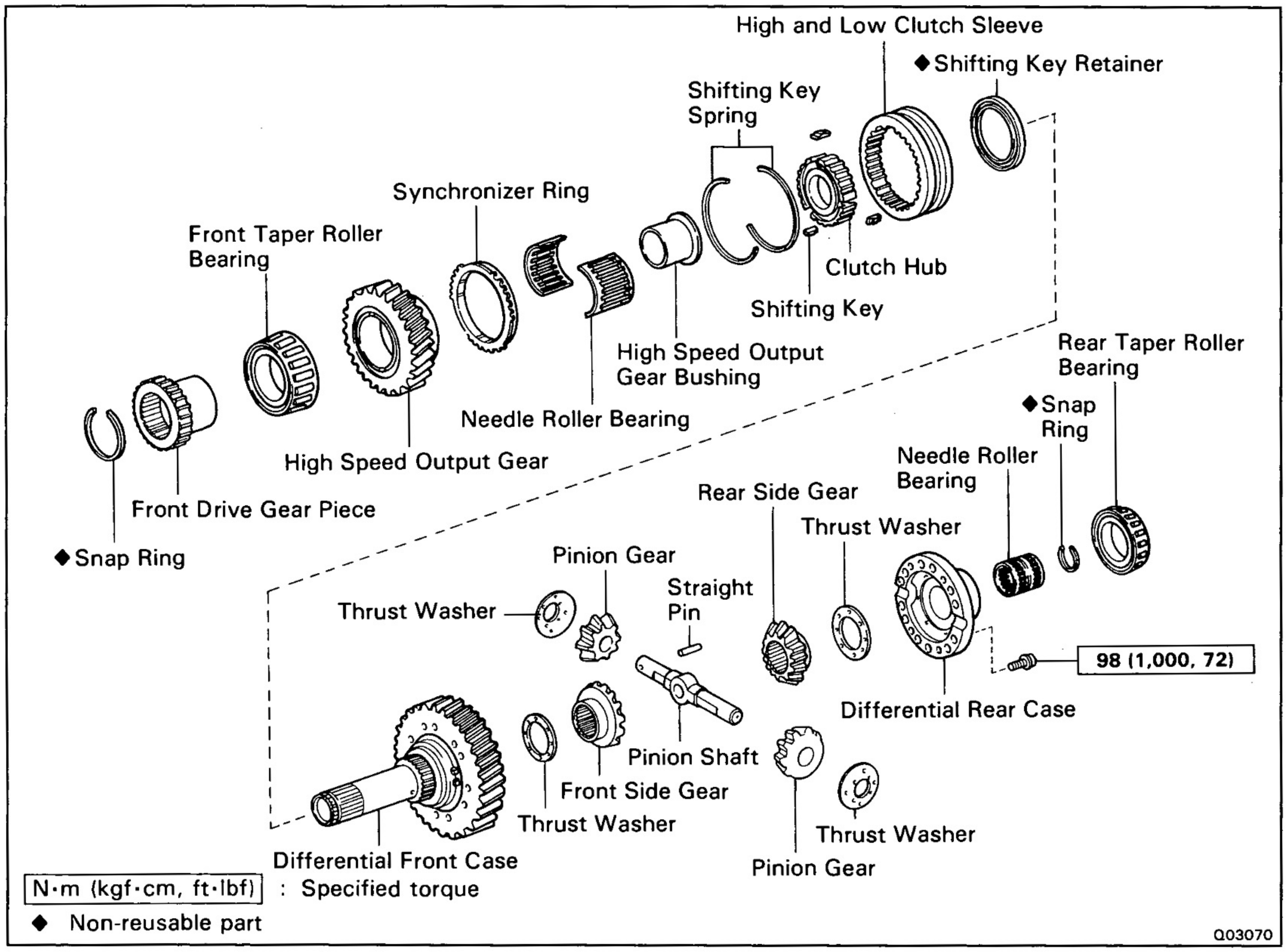

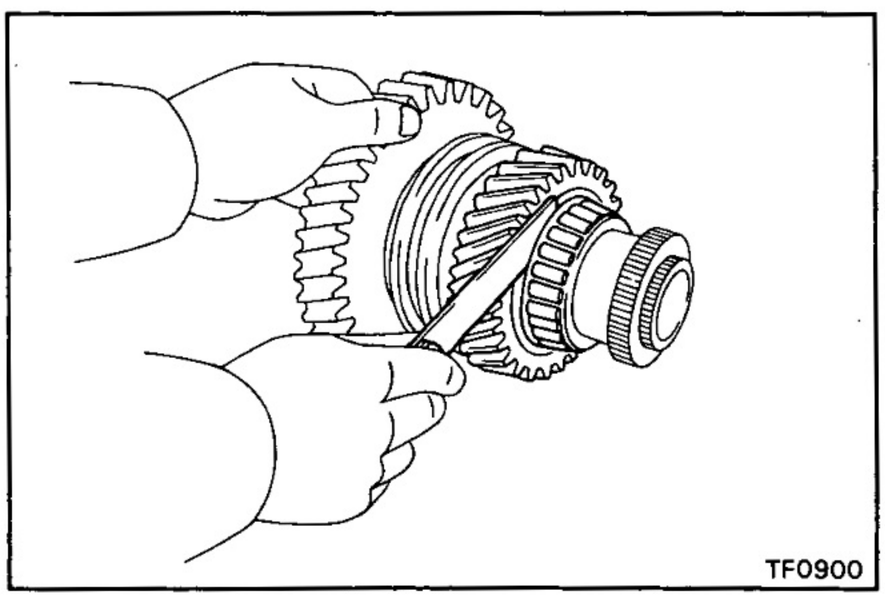

DISASSEMBLY OF CENTER DIFFERENTIAL ASSEMBLY

1. CHECK OIL CLEARANCE AND THRUST CLEARANCE OF HIGH SPEED GEAR

(a) Using a feeler gauge, measure the high speed gear thrust clearance.

Standard clearance: **0.10 — 0.25 mm (0.0039 — 0.0098 in.)**

Maximum clearance: **0.25 mm (0.0098 in.)**

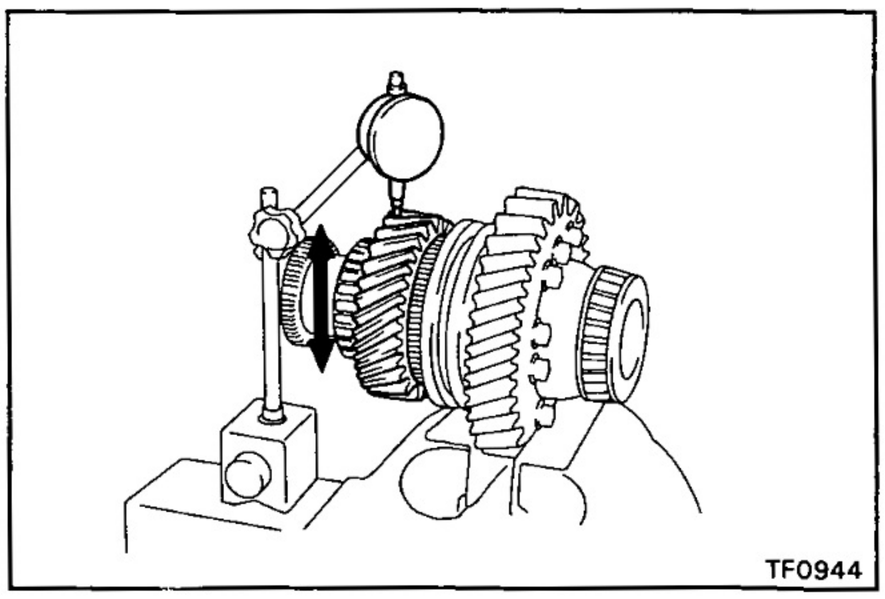

(b) Using a dial indicator, measure the high speed gear oil clearance.

Standard clearance: **0.015 — 0.071 mm (0.0006 — 0.0028 in.)**

Maximum clearance: **0.071 mm (0.0028 in.)**

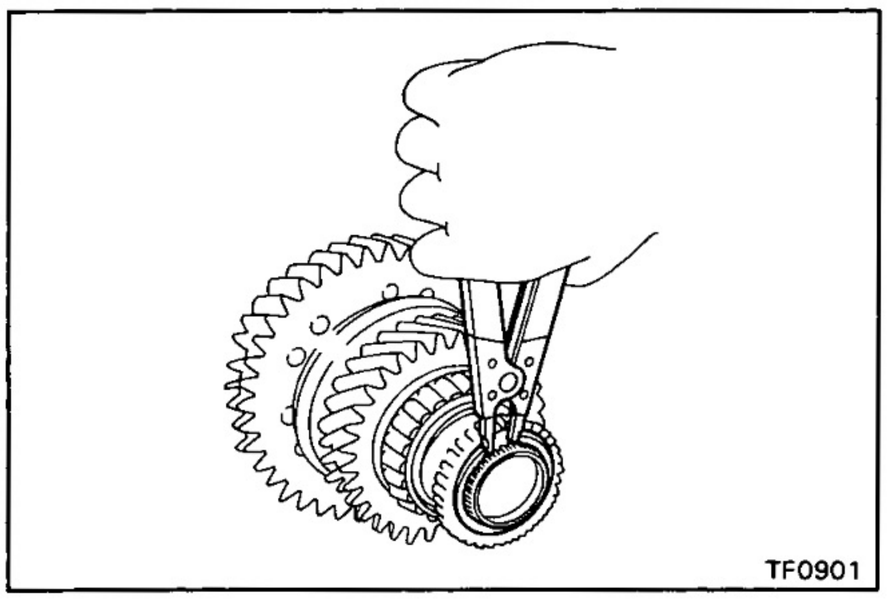

2. REMOVE FRONT DRIVE GEAR PIECE

(a) Using snap ring pliers, remove the snap ring.

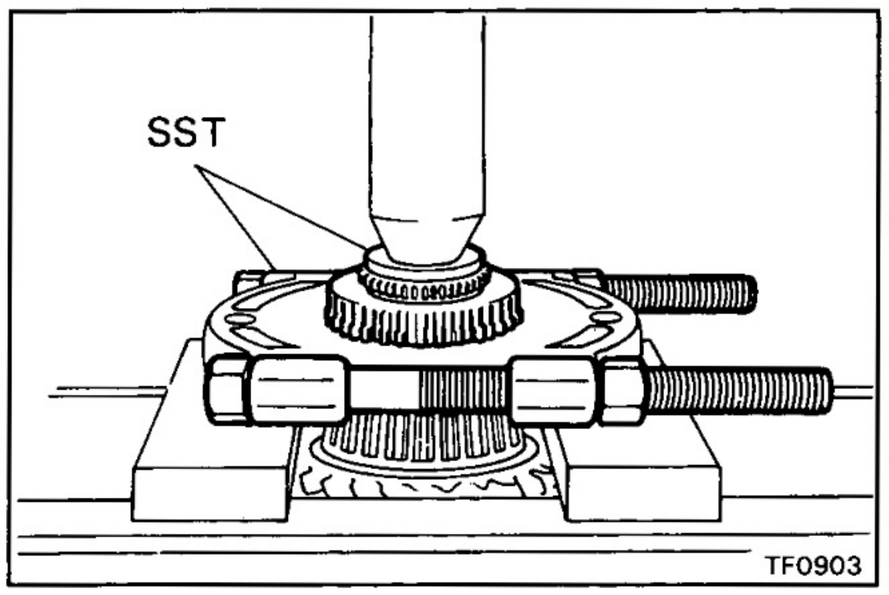

(b) Using SST and a press, remove the front drive gear piece.

SST 09950-20017, 09950-00020

NOTICE: Be careful do not drop the center differential assembly.

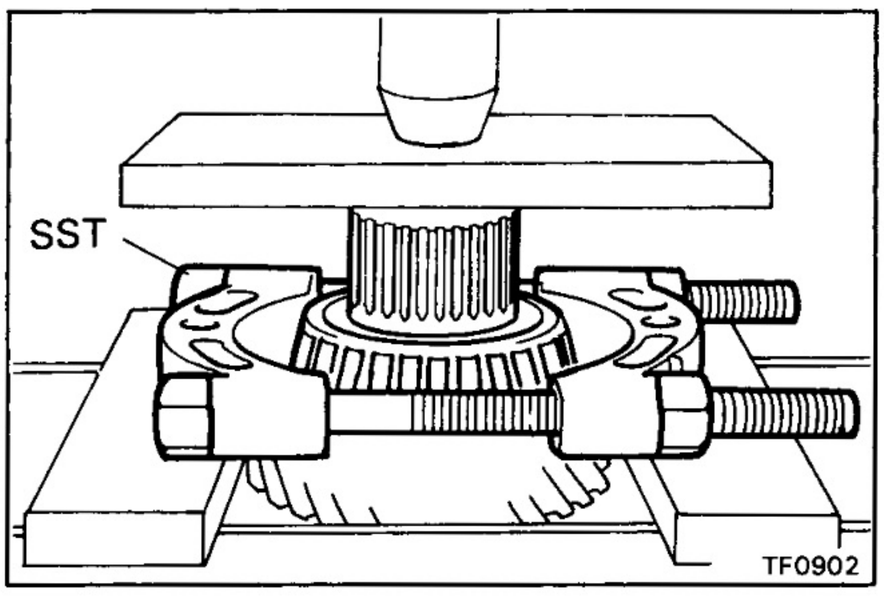

3. REMOVE FRONT TAPER ROLLER BEARING

Using SST and a press, remove the front taper roller bearing.

SST 09950-00020

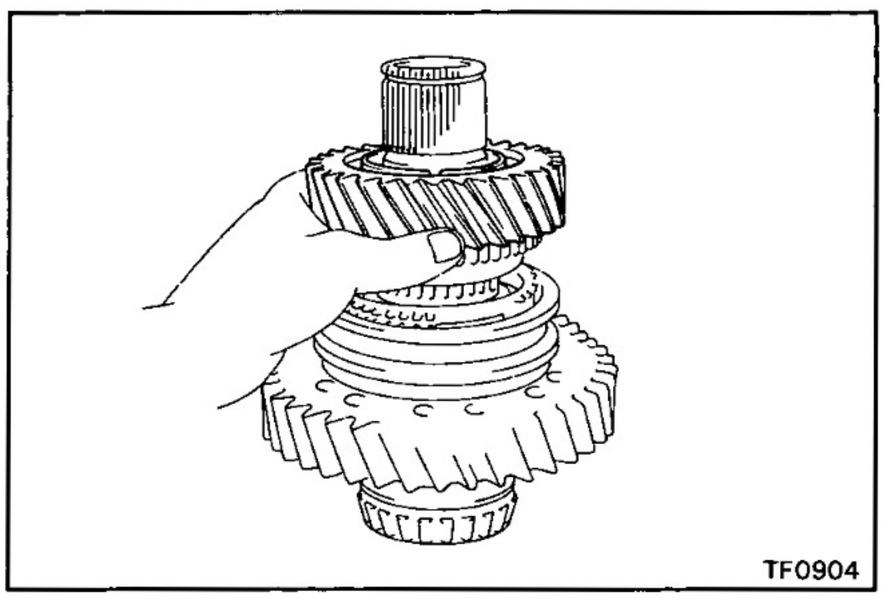

4. REMOVE HIGH SPEED OUTPUT GEAR AND SYNCHRONIZER RING

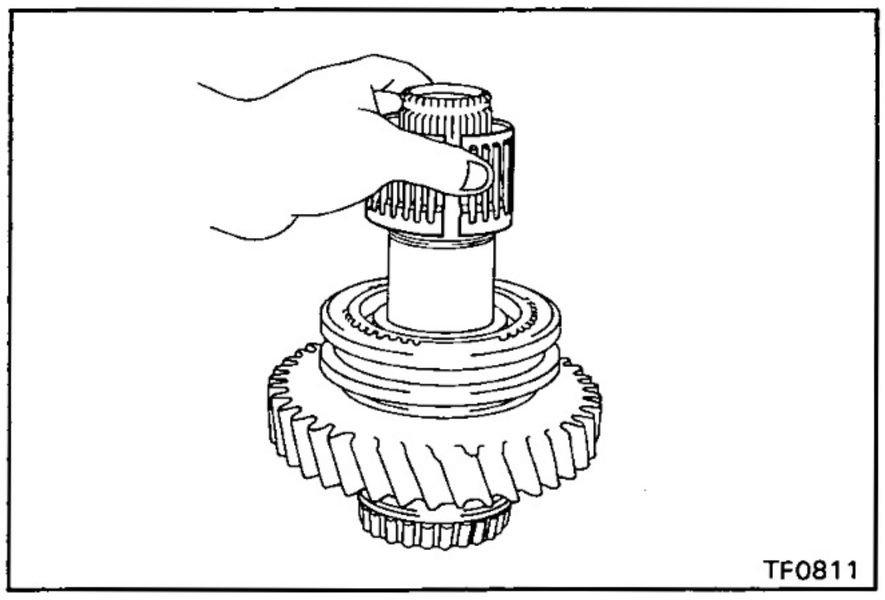

5. REMOVE NEEDLE ROLLER BEARING

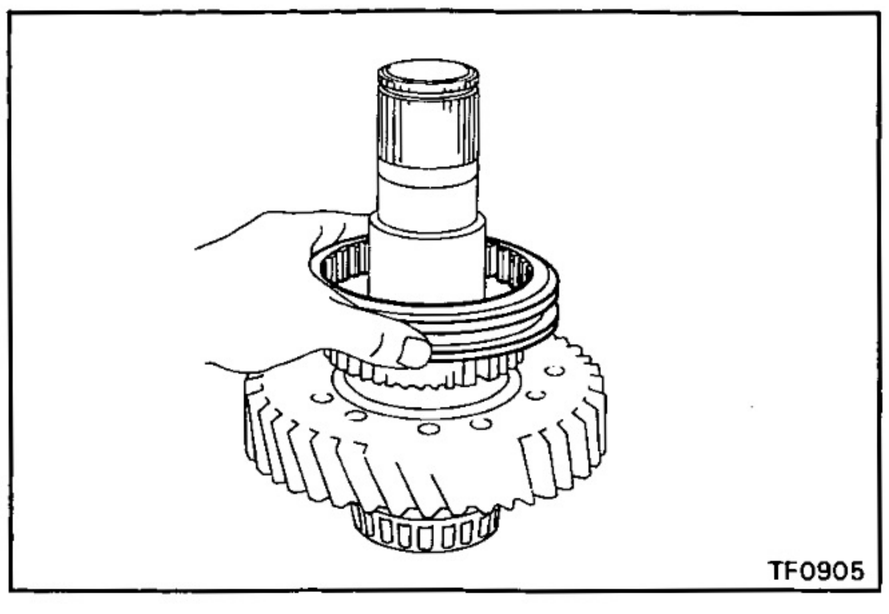

6. REMOVE HIGH AND LOW CLUTCH SLEEVE ASSEMBLY

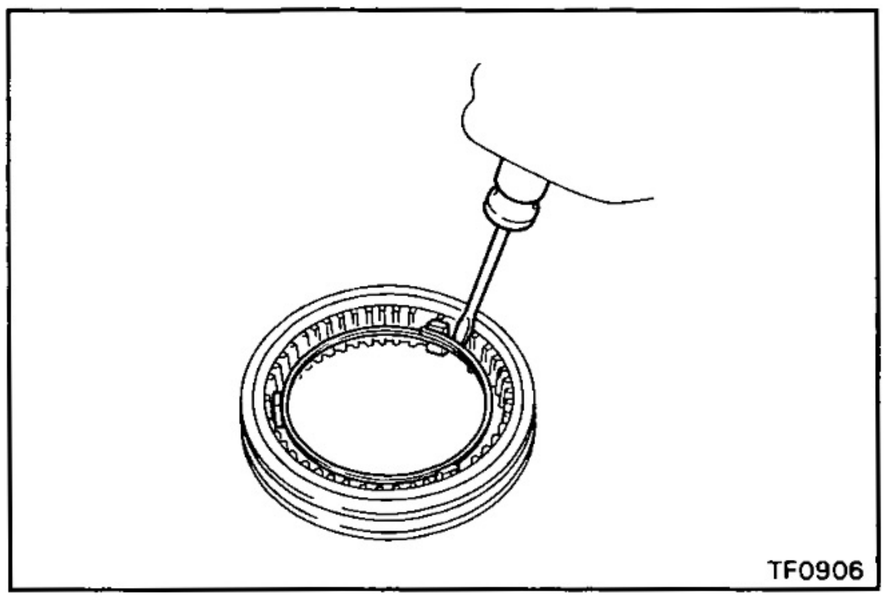

7. REMOVE HIGH AND LOW CLUTCH SLEEVE SHIFTING KEYS AND SPRINGS

Using a screwdriver, remove the two shifting key springs and shifting keys.

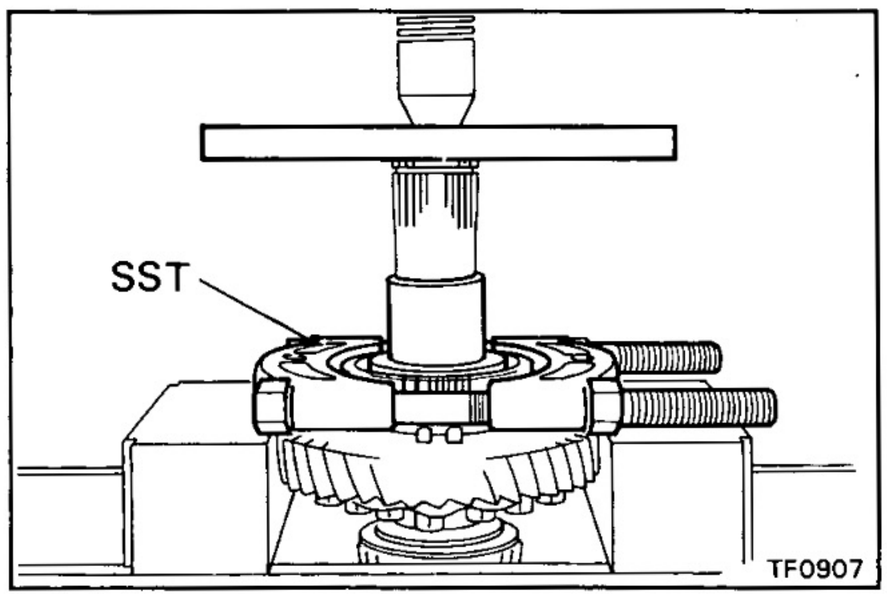

8. REMOVE HIGH SPEED OUTPUT GEAR BUSHING, CLUTCH HUB AND SHIFTING KEY RETAINER

(a) Using SST and a press, remove the high speed output gear bushing, clutch hub and shifting key retainer.

SST 09555-55010

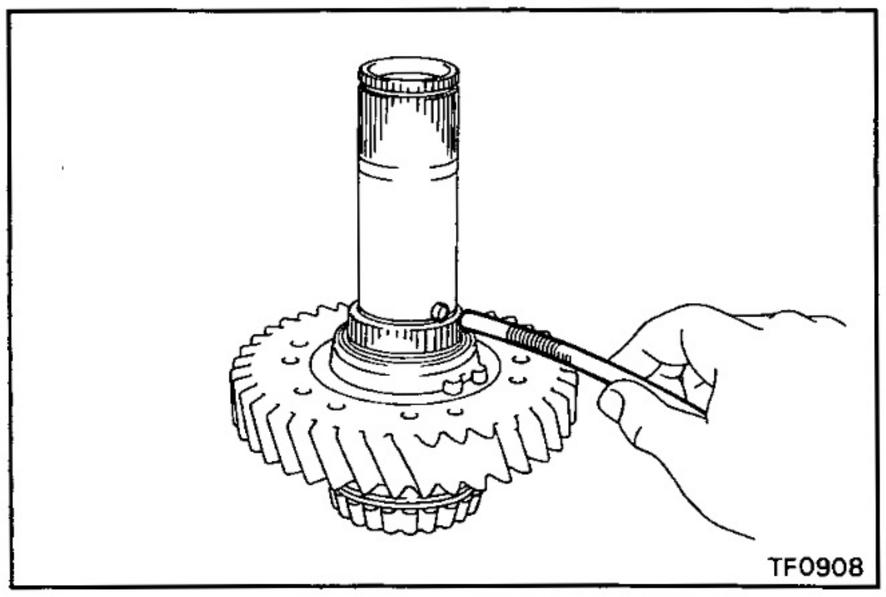

(b) Using a magnetic finger, remove the two straight pins.

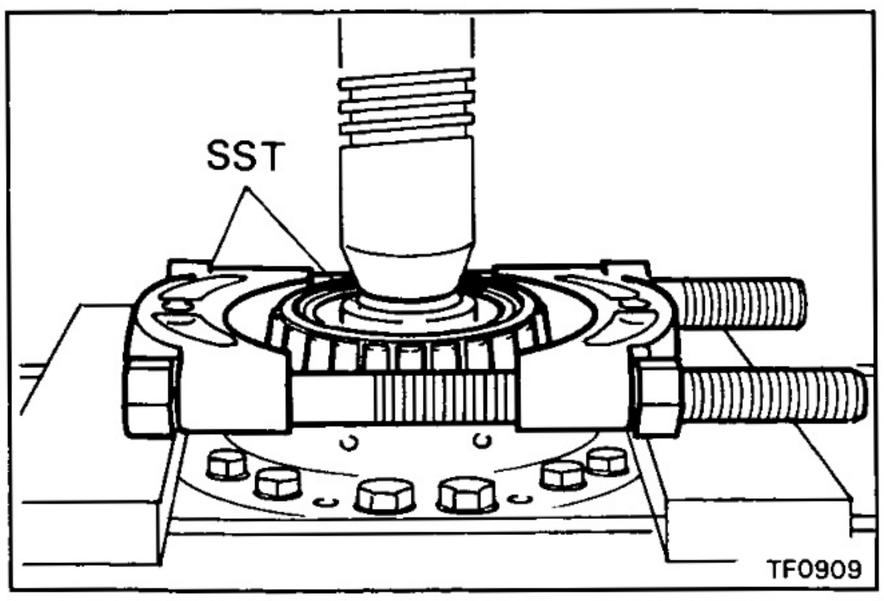

9. REMOVE REAR TAPER ROLLER BEARING

Using SST and a press, remove the rear taper roller bearing.

SST 09950-00020, 09950-20017 (09958-30010)

10. REMOVE SNAP RING AND NEEDLE ROLLER BEARING

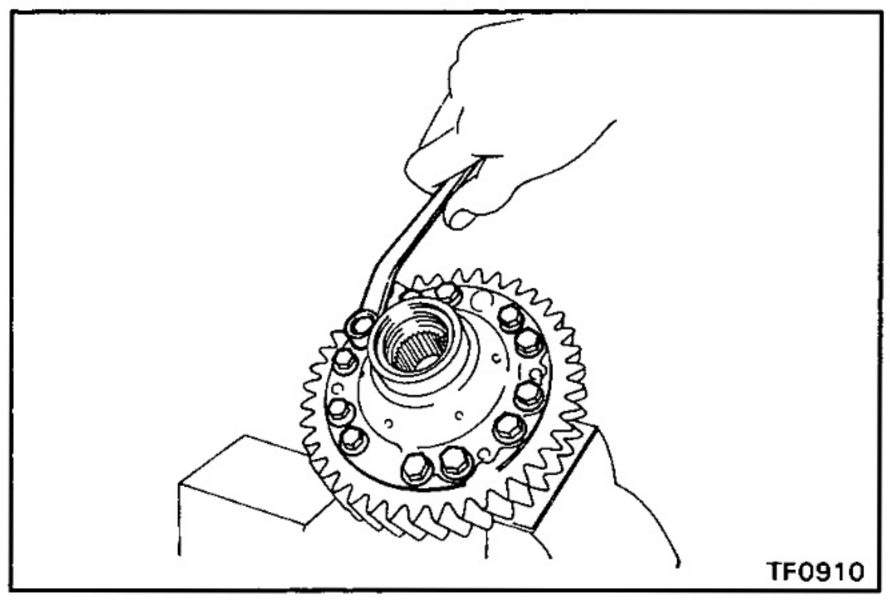
TF0910

11. REMOVE DIFFERENTIAL REAR CASE

Remove the twelve bolts and differential rear case.

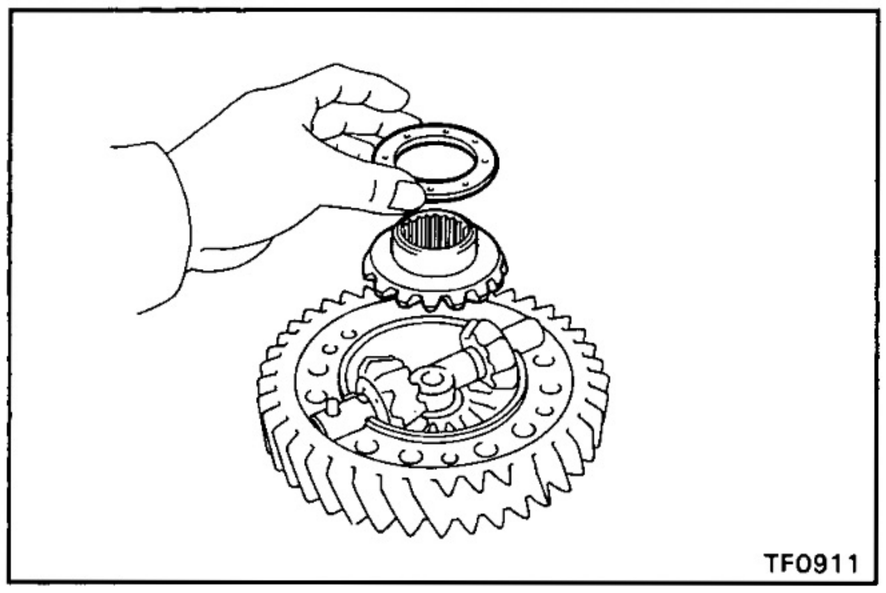
TF0911

12. REMOVE REAR SIDE GEAR AND THRUST WASHER

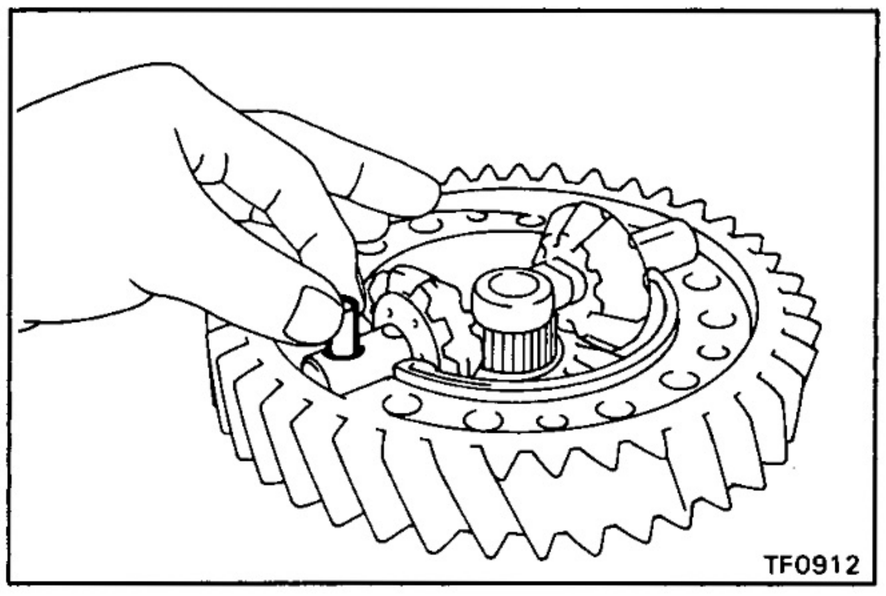
TF0912

13. REMOVE PINION SHAFT, PINION GEAR AND THRUST WASHER

(a) Remove the straight pin.

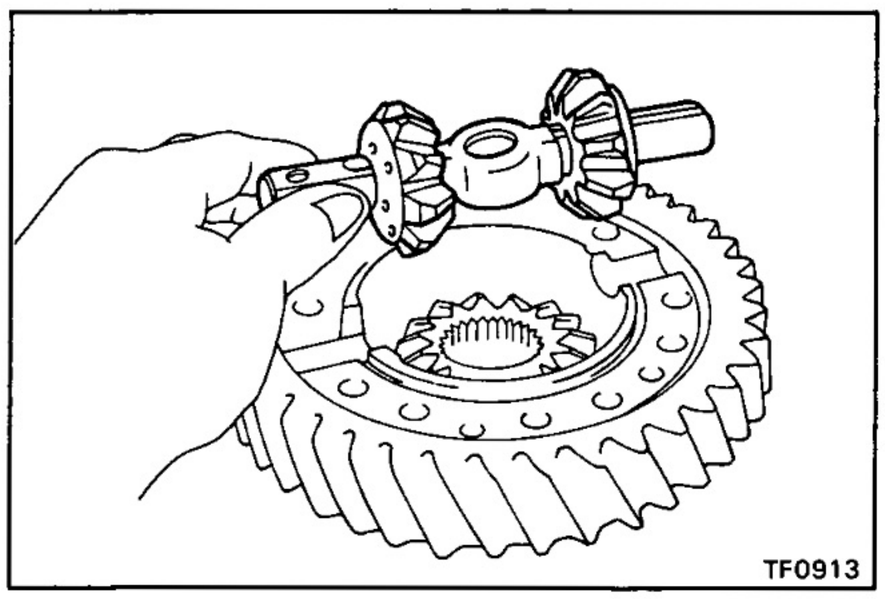
TF0913

(b) Remove the pinion shaft, pinion gear and thrust washer.

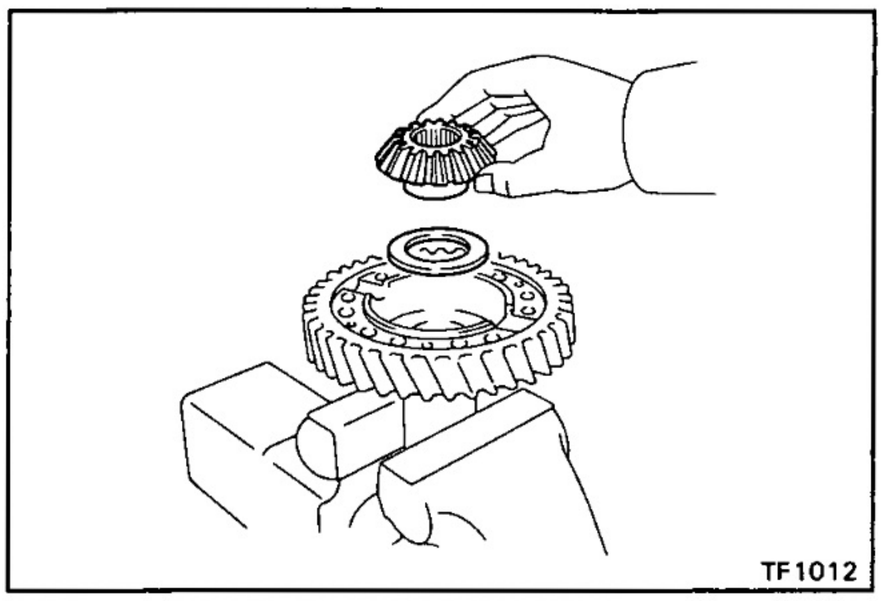
TF1012

(c) Remove the front side gear and thrust washer.

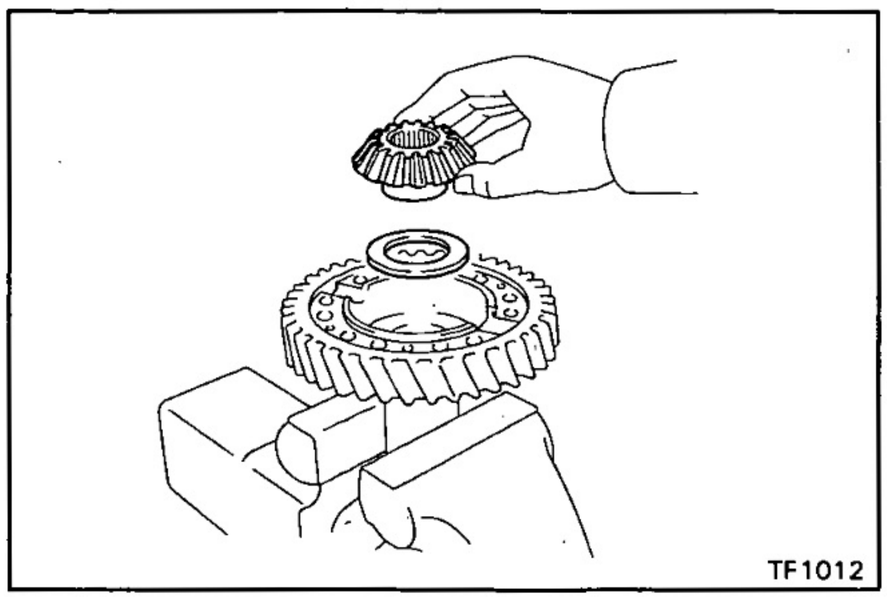
TF1012

ASSEMBLY OF CENTER DIFFERENTIAL ASSEMBLY

1. INSTALL PINION SHAFT, PINION GEAR AND THRUST WASHER

HINT: Coat all of the sliding and rotating surface with gear oil before assembly.

(a) Install the front side gear and thrust washer to the differential front case.

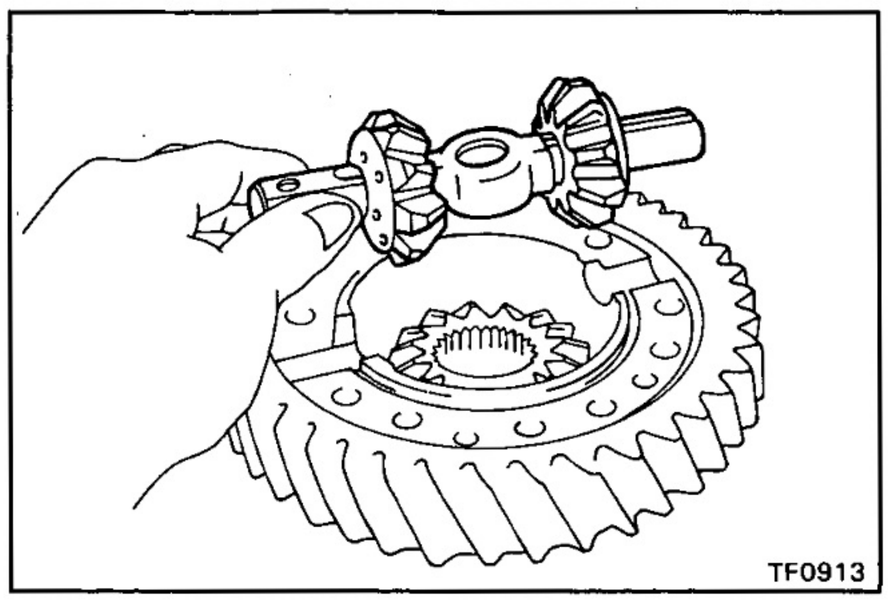
TF0913

(b) Install the two pinion gears and thrust washers to the differential front case.

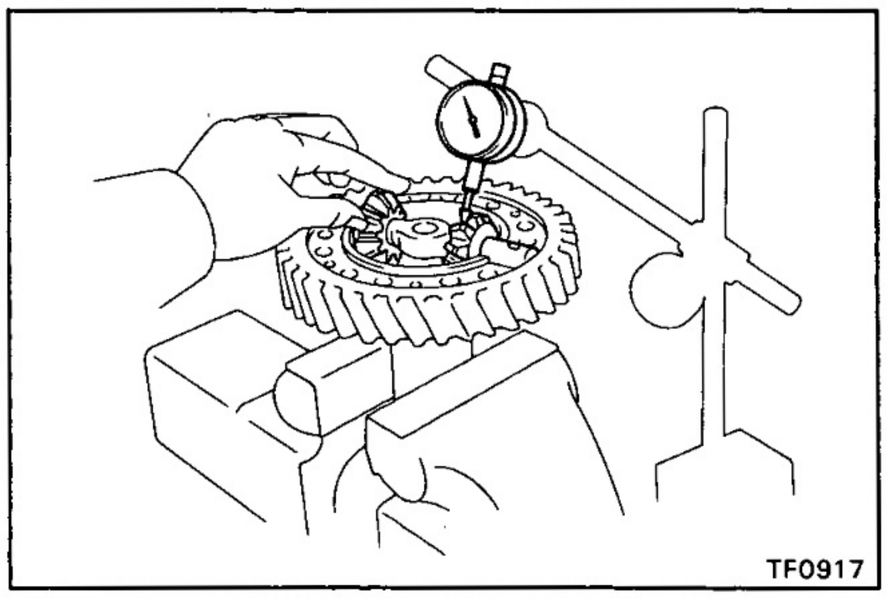
TF0917

(c) Using a dial indicator, measure the front case backlash.

HINT: Push the pinion shaft.

Minimum backlash: 0.05 mm (0.0020 in.)

If the backlash is not within specification, replace the thrust washer with one of the correct size and reinstall the thrust washer.

Thickness mm (in.)
1.70 (0.0669)
1.85 (0.0728)
2.00 (0.0787)
2.15 (0.0846)
2.30 (0.0906)
2.45 (0.0965)
2.60 (0.1024)
2.75 (0.1083)
2.90 (0.1142)
3.05 (0.1201)

(d) Measure the rear case backlash.
(See steps (a) to (c))

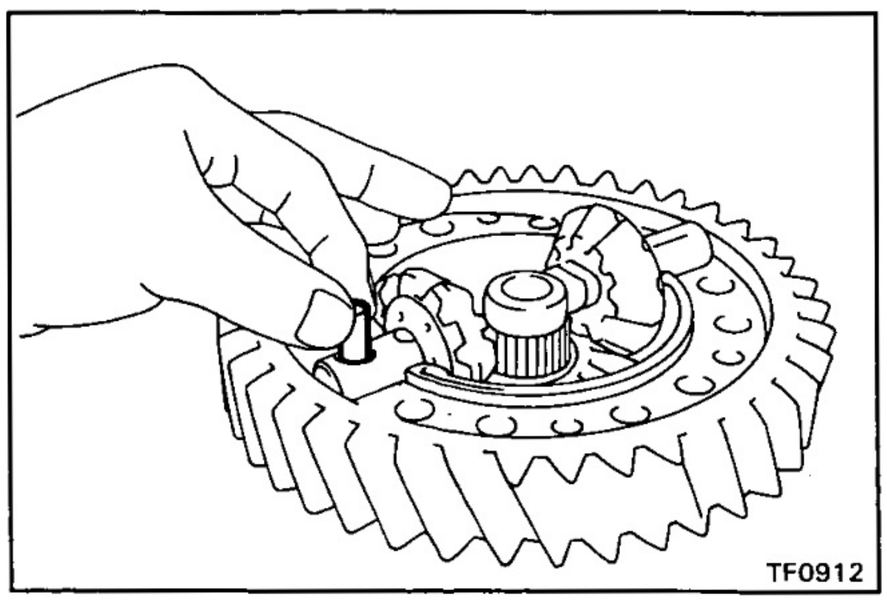
TF0912

2. INSTALL STRAIGHT PIN

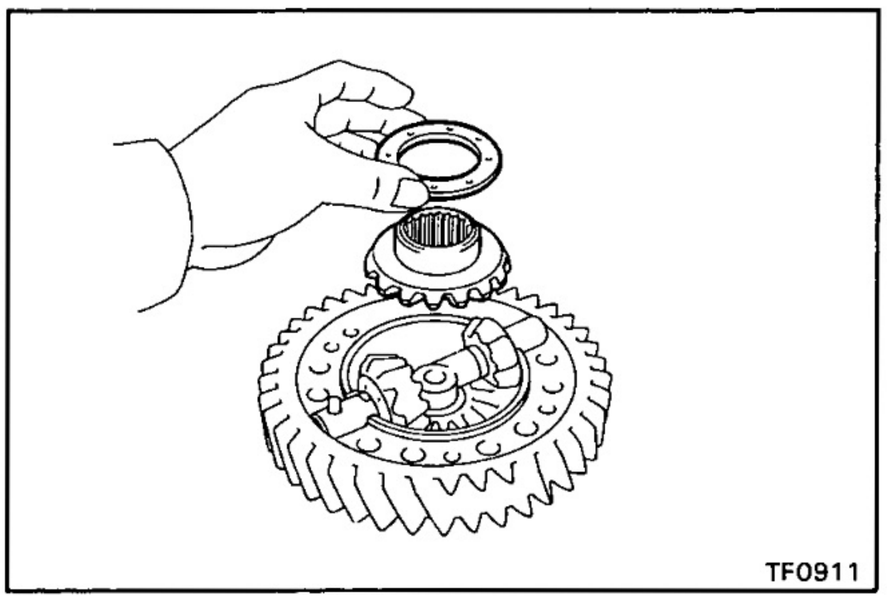

3. INSTALL REAR SIDE GEAR AND THRUST WASHER

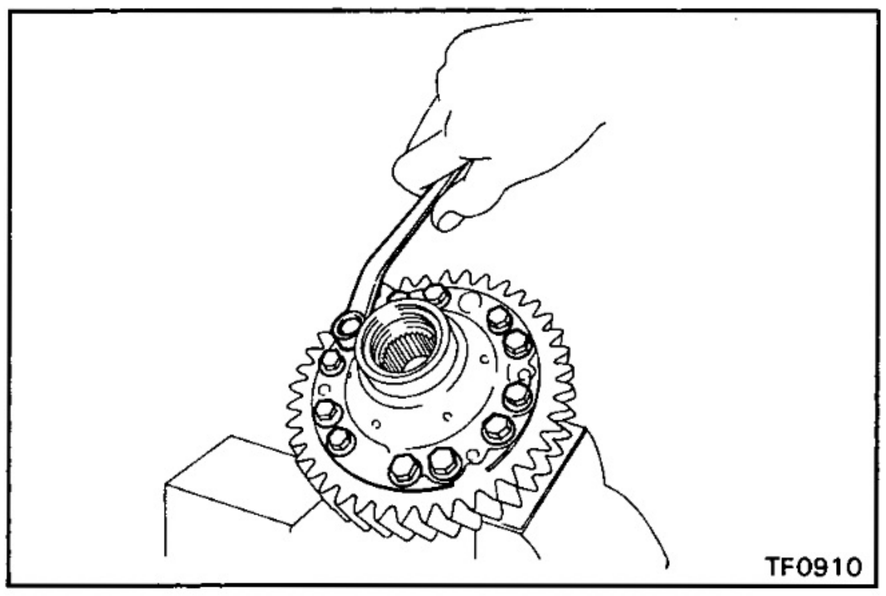

4. INSTALL DIFFERENTIAL REAR CASE

Temporary install the differential rear case and set bolts.

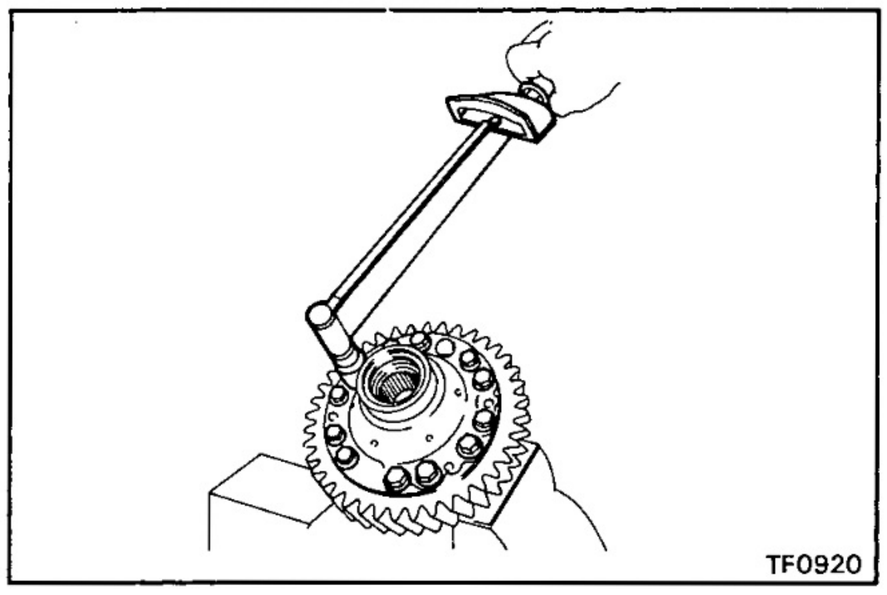

5. TORQUE REAR CASE SET BOLTS

(a) Torque the rear case set bolts.

Torque: 88 N·m (900 kgf·cm, 65 ft·lbf)

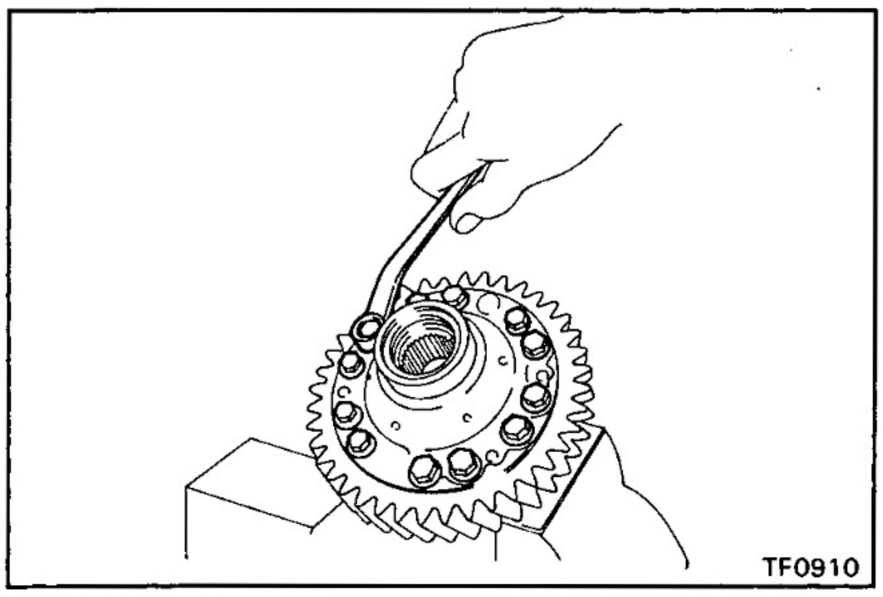

(b) Loosen the rear case set bolts.

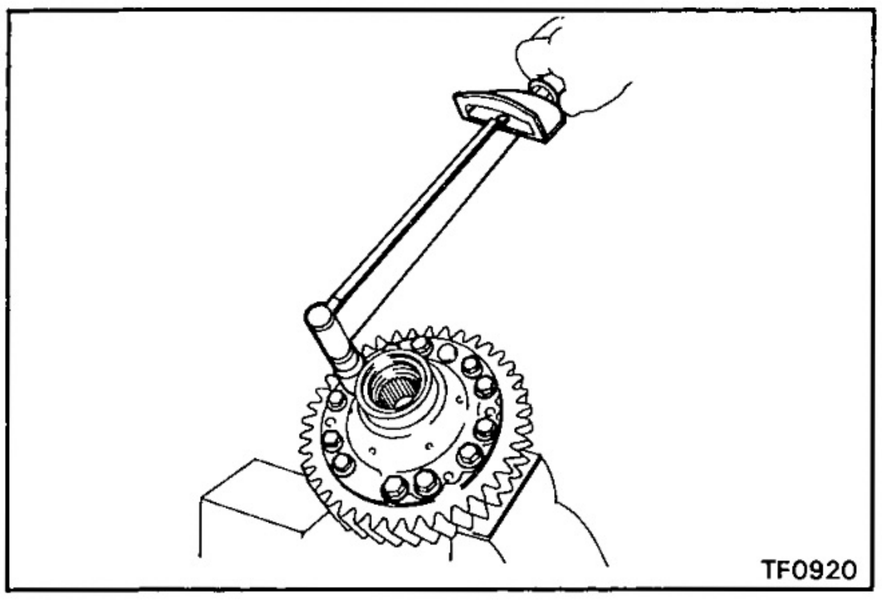

(c) Retorque the rear case set bolts.

Torque: 98 N·m (1000 kgf·cm, 72 ft·lbf)

6. INSTALL NEEDLE ROLLER BEARING AND SNAP RING

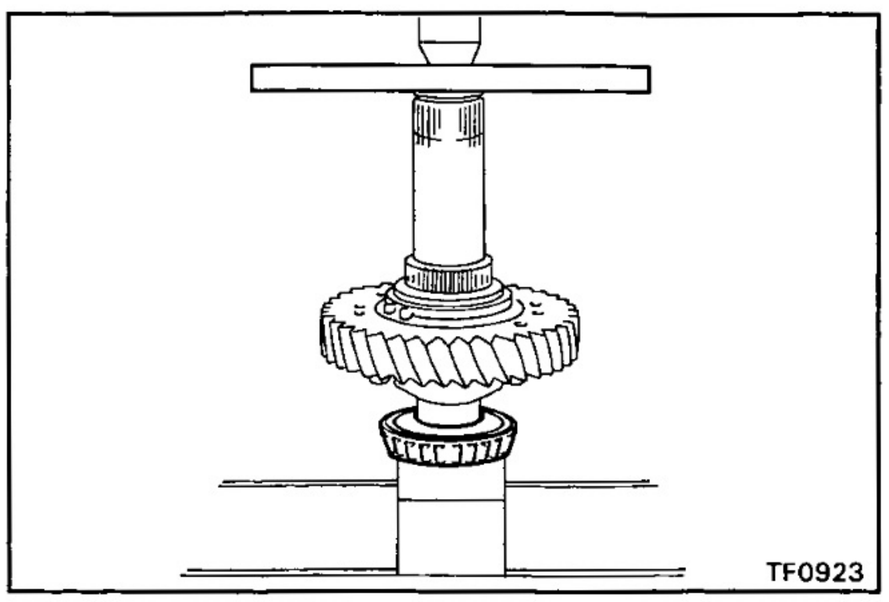

7. INSTALL REAR TAPER ROLLER BEARING

Using a press, install the rear taper roller bearing.

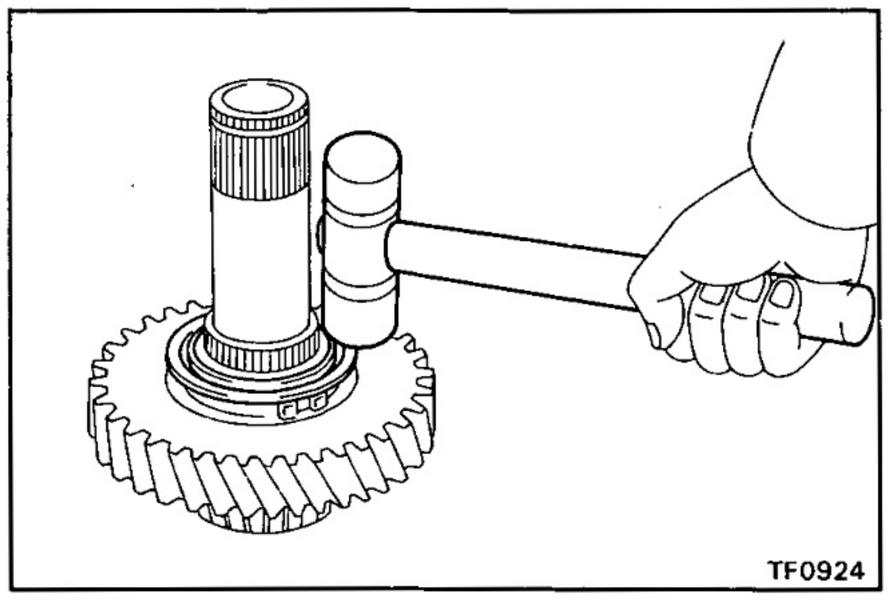

8. INSTALL SHIFTING KEY RETAINER

Using a plastic hammer, tap in the shifting key retainer.

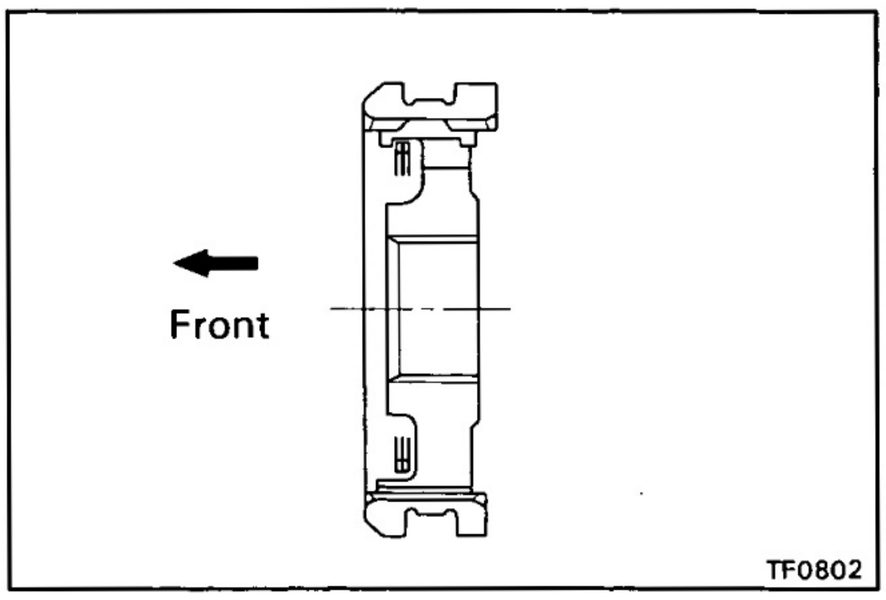

9. INSERT CLUTCH HUB INTO HIGH AND LOW CLUTCH SLEEVE

(a) Install the clutch hub and shifting keys to the high and low clutch sleeve.

(b) Install the shifting key springs.

NOTICE: Install the key springs positioned so that their end gaps are not in line.

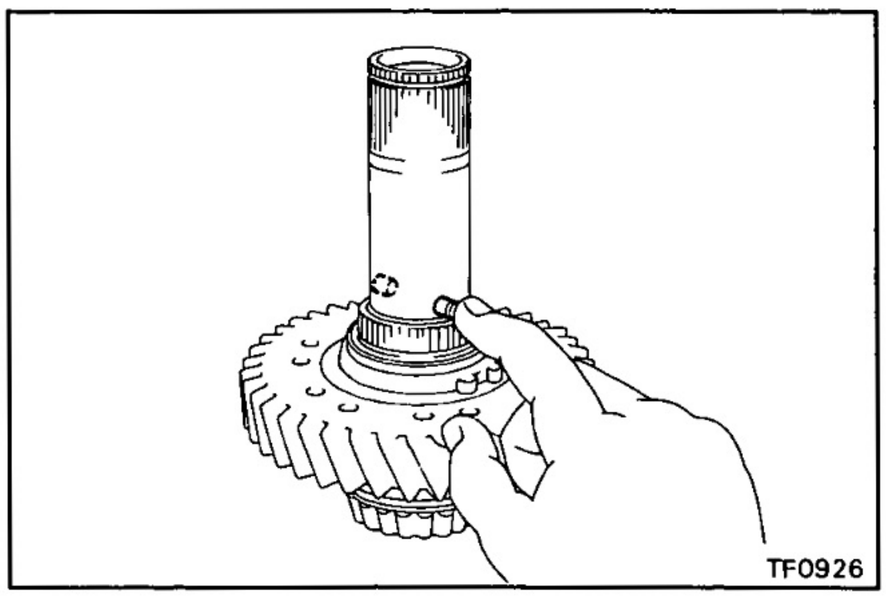

10. INSTALL HIGH AND LOW CLUTCH SLEEVE ASSEMBLY AND HIGH SPEED OUTPUT GEAR BUSHING

(a) Apply MP grease to the straight pin.

(b) Install the two straight pins.

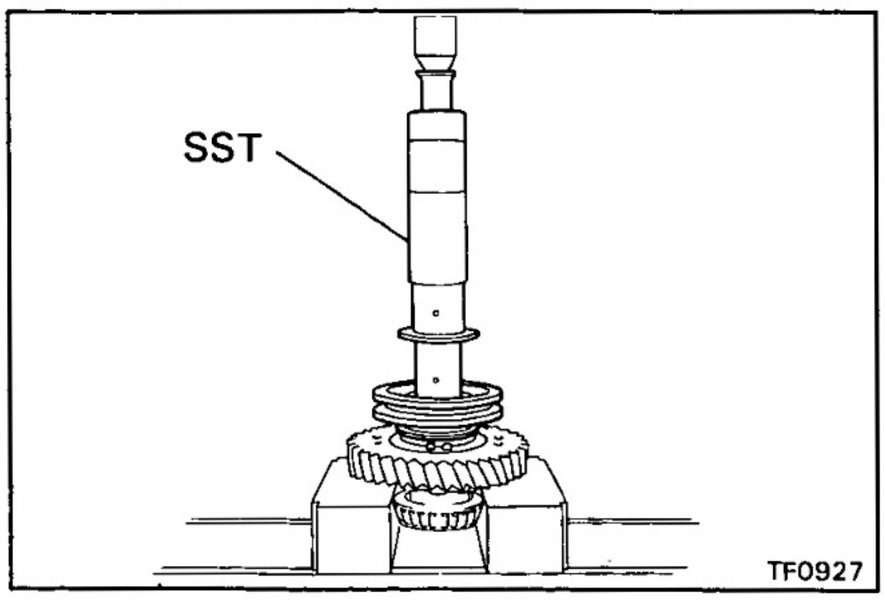

(c) Using SST and a press, install the clutch sleeve assembly and high speed output gear bushing.

SST 09316-60010 (09316-00010)

NOTICE: Before pressing, align the holes on the bushing and shaft so that the pin on the shaft aligned with the cutting portion of the bushing.

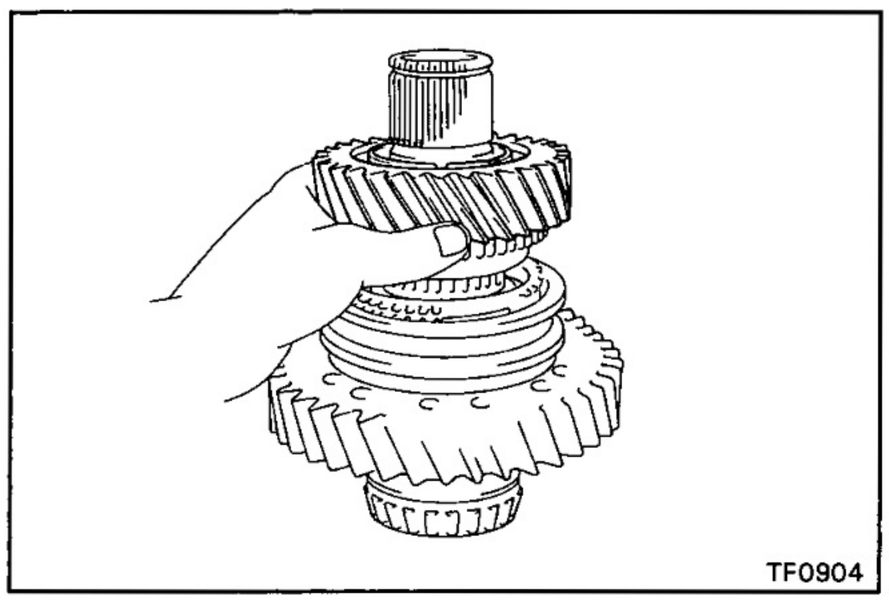

11. INSTALL HIGH SPEED OUTPUT GEAR AND NEEDLE ROLLER BEARING

(a) Apply gear oil to the needle roller bearing.

(b) Place the synchronizer ring on the gear and install the high speed output gear and needle roller bearing.

NOTICE: Align the ring slots with the shifting keys.

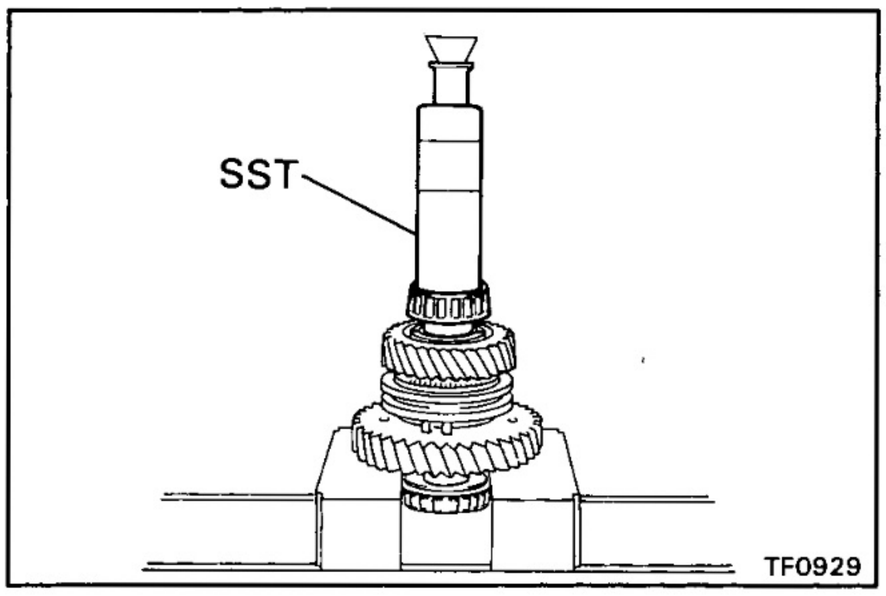

12. INSTALL FRONT TAPER ROLLER BEARING

Using SST and a press, install the front taper roller bearing.

SST 09316-60010 (09316-00010)

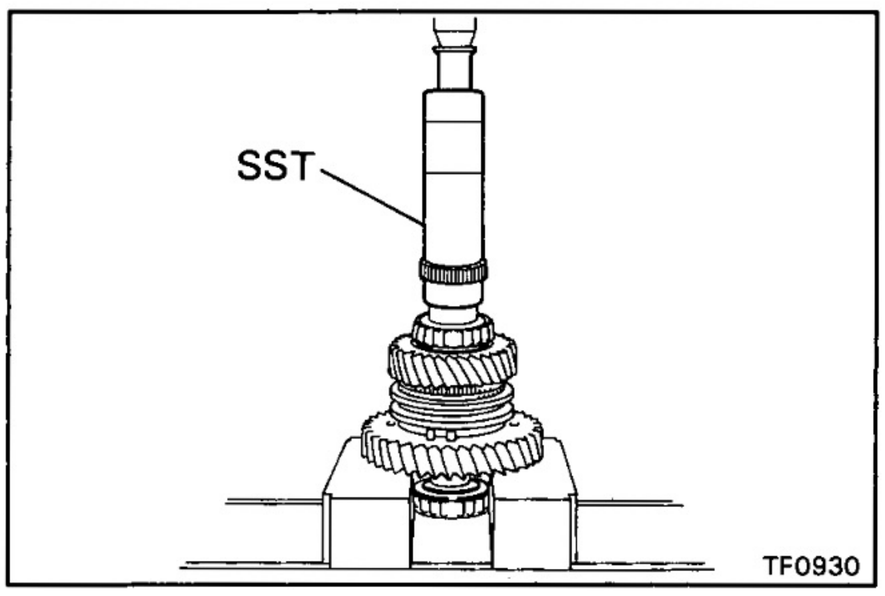

13. INSTALL FRONT DRIVE GEAR PIECE

Using SST and a press, install the front drive gear piece.

SST 09316-60010 (09316-00010)

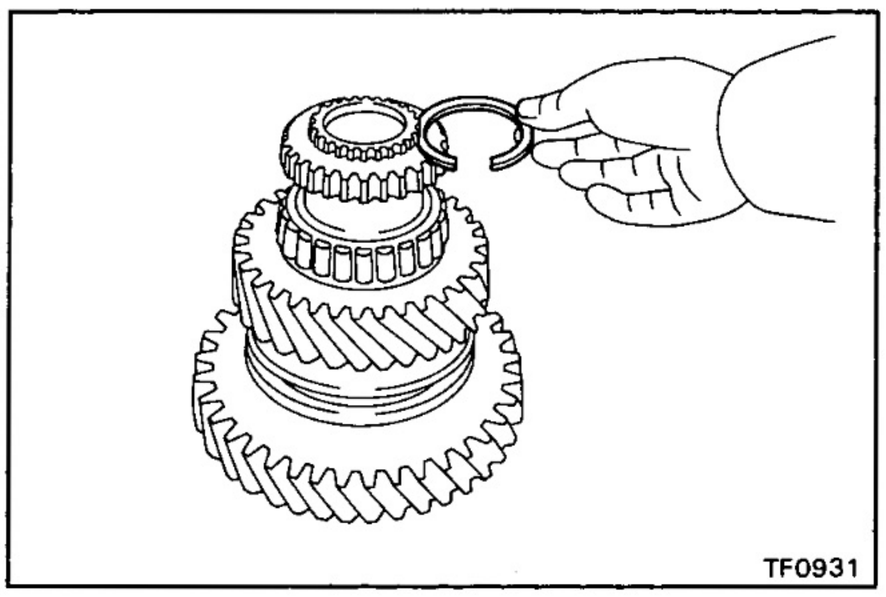

14. INSTALL SNAP RING

Select a snap ring that will allow minimum axial play and install it on the shaft.

Mark	Thickness mm (in.)
A	2.00 (0.0787)
B	2.10 (0.0827)
C	2.20 (0.0866)
D	2.30 (0.0906)
E	2.40 (0.0945)
F	2.50 (0.0984)
G	2.60 (0.1024)
H	2.70 (0.1063)
J	2.80 (0.1102)
K	1.80 (0.0709)
L	1.90 (0.0748)

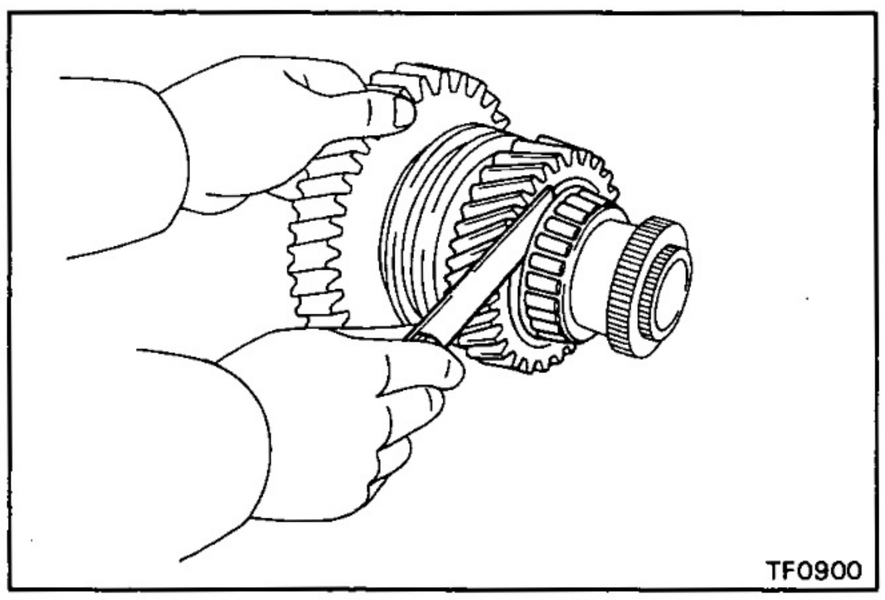
TF0900

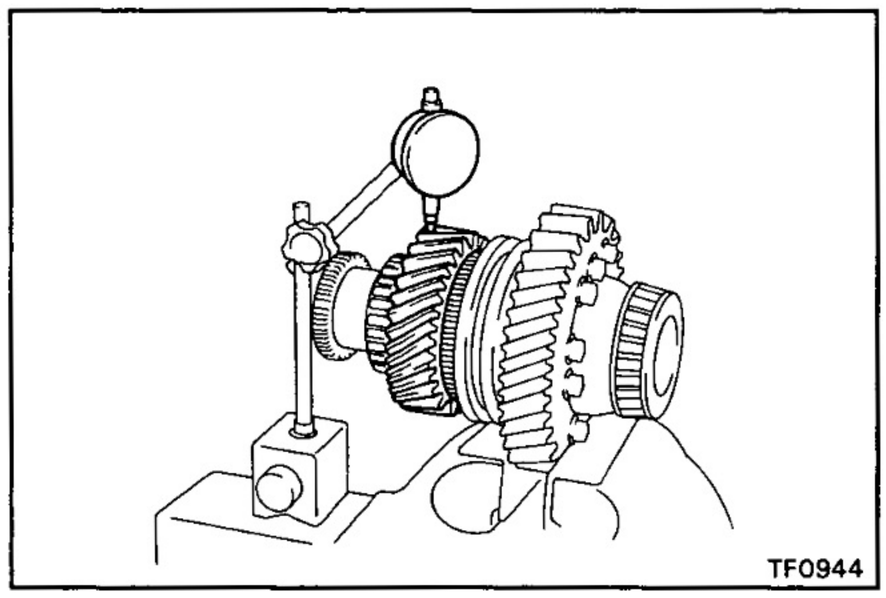
TF0944

15. MEASURE OIL CLEARANCE AND THRUST CLEARANCE OF HIGH SPEED OUTPUT GEAR THRUST CLEARANCE

(a) Using a feeler gauge, measure the high speed gear thrust clearance.

Standard clearance: **0.10 — 0.25 mm (0.0039 — 0.0098 in.)**

Maximum clearance: **0.25 mm (0.0098 in.)**

(b) Using a dial indicator, measure the high speed gear oil clearance.

Standard clearance: **0.015 — 0.071 mm (0.0006 — 0.0028 in.)**

Maximum clearance: **0.071 mm (0.0028 in.)**

Front Extension Housing Assembly

COMPONENTS

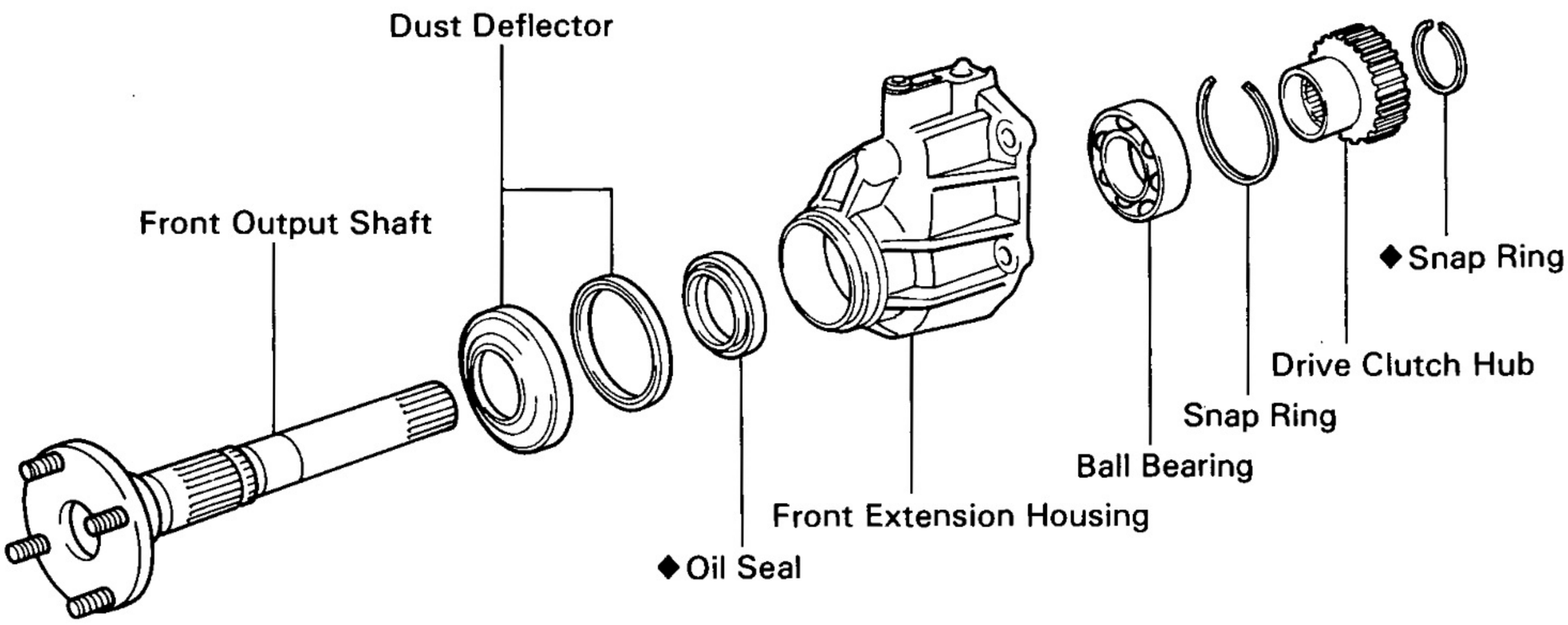

◆ Non-reusable part

TF0932

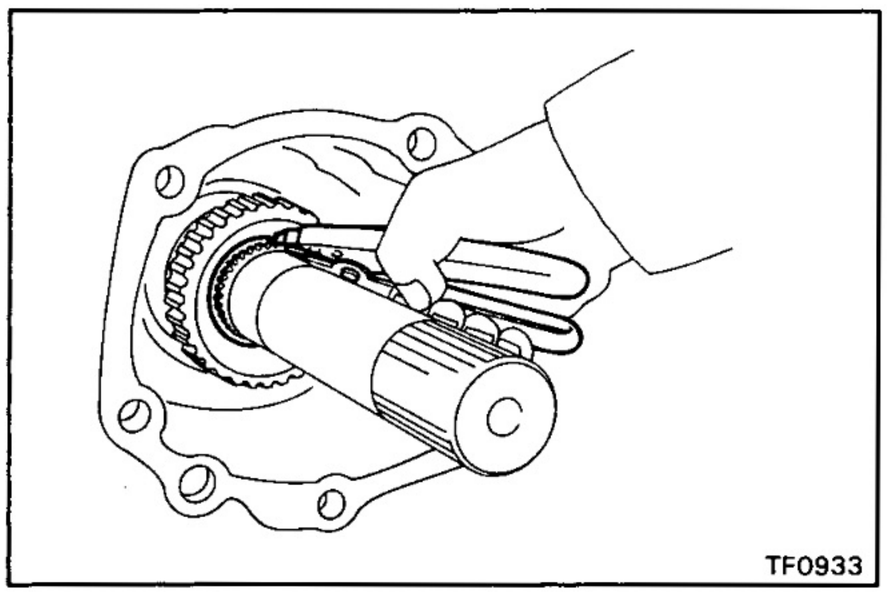

TF0933

DISASSEMBLY OF FRONT EXTENSION HOUSING ASSEMBLY

1. REMOVE DRIVE CLUTCH HUB

(a) Using snap ring pliers, remove the snap ring.

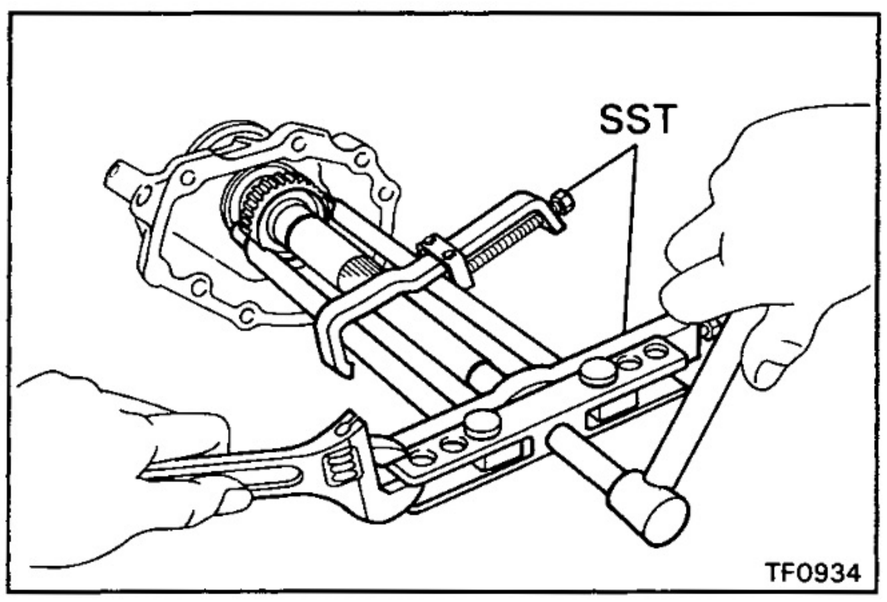

TF0934

(b) Using SST, remove the drive clutch hub.
SST 09950-20017

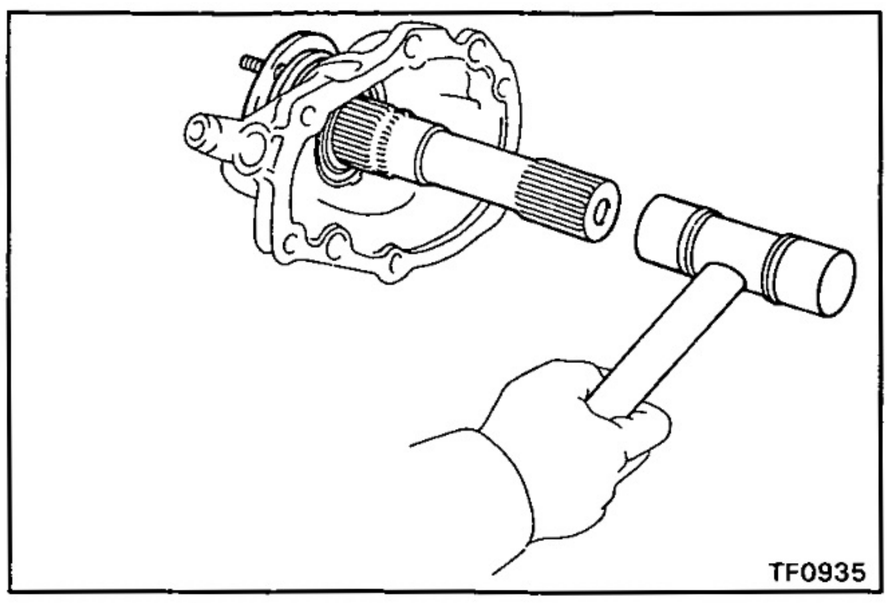

2. REMOVE FRONT OUTPUT SHAFT

Using a plastic hammer, drive out the front output shaft.

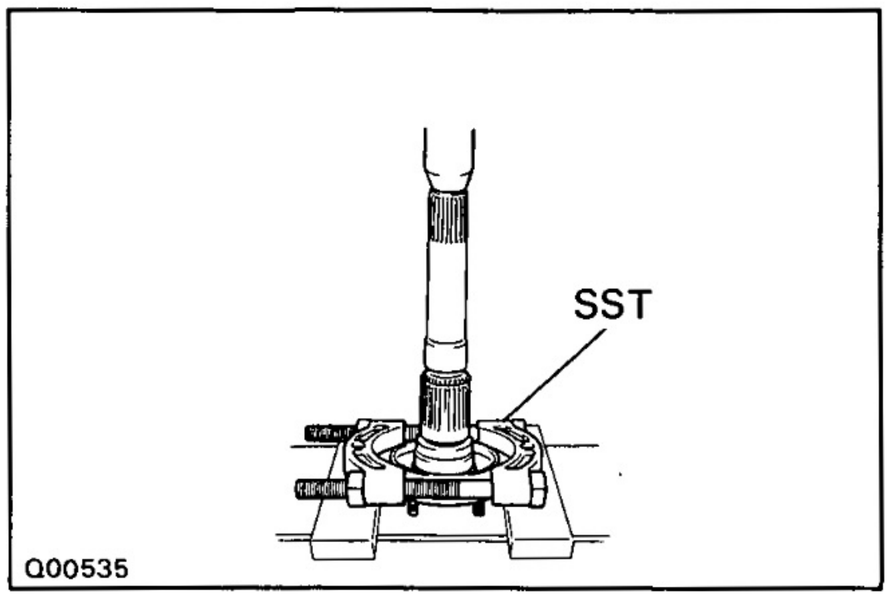

3. REMOVE DUST DEFLECTORS

(a) Using SST and a press, remove the dust deflector.

SST 09950-00020

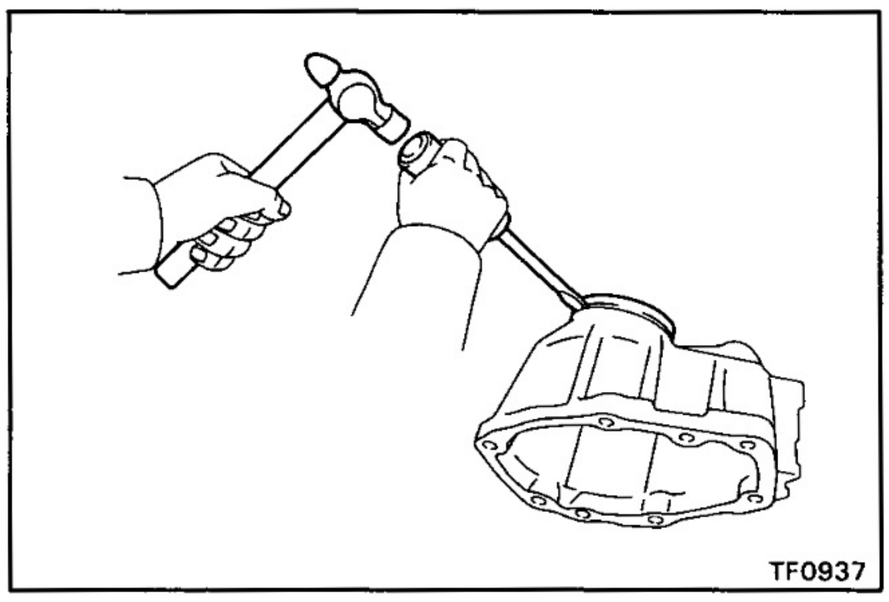

(b) Using a screwdriver and hammer, tap the dust deflector and remove it.

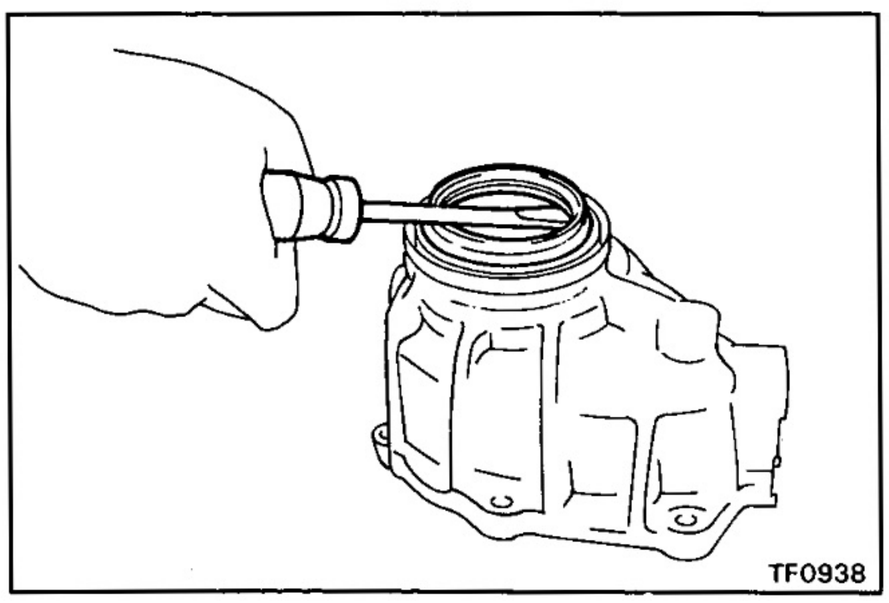

4. REMOVE OIL SEAL

Using a screwdriver, pry out the oil seal.

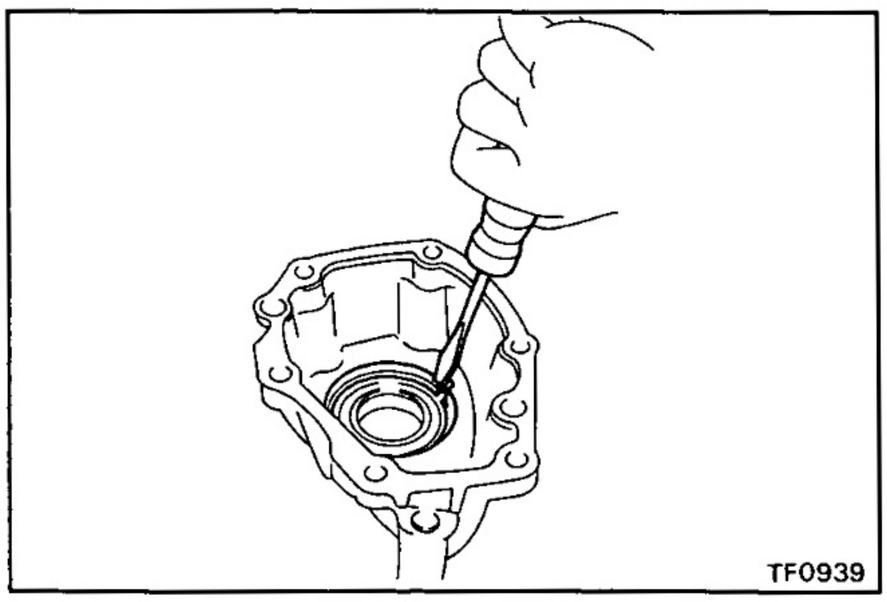

5. REMOVE BALL BEARING

(a) Using a screwdriver, remove the snap ring.

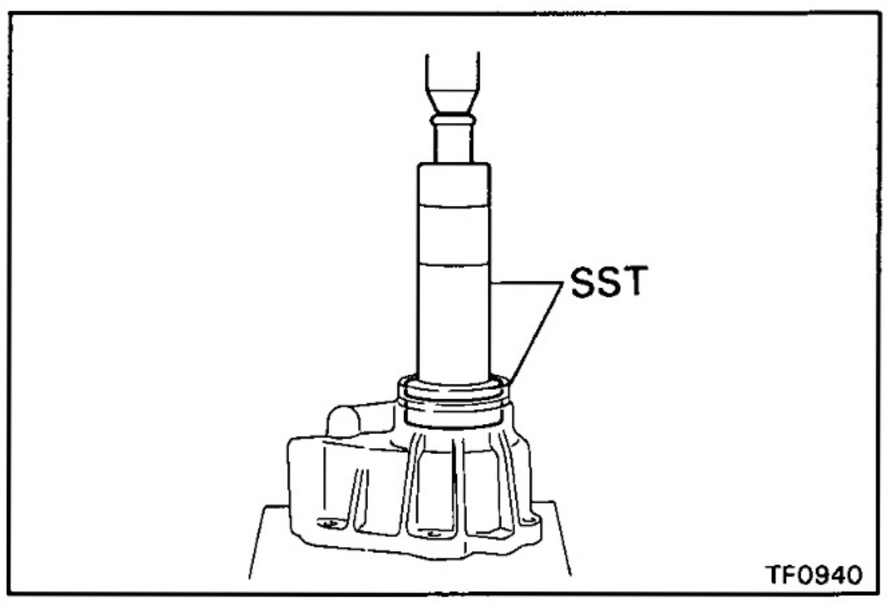

(b) Using SST and a press, remove the ball bearing.
SST 09316-60010 (09316-00010, 09316-00070)

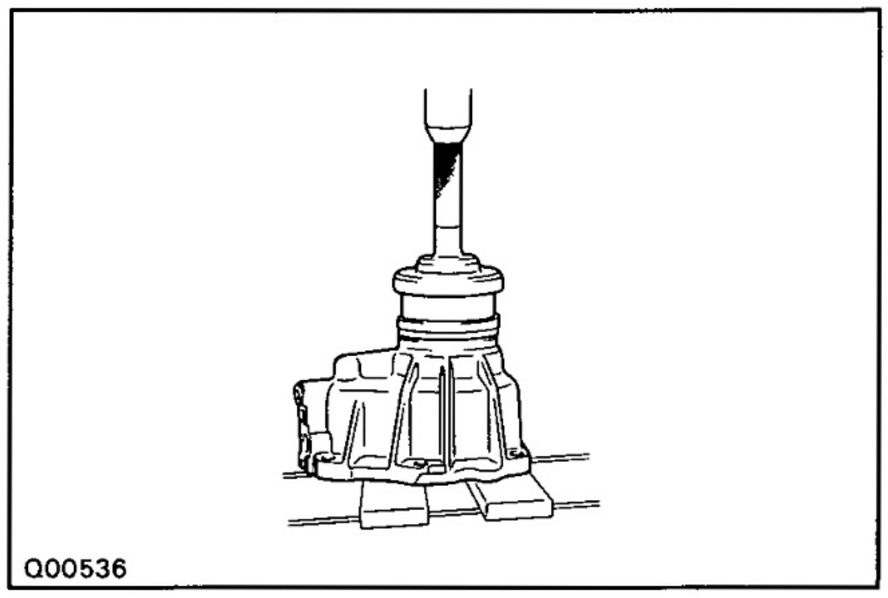

ASSEMBLY OF FRONT EXTENSION HOUSING ASSEMBLY

1. INSTALL DUST DEFLECTORS

(a) Using SST and a press, install the dust deflector.
SST 09223-41020, 09223-15020

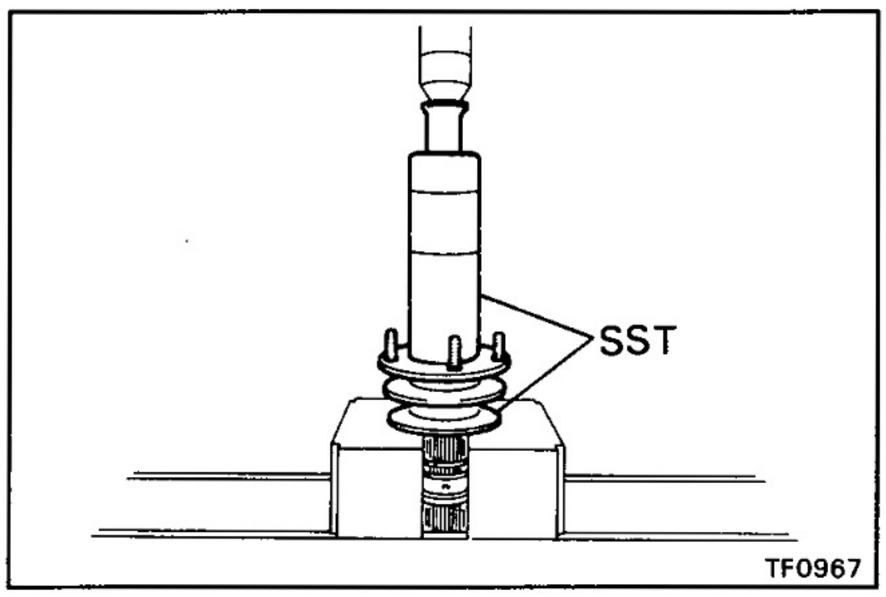

(b) Using SST and a press, install the dust deflector.
SST 09316-60010 (09316-00010),
09316-20011

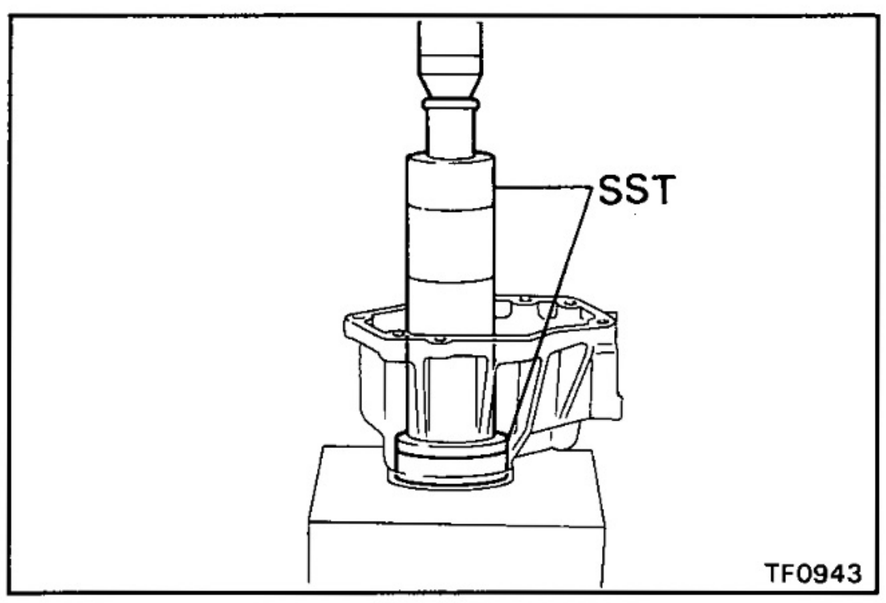

2. INSTALL BALL BEARING

(a) Using SST and a press, install the ball bearing.
SST 09316-60010 (09316-00010, 09316-00030)

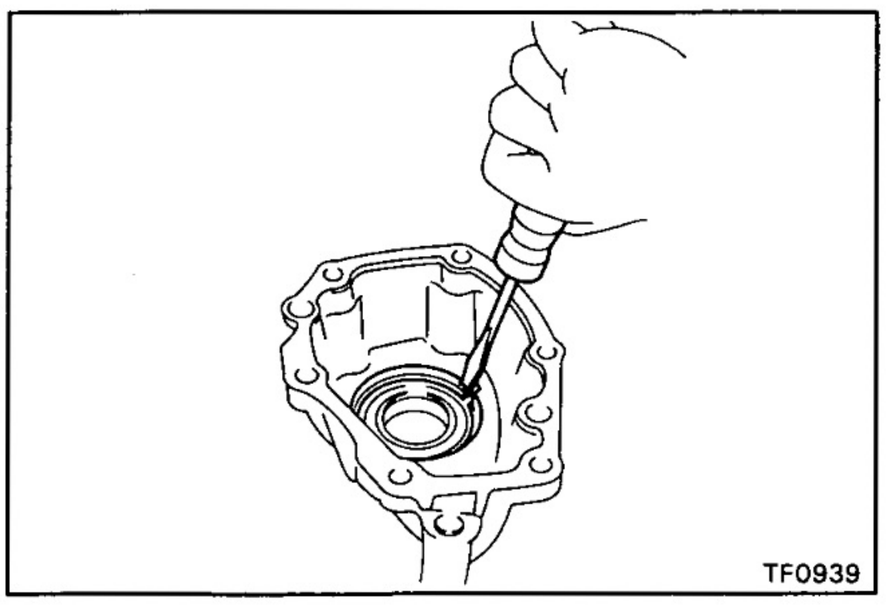

(b) Using a screwdriver, install the snap ring.

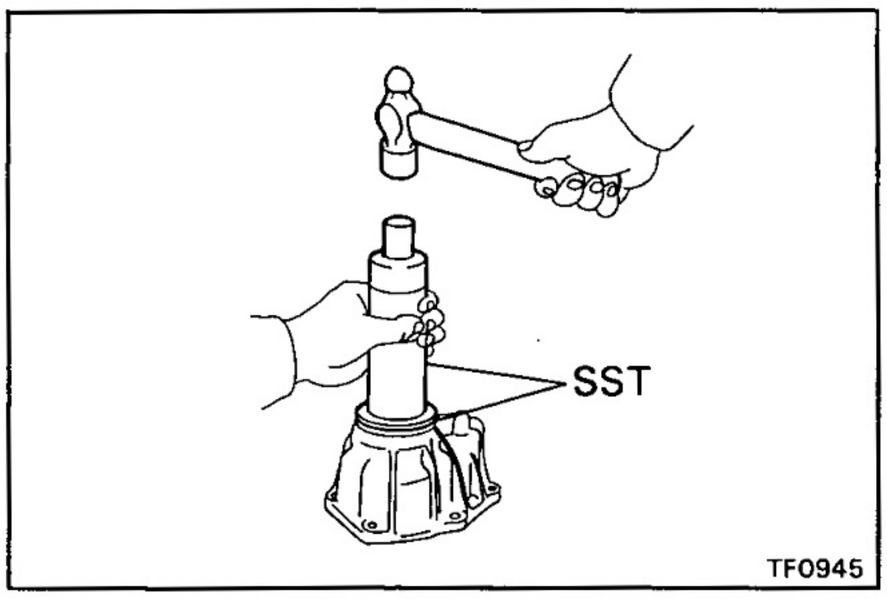

3. INSTALL OIL SEAL

Using SST and a hammer, drive in a new oil seal.

SST 09316-60010 (09316-00010, 09316-00060)

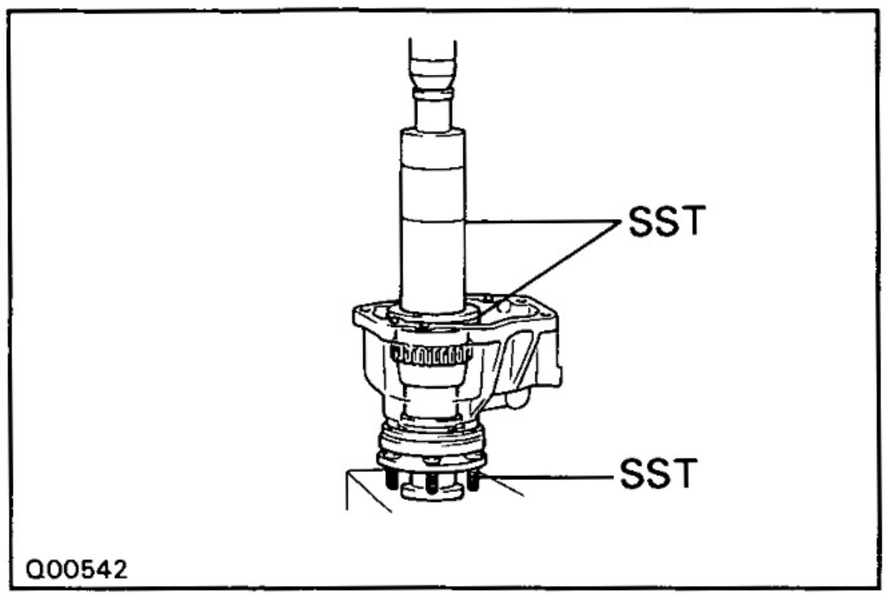

4. INSTALL FRONT OUTPUT SHAFT AND DRIVE CLUTCH HUB

(a) Using SST and press, install the front output shaft and drive clutch hub.

SST 09316-20011, 09316-60010 (09316-00010, 09316-00040, 09316-00070)

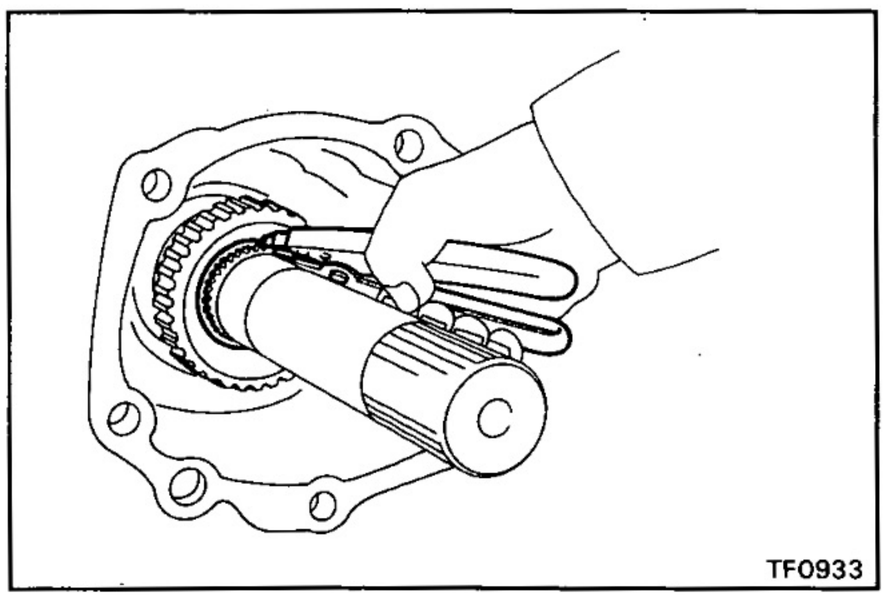

(b) Using snap ring pliers, install the new snap ring.

Rear Extension Housing Assembly

COMPONENTS

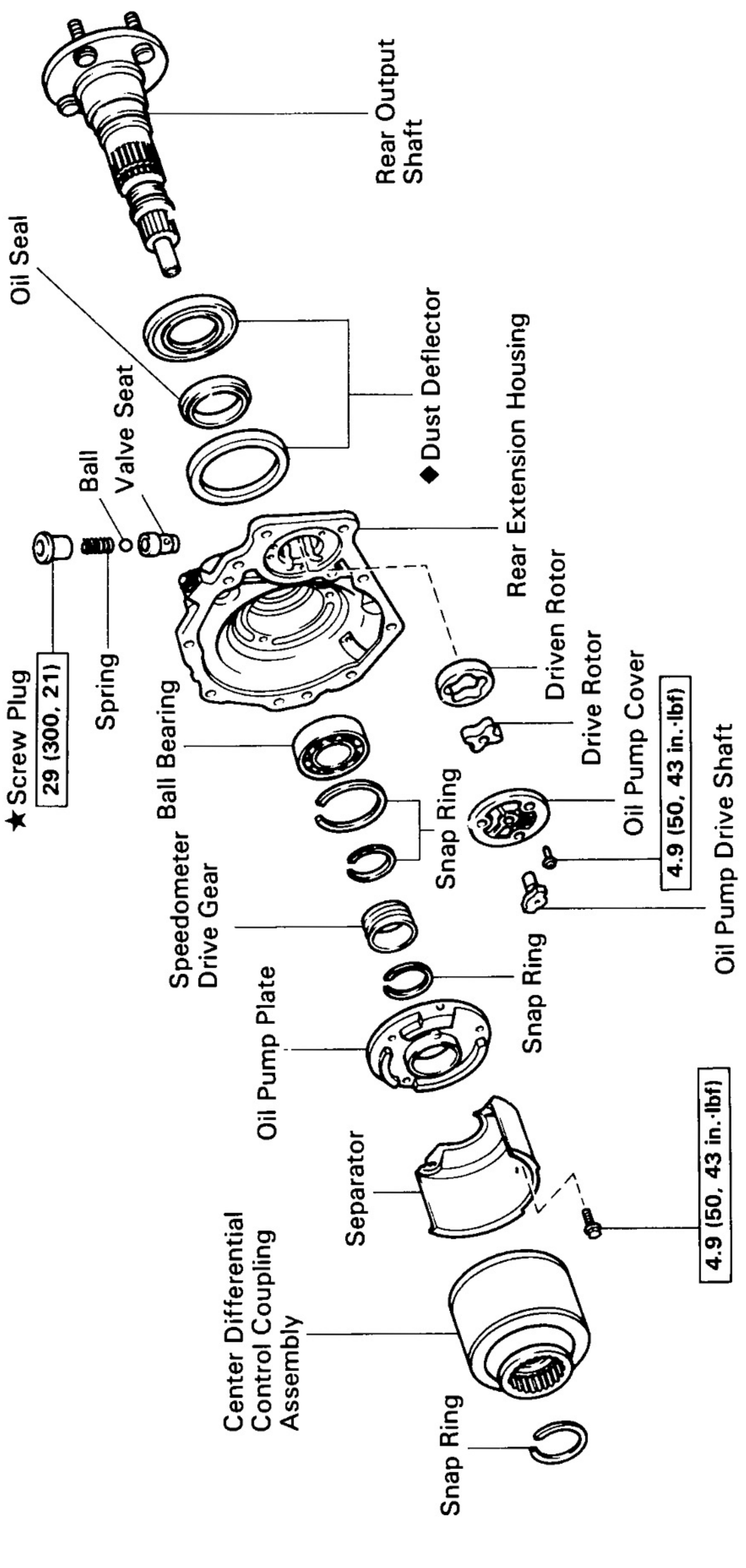

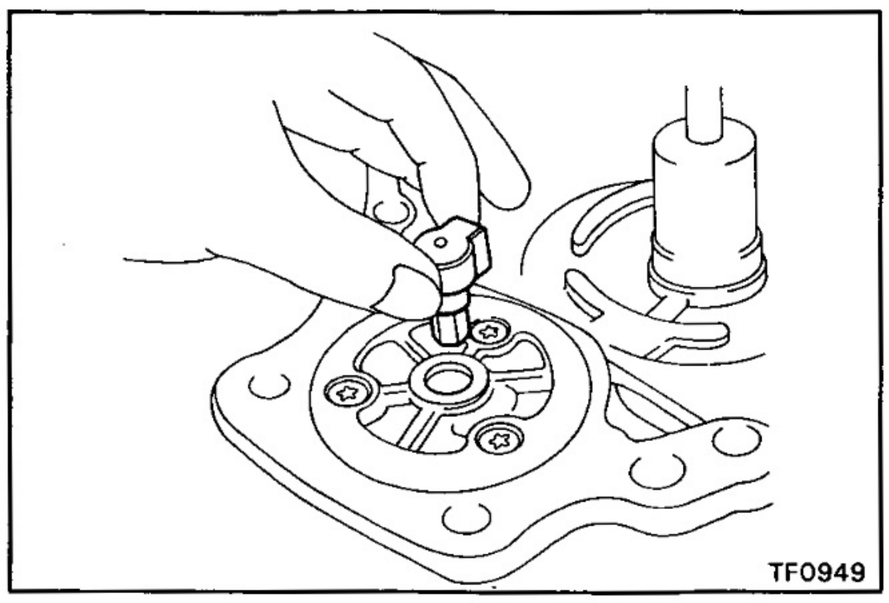

DISASSEMBLY OF REAR EXTENSION HOUSING ASSEMBLY

1. REMOVE OIL PUMP DRIVE SHAFT

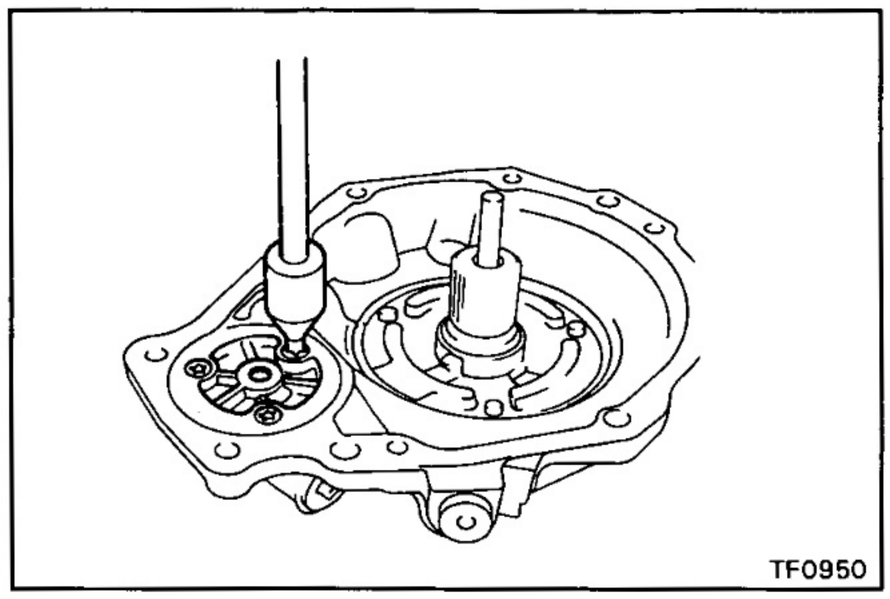

2. REMOVE OIL PUMP COVER

(a) Using a torx socket wrench, remove the three screws.
(Torx socket wrench T30 09042-00010)

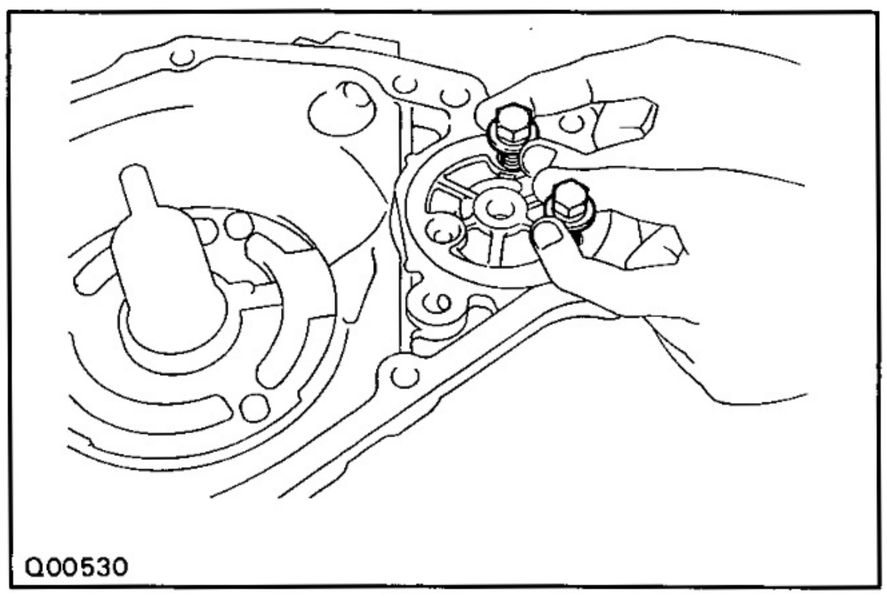

(b) Install two suitable bolts to the pump cover.

(c) Remove the pump cover from rear extension housing.

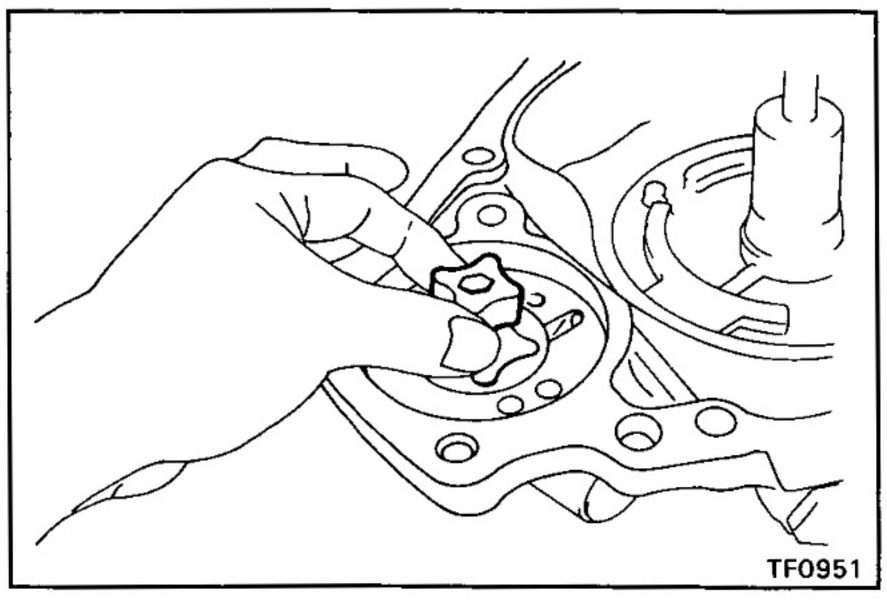

3. REMOVE DRIVE ROTOR

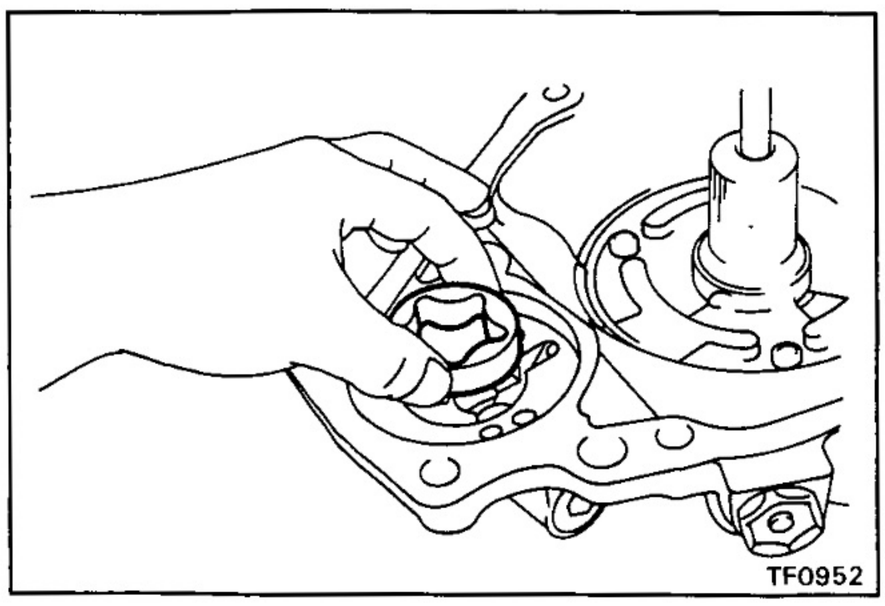

4. REMOVE DRIVEN ROTOR

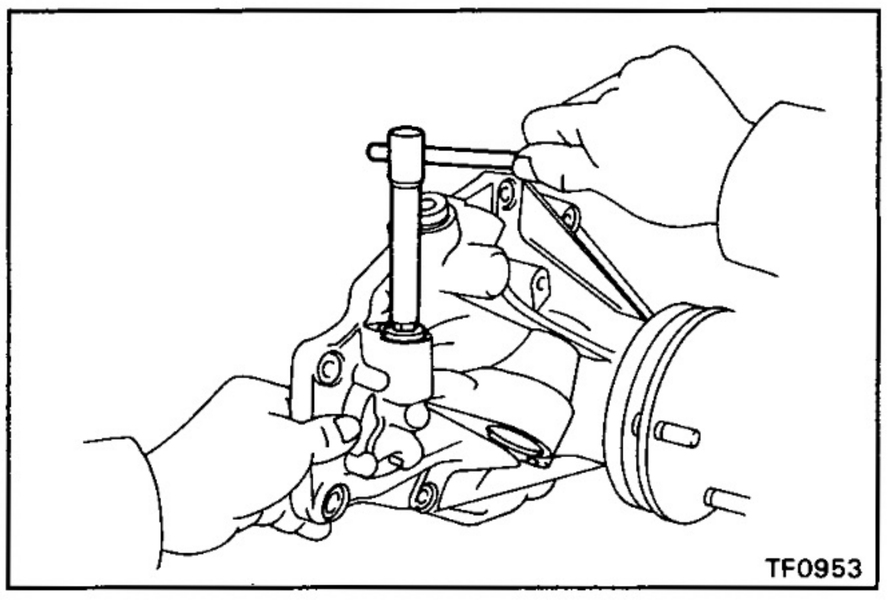

5. REMOVE SCREW PLUG, SPRING, BALL AND VALVE SEAT

(a) Using a hexagon wrench, remove the screw plug.

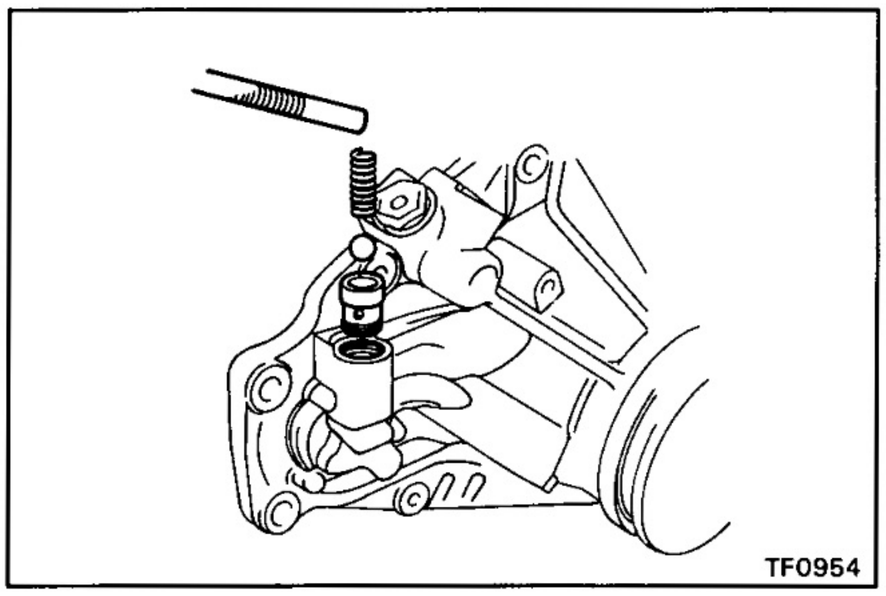

(b) Using a magnetic finger, remove the spring, ball and valve seat.

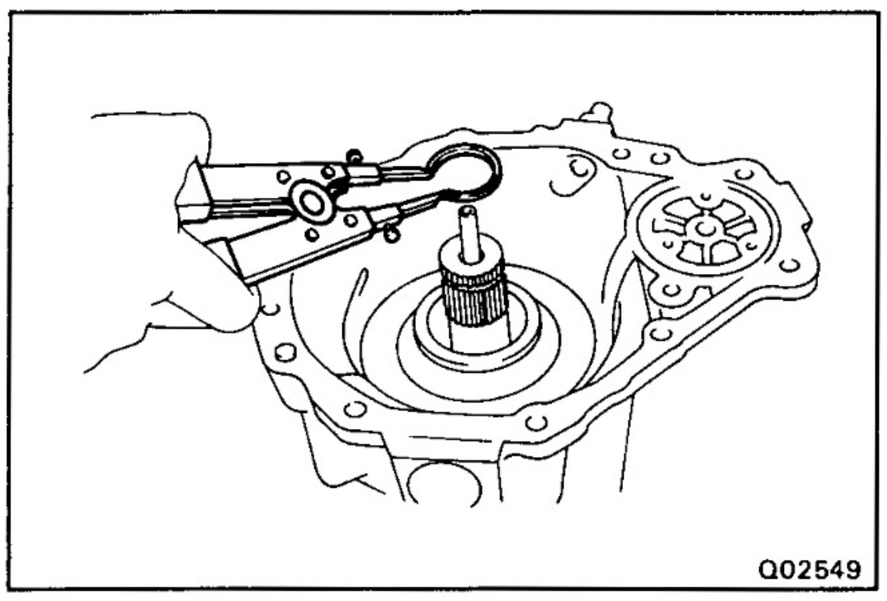

6. REMOVE CENTER DIFFERENTIAL CONTROL COUPLING ASSEMBLY

(a) Using snap ring pliers, remove the snap ring.

(b) Remove the coupling assembly.

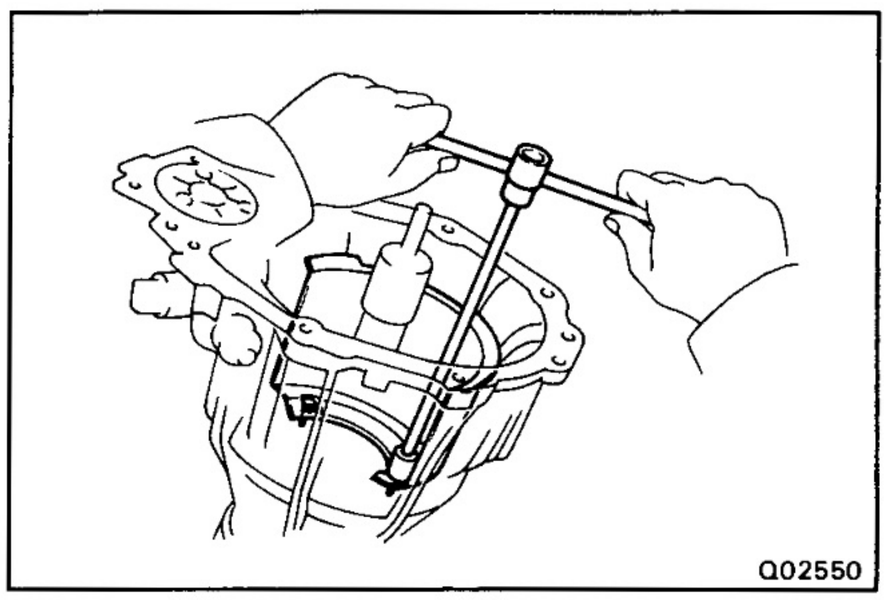

7. REMOVE SEPARATOR

Remove the two bolts and the separator.

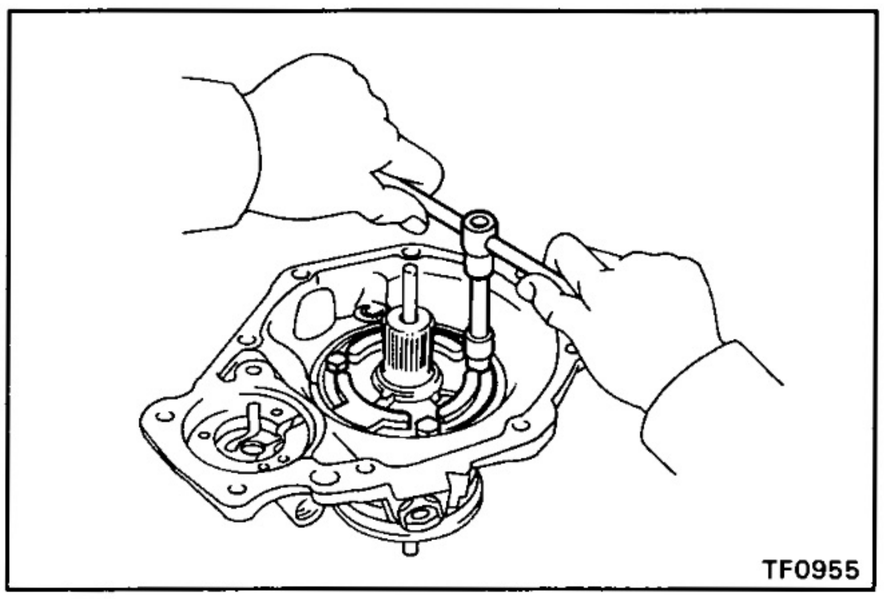

8. REMOVE OIL PUMP PLATE

Remove the bolt and the oil pump plate.

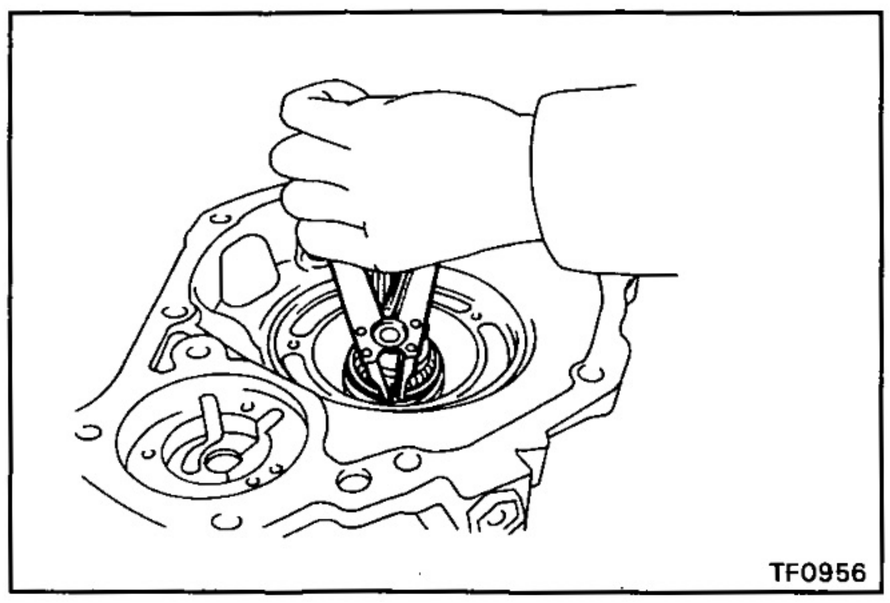
TF0956

9. REMOVE SPEED METER DRIVE GEAR

(a) Using snap ring pliers, remove the snap ring.

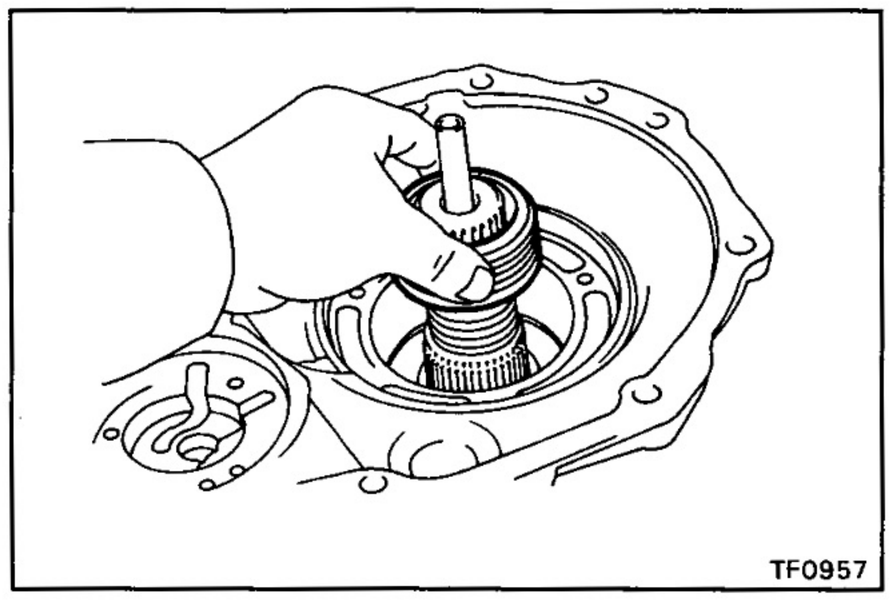
TF0957

(b) Remove the speedometer drive gear.

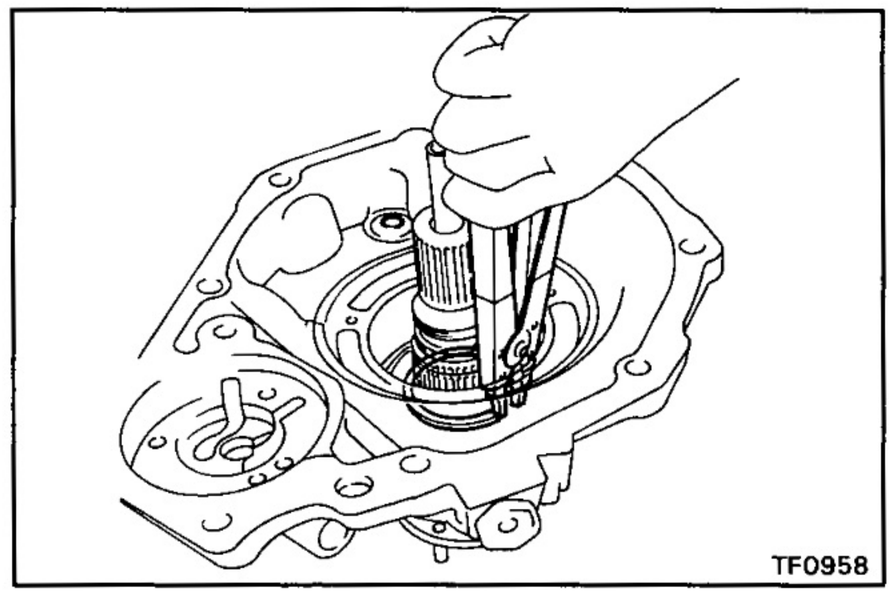
TF0958

10. REMOVE REAR OUTPUT SHAFT

(a) Using snap ring pliers, remove the snap ring.

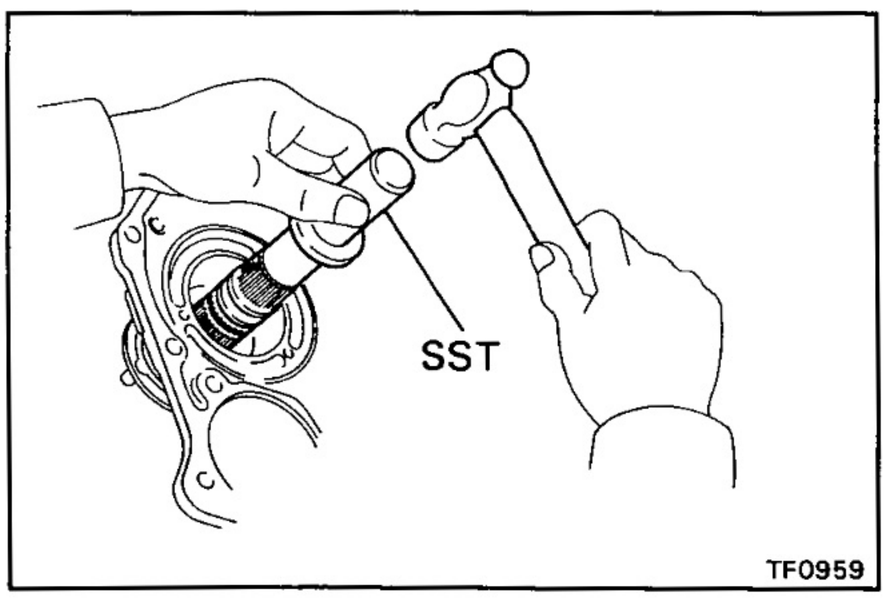

TF0959

(b) Using SST and a hammer, remove the rear output shaft.
SST 09325-12010

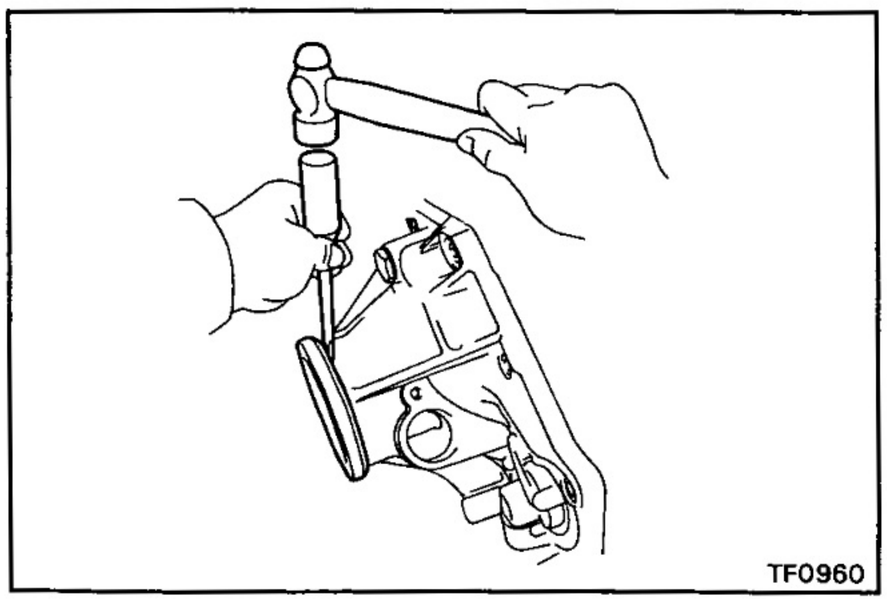
TF0960

11. REMOVE DUST DEFLECTORS

(a) Using a screwdriver and hammer, remove the rear extension housing dust deflectors.

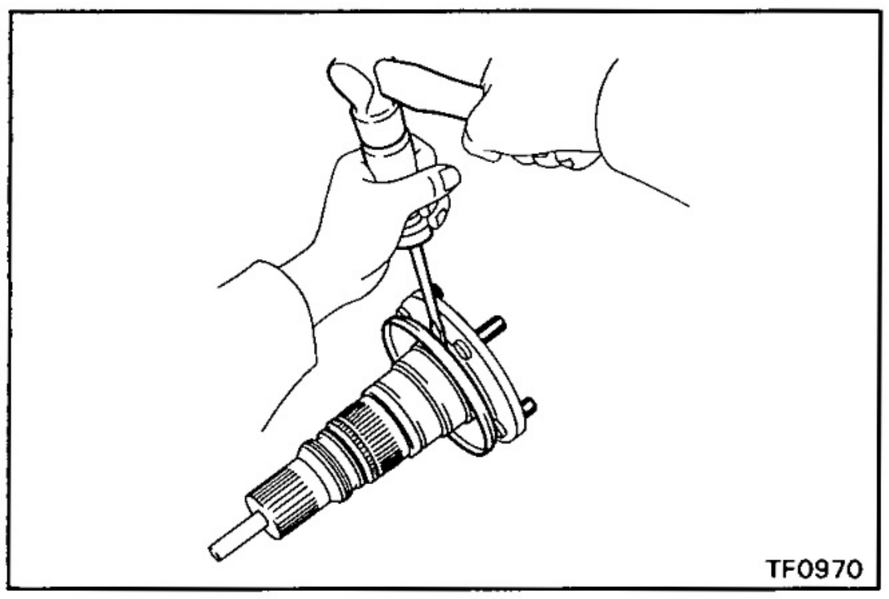

(b) Using a screwdriver and hammer, remove the rear output shaft dust deflector.

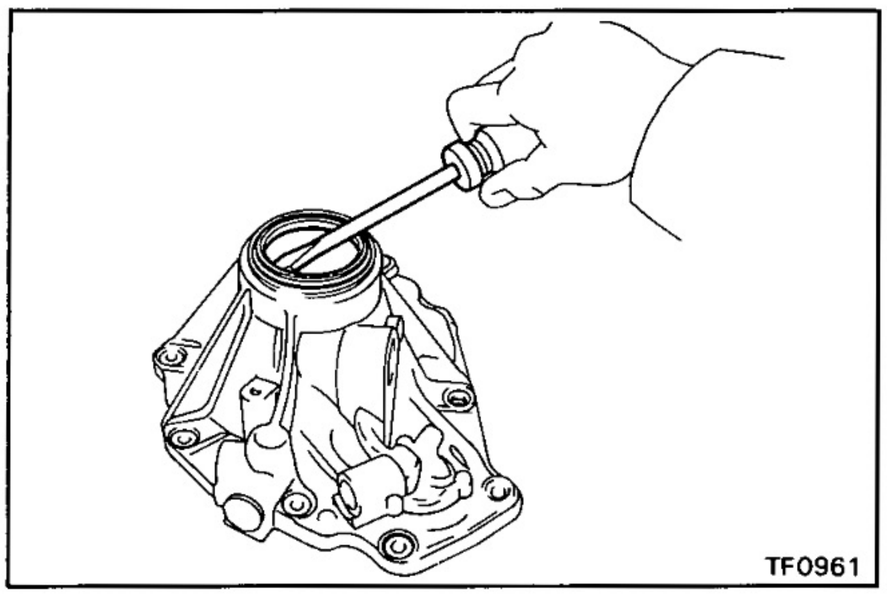

12. REMOVE OIL SEAL

Using a screwdriver, pry out the oil seal.

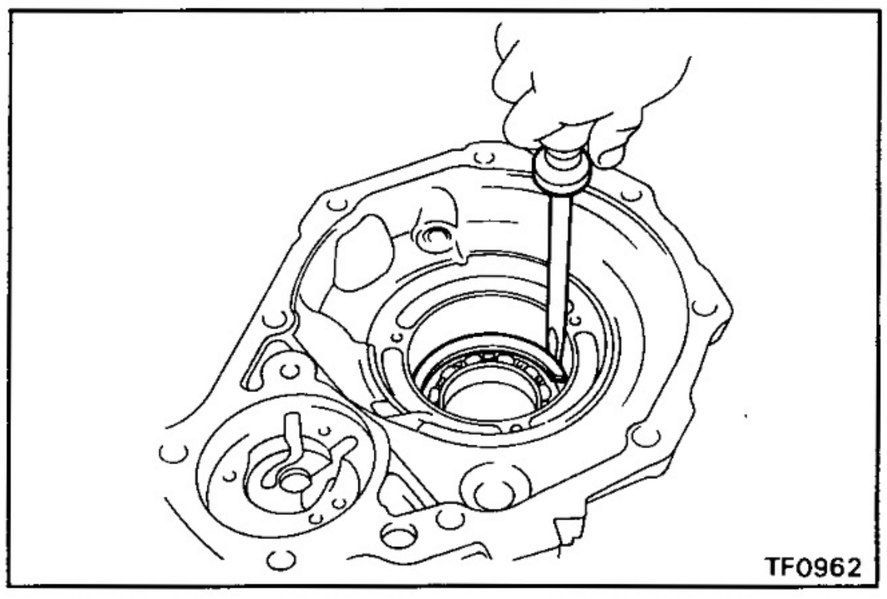

13. REMOVE BALL BEARING

(a) Using a screwdriver, remove the snap ring.

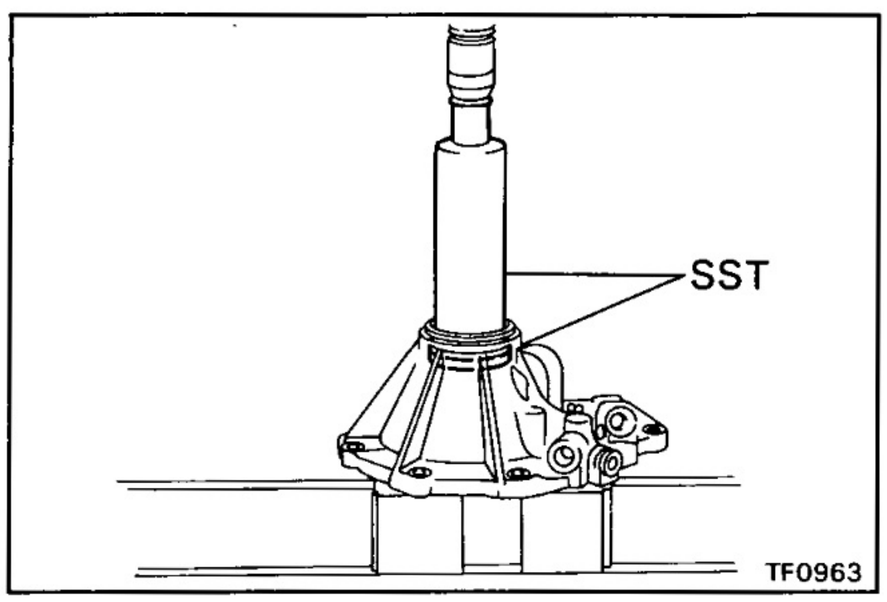

(b) Using SST and a press, remove the ball bearing.
SST 09316-60010 (09316-00010, 09316-00020)

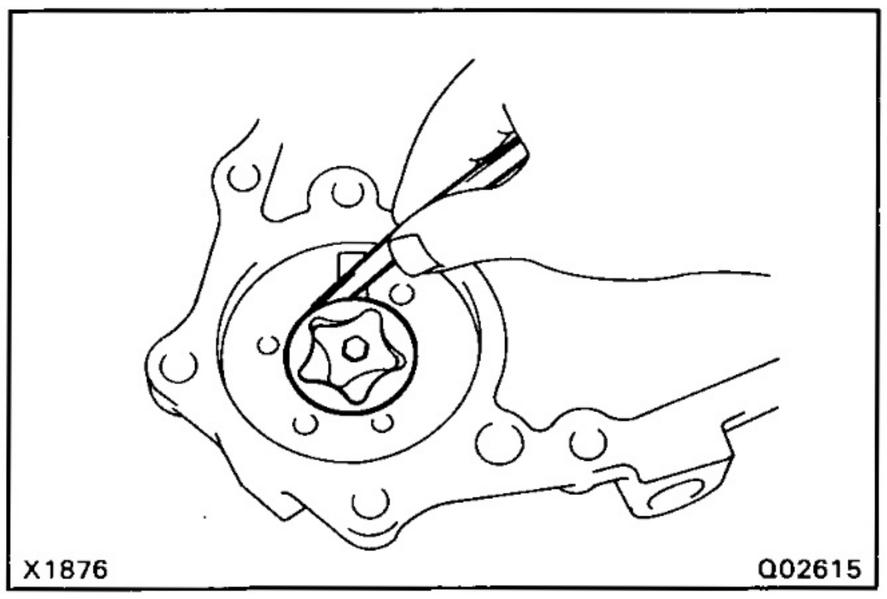

INSPECTION OF OIL PUMP

1. CHECK BODY CLEARANCE OF DRIVEN ROTOR

Install the drive rotor to the driven rotor.
Using a feeler gauge, measure body clearance between drive rotor and extension housing.

Standard body clearance: **0.08 — 0.17 mm (0.0031 — 0.0067 in.)**

Maximum body clearance: **0.17 mm (0.0067 in.)**

If the body clearance is greater than the maximum, replace the drive rotor or driven rotor.

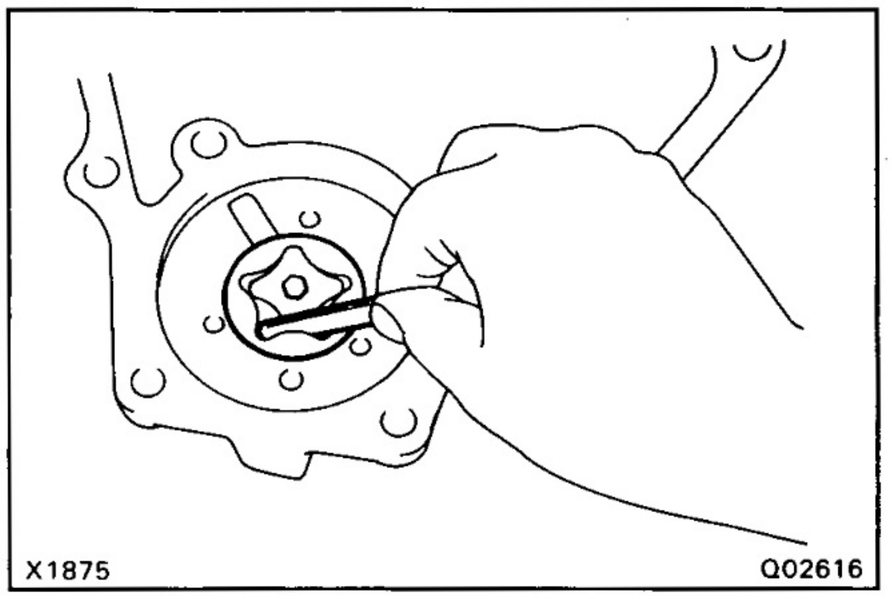

2. CHECK TIP CLEARANCE OF DRIVEN ROTOR

Using a feeler gauge, measure tip clearance between drive rotor and driven rotor.

Standard tip clearance: **0.05 — 0.15 mm (0.0020 — 0.0059 in.)**

Maximum tip clearance: **0.15 mm (0.0059 in.)**

If the tip clearance is greater than the maximum, replace the drive rotor or driven rotor.

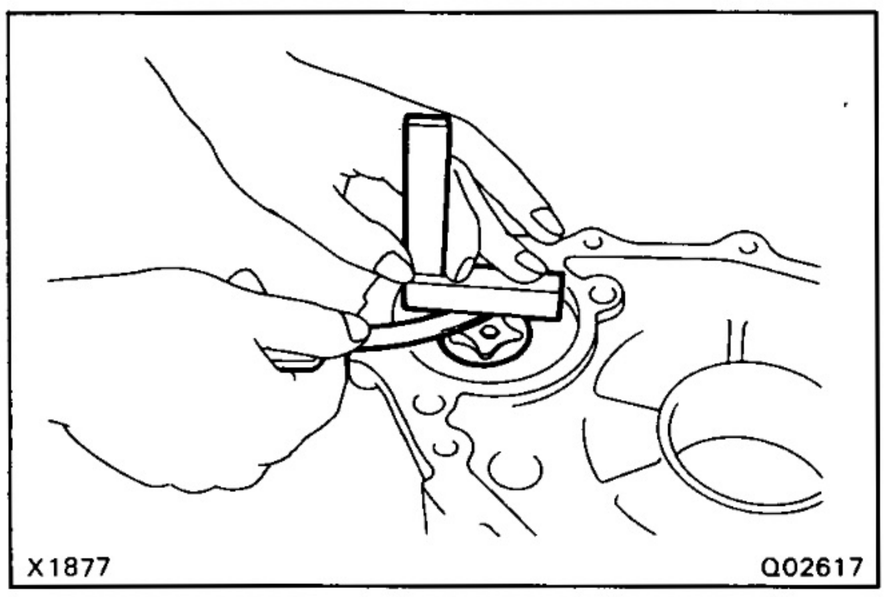

3. CHECK SIDE CLEARANCE OF OIL PUMP

Using a steel straight edge and a feeler gauge, measure the side clearance of oil pump.

Standard side clearance: **0.03 — 0.10 mm (0.0012 — 0.0039 in.)**

Maximum side clearance: **0.10 mm (0.0039 in.)**

If the side clearance greater than the maximum, replace the drive rotor or driven rotor.

ASSEMBLY OF REAR EXTENSION HOUSING ASSEMBLY

1. INSTALL BALL BEARING

(a) Using SST and a press, install the ball bearing.

SST 09316-60010 (09316-00010, 09316-00030)

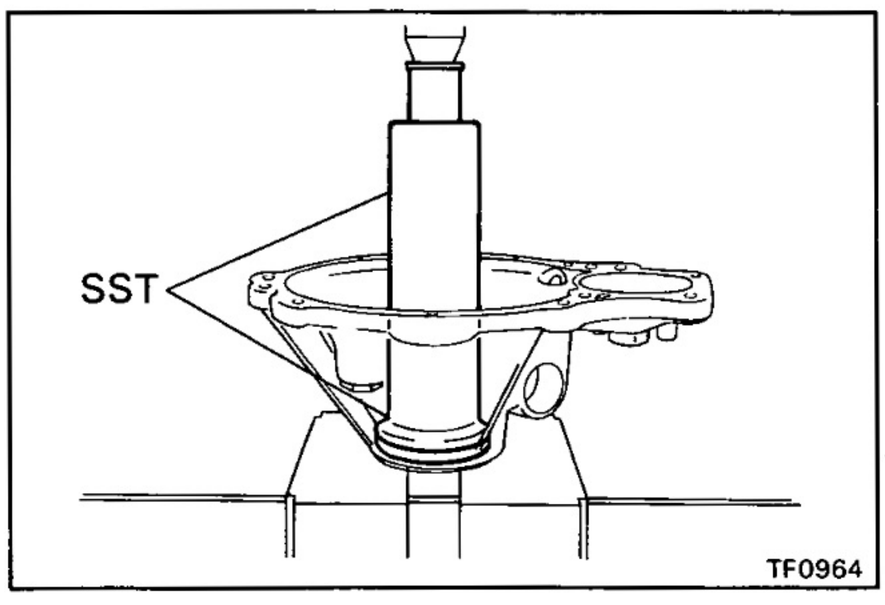

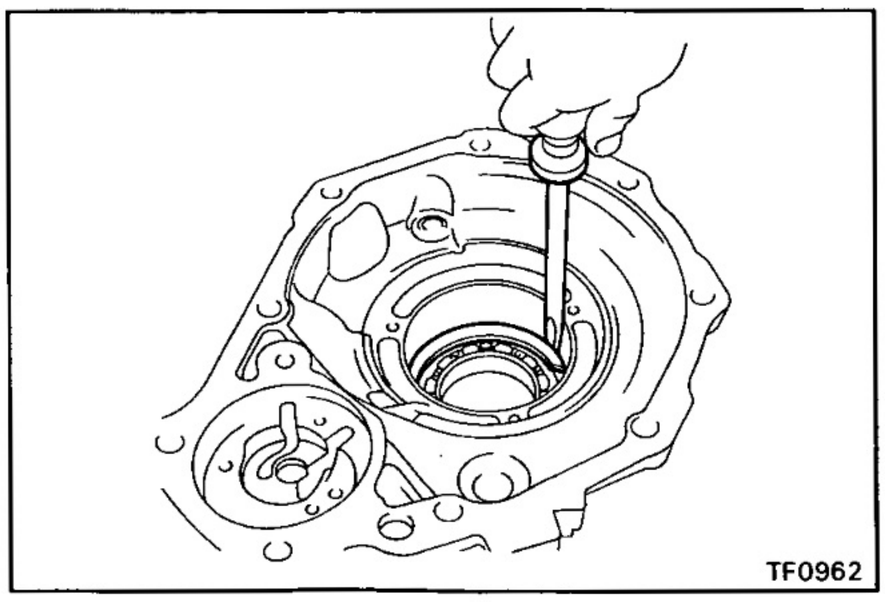

(b) Using a screwdriver, install the snap ring.

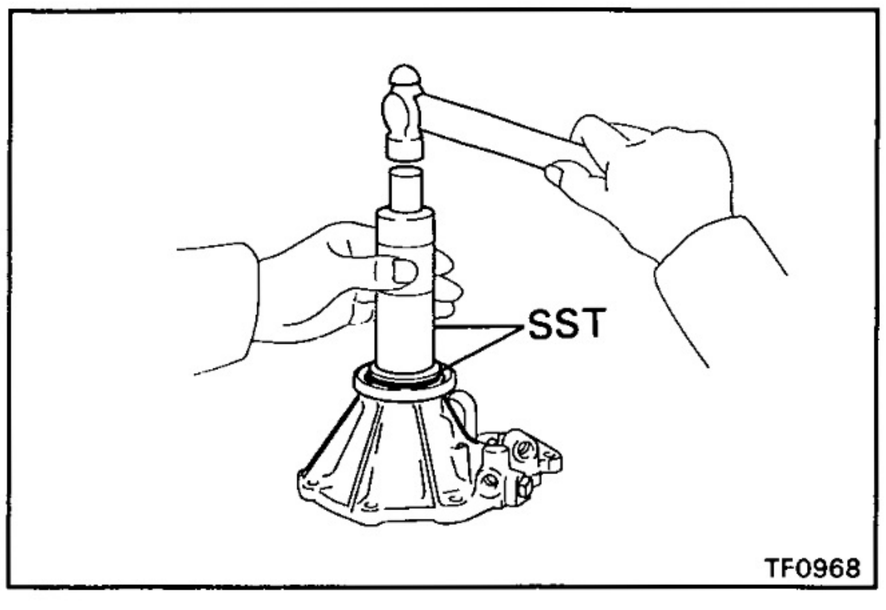

2. INSTALL DUST DEFLECTORS

(a) Using SST and a hammer, install a new rear extension housing dust deflector.

SST 09316-60010 (09316-00010, 09316-00040)

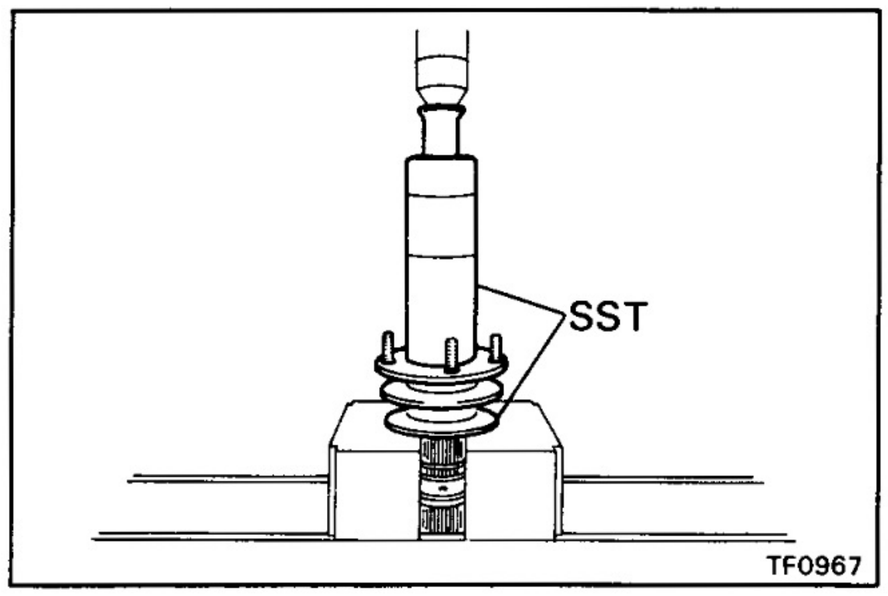

(b) Using SST and a press, install a new rear extension housing dust deflector.

SST 09316-20011, 09316-60010,
(09316-00010)

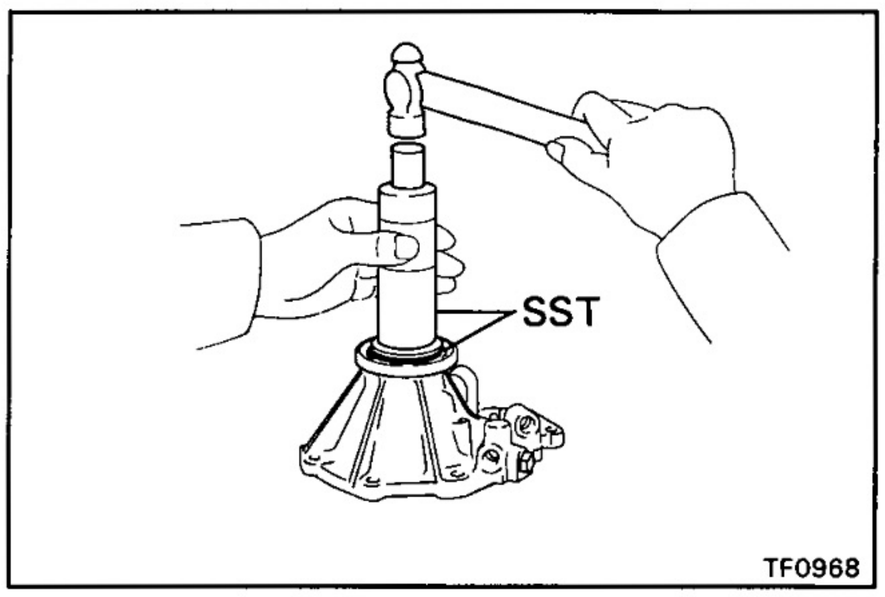

3. INSTALL OIL SEAL

Using SST and a hammer, drive in a new oil seal.

SST 09316-60010 (09316-00010, 09316-00030)

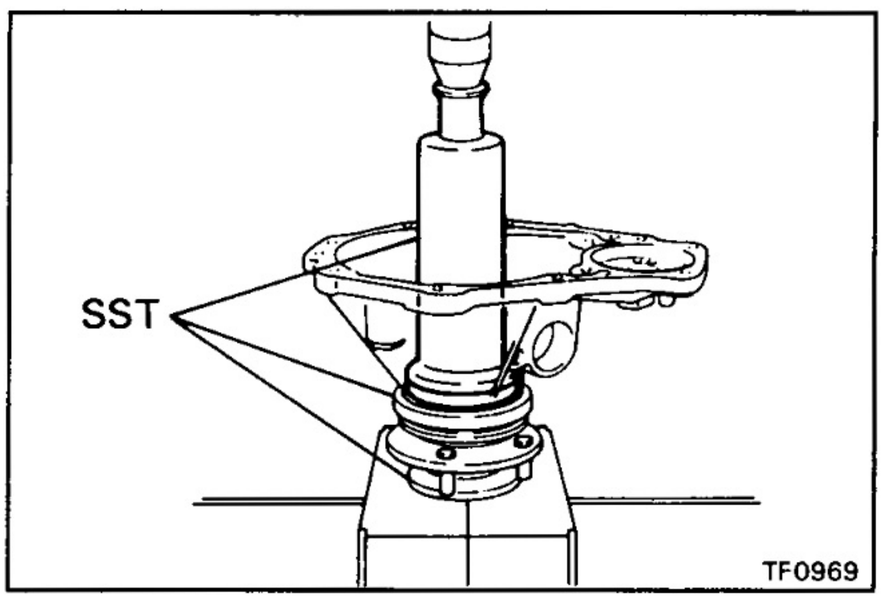

4. INSTALL REAR OUTPUT SHAFT

(a) Using SST and a press, install the rear output shaft.

SST 09316-60010 (09316-00010, 09316-00030)
09316-20011

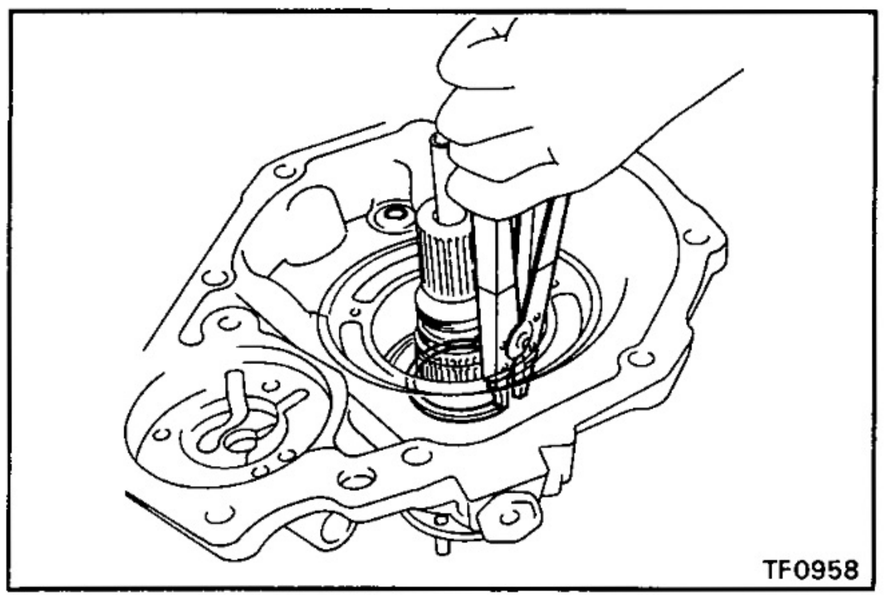

(b) Using snap ring pliers, install the snap ring.

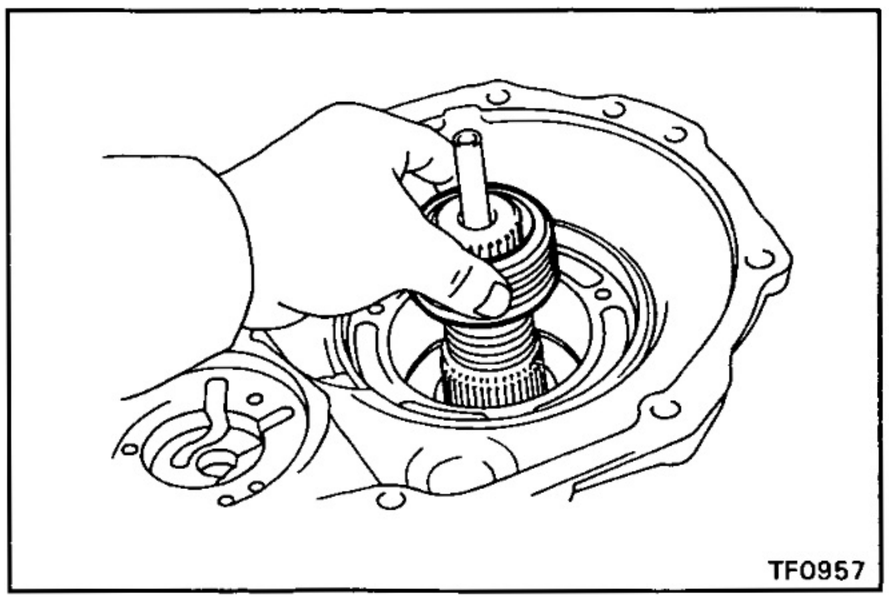
TF0957

5. INSTALL SPEEDOMETER DRIVE GEAR

(a) Install the speedometer drive gear.

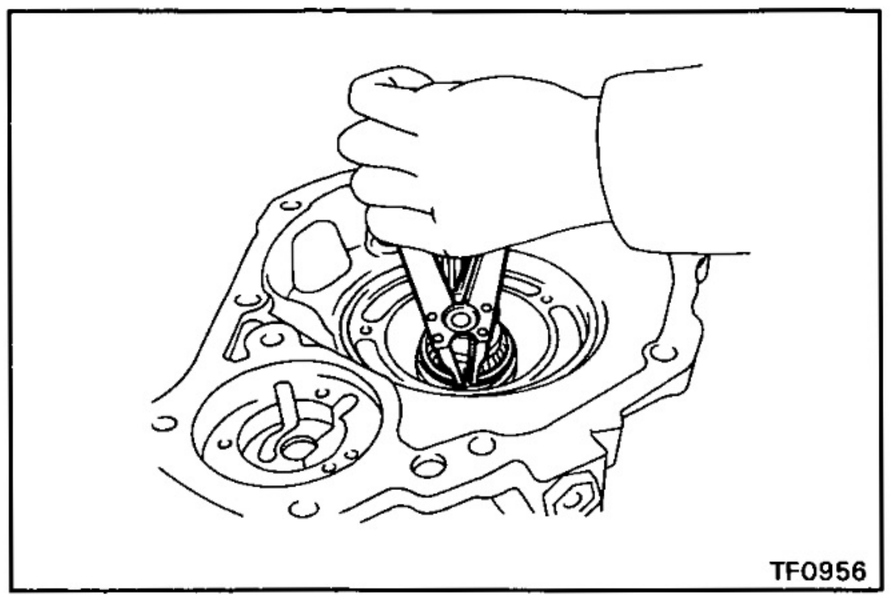
TF0956

(b) Using snap ring pliers, install the snap ring.

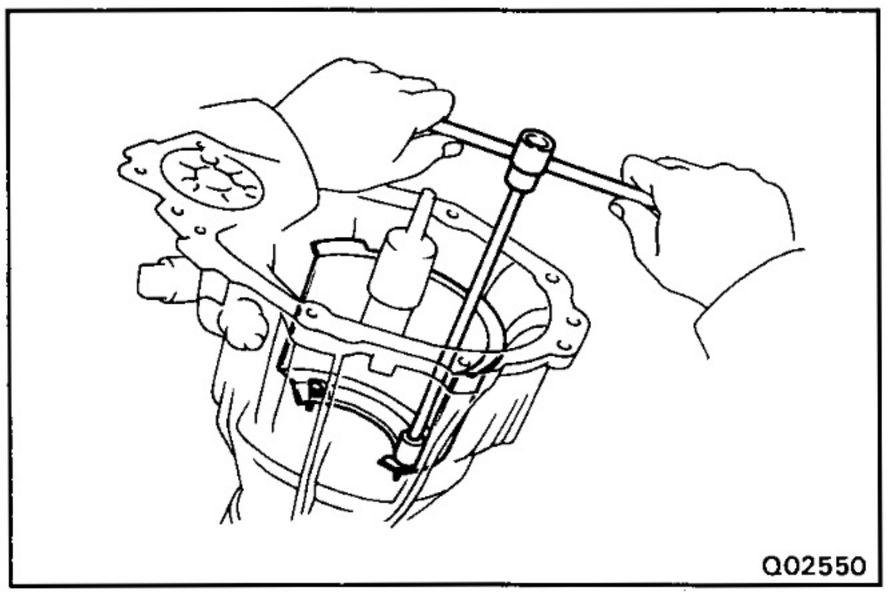
Q02550

6. INSTALL OIL PUMP PLATE SEPARATOR

(a) Install the oil pump plate.

(b) Install the separator.

(c) Install and torque the three bolts.

Torque: 4.9 N·m (50 kgf·cm, 43 in.·lbf)

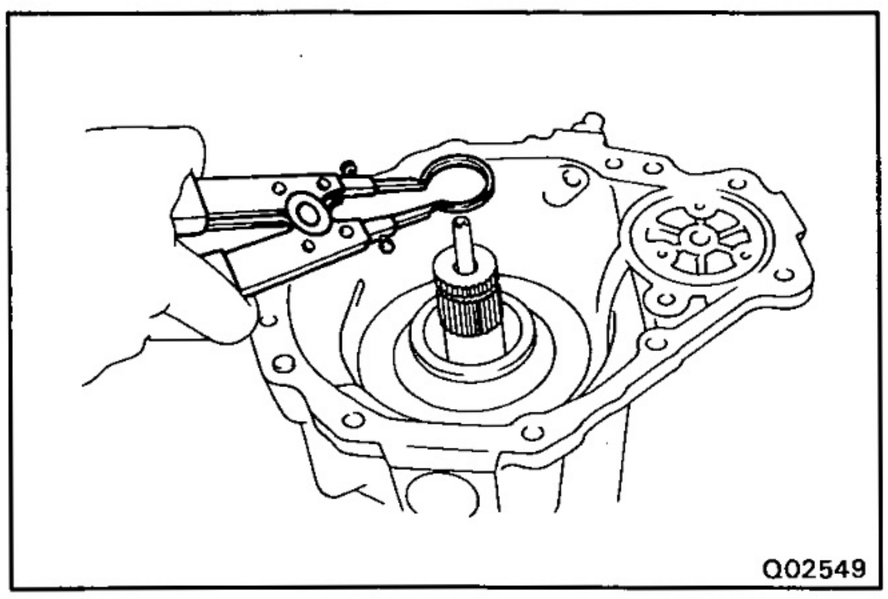
Q02549

7. INSTALL CENTER DIFFERENTIAL CONTROL COUPLING ASSEMBLY

(a) Install the coupling assembly.

(b) Using snap ring pliers, install the snap ring.

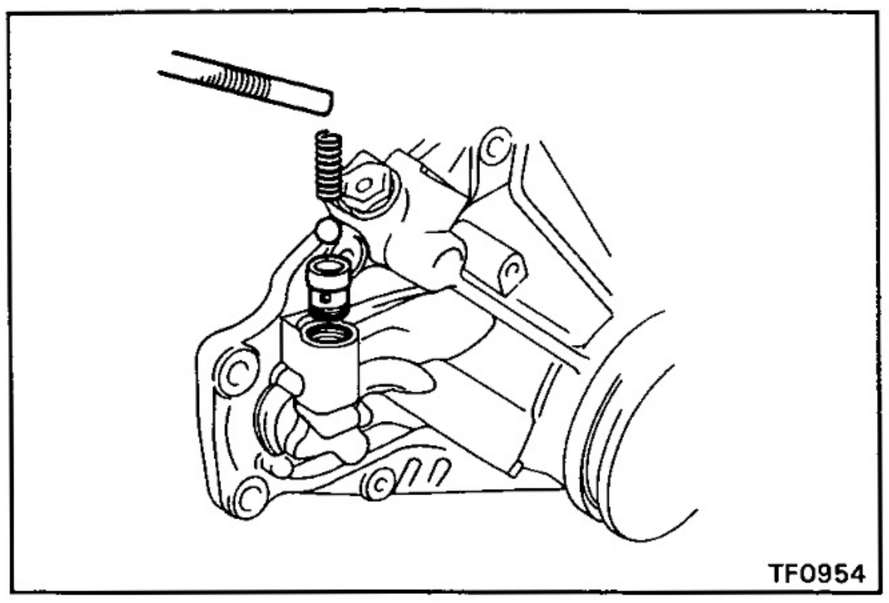
TF0954

8. INSTALL VALVE SEAT, BALL, SPRING AND SCREW PLUG

(a) Apply gear oil to the ball.

(b) Install the valve seat, ball and spring.

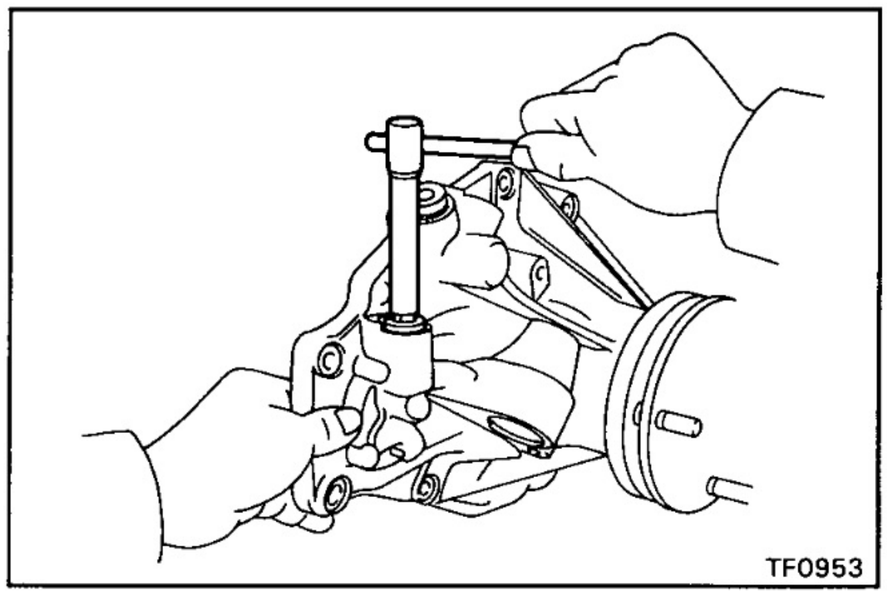

(c) Apply liquid sealer to the screw plug.

Sealant: Part No. 08833-00080, THREE BOND 1344, LOCTITE 242 or equivalent

(d) Using a hexagon wrench, install and torque the screw plug.

Torque: 29 N·m (300 kgf·cm, 21 ft·lbf)

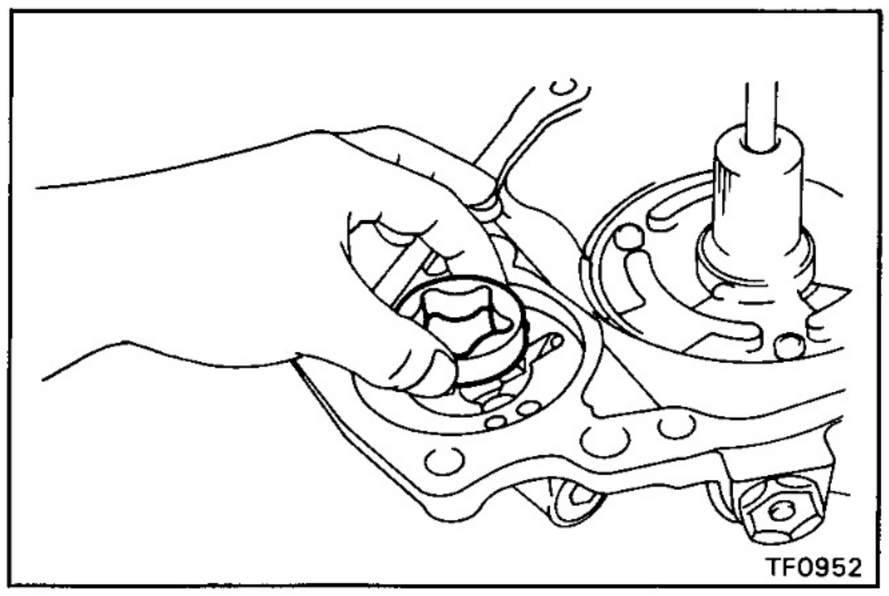

9. INSTALL DRIVEN ROTOR

(a) Apply gear oil to the driven rotor.

(b) Install the driven rotor.

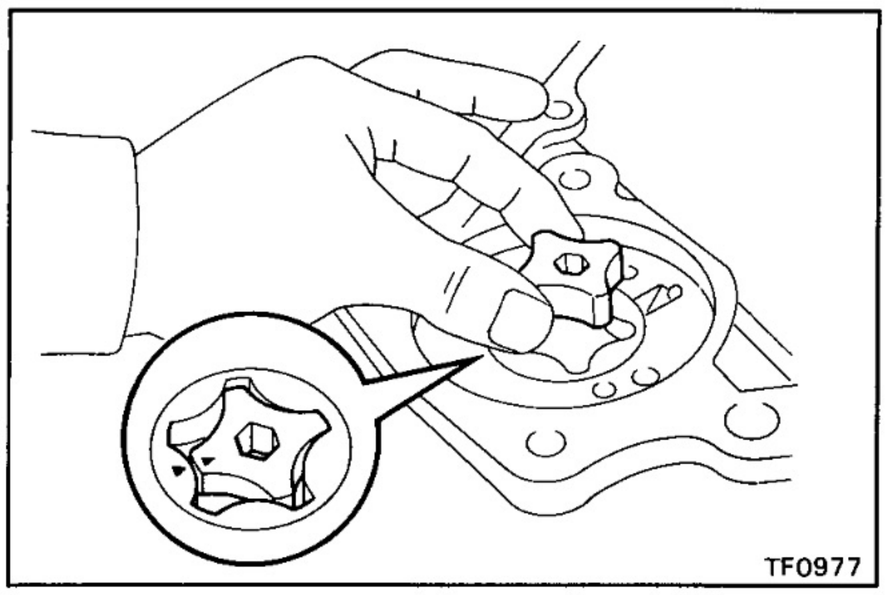

10. INSTALL DRIVE ROTOR

(a) Apply gear oil to the drive rotor.

(b) Install the drive rotor.

HINT: Align the alignment marks.

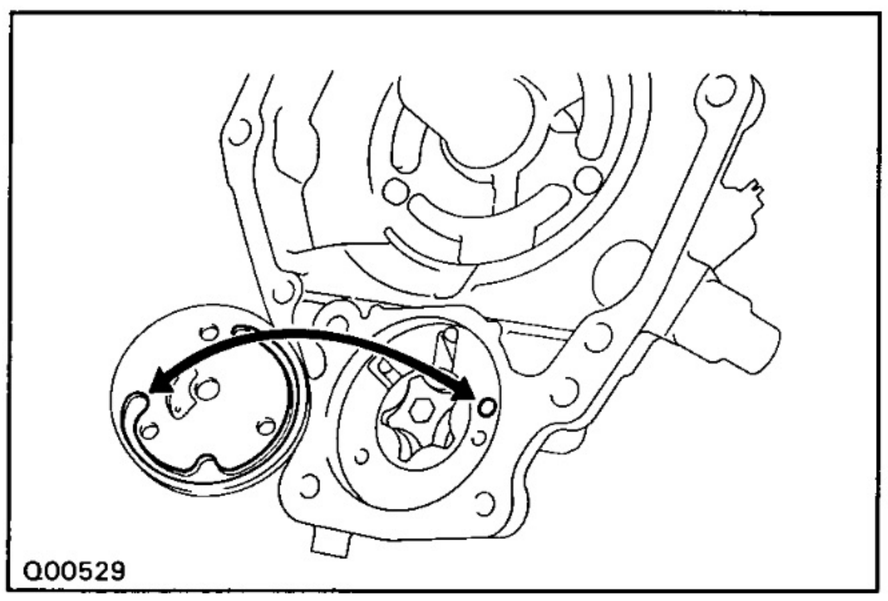

11. INSTALL OIL PUMP COVER

(a) Install the oil pump cover.

(b) Using a torx socket wrench, install and torque the three screws.

(Torx socket wrench T30 09042-00010)

Torque: 4.9 N·m (50 kgf·cm, 43 in.·lbf)

NOTICE: Align the oil hole of the rear extension housing and oil groove end of the oil pump cover.

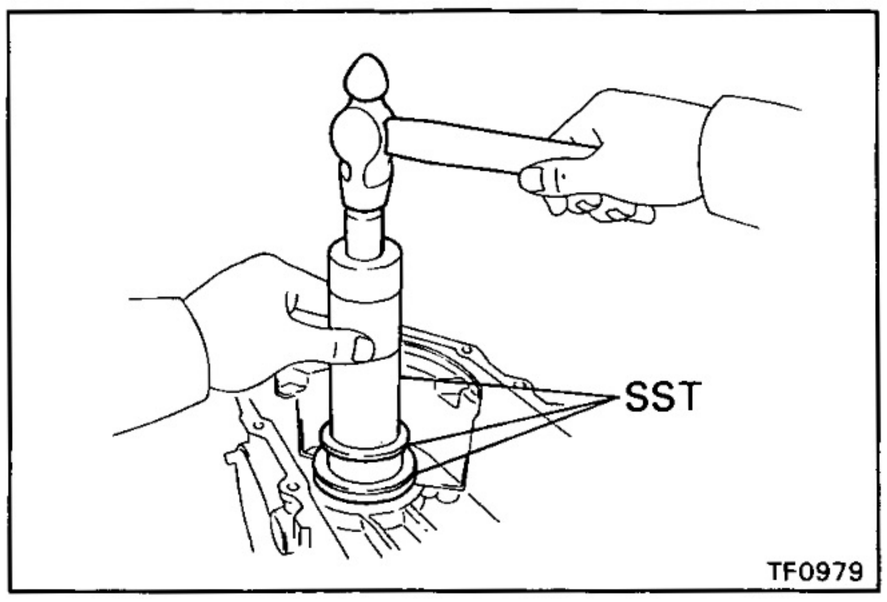

TRANSFER ASSEMBLY

1. INSTALL TWO BEARING RACES TO FRONT CASE

(a) Using SST and a hammer, install the center differential bearing race.

SST 09316-60010 (09316-00010, 09316-00030)
09316-20011

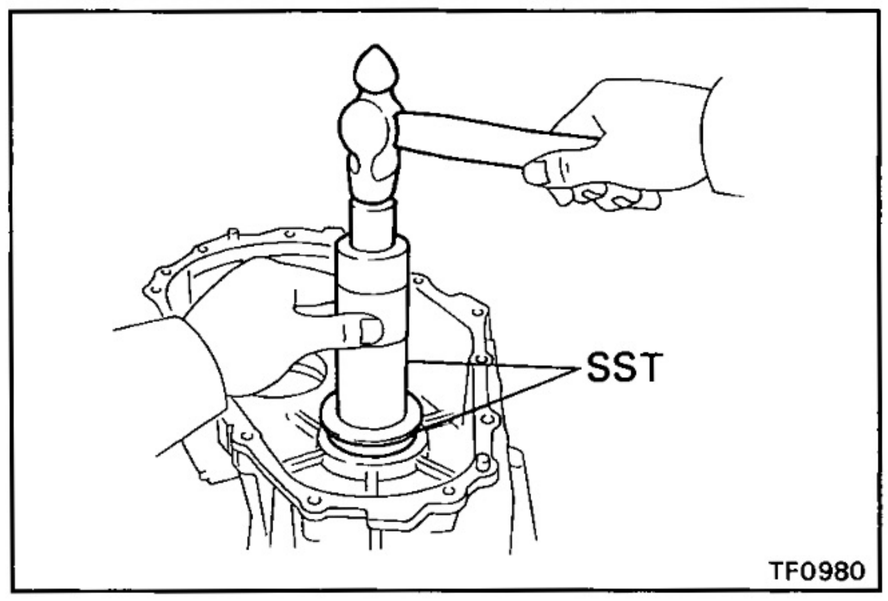

(b) Using SST and a hammer, install the idle gear bearing race.

SST 09316-60010 (09316-00010, 09316-00040)

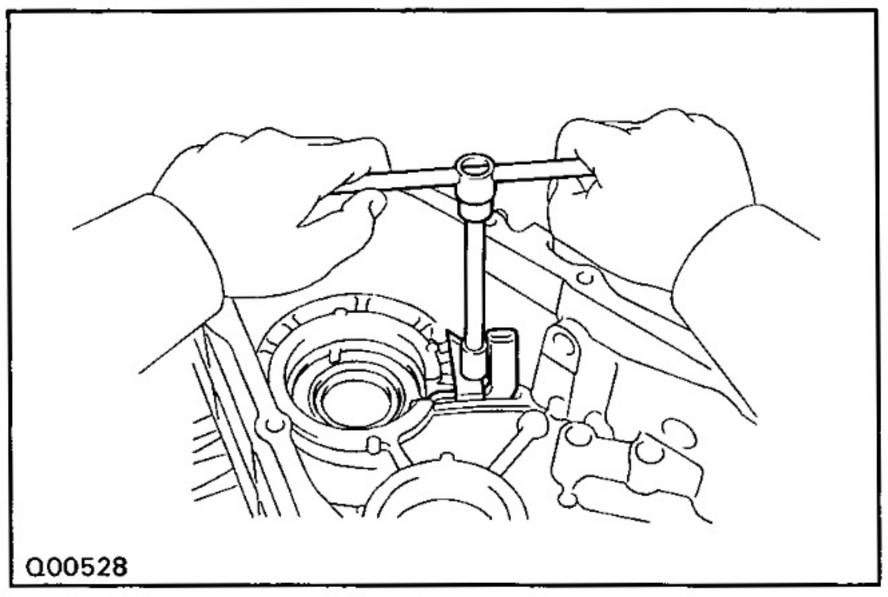

2. INSTALL OIL RECEIVER TO FRONT CASE

(a) Install the oil receiver.

(b) Install and torque the bolt.

Torque: 11.7 N·m (120 kgf·cm, 8.6 ft·lbf)

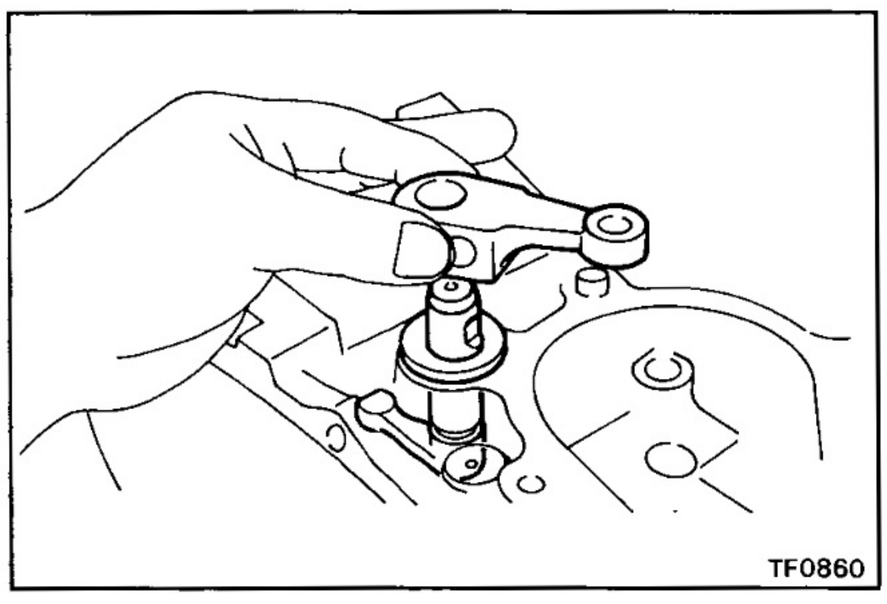

3. INSTALL SHIFT OUTER LEVER AND INNER LEVER

(a) Install the shift outer lever and inner lever.

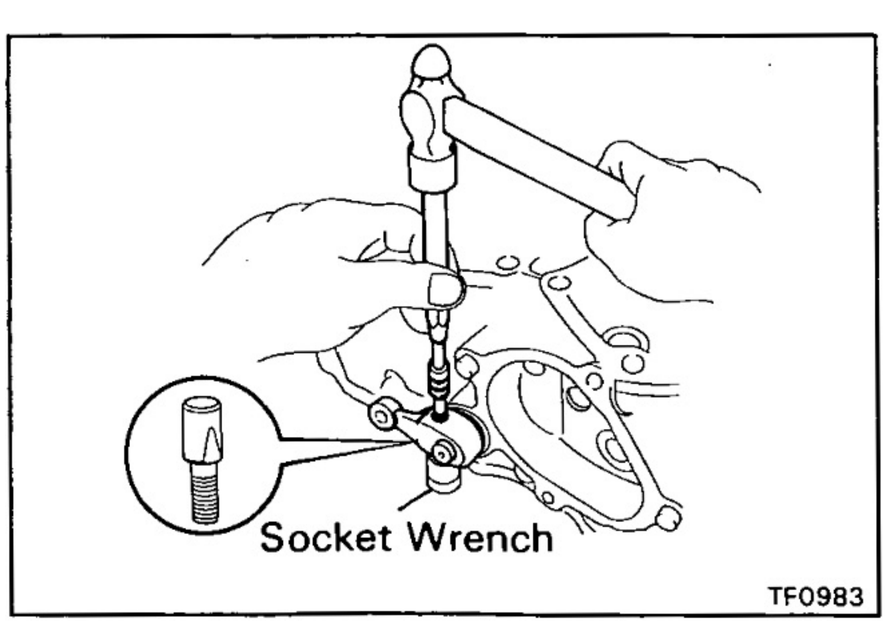

(b) Using a pin punch, hammer and socket wrench, install the lever lock pin.

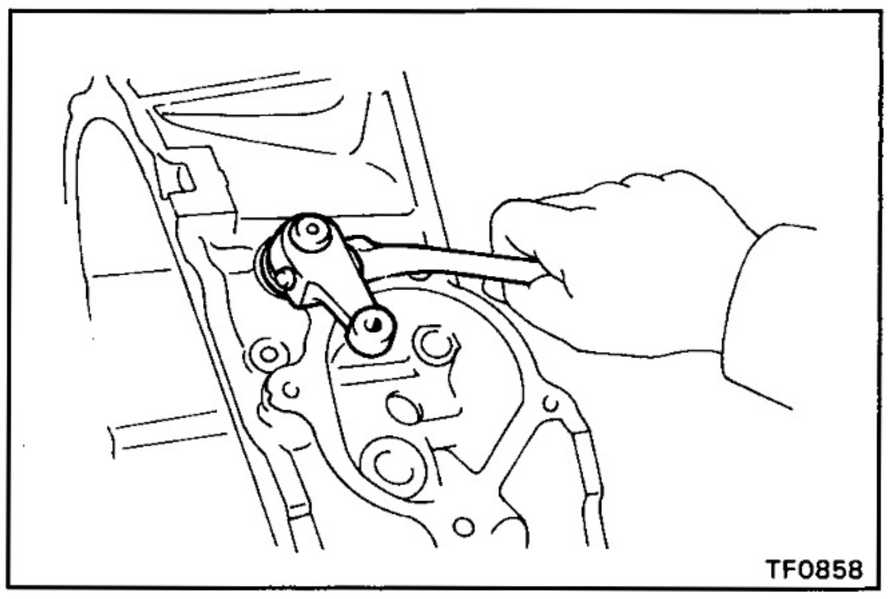

(c) Install the washer and nut.

Torque: 12 N·m (120 kgf·cm, 9 ft·lbf)

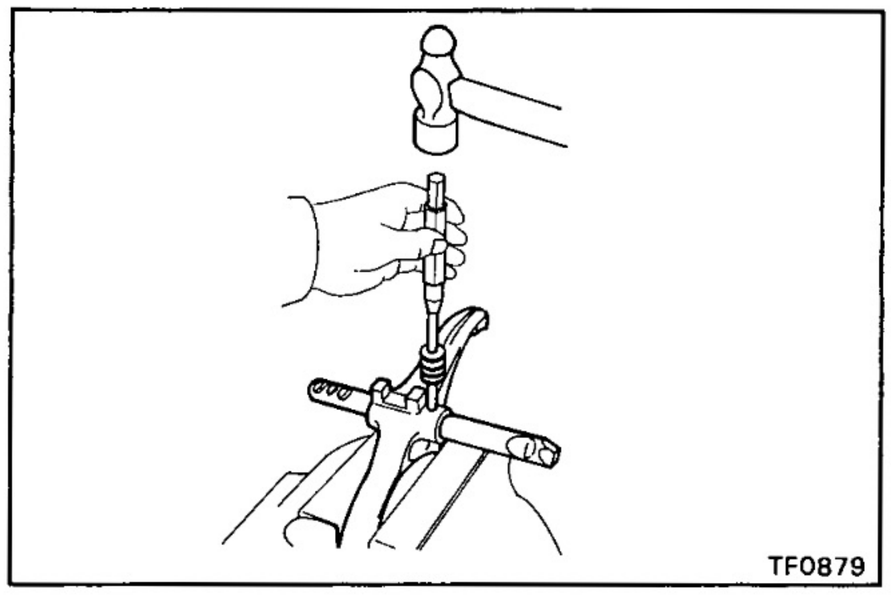

4. ASSEMBLE SHIFT FORK NO.1 AND FORK SHAFT

Using a pin punch and a hammer, drive in the slotted spring pin.

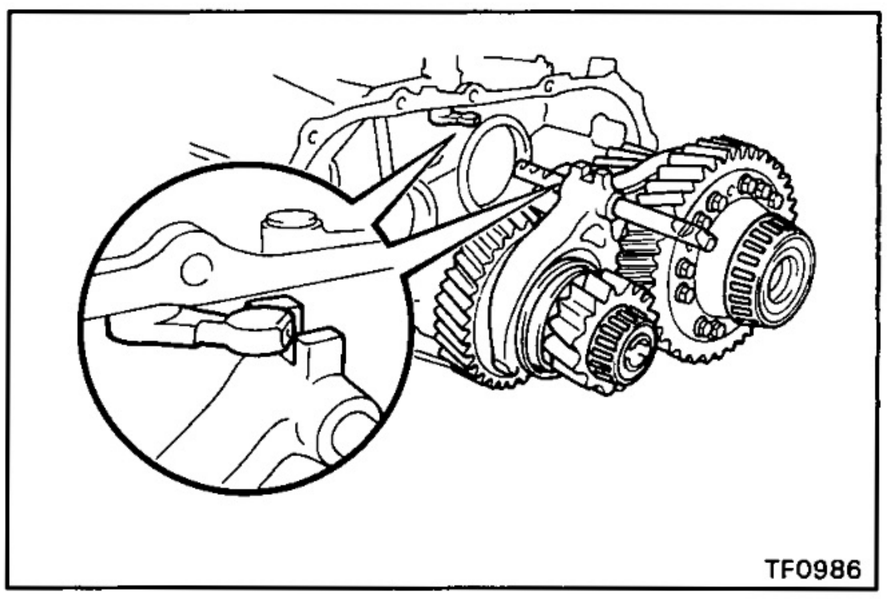

5. INSTALL IDLE GEAR ASSEMBLY, CENTER DIFFERENTIAL ASSEMBLY AND HIGH AND LOW SHIFT FORK ASSEMBLY TO FRONT CASE

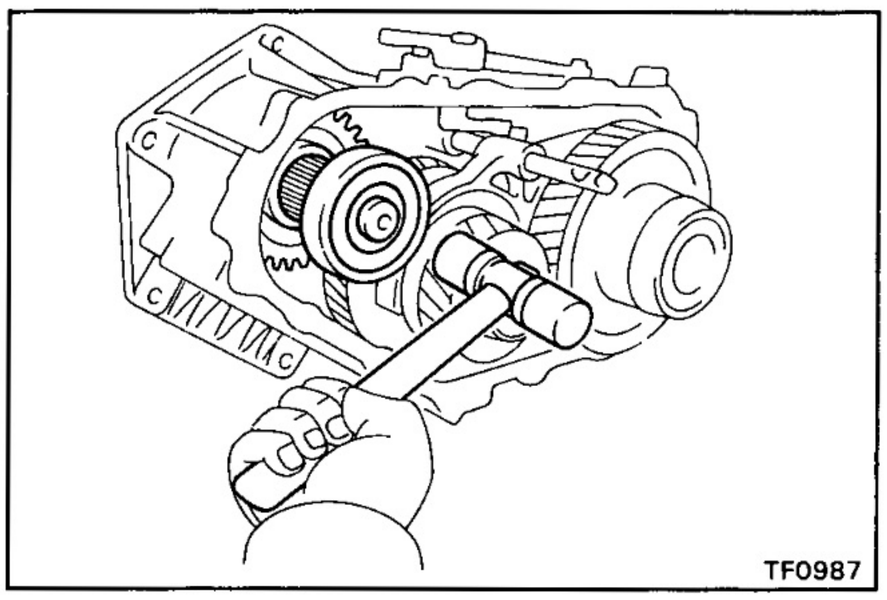

6. INSTALL INPUT SHAFT ASSEMBLY

Using a plastic hammer, tap in the input shaft.

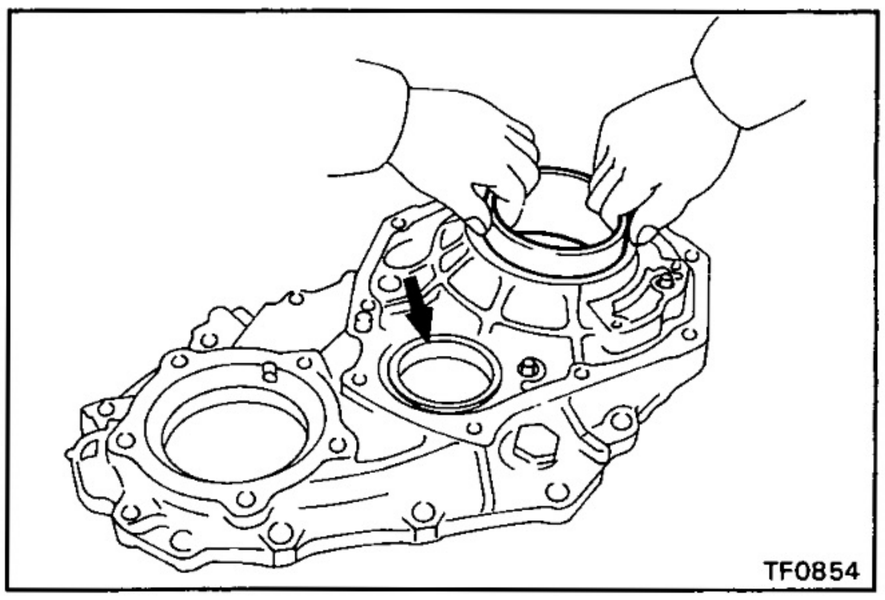

7. INSTALL TWO BEARING RACES TO REAR CASE

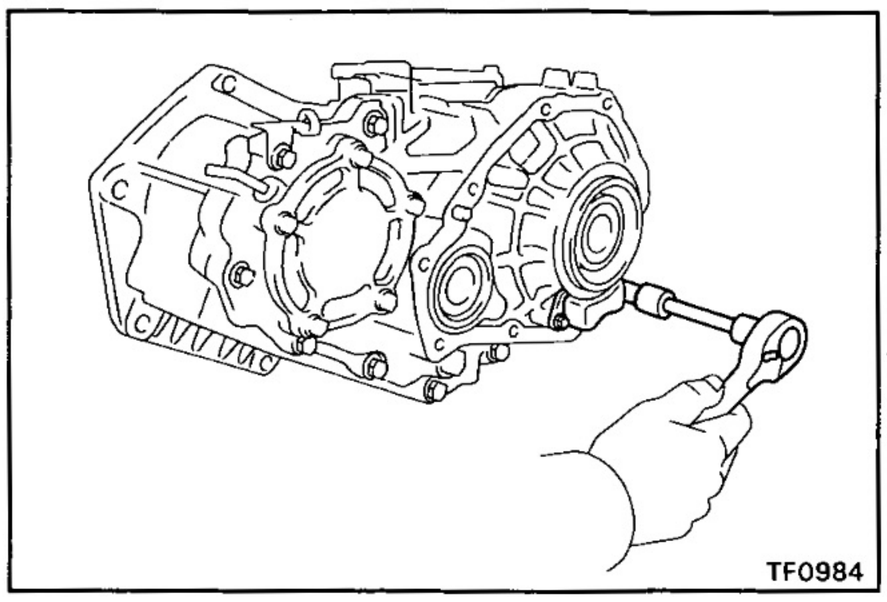

8. INSTALL OIL STRAINER TO REAR CASE

(a) Install the oil strainer.

(b) Install and torque the bolts.

Torque: 4.9 N·m (50 kgf·cm, 43 in.·lbf)

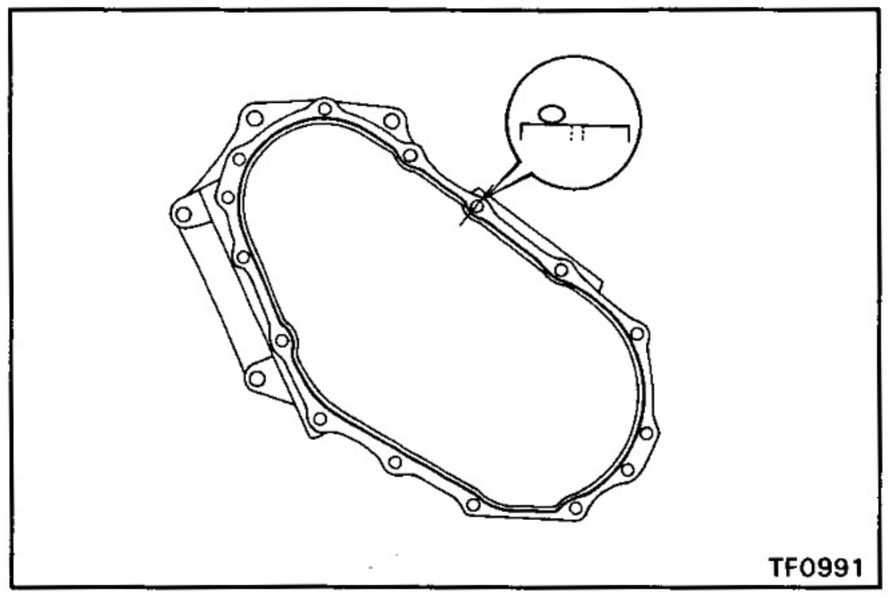

9. ASSEMBLE FRONT CASE AND REAR CASE

(a) Remove any packing material and be careful not to drop oil on the contacting surfaces of the front case.

(b) Apply seal packing to the front case as shown.

Seal packing: Part No. 08826-00090, THREE BOND 1281 or equivalent

HINT: Install the rear case as soon as the seal packing is applied.

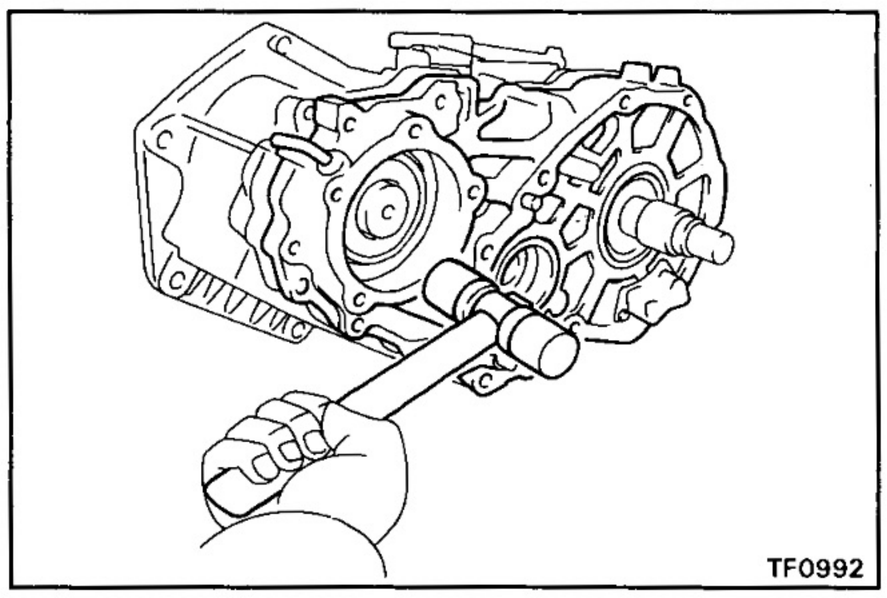

(c) Using a plastic hammer, tap the rear case and assemble it.

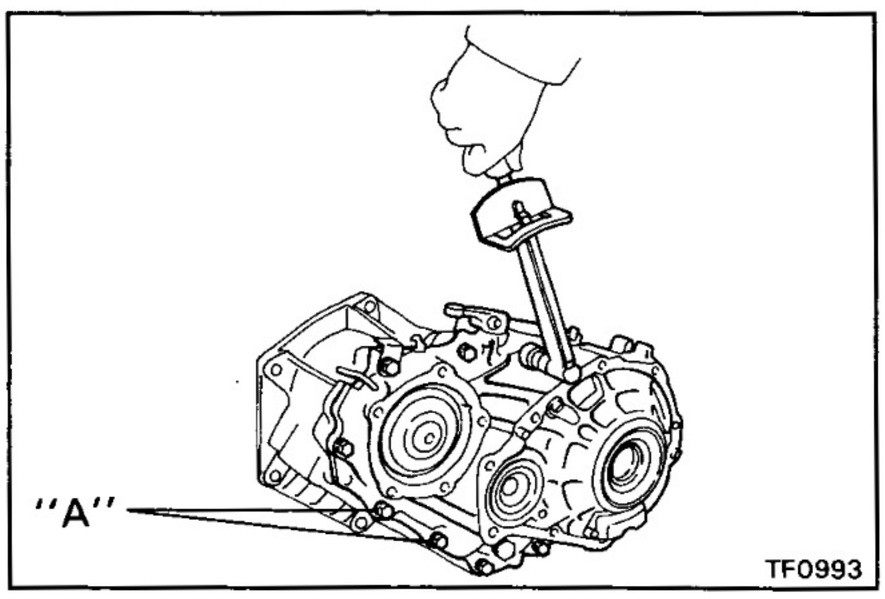

(d) Apply liquid sealer to the "A" bolt threads.

Sealant: Part No. 08833-00080, THREE BOND 1344, LOCTITE 242 or equivalent

(e) Install and torque the eight bolts.

Torque: 37 N·m (380 kgf·cm, 27 ft·lbf)

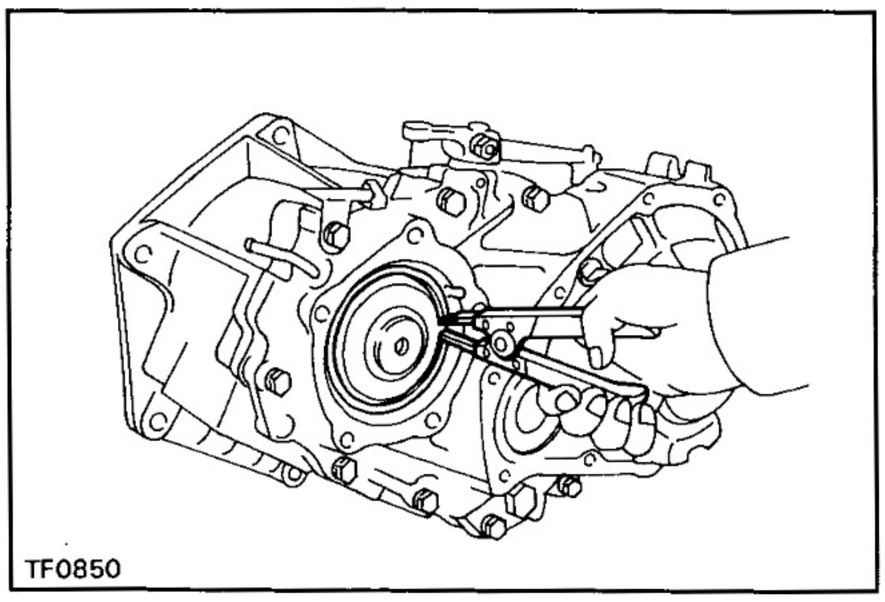

(f) Using snap ring pliers, install the snap ring.

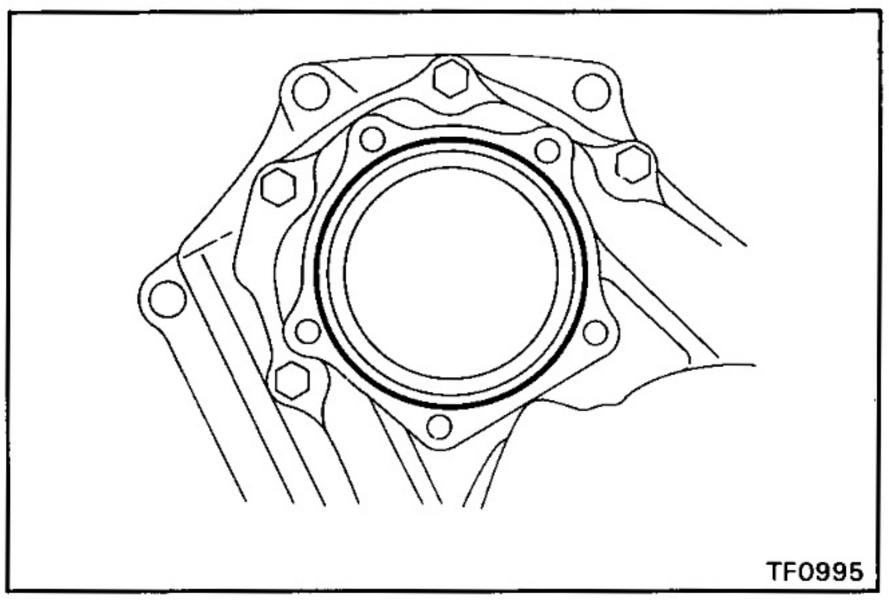
TF0995

10. INSTALL CASE COVER

(a) Remove any packing material and be careful not to drop oil on the contacting surfaces of the rear case.

(b) Apply seal packing to the rear case as shown.

Seal packing: Part No. 08826-00090, THREE BOND 1281 or equivalent

HINT: Install the case cover as soon as the seal packing is applied.

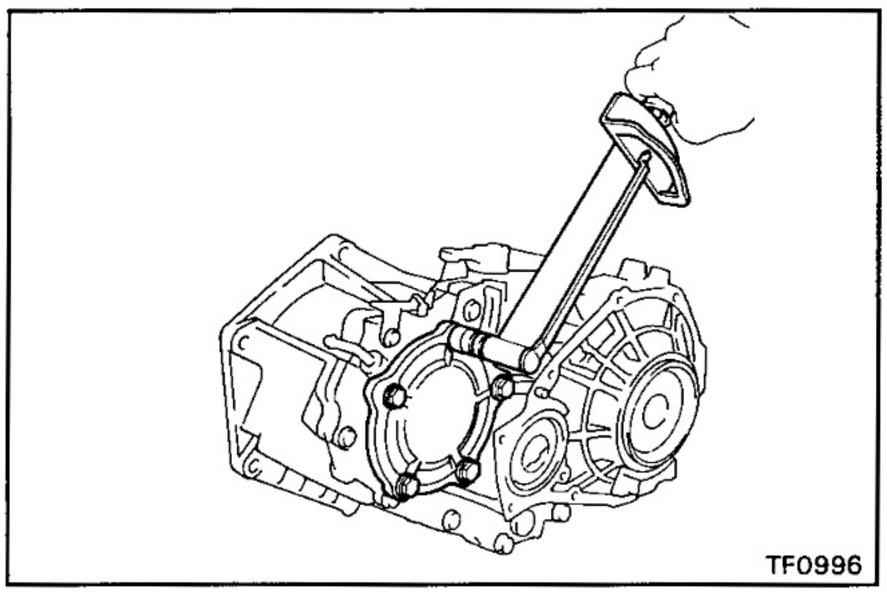
TF0996

(c) Install the case cover.

(d) Apply liquid sealer to the bolt threads.

Sealant: Part No. 08833-00080, THREE BOND 1344, LOCTITE 242 or equivalent

(e) Install and torque the five bolts.

Torque: 37 N·m (380 kgf·cm, 27 ft·lbf)

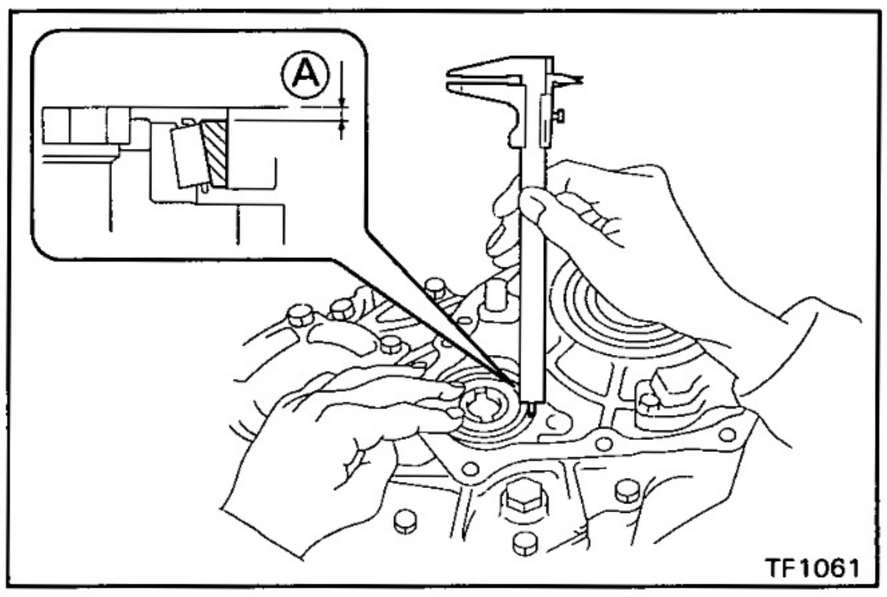

TF1061

11. SELECT ADJUSTING SHIMS FOR IDLER GEAR REAR TAPER ROLLER BEARING

(a) Using a vernier calipers, measure dimension Ⓐ .

HINT: Lightly hold down the bearing outer race in the thrust direction to eliminate any looseness before making the measurement.

(b) Using a steel straight edge and feeler gauge, measure the clearance of dimension Ⓑ .

(c) Calculate the required thickness of the adjusting shim. Thickness: Dimension Ⓐ + Dimension Ⓑ + (0.03 — 0.08 mm)

(d) From the following table, select a shim with a thickness fitting within the range of the calculation in (c).

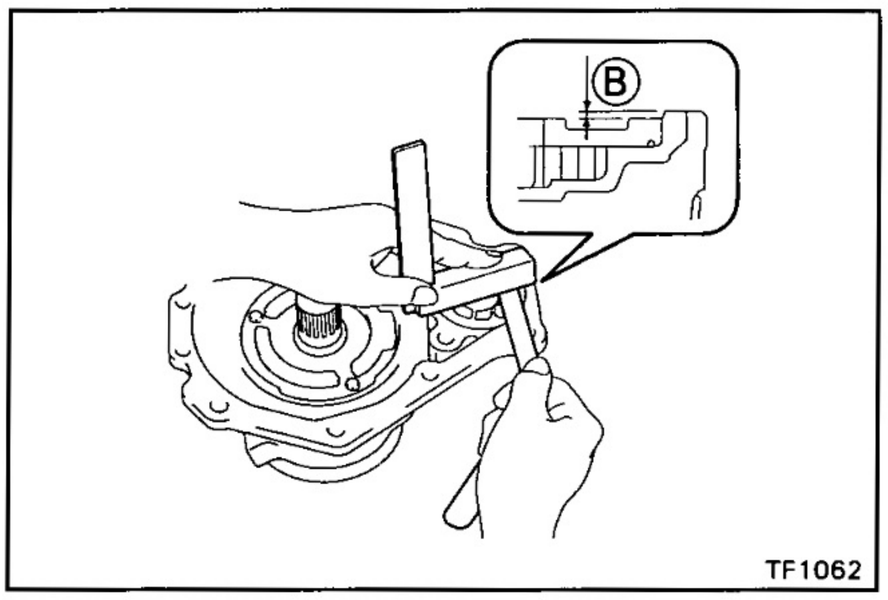

TF1062

Mark	Thickness mm (in.)	Mark	Thickness mm (in.)
2	0.30 (0.0118)	8	3.20 (0.1260)
3	0.45 (0.0177)	9	3.40 (0.1339)
4	2.40 (0.0945)	10	3.60 (0.1417)
5	2.60 (0.1024)	11	3.80 (0.1496)
6	2.80 (0.1102)	12	4.00 (0.1575)
7	3.00 (0.1181)	13	0.55 (0.0216)

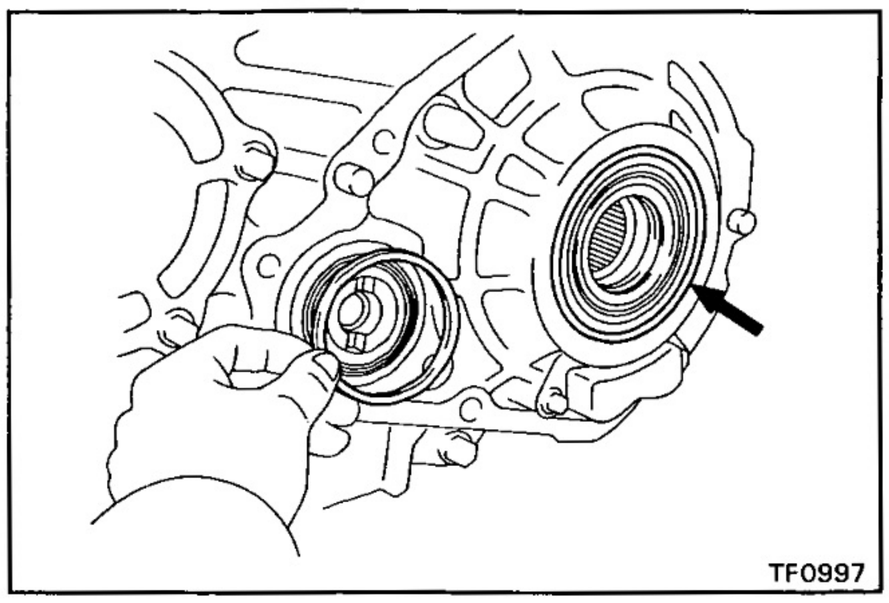

12. INSTALL ADJUSTING SHIMS TO IDLER GEAR AND OUTPUT SHAFT TAPER ROLLER BEARINGS

(a) Apply MP grease to the adjusting shims.

(b) Install the adjusting shims to bearing outer races.

HINT: Install the thinner shim on the bearing outer race side.

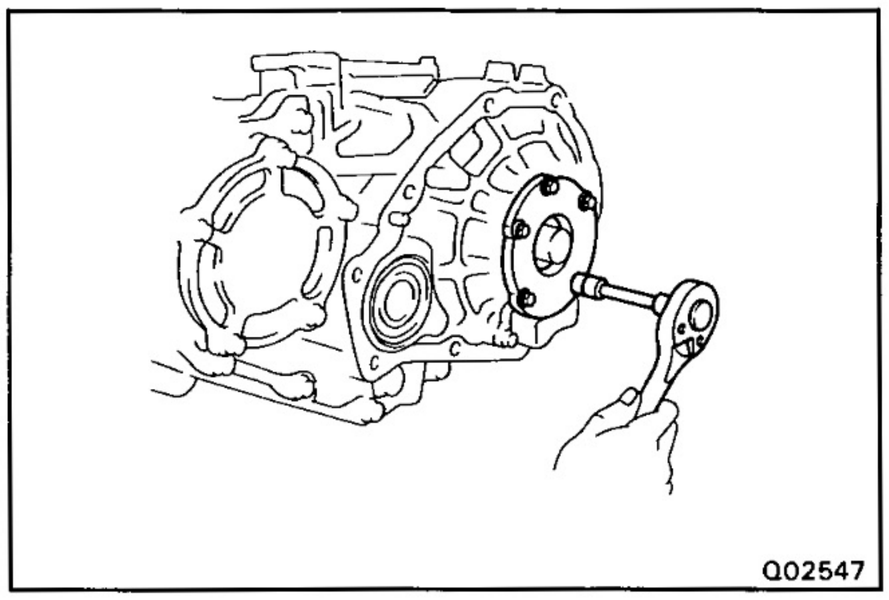

13. INSTALL RETAINER

Install the retainer with the five bolts.

Torque: 39.2 N·m (400 kgf·cm, 28 ft·lbf)

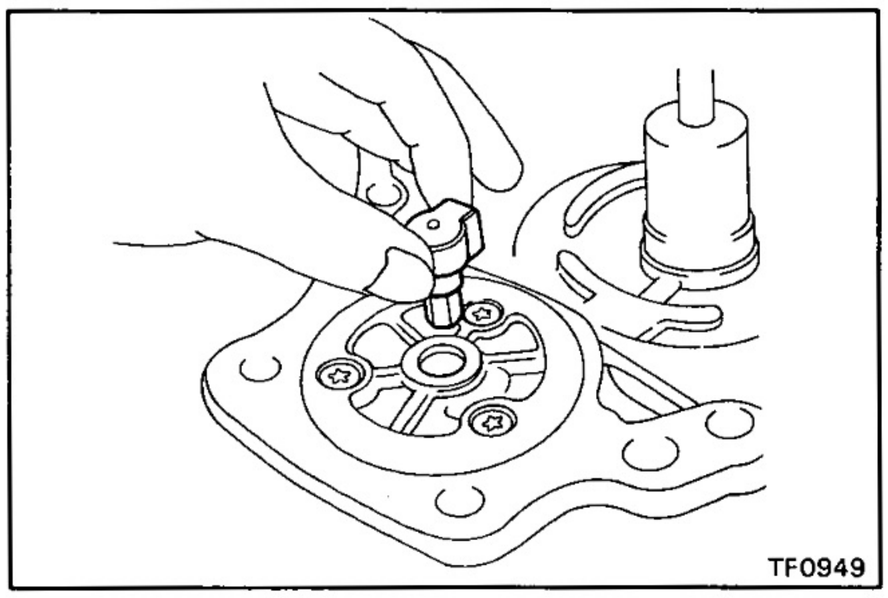

14. INSTALL REAR EXTENSION HOUSING

(a) Install the oil pump drive shaft.

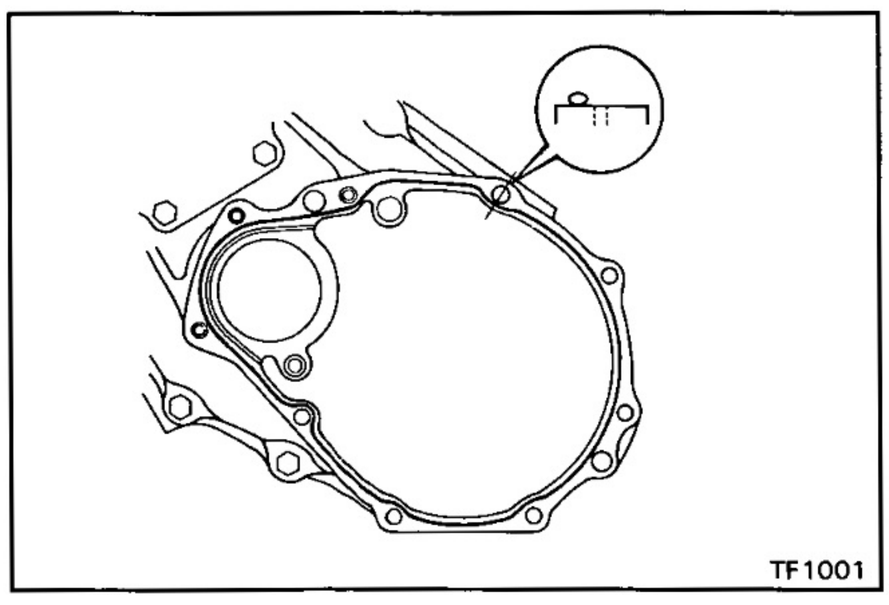

(b) Remove any packing material and be careful not drop oil on the contacting surfaces of the rear case.

(c) Apply seal packing to the rear case as shown.

Seal packing: Part No. 08826-00090, THREE BOND 1281 or equivalent

HINT: Install the rear extension housing as soon as the seal packing is applied.

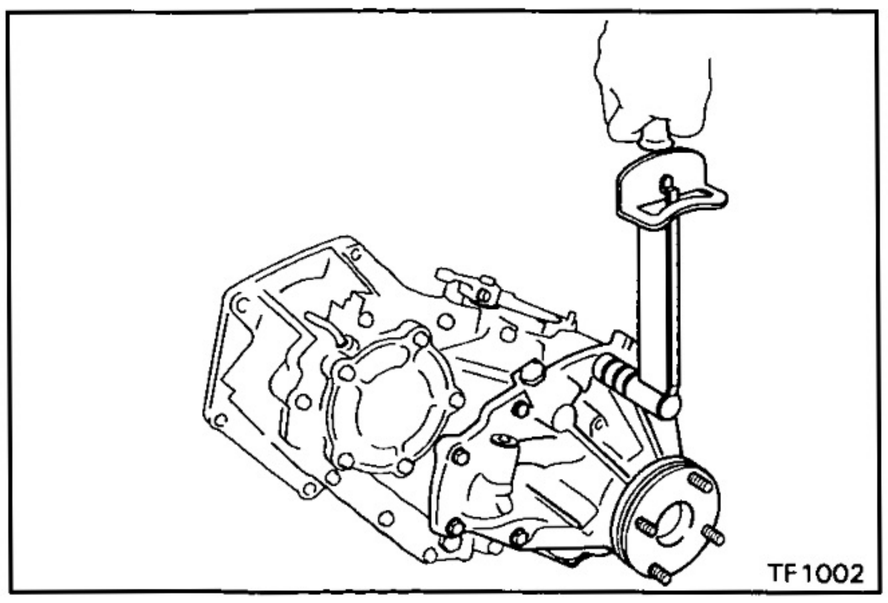

(d) Install the rear extension housing.

(e) Install and torque the nine bolts.

Torque: 37 N·m (380 kgf·cm, 27 ft·lbf)

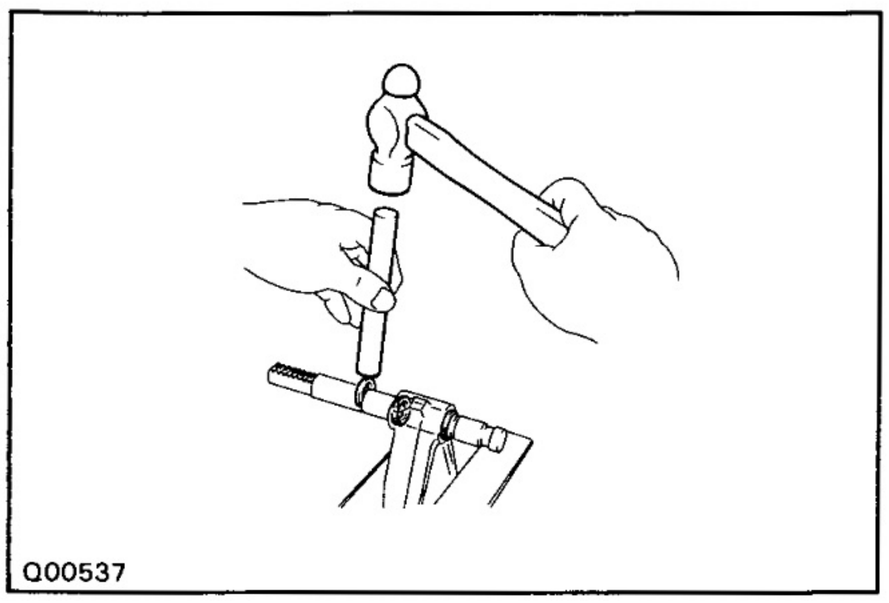
Q00537

15. ASSEMBLE SHIFT FORK NO.2 AND FORK SHAFT

(a) Assemble the shift fork No.2 and fork shaft.

(b) Using a brass bar and hammer, tap in the snap rings.

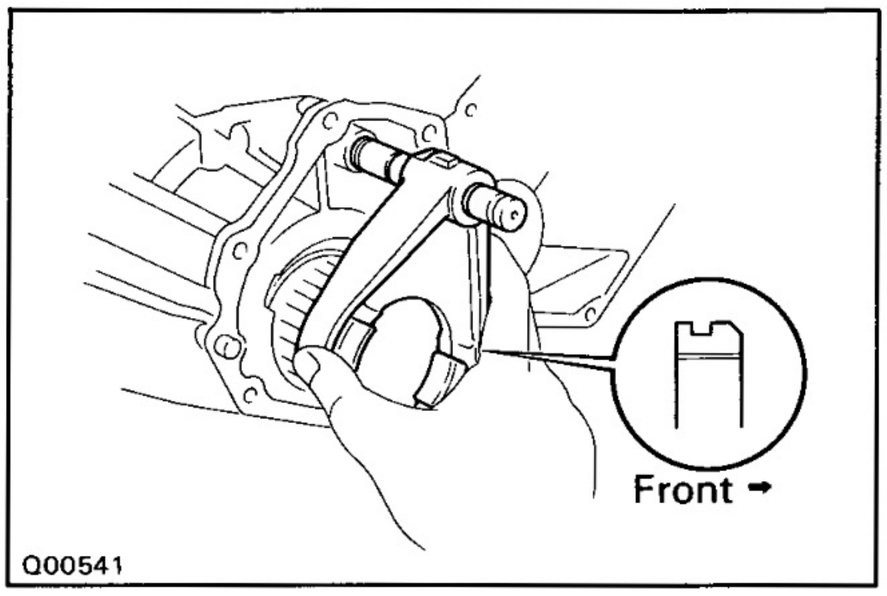

Q00541

16. INSTALL CLUTCH SLEEVE, SHIFT FORK NO.2 AND FORK SHAFT

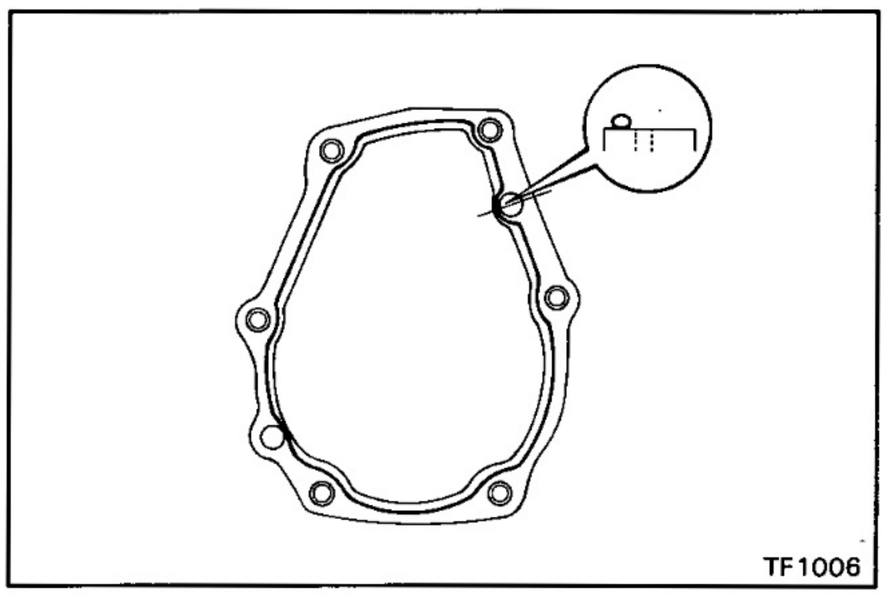
TF1006

17. INSTALL FRONT EXTENSION HOUSING

(a) Remove any packing material and be careful not to drop oil on the contacting surfaces of the front case.

(b) Apply seal packing to the front case as shown.

Seal packing: Part No. 08826-00090, THREE BOND 1281 or equivalent

HINT: Install the front extension housing as soon as the seal packing is applied.

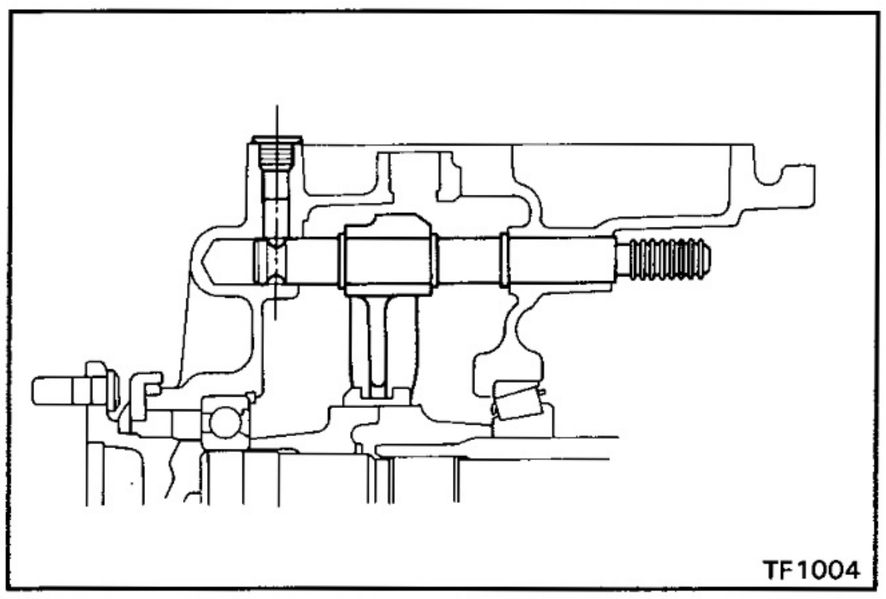
TF1004

(c) Set the clutch sleeve in 4WD condition in differential lock condition, install the front extension housing.

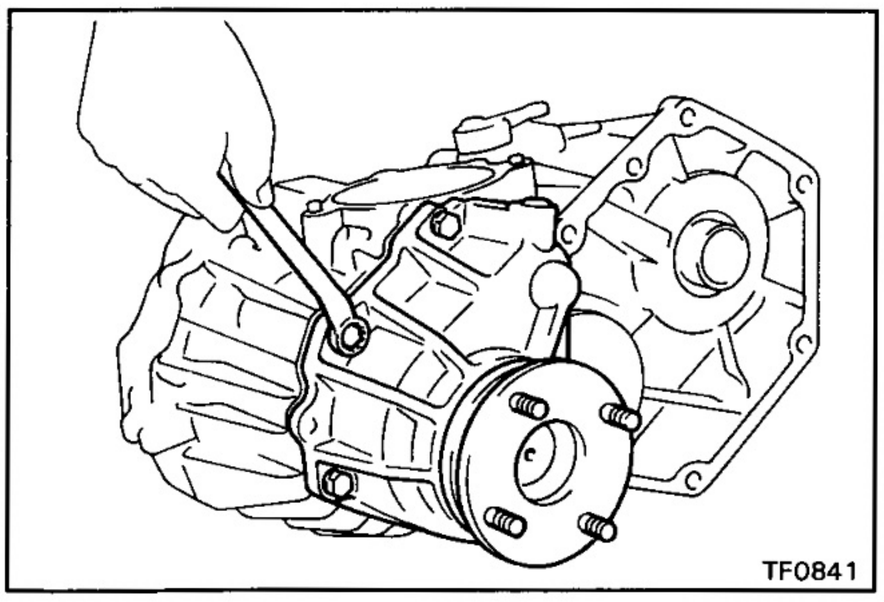
TF0841

(d) Install and torque the six bolts.

Torque: 37 N·m (380 kgf·cm, 27 ft·lbf)

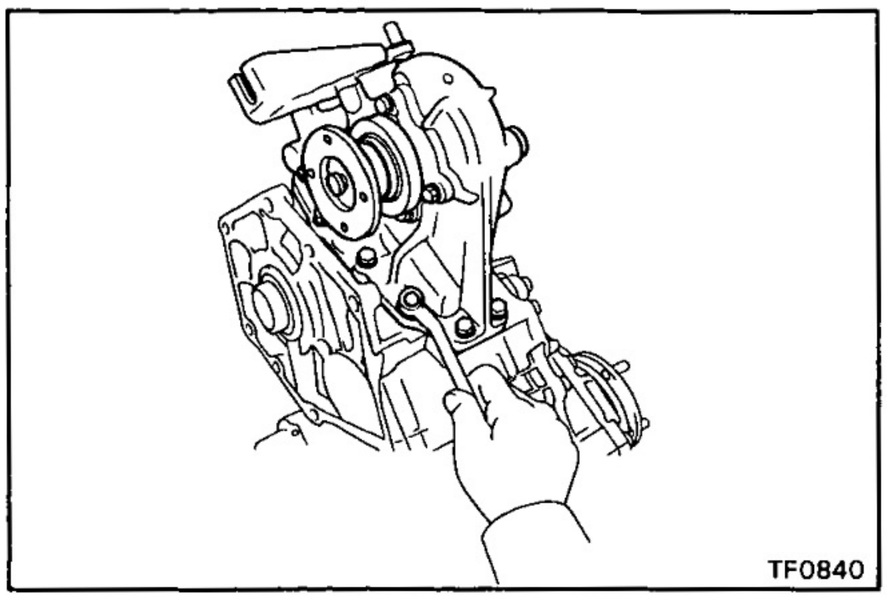
TF0840

18. (w/ POWER TAKE-OFF)
INSTALL POWER TAKE-OFF CASE

(a) Install the power take-off case and a new gasket.

(b) Apply liquid sealer to the bolt threads.

Sealant: Part No. 08833-00080, THREE BOND 1344, LOCTITE 242 or equivalent

(c) Install and torque the ten bolts.

Torque: 19 N·m (195 kgf·cm, 14 ft·lbf)

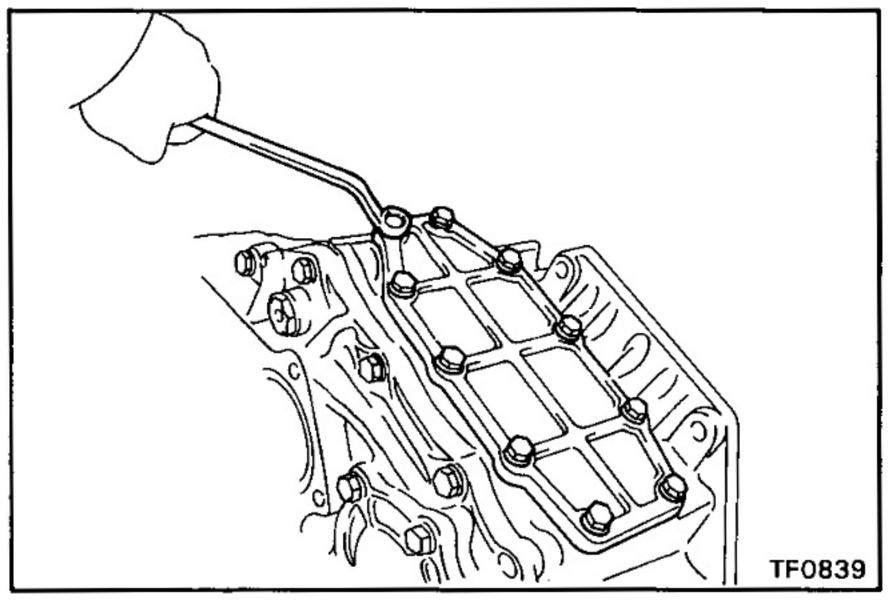
TF0839

19. (w/o POWER TAKE-OFF)
INSTALL POWER TAKE-OFF COVER

(a) Install the power take-off cover and a new gasket.

(b) Apply liquid sealer to the bolt threads.

Sealant: Part No. 08833-00080, THREE BOND 1344, LOCTITE 242 or equivalent

(c) Install and torque the ten bolts.

Torque: 19 N·m (195 kgf·cm, 14 ft·lbf)

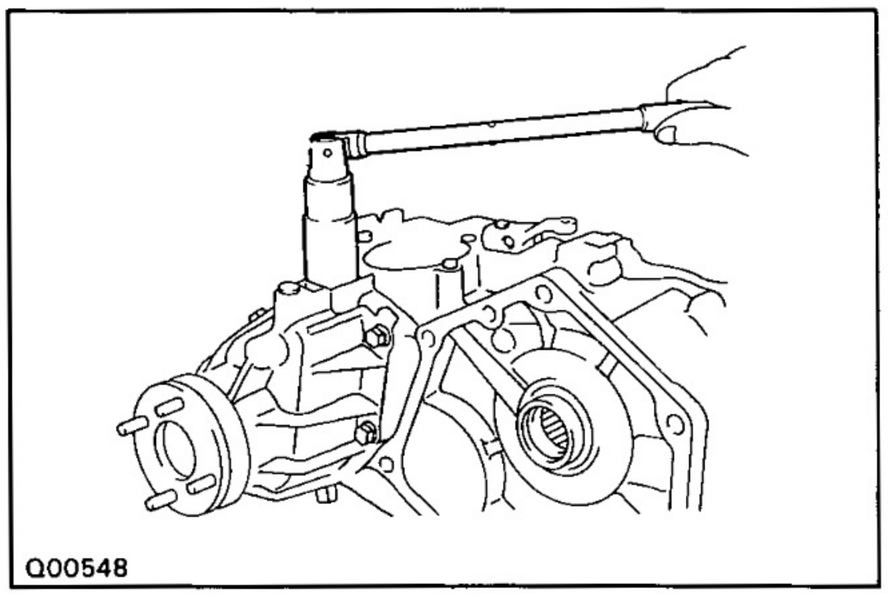
Q00548

20. INSTALL TRANSFER INDICATOR SWITCHES

Install and torque the Center Diff Lock indicator switch, L4 position switch and neutral position switch.

Torque: 37 N·m (380 kgf·cm, 27 ft·lbf)

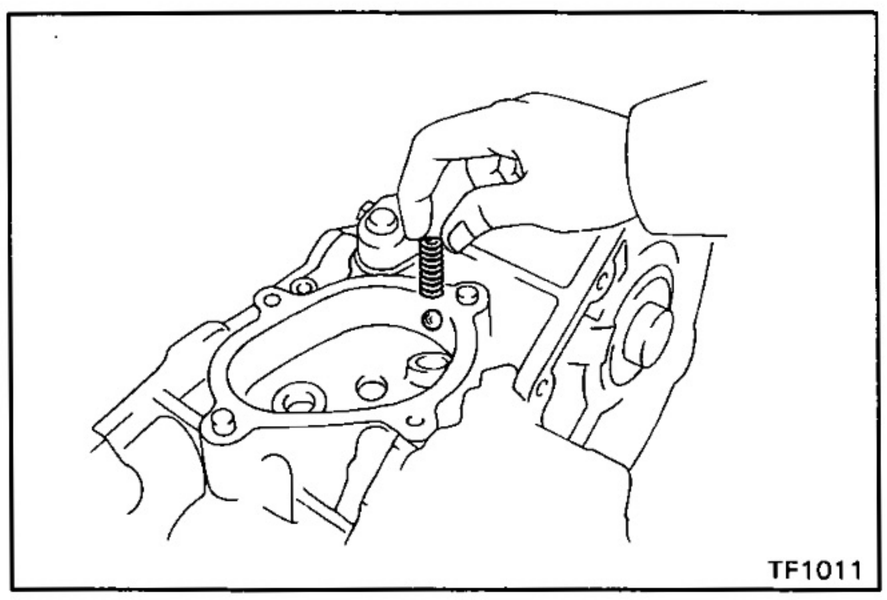
TF1011

21. INSTALL BALL, SPRING AND SCREW PLUG

(a) Install the ball and spring.

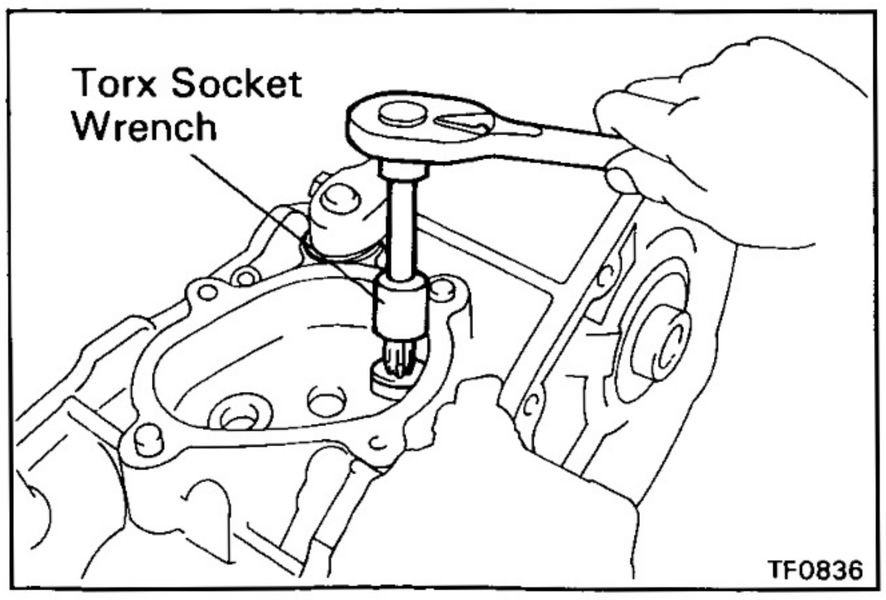

TF0836

(b) Apply liquid sealer to the screw plug.

Sealant: Part No. 08833-00080, THREE BOND 1344, LOCTITE 242 or equivalent

(c) Install and torque the screw plug.

(Torx socket wrench T40 09042-00020)

Torque: 19 N·m (190 kgf·cm, 14 ft·lbf)

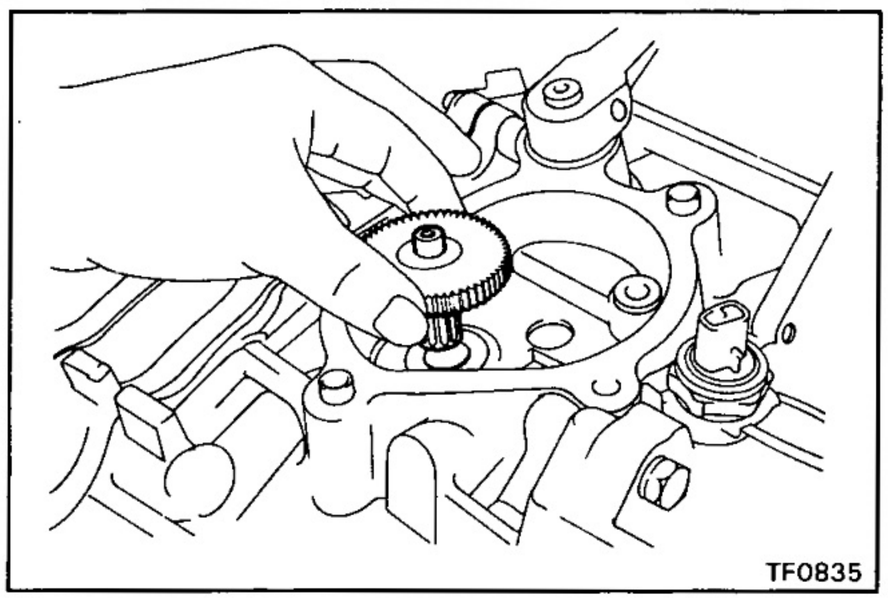
TF0835

22. INSTALL OUTPUT GEAR

(a) Apply gear oil to the output gear.

(b) Install the output gear.

NOTICE: Do not turn the output gear.

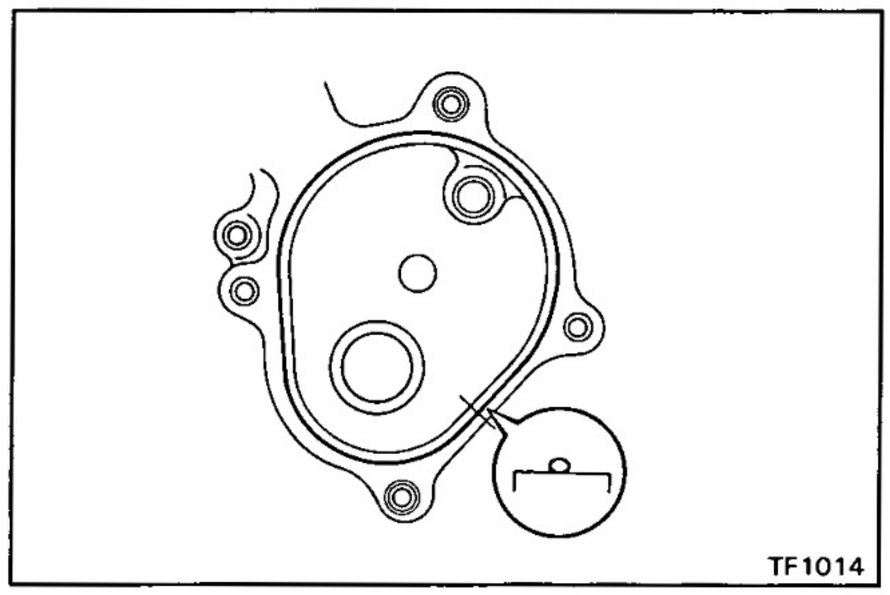
TF1014

23. INSTALL MOTOR ACTUATOR

(a) Remove any packing material and be careful not to drop oil on the contacting surfaces of the front case.

(b) Apply seal packing to the front case as shown.

Seal packing: Part No. 08826-00090, THREE BOND 1281 or equivalent

HINT: Install the motor actuator as soon as the seal packing is applied.

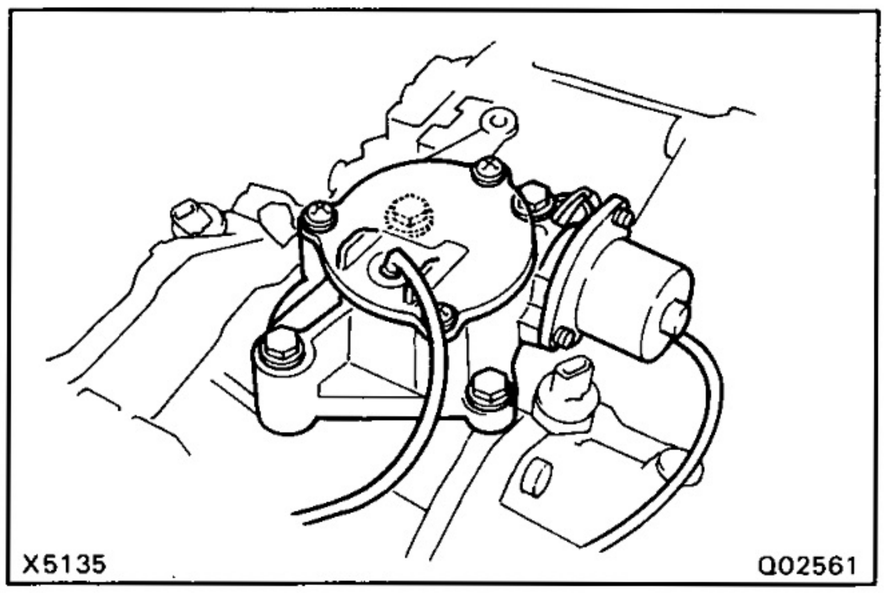
X5135 Q02561

(c) Install the motor actuator.

HINT: Set the motor actuator in differential lock condition.

(d) Install and torque the four bolts.

Torque: 18.1 N·m (185 kgf·cm, 13.3 ft·lbf)

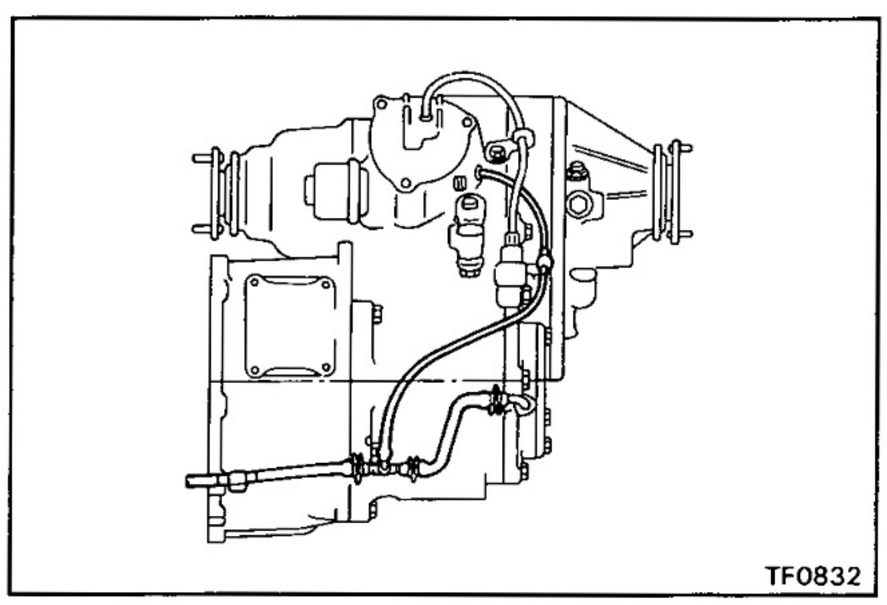
TF0832

24. INSTALL BREATHER HOSE

MOTOR SHIFT CONTROL SYSTEM

PARTS LOCATION

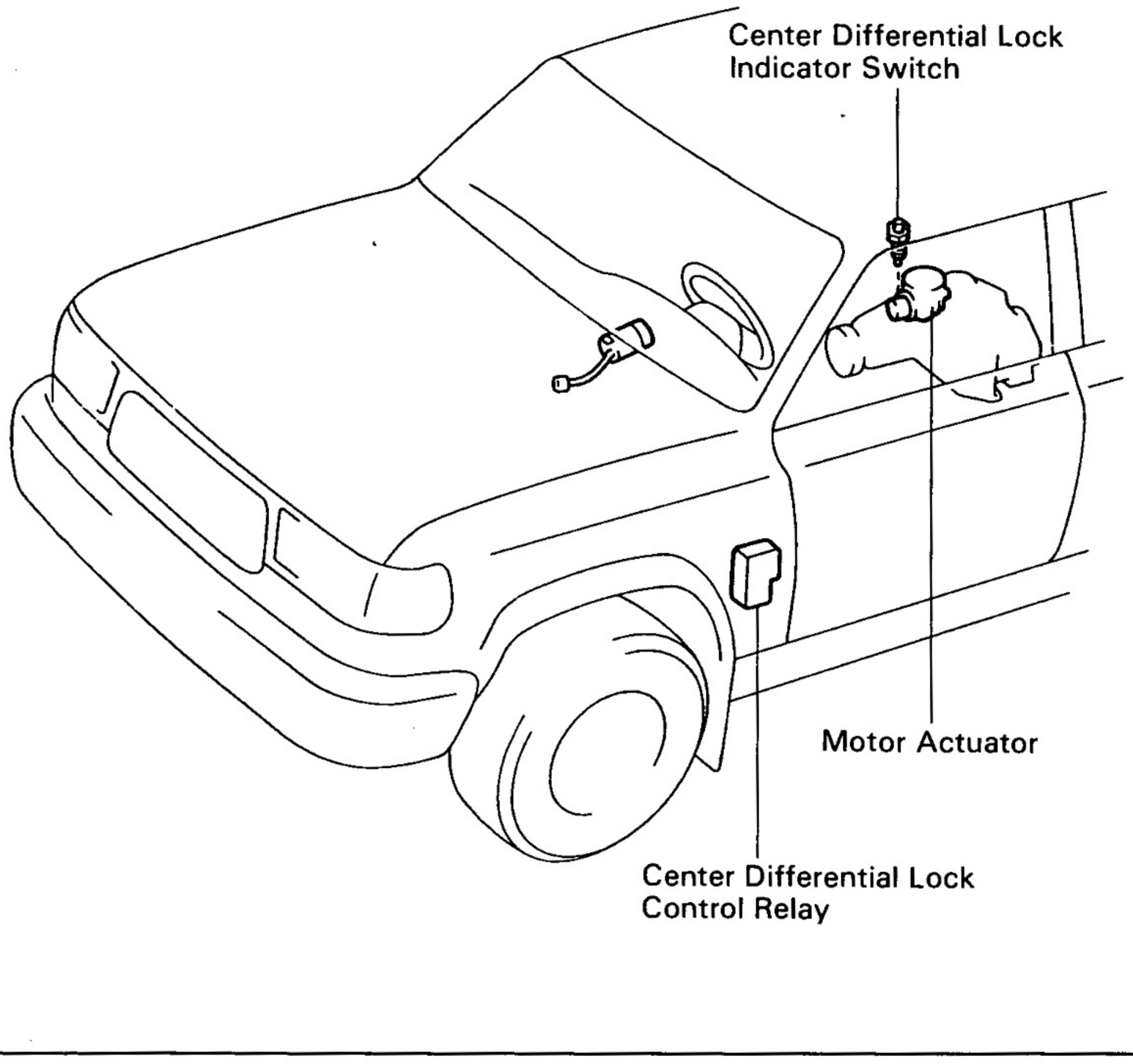

Q02841

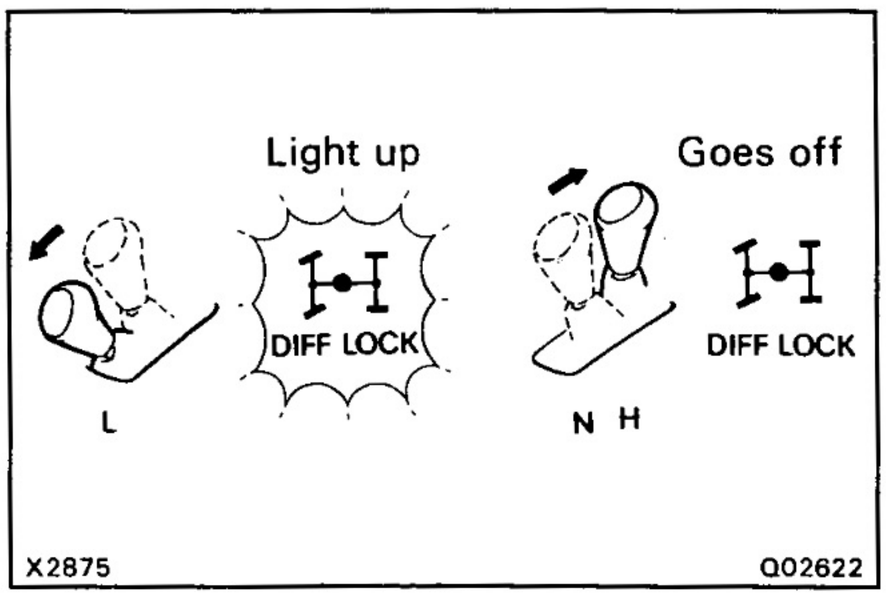

X2875 Q02622

SYSTEM INSPECTION

INSPECT SHIFT LEVER POSITION

(a) Start the engine, and center differential lock switch turned to OFF.

(b) Check that the center differential indicator light comes on when the transfer shift lever shifted to L position. Check that the light goes off when the lever is shifted to N or H position.

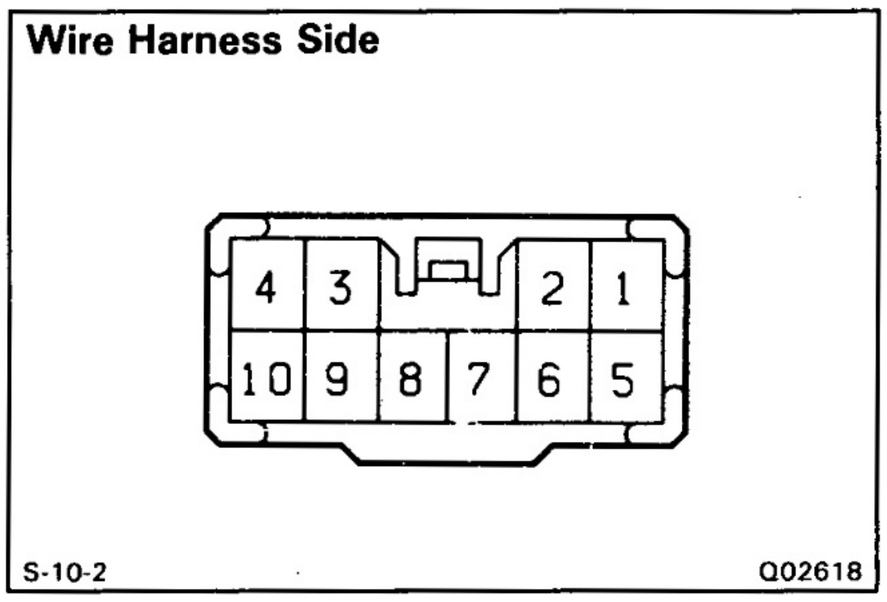

PARTS INSPECTION

1. INSPECT CENTER DIFFERENTIAL LOCK CONTROL RELAY

(a) Check that there is continuity between terminals as shown in the chart.

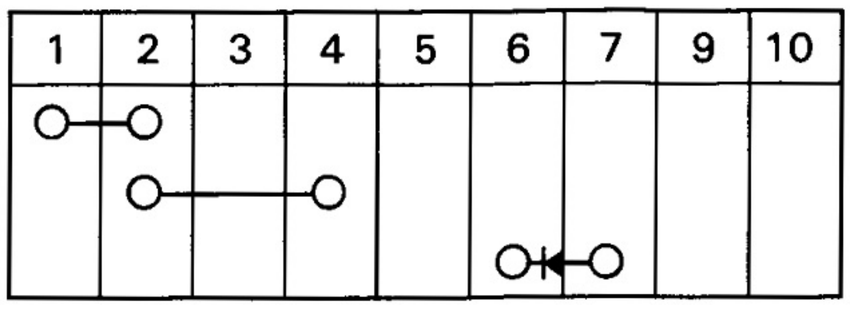

HINT: There is a diode between terminals 6 and 7. If the circuit shown no continuity, change the positive (+) and negative (—) probes and recheck the circuit.

(b) Apply battery voltage between terminals and check that there is continuity between terminals as shown in the chart.

Terminal: Battery voltage ⊕	Terminal: Battery voltage ⊖	1	2	3	4	5	6	7	8	9	10
6	5	○—○	○—○	○—○							
		○—×—○									
7	2									○—×—○	
9	10			○—○							
			○—×—○								

○—○ : Continuity
○—×—○ : No continuity

If continuity is not as specified, replace the relay.

2. INSPECT MOTOR ACTUATOR

(a) Using an ohmmeter, measure the resistance between terminals 2 and 3.

Standard resistance: 0.3 — 100 Ω

(b) Using an ohmmeter, measure the resistance between terminals 2 or 3 and body ground.

Standard resistance: More than 0.5 Ω

If resistance value is not as specified, replace the motor actuator.

SERVICE SPECIFICATIONS

SERVICE DATA

Input gear snap ring	Mark		
	A	2.00 mm	0.0787 in.
	B	2.10 mm	0.0827 in.
	C	2.20 mm	0.0866 in.
	D	2.30 mm	0.0906 in.
	E	2.40 mm	0.0945 in.
	F	2.50 mm	0.0984 in.
	G	2.60 mm	0.1024 in.
	H	2.70 mm	0.1063 in.
	J	2.80 mm	0.1102 in.
Input shaft rear ball bearing snap ring	Mark		
	A	2.00 mm	0.0787 in.
	B	2.10 mm	0.0827 in.
	C	2.20 mm	0.0866 in.
	D	2.30 mm	0.0906 in.
	E	2.40 mm	0.0945 in.
Idle low gear thrust clearance	STD	0.125 — 0.275 mm	0.0049 — 0.0108 in.
	Limit	0.275 mm	0.0108 in.
Idle low gear oil clearance	STD	0.015 — 0.068 mm	0.0006 — 0.0027 in.
	Limit	0.068 mm	0.0027 in.
High speed gear thrust clearance	STD	0.10 — 0.25 mm	0.0039 — 0.0098 in.
	Limit	0.25 mm	0.0098 in.
High speed gear oil clearance	STD	0.015 — 0.071 mm	0.0006 — 0.0028 in.
	Limit	0.071 mm	0.0028 in.
Center differential backlash adjusting shim		1.70 mm	0.0669 in.
		1.85 mm	0.0728 in.
		2.00 mm	0.0787 in.
		2.15 mm	0.0846 in.
		2.30 mm	0.0906 in.
		2.45 mm	0.0965 in.
		2.60 mm	0.1024 in.
		2.75 mm	0.1083 in.
		2.90 mm	0.1142 in.
		3.05 mm	0.1201 in.
Center differential backlash	Limit	0.05 mm	0.0020 in.
Oil pump driven rotor body clearance	STD	0.08 — 0.17 mm	0.0031 — 0.0067 in.
	Limit	0.17 mm	0.0067 in.
Oil pump driven rotor body tip clearance	STD	0.05 — 0.15 mm	0.0020 — 0.0059 in.
	Limit	0.15 mm	0.0059 in.
Oil pump side clearance	STD	0.03 — 0.1 mm	0.0012 — 0.0039 in.
	Limit	0.10 mm	0.0039 in.
Front drive gear piece snap ring	Mark		
	A	2.00 mm	0.0787 in.
	B	2.10 mm	0.0827 in.
	C	2.20 mm	0.0866 in.
	D	2.30 mm	0.0906 in.

	E	2.40 mm	0.0945 in.
	F	2.50 mm	0.0984 in.
	G	2.60 mm	0.1024 in.
	H	2.70 mm	0.1063 in.
	J	2.80 mm	0.1102 in.
	K	1.80 mm	0.0709 in.
	L	1.90 mm	0.0748 in.
Rear output shaft adjusting shim			
Idler gear side	Mark		
	2	0.30 mm	0.0118 in.
	3	0.45 mm	0.0177 in.
	4	2.40 mm	0.0945 in.
	5	2.60 mm	0.1024 in.
	6	2.80 mm	0.1102 in.
	7	3.00 mm	0.1181 in.
	8	3.20 mm	0.1260 in.
	9	3.40 mm	0.1339 in.
	10	3.60 mm	0.1417 in.
	11	3.80 mm	0.1496 in.
	12	4.00 mm	0.1575 in.
	13	0.55 mm	0.0216 in.

TORQUE SPECIFICATIONS

Part tightened	N·m	kgf·cm	ft·lbf
Oil pump plate × Rear extension housing	4.9	50	43 in.·lbf
Screw plug × Rear extension housing	29	300	22
Oil pump cover × Rear extension housing	4.9	50	43 in.·lbf
Lever lock pin	12	120	9
Oil strainer × Rear case	4.9	50	43 in.·lbf
Case cover × Rear case	37	380	27
Rear extension housing × Rear case	37	380	27
Front extension housing × Front case	37	380	27
Center Diff Lock Indicator switch × Front extension housing	37	380	27
Screw plug × Front case	19	190	14
Motor actuator × Front case	18.1	185	13.3
Differential front case × Differential rear case	98	1,000	72
(temporarily tighten)	88	900	65
Front case × Rear case	37	380	27
Rear case × Bearing retainer	39.2	400	28

PROPELLER SHAFT

REFER TO LAND CRUISER (STATION WAGON) REPAIR MANUAL FOR CHASSIS AND BODY (Pub. No. RM184E)

NOTE: The following pages contain only the points which differ from the above listed manual.

(STATION WAGON)

DESCRIPTION PR-2
PROPELLER SHAFT PR-3

DESCRIPTION

DESCRIPTION

The propeller shaft is connected to the front differential and the transfer via two joints.

Front Propeller Shaft

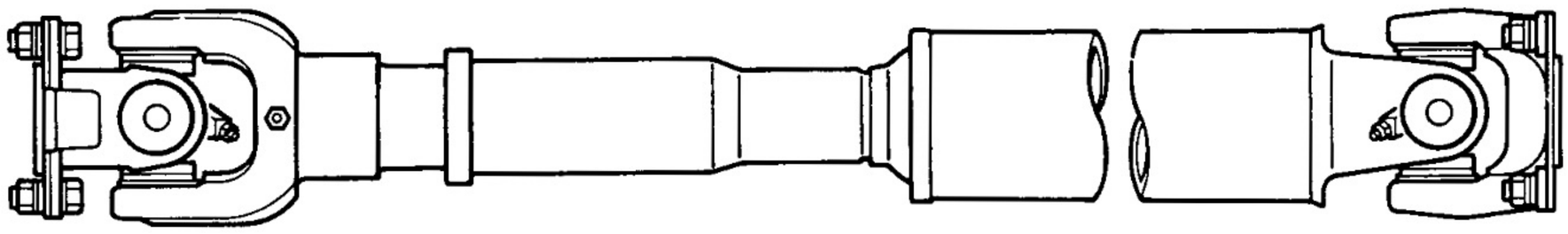

R05260

PROPELLER SHAFT

COMPONENTS

- **Front Propeller Shaft**

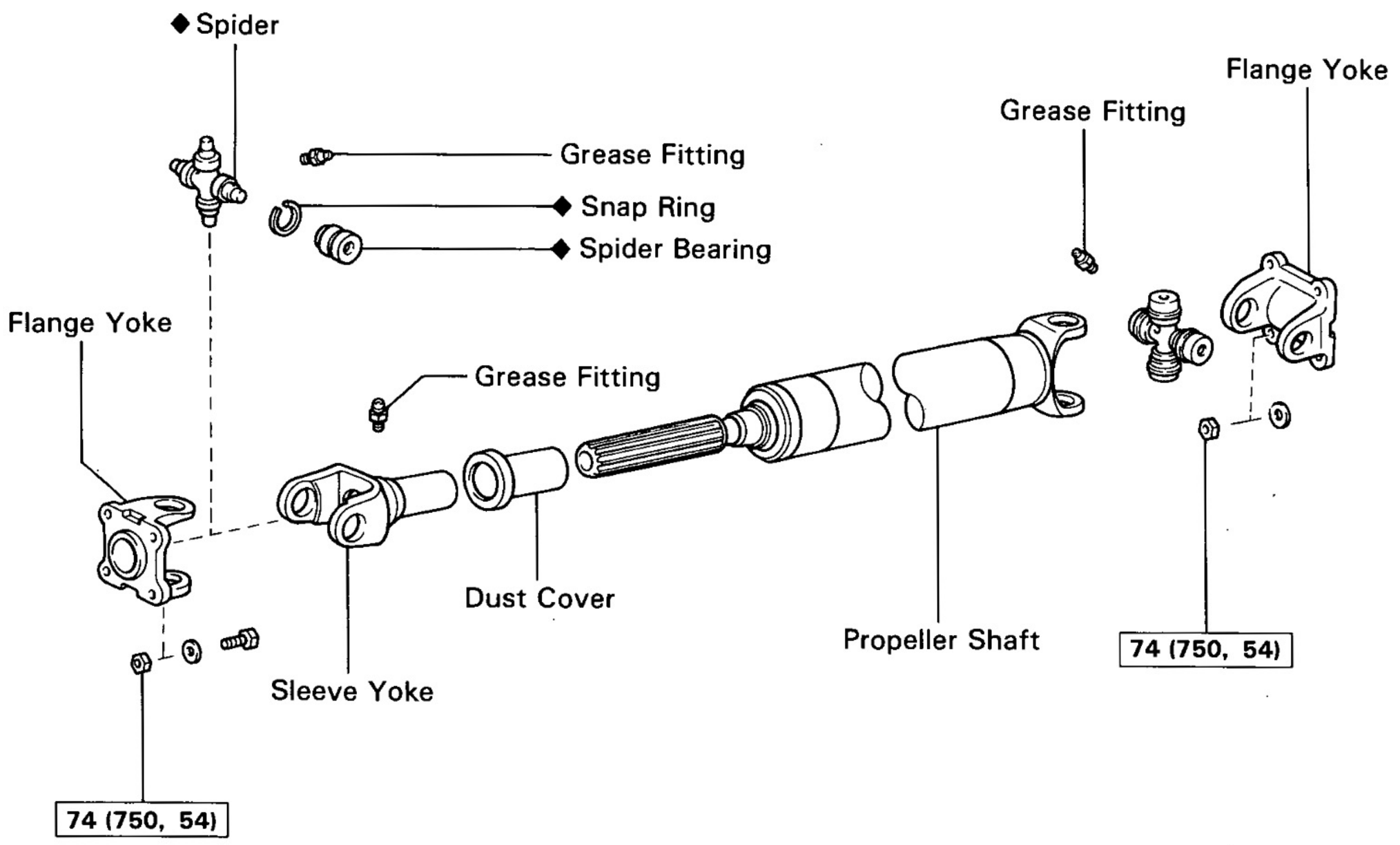

N·m (kgf·cm, ft·lbf) : Specified torque

◆ Non-reusable part

R05333

PROPELLER SHAFT ASSEMBLY

HINT: When replacing the spider, be sure that the grease fitting assembly hole is facing in the direction shown in the illustration.

SPIDER GREASE FITTING ASSEMBLY DIRECTION

Front Propeller Shaft

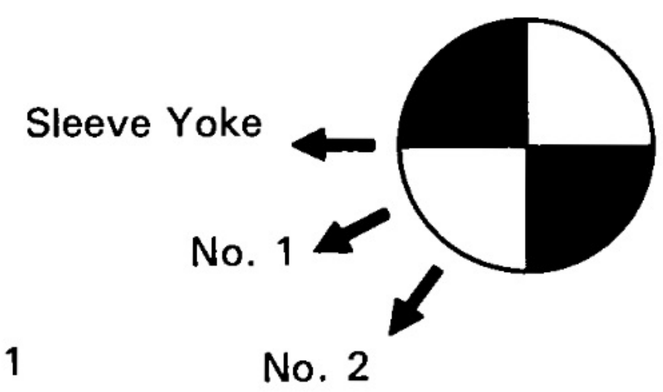

The figure at left shows the locations of the grease fittings as seen from the rear.

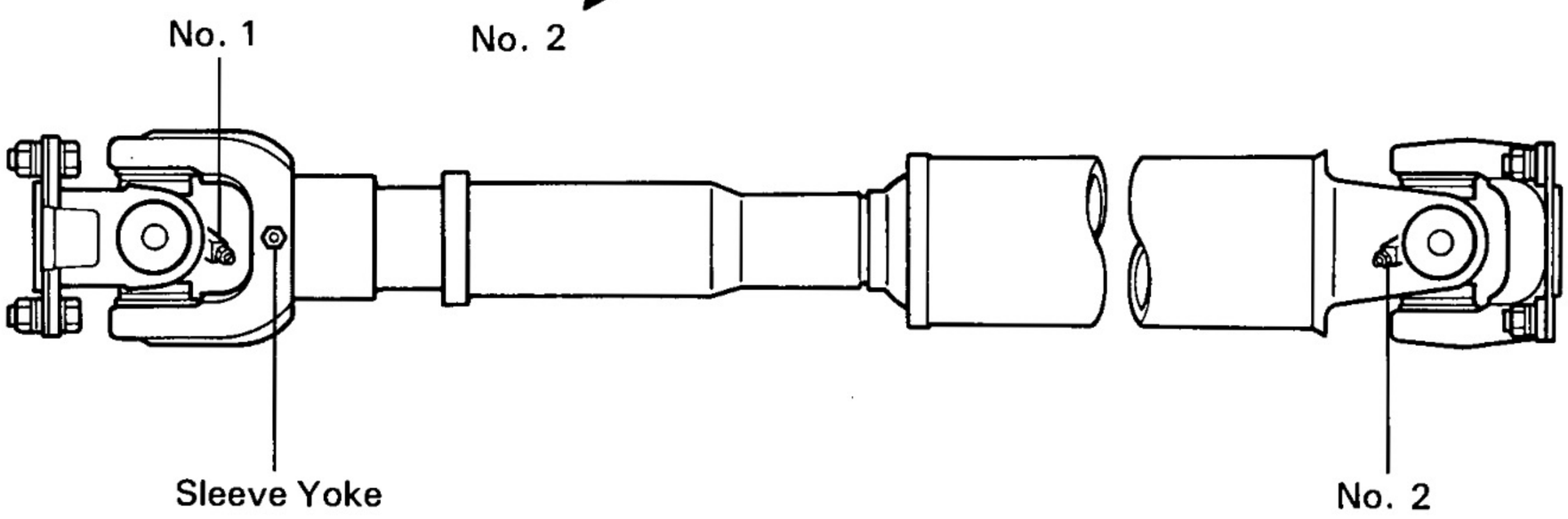

R05259

SUSPENSION AND AXLE

REFER TO FOLLOWING REPAIR MANUALS:

Manual Name	Pub. No.
• Land Cruiser (Hardtop and Canvas Top) Chassis and Body Repair Manual	RM183E
• Land Cruiser (Station Wagon) Chassis and Body Repair Manual	RM184E
• Land Cruiser (Hardtop, Canvas Top and Station Wagon) Chassis and Body Repair Manual Supplement	RM290E

NOTE: The following pages contain only the points which differ from the above listed manuals.

SA

(HARDTOP & CANVAS TOP)
FRONT DIFFERENTIAL SA-2
ASSEMBLY REMOVAL AND INSTALLATION SA-2
(STATION WAGON)
WHEEL ALIGNMENT SA-3
PRIMARY INSPECTION SA-3
FRONT WHEEL ALIGNMENT SA-4
FRONT DIFFERENTIAL SA-6
ASSEMBLY REMOVAL AND INSTALLATION SA-6
SERVICE SPECIFICATIONS SA-7

FRONT DIFFERENTIAL

ASSEMBLY REMOVAL AND INSTALLATION

COMPONENTS

FJ, PZJ, HZJ series

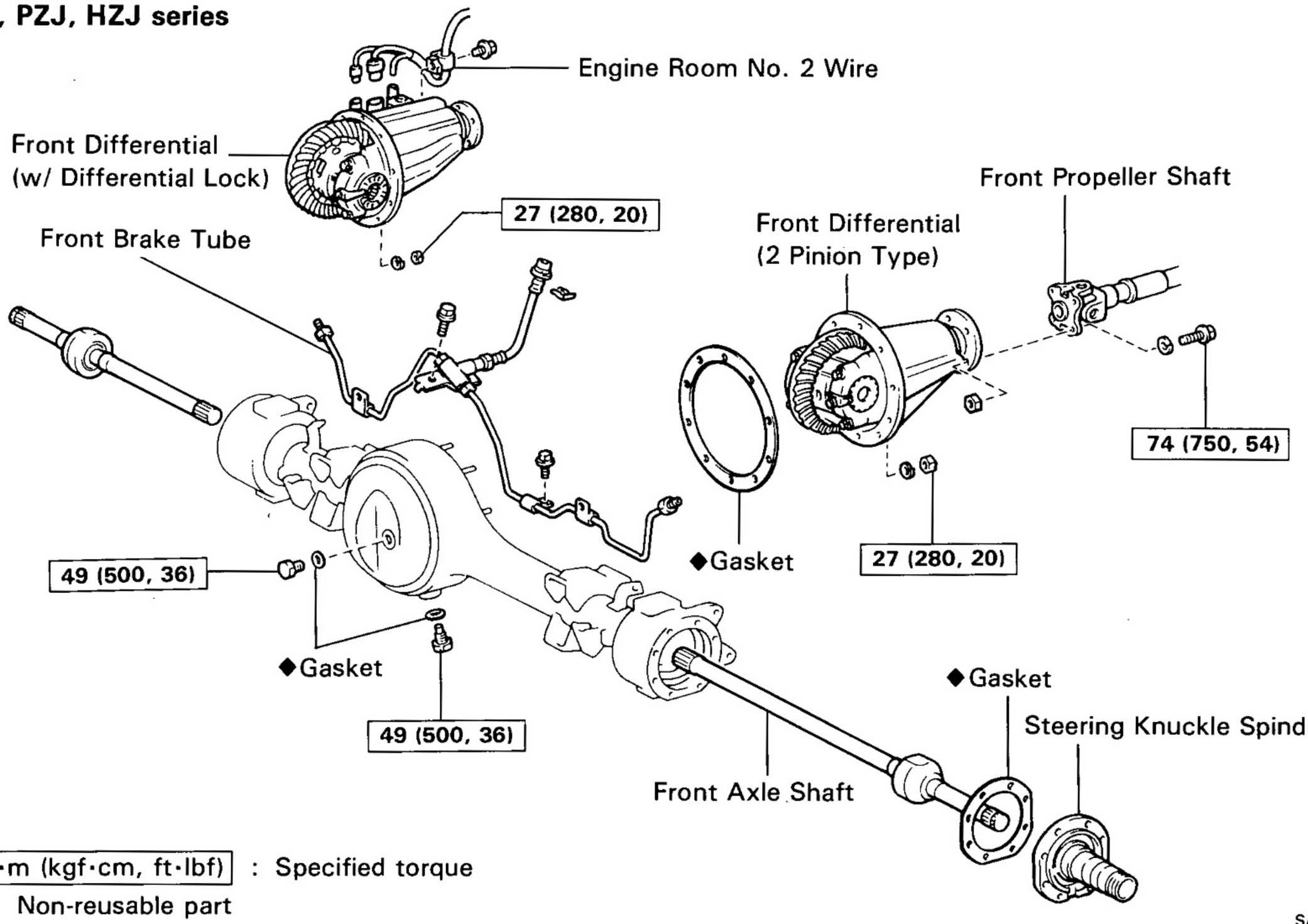

N·m (kgf·cm, ft·lbf) : Specified torque

◆ Non-reusable part

SA2874

WHEEL ALIGNMENT

PRIMARY INSPECTION

1. MAKE FOLLOW CHECKS AND CORRECT ANY PROBLEMS

(a) Check the tires for wear and proper inflation.

Cold tire inflation pressure:
See page SA-7

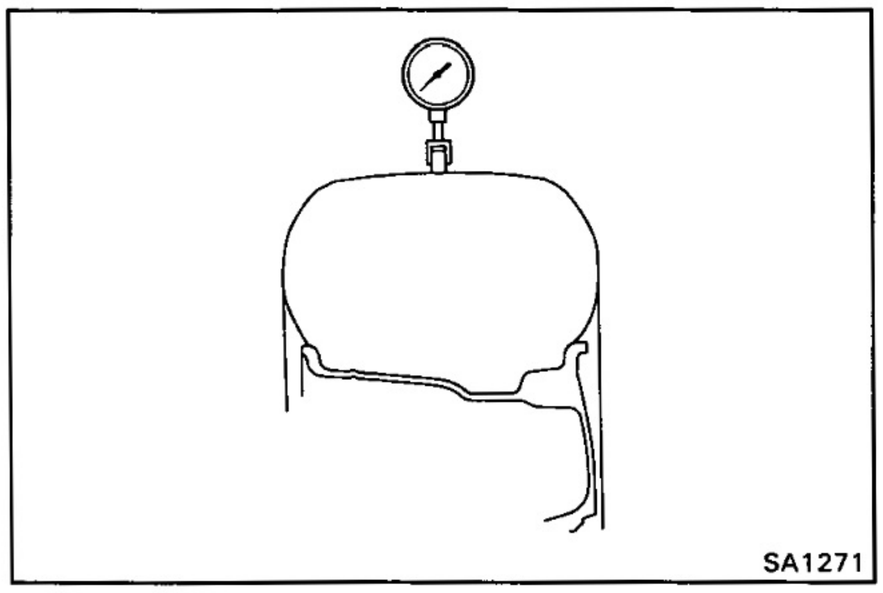
SA1271

(b) Check the tire runout.

Tire runout:
3.0 mm (0.118 in.) or less

(c) Check the wheel bearings for looseness.

(d) Check the suspension for looseness.

(e) Check the steering linkage for looseness.

(f) Check that the absorbers work properly by using the standard bounce test.

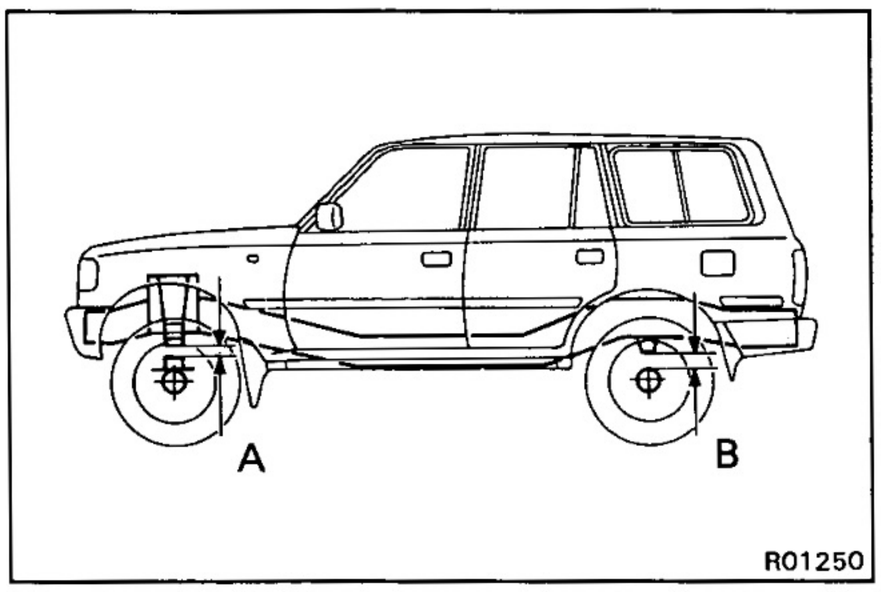

R01250

2. MEASURE FOLLOW SPRING CLEARANCE AND BUMPER STOPPER CLEARANCE

A: Follow spring clearance (Front)
B: Bumper stopper clearance (Rear)

	A	B
For Europe	39 mm (1.54 in.)	117 mm (4.61 in.)
For Australia*	52 mm (2.01 in.)	105 mm (4.13 in.)
For Middle East	38 mm (1.50 in.)	92 mm (3.62 in.)
Others	38 mm (1.50 in.)	118 mm (4.66 in.)

*: w/o Australia option

If the clearance of the vehicle is not standard, try to level the vehicle by rocking it down.

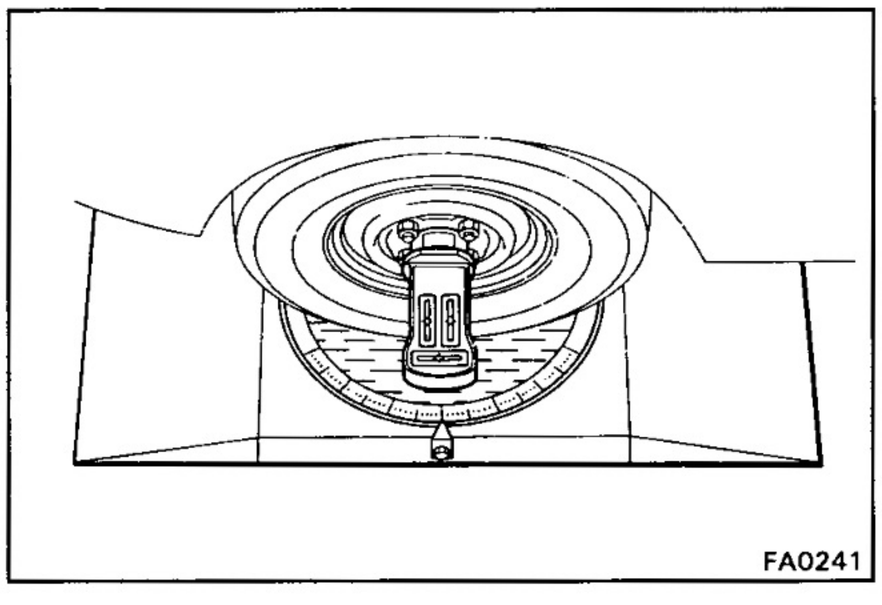
FA0241

FRONT WHEEL ALIGNMENT

1. INSTALL WHEEL ALIGNMENT EQUIPMENT

Follow the specific instructions of the equipment manufacturer.

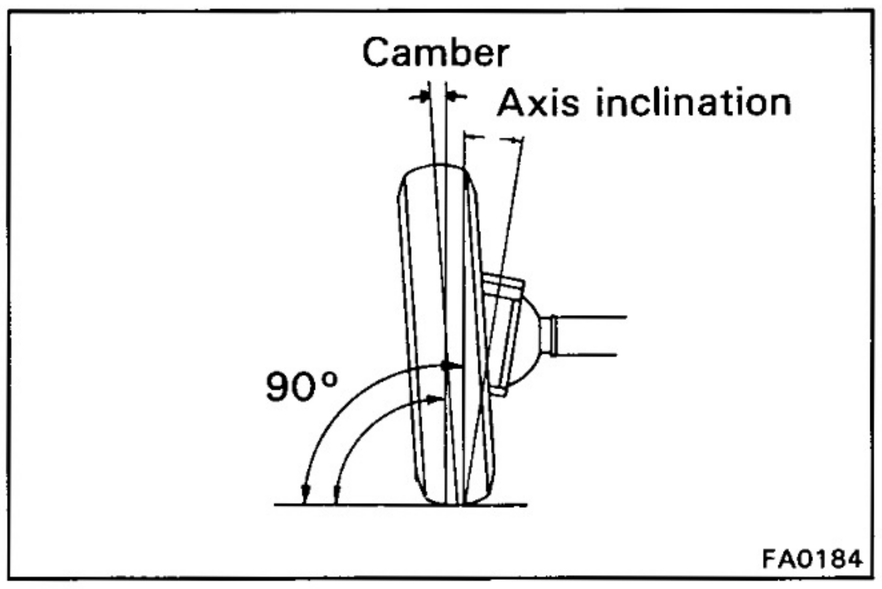

FA0184

2. INSPECT CAMBER AND STEERING AXIS INCLINATION

Camber:
1°00′ ± 45′
Cross camber:
30′ or less
Steering axis inclination:
13°00′ ± 45′

If the steering axis inclination is not as specified after camber have been correctly adjusted, recheck the steering knuckle and front wheel for bending or looseness.

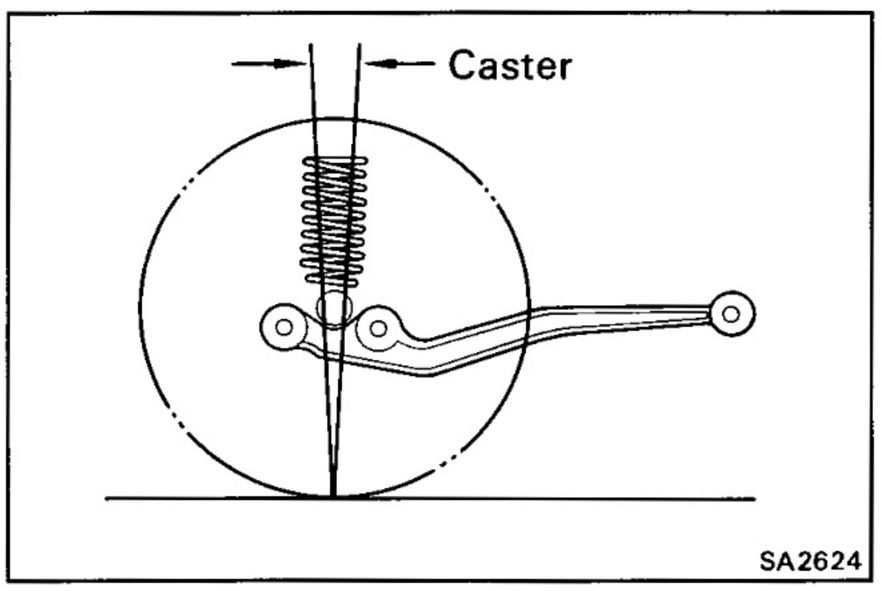

SA2624

3. INSPECT CASTER

Caster:
3°00′ ± 60′

If caster is not as specified, inspect and replace damaged or worn parts.

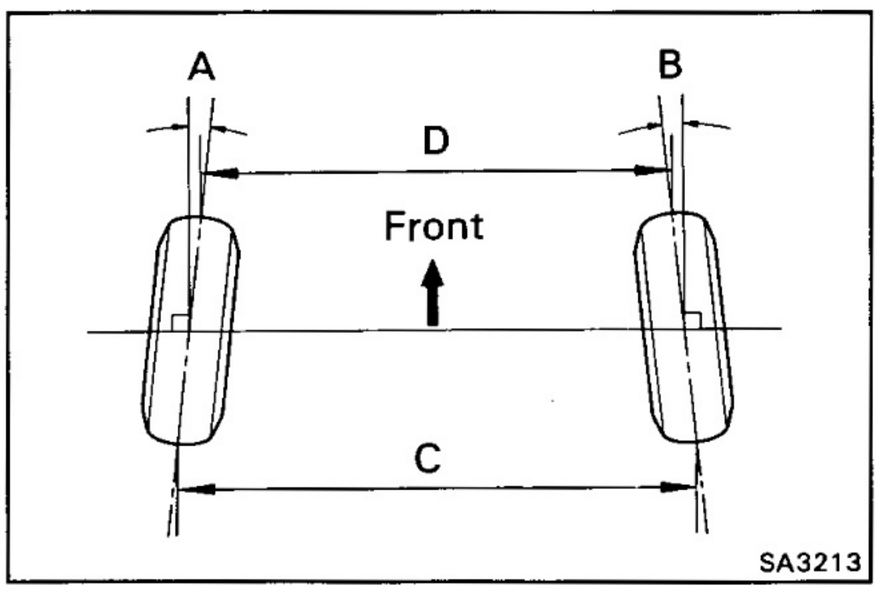

SA3213

4. INSPECT TOE-IN

Toe-in (total):

Tire type	A + B	C − D
Bias tire	0.4° ± 0.2°	4 ± 2 mm (0.16 ± 0.08 in.)
Radial tire	0.2° ± 0.2°	2 ± 2 mm (0.08 ± 0.08 in.)

If toe-in is not specification, adjust by tie rod.

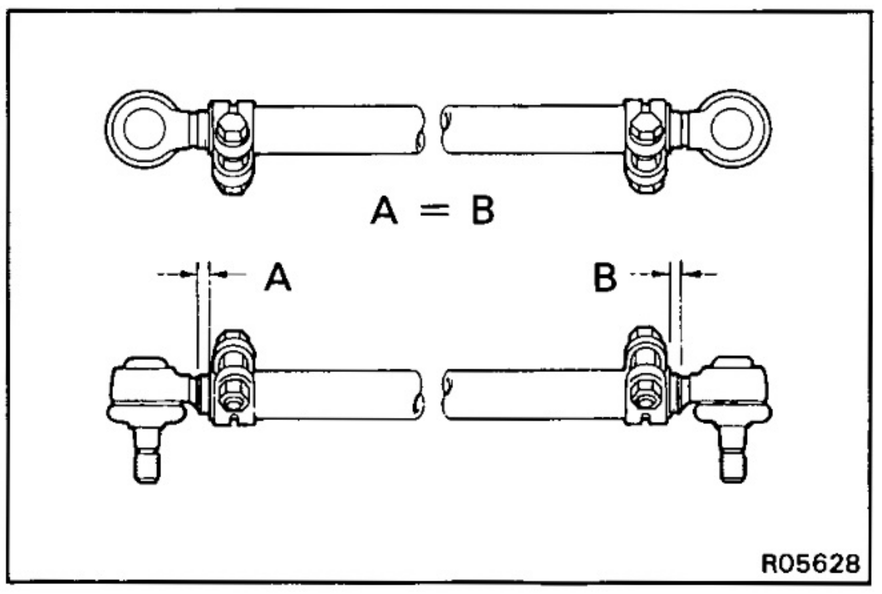

R05628

5. ADJUST TOE-IN

(a) Loosen the clamp bolts and nuts.
(b) Adjust toe-in to the correct value by turning the tie rod.
(c) Insure that the lengths of the tie rod ends are the same.
(d) Torque the tie rod clamp bolts and nuts.
Torque: 37 N·m (375 kgf·cm, 27 ft·lbf)

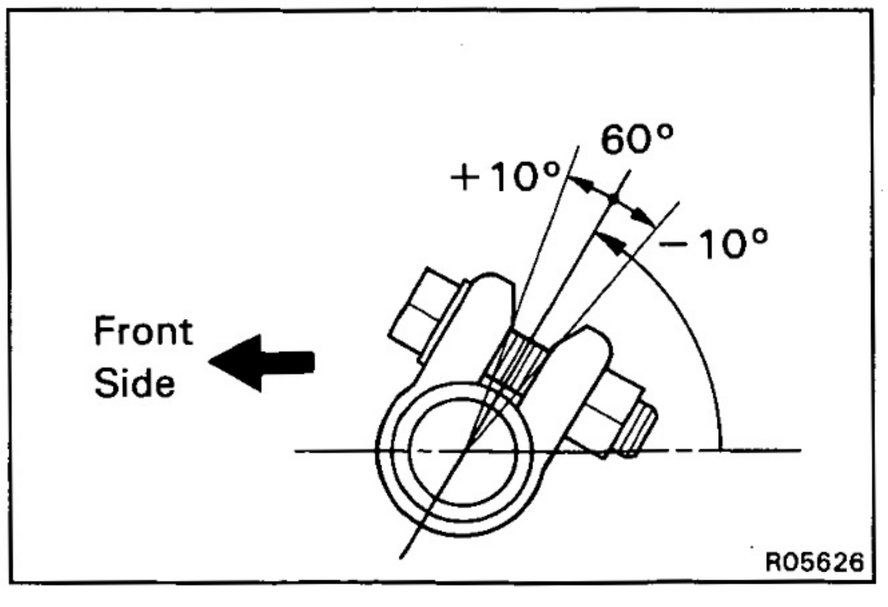

HINT: The clamps opening must be positioned at the rear of the tie rod and and face within 60° ± 10° from the verticle axis.

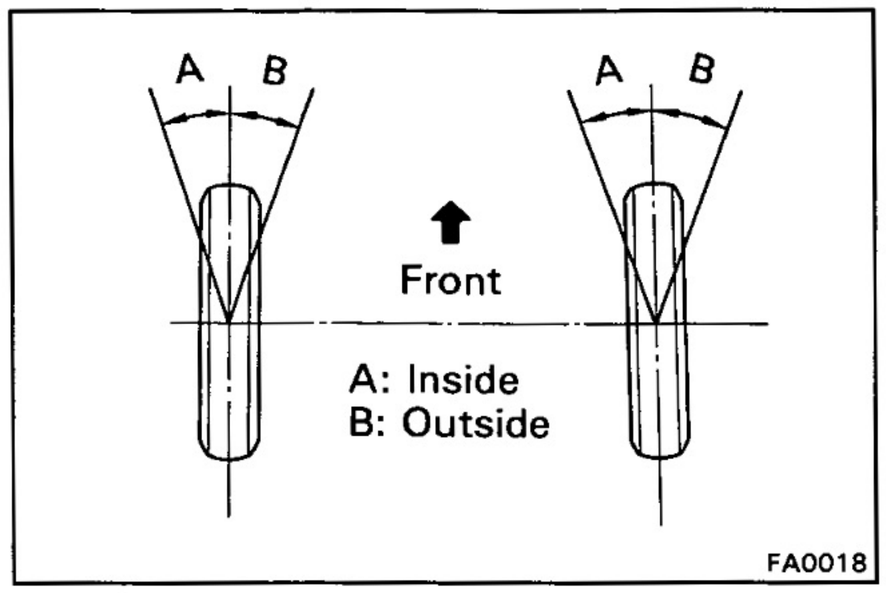

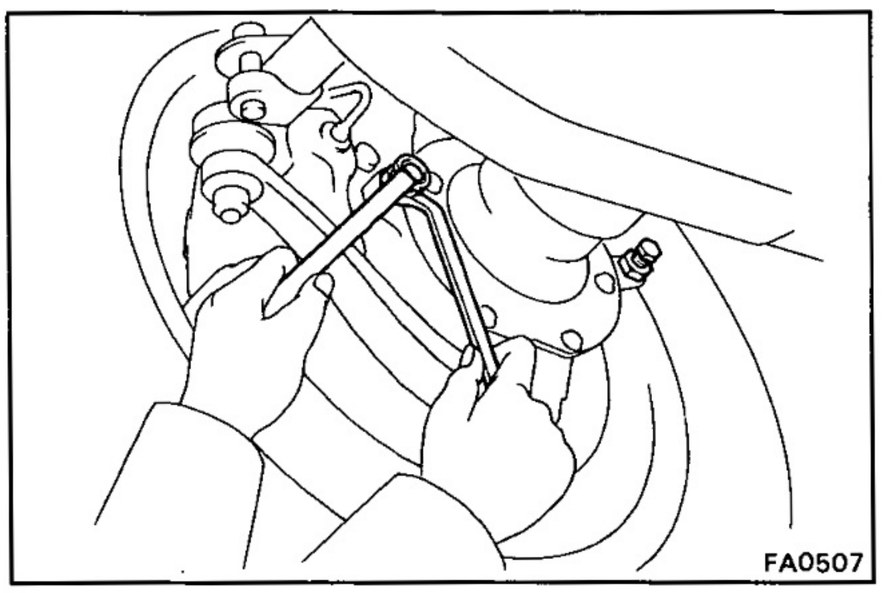

6. INSPECT WHEEL ANGLE

Remove the caps of the knuckle stopper bolts and check the steering angles.

Wheel angle:

Wheel angle (Max.)		
Inside wheel	w/ Power steering	35° $^{+0°}_{-3°}$
	w/o Power steering	32° $^{+0°}_{-3°}$
Outside wheel (reference)	w/ Power steering	31°
	w/ Power steering	29°

HINT: When the steering wheel is fully turned, make sure that the wheel is not touching the body or brake flexible hose.

If maximum steering angles differ from the standard value, adjust the wheel angle with the knuckle stopped bolts.

Torque: 44 N·m (450 kgf·cm, 33 ft·lbf)

If the wheel angle still cannot be adjusted within limits, inspect and replace damaged or worn steering parts.

FRONT DIFFERENTIAL

ASSEMBLY REMOVAL AND INSTALLATION

COMPONENTS

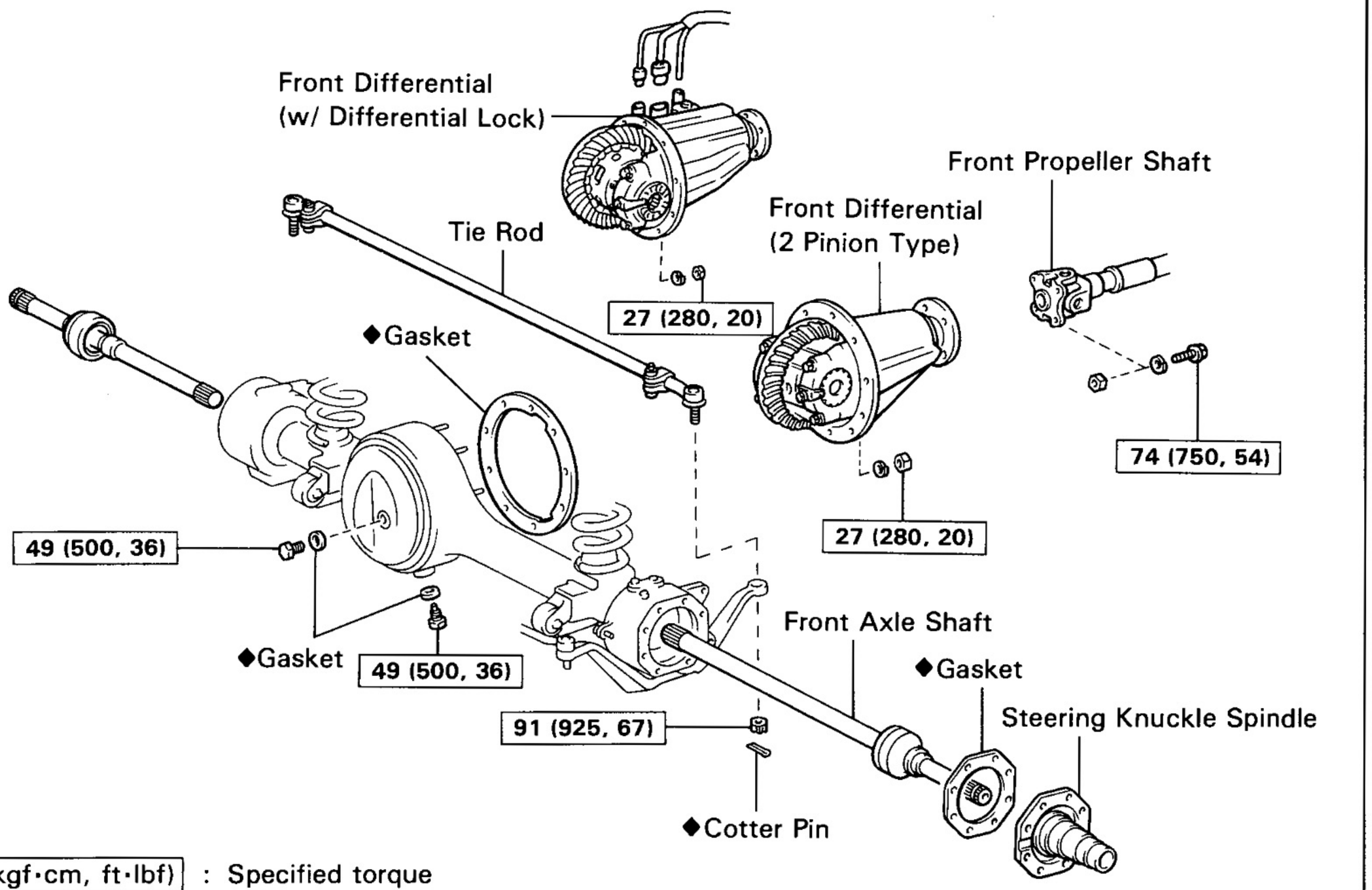

N·m (kgf·cm, ft·lbf) : Specified torque

◆ Non-reusable part

SA2387

SERVICE SPECIFICATIONS

SERVICE DATA (STATION WAGON)

Cold tire inflation pressure (For Europe)	Moving condition	Tire size	Engine (Grade)	Pressure kPa (kgf/cm² or bar, psi) Front	Rear
	For all roads including full rated loads	215/80R16	1HZ, 1HD-T (All grade)	240 (2.4, 35)	300 (3.0, 44)
		275/70R16	1FZ, 1HD-T (GX, VX)	220 (2.2, 32)	220 (2.2, 32)
	Optional inflation for reduced loads (2 front passengers + 2 rear passengers + 200 kg [440 lb.])	215/80R16	1HZ (Standard)	210 (2.1, 30)	220 (2.2, 32)
			1HZ (GX)	220 (2.2, 32)	240 (2.4, 35)
			1HD-T (GX, VX)	230 (2.3, 33)	240 (2.4, 35)
		275/70R16	1FZ, 1HD-T (GX, VX)	220 (2.2, 32)	220 (2.2, 32)

Cold tire inflation pressure (For Australia)	Moving condition	Tire size	Pressure kPa (kgf/cm² or bar, psi) Front	Rear
	For all roads including full rated loads	7.50R16-6PRLT	260 (2.6, 38)	350 (3.5, 51)
		275/70R16	220 (2.2, 32)	220 (2.2, 32)
	Optional inflation for reduced loads (2 front passengers + 2 rear passengers + 200 kg [440 lb.])	7.50R16-6PRLT	240 (2.4, 35)	320 (3.2, 46)
		275/70R16	220 (2.2, 32)	220 (2.2, 32)

Cold tire inflation pressure (Others)	Tire size	Pressure kPa (kgf/cm² or bar, psi) Front	Rear
	7.50-16-6PRLT	200 (2.0, 29)	300 (3.0, 44)
	7.50R16-6PRLT	250 (2.5, 36)	325 (3.25, 47)
	245/85R16	210 (2.1, 30)	260 (2.6, 38)
	275/70R16	220 (2.2, 32)	220 (2.2, 32)

Follow spring and bumper stopper clearance	A: Follow spring clearance (Front) B: Bumper stopper clearance (Rear) *: w/o Australia option		A	B
		For Europe	39 mm (1.54 in.)	117 mm (4.61 in.)
		For Australia*	52 mm (2.01 in.)	105 mm (4.13 in.)
		For Middle East	38 mm (1.50 in.)	92 mm (3.62 in.)
		Others	38 mm (1.50 in.)	118 mm (4.66 in.)

Front wheel alignment	Camber	Inspection standard	1°00 ± 45′	
		Left-right error	30′ or less	
	Steering axis inclination	Inspection standard	13°00′ ± 45′	
		Left-right error	30′ or less	
	Caster	Inspection standard	3°00′ ± 60′	
		Left-right error	30′ or less	
	Toe-in	Bias tire	0.4° ± 0.2° (4 mm ± 2 mm, 0.16 in. ± 0.08 in.)	
		Radial tire	0.2° ± 0.2° (2 mm ± 2 mm, 0.08 in. ± 0.08 in.)	
	Wheel angle (Max)		Inside wheel	Outside wheel
		w/ Power steering	35°00′ $^{+0°}_{-3°}$	31° (reference)
		w/o Power steering	32°00′ $^{+0°}_{-3°}$	29°00′ (reference)

TORQUE SPECIFICATIONS (HARDTOP & CANVAS TOP)

Part tightened	N·m	kgf·cm	ft·lbf
Front differential × Front axle housing	27	280	20
Front differential × Front propeller shaft	74	750	50
Front differential filler plug	49	500	36
Front differential drain plug	49	500	36

(STATION WAGON)

Part tightened	N·m	kgf·cm	ft·lbf
Tie rod end clamp bolt	37	375	27
Steering knuckle stopper bolt lock nut	44	450	33
Front differential × Front axle housing	27	280	20
Front differential × Front propeller shaft	74	750	50
Front differential filler plug	49	500	36
Front differential drain plug	49	500	36

BRAKE SYSTEM

REFER TO LAND CRUISER (STATION WAGON) REPAIR MANUAL FOR CHASSIS AND BODY (Pub. No. RM184E)

NOTE: The following pages contain only the points which differ from the above listed manual.

(STATION WAGON)
PREPARATION ..... BR- 2
CHECK AND ADJUSTMENT ..... BR- 4
MASTER CYLINDER ..... BR- 6
LOAD SENSING PROPORTIONING AND BY-PASS VALVE (LSP & BV) BR-13
ANTI-LOCK BRAKE SYSTEM (ABS) BR-20
DESCRIPTION BR-20
DIAGNOSIS SYSTEM BR-24
SPEED SENSOR AND DECELERATION SENSOR DIAGNOSIS SYSTEM BR-34
DECELERATION SENSOR OPERATION DIAGNOSIS SYSTEM BR-38
ABS ACTUATOR BR-40
CONTROL RELAY BR-45
FRONT SPEED SENSOR BR-46
REAR SPEED SENSOR BR-51
ANTI-LOCK BRAKE SYSTEM CIRCUIT BR-55
SERVICE SPECIFICATIONS BR-57

PREPARATION

SST (SPECIAL SERVICE TOOLS)

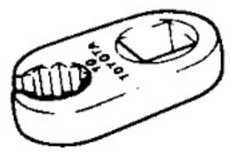	**09023-00100** Union Nut Wrench 10 mm	
	**09709-29017** LSPV Gauge Set	
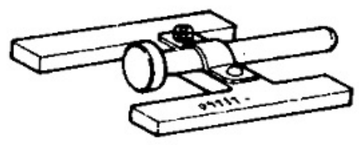	**09737-00010** Brake Booster Push Rod Gauge	
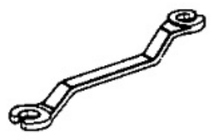	**09751-36011** Brake Tube Union Nut 10 x 12 mm Wrench	
	**09843-18020** Diagnosis Check Wire	w/ ABS
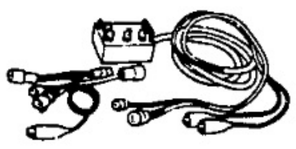	**09990-00150** ABS Actuator Checker and Sub-harness	w/ ABS
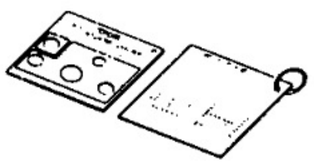	**09990-00163** ABS Actuator Checker Sheet ''A''	w/ ABS
	**09990-00200** ABS Actuator Checker Sub-harness ''C''	w/ ABS
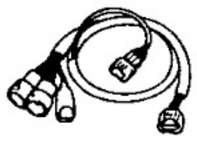	**09990-00210** ABS Actuator Checker Sub-harness ''E''	w/ ABS

RECOMMENDED TOOLS

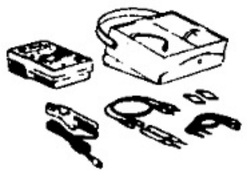	**09082-00015** TOYOTA Electrical Tester	
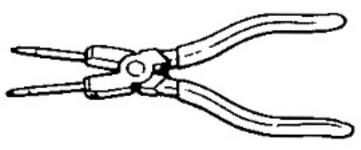	**09905-00013** Snap Ring Pillers	

EQUIPMENT

Torque wrench	

LUBRICANT

Item	Capacity	Classification
Brake fluid	—	SAE J1703 or FMVSS No.116 DOT 3

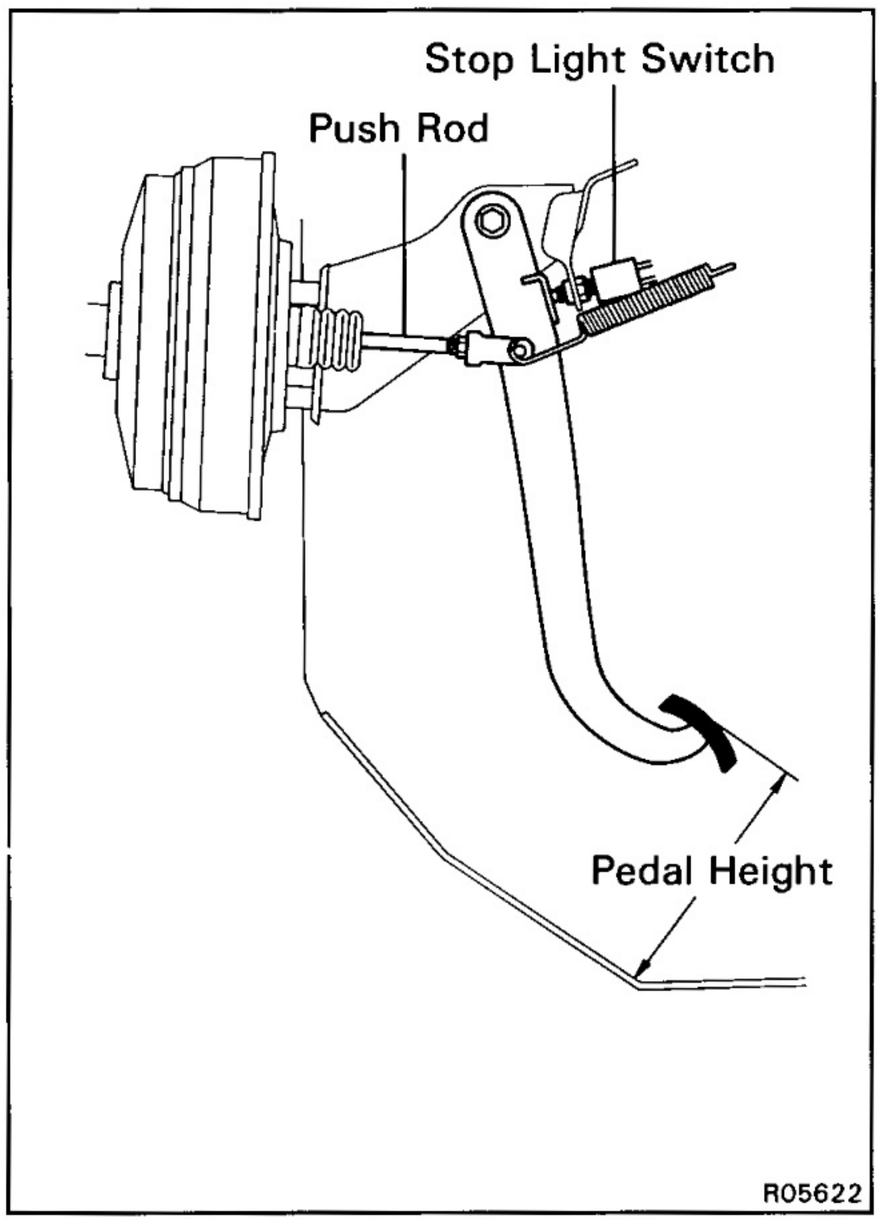

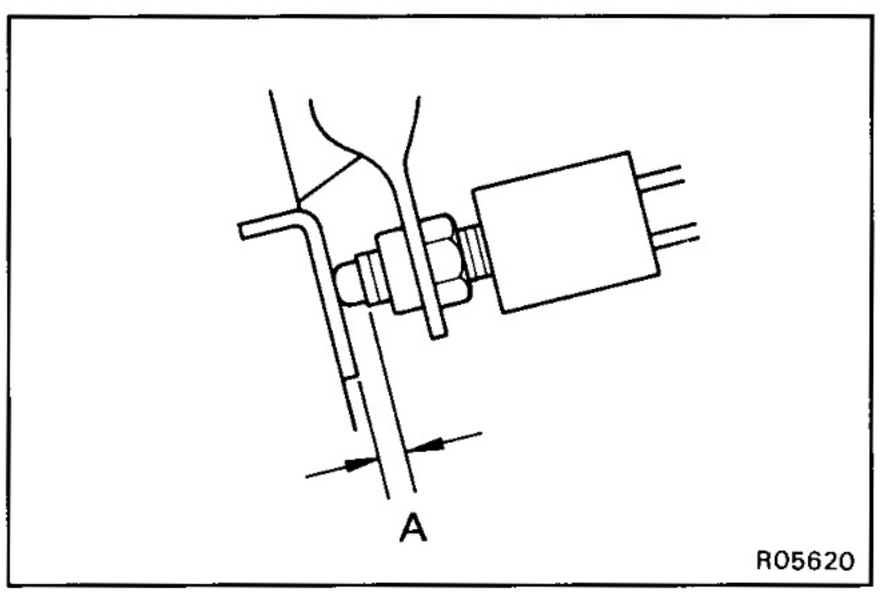

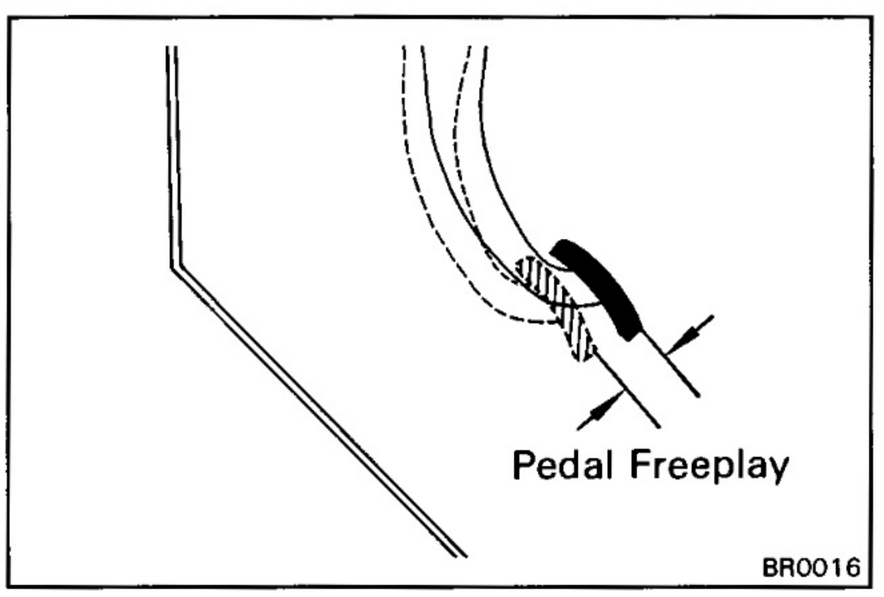

CHECK AND ADJUSTMENT

BRAKE PEDAL CHECK AND ADJUSTMENT

1. CHECK THAT PEDAL HEIGHT IS CORRECT, AS SHOWN

Pedal height from asphalt sheet:
167.5 – 177.5 mm (6.59 – 6.99 in.)

If the pedal height is incorrect, adjust it.

2. IF NECESSARY, ADJUST PEDAL HEIGHT

(a) Disconnect the connector from the stop light switch.

(b) Loosen the stop light switch lock nut and remove the stop light switch.

(c) Loosen the push rod lock nut.

(d) Adjust the pedal height by turning the pedal push rod.

(e) Tighten the push rod lock nut.

Torque: 25 N·m (260 kgf·cm, 19 ft·lbf)

(f) Install the stop light switch and turn it until it lightly contacts the pedal stopper.

(g) Return the stop light switch one turn.

(h) Check clearance (A) between the stop light switch and pedal.

Clearance:
0.5 – 2.4 mm (0.02 – 0.09 in.)

(i) Tighten the stop light switch lock nut.

(j) Connect the connector to the stop light switch.

(k) Check that the stop lights come on when the brake pedal is depressed, and go off when the brake pedal is released.

(l) After adjusting the pedal height, check the pedal freeplay.

HINT: If clearance (A) between the stop light switch and the brake pedal stopper has been adjusted correctly, the pedal freeplay will meet the specifications.

3. CHECK THAT PEDAL FREEPLAY IS CORRECT, AS SHOWN

(a) Stop the engine and depress the brake pedal several times until there is no more vacuum left in the booster.

(b) Push in the pedal by hand until the beginning of the resistance is felt, then measure the distance, as shown.

Pedal freeplay:
3 – 6 mm (0.12 – 0.24 in.)

HINT: The freeplay to the first point of resistance is due to the play between the clevis and pin. It is 3 – 6 mm (0.12 – 0.24 in.) on the pedal.

If incorrect, check the stop light switch clearance. And if the clearance is OK, then troubleshoot the brake system.

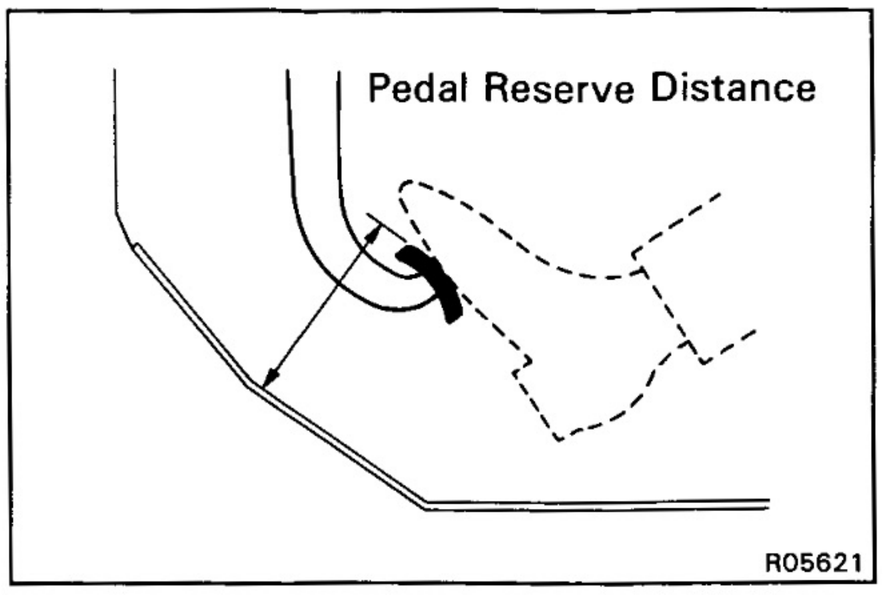

4. CHECK THAT PEDAL RESERVE DISTANCE IS CORRECT, AS SHOWN

Release the parking brake.

With the engine running, depress the pedal and measure the pedal reserve distance, as shown.

Pedal reserve distance from asphalt sheet at 490 N (50 kgf, 110.2 lbf):

More than 68 mm (2.68 in.)

If the reserve distance is incorrect, troubleshoot the brake system.

MASTER CYLINDER

MASTER CYLINDER REMOVAL

w/o ABS

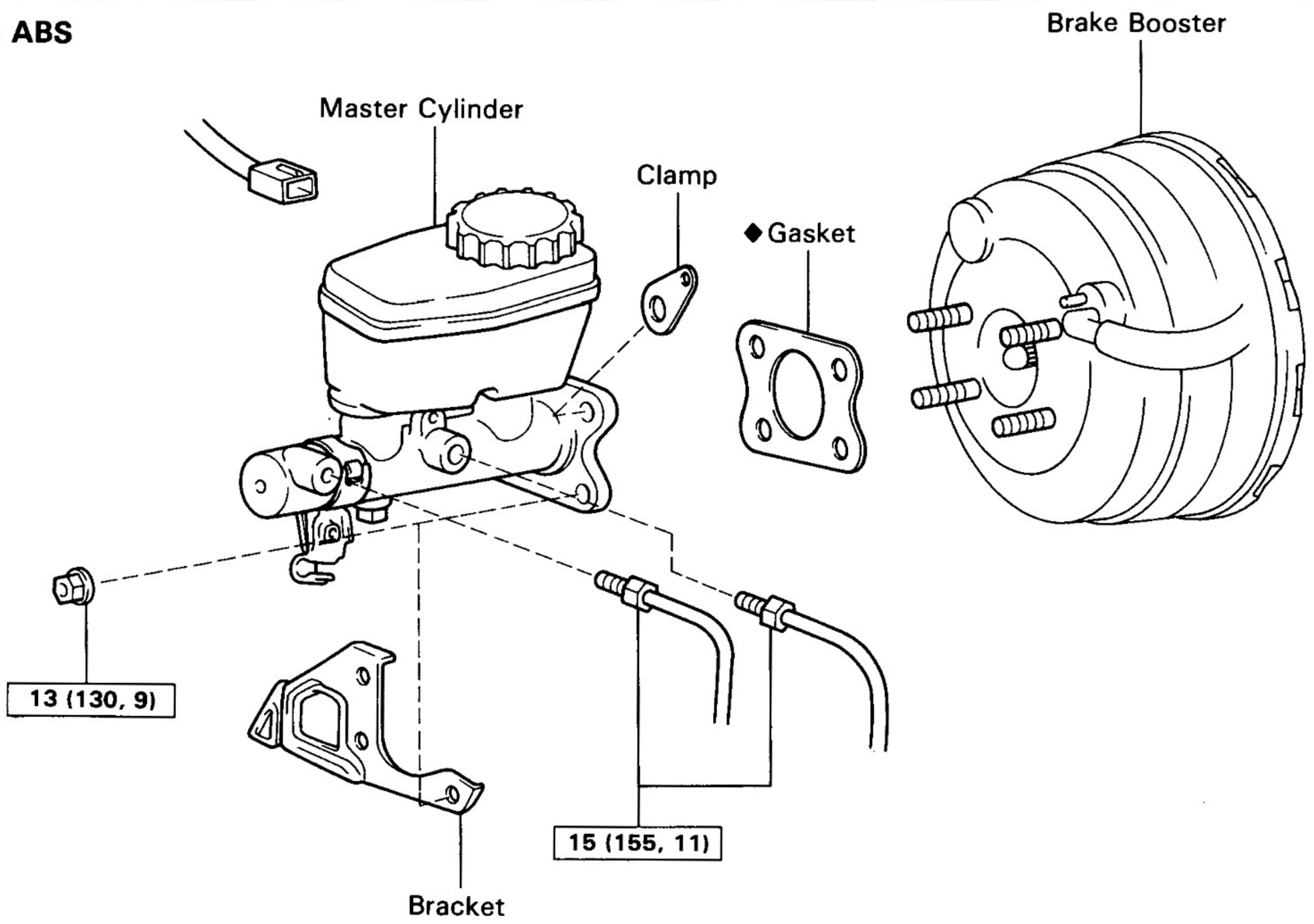

w/ ABS

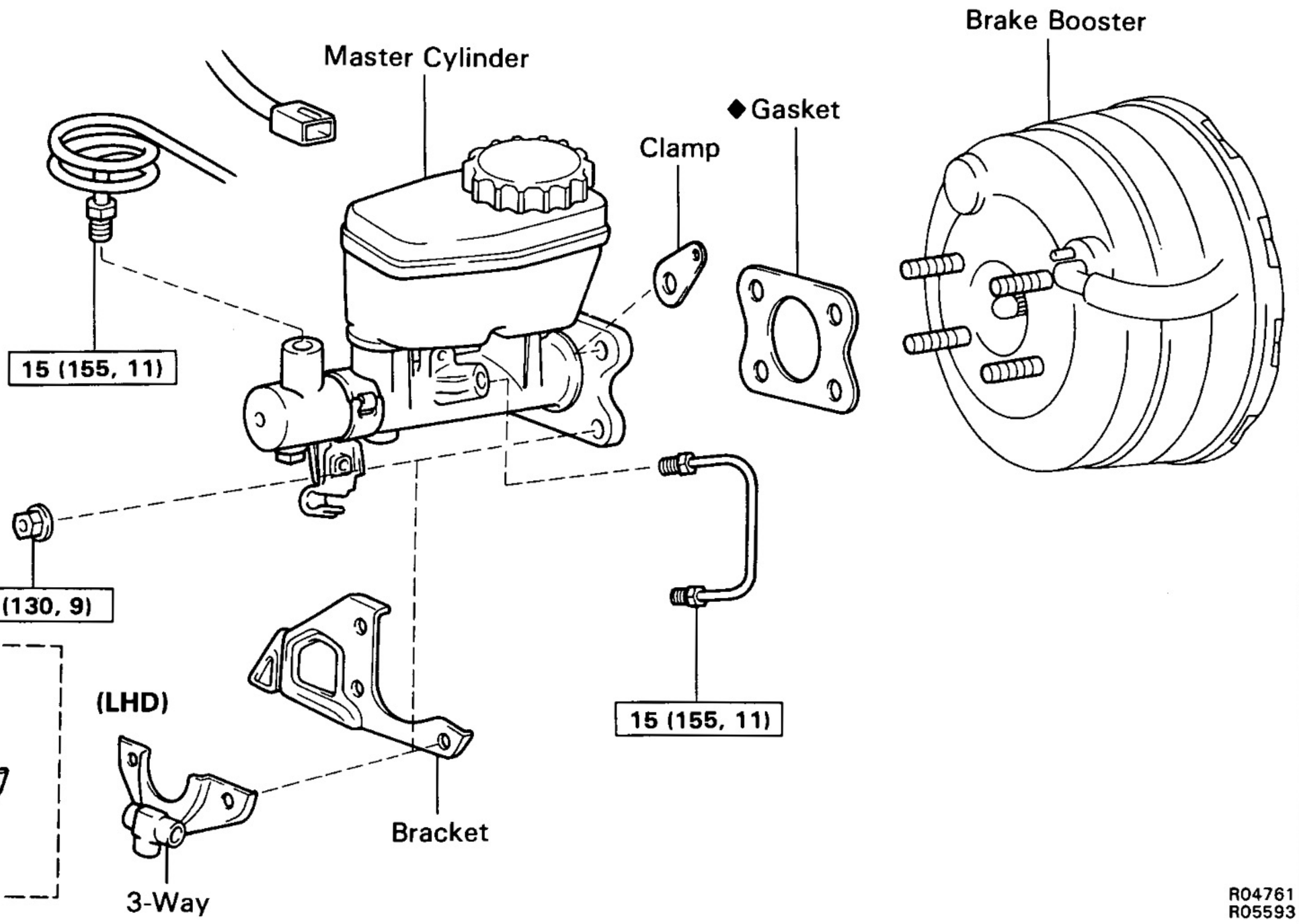

R04761
R05593

N·m (kgf·cm, ft·lbf) : Specified torque

◆ Non-reusable part

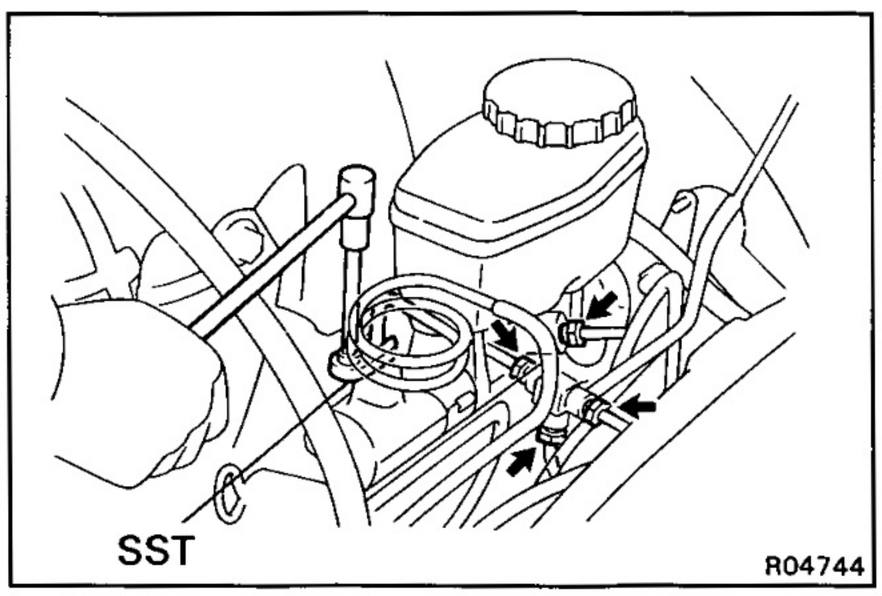

1. DISCONNECT LEVEL WARNING SWITCH CONNECTOR

2. TAKE OUT FLUID WITH SYRINGE

NOTICE: Do not let brake fluid remain on a painted surface. Wash it off immediately.

3. DISCONNECT BRAKE LINES

Using SST, disconnect brake lines from the master cylinder.
SST 09023-00100

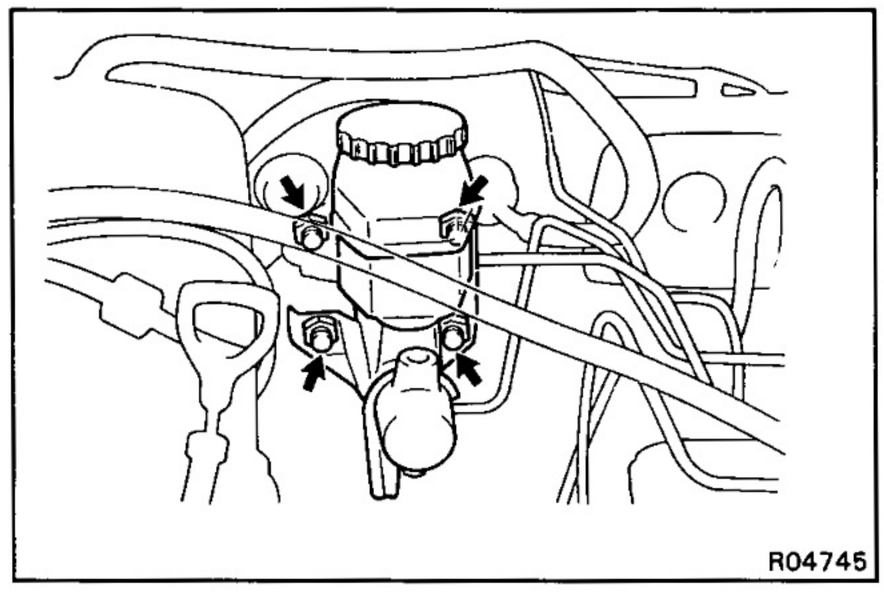

4. REMOVE MASTER CYLINDER

(a) Remove the mounting nuts.

(b) (w/ ABS)
Remove the 3-way, clamp and the bracket.

(w/o ABS)
Remove the clamp and the bracket.

(c) Pull out the master cylinder and gasket.

COMPONENTS

w/o ABS

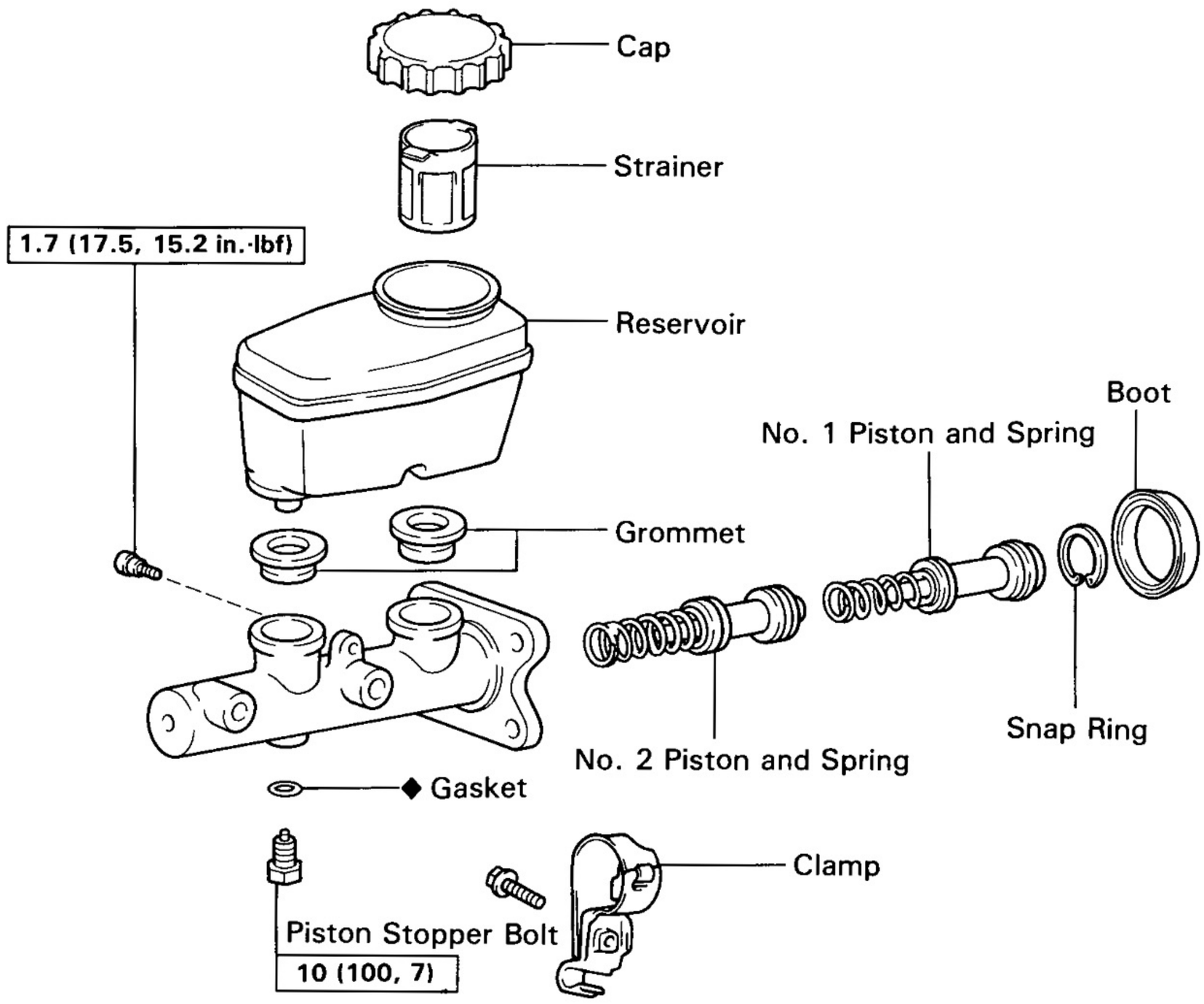

w/ ABS

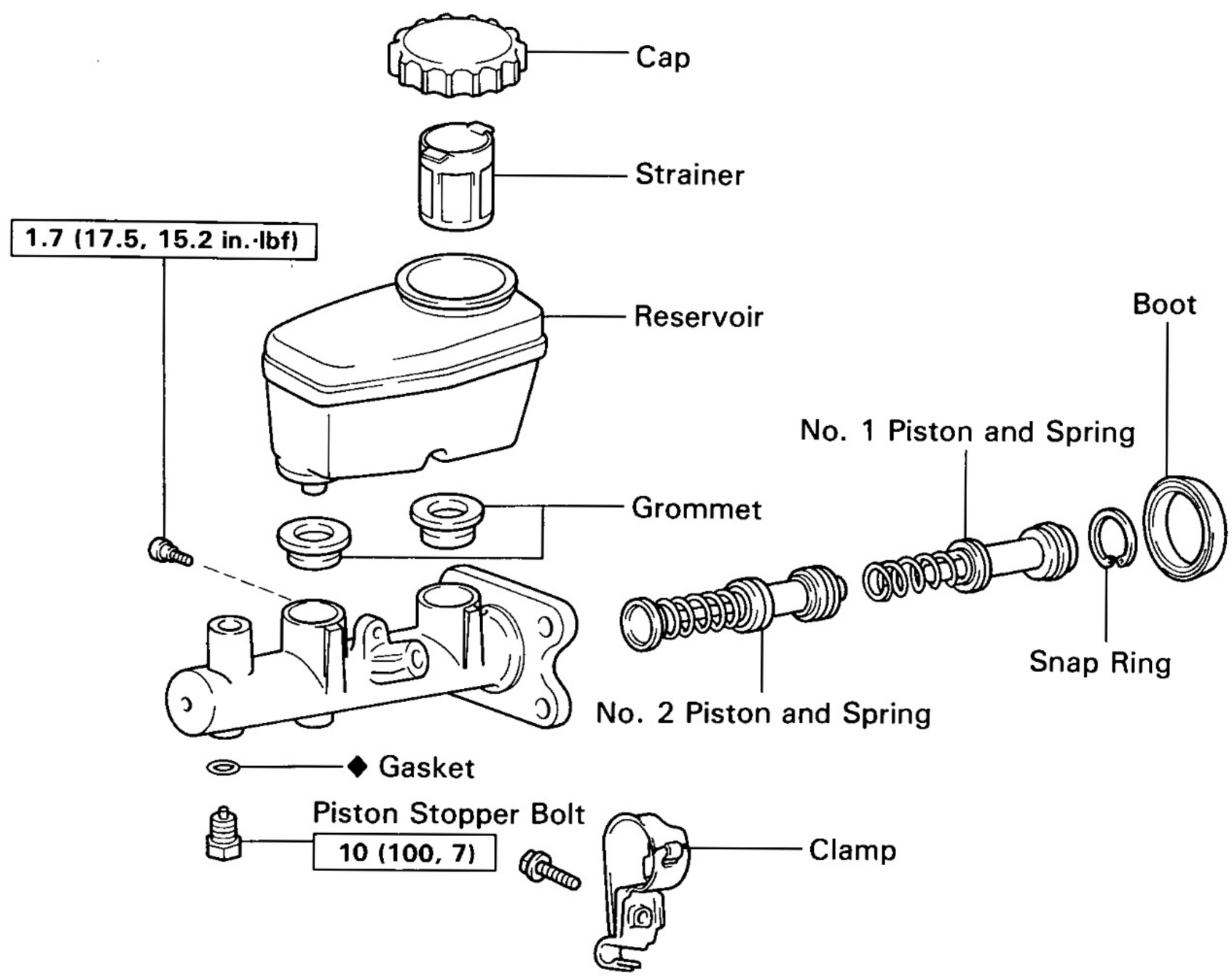

R04763
R04764

N·m (kgf·cm, ft·lbf) : Specified torque

◆ Non-reusable part

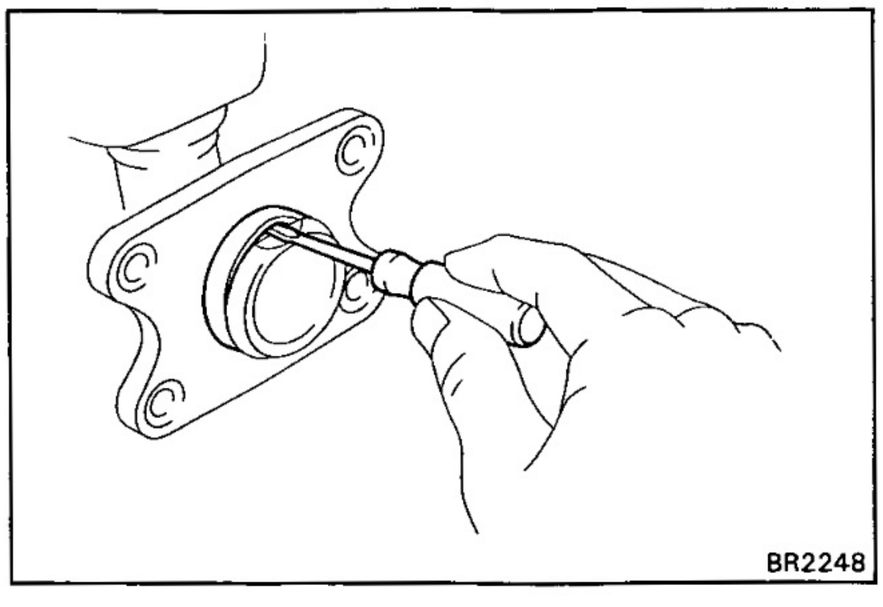

MASTER CYLINDER DISASSEMBLY

1. REMOVE MASTER CYLINDER BOOT

Using a screwdriver, remove the master cylinder boot.

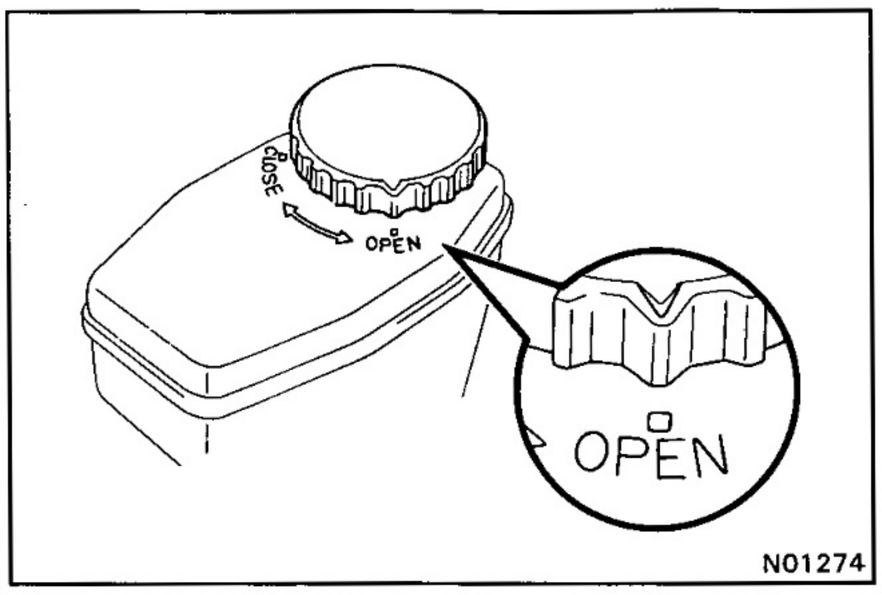

2. REMOVE RESERVOIR CAP AND STRAINER

(a) Turn the reservoir cap to the ''open'' side and remove it.

(b) Remove the strainer.

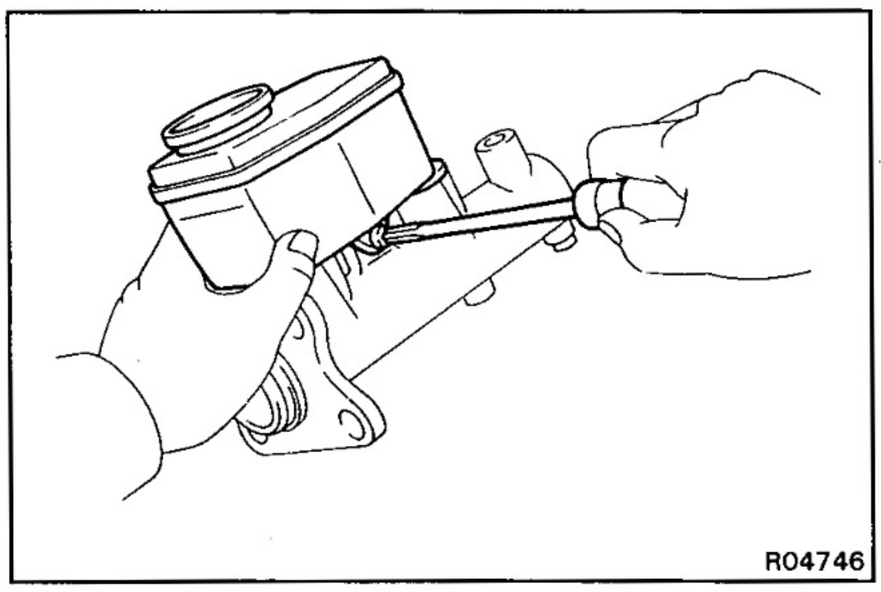

3. REMOVE RESERVOIR

Remove the set screw and pull out the reservoir.

4. REMOVE TWO GROMMETS

5. PLACE CYLINDER IN VISE

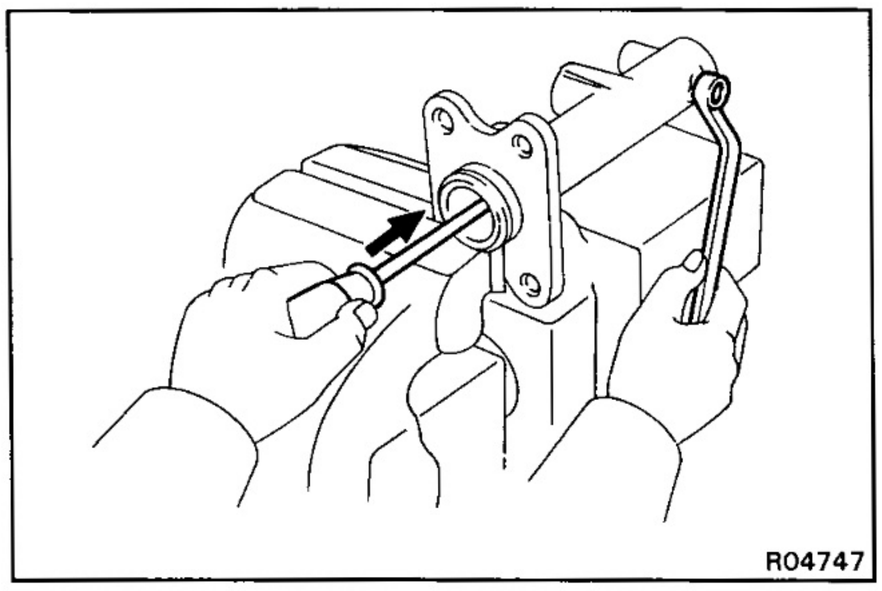

6. REMOVE NO.2 PISTON STOPPER BOLT

Using a screwdriver, push the pistons in all the way and remove the No.2 piston stopper bolt and gasket.

HINT: Tape the screwdriver tip before use.

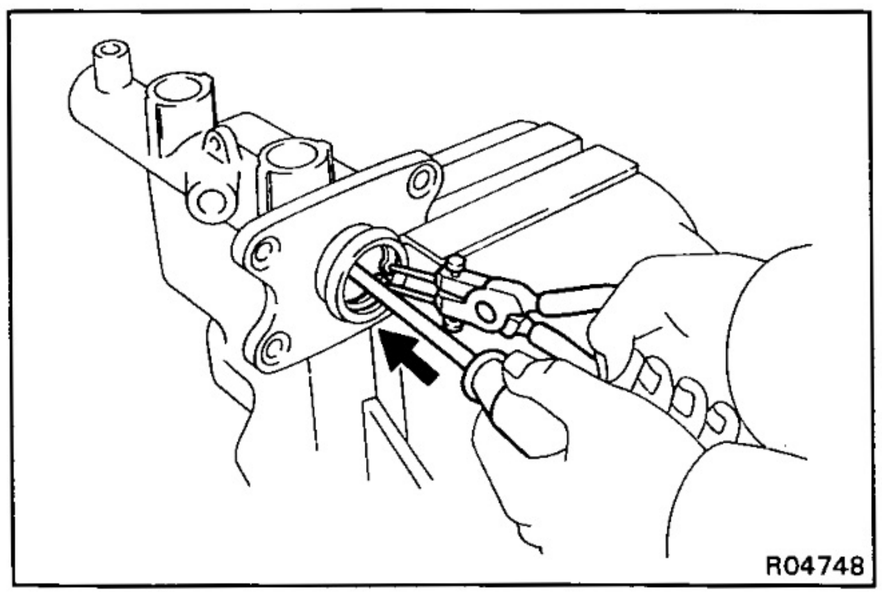

7. REMOVE TWO PISTONS

(a) Push in the piston with a screwdriver and remove the snap ring with snap ring pliers.

(b) Remove the No.1 piston and spring by hand, pulling straight out, not at an angle.

NOTICE: If pulled out at an angle, there is a possibility that the cylinder bore could be damaged.

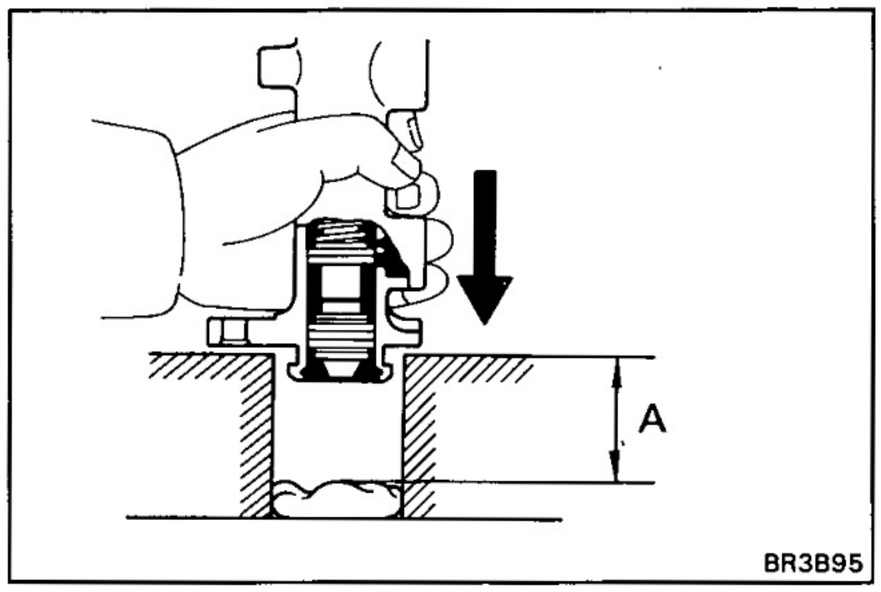

(c) Place a rag and two wooden blocks on the work table and lightly tap the cylinder flange against the blocks until the piston drops out of the cylinder.

HINT: Make sure the distance (A) from the rag to the top of the blocks is at least 100 mm (3.94 in.).

MASTER CYLINDER INSPECTION

HINT: Clean the disassembled parts with compressed air.

1. **INSPECT CYLINDER BORE FOR RUST OR SCORING**

2. **INSPECT CYLINDER FOR WEAR OR DAMAGE**

If necessary, clean or replace the cylinder.

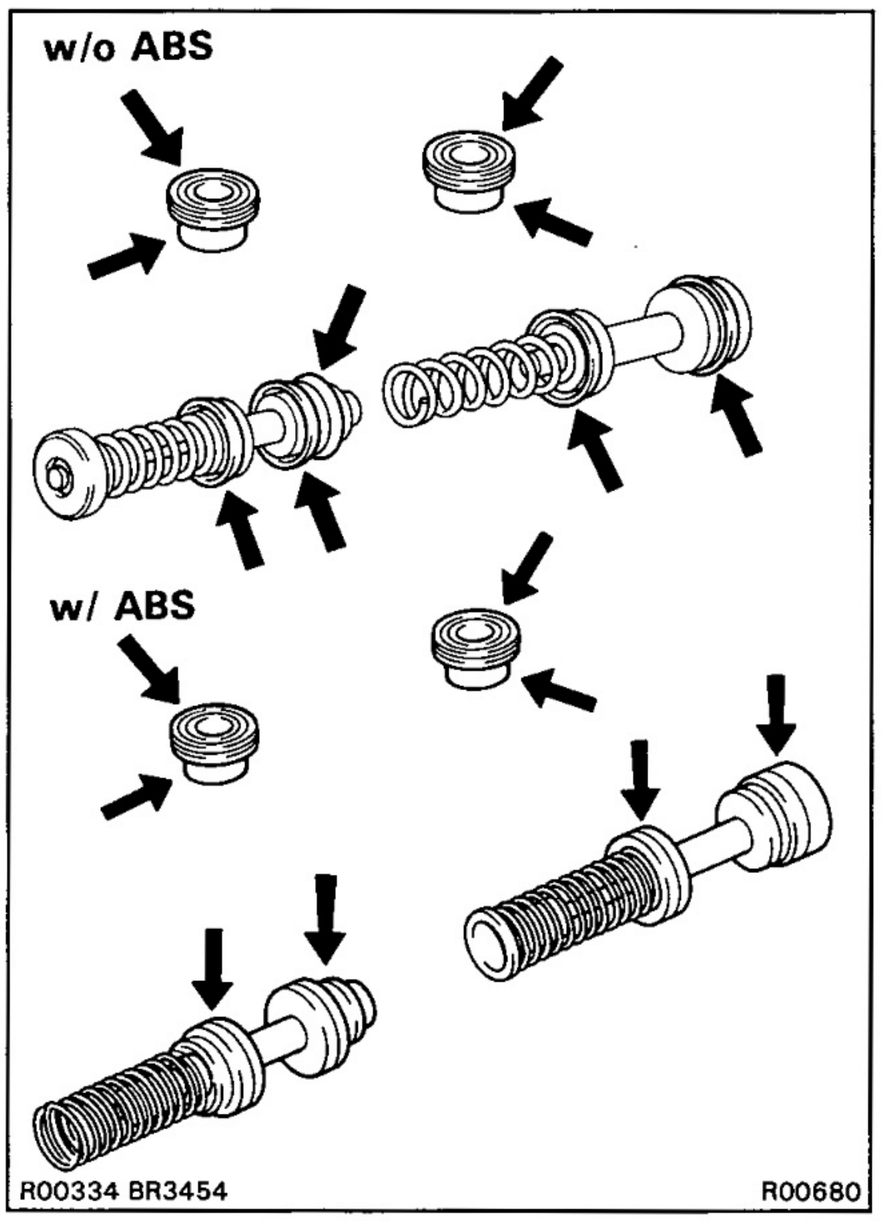

MASTER CYLINDER ASSEMBLY

1. **APPLY LITHIUM SOAP BASE GLYCOL GREASE TO RUBBER PARTS INDICATED BY ARROWS**

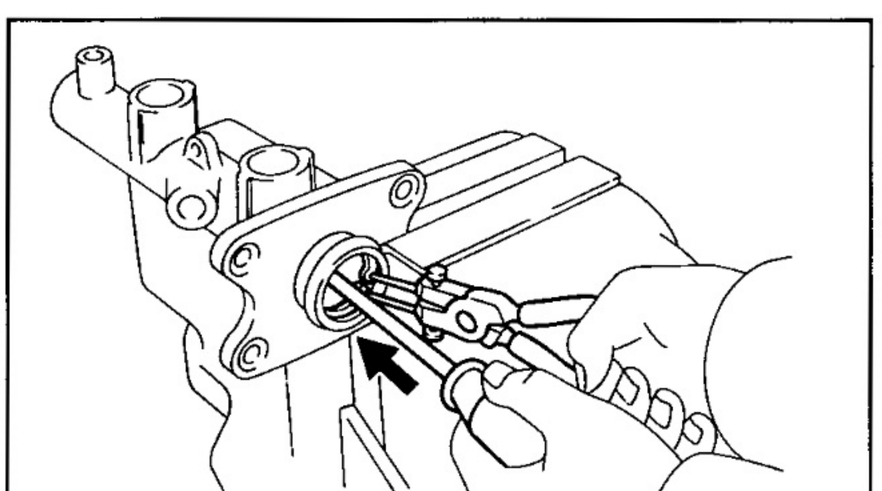

2. **INSTALL TWO PISTONS**

NOTICE: Be careful not to damage the rubber lips on the pistons.

(a) Install the two springs and pistons straight in, not at an angle.

NOTICE: If insert at an angle, there is a possibility of damaging the cylinder bore.

(b) Push in the piston with a screwdriver and install the snap ring with snap ring pliers.

HINT: Tape the screwdriver tip before use.

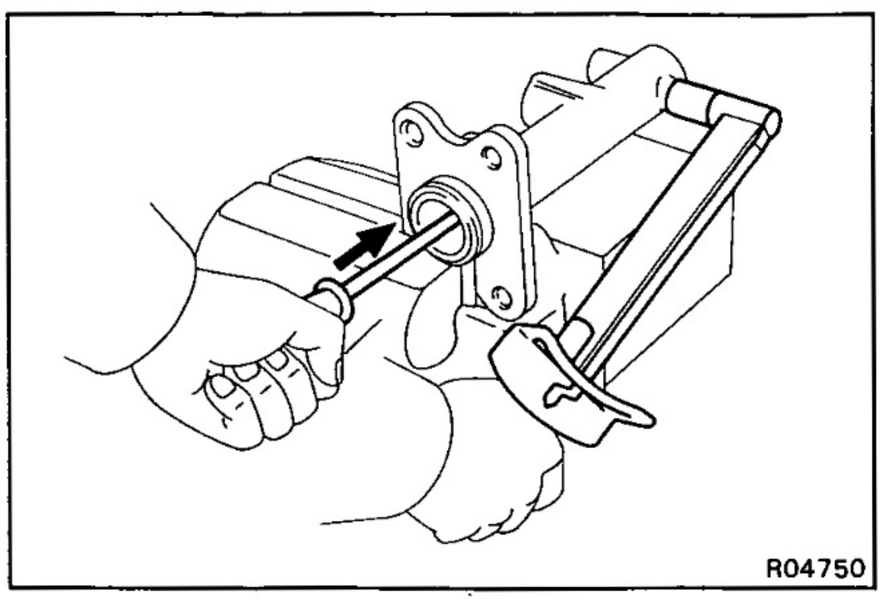

3. INSTALL NO.2 PISTON STOPPER BOLT

Using a screwdriver, push the piston in all the way and install the No.2 piston stopper bolt over a new gasket.

Torque: 10 N·m (100 kgf·cm, 7 ft·lbf)

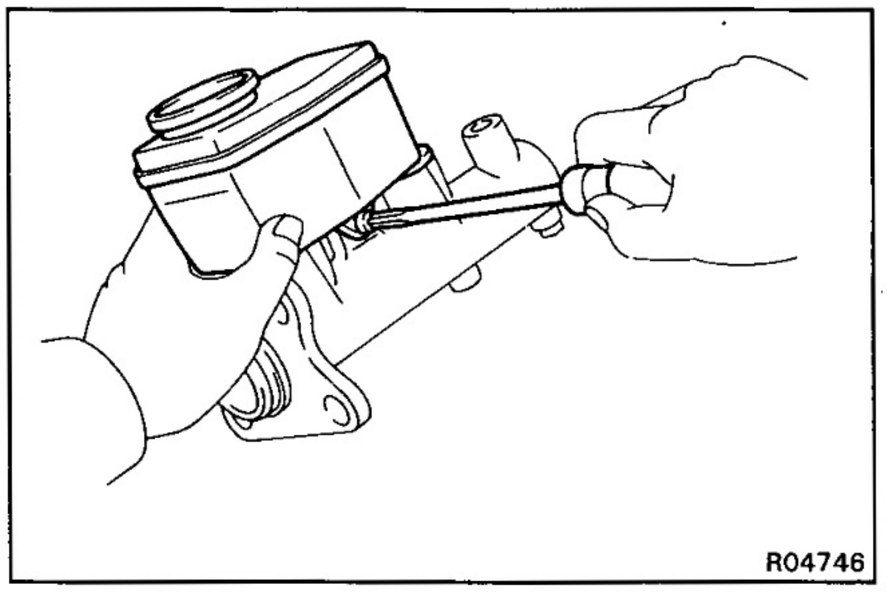

4. INSTALL TWO GROMMETS

5. INSTALL RESERVOIR

(a) Install the strainer to the reservoir.

(b) Push the reservoir onto the cylinder.

(c) Install the set screw while pushing on the reservoir.

Torque: 1.7 N·m (17.5 kgf·cm, 15.2 in.·lbf)

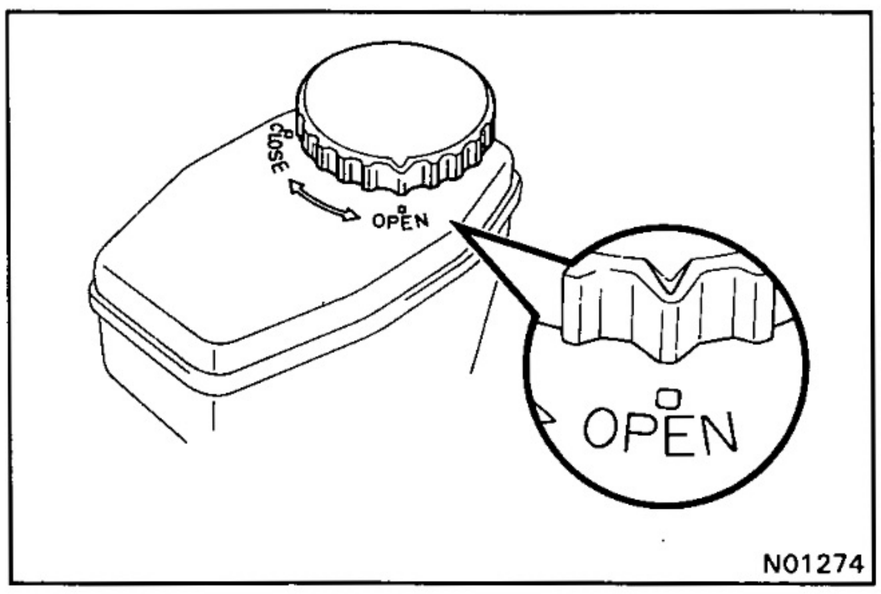

6. INSTALL RESERVOIR CAP

(a) Align the matchmark on the reservoir cap with the matchmark on the ''open'' side of reservoir.

(b) Push down on the reservoir cap and turn it clockwise until it locks.

(c) Check that the matchmark on the reservoir cap is now aligned with the matchmark on the ''close'' side of the reservoir.

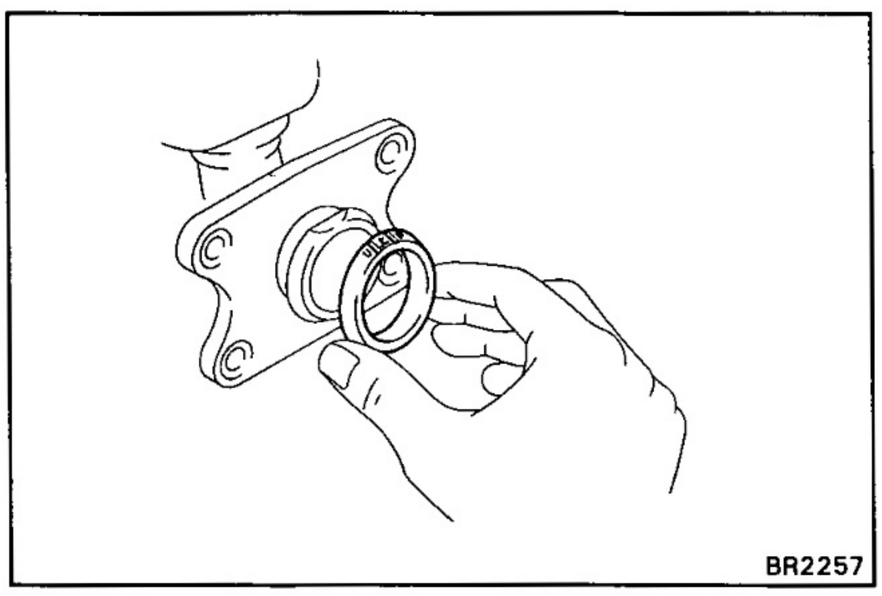

7. INSTALL MASTER CYLINDER BOOT

With the UP mark on the master cylinder boot facing upwards, install the cylinder boot on the master cylinder.

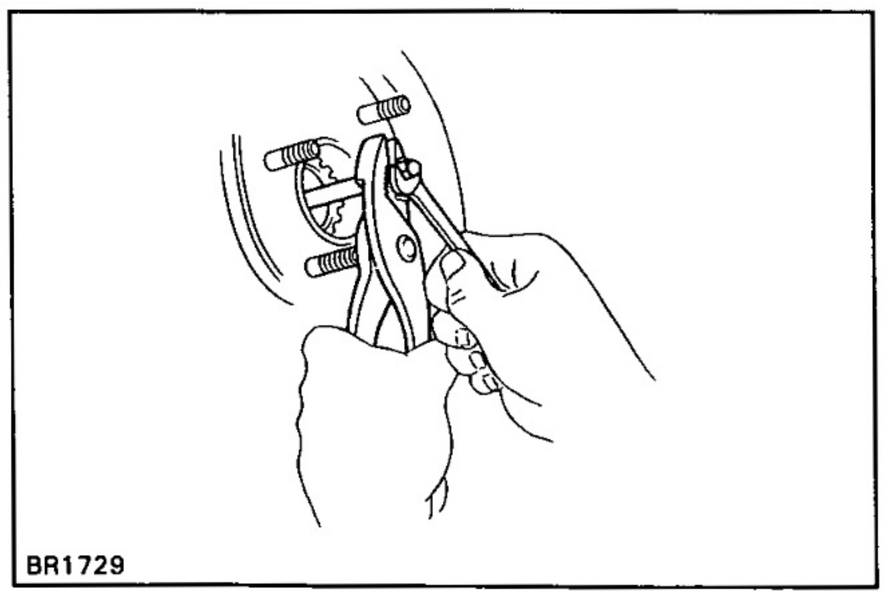

MASTER CYLINDER INSTALLATION

1. ADJUST LENGTH OF BRAKE BOOSTER PUSH ROD BEFORE INSTALLING MASTER CYLINDER

(See pub. No. RM184E, page BR-26)

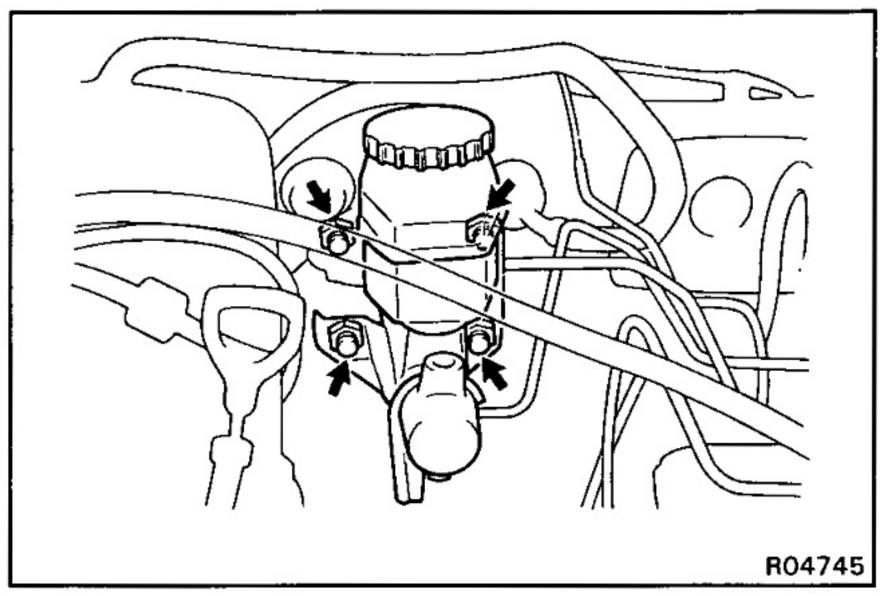

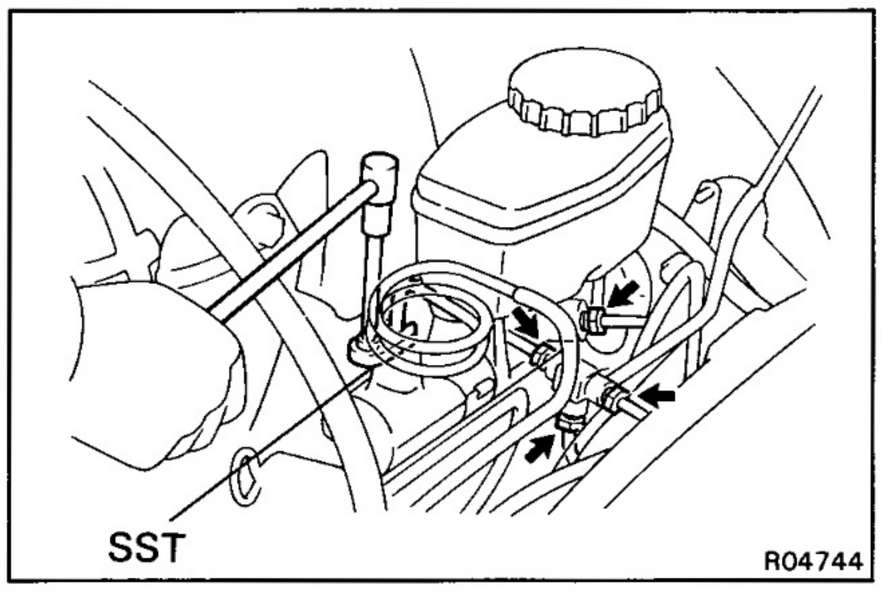

2. INSTALL MASTER CYLINDER

(a) (w/ ABS)
Install the master cylinder, gasket, 3-way, clamp and bracket on the brake booster with the four nuts.

(w/o ABS)
Install the master cylinder, gasket, clamp and bracket on the brake booster with the four nuts.

(b) Tighten the mounting nuts.

Torque: 13 N·m (130 kgf·cm, 9 ft·lbf)

3. CONNECT BRAKE LINES

Using SST, connect the brake lines to the master cylinder. Torque the union nuts.

SST 09023-00100

Torque: 15 N·m (155 kgf·cm, 11 ft·lbf)

4. CONNECT LEVEL WARNING SWITCH CONNECTOR

5. FILL BRAKE RESERVOIR WITH BRAKE FLUID AND BLEED BRAKE SYSTEM
(See pub No. RM184E, page BR-7)

6. CHECK FOR LEAKS

7. CHECK AND ADJUST BRAKE PEDAL
(See page BR-4)

LOAD SENSING PROPORTIONING AND BY-PASS VALVE (LSP & BV)

COMPONENTS

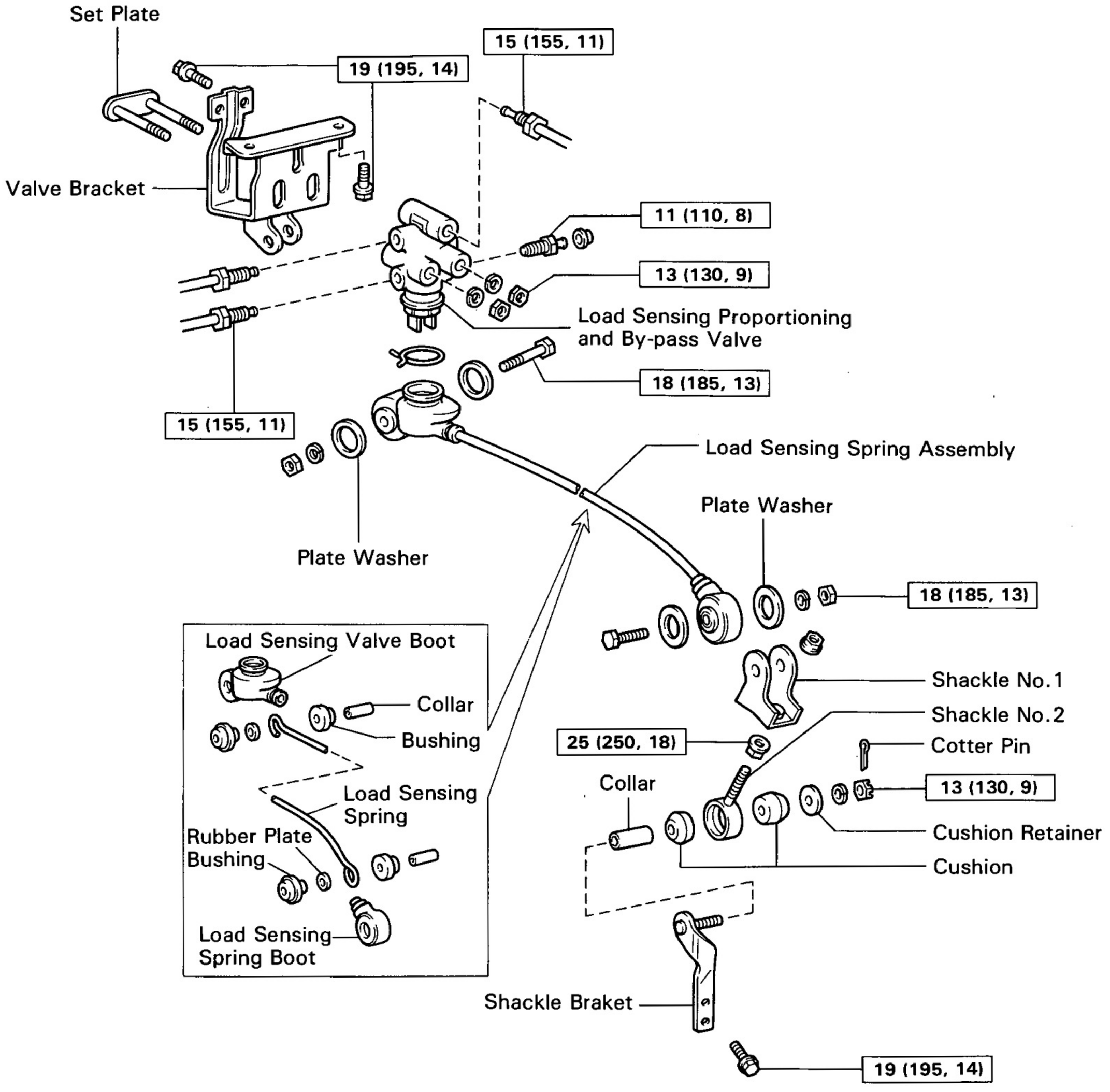

N·m (kgf·cm, ft·lbf) : Specified torque

◆ Non-reusable part

R05496

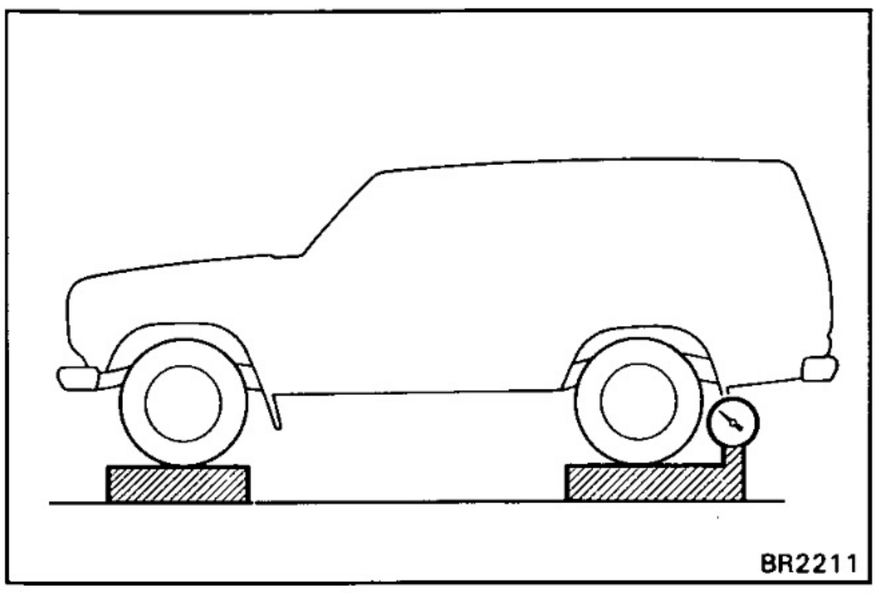

FLUID PRESSURE CHECK AND ADJUSTMENT

1. SET REAR AXLE LOAD

Rear axle load (include vehicle weight):
1,330 kg (2,932 lb)

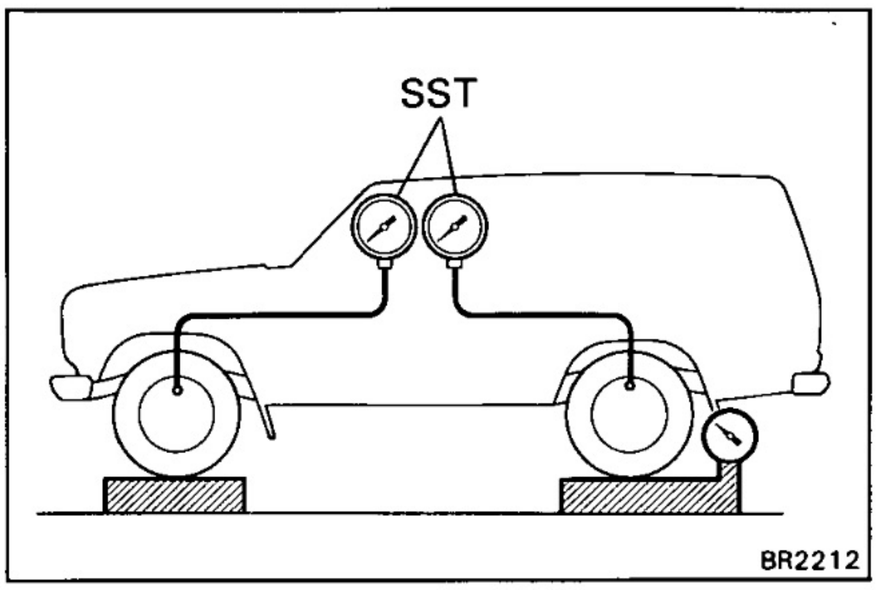

2. INSTALL LSPV GAUGE (SST) AND BLEED AIR

SST 09709-29017

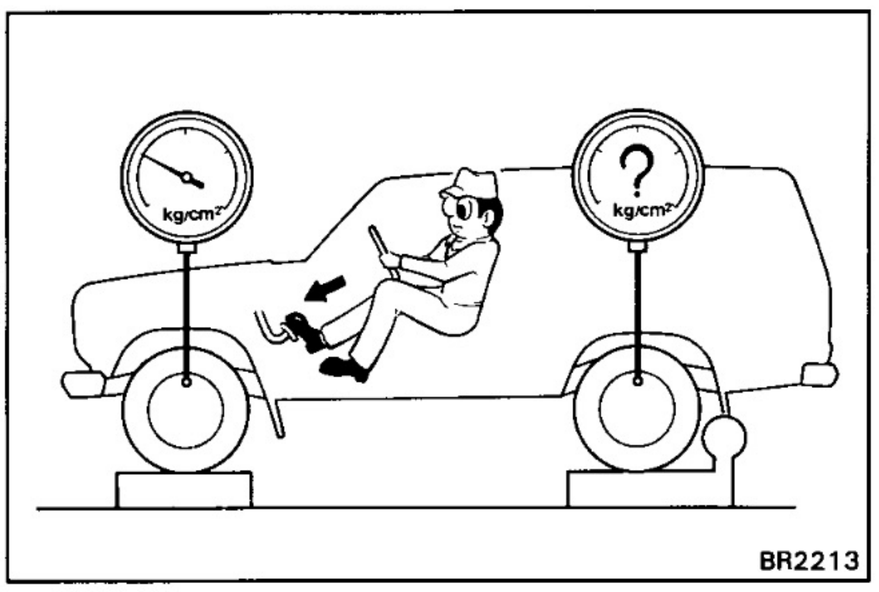

3. RAISE FRONT BRAKE PRESSURE TO 7,845 kPa (80 kgf/cm², 1,138 psi) AND CHECK REAR BRAKE PRESSURE

Rear brake pressure:
5,984 ± 589 kPa (61 ± 6 kgf/cm², 869 ± 86 psi)

HINT: The brake pedal should not be depressed twice and/or returned while setting to the specified pressure. Read the value of rear pressure two seconds after adjusting the specified fluid pressure.

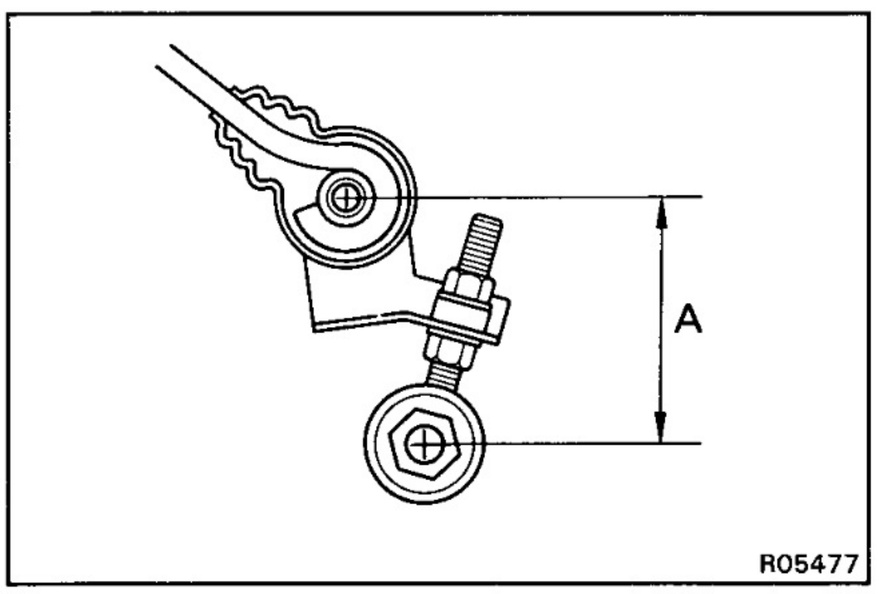

4. IF NECESSARY, ADJUST FLUID PRESSURE

(a) Disconnect the No.2 shackle from the shackle bracket.

(b) Adjust the length of the No.2 shackle turning it.

Low pressure — Lengthen A
High pressure — Shorten A

Initial set:
90 mm (3.54 in.)

Adjusting range:
84 — 96 mm (3.31 — 3.78 in.)

HINT: One turn of the No.2 shackle changes the fluid pressure about following specification.

98.1 kPa (1.0 kgf/cm², 14.2 psi)

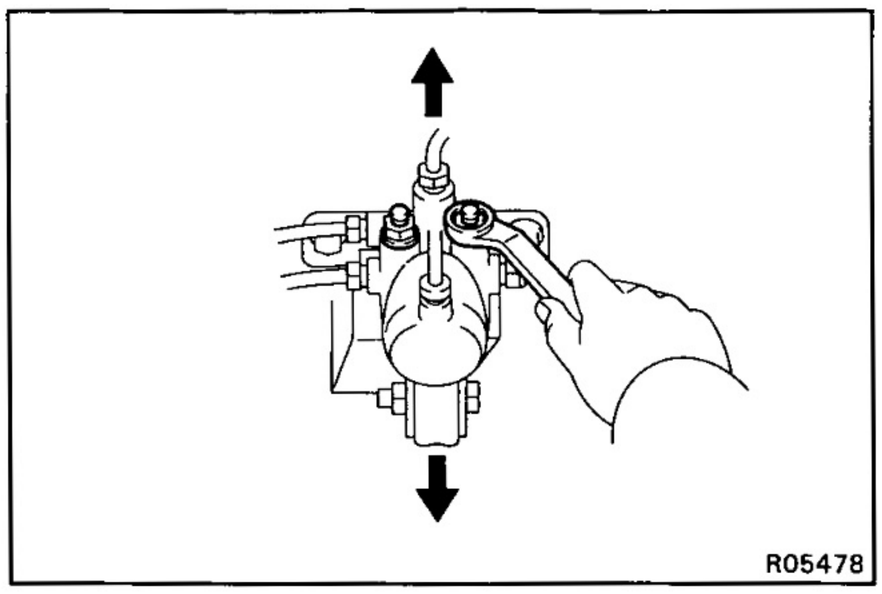

(c) In event the pressure cannot be adjusted by No.2 shackle, raise or lower the valve body.

Low pressure — Lower
High pressure — Raise

(d) Torque the nuts.

Torque: 13 N·m (130 kgf·cm, 9 ft·lbf)

(e) Adjust the length of the No.2 shackle again.

If it cannot be adjusted, inspect the valve housing.

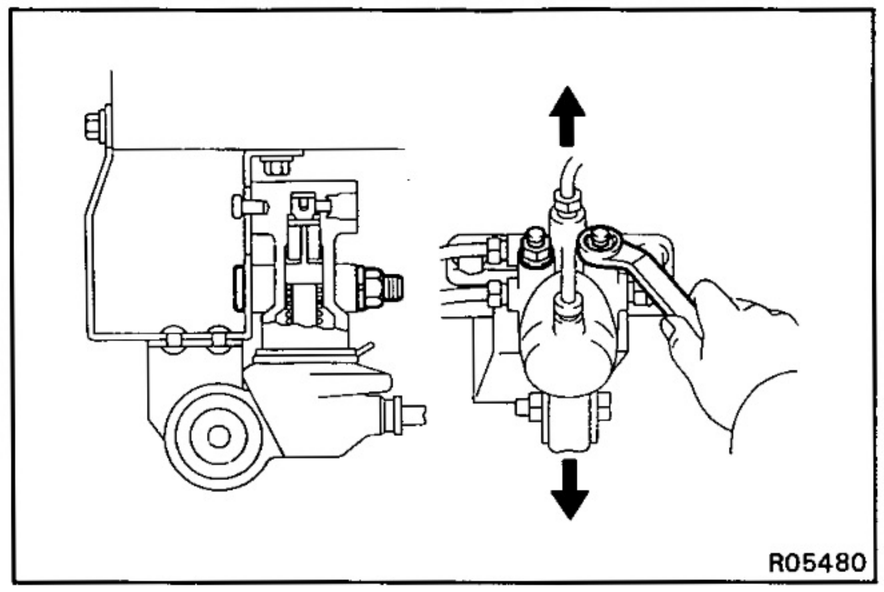

5. IF NECESSARY, CHECK VALVE BODY

(a) Assemble the valve body in the uppermost position.

HINT: When the brakes are applied, the piston will move down about 1 mm (0.039 in.). Even at this time, the piston should not make contact with or move the load sensing spring.

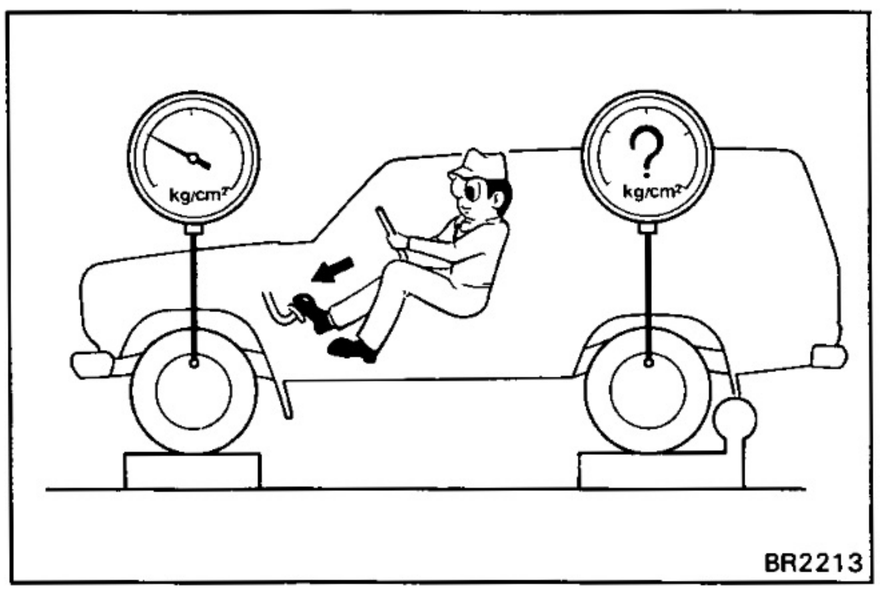

(b) In this position, check the rear brake pressure.

Front brake pressure kPa (kgf/cm², psi)	Rear brake pressure kPa (kgf/cm², psi)
3,434 (35, 498)	3,434 (35, 498)
5,396 (55, 783)	3,630 — 4,218 (37 — 43, 527 — 612)
9,810 (100, 1,424)	4,513 — 5,494 (46 — 56, 655 — 797)

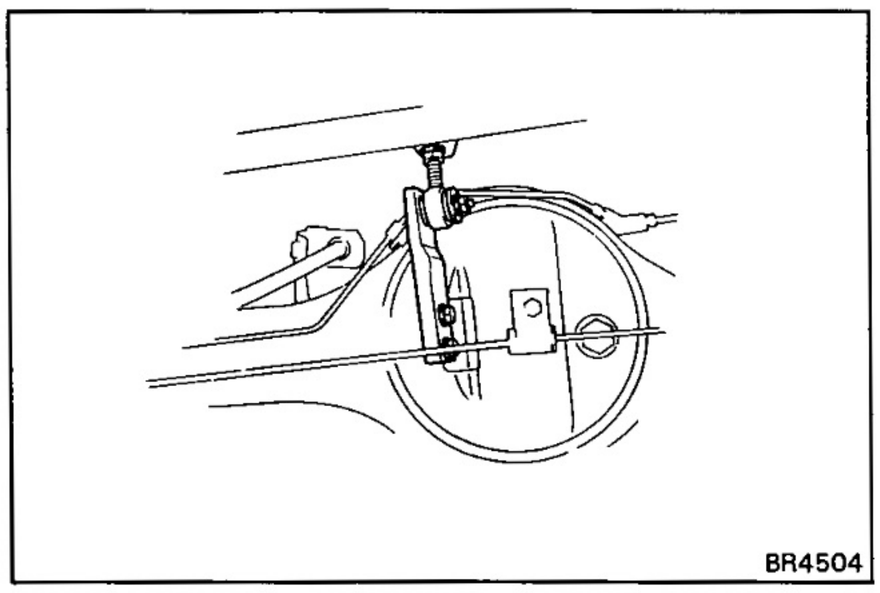

LSP & BV REMOVAL

1. DISCONNECT SHACKLE NO.2 FROM BRACKET

(a) Remove the cotter pin.

(b) Remove the nut and disconnect the shackle No.2 from the bracket.

(c) Remove the retainer, two cushions and collar.

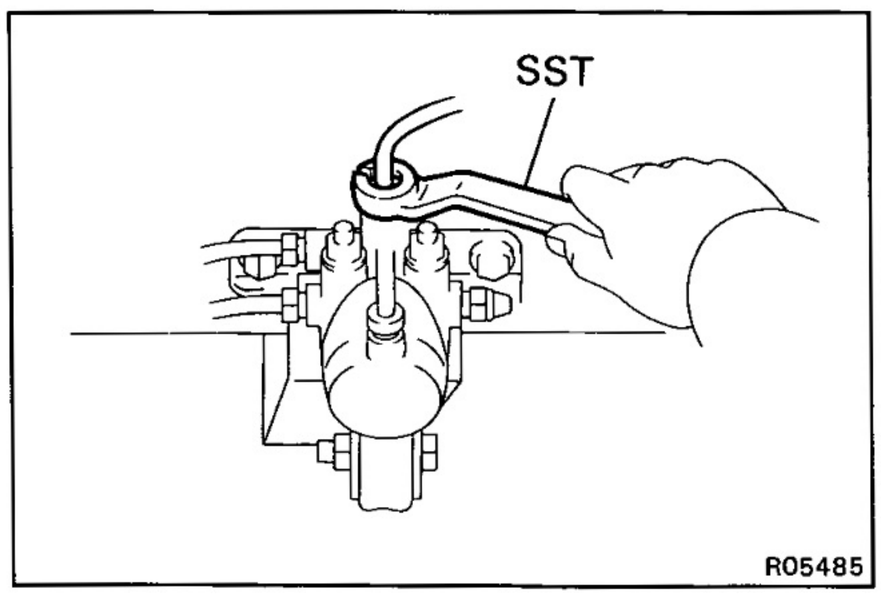

2. REMOVE LSP & BV ASSEMBLY

(a) Using SST, disconnect the brake lines from the valve body.

SST 09751-36011

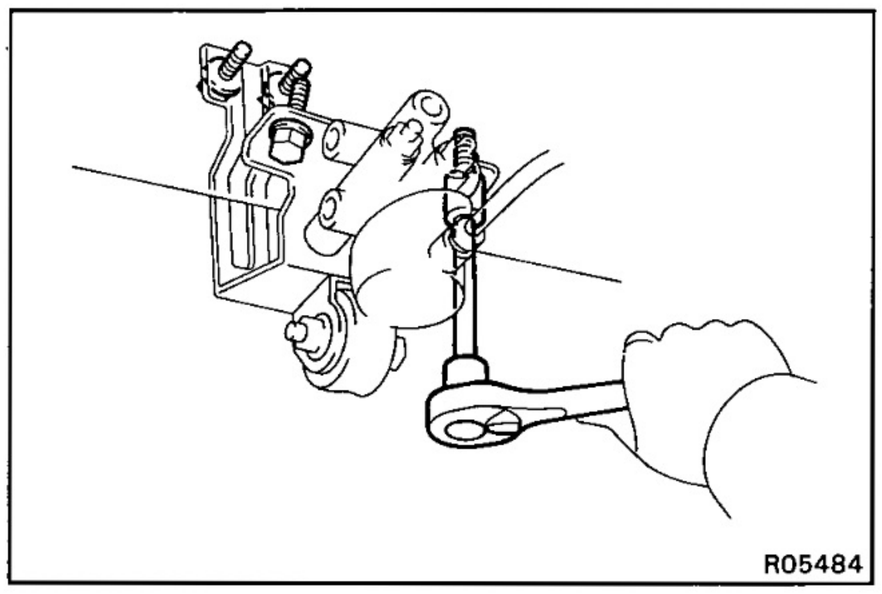

(b) Remove the valve bracket and mounting bolts, then remove the LSP & BV assembly.

LSP & BV ASSEMBLY DISASSEMBLY

1. REMOVE VALVE BRACKET

(a) Remove the nut and bolt as shown.

(b) Remove the two nuts, and remove the bracket and two bolts from the valve body.

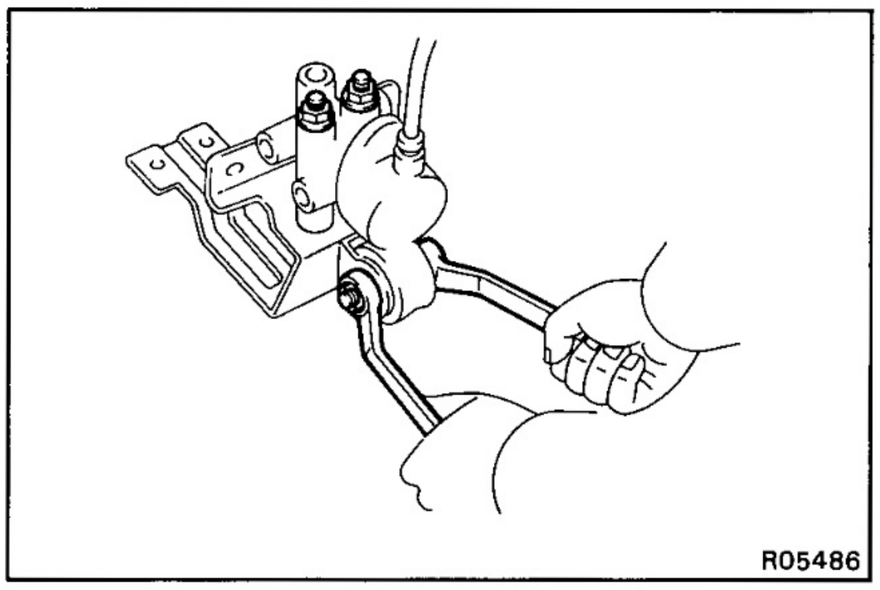

2. DISCONNECT SPRING FROM VALVE

Using pliers, remove the clip, and remove the spring from the valve.

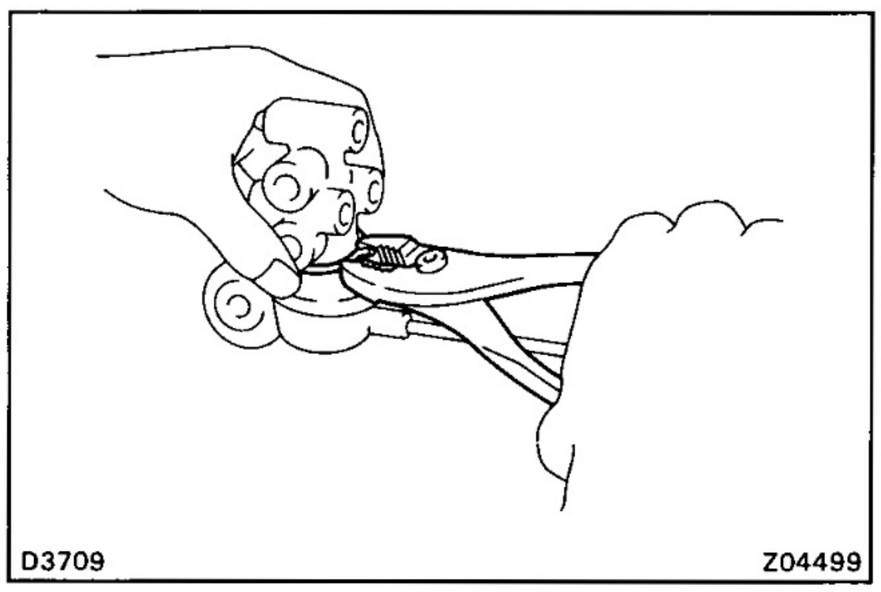

3. REMOVE SHACKLE NO.1 AND NO.2

(a) Remove the bolt and nut, then remove the following parts:
- Load sensing spring
- Two plate washers

(b) Loosen the two nuts, and remove the shackle No.1 from the shackle No.2.

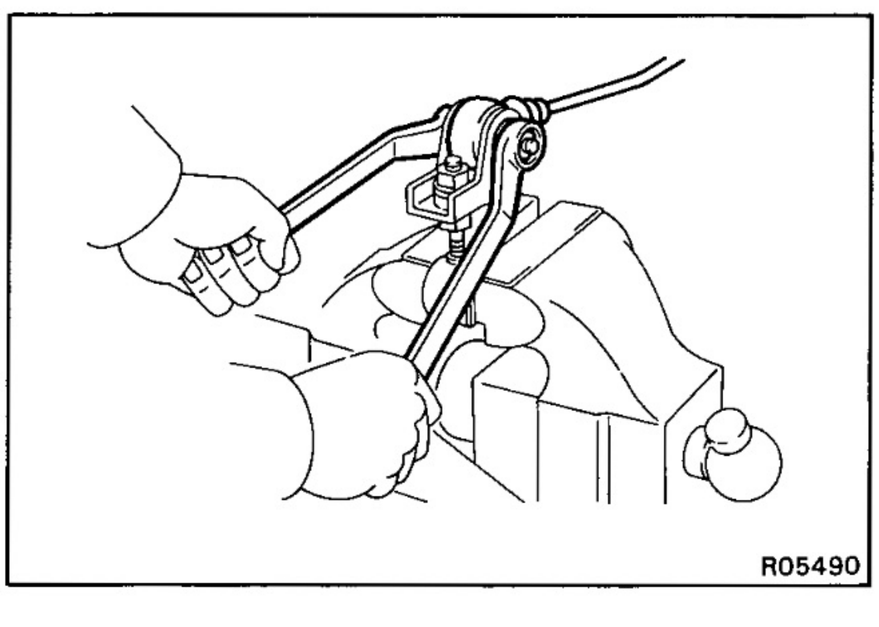

4. DISASSEMBLY LOAD SENSING SPRING

Disassembly the following parts:

(a) Bushings

(b) Collars

(c) Rubber plates

(d) Load sensing valve boot

(e) Load sensing spring boot

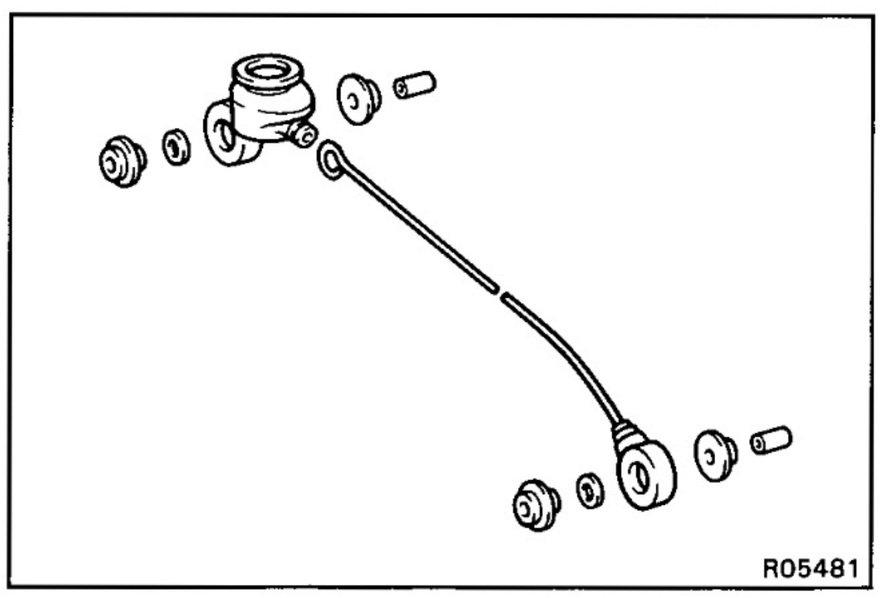

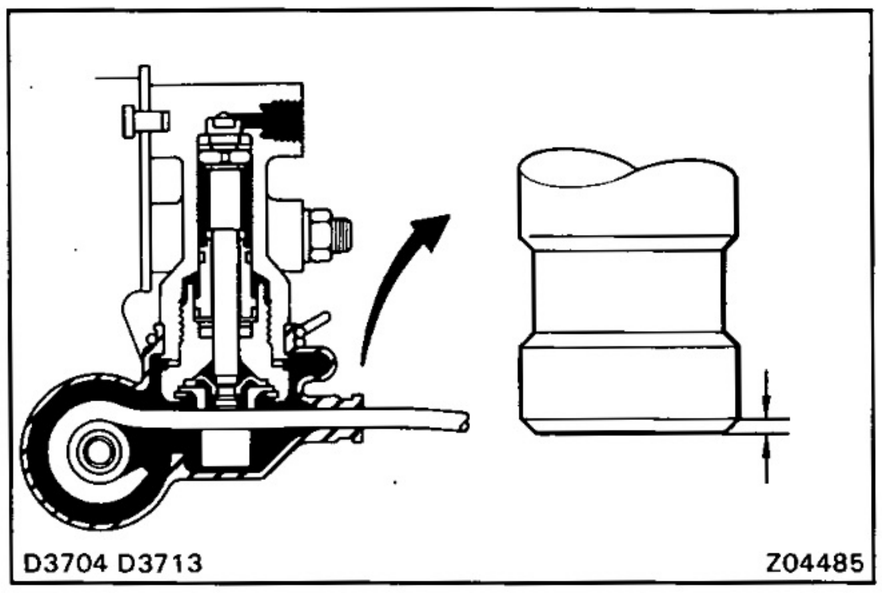

LSP & BV INSPECTION

INSPECT VALVE PISTON PIN AND LOAD SENSING SPRING CONTACT SURFACE FOR WEAR

Wear limit:

0.7 mm (0.028 in.)

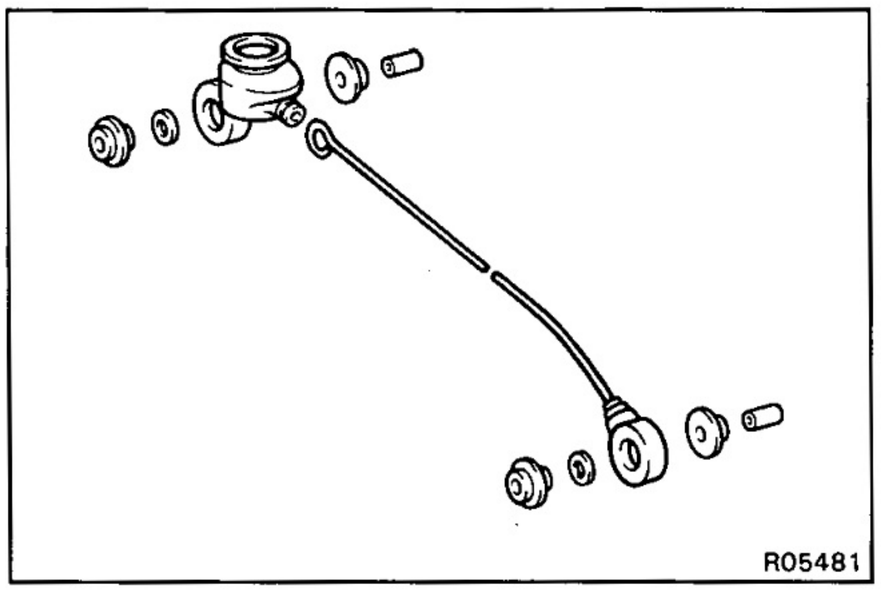

LSP & BV ASSEMBLY

1. **ASSEMBLE FOLLOWING PARTS TO LOAD SENSING SPRING:**

(a) Load sensing valve boot

(b) Load sensing spring boot

(c) Bushings

(d) Rubber plates

(e) Collars

HINT: Apply lithium soap base glycol grease to all rubbing areas.

Do not mistake the valve side for the shackle side of the load sensing spring.

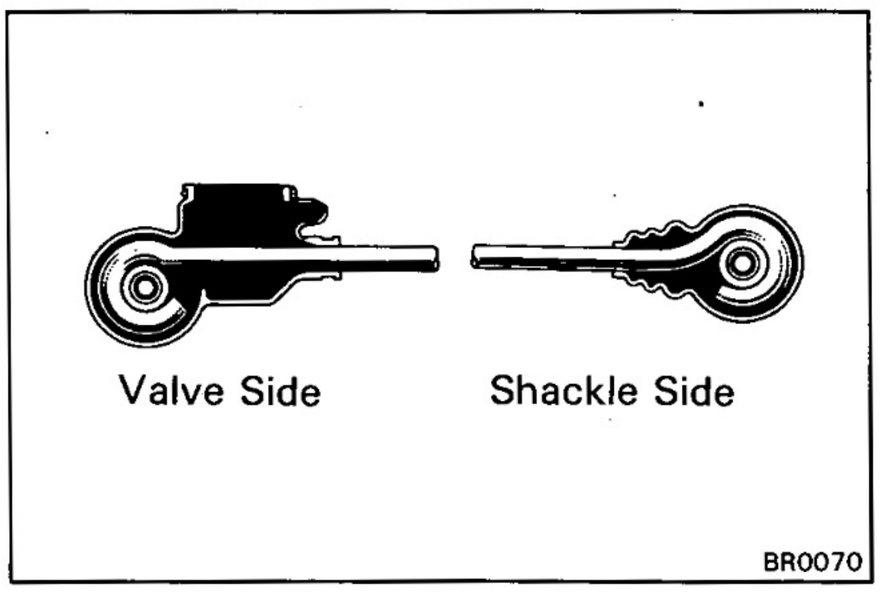

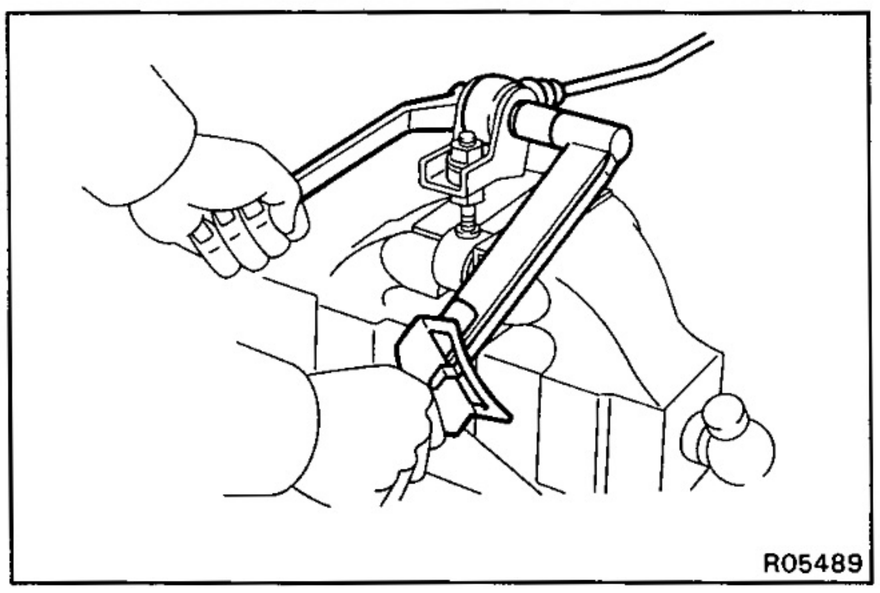

2. **INSTALL SHACKLE NO.1 AND NO.2 TO LOAD SENSING SPRING**

(a) Install the lock nut and shackle No.1 to the shackle No.2.

(b) Install and torque the bolt and nut as shown in illustration.

Torque: 18 N·m (185 kgf·cm, 13 ft·lbf)

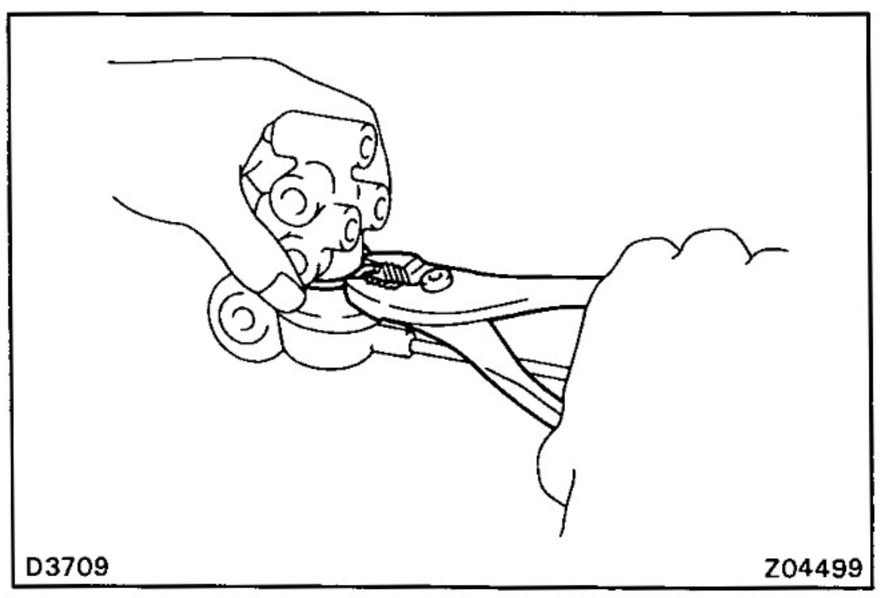

3. **INSTALL LOAD SENSING SPRING TO VALVE BODY**

Install the load sensing spring assembly to the load sensing valve with the clip.

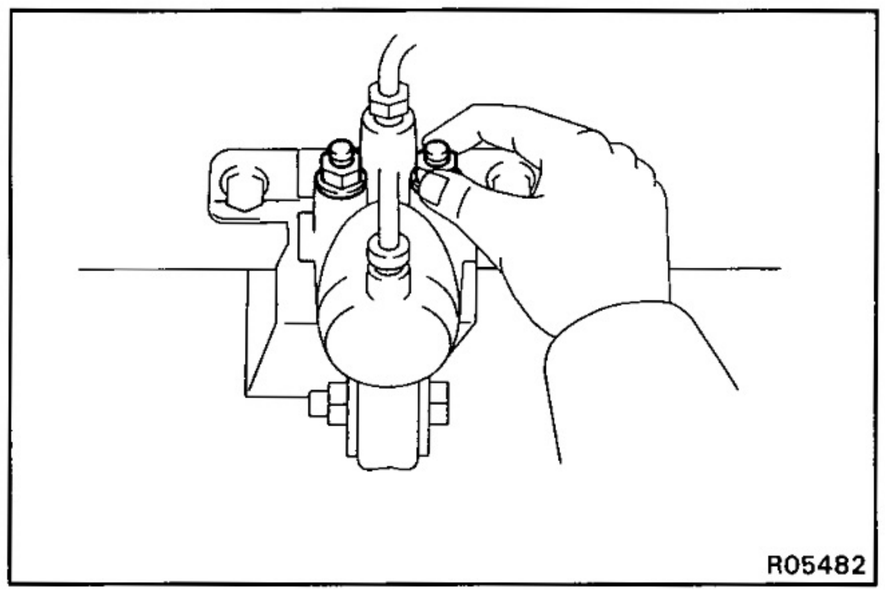

4. INSTALL VALVE BRACKET

(a) Install the two set bolts to the valve assembly through the valve bracket and temporarily tighten the two valve body mounting nuts.

(b) Torque the bolt and nut through the two plate washers.

Torque: 18 N·m (185 kgf·cm, 13 ft·lbf)

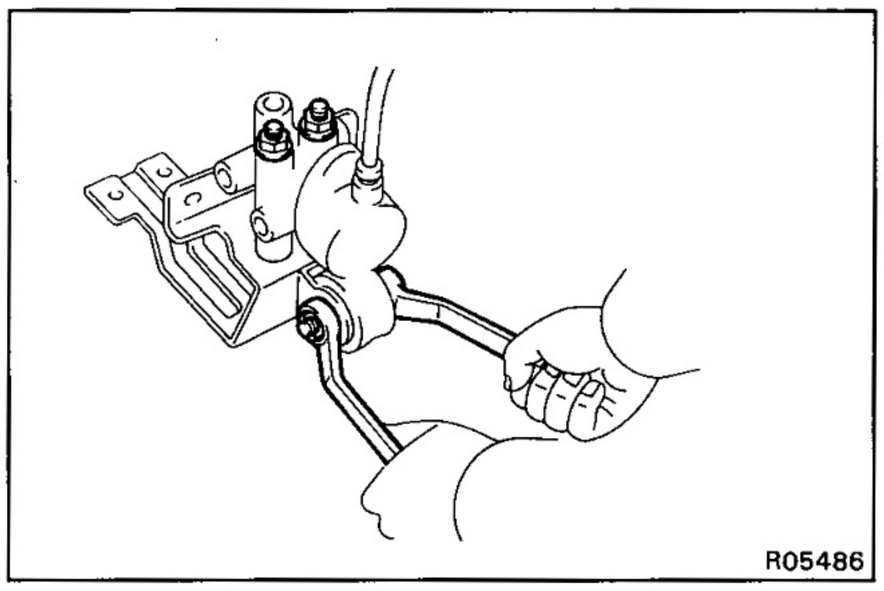

LSP & BV INSTALLATION

1. INSTALL LSP & BV ASSEMBLY

Install the LSP & BV assembly to the frame with the four bolts.

Torque: 19 N·m (195 kgf·cm, 14 ft·lbf)

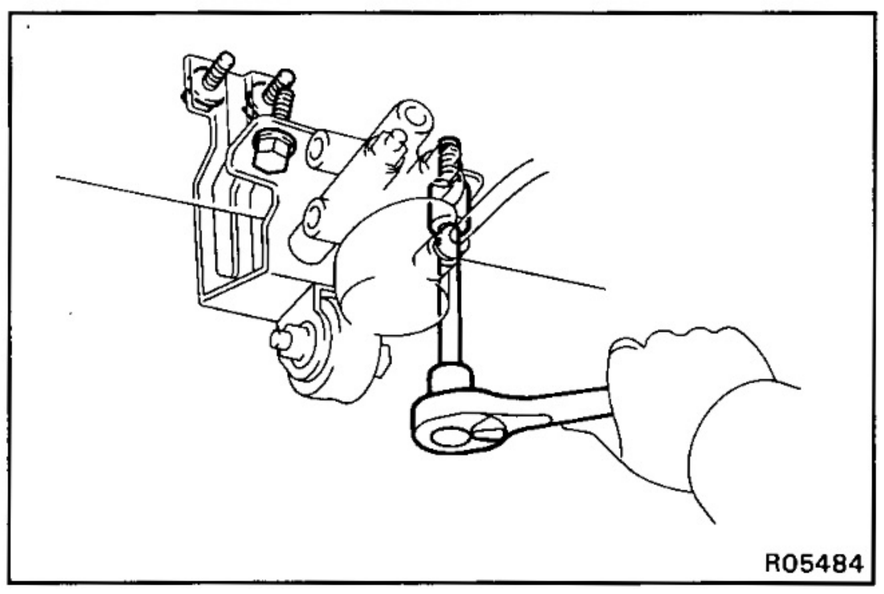

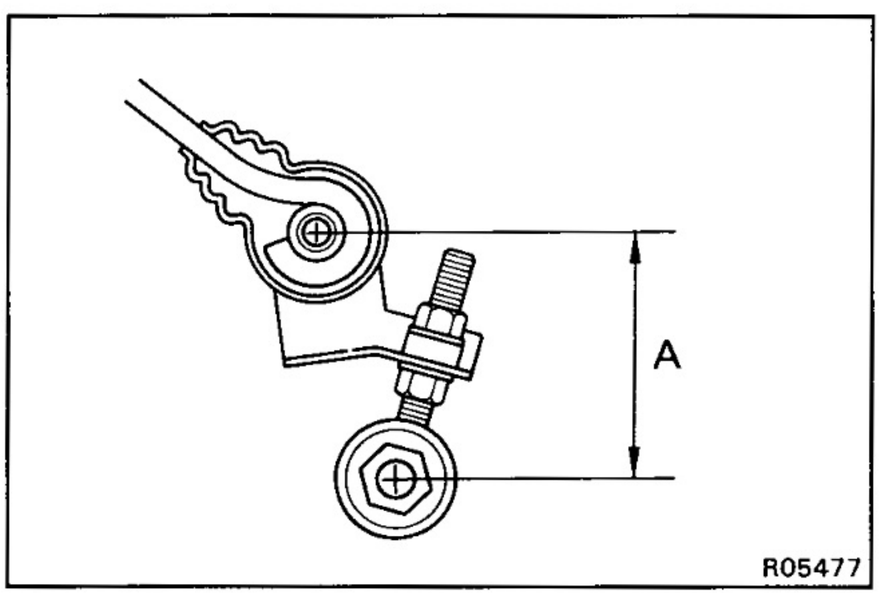

2. CONNECT SHACKLE NO.2 TO BRACKET

(a) Set the dimension A by turning shackle No.2.

Initial set:
90 mm (3.54 in.)

(b) Tighten the lock nut.

Torque: 25 N·m (250 kgf·cm, 18 ft·lbf)

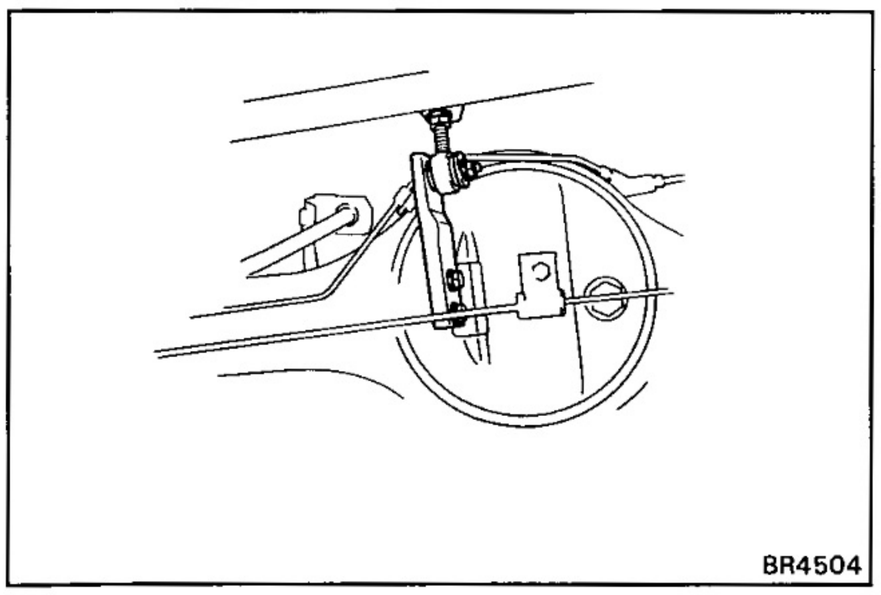

(c) Install the two bushings and collar to the load sensing spring shackle.

(d) Install the load sensing spring to the shackle bracket with a retainer and nut.

Torque: 13 N·m (130 kgf·cm, 9 ft·lbf)

(e) Install a new cotter pin.

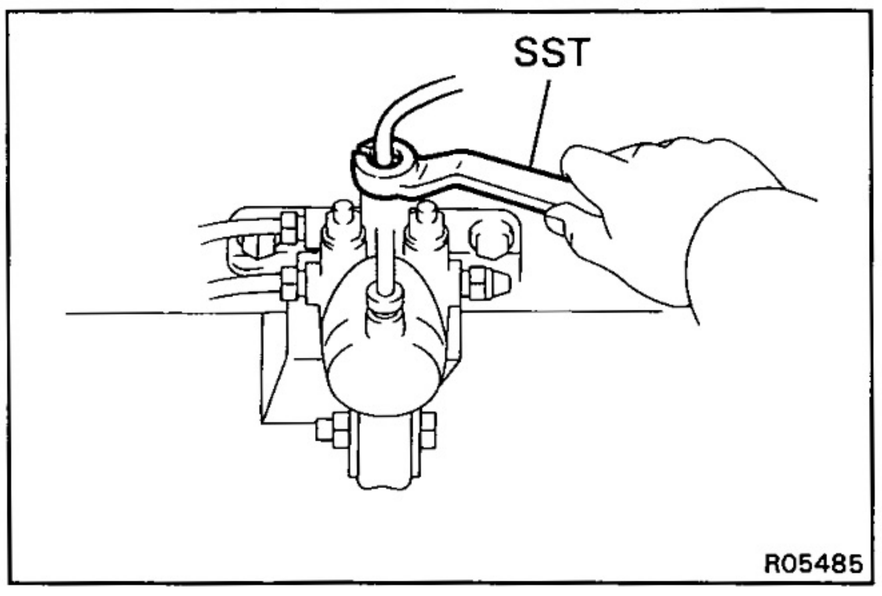

3. CONNECT BRAKE LINES

Using SST, connect the brake lines.

SST 09751-36011

Torque: 15 N·m (155 kgf·cm, 11 ft·lbf)

4. SET REAR AXLE LOAD
(See page BR-16)

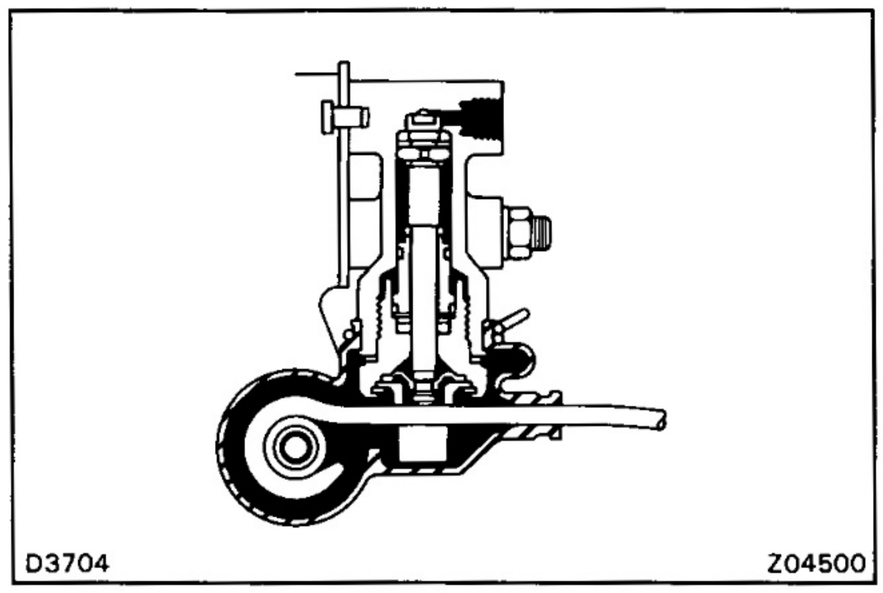

5. SET VALVE BODY

(a) When pulling down the load sensing spring, confirm that the valve piston moves down smoothly.

(b) Position the valve body so that the valve piston lightly contacts the load sensing spring.

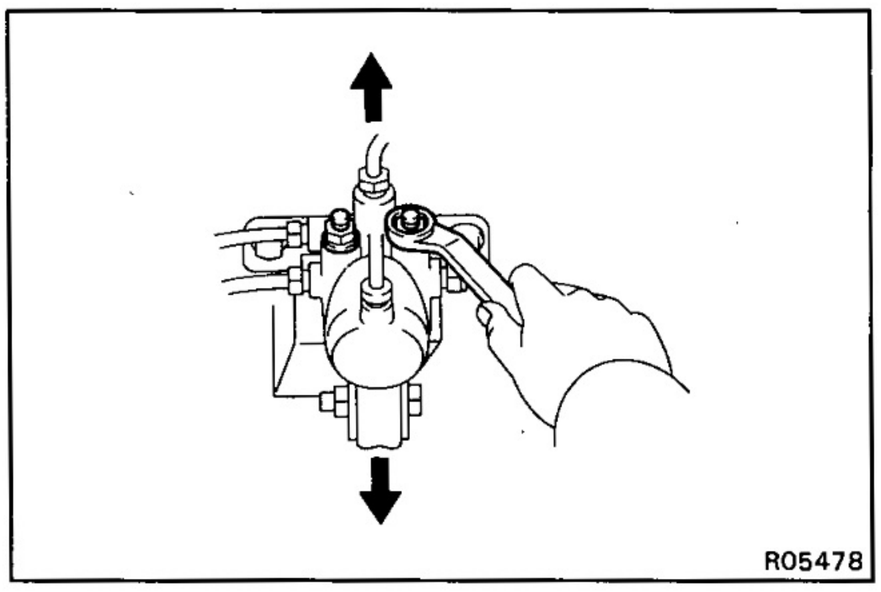

(c) Tighten the valve body mounting nuts.

Torque: 13 N·m (130 kgf·cm, 9 ft·lbf)

6. BLEED BRAKE SYSTEM
(See pub No. RM184E, page BR-7)

7. CHECK FLUID LEAKAGE

8. CHECK AND ADJUST LSP & BV FLUID PRESSURE
(See page BR-16)

ANTI-LOCK BRAKE SYSTEM (ABS)

DESCRIPTION

- The ABS is a brake system which controls the brake cylinder hydraulic pressure of all four wheels during sudden braking and braking on slippery road surfaces, preventing the wheels from locking. This ABS provides the following benefits:
  (1) Enables steering round an obstacle with a greater degree of certainty even when panic braking.
  (2) Enables stopping in a panic brake while keeping the effect upon stability and steerability to a minimum, even on curves.
- The function of the ABS is to help maintain directional stability and vehicle steerability on most road conditions. However, the system cannot prevent the vehicle from skidding if the cornering speed limit is exceeded.
- The ABS has a longitudinal deceleration sensor to match braking characteristics to the full-time four wheel drive.
- In case a malfunction occurs, a diagnosis function and fail-safe system have been adopted for the ABS to increase serviceability.
- When the center differential is locked, the ABS does not operate, so the ABS warning light lights up to indicate this.

COMPONENTS FUNCTION

Component	Function
Front Speed Sensor	Detect the wheel speed of each of the left and right front wheels.
Rear Speed Sensor	Detect the wheel speed of each of the left and right rear wheels.
ABS Warning Light	Lights up to alert the driver when trouble has occurred in the Anti-Lock Brake System and when the center differential is locked.
Actuator	Controls the brake fluid pressure to each disc brake cylinder through signals from the ECU.
ABS ECU	From the wheel speed signals from each sensor, it calculates acceleration, deceleration and slip values and sends signals to the actuator to control brake fluid pressure.
Deceleration Sensor	Detect the deceleration speed of the vehicle and sends a signal accordingly to the ABS ECU.

SYSTEM PARTS LOCATION

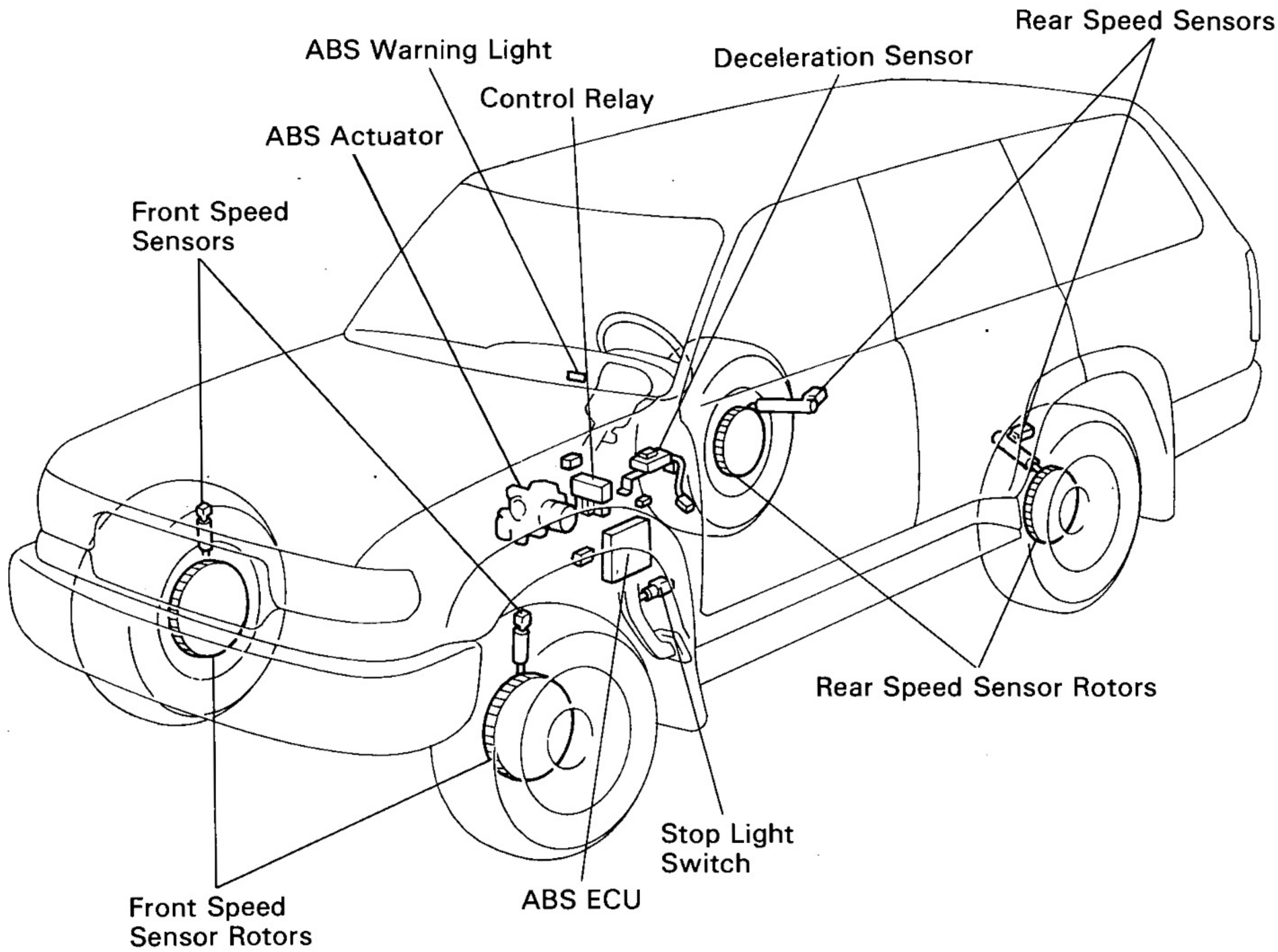

R05203

WIRING DIAGRAM

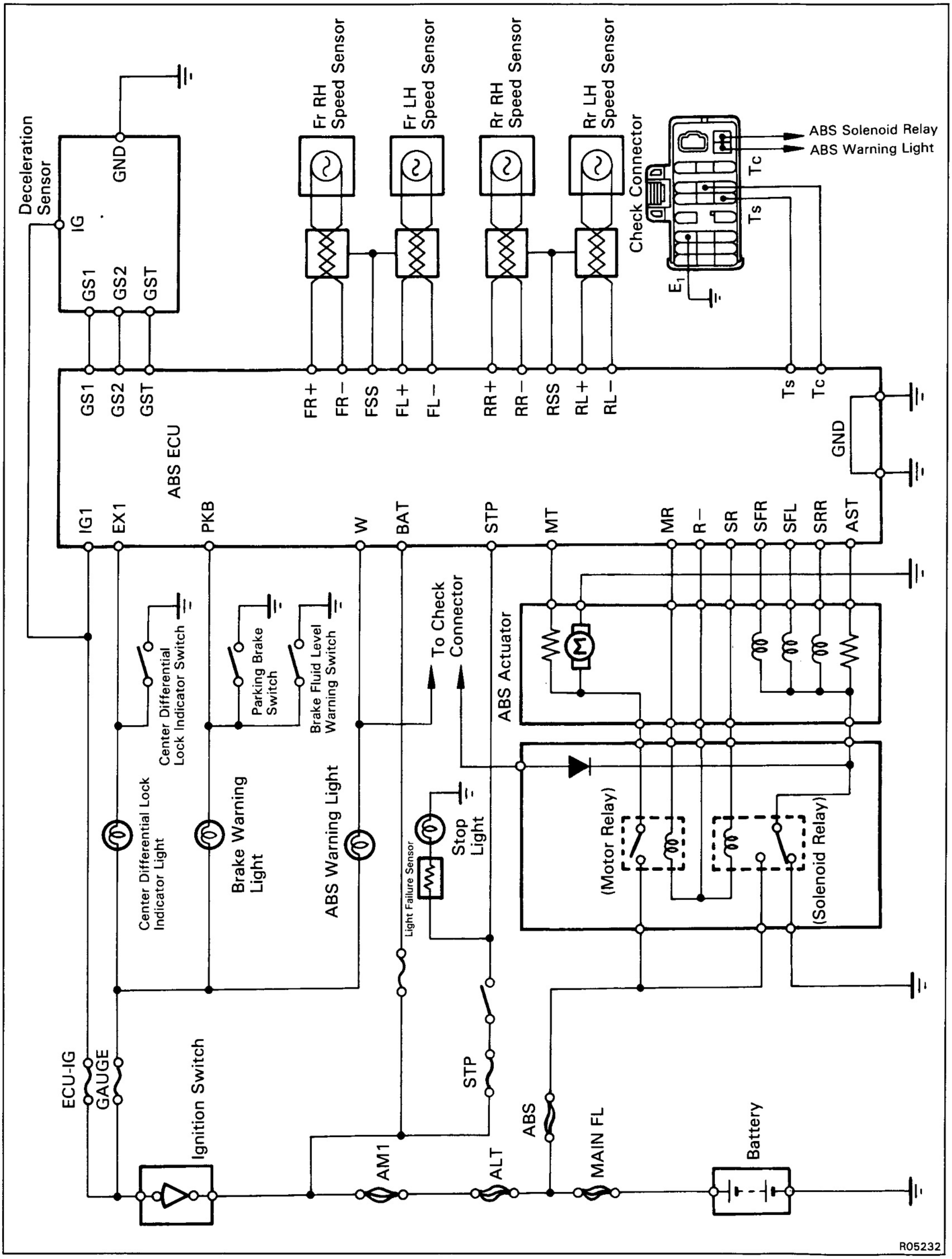

CONNECTORS

ABS Actuator

CONNECTOR A

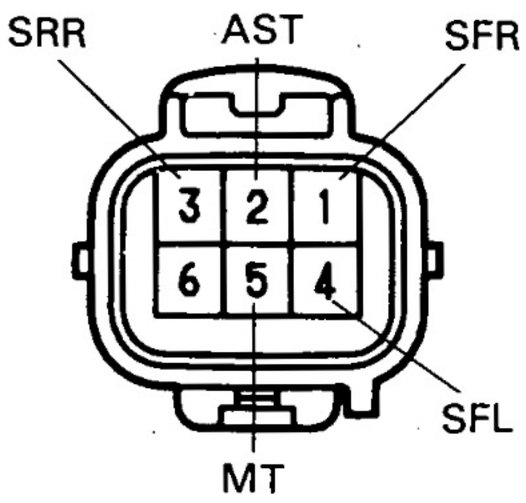

CONNECTOR B

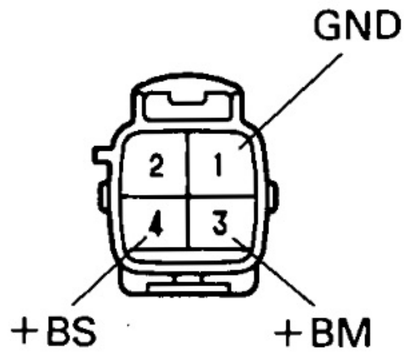

Control Relay

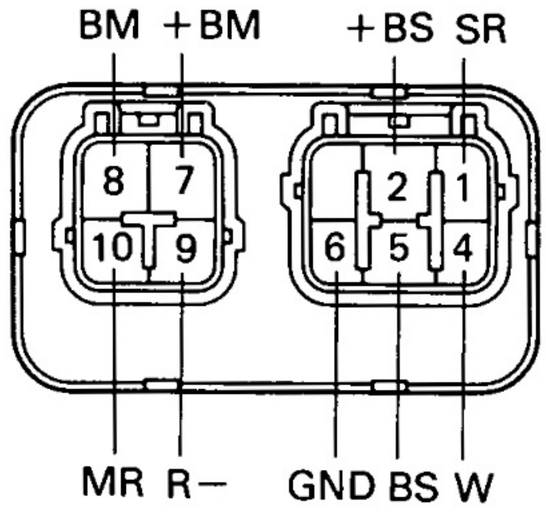

Front Speed Sensor

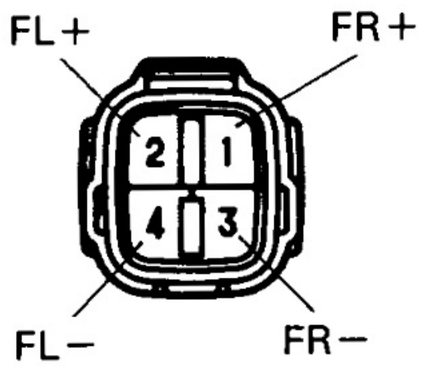

Deceleration Sensor

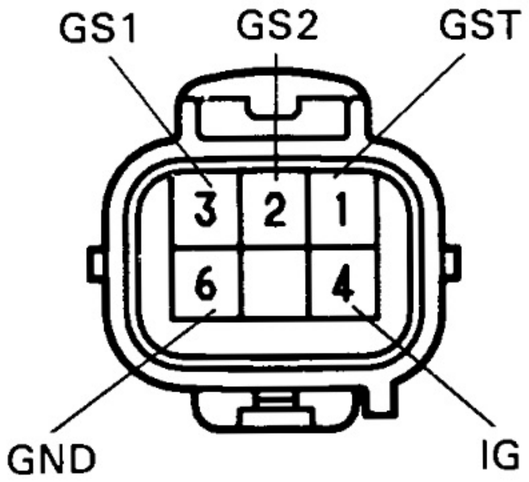

Rear Speed Sensor (LH)

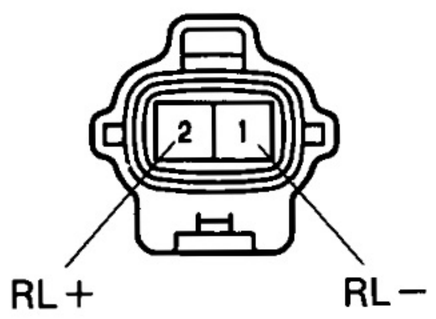

Rear Speed Sensor (RH)

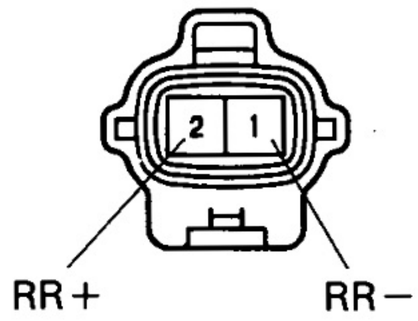

ABS ECU

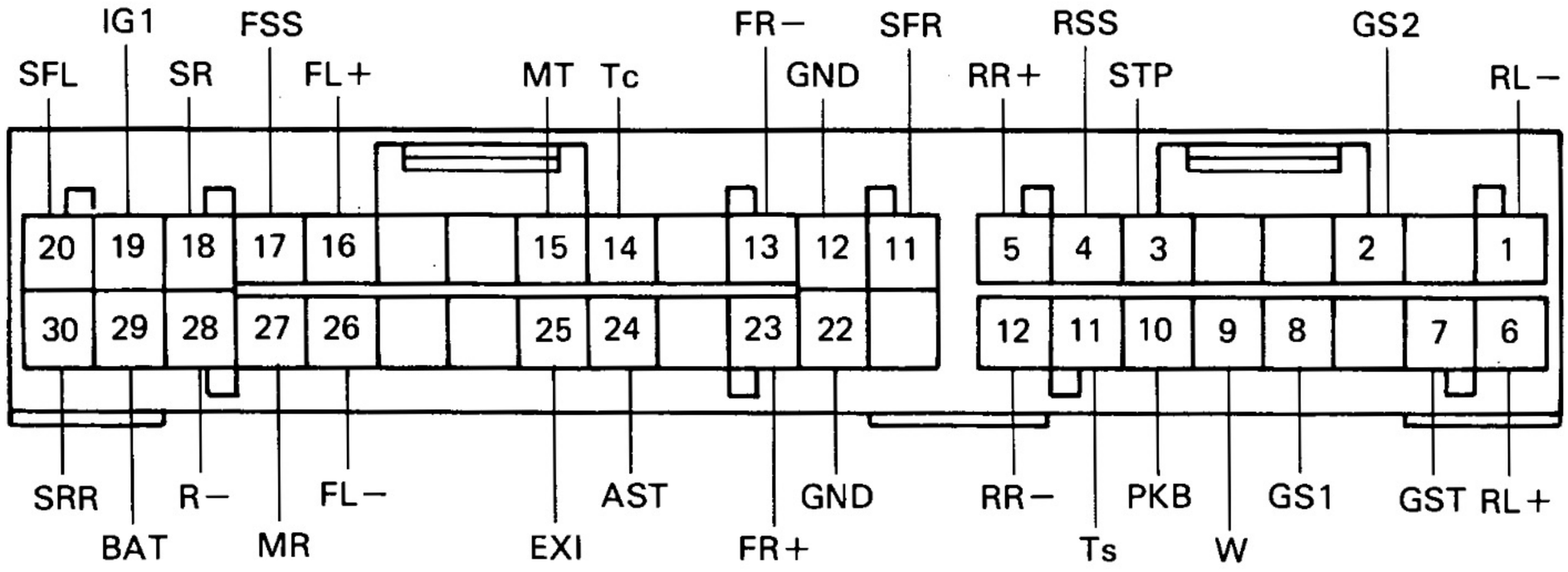

Ie-6-2-C Ig-4-2-A BR3999
Ie-4-2-H Ie-6-2-C
Ie-2-2-T Ie-2-2-T
R00463

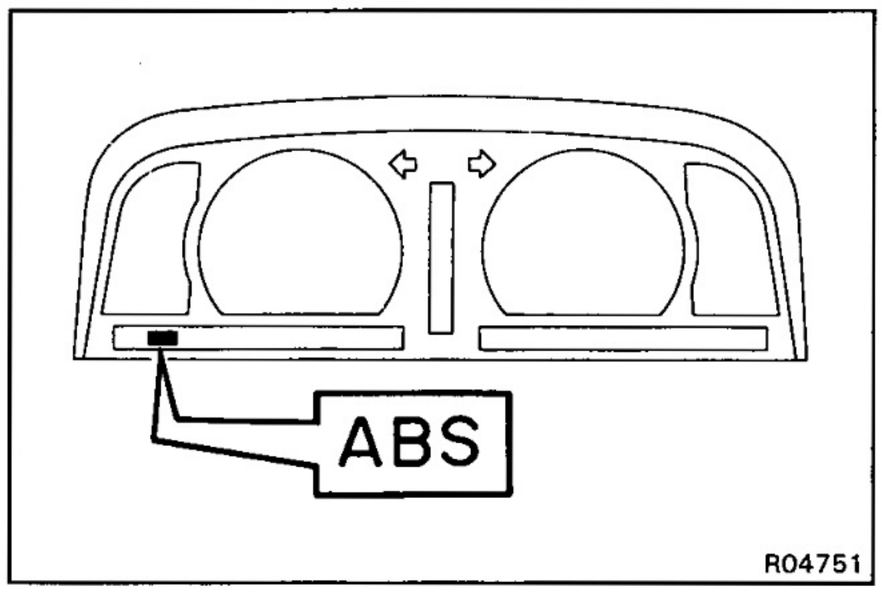

DIAGNOSIS SYSTEM

DESCRIPTION

If a malfunction occurs, the system will identify the problem and the ECU will store the codes for the trouble items.

At the same time, the system informs the driver of a malfunction via the "ABS" warning light in the combination meter.

By turning on the ignition switch, disconnecting the short pin of the check connector and use SST to connect Tc and E_1 of the check connector, the trouble can be identified by the number of blinks (diagnostic code) of the warning light.

In the event of two codes, that having the smallest numbered code will be identified first.

HINT: The warning light does not show the diagnostic codes while the vehicle is running.

When the transfer is in L (center differential lock) position, the ABS does not operate and the ABS warning light stays on.

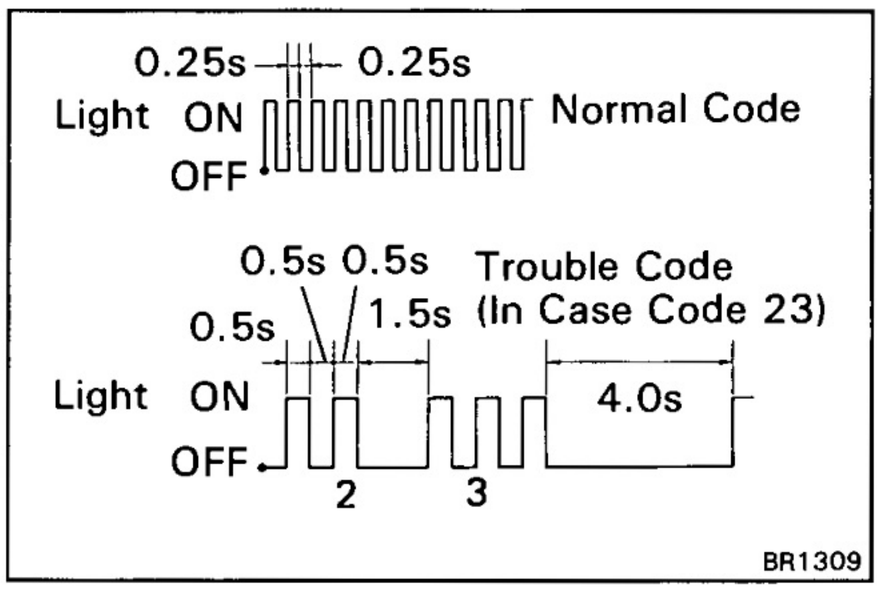

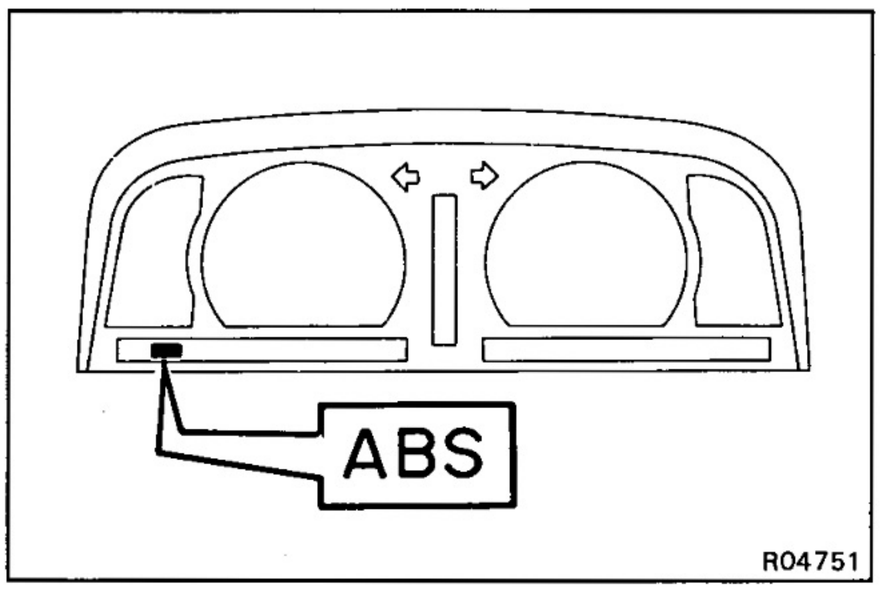

DIAGNOSIS SYSTEM INSPECTION

1. INSPECT BATTERY VOLTAGE

Inspect that the battery voltage is about 12 V.

2. CHECK THAT WARNING LIGHT TURNS ON

(a) Confirm that the center differential is free.

(b) Turn the ignition switch on.

(c) Check that the "ABS" warning light turns on for 3 seconds.

If not, inspect and repair or replace the fuse, bulb and wire harness.

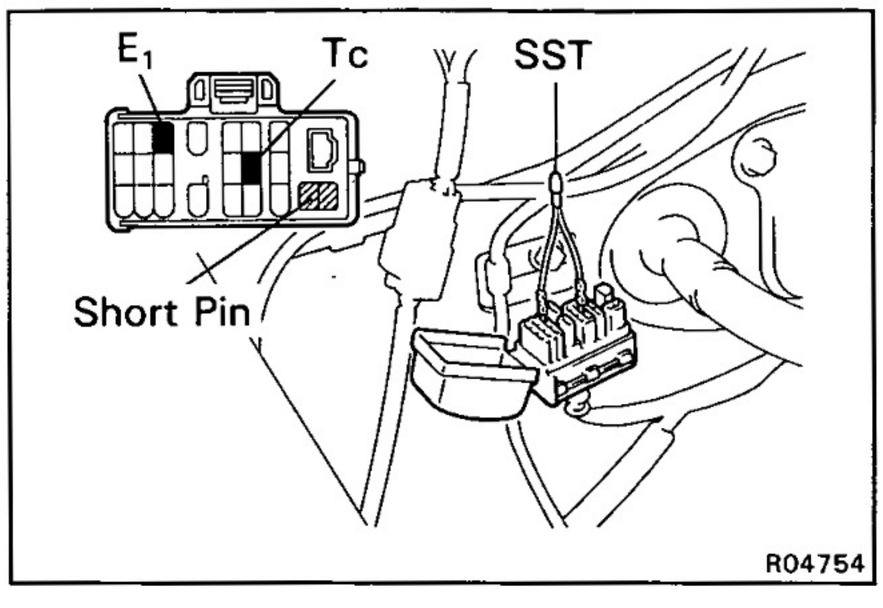

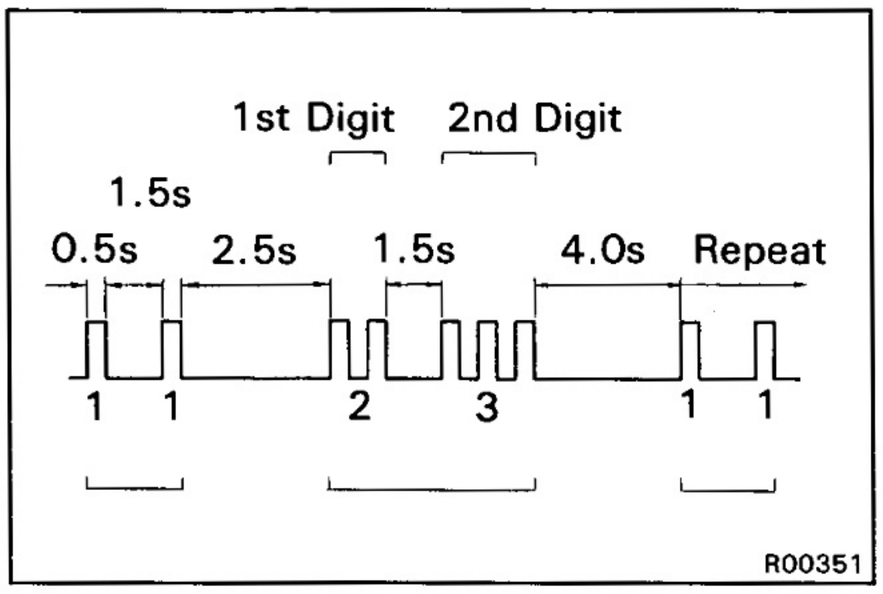

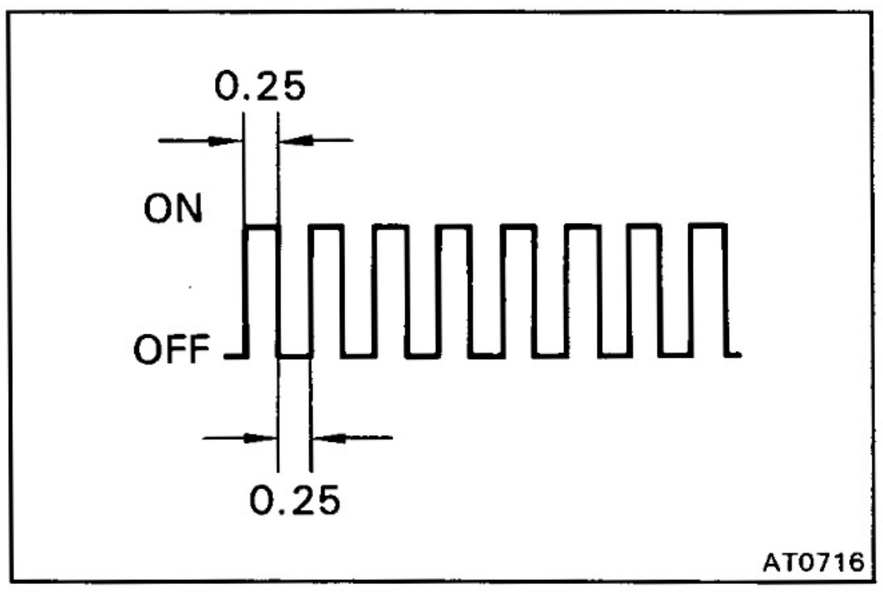

3. READ DIAGNOSTIC CODE

(a) Turn the ignition switch on.

(b) Using SST, connect terminals Tc and E_1 of the check connector.

SST 09843-18020

(c) Pull out the short pin from the terminals WA and WB of the check connector in the engine room.

(d) In event of a malfunction, 4 seconds later the warning light will begin to blink. Read the number of blinks. (See page BR-26)

HINT: The first number of blinks will equal the first digit of a two digit diagnostic code. After a 1.5 second pause, the 2nd number of blinks will equal the 2nd number of a two digit code. If there are two or more codes, there will be a 2.5 second pause between each, and indication will begin after 4.0 second pause from the smaller value and continue in order to larger.

(e) If the system is operating normally (no malfunction), the warning light will blink once every 0.5 seconds.

(f) Repair the system.

(g) After the malfunctioning components has been repaired, clear the diagnostic codes stored in the ECU. (See page BR-27)

HINT: If you disconnect the battery cable while repairing, all diagnostic codes in the ECU will erased.

(h) Remove the SST from terminals Tc and E_1 of the check connector.

SST 09843-18020

(i) Install the short pin to the terminals WA and WB.

(j) Turn the ignition switch on, and check that the "ABS" warning light goes off after the warning light goes on for 3 seconds.

DIAGNOSTIC CODE

Code No.	Light Pattern	Diagnosis	Trouble Part
11	ON / OFF 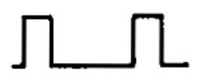 R05039	Open circuit in solenoid relay circuit	• Actuator inside wire harness • Solenoid relay • Wire harness and connector of solenoid relay circuit (Include AST circuit)
12	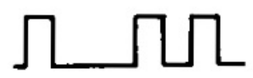 R05039	Short circuit in solenoid relay circuit	
13	 R05039	Open circuit in pump motor relay circuit	• Actuator inside wire harness • Pump motor relay • Wire harness and connector of pump motor relay circuit (include MT circuit)
14	 R05039	Short circuit in pump motor relay circuit	
21	 R05039	Open or short circuit in 3 position solenoid of front right wheel	• Actuator solenoid • Wire harness and connector of actuator solenoid circuit
22	 R05039	Open or short circuit in 3 position solenoid of front left wheel	
23	 R05039	Open or short circuit in 3 position solenoid of rear wheel	
31	 R05039	Front right wheel speed sensor signal malfunction	• Speed sensor • Sensor rotor • Wire harness and connector of speed sensor
32	 R05039	Front left wheel speed sensor signal malfunction	
33	 R05039	Rear right wheel speed sensor signal malfunction	
34	 R05039	Rear left wheel speed sensor signal malfunction	
35	 R05039	Open circuit in front left or rear right wheel speed sensor	
36	 R05039	Open circuit in front right or rear left wheel speed sensor	
41	 R05039	Abnormally high or low battery voltage	• Battery • Voltage regulator
43	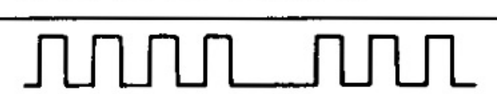 R05039	Malfunction in deceleration sensor	• Deceleration sensor • Deceleration sensor installation • Wire harness and connector of deceleration sensor
44	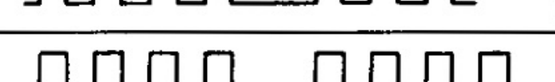 R05039	Open or short circuit in deceleration sensor	
48	 R05039	Open or short circuit in center differential lock indicator	• Center differential lock • Center differential lock indicator light • Center differential lock indicator switch • Wire harness and connector of center differential lock
51	R05039	Pump motor of actuator locked or open circuit in pump motor circuit in actuator	• Pump motor, relay and battery • Wire harness, connector and ground bolts or actuator pump motor circuit (Include MT circuit)
Always on	 R05039	Malfunction in ECU	• ECU

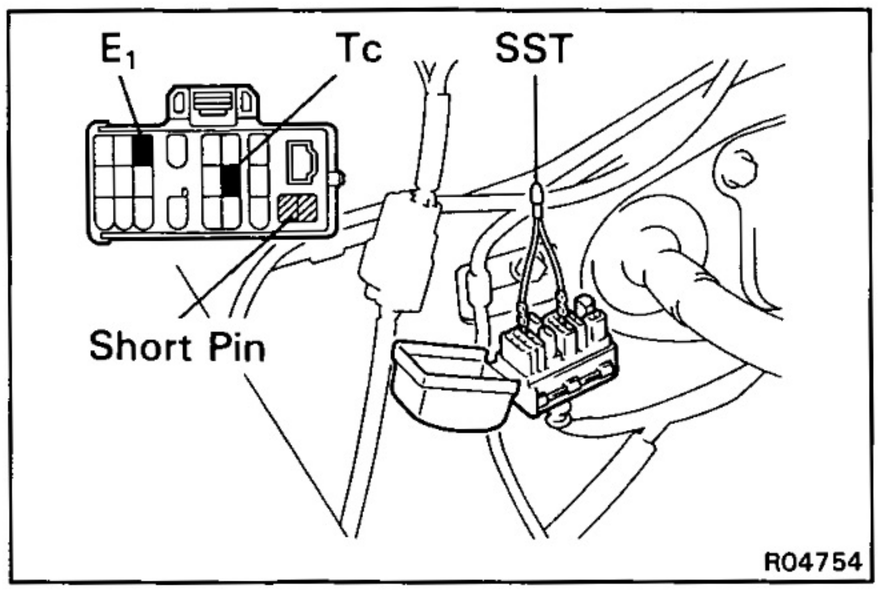

DIAGNOSTIC CODES CLEARING

CLEAR DIAGNOSTIC CODES

(a) Confirm that the center differential is free.

(b) Turn the ignition switch on.

(c) Using SST, connect terminals Tc and E_1 of the check connector.

SST 09843-18020

HINT: Keep the vehicle stopped vehicle speed 0 km/h (0 mph).

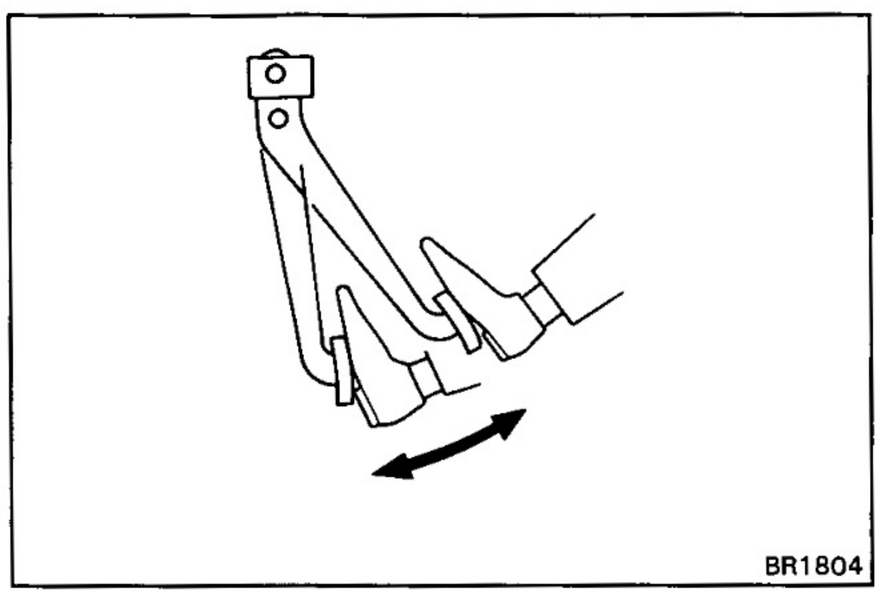

(d) Clear the diagnostic codes stored in ECU by depressing the brake pedal 8 or more times within 3 seconds.

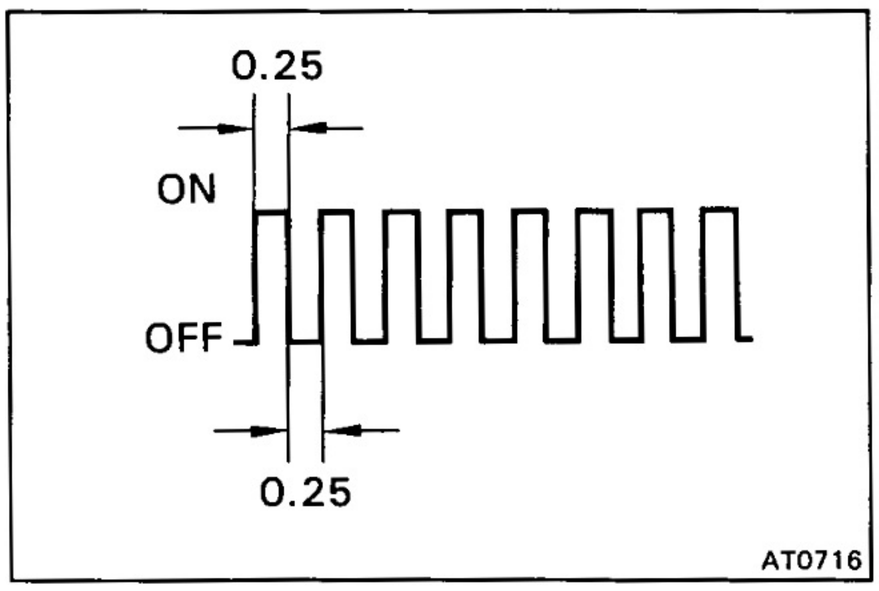

(e) Check that the warning light shows the normal code.

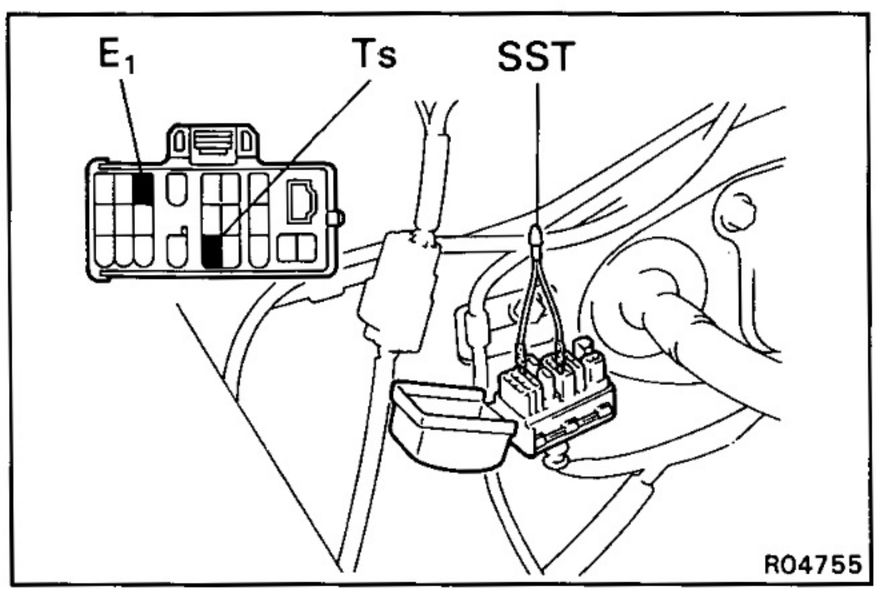

(f) Remove the SST from terminals Tc and E_1 of the check connector.

SST 09843-18020

(g) Check that the warning light goes off.

TROUBLESHOOTING

Problem		No.
"ABS" warning light	Always comes on after ignition switch is turned on.	1
	Does not come on for 3 seconds after ignition switch on.	2
	Goes on and off.	3
	Comes on while running.	1
	Does not light up when the transfer is in L (center differential lock) position.	6
Brake condition	Brakes pull.*	4
	Braking inefficient.*	4
	ABS operates at ordinary braking.	4
	ABS operates just before stopping at ordinary braking.	4
	Brake pedal pulsates abnormally while ABS is operating.	4
	Skidding noise occurs while ABS operating. (ABS operates inefficiently)	5
	When the transfer is in L (center differential lock) position, the ABS operates.	6

* Also check the parts of the brake system (brake cylinders, pads, hydraulic lines, etc.) not specifically part of the ABS.

1	"ABS" warning light comes on.

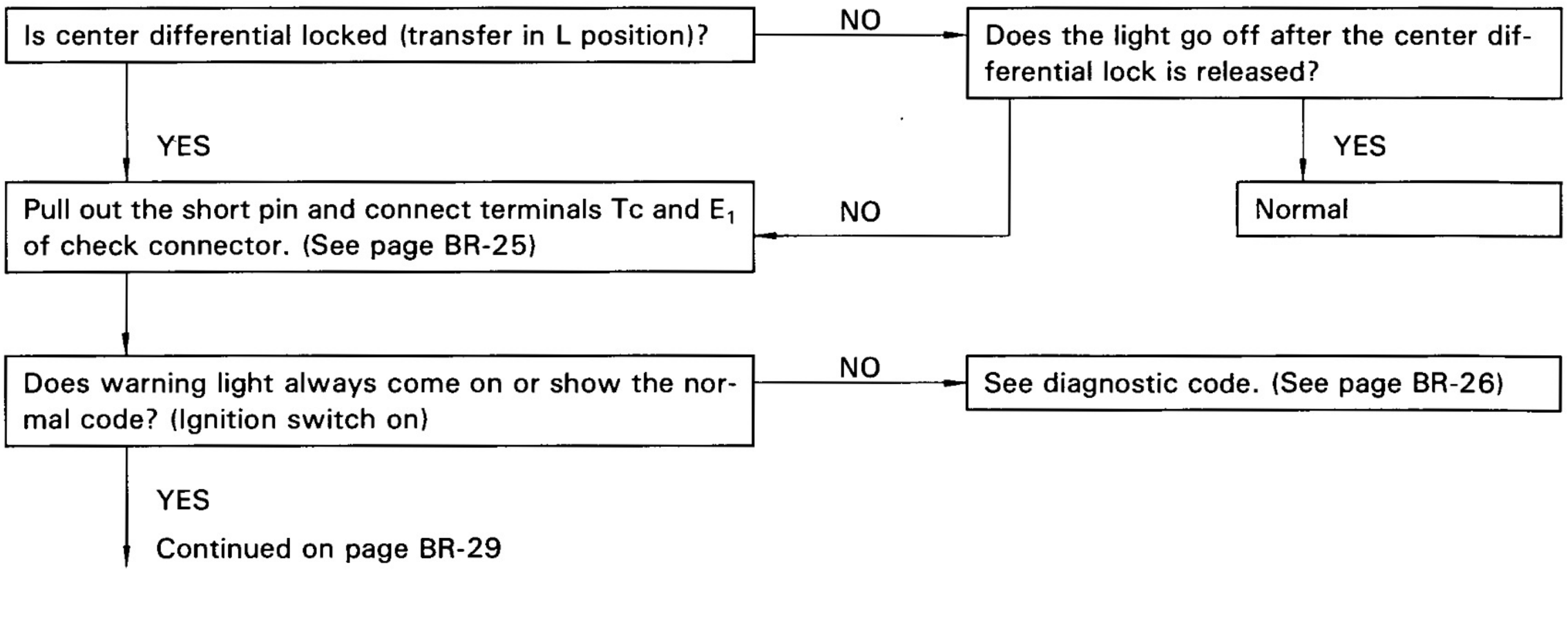

Continued from page BR-28

Is connector of ECU properly connected?
And are all terminals in the connector?

NO → Faulty ECU connector.

YES

Is there 10 — 16 V between terminal IG on ECU wire harness side connector and body ground? (Ignition switch on)

NO → Faulty power circuit.

YES

Does warning light go off when both the ECU connector and service connector are disconnected? (Ignition switch on)

NO (Come on) → Short circuit in wire harness between ECU terminal W and control relay Terminal W.

YES (Goes off)

Faulty ECU

2	"ABS" warning light does not come on for 3 seconds after ignition switch on.

Pull out the short pin and ground the terminal W of the female side connector. (Ignition switch on)

↓

Does warning light come on? — NO → Bulb burned out or open circuit in wire harness between warning light and control relay terminal W.

↓ YES

Disconnect connectors from ECU and control relay and ground terminal W or ECU wire harness side conenctor. (Ignition switch on)

↓

Does warning light come on? — NO → Open circuit in wire harness between ECU terminal W and warning light.

↓ YES

With ignition switch off, disconnect control relay connectors, and check continuity between terminal W and BS on actuator side.

↓

Reverse tester leads and check again.
Is there one way continuity between terminals? — NO → Short circuit in control relay inside diode.

↓ YES

Faulty ECU.

HINT: If the diode is short-circuited, a malfunction at ECU terminal W will occur. When inspecting the terminal, connect the ECU connector, and disconnect actuator connectors and check connector. Then turn the ignition switch on, and check that the warning light goes on. If it does, the ECU terminal is OK.

3	"ABS" warning light comes on and off.

• Check for short circuit in wire harness between terminal Tc and E_1 of check connector.

4	• Brakes pull. • Braking inefficient. • ABS operates at ordinary braking. • ABS operates just before stopping at ordinary braking. • Brake pedal pulsates abnormally while ABS is operating.

Pull out the short pin and connect terminals Tc and E_1 of check connector. (See page BR-25)

↓

Does warning light show the diagnostic normal code? (Ignition switch on)

NO → See diagnostic code. (See page BR-26)

↓ YES

Are each speed sensors installed in place? And are each installation bolts tightened securely?

NO → Speed sensor installation faulty.

↓ YES

Try speed sensor and deceleration sensor diagnosis system. Is sensor signal level OK? (See page BR-34)

NO → Inspect speed sensor, and replace if necessary.

↓ YES

Try speed sensor and deceleration sensor diagnosis system. Is sensor signal change OK? (See page BR-34)

NO → Inspect sensor rotor, and replace if necessary.

↓ YES

Disconnect connector from ECU, inspect continuity between each speed sensor terminals on wire harness side. (See page BR-56)

↓

Does any abnormal change occur in continuity when the connectors or wire harness of the speed sensor and intermediate connectors are twisted or bent?

YES (Abnormal change) → Faulty wire harness.

↓ NO (No change)

Continued on page BR-32

Continued from page BR-31

Is there foreign material or ferric chips on the sensor tip?
- YES → Clean chips from the speed sensor.
- NO ↓

Try deceleration sensor operation diagnosis system. (See page BR-38) is sensor operation OK?
- NO → Faulty deceleration sensor or sensor installation faulty.
- YES ↓

Inspect the actuator operation. (See page BR-52)

Is actuator operation OK?
- NO → Faulty actuator.
- YES ↓

Repalce ECU.

5	Anti-lock brake system operations infficiently.

Pull out the short pin and connect terminals Tc and E_1 of check connector. (See page BR-25)

Does warning light show the diagnostic normal code? (Ignition switch on)
- NO → See diagnostic code. (See page BR-26)
- YES ↓

Is there battery voltage between ECU terminal STP and body ground when depressing brake pedal?
- NO → Open circuit in stop light switch and/or wire harness.
- YES ↓

Inspect actuator. (See page BR-52)

6	• Does not light up when the transfer is in L position. • When the transfer is in L position, the ABS operates.

When the transfer is in L position, does the center differential lock indicator light come on?

NO → • Open circuit in center differential lock indicator switch or wire harness.
• Faulty center differential lock.

YES ↓

When the ECU connector is disconnected, is there continuity between the body and terminal EX1 on the vehicle wire harness side?

NO → Open circuit in wire harness.

YES ↓

Replace ECU.

SPEED SENSOR AND DECELERATION SENSOR DIAGNOSIS SYSTEM

DIAGNOSIS SYSTEM INSPECTION

PRECAUTION

While checking the speed sensor diagnosis system, ABS does not operate and brake system operates as normal brake system.

1. INSPECT BATTERY VOLTAGE

Inspect that the battery voltage is about 12 V.

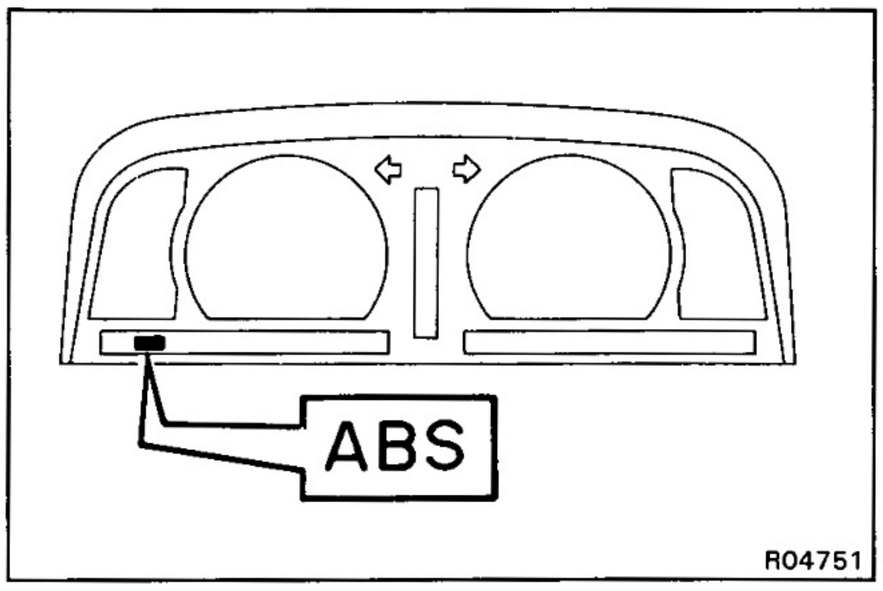

2. CHECK THAT WARNING LIGHT TURNS ON

(a) Turn the ignition switch on.

(b) Check that the "ABS" warning light turns on for 3 seconds.
If not, inspect and repair or replace the fuse, bulb and wire harness.

(c) Check that the "ABS" warning light turns off.

(d) Turn the ignition switch off.

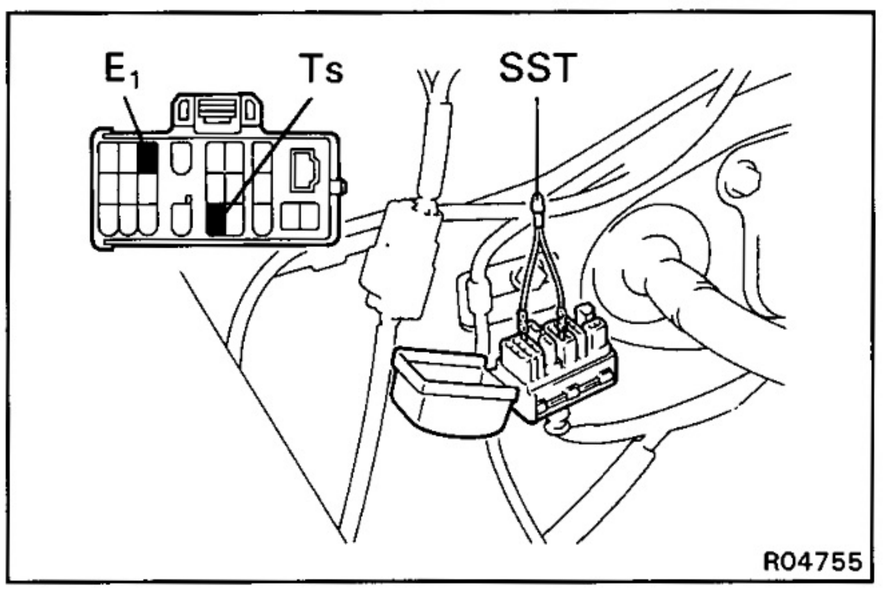

3. PERFORM FOLLOWING STEPS

(a) Using SST, connect terminals Ts and E_1 of the check connector in engine room.

SST 09843-18020

(b) Start the engine.

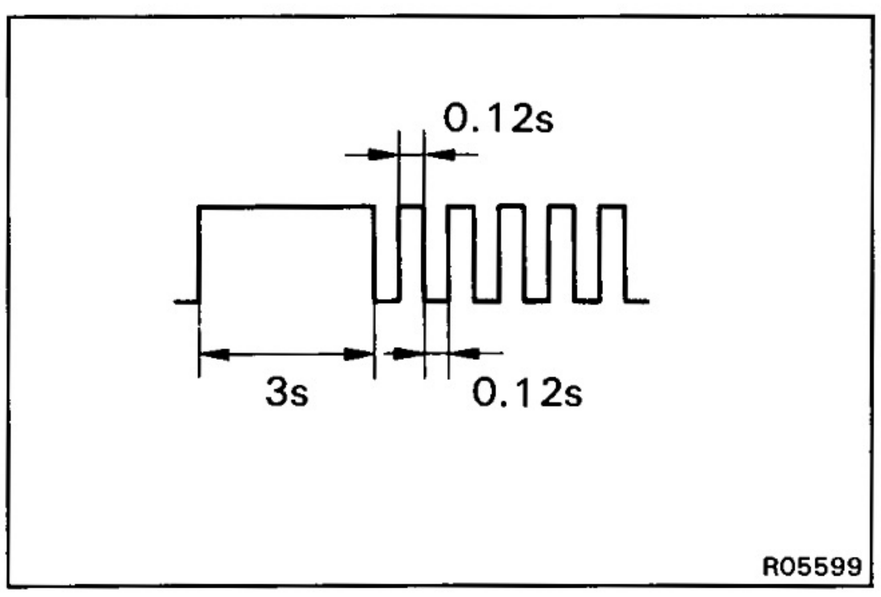

(c) Check that the warning light blinks about 4 times every 1 second as shown.

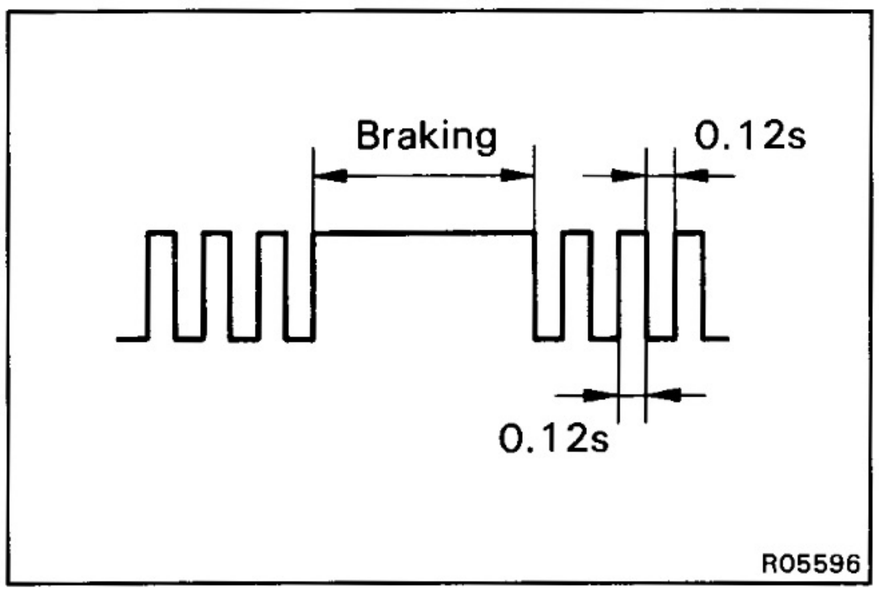

4. INSPECT DECELERATION SENSOR OPERATION

(a) Drive the vehicle straight ahead at about 20 km (12.4 mph) or more, depress the brake pedal a little strong.

(b) Check that the warning light turns on while braking.

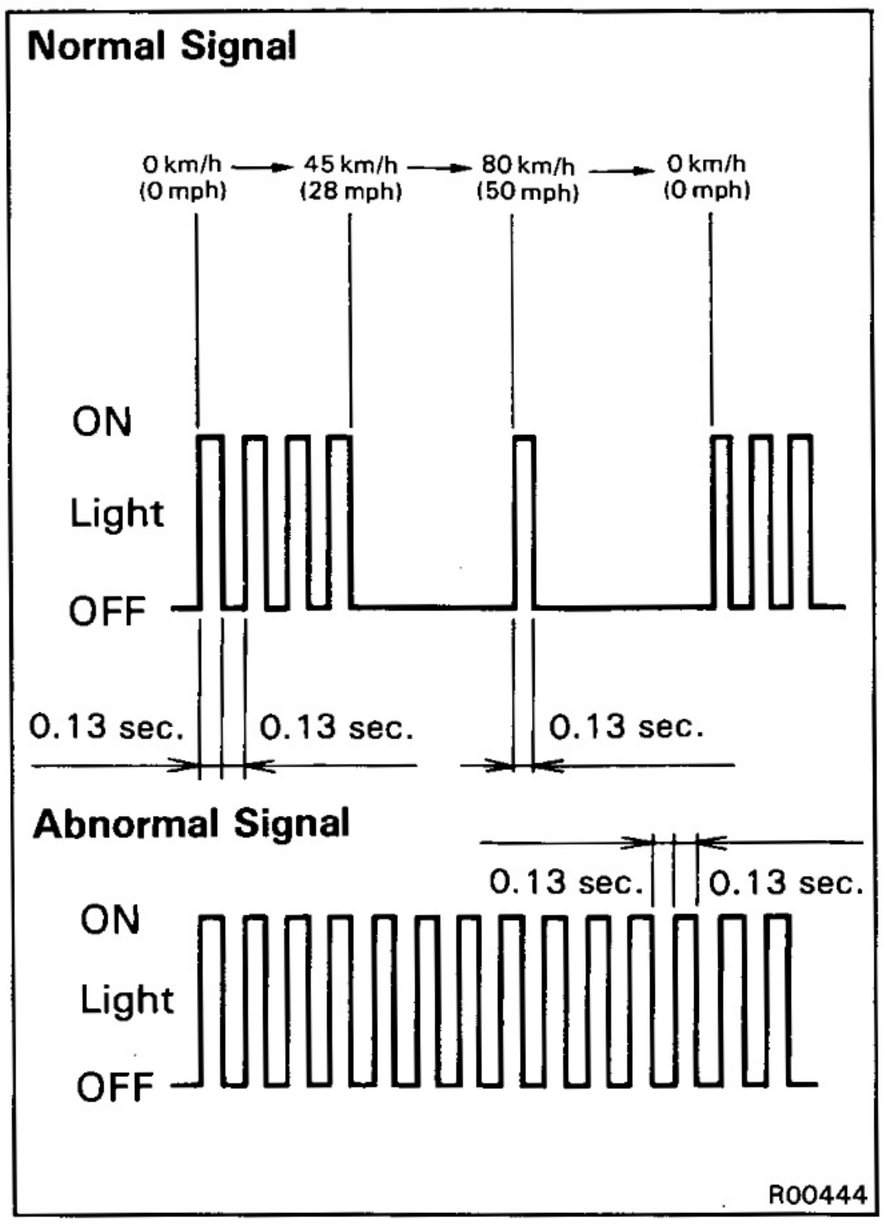

5. INSPECT SPEED SENSOR SIGNAL CHANGE

(a) Drive the faster than 45 km/h (28 mph) for several seconds.

(b) Check that the warning light signal.
If the warning light signal is abnormal, perform the steps 6 and 7.

HINT:

- If the deceleration sensor operation in step 4 does not occur, an abnormal signal is output.
- The high-speed check is possible at 80 km/h (50 mph) or highter.

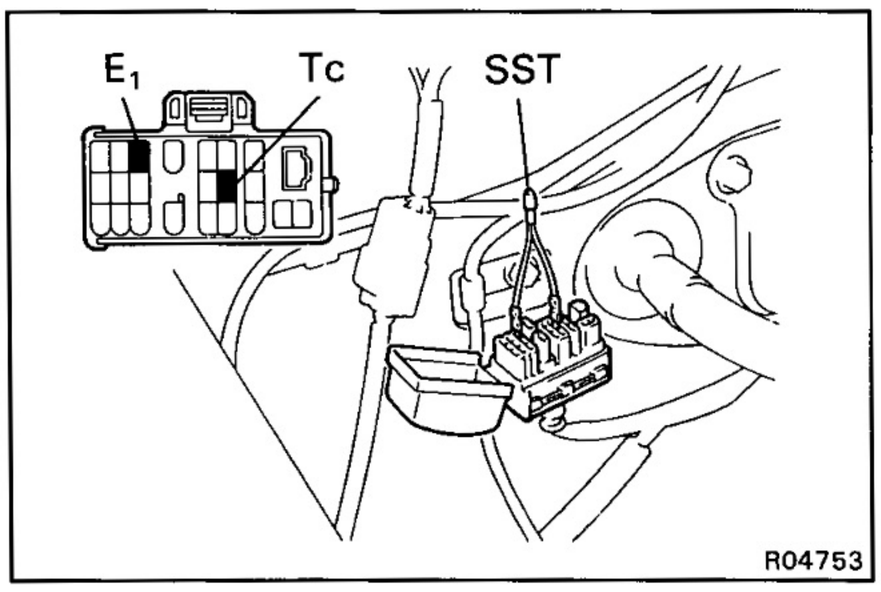

6. READ DIAGNOSTIC CODE

(a) Stop the vehicle, and warning light will being to blink.

(b) Using SST, connect the terminals Tc and E_1 of check connector.

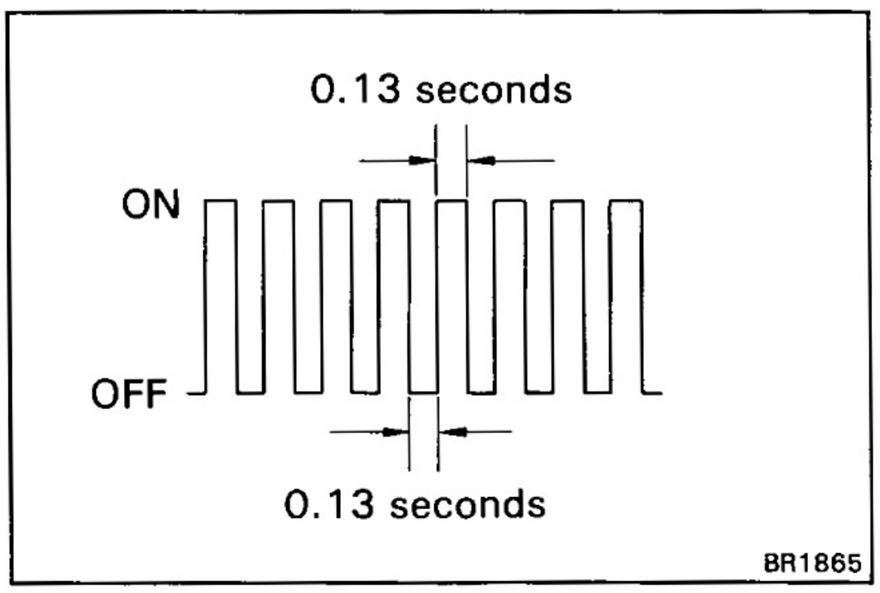

(c) Read the number of blinks of the ABS warning light.
(See page BR-37)

HINT: If normal, the warning light blinks about 4 times every 1 second.
If two or more malfunctions are indicated at the same time, the smallest numbered code will be displayed first.

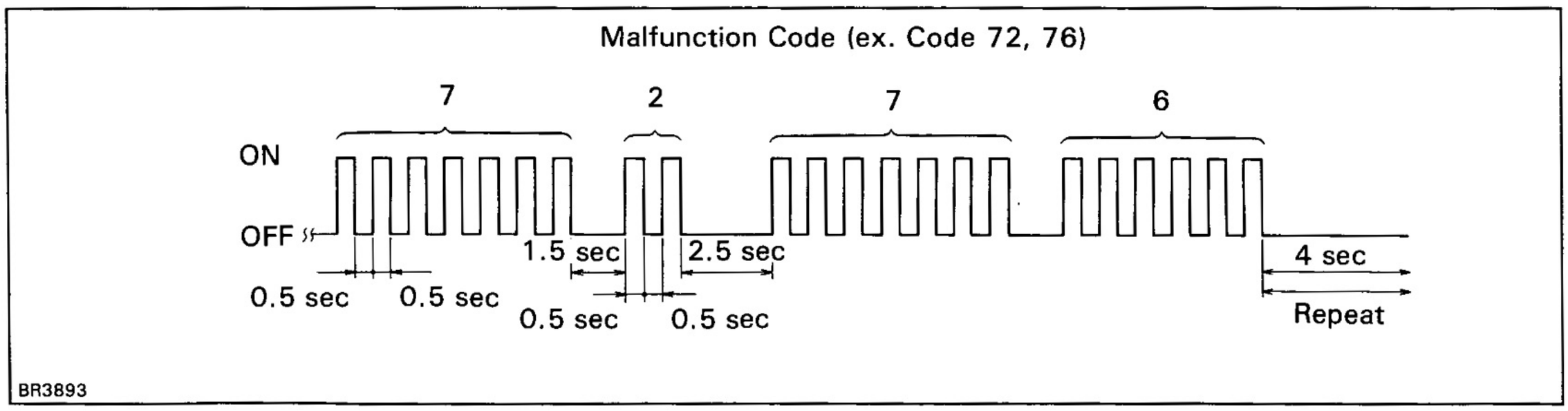

7. REPAIR MALFUNCTIONING PARTS

Repair or replace the malfunctioning parts.

HINT: When repairing or replacing parts, turn the ignition switch to OFF.

8. REMOVE SST

Remove the SST from terminals Tc, Ts and E_1 of the check connector.

SST 09843-18020

Code No.	Light Pattern	Diagnosis	Malfunctioning Part
	ON OFF  BR1807	All speed sensors and sensor rotors are normal	
71	 BR1807	Low voltage of front right speed sensor signal	• Front right speed sensor • Sensor installation
72	 BR1807	Low voltage of front left speed sensor signal	• Front left speed sensor • Sensor installation
73	 BR1807	Low voltage of rear right speed sensor signal	• Rear right speed sensor • Sensor installation
74	 BR1807	Low voltage of rear left speed sensor signal	• Rear left speed sensor • Sensor installation
75	 BR1807	Abnormal change of front right speed sensor signal	• Front right sensor rotor
76	 BR1807	Abnormal change of front left speed sensor signal	• Front left sensor rotor
77	 BR1807	Abnormal change of rear right speed sensor signal	• Rear right sensor rotor
78	 BR1807	Abnormal change of rear left speed sensor signal	• Rear left sensor rotor
79	 BE3937	Deceleration sensor is faulty	• Deceleration sensor • Sensor installation

DECELERATION SENSOR OPERATION DIAGNOSIS SYSTEM

PRECAUTION

While checking the deceleration sensor operating diagnosis system, the Anti-lock Brake System does not work and brake system works as normal brake system.

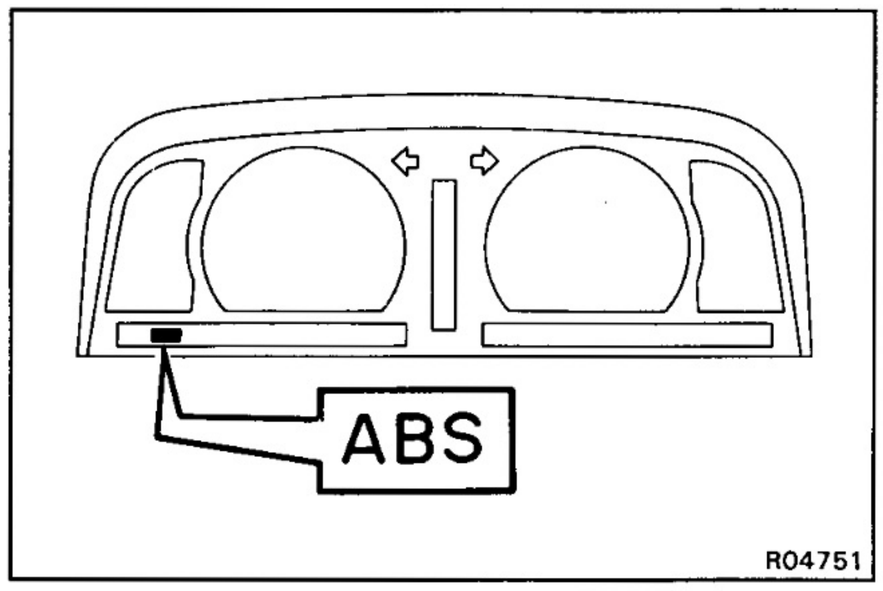

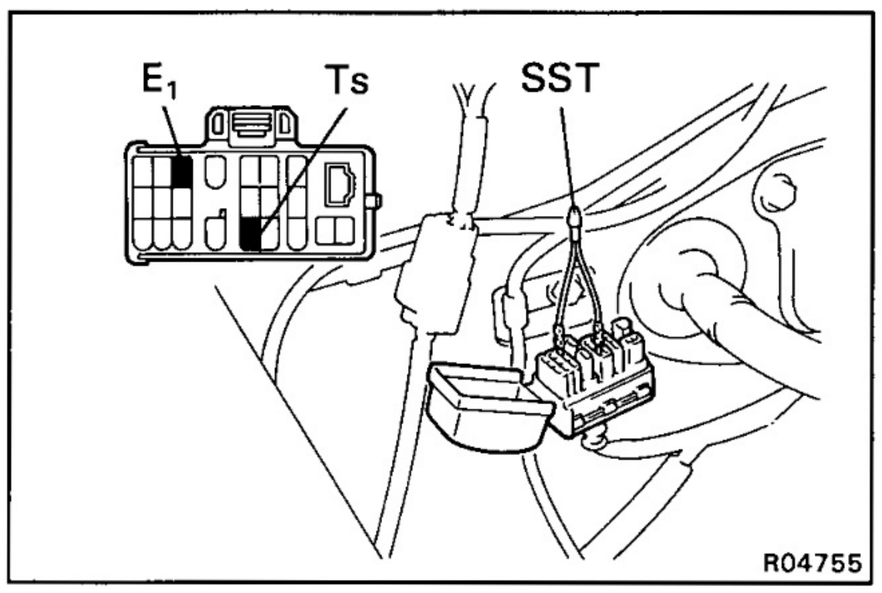

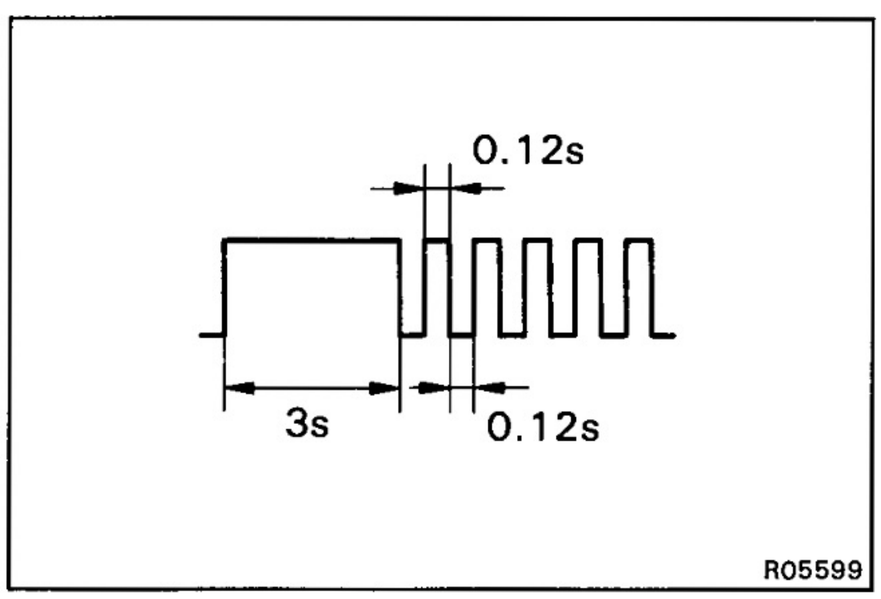

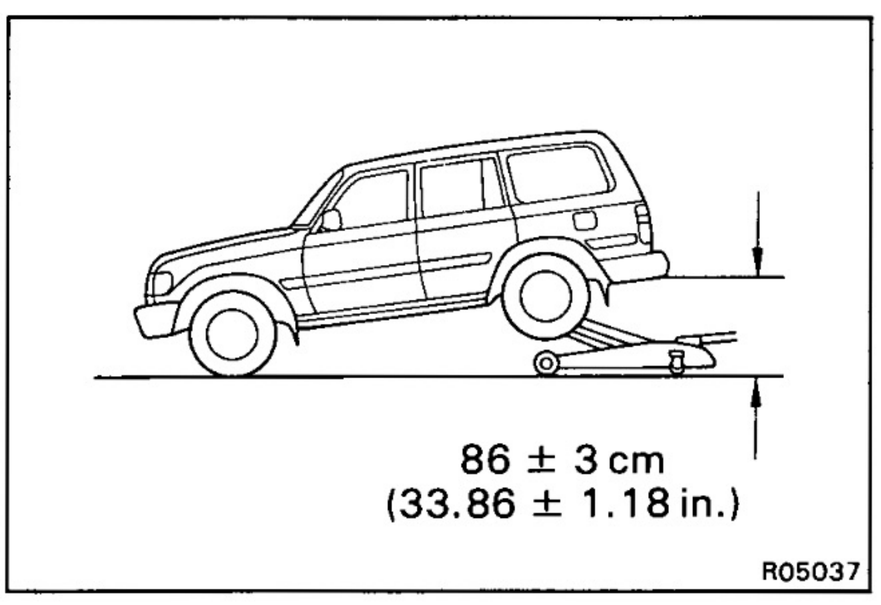

DIAGNOSIS SYSTEM INSPECTION

1. INSPECT BATTERY VOLTAGE

Inspect that the battery voltage is about 12 V.

2. CHECK THAT WARNING LIGHT TURNS ON

(a) Turn the ignition switch to ON.

(b) Check that the "ABS" warning light turns on for about 3 seconds.
If not, inspect and repair or replace the fuse, bulb and wire harness.

(c) Check that the "ABS" warning light turns off.

(d) Turn the ignition switch to OFF.

3. PERFORM FOLLOWING STEPS

(a) Using SST, connect the terminal Ts to E_1 of the check connector.

SST 09843-18020

(b) Check that the warning light blinks about 4 time every 1 second when 3 seconds after the engine is started.

4. INSPECT SENSOR DETECTION POINT

(a) Jack up the rear side of the vehicle slowly as shown.

HINT: When measuring the height, measure at the center of the lower body of the vehicle.

(b) Check that the warning light does not turn on.
If the warning light turns on, inspect the deceleration sensor installation. And if the sensor installation is OK, replace the deceleration sensor.

(c) Jack down the vehicle slowly.

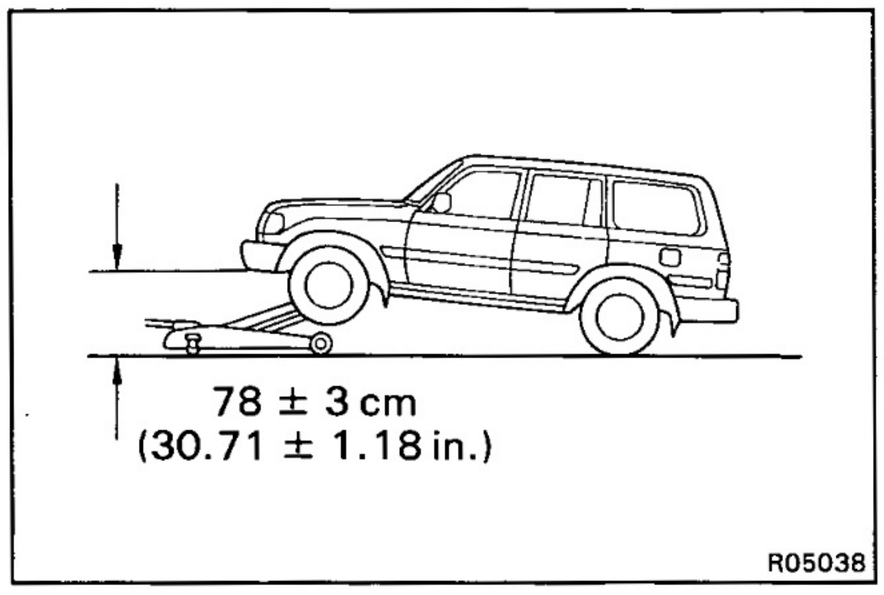

(d) Jack up the front side of the vehicle slowly as shown.

HINT: When measuring the height, measure at the center of the lower body of the vehicle.

(e) Check that the warning light does not turn on.
If the warning light turns on, inspect the deceleration sensor installation. And if the sensor installation is OK, replace the deceleration sensor.

(f) Jack down the vehicle slowly.

5. INSPECT SENSOR OPERATION

(a) Drive the vehicle straight ahead at about 20 km/h (12.4 mph) or more, lightly depress the brake pedal.

(b) Check that there is no change in the warning light pattern.

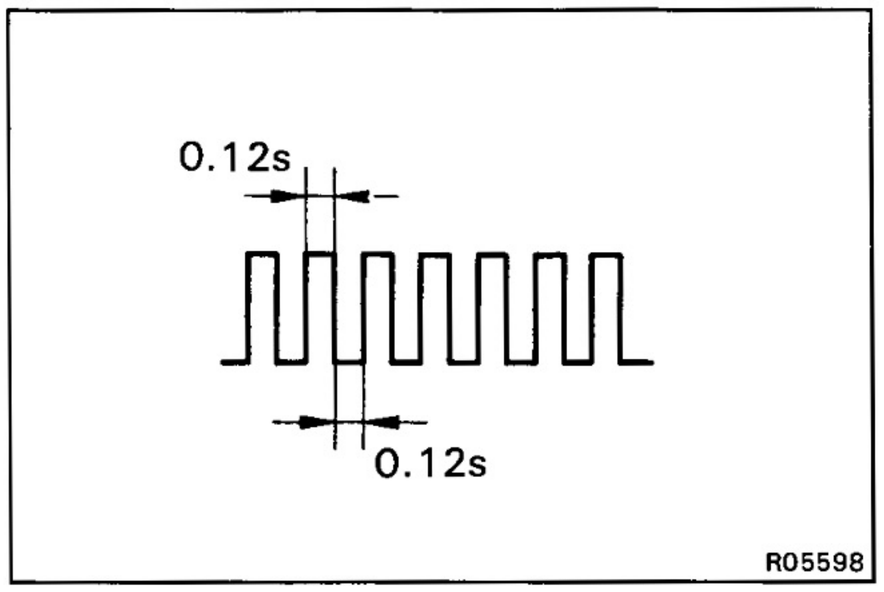

(c) Drive the vehicle straight ahead at about 20 km/h (12.4 mph) or more, depress the brake pedal a little strong.

(d) Check that the warning light turns on while braking.

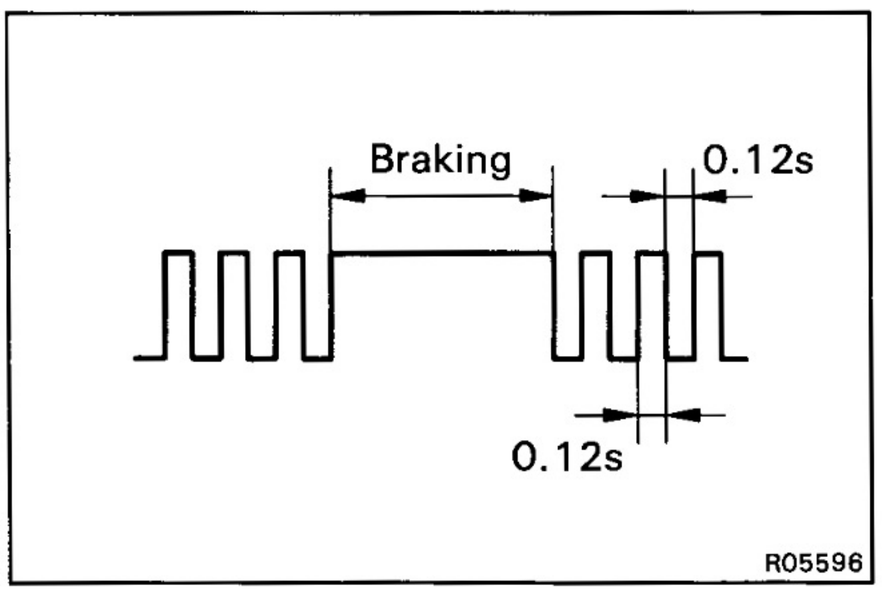

(e) Drive the vehicle straight ahead at about 20 km/h (12.4 mph) or more, depress the brake pedal strongly.

(f) Check that the warning light pattern changes while braking as shown.
If the operation is not as specified, inspect the deceleration sensor installation. And if the sensor installation is OK, replace the deceleration sensor.

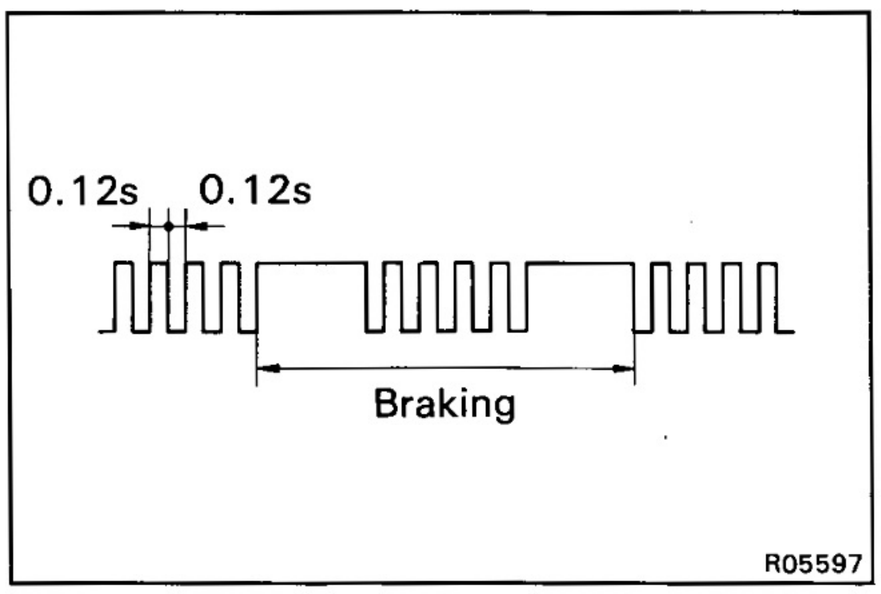

6. PERFORM FOLLOWING STEPS

(a) Stop the vehicle and turn the ignition switch to OFF.

(b) Remove SST from the terminals Ts and E_1 of the check connector.

SST 09843-18020

ABS ACTUATOR

ABS ACTUATOR REMOVAL AND INSTALLATION

Remove and install the parts as shown.

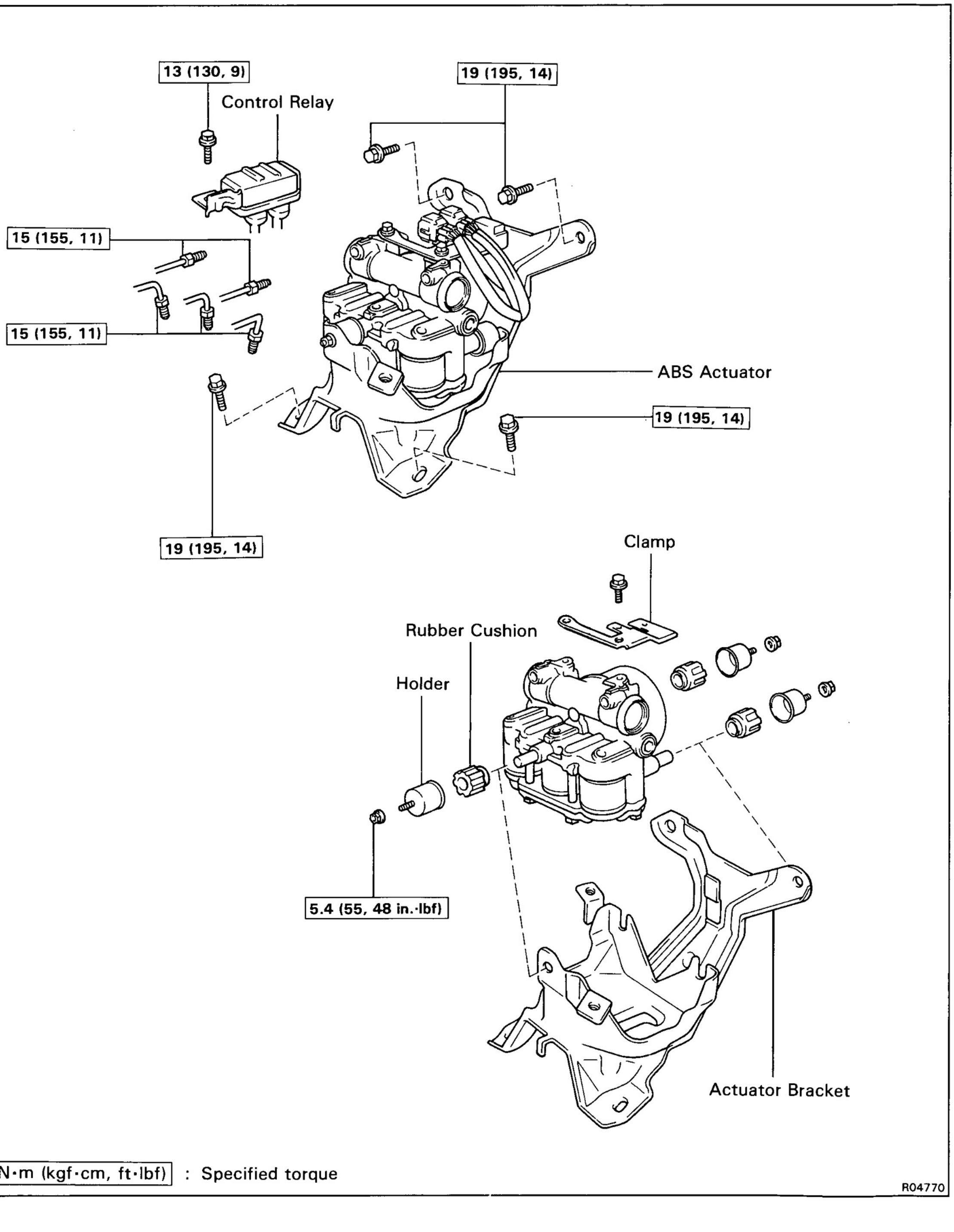

N·m (kgf·cm, ft·lbf) : Specified torque

R04770

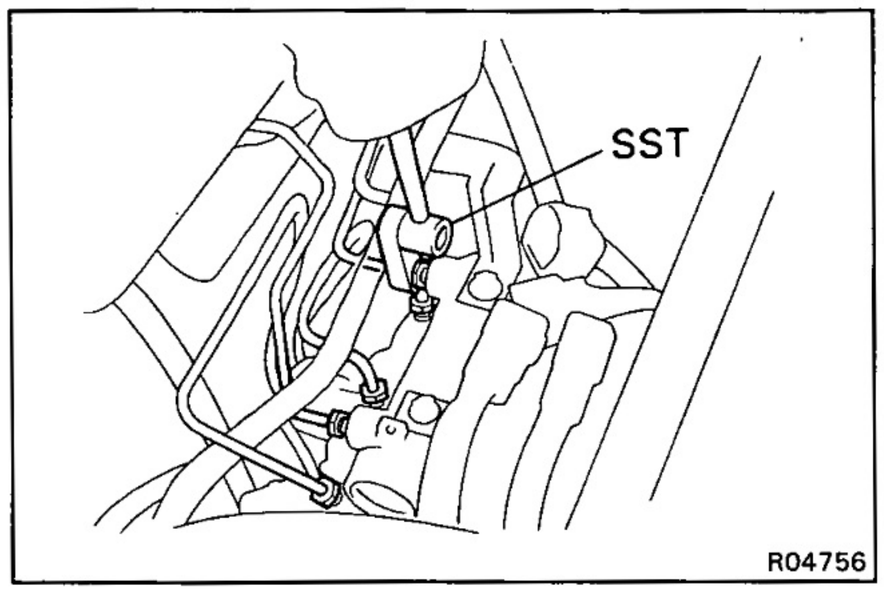

MAIN POINTS OF REMOVAL AND INSTALLATION

1. DISCONENCT AND CONNECT BRAKE LINES

Using SST, disconnect and connect the brake lines from/to the ABS actuator.

SST 09023-00100

Torque: 15 N·m (155 kgf·cm, 11 ft·lbf)

2. BLEED BRAKE SYSTEM

(See pub No.RM184E, page BR-7)

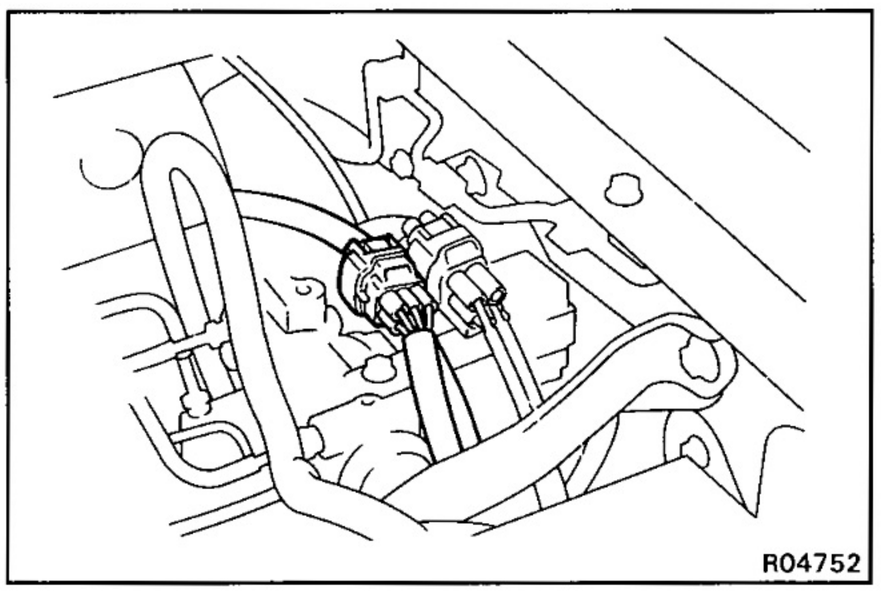

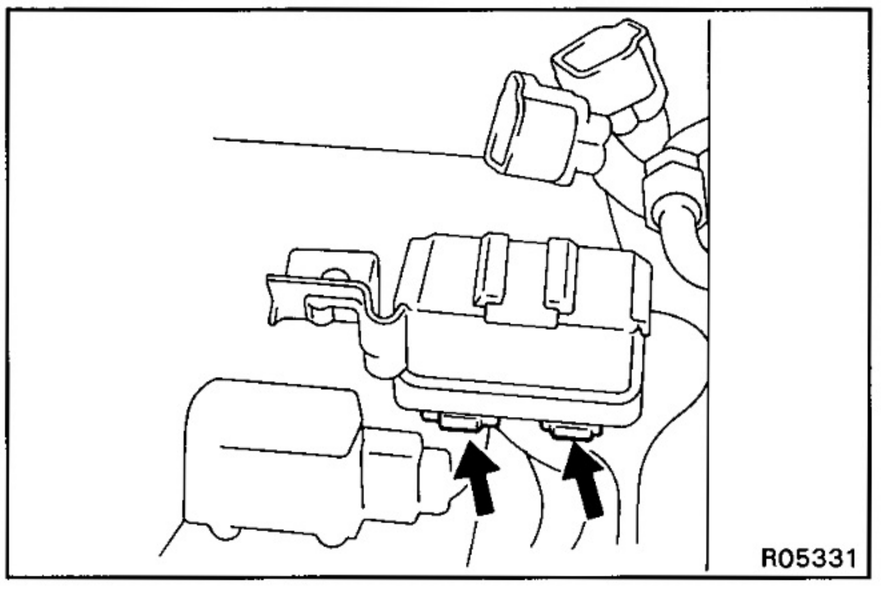

ABS ACTUATOR INSPECTION

1. INSPECT BATTERY VOLTAGE

Battery voltage:
10 – 14.5 V

2. DISCONNECT CONNECTORS

(a) Disconnect the connector from the actuator.

(b) Remove the control relay from the actuator bracket.

(c) Disconnect the two connectors from the control relay.

3. CONNECT ACTUATOR CHECKER (SST) TO ACTUATOR

(a) Connect the actuator checker (SST) to the actuator, control relay and body side wire harness through the sub-wire harness C and E (SST) as shown.

SST 09990-00150, 09990-00200, 09990-00210

(b) Connect the red cable of the checker to the battery positive (+) terminal and black cable to the negative (–) terminal. Connect the black cable of the sub-wire harness to the battery negative (–) terminal or body ground.

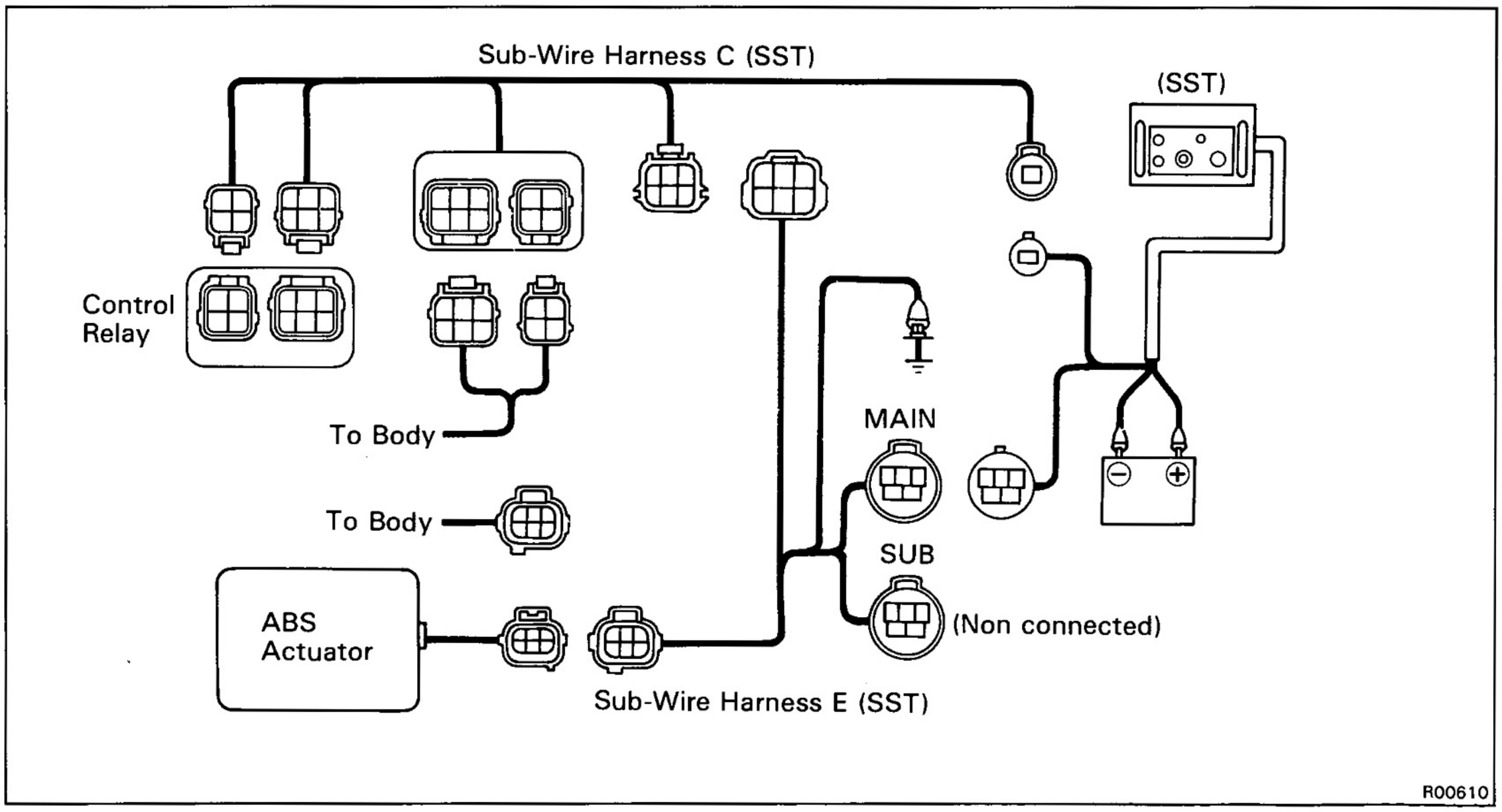

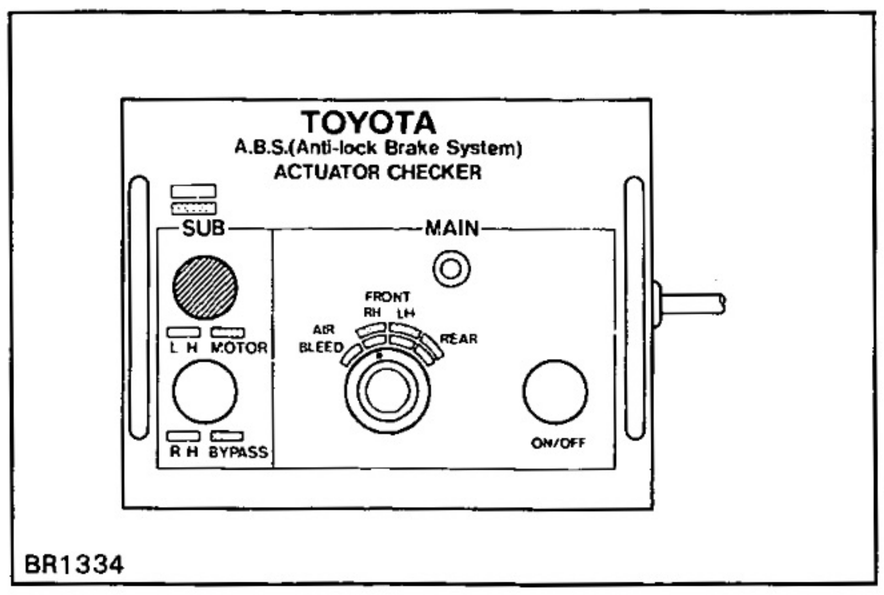

BR1334

4. INSPECT BRAKE ACTUATOR OPERATION

(a) Start the engine, and run it at idle.

(b) Turn the selector switch of the actuator checker to "FRONT RH" position.

(c) Push and hold in the MOTOR SWITCH for a few seconds.

(d) Depress the brake pedal and hold it until the step (g) is completed.

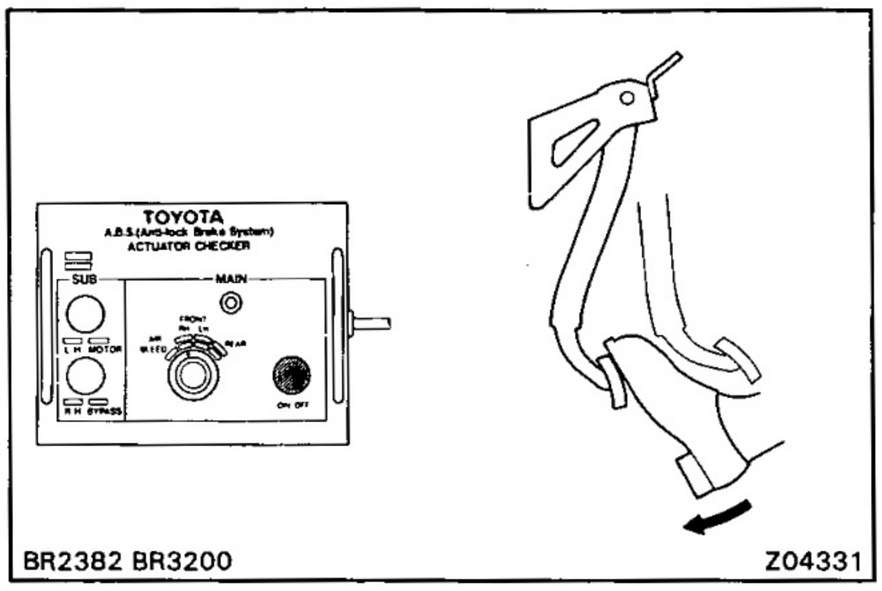

BR2382 BR3200 Z04331

(e) Push the POWER SWITCH, and check that the brake pedal does not go down.

NOTICE: Do not keep the POWER SWITCH pushed down for more than 10 seconds.

(f) Release the switch, and check that the pedal goes down.

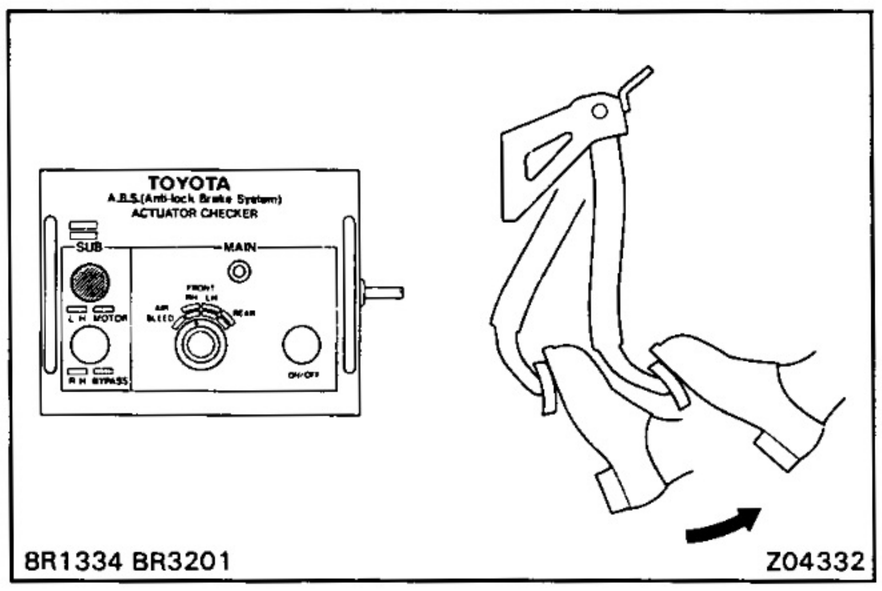

BR1334 BR3201 Z04332

(g) Push and hold in the SUB MOTOR switch for a few seconds, and check that the pedal returns.

(h) Release the brake pedal.

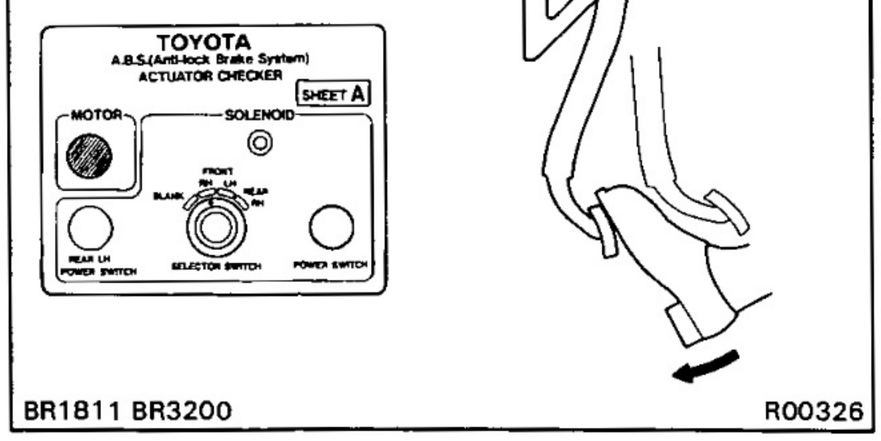

BR1811 BR3200 R00326

(i) Push and hold in the SUB MOTOR switch for a few seconds.

(j) Depress the brake pedal and hold it for about 15 seconds. As you hold the pedal down, push the MOTOR SWITCH for a few seconds. Check that the brake pedal does not pulsate.

(k) Release the brake pedal.

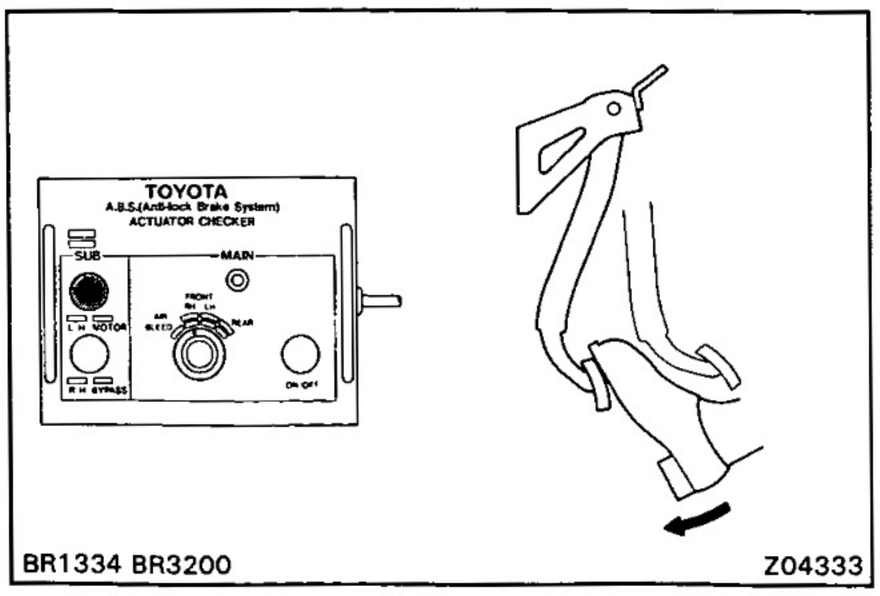

BR1334 BR3200 Z04333

5. INSPECT FOR OTHER WHEELS

(a) Turn the selector switch to "FRONT LH" position.

(b) Repeating (c) to (j) of the step 4, check the actuator operation similarly.

(c) Similarly, inspect "REAR" position.

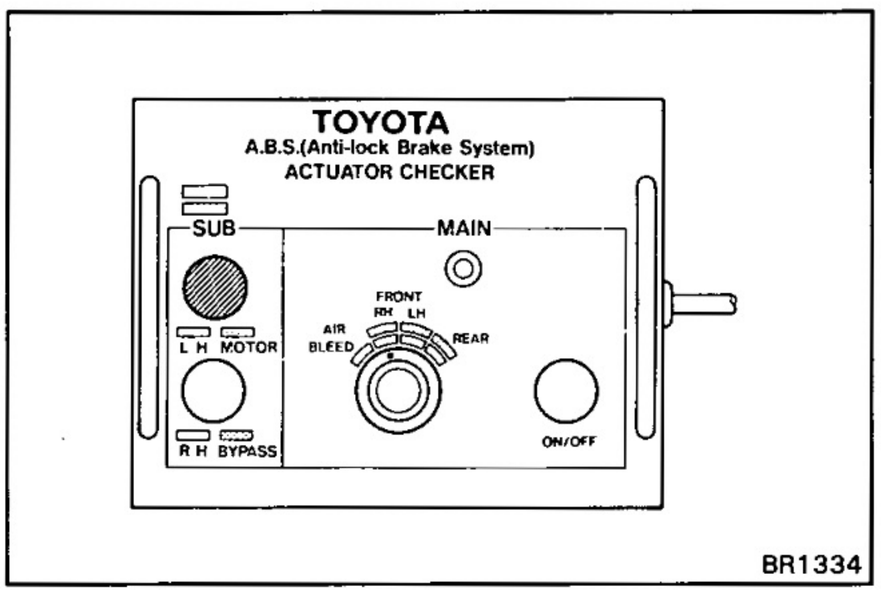

6. PUSH SUB MOTOR SWITCH

(a) Push and hold in the SUB MOTOR switch for a few seconds.

(b) Stop the engine.

7. DISCONNECT ACTUATOR CHECKER (SST) FROM ACTUATOR

Disconnect the actuator checker (SST) and sub-wire harness (SST) from the actuator, control relay and body side wire harness.

SST 09990-00150, 09990-00200, 09990-00210

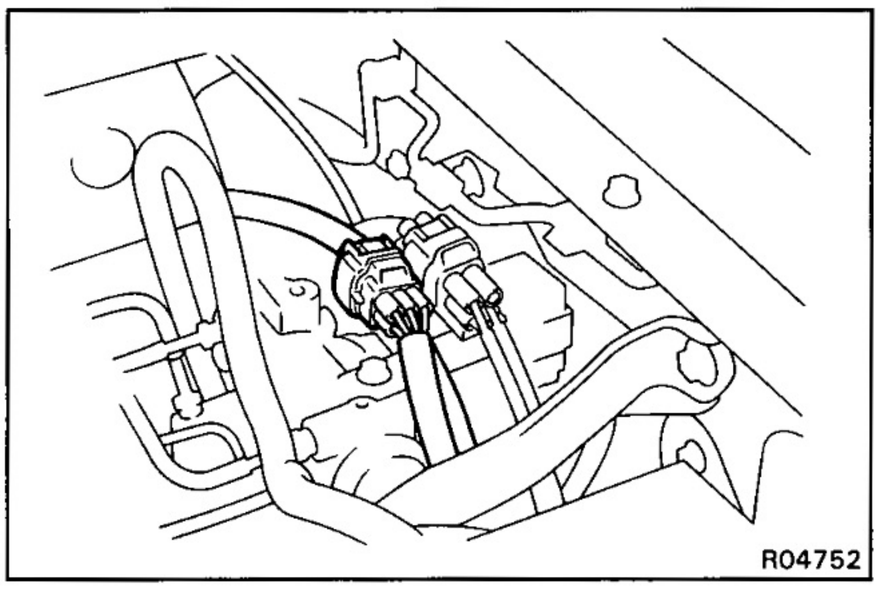

8. CONNECT CONNECTORS

(a) Connect the two connectors to the control relay.

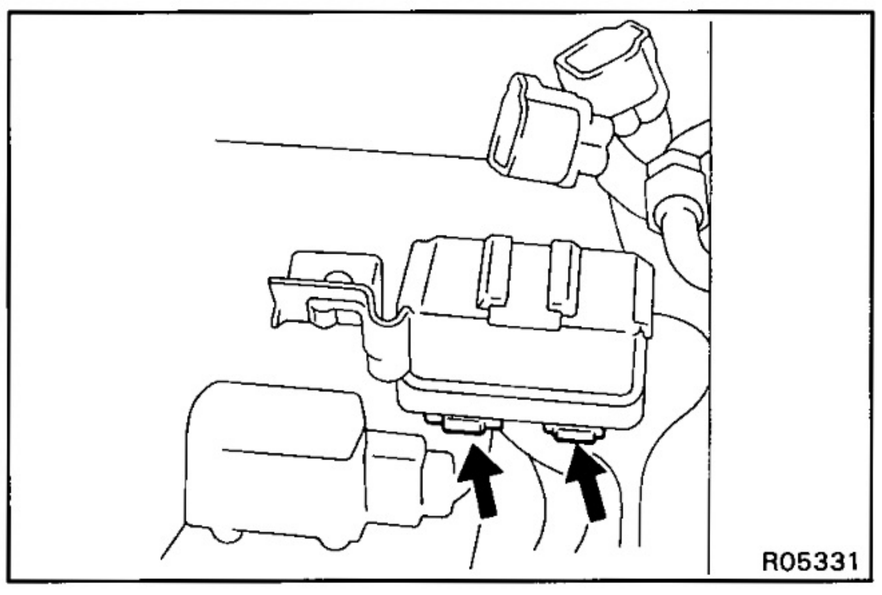

(b) Connect the connector to the actuator.

(c) Install the control relay to the actuator bracket.

9. CLEAR DIAGNOSTIC CODES
(See page BR-27)

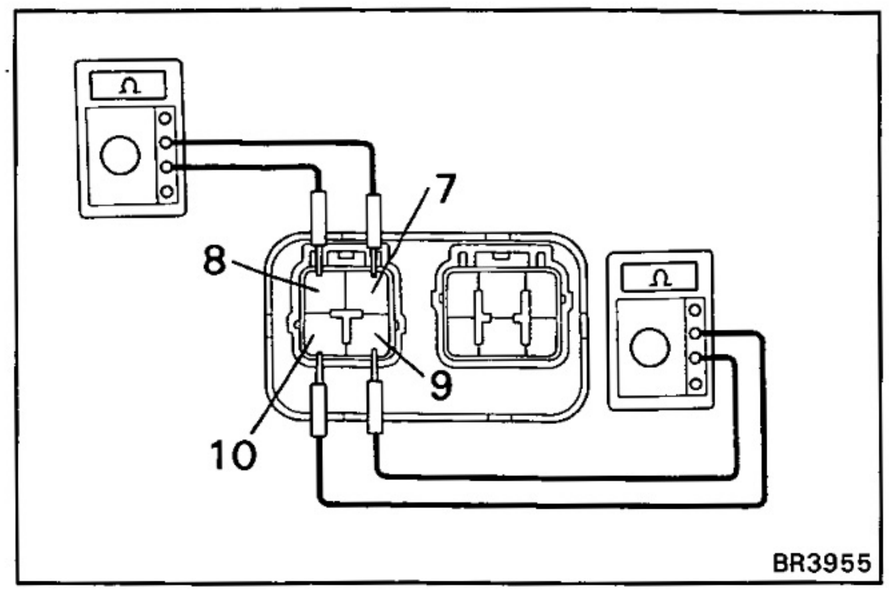

CONTROL RELAY

CONTROL RELAY INSPECTION

1. INSPECT CONTINUITY OF MOTOR RELAY CIRCUIT

(a) Check that there is continuity between terminals 9 and 10.

(b) Check that there is no continuity between terminals 7 and 8.
If continuity is not as specified, replace the relay.

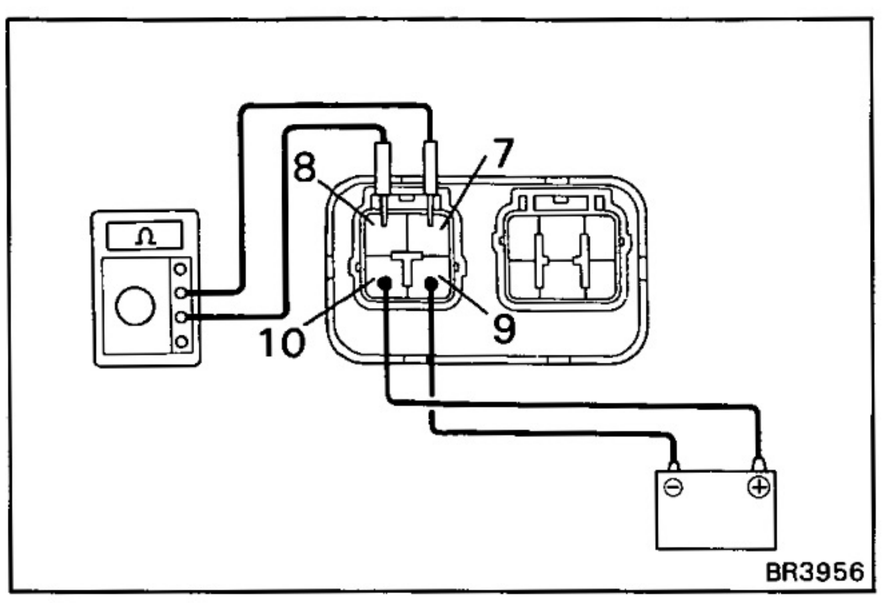

2. INSPECT OPERATION OF MOTOR RELAY CIRCUIT

(a) Connect the positive (+) lead from the battery to terminal 10 and negative (−) lead to terminal 9.

(b) Check that there is continuity between terminals 7 and 8.
If operation is not as specified, replace the relay.

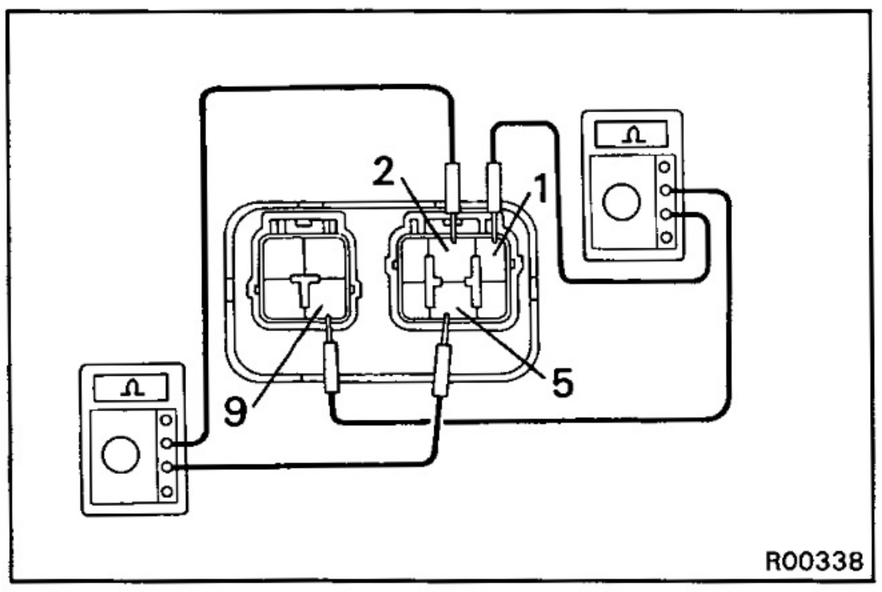

3. INSPECT CONTINUITY OF SOLENOID RELAY CIRCUIT

(a) Check that there is continuity between terminals 1 and 9.

(b) Check that there is no continuity between terminals 2 and 5.

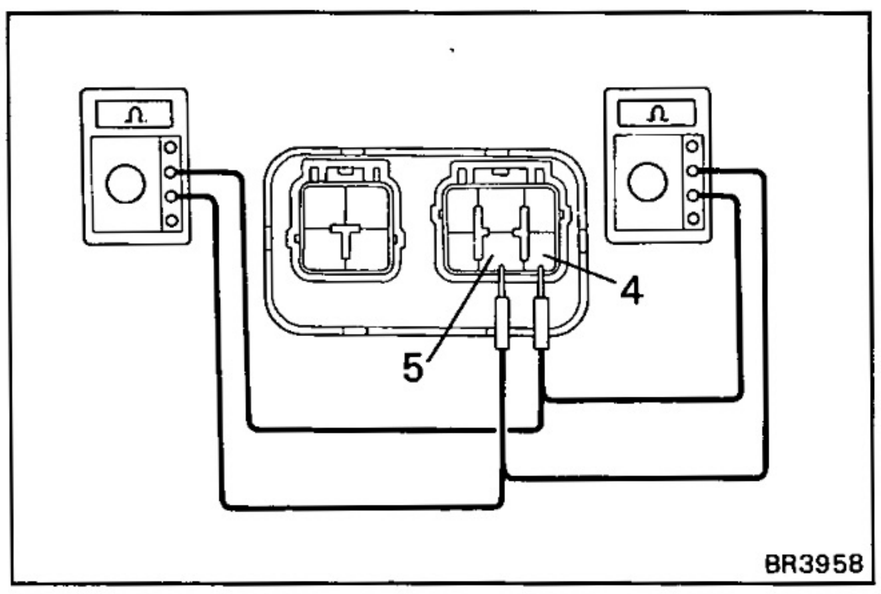

(c) Connect the positive lead from the ohmmeter to terminal 5 and connect negative lead to terminal 4.

(d) Check that there is continuity between terminals.

(e) Connect the two leads in reverse, and check that there is no continuity between terminals.
If continuity is not as specified, replace the relay.

HINT: For the different type ohmmeter, there is no continuity for step (d), and there is continuity for step (e).

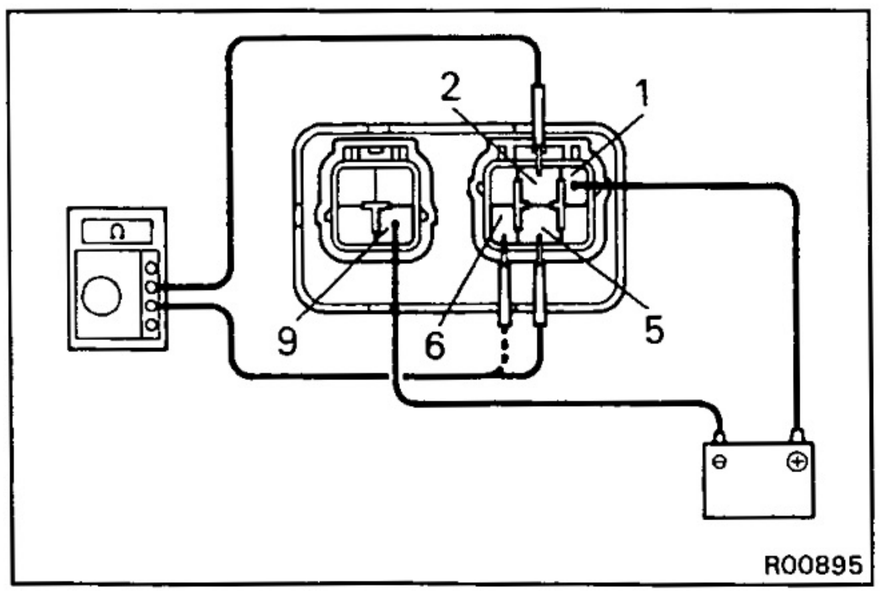

4. INSPECT OPERATION OF SOLENOID RELAY CIRCUIT

(a) Connect the positive (+) lead from the battery to terminal 1 and negative (−) lead to terminal 9.

(b) Check that there is continuity between terminals 2 and 5.

(c) Check that there is no continuity between terminals 2 and 6.

If operation is not as specified, repalce the relay.

FRONT SPEED SENSOR

COMPONENTS

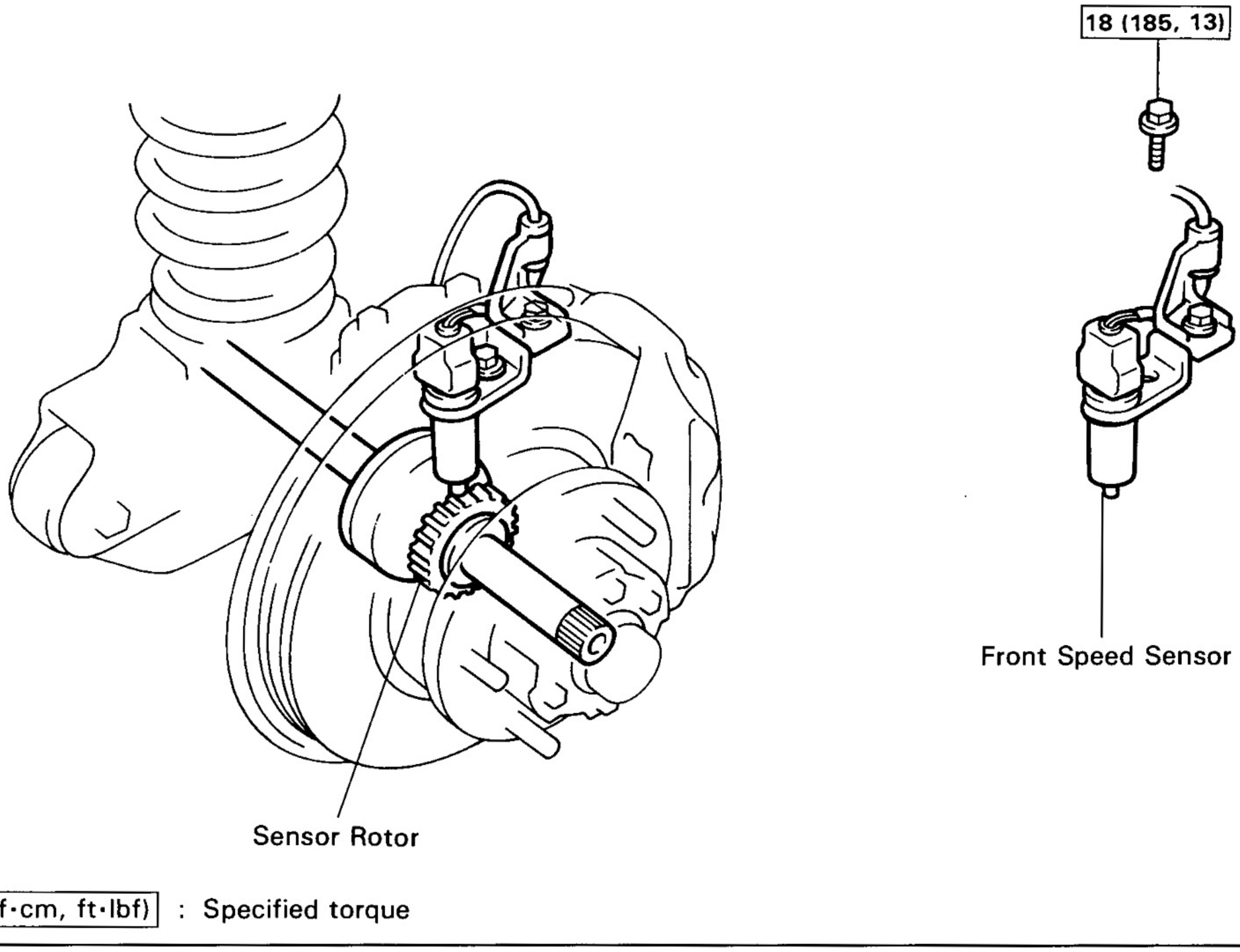

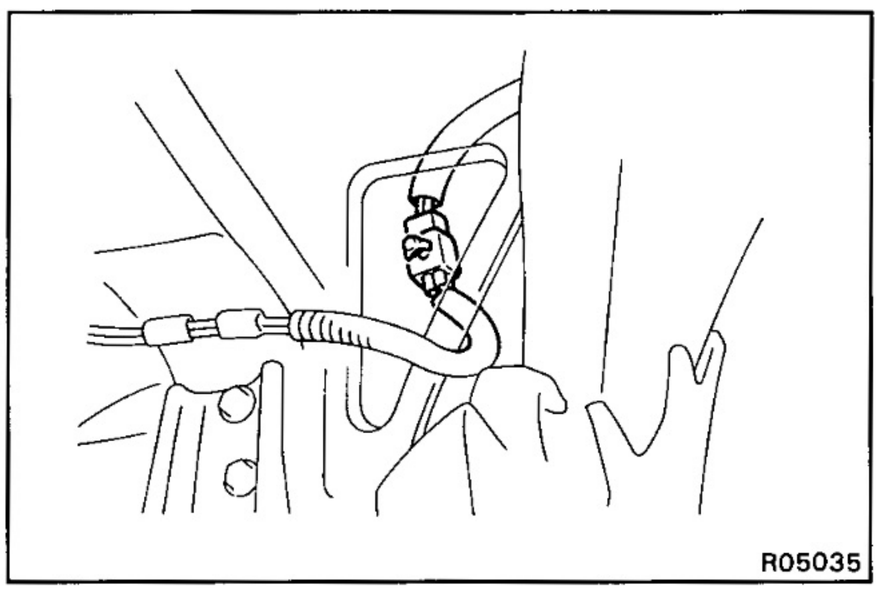

FRONT SPEED SENSOR INSPECTION

1. INSPECT SPEED SENSOR

(a) Disconnect the speed sensor connector.

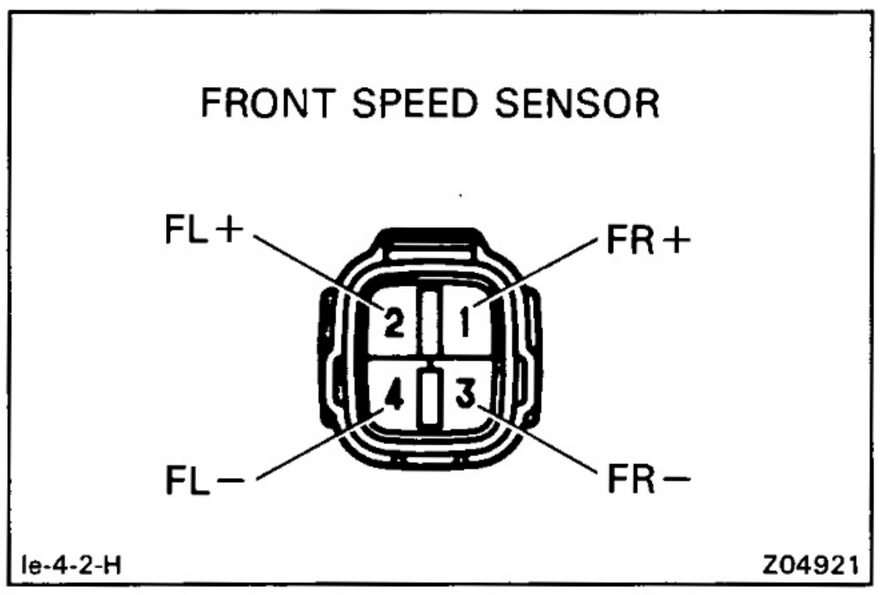

(b) Measure the resistance between terminals FR+, FR– and FL+, FL–.

Resistance:

0.87 – 1.27 kΩ

If resistance value is not as specified, replace the sensor.

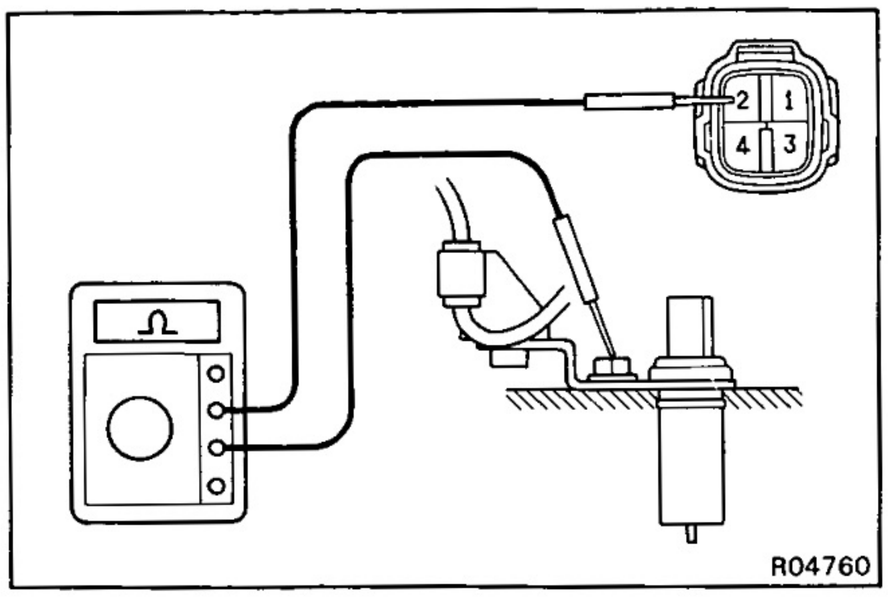

(c) Check that there is no continuity between each terminal and sensor body.
If there is continuity, replace the sensor.

(d) Connect the speed sensor connector.

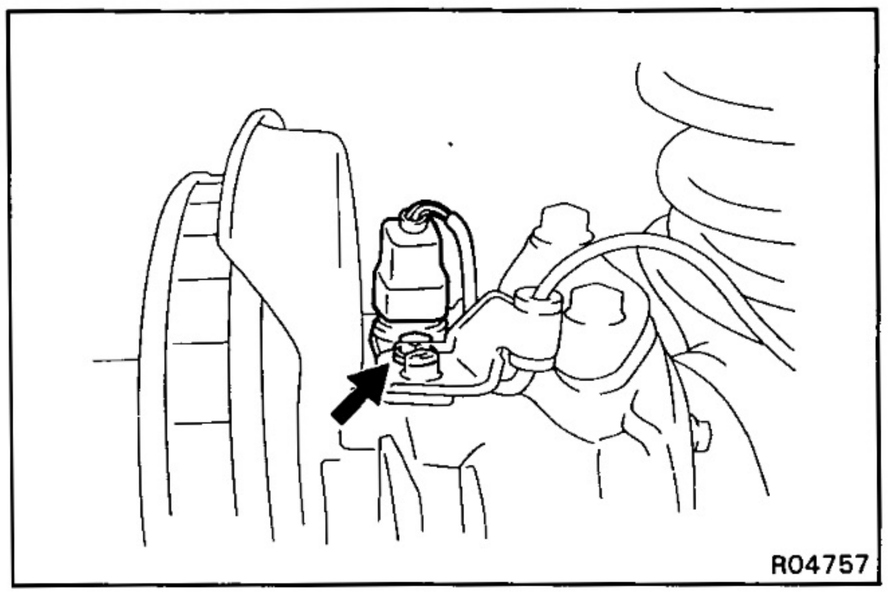

2. INSPECT SENSOR INSTALLATION

Check that the sensor installation bolt is tightened properly. If not, tighten the bolt.

Torque: 18 N·m (184 kgf·cm, 13 ft·lbf)

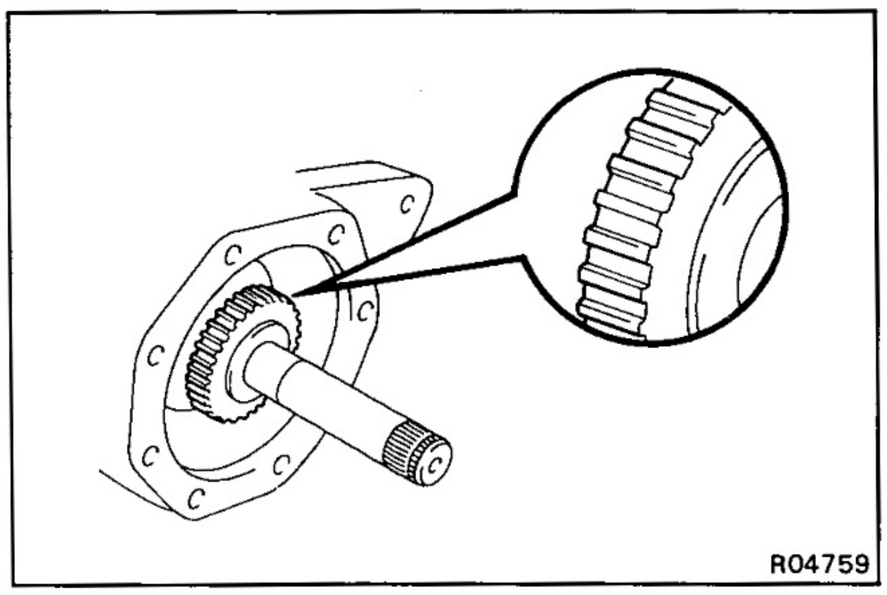

3. VISUALLY INSPECT SENSOR ROTOR SERRATIONS

(a) Remove the axle hub with disc.
(See pub No. RM184E, page SA-16)

(b) Inspect the sensor rotor serrations for scratches, cracks, warping or missing teeth.

(c) Install the axle hub with disc.
(See pub No. RM184E, page SA-19)

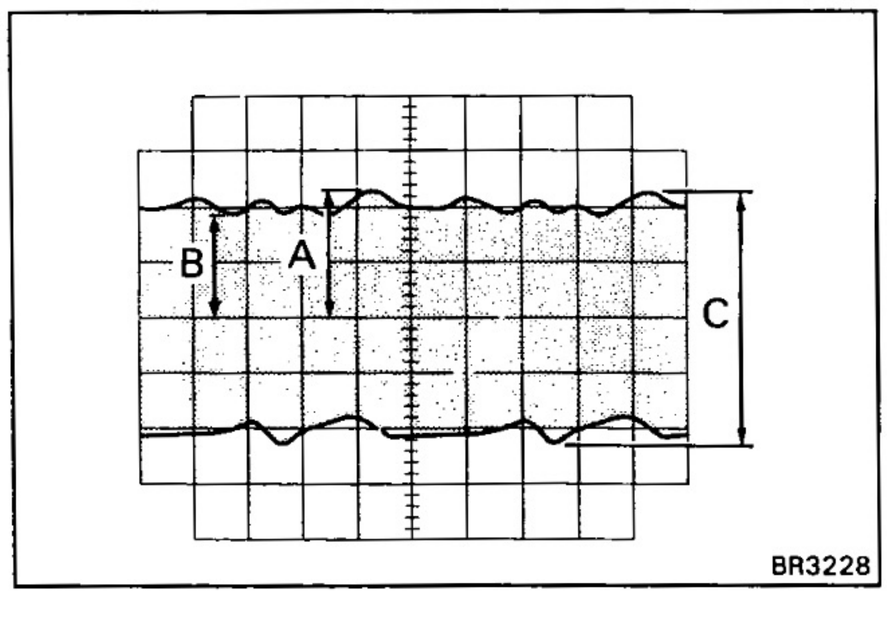

FRONT SPEED SENSOR AND SENSOR ROTOR SERRATIONS INSPECTION (REFERENCE)

INSPECT FRONT SPEED SENSOR AND SENSOR ROTOR SERRATIONS BY USING AN OSCILLOSCOPE

(a) Connect an oscilloscope to the speed sensor connector.

(b) Run the vehicle at 20 km/h (12.4 mph), and inspect speed sensor output wave.

(c) Check that C is 0.5 V or more.
If not as specified, replace the speed sensor.

(d) Check that B is 50 % or more of A.
If not as specified, replace the sensor rotor.

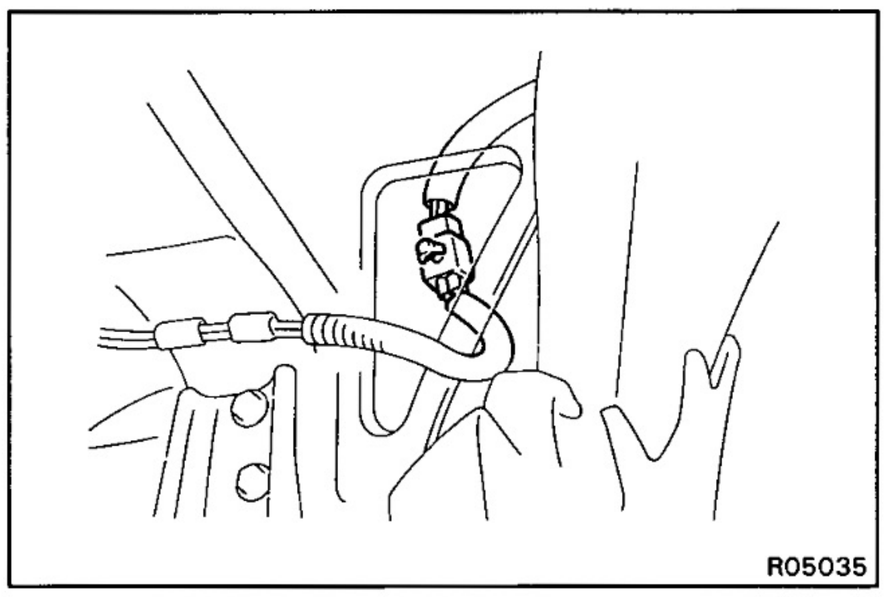

FRONT SPEED SENSOR REMOVAL

HINT: When replacing the sensor or sensor harness, replace the sensor and sensor harness together as a set.

Disconnect the speed sensor connector.

1. DISCONNECT SPEED SENSOR CONNECTOR

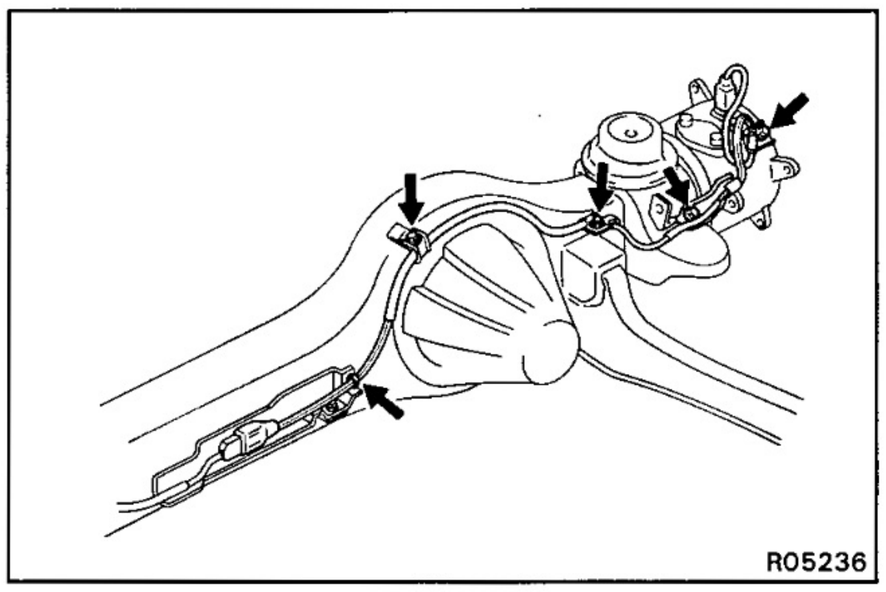

2. REMOVE SPEED SENSOR

(a) Remove the four clamp bolts holding the sensor harness RH from the axle housing.

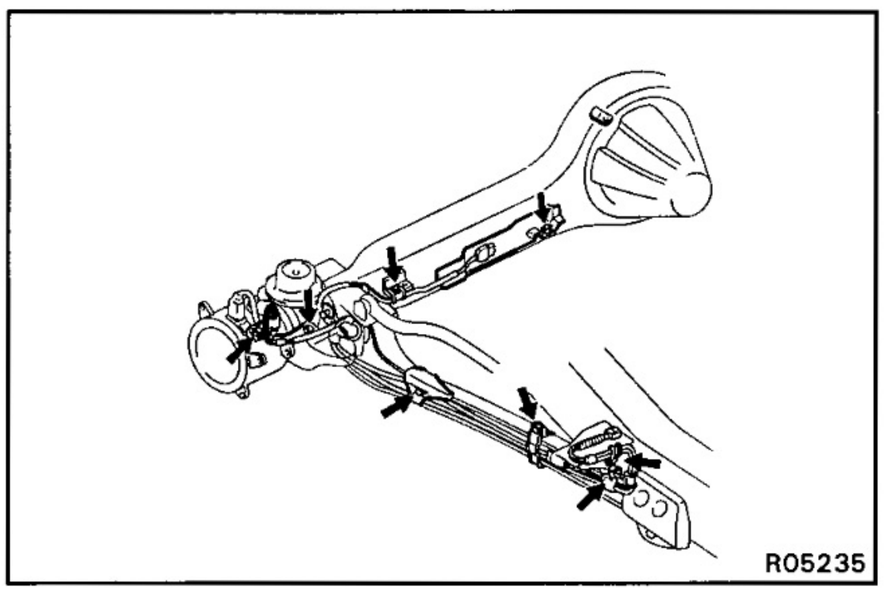

(b) Remove the eight clamp bolts holding the sensor harness LH from the axle housing and leading arm.

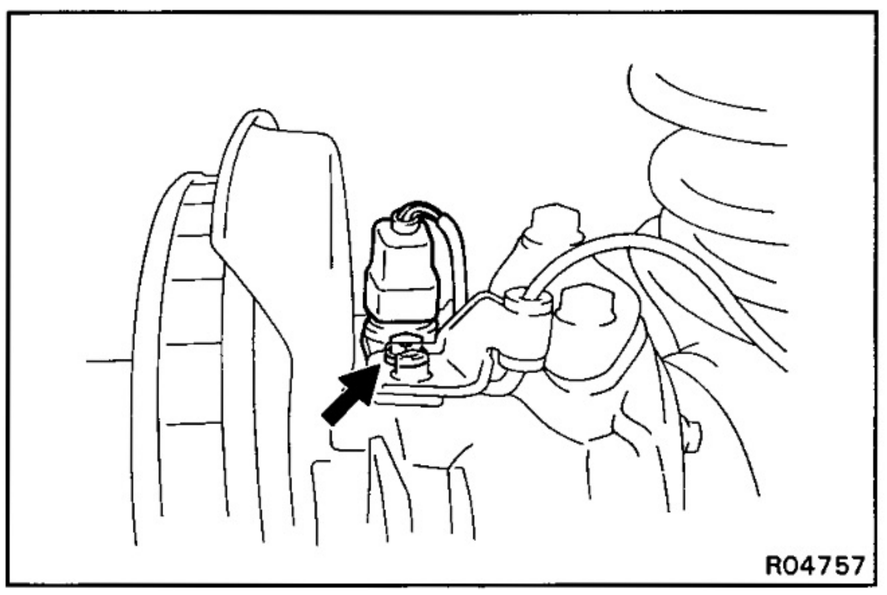

(c) Remove the speed sensor LH and RH from the steering knuckle.

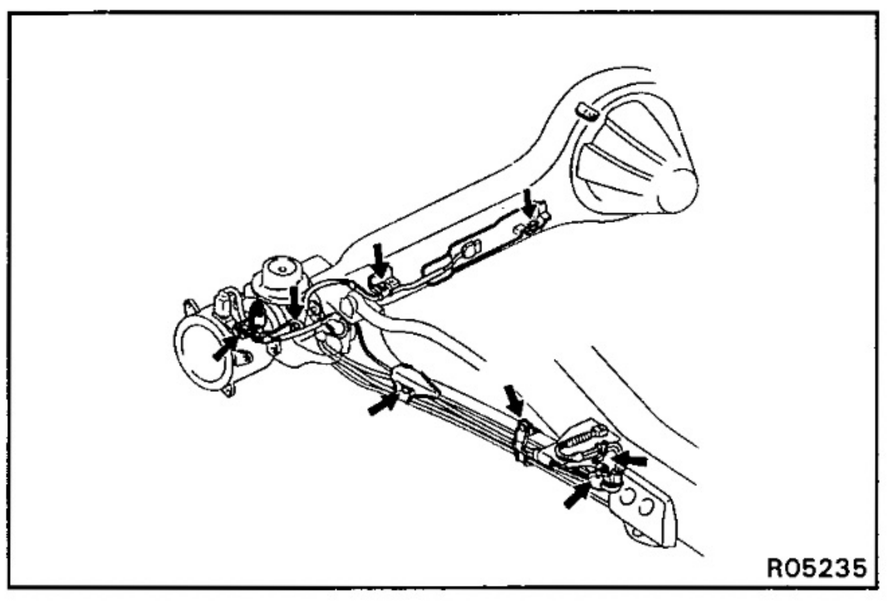

FRONT SPEED SENSOR INSTALLATION

1. INSTALL SPEED SENSOR WIRE HARNESS

(a) Install the sensor harness LH with the clamps and bolts in place.

Torque: 18 N·m (185 kgf·cm, 13 ft·lbf)

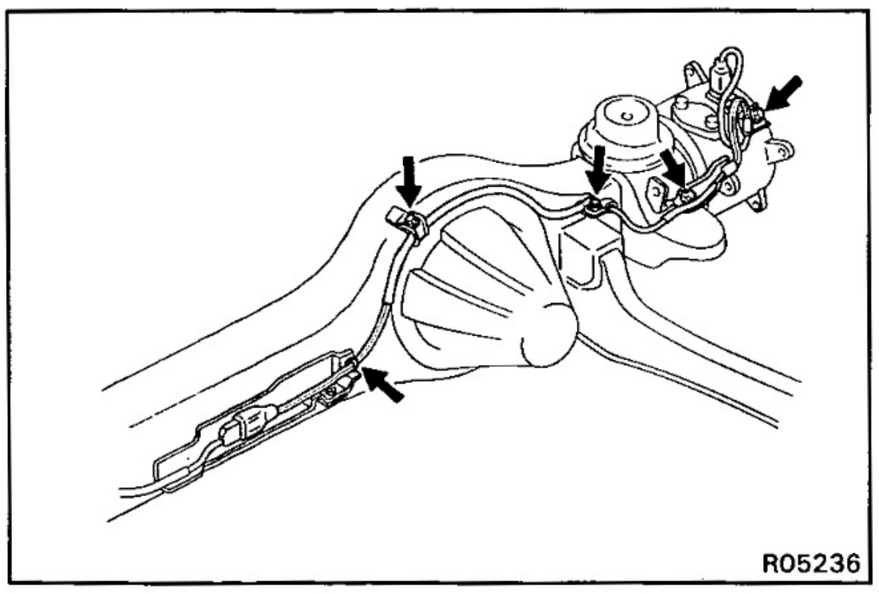
R05236

(b) Install the sensor harness RH with the clamps and bolts in place.

Torque: 18 N·m (185 kgf·cm, 13 ft·lbf)

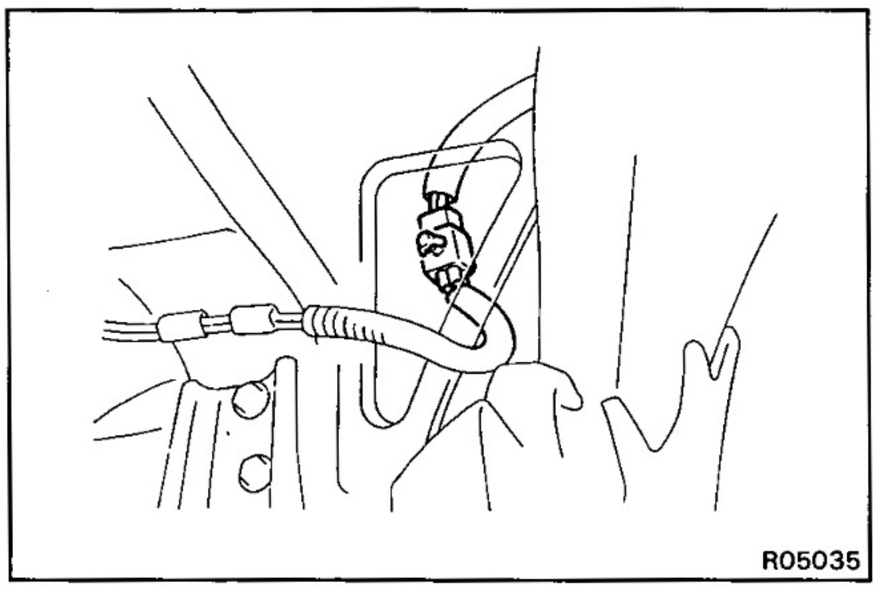
R05035

(c) Connect the speed sensor connector.

Torque: 18 N·m (185 kgf·cm, 13 ft·lbf)

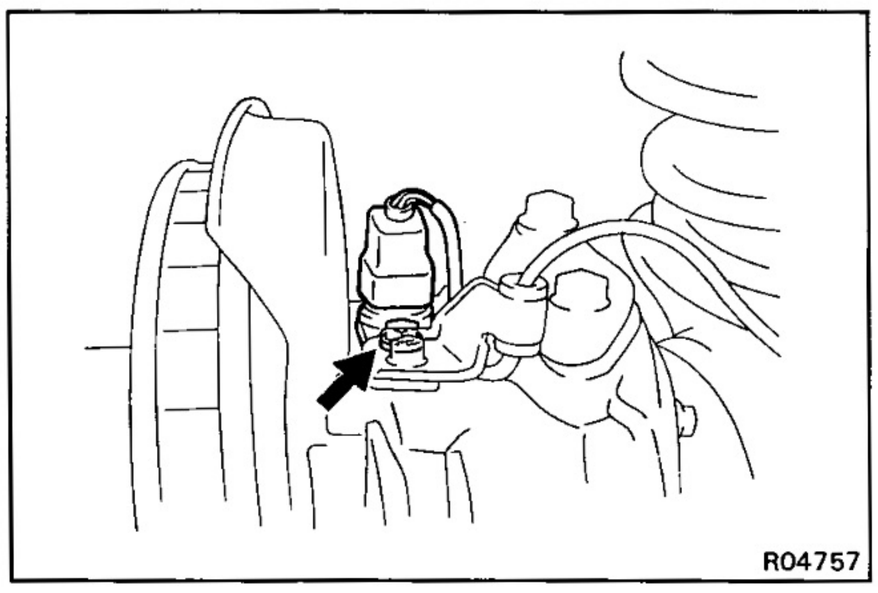
R04757

2. INSTALL SPEED SENSOR

HINT: When replacing the sensor, adjust the air gap.

(a) Install the speed sensor LH and RH to the steering knuckle.

Torque: 18 N·m (185 kgf·cm, 13 ft·lbf)

(b) Connect the connector.

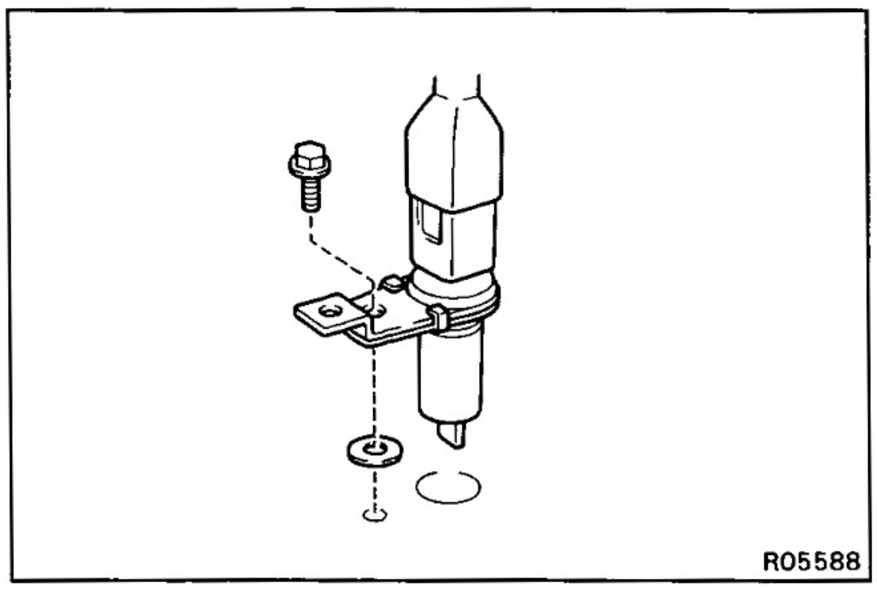
R05588

FRONT SPEED SENSOR AIR GAP ADJUSTMENT

FRONT SPEED SENSOR AIR GAP ADJUSTMENT

(a) Install the speed sensor and 0.2 mm spacer to the steering knuckle.

(b) Try speed sensor and deceleration sensor diagnosis system.

(c) If diagnosis code 71 or 72 is not displayed, remove the 0.2 mm spacer and install the speed sensor to the steering knuckle.

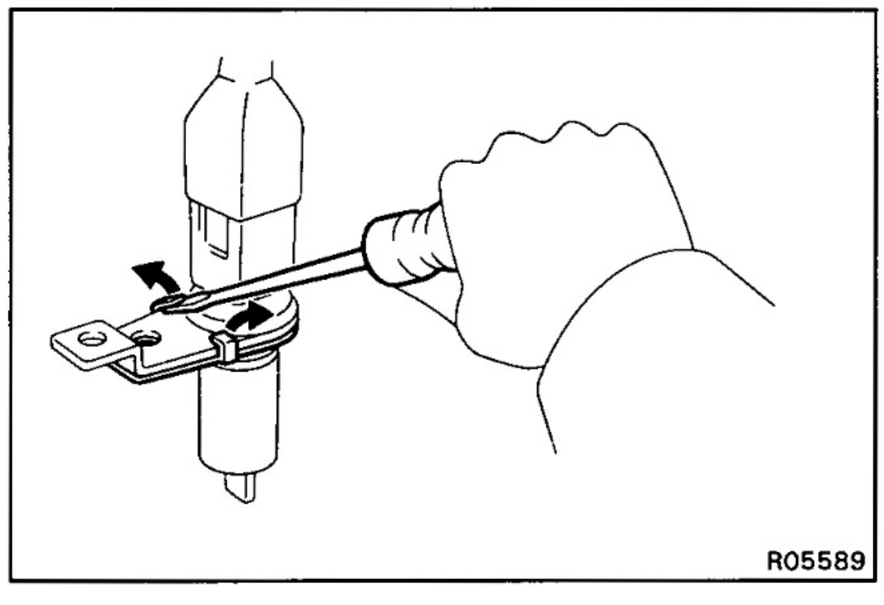
R05589

(d) If diagnosis code 71 or 72 is displayed, replace the 0.5 mm spacer inserted in the speed sensor with a 0.35 mm spacer.
   (1) Using a screwdriver to remove the 0.5 mm spacer.

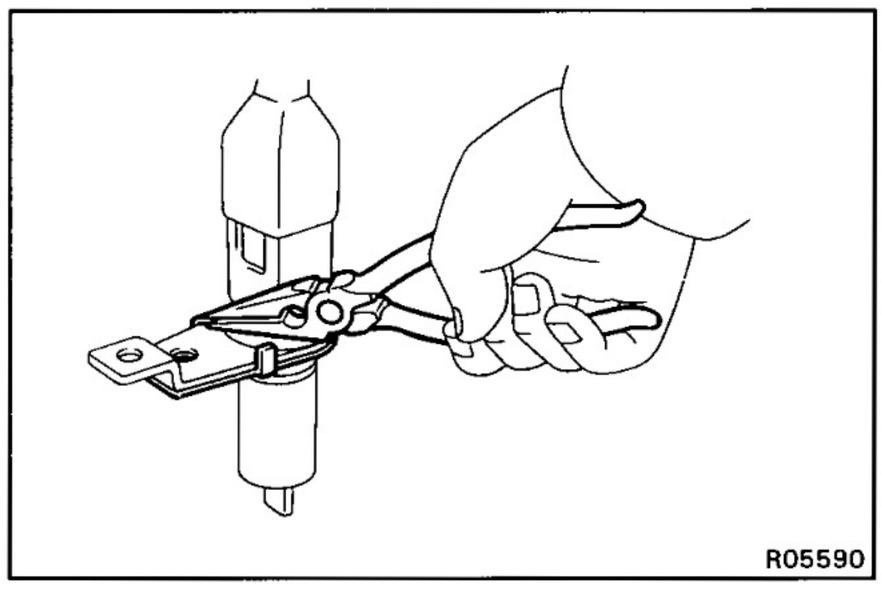
R05590

   (2) Using needle-nose pliers to install the 0.35 mm spacer.

(e) Repeating (a) and (b) to the step 1.

(f) If diagnosis code 71 or 72 is not displayed, remove the 0.2 mm spacer and install the speed sensor to the steering knuckle.

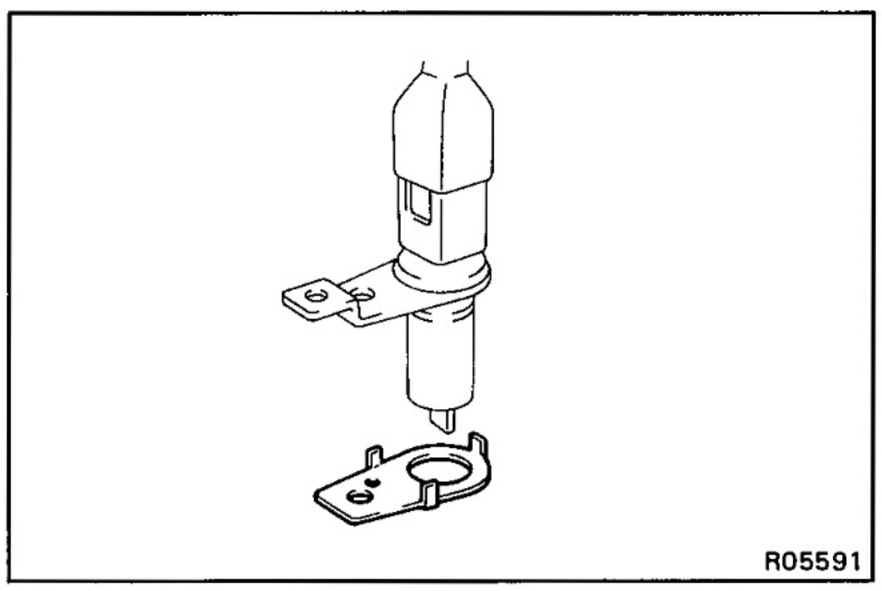
R05591

(g) If diagnosis code 71 or 72 is displayed, replace the 0.35 mm spacer with a 0.25 mm spacer.

(h) Repeating (a) and (b) to the step 1.

(i) If diagnosis code 71 or 72 is not displayed, remove the 0.2 mm spacer and install the speed sensor to the steering knuckle.

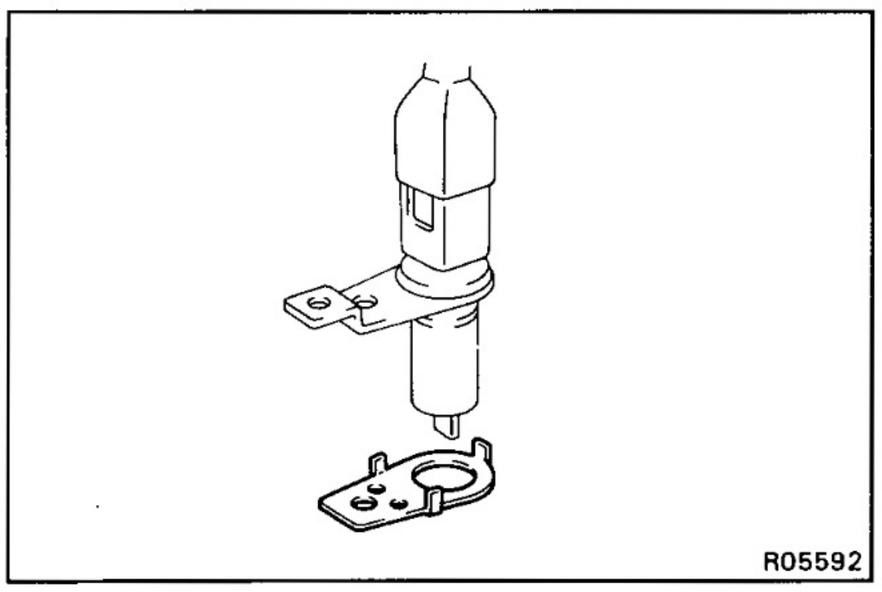
R05592

(j) If diagnosis code 71 or 72 is displayed, replace the 0.25 mm spacer with a 0.15 mm spacer and install the speed sensor to the steeing knuckle without using the 0.2 mm spacer.

REAR SPEED SENSOR

COMPONENTS

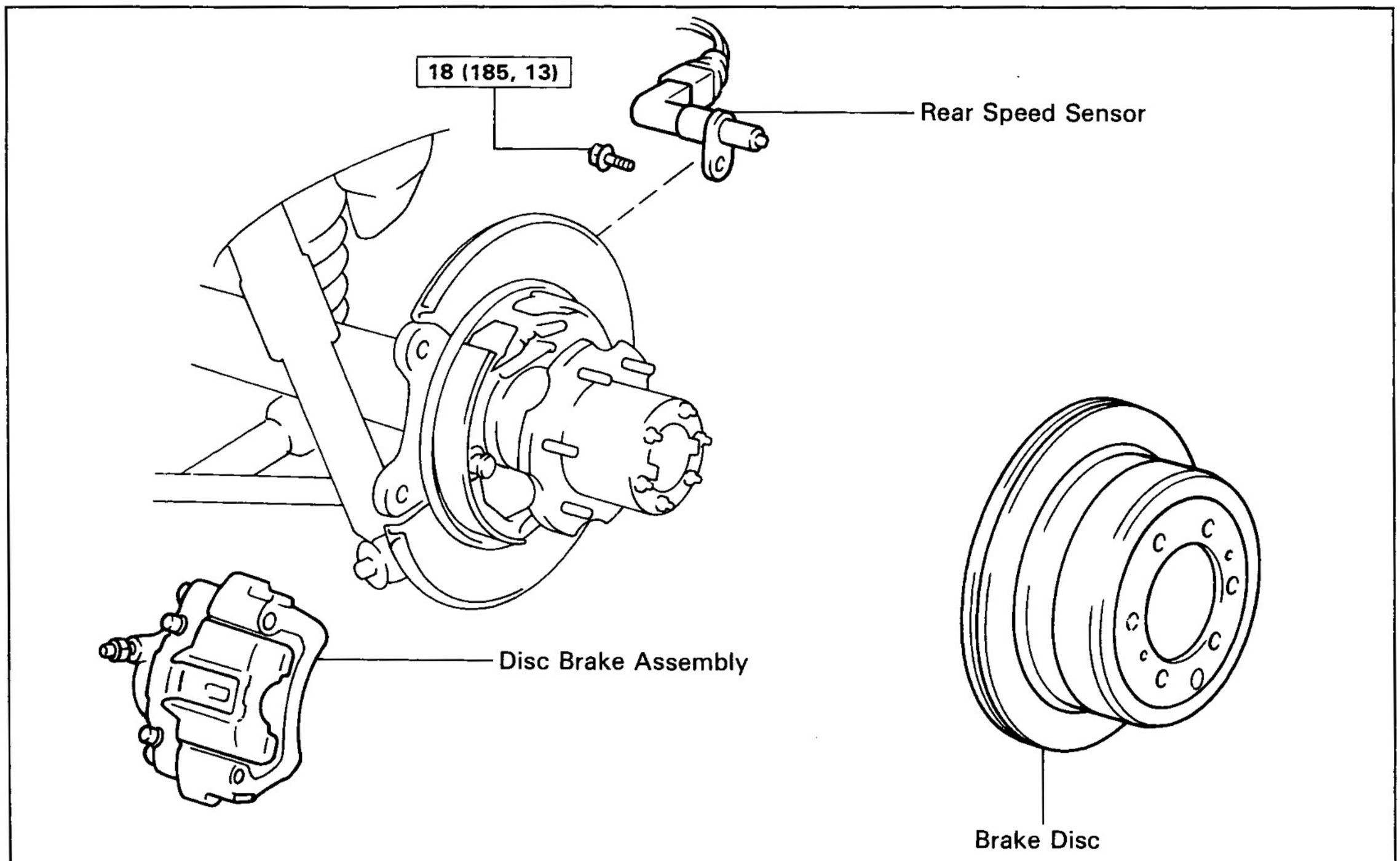

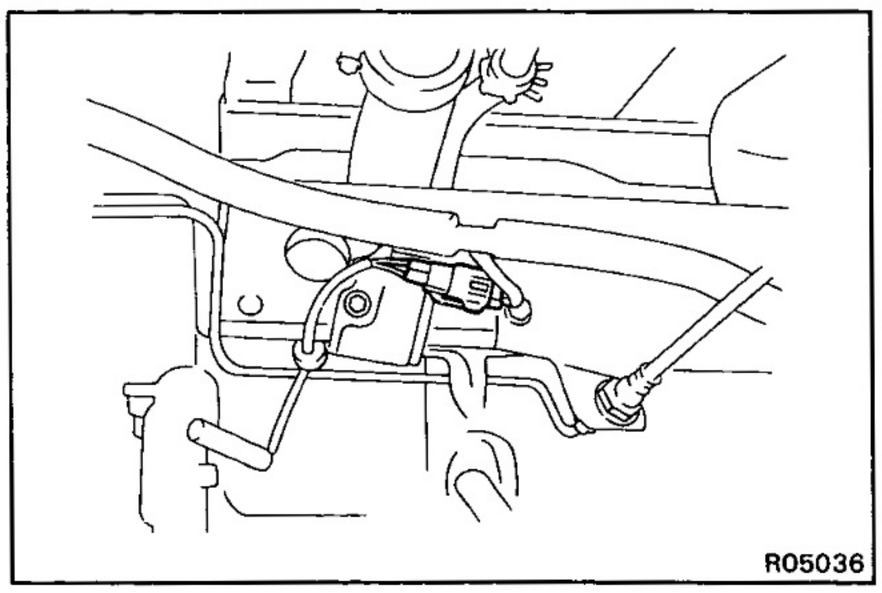

REAR SPEED SENSOR INSPECTION

1. INSPECT SPEED SENSOR

(a) Disconnect the speed sensor connector.

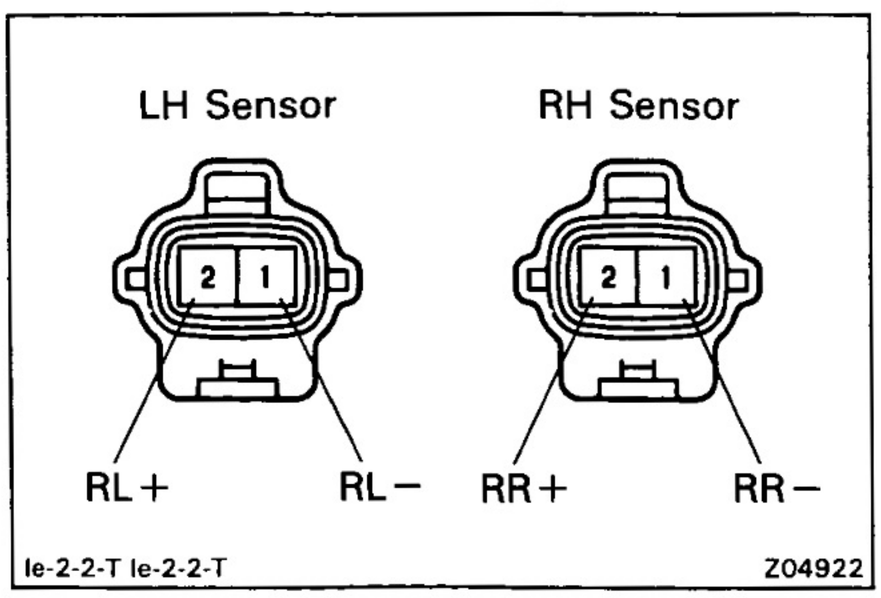

(b) Measure the resistance between terminals.

Resistance:

0.7 − 1.1 kΩ

If resistance value is not as specified, replace the sensor.

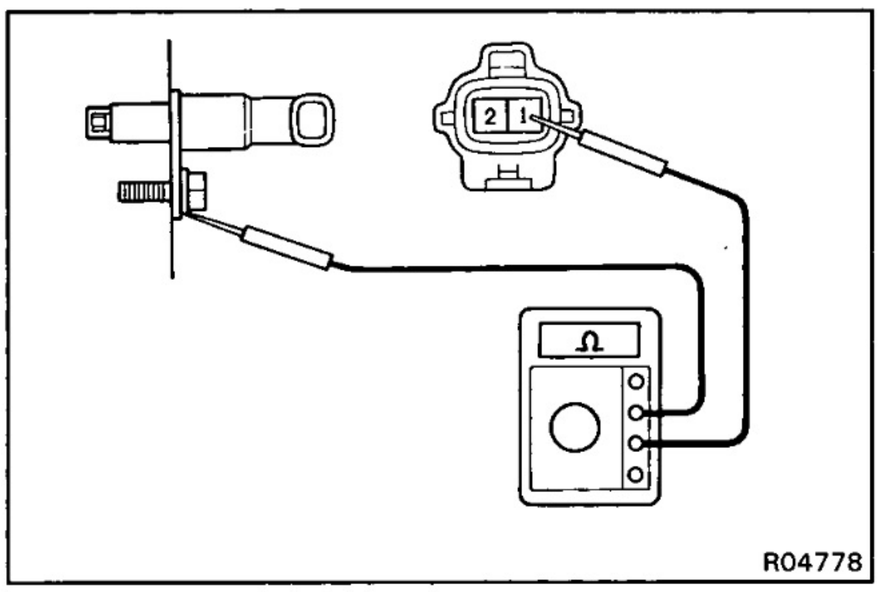

(c) Check that there is no continuity between each terminal and sensor body.
If there is continuity, replace the sensor.

(d) Connect the speed sensor connector.

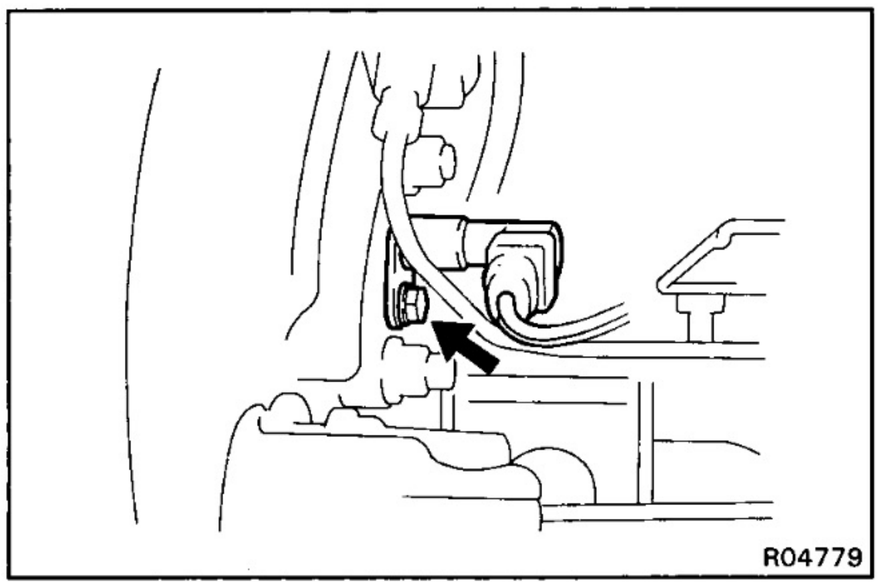

2. INSPECT SENSOR INSTALLATION

Check that the sensor installation bolt is tightened properly. If not, tighten the bolt.

Torque: 18 N·m (185 kgf·cm, 13 ft·lbf)

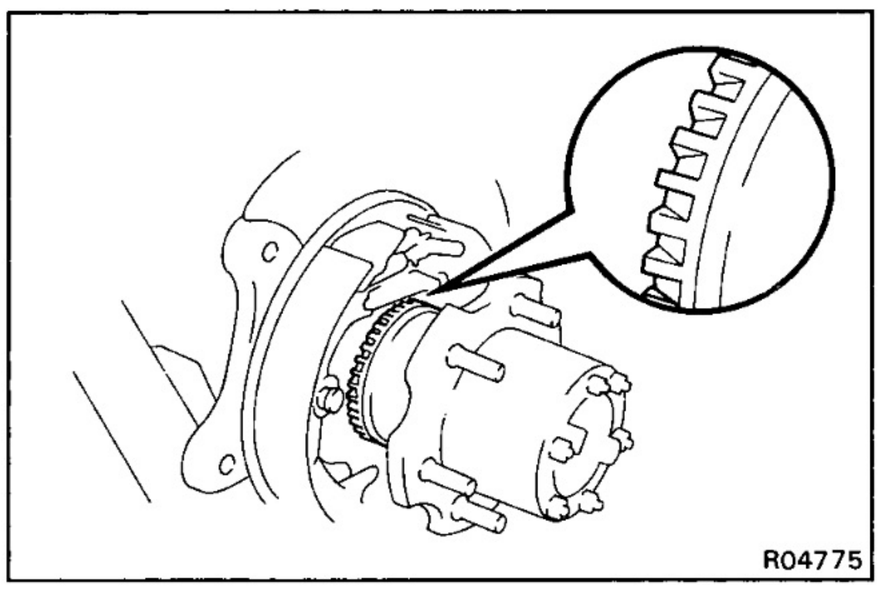

3. VISUALLY INSPECT SENSOR ROTOR SERRATIONS

(a) Remove the brake disc.
(See pub No. RM184E, page BR-57)

(b) Inspect the sensor rotor serrations for scratches, cracks, warping or missing teeth.

(c) Install the brake disc.
(See pub No. RM184E, page BR-64)

NOTICE: To prevent damage to the serrations, do not strike the axle hub.

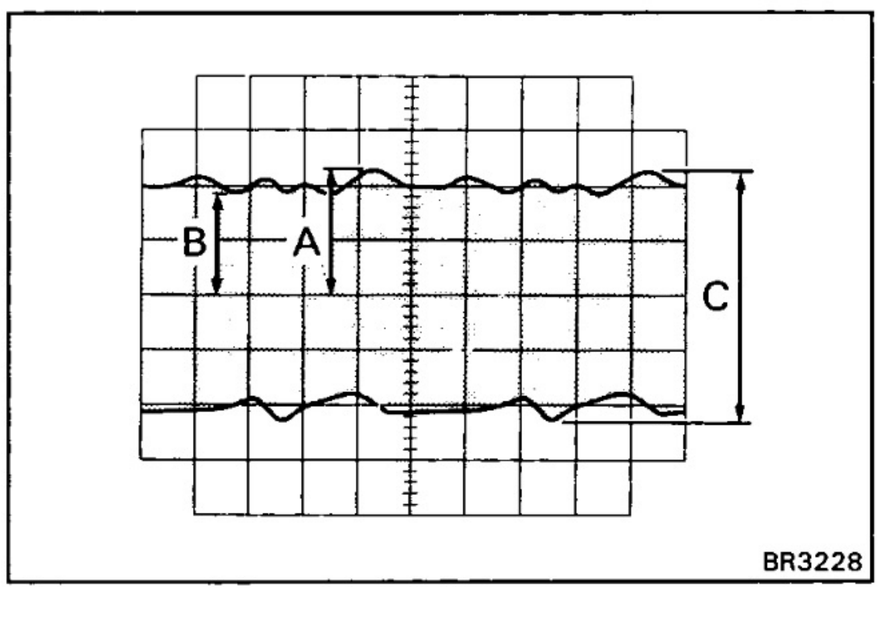

REAR SPEED SENSOR AND SENSOR ROTOR SERRATIONS INSPECTION (REFERENCE)

INSPECT REAR SPEED SENSOR AND SENSOR ROTOR SERRATIONS BY USING AN OSCILLOSCOPE

(a) Connect an oscilloscope to the speed sensor connector.

(b) Run the vehicle at 20 km/h (12.4 mph), and inspect speed sensor output wave.

(c) Check that C is 0.5 V or more.
If not as specified, replace the speed sensor.

(d) Check that B is 50 % or more of A.
If not as specified, replace the rear axle hub.

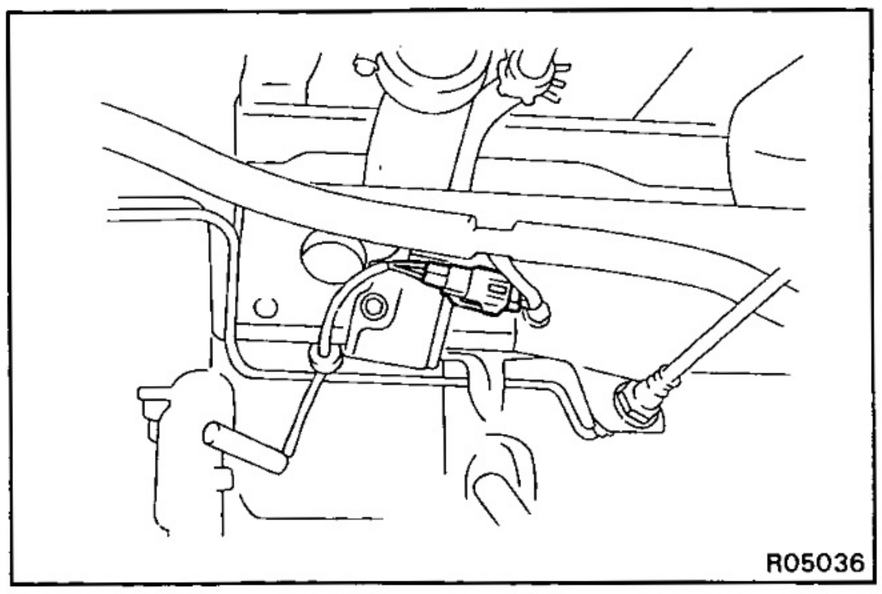

REAR SPEED SENSOR REMOVAL

HINT: When replacing the sensor or sensor harness, replace the sensor and sensor harness together as a set.

1. DISCONNECT SPEED SENSOR CONNECTOR

(a) Disconnect the speed sensor connector.

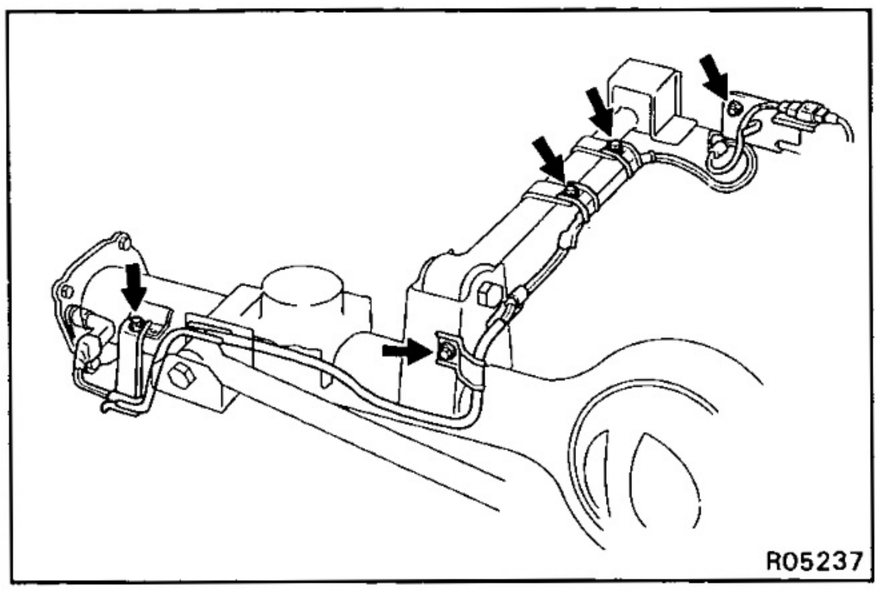

(b) Remove the five clamp bolts holding the sensor wire harness from the suspension arm and frame.

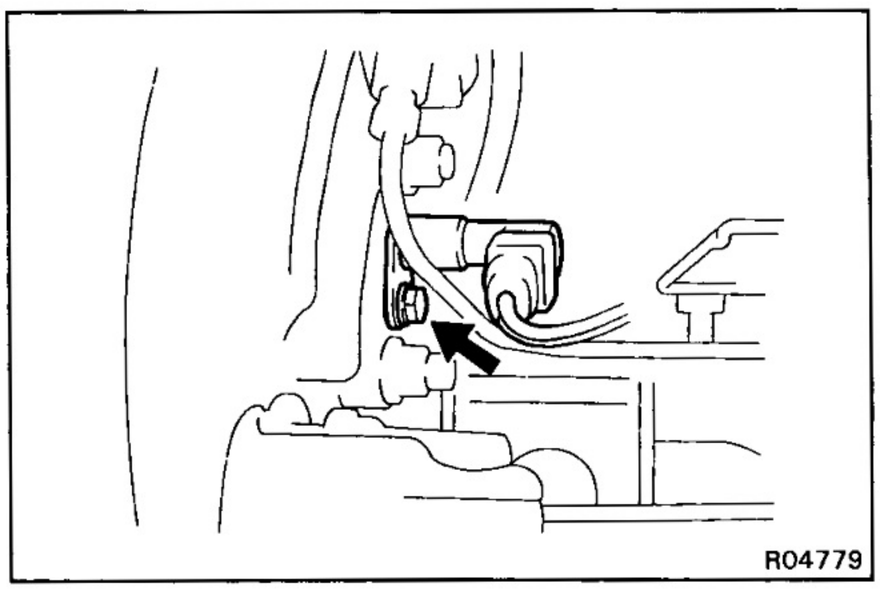

2. REMOVE SPEED SENSOR

Remove the speed sensor from the axle end.

REAR SPEED SENSOR INSTALLATION

1. INSTALL SPEED SENSOR

Install the speed sensor to the axle end.

Torque: 18 N·m (185 kgf·cm, 13 ft·lbf)

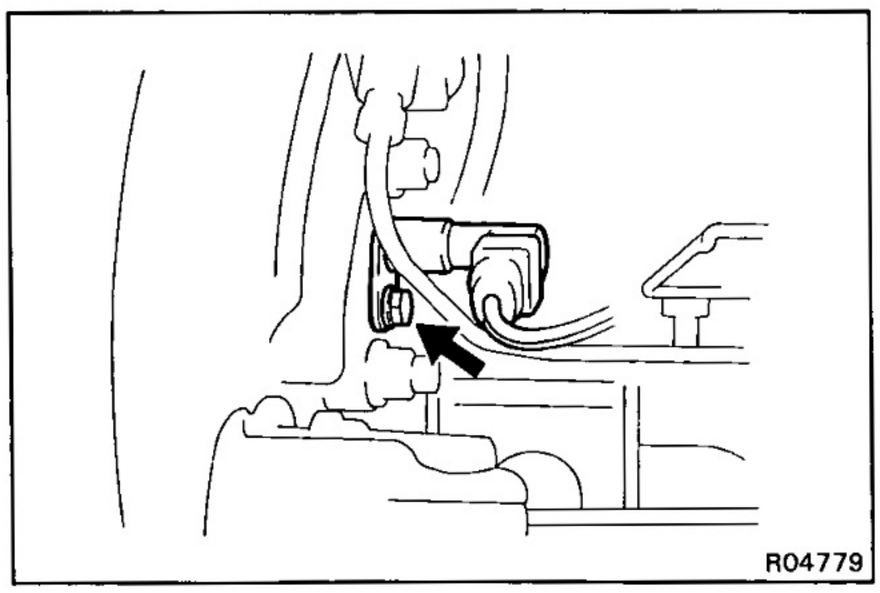

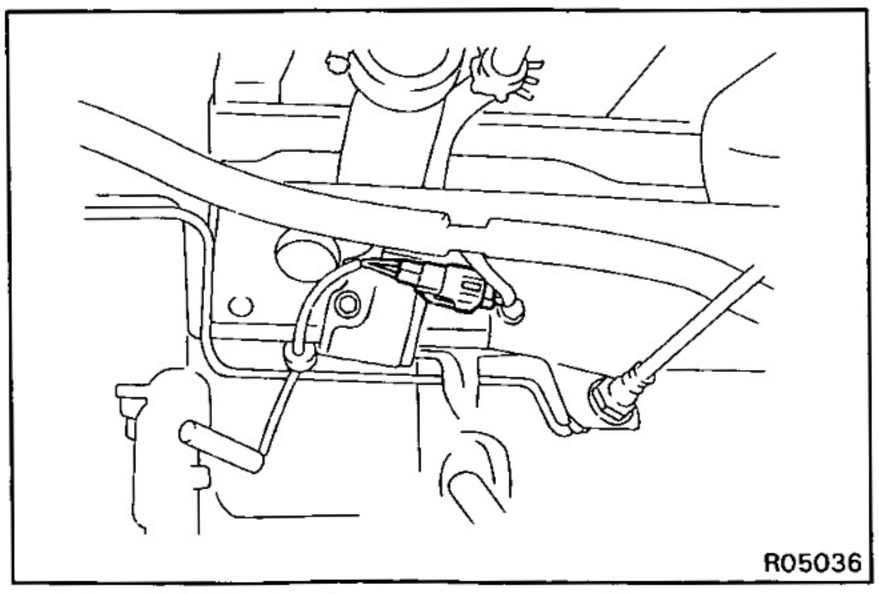

2. CONNECT SPEED SENSOR CONNECTOR

(a) Connect the speed sensor connector.

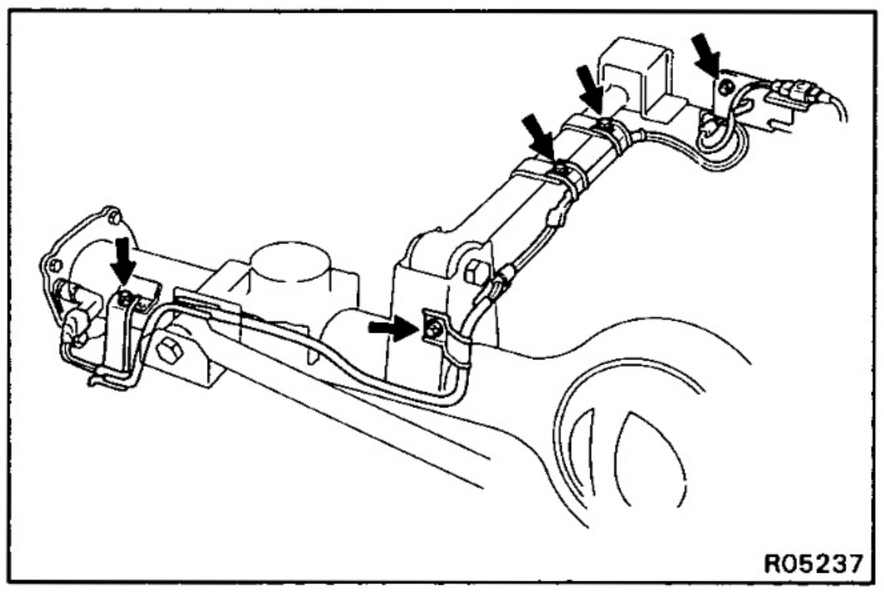

(b) Install the sensor harness with the clamps and bolts in place.

3. INSPECT SPEED SENSOR AND DECELERATION SENSOR DIAGNOSIS SYSTEM

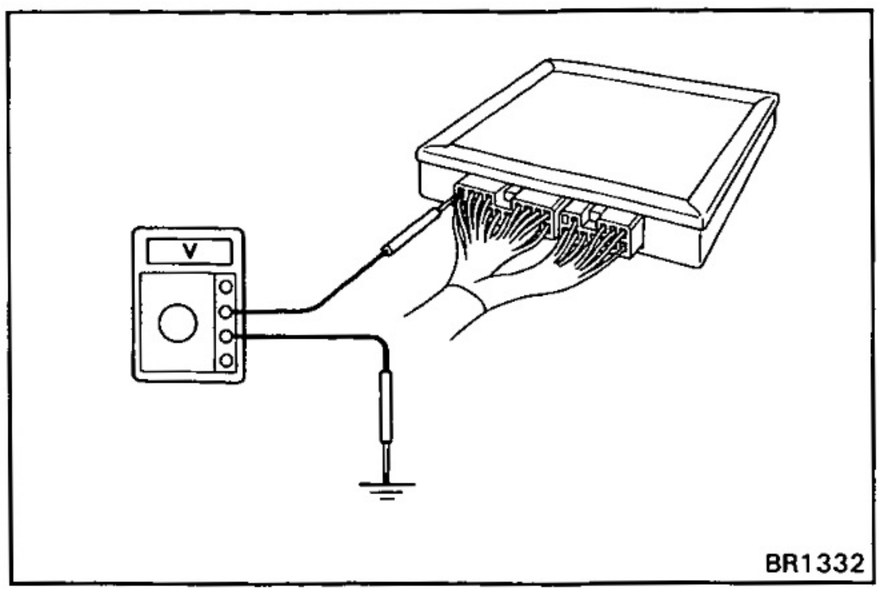

ANTI-LOCK BRAKE SYSTEM CIRCUIT

SYSTEM CIRCUIT INSPECTION

1. INSPECT SYSTEM CIRCUIT WITH CONNECTOR CONNECTED

(a) Remove the ABS ECU.

(b) Using a voltmeter with high impedance (10 kΩ/V minimum), measure the voltage at each terminal and body ground.

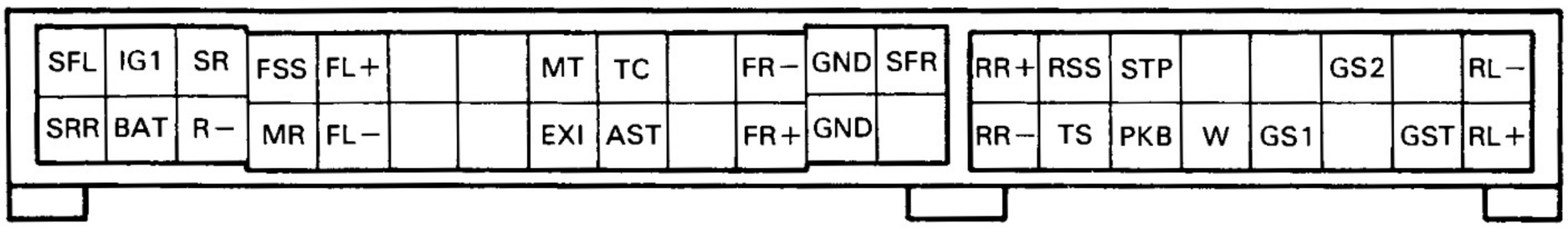

Tester Connection	Check Item	Condition	Specified Value	Trouble Part
RL−	Continuity	IG switch off	Continuity	ABS ECU
GS2	Voltage	IG switch on	4 ~ 6 V	Deceleration Sensor
STP	Voltage	IG switch off and brake pedal depressed	Battery voltage	Stop light switch Stop Light
	Continuity	IG switch off and brake pedal returned	Continuity	
RSS	Continuity	IG switch off	Continuity	ABS ECU
GS1	Voltage	IG switch on	4 ~ 6 V or 7 ~ 12 V	Deceleration Sensor
W	Voltage	IG switch on and "ABS" warning light goes on	About 0 V	ABS ECU "ABS" warning light
		IG switch on and "ABS" warning light goes off	Battery voltage	
PKB	Voltage	IG switch on and PKB lever pulled	About 0 V	Parking brake switch Level warning switch
		IG switch on and PKB lever returned	Battery voltage	
TS	Voltage	IG switch on and check connector Tc−E_1 connected	About 0 V	ABS ECU
RR−	Continuity	IG switch off	Continuity	
SFR	Voltage	IG switch on and "ABS" warning light goes on	About 0 V	Actuator
		IG switch on and "ABS" warning light goes off	Battery voltage	
GND	Continuity	IG switch off	Continuity	Wiring harness
FR−	Continuity	IG switch off	Continuity	ABS ECU
TC	Voltage	IG switch on and check connector Tc−E_1 not connected	Battery voltage	
		IG switch on and check connector Tc−E_1 connected	About 0 V	
FSS	Continuity	IG switch off	Continuity	
SR	Voltage	IG switch on and "ABS" warning light goes on	About 0 V	
		IG switch on and "ABS" warning light goes off	Battery voltage	
IG1	Voltage	IG switch on	Battery voltage	ECU-IG Fuse

Tester Connection	Check Item	Condition	Specified Value	Trouble Part
SFL	Voltage	IG switch on and "ABS" warning light goes on	About 0 V	Actuator
		IG switch on and "ABS" warning light goes off	Battery voltage	
AST	Voltage	IG switch on and "ABS" warning light goes on	About 0 V	
		IG switch on and "ABS" warning light goes off	Battery voltage	
EXI	Voltage	IG switch on and center differential lock indicator light goes off	Battery voltage	GAUGE Fuse
FL−	Continuity	IG switch off	Continuity	ABS ECU
R−	Continuity	IG switch off	Continuity	
BAT	Voltage	IG switch off	Battery voltage	DOME Fuse
SRR	Voltage	IG switch on and "ABS" warning light goes on	About 0 V	Actuator
		IG switch on and "ABS" warning light goes off	Battery voltage	

If the circuit is not as specified, check and repair or replace the trouble part shown in the table above.

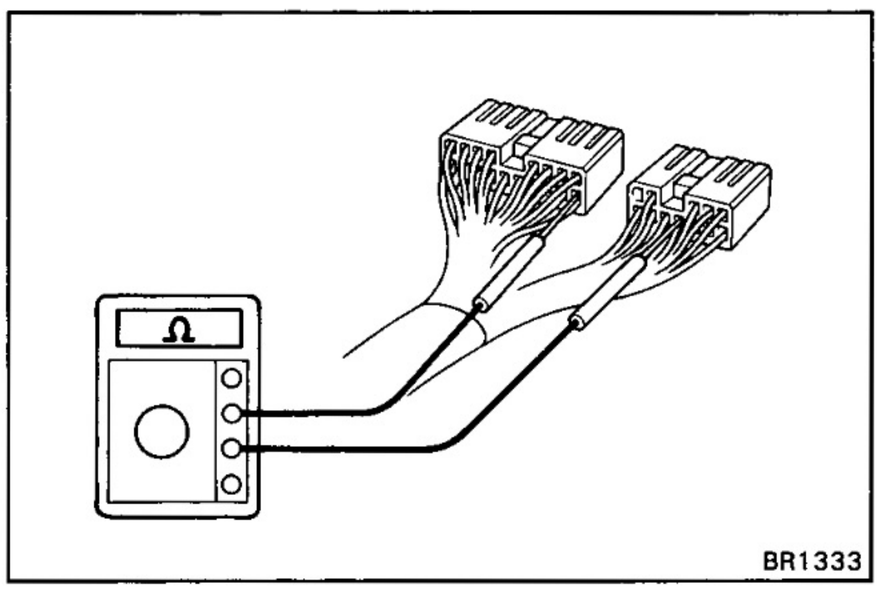

2. INSPECT SYSTEM CIRCUIT WITH CONNECTOR DISCONNECTED

(a) Disconnect the connectors from the ECU, inspect at the wire harness side connector.

Tester Connection	Check Item	Specified Value	Trouble Part	Tester Connection	Check Item	Specified Value	Trouble Part
RR+↔RR−	Resistance	*0.7 ~1.1 kΩ	Rear RH speed sensor	SFL↔AST	Resistance	*About 6 Ω	Actuator
RL+↔RL−	Resistance	*0.7 ~1.1 kΩ	Rear LH speed sensor	FR+↔FR−	Resistance	*0.87 ~1.27 kΩ	Front RH speed sensor
SFR↔AST	Resistance	*About 6 Ω	Actuator	AST↔Body ground	Resistance	*About 5 Ω	Actuator
MT↔Body ground	Continuity	Continuity	Actuator	MR↔R−	Resistance	*55.8 ~68.2 Ω	Control relay
FL+↔FL−	Resistance	*0.87 ~1.27 kΩ	Front LH speed sensor	SRR↔AST	Resistance	*About 6 Ω	Actuator
SR↔R−	Resistance	*60~100 Ω	Control relay				

*: 20°C (68°F)

If the circuit is not as specified, check and repair or repalce the trouble part shown in the table above.

(b) Connect the connectors, and install the ECU in place.

SERVICE SPECIFICATIONS

SERVICE DATA

Brake pedal height from asphalt sheet	167.5 – 177.5 mm (6.59 – 6.99 in.)
Brake pedal freeplay	3 – 6 mm (0.12 – 0.24 in.)
Brake pedal reserve distance at 490 N (50 kgf, 110.2 lbf)	More than 59 mm (2.32 in.)
Brake booster push rod to piston clearance (W/SST)	0 mm (0 in.)

TORQUE SPECIFICATIONS

Part tightened	N·m	kgf·cm	ft·lbf
Master cylinder × Piston stopper bolts	10	100	7
Master cylinder × Reservoir	1.7	17.5	15.2 in.·lbf
Master cylinder × Brake booster	13	130	9
Brake tube union nut	15	155	11
LSP & BV Bracket × Frame	19	195	14
LSP & BV × LSP & BV Bracket	13	130	9
LSP & BV Spring × LSP & BV Bracket	18	185	13
LSP & BV Spring × Shackle No. 1	18	185	13
LSP & BV Shackle lock nut	25	250	18
LSP & BV Shackle × Shackle bracket	13	130	9
LSP & BV Shackle bracket × Rear axle housing	19	195	14
ABS actuator bracket × Body	19	195	14
Front speed sensor installation bolt	18	185	13
Rear speed sensor installation bolt	18	185	13

BODY ELECTRICAL SYSTEM

REFER TO FOLLOWING REPAIR MANUALS:

Manual Name	Pub. No.
• Land Cruiser (Hardtop and Canvas Top) Chassis and Body Repair Manual	RM183E
• Land Cruiser (Station Wagon) Chassis and Body Repair Manual	RM184E
• Land Cruiser (Hardtop, Canvas Top and Station Wagon) Chassis and Body Repair Manual Supplement	RM290E

NOTE: The following pages contain only the points which differ from the above listed manuals.

(HARDTOP, CANVAS TOP & STATION WAGON)

WIPER AND WASHER SYSTEM ····· BE-2
COMBINATION METER ····· BE-3
POWER SEAT CONTROL SYSTEM ····· BE-21
CRUISE CONTROL SYSTEM ····· BE-29
EXTRA (SUB) TANK SYSTEM ····· BE-50
SATELLITE NAVIGATION SYSTEM ····· BE-59

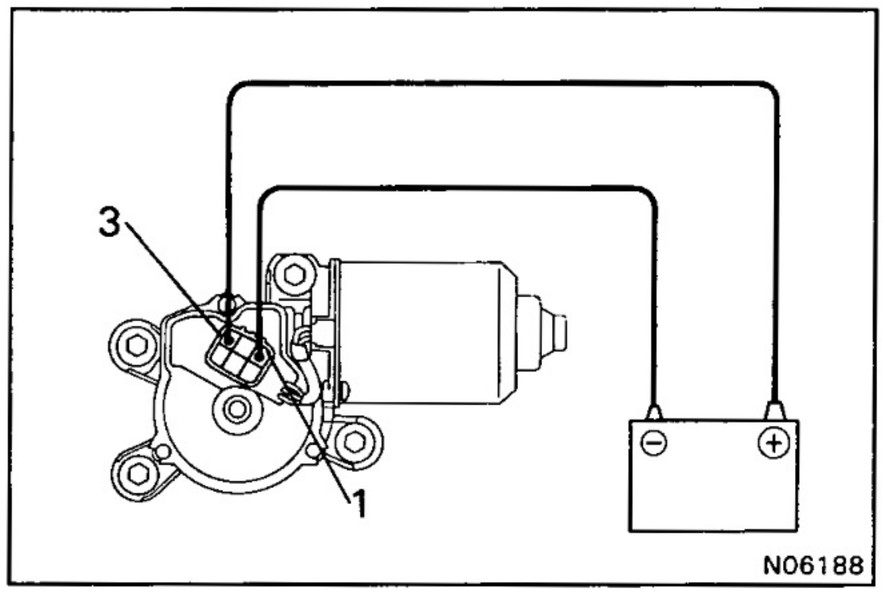

WIPER AND WASHER SYSTEM

FRONT WIPER MOTOR

FRONT WIPER MOTOR INSPECTION

OPERATION AT LOW SPEED

Connect the positive (+) lead from the battery to terminal 3 and negative (−) lead to terminal 1, check that the motor operates at low speed.

If operation is not as specified, replace the motor.

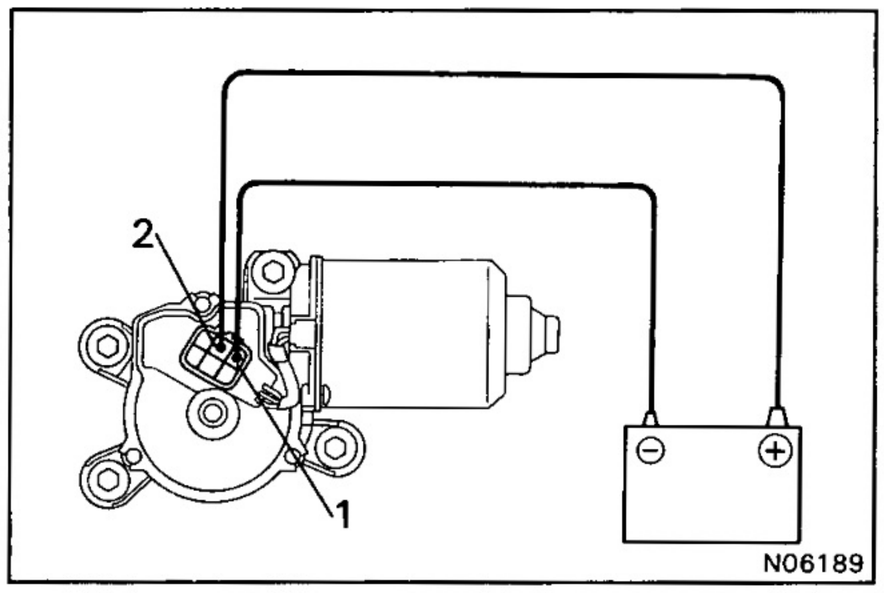

OPERATION AT HIGH SPEED

Connect the positive (+) lead from the battery to terminal 2 and the negative (−) lead to terminal 1, check that the moor operates at high speed.

If operation is not as specified, replace the motor.

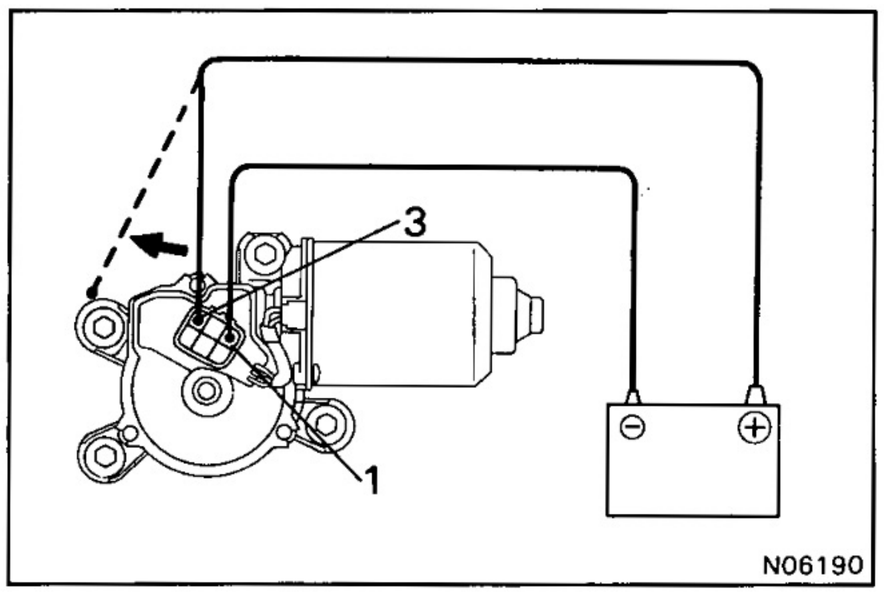

OPERATION, STOPPING AT STOP POSITION

(a) Operate the motor at low speed and stop the motor operation anywhere except at the stop position by disconnecting positive (+) lead from terminal 3.

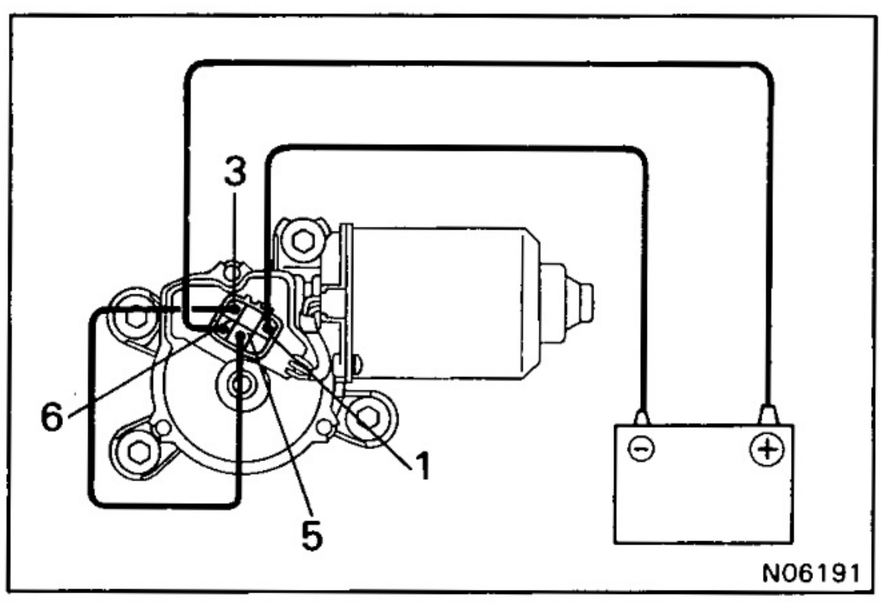

(b) Connect terminal 3 and 5.

(c) Connect the positive (+) lead from the battery to terminal 6 and the negative (−) lead to the terminal 1, check that the motor stops running at the stop position after the motor operates again.

If operation is not as specified, replace the motor.

COMBINATION METER

PARTS LOCATION

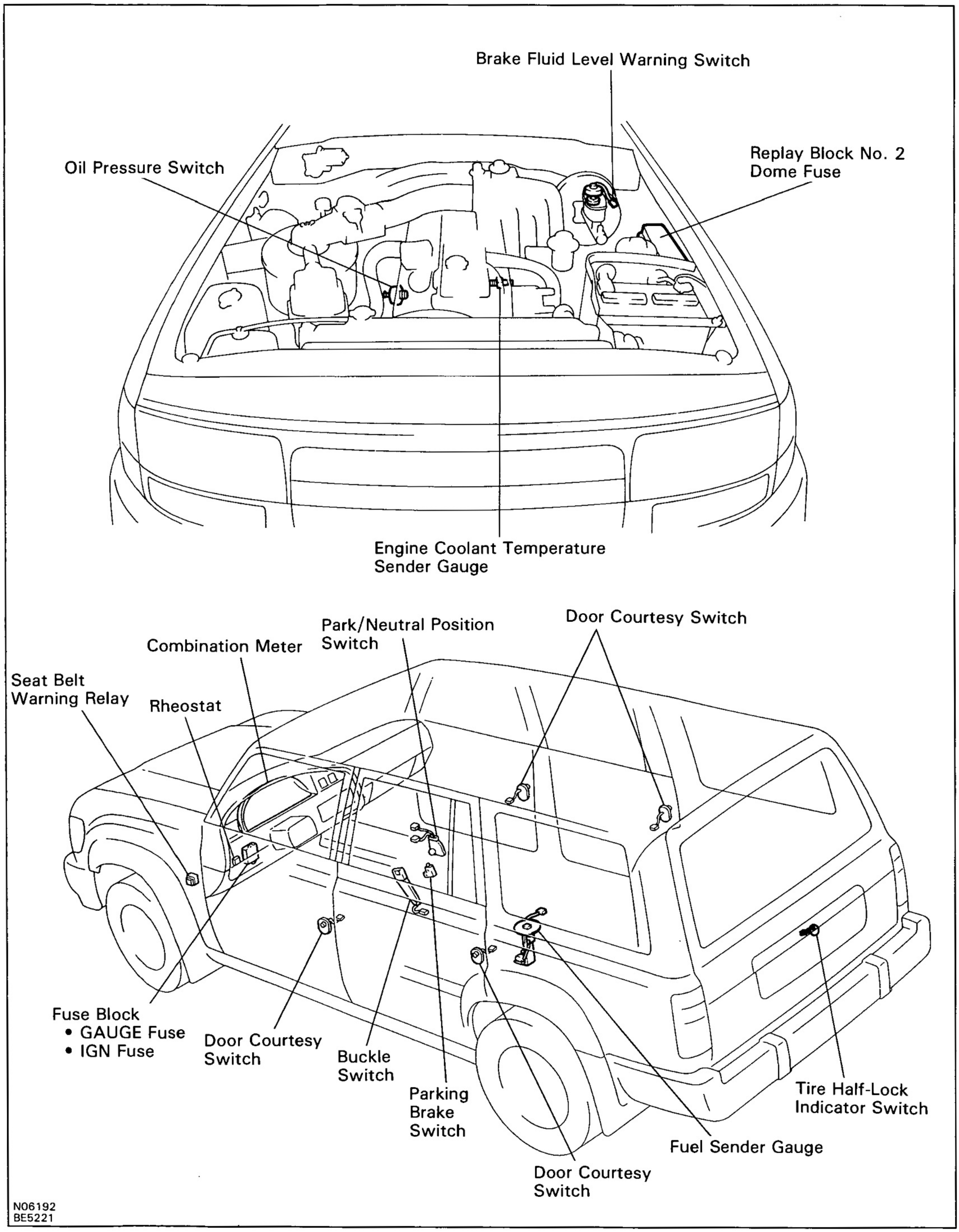

N06192
BE5221

METER CIRCUIT

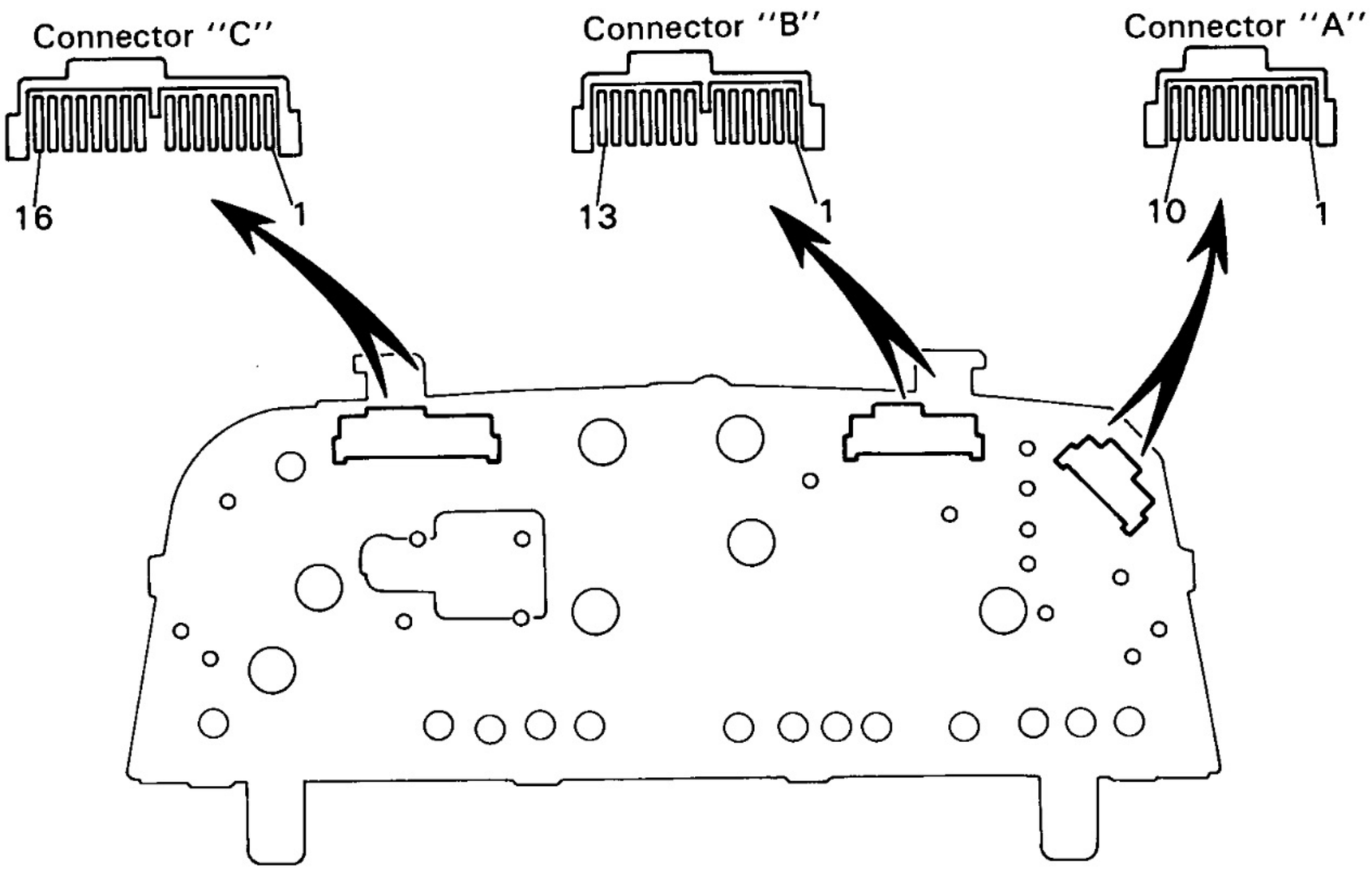

N06193

METER CIRCUIT

Hi-Grade

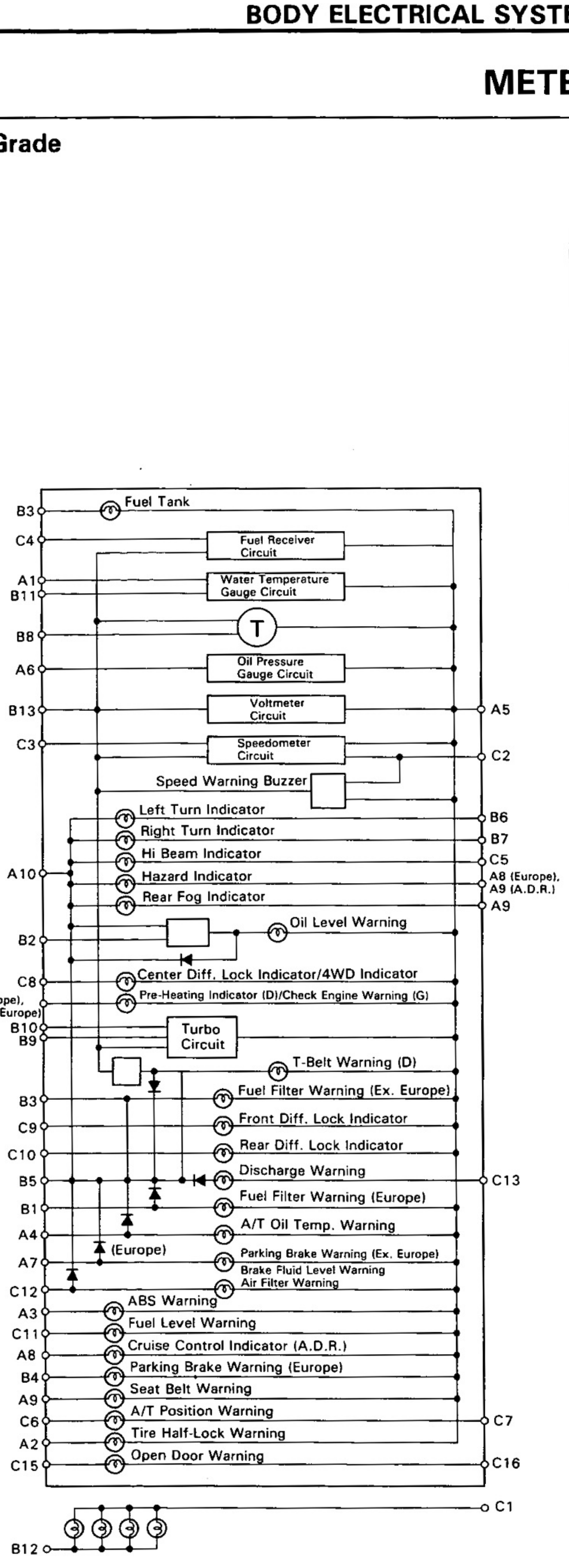

N06714

No.		Wiring Connector Side
A	1	Ground (TEMP)
	2	Tire Half-Lock Indicator Switch
	3	ABS ECU (Ex. G.C.C.)
	4	A/T Fluid Temperature Sensor
	5	GAUGE Fuse
	6	Low Oil Pressure Sender Gauge
	7	Brake Warning Switch Brake Fluid Level Warning (Europe) Brake Fluid Level Warning and Parking Brake Warning (Ex. Europe)
	8	Hazard Warning Light Switch (Europe) Cruise Control ECU (A.D.R.)
	9	Rear Fog Light Switch (Europe) Hazard Warning Light Switch (A.D.R.) Seat Belt Warning Relay (G.C.C.)
	10	Ground
B	1	Fuel Filter Warning Switch (Europe)
	2	Engine Oil Level Sensor (Ex. G.C.C.)
	3	EFI ECU (Gasoline engine) (Europe) Glow Timer Relay (Diesel engine)(Europe) Fuel Tank ECU (Ex. Europe), Fuel Filter Warning
	4	EFI ECU (Gasoline engine) (Ex. Europe) Glow Timer Relay (Diesel engine)(G.C.C., A.D.R.) Parking Brake Switch (Europe)
	5	Charge Light Relay
	6	Light Control Switch (Left)
	7	Light Control Switch (Right)
	8	Igniter (Gasoline engine), Tacho Pick Sensor (Diesel engine M/T), ECT ECU (Diesel engine A/T)
	9	Turbo Pressure Switch B (Diesel engine)
	10	Turbo Pressure Switch A (Diesel engine)
	11	Water Temperature Gauge
	12	Light Control Rheostat, Illumination (−)
	13	Ground (Gauge)
C	1	TAIL Fuse
	2	Speed Control Unit
	3	Speed Sensor
	5	Headlight Hi-Beam
	6	Neutral Start Switch (−)
	7	Neutral Start Switch (+)
	8	Center Diff. Lock Indicator Switch 4WD Indicator Switch (G.C.C., A.D.R.)
	9	Front Diff. Lock Indicator Switch
	10	Rear Diff. Lock Indicator Switch
	11	Fuel Level Warning Switch
	12	Air Filter Warning Switch
	13	IGN Fuse
	14	Fuel Sender Gauge
	15	Door Courtesy Switch
	16	Dome Fuse

METER CIRCUIT

Lo-Grade

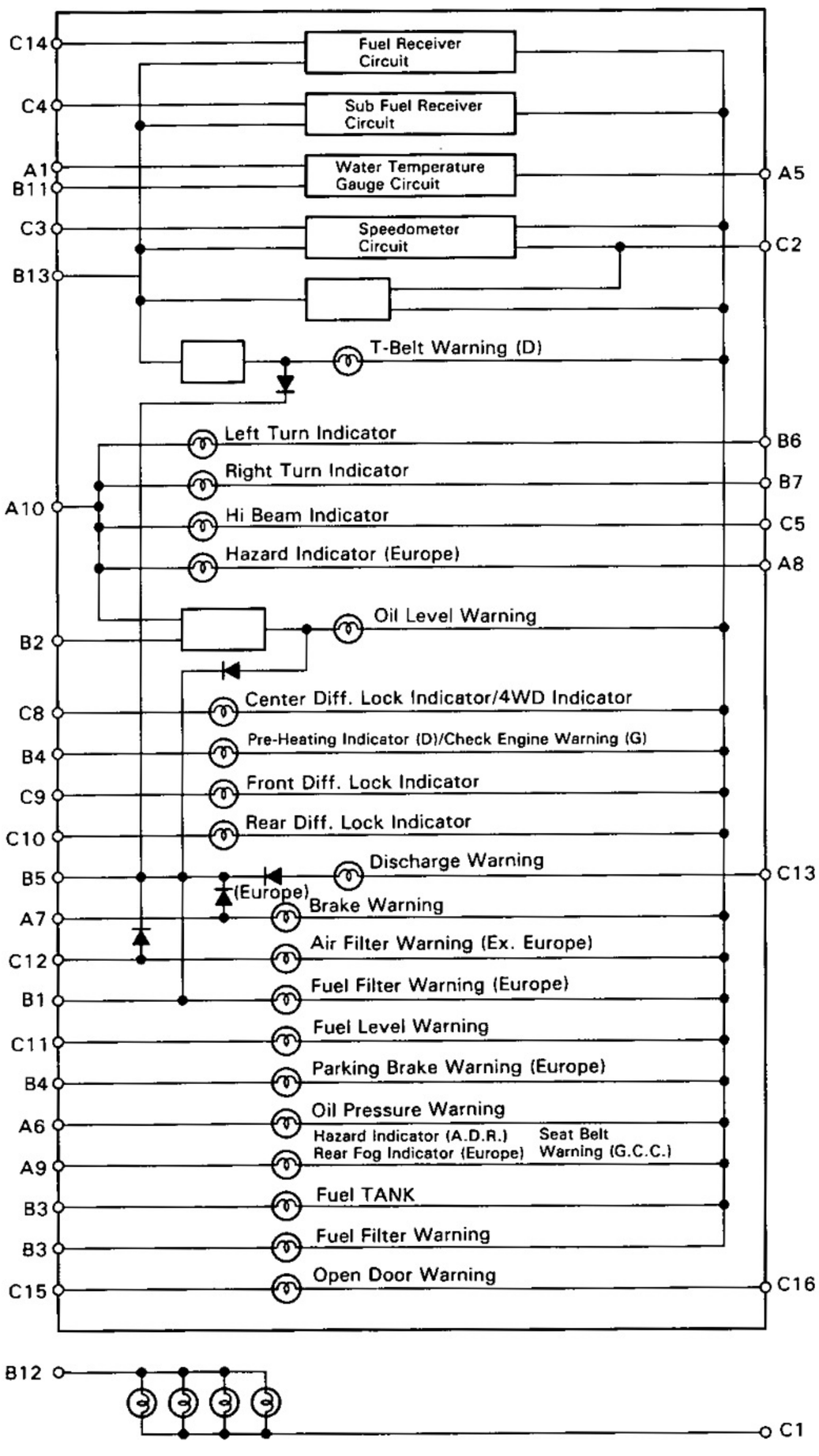

No.		Wiring Connector Side
A	1	Ground (TEMP)
	5	GAUGE Fuse
	6	Oil Pressure Switch
	7	Brake Warning Switch
	8	Hazard Warning Switch (Europe)
	9	Hazard Warning Switch (A.D.R.) Rear Fog Light Switch (Europe) Seat Belt Warning Relay (G.C.C.)
	10	Ground
B	1	Fuel Filter Warning Switch (Europe)
	2	Engine Oil Level Sensor (Ex. G.C.C.)
	3	Fuel Filter Warning (Ex. Europe) Glow Timer Relay (Europe), Fuel Tank (A.D.R.)
	4	EFI ECU (Gasoline)(A.D.R.) Glow Timer Relay (Ex. Europe) Parking Brake Switch (Europe)
	5	Charge Light Relay
	6	Light Control Switch (Left)
	7	Light Control Switch (Right)
	11	Engine Coolant Temperature Gauge
	12	Light Control Rheostat, Illumination (−)
	13	Ground (Gauge)
C	1	TAIL Fuse
	2	Speed Control Unit
	3	Speed Sensor
	4	Sub Fuel Sender Gauge (Ex. Europe)
	5	Headlight Hi-Beam
	8	Center Diff. Lock Indicator Switch (Europe) 4WD Indicator Switch (Ex. Europe)
	9	Front Diff. Lock Indicator Switch
	10	Rear Diff. Lock Indicator Switch
	11	Fuel Level Warning Switch
	12	Air Filter Warning Switch (Ex. Europe)
	13	IGN Fuse
	14	Fuel Sender Gauge
	15	Door Courtesy Switch
	16	Dome Fuse

- **SHIFT POSITION INDICATOR**

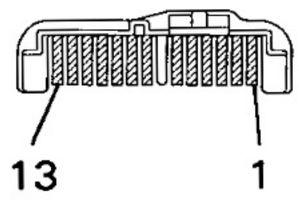

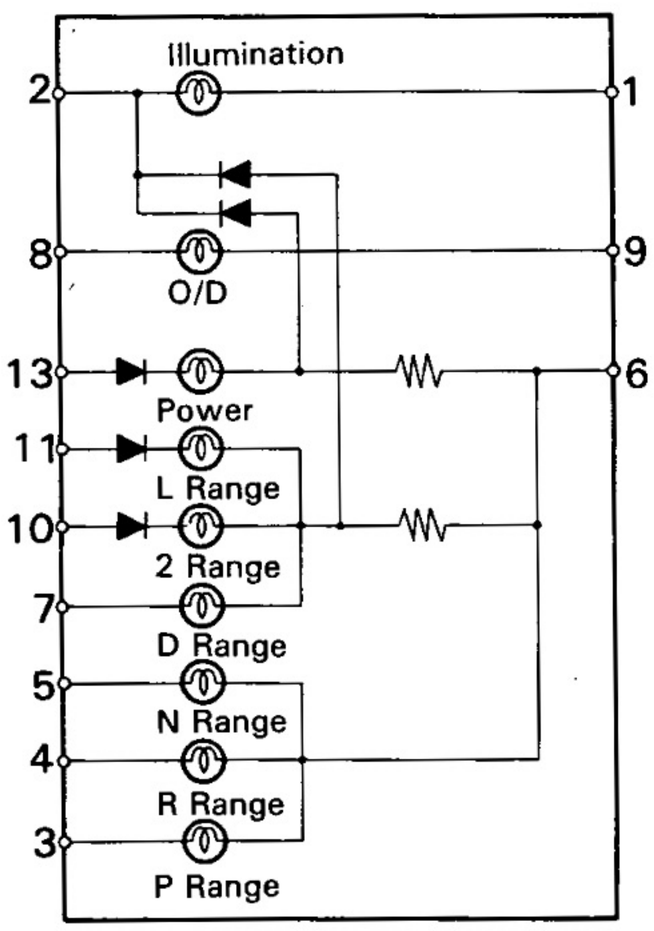

No.	Wiring Connector Side
1	Ground
2	TAIL Fuse
3	Neutral Start Switch "P"
4	Neutral Start Switch "R"
5	Neutral Start Switch "N"
6	Ground
7	Neutral Start Switch "D"
8	GAUGE Fuse
9	O/D Switch
10	Neutral Start Switch "N"
11	Neutral Start Switch "L"
13	ECT SELECT Switch

N03970
N06733

TROUBLESHOOTING

The table below will be useful for you in troubleshooting these electrical problems. The most likely causes of the malfunction are shown in the order of their probability. Inspect each part in the order shown, and replace the part when it is found to be faulty.

Trouble	Part name	See page
Combination meter do not operate.	1. GAUGE Fuse 2. Wire Harness	— —
Speedometer does not operate.	1. Speed Sensor	BE-10
Tachometer does not operate.	1. Tachometer 2. Igniter (Tacho pick sensor, ECT ECU) 3. Wire Harness	BE-11 — —
Fuel gauge does not operate.	1. Receiver Gauge 2. Sender Gauge 3. Wire Harness	BE-11 BE-12 —
Fuel level warning light does not light up.	1. Bulb 2. Fuel Level Warning Switch 3. Wire Harness	— BE-12 —
Water temperature gauge does not operate.	1. Receiver Gauge 2. Sender Gauge 3. Wire Harness	BE-13 BE-13 —
Oil pressure gauge does not operate.	1. Receiver Gauge 2. Sender Gauge 3. Wire Harness	BE-15 BE-15 —
Voltmeter does not operate.	1. Receiver Gauge 2. Wire Harness	BE-14 —
Brake warning light does not light up.	1. Bulb 2. Brake Fluid Level Warning Switch 3. Parking Brake Switch 4. Wire Harness	— BE-16 BE-16 —
Seat belt warning light does not light up.	1. Bulb 2. Seat Belt Warning Switch 3. Seat Belt Warning Relay 4. Wire Harness	— BE-17 BE-17 —
Open door warning light does not light up.	1. Bulb 2. Door Courtesy Switch 3. Wire Harness	— BE-16 —
Tire half-lock warning light does not light up.	1. Bulb 2. Tire Half-Lock Indicator Switch 3. Wire Harness	— BE-18 —

Trouble	Part name	See page
ABS warning light does not light up.	1. Bulb 2. ABS ECU 3. Wire Harness	– – –
Meter illumination control system does not operate.	1. Bulb 2. Light Control Rheostat 3. Wire Harness	– BE-19 –
Shift position indicator light does not light up.	1. Bulb 2. Neutral Position Switch 3. Wire Harness	– – –
Engine oil level warning light does not light up.	1. Bulb 2. Engine Oil Level Sensor 3. Wire Harness	– BE-19 –

(km/h) A.D.R.

Standard indication	Allowable range
40	36 — 44
60	54 — 66
80	72 — 88
100	90 — 110
120	108 — 132
140	126 — 154
160	144 — 176

(km/h) Europe, G.C.C., General

Standard indication	Allowable range
20	20 — 26
40	40 — 48
60	60 — 70
80	80 — 92
100	100 — 114
120	120 — 136
140	140 — 158
160	160 — 180

(mph) General

Standard indication	Allowable range
20	20 — 24.5
40	40 — 46.5
60	60 — 68.5
80	80 — 90.5
100	100 — 112.5

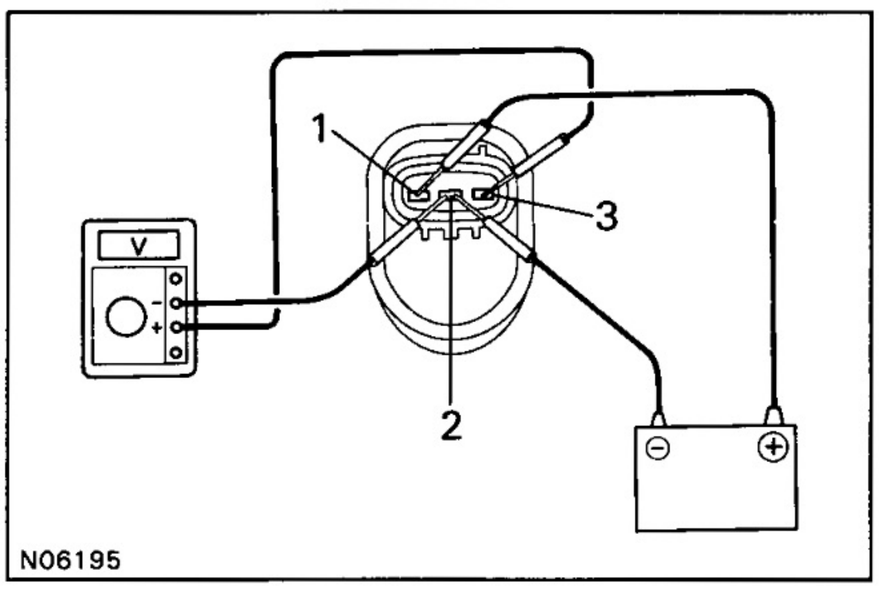

SPEEDOMETER SYSTEM

INSPECT SPEEDOMETER (ON-VEHICLE)

(a) Using a speedometer tester, inspect the speedometer for allowable indication error and check the operation of the odometer.

HINT: Tire wear and tire over or under inflation will increase the indication error.

(b) Check the speedometer for pointer vibration and abnormal noise.

HINT: Pointer vibration can be caused by a loose speedometer cable.

SPEED SENSOR INSPECTION

(a) Connect the positive (+) lead from battery to terminal 1 and negative (−) lead to terminal 2.

(b) Connect the positive (+) lead from tester to terminal 3 and negative (−) lead to terminal 2.

(c) Revolve shaft.

(d) Check that there is voltage changer from approx. 0 V to 11 V or more between terminal 3 and 2.

HINT: The voltage change should be 20 times per each revolution of the speed sensor shaft.

If operation is not as specified, replace the sensor.

DC 13.5 V 20°C (68°F) rpm	
Standard Indication	Allowable range
700	630 — 770
1,000	900 — 1,100
2,000	1,875 — 2,125
3,000	2,850 — 3,150
4,000	3,850 — 4,150
5,000	4,850 — 5,150

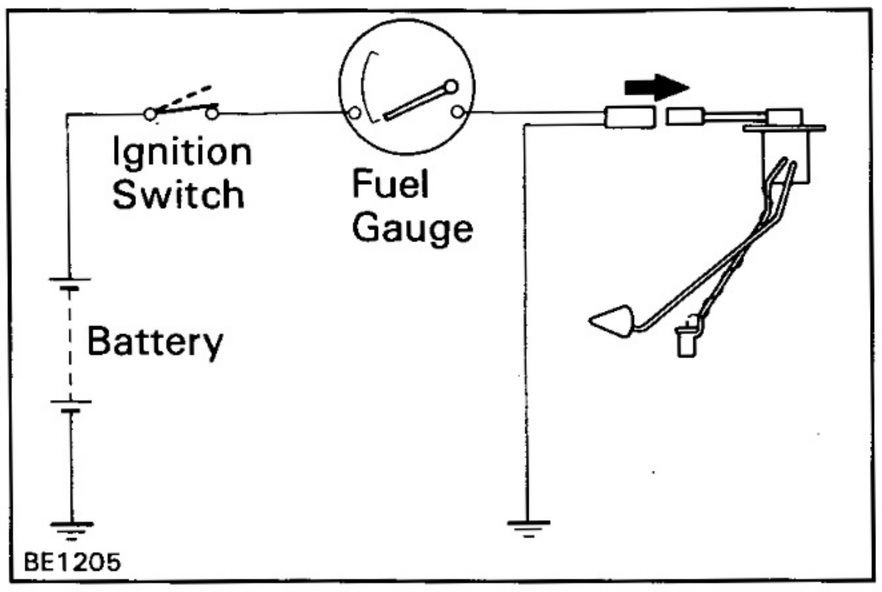

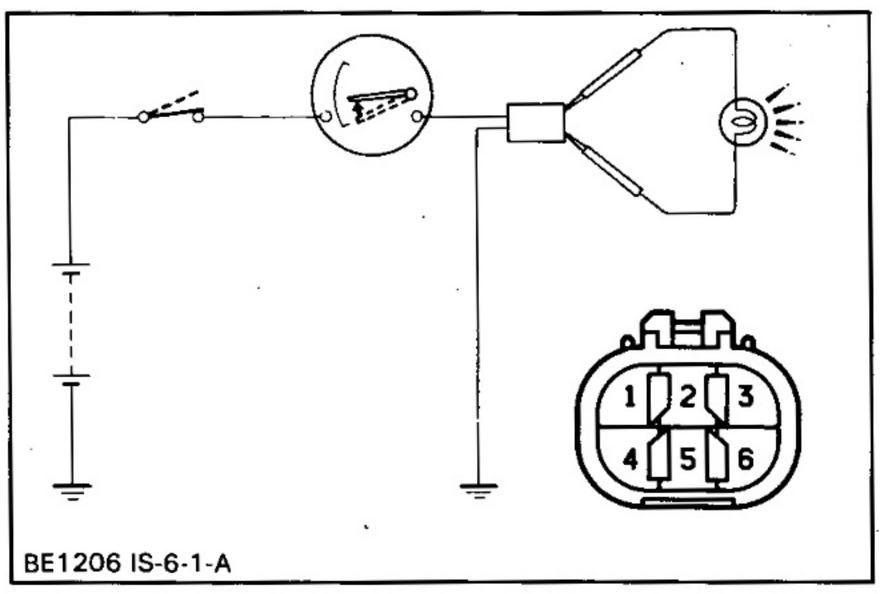

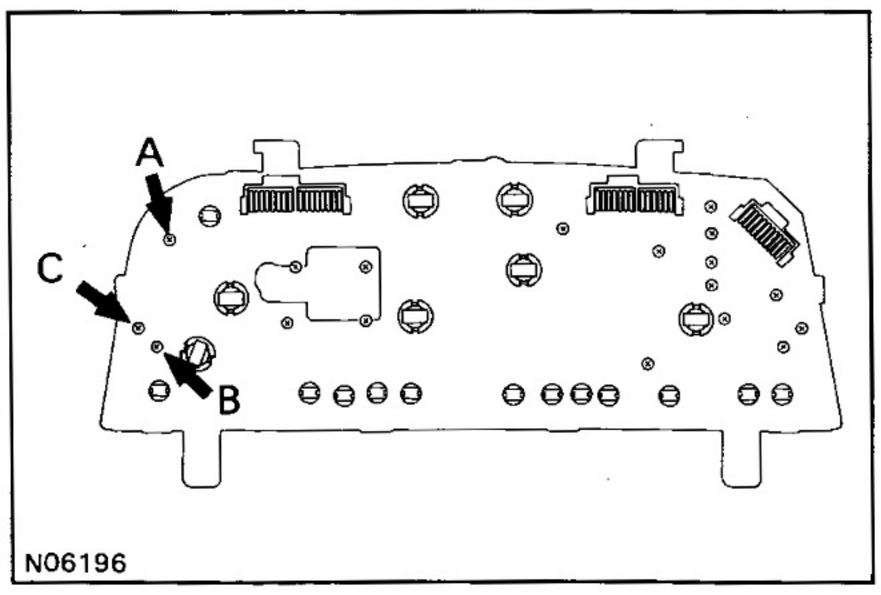

TACHOMETER SYSTEM

TACHOMETER INSPECTION

INSPECT TACHOMETER (ON-VEHICLE)

(a) Connect a tune-up test tachometer, and start the engine.

NOTICE:

- **Reversing the connection of the tachometer will damage the transistors and diodes inside.**
- **When removing or installing the tachometer, be careful not to drop or subject it to heavy shocks.**

(b) Compare the tester and tachometer indications.

If error is excessive, replace the tachometer.

FUEL GAUGE SYSTEM

FUEL RECEIVER GAUGE INSPECTION

OPERATION

(a) Disconnect the connector from the sender gauge.

(b) Turn the ignition switch ON, check that the receiver gauge needle indicates EMPTY.

(c) Connect terminals 4 and 5 on the wire harness side connector through a 3.4 watts test bulb.

(d) Turn the ignition switch ON, check that the bulb lights up and the receiver gauge needle moves towards the full side.

HINT: Because of the silicon oil in the gauge, it will take a short time for needle to stabilize.

If operation is not as specified, inspect the receiver gauge resistance.

RESISTANCE

Measure the resistance between terminals.

Between terminals	Resistance (Ω)
A — B	85.5 — 105.5
A — C	126 — 150
C — B	*90 — 110
*: Include voltmeter resistance.	

If resistance value is not as specified, replace the receiver gauge.

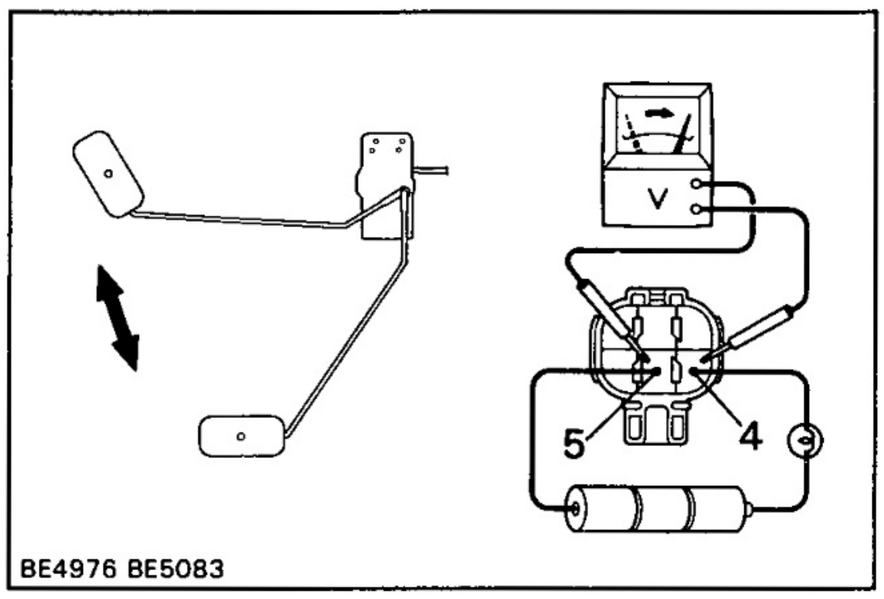

BE4976 BE5083

FUEL SENDER GAUGE INSPECTION

OPERATION

(a) Connect a series of three 1.5 volts dry cell batteries.

(b) Connect the positive (+) lead from the dry cell batteries to terminal 4 through a 3.4 watts test bulb and the negative (−) lead to terminal 5.

(c) Connect the positive (+) lead from the voltmeter to terminal 4 and the negative (−) lead to terminal 5.

(d) Check that the voltage rises as the float is moved from the full to empty position.

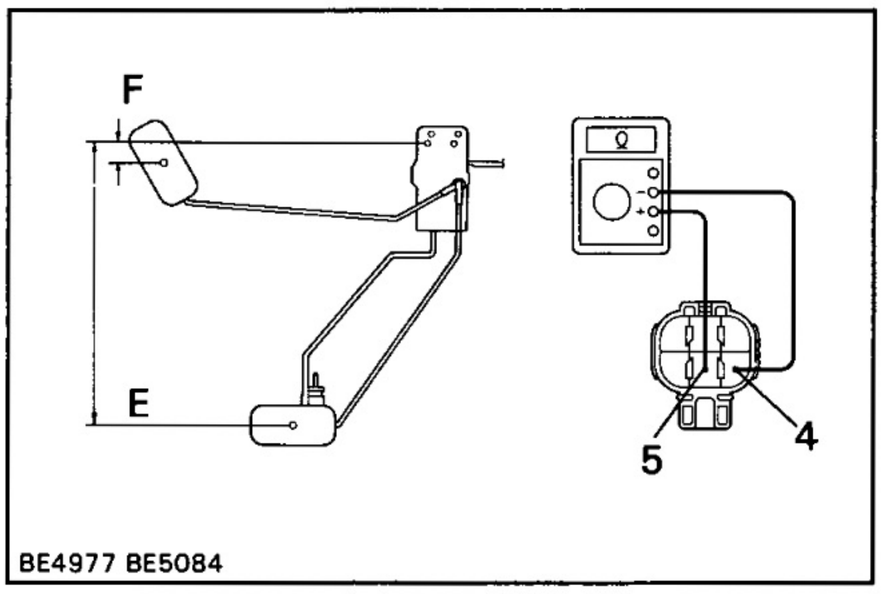

BE4977 BE5084

RESISTANCE

Measure the resistance between terminals 4 and 5.

Float position mm (in.)	Resistance (Ω)
F approx. 15 (0.59)	approx. 3
E approx. 200 (7.87)	approx. 110

If resistance value is not as specified, replace the sender gauge.

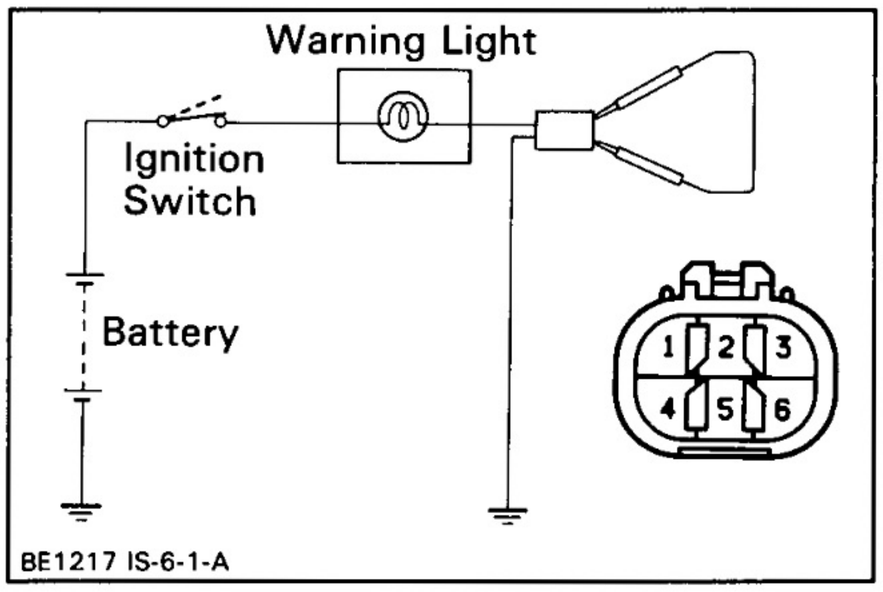

BE1217 IS-6-1-A

FUEL LEVEL WARNING SYSTEM

INSPECT WARNING LIGHT

(a) Disconnect the connector from the sender gauge.

(b) Connect terminals 1 and 5 on the wire harness side connector.

(c) Turn the ignition switch ON, check that the warning light lights up.

If the warning light does not light up, test the bulb.

INSPECT WARNING SWITCH

(a) Apply battery voltage between terminals 1 and 5 through a 3.4 watts test bulb, check that the bulb lights up.

HINT: It will take a short time for the bulb to light up.

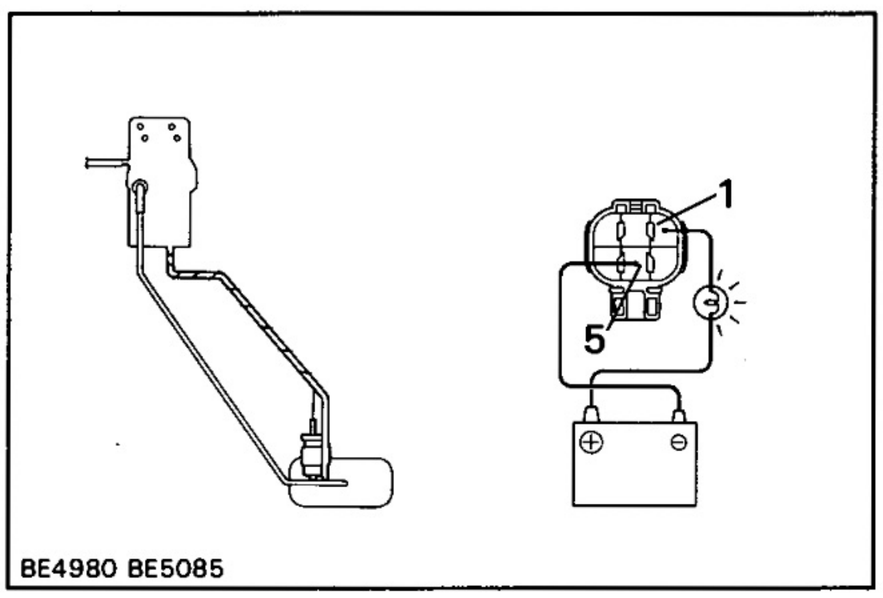

BE4980 BE5085

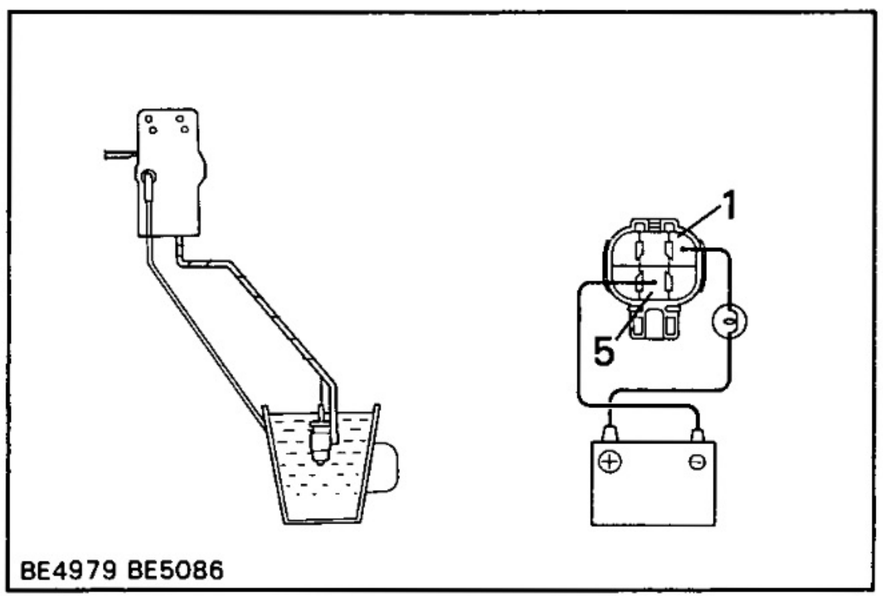

BE4979 BE5086

(b) Submerge the switch in fuel, check that the bulb goes out.

If operation is not specified, replace the sender gauge.

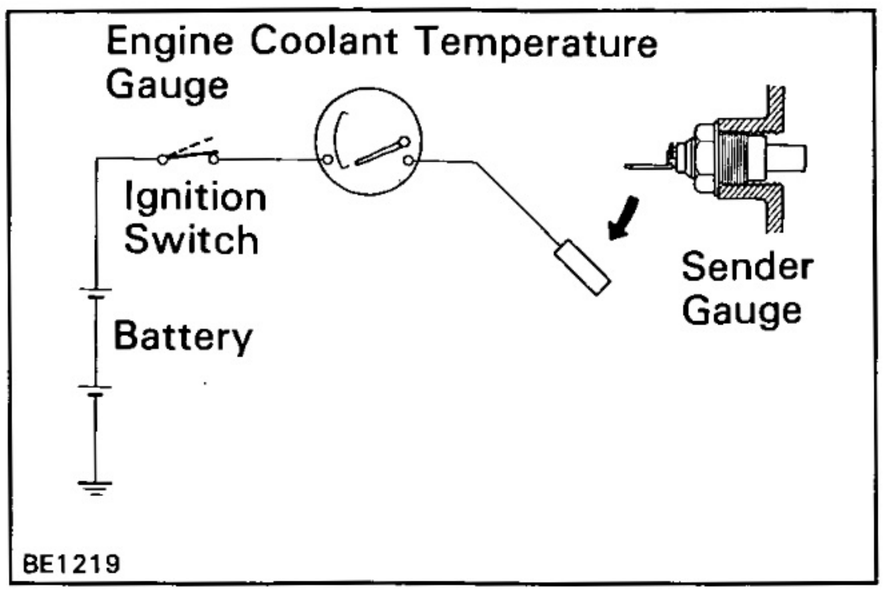

WATER TEMPERATURE GAUGE SYSTEM

WATER TEMPERATURE RECEIVER GAUGE INSPECTION

OPERATION

(a) Disconnect the connector from the sender gauge.

(b) Turn the ignition switch ON, check that the receiver gauge needle indicates COOL.

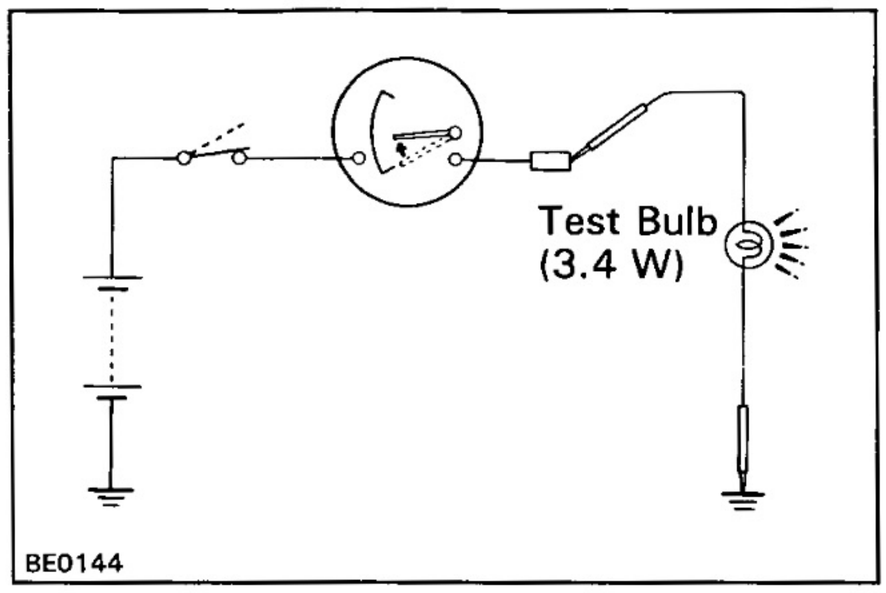

(c) Ground terminal on the wire harness side connector through a 3.4 watts test bulb.

(d) Turn the ignition switch ON, check that the bulb lights up and the receiver gauge needle moves to the hot side.

If operation is as specified, replace the sender gauge. Then recheck the system.

If operation is not as specified, measure the receiver gauge resistance.

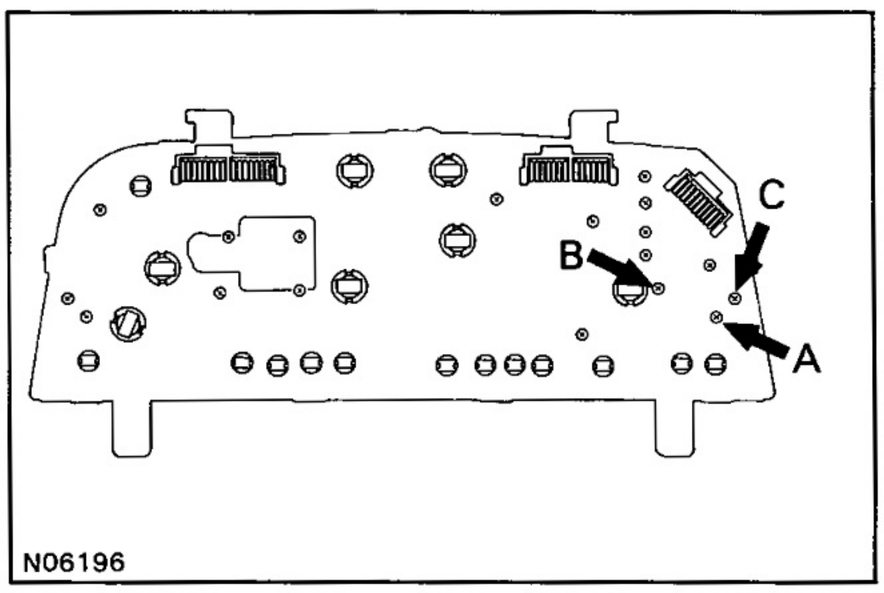

RESISTANCE

Measure the resistance between terminals.

Between terminals	Resistance (Ω)
A – B	71 – 79
A – C	117 – 141
B – C	185 – 215

HINT: Connect the test leads so that the current from the ohmmeter can flow according to the above order. This circuit include the diode.

If resistance value is not as specified, replace the receiver gauge.

VOLTMETER SYSTEM

INSPECT VOLTMETER (ON-VEHICLE)

Compare the tester and voltmeter indications.

If error is excessive, replace the voltmeter.

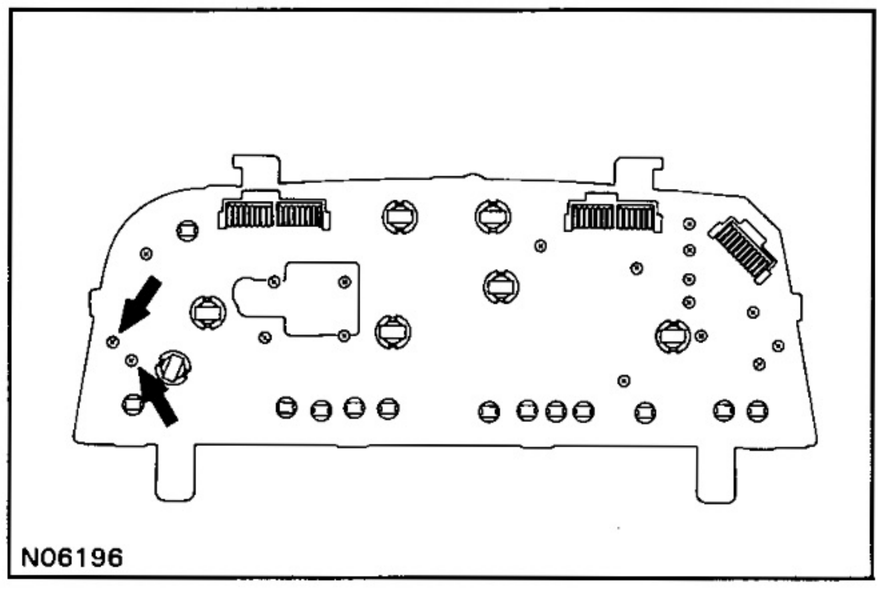

RESISTANCE

Measure the receiver gauge resistance between terminals.

Resistance: 90 — 110 Ω

If resistance value is not as specified, replace the receiver gauge.

HINT: This resistance include fuel receiver gauge resistance.

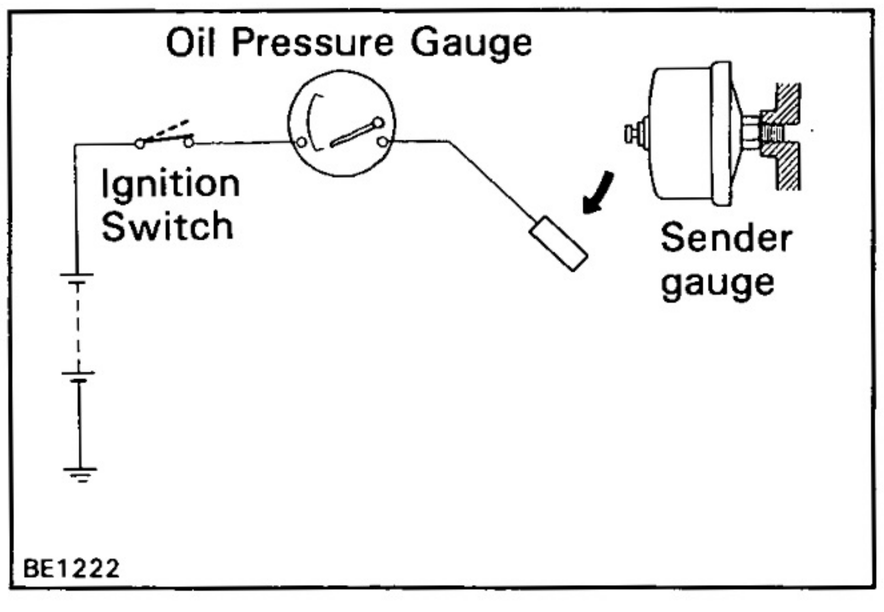

OIL PRESSURE GAUGE SYSTEM

OIL PRESSURE RECEIVER GAUGE INSPECTION

OPERATION

(a) Disconnect the connector from the sender gauge.

(b) Turn the ignition switch ON, check that the receiver gauge needle indicates LOW.

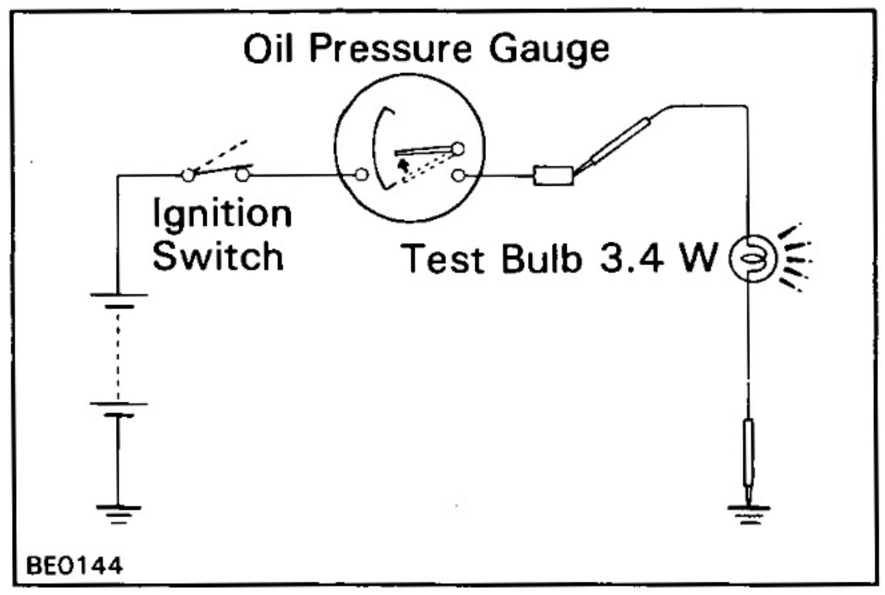

(c) Ground terminal on the wire harness side through a 3.4 W test bulb.

(d) Turn the ignition switch ON, check that the bulb lights up and the receiver gauge needle, moves to the high side.

If operation is not as specified, measure the receiver gauge resistance.

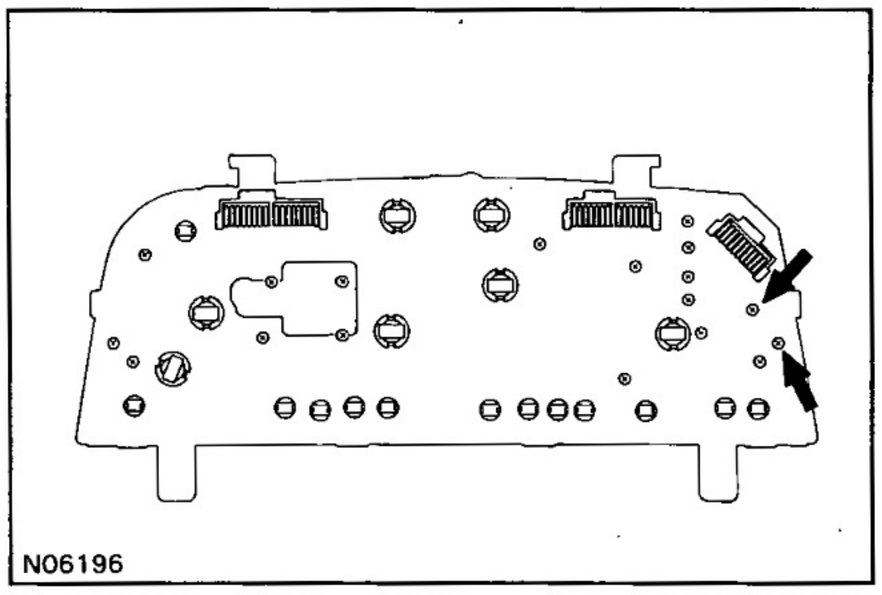

RESISTANCE

Measure the receiver gauge resistance between terminals.

Resistance: 22 — 28 Ω

If resistance value is not as specified, replace the receiver gauge.

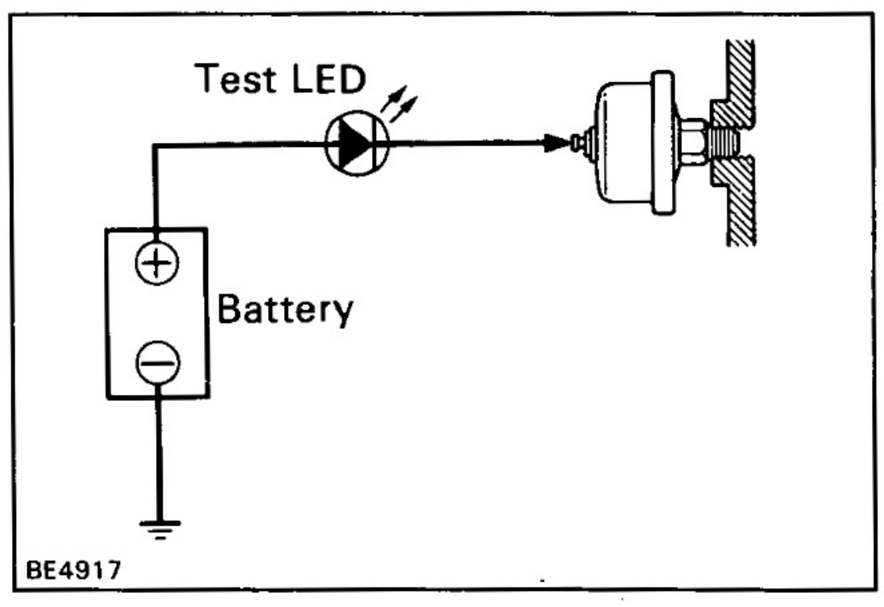

OIL PRESSURE SENDER GAUGE INSPECTION

INSPECT SENDER GAUGE

(a) Disconnect the connector from the sender gauge.

(b) Apply battery voltage to the sender gauge terminal through a test LED.

(c) Check that the bulb does not light when the engine is stopped.

(d) Check that the LED flashes when the engine is running. The number of flashed should vary with engine speed.

If operation is not as specified, replace the sender gauge.

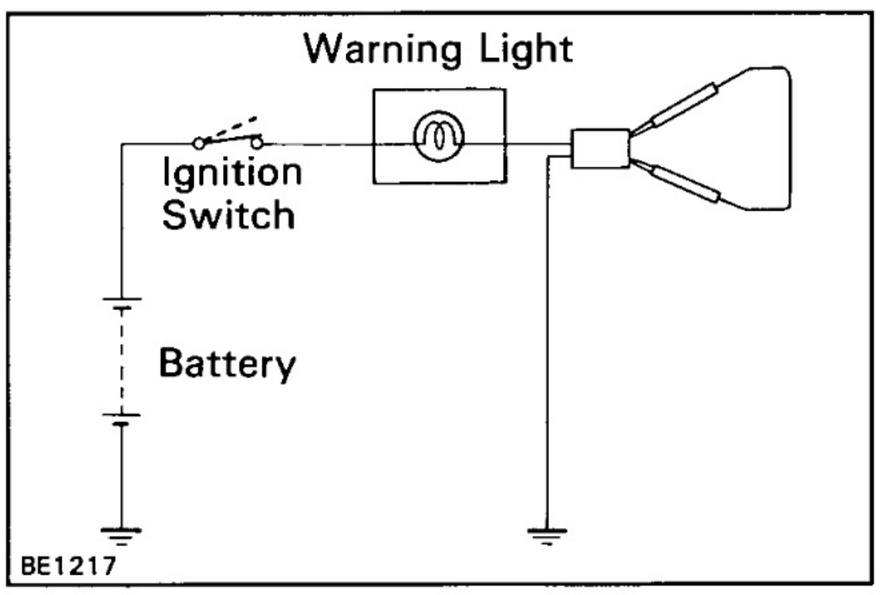

BRAKE WARNING SYSTEM

BRAKE WARNING LIGHT INSPECTION

INSPECT WARNING LIGHT

(a) Disconnect the connectors from the level warning switch, parking brake switch.

(b) Connect terminals on the wire harness side connector of the level warning switch connector.

(c) Turn the ignition switch ON, check that the warning light lights up.

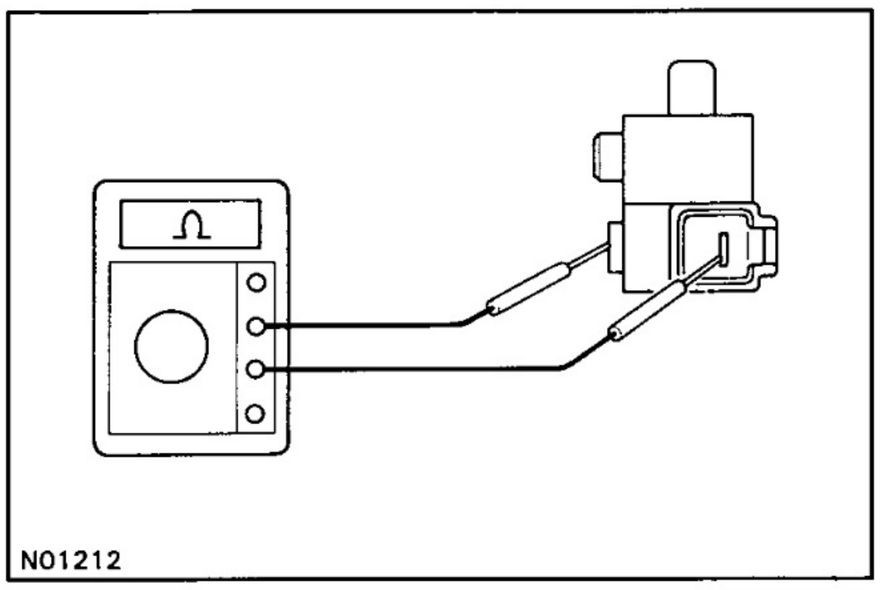

PARKING BRAKE SWITCH INSPECTION

INSPECT SWITCH

(a) Check that there is continuity between terminal and the switch set nut with switch pin released. (parking brake lever pulled up)

(b) Check that there is no continuity between terminal and the switch set nut with switch pin pushed in. (parking brake lever released)

If operation is not as specified, replace the switch.

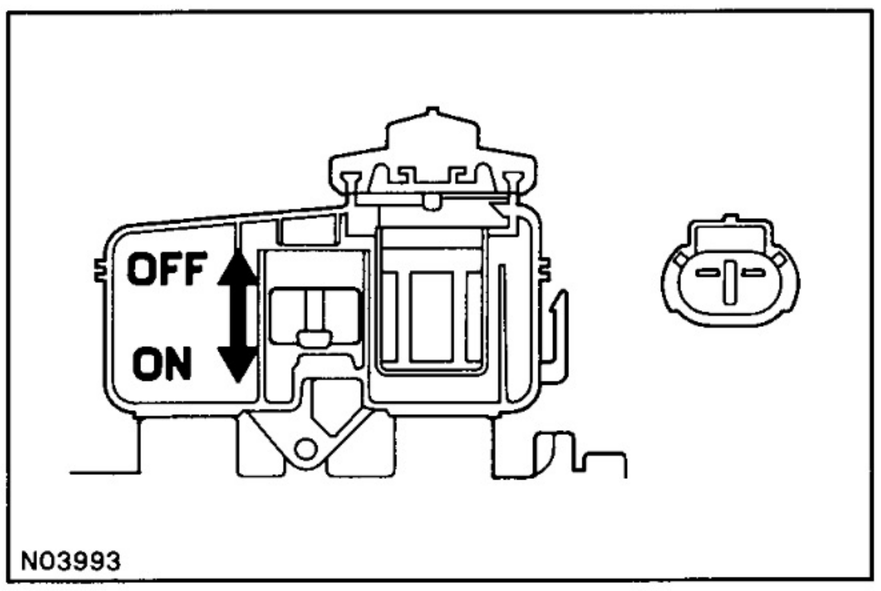

BRAKE FLUID LEVEL WARNING SWITCH INSPECTION

INSPECT SWITCH

(a) Remove the reservoir tank cap and strainer.

(b) Disconnect the connector.

(c) Check that there is no continuity between terminals with the switch OFF (float up).

(d) Use syphon, etc. to take fluid out of the reservoir tank.

(e) Check that there is continuity between terminals with the switch ON (float down).

(f) Pour the fluid back in the reservoir tank.

If operation is not as specified, replace the switch.

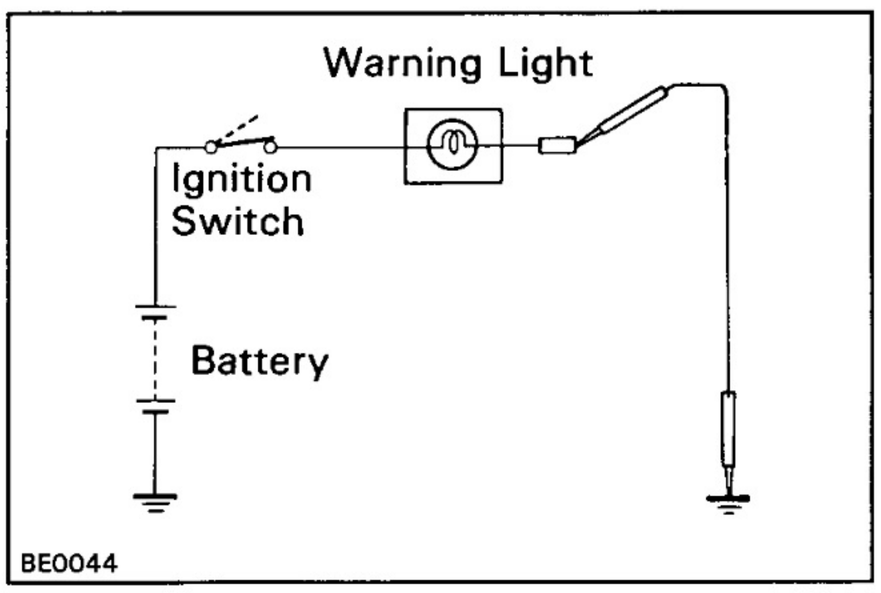

OPEN DOOR WARNING SYSTEM

OPEN DOOR WARNING INSPECTION

INSPECT WARNING LIGHT

(a) Disconnect the connector form the door courtesy switch and ground terminal on the wire harness side connector.

(b) Turn the ignition switch ON, check that the warning light lights up.

If the warning light does not light up, test the bulb.

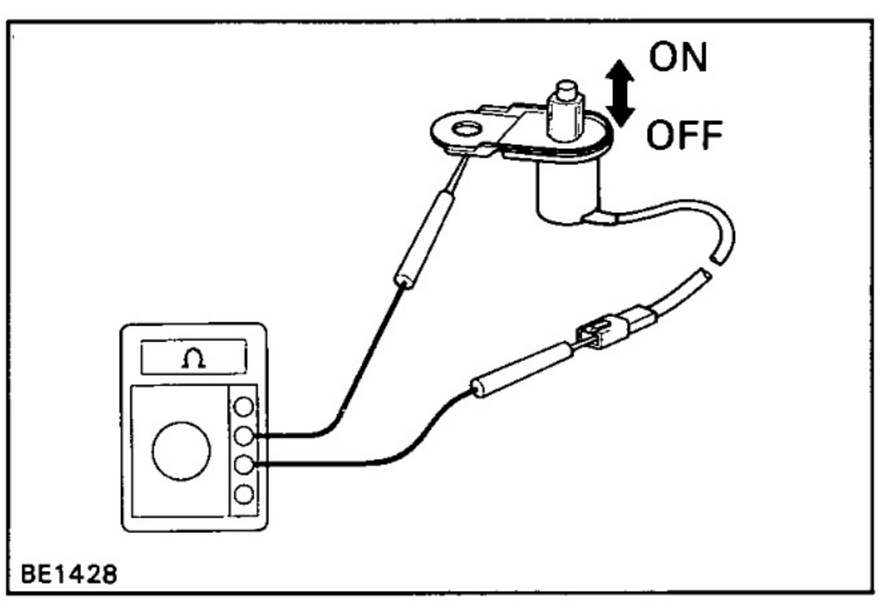

DOOR COURTESY SWITCH INSPECTION

INSPECT COURTESY SWITCH

(a) Check that there is continuity between terminal and the switch body with the ON (switch pin released: opened door).

(b) Check that there is no continuity between terminal and the switch body with the OFF (switch pin pushed in: closed door).

If operation is not as specified, replace the switch.

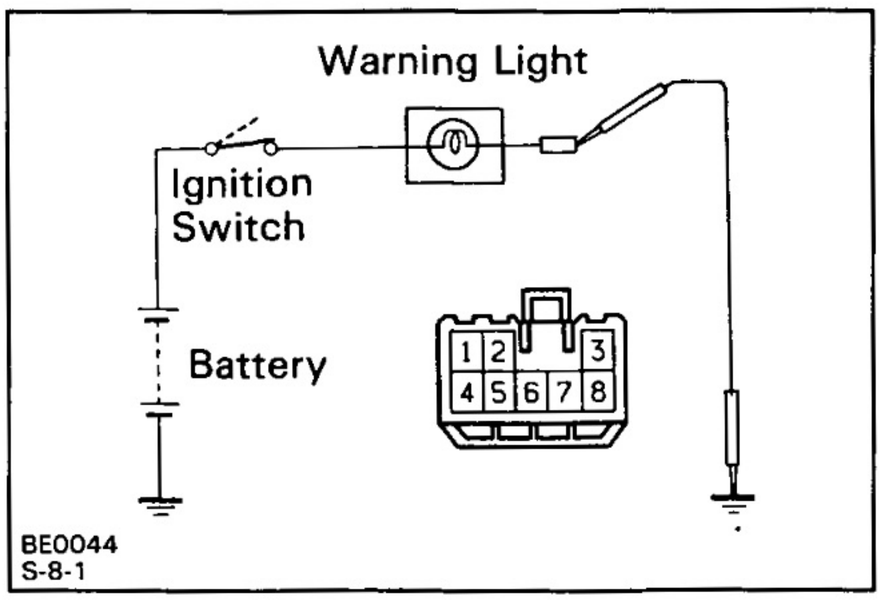

SEAT BELT WARNING SYSTEM

SEAT BELT WARNING INSPECTION

INSPECT WARNING LIGHT

(a) Disconnect the connector from the seat belt warning relay.

(b) Ground terminal 2 on the wire harness side connector.

(c) Turn the ignition switch ON, check that the warning light lights up.

If the warning light does not light, test the bulb.

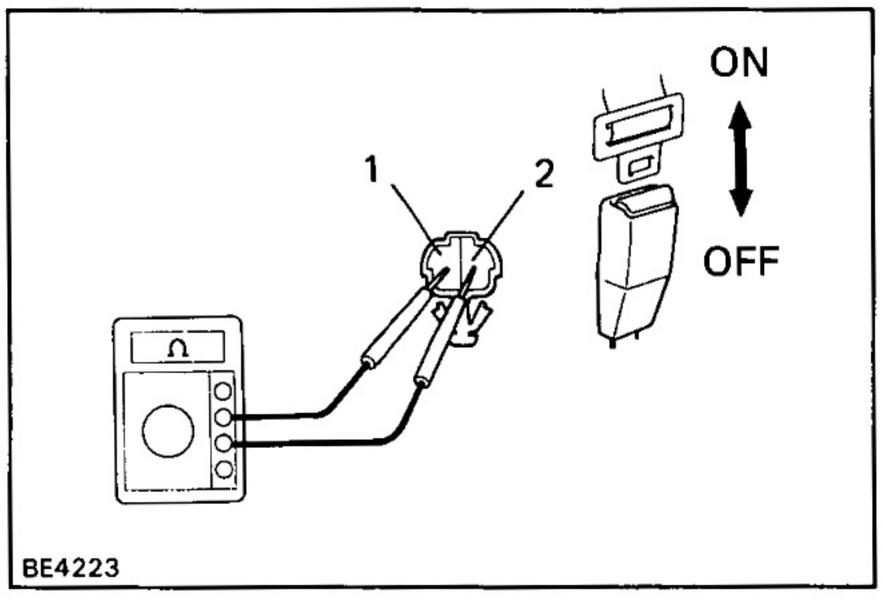

SEAT BELT BUCKLE SWITCH INSPECTION

INSPECT SWITCH

(a) Check that there is no continuity between terminals with the switch ON (belt unfastened).

(b) Check that there is continuity between terminals with the switch OFF (belt fastened).

If operation is not as specified, replace the seat belt inner.

DOOR COURTESY SWITCH

DOOR COURTESY SWITCH INSPECTION

See page BE-16

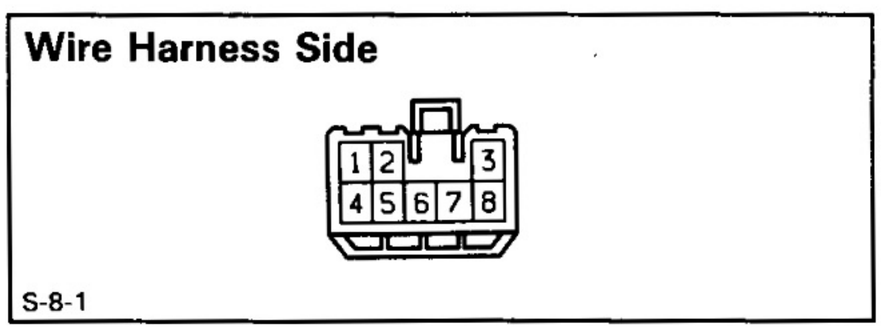

SEAT BELT WARNING RELAY INSPECTION

RELAY CIRCUIT

Disconnect the connector from the relay and inspect the connector on the wire harness side as shown in the chart.

Check for	Tester connection	Condition		Specified value
Voltage	5 — Ground	Ignition switch position	ON	Battery voltage
			LOCK or ACC	No voltage
	1 — Ground	Constant		Battery voltage

Continuity	3 – Ground	Driver's door	Open	Continuity
			Close	No continuity
	4 – Ground	Driver's seat belt	Fasten	Continuity
			Unfasten	No continuity
	7 – Ground	Ignition key	Set	Continuity
			Remove	No continuity
	6 – Ground	Constant		Continuity

If circuit is as specified, try another relay.

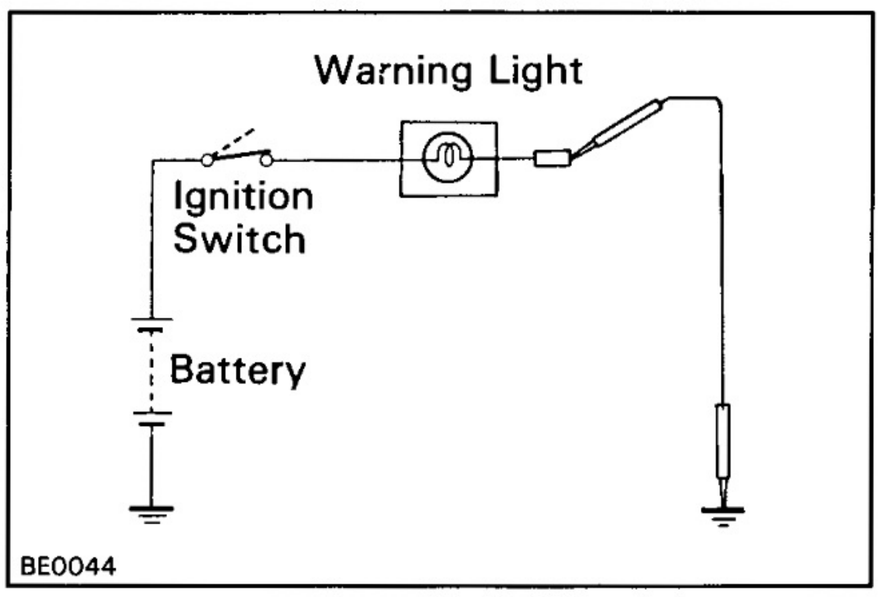

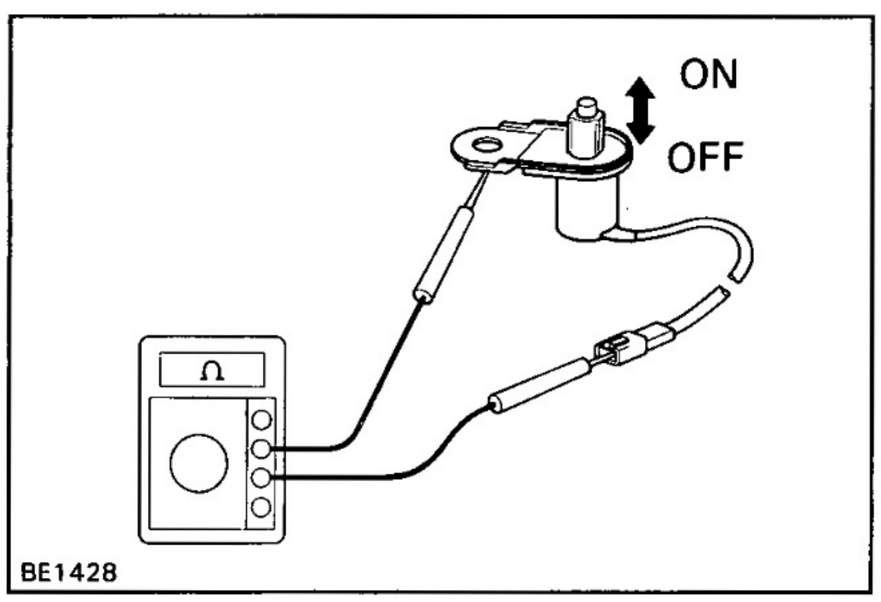

TIRE HALF-LOCK WARNING SYSTEM

TIRE HALF-LOCK WARNING INSPECTION

INSPECT WARNING LIGHT

(a) Disconnect the connector from the door courtesy switch and ground terminal on the wire harness side connector.

(b) Turn the ignition switch ON, check that the warning light lights up.

If the warning light does not light up, test the bulb.

TIRE HALF-LOCK INDICATOR SWITCH INSPECTION

INSPECT SWITCH

(a) Check that there is continuity between terminal and the switch body with the ON (switch pin released: opened door).

(b) Check that there is no continuity between terminal and the switch body with the OFF (switch pin pushed in: closed door).

If operation is not as specified, replace the switch.

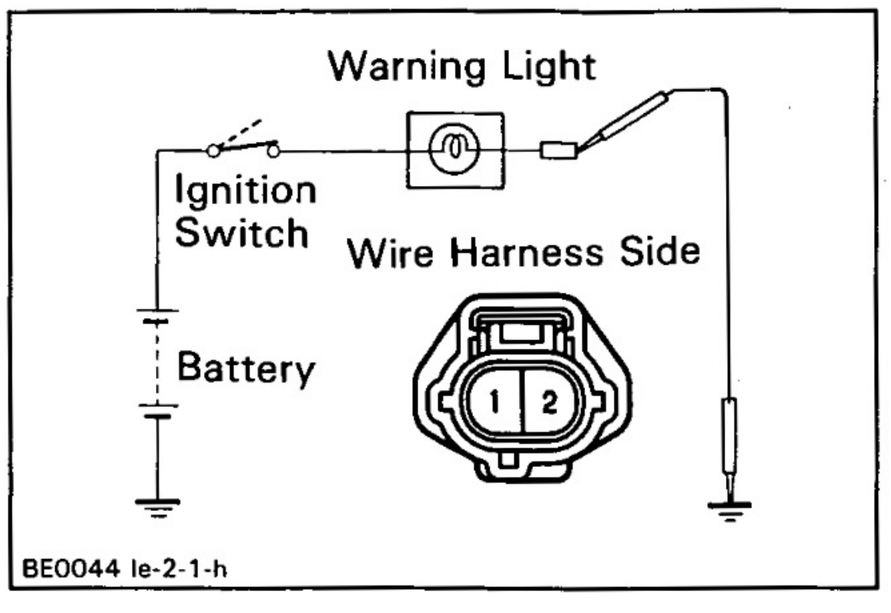

ENGINE OIL LEVEL WARNING SYSTEM

INSPECT WARNING LIGHT

(a) Disconnect the connector from the engine oil level sensor.

(b) Ground terminal 2 on the wire harness side connector.

(c) Turn the ignition switch ON, check that the warning light lights up.

If the warning light does not light up, test the bulb.

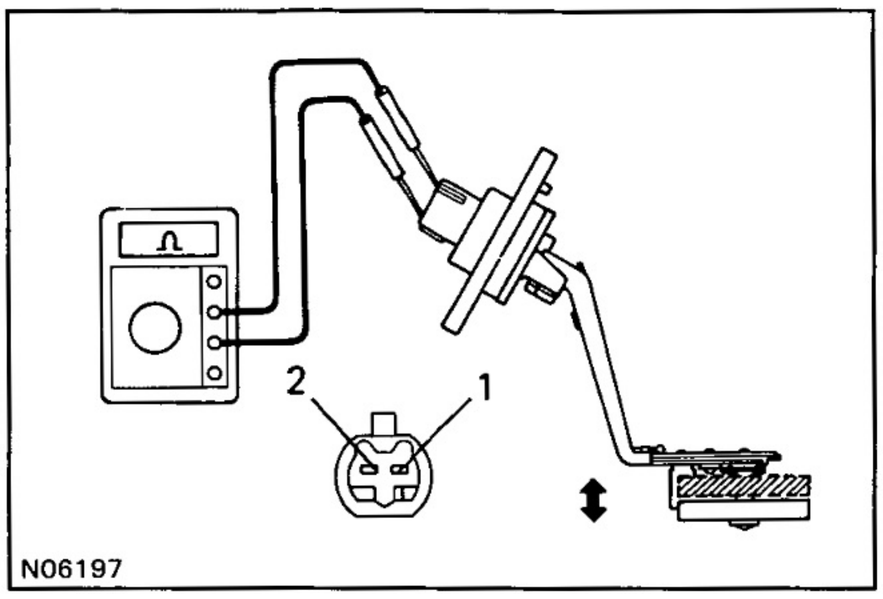

INSPECT ENGINE OIL LEVEL SENSOR

(a) Check that there is continuity between terminals with the switch each position.

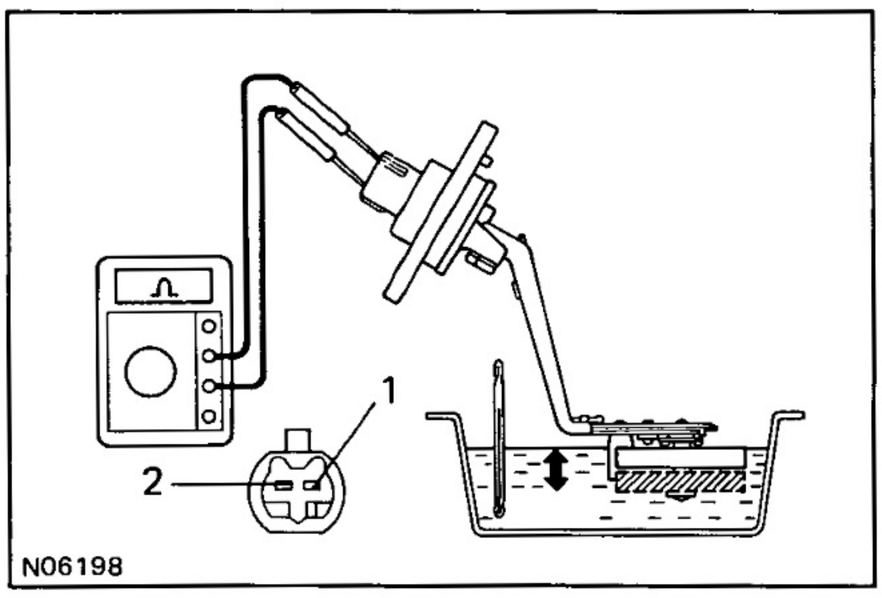

(b) Heat the switch to above 60°C (140°F) in an oil bath.

(c) Check that there is continuity between terminals with the switch ON (float up).

(d) Check that there is no continuity between terminals with the switch OFF (float down).

If operation is not as specified, replace the sensor.

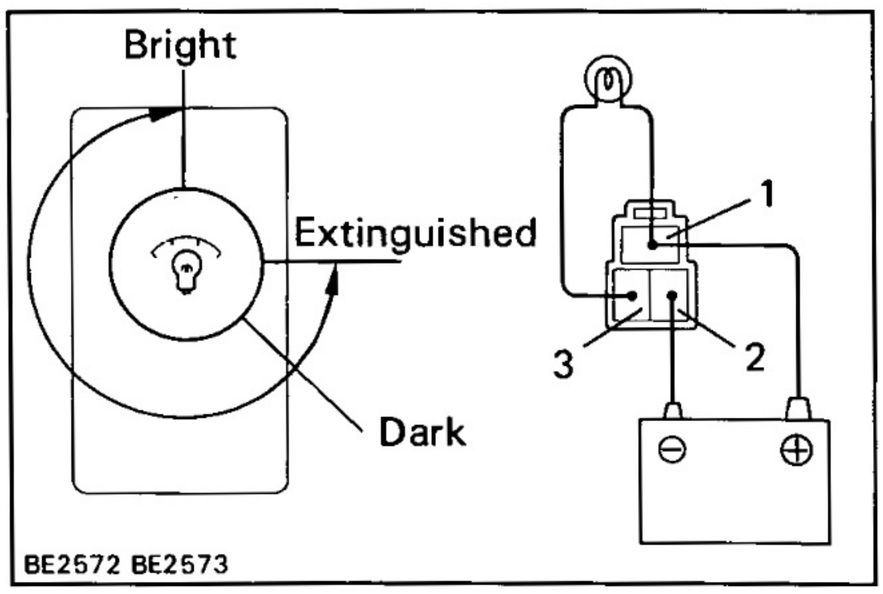

METER ILLUMINATION CONTROL SYSTEM

INSPECT LIGHT CONTROL RHEOSTAT

(a) Connect terminals 1 and 3 through a 3.4 watts test bulb.

(b) Connect the positive (+) lead from the battery to terminal 1 and the negative (−) lead to terminal 2.

(c) Turn the rheostat knob to fully counterclockwise, check that the test bulb goes out.

(d) Gradually turn the rheostat knob to clockwise, check that the test bulb brightness changes from dark to bright.

If operation is not as specified, replace the rheostat.

HINT: Illumination lights with adjustable brightness.

- Cigarette Lighter
- Ash Receptacle
- Antenna Switch
- Defogger Switch
- Headlight Cleaner Switch
- Audio
- A/C Control Assembly
- Center Diff. Lock Switch
- Hazard Warning Light Switch
- Shift Lever

POWER SEAT CONTROL SYSTEM

PARTS LOCATION

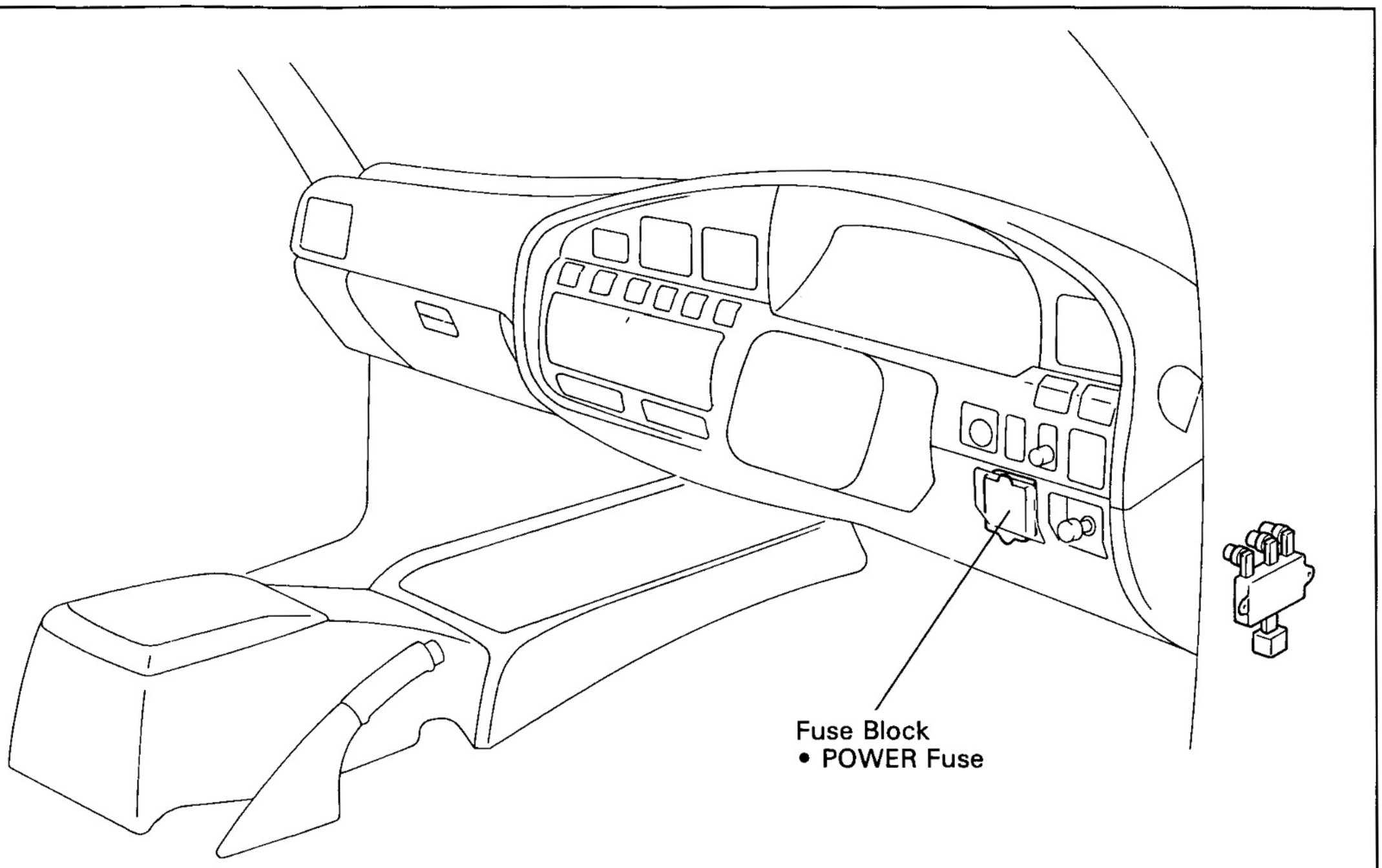

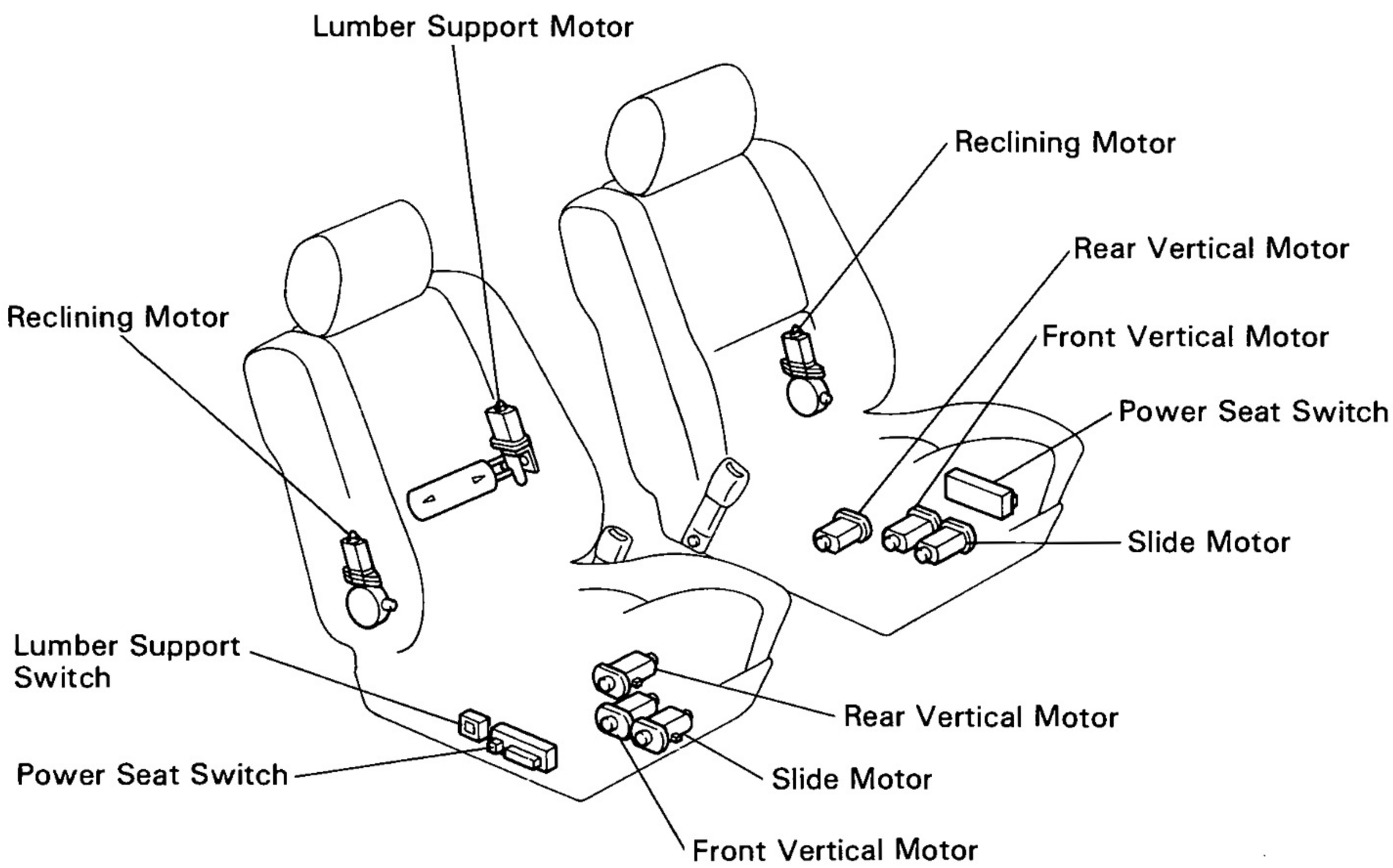

BE5073R
N06200R

TROUBLESHOOTING

The table below will be useful for you in troubleshooting these electrical problems. The most likely causes of the malfunction are shown in the order of their probability. Inspect each part in the order shown, and replace the part when it is found to be faulty.

Trouble	Part name	See page
Power seat does not operate. (Door lock does not operate.)	1. FL AM1 2. POWER Fuse 3. Wire Harness 4. Power Seat Switch (D) 5. Power Seat Switch (P)	– – – BE-23 BE-24
Power seat does not operate. (Door lock is normal.)	1. POWER Fuse 2. Wire Harness 3. Power Seat Switch (D) 4. Power Seat Switch (P)	– – BE-23 BE-24
Driver's seat does not operate.	1. Power Seat Switch (D) 2. Wire Harness	BE-23 –
Passenger's seat does not operate.	1. Power Seat Switch (P) 2. Wire Harness	BE-24 –
"Slide operation" does not operate.	1. Power Seat Switch (D) 2. Power Seat Switch (P) 3. Wire Harness	BE-23 BE-24 –
"Front vertical operation" does not operate.	1. Power Seat Switch (D) 2. Power Seat Switch (P) 3. Wire Harness 4. Slide Motor (D, P)	BE-23 BE-24 – BE-25
"Rear vertical operation" does not operate.	1. Power Seat Switch (D) 2. Power Seat Switch (P) 3. Wire Harness 4. Front Vertical Motor (D, P)	BE-23 BE-24 – BE-25
"Reclining operation" does not operate.	1. Power Seat Switch (D) 2. Power Seat Switch (P) 3. Wire Harness 4. Reclining Motor (D, P)	BE-23 BE-24 – BE-26
"Lumber support operation" does not operate.	1. Lumber Support Switch (D) 2. Wire Harness 3. Lumber Support Motor (D)	BE-23 – BE-28

(D): Driver's Seat
(P): Passenger's Seat

POWER SEAT SWITCH

POWER SEAT SWITCH INSPECTION

(DRIVER'S SIDE)

CONTINUITY

Inspect the switch continuity between terminals.

*1: FORWARD
*2: BACKWARD

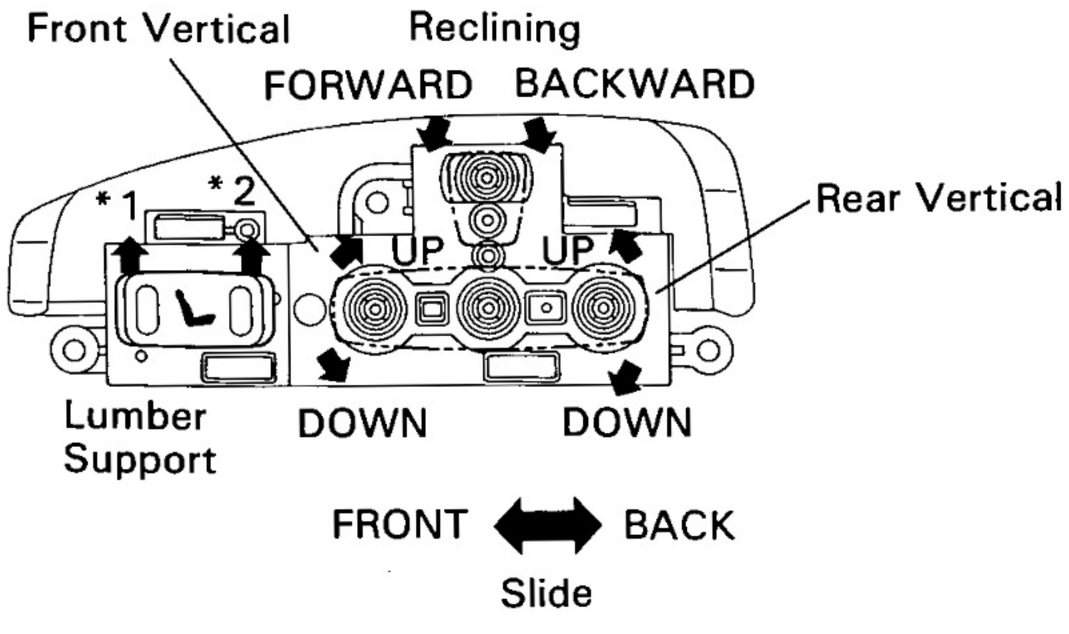

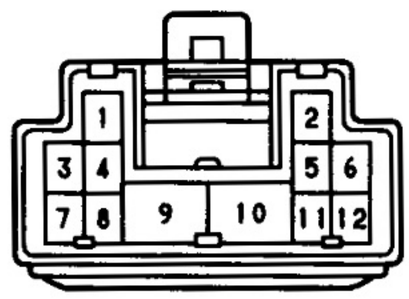

N06201R eg-12-1

Switch position \ Terminal		1	2	3	4	5	6	7	8	9	10	11	12
Slide Switch	FORWARD					○			○	○	○		
	OFF					○			○	○			
	BACKWARD					○					○		
Front Vertical Switch	UP				○						○		○
	OFF				○						○		○
	DOWN				○								○
Rear Vertical Switch	UP		○				○	○			○		
	OFF		○				○	○					
	DOWN		○					○			○		
Reclining Switch	FORWARD				○				○	○	○		
	OFF				○				○	○			
	BACKWARD				○						○		
Lumber Support Switch	FORWARD	○		○						○	○		
	OFF	○		○						○			
	BACKWARD	○		○							○		

If continuity is not as specified, replace the switch.

(PASSENGER' S SIDE)

CONTINUITY

Inspect the switch continuity between terminals.

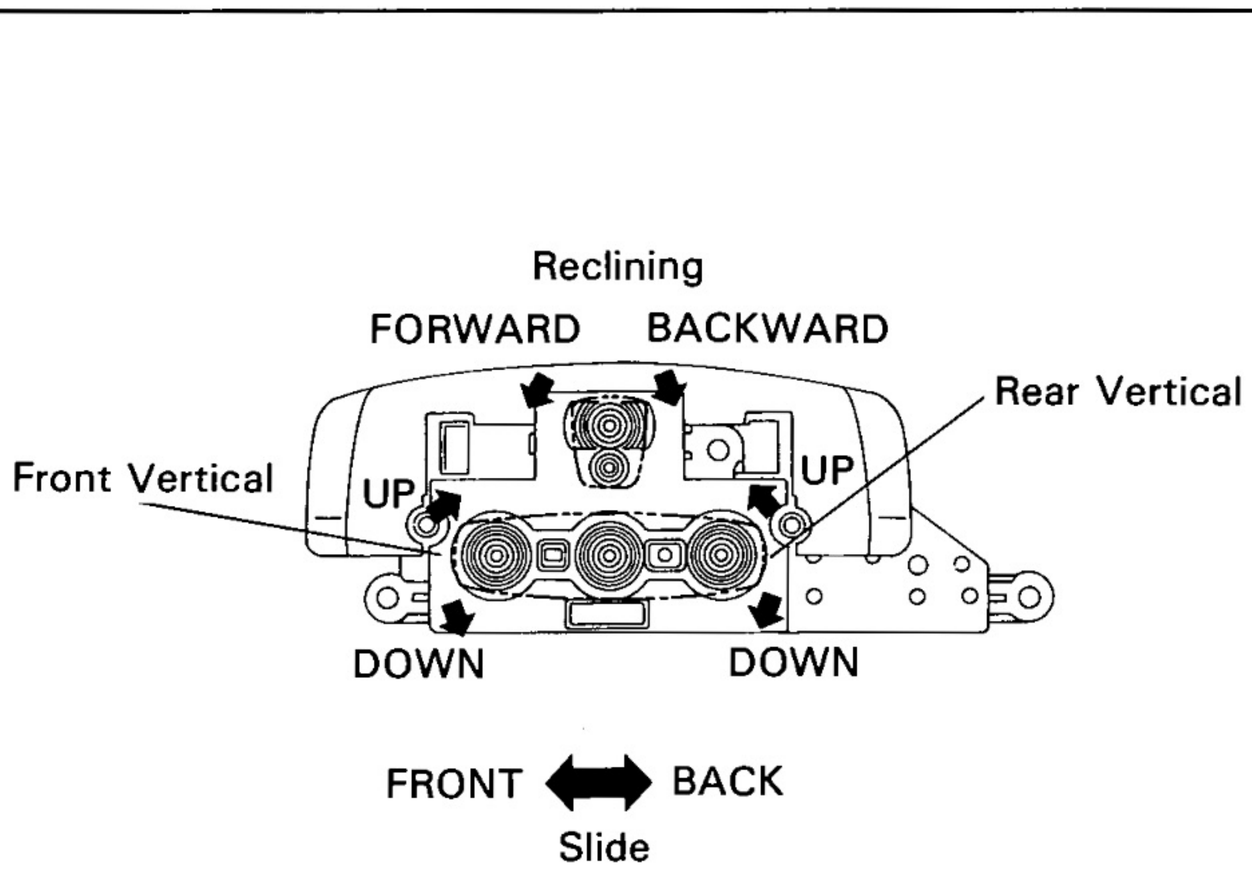

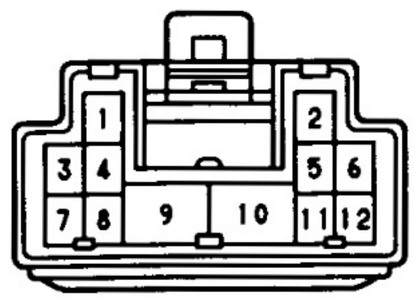

N06202R eg-12-1

Switch position \ Terminal		2	4	5	6	7	8	9	10	11	12
Slide Switch	FORWARD			○			○	○	○		
	OFF			○			○	○			
	BACKWARD			○			○	○	○		
Front Vertical Switch	UP		○						○		○
	OFF		○						○		○
	DOWN		○						○		○
Rear Vertical Switch	UP	○			○	○			○		
	OFF	○			○	○					
	DOWN	○			○	○			○		
Reclining Switch	FORWARD		○			○			○		
	OFF		○			○		○			
	BACKWARD		○			○		○	○		

If continuity is not as specified, replace the switch.

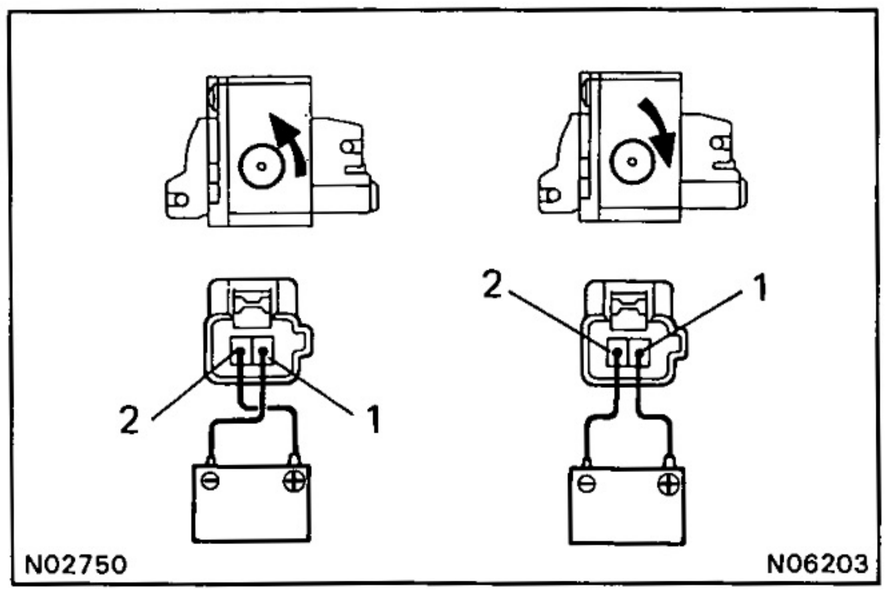

POWER SEAT MOTOR

SLIDE MOTOR INSPECTION
MOTOR OPERATION

(a) Connect the positive (+) lead from the battery to terminal 1 and the negative (−) lead to terminal 2, check that the motor turns counterclockwise.

(b) Reverse the polarity, check that the motor turns clockwise.

If operation is not as specified, replace the motor.

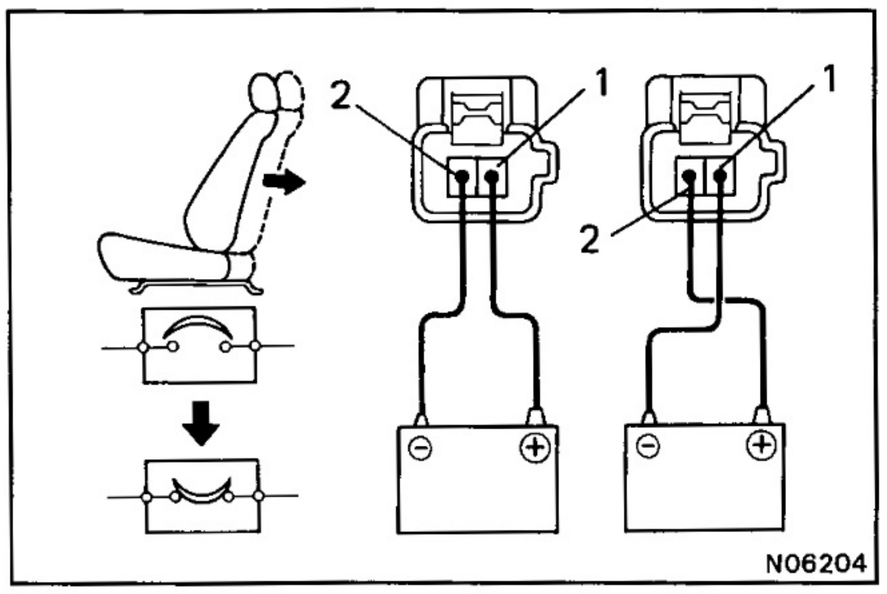

CIRCUIT BREAKER OPERATION

(a) Connect the positive (+) lead and the negative (−) lead from the battery to slide motor connector (illustrated terminals), and slide the seat to front end position.

(b) Continue to apply voltage, check that there is a circuit breaker operation noise within 4 to 60 seconds.

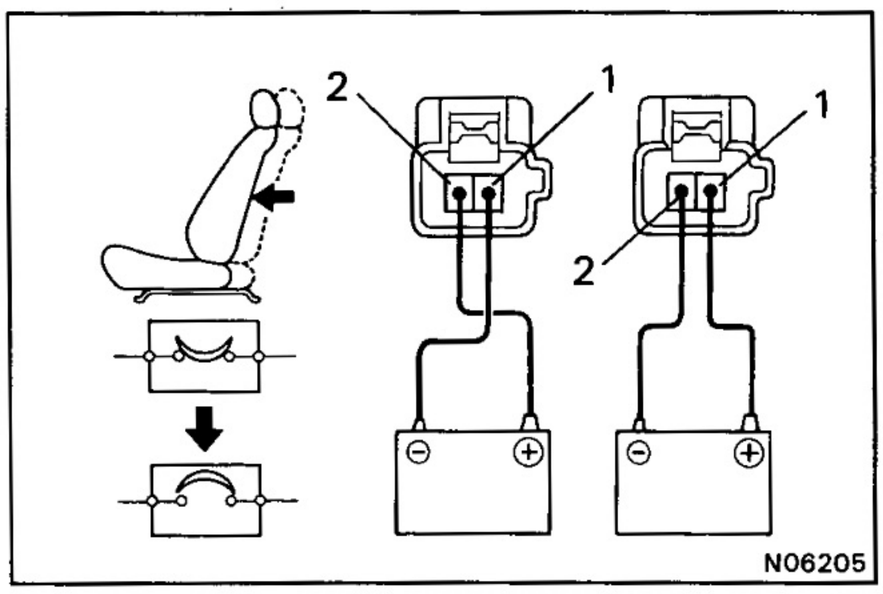

(c) Reverse the polarity, check that the seat begins to move backwards within approximately 60 seconds.

If operation is not as specified, replace the motor.

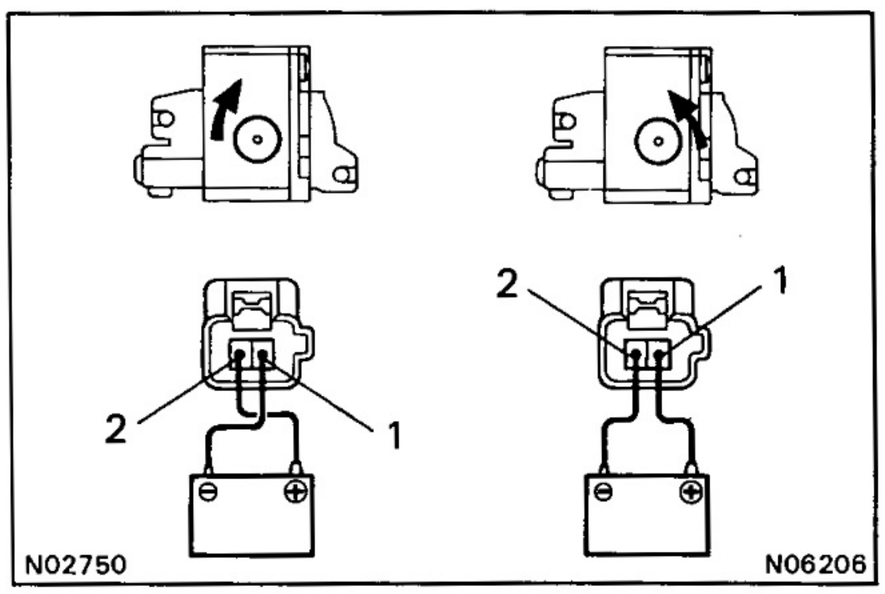

FRONT VERTICAL MOTOR INSPECTION
MOTOR OPERATION

(a) Connect the positive (+) lead from the battery to terminal 1 and the negative (−) lead to terminal 2, check that the motor turns counterclockwise.

(b) Reverse the polarity, check that the motor turns clockwise.

If operation is not as specified, replace the motor.

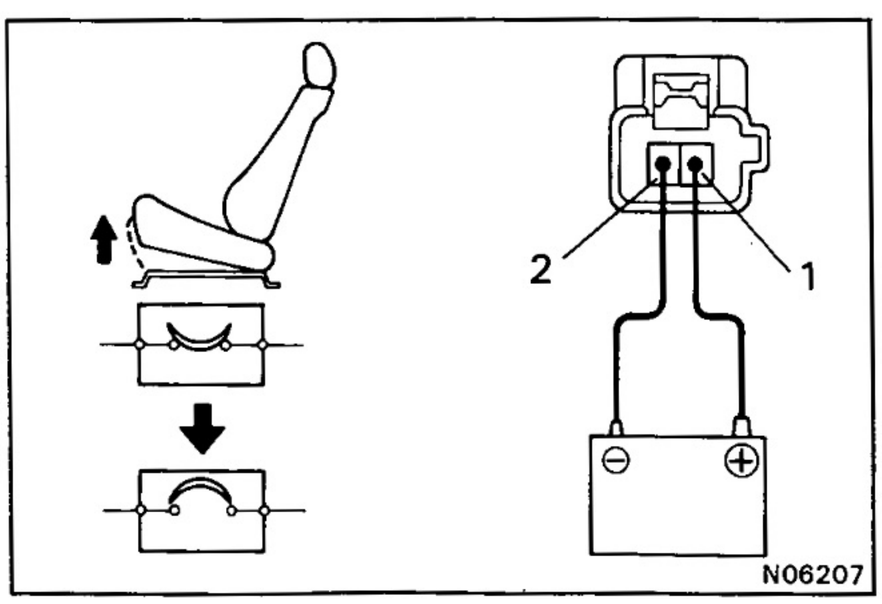

CIRCUIT BREAKER OPERATION

(a) Connect the positive (+) lead and the negative (−) lead from the battery to the front vertical motor connector (illustrated terminals), and move the front edge of seat cushion to the highest position.

(b) Continue to apply voltage, check that there is a circuit breaker operation noise within 4 to 60 seconds.

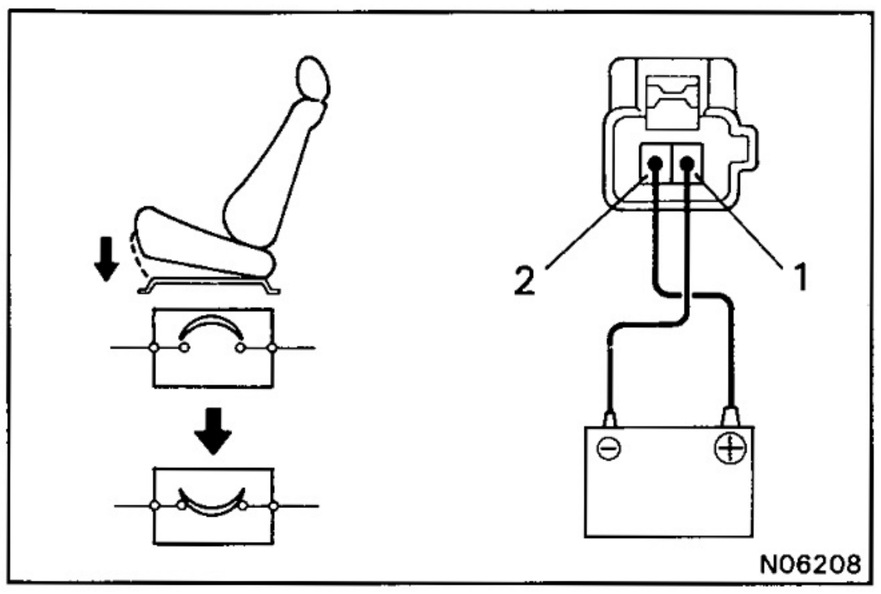

(c) Reverse the polarity, check that the seat cushion begins to descend within approximately 60 seconds.

If operation is not as specified, replace the motor.

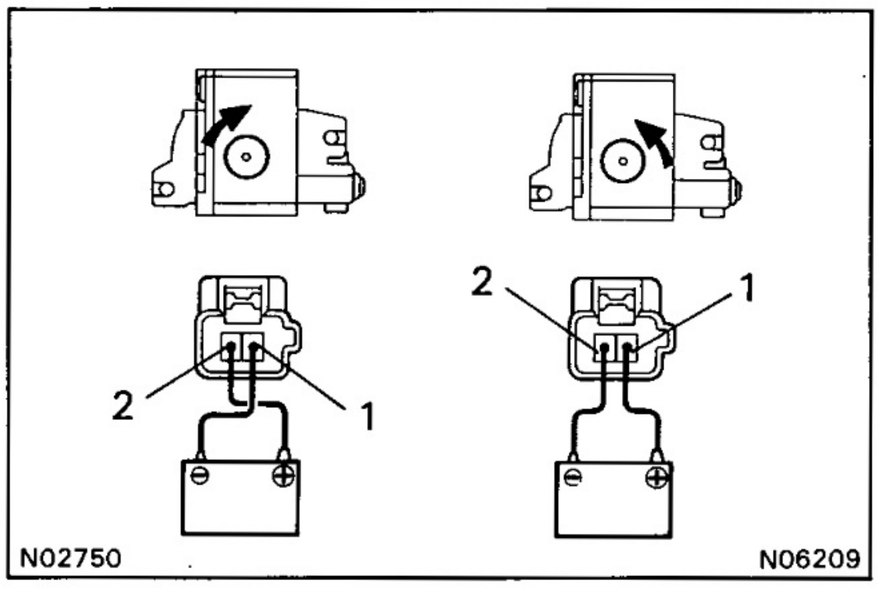

REAR VERTICAL MOTOR INSPECTION
MOTOR OPERATION

(a) Connect the positive (+) lead from the battery to terminal 2 and the negative (−) lead to terminal 1, check that the motor turns counterclockwise.

(b) Reverse the polarity, check that the motor turns clockwise.

If operation is not as specified, replace the motor.

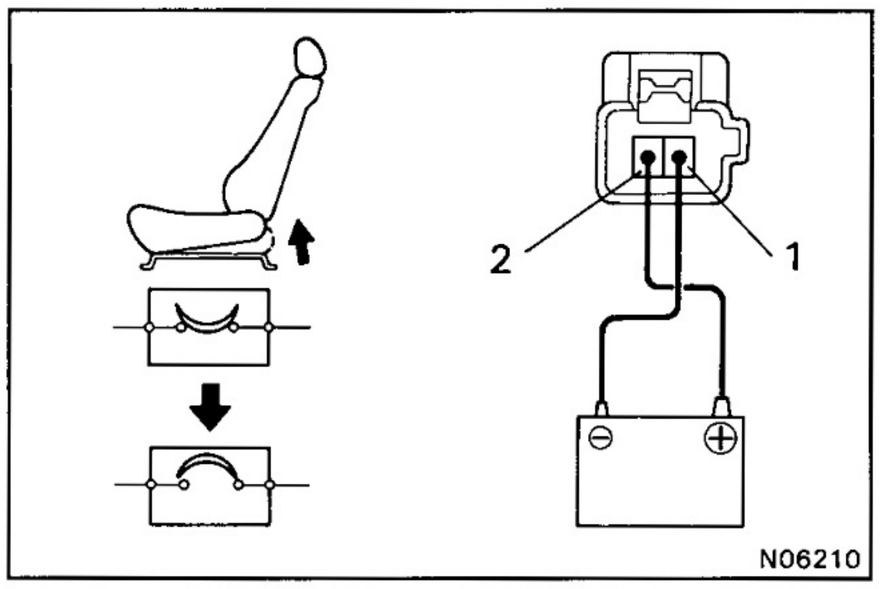

CIRCUIT BREAKER OPERATION

(a) Connect the positive (+) lead and the negative (−) lead from the battery to the rear vertical motor connector (illustrated terminals), and move the front edge of seat cushion to the highest position.

(b) Continue to apply voltage, check that there is a circuit breaker operation noise within 4 to 60 seconds.

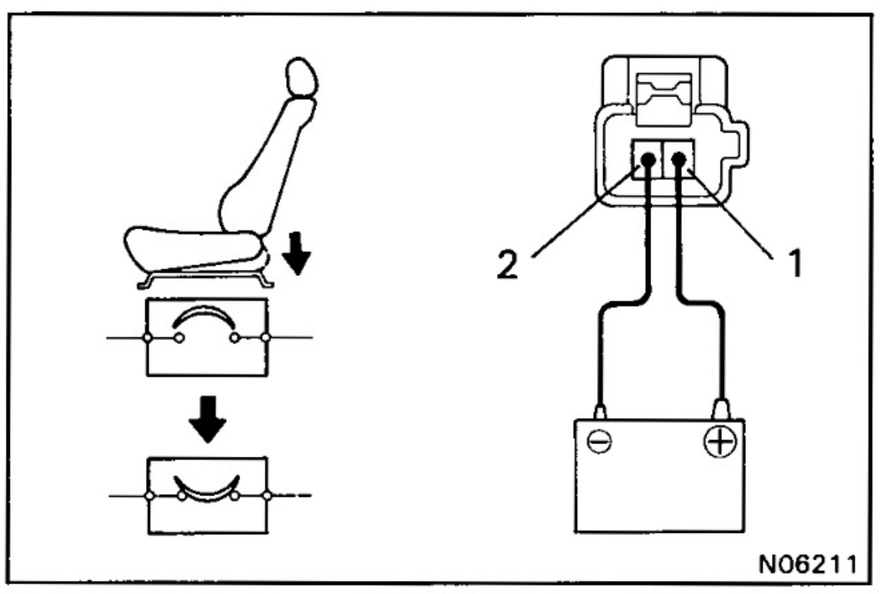

(c) Reverse the polarity, check that the seat cushion begins to descend within approximately 60 seconds.

If operation is not as specified, replace the motor.

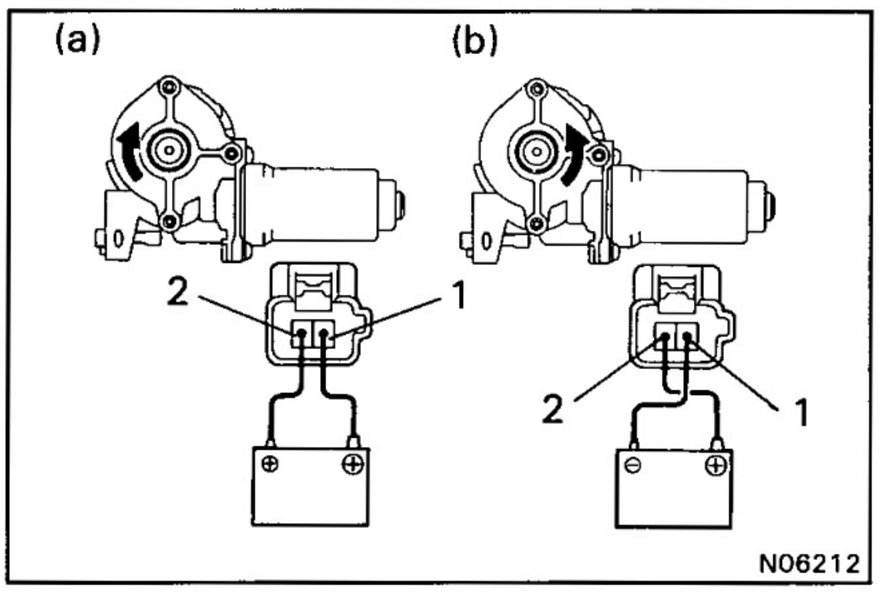

RECLINING MOTOR INSPECTION
MOTOR OPERATION DRIVER' S SEAT

(a) Connect the positive (+) lead from the battery to terminal 1 and the negative (−) lead to terminal 2, check that the motor turns clockwise.

(b) Reverse the polarity, check that the motor turns counterclockwise.

If operation is not as specified, replace the motor.

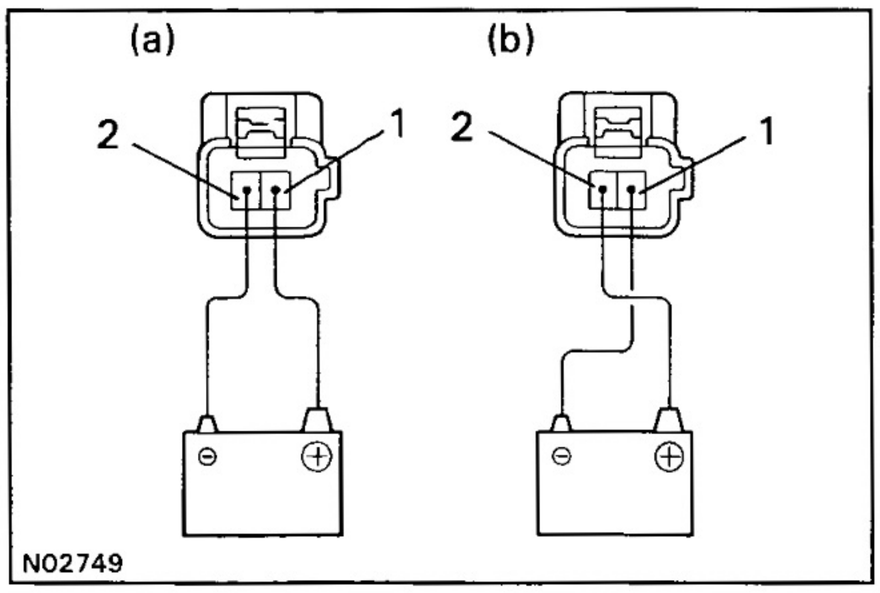

MOTOR OPERATION PASSENGER' S SEAT

(a) Connect the positive (+) lead from the battery to terminal 1 and the negative (−) lead to terminal 2, check that the motor turns counterclockwise.

(b) Reverse the polarity, check that the motor turns clockwise.

If operation is not as specified, replace the motor.

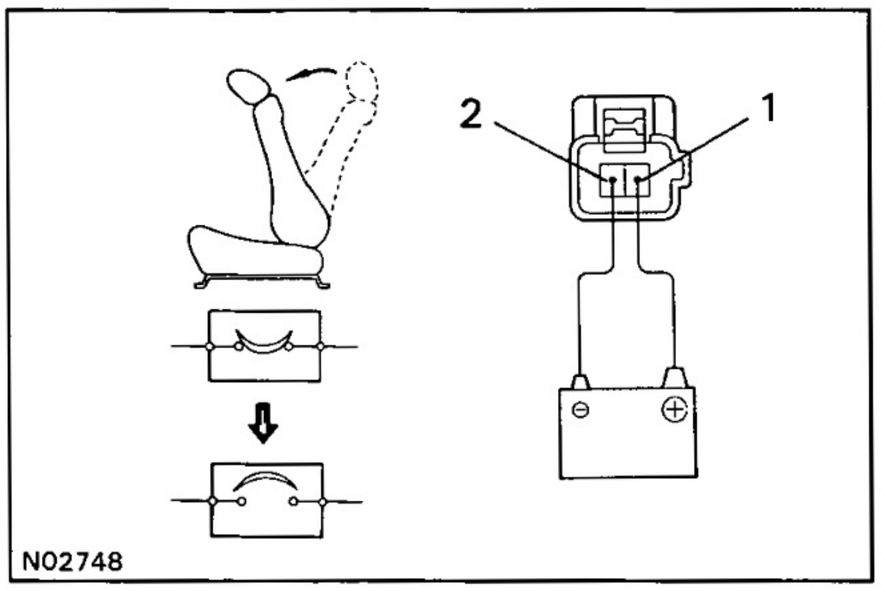

CIRCUIT BREAKER OPERATION DRIVER' S SEAT

(a) Connect the positive (+) lead from terminal 1 and negative (−) lead to terminal 2.
Check that the seat back reclines to the most forward position.

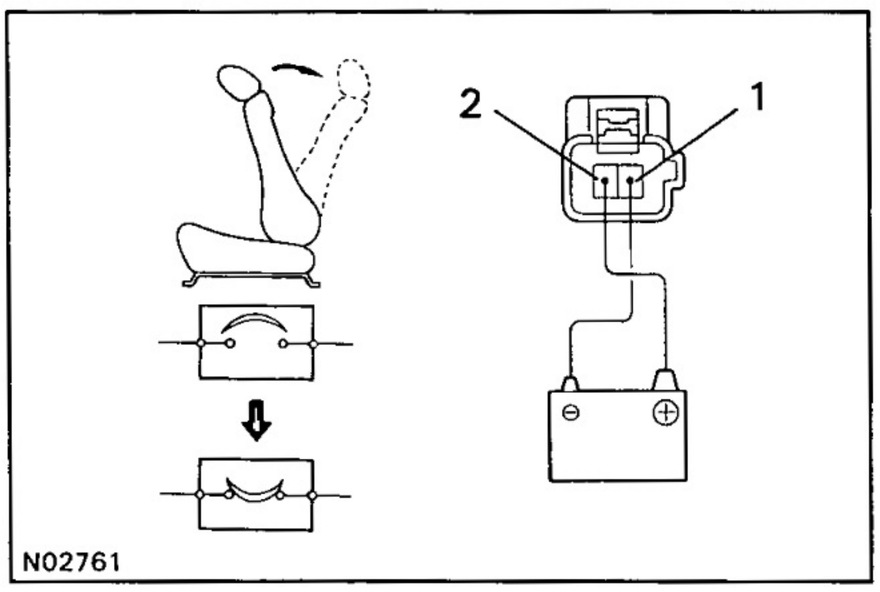

(b) Continue to apply voltage, check that there is a circuit breaker operation noise within 4 to 40 seconds.

(c) Reverse the polarity, check that the seat starts to fall backwards within approximately 60 seconds.

If operation is not as specified, replace the motor.

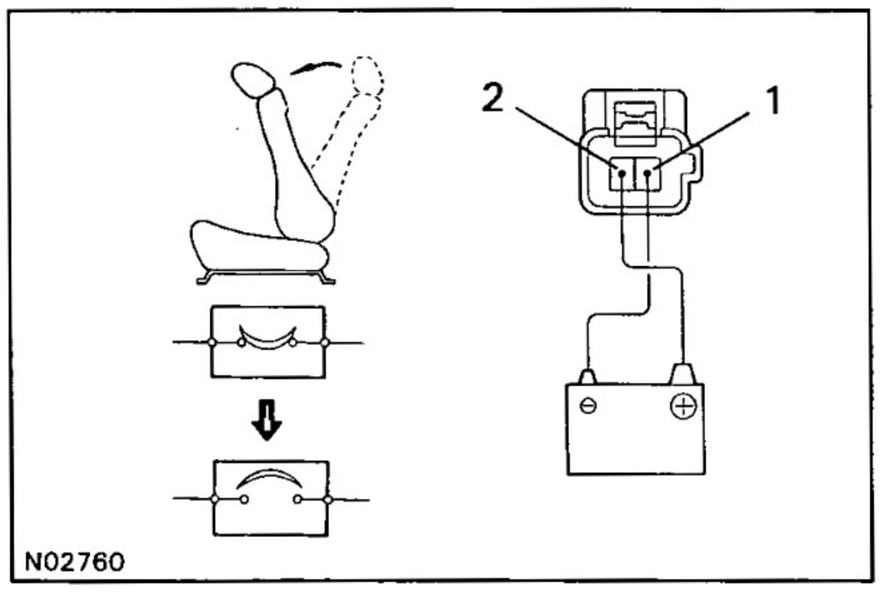

CIRCUIT BREAKER OPERATION PASSENGER'S SEAT

(a) Connect the positive (+) lead from the battery to terminal 2 and the negative (−) lead to terminal 1 on the seat wire harness side connector, and recline the seat back to the most forward position.

(b) Continue to apply voltage, check that there is a circuit breaker operation noise within 4 to 40 seconds.

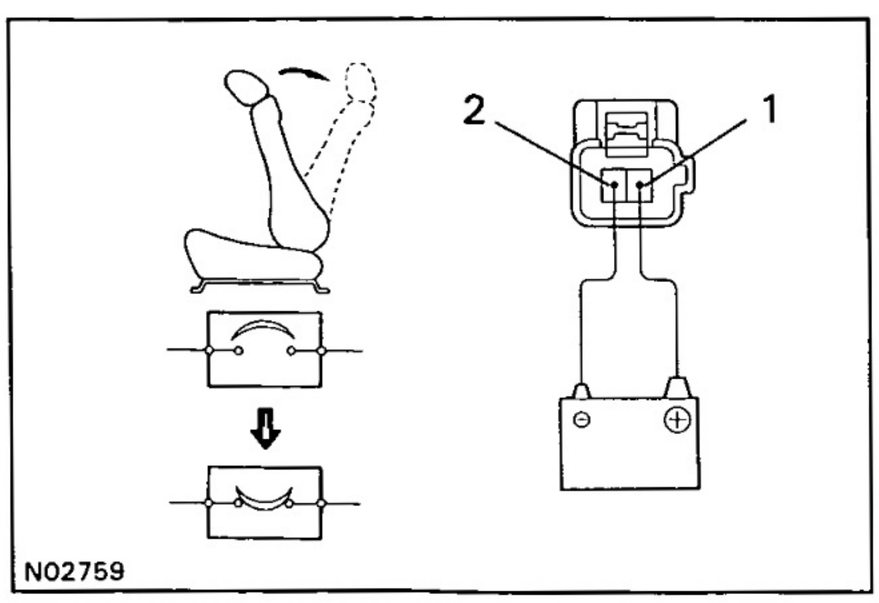

(c) Reverse the polarity, check that the seat back starts to fall backwards within approximately 60 seconds.

If operation is not as specified, replace the motor.

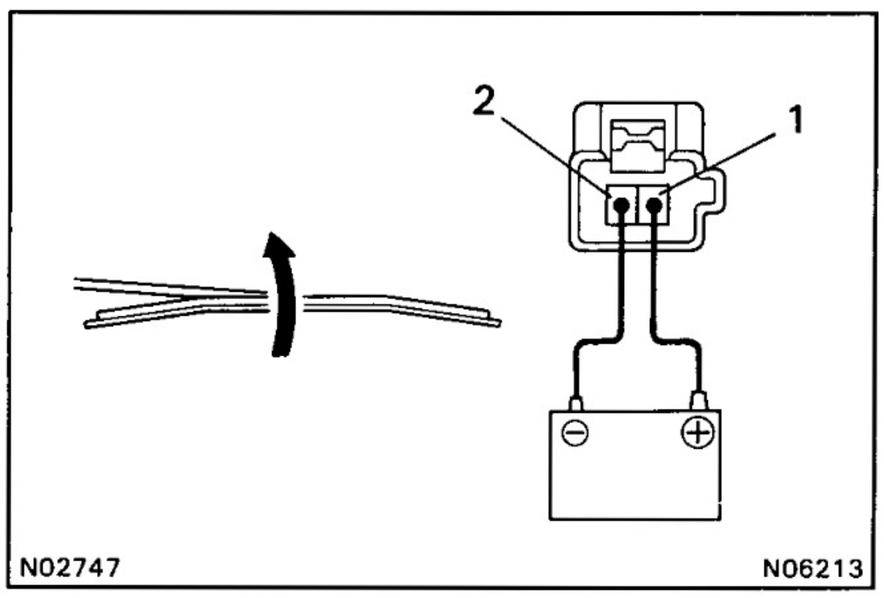

LUMBAR SUPPORT MOTOR INSPECTION

MOTOR OPERATION

(a) Connect the positive (+) lead from the battery to terminal 1 and the negative (−) lead to terminal 2, check that the lumbar support moves release side.

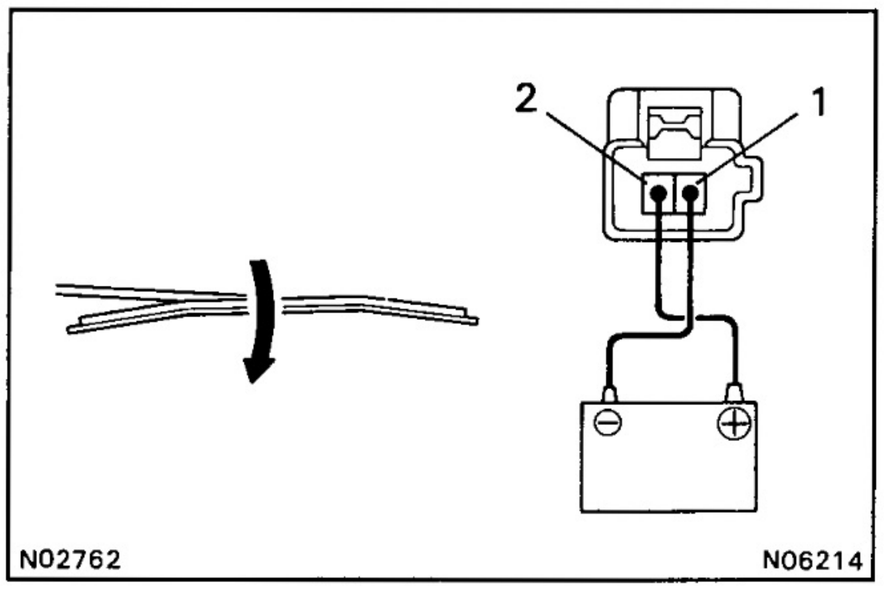

(b) Reverse the polarity, check that the lumbar support moves forward.

If operation is not as specified, replace the motor.

CIRCUIT BREAKER OPERATION

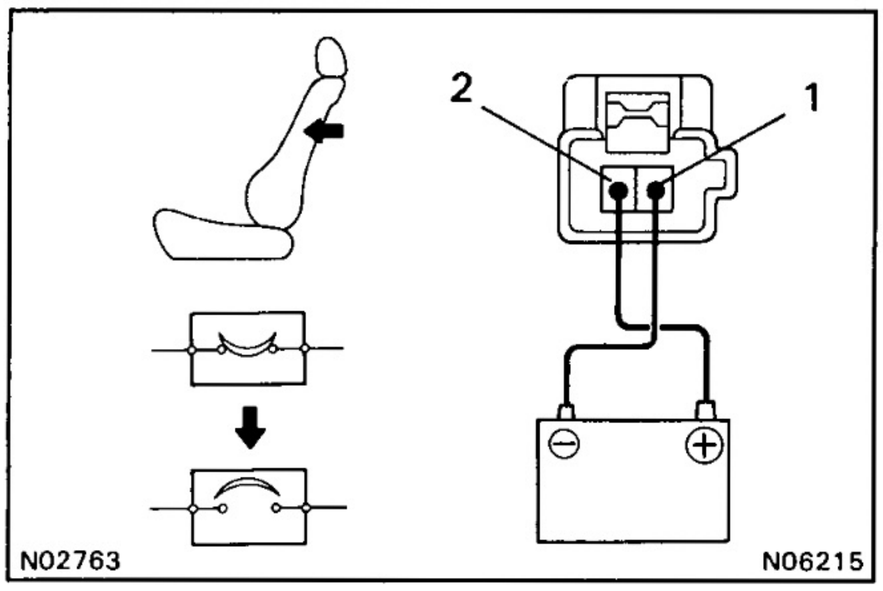

(a) Connect the positive (+) lead from the battery to terminal 2 and the negative (−) lead to terminal 1 on the lumbar support motor connector and move the lumbar support to front end position.

(b) Continue to apply voltage, check that there is a circuit breaker operation noise within 4 to 60 seconds.

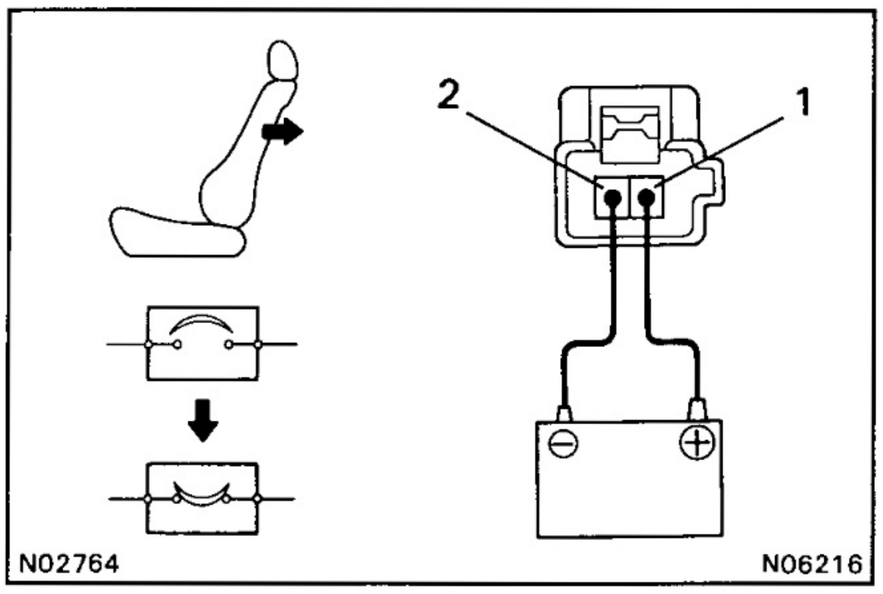

(c) Reverse the polarity, check that the lumbar support begins to move release side within approximately 60 seconds.

If operation is not as specified, replace the motor.

CRUISE CONTROL SYSTEM

PARTS LOCATION

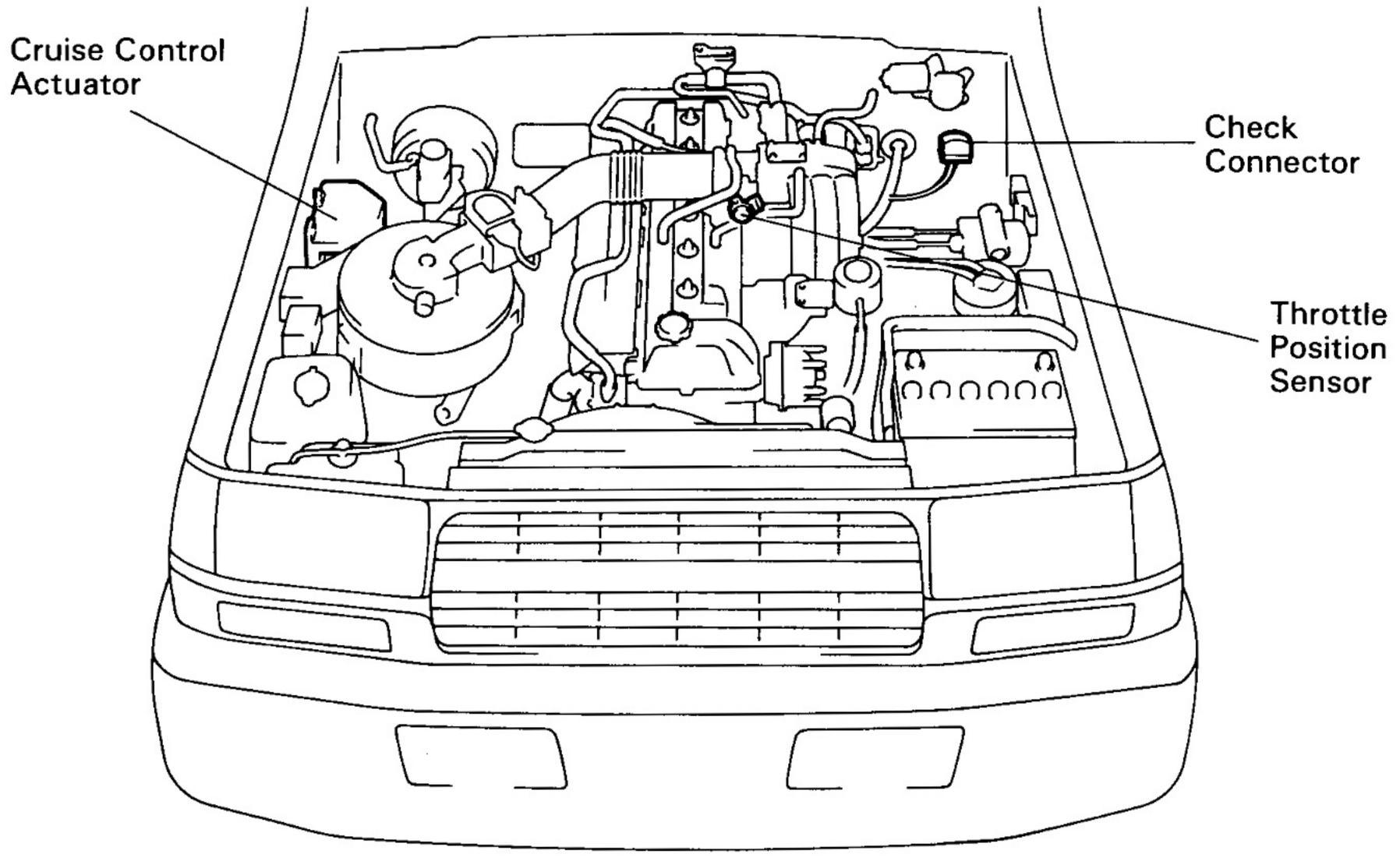

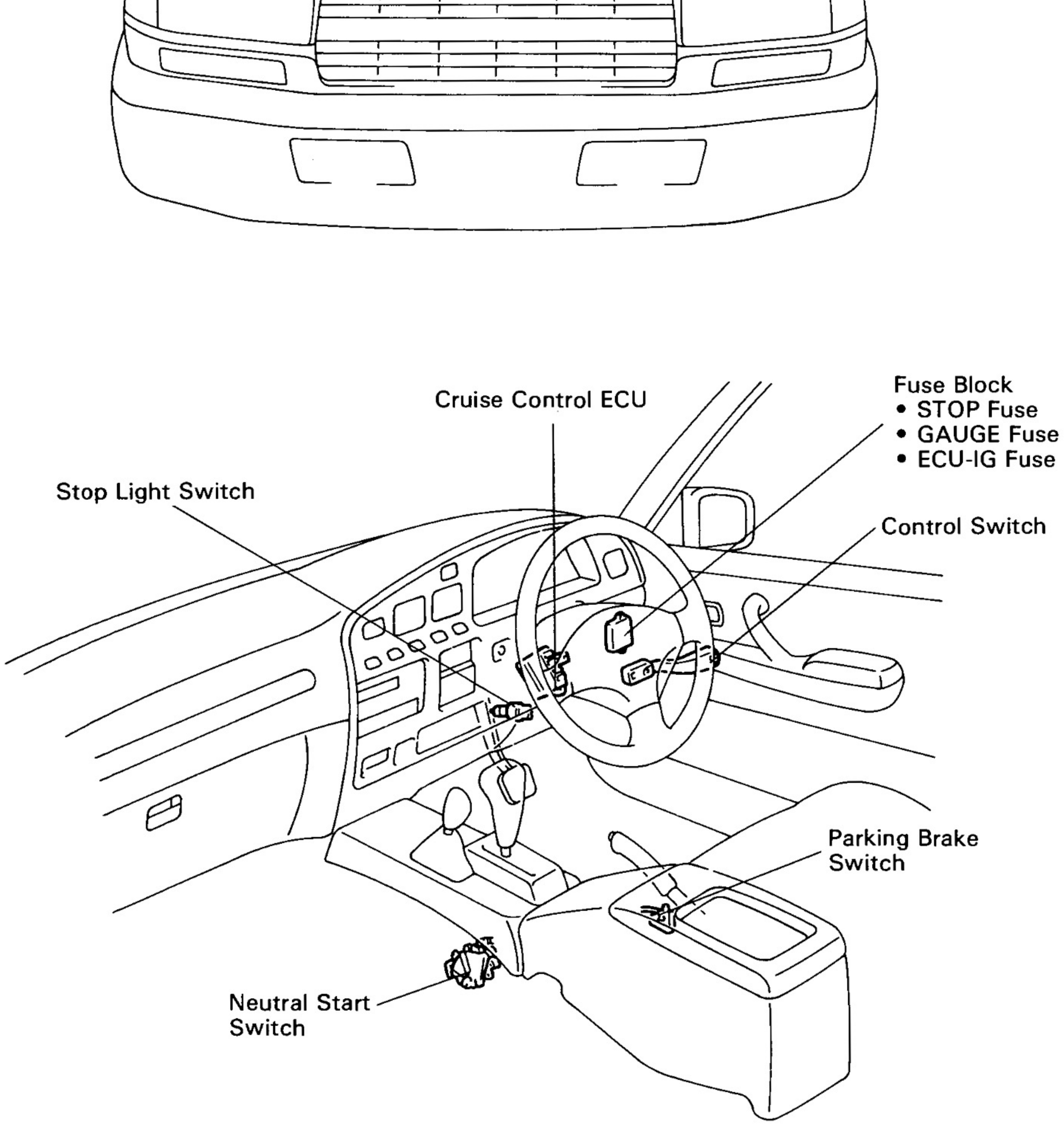

N06712
N04081

CONNECTOR DIAGRAMS

Cruise Control ECU

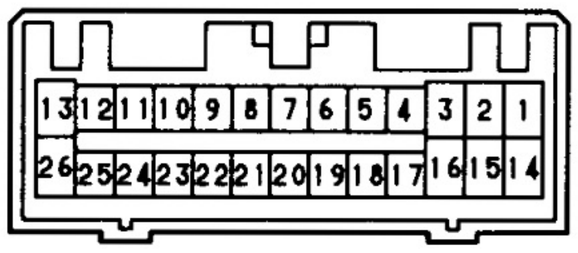

Control Switch (in Combination Switch)

Connector "A" Connector "B"

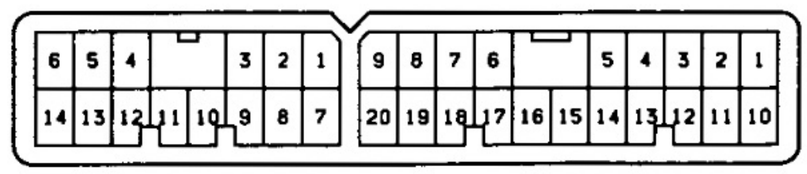

Stop Light Switch

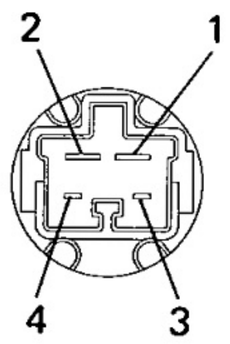

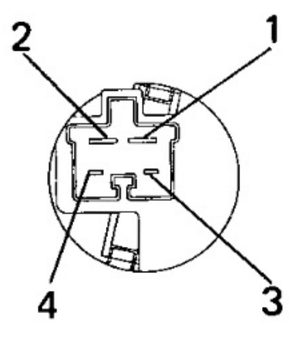

Parking Brake Switch

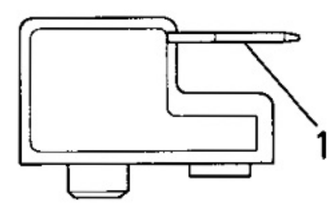

Speed Sensor



Actuator

Throttle Position Sensor
(1FZ-FE)

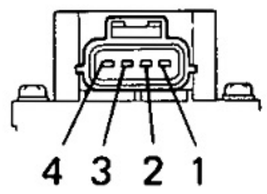

Ignition Switch

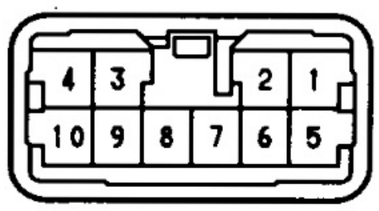

Check Connector
(TDCL)

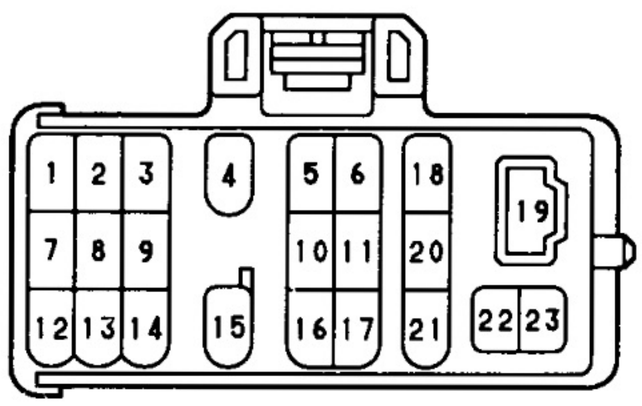

Combination Meter
(Cruise Control Indicator)
(Brake Warning)

Connector "A"

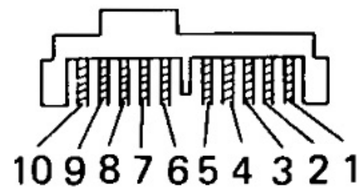

EFI ECU

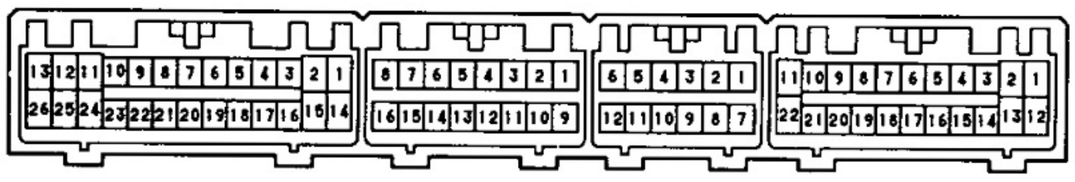

SYSTEM DESCRIPTION

- When the ignition switch is turned ON, current flows from the battery to terminal 14 of the cruise control (CC) ECU.
- Terminal 13 of the CC ECU is always grounded.

Basic Operation

HINT: For all explanations below, the ignition switch is in the ON position.

1. MAIN SWITCH OPERATION

When the main switch is pushed ON, current flows from terminal 4 of the CC ECU → terminal B-15 of the control switch → terminal B-20 of the switch → ground.

As a result, the CC ECU is on standby and terminal 5 of the CC ECU is grounded. Therefore the CC indicator lights up.

2. CONTROL SWITCH OPERATION

The control switch controls the SET, COAST, RESUME, ACCEL and CANCEL functions. When the control switch is turned to each position, current flows from terminals 18 of the CC ECU → terminals B-5 of the control switch → terminal B-20 of the switch → ground.

In the way, the CC ECU detects each position the control switch is turned to, and starts operation.
HINT: The SET function is detected by the CC ECU when the control switch released from SET/COAST.

3. SPEED CONTROL OPERATION

When the vehicle speed is set by the control switch, the ECU sends signal from terminal 10 → terminal 2 of the stop light switch → terminal 4 of the switch → terminal 5 of the actuator → (magnetic clutch) → terminal 4 of the actuator → ground.

At the same time, the CC ECU sends the signal from terminal 24 → terminal 1 of the actuator → (position sensor) → terminal 3 of the actuator → terminal 26 of the CC ECU. When the occurs, the position sensor sends the position of the actuator arm as a signal (voltage) from terminal 2 of the actuator to terminal 25 of the CC ECU.

When the actual vehicle speed drops below the set speed, the CC ECU sends a signal (voltage) from terminal 12 → terminal 6 of actuator → (motor) → terminal 7 of actuator → terminal 11 of CC ECU. This causes the motor to rotate the actuator arm in the throttle opening direction, increasing the vehicle speed. Then, when the arm reaches the prescribed angle, the CC ECU detects this at terminal 25 and stops the signal from 12.

When the actual vehicle speed rises above the set speed, the CC ECU sends a signal from terminal 11, turning the motor in the opposite direction so that the vehicle speed is reduced.

4. MANUAL CANCEL OPERATION

The CC system has the following methods of cancellation:

- **Speed Control Switch (CANCEL)**
  When the control switch is turned to CANCEL position.
- **Parking Brake Switch**
  When the parking brake lever is pulled, the parking brake switch is turned ON and sends a cancellation signal (ground voltage) to terminal 3 of the CC ECU.
- **Neutral Start Switch (A/T)**
  When the shift lever is set to ''N'' or ''P'' range, the neutral start switch is turned ON and sends a cancellation signal (ground voltage) to terminal 2 of the CC ECU.
- **Stop Light Switch**
  When the brake pedal is depressed, SW B of the stop light switch is turned OFF, the magnetic clutch (in actuator) is released, and SW A of the stop light switch is turned ON and sends a cancellation signal (battery voltage) to terminal 16 of the CC ECU.

When the CC ECU detects any of the above signals, it stops output of signals to the actuator, and cancels cruise control.

DIAGNOSIS SYSTEM

Output of Diagnostic Code

READ DIAGNOSTIC CODE

(Type A)

(a) Turn the ignition switch on.

(b) Turn the control switch to SET or RESUME position and keep it there.

(c) After pushing the main switch ON, keep the SET or RESUME switch ON for 3 seconds.

(d) Check that the "CRUISE" indicator light lights up in the combination meter.

(e) Turn the SET/COAST switch off.

(f) Meet the conditions listed in the table below.

(g) Read the diagnosis code on the cruise control indicator light.

No.	Conditions	Indication code	Diagnosis
1	Turn the control switch to SET/COAST position.	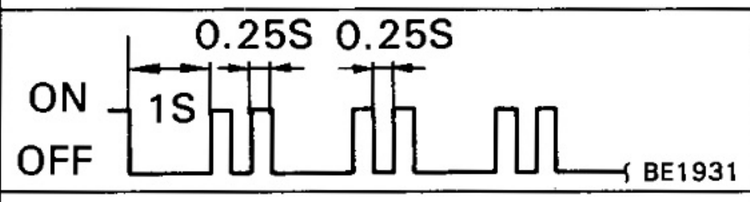	SET/COAST circuit is normal.
2	Turn the control switch to RES/ACC position.	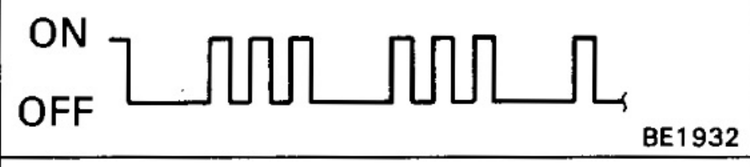	RES/ACC circuit is normal.
3	Each cancel switch is turned ON. • Control switch (to CANCEL) • Stop light switch • Parking brake switch • Neutral start switch (to N or P range)	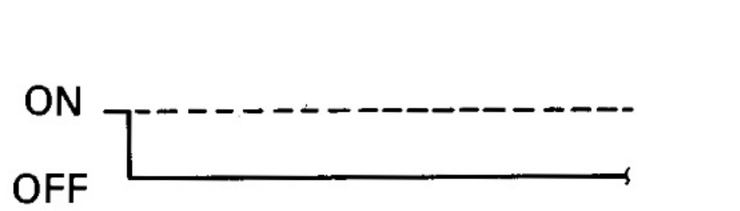	Each cancel switch is normal.
4	Drive at approx. 40 km/h (25 mph) or below.	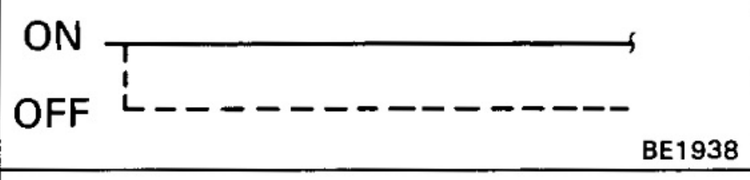	Speed sensor circuit is normal.
	Drive at approx. 40 km/h (25 mph) or over.	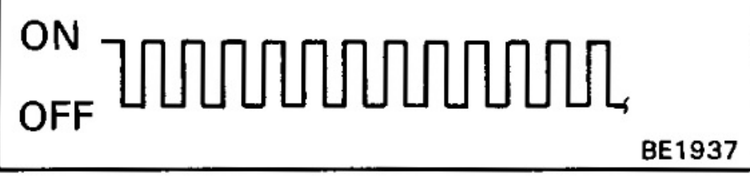	Speed sensor circuit is normal.

HINT:

- Indication codes appear in order from No. 1.
- If there is no indication code, perform troubleshooting and inspection. (See page BE-34)
- Indication is stopped when the MAIN switch is repushed.

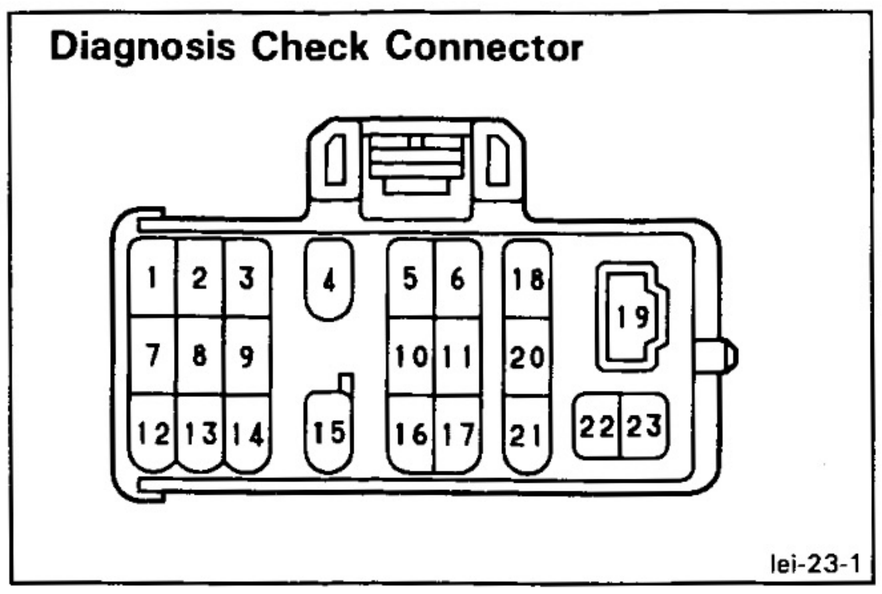

(Type B)

(a) If while driving with the cruise control on, the system is canceled by a malfunction in either the actuator, speed sensor or speed control switch circuit, the cruise control indicator light "CRUISE" will blink 5 times.

(b) While stopped, connect terminals E_1 (3) and Tc (11) of the check connector.

HINT: If the ignition switch is turned off, the diagnostic code will be erased from the computer memory.

(c) Read the diagnostic code on the indicator light "CRUISE".

Code No.	CRUISE MAIN Indicator Light Blinking Pattern	Diagnosis
–	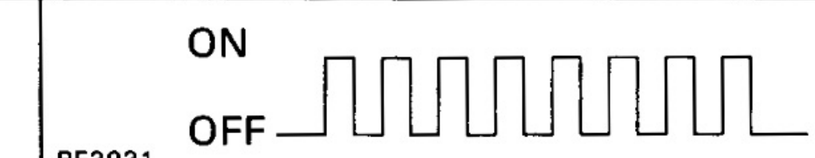	Normal
11	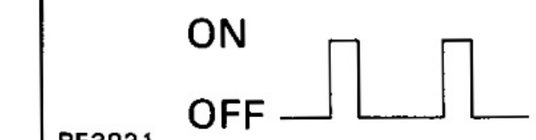	• Duty ratio of 100 % output to motor acceleration side. • Overcurrent in motor circuit.
12	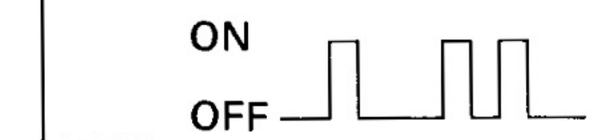	• Overcurrent in magnet clutch circuit. • Open in magnet clutch circuit.
13	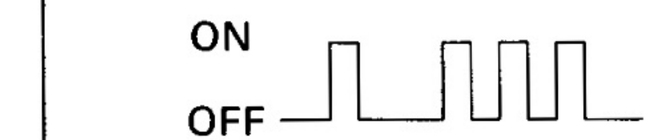	• Open in actuator motor circuit. • Position sensor detects abnormal voltage. • Position sensor signal value does not change when the motor operates.
21	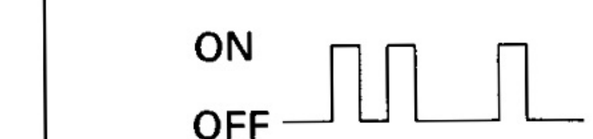	• Vehicle speed signal not sent for 140 msec. or longer
*23	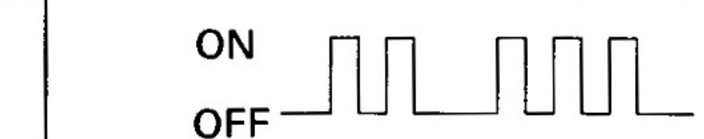	• Actual vehicle speed has dropped by 16 km/h (10 mph) or more below the set speed.
32		• Short in control switch circuit.
34	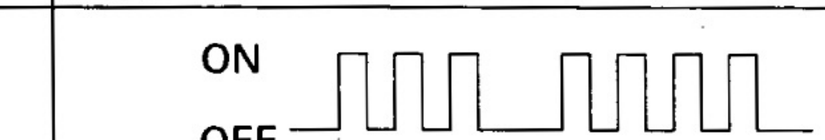	• Voltage abnormality in control switch.

HINT: When two or more codes are indicated, the lowest numbered code will be displayed first.

(*) When the vehicle speed is reduced on uphill roads, the speed can be set again and driving continued. (This is not a malfunction.)

TROUBLESHOOTING

You will find the source of the trouble more easily by properly using the table shown below. In this table, the numbers indicate the order of priority of the causes of trouble. Check each part in the order shown.

Chart No.				D	C	C	F	H	G	E	I		
Inspection Item / Diagnosis Code / Problem	Type B	Type A		CC ECU	Actuator	Main Switch (in Control Switch)	Control Switch	Stop Light Switch	Neutral Start Switch	Parking Brake Switch	Speed Sensor	Throttle Position Sensor	Speed Control Cable and Control Link	Wire Harness
• "CRUISE" indicator light blinks 5 times. • Cruise control system does not set. • Cruise control system does not operate.	11			2	1									3
	12			3	1			2						4
	13			2	1									3
	21			2							1			3
	23			4	3						2		1	
	32			2			1							3
	34			2			1							
	41			1										
	Normal	4	OK	8	7	1	2	3	4	5			6	9
			NG	2							1			
Set speed deviates on high or low side.				4	3						1		2	
Large speed increase or speed drop when the speed control switch turned to SET.				4	3							2	1	
Vehicle speed fluctuates when speed control switch turned to SET.				4	3						1		2	
Set speed does not cancel when brake pedal depressed.	3		OK	1										
			NG	2				1						
Set Speed does not cancel when parking brake lever pulled.	3		OK	1										
			NG	2						1				
Set speed does not cancel when shifted to "N" range.	3		OK	1										
			NG	2					1					
Vehicle speed does not decrease when speed control switch turned to COAST.	1		OK	4	1						3		2	
			NG	2			1							
Vehicle speed does not accelerate when speed control switch turned to ACCEL.	2		OK	4	1						3		2	
			NG	2			1							
Vehicle speed does not return to memorized speed when control switch turned on RESUME.	2		OK	4	1						3		2	
			NG	2			1							
Set speed does not cancel when speed control switch turned to CANCEL.	3		OK	1										
			NG	2			1							
Speed can be set below about 40 km/h (25 mph).	4		OK	1										
			NG	2							1			
Cruise control will not disengage even at about 40 km/h (25 mph).	4		OK	1										
			NG	3							1		2	
Acceleration response is sluggish when speed control switch turned to "ACCEL" or "RESUME".				4	3		1				2		1	

A POWER SOURCE CIRCUIT

HINT: While carrying out the following inspection, make certain that the connectors and terminals are properly connected.

Is ECU-IG fuse normal?
- No → Replace fuse and turn ignition switch ON. Is fuse normal?
  - Yes → Fuse faulty.
  - No → Disconnect connectors from CC ECU. Replace fuse and turn ignition switch ON. Is fuse normal?
    - No → Short circuit in wire harness on vehicle side.
    - Yes → Replace CC ECU. The recheck system.
- Yes → CC ECU: Disconnect connector from CC ECU and inspect connector on wire harness side as follows.

INSPECT GROUND CONNECTION
Is there continuity between terminal 13 and ground?
- No →
  - Open circuit in wire harness between terminal 13 of CC ECU and ground.
  - Ground faulty.
- Yes → **INSPECT POWER SOURCE** Turn ignition switch ON. Is there battery voltage between terminal 14 and ground?
  - No → Open circuit in wire harness between terminal 14 of CC ECU and ground.
  - Yes → Replace CC ECU. Then recheck system.

CC: Cruise Control

B CRUISE CONTROL INDICATOR CIRCUIT

HINT: While carrying out the following inspection, make certain that the connectors and terminals are properly connected.

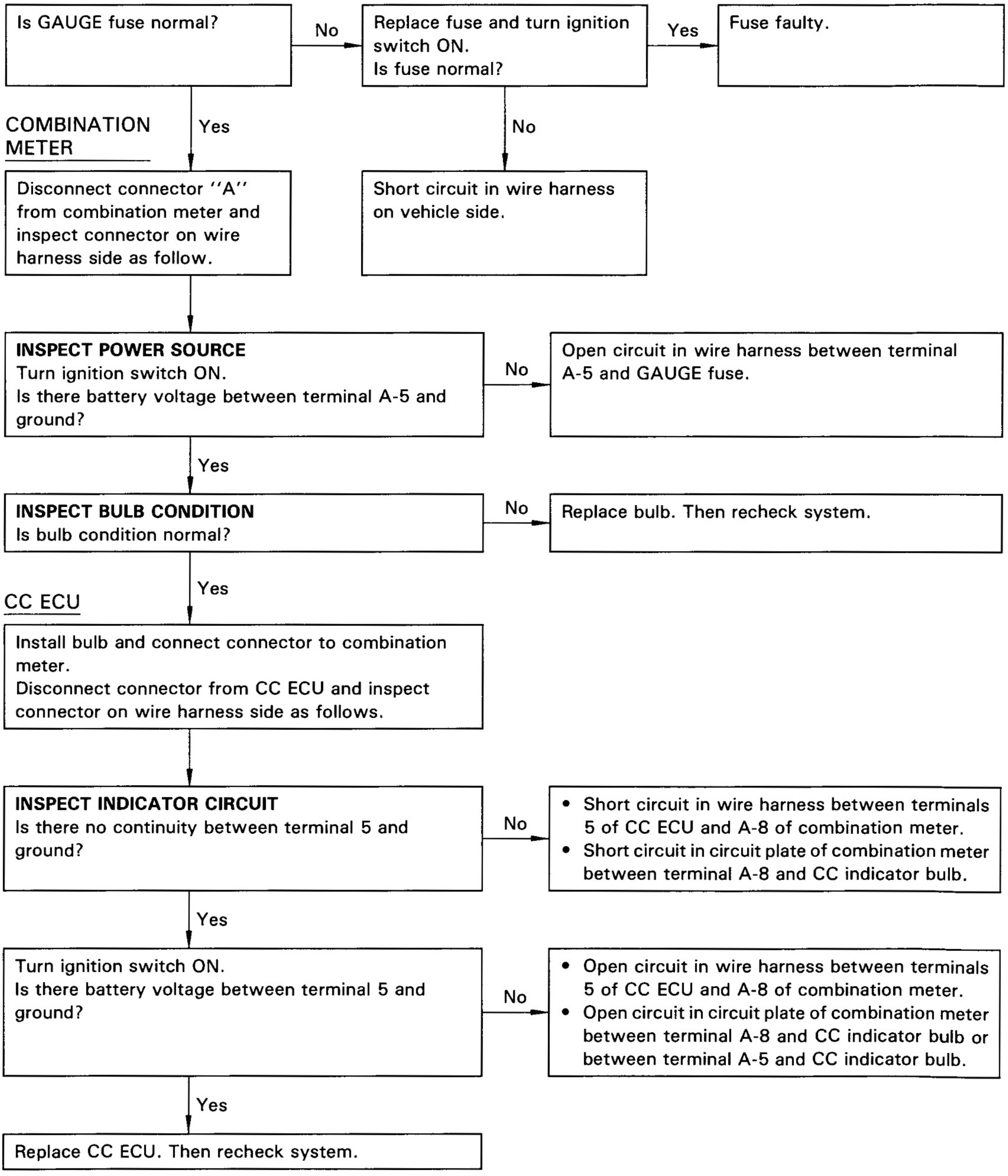

CC: Cruise Control

C CONTROL SWITCH CIRCUIT

HINT: While carrying out the following inspection, make certain that the connectors and terminals are properly connected.

CONTROL SWITCH

Disconnect connector from control switch and inspect connector on wire harness side as follows.

↓

INSPECT GROUND CONNECTION
Is there continuity between terminal B-20 and ground?

No → • Open circuit in wire harness between terminal B-20 of control switch and ground.
• Ground faulty.

↓ Yes

INSPECT CONTROL SWITCH (See page BE-47)
Is control switch operation normal?

No → Replace control switch. Then recheck system.

↓ Yes

CC ECU

Connect connector to control switch.
Disconnect connectors from CC ECU and inspect connectors on wire harness side as follows.

↓

INSPECT MAIN SWITCH CIRCUIT
Is there continuity between terminal 4 and ground with main switch OFF?

Yes → Short circuit in wire harness between terminals 4 of CC ECU and B-15 of control switch.

↓ No

Is there continuity between terminal 4 and ground with main switch ON?

No → Open circuit in wire harness between terminals 4 of CC ECU and B-15 of control switch.

↓ Yes

INSPECT CONTROL SWITCH CIRCUIT
Is there continuity between terminal 18 and ground with control switch OFF?

Yes → Short circuit in wire harness between terminals 18 of CC ECU and B-5 of control switch.

↓ No

Is there resistance as shown in table below between terminal 18 and ground when control switch is turned to each position?

Position	Resistance (Ω)
RES/ACC	Approx. 68
SET/COAST	Approx. 198
CANCEL	Approx. 418

No → Open circuit in wire harness between terminals 18 of CC ECU and B-5 of control switch.

↓ Yes

Replace CC ECU. Then recheck system.

CC: Cruise Control

D ACTUATOR CIRCUIT

HINT: While carrying out the following inspection, make certain that connectors and terminals are properly connected.

ACTUATOR

Disconnect connector from actuator and inspect connector on wire harness side as follows.

↓

INSPECT GROUND CONNECTION
Is there continuity between terminal 4 and ground?

No → • Open circuit in wire harness between terminal 4 of actuator and ground.
• Ground faulty.

Yes ↓

INSPECT ACTUATOR (See page BE-48)
Is actuator operation normal?

No → Replace actuator. Then recheck system.

Yes ↓

STOP LIGHT SWITCH

INSPECT STOP LIGHT SWITCH INSTALLATION
Is stop light switch installed properly?

No → Reinstall stop light switch properly. Then recheck system.

Yes ↓

Connect connector to actuator.
Disconnect connector from stop light switch and inspect connector on wire harness side as follows.

↓

INSPECT SAFETY MAGNETIC CLUTCH CIRCUIT
Is there approx. 38.5 Ω between terminal 4 and ground?

No → Open or short circuit in wire harness between terminals 4 of stop light and 5 of actuator.

Yes ↓

INSPECT STOP LIGHT SWITCH (See page BE-47)
Is stop light switch operation normal?

No → Replace stop light switch. Then recheck system.

Yes ↓

CONTINUED ON NEXT PAGE

CC: Cruise Control

CONTINUED FROM PREVIOUS PAGE

CC ECU

Connect connector to stop light switch.
Disconnect connectors from CC ECU and inspect connectors on wire harness side as follows.

INSPECT MAGNETIC CLUTCH CIRCUIT
Is there approx. 38.5 Ω between terminal 10 and ground?

No → Open or short circuit in wire harness between terminals 10 of CC ECU and 5 of actuator.

Yes

INSPECT MOTOR CIRCUIT
Is there no continuity between terminal 12 and ground?

No → Short circuit in wire harness between terminals 12 of CC ECU and 6 of actuator.

Yes

Is there no continuity between terminal 11 and ground?

No → Short circuit in wire harness between terminals 11 of CC ECU and 7 of actuator.

Yes

Is there continuity between terminals 12 and 11 with actuator arm in a position except max. open or max. close?

No → Open circuit in wire harness between terminals 12 of CC ECU and 6 of actuator or between terminals 11 of CC ECU and 7 of actuator.

Yes

INSPECT POSITION SENSOR CIRCUIT
Is there no continuity between terminal 24 and ground?

No → Short circuit in wire harness between terminals 24 of CC ECU and 1 of actuator.

Yes

Is there approx. 2 kΩ between terminals 24 and 26?

No →
- Open circuit in wire harness between terminals 26 of CC ECU and 3 of actuator.
- Open circuit in wire harness between terminals 24 of CC ECU and 1 of actuator.

Yes

Does resistance change even between terminals 26 and 25?

No → Open or short circuit in wire harness between terminals 25 of CC ECU and 2 of actuator.

Yes

Replace CC ECU. Then recheck system.

CC: Cruise Control

E SPEED SENSOR CIRCUIT

HINT: While carrying out the following inspection, make certain that the connectors and terminals are properly connected.

SPEED SENSOR

Disconnect connector from speed sensor and inspect connector on wire harness side as follows.

↓

INSPECT GROUND CONNECTION
Is there continuity between terminal 13 and ground?

No → • Open circuit in wire harness between terminal 13 of speed sensor and ground.
• Ground faulty.

↓ Yes

INSPECT SPEED SENSOR (See page BE-47)
Is speed sensor operation normal?

No → Replace speed sensor. Then recheck system.

↓ Yes

CC ECU

Connect connector to speed sensor.
Disconnect connector from CC ECU and inspect connector on wire harness side as follows.

↓

INSPECT SPEED SENSOR CIRCUIT
Is there continuity repeatedly between terminal 20 and ground?

No → • Open or short circuit in wire harness between terminals 20 of CC ECU and 2 of speed sensor.

↓ Yes

Replace CC ECU. Then recheck system.

CC: Cruise Control

F STOP LIGHT SWITCH CIRCUIT

HINT: While carrying out the following inspection, make certain that the connectors and terminals are properly connected.

INSPECT STOP LIGHT SYSTEM
Is stop light system operation normal?
- Yes → Inspect CC ECU on next page.
- No →

Is STOP fuse normal?
- No → Replace fuse. Is fuse normal?
  - Yes → Fuse faulty.
  - No →

Disconnect connector from CC ECU and replace fuse. Is fuse normal?
- No →
  - Short circuit in wire harness between terminal 1 of stop light switch and STOP fuse.
  - Short circuit in wire harness between terminal 16 of CC ECU and STOP fuse.
- Yes →

Replace fuse and depress brake pedal. Is fuse normal?
- No →
  - Short circuit in wire harness between terminal 3 of stop light switch and stop light.
  - Short circuit in wire harness between terminals 1 of CC ECU and 3 of stop light switch.
- Yes → Replace CC ECU. Then recheck system.

Yes

STOP LIGHT SWITCH

INSPECT STOP LIGHT SWITCH INSTALLATION
Is stop light switch installed properly?
- No → Reinstall stop light switch properly. Then recheck system.
- Yes

CC: Cruise Control

CONTINUED ON NEXT PAGE

CONTINUED FROM PREVIOUS PAGE

STOP LIGHT SWITCH

Disconnect connector from stop light switch and inspect connector on wire harness side as follows.

INSPECT POWER SOURCE
Is there battery voltage between terminal 1 and ground?

No → Open circuit in wire harness between terminal 1 of stop light switch and STOP fuse.

Yes

INSPECT STOP LIGHT CIRCUIT
Connect terminals 1 and 3.
Do stop lights light up?

No →
- Open circuit in wire harness between terminal 3 of stop light switch and ground.
- Ground faulty.

Yes

INSPECT STOP LIGHT SWITCH (See page BE-47)
Is stop light switch operation normal?

No → Replace stop light switch. Then recheck system.

Yes

CC ECU

Connect connector to stop light switch.
Disconnect connector from CC ECU and inspect connector on wire harness side as follows.

→ If stop light system operation is normal, start inspection from this step.

INSPECT STOP LIGHT SWITCH CIRCUIT
Is there battery voltage between terminal 1 and ground?

No → Open circuit in wire harness between terminal 1 of CC ECU and STOP fuse.

Yes

Is there battery voltage between terminal 16 and ground when brake pedal depressed?

No → Open circuit in wire harness between terminals 16 of CC ECU and 3 of stop light switch.

Yes

Replace CC ECU. Then recheck system.

CC: Cruise Control

G PARKING BRAKE SWITCH CIRCUIT

HINT: While carrying out the following inspection, make certain that the connectors and terminals are properly connected.

INSPECT PARKING BRAKE SWITCH
(See page BE-47)
Is parking brake switch operation normal?

No → Replace parking brake switch. Then recheck system.

Yes

CC ECU

Connect connector to parking brake switch.
Disconnect connector from CC ECU and inspect connector on wire harness side as follows.

INSPECT PARKING BRAKE SWITCH CIRCUIT
Is there continuity between terminal 3 and ground when parking brake lever is pulled?

No → Short circuit in wire harness between terminal 3 of CC ECU and parking brake switch.

Yes

Is there no continuity between terminal 3 and ground when parking brake lever is released?

No → Open circuit in wire harness between terminal 3 of CC ECU and parking brake switch.

Yes

Replace CC ECU. Then recheck system.

CC: Cruise Control

H NEUTRAL START SWITCH CIRCUIT

HINT: While carrying out the following inspection, make certain that the connectors and terminals are properly connected.

INSPECT STARTING SYSTEM
Is starting system normal?

No → Repair starting system. Then recheck system.

Yes ↓

CC ECU

Disconnect connector from CC ECU and inspect connector on wire harness side as follows.

↓

INSPECT NEUTRAL START SWITCH CIRCUIT
Is there continuity between terminal 2 and ground when shift lever is shifted to P or N range?

No → Open circuit in wire harness between terminals 2 of CC ECU and neutral start switch.

Yes ↓

Is there no continuity between terminal 2 and ground when shift lever is shifted to L, 2, 3, or R range?

No → Short circuit in wire harness between terminals 2 of CC ECU and neutral start switch.

Yes ↓

Replace CC ECU. Then recheck system.

CC: Cruise Control

I ECT SOLENOID No.2 CIRCUIT (with A/T)

HINT: While carrying out the following inspection, make certain that the connectors and terminals are properly connected.

INSPECT ECT SYSTEM
Is ECT system normal?

No → Repair ECT system. Then recheck system.

Yes ↓

CC ECU

Disconnect connector from CC ECU and inspect connector on wire harness side as follows.

↓

INSPECT NO.2 SOLENOID CIRCUIT
Is there approx. 13 Ω between terminal 22 and ground?

No → Open or short circuit in wire harness between terminal 22 of CC ECU and No.2 solenoid.

Yes ↓

Replace CC ECU. Then recheck system.

CC: Cruise Control

J IDL SIGNAL CIRCUIT (w/ 1FZ-FE Engine)

HINT: While carrying out the following inspection, make certain that the connectors and terminals are properly connected.

THROTTLE POSITION SENSOR

INSPECT THROTTLE POSITION SENSOR ADJUSTMENT (Refer to FI Section of ENGINE Repair Manual.) Is throttle position sensor adjustment normal?

No → Adjust position sensor position. Then recheck system.

Yes ↓

INSPECT THROTTLE POSITION SENSOR (Refer to FI Section of ENGINE Repair Manual.) Is throttle position sensor operation normal?

No → Replace throttle position sensor. Then recheck system.

Yes ↓

CC ECU

Connect connector to throttle position sensor. Disconnect connector from CC ECU and inspect connector on wire harness side as follows.

↓

INSPECT IDL SIGNAL CIRCUIT Is there continuity between terminal 23 and ground when acceleration pedal is released?

No → Open circuit in wire harness between terminals 23 of CC ECU and 2 of throttle position sensor.

Yes ↓

Is there no continuity between terminal 23 and ground when acceleration pedal is depressed?

No → Short circuit in wire harness between terminals 23 of CC ECU and 2 of throttle position sensor.

Yes ↓

Replace CC ECU. Then recheck system.

CC: Cruise Control

Wire Harness Side

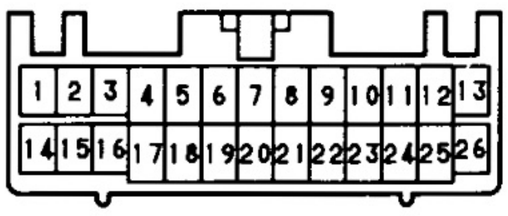

Vd-26-1-B

Cruise Control ECU Circuit

INSPECT ECU CIRCUIT

Disconnect connector and inspect connector on wire harness side as shown in the chart.

Check for	Measured item	Tester connection	Condition		Specified value
Continuity	Neutral start switch	2 — ground	Shift lever position	N or P	Continuity
				L, 2, D or R	No continuity
	Parking brake switch	3 — ground	Parking brake lever position	released	No continuity
				pulled	Continuity
	Control switch	4 — ground	Main switch position	OFF	No continuity
				ON	Continuity
	Ground connection	13 — ground	Constant		Continuity
	Actuator (motor)	*11 — 12	Actuator arm position	max. OPEN	(12 → 11) Continuity
				max. CLOSE	(11 → 12) Continuity
				any position except above position	(12 → 11) Continuity
	TDCL circuit	8 — ground	Constant		No continuity
			Terminals Tc and E1 connected		Continuity
	Throttle position sensor (IDL: 1FZ-FE Engine)	23 — ground	Acceleration pedal position	released	Continuity
				depressed	No continuity
	Speed sensor	20 — ground	With ignition switch ON, speedometer shaft or speed sensor shaft turned.		Continuity ↕ No continuity
Resistance	Actuator (position sensor)	24 — 26	Constant		Approx. 2 kΩ
		24 — 25	Actuator arm turned		Resistance change even
	Actuator (magnetic clutch)	10 — ground	Brake pedal position	released	Approx. 38.5 Ω
				depressed	No continuity
	Control switch	18 — ground	Control switch position	OFF	No continuity
				RES/ACC	Approx. 68 Ω
				SET/COAST	Approx. 198 Ω
				CANCEL	Approx. 418 Ω
	ECT No.2 solenoid valve (A/T)	22 — ground	Constant		Approx. 13 Ω
Voltage	Power source	14 — ground	Ignition switch position	LOCK or ACC	No voltage
				ON	Battery voltage
	STOP fuse	1 — ground	Constant		Battery voltage
	Stop light	16 — ground	Brake pedal position	released	No voltage
				depressed	Battery voltage

*: This circuit includes the diode. If the circuit shown no continuity, change the positive and negative proves and recheck system.

If circuit is as specified, try another ECU.

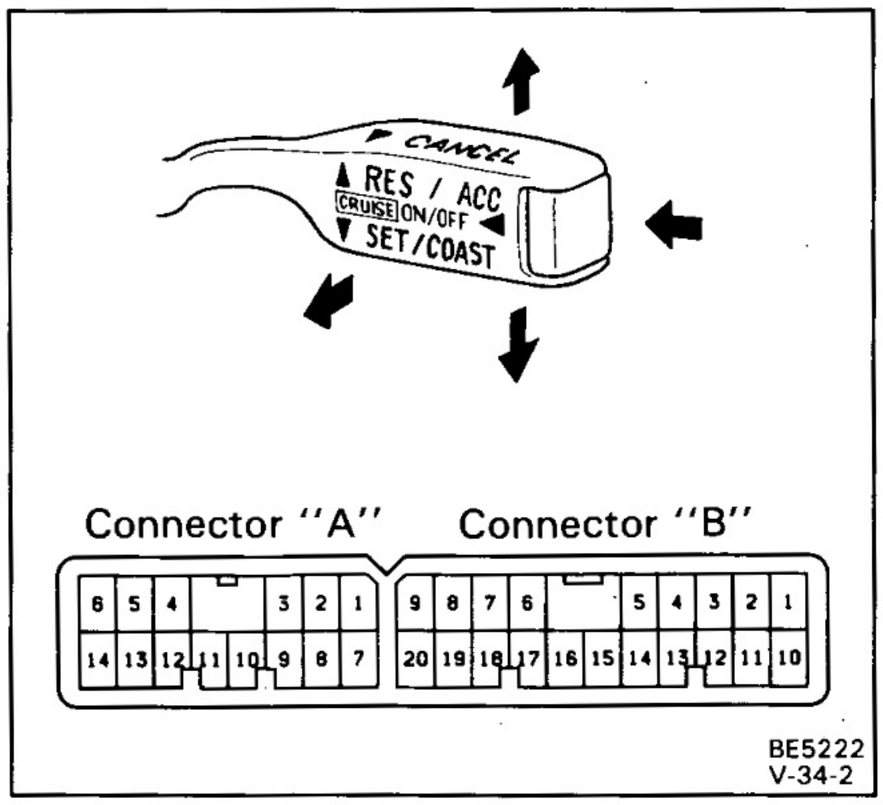

CONTROL SWITCH INSPECTION

INSPECT SWITCH

Switch position \ Terminal		B20	B11	B5	B17	B15
Main	ON	○	—	—	—	○
	OFF					
Control	RES/ACC	○	—	○		
	SET/COAST	○	—	○		
	CANCEL	○	—	○		

If the continuity is not as specified, replace the control switch.

STOP LIGHT SWITCH INSPECTION

INSPECT SWITCH

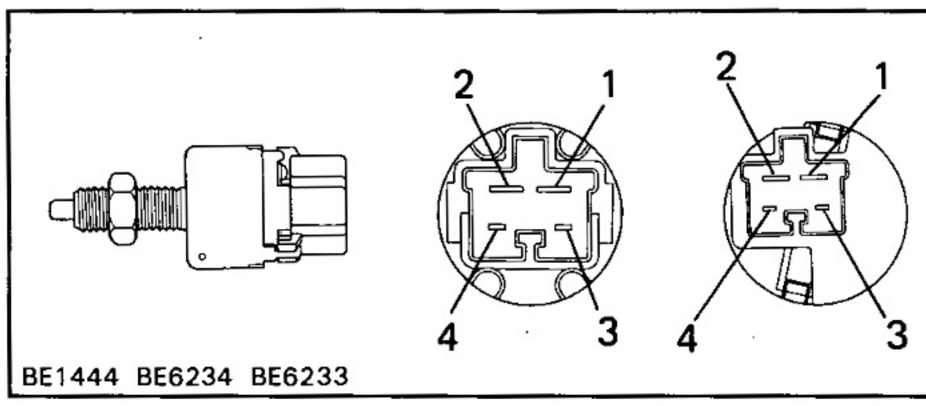

Switch position \ Terminal	1	2	w/ CCS 3	w/ CCS 4
Switch pin free (Brake pedal depressed)	○	○		
Switch pin pushed in (Brake pedal released)			○	○

If continuity is not as specified, replace the stop light switch.

NEUTRAL START SWITCH INSPECTION

See page AT section

THROTTLE POSITION SWITCH INSPECTION

(Refer to FI section of Engine Repair Manual)

PARKING BRAKE SWITCH INSPECTION

INSPECT SWITCH

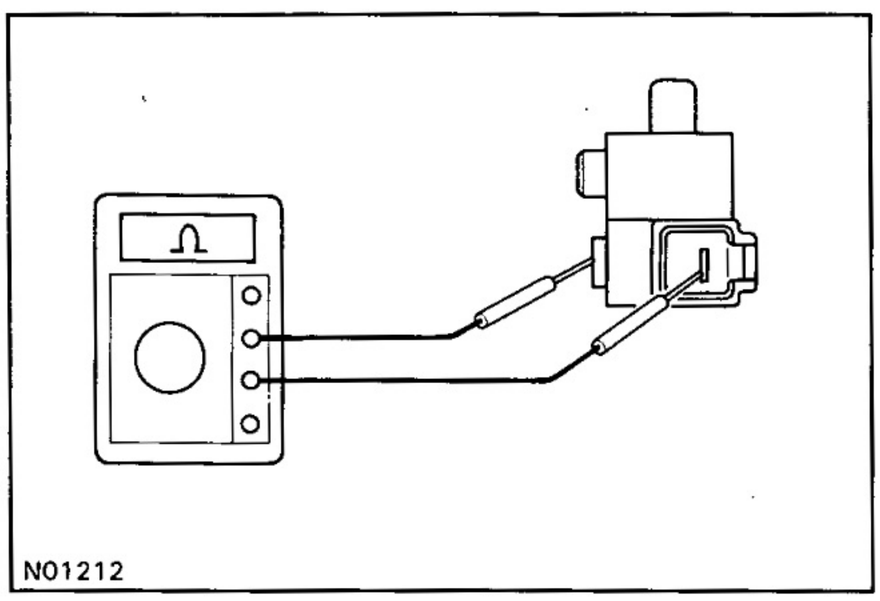

(a) Check that there is continuity between terminal and the switch set nut with switch pin released. (parking brake lever pulled up)

(b) Check that there is no continuity between terminal and the switch set nut with switch pin pushed in. (parking brake lever released)

If operation is not as specified, replace the switch.

SPEED SENSOR INSPECTION

INSPECT SENSOR

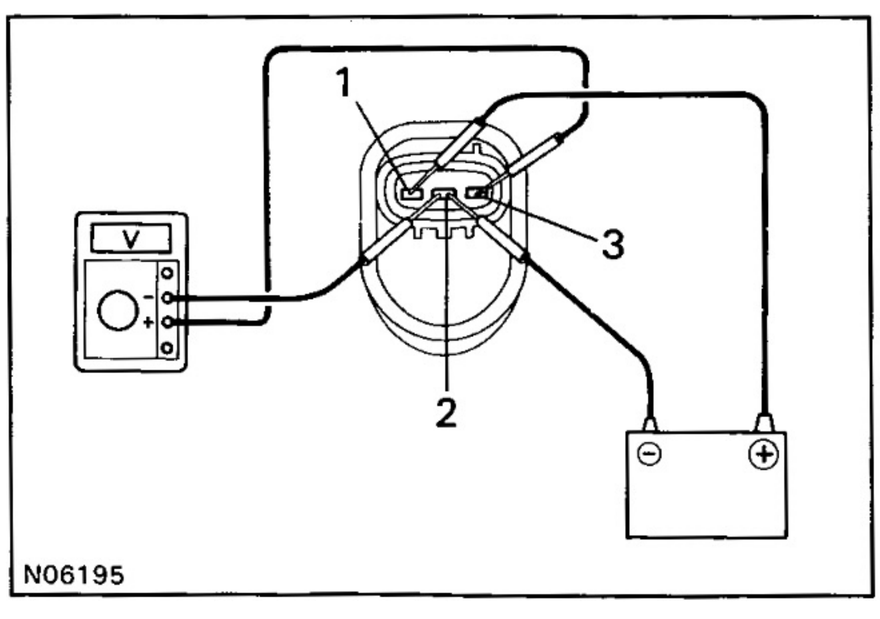

(a) Connect the positive (+) lead from battery to terminal 1 and negative (−) lead to terminal 2.

(b) Connect the positive (+) lead from tester to terminal 3 and negative (−) lead to terminal 2.

(c) Revolve shaft.

(d) Check that there is voltage changer from approx. 0 V to 11 V or more between terminal 3 and 2.

HINT: The voltage change should be 20 times per each revolution of the speed sensor shaft.

If operation is not as specified, replace the sensor.

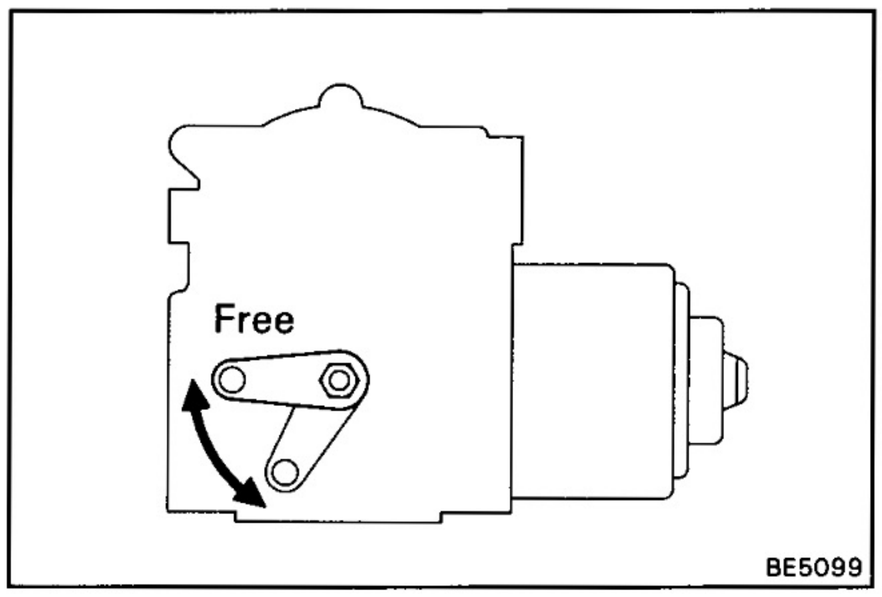

CRUISE CONTROL ACTUATOR INSPECTION

INSPECT ACTUATOR

(Magnet Clutch)

(a) Check that the arm moves smoothly by hand.

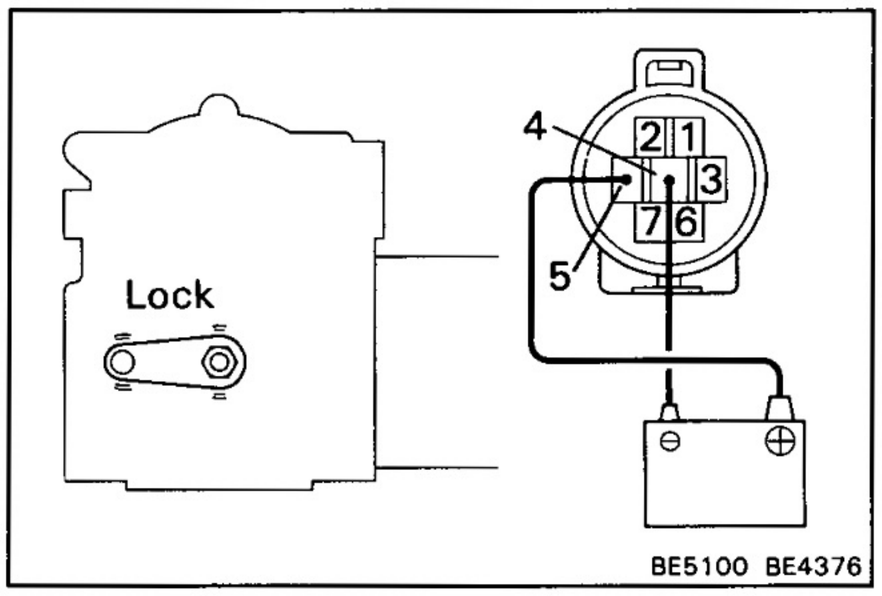

(b) Connect the positive (+) lead from the battery to terminal 5 and the negative (−) lead to terminal 4. (magnet clutch turned ON)

(c) Check that the arm does not move by hand.

If operation is not as specified, replace the motor.

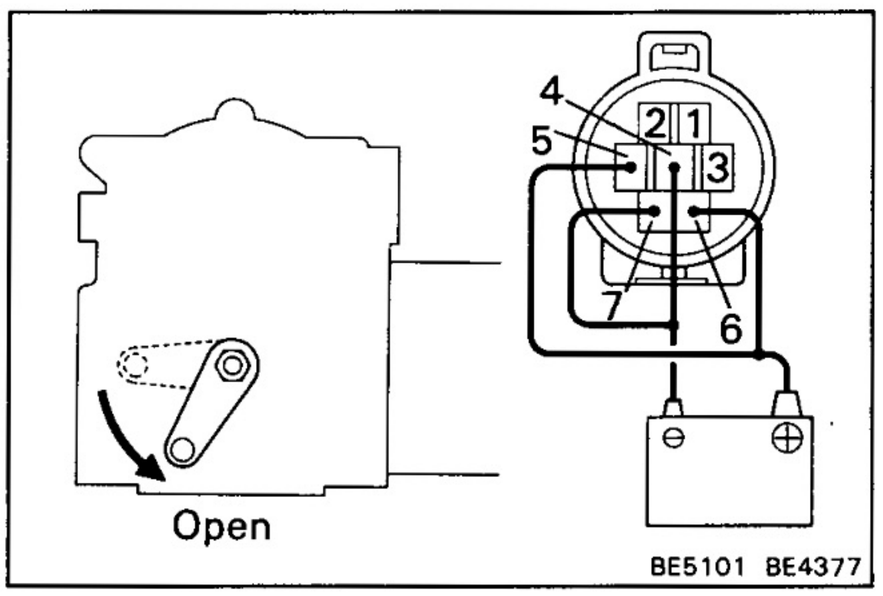

(Motor)

(a) With the magnetic clutch ON, connect the positive (+) lead from the battery to terminal 6 and the negative (−) lead to terminal 7, check that the arm moves to the open side.

(b) When the arm reached to the open position, check that the motor operation stops.

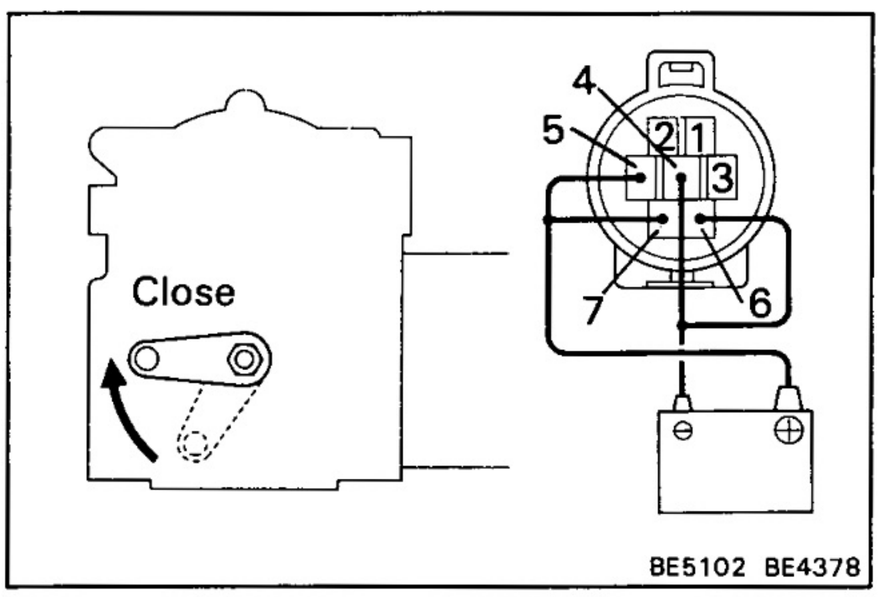

(c) With the magnetic clutch ON, connect the positive (+) lead from the battery to terminal 7 and the negative (−) lead to terminal 6, check that the arm moves to the close side.

(d) When the arm reaches to the closed position, check that the motor operation stops.

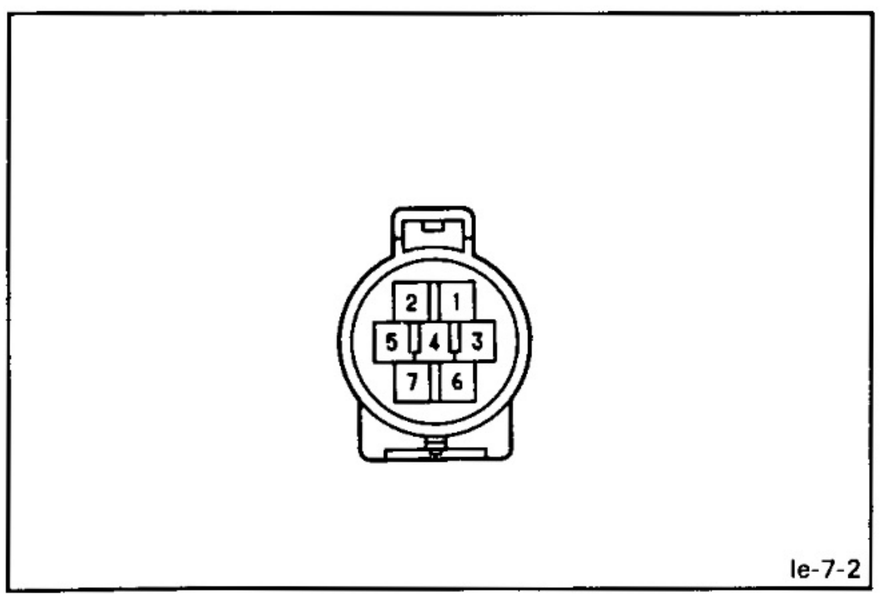

(Position Sensor)

(a) Measure the resistance between terminals 1 and 3.

Resistance: Approx. 2 kΩ

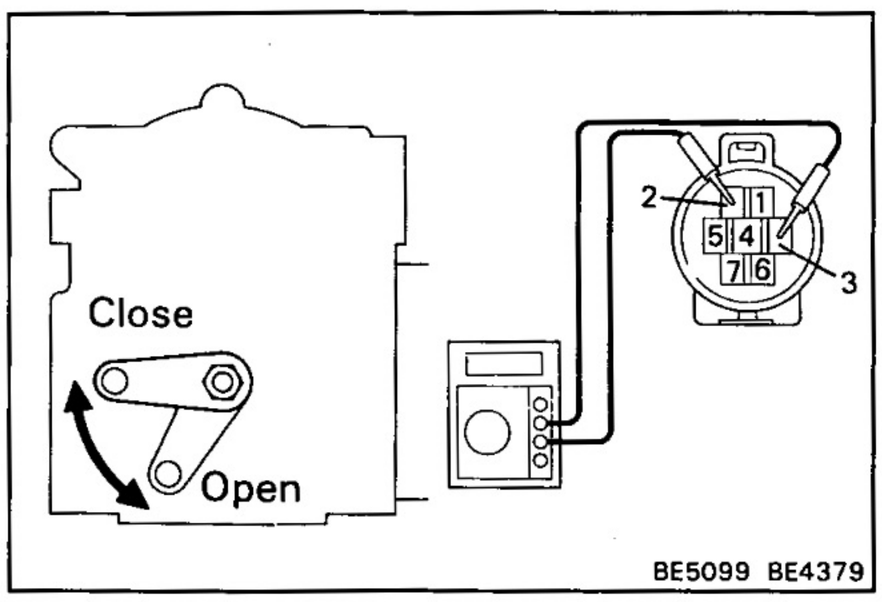

(b) When the arm is moving from the closed to open position, check that resistance between terminals 2 and 3 increases from approx. 0.5 to 1.7 kΩ.

If operation is not as specified, replace the motor.

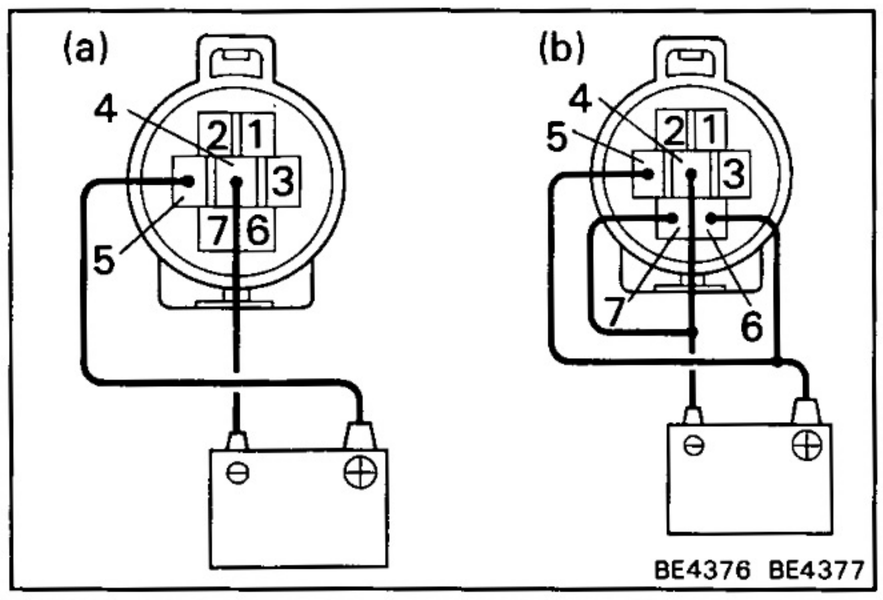

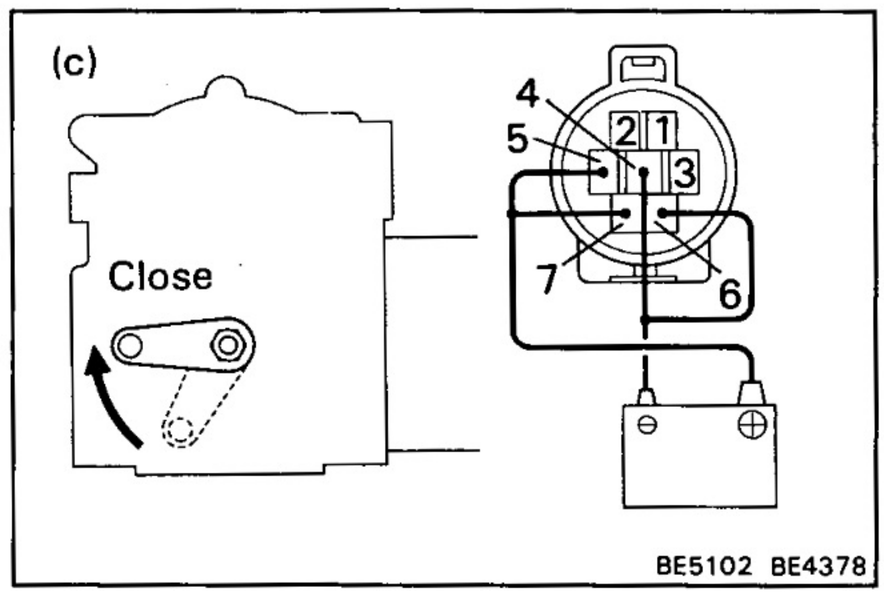

CONTROL LINK ASSEMBLY ADJUSTMENT

ADJUST CONTROL LINK ASSEMBLY

(a) Connect the positive (+) lead from the battery to terminal 5 and the negative (−) lead to terminal 4 of the actuator.
(magnet clutch turned ON)

NOTICE: Keep the magnet clutch ON until adjustment of control link assembly is completed.

(b) With the magnetic clutch ON, connect the positive (+) lead from the battery to terminal 6 and the negative (−) lead to terminal 7.
(Arm moves to the open side.)

(c) With the magnetic clutch ON, connect the positive (+) lead from the battery to terminal 7 and the negative (−) lead to terminal 6.
(Arm moves to the close side.)

(d) Install the control link assembly to the actuator.

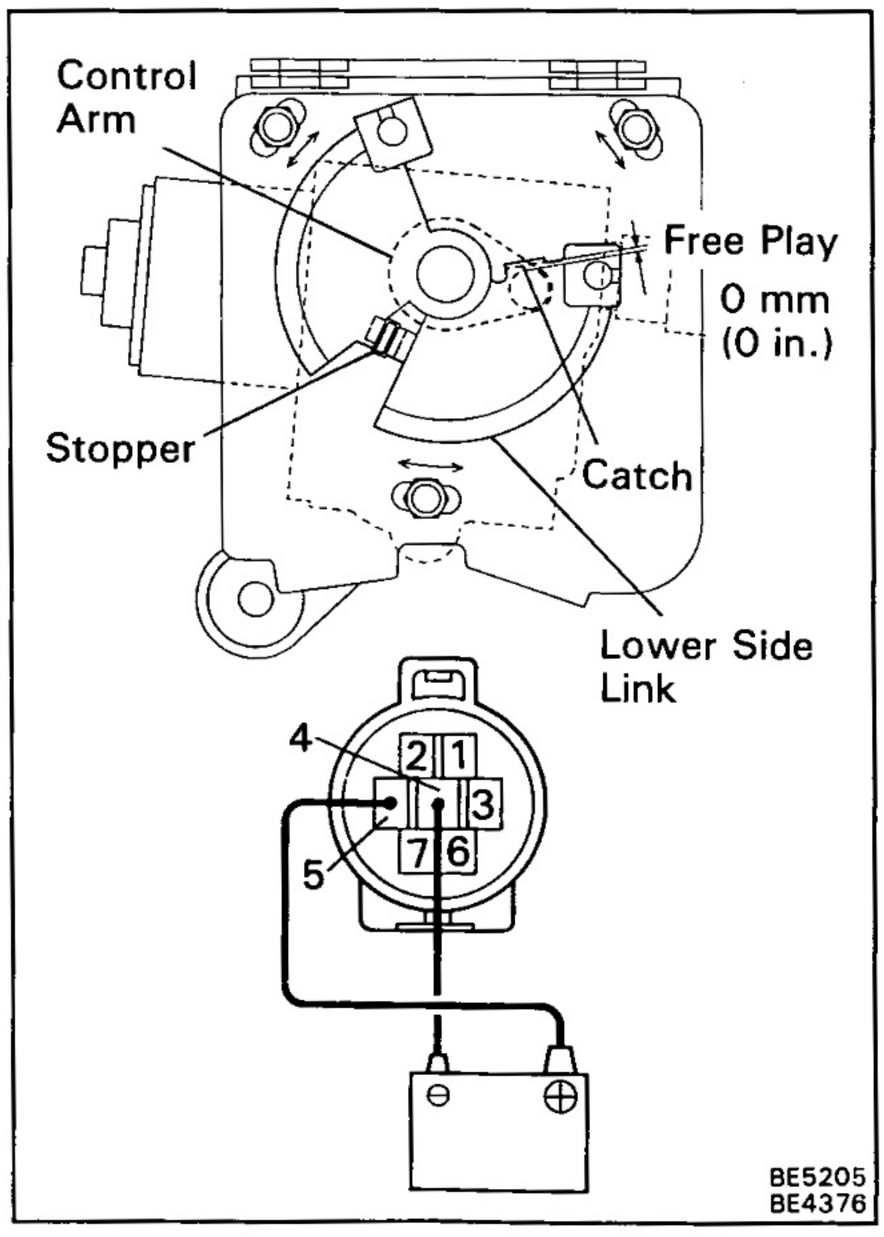

(e) Rotate the control link assembly so that the catch of the control link assembly's lower side link comes in contact with the actuator control arm (Free play 0).

Free play: 0 mm (0 in.)

NOTICE: Rotate the lower side link to the right until it touches the stopper.

(f) In condition (d), install and torque the three nuts.

(g) Disconnect lead wire from the actuator.

EXTRA (SUB) TANK SYSTEM

PARTS LOCATION

FZJ70 type

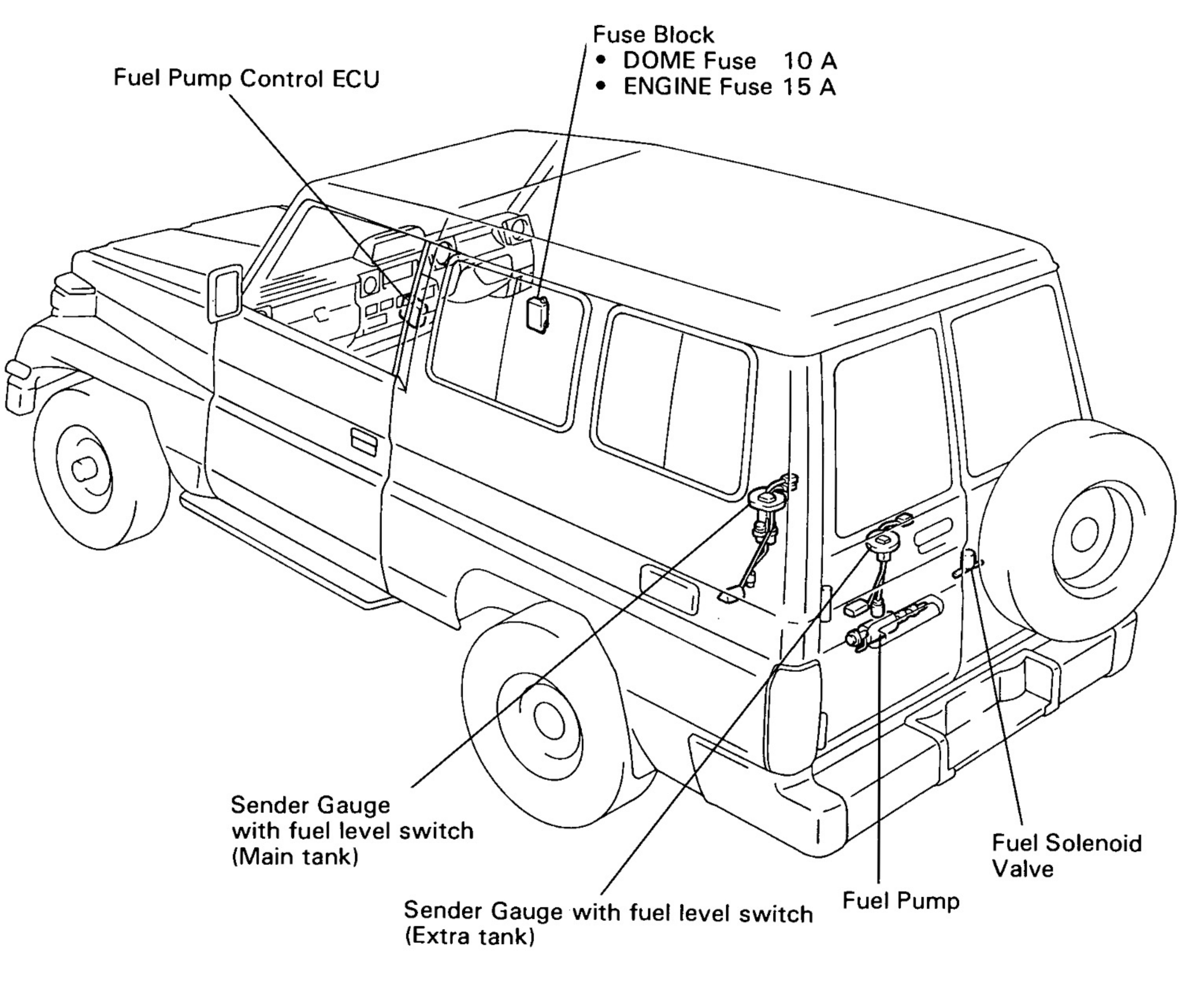

N06931

FZJ80 type

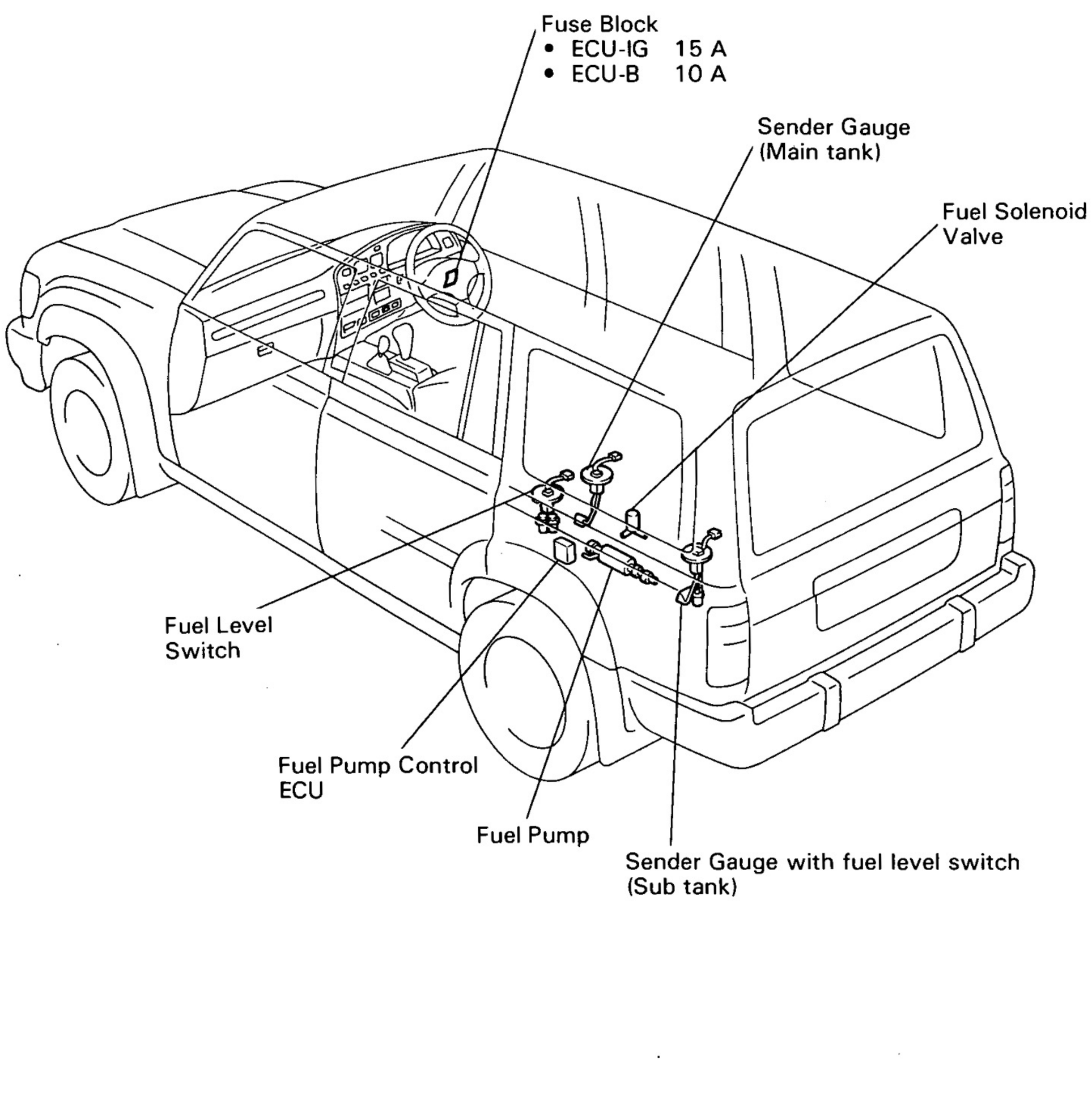

N06716

TROUBLESHOOTING

First use the diagnosis system to check for malfunctions. Repair any malfunctions found. Then check for malfunction in the parts shown in the table below.
The most likely causes of malfunction are shown in the order of their probability.
Inspect each part in the order shown, and replace the part when it is found to be faulty.

Trouble	Part name	See page
EXTRA (SUB) TANK system does not operate	1. Fuse FZJ70 type • DOME FUSE • ENGINE Fuse FZJ80 type • ECU-IG Fuse • ECU-B Fuse	—
	2. Fuel Pump	BE-53
	3. Sub Fuel Switch	BE-53
	4. Fuel Solenoid Valve	BE-55
	5. Fuel Level Switch (Main tank or Extra (sub) tank)	BE-54
	6. Sender Gauge	BE-54
	7. Fuel Pump Control ECU	BE-56
	8. Wire Harness	—

FZJ70 type

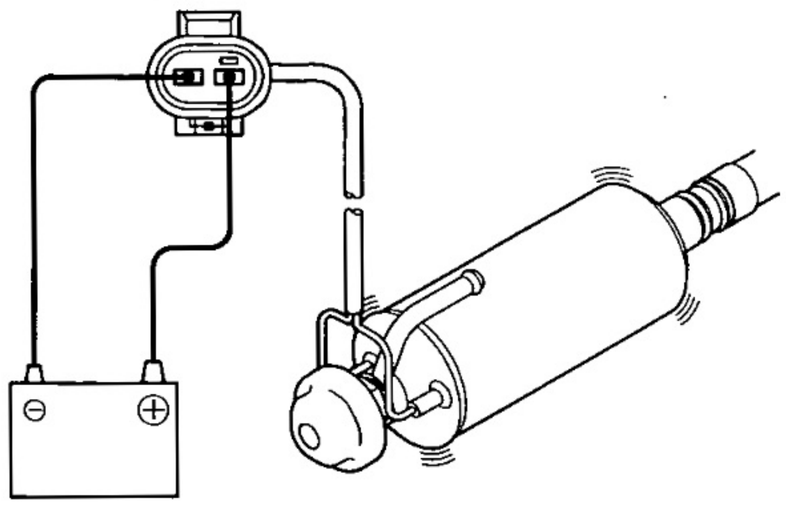

FZJ80 type

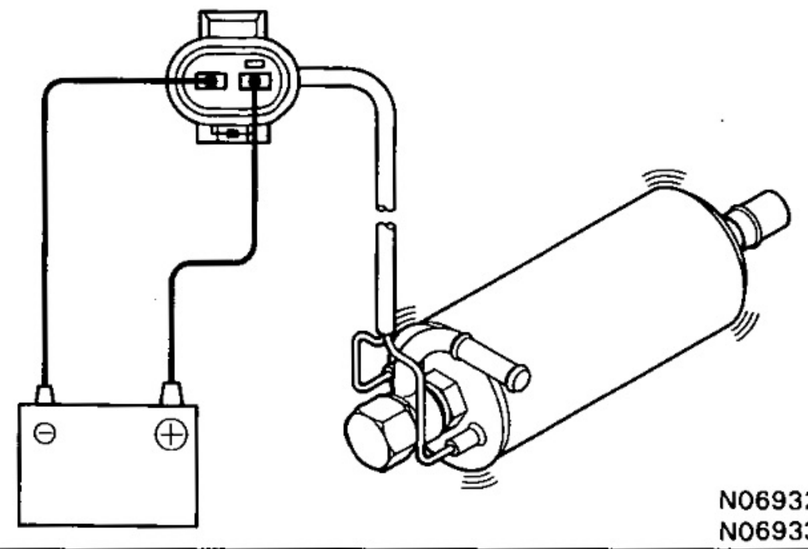

N06932
N06933

FUEL PUMP

INSPECT FUEL PUMP OPERATION

Connect the positive (+) lead from the battery to terminal 1 of the connector, and the negative (—) lead to terminal 2. Check that the fuel pump operates.

NOTICE:

- **These tests must be performed quickly (within 10 seconds) to prevent the coil from burning out.**
- **Keep the fuel pump as far away from the battery as possible.**
- **Always perform switching at the battery side.**

If operation is not as specified, replace the fuel pump.

FZJ70 type

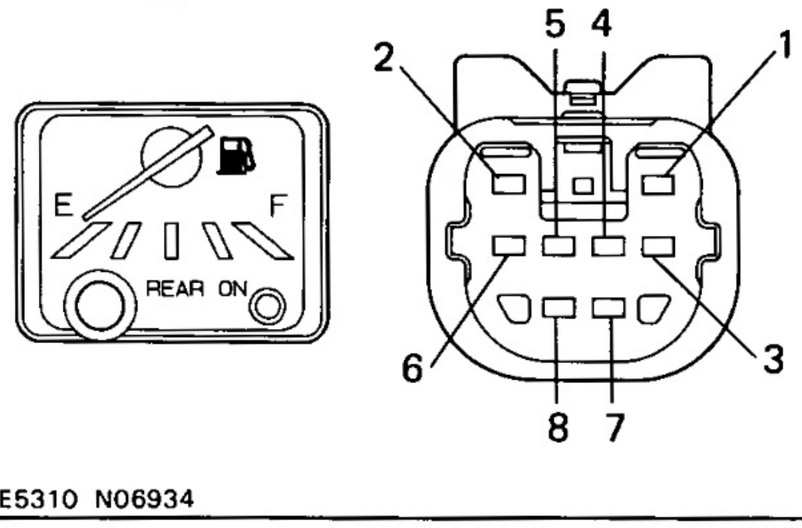

BE5310 N06934

SUB FUEL SWITCH

INSPECT SUB FUEL SWITCH

Terminal / SW Position	4	7	Illumination 1	Illumination 3
OFF				
ON	○——	——○		

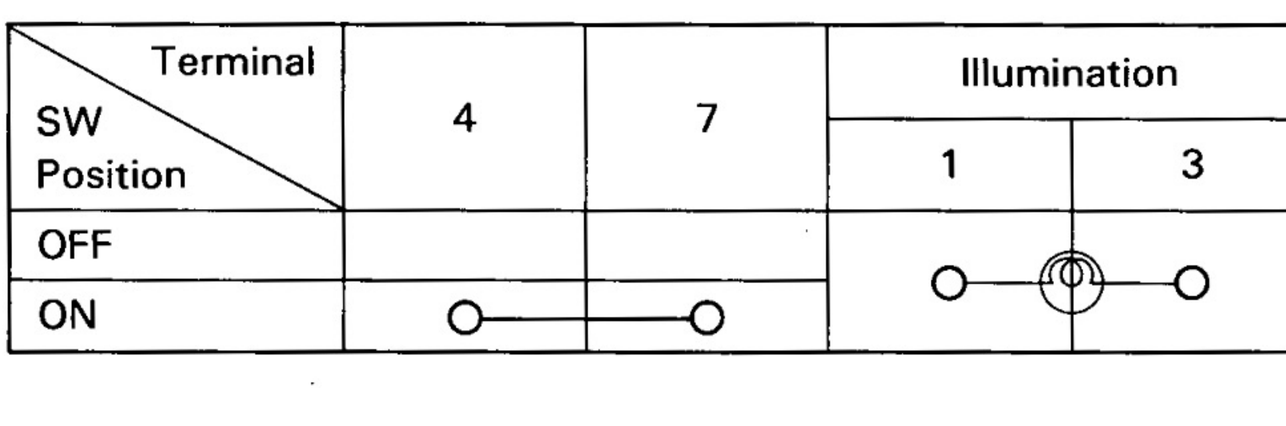

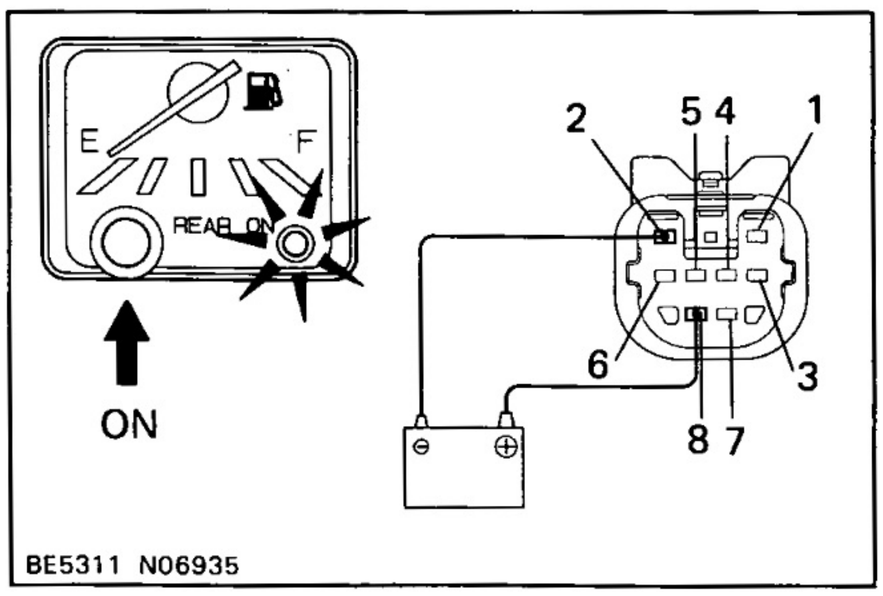

BE5311 N06935

INSPECT INDICATOR LIGHT

(a) Connect the positive (+) lead from the battery to terminal 8 and the negative (—) lead to terminal 2.

(b) Set the switch ON, check that the indicator light lights up.

If the indicator light does not light up, replace the accessory meter.

FZJ80 type

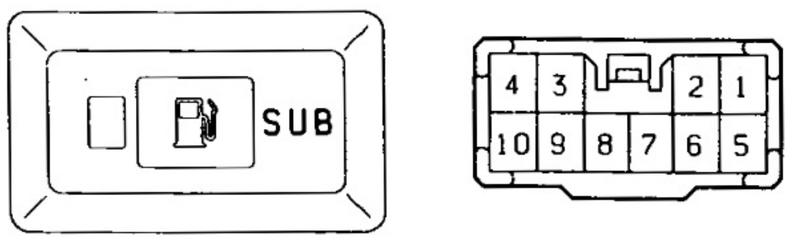

N06707 S-10-2

INSPECT SUB FUEL SWITCH

Terminal / SW Position	6	9	Illumination 1	Illumination 2	Illumination 3	Illumination 4
OFF						
ON	○——	——○				

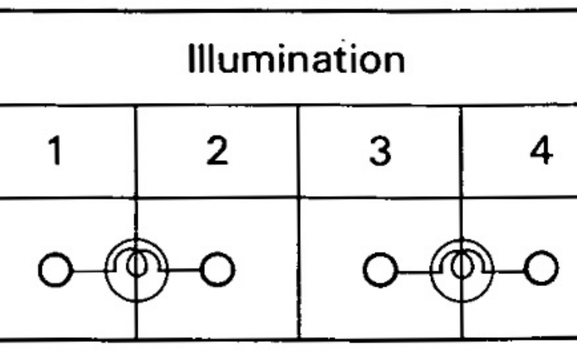

If continuity is not as specified, check the bulb or replace the switch.

FZJ70 type (Main Tank)

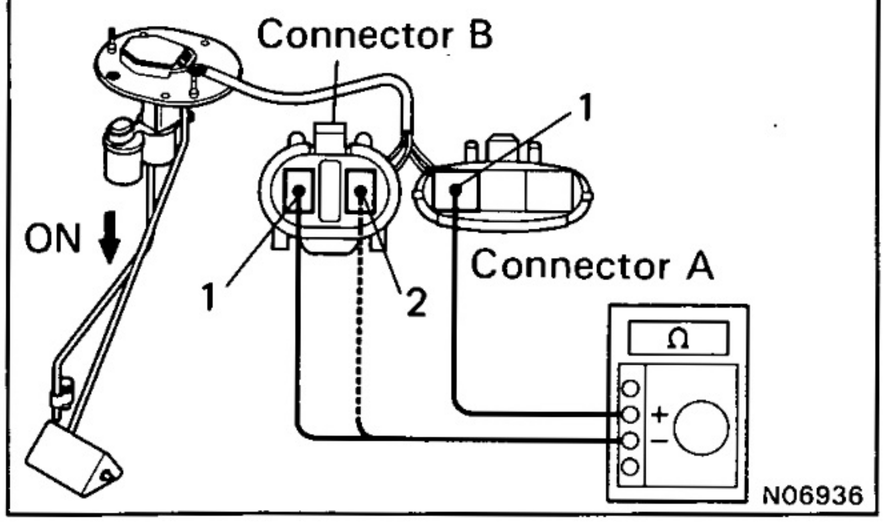

FZJ70 type (Extra Tank)

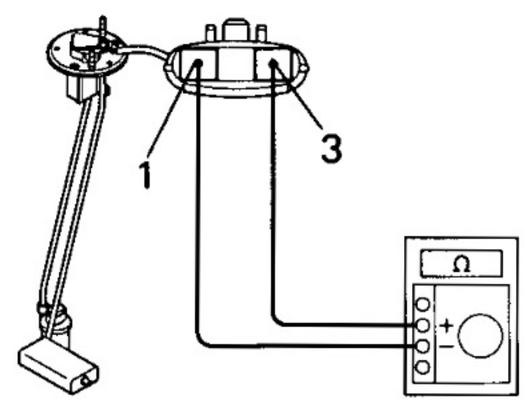

FZJ80type (Main Tank)

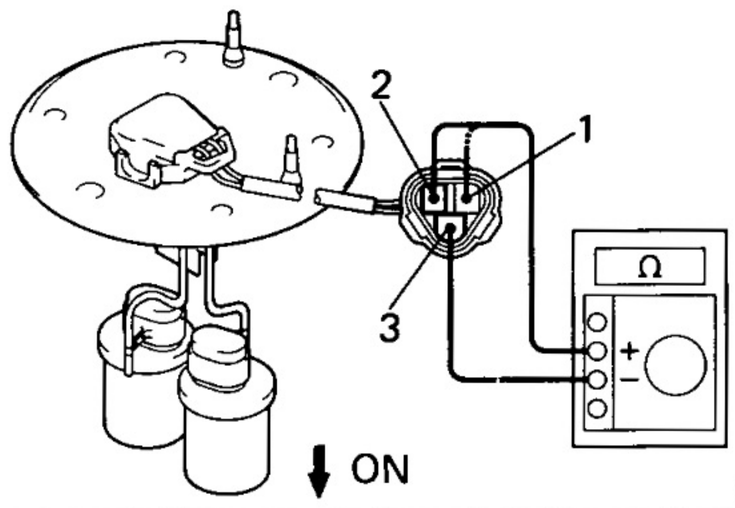

FZJ80 type (Sub Tank)

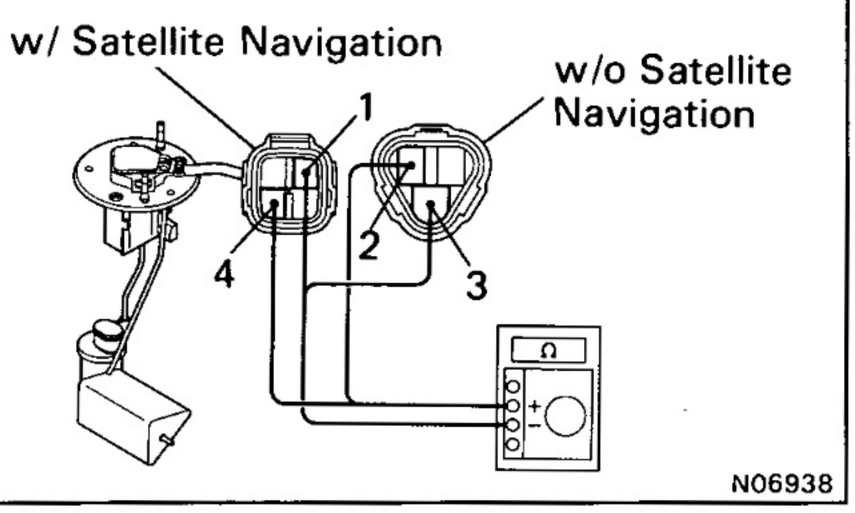

FUEL LEVEL SWITCH

INSPECT FUEL LEVEL SWITCH

(Continuity)

FZJ70 type (Main Tank)

Switch Position \ Terminal	Connector A	Connector B	
	1	1	2
ON (Float down)	○——	——○	○
	○——	——	——○
OFF (Float up)			

FZJ70 type (Extra Tank)

Switch position \ Terminal	1	3
ON (Float down)	○——	——○
OFF (Float up)		

FZJ80 type (Main Tank)

Switch position \ Terminal	1	2	3
ON (Float down)	○——	——	——○
		○——	——○
OFF (Float up)			

FZJ80 type (Sub Tank)

Switch position \ Terminal	w/ Satellite Navigation		w/o Satellite Navigation	
	1	4	2	3
ON (Float down)	○——	——○	○——	——○
OFF (Float up)				

If continuity is not as specified, replace the switch.

FZJ80 (Main tank)

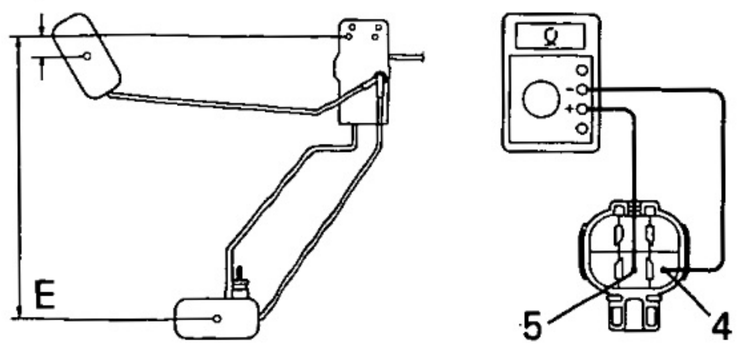

BE4977 BE5084

FZJ70 type (Main tank)

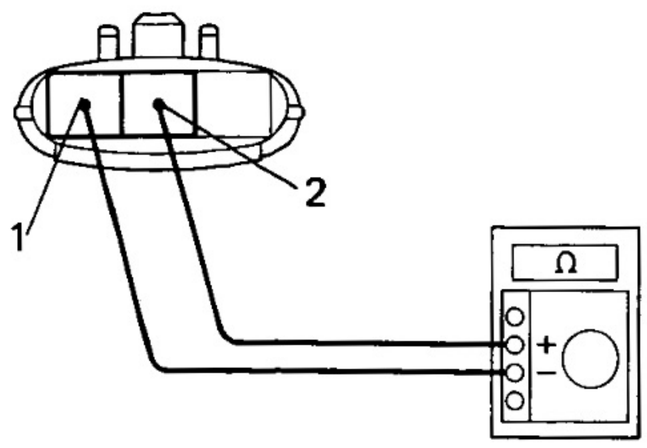

N06944

FUEL SENDER GAUGE

INSPECT FUEL SENDER GAUGE

Measure the resistance.

FZJ80 type (Main tank)

Float position mm (in.)	Resistance (Ω)
F approx. 71 (2.80)	approx. 3
E approx. 256 (10.08)	approx. 110

FZJ70 type (Main tank)

Float position mm (in.)	Resistance (Ω)
F approx. 39 (1.54)	approx. 3
E approx. 303 (11.93)	approx. 110

FZJ70 type

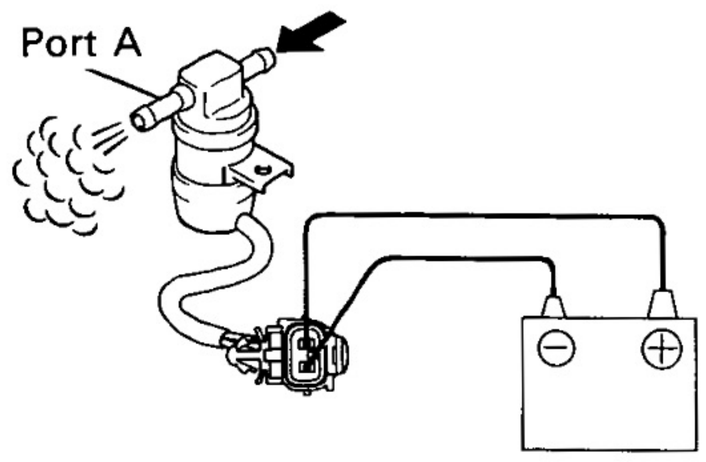

N06821

FZJ80 type

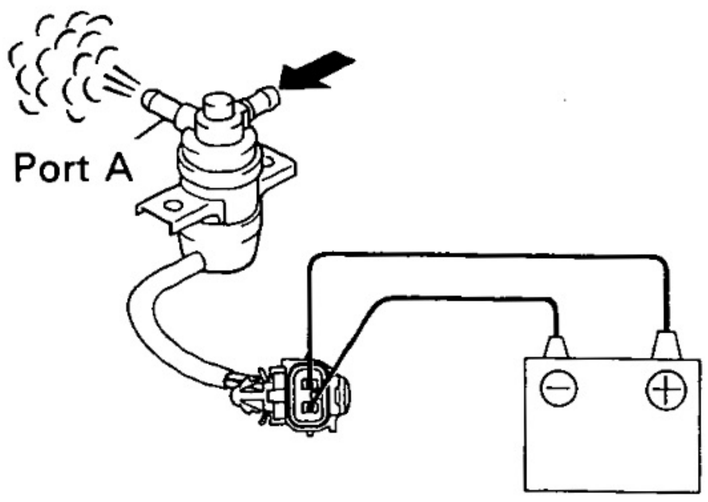

N06939

FUEL SOLENOID VALVE

INSPECT FUEL SOLENOID VALVE

1. Check that air flows out port A when battery voltage is applied across the terminals.
2. Check that air does not flow out port A when battery voltage is not applied across the terminal.

Replace the valve if either test is not successful.

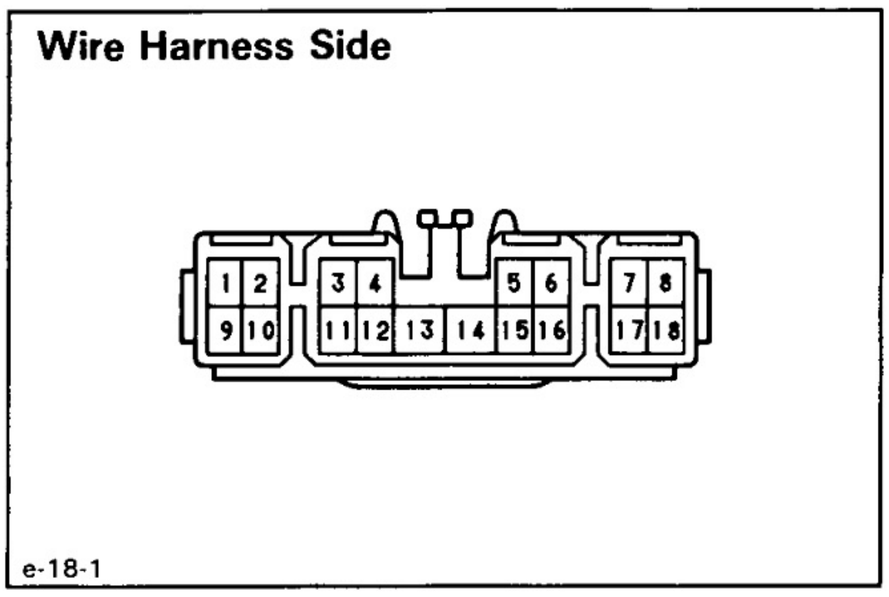

FUEL PUMP CONTROL ECU

FUEL PUMP CONTROL ECU INSPECTION

ECU CIRCUIT

Disconnect the connector from the ECU and inspect the connector on the wire harness side as shown in the chart.

Check for	Tester Connection	Condition		Specified value
Continuity	3 — Ground 11 — Ground	Main Tank Fuel Level	Full	No Continuity
			Below 3/4	Continuity
	6 — Ground	Constant		Continuity
	7 — Ground	Sub-Fuel Switch	OFF	No Continuity
			ON (Pushed)	Continuity
	13 — Ground	Sub Tank Fuel Level	Empty	Continuity
			above 1/4	No Continuity
	15 — Ground	Constant		No Continuity
		Terminals T_C and E_1 connected		Continuity
	16 — Ground	Constant		Continuity
	17 — Ground	Constant		Continuity
	18 — Ground	Constant		Continuity
	2 — Ground	Constant		Battery Voltage
	4 — Ground 5 — Ground	Ignition Switch Position	Lock or ACC	No Voltage
			ON	Battery Voltage
	10 — Ground	Ignition Switch Position	Lock or ACC	No Voltage
			ON	Battery Voltage
	12 — Ground	Ignition Switch: ON and Main Tank Fuel Level	Full	Below 1V
			Below 1/4	Above 3 V
	14 — Ground	Ignition Switch Position	ON	Approx 1 V
			ON (Engine running)	Battery Voltage

If circuit is as specified, try other ECU.

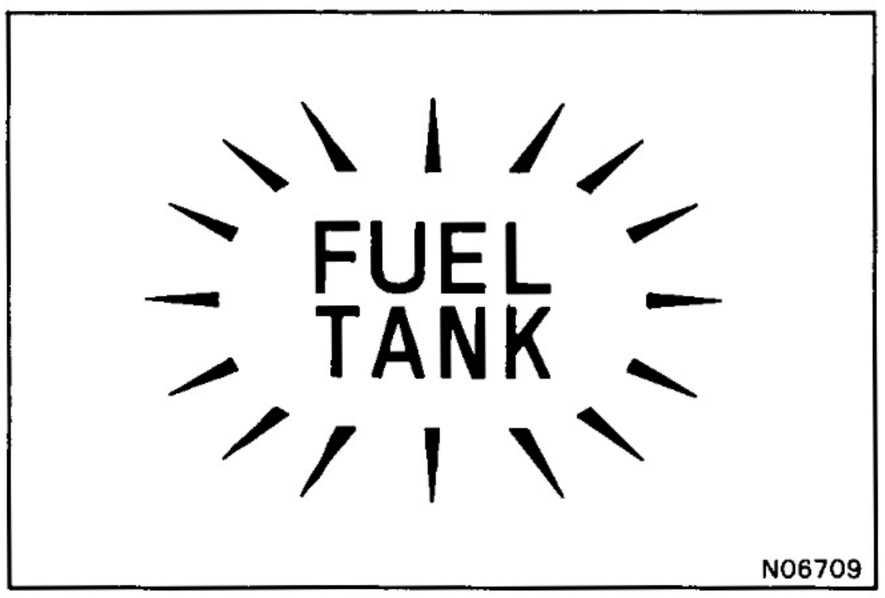

N06709

DIAGNOSIS SYSTEM

READ DIAGNOSTIC CODE

When there is a malfunction in the extra (sub) tank system, the warning light light up.

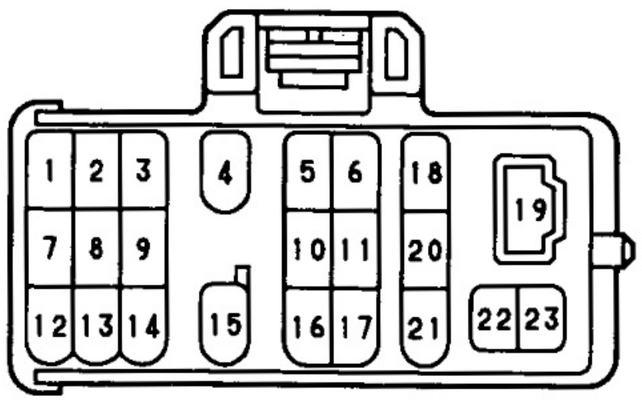

lei-23-1

OUTPUT OF DIAGNOSTIC CODE

1. Turn the ignition switch ON.
2. Connect terminals T_C and E_1 of the check connector.
3. Read the diagnostic code from the warning light.

	Indication Code	Diagnosis
	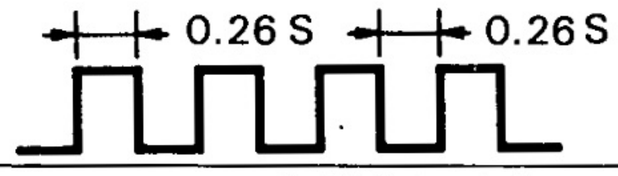 N06713	Normal
2	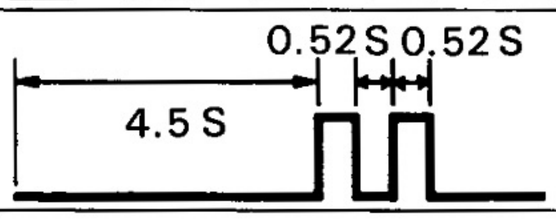 N06746	• Fuel level switch malfunction (Main tank) • Open in switch circuit
3	 N06747	• Main tank sender gauge malfunction
4	 N06748	• Fuel pump malfunction • Open or short in pump circuit
5	 N06749	• Fuel solenoid valve malfunction • Open or short in solenoid valve circuit

Diagnostic code clearance

1. After completing repairs the diagnostic code retained in memory can be cleared by removing the battery terminal (—) for 10 seconds or more,with the ignition switch off.
2. Check that the normal code is displayed after connecting the battery terminal (—).

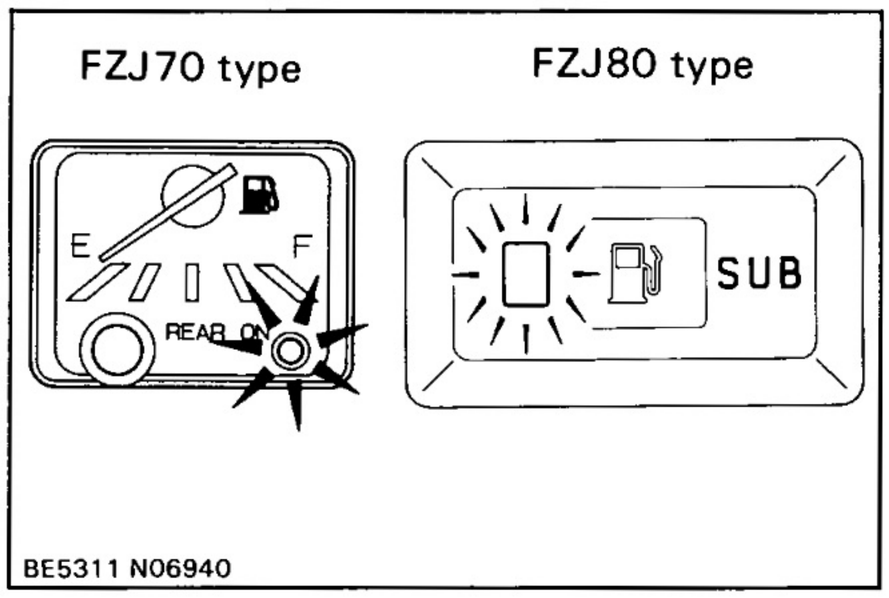

READ TEST CODE

The indicator light outputs the indication codes shown below in conformity with signals input or output by the extra (sub) tank system.

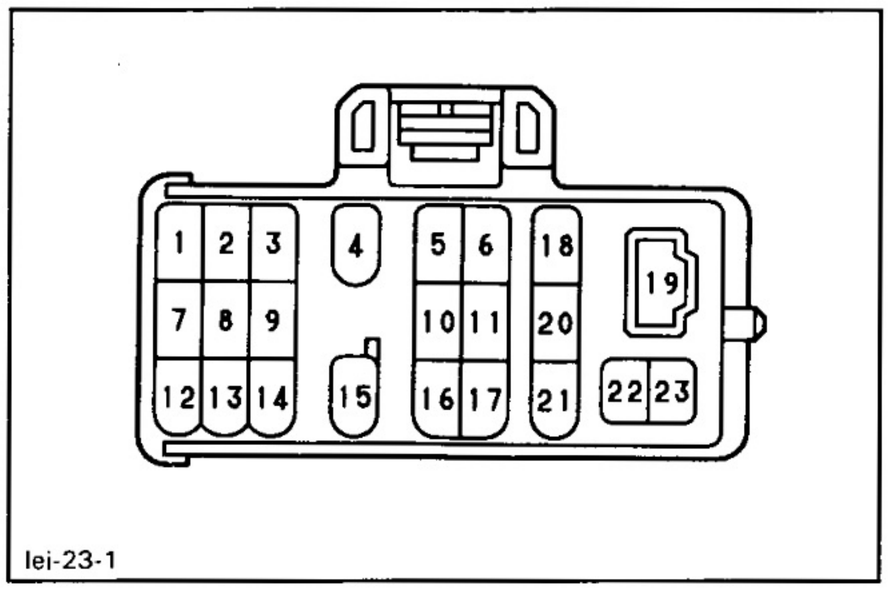

OUT PUT OF TEST CODE

1. Turn the ignition switch ON.
2. Connect terminals T_C and E_1 of the check connector.
3. Read the test code from the indicator light.

	Indication code	Condition indicated by signal input/output
2	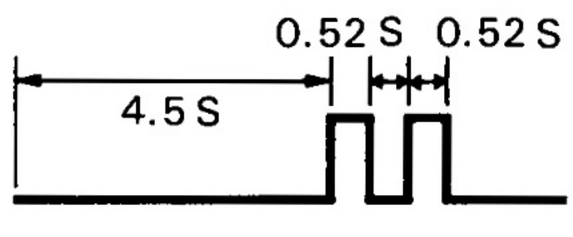 N06746	• Fuel level switch signal open or (Main tank) fuel level high.
3	 N06747	• Fuel sender gauge signal open or fuel level high.
4	 N06748	• Open or short in fuel pump circuit.
5	 N06749	• Open or short in fuel solenoid valve circuit.
6	 N06941	• Fuel level switch open or fuel level high. (Extra or sub tank)
—	 N06713	• Condition other than the above.

SATELLITE NAVIGATION SYSTEM

PARTS LOCATION

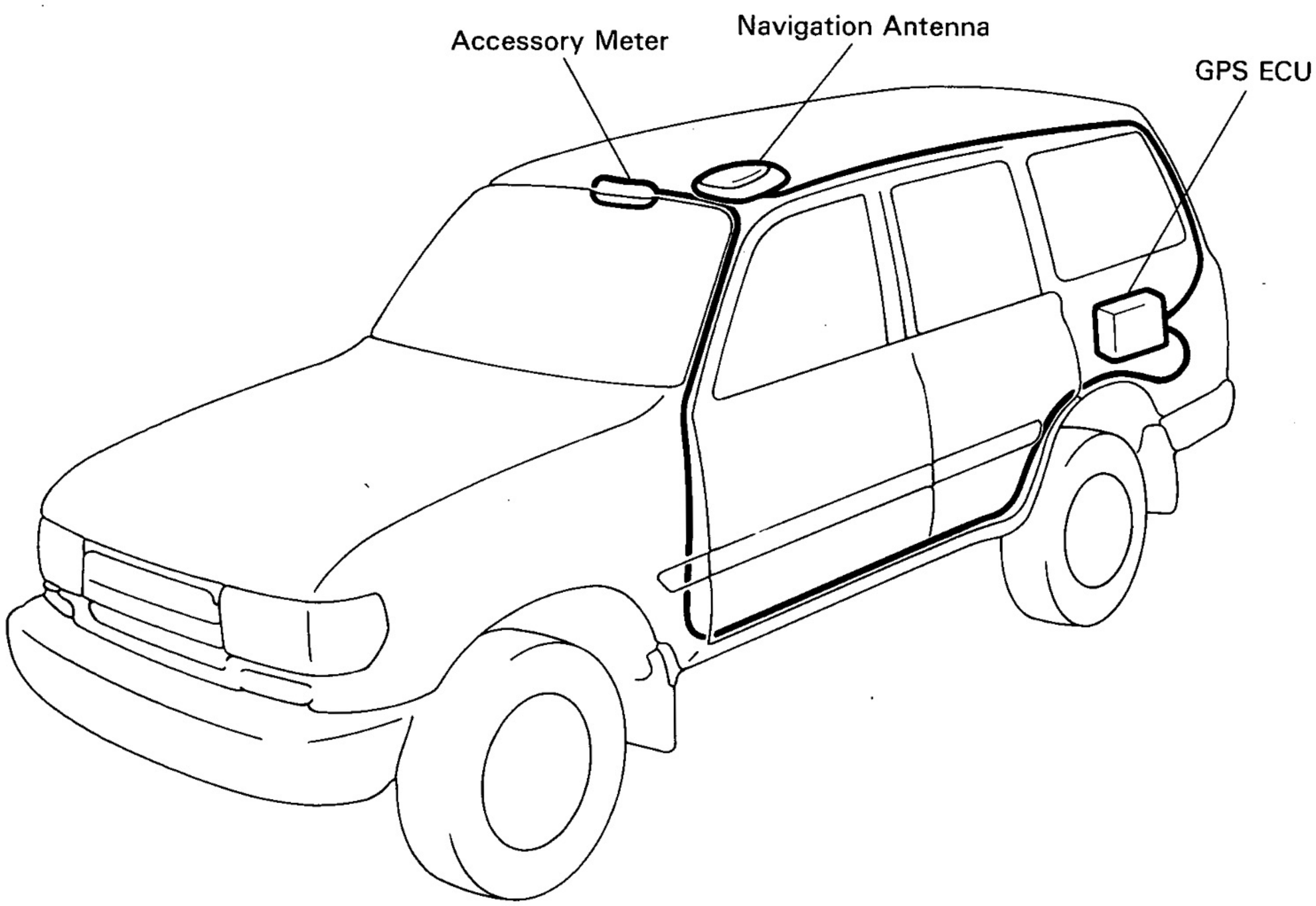

N06717

WIRING DIAGRAMS

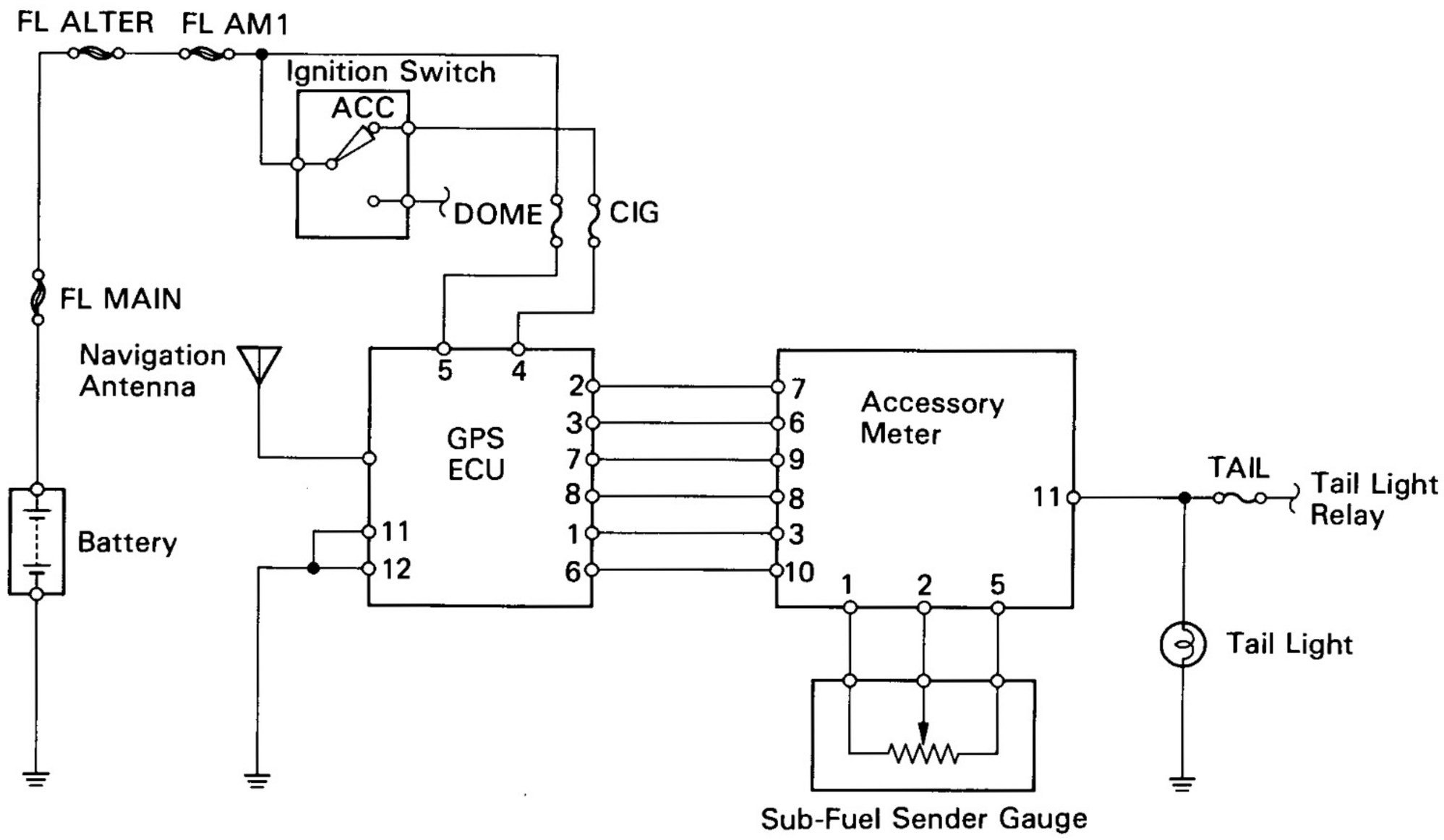

N06718

Display

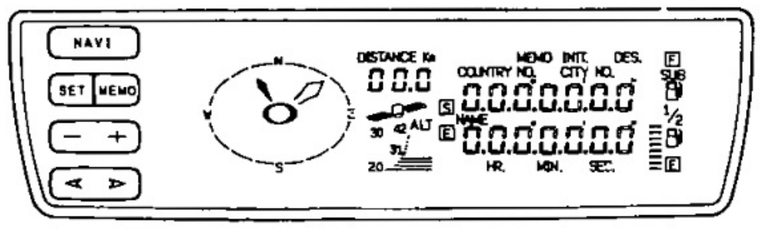

N06710

Display example

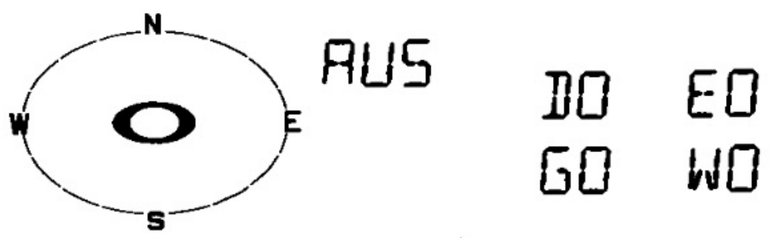

N06711

DIAGNOSIS SYSTEM

OUTPUT OF DIAGNOSTIC CODE

READ DIAGNOSTIC CODE

DO THE FOLLOWING STEPS TO READ DIAGNOSTIC CODE

(a) Turn the ignition switch ACC or ON.

(b) Push "NAVI" or "SET".

(c) Push "NAVI" and "SET" simultaneously for 5 seconds.

(d) Display the condition of each system on the screen.
If a malfunction code is displayed, check it again using other parts.

Display	Diagnosis
D_o E_o G_o W_o	Normal
D_1	• Display malfunction
E_1	• GPS ECU malfunction
G_1	• GPS antenna malfunction • Antenna cable faulty
W_1	• Malfunction in wire harness between GPS ECU and display.

AIR CONDITIONING SYSTEM

REFER TO FOLLOWING REPAIR MANUALS:

Manual Name	Pub. No.
• Land Cruiser (Hardtop and Canvas Top) Chassis and Body Repair Manual	RM183E
• Land Cruiser (Station Wagon) Chassis and Body Repair Manual	RM184E
• Land Cruiser (Hardtop, Canvas Top & Station Wagon) Chassis and Body Supplement Repair Manual	RM290E

NOTE: The following pages contain only the points which differ from the above listed manuals.

(HARDTOP & CANVAS TOP)
DESCRIPTION ..... AC- 2
DRIVE BELT AC-10
REFRIGERATION LINES AC-11
COMPRESSOR AC-12
COOLING UNIT AC-14
AIR CONDITIONER AMPLIFIER AC-15
(STATION WAGON)
DESCRIPTION AC-18
DRIVE BELT AC-22
COMPRESSOR AC-23
AIR CONDITIONER AMPLIFIER AC-25

AC

(Hardtop & Canvas Top)

DESCRIPTION

ELECTRICAL WIRING DIAGRAM

SINGLE A/C (Lever Type A/C Control Assembly)

1FZ-FE Engine

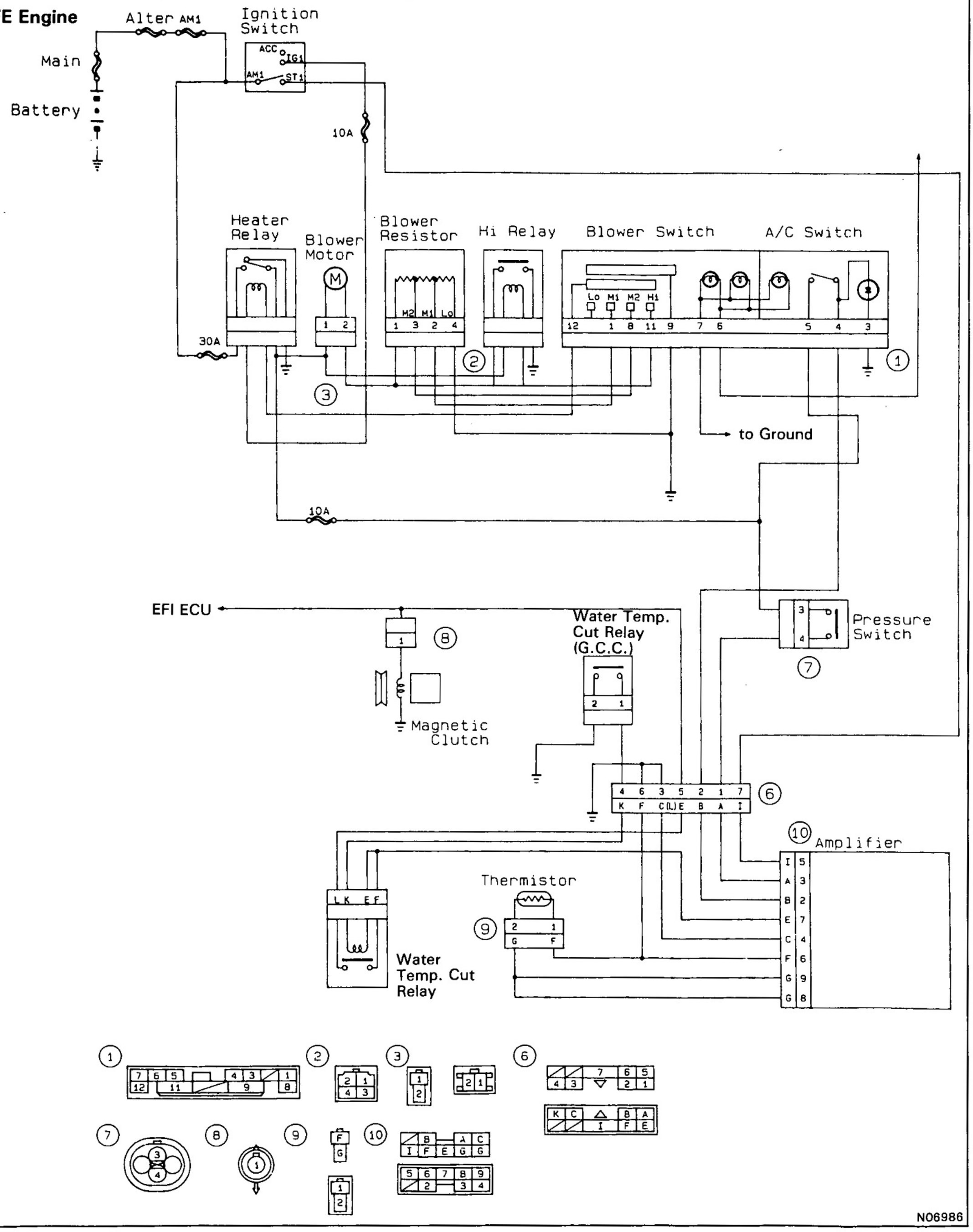

N06986

SINGLE A/C (Lever Type A/C Control Assembly)

1FZ Engine

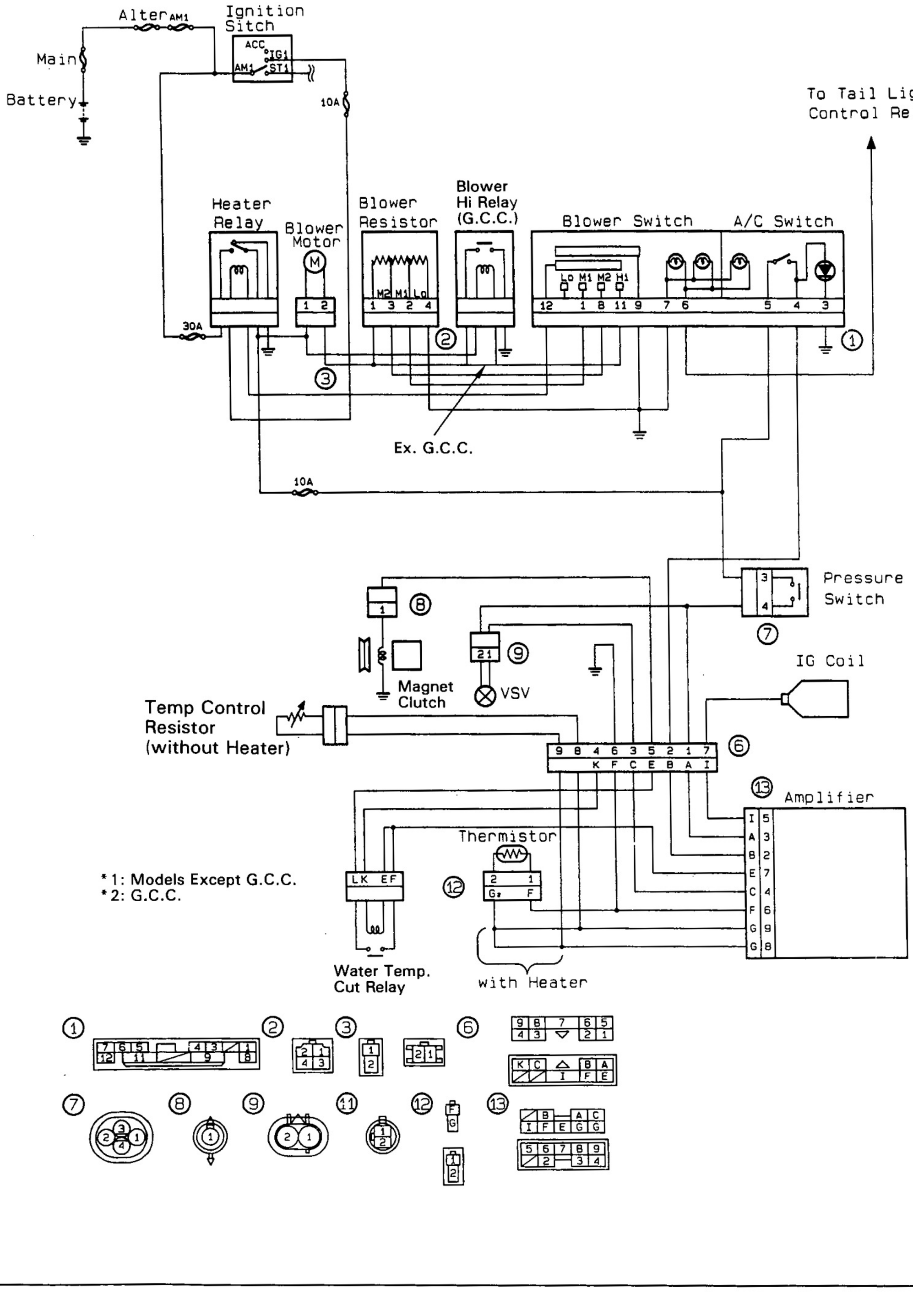

N06987

DUAL A/C (Lever Type A/C Control Assembly)

FZ Series Engine

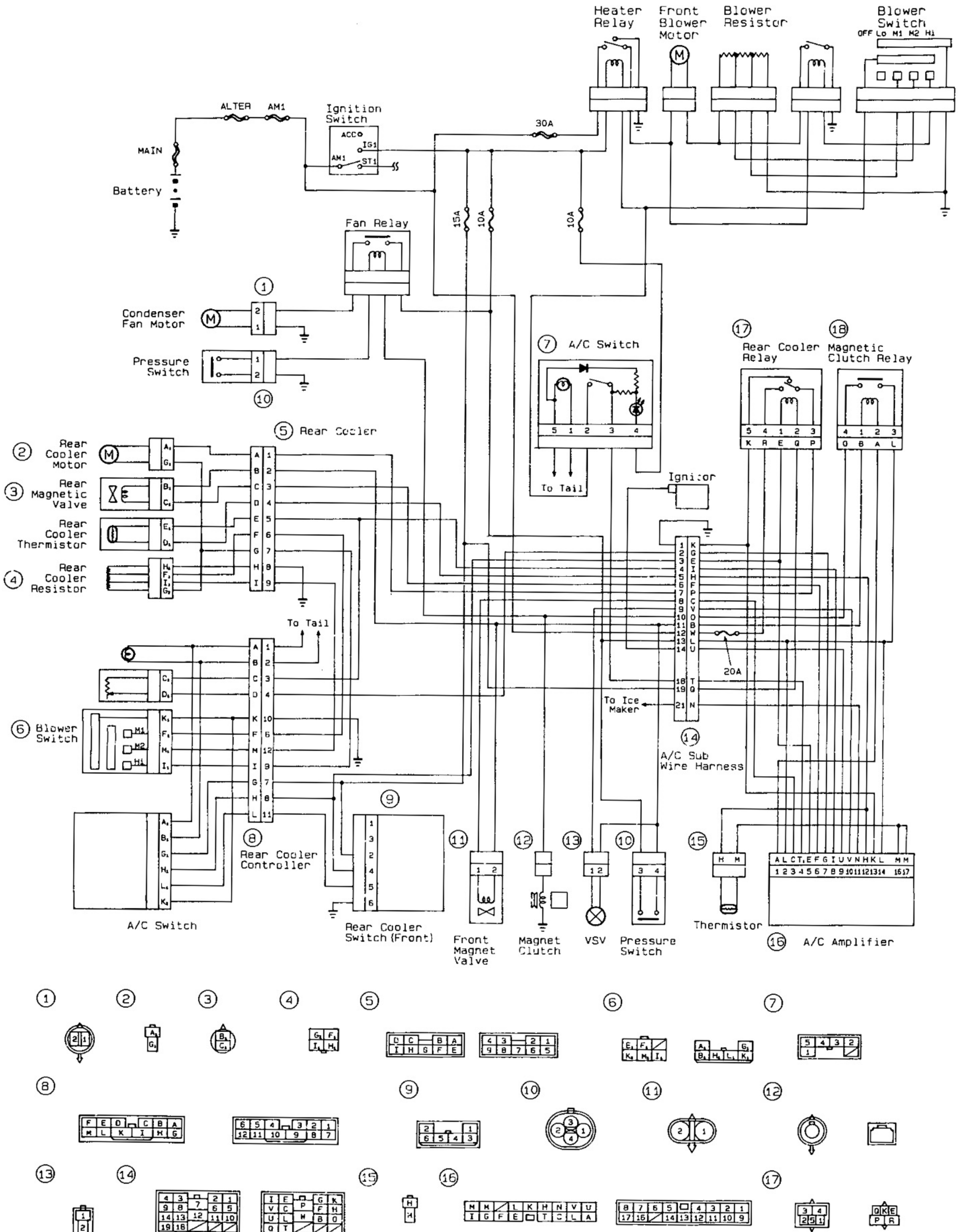

— MEMO —

SINGLE A/C (Push Type A/C Control Assembly)

FZ Series Engine

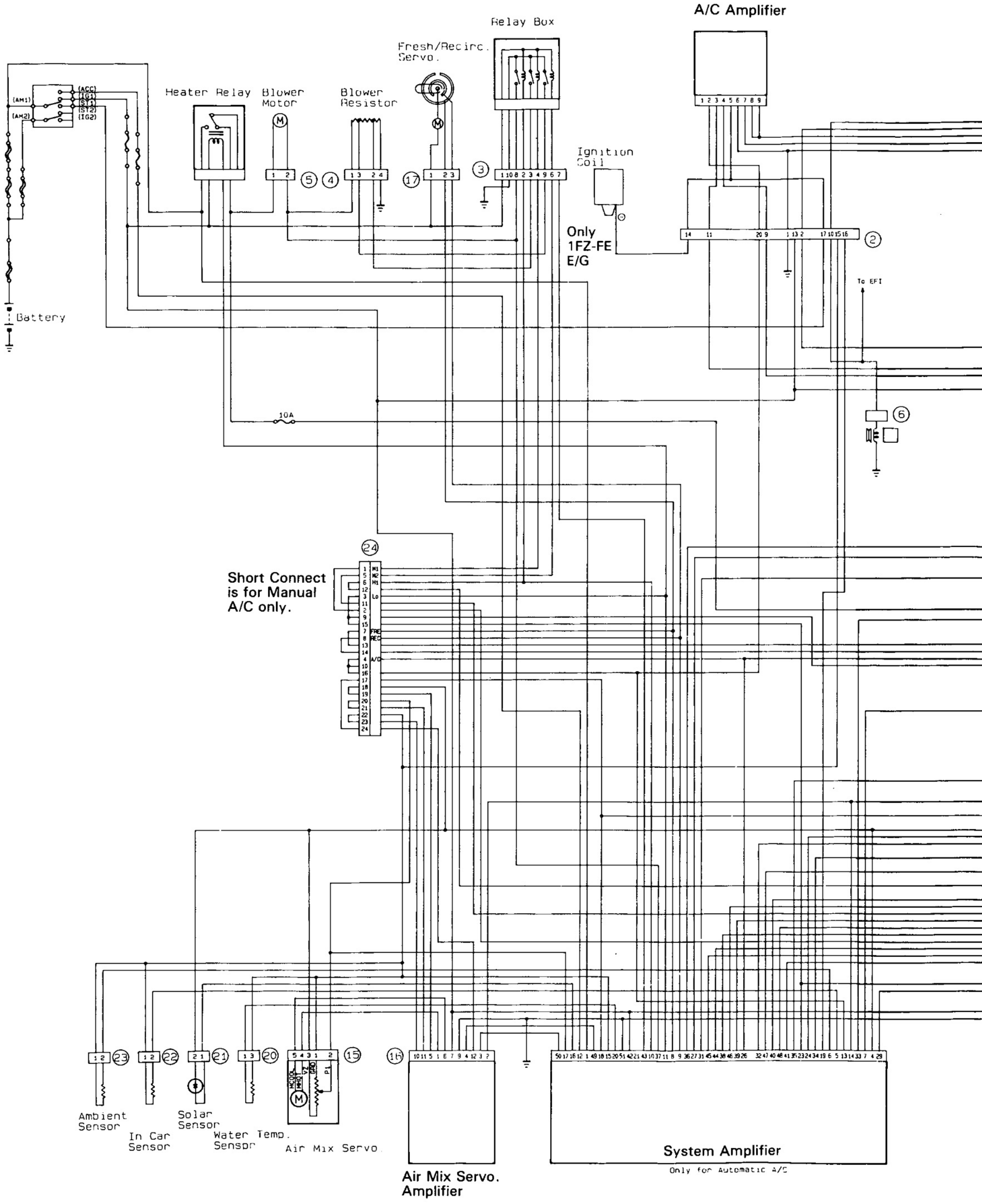

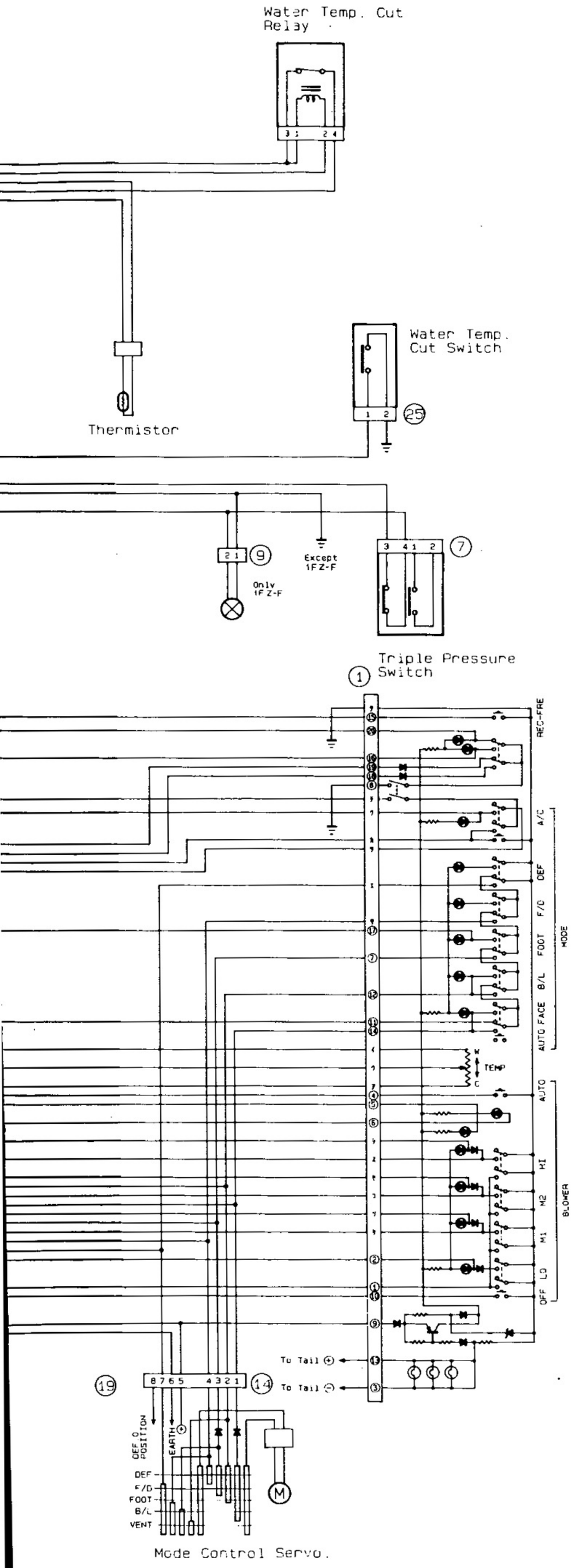

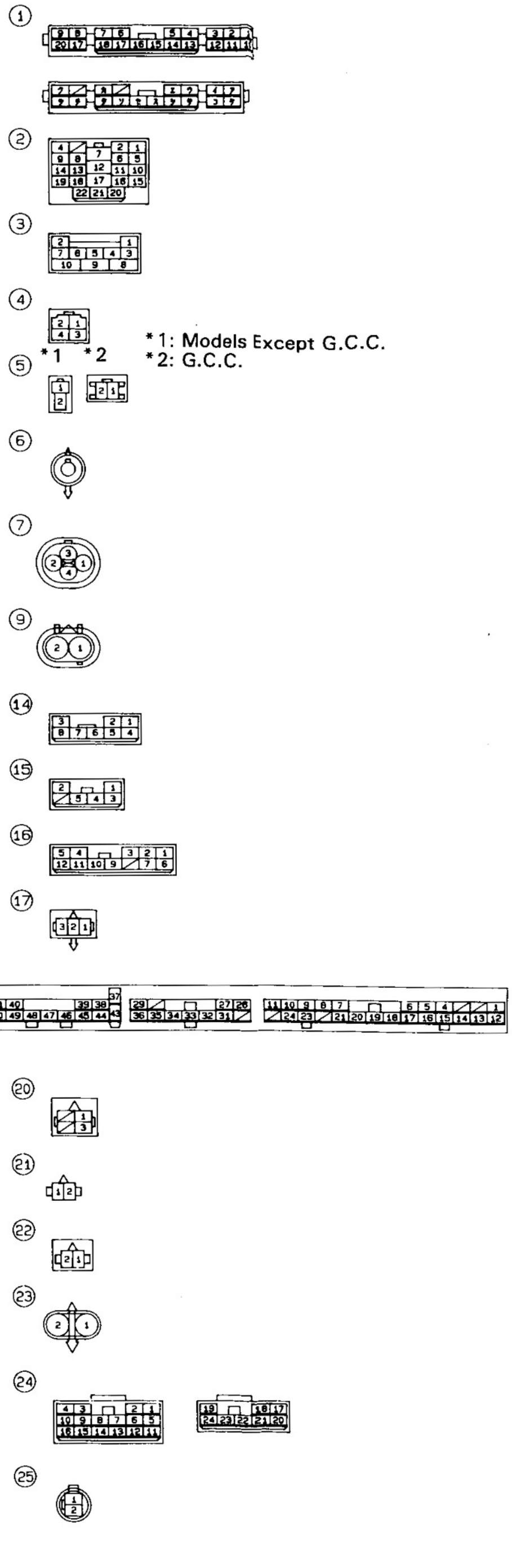

*1: Models Except G.C.C.
*2: G.C.C.

DUAL A/C (Push Type A/C Control Assembly)

FZ Series Engine

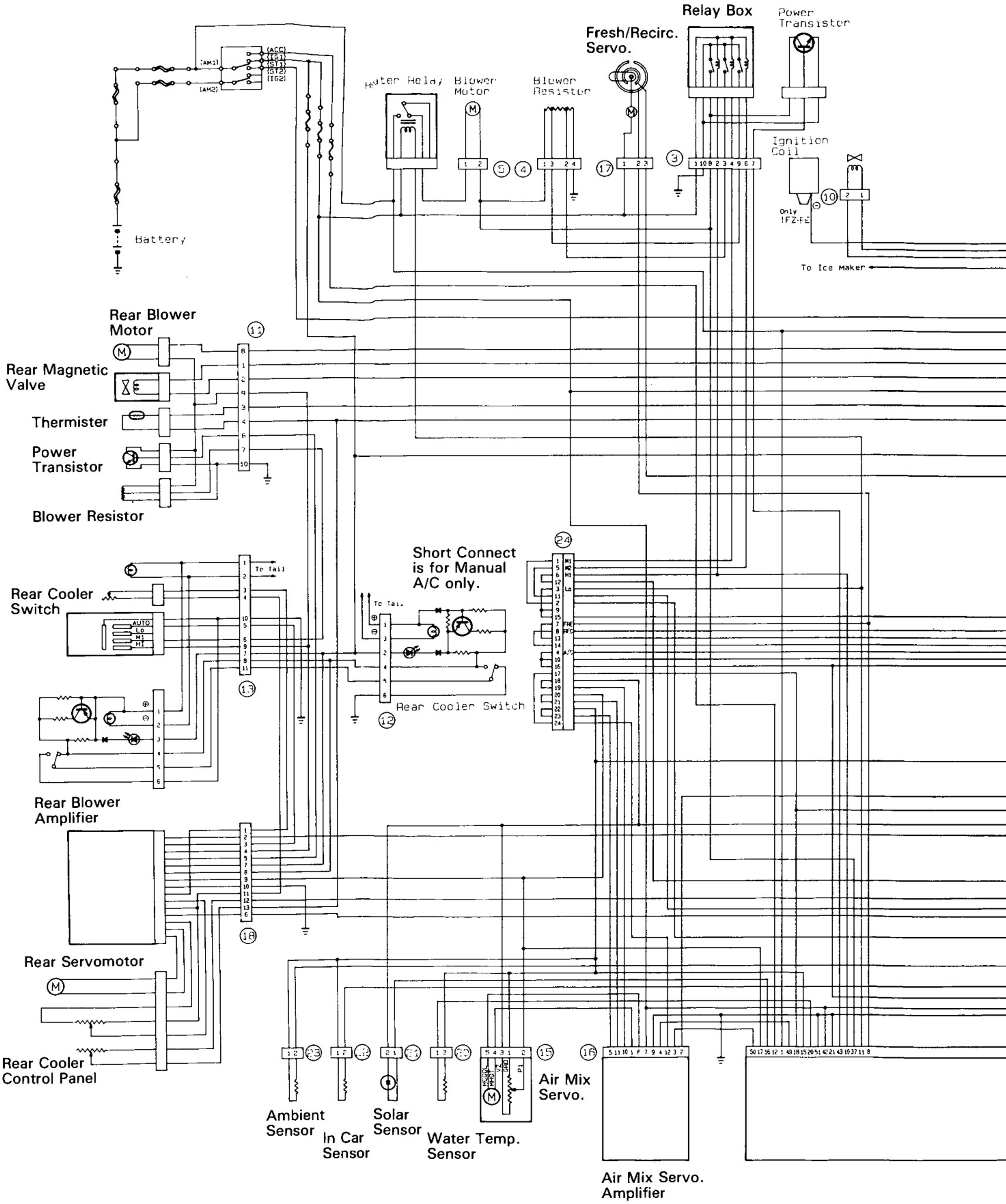

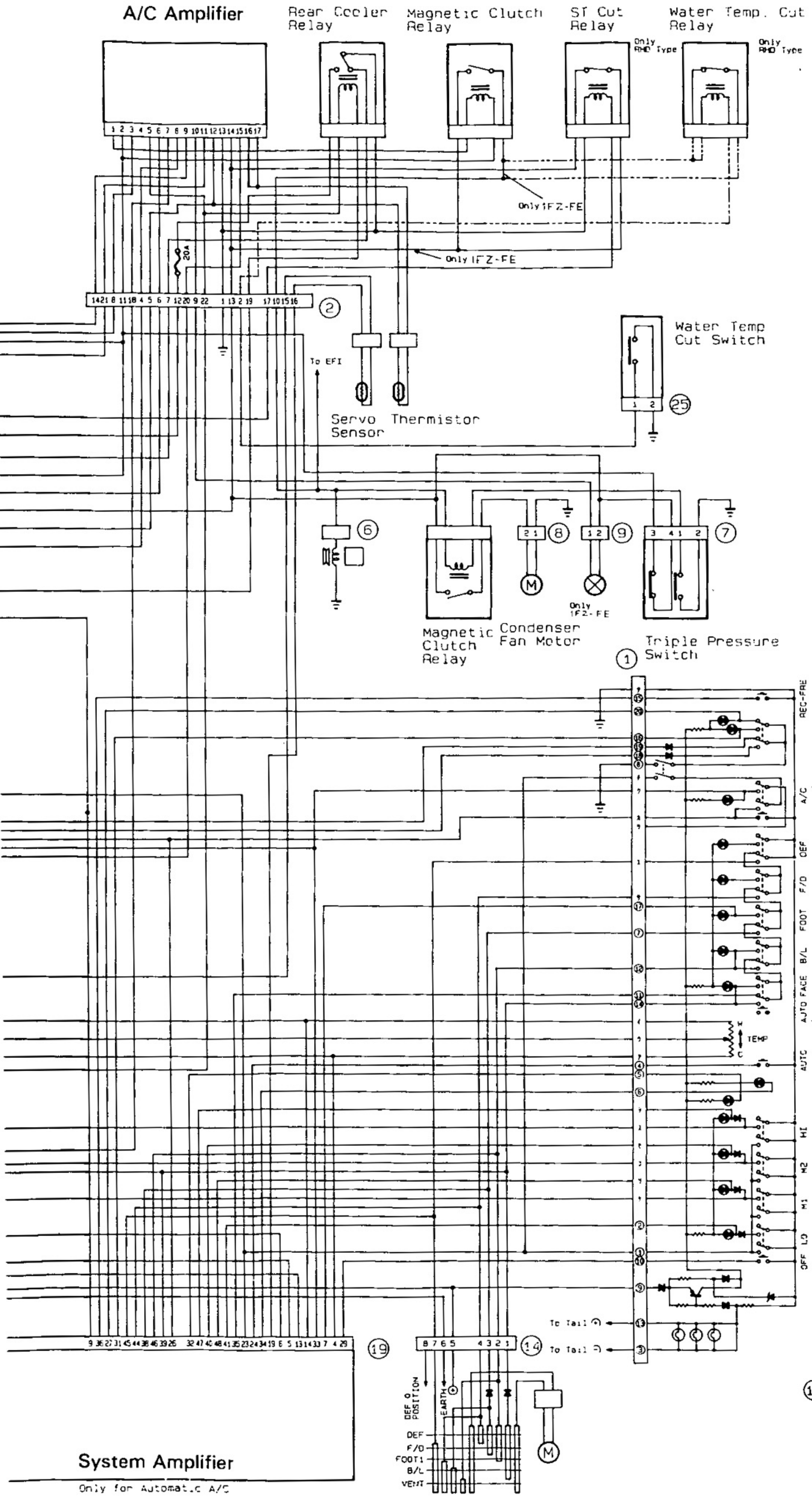
A/C Amplifier
Rear Cooler Relay
Magnetic Clutch Relay
ST Cut Relay
Water Temp. Cut Relay
Only RHD Type
Only 1FZ-FE
Only 1F2-FE
To EFI
Servo Thermistor Sensor
Water Temp Cut Switch
Magnetic Clutch Relay
Condenser Fan Motor
Triple Pressure Switch
REC-FRE
A/C
DEF
F/D
FOOT
B/L
AUTO FACE
MODE
TEMP
AUTO
HI
M2
M1
LO
OFF
BLOWER
To Tail
DEF O POSITION
EARTH
DEF
F/D
FOOT1
B/L
VENT
System Amplifier
Only for Automatic A/C
Mode Control Servo.

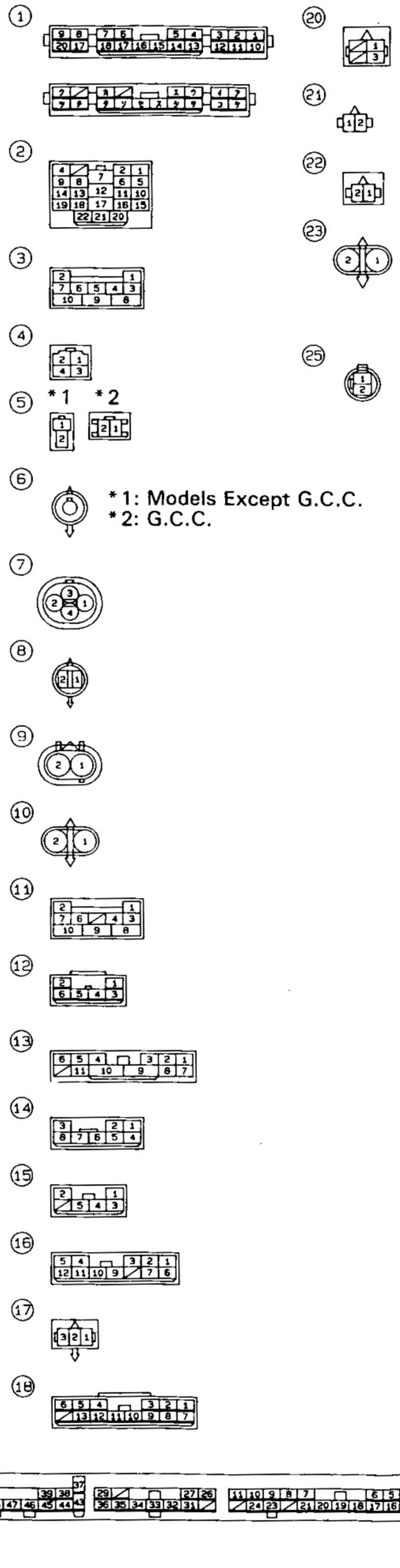
*1: Models Except G.C.C.
*2: G.C.C.

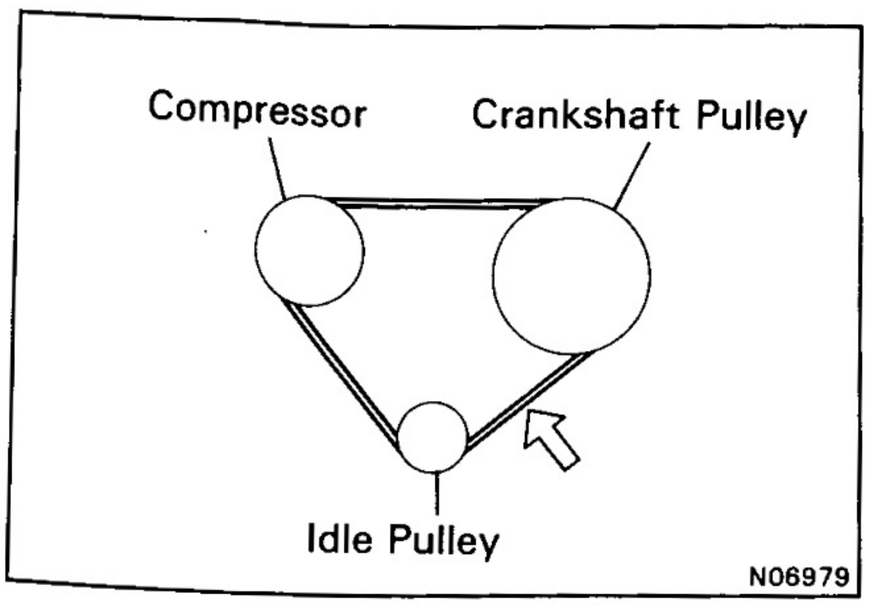

DRIVE BELT

ON-VEHICLE INSPECTION

INSPECT DRIVE BELT TENSION

Drive belt tension at 10 kg (22.0 lb, 98N):
FZ Series Engine

New belt
5 – 7 mm (0.20 – 0.28 in.)
Used belt
7 – 9.5 mm (0.28 – 0.37 in.)

REFRIGERATION LINES

TIGHTENING

FZ Series Engine

SINGLE A/C

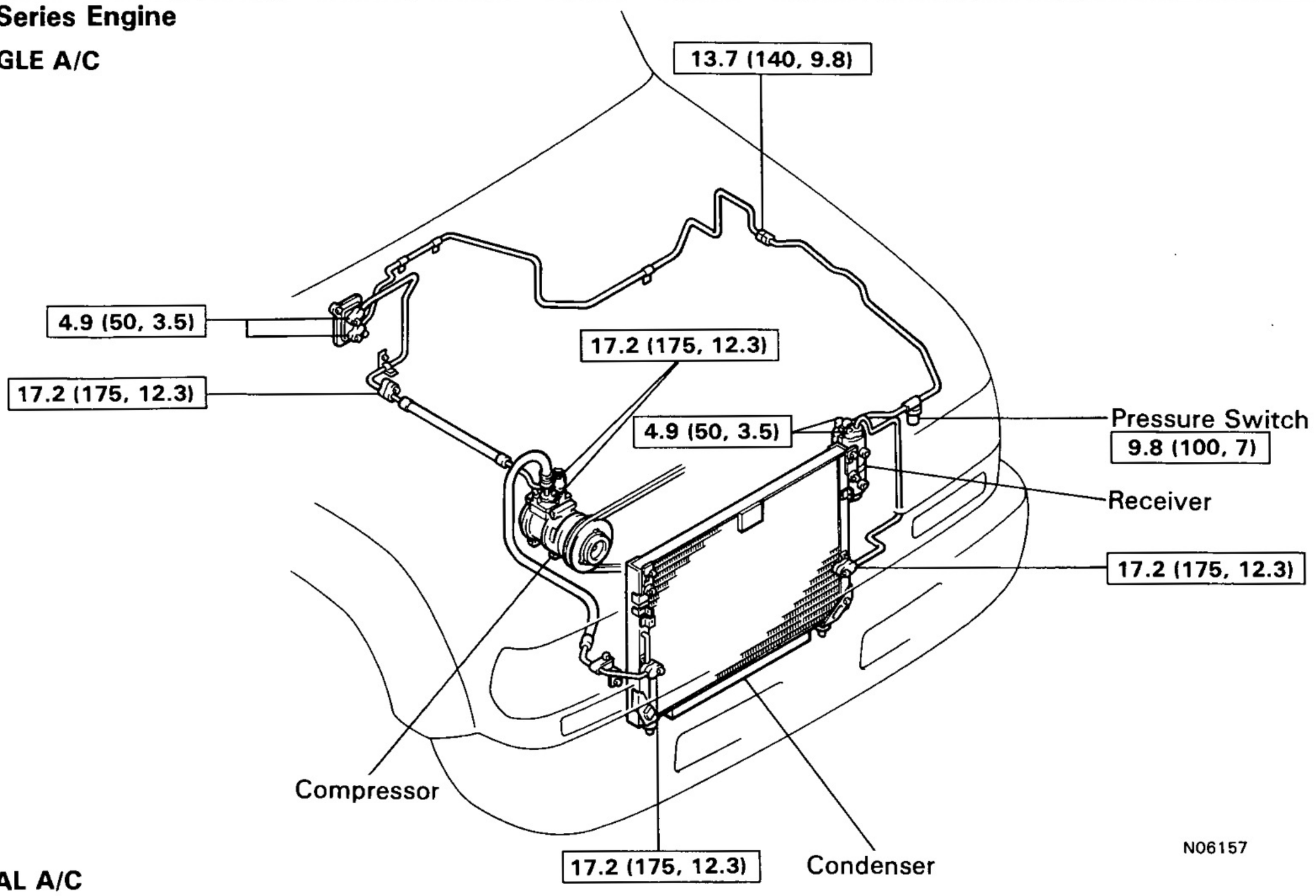

DUAL A/C

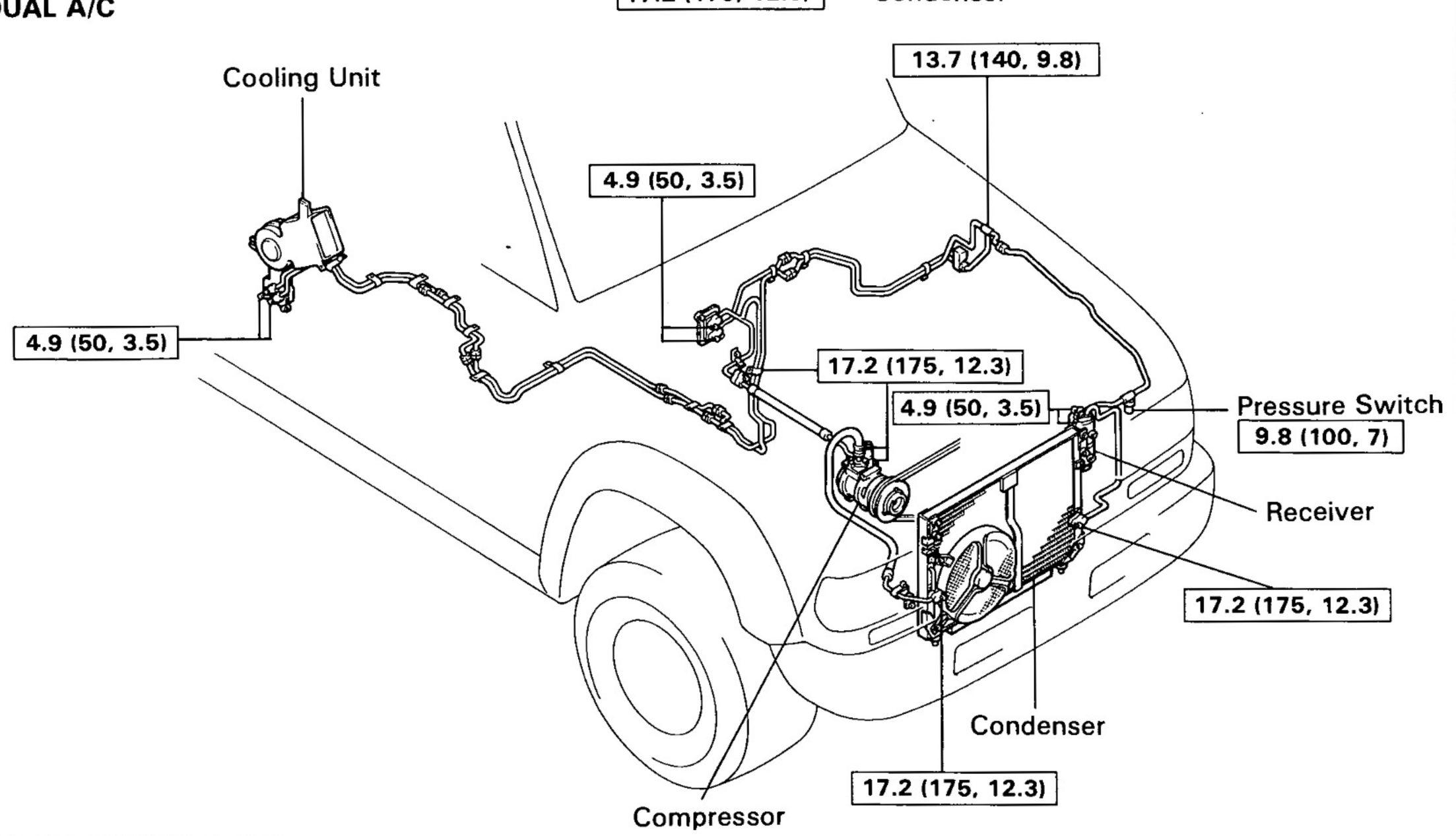

N·m (kgf·cm, ft·lbf) : Specified torque

N06981

COMPRESSOR

COMPRESSOR REMOVAL

FZ Series Engine

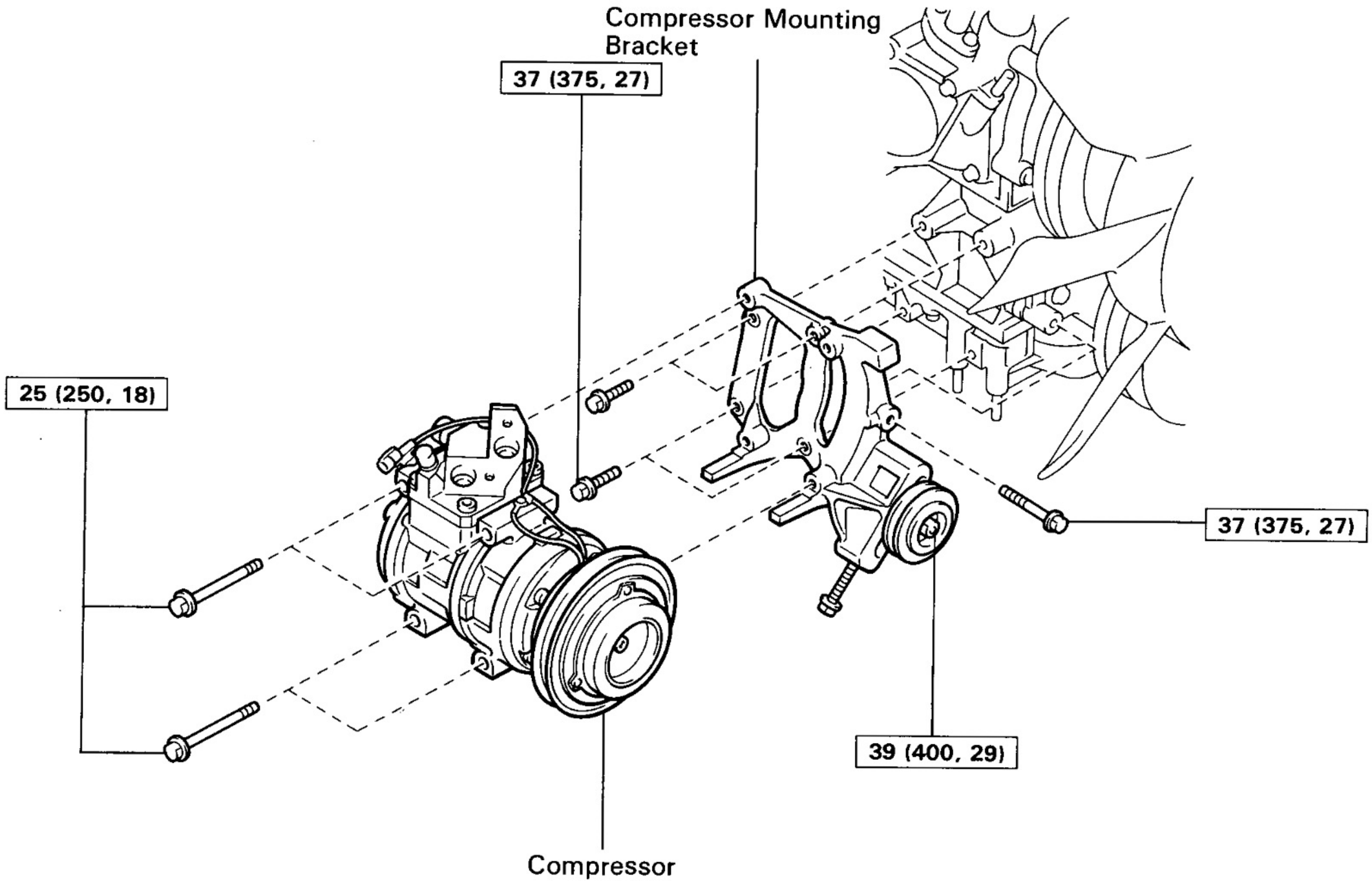

N·m (kgf·cm, ft·lbf) : Specified torque

N06159

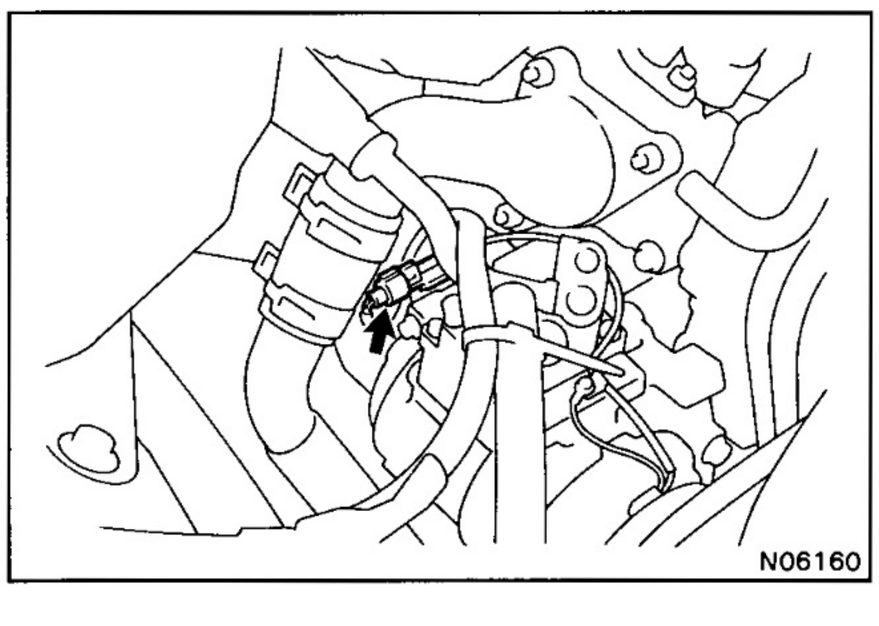

N06160

1. **RUN ENGINE AT IDLE SPEED WITH A/C ON FOR TEN MINUTES**
2. **STOP ENGINE**
3. **DISCONNECT NEGATIVE CABLE FROM BATTERY**
4. **DISCONNECT CONNECTOR FROM MAGNET CLUTCH**
5. **RECOVER REFRIGERANT FROM REFRIGERATION SYSTEM**

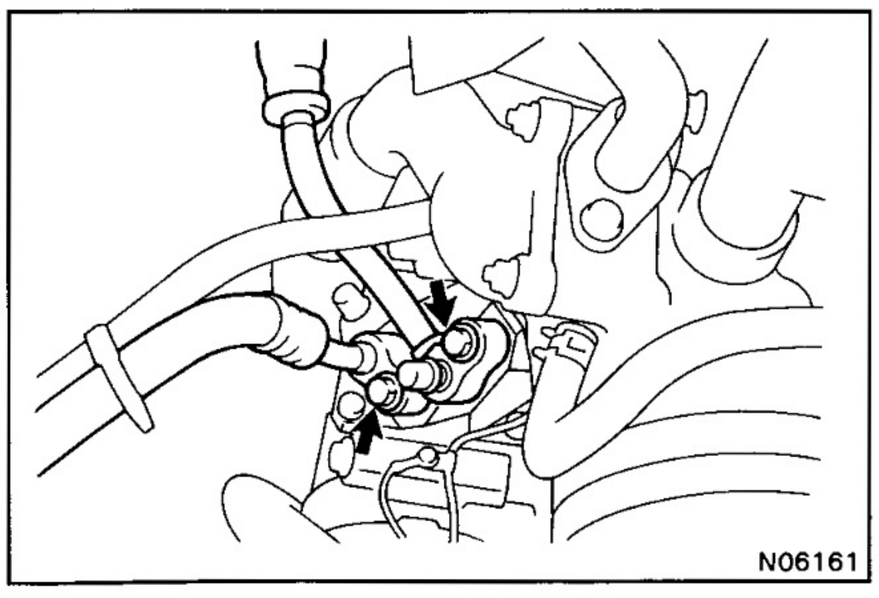

N06161

6. **DISCONNECT TWO HOSES FROM COMPRESSOR SERVICE VALVES**

   Cap the open fittings immediately to keep the moisture and dust out of the system.

7. **REMOVE ENGINE UNDER COVER**

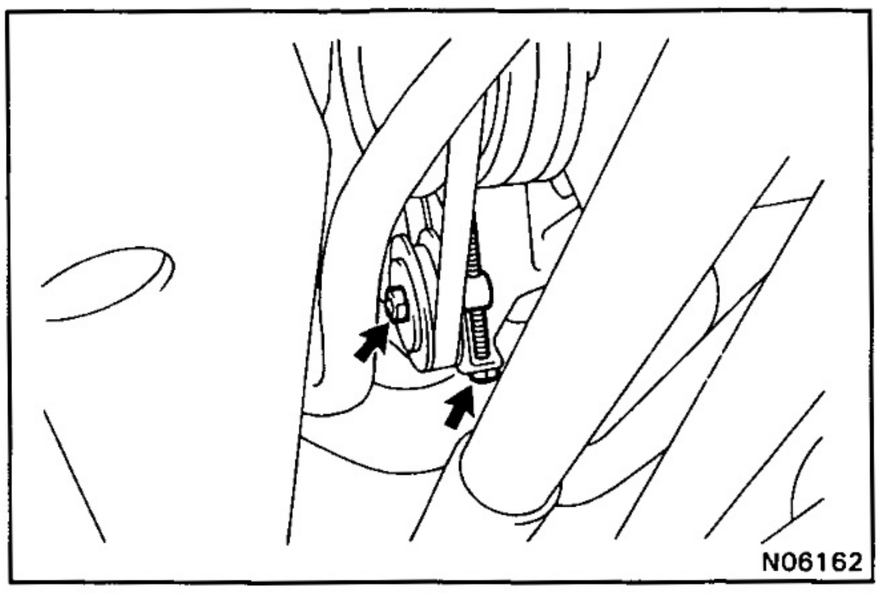

8. LOOSEN IDLE PULLEY LOCK NUT AND COMPRESSOR DRIVE BELT

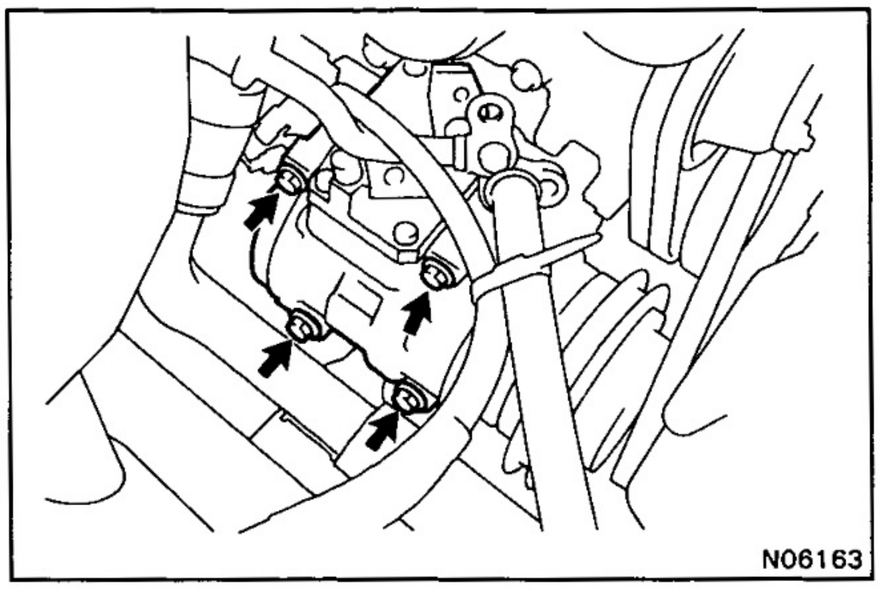

9. REMOVE COMPRESSOR

Remove the four bolts and pull the compressor upward.

MAGNET CLUTCH DISASSEMBLY

FZ Series Engine

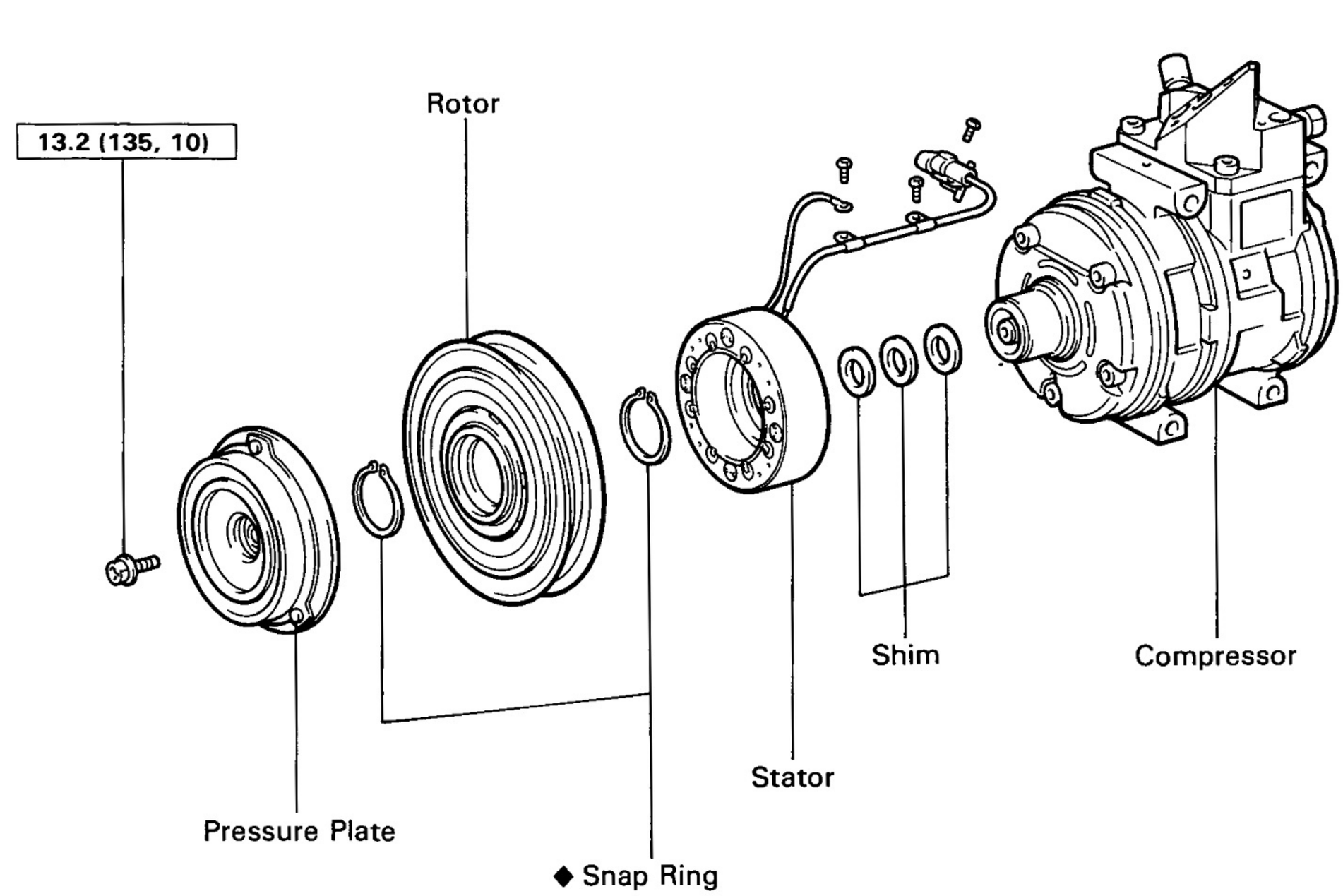

N·m (kgf·cm, ft·lbf) : Specified torque

◆ Non-reusable part

N06164

COOLING UNIT

COOLING UNIT DISASSEMBLY

FZ Series Engine

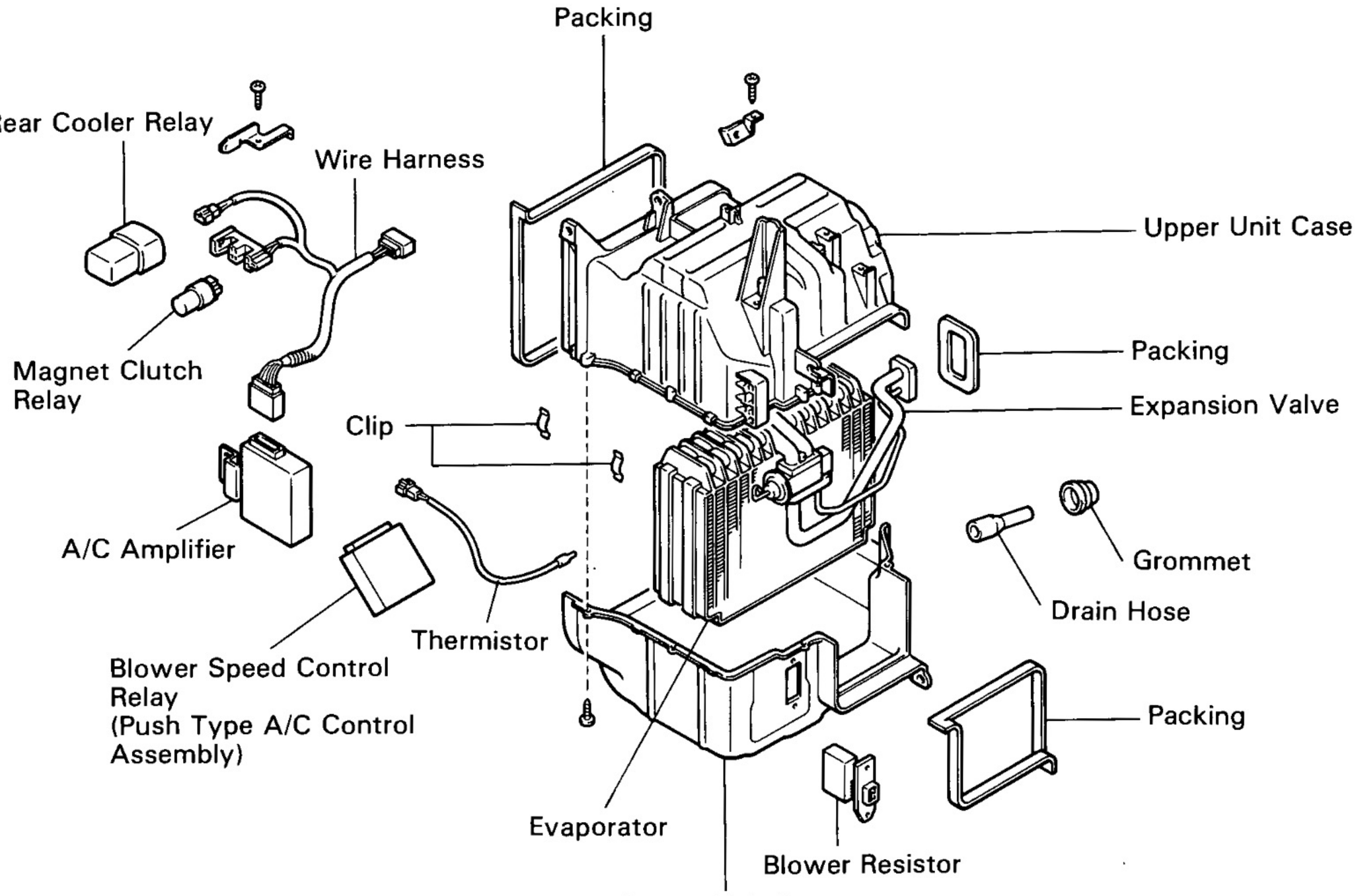

N06982

WIRE HARNESS

A/C Amplifier (Dual A/C)

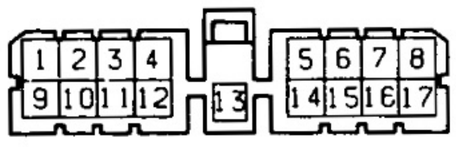

K-17-1

AIR CONDITIONER AMPLIFIER

(Dual A/C : 1FZ-F Engine)

INSPECT AMPLIFIER CIRCUIT

Disconnect the amplifier and inspect the connector on the wire harness side as shown in the chart below.

Test conditions:

(1) Ignition switch: ON

(2) Temperature control lever: MAX COOL

(3) Blower switch: HI

Check for	Tester connection	Condition	Specified value
Continuity	5 — 13	Turn rear A/C switch on.	Continuity
		Turn rear A/C switch off.	No continuity
	13 — Ground	Constant	Continuity
	16 — 17	Constant	Continuity
Voltage	1 — 13	Turn ignition switch on.	Battery voltage
		Turn ignition switch off.	No voltage
	2 — 13	Turn ignition switch on.	Battery voltage
		Turn ignition switch off.	No voltage
	3 — 13	Turn ignition switch on.	Battery voltage
		Turn ignition switch off.	No voltage
	4 — 13	Turn A/C switch on.	Battery voltage
		Turn A/C switch off.	No voltage
	5 — 13	Turn ignition switch on.	Battery voltage
		Turn ignition switch off.	No voltage
	6 — 13	Turn ignition switch on.	Battery voltage
		Turn ignition switch off.	No voltage
	9 — 13	Start the engine.	Approx. 10 to 14 V
		Stop the engine.	No voltage
	10 — 13	Turn ignition switch on.	Battery voltage
		Turn ignition switch off.	No voltage
	14 — 13	Turn ignition switch on.	Battery voltage
		Turn ignition switch off.	No voltage
Resistance	7 — 8	Variable	Approx. 0 to 3 kΩ
	8 — 12	Constant (thermistor)	Approx. 100 — 4,000 Ω
	16 — 12	Constant (thermistor)	Approx. 100 — 4,000 Ω

If circuit is as specified, replace the amplifier.

WIRE HARNESS
A/C Amplifier (Dual A/C)

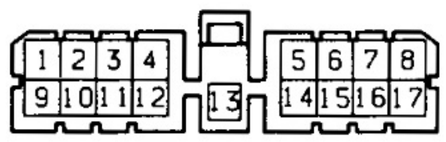

K-17-1

(Dual A/C : 1FZ-FE Engine)

INSPECT AMPLIFIER CIRCUIT

Disconnect the amplifier and inspect the connector on the wire harness side as shown in the chart below.

Test conditions:

(1) Ignition switch: ON
(2) Temperature control lever: MAX COOL
(3) Blower switch: HI

Check for	Tester connection	Condition	Specified value
Continuity	5 – 13	Turn rear A/C switch on.	Continuity
		Turn rear A/C switch off.	No continuity
	13 – Ground	Constant	Continuity
	16 – 17	Constant	Continuity
Voltage	1 – 13	Turn ignition switch on.	Battery voltage
		Turn ignition switch off.	No voltage
	2 – 13	Turn ignition switch on.	Battery voltage
		Turn ignition switch off.	No voltage
	3 – 13	Turn ignition switch on.	Battery voltage
		Turn ignition switch off.	No voltage
	4 – 13	Turn A/C switch on.	Battery voltage
		Turn A/C switch off.	No voltage
	5 – 13	Turn ignition switch on.	Battery voltage
		Turn ignition switch off.	No voltage
	6 – 13	Turn ignition switch on.	Battery voltage
		Turn ignition switch off.	No voltage
	14 – 13	Turn ignition switch on.	Battery voltage
		Turn ignition switch off.	No voltage
Resistance	7 – 8	Variable	Approx. 0 to 3 kΩ
	8 – 12	Constant (thermistor)	Approx. 100 – 4,000 Ω
	16 – 12	Constant (thermistor)	Approx. 100 – 4,000 Ω

If circuit is as specified, replace the amplifier.

– MEMO –

(Station Wagon)

DESCRIPTION

ELECTRICAL WIRING DIAGRAM

FZ Series Engine

Dual A/C

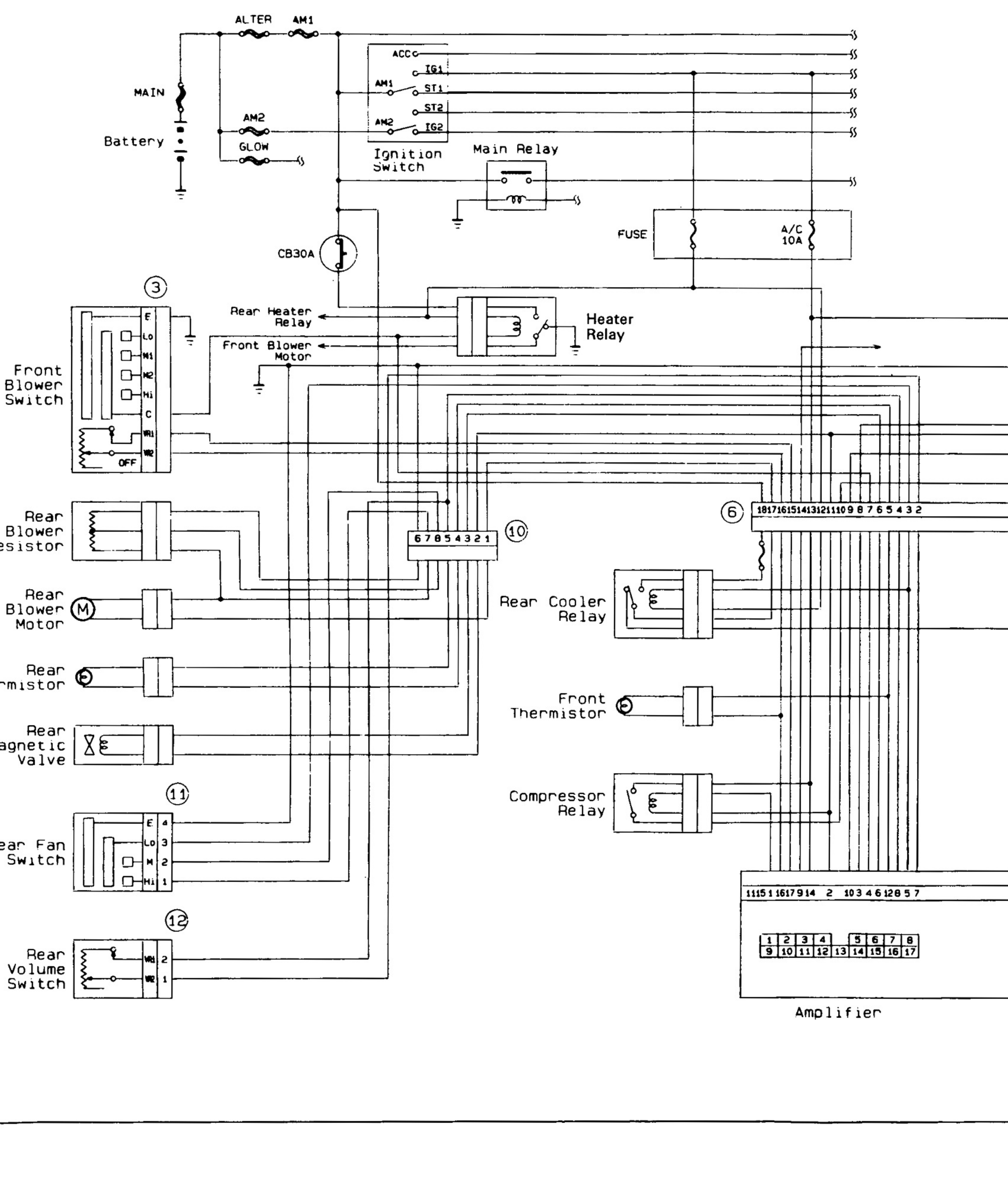

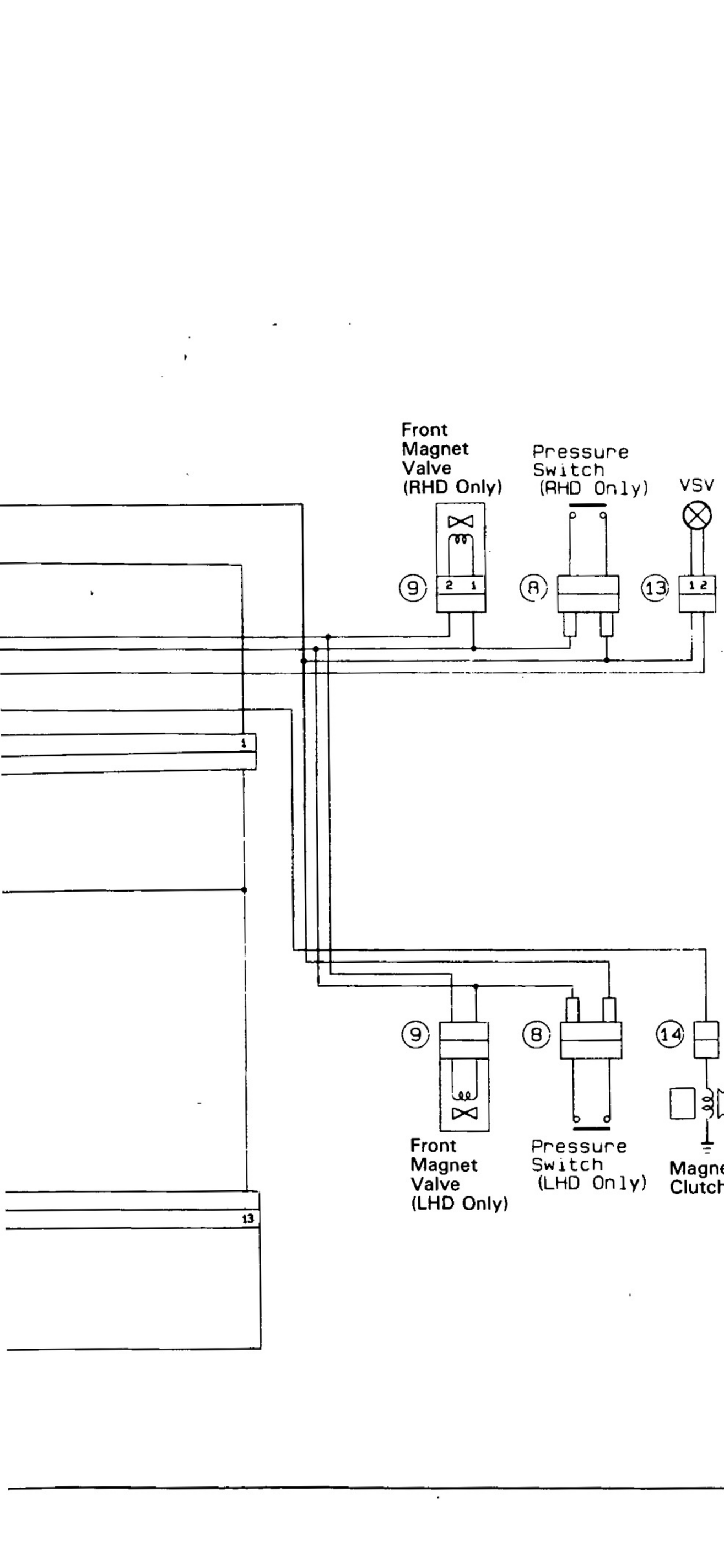
Front
Magnet
Valve
(RHD Only)
Pressure
Switch
(RHD Only)
VSV
Front
Magnet
Valve
(LHD Only)
Pressure
Switch
(LHD Only)
Magnet
Clutch

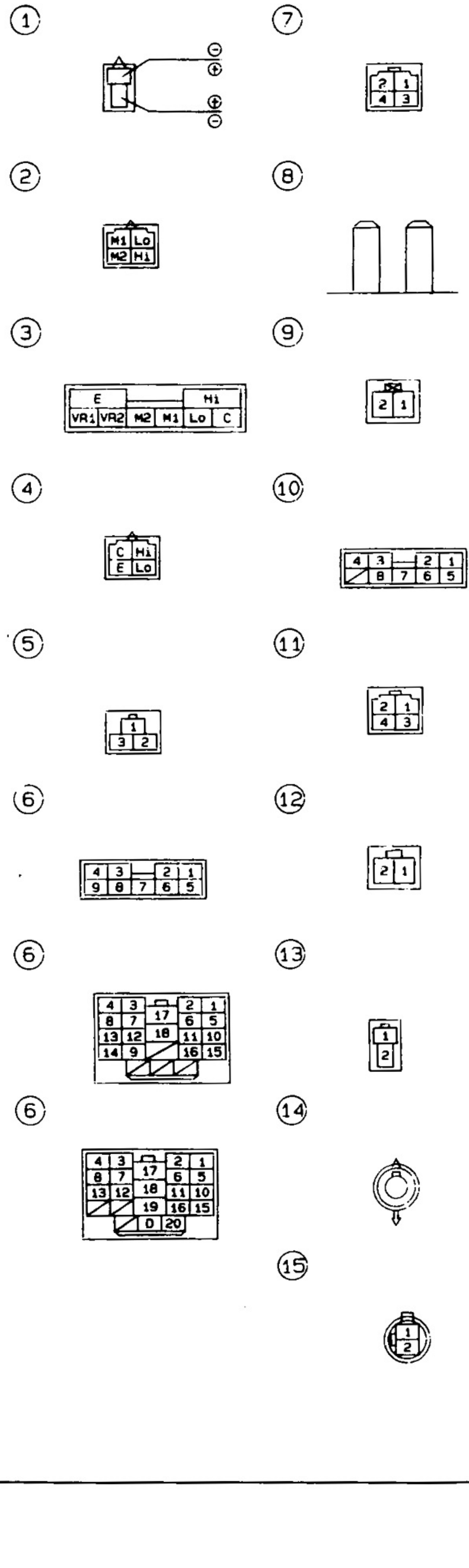
1
7
2
8
3
9
4
10
5
11
6
12
6
13
6
14
15

AC2773

FZ Series Engine

Single A/C

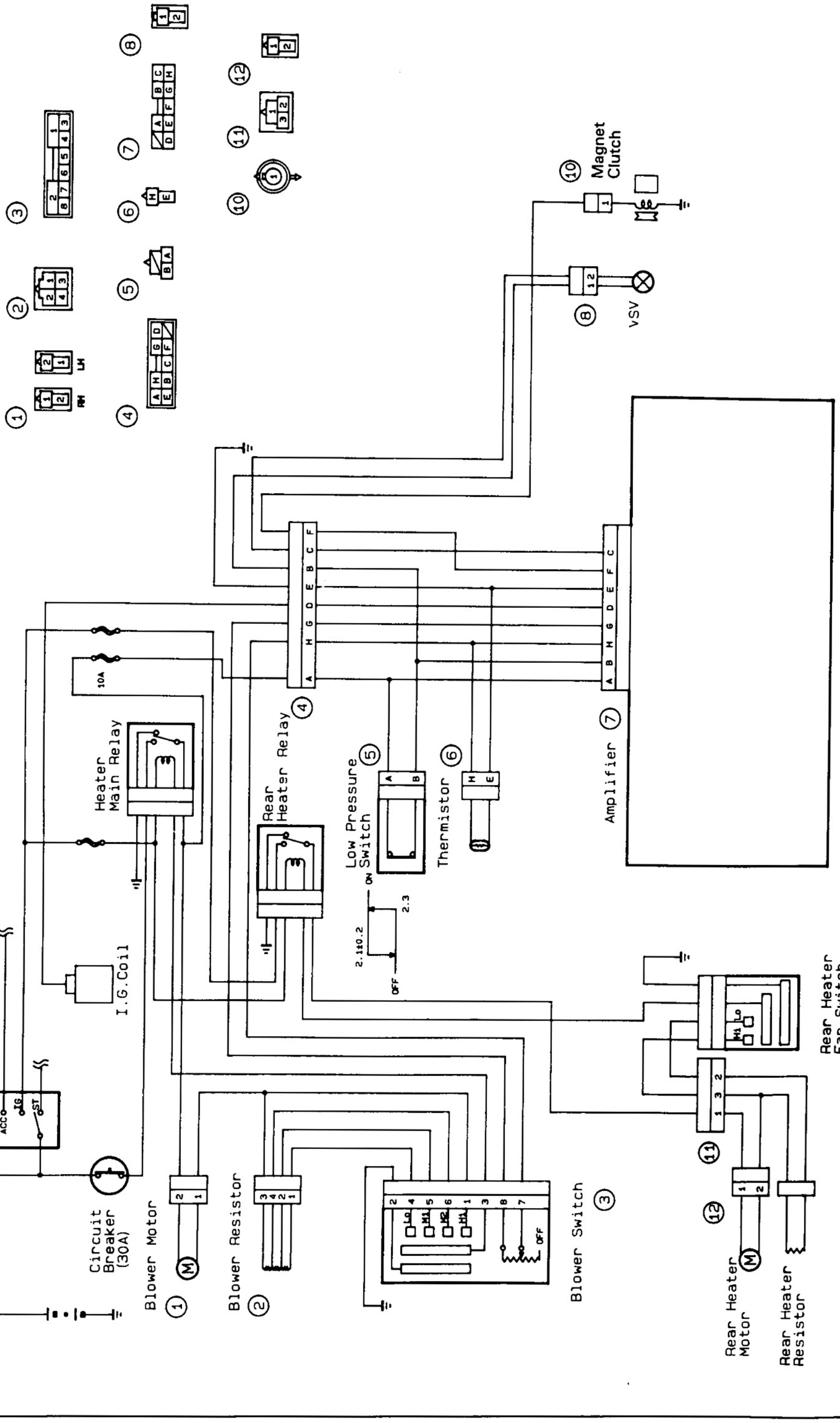

AC2770

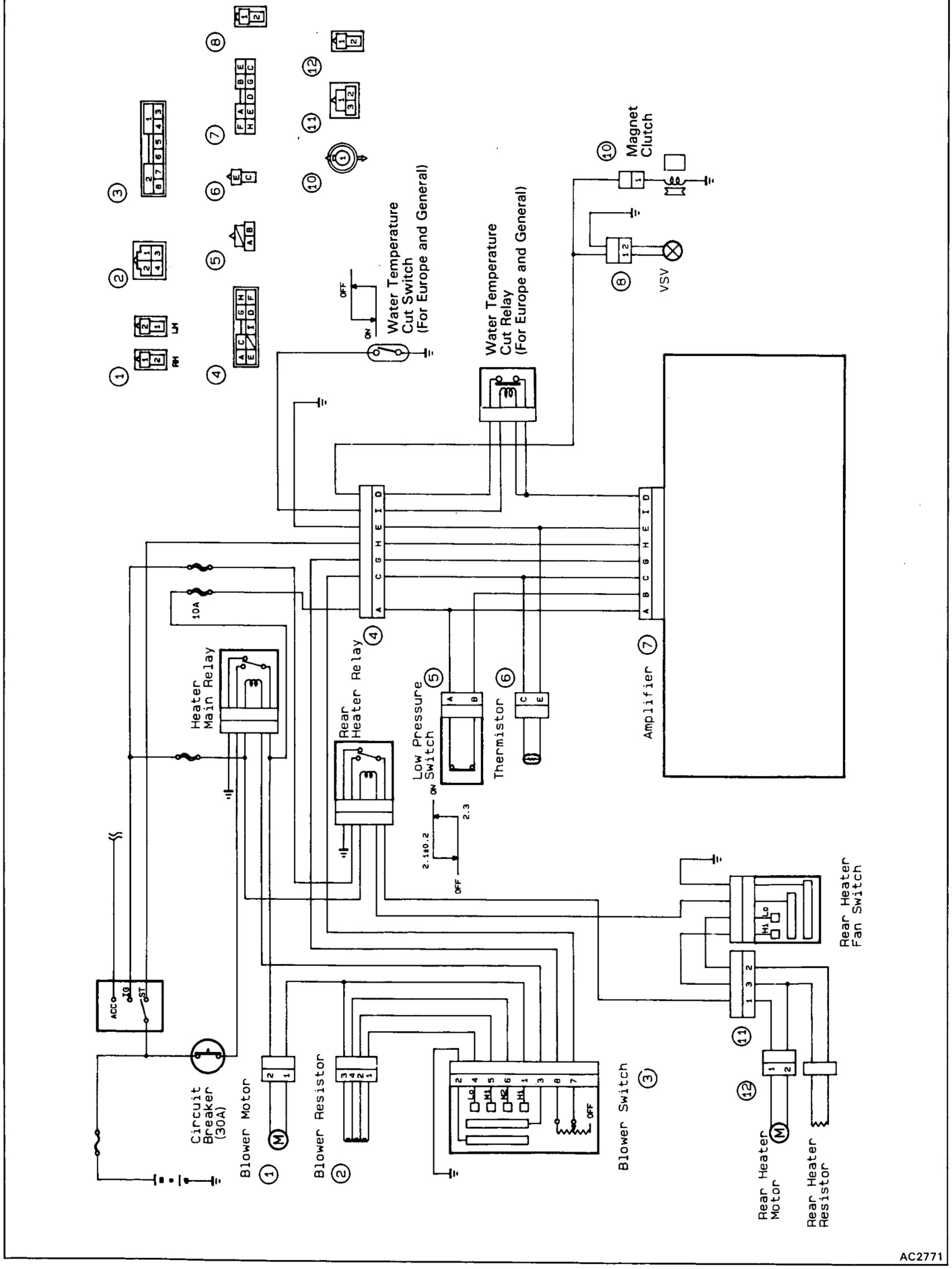
Magnet Clutch
VSV
Water Temperature Cut Switch (For Europe and General)
Water Temperature Cut Relay (For Europe and General)
Heater Main Relay
Rear Heater Relay
Low Pressure Switch
Thermistor
Amplifier
Blower Motor
Blower Resistor
Blower Switch
Circuit Breaker (30A)
Rear Heater Fan Switch
Rear Heater Motor
Rear Heater Resistor
10A
ACC
IG
ST
LH
RH
ON
OFF
2.110.2
2.3
Lo
H1
M2
H2
AC2771

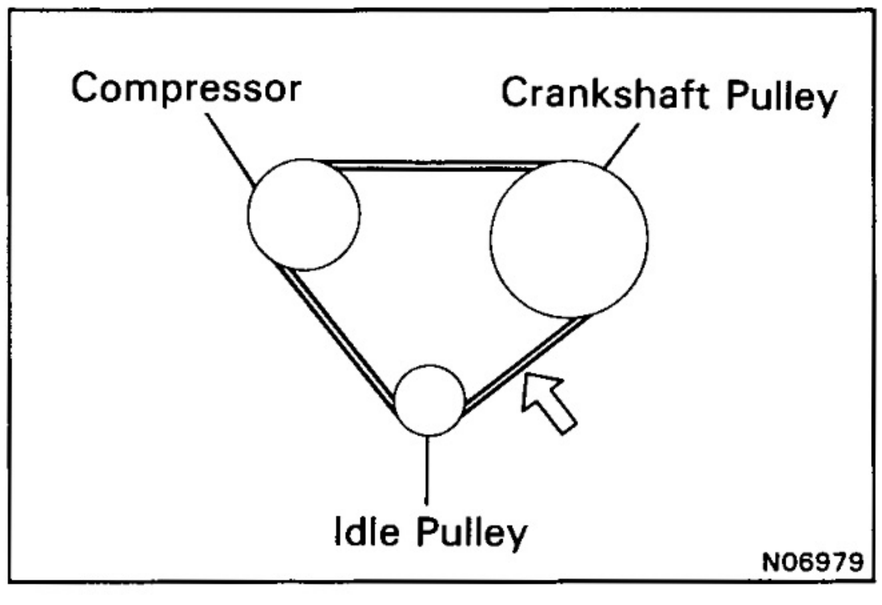

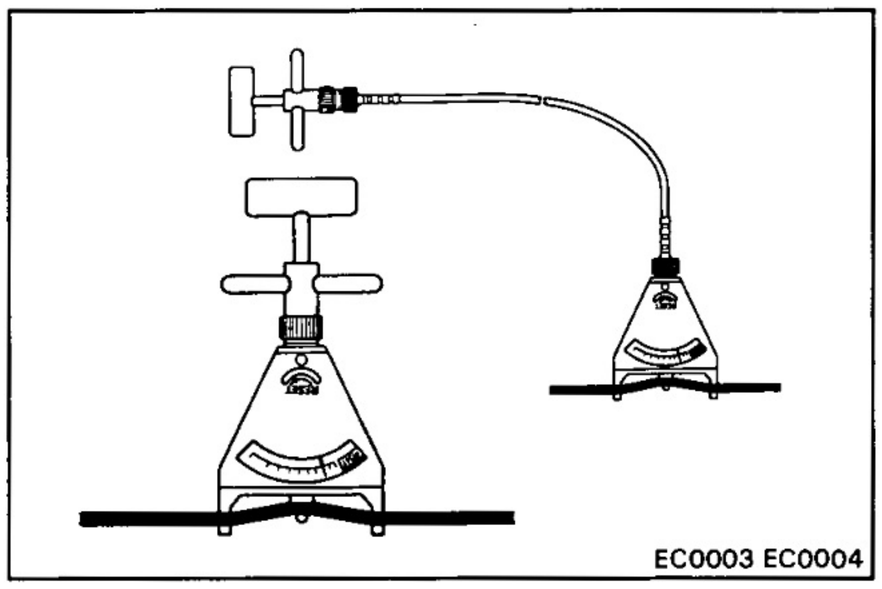

DRIVE BELT

ON-VEHICLE INSPECTION

INSPECT DRIVE BELT TENSION

Drive belt tension at 10 kg (22.0 lb, 98 N):
FZ Series Engine

New belt
5 – 7 mm (0.20 – 0.28 in.)
Used belt
7 – 7.5 mm (0.28 – 0.37 in.)

(Reference)

Using SST, check the drive belt tension.

SST 09216-00020 and 09216-00030

New belt: 40 – 60 kg

Used belt: 20 – 40 kg

COMPRESSOR

COMPRESSOR REMOVAL

FZ Series Engine

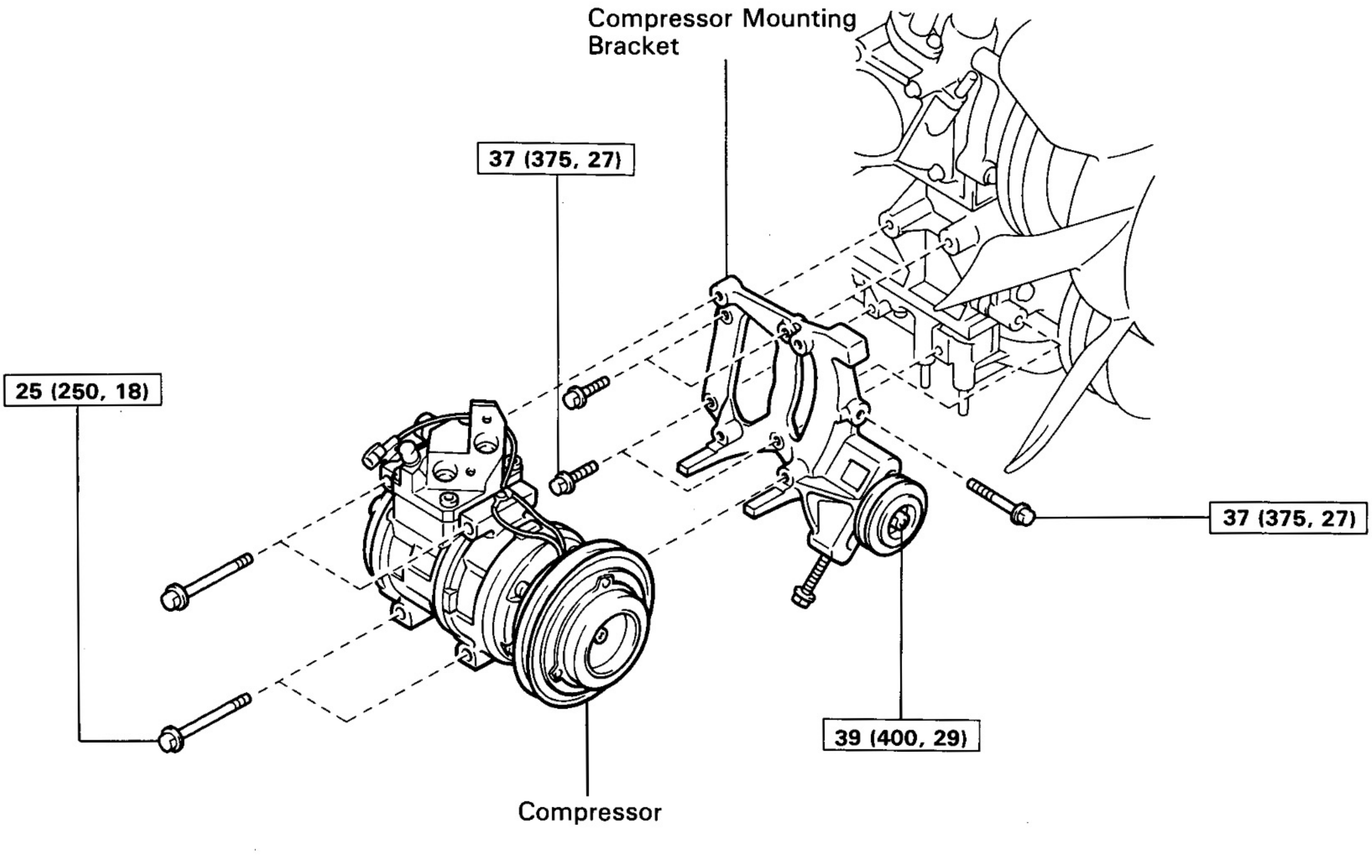

N·m (kgf·cm, ft·lbf) : Specified torque

N06159

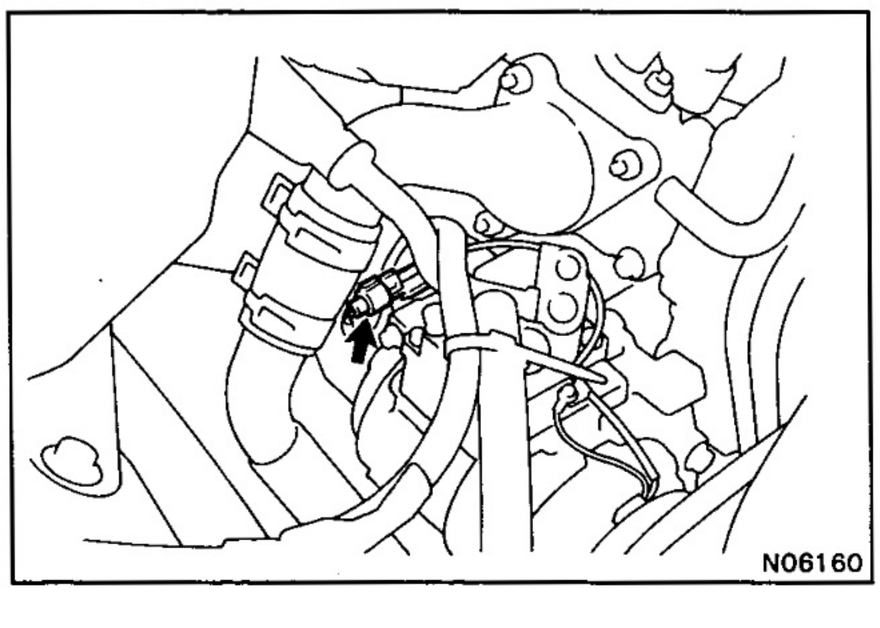

1. **RUN ENGINE AT IDLE SPEED WITH A/C ON FOR TEN MINUTES**
2. **STOP ENGINE**
3. **DISCONNECT NEGATIVE CABLE FROM BATTERY**
4. **DISCONNECT CONNECTOR FROM MAGNET CLUTCH**
5. **RECOVER REFRIGERANT FROM REFRIGERATION SYSTEM**

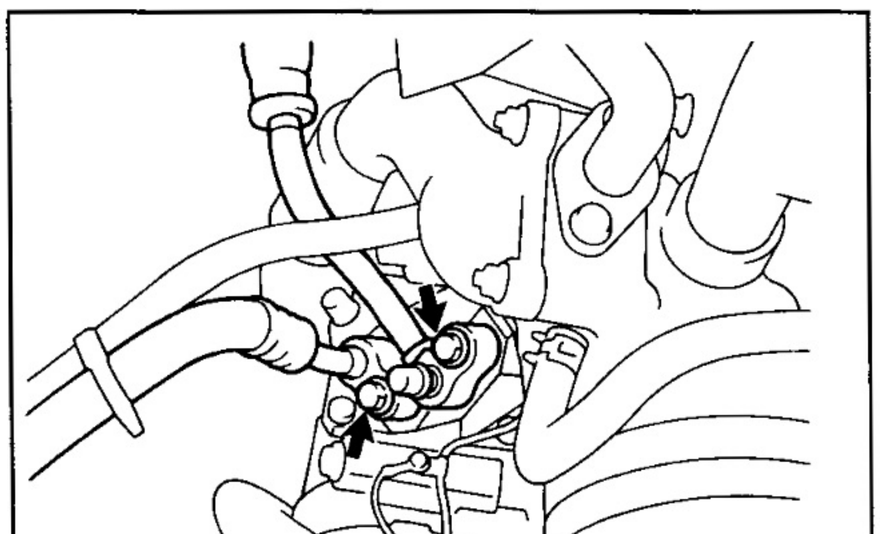

6. **DISCONNECT TWO HOSES FROM COMPRESSOR SERVICE VALVES**

   Cap the open fittings immediately to keep the moisture and dust out of the system.
7. **REMOVE ENGINE UNDER COVER**

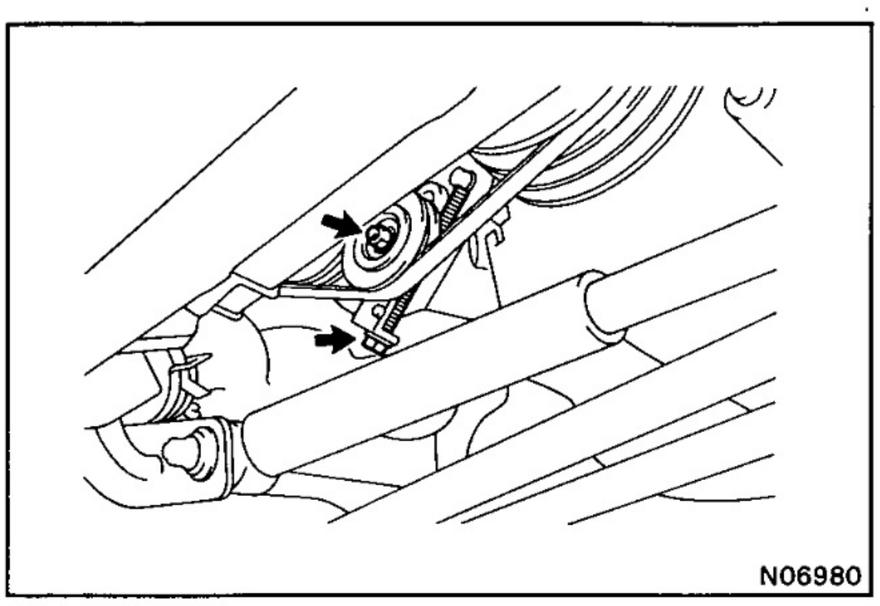

8. LOOSEN IDLE PULLEY LOCK NUT AND COMPRESSOR DRIVE BELT

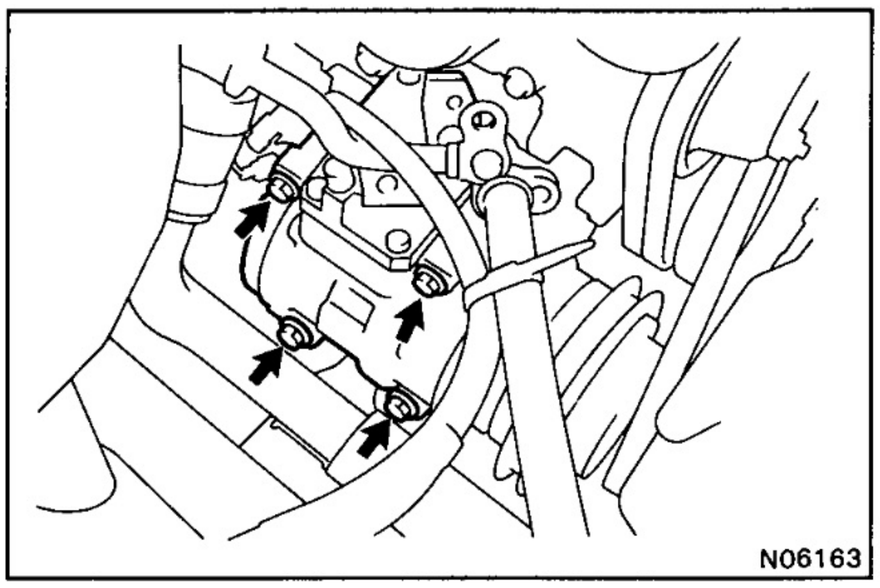

9. REMOVE COMPRESSOR

Remove the four bolts and pull the compressor upward.

MAGNET CLUTCH DISASSEMBLY

FZ Series Engine

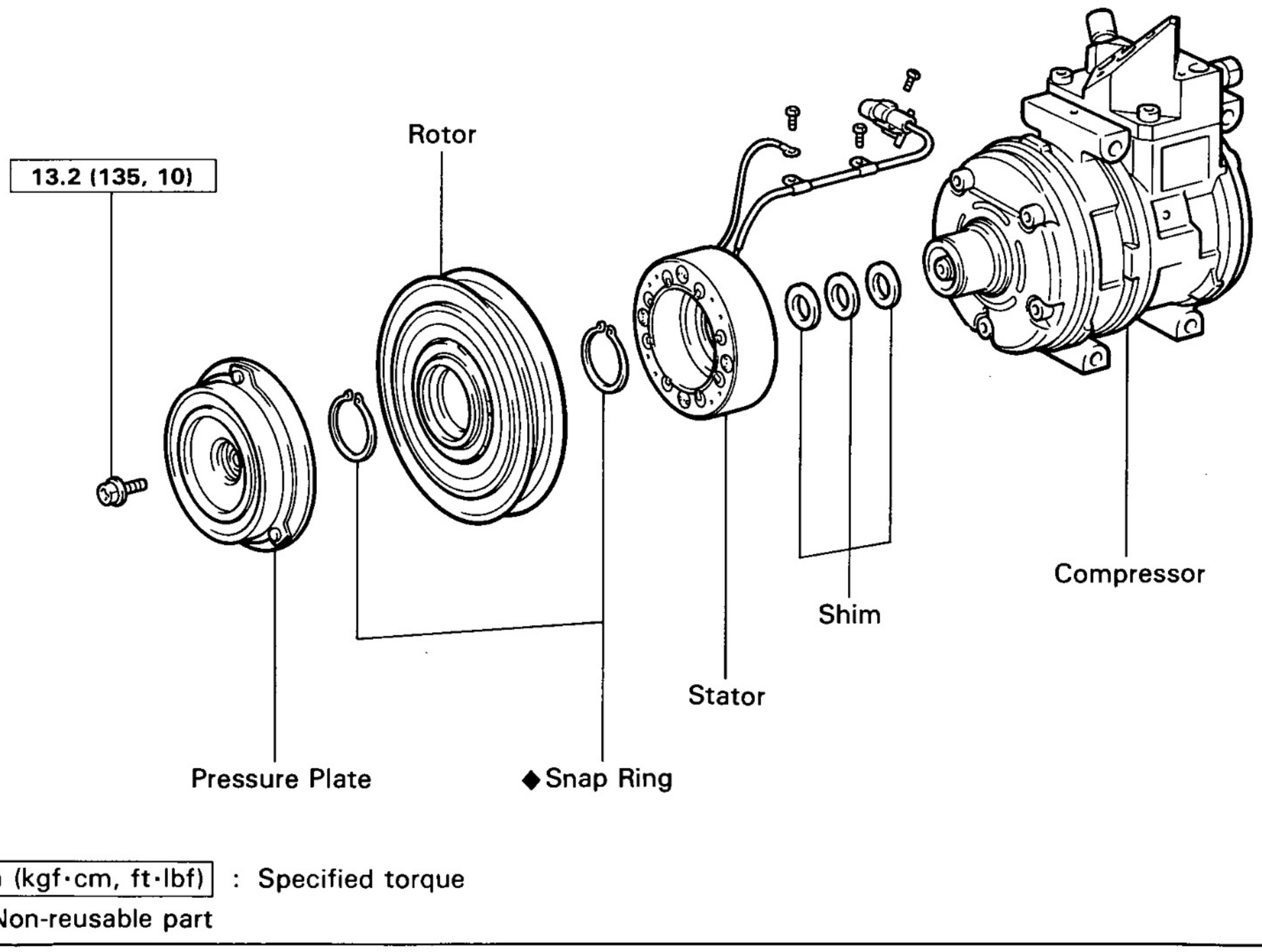

N·m (kgf·cm, ft·lbf) : Specified torque

◆ Non-reusable part

N06164

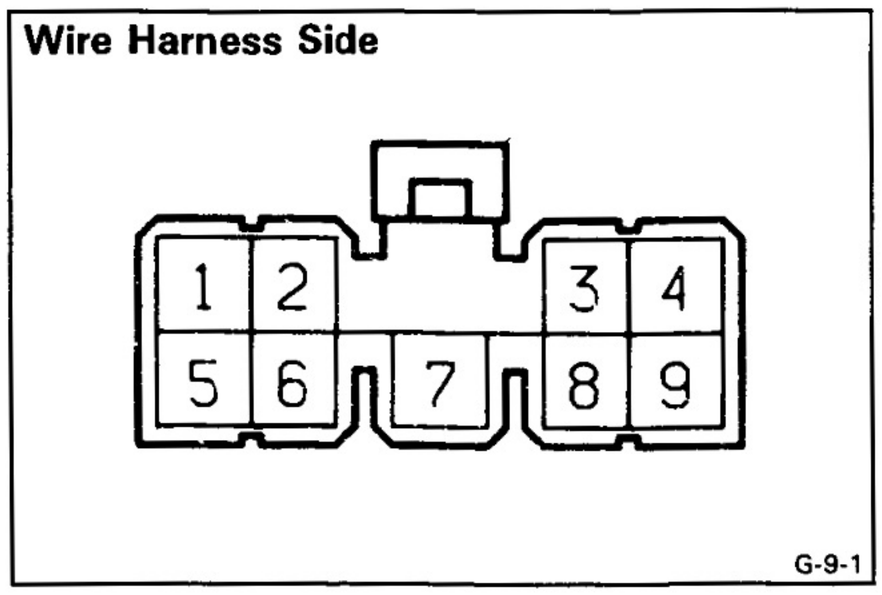

AIR CONDITIONER AMPLIFIER

INSPECT AMPLIFIER CIRCUIT

Disconnect the amplifier and inspect the connector on the wire harness side as shown in the chart below.

Test conditions:

(1) Ignition: ON

(2) Temperature control lever: MAX. COOL

(3) Blower switch: HI

FZ Series Engine

Check for	Tester connection	Condition	Specified value
Voltage	2 – 6	Turn A/C switch on	No voltage
		Turn A/C switch off	Battery voltage
	3 – 6	Turn A/C switch on	No voltage
		Turn A/C switch off	Battery voltage
	5 – 6	Start engine	Approx. 10 to 14 V
		Stop engine	No voltage
Resistance	3 – 4	Constant	Approx. 40 Ω at 25°C (77°F)
	6 – 7	Constant	Approx. 3.8 Ω
	8 – 9	Max. cool	Apporx. 0 Ω
		Min. cool	Apporx. 3 kΩ
	6 – 9	Constant	Approx. 1.5 kΩ at 25°C (77°F)

If circuit is as specified, replace the amplifier.

ELECTRICAL WIRING DIAGRAMS

ABBREVIATION

The following abbreviations are used in this wiring diagram.

ABS	=	Anti-Lock Brake System
A/C	=	Air Conditioner
AS	=	Air Suction
A/T	=	Automatic Transmission
CD	=	Compact Disc
COMB.	=	Combination
ECT	=	Electronic Controlled Transmission
ECU	=	Electronic Control Unit
EFI	=	Electronic Fuel Injection
EGR	=	Exhaust Gas Recirculation
Ex.	=	Except
FL	=	Fusible Link
ISC	=	Idle Speed Control
J/B	=	Junction Block
LH	=	Left-Hand
M/T	=	Manual Transmission
PPS	=	Progressive Power Steering
RH	=	Right-Hand
SW	=	Switch
TEMP.	=	Temperature
TP	=	Throttle Positioner
VSV	=	Vacuum Switching Valve
w/	=	With
w/o	=	Without
W/G	=	Wagon
2WD	=	Two Wheel Drive Vehicles (4 × 2)
4WD	=	Four Wheel Drive Vehicles (4 × 4)

HOW TO READ THIS SECTION

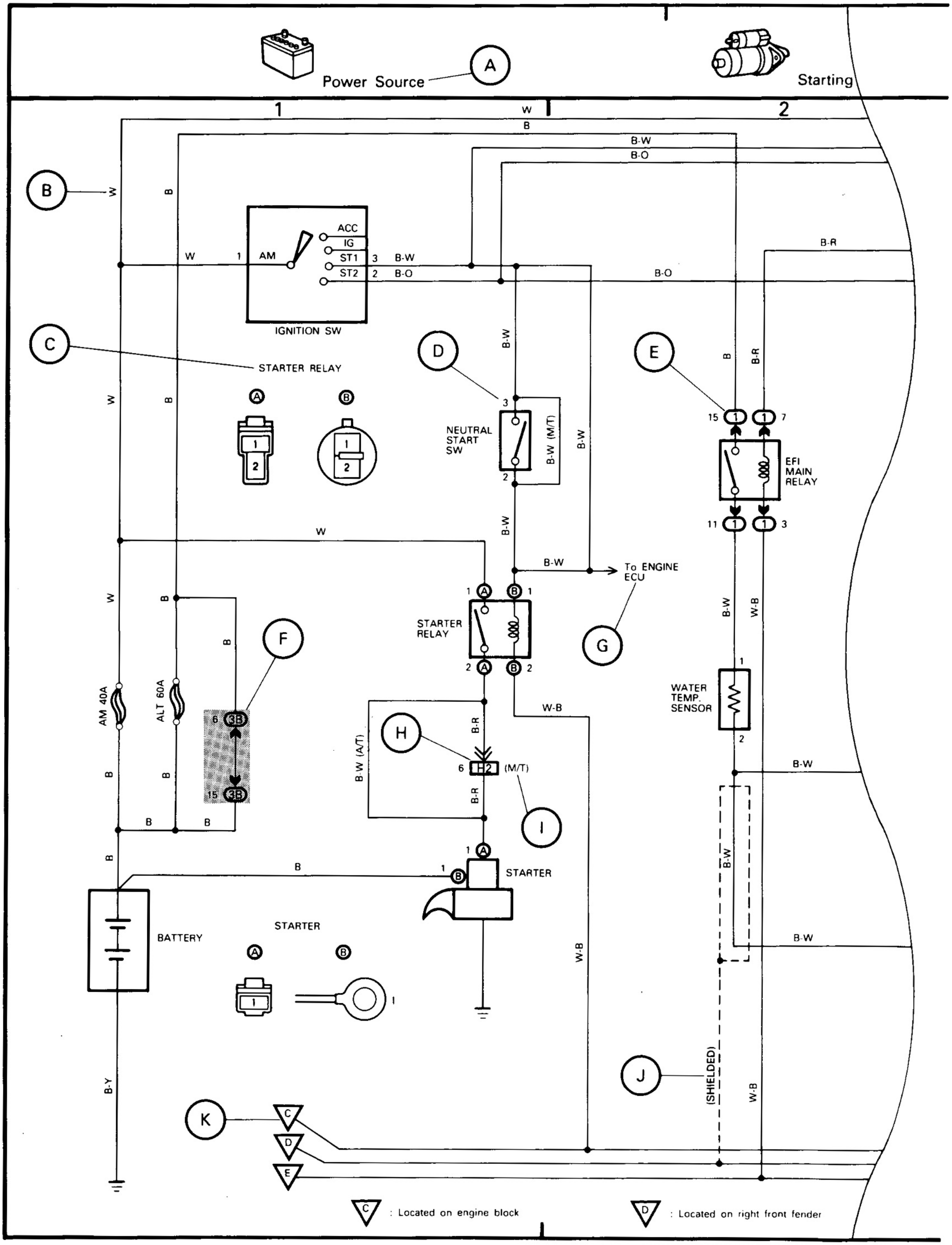

Ⓐ: System Title

Ⓑ: Indicates the wiring color.

Wire colors are indicated by an alphabetical code.

B	= Black	L	= Blue	R	= Red
BR	= Brown	LG	= Light Green	V	= Violet
G	= Green	O	= Orange	W	= White
GR	= Gray	P	= Pink	Y	= Yellow

The first letter indicates the basic wire color and the second letter indicates the color of the stripe.

Example: L—Y

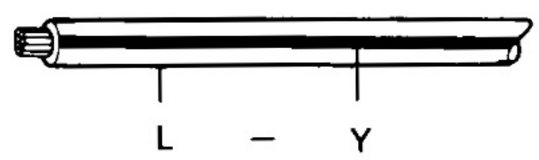

Ⓒ: Indicates the connector to be connected to a part (the numeral indicates the pin No.)

Ⓓ: Indicates the pin number of the connector. The numbering system is different for female and male connectors.

Example: Numbered in order from upper left to lower right / Numbered in order from upper right to lower left



Female Male

BE0832

The numbering system for the overall wiring diagram is the same as above.

Ⓔ: Indicates a Relay Block. No shading is used and only the Relay Block No. is shown to distinguish it from the J/B.

Example: ⓵ Indicates Relay Block No.1.

Ⓕ: Junction Block (The number in the circle is the J/B No. and the connector code is shown beside it). Junction Blocks are shaded to clearly separate them from other parts (different junction blocks are shaded differently for further clarification).

Example:

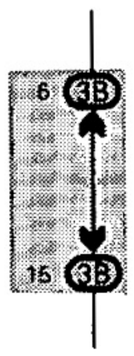

3B indicates that it is inside Junction Block No.3.

Ⓖ: Indicates related system.

Ⓗ: Indicates the wiring harness and wiring harness connector. The wiring harness with male terminal is shown with arrows (≫). Outside numerals are pin numbers.

- All connectors are shown from the open end, and the lock is on top.

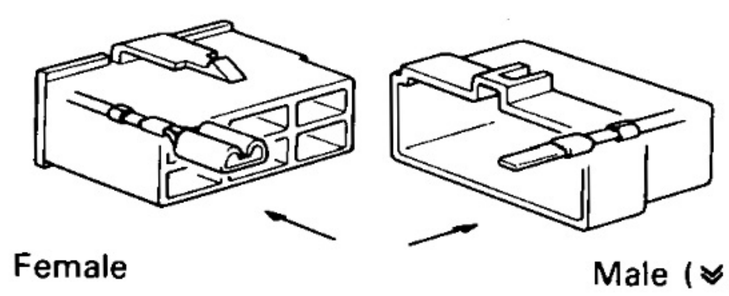

Female Male (≫)

BE0B33

Ⓘ: ( ) are used to indicate different wiring and connector, etc. when the vehicle model, engine type, or specification is different.

Ⓙ: Indicates a shielded cable.



Ⓚ: Indicates a ground point.

SYSTEM INDEX

LAND CRUISER 70 (Light-Duty) (Location No. 1 to 11)

SYSTEMS	LOCATION	SYSTEMS	LOCATION
Accessory Meter	4-7	Light Reminder	8-5 (Europe)
Air Conditioner, Cooler and Heater	3-2	Moon Roof	9-5
Back-Up Light	4-5	Power Source	1-1
Charging	2-5	Power Window	9-2
Cigarette Lighter	8-6	Radio and Player	8-7
Clock	8-5	Rear Fog Light	3-8
Combination Meter	3-5	Rear Window Defogger	4-1
Door Lock	7-6	Rear Wiper and Washer	4-4
Emission Control	2-7 (22R)	Remote Control Mirror	1-8
Engine Control	1-4 (22R-E)		
Front Fog Light	5-1 (General Ex. Australia)	Starting	1-2
Front Wiper and Washer	4-2	Stop Light	4-5
Fuel Heater	7-8 (2L-T Europe)	Taillight and Illumination	5-2 (Ex. Europe) 6-2 (Europe)
Glow and Emission Control	9-7 (2L-T Austria)	Theft Deterrent	10-1 (U.K.)
Glow Plug	2-2 (2L-T Ex. Austria) 2-3 (3L)	Trailer Socket	8-8
Headlight	5-3 (Ex. Europe) 5-5 (Europe)	Turn Signal and Hazard	6-7
Headlight Beam Level Control	8-2	Unlock and Seat Belt Warning	10-4
Headlight Cleaner	4-3 (Europe)	Winch	8-4
Horn	1-7	4WD	7-3
Ignition	1-6 (22R-E) 2-1 (22R)	Connector Joining Wire Harness and Wire Harness	11-4
Interior Light	5-8	Junction Connector	11-8

Power Source | Starting | Engine Control (22R-E) | Ignition (22R-E) | Horn | Remote Control Mirror

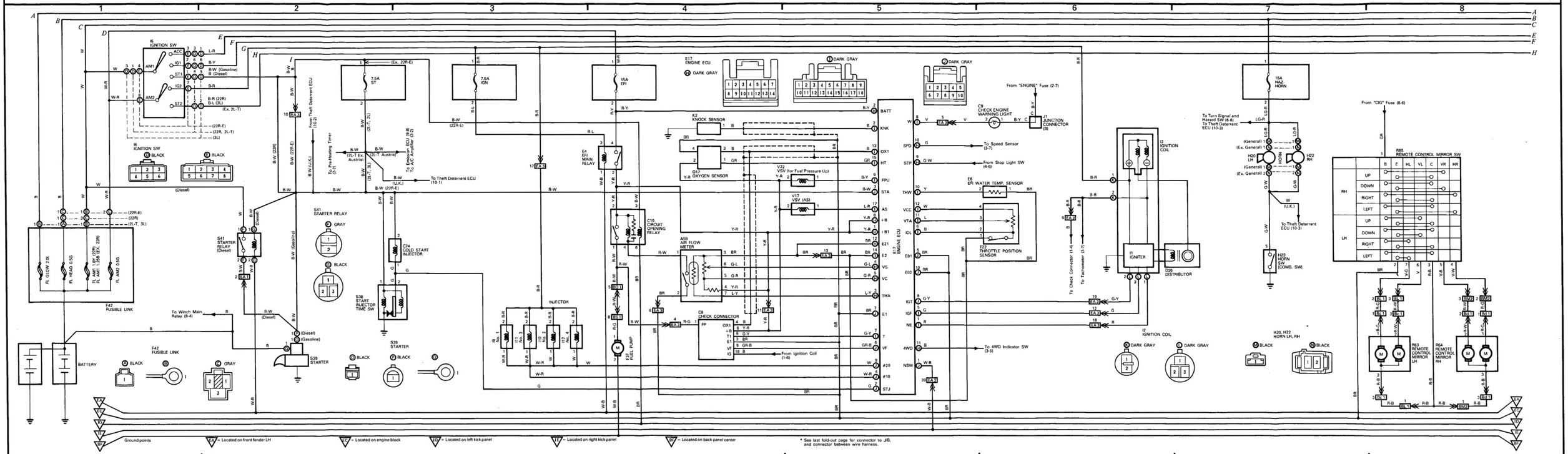

Ignition (22R) | Glow Plug (2L-T Ex. Austria) | Glow Plug (3L) | Charging | Emission Control (22R)

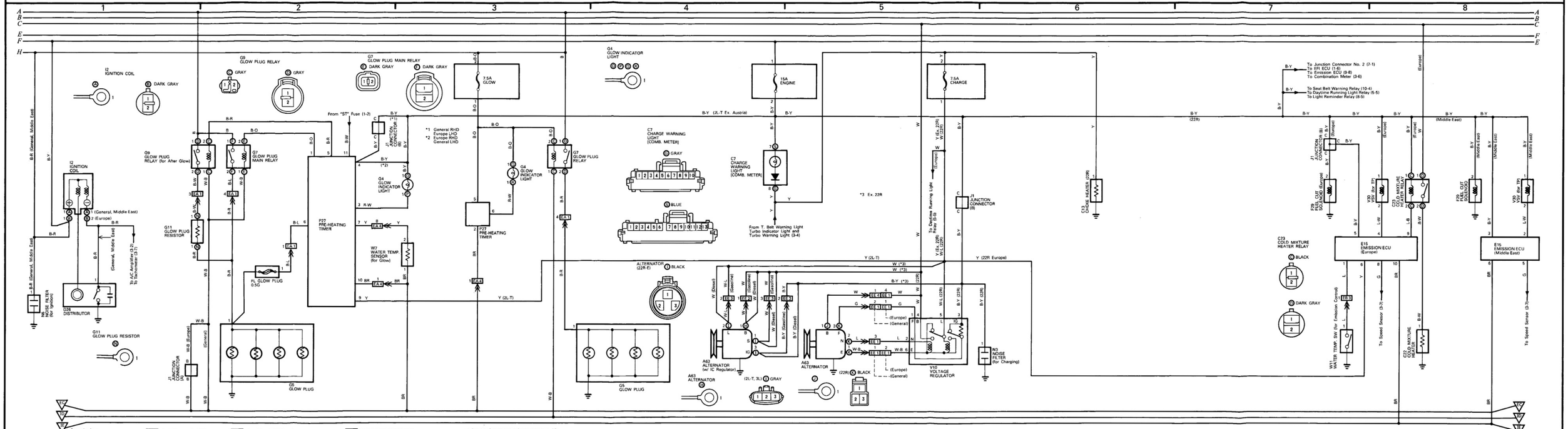

Air Conditioner, Cooler and Heater

Combination Meter

Rear Fog Light

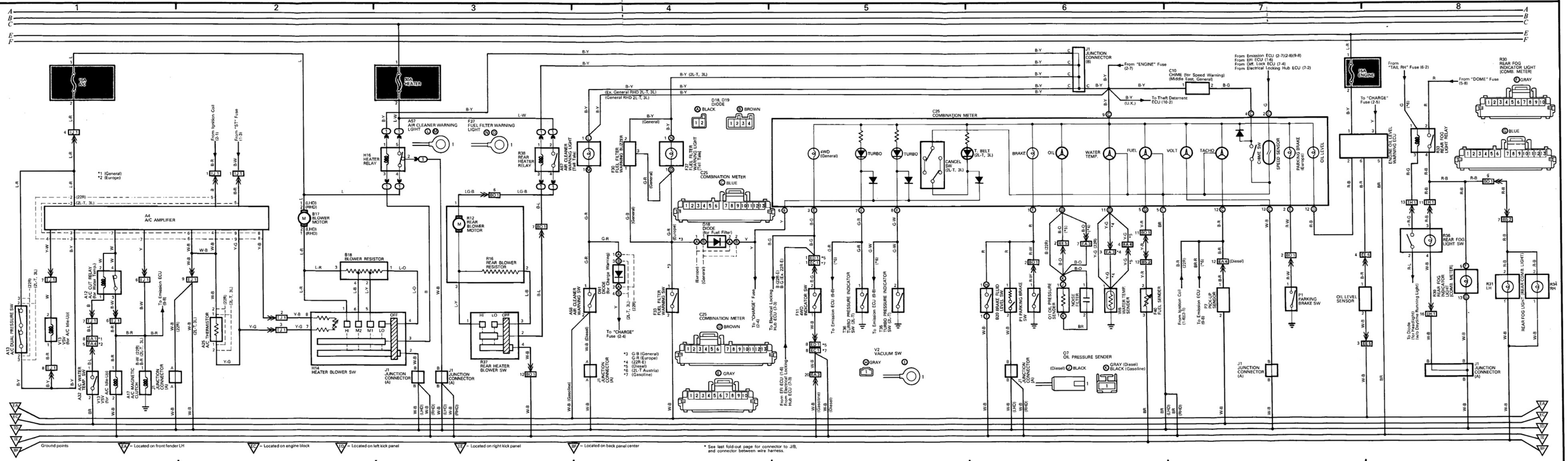
1
2
3
4
5
6
7
8
A
B
C
E
F
A4 A/C AMPLIFIER
A17 DUAL PRESSURE SW
A32 A/C WATER TEMP. SW
A17 A/C CUT RELAY (for Water Temp.)
A27 A/C MAGNETIC CLUTCH
A25 A/C THERMISTOR
B17 BLOWER MOTOR
B18 BLOWER RESISTOR
H14 HEATER BLOWER SW
H16 HEATER RELAY
A57 AIR CLEANER WARNING LIGHT
F27 FUEL FILTER WARNING LIGHT
R38 REAR HEATER RELAY
R12 REAR BLOWER MOTOR
R16 REAR BLOWER RESISTOR
R37 REAR HEATER BLOWER SW
J1 JUNCTION CONNECTOR (A)
J2 JUNCTION CONNECTOR (B)
J3 JUNCTION CONNECTOR (C)
J4 JUNCTION CONNECTOR (D)
J5 JUNCTION CONNECTOR (E)
J6 JUNCTION CONNECTOR (F)
J7 JUNCTION CONNECTOR (G)
J8 JUNCTION CONNECTOR (H)
J9 JUNCTION CONNECTOR (I)
J10 JUNCTION CONNECTOR (J)
J11 JUNCTION CONNECTOR (K)
J12 JUNCTION CONNECTOR (L)
J13 JUNCTION CONNECTOR (M)
J14 JUNCTION CONNECTOR (N)
J15 JUNCTION CONNECTOR (O)
J16 JUNCTION CONNECTOR (P)
J17 JUNCTION CONNECTOR (Q)
J18 JUNCTION CONNECTOR (R)
J19 JUNCTION CONNECTOR (S)
J20 JUNCTION CONNECTOR (T)
J21 JUNCTION CONNECTOR (U)
J22 JUNCTION CONNECTOR (V)
J23 JUNCTION CONNECTOR (W)
J24 JUNCTION CONNECTOR (X)
J25 JUNCTION CONNECTOR (Y)
J26 JUNCTION CONNECTOR (Z)
J27 JUNCTION CONNECTOR (AA)
J28 JUNCTION CONNECTOR (AB)
J29 JUNCTION CONNECTOR (AC)
J30 JUNCTION CONNECTOR (AD)
J31 JUNCTION CONNECTOR (AE)
J32 JUNCTION CONNECTOR (AF)
J33 JUNCTION CONNECTOR (AG)
J34 JUNCTION CONNECTOR (AH)
J35 JUNCTION CONNECTOR (AI)
J36 JUNCTION CONNECTOR (AJ)
J37 JUNCTION CONNECTOR (AK)
J38 JUNCTION CONNECTOR (AL)
J39 JUNCTION CONNECTOR (AM)
J40 JUNCTION CONNECTOR (AN)
J41 JUNCTION CONNECTOR (AO)
J42 JUNCTION CONNECTOR (AP)
J43 JUNCTION CONNECTOR (AQ)
J44 JUNCTION CONNECTOR (AR)
J45 JUNCTION CONNECTOR (AS)
J46 JUNCTION CONNECTOR (AT)
J47 JUNCTION CONNECTOR (AU)
J48 JUNCTION CONNECTOR (AV)
J49 JUNCTION CONNECTOR (AW)
J50 JUNCTION CONNECTOR (AX)
J51 JUNCTION CONNECTOR (AY)
J52 JUNCTION CONNECTOR (AZ)
J53 JUNCTION CONNECTOR (BA)
J54 JUNCTION CONNECTOR (BB)
J55 JUNCTION CONNECTOR (BC)
J56 JUNCTION CONNECTOR (BD)
J57 JUNCTION CONNECTOR (BE)
J58 JUNCTION CONNECTOR (BF)
J59 JUNCTION CONNECTOR (BG)
J60 JUNCTION CONNECTOR (BH)
J61 JUNCTION CONNECTOR (BI)
J62 JUNCTION CONNECTOR (BJ)
J63 JUNCTION CONNECTOR (BK)
J64 JUNCTION CONNECTOR (BL)
J65 JUNCTION CONNECTOR (BM)
J66 JUNCTION CONNECTOR (BN)
J67 JUNCTION CONNECTOR (BO)
J68 JUNCTION CONNECTOR (BP)
J69 JUNCTION CONNECTOR (BQ)
J70 JUNCTION CONNECTOR (BR)
J71 JUNCTION CONNECTOR (BS)
J72 JUNCTION CONNECTOR (BT)
J73 JUNCTION CONNECTOR (BU)
J74 JUNCTION CONNECTOR (BV)
J75 JUNCTION CONNECTOR (BW)
J76 JUNCTION CONNECTOR (BX)
J77 JUNCTION CONNECTOR (BY)
J78 JUNCTION CONNECTOR (BZ)
J79 JUNCTION CONNECTOR (CA)
J80 JUNCTION CONNECTOR (CB)
J81 JUNCTION CONNECTOR (CC)
J82 JUNCTION CONNECTOR (CD)
J83 JUNCTION CONNECTOR (CE)
J84 JUNCTION CONNECTOR (CF)
J85 JUNCTION CONNECTOR (CG)
J86 JUNCTION CONNECTOR (CH)
J87 JUNCTION CONNECTOR (CI)
J88 JUNCTION CONNECTOR (CJ)
J89 JUNCTION CONNECTOR (CK)
J90 JUNCTION CONNECTOR (CL)
J91 JUNCTION CONNECTOR (CM)
J92 JUNCTION CONNECTOR (CN)
J93 JUNCTION CONNECTOR (CO)
J94 JUNCTION CONNECTOR (CP)
J95 JUNCTION CONNECTOR (CQ)
J96 JUNCTION CONNECTOR (CR)
J97 JUNCTION CONNECTOR (CS)
J98 JUNCTION CONNECTOR (CT)
J99 JUNCTION CONNECTOR (CU)
J100 JUNCTION CONNECTOR (CV)
J101 JUNCTION CONNECTOR (CW)
J102 JUNCTION CONNECTOR (CX)
J103 JUNCTION CONNECTOR (CY)
J104 JUNCTION CONNECTOR (CZ)
J105 JUNCTION CONNECTOR (DA)
J106 JUNCTION CONNECTOR (DB)
J107 JUNCTION CONNECTOR (DC)
J108 JUNCTION CONNECTOR (DD)
J109 JUNCTION CONNECTOR (DE)
J110 JUNCTION CONNECTOR (DF)
J111 JUNCTION CONNECTOR (DG)
J112 JUNCTION CONNECTOR (DH)
J113 JUNCTION CONNECTOR (DI)
J114 JUNCTION CONNECTOR (DJ)
J115 JUNCTION CONNECTOR (DK)
J116 JUNCTION CONNECTOR (DL)
J117 JUNCTION CONNECTOR (DM)
J118 JUNCTION CONNECTOR (DN)
J119 JUNCTION CONNECTOR (DO)
J120 JUNCTION CONNECTOR (DP)
J121 JUNCTION CONNECTOR (DQ)
J122 JUNCTION CONNECTOR (DR)
J123 JUNCTION CONNECTOR (DS)
J124 JUNCTION CONNECTOR (DT)
J125 JUNCTION CONNECTOR (DU)
J126 JUNCTION CONNECTOR (DV)
J127 JUNCTION CONNECTOR (DW)
J128 JUNCTION CONNECTOR (DX)
J129 JUNCTION CONNECTOR (DY)
J130 JUNCTION CONNECTOR (DZ)
J131 JUNCTION CONNECTOR (EA)
J132 JUNCTION CONNECTOR (EB)
J133 JUNCTION CONNECTOR (EC)
J134 JUNCTION CONNECTOR (ED)
J135 JUNCTION CONNECTOR (EE)
J136 JUNCTION CONNECTOR (EF)
J137 JUNCTION CONNECTOR (EG)
J138 JUNCTION CONNECTOR (EH)
J139 JUNCTION CONNECTOR (EI)
J140 JUNCTION CONNECTOR (EJ)
J141 JUNCTION CONNECTOR (EK)
J142 JUNCTION CONNECTOR (EL)
J143 JUNCTION CONNECTOR (EM)
J144 JUNCTION CONNECTOR (EN)
J145 JUNCTION CONNECTOR (EO)
J146 JUNCTION CONNECTOR (EP)
J147 JUNCTION CONNECTOR (EQ)
J148 JUNCTION CONNECTOR (ER)
J149 JUNCTION CONNECTOR (ES)
J150 JUNCTION CONNECTOR (ET)
J151 JUNCTION CONNECTOR (EU)
J152 JUNCTION CONNECTOR (EV)
J153 JUNCTION CONNECTOR (EW)
J154 JUNCTION CONNECTOR (EX)
J155 JUNCTION CONNECTOR (EY)
J156 JUNCTION CONNECTOR (EZ)
J157 JUNCTION CONNECTOR (FA)
J158 JUNCTION CONNECTOR (FB)
J159 JUNCTION CONNECTOR (FC)
J160 JUNCTION CONNECTOR (FD)
J161 JUNCTION CONNECTOR (FE)
J162 JUNCTION CONNECTOR (FF)
J163 JUNCTION CONNECTOR (FG)
J164 JUNCTION CONNECTOR (FH)
J165 JUNCTION CONNECTOR (FI)
J166 JUNCTION CONNECTOR (FJ)
J167 JUNCTION CONNECTOR (FK)
J168 JUNCTION CONNECTOR (FL)
J169 JUNCTION CONNECTOR (FM)
J170 JUNCTION CONNECTOR (FN)
J171 JUNCTION CONNECTOR (FO)
J172 JUNCTION CONNECTOR (FP)
J173 JUNCTION CONNECTOR (FQ)
J174 JUNCTION CONNECTOR (FR)
J175 JUNCTION CONNECTOR (FS)
J176 JUNCTION CONNECTOR (FT)
J177 JUNCTION CONNECTOR (FU)
J178 JUNCTION CONNECTOR (FV)
J179 JUNCTION CONNECTOR (FW)
J180 JUNCTION CONNECTOR (FX)
J181 JUNCTION CONNECTOR (FY)
J182 JUNCTION CONNECTOR (FZ)
J183 JUNCTION CONNECTOR (GA)
J184 JUNCTION CONNECTOR (GB)
J185 JUNCTION CONNECTOR (GC)
J186 JUNCTION CONNECTOR (GD)
J187 JUNCTION CONNECTOR (GE)
J188 JUNCTION CONNECTOR (GF)
J189 JUNCTION CONNECTOR (GG)
J190 JUNCTION CONNECTOR (GH)
J191 JUNCTION CONNECTOR (GI)
J192 JUNCTION CONNECTOR (GJ)
J193 JUNCTION CONNECTOR (GK)
J194 JUNCTION CONNECTOR (GL)
J195 JUNCTION CONNECTOR (GM)
J196 JUNCTION CONNECTOR (GN)
J197 JUNCTION CONNECTOR (GO)
J198 JUNCTION CONNECTOR (GP)
J199 JUNCTION CONNECTOR (GQ)
J200 JUNCTION CONNECTOR (GR)
J201 JUNCTION CONNECTOR (GS)
J202 JUNCTION CONNECTOR (GT)
J203 JUNCTION CONNECTOR (GU)
J204 JUNCTION CONNECTOR (GV)
J205 JUNCTION CONNECTOR (GW)
J206 JUNCTION CONNECTOR (GX)
J207 JUNCTION CONNECTOR (GY)
J208 JUNCTION CONNECTOR (GZ)
J209 JUNCTION CONNECTOR (HA)
J210 JUNCTION CONNECTOR (HB)
J211 JUNCTION CONNECTOR (HC)
J212 JUNCTION CONNECTOR (HD)
J213 JUNCTION CONNECTOR (HE)
J214 JUNCTION CONNECTOR (HF)
J215 JUNCTION CONNECTOR (HG)
J216 JUNCTION CONNECTOR (HH)
J217 JUNCTION CONNECTOR (HI)
J218 JUNCTION CONNECTOR (HJ)
J219 JUNCTION CONNECTOR (HK)
J220 JUNCTION CONNECTOR (HL)
J221 JUNCTION CONNECTOR (HM)
J222 JUNCTION CONNECTOR (HN)
J223 JUNCTION CONNECTOR (HO)
J224 JUNCTION CONNECTOR (HP)
J225 JUNCTION CONNECTOR (HQ)
J226 JUNCTION CONNECTOR (HR)
J227 JUNCTION CONNECTOR (HS)
J228 JUNCTION CONNECTOR (HT)
J229 JUNCTION CONNECTOR (HU)
J230 JUNCTION CONNECTOR (HV)
J231 JUNCTION CONNECTOR (HW)
J232 JUNCTION CONNECTOR (HX)
J233 JUNCTION CONNECTOR (HY)
J234 JUNCTION CONNECTOR (HZ)
J235 JUNCTION CONNECTOR (IA)
J236 JUNCTION CONNECTOR (IB)
J237 JUNCTION CONNECTOR (IC)
J238 JUNCTION CONNECTOR (ID)
J239 JUNCTION CONNECTOR (IE)
J240 JUNCTION CONNECTOR (IF)
J241 JUNCTION CONNECTOR (IG)
J242 JUNCTION CONNECTOR (IH)
J243 JUNCTION CONNECTOR (II)
J244 JUNCTION CONNECTOR (IJ)
J245 JUNCTION CONNECTOR (IK)
J246 JUNCTION CONNECTOR (IL)
J247 JUNCTION CONNECTOR (IM)
J248 JUNCTION CONNECTOR (IN)
J249 JUNCTION CONNECTOR (IO)
J250 JUNCTION CONNECTOR (IP)
J251 JUNCTION CONNECTOR (IQ)
J252 JUNCTION CONNECTOR (IR)
J253 JUNCTION CONNECTOR (IS)
J254 JUNCTION CONNECTOR (IT)
J255 JUNCTION CONNECTOR (IU)
J256 JUNCTION CONNECTOR (IV)
J257 JUNCTION CONNECTOR (IW)
J258 JUNCTION CONNECTOR (IX)
J259 JUNCTION CONNECTOR (IY)
J260 JUNCTION CONNECTOR (IZ)
J261 JUNCTION CONNECTOR (JA)
J262 JUNCTION CONNECTOR (JB)
J263 JUNCTION CONNECTOR (JC)
J264 JUNCTION CONNECTOR (JD)
J265 JUNCTION CONNECTOR (JE)
J266 JUNCTION CONNECTOR (JF)
J267 JUNCTION CONNECTOR (JG)
J268 JUNCTION CONNECTOR (JH)
J269 JUNCTION CONNECTOR (JI)
J270 JUNCTION CONNECTOR (JJ)
J271 JUNCTION CONNECTOR (JK)
J272 JUNCTION CONNECTOR (JL)
J273 JUNCTION CONNECTOR (JM)
J274 JUNCTION CONNECTOR (JN)
J275 JUNCTION CONNECTOR (JO)
J276 JUNCTION CONNECTOR (JP)
J277 JUNCTION CONNECTOR (JQ)
J278 JUNCTION CONNECTOR (JR)
J279 JUNCTION CONNECTOR (JS)
J280 JUNCTION CONNECTOR (JT)
J281 JUNCTION CONNECTOR (JU)
J282 JUNCTION CONNECTOR (JV)
J283 JUNCTION CONNECTOR (JW)
J284 JUNCTION CONNECTOR (JX)
J285 JUNCTION CONNECTOR (JY)
J286 JUNCTION CONNECTOR (JZ)
J287 JUNCTION CONNECTOR (KA)
J288 JUNCTION CONNECTOR (KB)
J289 JUNCTION CONNECTOR (KC)
J290 JUNCTION CONNECTOR (KD)
J291 JUNCTION CONNECTOR (KE)
J292 JUNCTION CONNECTOR (KF)
J293 JUNCTION CONNECTOR (KG)
J294 JUNCTION CONNECTOR (KH)
J295 JUNCTION CONNECTOR (KI)
J296 JUNCTION CONNECTOR (KJ)
J297 JUNCTION CONNECTOR (KK)
J298 JUNCTION CONNECTOR (KL)
J299 JUNCTION CONNECTOR (KM)
J300 JUNCTION CONNECTOR (KN)
J301 JUNCTION CONNECTOR (KO)
J302 JUNCTION CONNECTOR (KP)
J303 JUNCTION CONNECTOR (KQ)
J304 JUNCTION CONNECTOR (KR)
J305 JUNCTION CONNECTOR (KS)
J306 JUNCTION CONNECTOR (KT)
J307 JUNCTION CONNECTOR (KU)
J308 JUNCTION CONNECTOR (KV)
J309 JUNCTION CONNECTOR (KW)
J310 JUNCTION CONNECTOR (KX)
J311 JUNCTION CONNECTOR (KY)
J312 JUNCTION CONNECTOR (KZ)
J313 JUNCTION CONNECTOR (LA)
J314 JUNCTION CONNECTOR (LB)
J315 JUNCTION CONNECTOR (LC)
J316 JUNCTION CONNECTOR (LD)
J317 JUNCTION CONNECTOR (LE)
J318 JUNCTION CONNECTOR (LF)
J319 JUNCTION CONNECTOR (LG)
J320 JUNCTION CONNECTOR (LH)
J321 JUNCTION CONNECTOR (LI)
J322 JUNCTION CONNECTOR (LJ)
J323 JUNCTION CONNECTOR (LK)
J324 JUNCTION CONNECTOR (LL)
J325 JUNCTION CONNECTOR (LM)
J326 JUNCTION CONNECTOR (LN)
J327 JUNCTION CONNECTOR (LO)
J328 JUNCTION CONNECTOR (LP)
J329 JUNCTION CONNECTOR (LQ)
J330 JUNCTION CONNECTOR (LR)
J331 JUNCTION CONNECTOR (LS)
J332 JUNCTION CONNECTOR (LT)
J333 JUNCTION CONNECTOR (LU)
J334 JUNCTION CONNECTOR (LV)
J335 JUNCTION CONNECTOR (LW)
J336 JUNCTION CONNECTOR (LX)
J337 JUNCTION CONNECTOR (LY)
J338 JUNCTION CONNECTOR (LZ)
J339 JUNCTION CONNECTOR (MA)
J340 JUNCTION CONNECTOR (MB)
J341 JUNCTION CONNECTOR (MC)
J342 JUNCTION CONNECTOR (MD)
J343 JUNCTION CONNECTOR (ME)
J344 JUNCTION CONNECTOR (MF)
J345 JUNCTION CONNECTOR (MG)
J346 JUNCTION CONNECTOR (MH)
J347 JUNCTION CONNECTOR (MI)
J348 JUNCTION CONNECTOR (MJ)
J349 JUNCTION CONNECTOR (MK)
J350 JUNCTION CONNECTOR (ML)
J351 JUNCTION CONNECTOR (MM)
J352 JUNCTION CONNECTOR (MN)
J353 JUNCTION CONNECTOR (MO)
J354 JUNCTION CONNECTOR (MP)
J355 JUNCTION CONNECTOR (MQ)
J356 JUNCTION CONNECTOR (MR)
J357 JUNCTION CONNECTOR (MS)
J358 JUNCTION CONNECTOR (MT)
J359 JUNCTION CONNECTOR (MU)
J360 JUNCTION CONNECTOR (MV)
J361 JUNCTION CONNECTOR (MW)
J362 JUNCTION CONNECTOR (MX)
J363 JUNCTION CONNECTOR (MY)
J364 JUNCTION CONNECTOR (MZ)
J365 JUNCTION CONNECTOR (NA)
J366 JUNCTION CONNECTOR (NB)
J367 JUNCTION CONNECTOR (NC)
J368 JUNCTION CONNECTOR (ND)
J369 JUNCTION CONNECTOR (NE)
J370 JUNCTION CONNECTOR (NF)
J371 JUNCTION CONNECTOR (NG)
J372 JUNCTION CONNECTOR (NH)
J373 JUNCTION CONNECTOR (NI)
J374 JUNCTION CONNECTOR (NJ)
J375 JUNCTION CONNECTOR (NK)
J376 JUNCTION CONNECTOR (NL)
J377 JUNCTION CONNECTOR (NM)
J378 JUNCTION CONNECTOR (NN)
J379 JUNCTION CONNECTOR (NO)
J380 JUNCTION CONNECTOR (NP)
J381 JUNCTION CONNECTOR (NQ)
J382 JUNCTION CONNECTOR (NR)
J383 JUNCTION CONNECTOR (NS)
J384 JUNCTION CONNECTOR (NT)
J385 JUNCTION CONNECTOR (NU)
J386 JUNCTION CONNECTOR (NV)
J387 JUNCTION CONNECTOR (NW)
J388 JUNCTION CONNECTOR (NX)
J389 JUNCTION CONNECTOR (NY)
J390 JUNCTION CONNECTOR (NZ)
J391 JUNCTION CONNECTOR (OA)
J392 JUNCTION CONNECTOR (OB)
J393 JUNCTION CONNECTOR (OC)
J394 JUNCTION CONNECTOR (OD)
J395 JUNCTION CONNECTOR (OE)
J396 JUNCTION CONNECTOR (OF)
J397 JUNCTION CONNECTOR (OG)
J398 JUNCTION CONNECTOR (OH)
J399 JUNCTION CONNECTOR (OI)
J400 JUNCTION CONNECTOR (OJ)
J401 JUNCTION CONNECTOR (OK)
J402 JUNCTION CONNECTOR (OL)
J403 JUNCTION CONNECTOR (OM)
J404 JUNCTION CONNECTOR (ON)
J405 JUNCTION CONNECTOR (OO)
J406 JUNCTION CONNECTOR (OP)
J407 JUNCTION CONNECTOR (OQ)
J408 JUNCTION CONNECTOR (OR)
J409 JUNCTION CONNECTOR (OS)
J410 JUNCTION CONNECTOR (OT)
J411 JUNCTION CONNECTOR (OU)
J412 JUNCTION CONNECTOR (OV)
J413 JUNCTION CONNECTOR (OW)
J414 JUNCTION CONNECTOR (OX)
J415 JUNCTION CONNECTOR (OY)
J416 JUNCTION CONNECTOR (OZ)
J417 JUNCTION CONNECTOR (PA)
J418 JUNCTION CONNECTOR (PB)
J419 JUNCTION CONNECTOR (PC)
J420 JUNCTION CONNECTOR (PD)
J421 JUNCTION CONNECTOR (PE)
J422 JUNCTION CONNECTOR (PF)
J423 JUNCTION CONNECTOR (PG)
J424 JUNCTION CONNECTOR (PH)
J425 JUNCTION CONNECTOR (PI)
J426 JUNCTION CONNECTOR (PJ)
J427 JUNCTION CONNECTOR (PK)
J428 JUNCTION CONNECTOR (PL)
J429 JUNCTION CONNECTOR (PM)
J430 JUNCTION CONNECTOR (PN)
J431 JUNCTION CONNECTOR (PO)
J432 JUNCTION CONNECTOR (PP)
J433 JUNCTION CONNECTOR (PQ)
J434 JUNCTION CONNECTOR (PR)
J435 JUNCTION CONNECTOR (PS)
J436 JUNCTION CONNECTOR (PT)
J437 JUNCTION CONNECTOR (PU)
J438 JUNCTION CONNECTOR (PV)
J439 JUNCTION CONNECTOR (PW)
J440 JUNCTION CONNECTOR (PX)
J441 JUNCTION CONNECTOR (PY)
J442 JUNCTION CONNECTOR (PZ)
J443 JUNCTION CONNECTOR (QA)
J444 JUNCTION CONNECTOR (QB)
J445 JUNCTION CONNECTOR (QC)
J446 JUNCTION CONNECTOR (QD)
J447 JUNCTION CONNECTOR (QE)
J448 JUNCTION CONNECTOR (QF)
J449 JUNCTION CONNECTOR (QG)
J450 JUNCTION CONNECTOR (QH)
J451 JUNCTION CONNECTOR (QI)
J452 JUNCTION CONNECTOR (QJ)
J453 JUNCTION CONNECTOR (QK)
J454 JUNCTION CONNECTOR (QL)
J455 JUNCTION CONNECTOR (QM)
J456 JUNCTION CONNECTOR (QN)
J457 JUNCTION CONNECTOR (QO)
J458 JUNCTION CONNECTOR (QP)
J459 JUNCTION CONNECTOR (QQ)
J460 JUNCTION CONNECTOR (QR)
J461 JUNCTION CONNECTOR (QS)
J462 JUNCTION CONNECTOR (QT)
J463 JUNCTION CONNECTOR (QU)
J464 JUNCTION CONNECTOR (QV)
J465 JUNCTION CONNECTOR (QW)
J466 JUNCTION CONNECTOR (QX)
J467 JUNCTION CONNECTOR (QY)
J468 JUNCTION CONNECTOR (QZ)
J469 JUNCTION CONNECTOR (RA)
J470 JUNCTION CONNECTOR (RB)
J471 JUNCTION CONNECTOR (RC)
J472 JUNCTION CONNECTOR (RD)
J473 JUNCTION CONNECTOR (RE)
J474 JUNCTION CONNECTOR (RF)
J475 JUNCTION CONNECTOR (RG)
J476 JUNCTION CONNECTOR (RH)
J477 JUNCTION CONNECTOR (RI)
J478 JUNCTION CONNECTOR (RJ)
J479 JUNCTION CONNECTOR (RK)
J480 JUNCTION CONNECTOR (RL)
J481 JUNCTION CONNECTOR (RM)
J482 JUNCTION CONNECTOR (RN)
J483 JUNCTION CONNECTOR (RO)
J484 JUNCTION CONNECTOR (RP)
J485 JUNCTION CONNECTOR (RQ)
J486 JUNCTION CONNECTOR (RR)
J487 JUNCTION CONNECTOR (RS)
J488 JUNCTION CONNECTOR (RT)
J489 JUNCTION CONNECTOR (RU)
J490 JUNCTION CONNECTOR (RV)
J491 JUNCTION CONNECTOR (RW)
J492 JUNCTION CONNECTOR (RX)
J493 JUNCTION CONNECTOR (RY)
J494 JUNCTION CONNECTOR (RZ)
J495 JUNCTION CONNECTOR (SA)
J496 JUNCTION CONNECTOR (SB)
J497 JUNCTION CONNECTOR (SC)
J498 JUNCTION CONNECTOR (SD)
J499 JUNCTION CONNECTOR (SE)
J500 JUNCTION CONNECTOR (SF)
J501 JUNCTION CONNECTOR (SG)
J502 JUNCTION CONNECTOR (SH)
J503 JUNCTION CONNECTOR (SI)
J504 JUNCTION CONNECTOR (SJ)
J505 JUNCTION CONNECTOR (SK)
J506 JUNCTION CONNECTOR (SL)
J507 JUNCTION CONNECTOR (SM)
J508 JUNCTION CONNECTOR (SN)
J509 JUNCTION CONNECTOR (SO)
J510 JUNCTION CONNECTOR (SP)
J511 JUNCTION CONNECTOR (SQ)
J512 JUNCTION CONNECTOR (SR)
J513 JUNCTION CONNECTOR (SS)
J514 JUNCTION CONNECTOR (ST)
J515 JUNCTION CONNECTOR (SU)
J516 JUNCTION CONNECTOR (SV)
J517 JUNCTION CONNECTOR (SW)
J518 JUNCTION CONNECTOR (SX)
J519 JUNCTION CONNECTOR (SY)
J520 JUNCTION CONNECTOR (SZ)
J521 JUNCTION CONNECTOR (TA)
J522 JUNCTION CONNECTOR (TB)
J523 JUNCTION CONNECTOR (TC)
J524 JUNCTION CONNECTOR (TD)
J525 JUNCTION CONNECTOR (TE)
J526 JUNCTION CONNECTOR (TF)
J527 JUNCTION CONNECTOR (TG)
J528 JUNCTION CONNECTOR (TH)
J529 JUNCTION CONNECTOR (TI)
J530 JUNCTION CONNECTOR (TJ)
J531 JUNCTION CONNECTOR (TK)
J532 JUNCTION CONNECTOR (TL)
J533 JUNCTION CONNECTOR (TM)
J534 JUNCTION CONNECTOR (TN)
J535 JUNCTION CONNECTOR (TO)
J536 JUNCTION CONNECTOR (TP)
J537 JUNCTION CONNECTOR (TQ)
J538 JUNCTION CONNECTOR (TR)
J539 JUNCTION CONNECTOR (TS)
J540 JUNCTION CONNECTOR (TT)
J541 JUNCTION CONNECTOR (TU)
J542 JUNCTION CONNECTOR (TV)
J543 JUNCTION CONNECTOR (TW)
J544 JUNCTION CONNECTOR (TX)
J545 JUNCTION CONNECTOR (TY)
J546 JUNCTION CONNECTOR (TZ)
J547 JUNCTION CONNECTOR (UA)
J548 JUNCTION CONNECTOR (UB)
J549 JUNCTION CONNECTOR (UC)
J550 JUNCTION CONNECTOR (UD)
J551 JUNCTION CONNECTOR (UE)
J552 JUNCTION CONNECTOR (UF)
J553 JUNCTION CONNECTOR (UG)
J554 JUNCTION CONNECTOR (UH)
J555 JUNCTION CONNECTOR (UI)
J556 JUNCTION CONNECTOR (UJ)
J557 JUNCTION CONNECTOR (UK)
J558 JUNCTION CONNECTOR (UL)
J559 JUNCTION CONNECTOR (UM)
J560 JUNCTION CONNECTOR (UN)
J561 JUNCTION CONNECTOR (UO)
J562 JUNCTION CONNECTOR (UP)
J563 JUNCTION CONNECTOR (UQ)
J564 JUNCTION CONNECTOR (UR)
J565 JUNCTION CONNECTOR (US)
J566 JUNCTION CONNECTOR (UT)
J567 JUNCTION CONNECTOR (UU)
J568 JUNCTION CONNECTOR (UV)
J569 JUNCTION CONNECTOR (UW)
J570 JUNCTION CONNECTOR (UX)
J571 JUNCTION CONNECTOR (UY)
J572 JUNCTION CONNECTOR (UZ)
J573 JUNCTION CONNECTOR (VA)
J574 JUNCTION CONNECTOR (VB)
J575 JUNCTION CONNECTOR (VC)
J576 JUNCTION CONNECTOR (VD)
J577 JUNCTION CONNECTOR (VE)
J578 JUNCTION CONNECTOR (VF)
J579 JUNCTION CONNECTOR (VG)
J580 JUNCTION CONNECTOR (VH)
J581 JUNCTION CONNECTOR (VI)
J582 JUNCTION CONNECTOR (VJ)
J583 JUNCTION CONNECTOR (VK)
J584 JUNCTION CONNECTOR (VL)
J585 JUNCTION CONNECTOR (VM)
J586 JUNCTION CONNECTOR (VN)
J587 JUNCTION CONNECTOR (VO)
J588 JUNCTION CONNECTOR (VP)
J589 JUNCTION CONNECTOR (VQ)
J590 JUNCTION CONNECTOR (VR)
J591 JUNCTION CONNECTOR (VS)
J592 JUNCTION CONNECTOR (VT)
J593 JUNCTION CONNECTOR (VU)
J594 JUNCTION CONNECTOR (VV)
J595 JUNCTION CONNECTOR (VW)
J596 JUNCTION CONNECTOR (VX)
J597 JUNCTION CONNECTOR (VY)
J598 JUNCTION CONNECTOR (VZ)
J599 JUNCTION CONNECTOR (WA)
J600 JUNCTION CONNECTOR (WB)
J601 JUNCTION CONNECTOR (WC)
J602 JUNCTION CONNECTOR (WD)
J603 JUNCTION CONNECTOR (WE)
J604 JUNCTION CONNECTOR (WF)
J605 JUNCTION CONNECTOR (WG)
J606 JUNCTION CONNECTOR (WH)
J607 JUNCTION CONNECTOR (WI)
J608 JUNCTION CONNECTOR (WJ)
J609 JUNCTION CONNECTOR (WK)
J610 JUNCTION CONNECTOR (WL)
J611 JUNCTION CONNECTOR (WM)
J612 JUNCTION CONNECTOR (WN)
J613 JUNCTION CONNECTOR (WO)
J614 JUNCTION CONNECTOR (WP)
J615 JUNCTION CONNECTOR (WQ)
J616 JUNCTION CONNECTOR (WR)
J617 JUNCTION CONNECTOR (WS)
J618 JUNCTION CONNECTOR (WT)
J619 JUNCTION CONNECTOR (WU)
J620 JUNCTION CONNECTOR (WV)
J621 JUNCTION CONNECTOR (WW)
J622 JUNCTION CONNECTOR (WX)
J623 JUNCTION CONNECTOR (WY)
J624 JUNCTION CONNECTOR (WZ)
J625 JUNCTION CONNECTOR (XA)
J626 JUNCTION CONNECTOR (XB)
J627 JUNCTION CONNECTOR (XC)
J628 JUNCTION CONNECTOR (XD)
J629 JUNCTION CONNECTOR (XE)
J630 JUNCTION CONNECTOR (XF)
J631 JUNCTION CONNECTOR (XG)
J632 JUNCTION CONNECTOR (XH)
J633 JUNCTION CONNECTOR (XI)
J634 JUNCTION CONNECTOR (XJ)
J635 JUNCTION CONNECTOR (XK)
J636 JUNCTION CONNECTOR (XL)
J637 JUNCTION CONNECTOR (XM)
J638 JUNCTION CONNECTOR (XN)
J639 JUNCTION CONNECTOR (XO)
J640 JUNCTION CONNECTOR (XP)
J641 JUNCTION CONNECTOR (XQ)
J642 JUNCTION CONNECTOR (XR)
J643 JUNCTION CONNECTOR (XS)
J644 JUNCTION CONNECTOR (XT)
J645 JUNCTION CONNECTOR (XU)
J646 JUNCTION CONNECTOR (XV)
J647 JUNCTION CONNECTOR (XW)
J648 JUNCTION CONNECTOR (XX)
J649 JUNCTION CONNECTOR (XY)
J650 JUNCTION CONNECTOR (XZ)
J651 JUNCTION CONNECTOR (YA)
J652 JUNCTION CONNECTOR (YB)
J653 JUNCTION CONNECTOR (YC)
J654 JUNCTION CONNECTOR (YD)
J655 JUNCTION CONNECTOR (YE)
J656 JUNCTION CONNECTOR (YF)
J657 JUNCTION CONNECTOR (YG)
J658 JUNCTION CONNECTOR (YH)
J659 JUNCTION CONNECTOR (YI)
J660 JUNCTION CONNECTOR (YJ)
J661 JUNCTION CONNECTOR (YK)
J662 JUNCTION CONNECTOR (YL)
J663 JUNCTION CONNECTOR (YM)
J664 JUNCTION CONNECTOR (YN)
J665 JUNCTION CONNECTOR (YO)
J666 JUNCTION CONNECTOR (YP)
J667 JUNCTION CONNECTOR (YQ)
J668 JUNCTION CONNECTOR (YR)
J669 JUNCTION CONNECTOR (YS)
J670 JUNCTION CONNECTOR (YT)
J671 JUNCTION CONNECTOR (YU)
J672 JUNCTION CONNECTOR (YV)
J673 JUNCTION CONNECTOR (YW)
J674 JUNCTION CONNECTOR (YX)
J675 JUNCTION CONNECTOR (YY)
J676 JUNCTION CONNECTOR (YZ)
J677 JUNCTION CONNECTOR (ZA)
J678 JUNCTION CONNECTOR (ZB)
J679 JUNCTION CONNECTOR (ZC)
J680 JUNCTION CONNECTOR (ZD)
J681 JUNCTION CONNECTOR (ZE)
J682 JUNCTION CONNECTOR (ZF)
J683 JUNCTION CONNECTOR (ZG)
J684 JUNCTION CONNECTOR (ZH)
J685 JUNCTION CONNECTOR (ZI)
J686 JUNCTION CONNECTOR (ZJ)
J687 JUNCTION CONNECTOR (ZK)
J688 JUNCTION CONNECTOR (ZL)
J689 JUNCTION CONNECTOR (ZM)
J690 JUNCTION CONNECTOR (ZN)
J691 JUNCTION CONNECTOR (ZO)
J692 JUNCTION CONNECTOR (ZP)
J693 JUNCTION CONNECTOR (ZQ)
J694 JUNCTION CONNECTOR (ZR)
J695 JUNCTION CONNECTOR (ZS)
J696 JUNCTION CONNECTOR (ZT)
J697 JUNCTION CONNECTOR (ZU)
J698 JUNCTION CONNECTOR (ZV)
J699 JUNCTION CONNECTOR (ZW)
J700 JUNCTION CONNECTOR (ZX)
J701 JUNCTION CONNECTOR (ZY)
J702 JUNCTION CONNECTOR (ZZ)
J703 JUNCTION CONNECTOR (AAA)
J704 JUNCTION CONNECTOR (AAB)
J705 JUNCTION CONNECTOR (AAC)
J706 JUNCTION CONNECTOR (AAD)
J707 JUNCTION CONNECTOR (AAE)
J708 JUNCTION CONNECTOR (AAF)
J709 JUNCTION CONNECTOR (AAG)
J710 JUNCTION CONNECTOR (AAH)
J711 JUNCTION CONNECTOR (AAI)
J712 JUNCTION CONNECTOR (AAJ)
J713 JUNCTION CONNECTOR (AAK)
J714 JUNCTION CONNECTOR (AAL)
J715 JUNCTION CONNECTOR (AAM)
J716 JUNCTION CONNECTOR (AAN)
J717 JUNCTION CONNECTOR (AAO)
J718 JUNCTION CONNECTOR (AAP)
J719 JUNCTION CONNECTOR (AAQ)
J720 JUNCTION CONNECTOR (AAR)
J721 JUNCTION CONNECTOR (AAS)
J722 JUNCTION CONNECTOR (AAT)
J723 JUNCTION CONNECTOR (AAU)
J724 JUNCTION CONNECTOR (AAV)
J725 JUNCTION CONNECTOR (AAW)
J726 JUNCTION CONNECTOR (AAX)
J727 JUNCTION CONNECTOR (AAY)
J728 JUNCTION CONNECTOR (AAZ)
J729 JUNCTION CONNECTOR (ABA)
J730 JUNCTION CONNECTOR (ABB)
J731 JUNCTION CONNECTOR (ABC)
J732 JUNCTION CONNECTOR (ABD)
J733 JUNCTION CONNECTOR (ABE)
J734 JUNCTION CONNECTOR (ABF)
J735 JUNCTION CONNECTOR (ABG)
J736 JUNCTION CONNECTOR (ABH

Rear Window Defogger | Front Wiper and Washer | Headlight Cleaner (Europe) | Rear Wiper and Washer | Back-Up Light | Stop Light | Accessory Meter

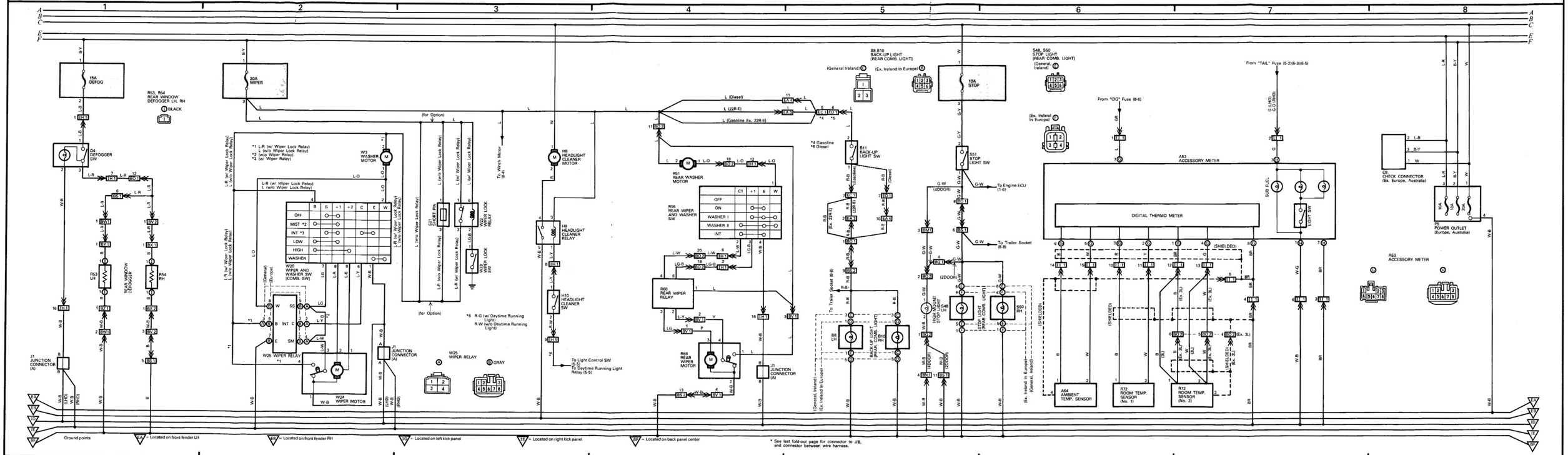

Front Fog Light (General)

Taillight and Illumination (Ex. Europe)

Headlight (Ex. Europe)

Headlight (Europe)

Interior Light

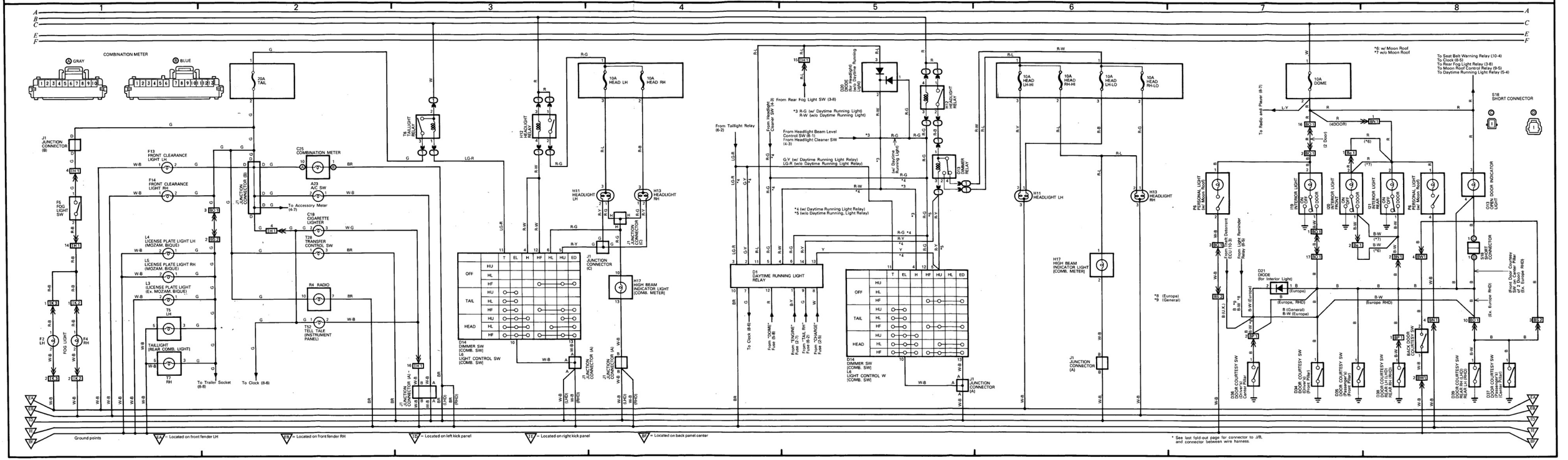

Taillight and Illumination (Europe)

Turn Signal and Hazard

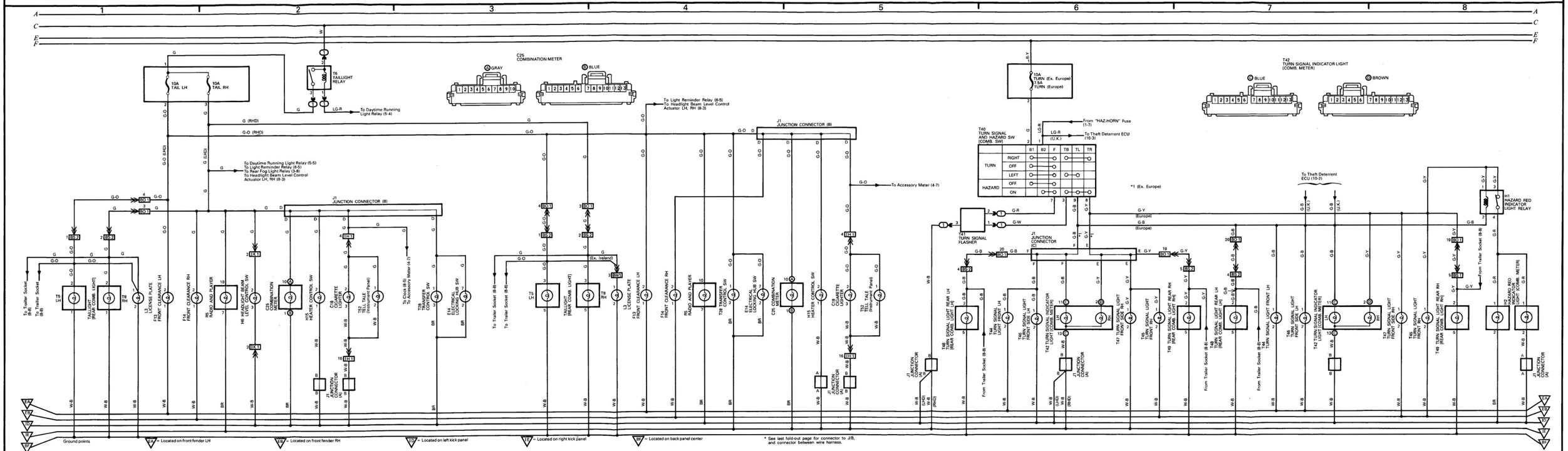
10A TAIL LH
10A TAIL RH
T9 TAILLIGHT RELAY
To Daytime Running Light Relay (5-4)
To Daytime Running Light Relay (5-5)
To Light Reminder Relay (8-5)
To Rear Fog Light Relay (3-8)
To Headlight Beam Level Control Actuator LH, RH (8-3)
To Light Reminder Relay (8-5)
To Headlight Beam Level Control Actuator LH, RH (8-3)
C26 COMBINATION METER
GRAY
BLUE
J1 JUNCTION CONNECTOR (B)
To Accessory Meter (4-7)
To Clock (8-5)
To Accessory Meter (4-7)
(Ex. Ireland)
To Trailer Socket (8-8)
To Trailer Socket (8-8)
TAILLIGHT (REAR COMB. LIGHT)
L3 LICENSE PLATE
F13 FRONT CLEARANCE LH
F14 FRONT CLEARANCE RH
R5 RADIO AND PLAYER
M1 HEADLIGHT BEAM LEVEL CONTROL SW
C25 COMBINATION METER
C18 CIGARETTE LIGHTER
H15 HEATER CONTROL SW
T32 TAIL (Instrument Panel)
T28 TRANSFER CONTROL SW
E14 ELECTRICAL LOCKING KLB SW
J1 JUNCTION CONNECTOR (A)
T40 TURN SIGNAL AND HAZARD SW (COMB. SW)
10A TURN (Ex. Europe) 7.5A TURN (Europe)
From "HAZ-HORN" Fuse (1-7)
To Theft Deterrent ECU (10-3)
(U.K.)
RIGHT
OFF
LEFT
OFF
HAZARD
ON
B1 B2 F TB TL TR
J1 JUNCTION CONNECTOR (C)
J1 JUNCTION CONNECTOR (D)
J1 JUNCTION CONNECTOR (E)
J1 JUNCTION CONNECTOR (F)
J1 JUNCTION CONNECTOR (G)
J1 JUNCTION CONNECTOR (H)
J1 JUNCTION CONNECTOR (I)
J1 JUNCTION CONNECTOR (J)
J1 JUNCTION CONNECTOR (K)
J1 JUNCTION CONNECTOR (L)
J1 JUNCTION CONNECTOR (M)
J1 JUNCTION CONNECTOR (N)
J1 JUNCTION CONNECTOR (O)
J1 JUNCTION CONNECTOR (P)
J1 JUNCTION CONNECTOR (Q)
J1 JUNCTION CONNECTOR (R)
J1 JUNCTION CONNECTOR (S)
J1 JUNCTION CONNECTOR (T)
J1 JUNCTION CONNECTOR (U)
J1 JUNCTION CONNECTOR (V)
J1 JUNCTION CONNECTOR (W)
J1 JUNCTION CONNECTOR (X)
J1 JUNCTION CONNECTOR (Y)
J1 JUNCTION CONNECTOR (Z)
J1 JUNCTION CONNECTOR (AA)
J1 JUNCTION CONNECTOR (AB)
J1 JUNCTION CONNECTOR (AC)
J1 JUNCTION CONNECTOR (AD)
J1 JUNCTION CONNECTOR (AE)
J1 JUNCTION CONNECTOR (AF)
J1 JUNCTION CONNECTOR (AG)
J1 JUNCTION CONNECTOR (AH)
J1 JUNCTION CONNECTOR (AI)
J1 JUNCTION CONNECTOR (AJ)
J1 JUNCTION CONNECTOR (AK)
J1 JUNCTION CONNECTOR (AL)
J1 JUNCTION CONNECTOR (AM)
J1 JUNCTION CONNECTOR (AN)
J1 JUNCTION CONNECTOR (AO)
J1 JUNCTION CONNECTOR (AP)
J1 JUNCTION CONNECTOR (AQ)
J1 JUNCTION CONNECTOR (AR)
J1 JUNCTION CONNECTOR (AS)
J1 JUNCTION CONNECTOR (AT)
J1 JUNCTION CONNECTOR (AU)
J1 JUNCTION CONNECTOR (AV)
J1 JUNCTION CONNECTOR (AW)
J1 JUNCTION CONNECTOR (AX)
J1 JUNCTION CONNECTOR (AY)
J1 JUNCTION CONNECTOR (AZ)
J1 JUNCTION CONNECTOR (BA)
J1 JUNCTION CONNECTOR (BB)
J1 JUNCTION CONNECTOR (BC)
J1 JUNCTION CONNECTOR (BD)
J1 JUNCTION CONNECTOR (BE)
J1 JUNCTION CONNECTOR (BF)
J1 JUNCTION CONNECTOR (BG)
J1 JUNCTION CONNECTOR (BH)
J1 JUNCTION CONNECTOR (BI)
J1 JUNCTION CONNECTOR (BJ)
J1 JUNCTION CONNECTOR (BK)
J1 JUNCTION CONNECTOR (BL)
J1 JUNCTION CONNECTOR (BM)
J1 JUNCTION CONNECTOR (BN)
J1 JUNCTION CONNECTOR (BO)
J1 JUNCTION CONNECTOR (BP)
J1 JUNCTION CONNECTOR (BQ)
J1 JUNCTION CONNECTOR (BR)
J1 JUNCTION CONNECTOR (BS)
J1 JUNCTION CONNECTOR (BT)
J1 JUNCTION CONNECTOR (BU)
J1 JUNCTION CONNECTOR (BV)
J1 JUNCTION CONNECTOR (BW)
J1 JUNCTION CONNECTOR (BX)
J1 JUNCTION CONNECTOR (BY)
J1 JUNCTION CONNECTOR (BZ)
J1 JUNCTION CONNECTOR (CA)
J1 JUNCTION CONNECTOR (CB)
J1 JUNCTION CONNECTOR (CC)
J1 JUNCTION CONNECTOR (CD)
J1 JUNCTION CONNECTOR (CE)
J1 JUNCTION CONNECTOR (CF)
J1 JUNCTION CONNECTOR (CG)
J1 JUNCTION CONNECTOR (CH)
J1 JUNCTION CONNECTOR (CI)
J1 JUNCTION CONNECTOR (CJ)
J1 JUNCTION CONNECTOR (CK)
J1 JUNCTION CONNECTOR (CL)
J1 JUNCTION CONNECTOR (CM)
J1 JUNCTION CONNECTOR (CN)
J1 JUNCTION CONNECTOR (CO)
J1 JUNCTION CONNECTOR (CP)
J1 JUNCTION CONNECTOR (CQ)
J1 JUNCTION CONNECTOR (CR)
J1 JUNCTION CONNECTOR (CS)
J1 JUNCTION CONNECTOR (CT)
J1 JUNCTION CONNECTOR (CU)
J1 JUNCTION CONNECTOR (CV)
J1 JUNCTION CONNECTOR (CW)
J1 JUNCTION CONNECTOR (CX)
J1 JUNCTION CONNECTOR (CY)
J1 JUNCTION CONNECTOR (CZ)
J1 JUNCTION CONNECTOR (DA)
J1 JUNCTION CONNECTOR (DB)
J1 JUNCTION CONNECTOR (DC)
J1 JUNCTION CONNECTOR (DD)
J1 JUNCTION CONNECTOR (DE)
J1 JUNCTION CONNECTOR (DF)
J1 JUNCTION CONNECTOR (DG)
J1 JUNCTION CONNECTOR (DH)
J1 JUNCTION CONNECTOR (DI)
J1 JUNCTION CONNECTOR (DJ)
J1 JUNCTION CONNECTOR (DK)
J1 JUNCTION CONNECTOR (DL)
J1 JUNCTION CONNECTOR (DM)
J1 JUNCTION CONNECTOR (DN)
J1 JUNCTION CONNECTOR (DO)
J1 JUNCTION CONNECTOR (DP)
J1 JUNCTION CONNECTOR (DQ)
J1 JUNCTION CONNECTOR (DR)
J1 JUNCTION CONNECTOR (DS)
J1 JUNCTION CONNECTOR (DT)
J1 JUNCTION CONNECTOR (DU)
J1 JUNCTION CONNECTOR (DV)
J1 JUNCTION CONNECTOR (DW)
J1 JUNCTION CONNECTOR (DX)
J1 JUNCTION CONNECTOR (DY)
J1 JUNCTION CONNECTOR (DZ)
J1 JUNCTION CONNECTOR (EA)
J1 JUNCTION CONNECTOR (EB)
J1 JUNCTION CONNECTOR (EC)
J1 JUNCTION CONNECTOR (ED)
J1 JUNCTION CONNECTOR (EE)
J1 JUNCTION CONNECTOR (EF)
J1 JUNCTION CONNECTOR (EG)
J1 JUNCTION CONNECTOR (EH)
J1 JUNCTION CONNECTOR (EI)
J1 JUNCTION CONNECTOR (EJ)
J1 JUNCTION CONNECTOR (EK)
J1 JUNCTION CONNECTOR (EL)
J1 JUNCTION CONNECTOR (EM)
J1 JUNCTION CONNECTOR (EN)
J1 JUNCTION CONNECTOR (EO)
J1 JUNCTION CONNECTOR (EP)
J1 JUNCTION CONNECTOR (EQ)
J1 JUNCTION CONNECTOR (ER)
J1 JUNCTION CONNECTOR (ES)
J1 JUNCTION CONNECTOR (ET)
J1 JUNCTION CONNECTOR (EU)
J1 JUNCTION CONNECTOR (EV)
J1 JUNCTION CONNECTOR (EW)
J1 JUNCTION CONNECTOR (EX)
J1 JUNCTION CONNECTOR (EY)
J1 JUNCTION CONNECTOR (EZ)
J1 JUNCTION CONNECTOR (FA)
J1 JUNCTION CONNECTOR (FB)
J1 JUNCTION CONNECTOR (FC)
J1 JUNCTION CONNECTOR (FD)
J1 JUNCTION CONNECTOR (FE)
J1 JUNCTION CONNECTOR (FF)
J1 JUNCTION CONNECTOR (FG)
J1 JUNCTION CONNECTOR (FH)
J1 JUNCTION CONNECTOR (FI)
J1 JUNCTION CONNECTOR (FJ)
J1 JUNCTION CONNECTOR (FK)
J1 JUNCTION CONNECTOR (FL)
J1 JUNCTION CONNECTOR (FM)
J1 JUNCTION CONNECTOR (FN)
J1 JUNCTION CONNECTOR (FO)
J1 JUNCTION CONNECTOR (FP)
J1 JUNCTION CONNECTOR (FQ)
J1 JUNCTION CONNECTOR (FR)
J1 JUNCTION CONNECTOR (FS)
J1 JUNCTION CONNECTOR (FT)
J1 JUNCTION CONNECTOR (FU)
J1 JUNCTION CONNECTOR (FV)
J1 JUNCTION CONNECTOR (FW)
J1 JUNCTION CONNECTOR (FX)
J1 JUNCTION CONNECTOR (FY)
J1 JUNCTION CONNECTOR (FZ)
J1 JUNCTION CONNECTOR (GA)
J1 JUNCTION CONNECTOR (GB)
J1 JUNCTION CONNECTOR (GC)
J1 JUNCTION CONNECTOR (GD)
J1 JUNCTION CONNECTOR (GE)
J1 JUNCTION CONNECTOR (GF)
J1 JUNCTION CONNECTOR (GG)
J1 JUNCTION CONNECTOR (GH)
J1 JUNCTION CONNECTOR (GI)
J1 JUNCTION CONNECTOR (GJ)
J1 JUNCTION CONNECTOR (GK)
J1 JUNCTION CONNECTOR (GL)
J1 JUNCTION CONNECTOR (GM)
J1 JUNCTION CONNECTOR (GN)
J1 JUNCTION CONNECTOR (GO)
J1 JUNCTION CONNECTOR (GP)
J1 JUNCTION CONNECTOR (GQ)
J1 JUNCTION CONNECTOR (GR)
J1 JUNCTION CONNECTOR (GS)
J1 JUNCTION CONNECTOR (GT)
J1 JUNCTION CONNECTOR (GU)
J1 JUNCTION CONNECTOR (GV)
J1 JUNCTION CONNECTOR (GW)
J1 JUNCTION CONNECTOR (GX)
J1 JUNCTION CONNECTOR (GY)
J1 JUNCTION CONNECTOR (GZ)
J1 JUNCTION CONNECTOR (HA)
J1 JUNCTION CONNECTOR (HB)
J1 JUNCTION CONNECTOR (HC)
J1 JUNCTION CONNECTOR (HD)
J1 JUNCTION CONNECTOR (HE)
J1 JUNCTION CONNECTOR (HF)
J1 JUNCTION CONNECTOR (HG)
J1 JUNCTION CONNECTOR (HH)
J1 JUNCTION CONNECTOR (HI)
J1 JUNCTION CONNECTOR (HJ)
J1 JUNCTION CONNECTOR (HK)
J1 JUNCTION CONNECTOR (HL)
J1 JUNCTION CONNECTOR (HM)
J1 JUNCTION CONNECTOR (HN)
J1 JUNCTION CONNECTOR (HO)
J1 JUNCTION CONNECTOR (HP)
J1 JUNCTION CONNECTOR (HQ)
J1 JUNCTION CONNECTOR (HR)
J1 JUNCTION CONNECTOR (HS)
J1 JUNCTION CONNECTOR (HT)
J1 JUNCTION CONNECTOR (HU)
J1 JUNCTION CONNECTOR (HV)
J1 JUNCTION CONNECTOR (HW)
J1 JUNCTION CONNECTOR (HX)
J1 JUNCTION CONNECTOR (HY)
J1 JUNCTION CONNECTOR (HZ)
J1 JUNCTION CONNECTOR (IA)
J1 JUNCTION CONNECTOR (IB)
J1 JUNCTION CONNECTOR (IC)
J1 JUNCTION CONNECTOR (ID)
J1 JUNCTION CONNECTOR (IE)
J1 JUNCTION CONNECTOR (IF)
J1 JUNCTION CONNECTOR (IG)
J1 JUNCTION CONNECTOR (IH)
J1 JUNCTION CONNECTOR (II)
J1 JUNCTION CONNECTOR (IJ)
J1 JUNCTION CONNECTOR (IK)
J1 JUNCTION CONNECTOR (IL)
J1 JUNCTION CONNECTOR (IM)
J1 JUNCTION CONNECTOR (IN)
J1 JUNCTION CONNECTOR (IO)
J1 JUNCTION CONNECTOR (IP)
J1 JUNCTION CONNECTOR (IQ)
J1 JUNCTION CONNECTOR (IR)
J1 JUNCTION CONNECTOR (IS)
J1 JUNCTION CONNECTOR (IT)
J1 JUNCTION CONNECTOR (IU)
J1 JUNCTION CONNECTOR (IV)
J1 JUNCTION CONNECTOR (IW)
J1 JUNCTION CONNECTOR (IX)
J1 JUNCTION CONNECTOR (IY)
J1 JUNCTION CONNECTOR (IZ)
J1 JUNCTION CONNECTOR (JA)
J1 JUNCTION CONNECTOR (JB)
J1 JUNCTION CONNECTOR (JC)
J1 JUNCTION CONNECTOR (JD)
J1 JUNCTION CONNECTOR (JE)
J1 JUNCTION CONNECTOR (JF)
J1 JUNCTION CONNECTOR (JG)
J1 JUNCTION CONNECTOR (JH)
J1 JUNCTION CONNECTOR (JI)
J1 JUNCTION CONNECTOR (JJ)
J1 JUNCTION CONNECTOR (JK)
J1 JUNCTION CONNECTOR (JL)
J1 JUNCTION CONNECTOR (JM)
J1 JUNCTION CONNECTOR (JN)
J1 JUNCTION CONNECTOR (JO)
J1 JUNCTION CONNECTOR (JP)
J1 JUNCTION CONNECTOR (JQ)
J1 JUNCTION CONNECTOR (JR)
J1 JUNCTION CONNECTOR (JS)
J1 JUNCTION CONNECTOR (JT)
J1 JUNCTION CONNECTOR (JU)
J1 JUNCTION CONNECTOR (JV)
J1 JUNCTION CONNECTOR (JW)
J1 JUNCTION CONNECTOR (JX)
J1 JUNCTION CONNECTOR (JY)
J1 JUNCTION CONNECTOR (JZ)
J1 JUNCTION CONNECTOR (KA)
J1 JUNCTION CONNECTOR (KB)
J1 JUNCTION CONNECTOR (KC)
J1 JUNCTION CONNECTOR (KD)
J1 JUNCTION CONNECTOR (KE)
J1 JUNCTION CONNECTOR (KF)
J1 JUNCTION CONNECTOR (KG)
J1 JUNCTION CONNECTOR (KH)
J1 JUNCTION CONNECTOR (KI)
J1 JUNCTION CONNECTOR (KJ)
J1 JUNCTION CONNECTOR (KK)
J1 JUNCTION CONNECTOR (KL)
J1 JUNCTION CONNECTOR (KM)
J1 JUNCTION CONNECTOR (KN)
J1 JUNCTION CONNECTOR (KO)
J1 JUNCTION CONNECTOR (KP)
J1 JUNCTION CONNECTOR (KQ)
J1 JUNCTION CONNECTOR (KR)
J1 JUNCTION CONNECTOR (KS)
J1 JUNCTION CONNECTOR (KT)
J1 JUNCTION CONNECTOR (KU)
J1 JUNCTION CONNECTOR (KV)
J1 JUNCTION CONNECTOR (KW)
J1 JUNCTION CONNECTOR (KX)
J1 JUNCTION CONNECTOR (KY)
J1 JUNCTION CONNECTOR (KZ)
J1 JUNCTION CONNECTOR (LA)
J1 JUNCTION CONNECTOR (LB)
J1 JUNCTION CONNECTOR (LC)
J1 JUNCTION CONNECTOR (LD)
J1 JUNCTION CONNECTOR (LE)
J1 JUNCTION CONNECTOR (LF)
J1 JUNCTION CONNECTOR (LG)
J1 JUNCTION CONNECTOR (LH)
J1 JUNCTION CONNECTOR (LI)
J1 JUNCTION CONNECTOR (LJ)
J1 JUNCTION CONNECTOR (LK)
J1 JUNCTION CONNECTOR (LL)
J1 JUNCTION CONNECTOR (LM)
J1 JUNCTION CONNECTOR (LN)
J1 JUNCTION CONNECTOR (LO)
J1 JUNCTION CONNECTOR (LP)
J1 JUNCTION CONNECTOR (LQ)
J1 JUNCTION CONNECTOR (LR)
J1 JUNCTION CONNECTOR (LS)
J1 JUNCTION CONNECTOR (LT)
J1 JUNCTION CONNECTOR (LU)
J1 JUNCTION CONNECTOR (LV)
J1 JUNCTION CONNECTOR (LW)
J1 JUNCTION CONNECTOR (LX)
J1 JUNCTION CONNECTOR (LY)
J1 JUNCTION CONNECTOR (LZ)
J1 JUNCTION CONNECTOR (MA)
J1 JUNCTION CONNECTOR (MB)
J1 JUNCTION CONNECTOR (MC)
J1 JUNCTION CONNECTOR (MD)
J1 JUNCTION CONNECTOR (ME)
J1 JUNCTION CONNECTOR (MF)
J1 JUNCTION CONNECTOR (MG)
J1 JUNCTION CONNECTOR (MH)
J1 JUNCTION CONNECTOR (MI)
J1 JUNCTION CONNECTOR (MJ)
J1 JUNCTION CONNECTOR (MK)
J1 JUNCTION CONNECTOR (ML)
J1 JUNCTION CONNECTOR (MM)
J1 JUNCTION CONNECTOR (MN)
J1 JUNCTION CONNECTOR (MO)
J1 JUNCTION CONNECTOR (MP)
J1 JUNCTION CONNECTOR (MQ)
J1 JUNCTION CONNECTOR (MR)
J1 JUNCTION CONNECTOR (MS)
J1 JUNCTION CONNECTOR (MT)
J1 JUNCTION CONNECTOR (MU)
J1 JUNCTION CONNECTOR (MV)
J1 JUNCTION CONNECTOR (MW)
J1 JUNCTION CONNECTOR (MX)
J1 JUNCTION CONNECTOR (MY)
J1 JUNCTION CONNECTOR (MZ)
J1 JUNCTION CONNECTOR (NA)
J1 JUNCTION CONNECTOR (NB)
J1 JUNCTION CONNECTOR (NC)
J1 JUNCTION CONNECTOR (ND)
J1 JUNCTION CONNECTOR (NE)
J1 JUNCTION CONNECTOR (NF)
J1 JUNCTION CONNECTOR (NG)
J1 JUNCTION CONNECTOR (NH)
J1 JUNCTION CONNECTOR (NI)
J1 JUNCTION CONNECTOR (NJ)
J1 JUNCTION CONNECTOR (NK)
J1 JUNCTION CONNECTOR (NL)
J1 JUNCTION CONNECTOR (NM)
J1 JUNCTION CONNECTOR (NN)
J1 JUNCTION CONNECTOR (NO)
J1 JUNCTION CONNECTOR (NP)
J1 JUNCTION CONNECTOR (NQ)
J1 JUNCTION CONNECTOR (NR)
J1 JUNCTION CONNECTOR (NS)
J1 JUNCTION CONNECTOR (NT)
J1 JUNCTION CONNECTOR (NU)
J1 JUNCTION CONNECTOR (NV)
J1 JUNCTION CONNECTOR (NW)
J1 JUNCTION CONNECTOR (NX)
J1 JUNCTION CONNECTOR (NY)
J1 JUNCTION CONNECTOR (NZ)
J1 JUNCTION CONNECTOR (OA)
J1 JUNCTION CONNECTOR (OB)
J1 JUNCTION CONNECTOR (OC)
J1 JUNCTION CONNECTOR (OD)
J1 JUNCTION CONNECTOR (OE)
J1 JUNCTION CONNECTOR (OF)
J1 JUNCTION CONNECTOR (OG)
J1 JUNCTION CONNECTOR (OH)
J1 JUNCTION CONNECTOR (OI)
J1 JUNCTION CONNECTOR (OJ)
J1 JUNCTION CONNECTOR (OK)
J1 JUNCTION CONNECTOR (OL)
J1 JUNCTION CONNECTOR (OM)
J1 JUNCTION CONNECTOR (ON)
J1 JUNCTION CONNECTOR (OO)
J1 JUNCTION CONNECTOR (OP)
J1 JUNCTION CONNECTOR (OQ)
J1 JUNCTION CONNECTOR (OR)
J1 JUNCTION CONNECTOR (OS)
J1 JUNCTION CONNECTOR (OT)
J1 JUNCTION CONNECTOR (OU)
J1 JUNCTION CONNECTOR (OV)
J1 JUNCTION CONNECTOR (OW)
J1 JUNCTION CONNECTOR (OX)
J1 JUNCTION CONNECTOR (OY)
J1 JUNCTION CONNECTOR (OZ)
J1 JUNCTION CONNECTOR (PA)
J1 JUNCTION CONNECTOR (PB)
J1 JUNCTION CONNECTOR (PC)
J1 JUNCTION CONNECTOR (PD)
J1 JUNCTION CONNECTOR (PE)
J1 JUNCTION CONNECTOR (PF)
J1 JUNCTION CONNECTOR (PG)
J1 JUNCTION CONNECTOR (PH)
J1 JUNCTION CONNECTOR (PI)
J1 JUNCTION CONNECTOR (PJ)
J1 JUNCTION CONNECTOR (PK)
J1 JUNCTION CONNECTOR (PL)
J1 JUNCTION CONNECTOR (PM)
J1 JUNCTION CONNECTOR (PN)
J1 JUNCTION CONNECTOR (PO)
J1 JUNCTION CONNECTOR (PP)
J1 JUNCTION CONNECTOR (PQ)
J1 JUNCTION CONNECTOR (PR)
J1 JUNCTION CONNECTOR (PS)
J1 JUNCTION CONNECTOR (PT)
J1 JUNCTION CONNECTOR (PU)
J1 JUNCTION CONNECTOR (PV)
J1 JUNCTION CONNECTOR (PW)
J1 JUNCTION CONNECTOR (PX)
J1 JUNCTION CONNECTOR (PY)
J1 JUNCTION CONNECTOR (PZ)
J1 JUNCTION CONNECTOR (QA)
J1 JUNCTION CONNECTOR (QB)
J1 JUNCTION CONNECTOR (QC)
J1 JUNCTION CONNECTOR (QD)
J1 JUNCTION CONNECTOR (QE)
J1 JUNCTION CONNECTOR (QF)
J1 JUNCTION CONNECTOR (QG)
J1 JUNCTION CONNECTOR (QH)
J1 JUNCTION CONNECTOR (QI)
J1 JUNCTION CONNECTOR (QJ)
J1 JUNCTION CONNECTOR (QK)
J1 JUNCTION CONNECTOR (QL)
J1 JUNCTION CONNECTOR (QM)
J1 JUNCTION CONNECTOR (QN)
J1 JUNCTION CONNECTOR (QO)
J1 JUNCTION CONNECTOR (QP)
J1 JUNCTION CONNECTOR (QQ)
J1 JUNCTION CONNECTOR (QR)
J1 JUNCTION CONNECTOR (QS)
J1 JUNCTION CONNECTOR (QT)
J1 JUNCTION CONNECTOR (QU)
J1 JUNCTION CONNECTOR (QV)
J1 JUNCTION CONNECTOR (QW)
J1 JUNCTION CONNECTOR (QX)
J1 JUNCTION CONNECTOR (QY)
J1 JUNCTION CONNECTOR (QZ)
J1 JUNCTION CONNECTOR (RA)
J1 JUNCTION CONNECTOR (RB)
J1 JUNCTION CONNECTOR (RC)
J1 JUNCTION CONNECTOR (RD)
J1 JUNCTION CONNECTOR (RE)
J1 JUNCTION CONNECTOR (RF)
J1 JUNCTION CONNECTOR (RG)
J1 JUNCTION CONNECTOR (RH)
J1 JUNCTION CONNECTOR (RI)
J1 JUNCTION CONNECTOR (RJ)
J1 JUNCTION CONNECTOR (RK)
J1 JUNCTION CONNECTOR (RL)
J1 JUNCTION CONNECTOR (RM)
J1 JUNCTION CONNECTOR (RN)
J1 JUNCTION CONNECTOR (RO)
J1 JUNCTION CONNECTOR (RP)
J1 JUNCTION CONNECTOR (RQ)
J1 JUNCTION CONNECTOR (RR)
J1 JUNCTION CONNECTOR (RS)
J1 JUNCTION CONNECTOR (RT)
J1 JUNCTION CONNECTOR (RU)
J1 JUNCTION CONNECTOR (RV)
J1 JUNCTION CONNECTOR (RW)
J1 JUNCTION CONNECTOR (RX)
J1 JUNCTION CONNECTOR (RY)
J1 JUNCTION CONNECTOR (RZ)
J1 JUNCTION CONNECTOR (SA)
J1 JUNCTION CONNECTOR (SB)
J1 JUNCTION CONNECTOR (SC)
J1 JUNCTION CONNECTOR (SD)
J1 JUNCTION CONNECTOR (SE)
J1 JUNCTION CONNECTOR (SF)
J1 JUNCTION CONNECTOR (SG)
J1 JUNCTION CONNECTOR (SH)
J1 JUNCTION CONNECTOR (SI)
J1 JUNCTION CONNECTOR (SJ)
J1 JUNCTION CONNECTOR (SK)
J1 JUNCTION CONNECTOR (SL)
J1 JUNCTION CONNECTOR (SM)
J1 JUNCTION CONNECTOR (SN)
J1 JUNCTION CONNECTOR (SO)
J1 JUNCTION CONNECTOR (SP)
J1 JUNCTION CONNECTOR (SQ)
J1 JUNCTION CONNECTOR (SR)
J1 JUNCTION CONNECTOR (SS)
J1 JUNCTION CONNECTOR (ST)
J1 JUNCTION CONNECTOR (SU)
J1 JUNCTION CONNECTOR (SV)
J1 JUNCTION CONNECTOR (SW)
J1 JUNCTION CONNECTOR (SX)
J1 JUNCTION CONNECTOR (SY)
J1 JUNCTION CONNECTOR (SZ)
J1 JUNCTION CONNECTOR (TA)
J1 JUNCTION CONNECTOR (TB)
J1 JUNCTION CONNECTOR (TC)
J1 JUNCTION CONNECTOR (TD)
J1 JUNCTION CONNECTOR (TE)
J1 JUNCTION CONNECTOR (TF)
J1 JUNCTION CONNECTOR (TG)
J1 JUNCTION CONNECTOR (TH)
J1 JUNCTION CONNECTOR (TI)
J1 JUNCTION CONNECTOR (TJ)
J1 JUNCTION CONNECTOR (TK)
J1 JUNCTION CONNECTOR (TL)
J1 JUNCTION CONNECTOR (TM)
J1 JUNCTION CONNECTOR (TN)
J1 JUNCTION CONNECTOR (TO)
J1 JUNCTION CONNECTOR (TP)
J1 JUNCTION CONNECTOR (TQ)
J1 JUNCTION CONNECTOR (TR)
J1 JUNCTION CONNECTOR (TS)
J1 JUNCTION CONNECTOR (TT)
J1 JUNCTION CONNECTOR (TU)
J1 JUNCTION CONNECTOR (TV)
J1 JUNCTION CONNECTOR (TW)
J1 JUNCTION CONNECTOR (TX)
J1 JUNCTION CONNECTOR (TY)
J1 JUNCTION CONNECTOR (TZ)
J1 JUNCTION CONNECTOR (UA)
J1 JUNCTION CONNECTOR (UB)
J1 JUNCTION CONNECTOR (UC)
J1 JUNCTION CONNECTOR (UD)
J1 JUNCTION CONNECTOR (UE)
J1 JUNCTION CONNECTOR (UF)
J1 JUNCTION CONNECTOR (UG)
J1 JUNCTION CONNECTOR (UH)
J1 JUNCTION CONNECTOR (UI)
J1 JUNCTION CONNECTOR (UJ)
J1 JUNCTION CONNECTOR (UK)
J1 JUNCTION CONNECTOR (UL)
J1 JUNCTION CONNECTOR (UM)
J1 JUNCTION CONNECTOR (UN)
J1 JUNCTION CONNECTOR (UO)
J1 JUNCTION CONNECTOR (UP)
J1 JUNCTION CONNECTOR (UQ)
J1 JUNCTION CONNECTOR (UR)
J1 JUNCTION CONNECTOR (US)
J1 JUNCTION CONNECTOR (UT)
J1 JUNCTION CONNECTOR (UU)
J1 JUNCTION CONNECTOR (UV)
J1 JUNCTION CONNECTOR (UW)
J1 JUNCTION CONNECTOR (UX)
J1 JUNCTION CONNECTOR (UY)
J1 JUNCTION CONNECTOR (UZ)
J1 JUNCTION CONNECTOR (VA)
J1 JUNCTION CONNECTOR (VB)
J1 JUNCTION CONNECTOR (VC)
J1 JUNCTION CONNECTOR (VD)
J1 JUNCTION CONNECTOR (VE)
J1 JUNCTION CONNECTOR (VF)
J1 JUNCTION CONNECTOR (VG)
J1 JUNCTION CONNECTOR (VH)
J1 JUNCTION CONNECTOR (VI)
J1 JUNCTION CONNECTOR (VJ)
J1 JUNCTION CONNECTOR (VK)
J1 JUNCTION CONNECTOR (VL)
J1 JUNCTION CONNECTOR (VM)
J1 JUNCTION CONNECTOR (VN)
J1 JUNCTION CONNECTOR (VO)
J1 JUNCTION CONNECTOR (VP)
J1 JUNCTION CONNECTOR (VQ)
J1 JUNCTION CONNECTOR (VR)
J1 JUNCTION CONNECTOR (VS)
J1 JUNCTION CONNECTOR (VT)
J1 JUNCTION CONNECTOR (VU)
J1 JUNCTION CONNECTOR (VV)
J1 JUNCTION CONNECTOR (VW)
J1 JUNCTION CONNECTOR (VX)
J1 JUNCTION CONNECTOR (VY)
J1 JUNCTION CONNECTOR (VZ)
J1 JUNCTION CONNECTOR (WA)
J1 JUNCTION CONNECTOR (WB)
J1 JUNCTION CONNECTOR (WC)
J1 JUNCTION CONNECTOR (WD)
J1 JUNCTION CONNECTOR (WE)
J1 JUNCTION CONNECTOR (WF)
J1 JUNCTION CONNECTOR (WG)
J1 JUNCTION CONNECTOR (WH)
J1 JUNCTION CONNECTOR (WI)
J1 JUNCTION CONNECTOR (WJ)
J1 JUNCTION CONNECTOR (WK)
J1 JUNCTION CONNECTOR (WL)
J1 JUNCTION CONNECTOR (WM)
J1 JUNCTION CONNECTOR (WN)
J1 JUNCTION CONNECTOR (WO)
J1 JUNCTION CONNECTOR (WP)
J1 JUNCTION CONNECTOR (WQ)
J1 JUNCTION CONNECTOR (WR)
J1 JUNCTION CONNECTOR (WS)
J1 JUNCTION CONNECTOR (WT)
J1 JUNCTION CONNECTOR (WU)
J1 JUNCTION CONNECTOR (WV)
J1 JUNCTION CONNECTOR (WW)
J1 JUNCTION CONNECTOR (WX)
J1 JUNCTION CONNECTOR (WY)
J1 JUNCTION CONNECTOR (WZ)
J1 JUNCTION CONNECTOR (XA)
J1 JUNCTION CONNECTOR (XB)
J1 JUNCTION CONNECTOR (XC)
J1 JUNCTION CONNECTOR (XD)
J1 JUNCTION CONNECTOR (XE)
J1 JUNCTION CONNECTOR (XF)
J1 JUNCTION CONNECTOR (XG)
J1 JUNCTION CONNECTOR (XH)
J1 JUNCTION CONNECTOR (XI)
J1 JUNCTION CONNECTOR (XJ)
J1 JUNCTION CONNECTOR (XK)
J1 JUNCTION CONNECTOR (XL)
J1 JUNCTION CONNECTOR (XM)
J1 JUNCTION CONNECTOR (XN)
J1 JUNCTION CONNECTOR (XO)
J1 JUNCTION CONNECTOR (XP)
J1 JUNCTION CONNECTOR (XQ)
J1 JUNCTION CONNECTOR (XR)
J1 JUNCTION CONNECTOR (XS)
J1 JUNCTION CONNECTOR (XT)
J1 JUNCTION CONNECTOR (XU)
J1 JUNCTION CONNECTOR (XV)
J1 JUNCTION CONNECTOR (XW)
J1 JUNCTION CONNECTOR (XX)
J1 JUNCTION CONNECTOR (XY)
J1 JUNCTION CONNECTOR (XZ)
J1 JUNCTION CONNECTOR (YA)
J1 JUNCTION CONNECTOR (YB)
J1 JUNCTION CONNECTOR (YC)
J1 JUNCTION CONNECTOR (YD)
J1 JUNCTION CONNECTOR (YE)
J1 JUNCTION CONNECTOR (YF)
J1 JUNCTION CONNECTOR (YG)
J1 JUNCTION CONNECTOR (YH)
J1 JUNCTION CONNECTOR (YI)
J1 JUNCTION CONNECTOR (YJ)
J1 JUNCTION CONNECTOR (YK)
J1 JUNCTION CONNECTOR (YL)
J1 JUNCTION CONNECTOR (YM)
J1 JUNCTION CONNECTOR (YN)
J1 JUNCTION CONNECTOR (YO)
J1 JUNCTION CONNECTOR (YP)
J1 JUNCTION CONNECTOR (YQ)
J1 JUNCTION CONNECTOR (YR)
J1 JUNCTION CONNECTOR (YS)
J1 JUNCTION CONNECTOR (YT)
J1 JUNCTION CONNECTOR (YU)
J1 JUNCTION CONNECTOR (YV)
J1 JUNCTION CONNECTOR (YW)
J1 JUNCTION CONNECTOR (YX)
J1 JUNCTION CONNECTOR (YY)
J1 JUNCTION CONNECTOR (YZ)
J1 JUNCTION CONNECTOR (ZA)
J1 JUNCTION CONNECTOR (ZB)
J1 JUNCTION CONNECTOR (ZC)
J1 JUNCTION CONNECTOR (ZD)
J1 JUNCTION CONNECTOR (ZE)
J1 JUNCTION CONNECTOR (ZF)
J1 JUNCTION CONNECTOR (ZG)
J1 JUNCTION CONNECTOR (ZH)
J1 JUNCTION CONNECTOR (ZI)
J1 JUNCTION CONNECTOR (ZJ)
J1 JUNCTION CONNECTOR (ZK)
J1 JUNCTION CONNECTOR (ZL)
J1 JUNCTION CONNECTOR (ZM)
J1 JUNCTION CONNECTOR (ZN)
J1 JUNCTION CONNECTOR (ZO)
J1 JUNCTION CONNECTOR (ZP)
J1 JUNCTION CONNECTOR (ZQ)
J1 JUNCTION CONNECTOR (ZR)
J1 JUNCTION CONNECTOR (ZS)
J1 JUNCTION CONNECTOR (ZT)
J1 JUNCTION CONNECTOR (ZU)
J1 JUNCTION CONNECTOR (ZV)
J1 JUNCTION CONNECTOR (ZW)
J1 JUNCTION CONNECTOR (ZX)
J1 JUNCTION CONNECTOR (ZY)
J1 JUNCTION CONNECTOR (ZZ)
J1 JUNCTION CONNECTOR (AAA)
J1 JUNCTION CONNECTOR (AAB)
J1 JUNCTION CONNECTOR (AAC)
J1 JUNCTION CONNECTOR (AAD)
J1 JUNCTION CONNECTOR (AAE)
J1 JUNCTION CONNECTOR (AAF)
J1 JUNCTION CONNECTOR (AAG)
J1 JUNCTION CONNECTOR (AAH)
J1 JUNCTION CONNECTOR (AAI)
J1 JUNCTION CONNECTOR (AAJ)
J1 JUNCTION CONNECTOR (AAK)
J1 JUNCTION CONNECTOR (AAL)
J1 JUNCTION CONNECTOR (AAM)
J1 JUNCTION CONNECTOR (AAN)
J1 JUNCTION CONNECTOR (AAO)
J1 JUNCTION CONNECTOR (AAP)
J1 JUNCTION CONNECTOR (AAQ)
J1 JUNCTION CONNECTOR (AAR)
J1 JUNCTION CONNECTOR (AAS)

4WD

Door Lock

Fuel Heater (2L-T Europe)

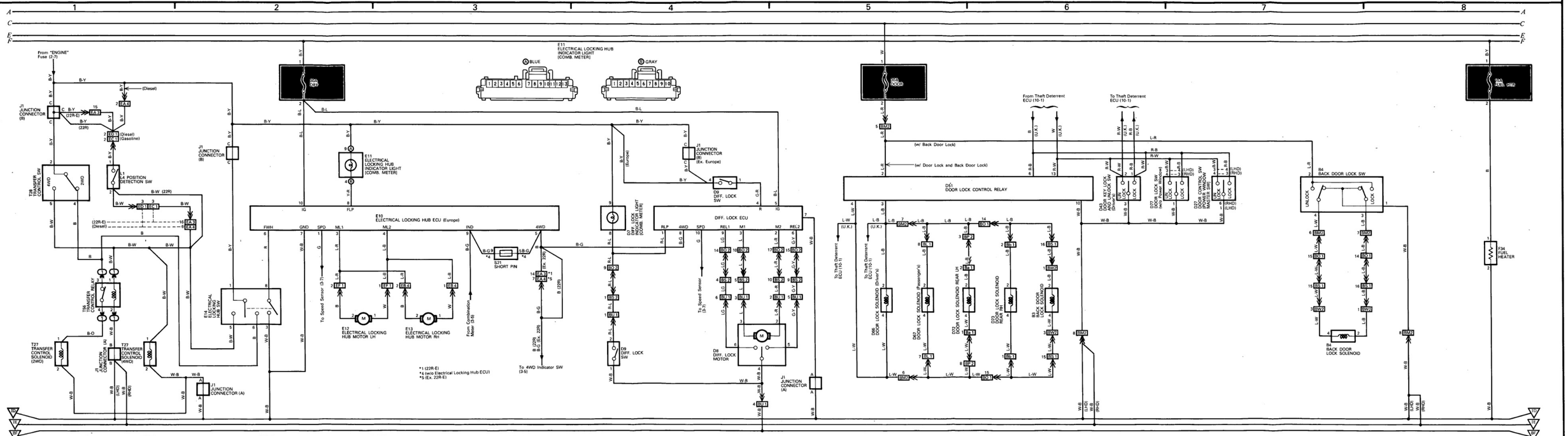

Headlight Beam Level Control | Winch | Light Reminder (Europe) | Clock | Cigarette Lighter | Radio and Player | Trailer Socket

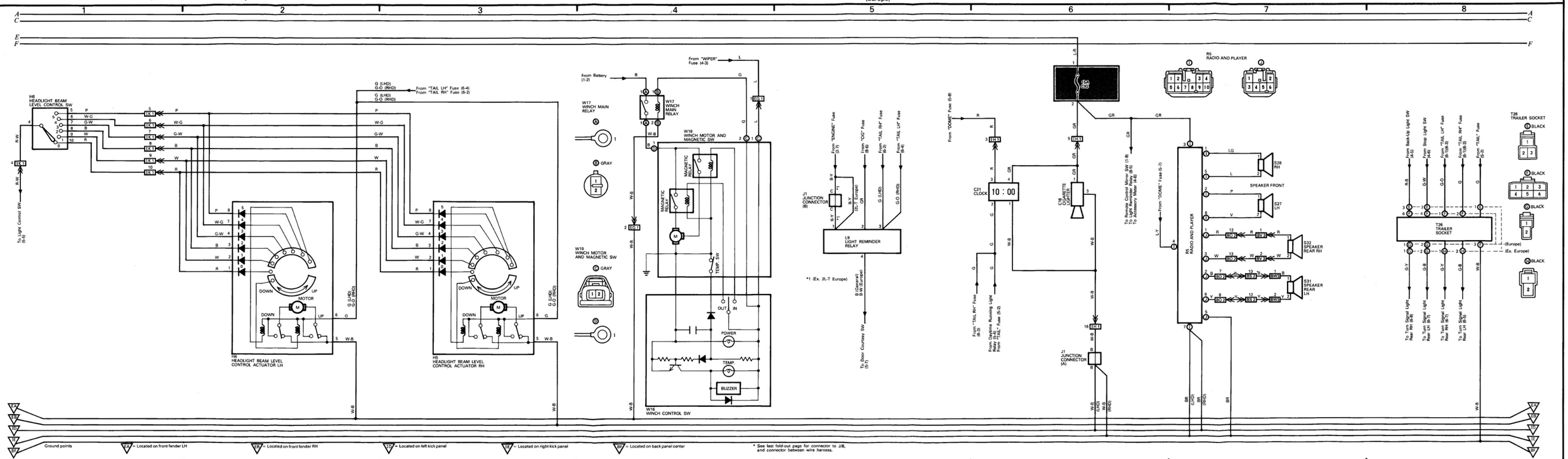

Power Window

Moon Roof

Glow and Emission Control (2L-T Austria)

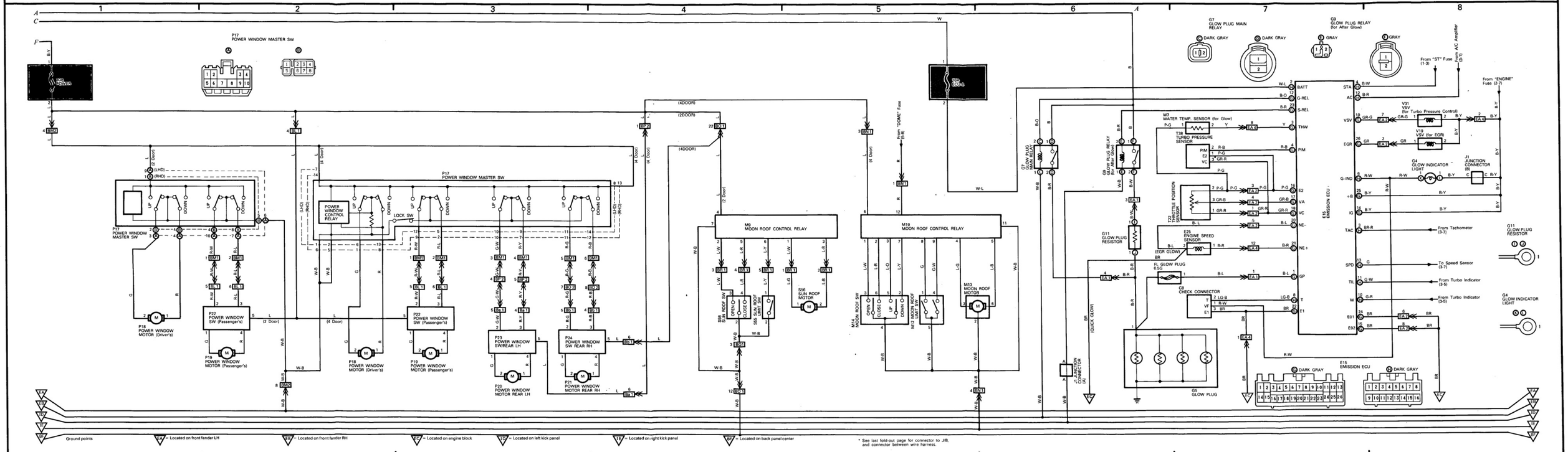

* See last fold-out page for connector to J/B and connector between wire harness.

Theft Deterrent System (U.K.)

Unlock and Seat Belt Warning

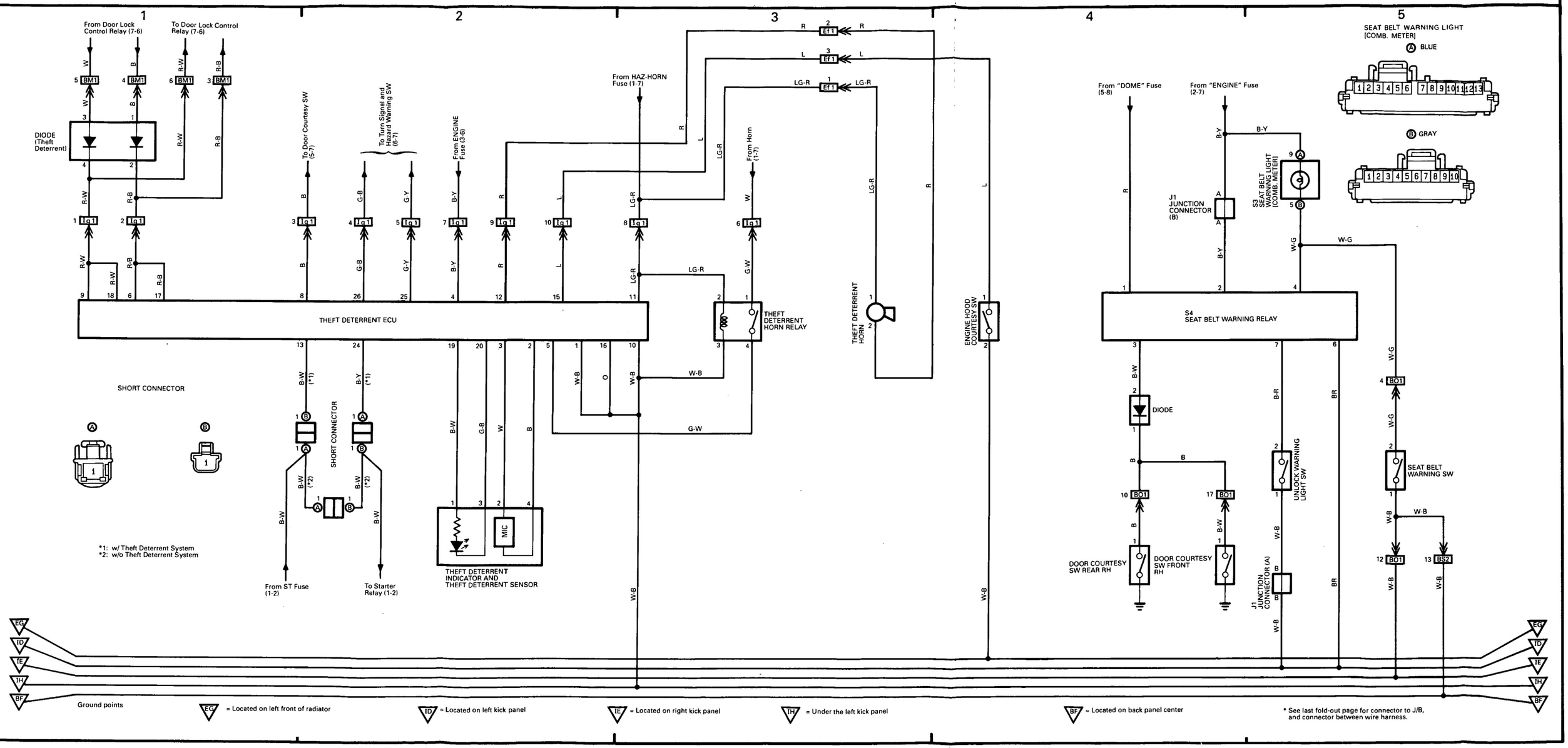

Connector Joining Wire Harness and Wire Harness
(E Group : Engine Compartment area)

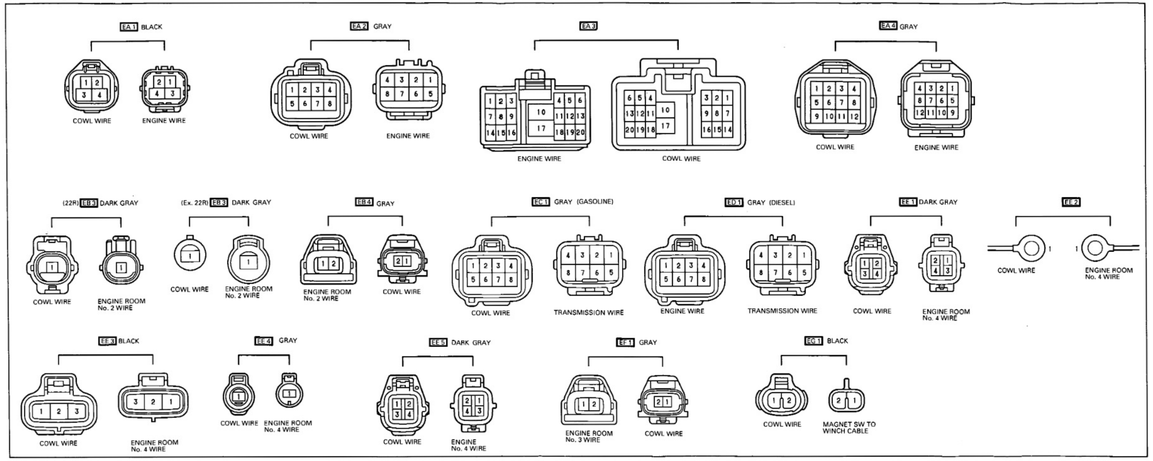

(I Group : Instrument Panel and Surrounding area)

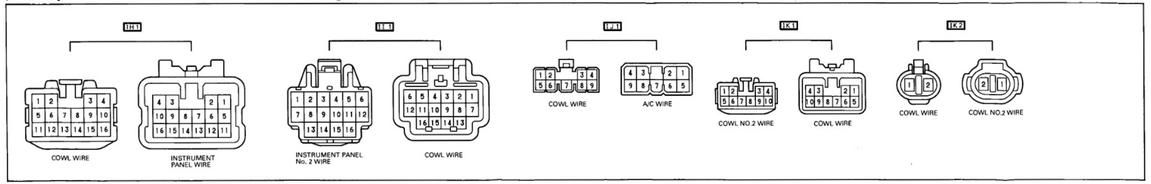

(B Group : Body and Surrounding area)

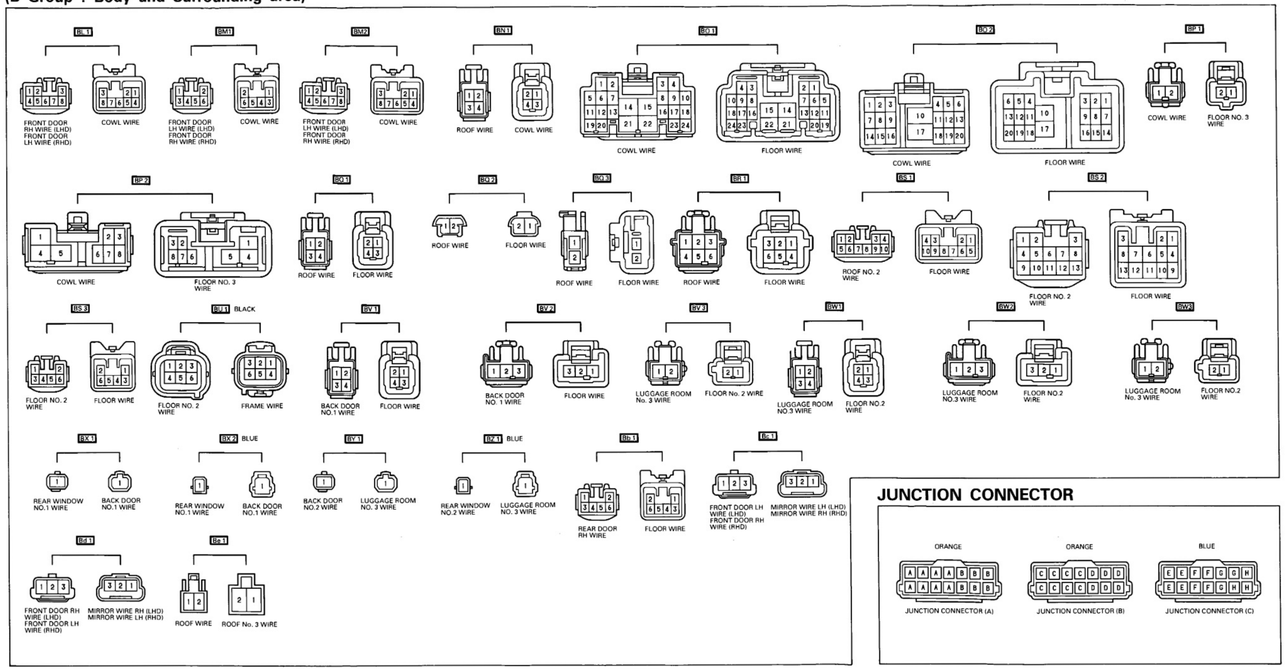

JUNCTION CONNECTOR

SYSTEM INDEX

LAND CRUISER 70 (Heavy-Duty) (Location No. 1 to 14)

SYSTEMS	LOCATION
Accessory Meter	11-2
Air Conditioner, Cooler and Heater	8-6 (Single Type) 9-6 (Dual Type)
Back-Up Light	5-3
Charging	2-1
Cigarette Lighter	9-1
Clock	9-1
Combination Meter	3-4
Door Lock	7-7
Emission Control	11-5 (1FZ-F)
Engine Control	12-5 (1FZ-FE)
Glow	1-5 (Europe, Australia) 1-6 (Ex. Europe, Australia)
Fog Light	3-7
Front Wiper and Washer	4-7
Fuel Heater	1-8
Headlight	5-4 (Ex. Europe) 5-6 (Europe)
Headlight Cleaner	5-1
Ignition	1-3
Horn	8-3
Interior Light	8-1
Light Reminder	3-8
Moon Roof	7-1
Power Source	1-1 12-1
Power Window	7-3
Radio and Player	9-3
Rear Fog Light	2-8
Rear Window Defogger	2-4
Rear Wiper and Washer	2-3
Remote Control Mirror	9-2
Starting	1-2
Stop Light	3-8
Taillight and Illumination	4-3
Trailer Socket	2-6
Turn Signal and Hazard	6-3
Unlock and Seat Belt Warning	2-6
Winch	5-1
4WD	10-3 (Ex. Gasoline) 11-7 (Gasoline)
Connection Joining Wire Harness and Wire Harness	13-4
Junction Connector	14-7

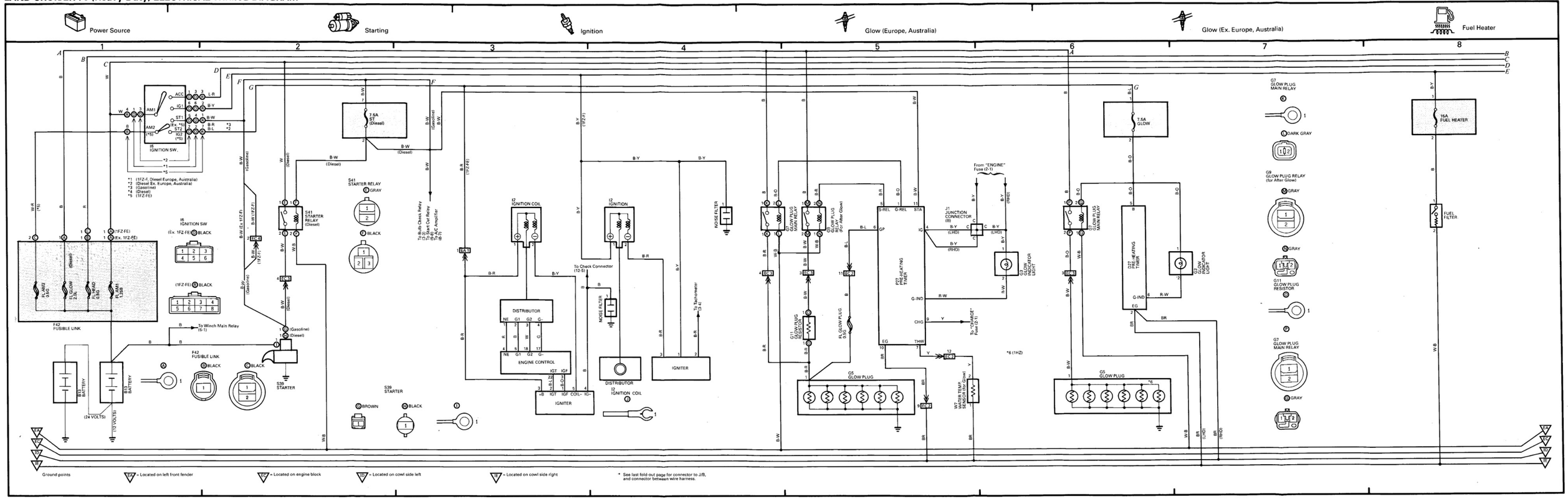
Power Source
Starting
Ignition
Glow (Europe, Australia)
Glow (Ex. Europe, Australia)
Fuel Heater
I6 IGNITION SW.
*1 (1FZ-F, Diesel Europe, Australia)
*2 (Diesel Ex. Europe, Australia)
*3 (Gasoline)
*4 (Diesel)
*5 (1FZ-FE)
F42 FUSIBLE LINK
B13 BATTERY
(24 VOLTS)
(12 VOLTS)
S41 STARTER RELAY (Diesel)
S39 STARTER
7.5A ST (Diesel)
I2 IGNITION COIL
DISTRIBUTOR
ENGINE CONTROL
IGNITER
NOISE FILTER
To Check Connector (12-5)
To Tachometer (3-4)
To Bulb Check Relay (3-3)
To Start Cut Relay (3-3)
To A/C Amplifier (8-7)
To Winch Main Relay (5-1)
G5 GLOW PLUG
G11 GLOW PLUG RESISTOR
G9 GLOW PLUG RELAY (for After Glow)
G7 GLOW PLUG MAIN RELAY
P27 PRE-HEATING TIMER
J1 JUNCTION CONNECTOR (8)
From "ENGINE" Fuse (2-1)
To "CHARGE" Fuse (2-1)
W7 WATER TEMP. SENSOR (for Glow)
G3 GLOW INDICATOR LIGHT
7.5A GLOW
G11 GLOW PLUG RESISTOR
G2 GLOW PLUG MAIN RELAY
16A FUEL HEATER
FUEL FILTER
Ground points
EA = Located on left front fender
EC = Located on engine block
ID = Located on cowl side left
IE = Located on cowl side right
* See last fold-out page for connector to J/B, and connector between wire harness.

Charging | Rear Wiper and Washer | Rear Window Defogger | Unlock and Seat Belt Warning | Trailer Socket | Rear Fog Light

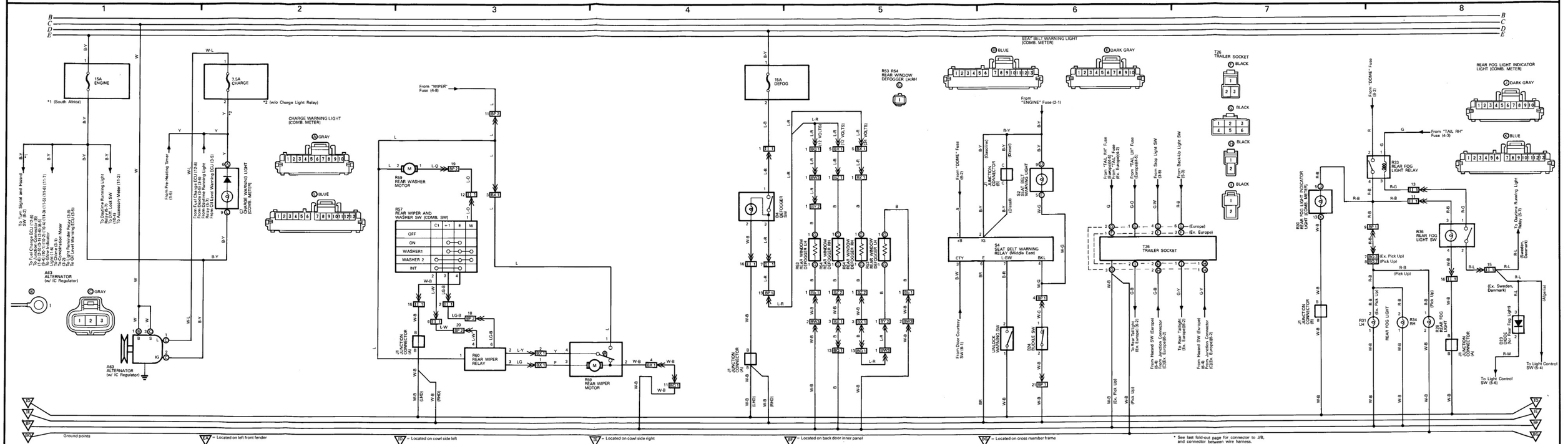

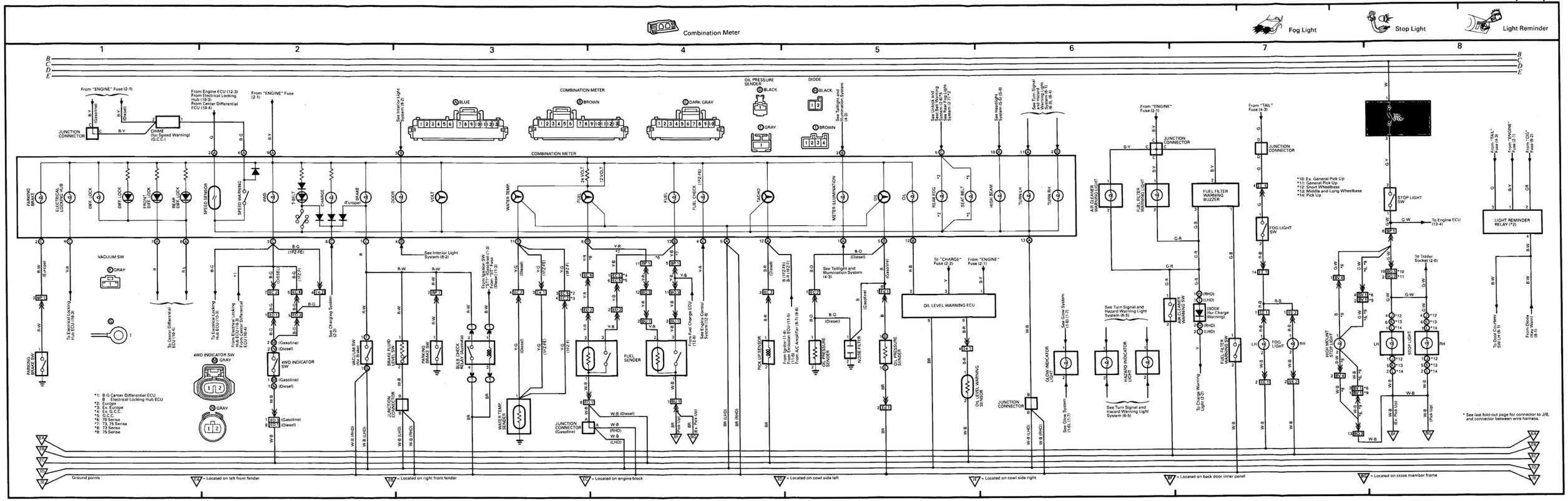
Combination Meter
Fog Light
Stop Light
Light Reminder
COMBINATION METER
OIL PRESSURE SENDER
DIODE
JUNCTION CONNECTOR
CHIME (for Speed Warning) (G.C.C.)
VACUUM SW
4WD INDICATOR SW
FUEL SENDER
OIL LEVEL WARNING ECU
FUEL FILTER WARNING BUZZER
STOP LIGHT SW
LIGHT REMINDER RELAY (*2)
*1: B-G Center Differential ECU
B Electrical Locking Hub ECU
*2: Europe
*3: Ex. Europe
*4: Ex. G.C.C.
*5: G.C.C.
*6: 70 Serise
*7: 73, 75 Serise
*8: 73 Serise
*9: 75 Serise
*10: Ex. General Pick Up
*11: General Pick Up
*12: Short Wheelbase
*13: Middle and Long Wheelbase
*14: Pick Up
* See last fold-out page for connector to J/B, and connector between wire harness.
Ground points
= Located on left front fender
= Located on right front fender
= Located on engine block
= Located on cowl side left
= Located on cowl side right
= Located on back door inner panel
= Located on cross member frame

Taillight and Illumination

Front Wiper and Washer

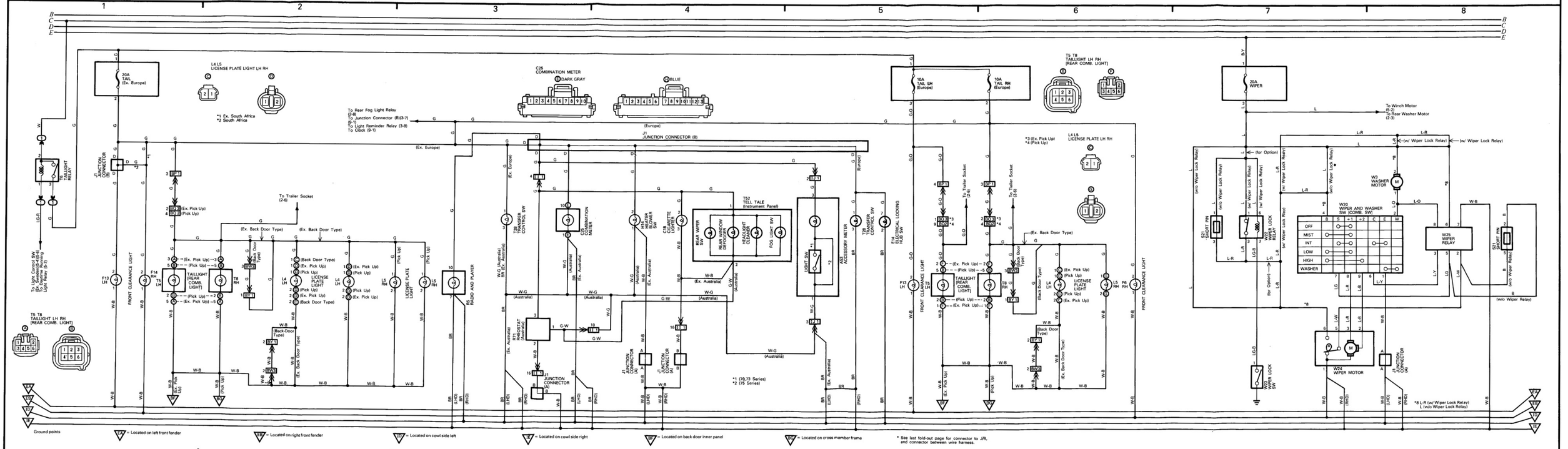

Headlight Cleaner | Winch | Back-Up Light | Headlight (Ex. Europe) | Headlight (Europe)

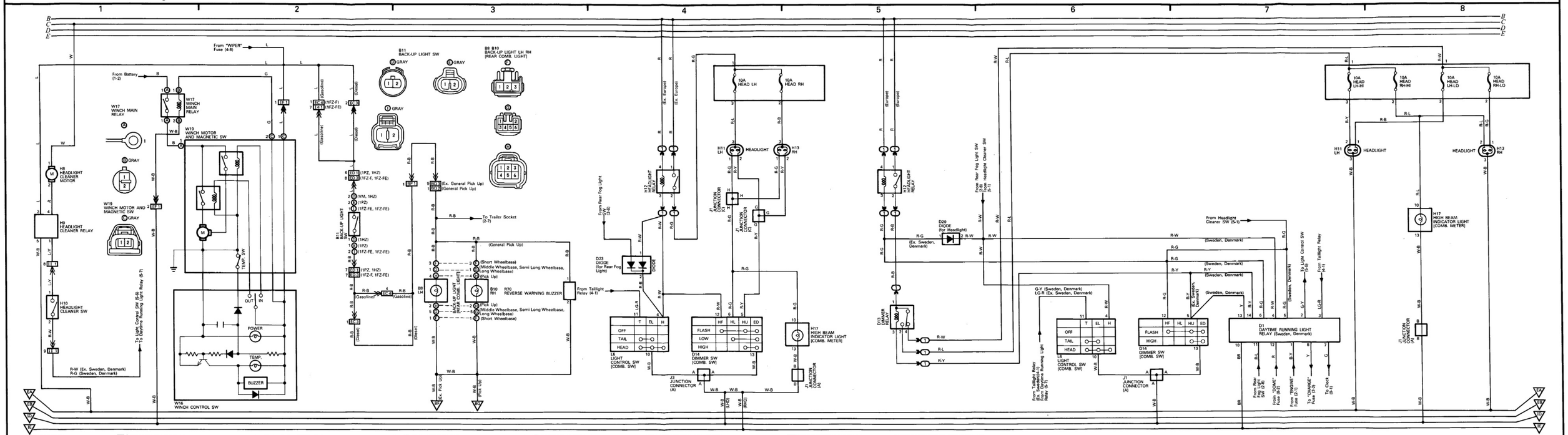

Turn Signal and Hazard Warning Light

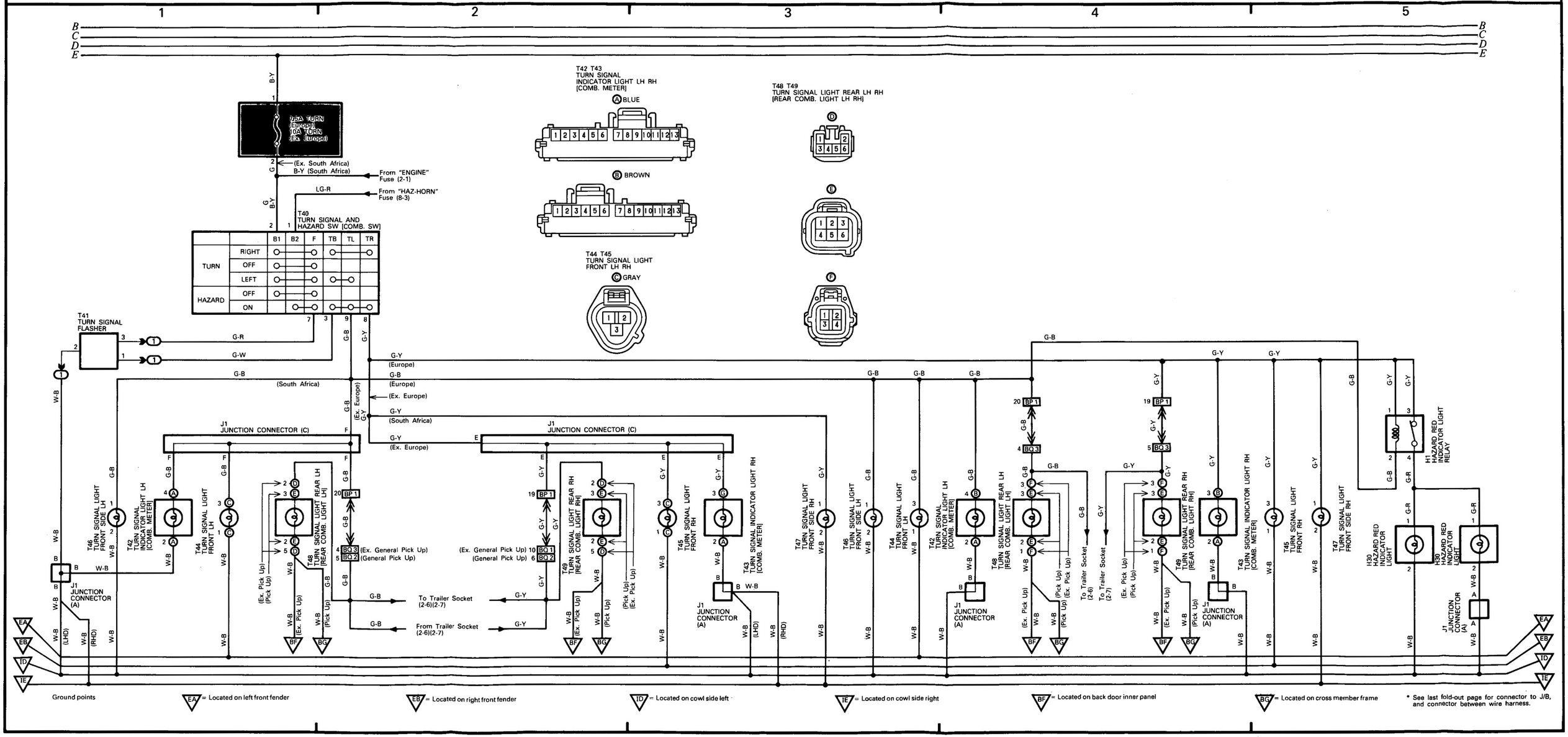

Moon Roof

Power Window

Door Lock

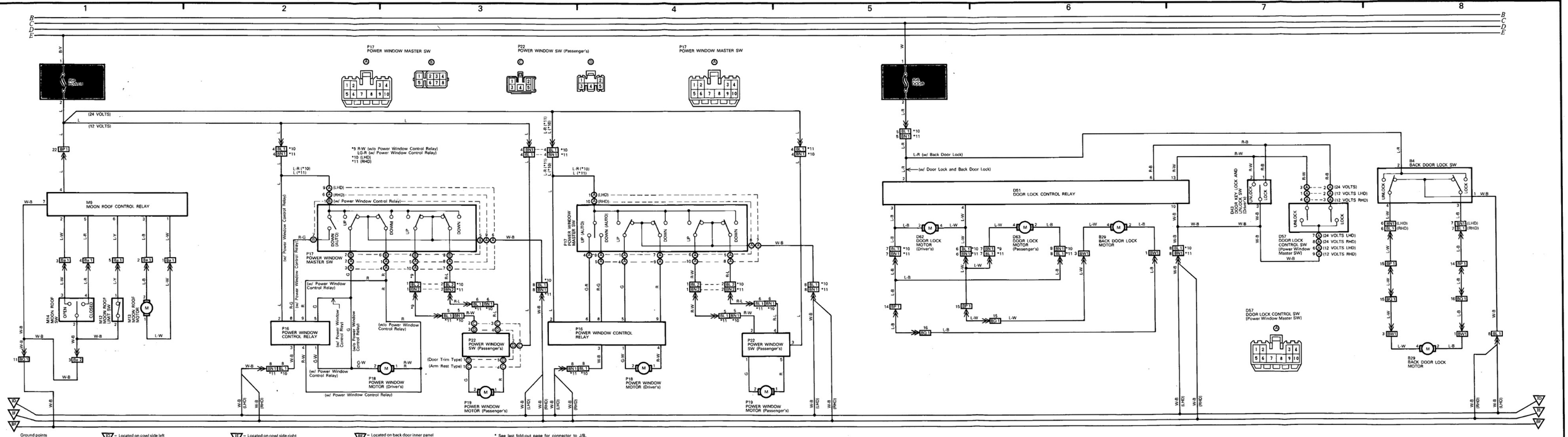

Interior Light

Horn

Air Conditioner, Cooler and Heater (Single Type)

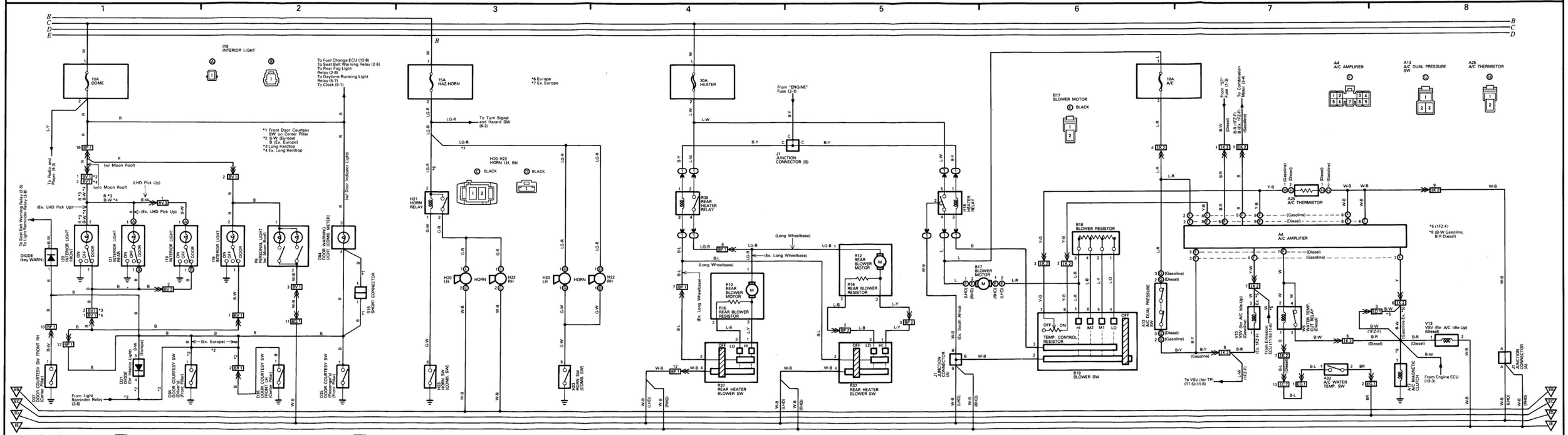

Clock | Cigarette Lighter | Remote Control Mirror | Radio and Player | Air Conditioner, Cooler and Heater (Dual Type)

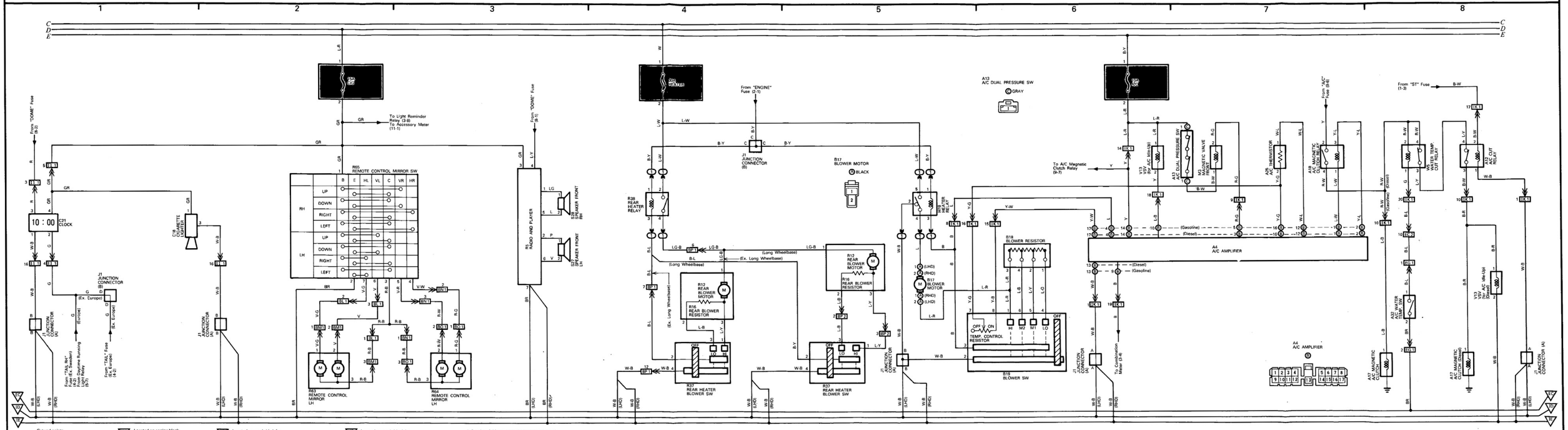

4WD (Ex. Gasoline)

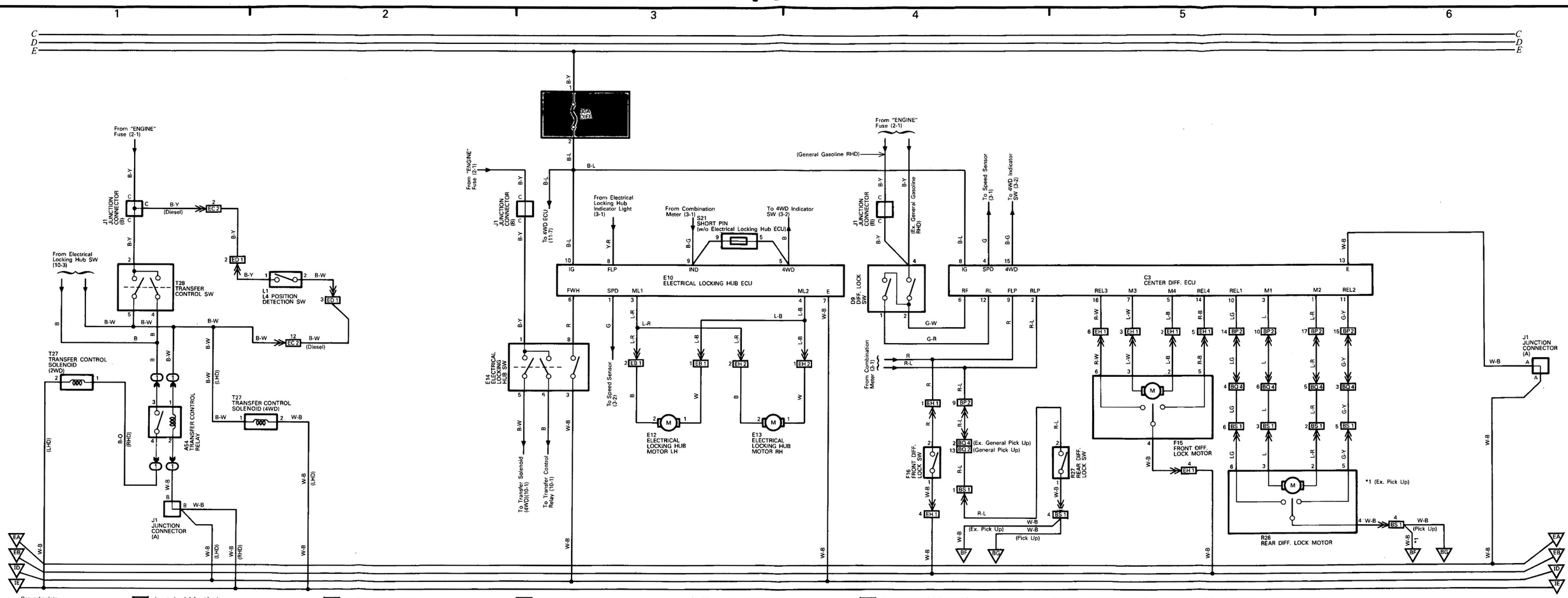

Accessory Meter

Emission Control (1FZ-F)

4WD (Gasoline)

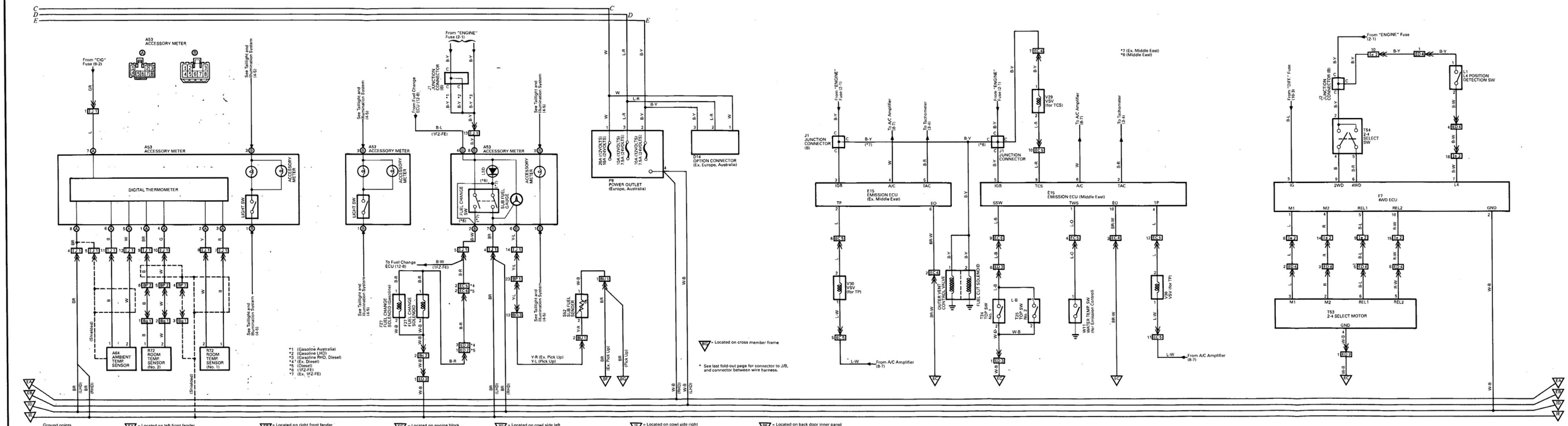

Power Source

Engine Control (1FZ-FE)

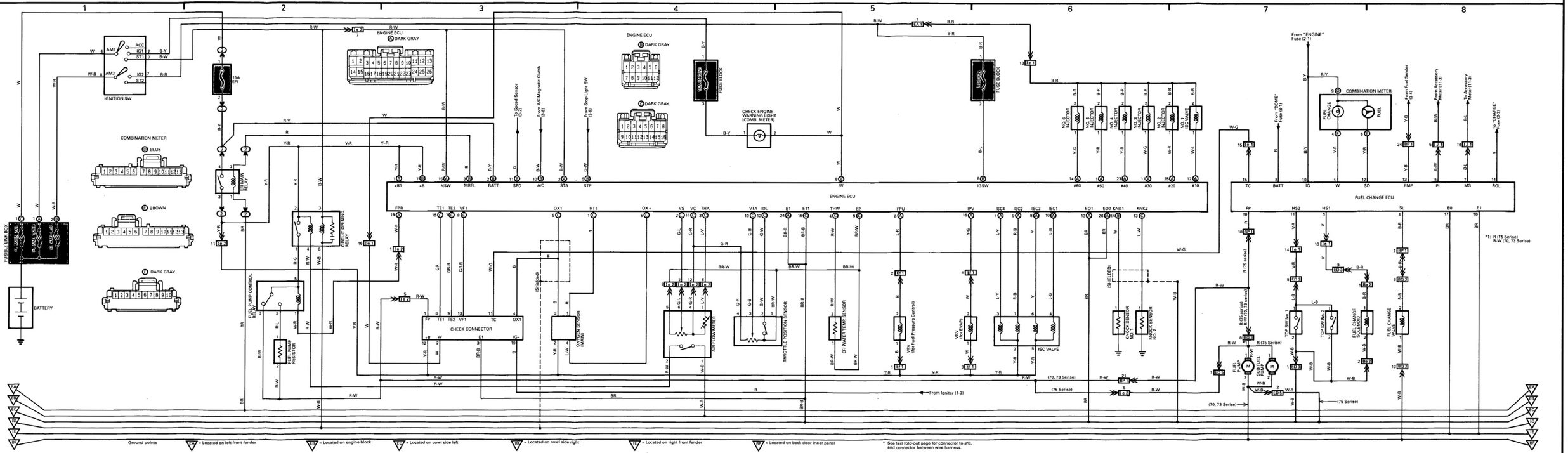

Connector Joining Wire Harness and Wire Harness
(E Group : Engine Compartment area)

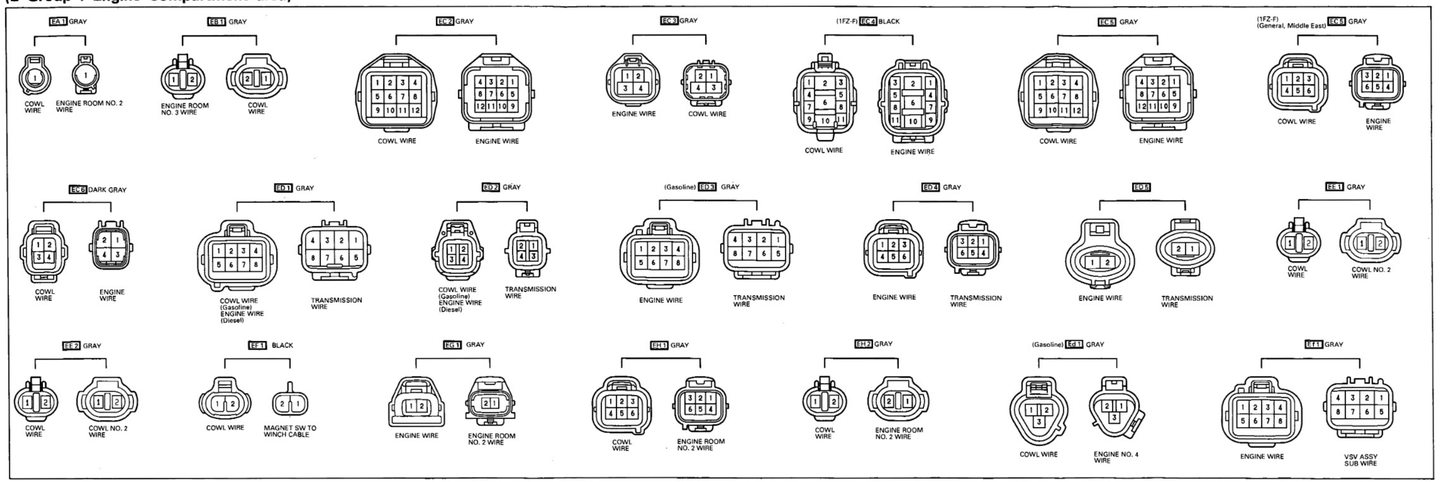

(I Group : Instrument Panel and Surrounding area)

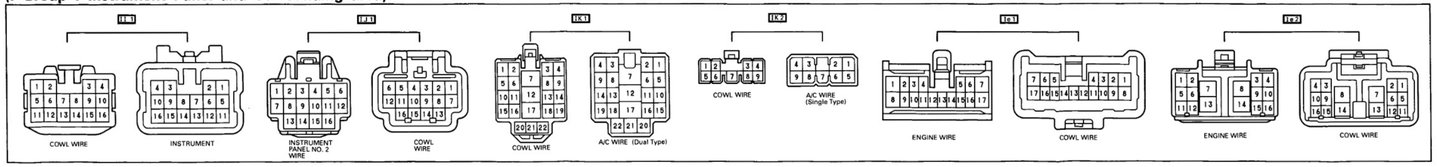

(B Group : Body and Surrounding area)

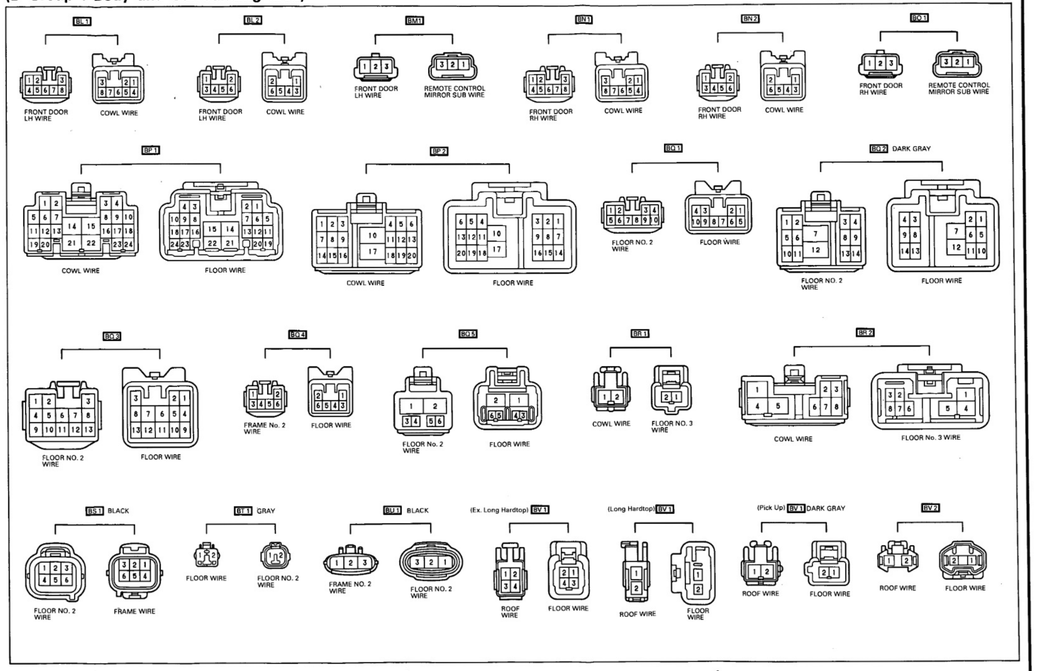

1 2 3 4

Connector Joining Wire Harness and Wire Harness (B Group : Body and Surrounding area)

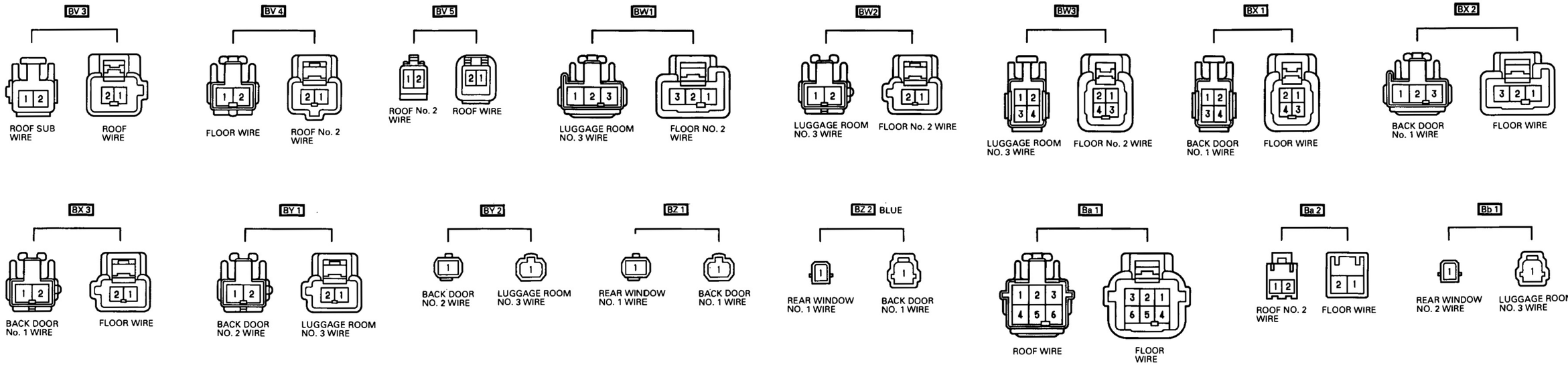

JUNCTION CONNECTOR

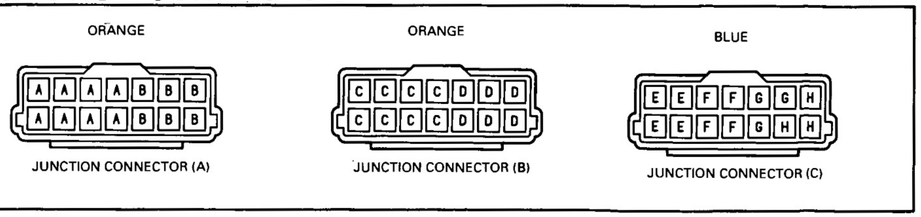

SYSTEM INDEX

LAND CRUISER (W/G) (Location No. 1 to 43)

SYSTEMS	LOCATION
ABS (Anti-Lock Brake System)	41-3
Accessory Meter	20-3
Air Conditioner, Cooler and Heater	30-4 (Push SW Type) 34-4 (Manual Dual A/C Type) 36-4 (Manual Single A/C Lever SW Type)
Auto Antenna	13-2 (Australia) 13-4 (Ex. Australia)
Automatic Transmission Indicator	21-2
Back-Up Light	21-3
Charging	2-3
Cigarette Lighter	24-3
Clock	24-2
Combination Meter	28-4
Condenser Fan	34-2
Cool/Ice Box	33-6
Cruise Control	23-3
ECT (Electronic Controlled Transmission)	39-3
Emission Control	37-2 (1FZ-FLHD) 37-3 (1FZ-FRHD)
Engine Control	27-4
Front Wiper and Washer	17-2 (1HZ, 1HD-T) 38-2 (1FZ-FE, 1FZ-F)
Fuel Heater	19-5
Fuel Tank Changeover	29-6
Glow Plug	4-3
Headlight Beam Level Control	6-3
Headlight Cleaner	3-4
Headlight	7-2 (w/ Daytime Running Light) 8-2 (LHD in Europe w/o Daytime Running Light) 9-2 (U.K.) 10-2 (Ex. LHD in Europe)
Horn	12-4
Ignition	37-4 (1FZ-F)
Interior Light	11-3
Light Auto Turn Off	40-4
Light Reminder	24-3
Moon Roof	19-2
Power Seat	19-3
Power Source	1 ~ 30, 34, 36 ~ 41-1
Power Window	15-3
PPS (Progressive Power Steering)	5-3
Radio and Player	26-3 (w/o CD Player) 26-5 (w/ CD Player)
Rear Air Conditioner	33-3 (Auto) 35-4 (Manual)
Rear Fog Light	14-3
Rear Window Defogger	18-2
Rear Wiper and Washer	17-3 (1HZ, 1HD-T) 38-4 (1FZ-FE, 1FZ-F)
Remote Control Mirror	20-2
Satellite Navigation	3-2 (Australia)
Seat Belt Warning	21-4
Seat Heater	18-4
Starting	1-3
Stop Light	24-4
Sub Fuel Tank	40-2 (1FZ-FE)
Taillight and Illumination	25-4
Theft Deterrent and Door Lock	16-3
Turn Signal and Hazard Warning Light	12-2
Winch	5-4
4WD	22-3
12-24 Volt Switchover System	1-2
Connector Joining Wire Harness and Wire Harness	42, 43

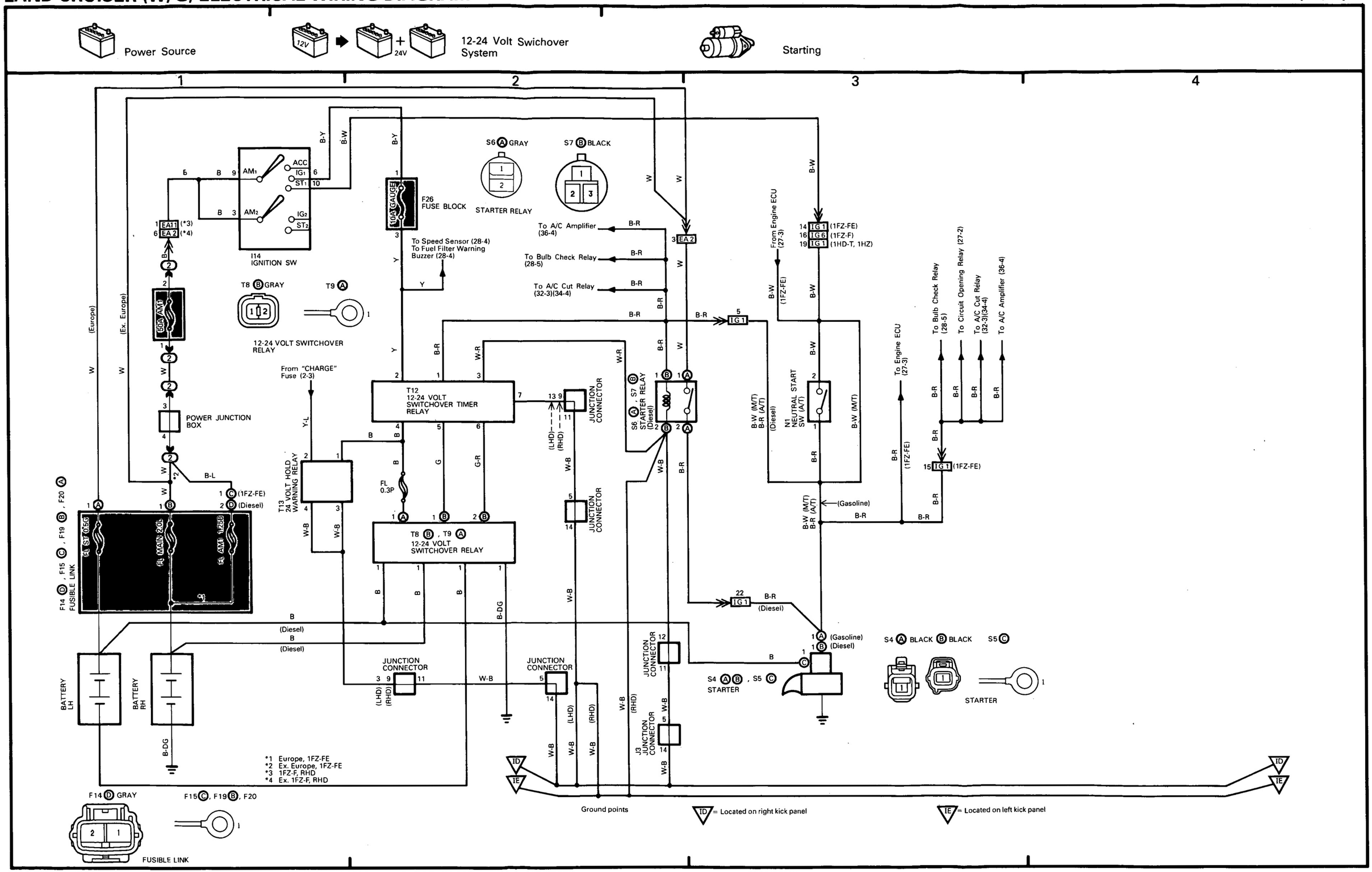
Power Source
12V
24V
12-24 Volt Swichover System
Starting
1
2
3
4
I14 IGNITION SW
ACC
IG1
ST1
IG2
ST2
AM1
AM2
EA1 (*3)
EA2 (*4)
50A AM1
POWER JUNCTION BOX
F26 FUSE BLOCK
10A GAUGE
S6 GRAY
S7 BLACK
STARTER RELAY
To Speed Sensor (28-4)
To Fuel Filter Warning Buzzer (28-4)
To A/C Amplifier (36-4)
To Bulb Check Relay (28-5)
To A/C Cut Relay (32-3)(34-4)
T8 GRAY
T9
12-24 VOLT SWITCHOVER RELAY
From "CHARGE" Fuse (2-3)
T12 12-24 VOLT SWITCHOVER TIMER RELAY
T13 24 VOLT HOLD WARNING RELAY
FL 0.3P
T8 , T9 12-24 VOLT SWITCHOVER RELAY
JUNCTION CONNECTOR
S6 , S7 STARTER RELAY (Diesel)
From Engine ECU (27-3)
(1FZ-FE)
IG1 (1FZ-FE)
IG6 (1FZ-F)
IG1 (1HD-T, 1HZ)
N1 NEUTRAL START SW (A/T)
To Engine ECU (27-3)
To Bulb Check Relay (28-5)
To Circuit Opening Relay (27-2)
To A/C Cut Relay (32-3)(34-4)
To A/C Amplifier (36-4)
(Gasoline)
(Diesel)
F14 , F15 , F19 , F20
FUSIBLE LINK
FL ST 0.5G
FL MAIN 2.0L
FL AM1 1.25B
BATTERY LH
BATTERY RH
S4 BLACK BLACK
S5
S4 , S5
STARTER
J3 JUNCTION CONNECTOR
*1 Europe, 1FZ-FE
*2 Ex. Europe, 1FZ-FE
*3 1FZ-F, RHD
*4 Ex. 1FZ-F, RHD
F14 GRAY
F15, F19, F20
FUSIBLE LINK
Ground points
ID = Located on right kick panel
IE = Located on left kick panel

2 LAND CRUISER (W/G)

Power Source

Charging

1 2 3 4

B-G

AM1 ACC IG1 ST1 AM2 IG2 ST2

B 3 4

6 EA 2 (*3)
1 EA11 (*4)

I14
IGNITION SW.

*3 Ex. 1FZ-F RHD
*4 1FZ-F RHD

B B

F14 C GRAY

F15 B , F19 D , F20 E

F16 A GRAY

FUSIBLE LINK

A13 B BLACK

A14 A

*1 Europe, 1FZ-FE
*2 Ex. Europe, 1FZ-FE

ALTERNATOR (w/ IC Regulator)

(Ex. Europe Diesel)

50A AM1

W

B-L

W *2

1 B (1FZ-FE)
2 C (Diesel)

1 D

1 E

W

W
(Europe Diesel)

Y-W
(w/ IC Regulator)

B-L
(w/ IC Regulator)

FL AM1 1.25B

FL MAIN 2.0L

FL ST 0.5G

*1

F14 C F15 B
F16 A F19 D F20 E
FUSIBLE LINK

B
(Europe Diesel)

(Ex. Europe Diesel)

BATTERY RH

BATTERY LH

1 A
B

L B 1
S B 3
IG B 2

Y-W W B B-L

A13 B , A14 A
ALTERNATOR
(w/ IC Regulator)

B-G

B-L

5 A

CHARGE WARNING LIGHT [COMB. METER]

5 B

Y-L

To Daytime Running Light Relay (7-3)

4 EA 1

To Pre-Heating Timer (4-3)

To Choke Heater (37-2) (37-3)

To 24 Volt Hold Warning Relay (1-1)

Y-L

2

1

7.5A CHARGE

2

1

7.5A IGN

F26 FUSE BLOCK

2

B-L

B-L

5 EA 1

B-L (w/ IC Regulator)

CHARGE WARNING LIGHT [COMB. METER]

A GRAY

1 2 3 4 5 6 7 8 9 10

B BLUE

1 2 3 4 5 6 7 8 9 10 11 12 13 14 15 16

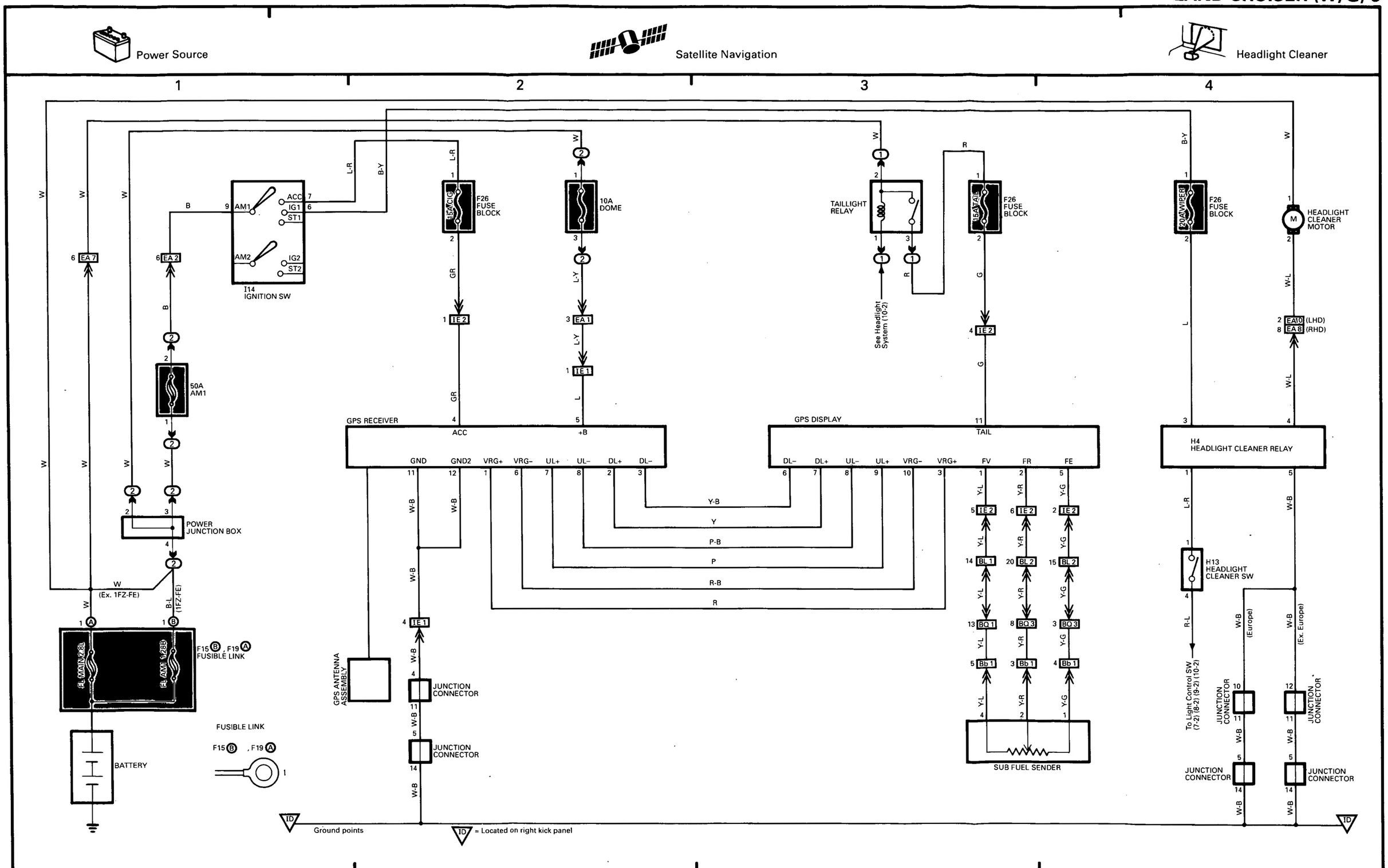
Power Source
Satellite Navigation
Headlight Cleaner
1
2
3
4
I14
IGNITION SW
AM1
AM2
ACC
IG1
ST1
IG2
ST2
F26
FUSE
BLOCK
10A
DOME
TAILLIGHT
RELAY
See Headlight
System (10-2)
F26
FUSE
BLOCK
F26
FUSE
BLOCK
HEADLIGHT
CLEANER
MOTOR
50A
AM1
POWER
JUNCTION BOX
(Ex. 1FZ-FE)
(1FZ-FE)
F15 B, F19 A
FUSIBLE LINK
BATTERY
FUSIBLE LINK
F15 B, F19 A
GPS RECEIVER
ACC
+B
GND
GND2
VRG+
VRG-
UL+
UL-
DL+
DL-
GPS DISPLAY
TAIL
DL-
DL+
UL-
UL+
VRG-
VRG+
FV
FR
FE
Y-B
Y
P-B
P
R-B
R
GPS ANTENNA
ASSEMBLY
JUNCTION
CONNECTOR
JUNCTION
CONNECTOR
SUB FUEL SENDER
H4
HEADLIGHT CLEANER RELAY
H13
HEADLIGHT
CLEANER SW
To Light Control SW
(7-2) (8-2) (9-2) (10-2)
JUNCTION
CONNECTOR
JUNCTION
CONNECTOR
JUNCTION
CONNECTOR
JUNCTION
CONNECTOR
(Europe)
(Ex. Europe)
Ground points
= Located on right kick panel

Power Source

Glow Plug

1 2 3 4

B-Y
B-G
B-W
B
9 AM1
3 AM2
ACC
IG1 6
ST1
IG2 4
ST2 2
I14 IGNITION SW
GLOW PLUG RELAY (SUB)
G5 B GRAY
G6 A
1 2
6 EA 2
50A AM1
2 1
W
3
4
POWER JUNCTION BOX
1 EC 2
W
B
1 A
1 B
FL MAIN 2.0L
FL GLOW 1.25B
F17 B , F19 A FUSIBLE LINK
BATTERY
FUSIBLE LINK
F17, B F19 A
1
GLOW PLUG RELAY
G2 C DARK GRAY
1 2
G3 B, G4 A
1
B
14 IG1
12 IG1
B-R
B-W
(SUPER GLOW TYPE)
1 A 2 C G4
B G3 GLOW PLUG RELAY
1 B 1 C G2
1 A 2 B G6
B G5 GLOW PLUG RELAY (SUB)
2 A 1 B
B-O
W-B
B-L
15 IG1
G7 A , G8 B GLOW PLUG RESISTOR
B-O (SUPER GLOW TYPE)
B-O (FIXED DELAY TYPE)
B-L (SUPER GLOW TYPE)
J3 JUNCTION CONNECTOR
6
14
W-B (LHD)
W-B (RHD)
G7, A G8 B
GLOW PLUG RESISTOR
G1 GLOW PLUG
8 IG1
B-W
(FIXED DELAY TYPE)
(SUPER GLOW TYPE)
5 A
1 B
11 A
3 B
S-REL
STA
B
1 F26 FUSE BLOCK
7.5A IGN
2
B-L
10 IG4
1 F26 FUSE BLOCK
10A GAUGE
3
Y
C10 GLOW INDICATOR LIGHT [COMB. METER]
5 C
3 D (Europe)
4 D (Ex. Europe)
Y-W
13 IG1
Y-W
3 A
8 B
G-IND
From "CHARGE" Fuse (2-3)
Y-L
11 IG1
Y-L
4 A
3 B
9 A (SUPER GLOW TYPE)
2 B (FIXED DELAY TYPE)
CHG
P4 A , P5 B PRE-HEATING TIMER
G-REL
GP
EG
THW
1 A
6 A
10 A
7 B
7 A (SUPER GLOW TYPE) (FIXED DELAY TYPE)
B-R
B-Y
BR
BR
1 F18 FUSIBLE LINK
FL GLOW PLUG
W-B (FIXED DELAY TYPE)
BR (SUPER GLOW TYPE)
1 W4 WATER TEMP. SENSOR (for Glow Plug)
2
Y-R
Y-R (SUPER GLOW TYPE)
B-L
3 F11 FUEL CUT SOLENOID
2
BR
PRE-HEATING TIMER
P4 A
P5 B
1 2 3 4 5 6 7 8 9 10 11 12 13
GLOW INDICATOR LIGHT [COMB. METER]
C GRAY
1 2 3 4 5 6 7 8 9 10
D BLUE
1 2 3 4 5 6 7 8 9 10 11 12 13
EC
ID
IE

Ground points

EC = Located on engine block

ID = Located on right kick panel

IE = Located on left kick panel

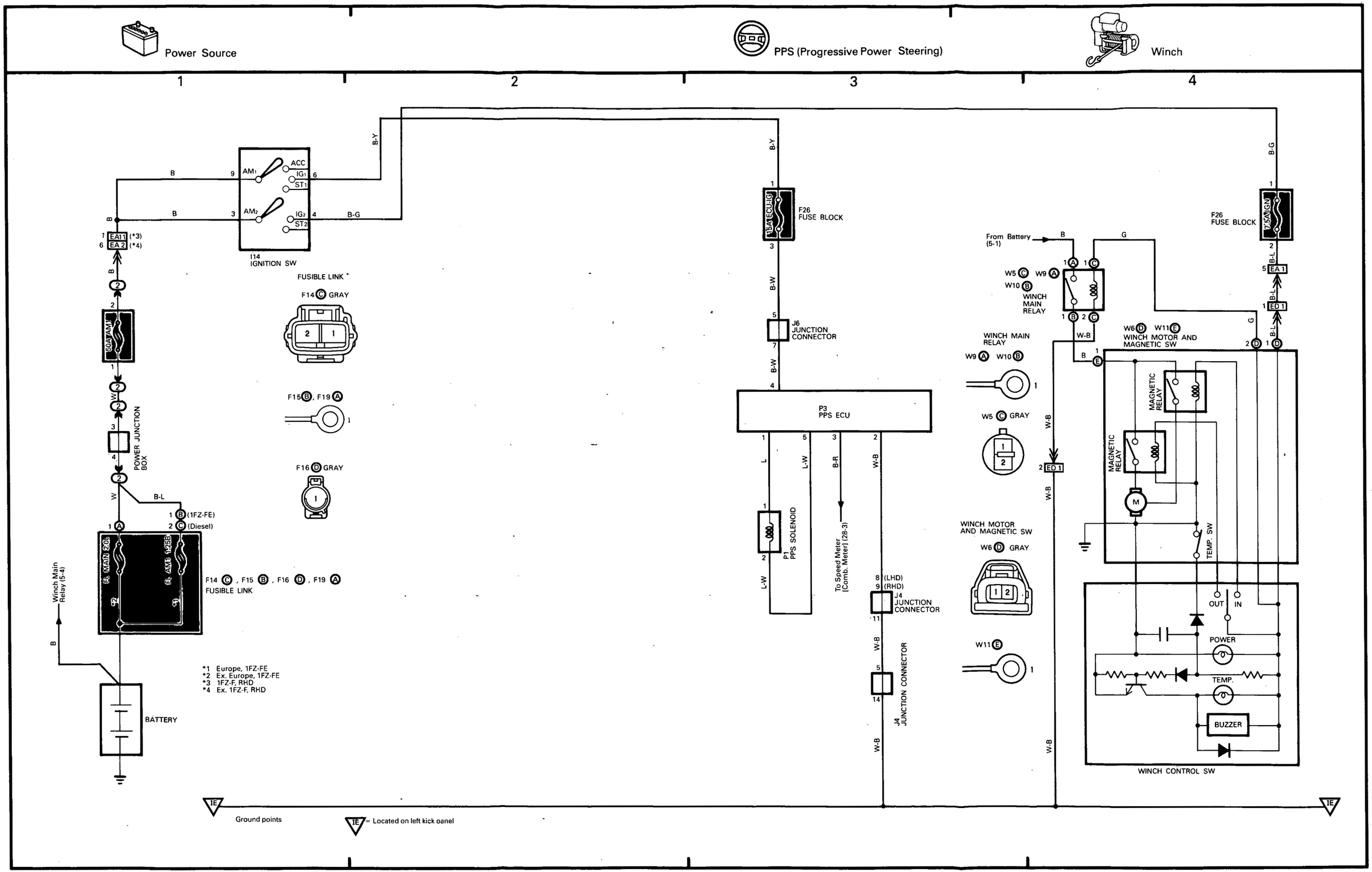
Power Source
PPS (Progressive Power Steering)
Winch
1
2
3
4
I14
IGNITION SW
AM1
AM2
ACC
IG1
ST1
IG2
ST2
B
B-Y
B-G
EA1 (*3)
EA2 (*4)
50A AM1
POWER JUNCTION BOX
FUSIBLE LINK
F14 GRAY
F15, F19
F16 GRAY
B-L
(1FZ-FE)
(Diesel)
FL MAIN 20L
FL AM1 1.25B
F14, F15, F16, F19
FUSIBLE LINK
Winch Main Relay (5-4)
BATTERY
*1 Europe, 1FZ-FE
*2 Ex. Europe, 1FZ-FE
*3 1FZ-F, RHD
*4 Ex. 1FZ-F, RHD
F26
FUSE BLOCK
15A ECU-IG
J6
JUNCTION CONNECTOR
P3
PPS ECU
P1
PPS SOLENOID
To Speed Meter (Comb. Meter) (28-3)
(LHD)
(RHD)
J4
JUNCTION CONNECTOR
From Battery (5-1)
W5 W9
W10
WINCH MAIN RELAY
W6 W11
WINCH MOTOR AND MAGNETIC SW
MAGNETIC RELAY
TEMP. SW
OUT
IN
POWER
TEMP.
BUZZER
WINCH CONTROL SW
7.5A IGN
EA1
ED1
Ground points
= Located on left kick panel

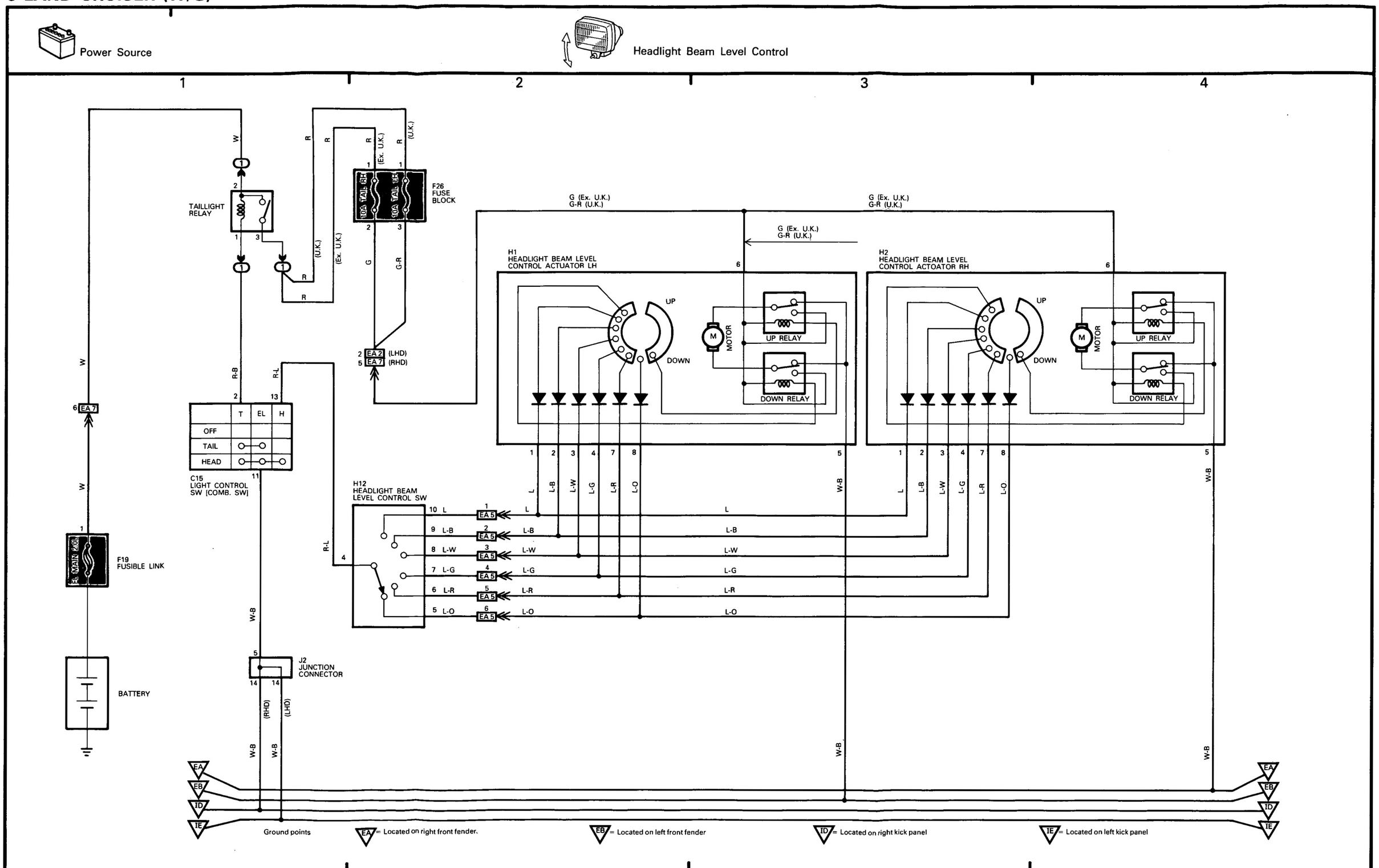
Power Source
Headlight Beam Level Control
1
2
3
4
TAILLIGHT RELAY
F26 FUSE BLOCK
10A TAIL RH
10A TAIL LH
G (Ex. U.K.)
G-R (U.K.)
H1 HEADLIGHT BEAM LEVEL CONTROL ACTUATOR LH
H2 HEADLIGHT BEAM LEVEL CONTROL ACTOATOR RH
UP
DOWN
MOTOR
UP RELAY
DOWN RELAY
EA 2 (LHD)
EA 7 (RHD)
C15 LIGHT CONTROL SW [COMB. SW]
T
EL
H
OFF
TAIL
HEAD
H12 HEADLIGHT BEAM LEVEL CONTROL SW
EA 5
F19 FUSIBLE LINK
FL MAIN 2.0L
BATTERY
J2 JUNCTION CONNECTOR
(RHD)
(LHD)
Ground points
EA = Located on right front fender.
EB = Located on left front fender
ID = Located on right kick panel
IE = Located on left kick panel

Power Source

Headlight (w/ Daytime Running Light)

1 2 3 4

*1: 1FZ-FE
*2: Ex. 1FZ-FE

I14 IGNITION SW

ACC, IG1, ST1, AM1, AM2, IG2, ST2

50A AM1

POWER JUNCTION BOX

FUSIBLE LINK F14 (B) GRAY

F15 (A), F19 (C)

F14 (B), F15 (A), F19 (C) FUSIBLE LINK

FL AM1 1.25B

FL HEAD 1.0Y

FL MAIN 2.0L

(1FZ-FE) 1 (A)
(Diesel) 2 (B)

BATTERY

10A ECU-B

F26 FUSE BLOCK

10A GAUGE

F26 FUSE BLOCK

HEADLIGHT RELAY

DIMMER RELAY

From Taillight Relay (14-1)(25-1)

From Headlight Cleaner SW (3-4)

D2
DAYTIME RUNNING LIGHT RELAY

C15
LIGHT CONTROL SW
[COMB. SW]

	T	EL	H
OFF			
TAIL	○		
HEAD	○	○	○

C15
DIMMER SW
[COMB. SW]

	HF	HU	HL	ED
FLASH	○	○		
LOW			○	
HIGH			○	○

J1 JUNCTION CONNECTOR

J2 JUNCTION CONNECTOR

J2 JUNCTION CONNECTOR

J1 JUNCTION CONNECTOR

From Rear Fog Light SW (14-2)

To Clock (24-2)

From "CHARGE" Fuse (2-3)

15A HEAD (LH-UPR)

15A HEAD (RH-UPR)

15A HEAD (LH-LWR)

15A HEAD (RH-LWR)

H7 No. 2 LH

H5 No. 1

H6 No. 1 RH

H8 No. 2

HEADLIGHT

HIGH BEAM INDICATOR LIGHT [COMB. METER]

C11 HIGH BEAM INDICATOR LIGHT [COMB. METER]

(A)

1	2	3	4	5	6	7	8	9	10	11	12	13	14	15	16

(B) GRAY

1	2	3	4	5	6	7	8	9	10

Ground points

EA = Located on right front fender

EB = Located on left front fender

IE = Located on left kick panel

Power Source

Headlight (LHD in Europe w/o Daytime Running Light)

*1: 1FZ-FE
*2: Ex. 1FZ-FE

W (1FZ-FE)
R (Ex. 1FZ-FE)
W
R
10A TAIL RH
F26 FUSE BLOCK
TAILLIGHT RELAY
HEADLIGHT RELAY
DIMMER RELAY
15A HEAD (LH-UPR)
15A HEAD (RH-UPR)
15A HEAD (LH-LWR)
15A HEAD (RH-LWR)
From Rear Fog Light SW (14-2)
To Clock (24-2)
D2 SHORT CONNECTOR
EA 1
EA 2
EA 3
H7 No. 2 LH
H5 No.1
H6 No.1
RH
H8 No. 2
HEADLIGHT
FL HEAD 1.0Y
FL MAIN 2.0L
F14 B, F19 C FUSIBLE LINK
BATTERY
FUSIBLE LINK
F14 B GRAY
F19 C
C15 LIGHT CONTROL SW [COMB. SW]
T EL H
OFF
TAIL
HEAD
From Headlight Cleaner SW (3-4)
D6 DIODE
C15 DIMMER SW [COMB. SW]
HF HU HL ED
FLASH
LOW
HIGH
J2 JUNCTION CONNECTOR
D2
SHORT CONNECTOR (for Except Daytime Running Light)
HIGH BEAM INDICATOR LIGHT [COMB. METER]
B GRAY
C11 HIGH BEAM INDICATOR LIGHT [COMB. METER]
Ground points
EA = Located on right front fender
EB = Located on left front fender
IE = Located on left kick panel

Power Source

Headlight (U.K.)

1 2 3 4

HEADLIGHT RELAY

DIMMER RELAY

15A HEAD (LH-UPR)

15A HEAD (RH-UPR)

15A HEAD (LH-LWR)

15A HEAD (RH-LWR)

H7 No. 2 LH

H5 No. 1

H6 No. 1

H8 No. 2 RH

HEADLIGHT

From Diode (for Rear Fog Light) (14-2)

From Headlight Cleaner SW (3-4)

To Diode (for Rear Fog Light) (14-2)

F14 FUSIBLE LINK

BATTERY

C15 LIGHT CONTROL SW [COMB. SW]

	T	EL	H
OFF			
TAIL	○	○	
HEAD	○	○	○

C15 DIMMER SW [COMB. SW]

	HF	HU	FL	ED
FLASH	○	○		○
LOW			○	○
HIGH		○		○

J2 JUNCTION CONNECTOR

HIGH BEAM INDICATOR LIGHT [COMB. METER]

C11 HIGH BEAM INDICATOR LIGHT [COMB. METER]

GRAY

Ground points

EA = Located on right front fender

EB = Located on left front fender

ID = Located on right kick panel

Power Source

Headlight (Ex. LHD in Europe)

1 2 3 4

*1: 1FZ-FE LHD
*2: 1FZ-FE RHD, 1FZ-F, 1HZ LHD, 1HD-T LHD
*3: 1HZ RHD, 1HD-T RHD
*4: 1FZ-FE RHD, 1FZ-F RHD

W
W (1FZ-FE)
W (Ex. 1FZ-FE)
POWER JUNCTION BOX
F19 FUSIBLE LINK
FL MAIN 2.0L
BATTERY
HEADLIGHT RELAY
From Light Retainer Relay (40-4)
To Light Retainer Relay (40-4)
R-G (*1)
R-W (*2)
R-B (*3)
R-Y
11 EA 1
B-L (Australia)
B-O (Australia)
R-W (Australia)
From Headlight Cleaner SW (3-4)
R-W
C15 LIGHT CONTROL SW [COMB. SW]
T EL H
OFF
TAIL
HEAD
C15 DIMMER SW [COMB. SW]
HF HU HL ED
FLASH
LOW
HIGH
4 EA 2 (LHD)
2 EA 7 (RHD Ex. *4)
3 EA 8 (*4)
15A HEAD (LH)
15A HEAD (RH)
R-L
R-W
H5 No. 1
HEADLIGHT LH
H7 No. 2
(*4)
(Ex. *4)
H6 No. 1
HEADLIGHT RH
H8 No. 2
R-Y
R-G
5 EA 2 (LHD)
3 EA 7 (RHD Ex. *4)
4 EA 8 (*4)
A · B HIGH BEAM INDICATOR [COMB. METER]
W-B
J2 JUNCTION CONNECTOR
W-B (RHD)
W-B (LHD)
ID
IE
Ground points
ID = Located on right kick panel
IE = Located on left kick panel

HIGH BEAM INDICATOR LIGHT [COMB. METER]

A
1 2 3 4 5 6 7 8 9 10 11 12 13 14 15 16

B GRAY
1 2 3 4 5 6 7 8 9 10

*1 (Ex. w/o Tachometer in Middle East)
*2 (w/o Tachometer in Middle East)

Power Source

Interior Light

1 2 3 4

FUSIBLE LINK

F14 C GRAY

F15 B, F19 A

10A DOME

EA 1

IE 1

BK 1

BL 1

BT 1

BV 2

BW2

BU 1

L3 LUGGAGE COMPARTMENT LIGHT

C13 OPEN DOOR WARNING LIGHT [COMB. METER]

D8 DIODE (for Interior Light)

M3 PERSONAL LIGHT

F31 (w/o Moon Roof) F32 (w/ Moon Roof) FRONT INTERIOR LIGHT

R28 REAR INTERIOR LIGHT

I12 IGNITION KEY CYLINDER LIGHT RELAY

I13 IGNITION KEY CYLINDER LIGHT

J2 JUNCTION CONENCTOR

J3 JUNCTION CONNECTOR

J4 JUNCTION CONNECTOR

B11 BACK DOOR COURTESY SW

B10 BACK DOOR COURTESY SW

B9 BACK DOOR COURTESY SW

D7 DIODE (for Interior Light)

D10 FRONT LH (LHD) D11 FRONT RH (RHD)

D11 FRONT RH (LHD) D10 FRONT LH (RHD)

D13 REAR RH

D12 REAR LH

POWER JUNCTION BOX

FL HEAD 1.0Y

FL MAIN 2.0L

FL AM1 1.25B

F14 C , F15 B , F19 A FUSIBLE LINK

BATTERY

*1: Europe Ex. 1FZ-FE
*2: Ex. Europe, 1FZ-FE

(1FZ-FE LHD)

(Ex. 1FZ-FE LHD)

(Ex. Europe)

(Europe)

(w/ Rear Wiper)

(w/o Rear Wiper)

(Swing Out Type Back Door)

(w/ Moon roof)

(w/o Moon Roof)

(w/ Moon Roof)

L (w/o Moon Roof)

(w/ Moon Roof)

(w/o Moon Roof)

L (w/o Moon Roof)

W-B (LHD)

(RHD)

(LHD)

From Light Retainer Relay (40-4)

(Australia)

From Door Lock Relay (16-2)

From Light Reminder Relay (24-3)

From Seat Belt Warning Relay (21-4)

DOOR COURTESY SW

Ground points

1D = Located on right kick panel

1E = Located on left kick panel

BF = Located on floor panel center

Power Source

Turn Signal and Hazard Warning Light

Horn

1 2 3 4

F14 C GRAY F15 B, F19 A

FUSIBLE LINK

I14 IGNITION SW

*4 1FZ-FE RHD
*5 Ex. 1FZ-FE RHD

W (Ex. 1HZ IHD-T Europe)
R (1HZ IHD-T Europe)

F26 FUSE BLOCK 7.5A TURN

15A HAZ-HORN

INDICATOR LIGHT (COMB. METER)

D GRAY

E BLUE

*3 (Ex. w/o Tachometer in Middle East)
*4 (w/o Tachometer in Middle East)

50A AM1

POWER JUNCTION BOX

H11 HAZARD SW

TURN SIGNAL FLASHER

To Theft Deterrent ECU (16-3)

HORN RELAY

F14 C, F15 B, F19 A FUSIBLE LINK
FL MAIN 2.0L
FL AM1 1.25B
FL HEAD 1.0Y
(Europe, Diesel)

BATTERY

*1 Europe, 1FZ-FE
*2 Ex. Europe, 1FZ-FE
*3 Ex. 1FZ-FE LHD
*6 Ex. 1HZ IHD-T Europe

J1 JUNCTION CONNECTOR

F3 FRONT SIDE TURN SIGNAL LIGHT LH

F5 FRONT TURN SIGNAL LIGHT LH

T15 A, T16 B TRAILER SOCKET (for Turn Signal Light)

(w/o Trailer Socket)

R17 REAR TURN SIGNAL LIGHT LH (REAR COMB. LIGHT LH)

T15 A BLACK

T16 B BLACK

TRAILER SOCKET (FOR TURN SIGNAL LIGHT)

C15 TURN SIGNAL SW (COMB. SW)

R18 REAR TURN SIGNAL LIGHT RH (REAR COMB. LIGHT RH)

F6 FRONT TURN SIGNAL LIGHT RH

F4 FRONT SIDE TURN SIGNAL LIGHT RH

J3 JUNCTION CONNECTOR

INDICATOR LIGHT (COMB. METER)

H9 H10 HORN

C15 HORN SW (COMB. SW)

From Theft Deterrent ECU (16-3)

Ground points

EA = Located on right front fender

EB = Located on left front fender

ID = Located on right kick panel

IE = Located on left kick panel

BG = Located on back panel center

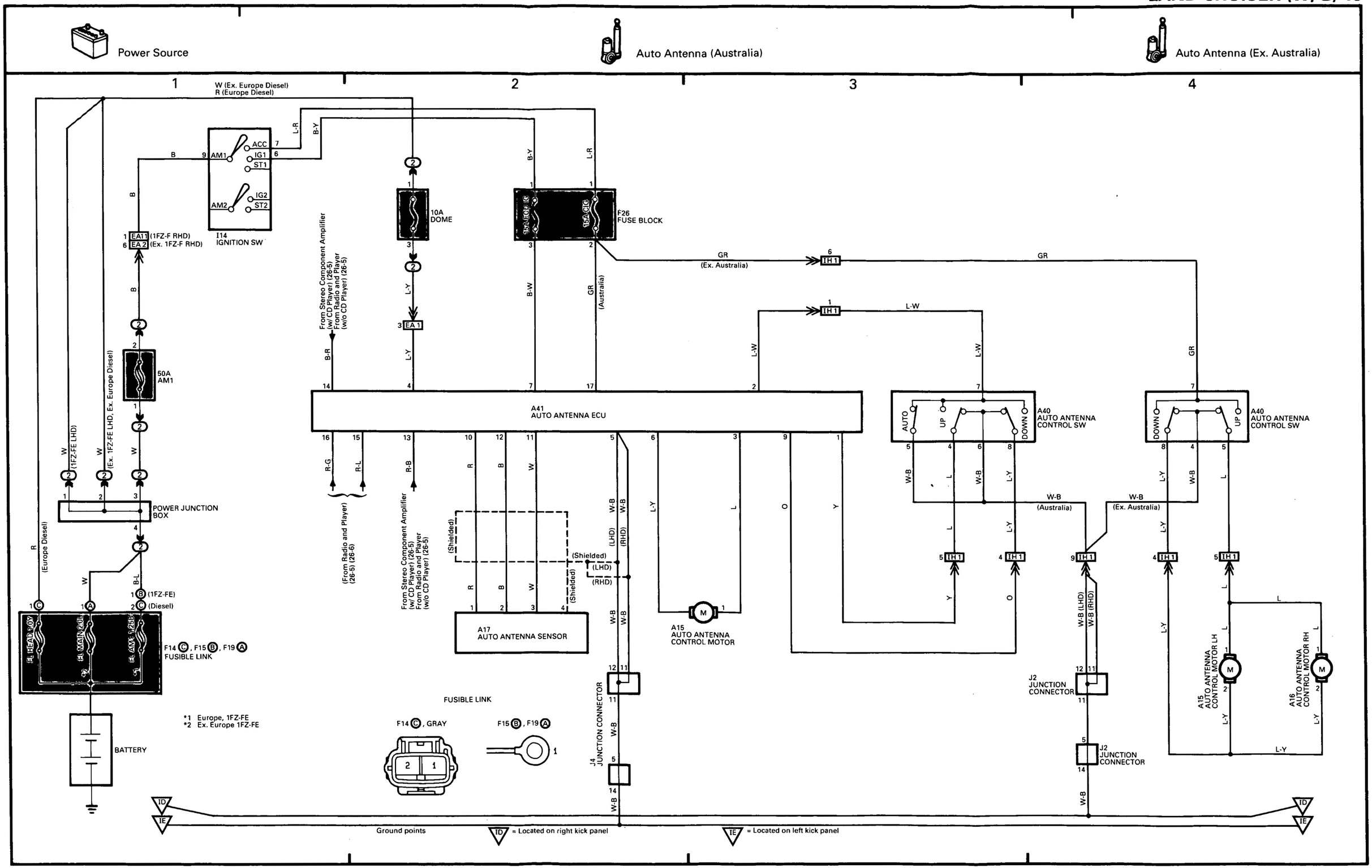
Power Source
Auto Antenna (Australia)
Auto Antenna (Ex. Australia)
1
2
3
4
W (Ex. Europe Diesel)
R (Europe Diesel)
I14
IGNITION SW
AM1
AM2
ACC
IG1
ST1
IG2
ST2
EA1 (1FZ-F RHD)
EA2 (Ex. 1FZ-F RHD)
50A
AM1
POWER JUNCTION BOX
(1FZ-FE LHD)
(Ex. 1FZ-FE LHD, Ex. Europe Diesel)
(Europe Diesel)
(1FZ-FE)
(Diesel)
F14 C, F15 B, F19 A
FUSIBLE LINK
BATTERY
*1 Europe, 1FZ-FE
*2 Ex. Europe 1FZ-FE
10A
DOME
EA1
From Stereo Component Amplifier (w/ CD Player) (26-5)
From Radio and Player (w/o CD Player) (26-5)
(From Radio and Player) (26-5) (26-6)
F26
FUSE BLOCK
GR
(Ex. Australia)
(Australia)
IH1
A41
AUTO ANTENNA ECU
A40
AUTO ANTENNA CONTROL SW
AUTO
UP
DOWN
W-B
(Australia)
(Ex. Australia)
(Shielded)
(LHD)
(RHD)
A17
AUTO ANTENNA SENSOR
A15
AUTO ANTENNA CONTROL MOTOR
J4
JUNCTION CONNECTOR
J2
JUNCTION CONNECTOR
A15
AUTO ANTENNA CONTROL MOTOR LH
A16
AUTO ANTENNA CONTROL MOTOR RH
FUSIBLE LINK
F14 C, GRAY
F15 B, F19 A
Ground points
ID = Located on right kick panel
IE = Located on left kick panel

Power Source

Rear Fog Light

1 2 3 4

W
W
W
G
G
B-R
W
R
G
R-B
G
B-R
R-L
R-W
R-W
R-W
B-R
R-W
G-R
R-W
W
W
W
R-W
R-W
R-W
G-R
W-B
W-B
W-B

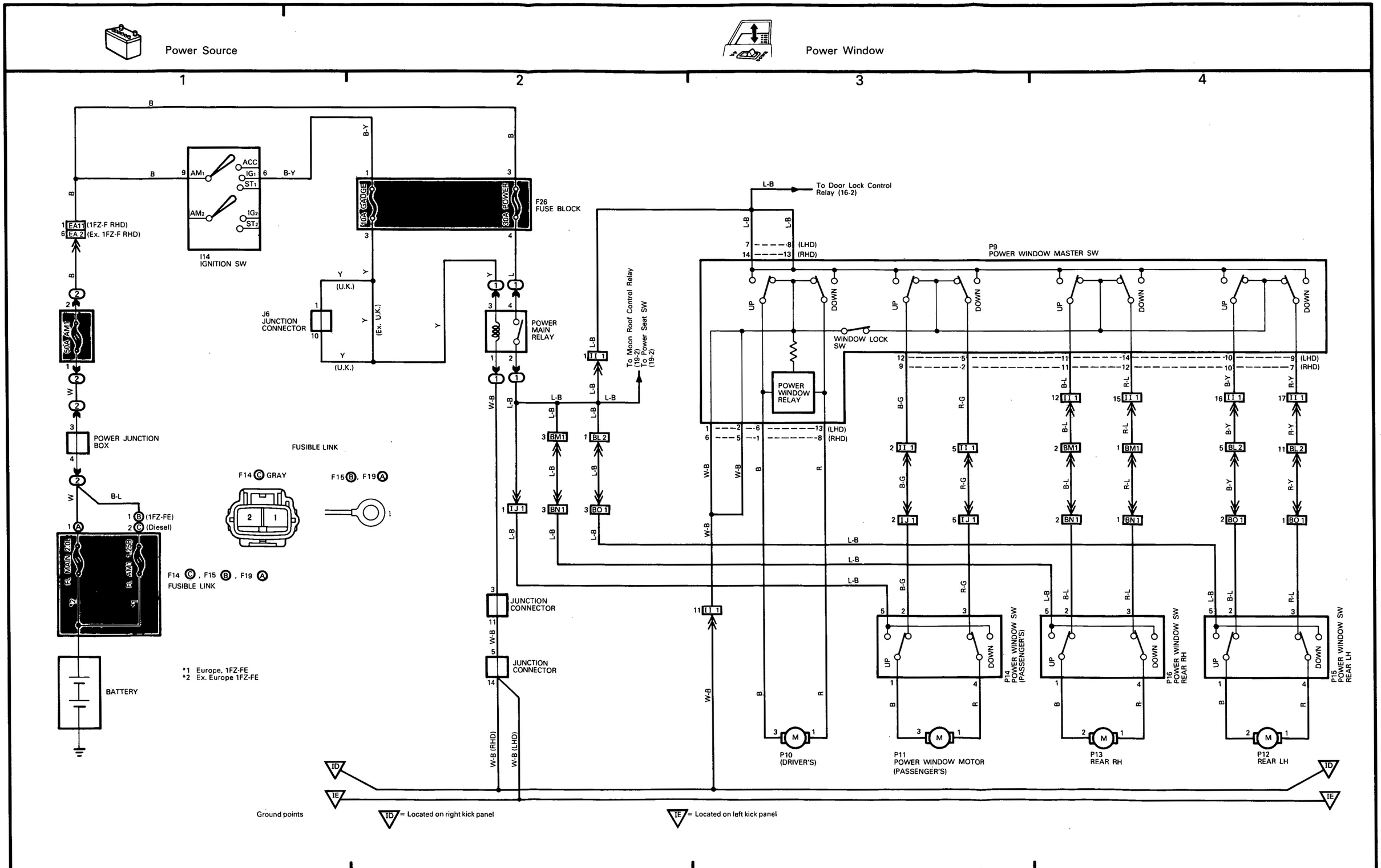
Power Source
Power Window
1
2
3
4
I14
IGNITION SW
F26
FUSE BLOCK
10A GAUGE
30A POWER
J6
JUNCTION
CONNECTOR
POWER
MAIN
RELAY
To Moon Roof Control Relay (19-2)
To Power Seat SW (19-2)
To Door Lock Control Relay (16-2)
P9
POWER WINDOW MASTER SW
WINDOW LOCK SW
POWER WINDOW RELAY
EA11 (1FZ-F RHD)
EA 2 (Ex. 1FZ-F RHD)
50A AM1
POWER JUNCTION BOX
FUSIBLE LINK
F14 C GRAY
F15 B, F19 A
B (1FZ-FE)
C (Diesel)
FL MAIN 2.0L
FL AM1 1.25B
F14 C, F15 B, F19 A
FUSIBLE LINK
BATTERY
*1 Europe, 1FZ-FE
*2 Ex. Europe 1FZ-FE
JUNCTION CONNECTOR
JUNCTION CONNECTOR
P10
(DRIVER'S)
P11
POWER WINDOW MOTOR
(PASSENGER'S)
P14
POWER WINDOW SW
(PASSENGER'S)
P13
REAR RH
P16
POWER WINDOW SW
REAR RH
P12
REAR LH
P15
POWER WINDOW SW
REAR LH
Ground points
ID = Located on right kick panel
IE = Located on left kick panel

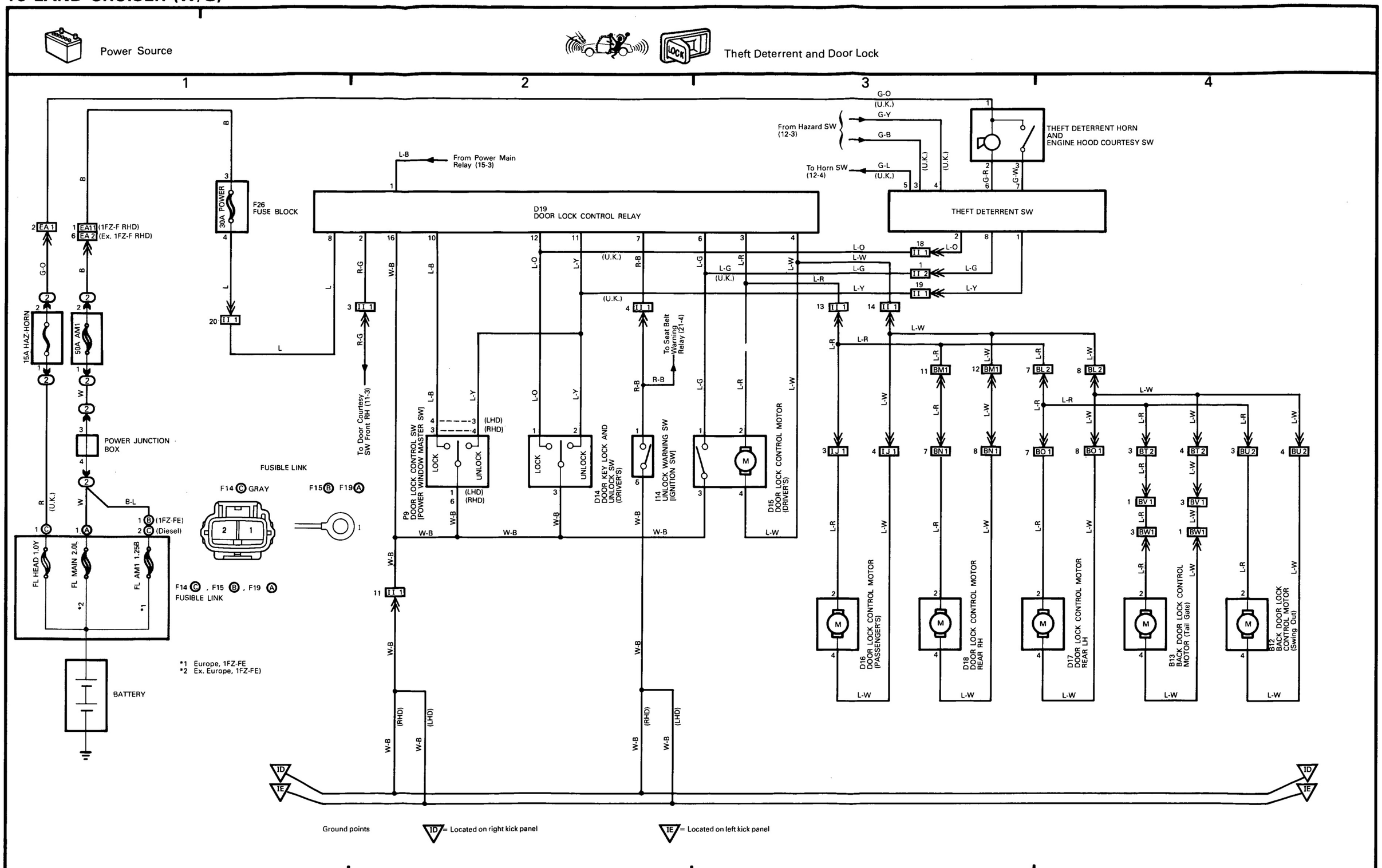
Power Source
Theft Deterrent and Door Lock
1
2
3
4
From Power Main Relay (15-3)
From Hazard SW (12-3)
To Horn SW (12-4)
THEFT DETERRENT HORN AND ENGINE HOOD COURTESY SW
THEFT DETERRENT SW
D19 DOOR LOCK CONTROL RELAY
F26 FUSE BLOCK
30A POWER
15A HAZ-HORN
50A AM1
POWER JUNCTION BOX
FUSIBLE LINK
F14 GRAY
F15 F19
F14 , F15 , F19
FUSIBLE LINK
FL HEAD 1.0Y
FL MAIN 2.0L
FL AM1 1.25B
BATTERY
*1 Europe, 1FZ-FE
*2 Ex. Europe, 1FZ-FE)
To Door Courtesy SW Front RH (11-3)
To Seat Belt Warning Relay (21-4)
P9 DOOR LOCK CONTROL SW [POWER WINDOW MASTER SW]
LOCK
UNLOCK
D14 DOOR KEY LOCK AND UNLOCK SW (DRIVER'S)
I14 UNLOCK WARNING SW [IGNITION SW]
D15 DOOR LOCK CONTROL MOTOR (DRIVER'S)
D16 DOOR LOCK CONTROL MOTOR (PASSENGER'S)
D18 DOOR LOCK CONTROL MOTOR REAR RH
D17 DOOR LOCK CONTROL MOTOR REAR LH
B13 BACK DOOR LOCK CONTROL MOTOR (Tail Gate)
B12 BACK DOOR LOCK CONTROL MOTOR (Swing Out)
Ground points
ID = Located on right kick panel
IE = Located on left kick panel

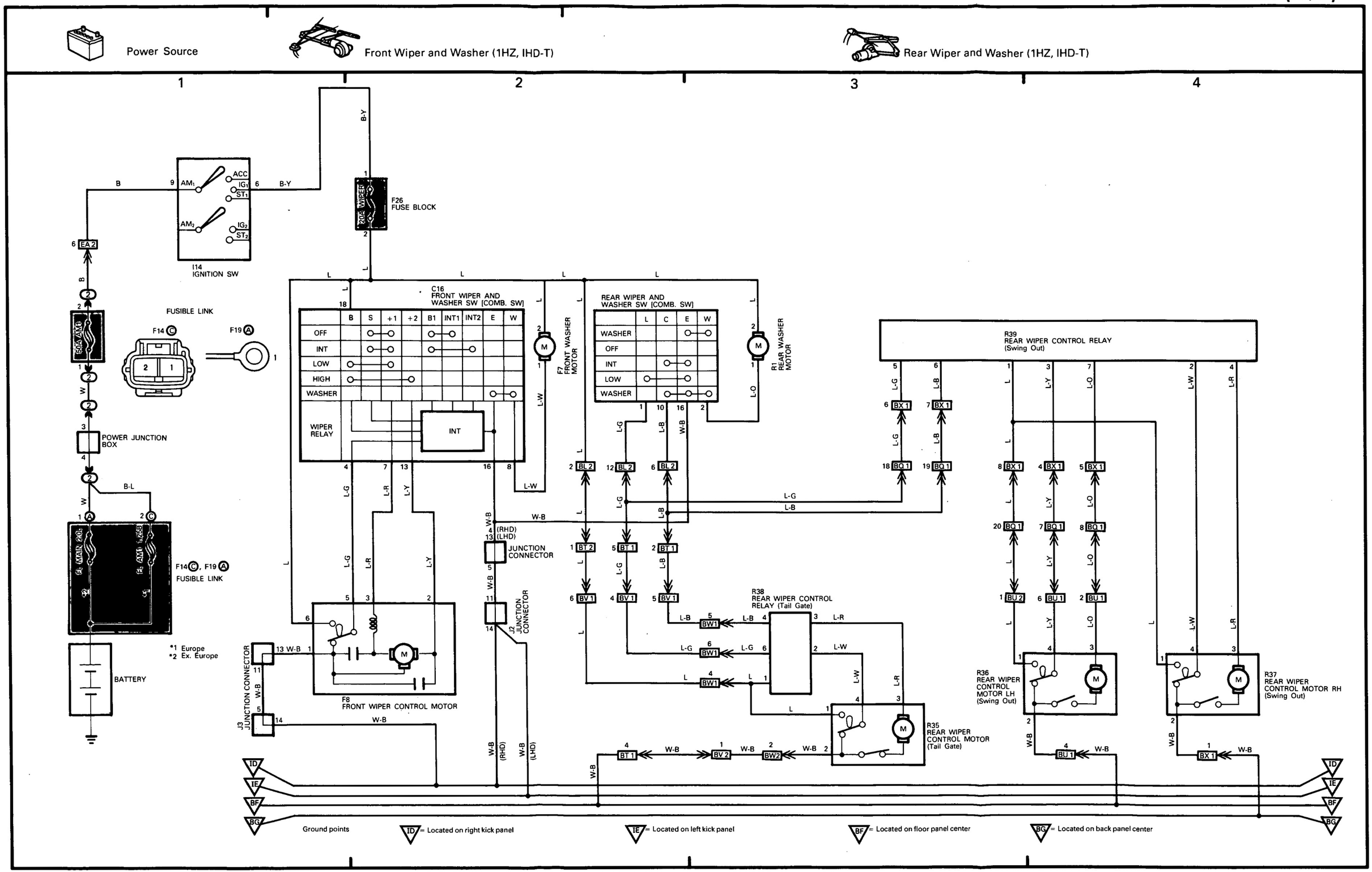
Power Source
Front Wiper and Washer (1HZ, IHD-T)
Rear Wiper and Washer (1HZ, IHD-T)
1
2
3
4
I14
IGNITION SW
F26
FUSE BLOCK
20A WIPER
FUSIBLE LINK
F14 C
F19 A
POWER JUNCTION BOX
F14 C, F19 A
FUSIBLE LINK
*1 Europe
*2 Ex. Europe
BATTERY
C16
FRONT WIPER AND WASHER SW [COMB. SW]
OFF
INT
LOW
HIGH
WASHER
WIPER RELAY
INT
F7
FRONT WASHER MOTOR
REAR WIPER AND WASHER SW [COMB. SW]
WASHER
OFF
INT
LOW
WASHER
R1
REAR WASHER MOTOR
R39
REAR WIPER CONTROL RELAY
(Swing Out)
JUNCTION CONNECTOR
J2
JUNCTION CONNECTOR
J3
JUNCTION CONNECTOR
F8
FRONT WIPER CONTROL MOTOR
R38
REAR WIPER CONTROL RELAY (Tail Gate)
R35
REAR WIPER CONTROL MOTOR (Tail Gate)
R36
REAR WIPER CONTROL MOTOR LH
(Swing Out)
R37
REAR WIPER CONTROL MOTOR RH
(Swing Out)
Ground points
ID = Located on right kick panel
IE = Located on left kick panel
BF = Located on floor panel center
BG = Located on back panel center

Power Source

Rear Window Defogger

Seat Heater

1 2 3 4

3 EA3 (LHD)
6 EA7 (RHD)

1 EA1 (1FZ-F RHD)
6 EA2 (Ex. 1FZ-F RHD)

I14 IGNITION SW

ACC, IG1, ST1, AM1, IG2, ST2

10A GAUGE, 20A DEFOG

F26 FUSE BLOCK

J6 JUNCTION CONNECTOR

DEFOGGER RELAY

D3 DEFOGGER SW

REAR WINDOW DEFOGGER
R29 A, R30 B, R31 A, R32 B, R33 A, R34 B

F26 FUSE BLOCK
20A REAR-HTR

BM2, Ba1

S17 SEAT HEATER SW LH
S18 SEAT HEATER SW RH

LOW, HIGH

S15 SEAT HEATER LH
S16 SEAT HEATER RH

LO, HI

SEAT HEATER (Seat Cushion)
SEAT HEATER (Seat Back)

(Swing Out Type Back Door)
(Ex. Swing Out Type Back Door)

REAR WINDOW DEFOGGER
R29 A, R30 B
R31 A, R32 B
R33 A, R34 B
LH, RH

BT1, BT2, BV1, BV2, BW1, BW2, Be1, Be2
BU1, BU2, Bf1, BX1, BQ1, Bq1

FUSIBLE LINK
F14 C GRAY
F15 B, F19 A

POWER JUNCTION BOX

F14 C, F15 B, F19 A
FUSIBLE LINK

(1FZ-FE)
(Diesel)

*1 Europe, 1FZ-FE
*2 Ex. Europe, 1FZ-FE

BATTERY

W-B (LHD)
W-B (RHD)

ID, IE, BF, BG

Ground points

ID = Located on right kick panel
IE = Located on left kick panel
BF = Located on floor panel center
BG = Located on back panel center

Power Source | Moon Roof | Power Seat | Fuel Heater

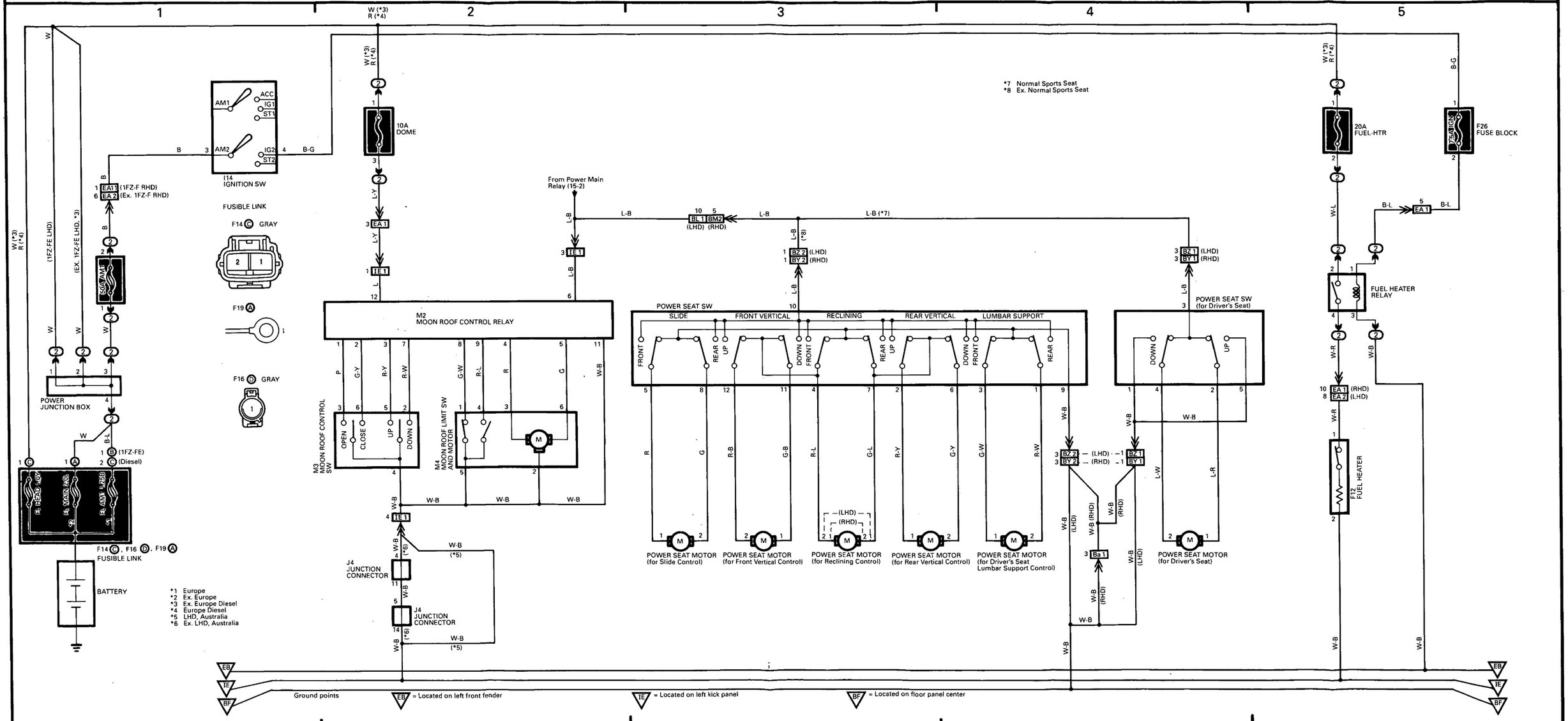

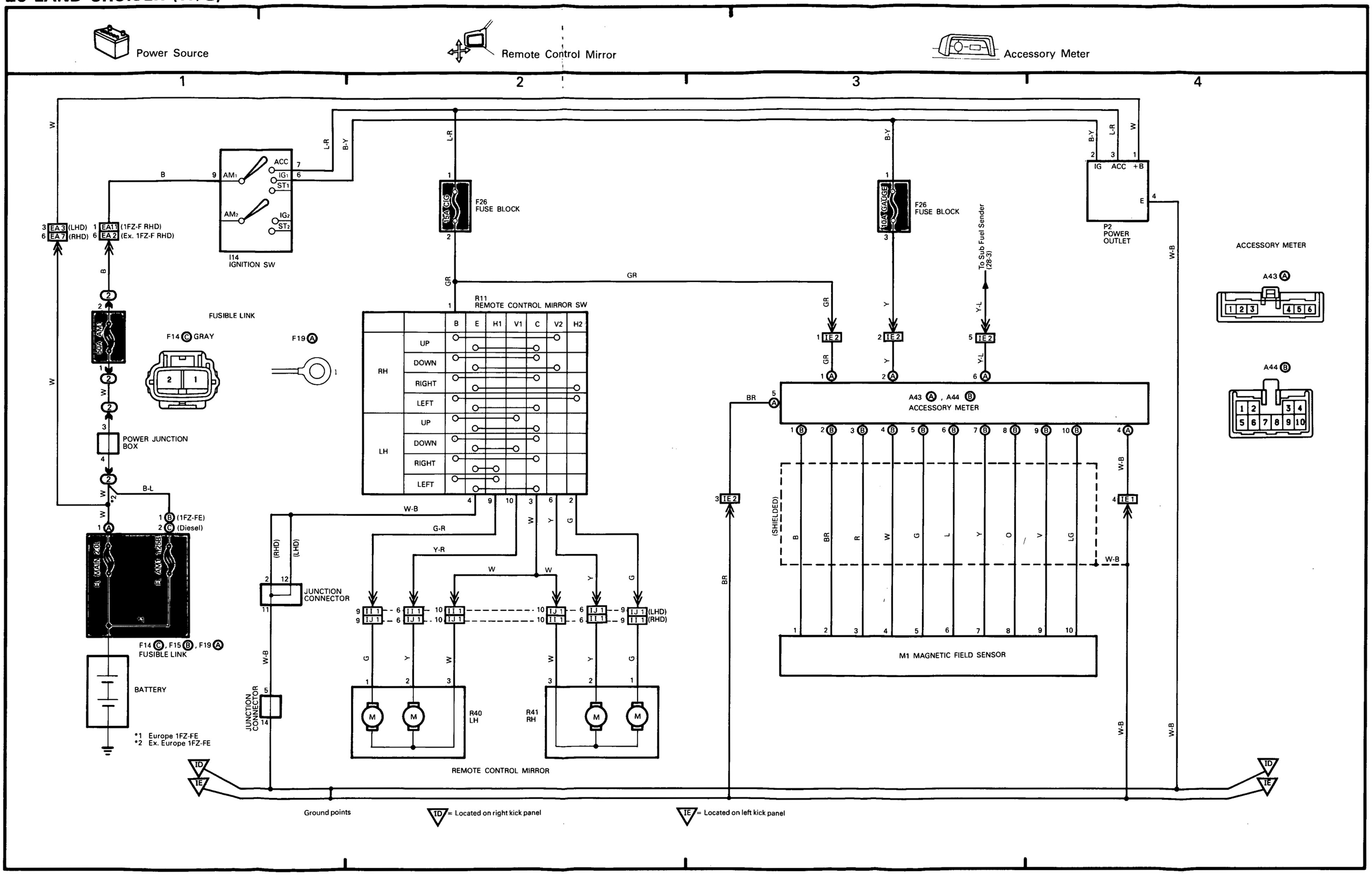
Power Source
Remote Control Mirror
Accessory Meter
1
2
3
4
I14
IGNITION SW
F26
FUSE BLOCK
F26
FUSE BLOCK
P2
POWER
OUTLET
ACCESSORY METER
A43 Ⓐ
A44 Ⓑ
To Sub Fuel Sender
(28-3)
FUSIBLE LINK
F14 Ⓒ GRAY
F19 Ⓐ
R11
REMOTE CONTROL MIRROR SW
RH
LH
UP
DOWN
RIGHT
LEFT
A43 Ⓐ, A44 Ⓑ
ACCESSORY METER
POWER JUNCTION
BOX
(1FZ-FE)
(Diesel)
F14 Ⓒ, F15 Ⓑ, F19 Ⓐ
FUSIBLE LINK
BATTERY
*1 Europe 1FZ-FE
*2 Ex. Europe 1FZ-FE
JUNCTION
CONNECTOR
JUNCTION
CONNECTOR
R40
LH
R41
RH
REMOTE CONTROL MIRROR
M1 MAGNETIC FIELD SENSOR
(SHIELDED)
Ground points
ID = Located on right kick panel
IE = Located on left kick panel

Power Source | Automatic Transmission Indicator | Back-Up Light | Unlock and Seat Belt Warning

1 2 3 4 5

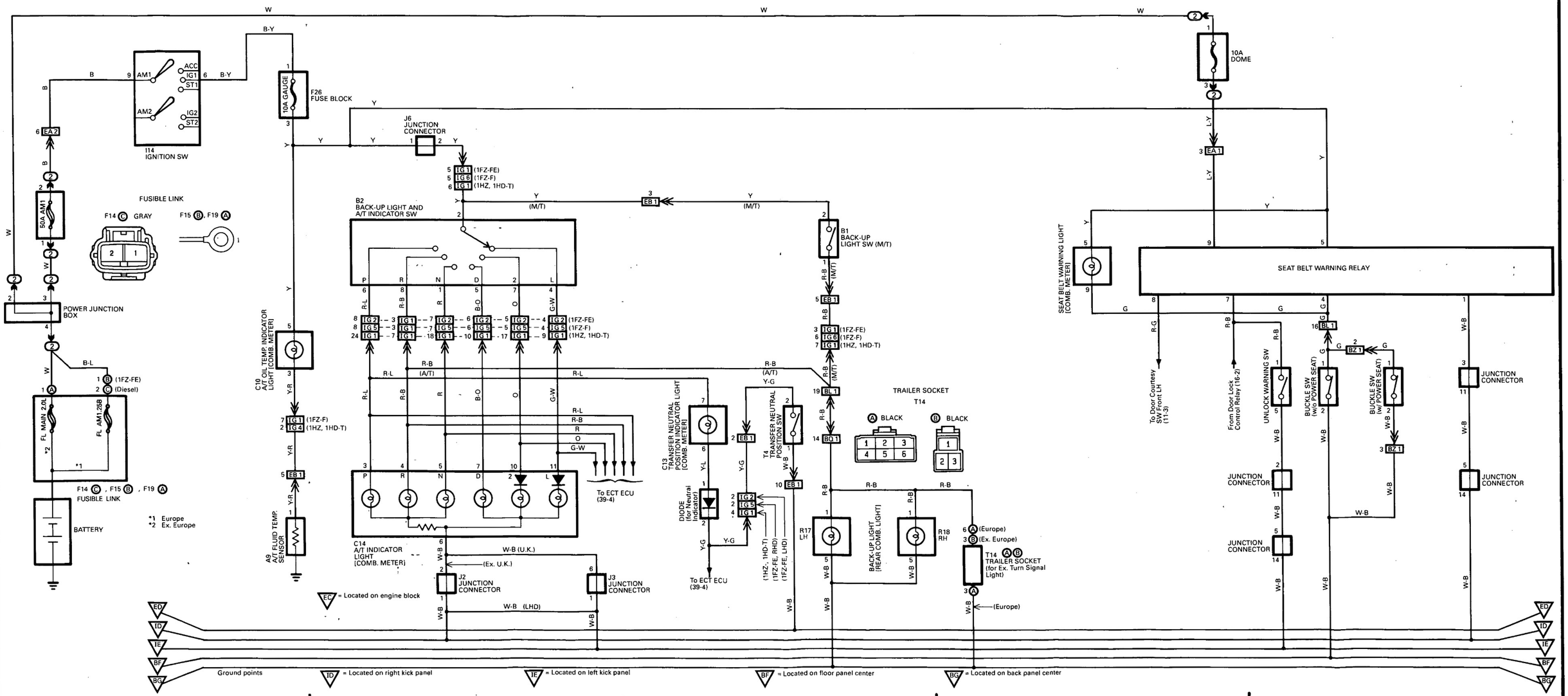

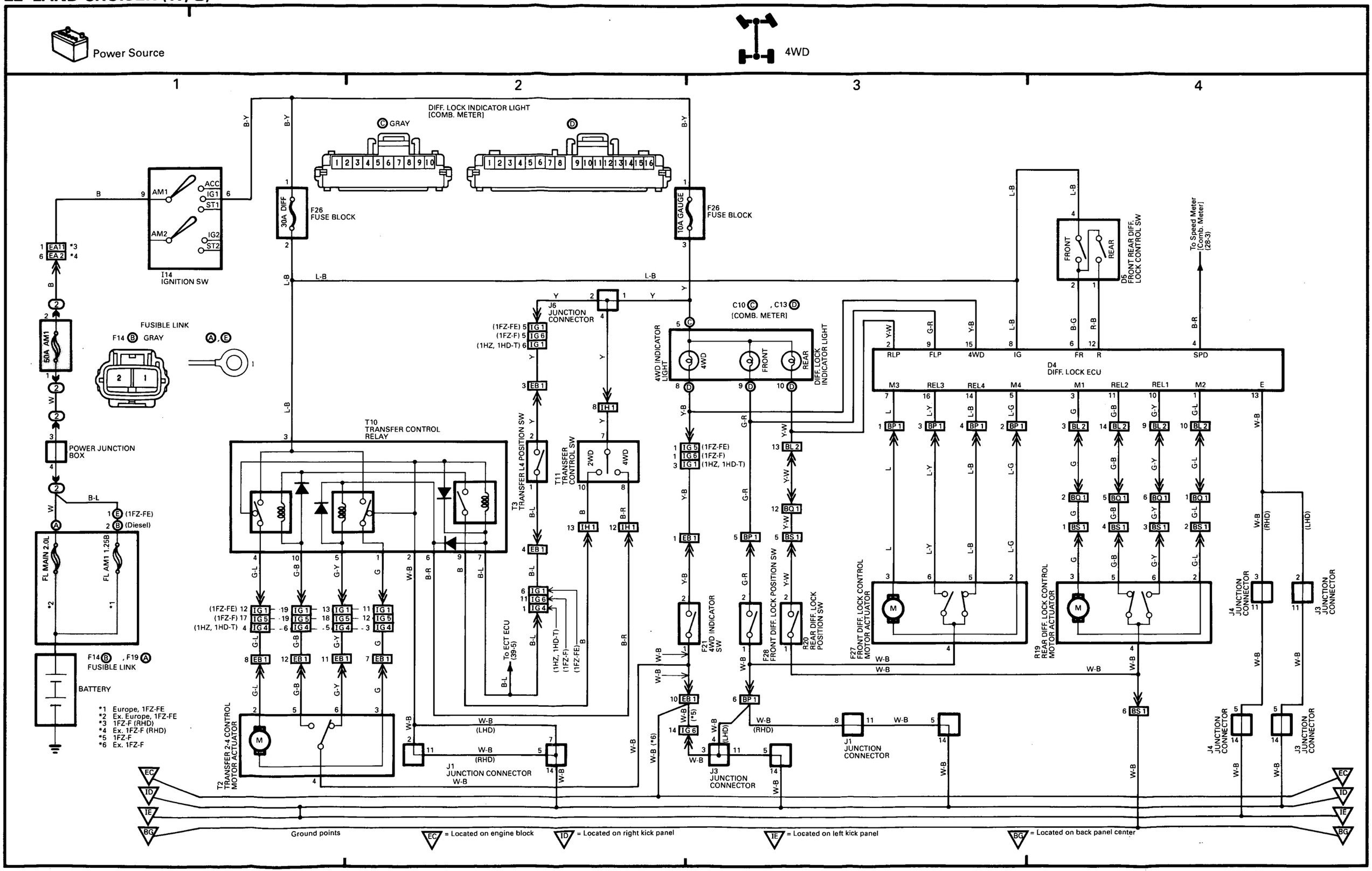
Power Source
4WD
1
2
3
4
DIFF. LOCK INDICATOR LIGHT [COMB. METER]
GRAY
F26 FUSE BLOCK
30A DIFF
10A GAUGE
I14 IGNITION SW
AM1
AM2
ACC
IG1
ST1
IG2
ST2
FUSIBLE LINK
F14 GRAY
50A AM1
POWER JUNCTION BOX
FL MAIN 2.0L
FL AM1 1.25B
(1FZ-FE)
(Diesel)
F14 , F19
FUSIBLE LINK
BATTERY
*1 Europe, 1FZ-FE
*2 Ex. Europe, 1FZ-FE
*3 1FZ-F (RHD)
*4 Ex. 1FZ-F (RHD)
*5 1FZ-F
*6 Ex. 1FZ-F
T10 TRANSFER CONTROL RELAY
T3 TRANSFER L4 POSITION SW
T11 TRANSFER CONTROL SW
2WD
4WD
J6 JUNCTION CONNECTOR
(1FZ-FE)
(1FZ-F)
(1HZ, 1HD-T)
To ECT ECU (39-5)
T2 TRANSFER 2-4 CONTROL MOTOR ACTUATOR
J1 JUNCTION CONNECTOR
(LHD)
(RHD)
C10 , C13
[COMB. METER]
4WD INDICATOR LIGHT
FRONT
REAR
DIFF. LOCK INDICATOR LIGHT
F21 4WD INDICATOR SW
F28 FRONT DIFF. LOCK POSITION SW
R20 REAR DIFF. LOCK POSITION SW
J3 JUNCTION CONNECTOR
J1 JUNCTION CONNECTOR
D5 FRONT REAR DIFF. LOCK CONTROL SW
To Speed Meter [Comb. Meter] (28-3)
D4 DIFF. LOCK ECU
RLP
FLP
4WD
IG
FR
R
SPD
M3
REL3
REL4
M4
M1
REL2
REL1
M2
E
F27 FRONT DIFF. LOCK CONTROL MOTOR ACTUATOR
R19 REAR DIFF. LOCK CONTROL MOTOR ACTUATOR
J4 JUNCTION CONNECTOR
J3 JUNCTION CONNECTOR
Ground points
EC = Located on engine block
ID = Located on right kick panel
IE = Located on left kick panel
BG = Located on back panel center

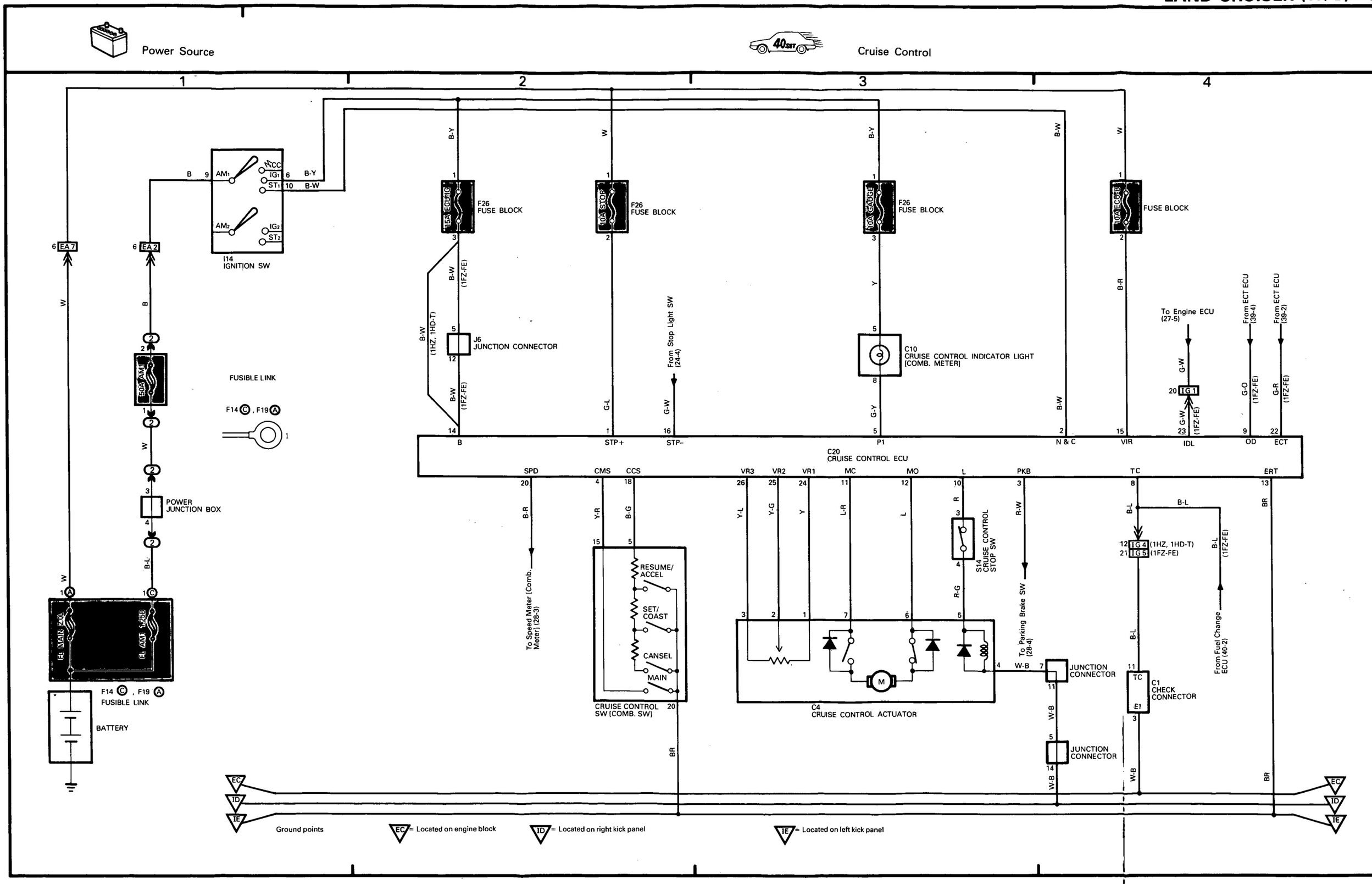
Power Source
Cruise Control
I14
IGNITION SW
F26
FUSE BLOCK
J6
JUNCTION CONNECTOR
C10
CRUISE CONTROL INDICATOR LIGHT
[COMB. METER]
FUSIBLE LINK
F14 C, F19 A
POWER
JUNCTION BOX
FL MAIN 20L
FL AM1 1.25B
BATTERY
C20
CRUISE CONTROL ECU
To Engine ECU
(27-5)
From ECT ECU
(39-4)
From ECT ECU
(39-2)
From Stop Light SW
(24-4)
To Speed Meter [Comb. Meter] (28-3)
RESUME/
ACCEL
SET/
COAST
CANSEL
MAIN
CRUISE CONTROL
SW [COMB. SW]
S14
CRUISE CONTROL
STOP SW
To Parking Brake SW
(28-4)
C4
CRUISE CONTROL ACTUATOR
JUNCTION
CONNECTOR
C1
CHECK
CONNECTOR
From Fuel Change
ECU (40-2)
Ground points
EC = Located on engine block
ID = Located on right kick panel
IE = Located on left kick panel

Power Source | Clock | Cigarette Lighter | Light Reminder | Stop Light

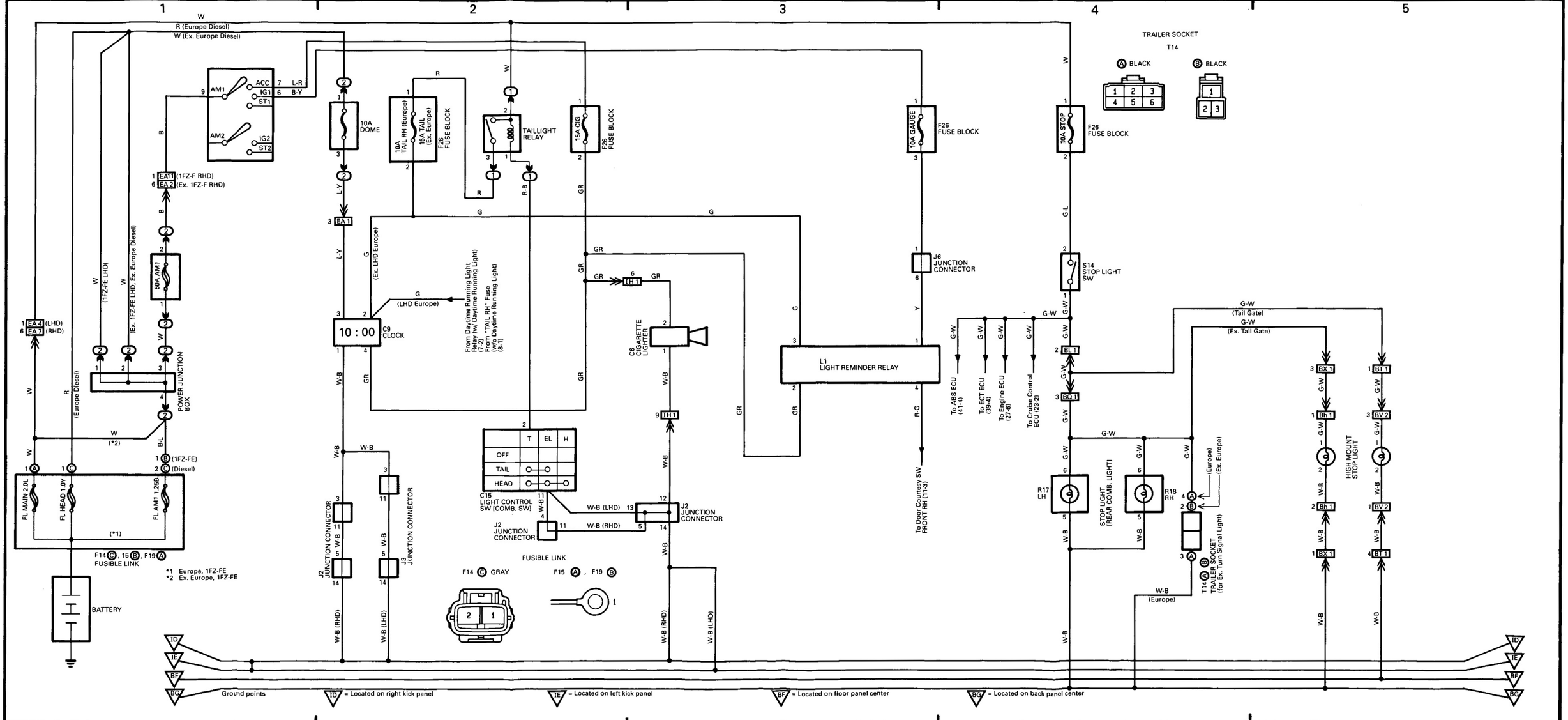

Power Source

Taillight and Illumination

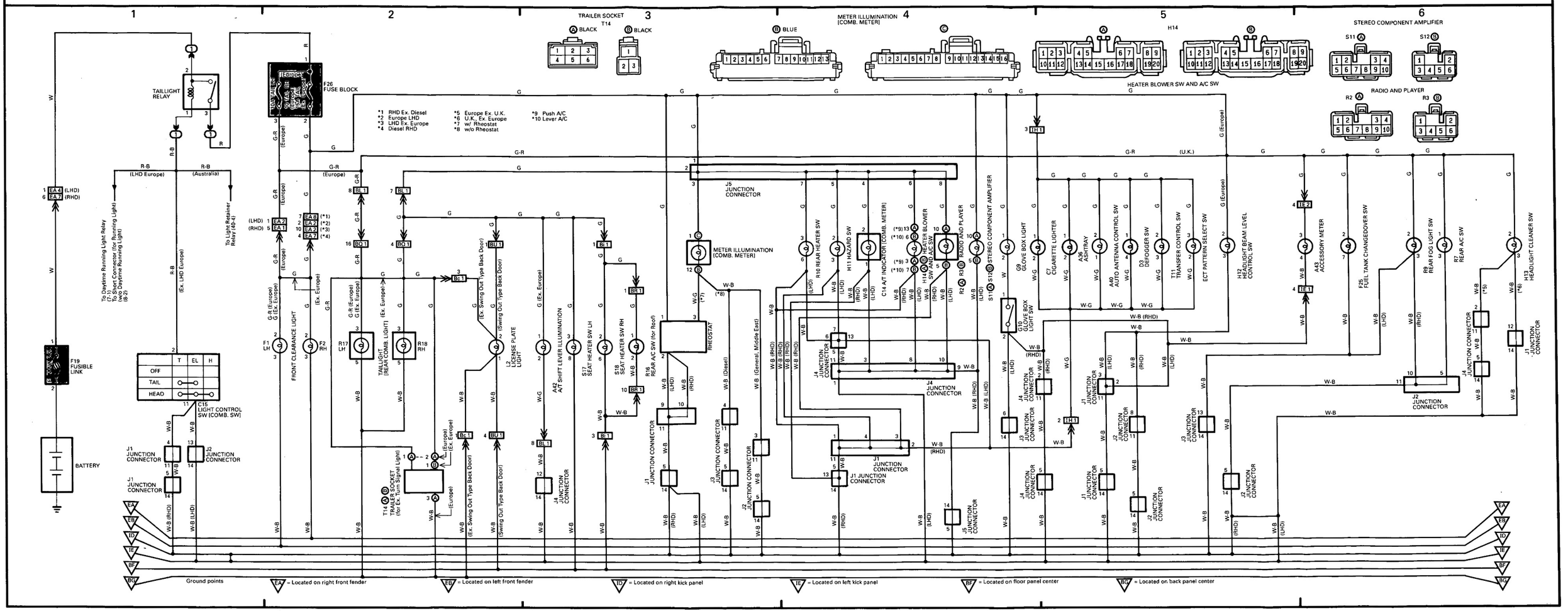

Power Source

Radio and Player (w/o CD Player)

Radio and Player (w/ CD Player)

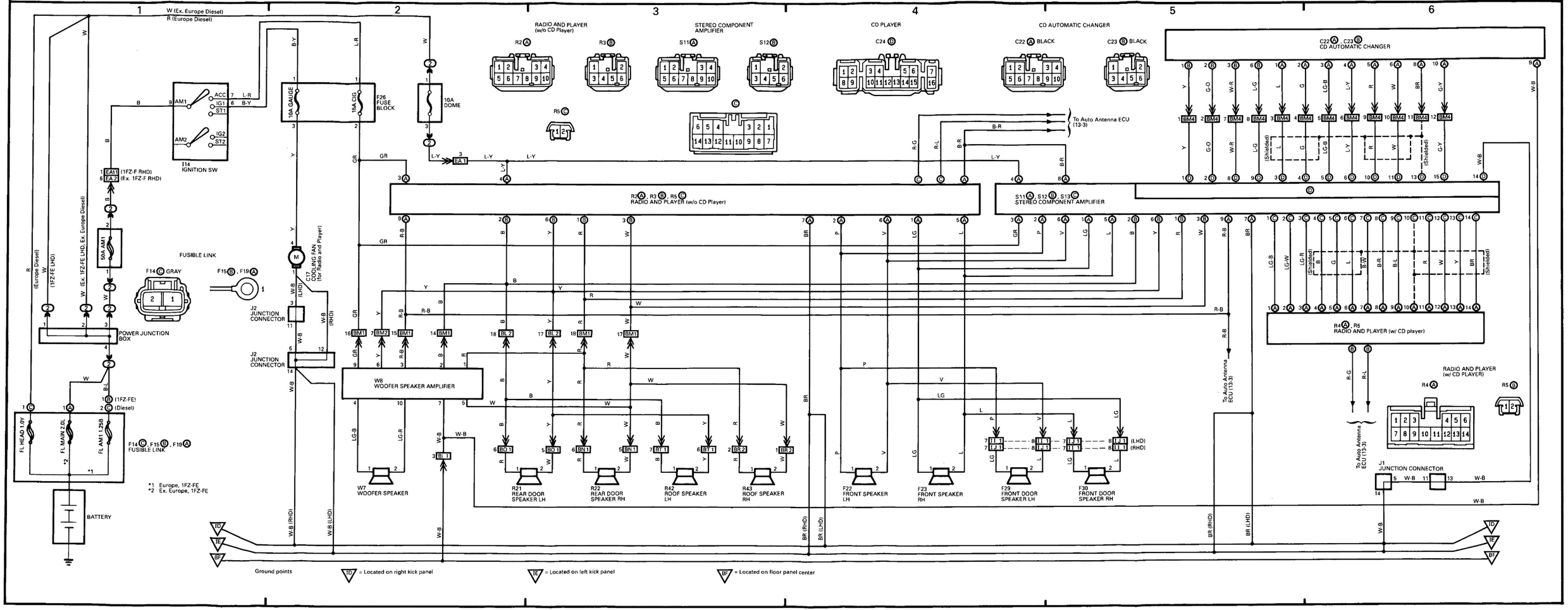

Power Source

Engine Control

H GRAY CHECK ENGINE WARNING LIGHT [COMB. METER] I BLUE

*1: LHD Europe, Australia
*2: Middle East, Australia

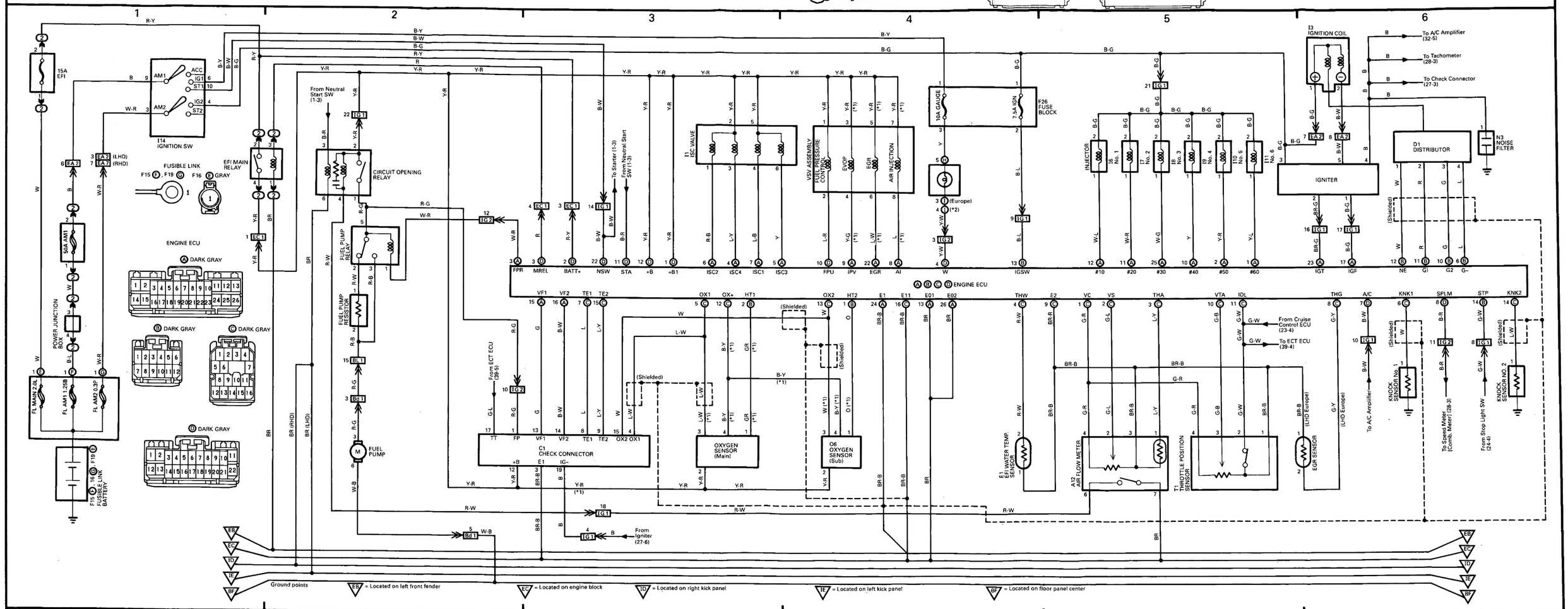

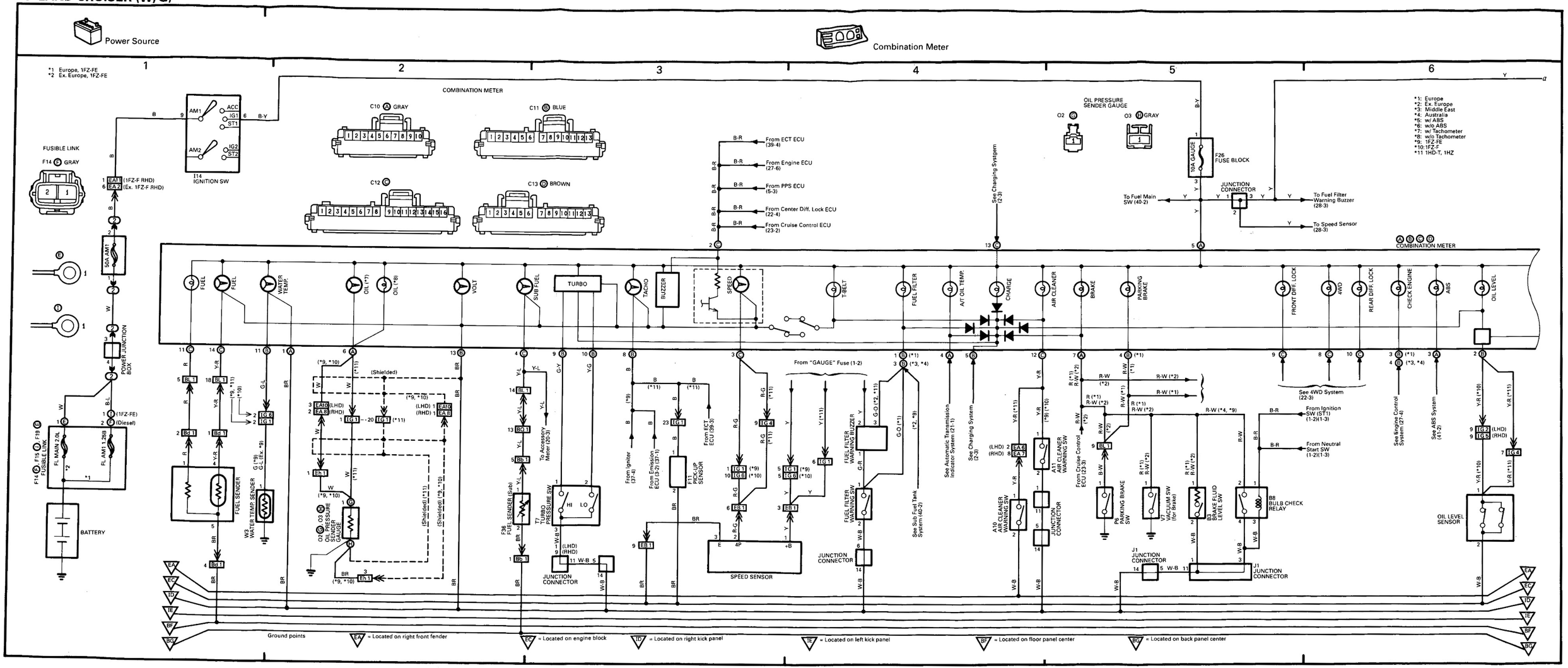
Power Source
Combination Meter
*1: Europe, 1FZ-FE
*2: Ex. Europe, 1FZ-FE
*1: Europe
*2: Ex. Europe
*3: Middle East
*4: Australia
*5: w/ ABS
*6: w/o ABS
*7: w/ Tachometer
*8: w/o Tachometer
*9: 1FZ-FE
*10 1FZ-F
*11 1HD-T, 1HZ
COMBINATION METER
FUSIBLE LINK
F14 GRAY
IGNITION SW
AM1
AM2
ACC
IG1
ST1
IG2
ST2
50A AM1
POWER JUNCTION BOX
FL MAIN 2.0L
FL AM1 1.25S
BATTERY
FUEL SENDER
W3 WATER TEMP. SENDER
O2 OIL PRESSURE SENDER GAUGE
F36 FUEL SENDER (Sub)
T7 TURBO PRESSURE SW
JUNCTION CONNECTOR
SPEED SENSOR
F11 PICK-UP
From ECT ECU (39-3)
From Igniter (37-4)
From Emission ECU (3-2), (37-1)
From ECT ECU (39-4)
From Engine ECU (27-6)
From PPS ECU (5-3)
From Center Diff. Lock ECU (22-4)
From Cruise Control ECU (23-2)
See Charging System (2-3)
OIL PRESSURE SENDER GAUGE
O3 GRAY
10A GAUGE
F26 FUSE BLOCK
JUNCTION CONNECTOR
To Fuel Main SW (40-2)
To Fuel Filter Warning Buzzer (28-3)
To Speed Sensor (28-3)
FUEL
FUEL
WATER TEMP.
OIL (*7)
OIL (*8)
VOLT
SUB FUEL
TURBO
TACHO
BUZZER
SPEED
T-BELT
FUEL FILTER
A/T OIL TEMP.
CHARGE
AIR CLEANER
BRAKE
PARKING BRAKE
FRONT DIFF. LOCK
4WD
REAR DIFF. LOCK
CHECK ENGINE
ABS
OIL LEVEL
From "GAUGE" Fuse (1-2)
FUEL FILTER WARNING BUZZER
FUEL FILTER WARNING SW
See Sub Fuel Tank System (40-2)
See Automatic Transmission Indicator System (21-1)
See Charging System (2-3)
A10 AIR CLEANER WARNING SW
A11 AIR CLEANER WARNING SW
From Cruise Control ECU (23-3)
PARKING BRAKE SW
V7 VACUUM SW (for Brake)
B3 BRAKE FLUID LEVEL SW
B8 BULB CHECK RELAY
J1 JUNCTION CONNECTOR
See 4WD System (22-3)
From Ignition SW (ST1) (1-2H, 1-3)
From Neutral Start SW (1-2H, 1-3)
See Engine Control System (27-4)
See ABS System (34-2)
OIL LEVEL SENSOR
Ground points
EA = Located on right front fender
EC = Located on engine block
ID = Located on right kick panel
IE = Located on left kick panel
BF = Located on floor panel center
BG = Located on back panel center

Combination Meter

Fuel Tank Changeover

*1: Europe
*2: Ex. Europe
*3: Middle East
*4: Australia
*5: w/ ABS
*6: w/o ABS
*7: w/ Tachometer
*8: w/o Tachometer
*9: 1FZ-FE
*10:1FZ-F
*11:1HD-T, 1HZ

COMBINATION METER
C10 (A) GRAY
(B) BLUE
C10 (A), C11 (B), C12 (C), C13 (D), C14 (B)
COMBINATION METER
SPARE WHEEL CARRIER
GLOW
CENTER DIFF LOCK
SEAT BELT
CRUISE
TRANSFER NEUTRAL POSITION
DOOR
HIGH BEAM
TURN LH
TURN RH
REAR FOG
HAZARD
METER ILLUMINATION
P
R
N
D
2
1
A/T ILLUMINATION
ECT POWER
O/D OFF
See Automatic Transmission Indicator System (21-3)
See Interior Light System (11-2)
See Head light System (7-4)(8-4)(9-4)(10-3)
See Turn Signal and Hazard System (12-3)
See Rear Fog System (14-3)
See Turn Signal and Hazard System (12-4)
See Taillight and Illumination System (25-3)
See Automatic Transmission Indicator System (21-2)
See Taillight and Illumination System (25-4)
See ECT System (39-2)
See Glow Plug System (4-3)
See ABS System
See Unlock and Seat Belt Warning System (21-4)
See Cruise Control System (23-3)
See Automatic Transmission Indicator System (21-3)
See Interior Light System (11-2)
See Taillight and Illumination System (25-3)
See Taillight and Illumination System (25-4)
See ECT System (39-2)
W-B (RHD)
W-B (LHD)
JUNCTION CONNECTOR
SPARE WHEEL CARRIER DETECTION SW
COMBINATION METER
(C)
(D) BROWN
F25 FUEL TANK CHANGEOVER SW
F33 FUEL CONTROL VALVE (for Return)
F34 FUEL CONTROL VALVE (for Spray)
J9 JUNCTION CONNECTOR (for Earth)
Ground points
1D = Located on right kick panel
1E = Located on left kick panel
BF = Located on floor panel center

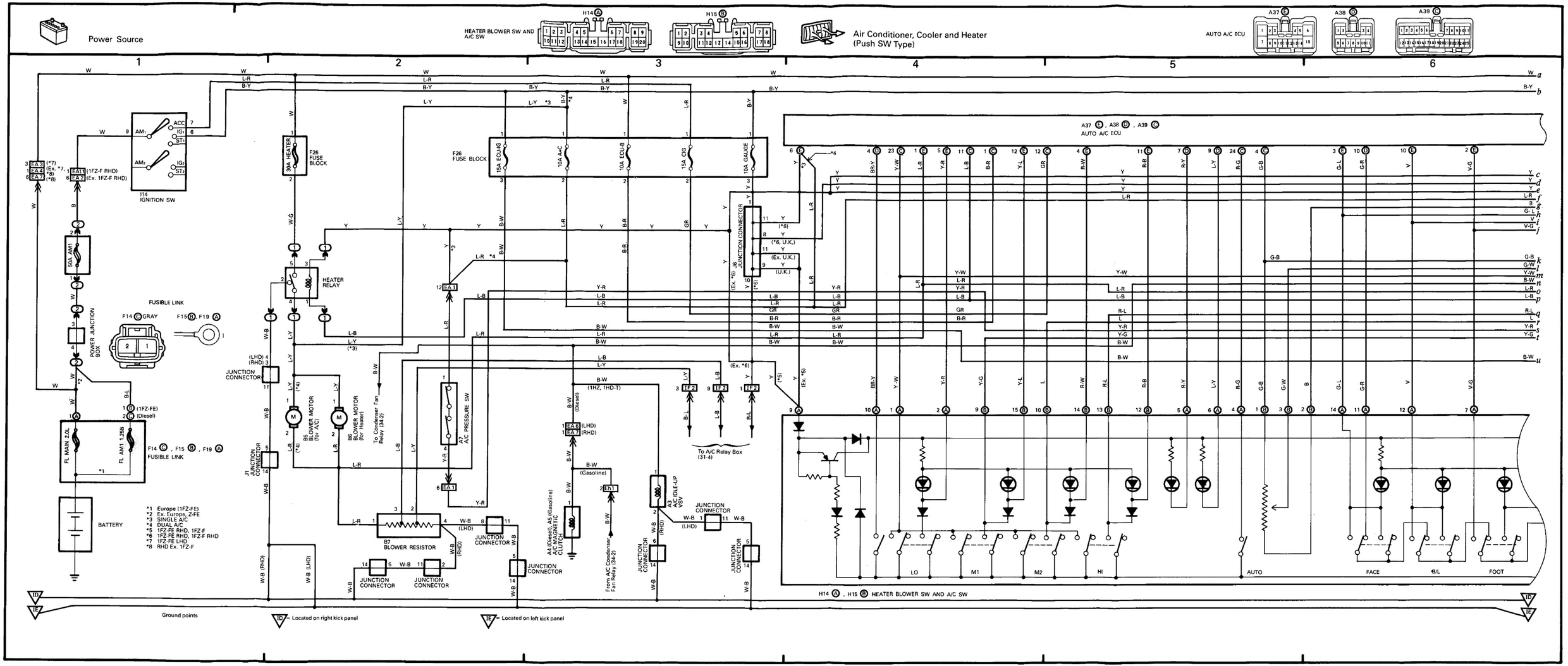
Power Source
HEATER BLOWER SW AND A/C SW
H14 A
H15 B
Air Conditioner, Cooler and Heater (Push SW Type)
AUTO A/C ECU
A37 E
A38 D
A39 C
1
2
3
4
5
6
I14 IGNITION SW
F26 FUSE BLOCK
30A HEATER
15A ECU-IG
10A A/C
10A ECU-B
15A CIG
10A GAUGE
HEATER RELAY
50A AM1
POWER JUNCTION BOX
FUSIBLE LINK
F14 C GRAY
F15 B, F19 A
FL MAIN 2.0L
FL AM1 1.25L
F14 C, F15 B, F19 A FUSIBLE LINK
BATTERY
JUNCTION CONNECTOR
B6 BLOWER MOTOR (for A/C)
B6 BLOWER MOTOR (for Heater)
To Condenser Fan Relay (34-2)
A2 A/C PRESSURE SW
B7 BLOWER RESISTOR
A4 (Diesel), A5 (Gasoline) A/C MAGNETIC CLUTCH
From A/C Condenser Fan Relay (34-2)
A3 A/C IDLE-UP VSV
To A/C Relay Box (31-4)
J6 JUNCTION CONNECTOR
*1 Europe (1FZ-FE)
*2 Ex. Europe, Z-FE
*3 SINGLE A/C
*4 DUAL A/C
*5 1FZ-FE RHD, 1FZ-F
*6 1FZ-FE RHD, 1FZ-F RHD
*7 1FZ-FE LHD
*8 RHD Ex. 1FZ-F
Ground points
1D = Located on right kick panel
1E = Located on left kick panel
H14 A, H15 B HEATER BLOWER SW AND A/C SW
LO
M1
M2
HI
AUTO
FACE
B/L
FOOT

HEATER BLOWER SW AND A/C SW

H14 (A)

H15 (B)

Air Conditioner, Cooler and Heater (Push SW Type)

AUTO A/C ECU

A37 (E)

A38 (D)

A39 (C)

1 2 3 4 5 6

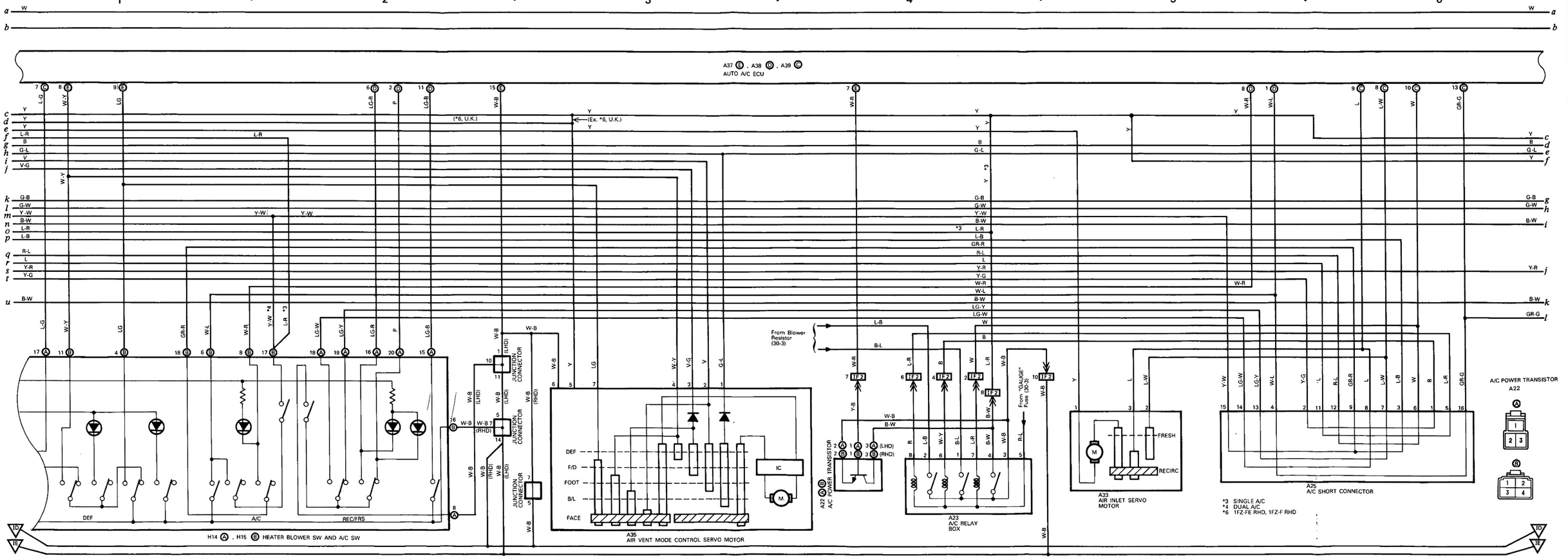

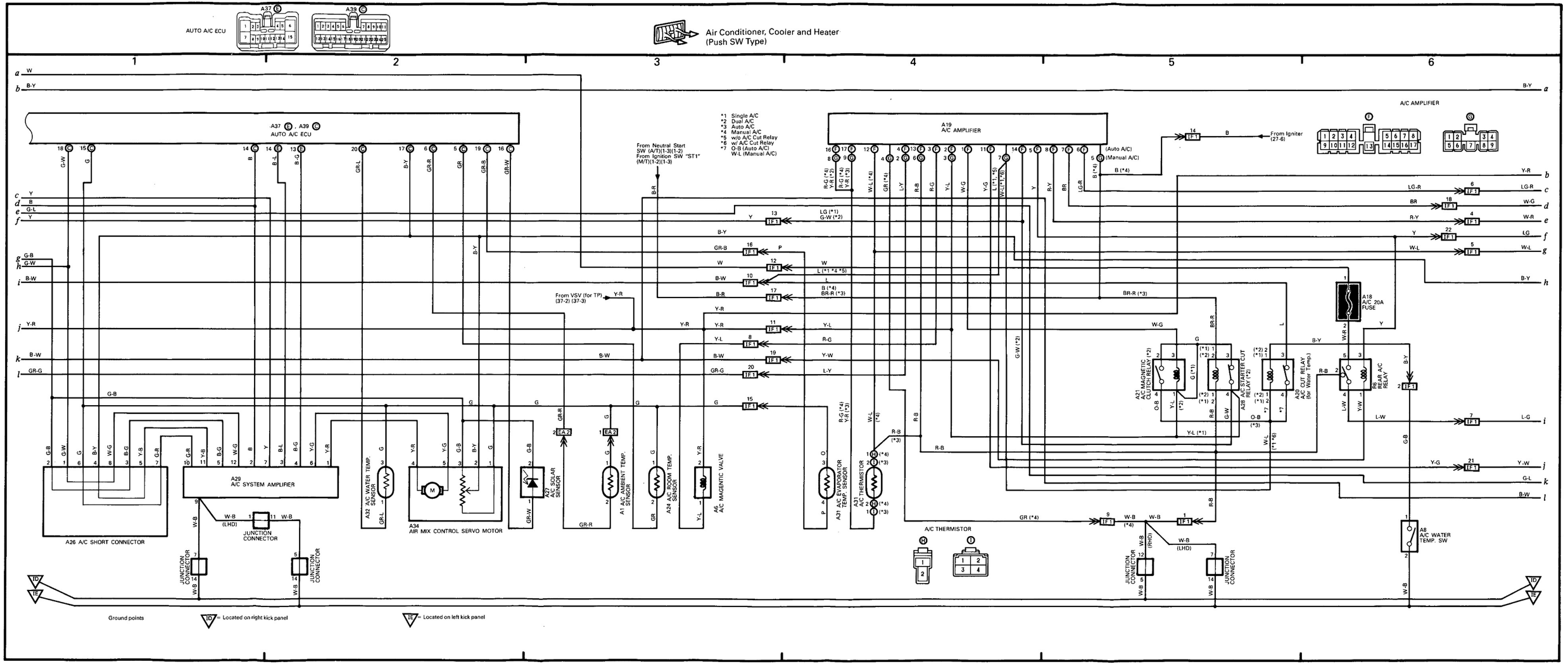
AUTO A/C ECU
A37
A39
Air Conditioner, Cooler and Heater (Push SW Type)
*1 Single A/C
*2 Dual A/C
*3 Auto A/C
*4 Manual A/C
*5 w/o A/C Cut Relay
*6 w/ A/C Cut Relay
*7 O-B (Auto A/C)
W-L (Manual A/C)
A37 , A39
AUTO A/C ECU
From Neutral Start SW (A/T)(1-3)(1-2) From Ignition SW "ST1" (M/T)(1-2)(1-3)
A19
A/C AMPLIFIER
(Auto A/C)
(Manual A/C)
From Igniter (27-6)
A/C AMPLIFIER
From VSV (for TP) (37-2) (37-3)
A18
A/C 20A FUSE
A21
A/C MAGNETIC CLUTCH RELAY
A28
A/C STARTER CUT RELAY (*2)
A20
A/C CUT RELAY (for Water Temp.)
RB
REAR A/C RELAY
A29
A/C SYSTEM AMPLIFIER
A32
A/C WATER TEMP. SENSOR
A34
AIR MIX CONTROL SERVO MOTOR
A27
A/C SOLAR SENSOR
A1
A/C AMBIENT TEMP. SENSOR
A24
A/C ROOM TEMP. SENSOR
A6
A/C MAGENTIC VALVE
A31
A/C EVAPORATOR TEMP. SENSOR
A/C THERMISTOR
A8
A/C WATER TEMP. SW
A26
A/C SHORT CONNECTOR
JUNCTION CONNECTOR
Ground points
1D = Located on right kick panel
1E = Located on left kick panel

Rear Air Conditioner (Auto)

Cool/Ice Box

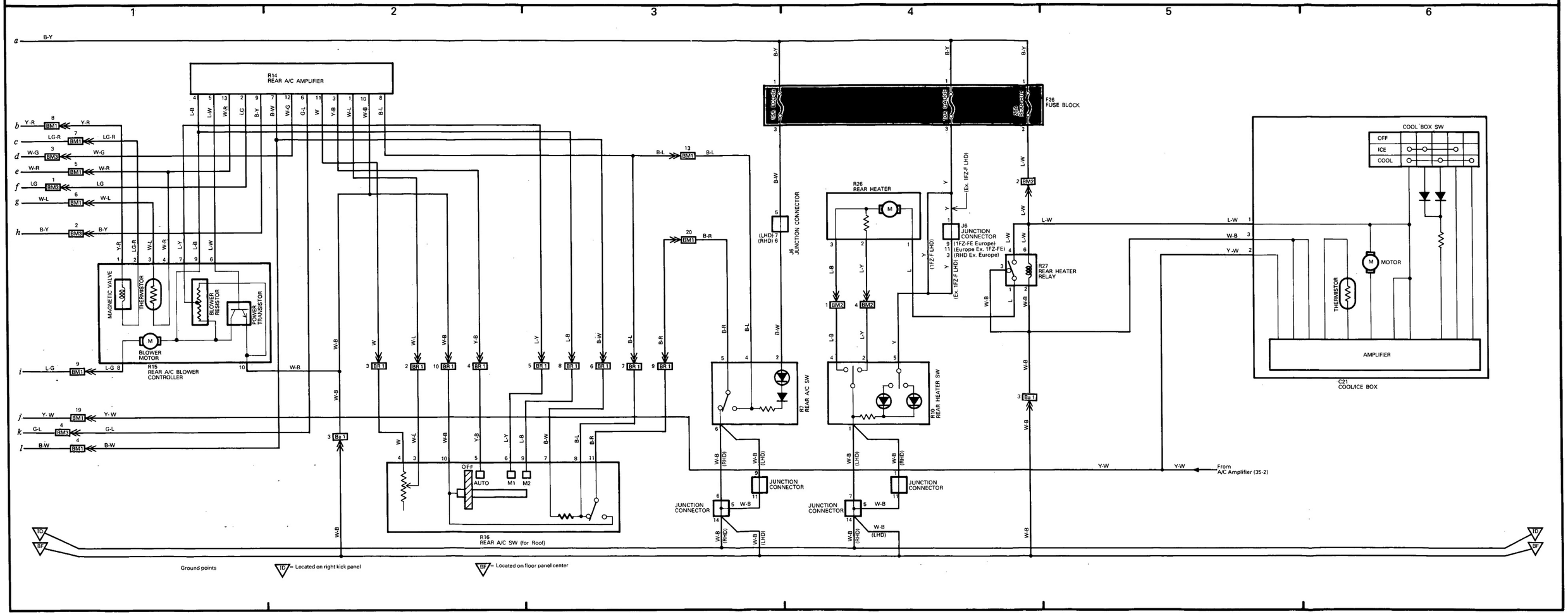

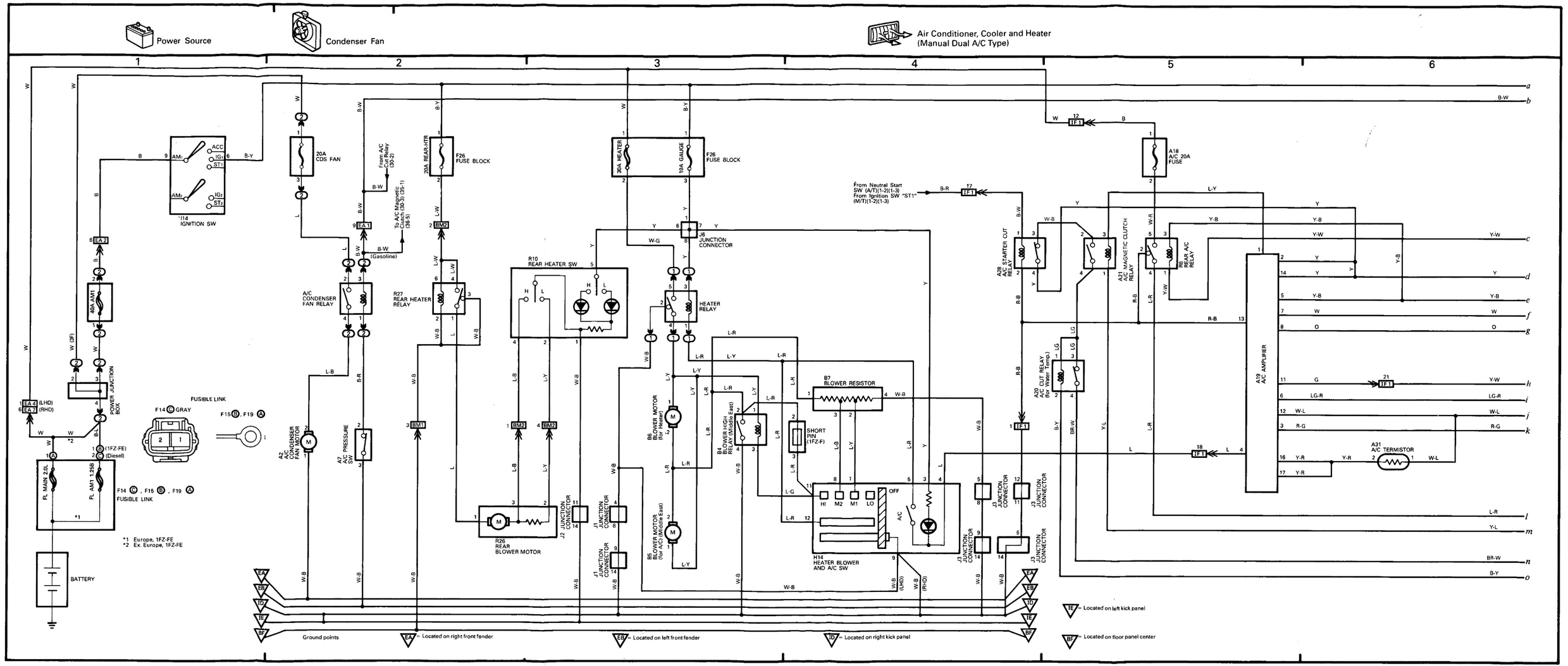
Power Source
Condenser Fan
Air Conditioner, Cooler and Heater (Manual Dual A/C Type)
1
2
3
4
5
6
BATTERY
POWER JUNCTION BOX
FUSIBLE LINK
F14 C GRAY
F15 B, F19 A
F14 C, F15 B, F19 A FUSIBLE LINK
FL MAIN 20L
FL AM1 1.25B
40A AM1
*1 Europe, 1FZ-FE
*2 Ex. Europe, 1FZ-FE
*114 IGNITION SW
20A CDS FAN
20A REAR-HTR
F26 FUSE BLOCK
30A HEATER
10A GAUGE
A/C CONDENSER FAN RELAY
R27 REAR HEATER RELAY
R10 REAR HEATER SW
HEATER RELAY
J6 JUNCTION CONNECTOR
A2 A/C CONDENSER FAN MOTOR
A7 A/C PRESSURE SW
R26 REAR BLOWER MOTOR
B6 BLOWER MOTOR (for Heater)
B5 BLOWER MOTOR (for A/C) (Middle East)
B4 BLOWER HIGH RELAY (Middle East)
B7 BLOWER RESISTOR
SHORT PIN (1FZ-F)
H14 HEATER BLOWER AND A/C SW
HI M2 M1 LO OFF A/C
J1 JUNCTION CONNECTOR
J2 JUNCTION CONNECTOR
J3 JUNCTION CONNECTOR
From A/C Cut Relay (30-2)
To A/C Magnetic Clutch (30-3) (35-1) (36-5)
From Neutral Start SW (A/T)(1-2)(1-3) From Ignition SW "ST1" (M/T)(1-2)(1-3)
A18 A/C 20A FUSE
A28 A/C STARTER CUT RELAY
A21 A/C MAGNETIC CLUTCH RELAY
RB REAR A/C RELAY
A20 A/C CUT RELAY (for Water Temp.)
A19 A/C AMPLIFIER
A31 A/C THERMISTOR
Ground points
EA = Located on right front fender
EB = Located on left front fender
TD = Located on right kick panel
TE = Located on left kick panel
BF = Located on floor panel center

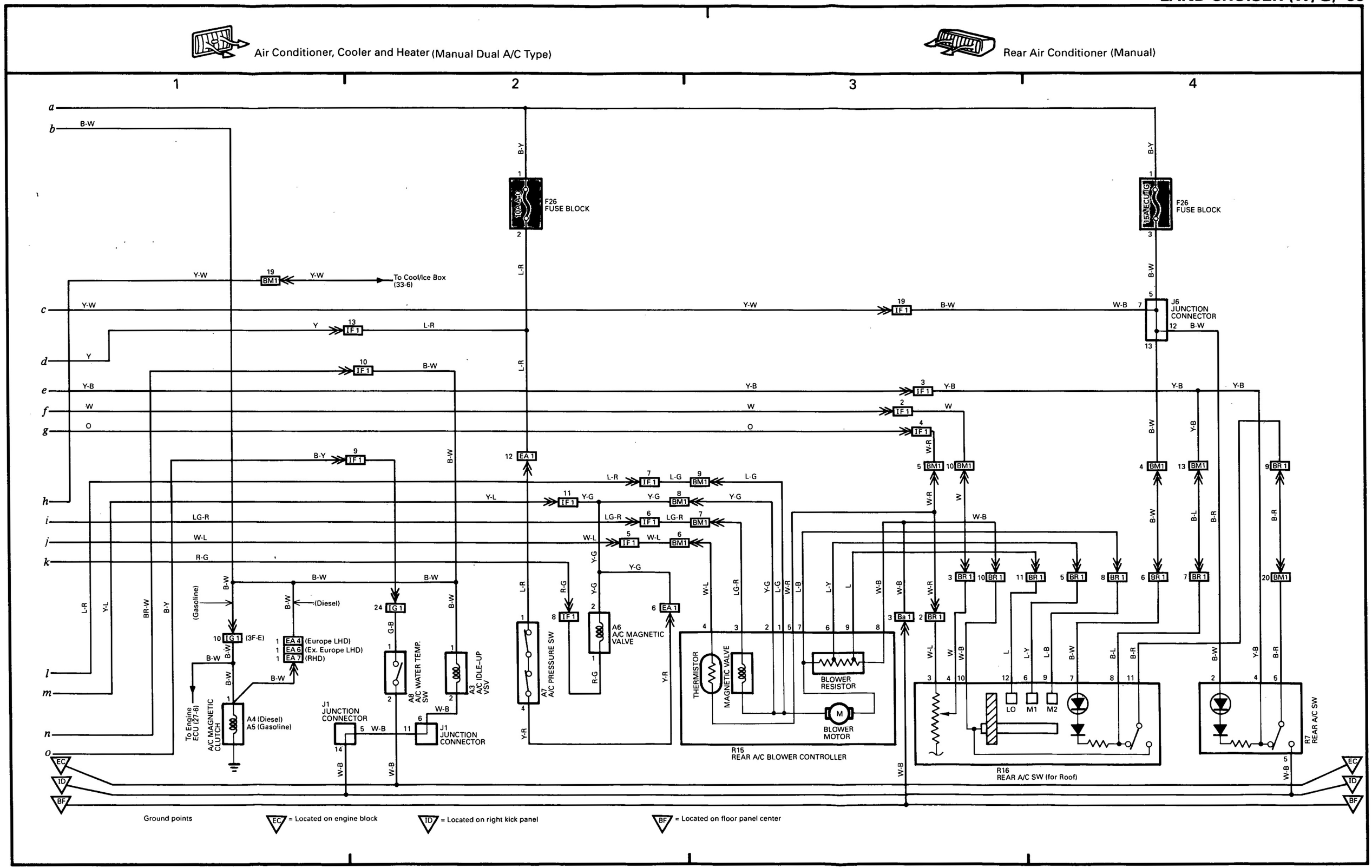
Air Conditioner, Cooler and Heater (Manual Dual A/C Type)
Rear Air Conditioner (Manual)
1
2
3
4
F26 FUSE BLOCK
10A A-C
15A ECU-IG
J6 JUNCTION CONNECTOR
To Cool/Ice Box (33-6)
A4 (Diesel)
A5 (Gasoline)
A/C MAGNETIC CLUTCH
To Engine ECU (27-6)
(Gasoline)
(Diesel)
(3F-E)
(Europe LHD)
(Ex. Europe LHD)
(RHD)
A8 A/C WATER TEMP. SW
A3 A/C IDLE-UP VSV
J1 JUNCTION CONNECTOR
A7 A/C PRESSURE SW
A6 A/C MAGNETIC VALVE
THERMISTOR
MAGNETIC VALVE
BLOWER RESISTOR
BLOWER MOTOR
R15 REAR A/C BLOWER CONTROLLER
R16 REAR A/C SW (for Roof)
R7 REAR A/C SW
LO
M1
M2
Ground points
EC = Located on engine block
ID = Located on right kick panel
BF = Located on floor panel center

Power Source

Air Conditioner, Cooler and Heater
(Manual Single A/C Lever SW Type)

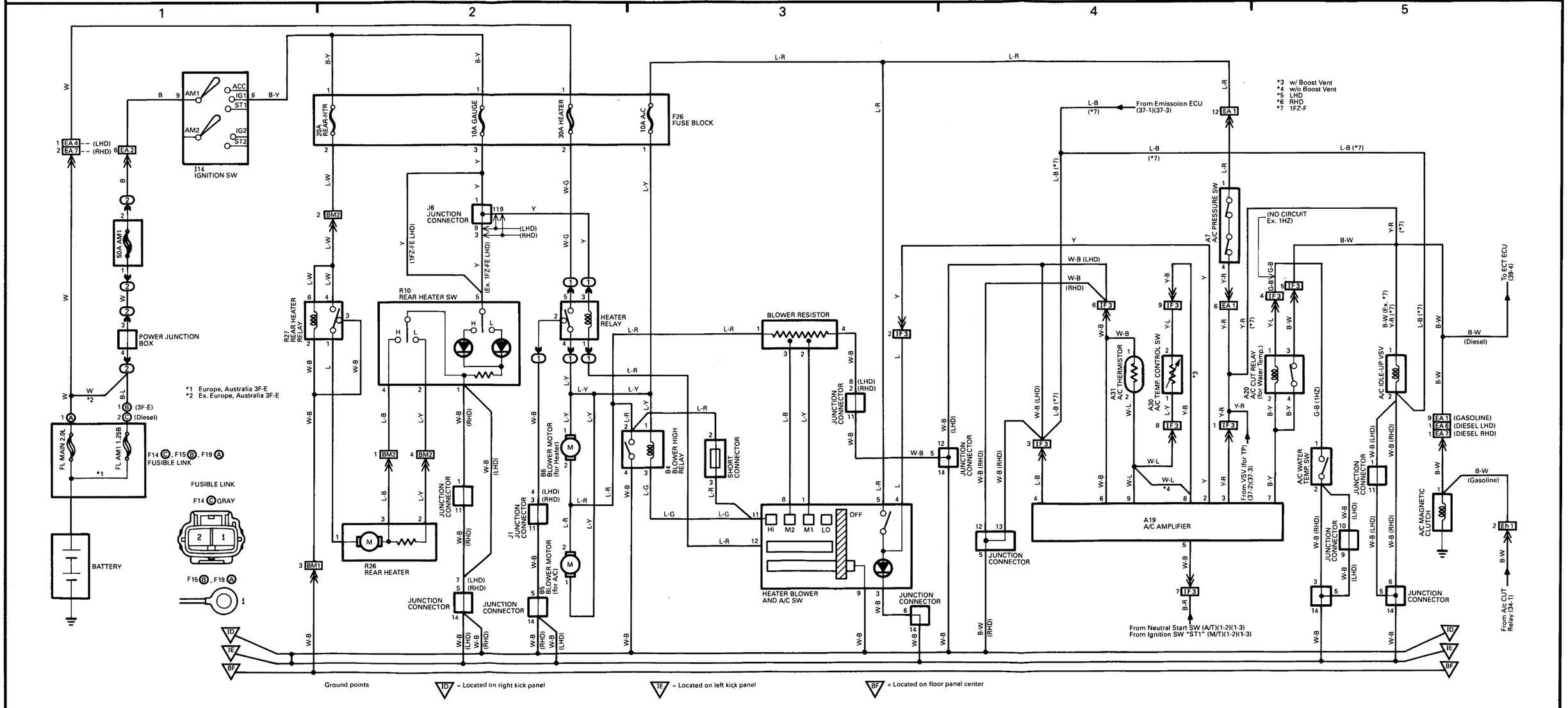

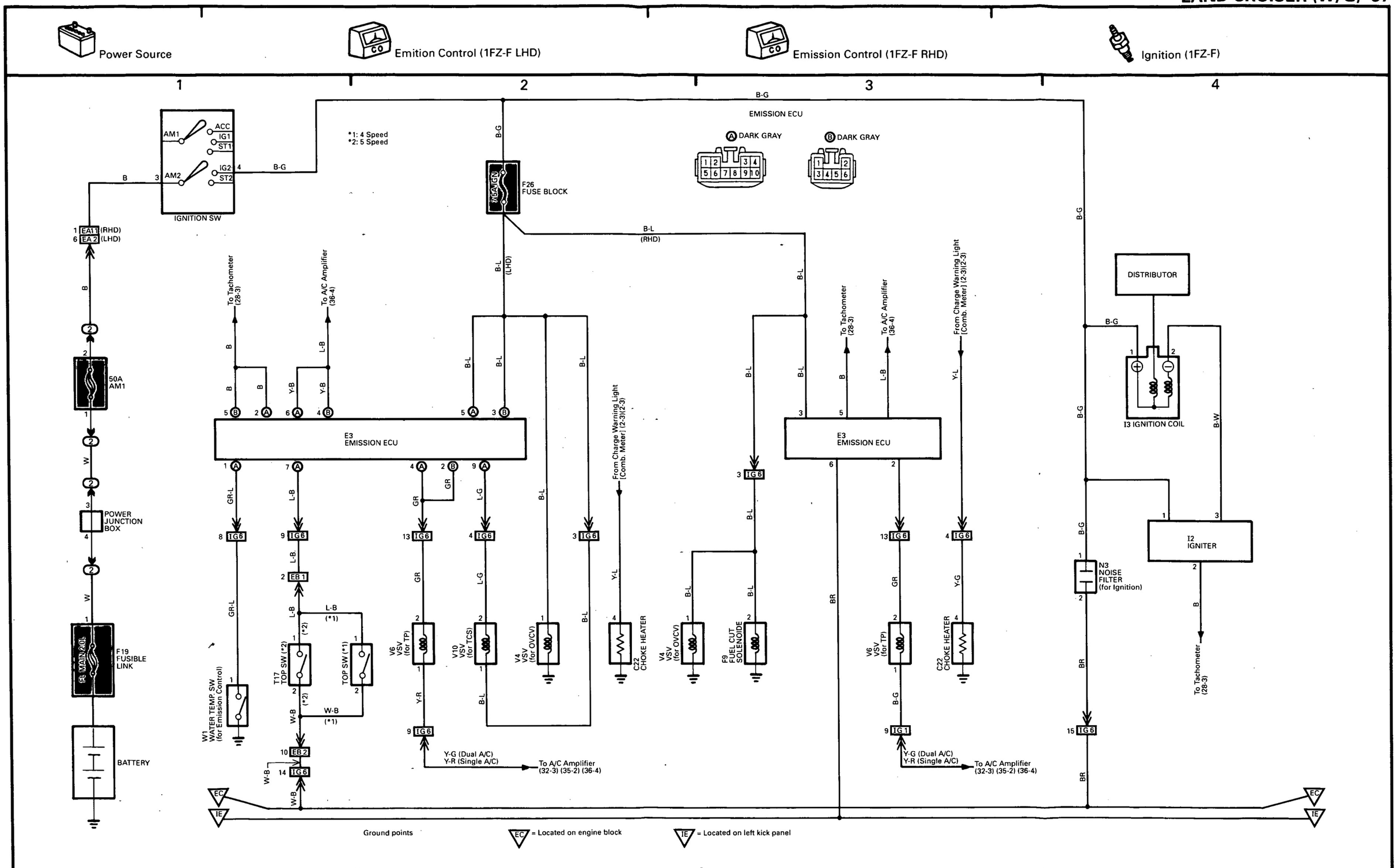
Power Source
Emition Control (1FZ-F LHD)
Emission Control (1FZ-F RHD)
Ignition (1FZ-F)
1
2
3
4
B-G
EMISSION ECU
A DARK GRAY
B DARK GRAY
*1: 4 Speed
*2: 5 Speed
AM1
ACC
IG1
ST1
AM2
IG2
ST2
IGNITION SW
F26
FUSE BLOCK
EA1 (RHD)
EA2 (LHD)
B-L
(RHD)
B-L
(LHD)
To Tachometer
(28-3)
To A/C Amplifier
(36-4)
From Charge Warning Light
[Comb. Meter] (2-3)(2-3)
DISTRIBUTOR
I3 IGNITION COIL
50A
AM1
E3
EMISSION ECU
POWER
JUNCTION
BOX
I2
IGNITER
N3
NOISE
FILTER
(for Ignition)
F19
FUSIBLE
LINK
W1
WATER TEMP. SW
(for Emission Control)
T17
TOP SW (*2)
TOP SW (*1)
V6
VSV
(for TP)
V10
VSV
(for TCS)
V4
VSV
(for OVCV)
C22
CHOKE HEATER
F9
FUEL CUT
SOLENOIDE
BATTERY
Y-G (Dual A/C)
Y-R (Single A/C)
To A/C Amplifier
(32-3) (35-2) (36-4)
To Tachometer
(28-3)
EC
IE
Ground points
EC = Located on engine block
IE = Located on left kick panel

Power Source

Front Wiper and Washer (1FZ-FE, 1FZ-F)

Rear Wiper and Washer (1FZ-FE, 1FZ-F)

1 2 3 4

B 9 AM1 ACC IG1 ST1 AM2 IG2 ST2 6 B-Y

I14 IGNITION SW

1 EA1 (1FZ-F RHD)
6 EA2 (Ex. 1FZ-F RHD)

B

2 50A AM1 1

FUSIBLE LINK
F15 B, F19 A

W

POWER JUNCTION BOX

B-L

1 A 1 B

FL MAIN 2.0L *2 FL AM1 1.25B *1

15 B, F19 A FUSIBLE LINK

*1 Europa, 1FZ-FE
*2 Ex. Europe, 1FZ-FE

BATTERY

B-Y 1 20A WIPER 2 F26 FUSE BLOCK

L L L L L L

18

C16
FRONT WIPER AND WASHER SW [COMB. SW]

	B	S	+1	+2	B1	INT1	INT2	E	W
OFF									
INT									
LOW									
HIGH									
WASHER									

WIPER RELAY

INT

4 7 13 16 8

L-G L-R L-Y W-B L-W

4 EA10 (LHD)
5 EA8 (RHD)

WASHER MOTOR

WASHER CHANGE VALVE

L-B L-O

5 EA10 (LHD)
6 EA8 (RHD)

DIODE (for Front Washer)

DIODE (for Rear Washer)

REAR WIPER AND WASHER SW [COMB. SW]

	L	C	E	W
WASHER				
OFF				
INT				
LOW				
WASHER				

10 16 2

L-G L-B

2 BL 2 12 BL 2 6 BL 2

1 BT 2 5 BT 1 2 BT 1

6 BV 1 4 BV 1 5 BV 1

4 BW1 6 BW1 5 BW1

R38
REAR WIPER CONTROL RELAY (Tail Gate)

L-B 4 3 L-R
L-G 6 2 L-W
1

R35
REAR WIPER CONTROL MOTOR (Tail Gate)

4 BT 1 W-B 1 BV 2 W-B 2 BW2 W-B 2

R39
REAR WIPER CONTROL RELAY (Swing Out)

6 L-B 5 L-G 1 L 3 L-Y 7 L-O 2 L-W 4 L-R

7 BX 1 6 BX 1 8 BX 1 4 BX 1 5 BX 1

19 BQ 1 18 BQ 1 20 BQ 1 7 BQ 1 8 BQ 1

1 BU 2 6 BU 1 2 BU 1

R36
REAR WIPER CONTROL MOTOR LH (Swing Out)

R37
REAR WIPER CONTROL MOTOR RH (Swing Out)

4 BU 1 W-B

1 BX 1

J3 JUNCTION CONNECTOR 3 W-B (LHD) 1

F8
FRONT WIPER CONTROL MOTOR

J3 JUNCTION CONNECTOR 5 14

J1 JUNCTION CONNECTOR 4 11 5 14

J2 JUNCTION CONNECTOR 13 14

W-B (RHD) W-B (LHD)

ID IE BF BG

Ground points

ID = Located on right kick panel
IE = Located on left kick panel
BF = Located on floor panel center
BG = Located on back panel center

Power Source

ECT ECT (Electronic Controlled Transmission)

*1: Diesel
*2: Gasoline

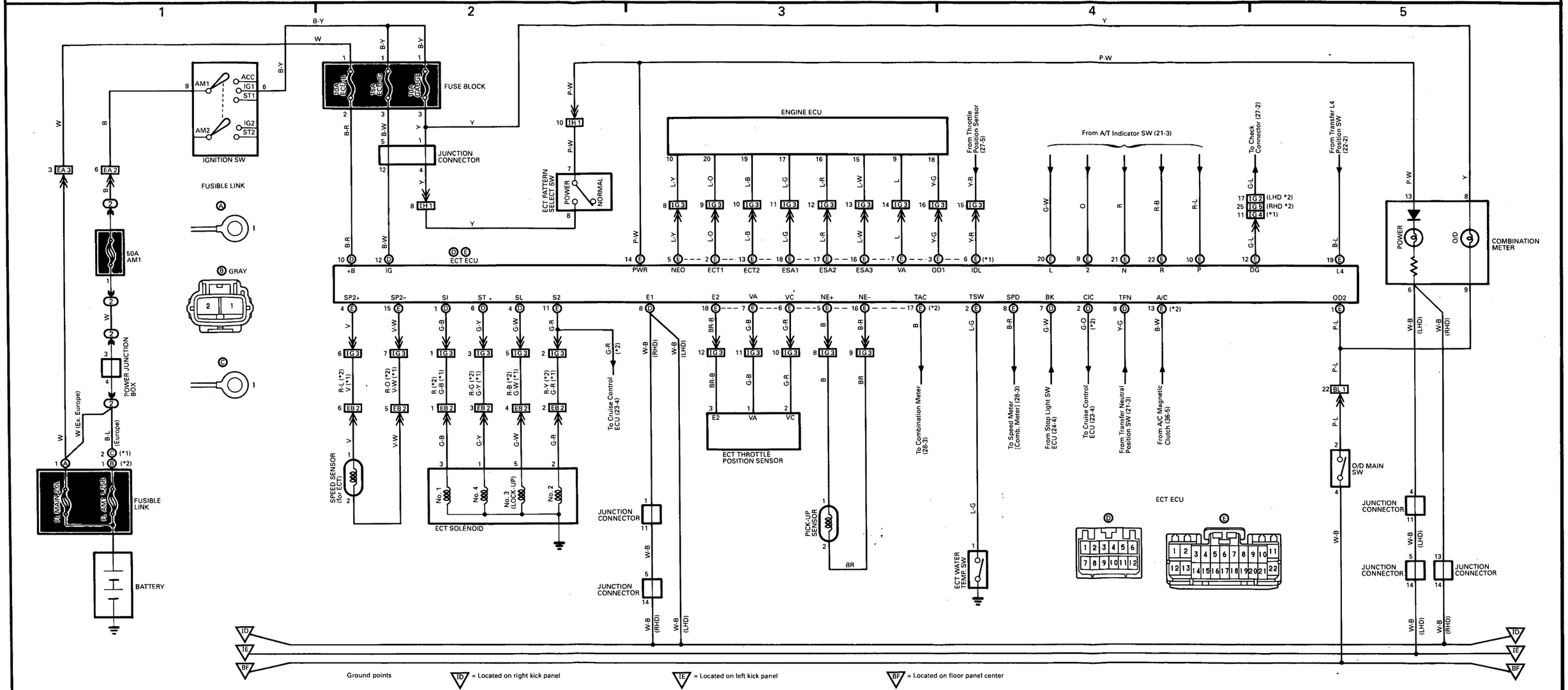

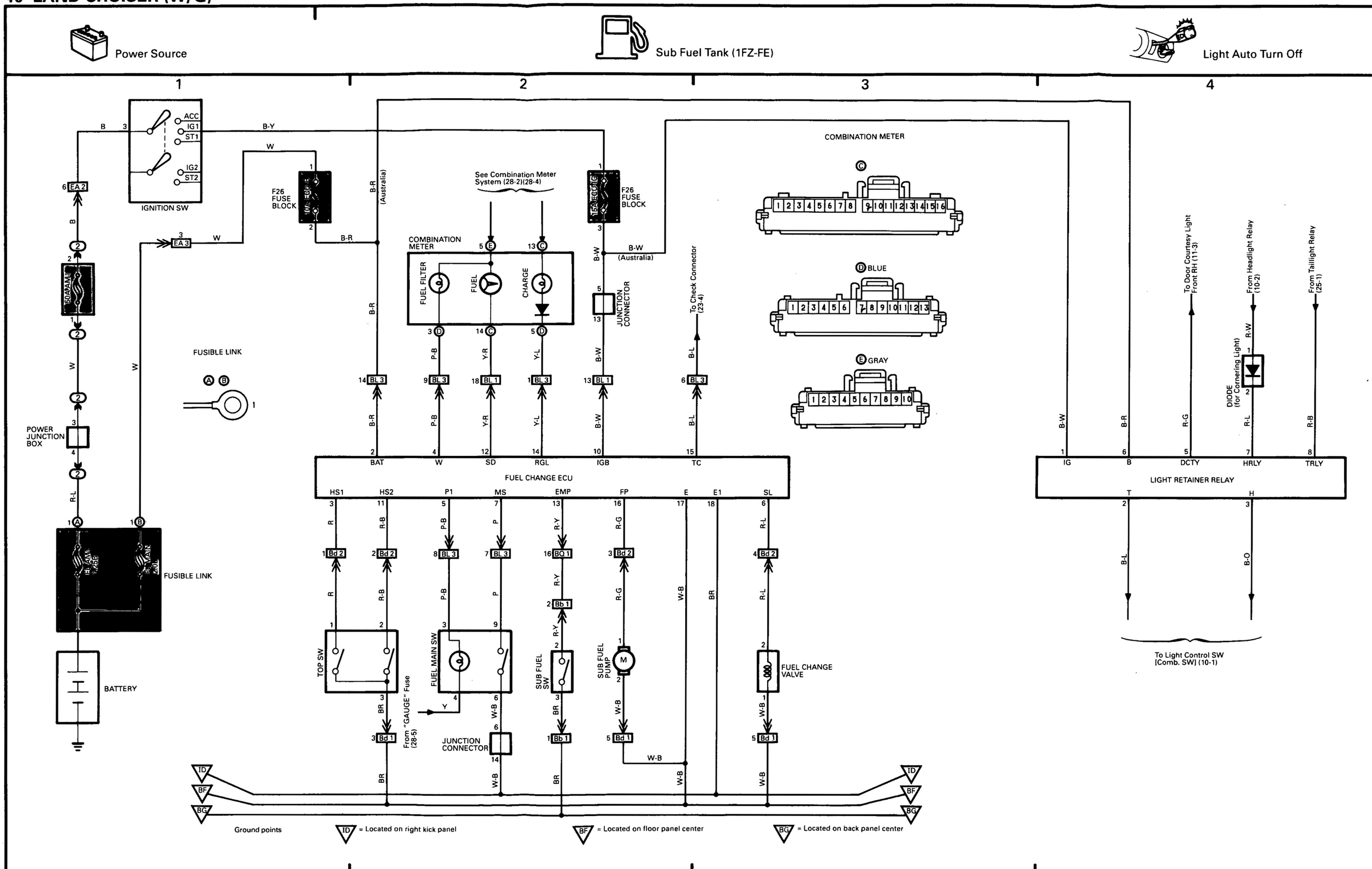
Power Source
Sub Fuel Tank (1FZ-FE)
Light Auto Turn Off
1
2
3
4
IGNITION SW
ACC
IG1
ST1
IG2
ST2
B
B-Y
W
EA 2
EA 3
50A AM1
POWER JUNCTION BOX
R-L
FUSIBLE LINK
BATTERY
F26 FUSE BLOCK
10A ECU-IG
15A ECU-IG
B-R
(Australia)
See Combination Meter System (28-2)(28-4)
COMBINATION METER
FUEL FILTER
FUEL
CHARGE
B-W
(Australia)
JUNCTION CONNECTOR
To Check Connector (23-4)
FUSIBLE LINK
BL 3
BL 1
P-B
Y-R
Y-L
B-W
B-L
BAT
W
SD
RGL
IGB
TC
FUEL CHANGE ECU
HS1
HS2
P1
MS
EMP
FP
E
E1
SL
Bd 2
Bb 1
Bd 1
BQ 1
R
R-B
P-B
P
R-Y
R-G
R-L
W-B
BR
TOP SW
FUEL MAIN SW
SUB FUEL SW
SUB FUEL PUMP
FUEL CHANGE VALVE
From "GAUGE" Fuse (28-5)
Y
JUNCTION CONNECTOR
COMBINATION METER
BLUE
GRAY
To Door Courtesy Light Front RH (11-3)
From Headlight Relay (10-2)
From Taillight Relay (25-1)
DIODE (for Cornering Light)
R-W
R-G
R-B
IG
B
DCTY
HRLY
TRLY
LIGHT RETAINER RELAY
T
H
B-O
To Light Control SW [Comb. SW] (10-1)
ID
BF
BG
Ground points
= Located on right kick panel
= Located on floor panel center
= Located on back panel center

Power Source

ABS (Anti-Lock Brake System)

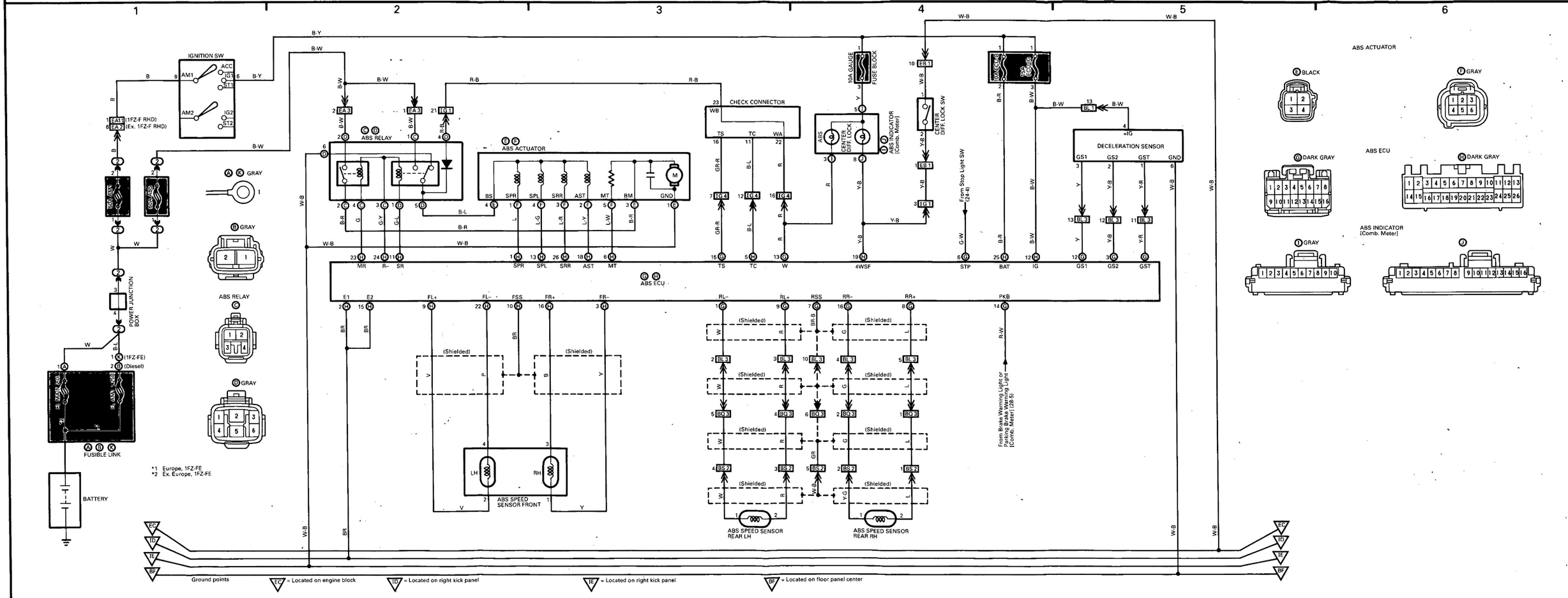

1 2 3 4 5

Connector Joining Wire Harness and Wire Harness
(E Group: Engine Compartment Area)

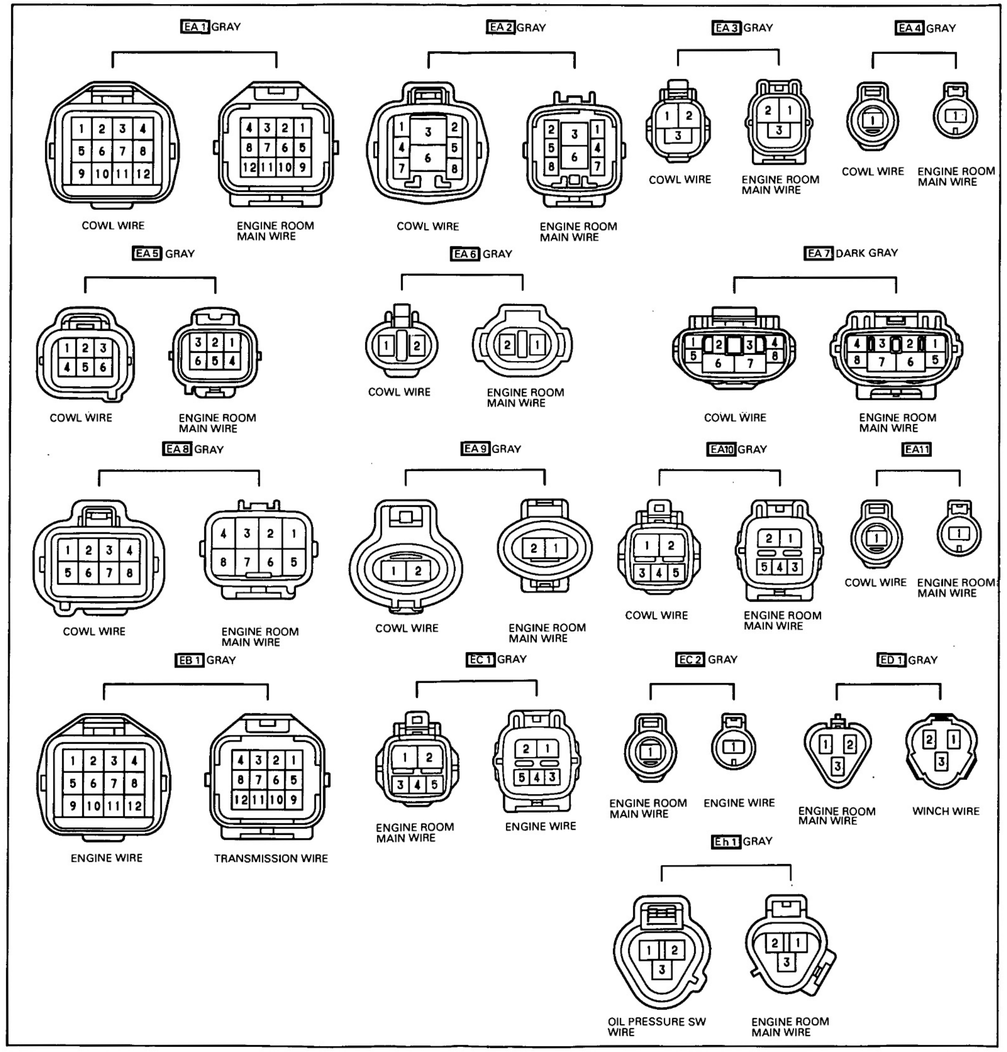

(I Group: Instrument Panel and Surounding Area)

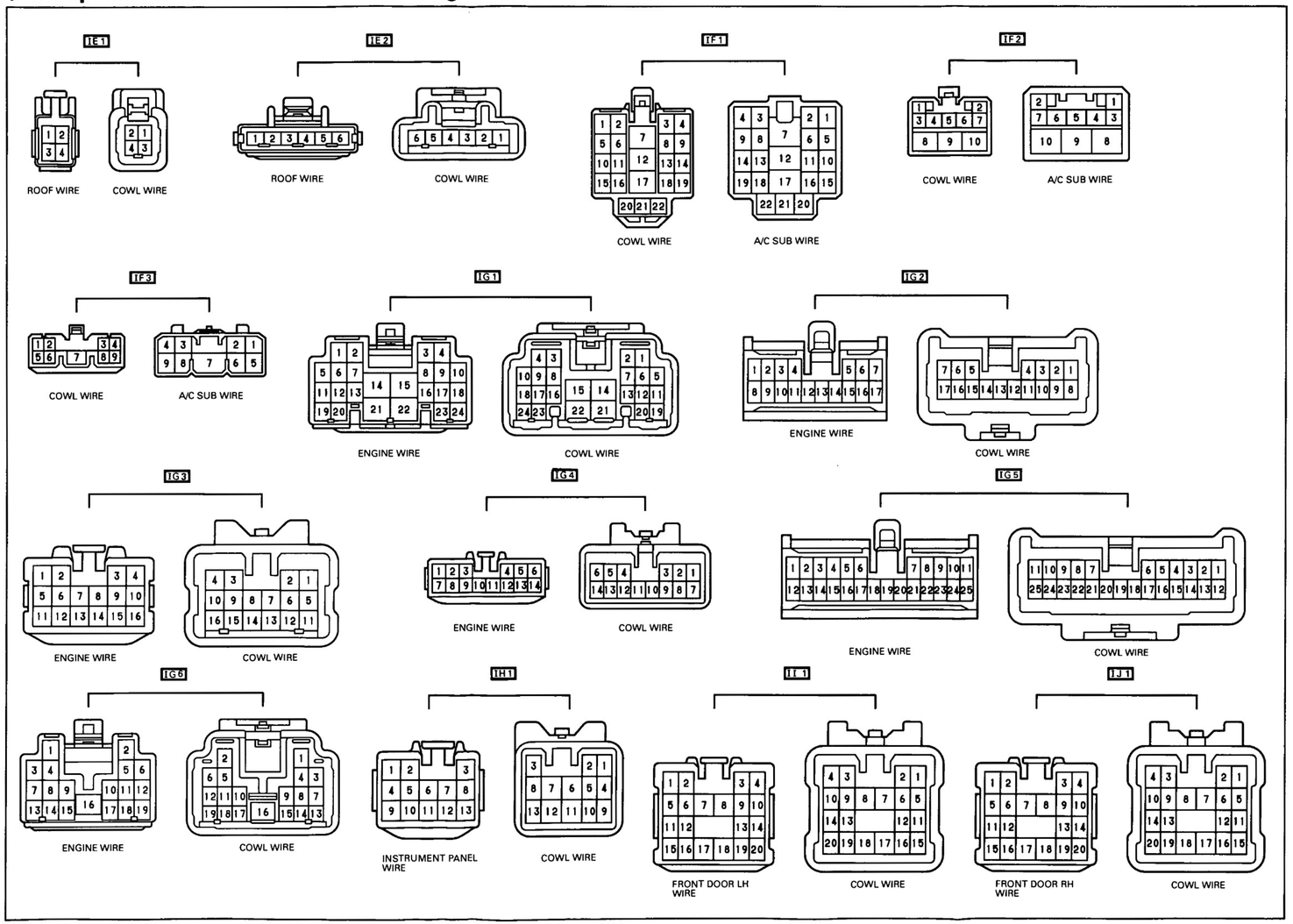

1 2 3 4

Connector Joining Wire Harness and Wire Harness
(B Group: Body Surounding Area)

