TOYOTA

REPAIR MANUAL FOR CHASSIS & BODY

LAND CRUISER

(Station Wagon)

FJ80 series
HZJ80 series
HDJ80 series

Jan., 1990

Pub. No. RM184E

FOREWORD

This repair manual has been prepared to provide information covering general service repairs for the chassis and body of the TOYOTA LAND CRUISER (Station Wagon).

Applicable models: FJ80 series
HZJ80 series
HDJ80 series

For the service specifications and repair procedures of the above model other than those listed in this manual, refer to the following manuals.

Manual Name	Pub. No.
• 3F Engine Repair Manual	36253E
• 3F-E Engine Repair Manual Supplement	RM134E
• 1PZ, 1HZ, 1HD-T Engine Repair Manual	RM172E
• A441L, A440F, A442F Automatic Transmission Repair Manual	RM188E
• Land Cruiser Station Wagon Electrical Wiring Diagram	EWD090F
• Land Cruiser Station Wagon New Car Features	NCF064E

All information in this manual is based on the latest product information at the time of publication. However, specifications and procedures are subject to change without notice.

TOYOTA MOTOR CORPORATION

TOYOTA LAND CRUISER (Station Wagon) REPAIR MANUAL FOR CHASSIS & BODY

INTRODUCTION IN
CLUTCH CL
MANUAL TRANSMISSION MT
AUTOMATIC TRANSMISSION AT
TRANSFER TR
PROPELLER SHAFT PR
SUSPENSION AND AXLE SA
BRAKE SYSTEM BR
STEERING SR
BODY ELECTRICAL SYSTEM BE
BODY BO
AIR CONDITIONING SYSTEM AC
SERVICE SPECIFICATIONS A
STANDARD BOLT TORQUE SPECIFICATIONS B
SST AND SSM C
ELECTRICAL WIRING DIAGRAMS D

©1990TOYOTA MOTOR CORPORATION
All rights reserved. This book may not be reproduced or copied, in whole or in part, without the written permission of Toyota Motor Corporation.

INTRODUCTION

	Page
HOW TO USE THIS MANUAL	IN-2
IDENTIFICATION INFORMATION	IN-4
GENERAL REPAIR INSTRUCTIONS	IN-4
PRECAUTIONS FOR VEHICLES EQUIPPED WITH A CATALYTIC CONVERTER	IN-7
PRECAUTIONS FOR VEHICLES WITH AN AUDIO SYSTEM WITH BUILT-IN ANTI-THEFT SYSTEM	IN-7
PRECAUTIONS WHEN SERVICING FULL-TIME 4WD VEHICLES	IN-8
PRECAUTIONS WHEN TOWING FULL-TIME 4WD VEHICLES	IN-13
VEHICLE LIFT AND SUPPORT LOCATIONS	IN-14
ABBREVIATIONS USED IN THIS MANUAL	IN-15

HOW TO USE THIS MANUAL

To assist you in finding your way through the manual, the Section Title and major heading are given at the top of every page.

An **INDEX** is provided on the first page of each section to guide you to the item to be repaired.

At the beginning of each section, **PRECAUTIONS** are given that pertain to *all* repair operations contained in that section. *Read these precautions before starting any repair task.*

TROUBLESHOOTING tables are included for each system to help you diagnose the problem and find the cause. The repair for each possible cause is referenced in the remedy column to quickly lead you to the solution.

REPAIR PROCEDURES

Most repair operations begin with an overview illustration. It identifies the components and shows how the parts fit together.

Example:

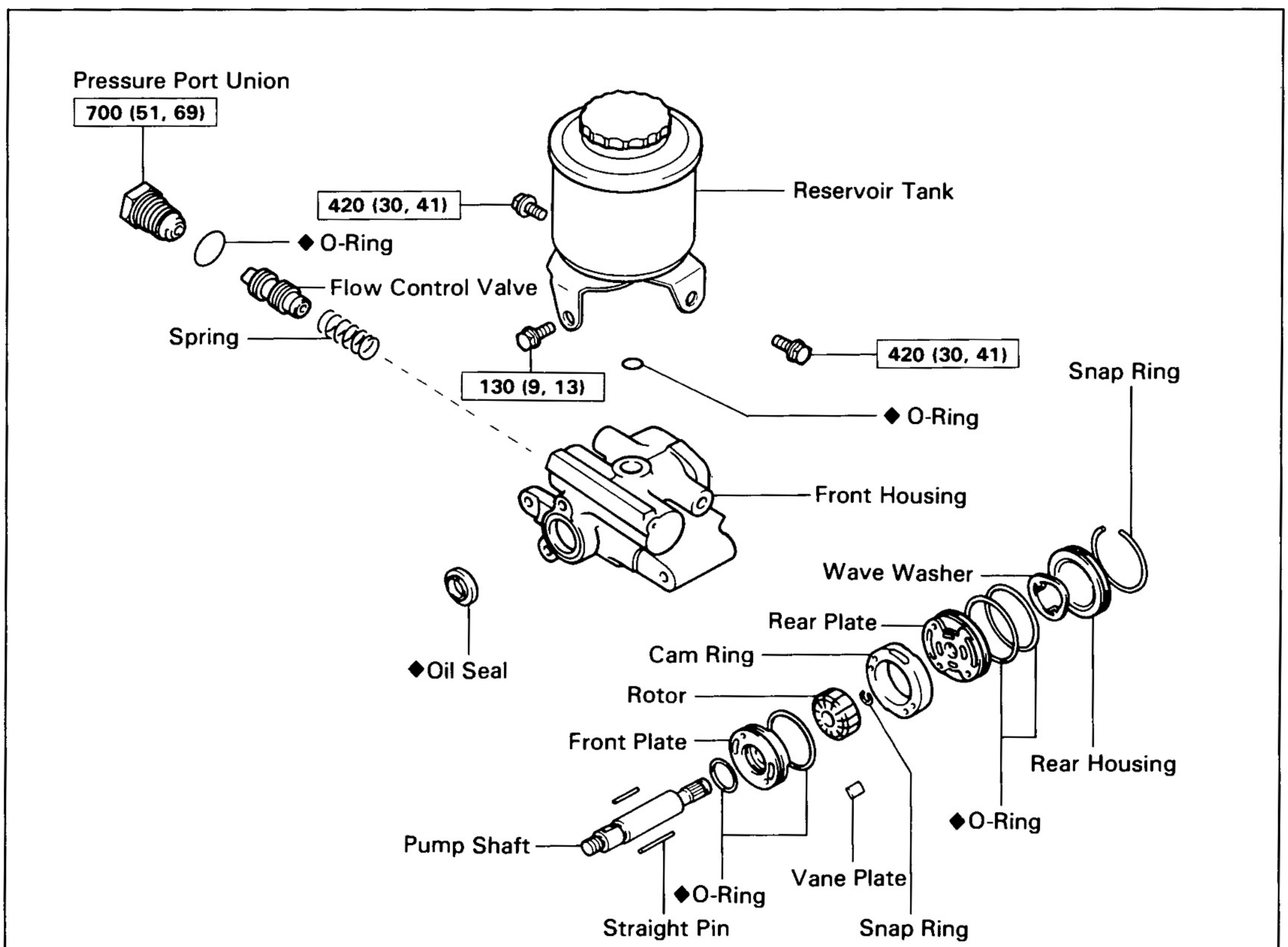

The procedures are presented in a step-by-step format:

- The illustration shows *what* to do and *where* to do it.
- The task heading tells *what* to do.
- The detailed text tells *how* to perform the task and gives other information such as specifications and warnings.

Example:

Illustration:
what to do and where

Task heading : what to do

21. CHECK PISTON STROKE OF OVERDRIVE BRAKE

(a) Place SST and a dial indicator onto the overdrive brake piston as shown in the figure.

SST 09350-30020 (09350-06120)

Set part No. *Component part No.*

Detailed text: how to do task

(b) Measure the stroke applying and releasing the compressed air (4 — 8 kg/cm^2, 57 — 114 psi or 392 — 785 kPa) as shown in the figure.

Piston stroke: 1.40 — 1.70 mm (0.0551 — 0.0669 in.)

Specification

This format provides the experienced technician with a FAST TRACK to the information needed. The upper case task heading can be read at a glance when necessary, and the text below it provides detailed information. Important specifications and warnings always stand out in bold type.

REFERENCES

References have been kept to a minimum. However, when they are required you are given the page to refer to.

SPECIFICATIONS

Specifications are presented in bold type throughout the text where needed. You never have to leave the procedure to look up your specifications. They are also found in Appendix A, for quick reference..

CAUTIONS, NOTICES, HINTS:

- CAUTIONS are presented in bold type, and indicate there is a possibility of injury to you or other people.
- NOTICES are also presented in bold type, and indicate the possibility of damage to the components being repaired.
- HINTS are separated from the text but do not appear in bold. They provide additional information to help you efficiently perform the repair.

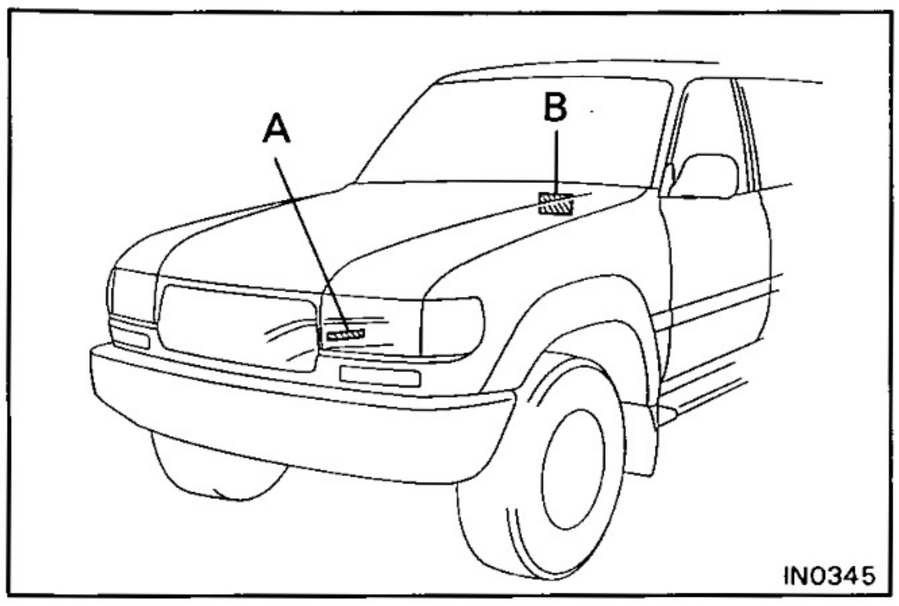

IDENTIFICATION INFORMATION

VEHICLE IDENTIFICATION NUMBER

The vehicle identification number is stamped on the outer surface of the front right side frame. This number is also stamped on the manufacturer's name plate.

A: Vehicle Identification Number
B: Manufacturer's Name Plate

3F and 3F-E Engines

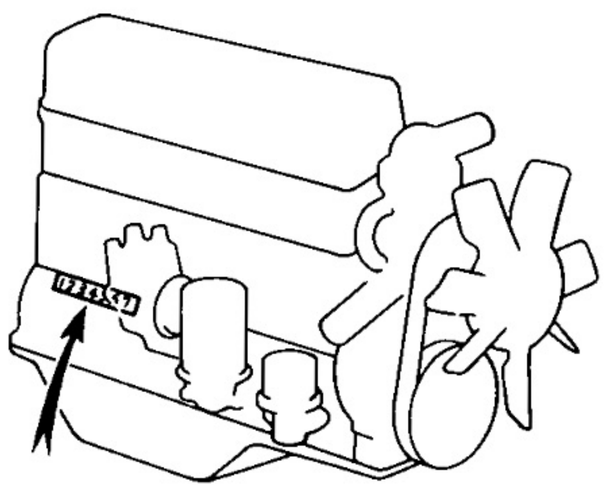

1HZ and 1HD-T Engines

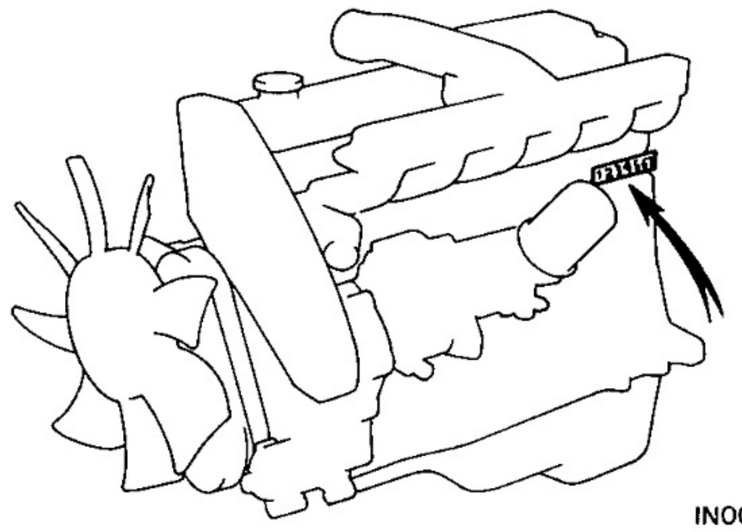

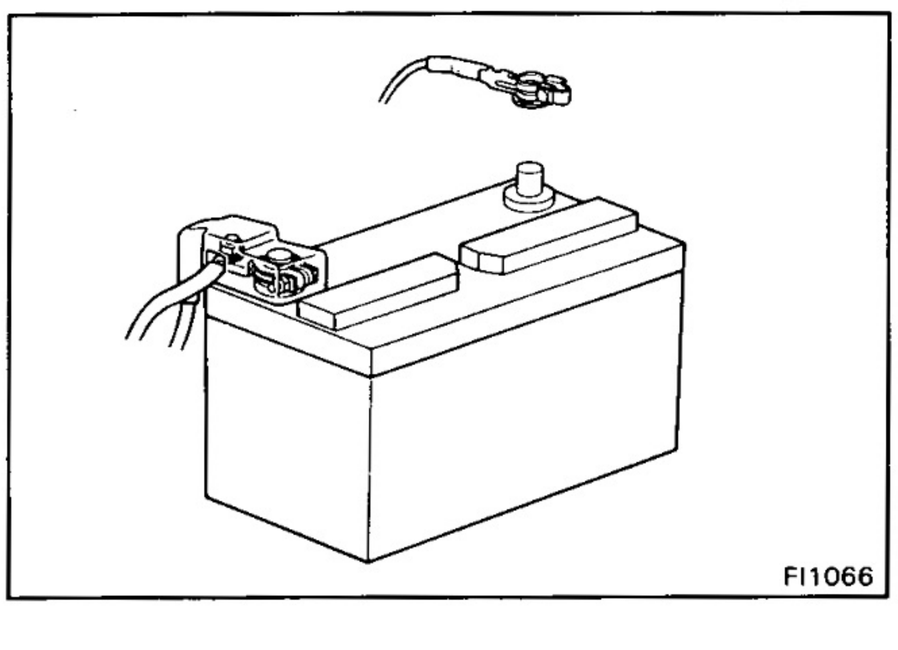

ENGINE SERIAL NUMBER

The engine serial number is stamped on the right side of the cylinder block.

GENERAL REPAIR INSTRUCTIONS

1. Use, fender seat and floor covers to keep the vehicle clean and prevent damage.
2. During disassembly, keep parts in the appropriate order to facilitate reassembly.
3. Observe the following:
   (a) Before performing electrical work, disconnect the negative cable from the battery terminal.
   (b) If it is necessary to disconnect the battery for inspection or repair, always disconnect the cable from the negative (−) terminal which is grounded to the vehicle body.
   (c) To prevent damage to the battery terminal post, loosen the terminal nut and raise the cable straight up without twisting or prying it.
   (d) Clean the battery terminal posts and cable terminals with a shop rag. Do not scrape them with a file or other abrasive object.
   (e) Install the cable terminal to the battery post with the nut loose, and tighten the nut after installation. Do not use a hammer to tap the terminal onto the post.
   (f) Be sure the cover for the positive (+) terminal is properly in place.
4. Check hose and wiring connectors to make sure that they are secure and correct.

5. Non-reusable parts
   (a) Always replace cotter pins, gaskets, O-rings and oil seals etc. with new ones.
   (b) Non-reusable parts are indicated in the component illustrations by the "◆" symbol.

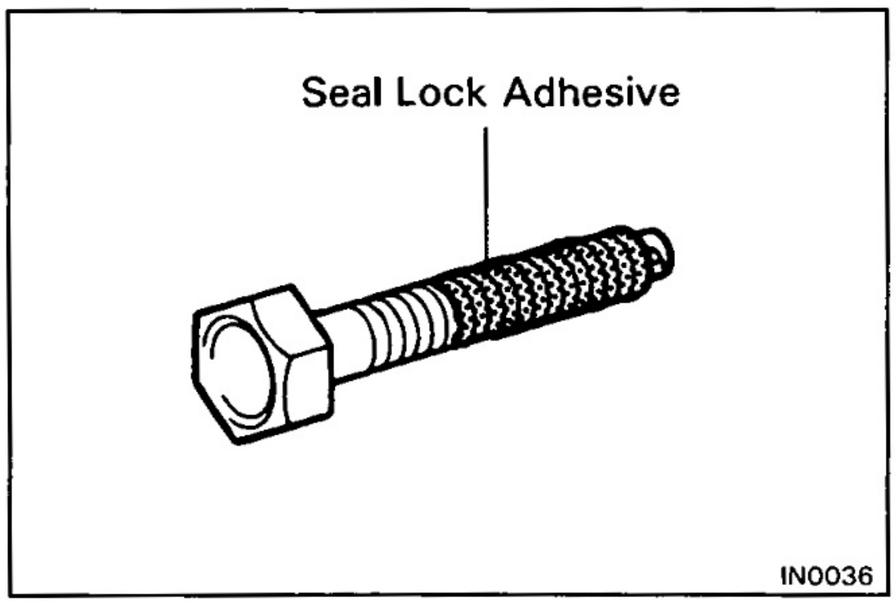

6. Precoated parts

   Precoated parts are bolts and nuts, etc. that are coated with a seal lock adhesive at the factory.
   (a) If a precoated part is tightened, loosened or caused to move in any way, it must be recoated with the specified adhesive.
   (b) Recoating of precoated parts
      (1) Clean off the old adhesive from the bolt, nut or threads.
      (2) Dry with compressed air.
      (3) Apply the specified seal lock adhesive to the bolt or nut threads.
   (c) Precoated parts are indicated in the component illustrations by the "★" symbol.
7. When necessary, use a sealer on gaskets to prevent leaks.
8. Carefully observe all specifications for bolt tightening torques. Always use a torque wrench.
9. Use of special service tools (SST) and special service materials (SSM) may be required, depending on the nature of the repair. Be sure to use SST and SSM where specified and follow the proper work procedure. A list of SST and SSM can be found at the back of this manual.
10. When replacing fuses, be sure the new fuse has the correct amperage rating. DO NOT exceed the rating or use one with a lower rating.

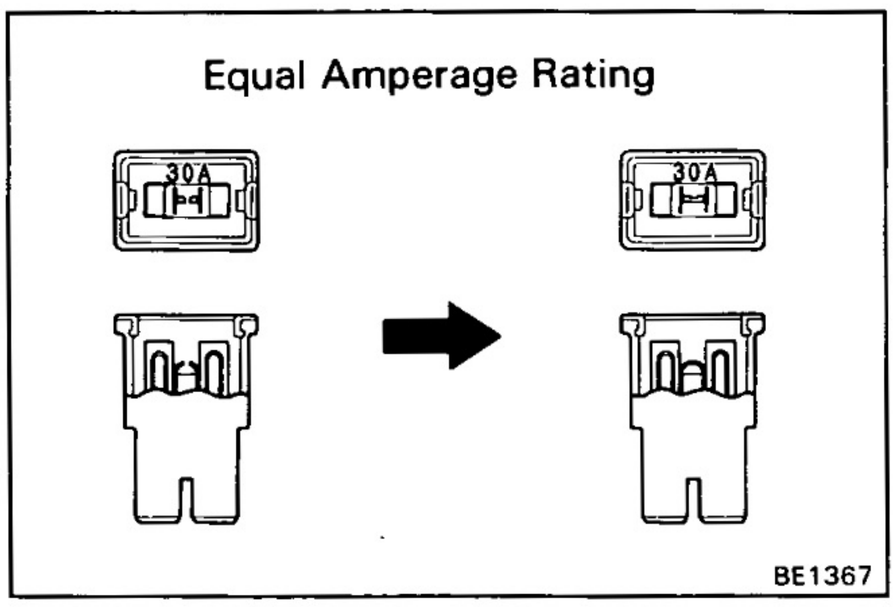

11. Care must be taken when jacking up and supporting the vehicle. Be sure to lift and support the vehicle at the proper locations (See page IN-14).
   (a) If the vehicle is to be jacked up only at the front or rear end, be sure to block the wheels at the opposite end in order to ensure safety.
   (b) After the vehicle is jacked up, be sure to support it on stands. It is extremely dangerous to do any work on a vehicle raised on a jack alone, even for a small job that can be finished quickly.

12. Observe the following precautions to avoid damage to the parts:
    (a) **Do not open the cover or case of the ECU unless absolutely necessary.**
    (If the IC terminals are touched, the IC may be destroyed by static electricity.)
    (b) To pull apart electrical connectors, pull on the connector itself, not the wires.

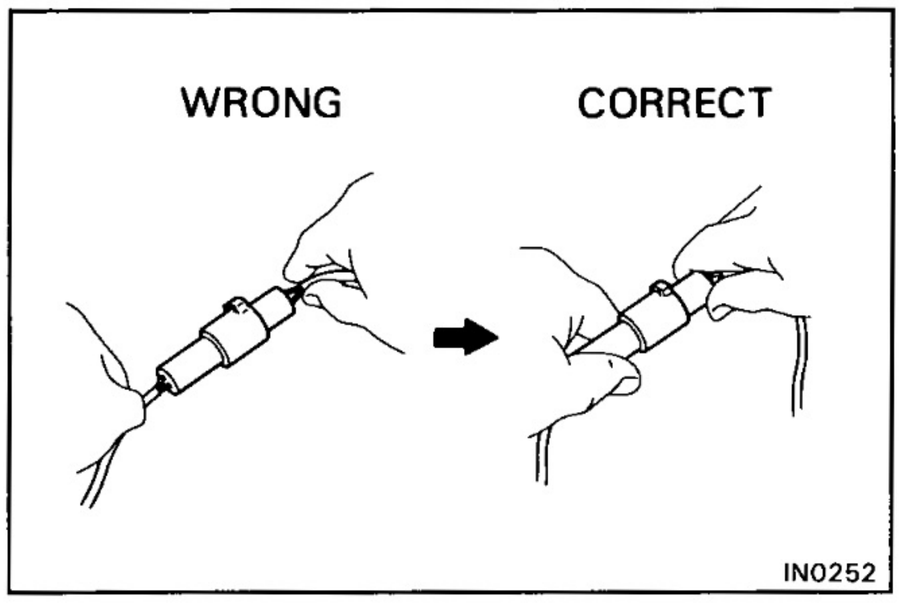

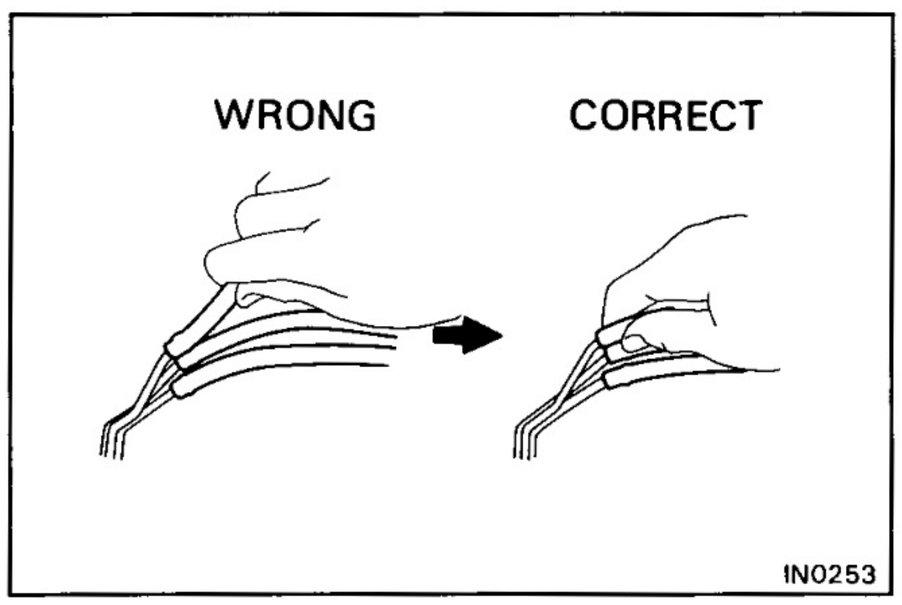

    (c) Be careful not to drop electrical components, such as sensors or relays. If they are dropped on a hard floor, they should be replaced and not reused.
    (d) When checking continuity at the wire connector, insert the tester probe carefully to prevent terminals from bending.
    (e) To disconnect vacuum hoses, pull on the end, not the middle of the hose.
    (f) When steam cleaning an engine, protect the distributor, coil, air filter and VCV from water.
    (g) Never use an impact wrench to remove or install temperature switches or temperature sensors.
    (h) When using a vacuum gauge, never force the hose onto a connector that is too large. Use a step-down adapter instead. Once the hose has been stretched, it may leak.

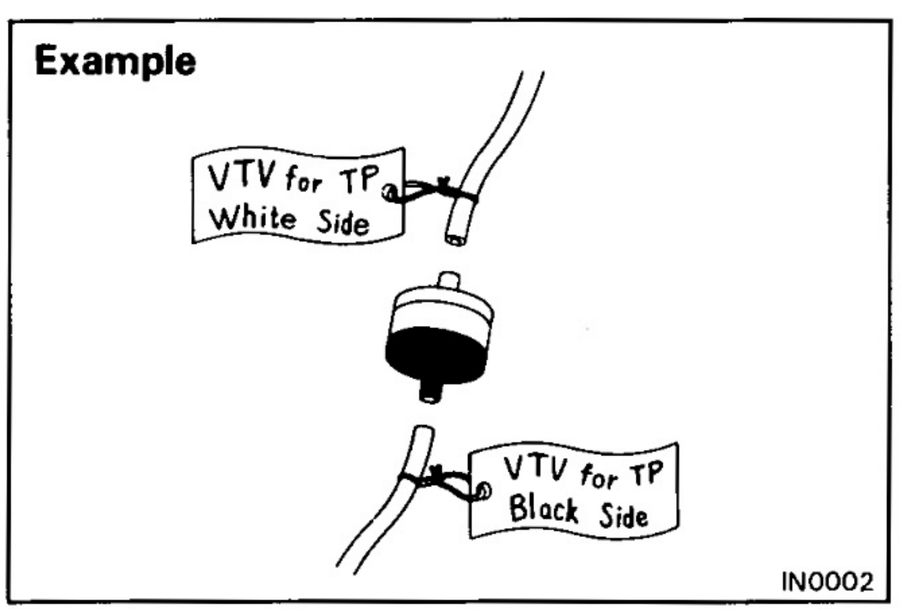

13. Tag hoses before disconnecting them:
    (a) When disconnecting vacuum houses, use tags to identify how they should be reconnected.
    (b) After completing a job, double check that the vacuum hoses are properly connected. A label under the hood shows the proper layout.

PRECAUTIONS FOR VEHICLES EQUIPPED WITH A CATALYTIC CONVERTER

CAUTION: If large amounts of unburned gasoline flow into the converter, it may overheat and create a fire hazard. To prevent this, observe the following precautions and explain them to your customer.

1. **Use only unleaded gasoline.**
2. **Avoid prolonged idling.**
   Avoid running the engine at idle speed for more than 20 minutes.
3. **Avoid spark jump test.**
   (a) Spark jump test only when absolutely necessary. Perform this test as rapidly as possible.
   (b) While testing, never race the engine.
4. **Avoid prolonged engine compression measurement.**
   Engine compression tests must be made as rapidly as possible.
5. **Do not run engine when fuel tank is nearly empty.**
   This may cause the engine to misfire and create an extra load on the converter.
6. **Avoid coasting with ignition turned off and prolonged braking.**
7. **Do not dispose of used catalyst along with parts contaminated with gasoline or oil.**

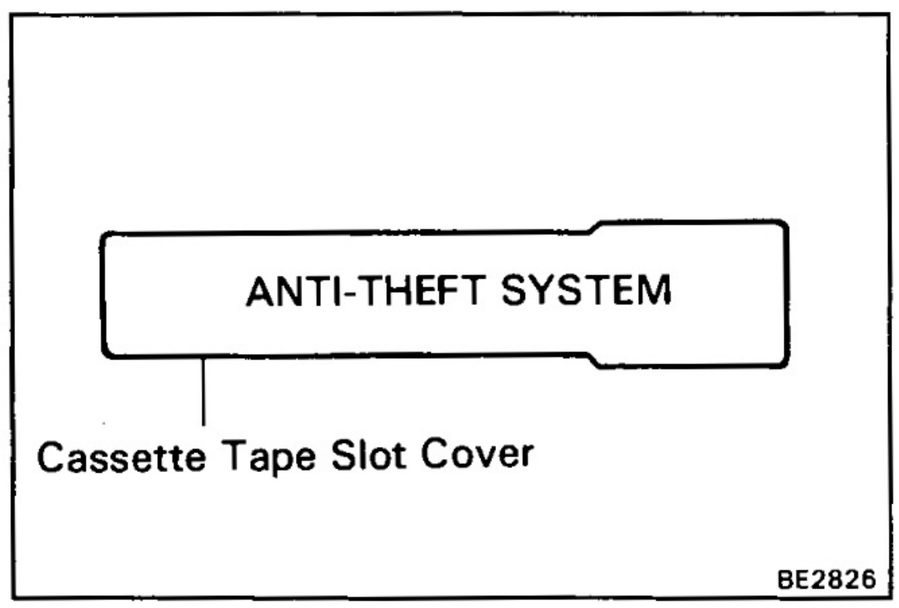

PRECAUTIONS FOR VEHICLES WITH AN AUDIO SYSTEM WITH BUILT-IN ANTI-THEFT SYSTEM

Audio Systems displaying the sign "ANTI-THEFT SYSTEM" shown on the left has a built-in anti-theft system which makes the audio system soundless if stolen.
If the power source for the audio system is cut even once, the anti-theft system operates so that even if the power source is reconnected, the audio system will not produce any sound unless the ID number selected by the customer is input again. Accordingly, when performing repairs on vehicles equipped with this system, before disconnecting the battery terminals or removing the audio system the customer should be asked for the ID number so that the technician can input the ID number afterwards, or else a request made to the customer to input the ID number.
For the method to input the ID number or cancel the anti-theft system, refer to the Owner's Manual.

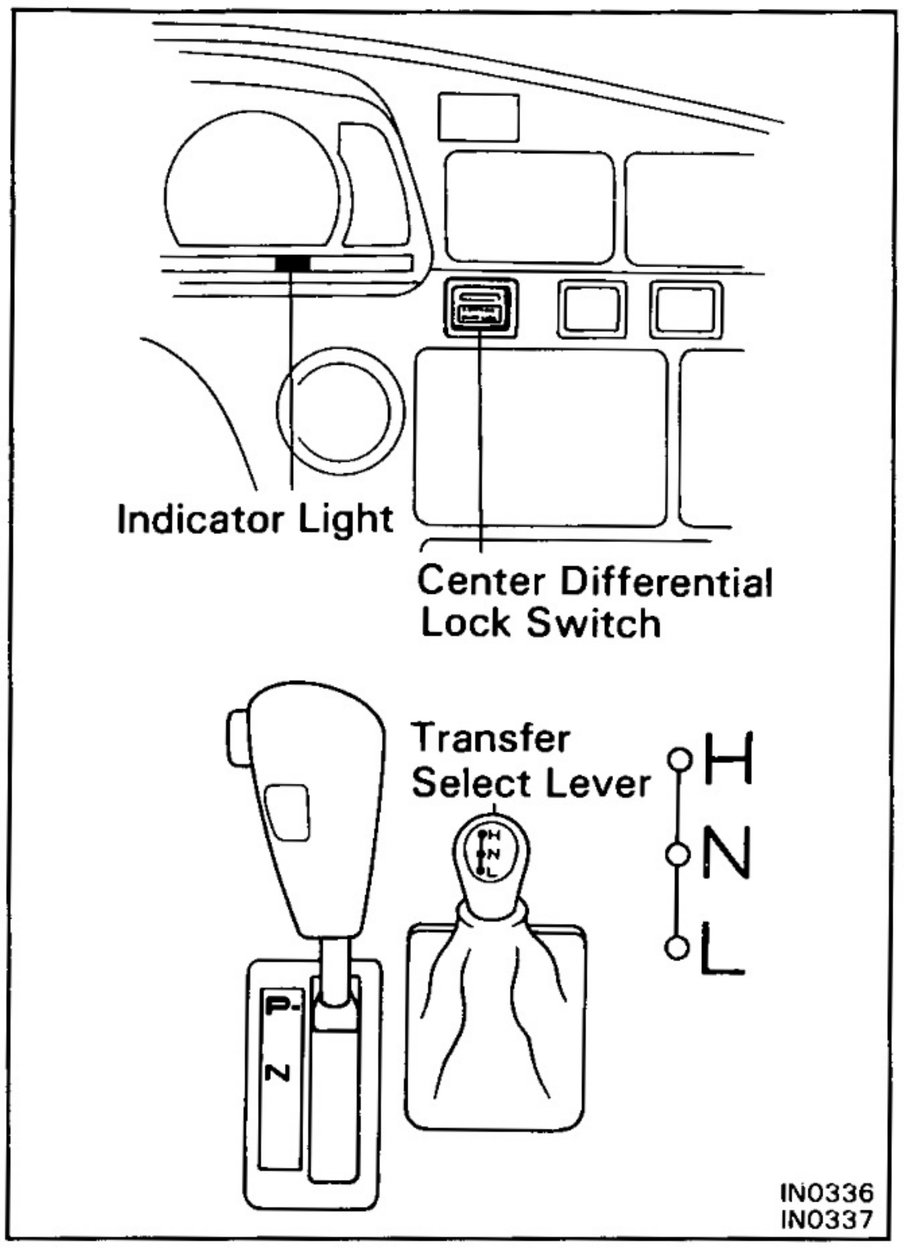

PRECAUTIONS WHEN SERVICING FULL-TIME 4WD VEHICLES

The full-time 4WD Land Cruiser Station Wagon is equipped with the mechanical lock type center differential system. When carrying out any kind of servicing or testing on a full-time 4WD in which the front or rear wheels are made to rotate (braking test, speedometer test, on-vehicle wheel balancing, etc.), or when towing the vehicle, be sure to observe the precautions given below. If incorrect preparations or test procedures are used, the test cannot be successfully carried out, and may be dangerous as well. Therefore, before beginning any such servicing or test, be sure to check the following items:

(1) Center differential lock type
(2) Center differential mode position (FREE or LOCK)
(3) Whether wheels should be touching ground or jacked up
(4) Transmission gear position
(5) Transfer gear position (H or L)
(6) Maximum testing vehicle speed
(7) Maximum testing time

Also be sure to observe the following cautions:

(1) Never accelerate or decelerate the vehicle suddenly.
(2) Observe the other cautions given for each individual test.

BEFORE BEGINNING TEST

During tests with a brake tester or chassis dynamometer, such as braking force tests or speedometer tests, if only the front or rear wheels are to be rotated, it is necessary to set the position of the center differential to the FREE position or to the LOCK position depending on the type of test being performed.

(1) Select the position of the center differential by pushing the center differential lock switch with the transfer select lever to "H" position.
(2) After selecting the position, confirm the operation of indicator light.

HINT:

- Move the vehicle backward or forward slightly if the indicator light does not operate correctly when the center differential lock switch is turned ON or OFF.
- When the transfer select lever is put in "L" position, the center differential is put in LOCK condition regardless of the position of the center differential lock switch.
- Transfer gear H ↔ L gear shifting procedure

  Automatic transmission:
  When shifting, always put the shift lever of the automatic transmission in P or N range. In other ranges, the gears of the transfer clash, and switching cannot occur.

  Manual transmission:
  When shifting, always put the shift lever of the manual transmission in neutral.

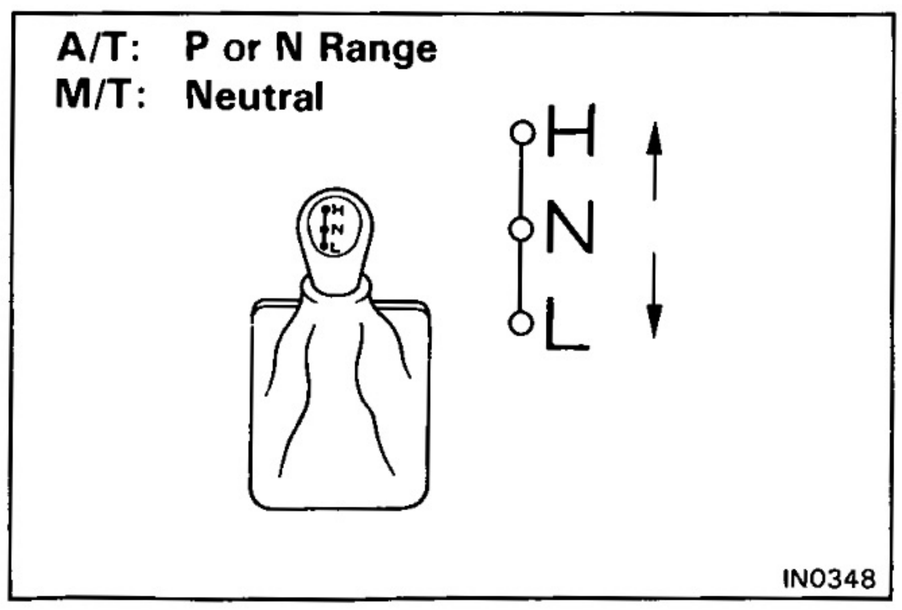

CAUTIONS WHEN CENTER DIFFERENTIAL CONTROL SWITCH IS TURNED ON

- Operate the switch only when all four wheels are stopped or when driving with the wheels in a straight line.
- Never operate the switch under the following conditions.
  (1) When any tire is slipping.
  (2) When any tire is spinning freely.
  (3) When swerving or cornering.

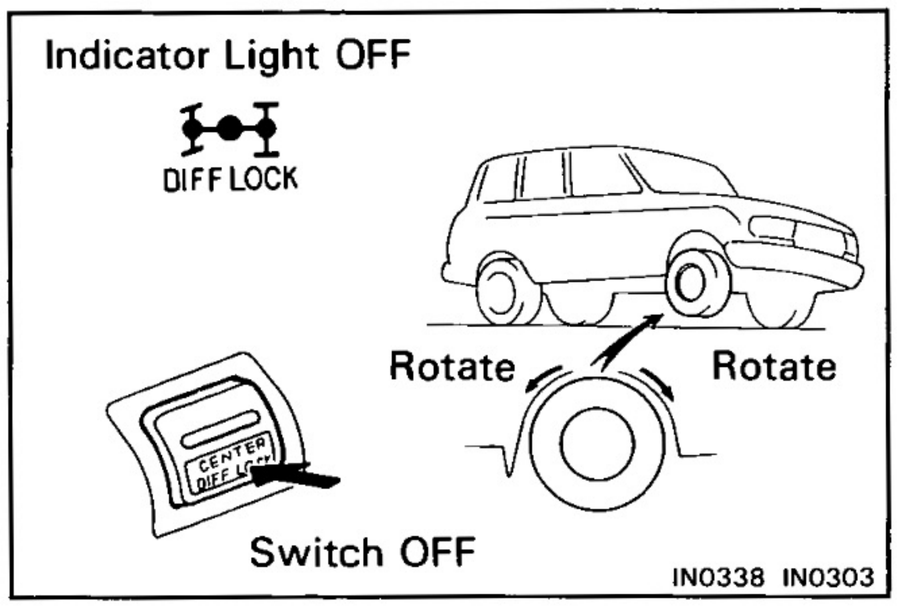

FREE Position

Center Differential Lock		Transfer Select Lever	Wheel
Control Switch	Indicator Light		
OFF	OFF	H	A lifted wheel can be rotated even if only one wheel is lifted up, as long as transmission is in neutral or N range.

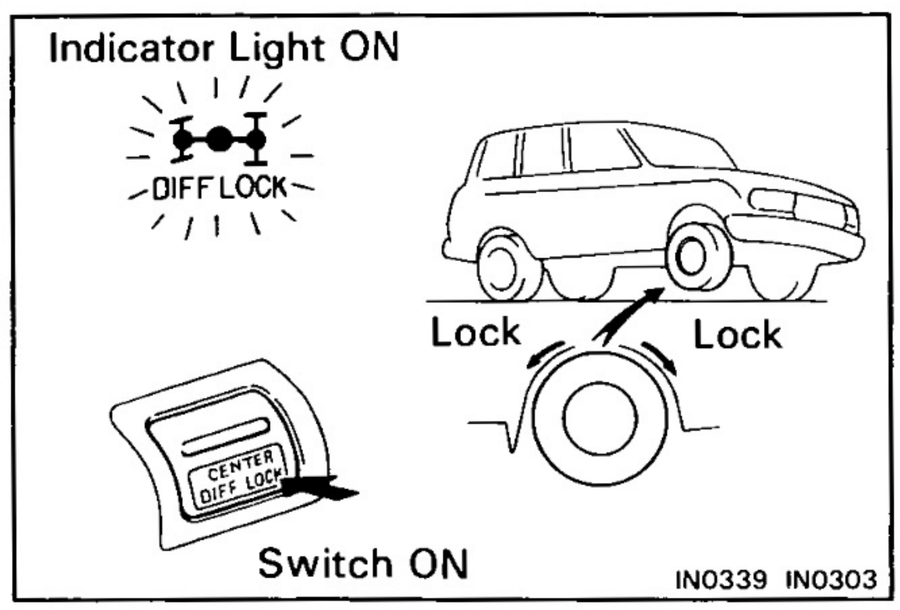

LOCK Position

Center Differential Lock		Transfer Select Lever	Wheel
Control Switch	Indicator Light		
ON	ON	H	A lifted wheel cannot be rotated if only one wheel is lifted up, even if transmission is in neutral or N range.
OFF	ON	L	

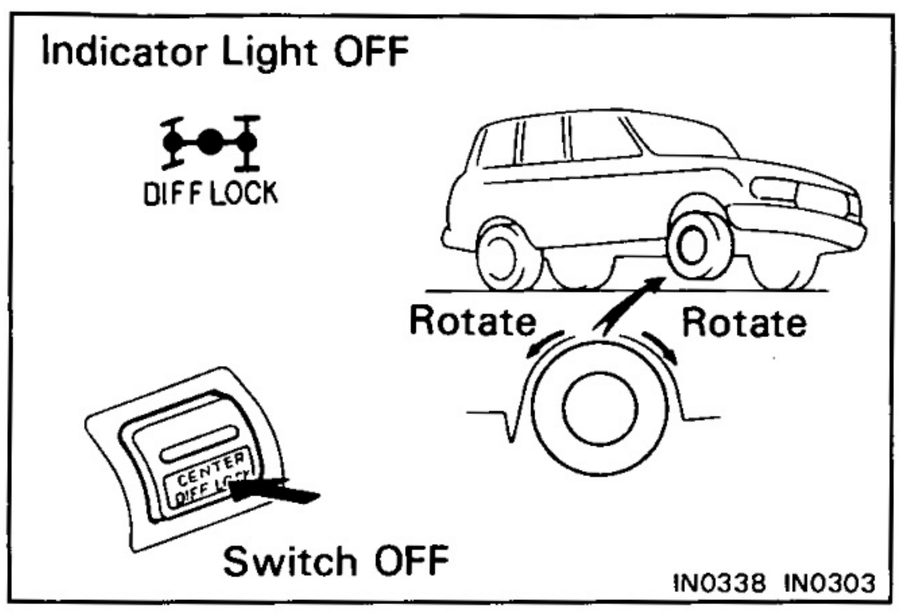

BRAKING FORCE TEST (Vehicle Speed : Below 0.5 km/h or 0.3 mph)

When performing low-speed type brake tester measurements, observe the following instructions.

(1) Put the center differential in FREE position.
- Shift the transfer select lever to H position.
- Turn the center differential lock switch to OFF and check that the center differential lock indicator light goes off.

(2) Shift the transmission shift lever to N range.

(3) Idle the engine, operate the brake booster and perform the test.

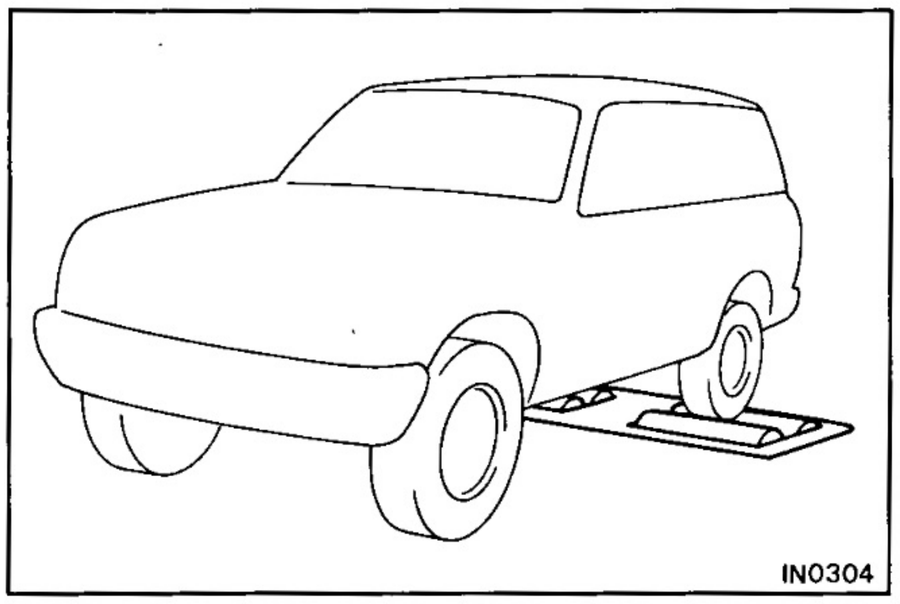

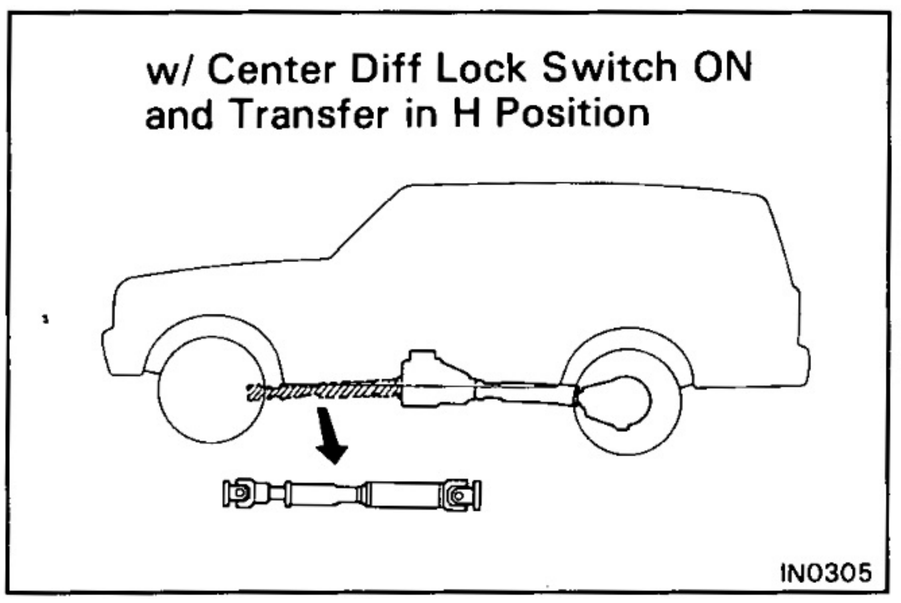

SPEEDOMETER TEST OR OTHER TESTS (Using Speedometer Tester or Chassis Dynamometer)

(1) Remove the front propeller shaft, put the center differential in LOCK position, then put the rear wheels on the tester roller and perform the test.

(2) When performing tests, observe the following precautions.
- Check that the center differential is securely in LOCK condition.
- Confirm that the vehicle is securely immobilised.
- Never operate the clutch or brakes suddenly, suddenly drive the wheels, or suddenly decelerate.

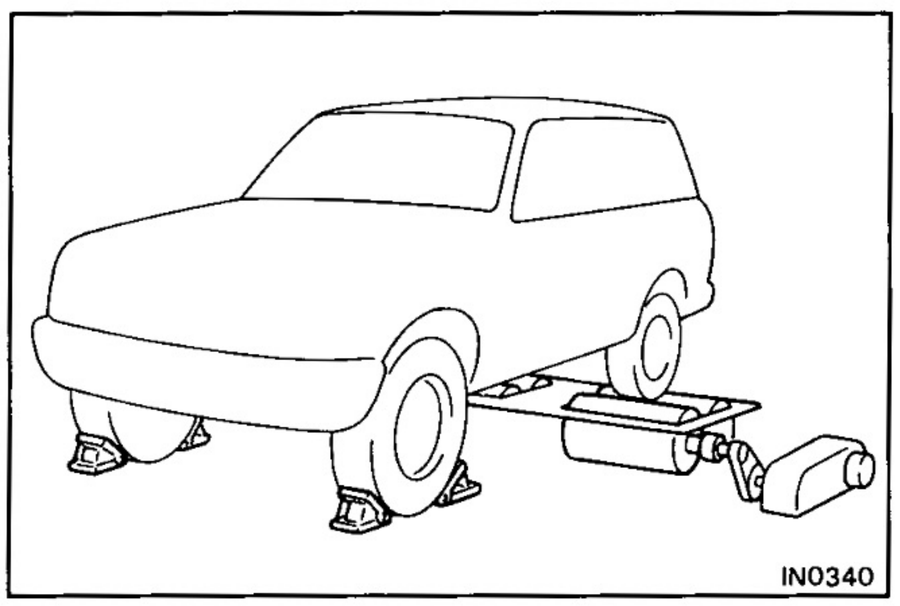

ON-VEHICLE WHEEL BALANCING

When doing on-vehicle wheel balancing on a full-time 4WD vehicle, to prevent the wheels from rotating at different speeds or in different directions from each other (which could lead to damage to the center differential or transfer gears), always be sure to observe the following precautions:

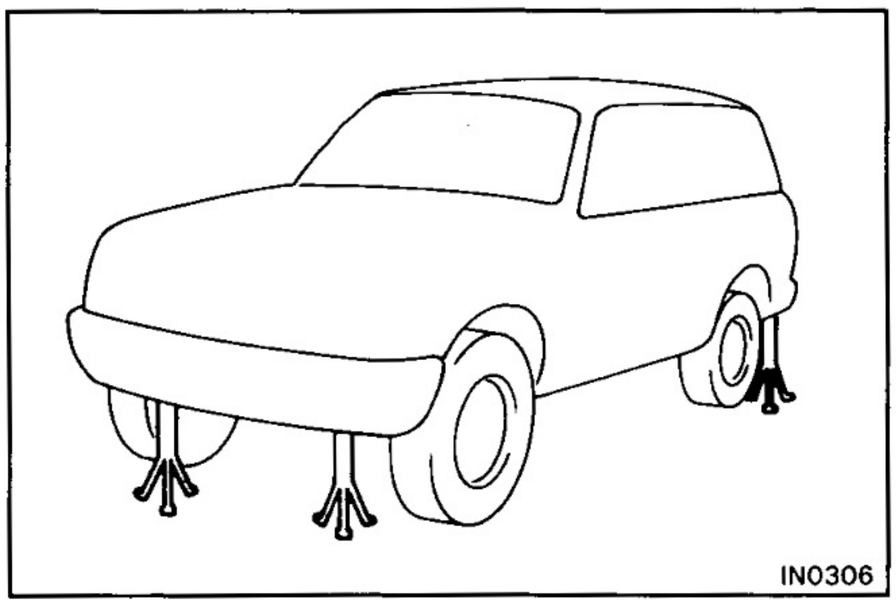

(1) All four wheels should be jacked up, clearing the ground completely.

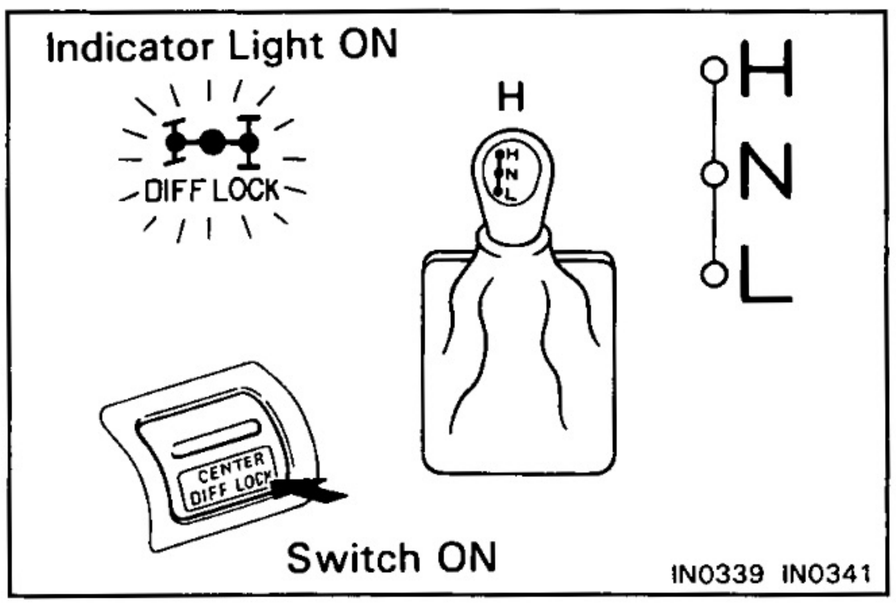

(2) The center differential should be in the LOCK position with the transfer gear in H position.

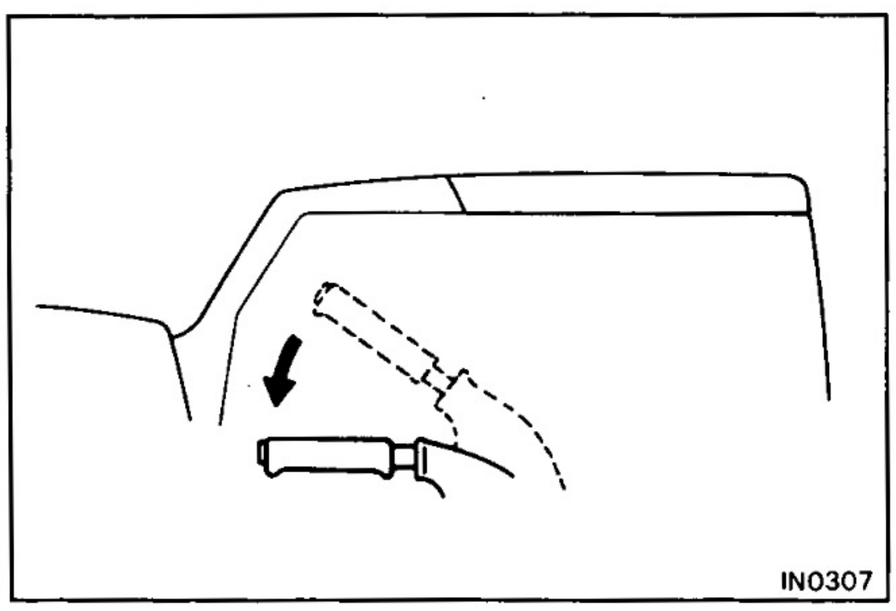

(3) The parking brake lever should be fully released.

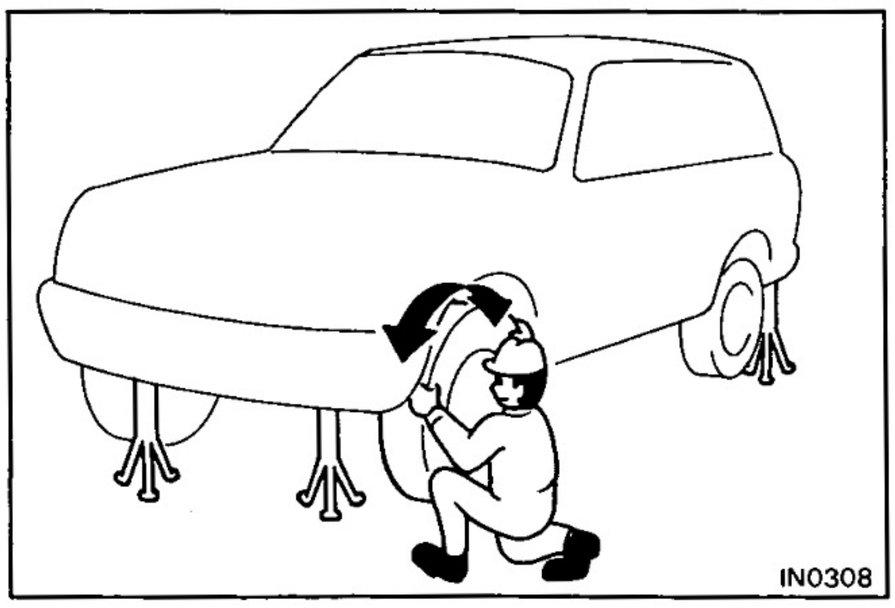

(4) None of the brakes should be allowed to drag.

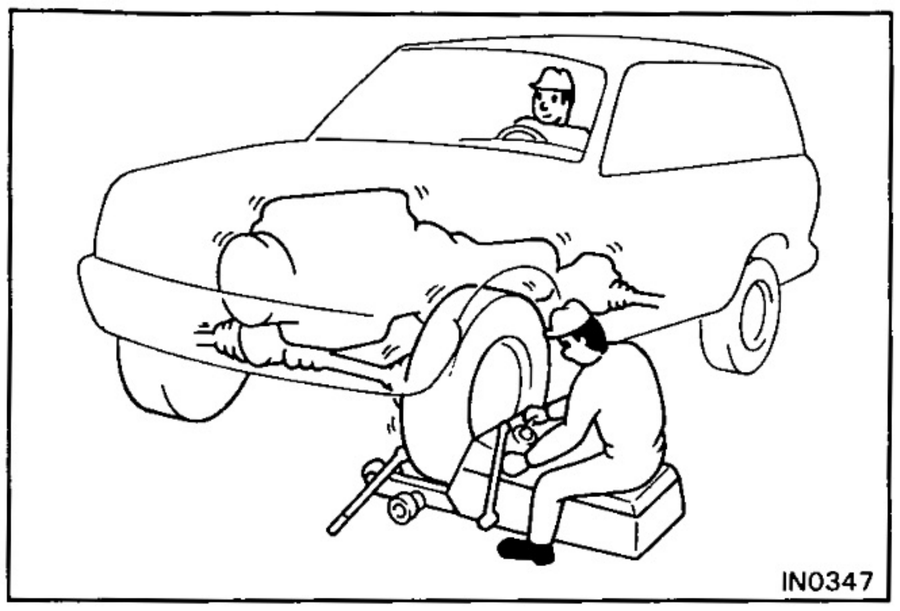

(5) The wheels should be driven with both the engine and the wheel balancer.

HINT: When doing this be careful of the other wheels, which will rotate at the same time.

(6) Avoid sudden acceleration, deceleration and braking.

(7) Carry out the wheel balancing with the transmission in 3rd or 4th gear (or 3rd or D range).

PRECAUTIONS WHEN TOWING FULL-TIME 4WD VEHICLES

1. Use one of the methods shown below to tow the vehicle.
2. When there is trouble with the chassis and drivetrain, use method ① (flat bed truck) or method ② (sling type tow truck with dollies)
3. Recommended Methods: No. ①, ② or ③
   Emergency Method: No. ④

<table>
<tr><th>Towing Method \ Condition</th><th>Parking Brake</th><th>Transmission Shift Lever Position</th><th>Transfer Shift Lever Position</th><th>Center Differential Lock Switch</th><th>Center Differential</th></tr>
<tr><td>① Flat Bed Truck
 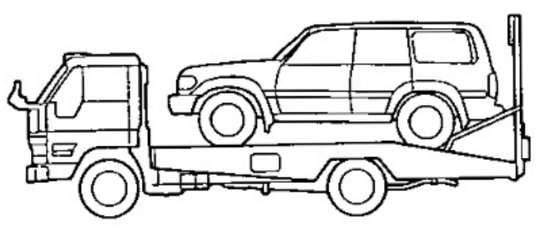
IN0309</td><td rowspan="2">Applied</td><td rowspan="2">Any Position</td><td rowspan="2">“H” Position</td><td rowspan="2">OFF</td><td rowspan="2">FREE
(Normal Driving)</td></tr>
<tr><td>② Sling-Type Tow Truck with Dollies
 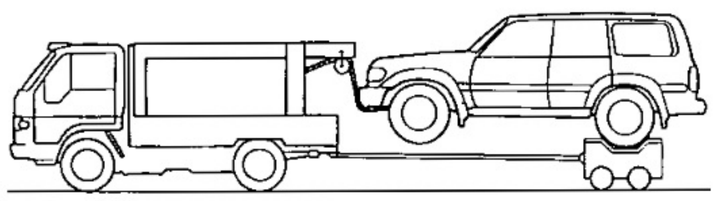
IN0310</td></tr>
<tr><td>③ Sling-Type Tow Truck
(Front wheels must be able to rotate freely)
 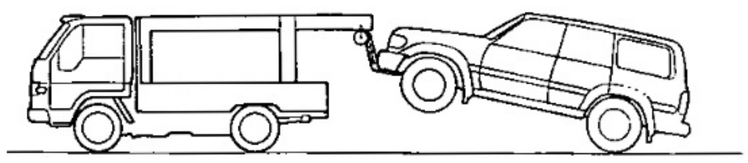
IN0311</td><td>Released</td><td>“N” Range or Neutral</td><td>“N” Position</td><td>OFF</td><td>↑</td></tr>
<tr><td>④ Towing with Rope
 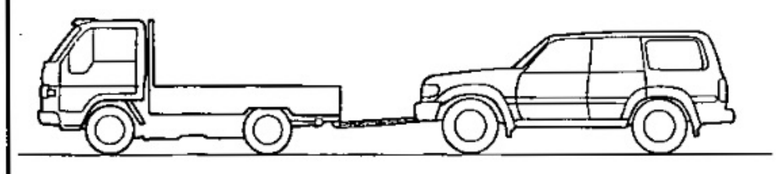
IN0312</td><td>Released</td><td>“N” Range or Neutral</td><td>“N” Position</td><td>OFF</td><td>↑</td></tr>
<tr><td colspan="6">HINT: Do not tow the vehicle at a speed faster than 30 mph (45 km/h) or a distance greater than 50 miles (80 km).</td></tr>
</table>

HINT: **Do not use any towing methods other than those shown above.**

For example, the towing method shown below is dangerous, so do not use it.

<table>
<tr><td>NO
 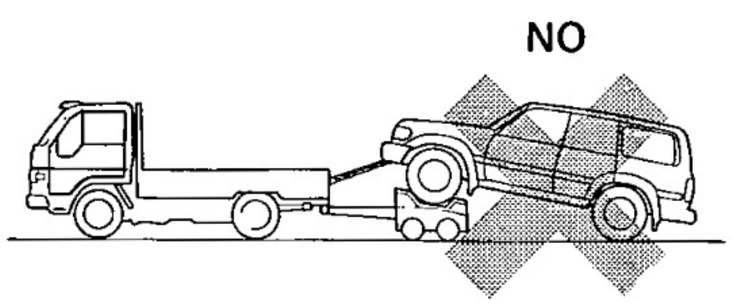
IN0313</td><td>During towing with this towing method, there is a danger of the drive train heating up and causing breakdown, or of the front wheels flying off the dolly.</td></tr>
</table>

VEHICLE LIFT AND SUPPORT LOCATIONS

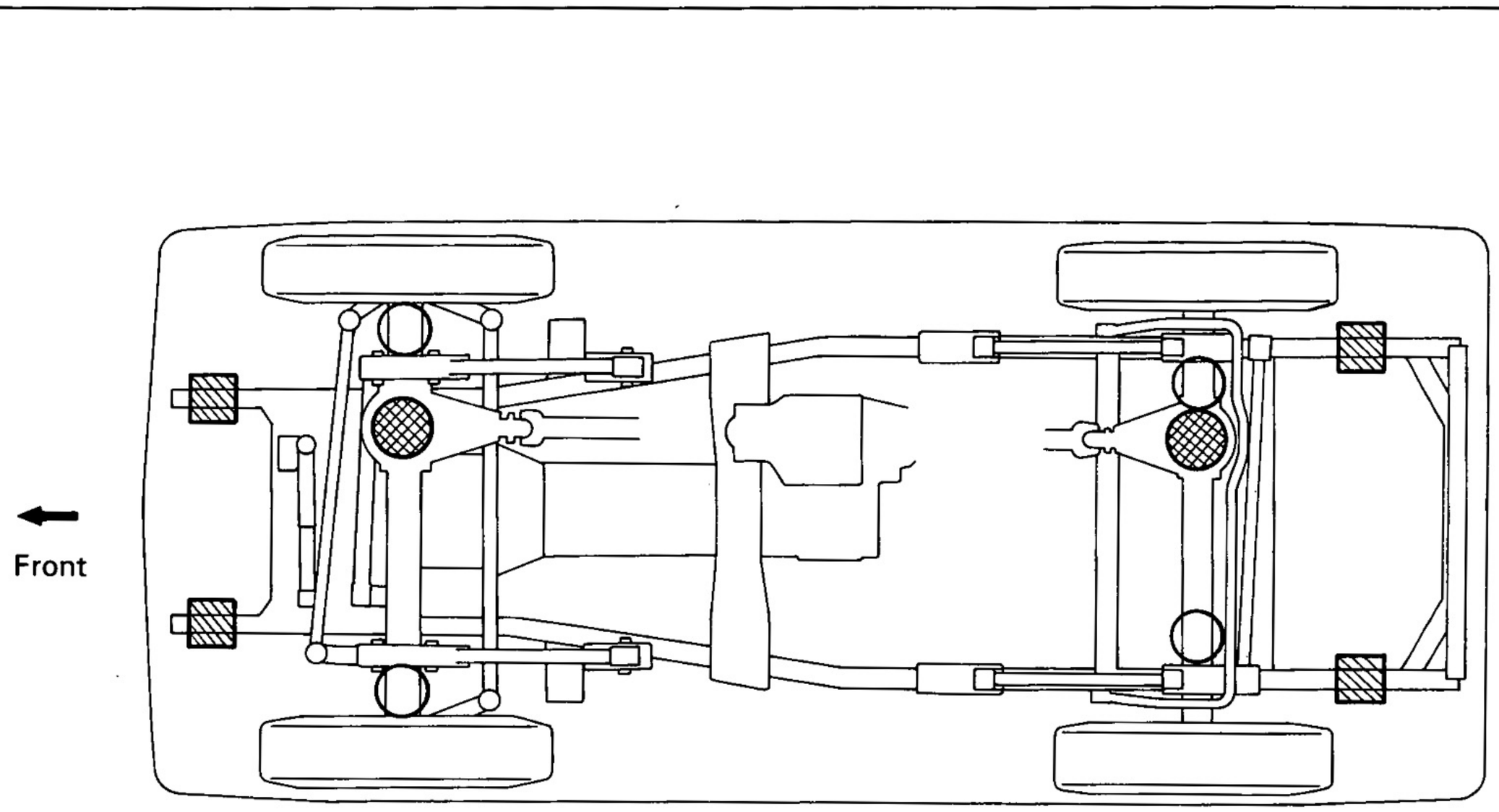

Front

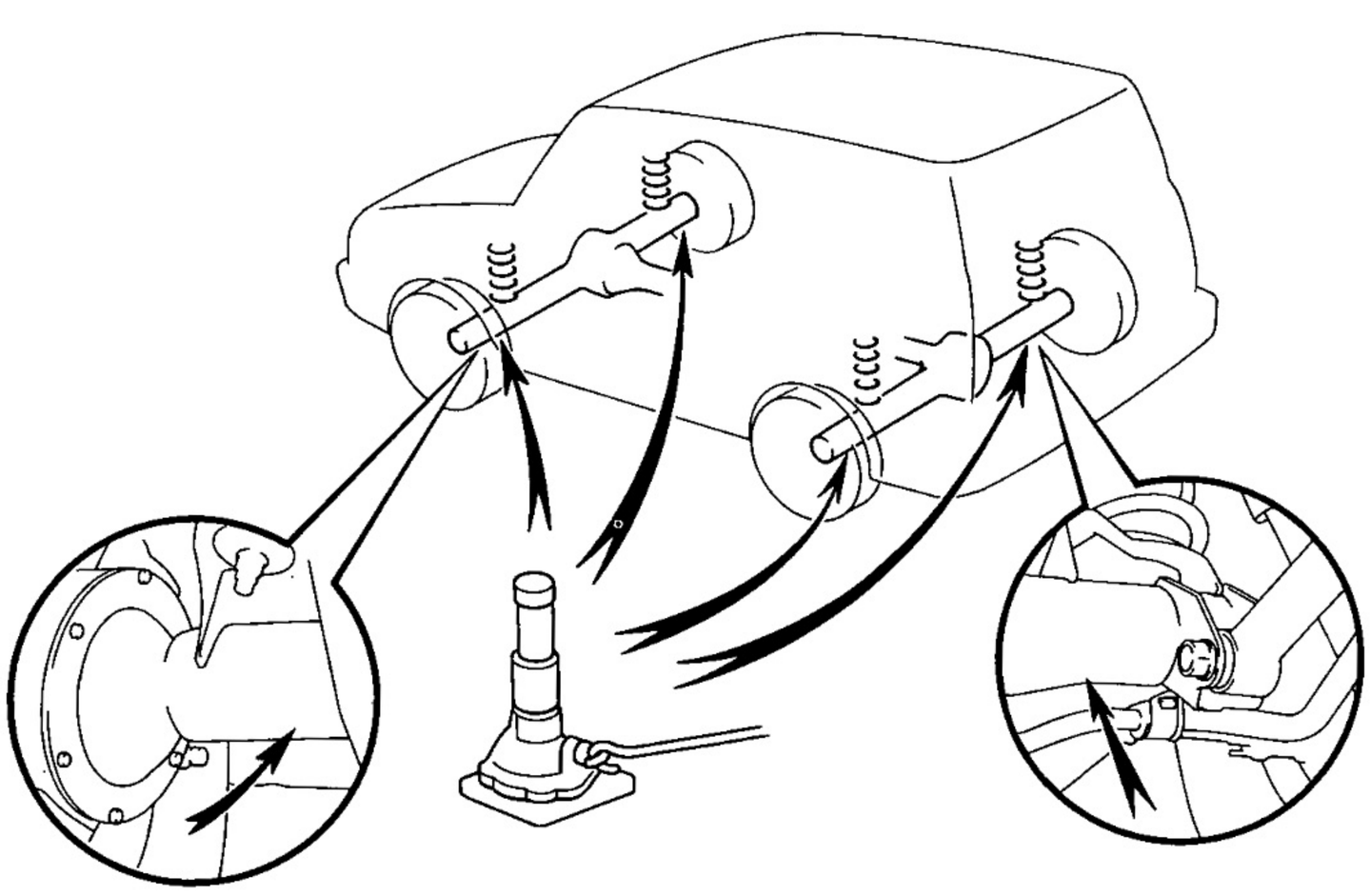

JACK POSITION ——————————

Front ..... Under the front differential

Rear ..... Under the rear differential

SCREW TYPE JACK POSITION ——————

SUPPORT POSITION

Safety stand .....

IN0314
IN0342

ABBREVIATIONS USED IN THIS MANUAL

A/C	Air Conditioner
A/T	Automatic Transmission
ATF	Automatic Transmission Fluid
A.T.P.	Automatic Transmission Parking
B_O	Overdrive Brake
B_2	Second Brake
B_3	First and Reverse Brake
C_O	Overdrive Direct Clutch
C_1	Forward Clutch
C_2	Direct Clutch
CCS	Cruise Control System
CD	Compact Disc
ECU	Electronic Control Unit
EFI	Electronic Fuel Injection
ELR	Emergency Locking Retractor
Ex.	Except
F_O	Overdrive One-Way Clutch
F_2	No.2 One-Way Clutch
FIPG	Formed on Place Gasket
FL	Fusible Link
G.C.C.	Gulf Cooperation Council Countries
IG	Ignition
LED	Light Emitting Diode
LH	Left-Hand
LHD	Left-Hand Drive
LSD	Limited Slip Differential
LSP & BV	Load Sensing Proportioning and By-Pass Valve
Max.	Maximum
M/T	Manual Transmission
MP	Multipurpose
O/D, OD	Overdrive
PPS	Progressive Power Steering
PS	Power Steering
PTO	Power Take-Off
RH	Right-Hand
RHD	Right-Hand Drive
SSM	Special Service Materials
SST	Special Service Tools
STD	Standard
SW	Switch
VSV	Vacuum Switching Valve
w/	With
w/o	Without
4WD	Four Wheel Drive Vehicles (4 × 4)

CLUTCH

	Page
TROUBLESHOOTING	CL-2
CHECK AND ADJUSTMENT OF CLUTCH PEDAL	CL-3
OPERATIONAL TEST OF CLUTCH BOOSTER	CL-4
BLEEDING OF CLUTCH SYSTEM	CL-5
CLUTCH MASTER CYLINDER	CL-6
CLUTCH BOOSTER	CL-10
CLUTCH ACCUMULATOR	CL-17
CLUTCH RELEASE CYLINDER	CL-21
CLUTCH UNIT	CL-22

TROUBLESHOOTING

Problem	Possible cause	Remedy	Page
Hard to shift or will not shift	Clutch pedal freeplay excessive	Adjust pedal freeplay	CL-3
	Clutch booster faulty	Inspect clutch booster	CL-10
	Clutch release cylinder faulty	Repair release cylinder	CL-21
	Clutch master cylinder faulty	Repair master cylinder	CL-6, 8
	Clutch disc out of true, lining greasy or broken	Inspect clutch disc	CL-22
	Splines on input shaft or clutch disc dirty or burred	Repair as necessary	CL-22
	Clutch pressure plate faulty	Replace pressure plate	CL-22
Transmission jumps out of gear	Pilot bearing worn	Replace pilot bearing	CL-22
Clutch slips	Clutch pedal freeplay insufficient	Adjust pedal freeplay	CL-3
	Clutch booster faulty	Inspect clutch booster	CL-10
	Clutch disc lining oily or worn out	Inspect clutch disc	CL-22
	Pressure plate faulty	Replace pressure plate	CL-22
	Release fork binds	Inspect release fork	CL-22
Clutch grabs/chatters	Clutch booster faulty	Inspect clutch booster	CL-10
	Clutch disc lining oily or worn out	Inspect clutch disc	CL-22
	Pressure plate faulty	Replace pressure plate	CL-22
	Clutch diaphragm spring bending	Align clutch diaphragm	CL-22
	Engine mounts loose	Repair as necessary	
Clutch pedal spongy	Air in clutch lines	Bleed clutch system	CL-5
	Clutch release cylinder faulty	Repair release cylinder	CL-21
	Clutch master cylinder faulty	Repair master cylinder	CL-6, 8
Clutch noisy	Loose part inside housing	Repair as necessary	
	Release bearing worn or dirty	Replace release bearing	CL-22
	Pilot bearing worn	Replace pilot bearing	CL-22
	Release fork or linkage sticks	Repair as necessary	

w/o Clutch Booster

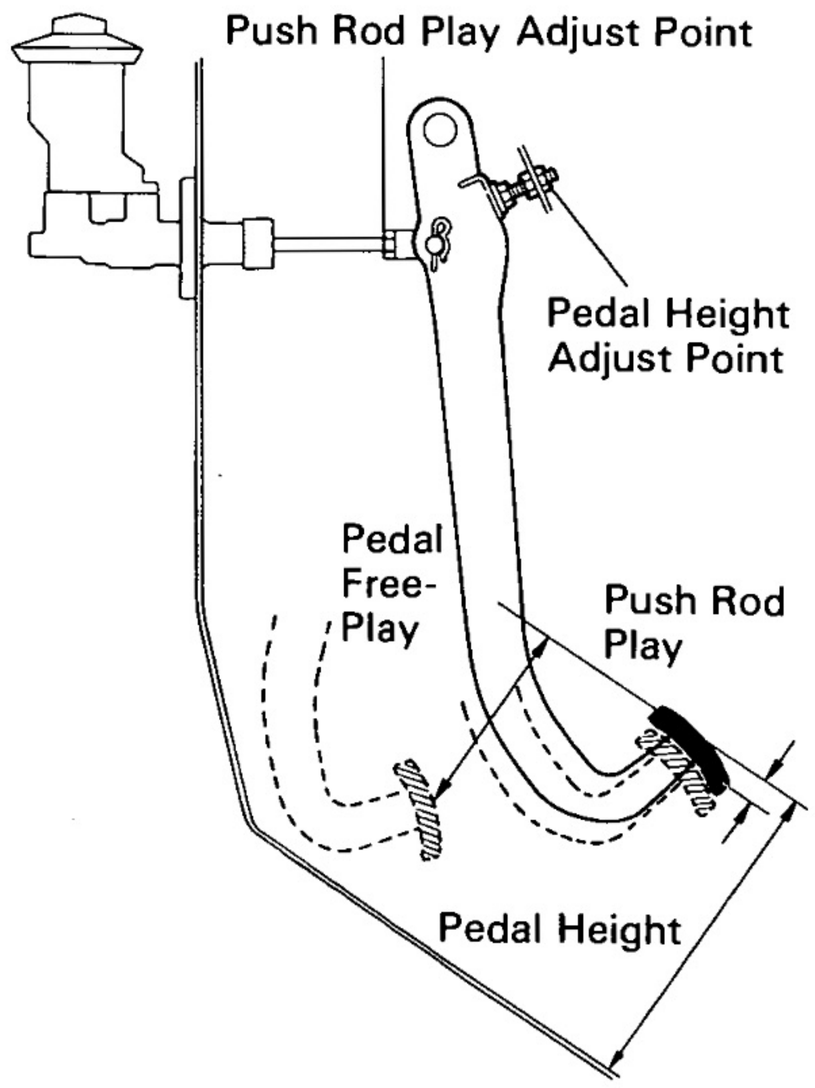

w/ Clutch Booster

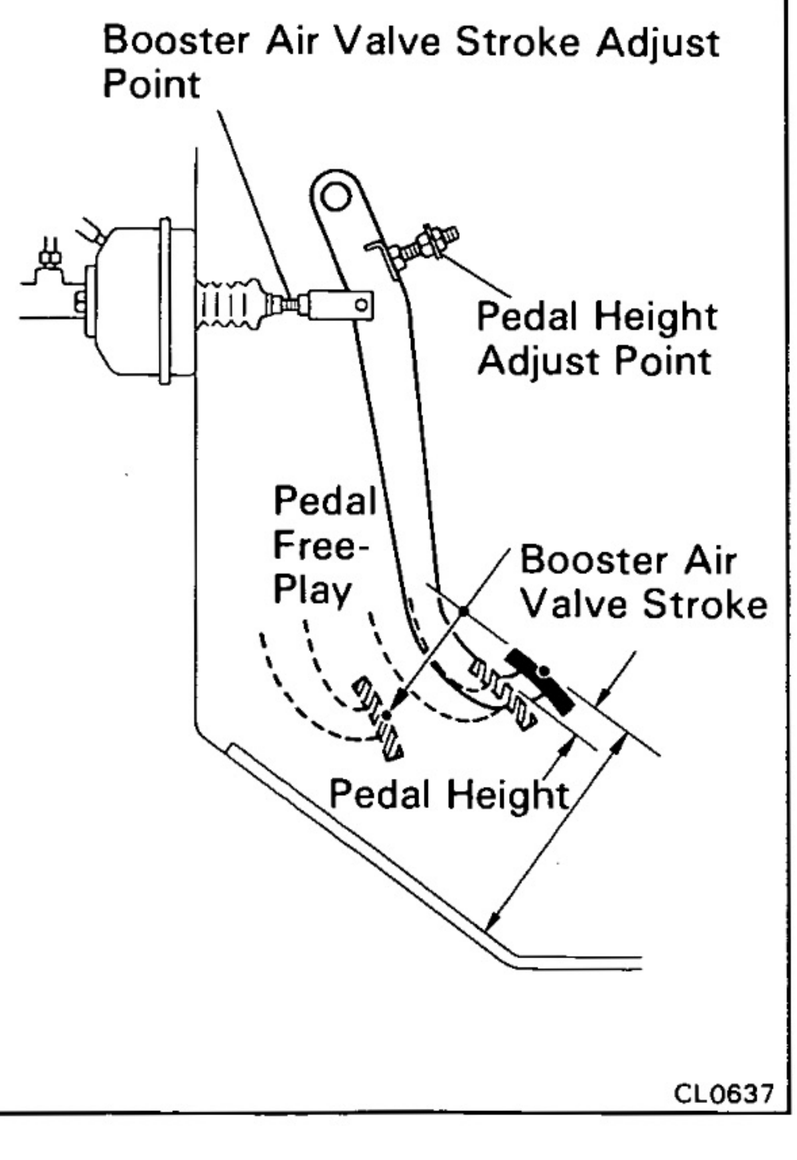

CHECK AND ADJUSTMENT OF CLUTCH PEDAL

1. CHECK THAT PEDAL HEIGHT IS CORRECT

Pedal height from asphalt sheet:
173 mm (6.81 in.)

2. IF NECESSARY, ADJUST PEDAL HEIGHT

Loosen the lock nut and turn the stopper bolt until the height is correct. Tighten the lock nut.

HINT: After adjusting the pedal height, check and adjust the pedal free play and push rod play or booster air valve stroke.

3-1. (w/o Clutch Booster) CHECK THAT PEDAL FREEPLAY AND PUSH ROD PLAY ARE CORRECT

(Pedal Freeplay)
Push in on the pedal until the beginning of clutch resistance is felt.

Pedal freeplay: 13.0 — 23.0 mm (0.51 — 0.91 in.)

(Push rod play)
Push in on the pedal with a finger softly until the resistance begins to increase a little.

Push rod play at pedal top: 1.0 — 5.0 mm (0.039 — 0.197 in.)

3-2. (w/ Clutch Booster) CHECK PEDAL FREEPLAY AND BOOSTER AIR VALVE STROKE

(Pedal Freeplay)
Push in on the pedal until the clutch begins to resist.

Pedal freeplay: 15.0 — 30.0 mm (0.59 — 1.18 in.)

(Booster Air Valve Stroke)

(a) Stop the engine and depress the clutch pedal several times until there is no vacuum left in the clutch booster.

(b) Push in on the pedal with a finger softly until the resistance begins to increase a little.

Booster air valve stroke at pedal top:
5.0 — 9.0 mm (0.20 — 0.35 in.)

HINT: The booster air valve stroke is the amount of the stroke until the booster piston is moved by the booster air valve.

4. IF NECESSARY, ADJUST PEDAL FREEPLAY AND PUSH ROD PLAY OR BOOSTER AIR VALVE STROKE

(a) Loosen the lock nut and turn the push rod until the freeplay and push rod play are correct.

(b) Tighten the lock nut.

(c) After adjusting the pedal freeplay, check the pedal height.

(d) Connect the air duct and install the lower finish panel.

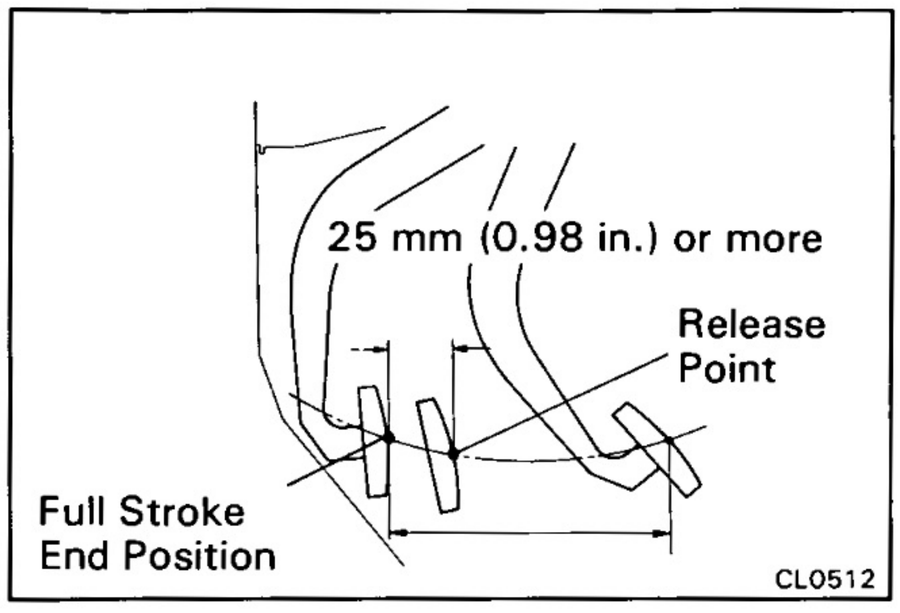

5. INSPECT CLUTCH RELEASE POINT

(a) Pull the parking brake lever and install wheel stopper.

(b) Start the engine and idle the engine.

(c) Without depressing the clutch pedal, slowly shift lever into reverse position until the gears contact.

(d) Gradually depress the clutch pedal and measure the stroke distance from the point the gear noise stops (release point) up to the full stroke end position.

Standard distance: 25 mm (0.98 in.) or more (From pedal stroke end position to release position to release point)

If the distance not as specified, perform the following operation.

- Inspect pedal height .
- Inspect push rod play and pedal freeplay.
- Bleed the clutch line.
- Inspect the clutch cover and disc.

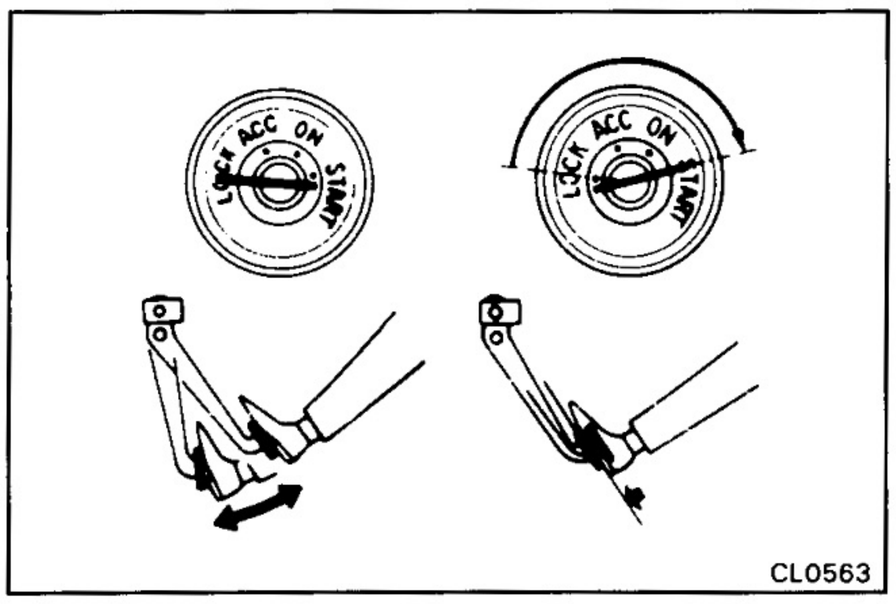

OPERATIONAL TEST OF CLUTCH BOOSTER

HINT: If there is leakage or lack of vacuum, repair before testing.

1. OPERATING CHECK

With the engine stopped, depress the clutch pedal several times. Then, with the pedal at the mid point, start the engine and confirm that the pedal sinks down slightly.

2. AIR-TIGHTNESS CHECK

(a) Depress the clutch pedal several times with the engine stopped. Then, start the engine and depress the clutch pedal and check that there is a light difference in pedal effort.

(b) Start the engine and turn it off after is sufficient vacuum in the booster. Depress the clutch pedal and confirm that the effort required for at least one time is equal to that with the engine running.

HINT: If (a) and (b) are not as stipulates, inspect the vacuum check valve and, if necessary, the clutch booster also.

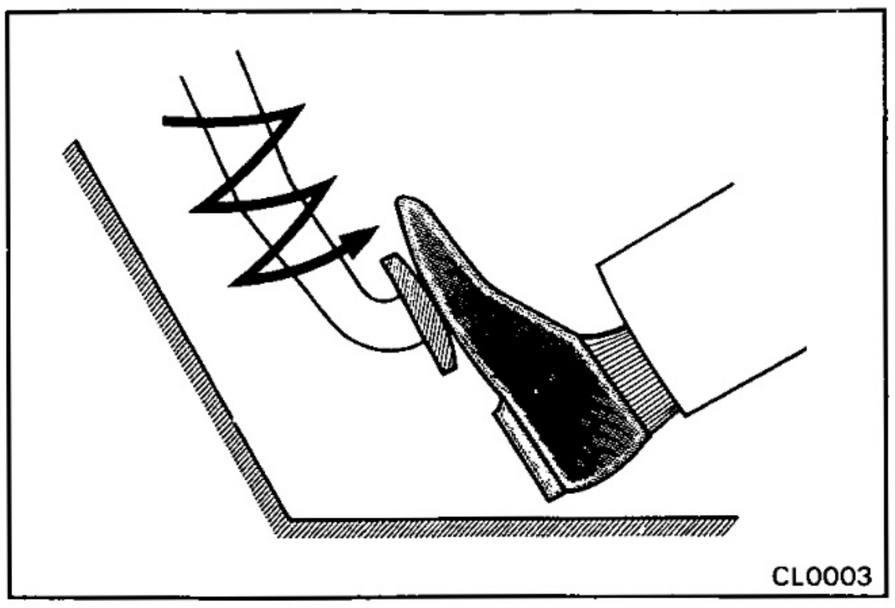
CL0003

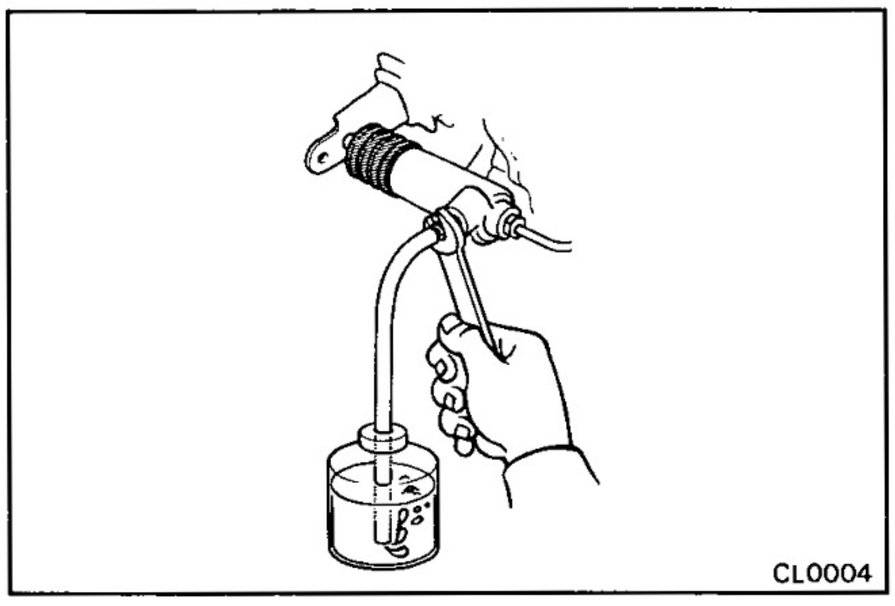
CL0004

BLEEDING OF CLUTCH SYSTEM

HINT: If any work is done on the clutch system or if air is suspected in the clutch lines, bleed the system of air.

NOTICE: Do not let brake fluid remain on a painted surface. Wash it off immediately.

1. FILL CLUTCH RESERVOIR WITH BRAKE FLUID

Check the reservoir frequently. Add fluid if necessary.

2. CONNECT VINYL TUBE TO BLEEDER PLUG

Insert the other end of the tube in a half-full container of brake fluid.

3. BLEED CLUTCH LINE

(a) Slowly pump the clutch pedal several times.

(b) While pressing on the pedal, loosen the bleeder plug until the fluid starts to run out. Then close the bleeder plug.

(c) Repeat this procedure until there are no more air bubbles in the fluid.

4. TIGHTEN BLEEDER PLUG

Torque: 110 kg-cm (8 ft-lb, 11 N·m)

CLUTCH MASTER CYLINDER (w/o Clutch Booster)

COMPONENTS

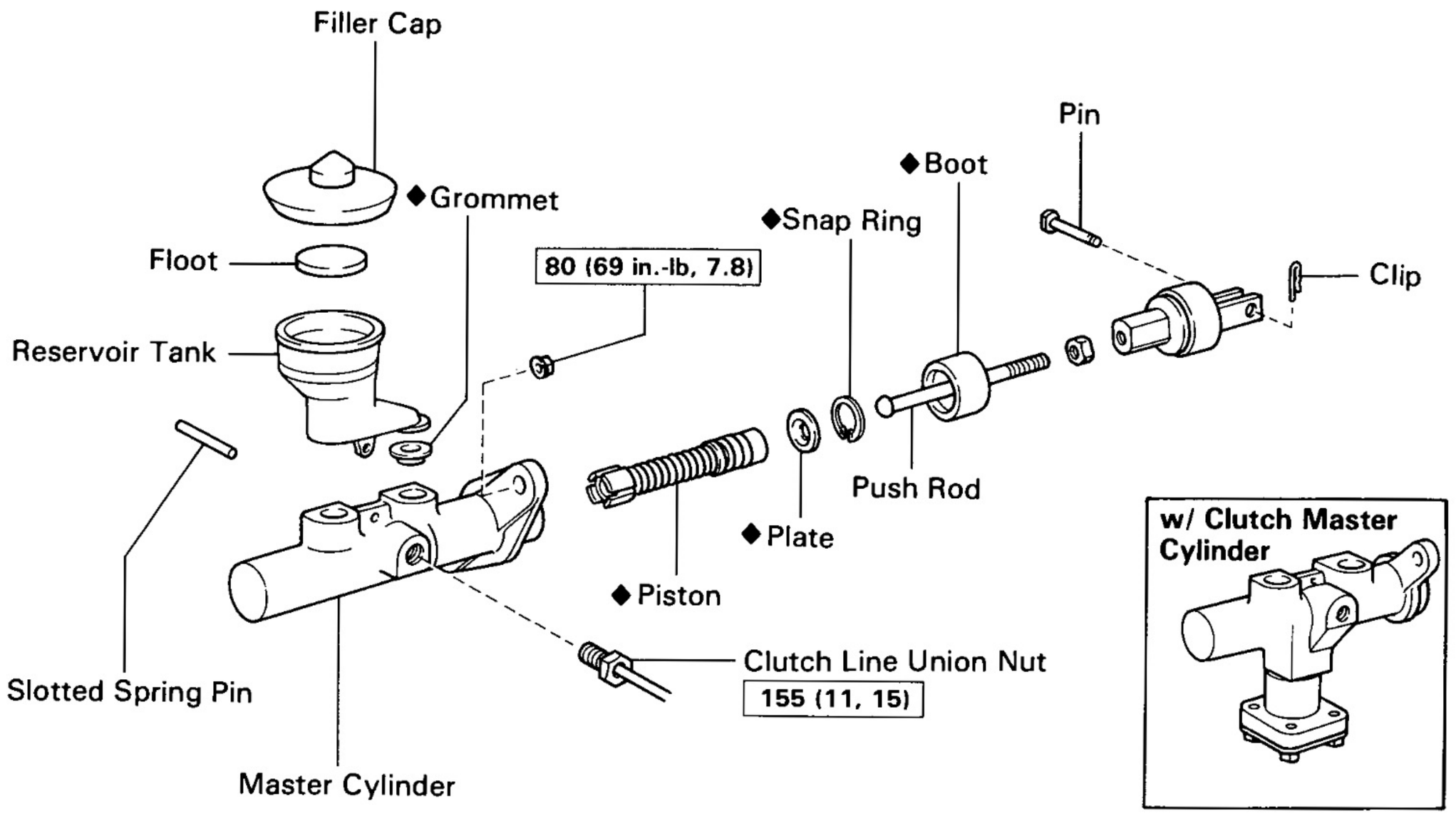

kg-cm (ft-lb, N·m) : Specified torque

◆ Non-reusable part

CL0564

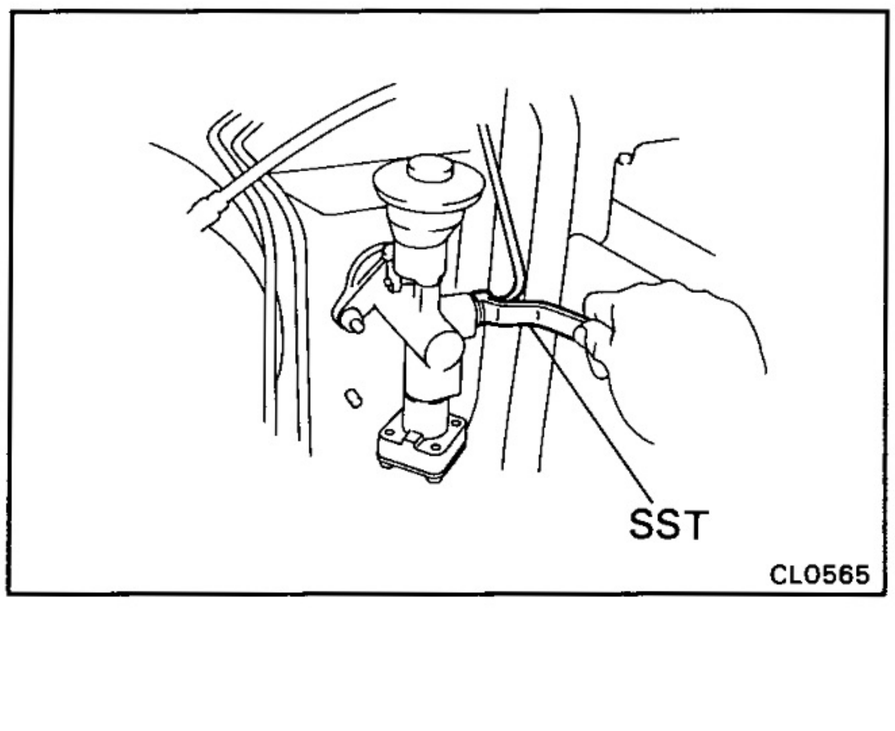

CL0565

REMOVAL AND INSTALLATION OF CLUTCH MASTER CYLINDER

(MAIN POINT OF REMOVAL AND INSTALLATION)

REMOVE MASTER CYLINDER

(a) Draw out fluid with syringe.

(b) Using SST, disconnect the clutch tube.

SST 09751-36011

(c) Remove the clip, clevis pin and return spring.

(d) Remove the nut from the room side.

(e) Remove the nut from the engine room side.

(f) Pull out the master cylinder.

DISASSEMBLY OF MASTER CYLINDER

1. REMOVE RESERVOIR TANK

(a) Using a pin punch and a hammer, drive out the slotted spring pin.

(b) Remove reservoir tank and grommet.

2. REMOVE PUSH ROD AND PISTON

INSPECTION OF MASTER CYLINDER

HINT: Clean the disassembled parts with compressed air.

1. INSPECT MASTER CYLINDER BORE FOR SCORING OR CORROSION

If a problem is found, clean or replace the cylinder.

2. INSPECT PISTON AND CUPS FOR WEAR, SCORING, CRACKS OR SWELLING

If either one requires replacement, use the parts from the cylinder kit.

3. INSPECT PUSH ROD FOR WEAR OR DAMAGE

If necessary, replace the push rod.

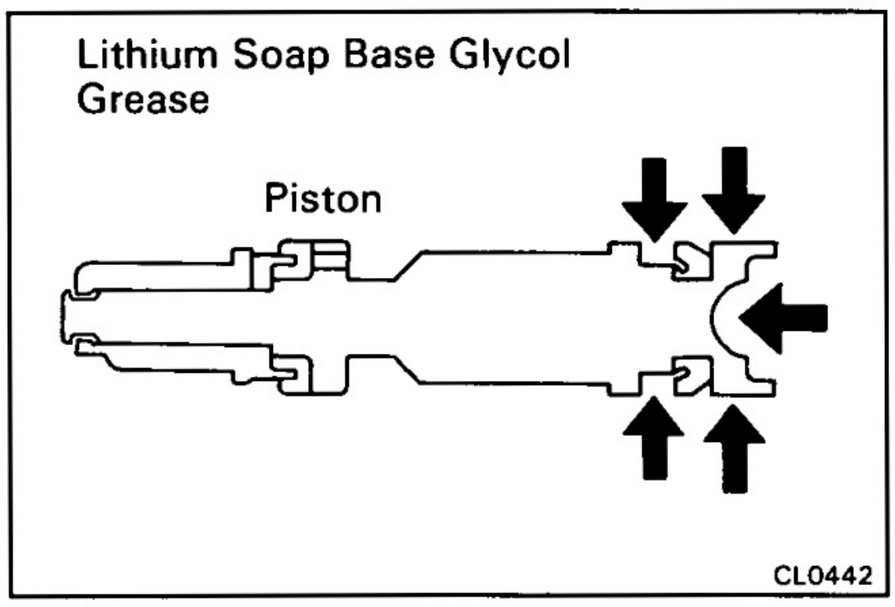

ASSEMBLY OF MASTER CYLINDER

1. COAT PARTS WITH LITHIUM SOAP BASE GLYCOL GREASE AS SHOWN

2. INSERT PISTON INTO CYLINDER

3. INSTALL PUSH ROD ASSEMBLY WITH SNAP RING

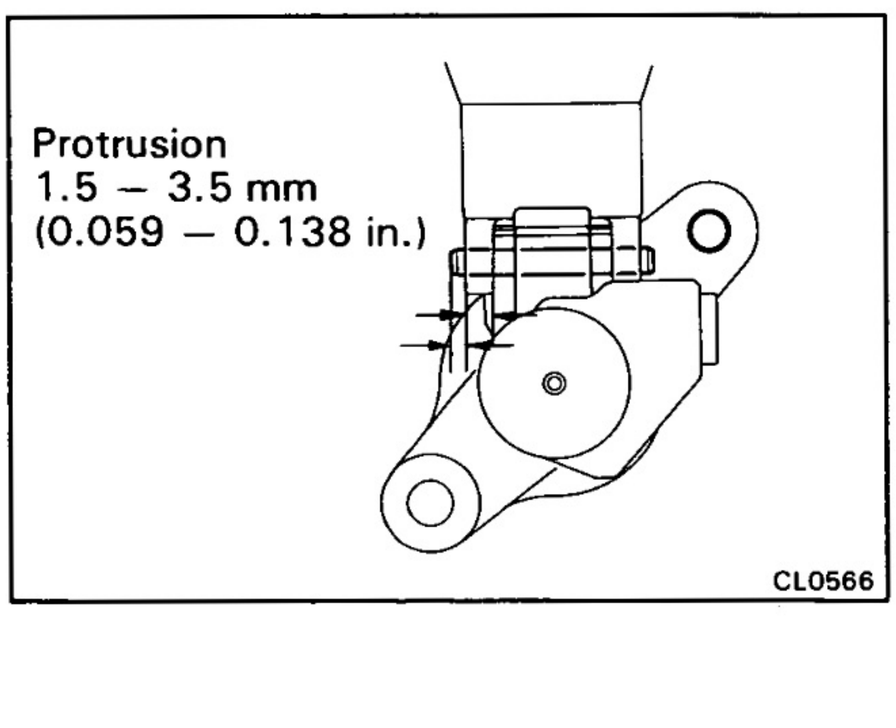

4. INSTALL RESERVOIR TANK

(a) Install reservoir tank and new grommet.

(b) Using a pin punch and a hammer, drive in the slotted spring pin.

INSTALLATION OF MASTER CYLINDER

(See page CL-6)

1. INSTALL MASTER CYLINDER

Install the mounting nut, and torque them.

Torque: 80 kg-cm (69 in.-lb, 7.8 N·m)

2. CONNECT CLUTCH LINE UNION

Using SST, connect the union.

SST 09751-36011

3. CONNECT PUSH ROD AND INSTALL PIN

Install the clip in the push rod pin.

4. BLEED SYSTEM AND ADJUST CLUTCH PEDAL

(See page CL-5)

(w/ Clutch Booster)

COMPONENTS

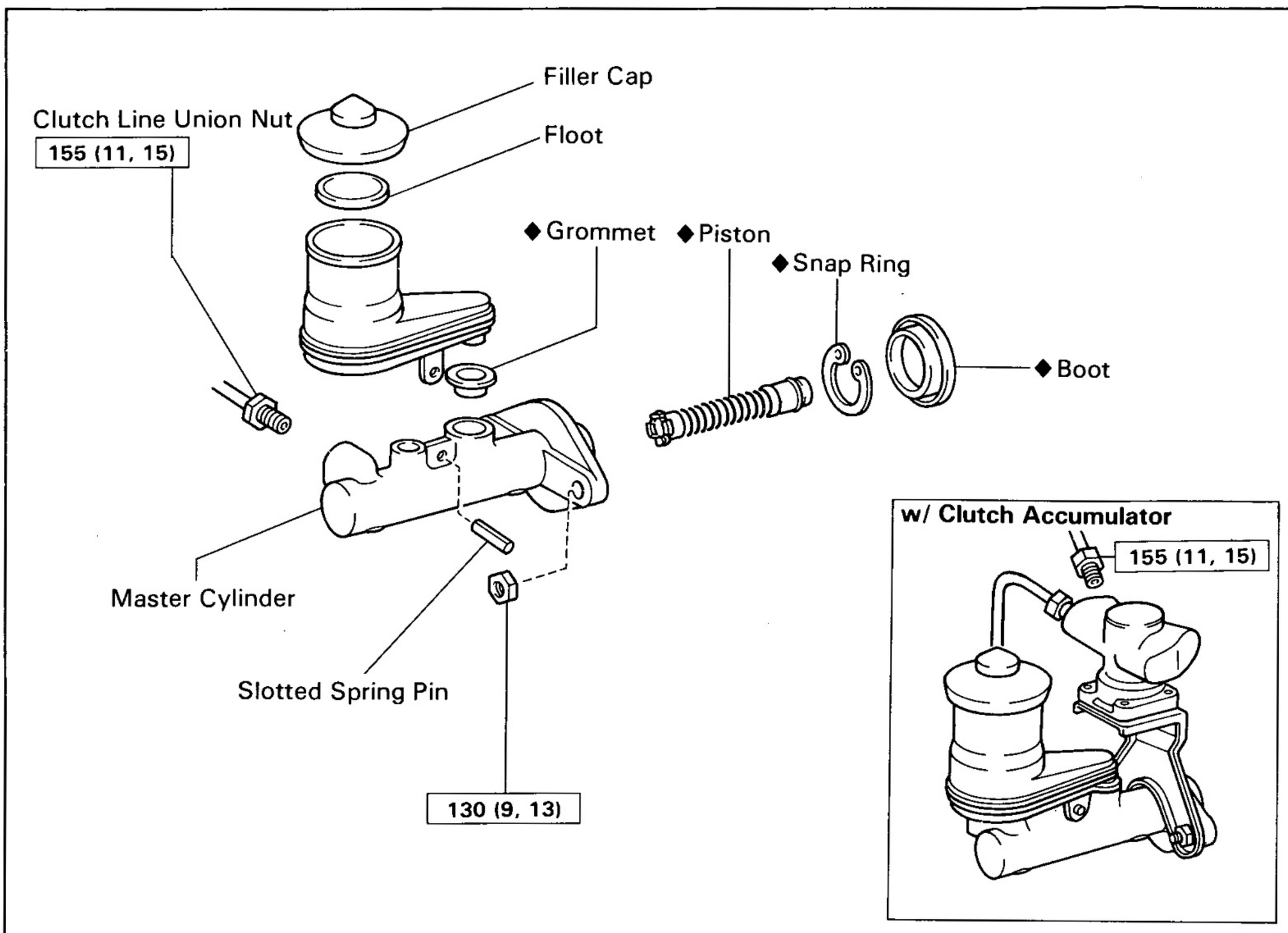

kg-cm (ft-lb, N·m) : Specified torque

◆ Non-reusable part

CL0567

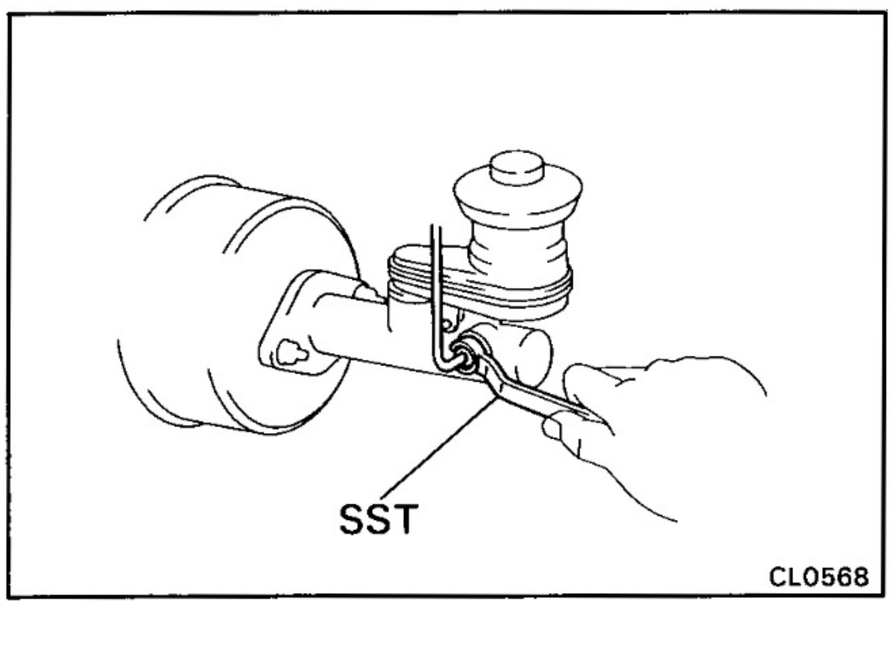

CL0568

REMOVAL AND INSTALLATION OF CLUTCH MASTER CYLINDER

(MAIN POINT OF REMOVAL AND INSTALLATION)

REMOVE MASTER CYLINDER

(a) Draw out fluid with syringe.

(b) Using SST, disconnect the clutch tube.

SST 09751-36011

(c) Remove the two nuts.

(d) Pull out the master cylinder.

DISASSEMBLY OF MASTER CYLINDER

1. REMOVE RESERVOIR TANK

(a) Using a pin punch and a hammer, drive out the slotted spring pin.

(b) Remove reservoir tank and grommet.

2. REMOVE PISTON

INSPECTION OF MASTER CYLINDER

HINT: Clean the disassembled parts with compressed air.

1. INSPECT MASTER CYLINDER BORE FOR SCORING OR CORROSION

If a problem is found, clean or replace the cylinder.

2. INSPECT PISTON AND CUPS FOR WEAR, SCORING, CRACKS OR SWELLING

If either one requires replacement, use the parts from the cylinder kit.

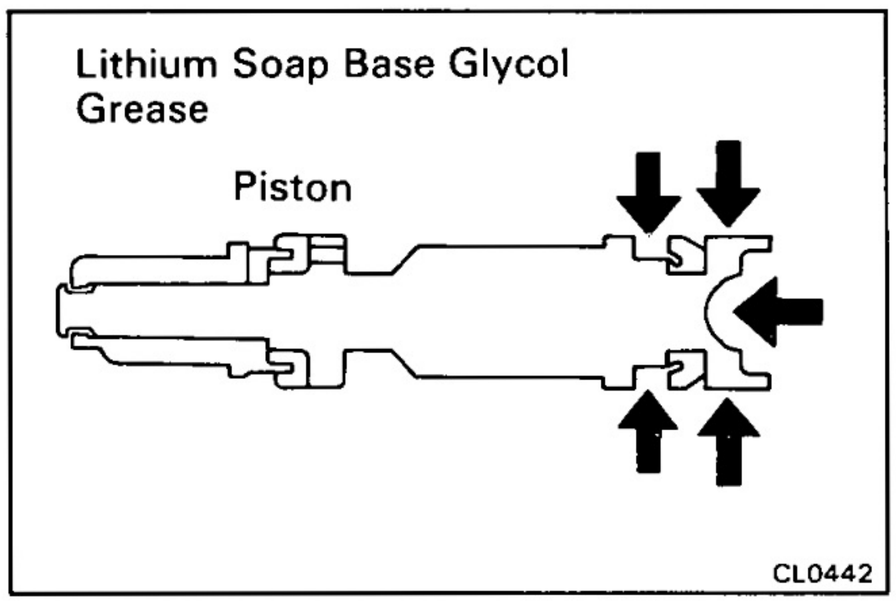

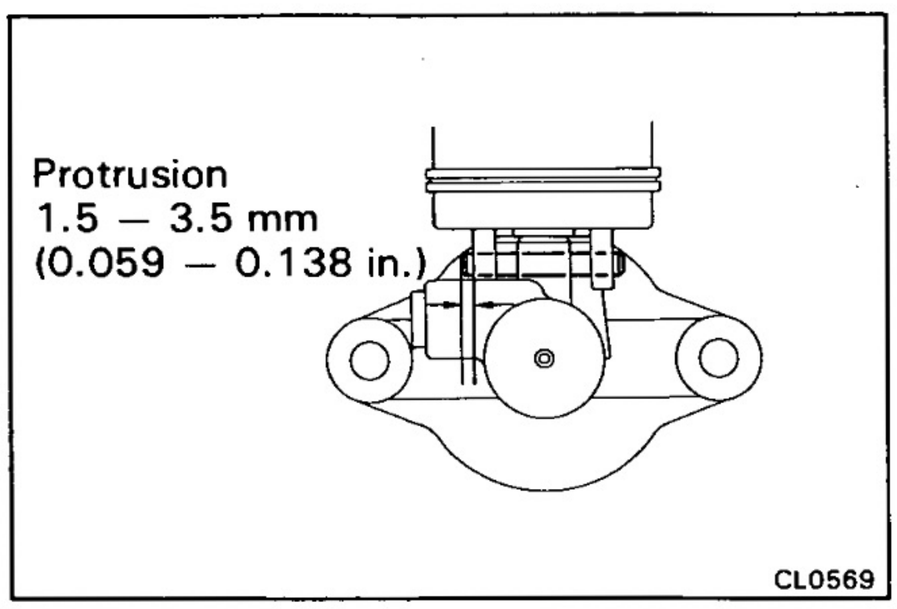

ASSEMBLY OF MASTER CYLINDER

1. COAT PARTS WITH LITHIUM SOAP BASE GLYCOL GREASE AS SHOWN

2. INSTALL PISTON INTO CYLINDER

3. INSTALL RESERVOIR TANK

(a) Install reservoir tank and new grommet.

(b) Using a pin punch and a hammer, drive in the slotted spring pin.

INSTALLATION OF MASTER CYLINDER

(See page CL-8)

1. ADJUST LENGTH OF CLUTCH BOOSTER PUSH ROD
(See step 1 on page CL-16)

2. INSTALL MASTER CYLINDER WITH MOUNTING NUTS

Torque: 130 kg-cm (9 ft-lb, 13 N·m)

3. CONNECT CLUTCH LINE UNION

Using SST, connect the union.

SST 09751-36011

4. BLEED SYSTEM AND ADJUST CLUTCH PEDAL
(See page CL-5)

CLUTCH BOOSTER

REMOVAL OF CLUTCH BOOSTER

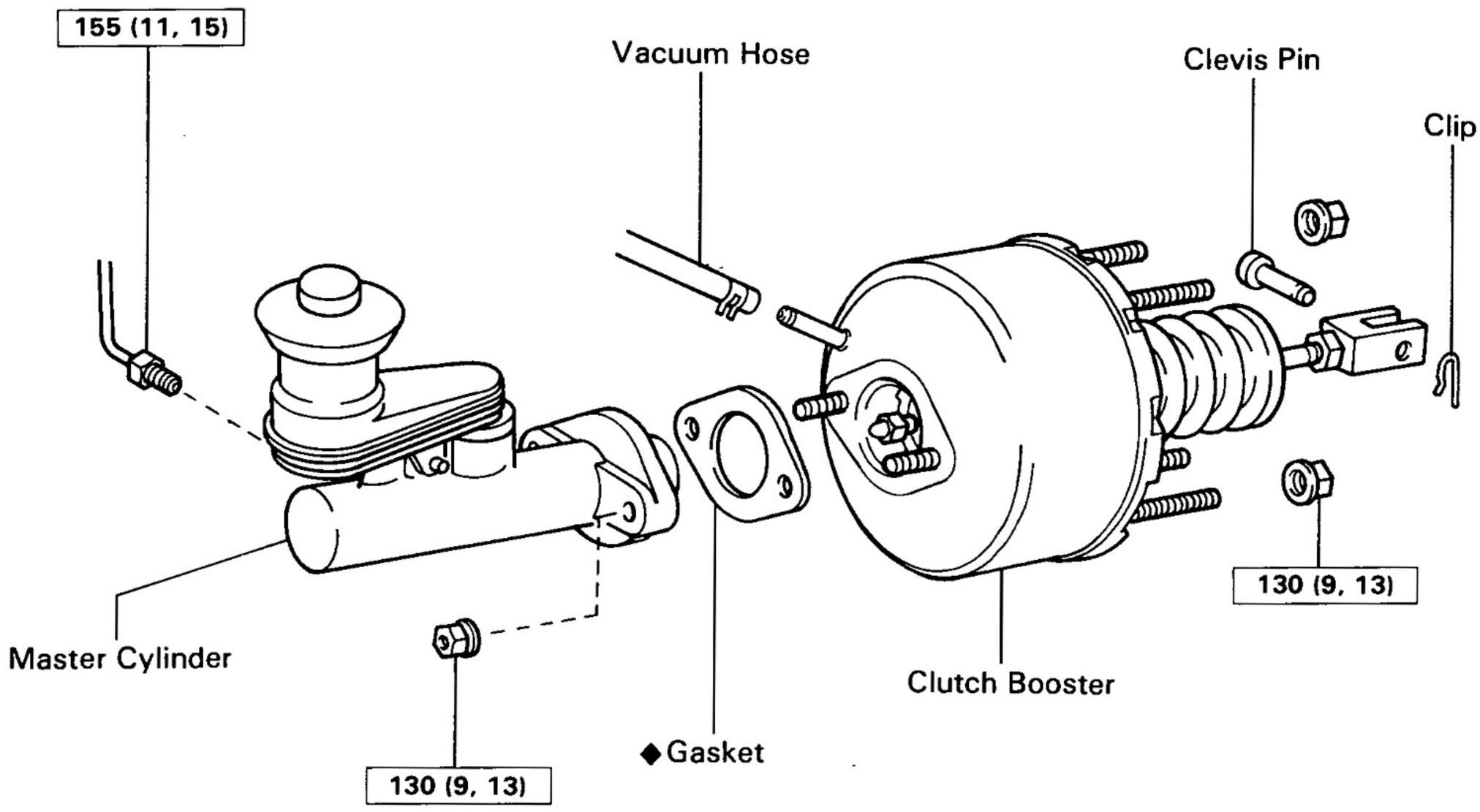

kg-cm (ft-lb, N·m) : Specified torque

◆ Non-reusable part

CL0570

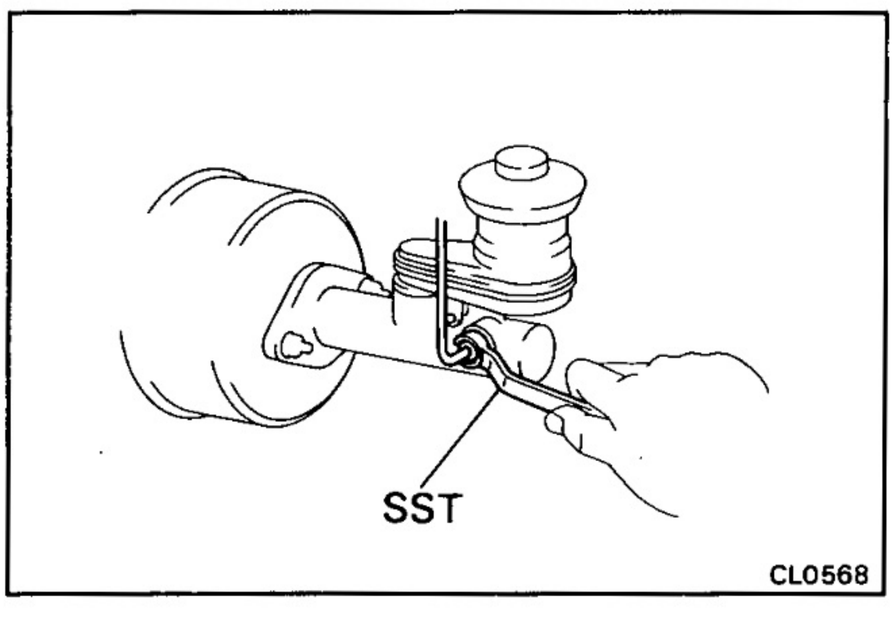

CL0568

1. **REMOVE MASTER CYLINDER**
   (See page CL-8)

2. **DISCONNECT VACUUM HOSE FROM CLUTCH BOOSTER**

3. **REMOVE CLUTCH PIPE AND VACUUM PIPE CLAMP BOLTS**

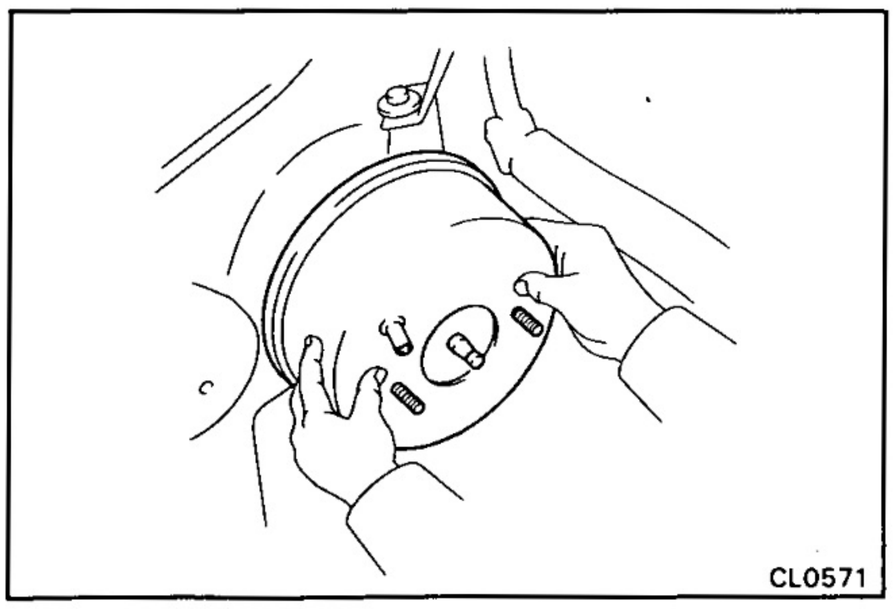

CL0571

4. **DISCONNECT CLEVIS FROM CLUTCH PEDAL**

   Remove the clip and clevis pin.

5. **REMOVE CLUTCH BOOSTER**

   (a) Remove four nuts from the room side.

   (b) Pull out the clutch booster from engine room side.

COMPONENTS

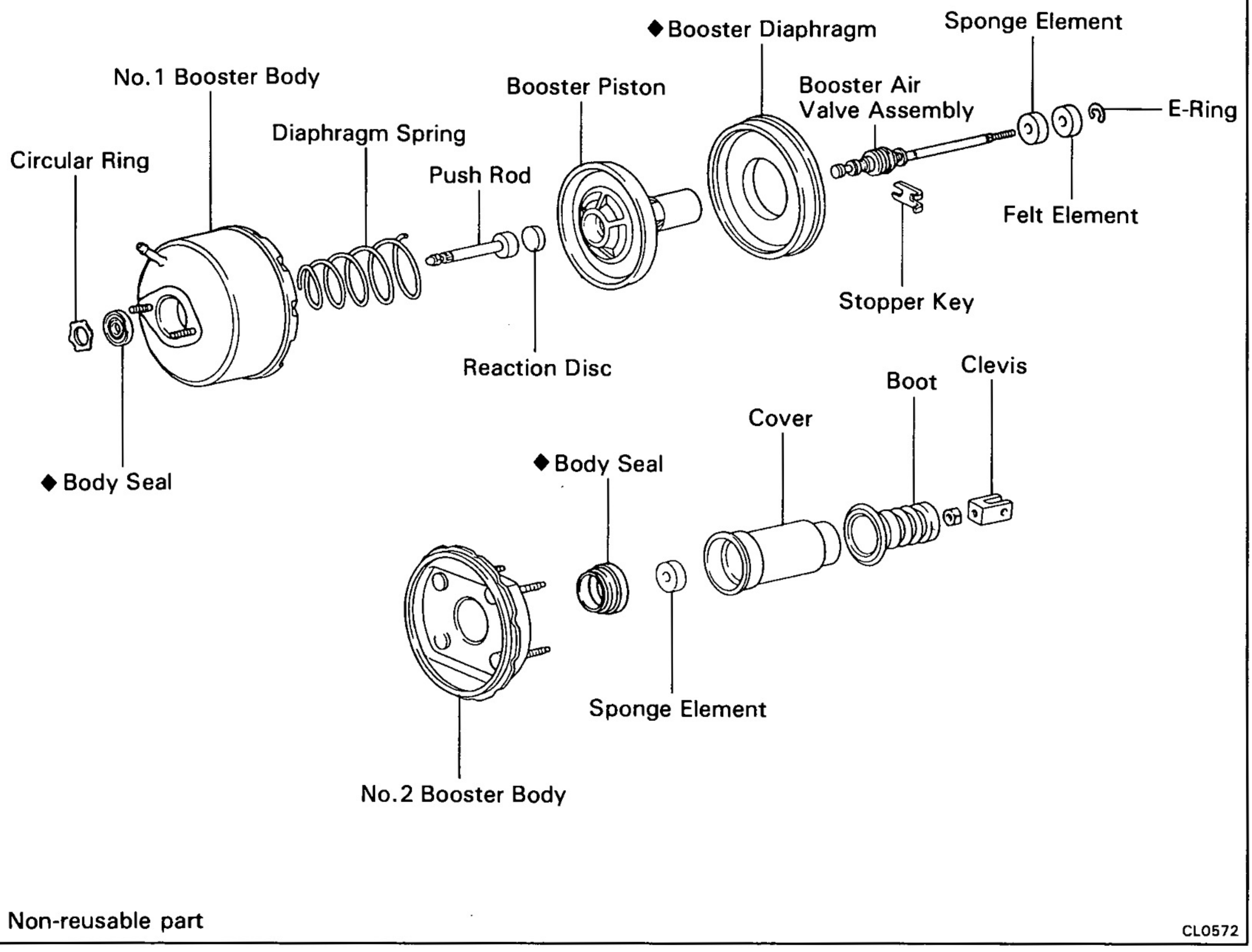

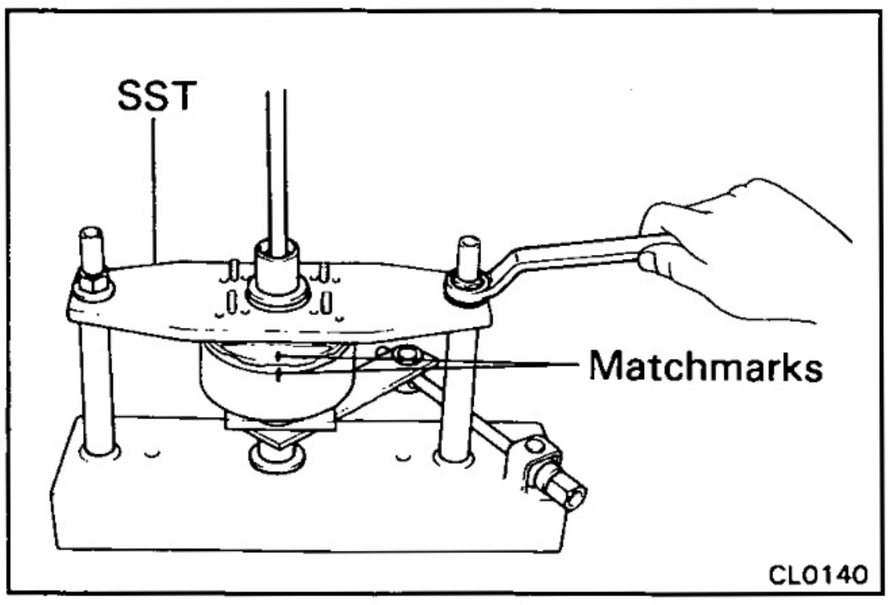

DISASSEMBLY OF CLUTCH BOOSTER

1. REMOVE CLEVIS

2. REMOVE PISTON COVER AND BOOT

(a) Remove the piston cover and boot.

(b) Remove the sponge element from the boot.

3. REMOVE SPONGE AND FELT ELEMENT

Using screwdriver, remove the E-ring and sponge and felt element.

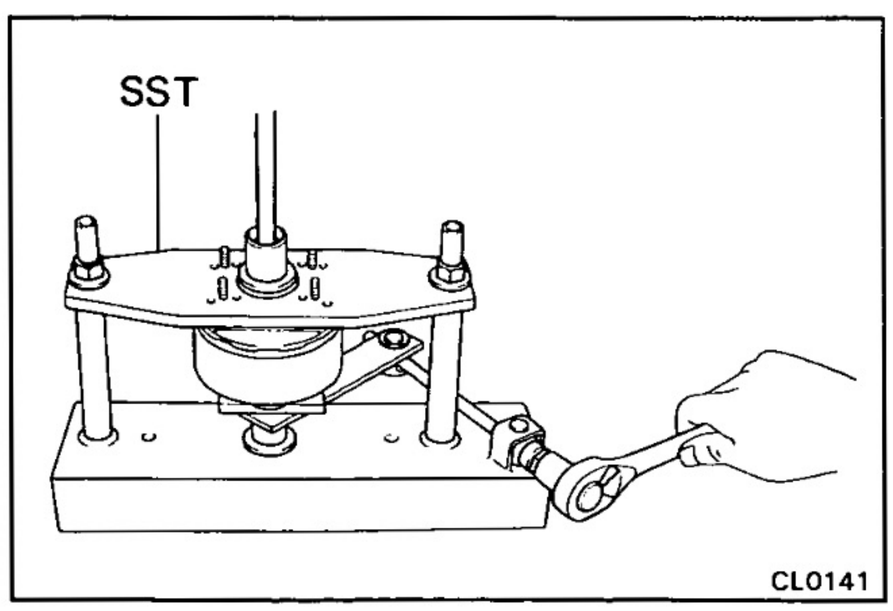

4. SEPARATE NO.1 AND NO.2 BOOSTER BODIES

(a) Put matchmarks on the No.1 and No.2 booster bodies.

(b) Set the booster in SST.

SST 09753-00013

NOTICE: Be careful not to tighten the two nuts of the SST too tightly.

(c) Turn the No.1 booster body clockwise, until the No.1 and No.2 booster bodies separate.

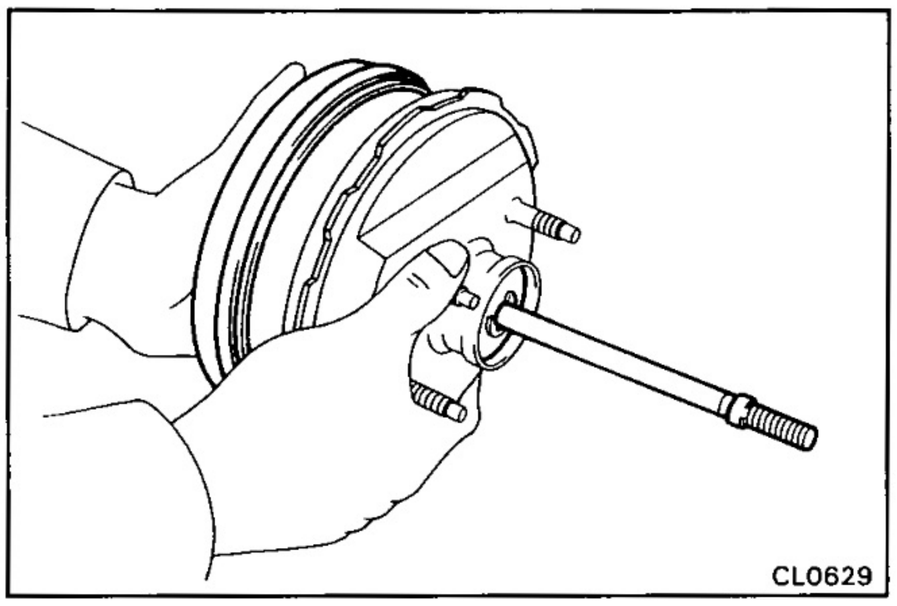

5. REMOVE BOOSTER PISTON ASSEMBLY FROM NO.2 BOOSTER BODY

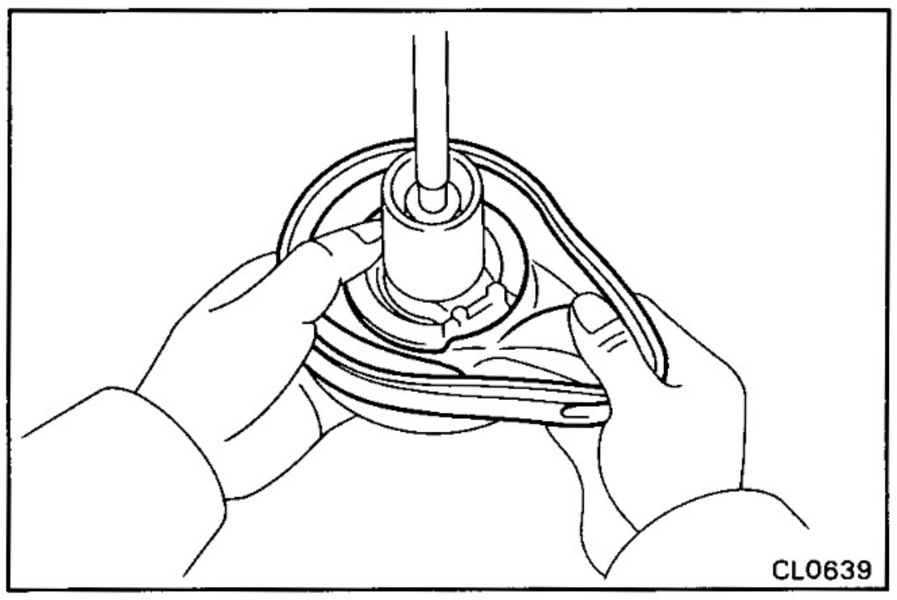

6. REMOVE BOOSTER DIAPHRAGM FROM BOOSTER PISTON

Pull off the diaphragm.

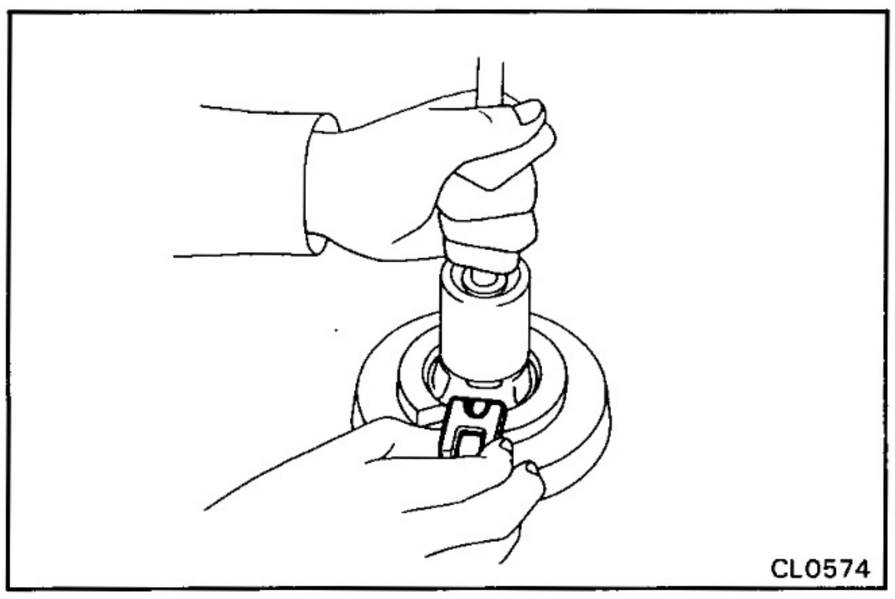

7. REMOVE BOOSTER AIR VALVE ASSEMBLY FROM BOOSTER PISTON

(a) Push down the booster air valve in the booster piston and remove the stopper key.

(b) Pull off the booster air valve assembly.

8. REMOVE REACTION DISC FROM BOOSTER PISTON

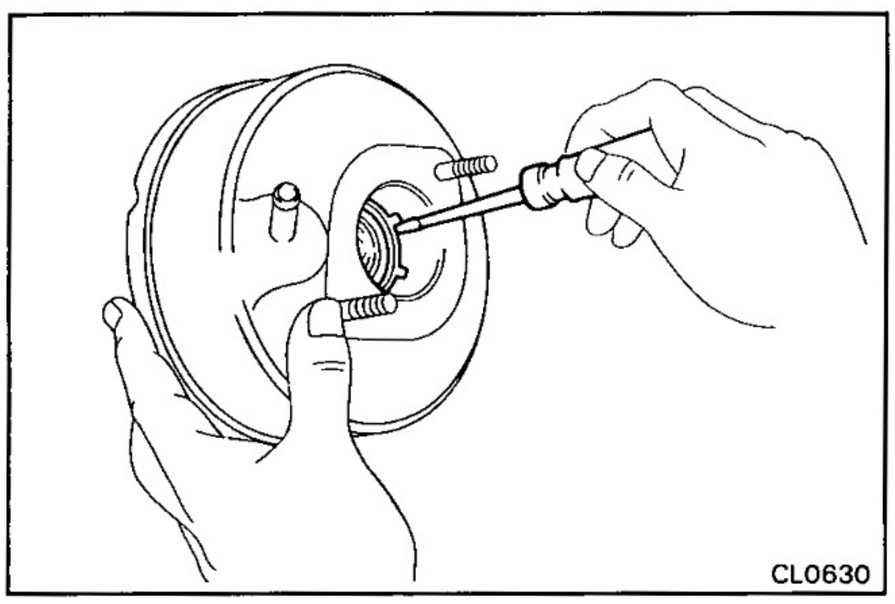

9. REMOVE BODY SEAL FROM NO.1 BOOSTER BODY

Using a screwdriver, pry out the circular ring and remove the body seal.

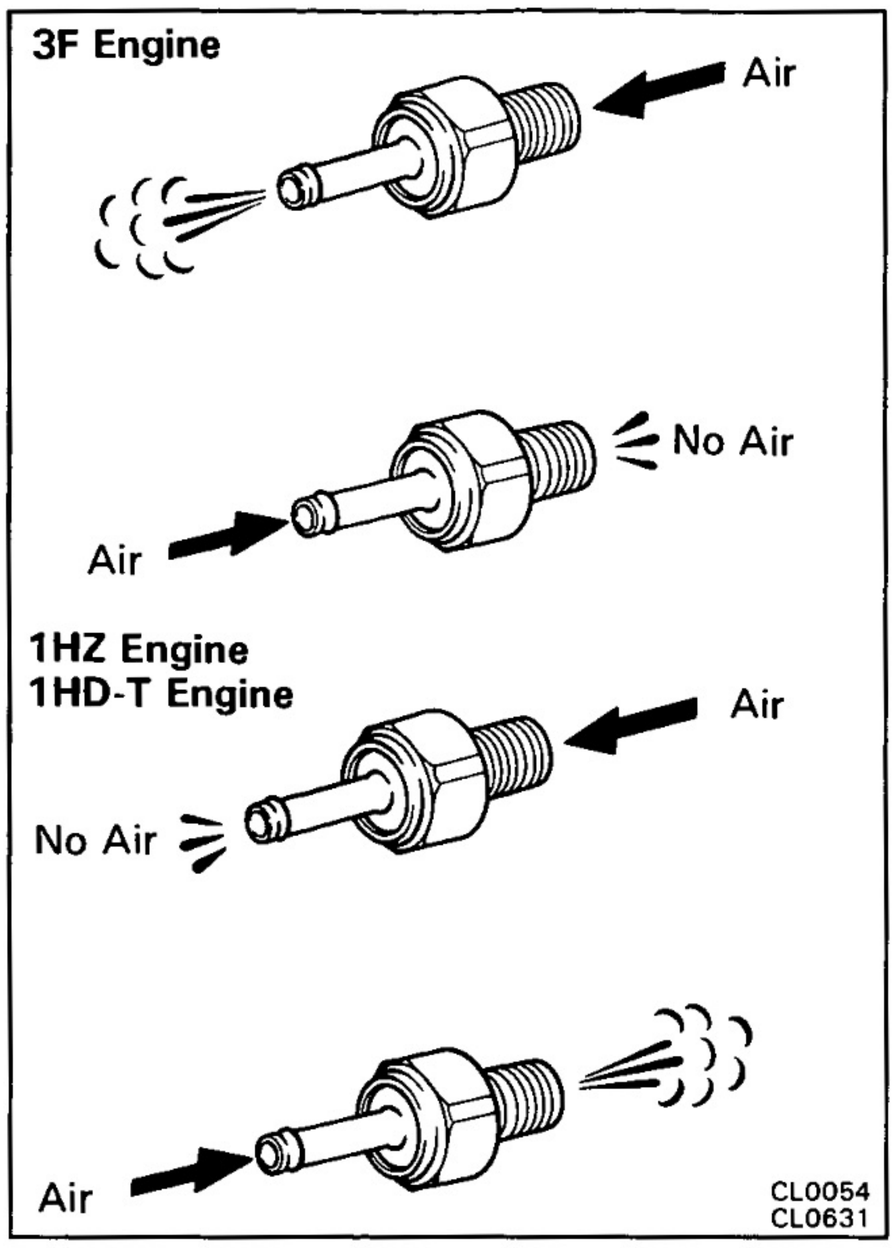

INSPECTION AND REPLACEMENT OF CLUTCH BOOSTER

1. INSPECT CHECK VALVE OPERATION

(a) Check that air flows from the vacuum tank side to the vacuum hose side.

(b) Check that air does not flow the vacuum hose side to the vacuum tank side.

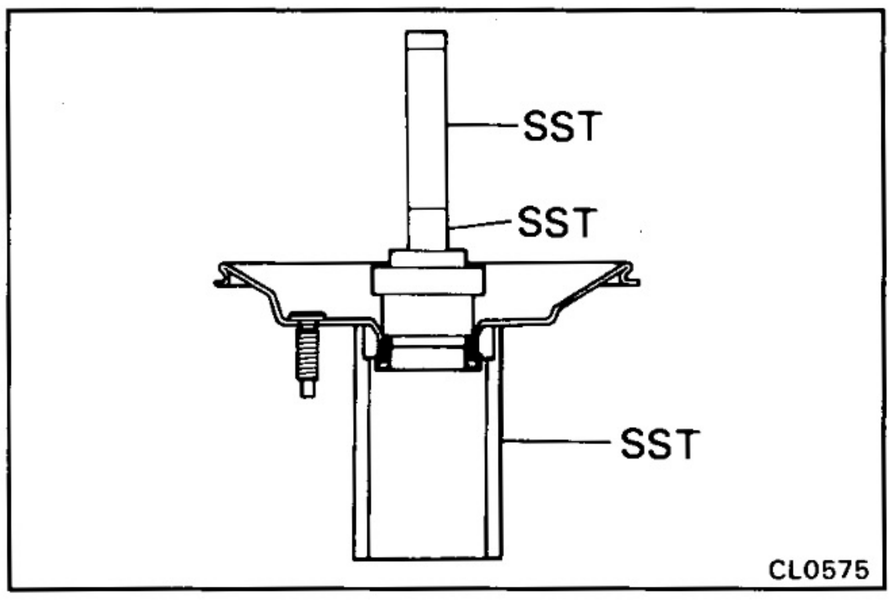

2. IF NECESSARY, REPLACE BODY SEAL FOR NO.2 BOOSTER BODY

(a) Using SST, remove the body sealer.

SST 09630-00012 (09631-00060), 09753-30020 and 09612-30012

HINT: Support the No.2 booster body using SST cylinder base only.

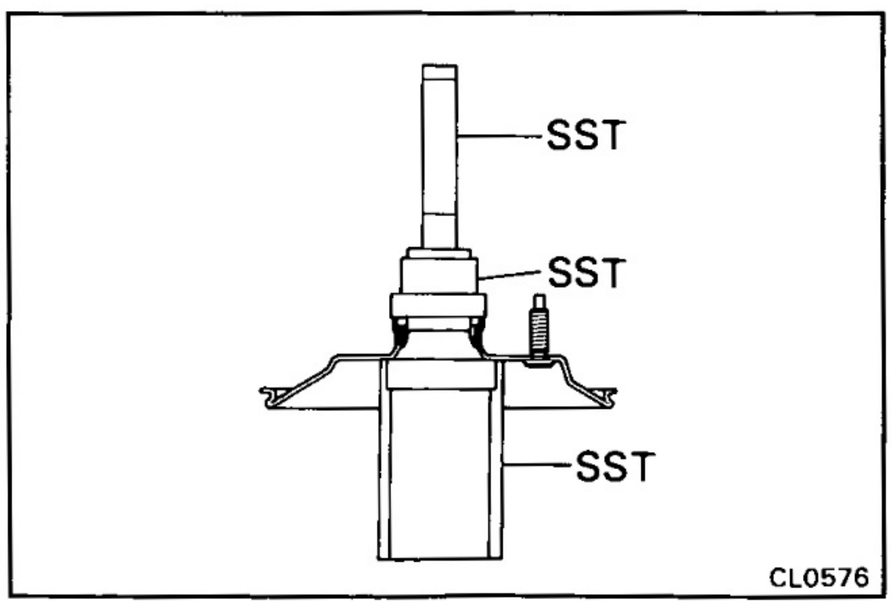

(b) Using SST, drive in the body sealer.

SST 09630-00012 (09631-00060), 09753-30020 and 09612-30012

HINT: Support the No.2 booster body using SST cylinder base only.

ASSEMBLY OF CLUTCH BOOSTER

(See page CL-10)

1. APPLY SILICONE GREASE TO PARTS SHOWN BELOW

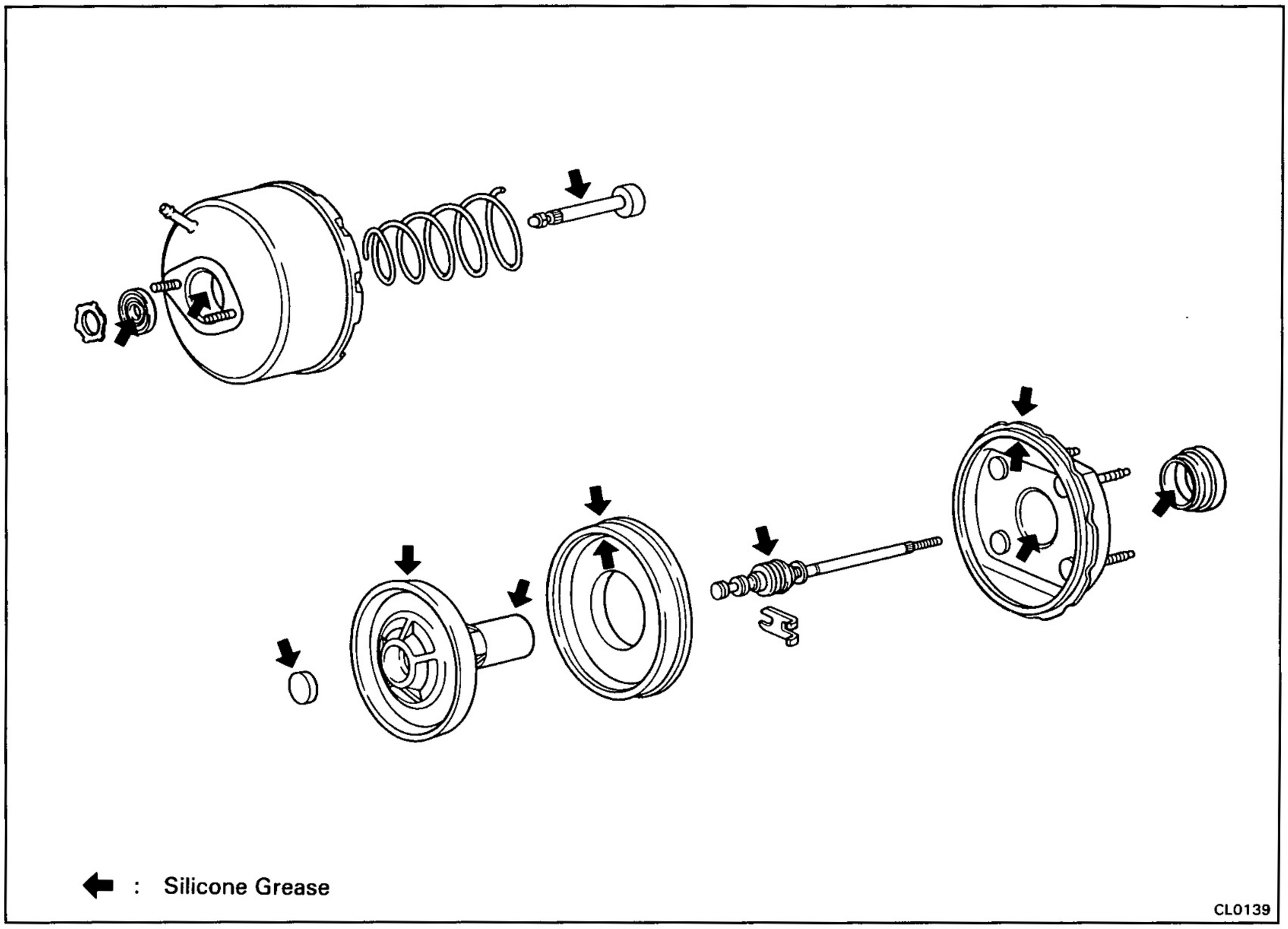

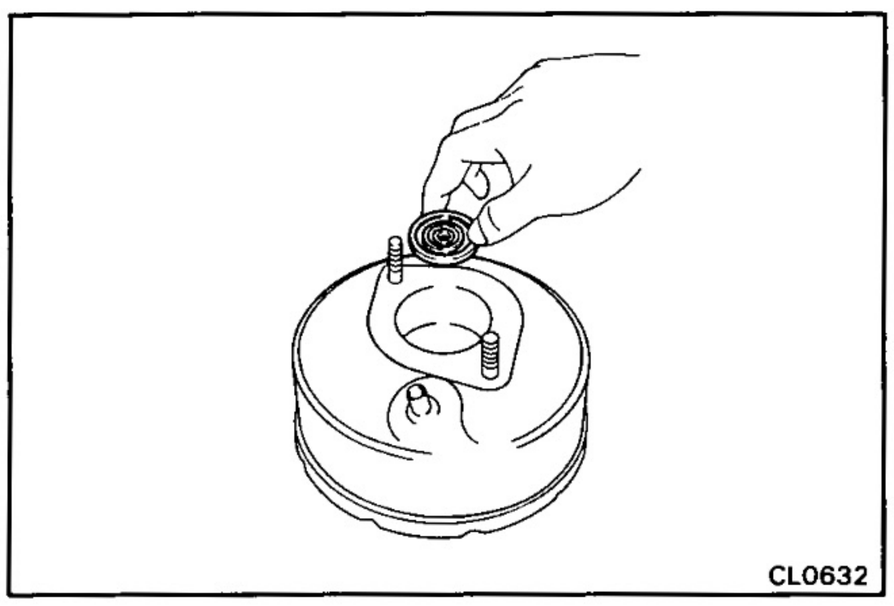

2. INSTALL BODY SEAL TO NO.1 BOOSTER BODY

(a) Place the body seal in position.

(b) Secure the body seal with the circular ring.

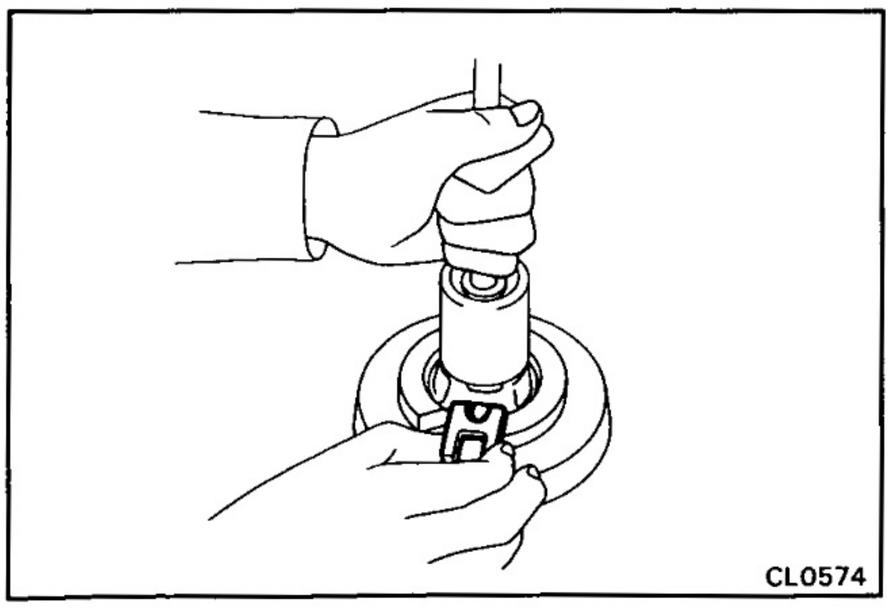

3. INSTALL BOOSTER AIR VALVE ASSEMBLY TO BOOSTER PISTON

(a) Insert the booster air valve in the booster piston.

(b) Push the booster air valve in the booster piston and install the stopper key.

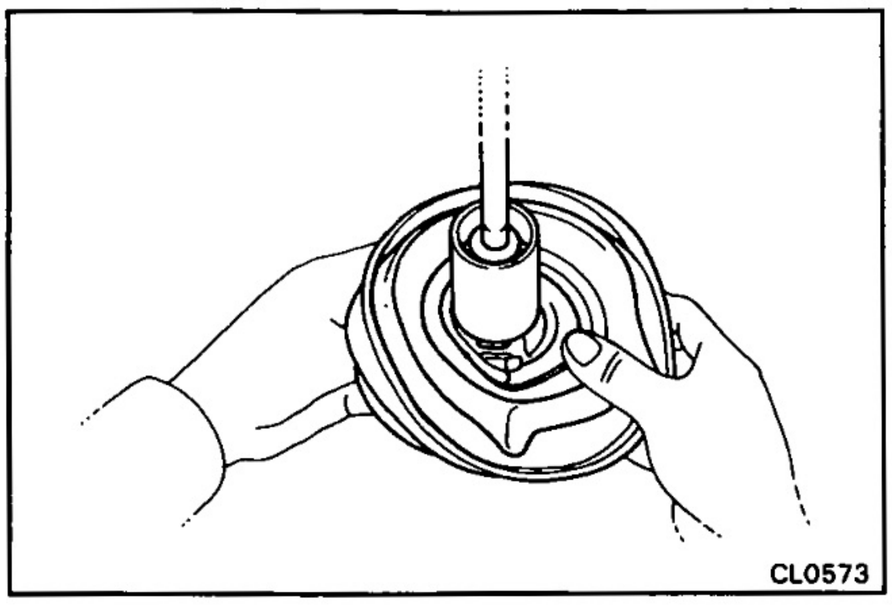

4. INSTALL DIAPHRAGM TO BOOSTER PISTON

Push in the head of the diaphragm.

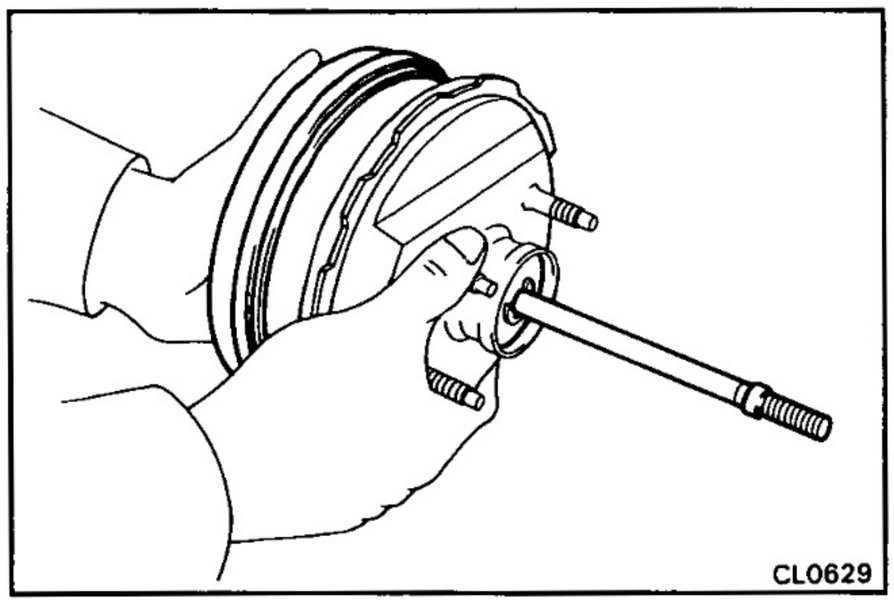

5. INSTALL BOOSTER PISTON ASSEMBLY TO NO.2 BOOSTER BODY

6. INSTALL REACTION DISC TO BOOSTER PISTON

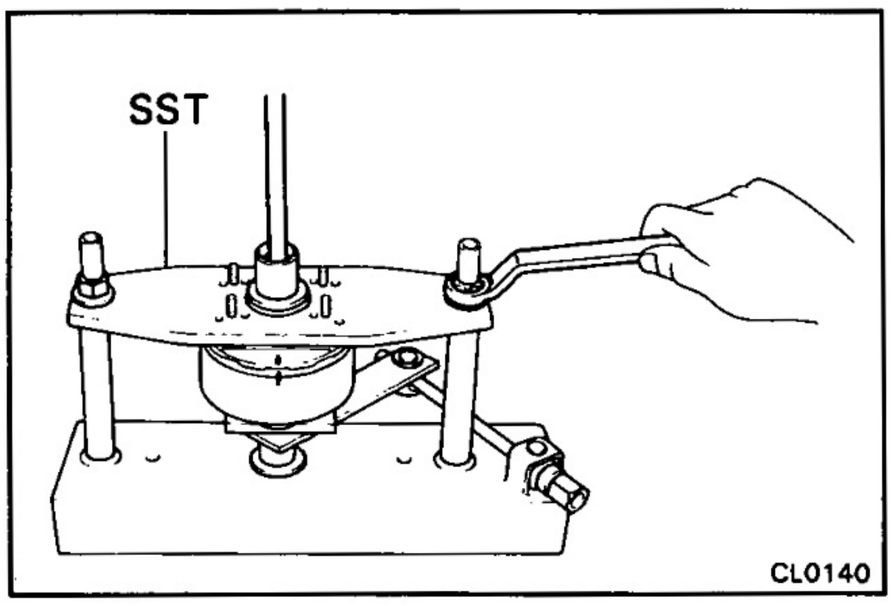

7. ASSEMBLY NO.1 AND NO.2 BOOSTER BODIES

(a) Place the No.1 booster on SST.

SST 09753-00013

(b) Place the push rod, diaphragm spring and No.2 booster body in the No.1 booster body.

(c) Compress the diaphragm spring between the No.1 and No.2 booster bodies.

NOTICE: Be careful not to tighten the two nuts of the SST too tightly.

(d) Turn the No.1 booster body counterclockwise, until the matchmarks match.

HINT: If the No.1 booster body is too tight to be turned, apply more silicone grease on the diaphragm edge that contacts the No.1 and No.2 booster bodies.

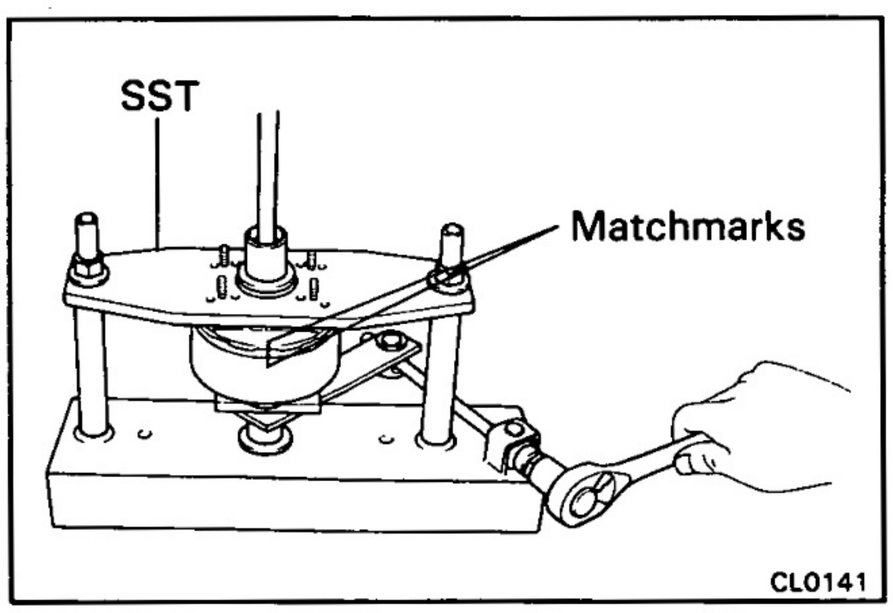

8. INSTALL SPONGE AND FELT ELEMENT

(a) Install the sponge and felt element into the booster.

(b) Install E-ring onto booster air valve assembly.

9. INSTALL PISTON COVER WITH BOOT

(a) Install the sponge element into the boot.

(b) Install the boot to the piston cover.

(c) Install a new gasket onto the booster and the piston cover with the boot.

10. INSTALL CLEVIS

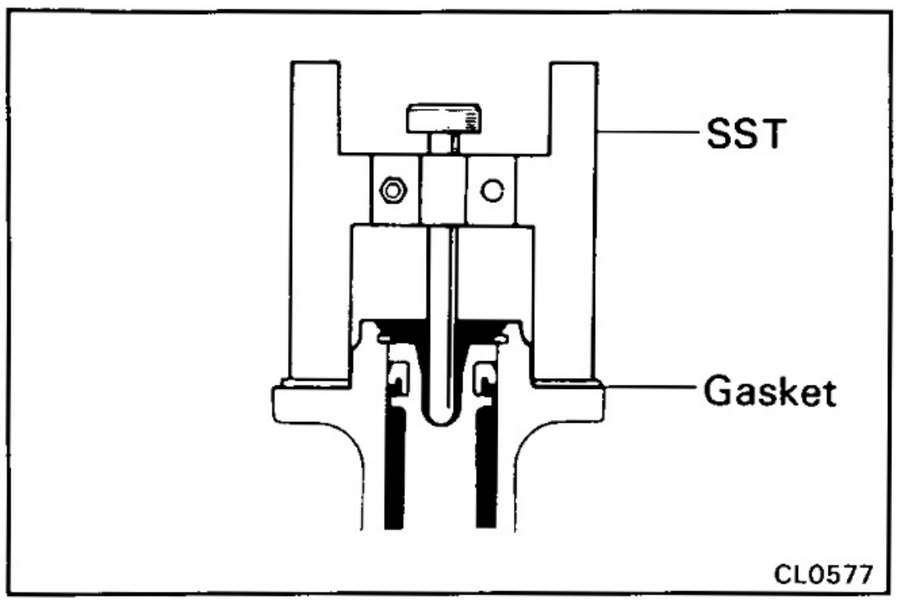

INSTALLATION OF CLUTCH BOOSTER

(See page CL-11)

1. ADJUST LENGTH OF BOOSTER PUSH ROD

(a) Install the gasket on the master cylinder.

(b) Set the SST on the gasket, and lower the pin until its tip slightly touches the piston.

SST 09737-00010

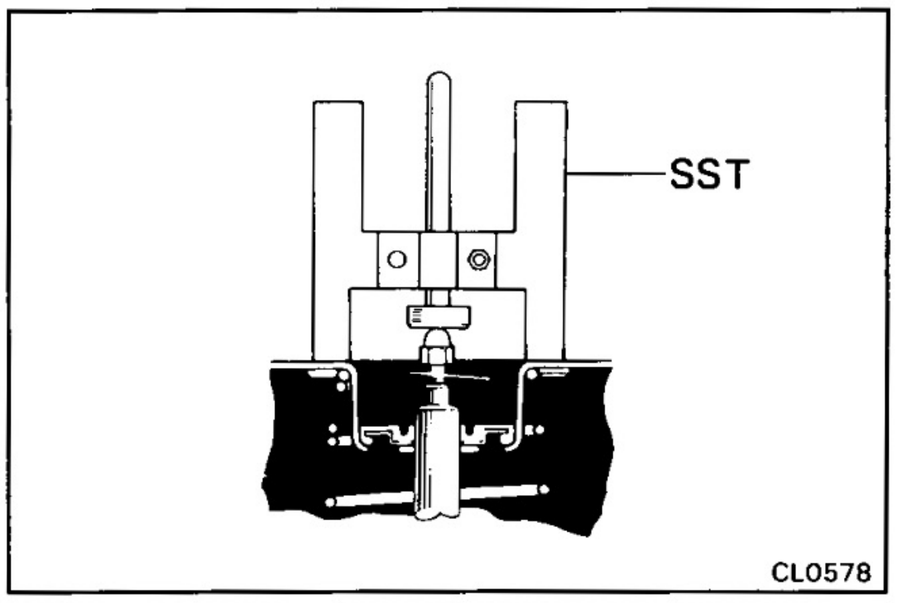

(c) Turn the SST upside down, and set it on the booster.

SST 09737-00010

(d) Measure the clearance between the booster push rod and pin head (SST).

Clearance: 0 mm (0 in.)

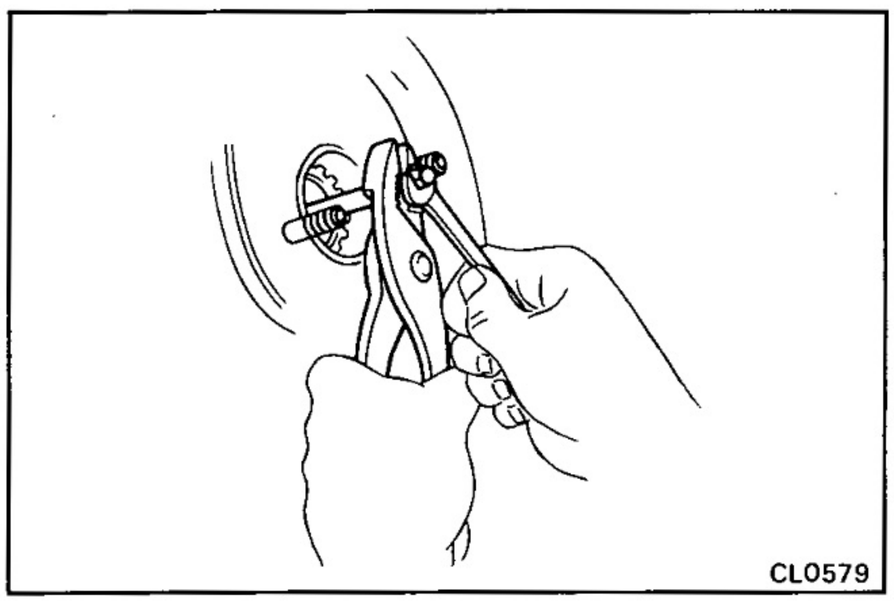

(e) Adjust the booster push rod length until the push rod lightly touches the pin head.

HINT: When adjusting the push rod, depress the brade pedal enough so that the push rod sticks out.

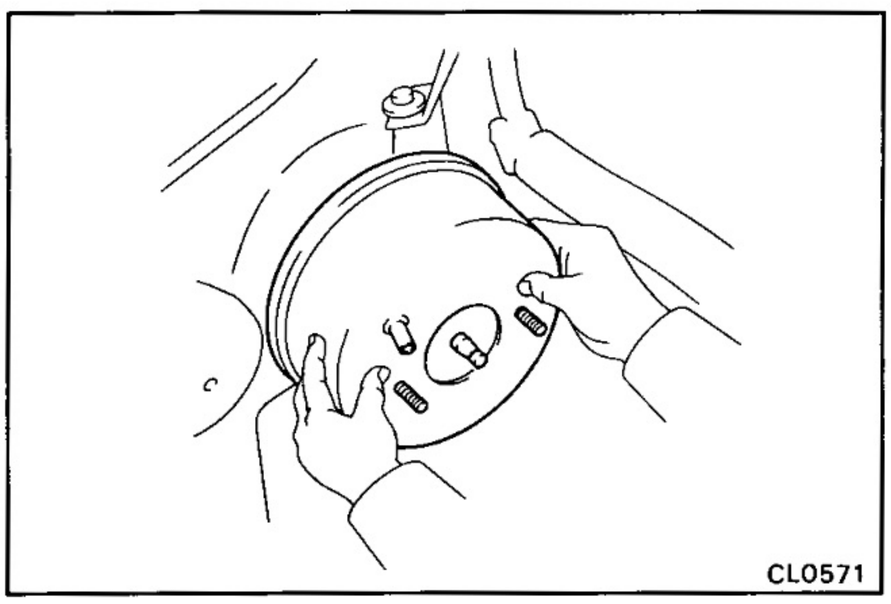

2. INSTALL CLUTCH BOOSTER

Install four nuts and the clutch booster.

3. CONNECT CLEVIS TO CLUTCH PEDAL

Connect the clevis to the clutch pedal with the clevis pin and clip.

4. INSTALL MASTER CYLINDER TO CLUTCH BOOSTER

(See page CL-8)

Torque: 130 kg-cm (9 ft-lb, 13 N·m)

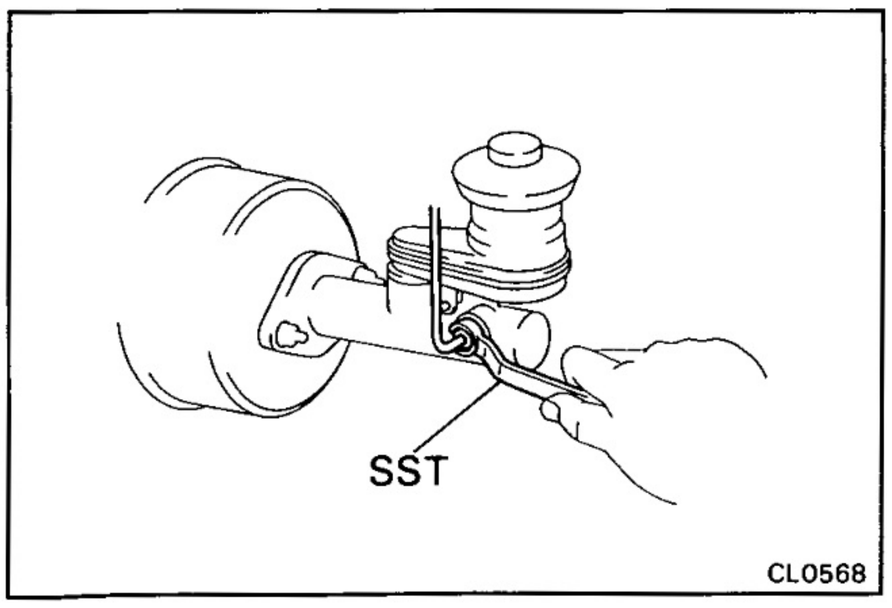

5. CONNECT CLUTCH LINE UNION

Using SST, connect the union.

SST 09751-36011

6. CONNECT VACUUM HOSE TO CLUTCH BOOSTER

7. ADJUST CLUTCH PEDAL AND BLEED SYSTEM

(See page CL-5)

CLUTCH ACCUMULATOR

COMPONENTS

•w/o Clutch Booster

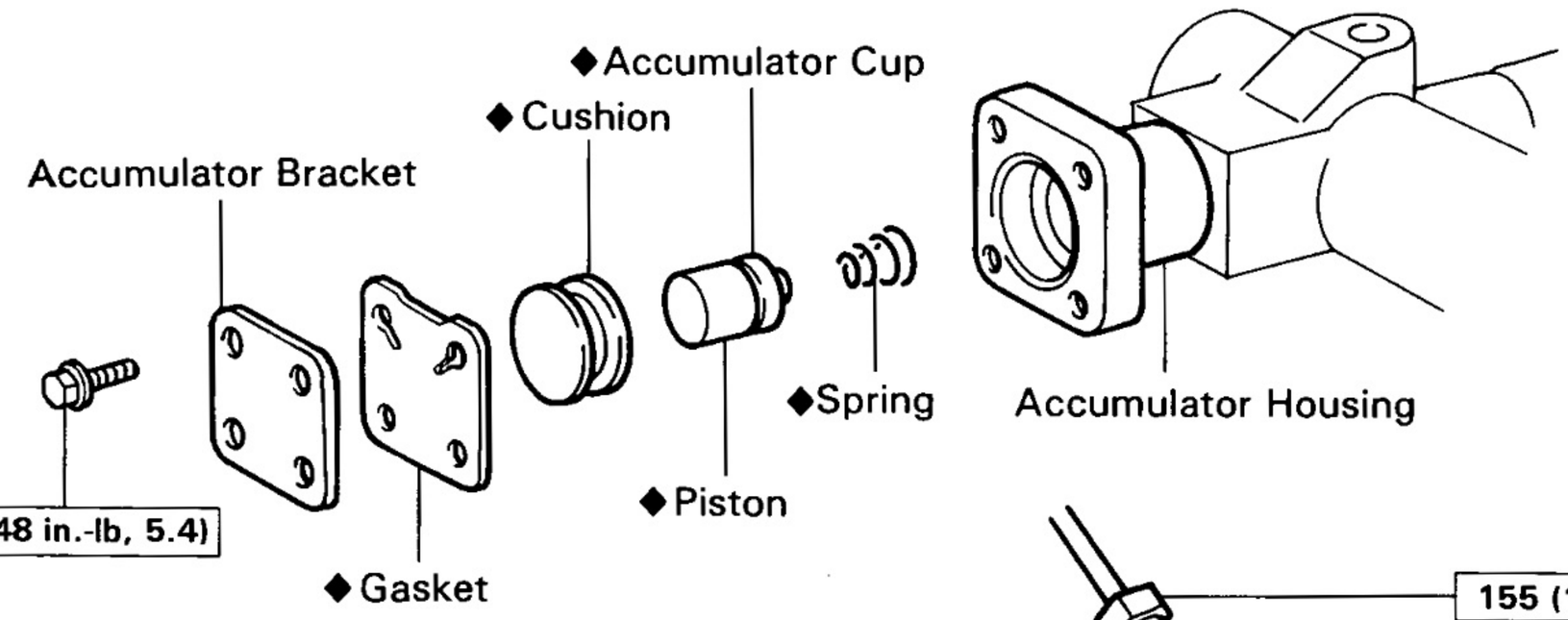

•w/ Clutch Booster

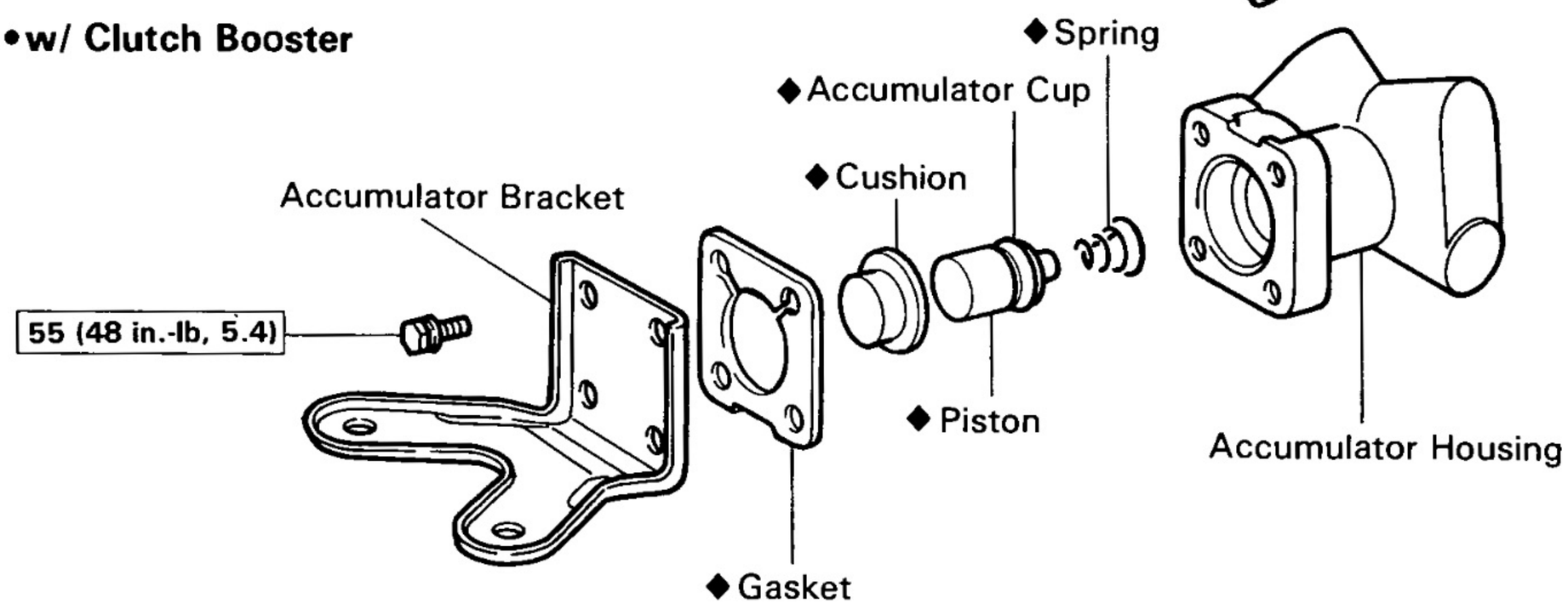

kg-cm (ft-lb, N·m) : Specified torque

◆ Non-reusable part

CL0580
CL0581

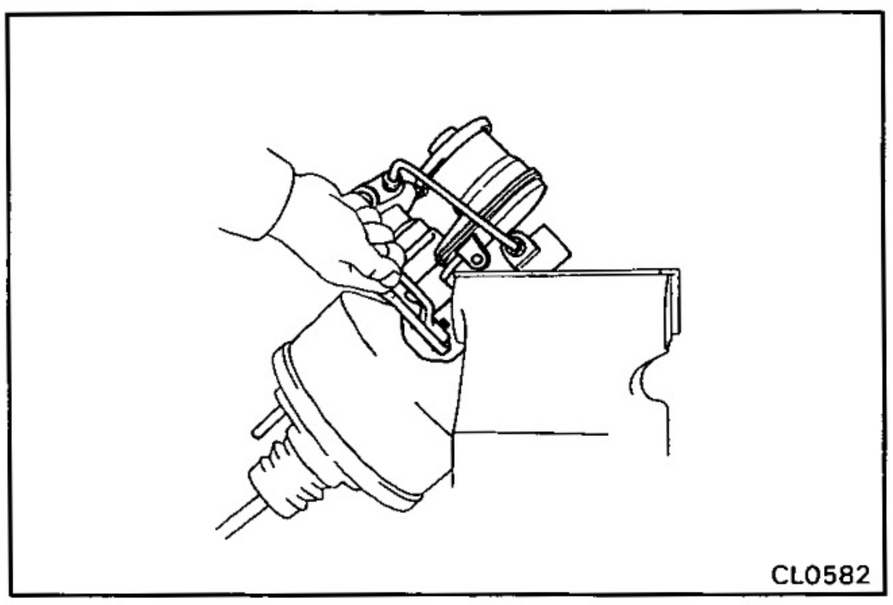

CL0582

REMOVAL OF CLUTCH ACCUMULATOR (MAIN POINT OF REMOVAL AND INSTALLATION)

(w/o Clutch Booster)

REMOVE MASTER CYLINDER
(See page CL-6)

(w/ Clutch Booster)

1. REMOVE MASTER CYLINDER
(See page CL-8)

2. REMOVE CLUTCH ACCUMULATOR

Remove two bolts and clutch accumulator with bracket.

w/o Clutch Booster

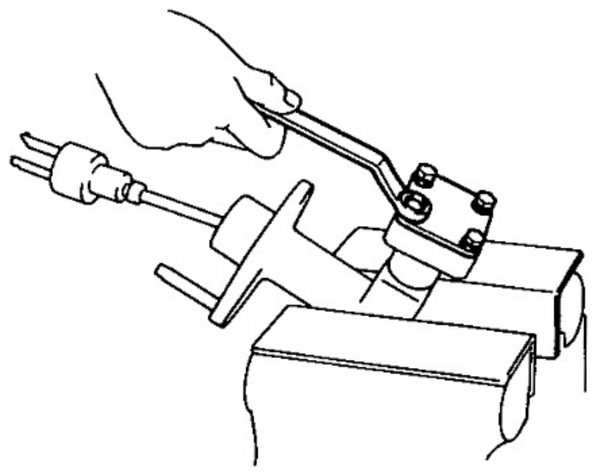

w/ Clutch Booster

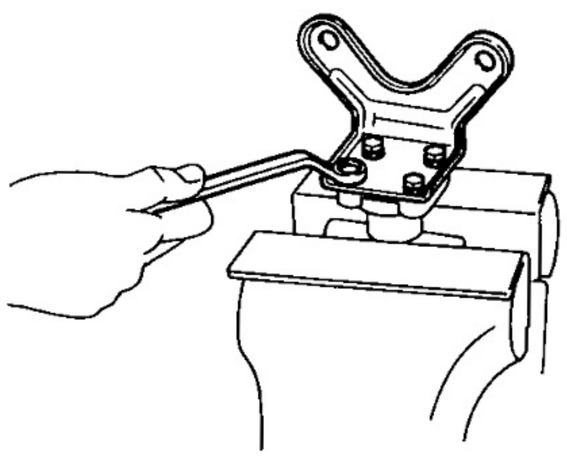

CL0583
CL0584

DISASSEMBLY OF CLUTCH ACCUMULATOR

1. **REMOVE CLUTCH BRACKET**
   (a) Remove four bolts and the bracket.
   (b) Remove the gasket from the bracket.
2. **REMOVE CUSHION**

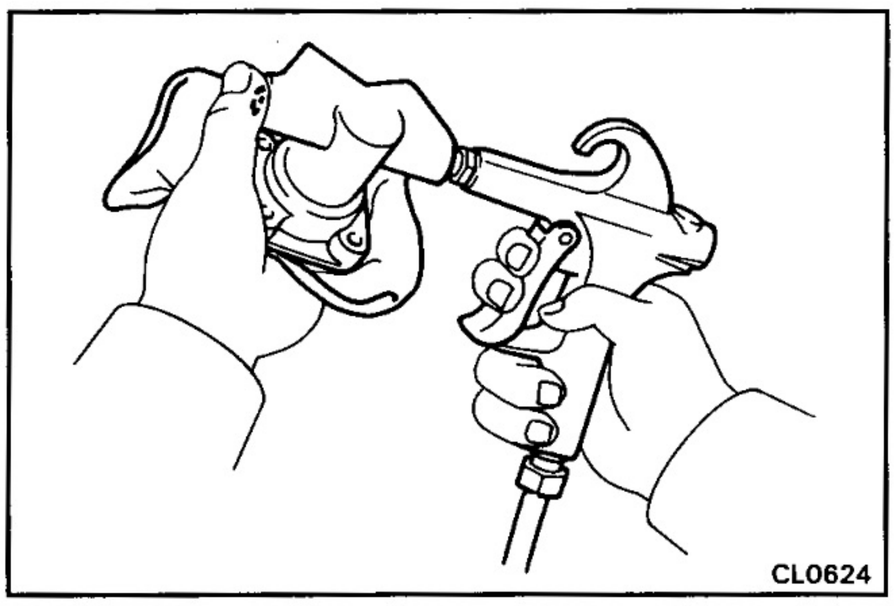

CL0624

3. **REMOVE PISTON AND SPRING**
   Using compressed air, remove the piston and spring.

ASSEMBLY OF CLUTCH ACCUMULATOR

(w/o Clutch Booster)

(See page CL-17)

1. **COAT PISTON AND ACCUMULATOR BODY WITH LITHIUM SOAP BASE GLYCOL GREASE, AS SHOWN**

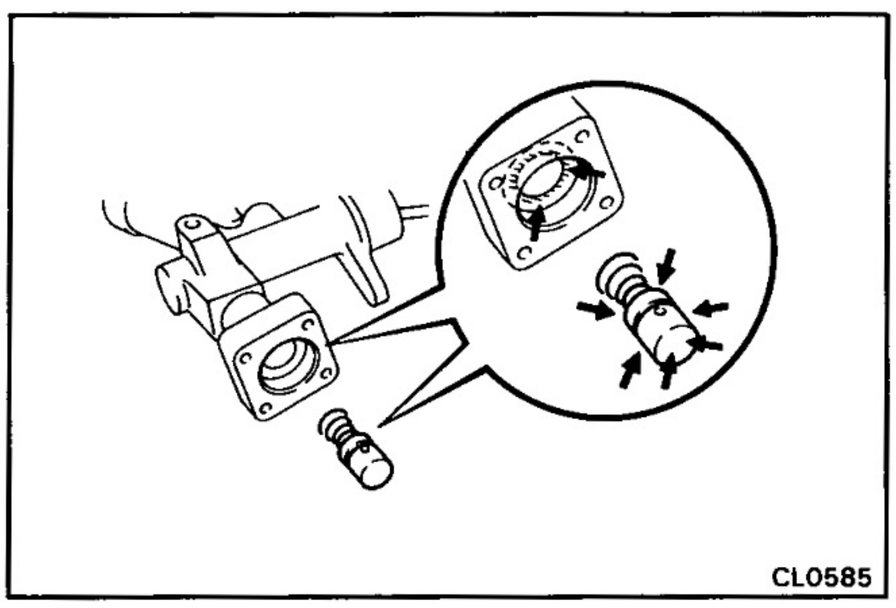

CL0585

2. **INSTALL SPRING, PISTON AND CUSHION INTO ACCUMULATOR**

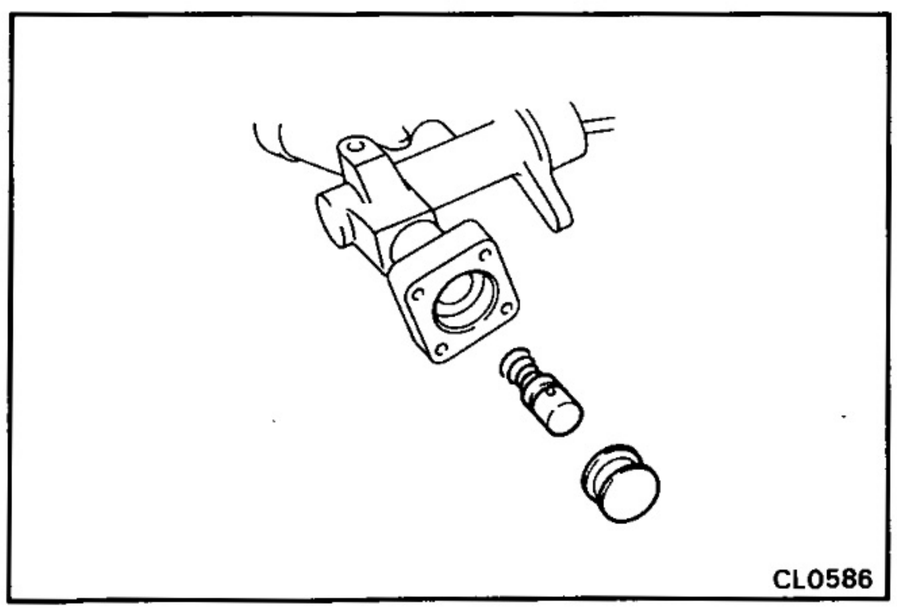

CL0586

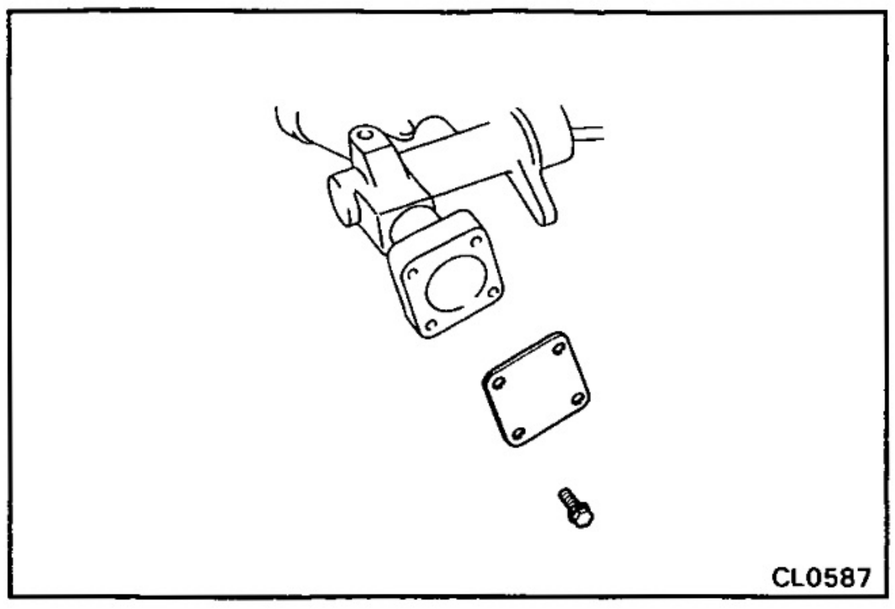

3. INSTALL ACCUMULATOR BRACKET

(a) Install a new gasket to the bracket.

(b) Install the bracket to the accumulator and tighten the four bolts.

Torque: 55 kg-cm (48 in.-lb, 5.4 N·m)

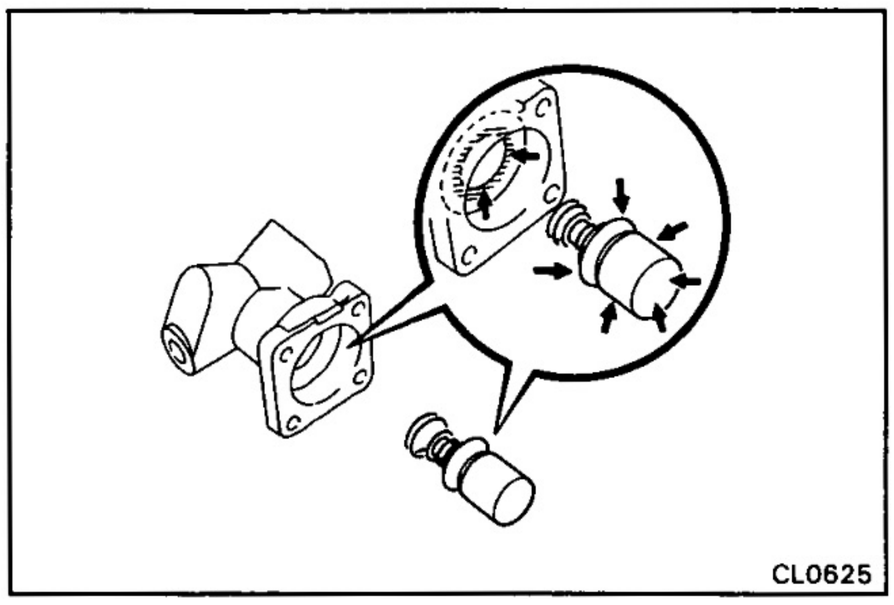

(w/ Clutch Booster)

(See page CL-17)

4. COAT PISTON AND ACCUMULATOR BODY WITH LITHIUM SOAP BASE GLYCOL GREASE, AS SHOWN

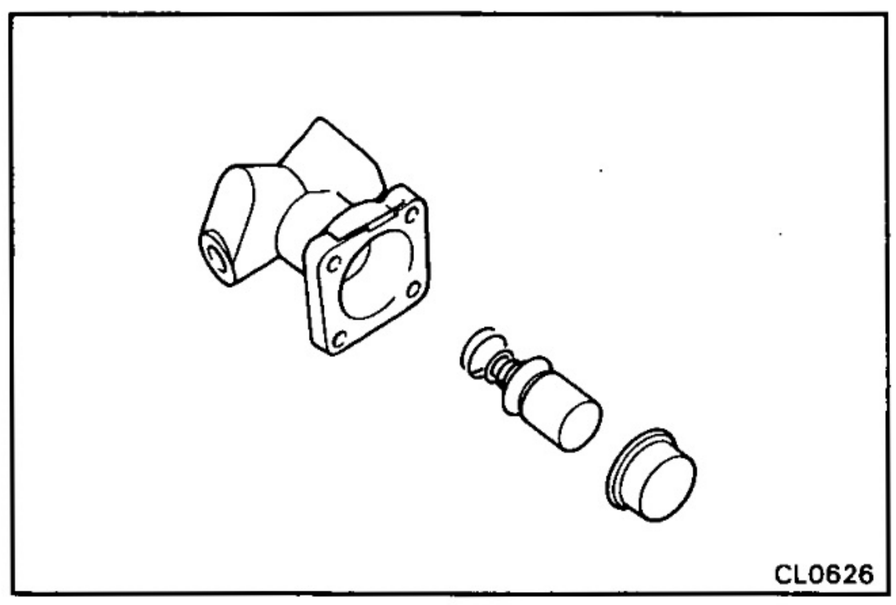

5. INSTALL SPRING, PISTON AND CUSHION INTO ACCUMULATOR

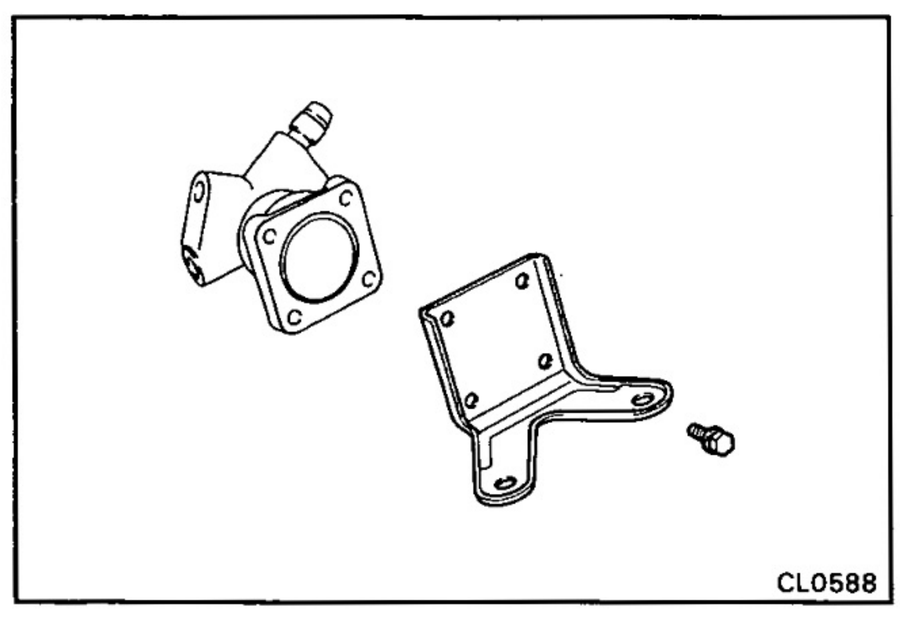

6. INSTALL ACCUMULATOR BRACKET

(a) Install a new gasket to the bracket.

(b) Install the bracket to the accumulator and tighten the four bolts.

Torque: 55 kg-cm (48 in.-lb, 5.4 N·m)

INSTALLATION OF CLUTCH ACCUMULATOR

(w/o Clutch Booster)

INSTALL MASTER CYLINDER
(See page CL-6)

(w/ Clutch Booster)

1. **INSTALL CLUTCH ACCUMULATOR**

   Install two bolts and clutch accumulator with bracket.

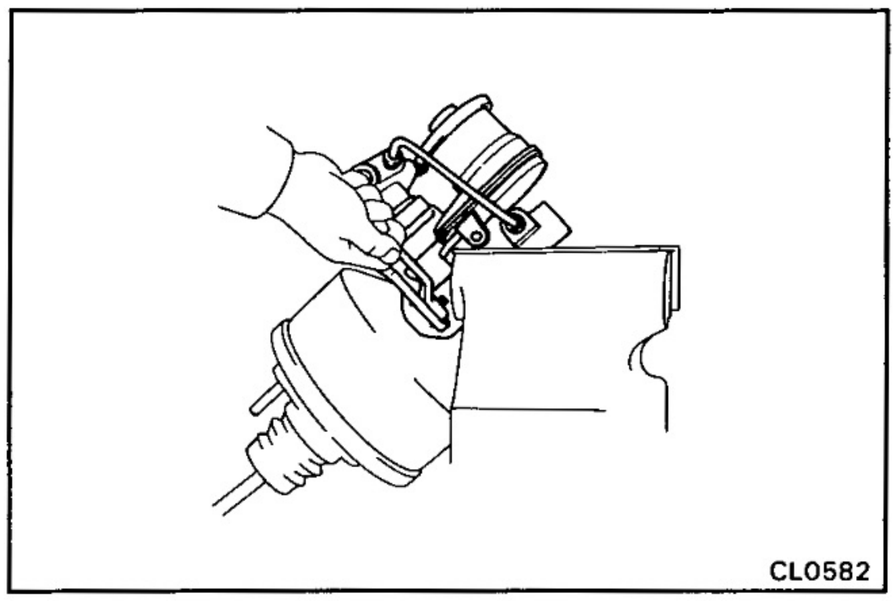

2. **CONNECT CLUTCH LINE TUBE**

   Using SST, connect the clutch line tube.

   SST 09751-36011

   Torque: 155 kg-cm (11 ft-lb, 15 N·m)

3. **INSTALL MASTER CYLINDER**
   (See page CL-8)

4. **FILL RESERVOIR WITH BRAKE FLUID AND BLEED CLUTCH SYSTEM**

5. **CHECK FOR LEAKS**

CLUTCH RELEASE CYLINDER

COMPONENTS

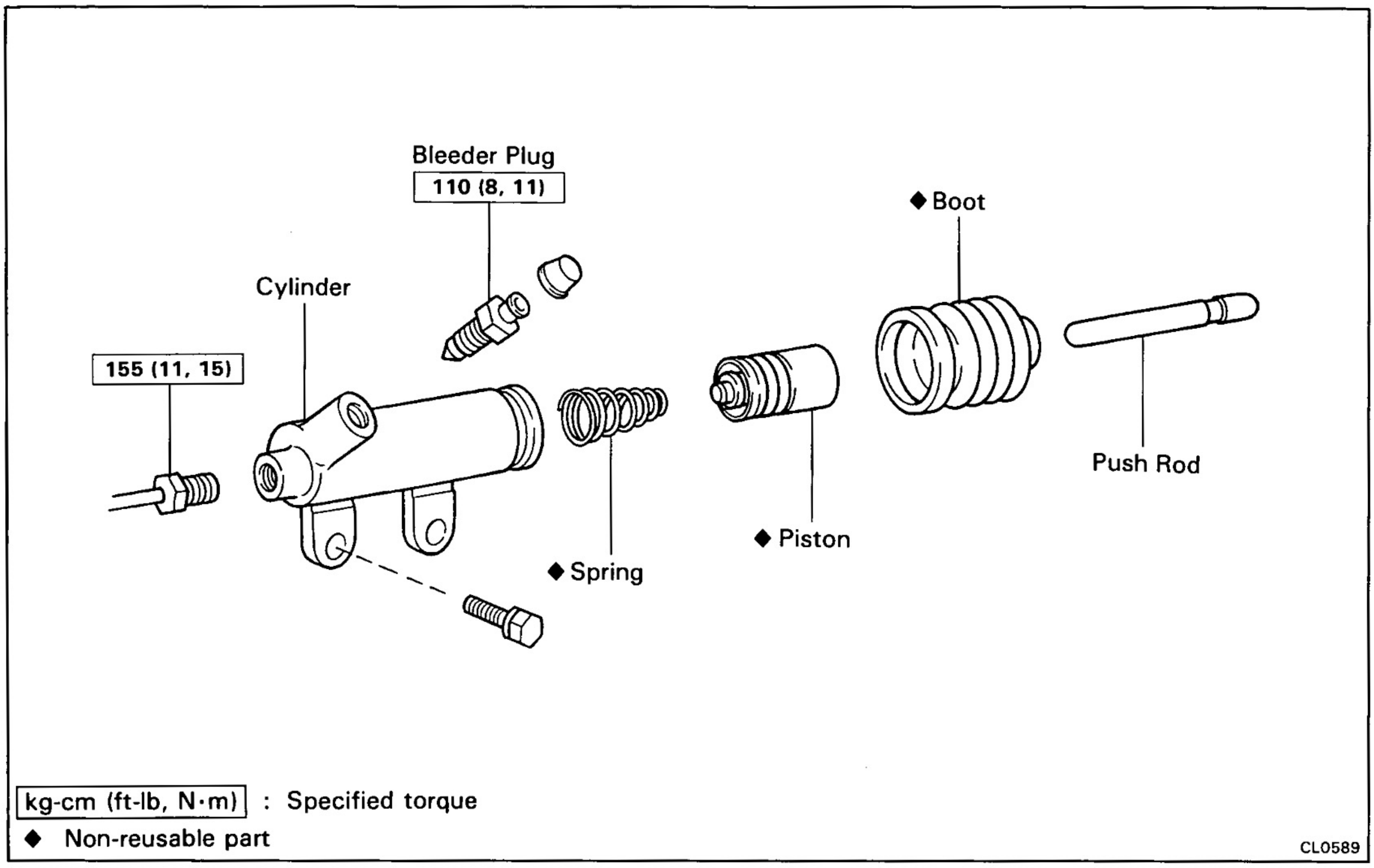

kg-cm (ft-lb, N·m) : Specified torque

◆ Non-reusable part

CL0589

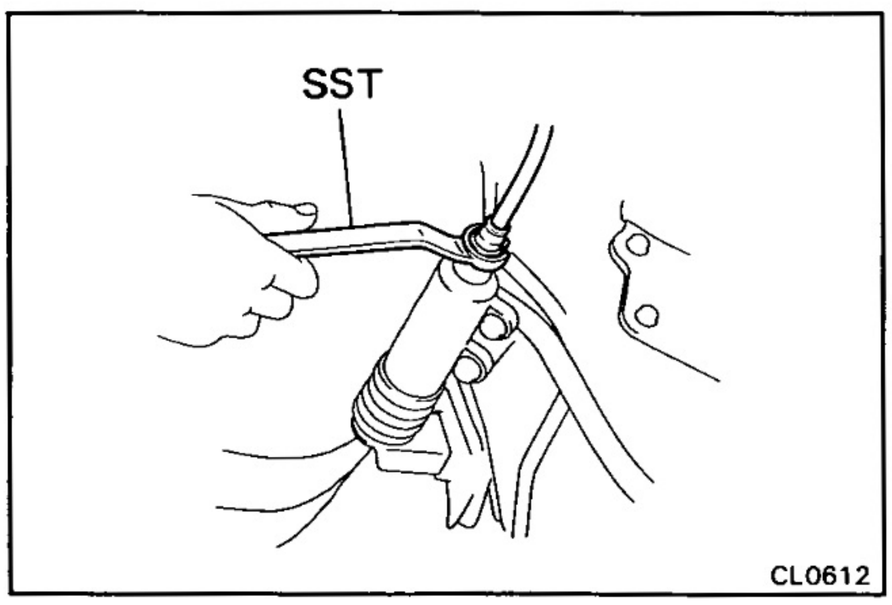

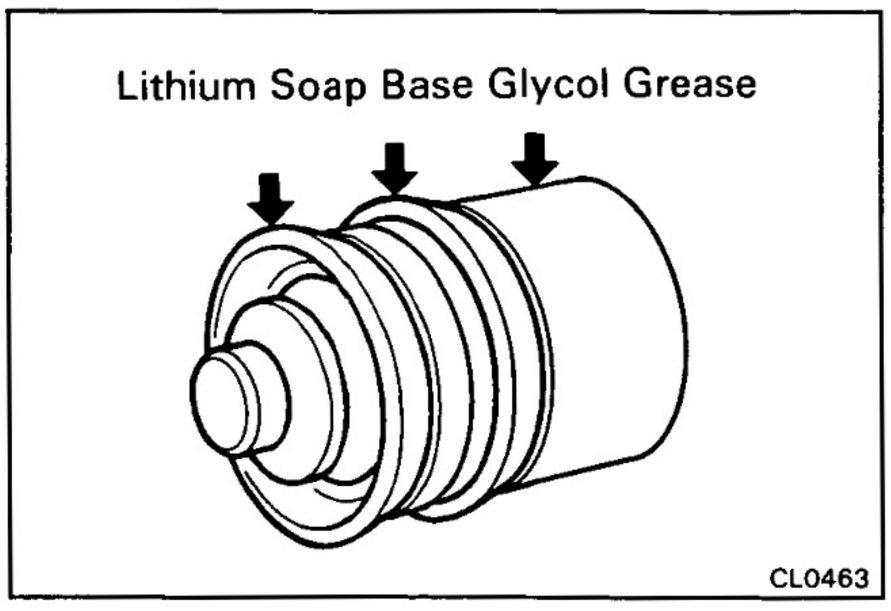

REMOVAL AND INSTALLATION OF CLUTCH RELEASE CYLINDER

(MAIN POINT OF REMOVAL AND INSTALLATION)

1. **DISCONNECT AND CONNECT CLUTCH LINE TUBE**

   Using SST, disconnect and connect the tube.

   SST 09751-36011

2. **INSPECT RELEASE CYLINDER BORE FOR SCORING OR CORROSION**

   If a problem is found, clean or replace the cylinder.

3. **INSPECT PISTON AND CUPS FOR WEAR, SCORING, CRACKS OR SWELLING**

   If either one requires replacement, use the parts from the cylinder kit.

4. **INSPECT PUSH ROD FOR WEAR OR DAMAGE**

   If necessary, replace the push rod.

5. **COAT PISTON WITH LITHIUM SOAP BASE GLYCOL GREASE AS SHOWN**

6. **BLEED CLUTCH SYSTEM**
   (See page CL-5)

CLUTCH UNIT

REMOVAL OF CLUTCH UNIT

Remove the parts as shown.

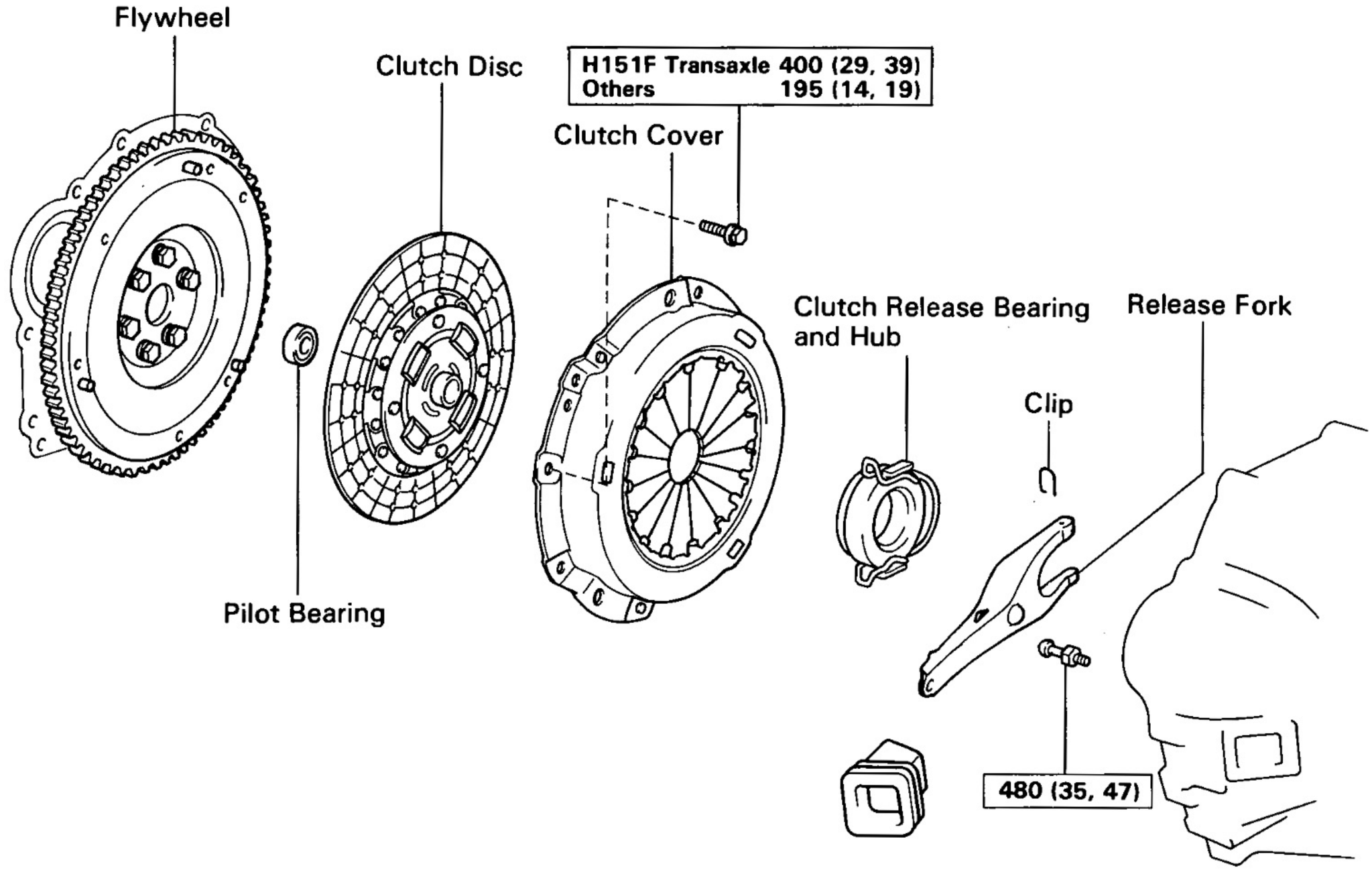

kg-cm (ft-lb, N·m) : Specified torque

◆ Non-reusable part

CL0613

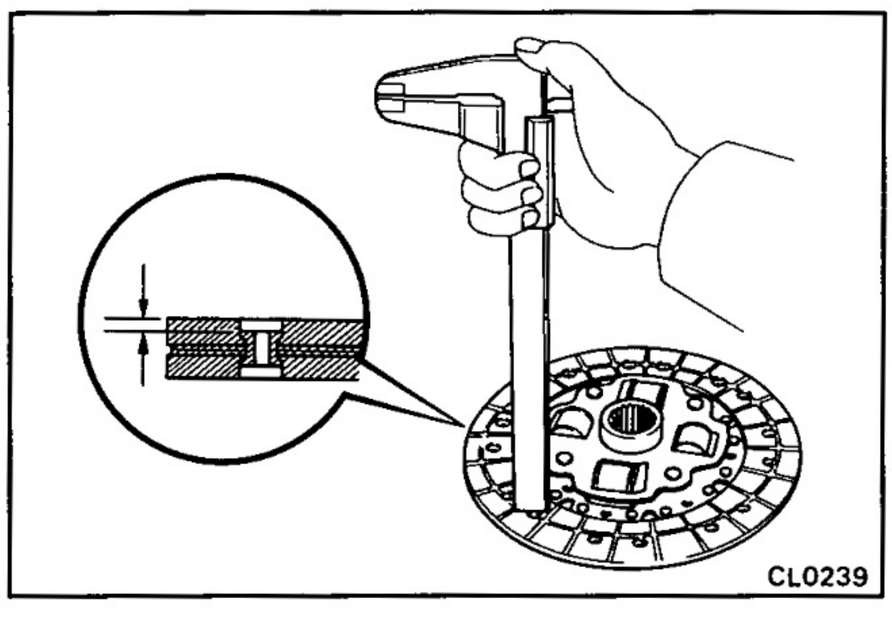

CL0239

INSPECTION OF CLUTCH PARTS

1. **INSPECT CLUTCH DISC FOR WEAR OR DAMAGE**

   Using calipers, measure the rivet head depth.

   Maximum rivet depth: 0.3 mm (0.012 in.)

   If a problem is found, replace the clutch disc.

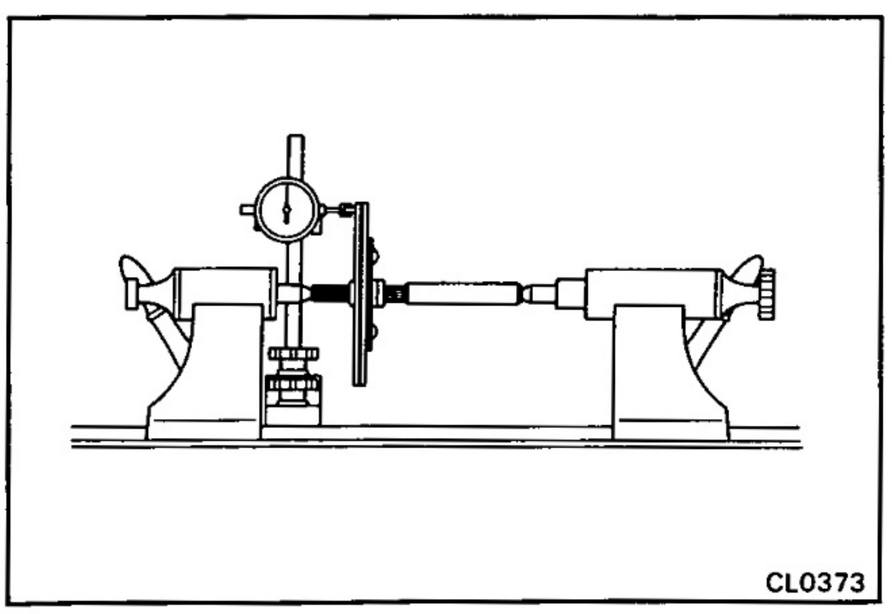

CL0373

2. **INSPECT CLUTCH DISC RUNOUT**

   Using a dial indicator, check the disc runout.

   Maximum runout: 0.8 mm (0.031 in.)

   If runout is excessive, replace the clutch disc.

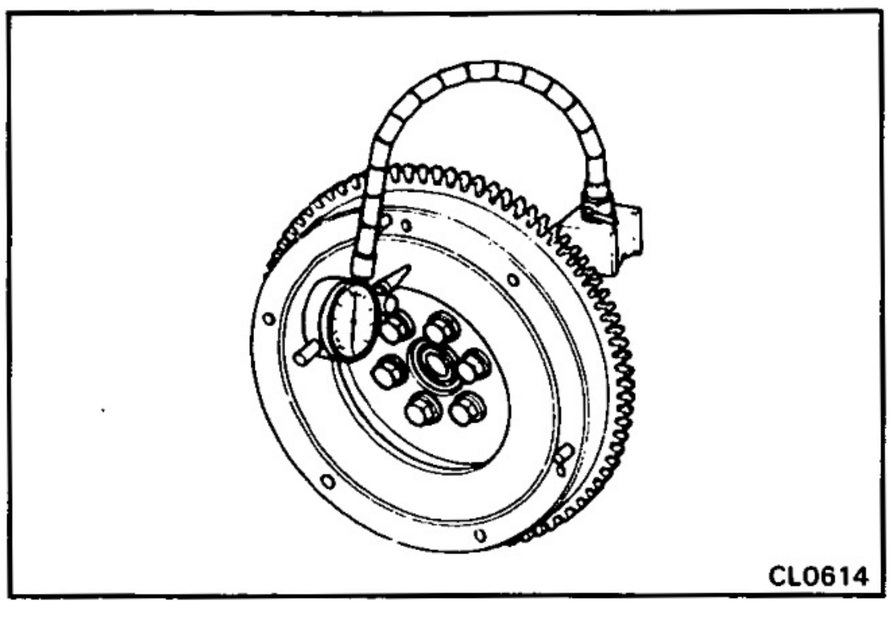

3. INSPECT FLYWHEEL RUNOUT

Using a dial indicator, check the flywheel runout.

Maximum runout: 0.1 mm (0.004 in.)

If runout is excessive, replace the flywheel.

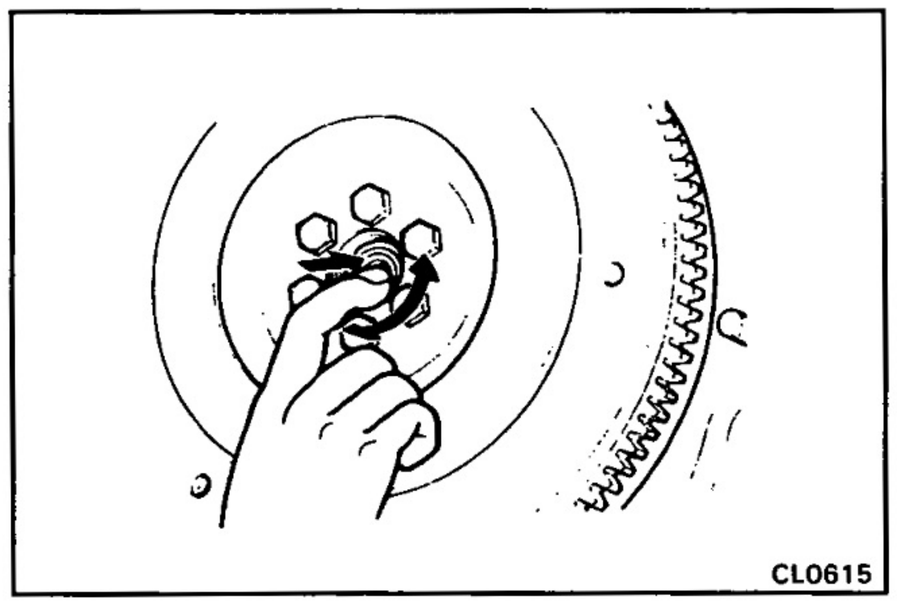

4. INSPECT PILOT BEARING

Turn the bearing by hand while applying force in the axial direction.

If the bearing sticks or has much resistance, replace the pilot bearing.

HINT: The bearing is permanently lubricated and requires no cleaning or lubrication.

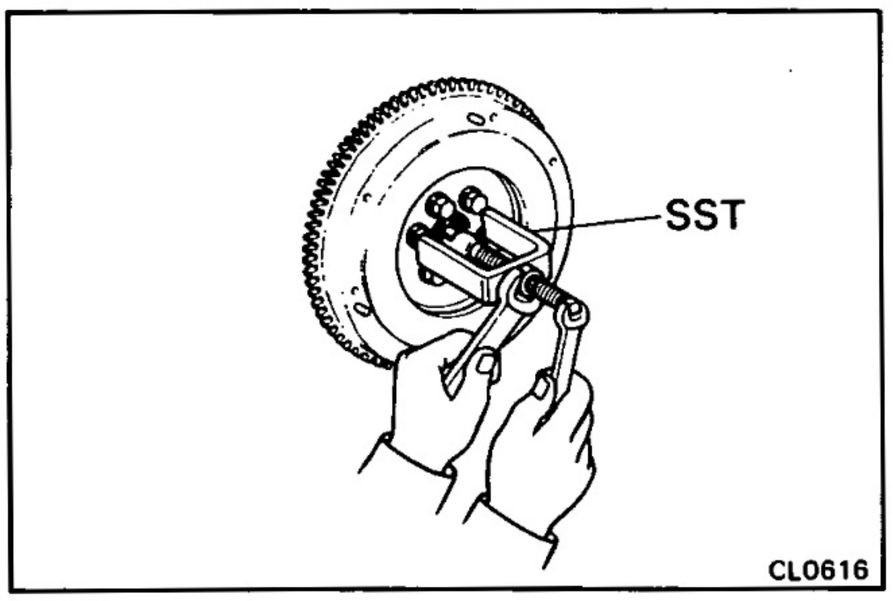

5. IF NECESSARY, REPLACE PILOT BEARING

(a) Using SST, remove the pilot bearing.

SST 09303-35011

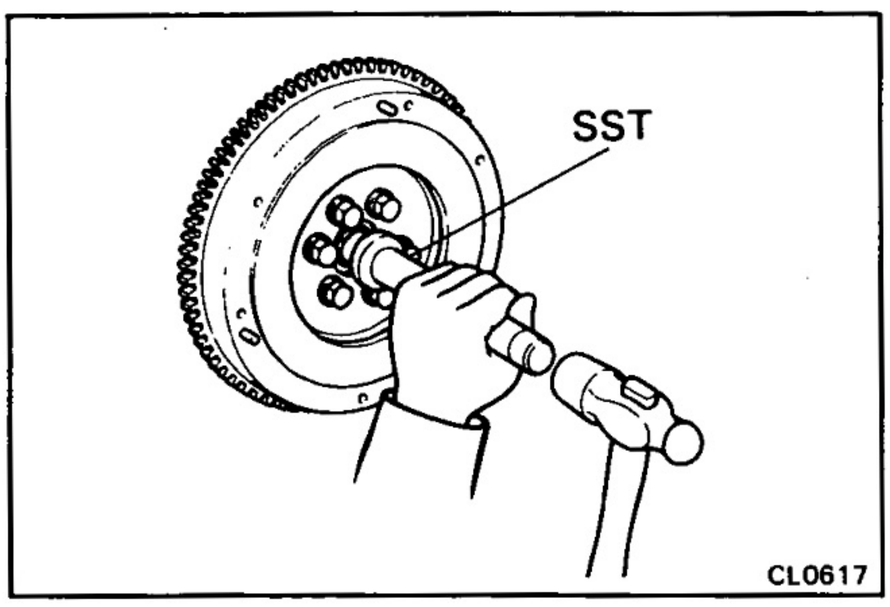

(b) Using SST, install the pilot bearing.

SST 09304-30012

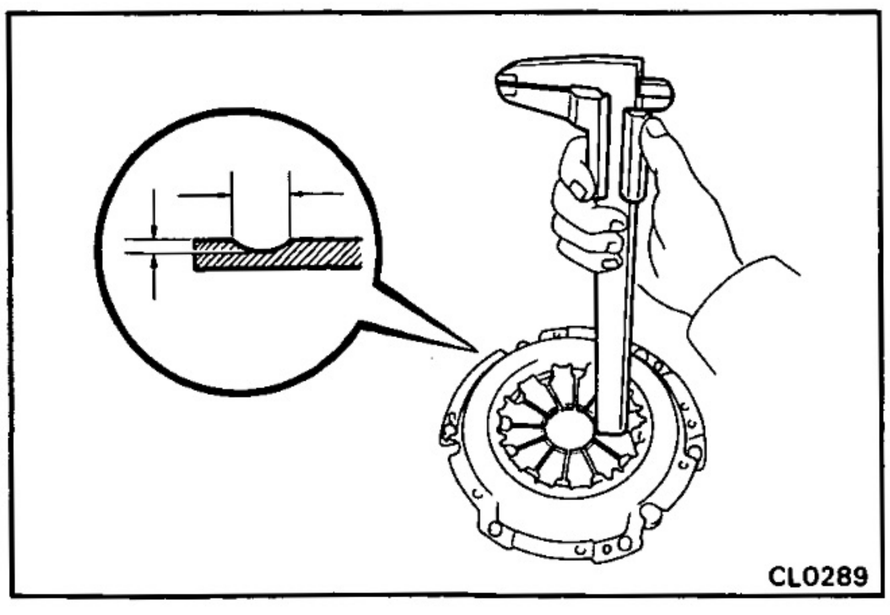

6. INSPECT DIAPHRAGM SPRING FOR WEAR

Using calipers, measure the diaphragm spring for depth and width of wear.

Maximum: Depth 0.6 mm (0.024 in.)
Width 5.0 mm (0.197 in.)

If necessary, replace the clutch cover.

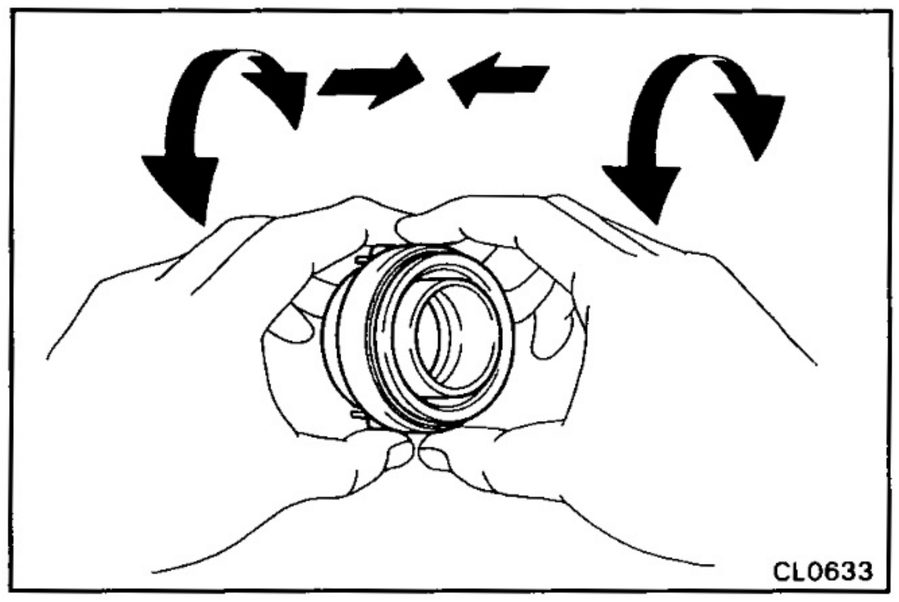

7. INSPECT RELEASE BEARING

Turn the bearing by hand while applying force in the axial direction.

HINT: The bearing is permanently lubricated and requires no cleaning or lubrication.

If a problem is found, replace the bearing.

INSTALLATION OF CLUTCH UNIT (MAIN POINT OF INSTALLATION)

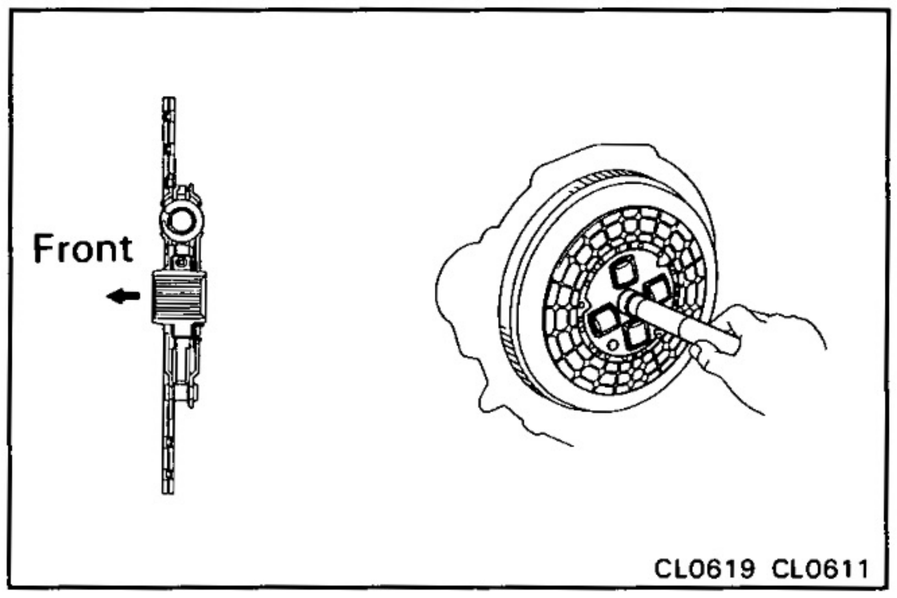

1. INSTALL CLUTCH DISC AND COVER ON FLYWHEEL

(a) Insert the SST in the clutch disc, and then set them and the cover in position.

SST 09301-55022

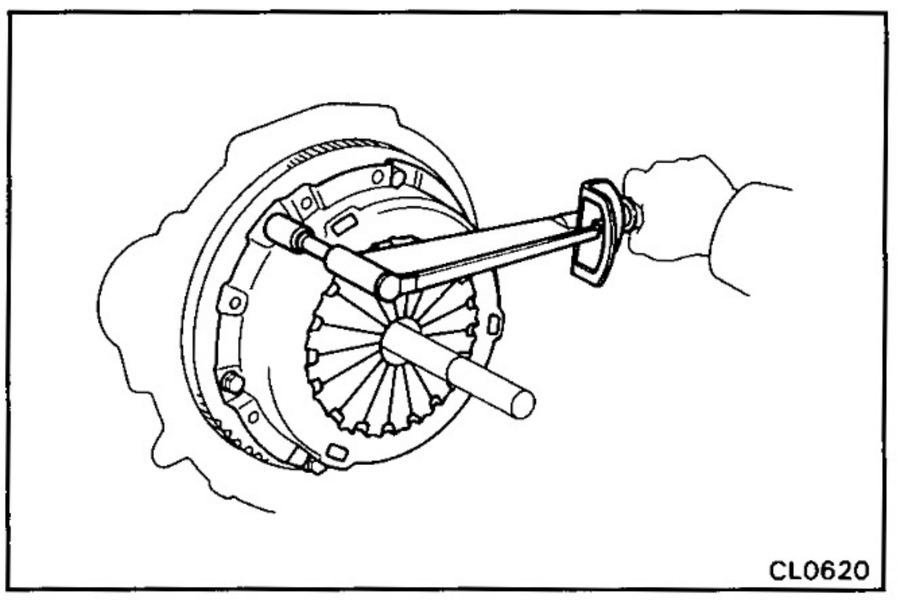

2. INSTALL CLUTCH COVER

(a) Align the matchmarks on the clutch cover and flywheel.

(b) Torque the bolts on the clutch cover in the order shown.

Torque:

1HD-T Engine	**400 kg-cm (29 ft-lb, 39 N·m)**
Others	**195 kg-cm (14 ft-lb, 19 N·m)**

HINT: Temporarily tighten the No.1 and No.2 bolts.

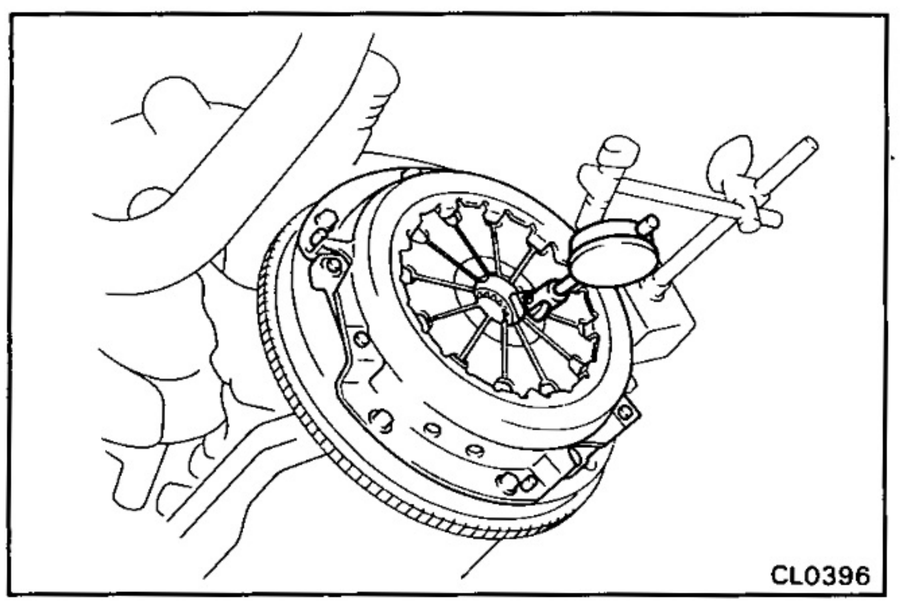

3. CHECK DIAPHRAGM SPRING TIP ALIGNMENT

Using SST, check the diaphragm spring tip alignment.

Maximum non-alignment: 0.5 mm (0.020 in.)

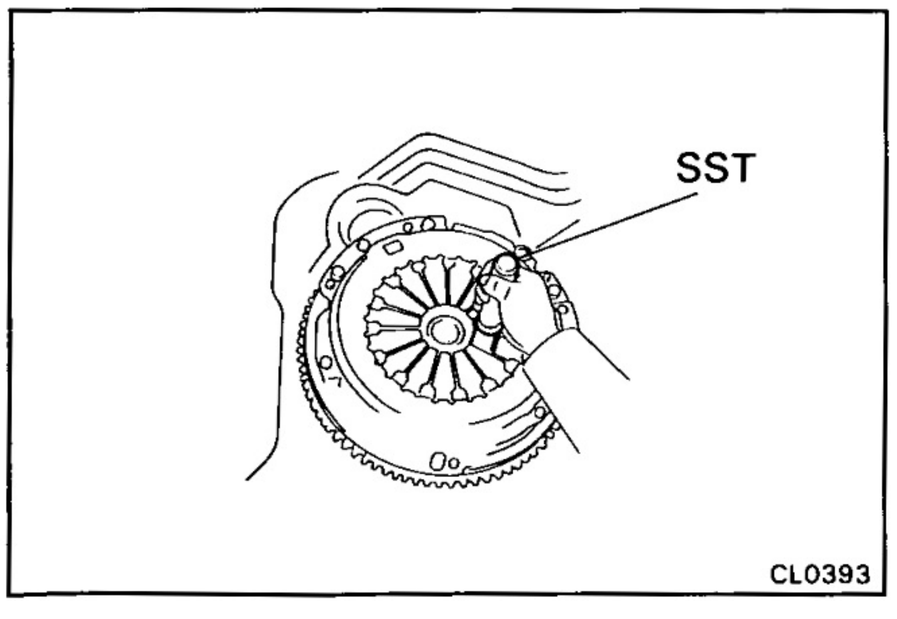

If alignment is not as specified, using SST, adjust the diaphragm spring tip alignment.

SST 09333-00013

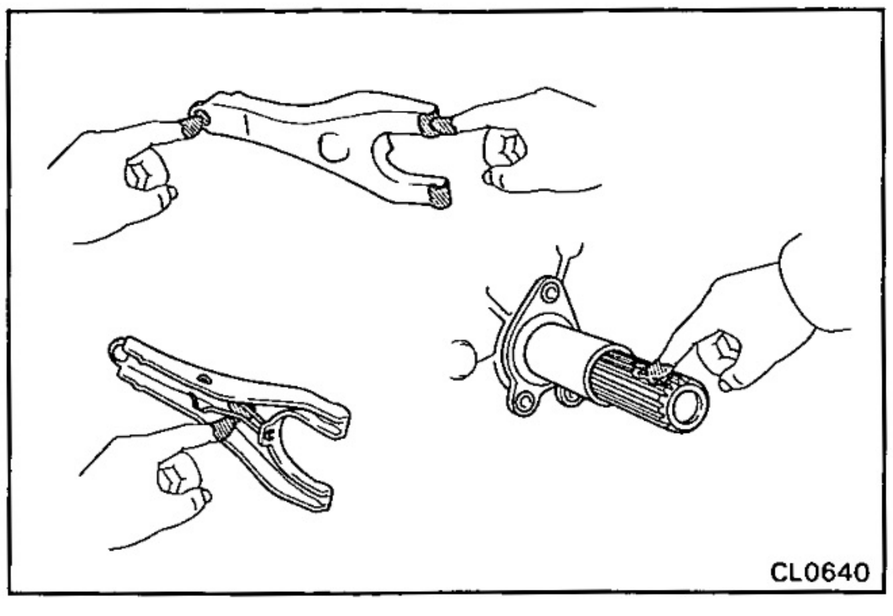

4. APPLY MOLYBDENUM DISULPHIDE LITHIUM BASE GREASE (NLGI NO.2) AS SHOWN

MANUAL TRANSMISSION (H140F, H150F AND H151F TRANSMISSIONS)

	Page
DESCRIPTION	MT-2
PRECAUTIONS	MT-4
TROUBLESHOOTING	MT-4
REMOVAL AND INSTALLATION OF TRANSMISSION	MT-5
COMPONENTS	MT-12
DISASSEMBLY OF TRANSMISSION	MT-15
COMPONENT PARTS	MT-25
Input Shaft Assembly	MT-25
Output Shaft Assembly	MT-27
Counter Gear Assembly	MT-39
Front Bearing Retainer	MT-42
Oil Pump Cover Assembly	MT-43
ASSEMBLY OF TRANSMISSION	MT-47

DESCRIPTION

- Transmission types, H140F, H150F and H151F are constant mesh synchronizer for forward gears and a sliding mesh reverse gear.

H140F

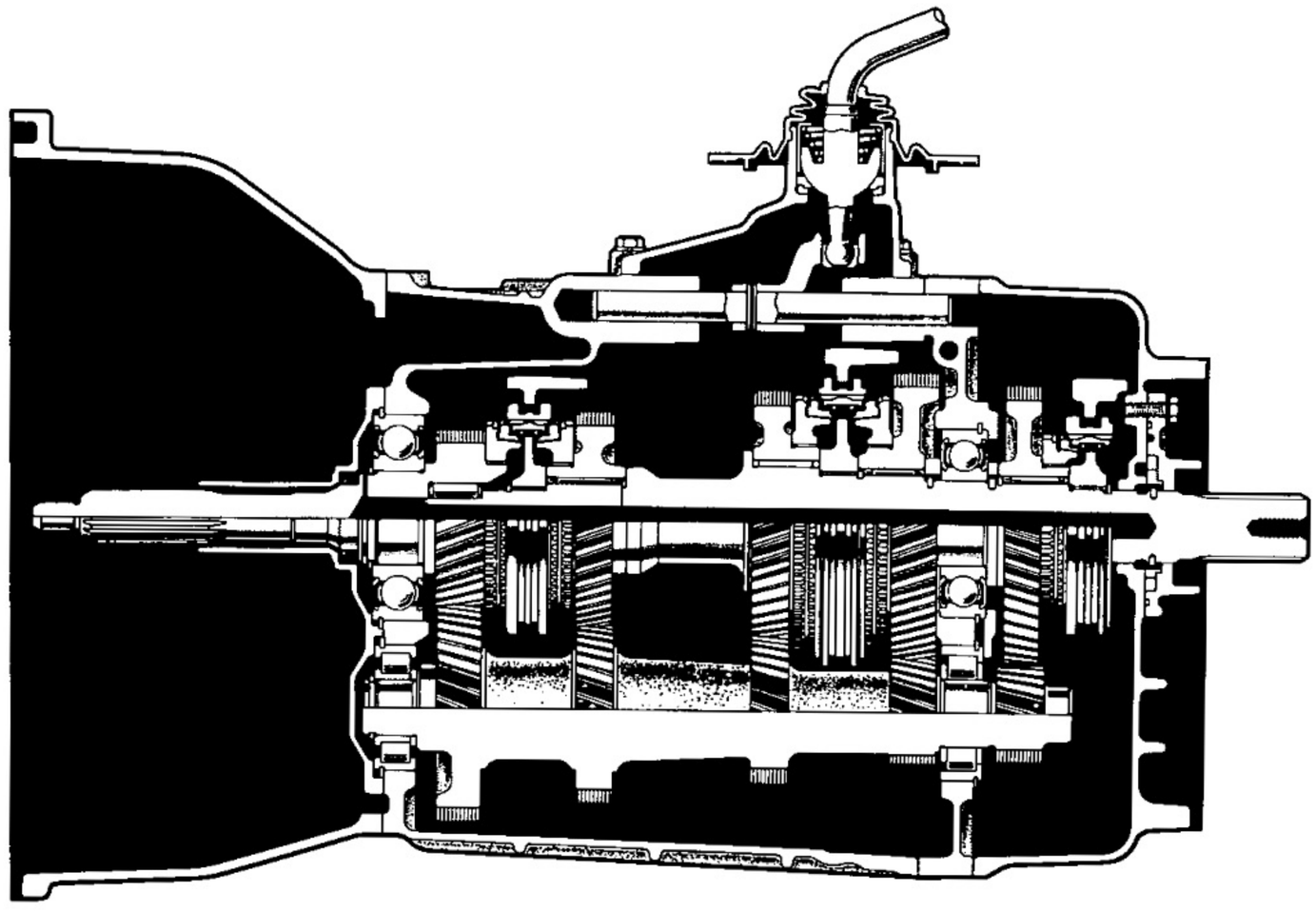

TF1015

H150F

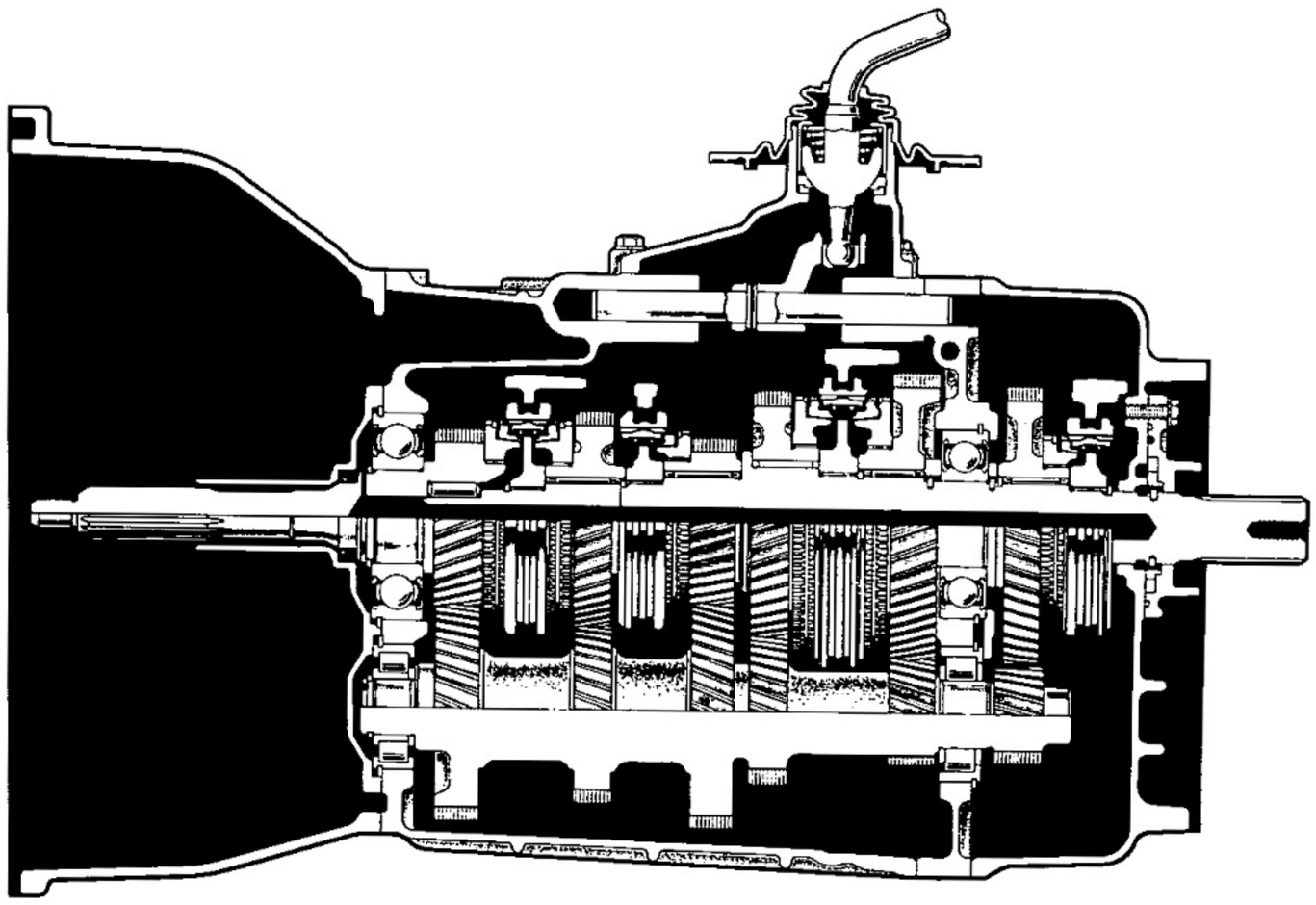

H151F

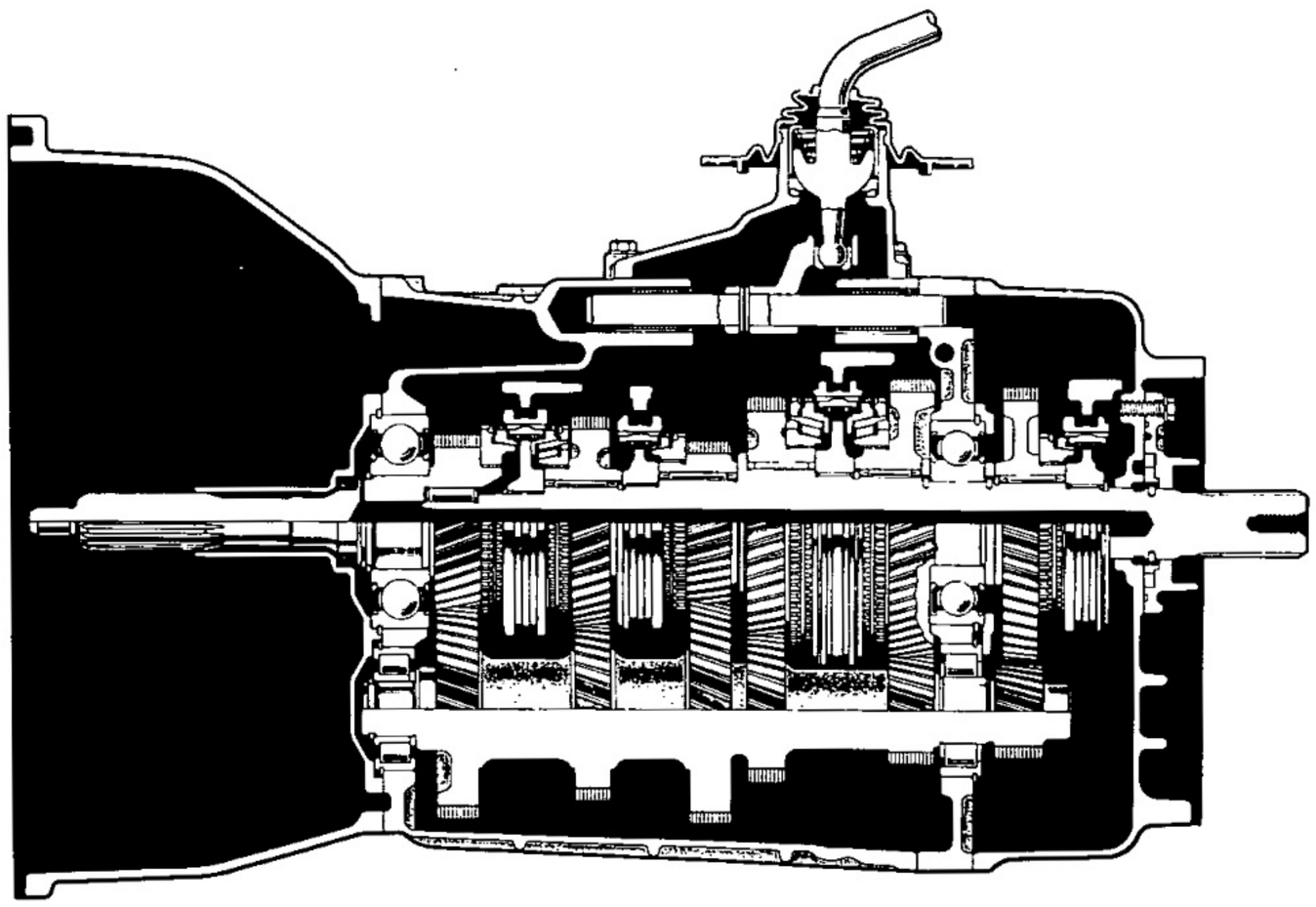

TF1016

Specifications

Type of Transmission		H140F	H150F	H151F
Type of Engine		3F, 1HZ		1HD-T
Gear Ratio	1 st	4.529	←	4.081
	2 nd	2.464	←	2.294
	3 rd	1.490	←	←
	4 th	1.000	←	←
	5 th	—	0.881	←
	Rev.	4.313	←	←
Oil Capacity	H140F	2.7 liters (2.8 Us qts, 2.4 Imp.qts)		
	H150F, H151F	2.6 liters (2.7 Us qts, 2.3 Imp.qts)		
Type of Oil		API GL-4 or GL-5 SAE 75W-90		

PRECAUTIONS

When working with FIPG material, you must be observe the following.

- Using a razor blade and gasket scraper, remove all the old packing (FIPG) material from the gasket surfaces.
- Thoroughly clean all components to remove all the loose material.
- Clean both sealing surfaces with a non-residue solvent.
- Apply the seal packing in approx. 1.2 mm (0.047 in.) bead along the sealing surface.
- Parts must be assembled within 10 minutes of application. Otherwise, the packing (FIPG) material must be removed and reapplied.

TROUBLESHOOTING

Problem	Possible cause	Remedy	Page
Hard to shift or will not shift	Splines on input shaft dirty or burred	Repair as necessary	MT-5
	Transmission faulty	Disassemble and inspect transmission	MT-5
Transmission jumps out of gear	Transmission faulty	Disassemble and inspect transmission	MT-5

REMOVAL AND INSTALLATION OF TRANSMISSION

COMPONENTS

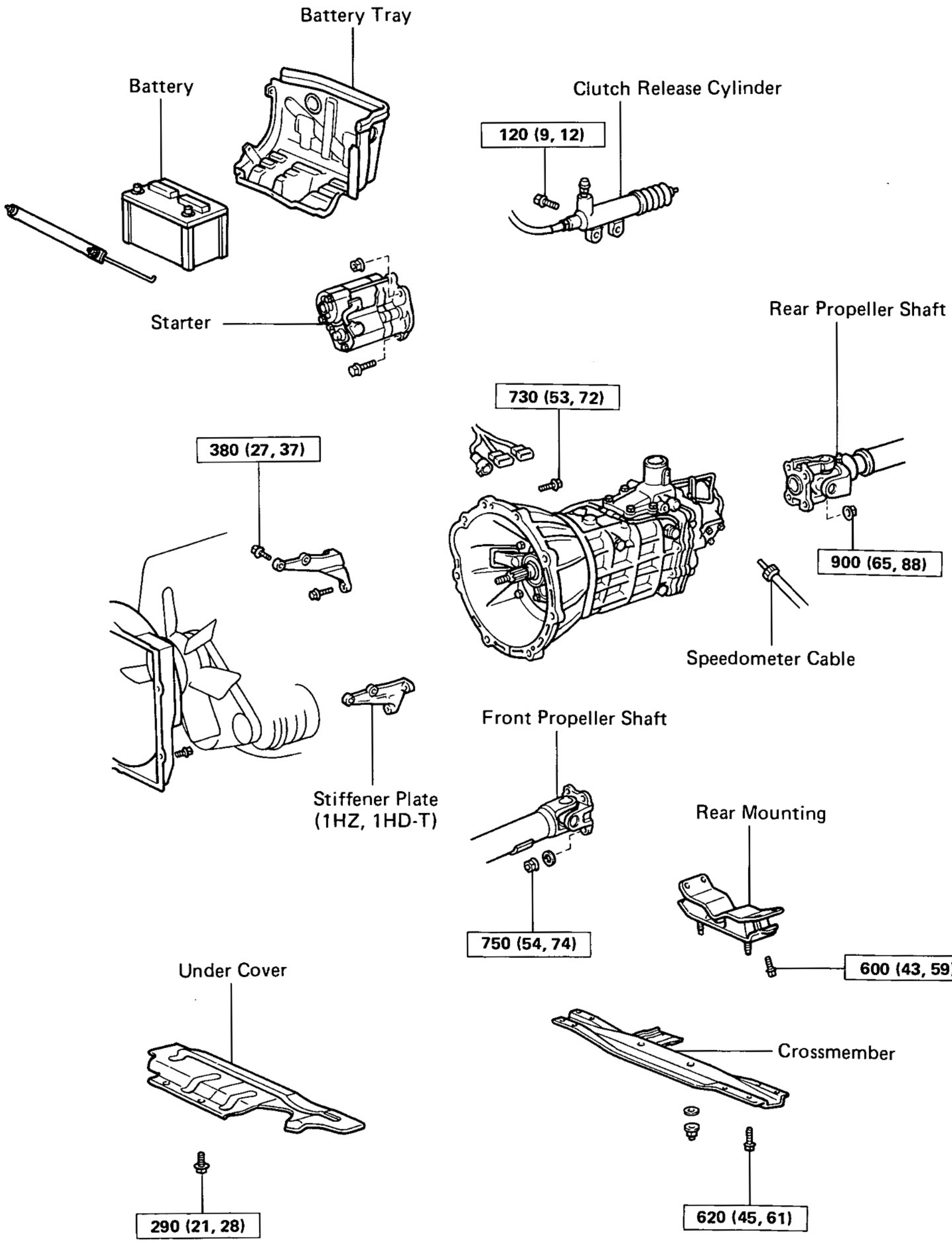

kg-cm (ft-lb, N·m) : Specified torque

MT0620

REMOVAL OF TRANSMISSION

1. **DISCONNECT BATTERY CABLE FROM NEGATIVE TERMINAL**

2. **REMOVE BATTERY AND COVER**

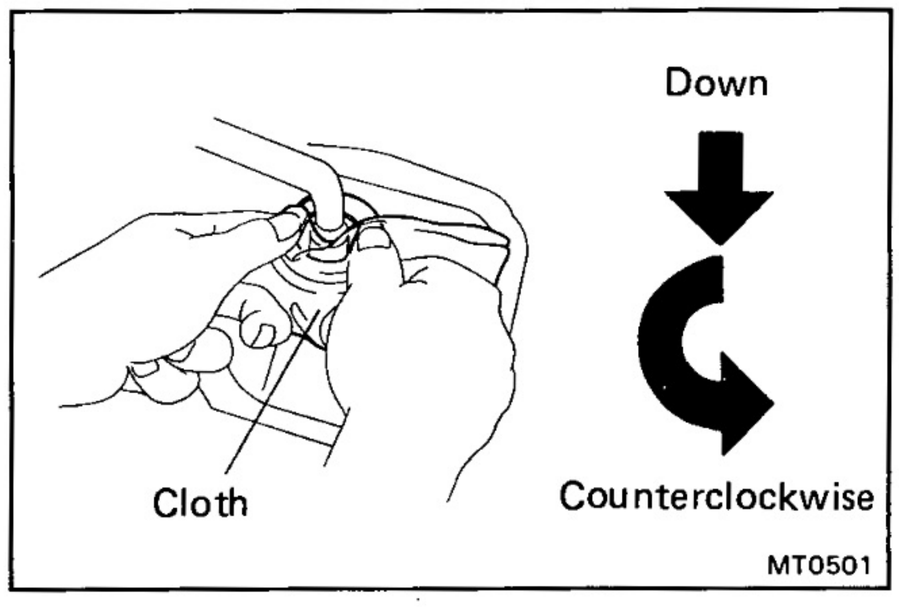

3. **REMOVE SHIFT LEVER FROM INSIDE OF VEHICLE**
   (a) Remove the shift lever knob.
   (b) Remove the two screws and remove the shift lever boot retainer.
   (c) Pull up the shift lever boot.
   (d) Cover the shift lever cap with a cloth.
   (e) Then, pressing down on the shift lever cap rotate it counterclockwise to remove.
   (f) Remove the shift lever.

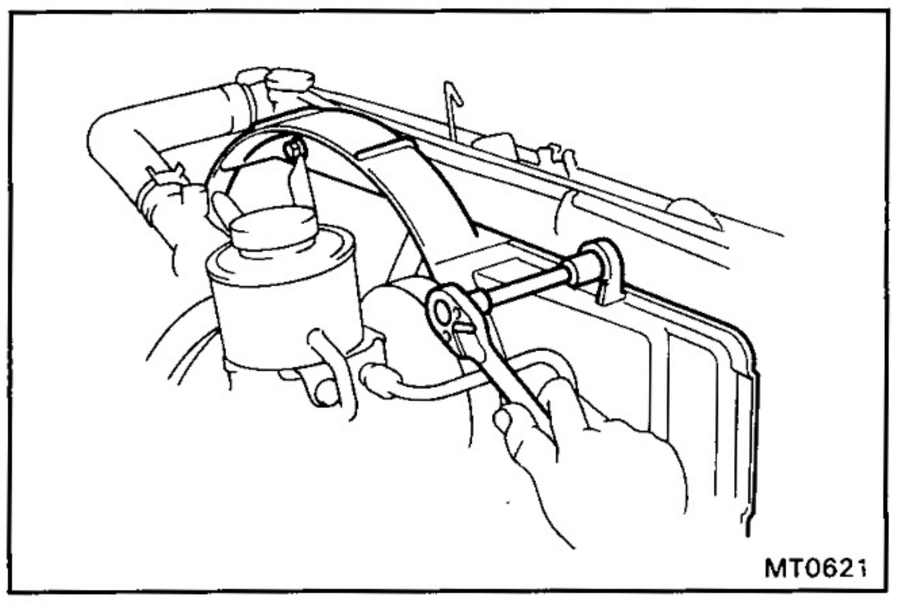

4. **LOOSEN FAN SHROUD OF COOLING FAN TO AVOID DAMAGE TO FAN**

5. **RAISE VEHICLE**

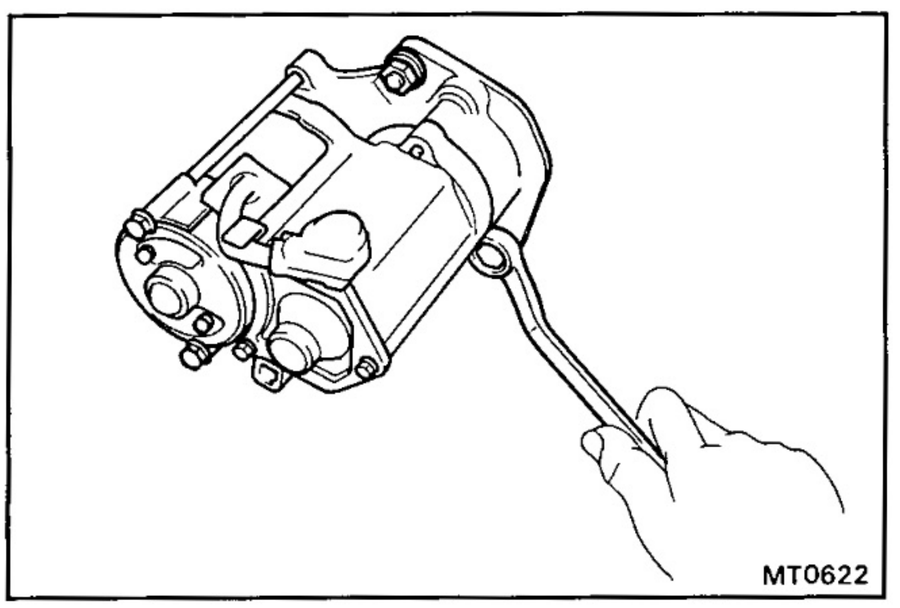

6. **DISCONNECT PROPELLER SHAFT**
   (See page PR-2)

7. **REMOVE STARTER**
   Remove the bolt, nut and the starter.

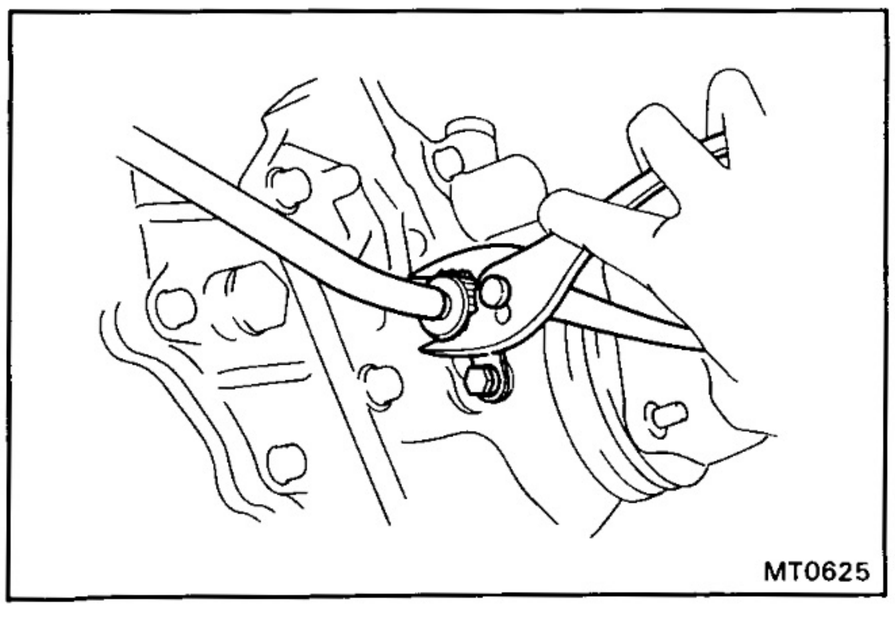

8. **DISCONNECT SPEEDOMETER CABLE**

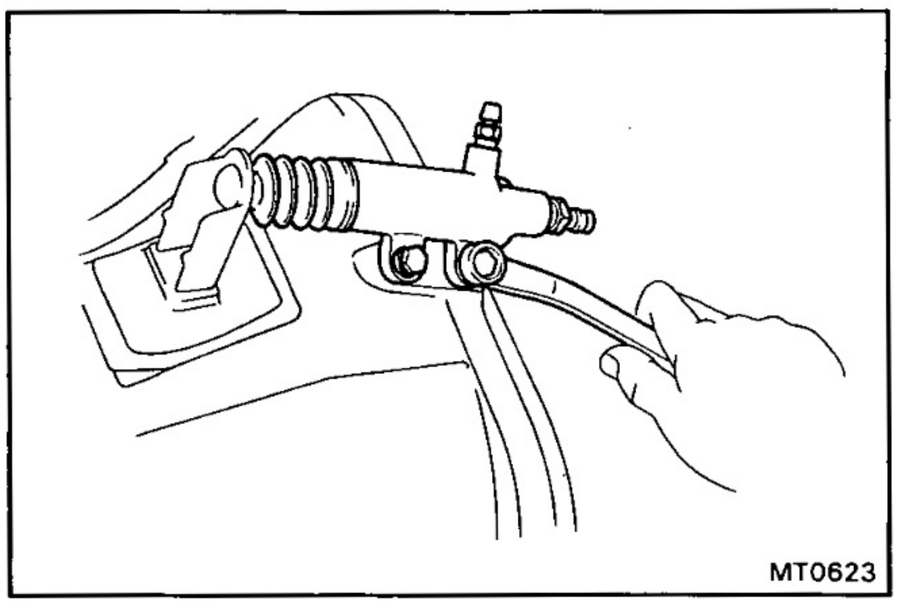

9. DISCONNECT BACK-UP LIGHT SWITCH CONNECTOR

10. DISCONNECT RELEASE CYLINDER FROM TRANSMISSION

Remove the two mounting bolts and release cylinder alongside the engine.

HINT: Do not disconnect the clutch line.

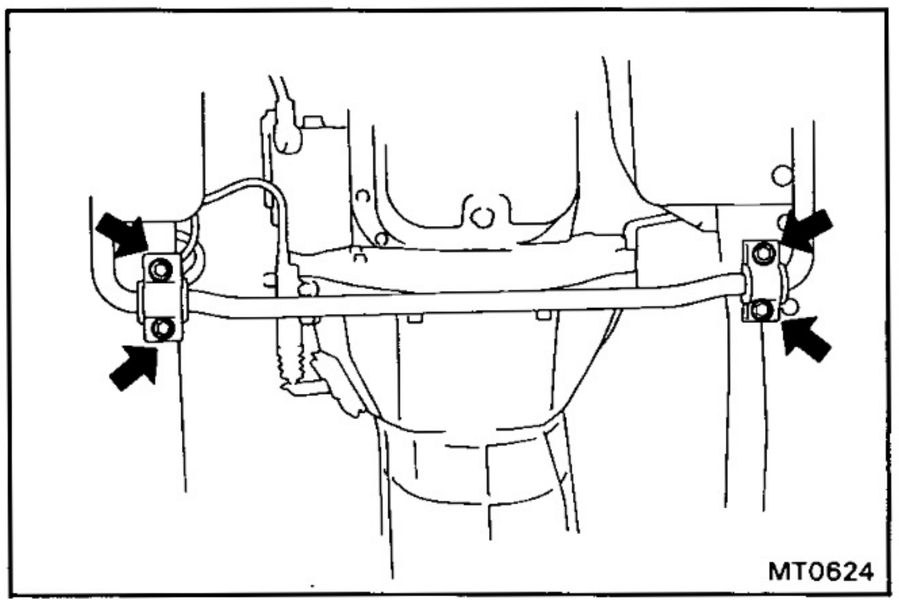

11. REMOVE STABILIZER BRACKET

Remove four stabilizer bracket set bolts.

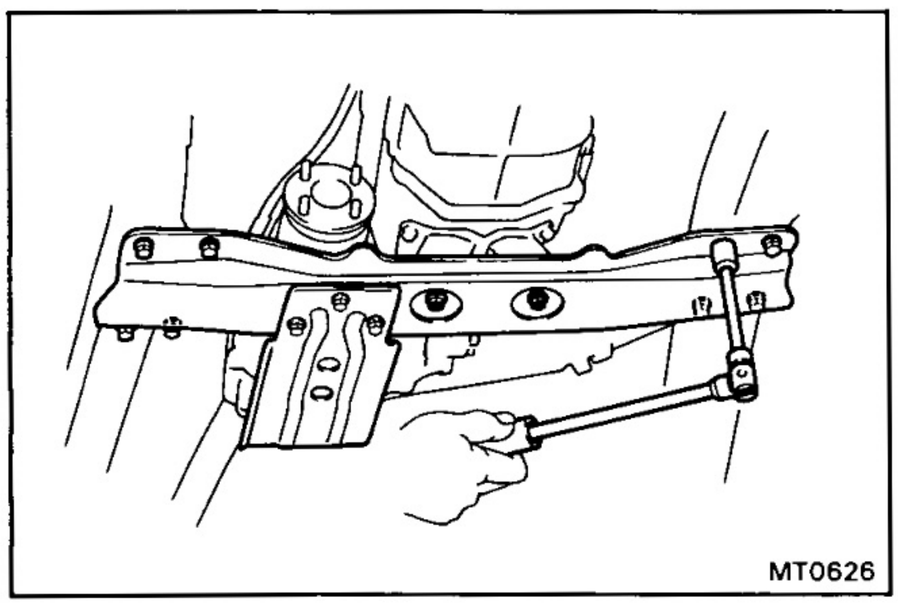

12. SUPPORT TRANSMISSION WITH JACK

13. REMOVE CROSSMEMBER AND REAR MOUNTING

(a) Remove the eight bolts, two nuts and crossmember.

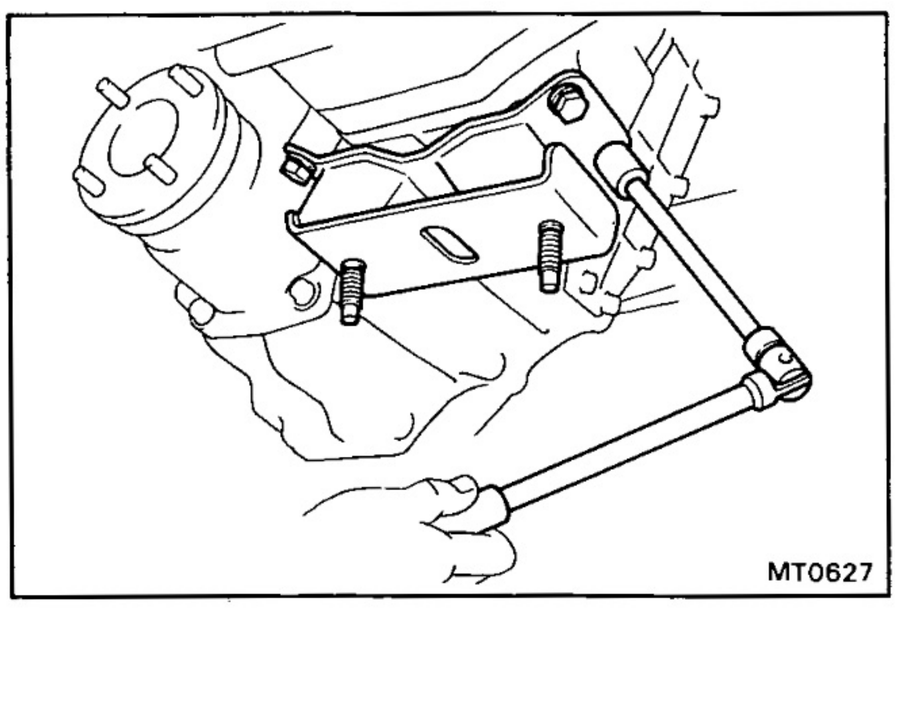

(b) Remove the four bolts and rear mounting from the transmission.

14. (1HZ, 1HD-T)
REMOVE STIFFENER PLATE BOLTS

Remove the four stiffener plate bolts from the transmission.

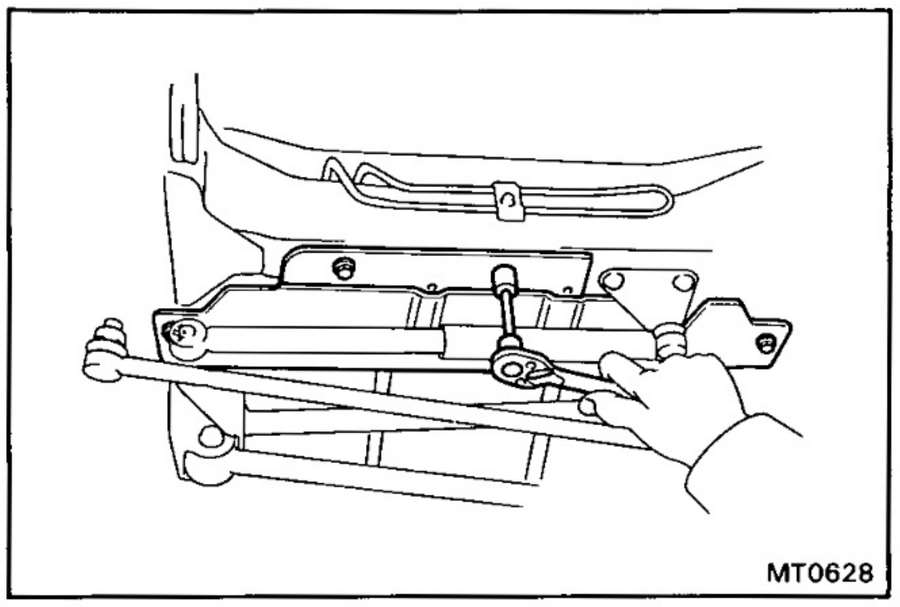

15. JACK UP FRONT SIDE OF ENGINE

(a) Remove the four set bolts and engine under cover.

(b) Jack up the front side of engine.

16. REMOVE REMAINING TRANSMISSION BOLTS

17. REMOVE TRANSMISSION

Remove transmission toward the rear.

18. REMOVE TRANSFER FROM TRANSMISSION

(a) Remove the transfer adaptor rear mounting bolts.

(b) Remove the transfer from the transmission.

INSTALLATION OF TRANSMISSION

1. INSTALL TRANSFER TO TRANSMISSION

(a) Install the transfer to the transmission.

(b) Install the transfer adaptor rear mounting bolts.

2. PLACE TRANSMISSION AT INSTALLATION POSITION

Align the input shaft spline with the clutch disc, and push the transmission fully into position.

3. INSTALL TRANSMISSION BOLTS

Torque: 730 kg-cm (53 ft-lb, 72 N·m)

4. (1HZ, 1HD-T) INSTALL STIFFENER PLATES

Torque: 380 kg-cm (27 ft-lb, 37 N·m)

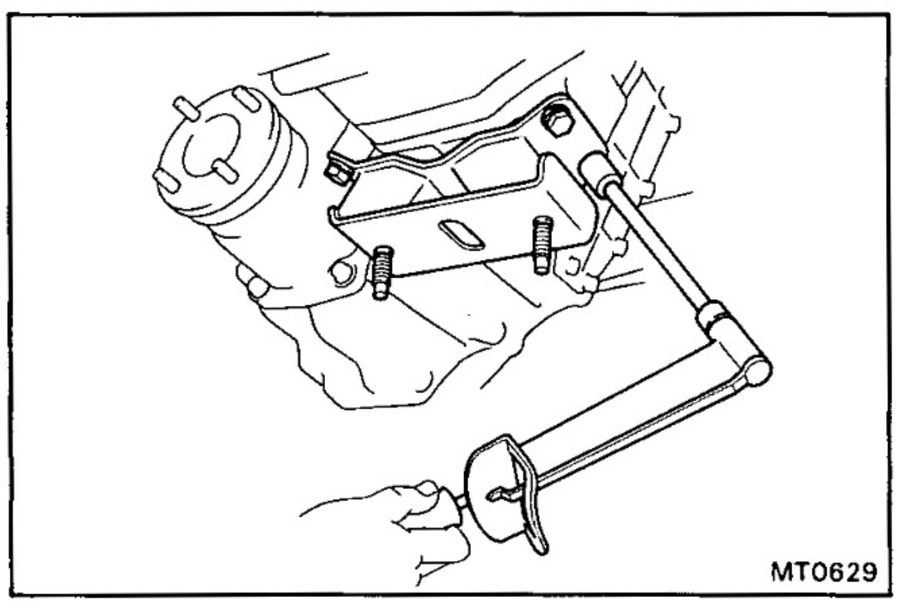
MT0629

5. INSTALL ENGINE REAR MOUNTING AND CROSSMEMBER

(a) Install the mounting with four bolts to the transmission.

Torque: 600 kg-cm (43 ft-lb, 59 N·m)

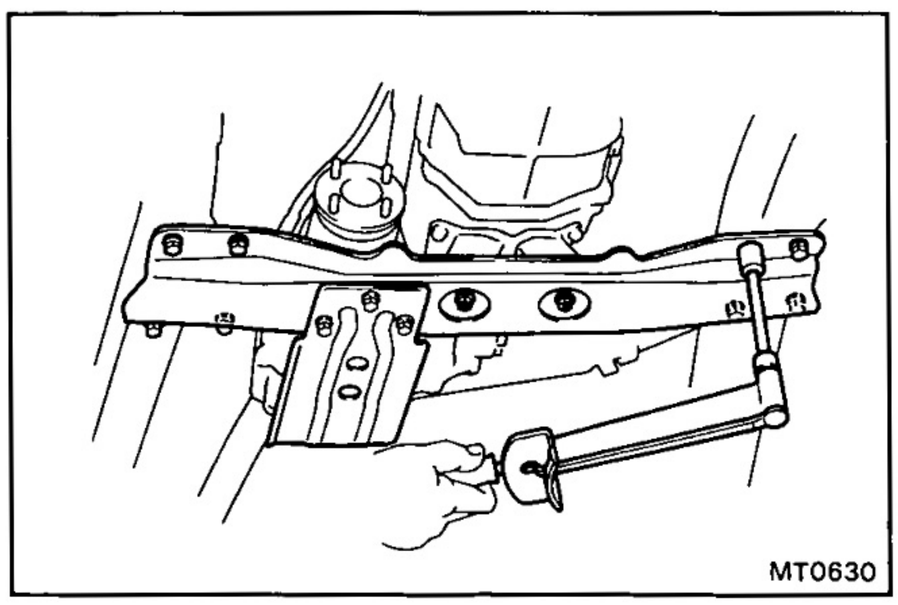
MT0630

(b) Install the crossmember with eight bolts and two nuts.

Torque: 620 kg-cm (45 ft-lb, 61 N·m)

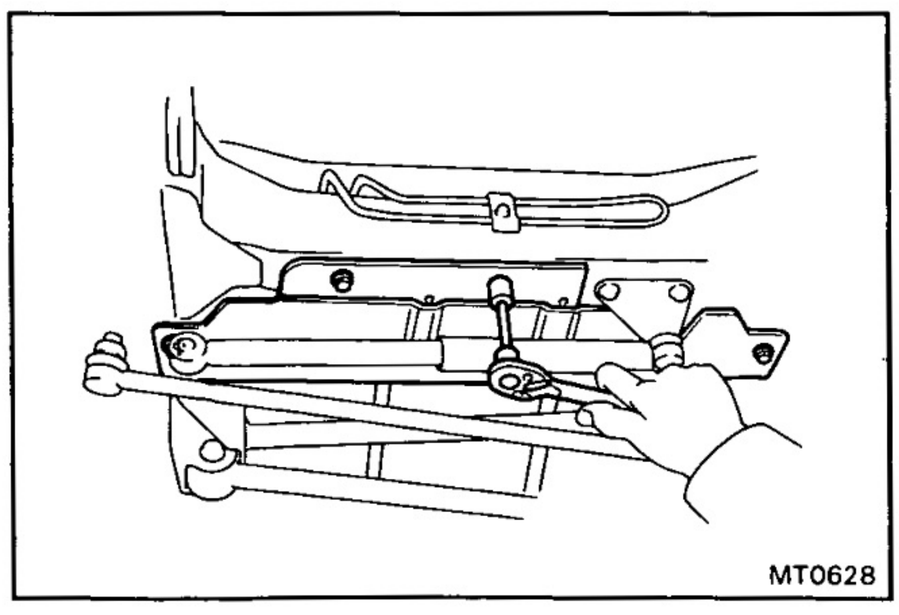
MT0628

6. REMOVE JACK

7. INSTALL ENGINE UNDER COVER

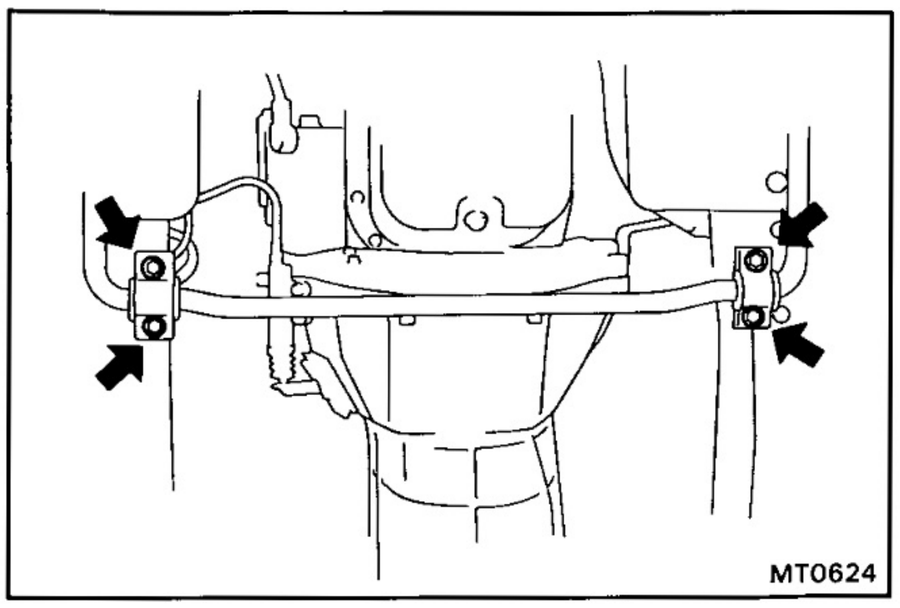

8. INSTALL STABILIZER BRACKET

Install the stabilizer bracket with four bolts.

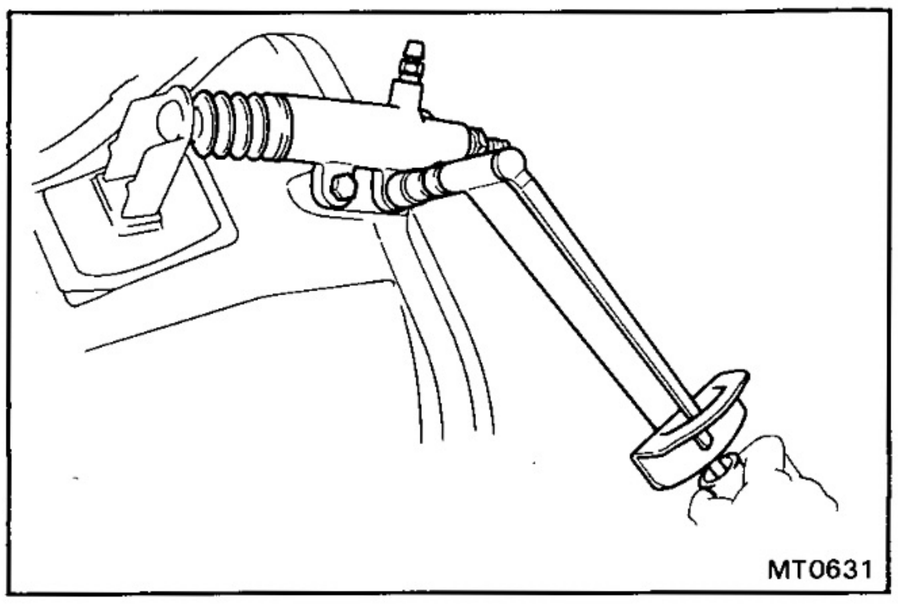

9. INSTALL CLUTCH RELEASE CYLINDER

Install the release cylinder with two bolts.

Torque: 120 kg-cm (9 ft-lb, 12 N·m)

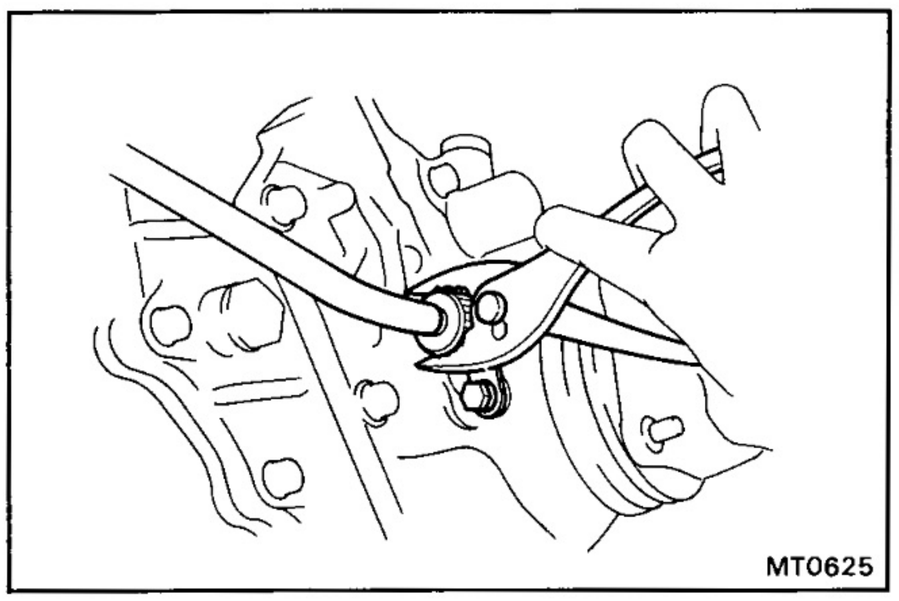

10. CONNECT BACK-UP LIGHT SWITCH CONNECTOR

11. CONNECT SPEEDOMETER CABLE

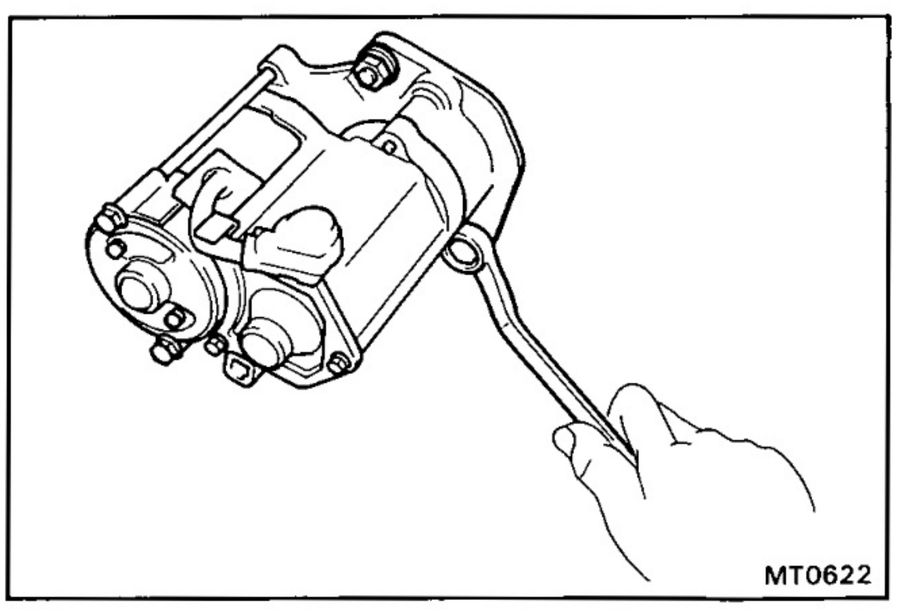

12. INSTALL STARTER

Install the starter with bolt and nut.

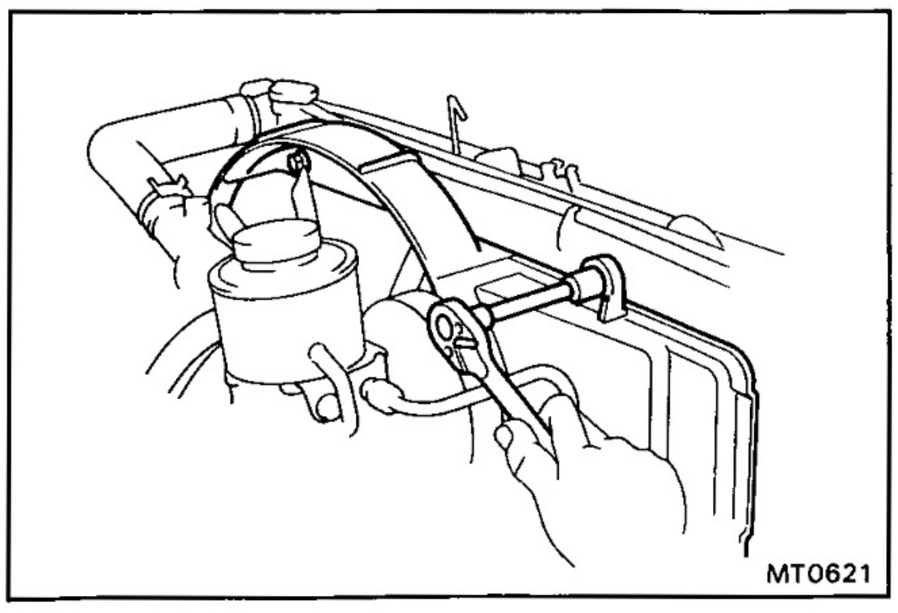

13. CONNECT PROPELLER SHAFT
(See page PR-2)

14. LOWER VEHICLE

15. TIGHTEN FAN SHROUD

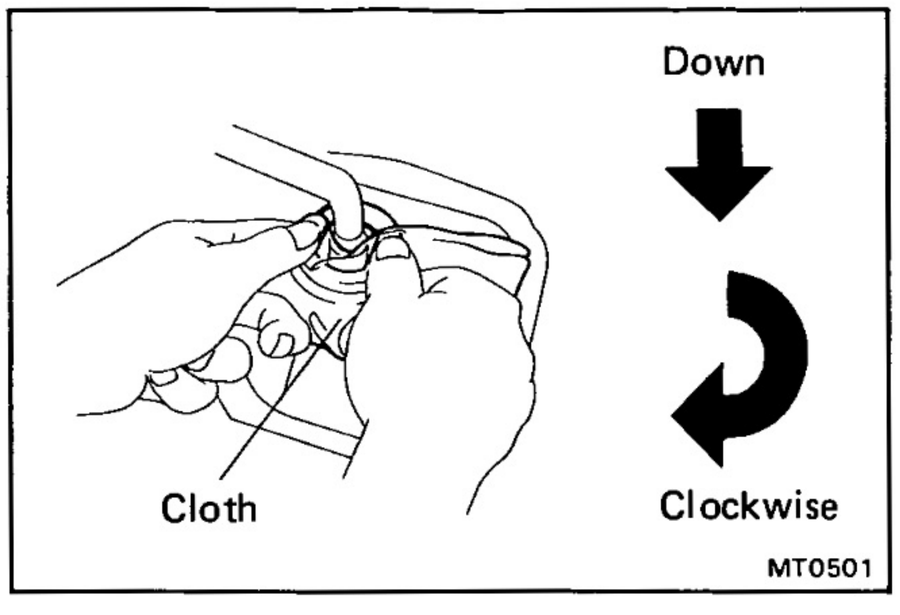

16. INSTALL SHIFT LEVER

(a) Apply MP grease to the shift lever.

(b) Align the groove of the shift lever cap and the pin part of case cover.

(c) Cover the shift lever cap with a cloth.

(d) Then, pressing down on the shift lever cap rotate it clockwise to install.

(e) Install the shift lever boot and retainer with four screws.

(f) Install the shift lever knob.

17. CONNECT BATTERY CABLE TO NEGATIVE TERMINAL

18. PERFORM ROAD TEST

Check for abnormal noise and smooth operation.

COMPONENTS (H140F, H150F AND H151F TRANSMISSIONS)

COMPONENTS

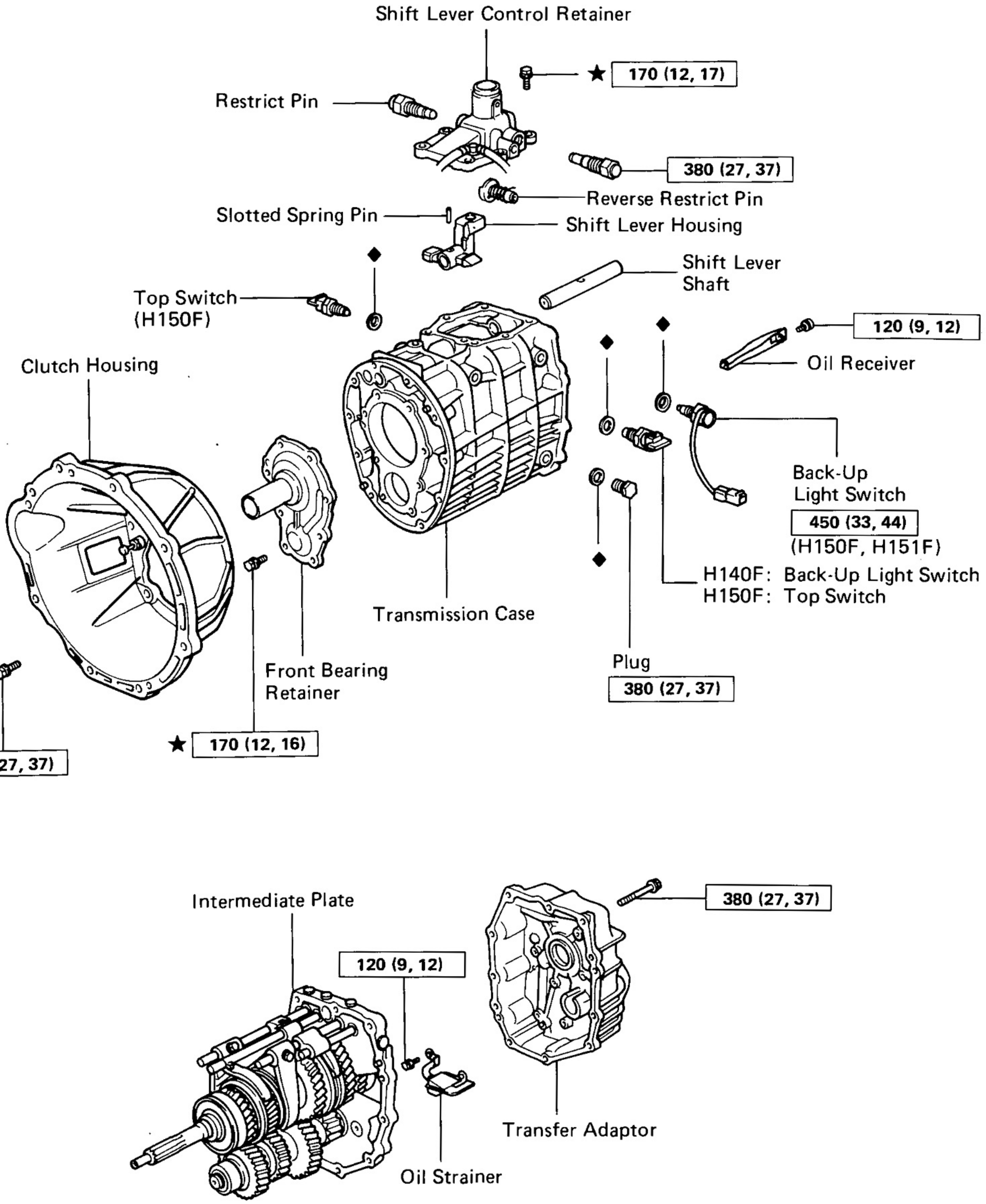

kg-cm (ft-lb, N·m) : Specified torque

◆ Non-reusable part

★ Precoated part

HM0339

COMPONENTS (Cont'd)

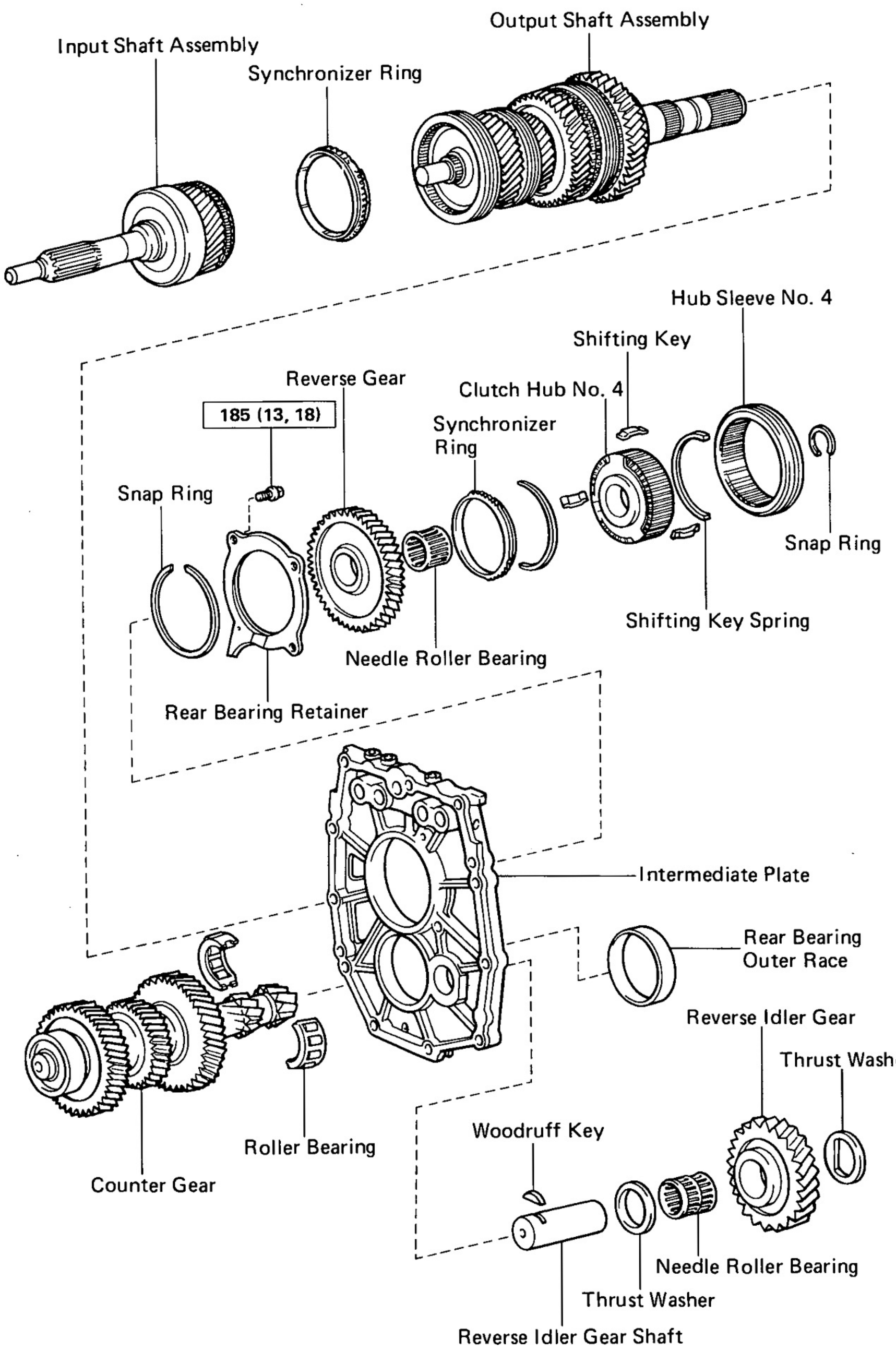

kg-cm (ft-lb, N·m) : Specified torque

HM0340

COMPONENTS (Cont'd)

4-Speed (H140F)

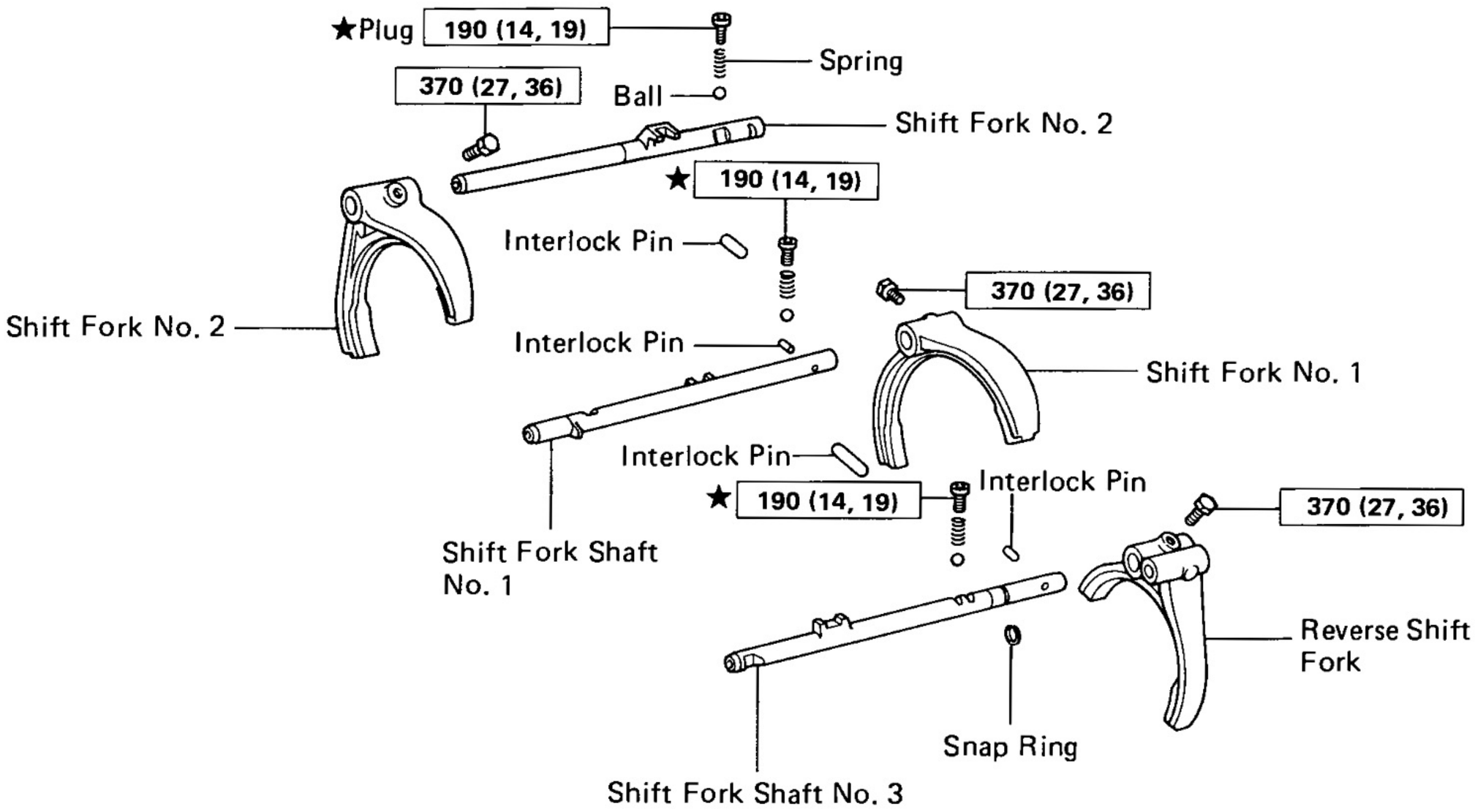

5-Speed (H150F, H151F)

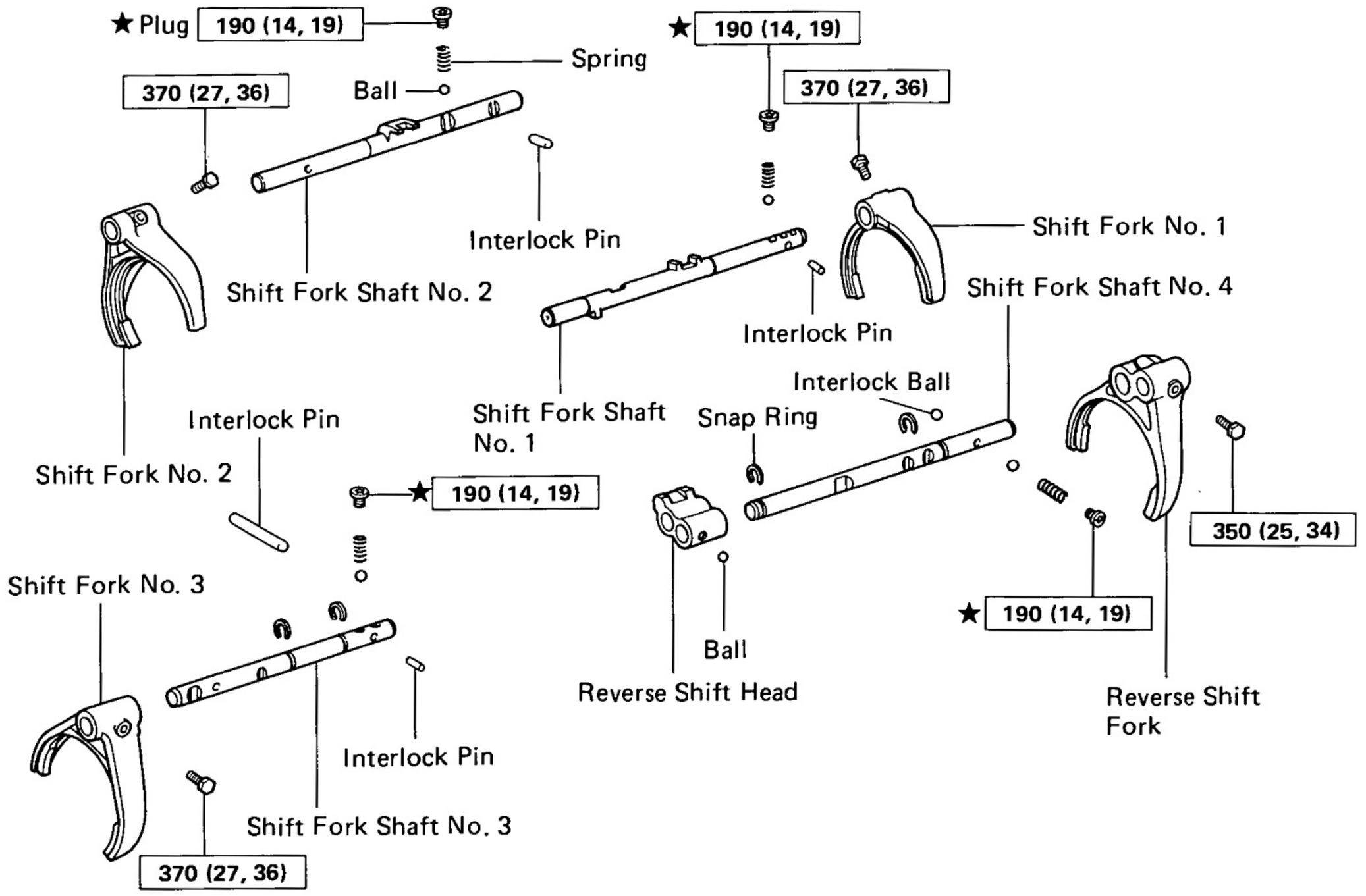

kg-cm (ft-lb, N·m) : Specified torque

★ Precoated part

HM0505
HM0341

DISASSEMBLY OF TRANSMISSION

(See page MT-12 to 14)

1. REMOVE RELEASE FORK AND BEARING

2. REMOVE BACK-UP LIGHT SWITCH

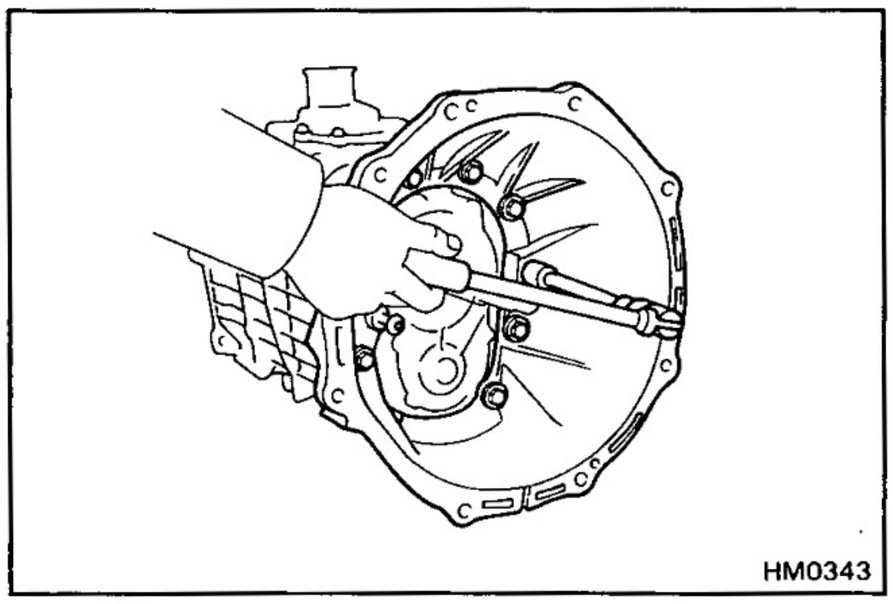
HM0343

3. REMOVE CLUTCH HOUSING FROM TRANSMISSION CASE

Remove the ten bolts and clutch housing.

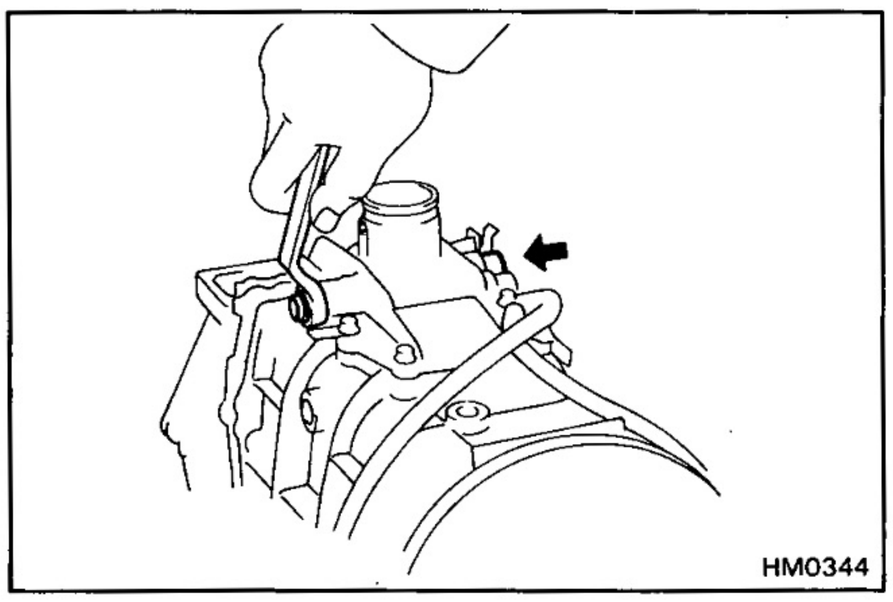
HM0344

4. REMOVE TWO RESTRICT PINS

5. REMOVE BREATHER HOSE

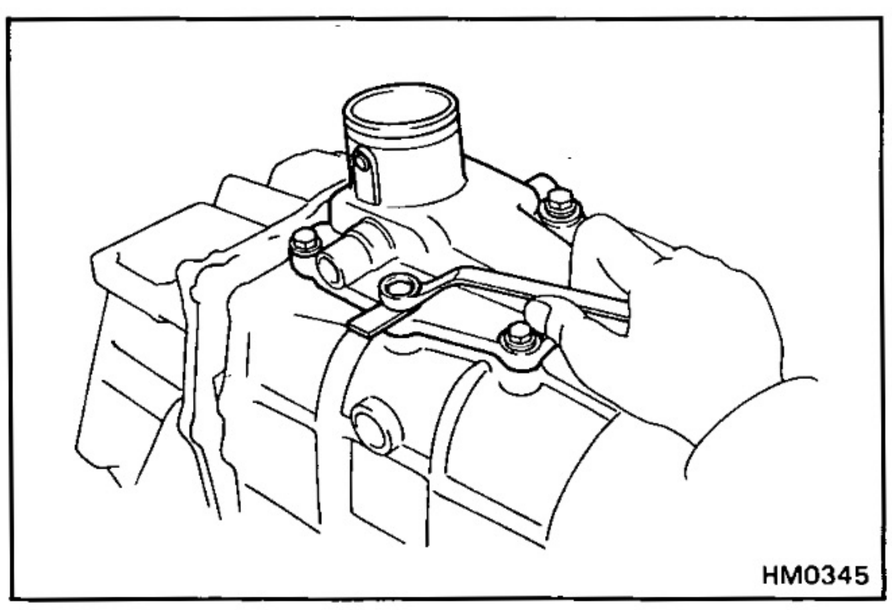
HM0345

6. REMOVE SHIFT LEVER CONTROL RETAINER

Remove the six bolts and transmission shift lever control retainer.

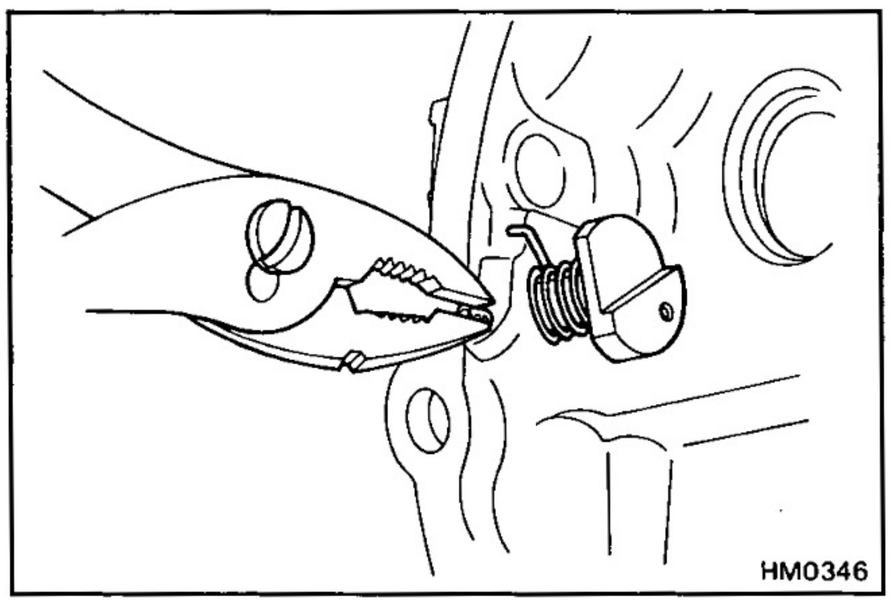
HM0346

7. REMOVE REVERSE RESTRICT PIN

(a) Using pliers, remove the slotted spring pin.

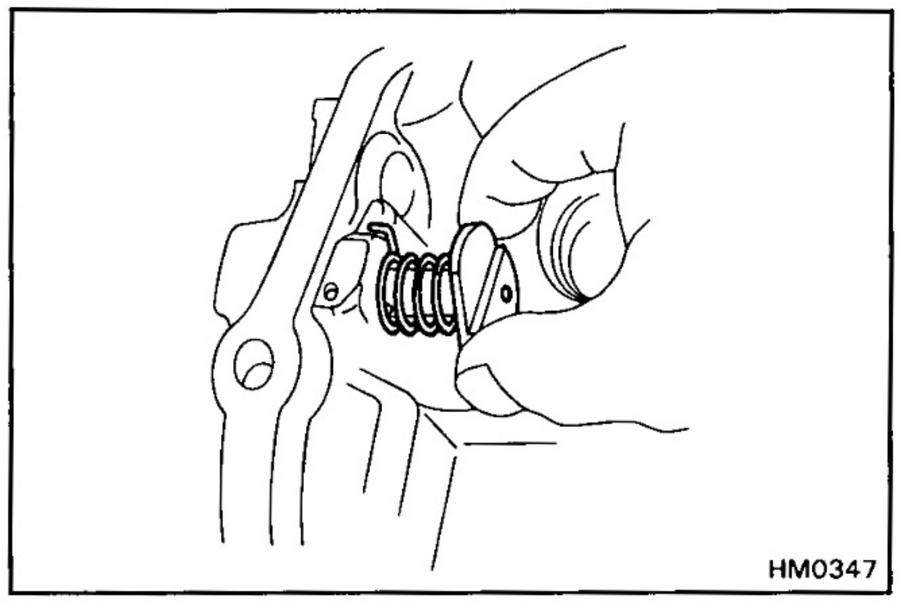
HM0347

(b) Remove the reverse restrict pin.

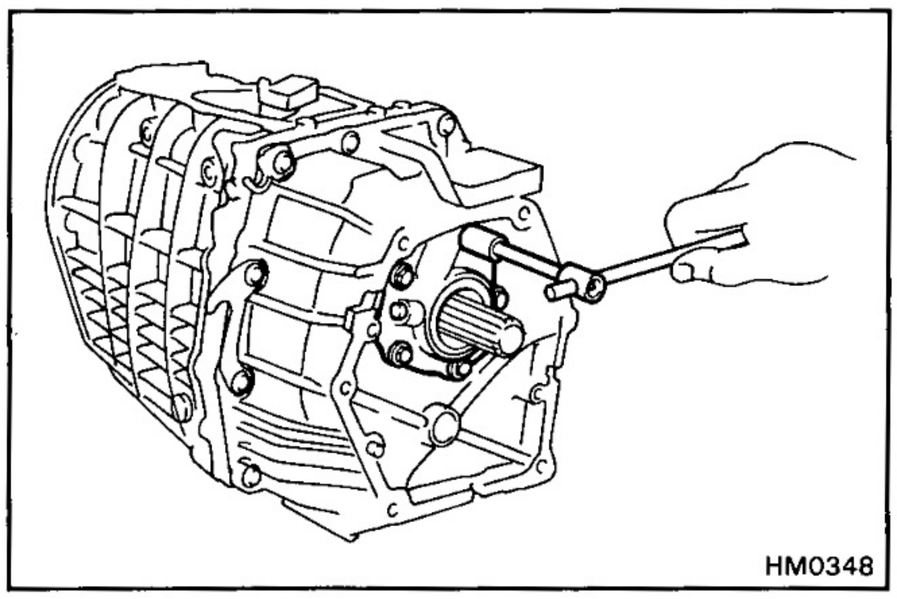
HM0348

8. REMOVE OIL PUMP COVER ASSEMBLY

(a) Remove the five bolts and oil pump cover.

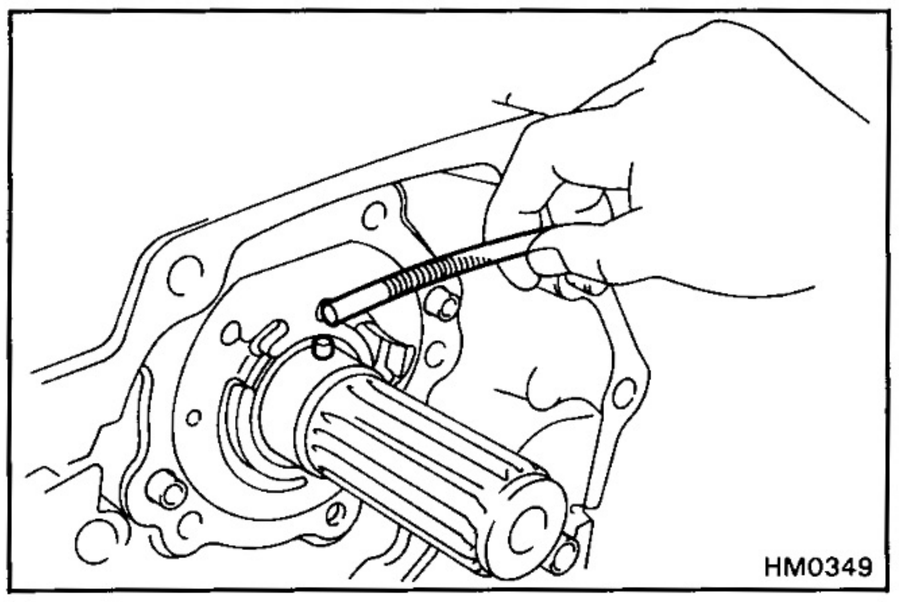
HM0349

(b) Using a magnetic finger, remove the two straight pins.

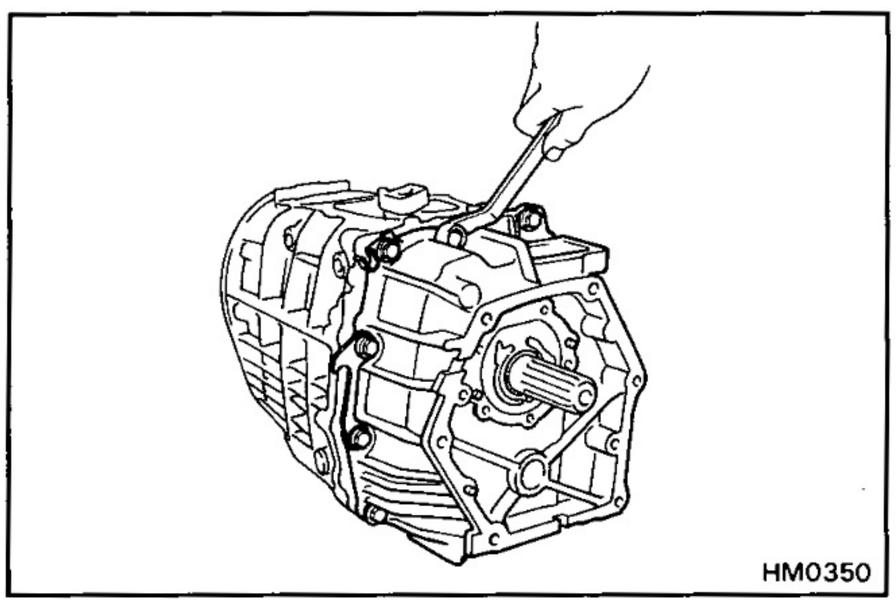
HM0350

9. REMOVE TRANSFER ADAPTOR

Remove the eleven bolts.

HINT: If necessary, tap the transfer adaptor with a plastic hammer.

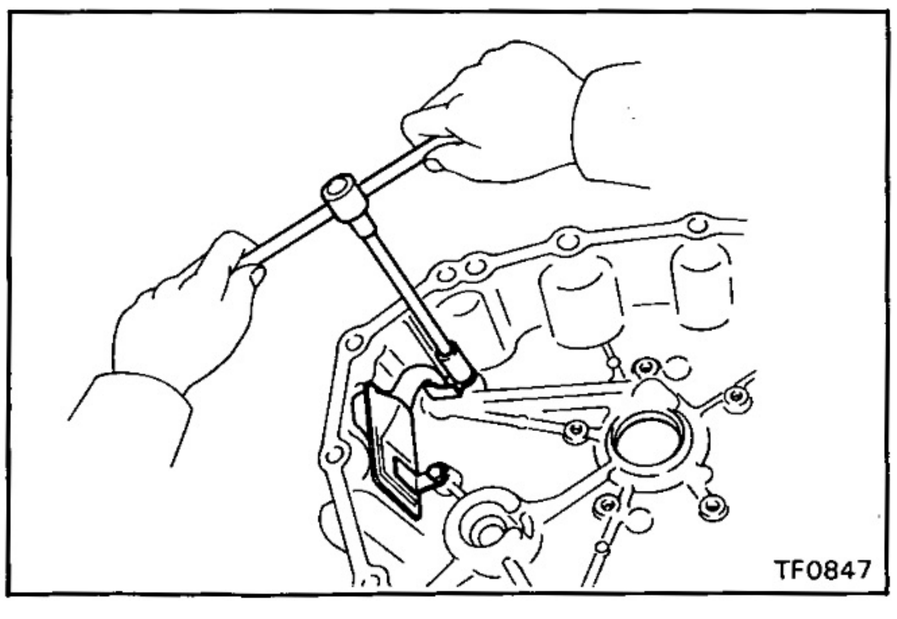
TF0847

10. REMOVE OIL STRAINER FROM TRANSFER ADAPTOR

Remove the two bolts and oil strainer.

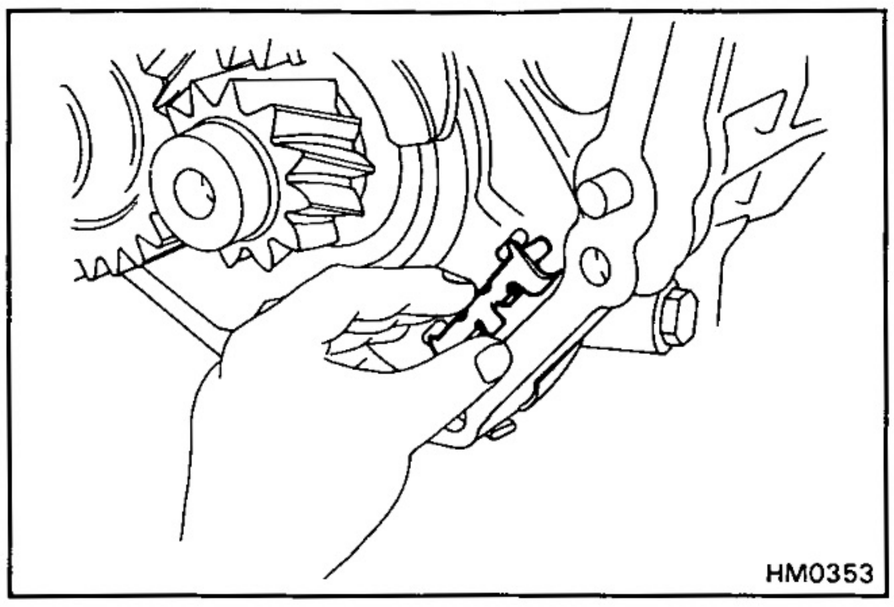

11. REMOVE MAGNET FROM INTERMEDIATE PLATE

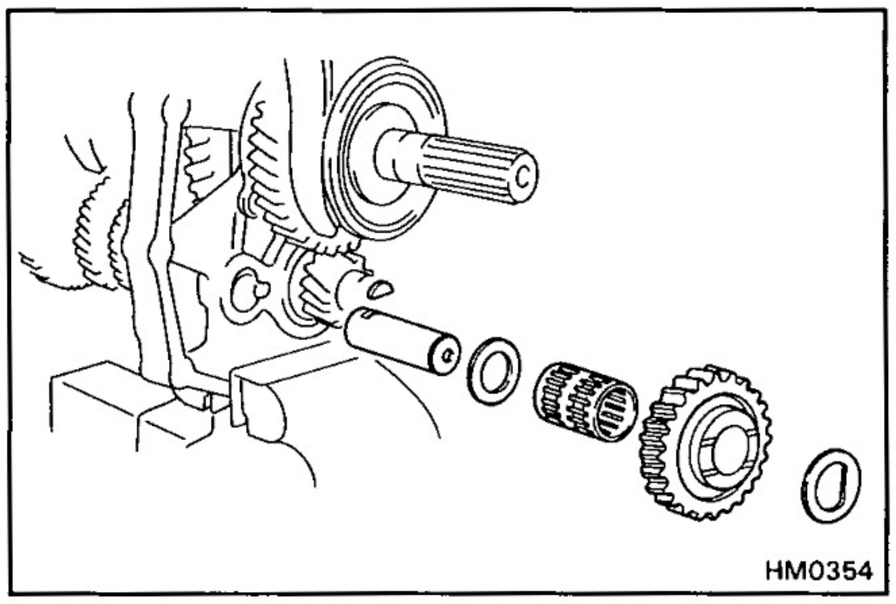

12. REMOVE REVERSE IDLE GEAR FROM INTERMEDIATE PLATE

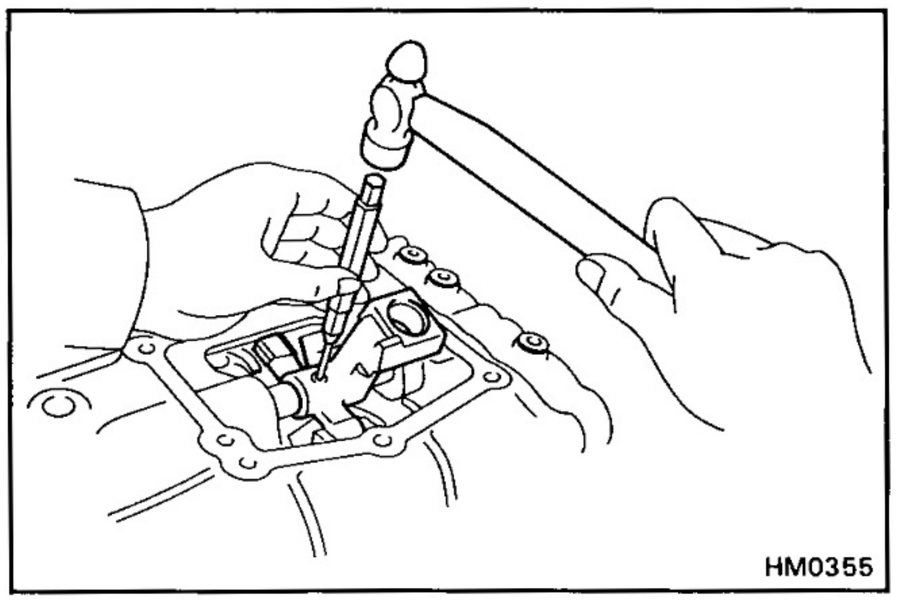

13. REMOVE SHIFT LEVER SHAFT AND SHIFT LEVER HOUSING

(a) Using a pin punch and a hammer, drive out the slotted spring pin from the shift lever housing.

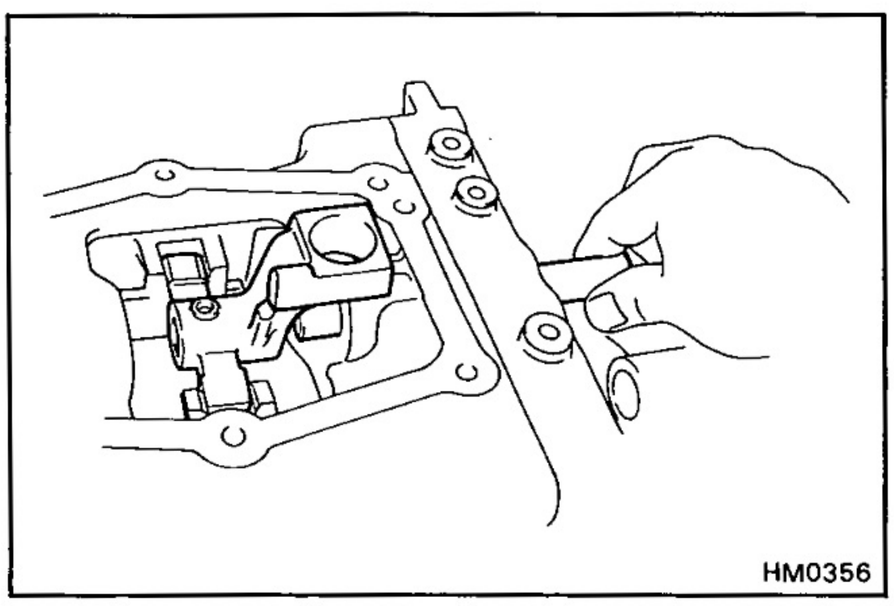

(b) Remove the shift lever shaft and shift lever housing.

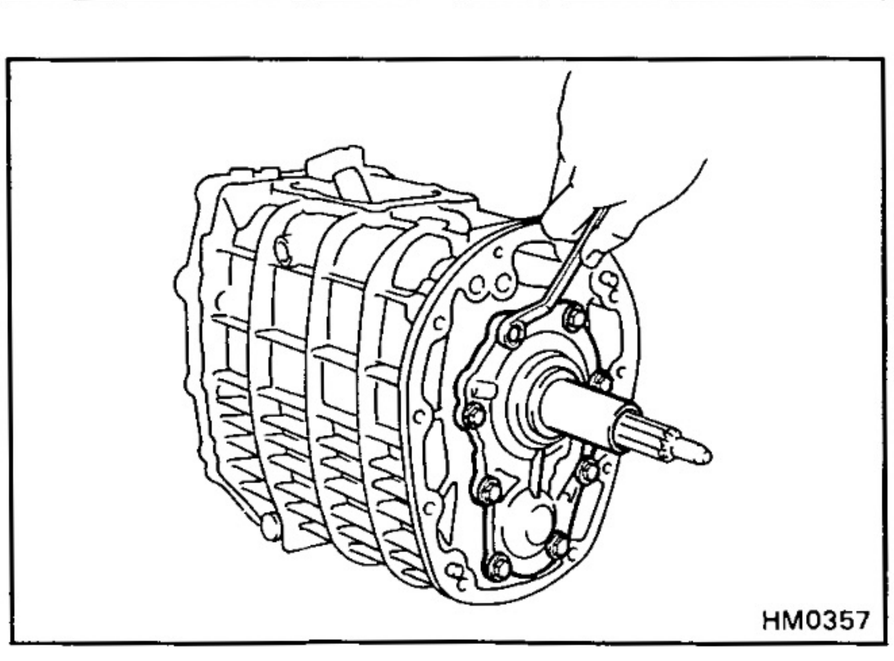

14. REMOVE FRONT BEARING RETAINER

(a) Remove the eight bolts, and front bearing retainer.

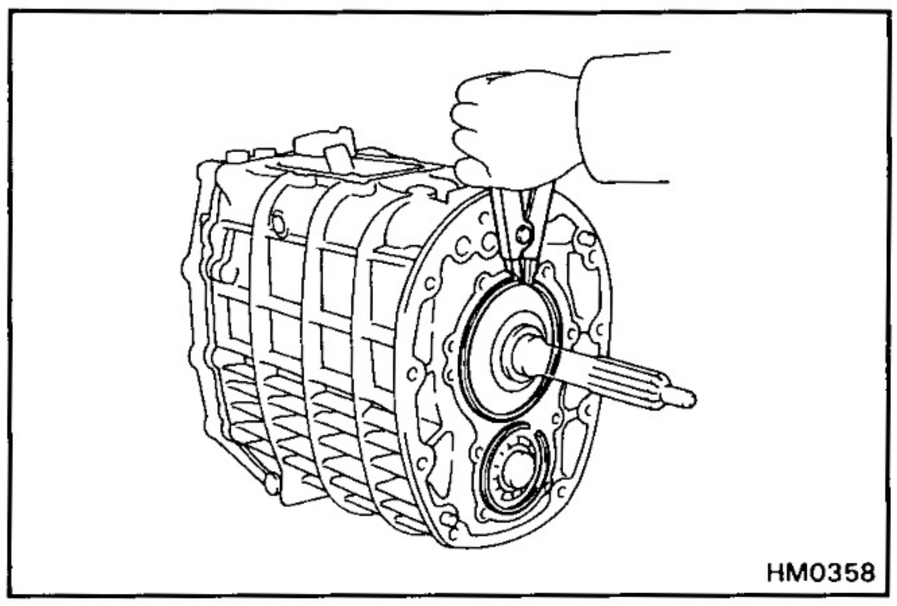
HM0358

(b) Using snap ring pliers, remove the two snap rings from the input shaft and counter gear.

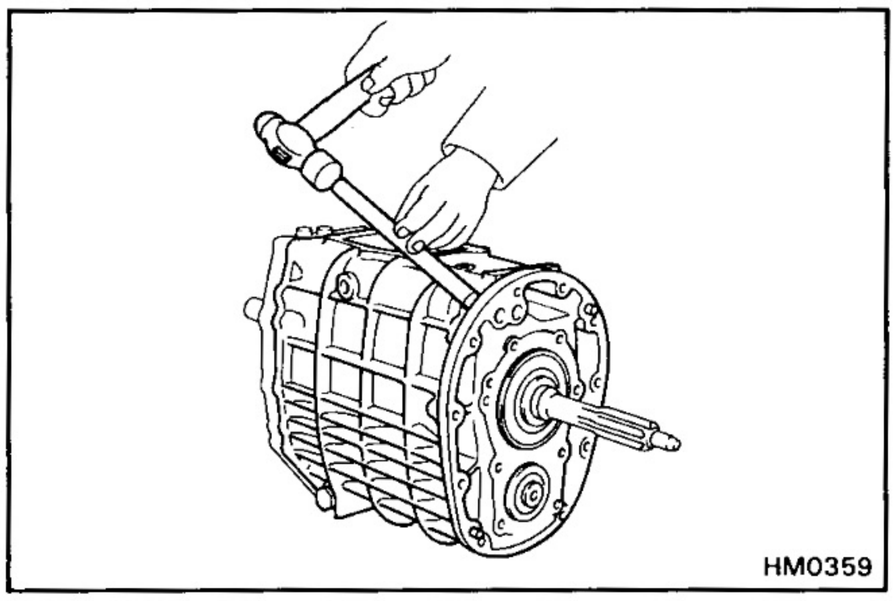
HM0359

15. SEPARATE TRANSMISSION CASE FROM INTERMEDIATE PLATE

(a) Using a brass bar and a hammer, carefully tap off the transmission case.

(b) Remove the transmission case from the intermediate plate.

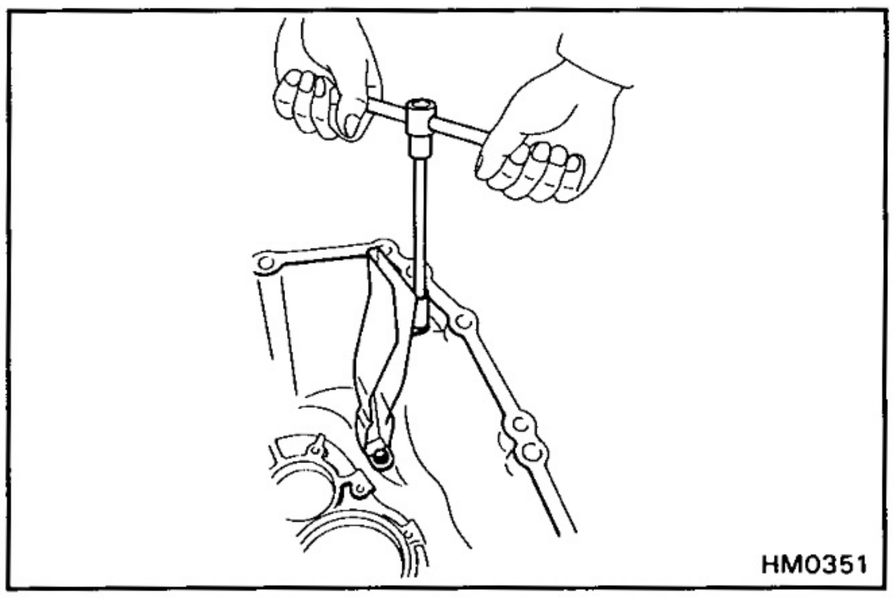
HM0351

16. REMOVE OIL RECEIVER FROM TRANSMISSION CASE

Remove the two bolts and oil receiver.

17. REMOVE OIL RECEIVER FROM INTERMEDIATE PLATE

Remove the three bolts and oil receiver.

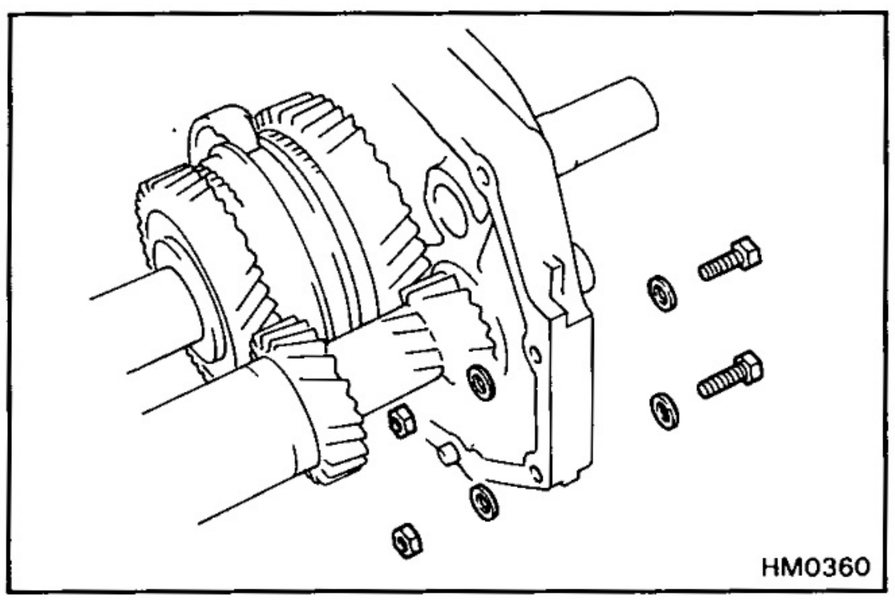
HM0360

18. MOUNT INTERMEDIATE PLATE IN VISE

(a) Use two clutch housing bolts, plate washers and suitable nuts as shown.

NOTICE: Install the plate washers in reverse of normal. Increase of decrease plate washers so that the bolt tip and front tip surface of the nut are aligned.

(b) Mount the intermediate plate in vise.

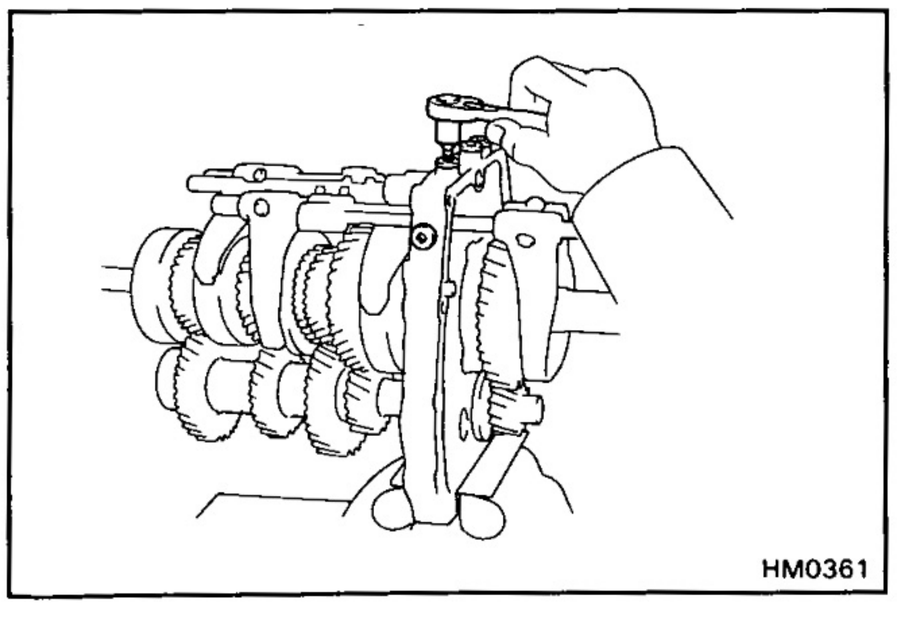
HM0361

19. REMOVE STRAIGHT SCREW PLUGS, LOCKING BALLS AND SPRINGS

(a) Using a torx socket wrench, remove the four screw plugs.

(Torx socket wrench T40 09042-00020)

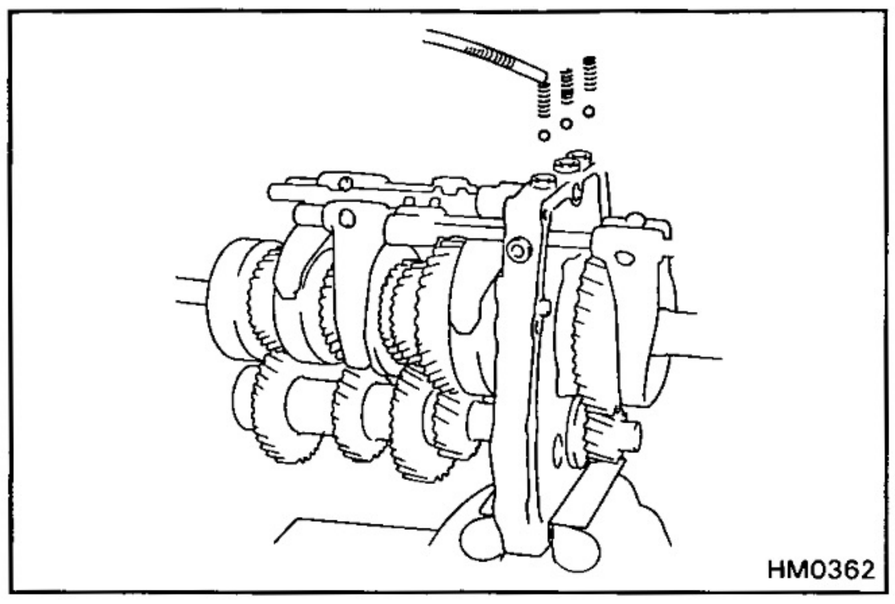

(b) Using a magnetic finger, remove the springs and balls.

4-Speed: Three springs and balls

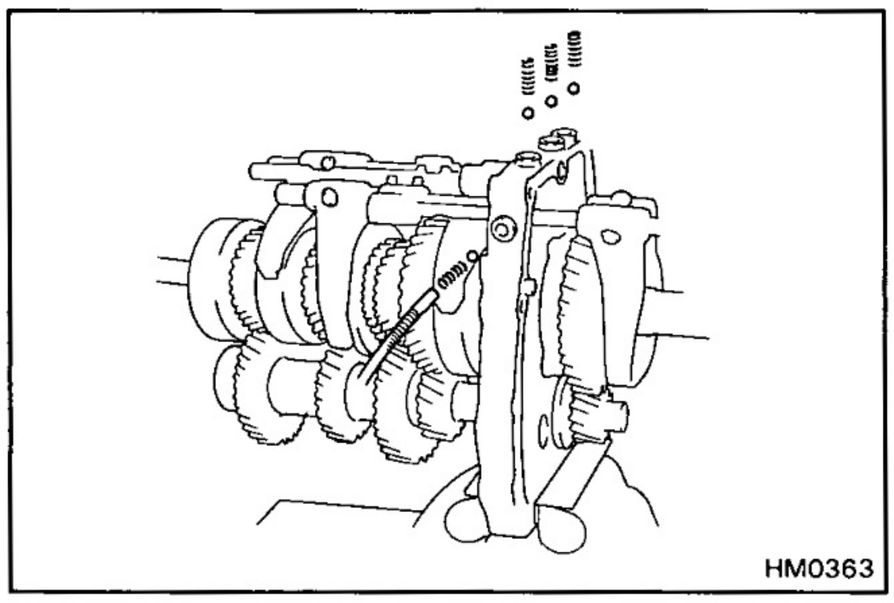

5-Speed: Four springs and balls

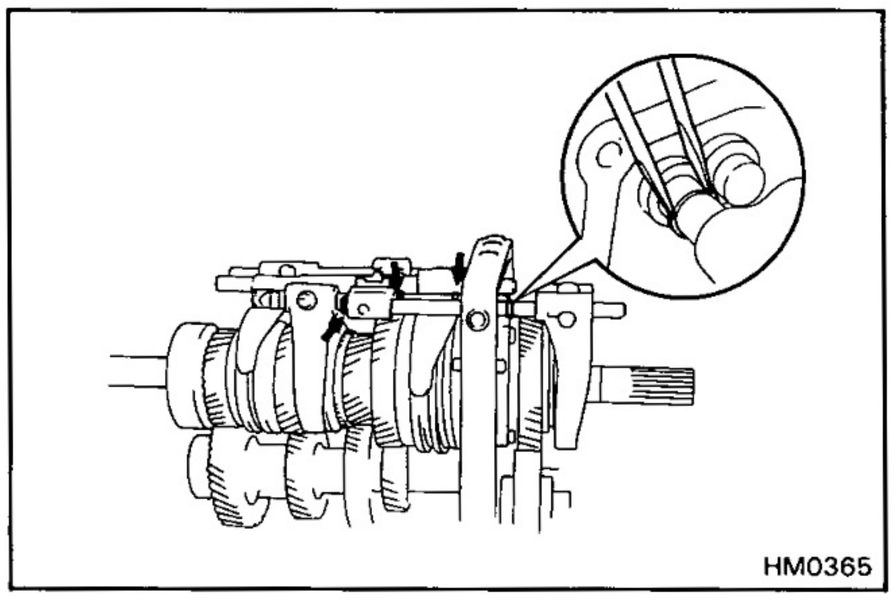

20. REMOVE FORK SHAFT SNAP RINGS

Using two screwdrivers and a hammer, tap out the snap rings.

4-Speed: One snap ring
5-Speed: Four snap rings

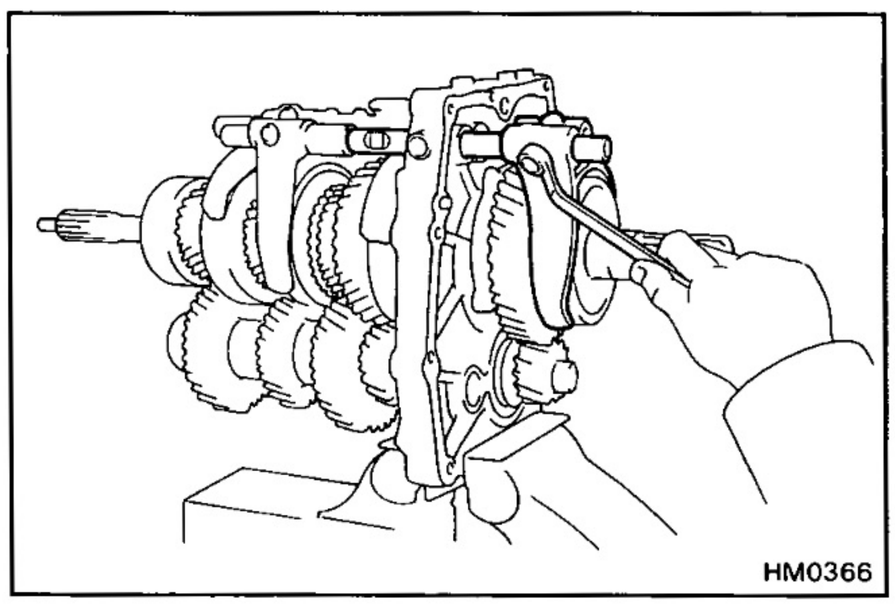

21. REMOVE SHIFT FORK SHAFT NO.3 OR NO.4 AND REVERSE SHIFT FORK

4-Speed: Shift fork shaft No.3
5-Speed: Shift fork shaft No.4

(a) Remove the set bolt.

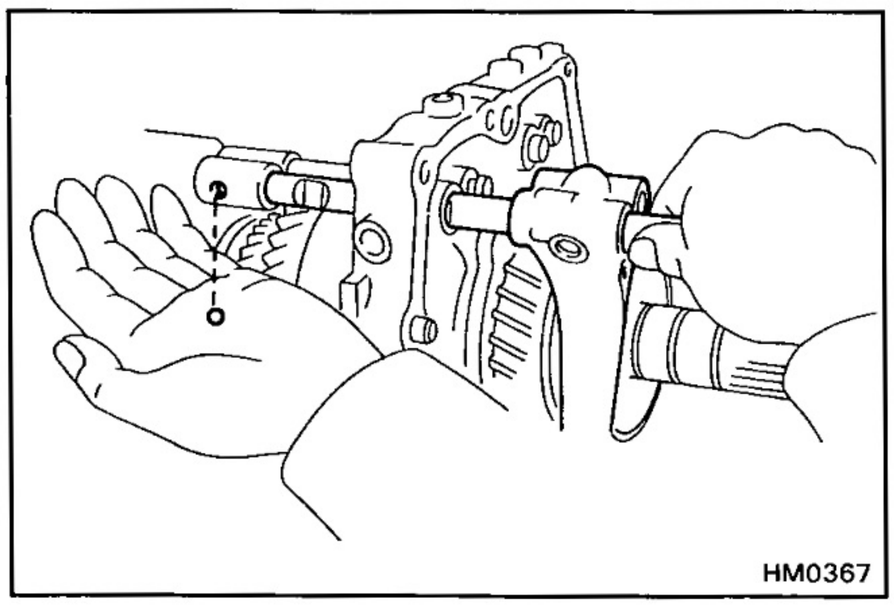

(b) (5-Speed)
Remove the shift fork shaft No.4, reverse shift fork and ball.

(c) (4-Speed)
Remove the shift fork shaft No.3 and reverse shift fork.

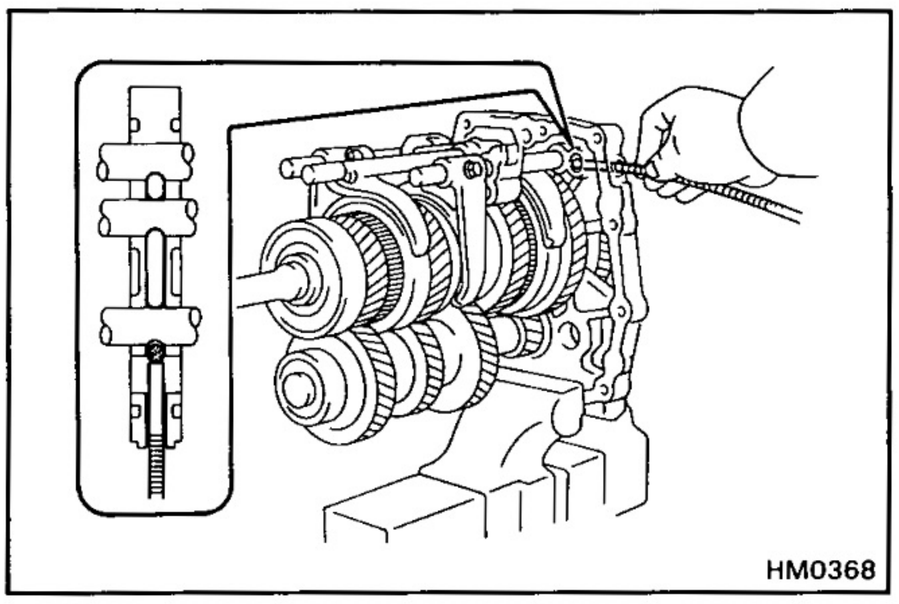

22. (5-Speed)
REMOVE SHIFT FORK SHAFT NO.3, SHIFT FORK NO.3 AND REVERSE SHIFT HEAD

(a) Using a magnetic finger, remove the interlock ball.

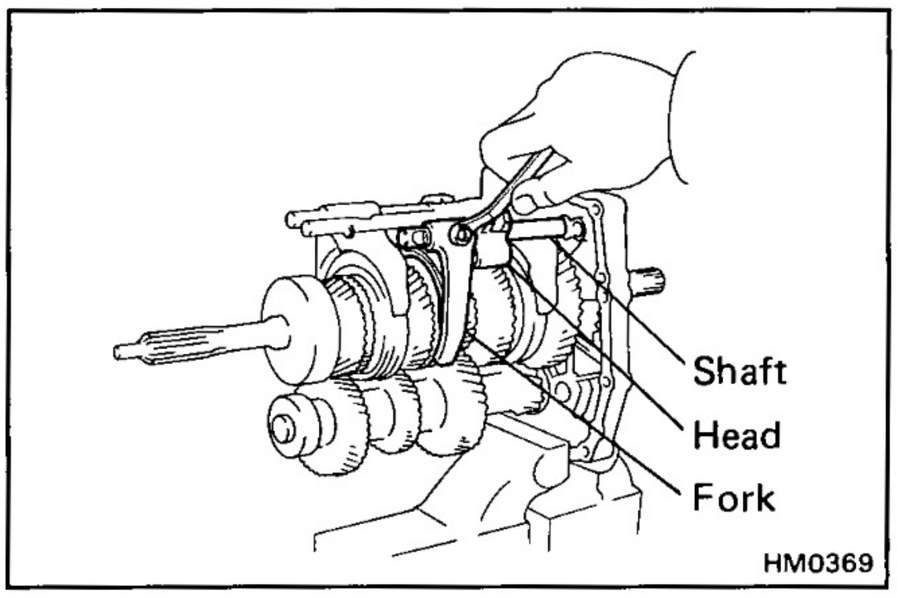

(b) Remove the set bolt.

(c) Remove the shift fork shaft No.3, shift fork No.3 and reverse shift head.

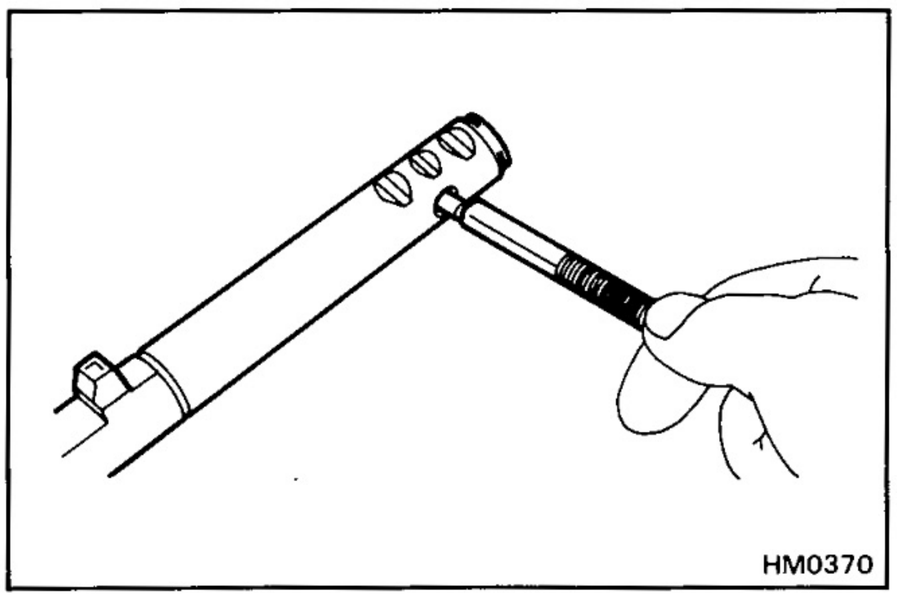

(d) Using a magnetic finger, remove the interlock pin from shift fork shaft No.3.

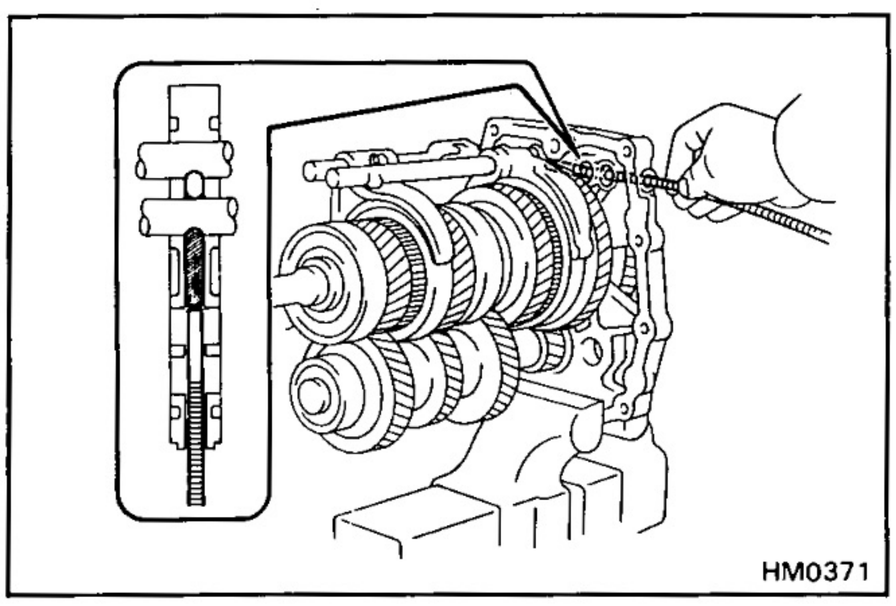

23. REMOVE SHIFT FORK SHAFT NO.2 AND SHIFT FORK NO.1

(a) Using a magnetic finger, remove the interlock pin.

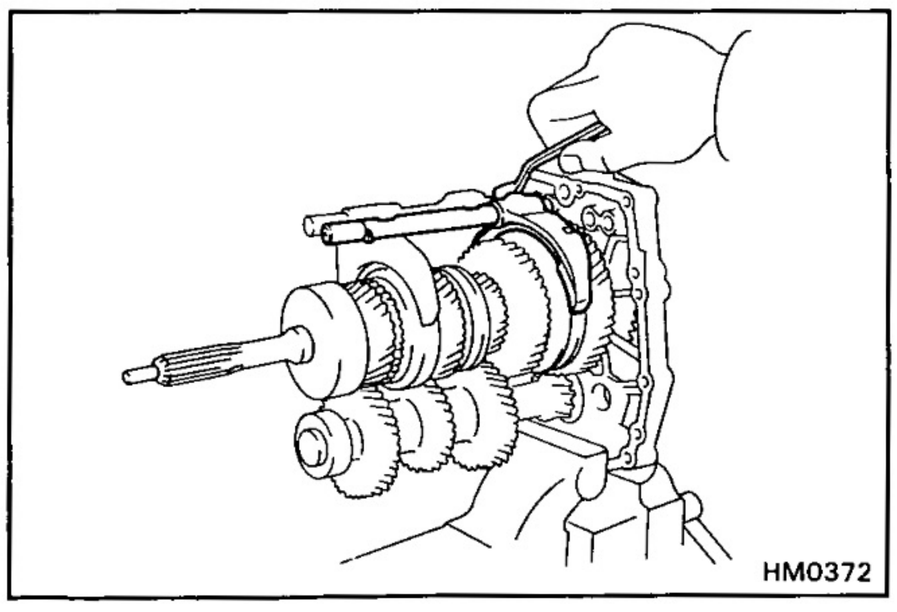

(b) Remove the set bolt.

(c) Remove the shift fork shaft No.1 and shift fork No.1.

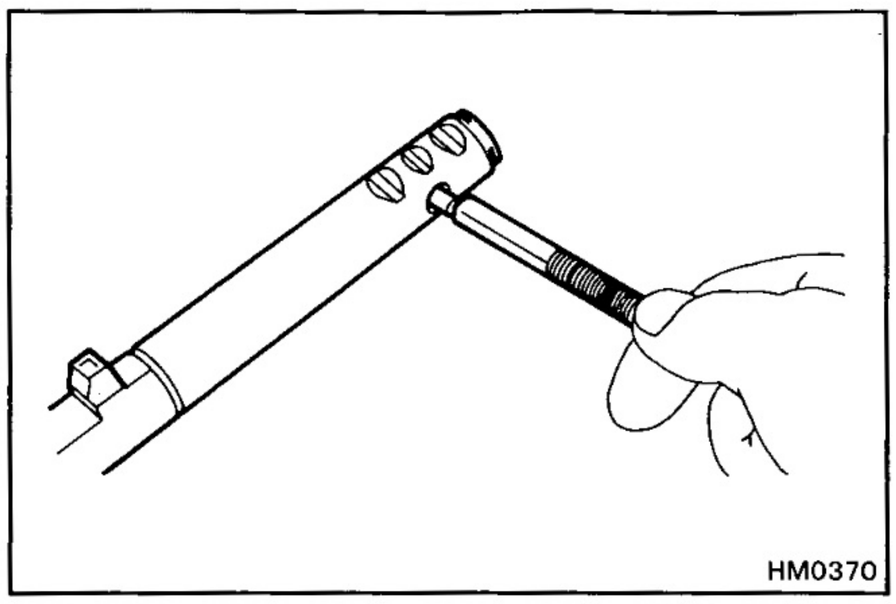
HM0370

(d) Using a magnetic finger, remove the interlock pin from shift fork shaft No.1.

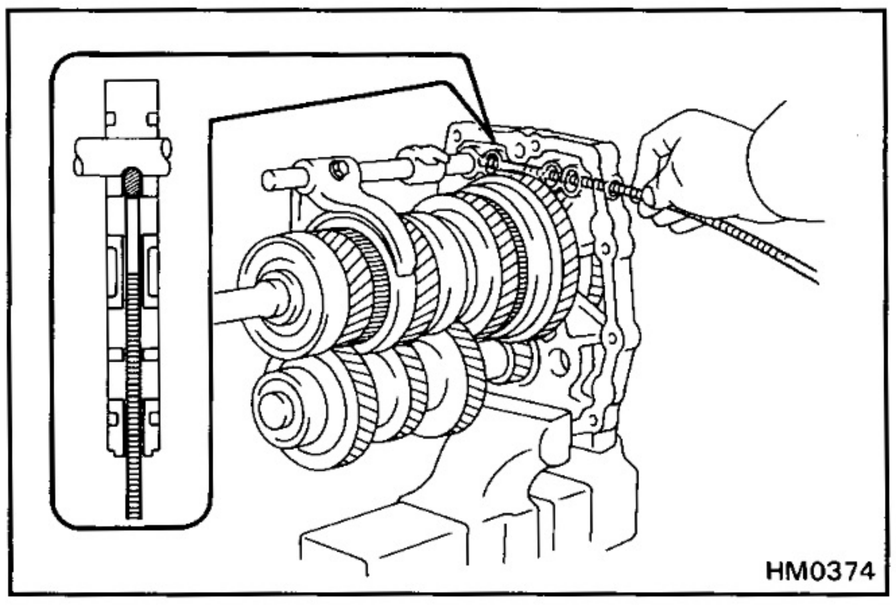
HM0374

24. REMOVE SHIFT FORK SHAFT NO.2 AND SHIFT FORK NO.2

(a) Using a magnetic finger, remove the interlock ball.

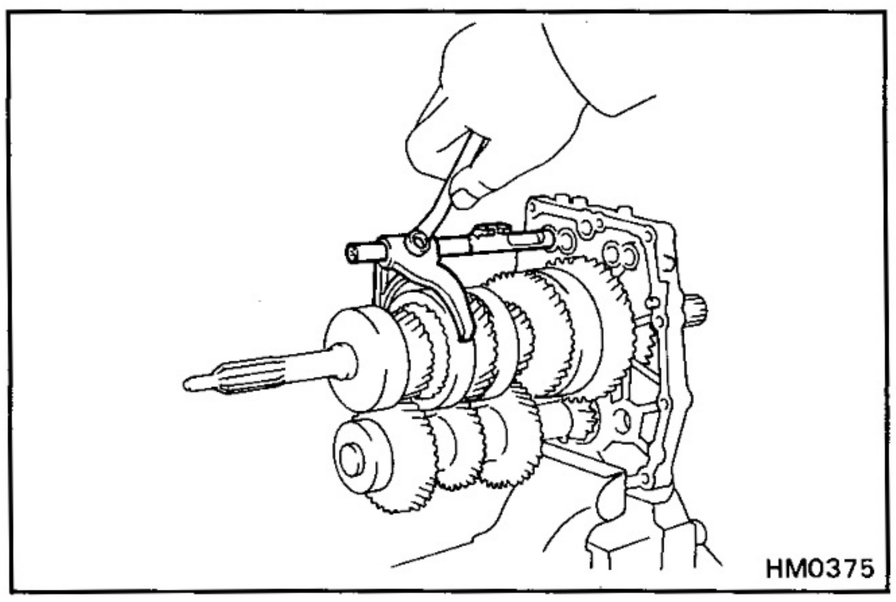
HM0375

(b) Remove the set bolt.

(c) Remove the shift fork shaft No.2 and shift fork No.2.

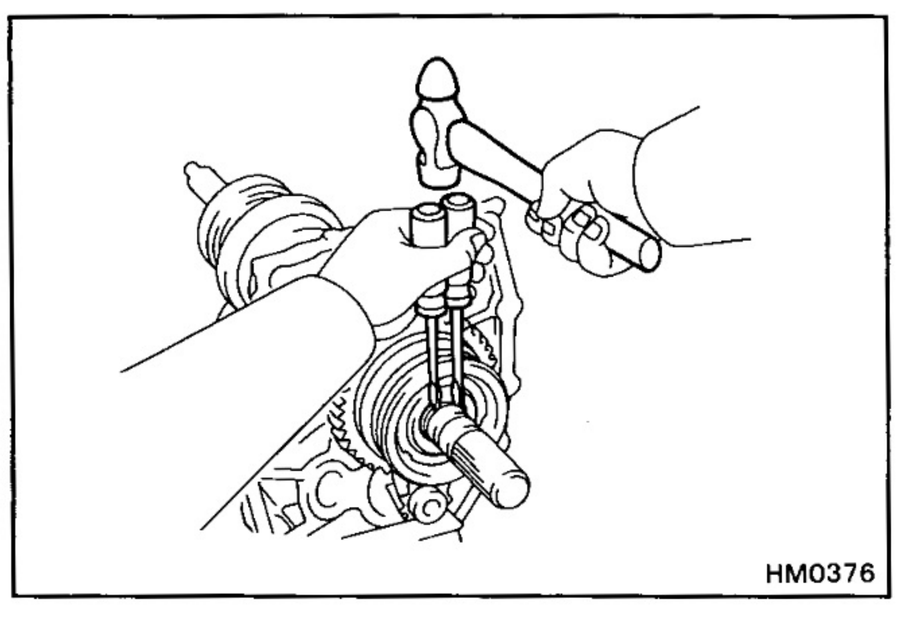
HM0376

25. REMOVE REVERSE GEAR AND CLUTCH HUB NO.4 ASSEMBLY
(w/ SERVICE HOLE)

(a) Using two screwdrivers and a hammer, drive out the snap ring.

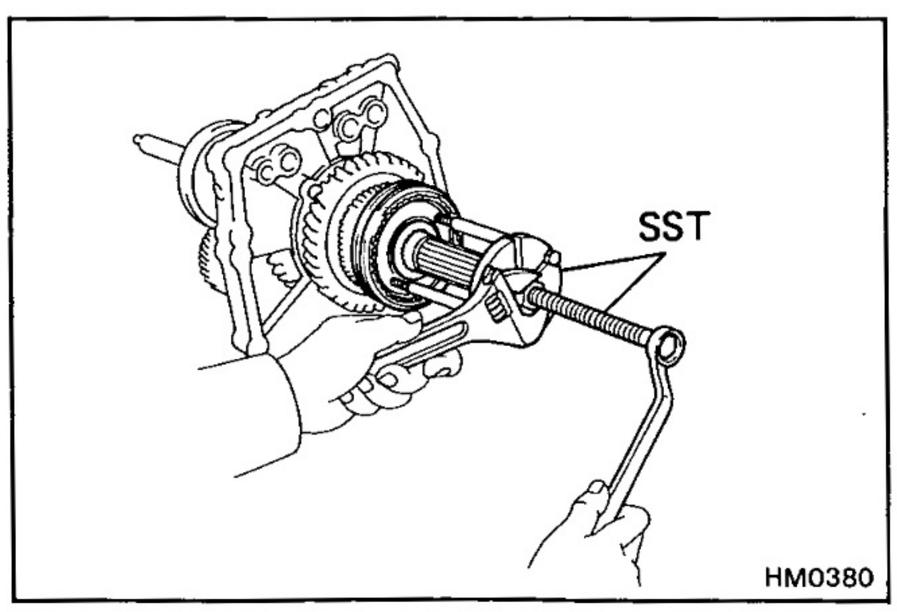

HM0380

(b) Using SST and two bolts (90101-08136), remove the clutch hub No.4 assembly.

SST 09310-17010 (09310-07010, 09310-07020)

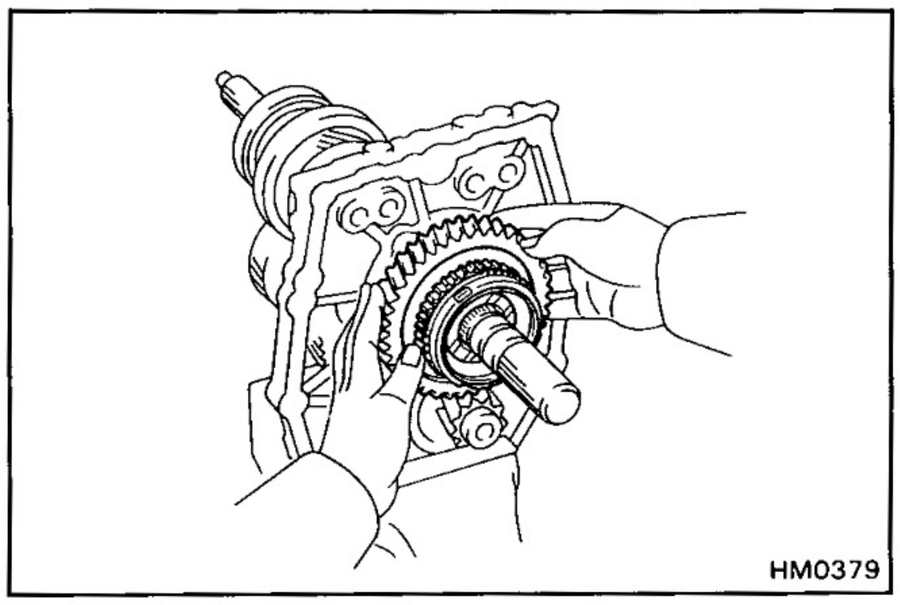

(c) Remove the synchronizer ring, reverse gear and needle roller bearing.

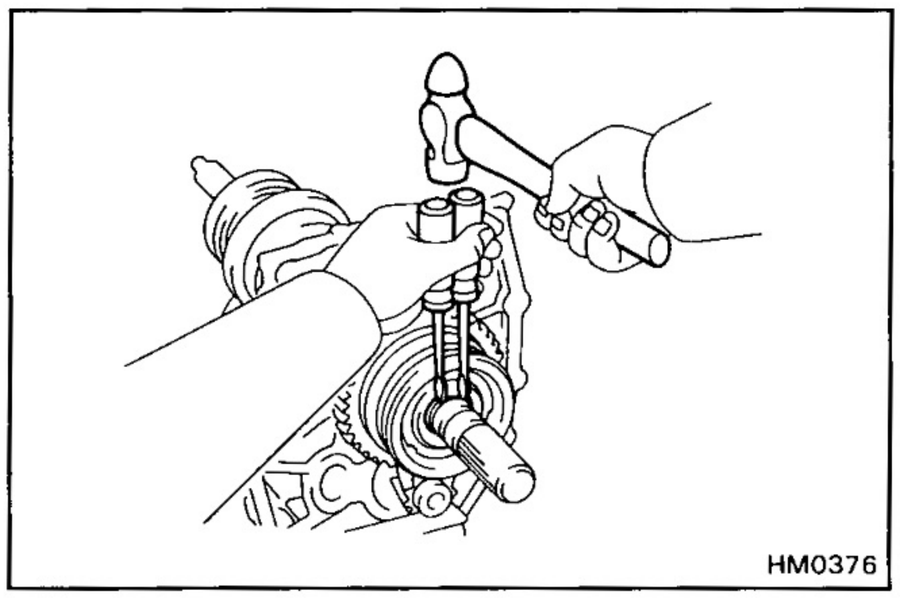

(w/o SERVICE HOLE)

(a) Using two screwdrivers and a hammer, drive out the snap ring.

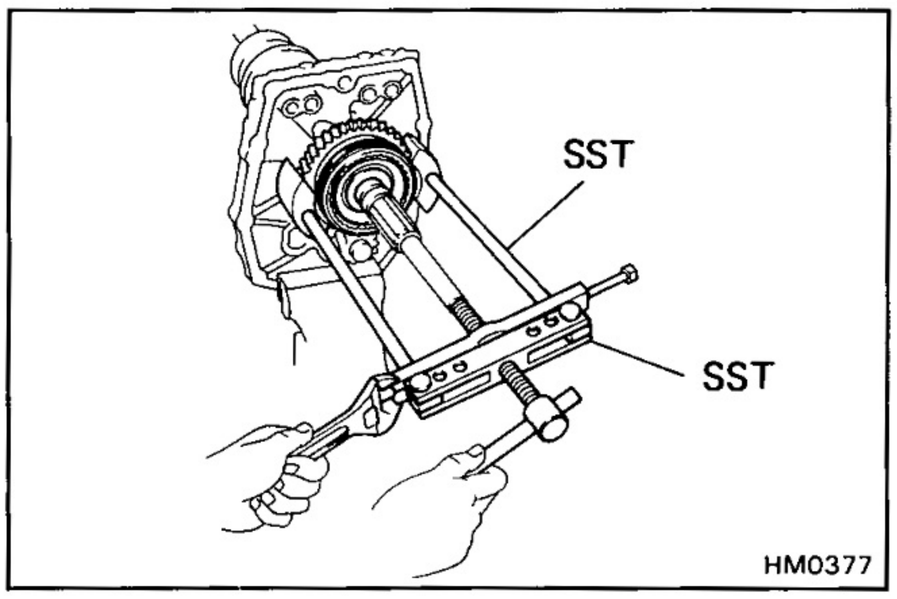

(b) Using SST, remove the reverse gear with clutch hub No.4 assembly.

SST 09336-60010, 09950-20017

(c) Remove the needle roller bearing and synchronizer ring.

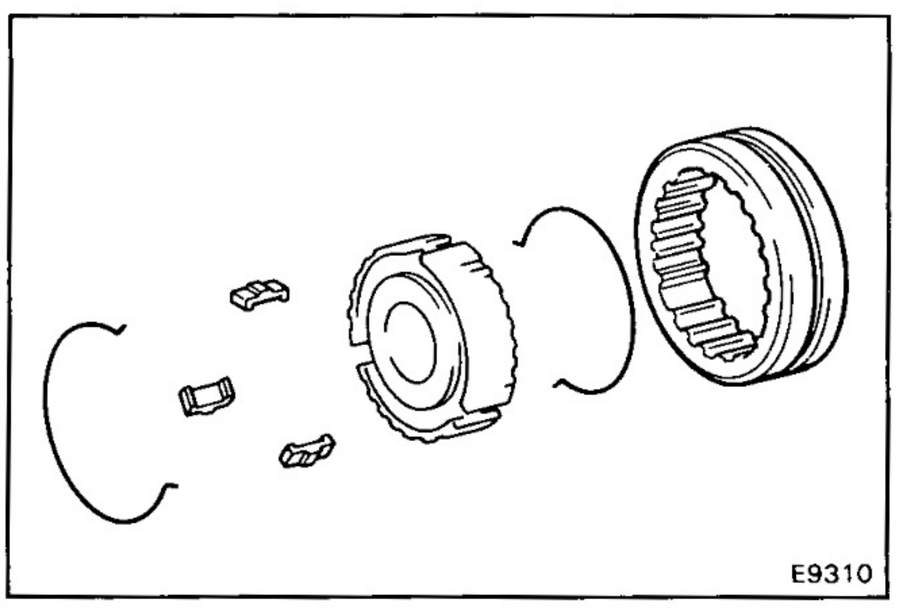

26. REMOVE HUB SLEEVE NO.4, SHIFTING KEYS AND SPRINGS FROM CLUTCH HUB NO.3

Using a screwdriver, remove the two springs and three shifting keys from clutch hub No.4.

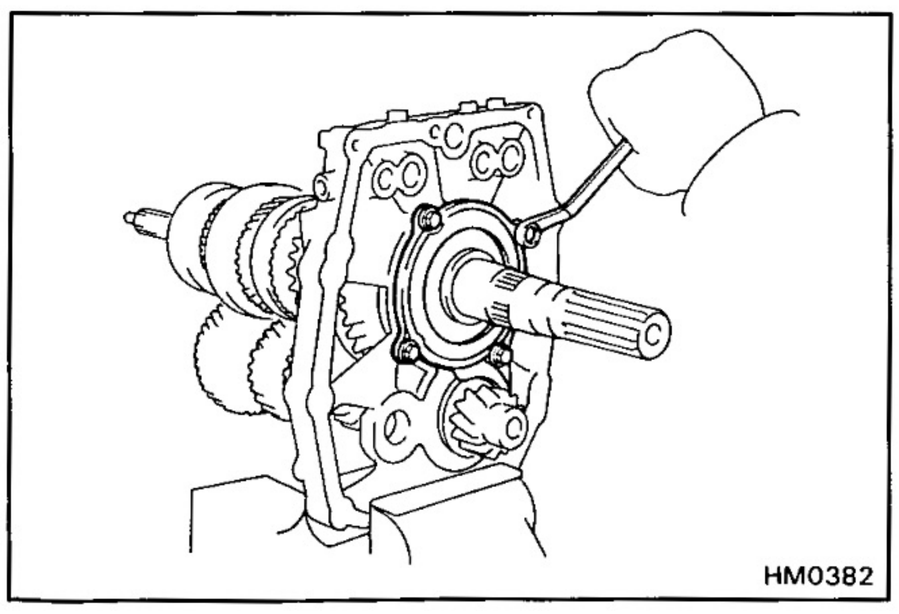

27. REMOVE REAR BEARING RETAINER

Remove the four bolts, and rear bearing retainer.

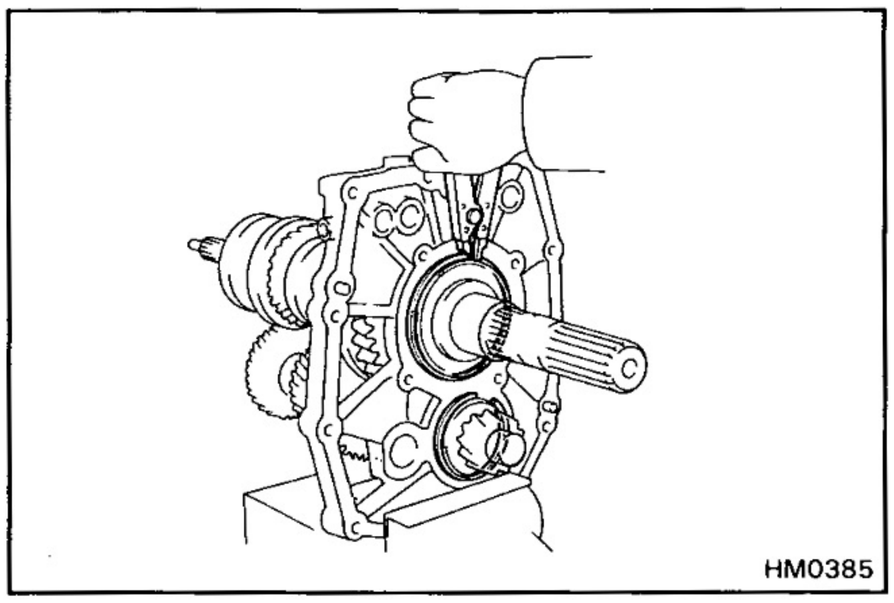

28. REMOVE TWO SNAP RINGS

(a) Using snap ring pliers, remove the two snap rings.

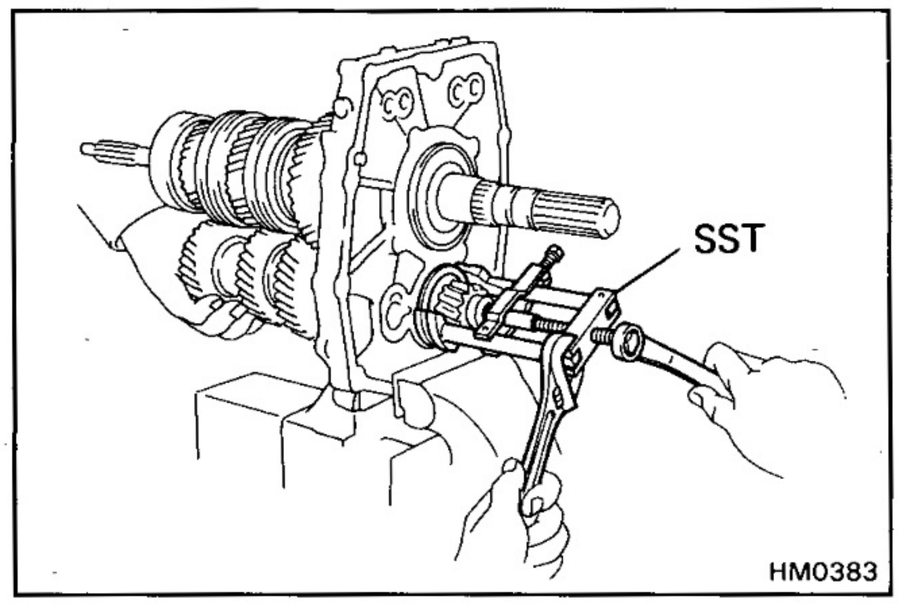

29. REMOVE COUNTER GEAR

(a) Using SST, remove the rear bearing outer race.

SST 09602-35011

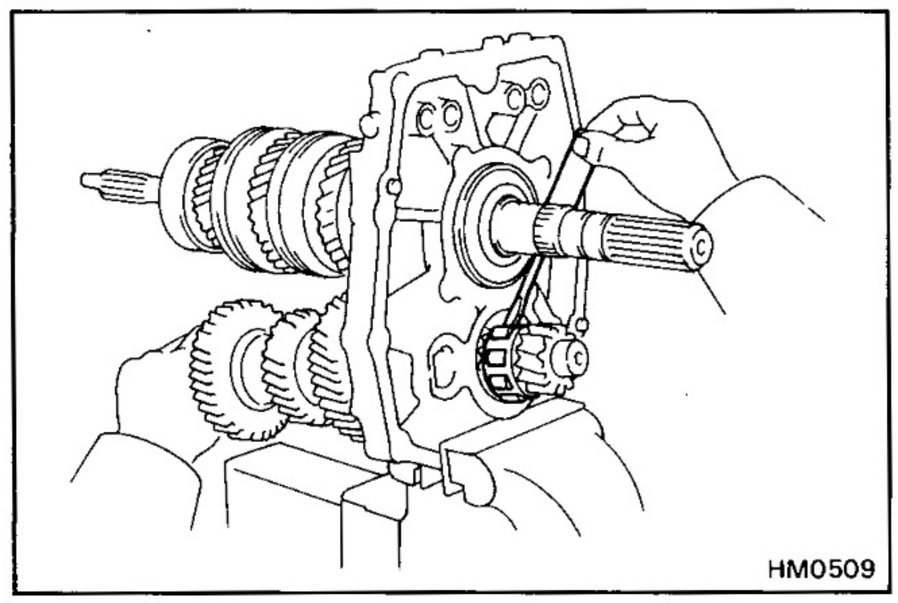

(b) Using a screwdriver, remove the roller bearing and counter gear.

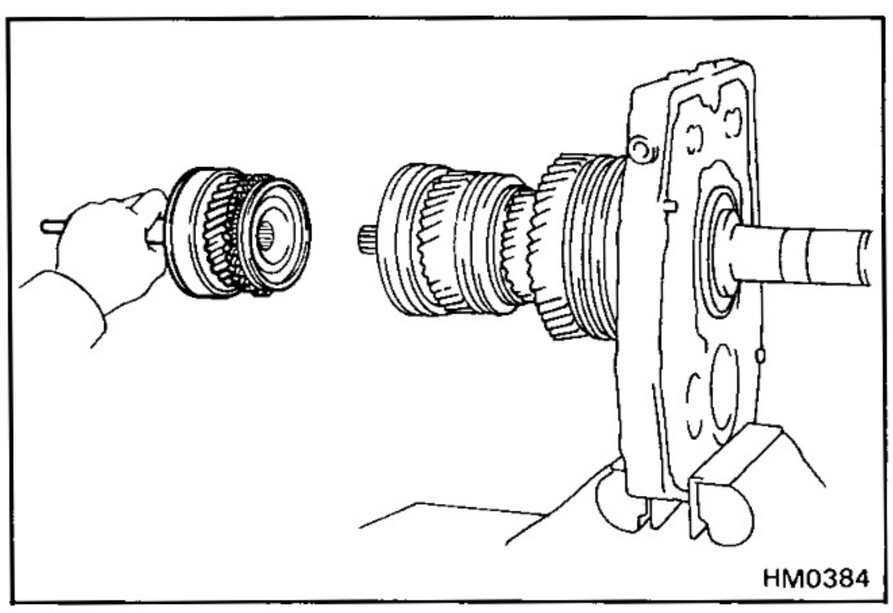

30. REMOVE INPUT SHAFT

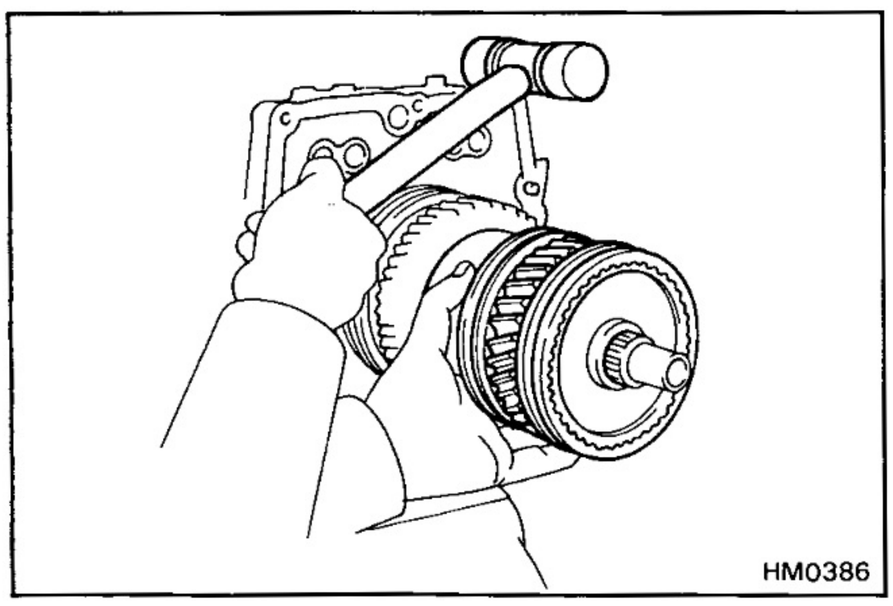

31. REMOVE OUTPUT SHAFT

Remove the output shaft, from the intermediate plate by pulling on the output shaft and tapping on the intermediate plate with plastic hammer.

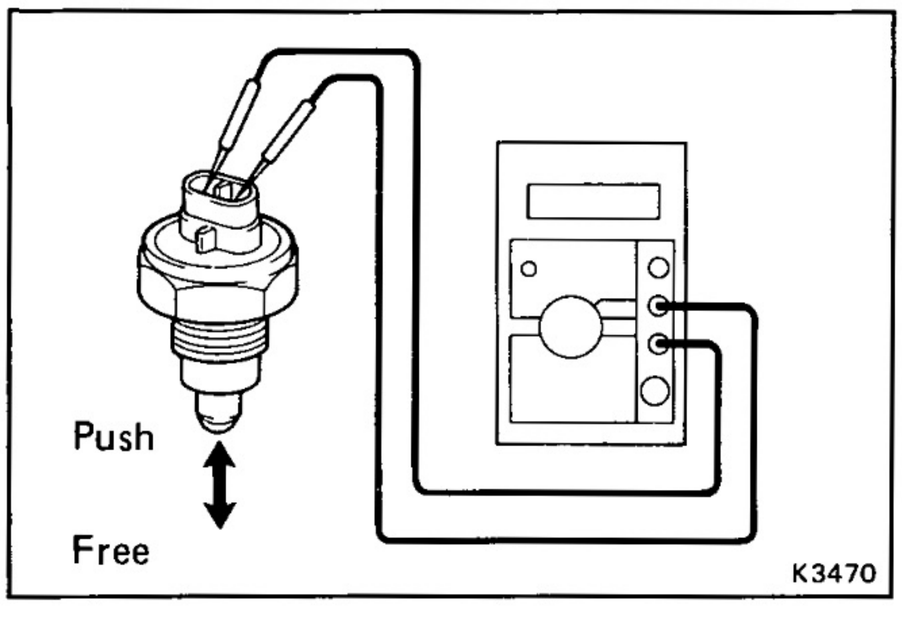

32. INSPECT BACK-UP LIGHT SWITCH

Check that there is continuity between terminals as shown.

Switch Position	Specified
Push	Continuity
Free	No Continuity

If operation is not specified replace the switch.

COMPONENT PARTS

Input Shaft Assembly

COMPONENTS

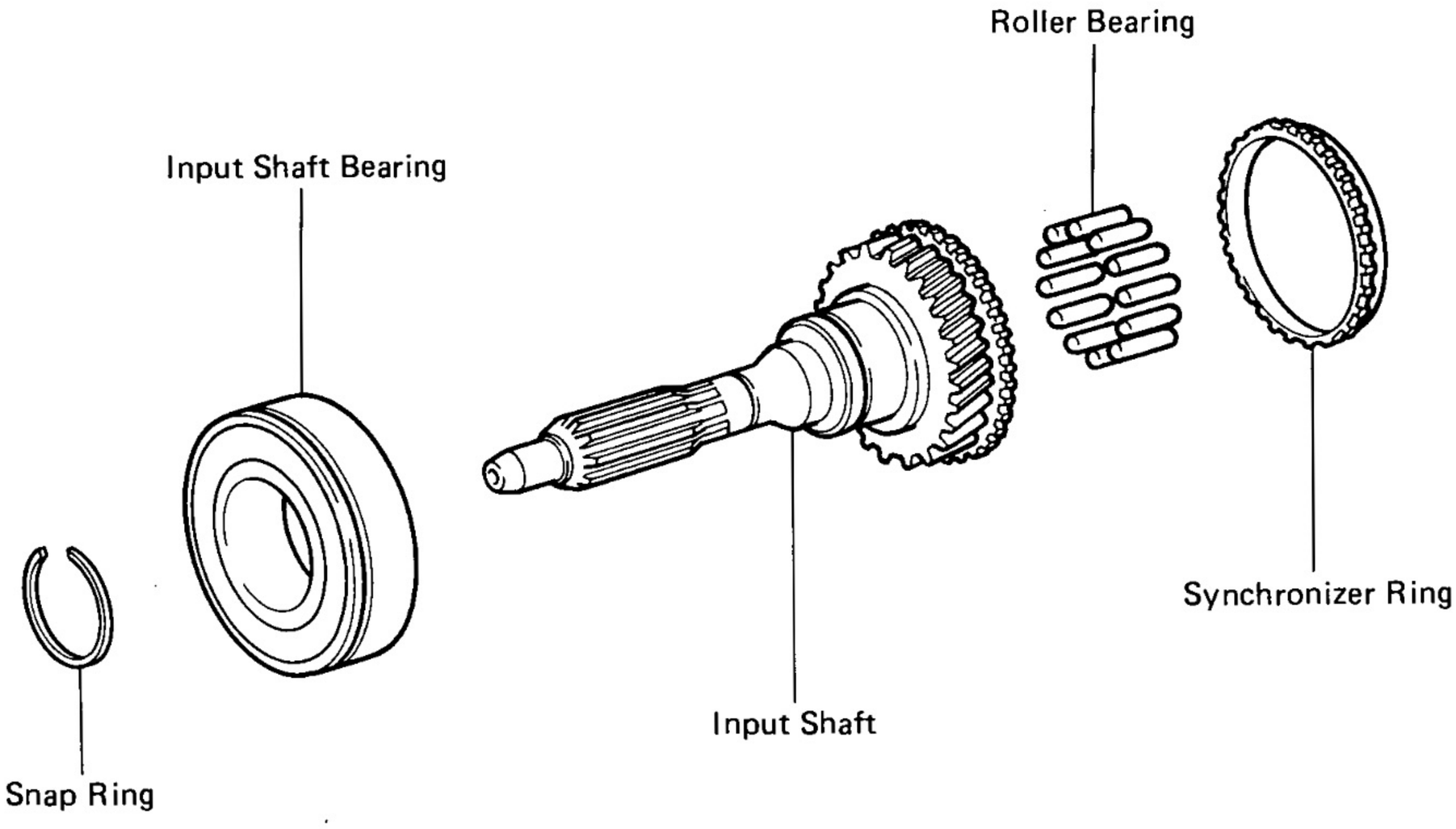

◆ Non-reusable part

HM0387

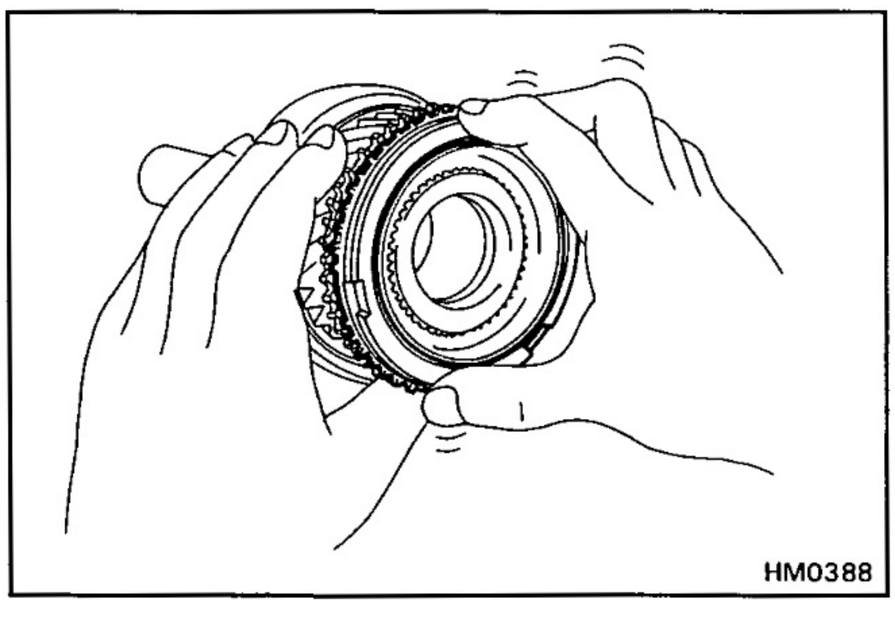

HM0388

INSPECTION OF INPUT SHAFT ASSEMBLY

INSPECT SYNCHRONIZER RING

(a) Turn the ring and push it into check braking action.

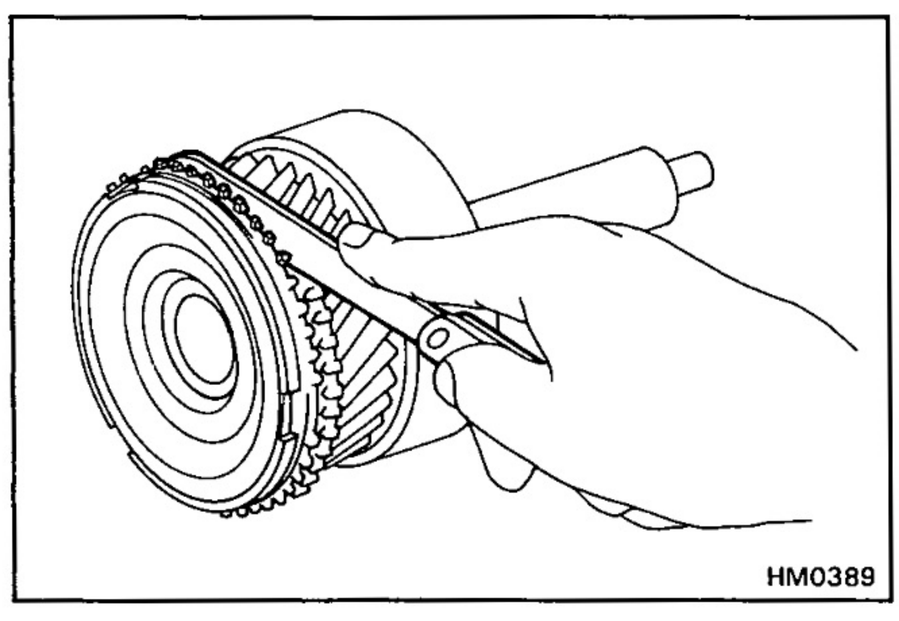

HM0389

(b) Measure the clearance between the synchronizer ring back and the gear spline end.

Standard clearance:
0.8 — 1.6 mm (0.0315 — 0.0630 in.)

Minimum clearance: 0.6 mm (0.0236 in.)

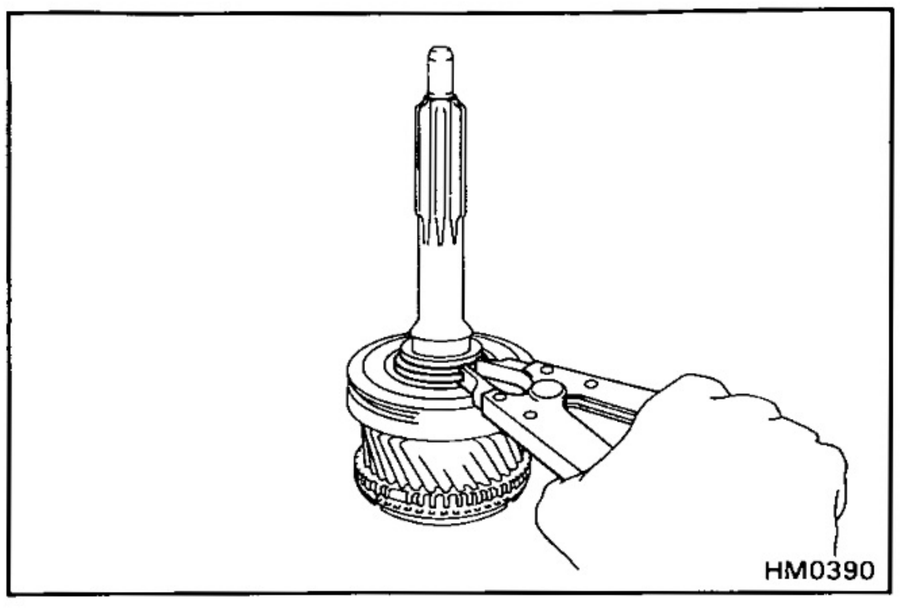

REPLACEMENT OF BEARING

IF NECESSARY, REPLACE INPUT SHAFT BEARING

(a) Using snap ring pliers, remove the snap ring.

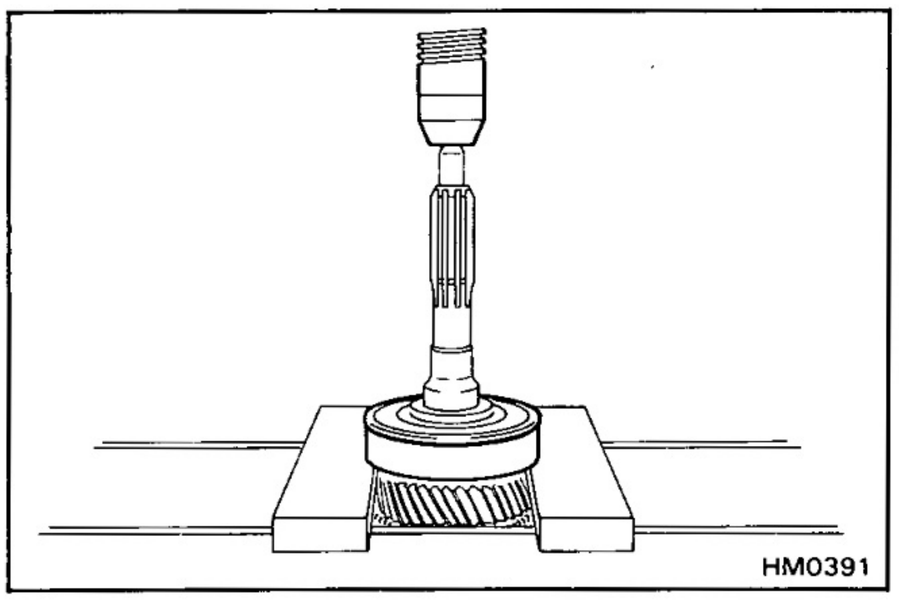

(b) Using a press, remove the bearing.

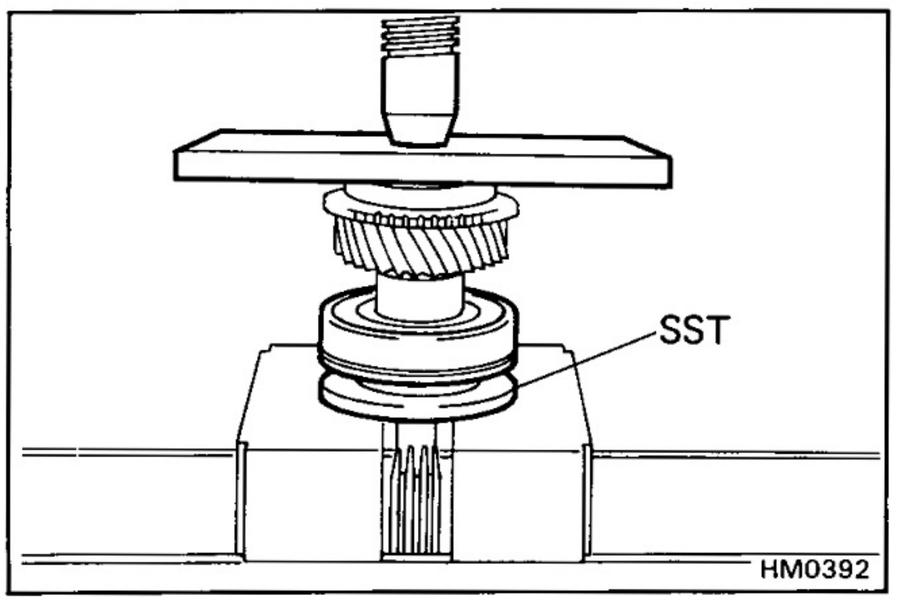

(c) Using SST and a press, install a new bearing.

SST 09316-20011

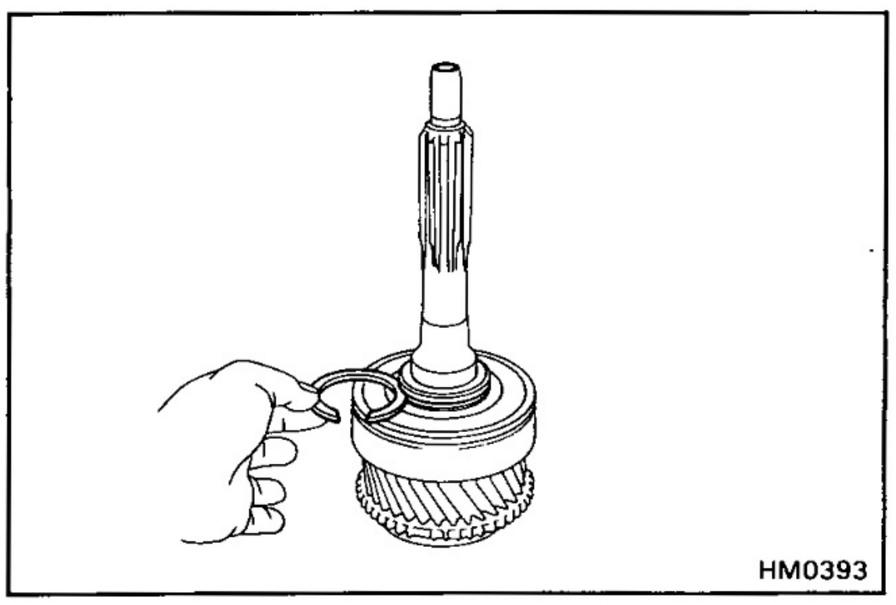

(d) Select a snap ring that will allow minimum axial play.

Mark	Thickness mm (in.)
A	2.50 — 2.55 (0.0984 — 0.1004)
B	2.55 — 2.60 (0.1004 — 0.1024)
C	2.60 — 2.65 (0.1024 — 0.1043)
D	2.65 — 2.70 (0.1043 — 0.1063)
E	2.70 — 2.75 (0.1063 — 0.1083)
F	2.75 — 2.80 (0.1083 — 0.1102)

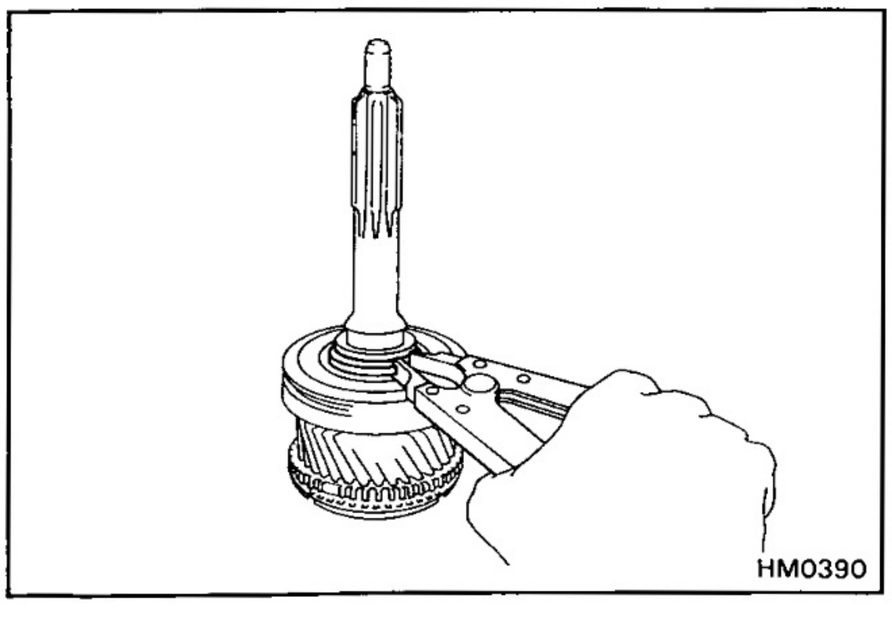

(e) Using snap ring pliers, install the snap ring.

Output Shaft Assembly

COMPONENTS

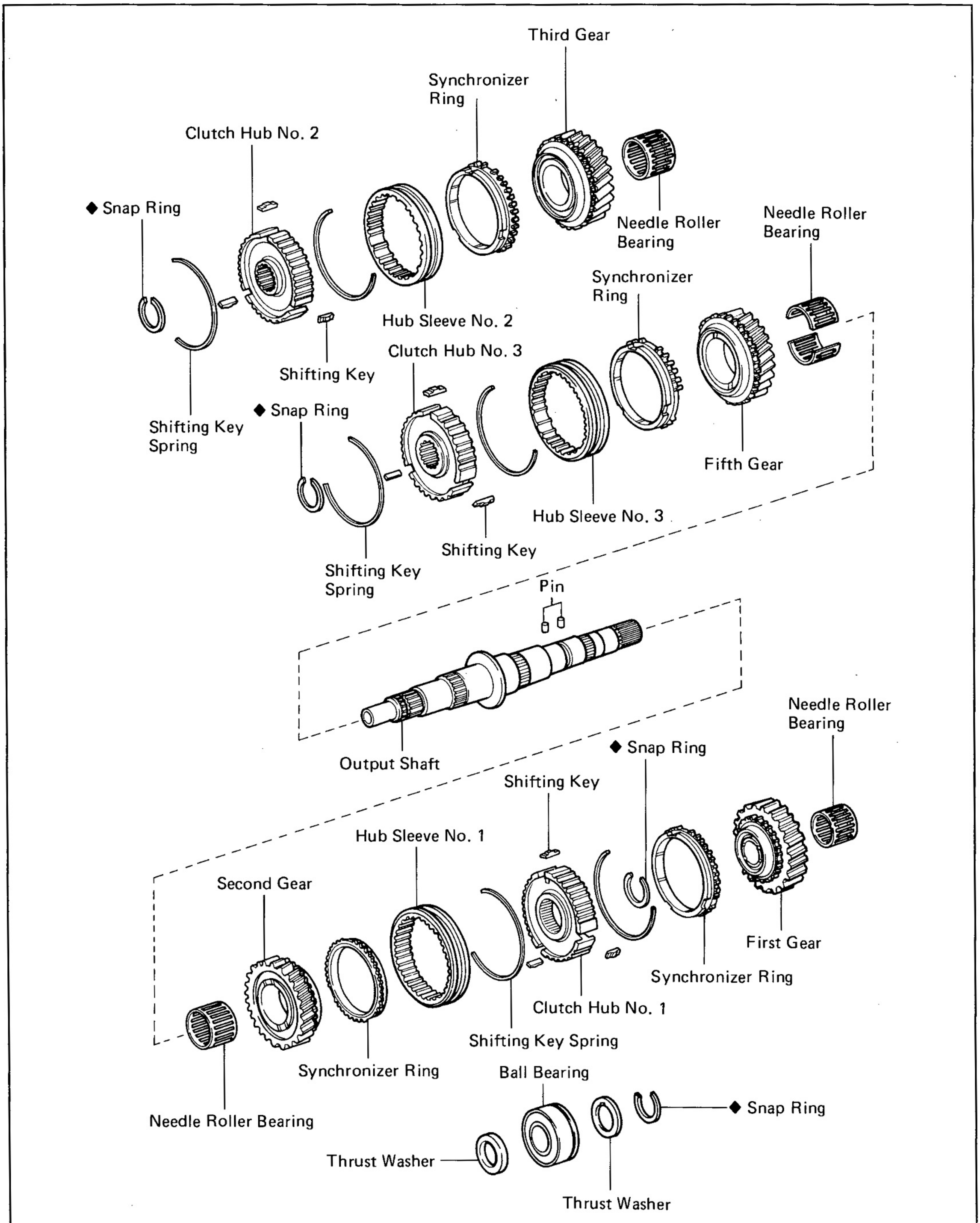

◆ Non-reusable part

HM0395

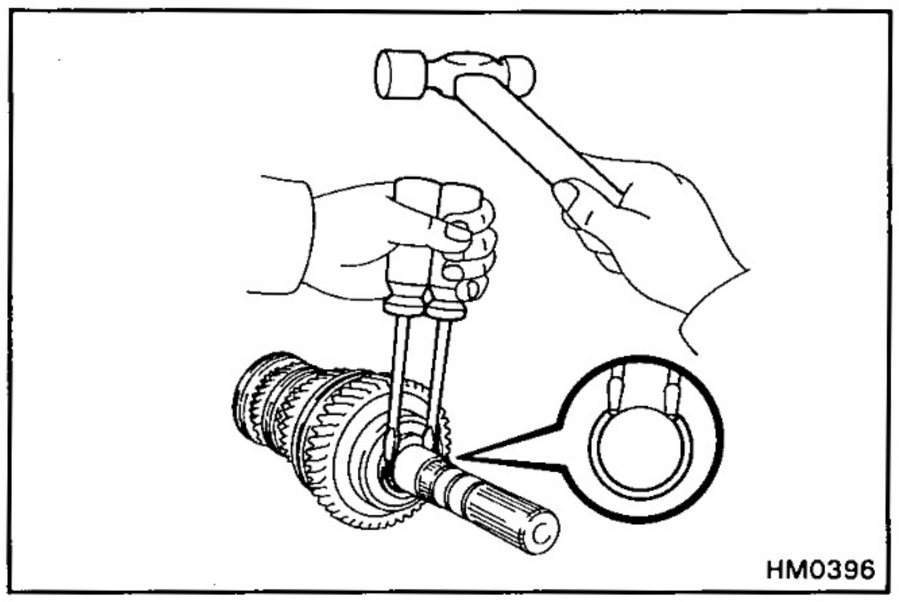

DISASSEMBLY OF OUTPUT SHAFT ASSEMBLY

1. (H140F, H150F)
REMOVE BALL BEARING AND FIRST GEAR

(a) Using two screwdrivers and a hammer, drive out the snap ring.

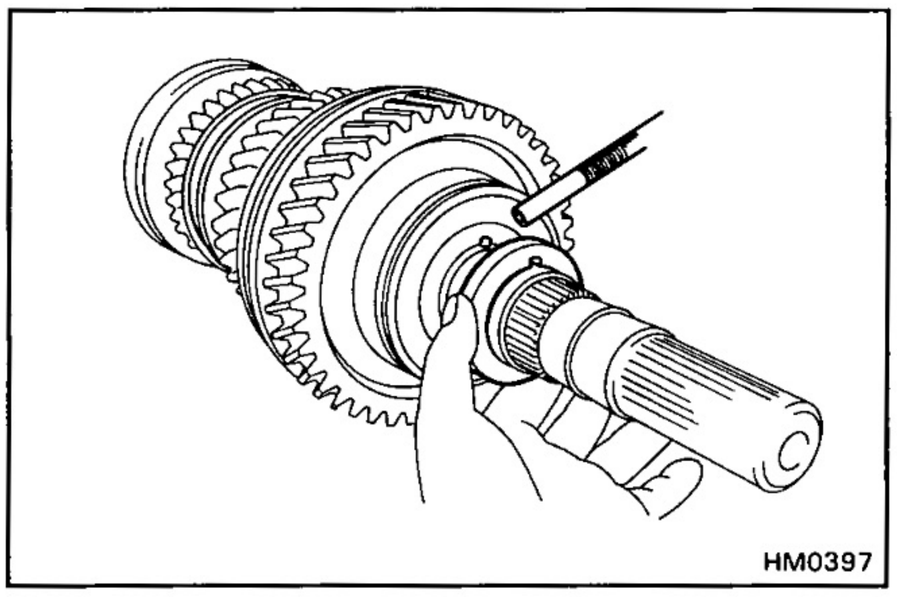

(b) Remove the thrust washer and pin.

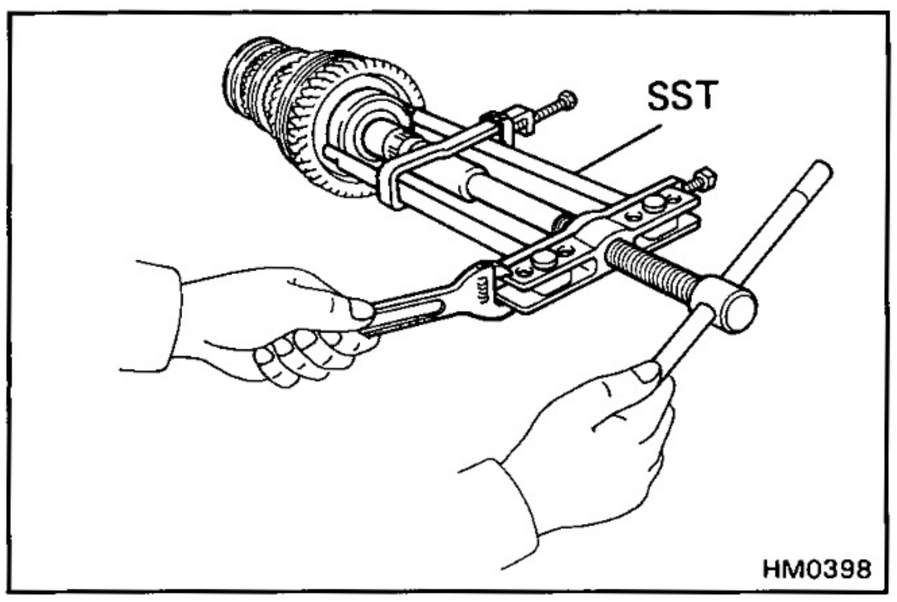

(c) Using SST, remove the ball bearing.
SST 09950-20017

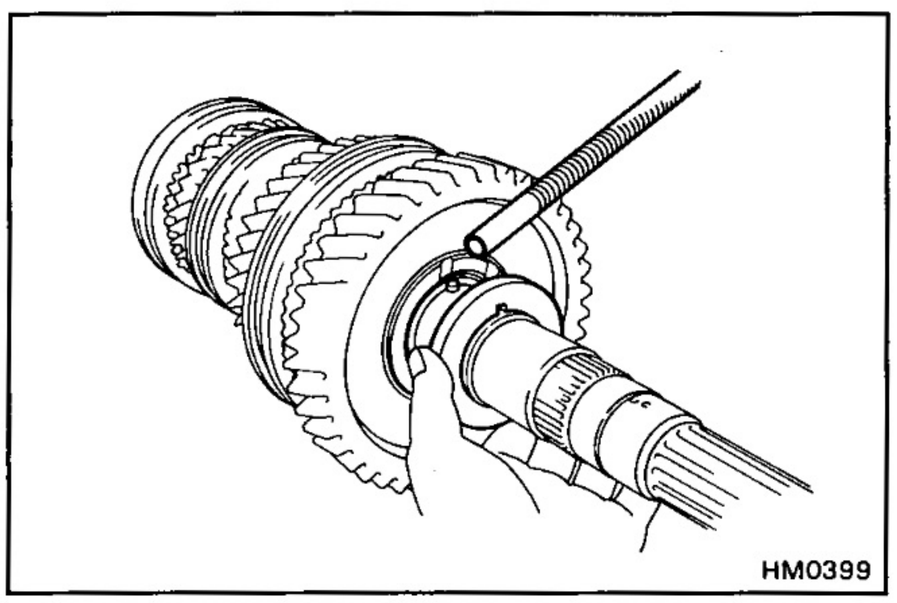

(d) Remove the thrust washer and pin.

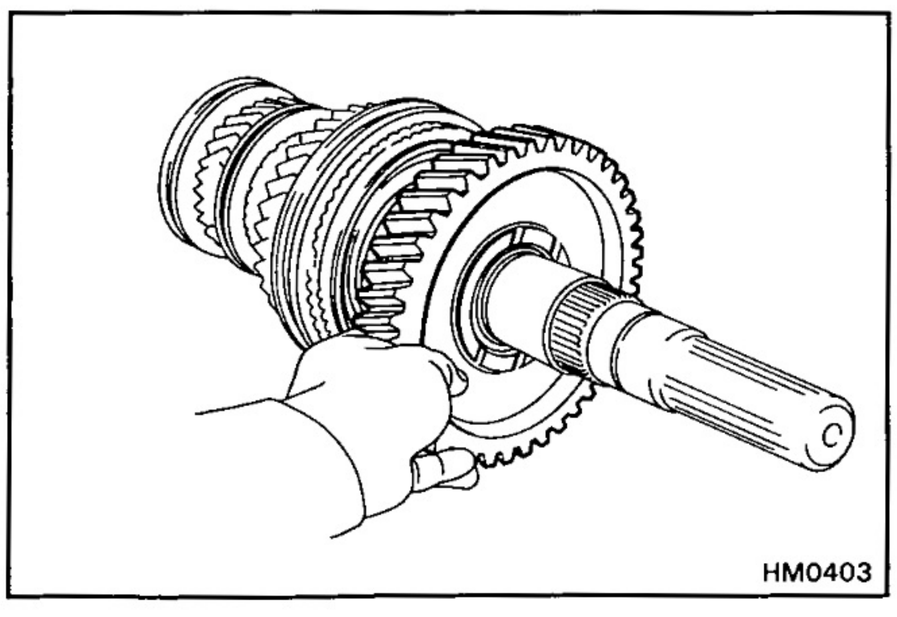

(e) Remove the first gear, synchronizer ring No.1 and needle roller bearing.

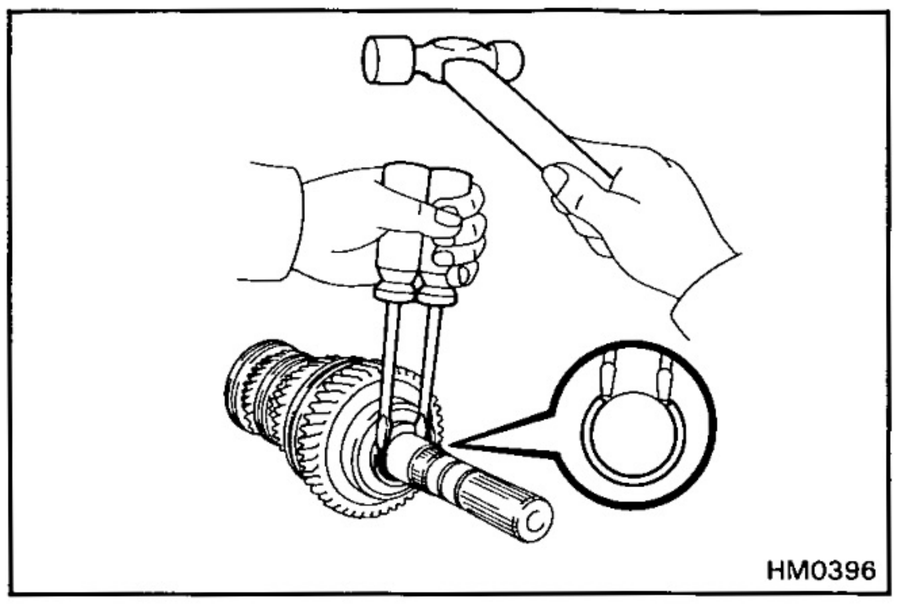

(H151F)
REMOVE BALL BEARING AND FIRST GEAR

(a) Using two screwdrivers and a hammer, drive out the snap ring.

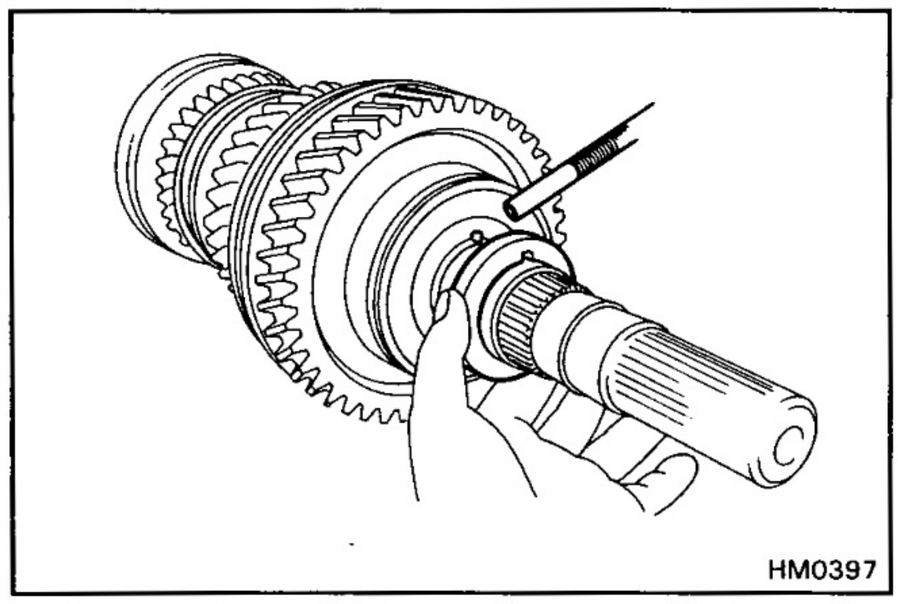

(b) Remove the thrust washer and pin.

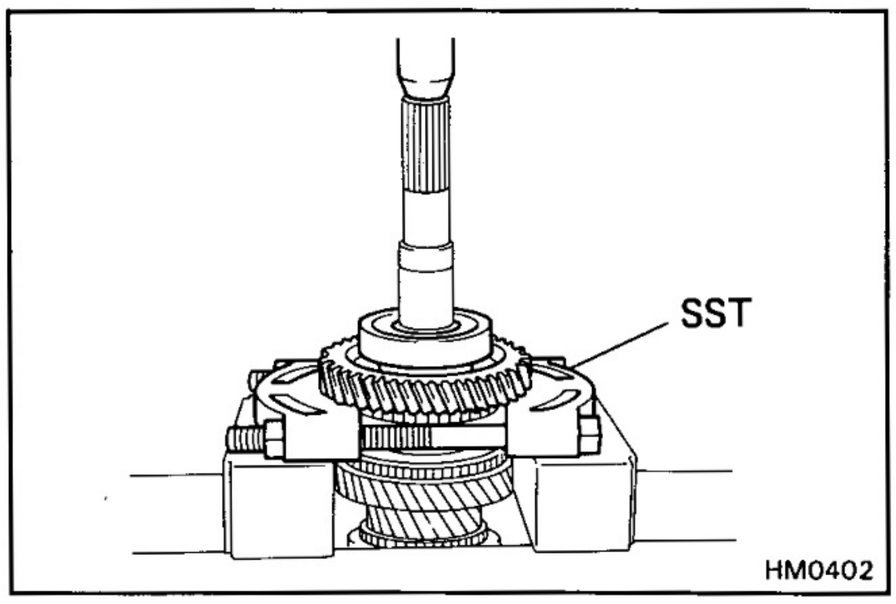

(c) Using SST and a press, remove the ball bearing, thrust washer and first gear.

SST 09555-55010

(d) Remove the pin and needle roller bearing.

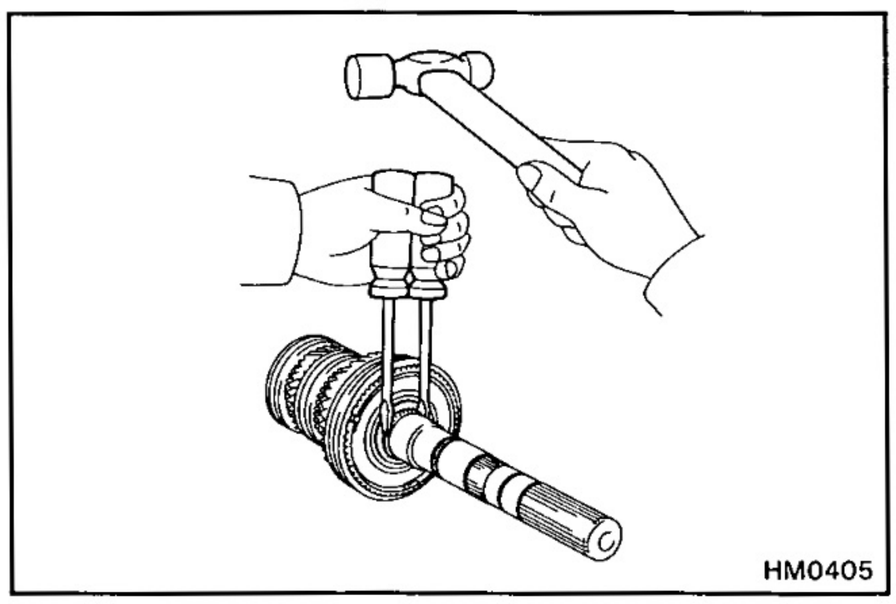

2. REMOVE HUB SLEEVE NO.1 ASSEMBLY, SYNCHRONIZER RING NO.1, SECOND GEAR AND NEEDLE ROLLER BEARING

(a) Using two screwdrivers and a hammer, drive out the snap ring.

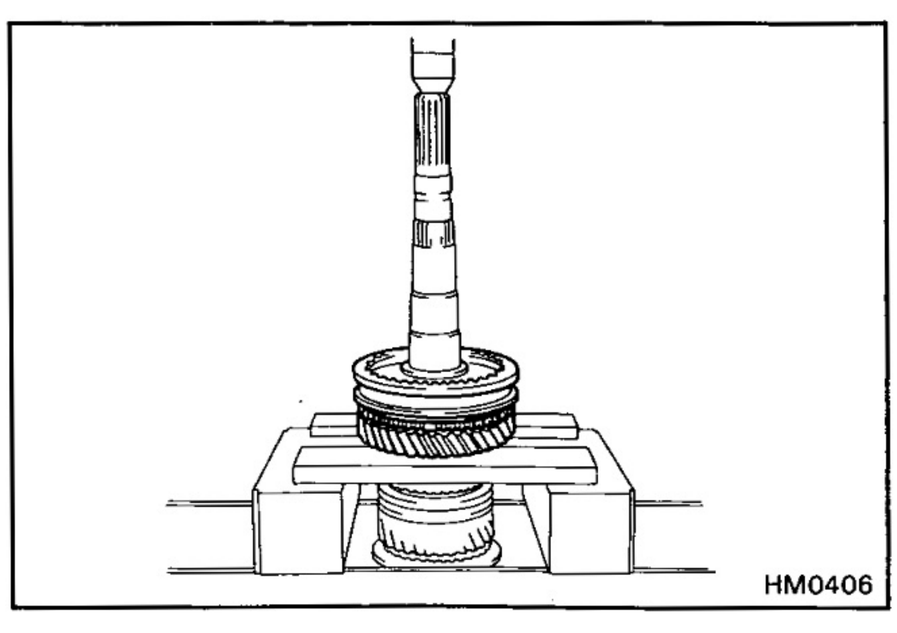

(b) Using a press, remove the hub sleeve No.1 assembly, synchronizer ring No.1, and second gear.

(c) Remove the needle roller bearing.

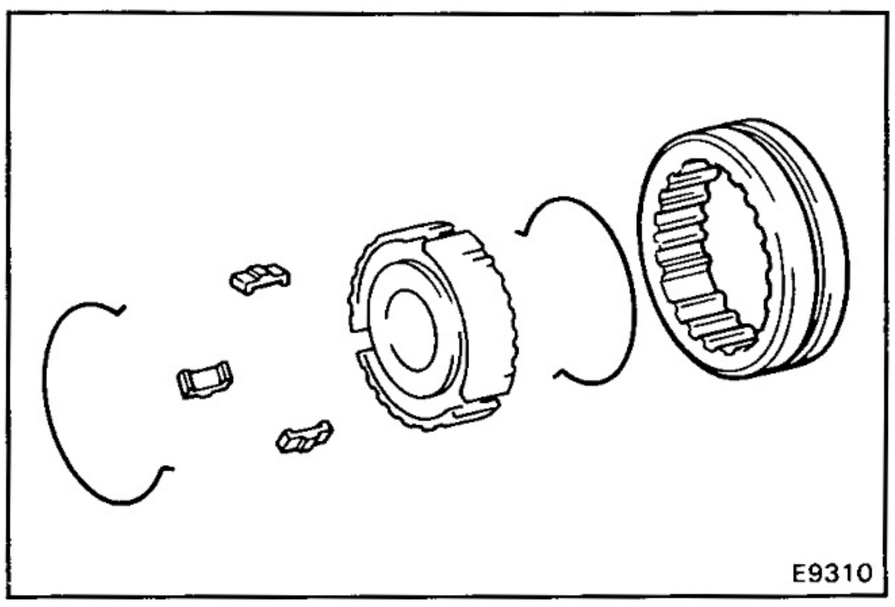

3. REMOVE HUB SLEEVE NO.1, SHIFTING KEYS AND SPRINGS FROM CLUTCH HUB NO.1

Using a screwdriver, remove the three shifting keys and two springs from the clutch hub No.1.

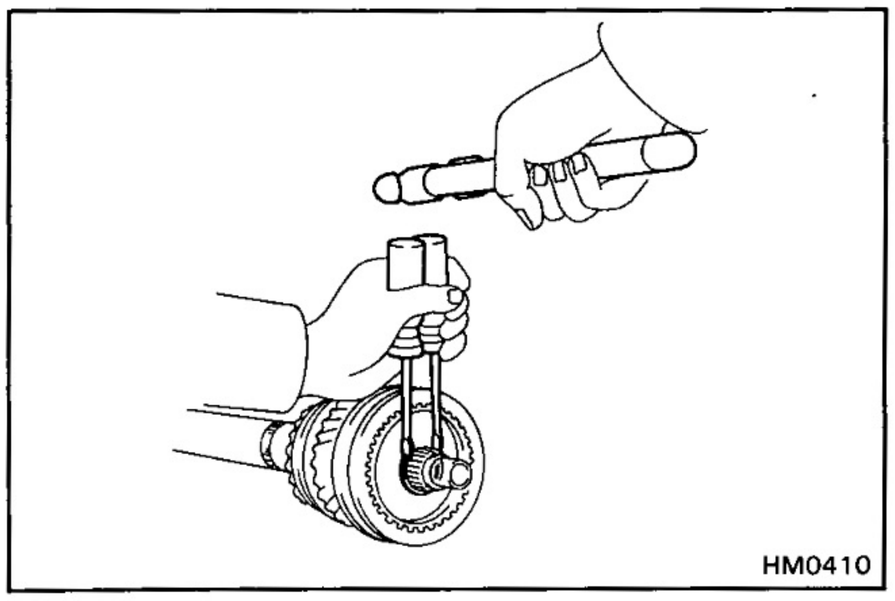

4. REMOVE HUB SLEEVE NO.2 ASSEMBLY, SYNCHRONIZER RING, THIRD GEAR AND NEEDLE ROLLER BEARING

(a) Remove two screwdrivers and a hammer, drive out the snap ring.

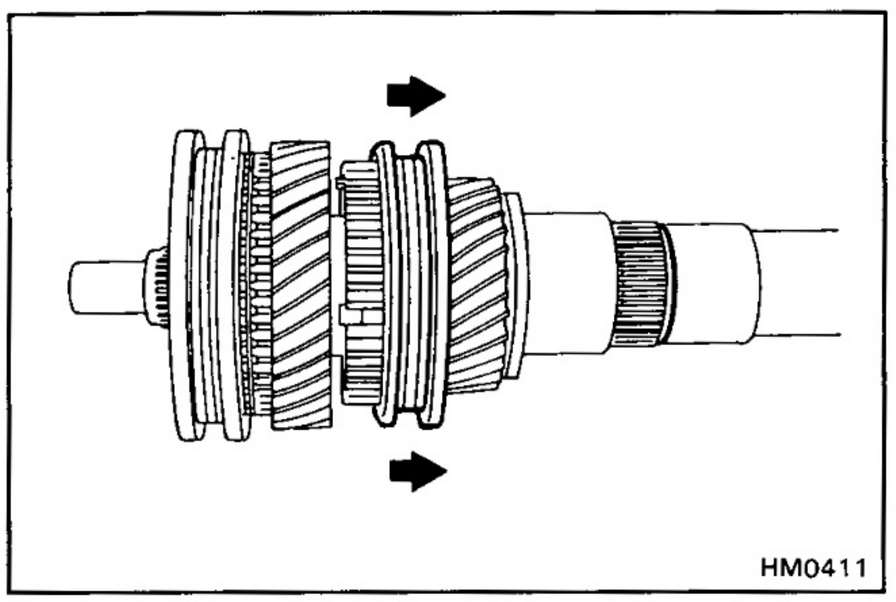

(b) (H150F,H151F)
Shift hub sleeve No.3 onto the fifth gear.

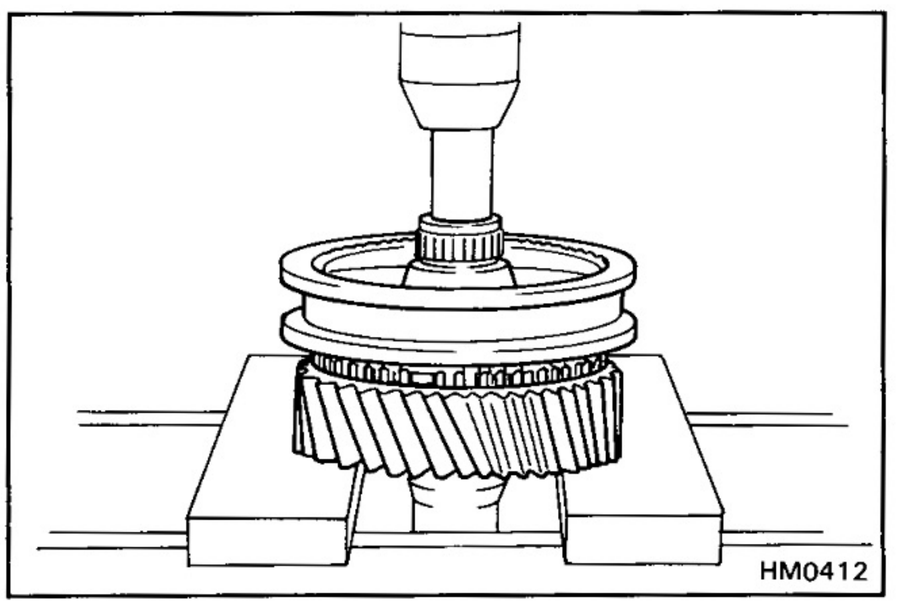

(c) (H140F)
Using a press, remove the hub sleeve No.2 assembly, synchronizer ring and third gear.

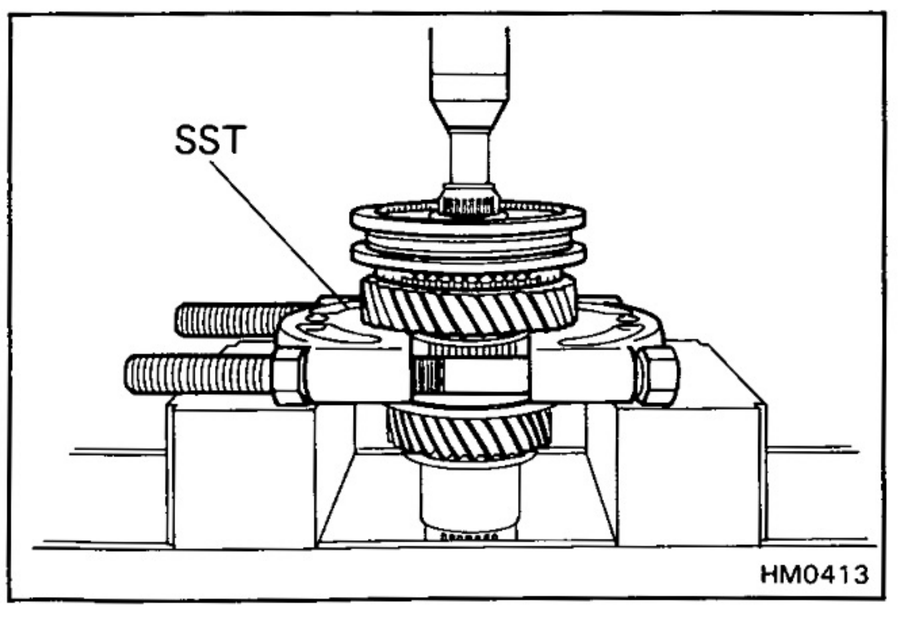

(H150F,H151F)
Using SST and a press, remove the hub sleeve No.2 assembly, synchronizer ring and third gear.

SST 09555-55010

(d) Remove the needle roller bearing.

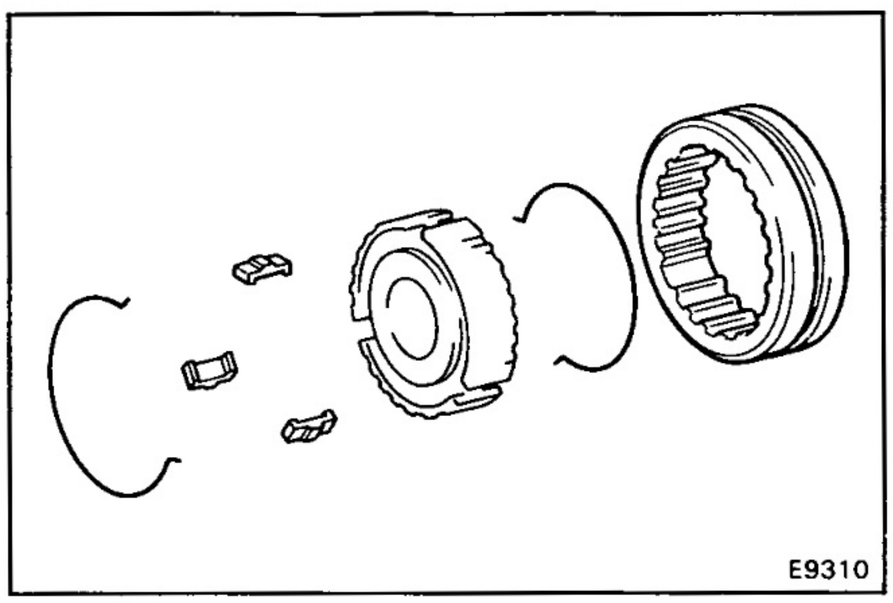

5. **(H150F,H151F)**
REMOVE HUB SLEEVE NO.2, SHIFTING KEYS AND SPRINGS FROM CLUTCH HUB NO.2

Using a screwdriver, remove the three shifting keys and two springs from the clutch hub No.2.

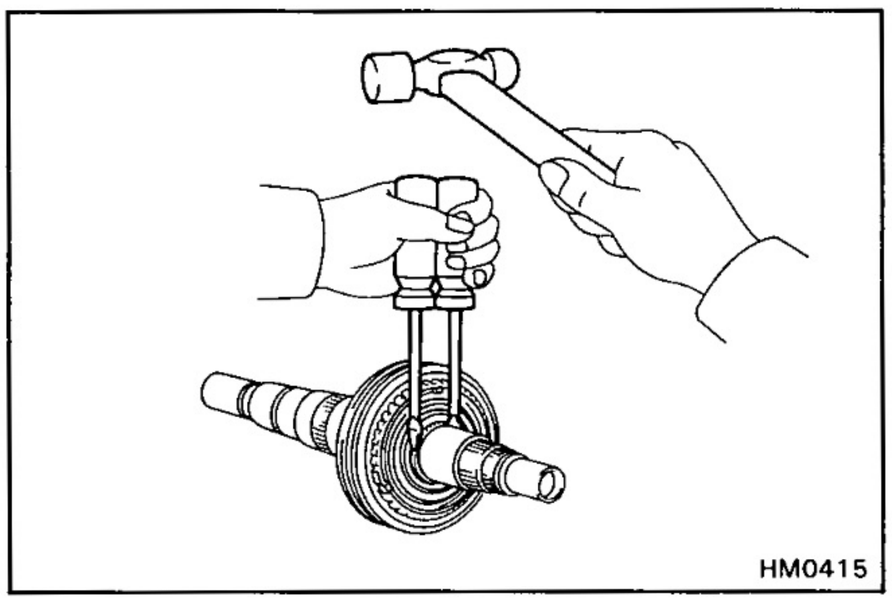

6. **(H150F,H151F)**
REMOVE HUB SLEEVE NO.3 ASSEMBLY, SYNCHRONIZER RING, FIFTH GEAR AND NEEDLE ROLLER BEARING

(a) Using two screwdriver, and a hammer, drive out the snap ring.

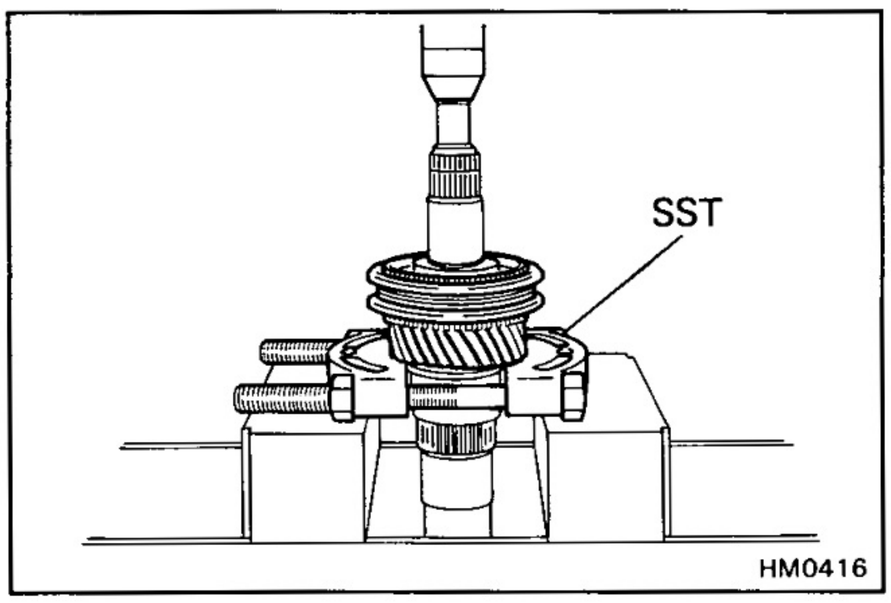

(b) Using SST and a press, remove the hub sleeve No.3 assembly, synchronizer ring.

SST 09950-00020

(c) Remove the needle roller bearing.

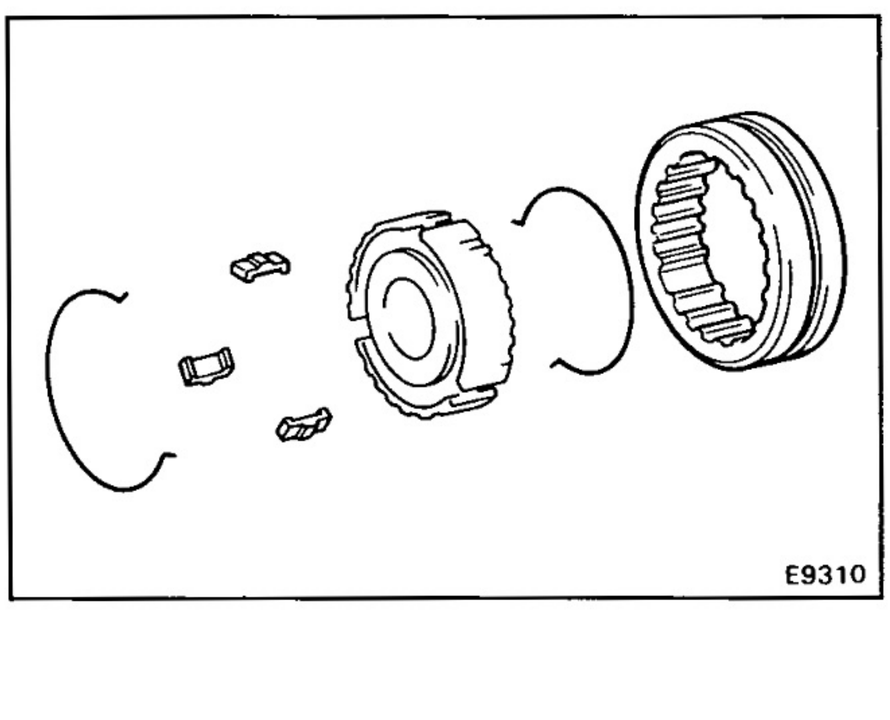

7. **(H150F,H151F)**
REMOVE HUB SLEEVE NO.3 SHIFTING KEYS AND SPRINGS FROM CLUTCH HUB NO.3

Using a screwdriver, remove the three shifting keys and two springs from the clutch hub No.3.

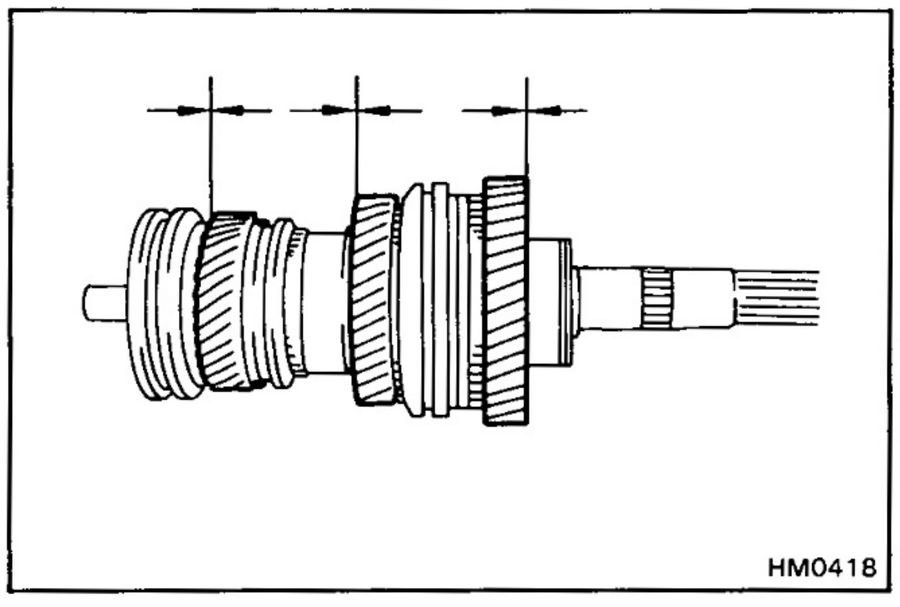
HM0418

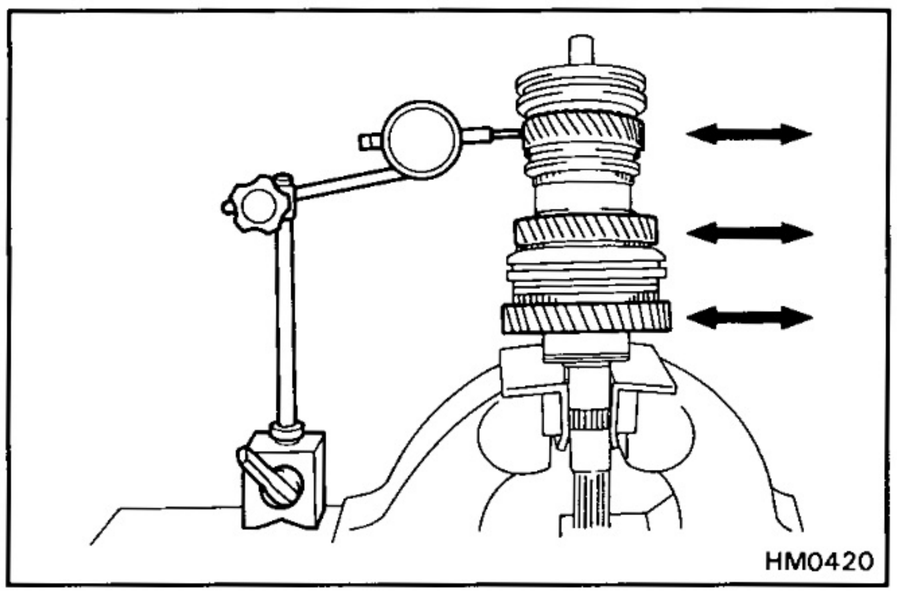
HM0420

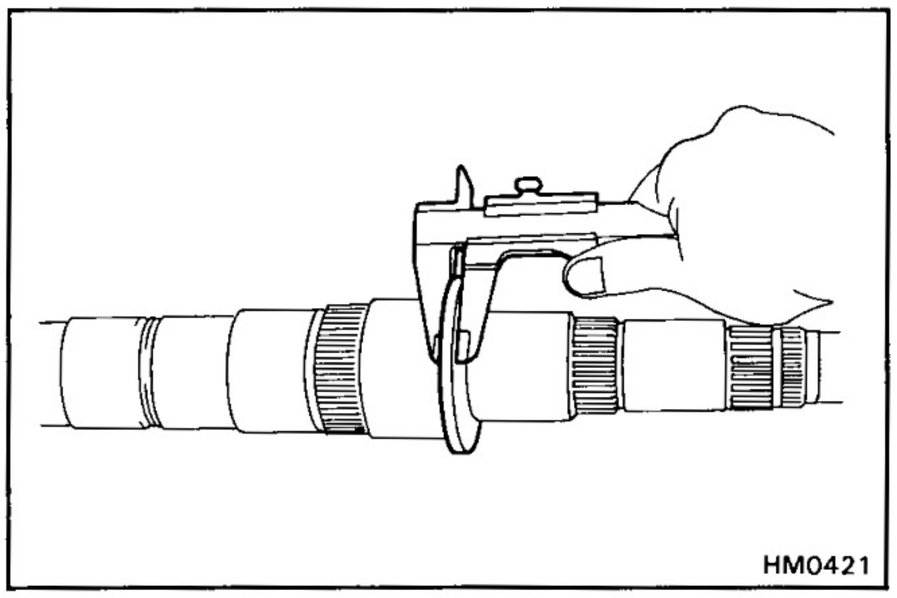
HM0421

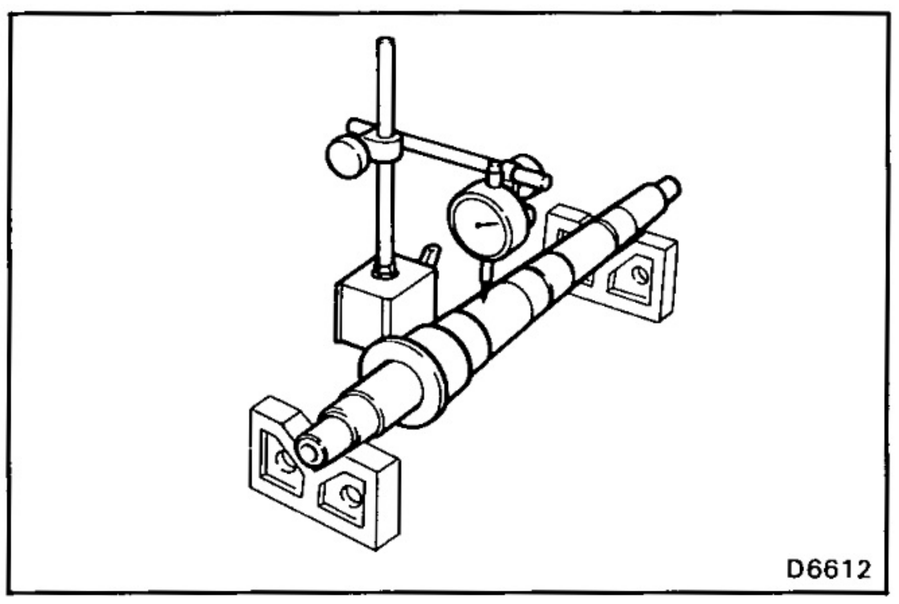
D6612

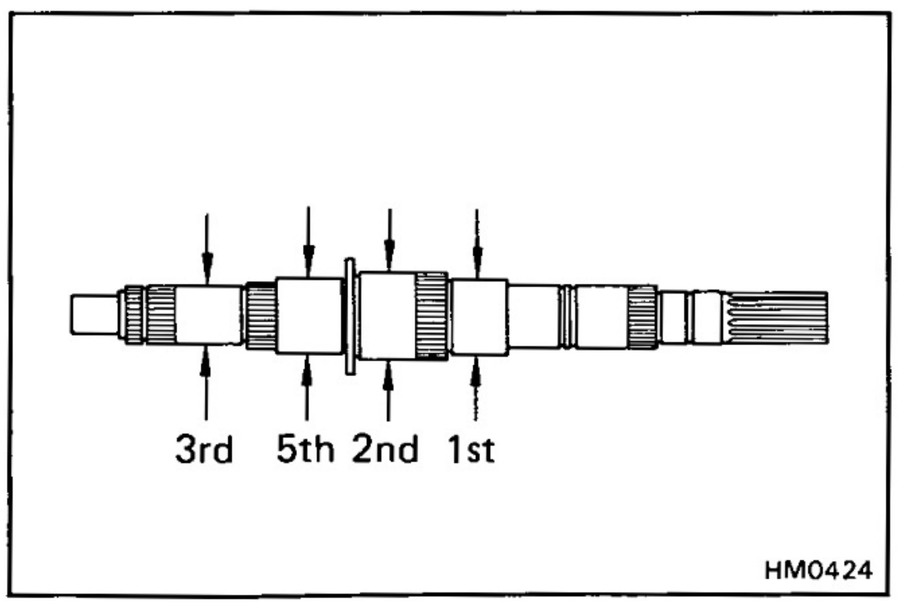

HM0424

INSPECTION OF OUTPUT SHAFT ASSEMBLY

1. MEASURE EACH GEAR THRUST CLEARANCE

Measure the thrust clearance of each gear.

Standard clearance:

1st and 3rd gear	**0.1 — 0.45 mm (0.0039 — 0.0177 in.)**
2nd and 5th gear	**0.1 — 0.35 mm (0.0039 — 0.0138 in.)**

Maximum clearance:

1st and 3rd gear	**0.45 mm (0.0177 in.)**
2nd and 5th gear	**0.35 mm (0.0138 in.)**

2. MEASURE EACH GEAR OIL CLEARANCE

Using a dial indicator, measure the oil clearance of each gear.

Standard clearance:

1st and 3rd gear	**0.020 — 0.073 mm (0.0008 — 0.0029 in.)**
2nd and 5th gear	**0.015 — 0.068 mm (0.0006 — 0.0027 in.)**

Maximum clearance:

1st and 3rd gear	**0.073 mm (0.0029 in.)**
2nd and 5th gear	**0.068 mm (0.0027 in.)**

3. (H150F,H151F) INSPECT OUTPUT SHAFT

(a) Using calipers, measure the output shaft flange thickness.

Minimum thickness: 4.725 mm (0.1860 in.)

(b) Using a dial indicator, check the shaft runout.

Maximum runout: 0.05 mm (0.0020 in.)

(c) Using a micrometer, measure the outer diameter of the output shaft journal.

Minimum diameter:

1st	**49.979 mm (1.9677 in.)**
2nd	**57.984 mm (2.2828 in.)**
3rd	**37.979 mm (1.4952 in.)**
5th	**45.984 mm (1.8104 in.)**

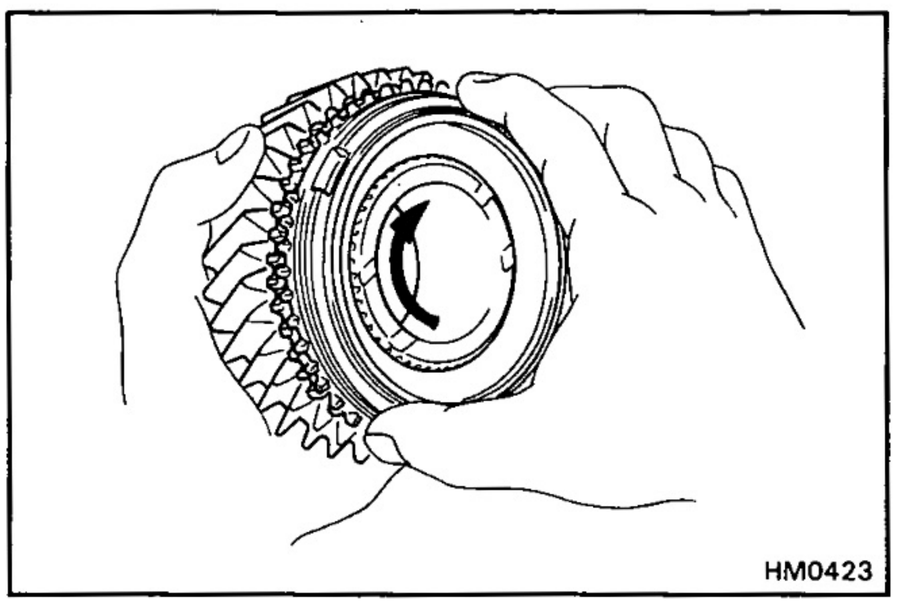
HM0423

4. INSPECT SYNCHRONIZER RINGS

(a) Turn the ring and push it in to check the braking action.

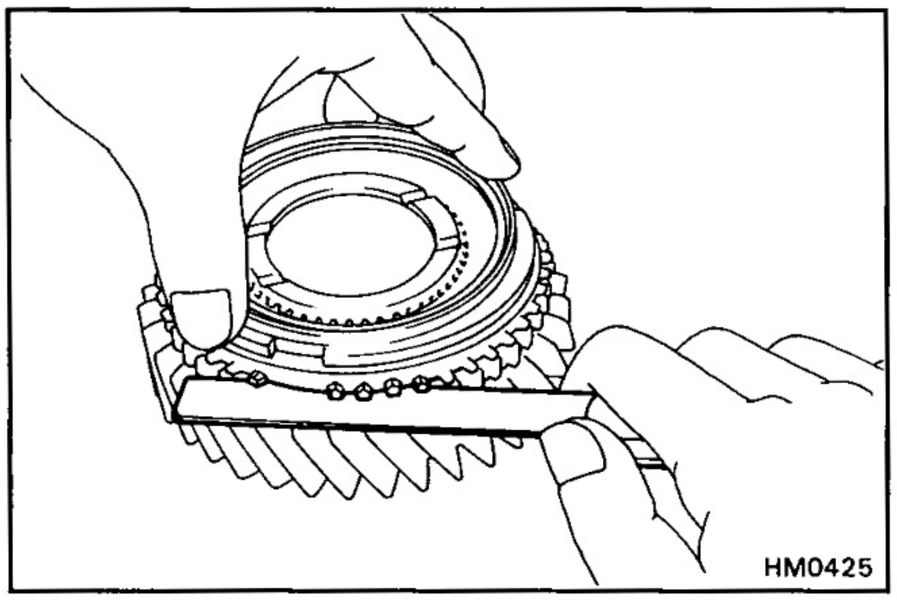
HM0425

(b) Measure the clearance between the synchronizer ring back and the gear spline end.

(H140F, H150F)

Standard clearance:

1st and 2nd gear	**1.1 — 1.9 mm (0.043 — 0.075 in.)**
3rd and reverse gear	**0.8 — 1.6 mm (0.031 — 0.063 in.)**

Minimum clearance:

1st and 2nd gear	**1.1 mm (0.043 in.)**
3rd and reverse gear	**0.8 mm (0.031 in.)**

(H151F)

Standard clearance:

1st and 2nd gear	**0.85 — 1.4 mm (0.0335 — 0.0551 in.)**
3rd gear	**0.75 — 1.3 mm (0.0295 — 0.0512 in.)**

Minimum clearance:

1st and 2nd gear	**0.85 mm (0.0335 in.)**
3rd gear	**0.75 mm (0.0295 in.)**

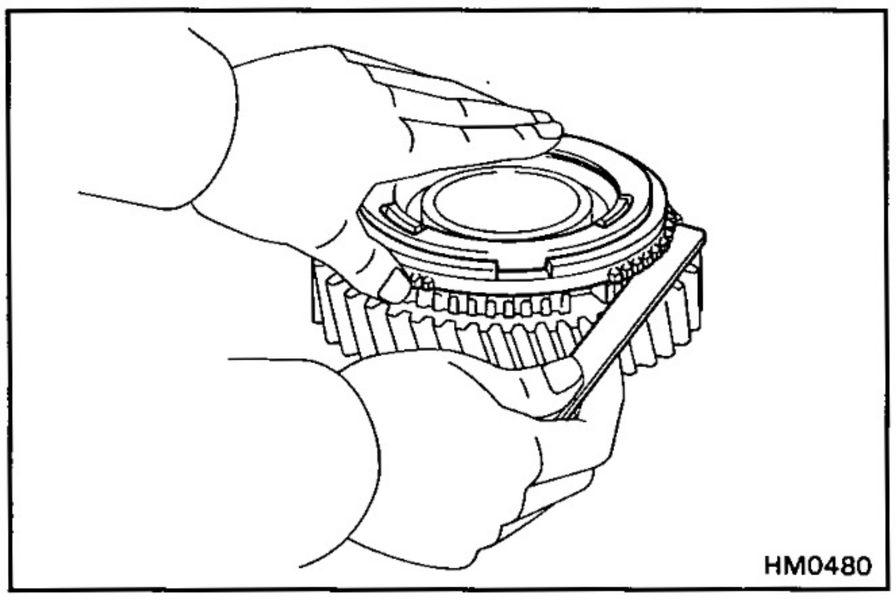
HM0480

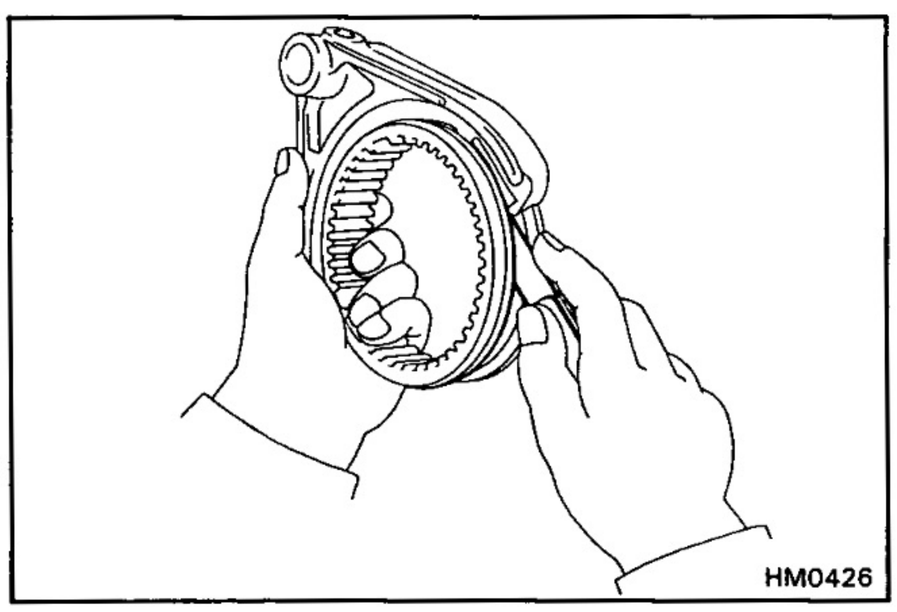
HM0426

5. MEASURE CLEARANCE OF SHIFT FORKS AND HUB SLEEVES

Using a feeler gauge, measure the clearance between the hub sleeve and shift fork.

Maximum clearance: 0.35 mm (0.0138 in.)

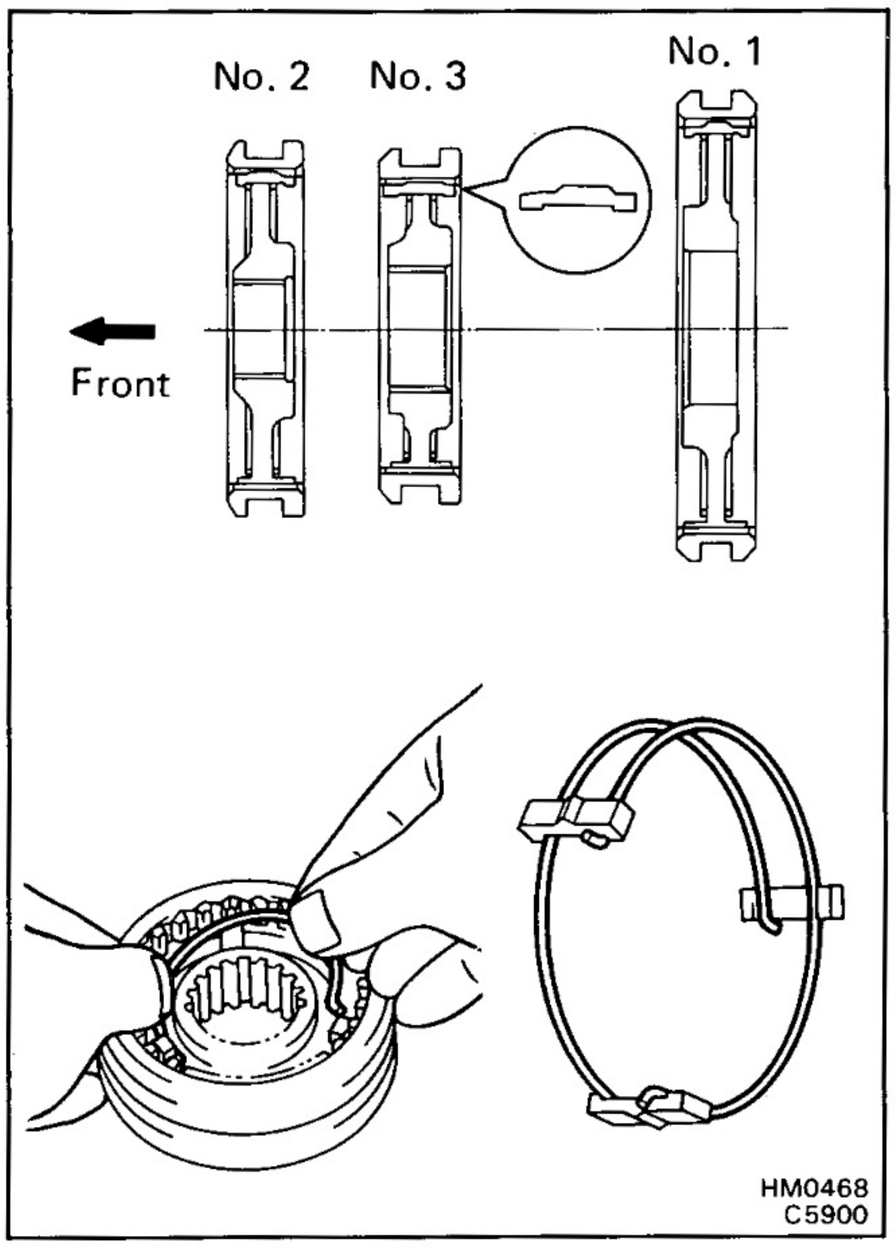

ASSEMBLY OF OUTPUT SHAFT ASSEMBLY

1. INSERT CLUTCH HUB NO.1, NO.2 AND NO.3 INTO HUB SLEEVE

(a) Install the clutch hub and shifting keys to the hub sleeve.

(b) Install the springs under the shifting keys.

NOTICE: Install the key springs positioned so that their end gaps are not in line.

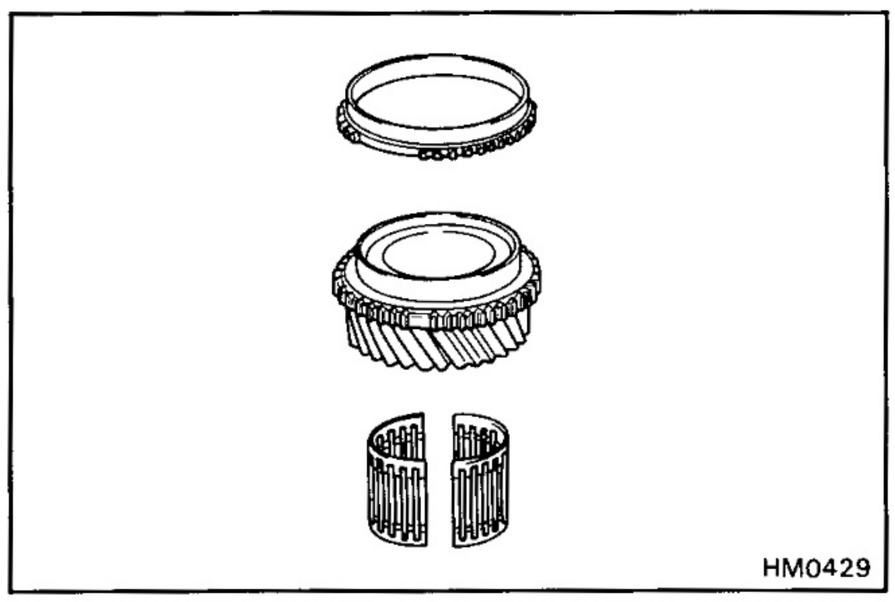

2. INSTALL FIFTH GEAR AND HUB SLEEVE NO.3 ASSEMBLY ON OUTPUT SHAFT

(a) Apply gear oil to the shaft and needle roller bearing.

(b) Place the synchronizer ring on the gear and align the ring slots with the shifting keys.

(c) Install the needle roller bearing in the fifth gear.

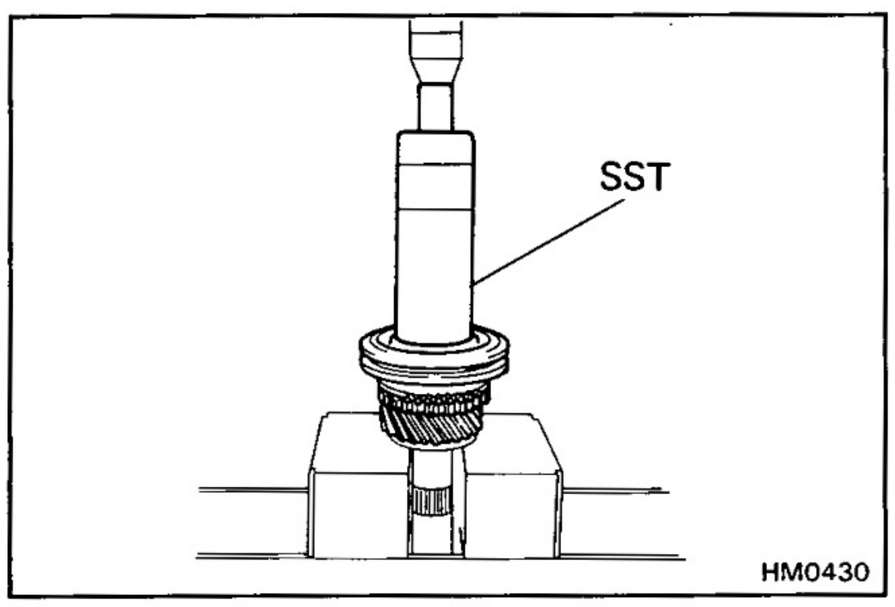

(d) Using SST and a press, install the fifth gear and hub sleeve No.3.

SST 09316-60010 (09316-00010)

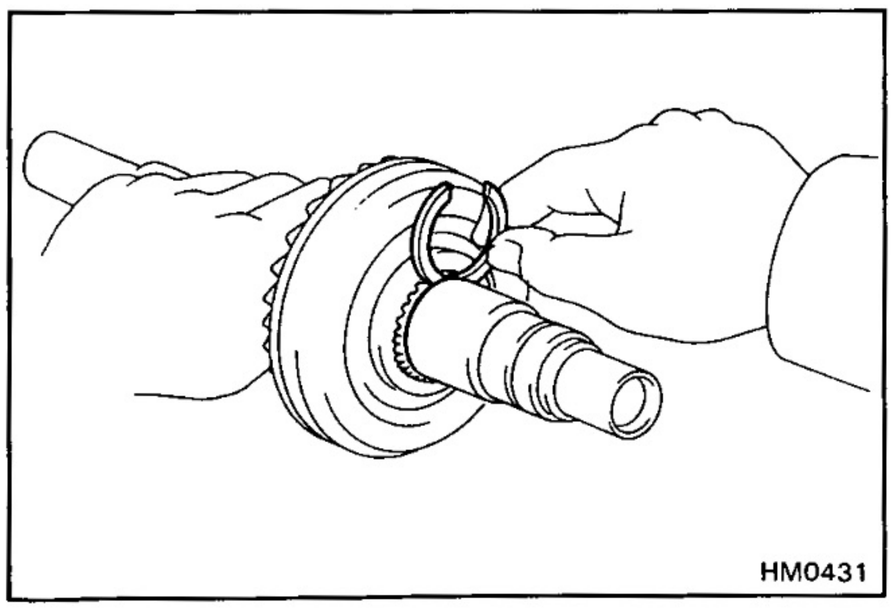

3. INSTALL SNAP RING

(a) Select a snap ring that will allow minimum axial play.

Mark	Thickness mm (in.)
A	2.40 — 2.45 (0.0945 — 0.0965)
B	2.45 — 2.50 (0.0965 — 0.0984)
C	2.50 — 2.55 (0.0984 — 0.1004)
D	2.55 — 2.60 (0.1004 — 0.1024)
E	2.60 — 2.65 (0.1024 — 0.1044)
F	2.65 — 2.70 (0.1044 — 0.1063)

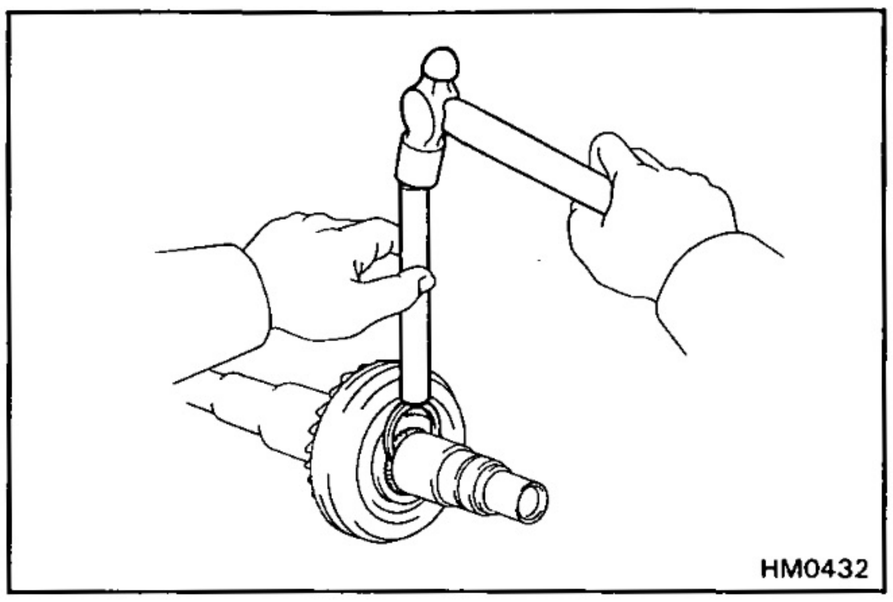

(b) Using a brass bar and hammer, drive in the snap ring.

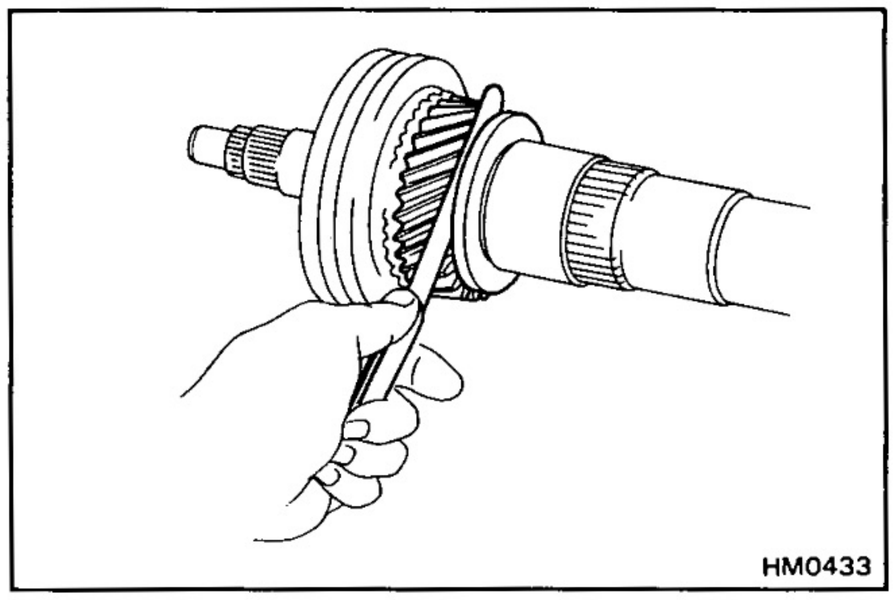

4. MEASURE FIFTH GEAR THRUST CLEARANCE

Using a feeler gauge, measure the fifth gear thrust clearance.

Standard clearance: **0.1 — 0.35 mm (0.0039 — 0.0138 in.)**

Maximum clearance: **0.35 mm (0.0138 in.)**

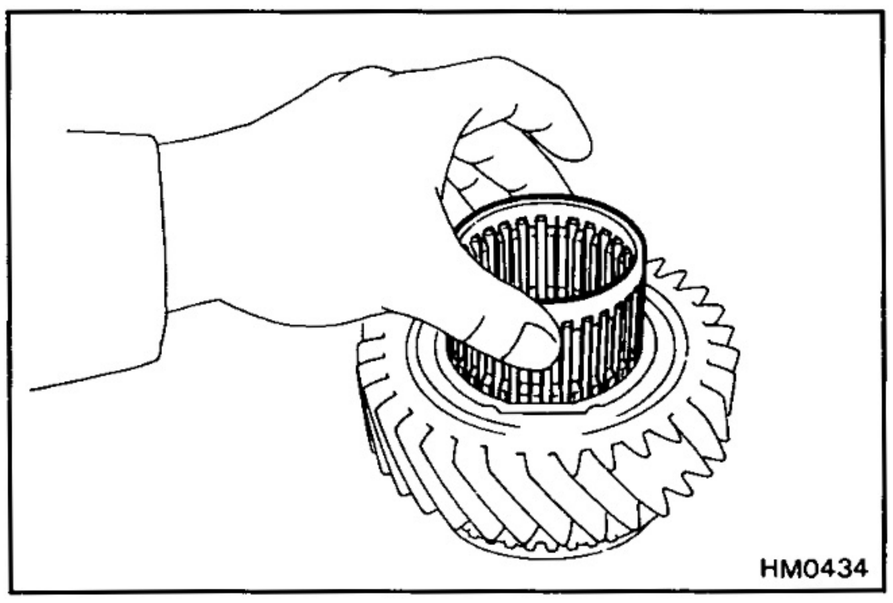

5. INSTALL THIRD GEAR AND HUB SLEEVE NO.2 ASSEMBLY

(a) Apply gear oil to the shaft and needle roller bearing.

(b) Place the synchronizer ring on the gear and align the ring slots with the shifting keys.

(c) Install the needle roller bearing in the third gear.

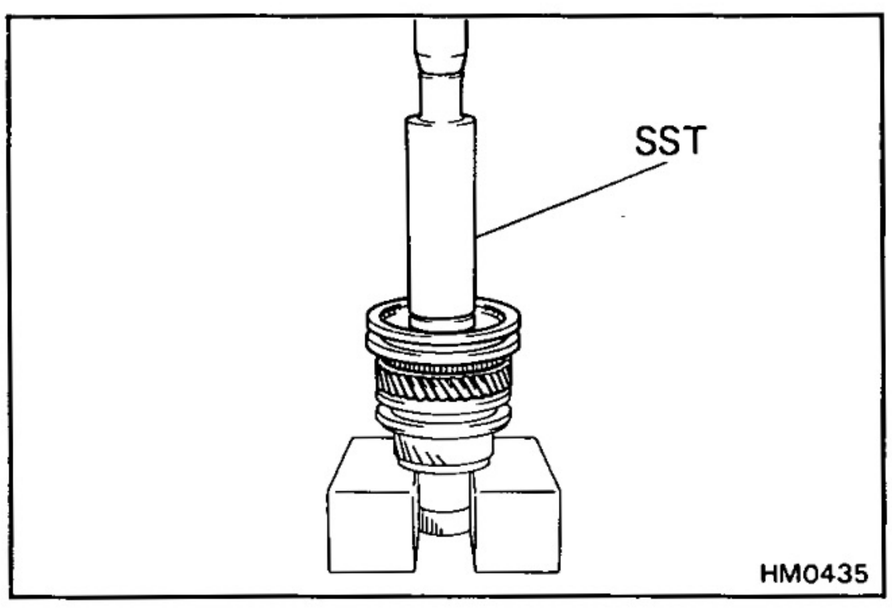

(d) Using SST and a press, install the third gear and hub sleeve No.2.

SST 09316-60010 (09316-00010)

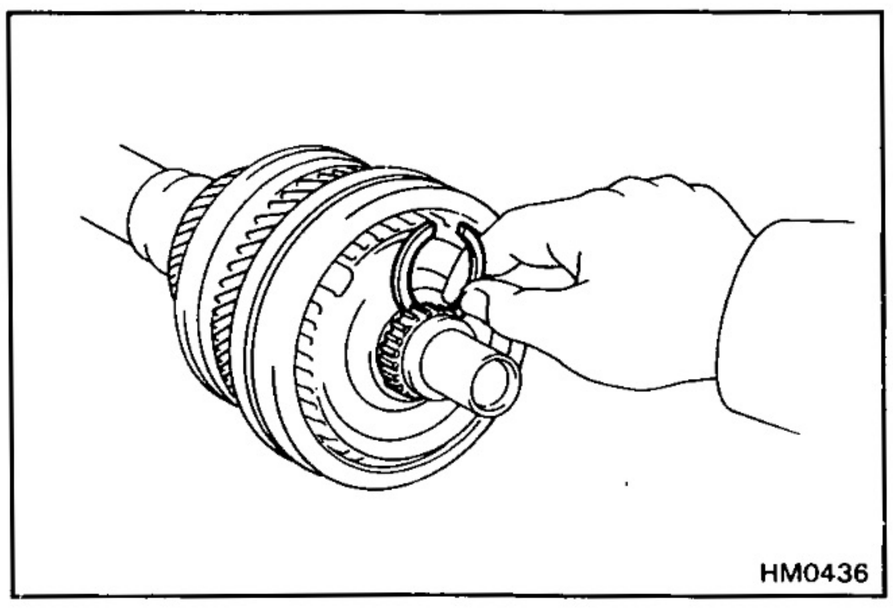

6. INSTALL SNAP RING

(a) Select a snap ring that will allow minimum axial play.

Mark	Thickness mm (in.)
4	1.90 — 1.95 (0.0748 — 0.0768)
5	1.95 — 2.00 (0.0768 — 0.0787)
6	2.00 — 2.05 (0.0787 — 0.0807)
7	2.05 — 2.10 (0.0807 — 0.0827)
8	2.10 — 2.15 (0.0827 — 0.0847)
9	2.15 — 2.20 (0.0847 — 0.0866)

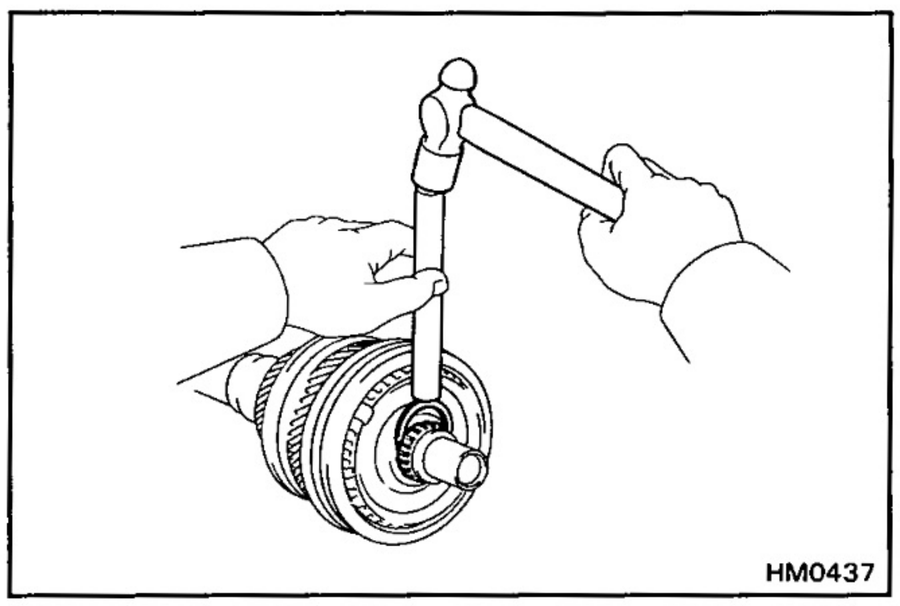
HM0437

(b) Using a brass bar and a hammer, drive in a new snap ring.

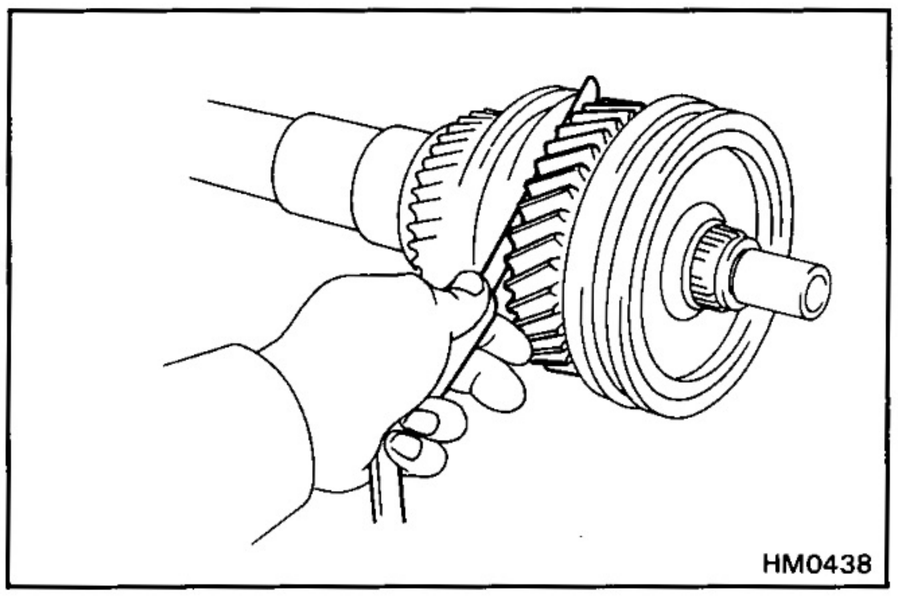
HM0438

7. MEASURE THIRD GEAR THRUST CLEARANCE

Using a feeler gauge, measure the third gear thrust clearance.

Standard clearance: **0.1 — 0.45 mm (0.0039 — 0.0138 in.)**

Maximum clearance: **0.45 mm (0.0138 in.)**

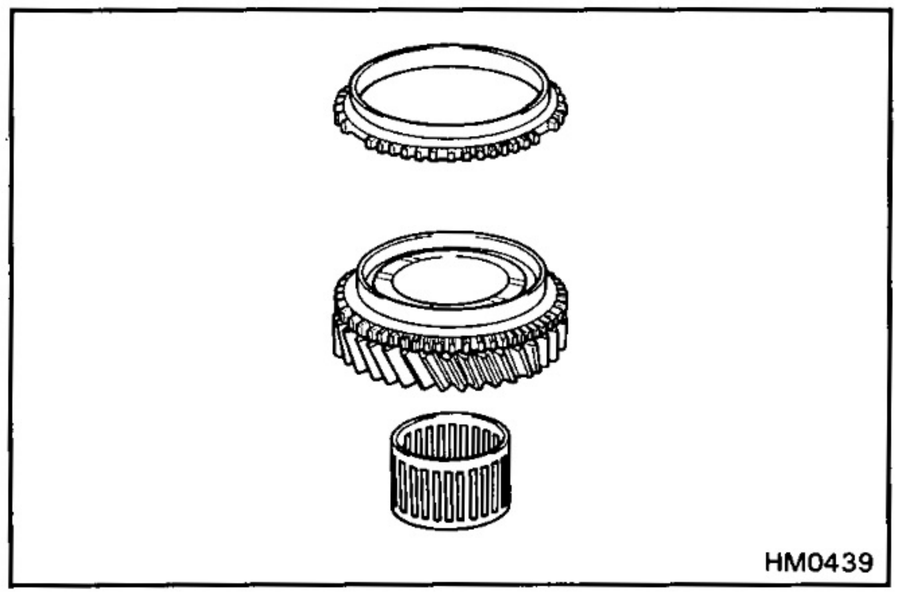
HM0439

8. INSTALL SECOND GEAR AND HUB SLEEVE NO.1 ASSEMBLY

(a) Apply gear oil to the shaft and needle roller bearing.

(b) Place the synchronizer ring on the gear and align the ring slots with the shifting keys.

(c) Install the needle roller bearing in the second gear.

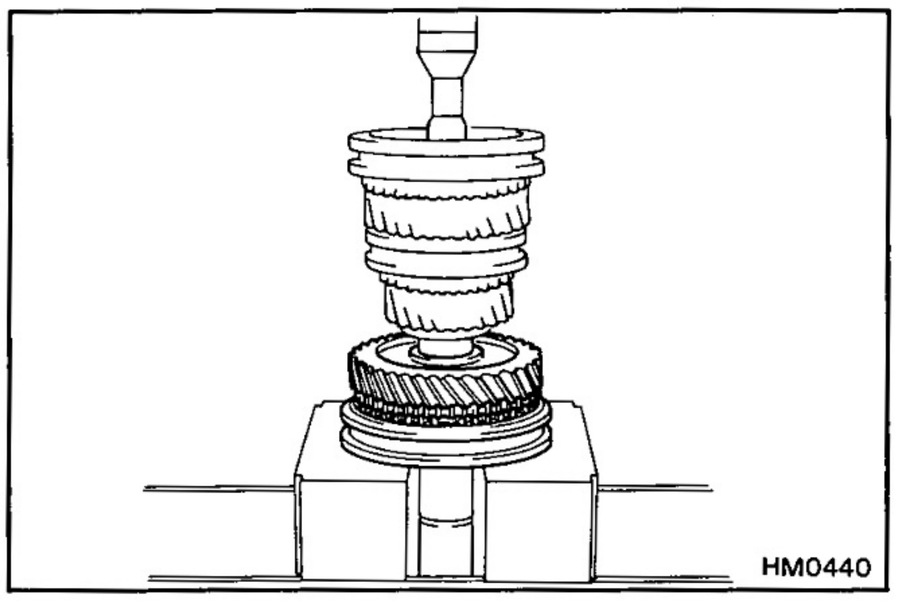
HM0440

(d) Using a press, install the second gear and hub sleeve No.1 assembly.

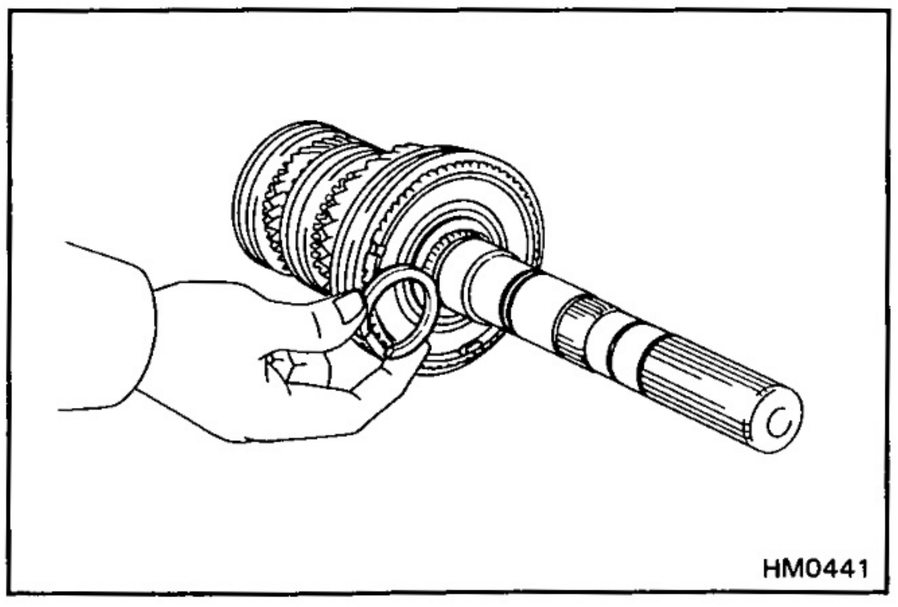
HM0441

9. INSTALL SNAP RING

(a) Select a snap ring that will allow minimum axial play.

Mark	Thickness mm (in.)
A	2.90 — 2.95 (0.1142 — 0.1162)
B	2.95 — 3.00 (0.1162 — 0.1181)
C	3.00 — 3.05 (0.1181 — 0.1201)
D	3.05 — 3.10 (0.1201 — 0.1220)
E	3.10 — 3.15 (0.1220 — 0.1240)
F	3.15 — 3.20 (0.1240 — 0.1260)

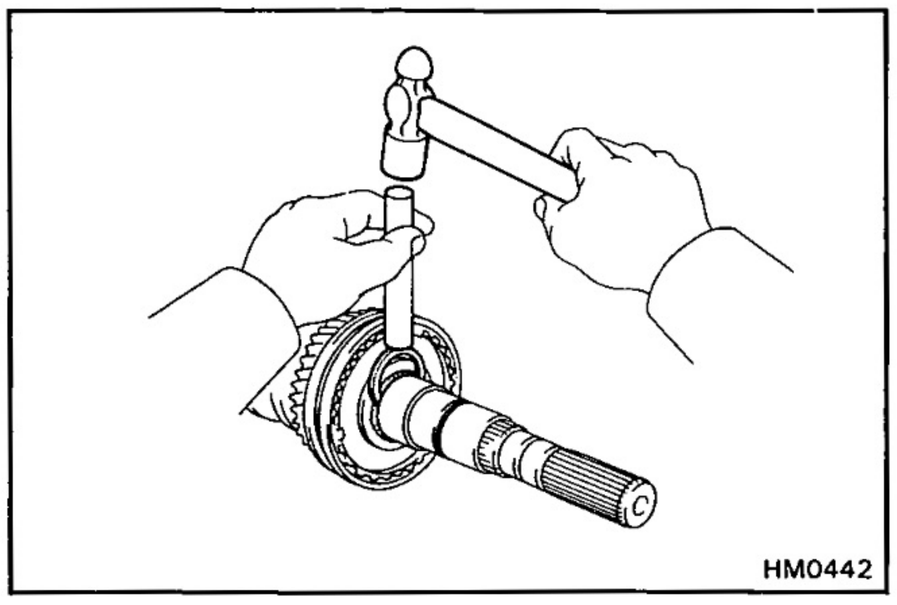
HM0442

(b) Using a brass bar and a hammer, drive in a new snap ring.

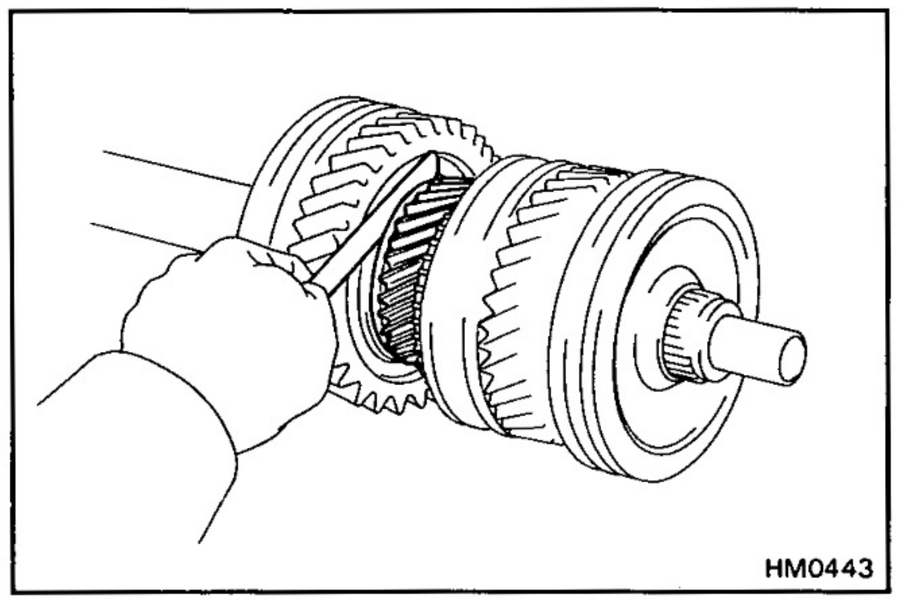
HM0443

10. MEASURE SECOND GEAR THRUST CLEARANCE

Using a feeler gauge, measure the second gear thrust clearance.

Standard clearance: **0.1 — 0.35 mm (0.0039 — 0.0138 in.)**

Maximum clearance: **0.35 mm (0.0138 in.)**

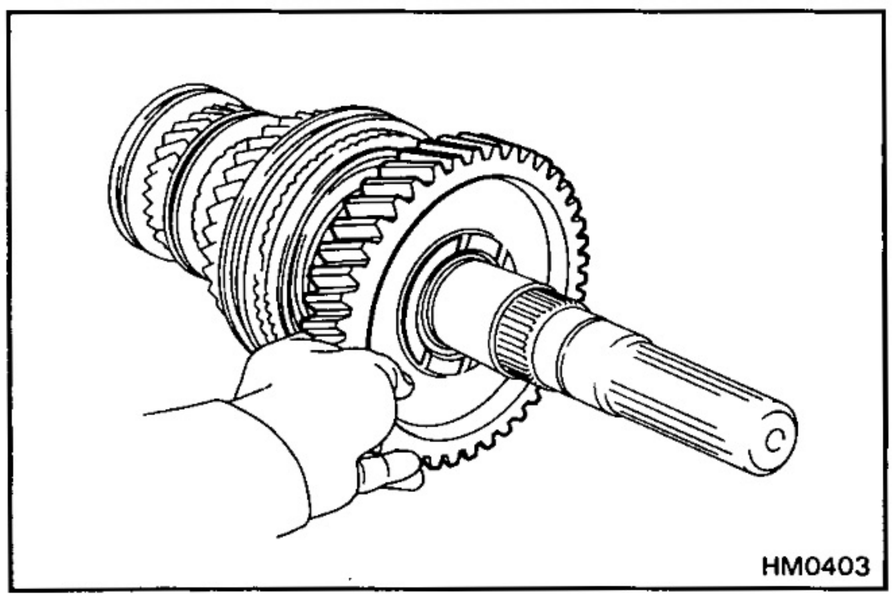
HM0403

11. INSTALL FIRST GEAR

(a) Apply gear oil to the shaft and needle roller bearing.

(b) Place the synchronizer ring on the gear and align the ring slots with the shifting keys.

(c) Install the needle roller bearing in the first gear.

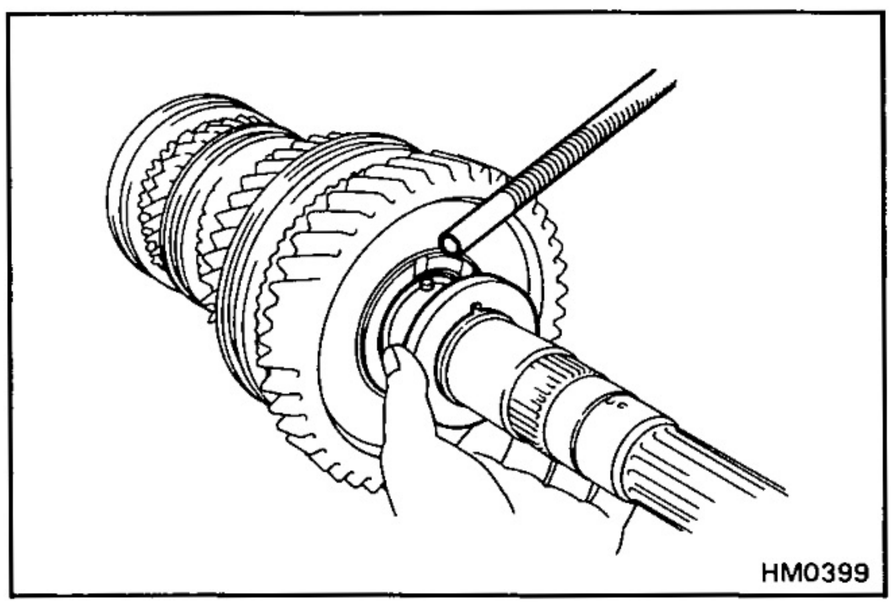
HM0399

12. INSTALL BALL BEARING

(a) Install the pin and thrust washer.

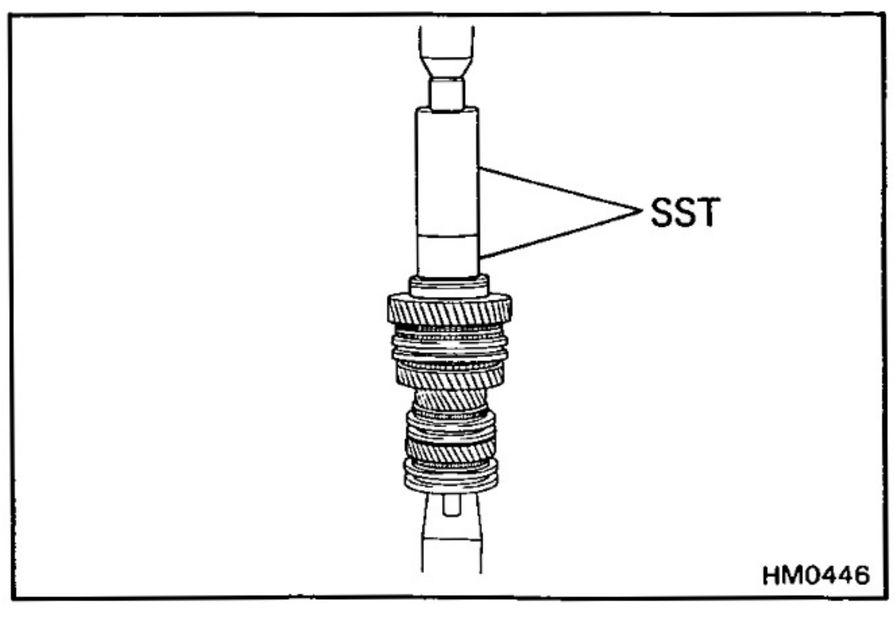

HM0446

(b) Using SST and a press, install the ball bearing.

SST 09316-60010 (09316-00010), 09523-36010

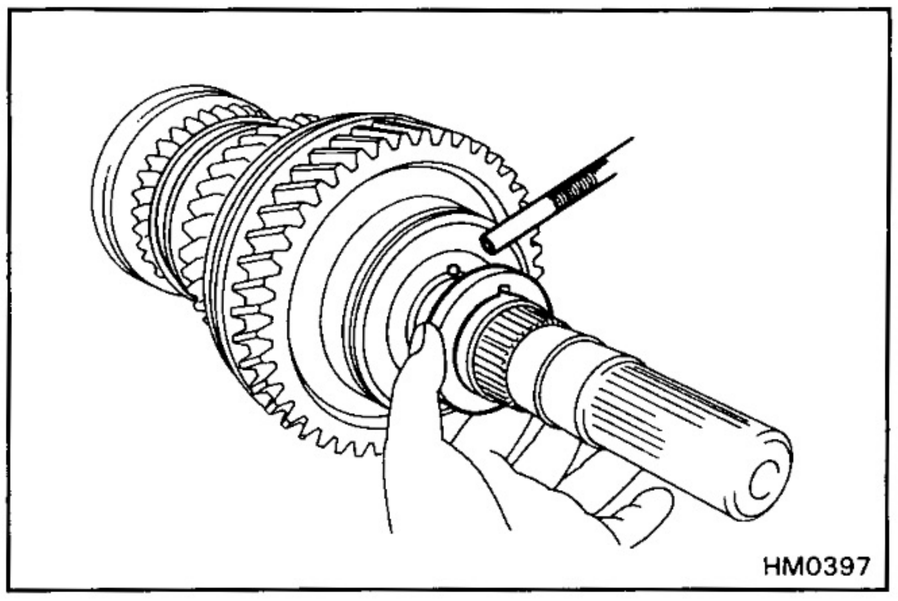
HM0397

(c) Install the pin and thrust washer.

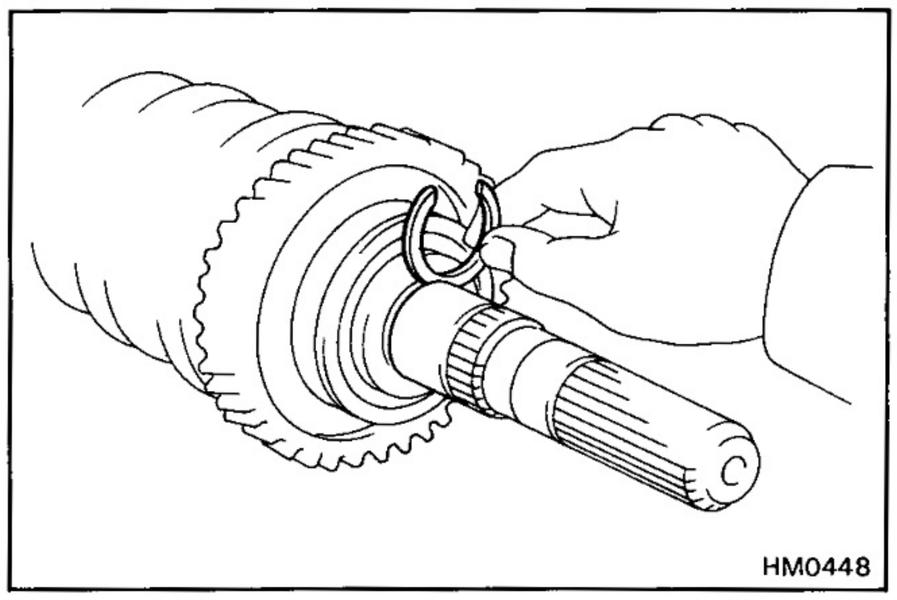
HM0448

13. INSTALL SNAP RING

(a) Select a snap ring that will allow minimum axial play.

Mark	Thickness mm (in.)
A	2.40 — 2.45 (0.0945 — 0.0965)
B	2.45 — 2.50 (0.0965 — 0.0984)
C	2.50 — 2.55 (0.0984 — 0.1004)
D	2.55 — 2.60 (0.1004 — 0.1024)
E	2.60 — 2.65 (0.1024 — 0.1044)
F	2.65 — 2.70 (0.1044 — 0.1063)
G	2.70 — 2.75 (0.1063 — 0.1083)
H	2.75 — 2.80 (0.1083 — 0.1102)

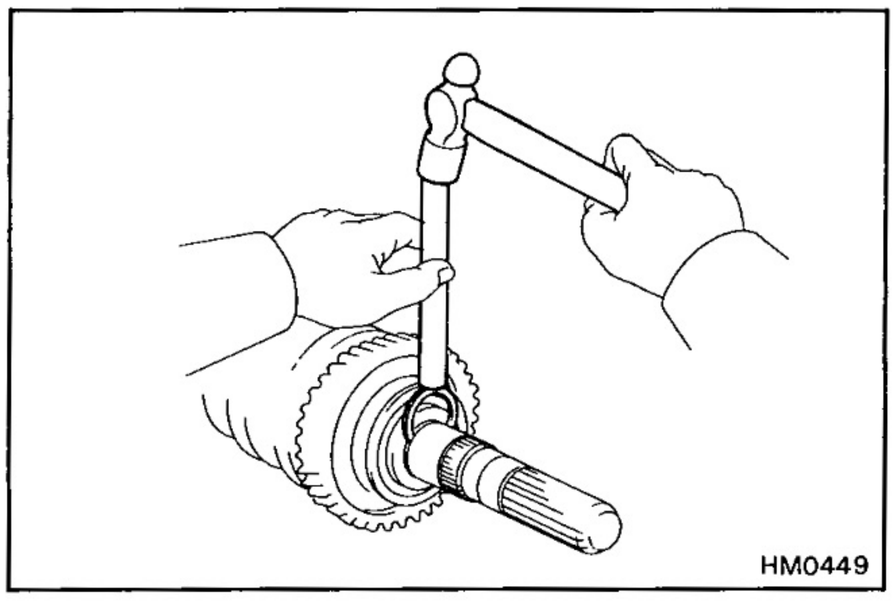
HM0449

(b) Using a brass bar and a hammer, drive in a new snap ring.

Counter Gear Assembly

COMPONENTS

1H engine

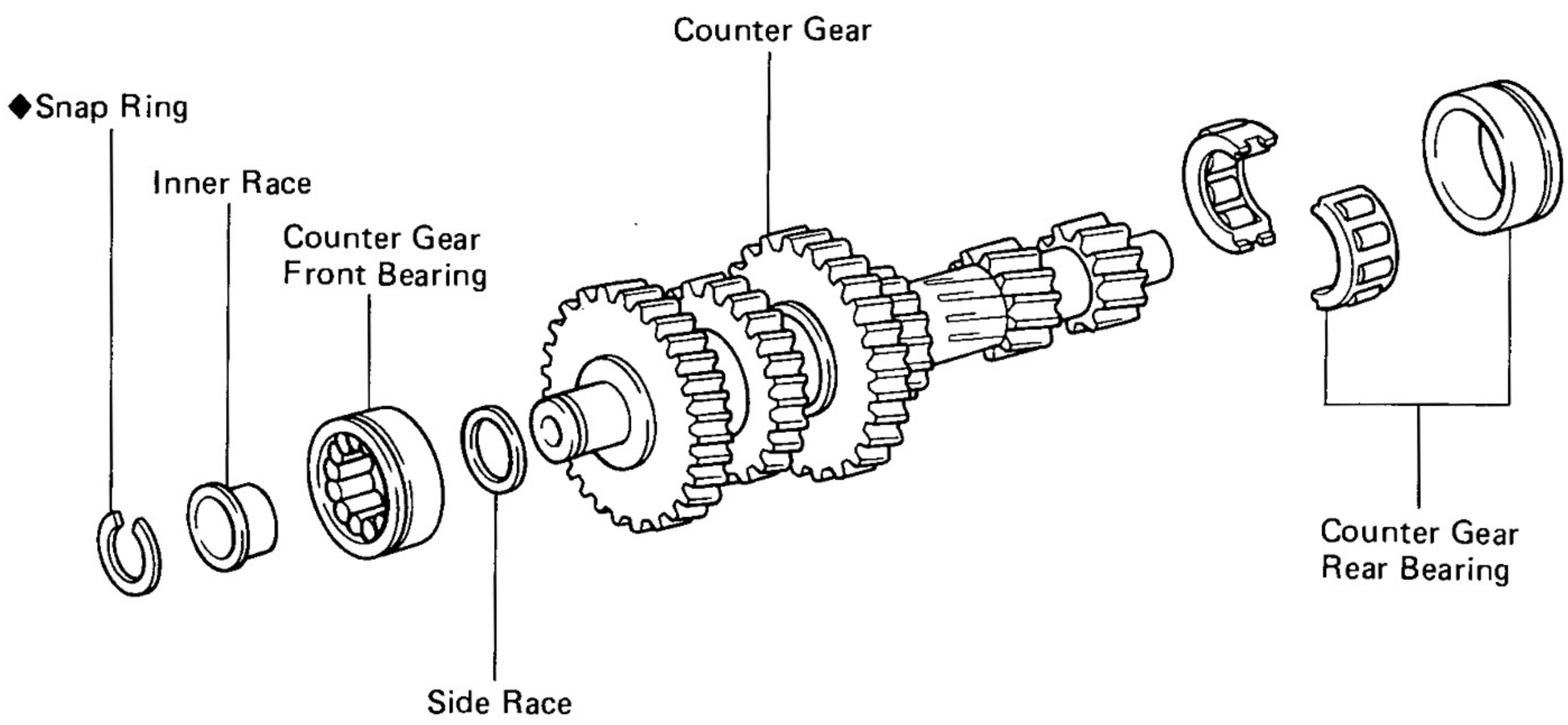

◆ Non-reusable part

HM0450

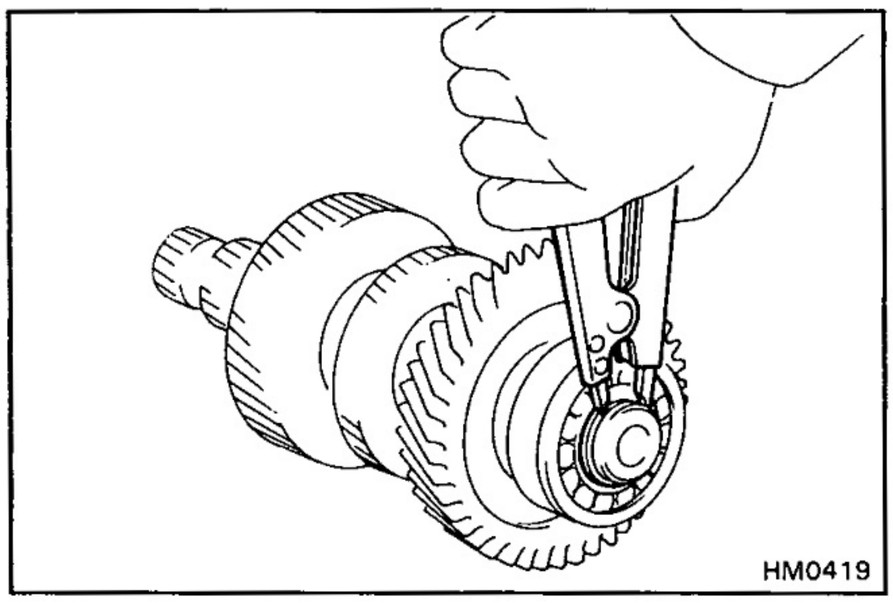

HM0419

DISASSEMBLY OF COUNTER GEAR ASSEMBLY

IF NECESSARY, REPLACE COUNTER GEAR FRONT BEARING AND SIDE RACE

(a) Using snap ring pliers, remove the snap ring.

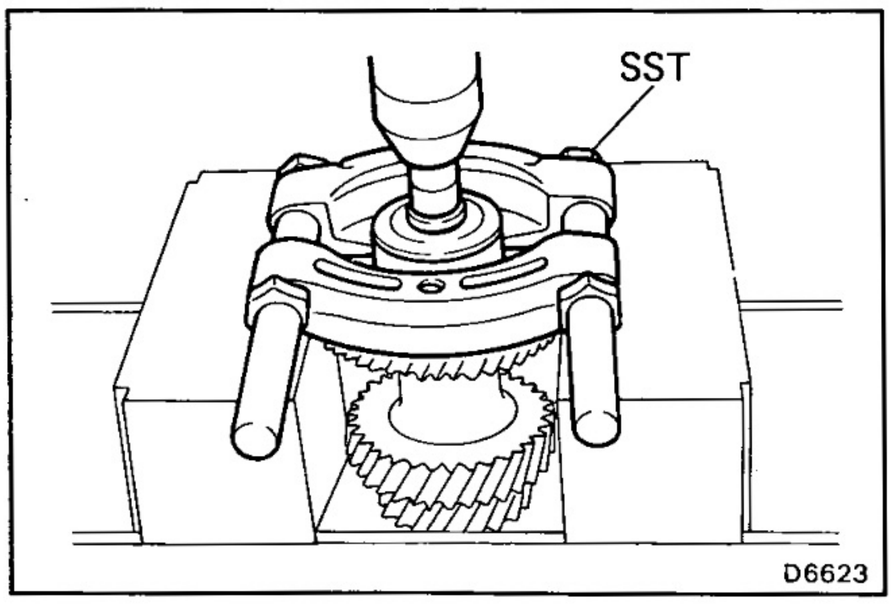

D6623

(b) Using SST and socket wrench, press out the bearing.

SST 09950-00020

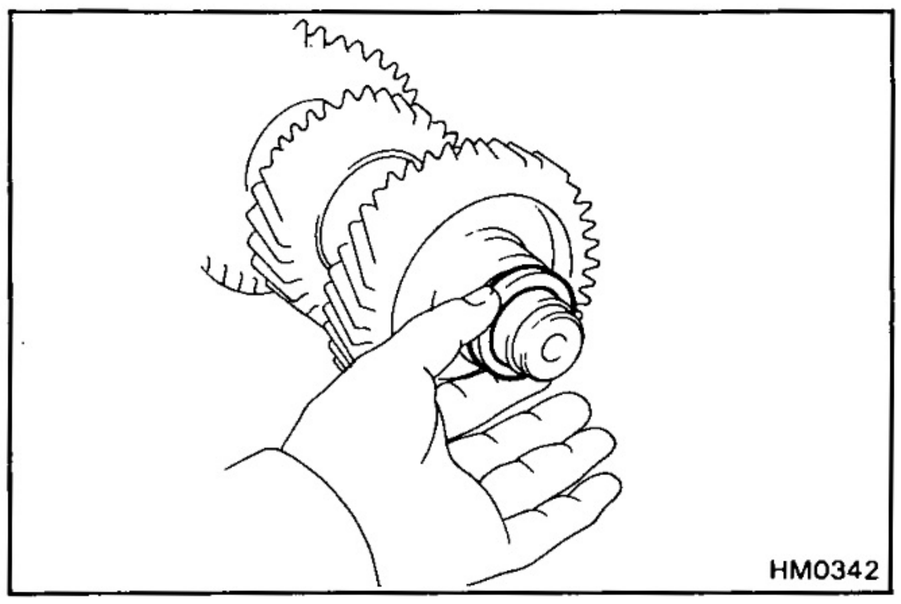

(c) Remove the side race.

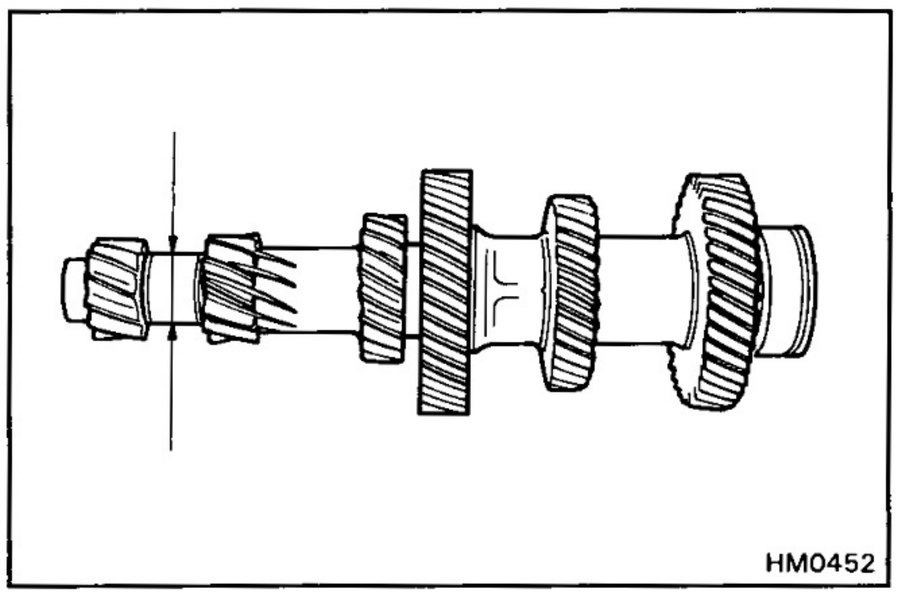

INSPECTION OF COUNTER GEAR ASSEMBLY

INSPECT COUNTER GEAR

Using a micrometer, measure the outer diameter of needle roller bearing race.

Standard diameter: **35.957 — 35.970 mm (1.4156 — 1.4161 in.)**

Maximum diameter: **35.970 mm (1.4161 in.)**

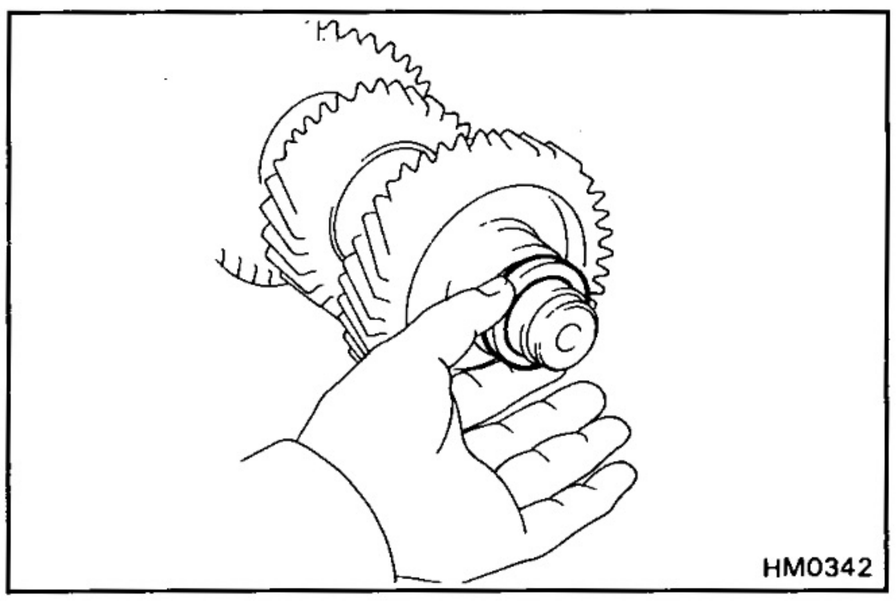

ASSEMBLY OF COUNTER GEAR ASSEMBLY

INSTALL SIDE RACE AND COUNTER GEAR FRONT BEARING

(a) Apply gear oil to the side race.

(b) Install the side race.

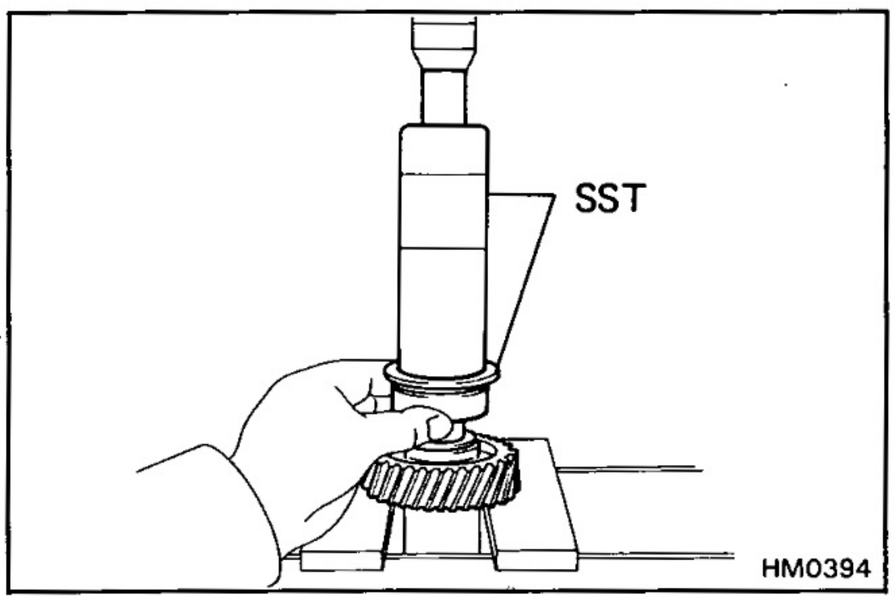

(c) Apply gear oil to the bearing.

(d) Using SST and a press, install the bearing.

SST 09316-60010 (09316-00010, 09316-00020)

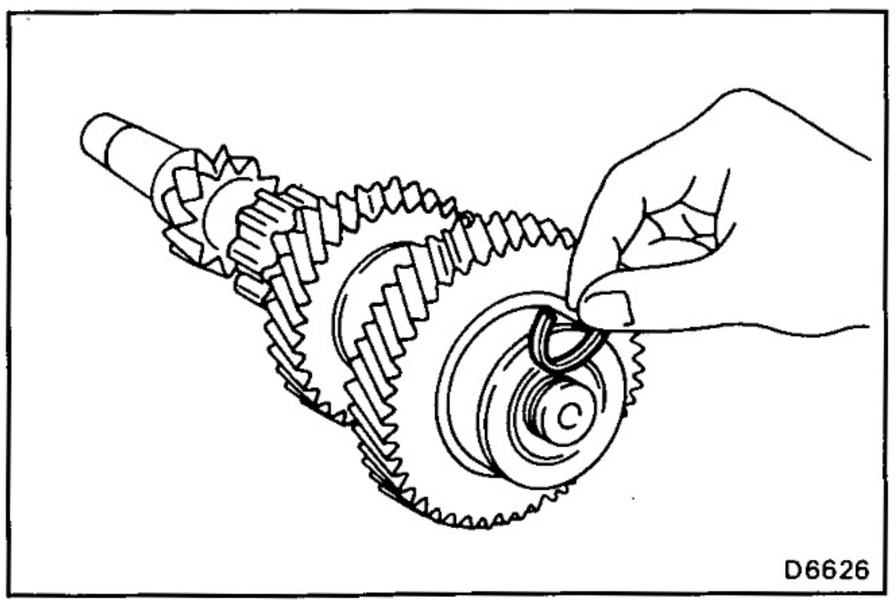

(e) Select a snap ring that will allow minimum axial play.

Mark	Thickness mm (in.)
A	2.45 — 2.50 (0.0970 — 0.0984)
B	2.50 — 2.55 (0.0984 — 0.1004)
C	2.55 — 2.60 (0.1004 — 0.1024)
D	2.60 — 2.65 (0.1024 — 0.1043)
E	2.65 — 2.70 (0.1043 — 0.1063)
F	2.70 — 2.75 (0.1063 — 0.1083)

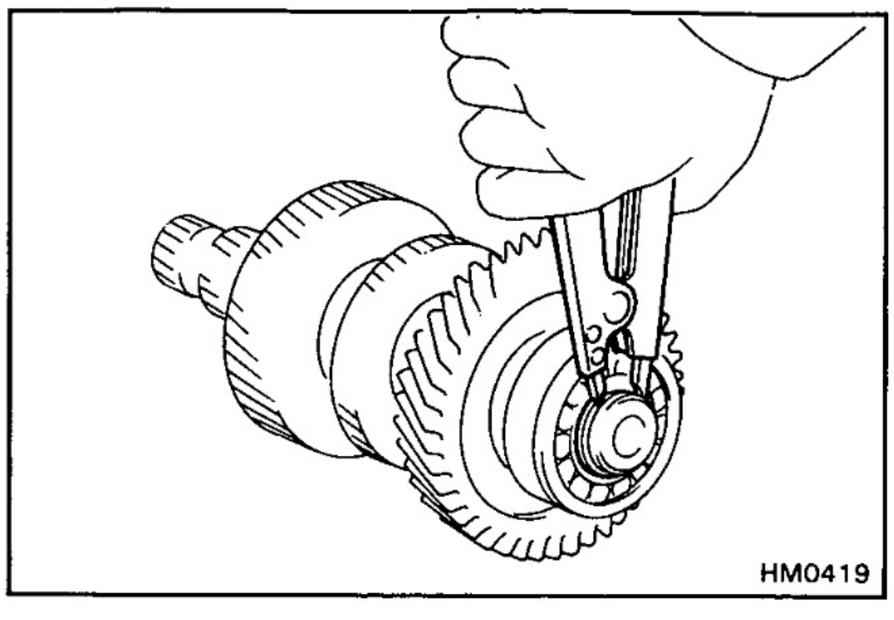

(f) Using snap ring pliers, install a new snap ring.

Front Bearing Retainer

COMPONENTS

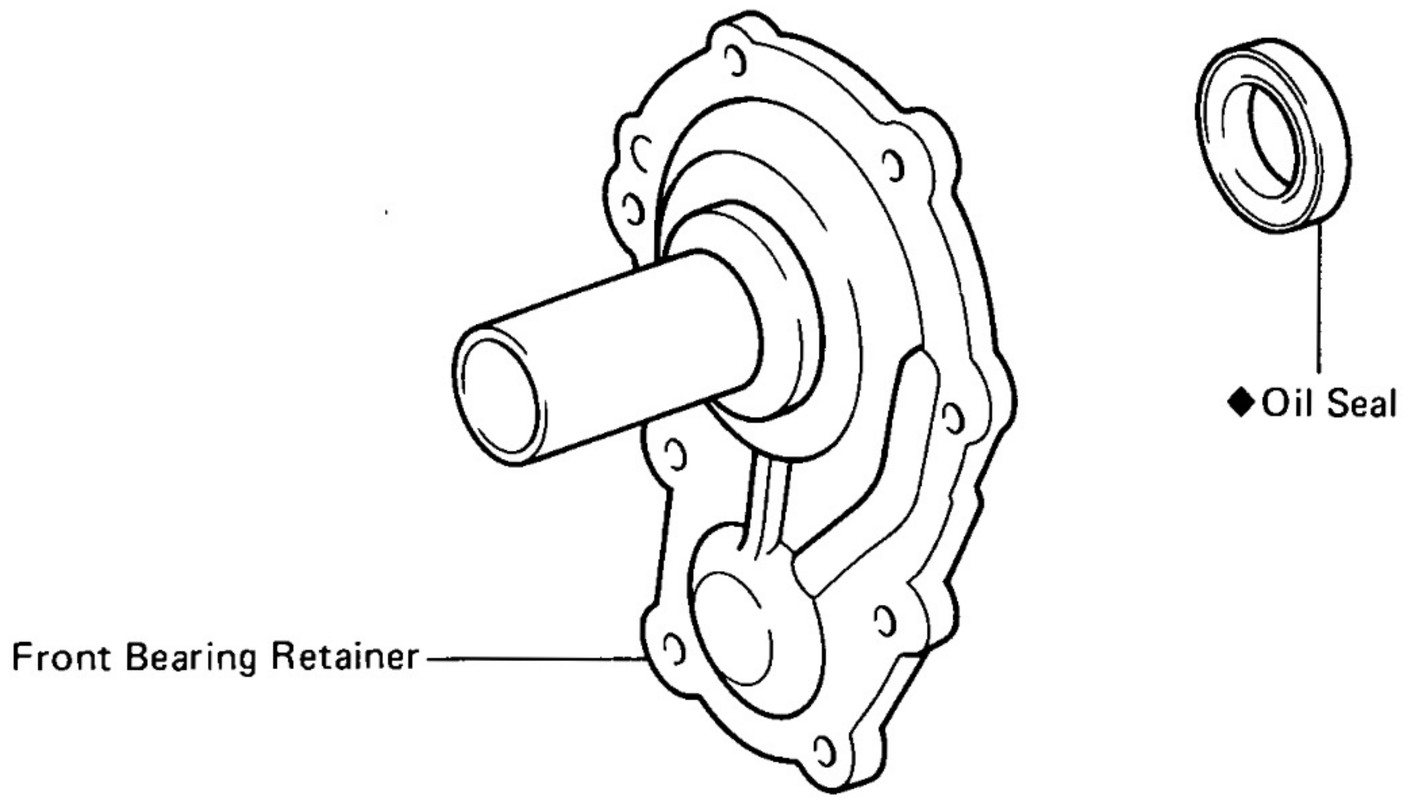

◆ Non-reusable part

HM0454

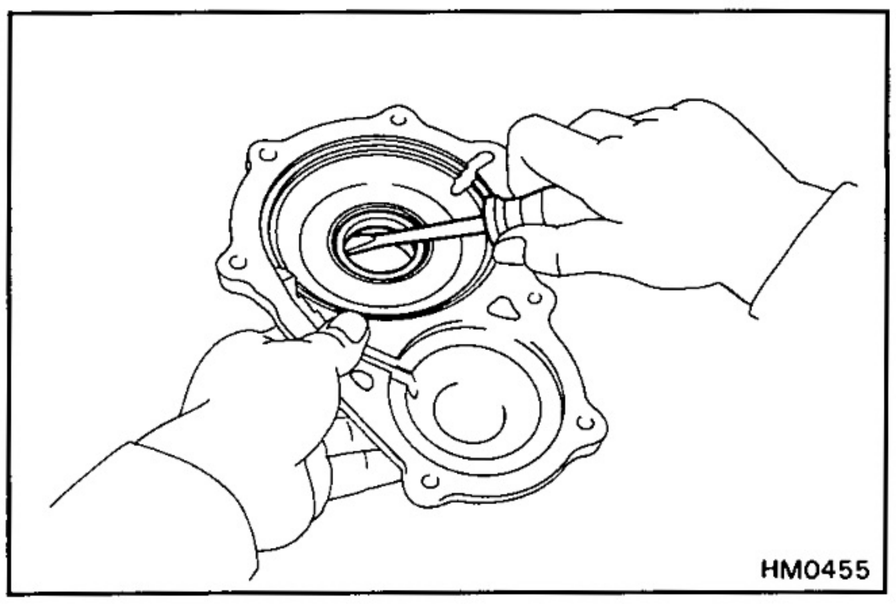

HM0455

REPLACEMENT OF OIL SEAL

IF NECESSARY REPLACE FRONT BEARING RETAINER OIL SEAL

(a) Using a screwdriver, pry out the oil seal.

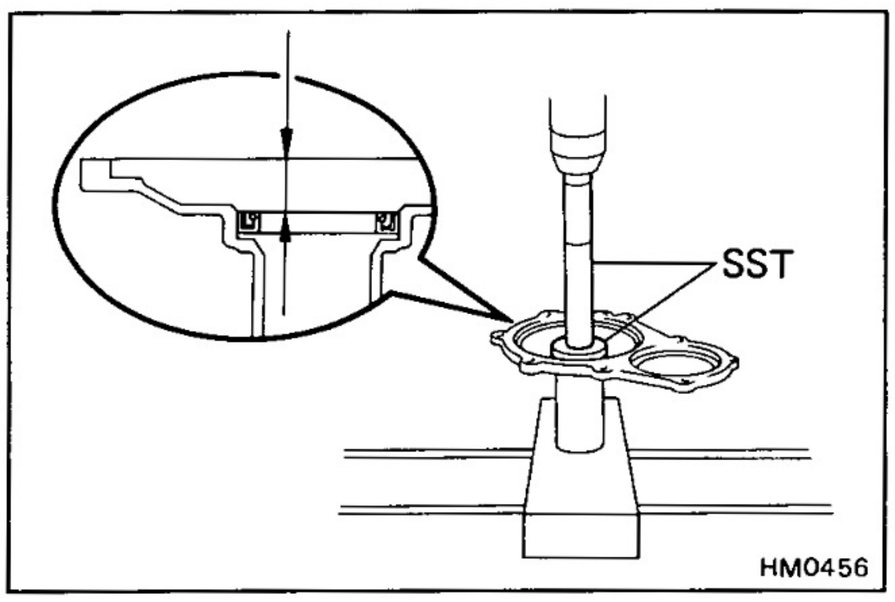

HM0456

(b) Using SST and a press in a new oil seal.

SST 09608-20012 (09608-03020, 09608-00040)

Oil seal depth: 15.4 — 16.2 mm (0.606 — 0.638 in.)

Oil Pump Cover Assembly

COMPONENTS

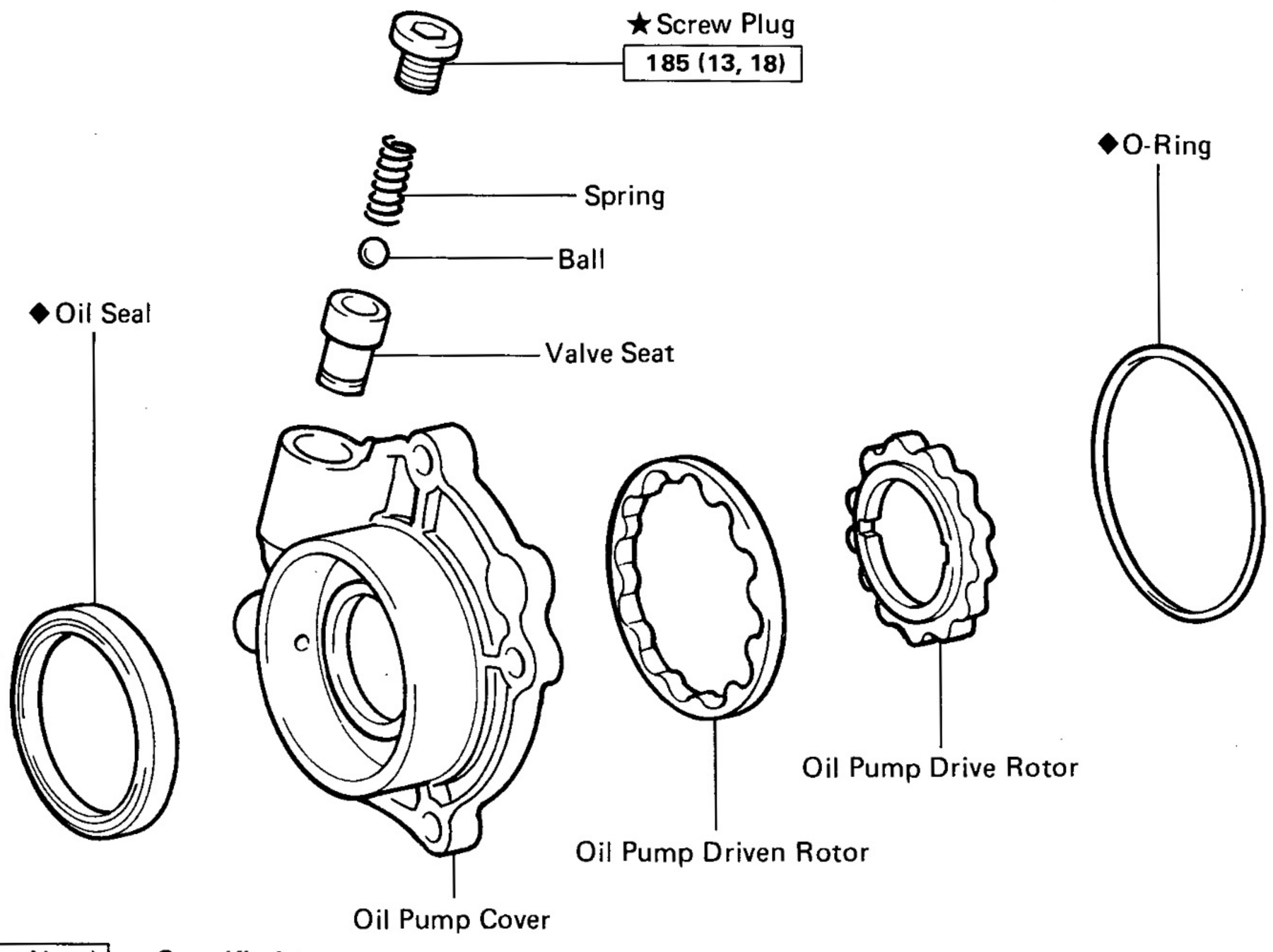

kg-cm (ft-lb, N·m) : Specified torque
◆ Non-reusable part
★ Precoated part

HM0400

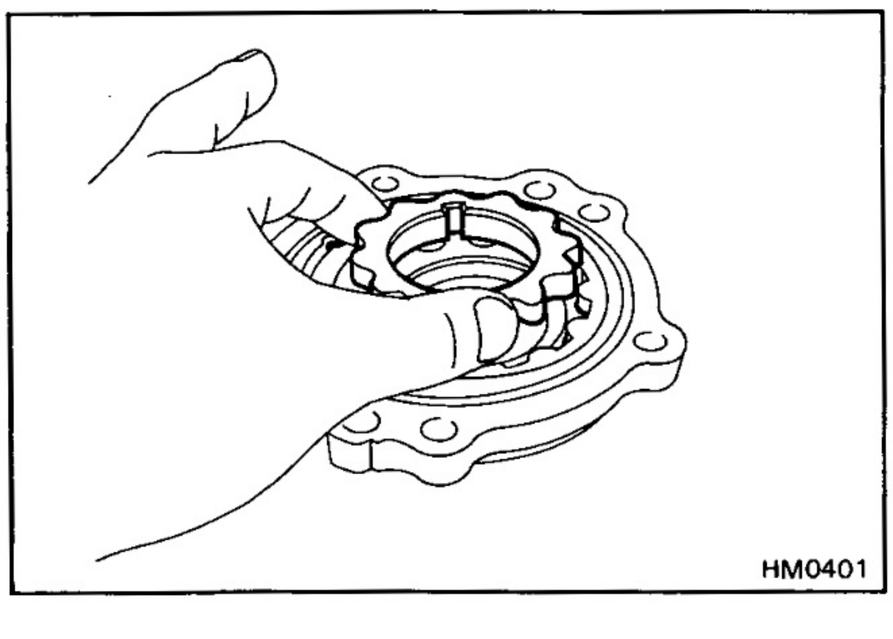

HM0401

DISASSEMBLY OF OIL PUMP COVER ASSEMBLY

1. REMOVE OIL SEAL
2. REMOVE OIL PUMP DRIVE ROTOR

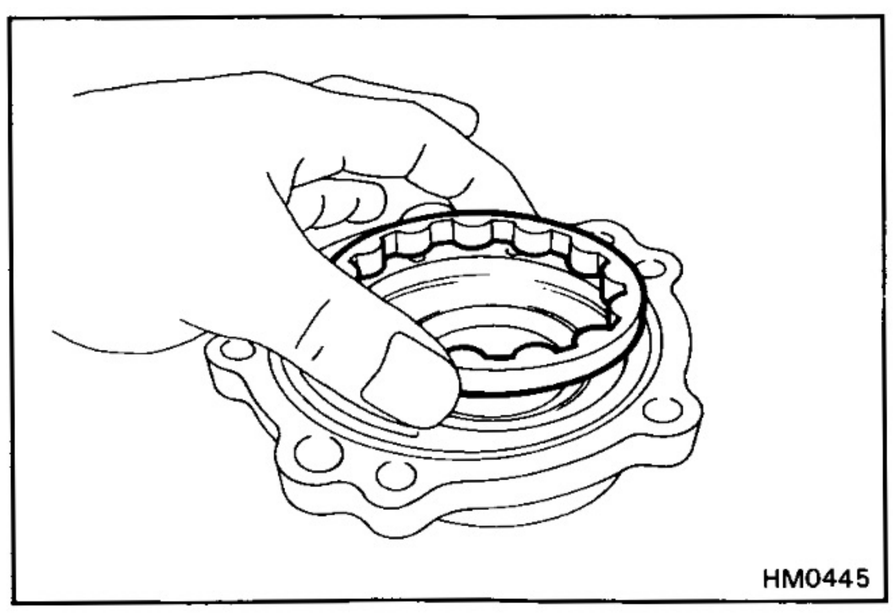

HM0445

3. REMOVE OIL PUMP DRIVEN ROTOR
4. REMOVE O-RING

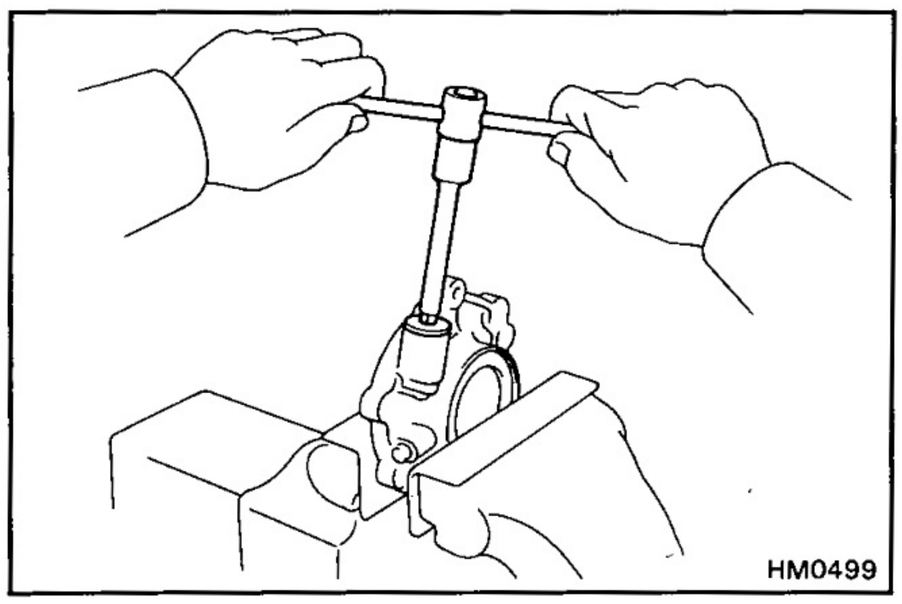

5. REMOVE SCREW PLUG, SPRING, BALL AND VALVE SEAT

(a) Using a hexagon wrench, remove the screw plug.

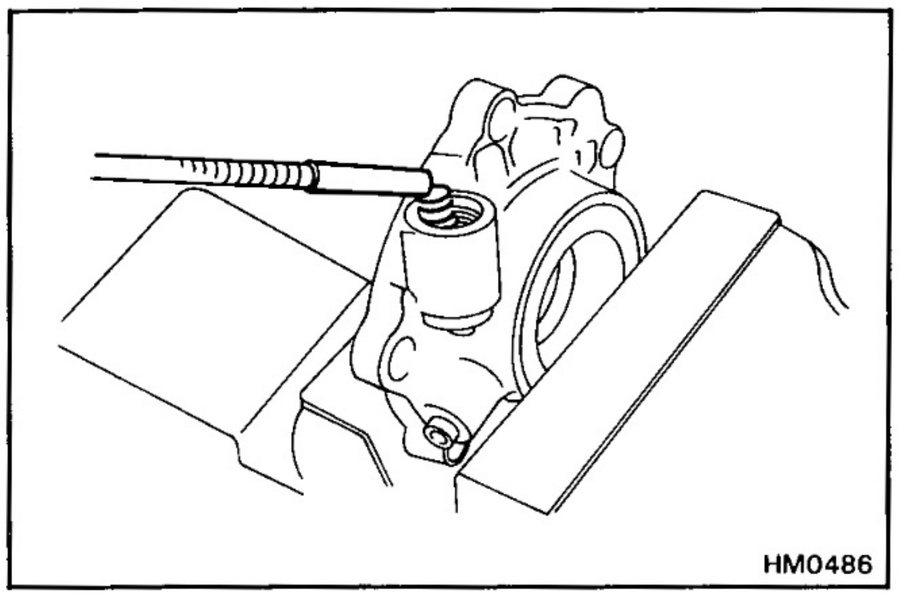

(b) Using a magnetic finger, remove the spring.

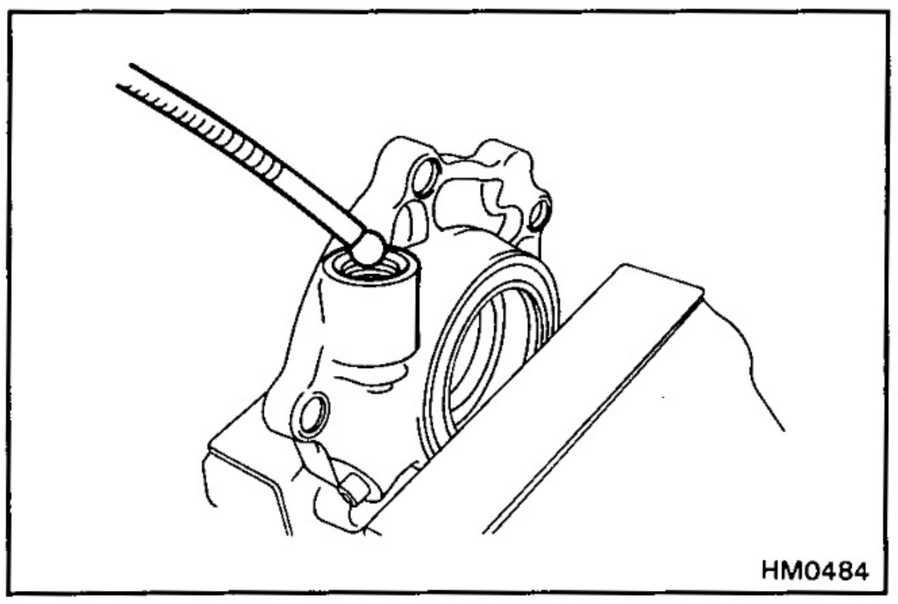

(c) Using a magnetic finger, remove the ball.

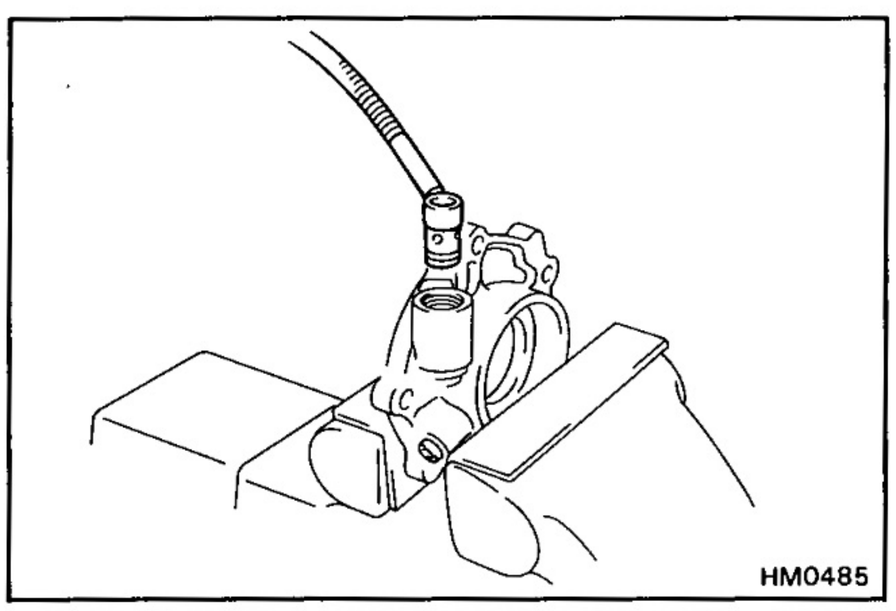

(d) Using a magnetic finger, remove the valve seat.

(e) Remove the O-ring from the valve seat.

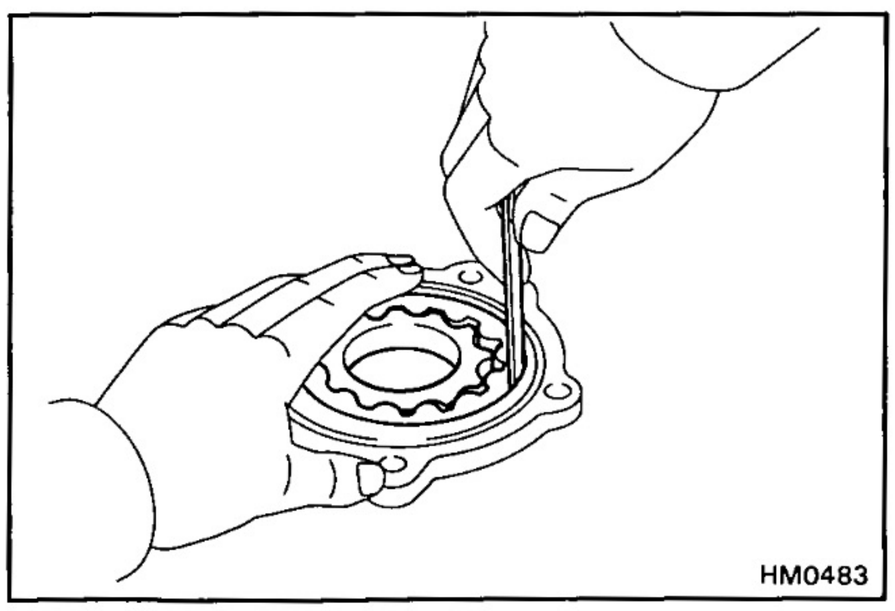

INSPECTION OF OIL PUMP COVER ASSEMBLY

1. CHECK BODY CLEARANCE OF DRIVEN ROTOR

Push the driven rotor to one side of the cover.

Using a feeler gauge, measure the clearance.

Standard clearance: **0.075 — 0.170 mm (0.0030 — 0.0067 in.)**

Maximum clearance: **0.170 mm (0.0067 in.)**

If the clearance more than the limit, replace the driven rotor or pump cover.

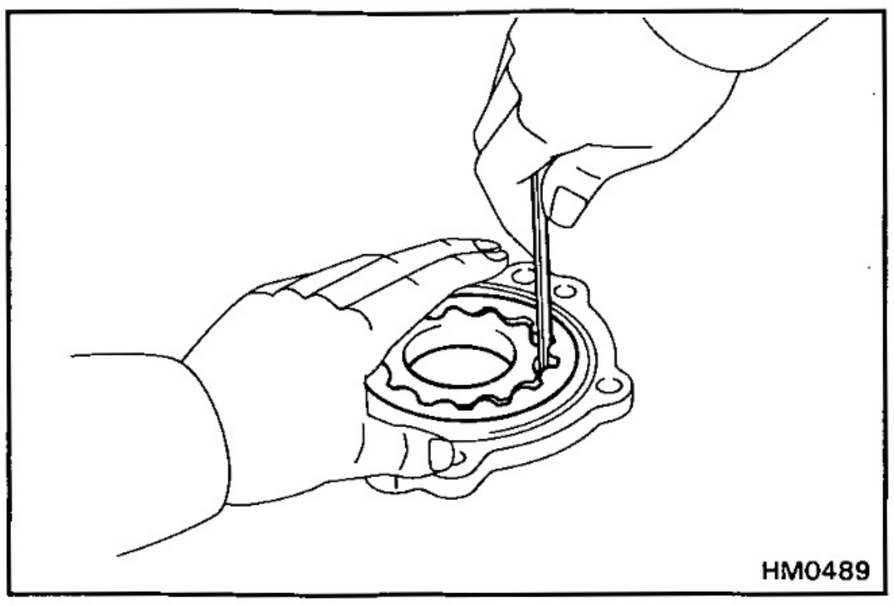
HM0489

2. CHECK TIP CLEARANCE OF BOTH ROTORS

Using a feeler gauge, measure the clearance between both rotor tips.

Standard clearance: **0.10 — 0.22 mm (0.0039 — 0.0087 in.)**

Maximum clearance: **0.22 mm (0.0087 in.)**

If the clearance more than the limit, replace the drive rotor or driven rotor.

ASSEMBLY OF OIL PUMP COVER ASSEMBLY

1. INSTALL VALVE SEAT, BALL, SPRING AND SCREW PLUG

(a) Install the O-ring to valve seat.

(b) Apply gear oil to the valve seat.

(c) Install the valve seat.

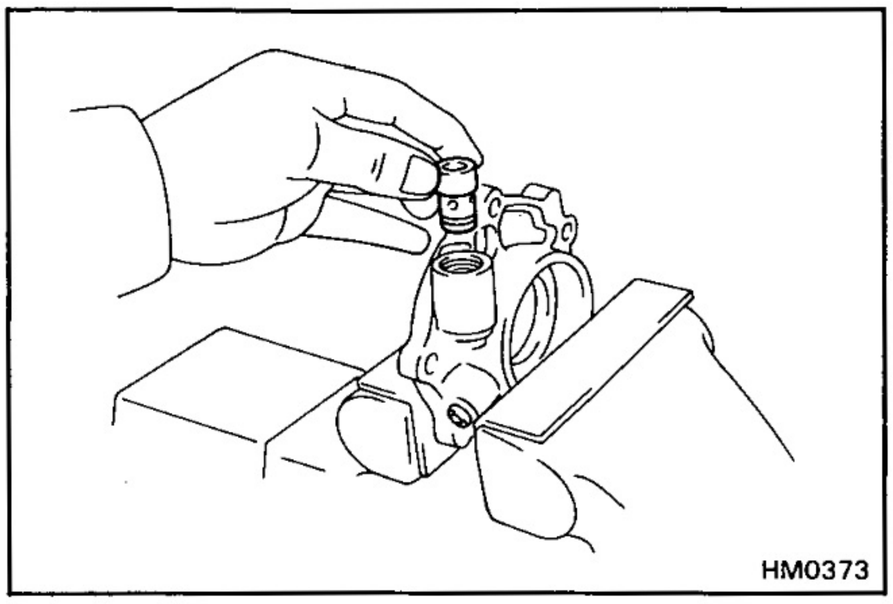
HM0373

(d) Apply gear oil to the ball.

(e) Install the ball.

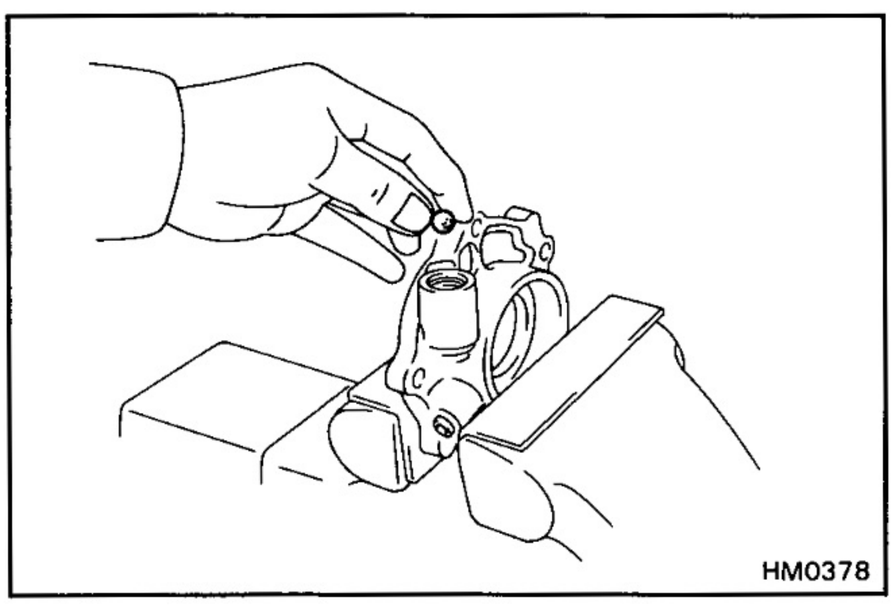
HM0378

(f) Install the spring.

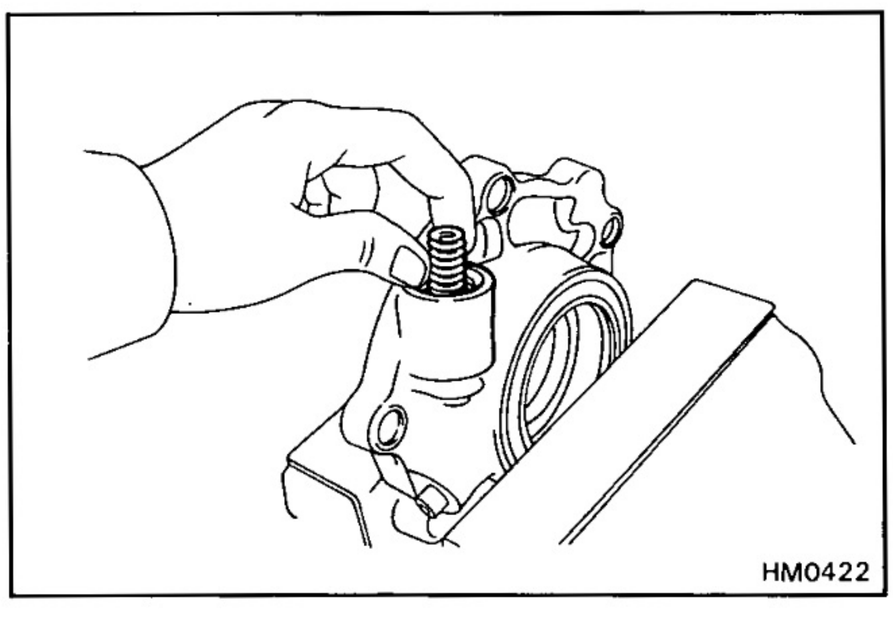
HM0422

(g) Using a hexagon wrench, install and torque the screw plug.

Torque: **185 kg-cm (13 ft-lb, 18 N·m)**

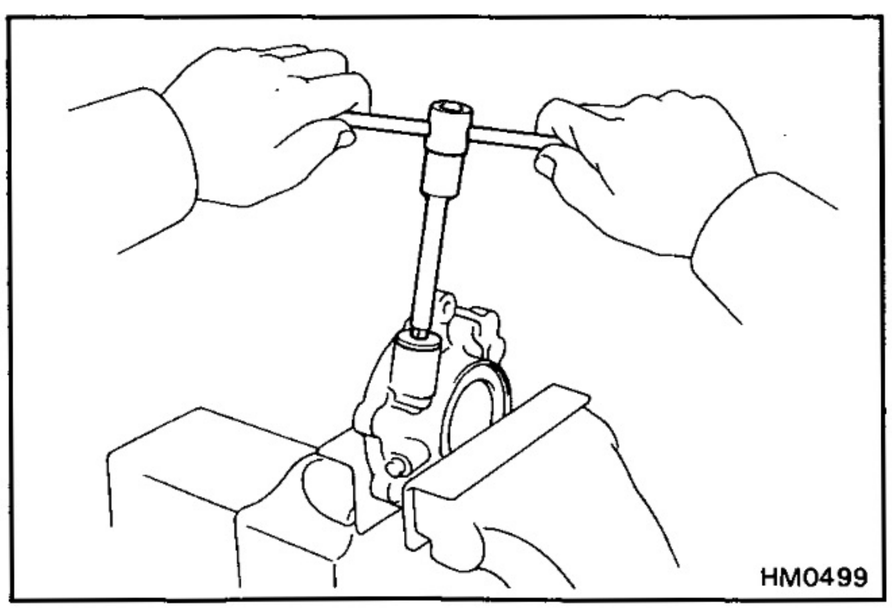
HM0499

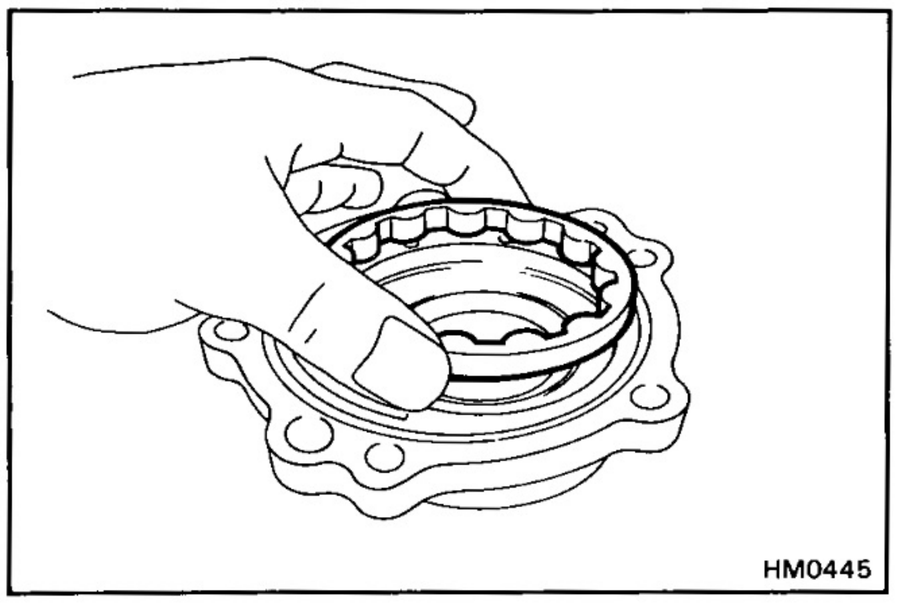
HM0445

2. INSTALL OIL PUMP DRIVEN ROTOR

(a) Aplly gear oil to the driven rotor.

(b) Install the oil pump driven rotor.

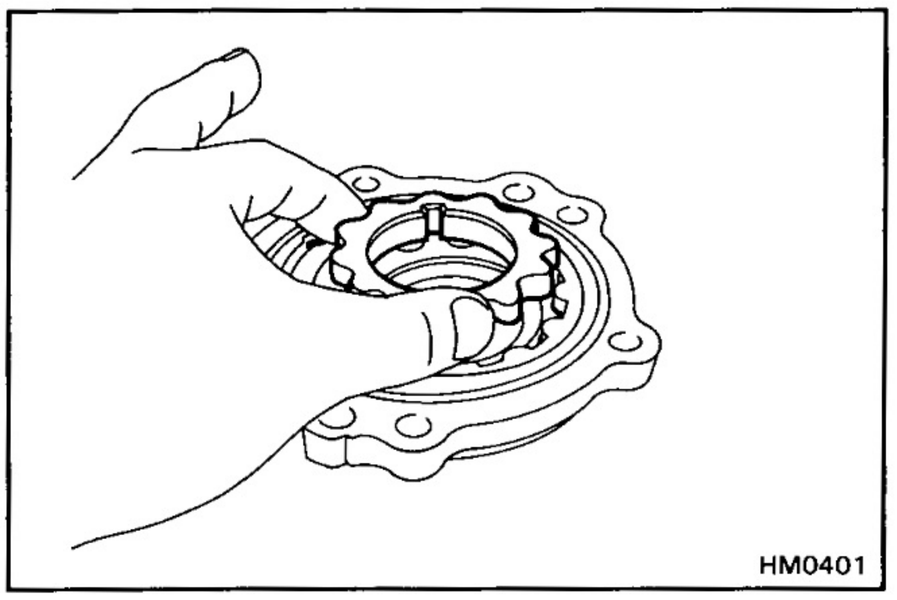
HM0401

3. INSTALL OIL PUMP DRIVE ROTOR

(a) Apply gear oil to the drive rotor.

(b) Install the oil pump drive rotor.

4. INSTALL NEW O-RING

5. INSTALL NEW OIL SEAL

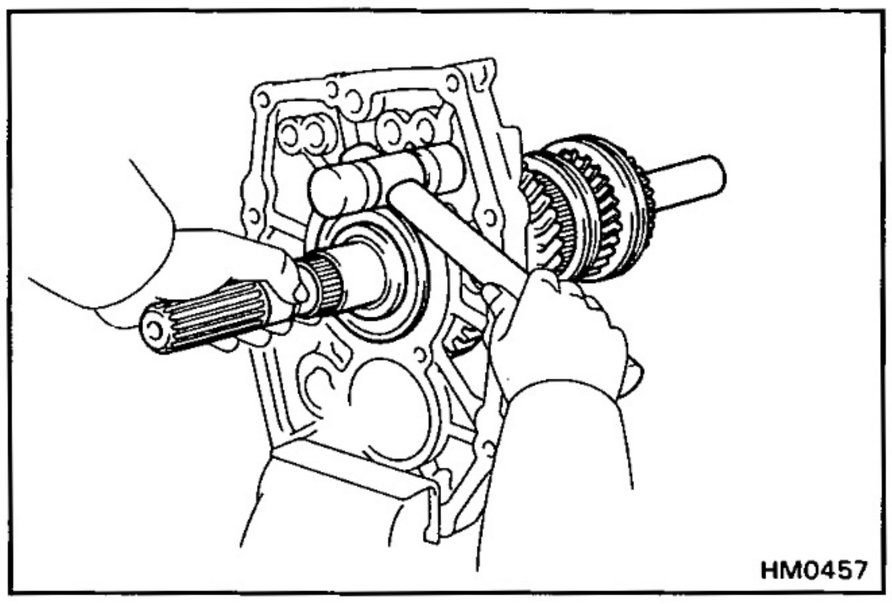
HM0457

ASSEMBLY OF TRANSMISSION

(See page MT-12 to 14)

1. INSTALL OUTPUT SHAFT ASSEMBLY TO INTERMEDIATE PLATE

(a) Install the output shaft assembly into the intermediate plate by pulling on the output shaft assembly and tapping on the intermediate plate.

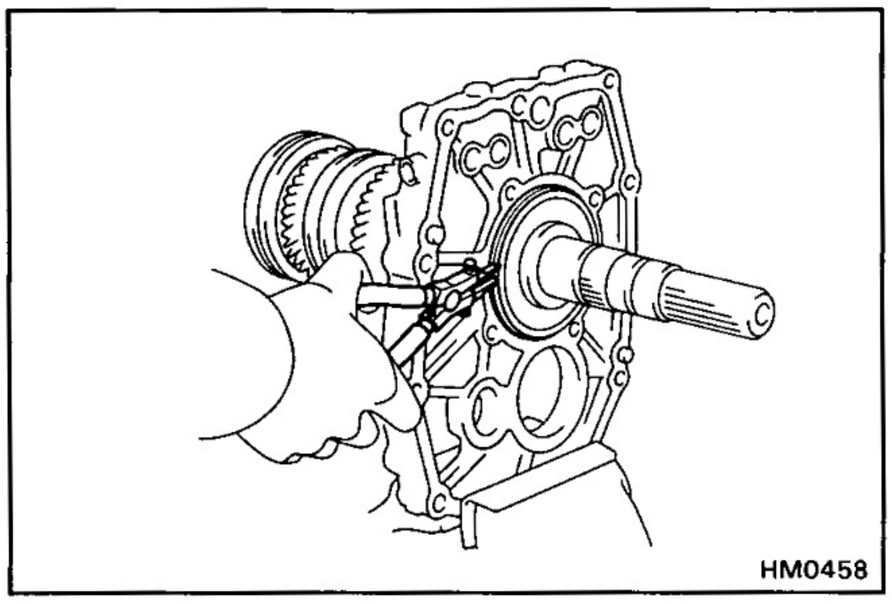
HM0458

(b) Using snap ring pliers, install the snap ring.

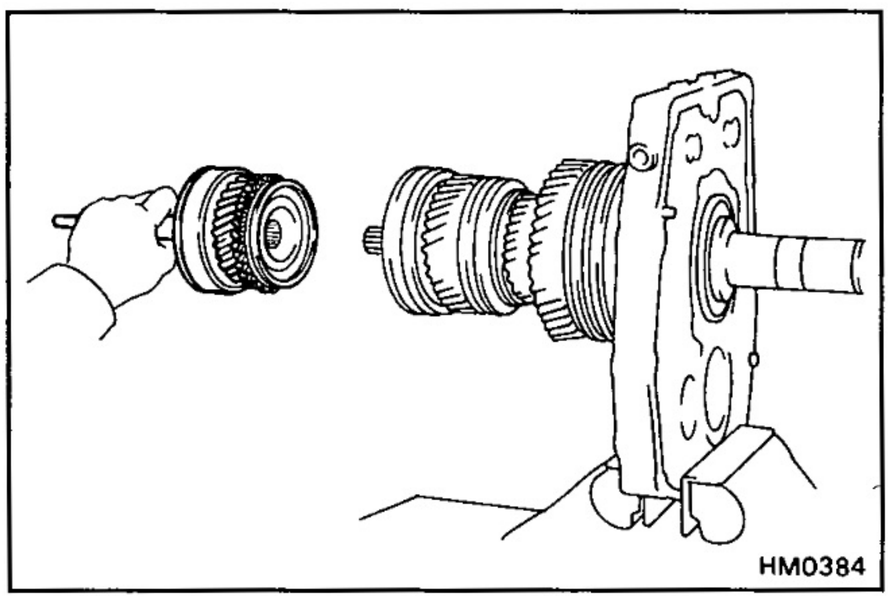
HM0384

2. INSTALL INPUT SHAFT

(a) Apply MP grease to the 12-needle roller bearing and install them into the input shaft.

(b) Install the input shaft to the output shaft with the synchronizer ring slots aligned with the shifting keys.

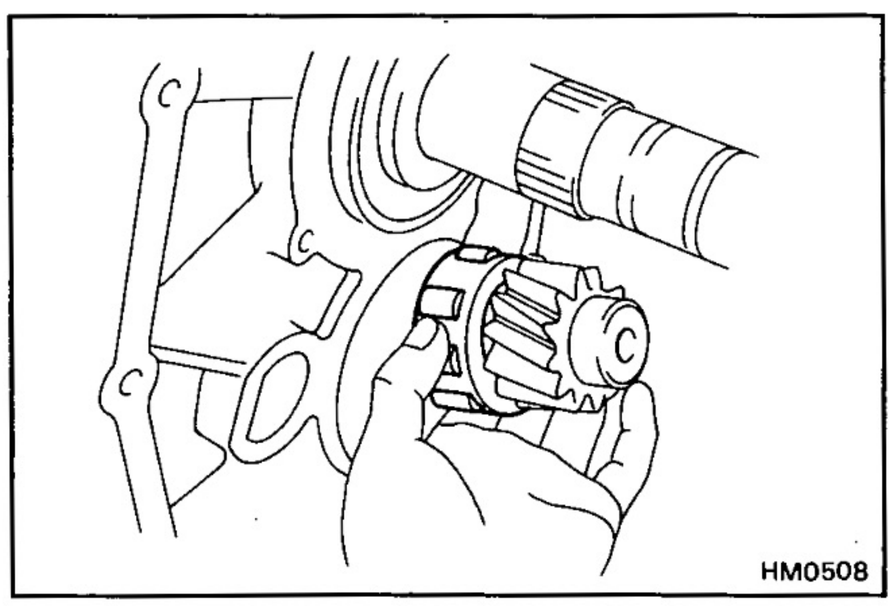
HM0508

3. INSTALL COUNTER GEAR

(a) Install the counter gear into the intermediate plate and install the roller bearing.

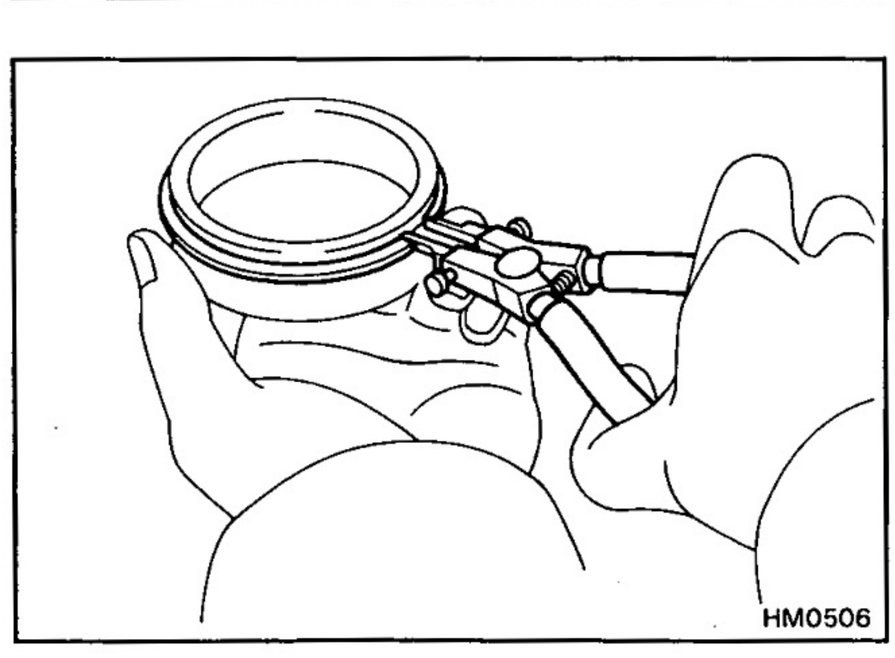
HM0506

(b) Using snap ring pliers, install the snap ring to outer race.

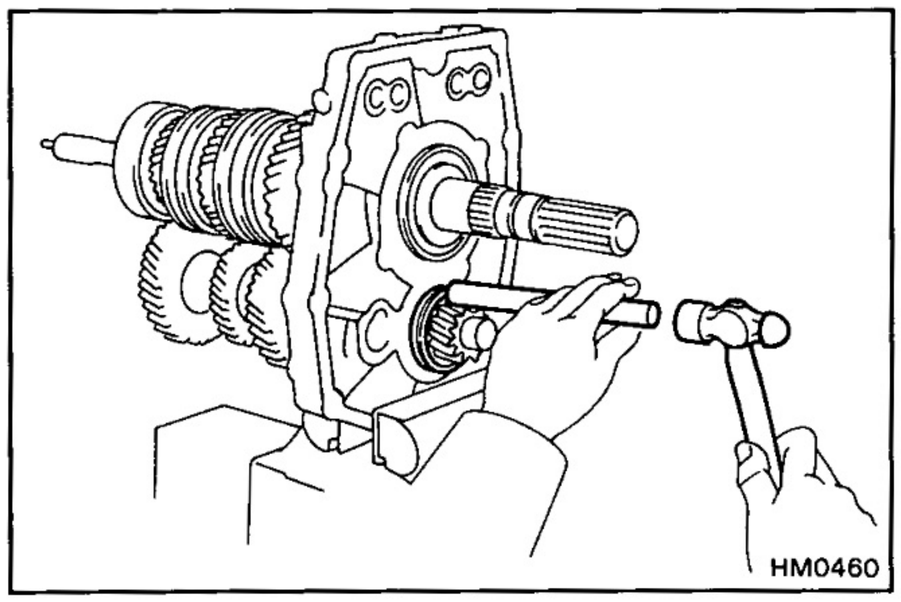

(c) Install the counter gear rear bearing outer race with a brass bar and hammer.

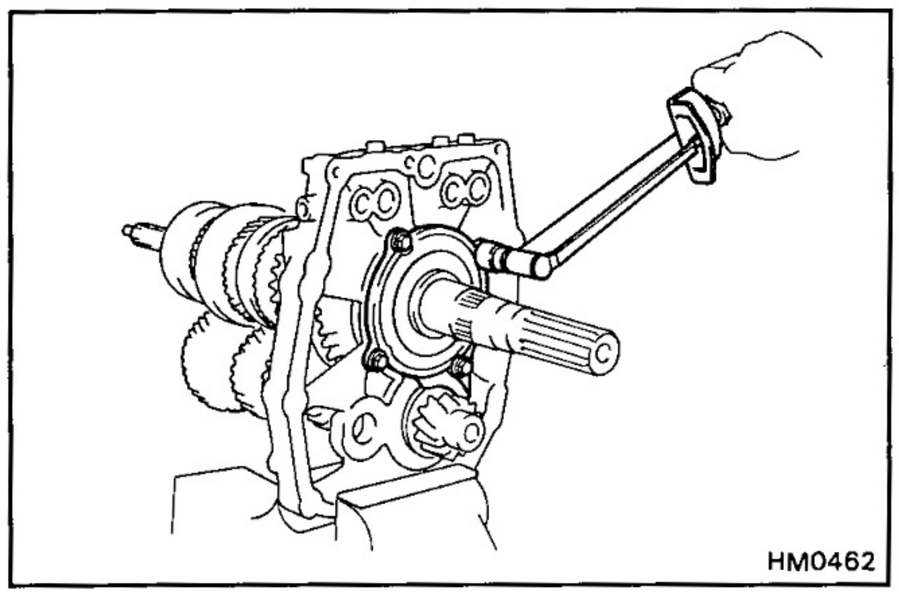

4. INSTALL REAR BEARING RETAINER

Install and torque the bolts.

Torque: 185 kg-cm (13 ft-lb, 18 N·m)

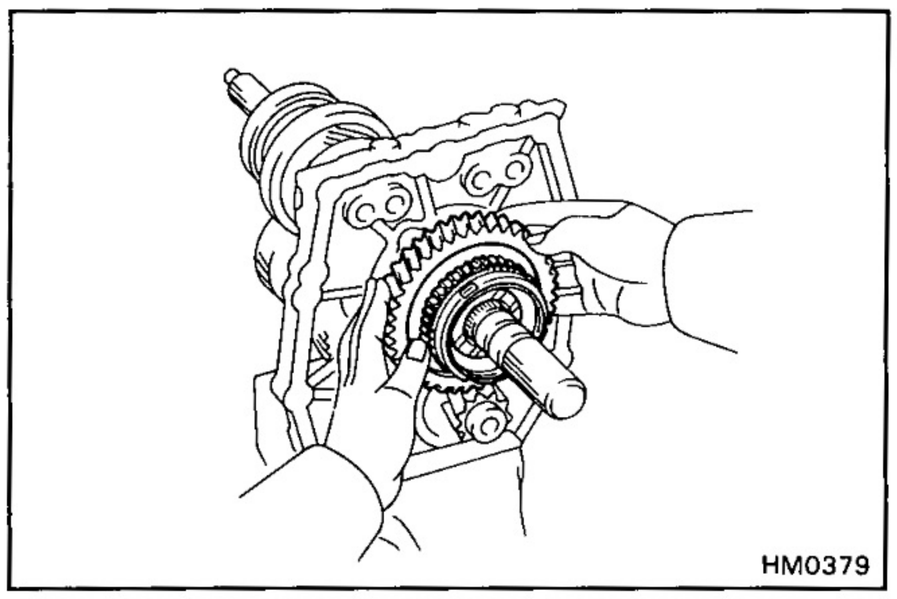

5. INSTALL REVERSE GEAR, REVERSE SYNCHRO ASSEMBLY AND NEEDLE ROLLER BEARING

(a) Apply gear oil to the needle roller bearing.

(b) Install the needle roller bearing and reverse gear with synchronizer ring.

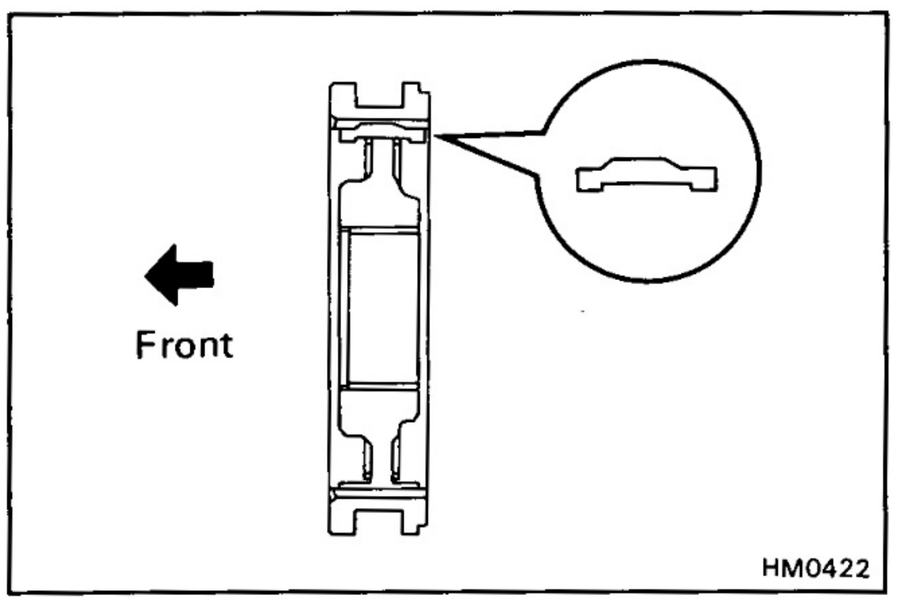

(c) Install the clutch hub No.4 and shifting keys to the hub sleeve No.4.

(d) Install the spring under the shifting keys.

NOTICE: Install the key springs positioned so that their end gaps are not in line.

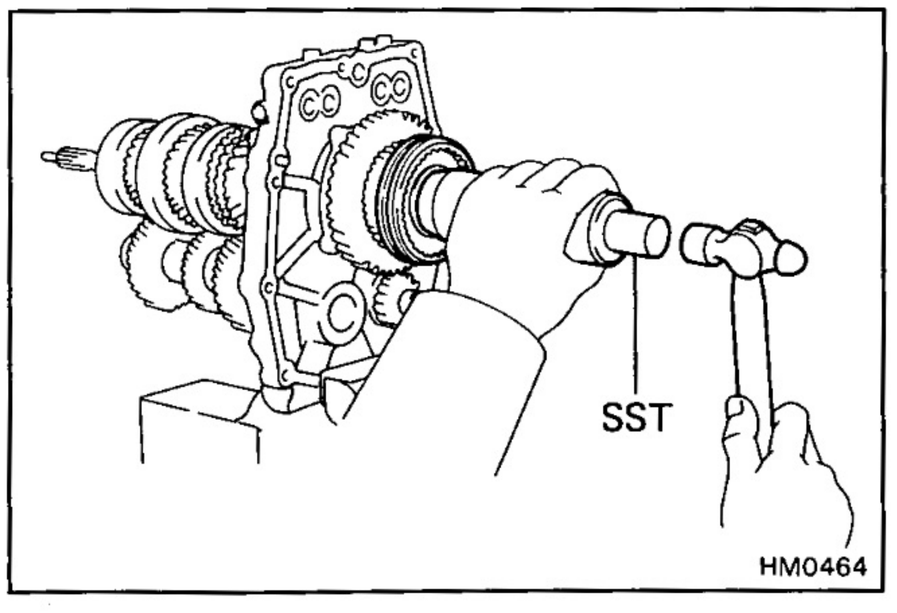

(e) Using SST and a hammer, install the reverse synchro assembly.

SST 09316-60010 (09316-00010)

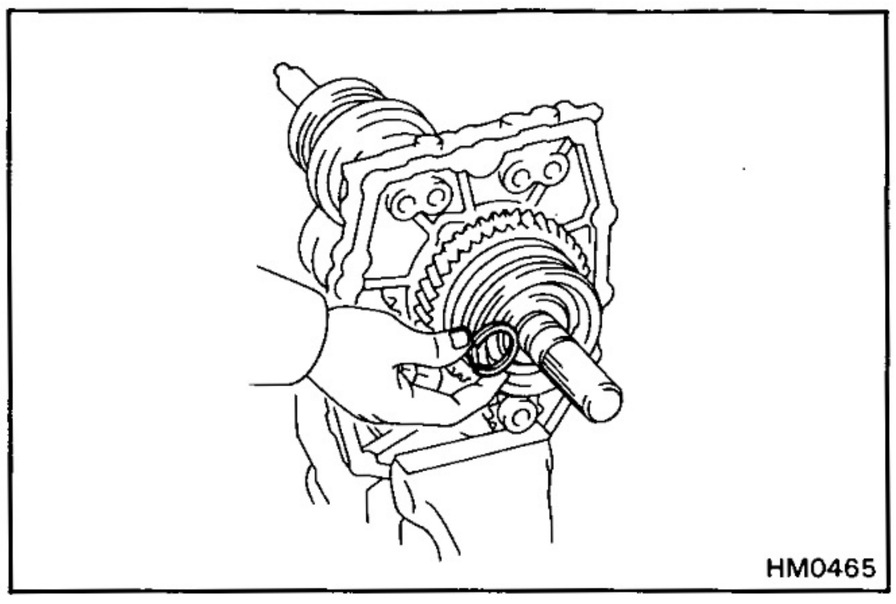
HM0465

6. INSTALL SNAP RING

(a) Select a snap ring that will allow minimum axial play.

Mark	Thickness mm (in.)
A	2.40 — 2.45 (0.0945 — 0.0965)
B	2.45 — 2.50 (0.0965 — 0.0984)
C	2.50 — 2.55 (0.0984 — 0.1004)
D	2.55 — 2.60 (0.1004 — 0.1024)
E	2.60 — 2.65 (0.1024 — 0.1044)
F	2.65 — 2.70 (0.1044 — 0.1063)

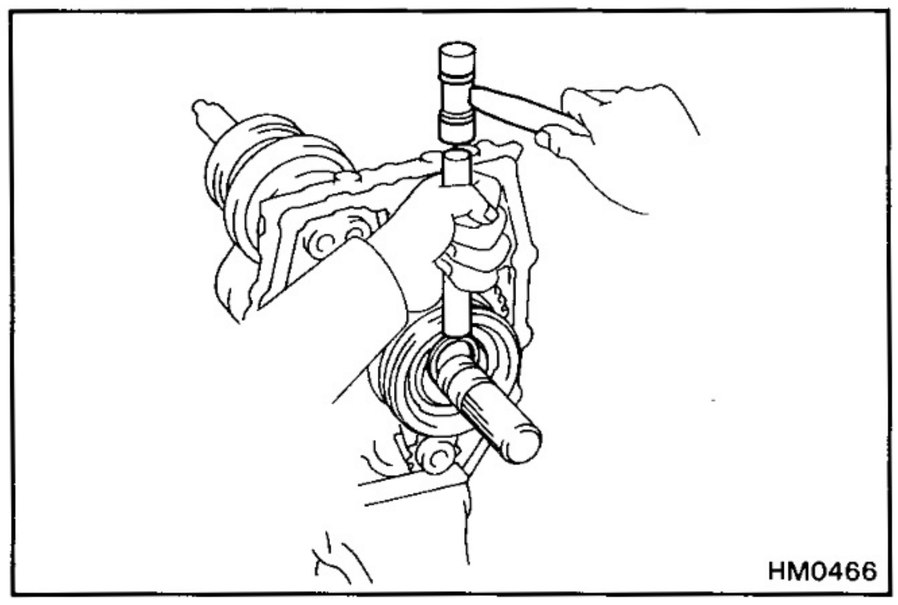
HM0466

(b) Using a brass bar and a hammer, install the snap ring.

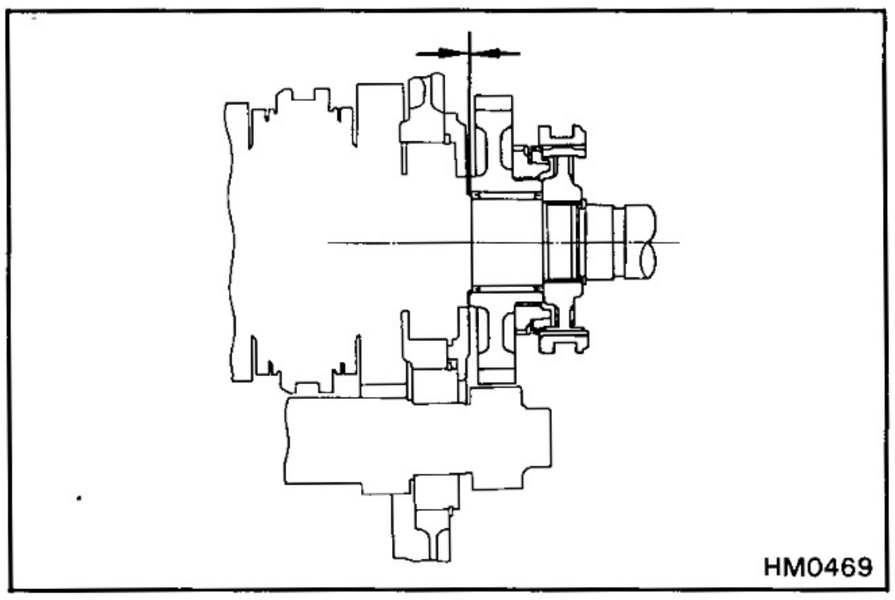
HM0469

7. MEASURE REVERSE GEAR THRUST CLEARANCE

Using a feeler gauge, measure the reverse gear clearance.

Standard clearance: 0.1 — 0.67 mm (0.0039 — 0.0264 in.)

Maximum clearance: 0.67 mm (0.0264 in.)

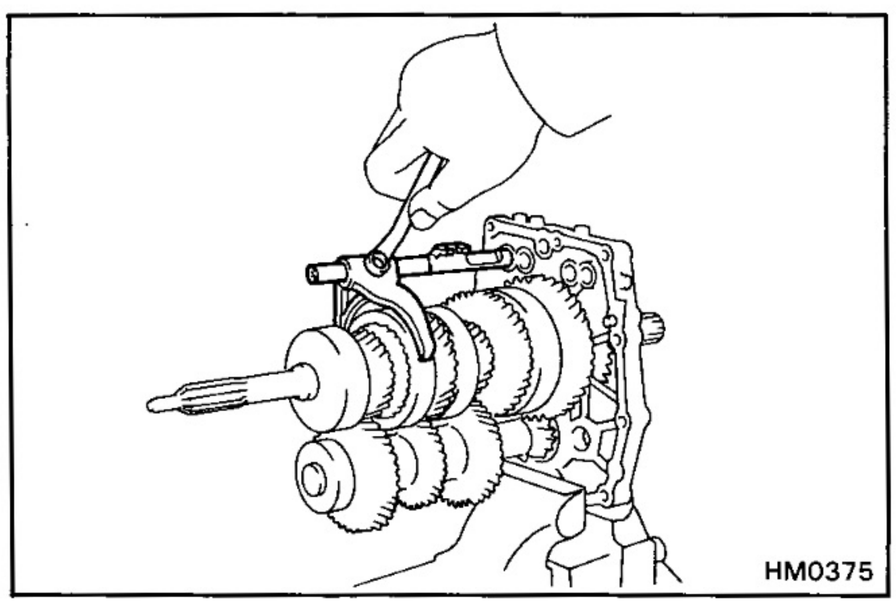
HM0375

8. INSTALL SHIFT FORK SHAFT NO.2 AND SHIFT FORK NO.2

(a) Place shift fork No.2 into the grove of hub sleeve No.2.

(b) Install shift fork shaft No.2 to shift fork No.2 and intermediate plate.

(c) Install and torque the set bolt.

Torque: 370 kg-cm (27 ft-lb, 36 N·m)

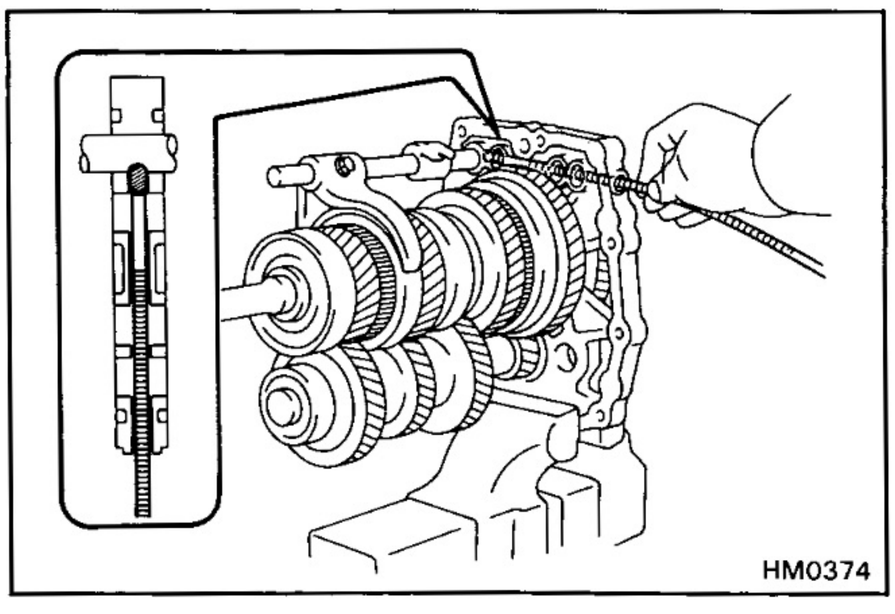
HM0374

9. INSTALL SHIFT FORK SHAFT NO.1 AND SHIFT FORK NO.1

(a) Using a magnetic finger, install the interlock pin into the intermediate plate.

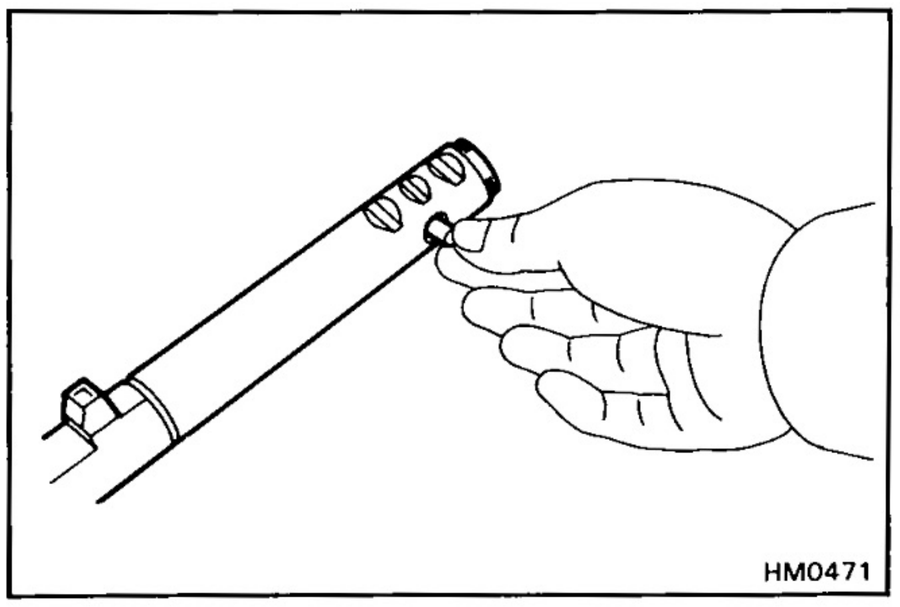
HM0471

(b) Install the interlock pin into the shaft hole.

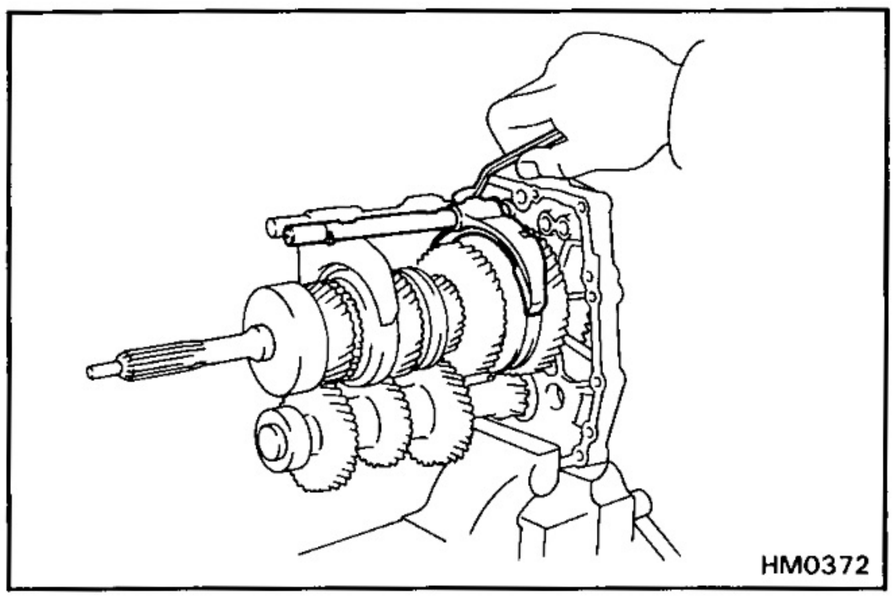
HM0372

(c) Place shift fork No.1 into the groove of hub sleeve No.1.

(d) Install shift fork shaft No.1 to shift fork No.1 and intermediate plate.

(e) Install and torque the bolt.

Torque: 370 kg-cm (27 ft-lb, 36 N·m)

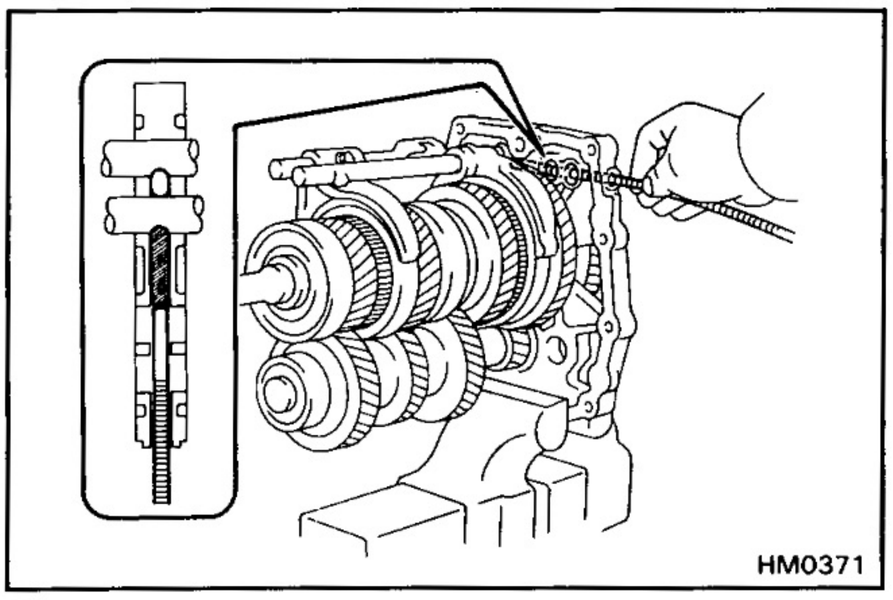
HM0371

10. INSTALL SHIFT FORK SHAFT NO.3, REVERSE SHIFT HEAD AND SHIFT FORK NO.3

(a) Using a magnetic finger, install the interlock pin into the intermediate plate.

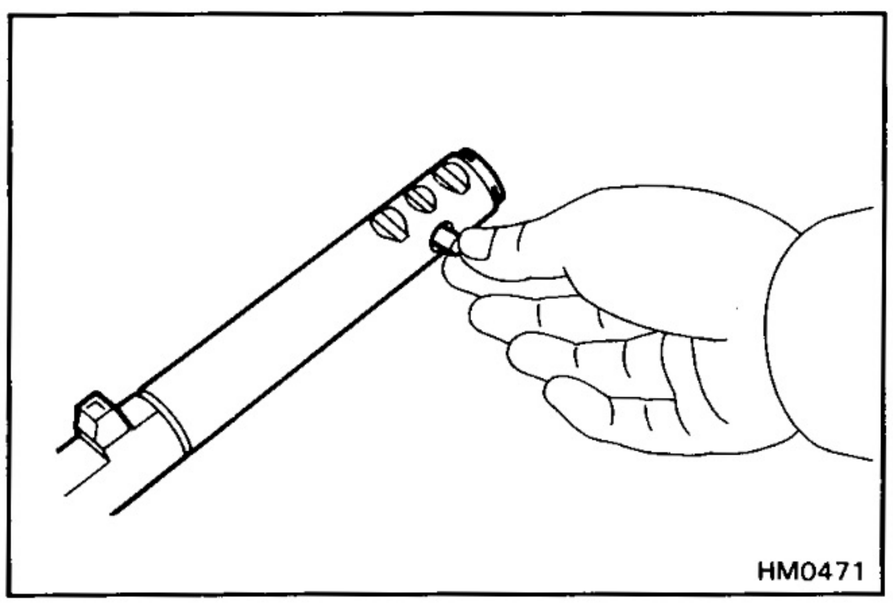
HM0471

(b) Install the interlock pin into the shaft hole.

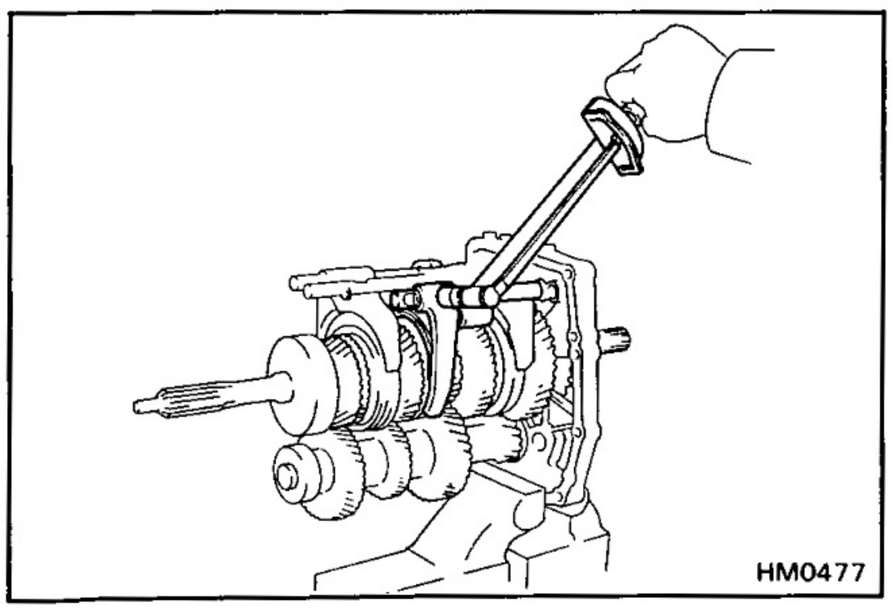
HM0477

(c) Place shift fork No.3 into the groove of hub sleeve No.3.

(d) Install shift fork shaft No.3 to shift fork No.3, reverse shift head and shift fork through the intermediate plate.

(e) Install and torque the set bolt.

Torque: 370 kg-cm (27 ft-lb, 36 N·m)

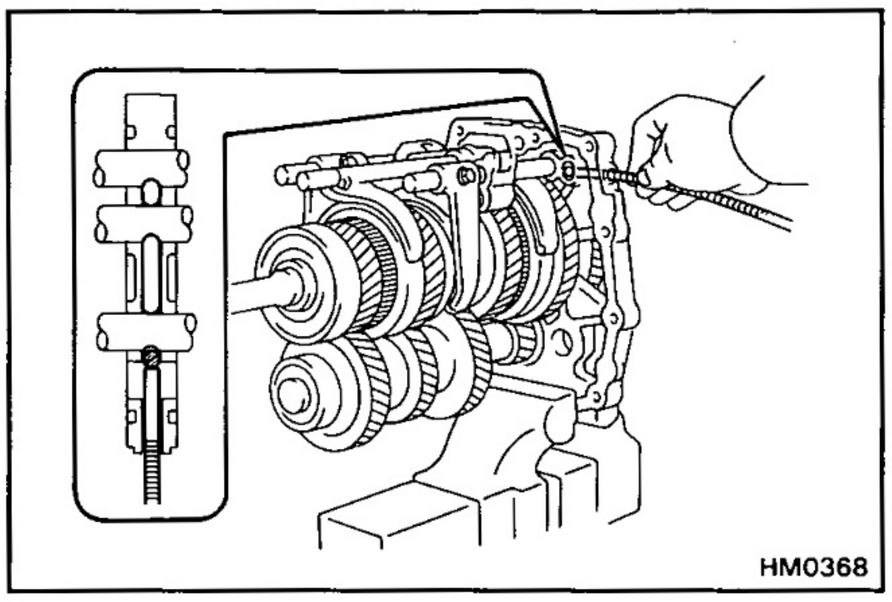
HM0368

11. INSTALL SHIFT FORK SHAFT NO.3 OR NO.4 AND REVERSE SHIFT FORK

(a) Using a magnetic finger, install the locking ball into the intermediate plate.

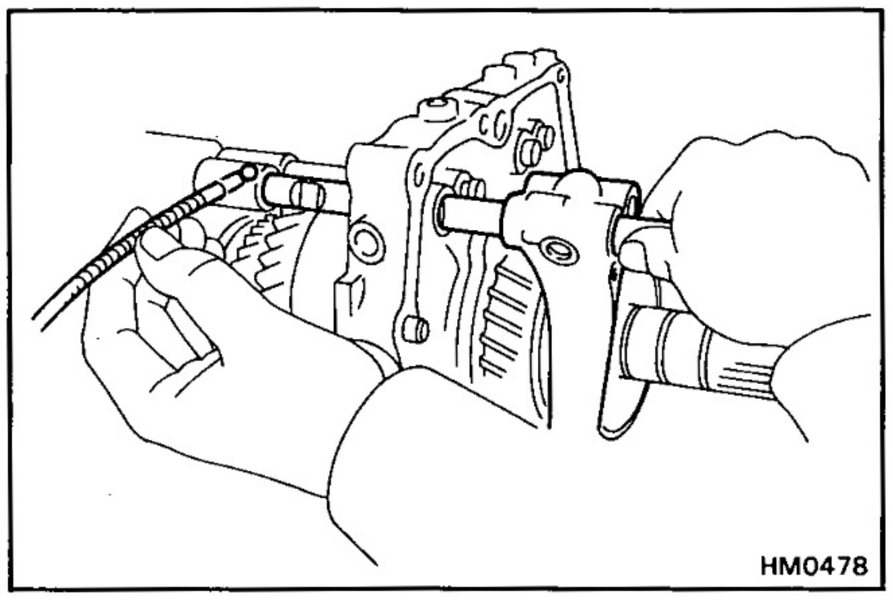
HM0478

(b) Place reverse shift fork into the groove of hub sleeve No.3 or No.4.

(c) Install shift fork shaft No.3 or No.4 to reverse shift fork and shift fork through the intermediate plate.

(d) Using a magnetic finger, install the locking ball into the reverse shift head.

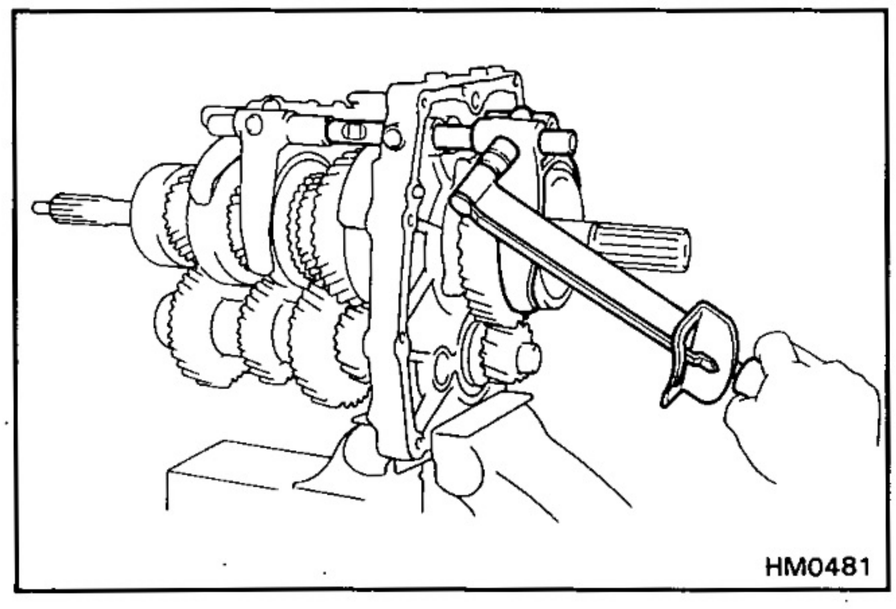
HM0481

(e) Install and torque the set bolt.

Torque: 4-Speed 350 kg-cm (25 ft-lb, 34 N·m)
5-Speed 370 kg-cm (27 ft-lb, 36 N·m)

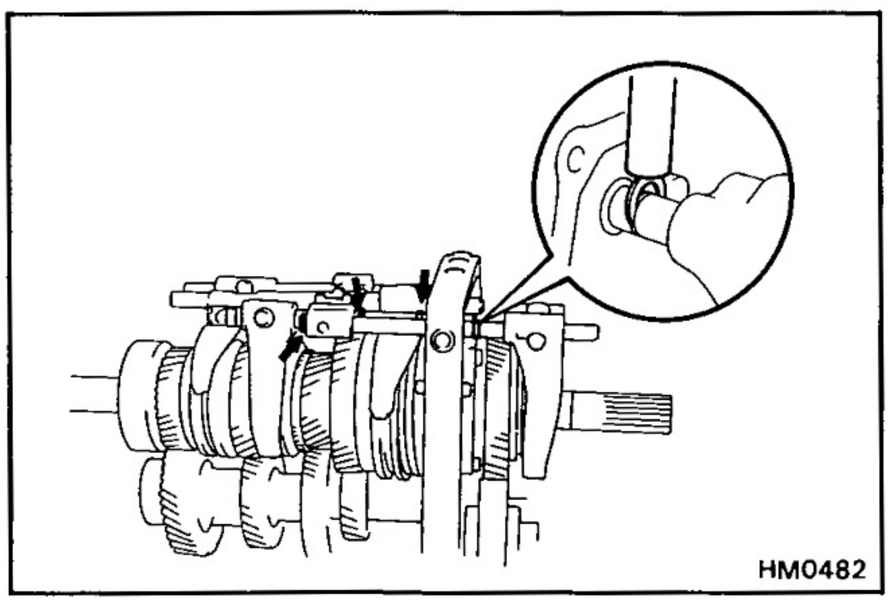
HM0482

12. INSTALL FORK SHAFT SNAP RINGS

Using a brass bar and hammer, tap in the snap rings.

4-Speed: One snap ring
5-Speed: Four snap rings.

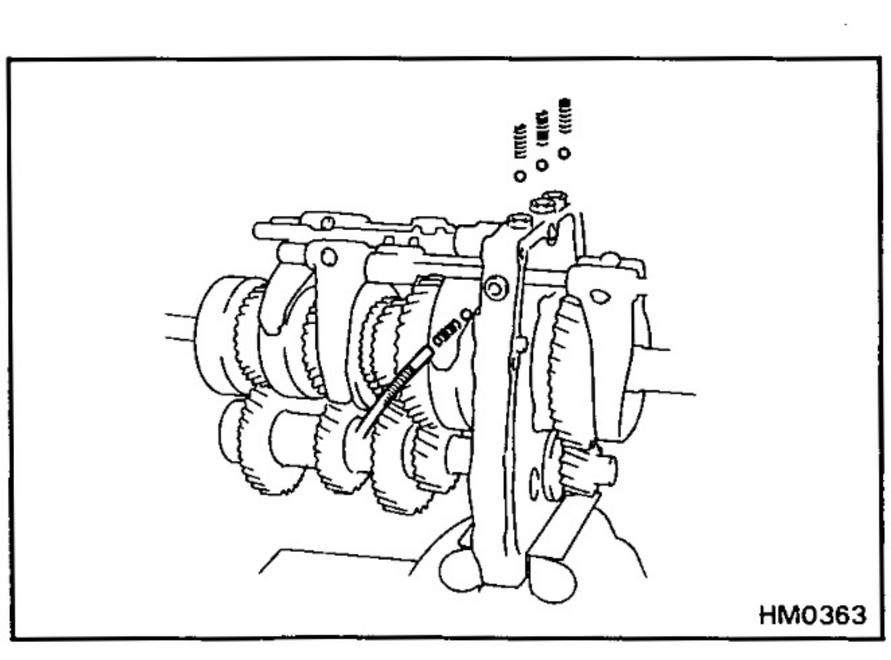
HM0363

13. INSTALL LOCKING BALLS, SPRINGS AND SCREW PLUGS

(a) Install the locking balls, springs and screw plugs.

4-Speed: Three locking balls and springs
5-Speed: Four locking balls and springs

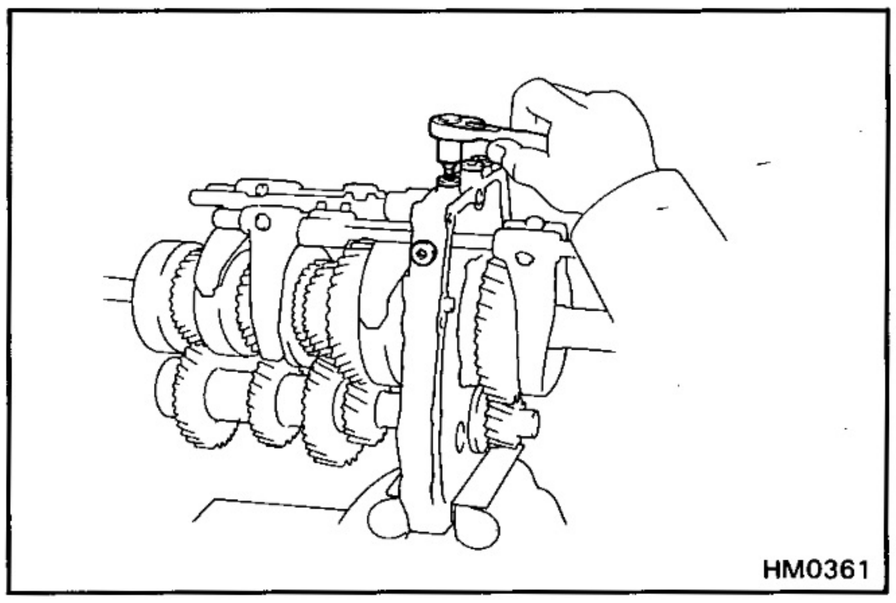
HM0361

(b) Apply liquid sealer to the plug threads.

Sealant: Part No.08833-00080, THREE BOND 1344, LOCTITE 242 or equivalent

(c) Using a torx socket wrench, torque the screw plug.

(Torx socket wrench T40 09042-00020)

Torque: 190 kg-cm (14 ft-lb, 19 N·m)

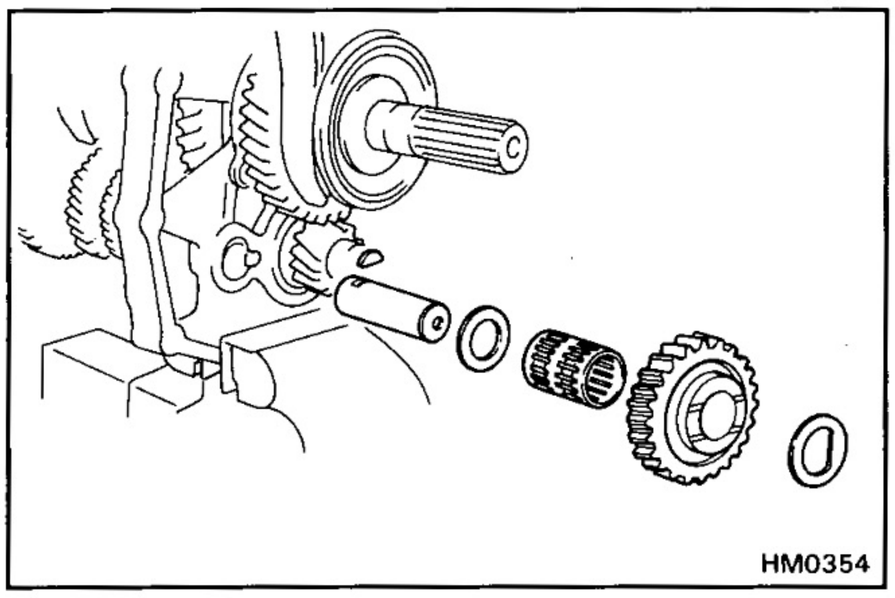
HM0354

14. INSTALL REVERSE IDLER GEAR TO INTERMEDIATE PLATE

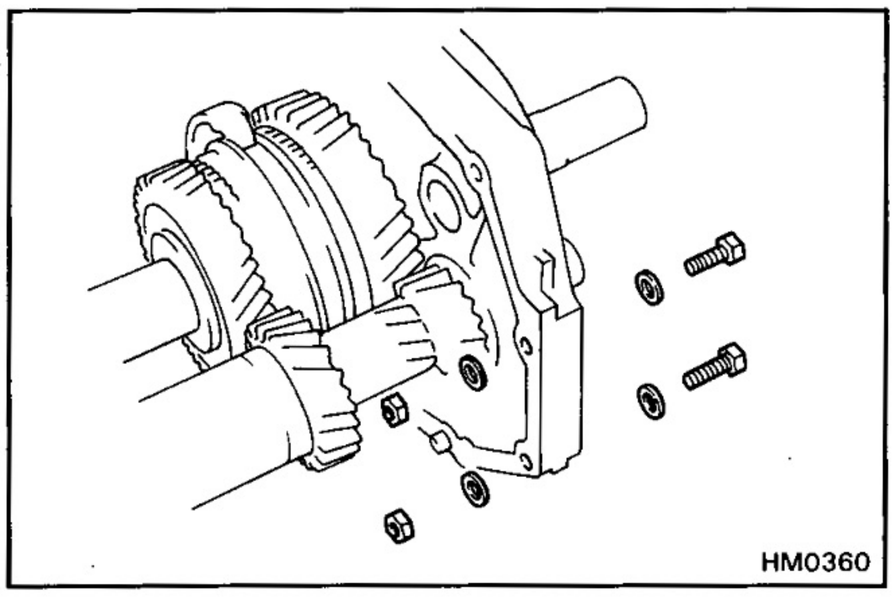
HM0360

15. DISMOUNT INTERMEDIATE PLATE FROM VISE

(a) Dismount the intermediate plate from the vise.

(b) Remove the bolts, nuts and plate washers.

16. INSTALL OIL RECEIVER TO INTERMEDIATE PLATE

(a) Install the oil receiver.

(b) Install and torque the three bolts.

Torque: 185 kg-cm (13 ft-lb, 18 N·m)

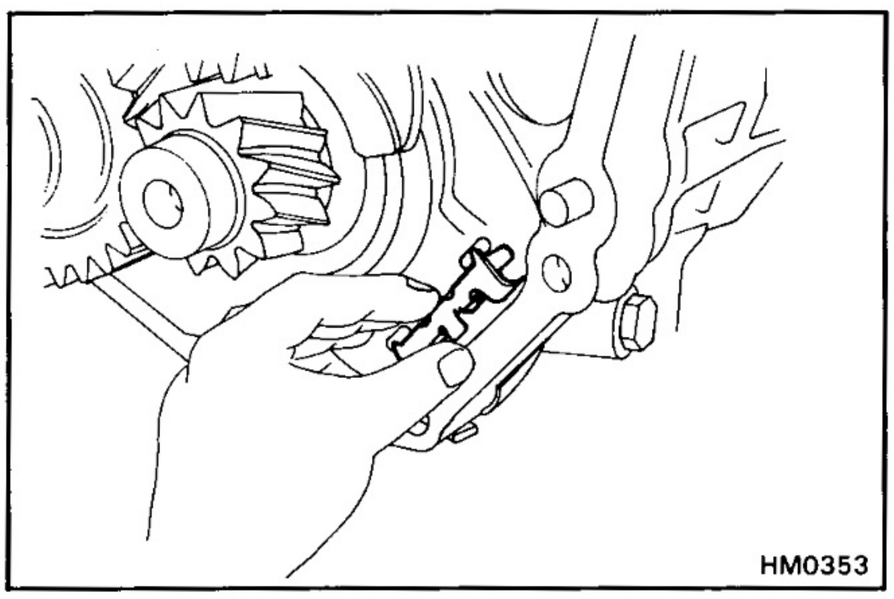
HM0353

17. INSTALL MAGNET TO INTERMEDIATE PLATE

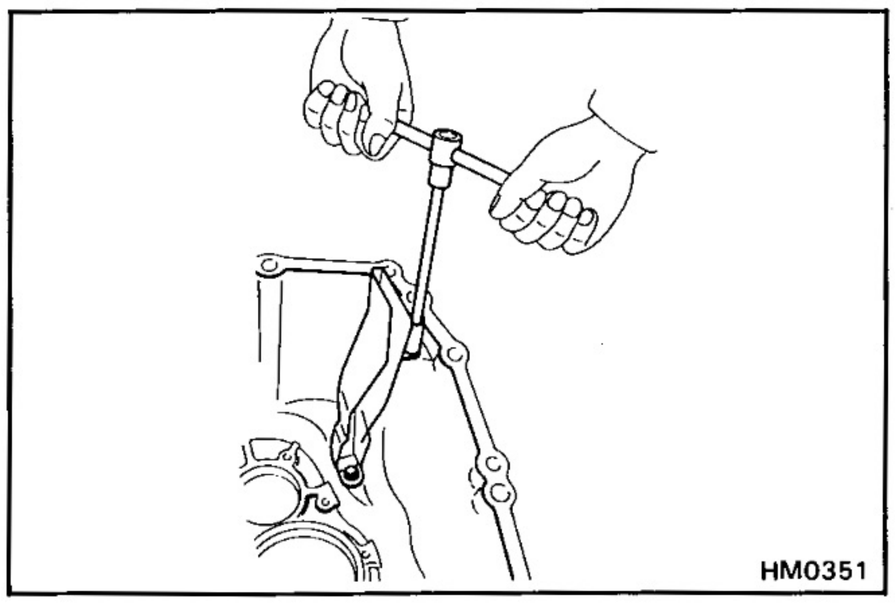
HM0351

18. INSTALL OIL RECEIVER TO FRONT CASE

Install and torque the two bolts.

Torque: 120 kg-cm (9 ft-lb, 12 N·m)

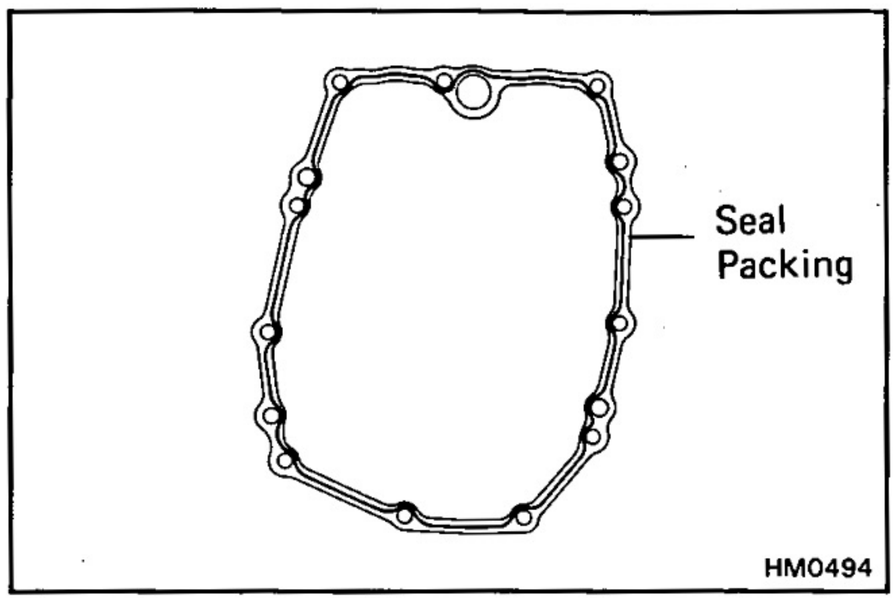

19. ASSEMBLE TRANSMISSION CASE AND INTERMEDIATE PLATE

(a) Remove any packing material and be careful not to drop oil on the contacting surface of the transmission case.

(b) Apply seal packing to the transmission case as shown in the figure.

Seal packing: Part No.08826-00090, THREE BOND 1281 or equivalent

HINT: Install the transmission case as soon as the seal packing is applied.

(c) Align each bearing outer race, each fork shaft end and reverse idler gear shaft end with the case installation holes, and install the case.

(d) Using a plastic hammer, tap on the case to install it.

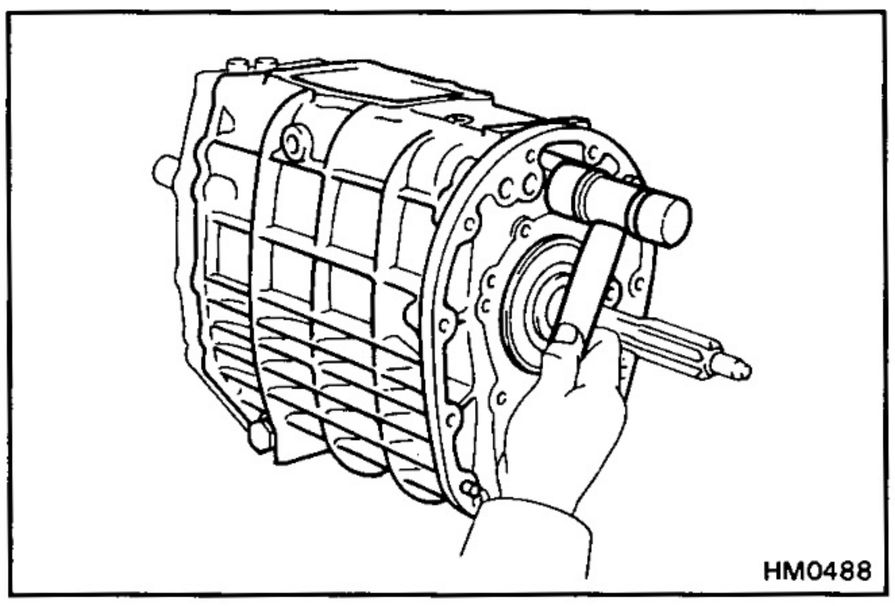

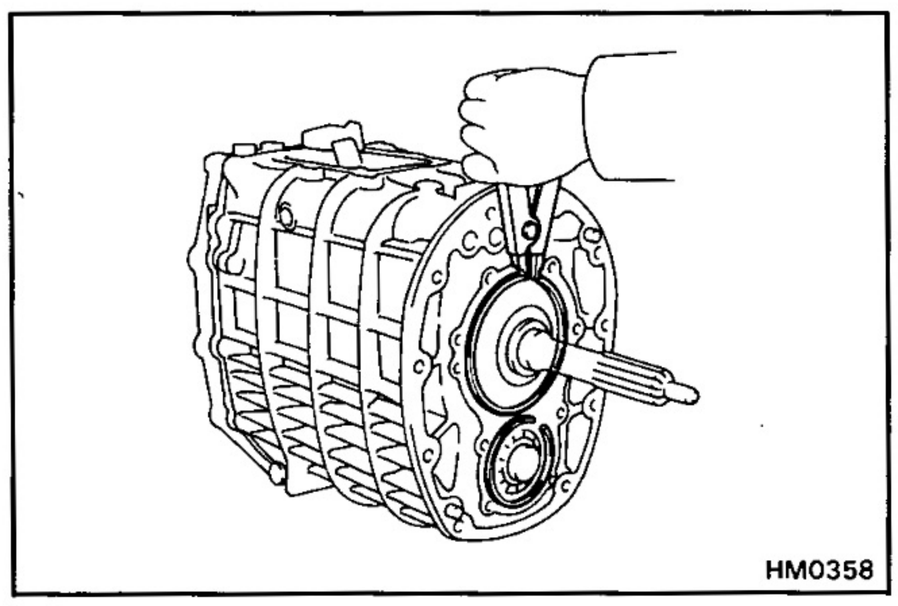

20. INSTALL BEARING SNAP RINGS

Using snap ring pliers, install the two snap rings to the input shaft bearing and counter gear front bearing.

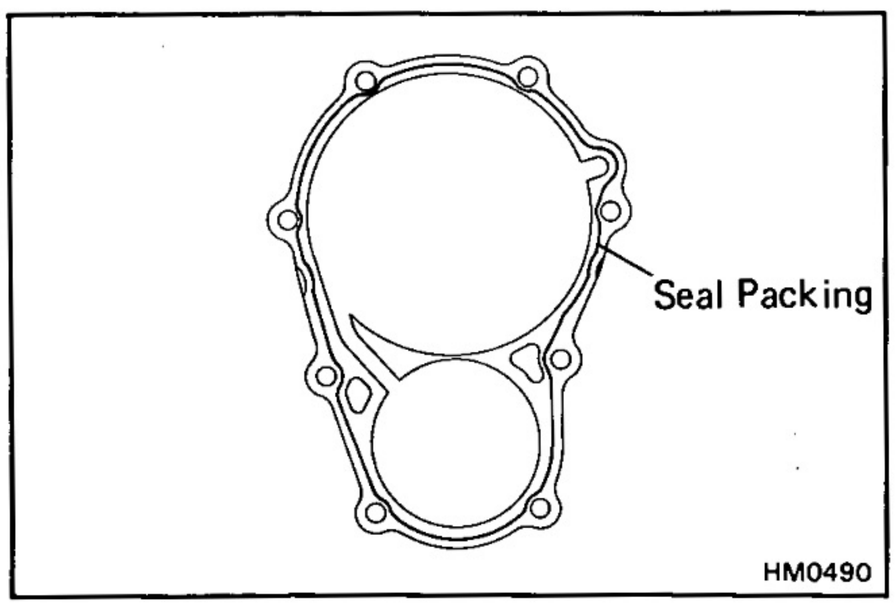

21. INSTALL FRONT BEARING RETAINER

(a) Remove any packing material and be careful not to drop oil on the contacting surfaces of the front bearing retainer.

(b) Apply seal packing to the retainer as shown in the figure and install it to the transmission case.

Seal packing: Part No.08826-00090, THREE BOND 1281 or equivalent

HINT: Install the front bearing retainer as soon as the seal packing is applied.

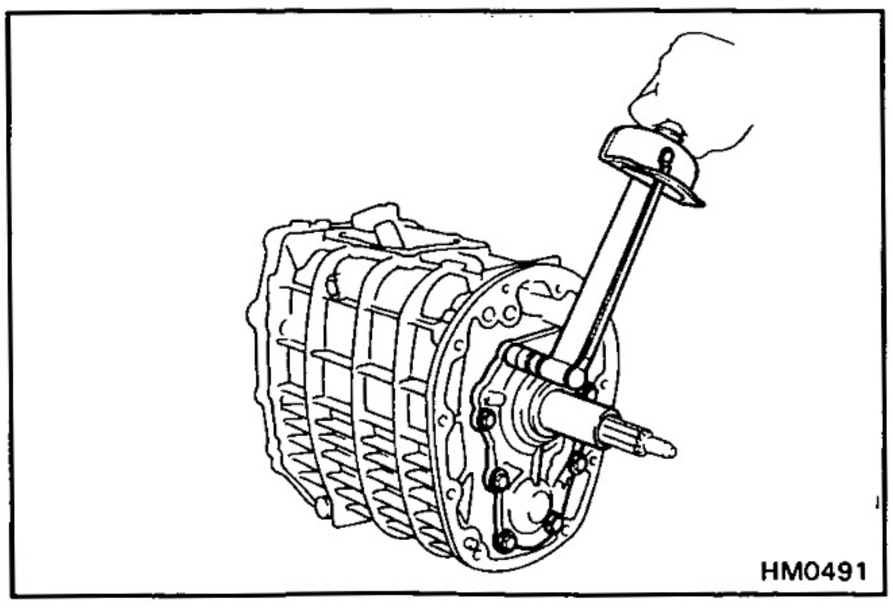

(c) Apply liquid sealer to the bolt threads.

Sealant: Part No.08833-00080, THREE BOND 1344, LOCTITE 242 or equivalent

(d) Install and torque the eight bolts.

Torque: 170 kg-cm (12 ft-lb, 16 N·m)

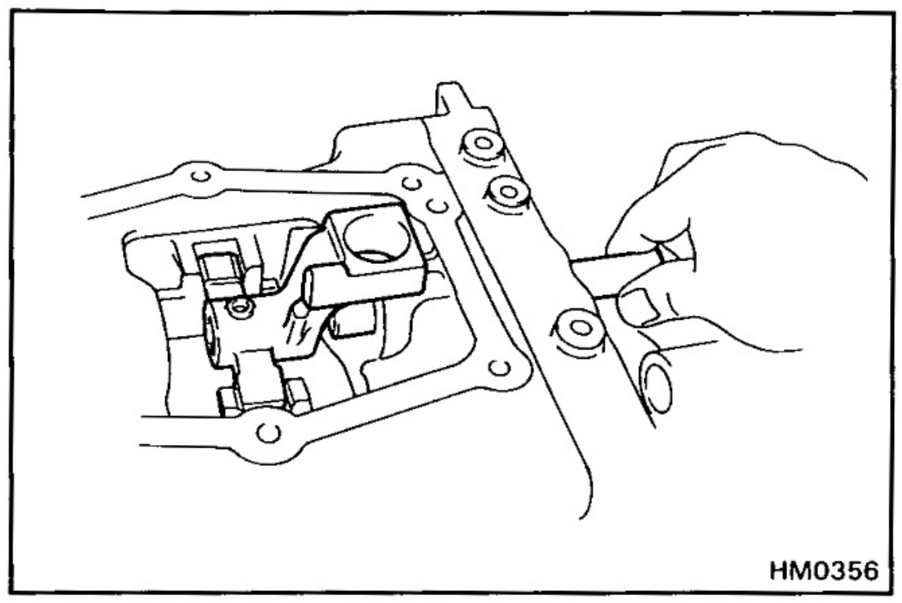
HM0356

22. INSTALL SHIFT LEVER SHAFT AND SHIFT LEVER HOUSING

(a) Install the shift lever shaft and shift lever housing.

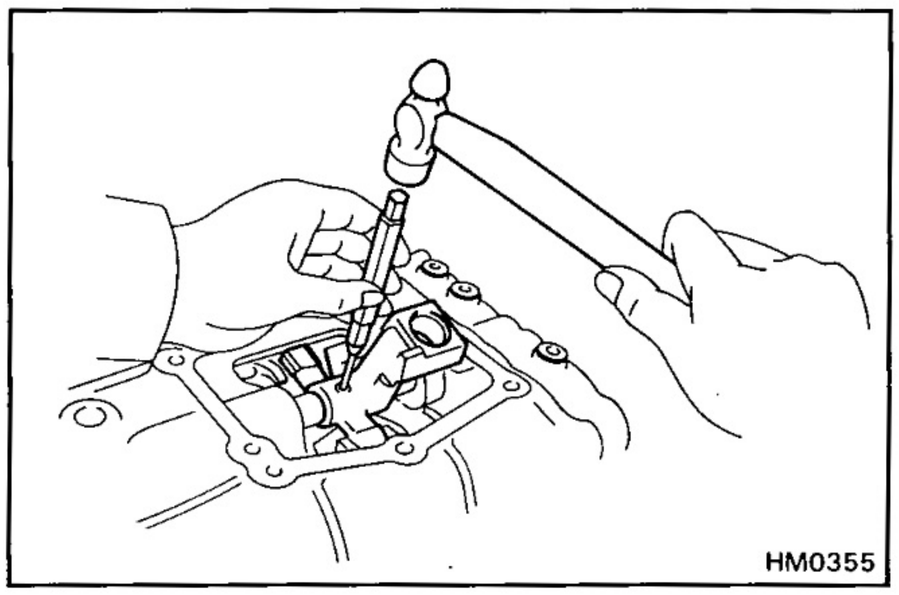
HM0355

(b) Using a pin punch and hammer, drive in the slotted spring pin.

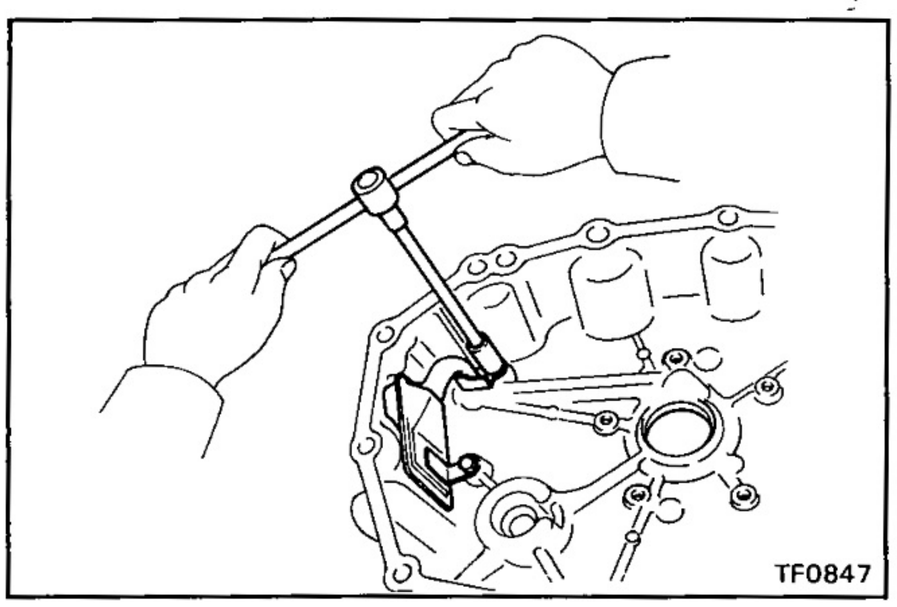
TF0847

23. INSTALL OIL STRAINER TO TRANSFER ADAPTOR

(a) Install the oil strainer.

(b) Install and torque the two bolts.

Torque: 120 kg-cm (9 ft-lb, 12 N·m)

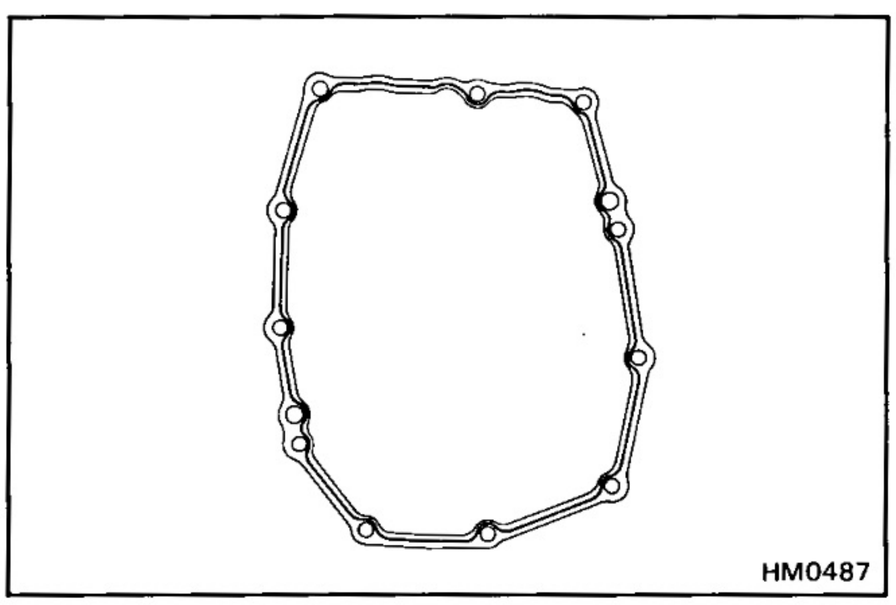
HM0487

24. INSTALL TRANSFER ADAPTOR

(a) Remove any packing material and be careful not to drop oil on the contacting surfaces of the transfer adaptor.

(b) Apply seal packing to the transfer adaptor as shown.

Seal packing: Part No.08826-00090, THREE BOND 1281 or equivalent

HINT: Install the transfer adaptor as soon as the seal packing is applied.

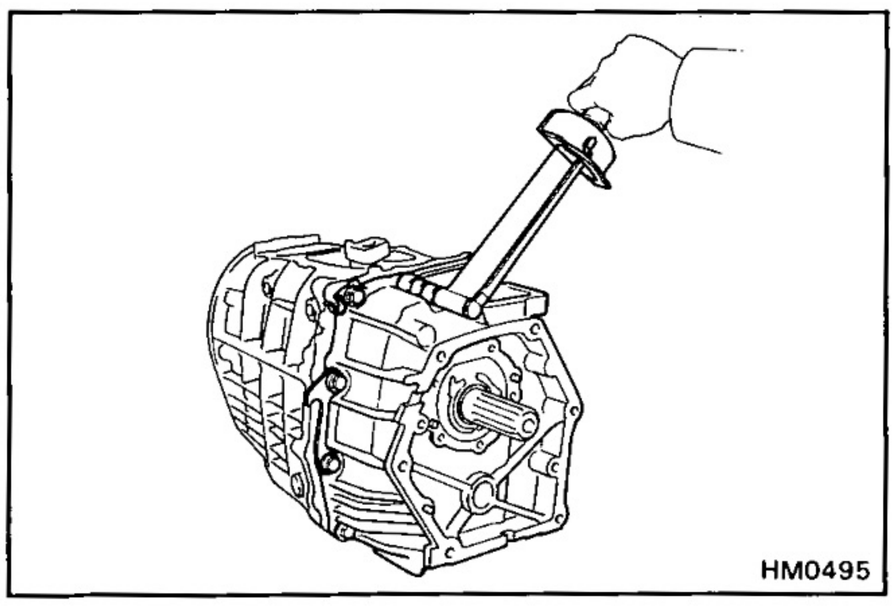
HM0495

(c) Install the transfer adaptor.

(d) Install and torque the eleven bolts.

Torque: 380 kg-cm (27 ft-lb, 37 N·m)

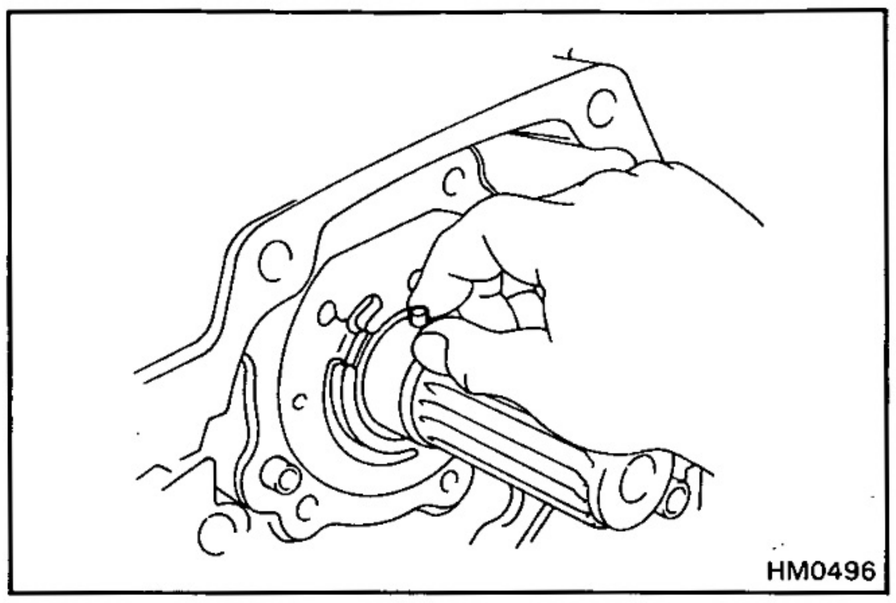

25. INSTALL OIL PUMP BODY

(a) Apply MP grease to the straight pin.

(b) Install the two straight pins.

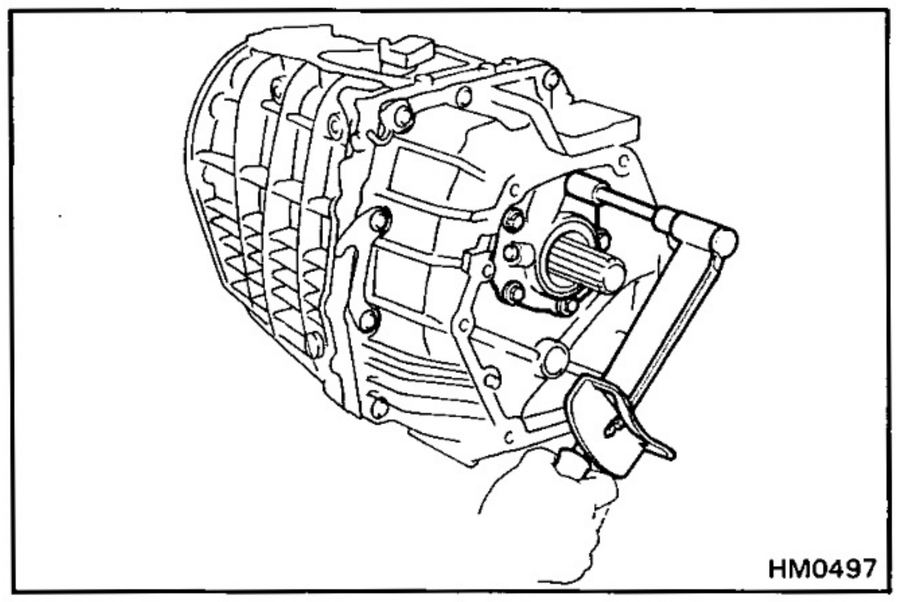

(c) Install the oil pump body.

(d) Apply liquid sealer to the bolt threads.

Sealant: Part No. 08833-00080, THREE BOND 1344, LOCTITE 242 or equivalent.

(e) Install and torque the five bolts.

Torque: 170 kg-cm (12 ft-lb, 17 N·m)

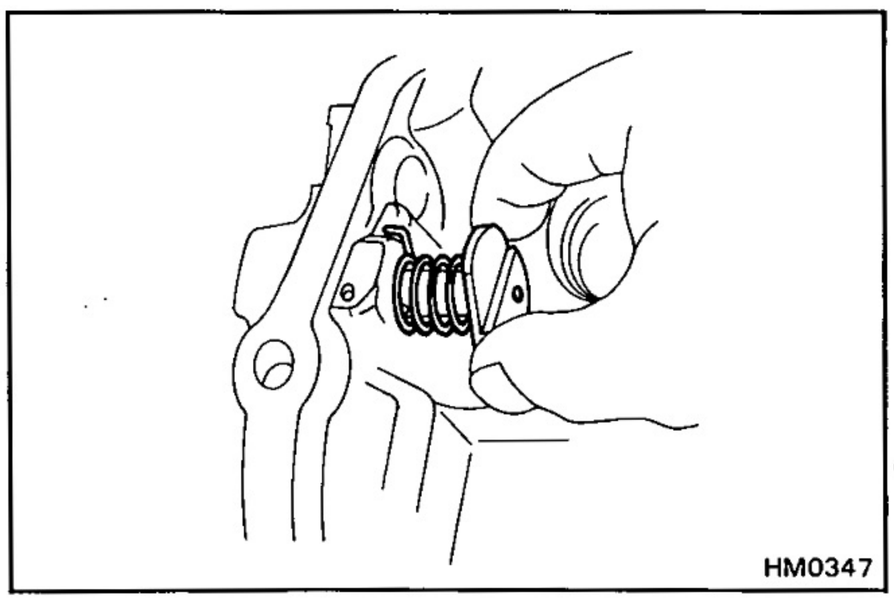

26. (H150F, H151F) INSTALL REVERSE RESTRICT PIN

(a) Install the reverse restrict pin to the shift control retainer.

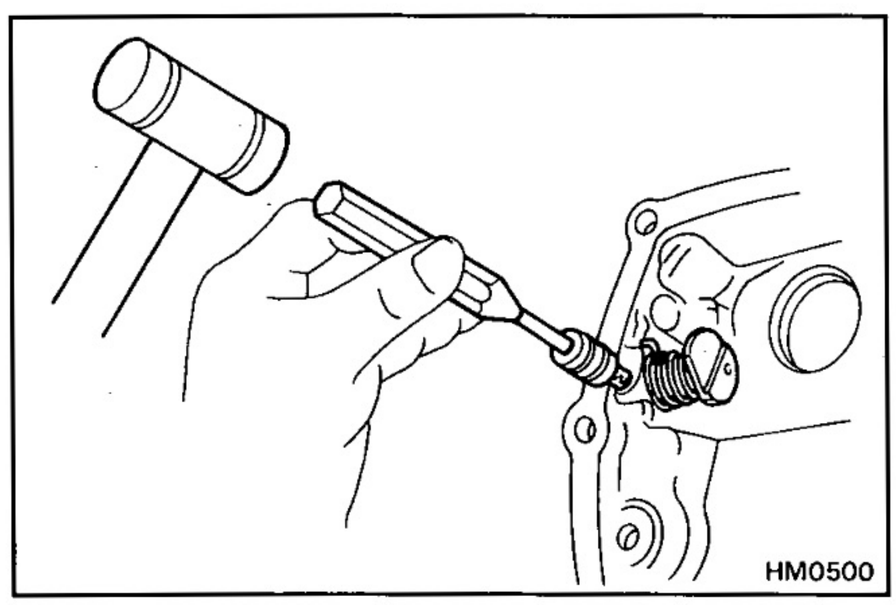

(b) Using a hammer, tap in the slotted spring pin as shown.

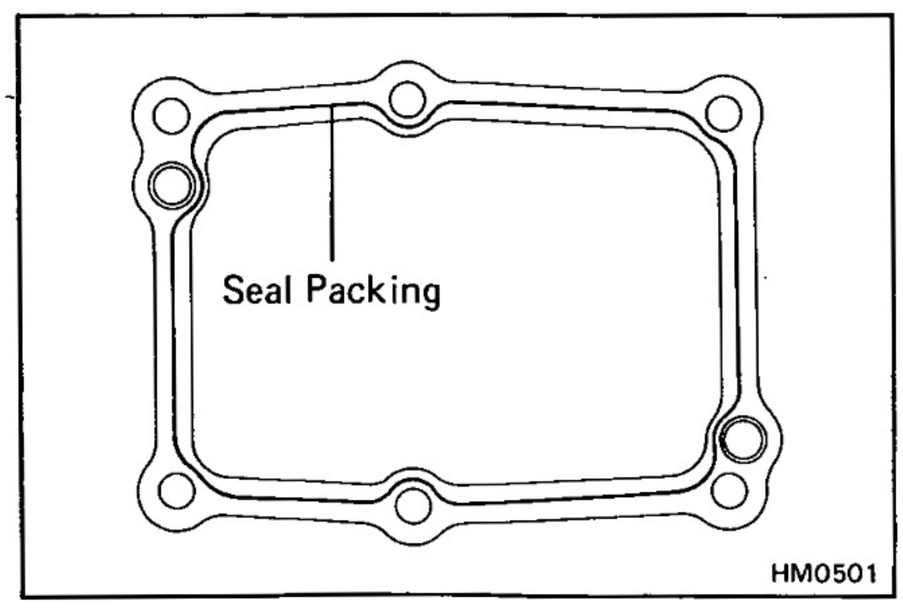

27. INSTALL SHIFT LEVER CONTROL RETAINER

(a) Remove any packing material and be careful not to drop oil on the contacting surfaces of the shift lever control retainer as shown.

(b) Apply seal packing to the shift lever control retainer.

Seal packing: Part No.08826-00090, THREE BOND 1281 or equivalent

HINT: Install the shift lever control retainer as soon as the seal packing is applied.

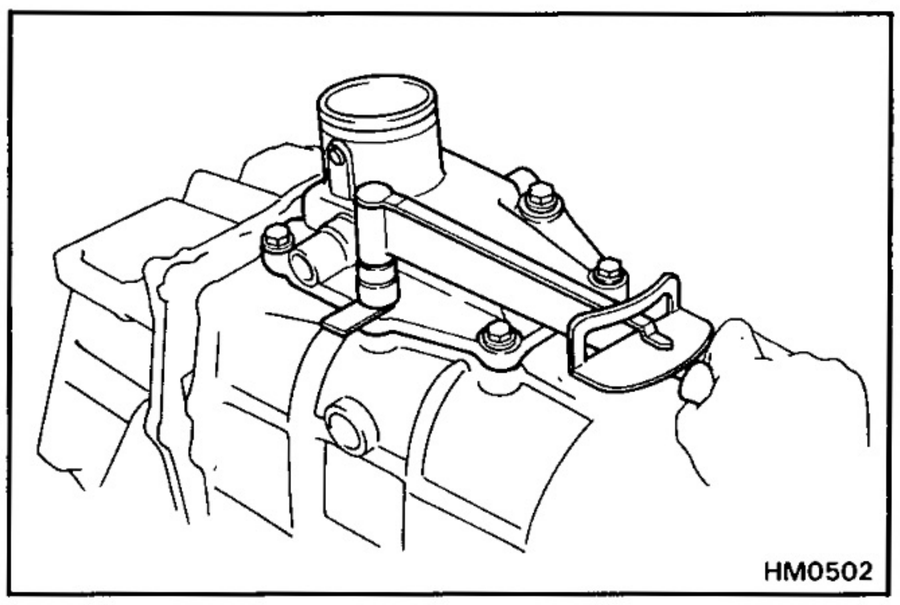
HM0502

(c) Install and torque the six bolts.

Torque: 170 kg-cm (12 ft-lb, 17 N·m)

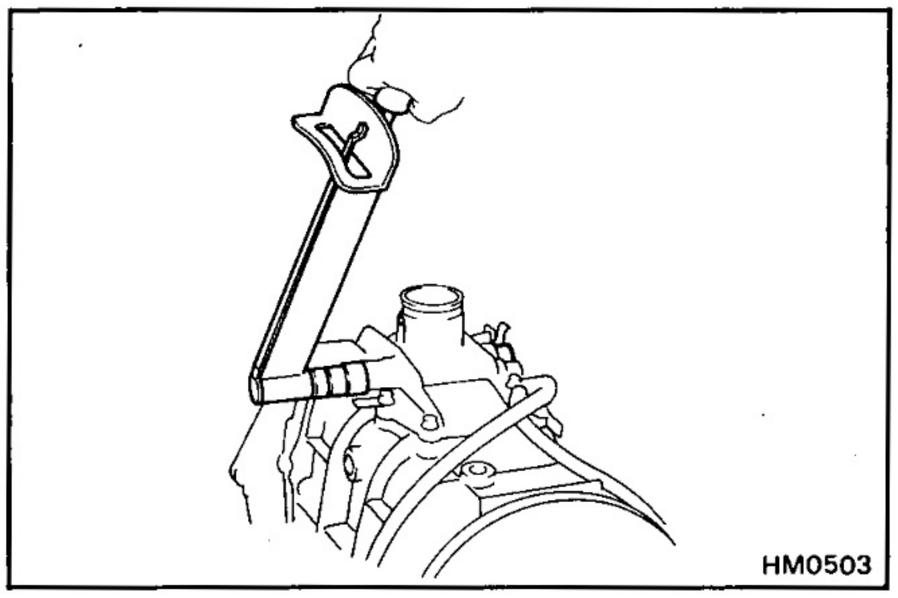
HM0503

28. INSTALL TWO RESTRICT PINS

Torque: 380 kg-cm (27 ft-lb, 37 N·m)

29. INSTALL BREATHER HOSE

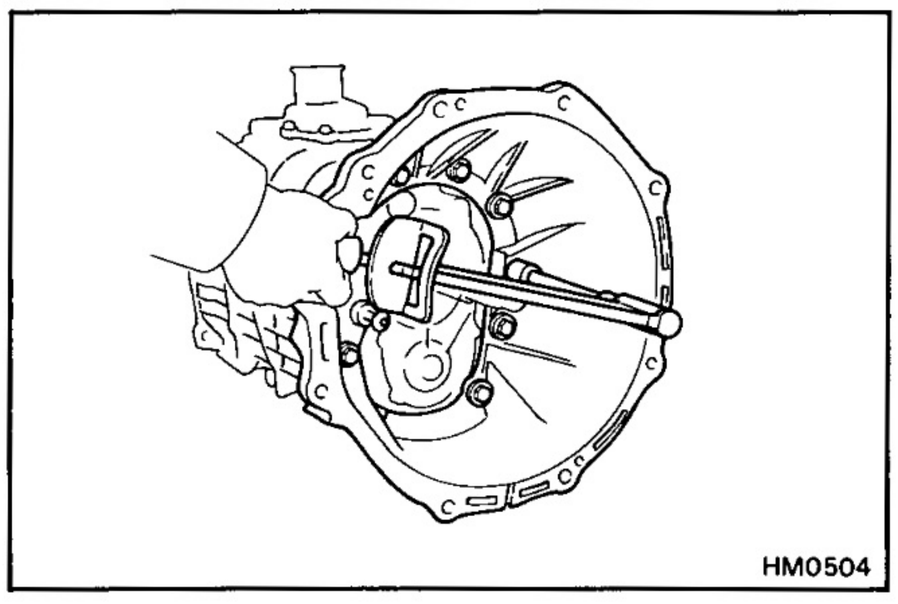
HM0504

30. INSTALL CLUTCH HOUSING

(a) Install the clutch housing.

(b) Install and torque the ten bolts.

Torque: 380 kg-cm (27 ft-lb, 37 N·m)

31. INSTALL BACK-UP LIGHT SWITCH

Torque: 450 kg-cm (33 ft-lb, 44 N·m)

32. INSTALL RELEASE FORK AND BEARING

AUTOMATIC TRANSMISSION

	Page
DESCRIPTION	AT-2
OPERATION	AT-4
TROUBLESHOOTING	AT-9
General Notes	AT-9
General Troubleshooting	AT-10
Preliminary Check	AT-12
Mechanical System Tests	AT-14
Automatic Shift Schedule	AT-26
Neutral Start Switch	AT-28
O/D Solenoid (w/ Cruise Control System)	AT-28
A/T Fluid Temperature Warning System	AT-29
ON-VEHICLE REPAIR	AT-30
Valve Body	AT-30
Throttle Cable	AT-33
REMOVAL AND INSTALLATION OF TRANSMISSION	AT-36
REMOVAL OF TRANSMISSION	AT-38
INSTALLATION OF TRANSMISSION	AT-44

DESCRIPTION

GENERAL

The A440F and A442F automatic transmissions are the four-speed automatic transmission with a two-speed transfer, developed with the aim of producing an easy-driving 4WD vehicle. A lock-up mechanism is built into the torque converter.

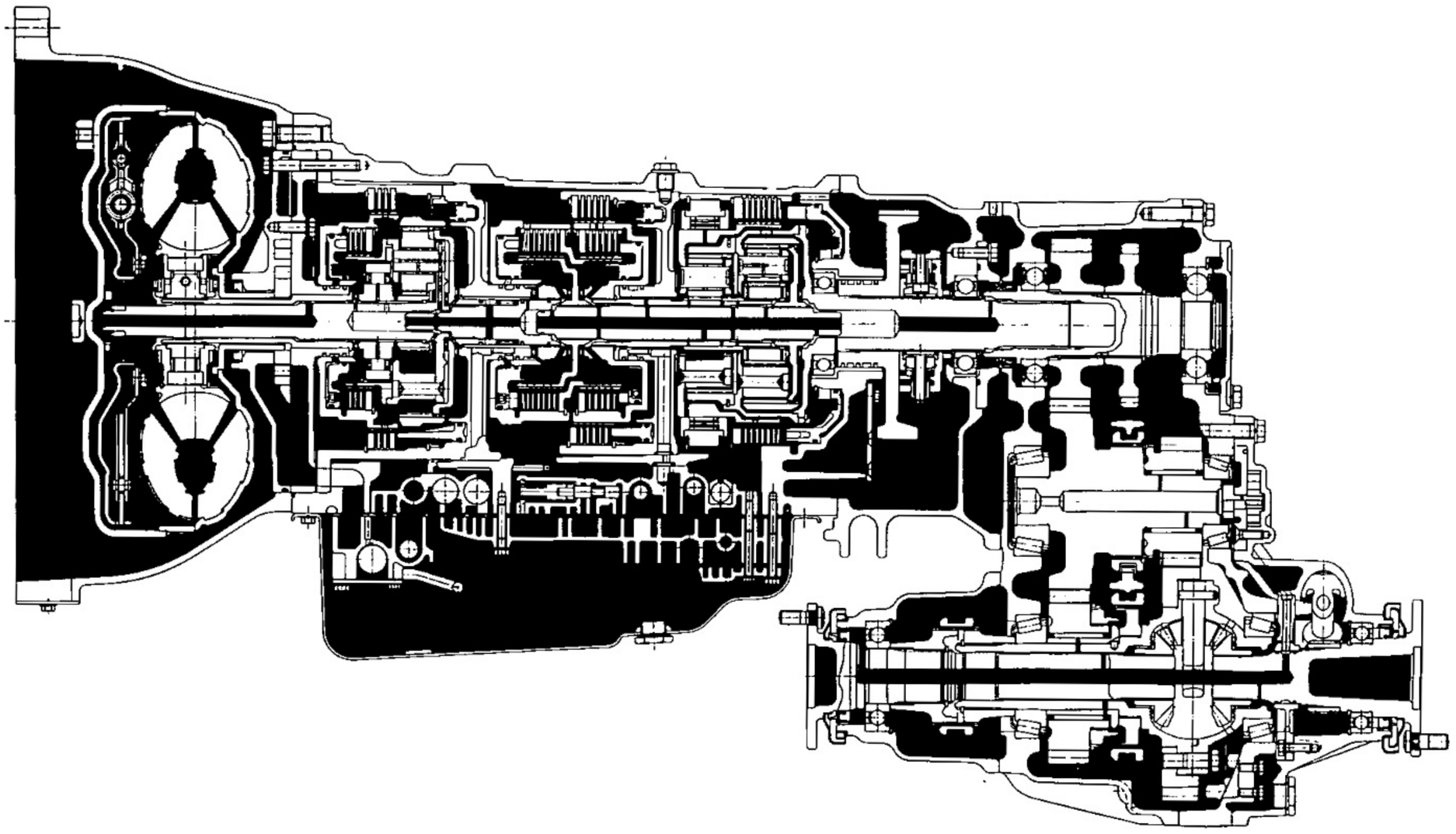

AT6021

The A440F and A442F transmissions are mainly composed of the torque converter, the overdrive (hereafter called O/D) planetary gear unit, 3-speed planetary gear unit, 2-speed transfer and the hydraulic control system.

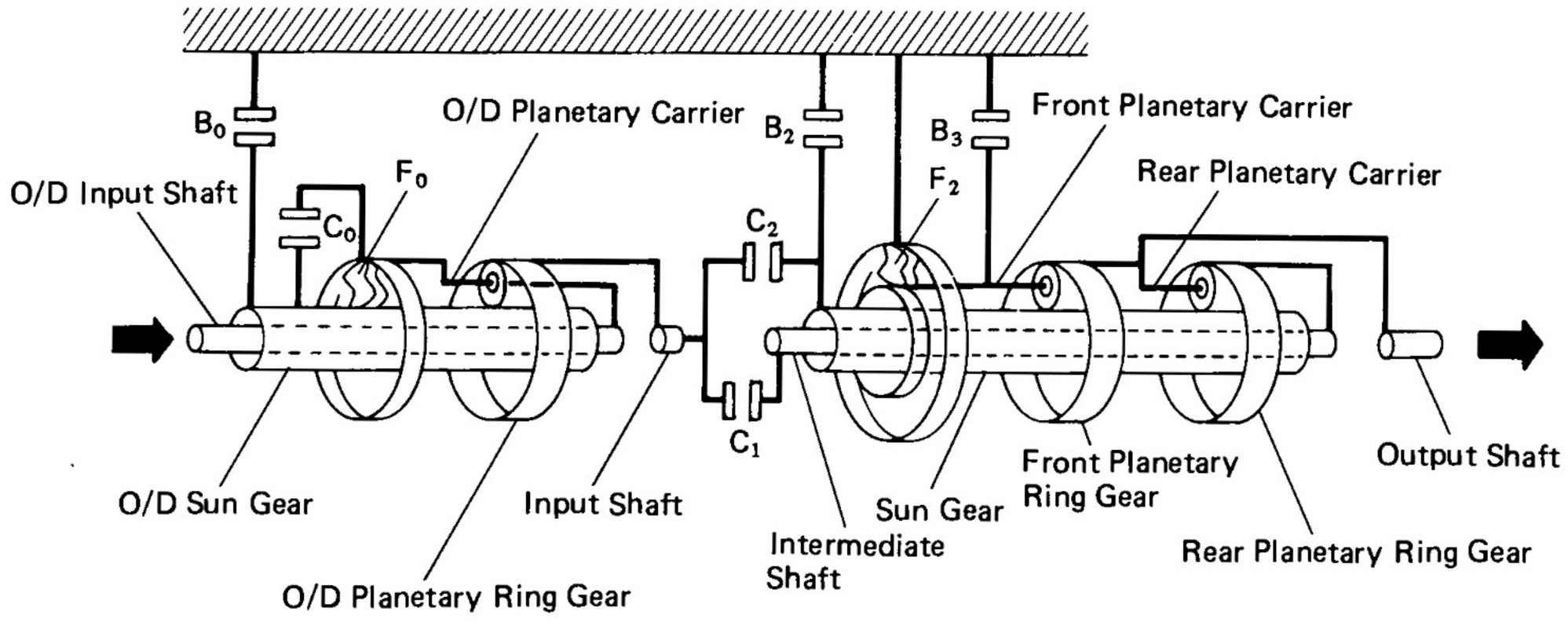

AT3917

General Specifications

Type of Transmission			A440F	A442F
Type of Engine			3F, 3F-E, 1HZ	1HD-T
Torque Converter	Stall Torque Ratio		1.88 : 1	2.0 : 1
	Lock-Up Mechanism		Equipped	Equipped
Gear Ratio	1st Gear		2.950	2.950
	2nd Gear		1.530	1.530
	3rd Gear		1.000	1.000
	O/D Gear		0.717	0.765
	Reverse Gear		2.678	2.678
Number of Disc and Plates (Disc/Plate)	C_1	Forward Clutch	6	6
	C_2	Direct Clutch	5	5
	C_0	O/D Direct Clutch	3	3
	B_2	2nd Brake	4	5
	B_3	1st and Reverse Brake	6	6
	B_0	O/D Brake	3	3
Number of Sprags	F_2	No.2 One-Way Clutch	46	46
	F_0	O/D One-Way Clutch	22	22
Front Planetary Gear	No. of Sun Gear Teeth		28	28
	No. of Pinion Gear Teeth		23	23
	No. of Ring Gear Teeth		75	75
Rear Planetary Gear	No. of Sun Gear Teeth		44	44
	No. of Pinion Gear Teeth		20	20
	No. of Ring Gear Teeth		83	83
Overdrive Planetary Gear	No. of Sun Gear Teeth		35	31
	No. of Pinion Gear Teeth		27	35
	No. of Ring Gear Teeth		89	101
ATF	Type		DEXRON® II	DEXRON® II
	Capacity litter (US qts, Imp. qts)	Total	15.0 (15.9, 13.2)	15.0 (15.9, 13.2)
		Drain and Refill	6.0 (6.3, 5.3)	6.0 (6.3, 5.3)

OPERATION

PLANETARY GEAR UNIT

The planetary gear unit is composed of three sets of planetary gears, three clutched which transmit power to the planetary gears, and three brakes and two one-way clutches which immobilize the planetary carrier and planetary sun gear.

Power from the engine transmitted the input shaft via the torque converter is than transmitted to the planetary gears by the operation of the clutches. By operation of the brakes and one-way clutches, either the planetary carrier or the planetary sun gear is immobilized, altering the speed of revolution of the planetary gear unit. Shift change is carried out by altering the combination of clutch and brake operation.

Each clutch and brake operates by hydraulic pressure; gear position is decided according to the throttle opening angle and vehicle speed, and shift change automatically occurs.

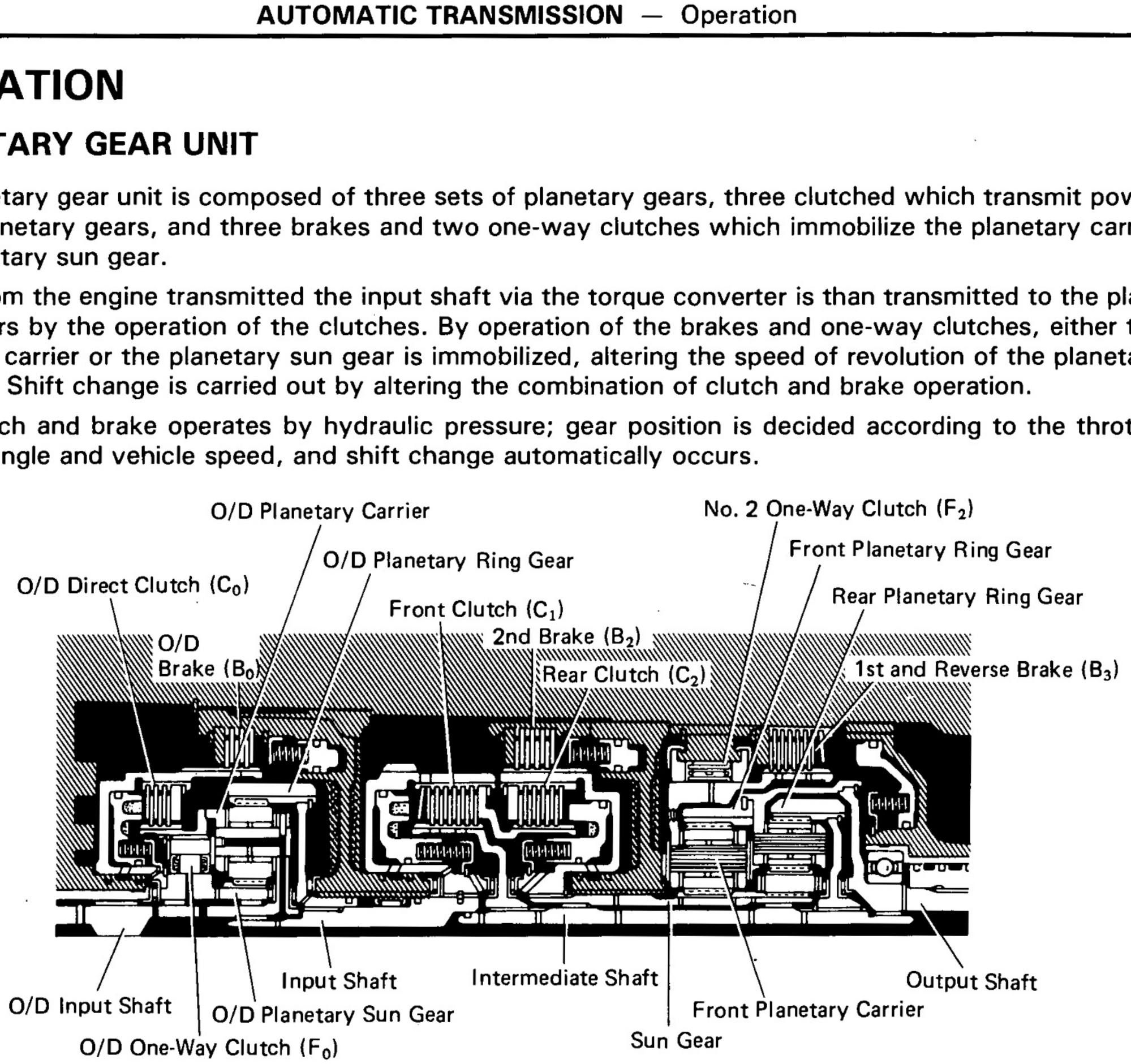

AT3918

OPERATION OF EACH ELEMENT

NOMENCLATURE	OPERATION
O/D Direct Clutch (C_0)	Connects overdrive sun gear and overdrive carrier
O/D Brake (B_0)	Prevents overdrive sun gear from turning either clockwise or counterclockwise
O/D One-Way Clutch (F_0)	When transmission is being driven by engine, connects overdrive sun gear and overdrive carrier
Front Clutch (C_1)	Connects input shaft and intermediate shaft
Rear Clutch (C_2)	Connects input shaft and front & rear planetary sun gear
2nd Brake (B_2)	Prevents front & rear planetary sun gear from turning either clockwise or counterclockwise
1st & Reverse Brake (B_3)	Prevents front planetary carrier form turning either clockwise or counterclockwise
No.2 One-Way Clutch (F_2)	Prevents front planetary carrier from turning counterclockwise

OPERATING CONDITION FOR EACH GEAR

○ ..... Operating

Shift lever position	Gear position	C_0	C_1	C_2	B_0	B_2	B_3	F_0	F_2
P	Parking	○						○	
R	Reverse	○		○			○	○	
N	Neutral	○						○	
D	1st	○	○					○	○
	2nd		○			○		○	
	3rd	○	○	○				○	
	O/D		○	○	○				
3	1st	○	○					○	○
	2nd		○			○		○	
	3rd	○	○	○				○	
2	2nd	○	○			○		○	
L	1st	○	○				○	○	○

FUNCTION OF COMPONENTS

The conditions of operation for each gear position are shown on the following illustration:

D or 3 Range 1st Gear

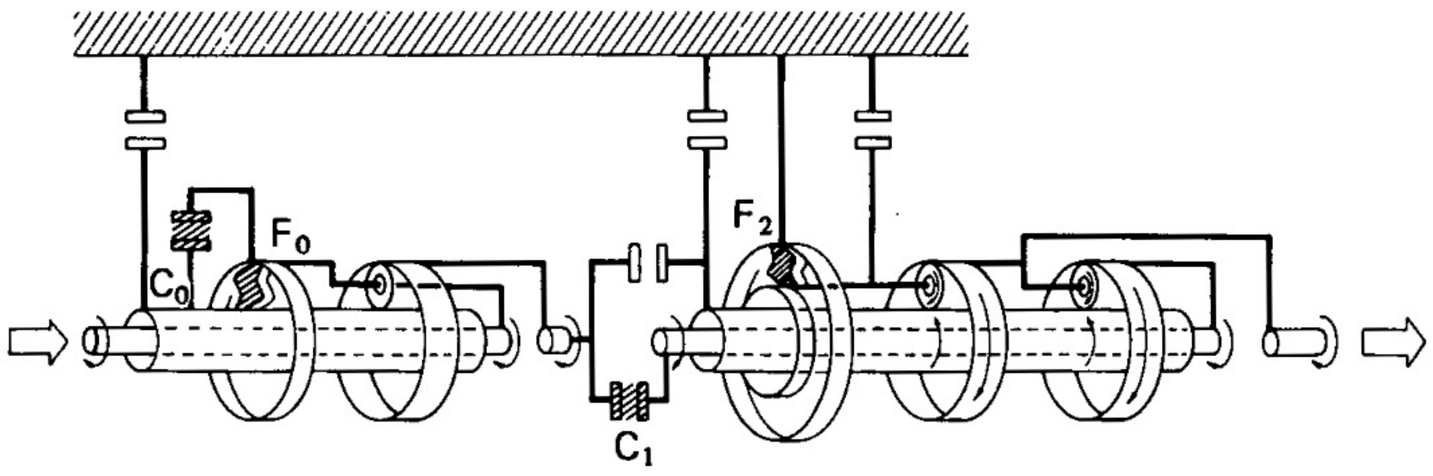

AT5949

D or 3 Range 2nd Gear

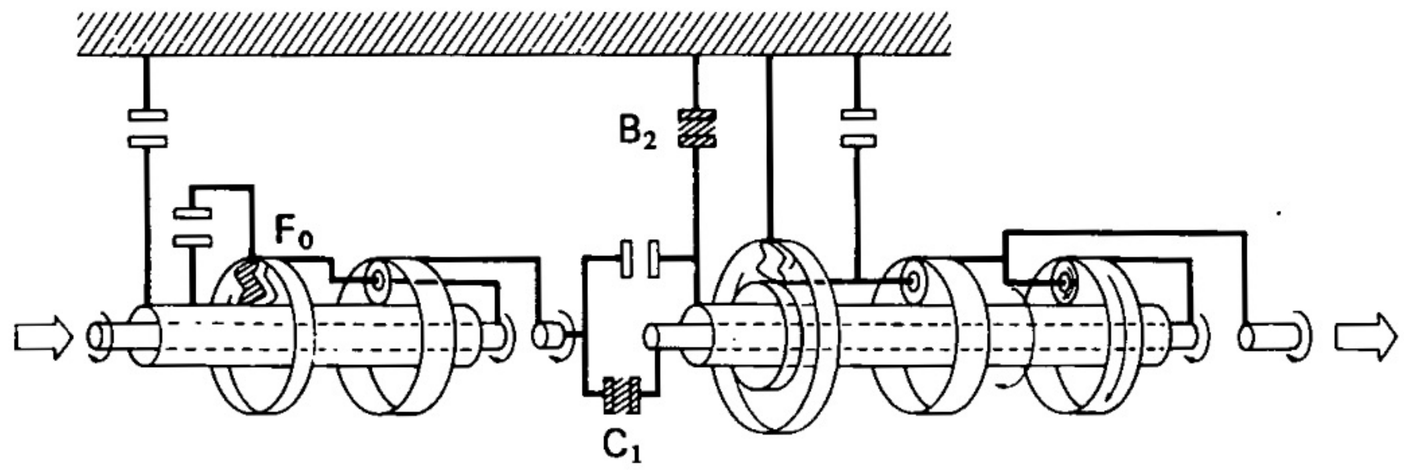

AT5950

FUNCTION OF COMPONENTS (Cont'd)

D or 3 Range 3rd Gear

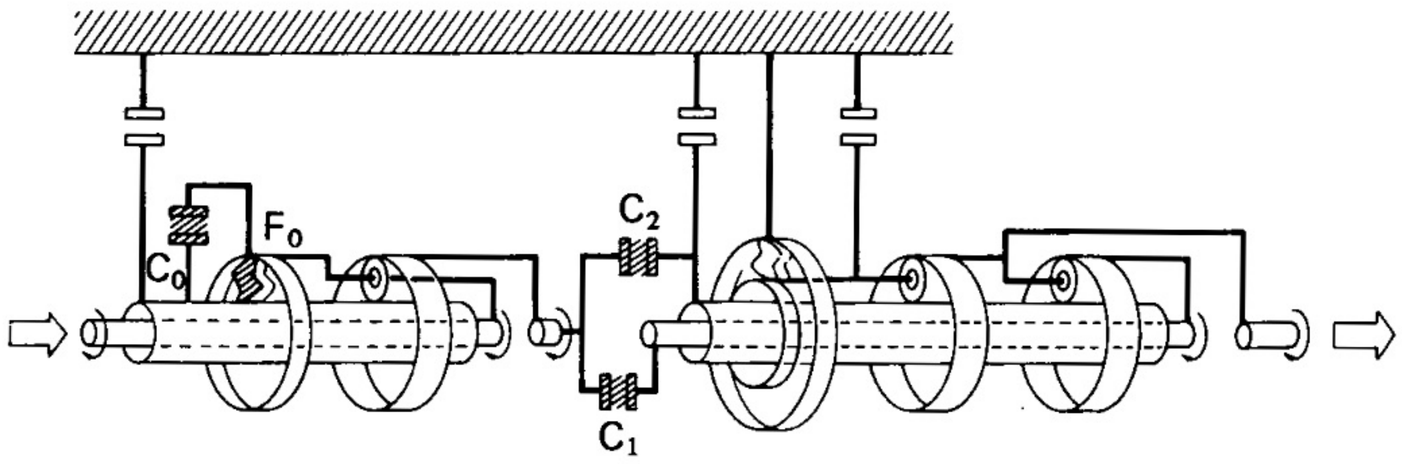

AT5951

D Range O/D

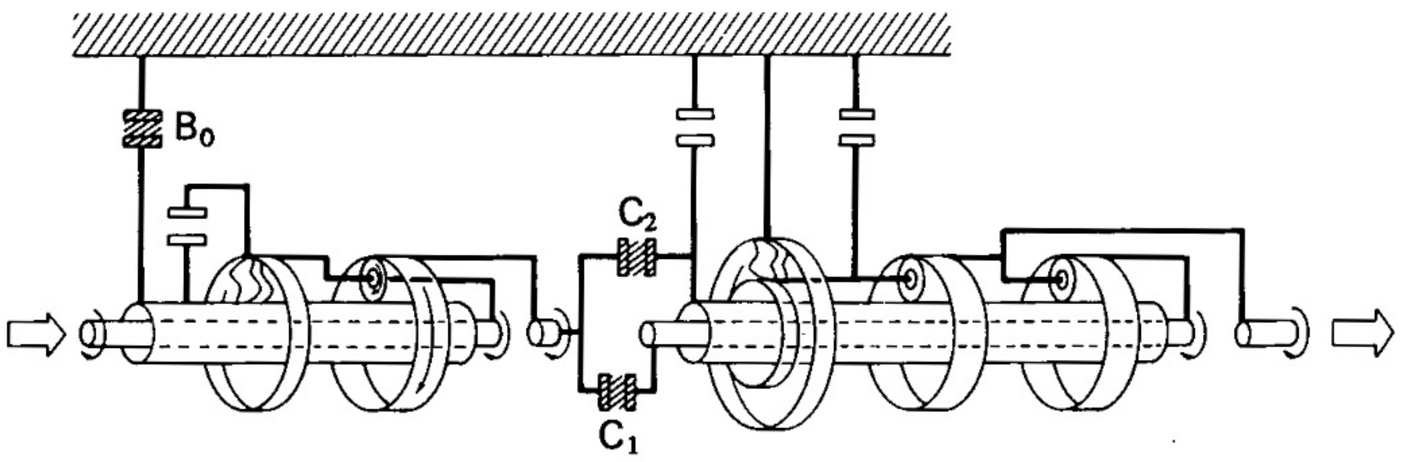

AT5952

2 Range 2nd Gear

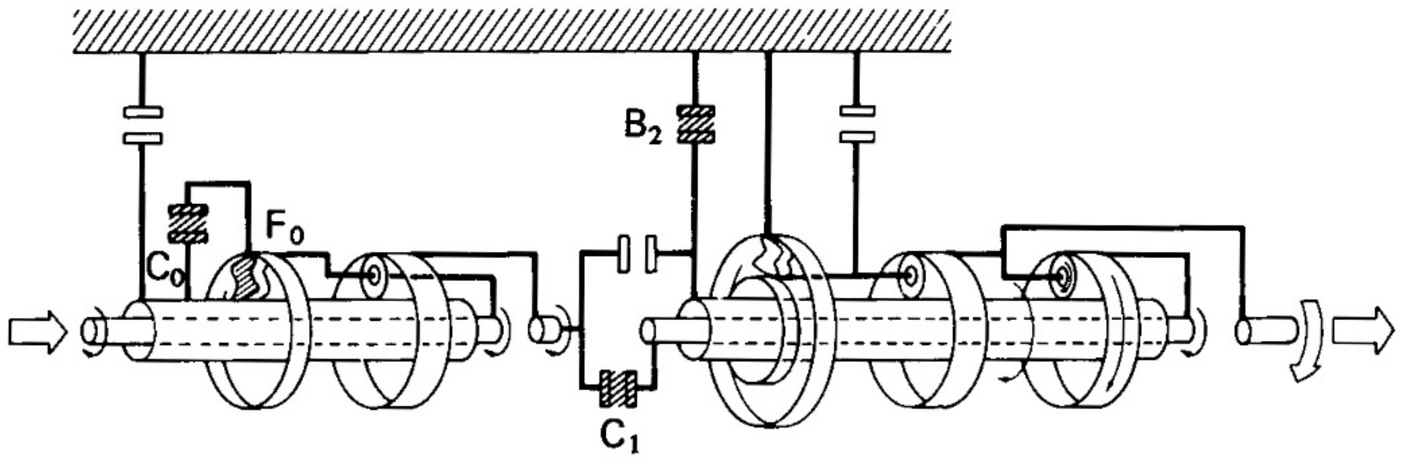

AT5953

L Range 1st Gear

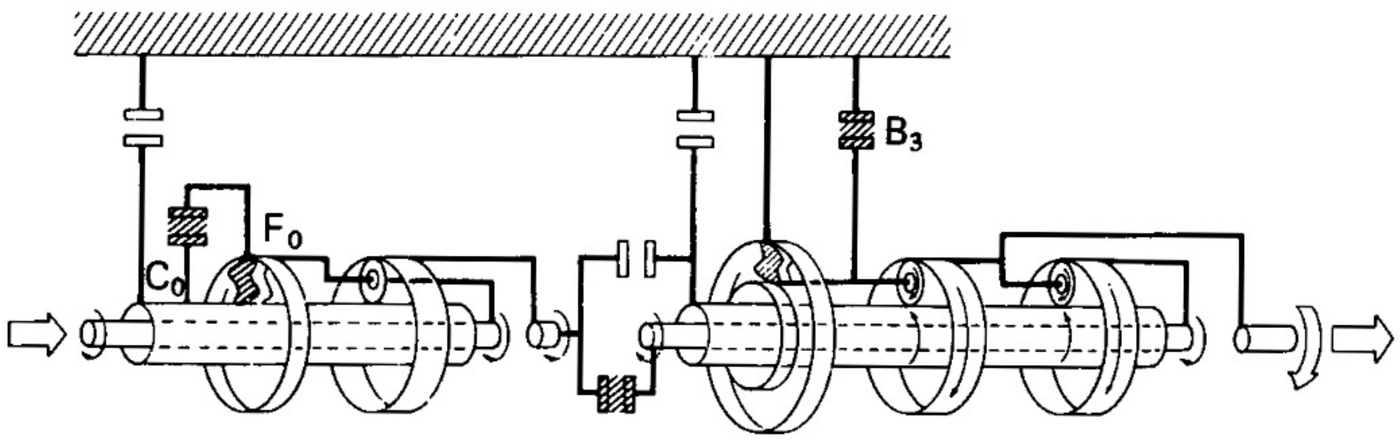

AT5954

R Range Reverse Gear

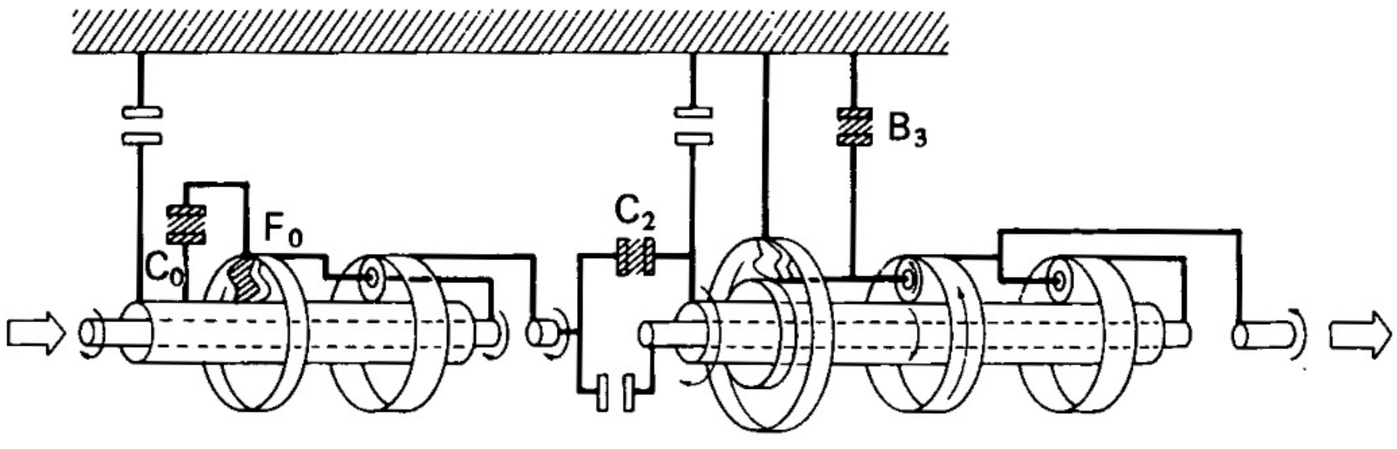

AT5955

Hydraulic Control System

The hydraulic control system is composed of the oil pump, the valve body, the solenoid valve, the accumulators, the clutches and brakes, as well as the fluid passages which connect all of these components.

Based on the hydraulic pressure created by the oil pump, the hydraulic control system governs the hydraulic pressure acting on the torque converter, clutches and brakes in accordance with the vehicle driving conditions.

There is a solenoid valve on the valve body.

The solenoid valve accompany with the cruise control system is turned on and off by signals from the CCS ECU to operate the 3-4 shift valve, and change the gear shift position.

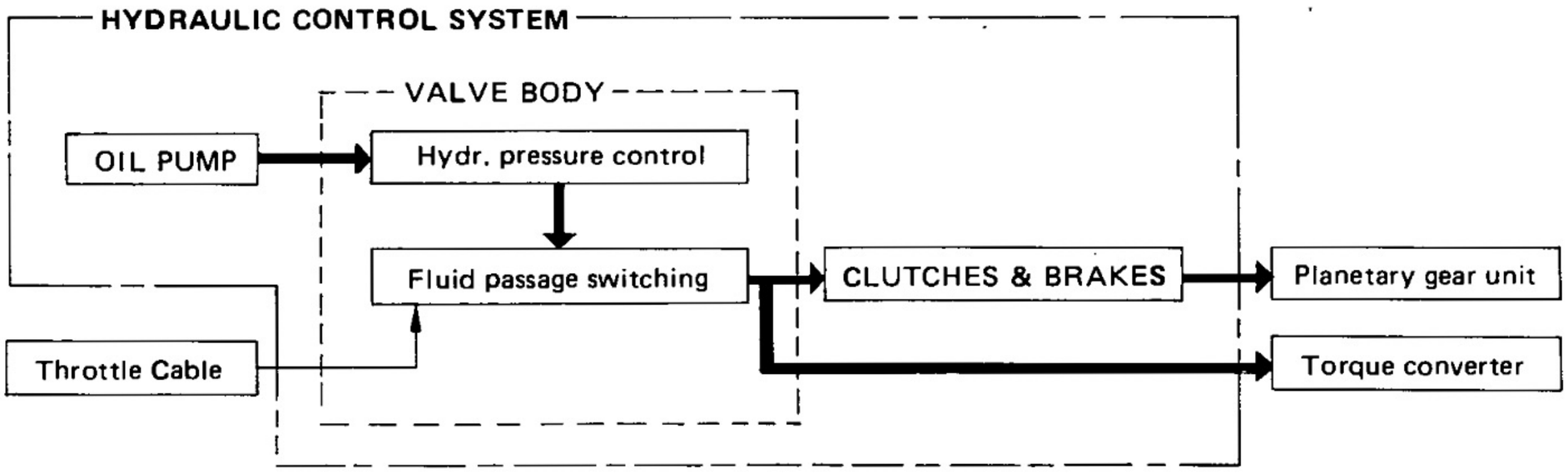

(w/ Cruise Control System)

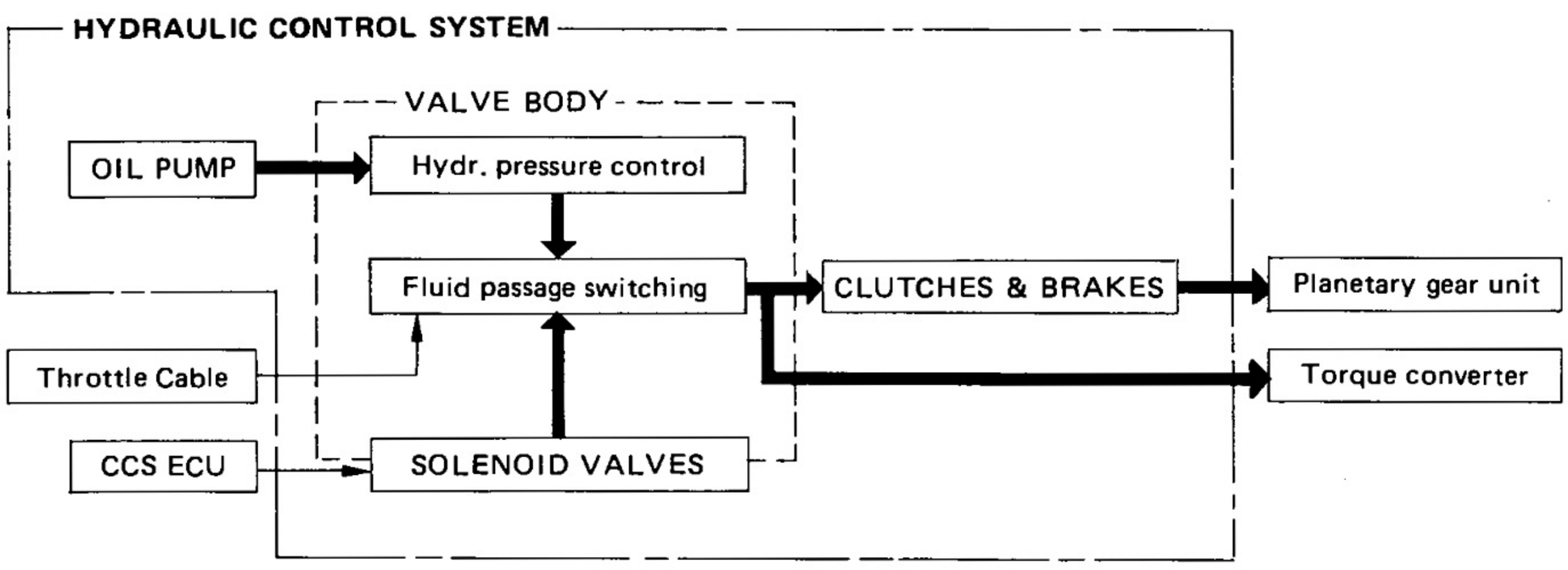

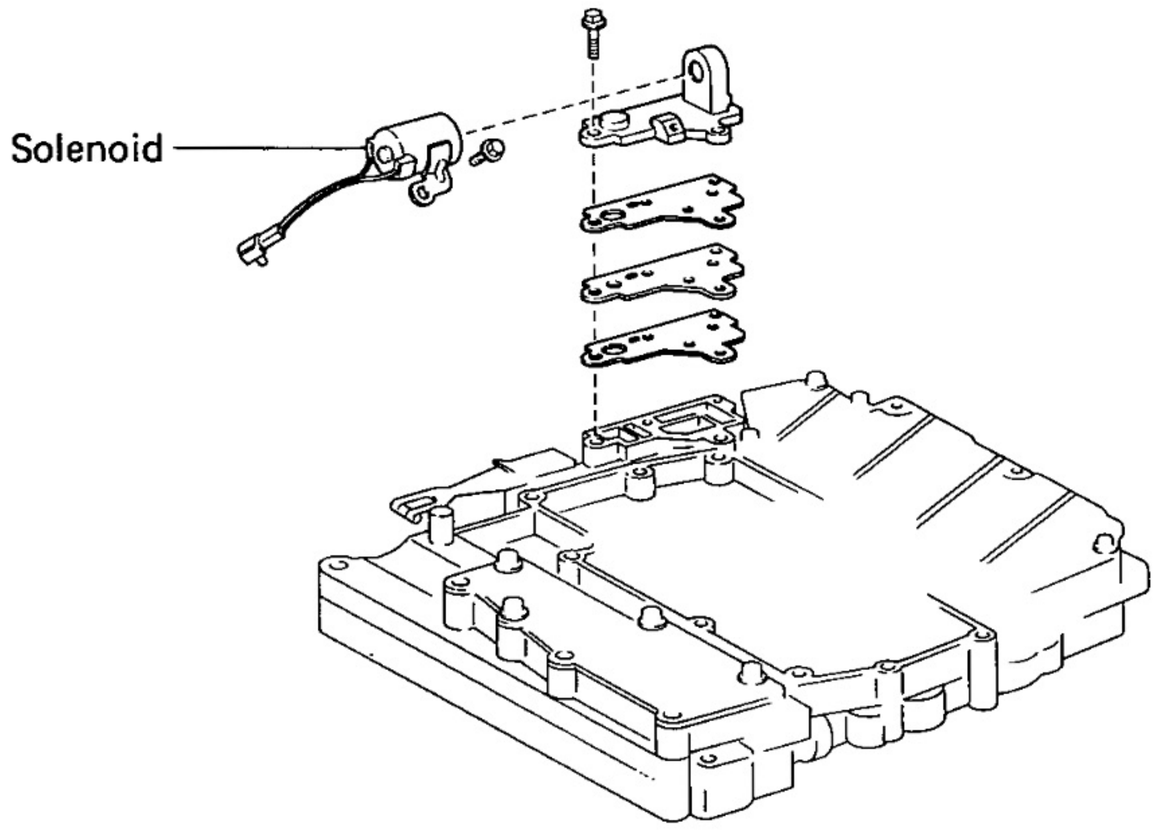

AT6022

A.T. FLUID TEMPERATURE WARNING SYSTEM

The ECU detects the A/T fluid temperature by means of a fluid temperature sensor fitted to the union. The A/T fluid may become extremely hot when the vehicle is under and extreme load, as when driving on sand or climbing uphill. Should the fluid temperature increase above 150 °C (302 °F), the ECU lights the warning light located in the combination meter. The light goes off when the temperature falls below 120 °C (248 °F).

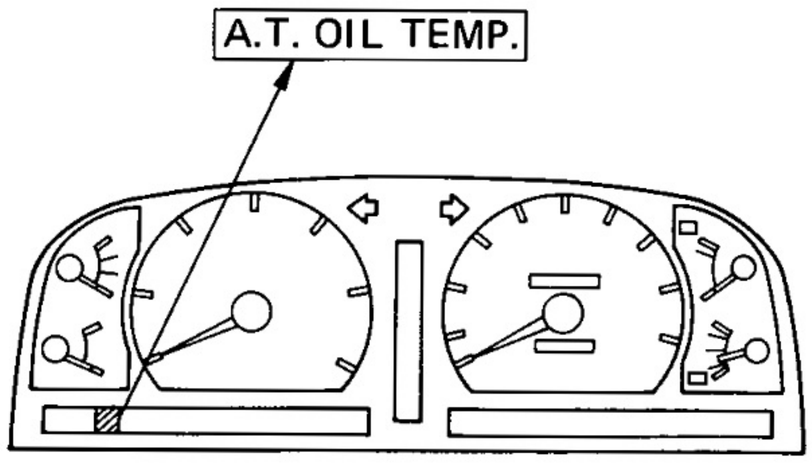

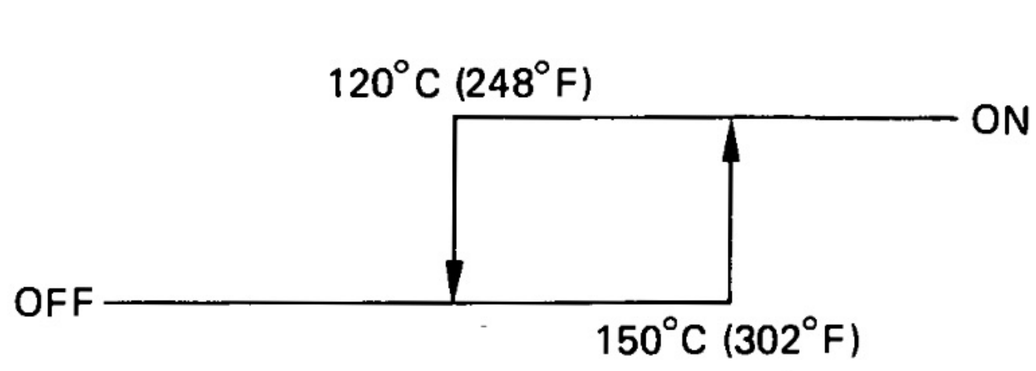

A.T. Fluid Temp.

AT6023

A.T.P. (Automatic Transmission Parking) INDICATOR

The propeller shaft and wheels are free even when the transmission shift lever is set to "P" as long as the transfer shift lever is in "neutral" position. The A.T.P. indicator lights up to warn the driver that the propeller shaft and wheels are not locked. If the A.T.P. indicator light goes on, the transfer shift lever should be shifted to out of "N" position.

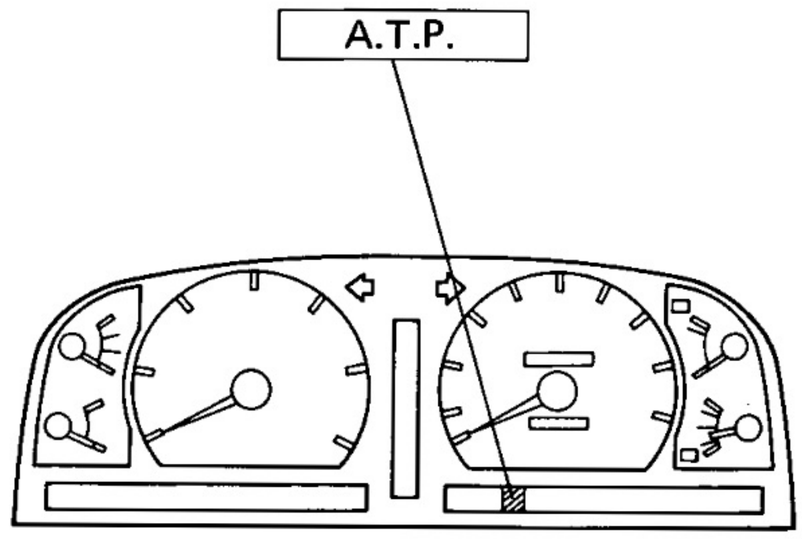

AT6024

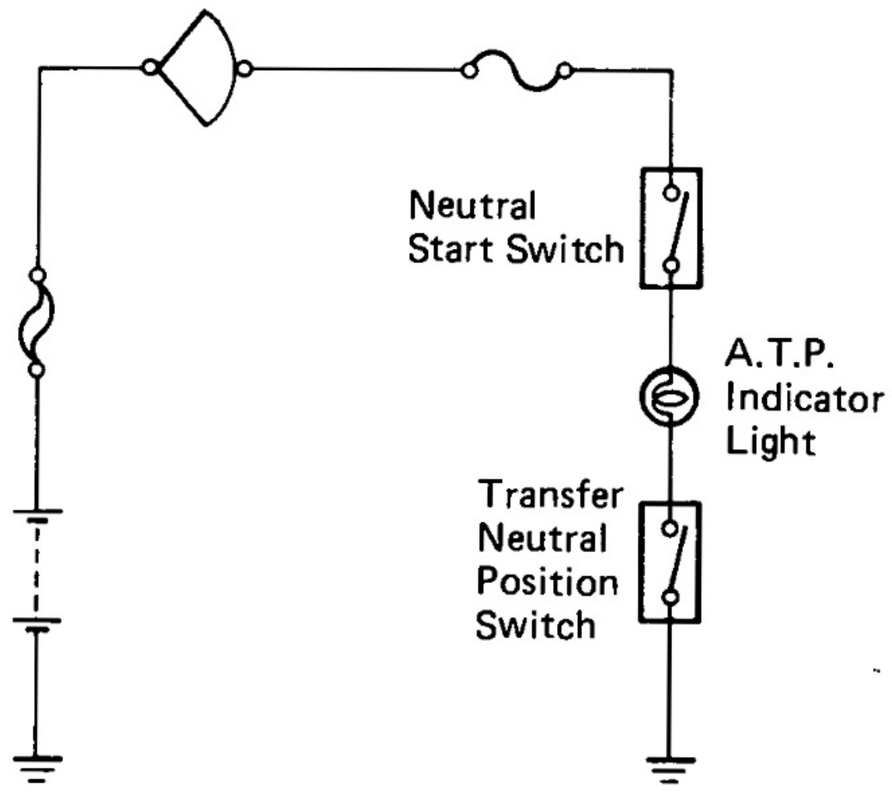

AT3920

TROUBLESHOOTING

General Notes

1. Troubles occuring with the automatic transmission can be caused by either the engine or the transmission itself. These two areas should be distinctly isolated before proceeding with troubleshooting.
2. Troubleshooting should begin with the simplest operation, working up in order of difficulty, but first determine whether the trouble lies within the engine, electrical control or transmission.
3. Proceed with the inspection as follows:

PRELIMINARY CHECK (See Page AT-12)

(a) Check the tire inflation.
(b) Check the idle speed.
(c) Check the fluid level and fluid condition.
(d) Check the throttle cable mark.
(e) Check the shift linkage.
(f) Check the neutral start switch.

↓

STALL TEST (See page AT-14)

Check the engine and torque converter.

↓

TIME LAG TEST (See page AT-15)

Check the automatic transmission (each clutch, brake and gear) for wear.

↓

HYDRAULIC TEST (See page AT-16)

Measure the line pressure and make a basic check of fluid circuit.

↓

ROAD TEST (See page AT-22)

Confirm if trouble lies within automatic transmission.If noisy or vibrating, the possible cause could be with the compressor, engine, propeller shafts, tires, etc.

General Troubleshooting

Problem	Possible cause	Remedy	Page
Fluid discolored or smells burnt	Fluid contaminated	Replace fluid	AT-12
	Torque converter faulty	Replace torque converter	AT-37
	Transmission faulty	Disassemble and inspect transmission	
Vehicle does not move in any forward range or reverse	Manual linkage out of adjustment	Adjust linkage	AT-13
	Valve body or primary regulator faulty	Inspect valve body	AT-29
	Parking lock pawl faulty	Inspect parking lock pawl	
	Torque converter faulty	Replace torque converter	AT-37
	Converter drive plate broken	Replace drive plate	AT-37
	Oil pump intake strainer blocked	Clean strainer	AT-29
	Transmission faulty	Disassemble and inspect transmission	
Shift lever position incorrect	Manual linkage out of adjustment	Adjust linkage	AT-13
	Manual valve and lever faulty	Inspect valve body	AT-29
	Transmission faulty	Disassemble and inspect transmission	
Harsh engagement into any drive range	Throttle cable out of adjustment	Adjust throttle cable	AT-13
	Valve body or primary regulator faulty	Inspect valve body	AT-29
	Accumulator pistons faulty	Inspect accumulator pistons	
	Transmission faulty	Disassemble and inspect transmission	
Delayed 1-2, 2-3 or 3-O/D up-shift, or down-shifts from O/D-3 or 3-2 and shifts back to O/D or 3	Throttle cable out of adjustment	Adjust throttle cable	AT-13
	Throttle cable and cam faulty	Inspect throttle-cable and cam	AT-32
	Governor faulty	Inspect governor	
	Valve body faulty	Inspect valve body	AT-29
Slips on 1-2, 2-3 or 3-O/D up-shift, or slips or shudders on acceleration	Manual linkage out of adjustment	Adjust linkage	AT-13
	Throttle cable out of adjustment	Adjust throttle cable	AT-13
	Valve body faulty	Inspect valve body	AT-29
	Transmission faulty	Disassemble and inspect transmission	
Drag, binding or tie-up of 1-2, 2-3 or 3-O/D up-shift	Manual linkage out of adjustment	Adjust linkage	AT-13
	Valve body faulty	Inspect valve body	AT-29
	Transmission faulty	Disassemble and inspect transmission	

General Troubleshooting (Cout'd)

Problem	Possible cause	Remedy	Page
No lock-up	Valve body faulty	Inspect valve body	AT-29
	Torque converter faulty	Replace torque converter	AT-44
	Transmission faulty	Disassemble and inspect transmission	
Harsh down-shift	Throttle cable out of adjustment	Adjust throttle cable	AT-13
	Throttle cable and cam faulty	Inspect throttle cable and cam	AT-32
	Accumulator pistons faulty	Inspect accumulator pistons	
	Valve body faulty	Inspect valve body	AT-29
	Transmission faulty	Disassemble and inspect transmission	
No down-shift when coasting	Governor faulty	Inspect governor	
	Valve body faulty	Inspect valve body	AT-29
Down-shift occurs too quickly or too late while coasting	Throttle cable out of adjustment	Adjust throttle cable	AT-13
	Governor faulty	Inspect governor	
	Valve body faulty	Inspect valve body	AT-29
	Transmission faulty	Disassemble and inspect transmission	
No O/D-3 , 3-2 or 2-1 kick-down	Throttle cable out of adjustment	Adjust throttle cable	AT-13
	Governor faulty	Inspect governor	
	Valve body faulty	Inspect valve body	AT-29
No engine braking in 2 or L range	Valve body faulty	Inspect valve body	AT-29
	Transmission faulty	Disassemble and inspect transmission	
Vehicle does not hold in P	Manual linkage out of adjustment	Adjust linkage	AT-13
	Parking lock pawl cam and spring faulty	Inspect cam and spring	

Preliminary Check

1. CHECK FLUID LEVEL

HINT:

- The vehicle must have driven so that the engine and transmission are at normal operating temperature.

(Fluid temperature: 70 — 80 °C or 158 — 176 °F)

- Only use the COOL range on the dipstick as a rough reference when the fluid is replaced or the engine does not run.

(a) Park the vehicle on a level surface, set the parking brake.

(b) With the engine idling, shift the shift lever into all positions from P to **L** position and return to P position.

(c) Pull out the transmission dipstick and wipe it clean.

(d) Push it back fully into the tube.

(e) Pull it out and check that the fluid level is on the HOT range.

If the level is at the low side, add fluid.

Fluid type: ATF DEXRON® II

NOTICE: Do not overfill.

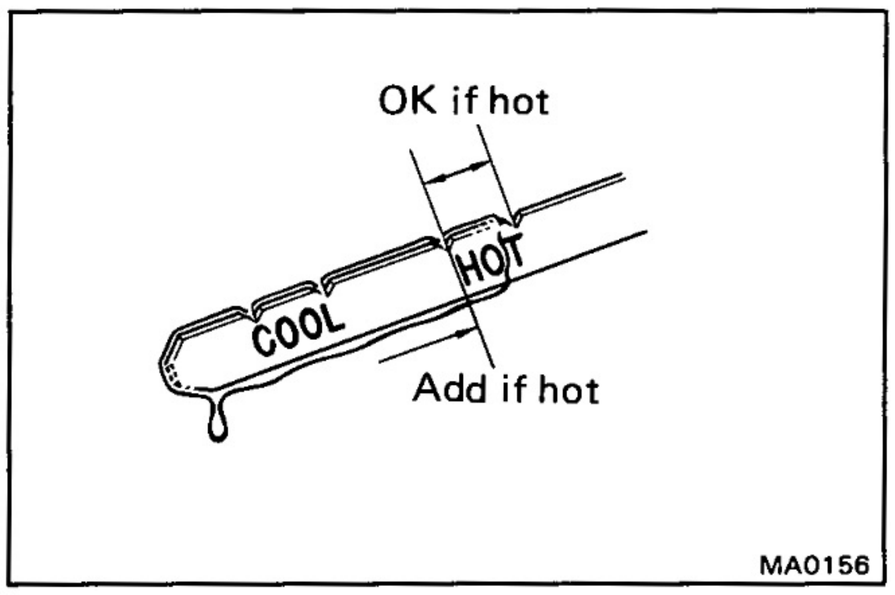

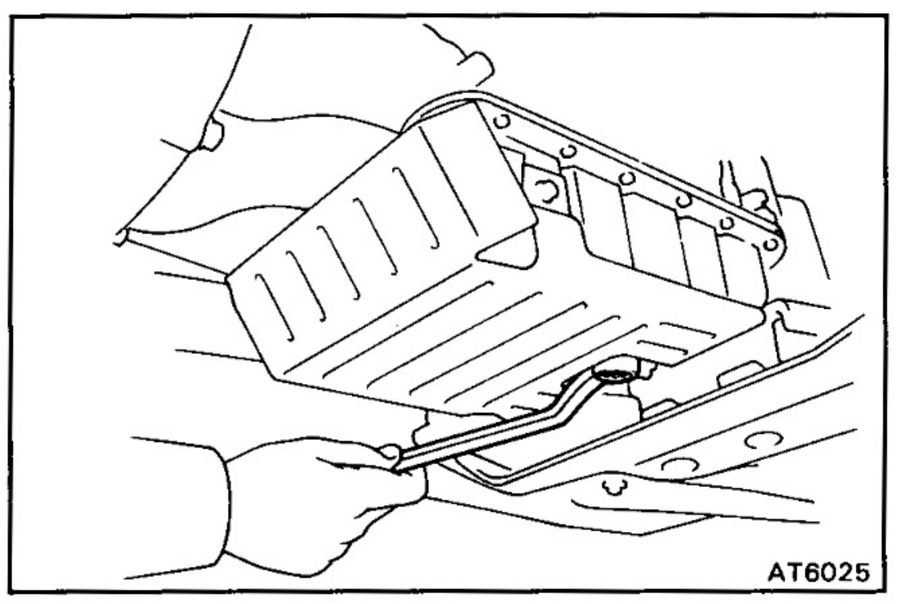

2. CHECK FLUID CONDITION

If the fluid smells burnt or is black, replace it in the following procedure.

(a) Remove the drain plug and drain the fluid.

(b) Reinstall the drain plug securely.

Torque: 280 kg-cm (20 ft-lb, 27 N·m)

(c) With the engine OFF, add new fluid through the oil filler tube.

Fluid type: ATF DEXRON® II

Capacity:

Total

w/o Oil cooler

15.0 litters (15.9 US qts, 13.2 Imp. qts)

w/ Oil cooler

15.4 litters (16.3 US qts, 13.6 Imp. qts)

Drain and refill

6.0 litters (6.3 US qts, 5.3 Imp. qts)

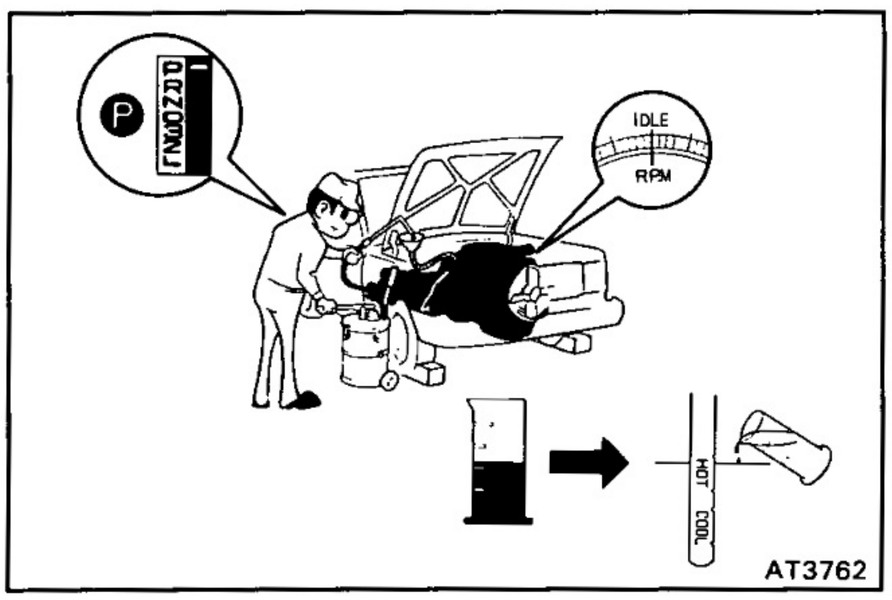

(d) Start the engine and shift the shift lever into all positions from P to L position and then shift into P position.

(e) With the engine idling, check the fluid level. Add fluid up to the COOL level on the dipstick.

(f) Check the fluid level with the normal operating temperature (70 — 80 °C or 158 — 176 °F) and add as necessary.

NOTICE: Do not overfill.

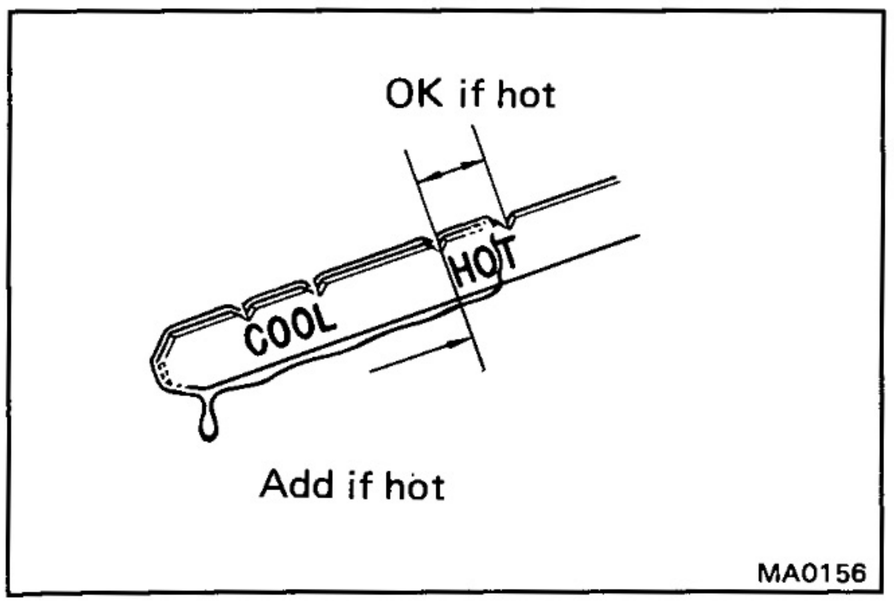

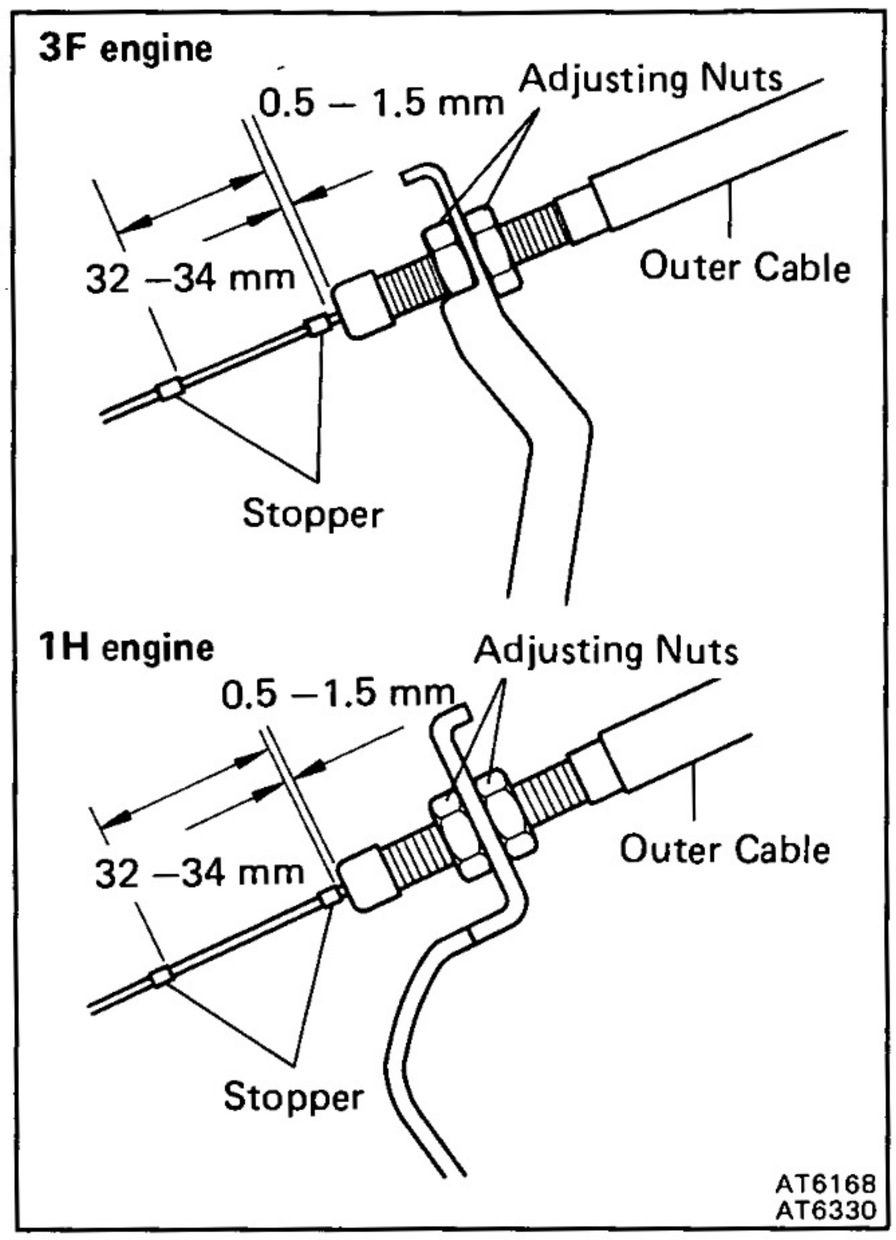

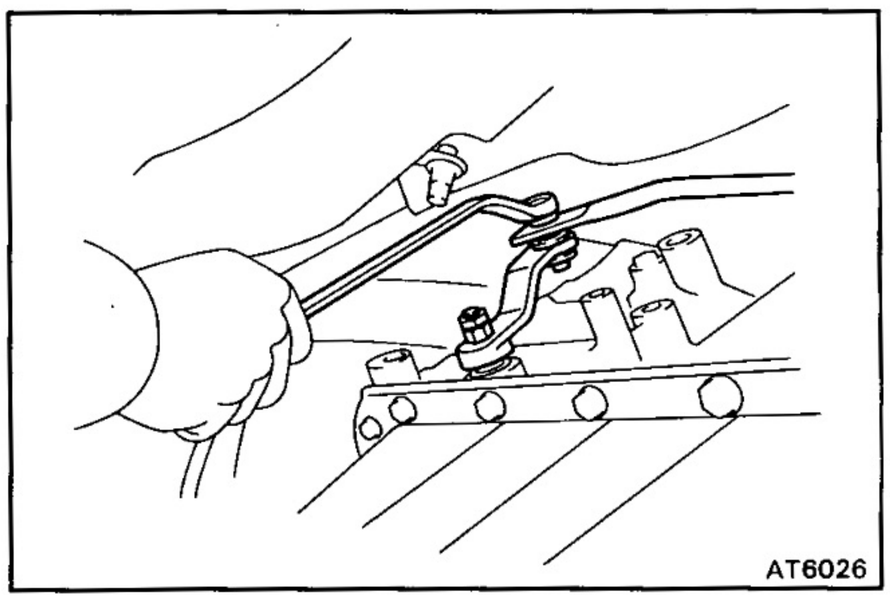

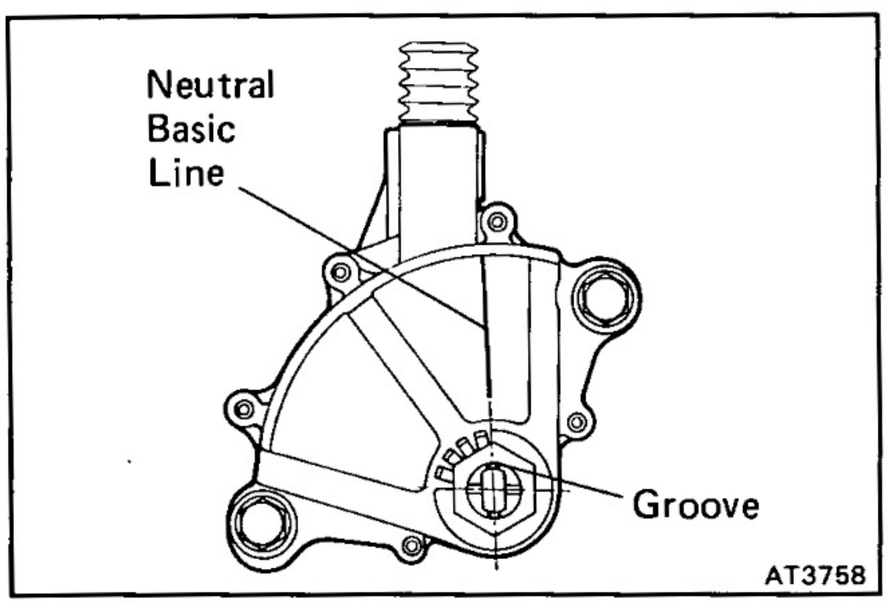

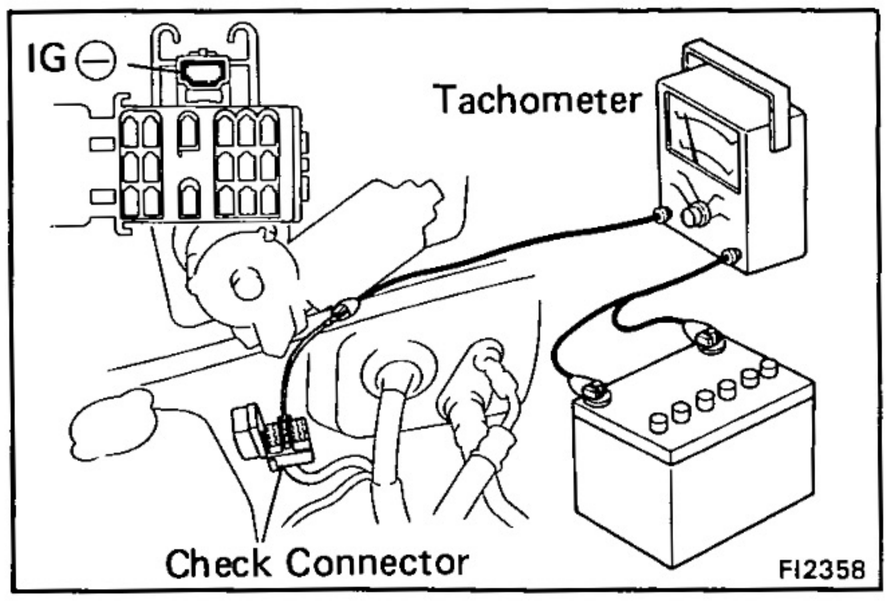

3. INSPECT THROTTLE CABLE

(a) Check that the throttle cable is installed correctly and not bent.

(b) With the throttle valve fully closed, measure the distance between the end of the boot and stopper on the cable.

Standard distance:

Fully closed	**0.5 — 1.5 mm (0.020 — 0.059 in.)**
Fully opened	**32 — 34 mm (1.260 — 1.339 in.)**

If the distance is not standard, adjust the cable by the adjusting nuts.

4. INSPECT TRANSMISSION SHIFT LEVER POSITION

When shifting the shift lever from the N position to other positions, check that the lever can be shifted smoothly and accurately to each position and that the position indicator correctly indicates the position.

If the indicator is not aligned with the correct position, carry out the following adjustment procedures.

(a) Loosen the nut on the control rod.

(b) Push the control shaft lever fully toward the rear of the vehicle.

(c) Return the control shaft lever two notches to N position.

(d) Set the shift lever to N position.

(e) While holding the shift lever lightly toward the R position side, tighten the control rod nut.

(f) Start the engine and make sure that the vehicle moves forward when shifting the lever from the N to D position and reverse when shifting it to the R position.

5. INSPECT NEUTRAL START SWITCH

Check that the engine can be started with the shift lever only in the N or P position, but not in other positions.

If not as started above, carry out the following adjustment procedures.

(a) Loosen the neutral start switch bolts and set the shift lever to the N position.

(b) Align the groove and neutral basic line.

(c) Hold in position and tighten the bolts.

Torque: 130 kg-cm (9 ft-lb, 13 N·m)

6. INSPECT IDLE SPEED (N RANGE)

Connect tachometer test probe to the check connector terminal IG ⊖, inspect the idle speed.

Idle speed: 650 rpm

Mechanical System Tests

STALL TEST

The object of this test is to check the overall performance of the transmission and engine by measuring the stall speeds in the D and R ranges.

NOTICE:

- **Perform the test at normal operating fluid temperature (50 — 80 °C or 122 — 176 °F).**
- **Do not continuously run this test longer than 5 seconds.**

MEASURE STALL SPEED

(a) Warm up the transmission fluid.

(b) Chock the front and rear wheels.

(c) Connect a tachometer to the engine.

(d) Fully apply the parking brake.

(e) Step down strongly on the brake pedal with your left foot.

(f) Start the engine.

(g) Shift into the D range. Step all the way down on the accelerator pedal with your right foot. Quickly read the stall speed at this time.

Stall speed: 3F Engine 1,850 ± 150 rpm
1H Engine 1,900 ± 150 rpm

(h) Perform the same test in R range.

EVALUATION

(a) If the stall speed is the same for both ranges but lower than specified value:

- Engine output may be insufficient
- Stator one-way clutch is not operating properly

HINT: If more than 600 rpm below the specified value, the torque converter could be faulty.

(b) If the stall speed in D range is higher than specified:

- Line pressure too low
- Front clutch slipping
- No.2 one-way clutch not operating properly
- O/D one-way clutch not operating properly

(c) If the stall speed in R range is higher than specified:

- Line pressure too low
- Rear clutch slipping
- First and reverse brake slipping
- O/D one-way clutch not operating properly

(d) If the stall speed in both R and D ranges are higher than specified:

- Line pressure too low
- Improper fluid level
- O/D one-way clutch not operating properly

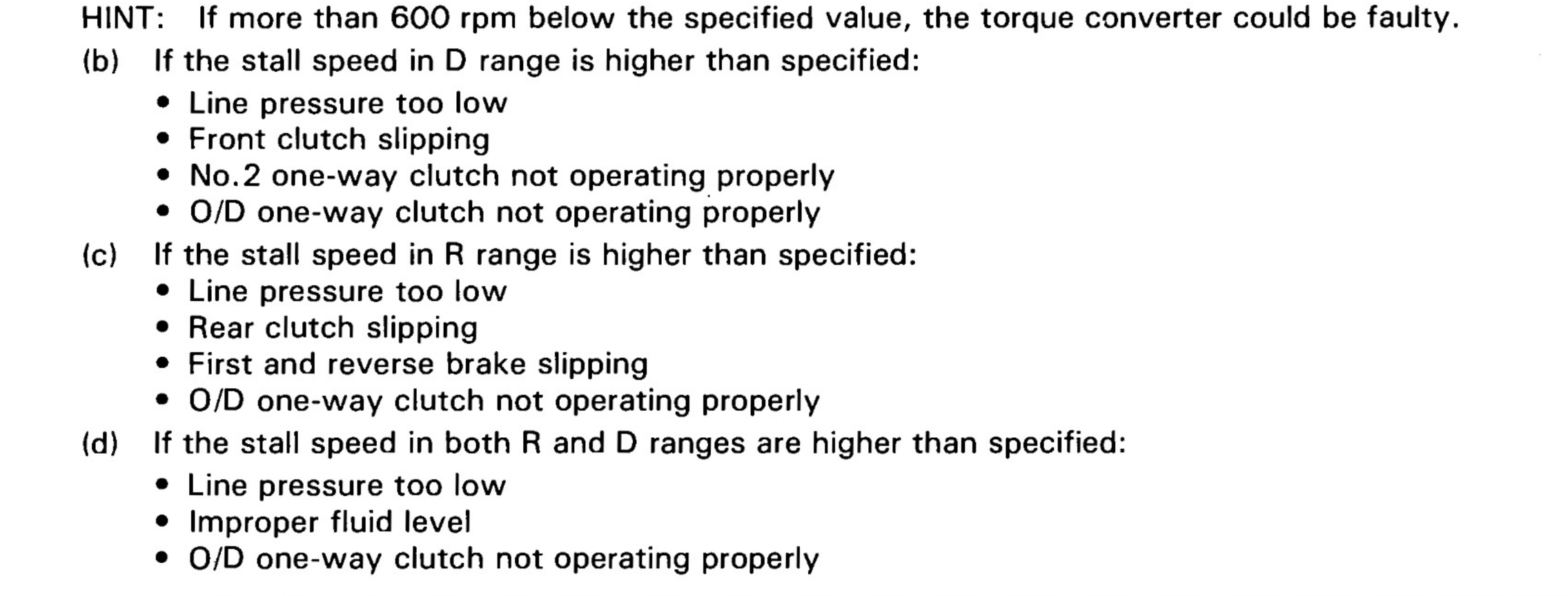

TIME LAG TEST

If the shift lever is shifted while the engine is idling, there will be a certain time lapse or lag before the shock can be felt. This is used for checking the condition of the O/D direct clutch, front clutch, rear clutch and first and reverse brakes.

NOTICE:

- **Perform the test at normal operating fluid temperature (50 — 80 °C or 122 — 176 °F)**
- **Be sure to allow one minute intervals between tests.**
- **Make three measurements and take the average value.**

MEASURE TIME LAG

(a) Fully apply the parking brake.

(b) Start the engine and check the idle speed.

Idle speed: 3F engine 750 rpm 1HZ engine 710 rpm
3F-E engine 650 rpm 1HD-T engine 800 rpm

(c) Shift the shift lever from N to D position. Using a stop watch, measure the time it takes from shifting the lever until the shock is felt.

Time lag: Less than 0.7 seconds

(d) In same manner, measure the time lag N → R.

Time lag: Less than 1.2 seconds

EVALUATION

(a) If N → D time lag is longer than specified:

- Line pressure too low
- Front clutch worn
- O/D one-way clutch not operating properly

(b) If N → R time lag is longer than specified:

- Line pressure too low
- Rear clutch worn
- First and reverse brake worn
- O/D one-way clutch not operating properly

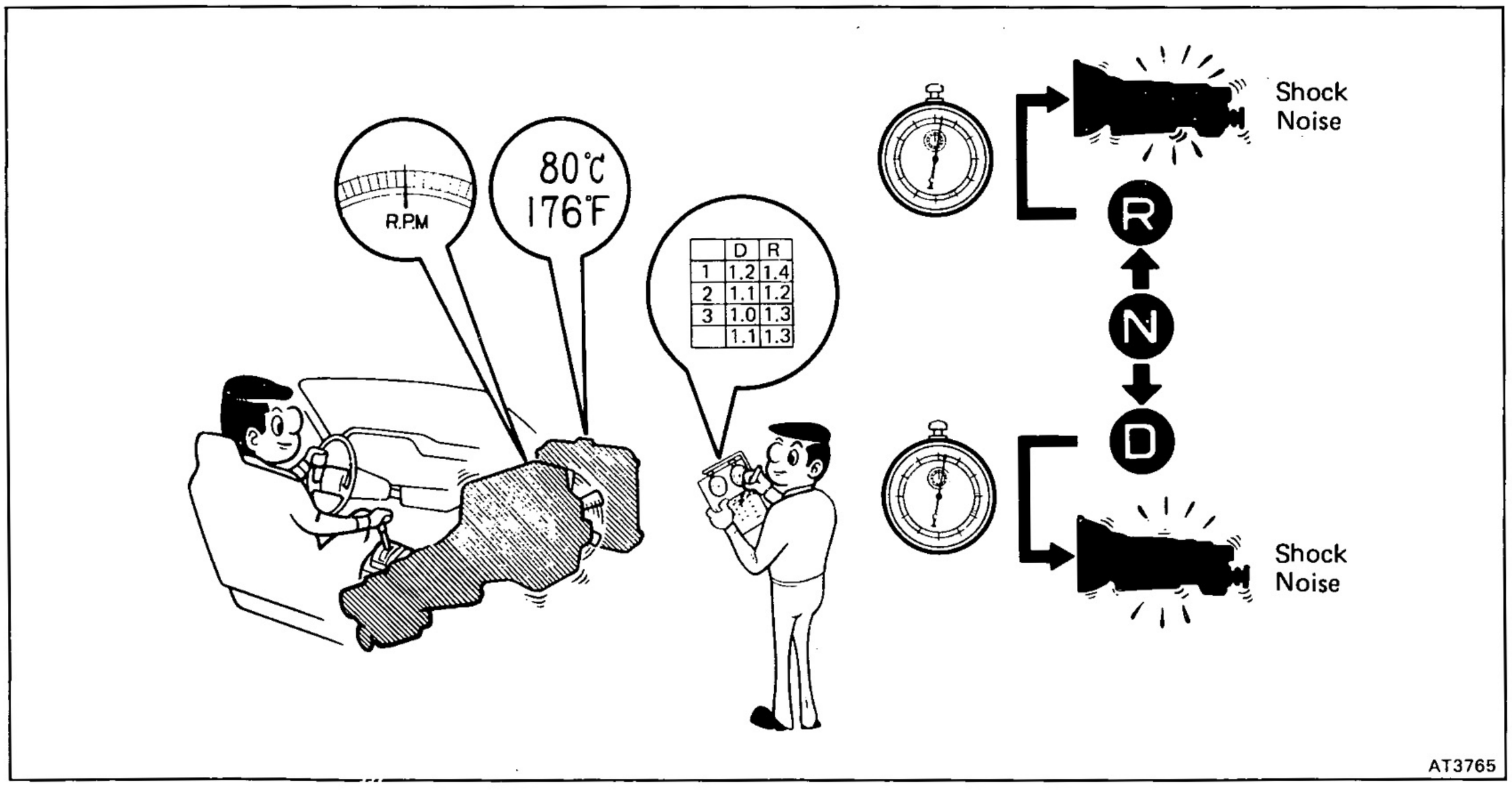

HYDRAULIC TEST

1. MEASURE LINE PRESSURE

NOTICE: Perform the test at normal operating fluid temperature (50 — 80 °C or 122 — 176 °F)

(a) Warm up the transmission fluid.

(b) Remove the transmission case test plug and connect the hydraulic pressure gauge.

SST 09992-00094 (Oil pressure gauge)

(c) Fully apply the parking brake and chock the four wheels.

(d) Start the engine and check idling rpm.

(e) Step down strongly on the brake pedal with your left foot and shift into D range.

(f) Measure the line pressure when the engine is idling.

(g) Press the accelerator pedal all the way down. Quickly read the highest line pressure when engine speed reaches stall speed.

(h) In the same manner, perform the test in R range.

(A440F)

kg/cm² (psi, kPa)

D range		R range	
Idling	Stall	Idling	Stall
3.7—4.3 (53—61, 363—422)	11.1—13.6 (158—193, 1,089—1,344)	4.5—5.5 (64—78, 441—539)	14.0—17.0 (199—242, 1,373—1,677)

(A442F)

kg/cm² (psi, kPa)

D range		R range	
Idling	Stall	Idling	Stall
4.4—5.2 (63—74, 431—510)	9.9—12.5 (141—178, 971—1,226)	6.5—8.6 (92—122, 637—843)	16.4—18.9 (233—269, 1,608—1,853)

If the measured pressures are not up to specified values, recheck the throttle cable adjustment and perform a retest.

EVALUATION

(a) If the measured values at all ranges are higher than specified:
- Throttle cable out of adjustment
- Throttle valve defective
- Regulator valve defective

(b) If the measured values at all ranges are lower than specified:
- Throttle cable out of adjustment
- Throttle valve defective
- Regulator valve defective
- Oil pump defective
- O/D direct clutch defective

(c) If pressure is low in the D range only:
- D range circuit fluid leakage
- Front clutch defective

(d) If pressure is low in the R range only:
- R range circuit fluid leakage
- Rear clutch defective
- First and reverse brake defective

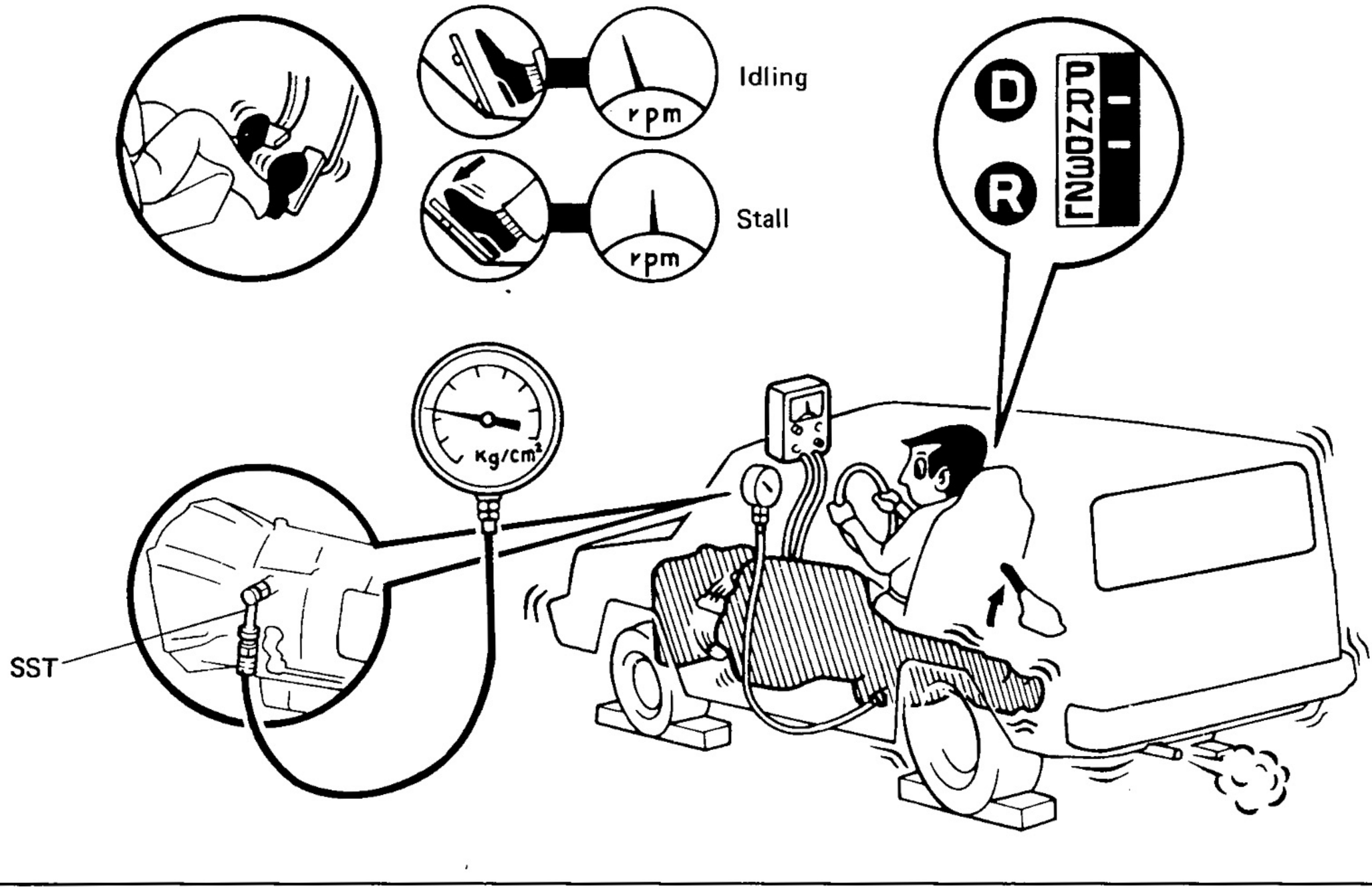
rpm
Idling
rpm
Stall
D
R
Kg/cm²
SST
AT3763

2. MEASURE GOVERNOR PRESSURE

NOTICE:

- **Perform the test at normal operating fluid temperature (50 — 80 °C or 122 — 176 °F).**
- **Measurement can be made with a 1,000 rpm test, but if tests are to be made at 1,800 rpm and 3,500 rpm, it would be safer to do it on road or using a chassis dynamometer because an on-stand test could be hazardous.**

(a) Warm up the transmission fluid.

(b) (Part-time) Shift the transfer shift lever to the "H2" position.

(Full-time) Lock the center differential.

(c) (Part-time) Chock the front wheels.

(Full-time) Remove front propeller shaft.

(d) (Part-time) Jack up rear of the vehicle and support it on stands.

(Full-time) Jack up the vehicle and support it on stands.

(e) Remove the transmission case test plug and connect the hydraulic pressure gauge.

SST 09992-00094 (Oil pressure gauge)

(f) Check that the parking brake is not applied.

(g) Start the engine.

(h) Shift into the D range and measure the governor pressure at the speeds specified in the table.

[Australia]
(3F-E Engine)

Output shaft rpm	Vehicle speed (Reference) km/h (mph)		Governor pressure kg/cm² (psi, kPa)
	Tire size		
	7.50R16-6	265/75R-15	
1,000	35 (22)	34 (21)	0.8 — 1.2 (11 — 17, 78 — 118)
1,800	64 (40)	61 (38)	2.0 — 2.4 (28 — 34, 196 — 235)
3,500	124 (77)	118 (74)	5.7 — 6.3 (81 — 90, 559 — 618)

(1HD-T Engine)

Output shaft rpm	Vehicle speed (Reference) km/h (mph)		Governor pressure kg/cm² (psi, kPa)
	Tire size		
	7.50R16-6	265/75R-15	
1,000	35 (22)	34 (21)	1.0 — 1.4 (14 — 20, 98 — 137)
1,800	64 (40)	61 (38)	2.3 — 2.9 (33 — 41, 226 — 284)
3,500	124 (77)	118 (74)	5.7 — 6.3 (81 — 90, 559 — 618)

[Europe]
(3F-E Engine)

Output shaft rpm	Vehicle speed (Reference) km/h (mph)		Governor pressure kg/cm² (psi, kPa)
	Tire size		
	215/80R-16	265/75R-15	
1,000	33 (20)	34 (21)	0.8 — 1.2 (11 — 17, 78 —118)
1,800	59 (36)	61 (38)	2.0 — 2.4 (28 — 34, 196 — 235)
3,500	114 (71)	118 (74)	5.7 — 6.3 (81 — 90, 559 — 618)

(1HZ Engine)

Output shaft rpm	Vehicle speed (Reference) km/h (mph)		Governor pressure kg/cm² (psi, kPa)
	Tire size		
	215/80R-16	265/75R-15	
1,000	33 (20)	34 (21)	0.8 — 1.2 (11 — 17, 78 — 118)
1,800	59 (36)	61 (38)	2.0 — 3.4 (28 — 34, 196 — 235)
3,500	114 (71)	118 (74)	5.7 — 6.3 (81 — 90, 559 — 618)

(1HD-T Engine)

Output shaft rpm	Vehicle speed (Reference) km/h (mph)		Governor pressure kg/cm² (psi, kPa)
	Tire size		
	215/80R-16	265/75R-15	
1,000	33 (20)	34 (21)	1.0 — 1.4 (14 — 20, 98 — 137)
1,800	59 (36)	61 (38)	2.3 — 2.9 (33 — 41, 226 — 284)
3,500	114 (71)	118 (74)	5.7 — 6.3 (81 — 90, 559 — 618)

[Middle East]

Output shaft rpm	Vehicle speed (Reference) km/h (mph)		Governor pressure kg/cm² (psi, kPa)
	Tire size		
	7.50-16-6	9.00-15-6	
1,000	35 (22)	37 (23)	0.8 — 1.2 (11 — 17, 78 — 118)
1,800	63 (39)	67 (42)	2.0 — 2.4 (28 — 34, 196 — 235)
3,500	123 (76)	130 (81)	5.7 — 6.3 (81 — 90, 559 — 618)

Output shaft rpm	Vehicle speed (Reference) km/h (mph)		Governor pressure kg/cm² (psi, kPa)
	Tire size		
	31×10.5R-15	7.50R16-8	
1,000	34 (21)	35 (22)	0.8 — 1.2 (11 — 17, 78 — 118)
1,800	62 (38)	64 (40)	2.0 — 2.4 (28 — 34, 196 — 235)
3,500	120 (75)	124 (77)	5.7 — 6.3 (81 — 90, 559 — 618)

[Others]
(3F-Engine)

Output shaft rpm	Vehicle speed (Reference) km/h (mph)			Governor pressure kg/cm² (psi, kPa)
	Tire size			
	7.50-16-6	7.50-16-8	9.00-15-6	
1,000	35 (22)	35 (22)	37 (23)	0.8 — 1.2 (11 — 17, 78 — 118)
1,800	63 (39)	63 (39)	67 (42)	2.0 — 2.4 (28 — 34, 196 — 235)
3,500	123 (76)	123 (76)	130 (81)	5.7 — 6.3 (81 — 90, 559 — 618)
	31×10.5R-15	235/75R-15	7.50R16-8	Governor pressure kg/cm² (psi, kPa)
1,000	34 (21)	32 (20)	35 (22)	0.8 — 1.2 (11 — 17, 78 — 118)
1,800	62 (38)	58 (36)	64 (40)	2.0 — 2.4 (28 — 34, 196 — 235)
3,500	120 (75)	112 (70)	124 (77)	5.7 — 6.3 (81 — 90, 559 — 618)

(1HZ Engine)

Output shaft rpm	Vehicle speed (Reference) km/h (mph)			Governor pressure kg/cm² (psi, kPa)
	Tire size			
	7.50-16-6	7.50-16-8	7.50R16-8	
1,000	35 (22)	35 (22)	35 (22)	0.8 — 1.2 (11 — 17, 78 — 118)
1,800	63 (39)	63 (39)	64 (40)	2.0 — 2.4 (28 — 34, 196 — 235)
3,500	123 (76)	123 (76)	124 (77)	5.7 — 6.3 (81 — 90, 559 — 618)
	9.00-15-6	31 × 10.5R-6	—	Governor pressure kg/cm² (psi, kPa)
1,000	37 (23)	34 (21)	—	0.8 — 1.2 (11 — 17, 78 — 118)
1,800	67 (42)	62 (38)	—	2.0 — 2.4 (28 — 34, 196 — 235)
3,500	130 (81)	120 (75)	—	5.7 — 6.3 (81 — 90, 559 — 618)

(1HD-T Engine)

Output shaft rpm	Vehicle speed (Reference) km/h (mph)			Governor pressure kg/cm² (psi, kPa)
	Tire size			
	7.50-16-6	7.50-16-8	7.50R16-8	
1,000	35 (22)	35 (22)	35 (22)	1.0 — 1.4 (14 — 20, 98 — 137)
1,800	63 (39)	63 (39)	64 (40)	2.3 — 2.9 (33 — 41, 226 — 284)
3,500	123 (76)	123 (76)	124 (77)	5.7 — 6.3 (81 — 90, 559 — 618)
	9.00-15-6	31 × 10.5R-6	—	Governor pressure kg/cm² (psi, kPa)
1,000	37 (23)	34 (21)	—	1.0 — 1.4 (14 — 20, 98 — 137)
1,800	67 (42)	62 (38)	—	2.3 — 2.9 (33 — 41, 226 — 284)
3,500	130 (81)	120 (75)	—	5.7 — 6.3 (81 — 90, 559 — 618)

EVALUATION

If governor pressure is defective:

- Line pressure defective
- Fluid leakage in governor pressure circuit
- Governor valve operation defective

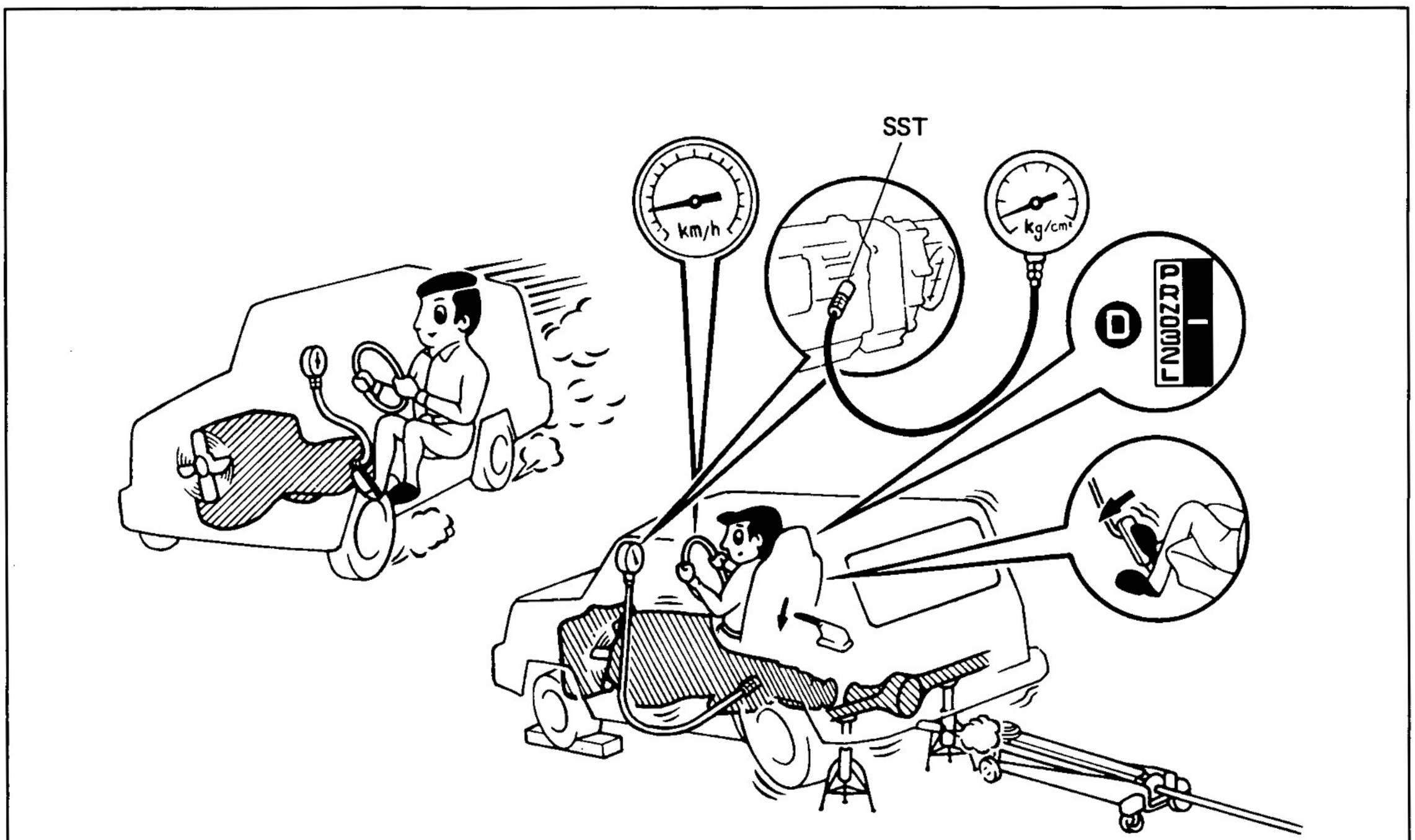

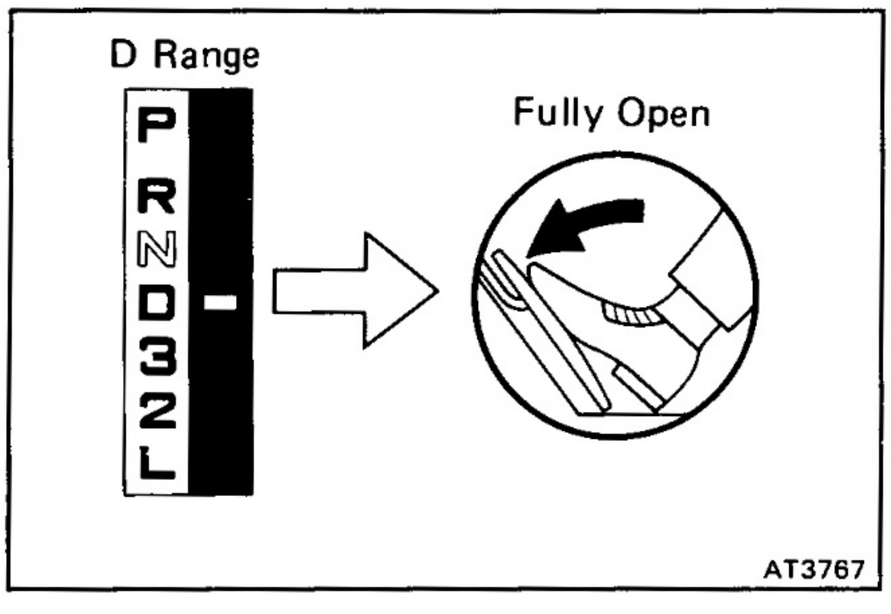

ROAD TEST

NOTICE: Perform the test at normal operating fluid temperature (50 — 80 °C or 122 — 176 °F)

1. D RANGE TEST

Shift into the D range and while driving with the accelerator pedal held constant at full throttle valve opening position, check the following points:

(a) Check to see that the 1 → 2, 2 → 3 and 3 → O/D up-shifts take place, and shift points should conform to those shown in the automatic shift schedule.

EVALUATION

(1) If there is no 1 → 2 up-shift:
- Governor valve is defective
- 1-2 shift valve is stuck

(2) If there is no 2 → 3 up-shift:
- Governor valve is defective
- 2-3 shift valve is stuck

(3) If there is no 3 → O/D up-shift:
- Governor valve is defective
- 3-4 shift valve is stuck

(4) If the shift point is defective:
- Throttle cable is out-of-adjustment
- Throttle valve, 1-2 shift valve, 2-3 shift valve, 3-4 shift valve etc., are defective

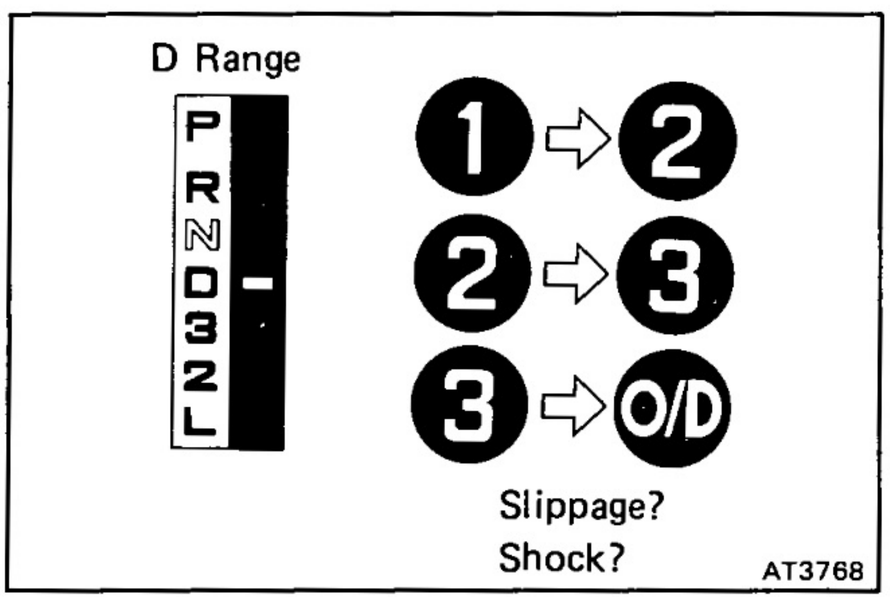

(b) In the same manner, check the shock and slip at the 1 → 2, 2 → 3 and 3 → O/D up-shifts.

EVALUATION

If the shock is excessive:
- Line pressure is too high
- Accumulator is defective
- Check ball is defective

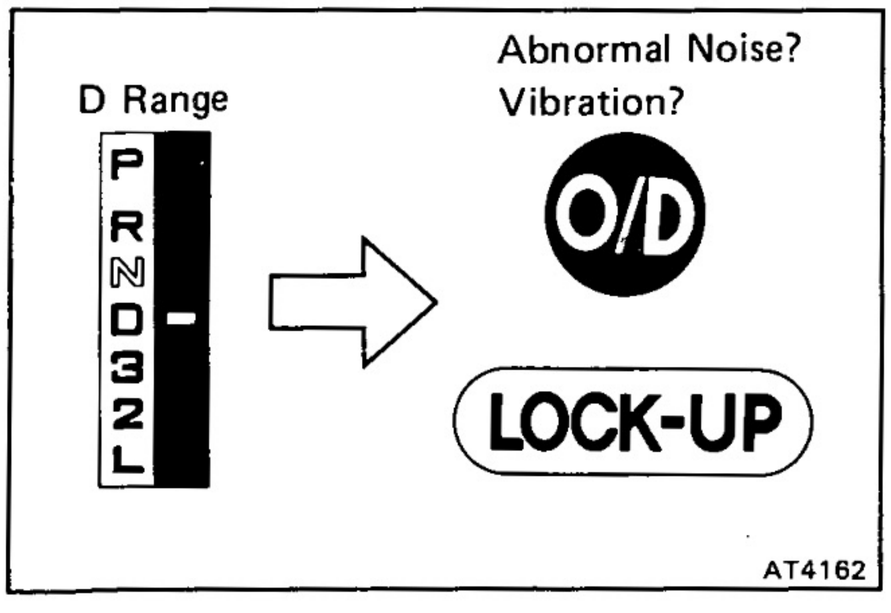

(c) Run in the O/D gear or lock-up of the D range and check for abnormal noise and vibration.

HINT: The check for the cause of abnormal noise and vibration must be made with extreme care as it could also be due to loss of balance in the propeller shafts, differentials, torque converter, etc.

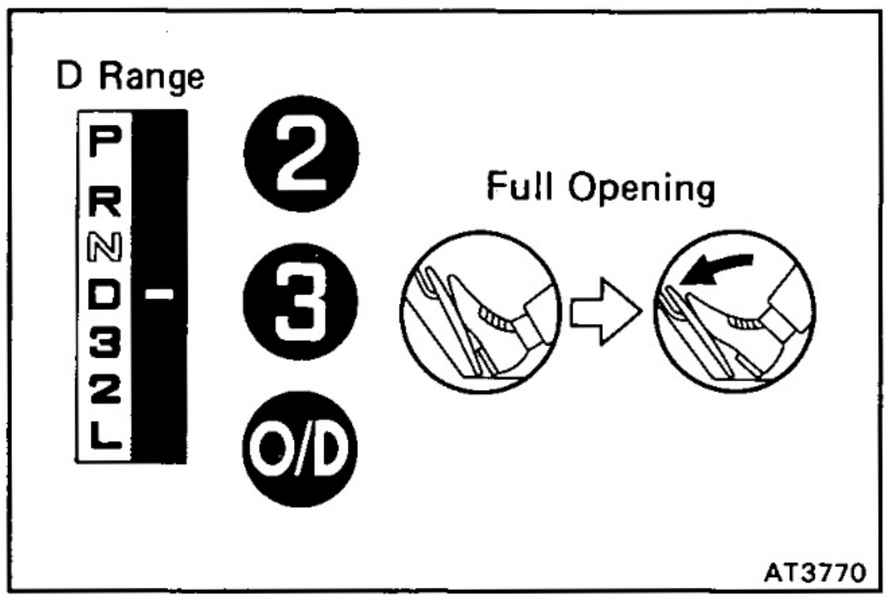

(d) While running in the 2nd, 3rd, or O/D gear of the D range, check to see that the possible kick-down vehicle speed limits for 2 → 1, 3 → 2 or O/D → 3 kick-downs conform to those indicated on the automatic shift schedule.

(e) Check for abnormal shock and slip at kick-down.

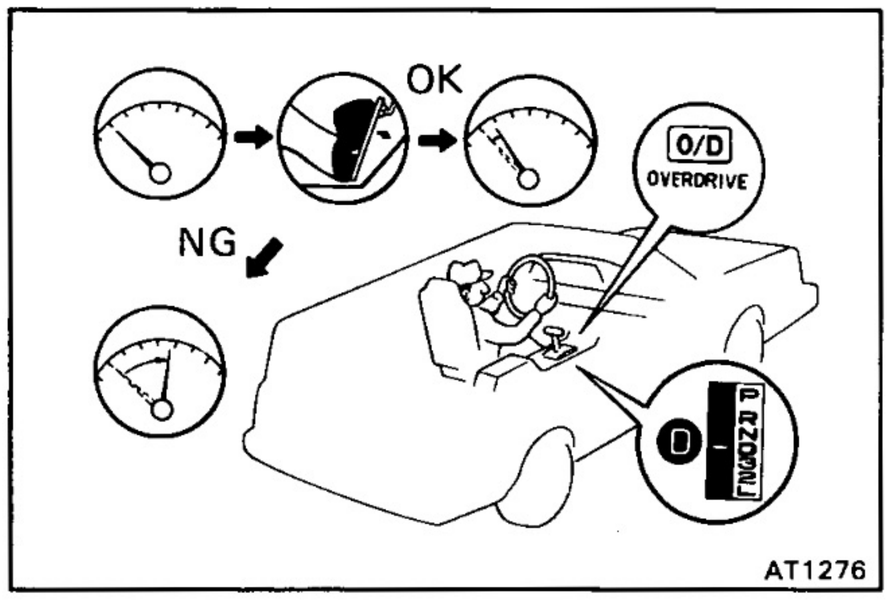

(f) Check for the lock-up mechanism.

(1) Drive in O/D gear of the D range, at a steady speed (lock-up ON) of about 85 km/h (53 mph).

(2) Lightly depress the accelerator pedal and check that the engine rpm does not change abruptly.

If there is a big jump in engine rpm, there is no lock-up.

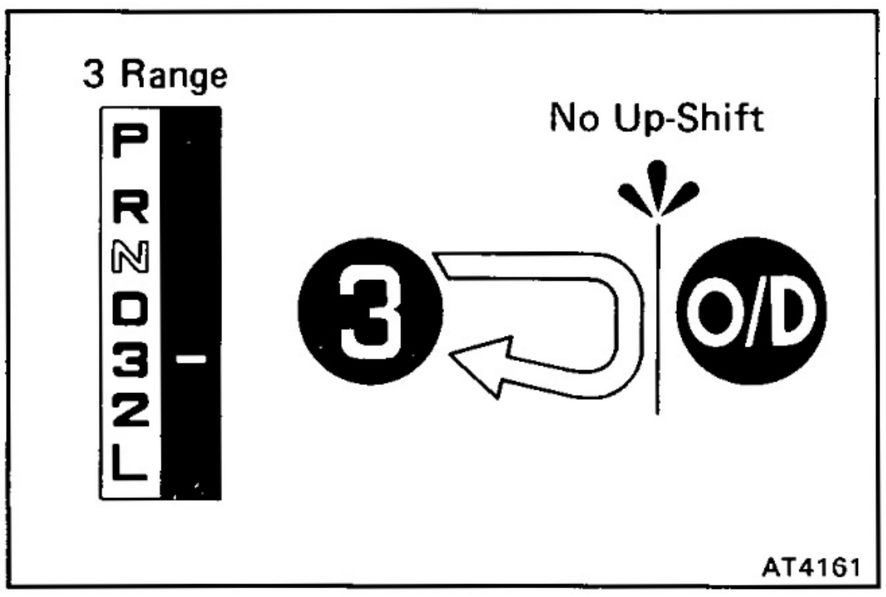

2. 3 RANGE TEST

(a) While running in the 3rd gear of the 3 range, check to see that there is no up-shift to the O/D gear.

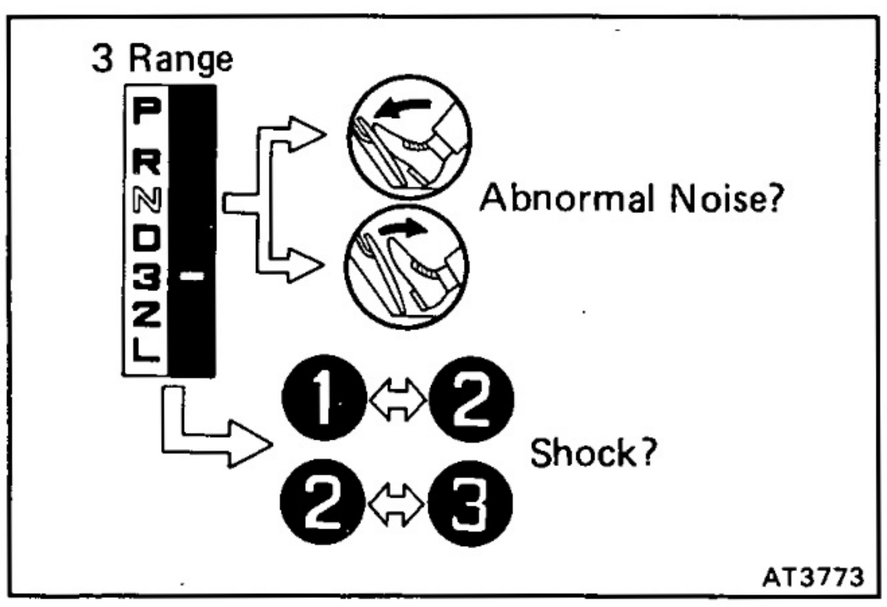

(b) Check for abnormal noise at acceleration and deceleration, and for shock at up-shift and down-shift.

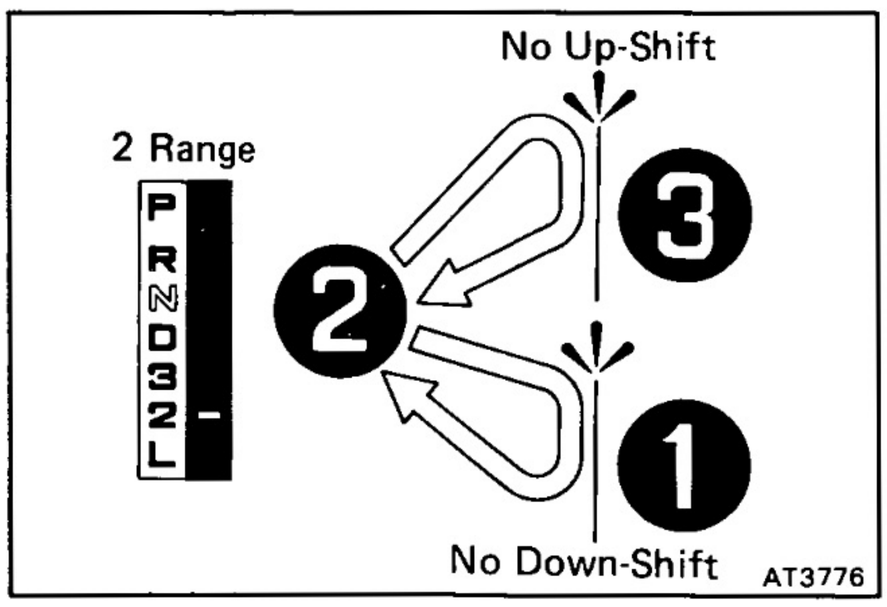

3. 2 RANGE TEST

(a) While running in the 2nd gear of the 2 range, check to see that there is no up-shift to the 3rd gear.

(b) While running in the 2nd gear of the 2 range, check to see that there is no down-shift to the 1st gear.

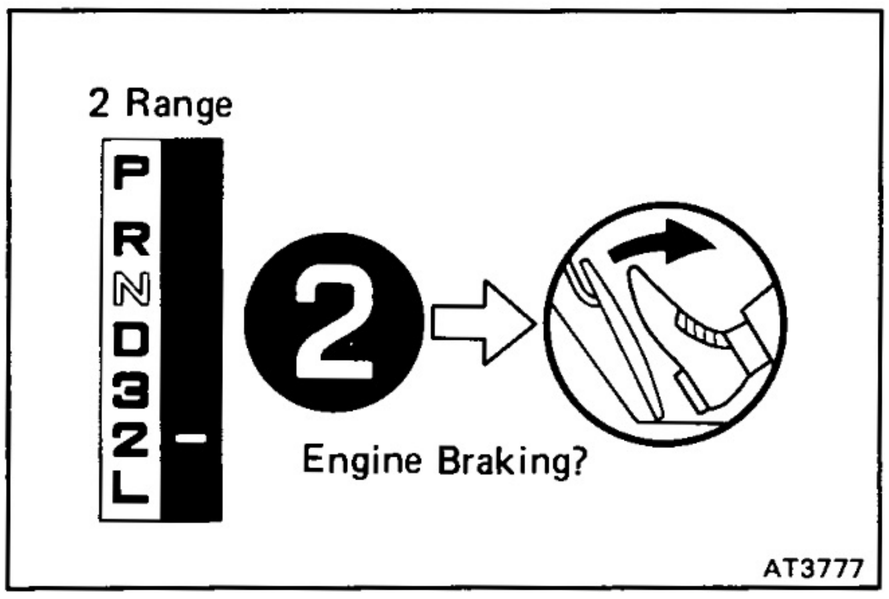

(c) While running in the 2nd gear of the 2 range, release the accelerator pedal and check the engine braking effect.

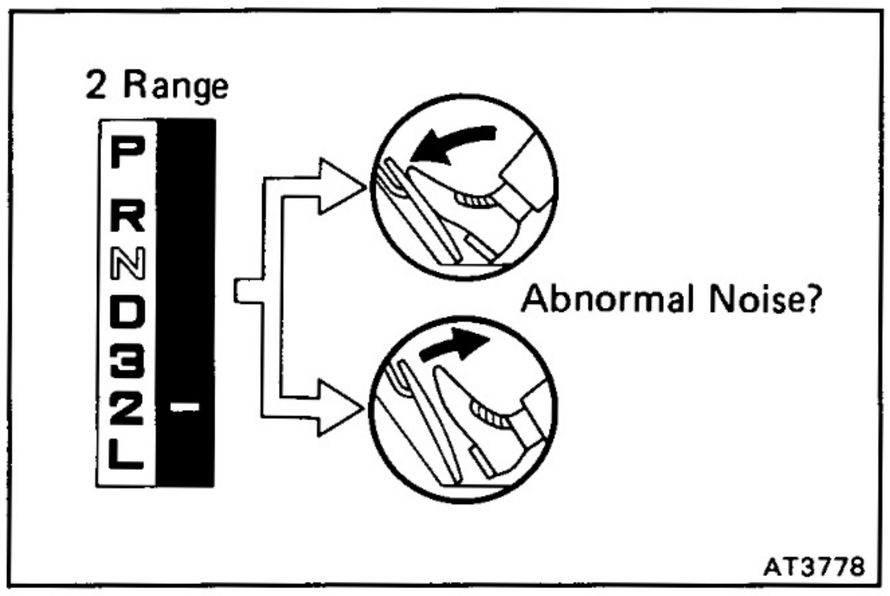

(d) Check for abnormal noise during acceleration and deceleration.

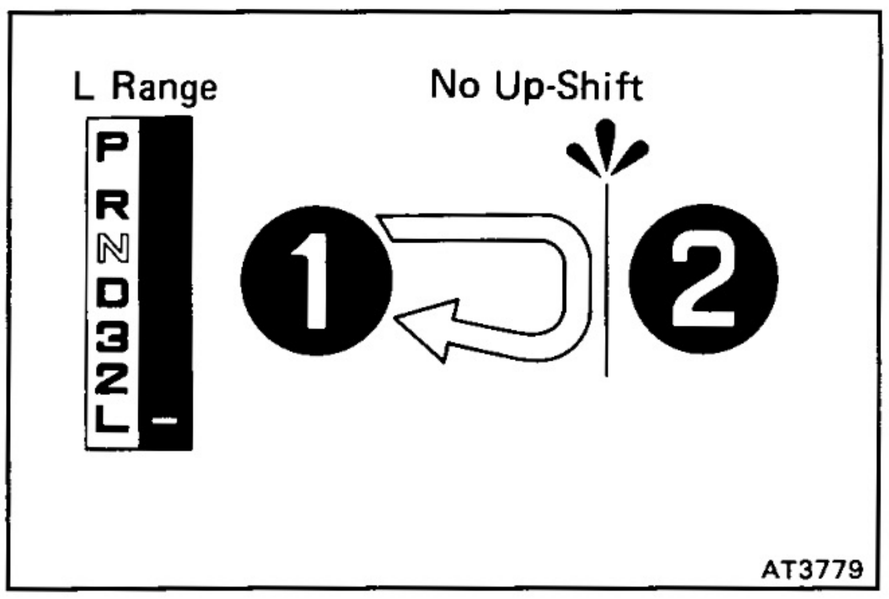

4. L RANGE TEST

(a) While running in the L range, check to see that there is no up-shift to the 2nd gear.

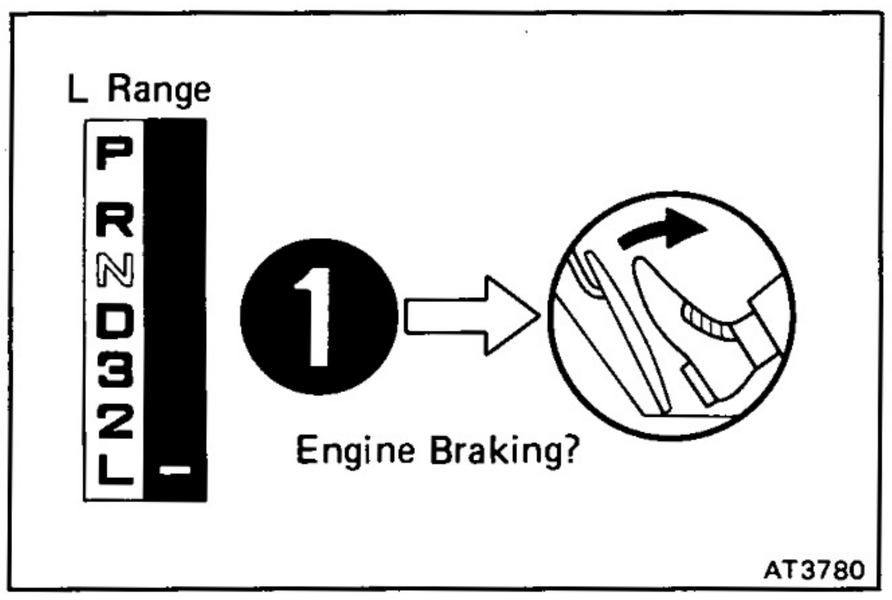

(b) While running in the L range, release the accelerator pedal and check the engine braking effect.

EVALUATION

If there is no engine braking effect:

- First and reverse brake is defective

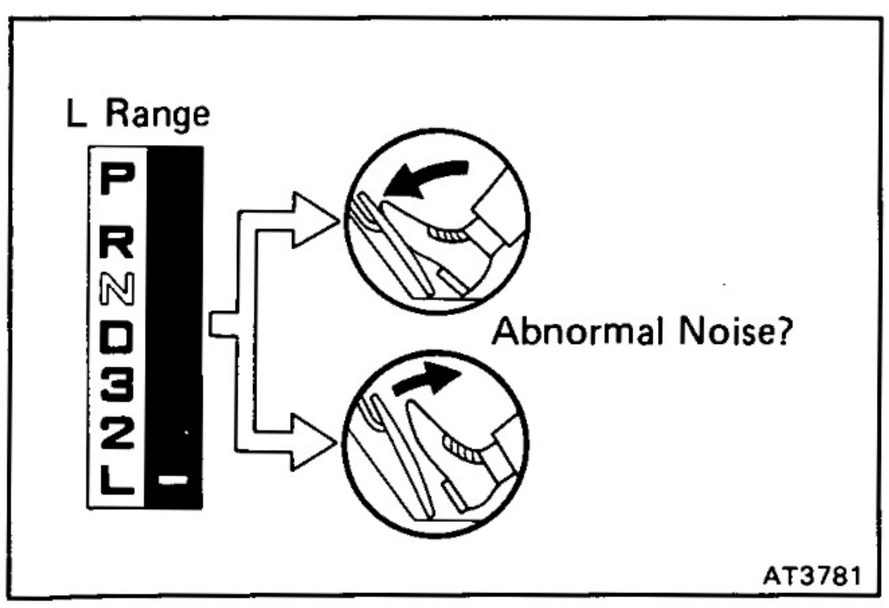

(c) Check for abnormal noise during acceleration and deceleration.

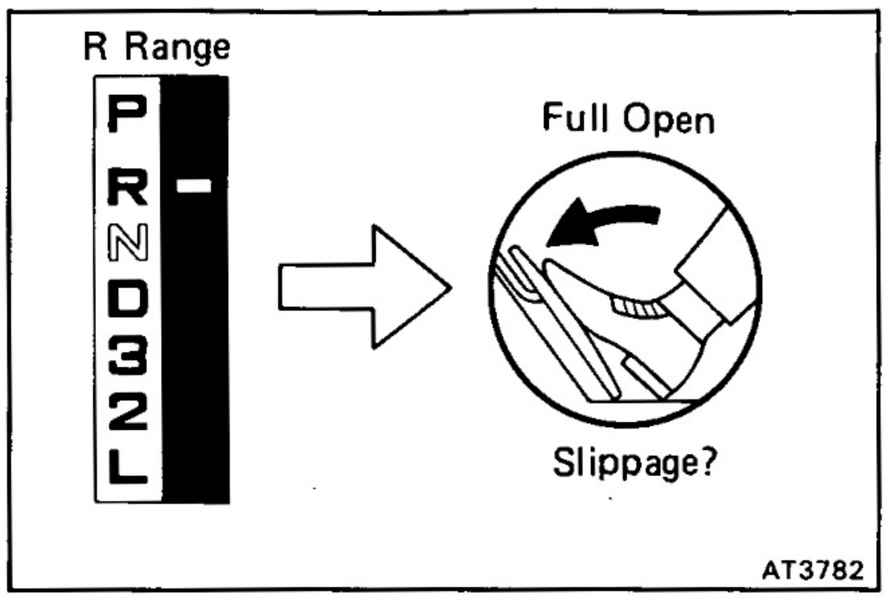

5. R RANGE TEST

Shift into the R range and, while starting at full throttle, check for slipping.

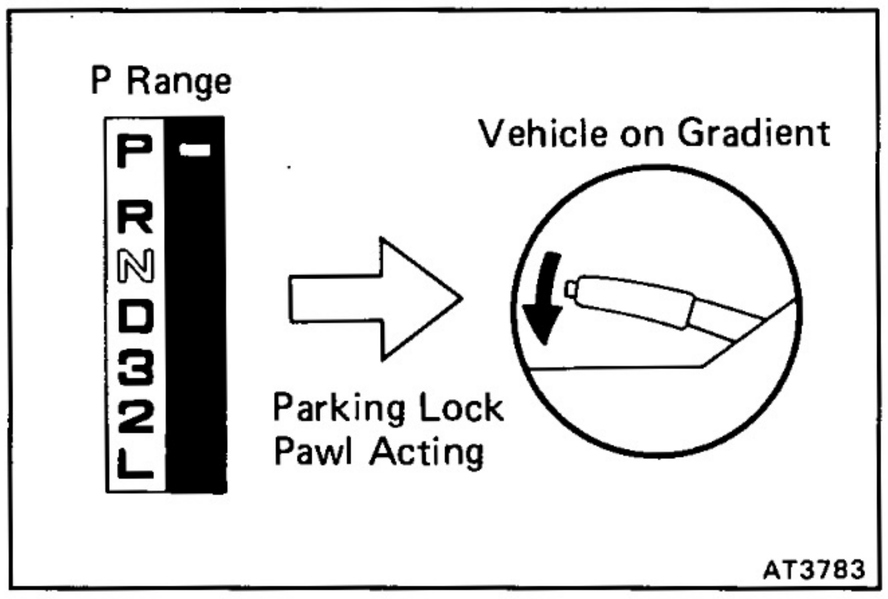

6. P RANGE TEST

Stop the vehicle on a gradient (more than 9 %) and after shifting into the P range, release the parking brake.

Then check to see that the parking lock pawl holds the vehicle in place.

Automatic Shift Schedule

(Australia)

km/h (mph)

		Throttle valve fully open						(fully closed)		2 range	1 range
Engine	Tire Size	1→2	2→3	3→O/D	OD→3	3→2	2→1	*1	*2	3→2	2→1
3F-E	7.50R-16-6	37-52 (23-32)	83-98 (52-61)	122-137 (76-85)	112-128 (70-80)	72-87 (45-54)	31-46 (19-29)	80-92 (50-57)	76-87 (47-54)	85-101 (53-63)	39-54 (24-34)
	265/75R-15	35-50 (22-31)	80-95 (50-59)	117-132 (73-82)	108-123 (67-76)	70-84 (43-52)	30-44 (19-27)	77-88 (48-55)	73-84 (48-52)	82-97 (51-60)	37-52 (23-32)
1HD-T	7.50R-16-6	27-42 (17-26)	73-88 (45-55)	124-139 (77-86)	114-129 (71-80)	60-75 (37-47)	19-35 (12-22)	73-85 (45-53)	69-80 (43-50)	78-93 (48-58)	35-49 (22-30)
	265/75R-15	25-40 (16-25)	69-84 (43-52)	117-132 (73-82)	108-123 (67-76)	57-72 (35-45)	18-33 (11-21)	69-81 (43-50)	65-76 (40-47)	74-88 (46-55)	33-46 (21-29)

*1 Lock-up ON *2 Lock-up OFF

(Europe)

km/h (mph)

		Throttle valve fully open						(fully closed)		2 range	1 range
Engine	Tire Size	1→2	2→3	3→O/D	OD→3	3→2	2→1	*1	*2	3→2	2→1
3F-E	265/75R-15	35-50 (22-31)	80-95 (50-59)	117-132 (73-82)	108-123 (67-76)	70-84 (43-52)	30-44 (19-27)	77-88 (48-55)	73-84 (45-52)	82-97 (51-60)	37-52 (23-32)
	215/80R-16	33-47 (21-29)	76-90 (47-56)	111-125 (69-78)	103-117 (64-73)	66-80 (41-50)	28-42 (17-26)	73-84 (45-52)	69-80 (43-50)	78-92 (48-57)	36-50 (22-31)
1HZ	265/75R-15	30-45 (19-28)	74-89 (46-55)	117-132 (73-82)	108-123 (67-76)	64-79 (40-49)	25-39 (16-24)	72-83 (45-52)	67-79 (42-49)	76-91 (47-57)	36-51 (22-32)
	215/80R-16	29-43 (18-27)	70-84 (43-52)	111-125 (69-78)	103-116 (64-72)	61-75 (38-47)	24-38 (15-24)	68-79 (42-49)	64-75 (40-47)	73-87 (45-54)	34-48 (21-30)
1HD-T	265/75R-15	25-40 (16-25)	69-84 (43-52)	117-132 (73-82)	108-123 (67-76)	57-72 (35-45)	18-33 (11-21)	69-81 (43-50)	65-76 (40-47)	74-88 (46-55)	33-46 (21-29)
	215/80R-16	24-38 (15-24)	66-80 (41-50)	111-125 (69-78)	103-117 (64-73)	54-68 (34-42)	17-31 (11-19)	66-77 (41-48)	62-73 (39-45)	70-84 (43-52)	32-44 (30-27)

*1 Lock-up ON *2 Lock-up OFF

(Middle East)

km/h (mph)

Engine	Tire Size	Throttle valve fully open 1→2	2→3	3→O/D	OD→3	3→2	2→1	(fully closed) *1	*2	2 range 3→2	1 range 2→1
3F	7.50-16-6	31-47 (19-29)	77-92 (48-57)	121-137 (75-85)	112-127 (70-79)	67-82 (42-51)	26-41 (16-25)	74-86 (46-53)	70-81 (43-50)	79-94 (49-58)	45-58 (28-36)
	9.00-15-6	33-49 (21-30)	81-97 (50-60)	128-143 (80-89)	118-133 (73-83)	70-86 (43-53)	27-43 (17-27)	78-90 (48-56)	73-86 (45-53)	83-99 (52-62)	45-61 (28-38)
	31×10.5R-15	30-45 (19-28)	75-89 (47-55)	118-133 (73-83)	109-123 (68-76)	65-80 (40-50)	25-40 (16-25)	72-83 (45-52)	68-79 (42-49)	77-92 (48-57)	41-56 (25-35)
	7.50R-16-8	32-47 (20-29)	78-94 (48-58)	124-139 (77-86)	114-129 (71-80)	68-83 (42-52)	27-42 (17-26)	75-87 (47-54)	71-83 (44-52)	81-96 (50-60)	43-59 (27-37)

*1 Lock-up ON *2 Lock-up OFF

(Others)

km/h (mph)

Engine	Tire Size	Throttle valve fully open 1→2	2→3	3→O/D	OD→3	3→2	2→1	(fully closed) *1	*2	2 range 3→2	1 range 2→1
3F	7.50-16-6 7.50-16-8	31-47 (19-29)	77-92 (48-57)	121-137 (75-85)	112-127 (70-79)	67-82 (42-51)	26-41 (16-25)	74-86 (46-53)	70-81 (43-50)	79-94 (49-58)	43-58 (28-36)
	9.00-15-6	33-49 (21-30)	81-97 (50-60)	128-143 (80-89)	118-133 (73-83)	70-86 (43-53)	27-43 (17-27)	78-90 (48-56)	73-86 (45-53)	83-99 (52-62)	45-61 (28-38)
	31×10.5R-15	30-45 (19-28)	75-89 (47-55)	118-133 (73-83)	109-123 (68-76)	65-80 (40-50)	25-40 (16-25)	72-83 (45-52)	68-79 (42-49)	77-92 (48-57)	41-56 (25-35)
	7.50R-16-8	32-47 (20-29)	78-94 (48-58)	124-139 (77-86)	114-129 (71-80)	68-83 (42-52)	27-42 (17-26)	75-87 (47-54)	71-83 (44-52)	81-96 (50-60)	43-59 (27-37)
	235/75R-15	28-42 (17-26)	69-83 (43-52)	110-123 (68-76)	101-115 (63-71)	60-74 (37-46)	23-37 (14-23)	67-78 (42-48)	63-74 (39-46)	71-85 (44-53)	39-52 (24-32)
1HZ	7.50-16-6 7.50-16-8	31-47 (19-29)	77-92 (48-57)	121-137 (75-85)	112-127 (70-79)	67-82 (42-51)	26-41 (16-25)	74-86 (46-53)	70-81 (43-50)	79-94 (49-58)	43-58 (28-36)
	7.50R-16-8	32-47 (20-29)	78-94 (48-58)	124-139 (77-86)	114-129 (71-80)	68-83 (42-52)	27-42 (17-26)	75-87 (47-54)	71-83 (44-52)	81-96 (50-60)	38-53 (24-33)
	9.00-15-6	33-49 (21-30)	81-97 (50-60)	128-143 (80-89)	118-133 (73-83)	70-86 (43-53)	28-43 (17-27)	78-90 (48-56)	73-86 (45-53)	83-99 (52-62)	39-55 (24-34)
	31×10.5R-15	30-45 (19-28)	75-89 (47-55)	118-133 (73-83)	109-123 (68-76)	65-80 (40-50)	25-40 (16-25)	72-83 (45-52)	68-79 (42-49)	77-92 (48-57)	36-51 (22-32)
1HD-T	7.50-16-6	26-41 (16-25)	72-87 (45-54)	121-137 (75-85)	112-127 (70-79)	59-74 (37-46)	19-34 (12-21)	72-83 (45-52)	67-79 (42-49)	76-92 (47-57)	35-48 (22-30)

*1 Lock-up ON *2 Lock-up OFF

km/h (mph)

		Throttle valve fully open						(fully closed)		2 range	1 range
Engine	Tire Size	1→2	2→3	3→O/D	OD→3	3→2	2→1	*1	*2	3→2	2→1
1HD-T	7.50-16-8	26-41 (16-25)	72-87 (45-54)	121-137 (75-85)	112-127 (70-79)	59-74 (37-46)	19-34 (12-21)	72-83 (45-52)	67-79 (42-49)	76-92 (47-57)	35-48 (22-30)
	7.50R-16-8	27-42 (17-26)	73-88 (45-55)	124-139 (77-86)	114-129 (71-80)	60-75 (37-47)	19-35 (12-22)	73-85 (45-53)	69-80 (43-50)	78-93 (48-58)	35-49 (22-30)
	9.00-15-6	27-43 (17-27)	75-91 (47-57)	128-143 (80-89)	118-133 (73-83)	62-78 (39-48)	20-36 (12-22)	76-88 (47-55)	71-83 (44-52)	62-78 (39-48)	20-36 (12-22)
	31×10.5R-15	25-40 (16-25)	70-84 (43-52)	118-133 (73-83)	109-123 (68-76)	57-72 (35-45)	18-33 (11-21)	70-81 (43-50)	65-77 (40-48)	74-89 (46-55)	34-47 (21-29)

*1 Lock-up ON *2 Lock-up OFF

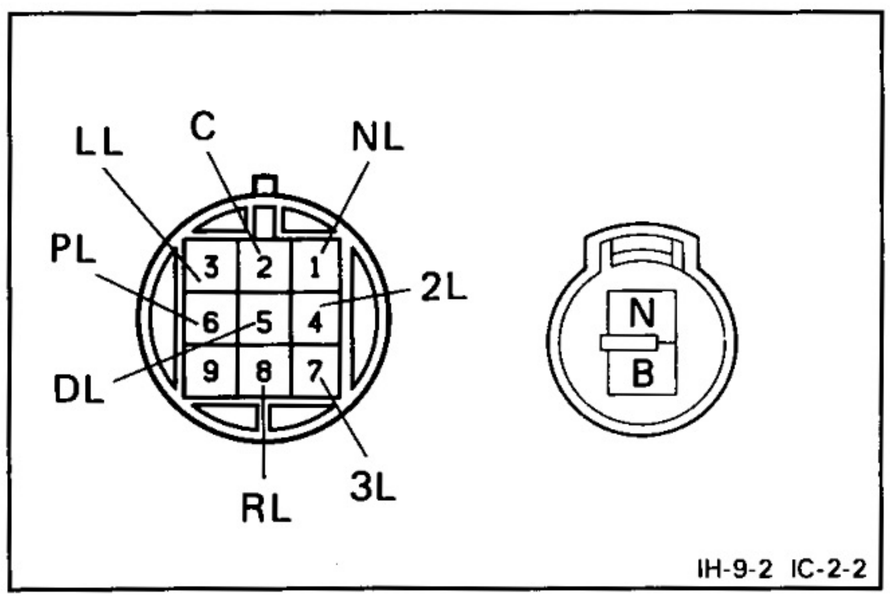

Neutral Start Switch

INPSECT NEUTRAL START SWITCH

Using an ohmmeter, check the ccontinuity of the terminals for each switch position shown in the table below.

Terminal / Switch position	B	N	C	PL	RL	NL	DL	3L	2L	LL
P range	○	○	○	○						
R range			○		○					
N range	○	○	○			○				
D range			○				○			
3 range			○					○		
2 range			○						○	
L range			○							○

If continuity between terminals is not as specified, replace the switch.

O/D Solenoid (w/ Cruise Control System)

CHECK SOLENOID SEAL

If there is foreign material in the solenoid valve, there will be no fluid control even with solenoid operation.

(a) Applying compressed air, check that the solenoid valve opens.

(b) When supply battery voltage to the solenoid, check that the solenoid valve does not leak the air.

If operation is not as specified, replace the solenoid.

A/T Fluid Temperature Warning System

A/T FLUID TEMPERATURE WARNING SYSTEM CIRCUIT

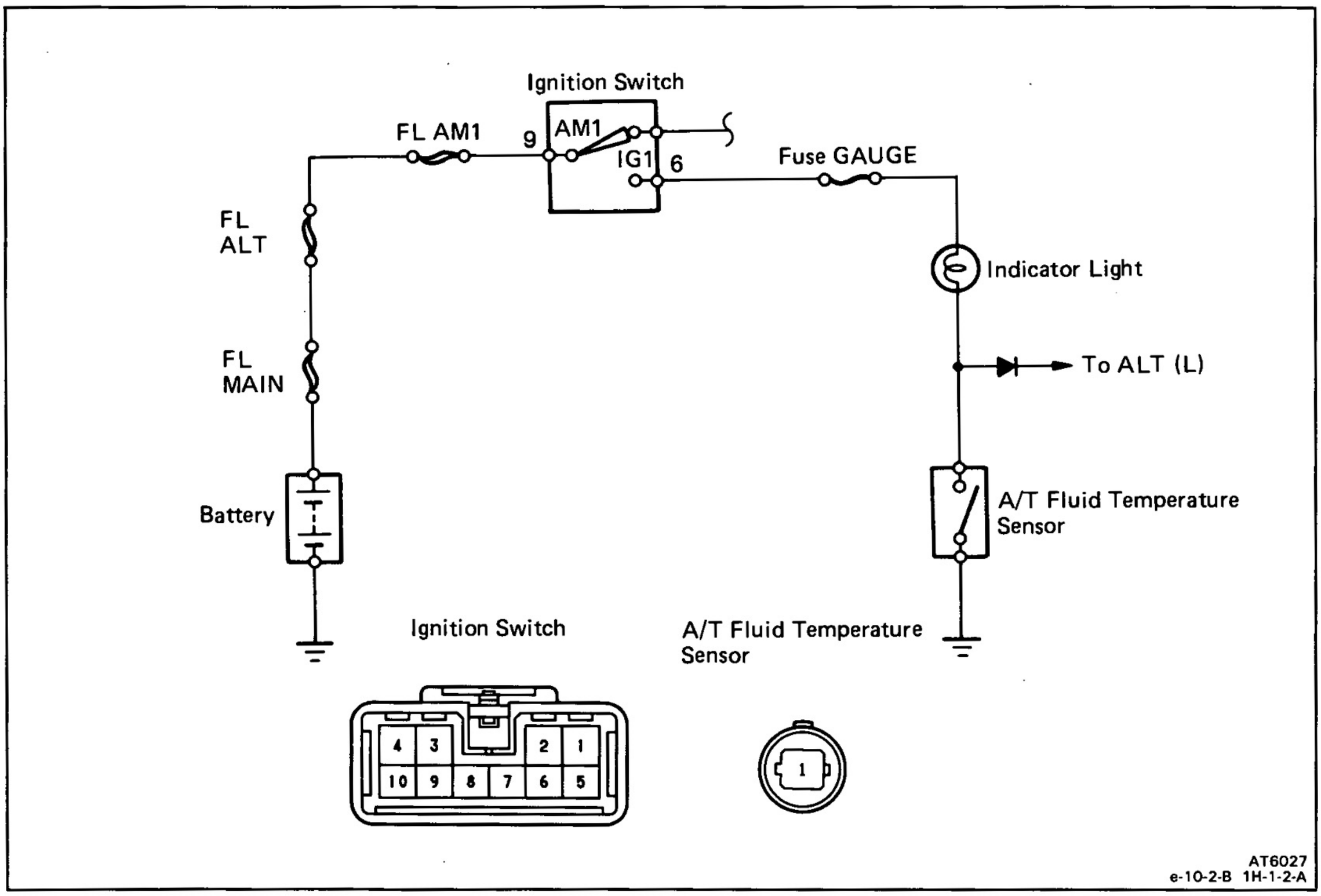

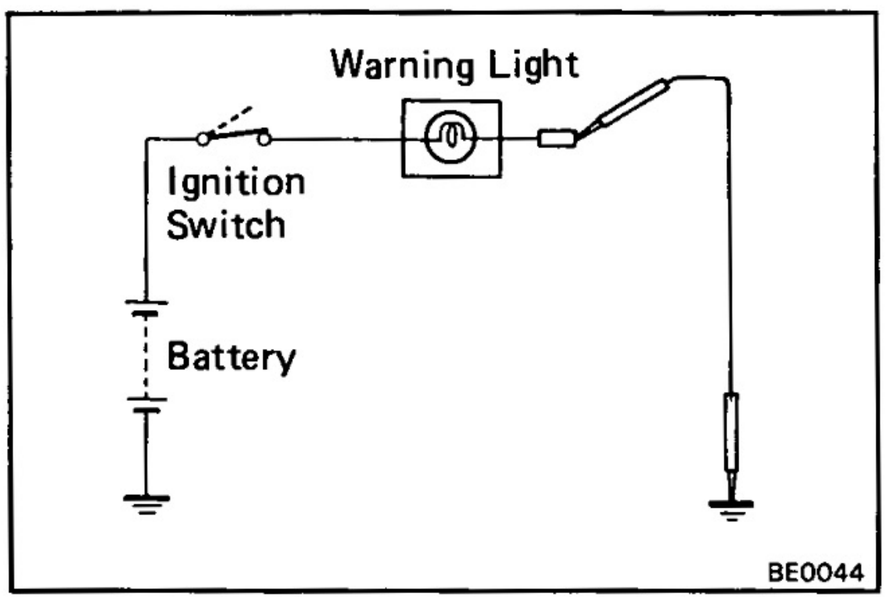

INSPECTION OF A/T FLUID TEMPERATURE WARNING SYSTEM COMPONENTS

1. INSPECT A/T FLUID TEMPERATURE WARNING LIGHT

(a) Disconnect the connector from the temperature switch. Connect terminal of the wire harness side connector and body ground.

(b) Turn the ignition switch ON, check that the light go on.

If warning light does not light, test the bulb.

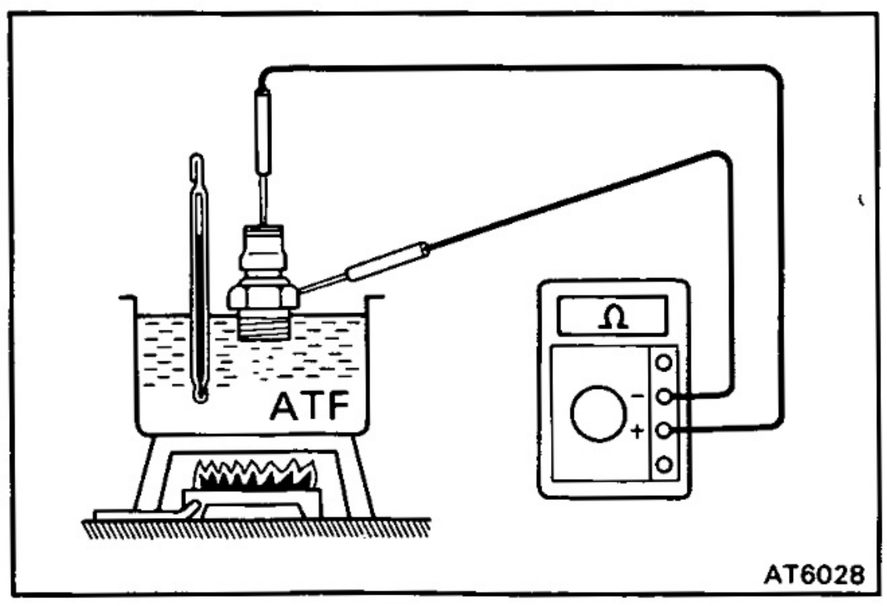

2. INSPECT A/T FLUID TEMPERATURE SENSOR

Check that there is continuity at the temperature of 145°C — 155°C (325°F — 343°F).

If continuity is not as specified, replace the sensor.

ON-VEHICLE REPAIR

Valve Body

REMOVAL OF VALVE BODY

1. MAKE PLATE TO RETAIN ACCUMULATOR PISTONS

A retainer is helpful for holding accumulator pistons in the case during removal and installation of the valve body.

The plate may be made from aluminum or plastic.

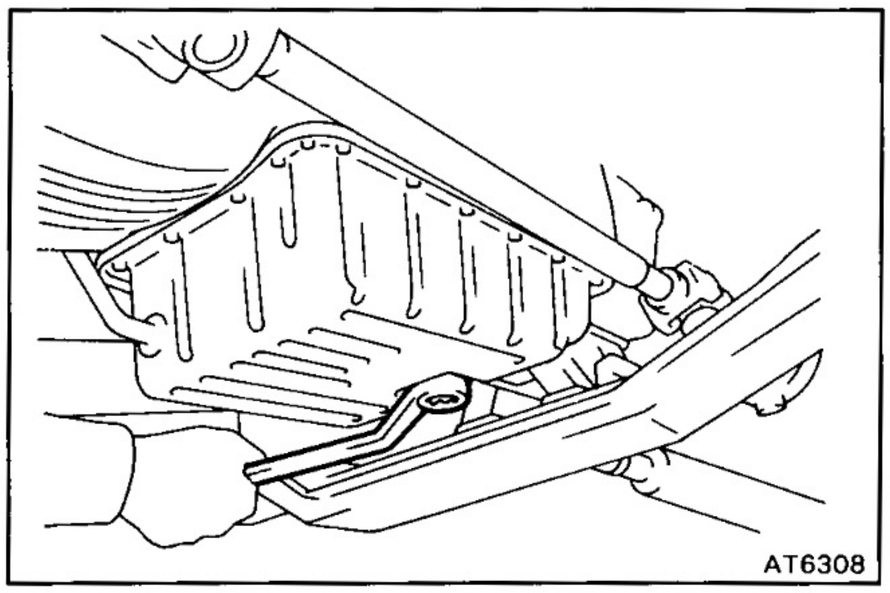

2. REMOVE TRANSMISSION AND TRANSFER UNDER COVERS

3. CLEAN TRANSMISSION EXTERIOR

To help prevent contamination, clean the exterior of the transmission.

4. DRAIN TRANSMISSION FLUID

Remove the drain plug and drain fluid into a suitable container.

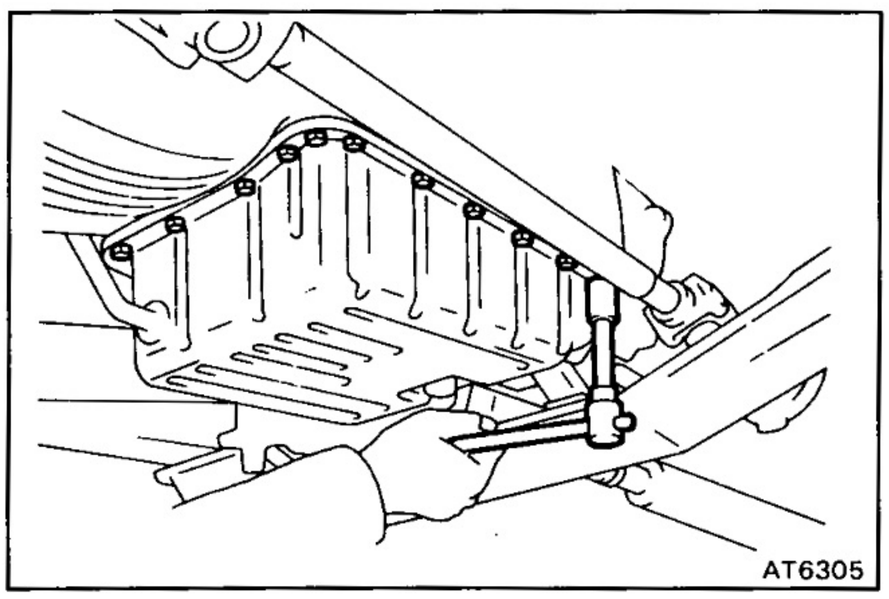

5. REMOVE OIL PAN AND GASKET

NOTICE: Some fluid will remain in the oil pan. Be careful not to damage the filler tube.

Insert the blade of SST between the transmission and oil pan, cut off applied sealer.

SST 09032-00010

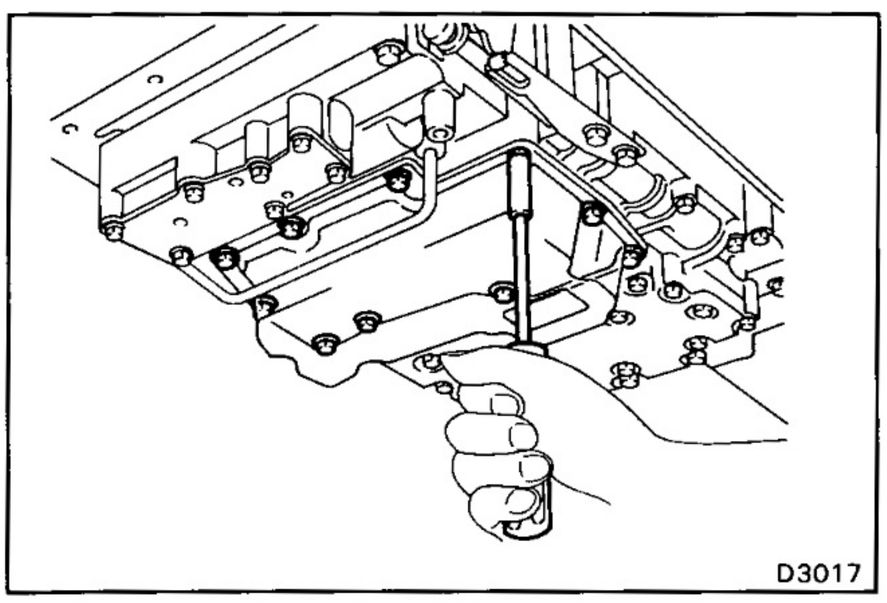

6. REMOVE OIL STRAINER AND GASKET

(a) Remove the ten bolts and oil strainer.

NOTICE: Be careful as some oil will come out with the filter.

(b) Remove the gasket.

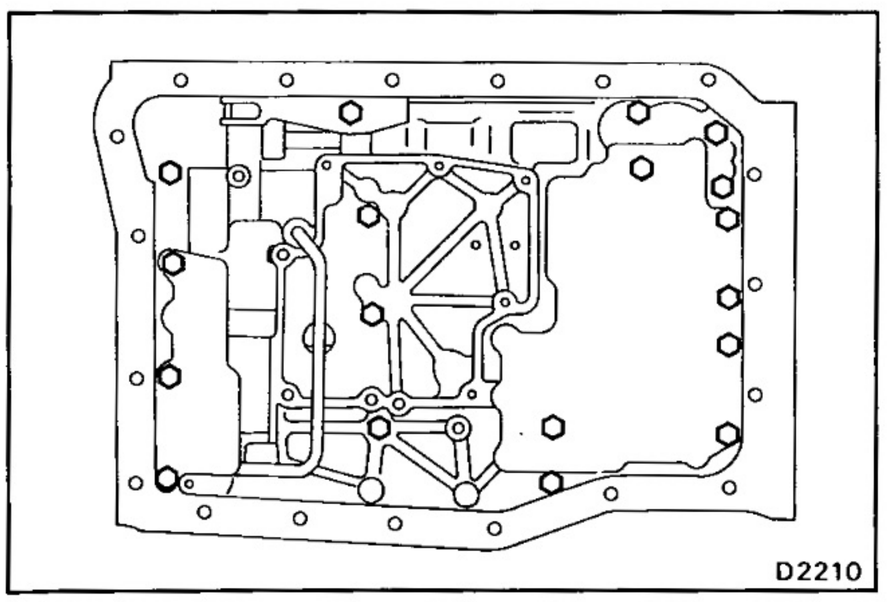

7. REMOVE VALVE BODY

(a) Remove the eighteen bolts.

HINT: Support the valve body by hand to prevent it from falling.

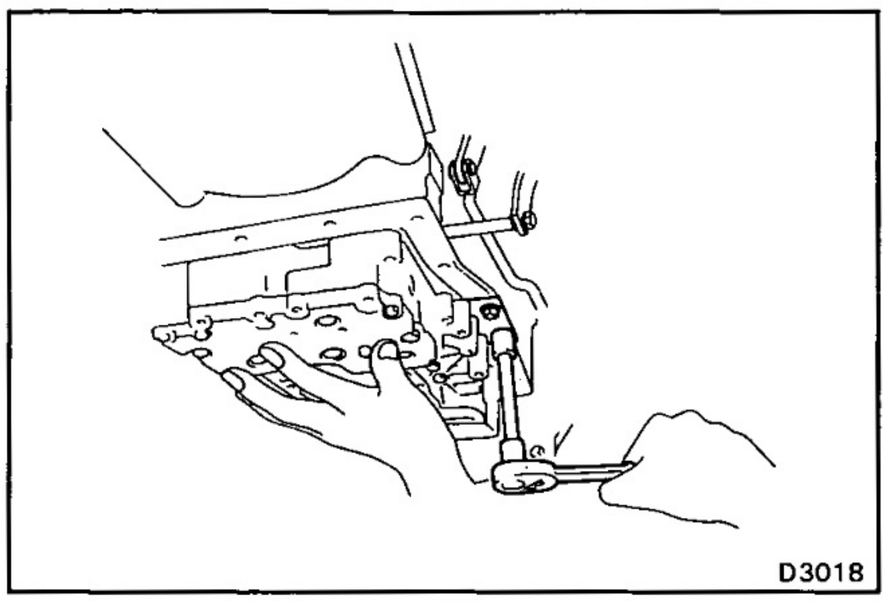

(b) Lower valve body slightly, and install the accumulator piston retaining plate. Hold in place with two pan bolts, and hand tighten.

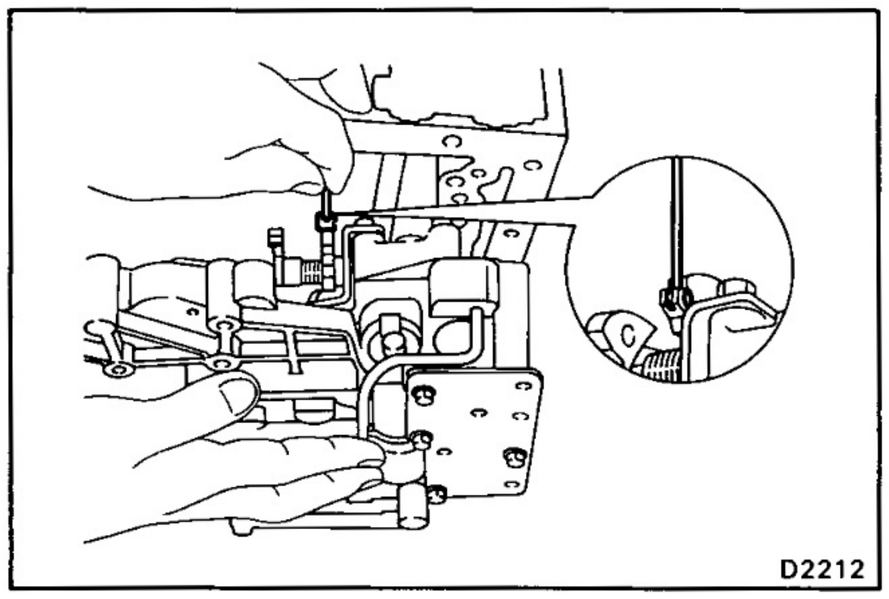

(c) Disconnect the throttle cable from the cam and remove the valve body.

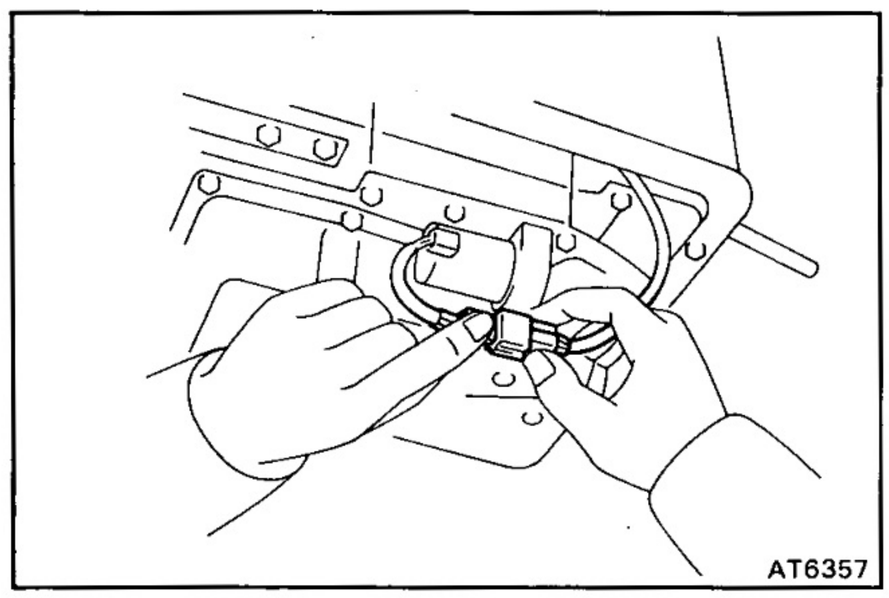

(d) (w/ Cruise Control System: 3F-E engine Australia) Disconnect the solenoid wiring, throttle cable and remove the valve body.

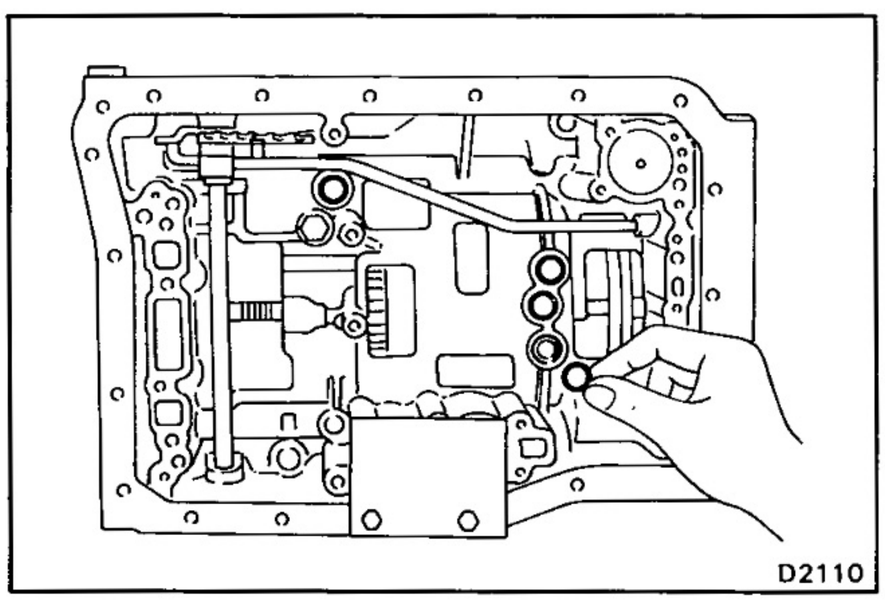

8. REMOVE FOUR CENTER SUPPORT APPLY GASKETS

INSTALLATION OF VALVE BODY

1. INSTALL FOUR CENTER SUPPORT APPLY GASKETS

Install the four center support apply gaskets, facing the pitted sides toward the transmission case.

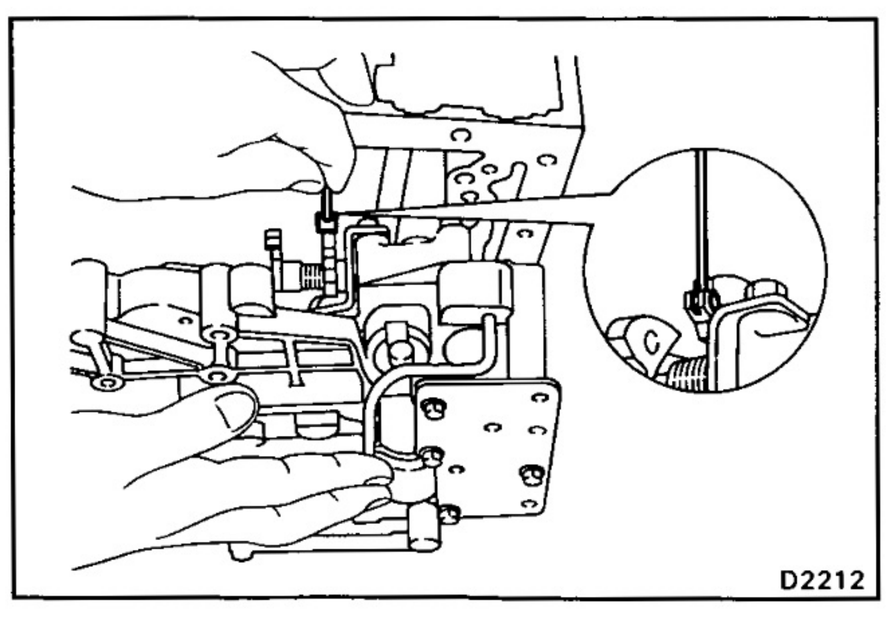

2. CONNECT THROTTLE CABLE TO CAM

Push the cable fitting into the cam.

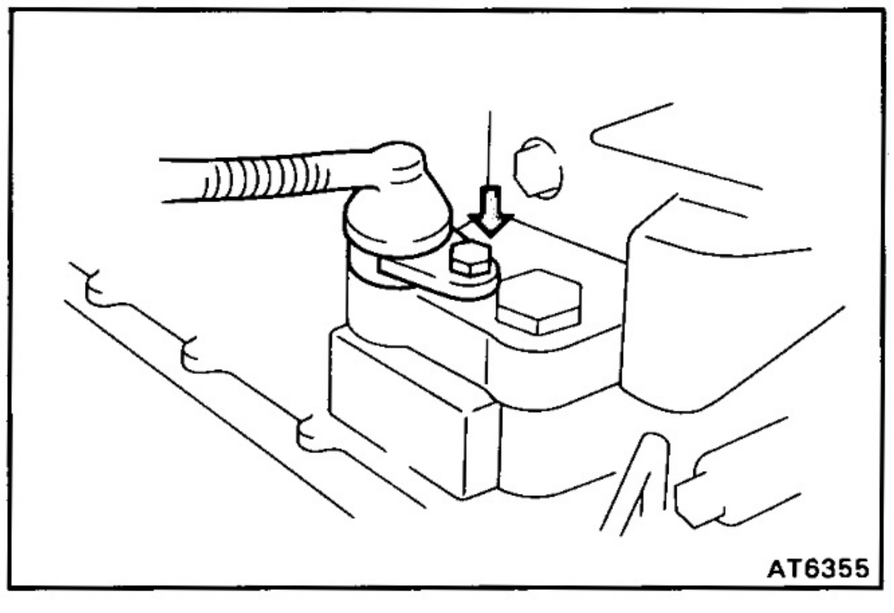

(w/ Cruise Control System)

Push the cable fitting into the cam and connect the solenoid wiring connector.

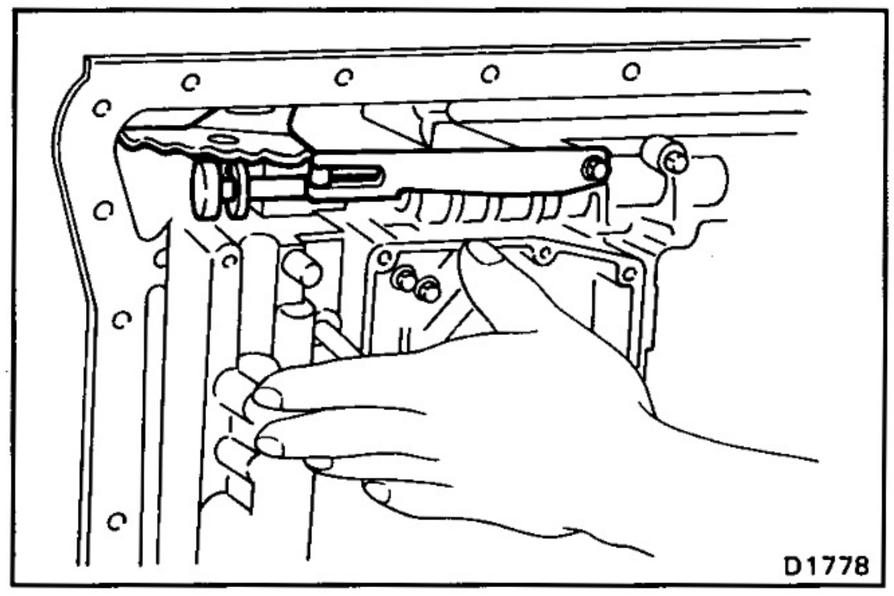

3. INSTALL VALVE BODY

(a) Align the manual valve lever with the manual valve.

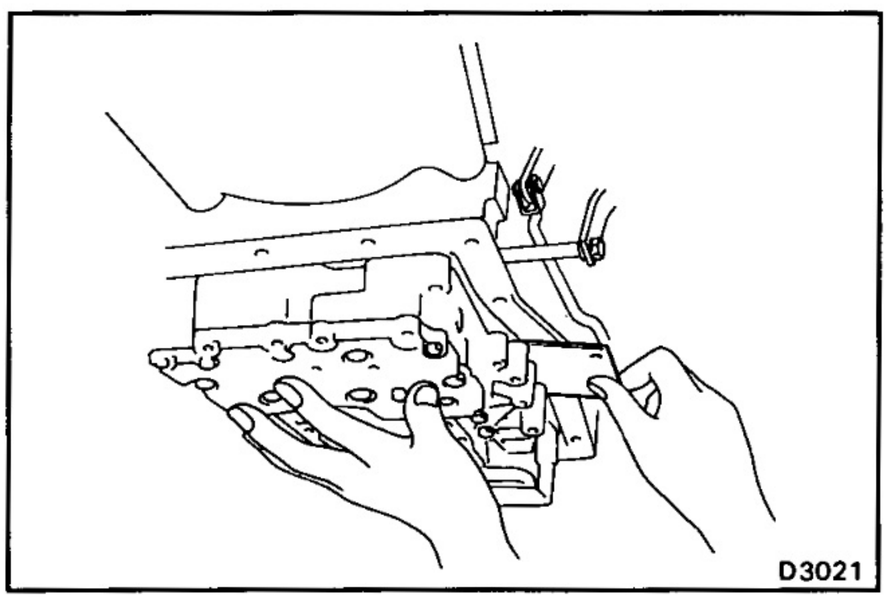

(b) Remove the two pan bolts, and slide out the accumulator retaining plate.

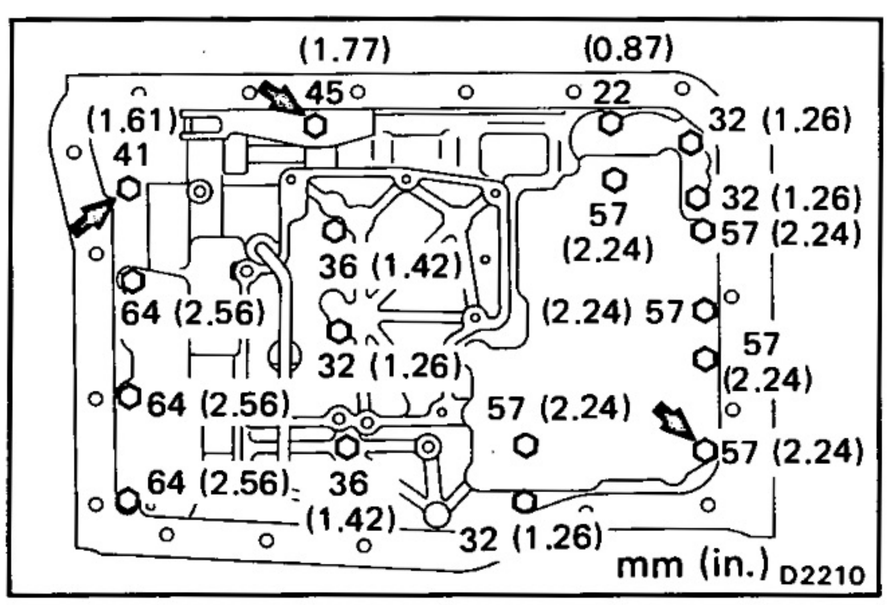

4. INSTALL VALVE BODY BOLTS

(a) Install the three bolts indicated by the arrows.

(b) Install the other bolts.

(c) Check that the manual valve lever contacts the center of the roller at the tip of the detent spring.

(d) Tighten the bolts.

Torque: 100 kg-cm (7 ft-lb, 10 N·m)

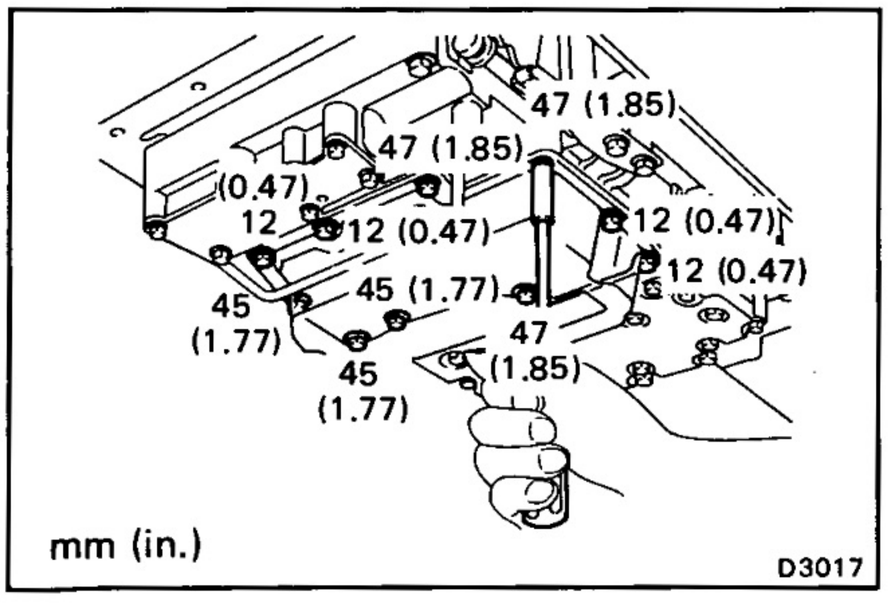

5. INSTALL OIL STRAINER

Be sure the strainer is clean. Install a new gasket and strainer.

Torque: 5 mm bolt 55 kg-cm (48 in.-lb, 5.4 N·m)
6 mm bolt 100 kg-cm (7 ft-lb, 10 N·m)

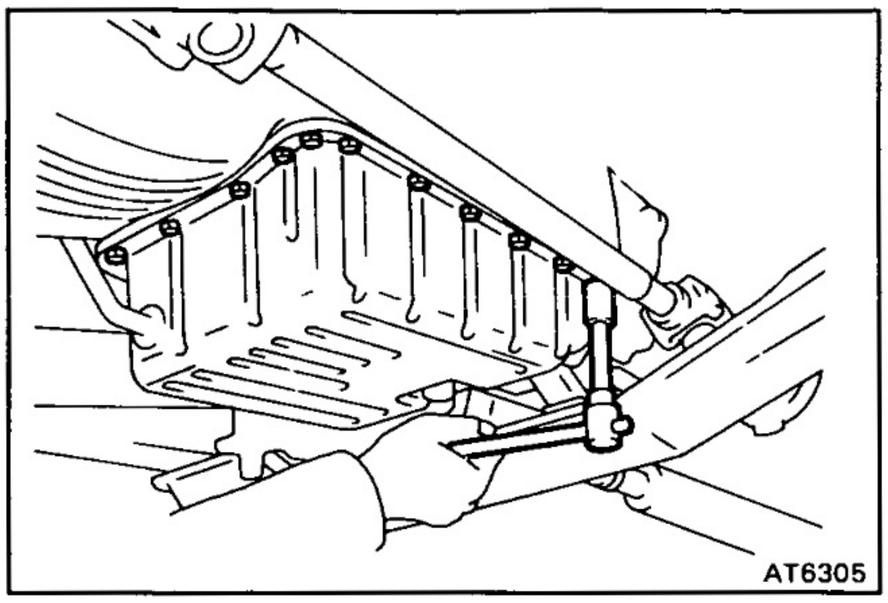

6. INSTALL PAN WITH NEW GASKET

(a) Remove any packing material and be careful not to drop oil on the contacting surface of the transmission case and oil pan.

(b) Apply seal packing to the oil pan.

Seal packing: Part No. 08826-00090, THREE BOND 1281B or equivalent

(c) Install and torque the twenty bolts.

Torque: 70 kg-cm (61-in.-lb, 6.9 N·m)

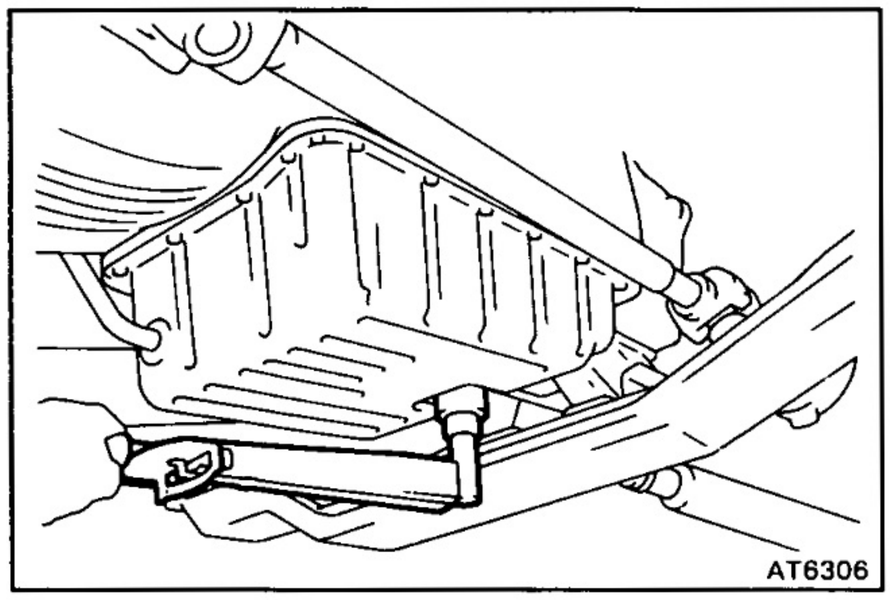

7. INSTALL DRAIN PLUG

(a) Install a new gasket and drain plug.

(b) Torque the drain plug.

Torque: 280 kg-cm (20 ft-lb, 27 N·m)

8. INSTALL TRANSMISSION UNDER COVER AND TRANSFER UNDER COVER

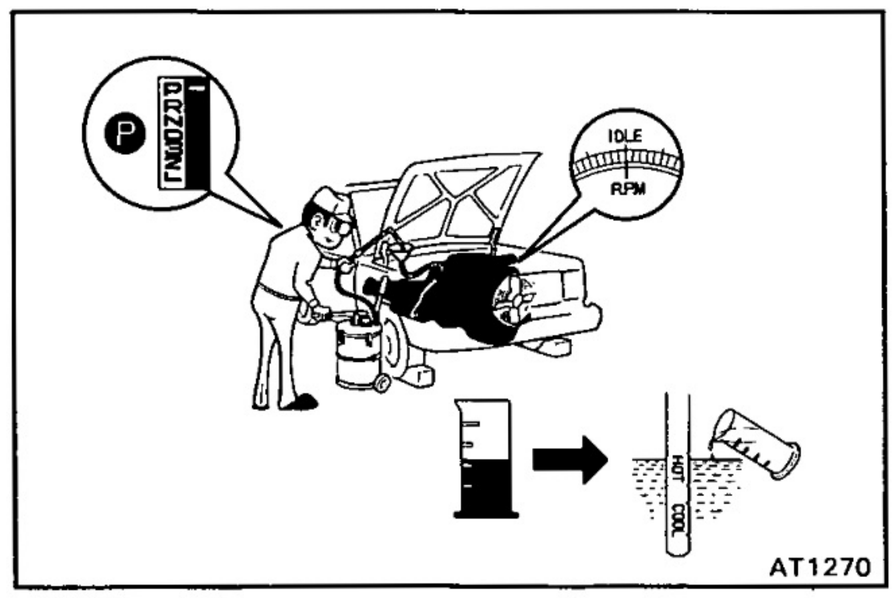

9. FILL TRANSMISSION WITH ATF

Add 6.0 liters (6.3 US qts, 5.3 Imp. qts)

NOTICE: Do not overfill.

Fluid type: ATF DEXRON® II

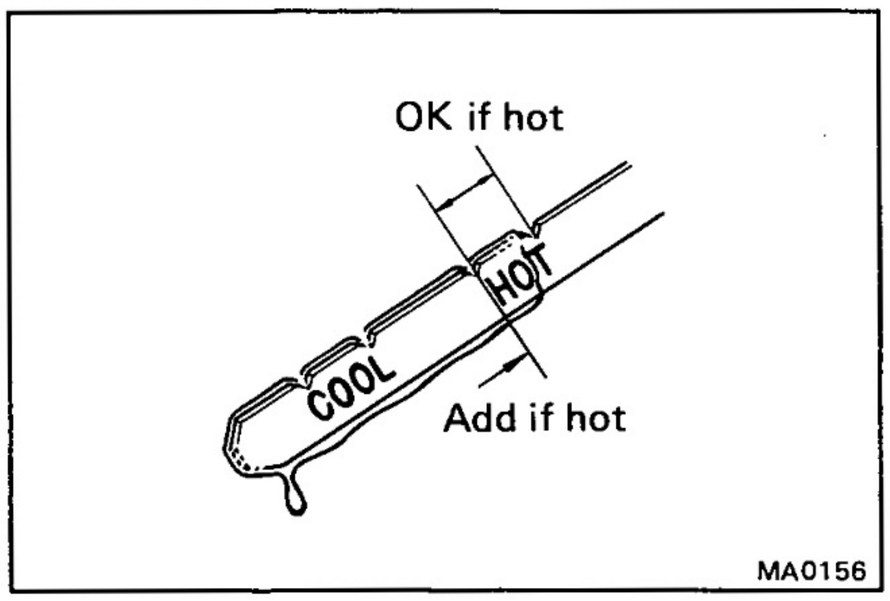

10. CHECK FLUID LEVEL (See page AT-12)

Throttle Cable

REMOVAL OF THROTTLE CABLE

1. REMOVE FRONT PROPELLER SHAFT (See page PR-2)

2. DISCONNECT THROTTLE CABLE

(a) Disconnect the cable housing from the bracket.

(b) Disconnect the cable from the throttle linkage.

(c) Disconnect the cable from the torque converter housing.

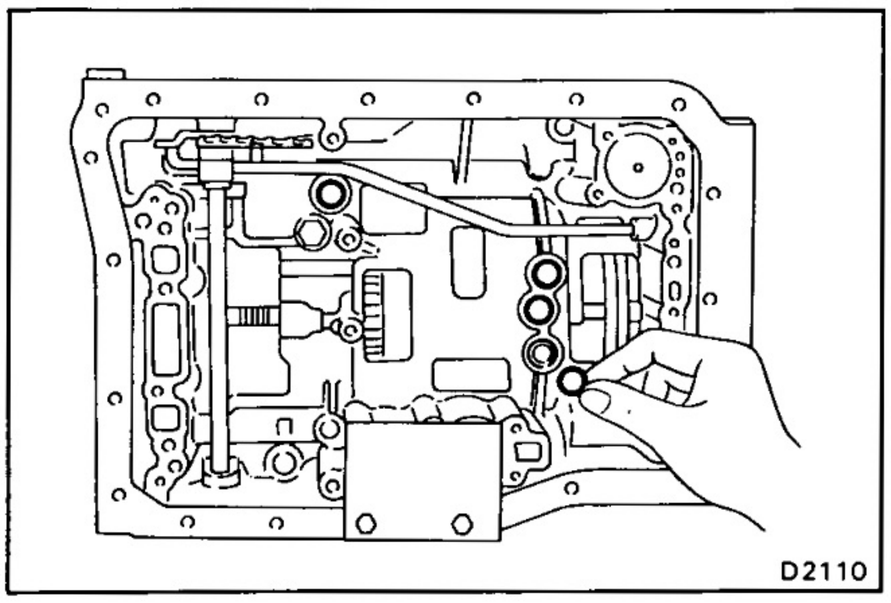

3. **REMOVE VALVE BODY (See page AT-29)**

4. **REMOVE FOUR CENTER SUPPORT APPLY GASKETS**

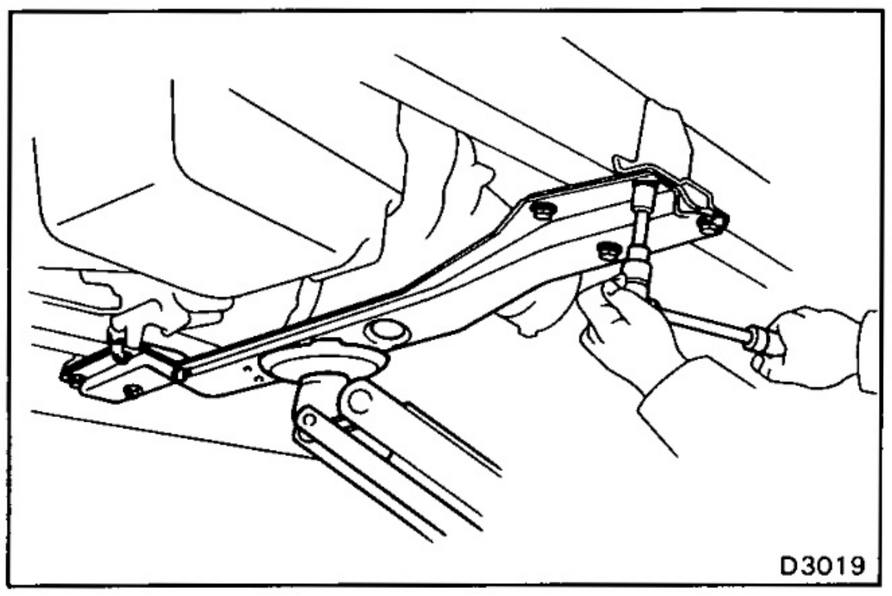

5. **REMOVE FRAME CROSSMEMBER SET BOLTS**
   (a) Support the frame crossmember with jack.
   (b) Remove the eight set bolts.

6. **REMOVE THROTTLE CABLE CLAMP**
   (a) Lower the jack.
   (b) Remove the cable clamp from the transmission housing.

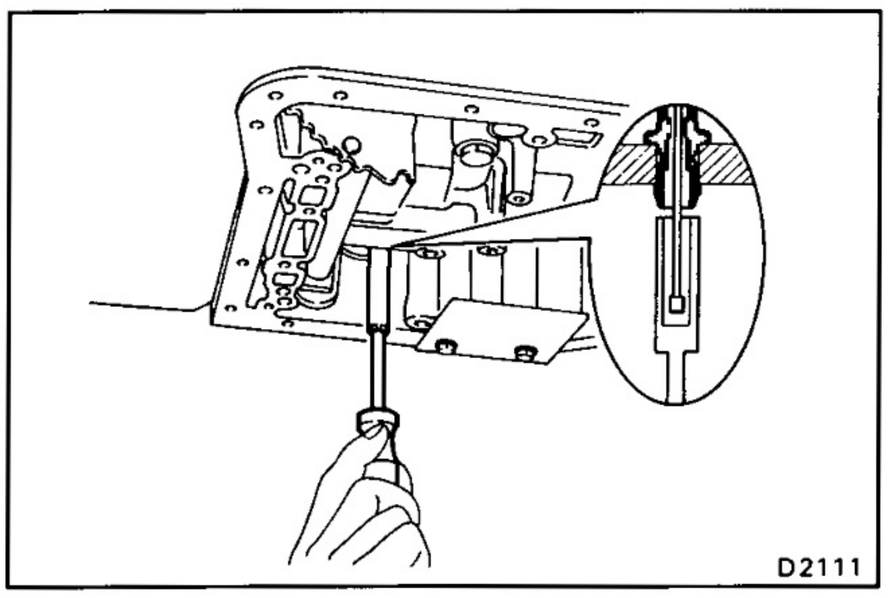

7. **PUSH THROTTLE CABLE OUT OF TRANSMISSION CASE**
   Using 10 mm socket, push the throttle cable out.

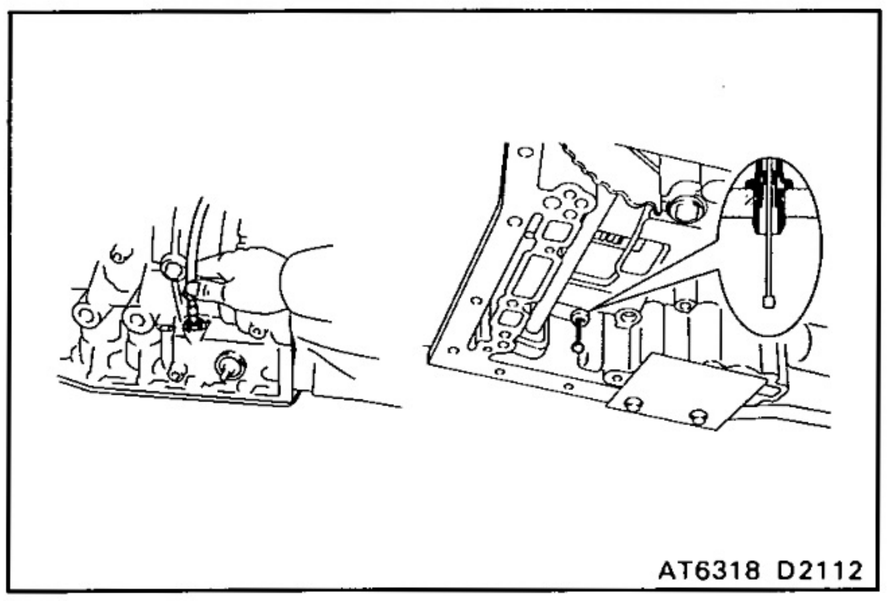

INSTALLATION OF THROTTLE CABLE

1. **INSTALL CABLE IN TRANSMISSION CASE**
   Be sure to push it in all the way.

2. **INSTALL THROTTLE CABLE CLAMP TO TRANSMISSION HOUSING**

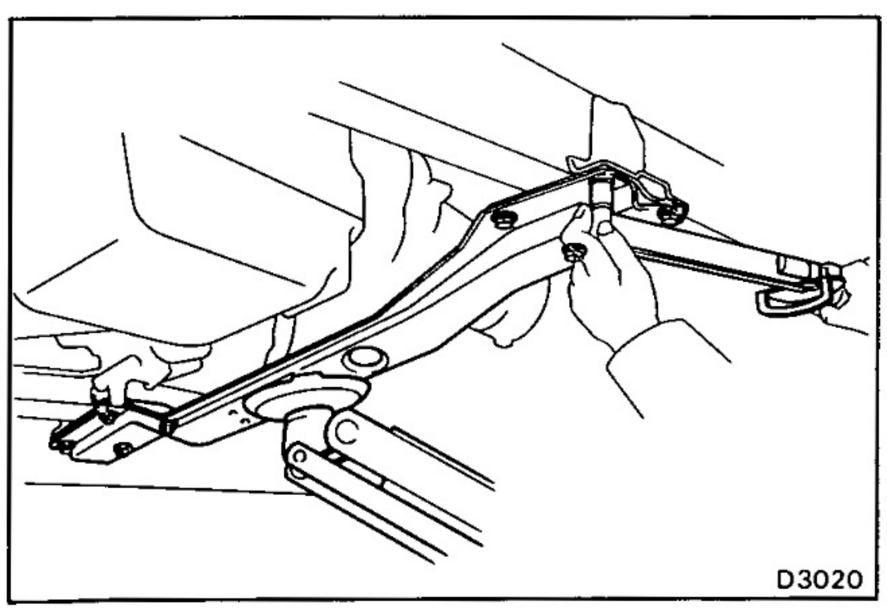

3. **INSTALL FRAME CROSSMEMBER SET BOLTS**
   Torque: 620 kg-cm (45 ft-lb, 61 N·m)

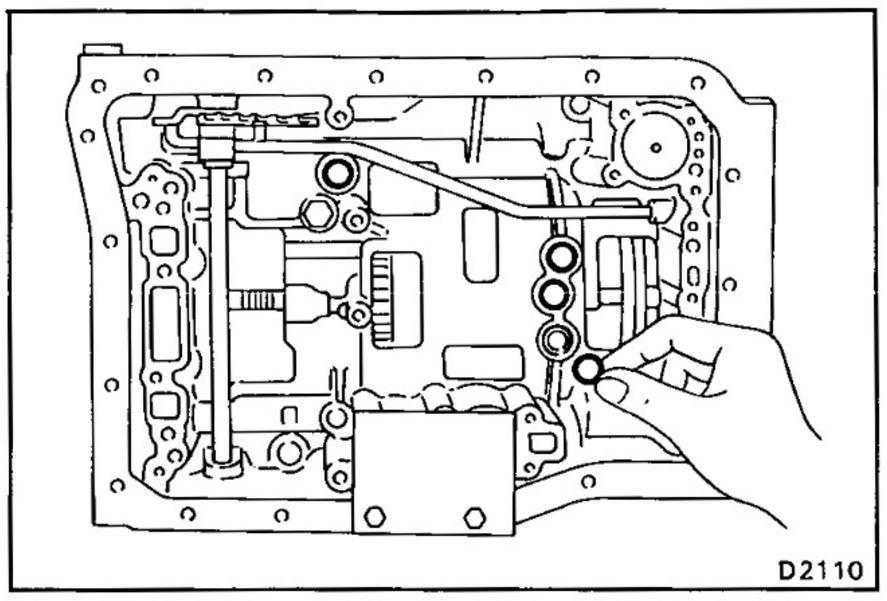

4. INSTALL FOUR CENTER SUPPORT APPLY GASKETS

5. INSTALL VALVE BODY (See page AT-31)

6. INSTALL FRONT PROPELLER SHAFT (See page PR-2)

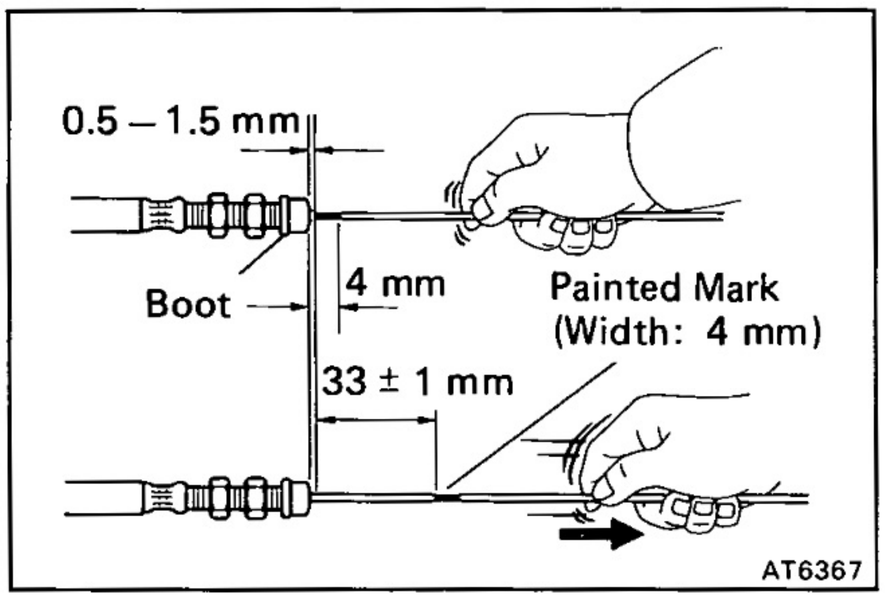

7. IF THROTTLE CABLE IS NEW, PAINT MARK ON INNER CABLE

HINT: New cables do not have a cable stopper installed.

Therefore to mark adjustment possible, paint a mark as described below.

(a) Connect the throttle cable to the throttle cam of valve body.

(b) Pull the inner cable lightly until resistance is felt, and hold it.

(c) Paint a mark as shown, about 4 mm (0.16 in.) in width.

(d) Pull the inner cable fully, measure the cable stroke.

Cable stroke: 33 ± 1 mm (1.30 ± 0.04 in.)

8. CONNECT THROTTLE CABLE

(a) Connect the cable to the throttle linkage.

(b) Connect the cable housing to the bracket on the valve cover.

9. ADJUST THROTTLE CABLE (See page AT-13)

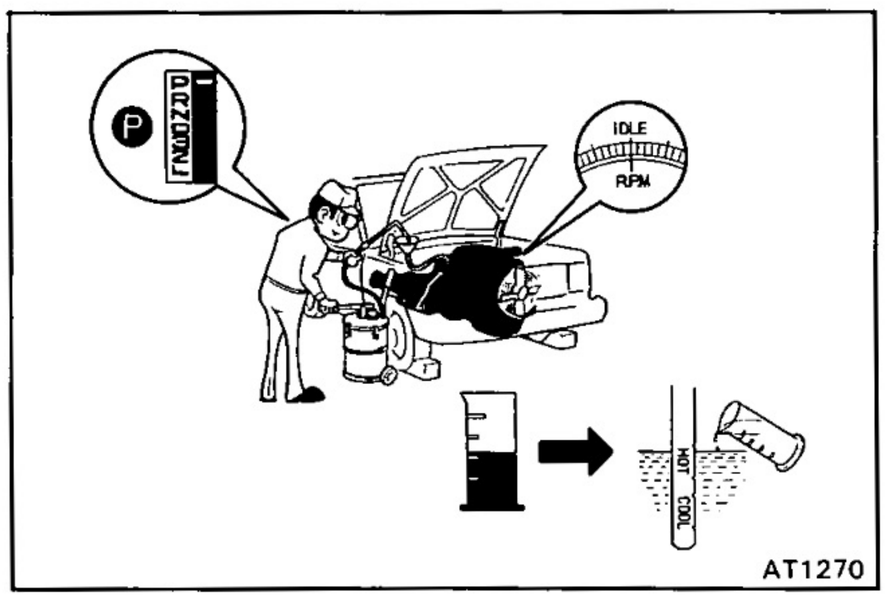

10. FILL TRANSMISSION WITH ATF

Add 6 liters (6.3 US qts, 5.3 Imp. qts)

NOTICE: Do not overfill.

Fluid type: ATF DEXRON® II

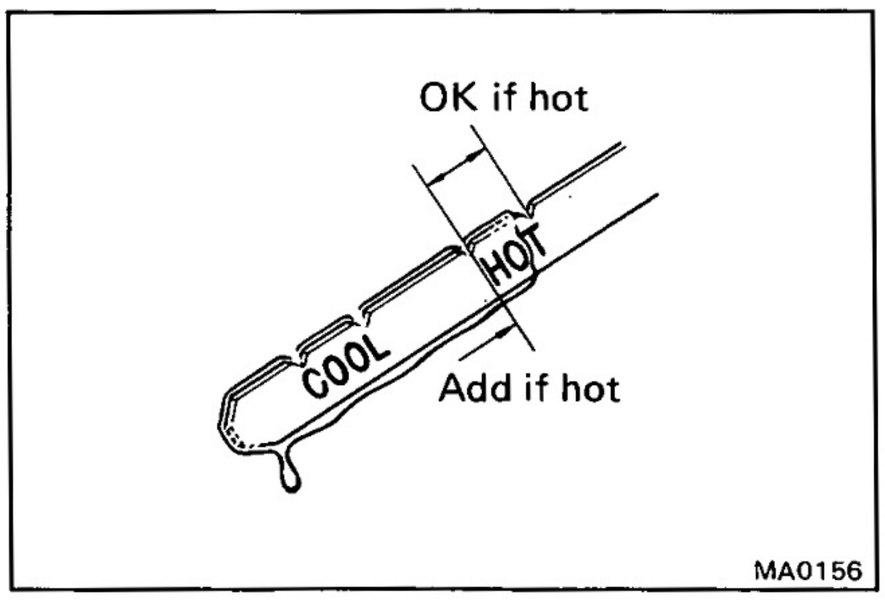

11. CHECK FLUID LEVEL (See page AT-12)

REMOVAL AND INSTALLATION OF TRANSMISSION

Remove and install the parts as shown.

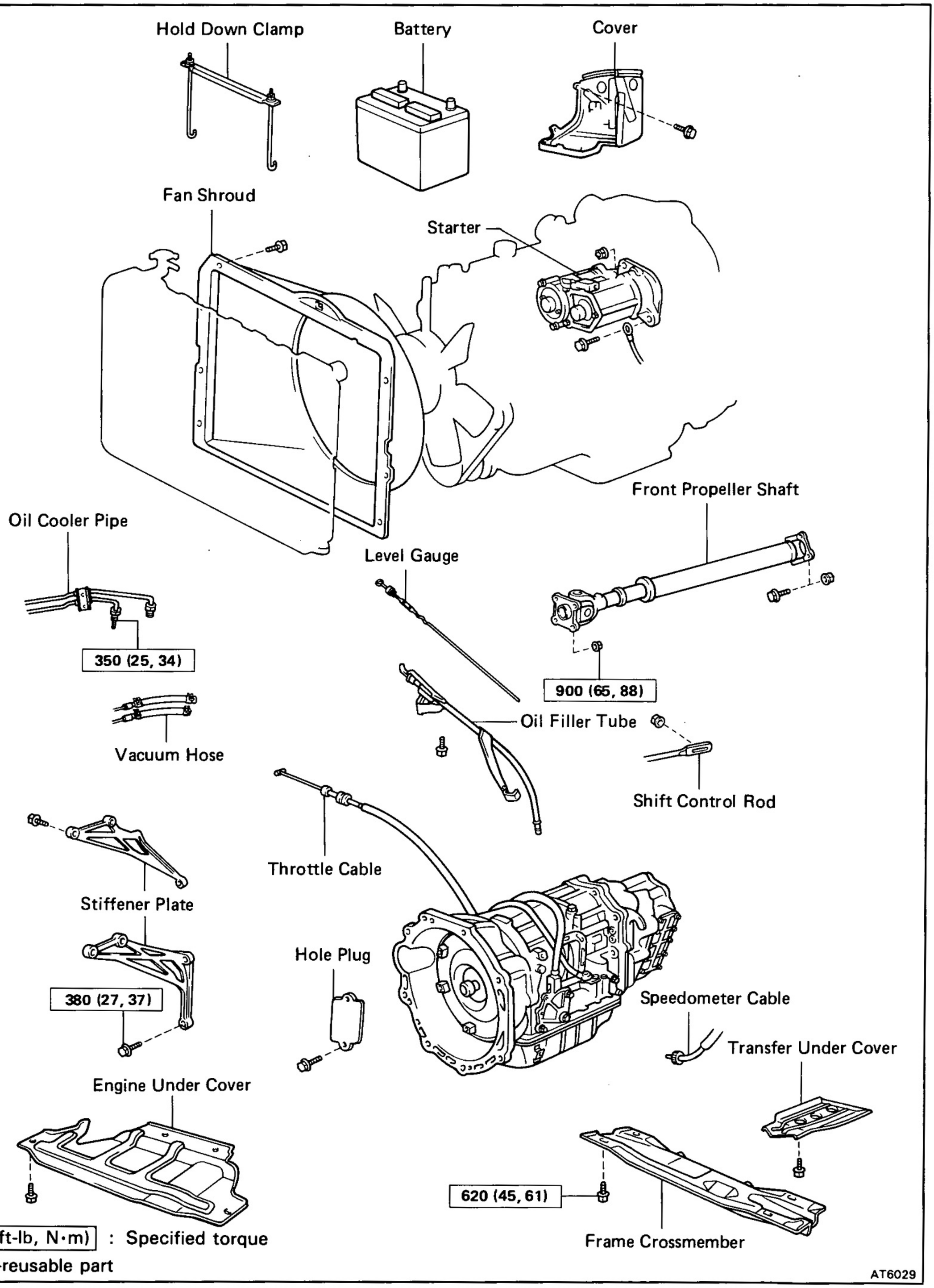

kg-cm (ft-lb, N·m) : Specified torque

◆ Non-reusable part

AT6029

(Cont'd)

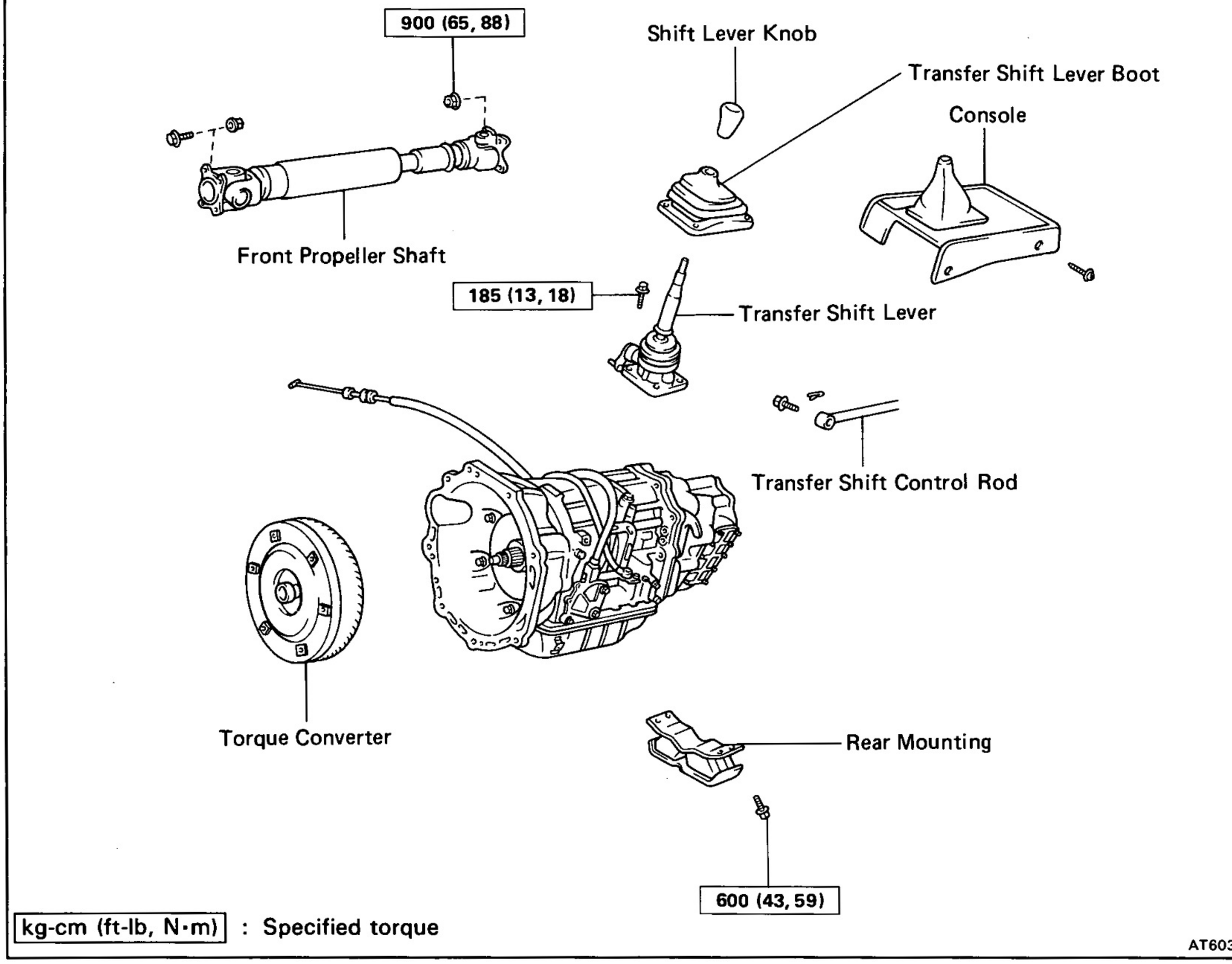

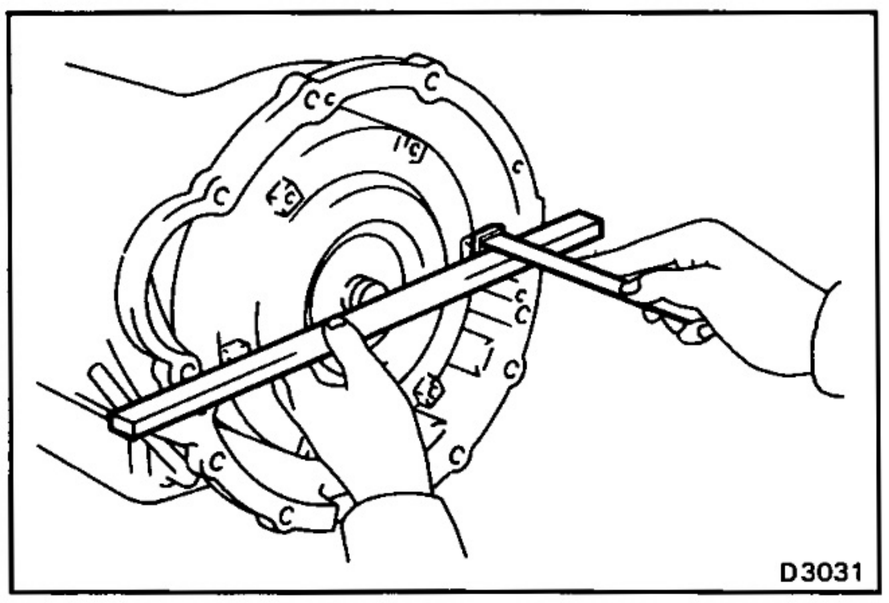

(MAIN POINT OF INSTALLATION)

CHECK TORQUE CONVERTER INSTALLATION

Using calipers and a straight edge, measure from the installed surface of the torque converter to the front surface of the transmission housing.

Correct distance:

3F engine 16.5 mm (0.650 in.) or more
1H engine 41.2 mm(1.622 in.) or more

NOTICE: Install the converter horizontally to prevent oil seal from damage:

If the distance is less than the standard, check for an improper installation.

REMOVAL OF TRANSMISSION

1. **DISCONNECT BATTERY CABLE FROM NEGATIVE TERMINAL**

2. **REMOVE BATTERY AND COVER**

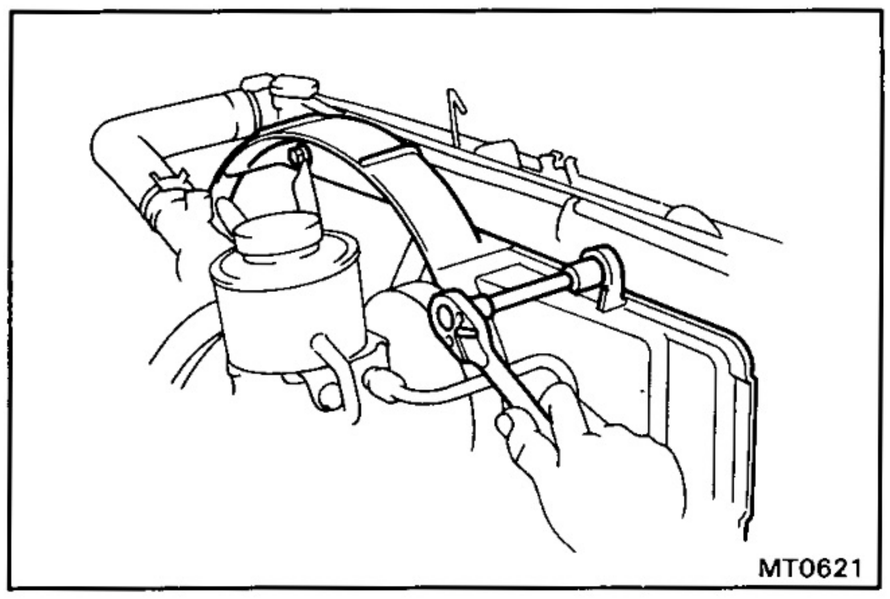

3. **LOOSEN THE FAN SHROUD OF THE COOLING FAN TO AVOID DAMAGE TO THE FAN**

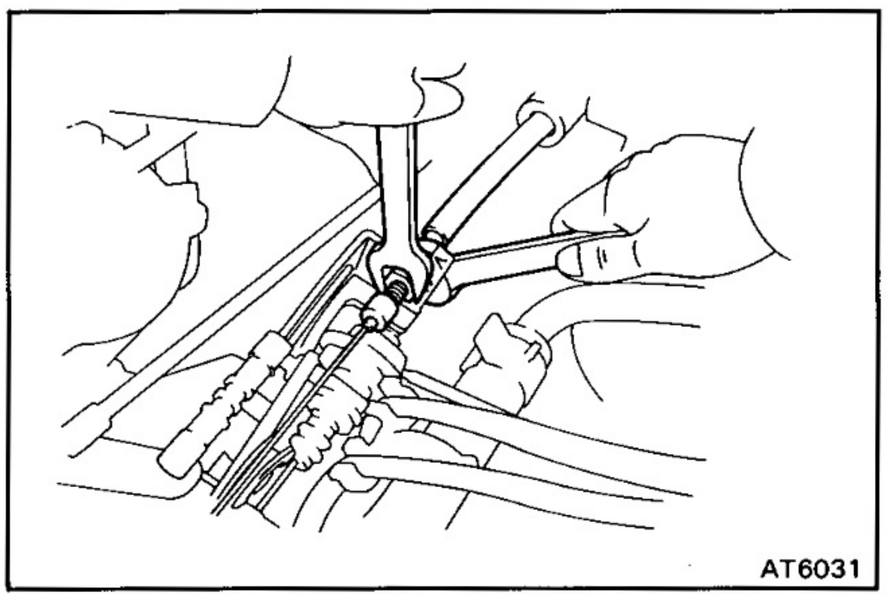

4. **DISCONNECT THROTTLE CABLE**
   (a) Loosen the adjusting nuts, and disconnect the cable housing from the bracket.
   (b) Disconnect the cable from the throttle linkage.

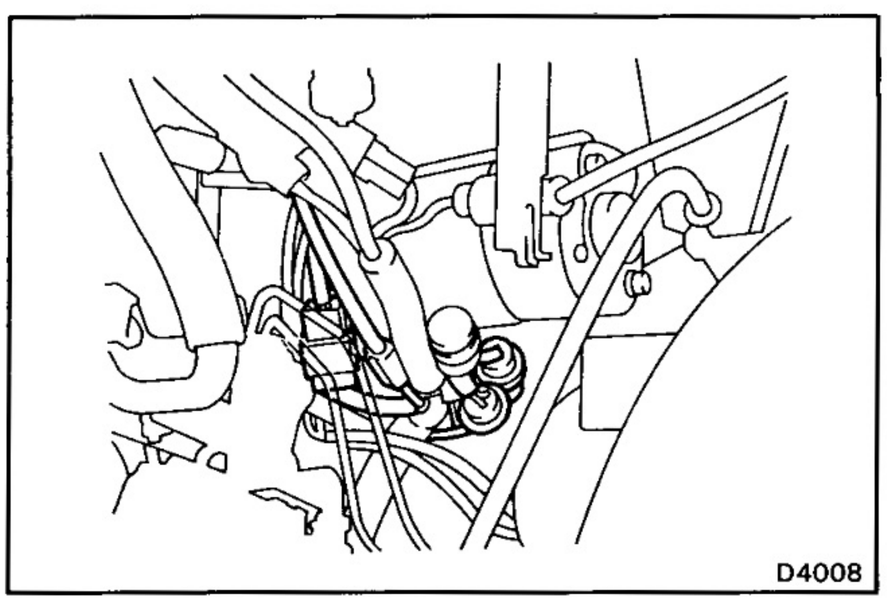

5. **DISCONNECT CONNECTORS**
   Disconnect the connectors near the starter.

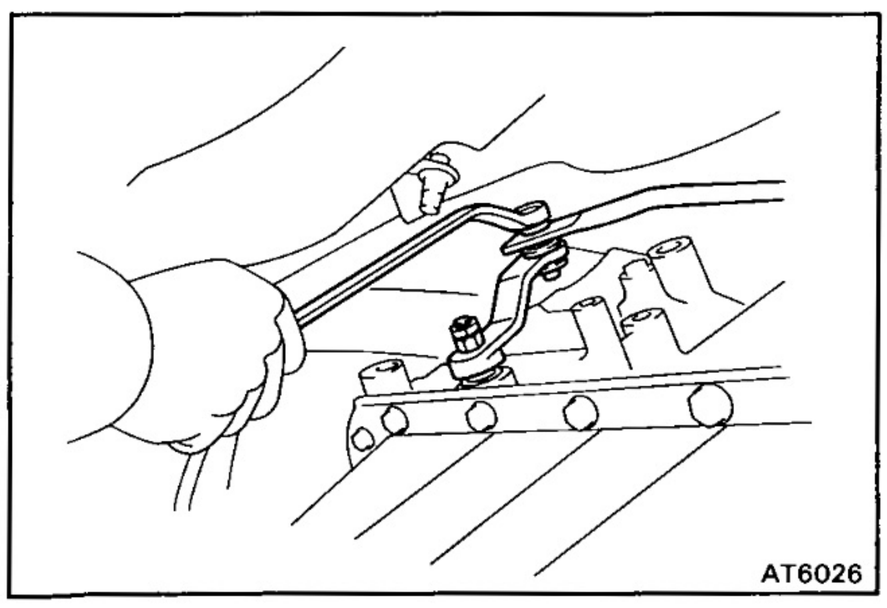

6. **REMOVE TRANSFER SHIFT LEVER**
   (a) Remove the nut and the transmission control rod.

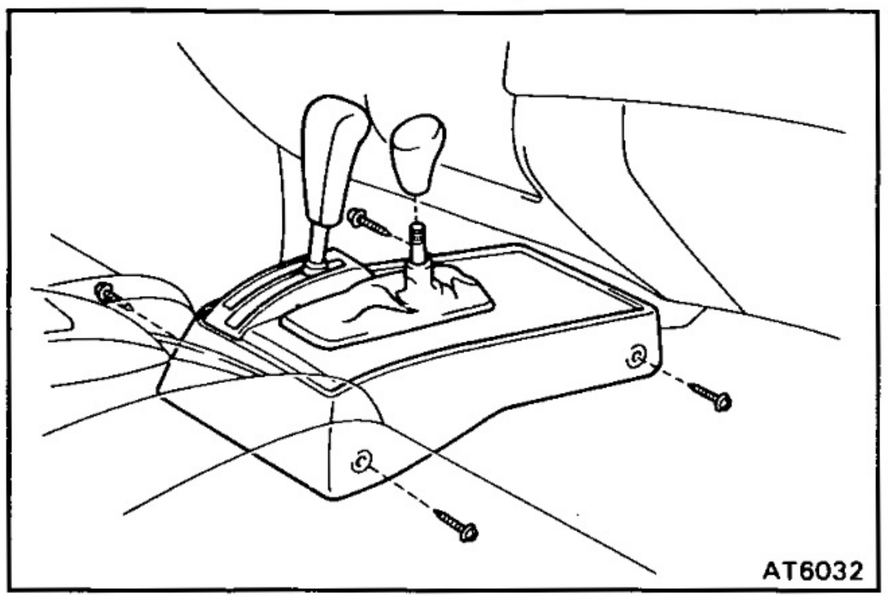

(b) Remove the transfer shift lever knob.

(c) Remove four screws and the console.

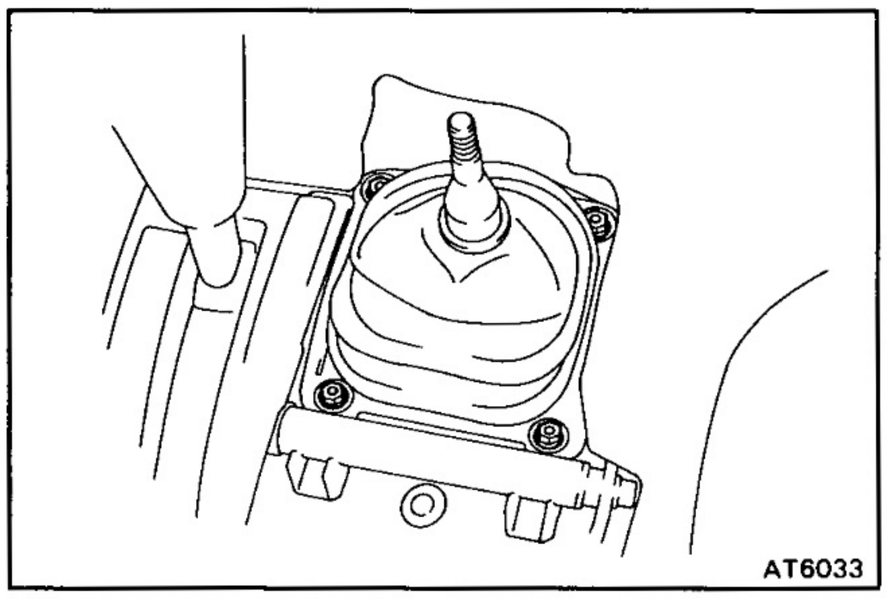

(d) Remove four bolts and transfer shift lever boot.

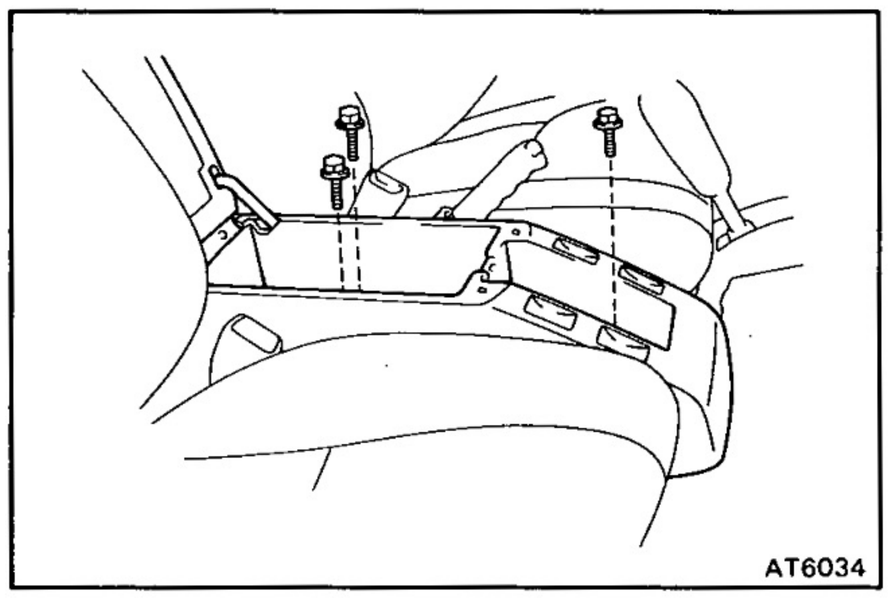

(e) Remove three bolts and the console box.

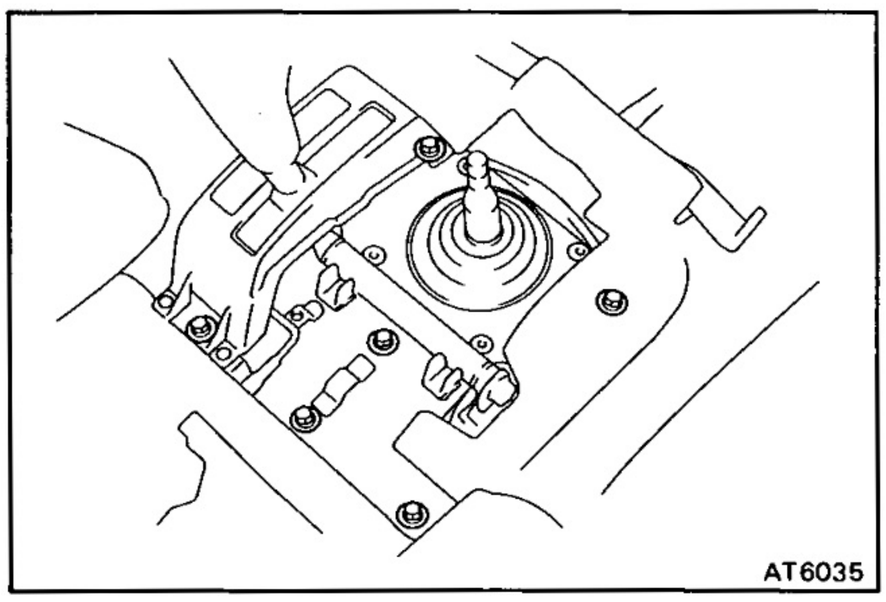

(f) Remove the six bolts and the transmission shift lever assembly.

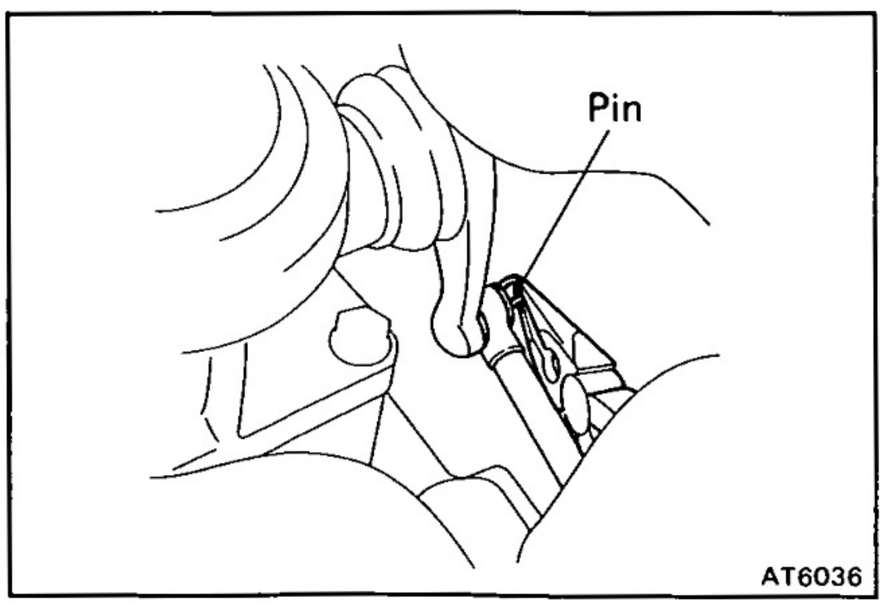

(g) Pull out the pin and disconnect the shift rod.

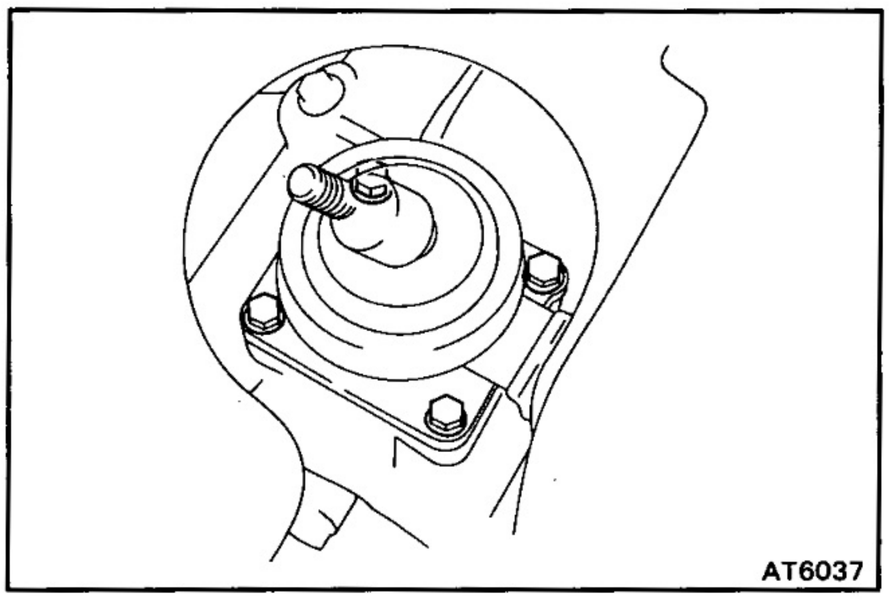

(h) Remove the four bolts and the transfer shift lever.

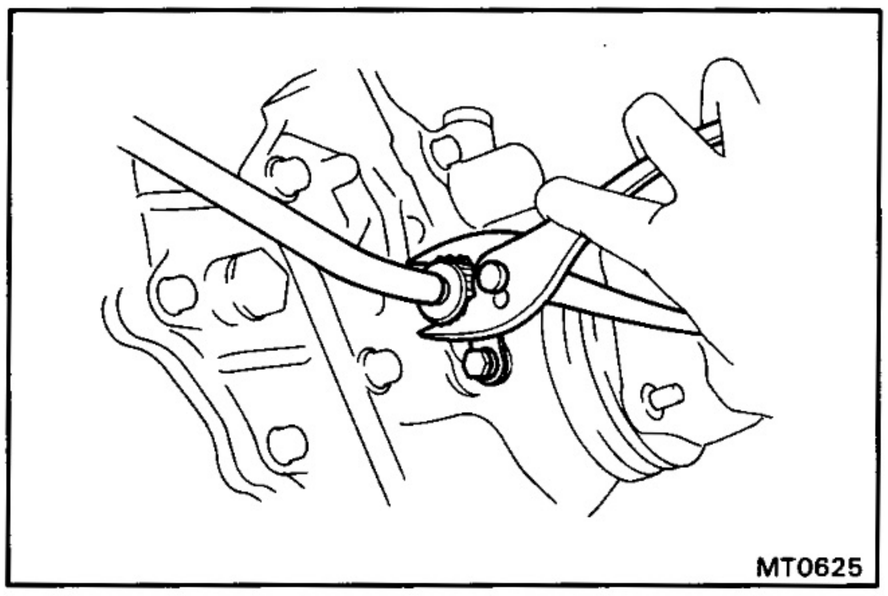

7. DISCONNECT SPEEDOMETER CABLE

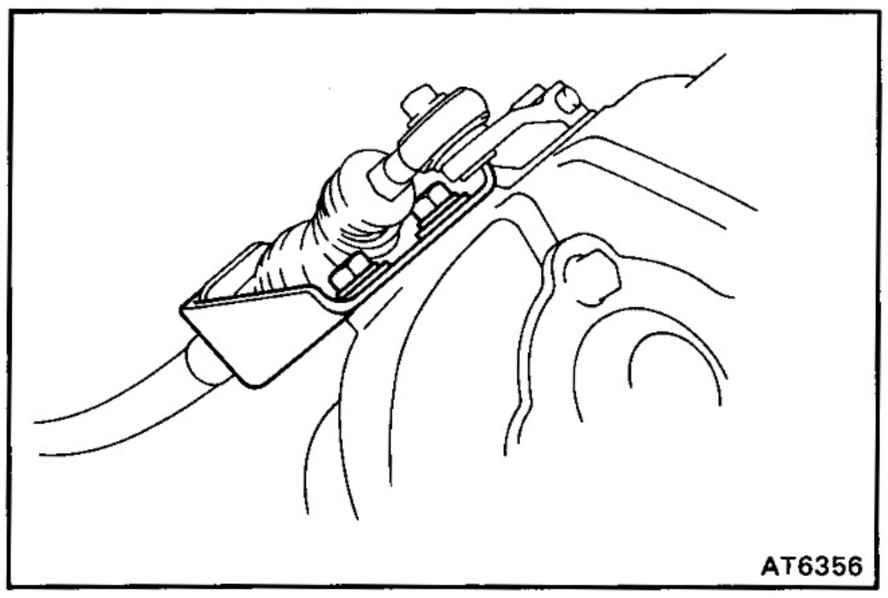

8. REMOVE POWER TAKE-OFF SHIFT CABLE (w/ MECHANICAL WINCH)

(a) Pull out the pin and disconnect the cable.

(b) Remove the two bolts and the cable bracket.

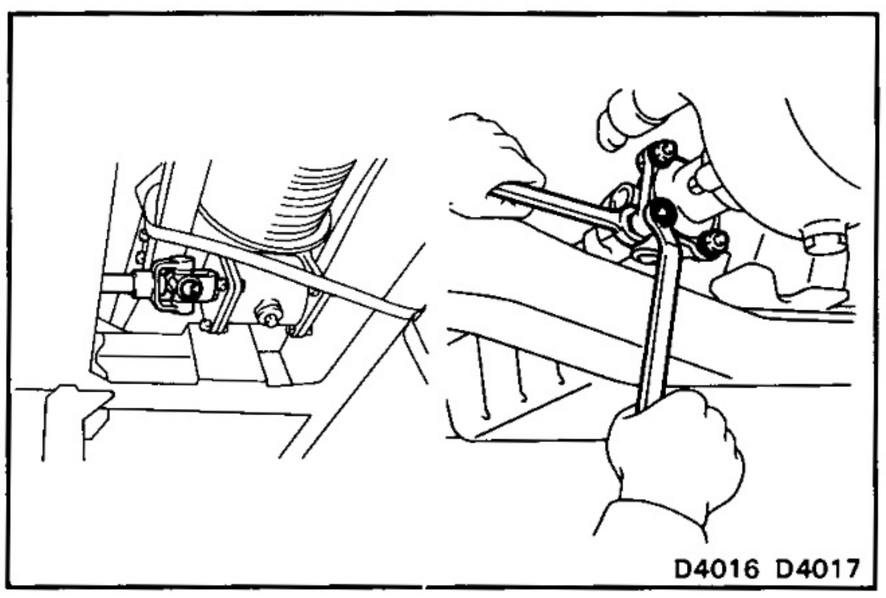

(c) Remove the engine under cover.

(d) Place matchmarks on the yoke and flange.

(e) Remove the bolts and nuts, and disconnect the drive shaft from the PTO.

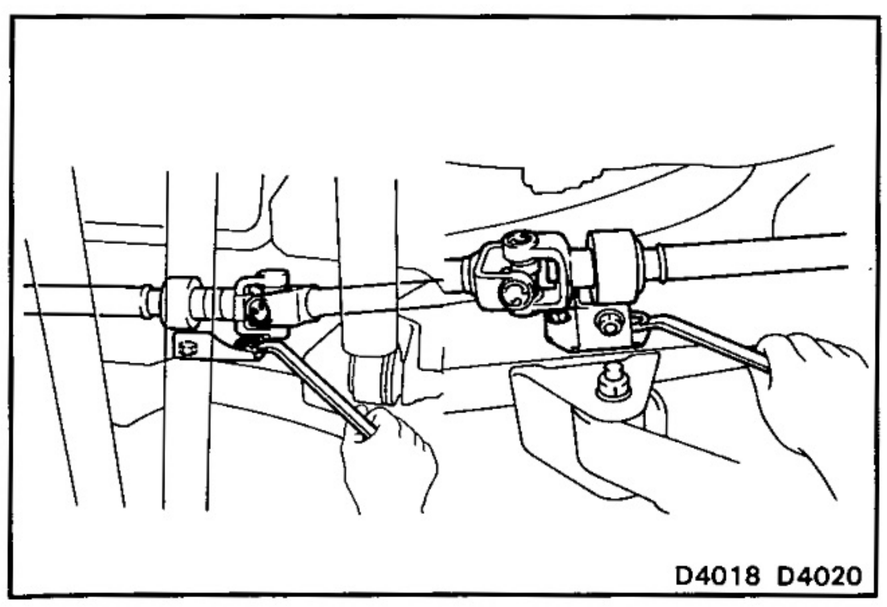

(f) Remove the front and rear bracket set bolts, and then remove the drive shaft.

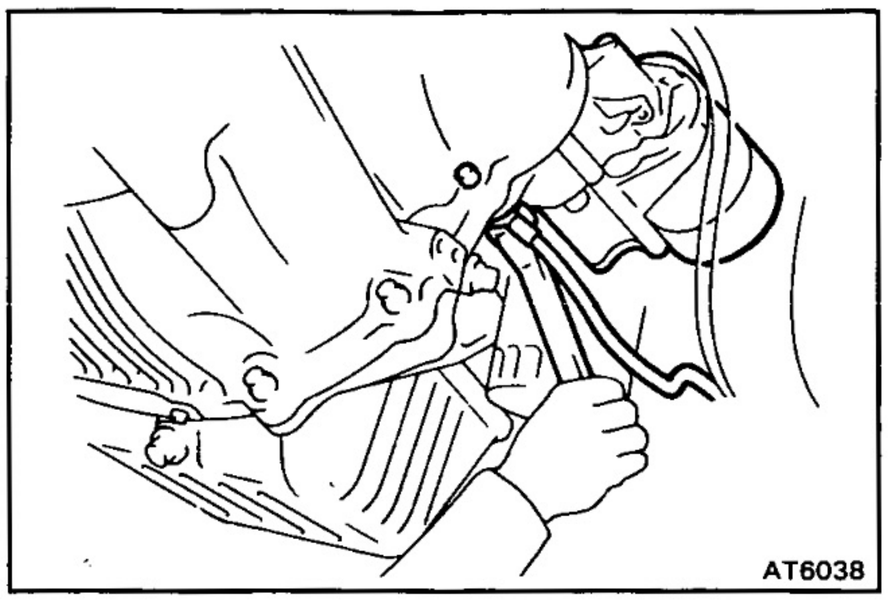
AT6038

9. REMOVE PROPELLER SHAFT
(See page PR-2)

10. REMOVE STARTER

(a) Disconnect the connector and cable.

(b) Remove the bolt, nut and starter.

11. REMOVE OIL FILLER TUBE

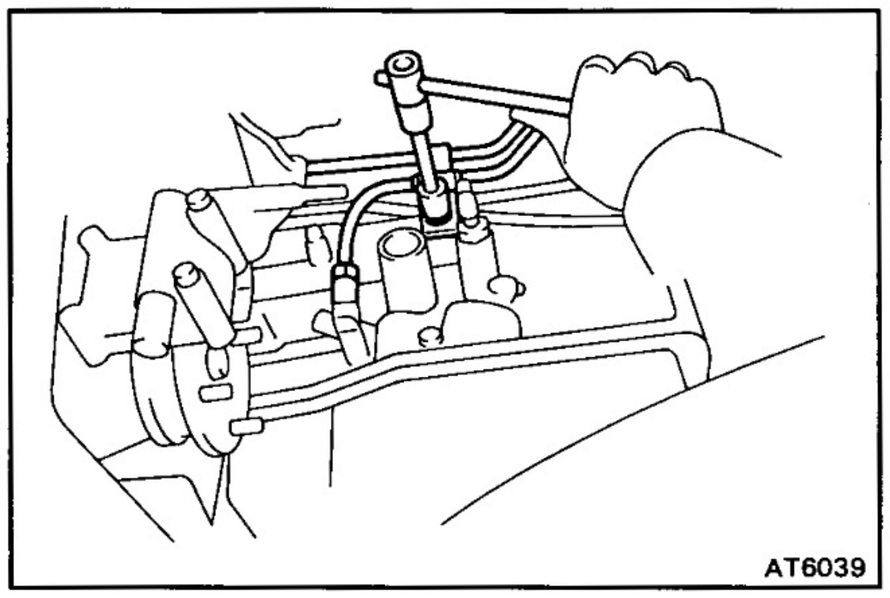
AT6039

12. DISCONNECT TWO OIL COOLER TUBES

(a) Remove the cooler tube clamp.

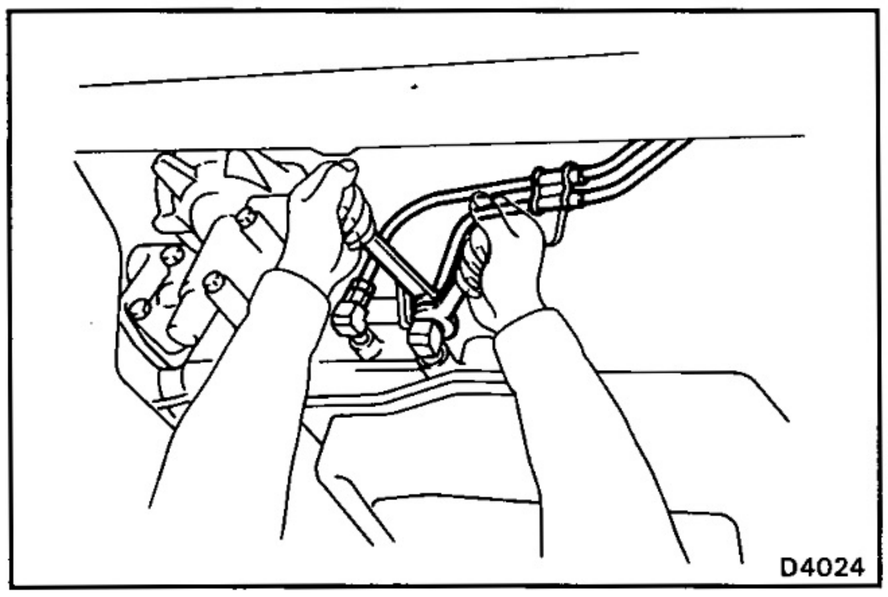
D4024

(b) Disconnect the two oil cooler tubes.

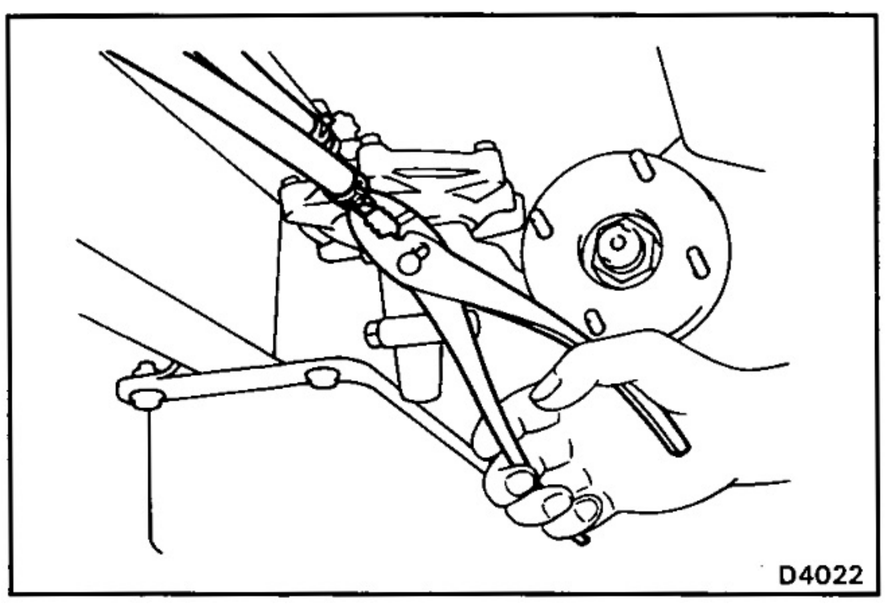
D4022

13. DISCONNECT TWO VACUUM HOSES

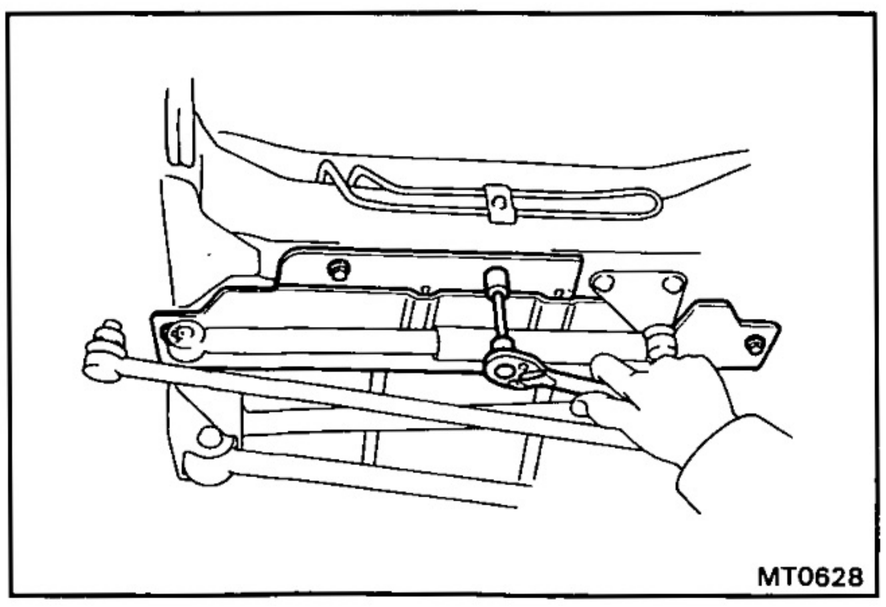
MT0628

14. REMOVE UNDER COVER

Remove four bolts and the under cover.

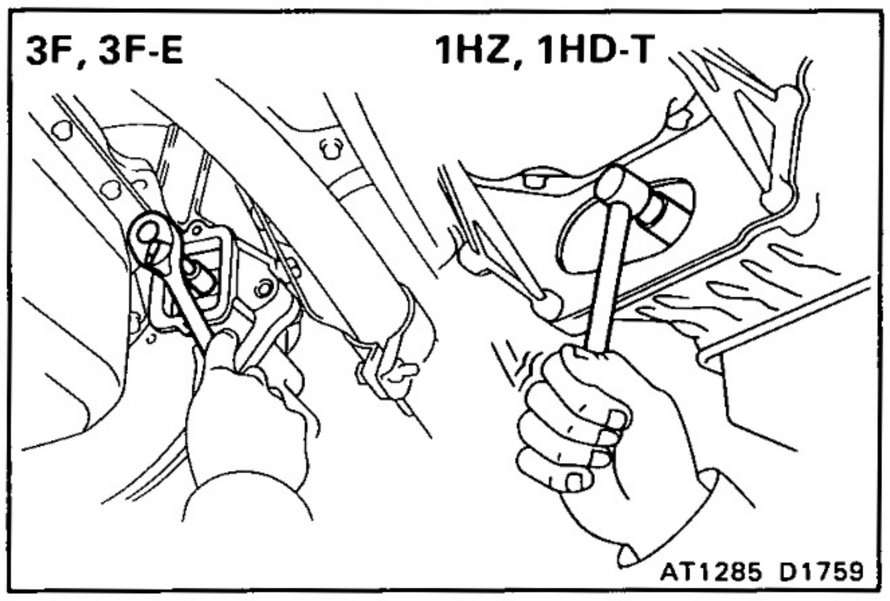

15. REMOVE SIX TORQUE CONVERTER MOUNTING BOLTS

(a) Remove the end plate hole plug.

(b) Turn the crankshaft to gain access to each bolt. Remove six bolts.

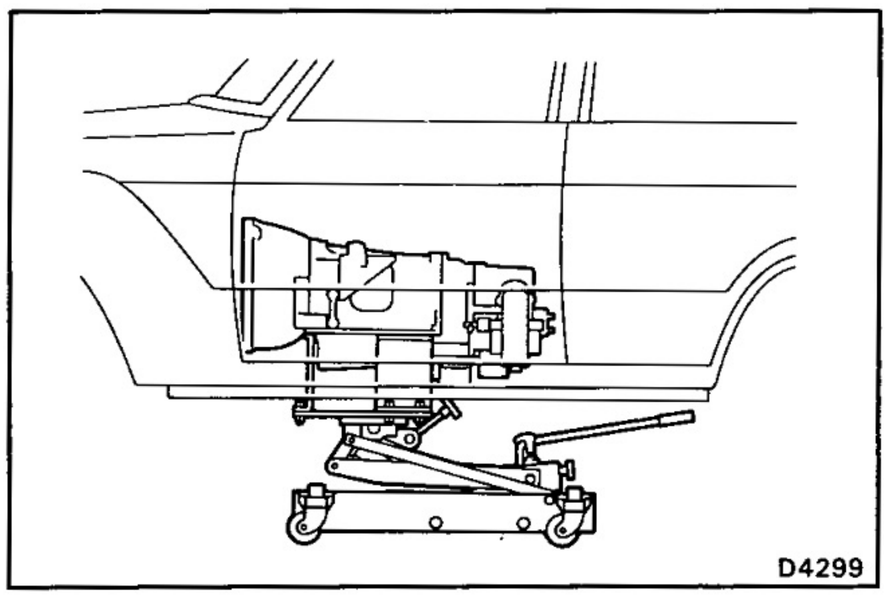

16. REMOVE FRAME CROSSMEMBER

(a) Support the transmission with the transmission jack.

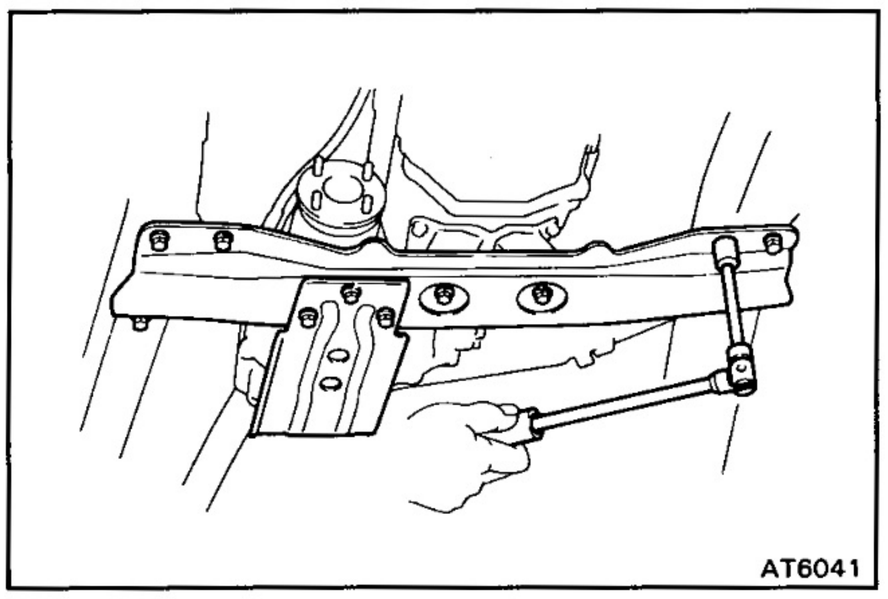

(b) Remove the eight bolts and two nuts, and then remove the frame crossmember.

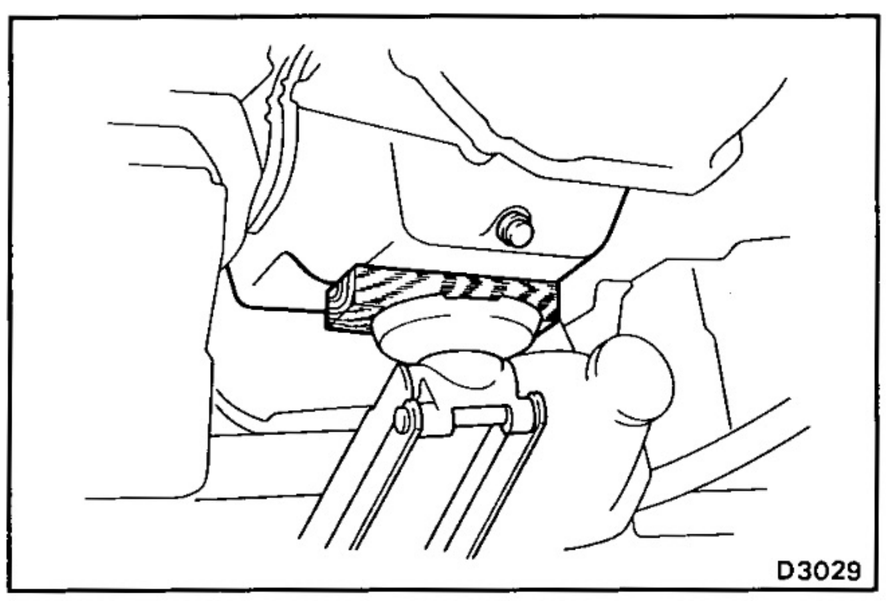

17. REMOVE TRANSMISSION ASSEMBLY

(a) Be sure to out a wooden block or equivalent between the jack and the oil pan to prevent damage. Support the oil pan with a jack.

(b) Lower the rear end of transmission.

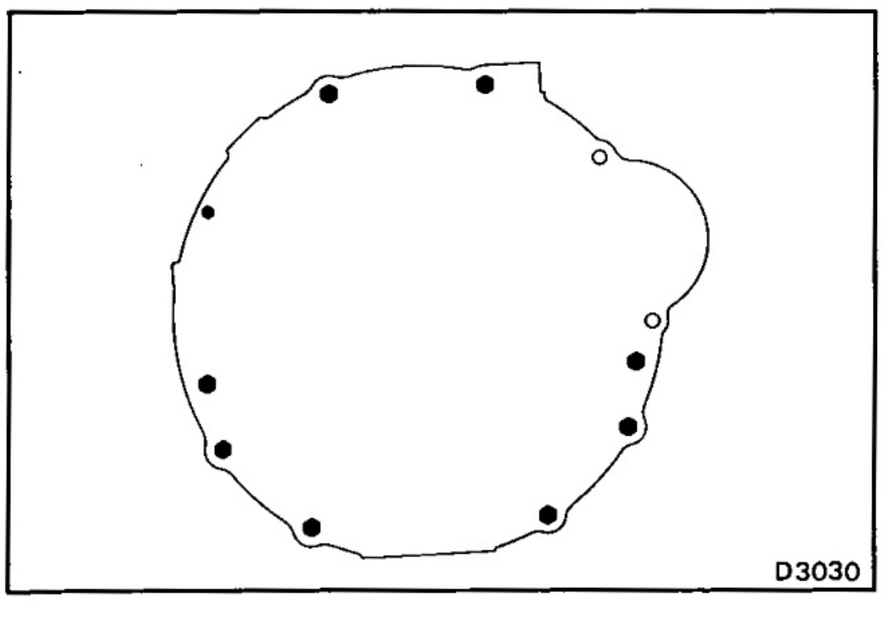

(c) Remove the nine transmission mounting bolts.

(d) Draw out the transmission down and toward the rear.

NOTICE: Be careful not to snag the throttle cable or neutral start switch cable. Keep the oil pan positioned downward.

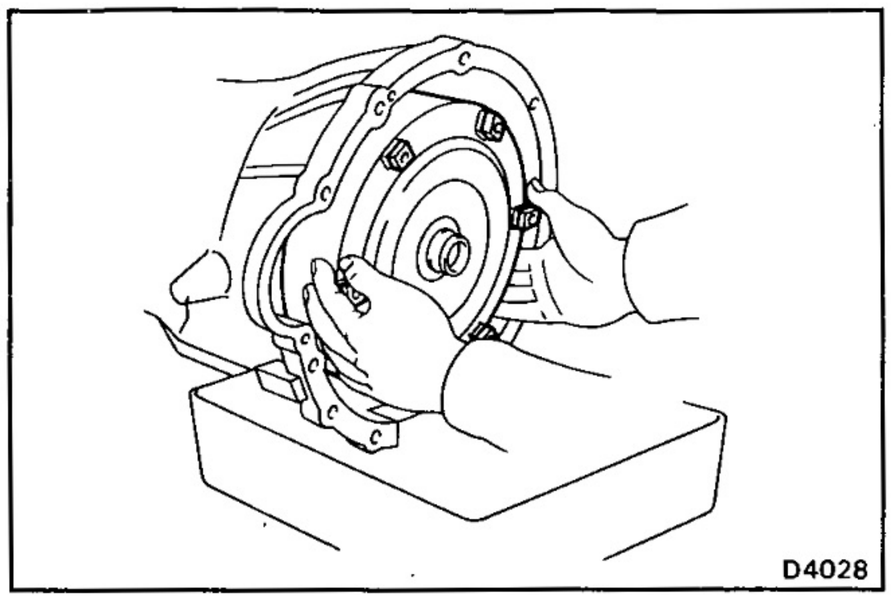

18. PLACE PAN UNDER CONVERTER HOUSING, AND REMOVE CONVERTER

Pull the converter straight off, and allow the fluid to drain into the pan.

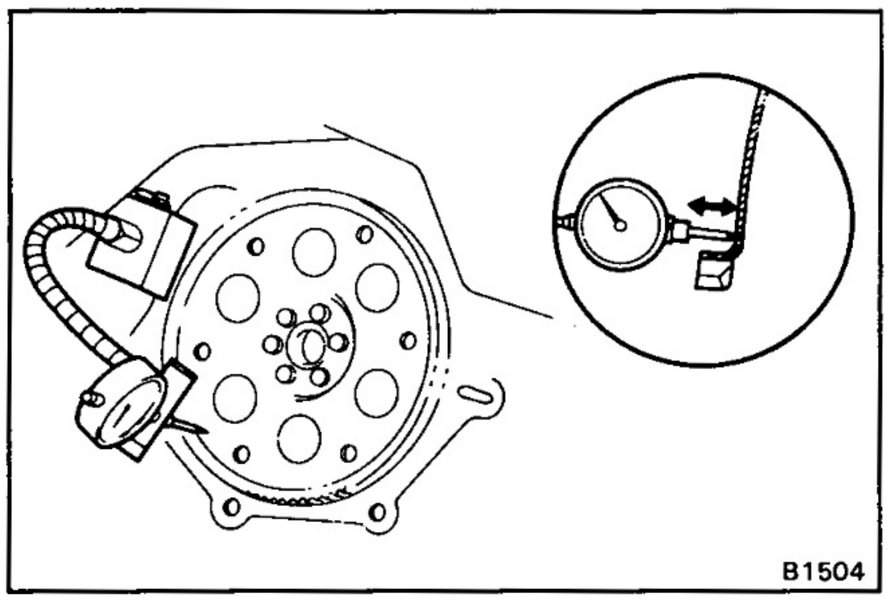
B1504

INSTALLATION OF TRANSMISSION

1. MEASURE DRIVE PLATE RUNOUT AND INSPECT RING GEAR

Set up a dial indicator and measure the drive plate runout.

If runout exceeds 0.20 mm (0.0079 in.) or if the ring gear is damaged, replace the drive plate. If installing a new drive plate, note the orientation of spacers and tighten the bolts.

3F engine ~~900 kg-cm (65 ft-lb, 88 N·m)~~ 1200 kg-cm (87 ft-lb, 118 N·m)

1H engine 1,300 kg-cm (94 ft-lb, 127 N·m)

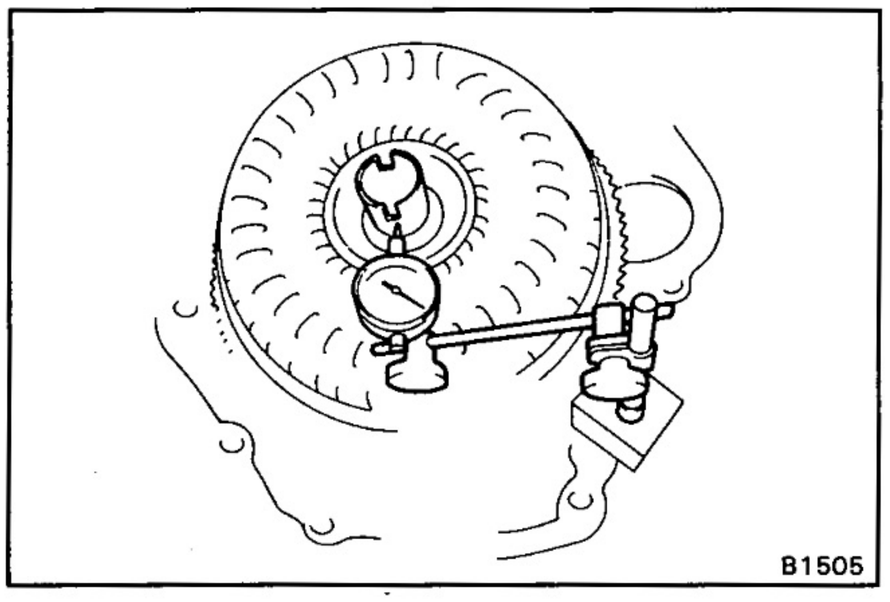
B1505

2. MEASURE TORQUE CONVERTER SLEEVE RUNOUT

(a) Temporarily mount the torque converter to the drive plate. Set up a dial indicator.

If runout exceeds 0.30 mm (0.118 in.), try to correctly by reorienting the installation of the converter. If excessive runout cannot be corrected, replace the torque converter.

HINT: Mark the position of the converter to ensure correct installation.

(b) Remove the torque converter.

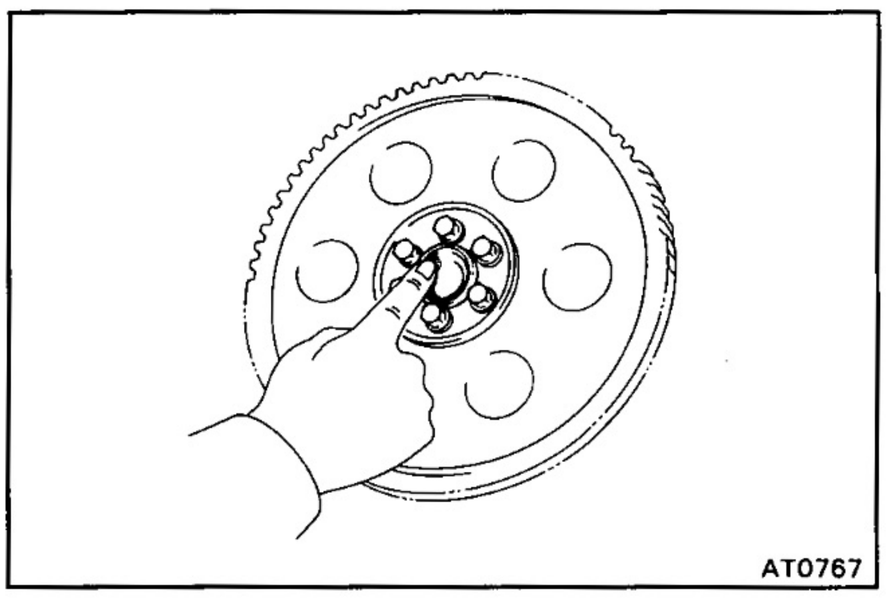
AT0767

3. APPLY GREASE TO CENTER HUB OF TORQUE CONVERTER AND PILOT HOLE IN CRANKSHAFT

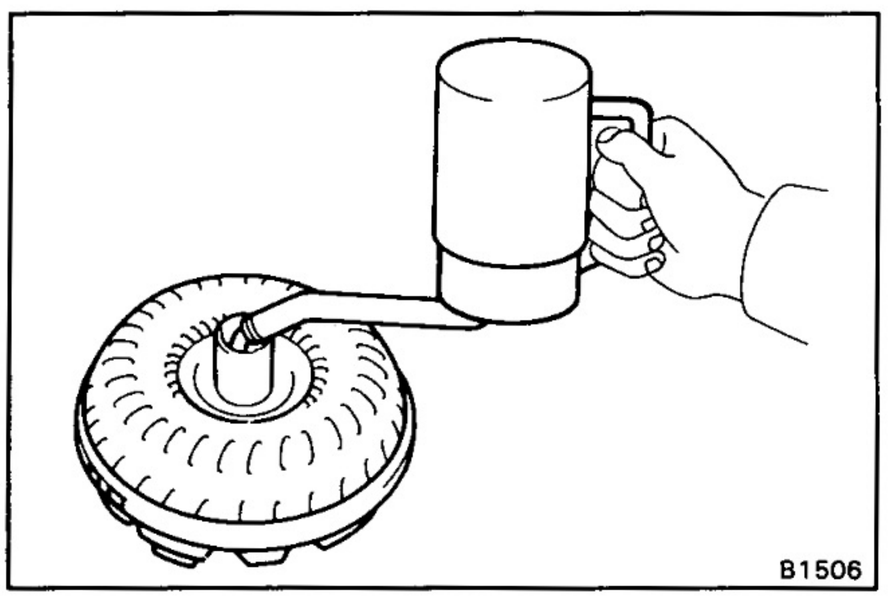
B1506

4. INSTALL TORQUE CONVERTER IN TRANSMISSION

If the torque converter has been drained and washed, refill with fresh ATF.

Refill capacity: 2.0 litters (2.1 US qts, 1.8 Imp. qts)

Dry fill capacity: 5.4 litters (5.7 US qts, 4.8 Imp. qts)

Fluid type: ATF DEXRON® II

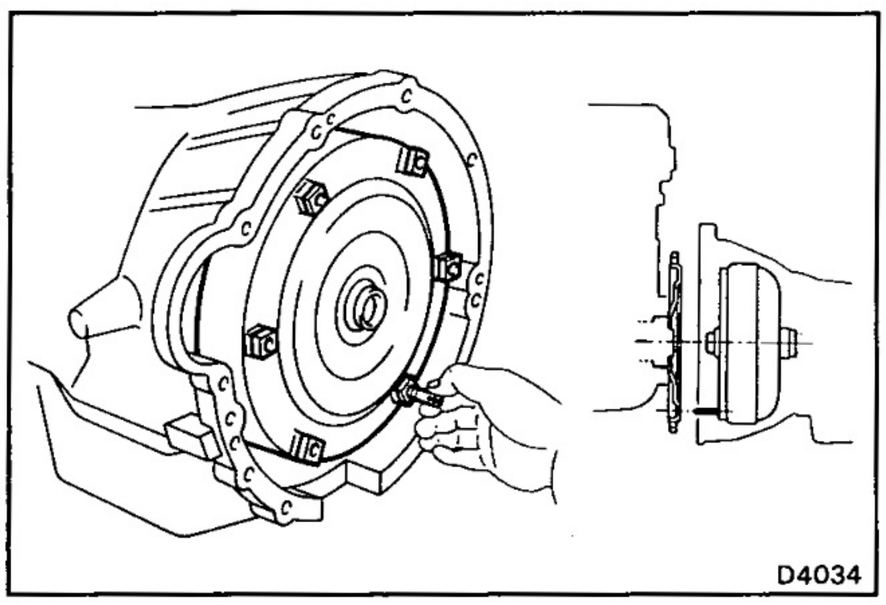
D4034

5. INSTALL TRANSMISSION ASSEMBLY

(a) Install the guide pin in the torque converter.

(b) Align the guide pin with one of the drive plate holes.

(c) Align two sleeves on the block with the converter housing.

(d) Temporarily install one bolt.

NOTICE: Be careful not to tilt the transmission forward because the torque converter could slide out.

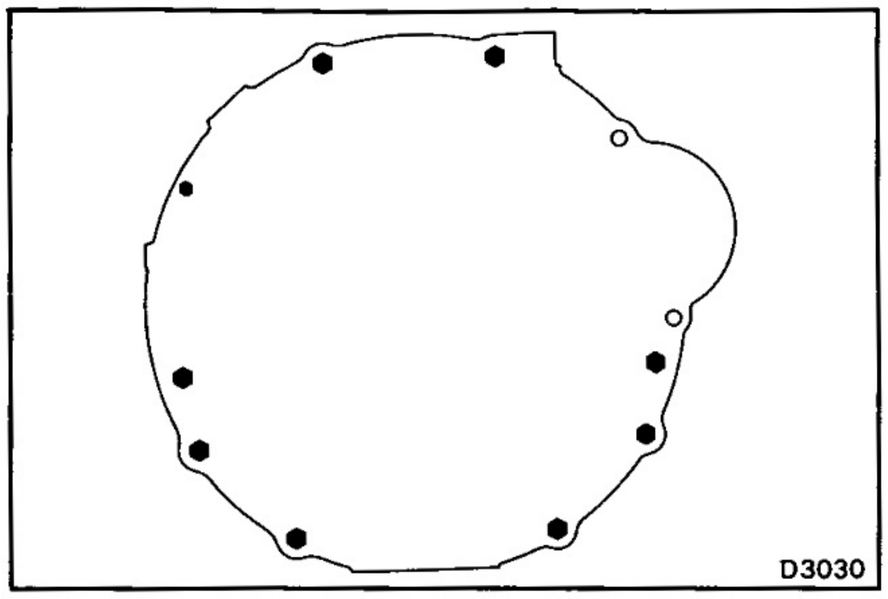

(e) Install the nine transmission mounting bolts.

Torque: 8 mm bolt 185 kg-cm (13 ft-lb, 18 N·m)
10 mm bolt 380 kg-cm (27 ft-lb, 37 N·m)
12 mm bolt 730 kg-cm (53 ft-lb, 72 N·m)

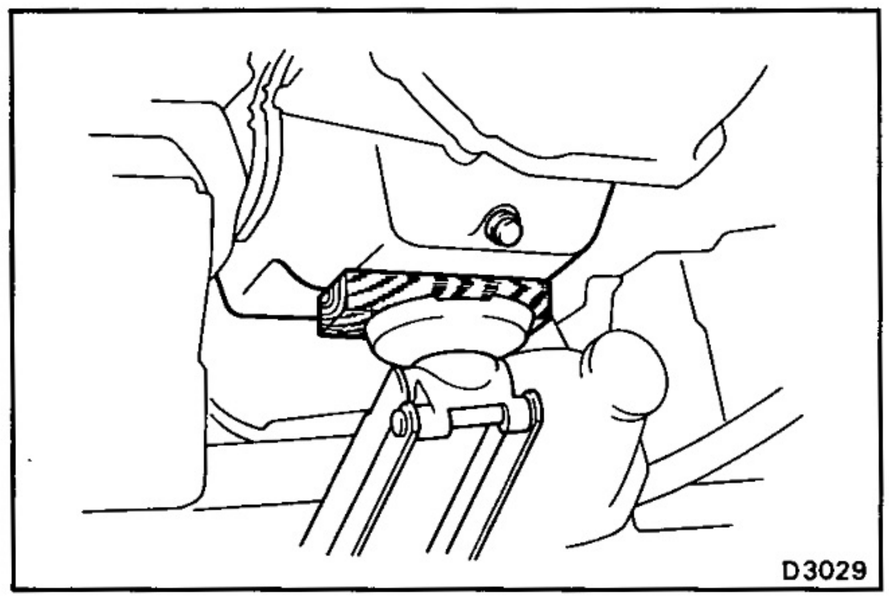

6. INSTALL FRAME CROSSMEMBER

(a) Support the transmission with the transmission jack.

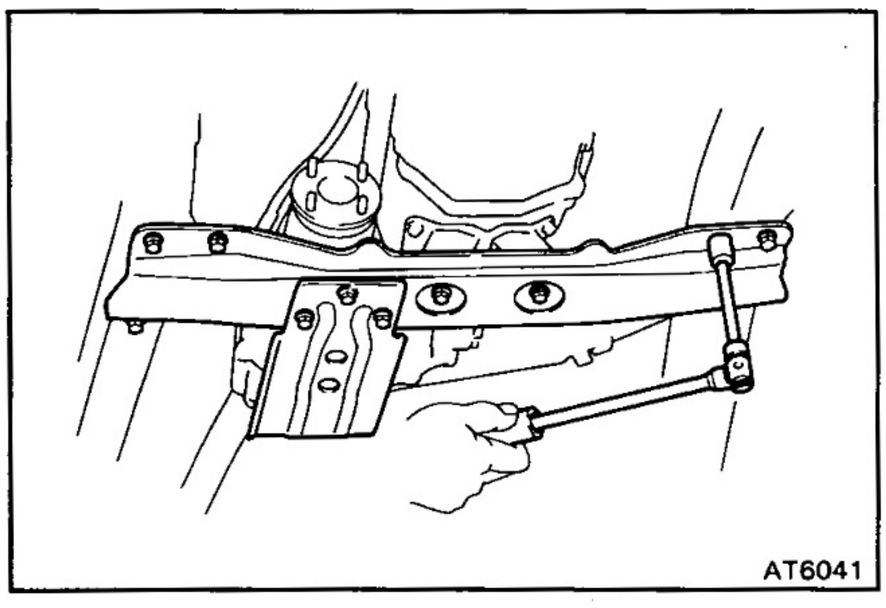

(b) Install the eight bolts and two nuts, and then install the frame crossmember.

Torque: Bolt 620 kg-cm (45 ft-lb, 61 N·m)
Nut 750 kg-cm (54 ft-lb, 74 N·m)

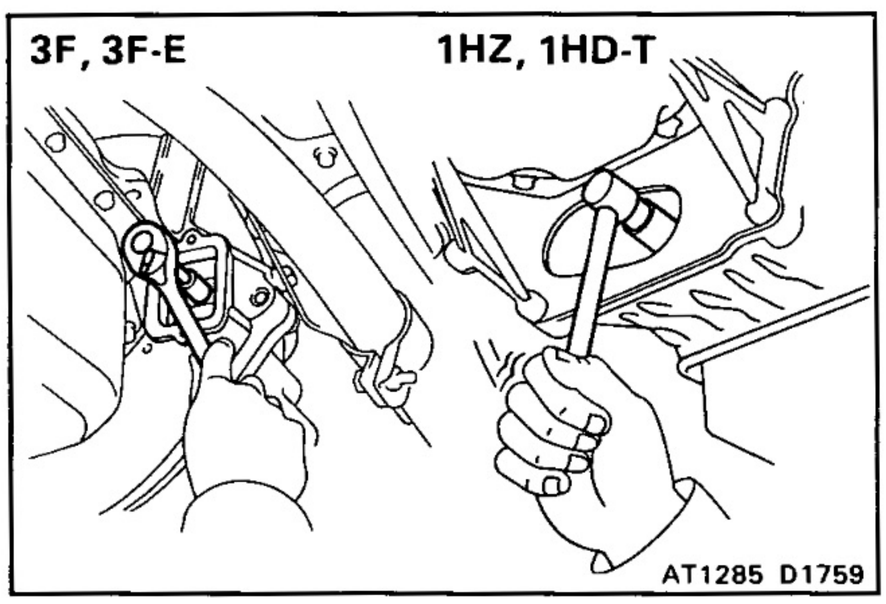

7. INSTALL SIX TORQUE CONVERTER MOUNTING BOLTS

(a) Temporarily install each bolts by turning the crankshaft.

(b) Torque the bolts.

Torque: 3F engine 290 kg-cm (21 ft-lb, 28 N·m)
1H engine 550 kg-cm (40 ft-lb, 54 N·m)

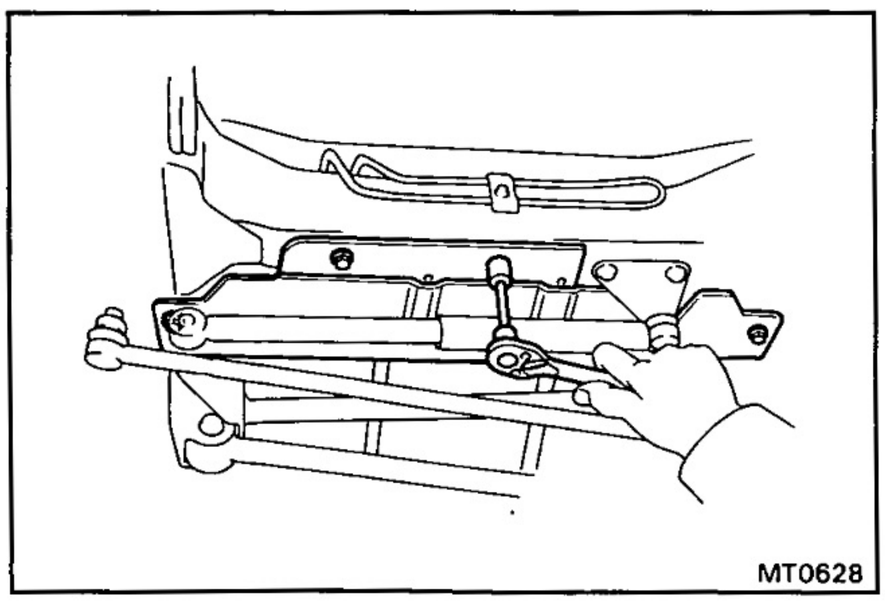

8. INSTALL UNDER COVER

Install the under cover with four bolts.

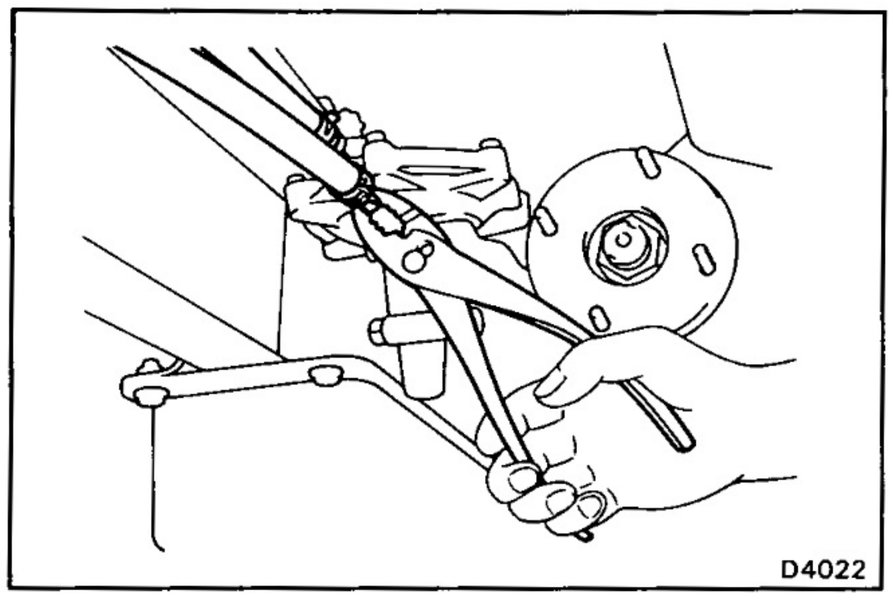

9. CONNECT TWO VACUUM HOSES

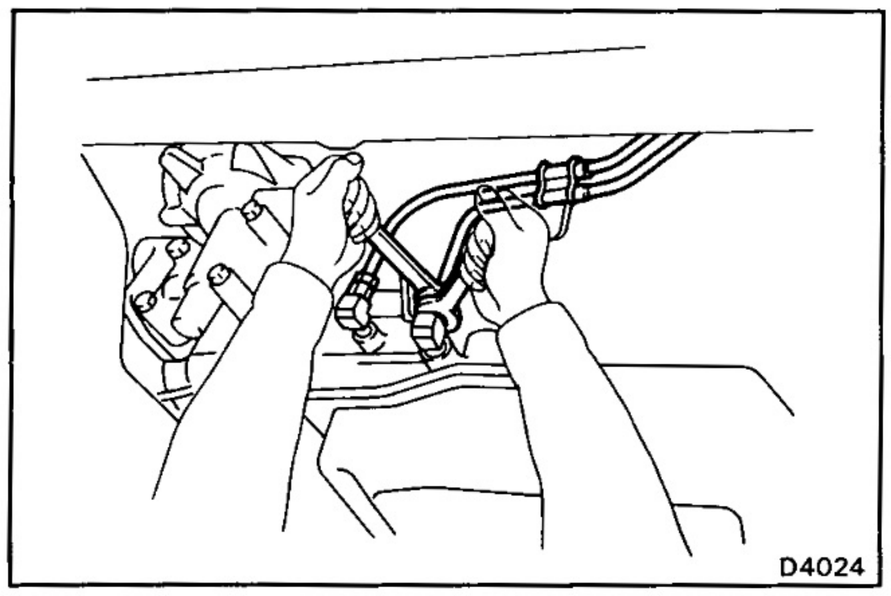

10. CONNECT TWO OIL COOLER TUBES

(a) Connect the two oil cooler tubes.

Torque: 350 kg-cm (25 ft-lb, 34 N·m)

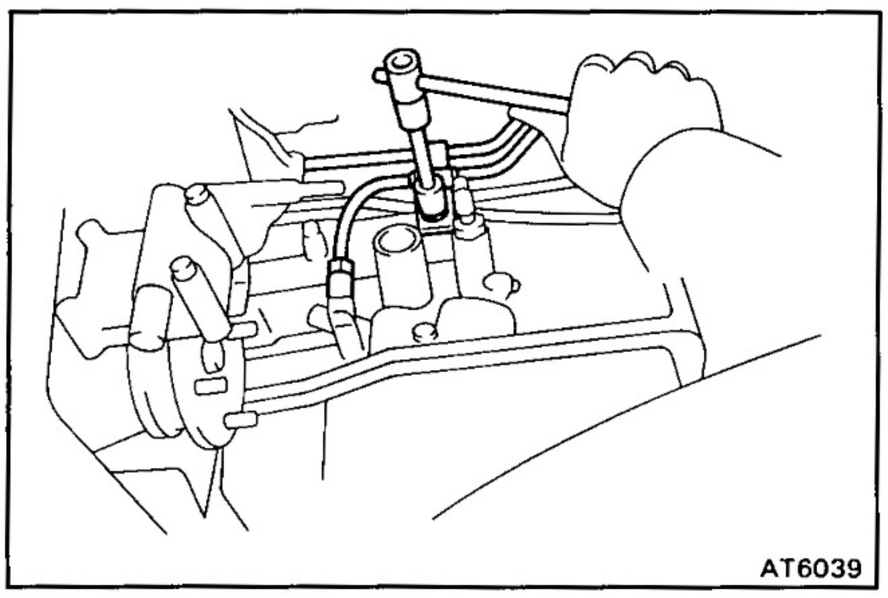

(b) Install the cooler tube clamp.

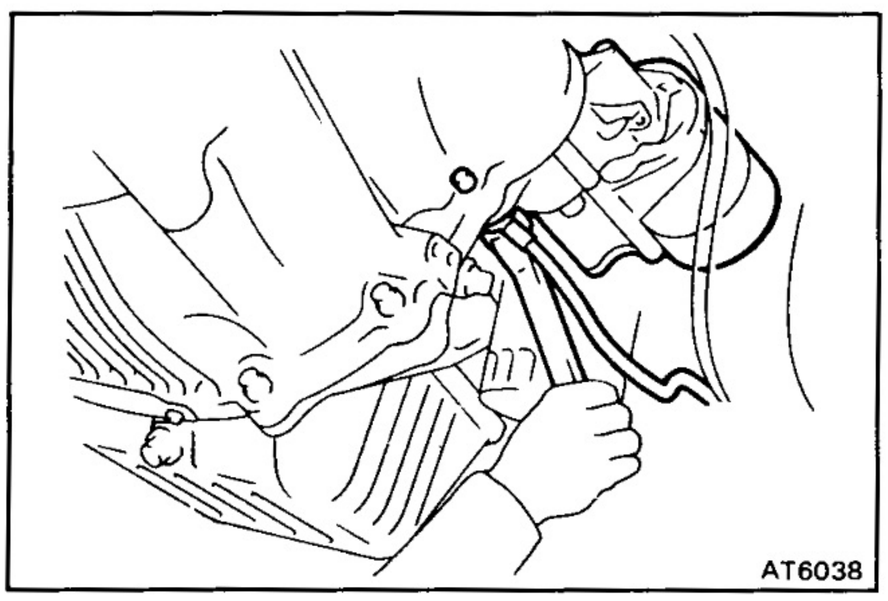

11. INSTALL PROPELLER SHAFT

(See page PR-2)

12. INSTALL STARTER

(a) Install the bolt, nut and starter.

(b) Connect the connector and cable.

13. INSTALL OIL FILLER TUBE

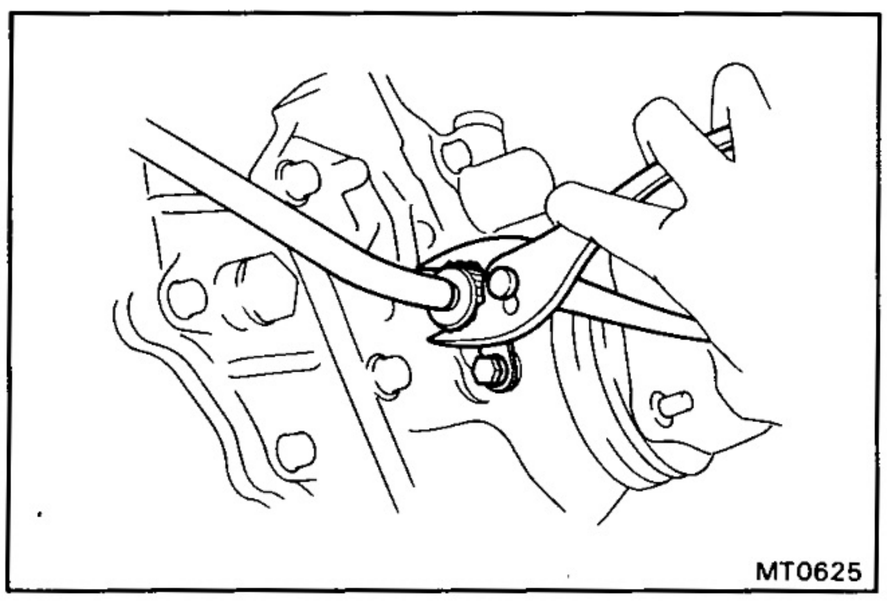

14. CONNECT SPEEDOMETER CABLE

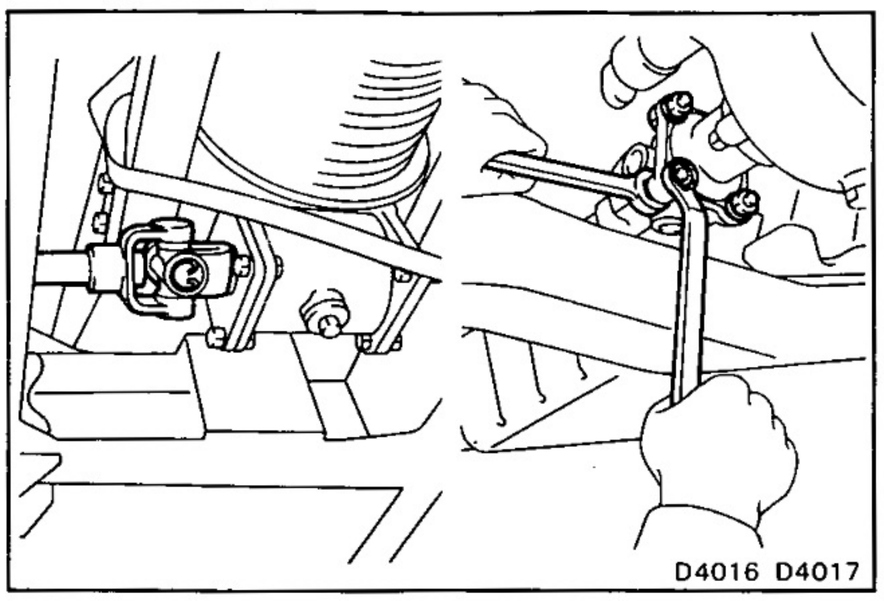

15. INSTALL POWER TAKE-OFF DRIVE SHAFT (w/ MECHANICAL WINCH)

(a) Align the matchmarks on the joint flange yoke and drive shaft.

(b) Install the drive shaft.

(c) Align the matchmarks on the drive shaft and PTO.

(d) Torque the nuts.

Torque: 200 kg-cm (14 ft-lb, 20 N·m)

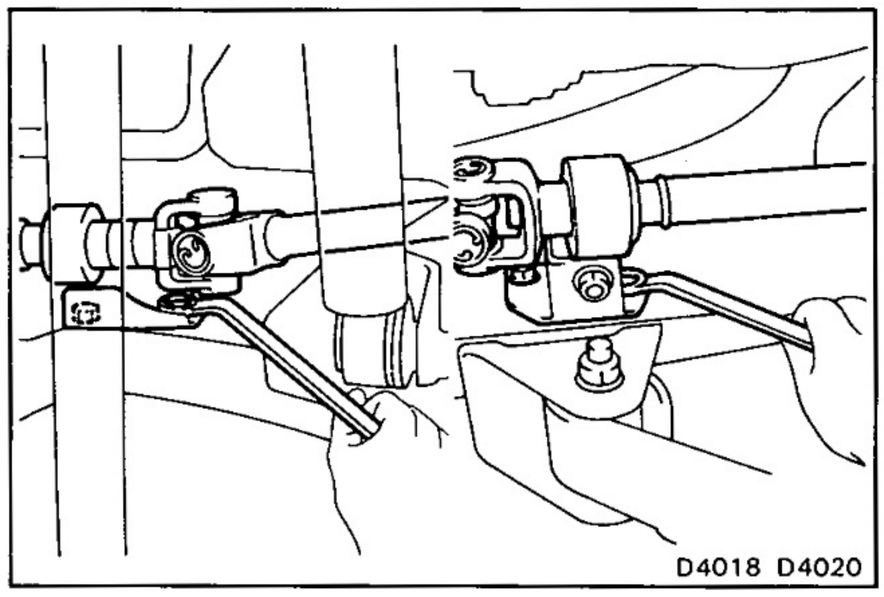

(e) Install the front and rear bracket.

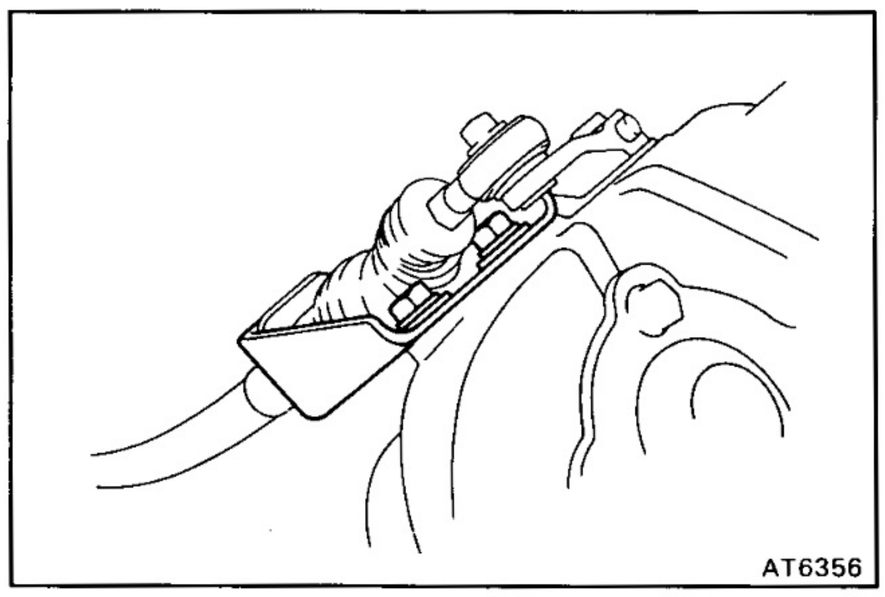

16. INSTALL POWER TAKE-OFF SHIFT CABLE (w/ MECHANICAL WINCH)

(a) Install the two bolts and the cable bracket.

(b) Connect the cable and insert the pin.

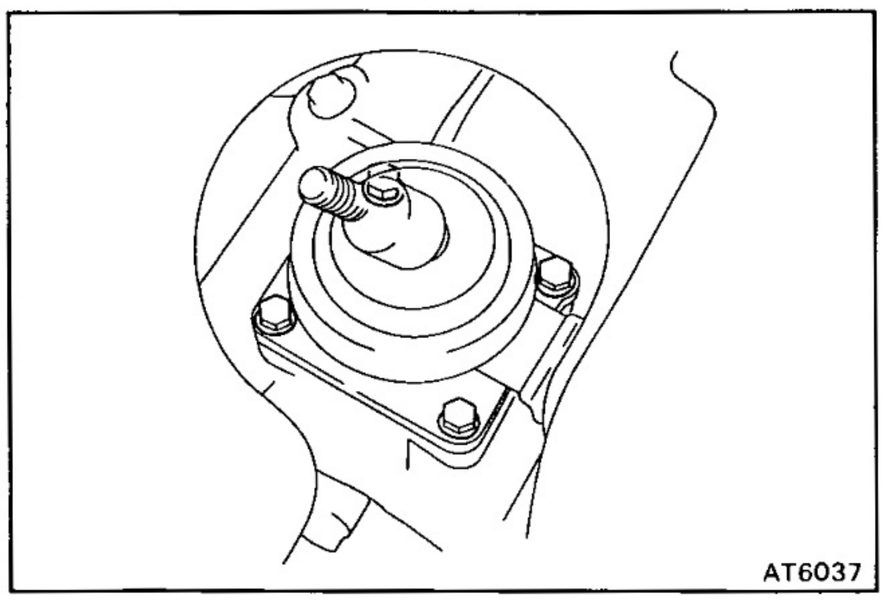

17. INSTALL TRANSFER SHIFT LEVER

(a) Install the transfer shift lever with four bolts.

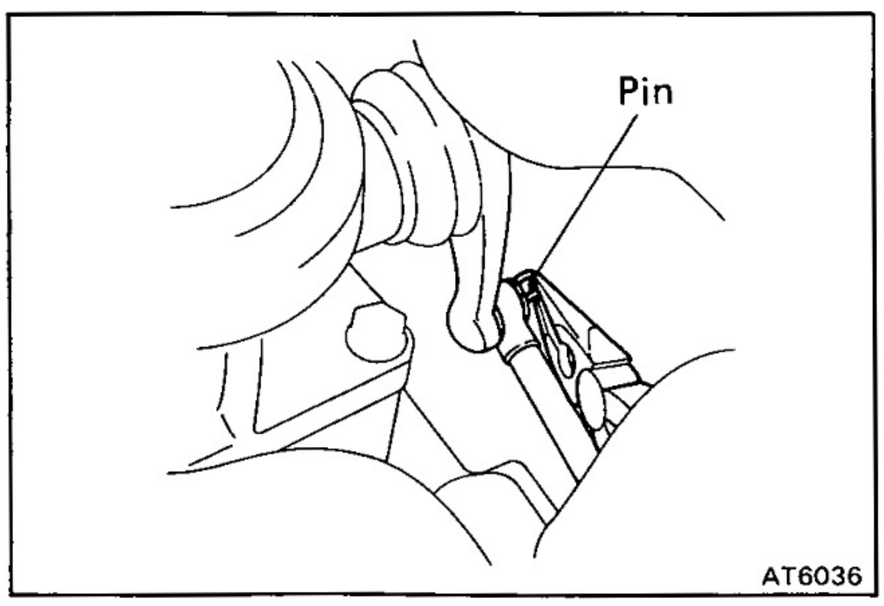

(b) Connect the shift rod and install the pin.

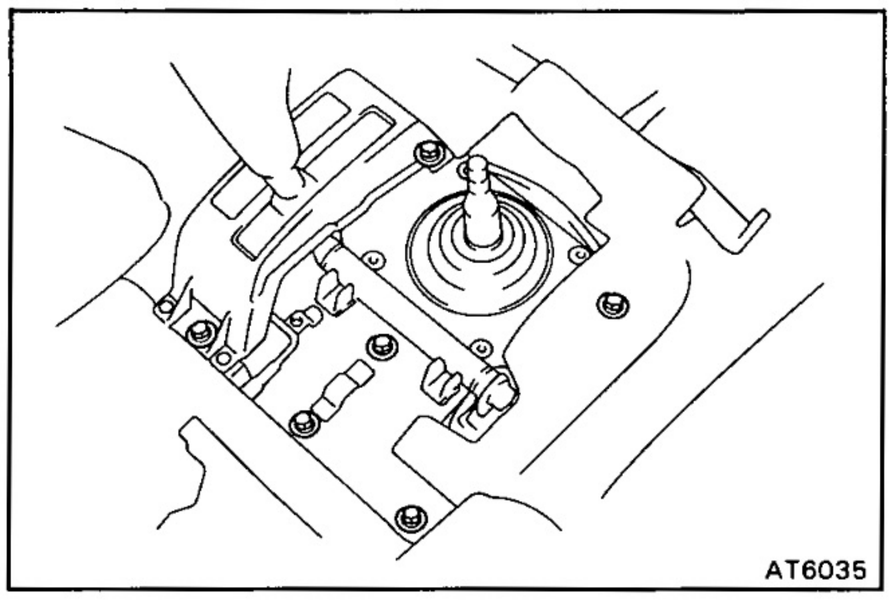

(c) Install the transmission shift lever assembly with the six bolts.

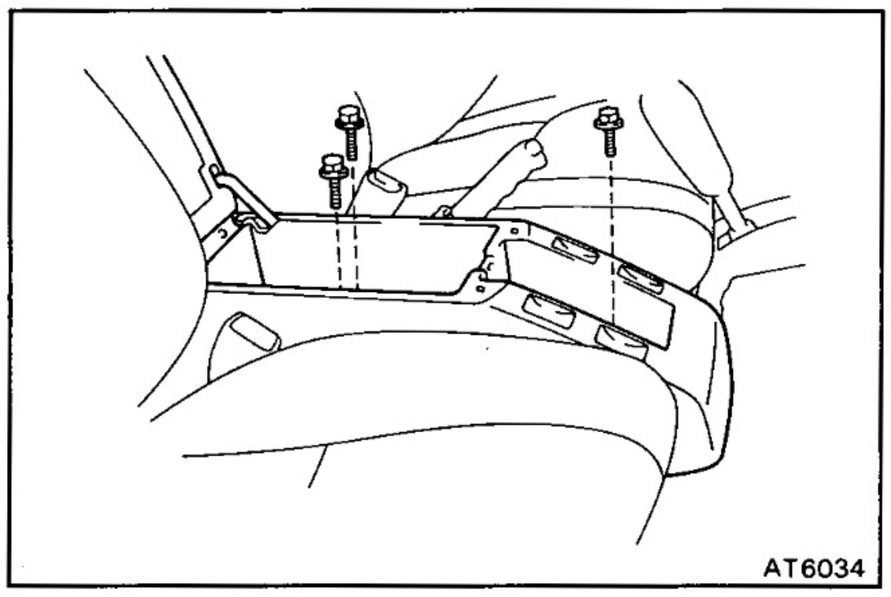

(d) Install the console box with three bolts.

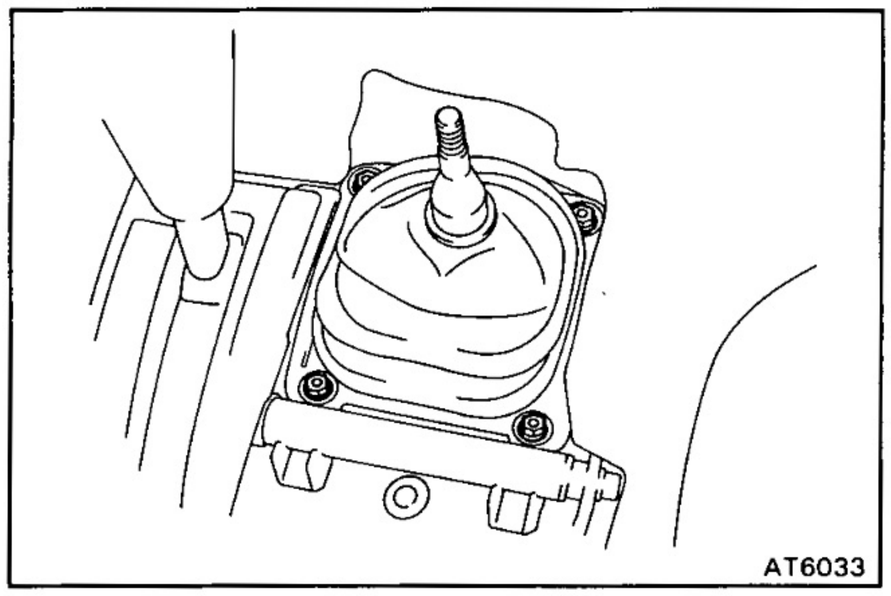

(e) Install the transfer shift lever boot with the four bolts.

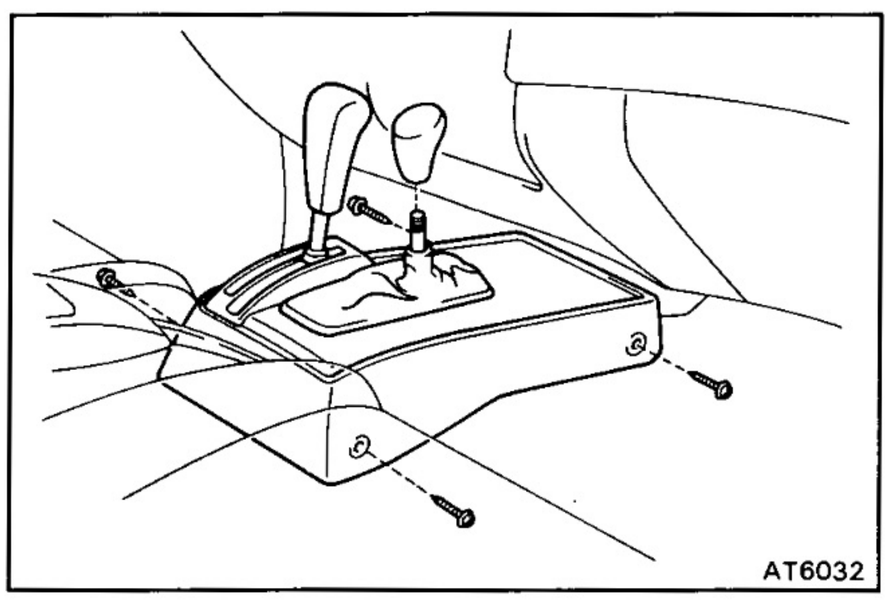

(f) Install the console with the four screws.

(g) Install the transfer shift lever knob.

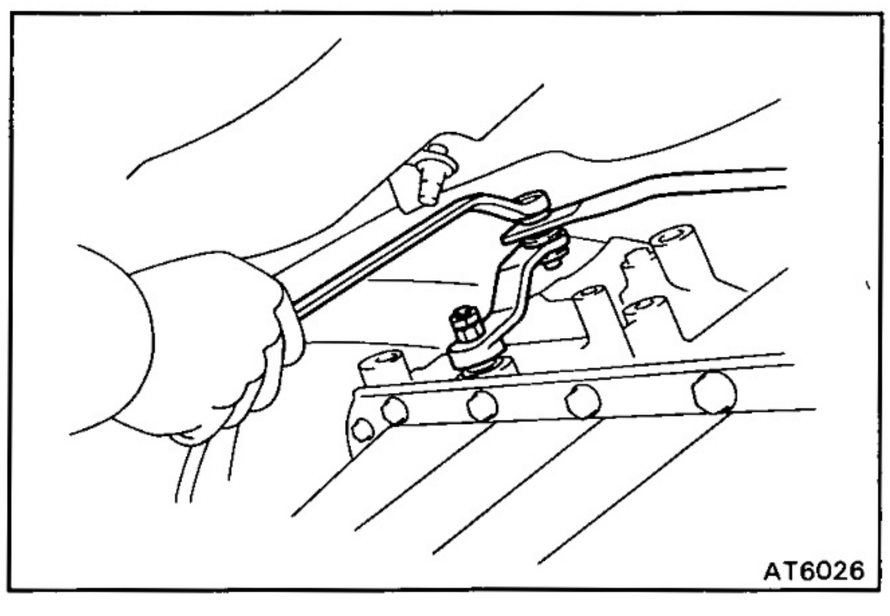

(h) Install the transmission control rod with the nut.

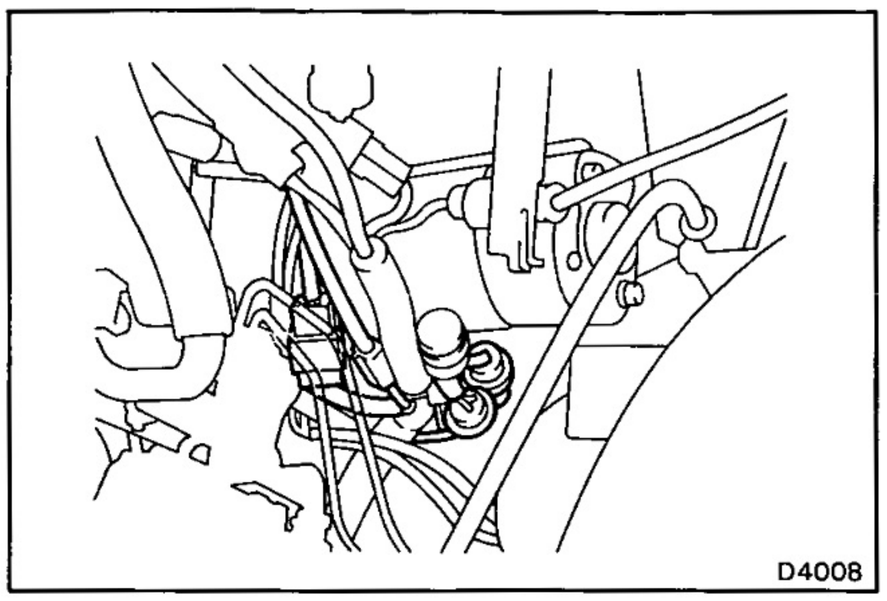

18. CONNECT CONNECTORS

Connect the connectors near the starter.

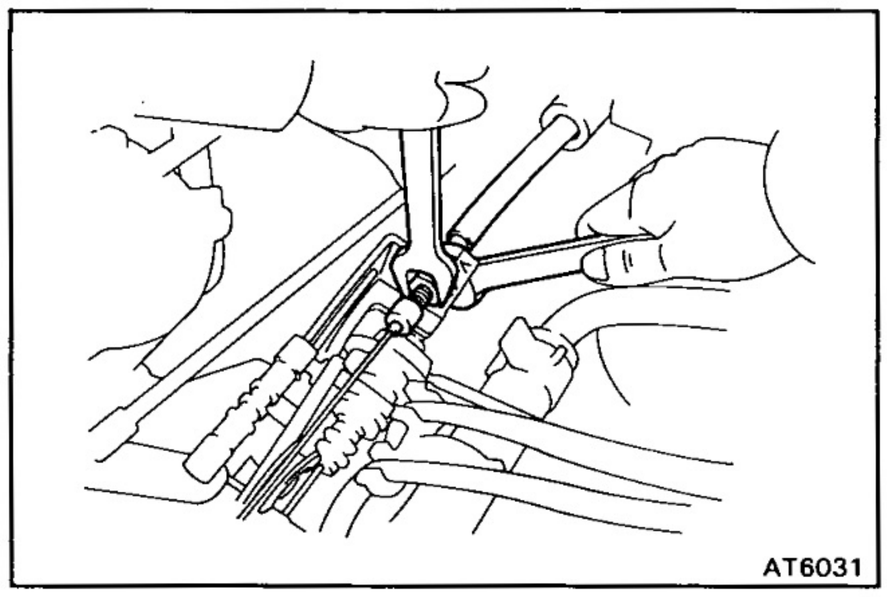

19. CONNECT THROTTLE CABLE

(a) Connect the cable to the throttle linkage.

(b) Connect the cable housing to the bracket and tighten the adjusting nut.

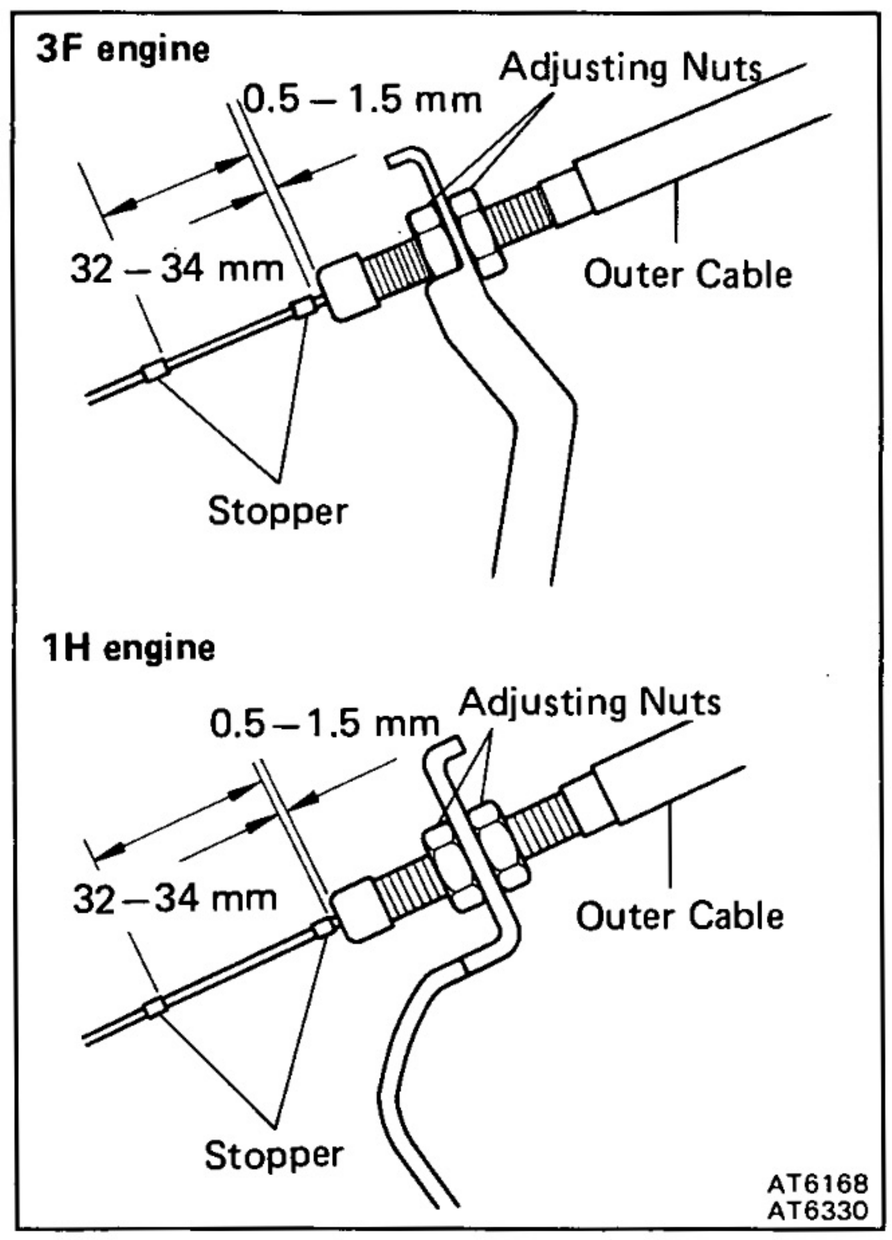

20. ADJUST THROTTLE CABLE
(See page AT-13)

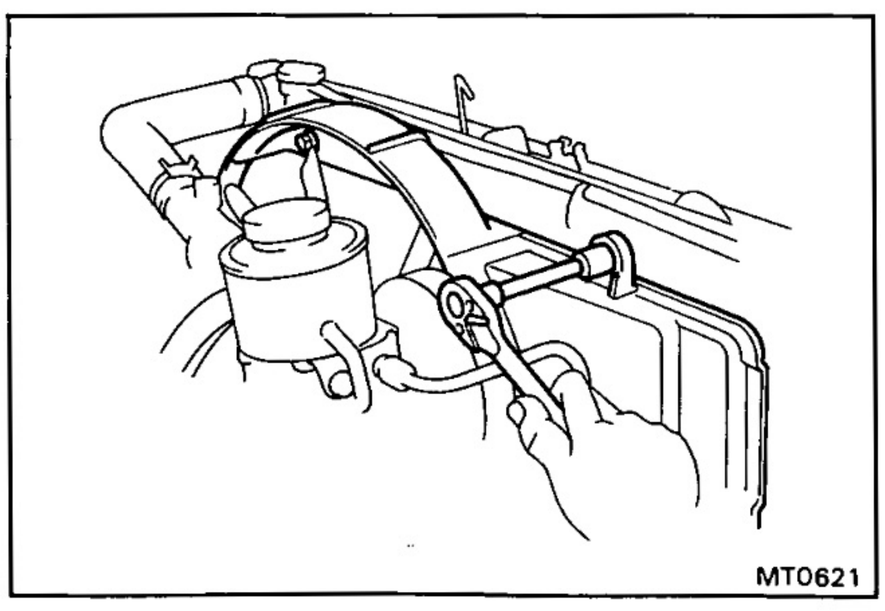

21. TIGHTEN THE FAN SHROUD OF THE COOLING FAN

22. INSTALL BATTERY AND COVER

23. CONNECT BATTERY CABLE TO NEGATIVE TERMINAL

TRANSFER

	Page
DESCRIPTION	TF-2
PRECAUTIONS	TF-3
TROUBLESHOOTING	TF-3
(Full-Time 4WD Type Transfer)	
COMPONENTS	TF-4
DISASSEMBLY OF TRANSFER	TF-5
COMPONENT PARTS	TF-12
Input Shaft Assembly	TF-12
Idler Gear Assembly	TF-16
Center Differential Assembly	TF-20
Front Extension Housing Assembly	TF-29
Rear Extension Housing Assembly	TF-33
ASSEMBLY OF TRANSFER	TF-40
(Part-Time 4WD Type Transfer)	
COMPONENTS	TF-49
DISASSEMBLY OF TRANSFER	TF-50
COMPONENT PARTS	TF-59
Input Shaft Assembly	TF-59
Idler Gear Assembly	TF-63
Output Shaft Assembly	TF-65
Front Extension Housing Assembly	TF-71
Rear Extension Housing Assembly	TF-75
ASSEMBLY OF TRANSFER	TF-79
MOTOR SHIFT CONTROL SYSTEM	TF-89

DESCRIPTION

TRANSFER

The transfer transmits the drive force from the transmission to the front wheels, switching between 2WD, 4WD (High) and 4WD (Low).

The specifications and cross-section diagrams are as shown.

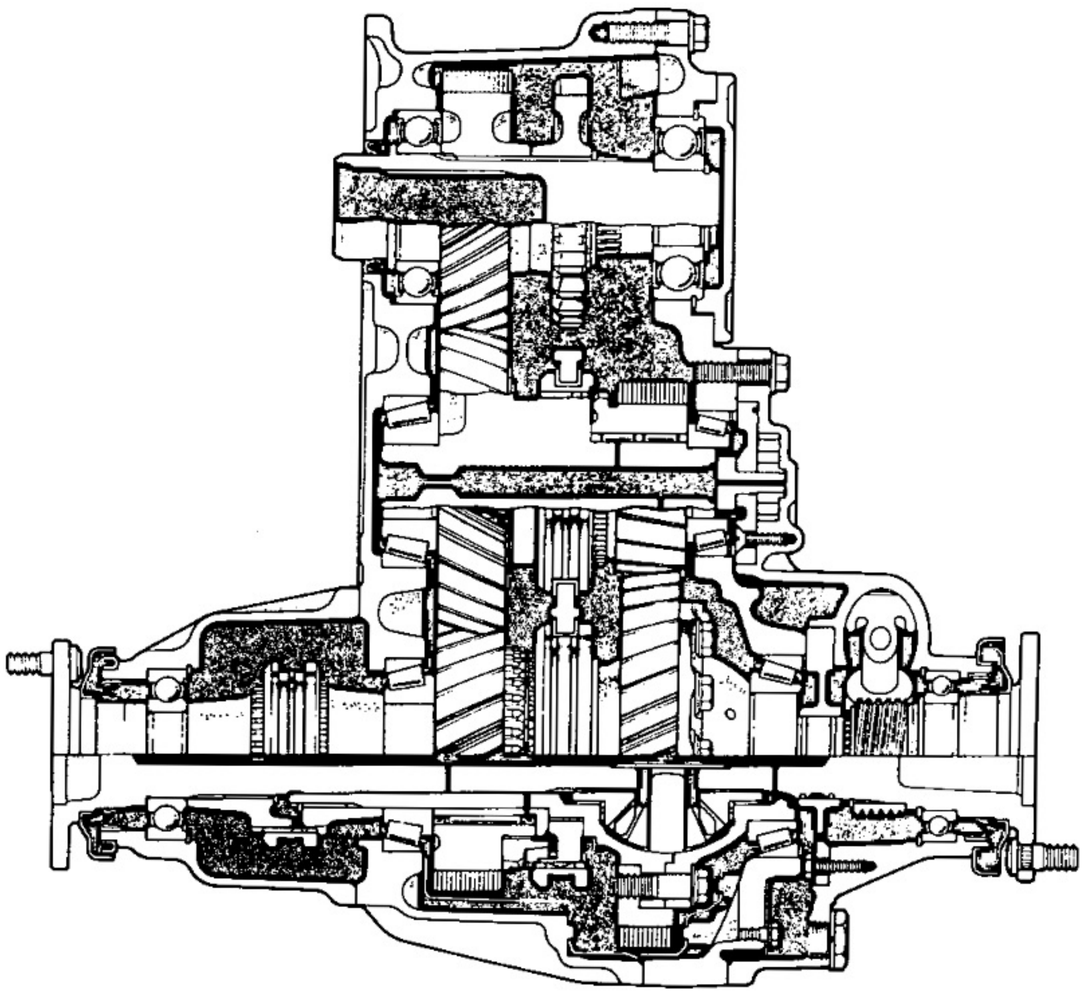

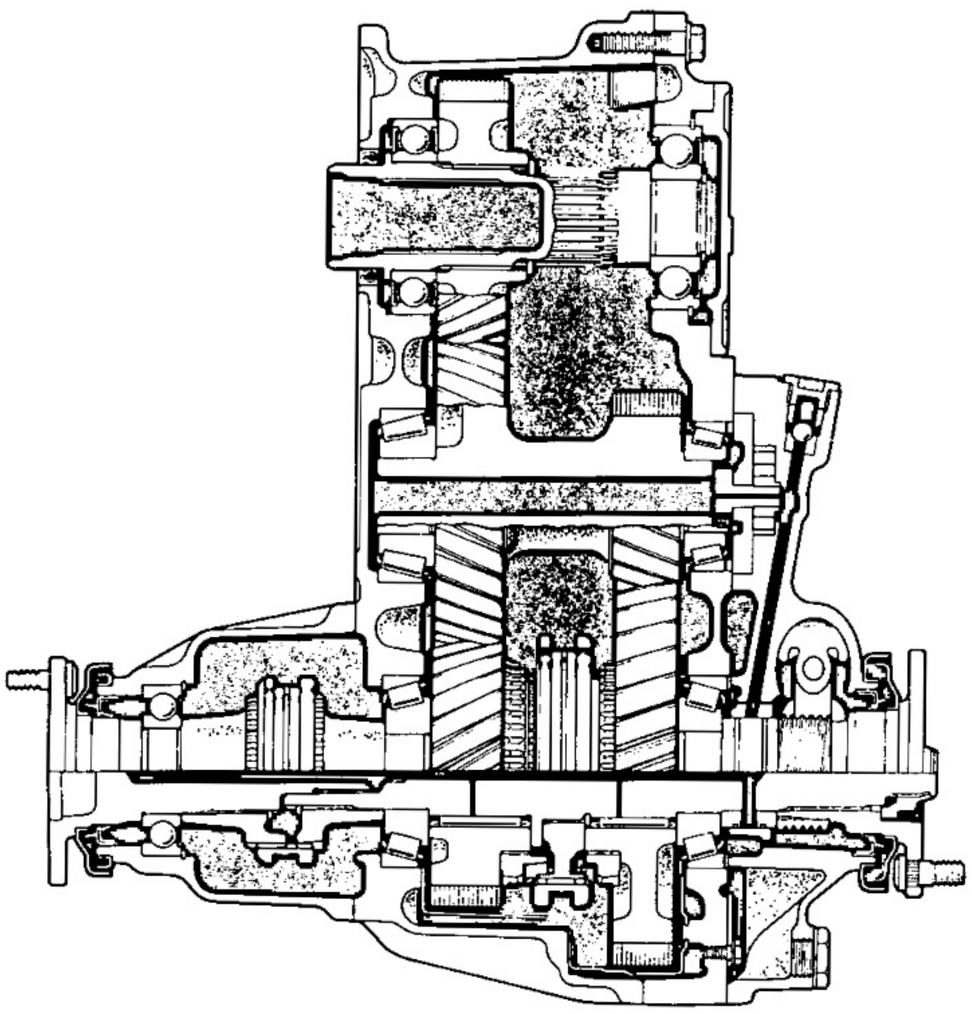

TF0106 TF0105

Specifications

Type of Transfer		HF2A (Full-Time)				HF1A (Part-Time)				
Type of Transmission		H150F	H151F	A440F	A442F	H140F	H150F	H151F	A440F	A442F
Type of Engine		3F 1HZ	1HD-T	3F-E 1HZ	1HD-T	3F 1HZ	3F 1HZ	1HD-T	3F 1HZ	1HD-T
Gear Ratio	High Speed Range	1.000				←				
	Low Speed Range	2.488				←				
Oil Capacity		1.3 liters (1.4 US qts, 1.1 Imp.qts)				←				
Type of oil		API GL-4 or GL-5, SAE 75W-90								

PRECAUTIONS

When working with FIPG material, you must be observe the following.

- Using a razor blade and gasket scraper, remove all the old packing (FIPG) material from the gasket surfaces.
- Thoroughly clean all components to remove all the loose material.
- Clean both sealing surfaces with a non-residue solvent.
- Apply the seal packing in approx. 1 mm (0.04 in.) bead along the sealing surface.
- Parts must be assembled within 10 minutes of application. Otherwise, the packing (FIPG) material must be removed and reapplied.

TROUBLESHOOTING

Problem	Possible cause	Remedy	Page
Hard to shift or will not shift	Transfer taulty	Disassemble and inspect transfer	TF-48
Transfer jumps out of gear	Transfer faulty	Disassemble and inspect transfer	TF-48
Noise	Transfer faulty Wrong oil grade Oil level low	Disassembly and inspect transfer Replace oil Add oil	MT-4 MT-4
Oil leakage	Oil level too high Oil seal, O-ring or gasket worn or damaged	Drain oil Replace oil seal, O-ring or gasket	 MT-4
Tight corner braking	Center differential or transfer faulty	Replace center differential or transfer	MT-4 MT-4

(FULL-TIME 4WD TYPE TRANSFER)
COMPONENTS

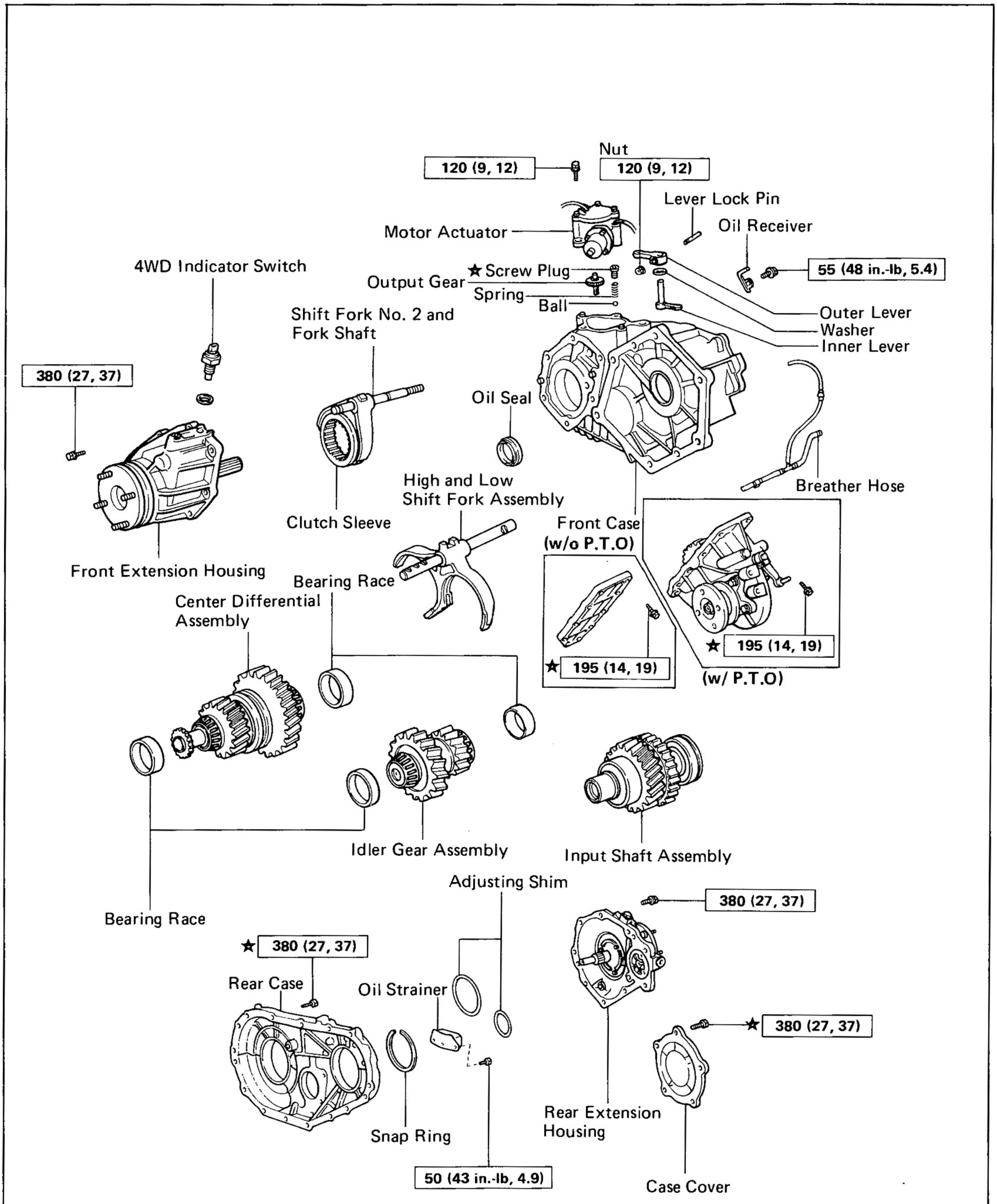

kg-cm (ft-lb, N·m) : Specified torque

★ Precoated part

TF1090

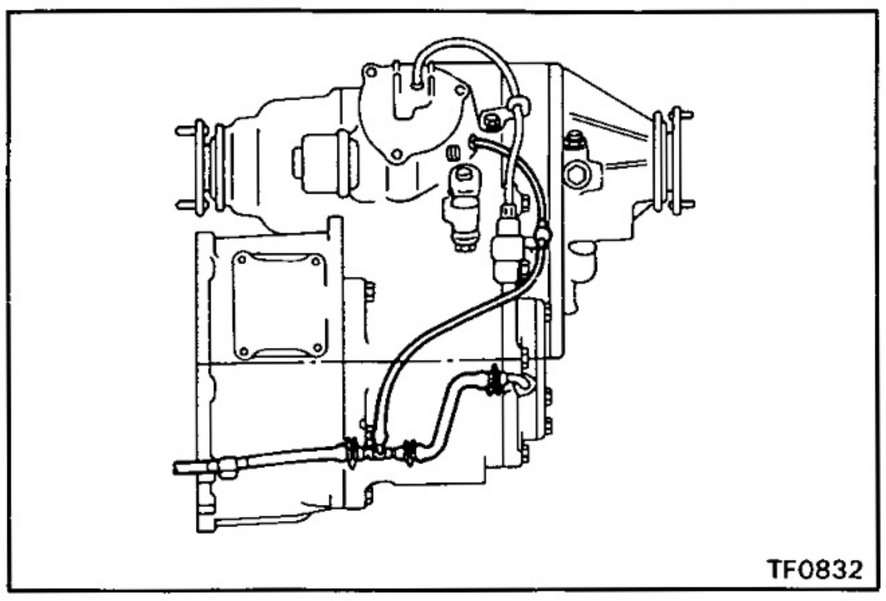
TF0832

DISASSEMBLY OF TRANSFER

(See page TF-4)

1. **REMOVE BREATHER HOSE**

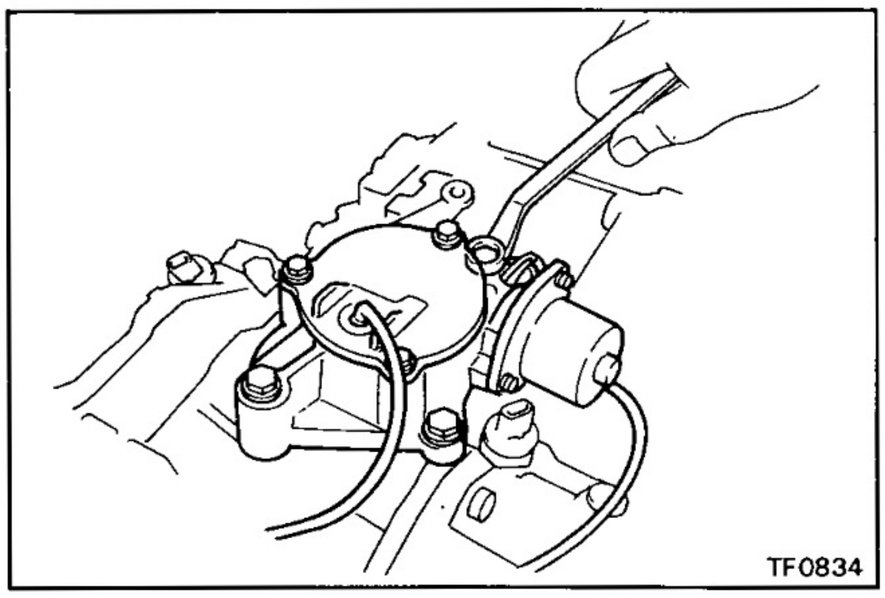
TF0834

2. **REMOVE MOTOR ACTUATOR**

Remove the four bolts and motor actuator.

HINT: Set the motor actuator in differential lock condition.

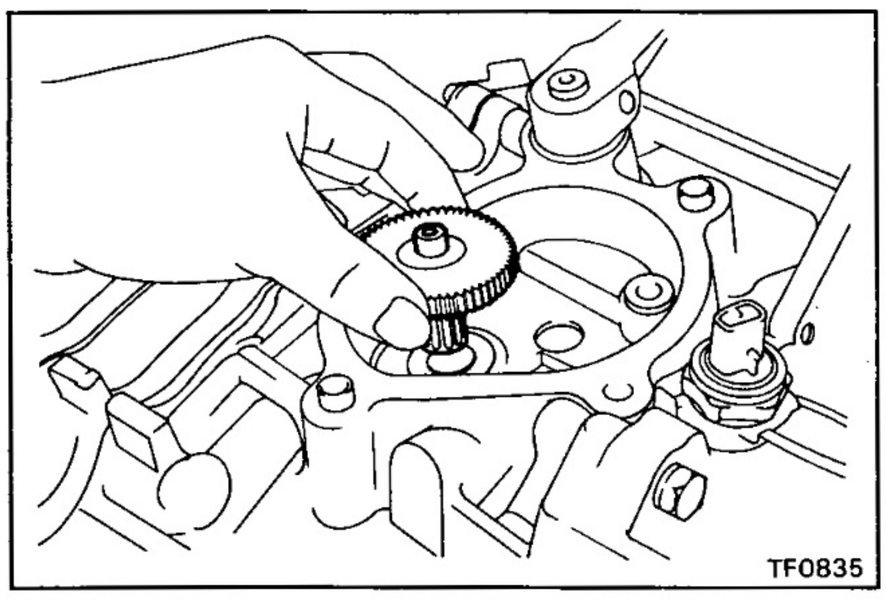
TF0835

3. **REMOVE OUTPUT GEAR**

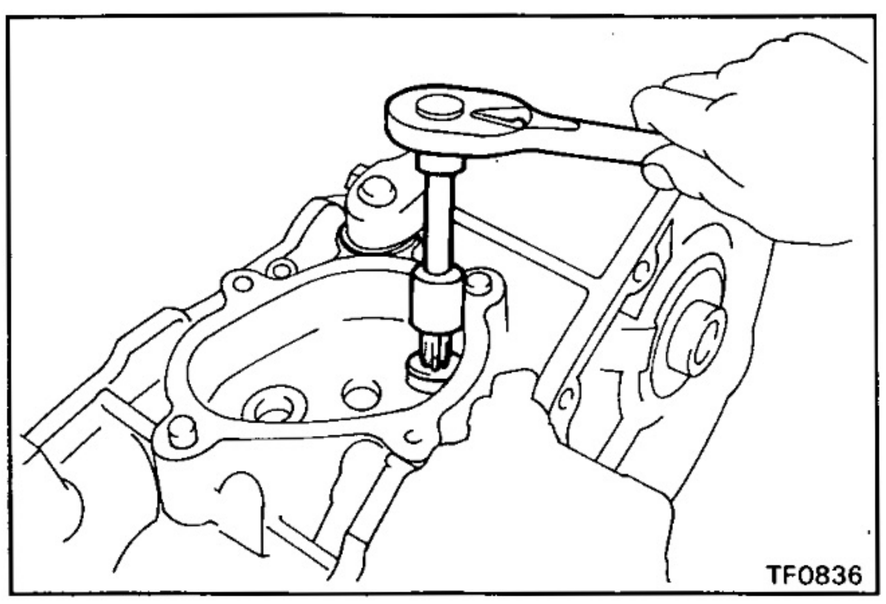
TF0836

4. **REMOVE SCREW PLUG, SPRING AND BALL**

(a) Using a torx socket wrench, remove the screw plug.

(Torx socket wrench T40 09042-00020)

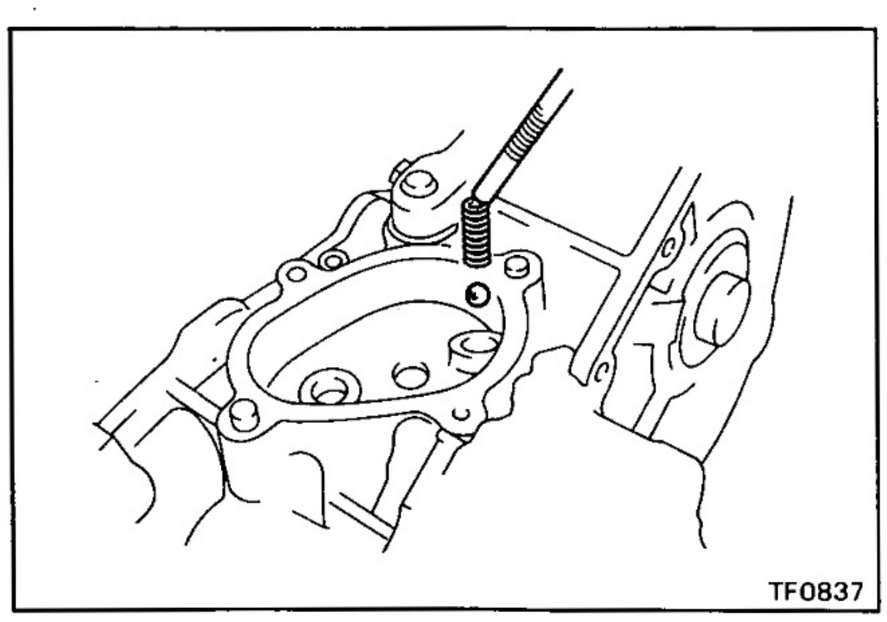
TF0837

(b) Using a magnetic finger, remove the spring and ball.

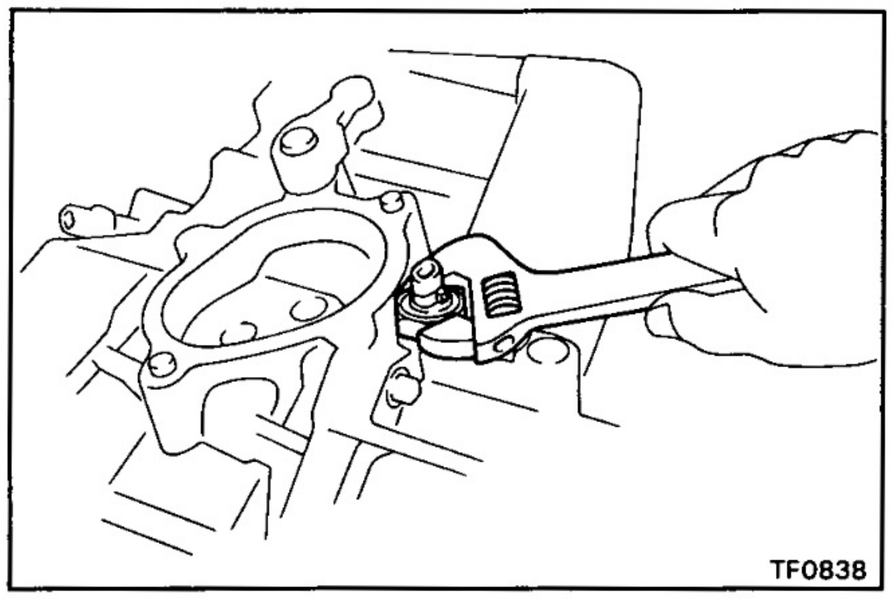

5. REMOVE 4WD INDICATOR SWITCH

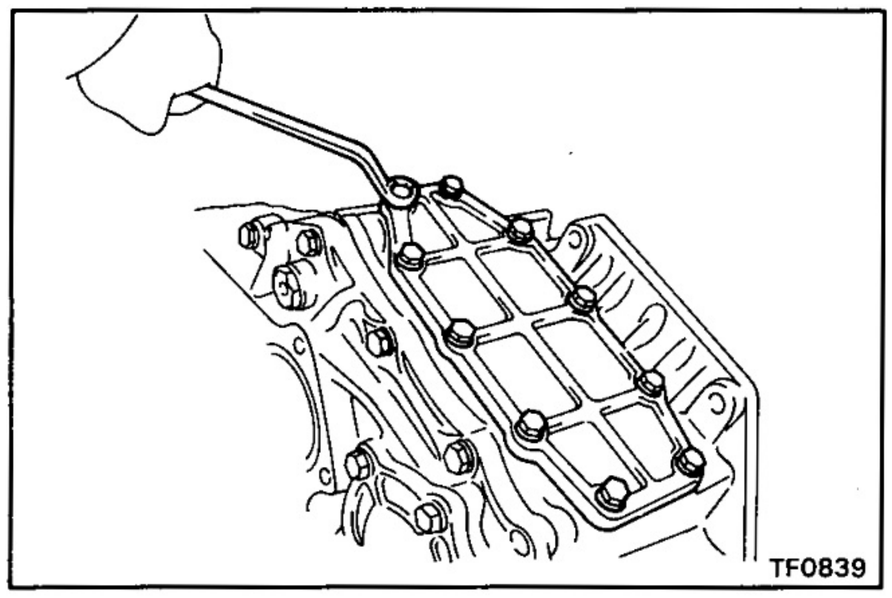

6. (w/o POWER TAKE-OFF)
REMOVE POWER TAKE-OFF COVER

Remove the ten bolts, power take-off cover and gasket.

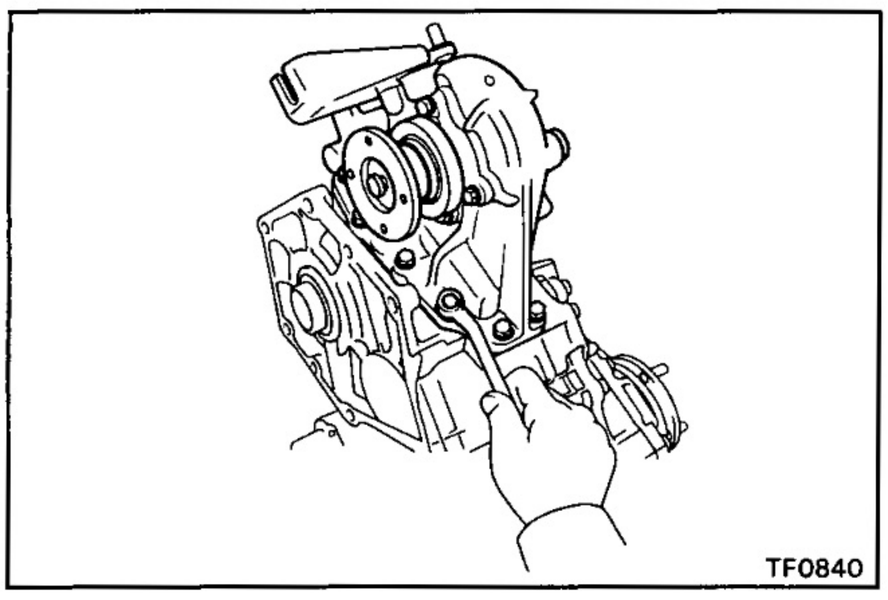

7. (w/ POWER TAKE-OFF)
REMOVE POWER TAKE-OFF CASE

Remove the ten bolts, power take-off case and gasket.

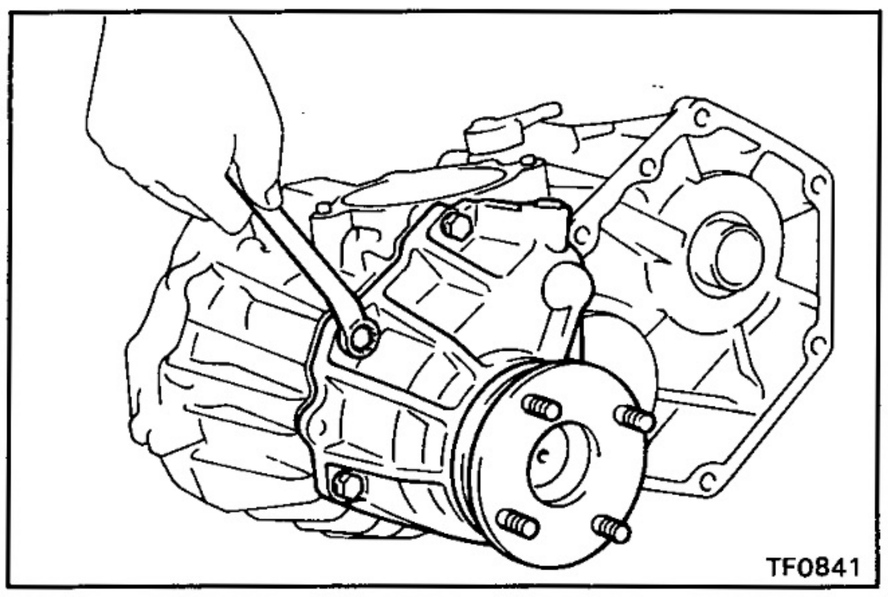

8. REMOVE FRONT EXTENSION HOUSING

(a) Remove the six bolts.

(b) If necessary, tap the front extension housing with a plastic hammer.

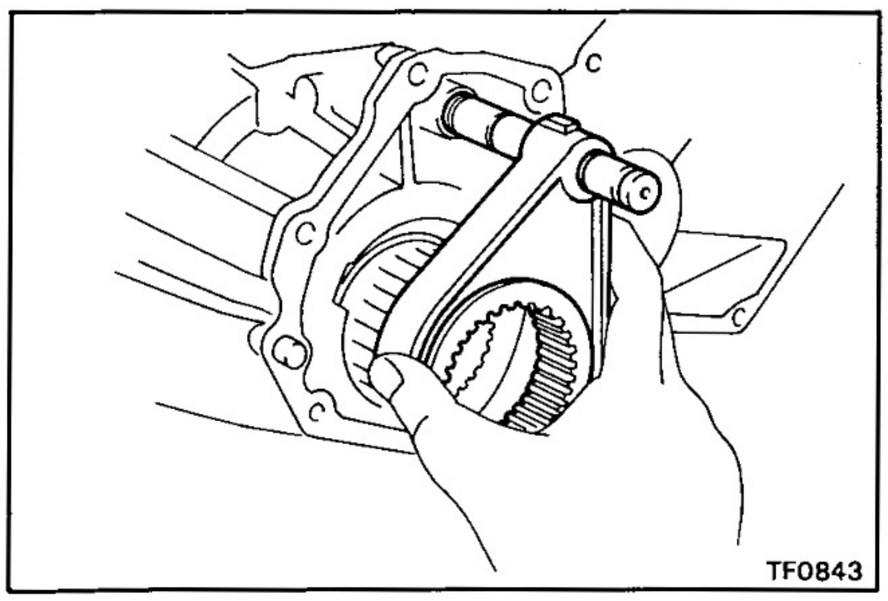

9. REMOVE CLUTCH SLEEVE, SHIFT FORK NO.2 AND FORK SHAFT

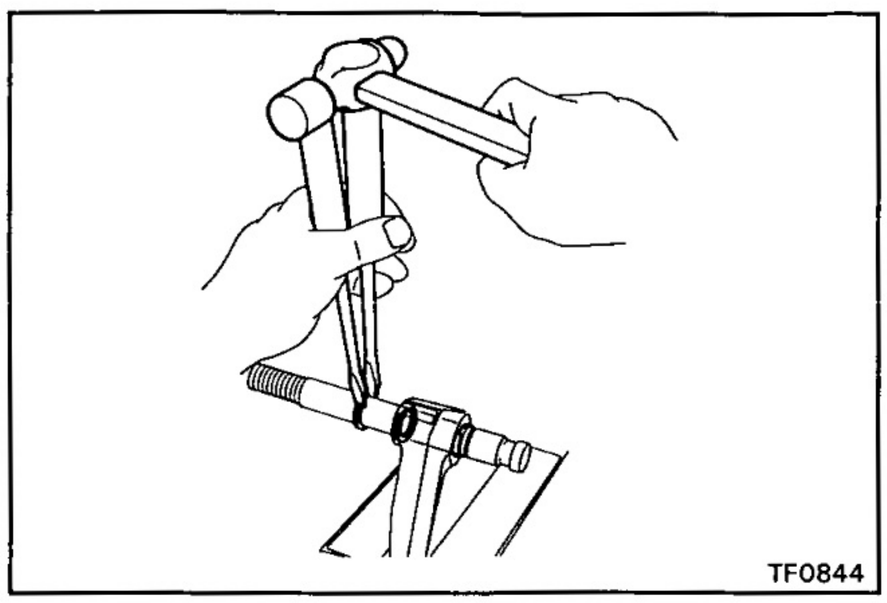

10. SEPARATE SHIFT FORK NO.2 AND FORK SHAFT

(a) Using two screwdrivers and a hammer, tap out the three snap rings.

(b) Separate the shift fork No.2 and fork shaft.

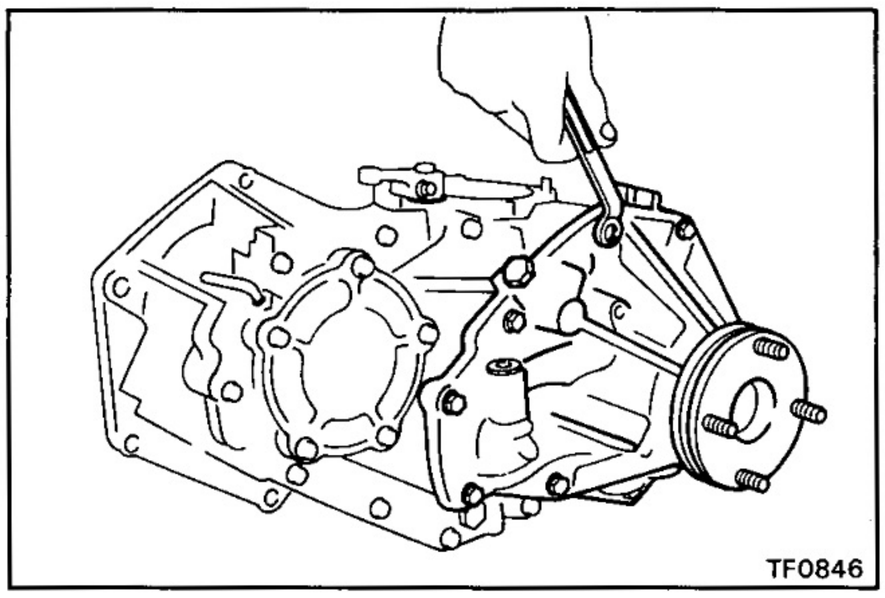

11. REMOVE REAR EXTENSION HOUSING

(a) Remove the nine bolts.

(b) If necessary, tap the rear extension housing with a plastic hammer.

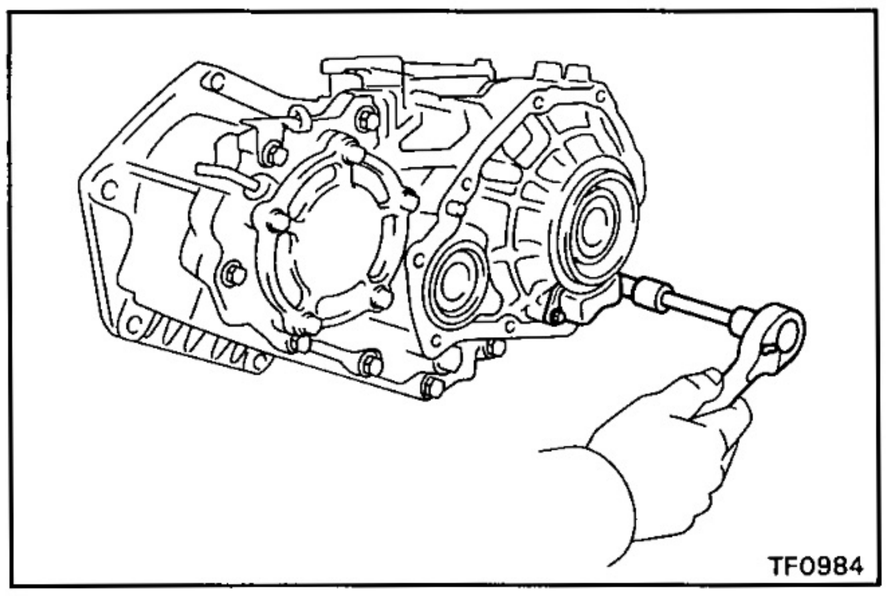

12. REMOVE OIL STRAINER FROM REAR CASE

Remove the two set bolts and oil strainer.

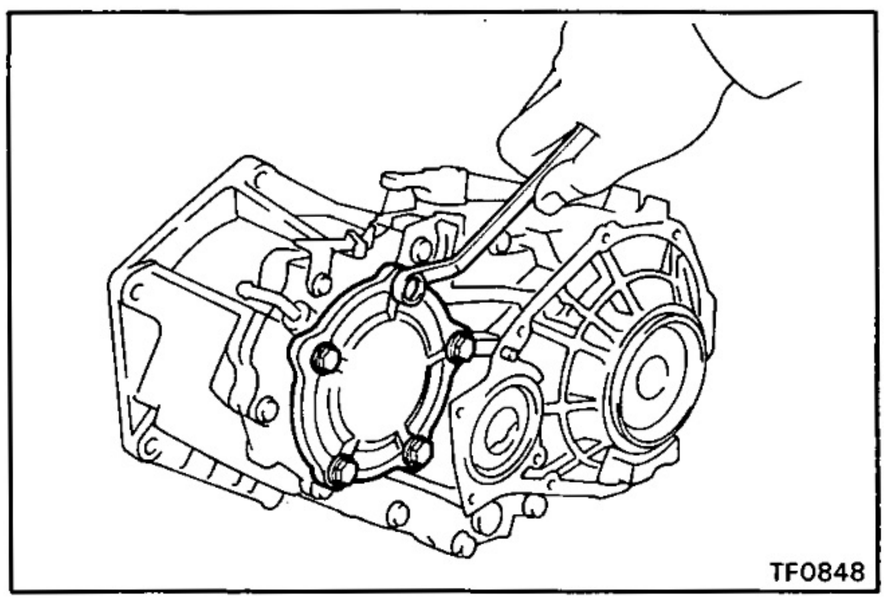

13. REMOVE CASE COVER

(a) Remove the five bolts.

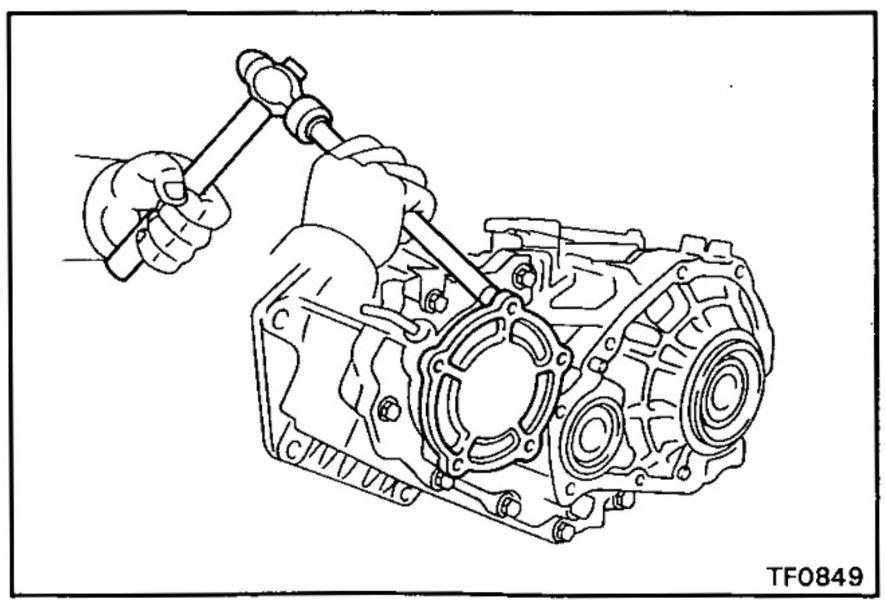

(b) Using a brass bar and hammer, tap the case cover and remove it.

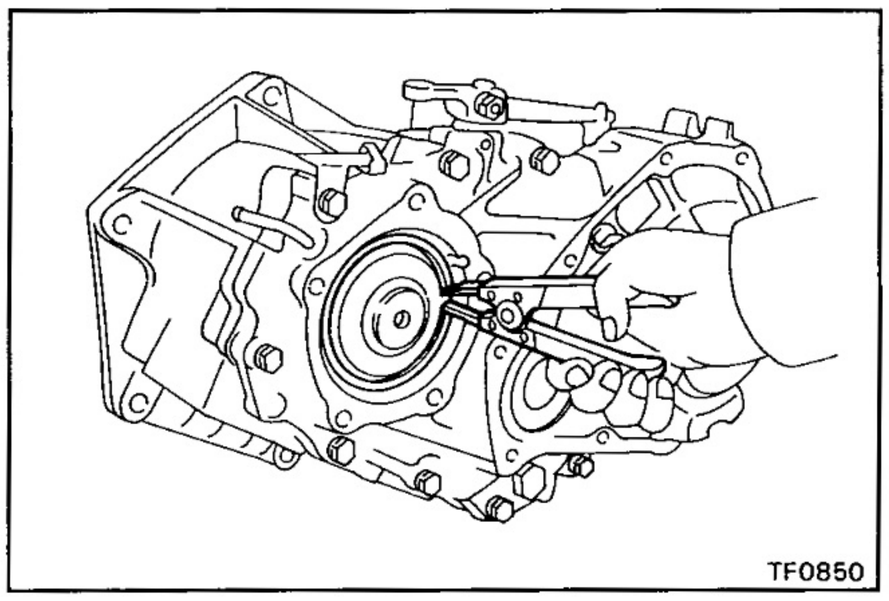
TF0850

14. SEPARATE FRONT CASE AND REAR CASE

(a) Using snap ring pliers, remove the snap ring.

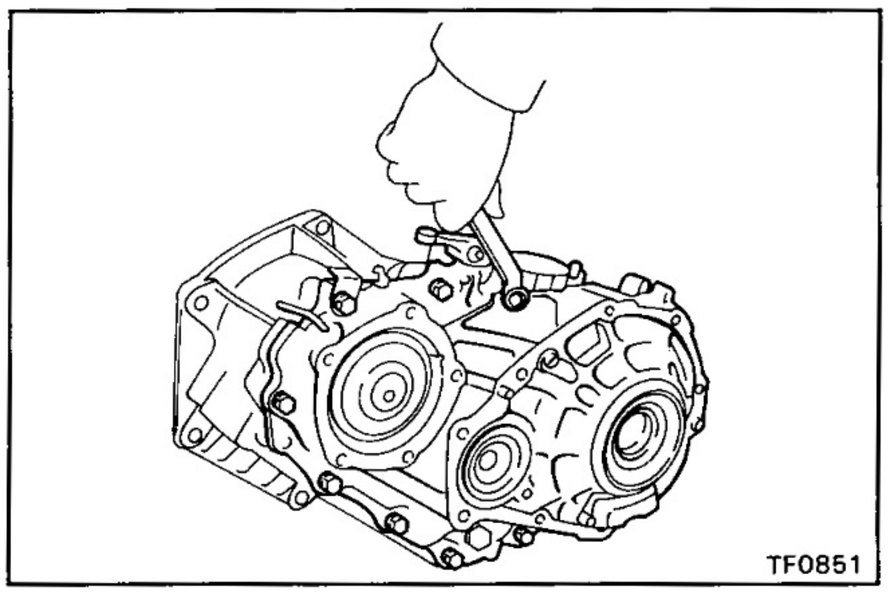
TF0851

(b) Remove the eight bolts.

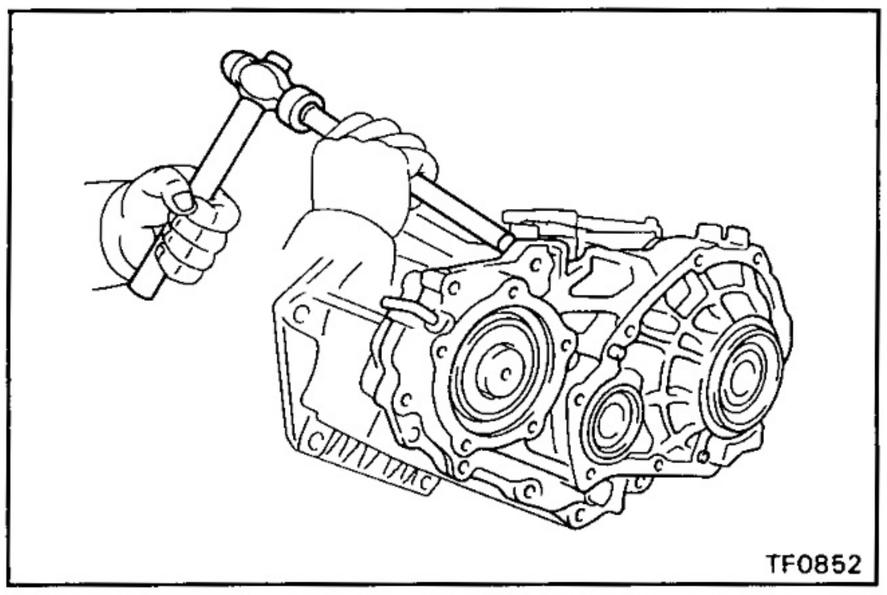
TF0852

(c) Using a brass bar and hammer, tap the rear case and separate it.

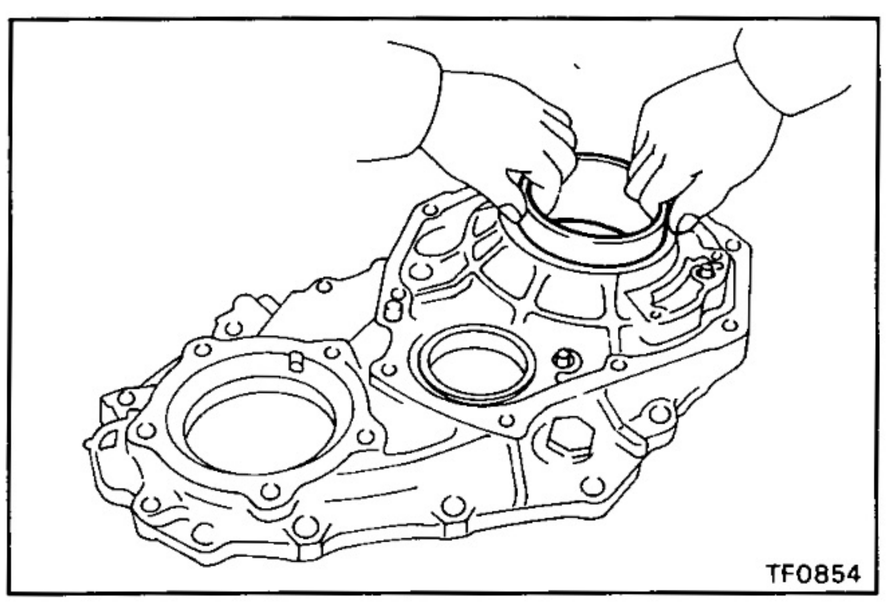
TF0854

15. REMOVE TWO BEARING RACES FROM REAR CASE

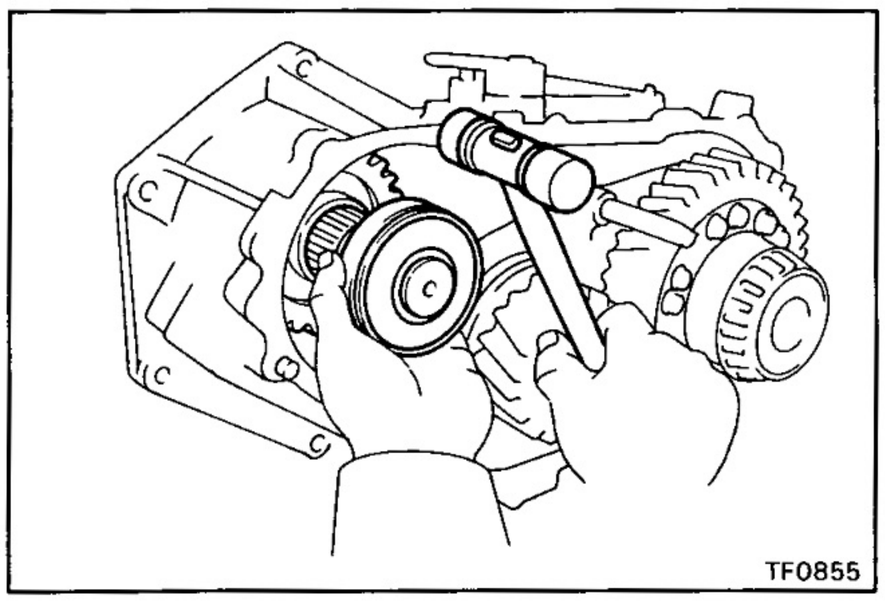
TF0855

16. REMOVE INPUT SHAFT ASSEMBLY

Using a plastic hammer, remove the input shaft assembly.

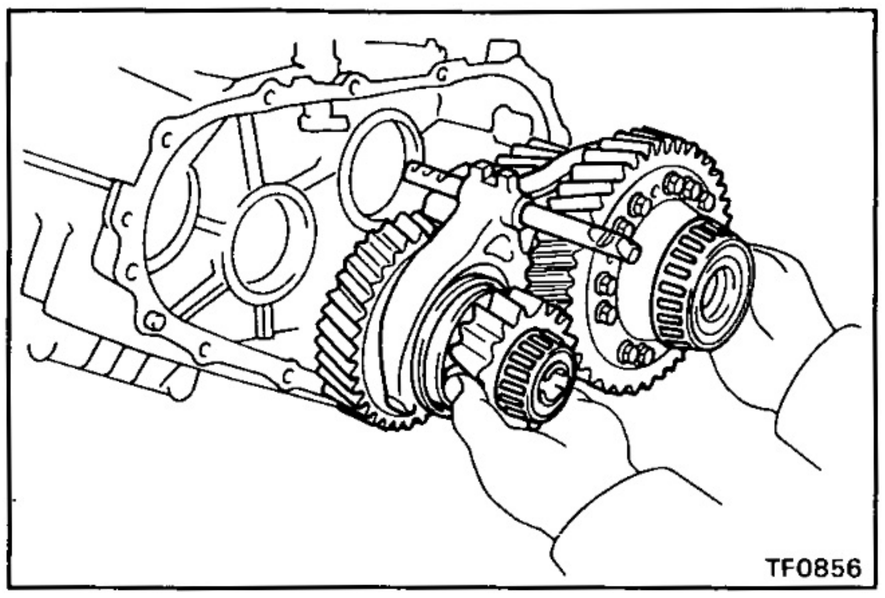

17. REMOVE IDLER GEAR ASSEMBLY, CENTER DIFFERENTIAL ASSEMBLY AND HIGH AND LOW SHIFT FORK ASSEMBLY

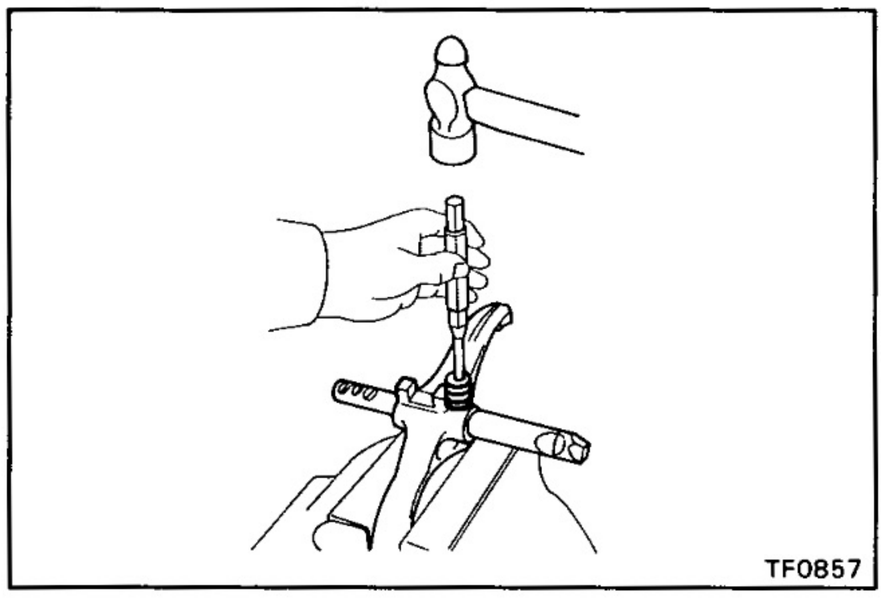

18. SEPARATE HIGH AND LOW SHIFT FORK

(a) Using a pin punch and hammer, drive out the slotted spring pin.

(b) Separate the high and low shift fork and fork shaft.

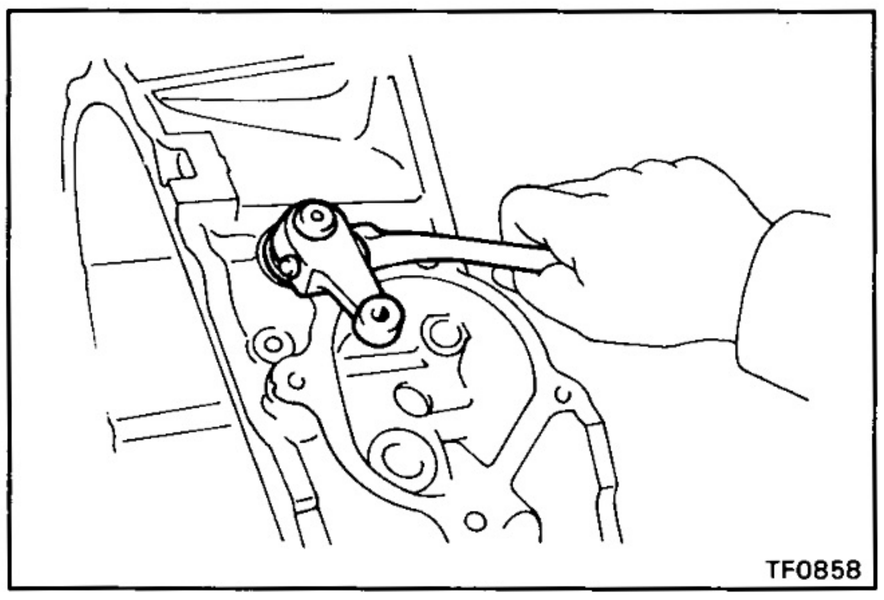

19. REMOVE SHIFT OUTER LEVER, INNER LEVER AND WASHER

(a) Remove the nut and washer.

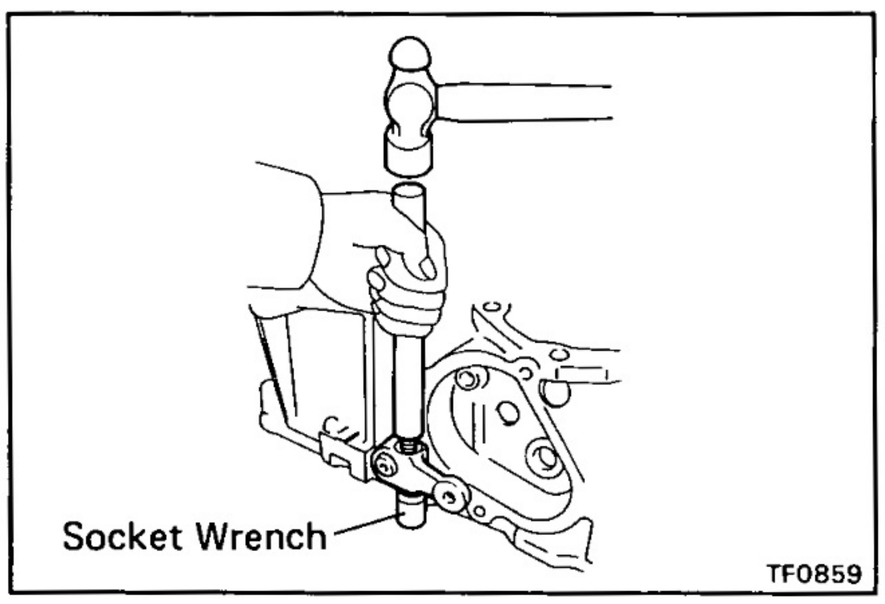

(b) Using a brass bar, hammer and socket wrench, tap out the lever lock pin.

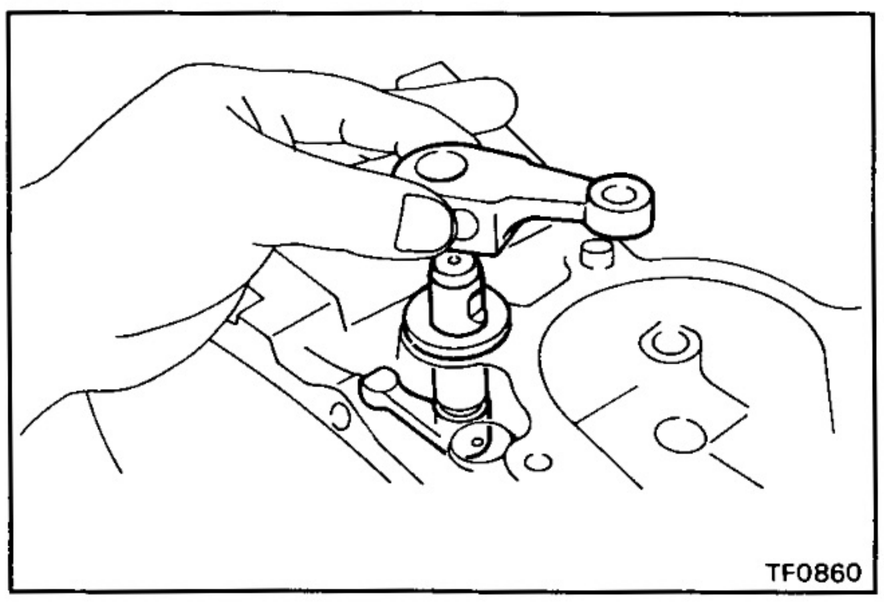

(c) Remove the shift outer lever, inner lever and washer.

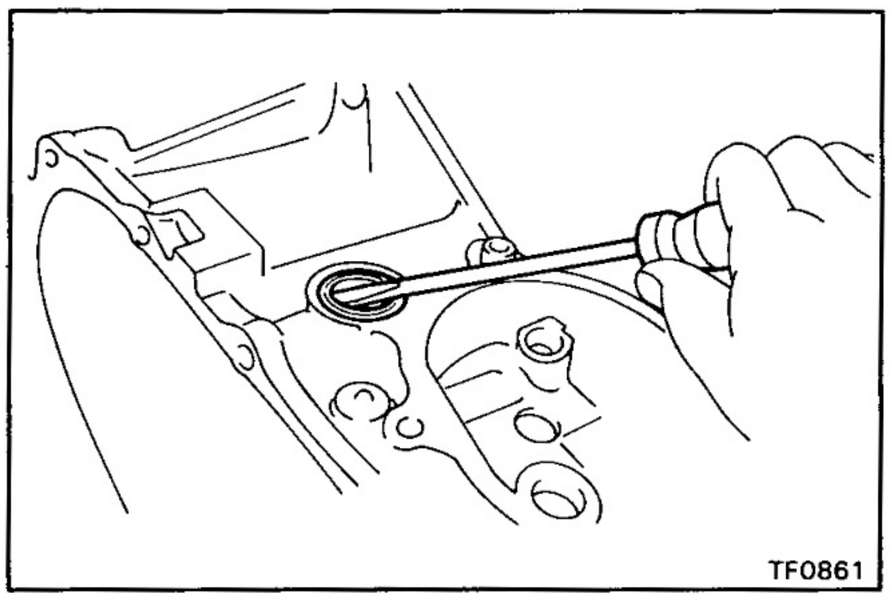

20. IF NECESSARY, REPLACE SHIFT LEVER OIL SEAL

(a) Using a screwdriver, pry out the oil seal.

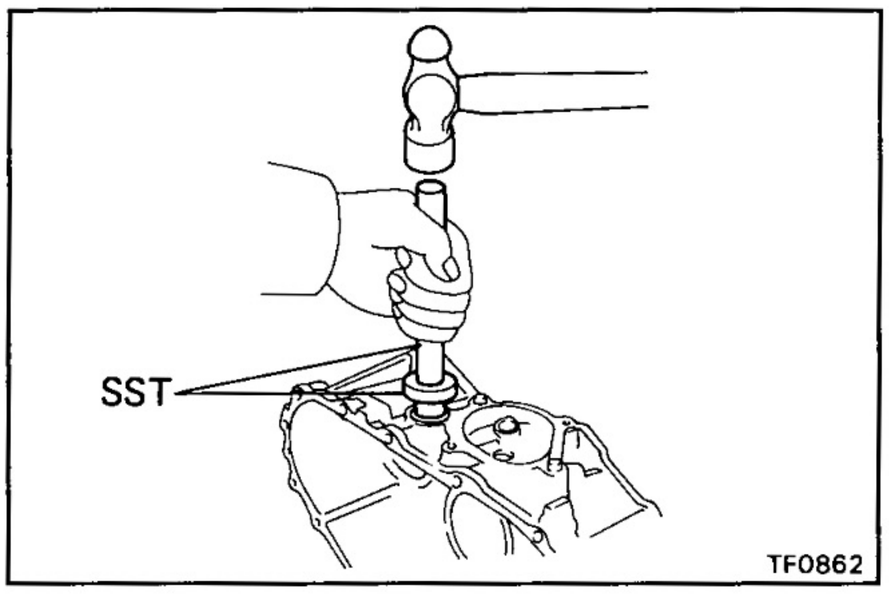

(b) Using SST and a hammer, drive in a new oil seal.

SST 09608-20012, (09608-00080, 09608-03020)

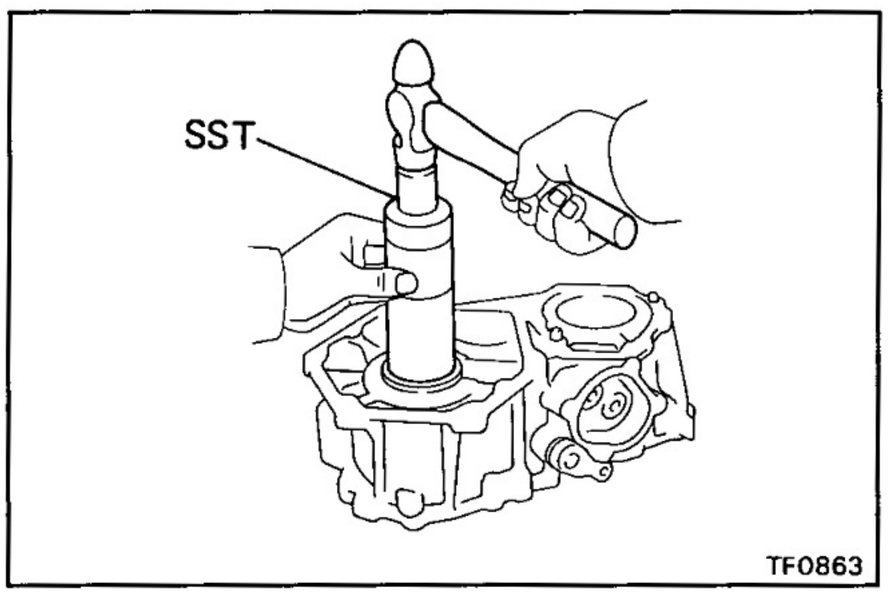

21. IF NECESSARY, REPLACE INPUT SHAFT OIL SEAL

(a) Using SST and a hammer, drive out the oil seal.

SST 09316-60010 (09316-00010)

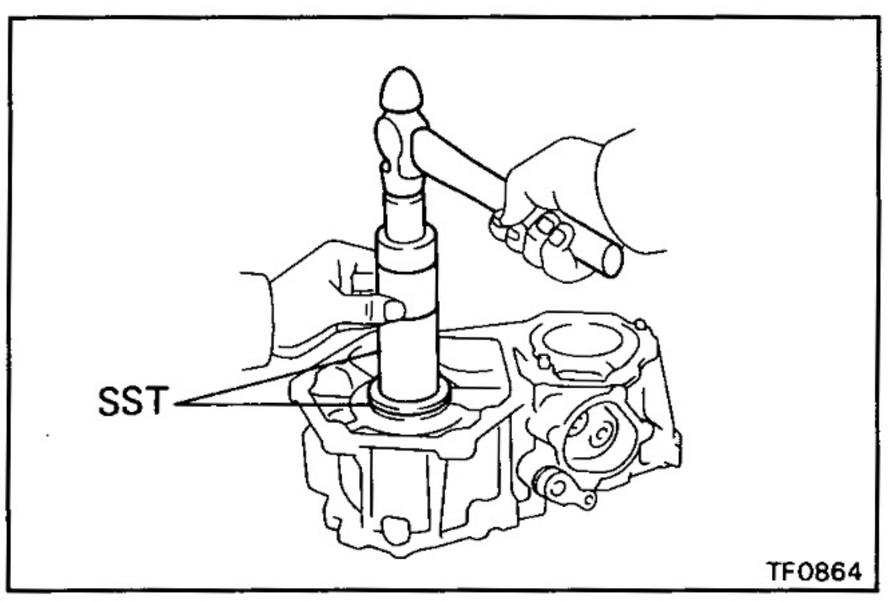

(b) Using SST and a hammer, drive in a new oil seal.

SST 09316-60010 (09316-00010, 09316-00030)

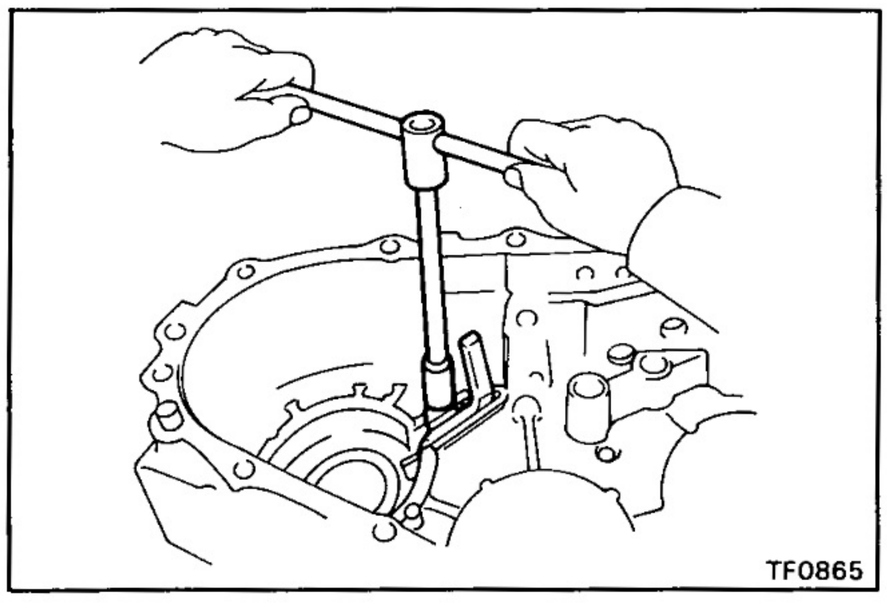

22. REMOVE OIL RECEIVER FROM FRONT CASE

Remove the set bolt and oil receiver.

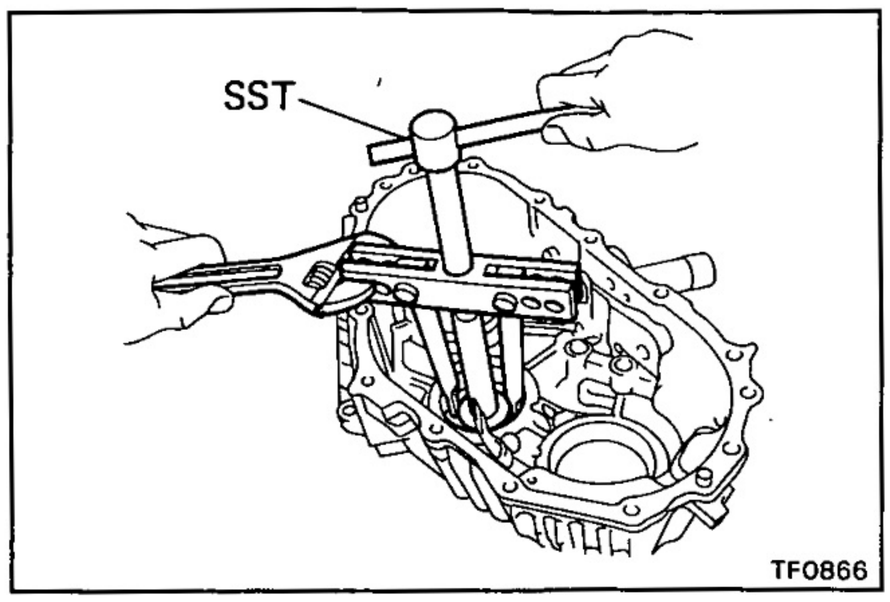

23. REMOVE TWO BEARING RACES FROM FRONT CASE

(a) Using SST, remove the bearing race.

SST 09950-20017

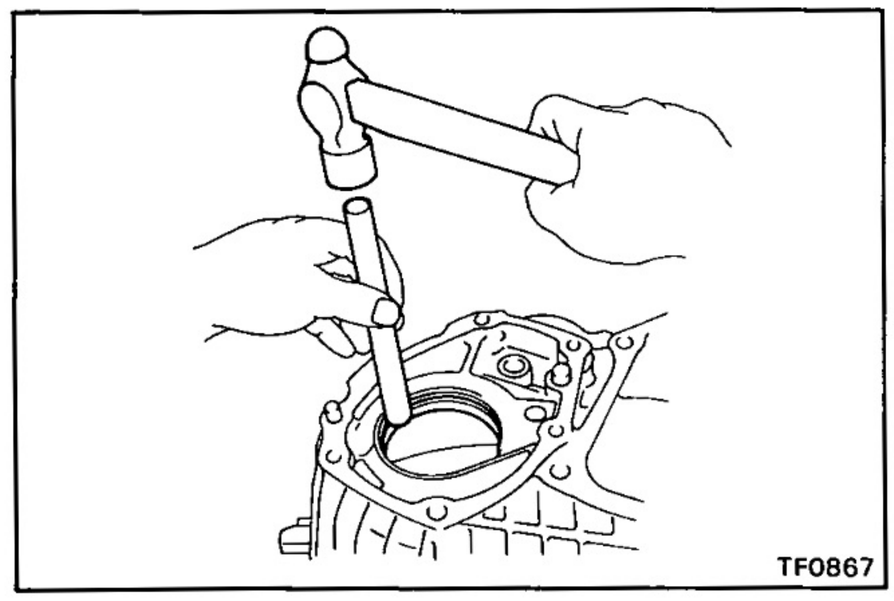

(b) Using a brass bar and hammer, remove the bearing race.

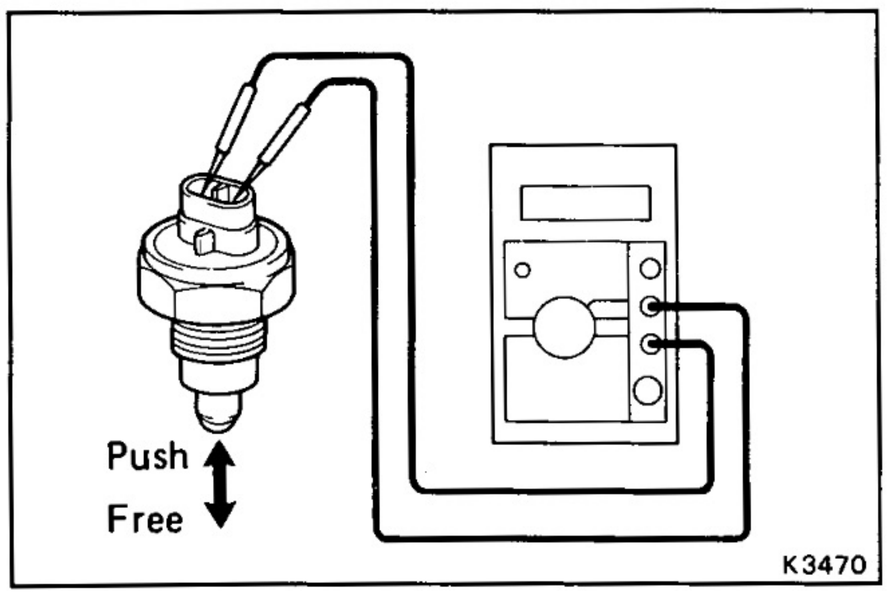

24. INSPECTION OF 4WD INDICATOR SWITCH

Check that there is continuity between terminals as shown.

Switch Position	Specified
Push	Continuity
Free	No continuity

If operation is not as specified, replace the switch.

COMPONENT PARTS

Input Shaft Assembly

COMPONENTS

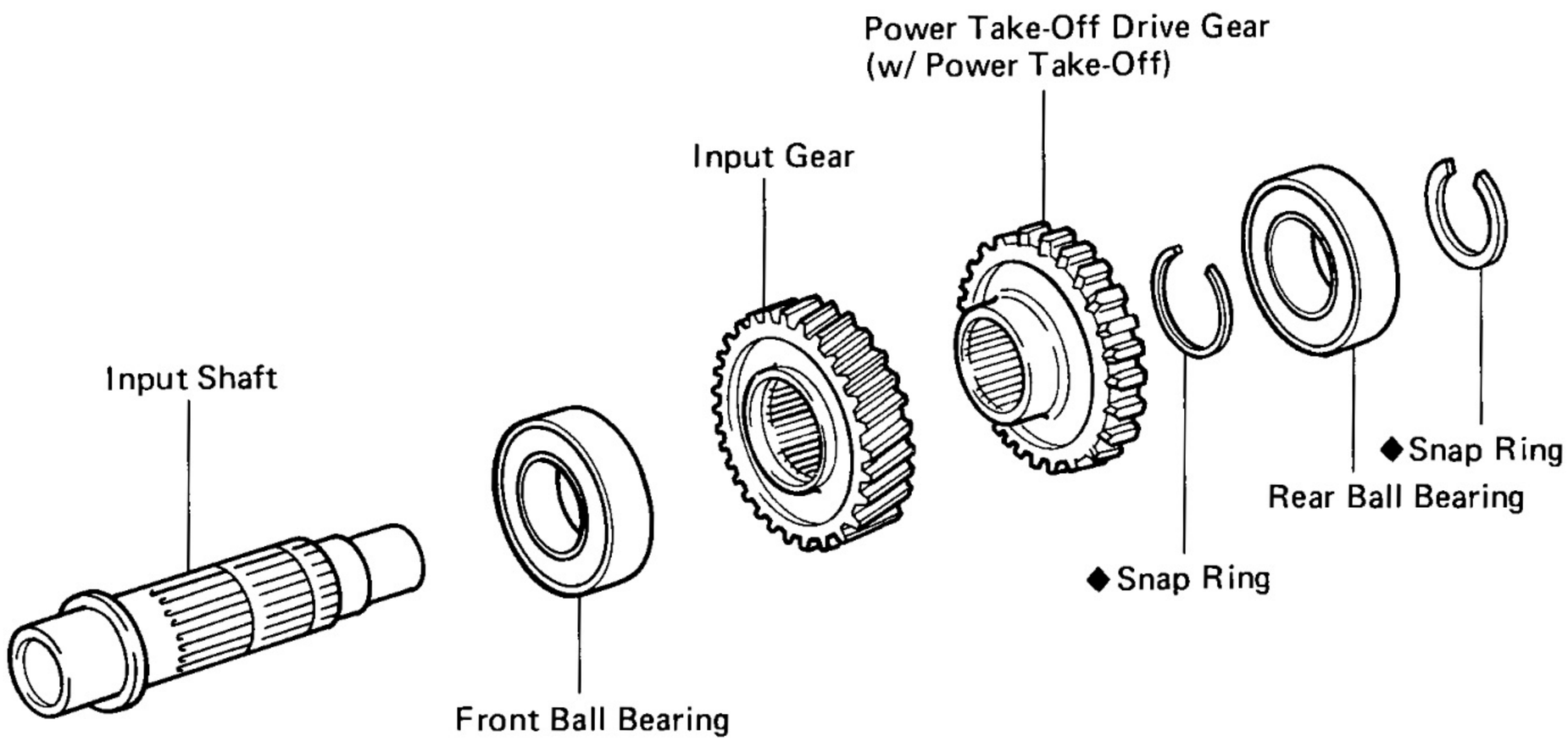

◆ Non-reusable part

TF0868

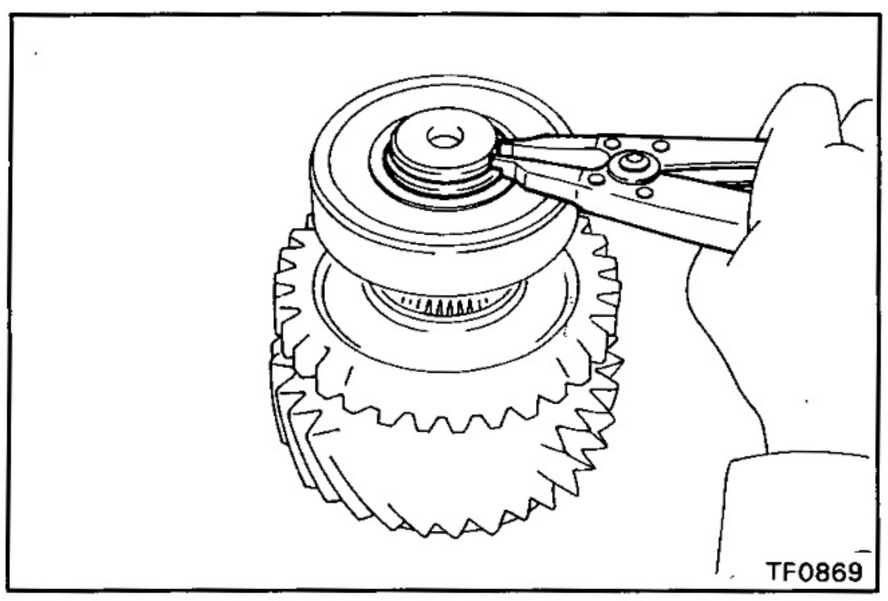

TF0869

DISASSEMBLY OF INPUT SHAFT ASSEMBLY

1. REMOVE REAR BALL BEARING

(a) Using snap ring pliers, remove the snap ring.

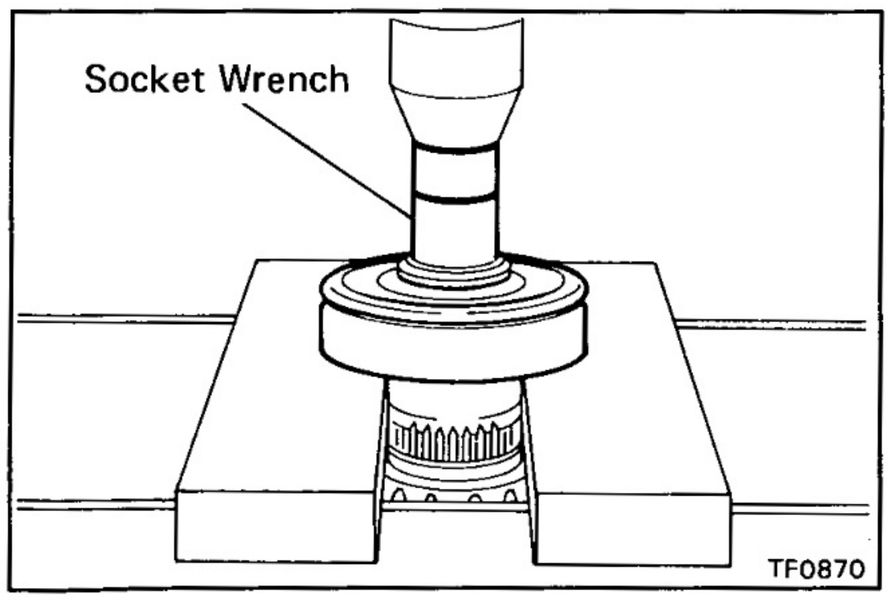

TF0870

(b) Using a press and socket wrench, remove the rear ball bearing.

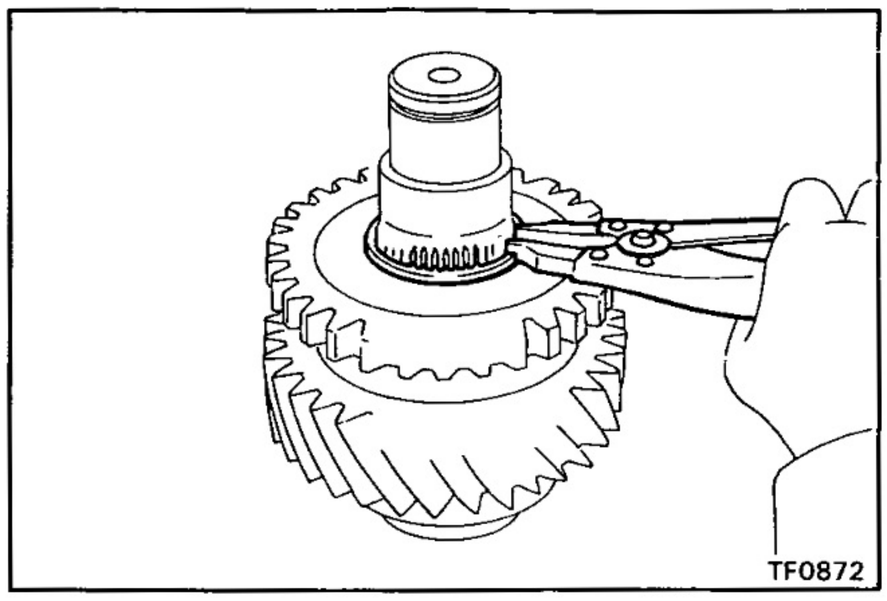

2. (w/ POWER TAKE-OFF)
REMOVE POWER TAKE-OFF DRIVE GEAR

(a) Using snap ring pliers, remove the snap ring.

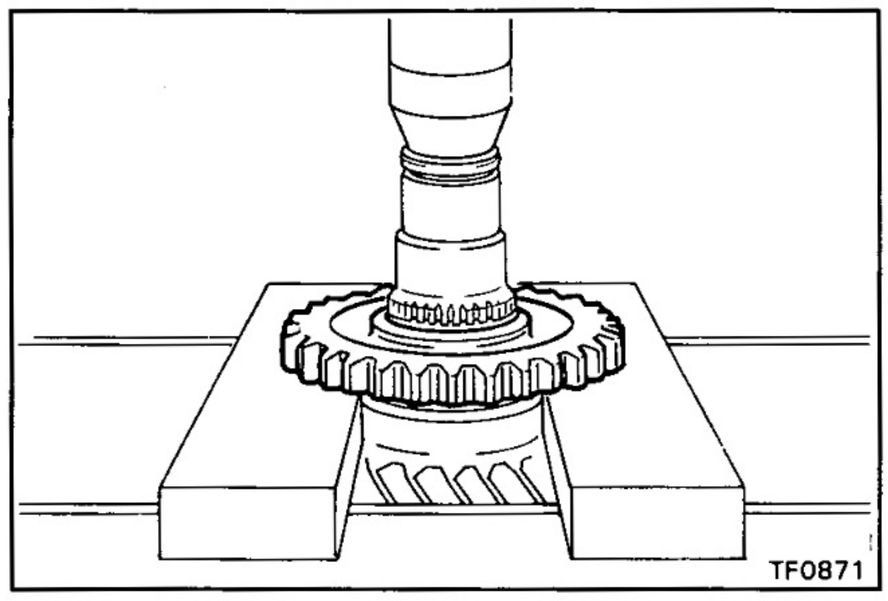

(b) Using a press, remove the power take-off drive gear.

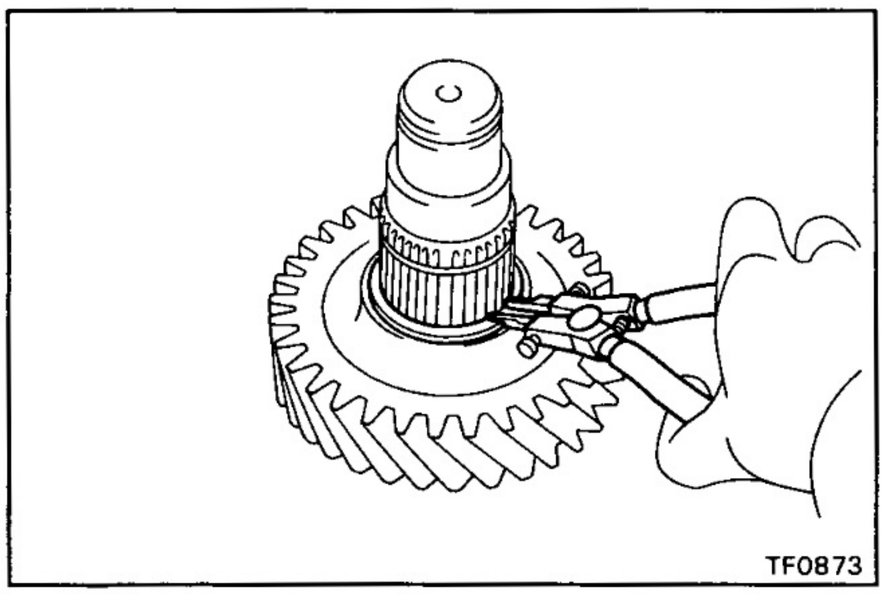

3. REMOVE INPUT GEAR

(a) (w/o Power take-off)
Using snap ring pliers, remove the snap ring.

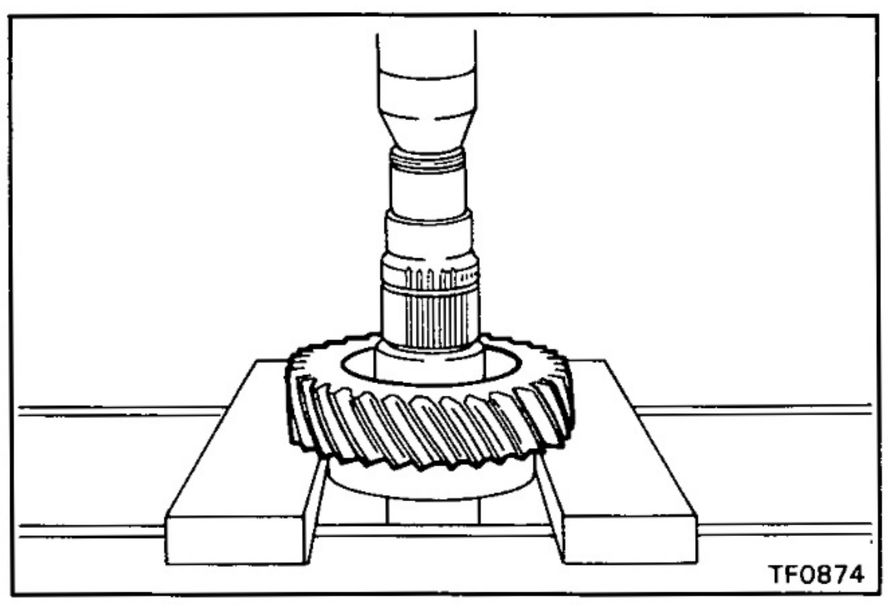

(b) Using a press, remove the input gear.

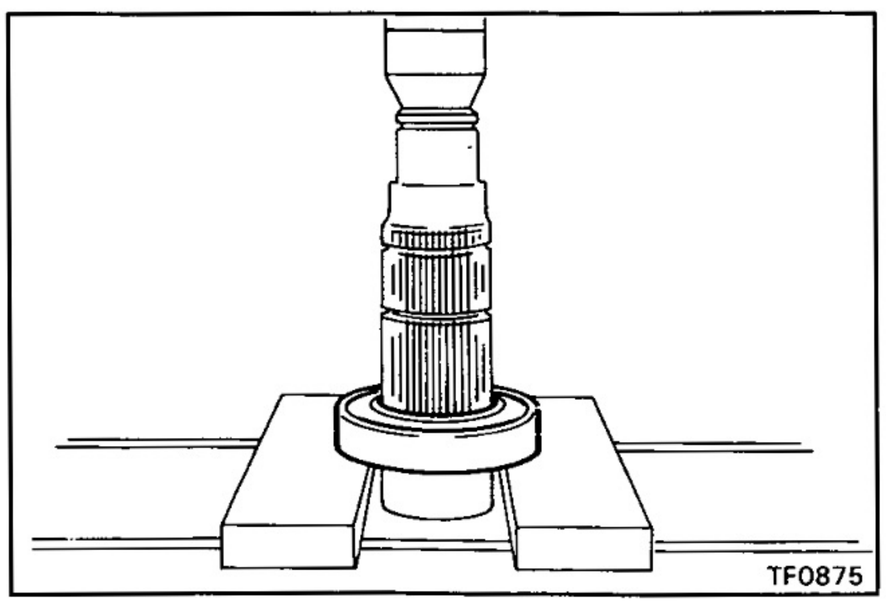

4. REMOVE FRONT BALL BEARING

Using a press, remove the front ball bearing.

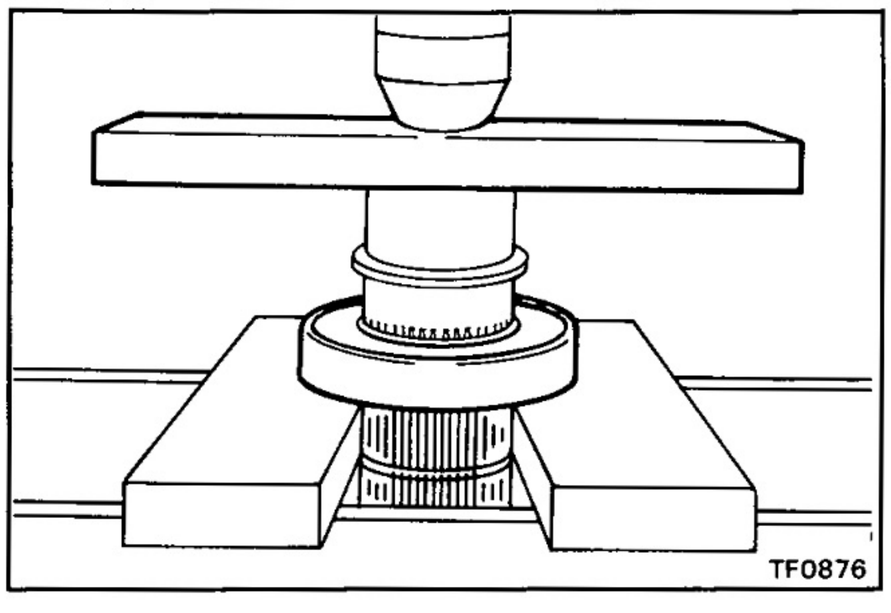
TF0876

ASSEMBLY OF INPUT SHAFT ASSEMBLY

1. INSTALL FRONT BALL BEARING

Using a press, install the front ball bearing.

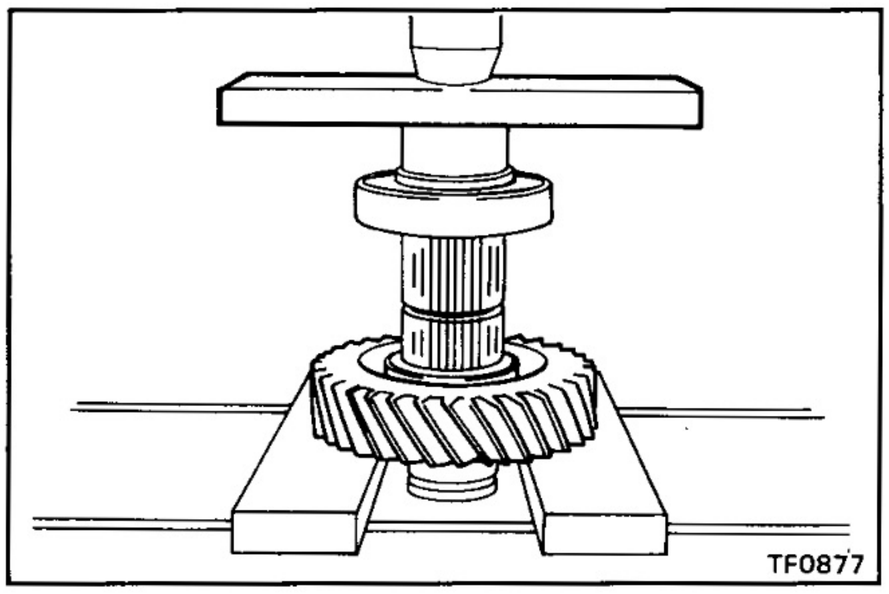
TF0877

2. INSTALL INPUT GEAR

(a) Using a press, install the input gear.

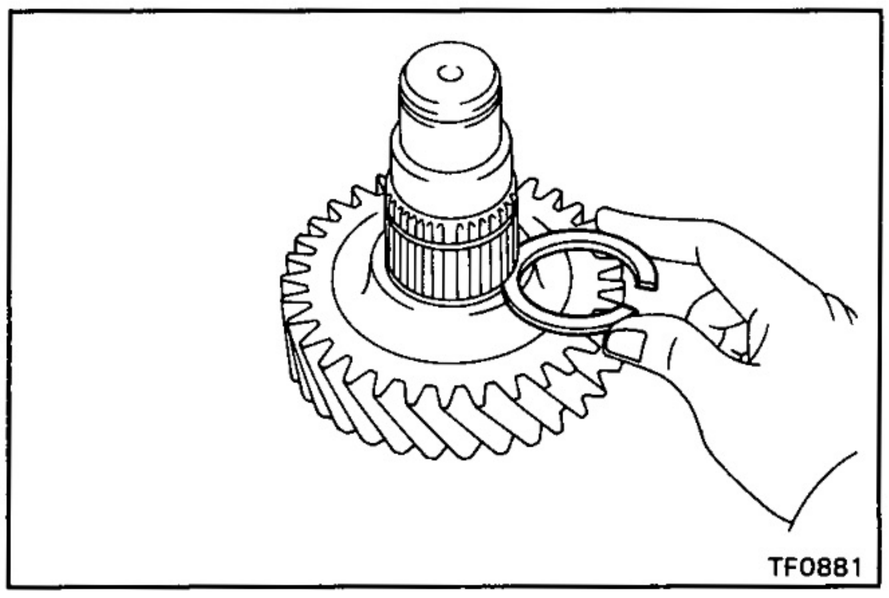
TF0881

(b) (w/o Power take-off)
Select a snap ring that will allow minimum axial play and install it on the shaft.

Mark	Thickness mm (in.)
A	2.0 (0.0787)
B	2.1 (0.0827)
C	2.2 (0.0866)
D	2.3 (0.0906)
E	2.4 (0.0945)
F	2.5 (0.0984)
G	2.6 (0.1024)
H	2.7 (0.1063)
J	2.8 (0.1102)

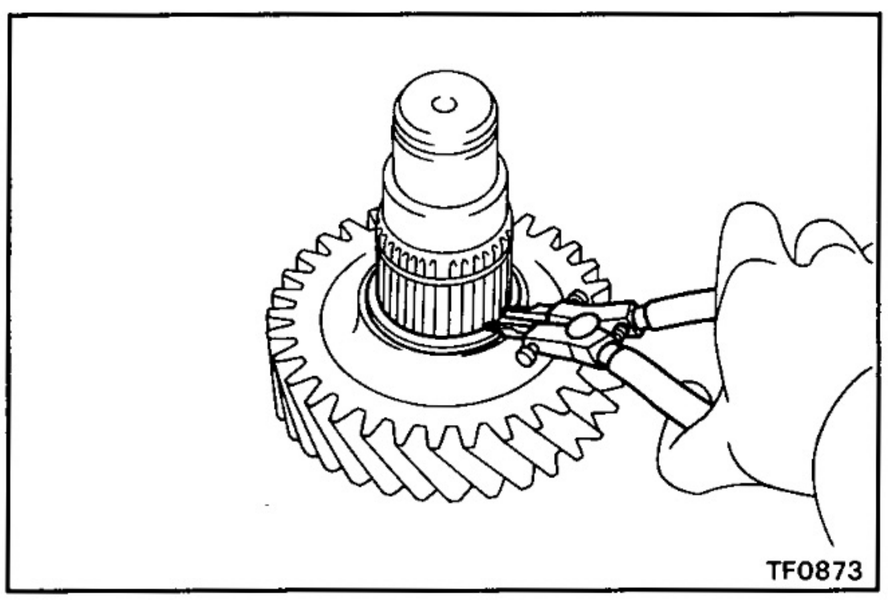
TF0873

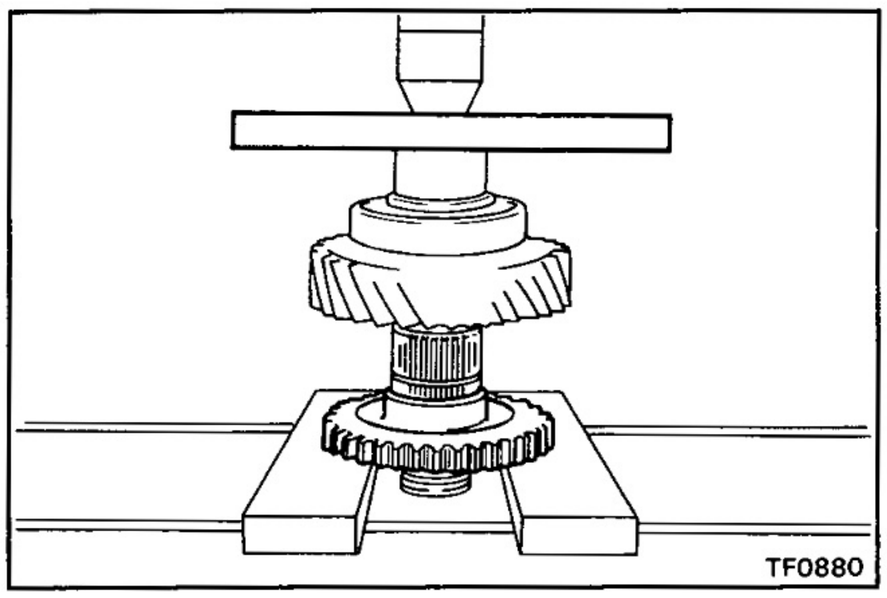
TF0880

3. (w/ POWER TAKE-OFF) INSTALL POWER TAKE-OFF GEAR

(a) Using a press, install the power take-off gear.

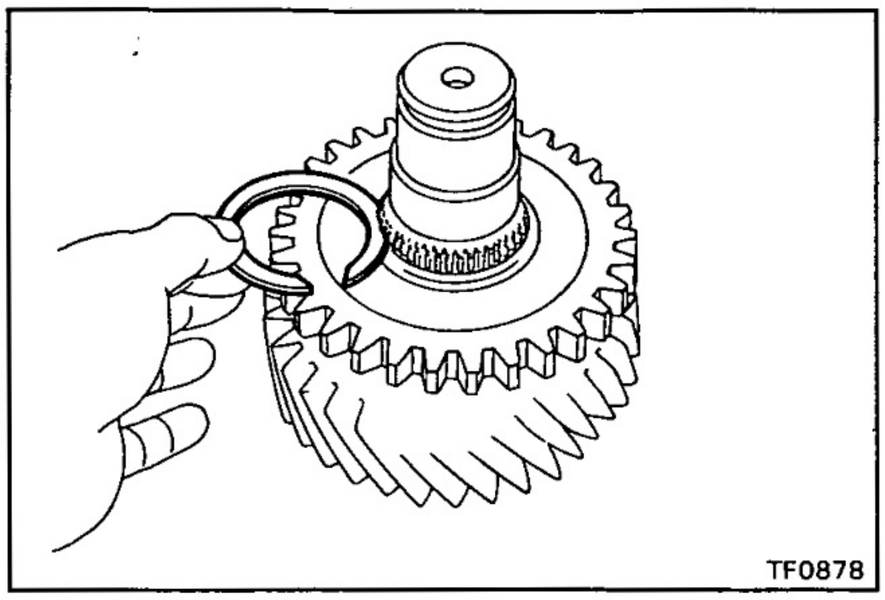
TF0878

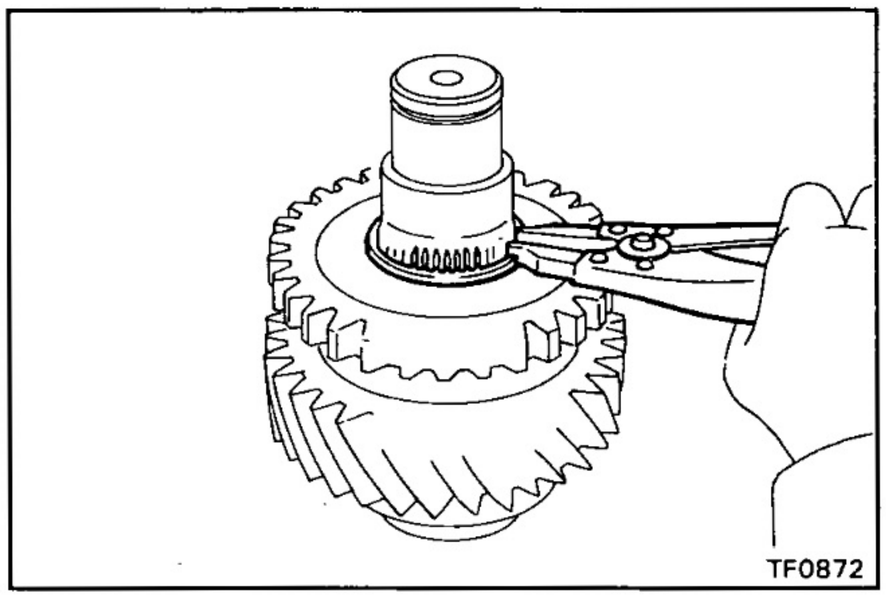
TF0872

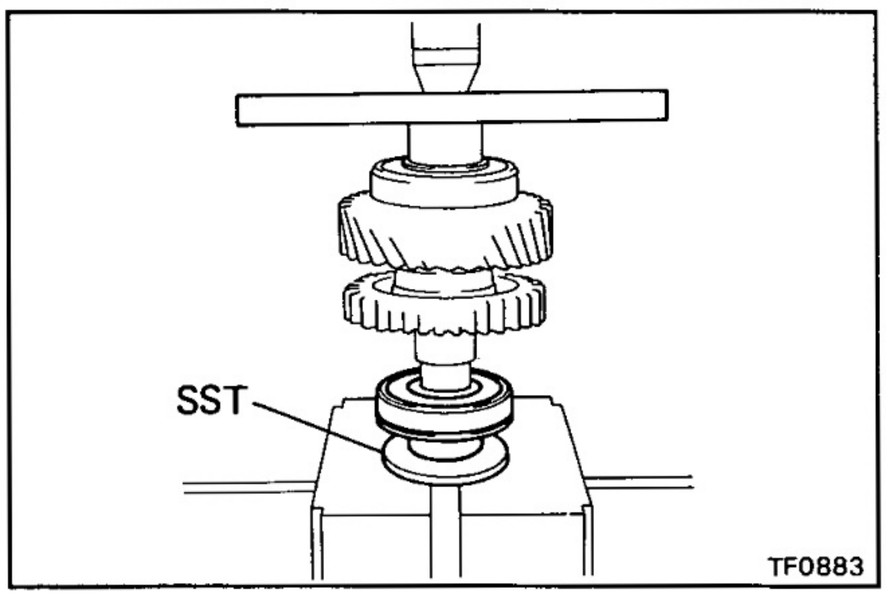

TF0883

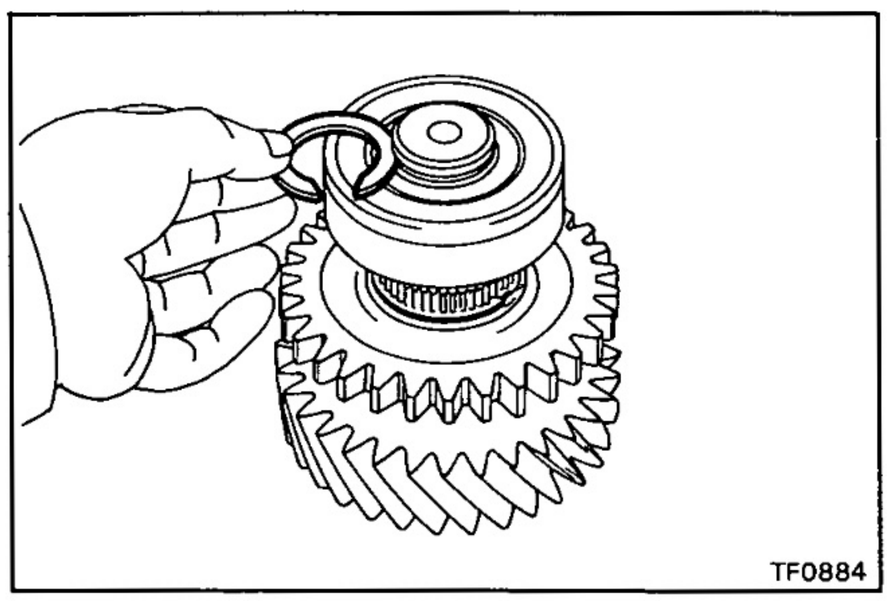
TF0884

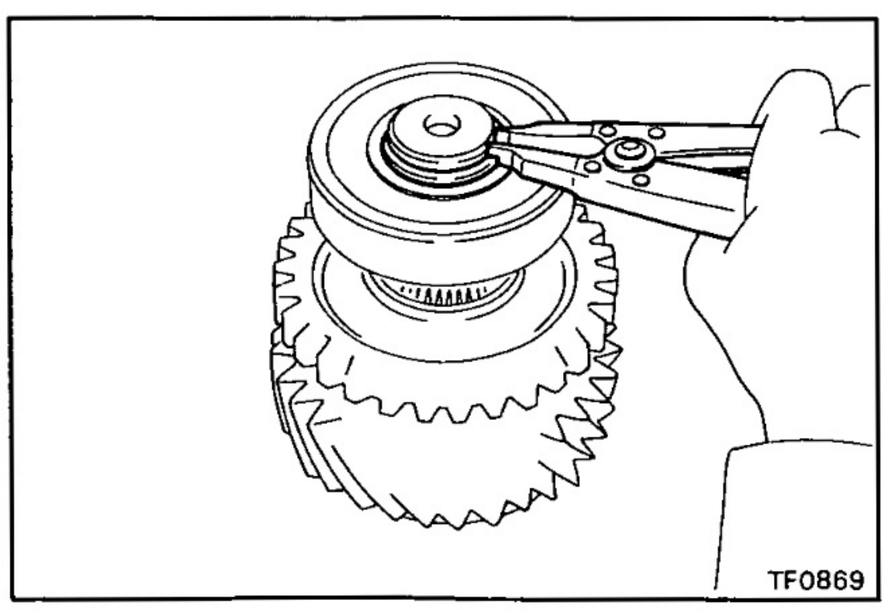
TF0869

(b) Select a snap ring that will allow minimum axial play and install it on the shaft.

Mark	Thickness mm (in.)
A	2.0 (0.0787)
B	2.1 (0.0827)
C	2.2 (0.0866)
D	2.3 (0.0906)
E	2.4 (0.0945)
F	2.5 (0.0984)
G	2.6 (0.1024)
H	2.7 (0.1063)
J	2.8 (0.1102)

4. INSTALL REAR BALL BEARING

(a) Using SST and a press, install the rear ball bearing.

SST 09316-60010 (09316-00030)

(b) Select a snap ring that will allow minimum axial play.

Mark	Thickness mm (in.)
A	2.0 (0.0787)
B	2.1 (0.0827)
C	2.2 (0.0866)
D	2.3 (0.0906)
E	2.4 (0.0945)

(c) Using snap ring pliers, install the snap ring.

Idler Gear Assembly

COMPONENTS

TF0886

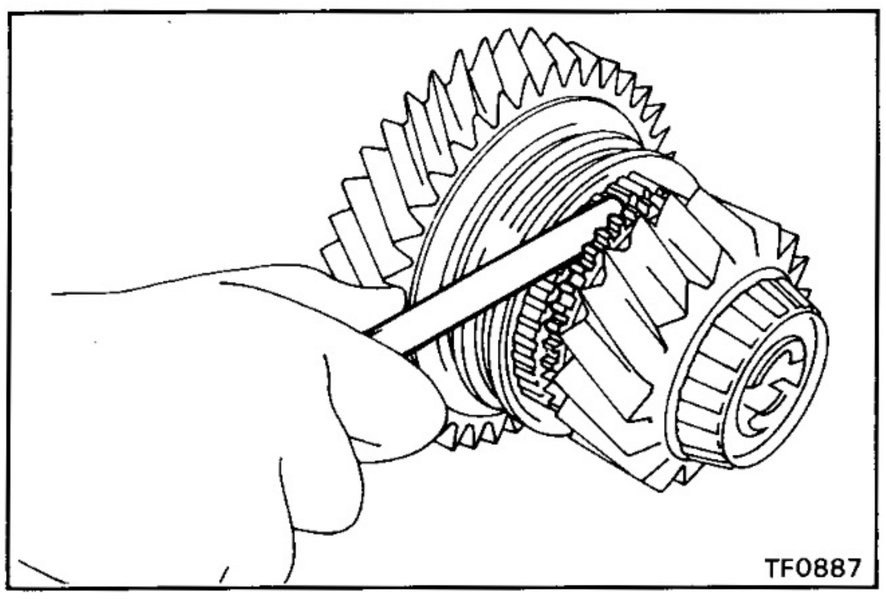

TF0887

DISASSEMBLY OF IDLER GEAR ASSEMBLY

1. CHECK OIL CLEARANCE AND THRUST CLEARANCE OF IDLER LOW GEAR

(a) Using a feeler gauge, measure the idler low gear thrust clearance.

Standard clearance: **0.125 — 0.275 mm (0.0049 — 0.0108 in.)**

Maximum clearance: **0.275 mm (0.0108 in.)**

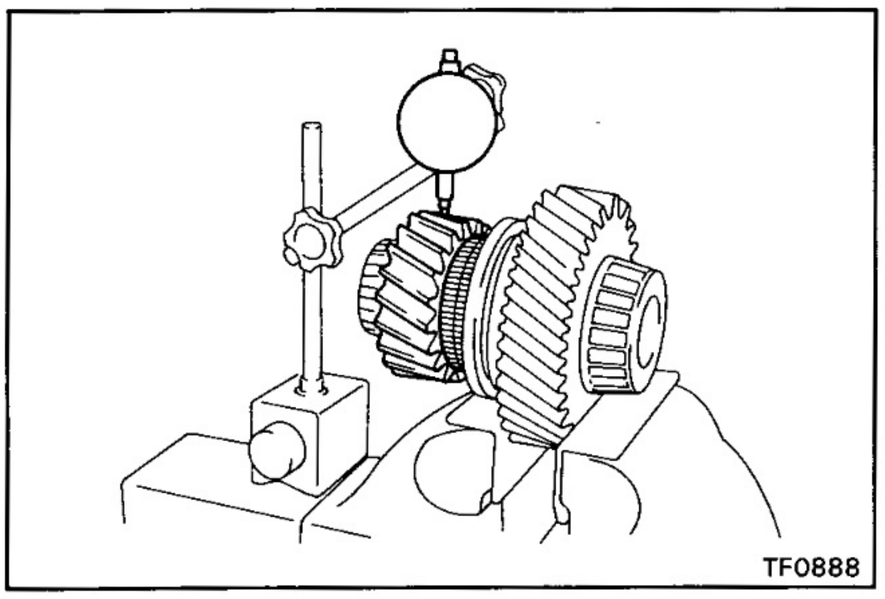

TF0888

(b) Using a dial indicator, measure the idler low gear oil clearance.

Standard clearance: **0.015 — 0.068 mm (0.0006 — 0.0027 in.)**

Maximum clearance: **0.068 mm (0.0027 in.)**

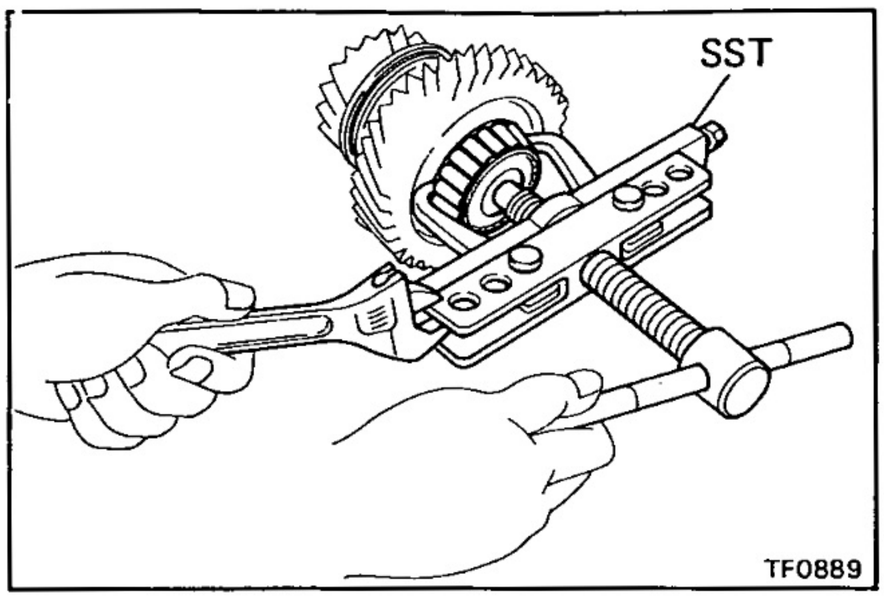

2. REMOVE FRONT TAPER ROLLER BEARING

Using SST, remove the front taper roller bearing.

SST 09950-20017

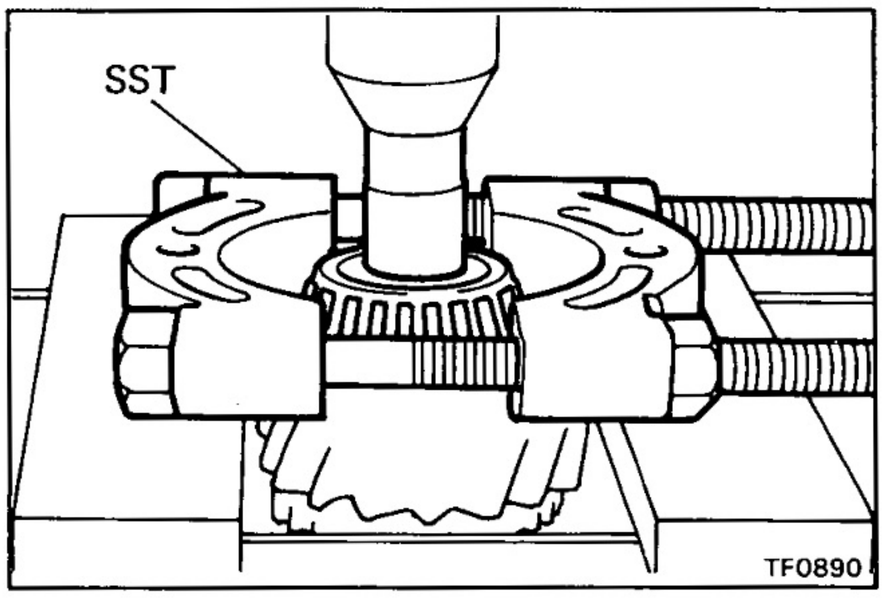

3. REMOVE REAR TAPER ROLLER BEARING

Using SST, press and socket wrench, remove the rear taper roller bearing.

SST 09950-00020

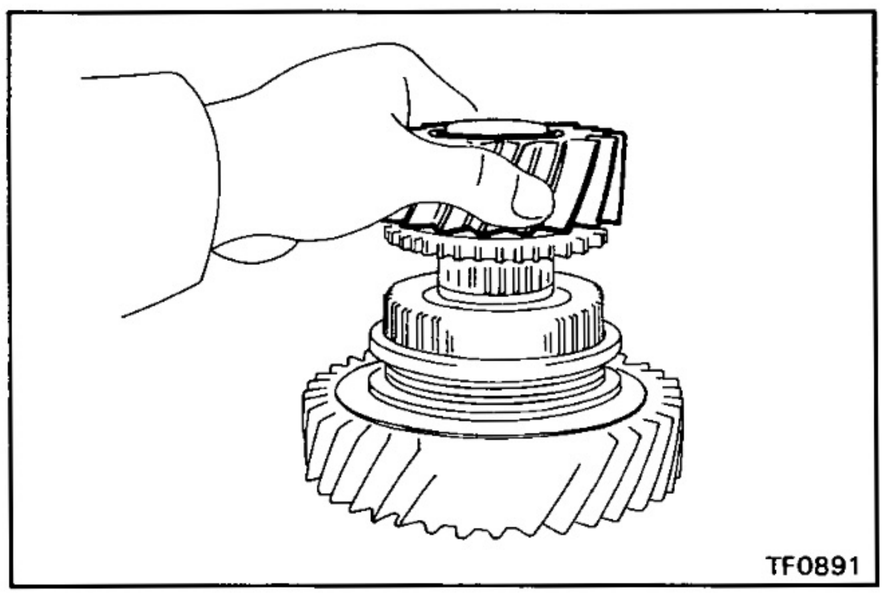

4. REMOVE IDLER LOW GEAR AND NEEDLE ROLLER BEARING

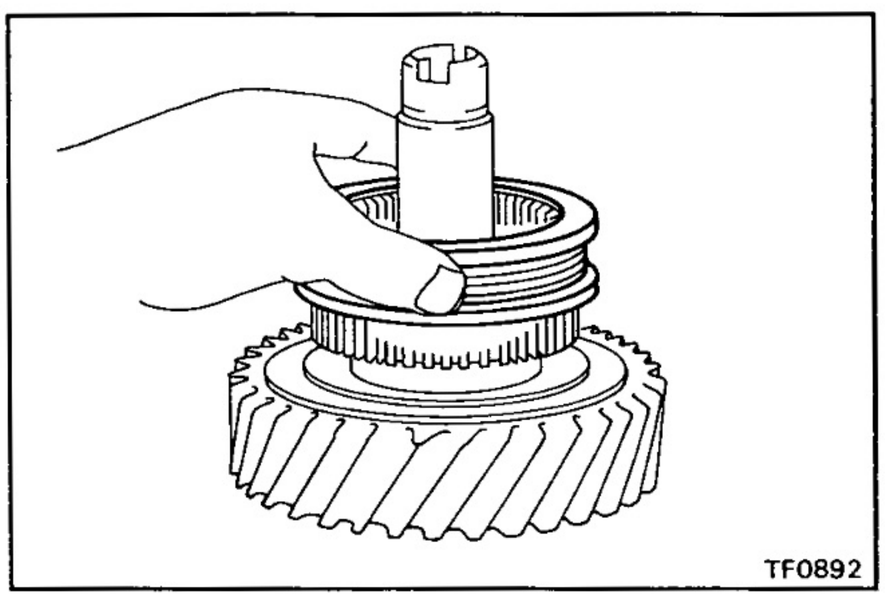

5. REMOVE HIGH AND LOW CLUTCH SLEEVE

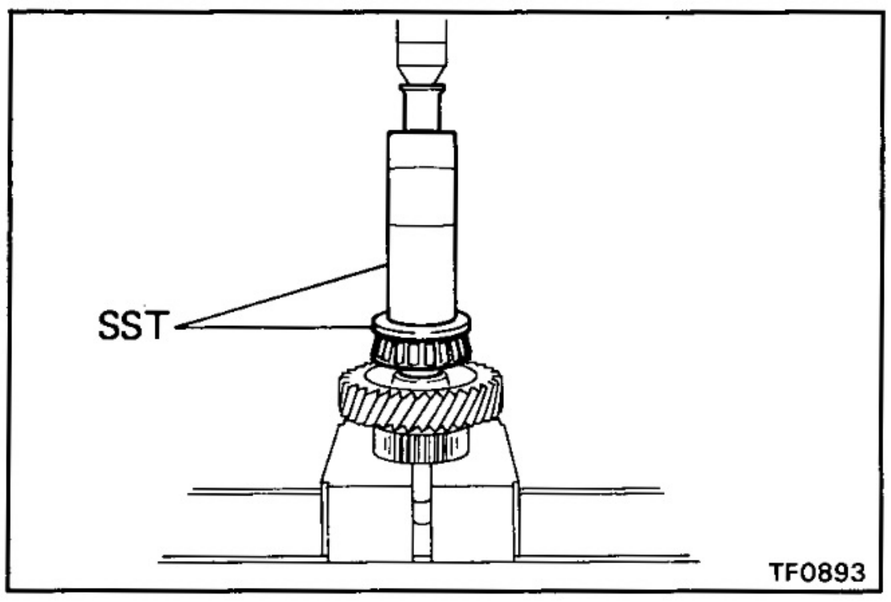

ASSEMBLY OF IDLER GEAR ASSEMBLY

1. INSTALL FRONT TAPER ROLLER BEARING

Using SST and a press, install the front taper roller bearing.

SST 09316-60010 (09316-00010, 09316-00030)

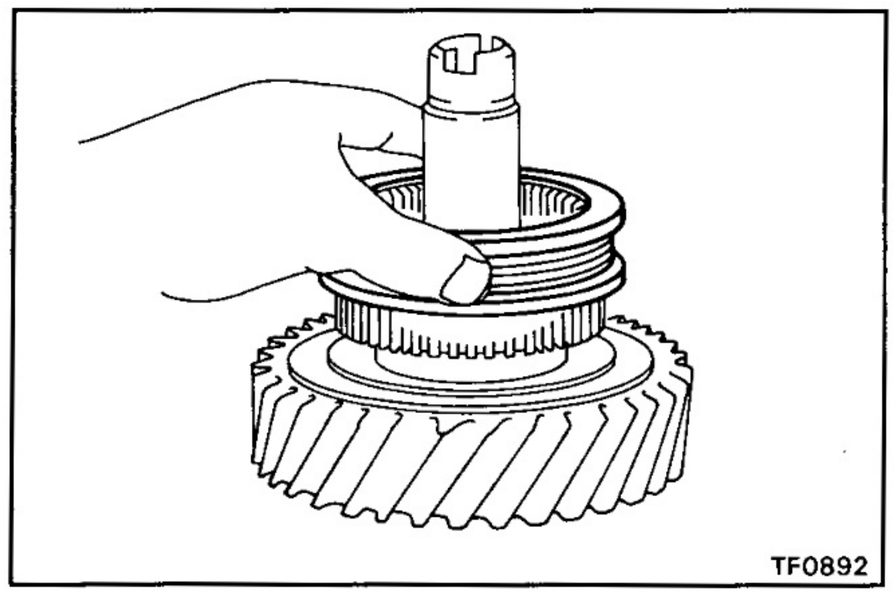

2. INSTALL HIGH AND LOW CLUTCH SLEEVE

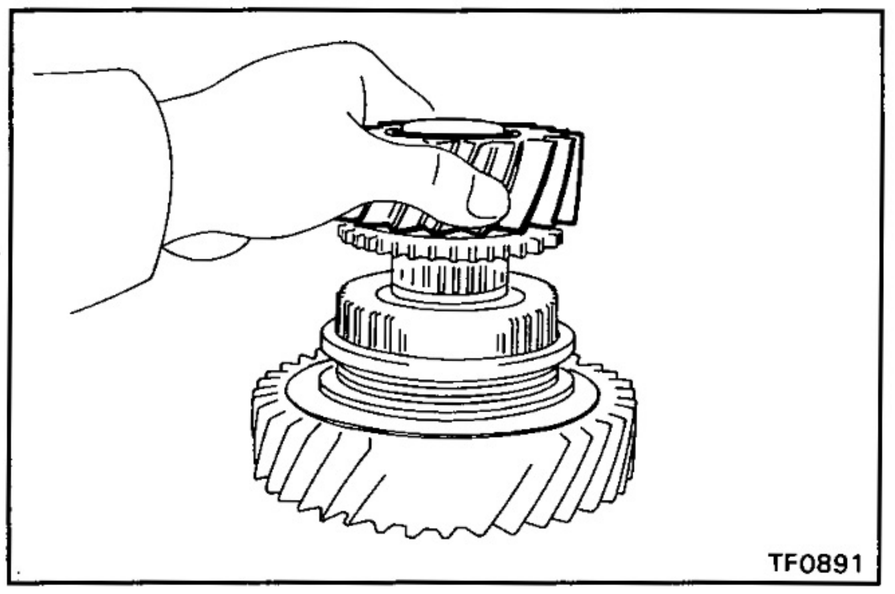

3. INSTALL NEEDLE ROLLER BEARING AND IDLER LOW GEAR

(a) Apply gear oil to the needle roller bearing.

(b) Install the needle roller bearing and Idler low gear.

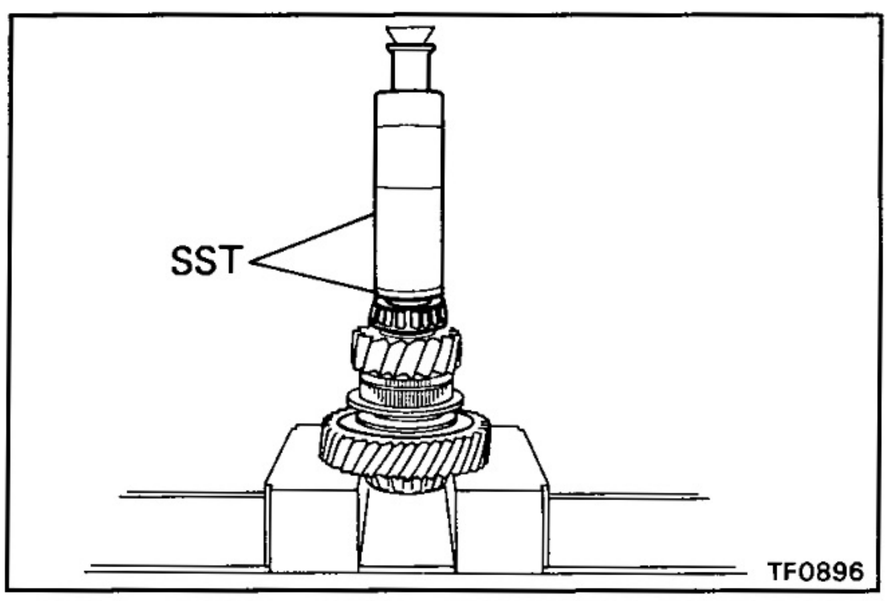

4. INSTALL REAR TAPER ROLLER BEARING

Using SST and a press, install the rear taper roller bearing.

SST 09316-60010 (09316-00010, 09316-00070)

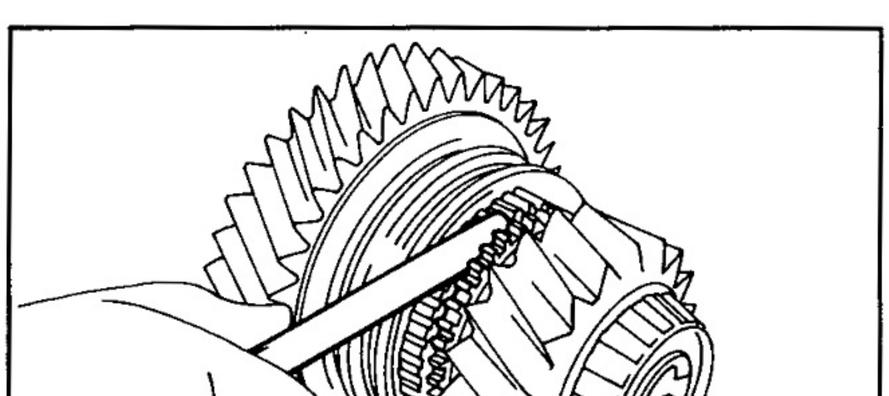

5. MEASURE OIL CLEARANCE AND THRUST CLEARANCE OF IDLE LOW GEAR

(a) Using a feeler gauge, measure the idler low gear thrust clearance.

Standard clearance: **0.125 — 0.275 mm (0.0049 — 0.0108 in.)**

Maximum clearance: **0.275 mm (0.0108 in.)**

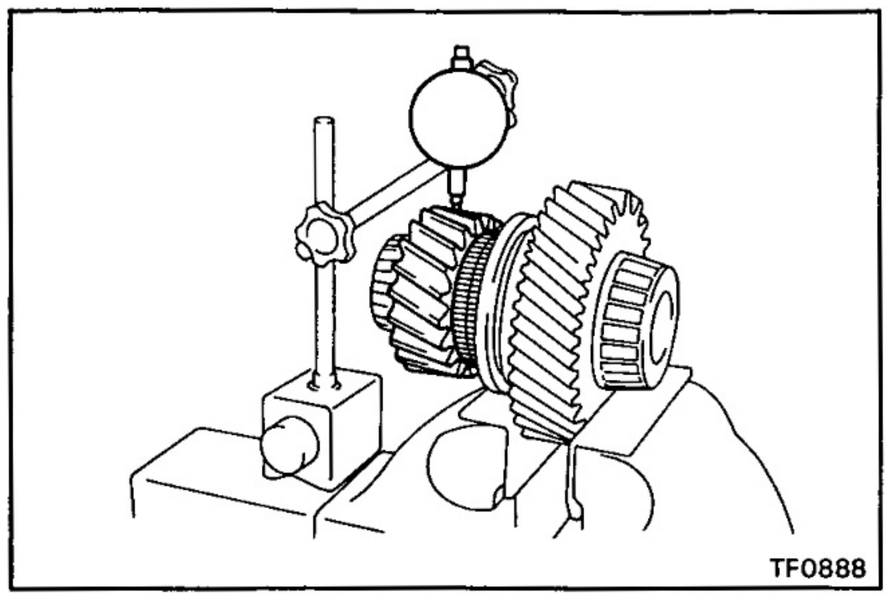

(b) Using a dial indicator, measure the idler low gear oil clearance.

Standard clearance: **0.015 — 0.068 mm (0.0006 — 0.0027 in.)**

Maximum clearance: **0.068 mm (0.0027 in.)**

Center Differential Assembly

COMPONENTS

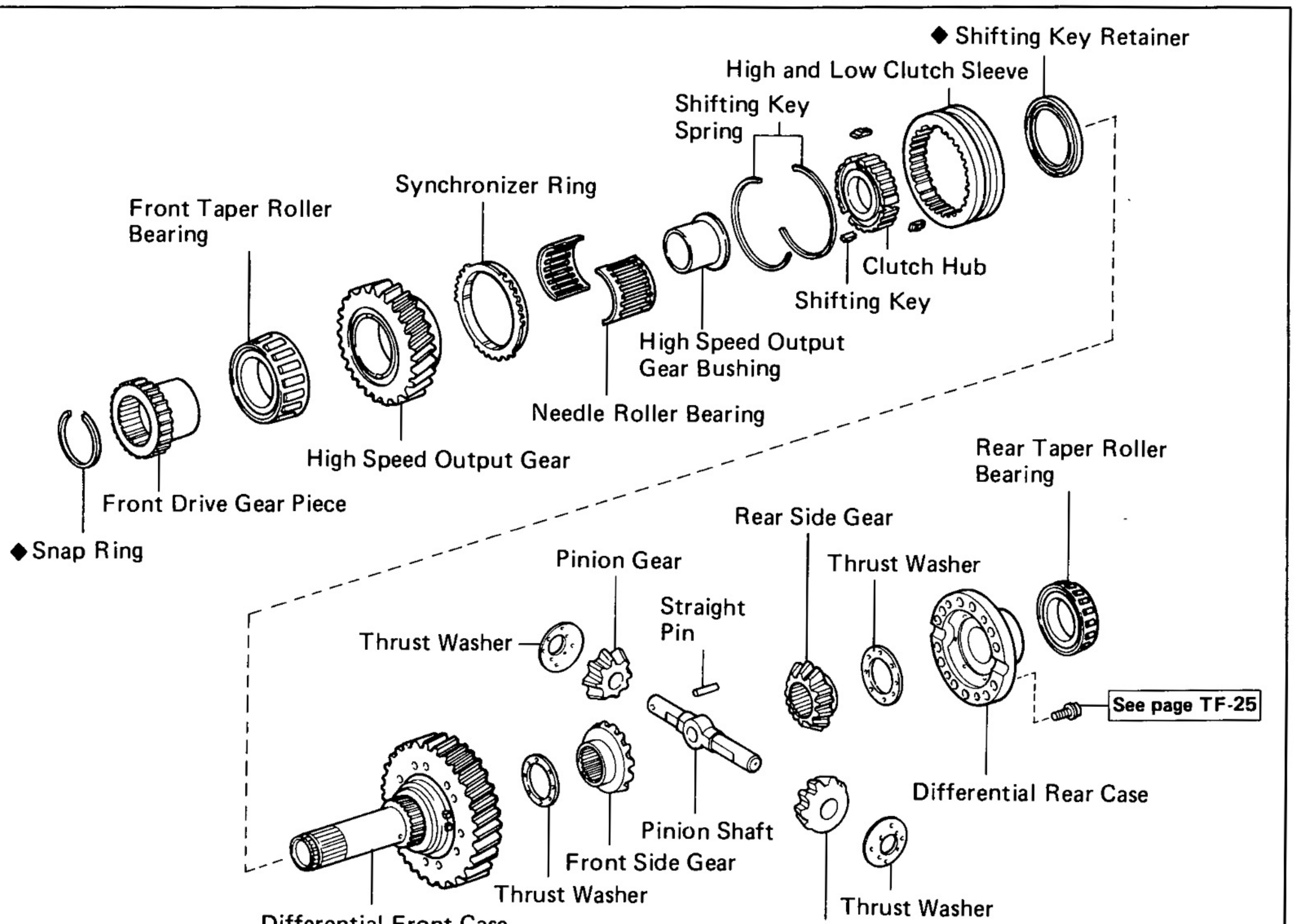

kg-cm (ft-lb, N·m) : Specified torque

◆ Non-reusable part

TF0899

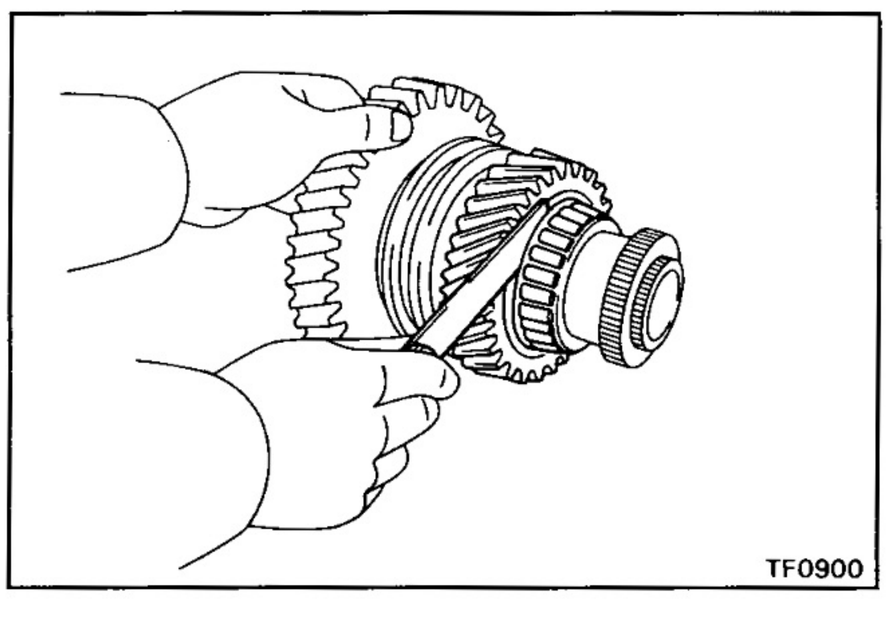

TF0900

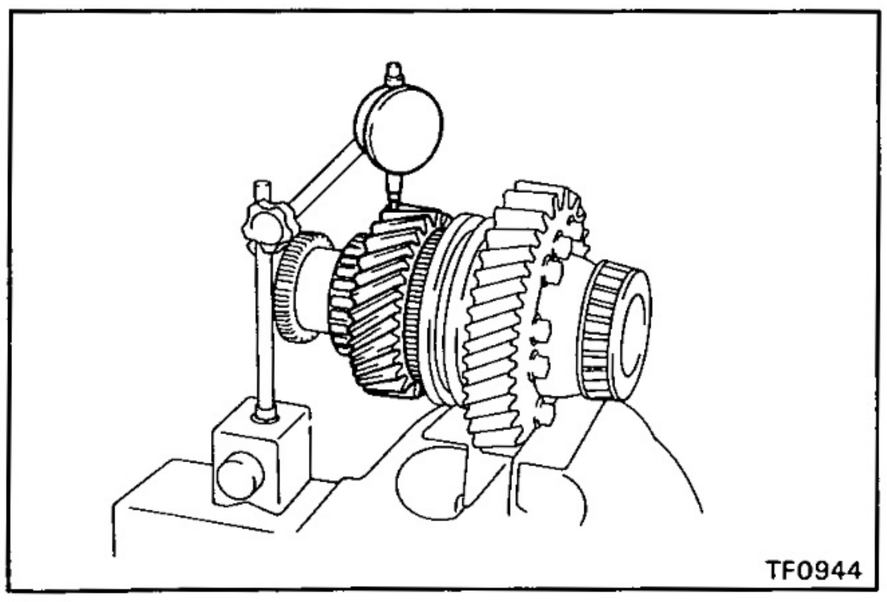

TF0944

DISASSEMBLY OF CENTER DIFFERENTIAL ASSEMBLY

1. CHECK OIL CLEARANCE AND THRUST CLEARANCE OF HIGH SPEED OUTPUT GEAR

(a) Using a feeler gauge, measure the high speed output gear thrust clearance.

Standard clearance: 0.10 — 0.25 mm (0.0039 — 0.0098 in.)

Maximum clearance: 0.25 mm (0.0098 in.)

(b) Using a dial indicator, measure the high speed output gear oil clearance.

Standard clearance: 0.015 — 0.071 mm (0.0006 — 0.0028 in.)

Maximum clearance: 0.071 — 0.0028 in.)

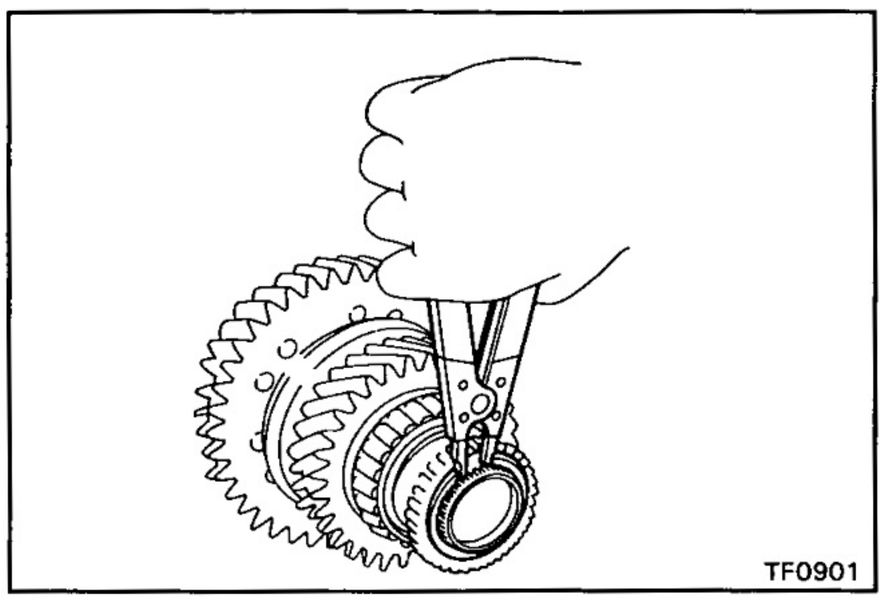

2. REMOVE FRONT DRIVE GEAR PIECE

(a) Using snap ring pliers, remove the snap ring.

(b) Using SST and a press, remove the front drive gear piece.

SST 09950-00020, 09950-20017 (09958-30010)

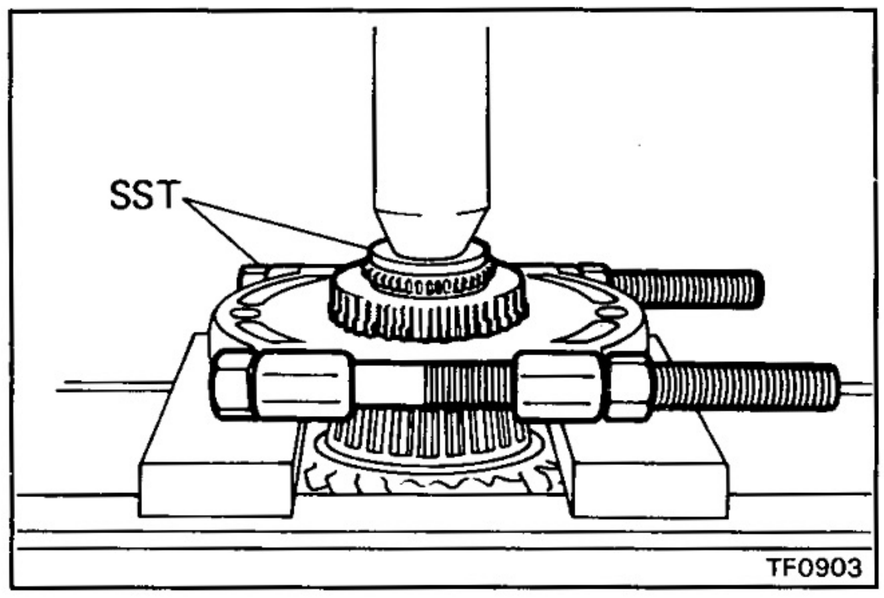

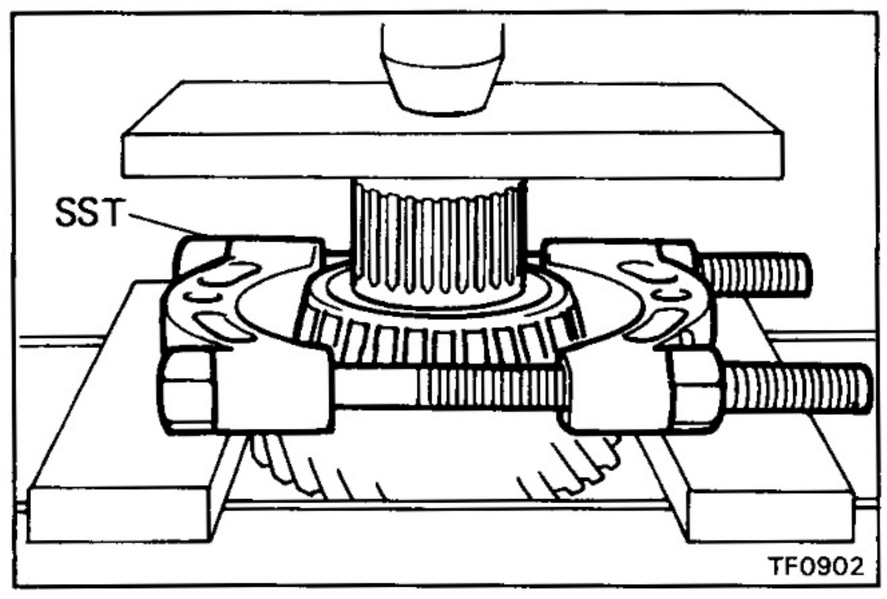

3. REMOVE FRONT TAPER ROLLER BEARING

Using SST and a press, remove the front taper roller bearing.

SST 09950-00020

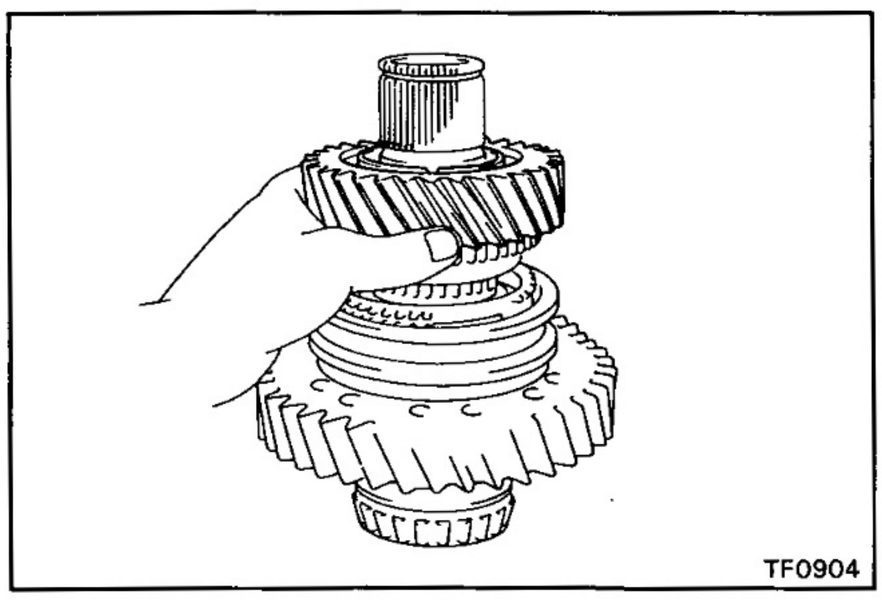

4. REMOVE HIGH SPEED OUTPUT GEAR AND SYNCHRONIZER RING

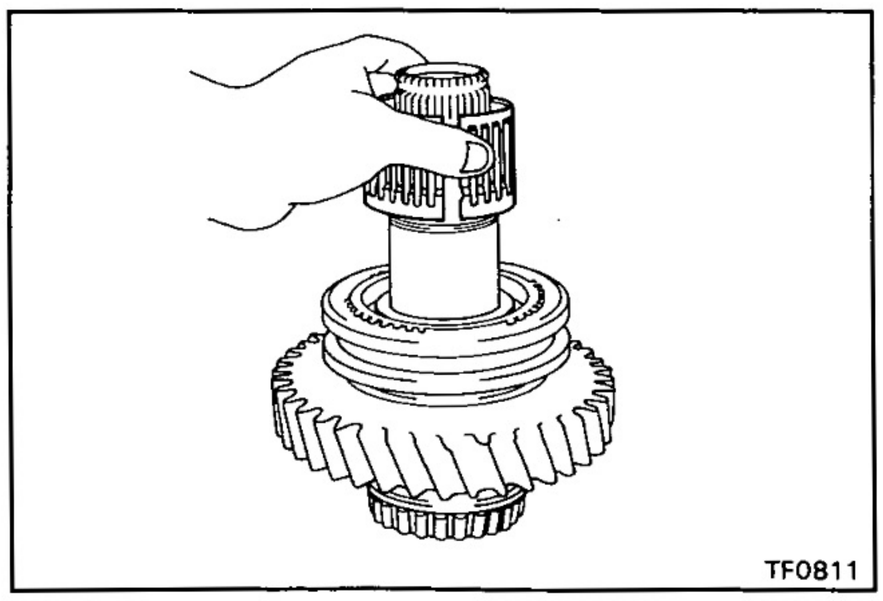

5. REMOVE NEEDLE ROLLER BEARING

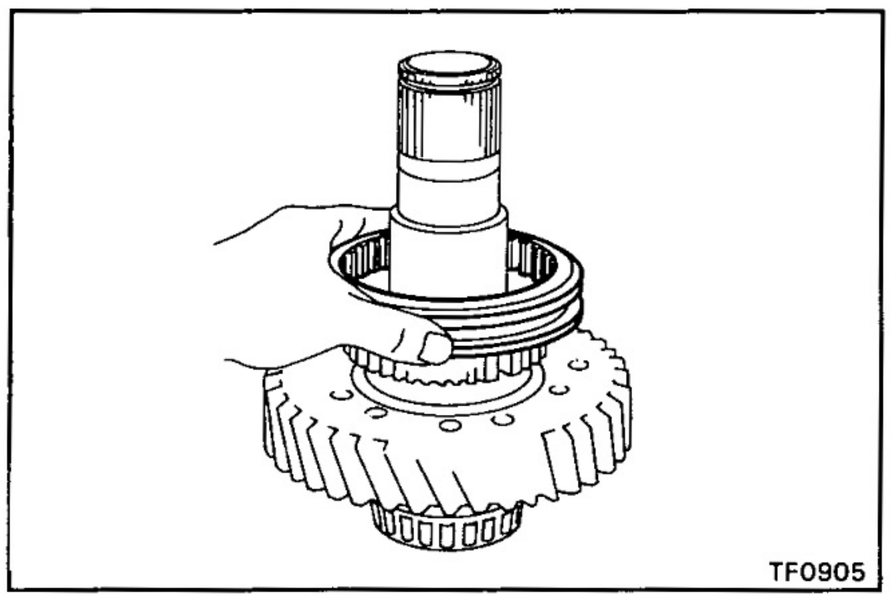

6. REMOVE HIGH AND LOW CLUTCH SLEEVE

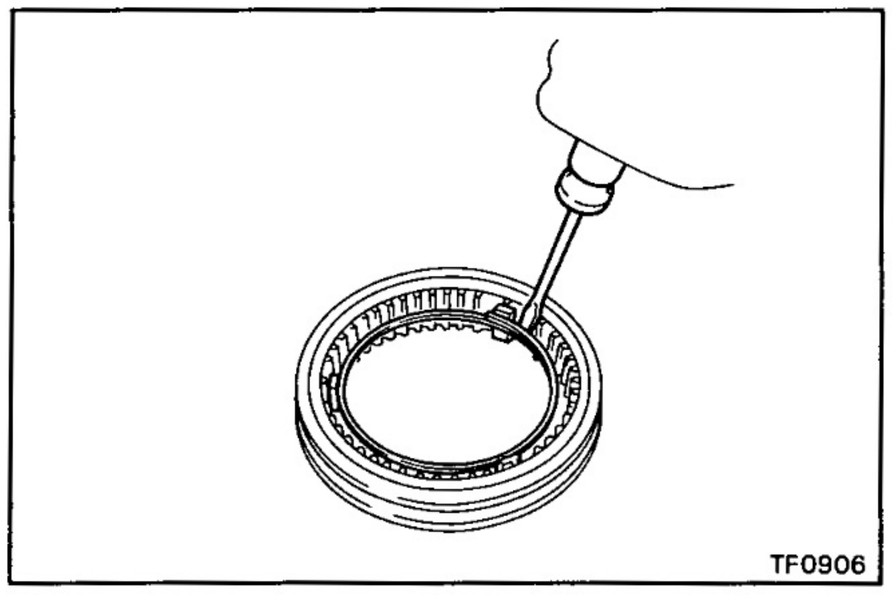

7. REMOVE HIGH AND LOW CLUTCH SLEEVE SHIFTING KEYS AND SPRINGS

Using a screwdriver, remove the two shifting key springs and shifting keys.

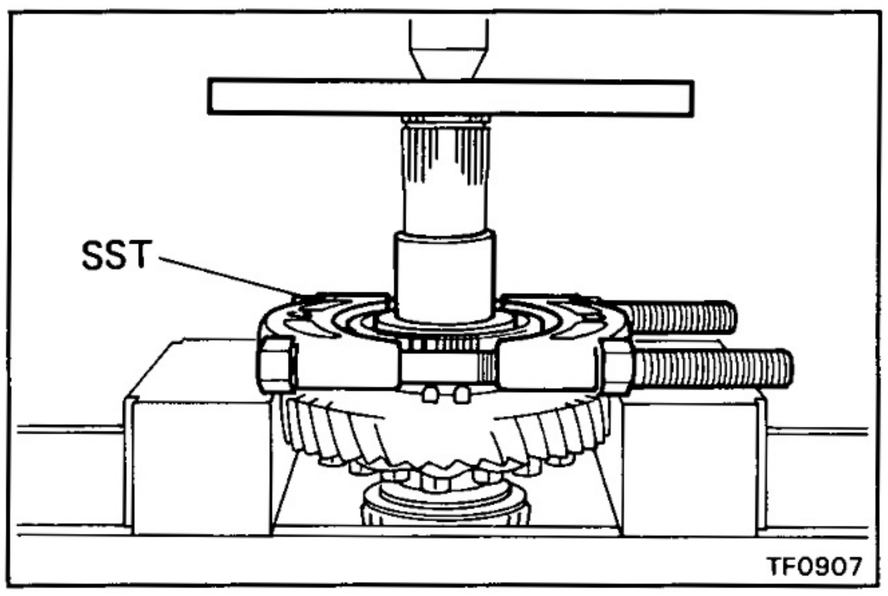

8. REMOVE HIGH SPEED OUTPUT GEAR BUSHING, CLUTCH HUB AND SHIFTING KEY RETAINER

(a) Using SST and a press, remove the high speed output gear bushing, clutch hub and shifting key retainer.

SST 09555-55010

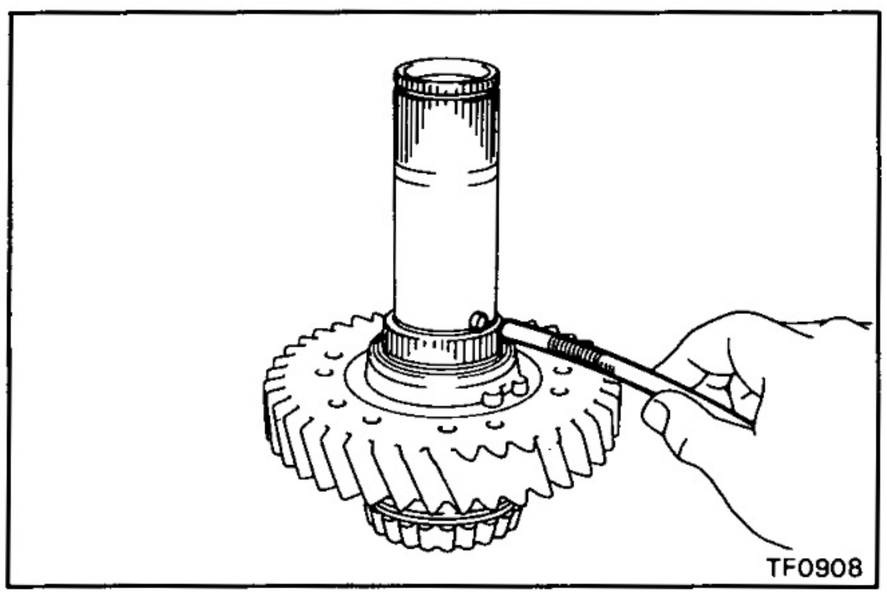

(b) Using a magnetic finger, remove the two straight pins.

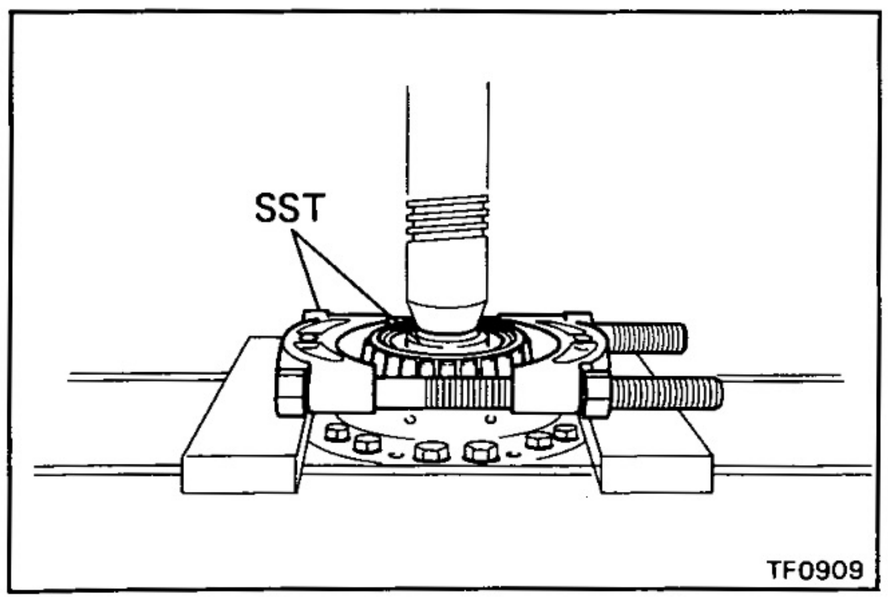

9. REMOVE REAR TAPER ROLLER BEARING

Using SST and a press, remove the rear taper roller bearing.

SST 09950-00020, 09950-20017 (09958-30010)

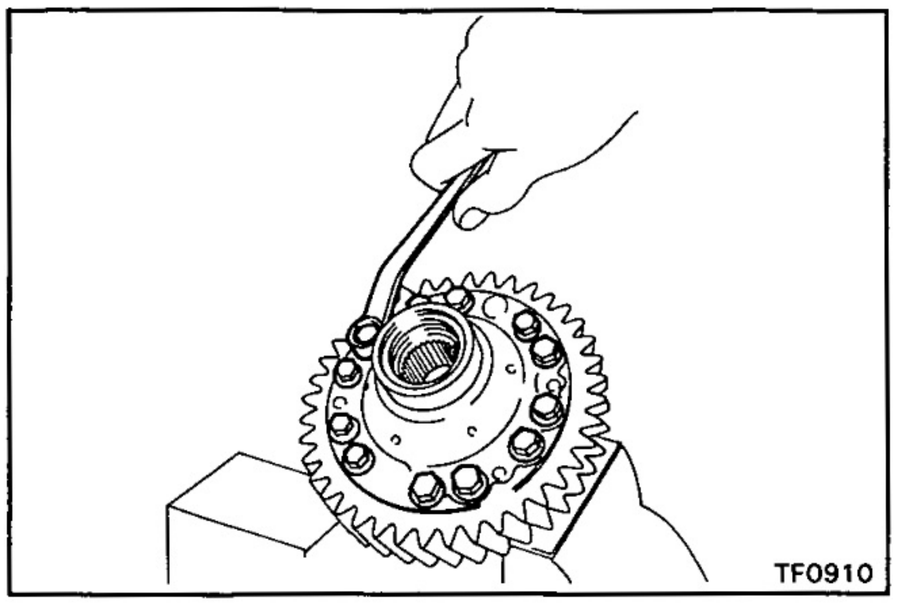

10. REMOVE DIFFERENTIAL REAR CASE

Remove the twelve bolts and differential rear case.

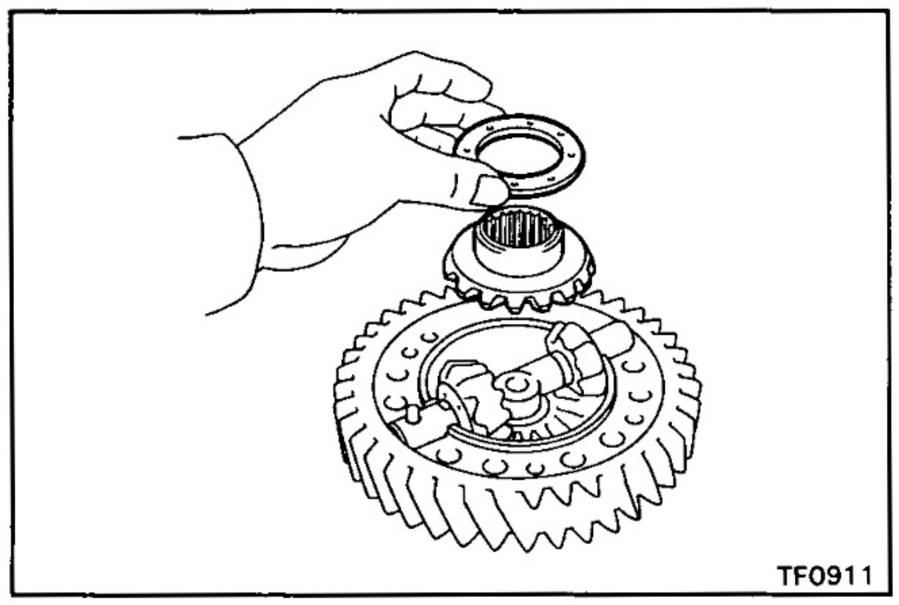

11. REMOVE REAR SIDE GEAR AND THRUST WASHER

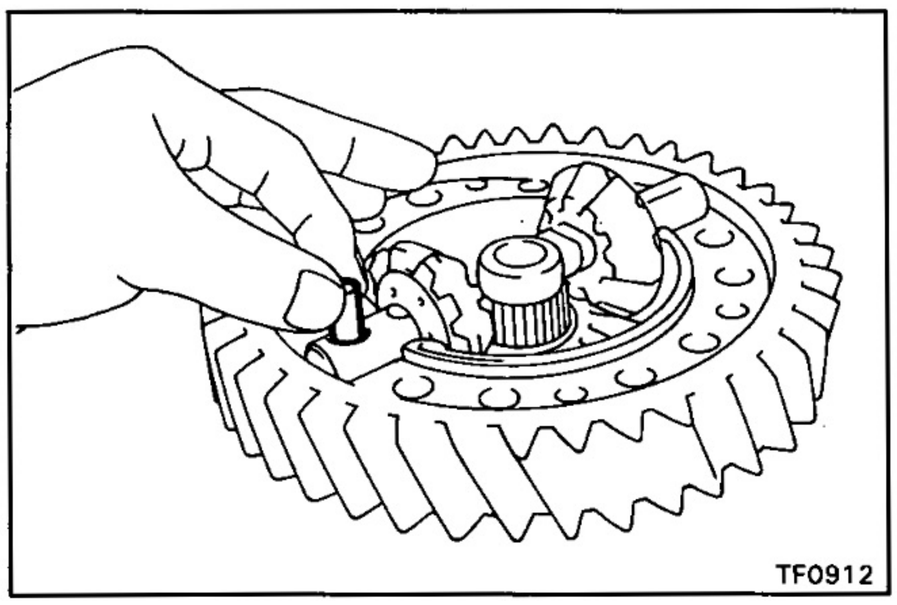

12. REMOVE PINION SHAFT, PINION GEAR AND THRUST WASHER

(a) Remove the straight pin.

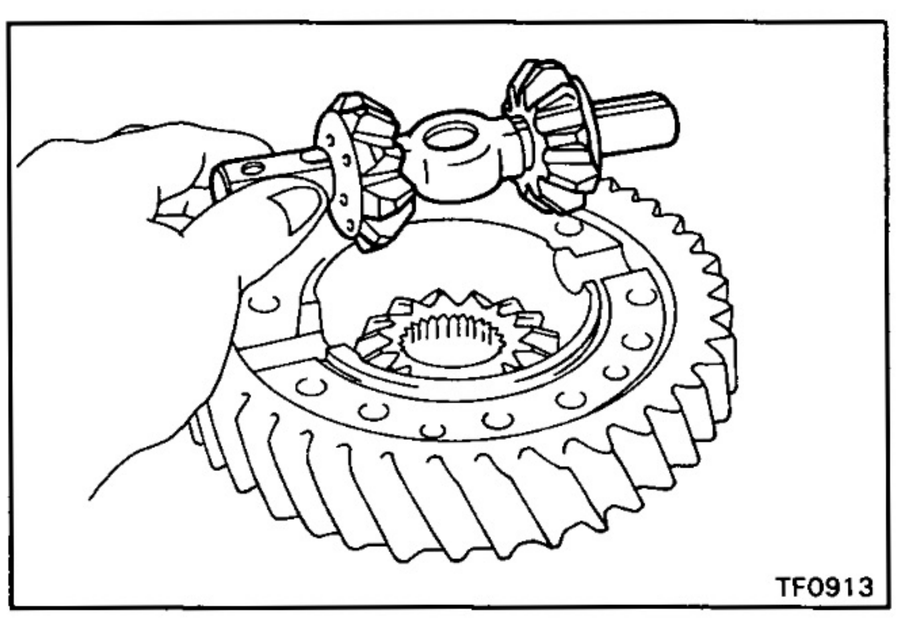

(b) Remove the pinion shaft, pinion gear and thrust washer.

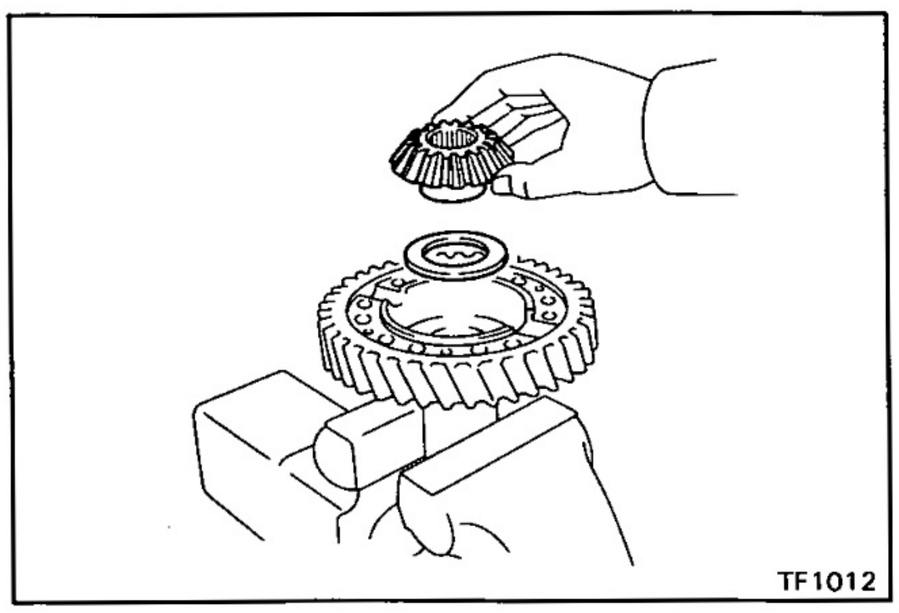

(c) Remove the front side gear and thrust washer.

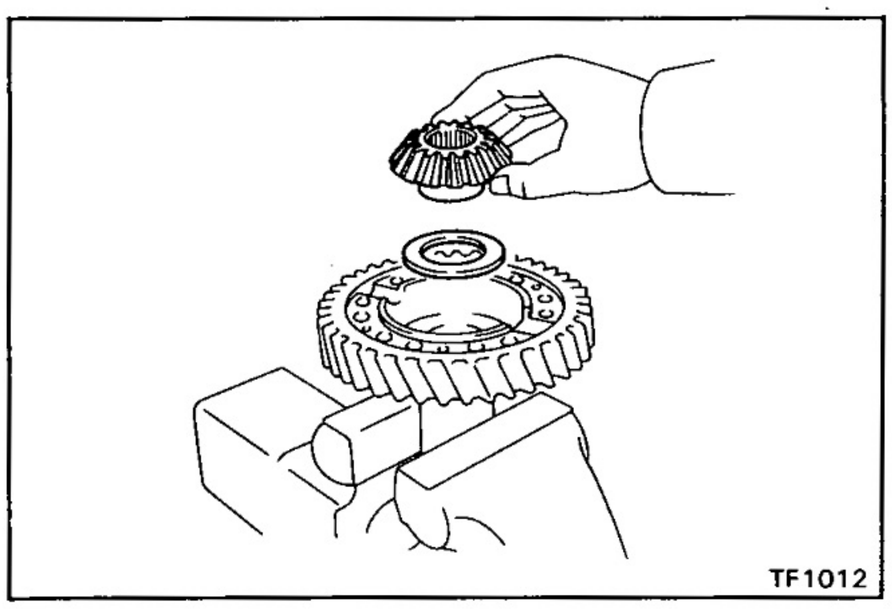
TF1012

ASSEMBLY OF CENTER DIFFERENTIAL ASSEMBLY

1. INSTALL PINION SHAFT, PINION GEAR AND THRUST WASHER

HINT: Coat all of the sliding and rotating surface with gear oil before assembly.

(a) Install the front side gear and thrust washer to the differential front case.

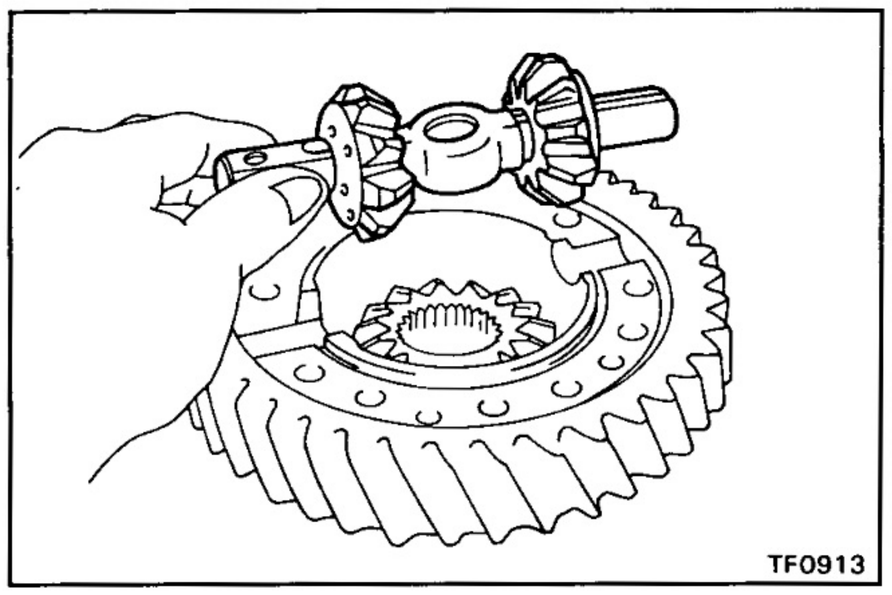
TF0913

(b) Install the two pinion gears and thrust washers to the differential front case.

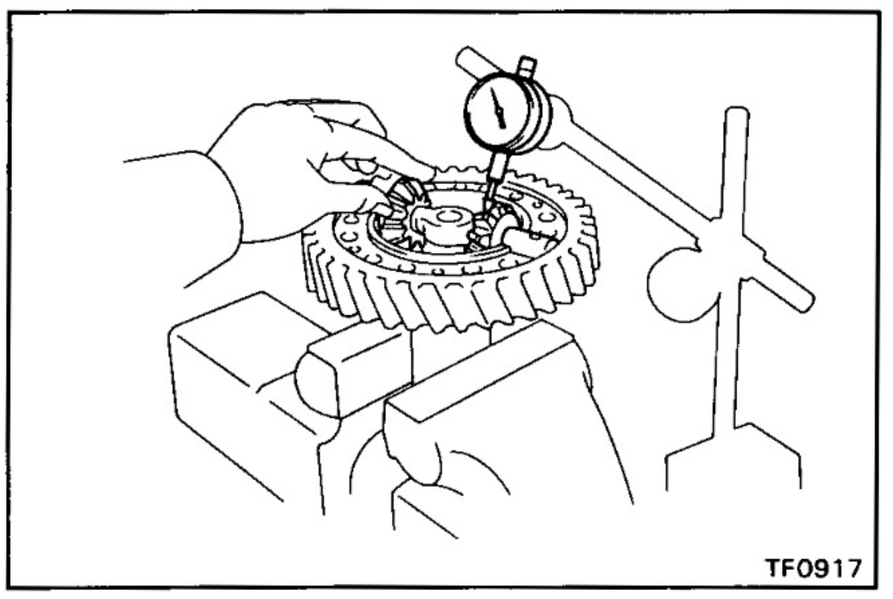
TF0917

(c) Using a dial indicator, measure the front case backlash.

HINT: Push the pinion shaft.

Minimum backlash: 0.05 mm (0.0020 in.)

If the backlash is not within specification, replace the thrust washer with one of the correct size and reinstall the thrust washer.

Thickness mm (in.)
1.70 (0.0669)
1.85 (0.0728)
2.00 (0.0787)
2.15 (0.0846)
2.30 (0.0906)
2.45 (0.0965)
2.60 (0.1024)
2.75 (0.1083)
2.90 (0.1142)
3.05 (0.1201)

(d) Measure the rear case backlash.

(See steps (a) to (c))

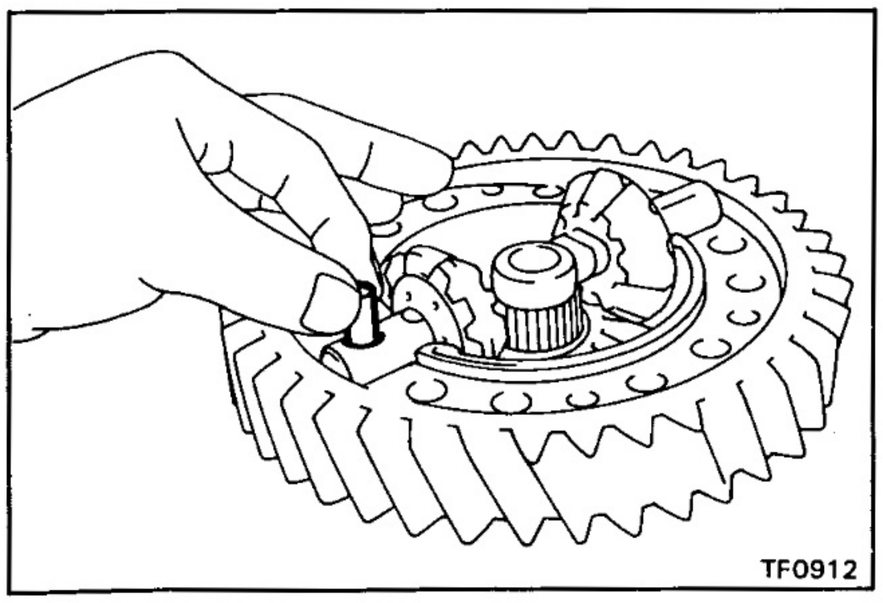
TF0912

2. INSTALL STRAIGHT PIN

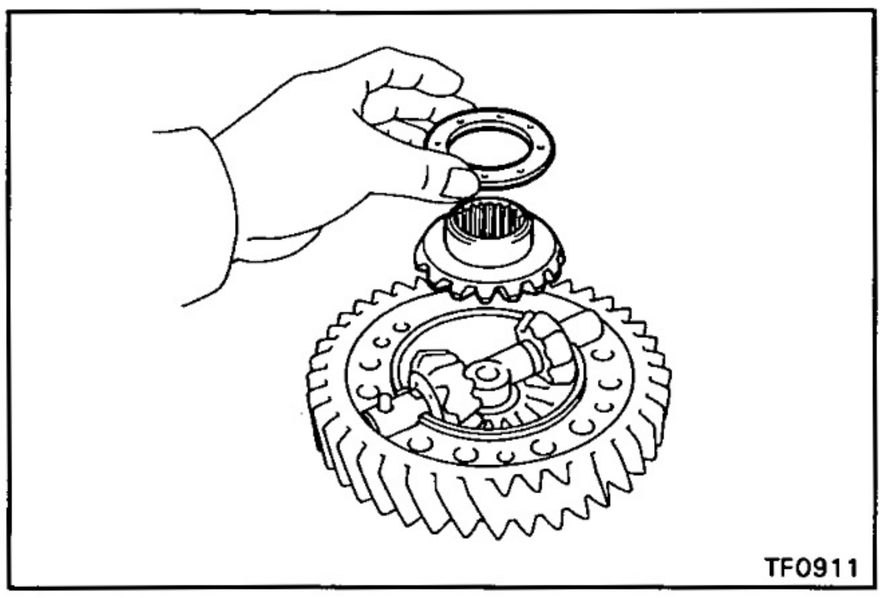

3. INSTALL REAR SIDE GEAR AND THRUST WASHER

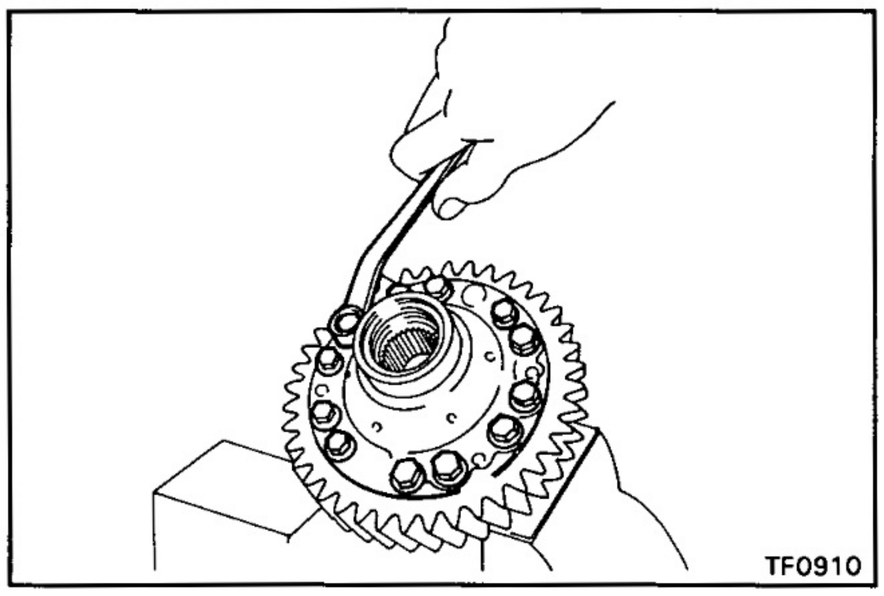

4. INSTALL DIFFERENTIAL REAR CASE

Temporary install the differential rear case and set bolts.

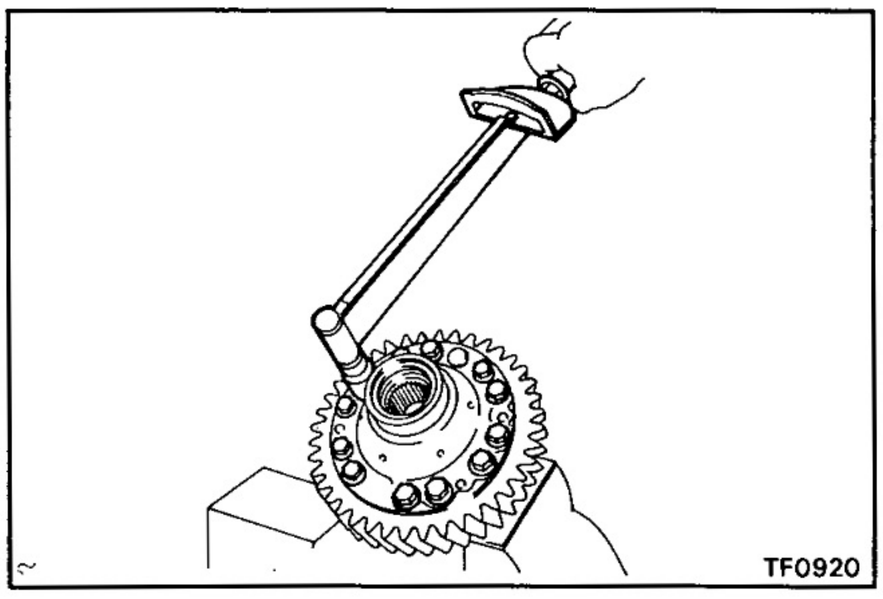

5. TORQUE REAR CASE SET BOLTS

(a) Torque the rear case set bolts.

Torque: 900 kg-cm (65 ft-lb, 88 N·m)

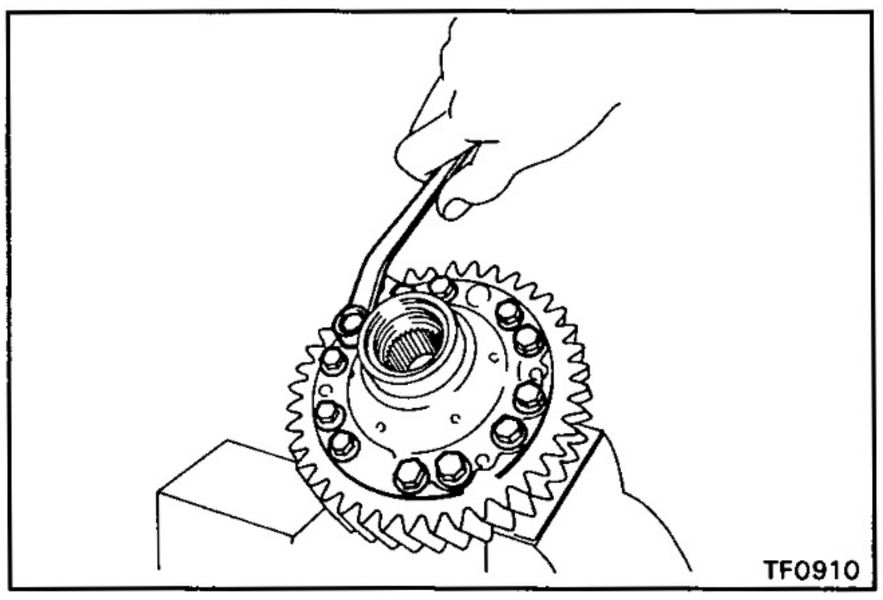

(b) Loosen the rear case set bolts.

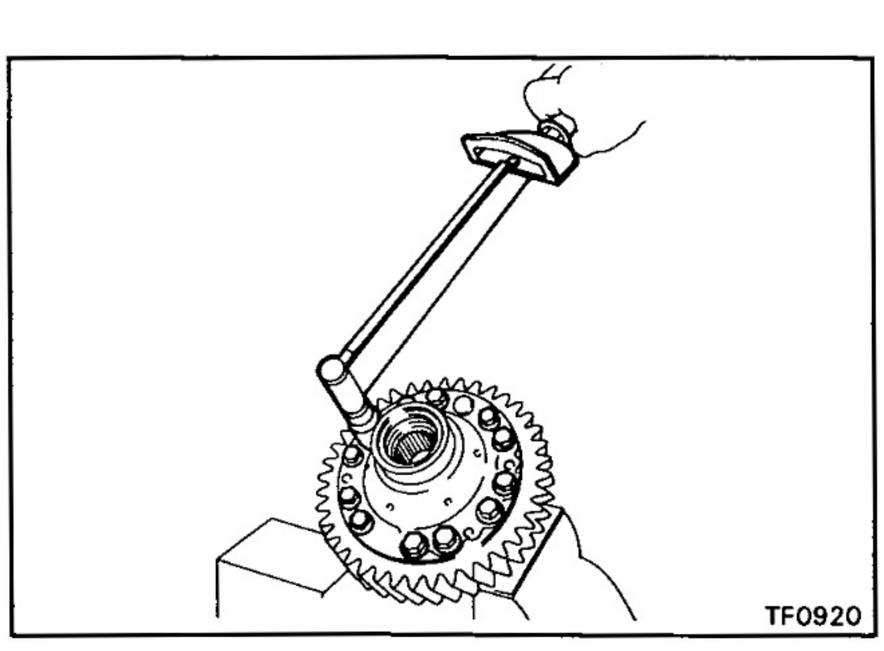

(c) Retorque the rear case set bolts.

Torque: 1,000 kg-cm (72 ft-lb, 98 N·m)

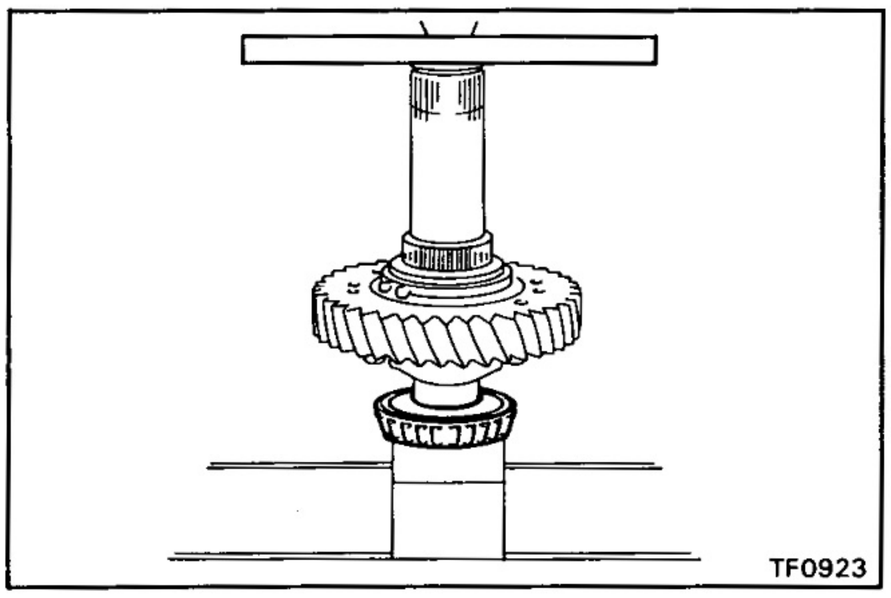

6. INSTALL REAR TAPER ROLLER BEARING

Using a press, install the rear taper roller bearing.

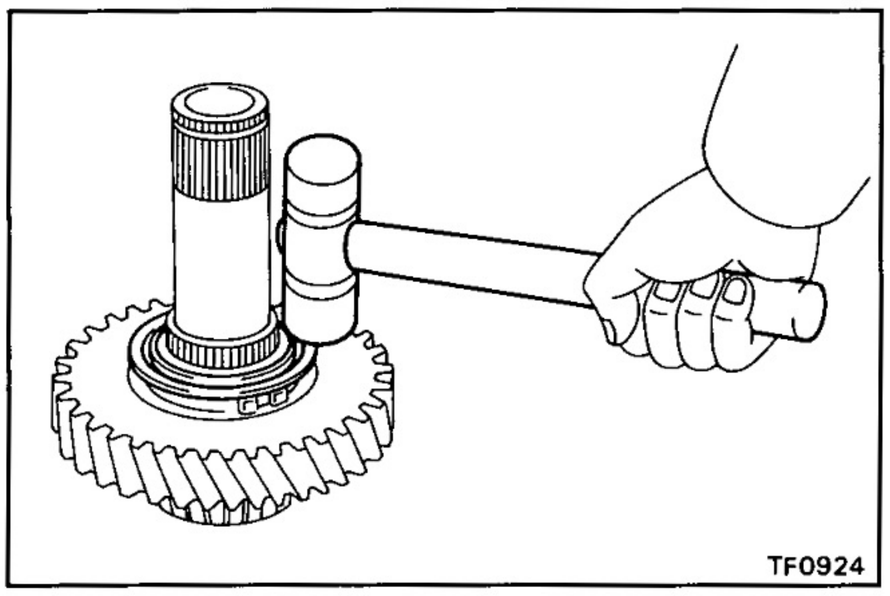

7. INSTALL SHIFTING KEY RETAINER

Using a plastic hammer, tap in the shifting key retainer.

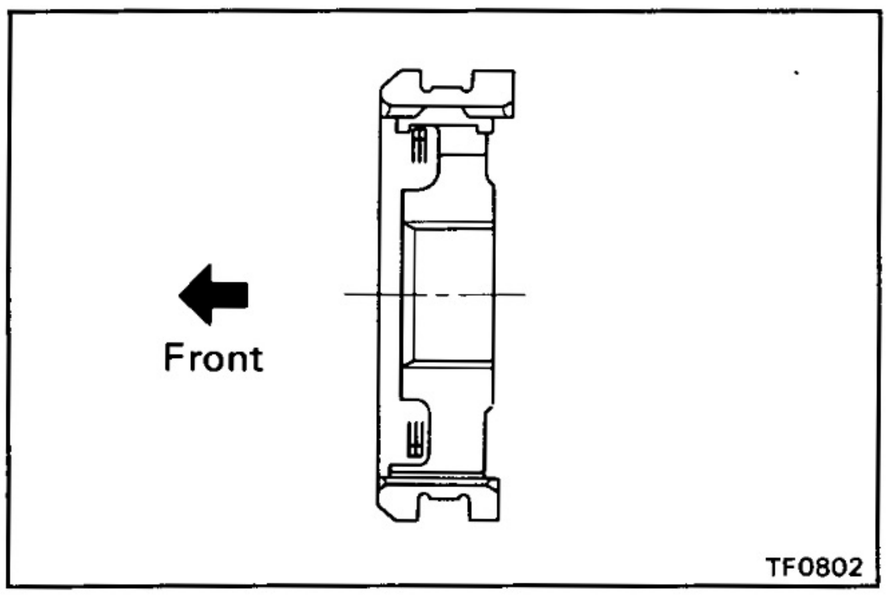

8. INSERT CLUTCH HUB INTO HIGH AND LOW CLUTCH SLEEVE

(a) Install the clutch hub and shifting keys to the high and low clutch sleeve.

(b) Install the shifting key springs.

NOTICE: Install the key springs positioned so that their end gaps are not in line.

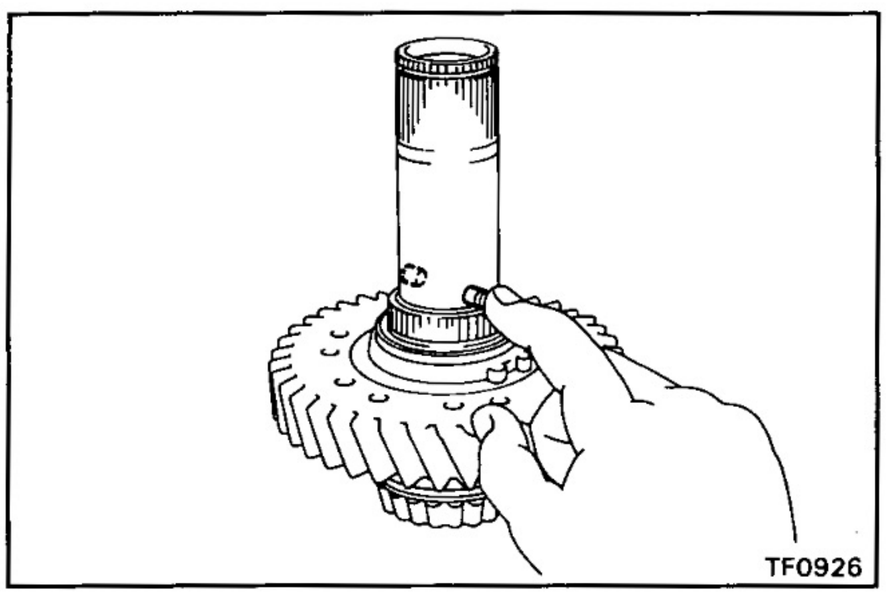

9. INSTALL HIGH AND LOW CLUTCH SLEEVE ASSEMBLY AND HIGH SPEED OUTPUT GEAR BUSHING

(a) Apply MP grease to the straight pin.

(b) Install the two straight pins.

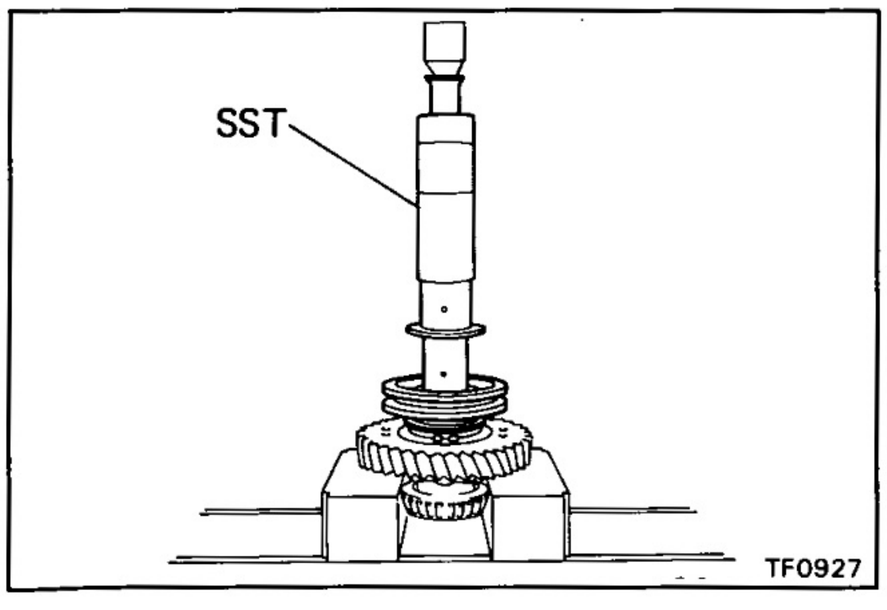

(c) Using SST and a press, install the clutch sleeve assembly and high speed output gear bushing.

SST 09316-60010 (09316-00010)

NOTICE: Before pressing, align the holes on the bushing and shaft so that the pin on the shaft aligned with the cutting portion of the bushing.

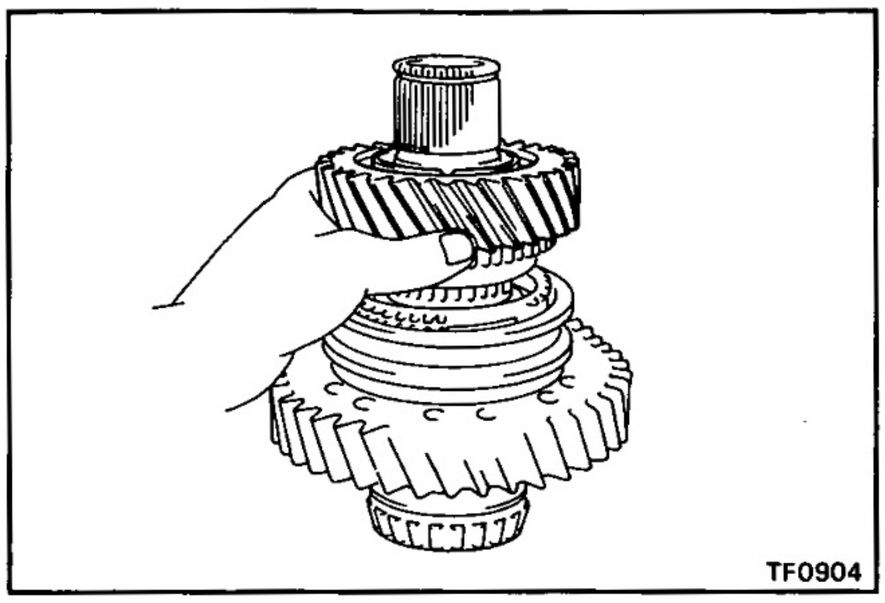

10. INSTALL HIGH SPEED OUTPUT GEAR AND NEEDLE ROLLER BEARING

(a) Apply gear oil to the needle roller bearing.

(b) Place the synchronizer ring on the gear and install the high speed output gear and needle roller bearing.

NOTICE: Align the ring slots with the shifting keys.

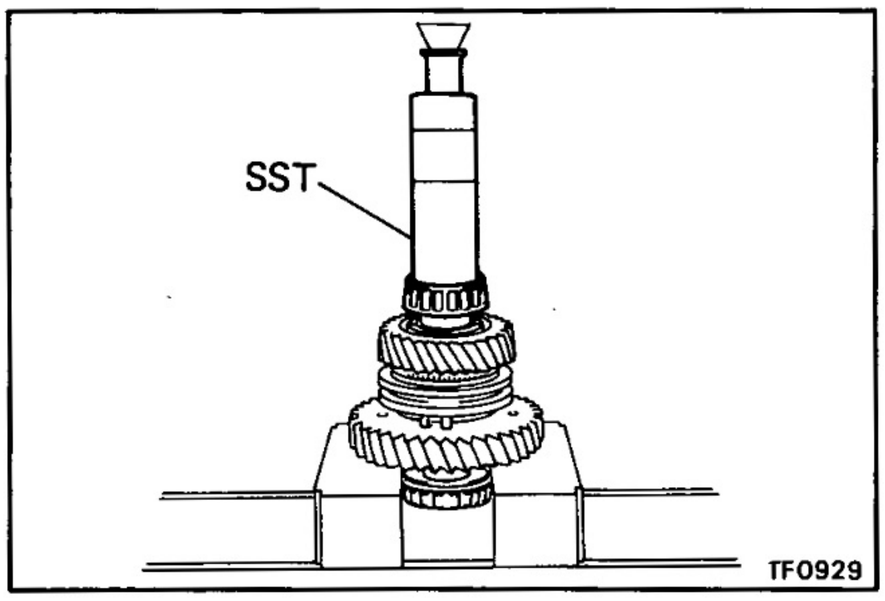

11. INSTALL FRONT TAPER ROLLER BEARING

Using SST and a press, install the front taper roller bearing.

SST 09316-60010 (09316-00010)

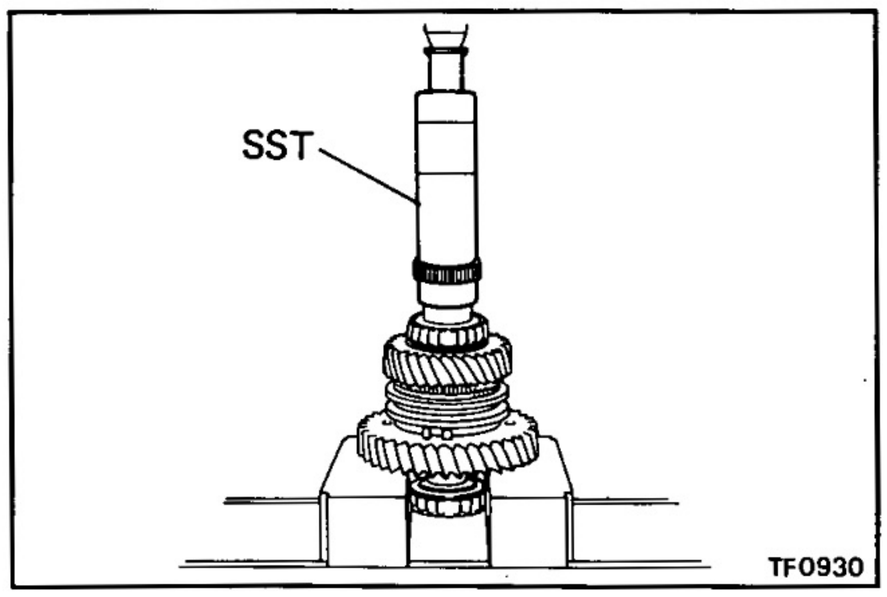

12. INSTALL FRONT DRIVE GEAR PIECE

Using SST and a press, install the front drive gear piece.

SST 09316-60010 (09316-00010)

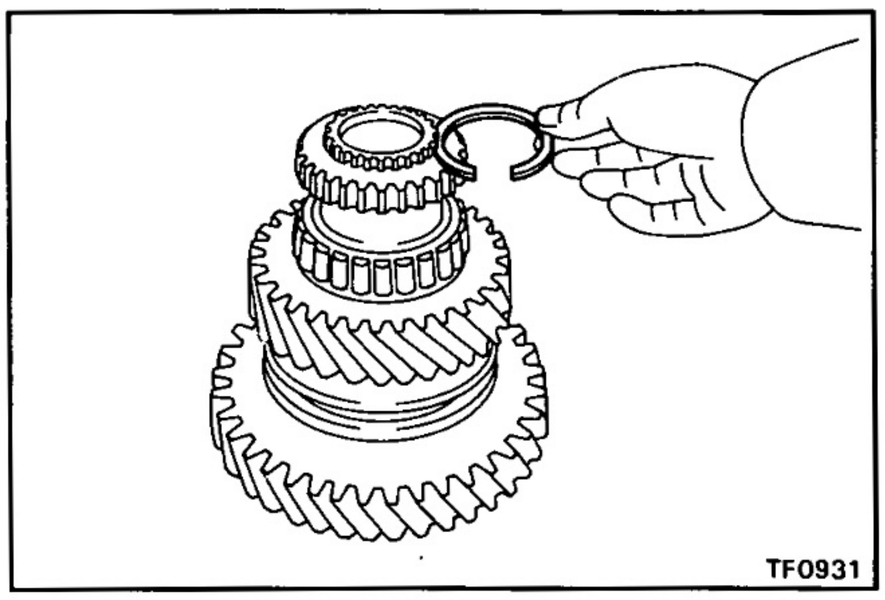

13. INSTALL SNAP RING

Select a snap ring that will allow minimum axial play and install it on the shaft.

Mark	Thickness mm (in.)
A	2.00 (0.0787)
B	2.10 (0.0827)
C	2.20 (0.0866)
D	2.30 (0.0906)
E	2.40 (0.0945)
F	2.50 (0.0984)
G	2.60 (0.1024)
H	2.70 (0.1063)
J	2.80 (0.1102)
K	1.80 (0.0709)
L	1.90 (0.0748)

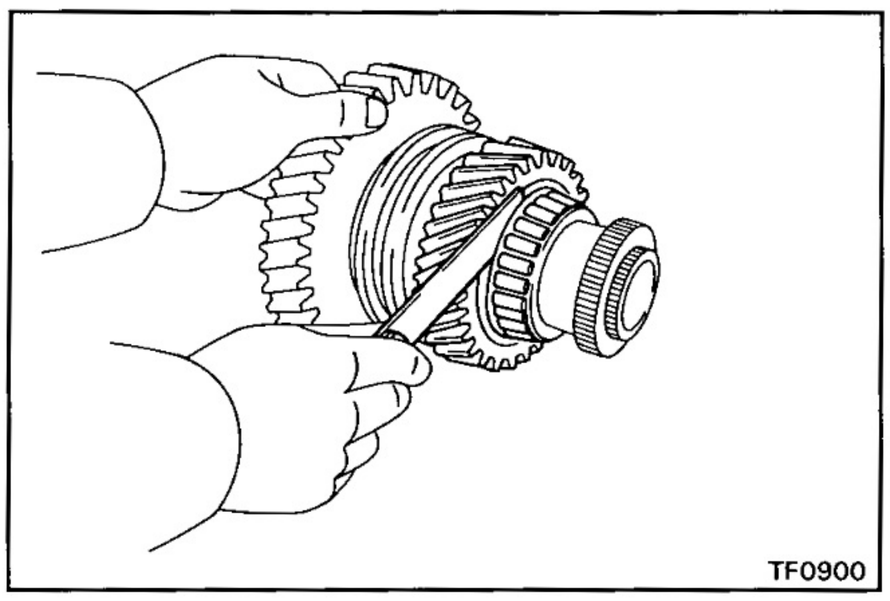
TF0900

14. MEASURE OIL CLEARANCE AND THRUST CLEARANCE OF HIGH SPEED OUTPUT GEAR THRUST CLEARANCE

(a) Using a feeler gauge, measure the high speed gear thrust clearance.

Standard clearance: **0.10 — 0.25 mm (0.0039 — 0.0098 in.)**

Maximum clearance: **0.25 mm (0.0098 in.)**

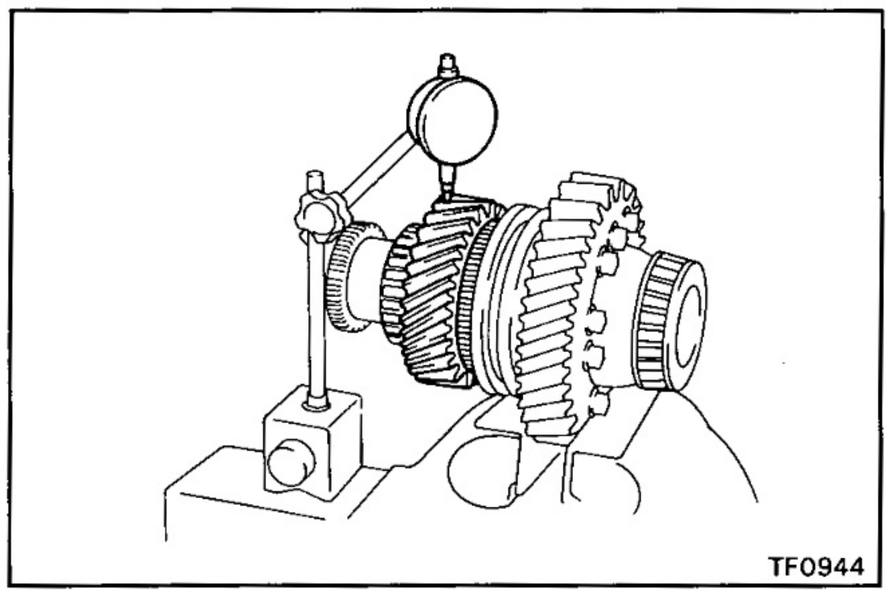
TF0944

(b) Using a dial indicator, measure the high speed gear oil clearance.

Standard clearance: **0.015 — 0.071 mm (0.0006 — 0.0028 in.)**

Maximum clearance: **0.071 mm (0.0028 in.)**

Front Extension Housing Assembly

COMPONENTS

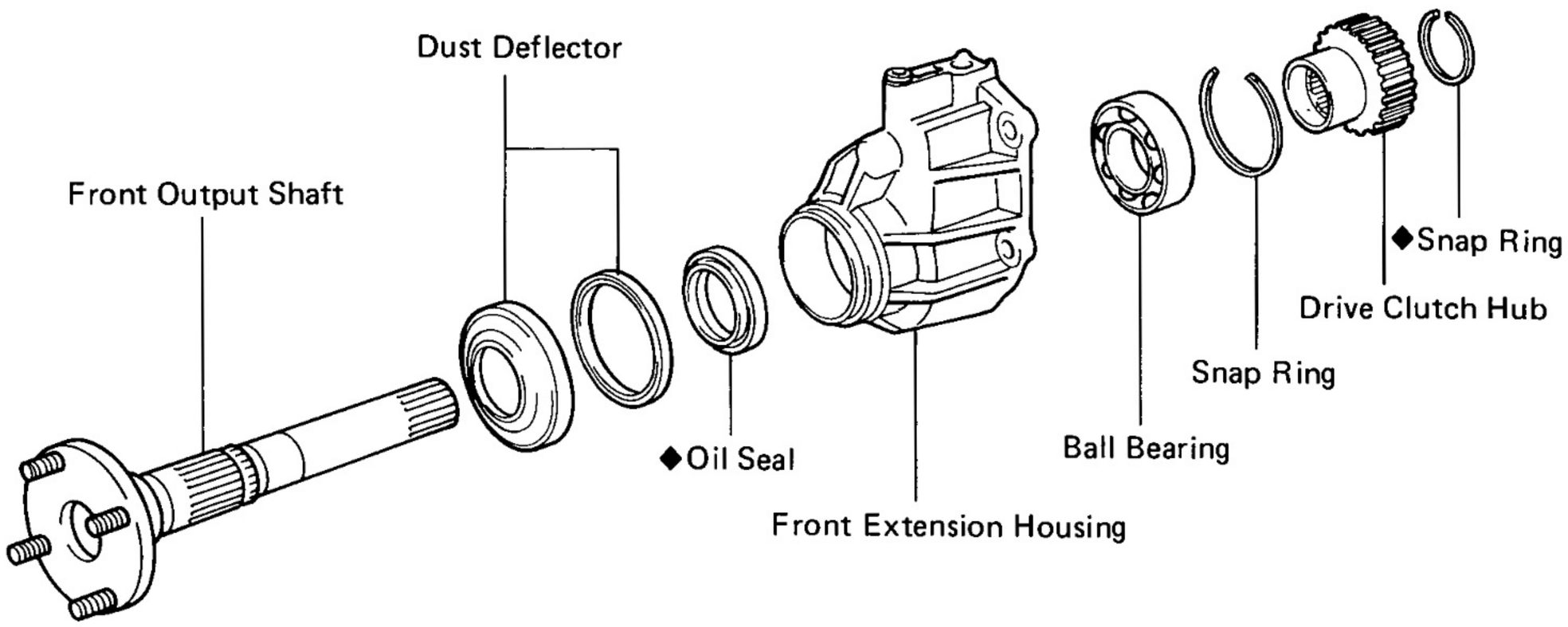

◆ Non-reusable part

TF0932

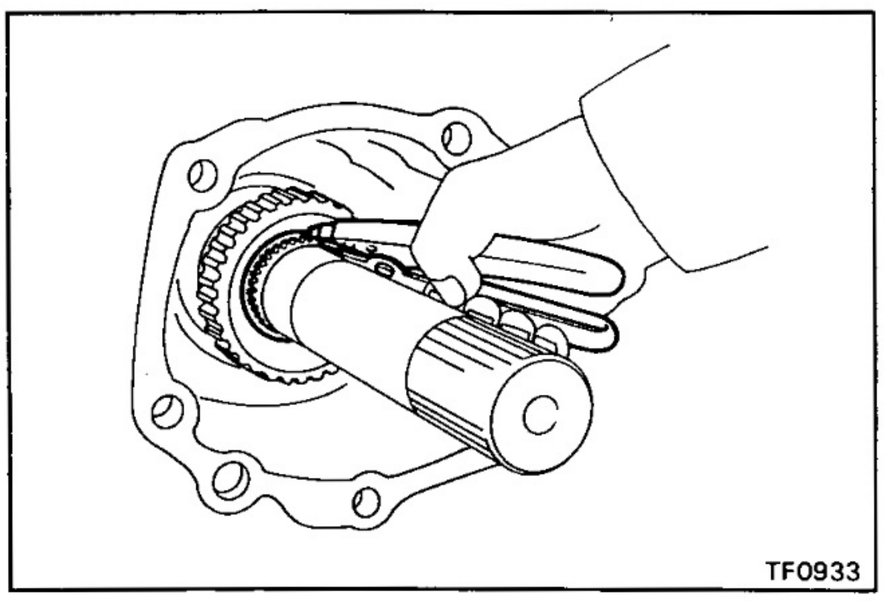

TF0933

DISASSEMBLY OF FRONT EXTENSION HOUSING ASSEMBLY

1. REMOVE DRIVE CLUTCH HUB

(a) Using snap ring pliers, remove the snap ring.

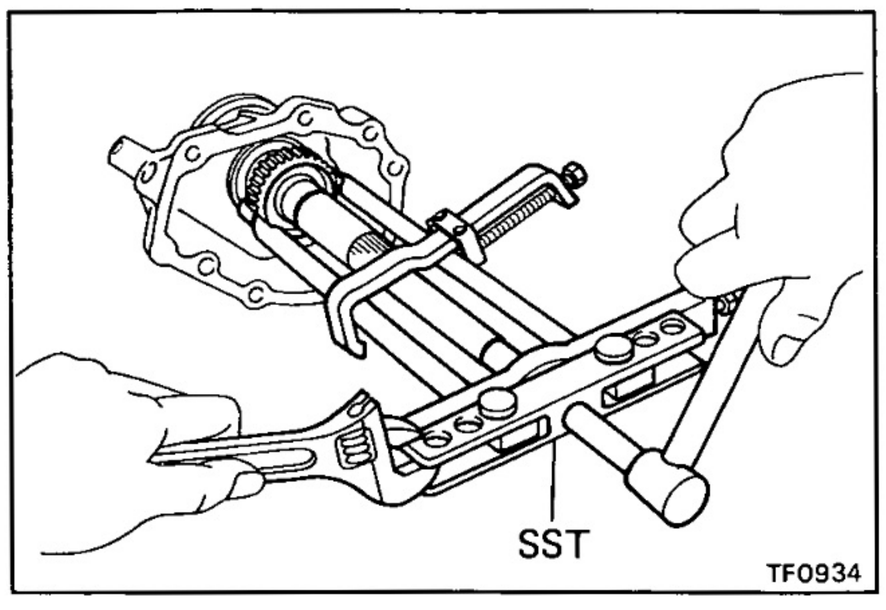

TF0934

(b) Using SST, remove the drive clutch hub.

SST 09950-20017

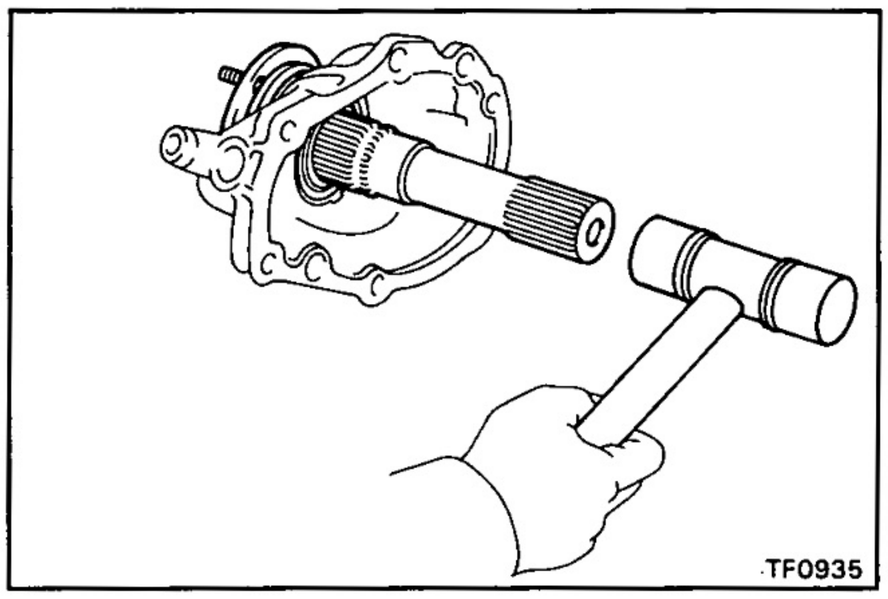

2. REMOVE FRONT OUTPUT SHAFT

Using a plastic hammer, tap the front output shaft and remove it.

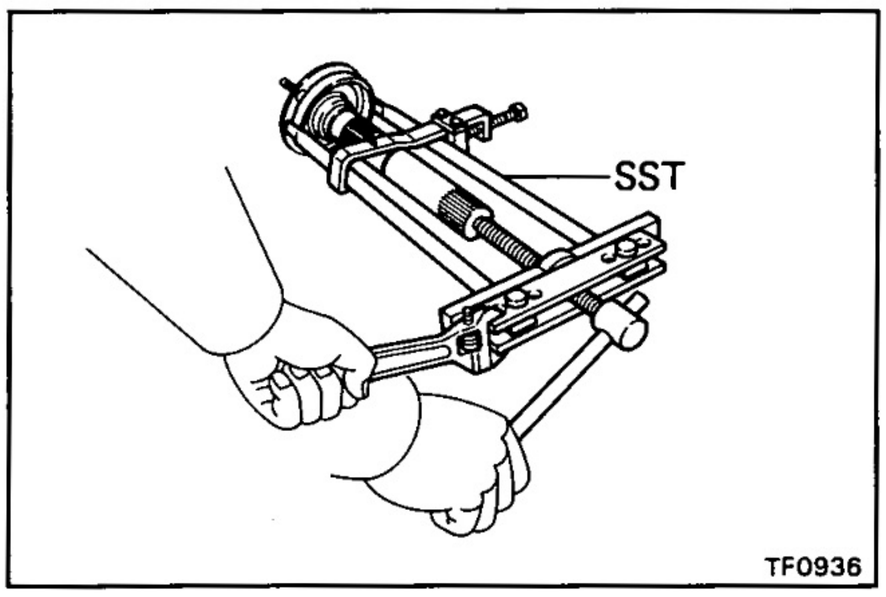

3. REMOVE DUST DEFLECTORS

(a) Using SST, remove the dust deflector.

SST 09950-20017

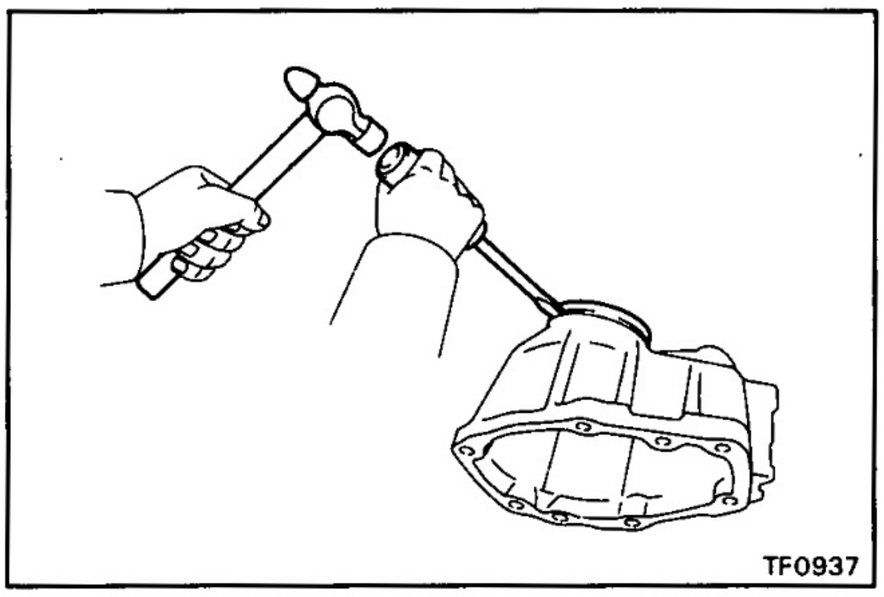

(b) Using a screwdriver and hammer, tap the dust deflector and remove it.

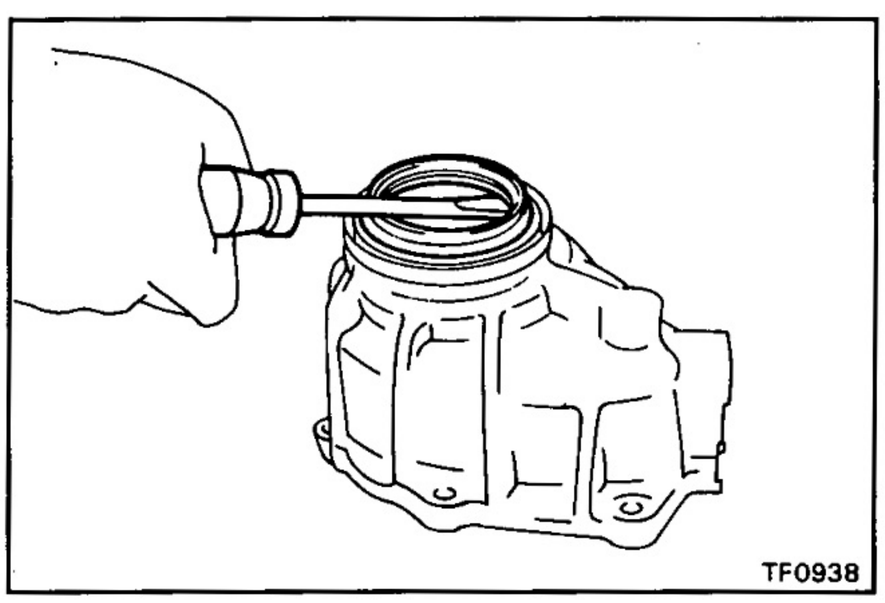

4. REMOVE OIL SEAL

Using a screwdriver, pry out the oil seal.

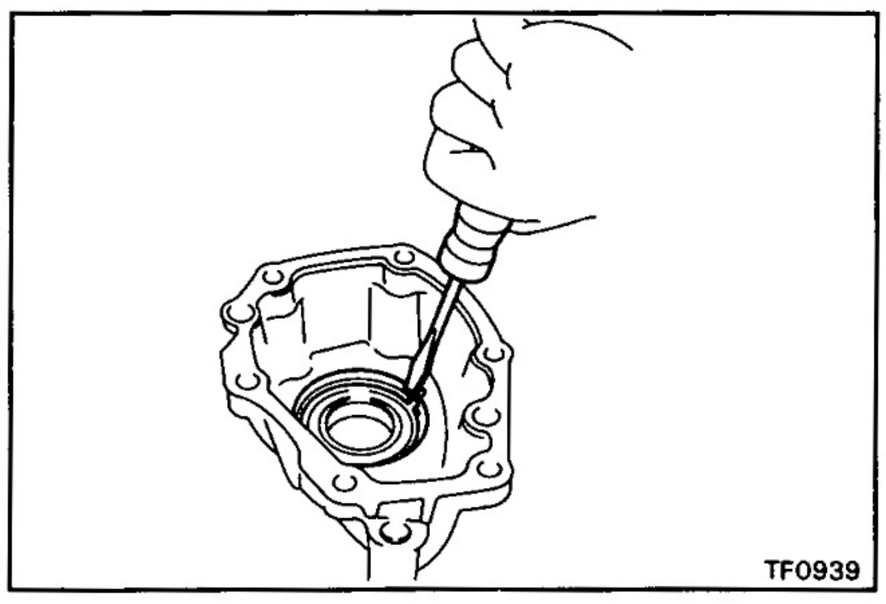

5. REMOVE BALL BEARING

(a) Using a screwdriver, remove the snap ring.

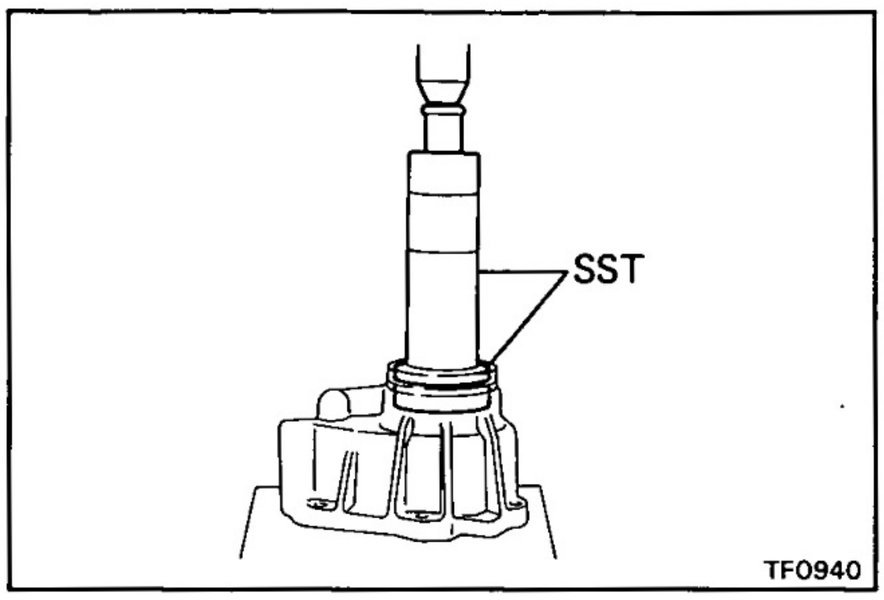

(b) Using SST and a press, remove the ball bearing.

SST 09316-60010 (09316-00010, 09316-00070)

ASSEMBLY OF FRONT EXTENSION HOUSING ASSEMBLY

1. INSTALL DUST DEFLECTORS

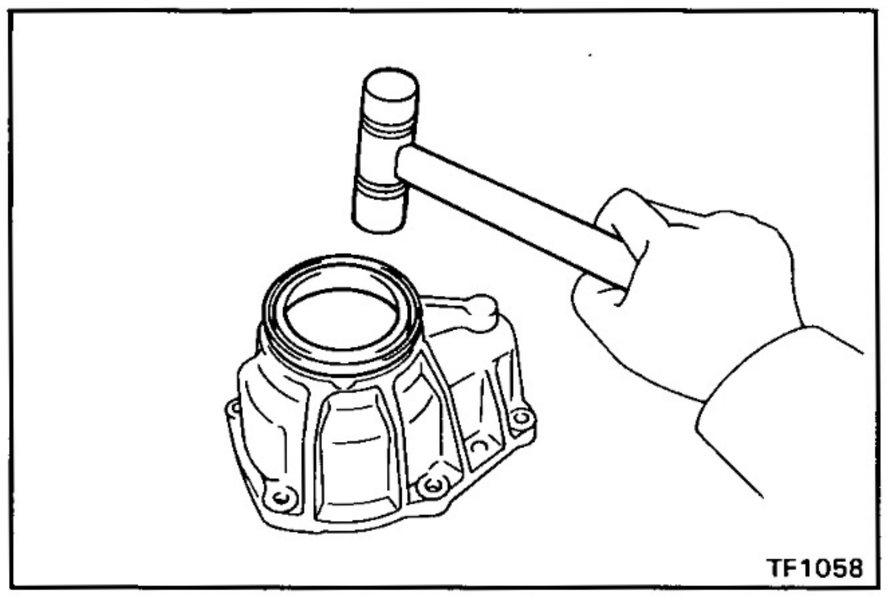

(a) Using a plastic hammer, install the dust deflector.

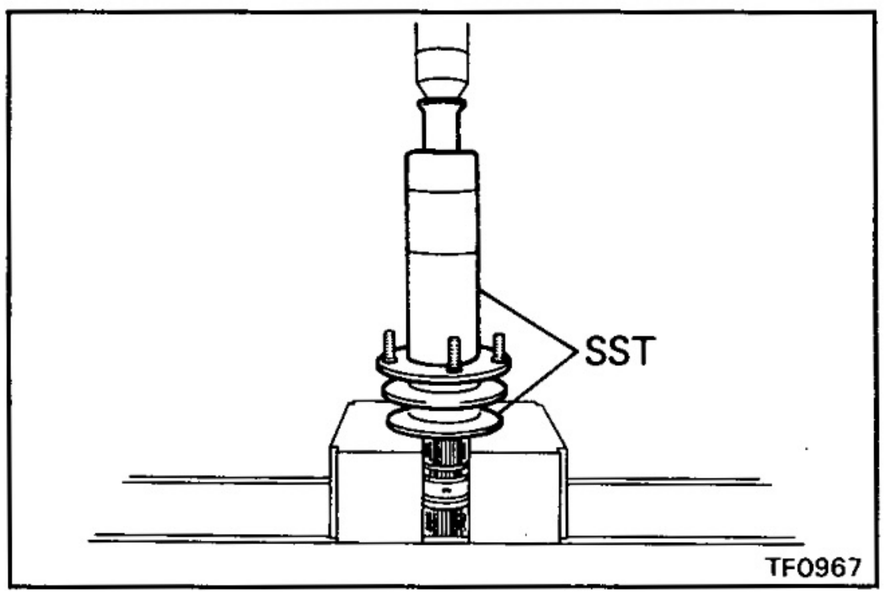

(b) Using SST and a press, install the dust deflector.

SST 09316-20011, 09316-60010 (09316-00010)

2. INSTALL BALL BEARING

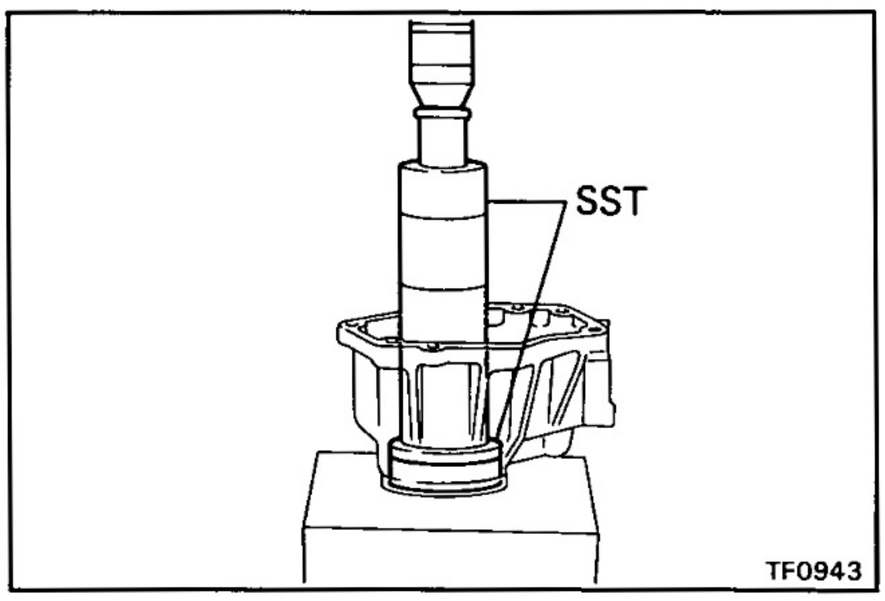

(a) Using SST and a press, install the ball bearing.

SST 09316-60010 (09316-00010, 09316-00030)

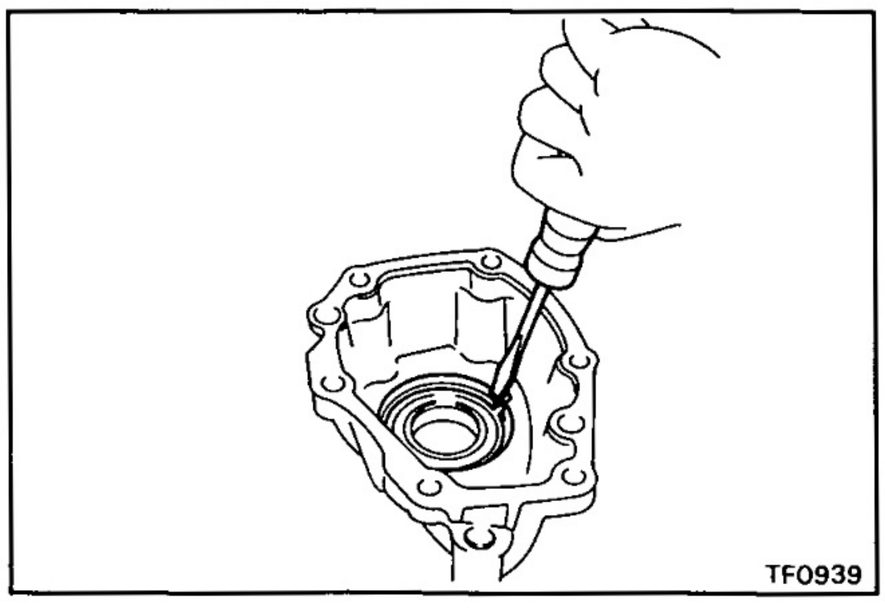

(b) Using a screwdriver, install the snap ring.

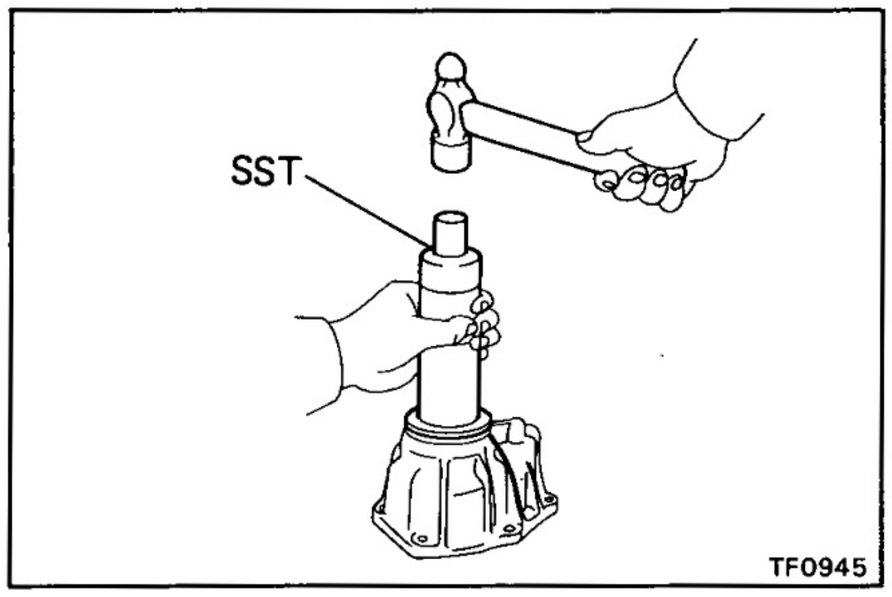

3. INSTALL OIL SEAL

Using SST and a hammer, drive in a new oil seal.

SST 09316-60010 (09316-00010, 09316-00060)

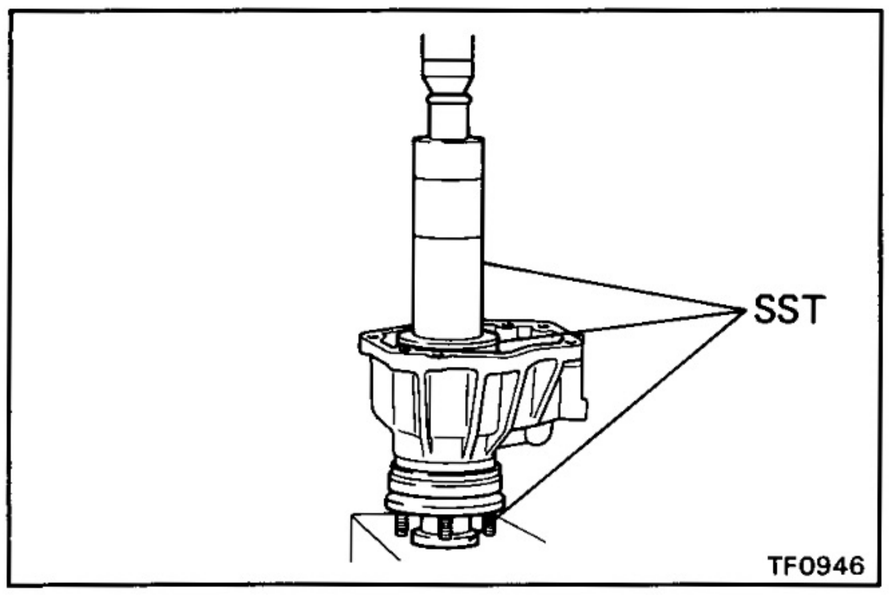

4. INSTALL FRONT OUTPUT SHAFT AND DRIVE CLUTCH HUB

(a) Using SST and press, install the front output shaft and drive clutch hub.

SST 09316-20011, 09316-60010 (09316-00010, 09316-00040, 09316-00070)

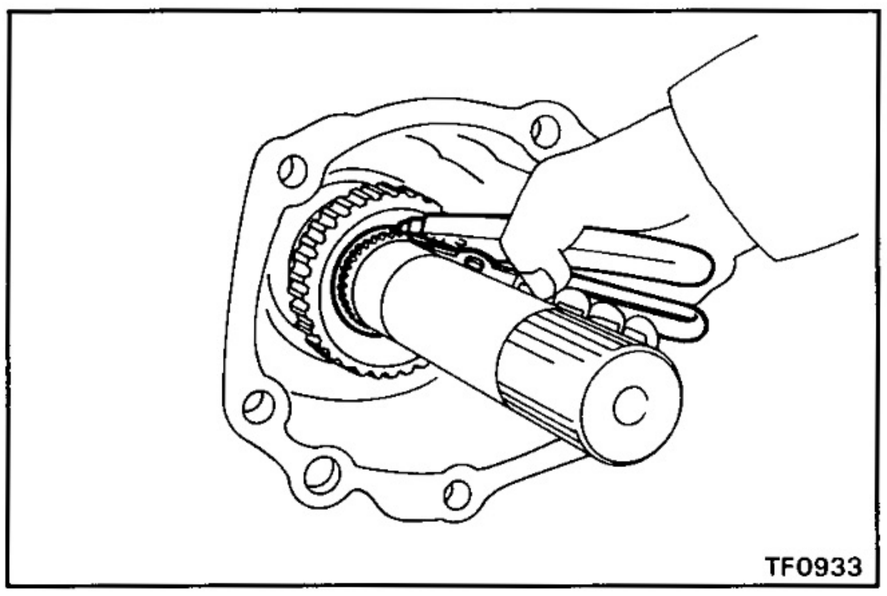

(b) Using snap ring pliers, install the snap ring.

Rear Extension Housing Assembly

COMPONENTS

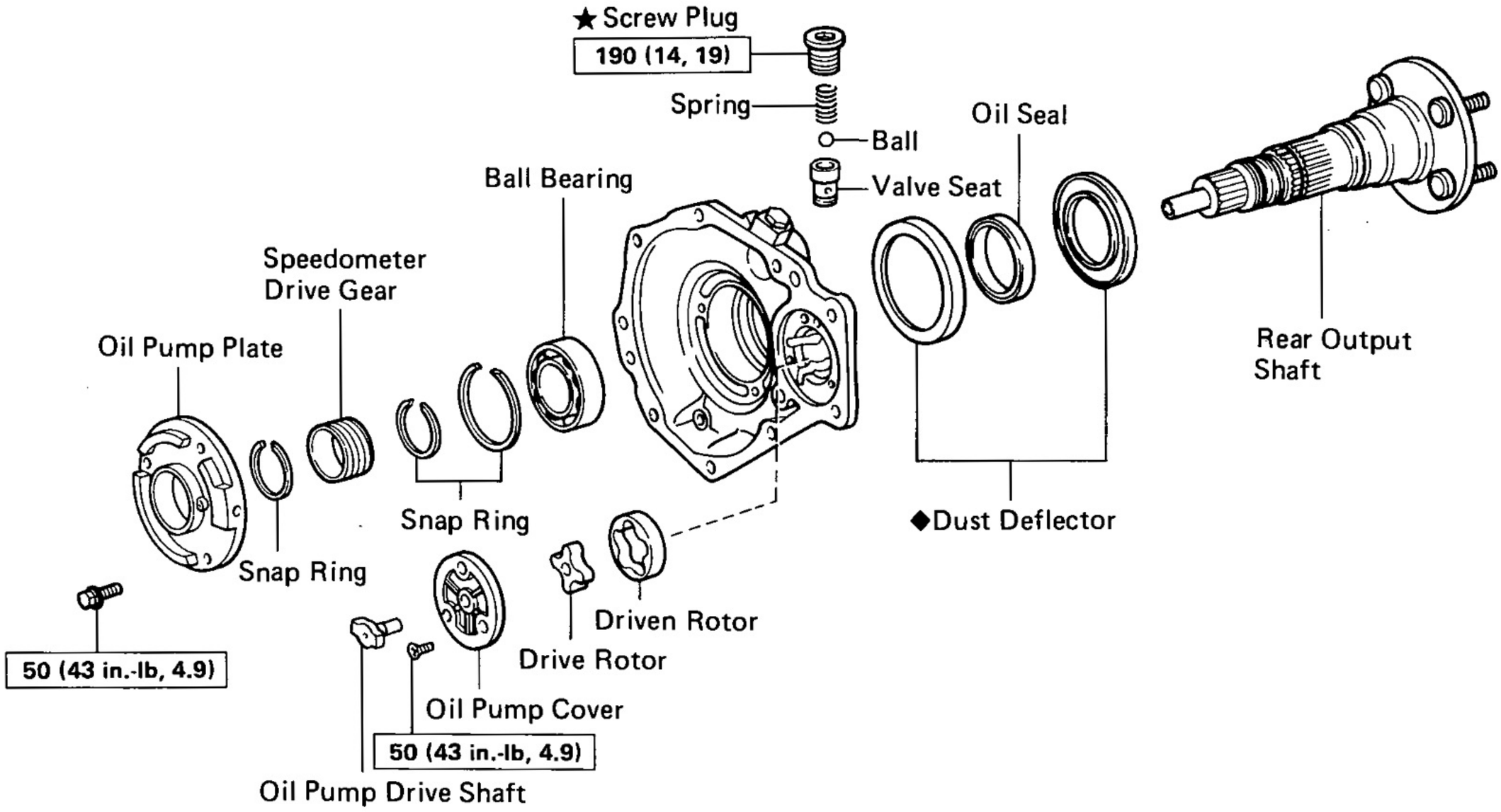

kg-cm (ft-lb, N·m) : Specified torque
◆ Non-reusable part
★ Precoated part

TF0948

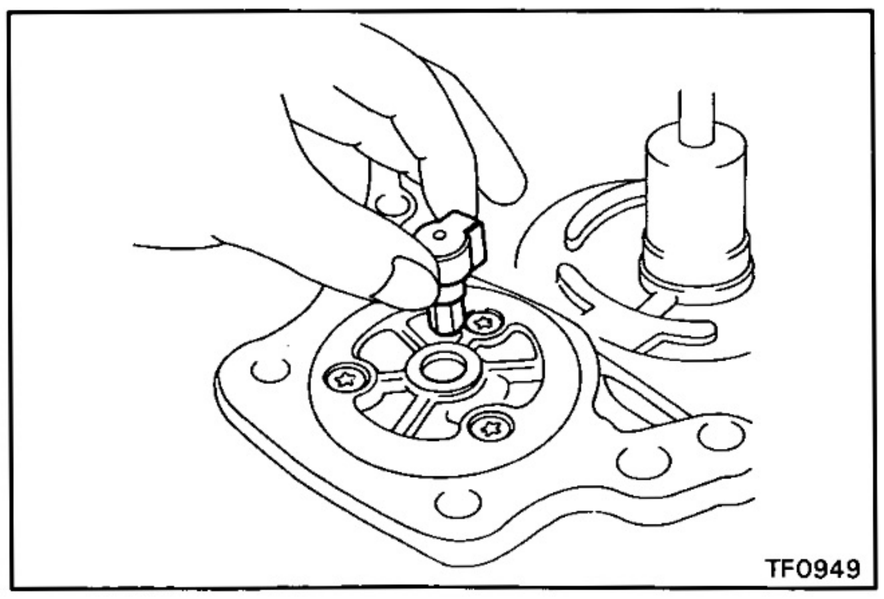

TF0949

DISASSEMBLY OF REAR EXTENSION HOUSING ASSEMBLY

1. REMOVE OIL PUMP DRIVE SHAFT

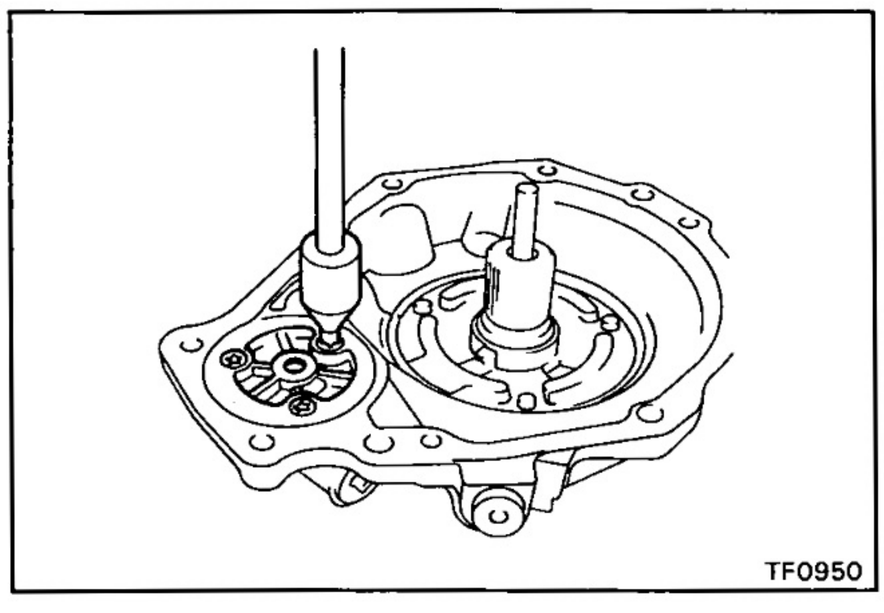

TF0950

2. REMOVE OIL PUMP COVER

Using a torx socket wrench, remove the three screws and the oil pump cover.

(Torx socket wrench T30 09042-00010)

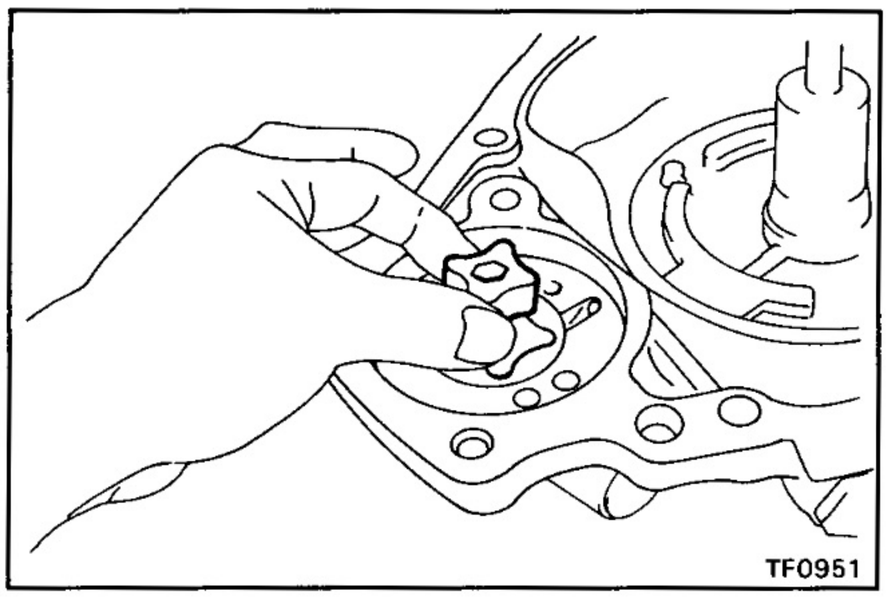

3. REMOVE DRIVE ROTOR

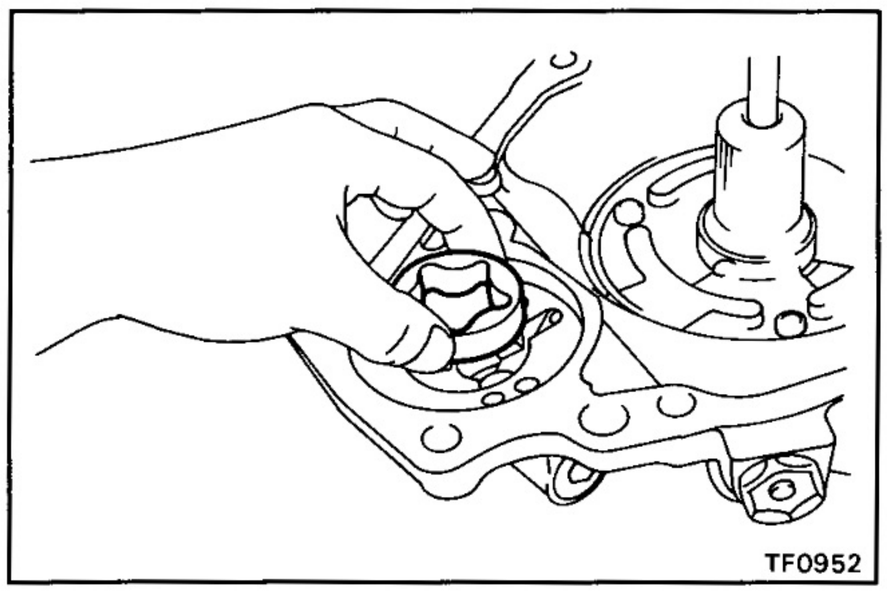

4. REMOVE DRIVEN ROTOR

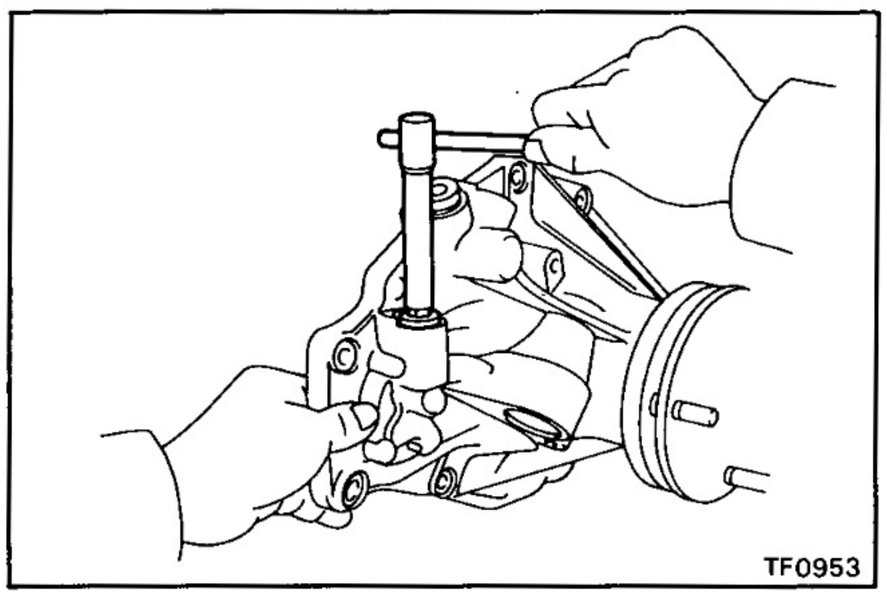

5. REMOVE SCREW PLUG, SPRING, BALL AND VALVE SEAT

(a) Using a hexagon wrench, remove the screw plug.

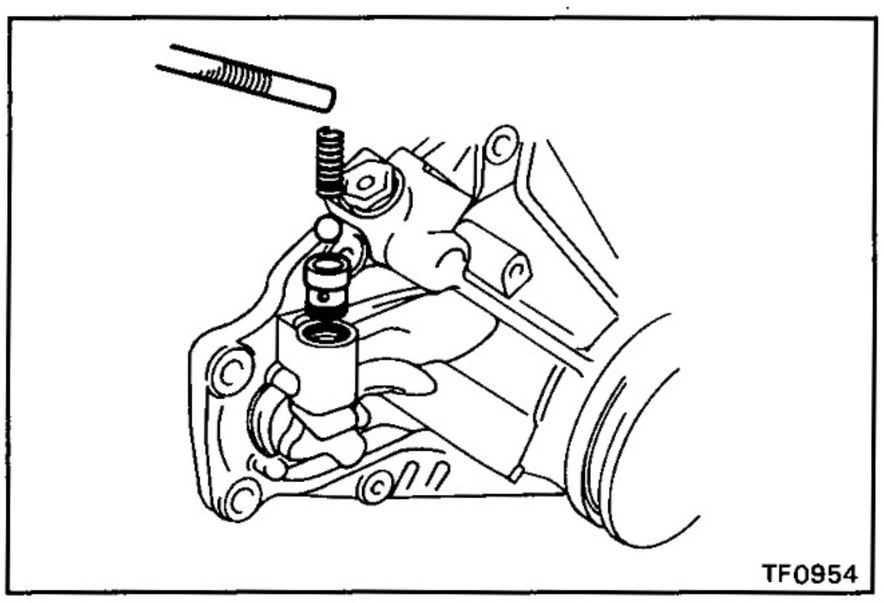

(b) Using a magnetic finger, remove the spring, ball and valve seat.

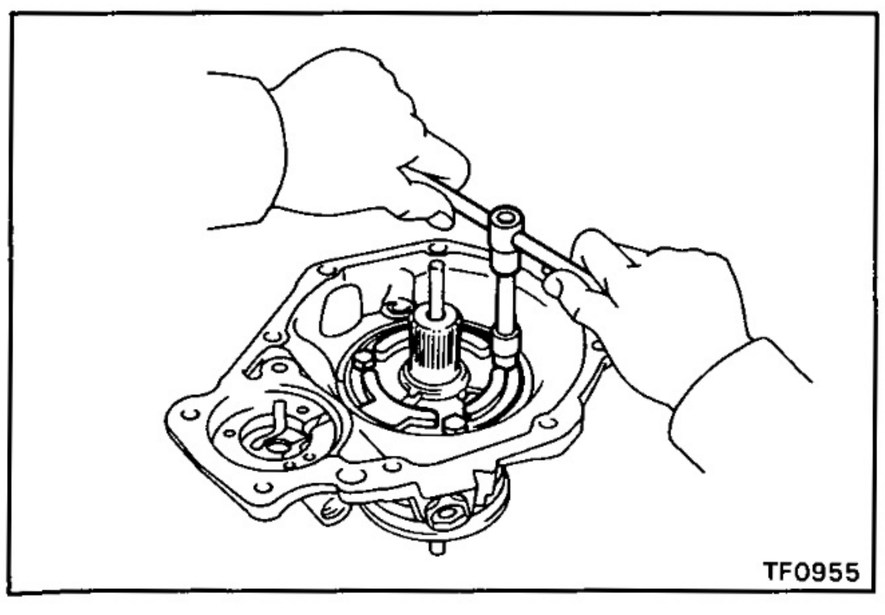

6. REMOVE OIL PUMP PLATE

Remove the three bolts and the oil pump plate.

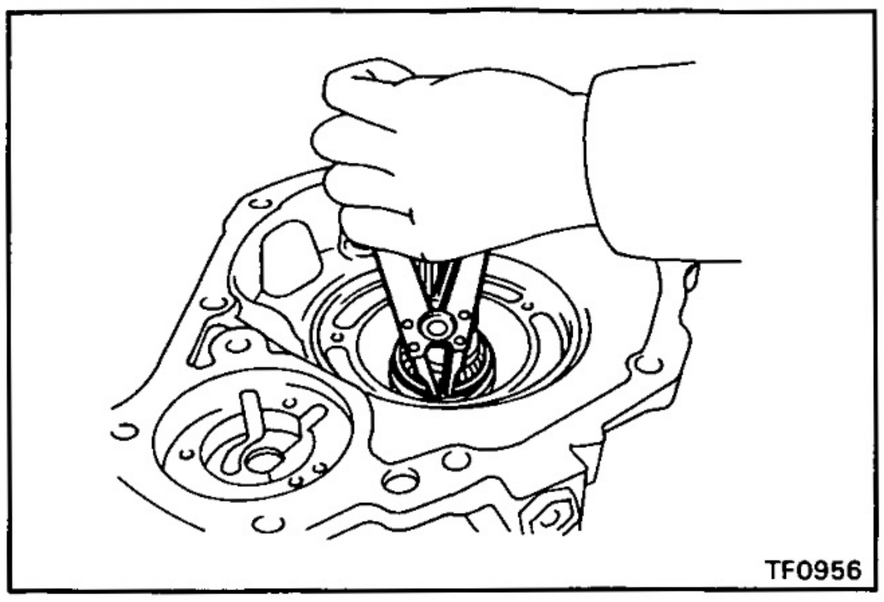

7. REMOVE SPEEDOMETER DRIVE GEAR

(a) Using snap ring pliers, remove the snap ring.

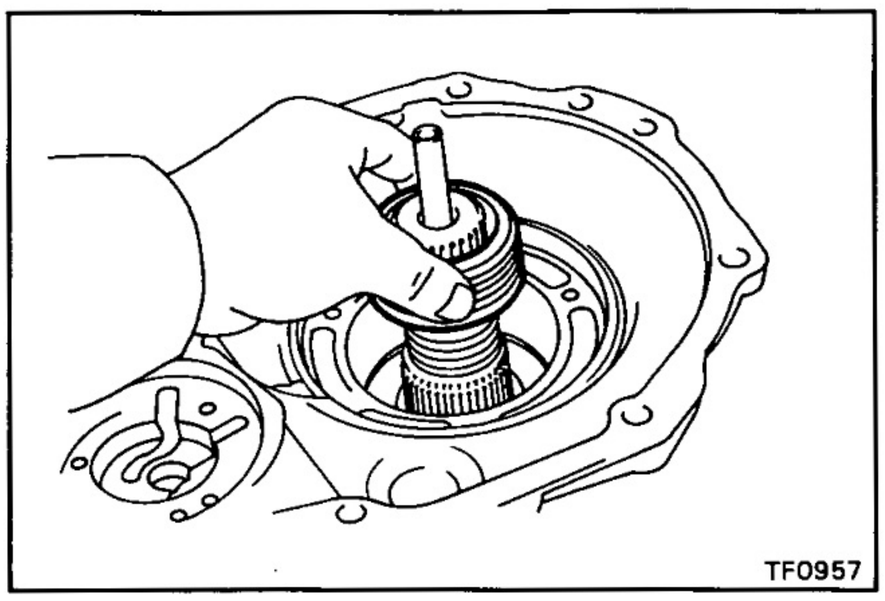

(b) Remove the speedometer drive gear.

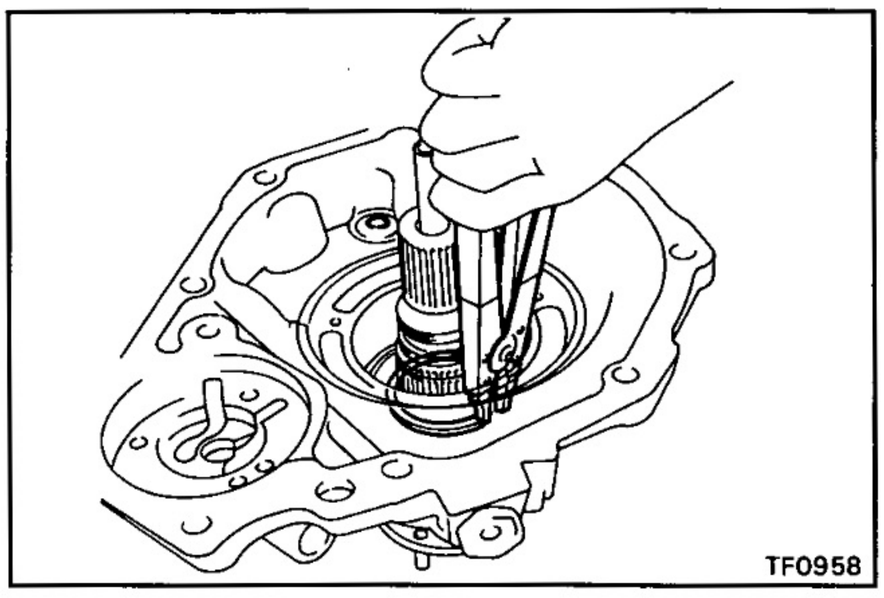

8. REMOVE REAR OUTPUT SHAFT

(a) Using snap ring pliers, remove the snap ring.

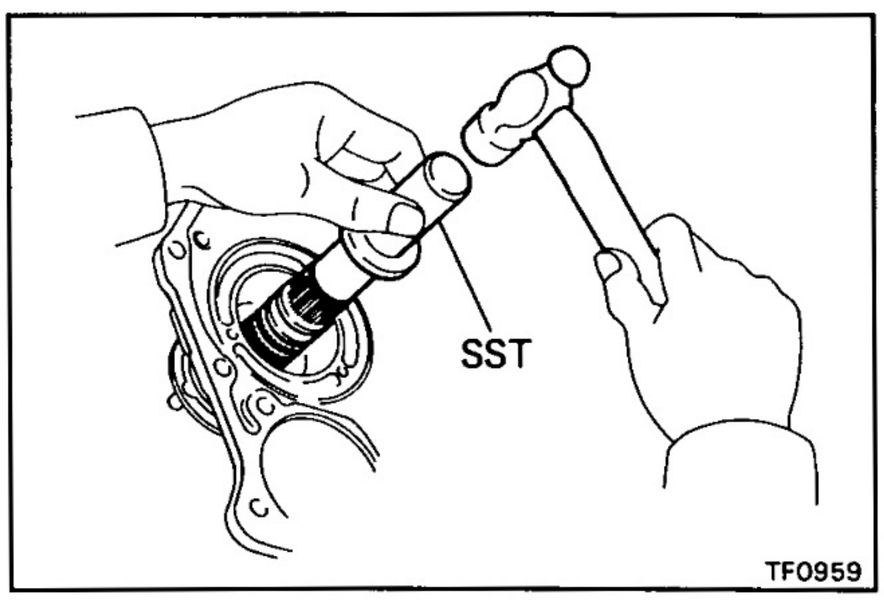

(b) Using SST and a hammer, remove the rear output shaft.

SST 09325-12010

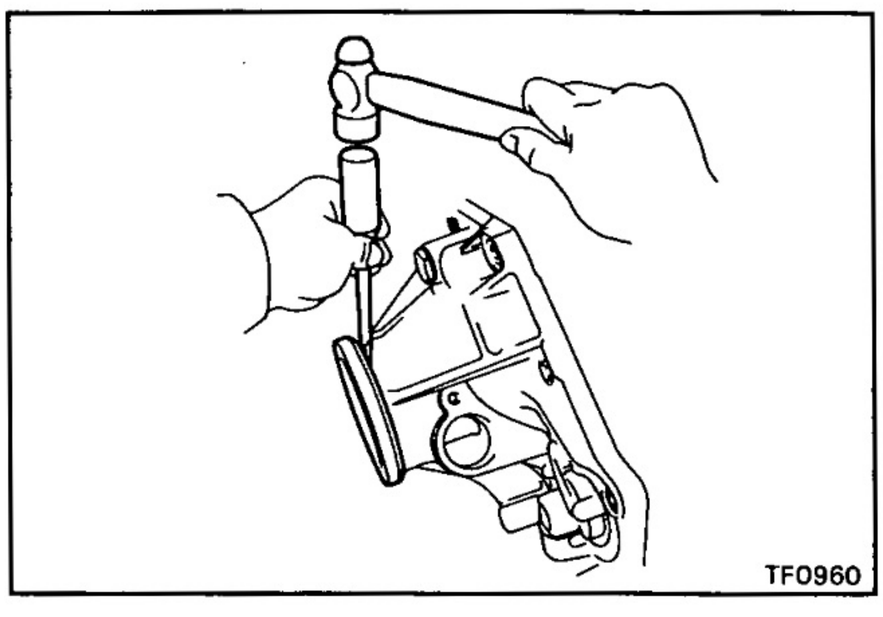

9. REMOVE DUST DEFLECTORS

(a) Using a screwdriver and hammer, remove the rear extension housing dust deflector.

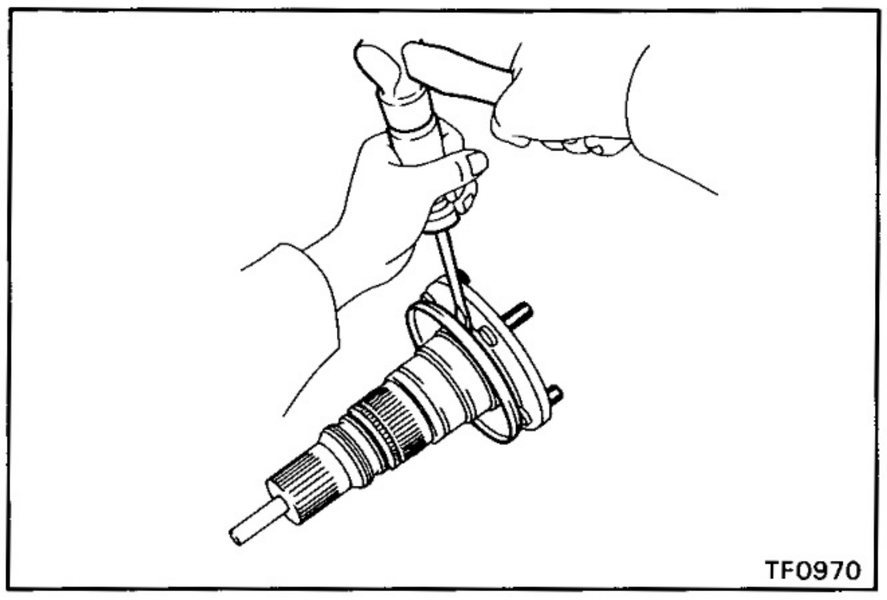

(b) Using a screwdriver and hammer, remove the rear output shaft dust deflector.

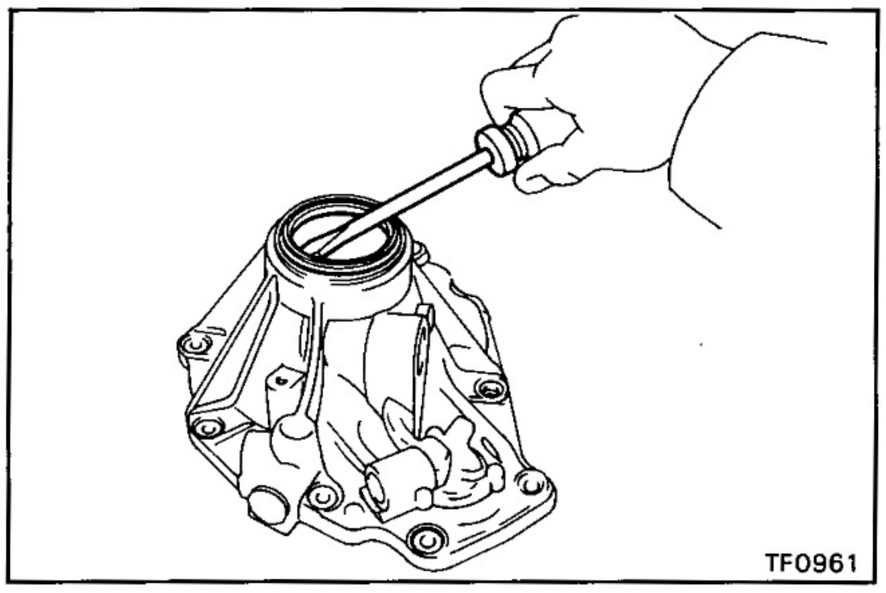

10. REMOVE OIL SEAL

Using a screwdriver, pry out the oil seal.

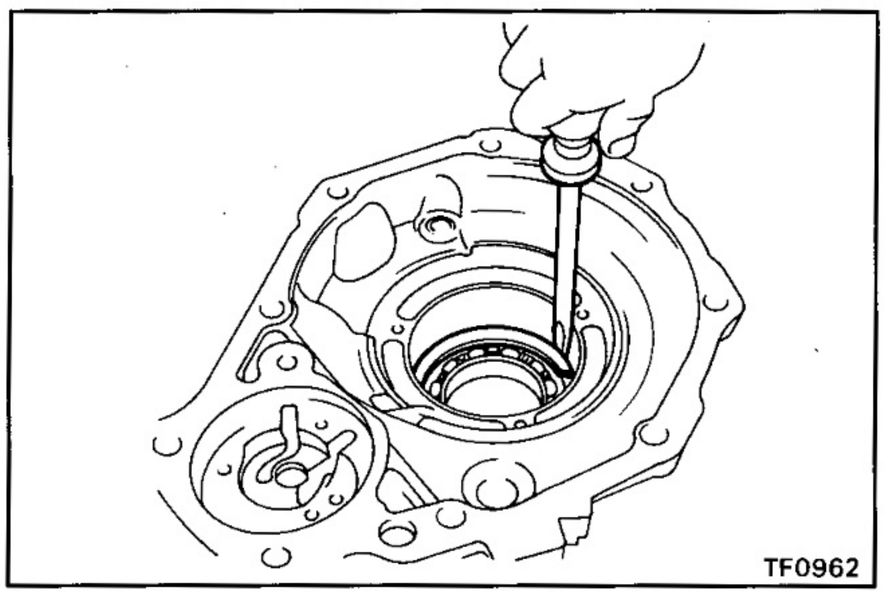

11. REMOVE BALL BEARING

(a) Using a screwdriver, remove the snap ring.

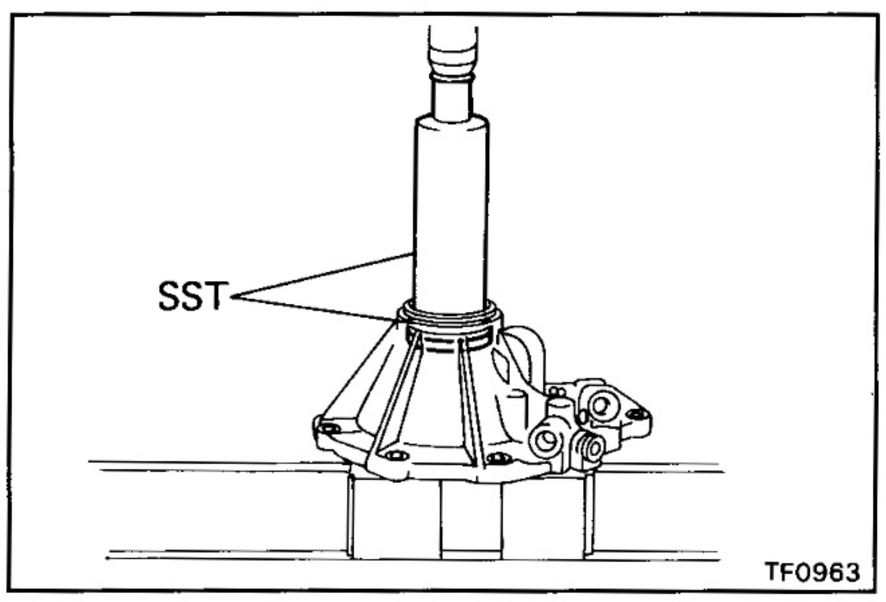

(b) Using SST and a press, remove the ball bearing.

SST 09316-60010 (09316-00010, 09316-00020)

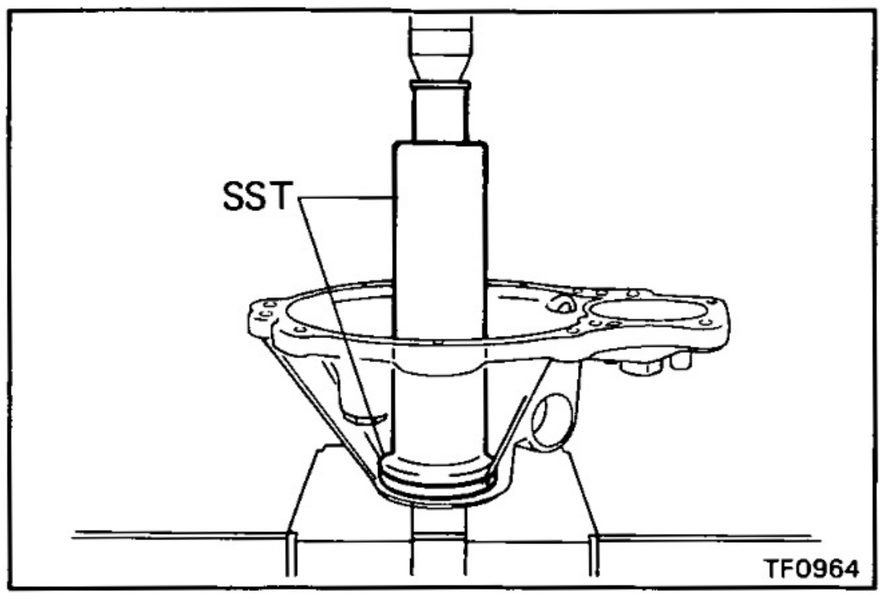

ASSEMBLY OF REAR EXTENSION HOUSING

1. INSTALL BALL BEARING

(a) Using SST and a press, install the ball bearing.

SST 09316-60010 (09316-00010, 09316-00030)

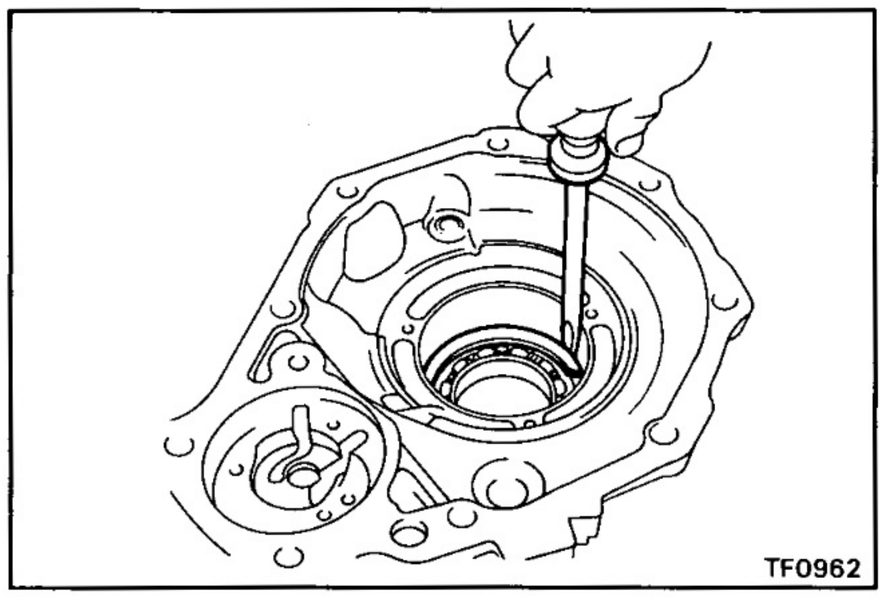

(b) Using a screwdriver, install the snap ring.

2. INSTALL DUST DEFLECTORS

(a) Using SST and a hammer, install the rear extension housing dust deflector.

SST 09316-60010 (09316-00010, 09316-00040)

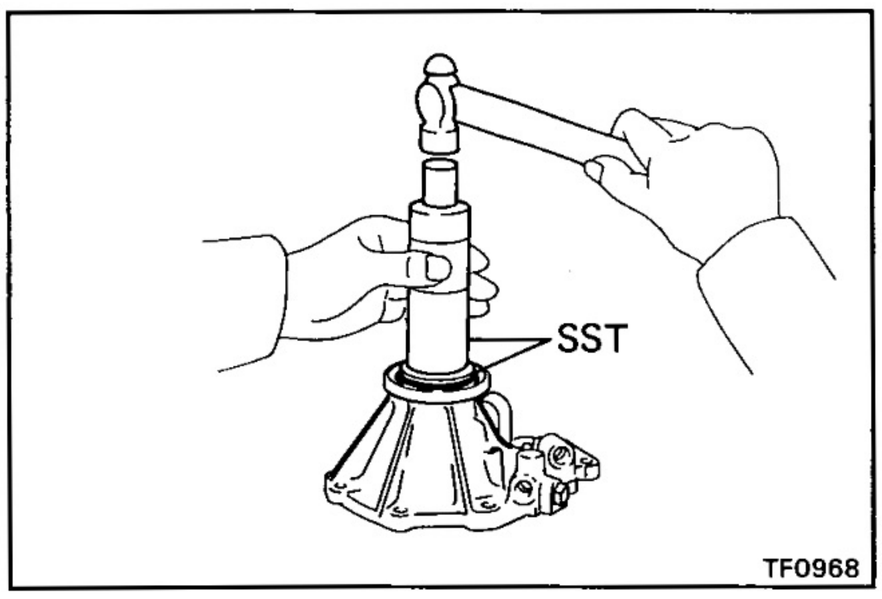

(b) Using SST and a press, install the rear output shaft dust deflector.

SST 09316-20011, 09316-60010 (09316-00010)

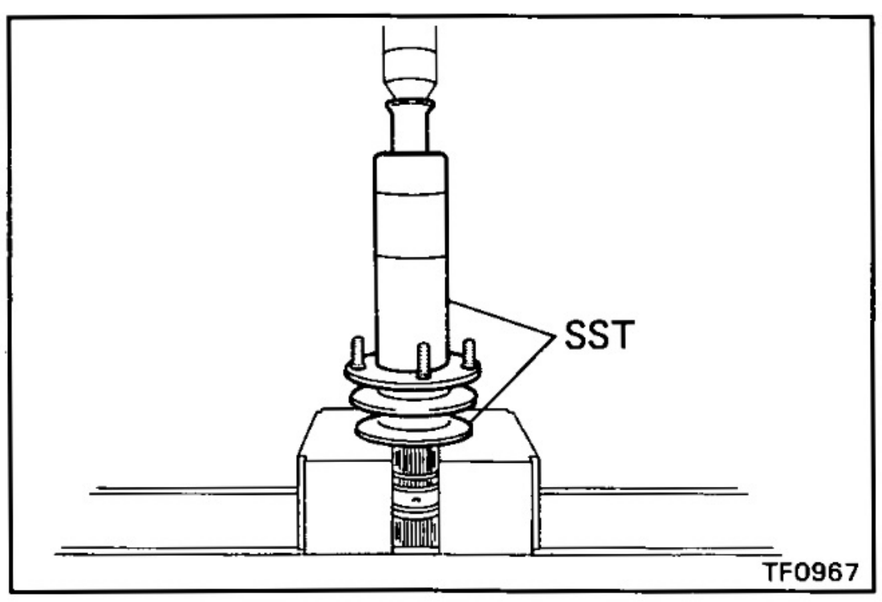

3. INSTALL OIL SEAL

Using SST and a hammer, drive in a new oil seal.

SST 09316-60010 (09316-00010, 09316-00030)

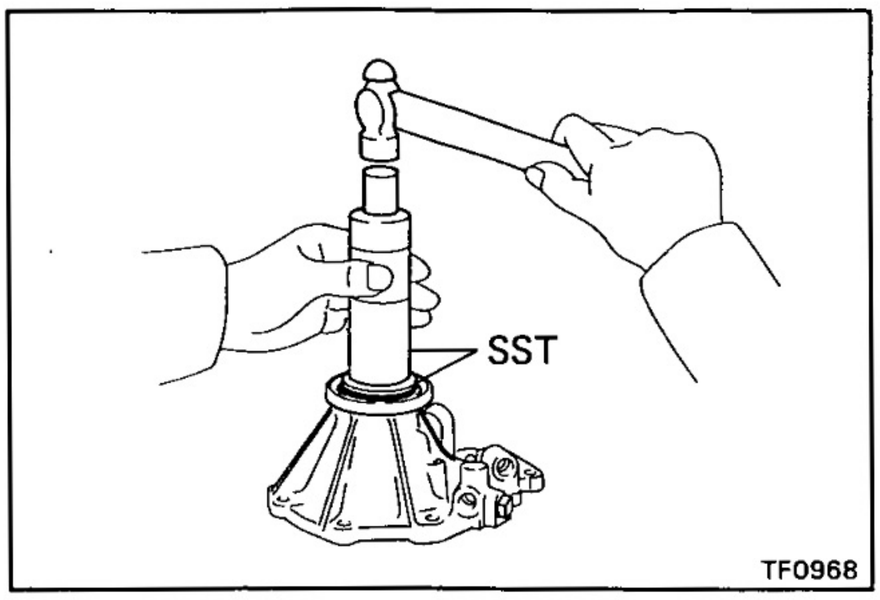

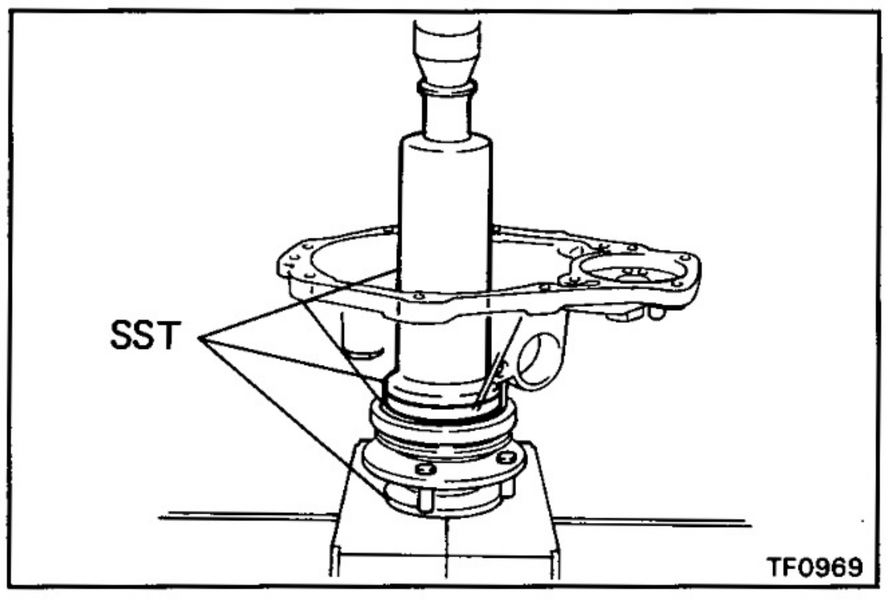

4. INSTALL REAR OUTPUT SHAFT

(a) Using SST and a press, install the rear output shaft.

SST 09316-20011, 09316-60010
(09316-00010, 09316-00030)

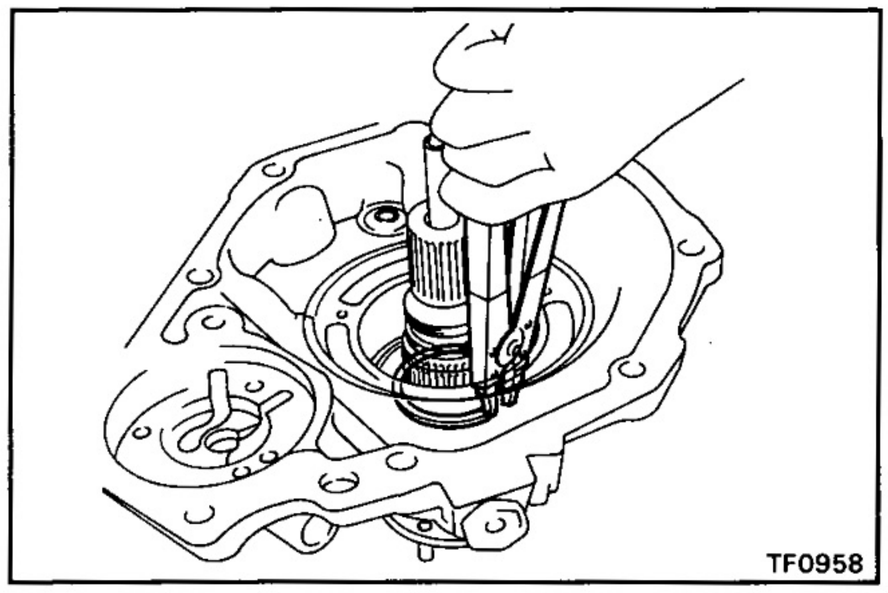

(b) Using snap ring pliers, install the snap ring.

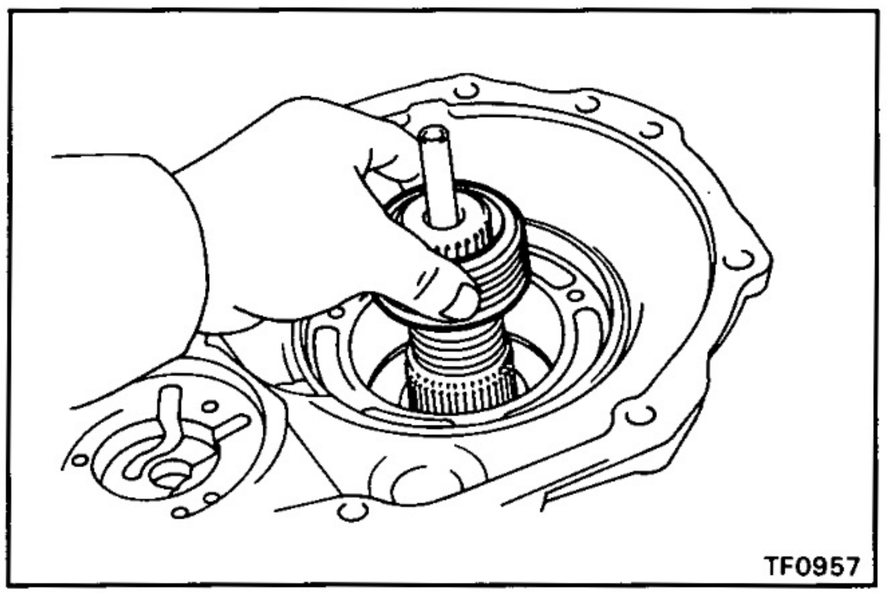

5. INSTALL SPEEDOMETER DRIVE GEAR

(a) Install the speedometer drive gear.

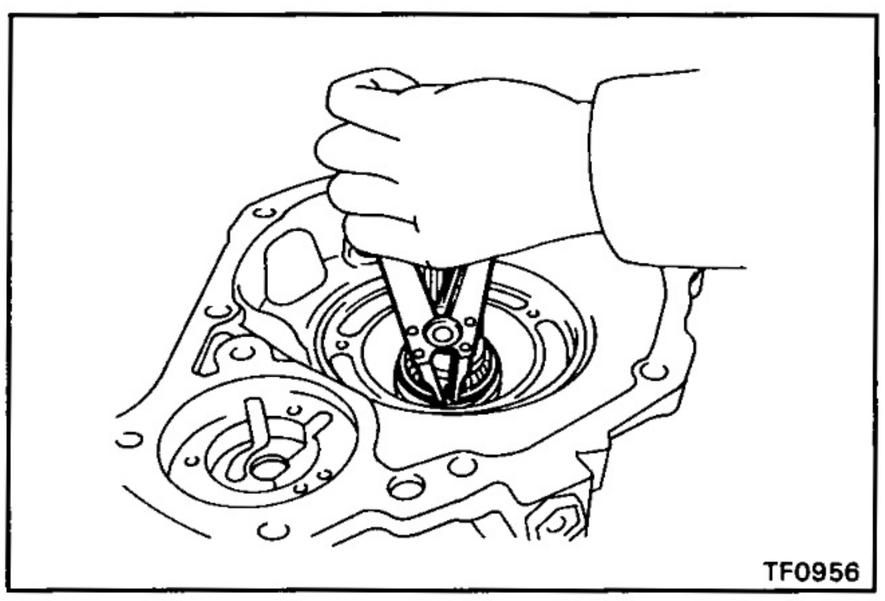

(b) Using snap ring pliers, install the snap ring.

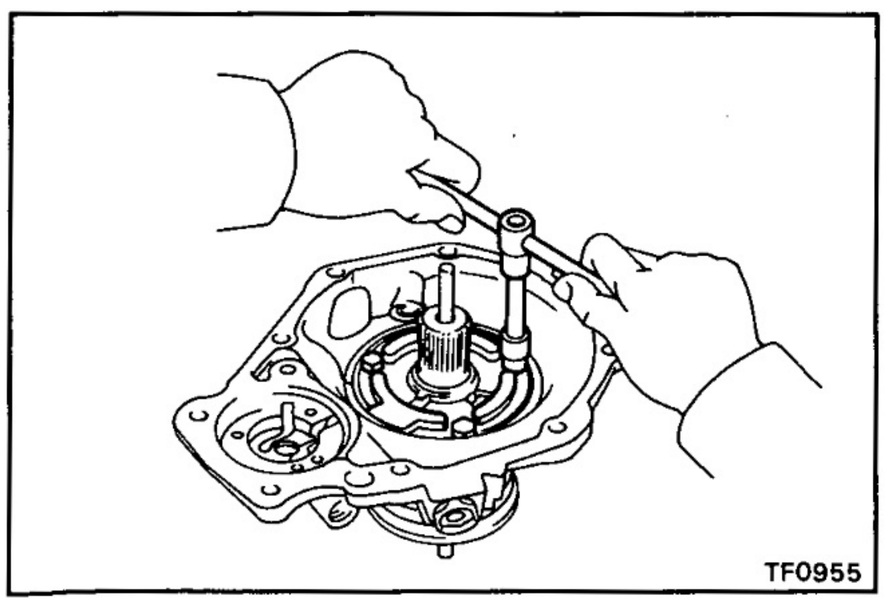

6. INSTALL OIL PUMP PLATE

(a) Install the oil pump plate.

(b) Install and torque the three bolts.

Torque: 50 kg-cm (43 in.-lb, 4.9 N·m)

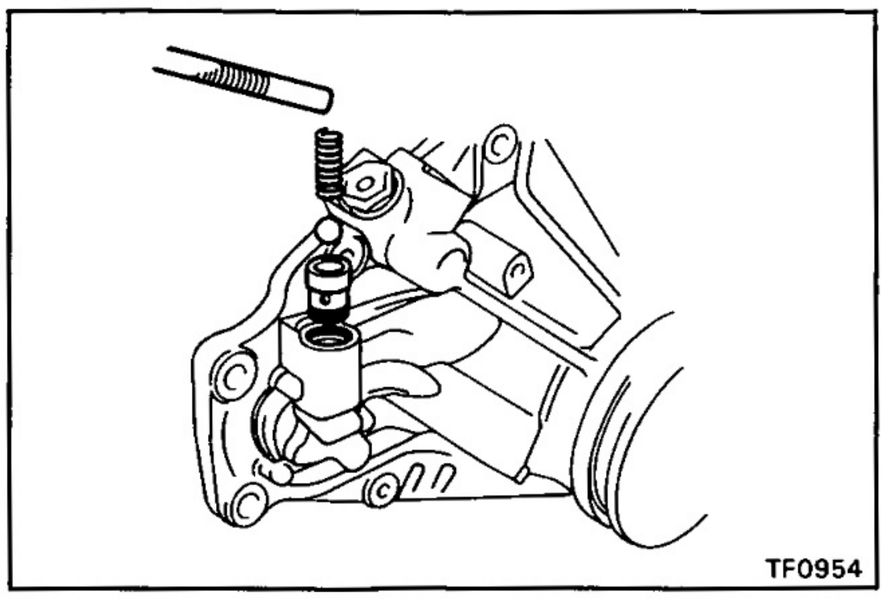
TF0954

7. INSTALL VALVE SEAT, BALL, SPRING AND SCREW PLUG

(a) Apply gear oil to the ball.

(b) Install the valve seat, ball and spring.

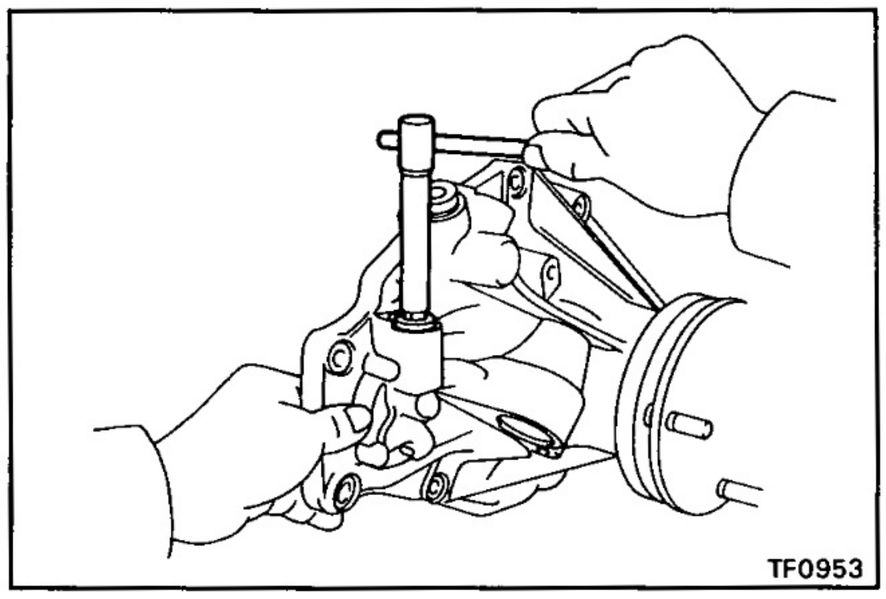
TF0953

(c) Apply liquid sealer to the screw plug.

Sealant: Part No.08833-00080, THREE BOND 1344, LOCTITE 242 or equivalent

(d) Install and torque the screw plug.

Torque: 190 kg-cm (14 ft-lb, 19 N·m)

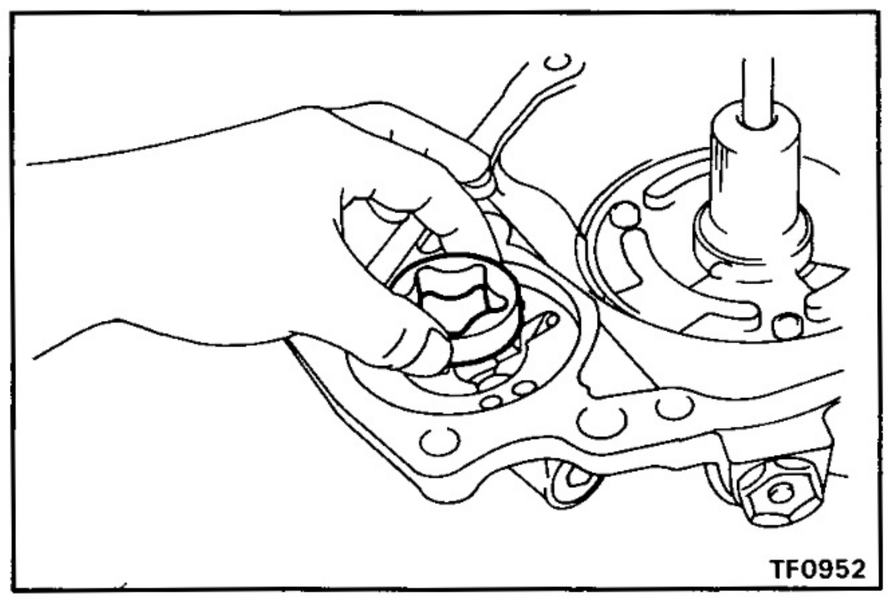
TF0952

8. INSTALL DRIVEN ROTOR

(a) Apply gear oil to the driven rotor.

(b) Install the driven rotor.

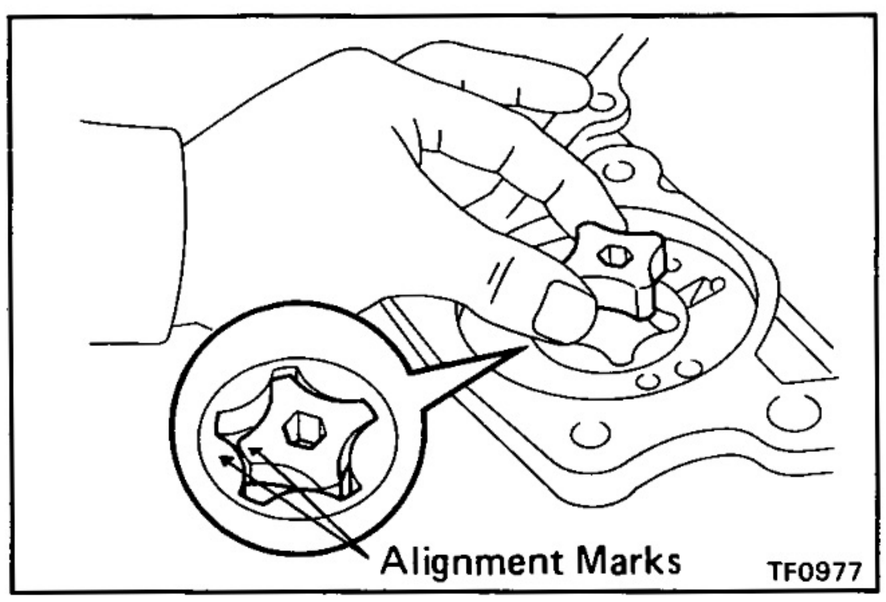

TF0977

9. INSTALL DRIVE ROTOR

(a) Apply gear oil to the drive rotor.

(b) Install the drive rotor.

HINT: Align the alignment marks.

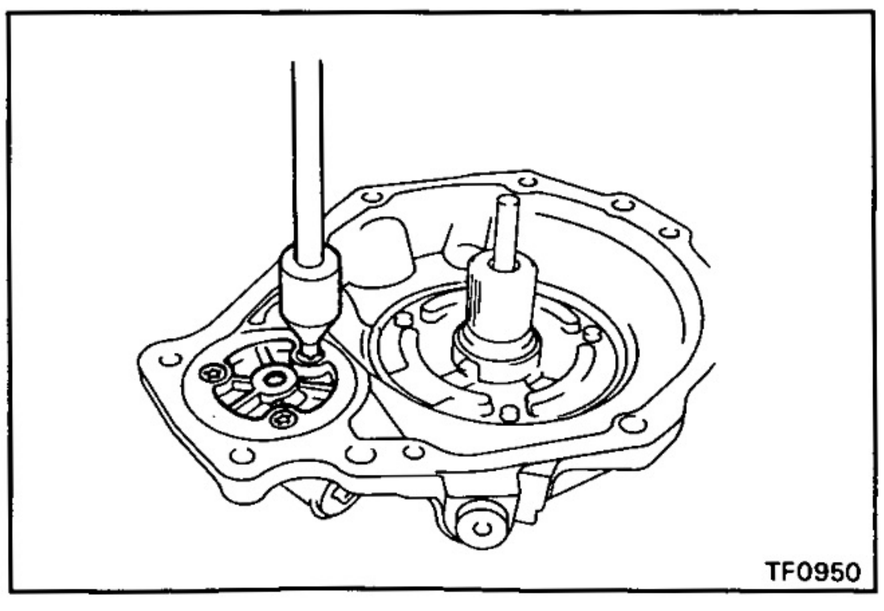
TF0950

10. INSTALL OIL PUMP COVER

(a) Install the oil pump cover.

(b) Using a torx socket wrench, install and torque the three screws.

(Torx socket wrench T30 09042-00010)

Torque: 50 kg-cm (43 in.-lb, 4.9 N·m)

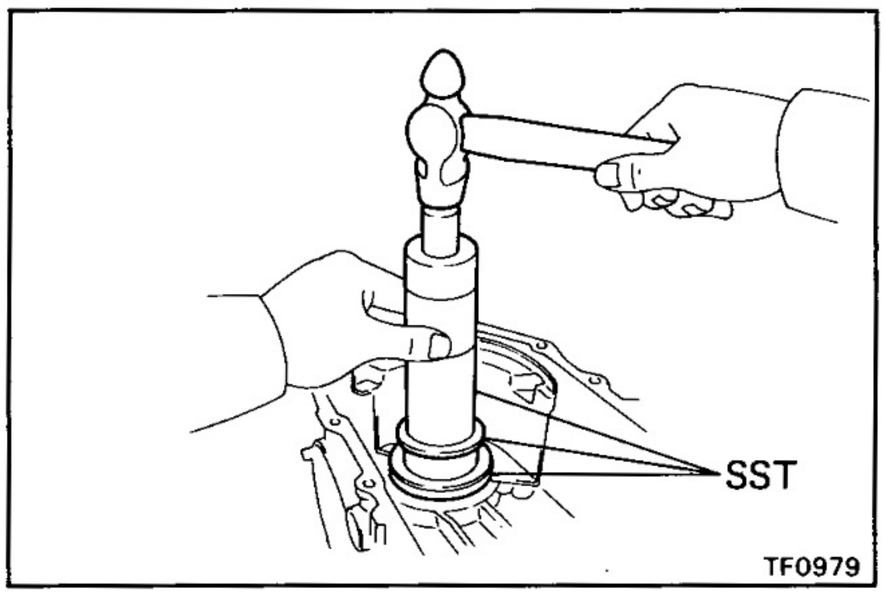

ASSEMBLY OF TRANSFER

1. INSTALL TWO BEARING RACES TO FRONT CASE

(a) Using SST and a hammer, install the center differential bearing race.

SST 09316-20011, 09316-60010 (09316-00010, 09316-00030)

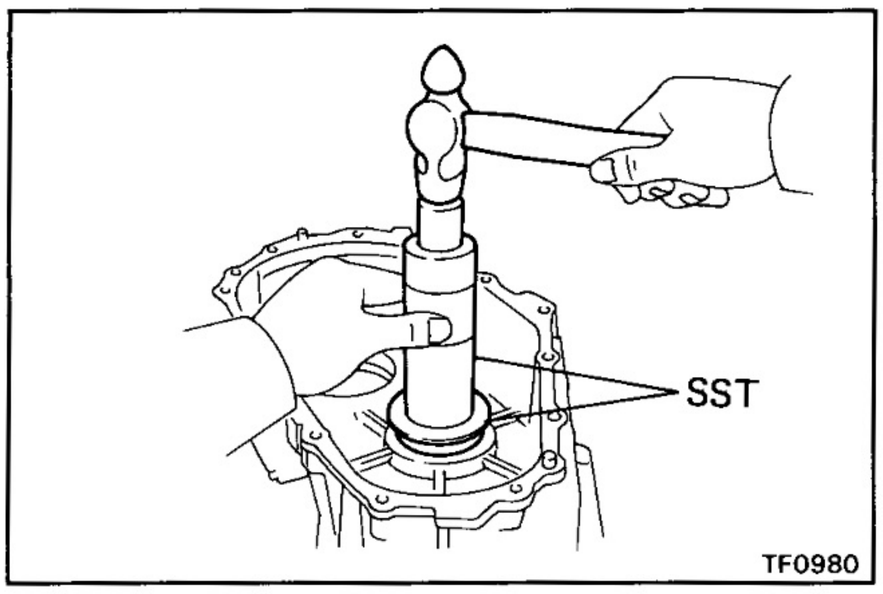

(b) Using SST and a hammer, install the idler gear bearing race.

SST 09316-60010 (09316-00010, 09316-00040)

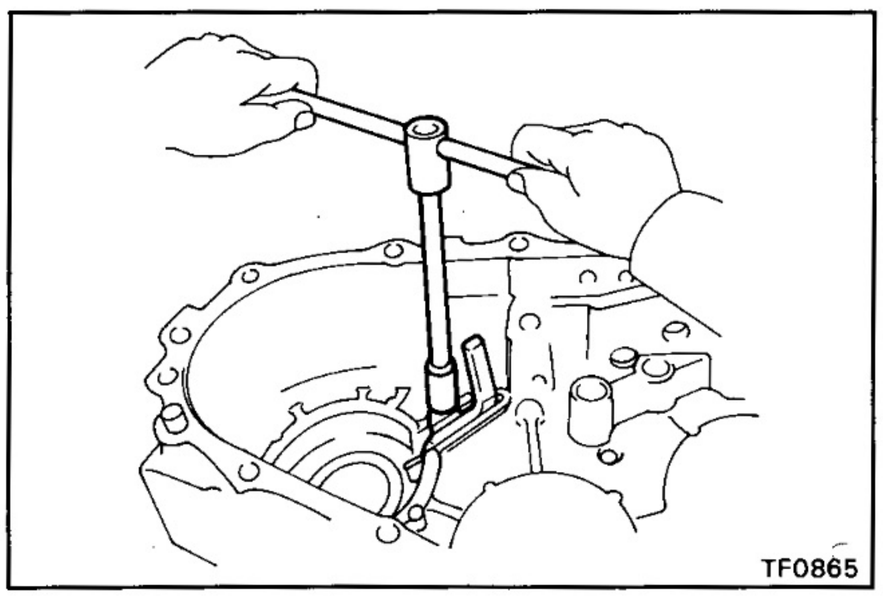

2. INSTALL OIL RECEIVER TO FRONT CASE

(a) Install the oil receiver.

(b) Install and torque the bolt.

Torque: 55 kg-cm (48 in.-lb, 5.4 N·m)

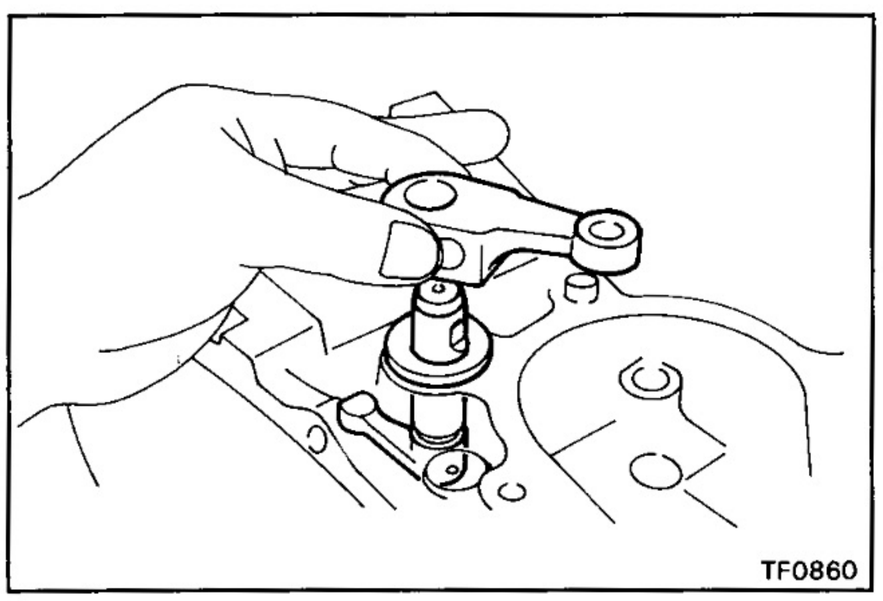

3. INSTALL SHIFT OUTER LEVER, INNER LEVER AND WASHER

(a) Install the shift outer lever, inner lever and washer.

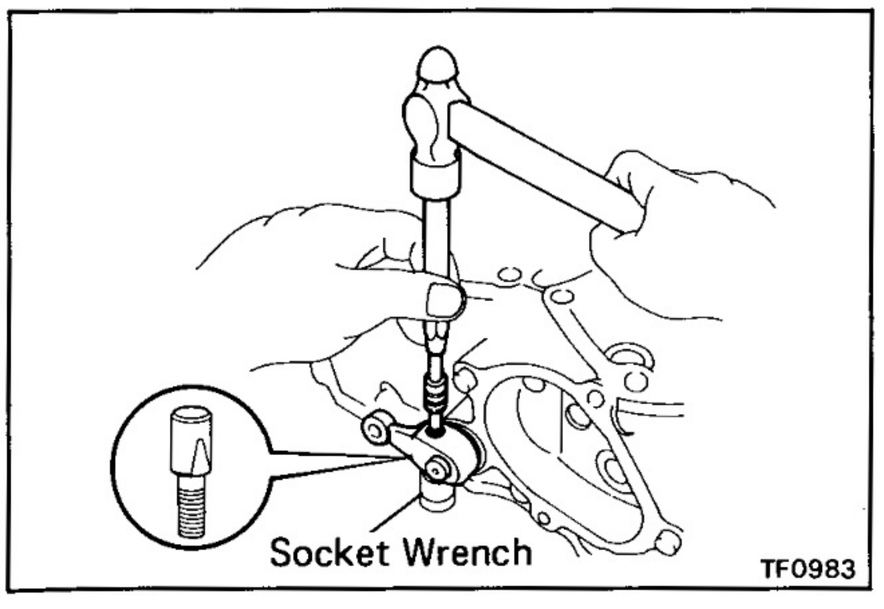

(b) Using a pin punch, hammer and socket wrench, install the lever lock pin.

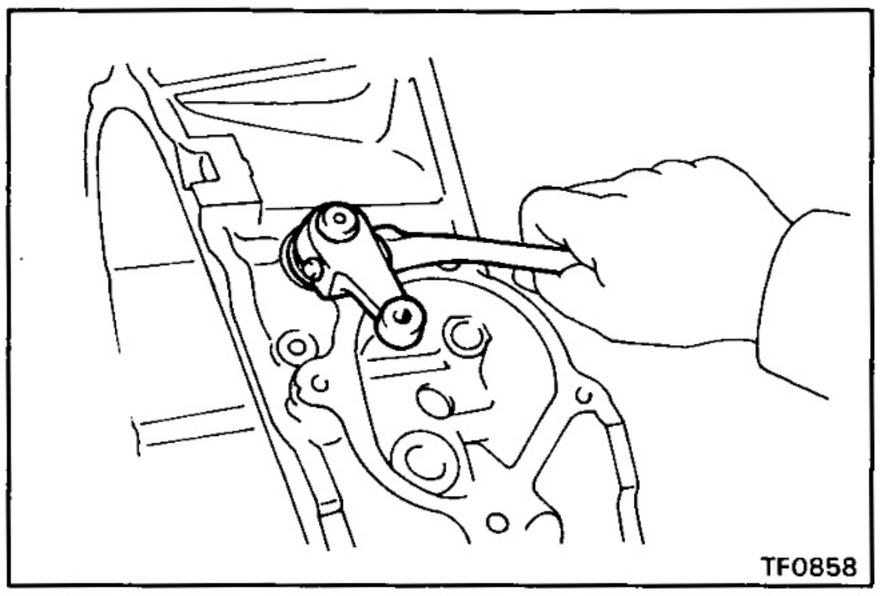

(c) Install the washer and nut.

Torque: 120 kg-cm (9 ft-lb, 12 N·m)

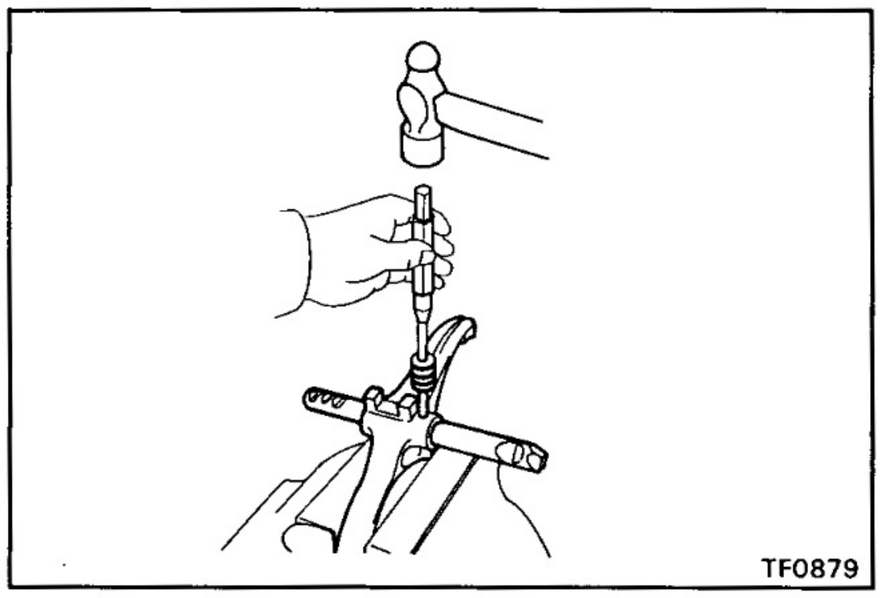

4. ASSEMBLE HIGH AND LOW SHIFT FORK AND FORK SHAFT

Using a pin punch and a hammer, drive in the slotted spring pin.

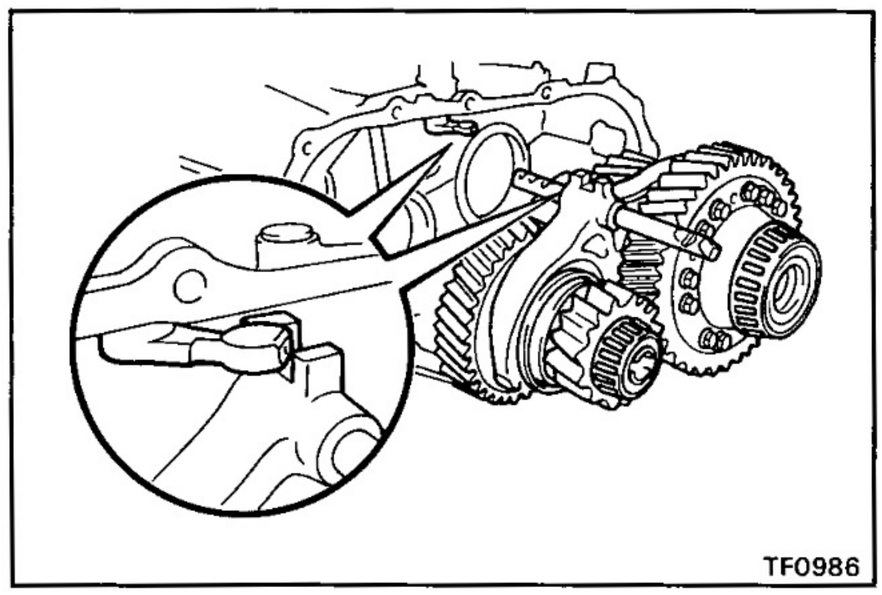

5. INSTALL IDLER GEAR ASSEMBLY, CENTER DIFFERENTIAL ASSEMBLY AND HIGH AND LOW SHIFT FORK ASSEMBLY TO FRONT CASE

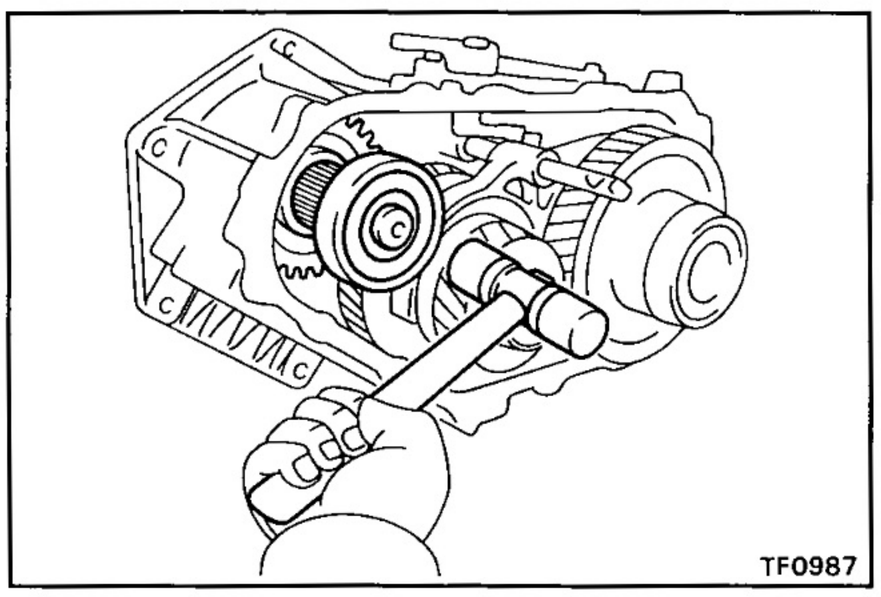

6. INSTALL INPUT SHAFT ASSEMBLY

Using a plastic hammer, tap in the input shaft.

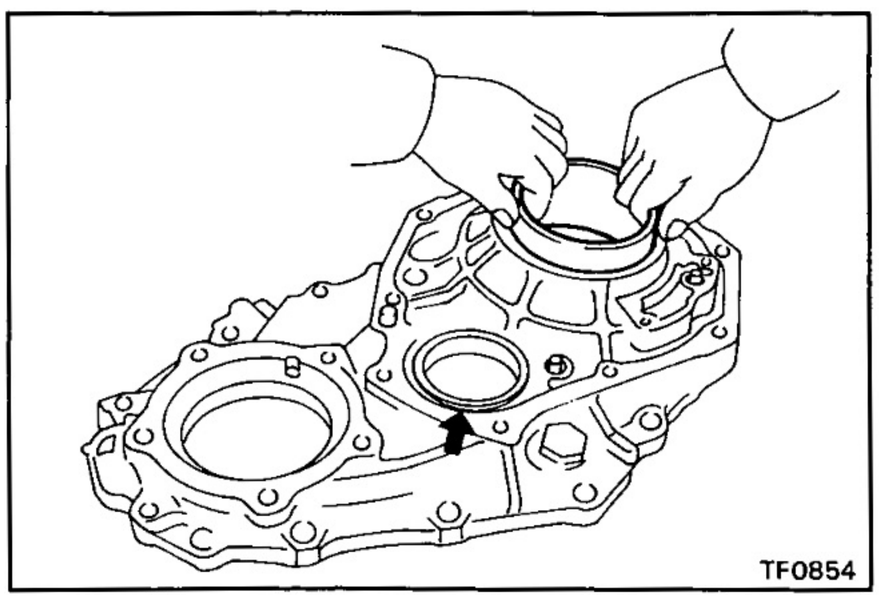

7. INSTALL TWO BEARING RACES TO REAR CASE

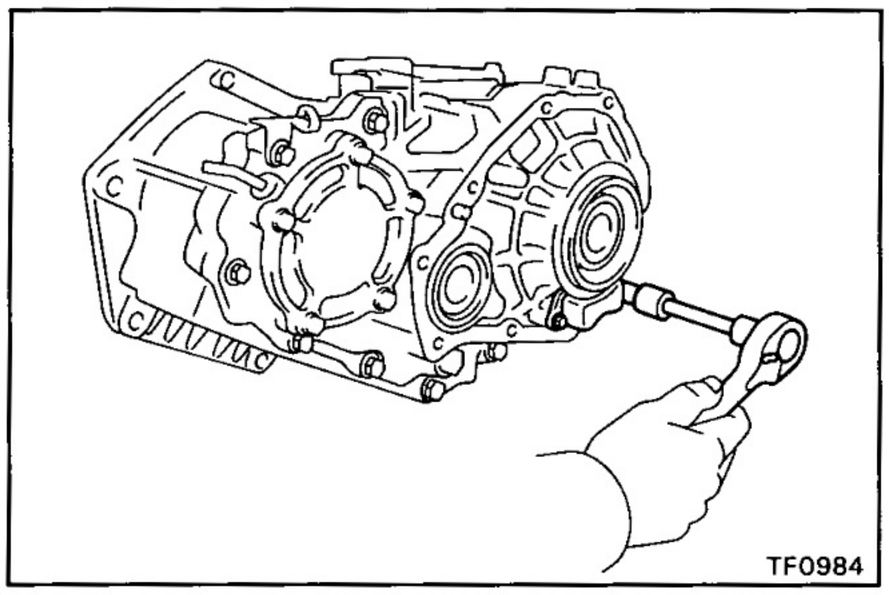
TF0984

8. INSTALL OIL STRAINER TO REAR CASE

(a) Install the oil strainer.

(b) Install and torque the bolts.

Torque: 50 kg-cm (43 in.-lb, 4.9 N·m)

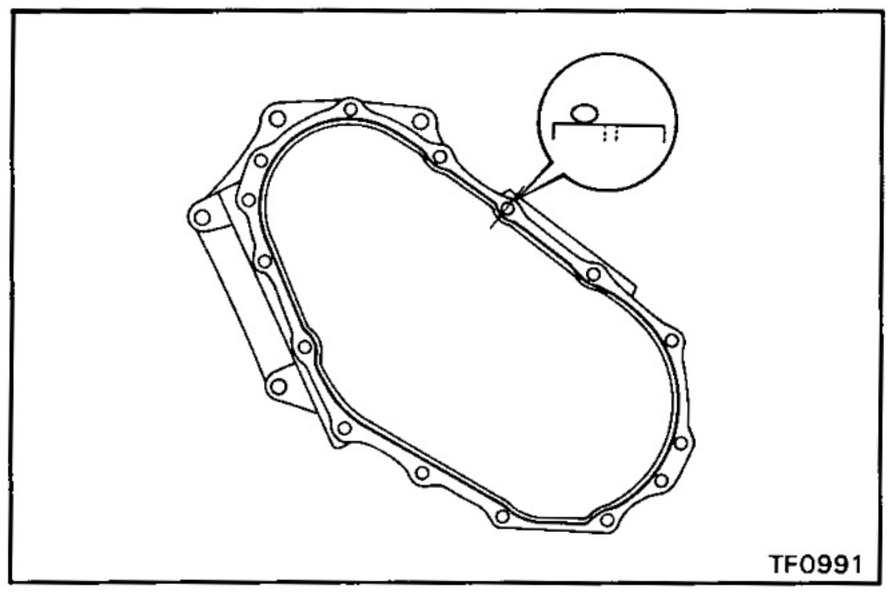
TF0991

9. ASSEMBLE FRONT CASE AND REAR CASE

(a) Remove any packing material and be careful not to drop oil on the contacting surfaces of the front case.

(b) Apply seal packing to the front case as shown.

Seal packing: Part No.08826-00090, THREE BOND 1281 or equivalent

HINT: Install the rear case as soon as the seal packing is applied.

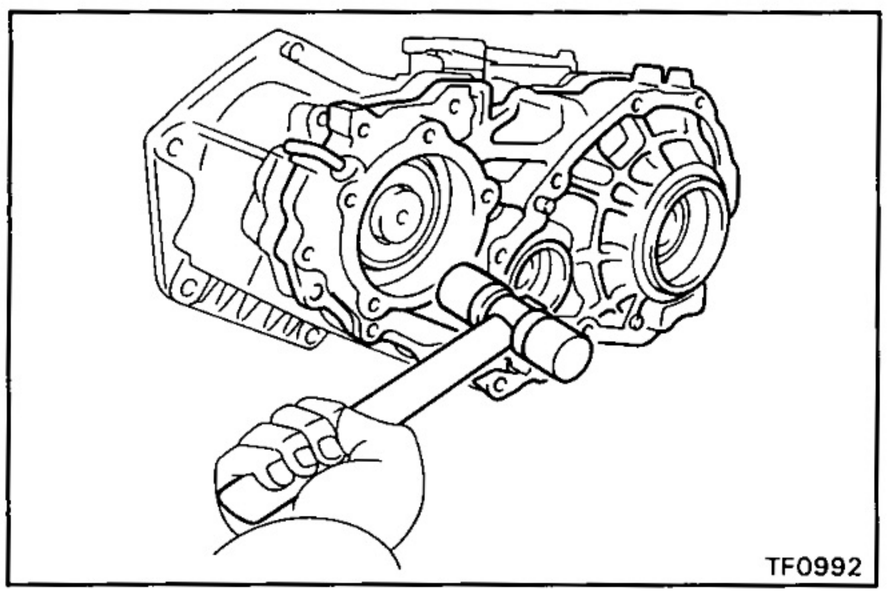
TF0992

(c) Using a plastic hammer, tap the rear case and assemble it.

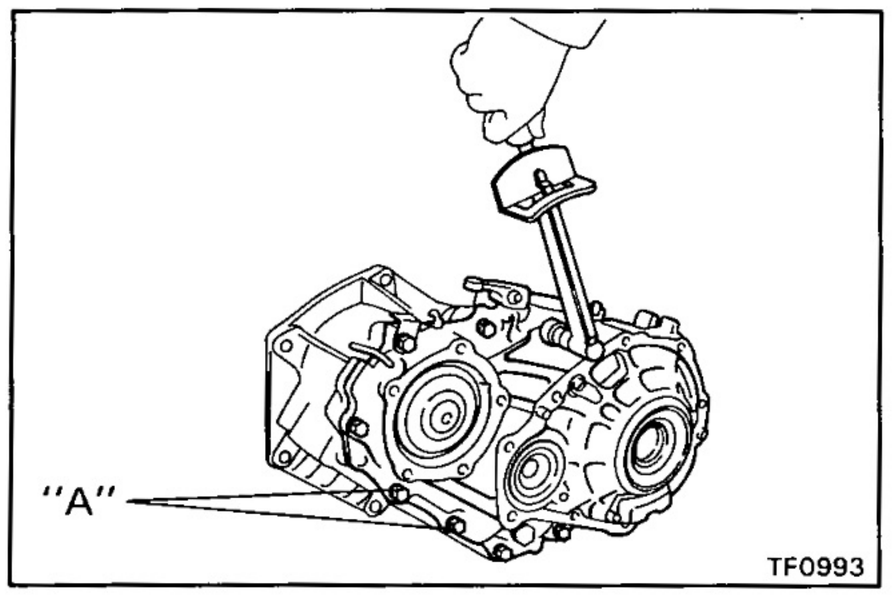

TF0993

(d) Apply liquid sealer to the "A" bolt threads.

Sealant: Part No.08833-00080, THREE BOND 1344, LOCTITE 242 or equivalent

(e) Install and torque the eight bolts.

Torque: 380 kg-cm (27 ft-lb, 37 N·m)

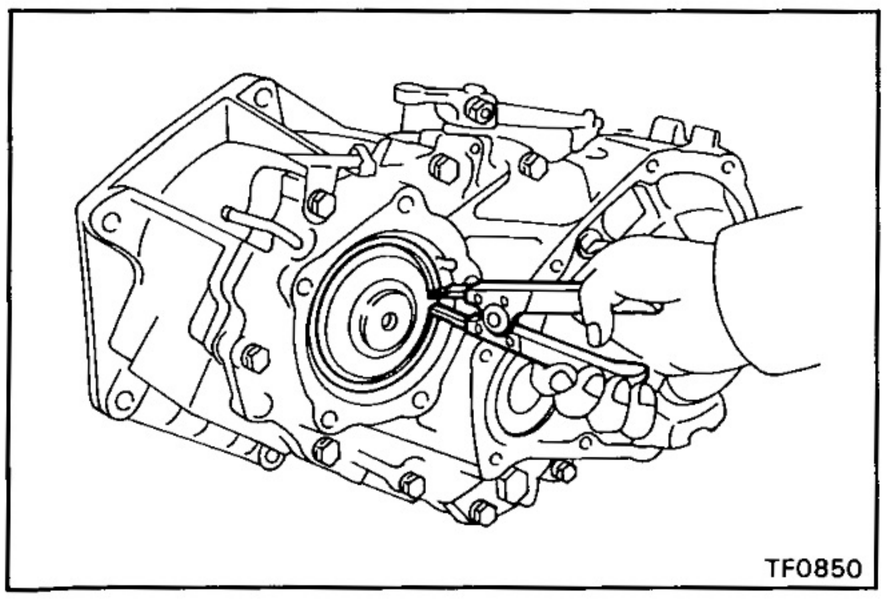
TF0850

(f) Using snap ring pliers, install the snap ring.

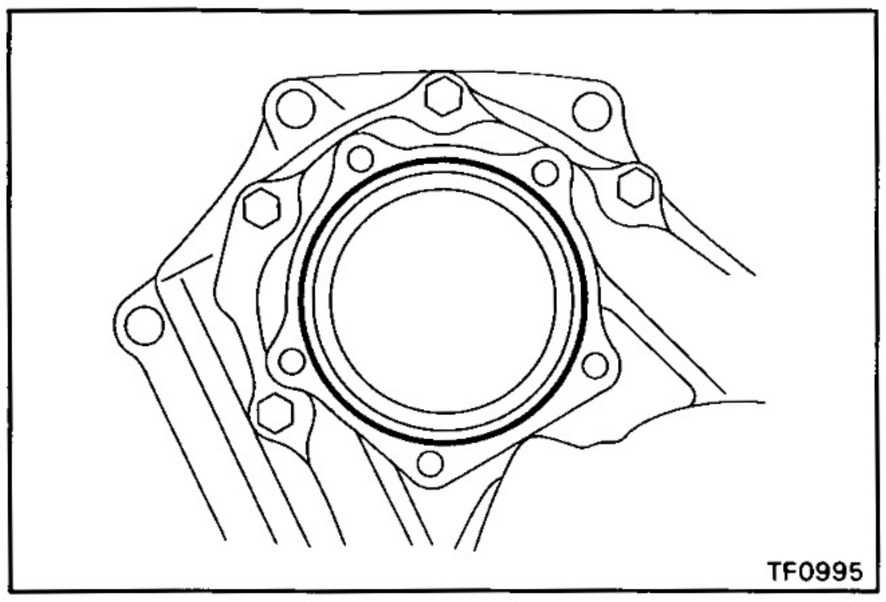
TF0995

10. INSTALL CASE COVER

(a) Remove any packing material and be careful not to drop oil on the contacting surfaces of the rear case.

(b) Apply seal packing to the rear case as shown.

Seal packing: Part No.08826-00090, THREE BOND 1281 or equivalent

HINT: Install the case cover as soon as the seal packing is applied.

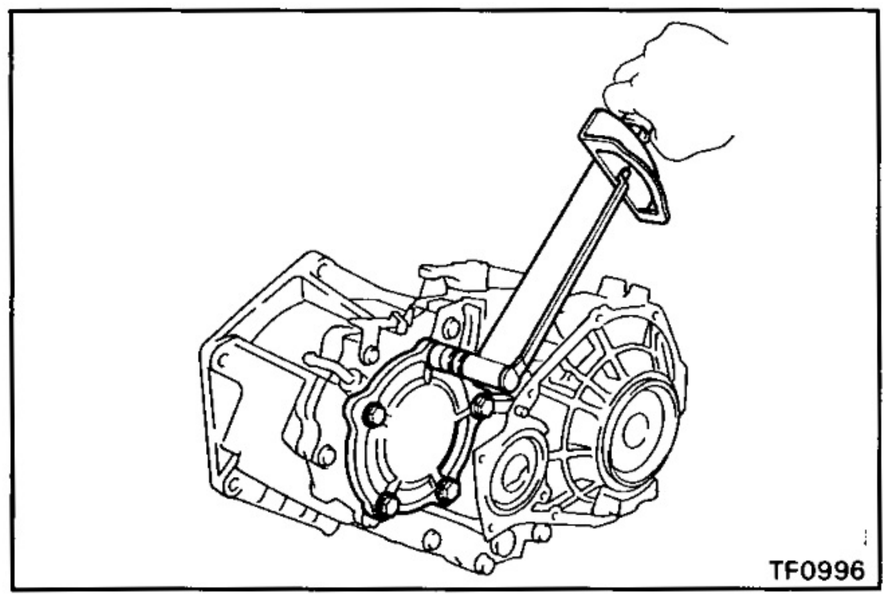
TF0996

(c) Install the case cover.

(d) Apply liquid sealer to the bolt threads.

Sealant: Part No.08833-00080, THREE BOND 1344, LOCTITE 242 or equivalent

(e) Install and torque the five bolts.

Torque: 380 kg-cm (27 ft-lb, 37 N·m)

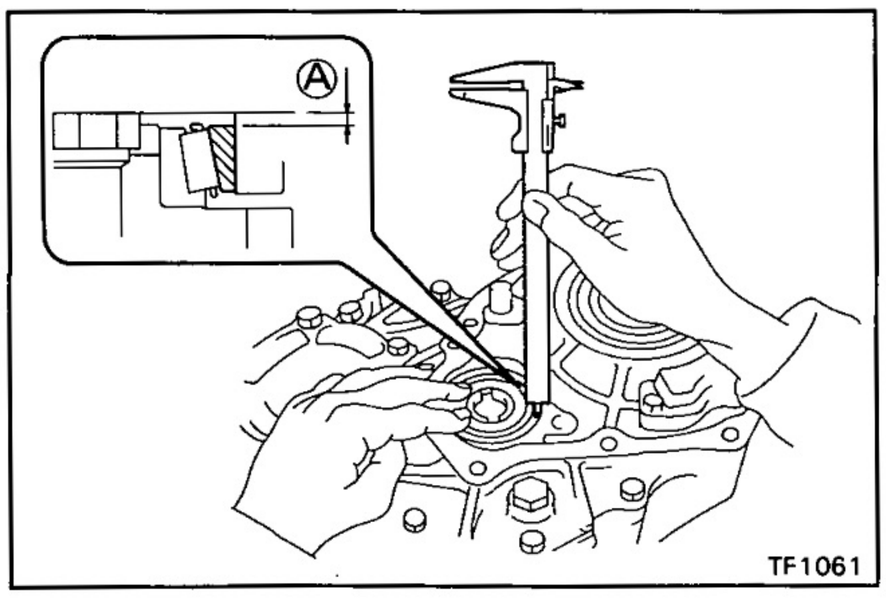

TF1061

11. SELECT ADJUSTING SHIMS FOR IDLER GEAR REAR TAPER ROLLER BEARING

(a) Using a vernier caliper with depth gauge, measure dimension Ⓐ.

HINT: Lightly hold down the bearing outer race in the thrust direction to eliminate any looseness before making the measurement.

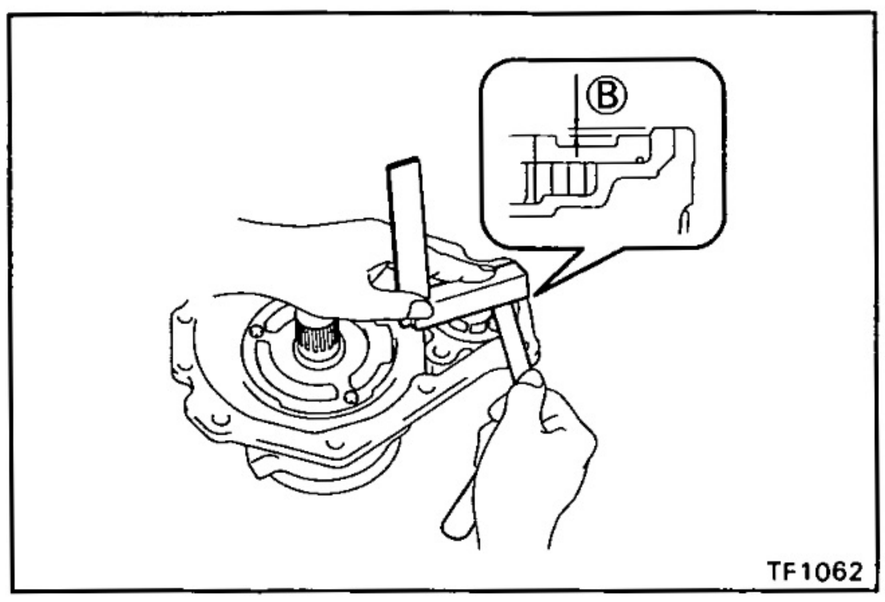

TF1062

(b) Using a steel straight edge and feeler gauge, measure the clearance of dimension Ⓑ.

(c) Calculate the required thickness of the adjusting shim.

Thickness:

Dimension Ⓐ + Dimension Ⓑ + (0.03 ~ 0.08 mm)

(d) From the following table, select a shim with a thickness fitting with in the rang of the calculation in (c).

Mark	Thickness mm (in.)	Mark	Thickness mm (in.)
A	0.15 (0.0059)	G	3.00 (0.1181)
B	0.30 (0.0118)	H	3.20 (0.1260)
C	0.45 (0.0177)	J	3.40 (0.1339)
D	2.40 (0.0945)	K	3.60 (0.1417)
E	2.60 (0.1024)	L	3.80 (0.1496)
F	2.80 (0.1102)	M	4.00 (0.1575)

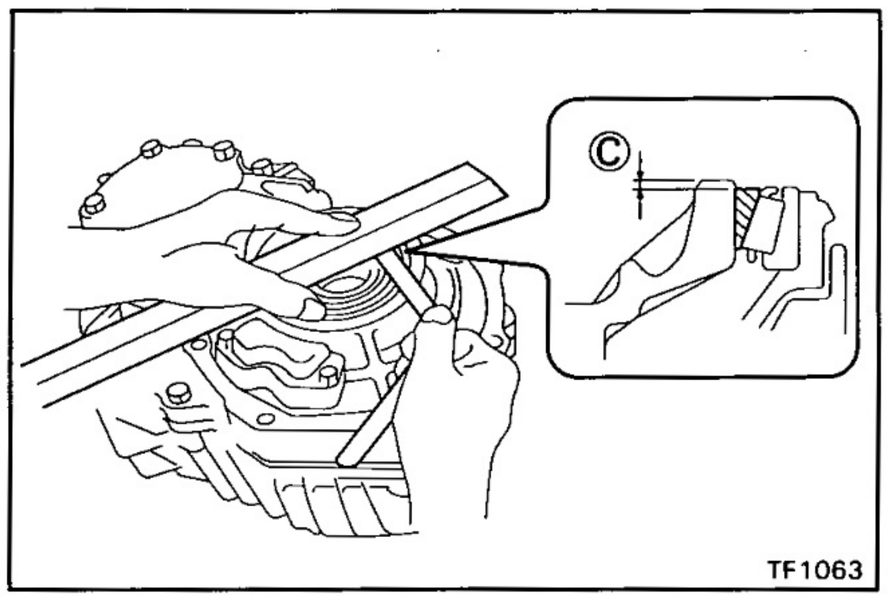

12. SELECT ADJUSTING SHIMS FOR OUTPUT SHAFT TAPER ROLLER BEARING

(a) Using a steel straight edge and feeler gauge, measure the clearance of dimension Ⓒ.

HINT: Lightly hold down the bearing outer race in the thrust direction to eliminate any looseness before making the measurement.

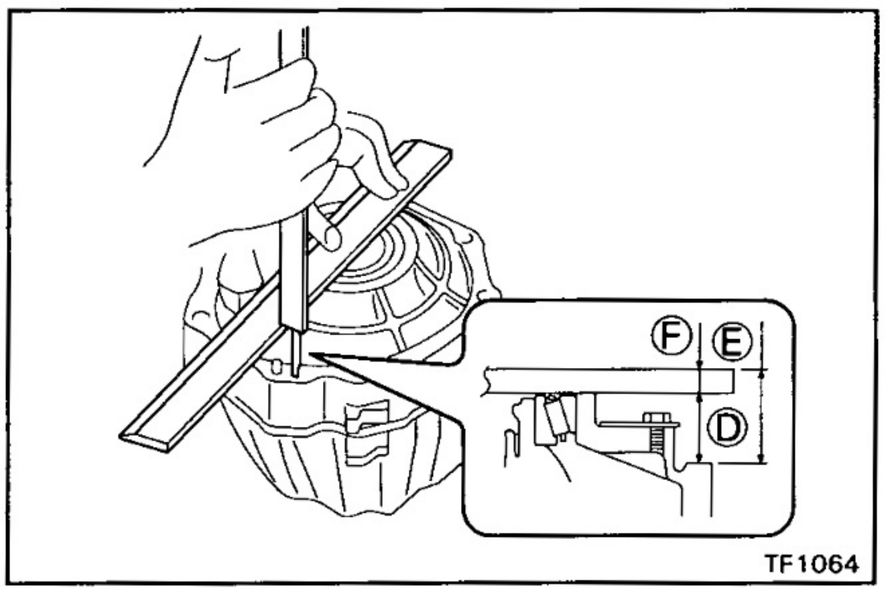

(b) Using a steel straight edge and vernier caliper with depth gauge, measure dimension Ⓓ.

HINT: Dimension Ⓓ is the straight edge thickness (Dimension Ⓕ) subtracted from dimension Ⓔ in the illustration to the left.

Dimension Ⓓ: Dimension Ⓔ — Dimension Ⓕ

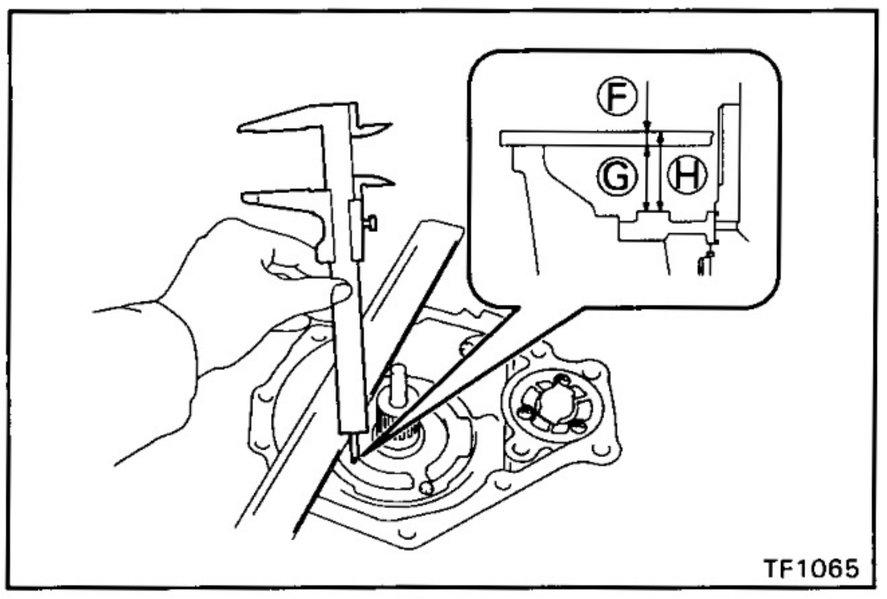

(c) Using a steel straight edge and vernier caliper with depth gauge, measure dimension Ⓖ.

HINT: Dimension Ⓖ is the straight edge thickness (Dimension Ⓕ) subtracted from Dimension Ⓗ

Dimension Ⓖ: Dimension Ⓗ — Dimension Ⓕ

(d) Calculate the required thickness of the adjusting shim.

Thickness: Dimension Ⓖ — (Dimension Ⓓ — Dimension Ⓒ) + (0.02 ~ 0.07 mm)

(e) From the following table, select a shim with a thickness fitting within the range of the calculation in (d).

Mark	Thickness mm (in.)	Mark	Thickness mm (in.)
A	0.15 (0.0059)	G	1.60 (0.0630)
B	0.30 (0.0118)	H	1.80 (0.0709)
C	0.45 (0.0177)	J	2.00 (0.0787)
D	1.00 (0.0394)	K	2.20 (0.0866)
E	1.20 (0.0472)	L	2.40 (0.0945)
F	1.40 (0.0551)	M	2.60 (0.1024)

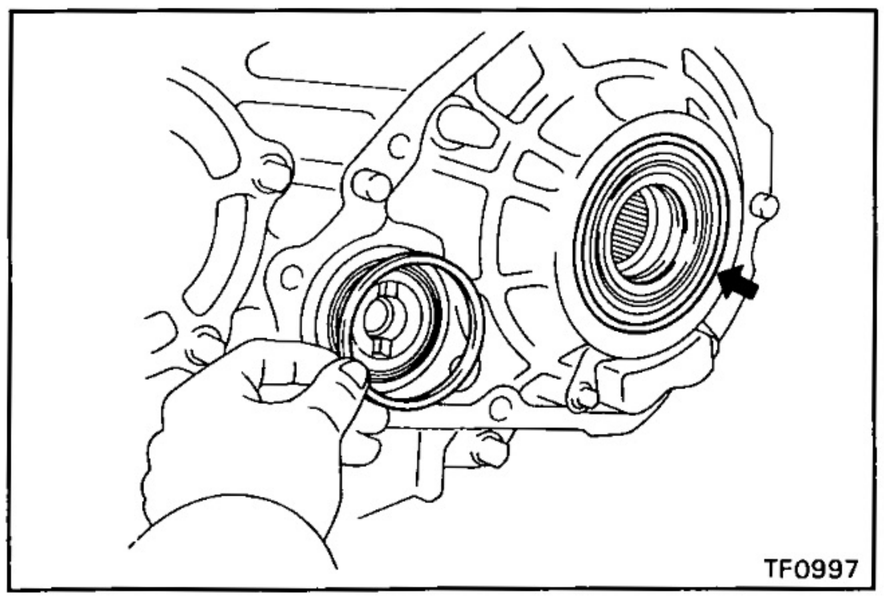

13. INSTALL ADJUSTING SHIMS TO IDLER GEAR AND OUTPUT SHAFT TAPER ROLLER BEARINGS

(a) Apply MP grease to the adjusting shims.

(b) Install the adjusting shims to bearing outer races.

HINT: Install the thinnest shim on the bearing outer race side.

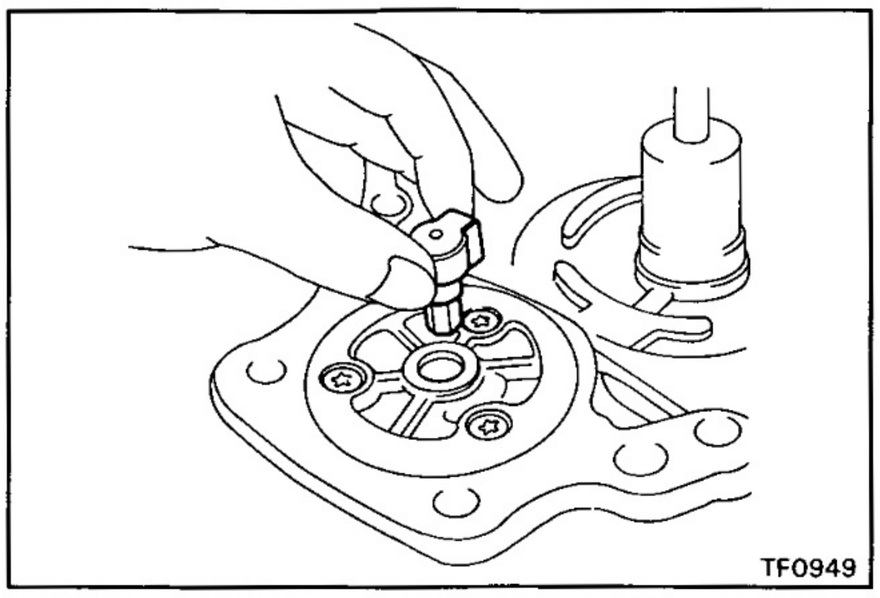
TF0949

14. INSTALL REAR EXTENSION HOUSING

(a) Install the oil pump drive shaft.

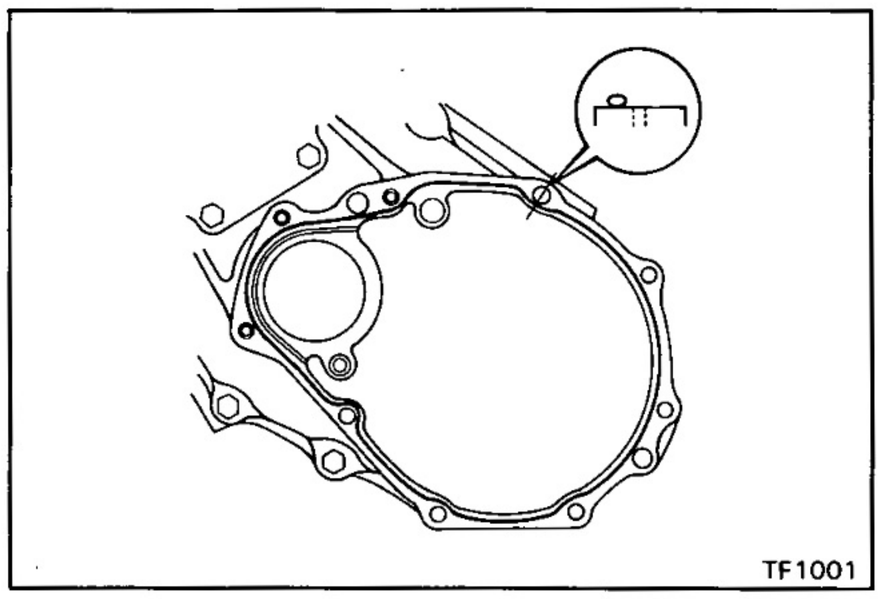
TF1001

(b) Remove any packing material and be careful not to drop oil on the contacting surfaces of the rear case.

(c) Apply seal packing to the rear case as shown.

Seal packing: Part No.08826-00090, THREE BOND 1281 or equivalent

HINT: Install the rear extension housing as soon as the seal packing is applied.

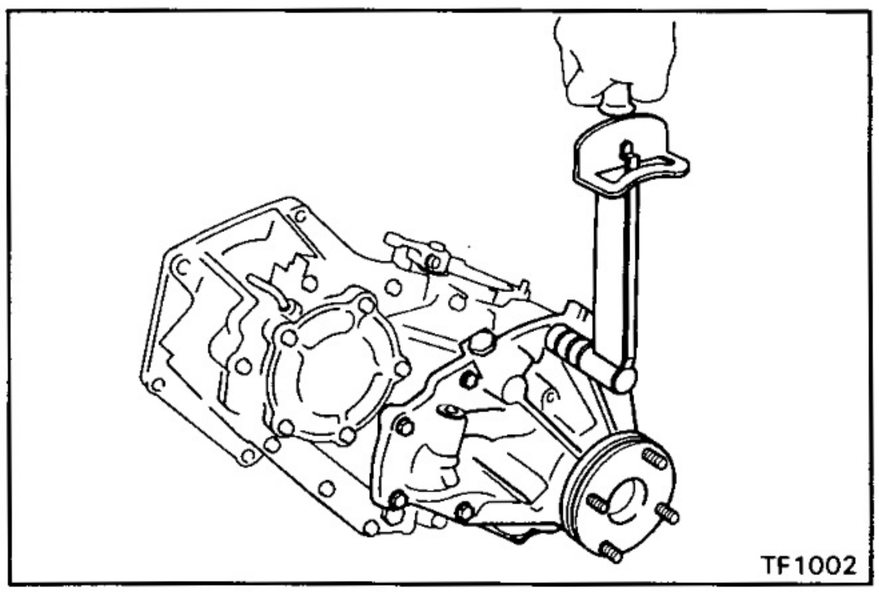
TF1002

(d) Install the rear extension housing.

(e) Install and torque the nine bolts.

Torque: 380 kg-cm (27 ft-lb, 37 N·m)

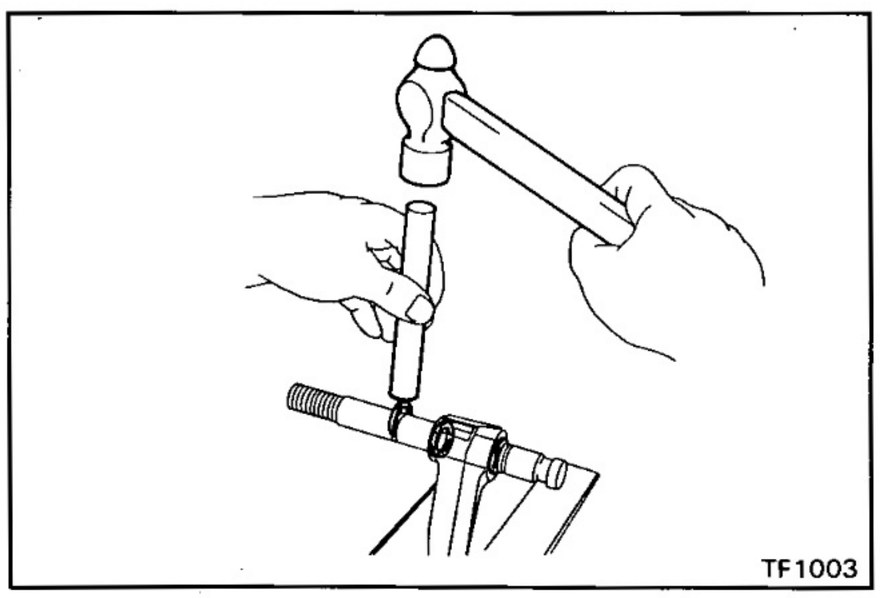
TF1003

15. ASSEMBLE SHIFT FORK NO.2 AND FORK SHAFT

(a) Assemble the shift fork No.2 and fork shaft.

(b) Using a brass bar and hammer, tap in the snap rings.

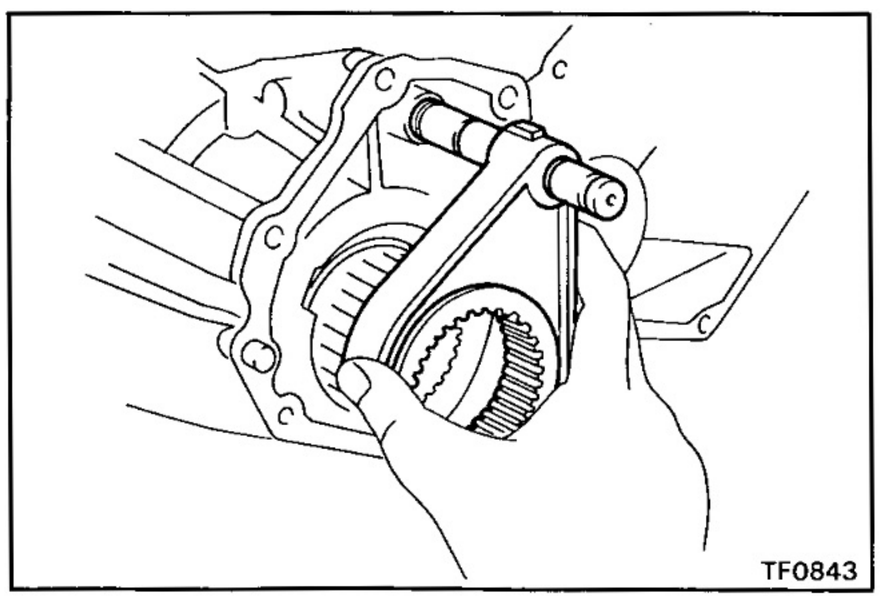
TF0843

16. INSTALL CLUTCH SLEEVE, SHIFT FORK NO.2 AND FORK SHAFT

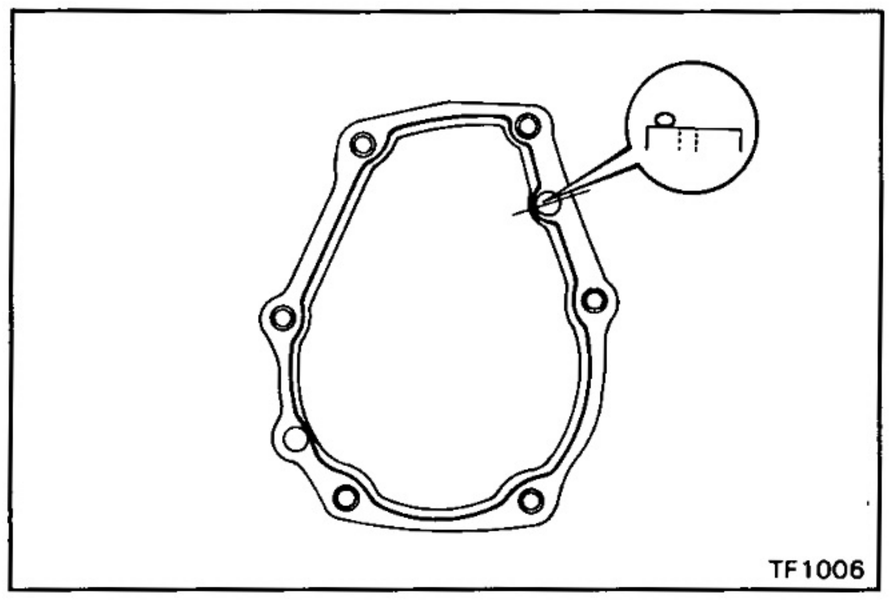

17. INSTALL FRONT EXTENSION HOUSING

(a) Remove any packing material and be careful not to drop oil on the contacting surfaces of the front case.

(b) Apply seal packing to the front case as shown.

Seal packing: Part No.08826-00090, THREE BOND 1281 or equivalent

HINT: Install the front extension housing as soon as the seal packing is applied.

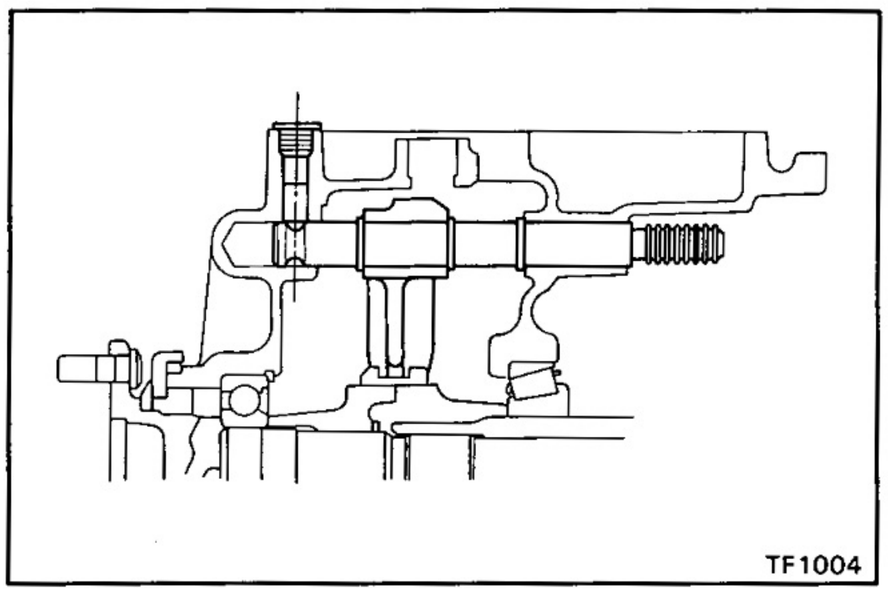

(c) Set the clutch sleeve in 4WD condition, install the front extension housing.

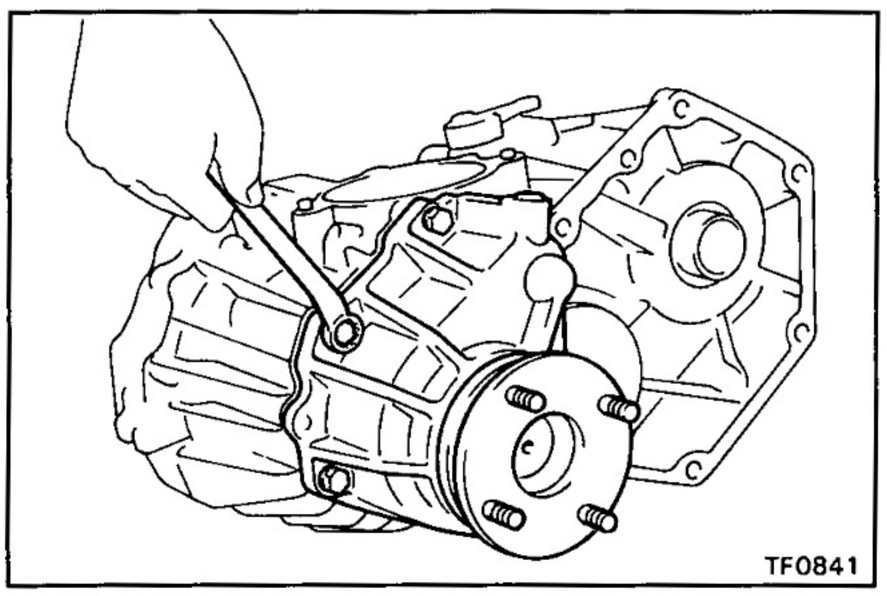

(d) Install and torque the six bolts.

Torque: 380 kg-cm (27 ft-lb, 37 N·m)

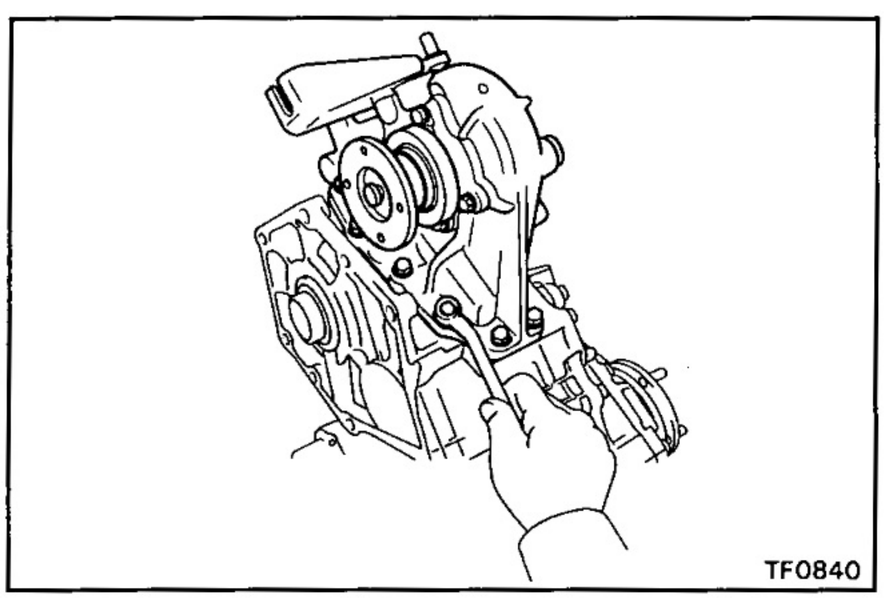

18. (w/ POWER TAKE-OFF) INSTALL POWER TAKE-OFF CASE

(a) Install the power take-off case and a new gasket.

(b) Apply liquid sealer to the bolt threads.

Sealant: Part No.08833-00080, THREE BOND 1344, LOCTITE 242 or equivalent

(c) Install and torque the ten bolts.

Torque: 195 kg-cm (14 ft-lb, 19 N·m)

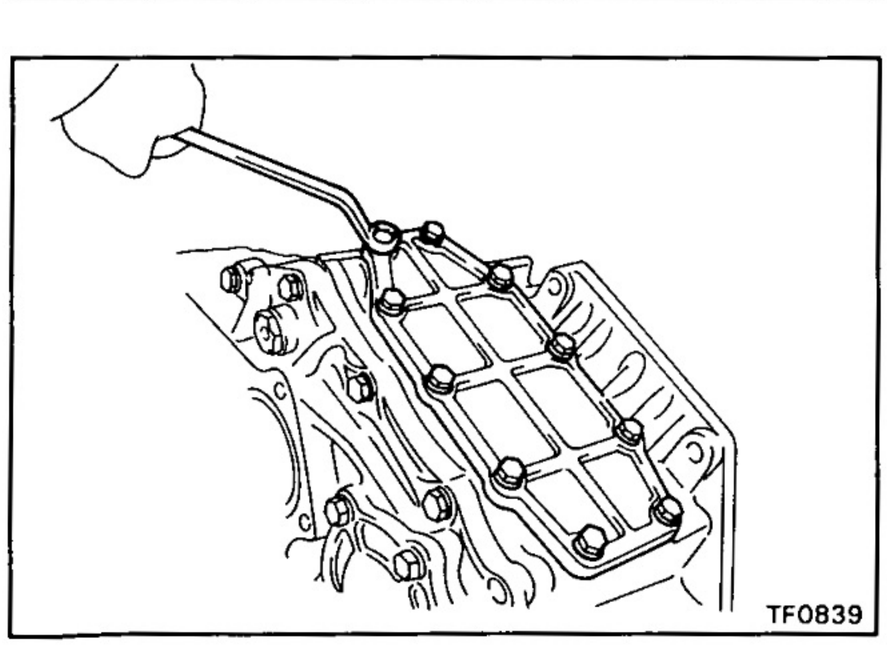

19. (w/o POWER TAKE-OFF) INSTALL POWER TAKE-OFF COVER

(a) Install the power take-off cover and a new gasket.

(b) Apply liquid sealer to the bolt threads.

Sealant: Part No.08833-00080, THREE BOND 1344, LOCTITE 242 or equivalent

(c) Install and torque the ten bolts.

Torque: 195 kg-cm (14 ft-lb, 19 N·m)

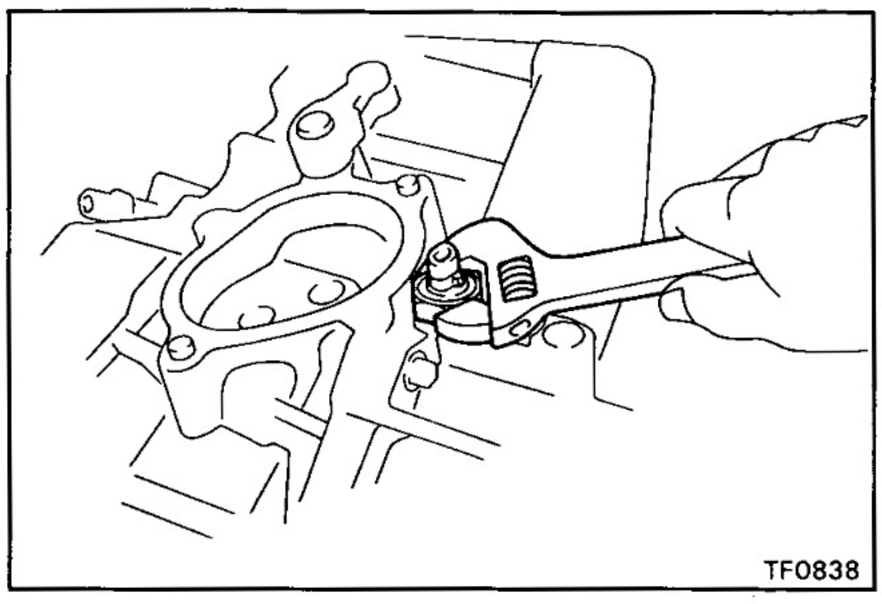
TF0838

20. INSTALL 4WD INDICATOR SWITCH

Install and torque the transfer indicator switch.

Torque: 380 kg-cm (27 ft-lb, 37 N·m)

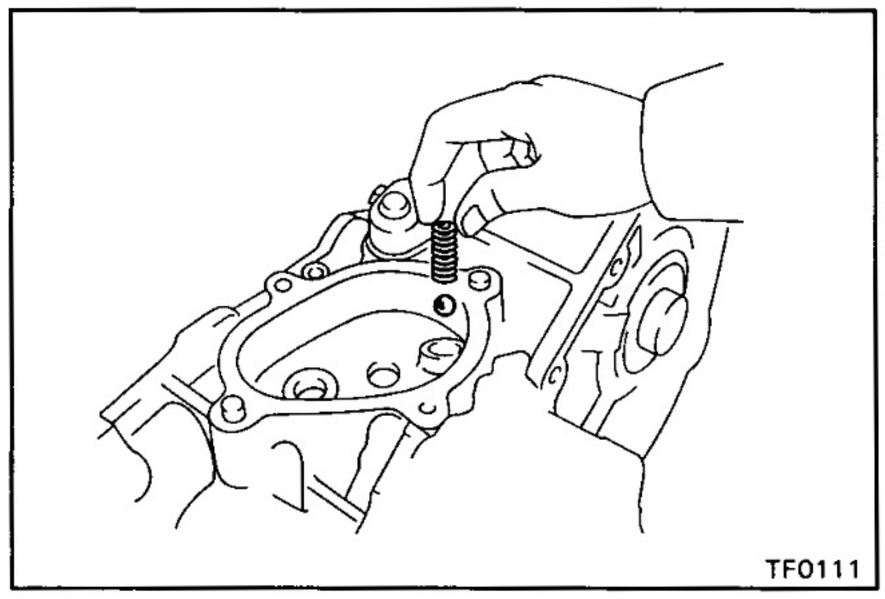
TF0111

21. INSTALL BALL, SPRING AND SCREW PLUG

(a) Install the ball and spring.

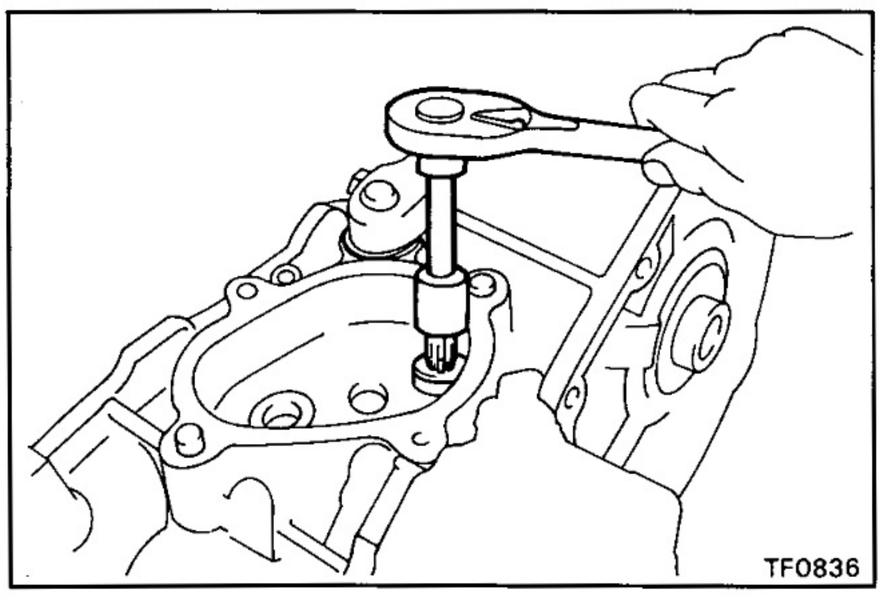
TF0836

(b) Apply liquid sealer to the screw plug.

Sealant: Part No.08833-00080, THREE BOND 1344, LOCTITE 242 or equivalent

(c) Using a torx socket wrench, install and torque the screw plug.

(Torx socket wrench T40 09042-00020)

Torque: 190 kg-cm (14 ft-lb, 19 N·m)

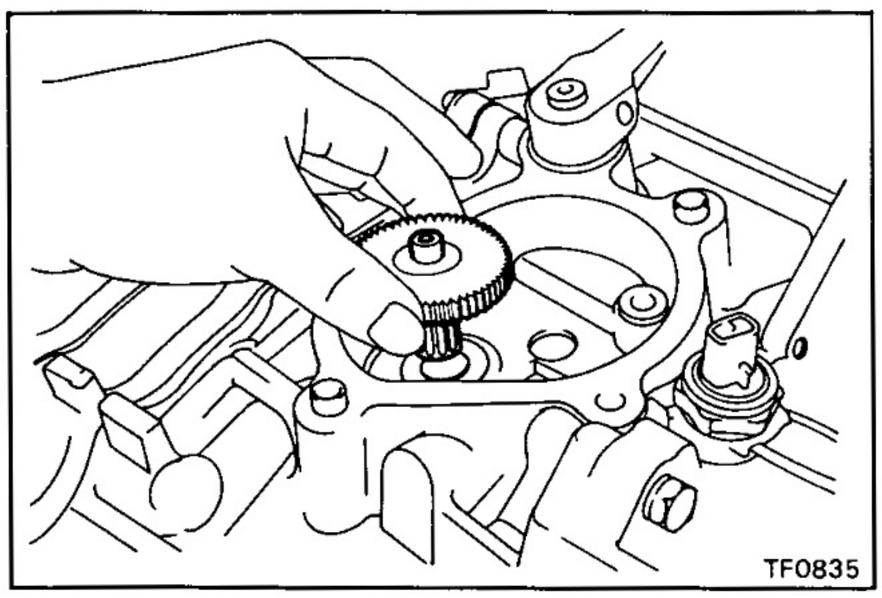
TF0835

22. INSTALL OUTPUT GEAR

(a) Apply gear oil to the output gear.

(b) Install the output gear.

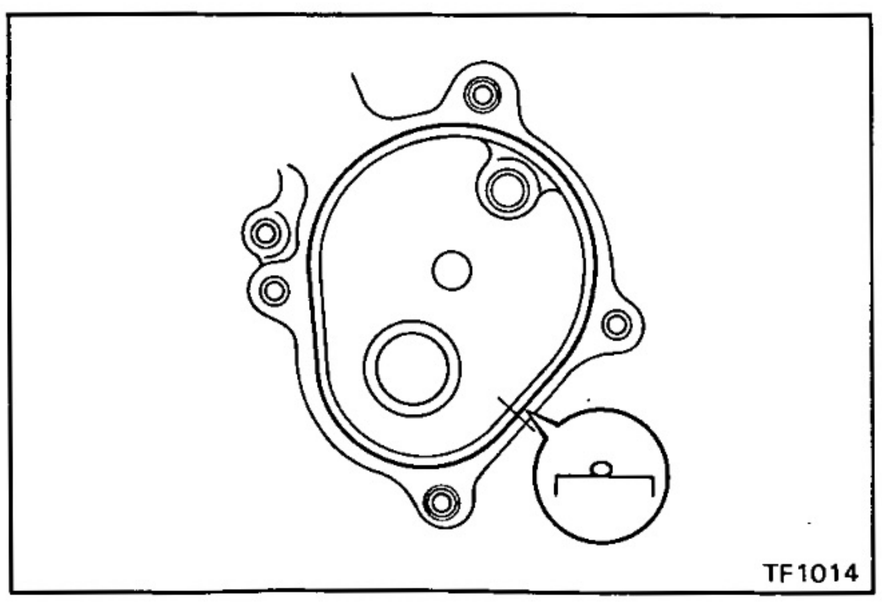
TF1014

23. INSTALL MOTOR ACTUATOR

(a) Remove any packing material and be careful not to drop oil on the contacting surfaces of the front case.

(b) Apply seal packing to the front case as shown.

Seal packing: Part No.08826-00090,THREE BOND 1281 or equivalent

HINT: Install the motor actuator as soon as the seal packing is applied.

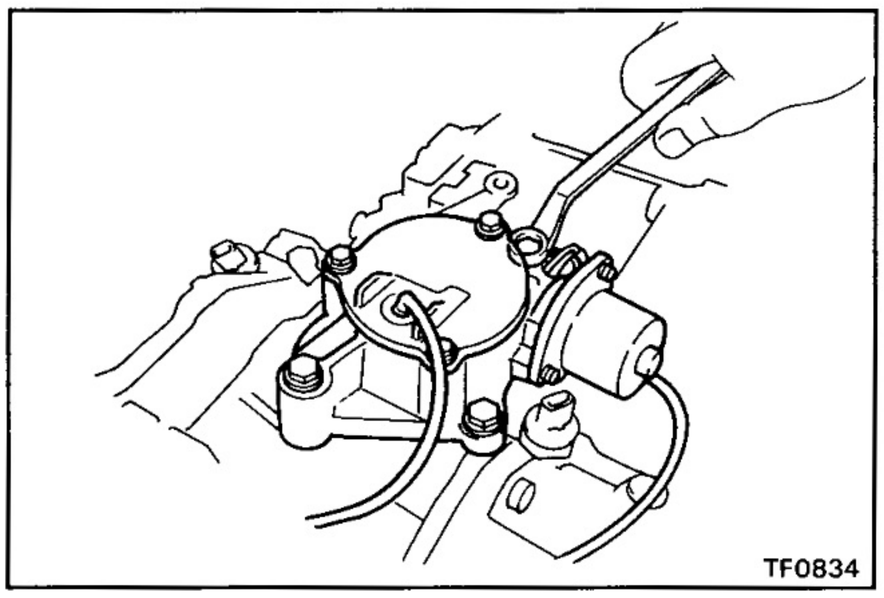
TF0834

(c) Install the motor actuator.

HINT: Set the motor actuator in differential lock condition.

(d) Install and torque the four bolts.

Torque: 195 kg-cm (14 ft-lb, 19 N·m)

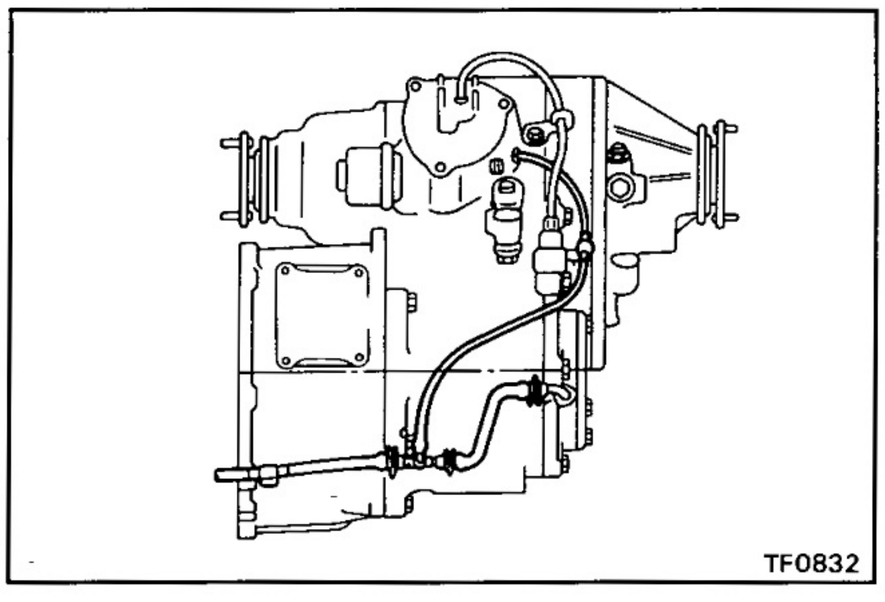
TF0832

24. INSTALL BREATHER HOSE

(PART-TIME 4WD TYPE TRANSFER)
COMPONENTS

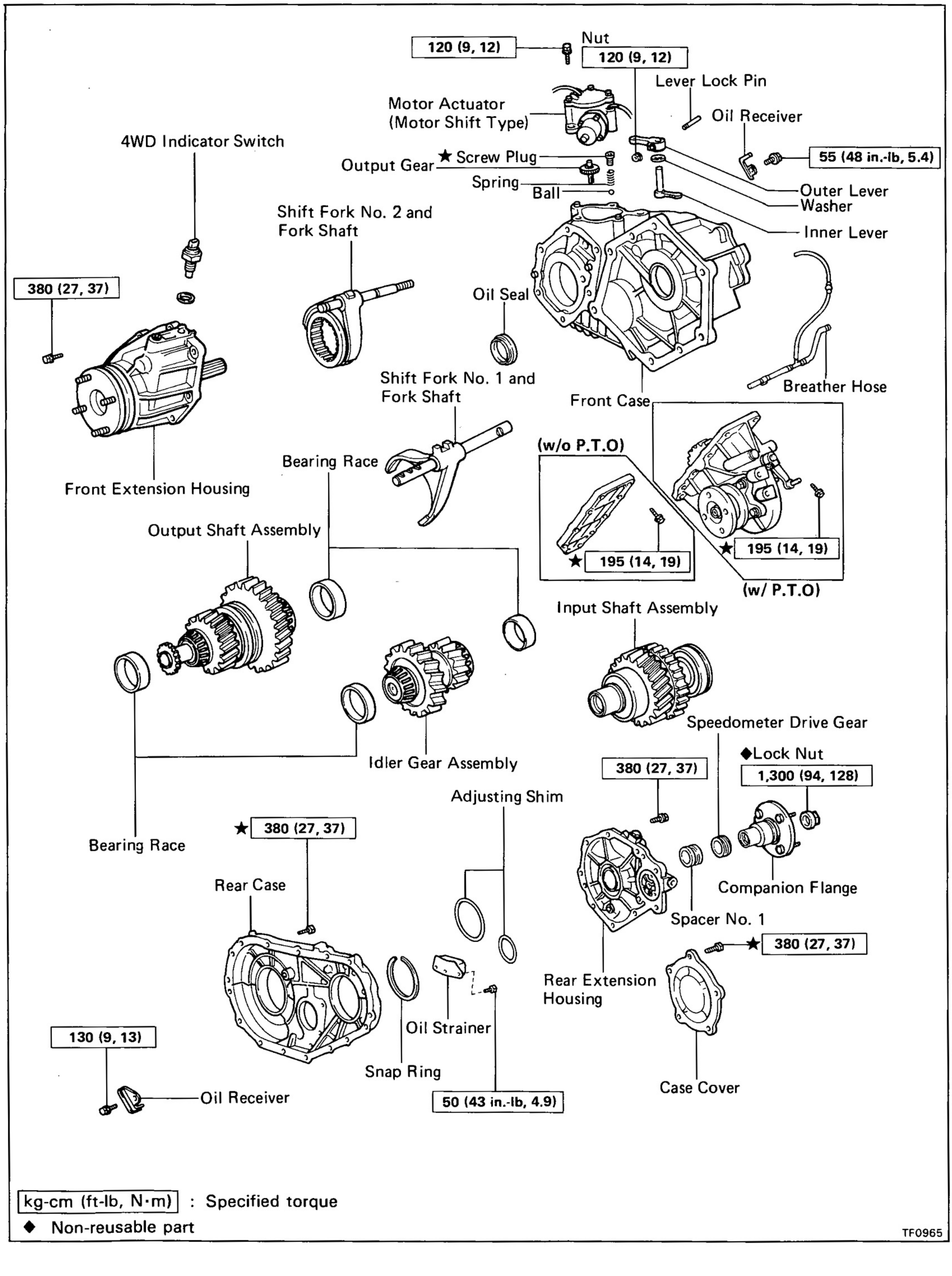

kg-cm (ft-lb, N·m) : Specified torque

◆ Non-reusable part

TF0965

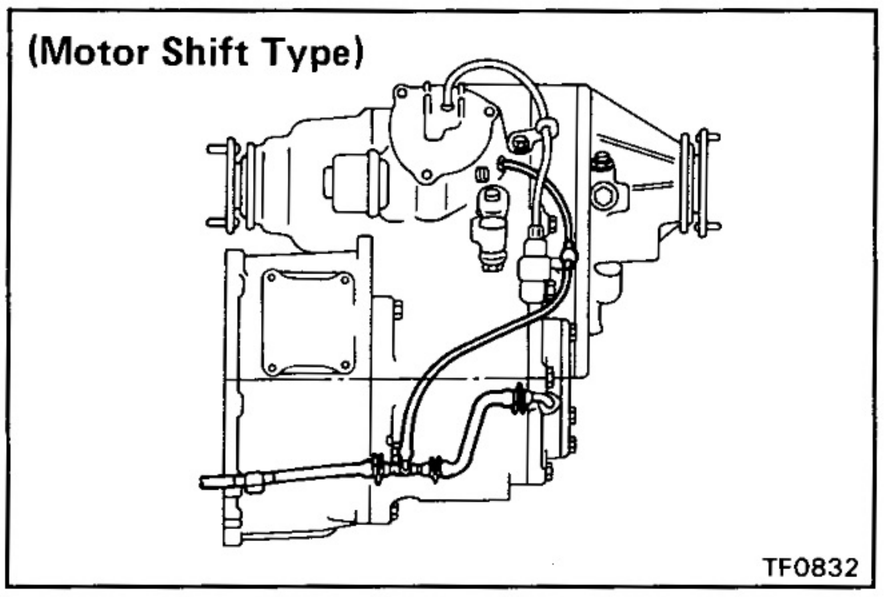

DISASSEMBLY OF TRANSFER

(See page TF-49)

1. REMOVE BREATHER HOSE

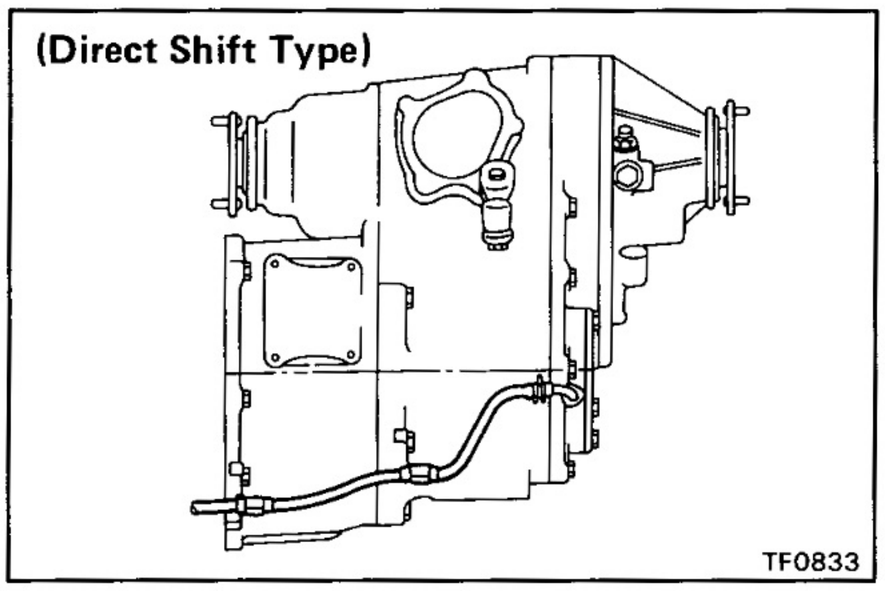

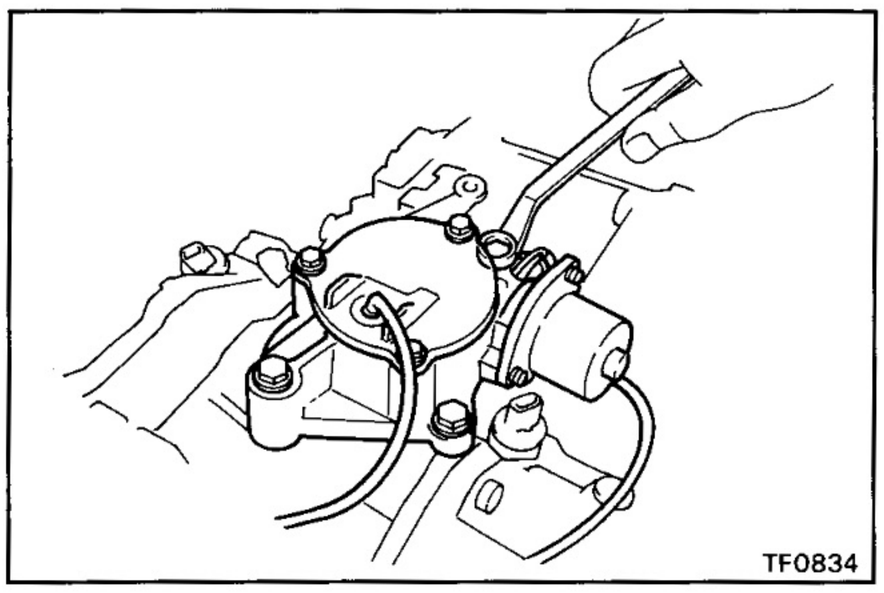

2. (MOTOR SHIFT TYPE)
REMOVE MOTOR ACTUATOR

Remove the four bolts and motor actuator.

HINT: Set the motor actuator in differential lock condition.

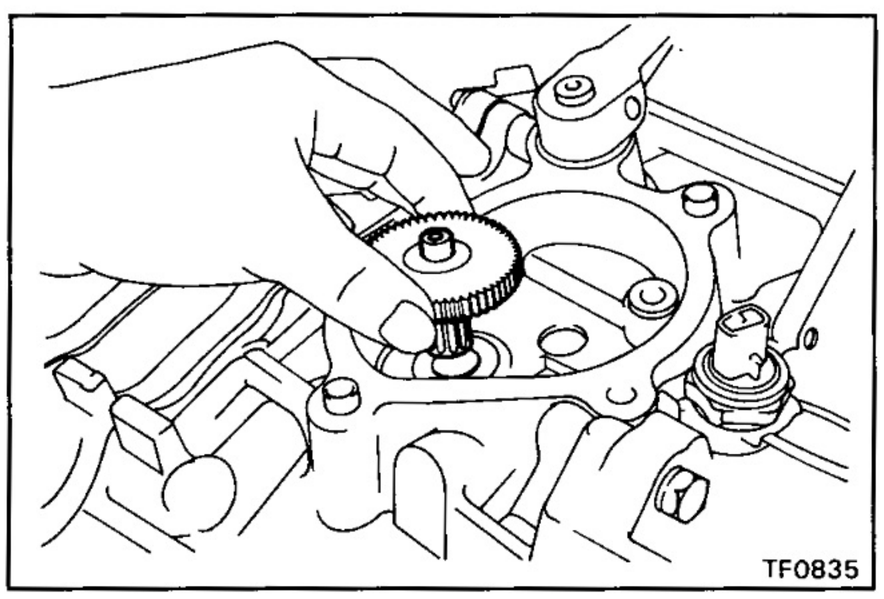

3. (MOTOR SHIFT TYPE)
REMOVE OUTPUT GEAR

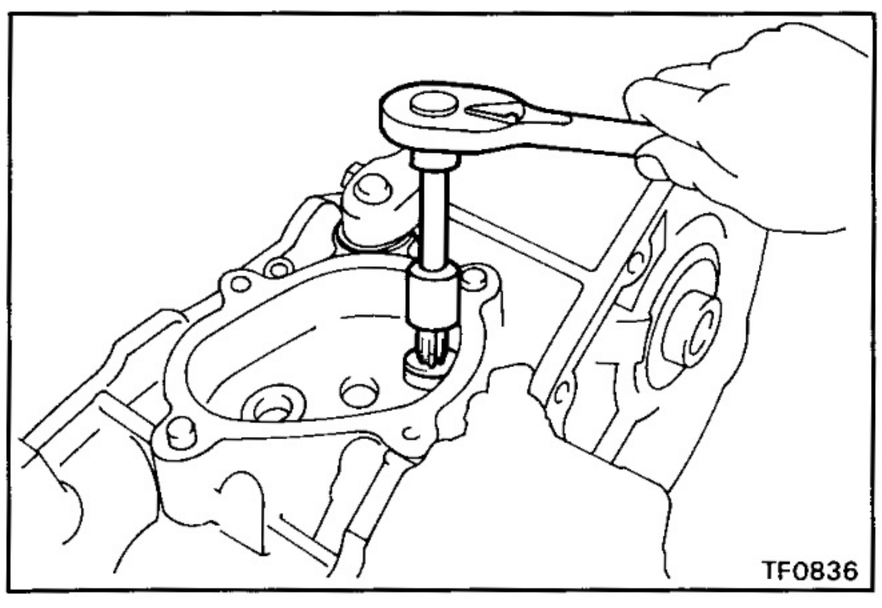

4. REMOVE SCREW PLUG, SPRING AND BALL

(a) Using a torx socket wrench, remove the screw plug.

(Torx socket wrench T40 09042-00020)

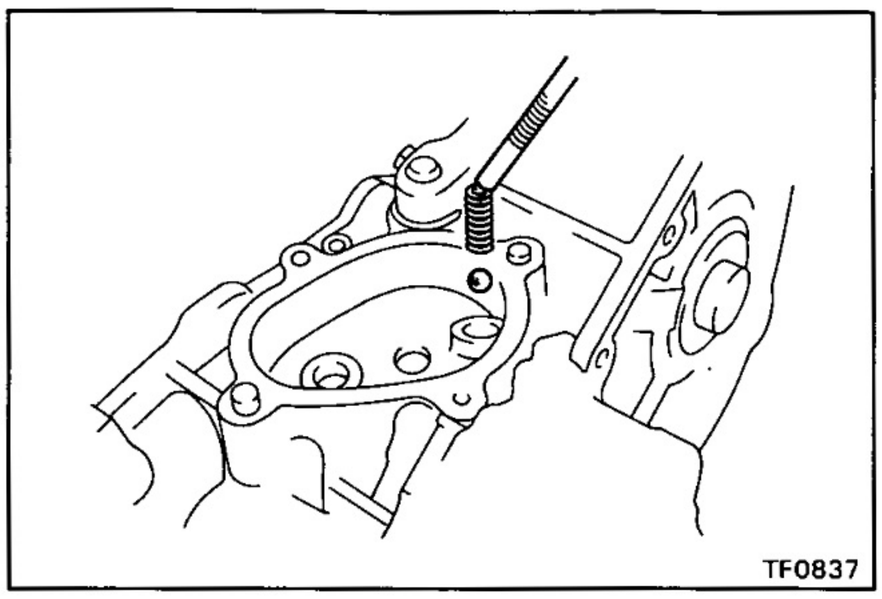

(b) Using a magnetic finger, remove the spring and ball.

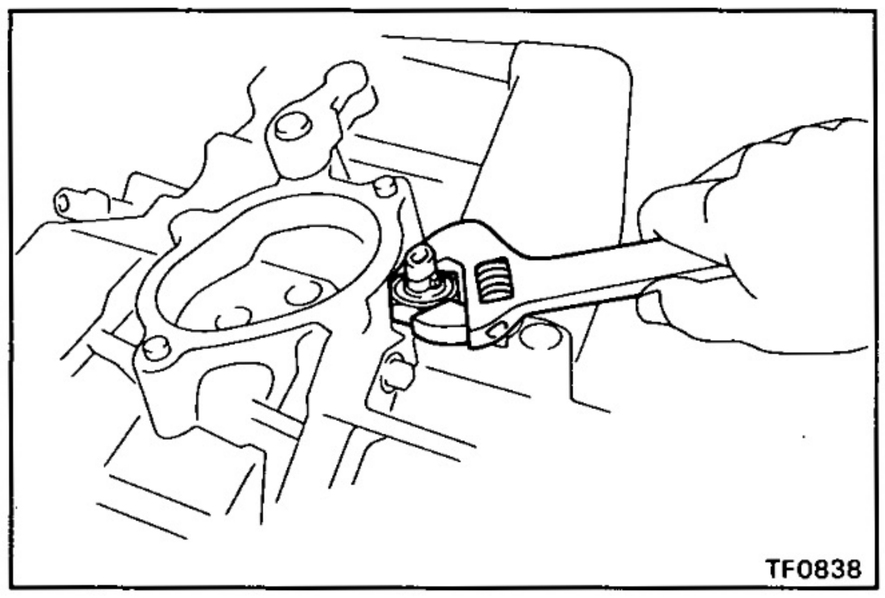

5. REMOVE 4WD INDICATOR SWITCH

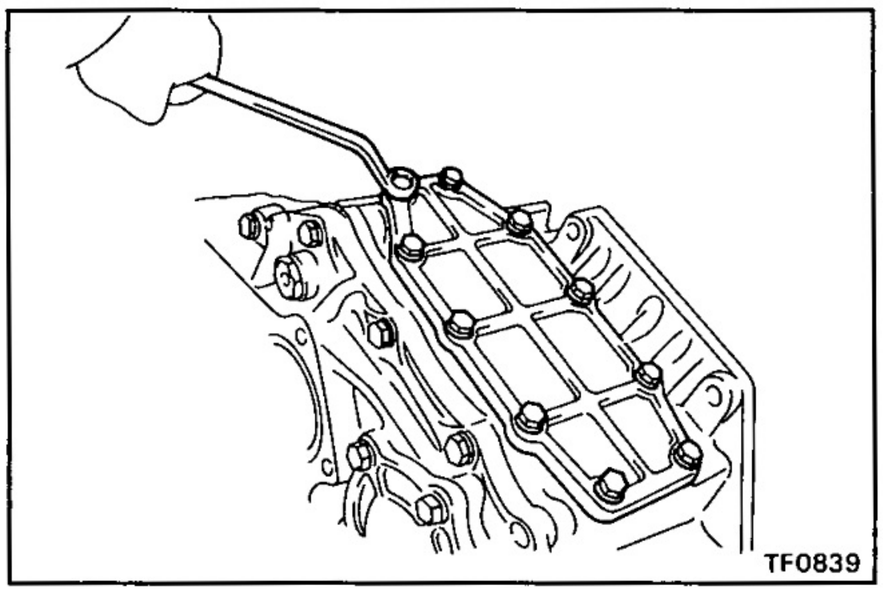

6. (w/o POWER TAKE-OFF)
REMOVE POWER TAKE-OFF COVER

Remove the ten bolts, power take-off cover and gasket.

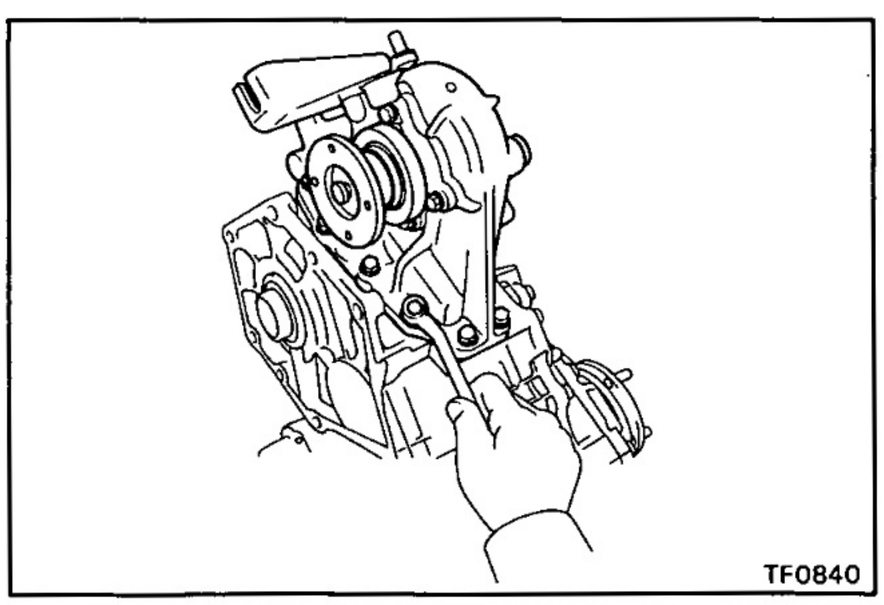

7. (w/ POWER TAKE-OFF)
REMOVE POWER TAKE-OFF CASE

Remove the ten bolts, power take-off case and gasket.

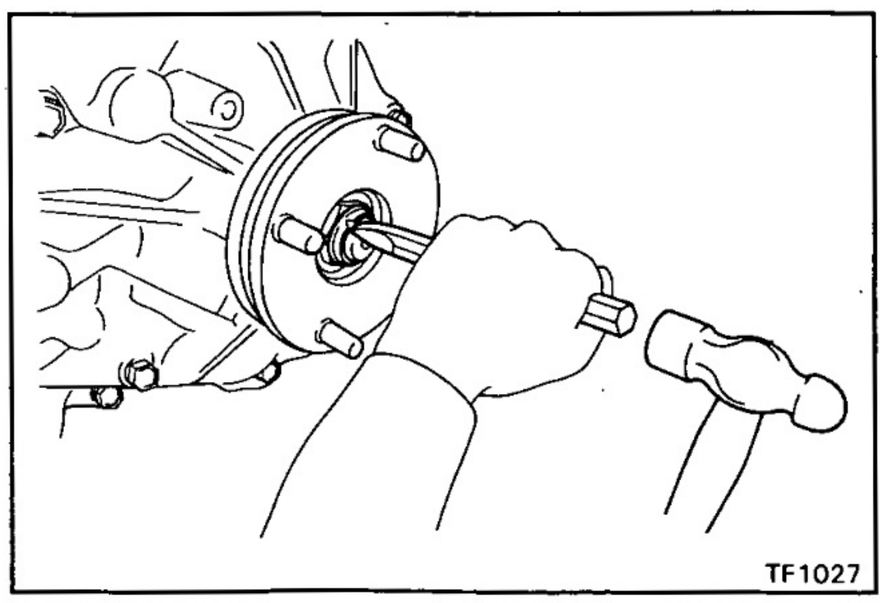

8. REMOVE OUTPUT SHAFT COMPANION FLANGE

(a) Using a hammer and chisel, loosen the staked part of the nut.

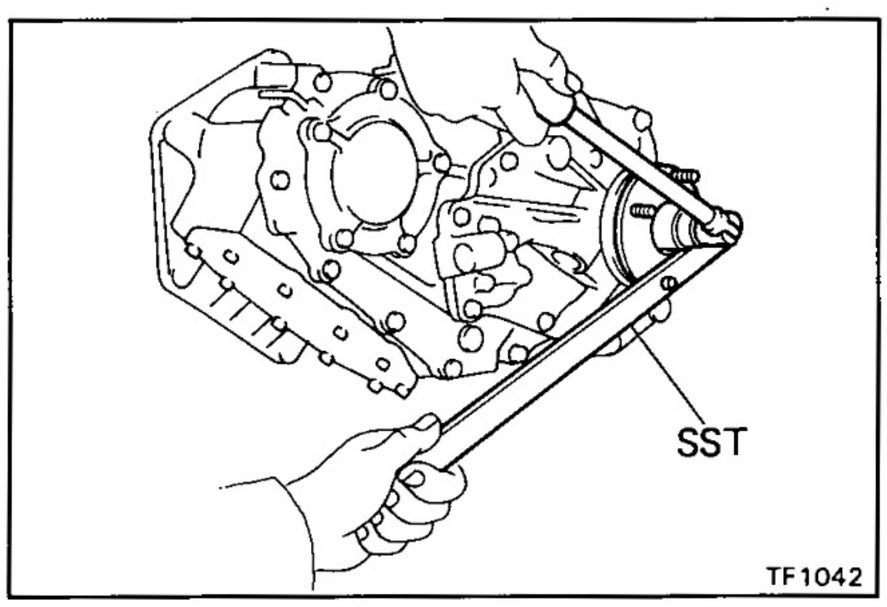

(b) Using SST to hold the flange, remove the nut and washer.

SST 09330-00021

(c) Remove the companion flange.

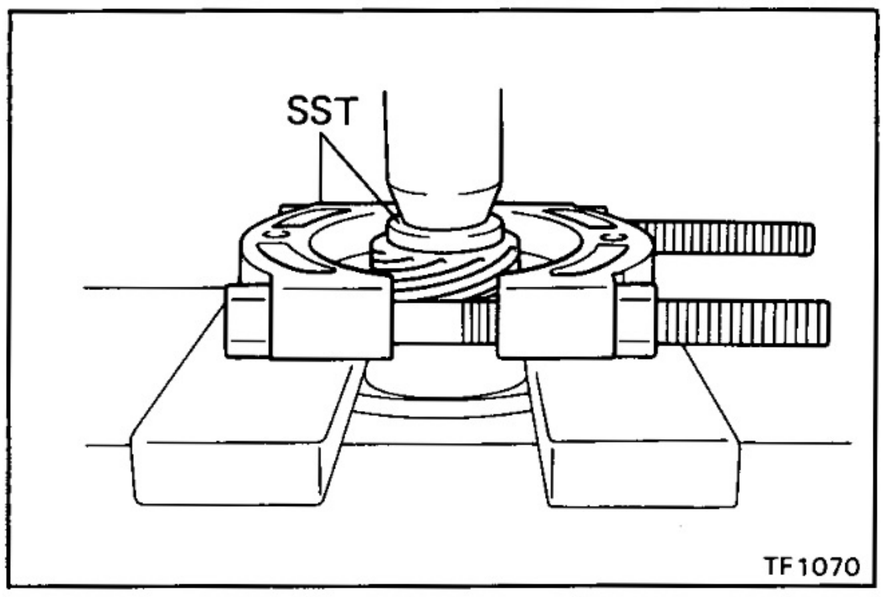

9. REMOVE SPEEDOMETER DRIVE GEAR AND DUST DEFLECTOR FROM OUTPUT SHAFT COMPANION FLANGE

(a) Using SST and a press, remove the speedometer drive gear.

SST 09608-20012 (09608-00040), 09950-00020

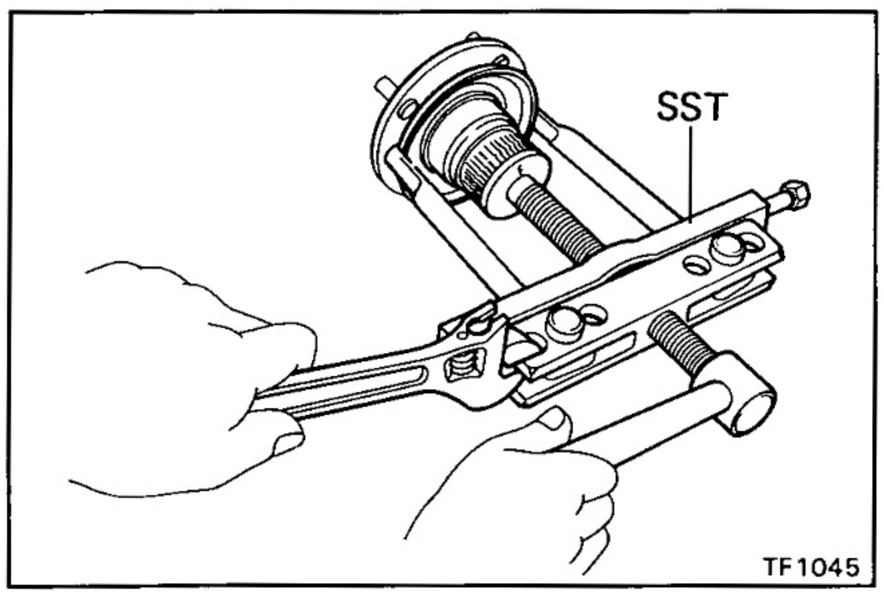

(b) Using SST, remove the dust deflector.

SST 09950-20017

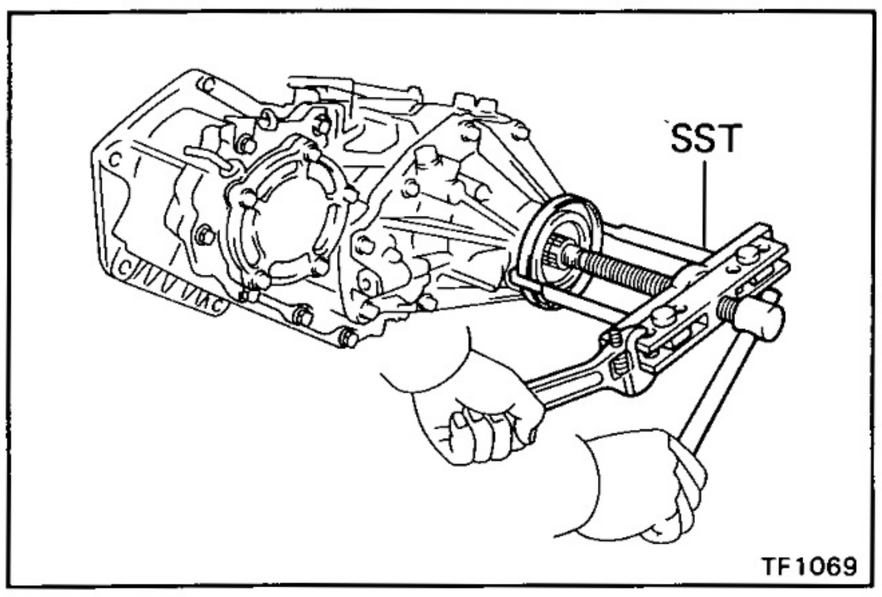

10. REMOVE DUST DEFLECTOR FROM REAR EXTENSION HOUSING

Using SST, remove the dust deflector.

SST 09950-20017

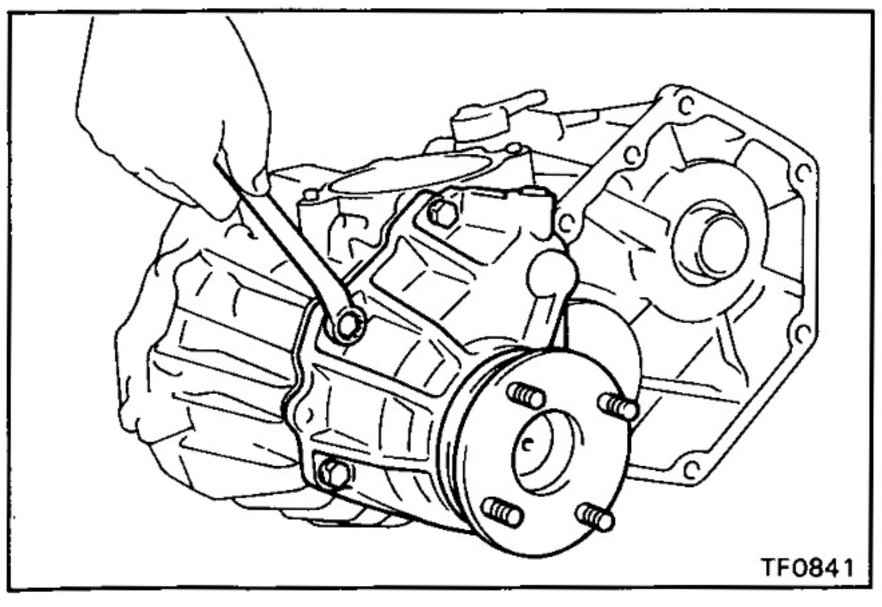

11. REMOVE FRONT EXTENSION HOUSING

Remove the six bolts and front extension housing.

HINT: If necessary, tap the front extension housing with a plastic hammer.

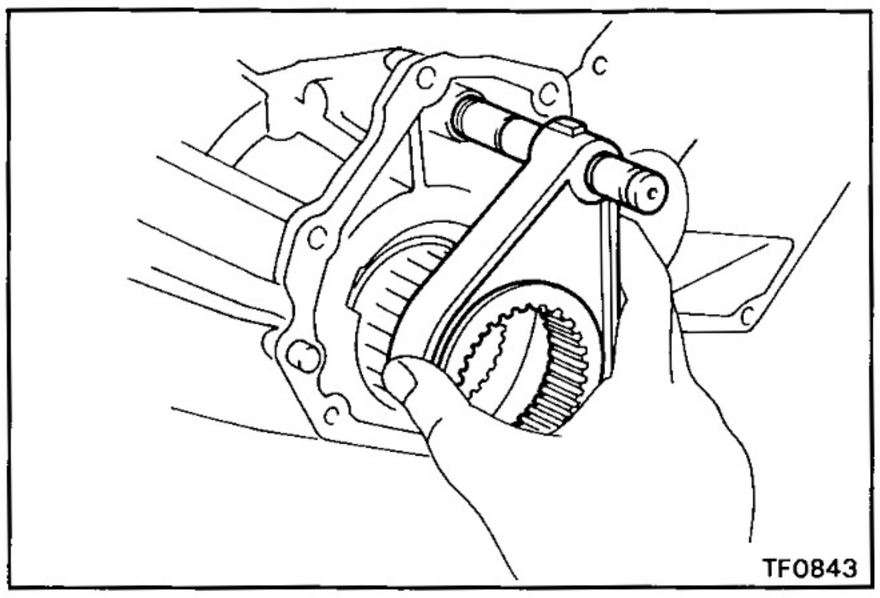

12. REMOVE CLUTCH SLEEVE, SHIFT FORK NO.2 AND FORK SHAFT

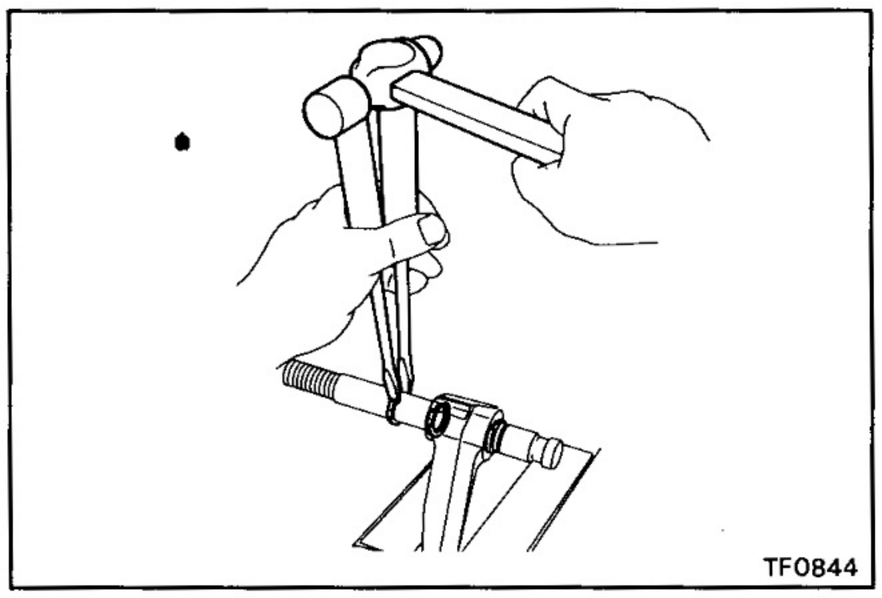

13. SEPARATE SHIFT FORK NO.2 AND FORK SHAFT

(Motor shift type)

(a) Using two screwdrivers and a hammer, tap out the snap rings.

(b) Separate the shift fork No.2 and fork shaft.

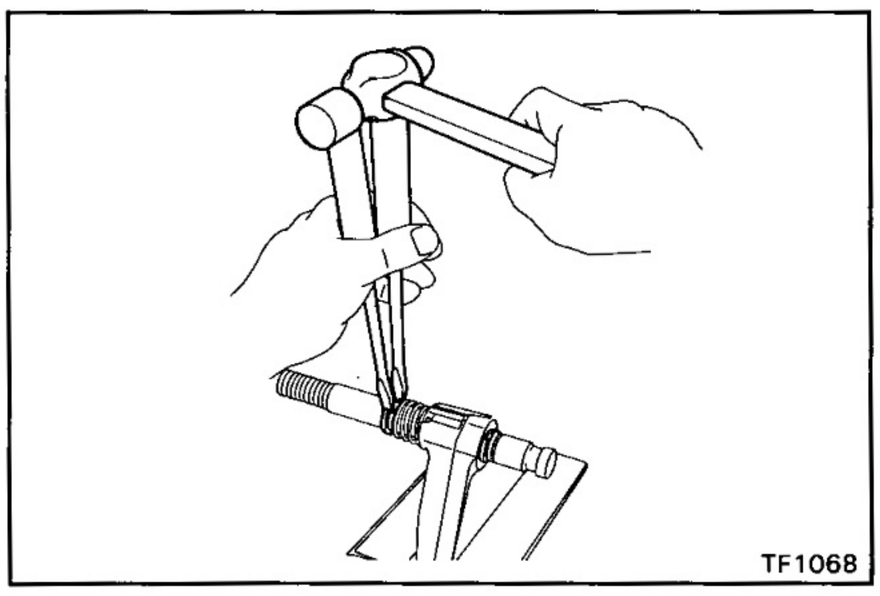

(Direct shift type)

(a) Using two screwdrivers and a hammer, tap out the snap rings.

(b) Separate the shift fork No.3, fork shaft and spring.

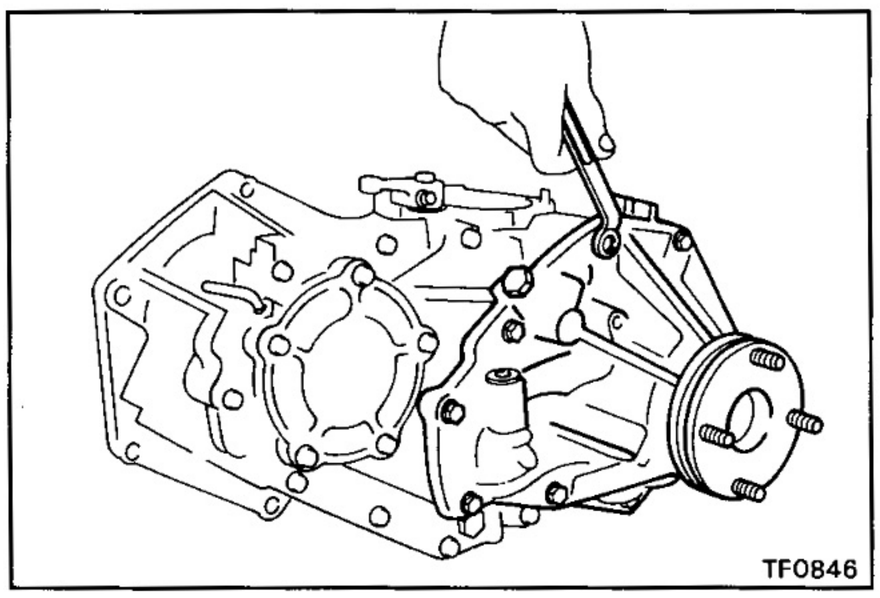

14. REMOVE REAR EXTENSION HOUSING

Remove the nine bolts and rear extension housing.

HINT: Using a plastic hammer, tap the rear extension housing and remove it.

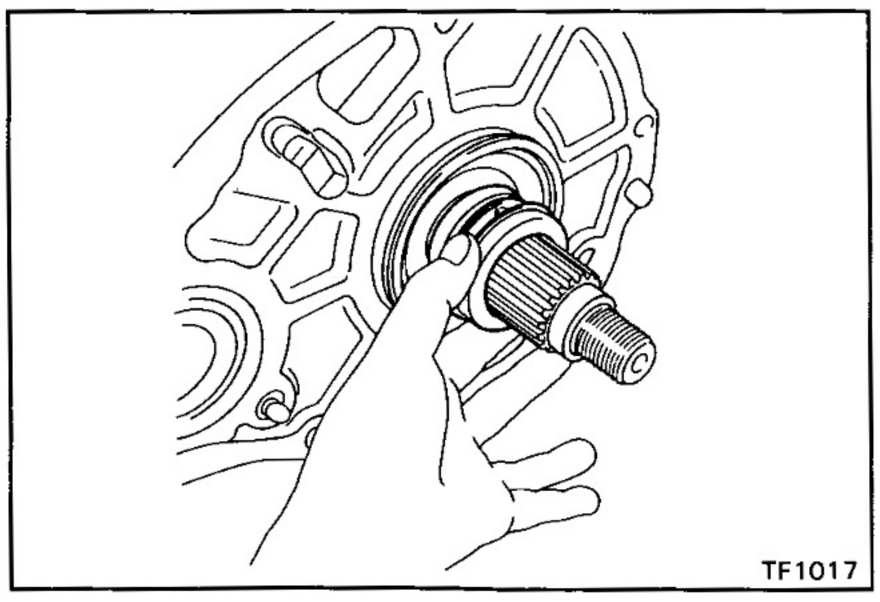

15. REMOVE SPACER NO.1, BALL AND SHIMS

(a) Remove the spacer No.1.

(b) Using a magnetic finger, remove the ball.

(c) Remove the shims.

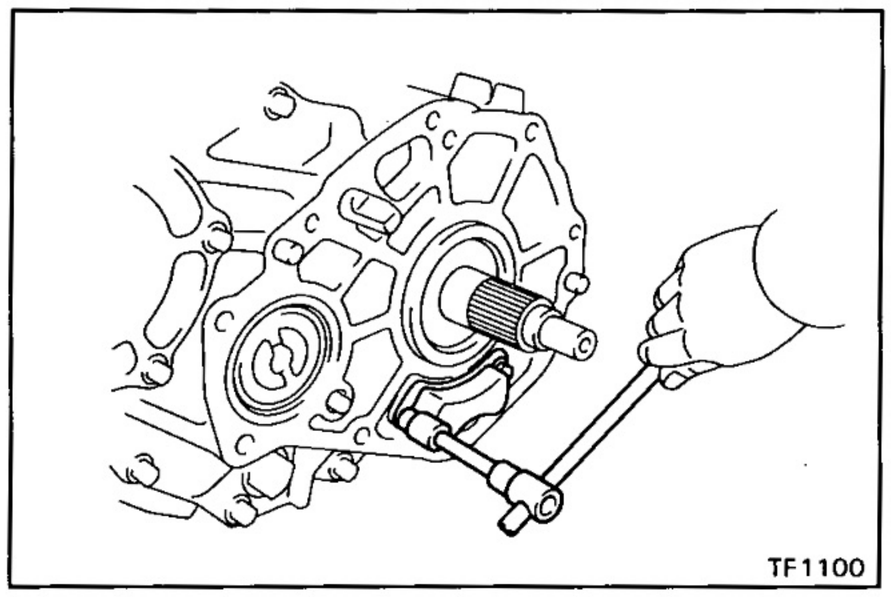

16. REMOVE OIL STRAINER FROM REAR CASE

Remove the two set bolts and oil strainer.

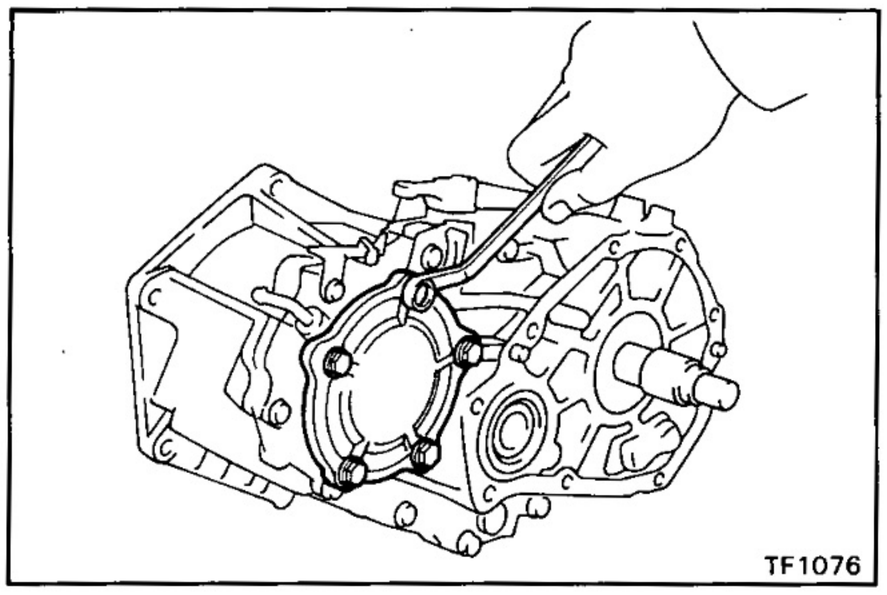

17. REMOVE CASE COVER

(a) Remove the five bolts.

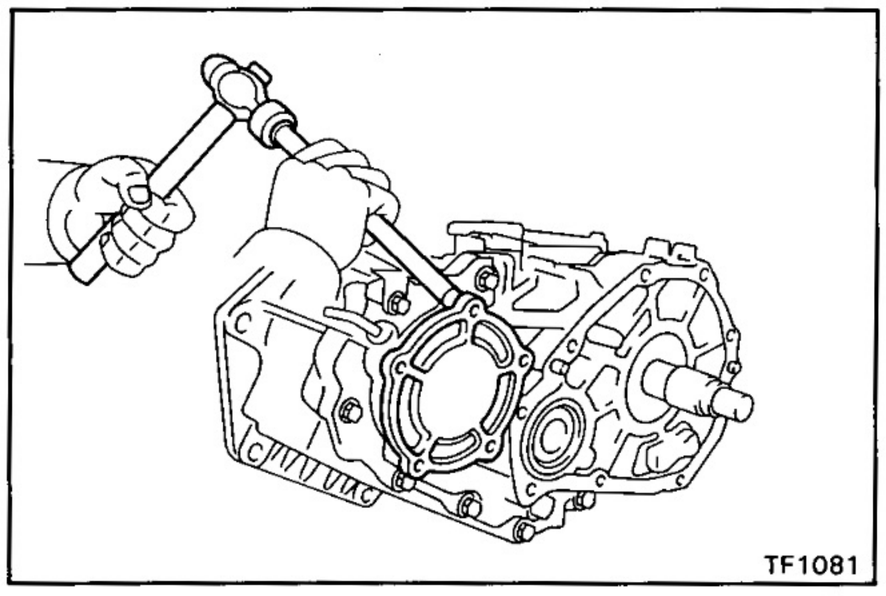

(b) Using a brass bar and hammer, remove the case cover.

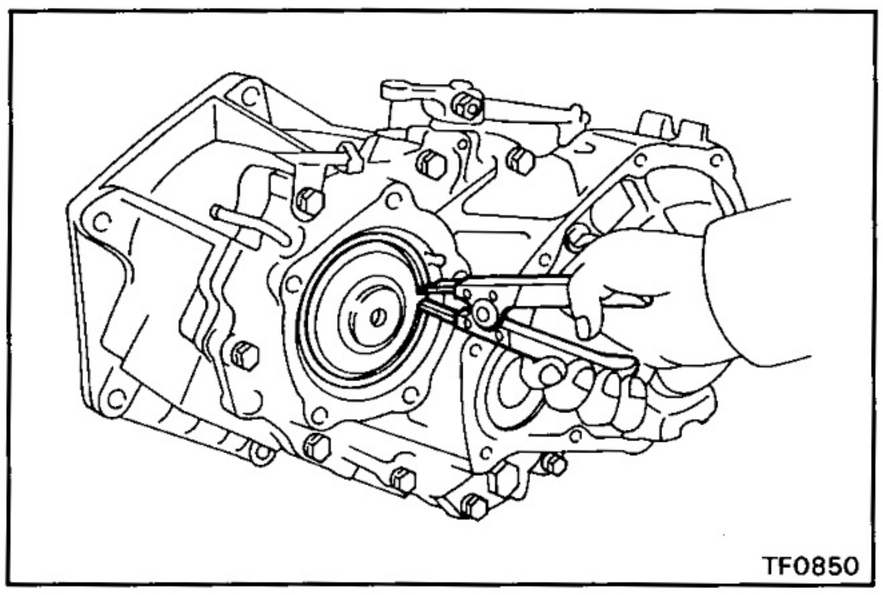

18. SEPARATE FRONT CASE AND REAR CASE

(a) Using snap ring pliers, remove the snap ring.

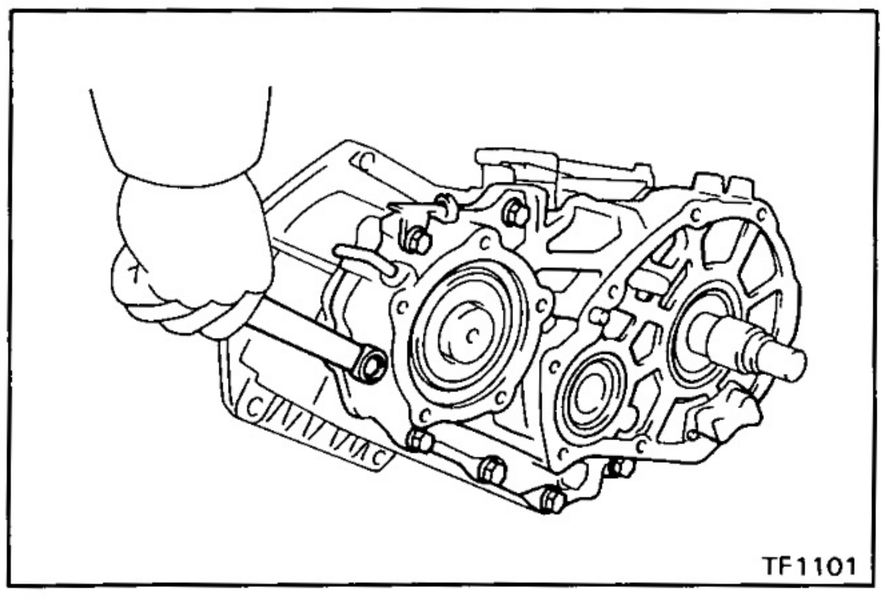

(b) Remove the eight bolts.

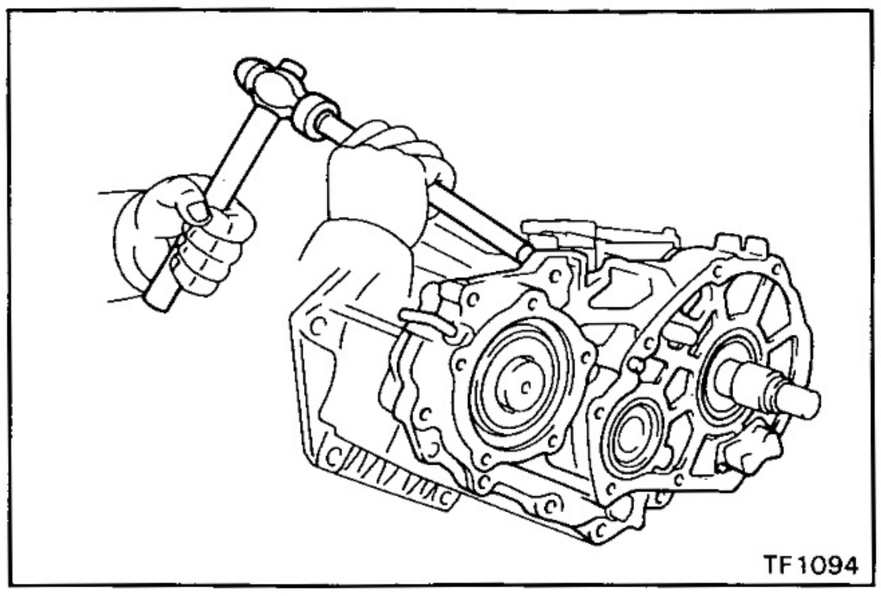

(c) Using a brass bar and hammer, tap the rear case and separate it.

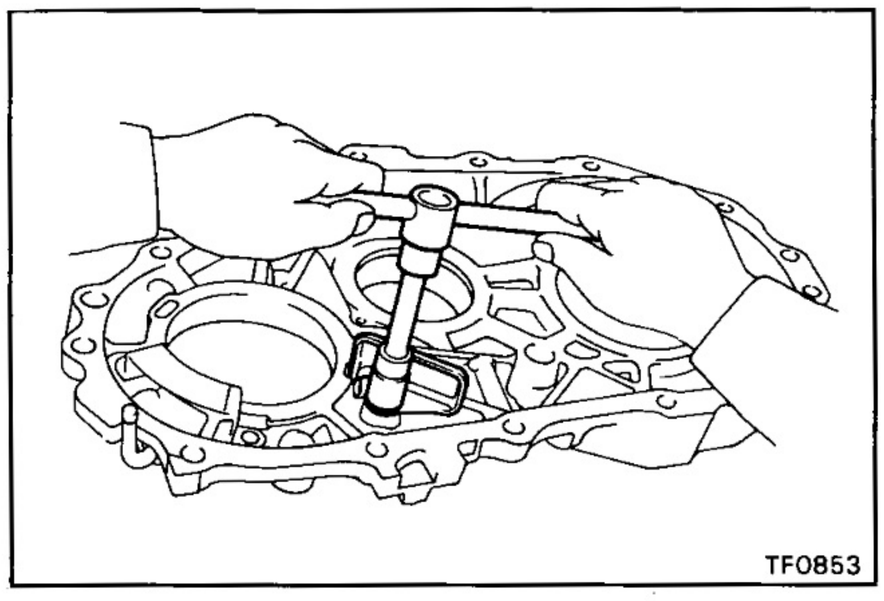

19. REMOVE OIL RECEIVER FROM REAR CASE

Remove the set bolt and oil receiver.

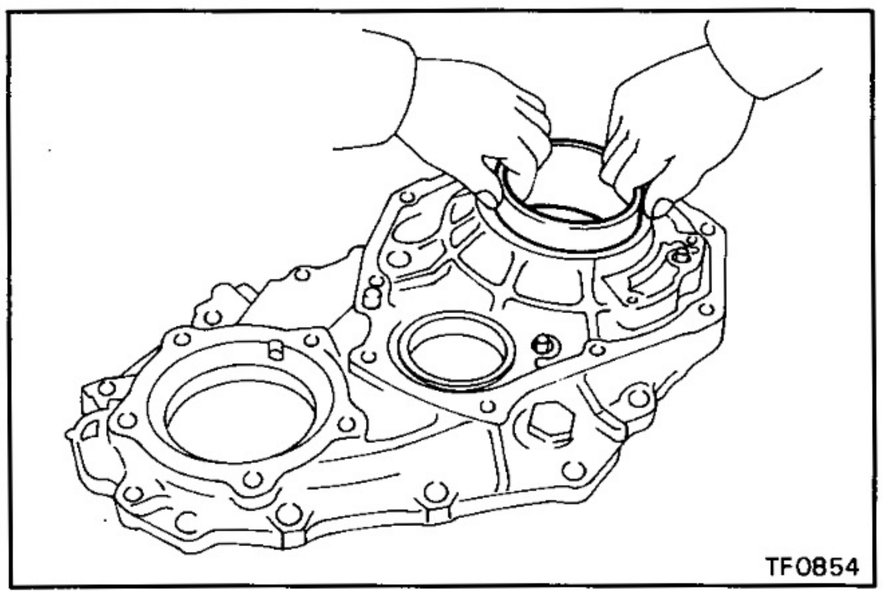

20. REMOVE TWO BEARING RACES FROM REAR CASE

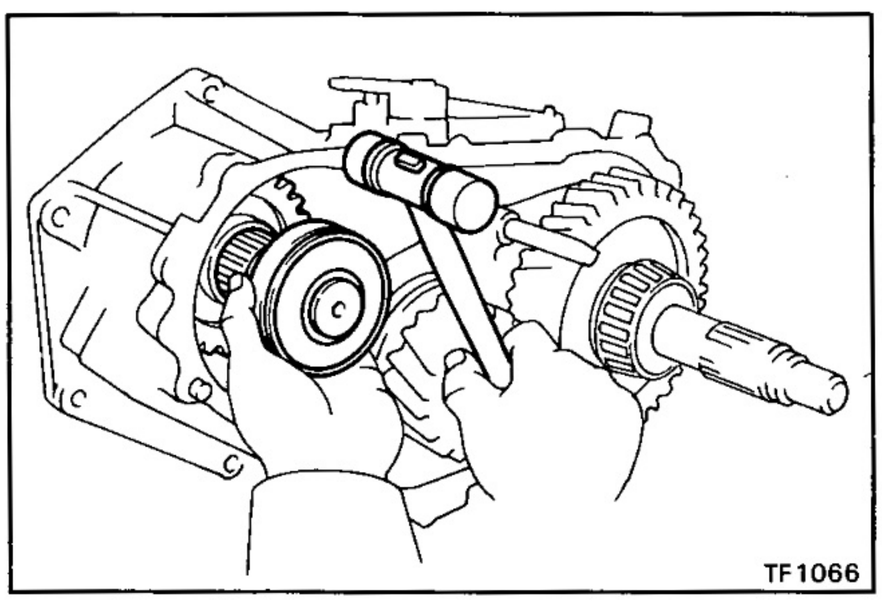

21. REMOVE INPUT SHAFT ASSEMBLY

Using a plastic hammer, tap the front case and remove the input shaft.

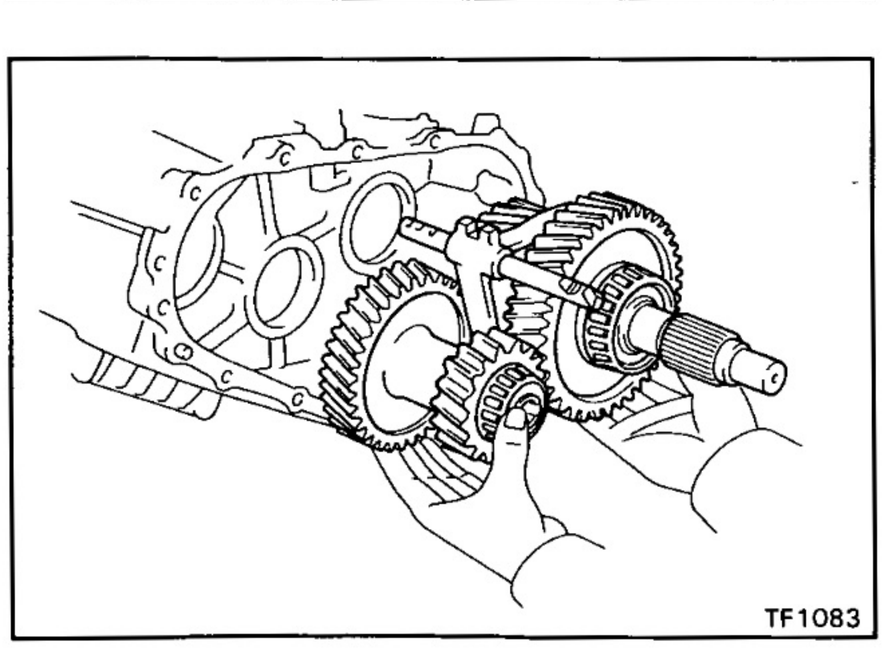

22. REMOVE IDLE GEAR ASSEMBLY, OUTPUT SHAFT ASSEMBLY, SHIFT FORK NO.1 AND FORK SHAFT

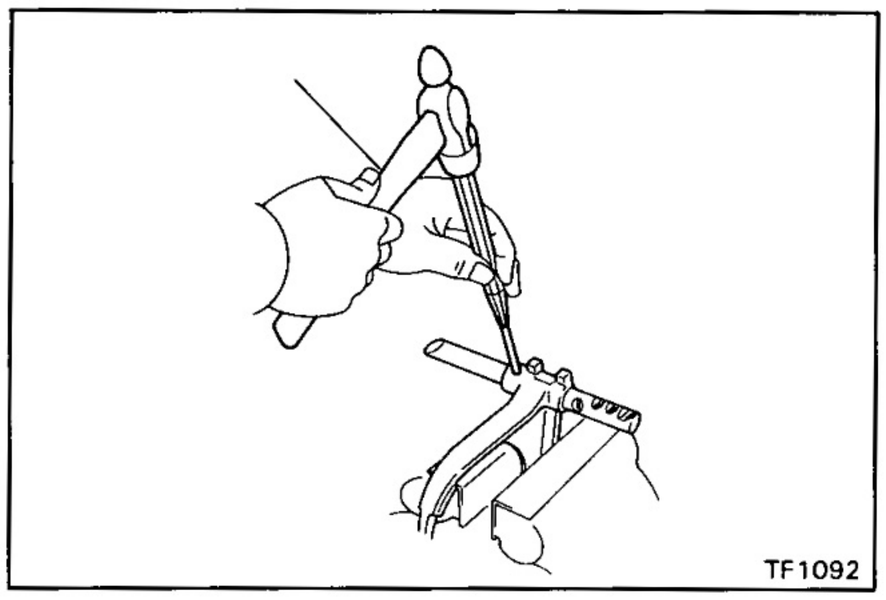

23. SEPARATE SHIFT FORK NO.1 AND FORK SHAFT

(a) Using a pin punch and hammer, drive out the slotted spring pin.

(b) Separate the shift fork No.1 and fork shaft.

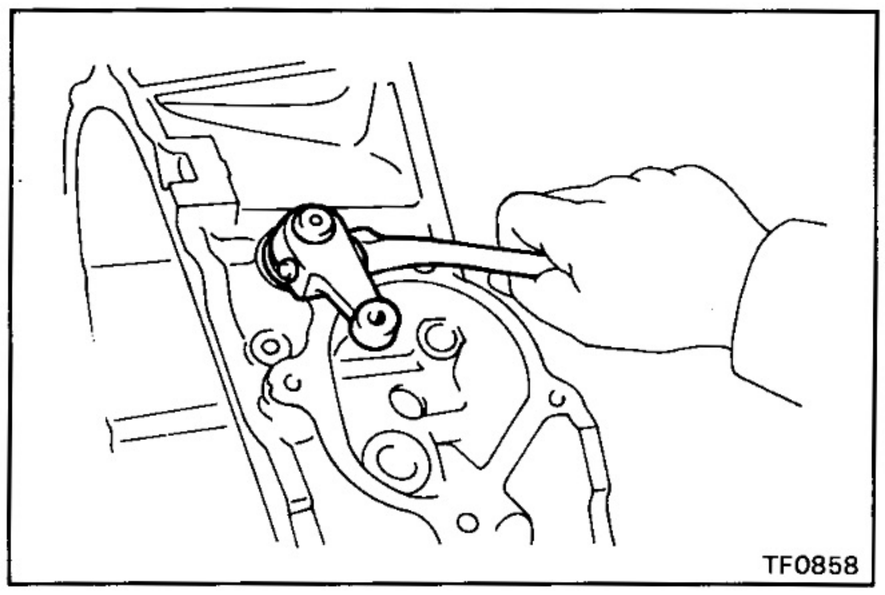

24. REMOVE SHIFT OUTER LEVER AND INNER LEVER

(a) Remove the nut and washer.

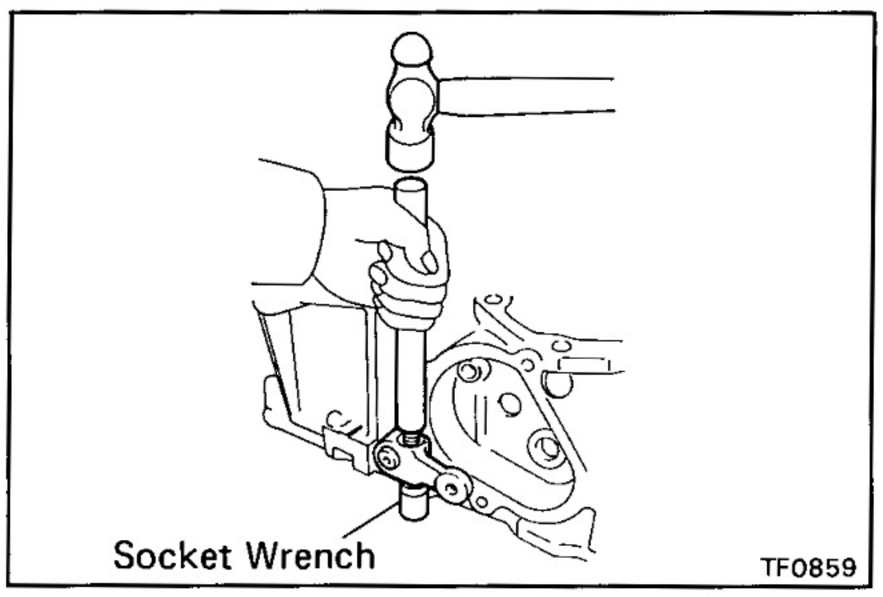

(b) Using a brass bar and hammer, tap out the lever lock pin.

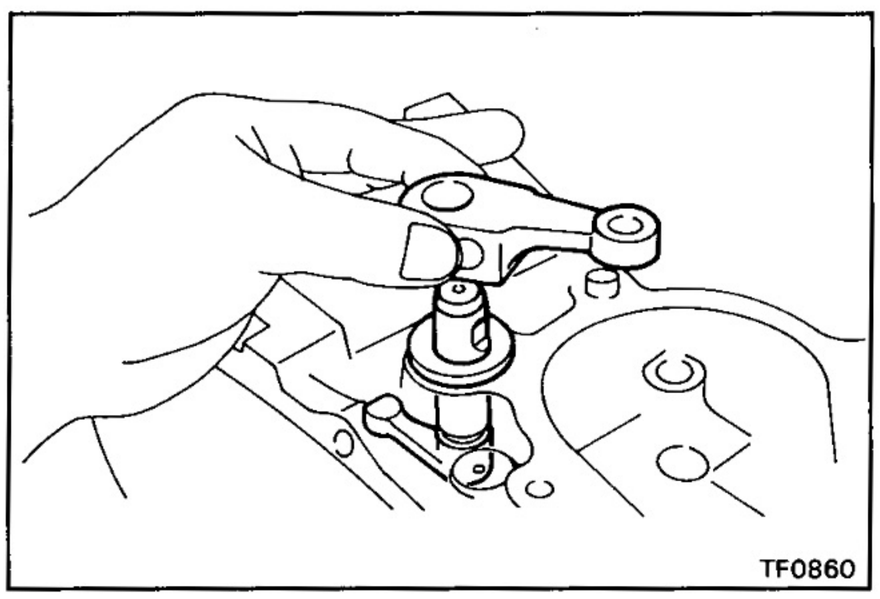

(c) Remove the shift outer lever and inner lever.

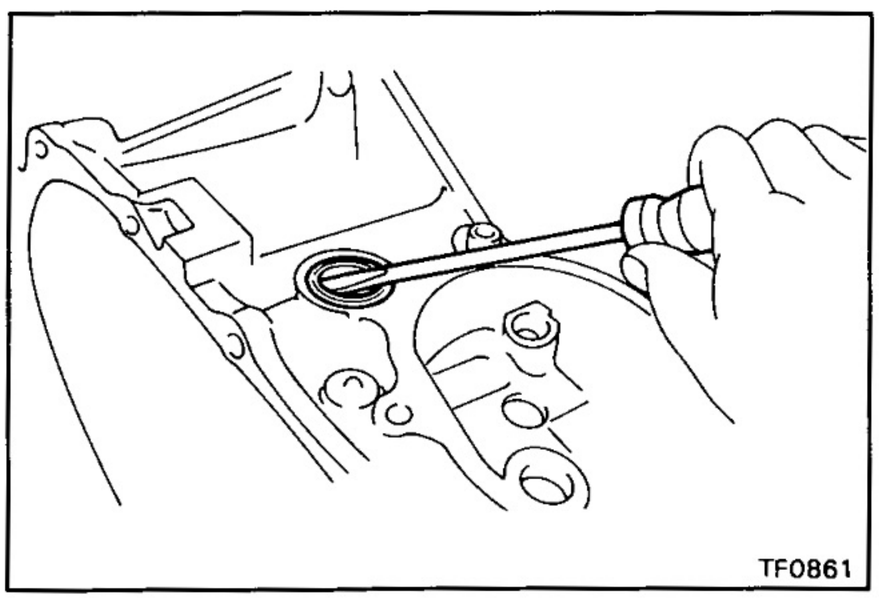

25. IF NECESSARY, REPLACE SHIFT LEVER OIL SEAL

(a) Using a screwdriver, pry out the oil seal.

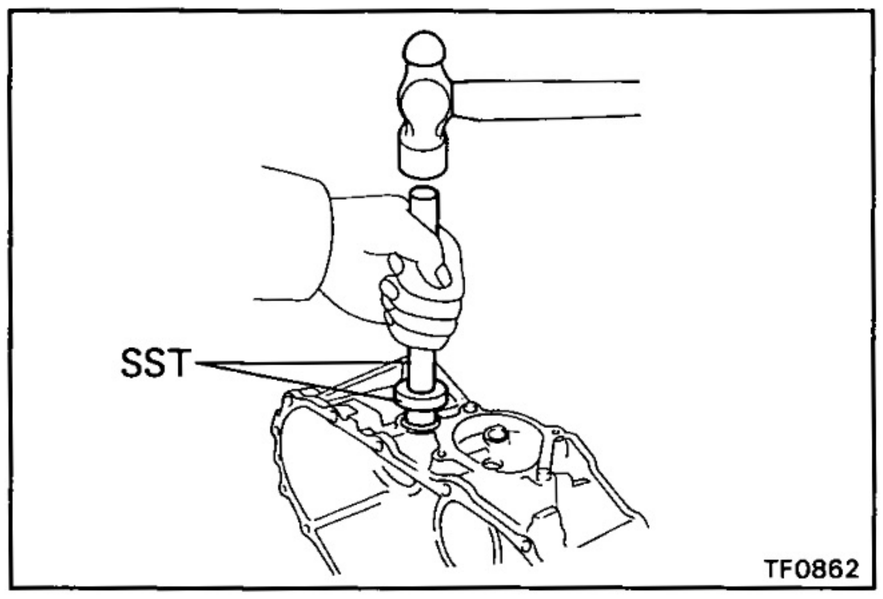

(b) Using SST and a hammer, drive in a new oil seal.

SST 09608-20012 (09608-00080, 09608-03020)

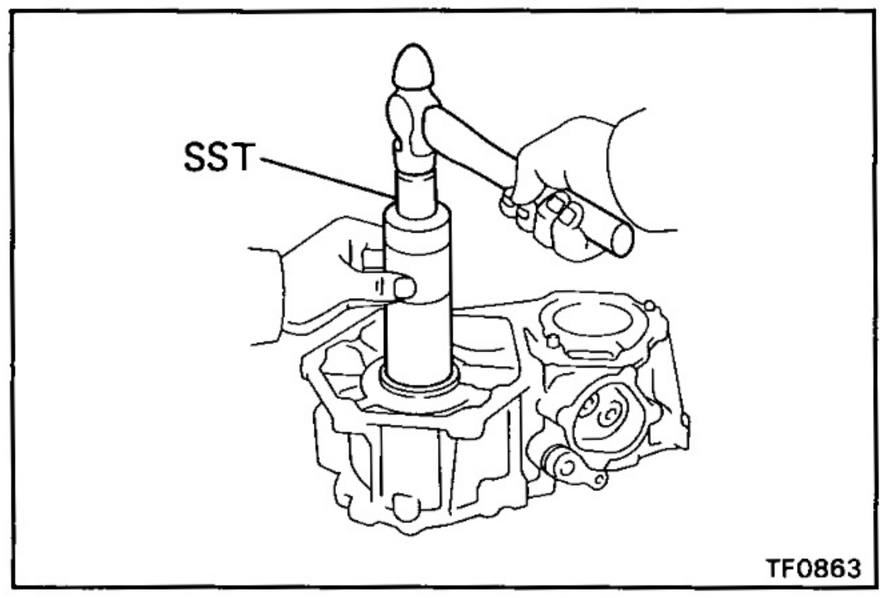

26. IF NECESSARY, REPLACE INPUT SHAFT OIL SEAL

(a) Using SST and a hammer, drive out the oil seal.

SST 09316-60010 (09316-00010)

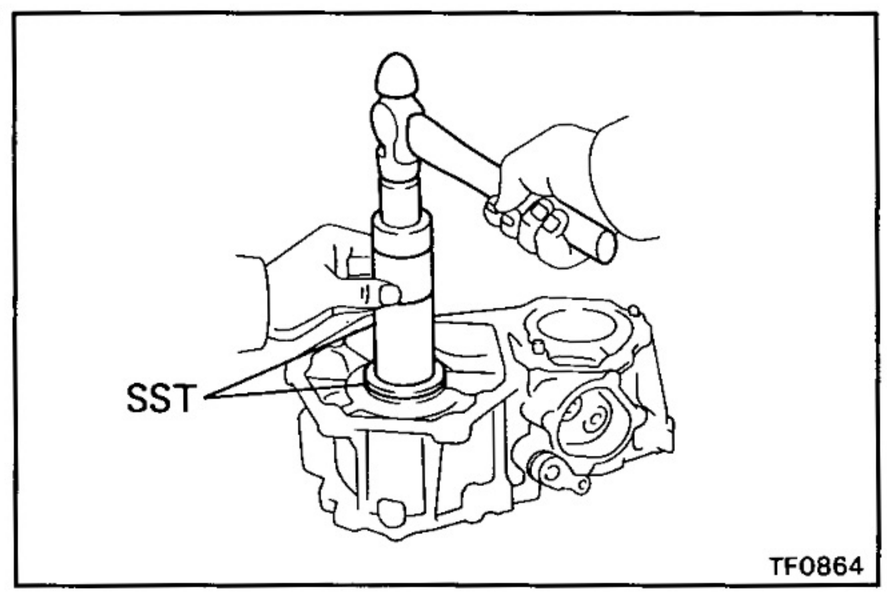

(b) Using SST and a hammer, drive in a new oil seal.

SST 09316-60010 (09316-00010, 09316-00030)

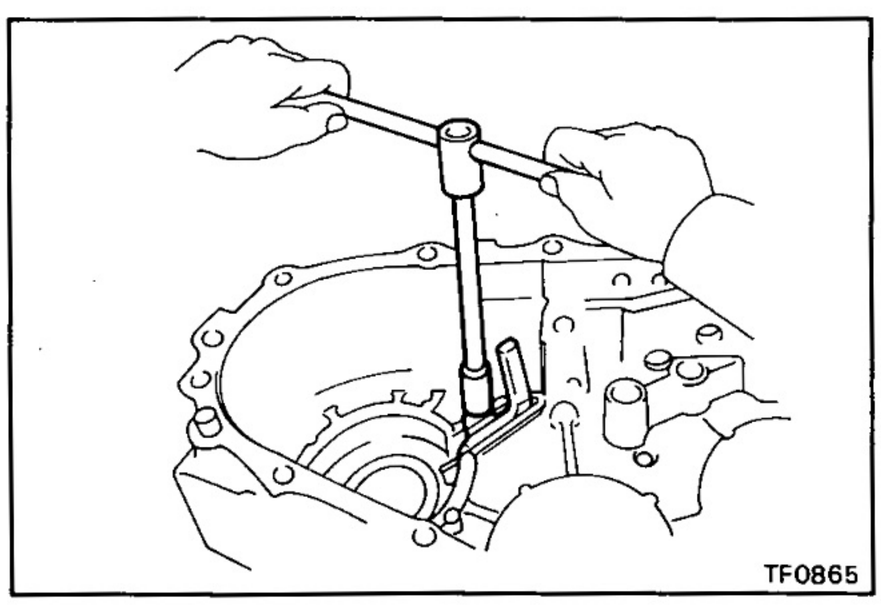

27. REMOVE OIL RECEIVER FROM FRONT CASE

Remove the set bolt and oil receiver.

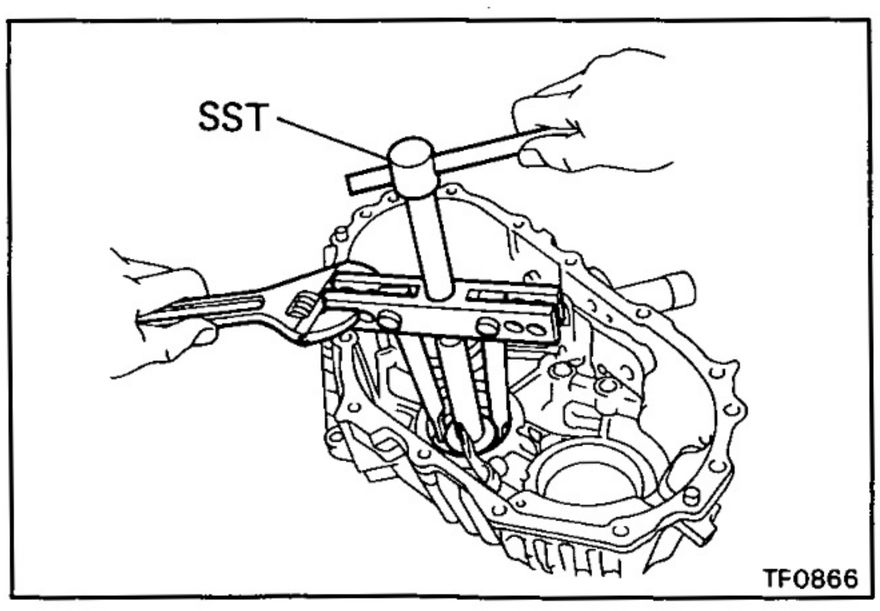

28. REMOVE TWO BEARING RACES FROM FRONT CASE

(a) Using SST, remove the bearing race.

SST 09950-20017

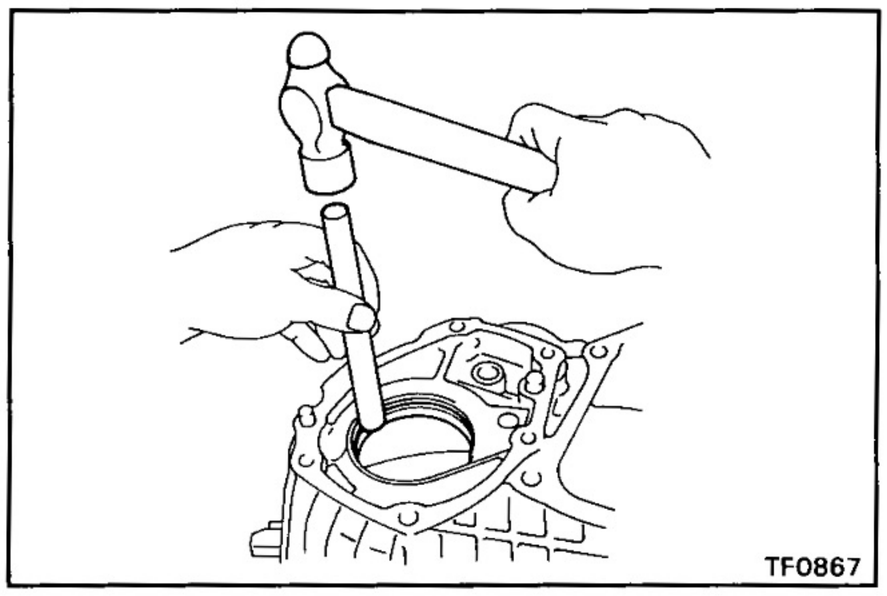

(b) Using a brass bar and hammer, remove the bearing race.

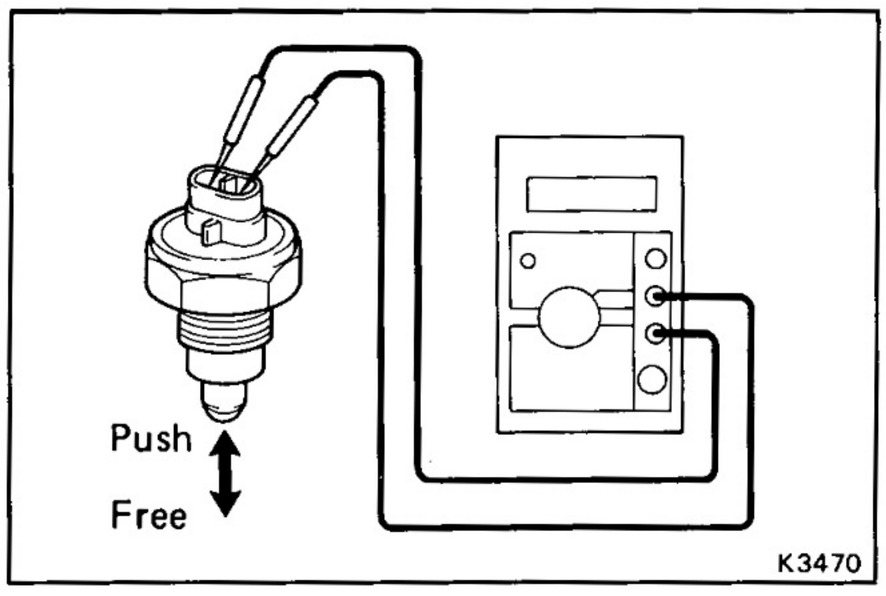

29. INSPECTION OF TRANSFER INDICATOR SWITCH

Check that there is continuity between terminals as shown.

Switch Position	Specified
Push	Continuity
Free	No continuity

If operation is not as specified, replace the switch.

COMPONENT PARTS

Input Shaft Assembly

COMPONENTS

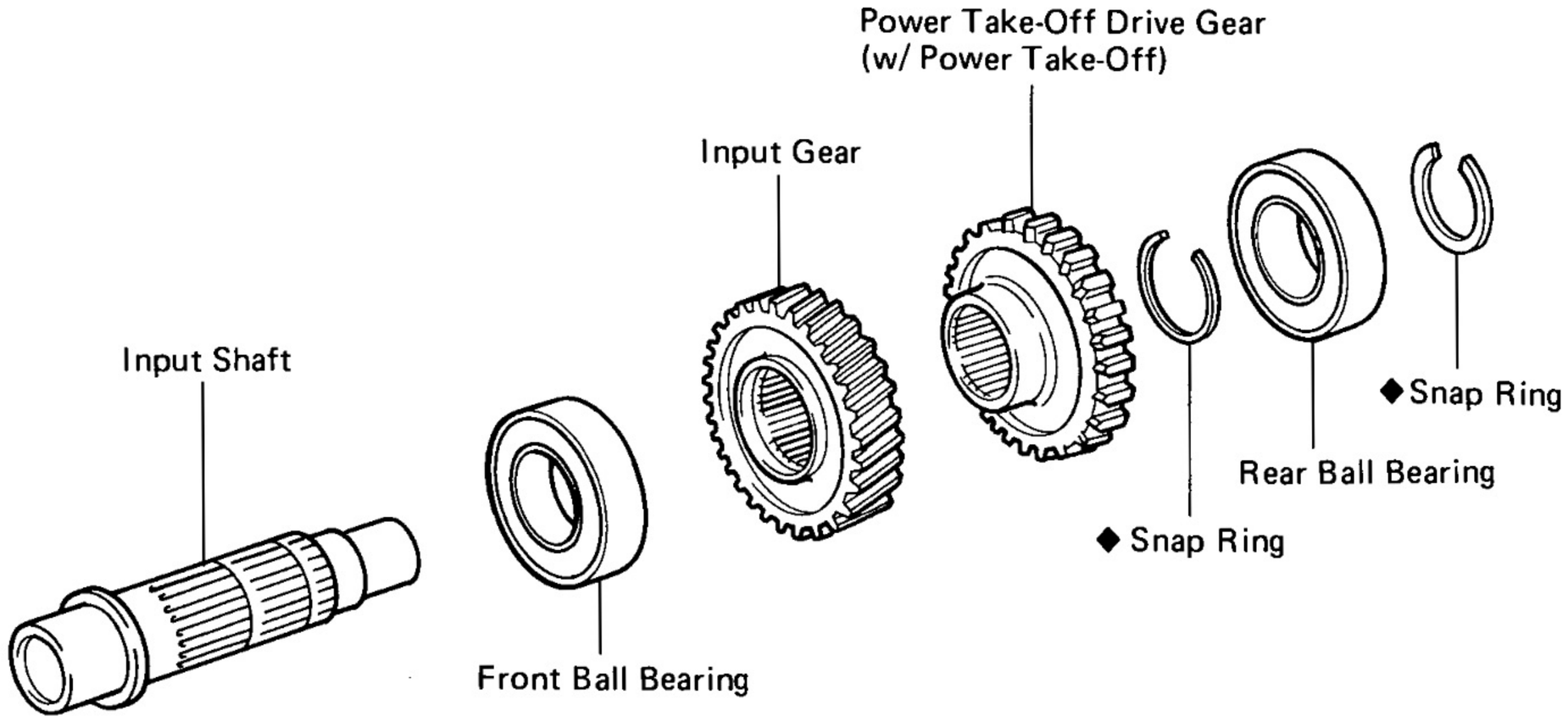

◆ Non-reusable part

TF0868

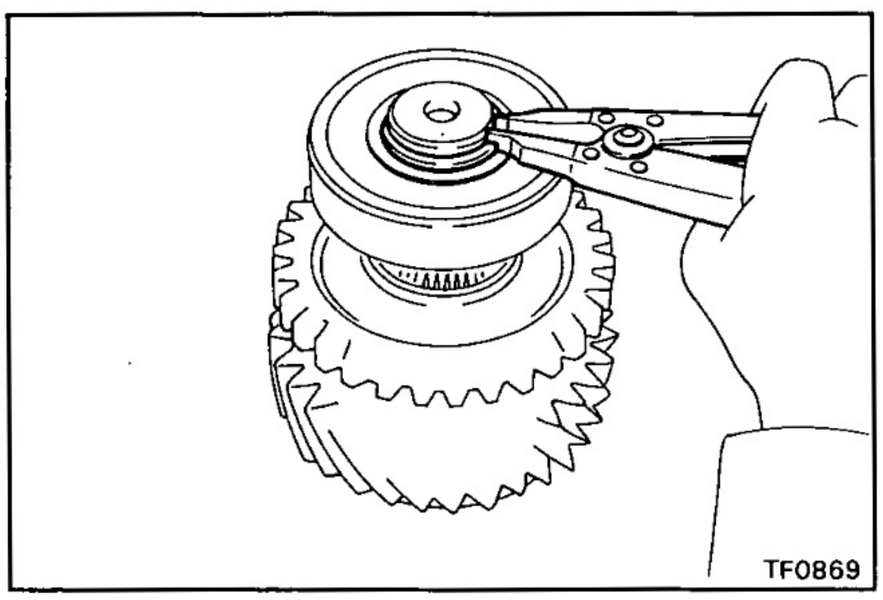

TF0869

DISASSEMBLY OF INPUT SHAFT ASSEMBLY

1. REMOVE REAR BALL BEARING

(a) Using snap ring pliers, remove the snap ring.

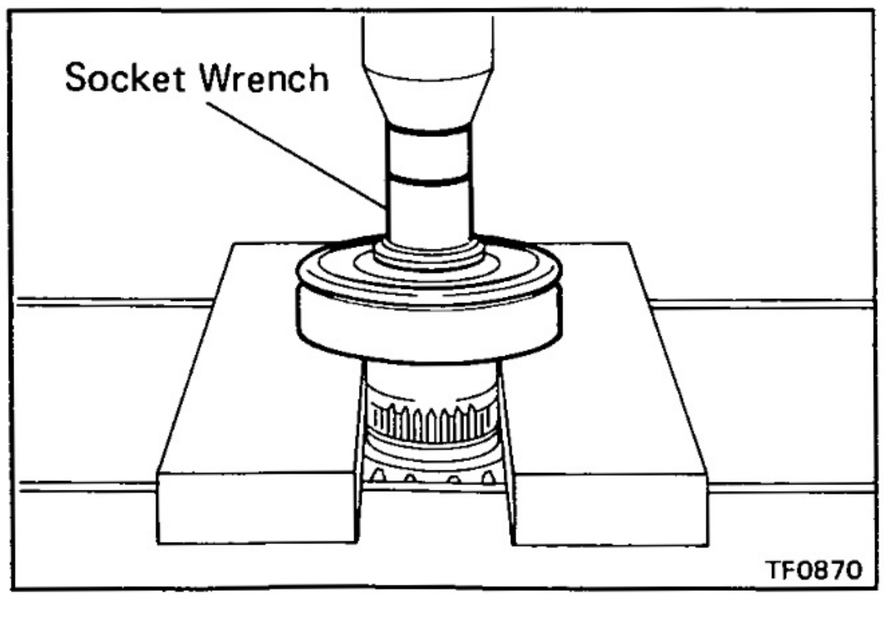

TF0870

(b) Using a press and socket wrench, remove the rear ball bearing.

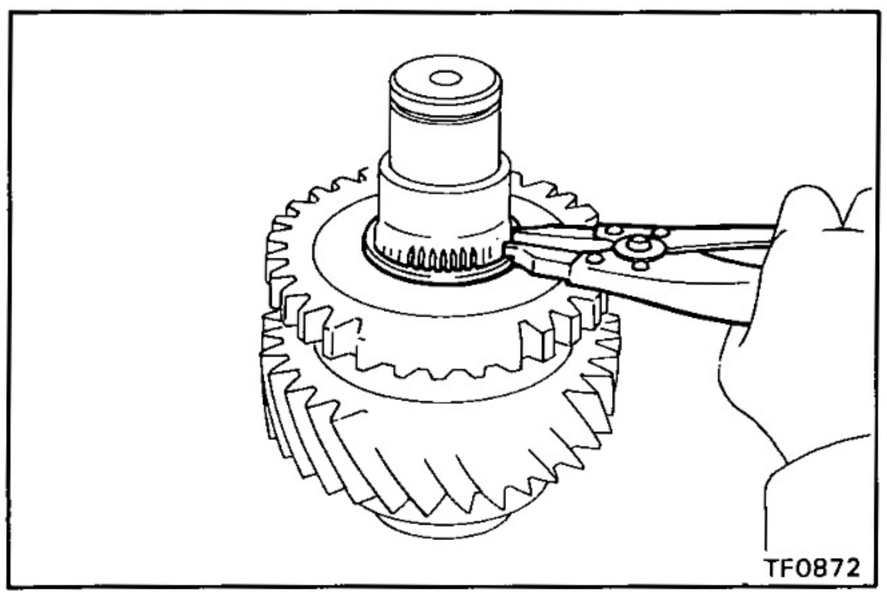

**2. (w/ POWER TAKE-OFF)
REMOVE POWER TAKE-OFF DRIVE GEAR**

(a) Using snap ring pliers, remove the snap ring.

(b) Using a press, remove the power take-off drive gear.

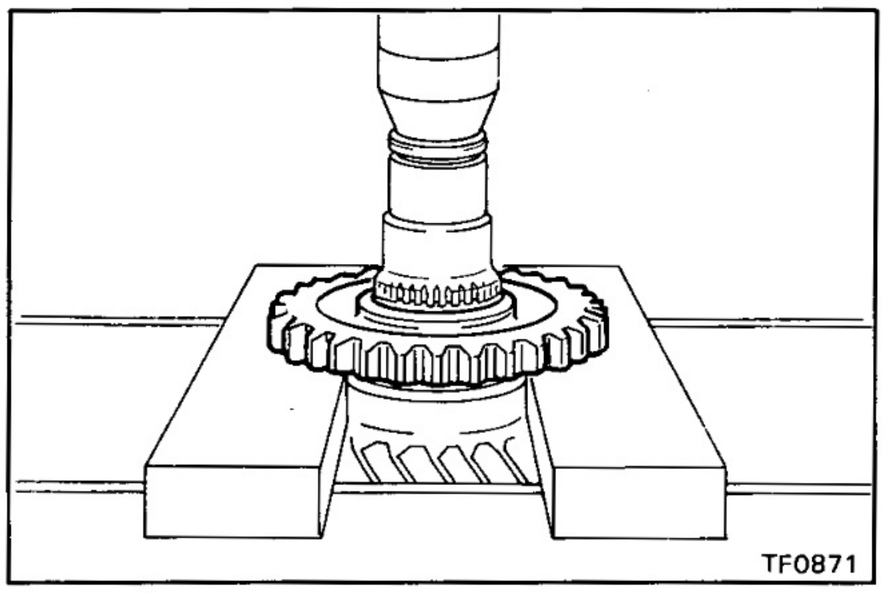

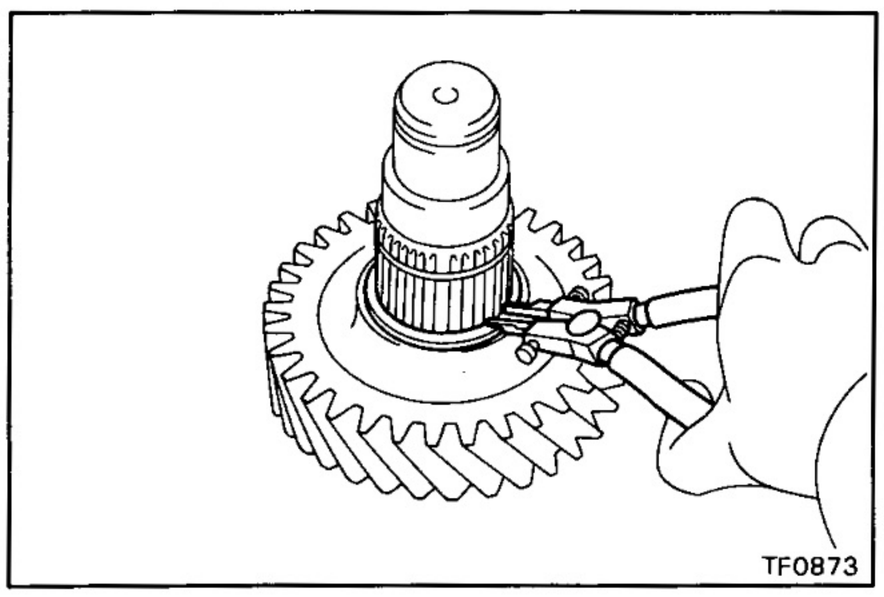

3. REMOVE INPUT GEAR

(a) (w/o Power take-off)
Using snap ring pliers, remove the snap ring.

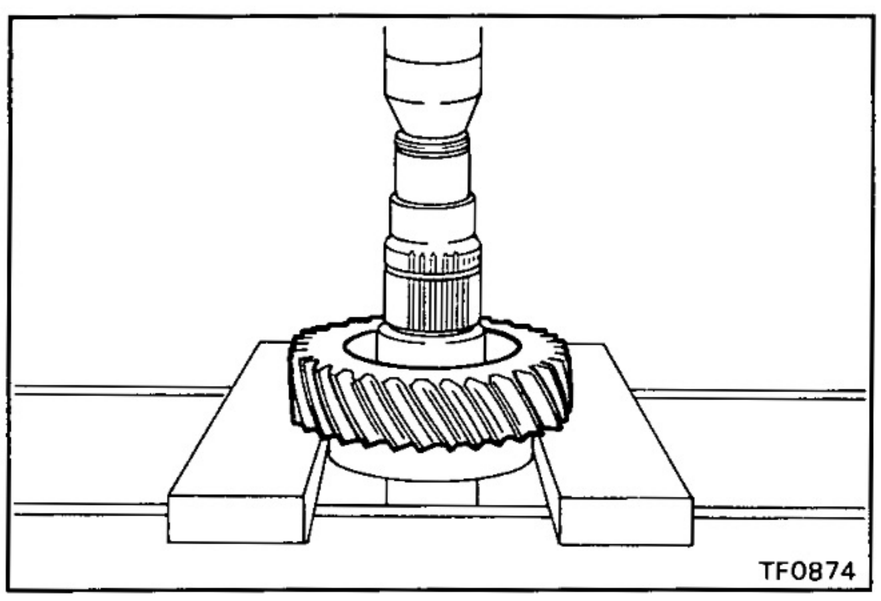

(b) Using a press, remove the input gear.

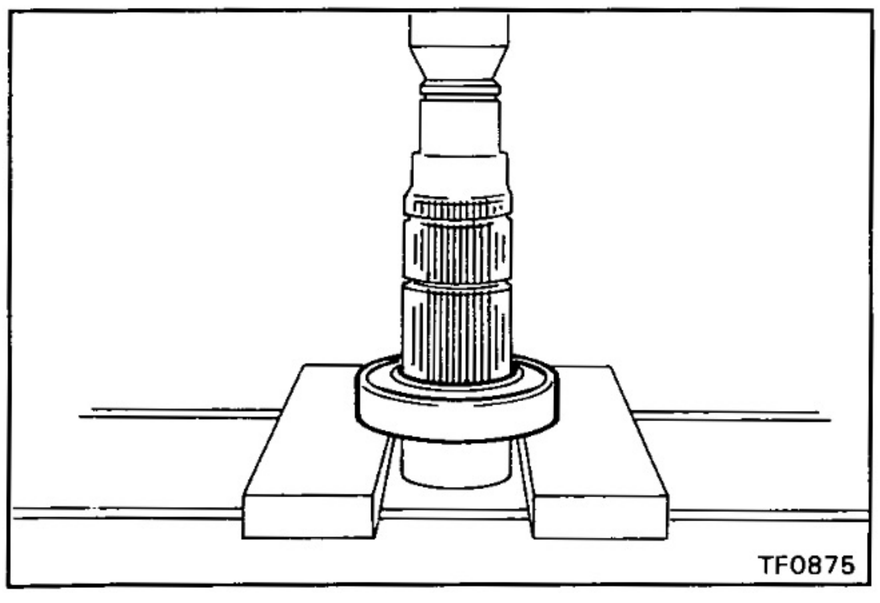

4. REMOVE FRONT BALL BEARING

Using a press, remove the front ball bearing.

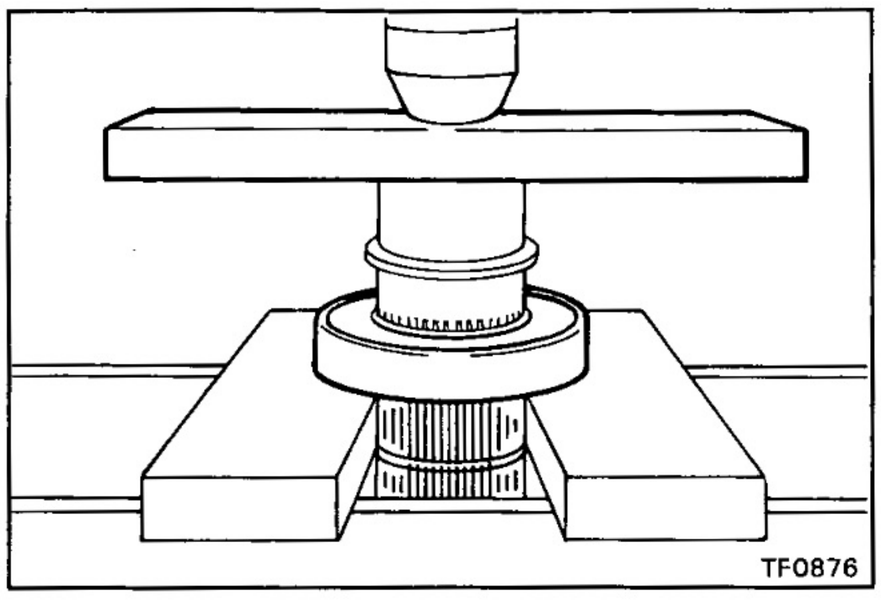

ASSEMBLY OF INPUT SHAFT ASSEMBLY

1. INSTALL FRONT BALL BEARING

Using a press, install the front ball bearing.

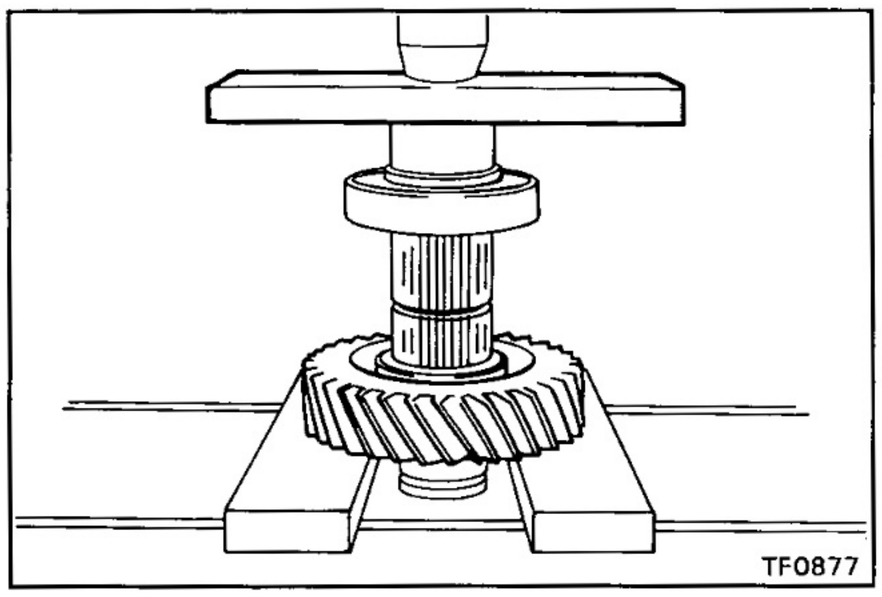

2. INSTALL INPUT GEAR

(a) Using a press, install the input gear.

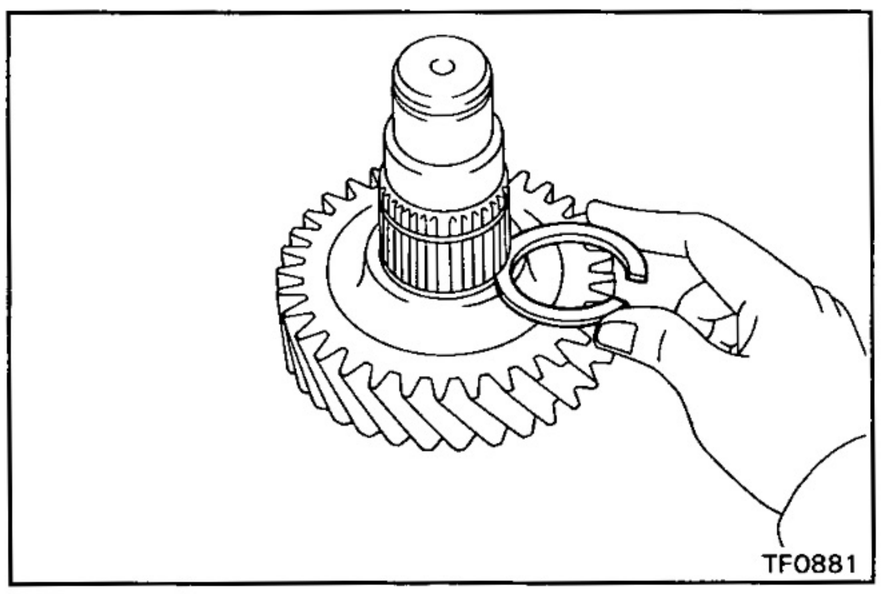

(b) (w/o Power take-off)
Select a snap ring that will allow minimum axial play and install it on the shaft.

Mark	Thickness mm (in.)
A	2.0 (0.0787)
B	2.1 (0.0827)
C	2.2 (0.0866)
D	2.3 (0.0906)
E	2.4 (0.0945)
F	2.5 (0.0984)
G	2.6 (0.1024)
H	2.7 (0.1063)
J	2.8 (0.1102)

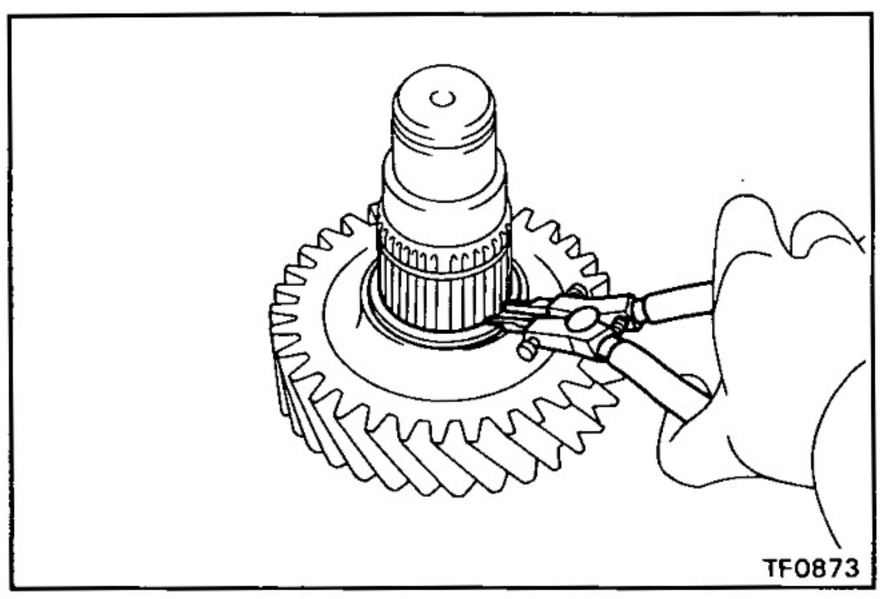

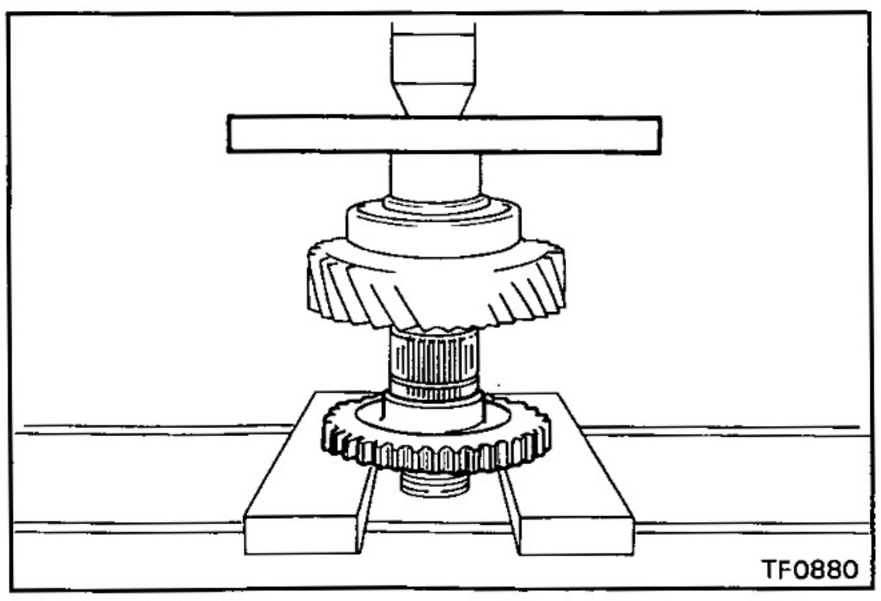

3. (w/ POWER TAKE-OFF) INSTALL POWER TAKE-OFF GEAR

(a) Using a press, install the power take-off gear.

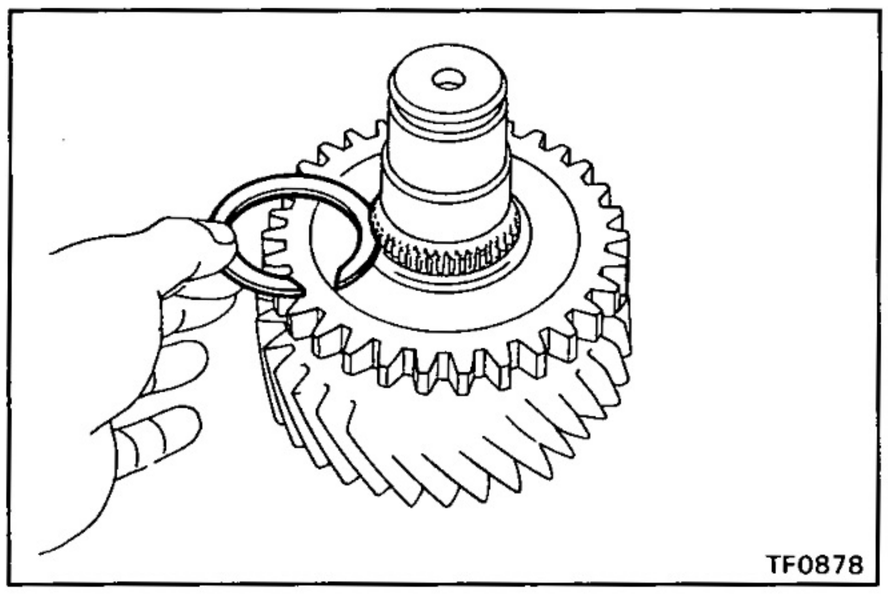
TF0878

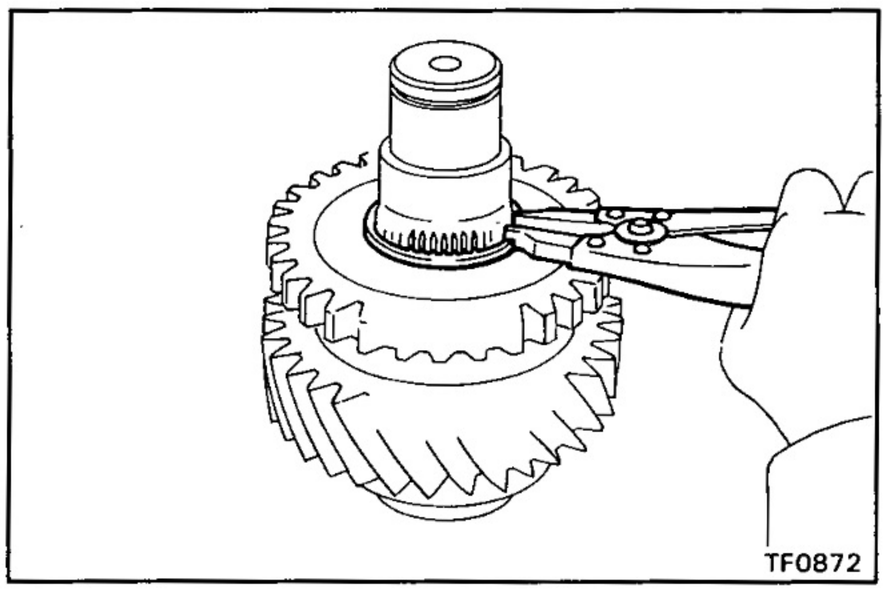
TF0872

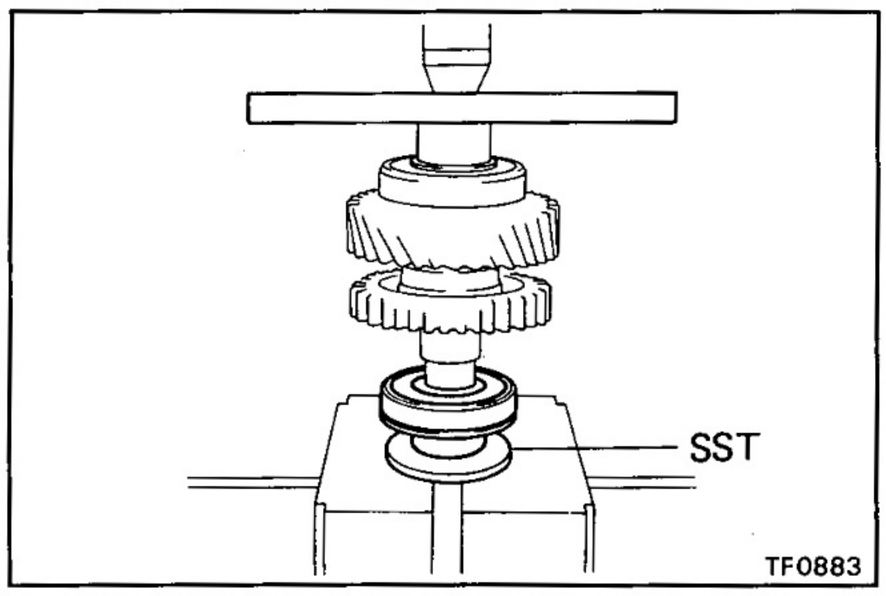

TF0883

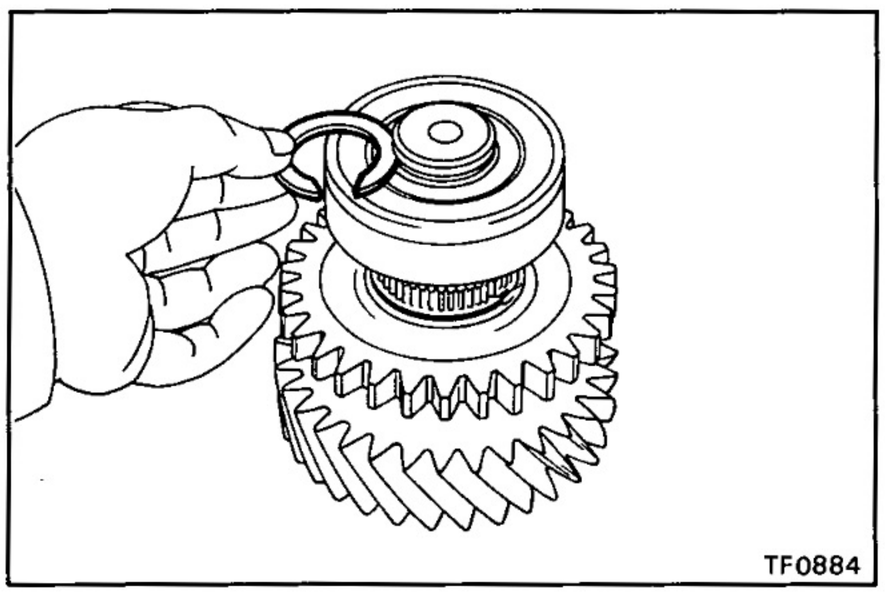
TF0884

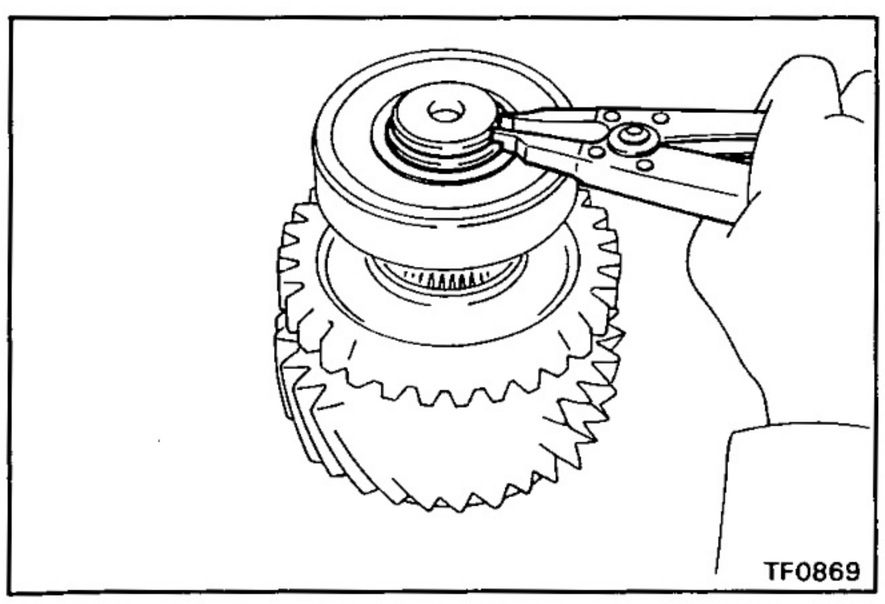
TF0869

(b) Select a snap ring that will allow minimum axial play and install it on the shaft.

Mark	Thickness mm (in.)
A	2.0 (0.0787)
B	2.1 (0.0827)
C	2.2 (0.0866)
D	2.3 (0.0906)
E	2.4 (0.0945)
F	2.5 (0.0984)
G	2.6 (0.1024)
H	2.7 (0.1063)
J	2.8 (0.1102)

4. INSTALL REAR BALL BEARING

(a) Using SST and a press, install the rear ball bearing.

SST 09316-60010 (09316-00030)

(b) Select a snap ring that will allow minimum axial play.

Mark	Thickness mm (in.)
A	2.0 (0.0787)
B	2.1 (0.0827)
C	2.2 (0.0866)
D	2.3 (0.0906)
E	2.4 (0.0945)

(c) Using snap ring pliers, install the snap ring.

Idler Gear Assembly

COMPONENTS

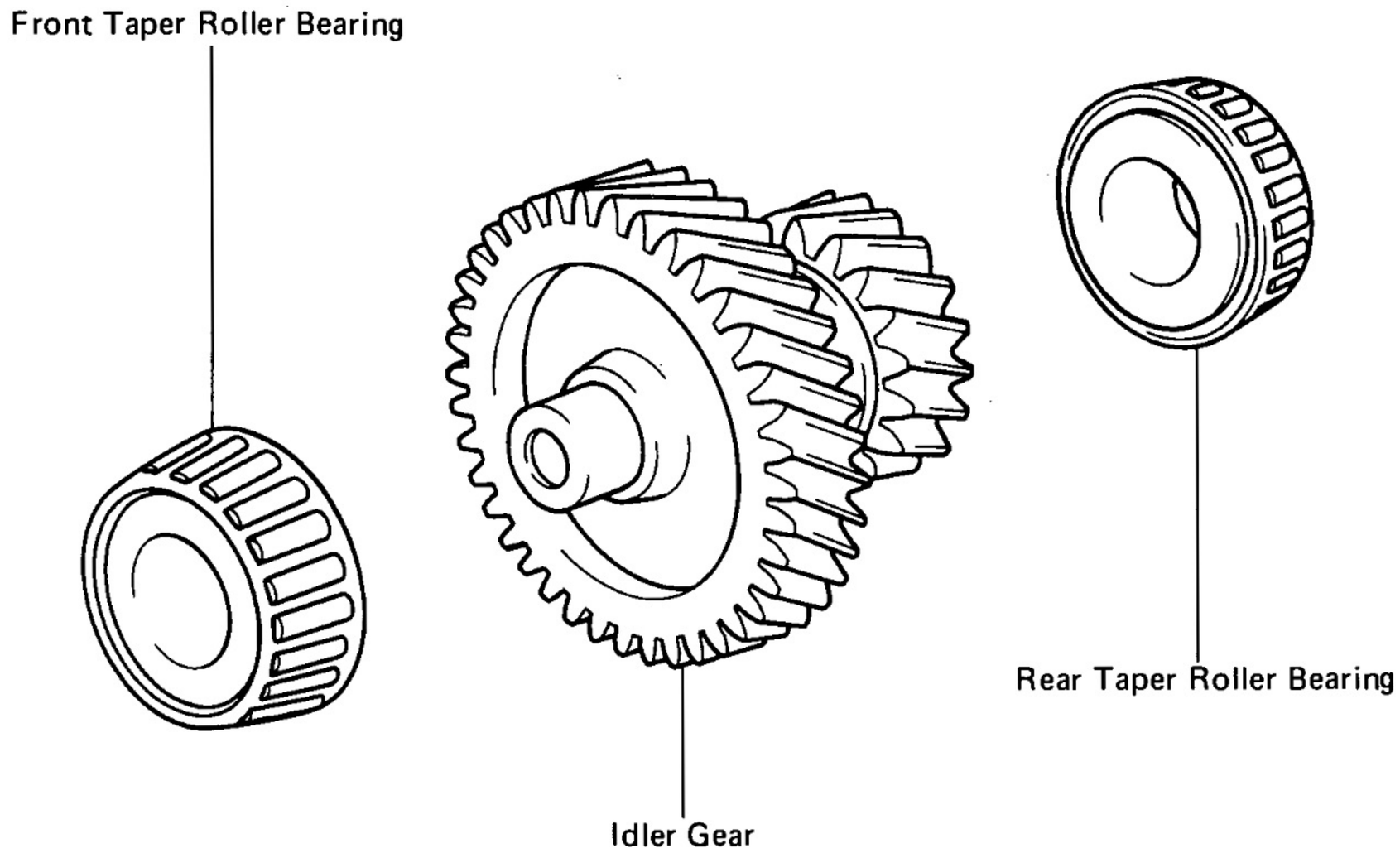

TF1078

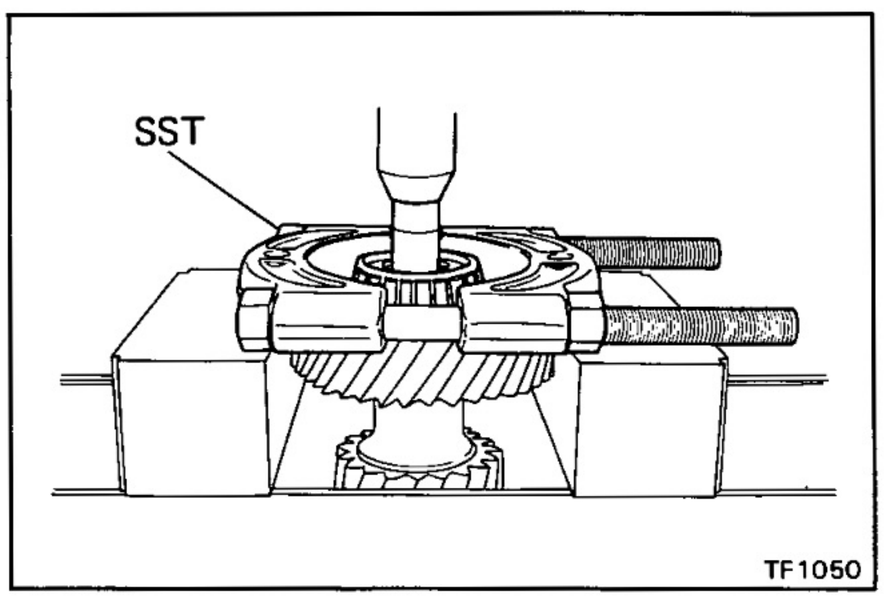

TF1050

DISASSEMBLY OF IDLER GEAR ASSEMBLY

1. REMOVE FRONT TAPER ROLLER BEARING

Using SST, press and socket wrench, remove the front taper roller bearing.

SST 09555-55010

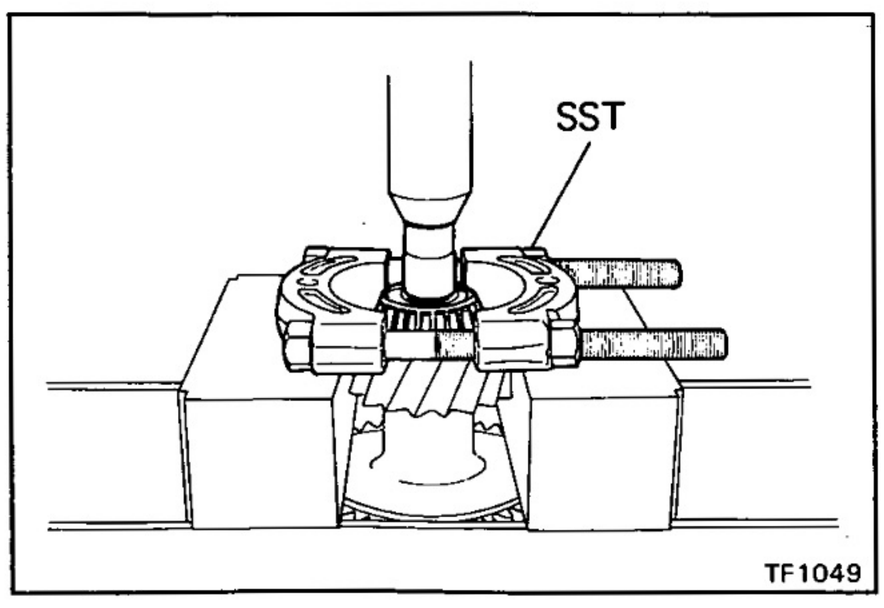

TF1049

2. REMOVE REAR TAPER ROLLER BEARING

Using SST, press and socket wrench, remove the rear taper roller bearing.

SST 09950-00020

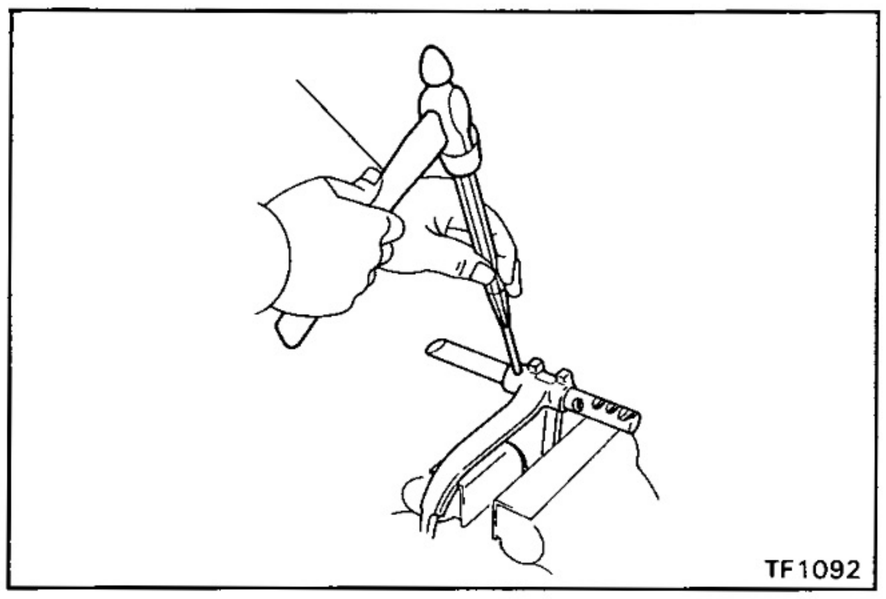

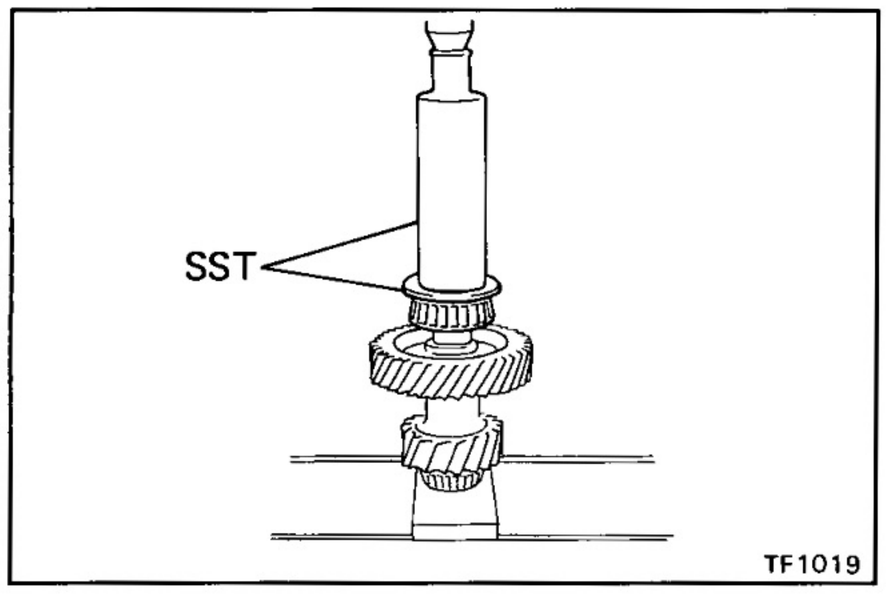

ASSEMBLY OF IDLER GEAR ASSEMBLY

1. INSTALL REAR TAPER ROLLER BEARING

Using SST and a press, install the rear taper roller bearing.

SST 09316-60010 (09316-00010, 09316-00070)

2. INSTALL FRONT TAPER ROLLER BEARING

Using SST and a press, install the front taper roller bearing.

SST 09316-60010 (09316-00010, 09316-00050)

Output Shaft Assembly

COMPONENTS

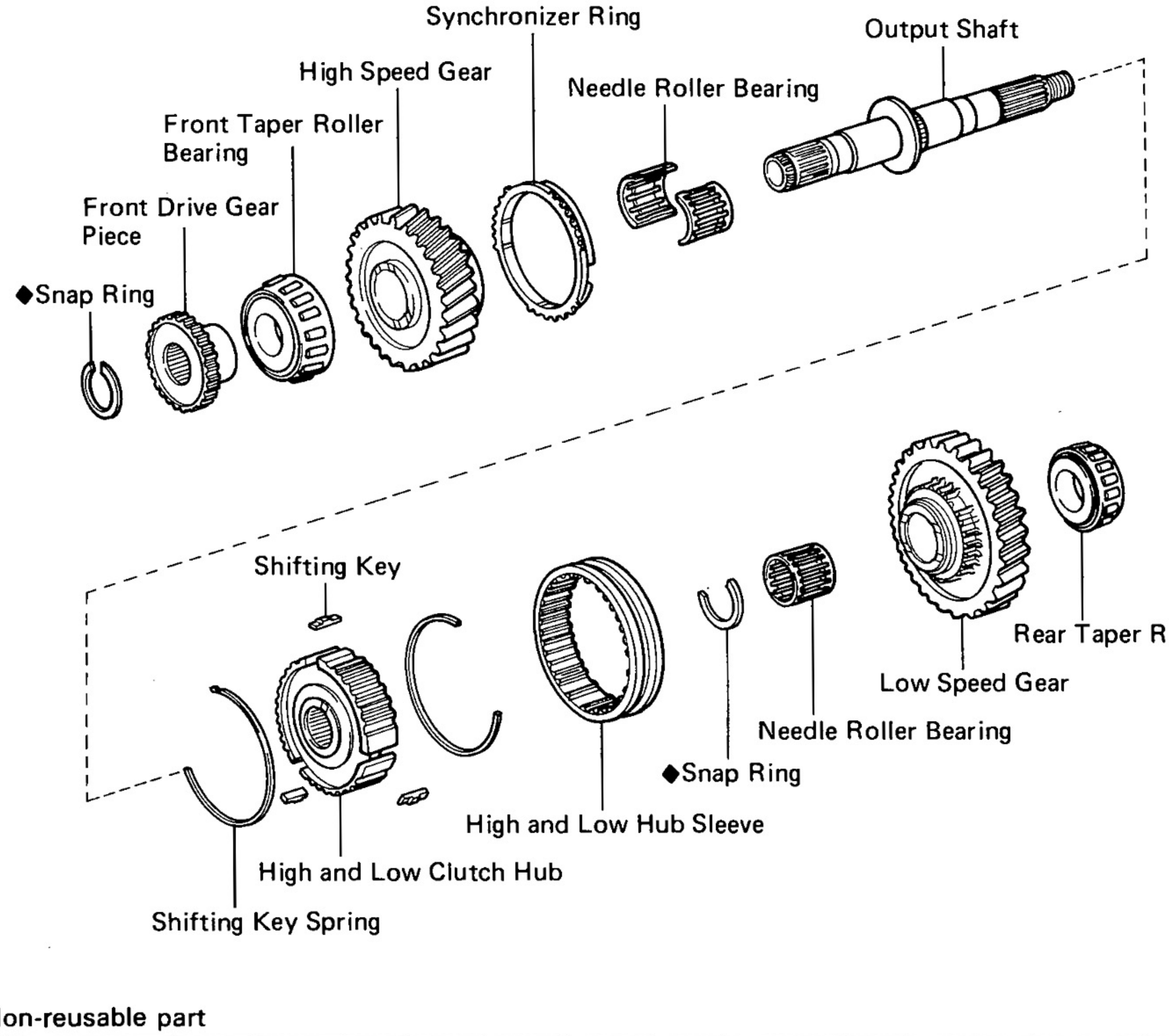

◆ Non-reusable part

TF1055

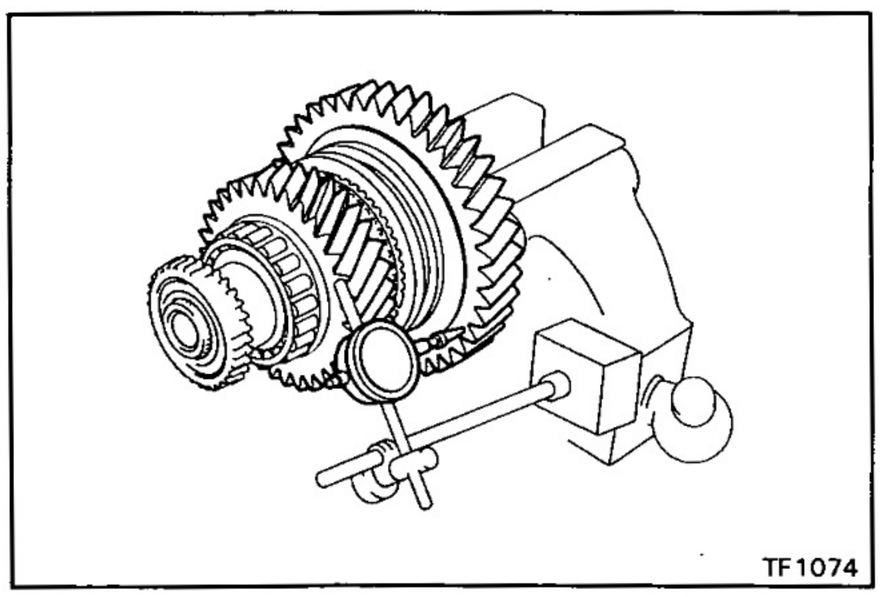

TF1074

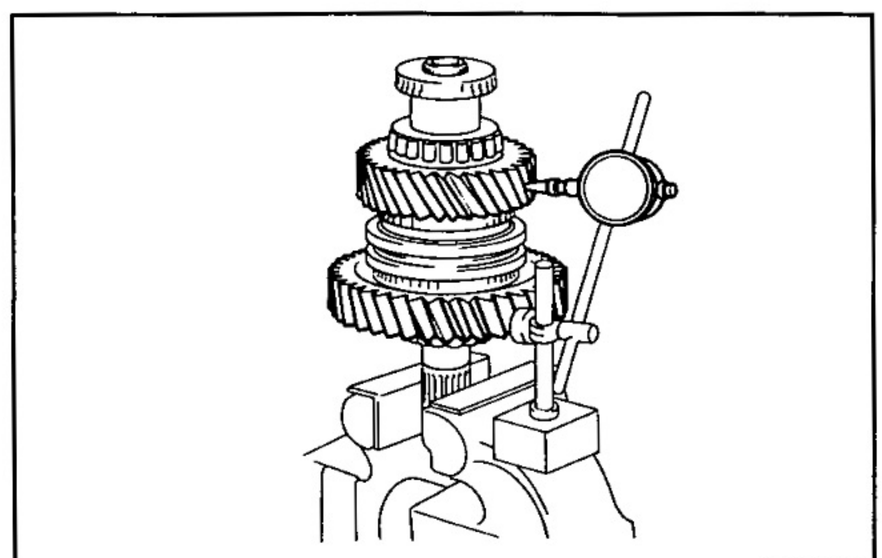

TF1075

DISASSEMBLY OF OUTPUT SHAFT ASSEMBLY

1. MEASURE EACH GEAR THRUST CLEARANCE

Using a dial indicator, measure the thrust clearance of high speed gear and low speed gear.

High speed gear

Standard clearance: **0.28 — 0.43 mm (0.0110 — 0.0169 in.)**

Maximum clearance: **0.43 mm (0.0169 in.)**

Low speed gear

Standard clearance: **0.20 — 0.45 mm (0.0079 — 0.0177 in.)**

Maximum clearance: **0.45 mm (0.0177 in.)**

2. MEASURE EACH GEAR OIL CLEARANCE

Using a dial indicator, measure the oil clearance of high speed gear and low speed gear.

Standard clearance: **0.0075 — 0.034 mm (0.0003 — 0.0013 in.)**

Maximum clearance: **0.34 mm (0.0013 in.)**

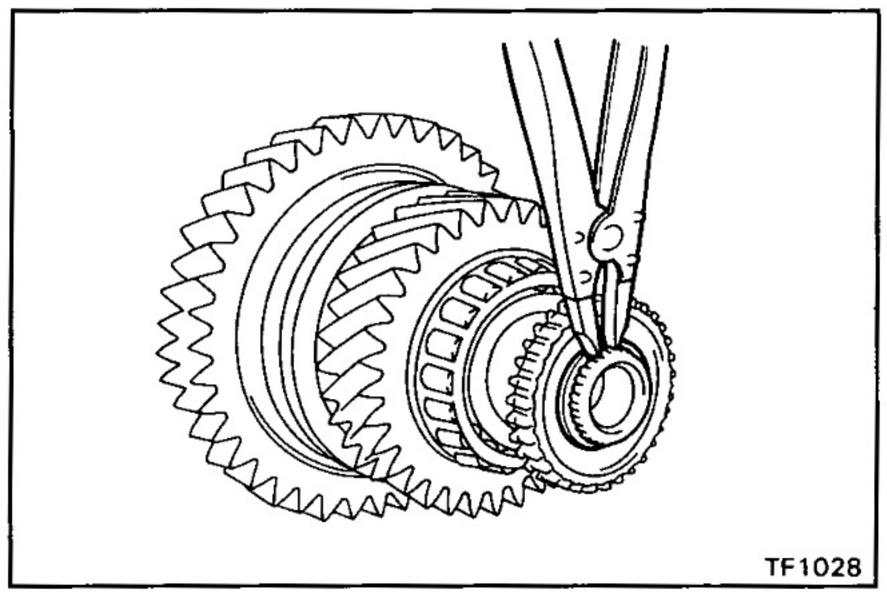

3. REMOVE FRONT DRIVE GEAR PIECE

(a) Using snap ring pliers, remove the snap ring.

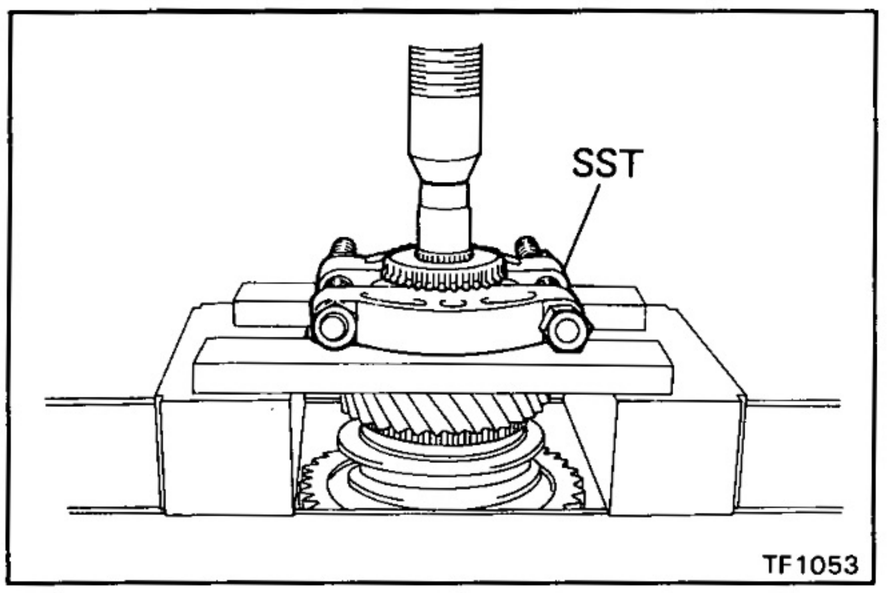

(b) Using SST and socket wrench, remove the front drive gear piece.

SST 09950-00020

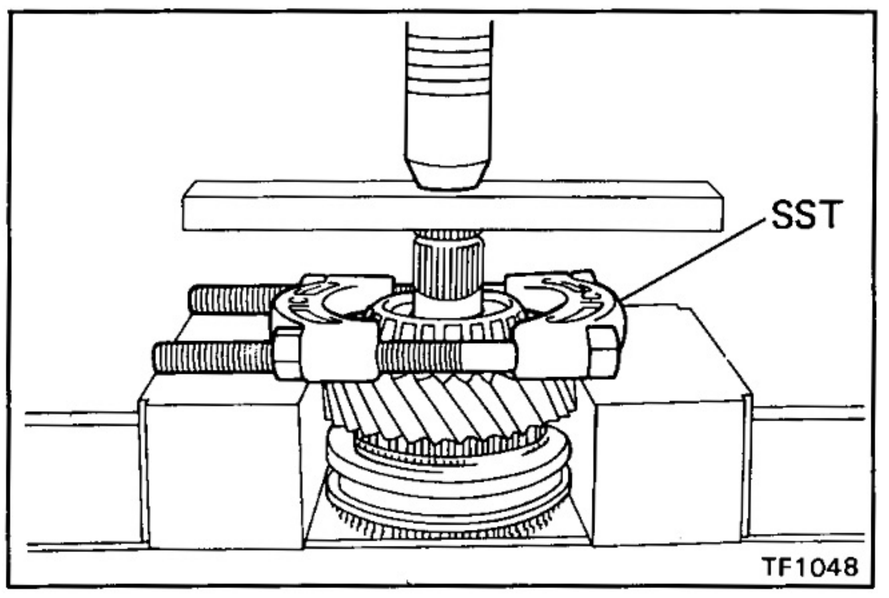

4. REMOVE FRONT TAPER ROLLER BEARING

Using SST and a press, remove the front taper roller bearing.

SST 09950-00020

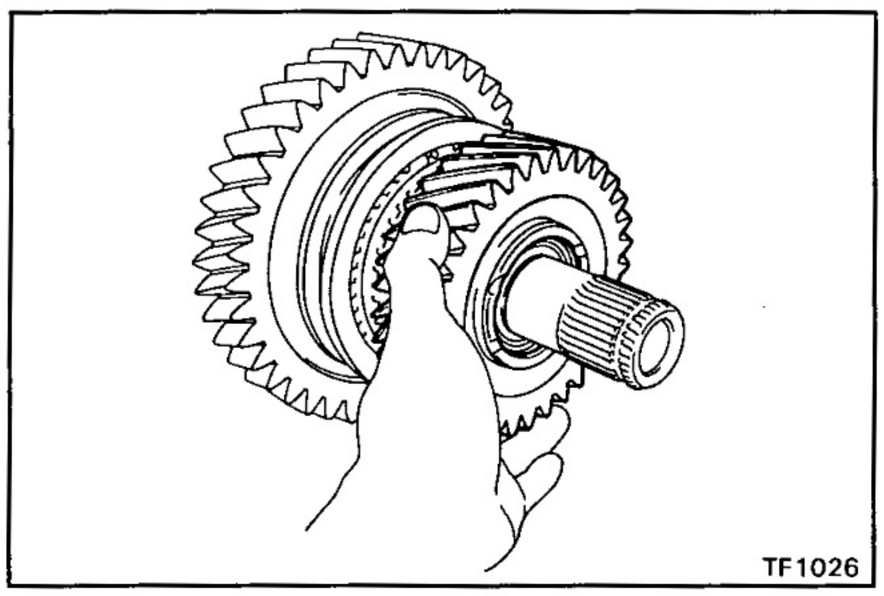

5. REMOVE HIGH SPEED GEAR, SYNCHRONIZER RING AND NEEDLE ROLLER BEARING

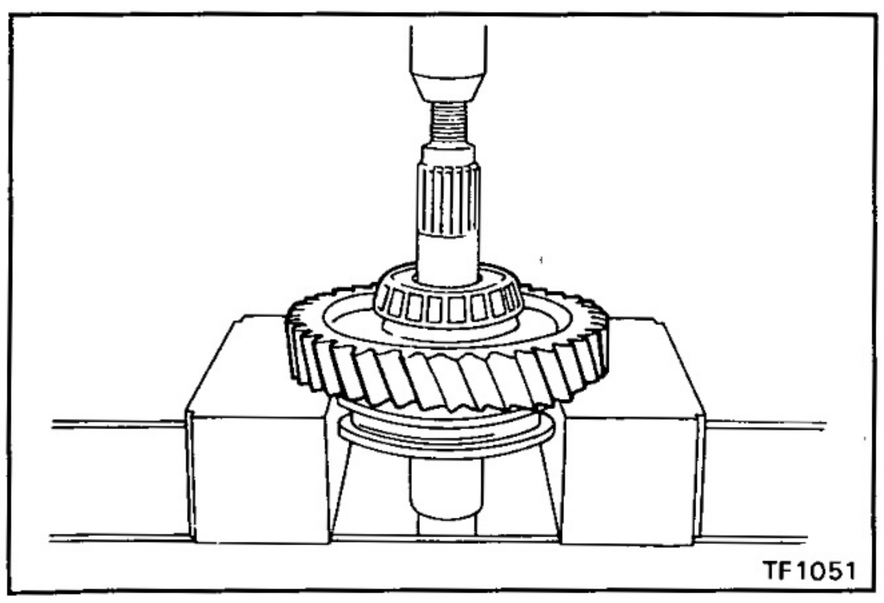

6. REMOVE LOW SPEED GEAR AND REAR TAPER ROLLER BEARING

(a) Using a press, remove the low speed gear and rear taper roller bearing.

(b) Remove the needle roller bearing.

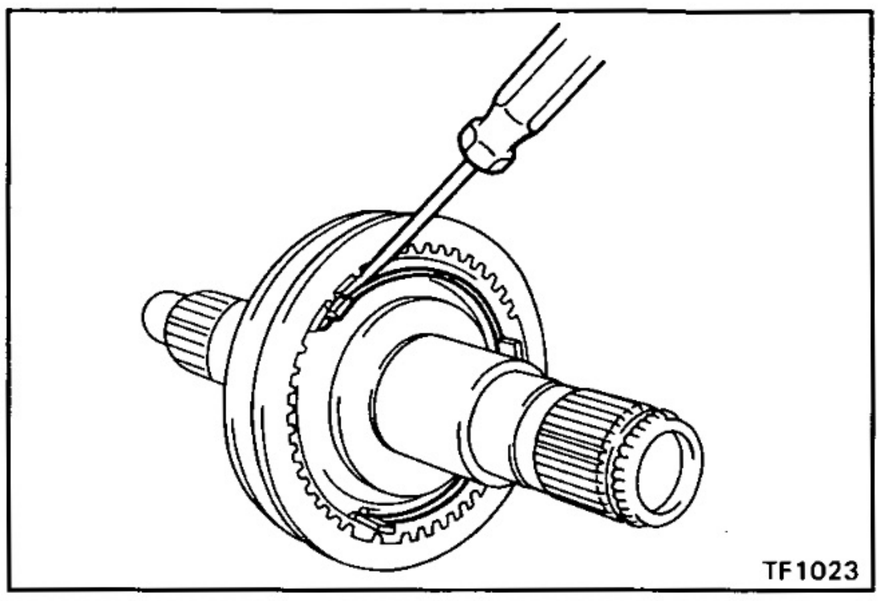
TF1023

7. REMOVE HIGH AND LOW HUB SLEEVE

(a) Using a screwdriver, remove the two springs.

(b) Remove the high and low hub sleeve and shifting keys.

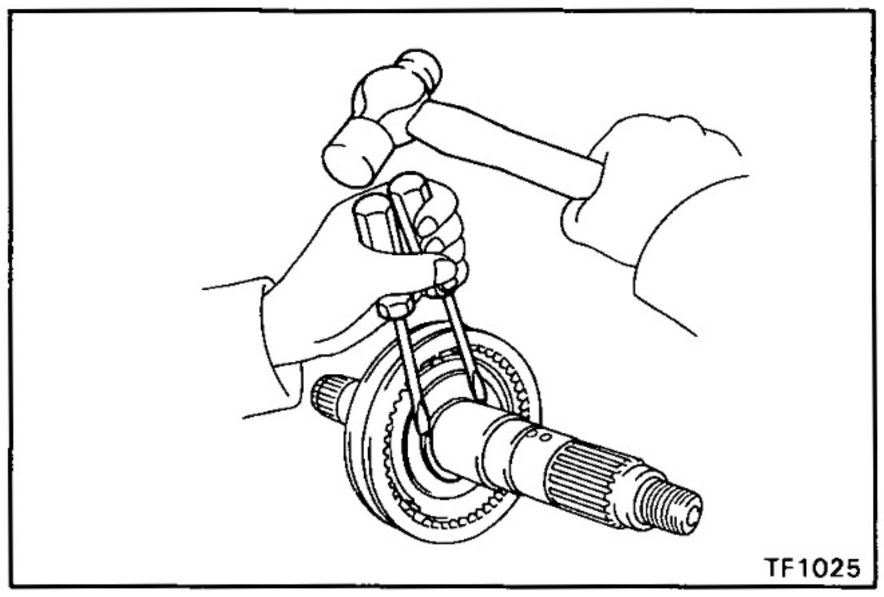
TF1025

(c) Using two screwdrivers and hammer, drive out the snap ring.

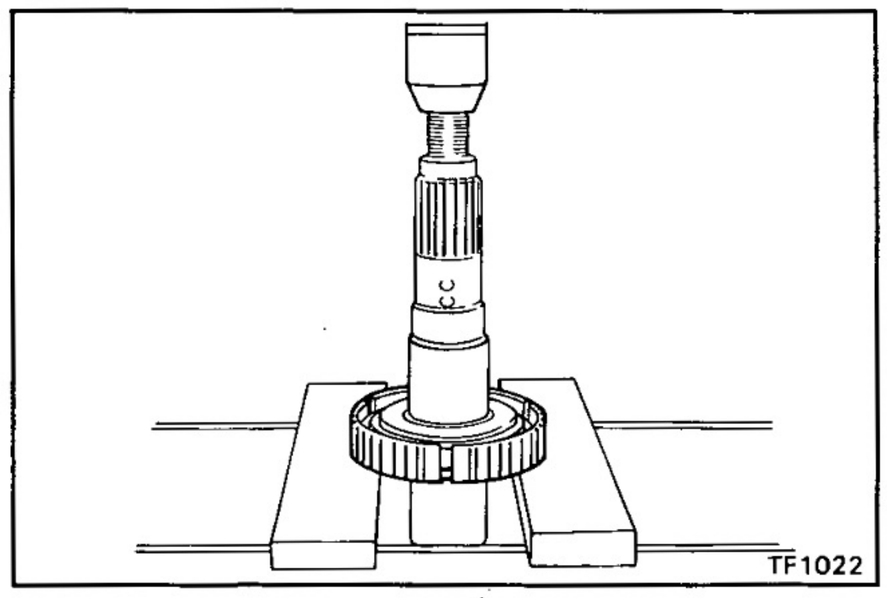
TF1022

(d) Using a press, remove the clutch hub.

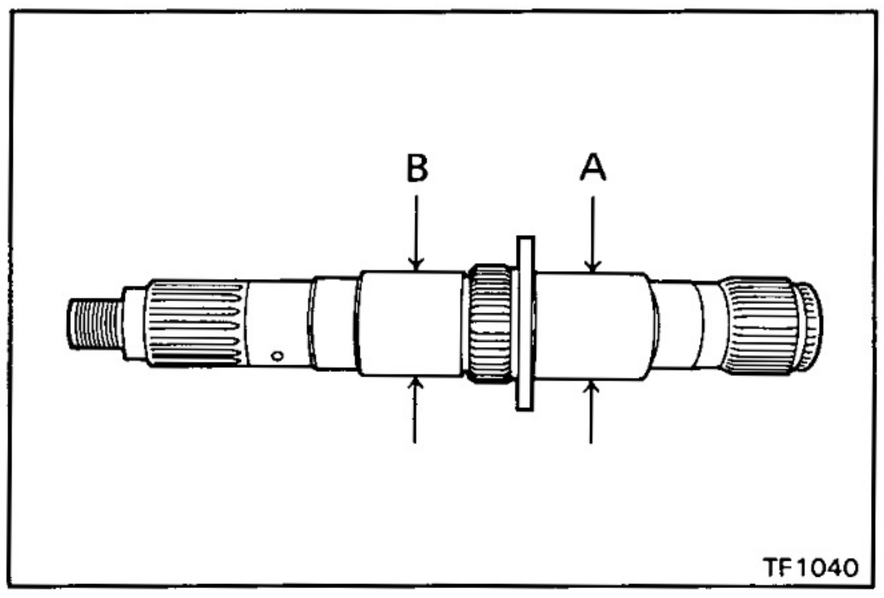

INSPECTION OF OUTPUT SHAFT ASSEMBLY

1. INSPECT OUTPUT SHAFT

(a) Using a micrometer, measure the outer diameter of the output shaft journal.

Minimum diameter:

A: High speed gear 41.984 mm (1.6529 in.)
B: Low speed gear 42.984 mm (1.6923 in.)

If the clearance is less than the limit, replace the output shaft.

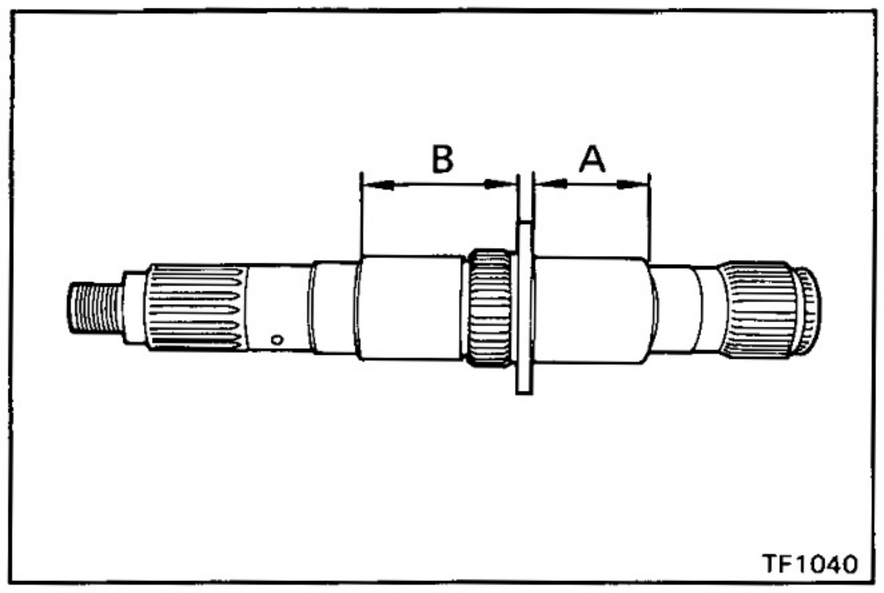

(b) Using calipers, measure the output shaft journal length.

Maximum length:

A: High speed gear 46.55 mm (1.8327 in.)
B: Low speed gear 62.35 mm (2.4547 in.)

If the length is less than the limit, replace the output shaft.

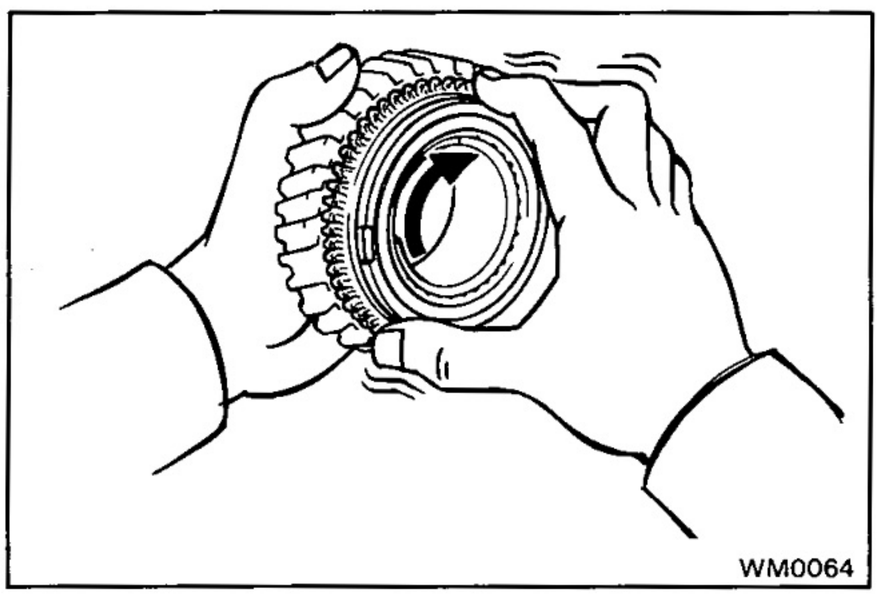

2. INSPECT SYNCHRONIZER RINGS

(a) Turn the ring and push it in to check the braking action.

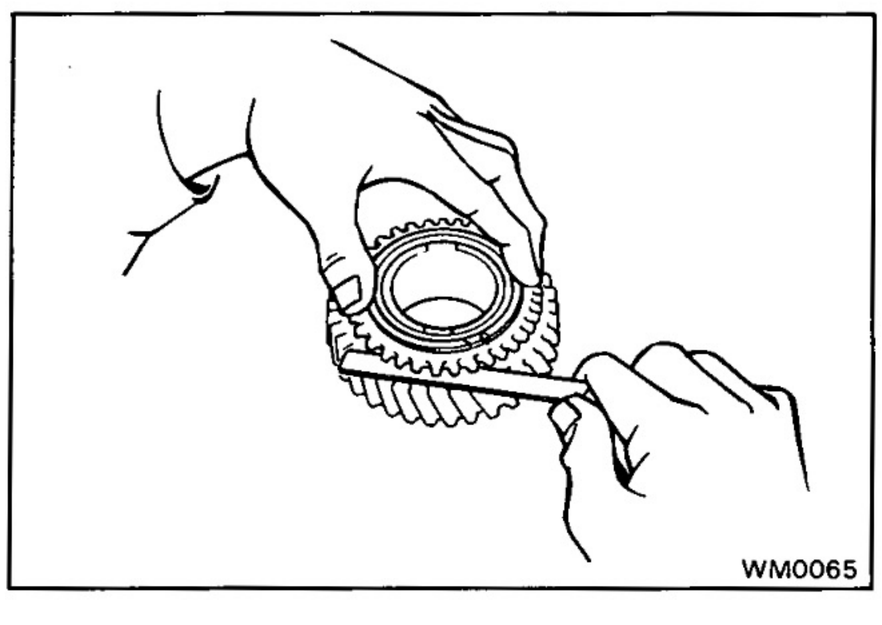

(b) Measure the clearance between the synchronizer ring back and the gear spline end.

Standard clearance: 0.75 — 1.65 mm (0.0295 — 0.0650 in.)

Minimum clearance: 0.75 mm (0.0295 in.)

If the clearance is less than the limit, replace the synchronizer ring.

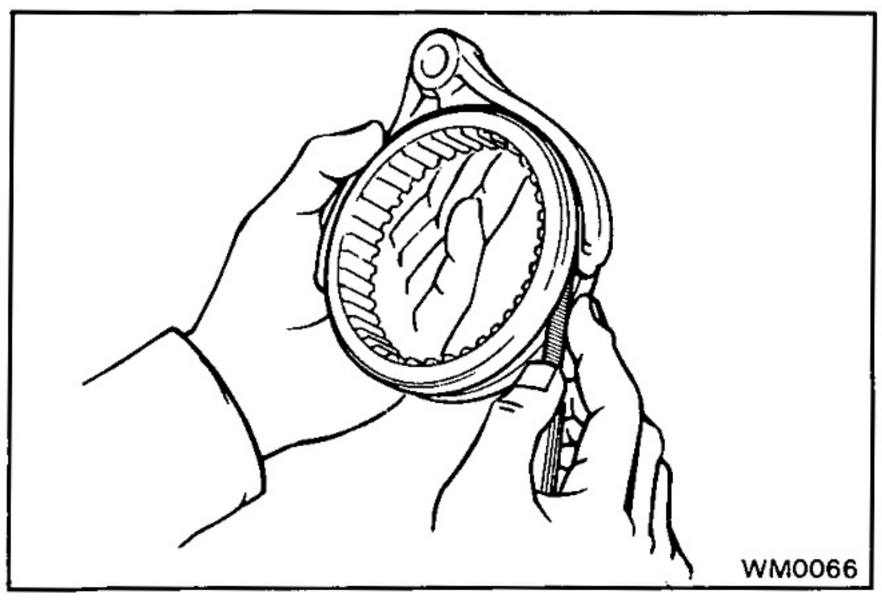

3. MEASURE CLEARANCE OF SHIFT FORK AND SLEEVE

Using a feeler gauge, measure the clearance between the hub sleeve and shift fork.

Standard clearance: 0.1 — 0.4 mm (0.0039 — 0.0157 in.)

Maximum clearance: 0.4 mm (0.0157 in.)

If the clearance is more than the limit, replace the shift fork or hub sleeve.

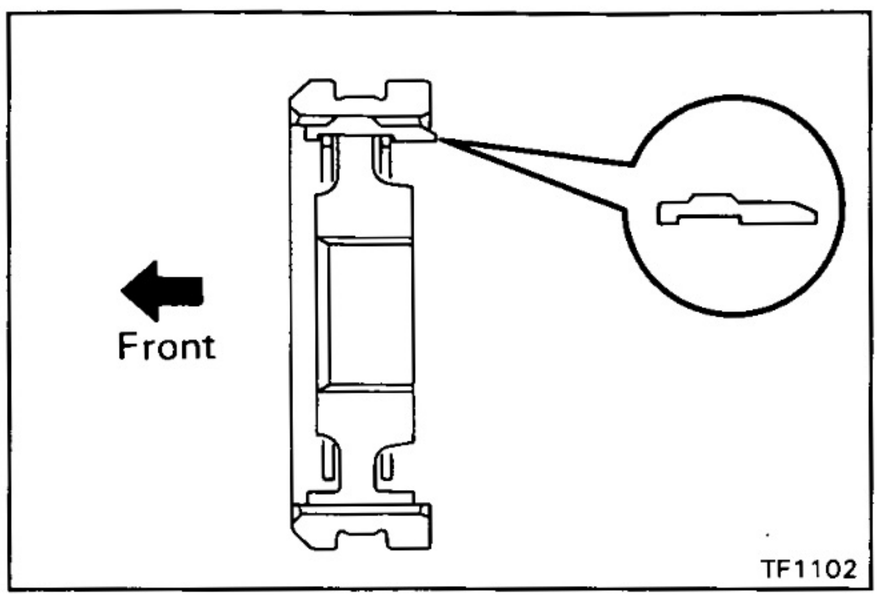

ASSEMBLY OF OUTPUT SHAFT ASSEMBLY

1. INSERT CLUTCH HUB INTO HIGH AND LOW HUB SLEEVE

(a) Insert the clutch hub and shifting keys to the high and low hub sleeve.

(b) Install the shifting key springs under the shifting keys.

NOTICE: Install the key springs positioned so that their end gaps are not in line.

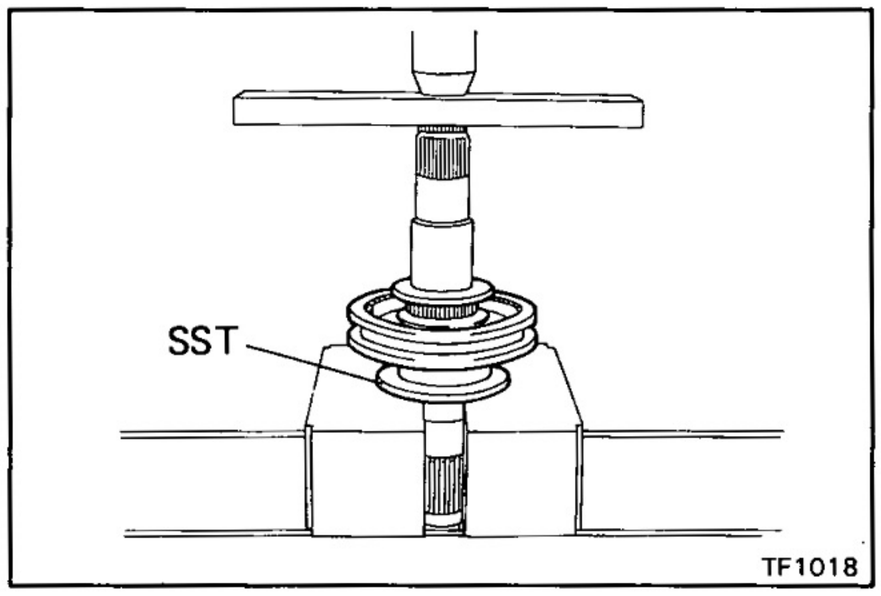

2. INSTALL HIGH AND LOW HUB SLEEVE

(a) Using SST and a press, install the high and low hub sleeve.

SST 09316-20011

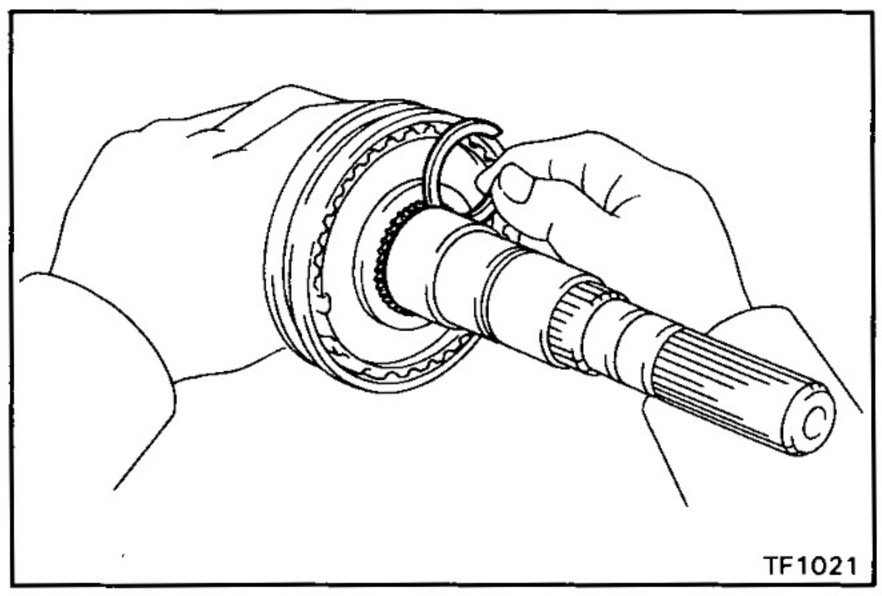

(b) Select a snap ring that will allow minimum axial play and install it on the shaft.

Mark	Thickness mm (in.)
A	2.60 (0.1024)
B	2.65 (0.1043)
C	2.70 (0.1063)
D	2.75 (0.1083)
E	2.80 (0.1102)
F	2.85 (0.1122)
G	2.90 (0.1142)

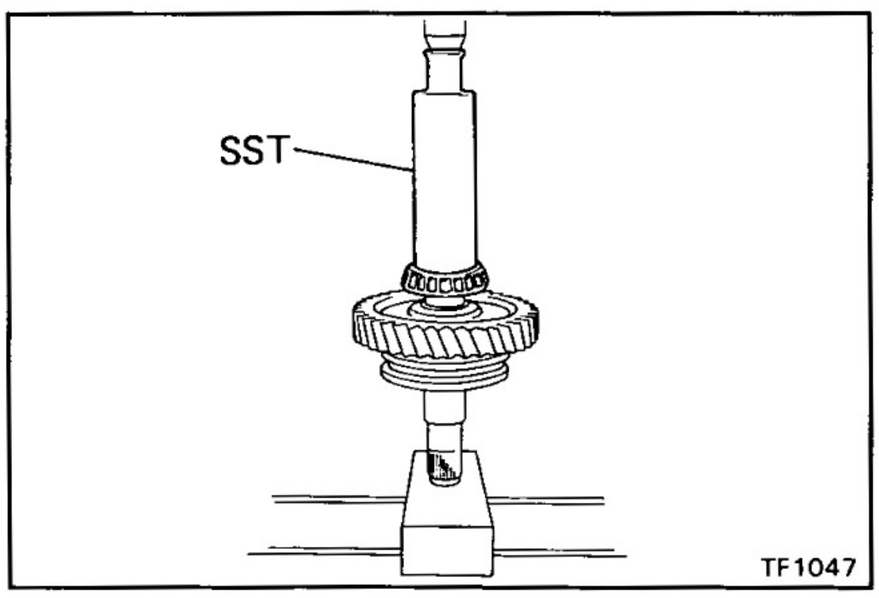

3. INSTALL NEEDLE ROLLER BEARING, LOW SPEED GEAR AND REAR TAPER ROLLER BEARING

(a) Apply gear oil to the needle roller bearing.

(b) Install the needle roller bearing and low speed gear.

(c) Using SST and a press, install the rear taper roller bearing.

SST 09316-60010 (09316-00010)

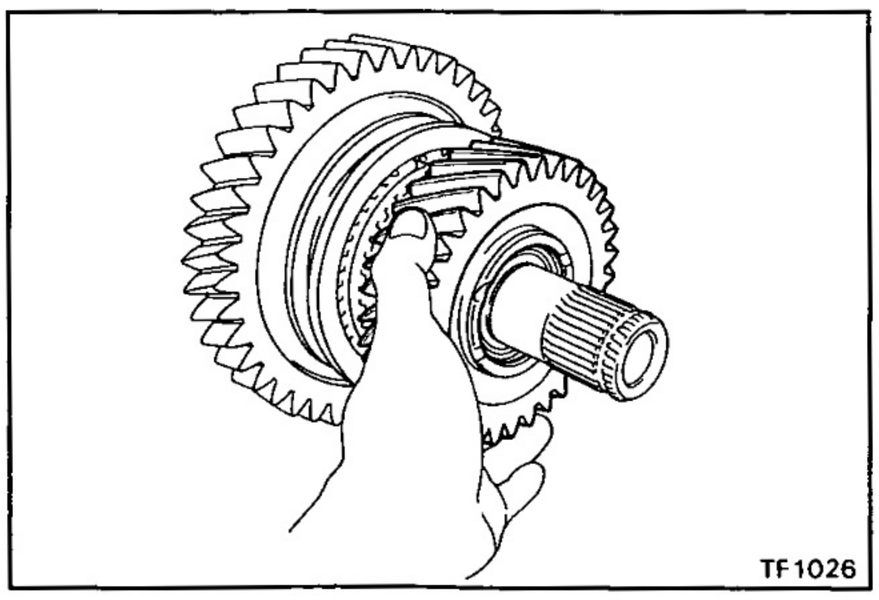

4. INSTALL HIGH SPEED GEAR, SYNCHRONIZER RING AND NEEDLE ROLLER BEARING

(a) Apply gear oil to the needle roller bearing.

(b) Install high speed gear, synchronizer ring and needle roller bearing.

NOTICE: Align the ring slots with the shifting keys.

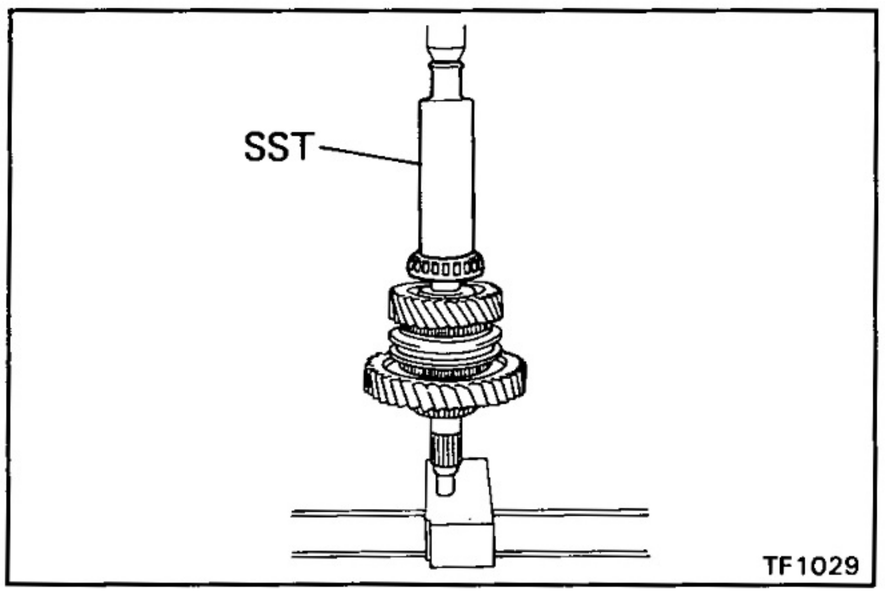

5. INSTALL FRONT TAPER ROLLER BEARING

Using SST and a press, install the front taper roller bearing.

SST 09316-60010 (09316-00010)

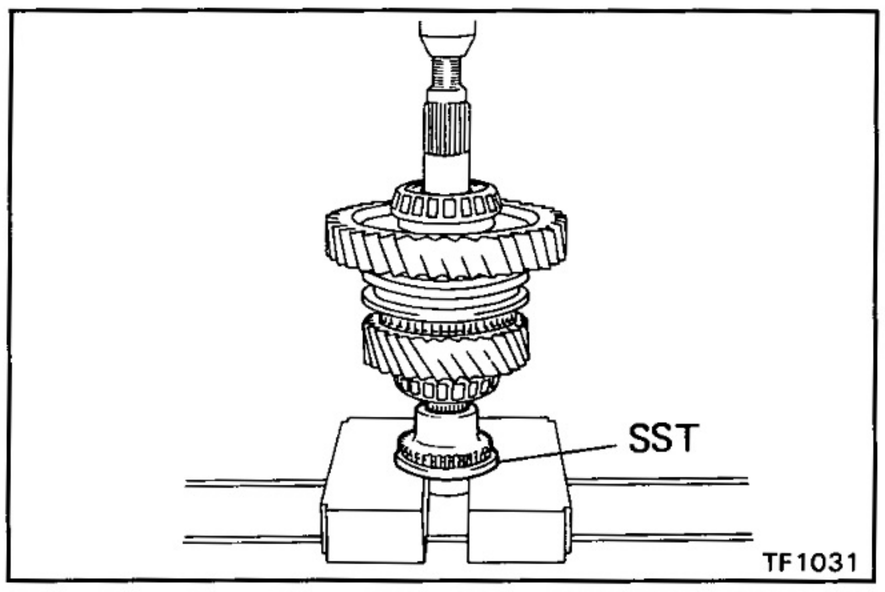

6. INSTALL FRONT DRIVE GEAR PIECE

(a) Using SST and a press, install the front drive gear piece.

SST 09316-60010 (09316-00030)

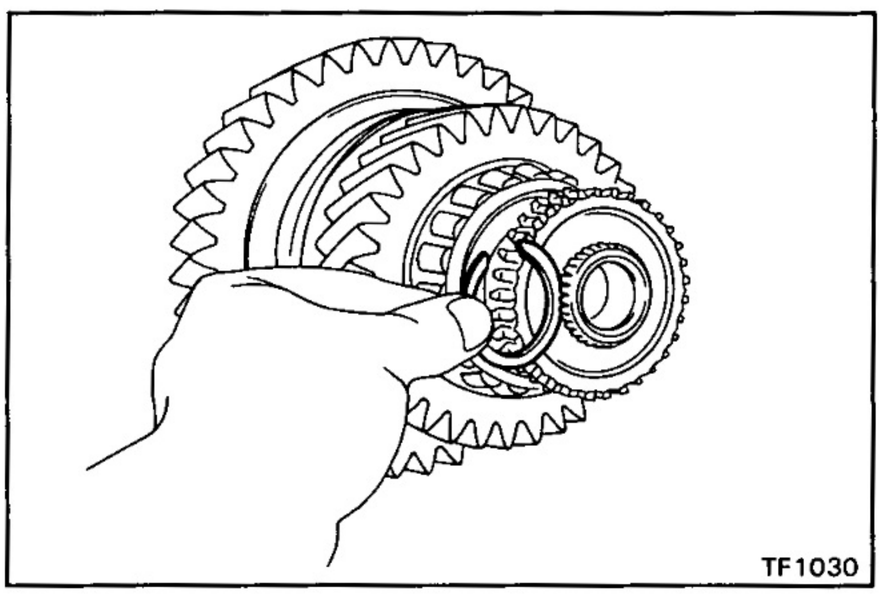

(b) Select a snap ring that will allow minimum axial play.

Mark	Thickness mm (in.)
A	2.0 (0.0787)
B	2.1 (0.0827)
C	2.2 (0.0866)
D	2.3 (0.0906)
E	2.4 (0.0945)

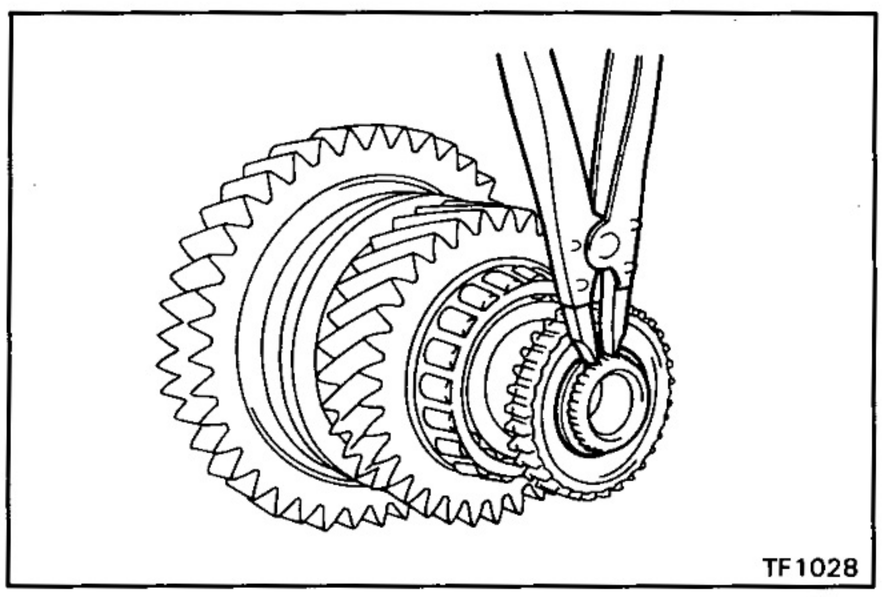

(c) Using snap ring pliers, install the snap ring.

Front Extension Housing Assembly

COMPONENTS

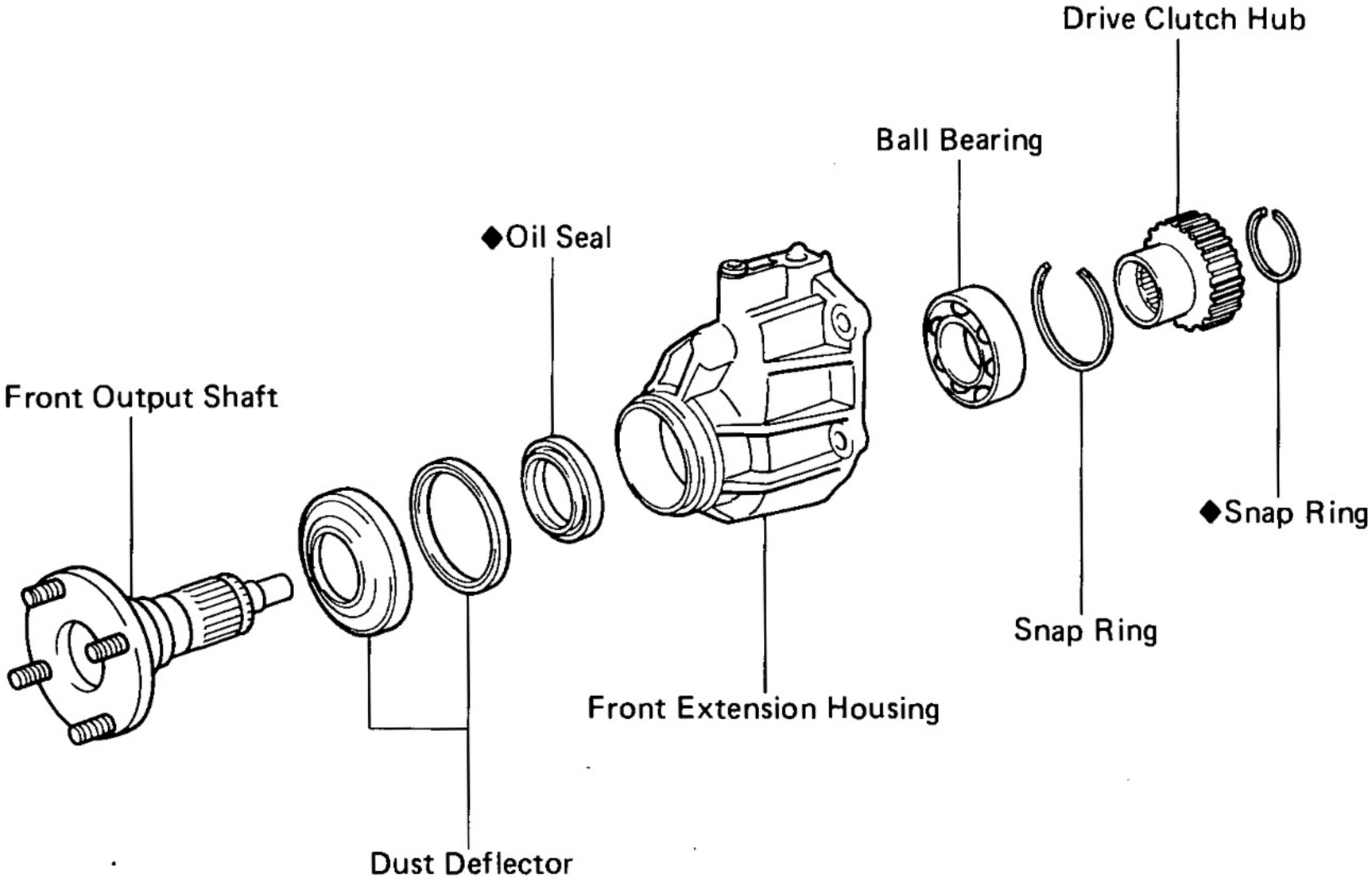

◆ Non-reusable part

TF1084

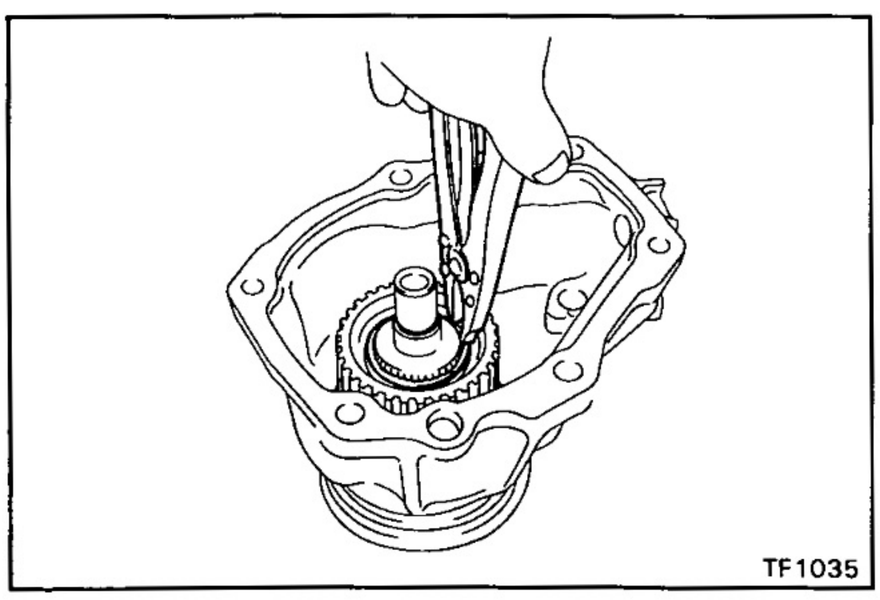

TF1035

DISASSEMBLY OF FRONT EXTENSION HOUSING ASSEMBLY

1. REMOVE DRIVE CLUTCH HUB

(a) Using snap ring pliers, remove the snap ring.

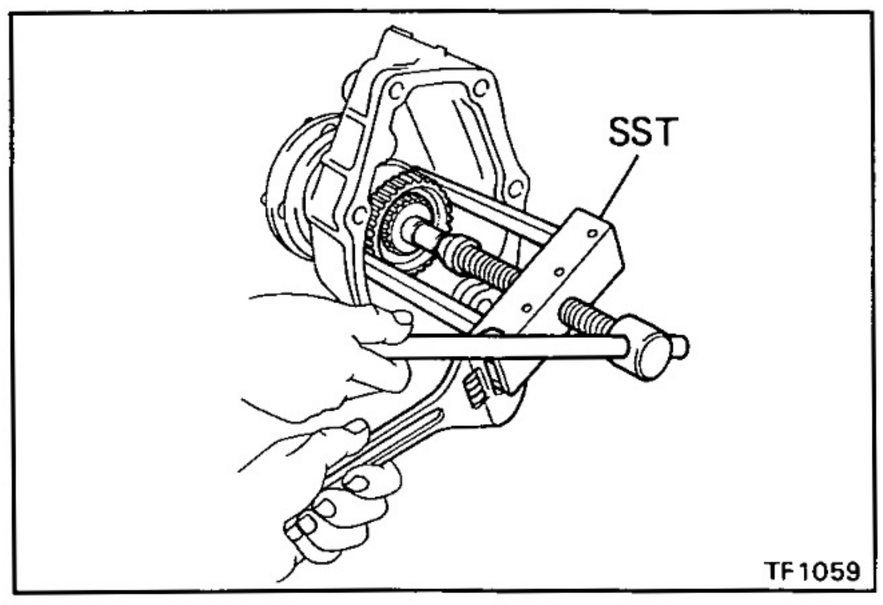

TF1059

(b) Using SST, remove the drive clutch hub.

SST 09213-27010

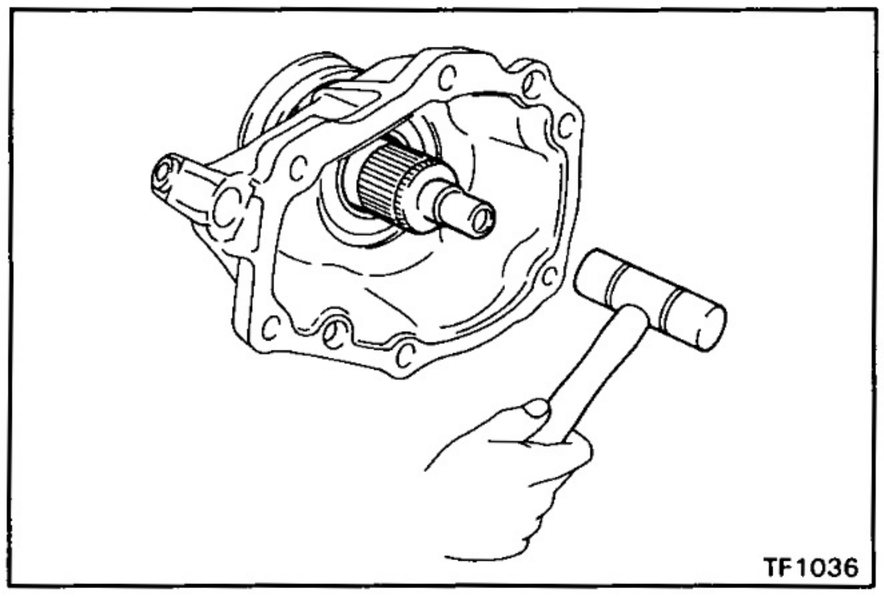

2. REMOVE FRONT OUTPUT SHAFT

Using a plastic hammer, tap the front output shaft and remove it.

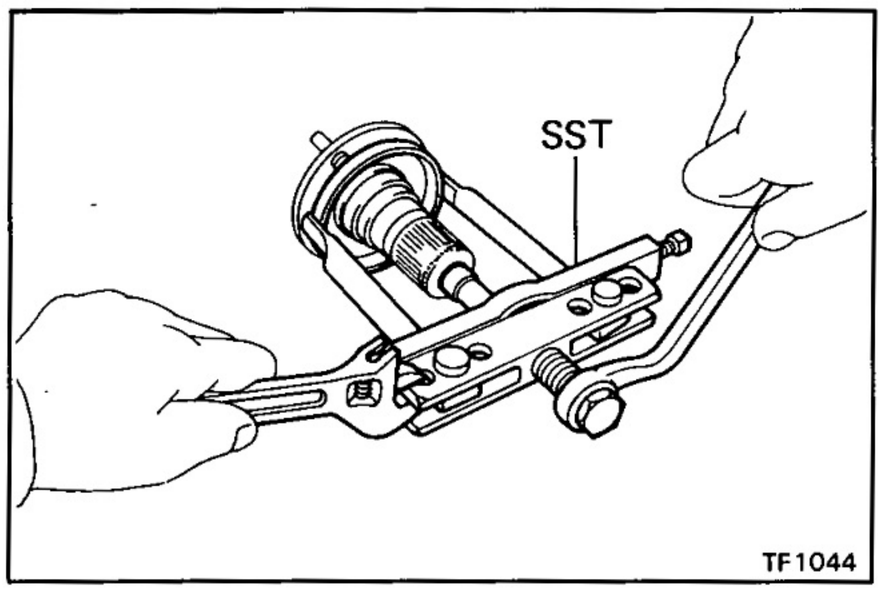

3. REMOVE DUST DEFLECTORS

(a) Using SST, remove the dust deflector.

SST 09950-20017

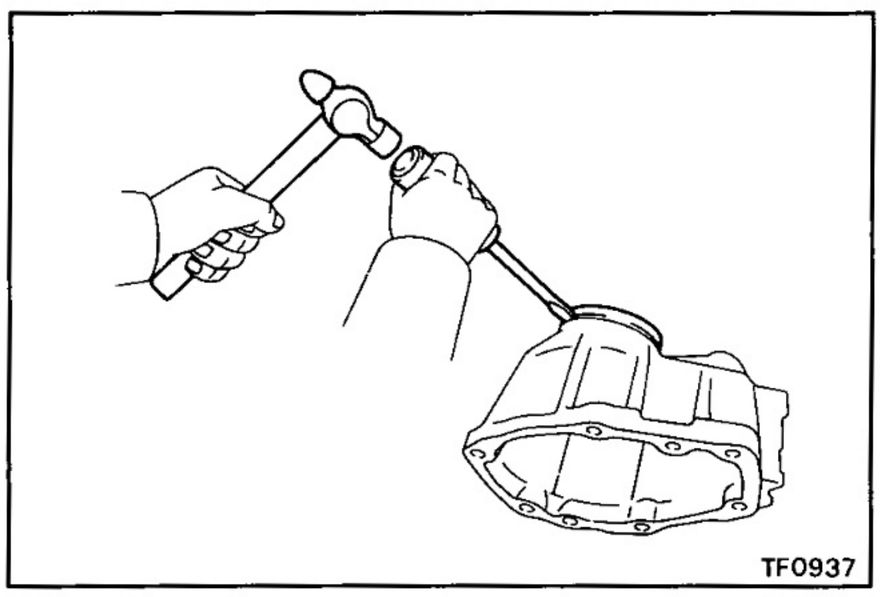

(b) Using a screwdriver and hammer, tap the dust deflector and remove it.

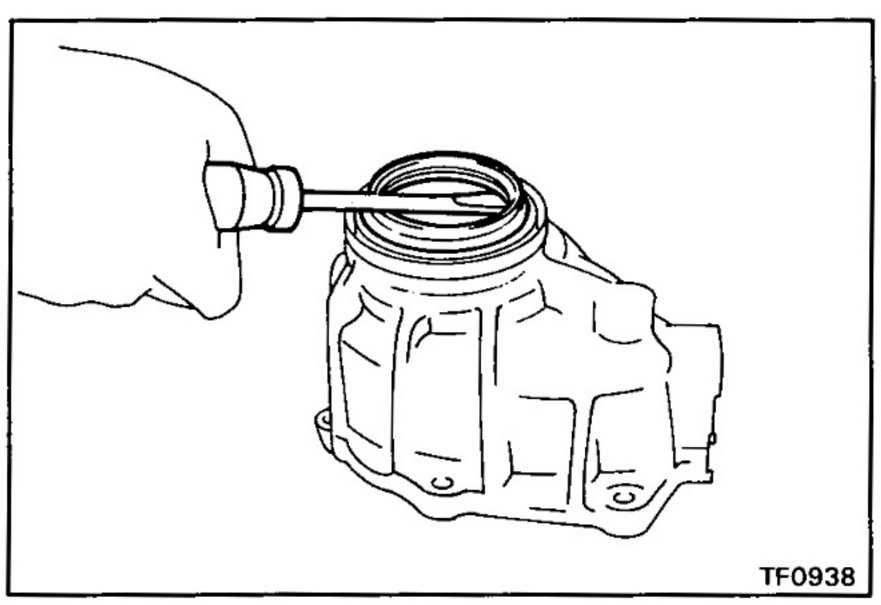

4. REMOVE OIL SEAL

Using a screwdriver, pry out the oil seal.

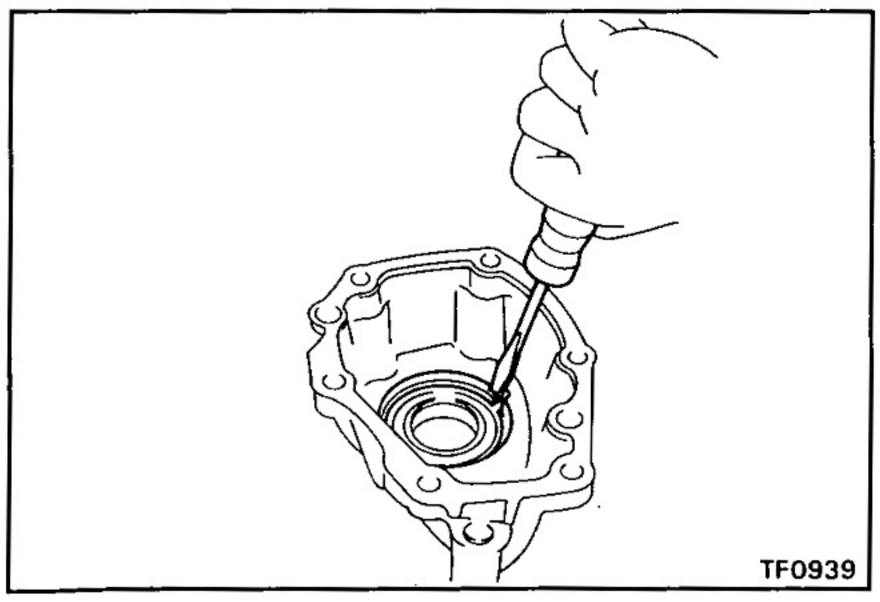

5. REMOVE BALL BEARING

(a) Using a screwdriver, remove the snap ring.

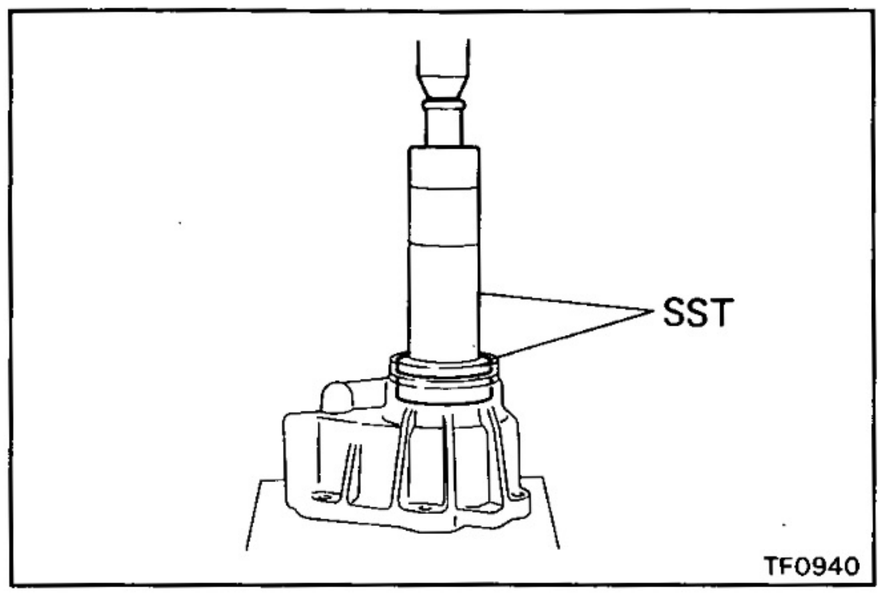

(b) Using SST and a press, remove the ball bearing.

SST 09316-60010 (09316-00010, 09316-00070)

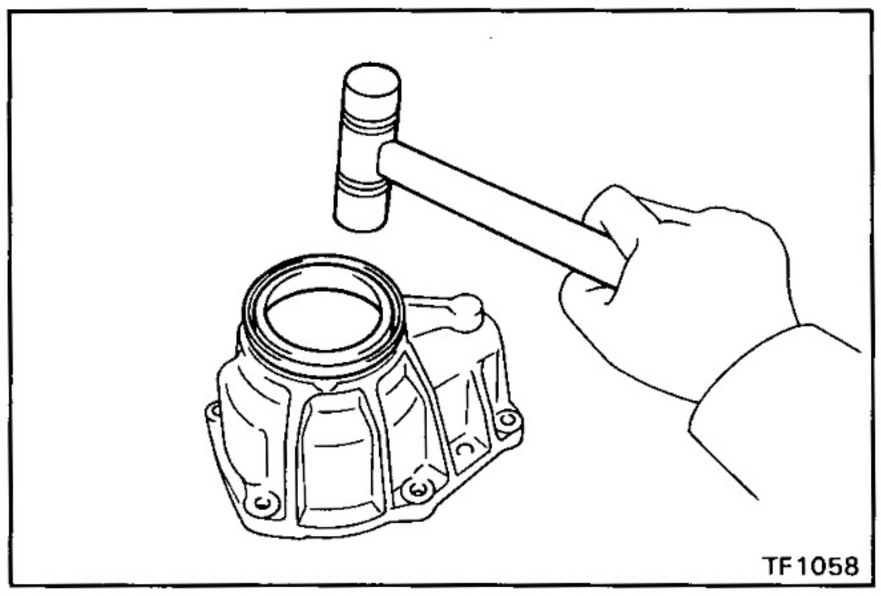

ASSEMBLY OF FRONT EXTENSION HOUSING ASSEMBLY

1. INSTALL DUST DEFLECTORS

(a) Using a plastic hammer, install the dust deflector.

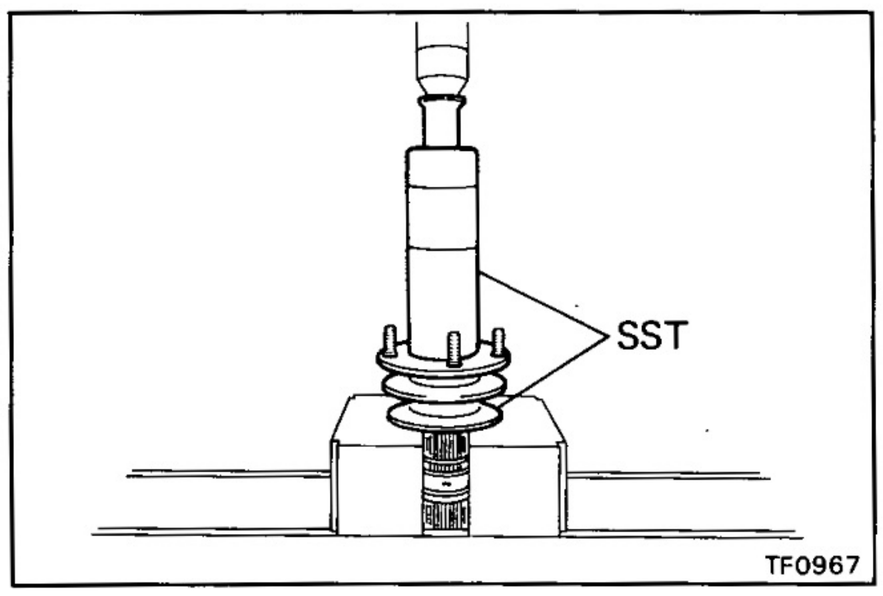

(b) Using SST and a press, install the dust deflector.

SST 09316-20011, 09316-60010 (09316-00010)

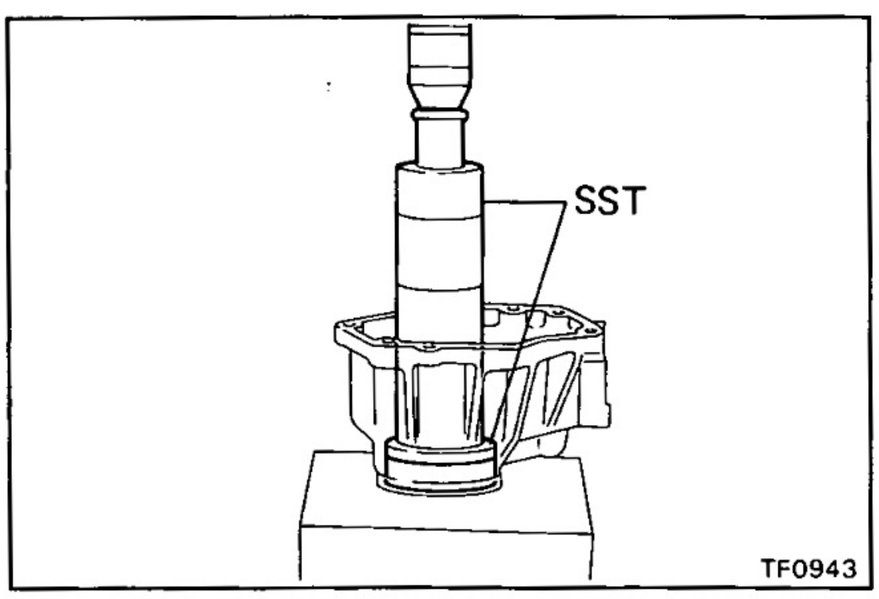

2. INSTALL BALL BEARING

(a) Using SST and a press, install the ball bearing.

SST 09316-60010 (09316-00010, 09316-00030)

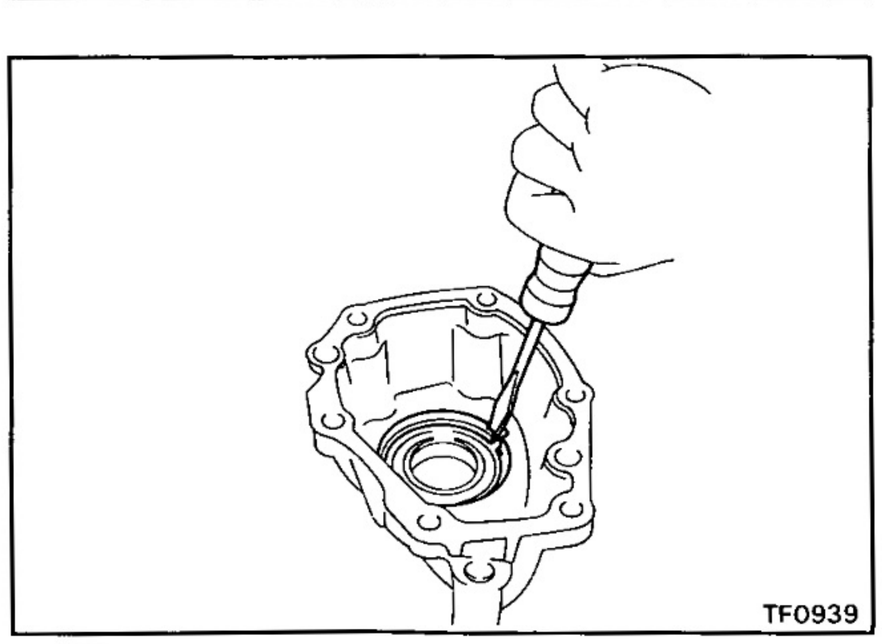

(b) Select a snap ring that will allow minimum axial play and install it.

Mark	Thickness mm (in.)
A	1.7 (0.0669)
B	1.8 (0.0709)

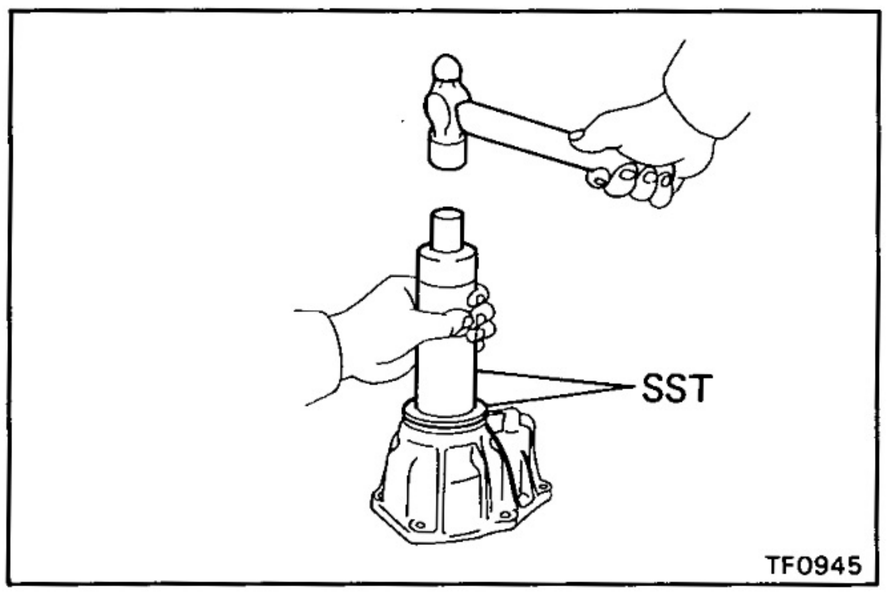

3. INSTALL OIL SEAL

Using SST and a hammer, drive in a new oil seal.

SST 09316-60010 (09316-00010, 09316-00060)

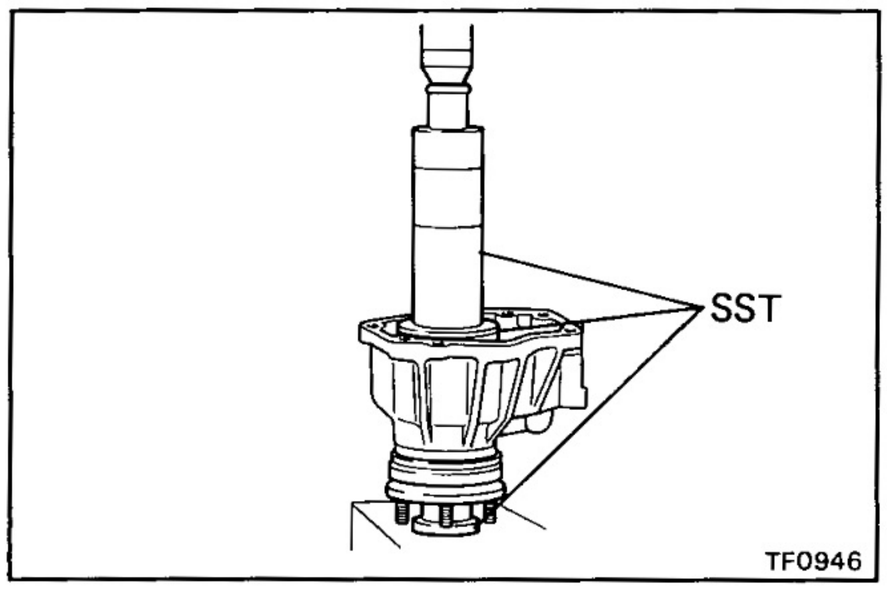

4. INSTALL FRONT OUTPUT SHAFT AND DRIVE CLUTCH HUB

(a) Using SST and a press, install the front output shaft and drive clutch hub.

SST 09316-20011, 09316-60010
(09316-00010, 09316-00040, 09316-00070)

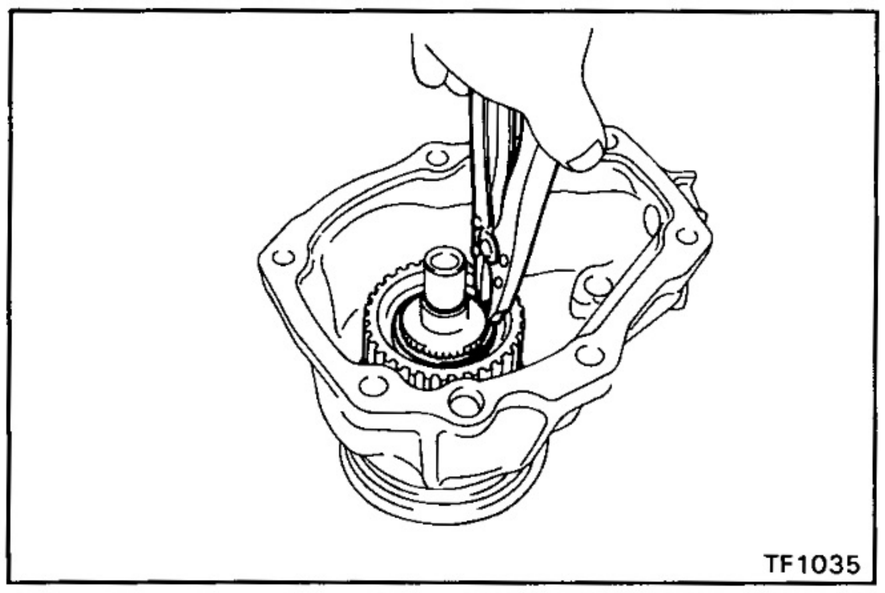

(b) Select a snap ring that will allow minimum axial play and install it.

Mark	Thickness mm (in.)
A	1.8 (0.0709)
B	1.9 (0.0748)
C	2.0 (0.0787)
D	2.1 (0.0827)
E	2.2 (0.0866)

Rear Extension Housing Assembly

COMPONENTS

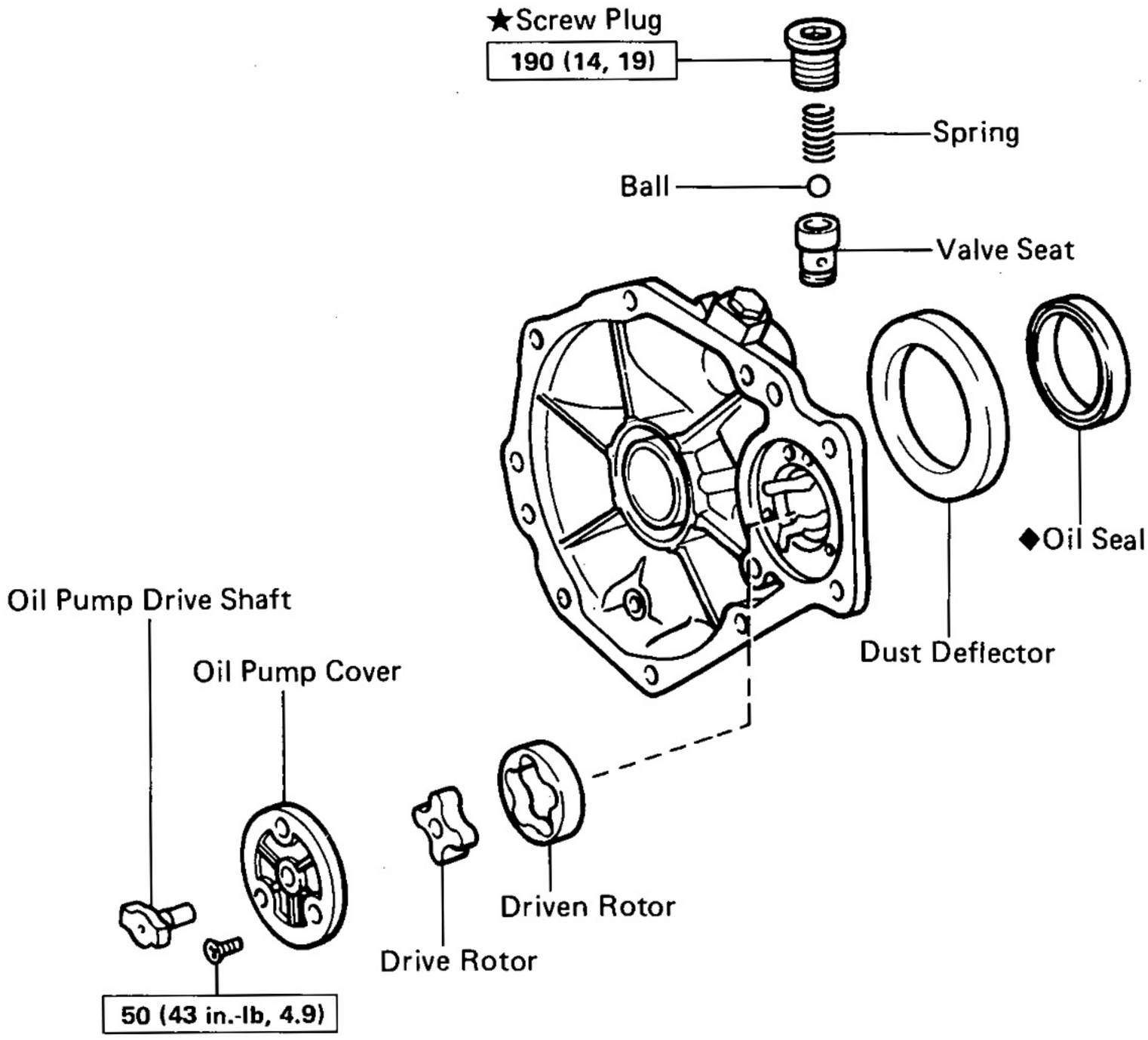

kg-cm (ft-lb, N·m) : Specified torque
◆ Non-reusable part
★ Precoated part

TF1071

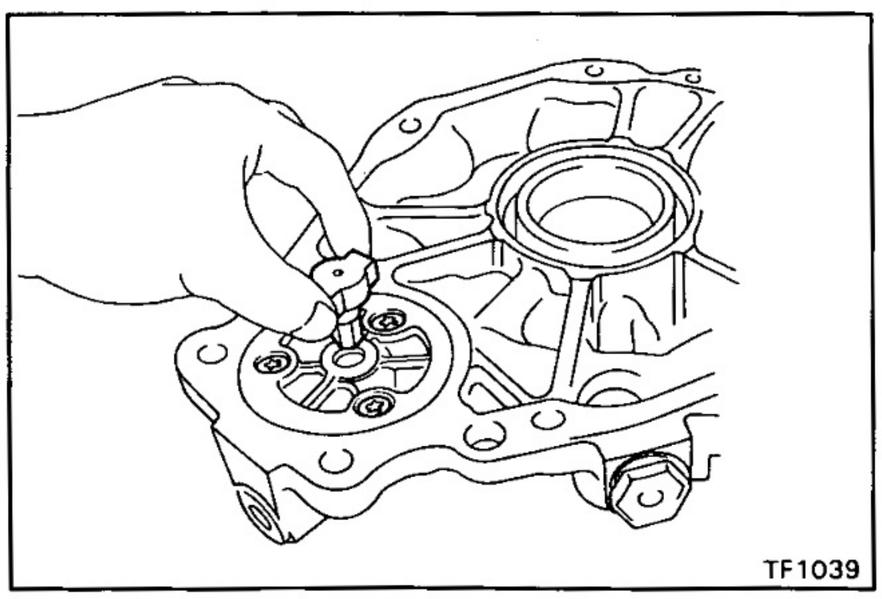

TF1039

DISASSEMBLY OF REAR EXTENSION HOUSING ASSEMBLY

1. REMOVE OIL PUMP DRIVE SHAFT

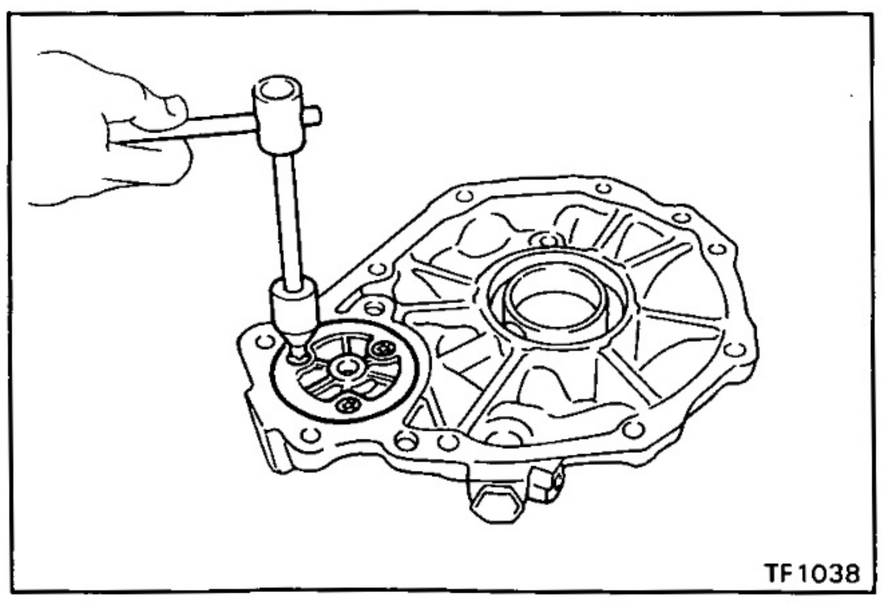

TF1038

2. REMOVE OIL PUMP COVER

Using a torx socket wrench, remove the three screws and oil pump cover.

(Torx socket wrench T30 09042-00010)

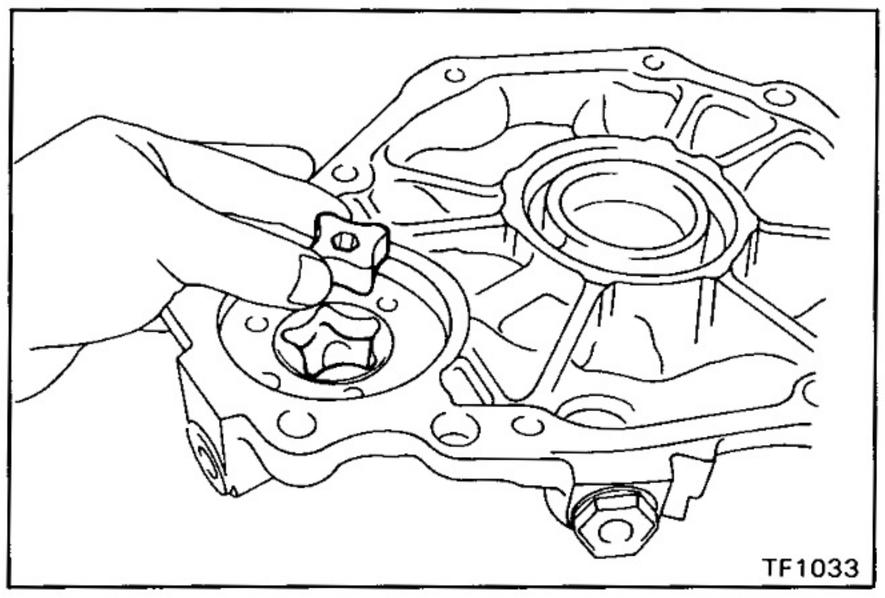

3. REMOVE DRIVE ROTOR

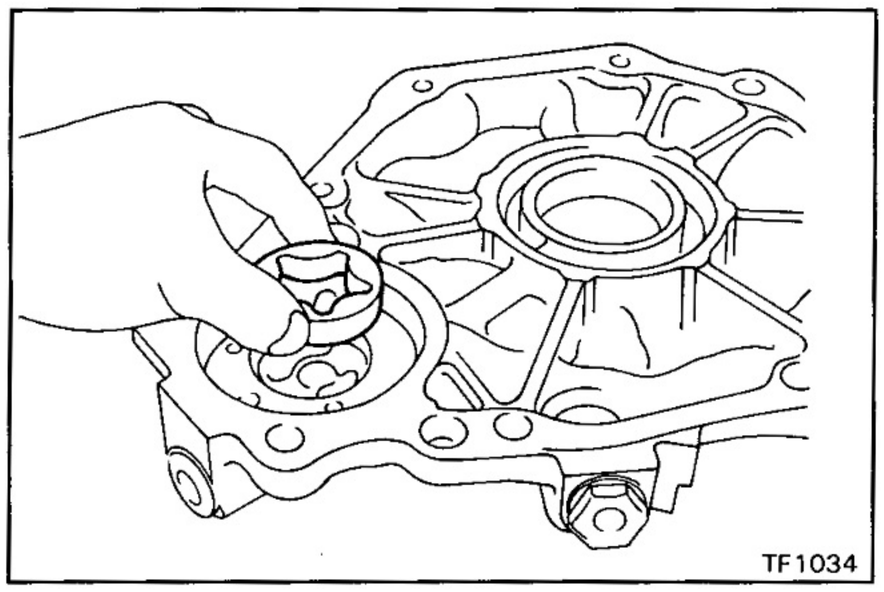

4. REMOVE DRIVEN ROTOR

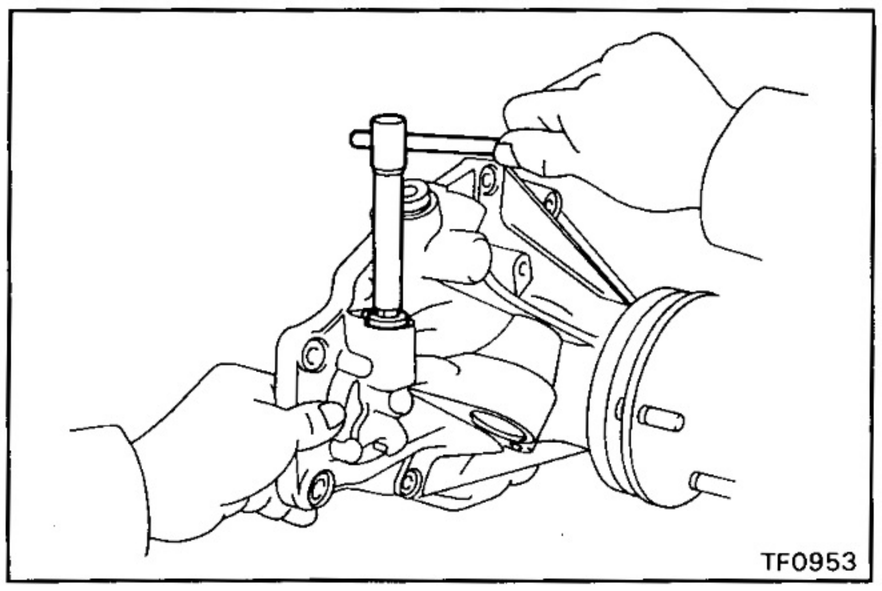

5. REMOVE SCREW PLUG, SPRING, BALL AND VALVE SEAT

(a) Using a hexagon wrench, remove the screw plug.

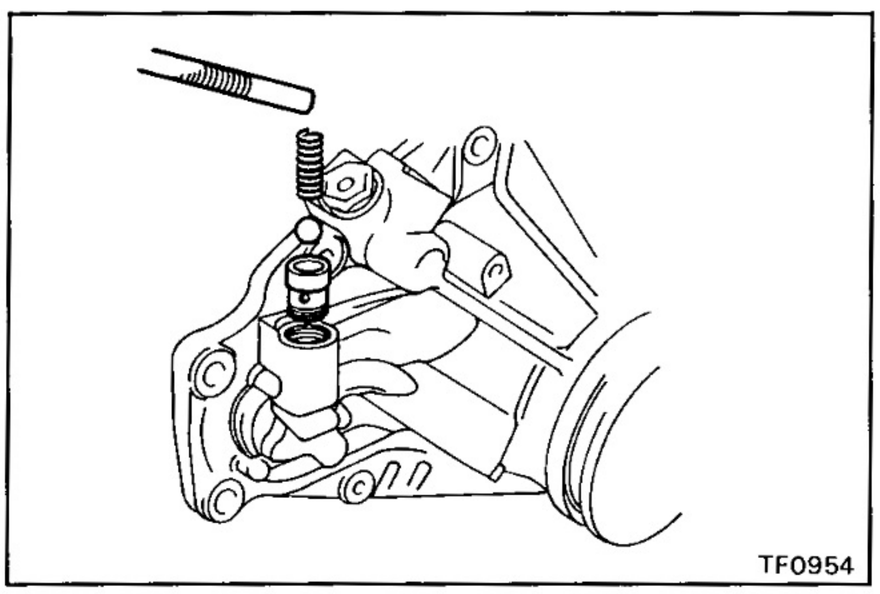

(b) Using a magnetic finger, remove the spring, ball and valve seat.

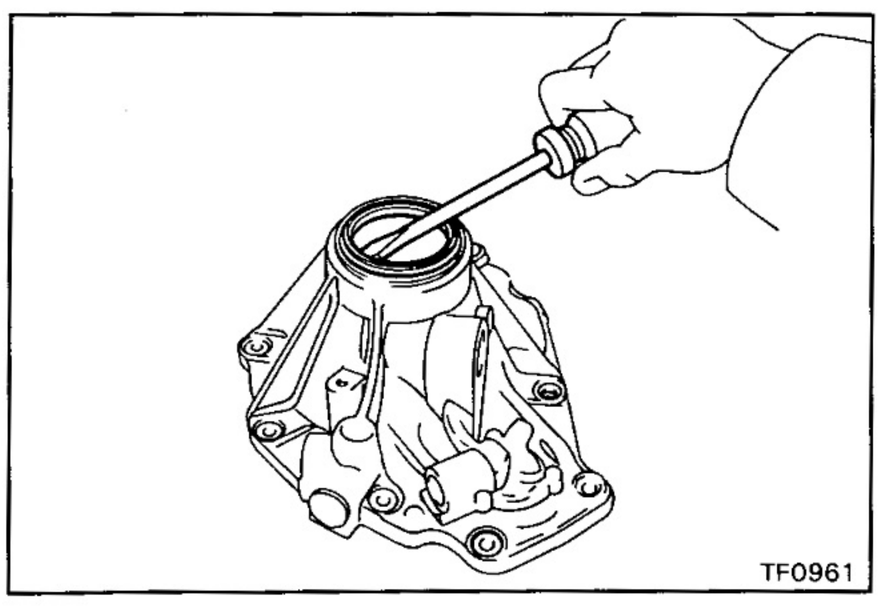

6. REMOVE OIL SEAL

Using a screwdriver, pry out the oil seal.

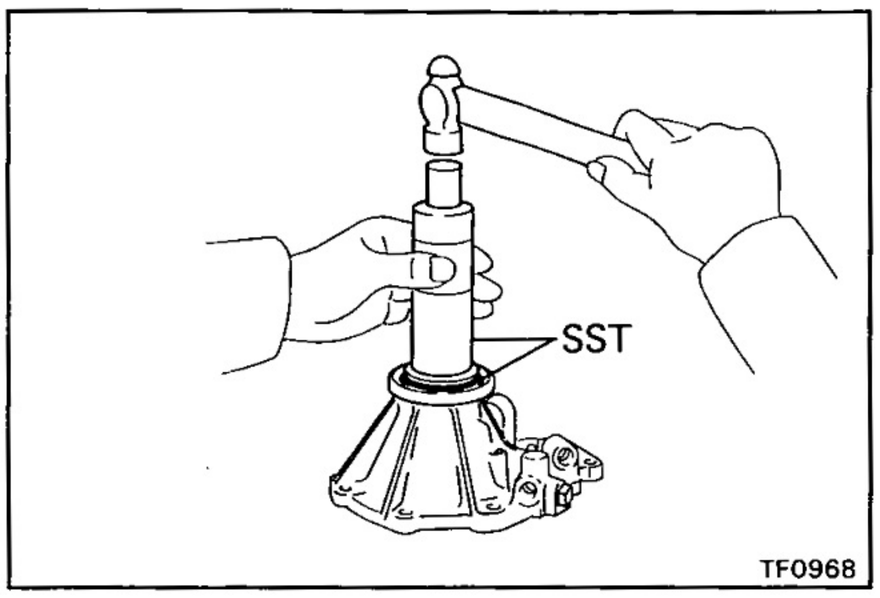

ASSEMBLY OF REAR EXTENSION HOUSING ASSEMBLY

1. INSTALL DUST DEFLECTORS

Using SST and a hammer, install the dust deflector.

SST 09316-60010 (09316-00010, 09316-00040)

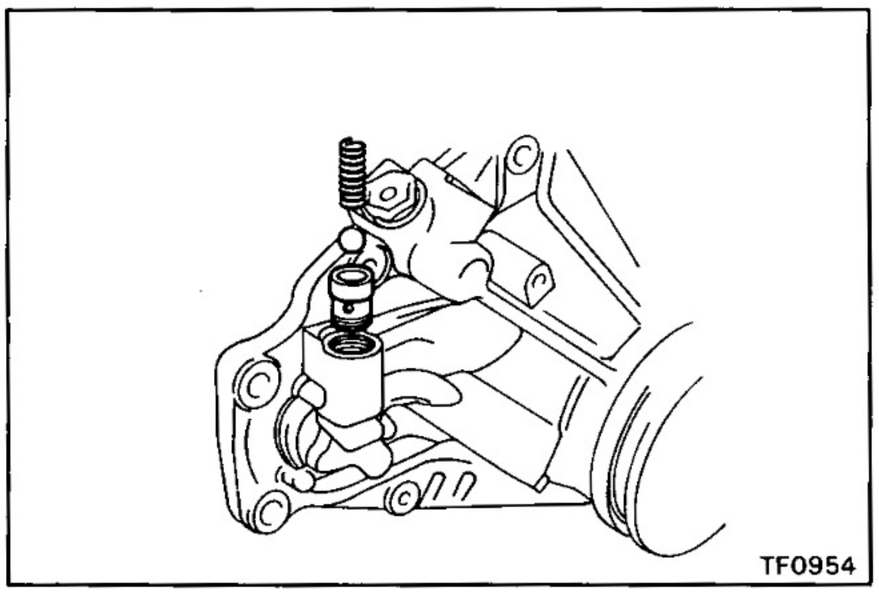

2. INSTALL VALVE SEAT, BALL, SPRING AND SCREW PLUG

(a) Apply gear oil to the ball.

(b) Install the valve seat, ball and spring.

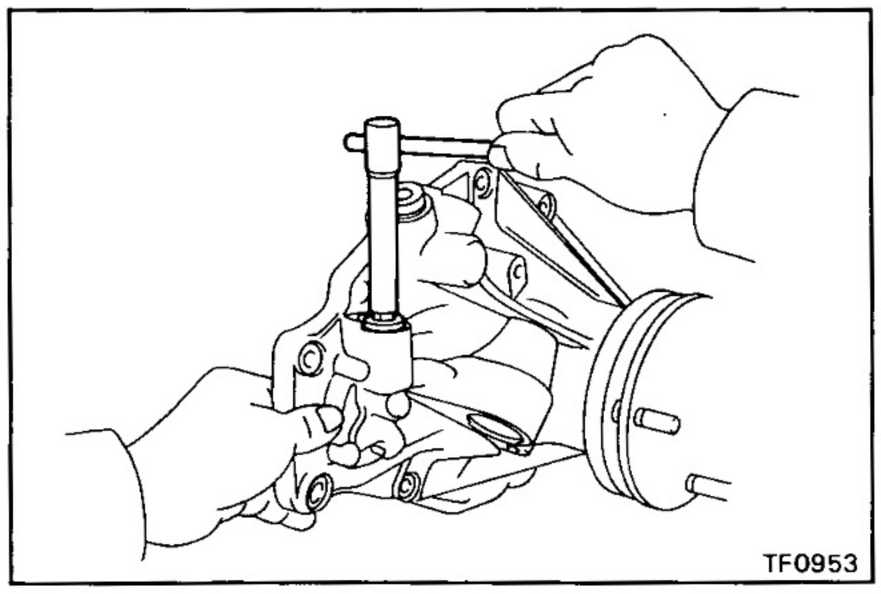

(c) Install and torque the screw plug.

Torque: 190 kg-cm (14 ft-lb, 19 N·m)

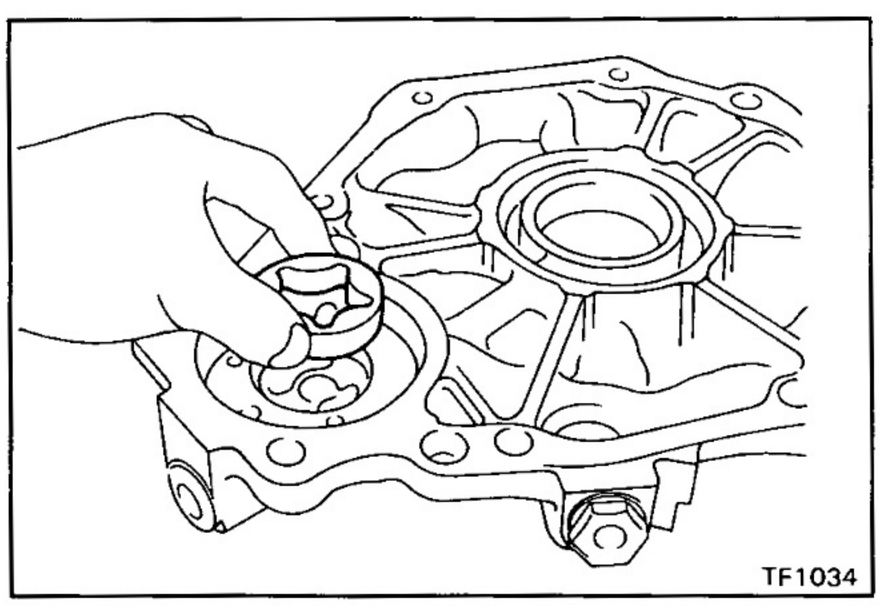

3. INSTALL DRIVEN ROTOR

(a) Apply gear oil to the driven rotor.

(b) Install the driven rotor.

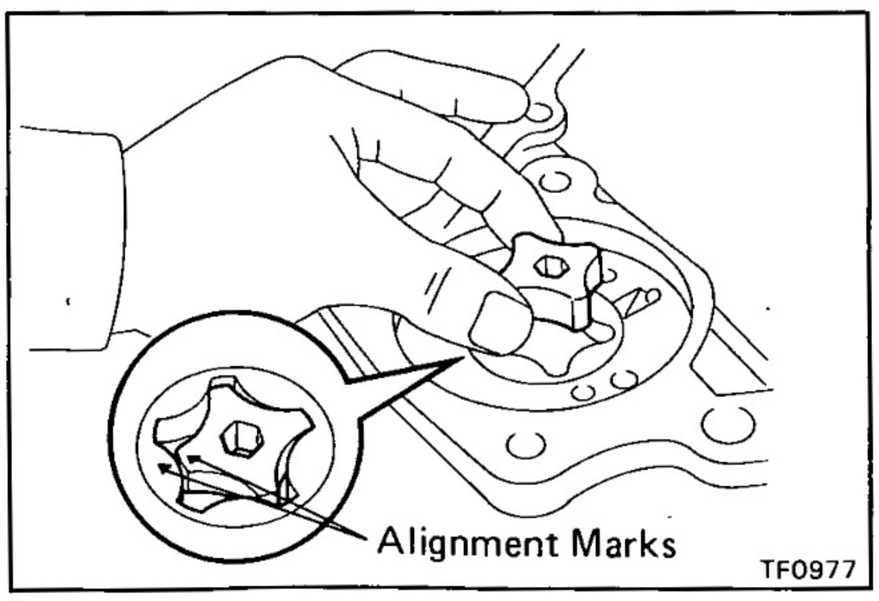

4. INSTALL DRIVE ROTOR

(a) Apply gear oil to the drive rotor.

(b) Install the drive rotor.

HINT: Align the alignment marks.

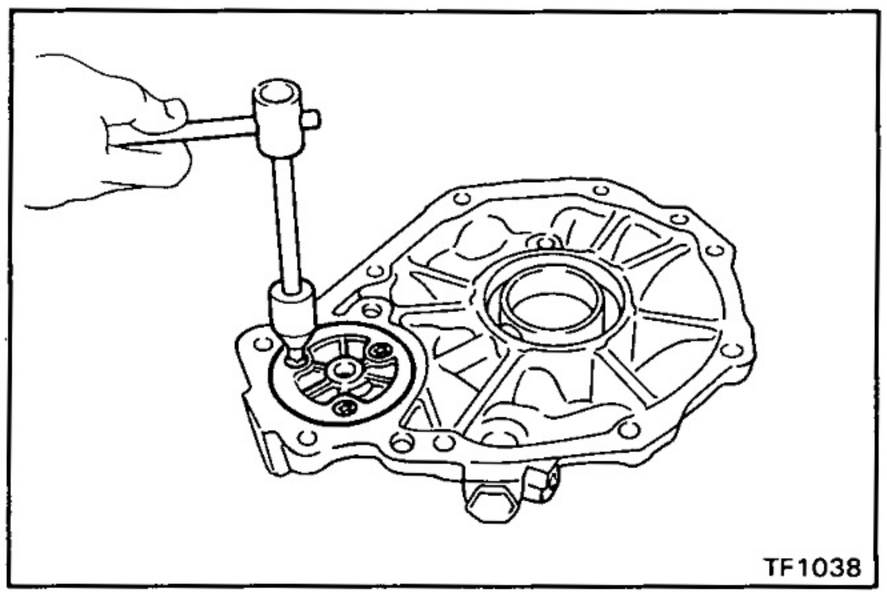

5. INSTALL OIL PUMP COVER

(a) Install the oil pump cover.

(b) Install and torque the three bolts.

(Torx socket wrench T30 09042-00010)

Torque: 50 kg-cm (43 in.-lb, 4.9 N·m)

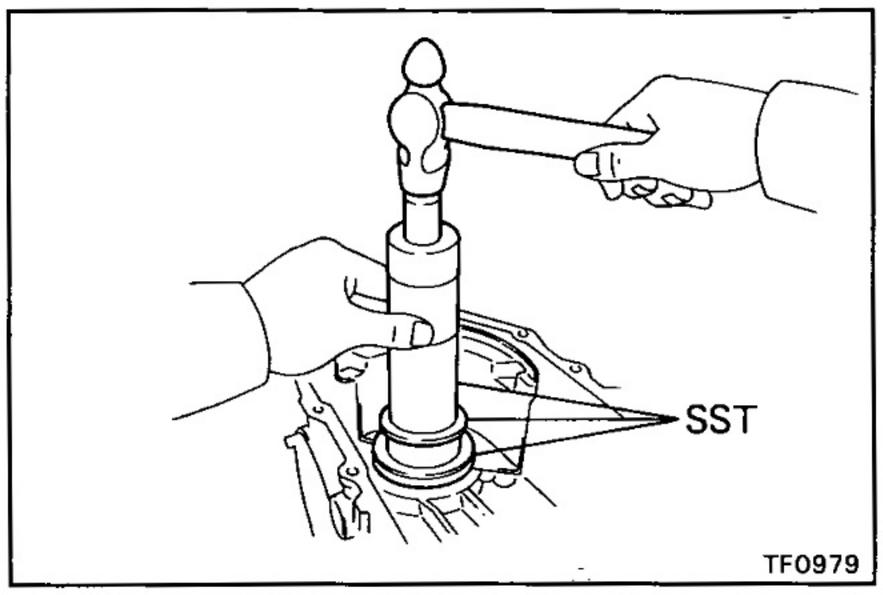

ASSEMBLY OF TRANSFER

1. INSTALL TWO BEARING RACES TO FRONT CASE

(a) Using SST and a hammer, install the output shaft bearing race.

SST 09316-20011, 09316-60010 (09316-00010, 09316-00030)

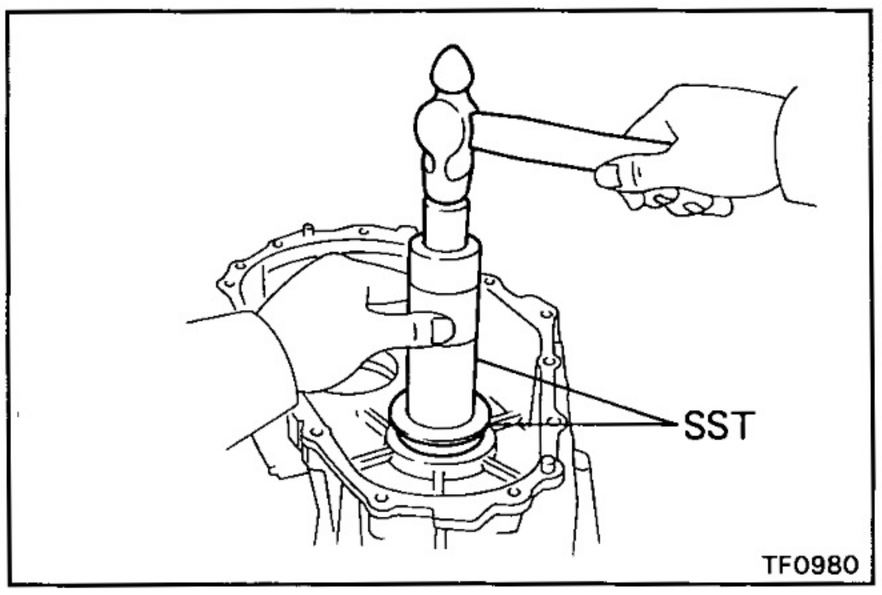

(b) Using SST and a hammer, install the idle gear bearing race.

SST 09316-60010 (09316-00010, 09316-00040)

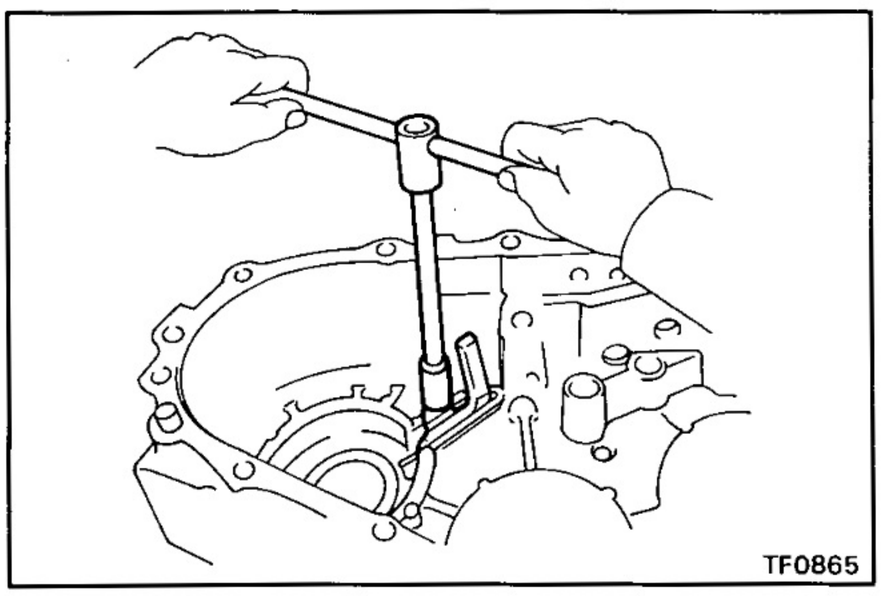

2. INSTALL OIL RECEIVER TO FRONT CASE

(a) Install the oil receiver.

(b) Install and torque the bolt.

Torque: 55 kg-cm (48 in.-lb, 5.4 N·m)

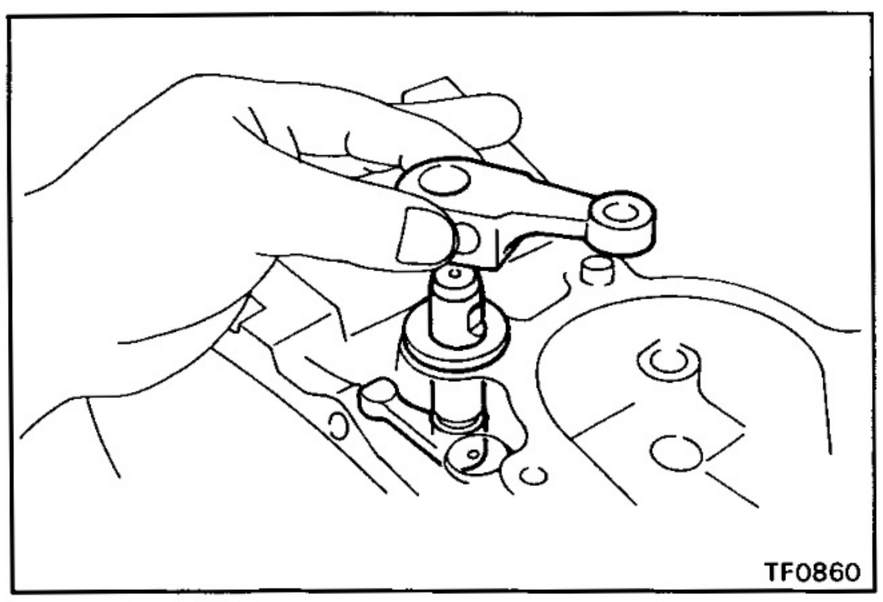

3. INSTALL SHIFT OUTER LEVER AND INNER LEVER

(a) Install the shift outer lever and inner lever.

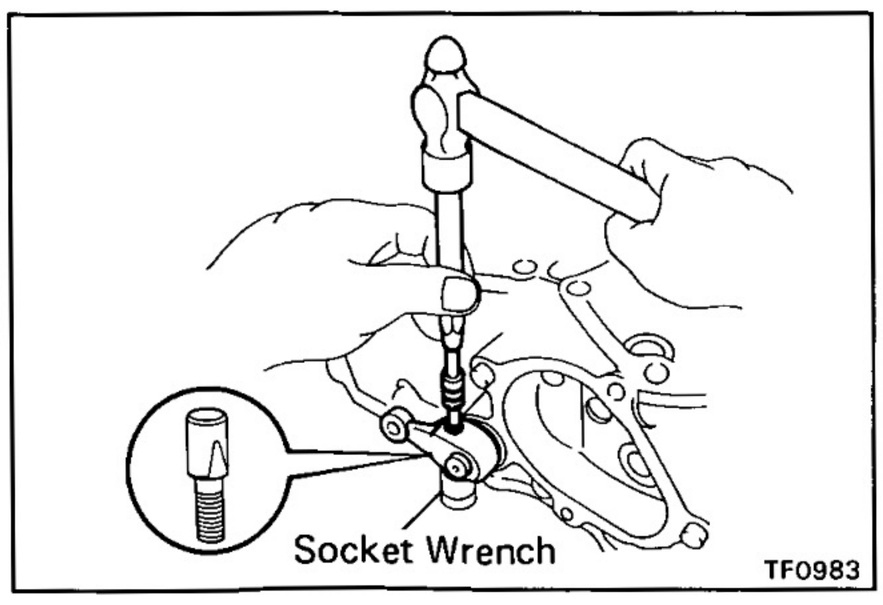

(b) Using a pin punch and a hammer, tap in the lever lock pin.

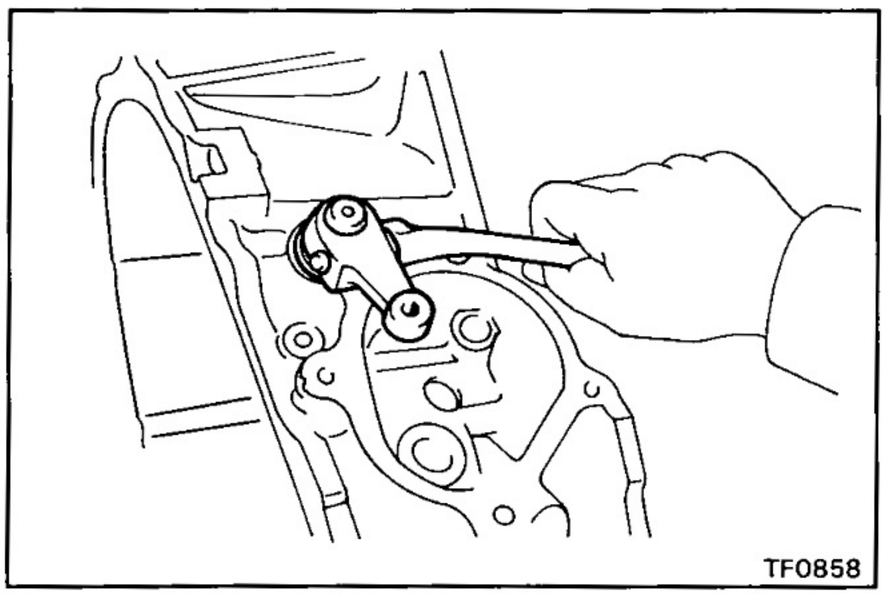
TF0858

(c) Install the washer and nut.

Torque: 120 kg-cm (9 ft-lb, 12 N·m)

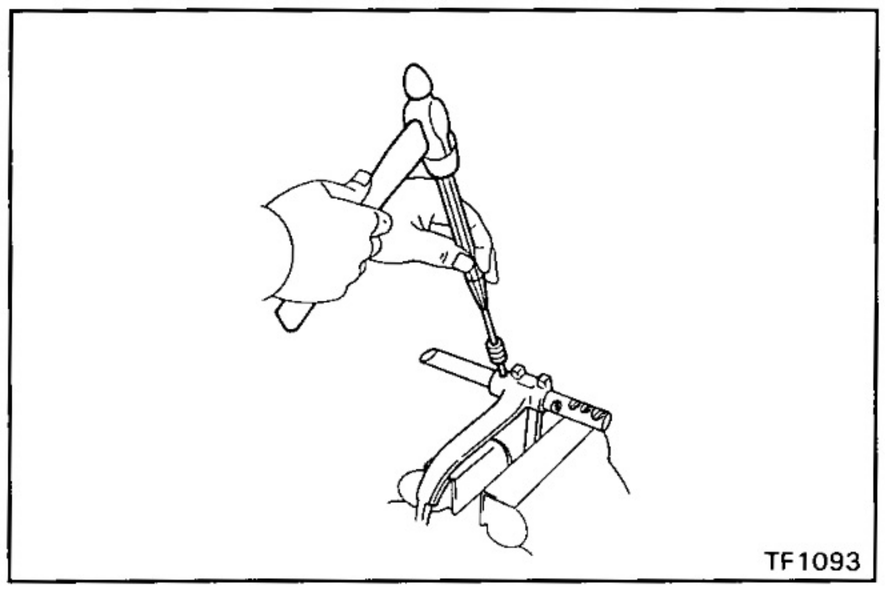
TF1093

4. ASSEMBLE SHIFT FORK NO.1 AND FORK SHAFT

Using a pin punch and a hammer, drive in the slotted spring pin.

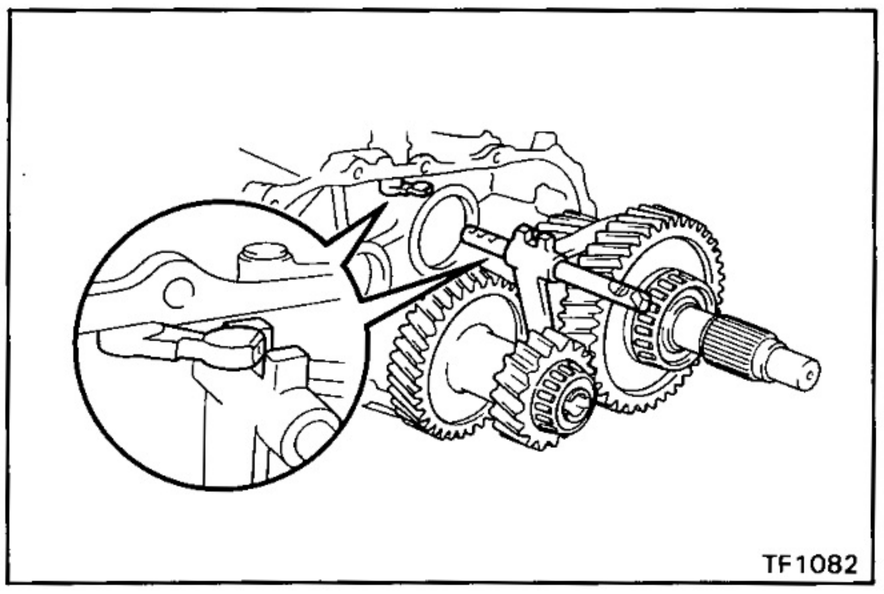
TF1082

5. INSTALL IDLE GEAR ASSEMBLY, OUTPUT SHAFT ASSEMBLY, SHIFT FORK NO.1 AND FORK SHAFT

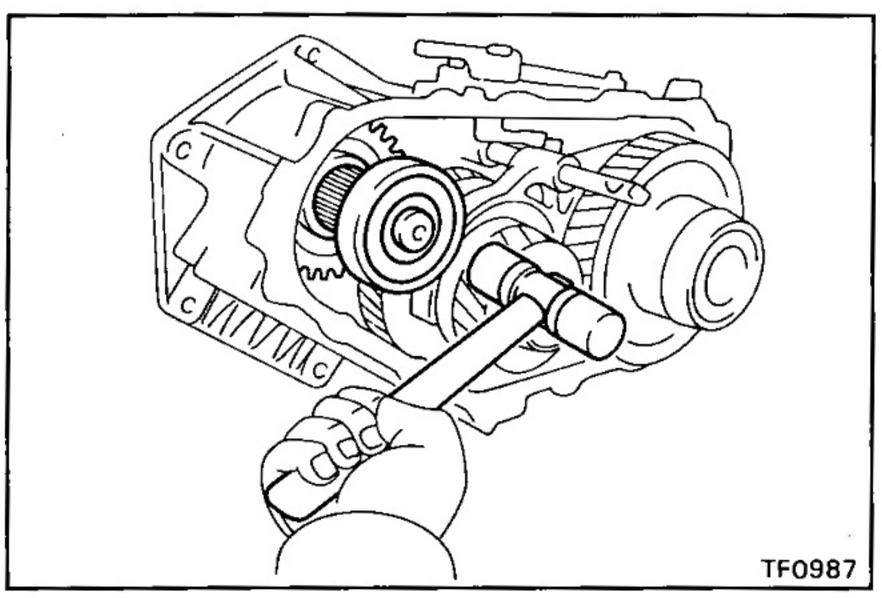
TF0987

6. INSTALL INPUT SHAFT ASSEMBLY

Using a plastic hammer, tap in the input shaft.

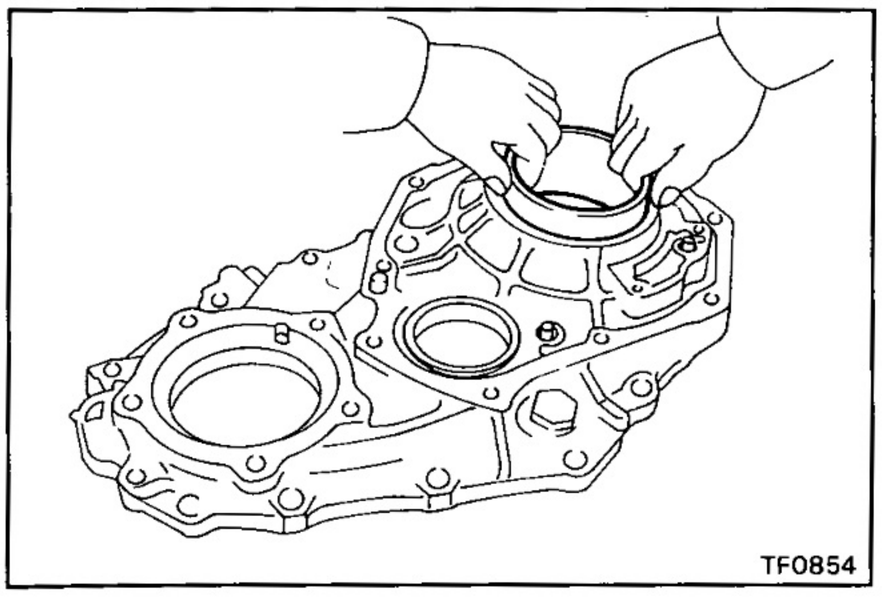
TF0854

7. INSTALL TWO BEARING RACES FROM REAR CASE

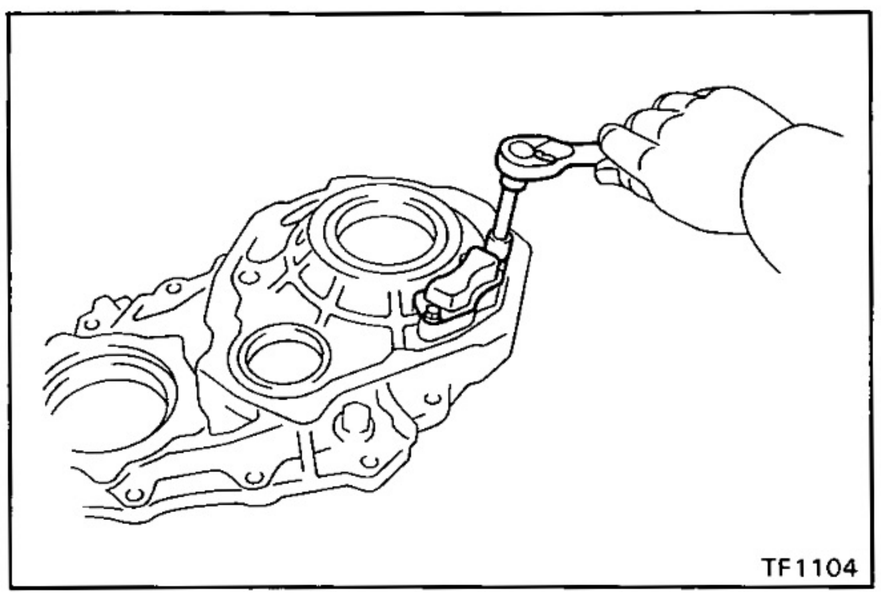

8. INSTALL OIL STRAINER TO REAR CASE

(a) Install the oil strainer.

(b) Install and torque the bolts.

Torque: 50 kg-cm (43 in.-lb, 4.9 N·m)

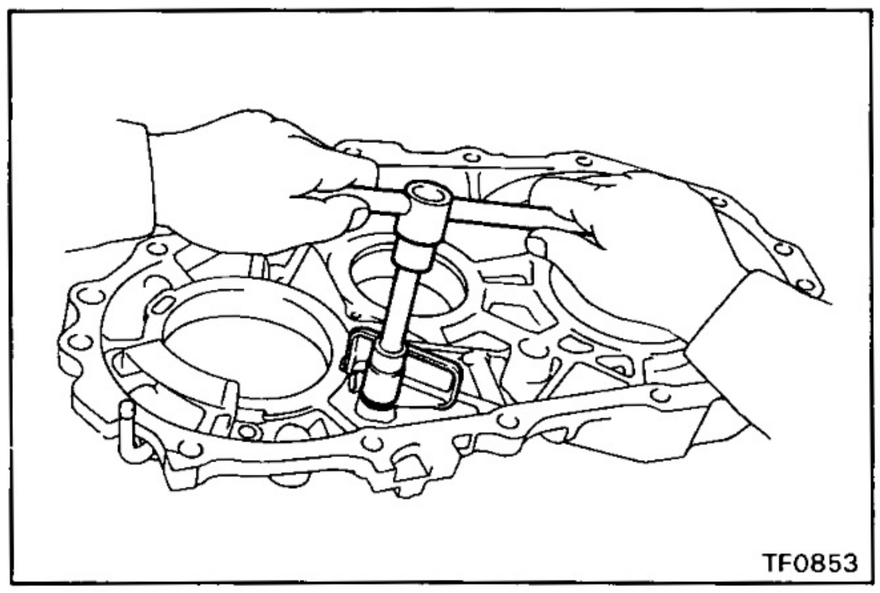

9. INSTALL OIL RECEIVER

Install the oil receiver with bolt.

Torque: 130 kg-cm (9 ft-lb, 13 N·m)

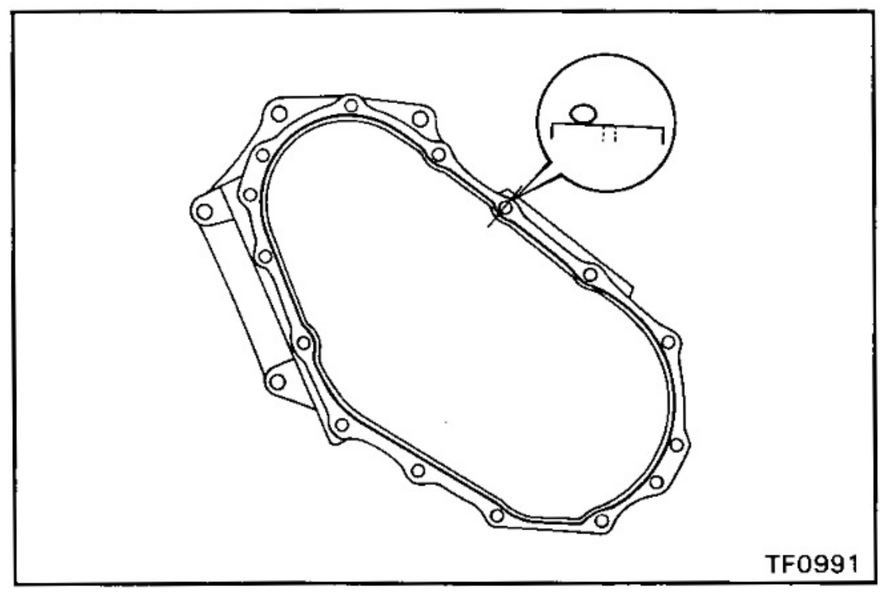

10. ASSEMBLE FRONT CASE AND REAR CASE

(a) Apply seal packing to the front case as shown.

Seal packing: Part No.08826-00090, THREE BOND 1281 or equivalent

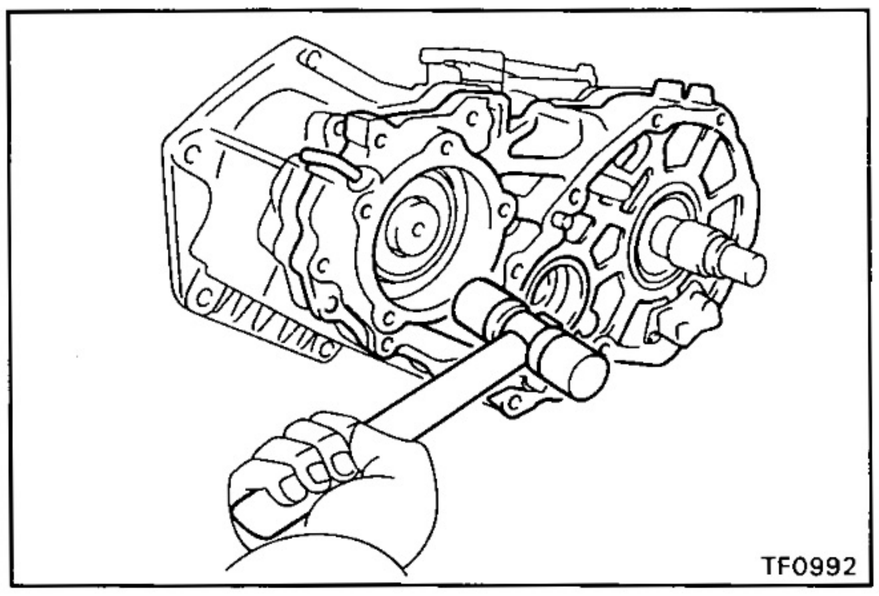

(b) Using a plastic hammer, tap the rear case and assemble it.

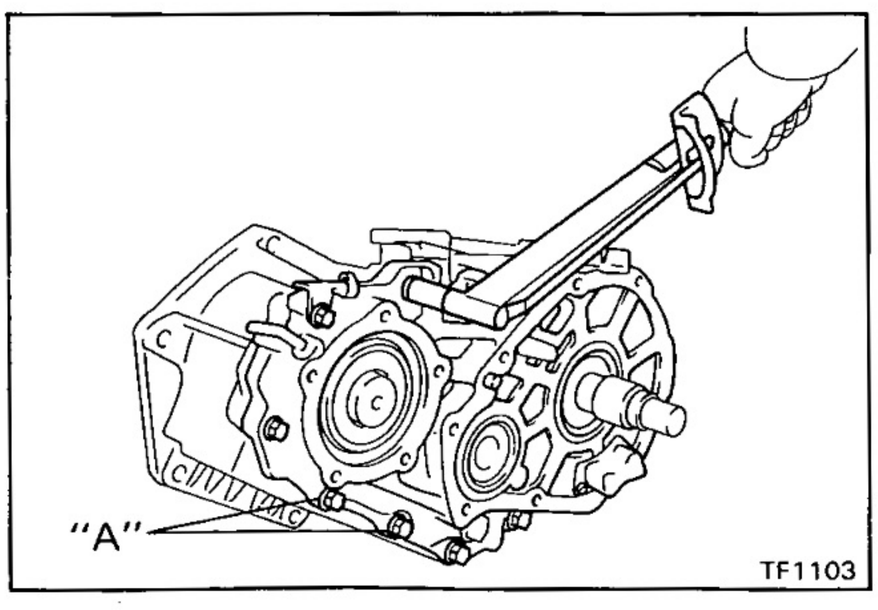

(c) Apply liquid sealer to the "A" bolt threads.

Sealant: Part No.08833-00080, THREE BOND 1344, LOCTITE 242 or equivalent

(d) Install and torque the eight bolts.

Torque: 380 kg-cm (27 ft-lb, 37 N·m)

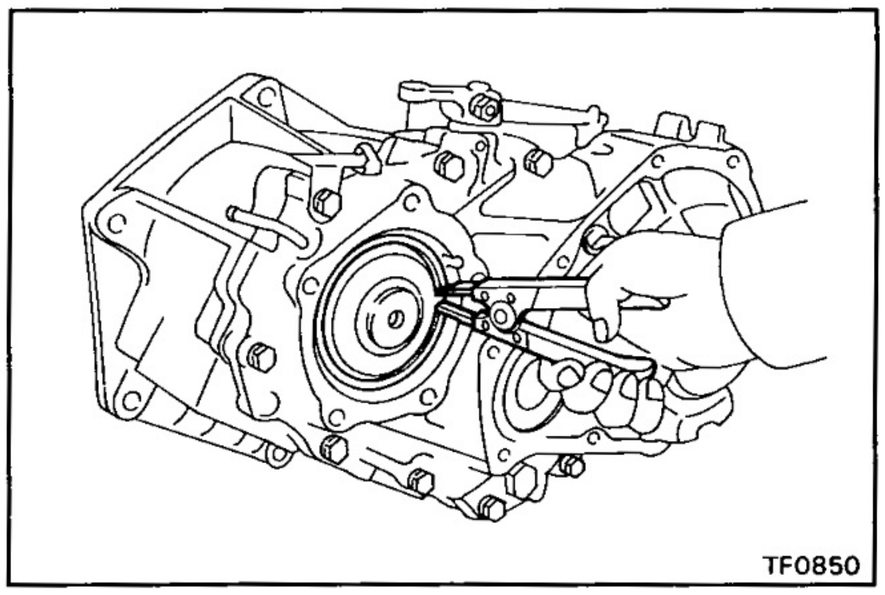
TF0850

(e) Using snap ring pliers, install the snap ring.

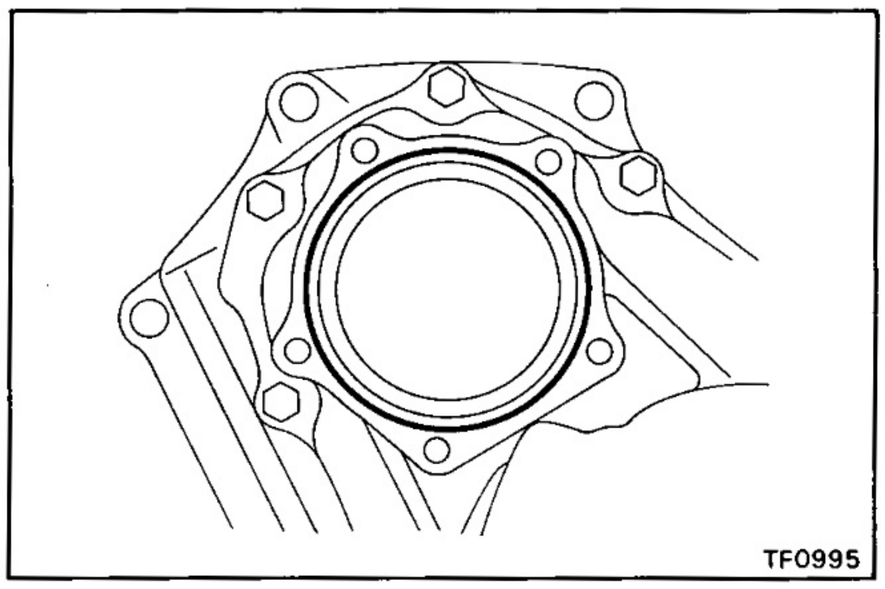
TF0995

11. INSTALL CASE COVER

(a) Apply seal packing to the rear case as shown.

Seal packing: Part No.08826-00090, THREE BOND 1281 or equivalent

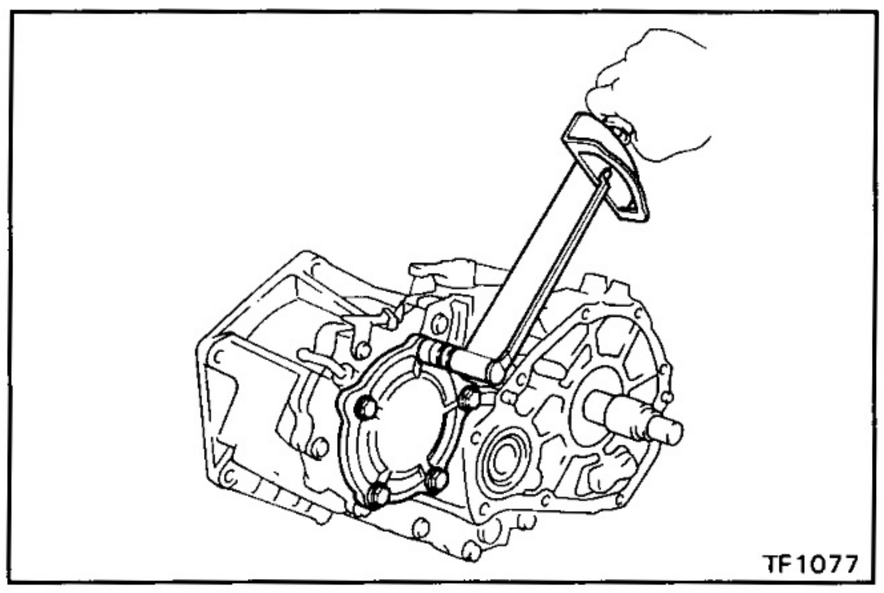
TF1077

(c) Install the case cover.

(d) Install and torque the five bolts.

Torque: 380 kg-cm (27 ft-lb, 37 N·m)

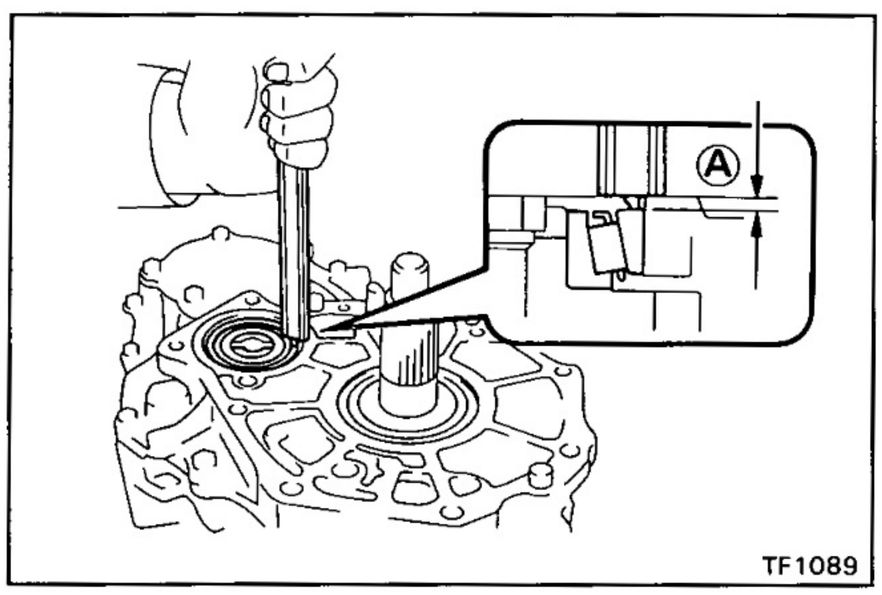

TF1089

12. SELECT ADJUSTING SHIMS FOR IDLER GEAR

(a) Using a vernier caliper with depth gauge, measure dimension Ⓐ.

HINT: Lightly hold down the bearing outer race in the thrust direction to eliminate any looseness before making the measurement.

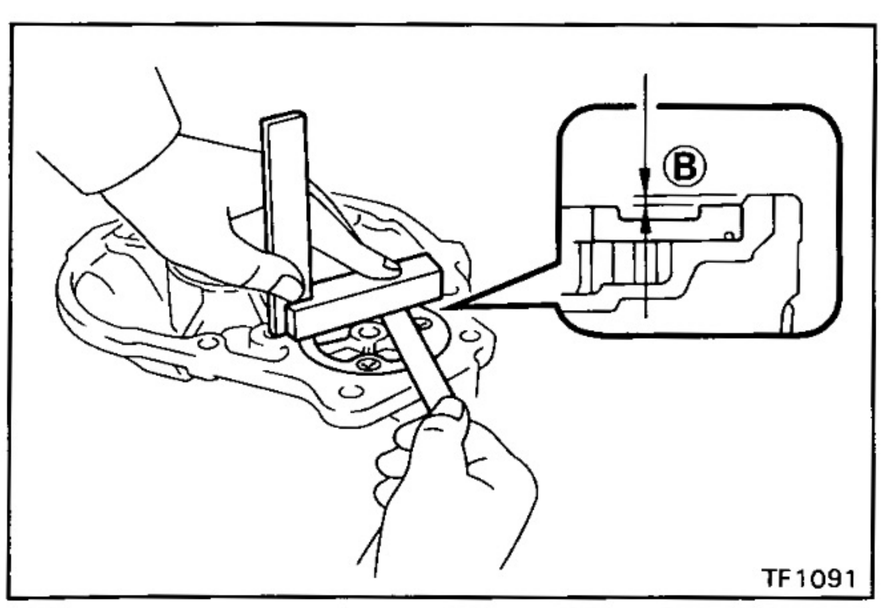

TF1091

(b) Using a steel straight edge and feeler gauge, measure the clearance of dimension Ⓑ.

(c) Calculate the required thickness of the adjusting shim.

Thickness: Dimension Ⓐ + Dimension Ⓑ + Ⓒ

Ⓒ 0.02 — 0.07 mm (0.0008 — 0.0028 in.)

(d) From the following table, select a shim with a thickness fitting within the range of the calculation in (c).

Mark	Thickness mm (in.)	Mark	Thickness mm (in.)
A	0.15 (0.0059)	G	3.00 (0.1181)
B	0.30 (0.0118)	H	3.20 (0.1260)
C	0.45 (0.0177)	J	3.40 (0.1339)
D	2.40 (0.0945)	K	3.60 (0.1417)
E	2.60 (0.1024)	L	3.80 (0.1496)
F	2.80 (0.1102)	M	4.00 (0.1575)

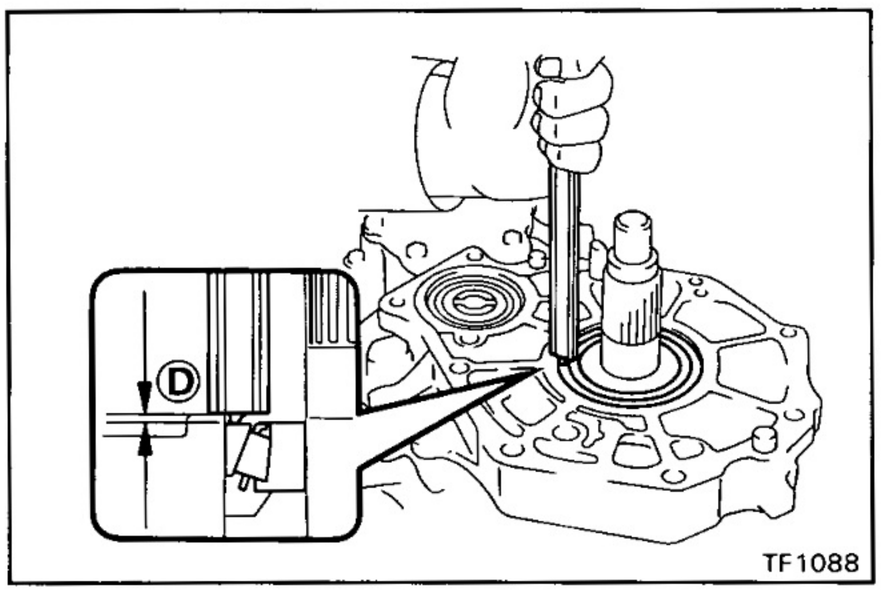

13. SELECT ADJUSTING SHIMS FOR OUTPUT SHAFT TAPER ROLLER BEARING

(a) Using a vernier caliper with depth gauge, measure dimension Ⓓ.

HINT: Lightly hold down the bearing outer race in the thrust direction to eliminate any looseness before making the measurement.

Thickness: Dimension Ⓓ + Ⓔ

Ⓔ 0.04 — 0.09 mm (0.0016 — 0.0035 in.)

(b) From the following table, select a shim with a thickness fitting within the range of the calculation in (a).

Mark	Thickness mm (in.)	Mark	Thickness mm (in.)
A	0.15 (0.0059)	G	1.60 (0.0630)
B	0.30 (0.0118)	H	1.80 (0.0709)
C	0.45 (0.0177)	J	2.00 (0.0787)
D	1.00 (0.0394)	K	2.20 (0.0866)
E	1.20 (0.0472)	L	2.40 (0.0945)
F	1.40 (0.0551)	M	2.60 (0.1024)

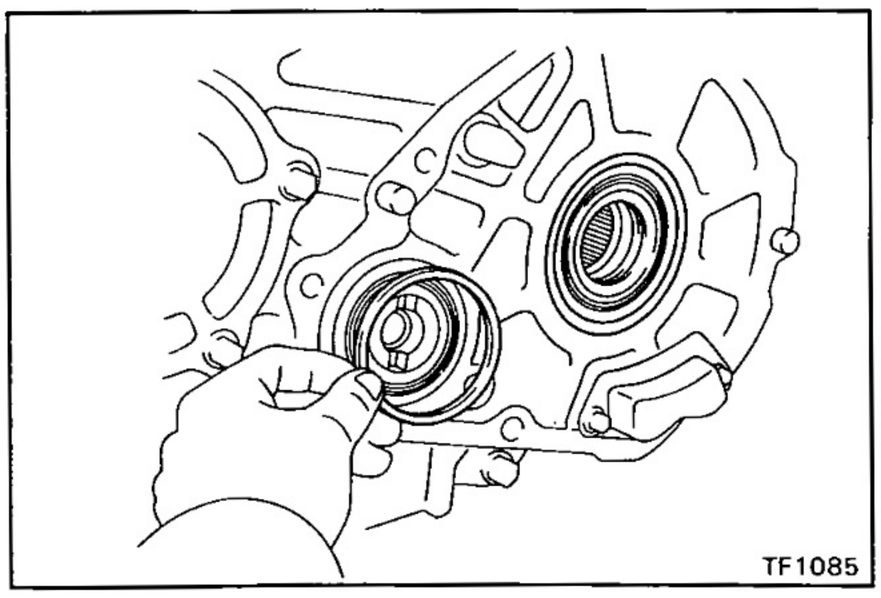

14. INSTALL SHIMS

Apply MP grease to the reuse shims.

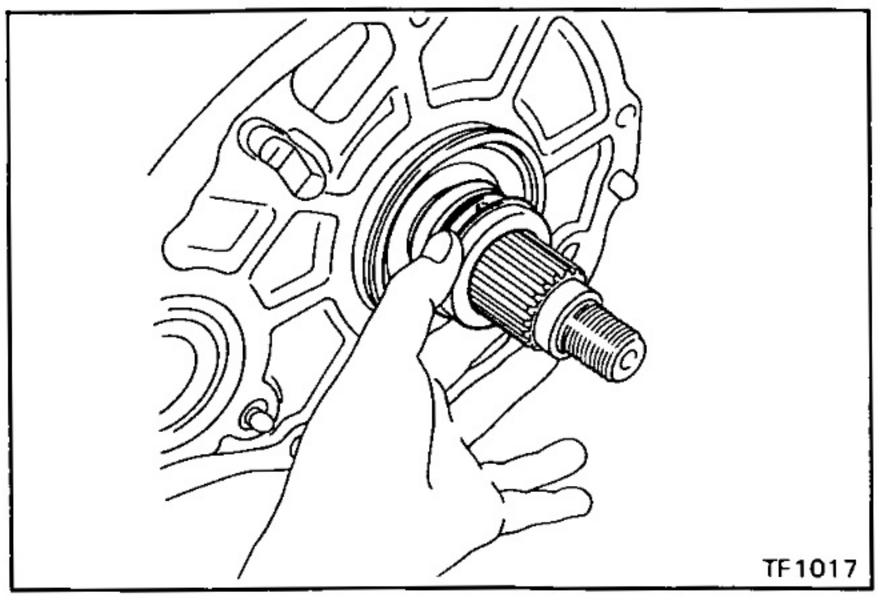

15. INSTALL BALL AND SPACER NO.1

(a) Apply MP grease to the ball.

(b) Install the ball and spacer No.1.

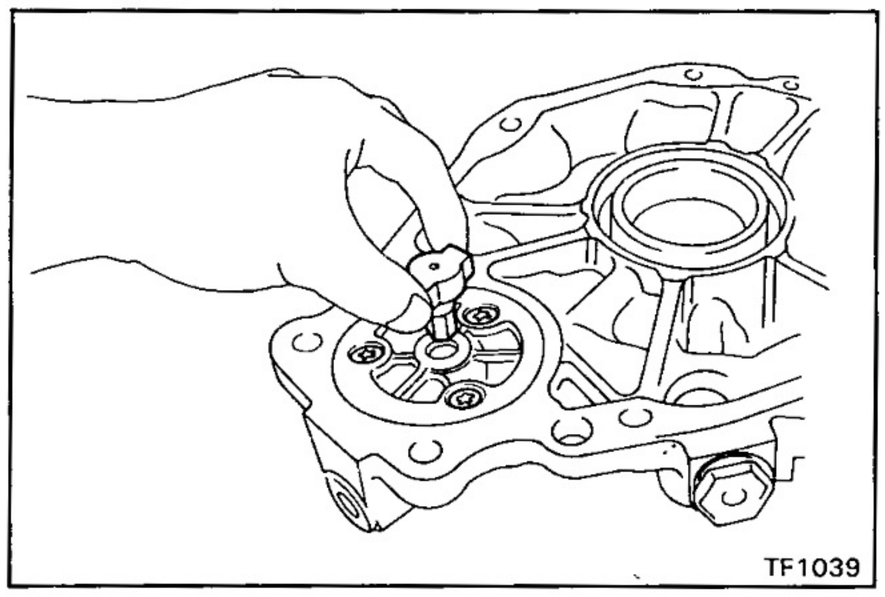
TF1039

16. INSTALL REAR EXTENSION HOUSING

(a) Install the oil pump drive shaft.

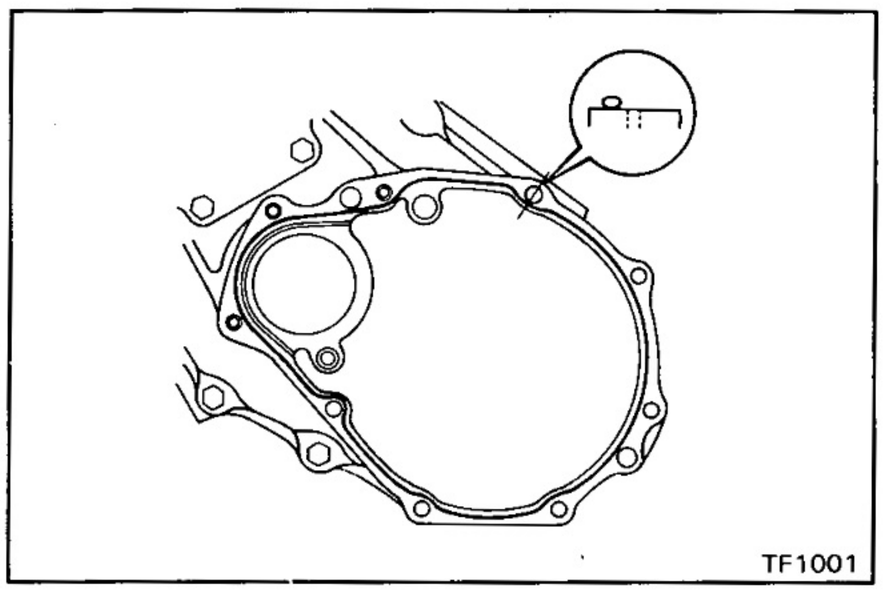
TF1001

(b) Apply seal packing to the rear case as shown.

Seal packing: Part No.08826-00090, THREE BOND 1281 or equivalent

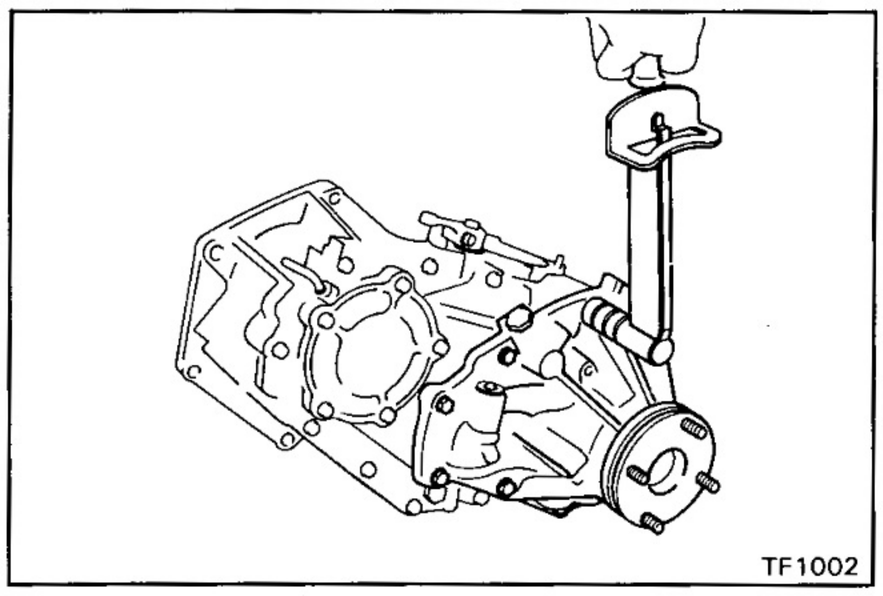
TF1002

(c) Install rear extension housing.

(d) Install and torque the eight bolts.

Torque: 380 kg-cm (27 ft-lb, 37 N·m)

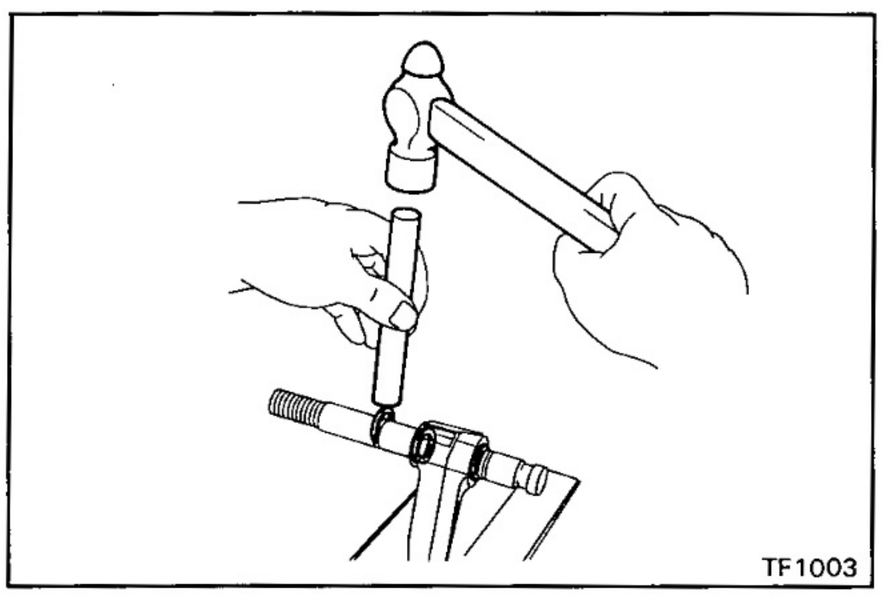
TF1003

17. ASSEMBLE SHIFT FORK NO.2 AND FORK SHAFT

(Motor shift type)

(a) Assemble the shift fork No.2 and fork shaft.

(b) Using a brass bar and hammer, tap in the snap ring.

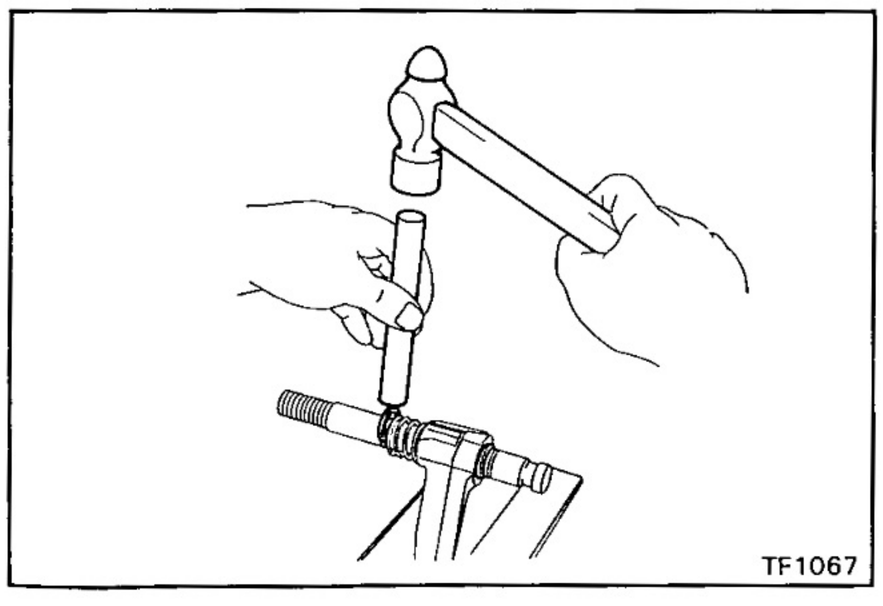
TF1067

(Direct shift type)

(a) Assemble the shift fork No.2, fork shaft and spring.

(b) Using a brass bar and hammer, tap in the snap ring.

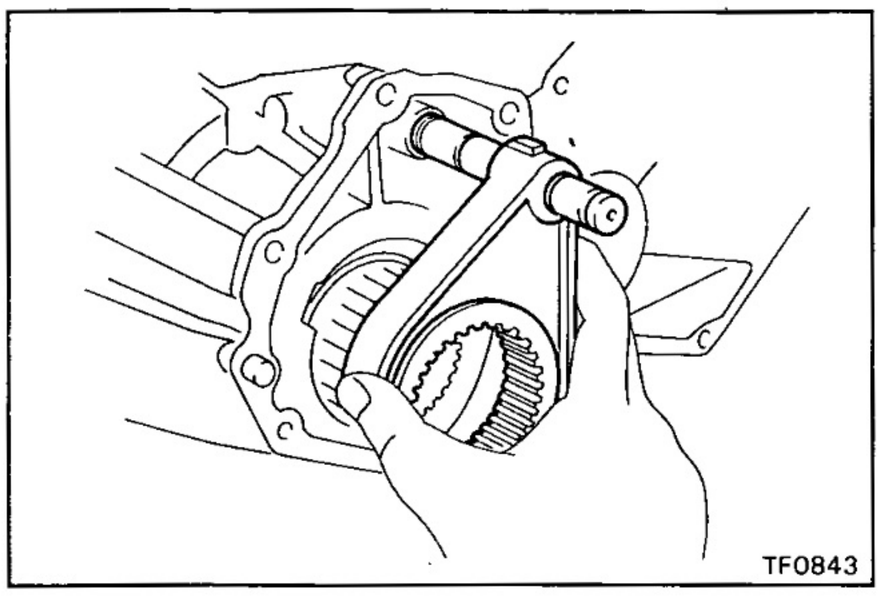

18. INSTALL CLUTCH SLEEVE, SHIFT FORK NO.2 AND FORK SHAFT

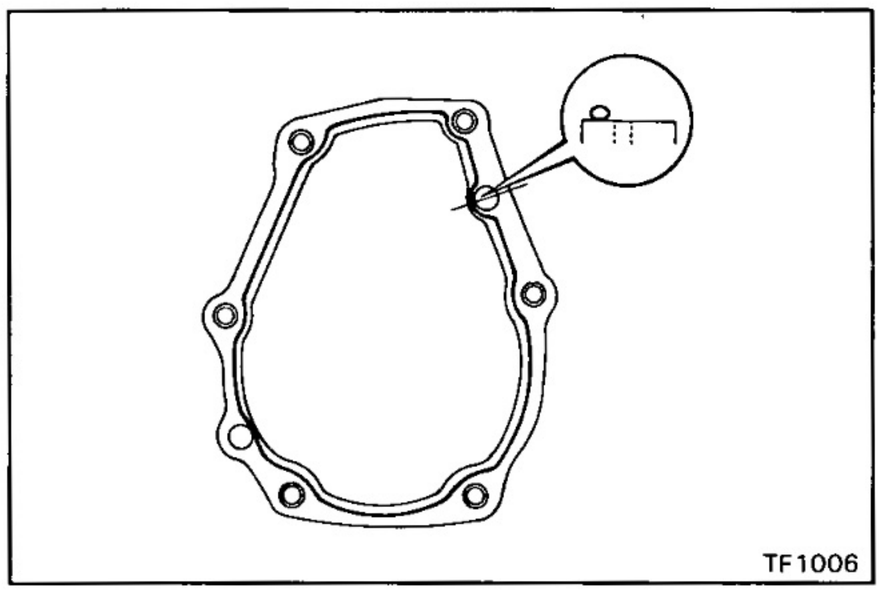

19. INSTALL FRONT EXTENSION HOUSING

(a) Remove any packing material and be careful not to drop oil on the contacting surfaces of the front case.

(b) Apply seal packing to the front case as shown.

Seal packing: Part No.08826-00090, THREE BOND 1281 or equivalent

HINT: Install the front extension housing as soon as the seal packing is applied.

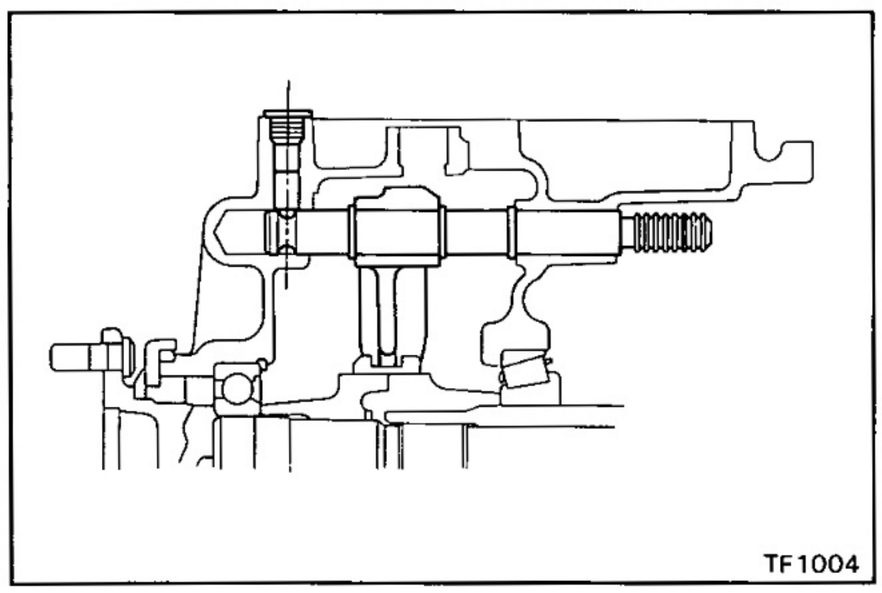

(c) Set the clutch sleeve in 4WD condition, install the front extension housing.

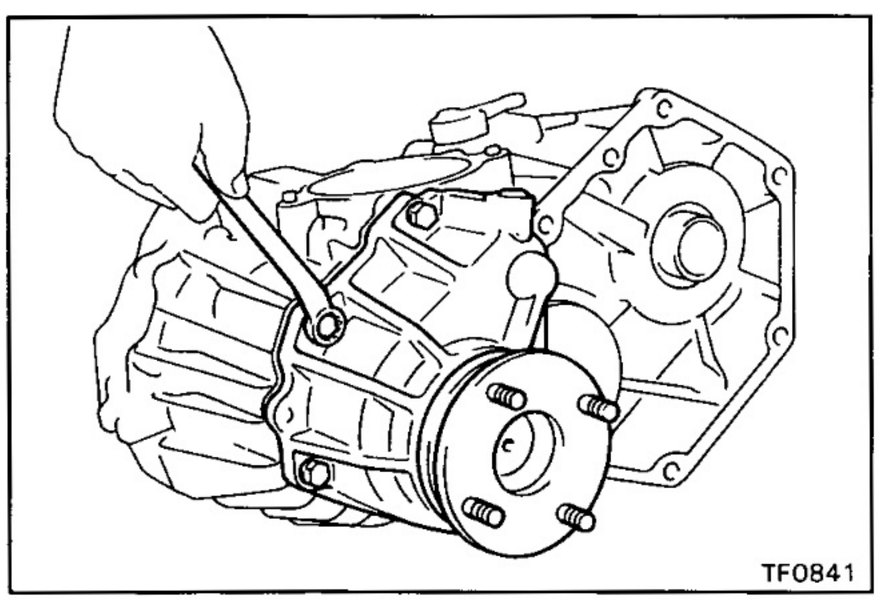

(d) Install and torque the six bolts.

Torque: 380 kg-cm (27 ft-lb, 37 N·m)

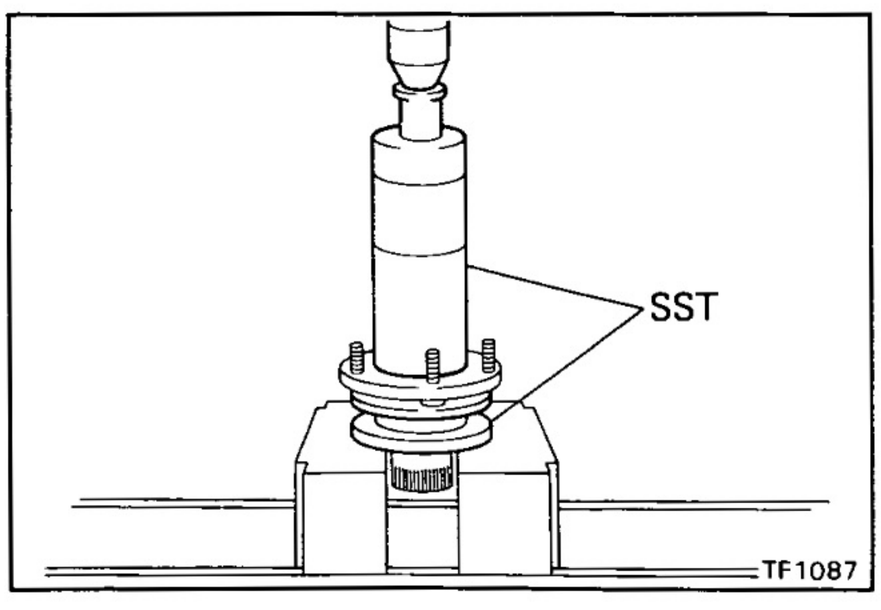

20. INSTALL DUST DEFLECTOR

Using SST and a press, install the dust deflector.

SST 09316-20011, 09316-60010 (09316-00010)

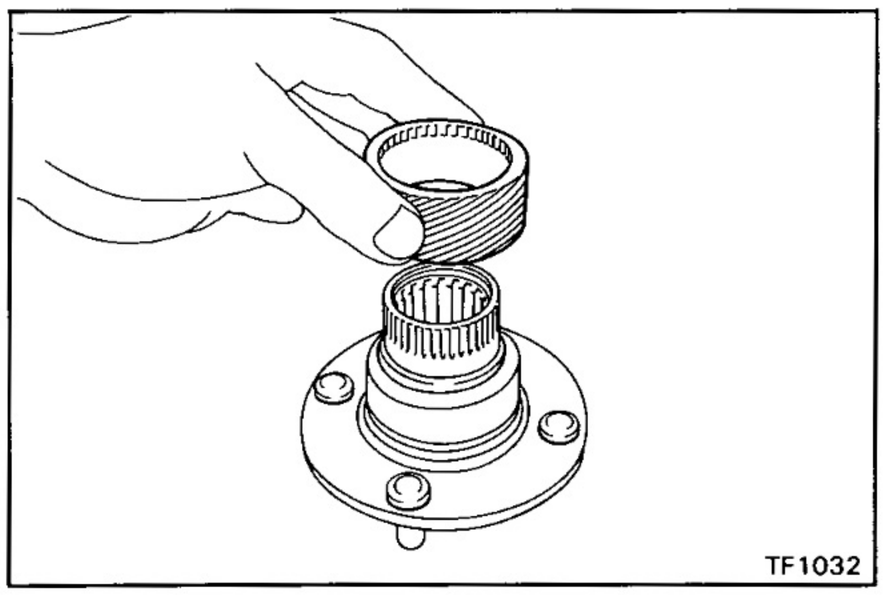

21. INSTALL OUTPUT SHAFT COMPANION FLANGE

(a) Install the speedometer drive gear to the output shaft companion flange.

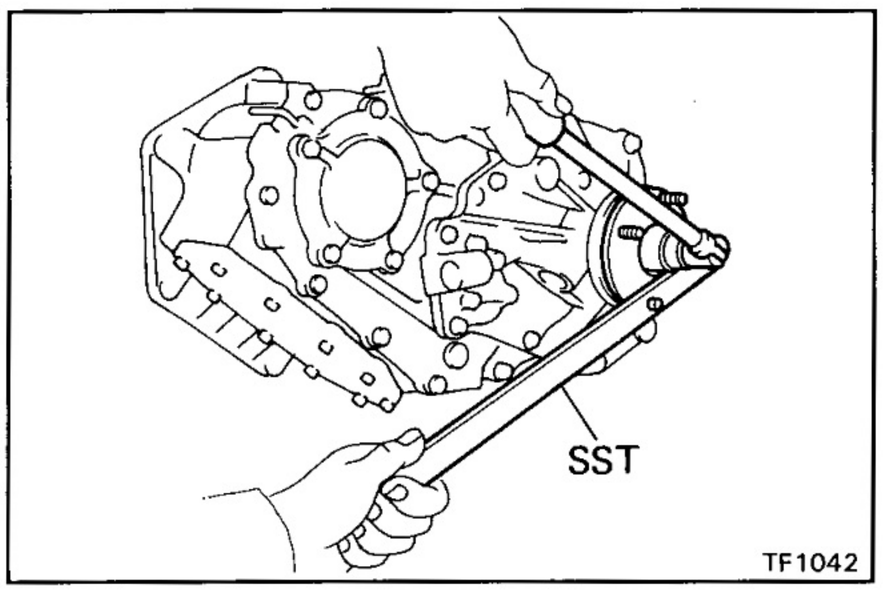

(b) Install the output shaft companion flange.

(c) Install and torque the nut.

Torque: 1,300 kg-cm (94 ft-lb, 128 N·m)

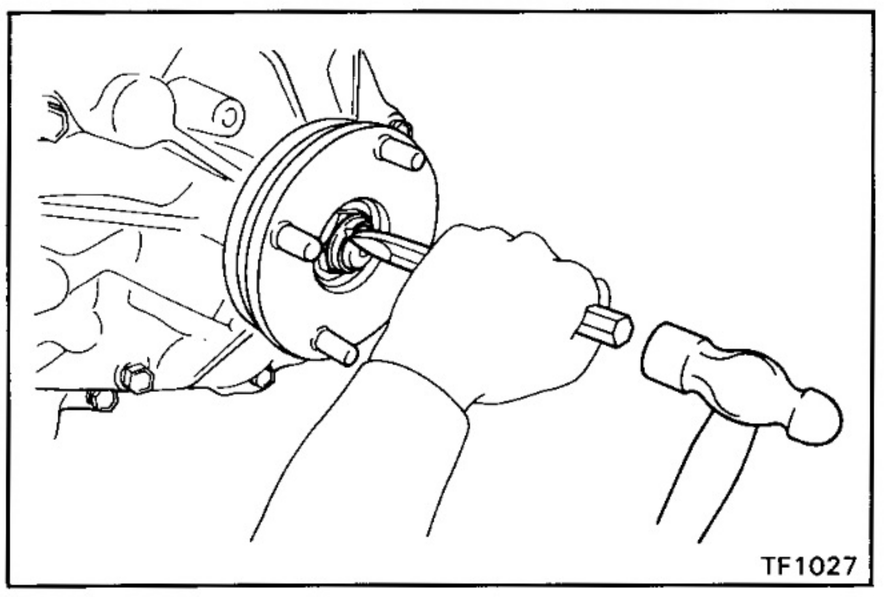

(d) Stake the nut.

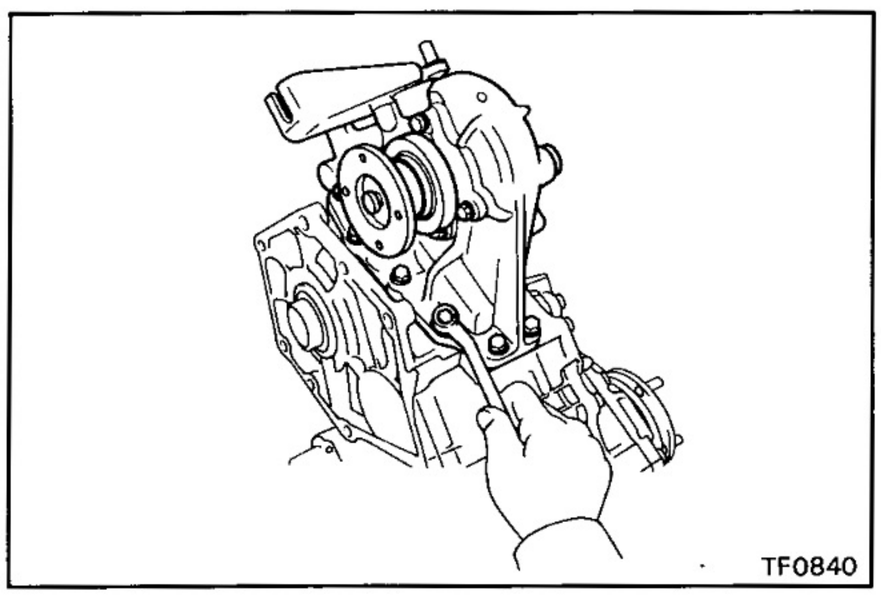

22. (w/ POWER TAKE-OFF) INSTALL POWER TAKE-OFF CASE

(a) Install the power take-off case and a new gasket.

(b) Apply liquid sealer to the bolt threads.

Sealant: Part No.08833-00080, THREE BOND 1344, LOCTITE 242 or equivalent

(c) Install and torque the ten bolts.

Torque: 195 kg-cm (14 ft-lb, 19 N·m)

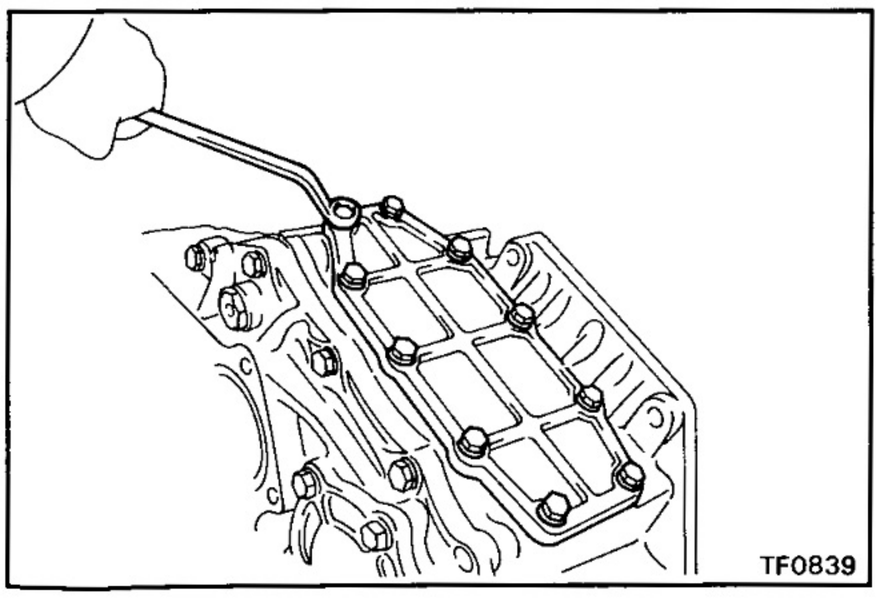

23. (w/o POWER TAKE-OFF) INSTALL POWER TAKE-OFF COVER

(a) Install the power take-off cover and a new gasket.

(b) Apply liquid sealer to the bolt threads.

Sealant: Part No.08833-00080, THREE BOND 1344, LOCTITE 242 or equivalent

(c) Install and torque the ten bolts.

Torque: 195 kg-cm (14 ft-lb, 19 N·m)

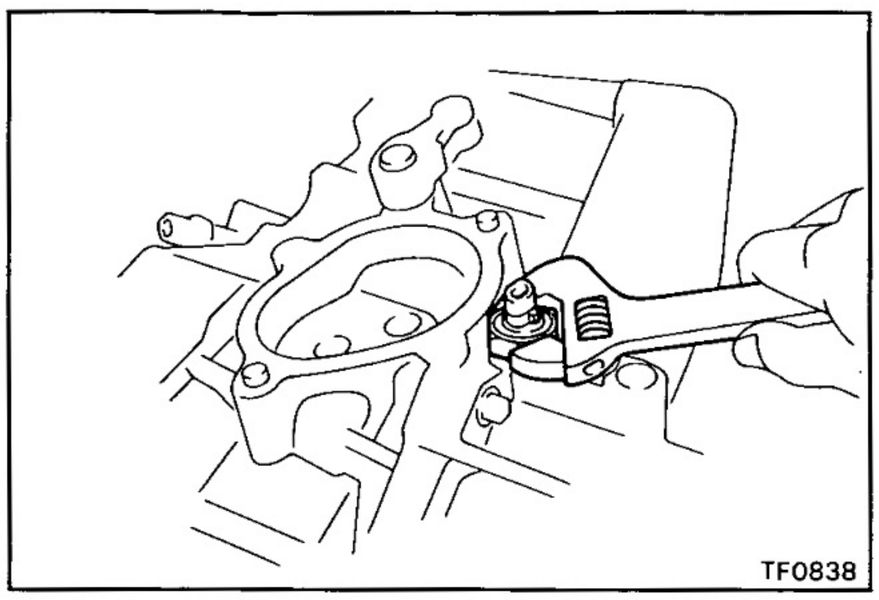

24. INSTALL 4WD INDICATOR SWITCH

Install and torque the transfer indicator switch.

Torque: 380 kg-cm (27 ft-lb, 37 N·m)

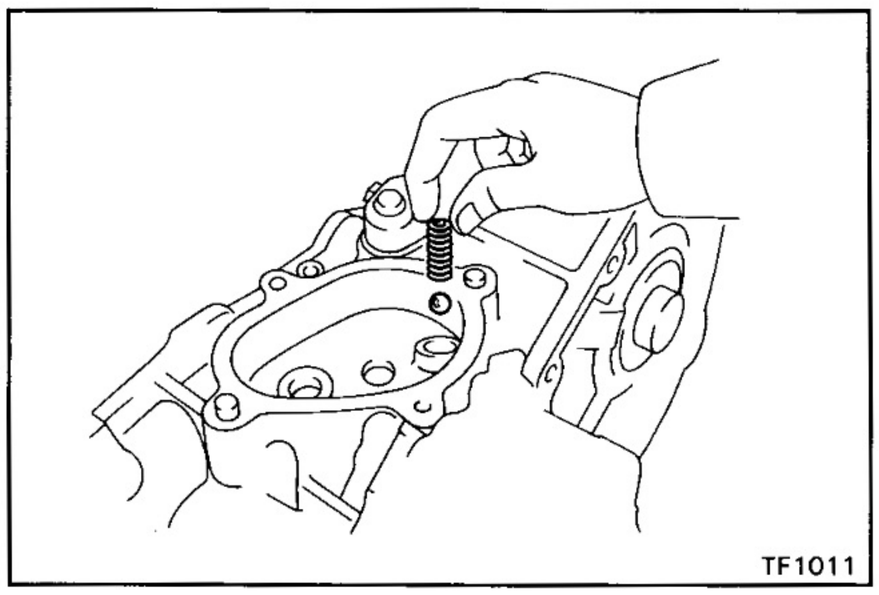

25. INSTALL BALL, SPRING AND SCREW PLUG

(a) Install the ball and spring.

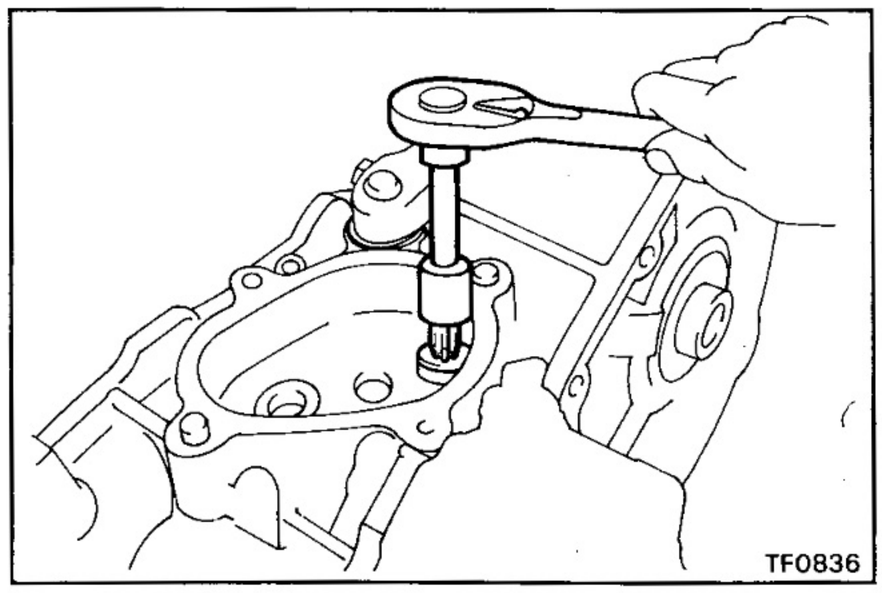

(b) Apply liquid sealer to the screw plug.

Sealant: Part No.08833-00080, THREE BOND 1344, LOCTITE 242 or equivalent

(c) Install and torque the screw plug.

Torque: 190 kg-cm (14 ft-lb, 19 N·m)

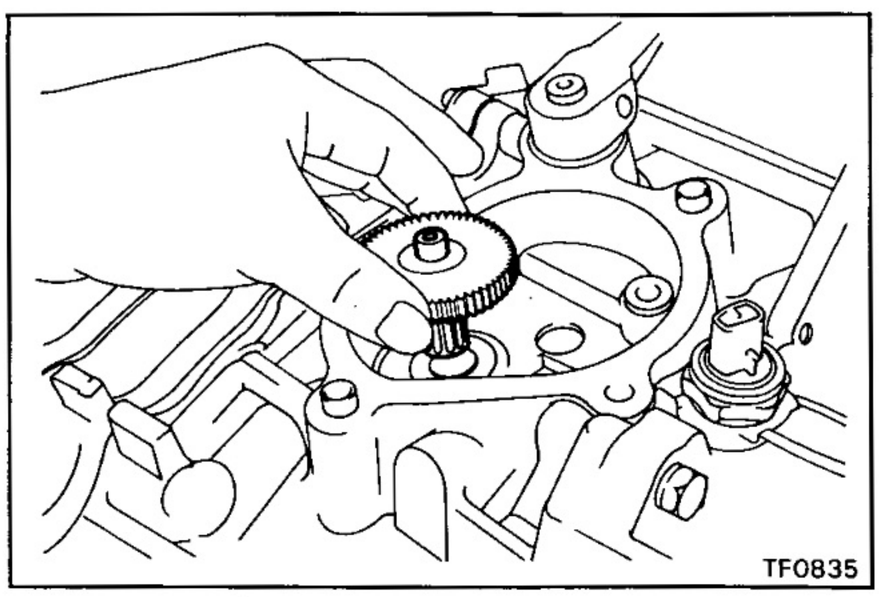

26. (MOTOR SHIFT TYPE) INSTALL OUTPUT GEAR

(a) Coat the gear oil as shown.

(b) Install the output gear.

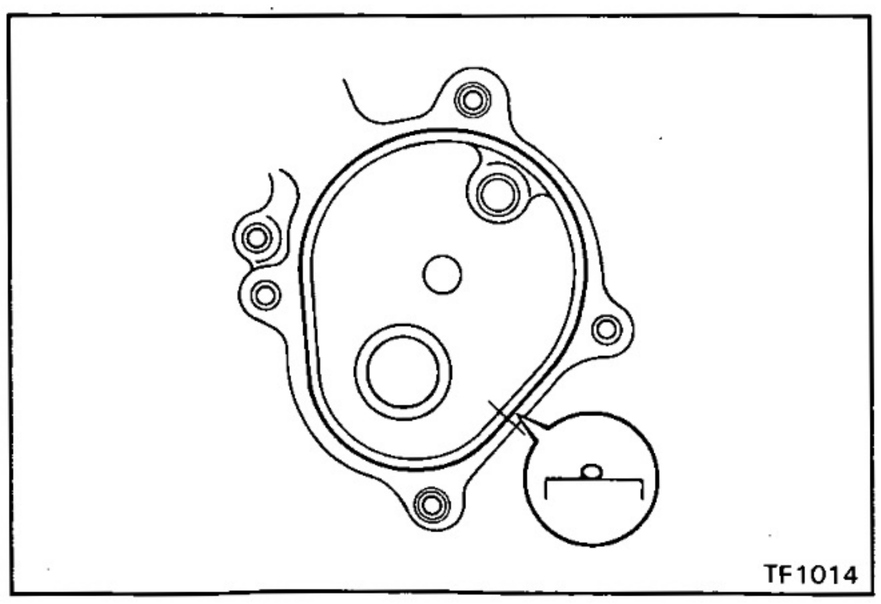

27. (MOTOR SHIFT TYPE) INSTALL MOTOR ACTUATOR

(a) Apply seal packing to the front case as shown.

Seal packing: Part No.08826-00090,THREE BOND 1281 or equivalent

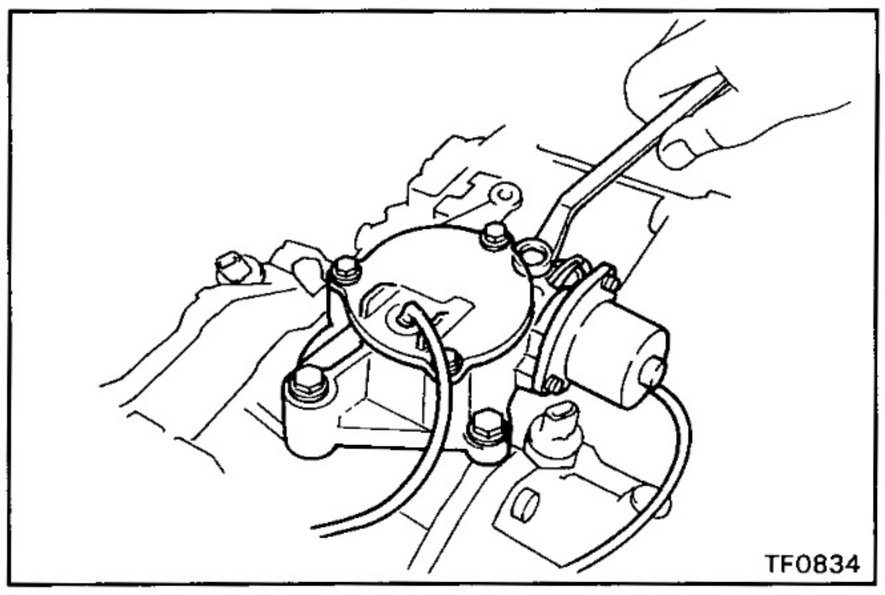

(b) Install the motor actuator.

(c) Install and torque the four bolts.

Torque: 195 kg-cm (14 ft-lb, 19 N·m)

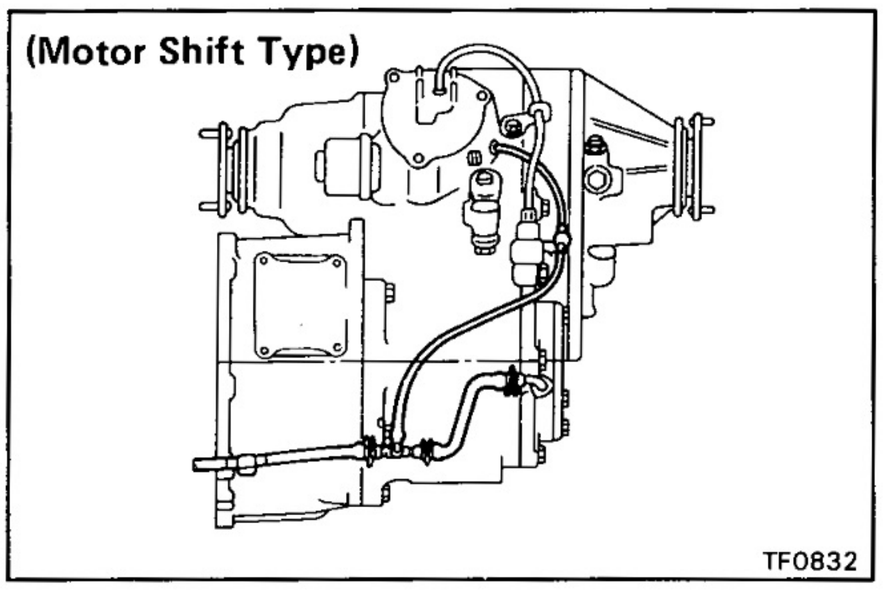

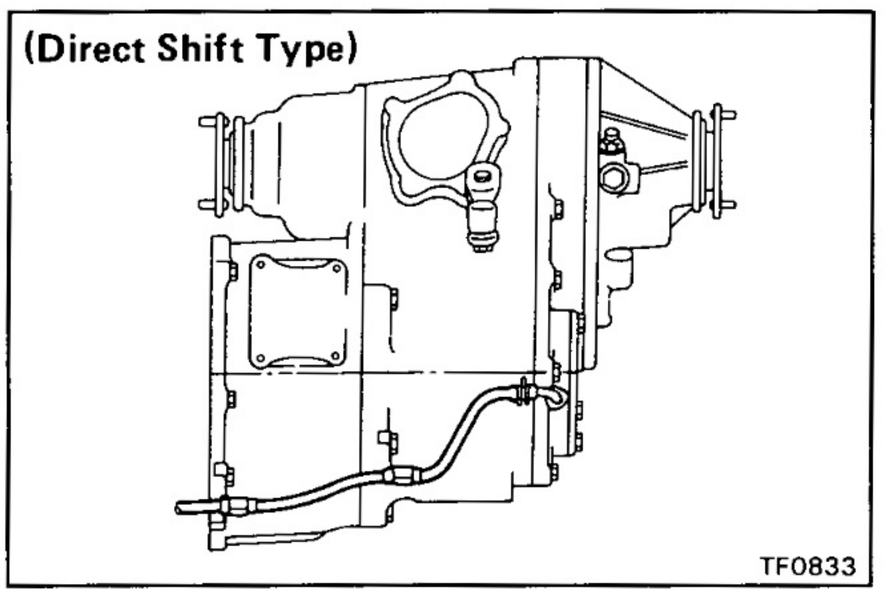

28. INSTALL BREATHER HOSE

MOTOR SHIFT CONTROL SYSTEM

PARTS LOCATION

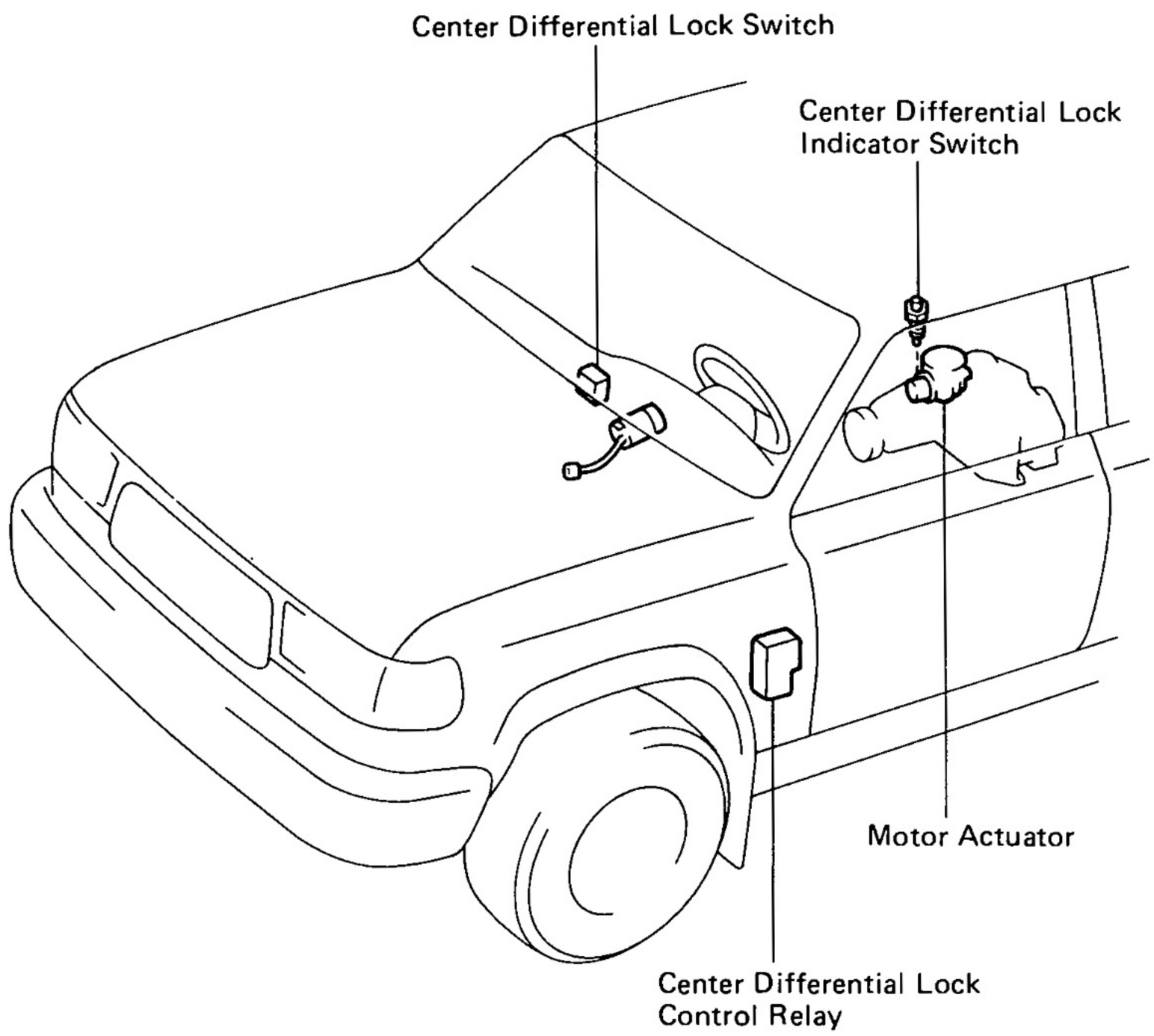

TF0885

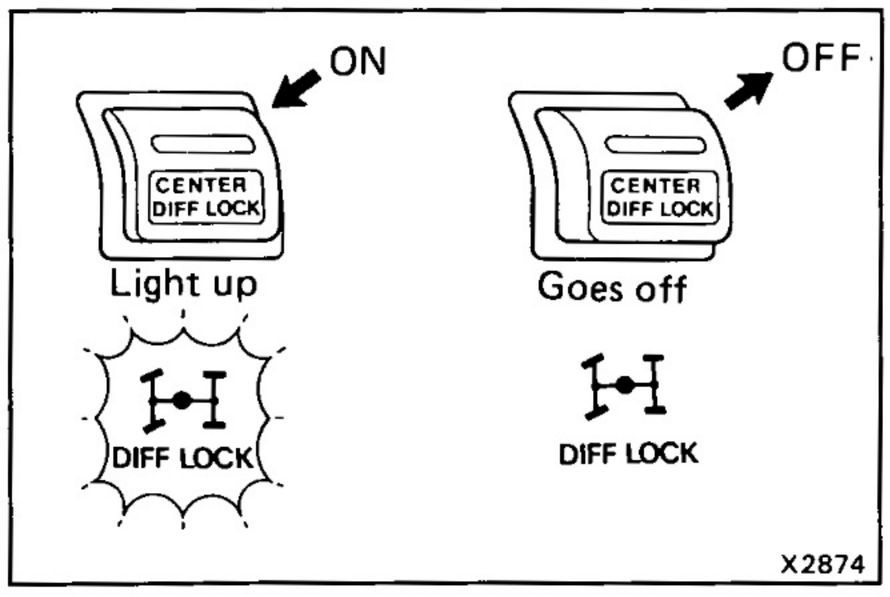

SYSTEM INSPECTION

1. INSPECT CENTER DIFFERENTIAL LOCK SWITCH

(a) Start the engine and shift the transfer shift lever in H position.

(b) Check that the center differential lock indicator light comes on when the center differential lock switch is turnd ON.
Check that the light goes off when the switch OFF.

HINT: There are times when the light will not go off unless the steering is straight ahead and acceleration and deceleration are performed slowly.

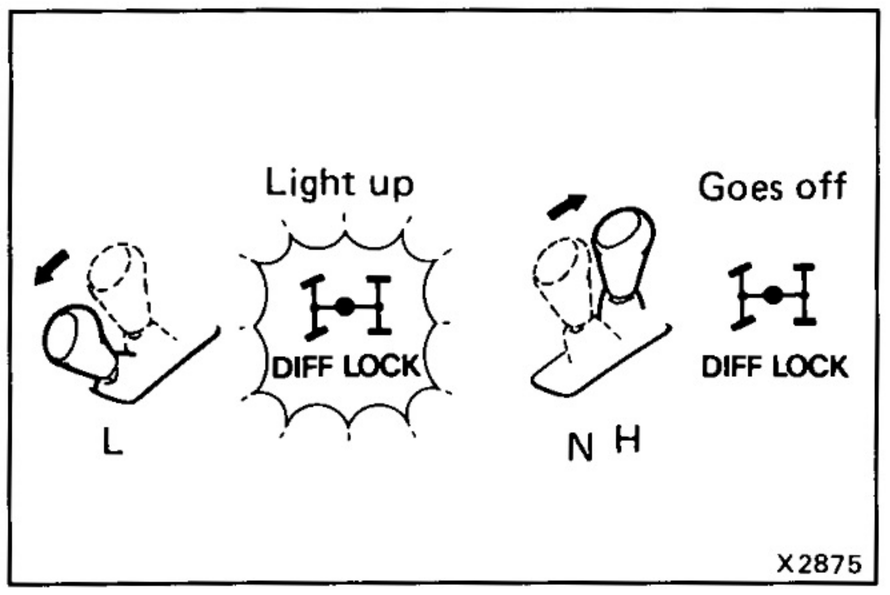

2. INSPECT SHIFT LEVER POSITION

(a) Start the engine, and center differential lock switch turned to OFF.

(b) Check that the center differential indicator light comes on when the transfer shift lever shifted to L position. Check that the light goes off when the lever is shifted to N or H position.

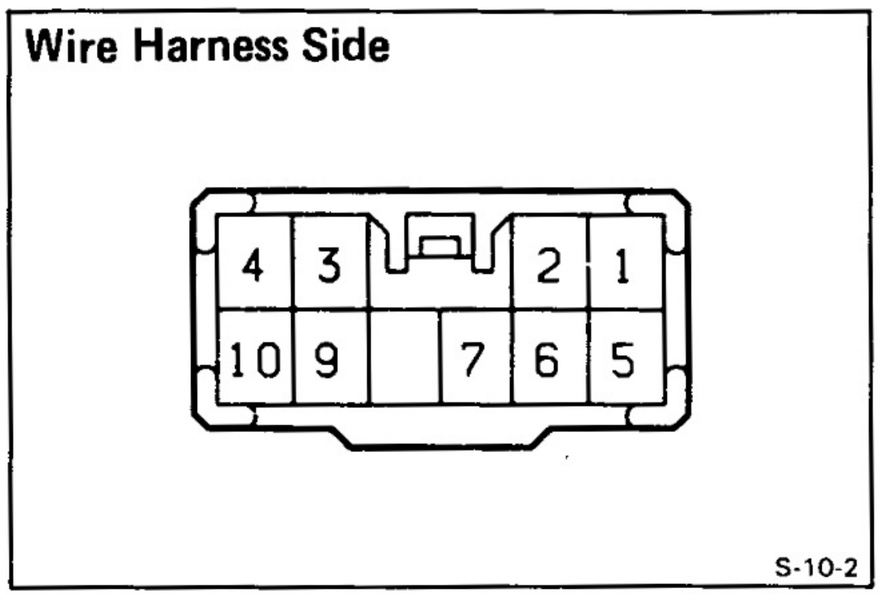

PARTS INSPECTION

1. INSPECT CENTER DIFFERENTIAL LOCK CONTROL RERAY

(a) Check that there is continuity between terminals as shown in the chart.

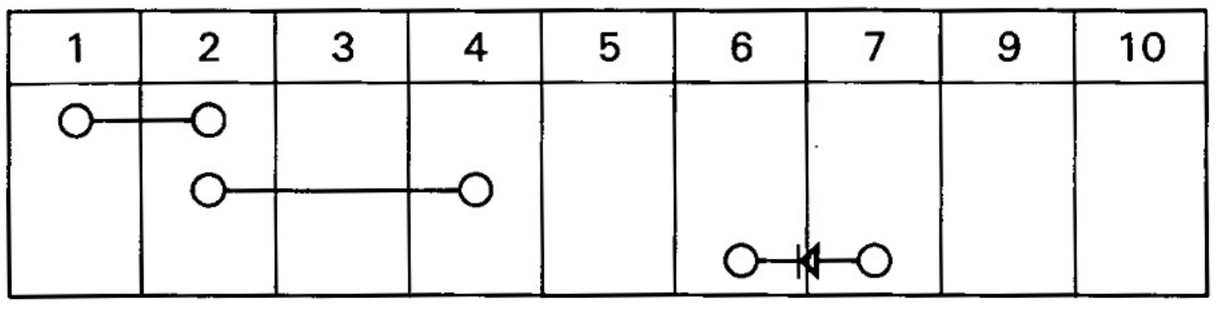

HINT: There is a diode between terminals 6 and 7. If the circuit shown no continuity, change the positive (+) and negative (—) probes and recheck the circuit.

(b) Apply battery voltage between terminals and check that there is continuity between terminals as shown in the chart.

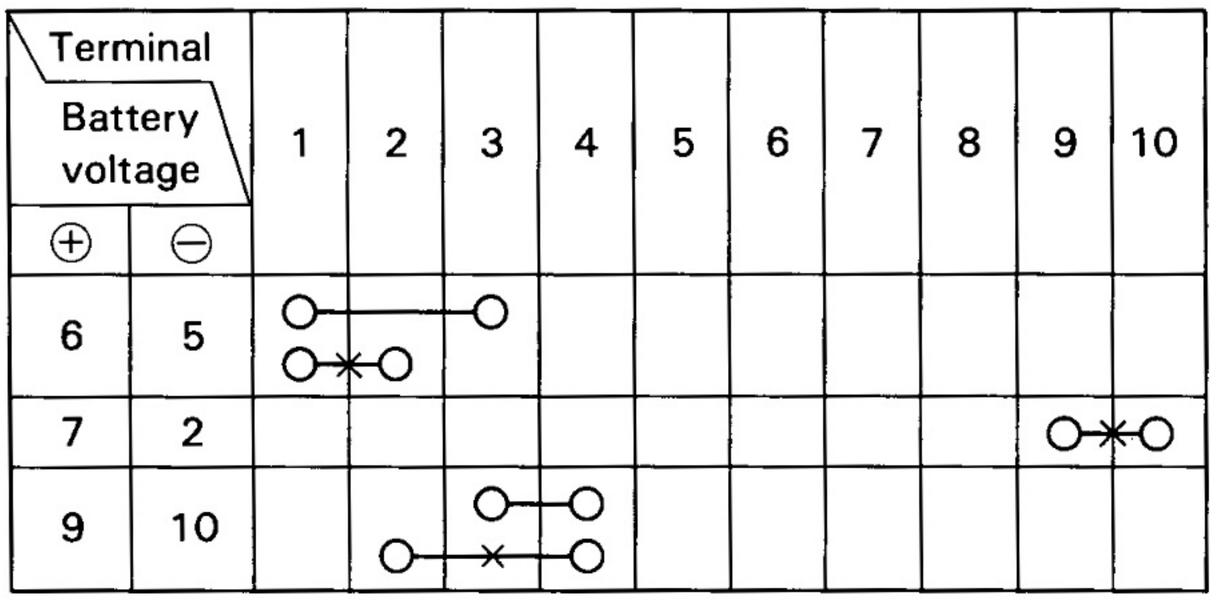

○—○: Continuity
○✕○: No continuity

If continuity is not as specified, replace the relay.

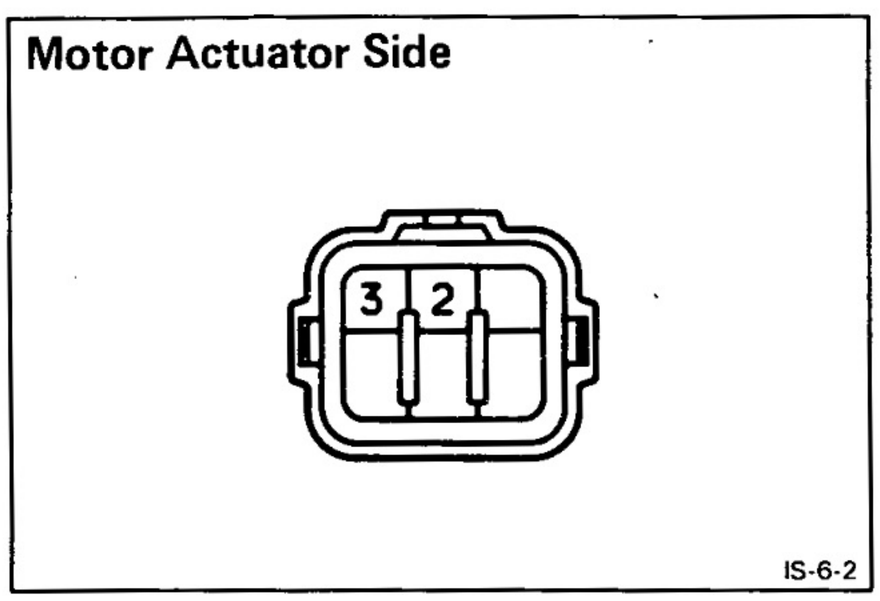

2. INSPECT MOTOR ACTUATOR

(a) Using an ohmmeter, measure the resistance between terminals 2 and 3.

Standard resistance: 0.3 — 100 Ω

(b) Using an ohmmeter, measure the resistance between terminals 2 or 3 and body ground.

Standard resistance: More than 0.5 MΩ

If resistance value is not as specified, replace the motor actuator.

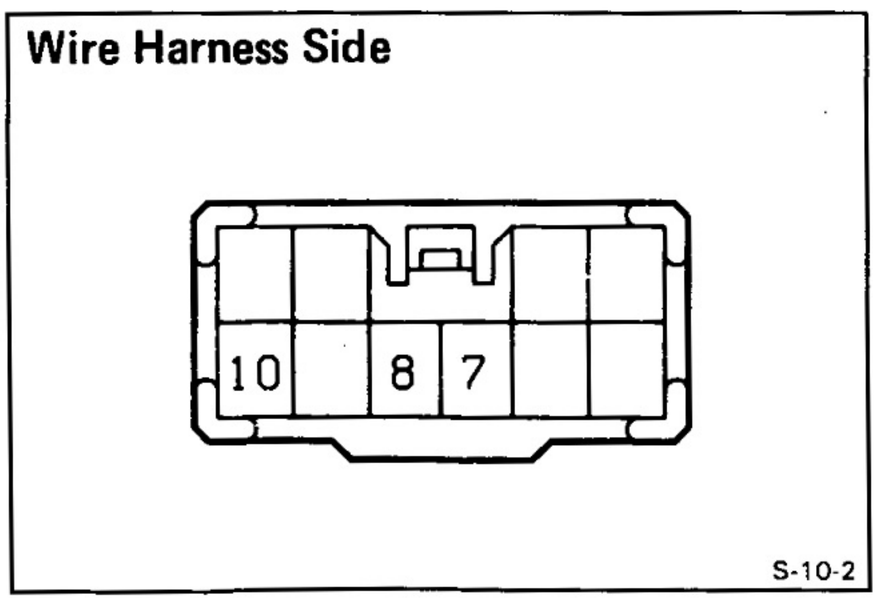

3. INSPECT CENTER DIFFERENTIAL LOCK SWITCH

Check that there is continuity between terminals as shown in the chart.

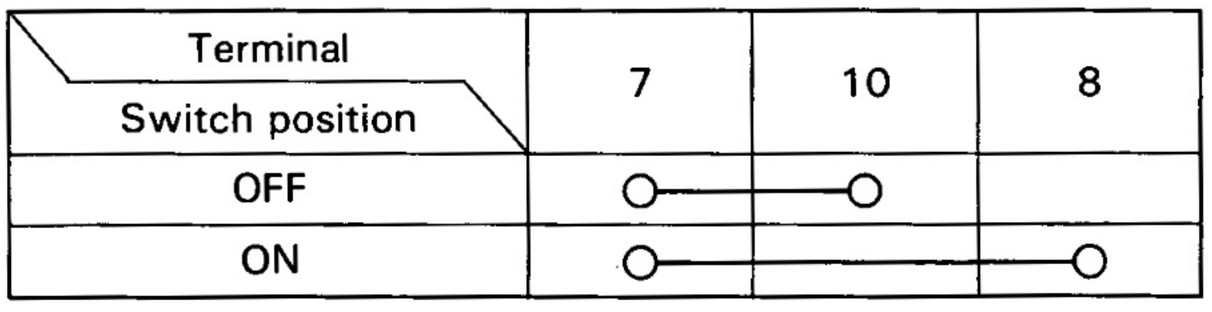

If continuity is not as specified, replace the switch.

4. INSPECT CENTER DIFFERENTIAL LOCK INDICATOR SWITCH

(See step 3 on page TF-11)

PROPELLER SHAFT

	Page
PRECAUTIONS	PR-2
TROUBLESHOOTING	PR-2
PROPELLER SHAFT	PR-2

PR

PRECAUTIONS

Be careful not to grip the propeller shaft tube too tightly in the vise as this will cause deformation.

TROUBLESHOOTING

Problem	Possible cause	Remedy	Page
Noise	Sleeve yoke spline worn	Replace sleeve yoke	PR-4
	Spider bearing worn or stuck	Replace spider bearing	PR-4
Vibration	Propeller shaft runout	Replace propeller shaft	PR-3
	Propeller shaft imbalance	Balance propeller shaft	
	Sleeve yoke spline stuck	Replace sleeve yoke	PR-4

PROPELLER SHAFT

COMPONENTS

- **Front Propeller Shaft**

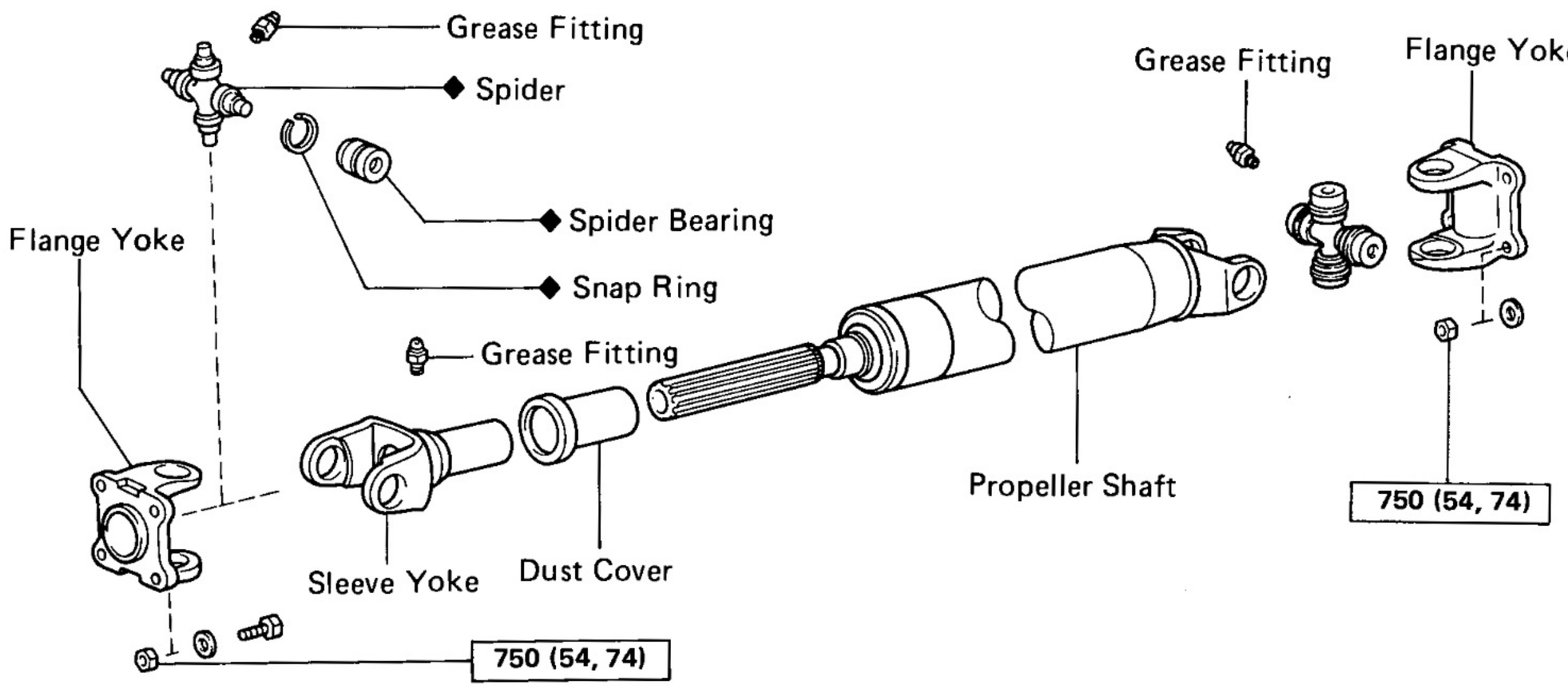

- **Rear Propeller Shaft**

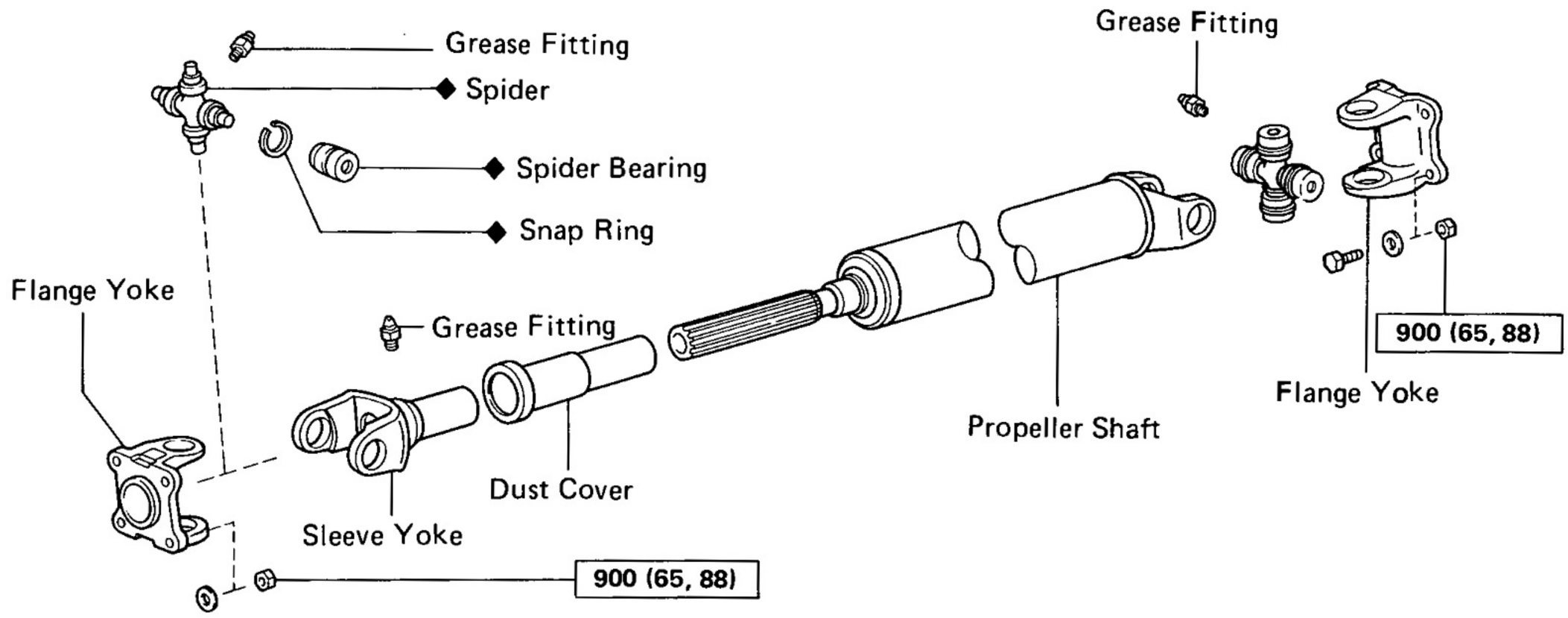

kg-cm (ft-lb, N·m) : Specified torque

◆ Non-reusable part

PR0278
PR0279

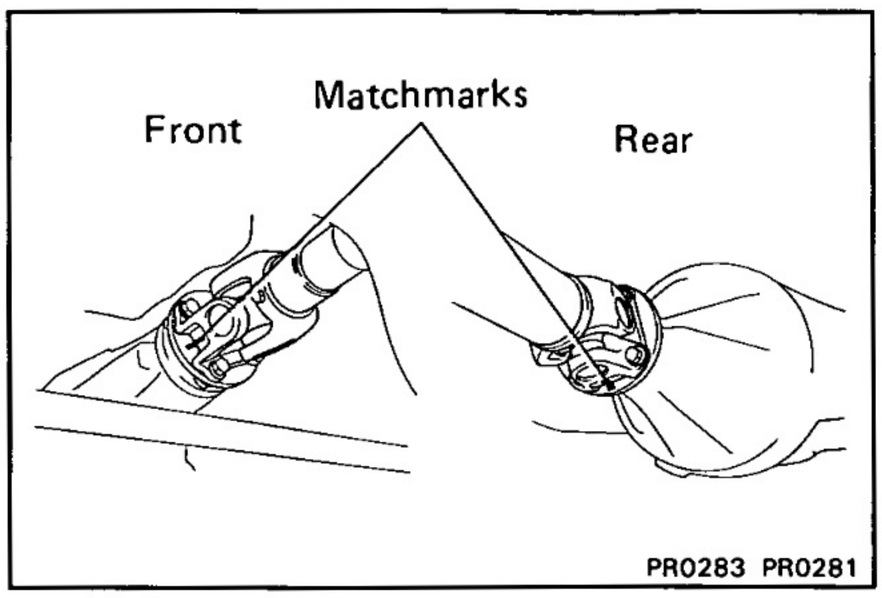

REMOVAL OF FRONT AND REAR PROPELLER SHAFTS

1. DISCONNECT PROPELLER SHAFT FLANGE FROM COMPANION FLANGE ON DIFFERENTIAL

(a) Put matchmarks on the flanges.

(b) Remove the four bolts and nuts.

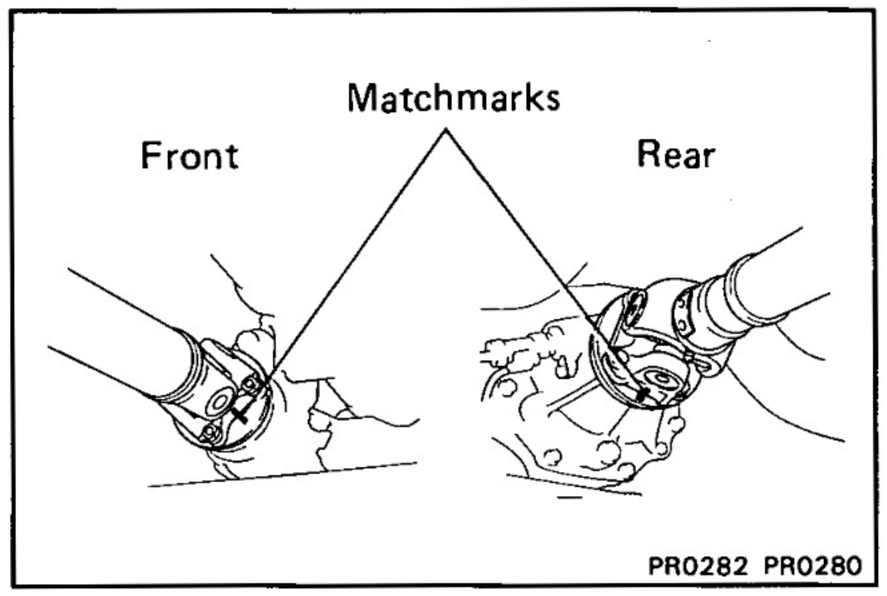

2. DISCONNECT PROPELLER SHAFT FLANGE FROM COMPANION FLANGE ON TRANSFER

(a) Put matchmarks on the flange.

(b) Remove the four nuts.

(c) Remove the propeller shaft.

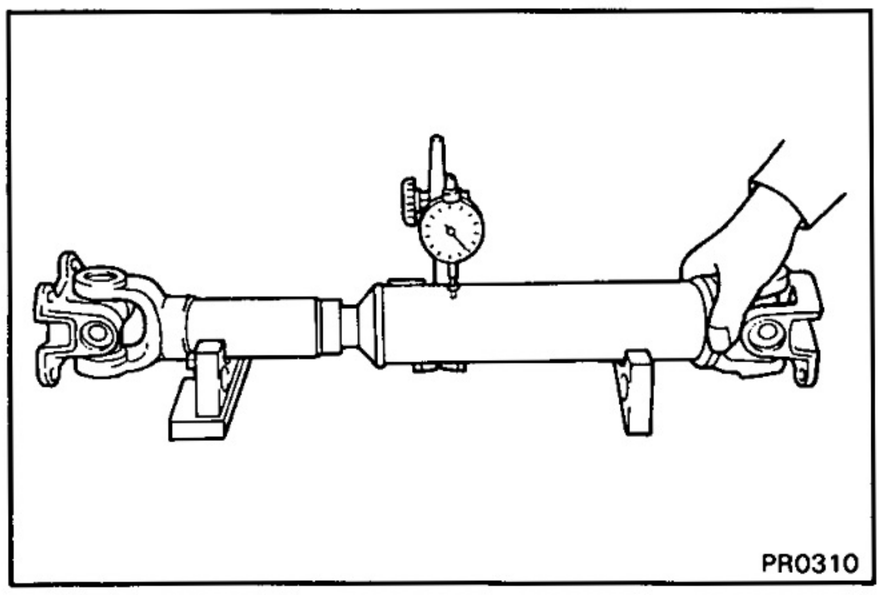

INSPECTION OF PROPELLER SHAFT COMPONENTS

1. INSPECT FRONT AND REAR PROPELLER SHAFTS FOR DAMAGE OR RUNOUT

If shaft runout is greater than maximum, replace the shaft.

Maximum runout: 0.8 mm (0.031 in.)

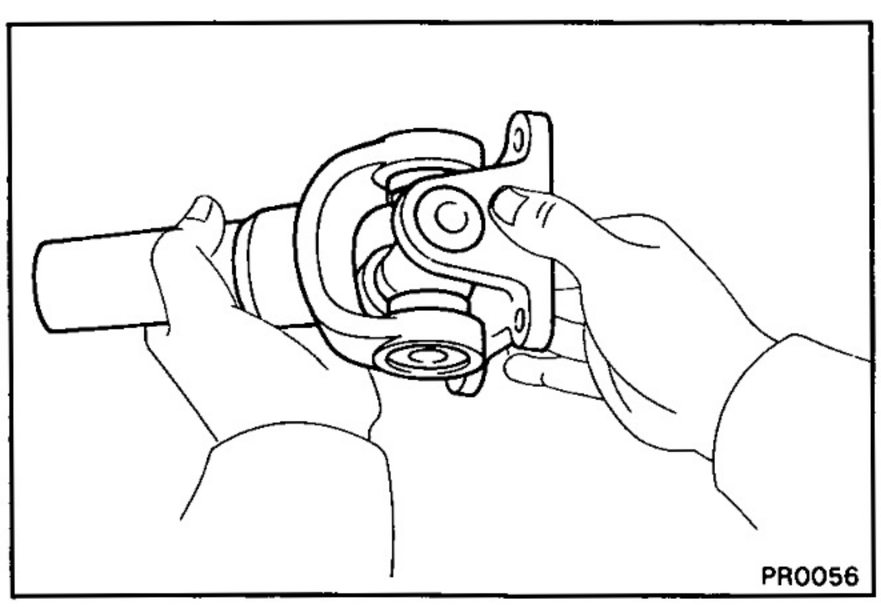

2. INSPECT SPIDER BEARINGS

(a) Inspect the spider bearings for wear or damage.

(b) Check the spider bearing axial play by turning the yoke while holding the shaft tightly.

Bearing axial play: Less than 0.05 mm (0.0020 in.)

If necessary, replace the spider bearing.

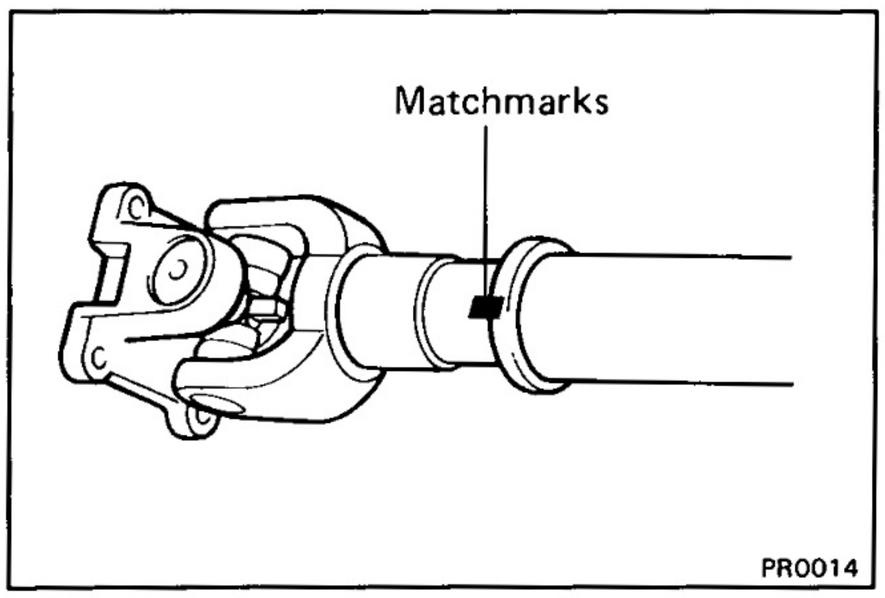

DISASSEMBLY OF PROPELLER SHAFT

1. REMOVE SLEEVE YOKE FROM PROPELLER SHAFT

(a) Place matchmarks on the sleeve yoke and shaft.

(b) Pull out the sleeve yoke from the shaft.

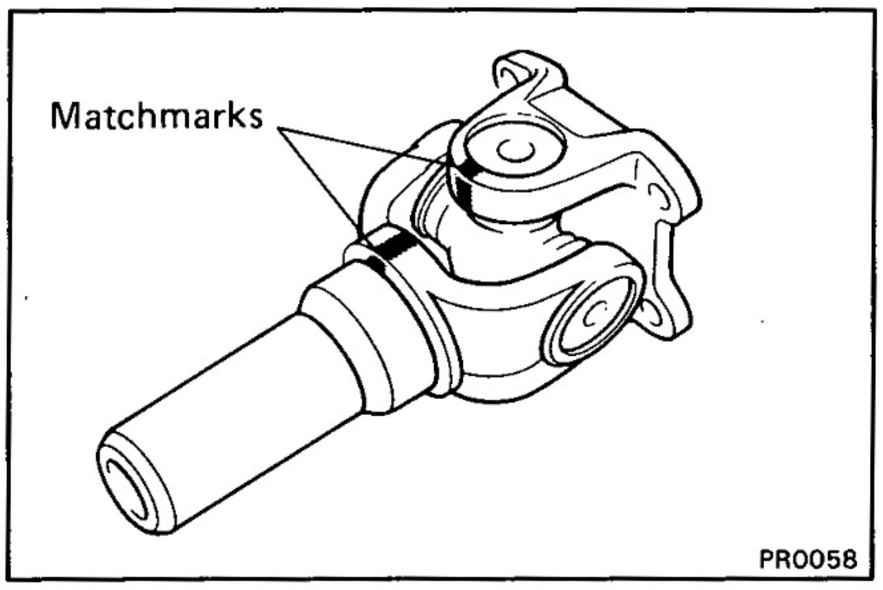

2. REMOVE SPIDER BEARING

(a) Put matchmarks on the sleeve yoke and flange.

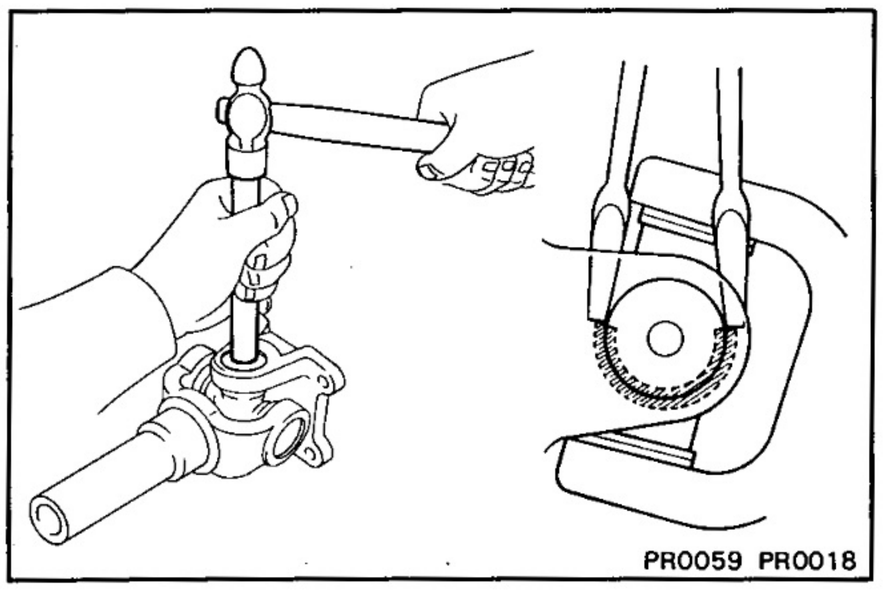

(b) Slightly tap in the bearing outer races.

(c) Using two screwdrivers, remove the four snap rings from the grooves.

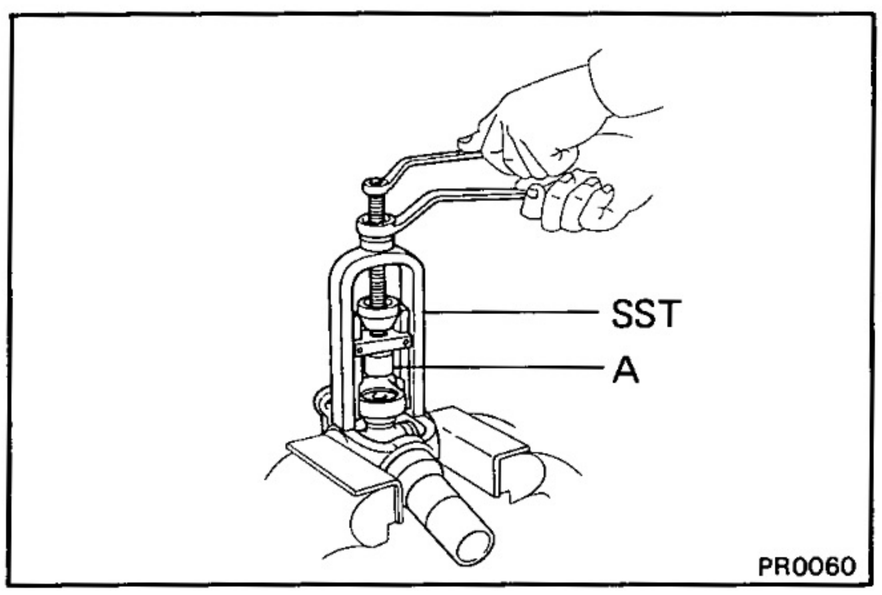

(d) Using SST, push out the bearing from the flange.

SST 09332-25010

HINT: Sufficiently raise the part indicated by A so that it does not come into contact with the bearing.

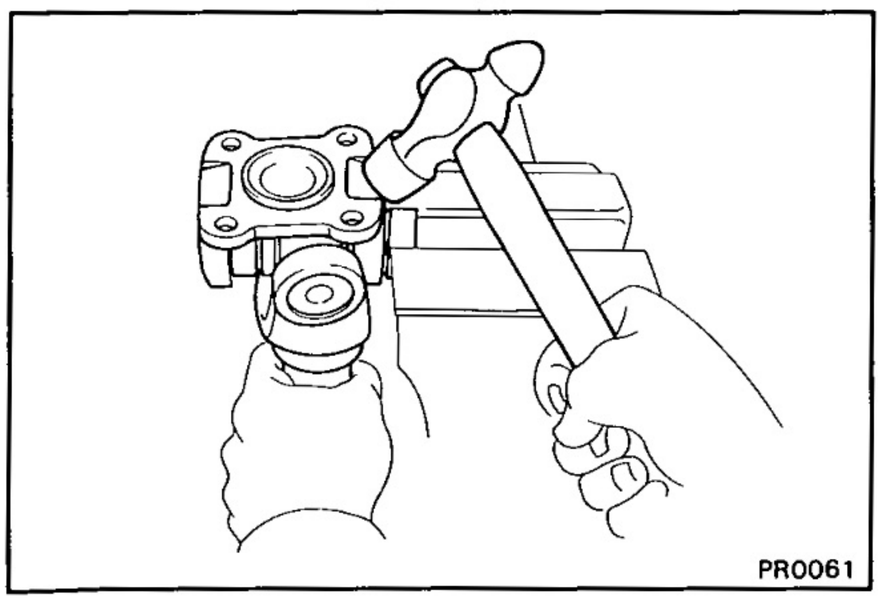

(e) Clamp the bearing outer race in a vise and tap off the flange with a hammer.

HINT: Remove the bearing on the opposite side in the same procedure.

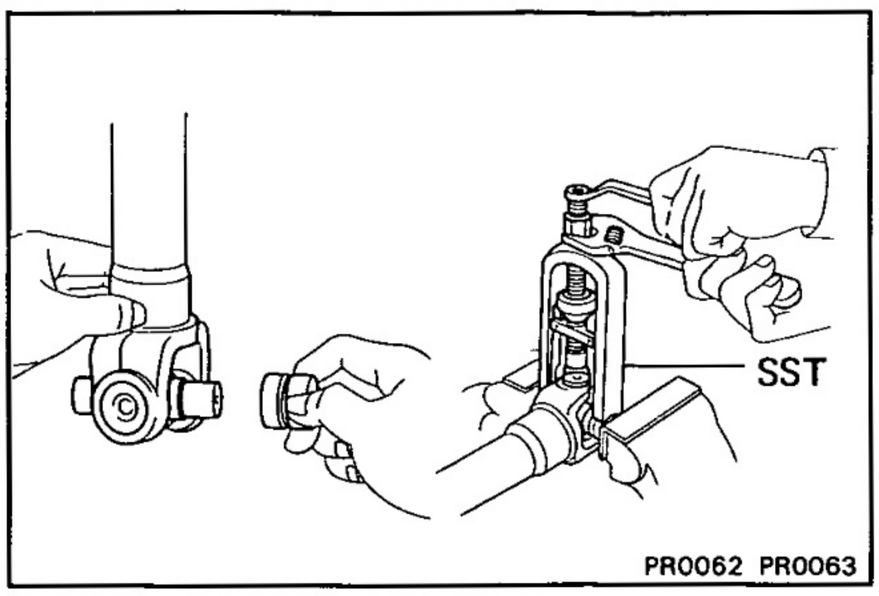

(f) Install the two removed bearing outer races to the spider.

(g) Using SST, push out the bearing from the yoke.

SST 09332-25010

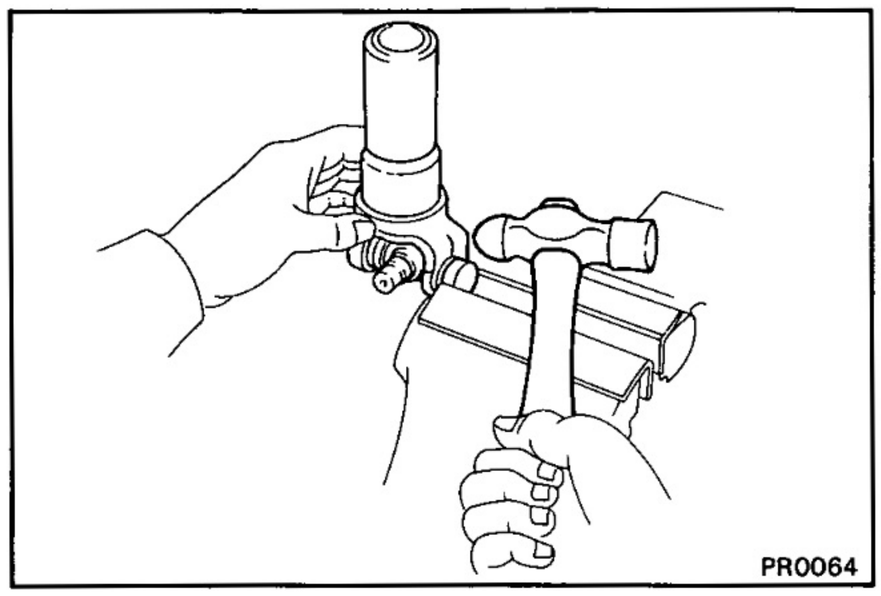

(h) Clamp the outer bearing race in a vise and tap off the yoke with a hammer.

HINT: Remove the bearing on the opposite side in the same procedure.

ASSEMBLY OF PROPELLER SHAFT

(See page PR-2)

HINT: When replacing the spider, be sure that the grease fitting assembly hole is facing in the direction shown in figure.

SPIDER GREASE FITTING ASSEMBLY DIRECTION
Front Propeller Shaft

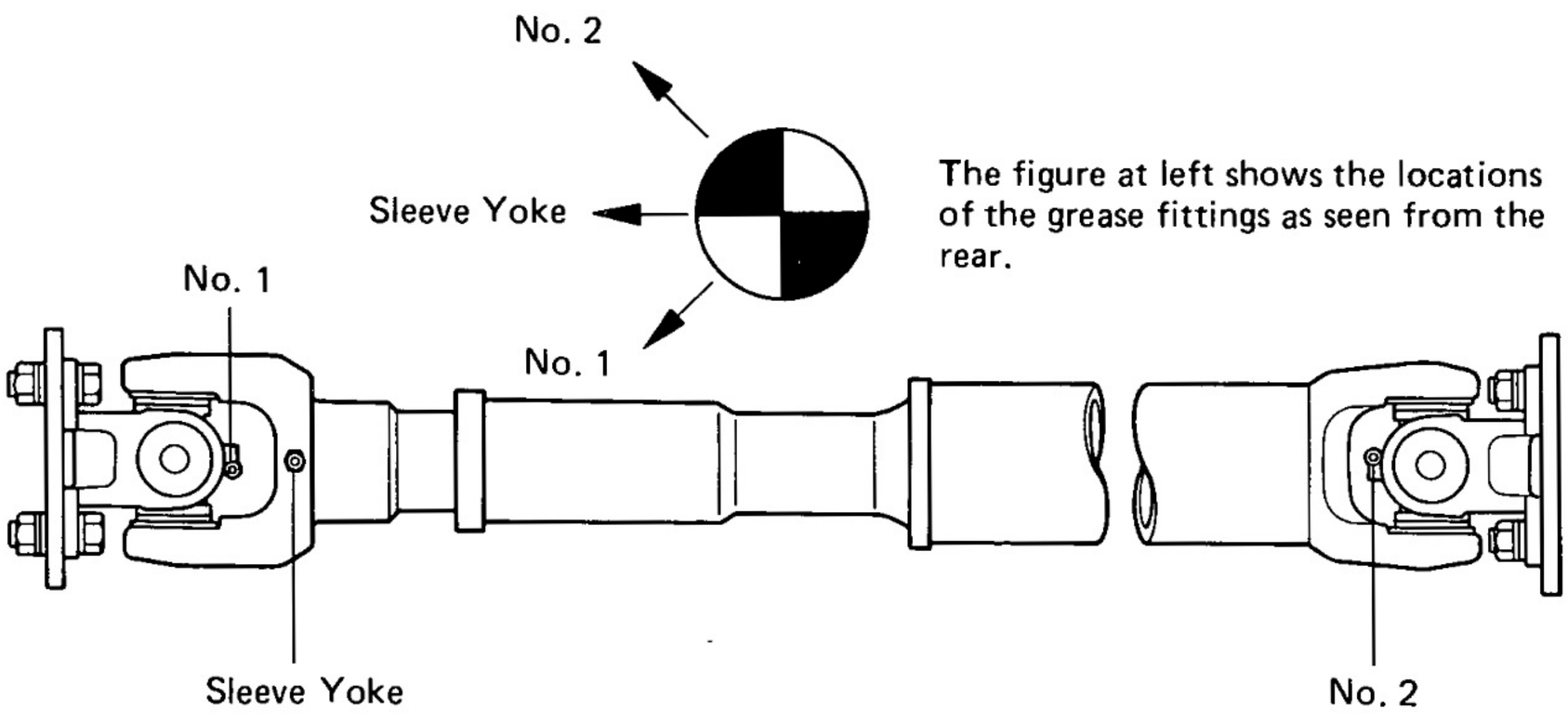

The figure at left shows the locations of the grease fittings as seen from the rear.

SPIDER GREASE FITTING ASSEMBLY DIRECTION
Rear Propeller Shaft

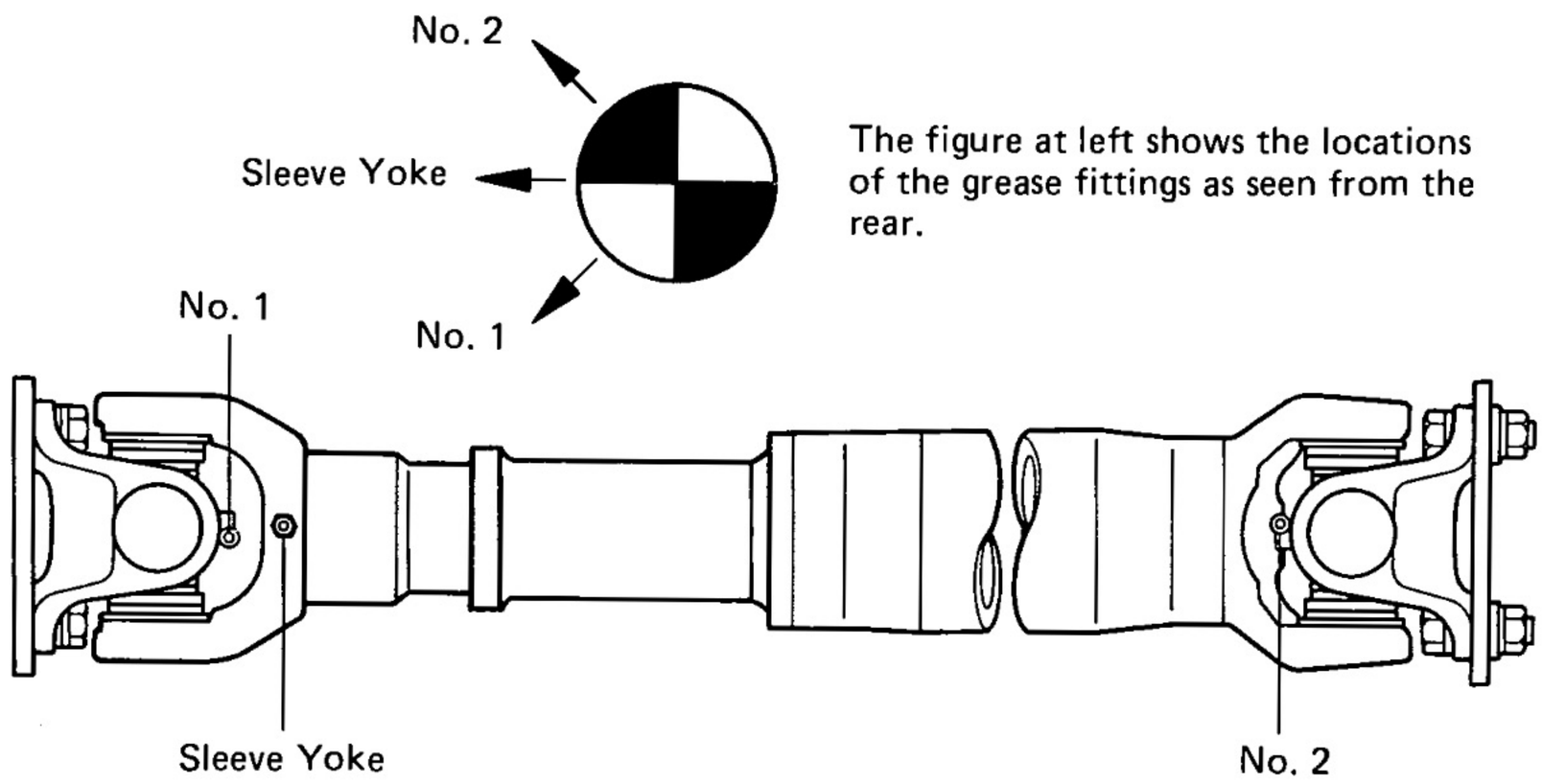

The figure at left shows the locations of the grease fittings as seen from the rear.

PR0285

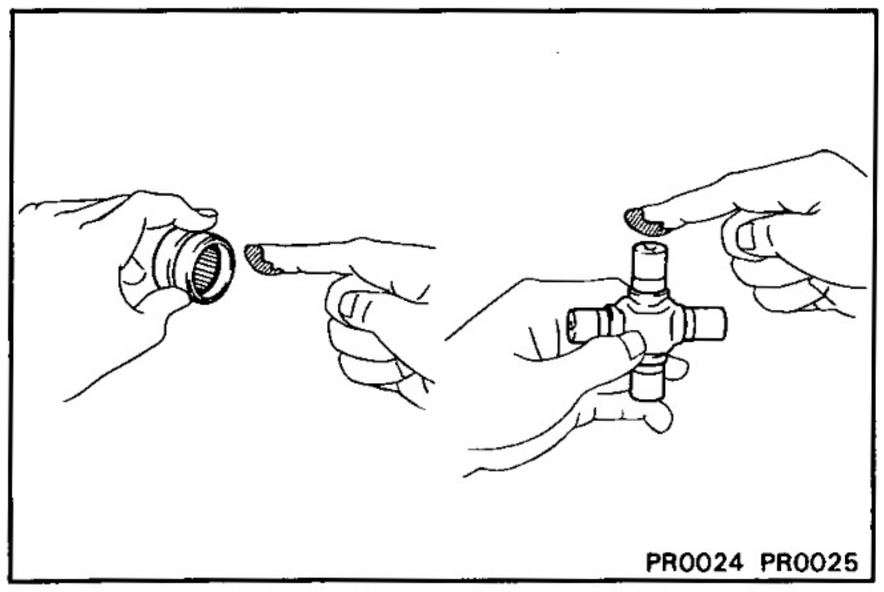

PR0024 PR0025

1. INSTALL SPIDER BEARINGS

(a) Apply MP grease to the spider and bearings.

HINT: Be careful not to apply too much grease.

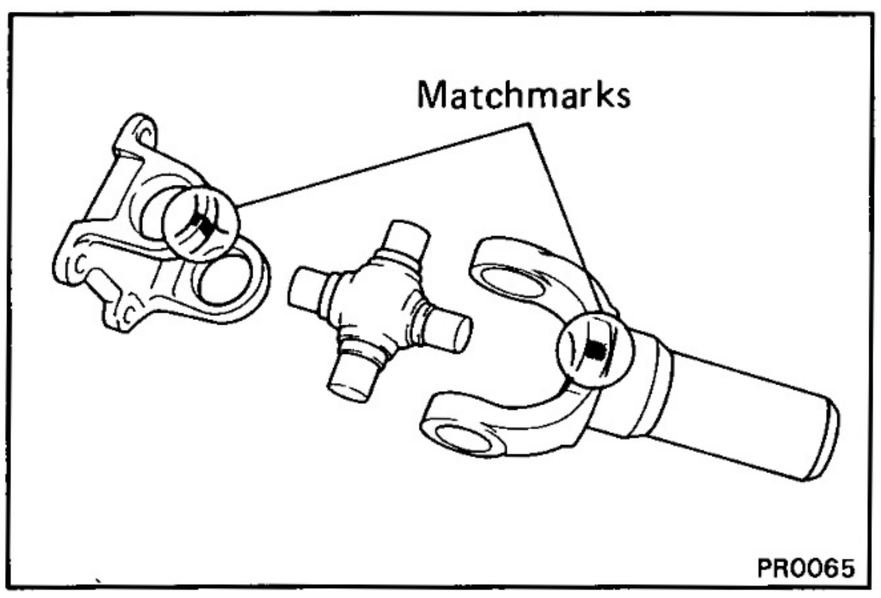

PR0065

(b) Align the matchmarks on the yoke and flange.

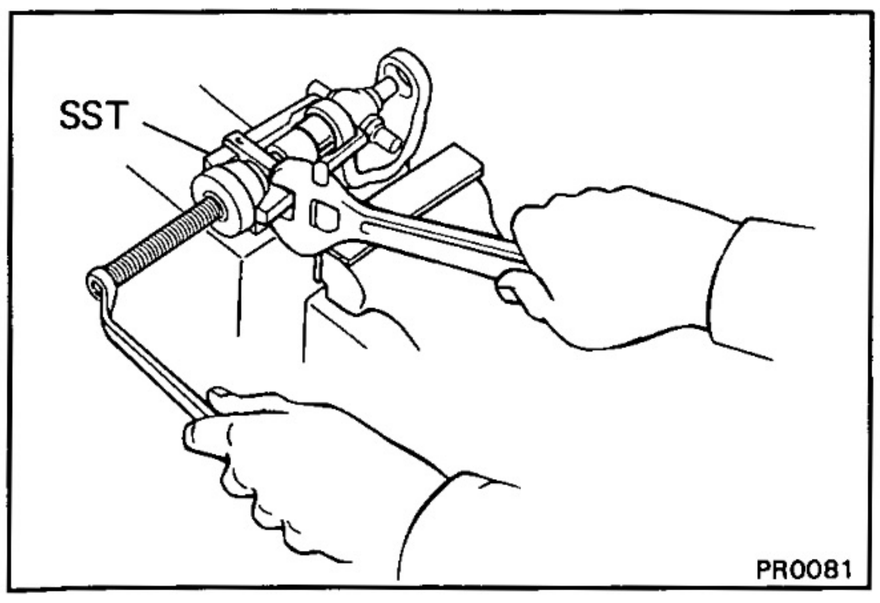

PR0081

(c) Fit the new spider into the yoke.

(d) Using SST, install the new bearing on the spider.

SST 09332-25010

• **Front Propeller Shaft**

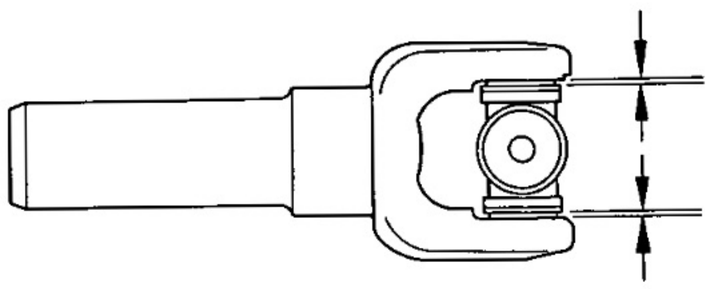

• **Rear Propeller Shaft**

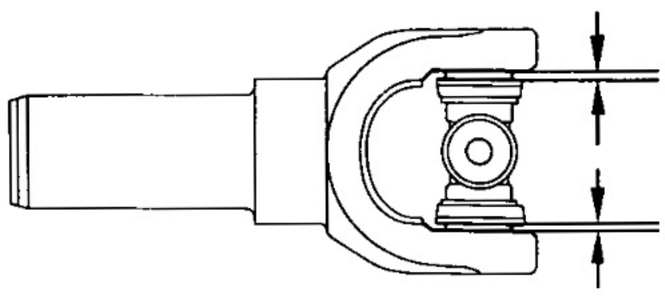

PR0286
PR0068

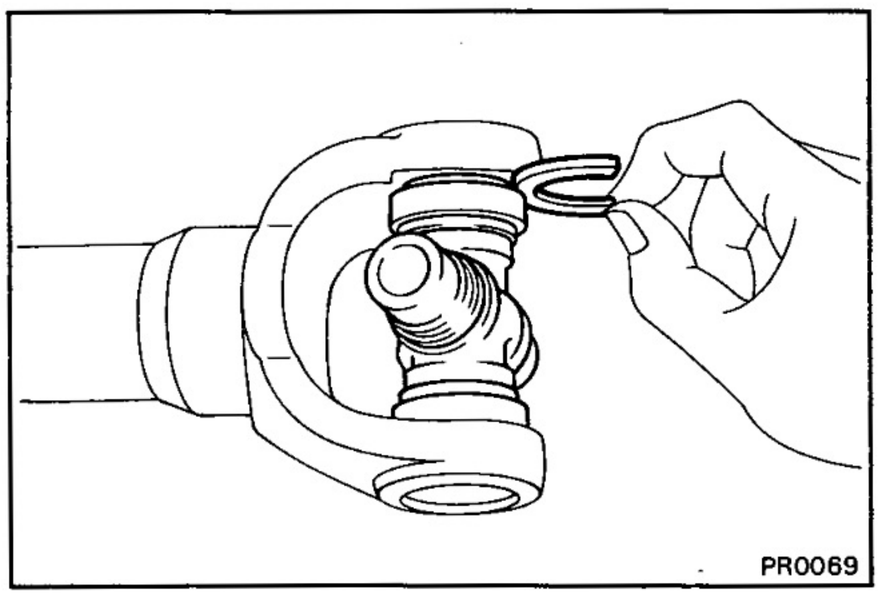

PR0069

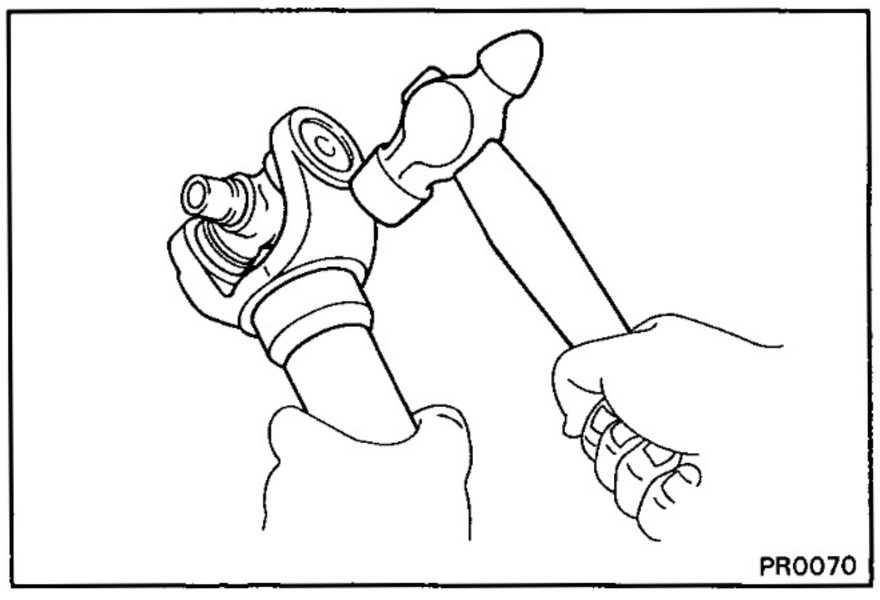

PR0070

(e) Using SST, adjust both bearings so that the snap ring grooves are at maximum and equal widths.

(f) Install two snap rings of equal thickness which will allow 0 — 0.05 mm (0 — 0.0020 in.) axial play.

HINT: Do not reuse the snap rings.

Thickness of snap ring

Front Propeller Shaft

Color	Mark	Thickness mm (in.)
—	1	2.100 — 2.150 (0.0827 — 0.0846)
—	2	2.150 — 2.200 (0.0846 — 0.0866)
—	3	2.200 — 2.250 (0.0866 — 0.0886)
Brown	—	2.250 — 2.300 (0.0886 — 0.0906)
Blue	—	2.300 — 2.350 (0.0906 — 0.0925)
—	6	2.350 — 2.400 (0.0925 — 0.0945)
—	7	2.400 — 2.450 (0.0945 — 0.0984)
—	8	2.450 — 2.500 (0.0965 — 0.0984)

Rear Propeller Shaft

Tickness mm (in.)	Color
2.00 (0.0787)	—
2.03 (0.0799)	Brown
2.06 (0.0811)	Blue
2.09 (0.0823)	—

(g) Using a hammer, tap the yoke until there is no clearance between the bearing outer race and snap ring.

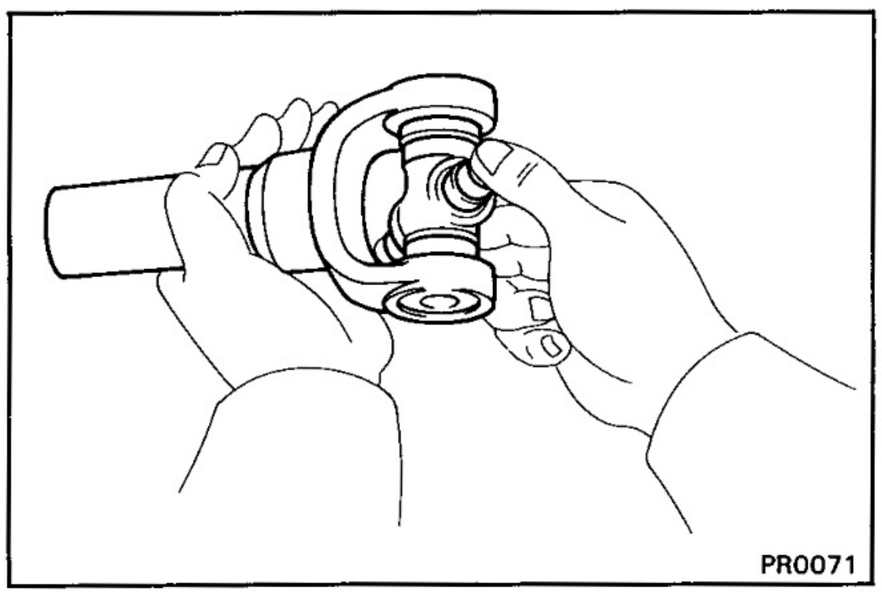
PR0071

(h) Check that the spider bearing moves smoothly.

(i) Check the spider bearing axial play.

Bearing axial play: Less than 0.05 mm (0.0020 in.)

HINT: Install new spider bearings on the flange side in the procedure described above.

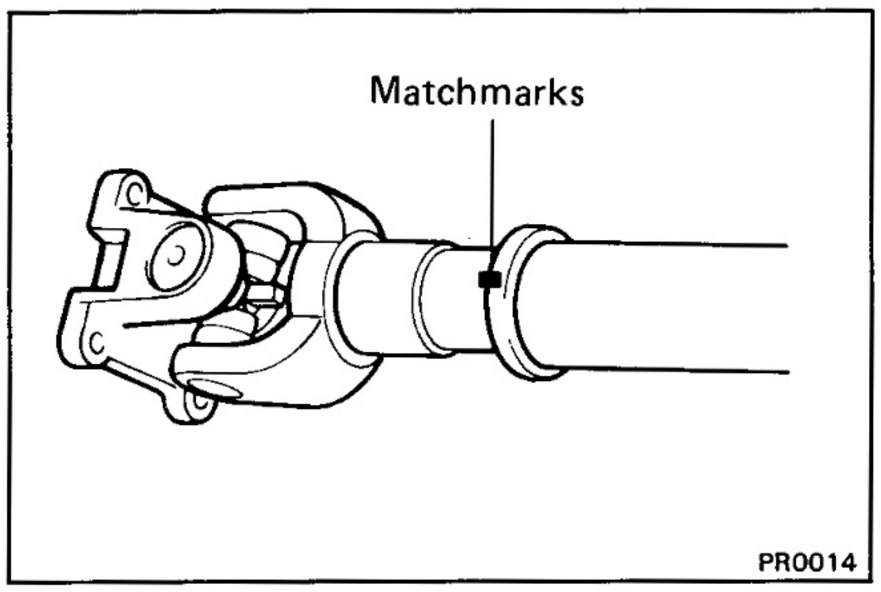

PR0014

2. INSERT SLEEVE YOKE INTO PROPELLER SHAFT

(a) Apply MP grease to the propeller shaft spline and sleeve yoke sliding surface.

(b) Align the matchmarks on the sleeve and propeller shaft.

(c) Install the propeller shaft into the sleeve yoke.

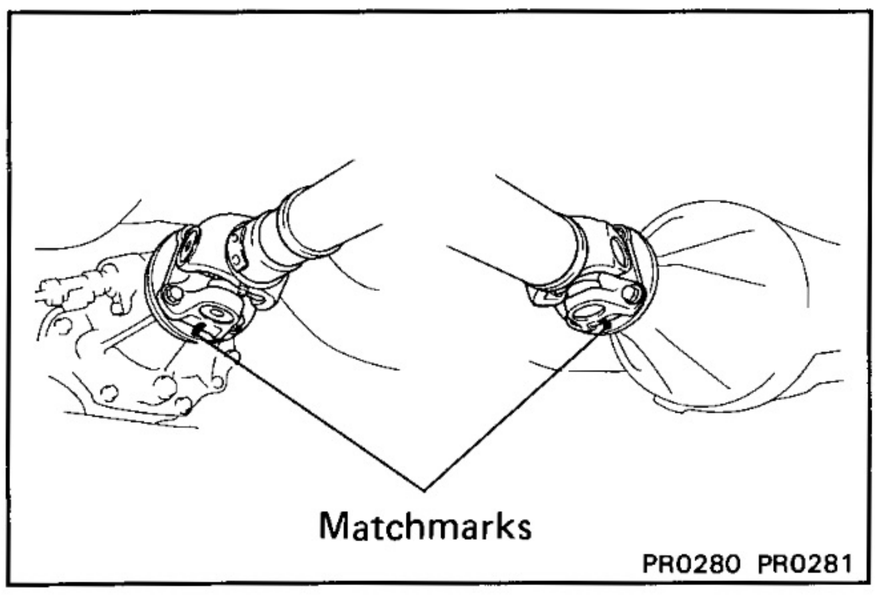

PR0280 PR0281

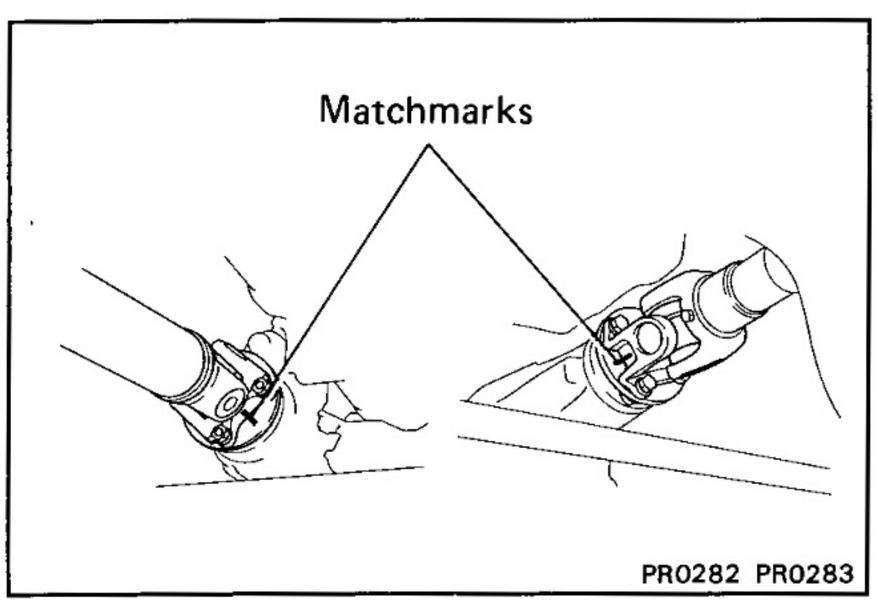

PR0282 PR0283

INSTALLATION OF FRONT AND REAR PROPELLER SHAFTS

1. CONNECT PROPELLER SHAFT FLANGE TO COMPANION FLANGE ON TRANSFER

(a) Align the matchmarks on the flanges and connect the flanges with four nuts.

(b) Torque the nuts.

Torque:
Front Propeller Shaft
750 kg-cm (54 ft-lb, 74 N·m)
Rear Propeller Shaft
900 kg-cm (65 ft-lb, 88 N·m)

HINT: When installing the washers, put them properly in place.

2. CONNECT PROPELLER SHAFT FLANGE ON DIFFERENTIAL

(a) Align the matchmarks on the flanges and connect the flanges with four bolts and nuts.

(b) Torque the bolts and nuts.

Torque:
Front Propeller Shaft
750 kg-cm (54 ft-lb, 74 N·m)
Rear Propeller Shaft
900 kg-cm (65 ft-lb, 88 N·m)

HINT: When installing the washers, put them properly in place.

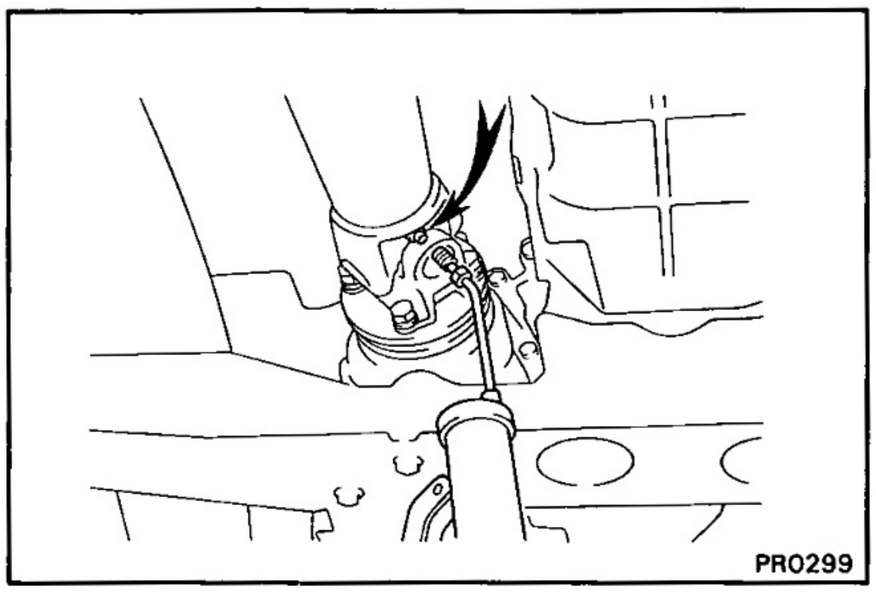

3. APPLY MP GREASE TO GREASE FITTING

With a grease gun, pump the MP grease into each fitting until it begins to flow around the oil seal.

SUSPENSION AND AXLE

TROUBLESHOOTING SA-2
WHEEL ALIGNMENT SA-3
FREE WHEELING HUB SA-6
FRONT AXLE HUB SA-15
STEERING KNUCKLE AND AXLE SHAFT SA-23
FRONT DIFFERENTIAL
- On-Vehicle Replacement of Rear Oil Seal SA-33
- Removal and Installation of Front Differential SA-38
- Differential Carrier SA-41
- Differential Case (2 Pinion Type) SA-62
- Differential Case (4 Pinion Type) SA-64

FRONT SUSPENSION
- Coil Spring and Shock Absorber SA-67
- Stabilizer Bar SA-70
- Lateral Control Rod SA-73
- Leading Arm SA-75

REAR AXLE SHAFT
(Semi-Floating Type) SA-78
REAR AXLE SHAFT AND AXLE HUB
(Full-Floating Type) SA-84
REAR DIFFERENTIAL
- On-Vehicle Replacement of Front Oil Seal SA-93
- Removal and Installation of Rear Differential SA-97
- Differential Carrier SA-101
- Differential Case (2 Pinion Type) SA-124
- Differential Case (4 Pinion Type) SA-126
- Differential Case (Limited Slip Differential) SA-129

DIFFERENTIAL LOCKING SYSTEM
- Description SA-133
- Parts Location and System Diagram SA-134
- Wiring and Connector Diagrams SA-134
- Troubleshooting SA-135
- System Inspection SA-135
- Differential Locking System Circuit SA-137
- Differential Lock Actuator SA-139
- Differential Lock Control Switch SA-144
- Indicator Switch SA-144
- Combination Meter SA-144

REAR SUSPENSION
- Coil Spring and Shock Absorber SA-145
- Lateral Control Rod SA-151
- Upper and Lower Control Arms SA-153
- Stabilizer Bar SA-156

TROUBLESHOOTING

Problem	Possible cause	Remedy	Page	
			Front	Rear
Wanders/pulls	Tire worn or improperly inflated	Replace tire or inflate tires to proper pressure	A-14	A-14
	Alignment incorrect	Check front wheel alignment	SA-3	—
	Front or rear suspension parts loose or broken	Tighten or replace suspension parts	SA-67	SA-145
	Steering linkage loosen or worn	Tighten or replace steering linkage	SR-71	—
	Steering gear out of adjustment or broken	Adjust or repair steering gear	SR-19, 54	—
Bottoming	Vehicle overloaded	Check loading		
	Shock absorber worn out	Replace shock absorber	SA-67	SA-145
	Spring weak	Replace spring	SA-67	SA-145
Stay/pitches	Tires improperly inflated	Inflated tires to proper pressure	A-14	A-14
	Stabilizer bar bent or broken	Inspect stabilizer bar	SA-67	SA-145
	Shock absorber worn out	Replace shock absorber	SA-67	SA-145
Front wheel shimmy	Tires worn or improperly inflated	Replace tire or inflate tires to proper pressure		—
	Wheels out of balance	Balance wheels		
	Shock absorber worn out	Replace shock absorber	SA-67	—
	Wheel alignment incorrect	Check front wheel alignment	SA-3	—
	Hub bearings worn	Replace hub bearings	SA-15	—
	Steering gear out of adjustment or broken	Adjust or repair steering gear	SR-19, 54	—
Abnormal tire wear	Tires improperly inflated	Inflated tire to proper pressure	A-14	A-14
	Shock absorbers worn out	Replace shock absorber	SA-67	SA-145
	Wheel alignment incorrect	Check wheel alignment	SA-3	—
	Suspension parts worn	Replace suspension parts	SA-67	SA-145
Oil leak from axle	Oil seals worn or damaged	Replace oil seal	SA-23	SA-78, 84
	Bearing retainer loose	Replace retainer	—	SA-78, 84
	Axle housing cracked	Repair as necessary		
Oil leak from pinion shaft	Oil level too high or wrong grade	Drain and replace oil	SA-37	SA-96
	Oil seal worn or damaged	Replace oil seal	SA-33	SA-93
	Companion flange loose or damaged	Tighten or replace bearings	SA-37	SA-96
Noise in axle	Oil level low or wrong grade	Drain and replace oil	SA-37	SA-96
	Excessive backlash between pinion and ring or side gear	Check backlash	SA-41	SA-101
	Ring, pinion or side gears worn or chipped	Inspect gears	SA-41	SA-101
	Pinion shaft bearing worn	Replace bearing	SA-41	SA-101
	Axle shaft bearing worn	Replace bearing	SA-23	SA-78, 84
	Differential bearing loose worn	Tighten or replace bearings	SA-41	SA-101

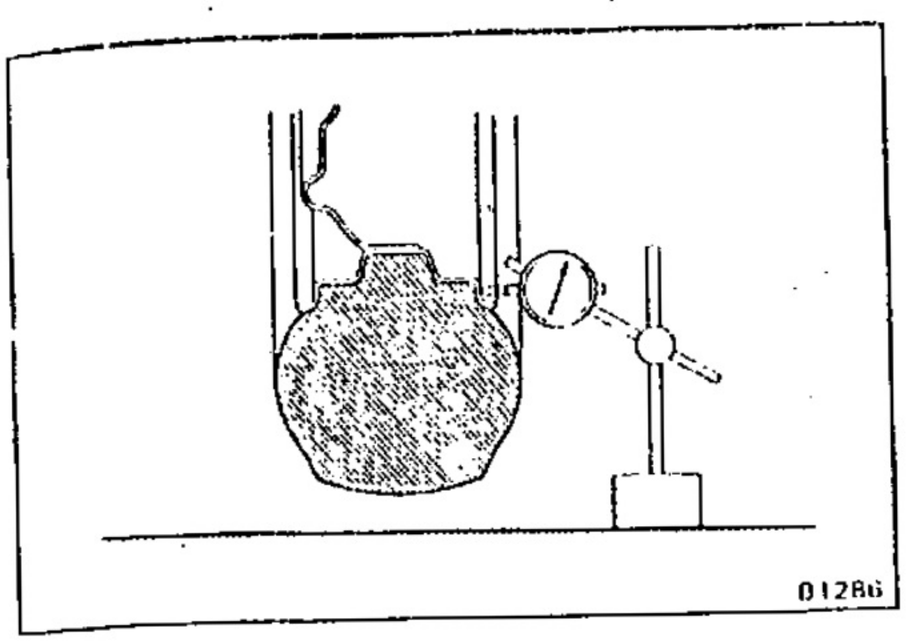

WHEEL ALIGNMENT

1. MAKE FOLLOW CHECKS AND CORRECT ANY PROBLEMS

(a) Check the tires for wear and proper inflation.

Cold tire inflation pressure: See page A-14

(b) Check the wheel runout.

Lateral runout: 1.2 mm (0.047 in.) or less

(c) Check the front wheel bearings for looseness.

(d) Check the front suspension for looseness.

(e) Check the steering linkage for looseness.

(f) Check that the front absorbers work properly by using the standard bounce test.

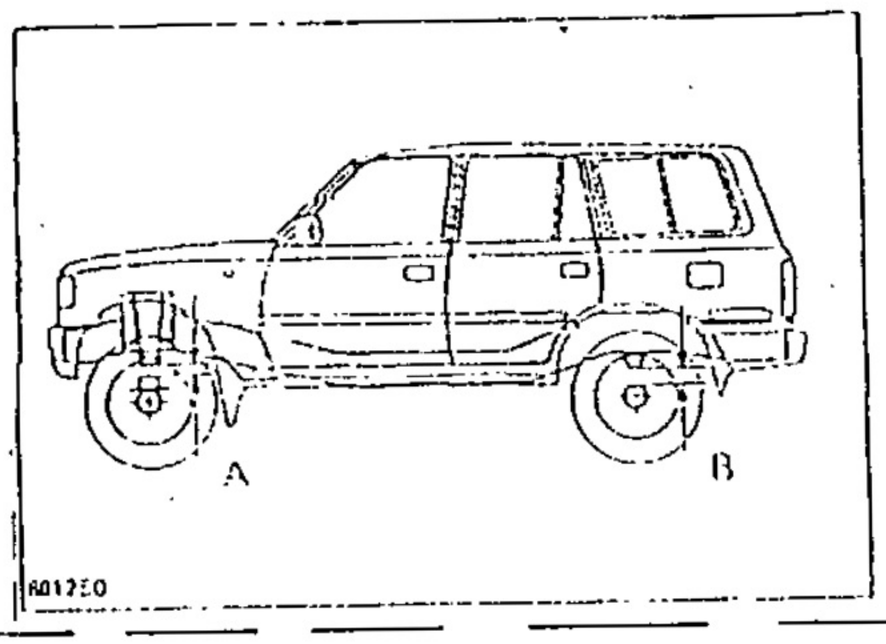

2. MEASURE HOLLOW SPRING CLEARANCE AND BUMPER STOPPER CLEARANCE

A (Hollow spring clearance): 25 mm (0.98 in.)
B (Bumper stopper clearance): 45 mm (1.77 in.)

If the clearance of the vehicle is not standard, try to level the vehicle by rocking it down. If still not correct, check for bad springs or suspension parts.

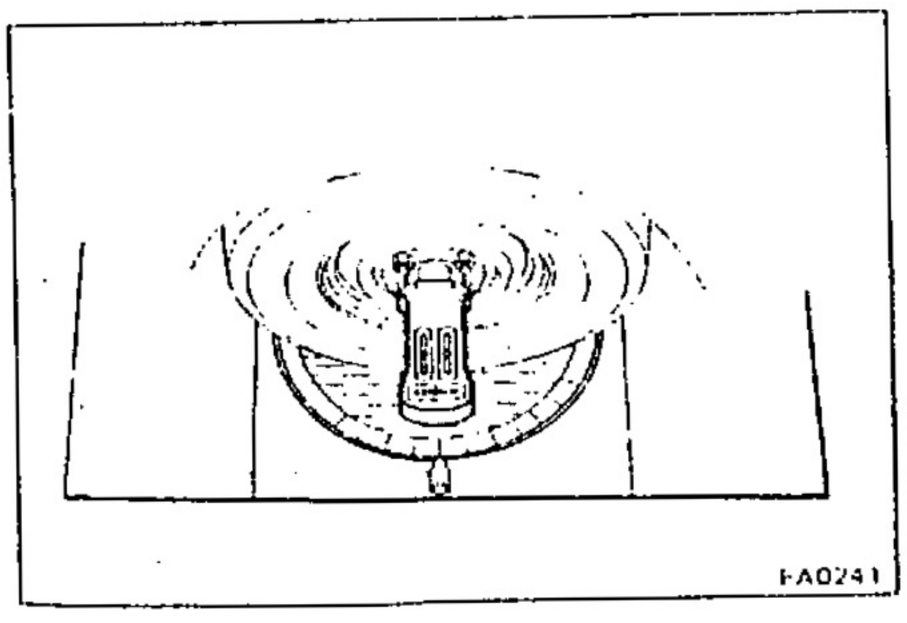

3. INSTALL WHEEL ALIGNMENT EQUIPMENT

Follow the specific instructions of the equipment manufacturer.

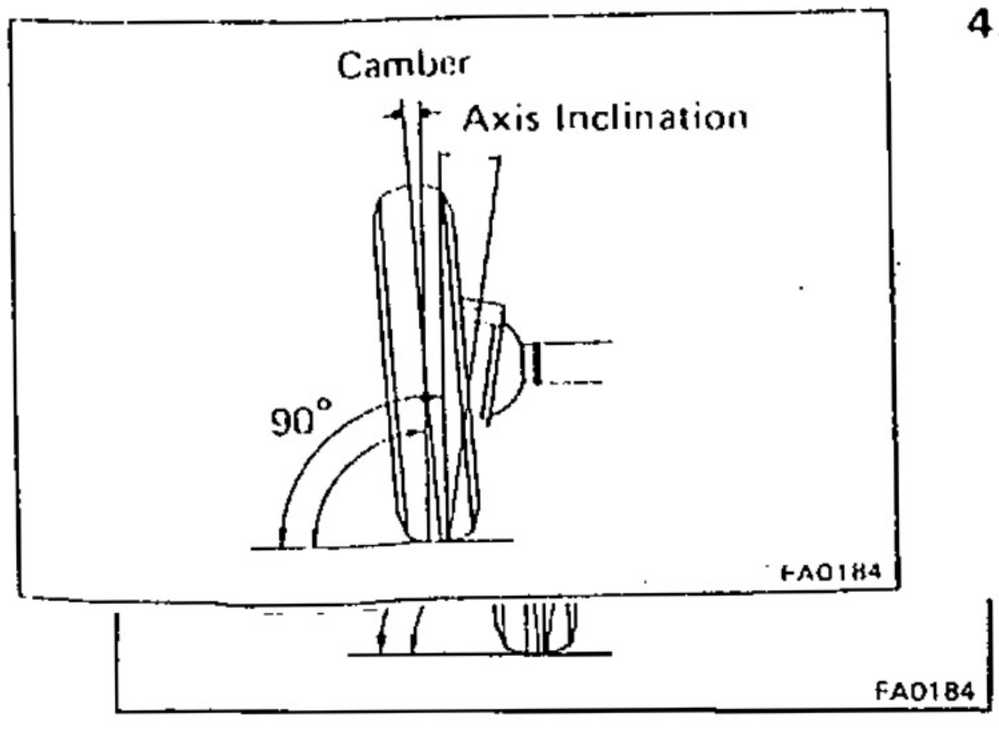

4. CHECK CAMBER AND STEERING AXIS INCLINATION

Camber: 1° ± 45'

Steering axis inclination: 13° ± 45'

If the steering axis inclination is not as specified after camber have been correct'y adjusted, recheck the steering knuckle and front wheel for bending or looseness.

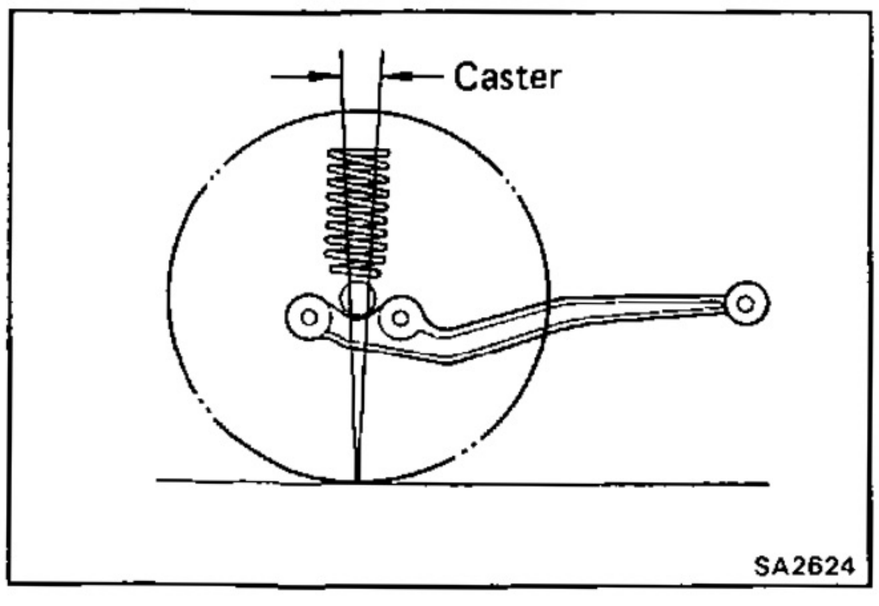

5. CHECK CASTER

Tire size	Caster
31 × 10.50R15 — 6PRLT 265/75R15 9.00 — 15 — 6PRLT	1°40' ± 60'
Other	3°00' ± 60'

If caster is not as specified, inspect and replace damaged or worn parts.

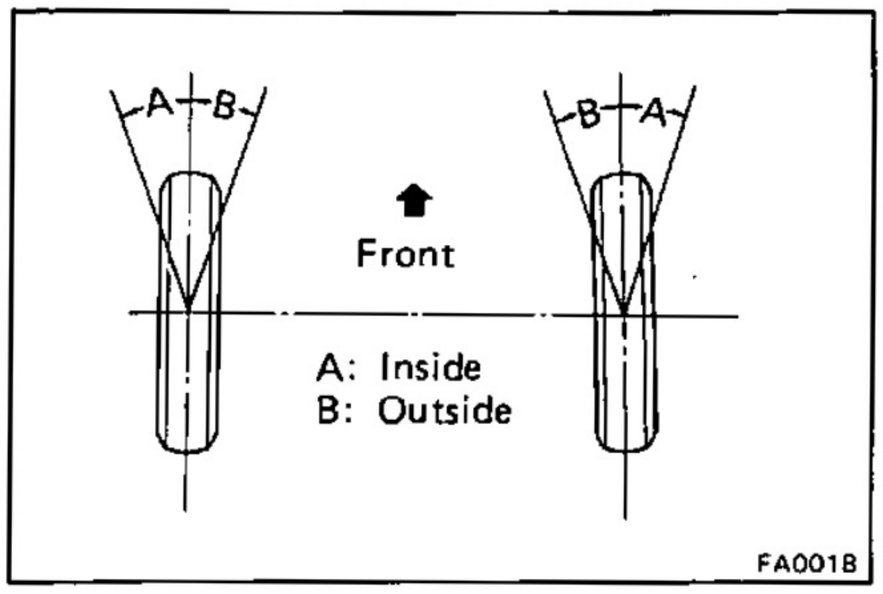

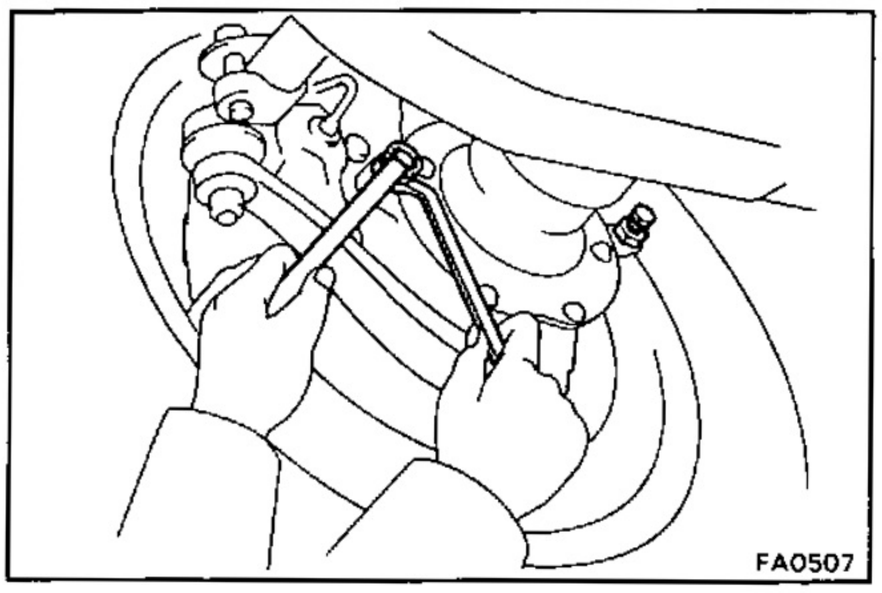

6. ADJUST WHEEL ANGLE

Remove the caps of the knuckle stopper bolts and check the steering angles.

Wheel Angle			
Steering Type		PS	MS
Max.	Inside Wheel	35° +0° −3°	32° +0° −3°
	Outside Wheel	31°	29°

HINT: When the steering wheel is fully turned, make sure that the wheel is not touching the body or brake flexible hose.

If maximum steering angles differ from standard value, adjust the wheel angle with the knuckle stopper bolts.

Torque: 450 kg-cm (33 ft-lb, 44 N·m)

If the wheel angle still cannot be adjusted within limits, inspect and replace damaged or worn steering parts.

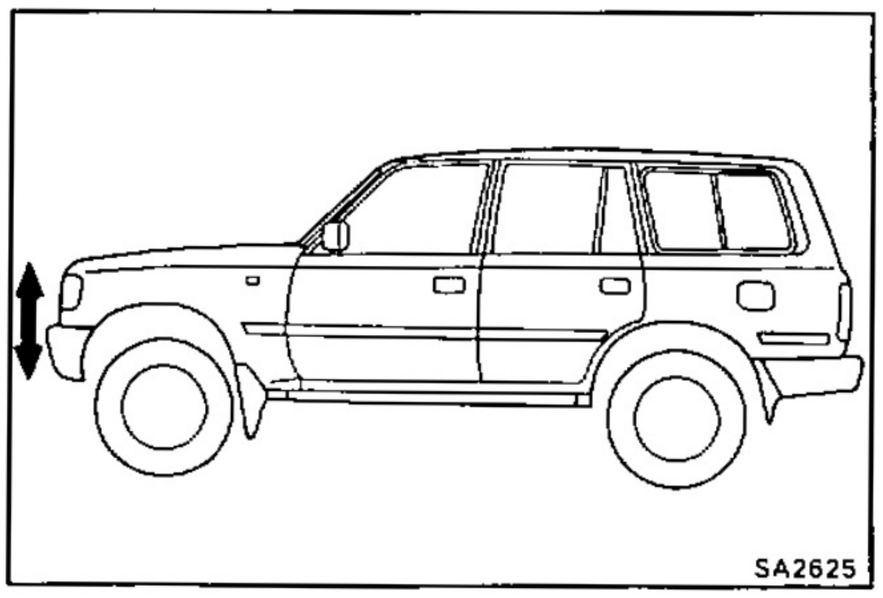

7. ADJUST TOE-IN

Adjust toe-in with a toe-in gauge in the following procedure.

(a) Rock the vehicle up and down to stabilize the suspension.

(b) Move the vehicle forward about 5 m (16.4 ft) with the front wheel in the straight-ahead position on the level place.

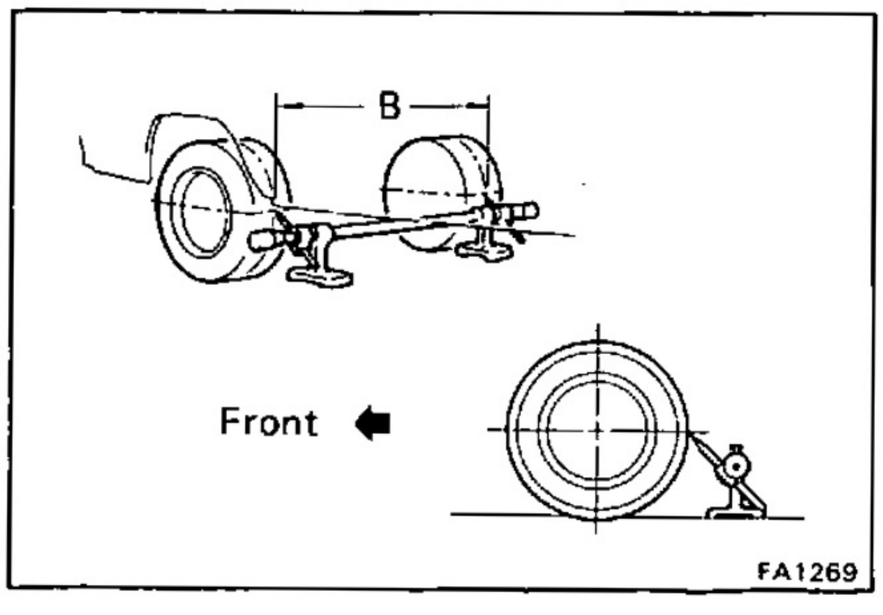

(c) Mark the center of each rear tread and measure the distance "B" between the marks of the right and left tires.

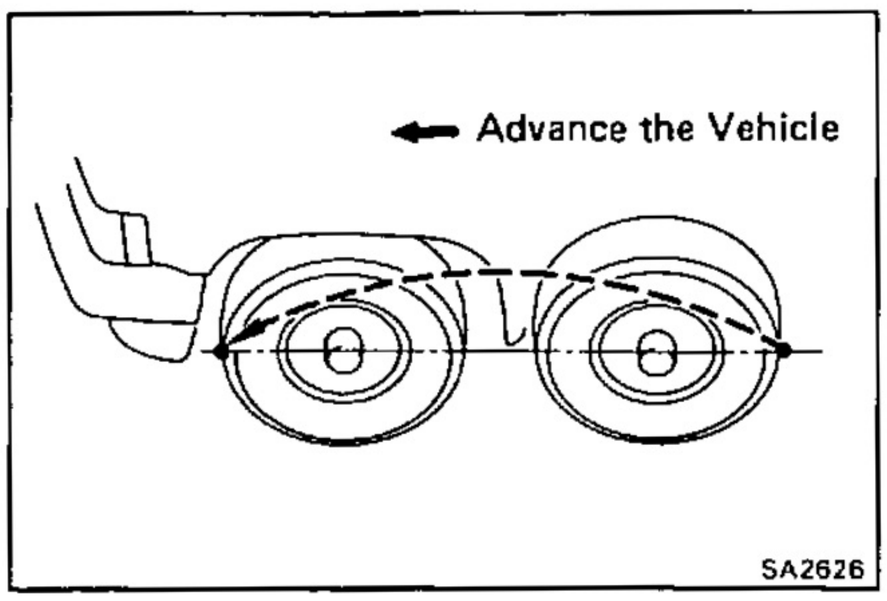

(d) Advance the vehicle until the marks on the rear sides of the tires come to the measuring heights of the gauge on the front side.

HINT: If the tire rolls too far, repeat from step (b).

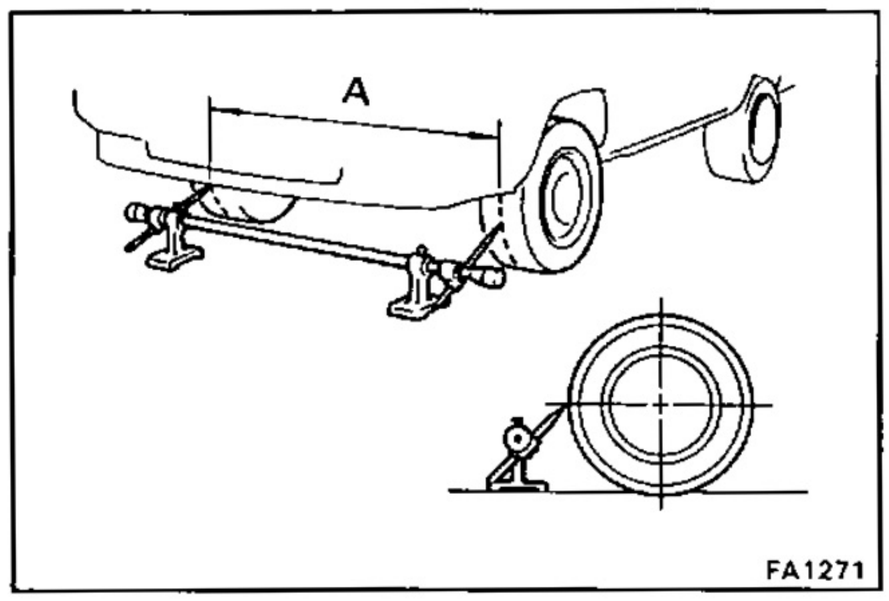

(e) Measure the distance "A" between the marks on the front of the tires.

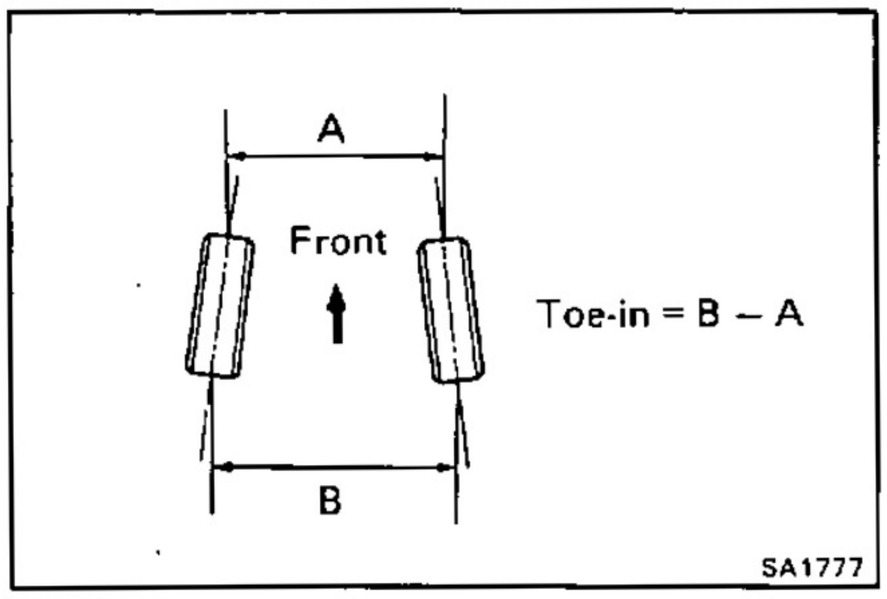

(f) Measure the toe-in.

Toe-in = B — A

Inspection standard: See page A-14

If toe-in is not specification, adjust by left and right tie rods.

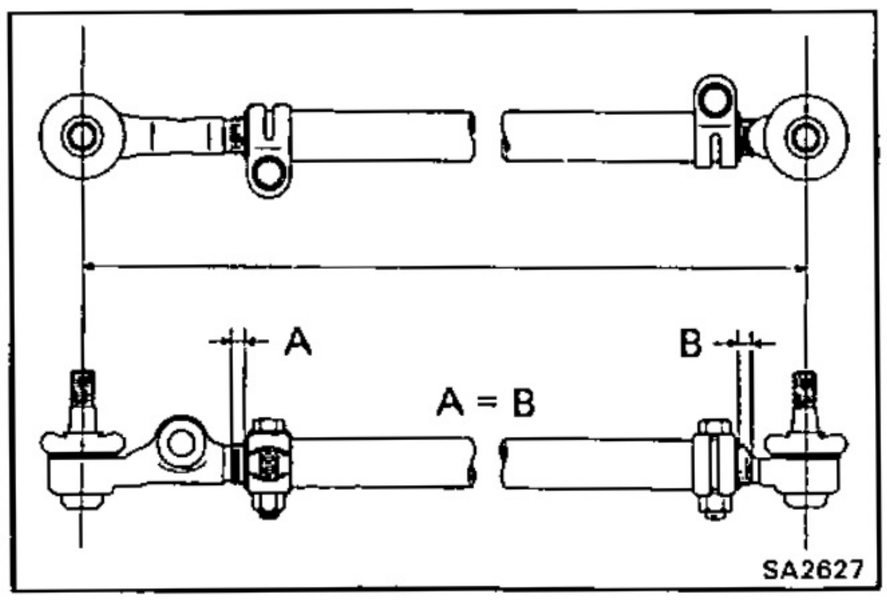

(g) Loosen the clamp bolts and nuts.

(h) Adjust toe-in by turning the left and right tie rod tubes an equal amount.

Adjustment standard: See page A-14

(i) Torque the tie rod, clamp bolts.

Torque: 375 kg-cm (27 ft-lb, 37 N·m)

HINT: Insure that the lenghts of the tie rod ends are the same.

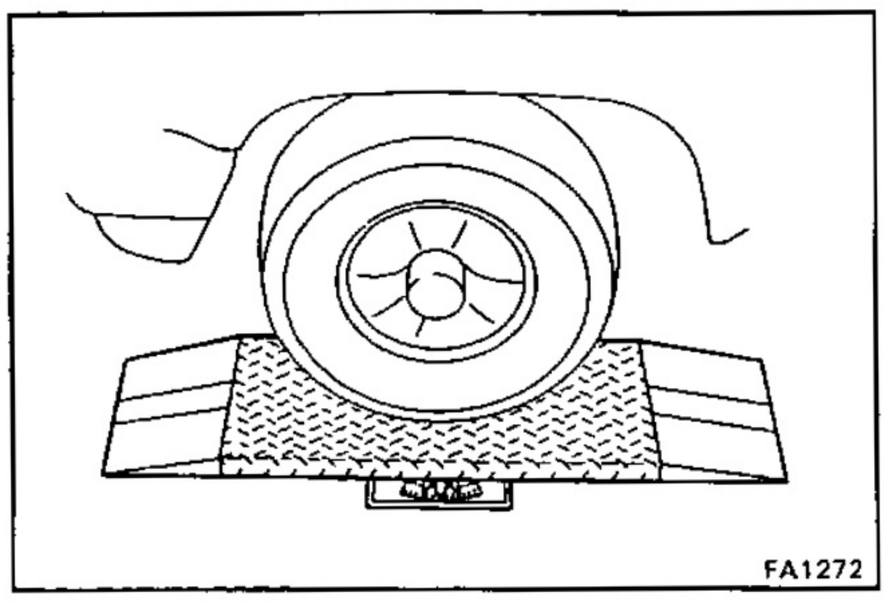

7. INSPECT SIDE SLIP (REFERENCE ONLY)

Side slip: 3.0 mm/m (0.118 in./3.3 ft) or less

FREE WHEELING HUB

COMPONENTS

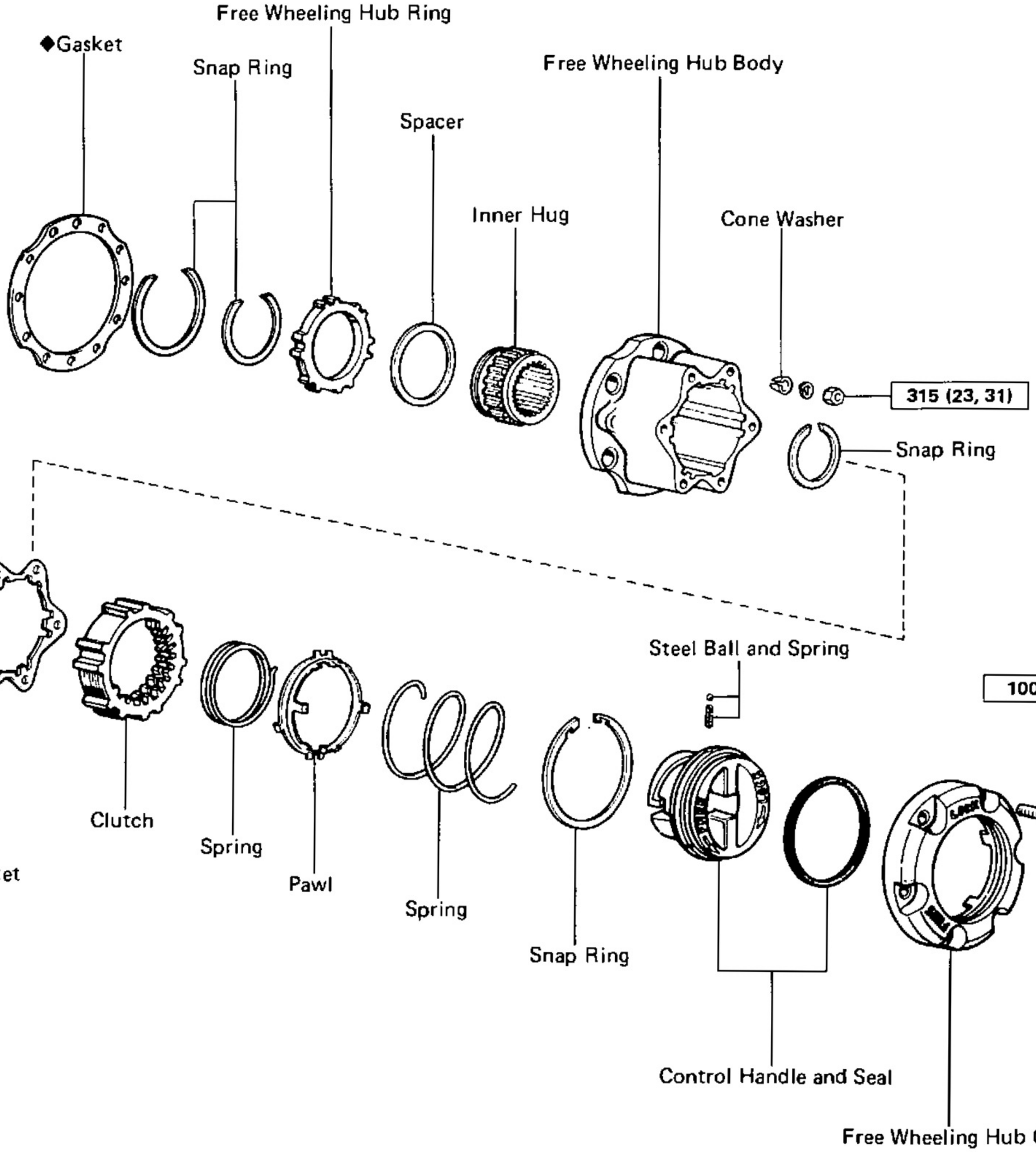

kg-cm (ft-lb, N·m) : Specified torque

◆ Non-reusable part

SA2906

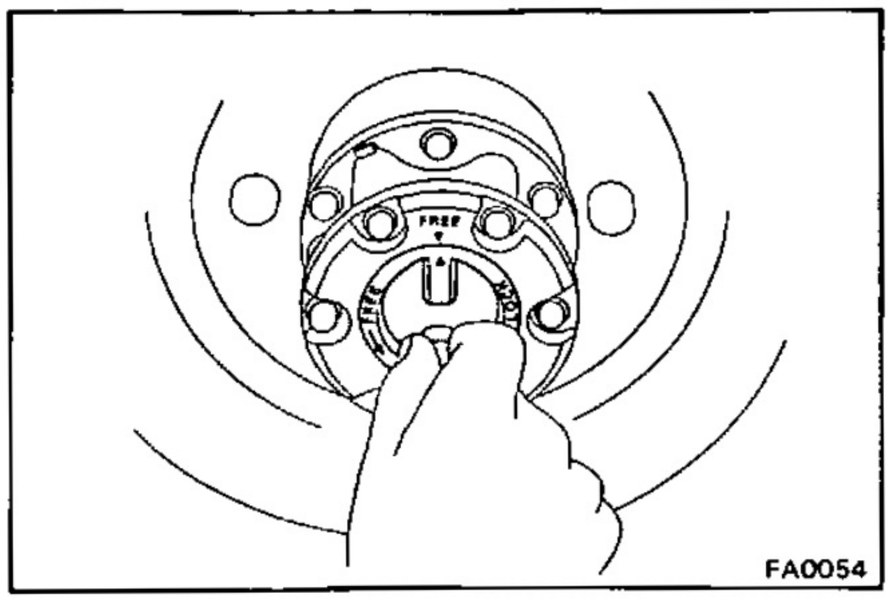

REMOVAL OF FREE WHEELING HUB

(See page SA-6)

1. REMOVE FREE WHEELING HUB COVER

(a) Set the control handle to FREE.

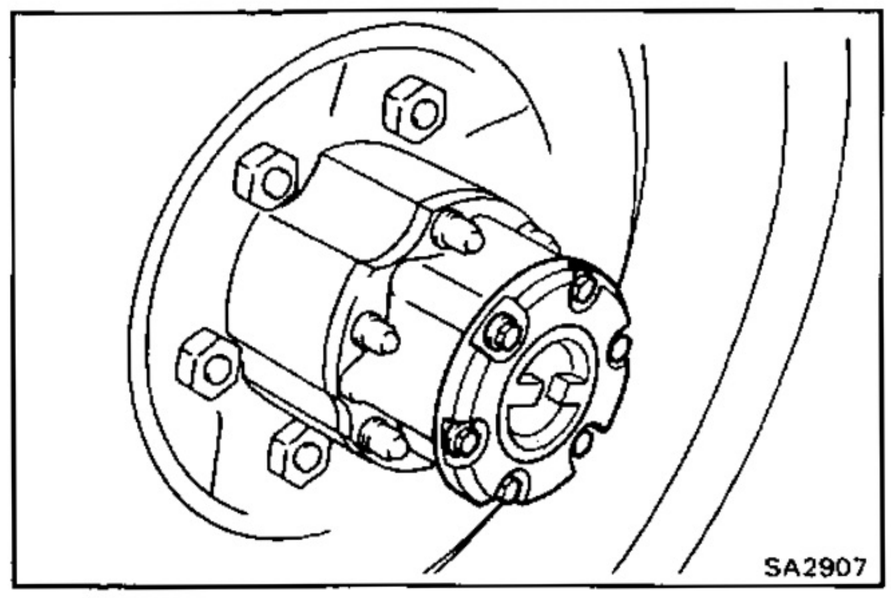

(b) Remove the six cover mounting bolts and pull off the cover.

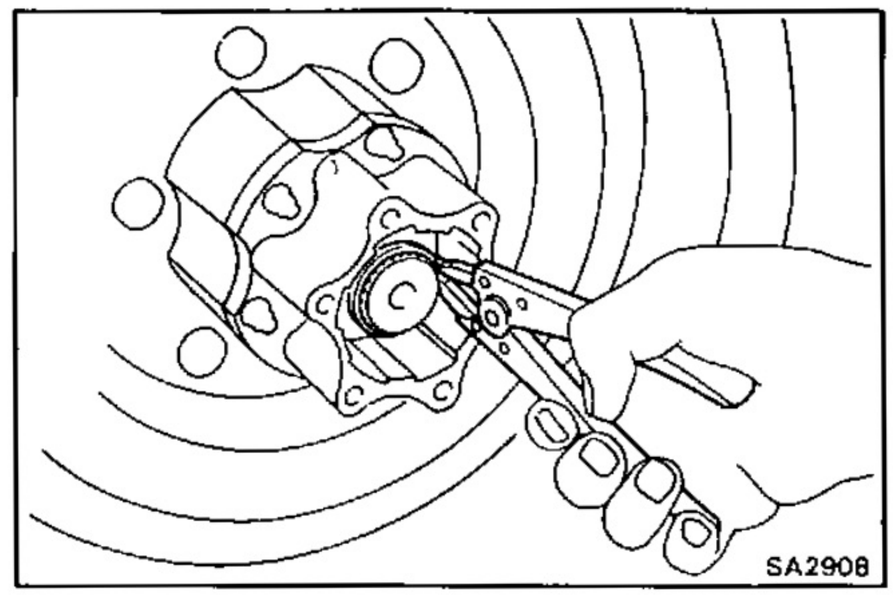

2. REMOVE SNAP RING

Using snap ring pliers, remove the snap ring.

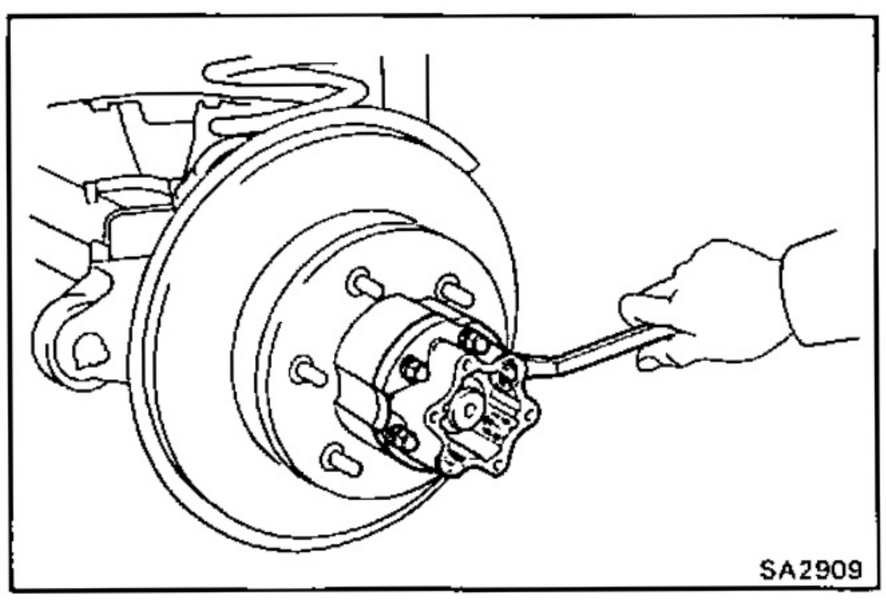

3. REMOVE FREE WHEELING HUB BODY

(a) Remove the six mounting nuts and washers.

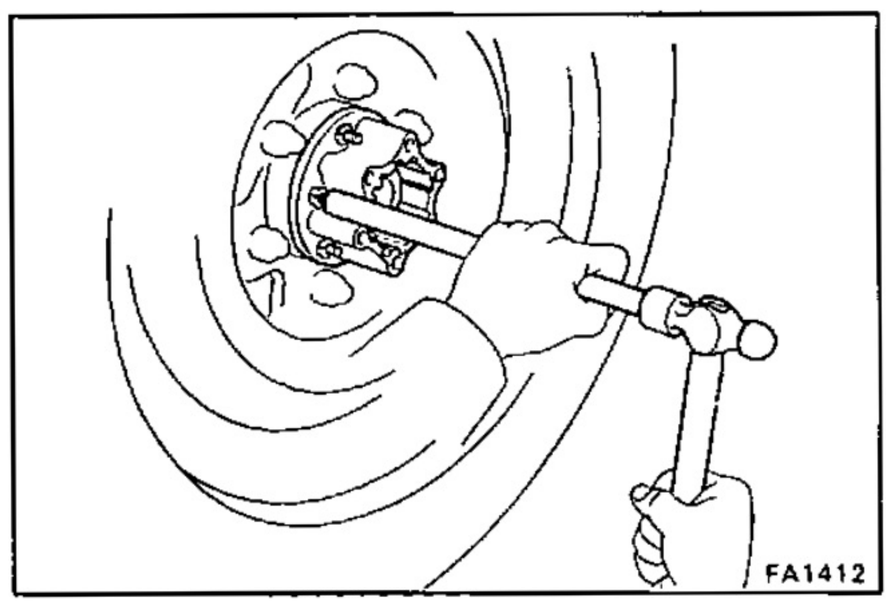

(b) Using a brass bar and hammer, tap on the bolts head and remove the six cone washers.

(c) Pull off the free wheeling hub body.

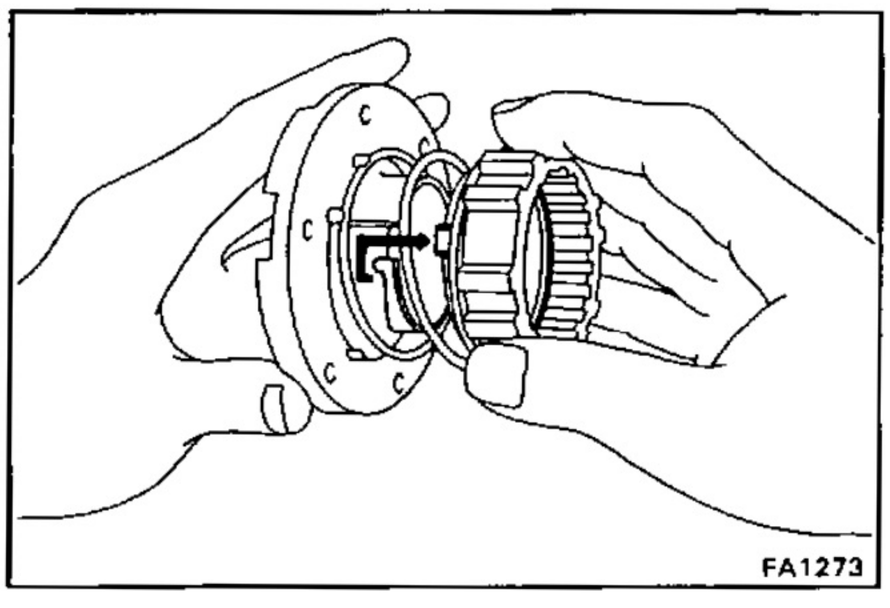

DISASSEMBLY OF FREE WHEELING HUB

(See page SA-6)

1. REMOVE CONTROL HANDLE FROM FREE WHEELING HUB COVER

(a) Compressing the spring, remove the pawl tab from the handle cam, and remove the clutch.

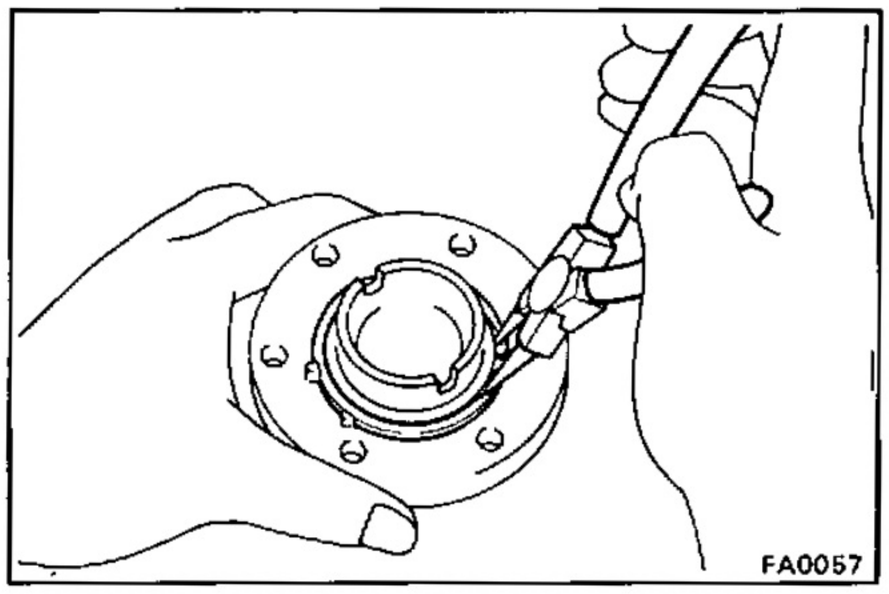

(b) Using snap ring pliers, remove the snap ring from the free wheeling hub cover.

(c) Remove the control handle from the free wheeling hub cover.

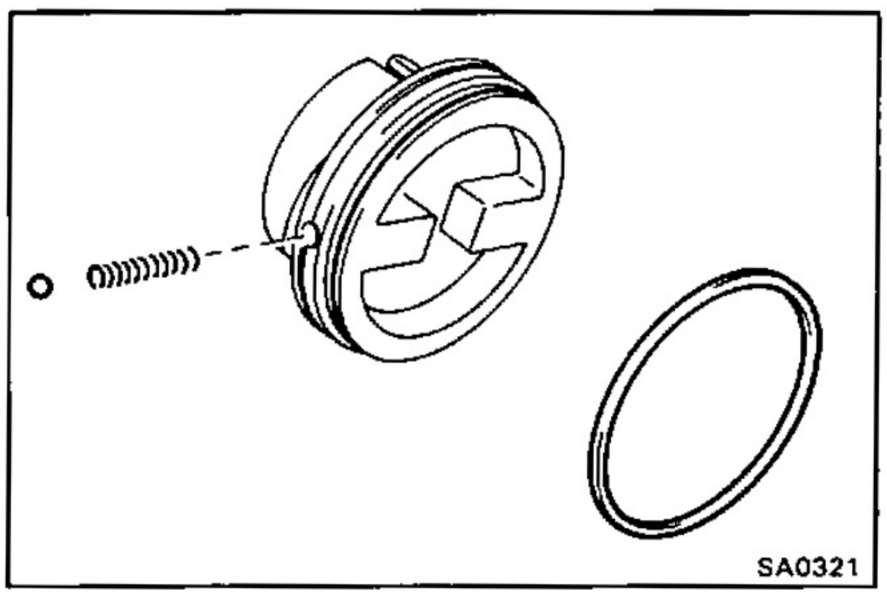

(d) Remove the steel ball and spring from the control handle.

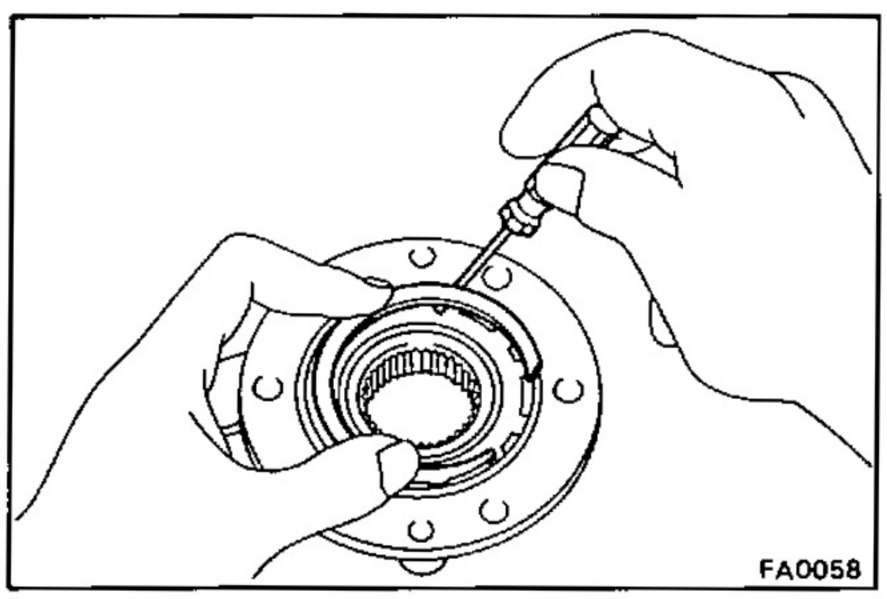

2. REMOVE INNER HUB AND FREE WHEELING HUB RING FROM FREE WHEELING HUB BODY

(a) Using a screwdriver, remove the snap ring from the free wheeling hub body.

(b) Remove the inner hub and free wheeling hub ring.

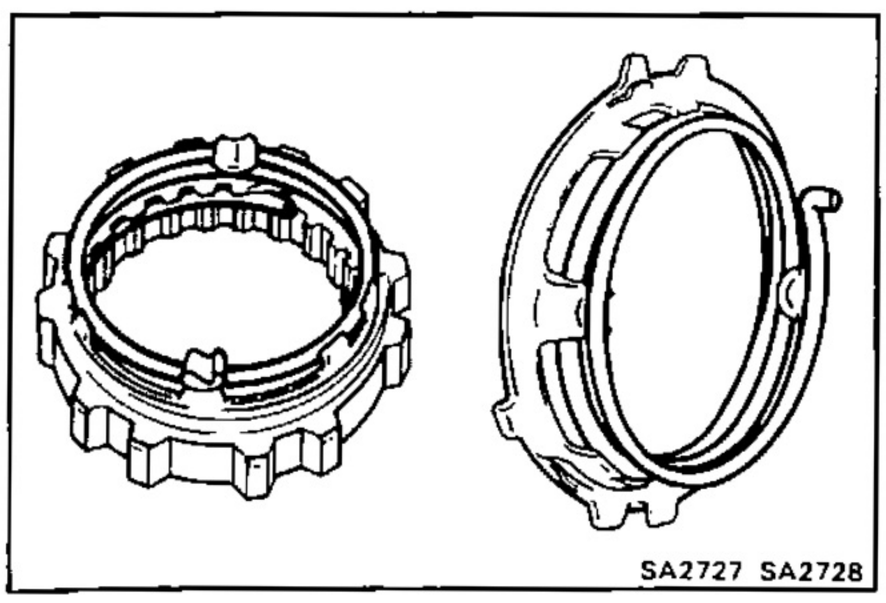

3. REMOVE PAWL FROM FREE WHEELING HUB CLUTCH

(a) Remove the pawl with the spring from the clutch.

(b) Remove the spring from the pawl.

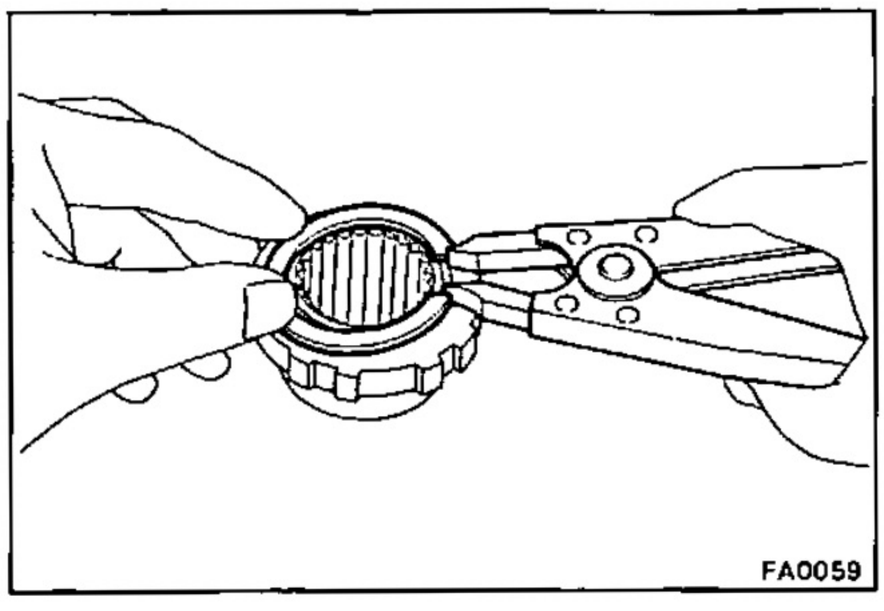
FA0059

4. REMOVE FREE WHEELING HUB RING FROM INNER HUB

(a) Using snap ring pliers, remove the snap ring from the inner hub.

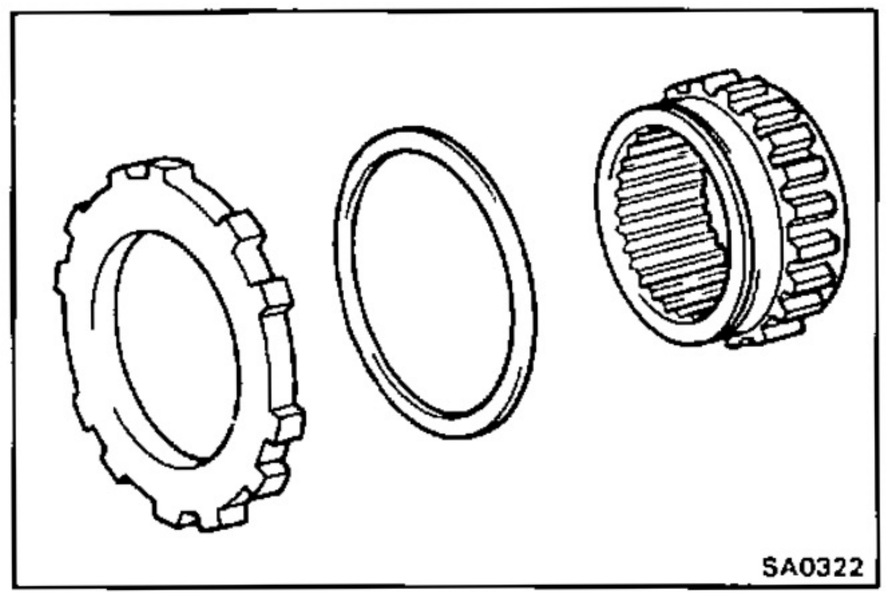
SA0322

(b) Remove the free wheeling hub ring and spacer from the inner hub.

INSPECTION OF FREE WHEELING HUB

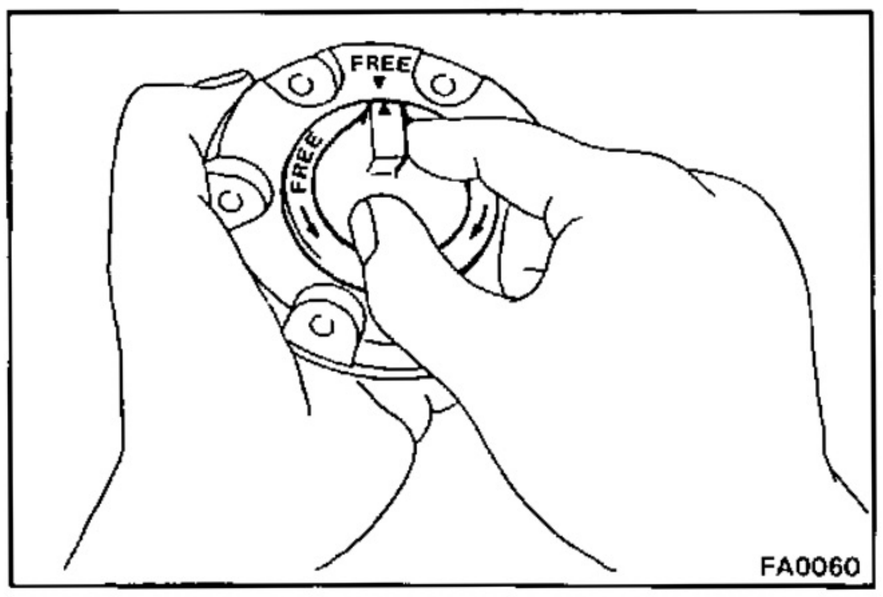

FA0060

1. INSPECT COVER, HANDLE AND SEAL

Temporarily install the handle in the cover and check that the handle moves smoothly and freely.

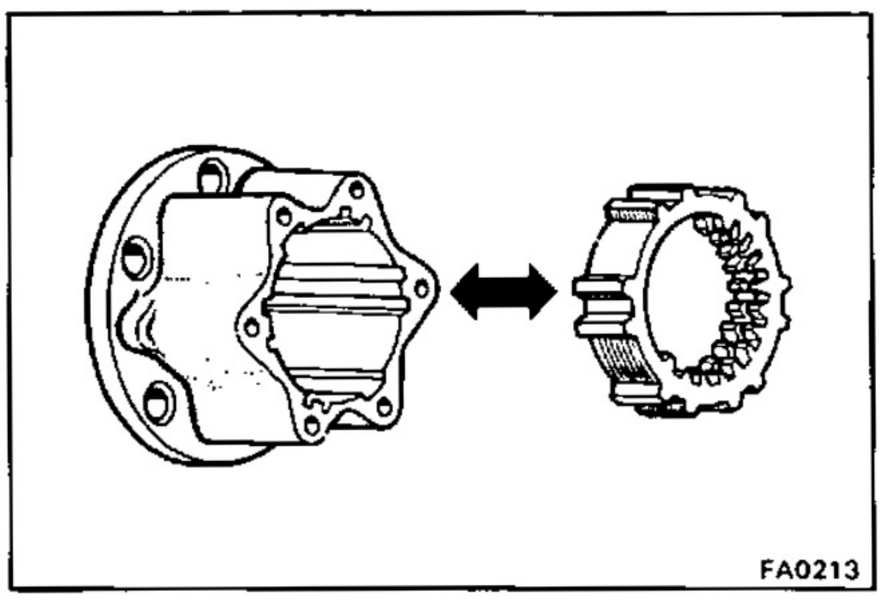
FA0213

2. INSPECT BODY AND CLUTCH

Check that the clutch moves smoothly in the body.

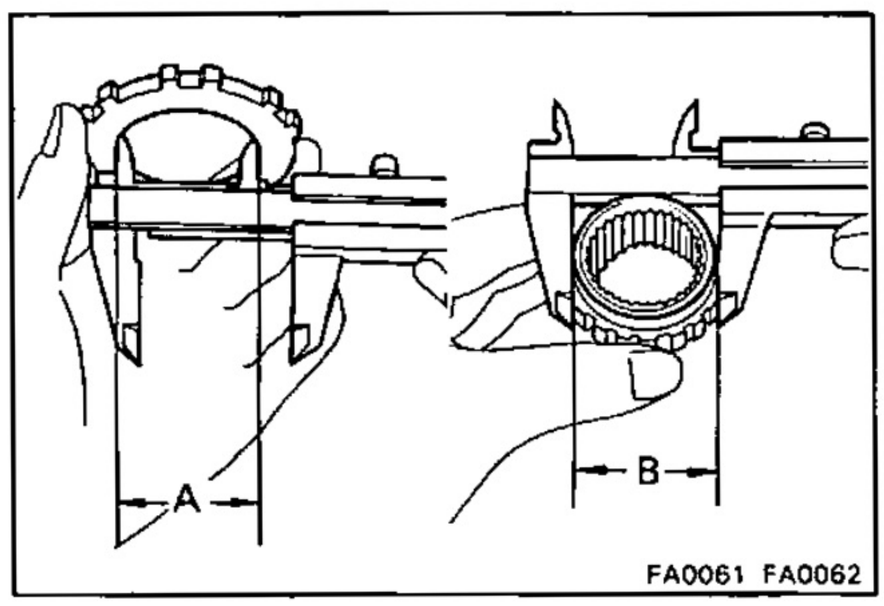

FA0061 FA0062

3. MEASURE OIL CLEARANCE BETWEEN INNER HUB AND FREE WHEELING HUB RING

Oil clearance: (A — B): 0.3 mm (0.012 in.)

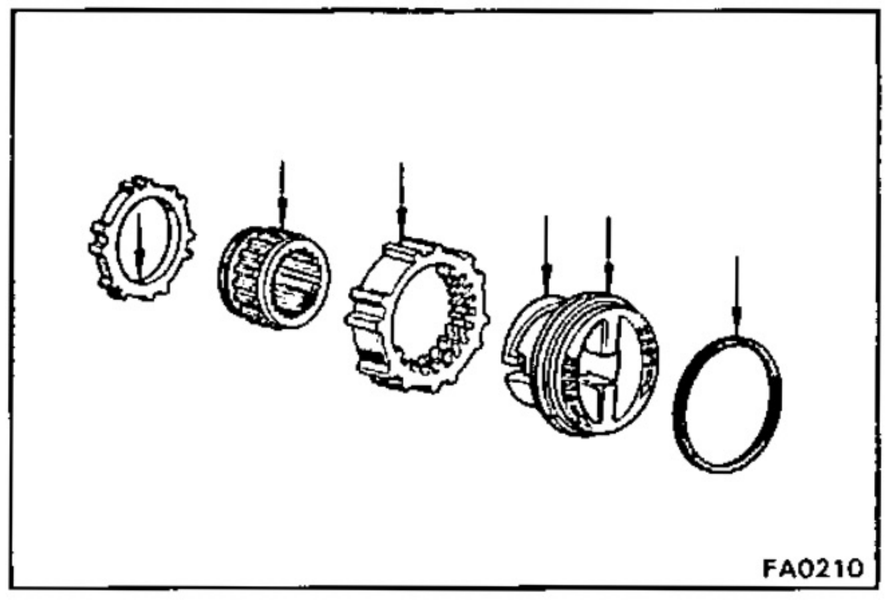
FA0210

ASSEMBLY OF FREE WHEELING HUB

(See page SA-6)

1. APPLY MP GREASE TO SLIDING SURFACE OF PARTS

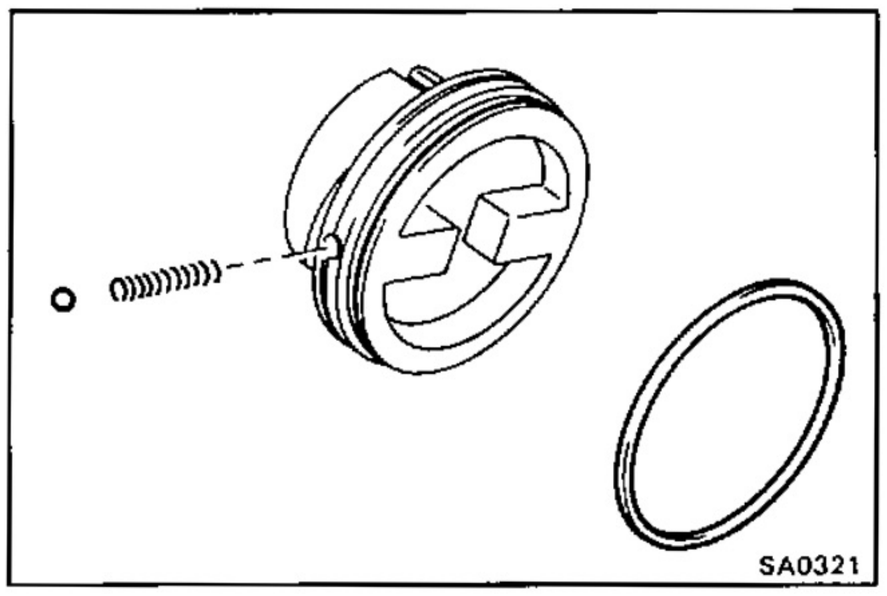
SA0321

2. INSTALL CONTROL HANDLE TO COVER

(a) Install the seal, spring and steel ball to the handle.

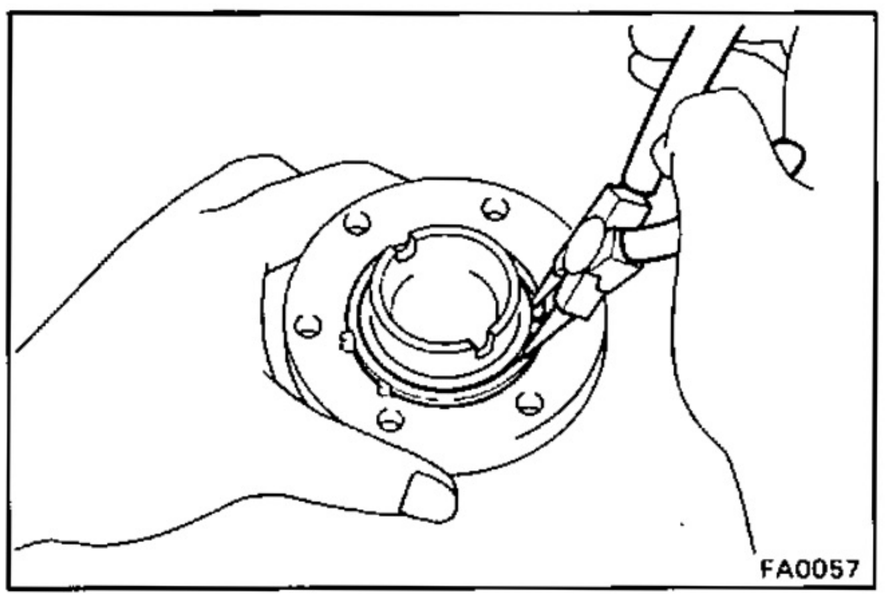
FA0057

(b) Insert the handle to the cover.

(c) Using snap ring pliers, install the snap ring to the cover.

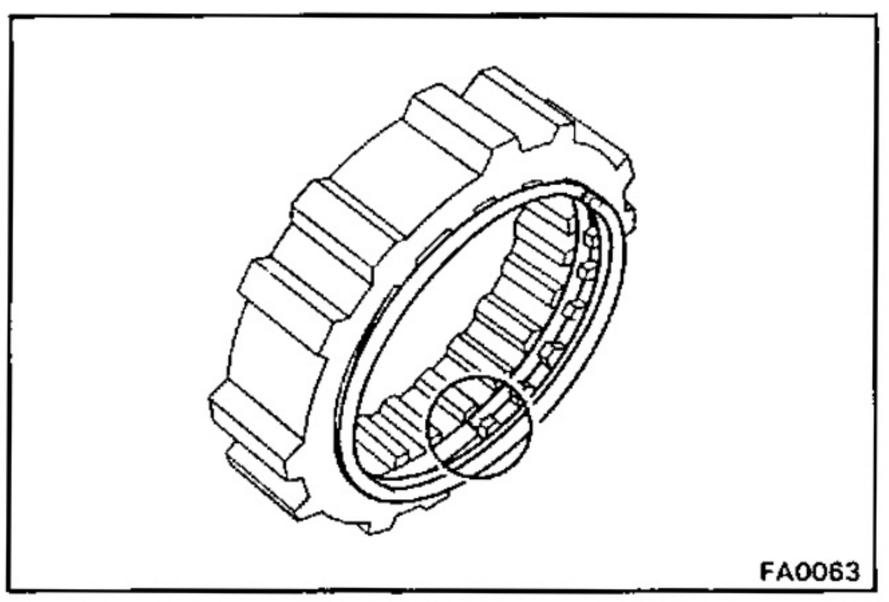
FA0063

3. INSTALL TENSION SPRING ON CLUTCH

Install the tension spring to the clutch with the spring end aligned with the initial groove.

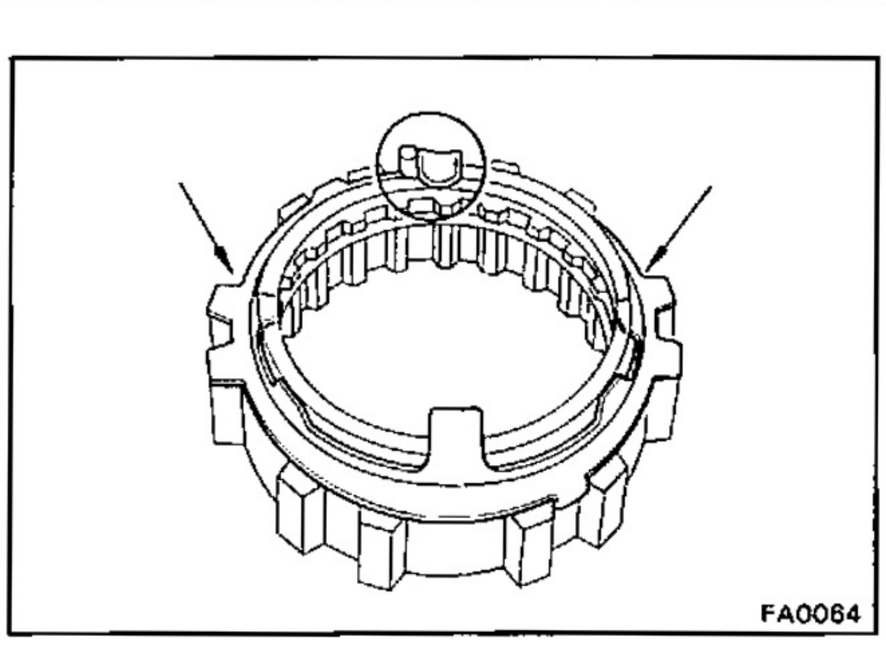
FA0064

4. INSTALL FOLLOWER PAWL TO CLUTCH

(a) Place the follower pawl on the tension spring with one of the large tabs against the bent spring end.

(b) Place the top ring of the spring on the small tabs.

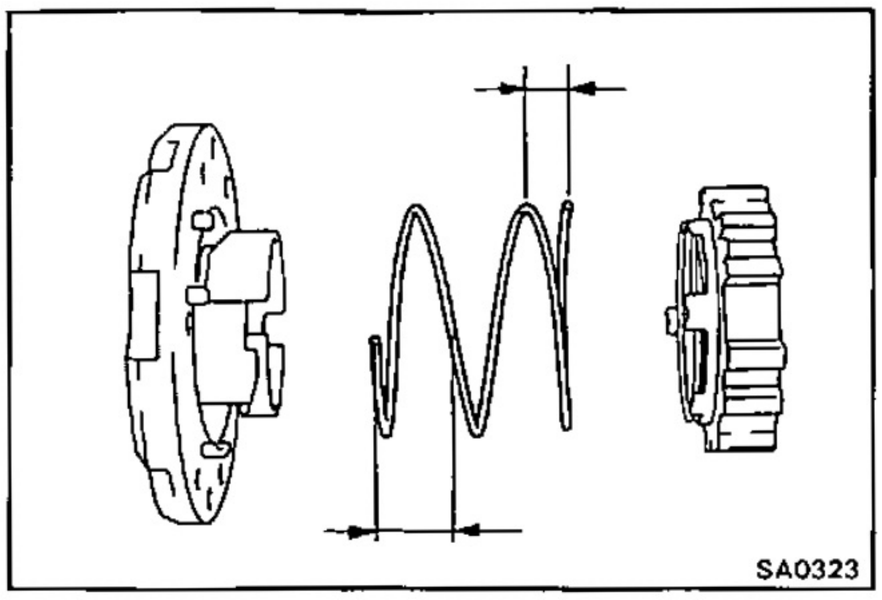

5. INSTALL CLUTCH AND SPRING INTO COVER

(a) Place the spring between the cover and clutch with the large spring end toward the cover.

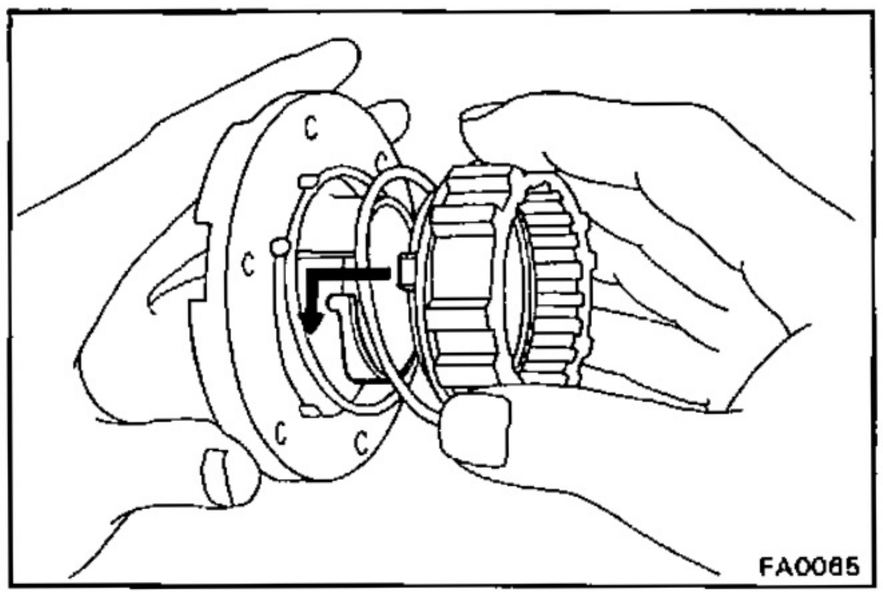

(b) Compress the spring and install the clutch with the pawl tab fit to the handle cam.

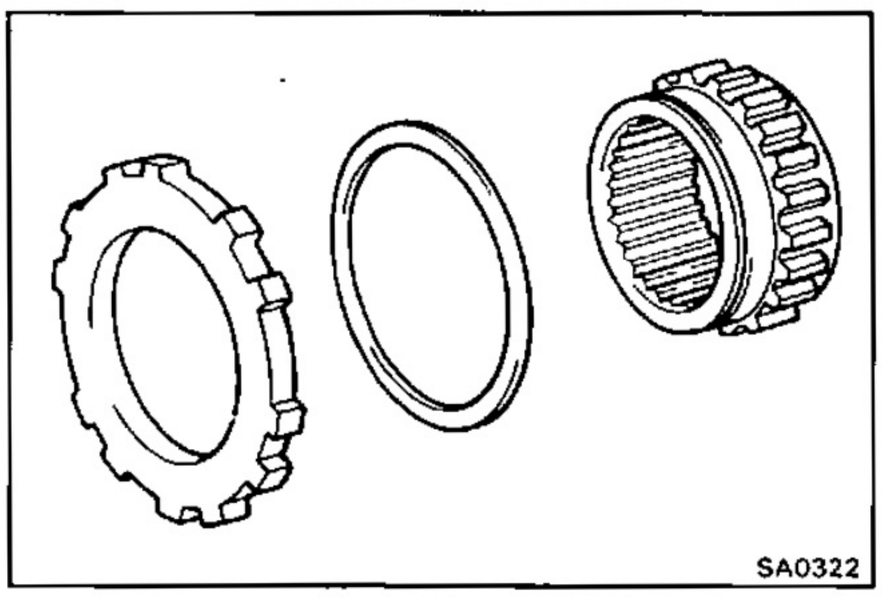

6. INSTALL SPACER AND FREE WHEELING HUB RING TO INNER HUB

(a) Install the spacer and free wheeling hub ring to the inner hub.

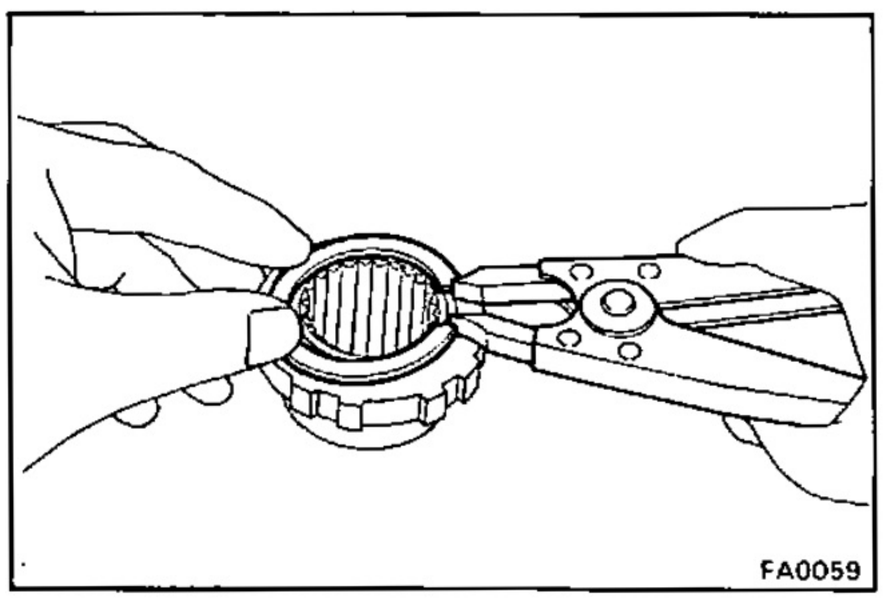

(b) Using snap ring pliers, install the snap ring to the free wheeling hub ring.

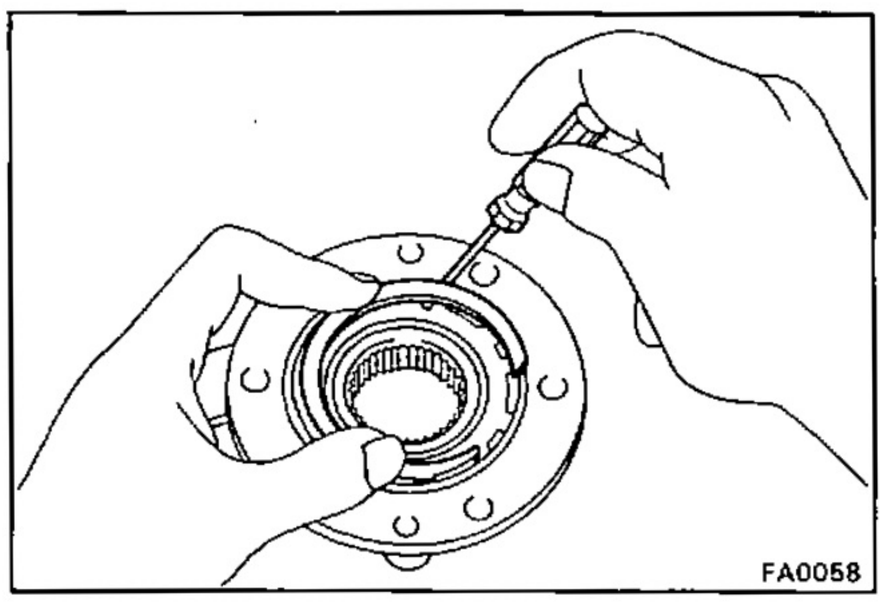

7. INSTALL INNER HUB AND FREE WHEELING HUB RING IN FREE WHEELING HUB BODY

(a) Insert the inner hub and hub ring to the body.

(b) Using a screwdriver, install the snap ring.

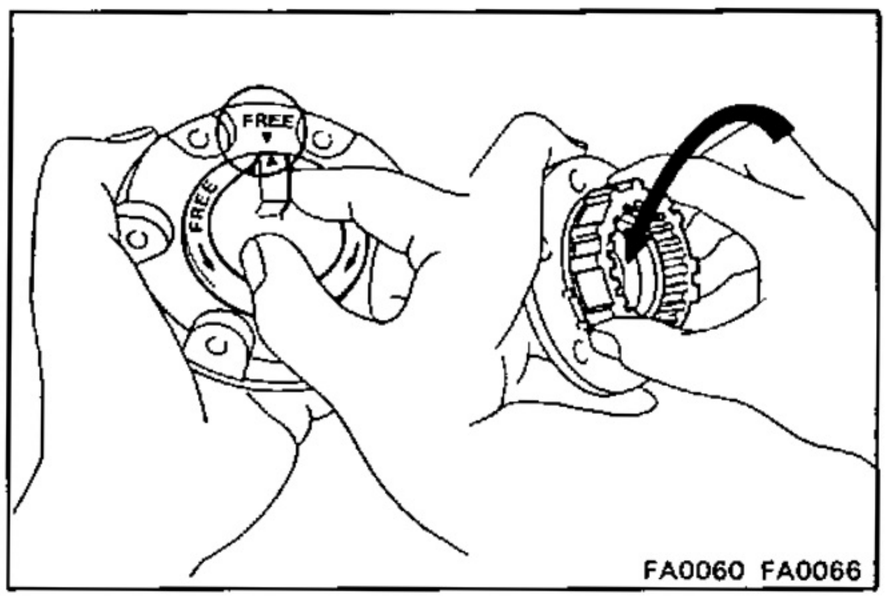

8. TEMPORARILY INSTALL COVER TO BODY AND CHECK FREE WHEELING HUB

(a) Set the control handle and clutch to the FREE position.

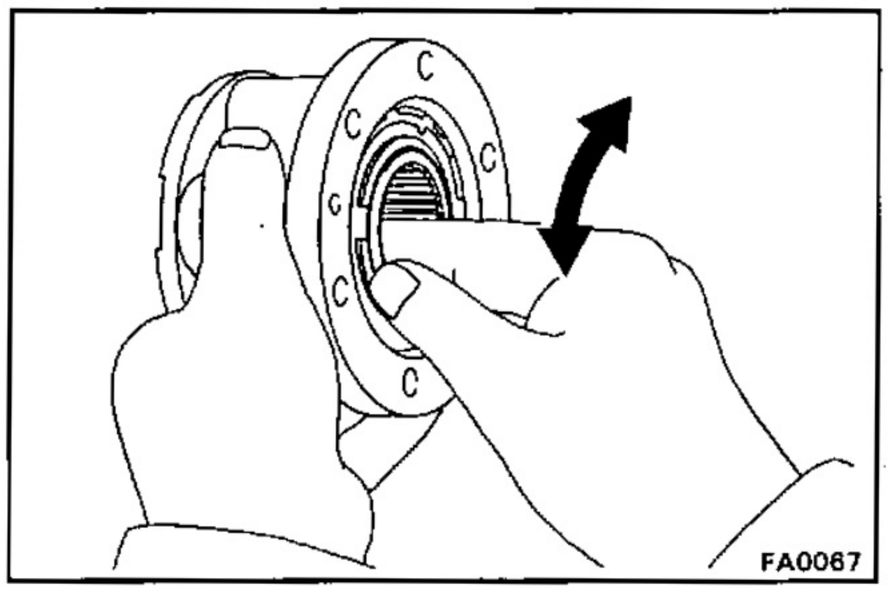

(b) Insert the cover to the body and verify that the hub turns smoothly.

(c) Remove the cover from the body.

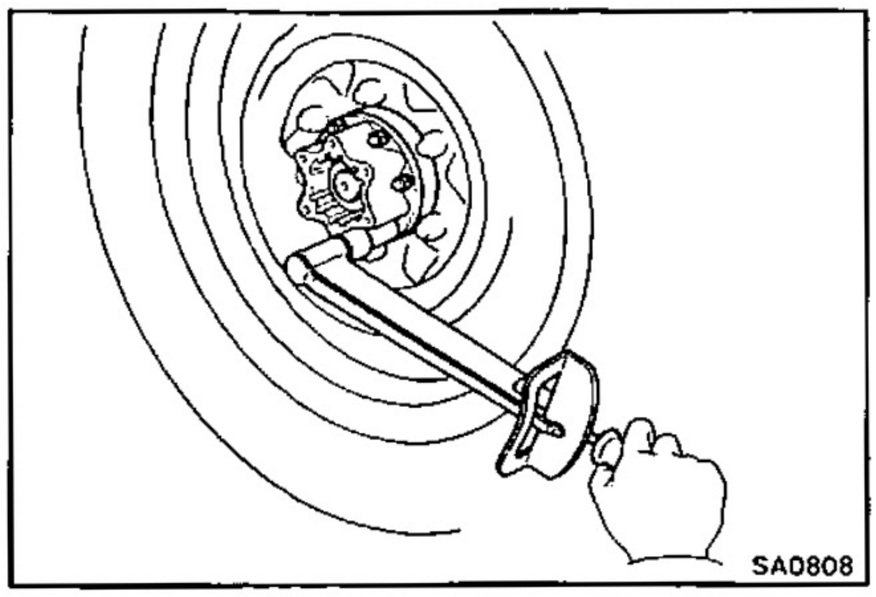

INSTALLATION OF FREE WHEELING HUB

(See page SA-6)

1. INSTALL FREE WHEELING HUB BODY

(a) Place a new gasket in position on the front axle hub.

(b) Install the free wheeling hub body with six cone washers, washers and nuts. Torque the nuts.

Torque: 315 kg-cm (23 ft-lb, 31 N·m)

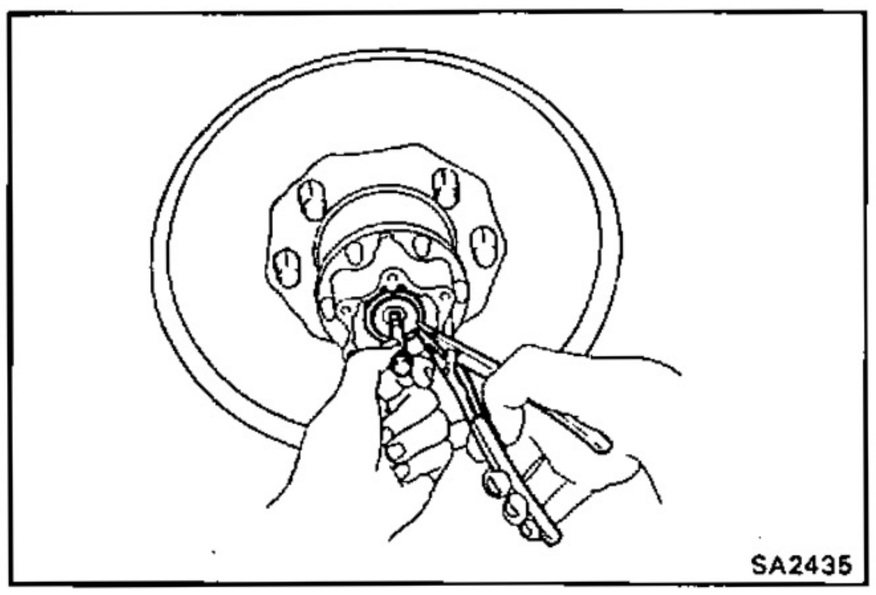

2. INSTALL SNAP RING

(a) Install a bolt to the axle shaft and pull it out.

(b) Using snap ring pliers, install the snap ring.

(c) Remove the bolt.

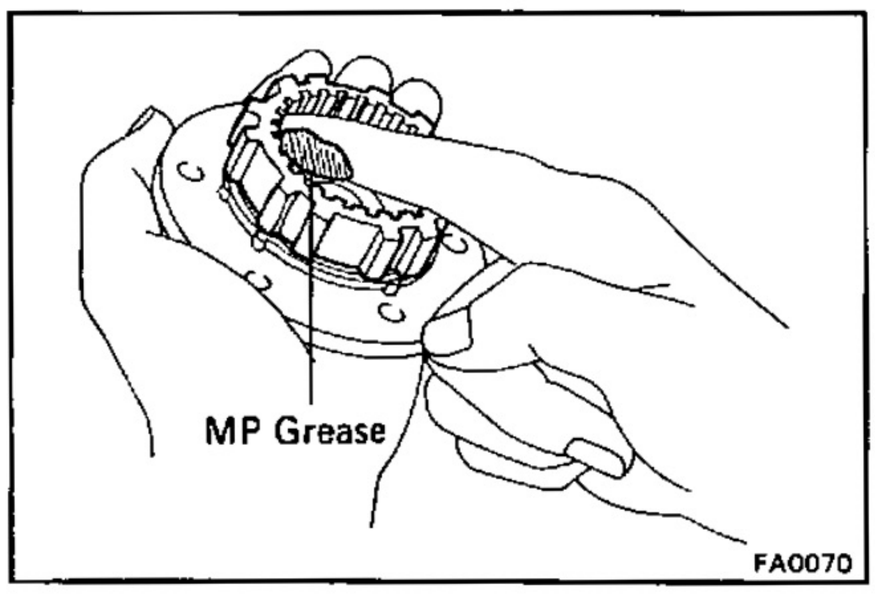

3. APPLY MP GREASE TO INNER HUB SPLINES

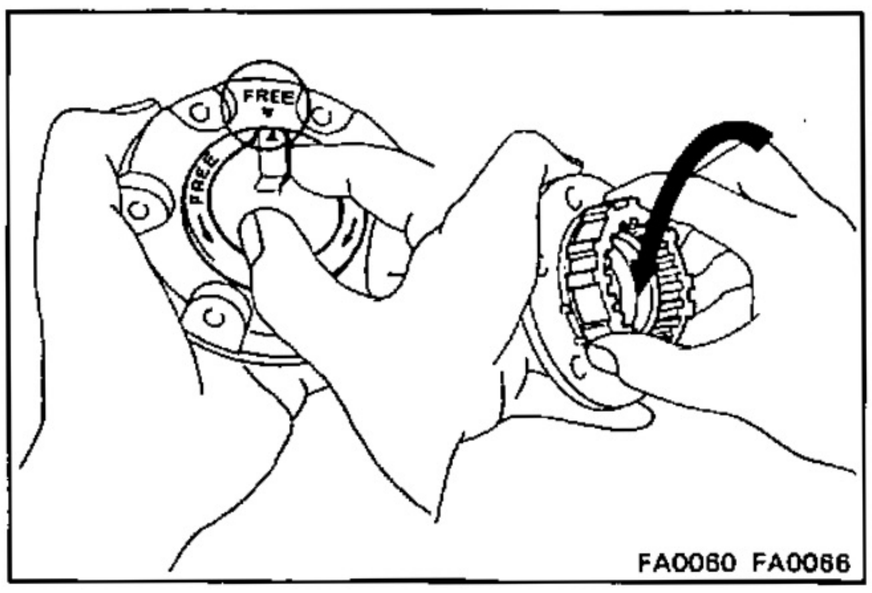

4. INSTALL FREE WHEELING HUB COVER WITH NEW GASKET

(a) Set the control handle and clutch to the FREE position.

(b) Place a new gasket in position on the cover.

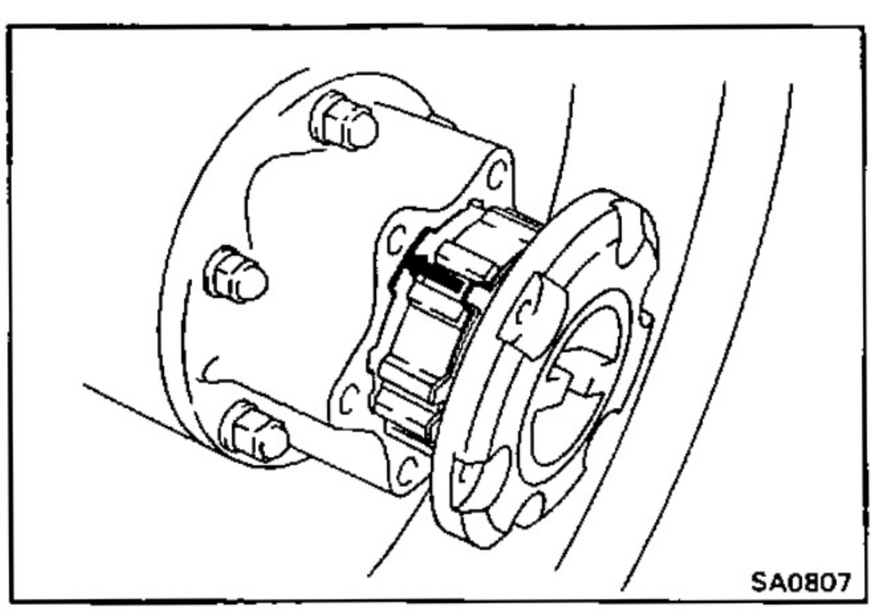

(c) Install the cover to the body with the follower pawl tabs aligned with the non-toothed portions of the body.

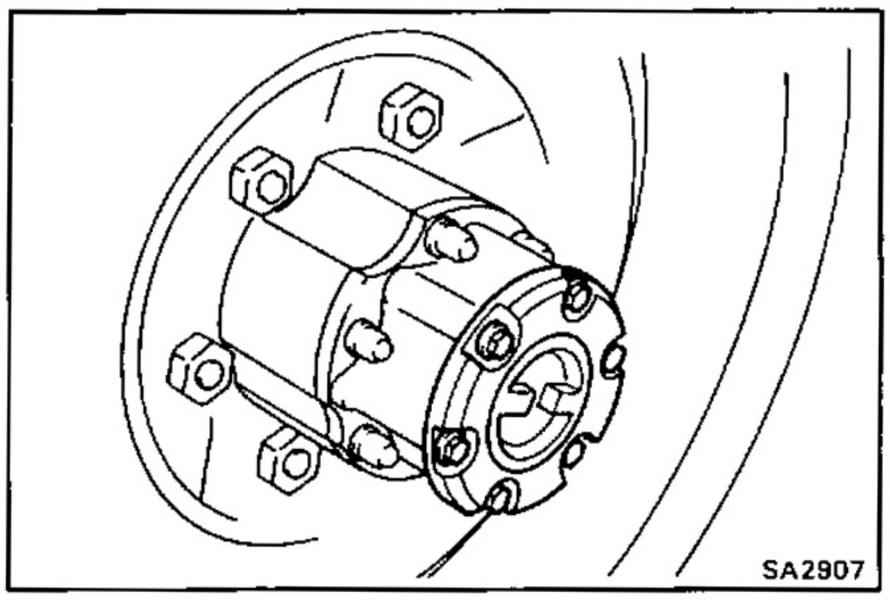

(c) Install and torque the six cover mounting bolts.

Torque: 100 kg-cm (7 ft-lb, 10 N·m)

FRONT AXLE HUB

COMPONENTS

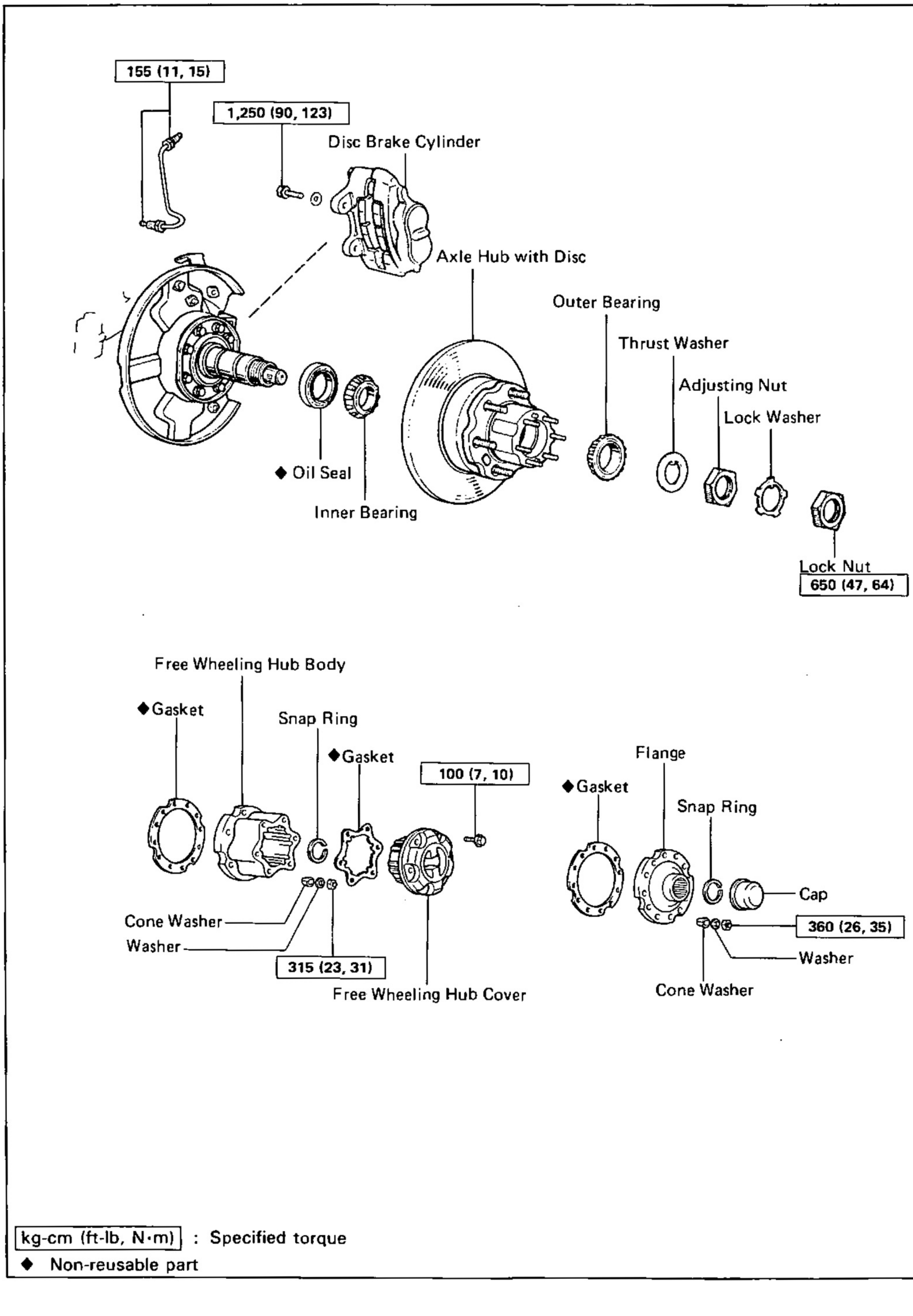

kg-cm (ft-lb, N·m) : Specified torque

◆ Non-reusable part

SA2628
SA2729

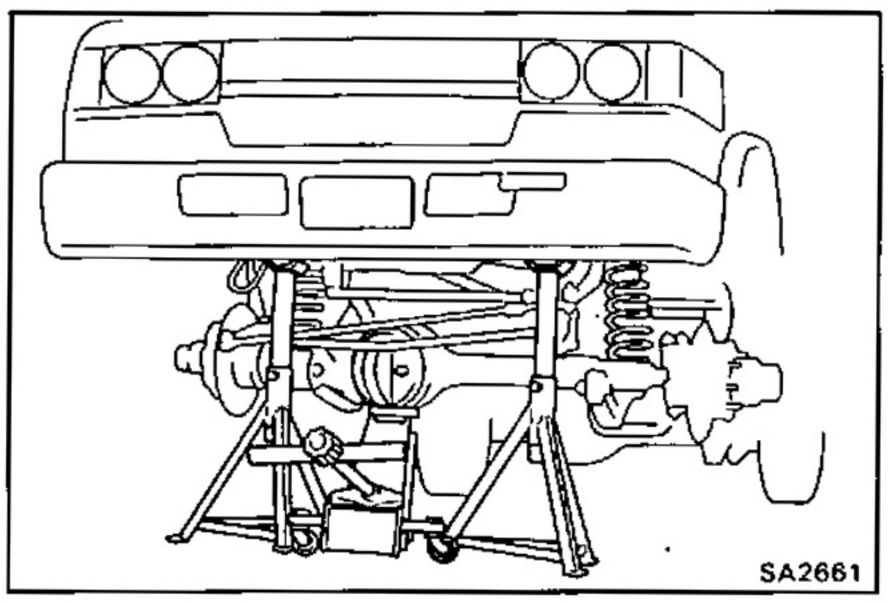

DISASSEMBLY OF FRONT AXLE HUB

(See page SA-15)

1. **JACK UP AND SUPPORT VEHICLE WITH FRAME**

   Jack up and support the frame on stands.

2. **REMOVE FRONT WHEEL**

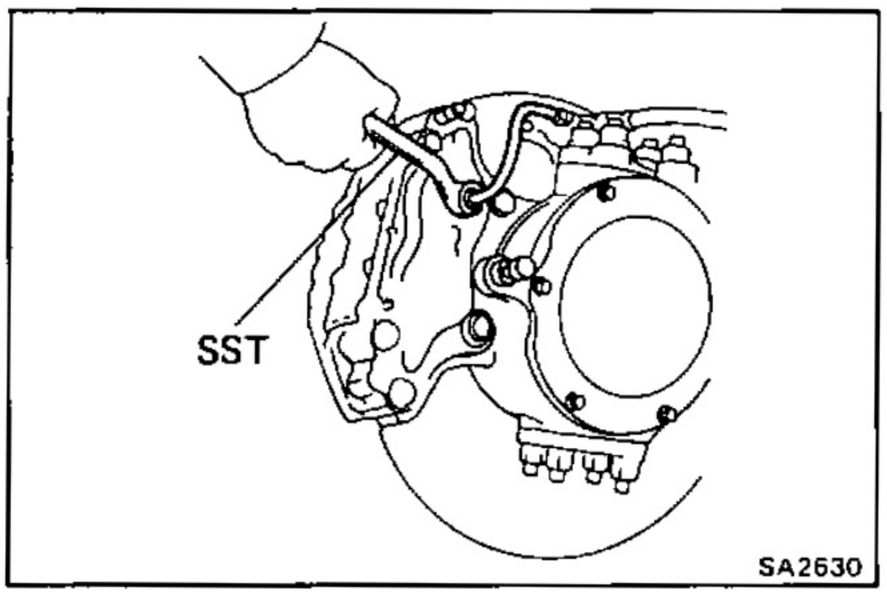

3. **REMOVE DISC BRAKE CYLINDER**

   (a) Using SST, disconnect the brake tube.

   SST 09751-36011

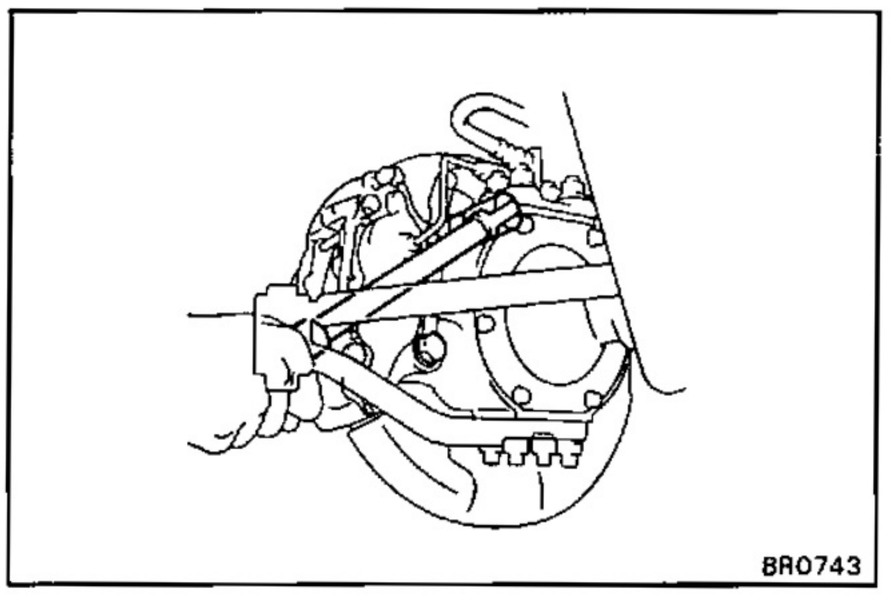

   (b) Remove two bolts and brake cylinder.

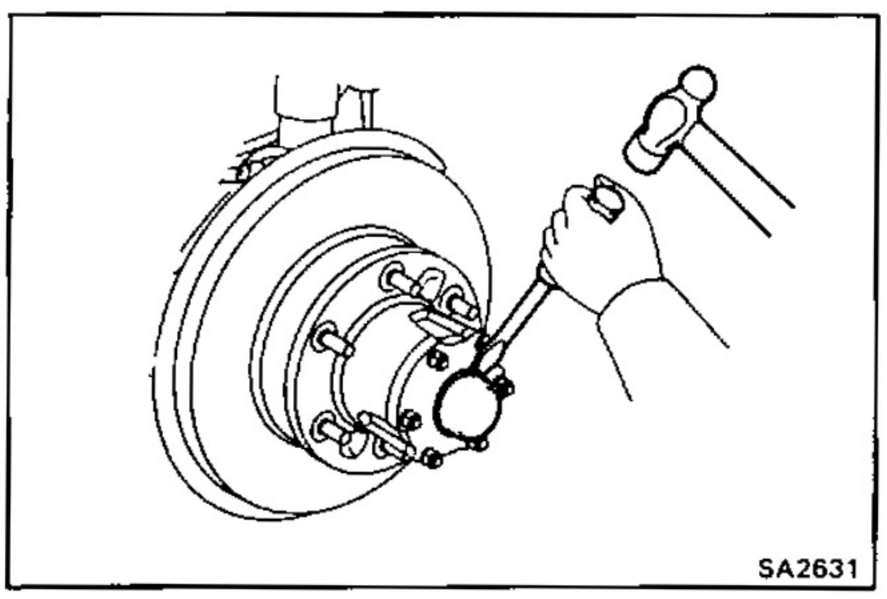

2. **(w/ FREE WHEELING HUB)**
   REMOVE FREE WHEELING HUB

   HINT: If the vehicle has the free wheeling hub, see page SA-6.

3. **(w/o FREE WHEELING HUB)**
   REMOVE FLANGE

   (a) Using a screwdriver and hammer, remove the cap from the flange.

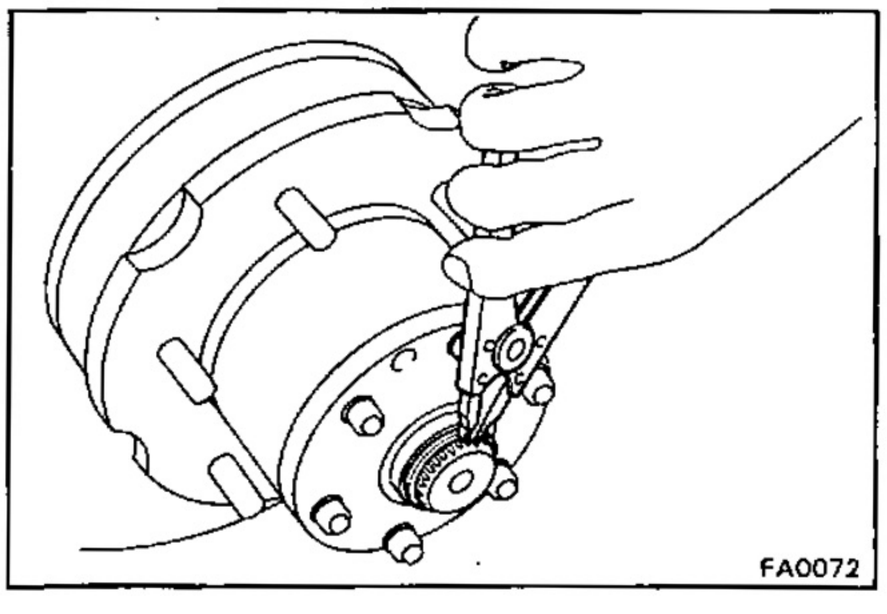

   (b) Using snap ring pliers, remove the snap ring.

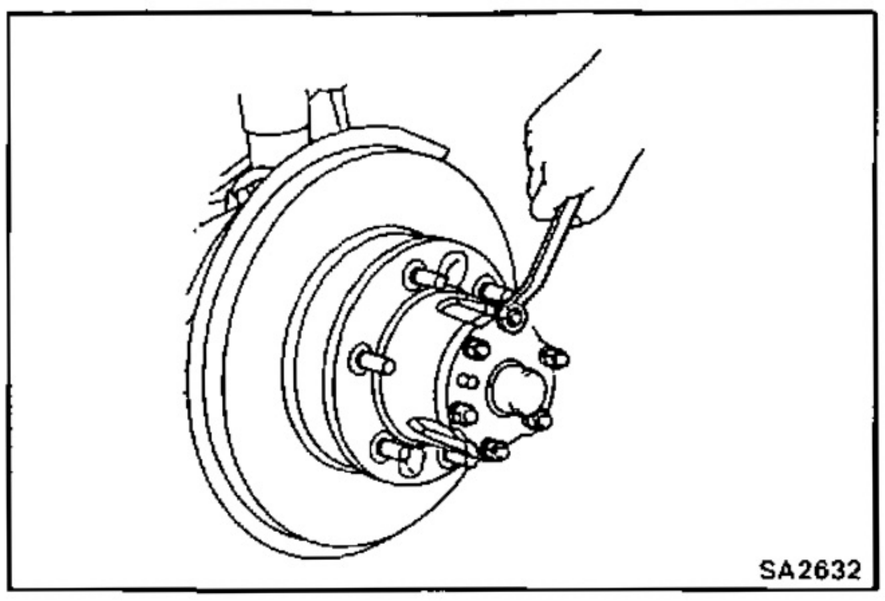
SA2632

(c) Remove the six mounting nuts and washers.

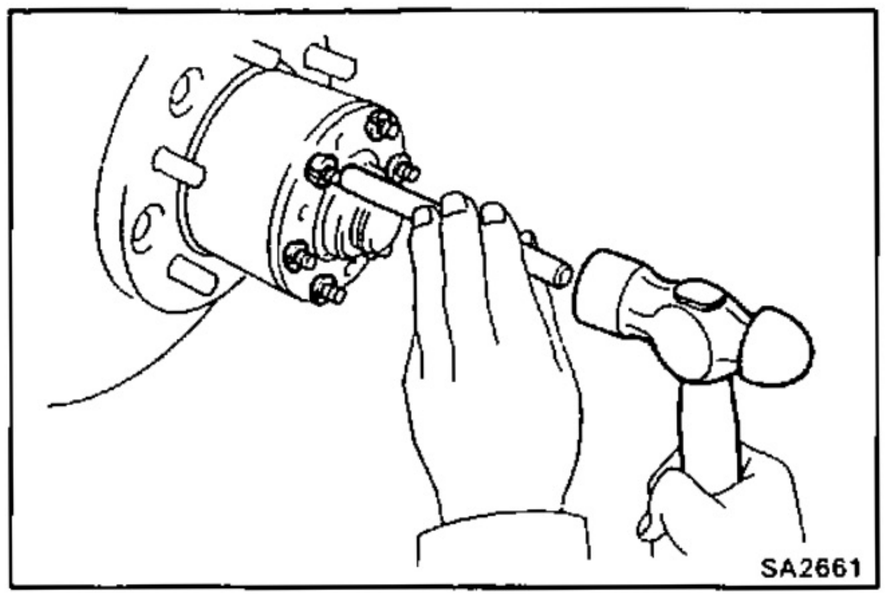
SA2661

(d) Using a brass bar and hammer, drive the bolt heads and remove the cone washers.

(e) Pull out the flange.

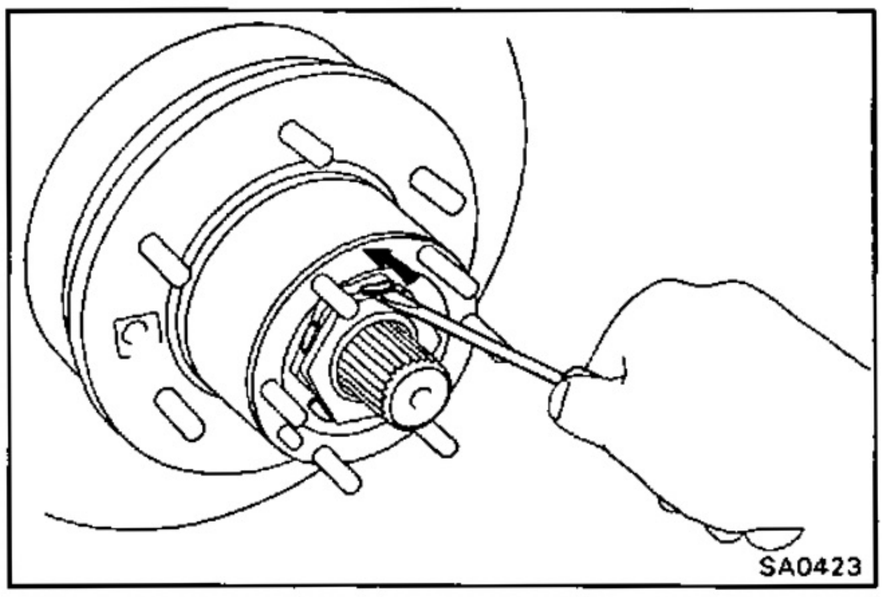
SA0423

3. REMOVE AXLE HUB WITH DISC

(a) Using a screwdriver, release the lock washer.

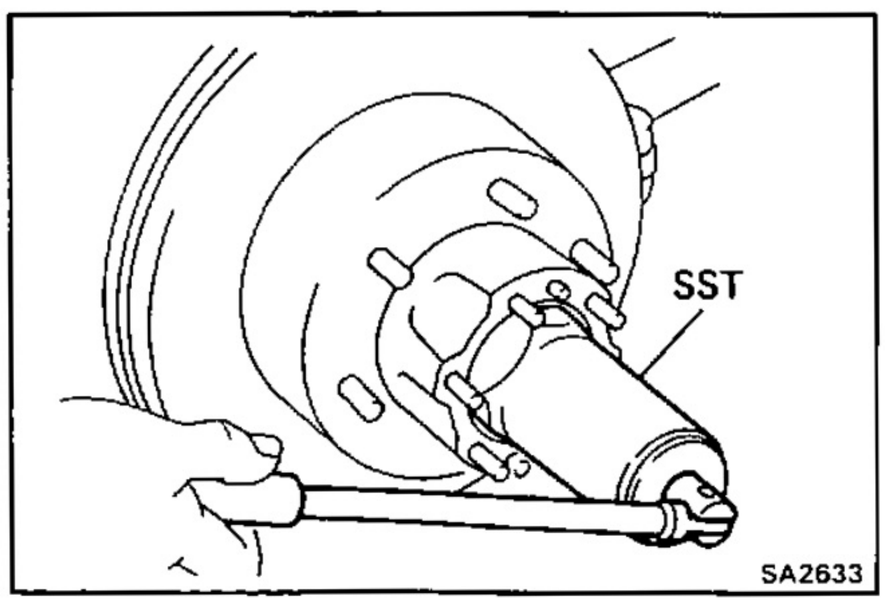

SA2633

(b) Using SST, remove the lock nut.

SST 09607-60020

(c) Remove the lock washer.

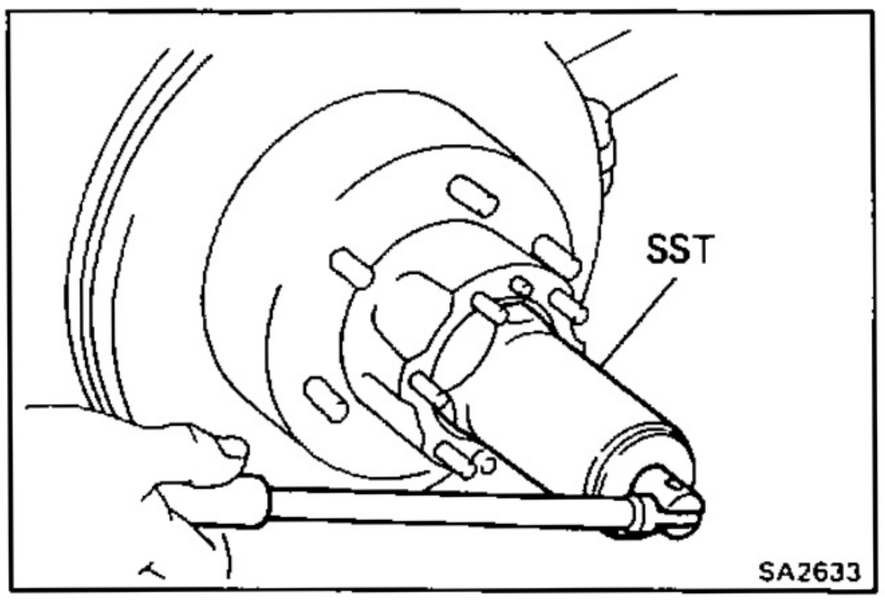

SA2633

(d) Using SST, remove the adjusting nut.

SST 09607-60020

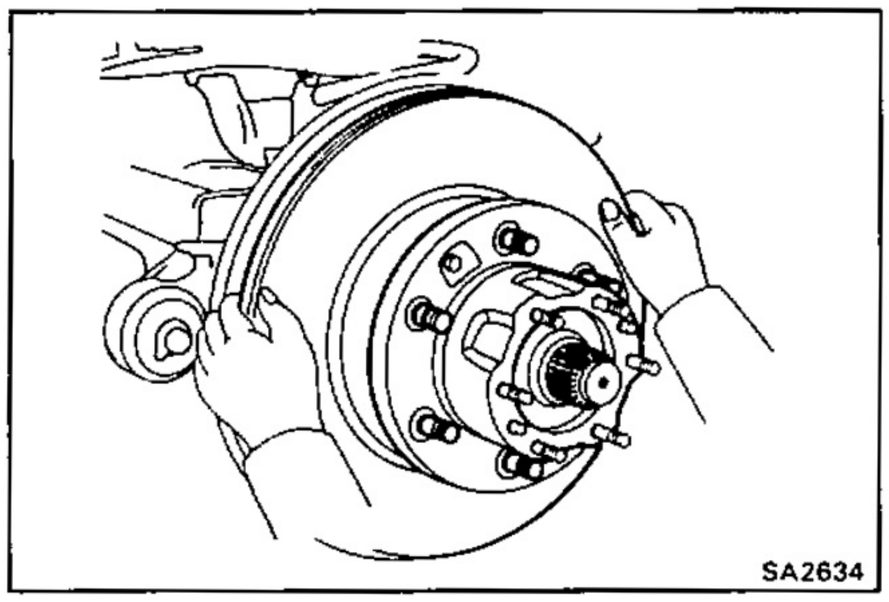

(e) Remove the axle hub with the disc.

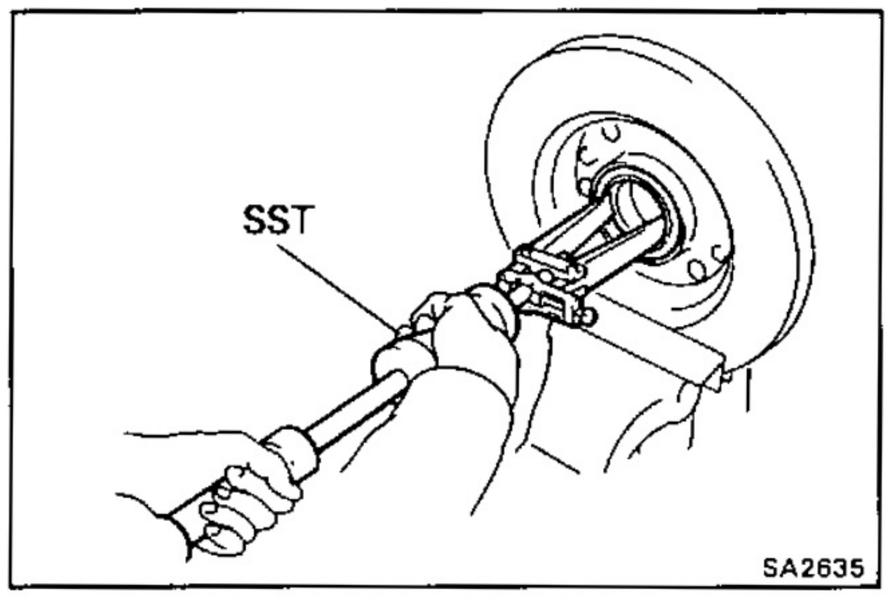

4. REMOVE INNER BEARING AND OIL SEAL

(a) Using SST, remove the oil seal.

SST 09308-00010

(b) Remove the inner bearing from the axle hub.

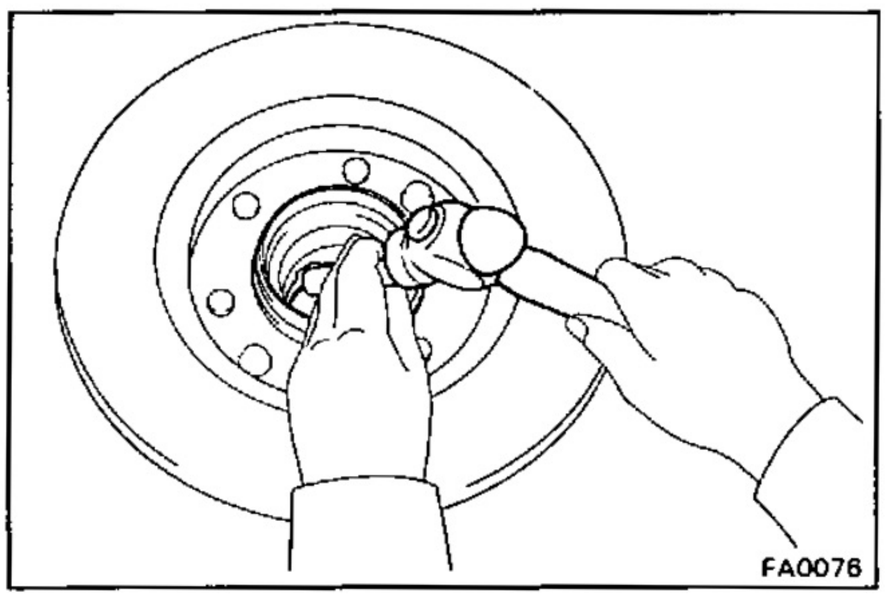

INSPECTION AND REPAIR OF FRONT AXLE HUB

1. INSPECT BEARING

Clean the bearings and outer races and inspect them for wear or damage.

2. REPLACE BEARING OUTER RACE

(a) Using a brass bar and hammer, drive out the bearing outer race.

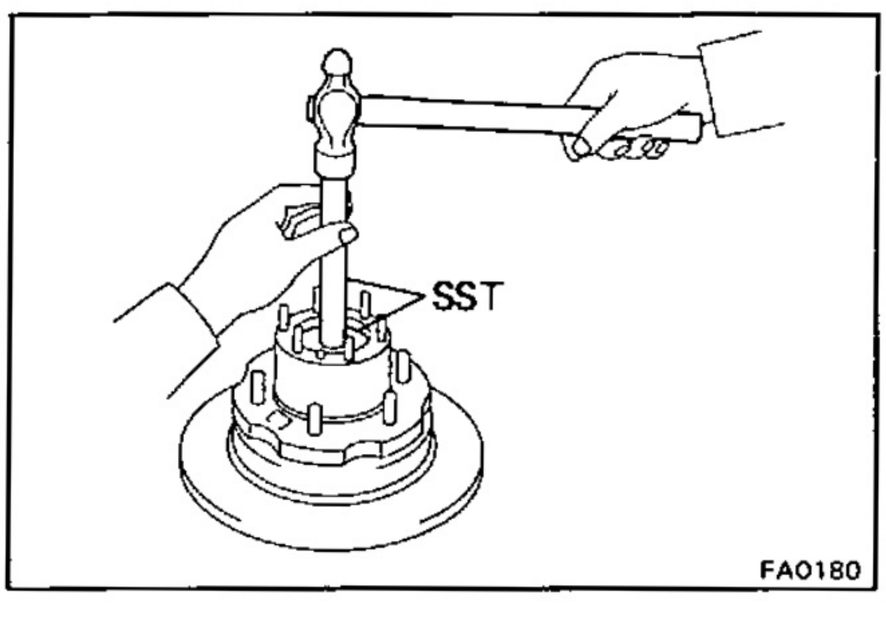

(b) Using SST, carefully drive in a new bearing outer race.

SST 09608-35014

Inner Bearing (09608-06020, 09608-06210)

Outer Bearing (09608-06020, 09608-06200)

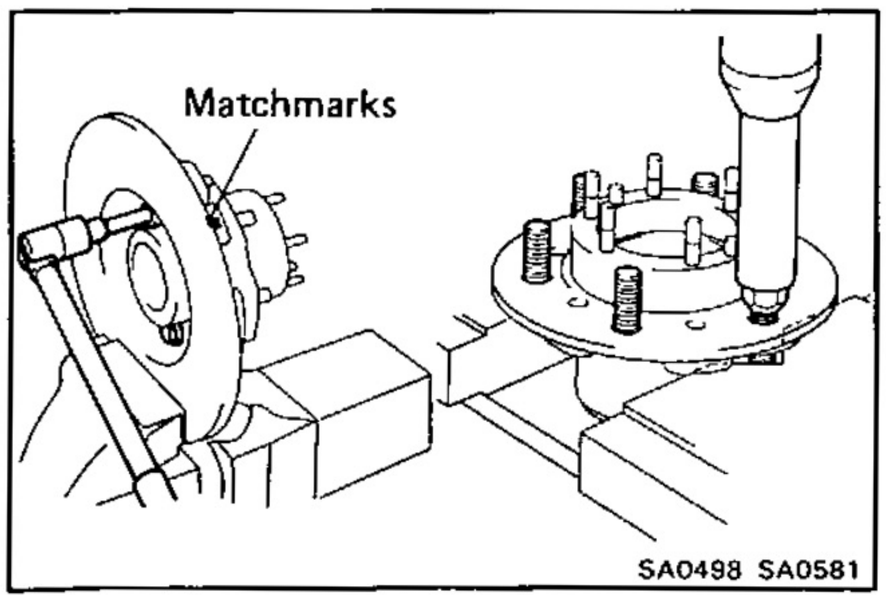

3. REPLACE HUB BOLTS

(a) Place matchmarks on the axle hub and rotor disc.

(b) Remove the six bolts and rotor disc from the axle hub.

(c) Install the nut to the hub bolts.

(d) Using an extension bar and press, press out the hub bolts.

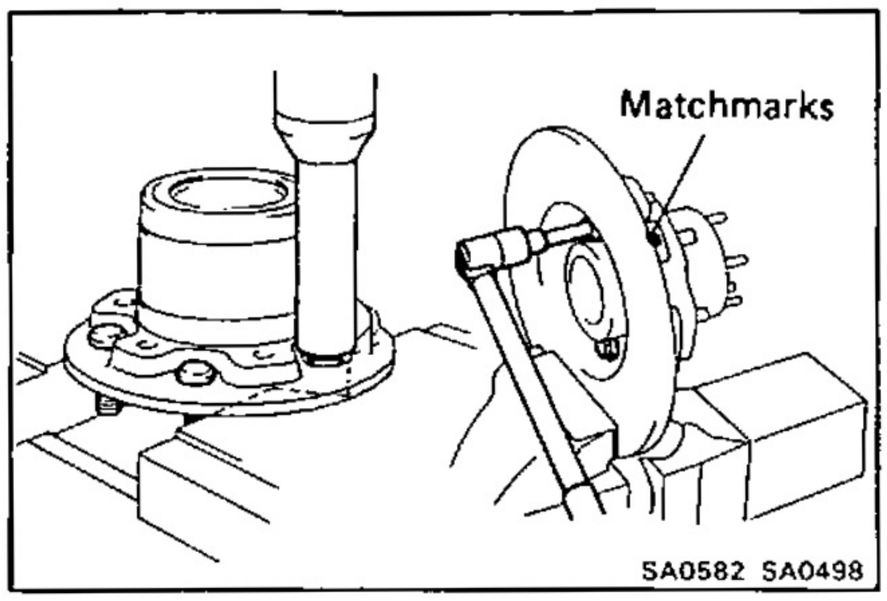

(e) Using an extension bar and press, press in the hub bolts.

(k) Align the matchmarks, install the axle hub to the rotor disc.

Torque: 650 kg-cm (47 ft-lb, 64 N·m)

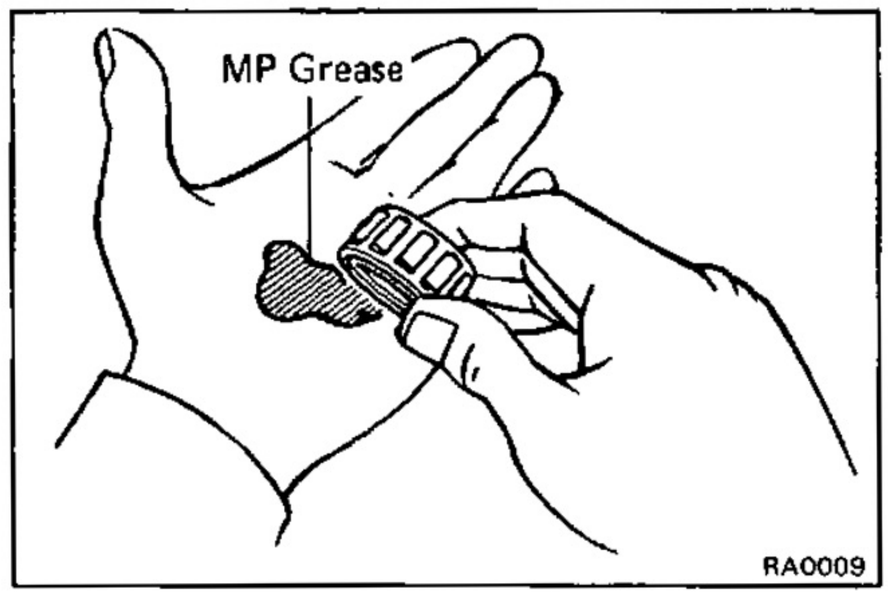

ASSEMBLY OF AXLE HUB

(See page SA-15)

1. PACK BEARINGS WITH MP GREASE

(a) Place MP grease in the palm of your hand.

(b) Pack grease into the bearing, continue until the grease oozes out from the outer side.

(c) Do the same around the bearing circumference.

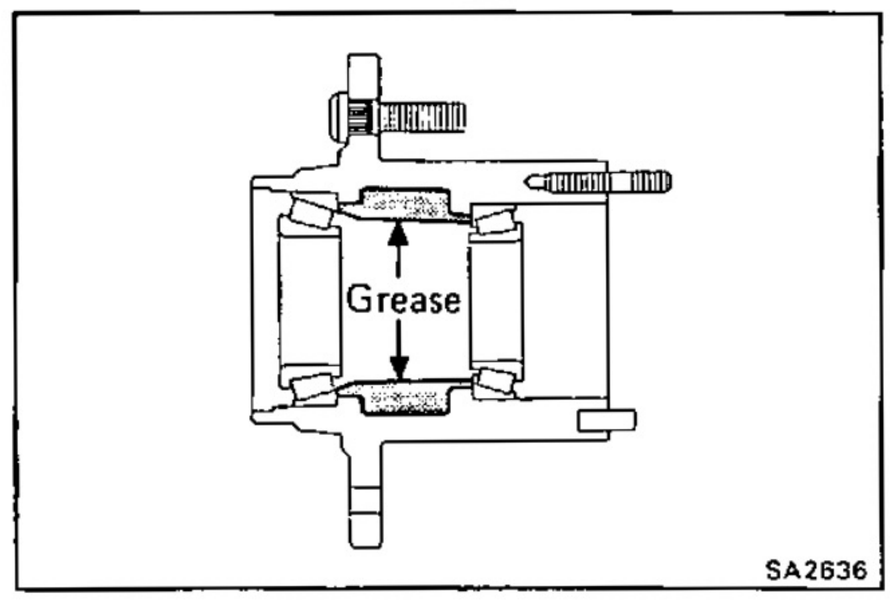

2. PACK INSIDE OF HUB AND CAP WITH MP GREASE

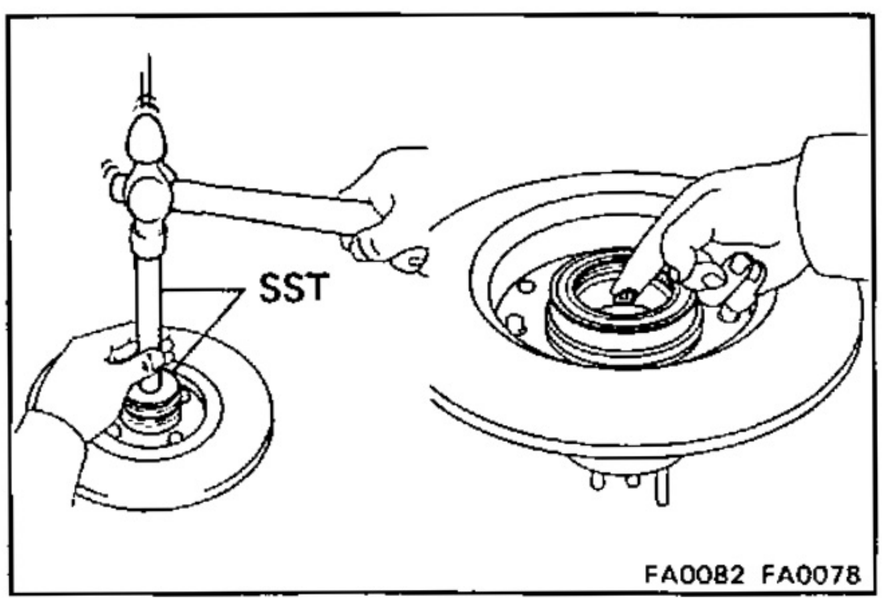

3. INSTALL INNER BEARING AND OIL SEAL

(a) Place inner bearing into the hub.

(b) Using SST, drive in the oil seal into the hub.

SST 09608-35014 (09608-06020, 09608-06150)

(c) Coat the oil seal with MP grease.

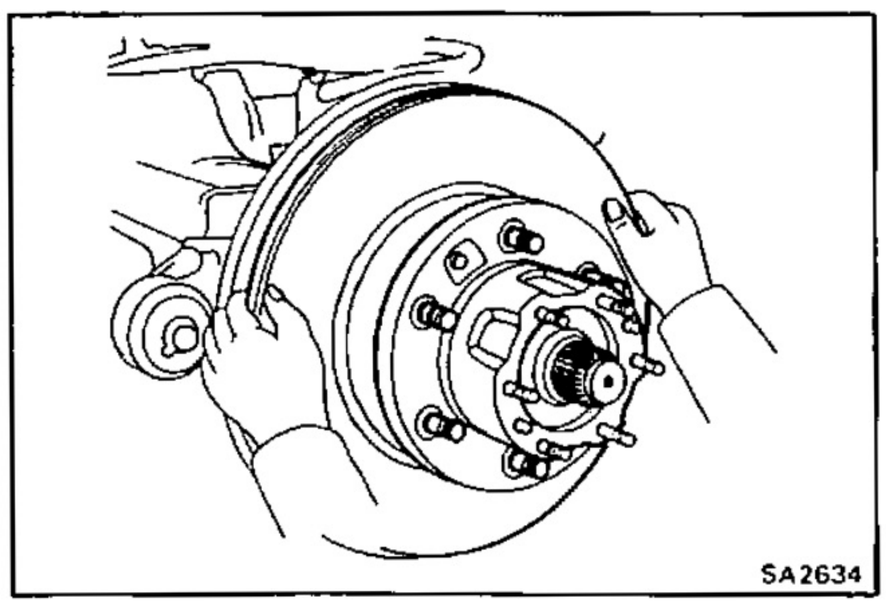

4. INSTALL AXLE HUB ON SPINDLE

(a) Place the axle hub on the spindle.

(b) Install the outer bearing and thrust washer.

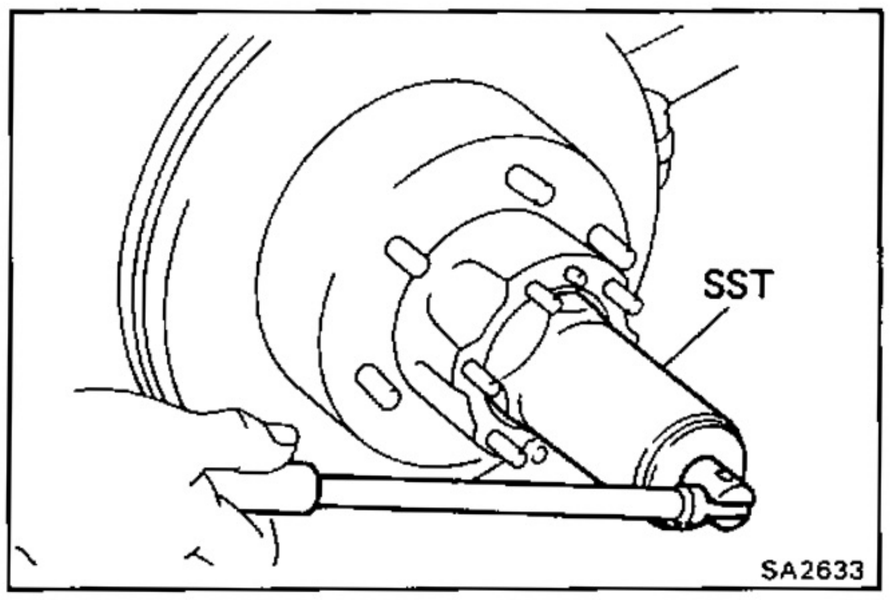

5. **ADJUST PRELOAD**

(a) Using SST, torque the bearing adjusting nut.

SST 09607-60020

Torque: 600 kg-cm (43 ft-lb, 59 N·m)

(b) Turn the hub right and left two or three times.

(c) Loosen the nut until it can be turned by hand.

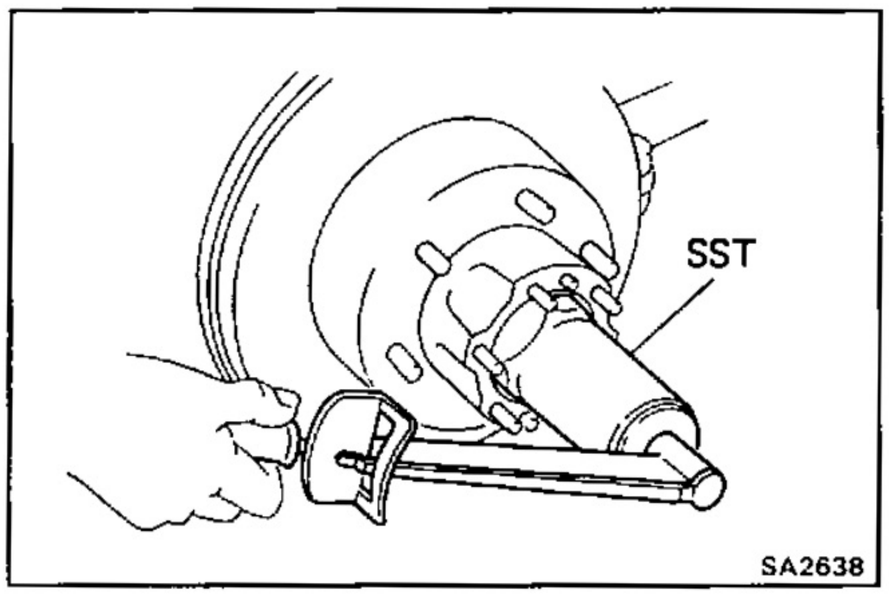

(d) Using SST, retorque the bearing adjusting nut.

SST 09607-60020

Torque: 600 kg-cm (43 ft-lb, 59 N·m)

(e) Loosen the nut until it can turned by hand.

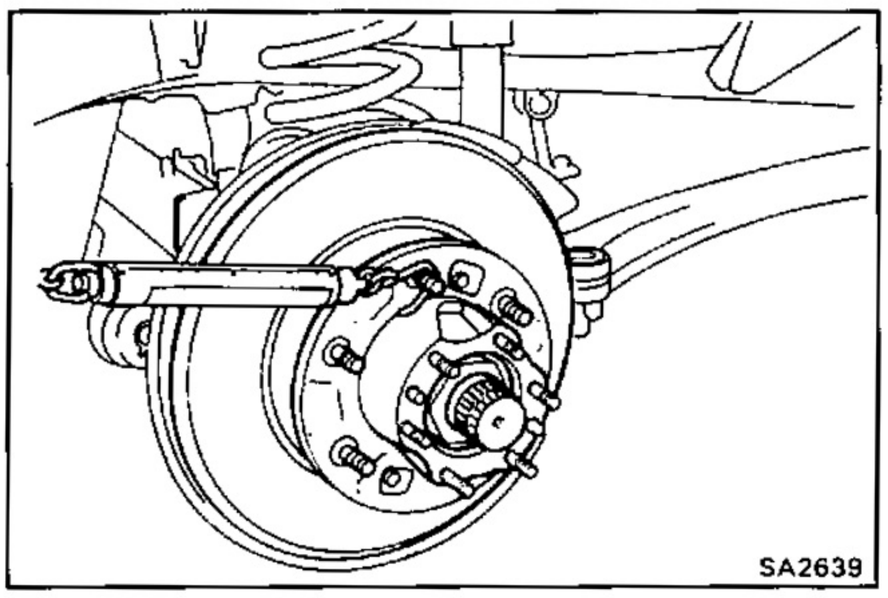

(f) Using a spring tension gauge, measure the frictional force of the oil seal at the hub bolt.

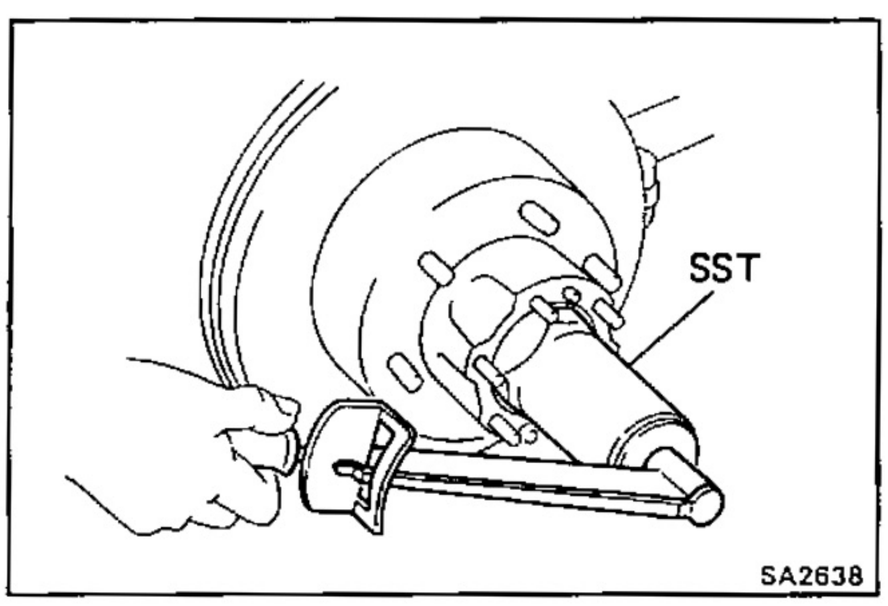

(g) Using SST, retorque the adjusting nut.

SST 09607-60020

Torque: 55 kg-cm (48 in.-lb,5.4 N·m)

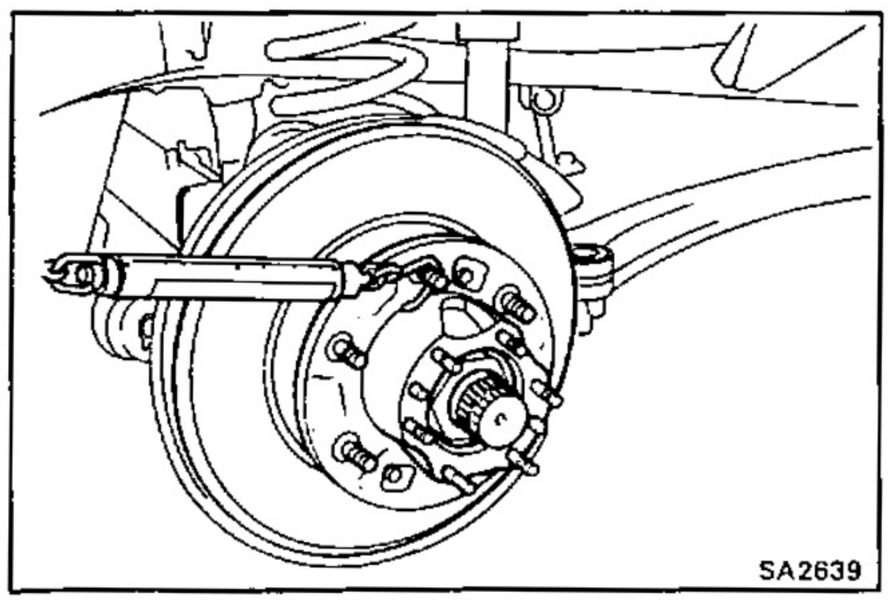

(h) Using a spring tension gauge, measure the preload.

Preload (starting):

Frictional force plus 2.8 — 5.7 kg

(6.2— 12.6 lb,27— 56 N)

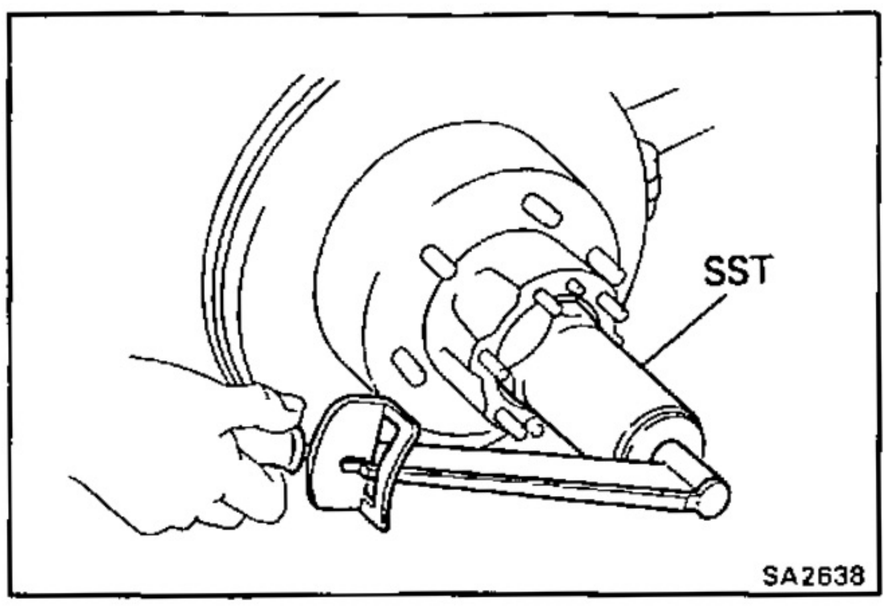

6. INSTALL LOCK WASHER AND LOCK NUT

(a) Install the lock washer and lock nut.

(b) Using SST, torque the lock nut.

SST 09607-60020

Torque: 900 kg-cm (65 ft-lb, 88 N·m)

(c) Check that the bearing has no play.

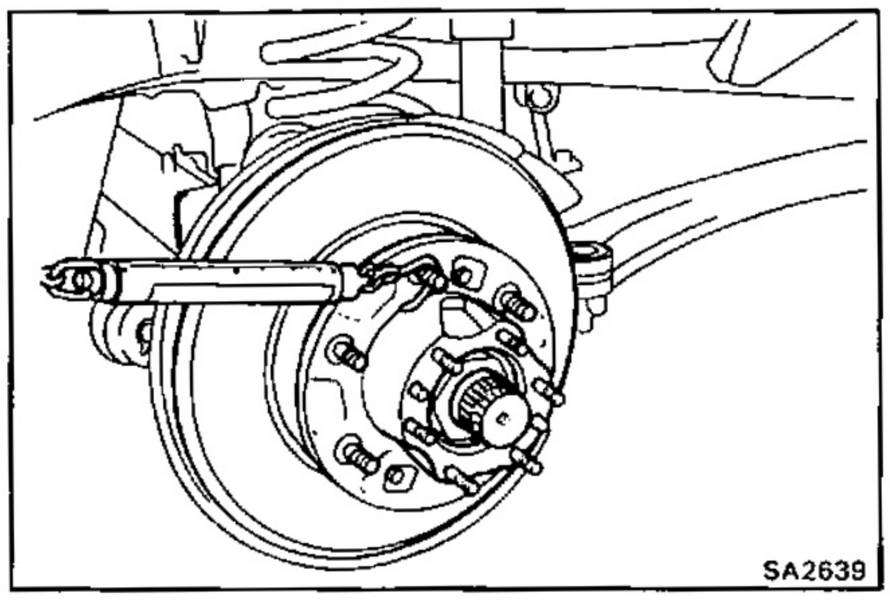

(d) Using a spring tension gauge, check the preload.

Preload (starting):

Frictional force plus 2.8 — 5.7 kg

(6.2 — 12.6 lb, 27 — 56 N)

If not within specification, adjust with the adjusting nut.

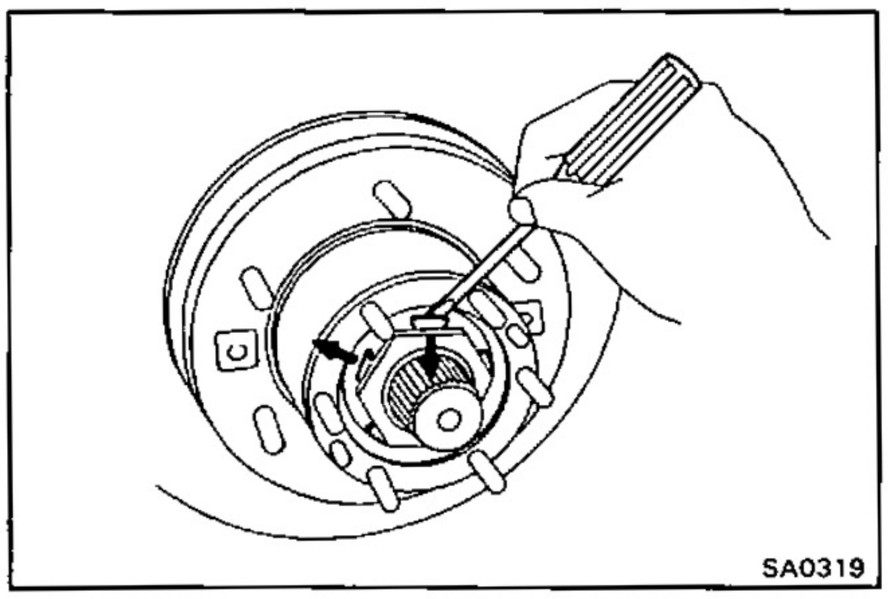

(e) Secure the lock nut by bending one of the lock washer tooth inward and another lock washer tooth outward.

7. (w/ FREE WHEELING HUB)
INSTALL FREE WHEELING HUB
(See page SA-6)

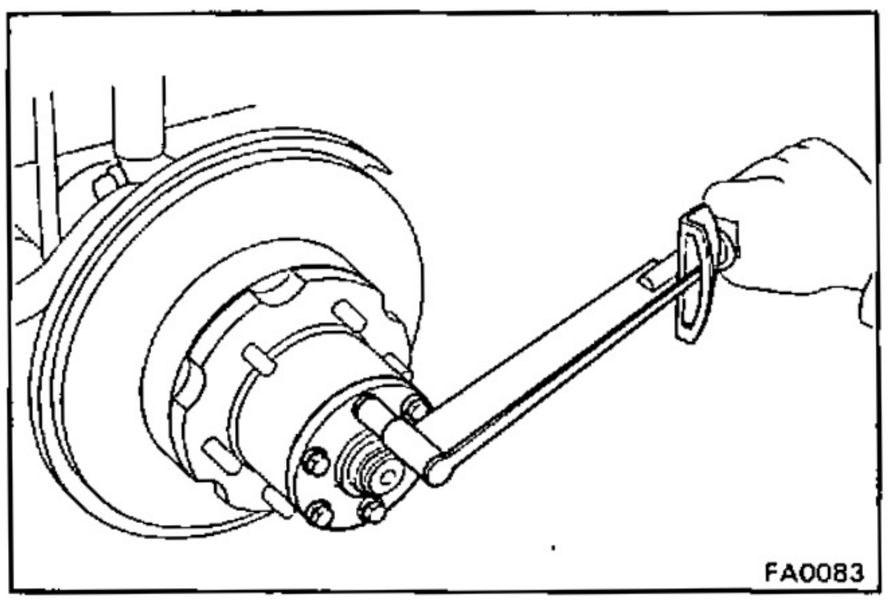

8. (w/o FREE WHEELING HUB)

(a) Place a new gasket in position on the axle hub.

(b) Install the flange to the axle hub.

(c) Install six cone washers, washers and nuts. Torque the nuts.

Torque: 360 kg-cm (26 ft-lb, 35 N·m)

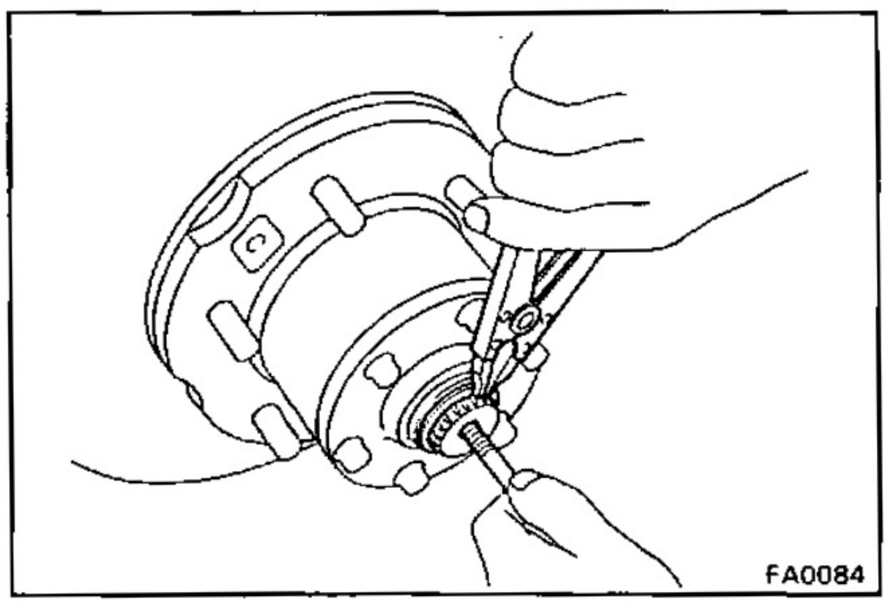

(d) Install a bolt to the axle shaft and pull it out.

(e) Using snap ring pliers, install the snap ring.

(f) Remove the bolt.

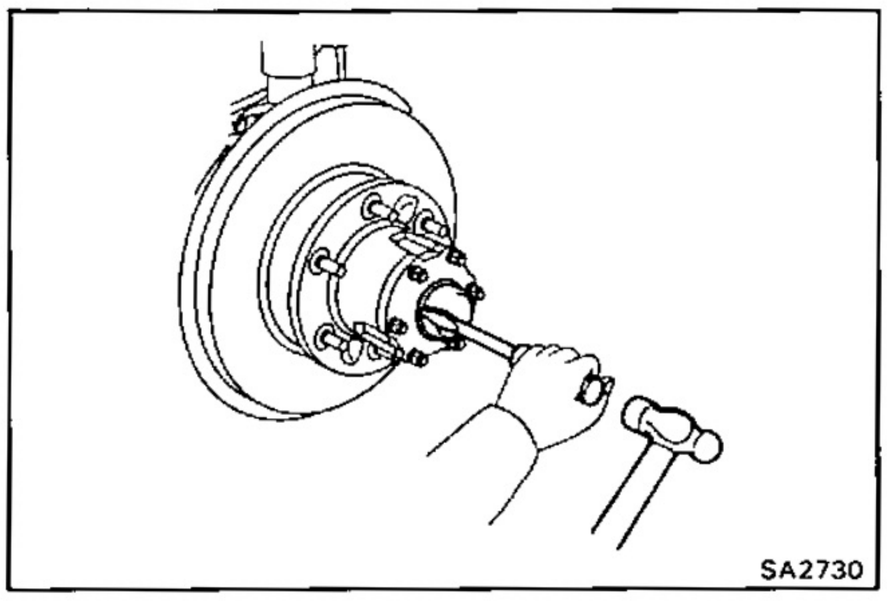

(g) Using a screwdriver and hammer, install the cap to the flange.

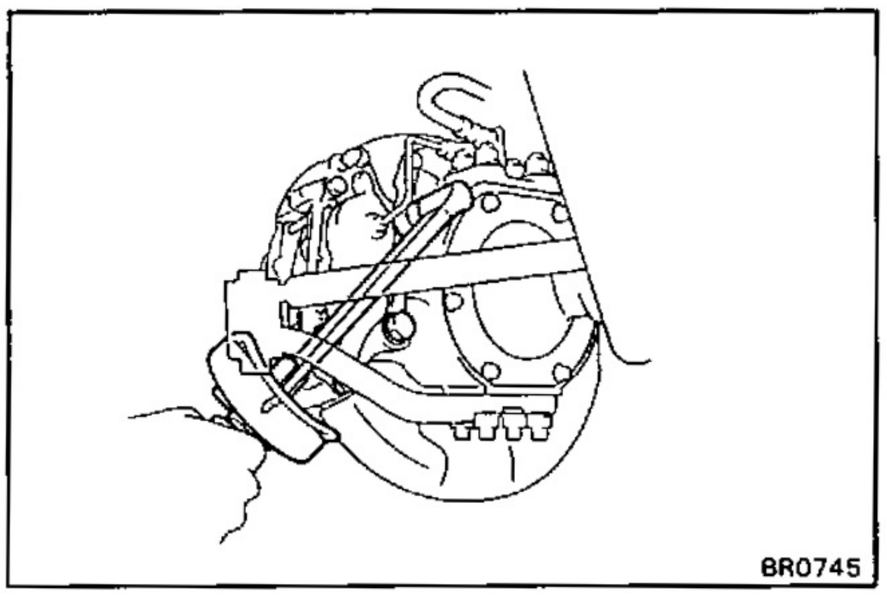

9. INSTALL BRAKE CYLINDER

(a) Install the brake cylinder to the steering knuckle. Torque the mounting bolts.

Torque: 1,250 kg-cm (90 ft-lb, 123 N·m)

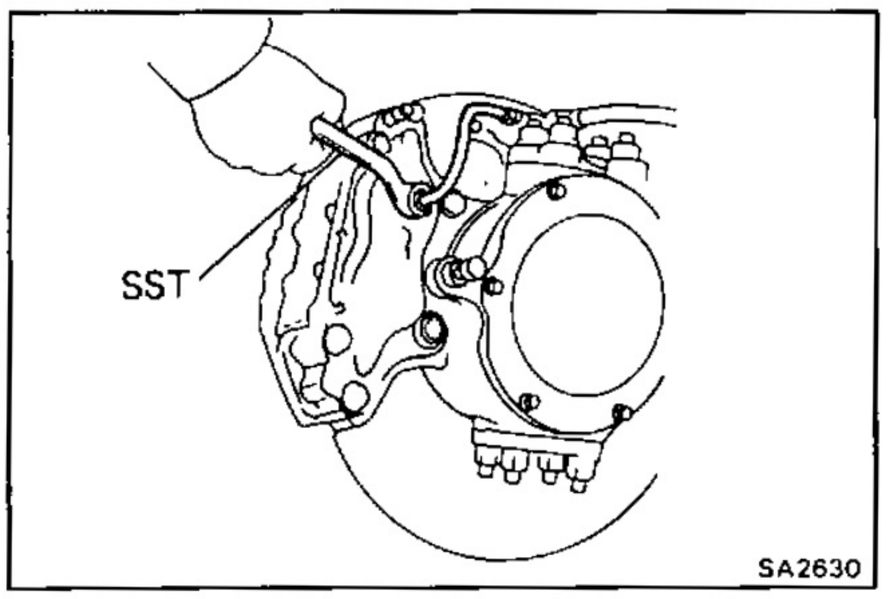

(b) Using SST, connect the brake tube.

SST 09751-36011

Torque: 155 kg-cm (11 ft-lb, 15 N·m)

10. BLEED BRAKE LINE
(See page BR-7)

STEERING KNUCKLE AND AXLE SHAFT

COMPONENTS

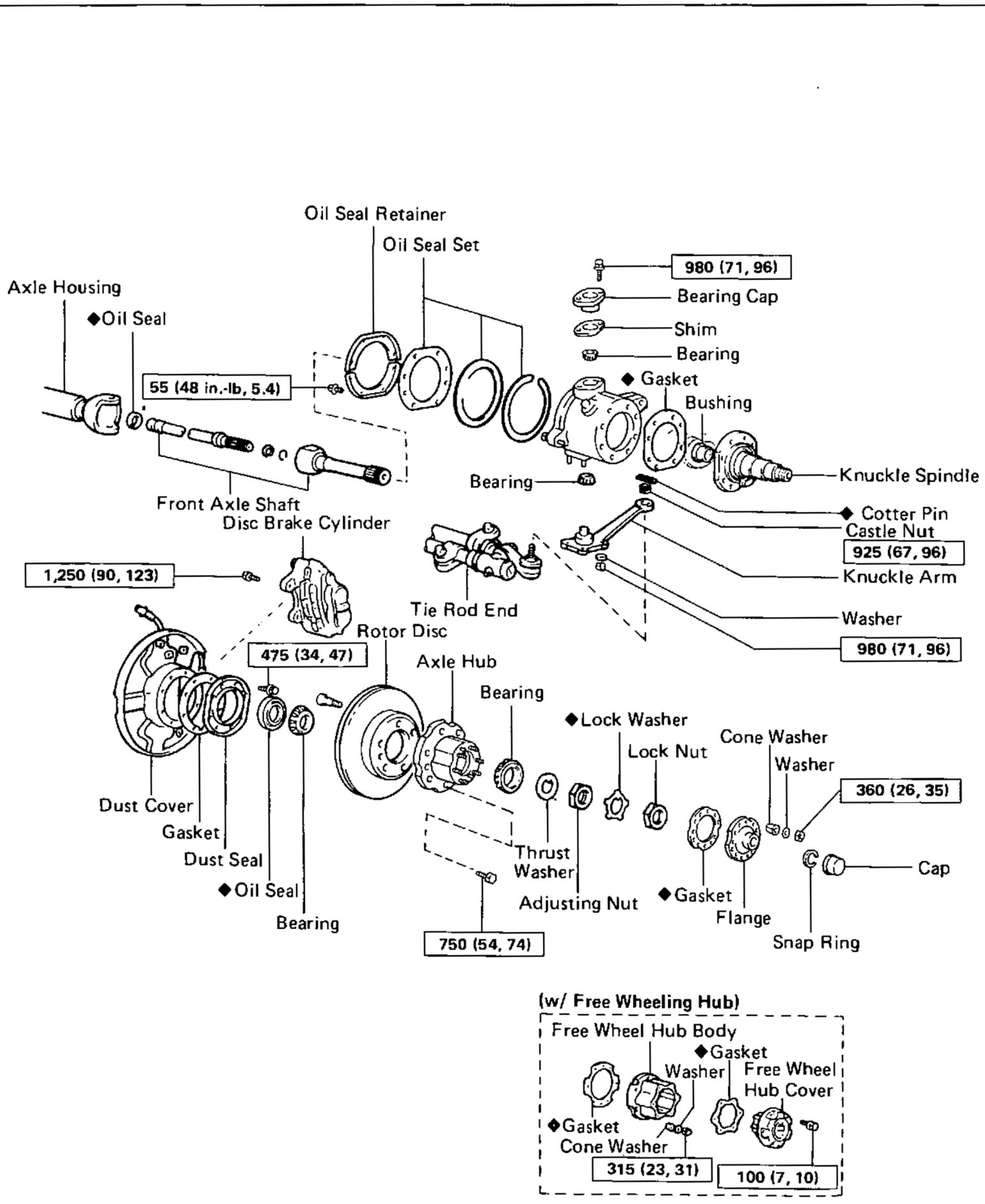

kg-cm (ft-lb, N·m) : Specified torque

◆ Non-reusable part

SA2731

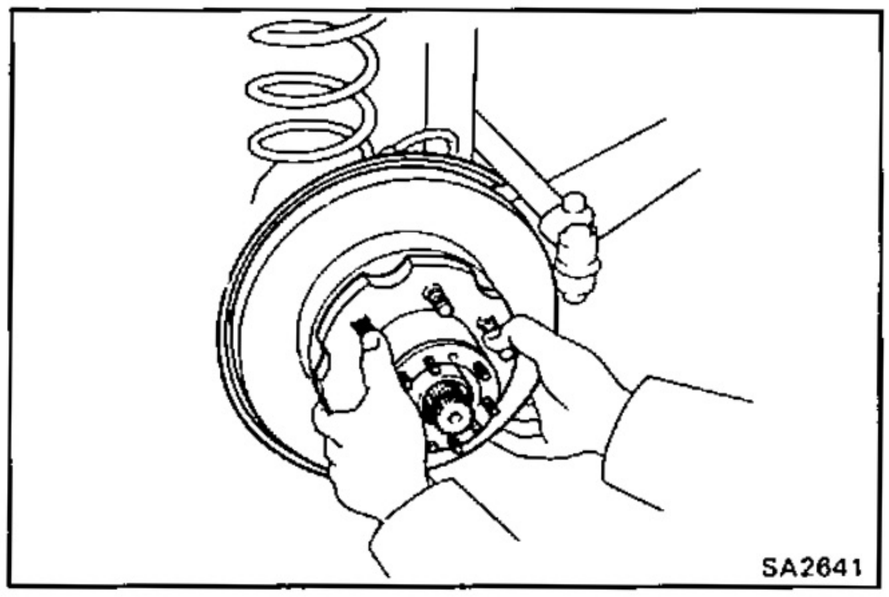

DISASSEMBLY OF STEERING KNUCKLE AND AXLE SHAFT

(See page SA-23)

1. **REMOVE FRONT AXLE HUB**
(See page SA-15)

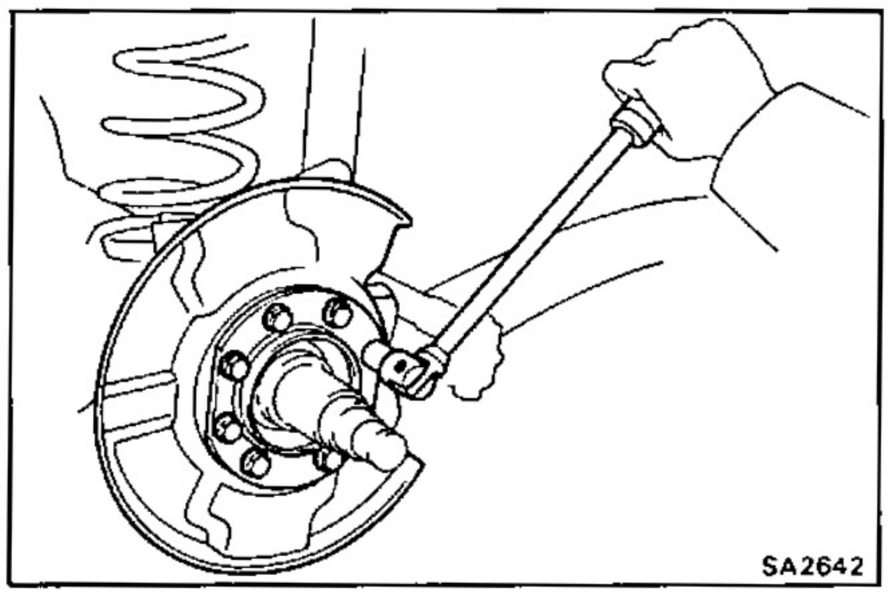

2. **REMOVE KNUCKLE SPINDLE MOUNTING BOLTS**

3. **REMOVE DUST SEAL AND DUST COVER**

Remove the eight bolts and the dust seal, dust cover and gasket.

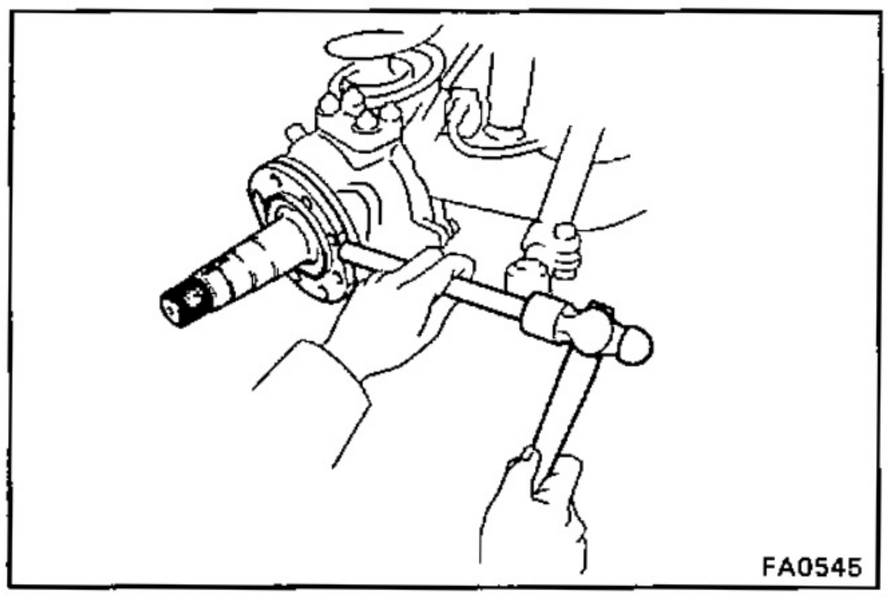

4. **REMOVE KNUCKLE SPINDLE**

Using a brass bar and hammer, tap the knuckle spindle to the steering knuckle.

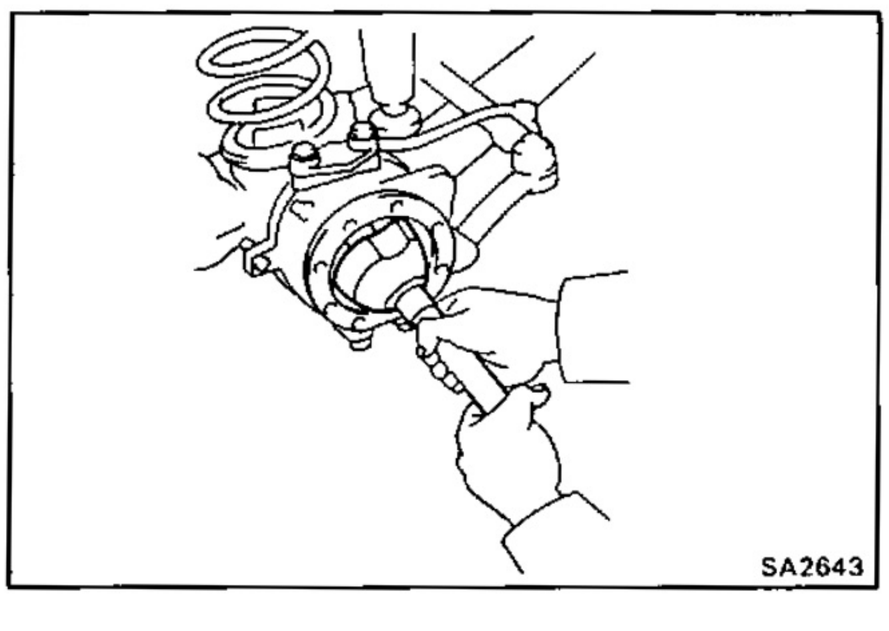

5. **REMOVE AXLE SHAFT**

Position one flat part of the outer shaft upward and pull out the axle shaft.

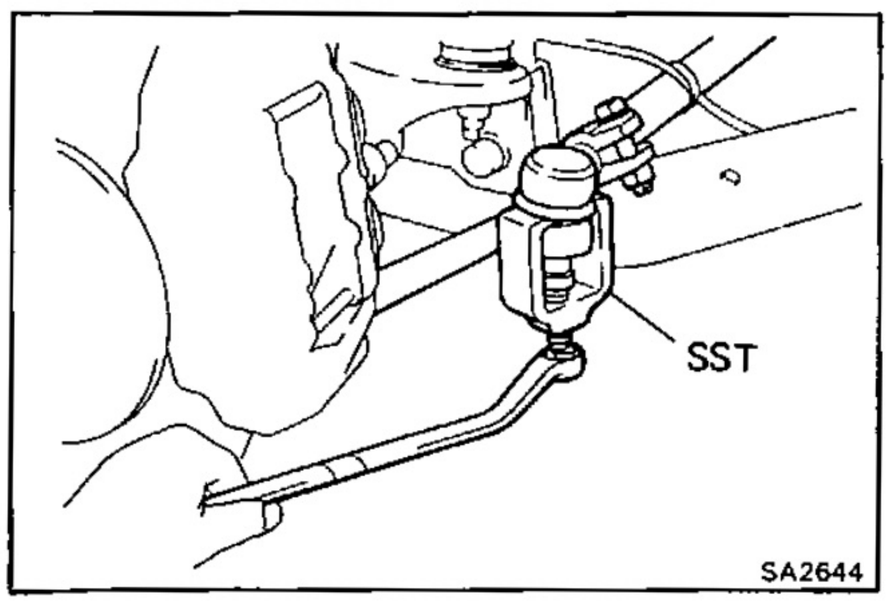

6. **DISCONNECT TIE ROD END FROM KNUCKLE ARM**

(a) Remove the cotter pin and castle nut.

(b) Using SST, disconnect the tie rod end from the knuckle arm.

SST 09611-22012

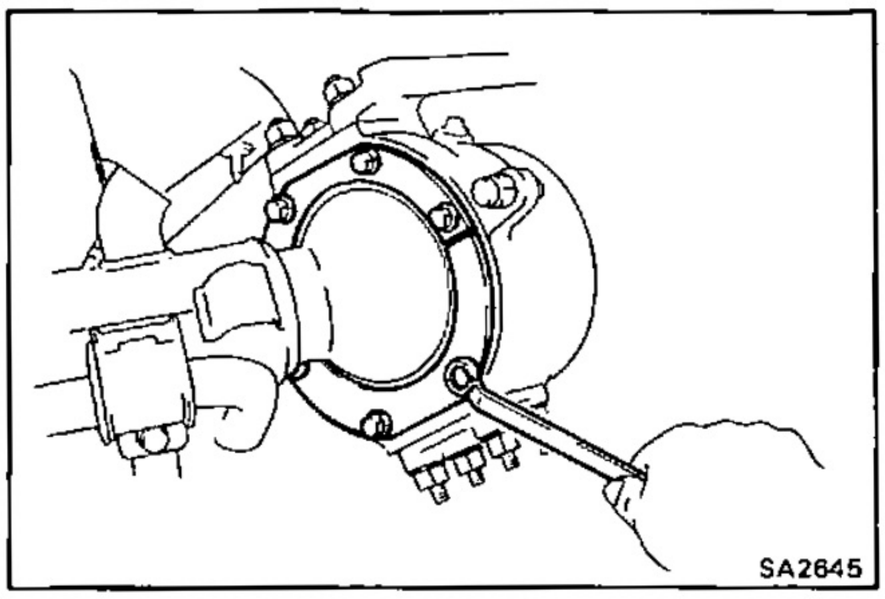

7. REMOVE OIL SEAL END RETAINER

Remove the six bolts and the retainer.

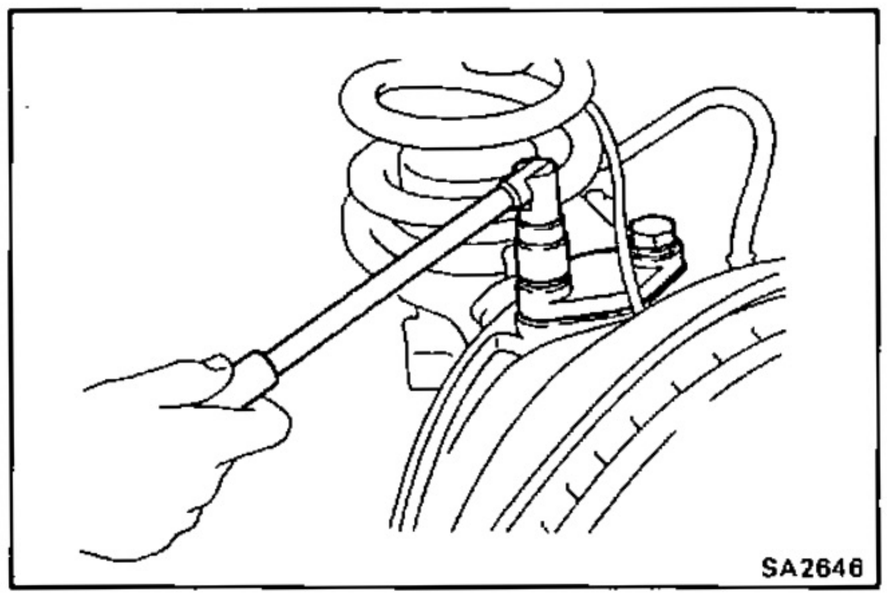

8. REMOVE KNUCKLE ARM AND BEARING CAP

(a) Remove the knuckle and bearing cap mounting nuts.

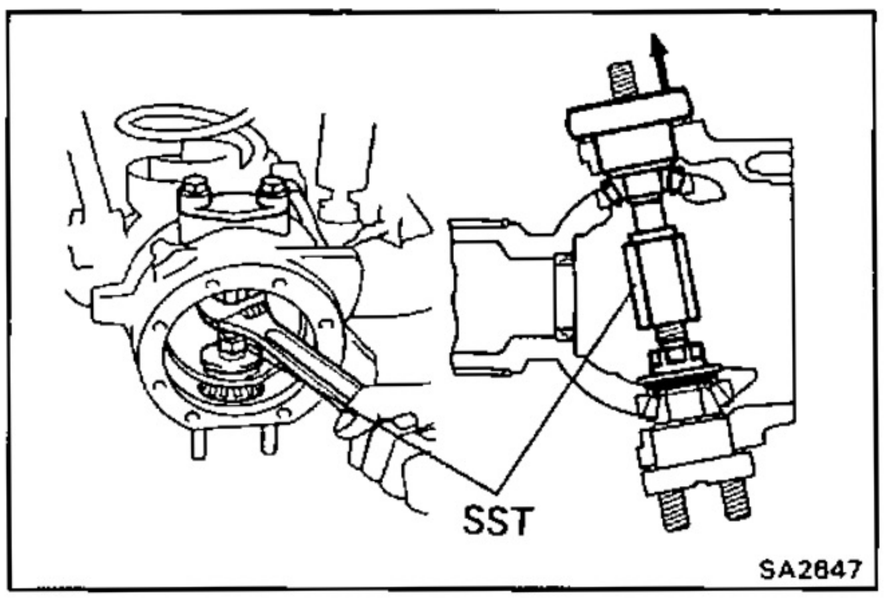

(b) Using SST, push out the bearing cap and shims from the steering knuckle.

SST 09606-60020

HINT: Use the SST without a collar.

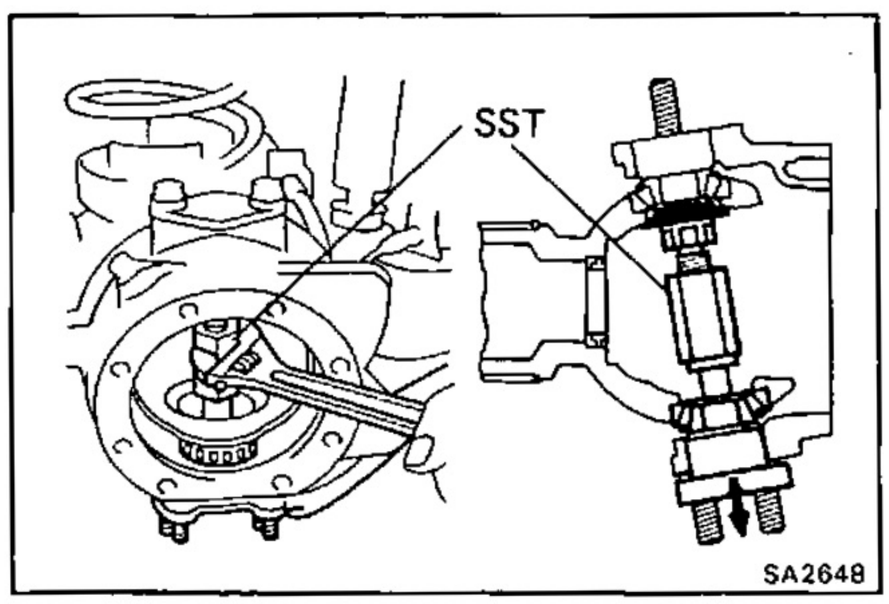

(c) Using SST, push out the knuckle arm from the steering knuckle.

SST 09606-60020

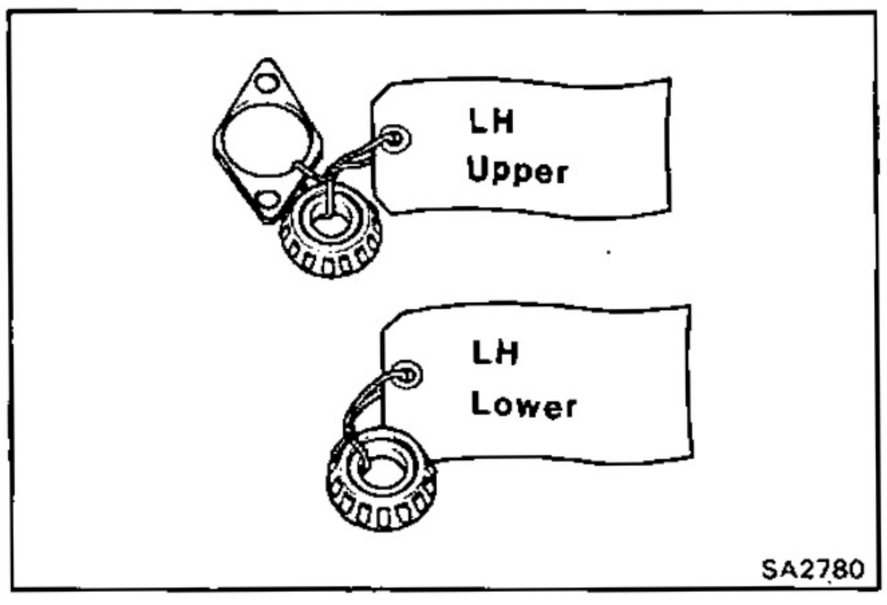

9. REMOVE STEERING KNUCKLE AND BEARING

HINT: Mark the removed adjusting shims and bearings so as to enable reassembling them to their proper positions.

INSPECTION AND REPAIR OF STEERING KNUCKLE AND AXLE SHAFT

1. INSPECT KNUCKLE SPINDLE

Clean the knuckle spindle and inspect the bushing for wear or damage.

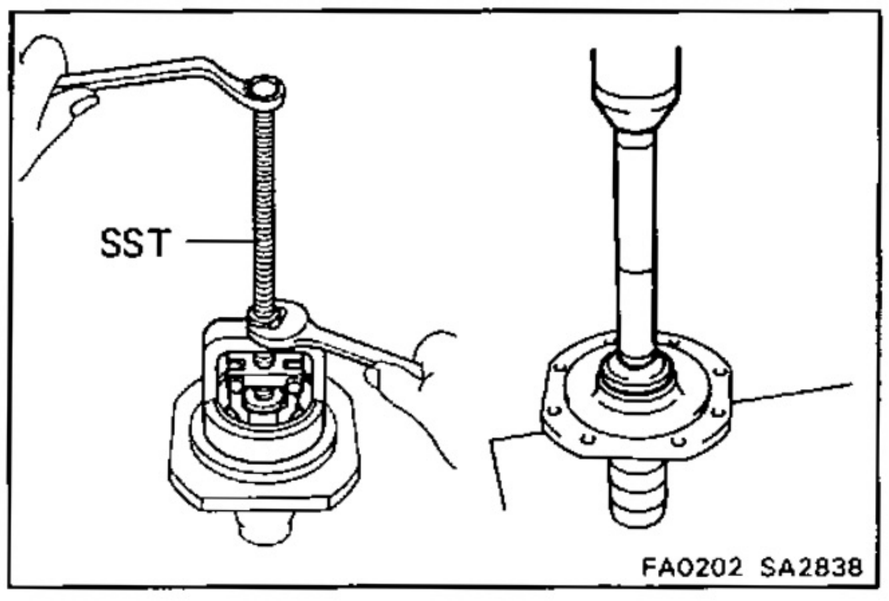

2. REPLACE BUSHING

(a) Using SST, remove the bushing.

SST 09612-65014 (09612-01010, 09612-01050)

(b) Using SST, press a new bushing into the spindle.

SST 09618-60010

3. INSPECT BEARING

Clean the bearings and outer races and inspect them for wear or damage.

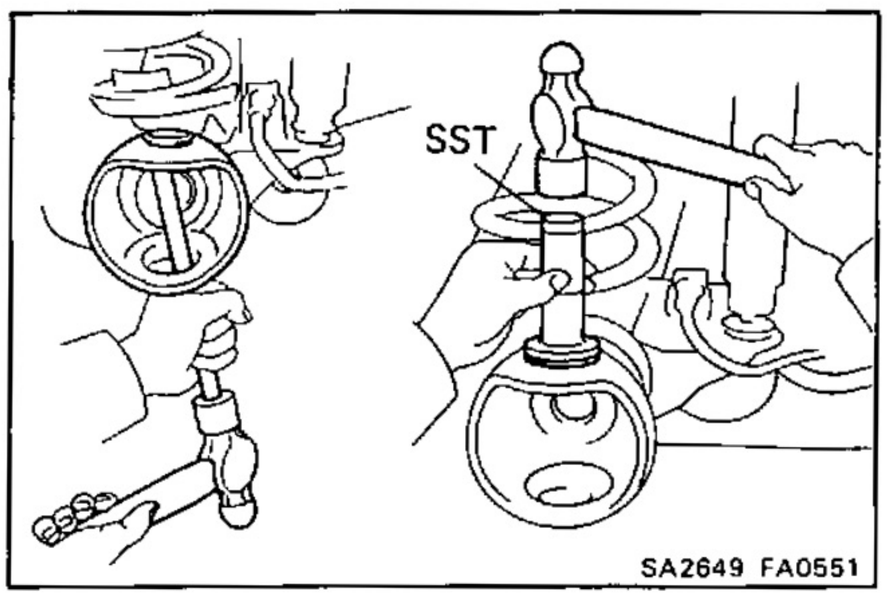

4. IF NECESSARY, REPLACE BEARING OUTER RACE

(a) Using a brass bar, drive out the bearing outer race.

(b) Using SST, carefully drive in a new bearing outer race.

SST 09605-60010

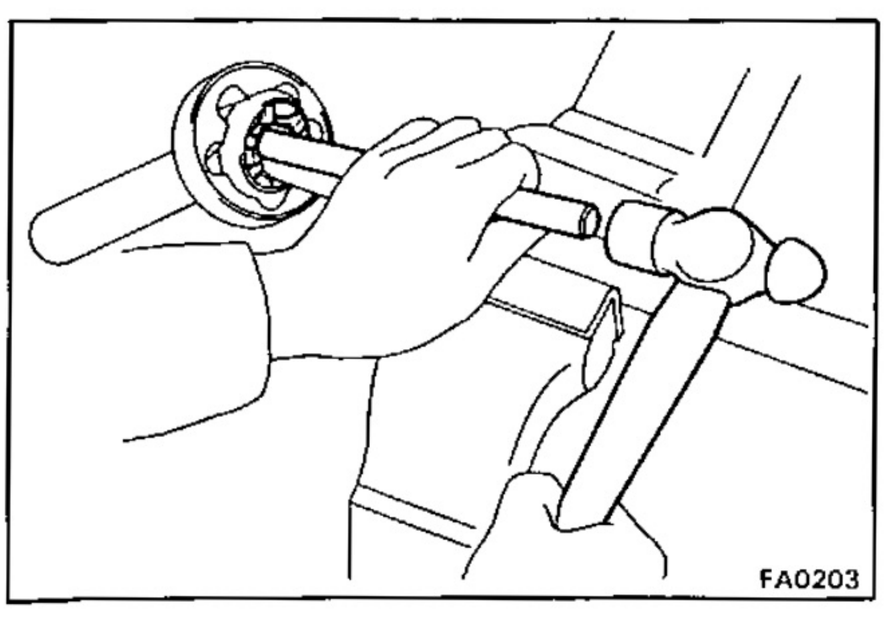

5. INSECT BIRFIELD JOINT INNER PARTS

(a) Hold the inner shaft in a vise.

(b) Place a brass bar against the joint inner race and drive out the outer shaft.

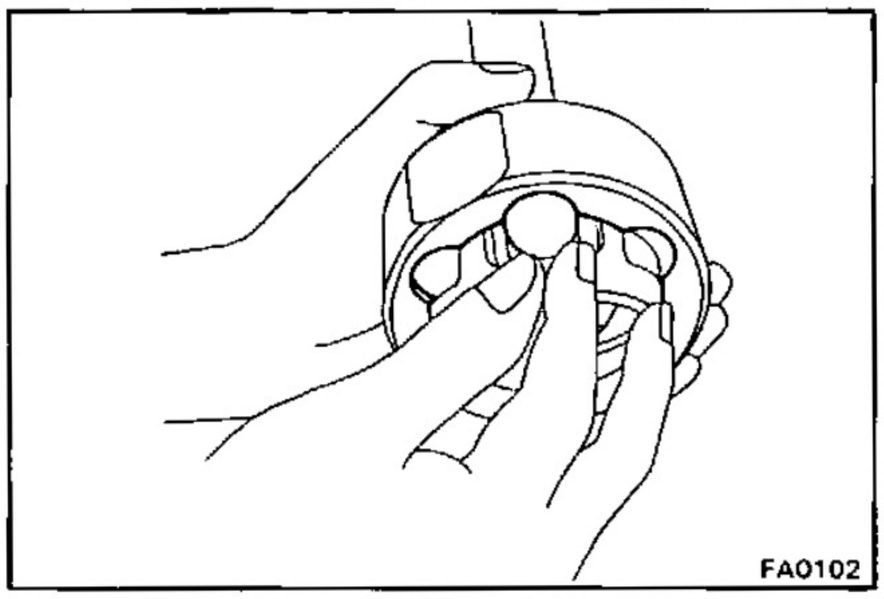

(c) Tilt the inner race and cage and take out the bearing balls one by one.

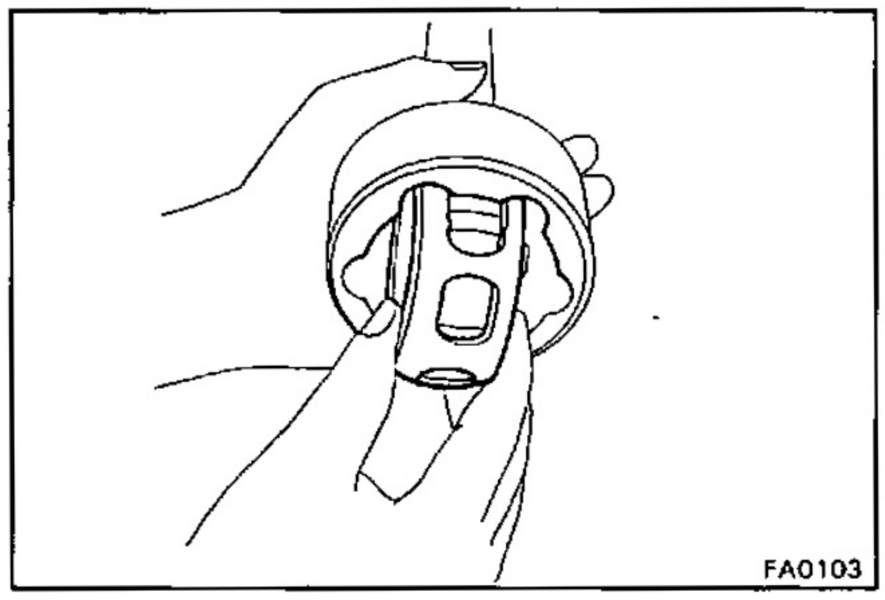

(d) Fit the two large openings in the cage against the protruding parts of the outer shaft, and pull out the cage and inner race.

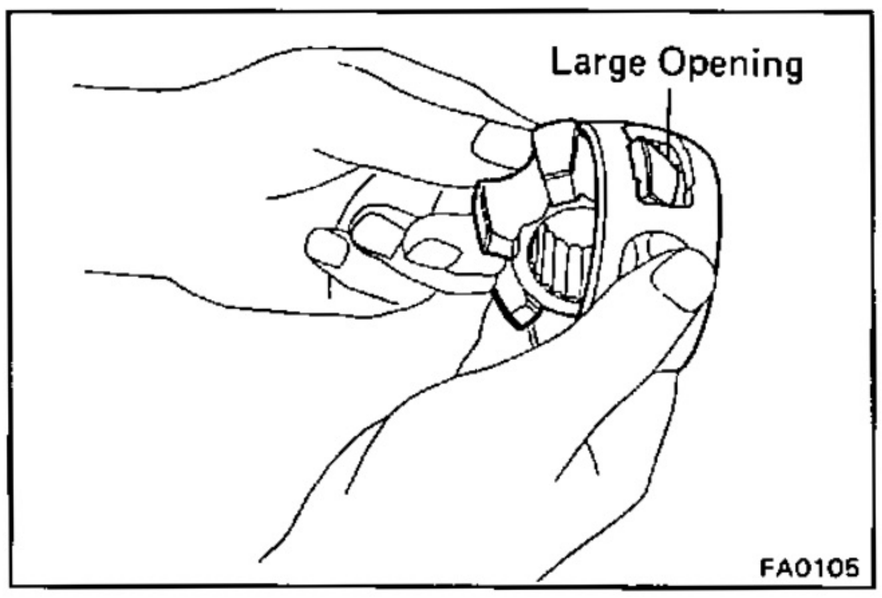

(e) Take out the inner race from the cage through the large opening.

(f) Clean and inspect the joint parts for wear or damage.

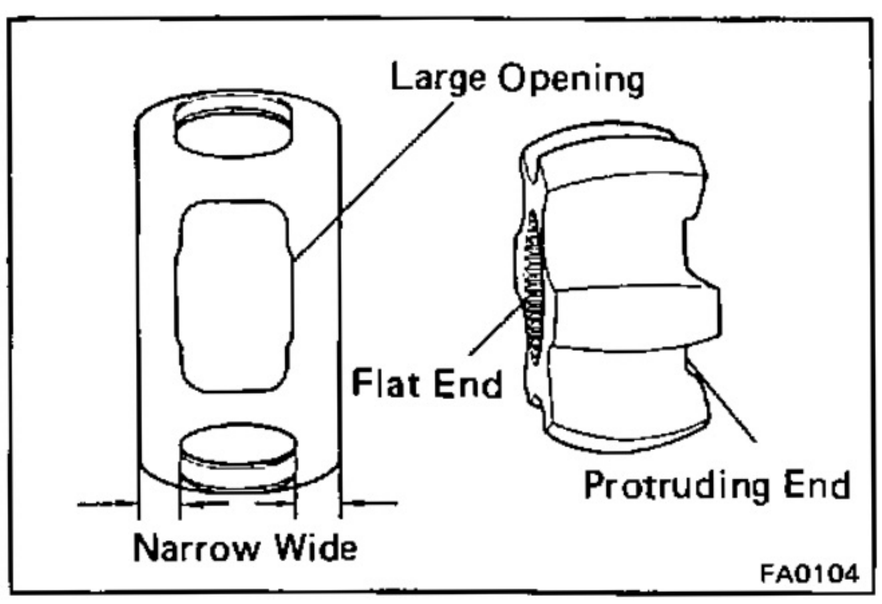

(g) Coat the joint inner parts and outer shaft inside with molybdenum disulphide lithium base grease.

(h) Insert the inner race in the cage through the large opening.

(i) Position the protruding end of the inner race toward the wide side of the cage.

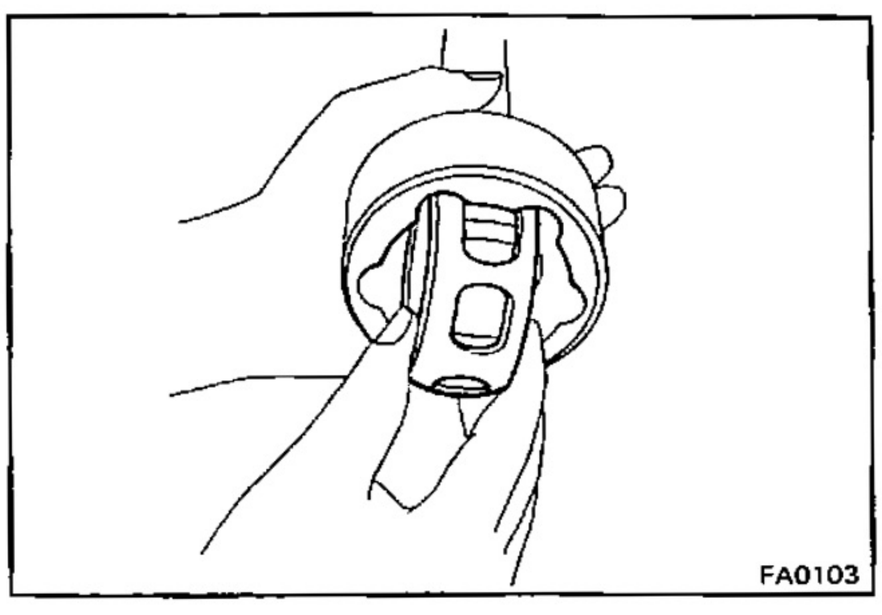

(j) Assemble the cage and inner race to the outer shaft by fitting the two large openings in the cage against the protruding parts of the outer shaft.

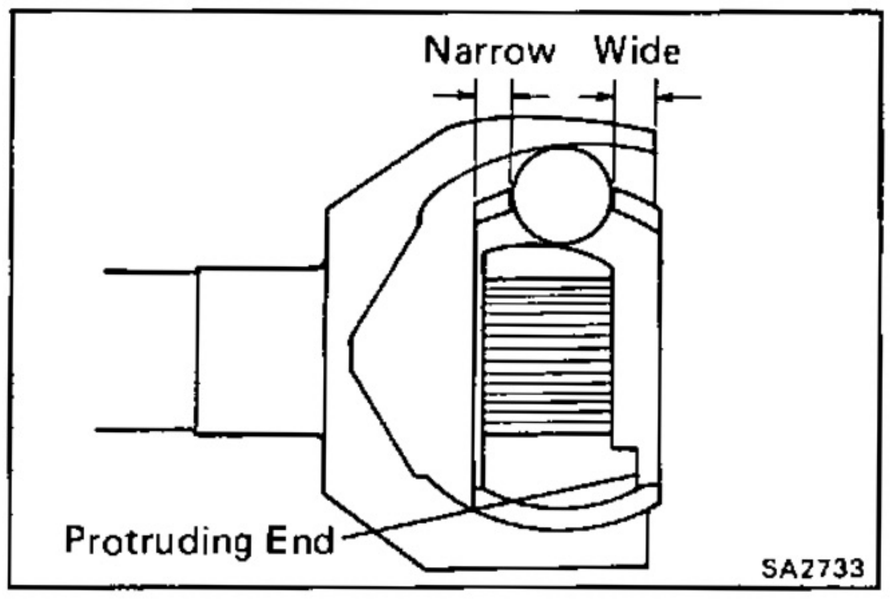

(k) Make sure to position the wide side of the cage and the inner race protruding end outward.

(l) Fit in the inner race and cage, and install the six bearing balls in the outer shaft. (See step (c))

(m) Pack molybdenum disulphide lithium base grease in the outer shaft.

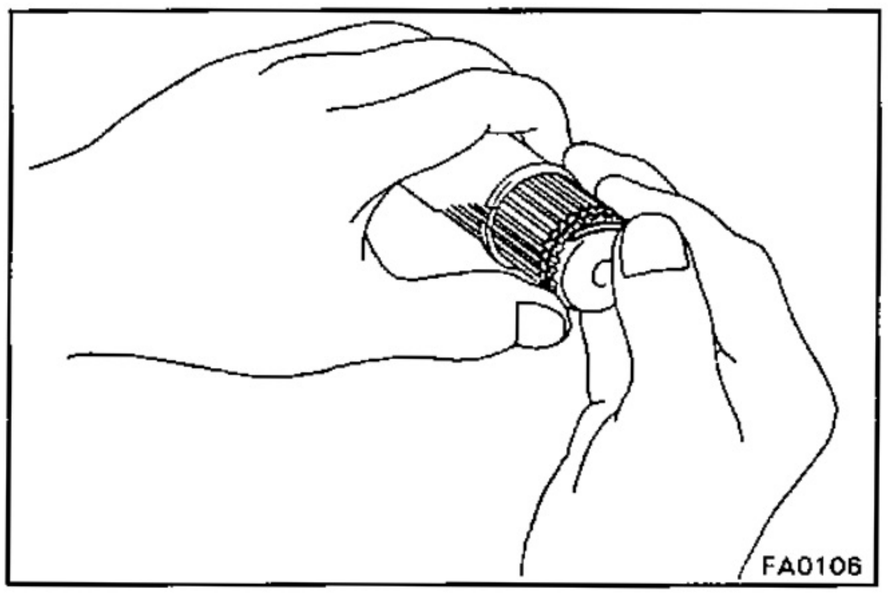

(n) Install new snap rings to the inner shaft.

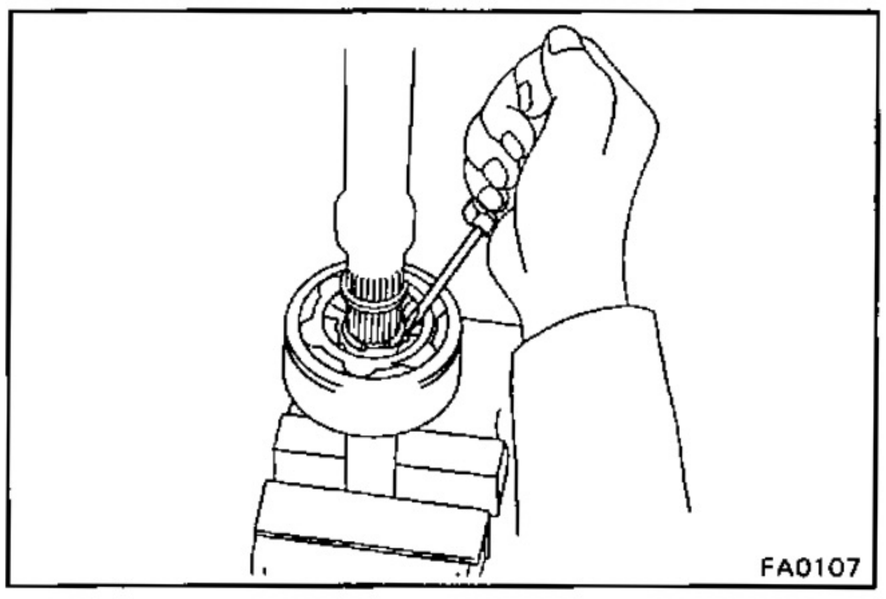

(o) Hold the outer shaft in a vise and, while compressing the snap inner ring, install the inner shaft to the outer shaft.

(p) Verify that the inner shaft cannot be pulled out.

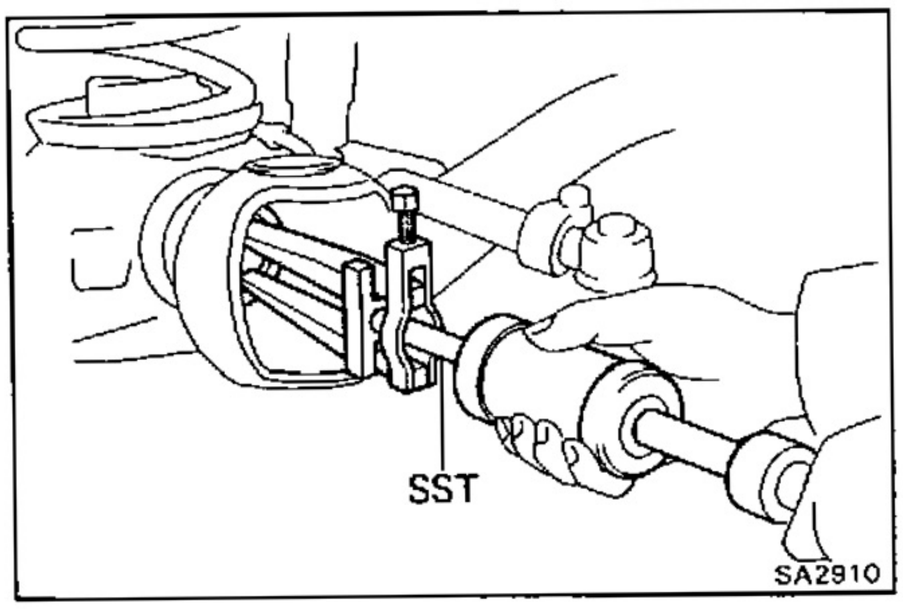

REPLACEMENT OF DRIVE SHAFT OIL SEAL

1. REMOVE DRIVE SHAFT OIL SEAL

Using SST, remove the oil seal from the axle housing.

SST 09308-00010

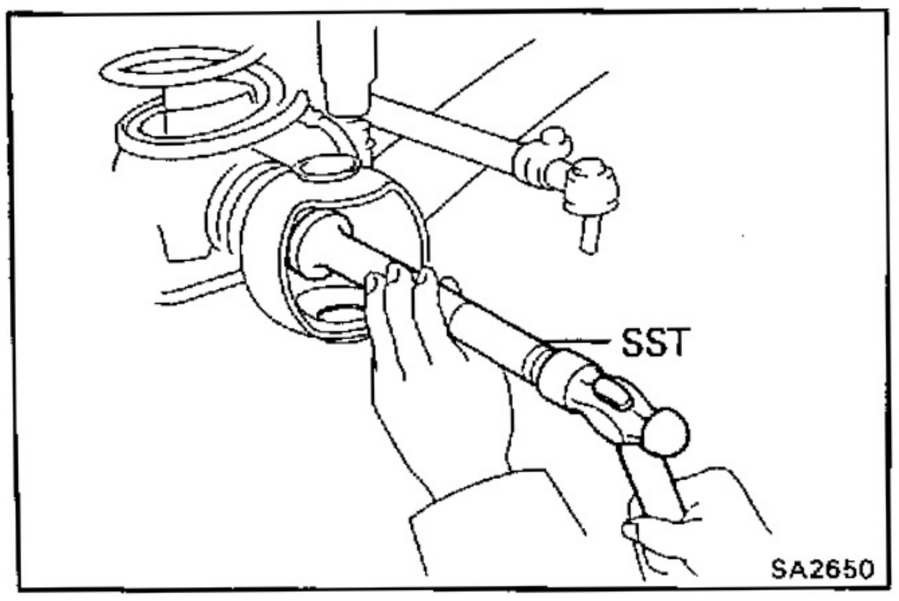

2. INSTALL DRIVE SHAFT OIL SEAL

Using SST, drive in the oil seal into the axle housing.

SST 09618-60010

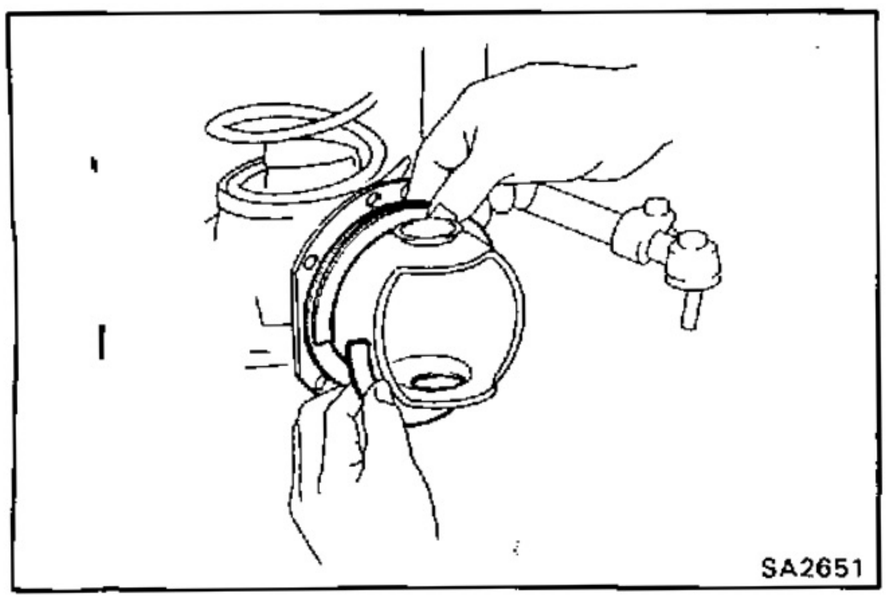

ASSEMBLY OF STEERING KNUCKLE AND AXLE SHAFT

(See page SA-23)

1. INSTALL OIL SEAL SET END RETAINER

Install the parts in the following order:

(a) Felt dust seal

(b) Rubber seal

(c) Steel ring

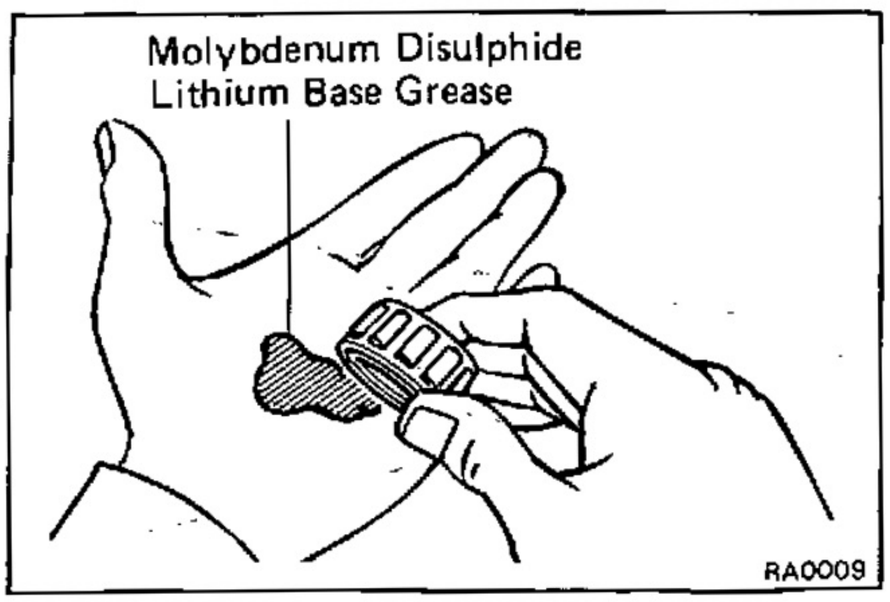

2. PACK BEARINGS WITH MOLYBDENUM DISULPHIDE LITHIUM BASE GREASE

(a) Place molybdenum disulphide lithium base grease in the palm of your hand.

(b) Pack grease into the bearing, continuing until the grease oozes out from the other side.

(c) Do the same around the bearing circumference.

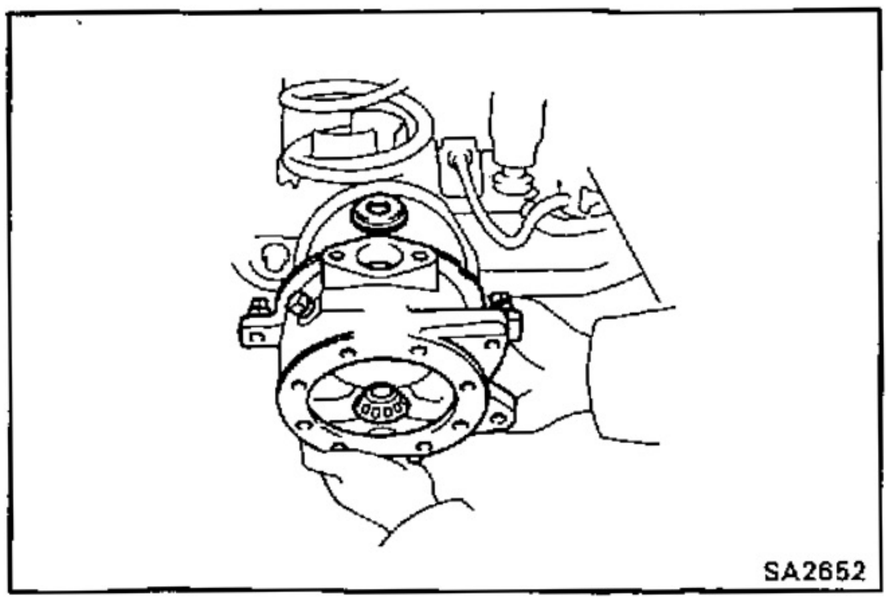

3. INSTALL STEERING KNUCKLE AND BEARINGS

(a) Place the bearings in positions on the knuckle and axle housing.

(b) Insert the knuckle on the axle housing.

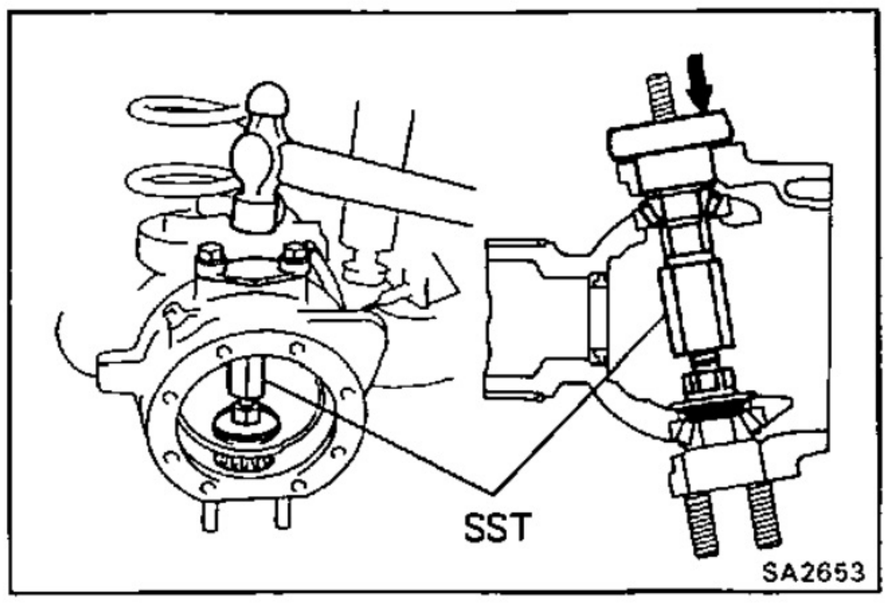

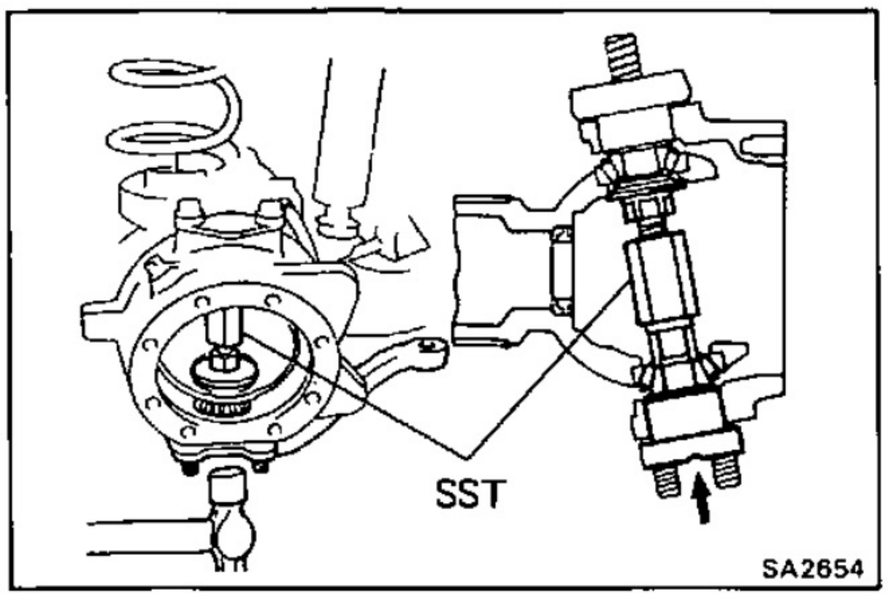

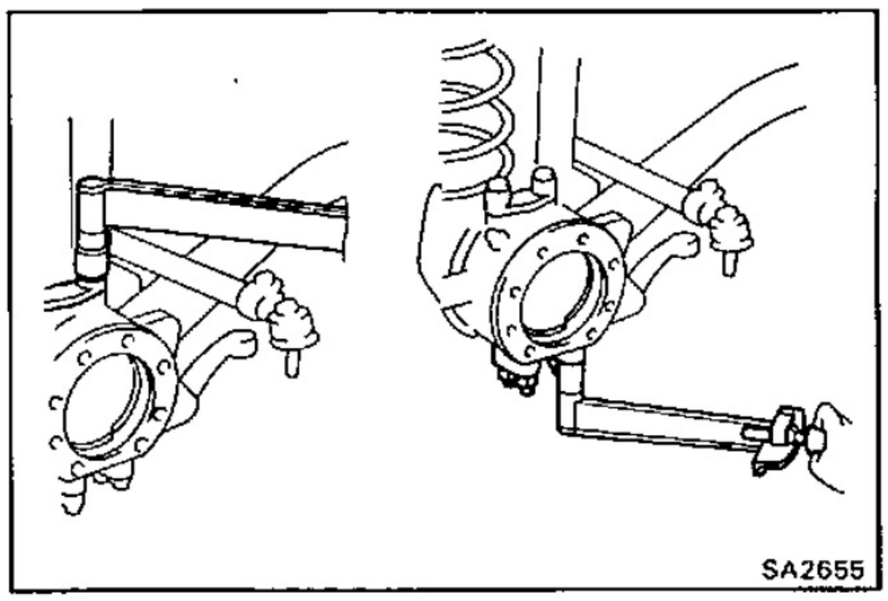

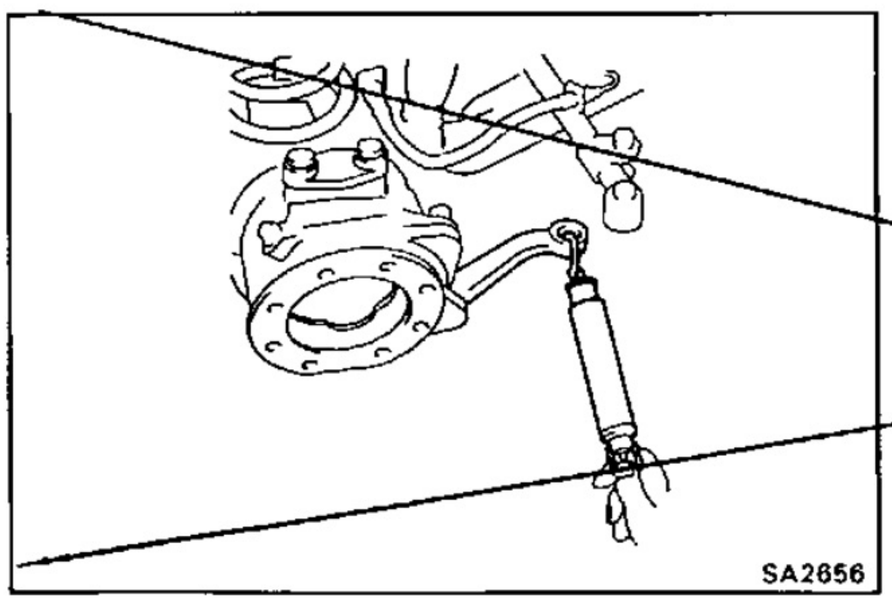

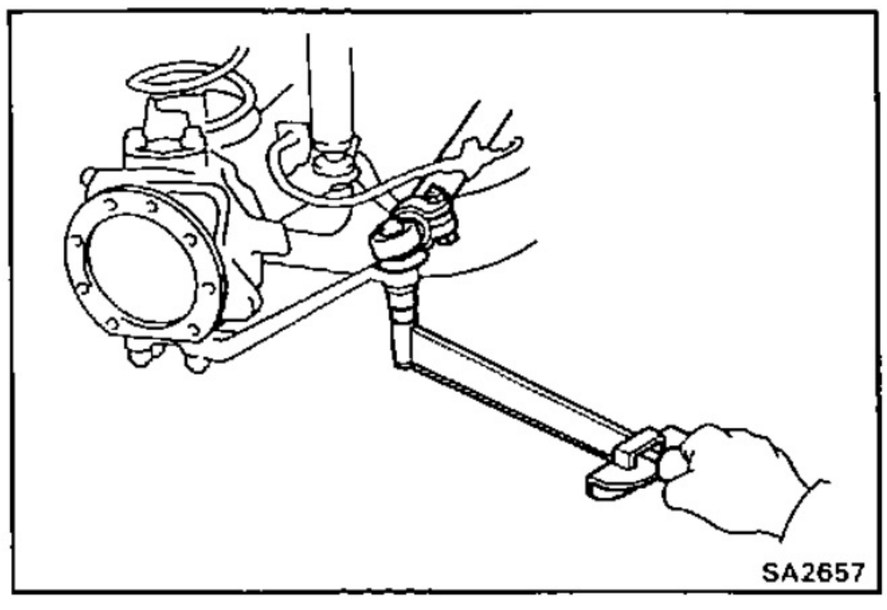

4. INSTALL KNUCKLE ARM AND BEARING CAP

(a) Using SST, support the upper bearing inner race.

SST 09606-60020

HINT: Use SST with a collar.

(b) Install the bearing cap or the third arm over the shims that were originally used or were selected as described in the adjustment operations.

(c) Using a hammer, tap the bearing cap or the third arm into the bearing inner race.

(d) Using SST, support the lower bearing inner race.

SST 09606-60020

(e) Install the knuckle arm over the shims that were originally used or were selected in the adjustment operations.

(f) Using a hammer, tap the knuckle arm into the bearing inner race.

(g) Remove SST from the knuckle.

SST 09606-60020

(h) Install and torque the nuts.

(Knuckle Arm)

Install the cone washers, spring washers, nuts and torque the nuts.

Torque: 980 kg-cm (71 ft-lb, 96 N·m)

(Third Arm)

Install the cone washers, spring washers, nuts and torque the nuts.

Torque: 980 kg-cm (71 ft-lb, 96 N·m)

(Bearing Cap)

Install the spring washers, bolts and torque the bolts.

Torque: 980 kg-cm (71 ft-lb, 96 N·m)

5. MEASURE BEARING PRELOAD

Using a spring tension gauge, measure the preload.

Preload (starting): 2.5 — 4.6 kg
(5.6 — 9.9 lb, 25 — 44 N)

REFER NEXT PAGE

6. CONNECT TIE ROD TO KNUCKLE ARM

Torque the castle nut and secure it with a cotter pin.

Torque: 925 kg-cm (67 ft-lb, 91 N·m)

. 80 Series

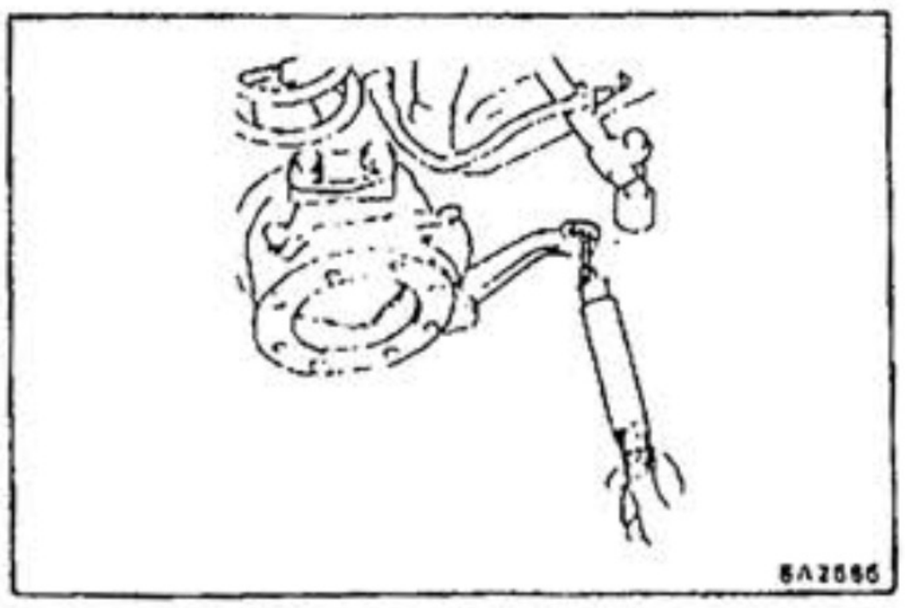

Adjusting shim thickness

Thickness	mm (in.)
0.1	(0.004)
0.2	(0.008)
0.5	(0.020)
1.0	(0.039)

5. CHECK BEARING PRELOAD

Using a spring tension gauge, measure the preload.

Preload (starting) :

25-44 N (2.5-4.5 kgf, 5.6-9.9 lbf)

If the bearing preload is not within specification, adjust it by replacing the adjusting shims.

HINT:

. If the bearing preload is excessive, use thicker shims.
. If the bearing preload is insufficient, use thinner shims.
. The preload will change about 1.0-2.0 N (0.1-0.2 kgf, 0.2-0.4 lbf) with each 0.1mm (0.004 in.) alteration of the adjusting shim thickness.

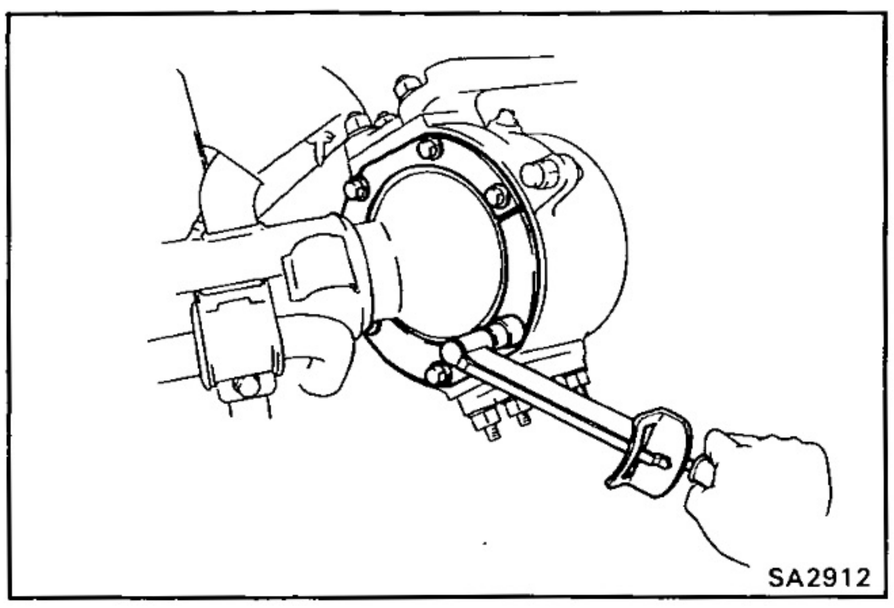
SA2912

7. INSTALL OIL SEAL SET RETAINER TO KNUCKLE

Install the oil seal set retainer to steering knuckle with the six bolts.

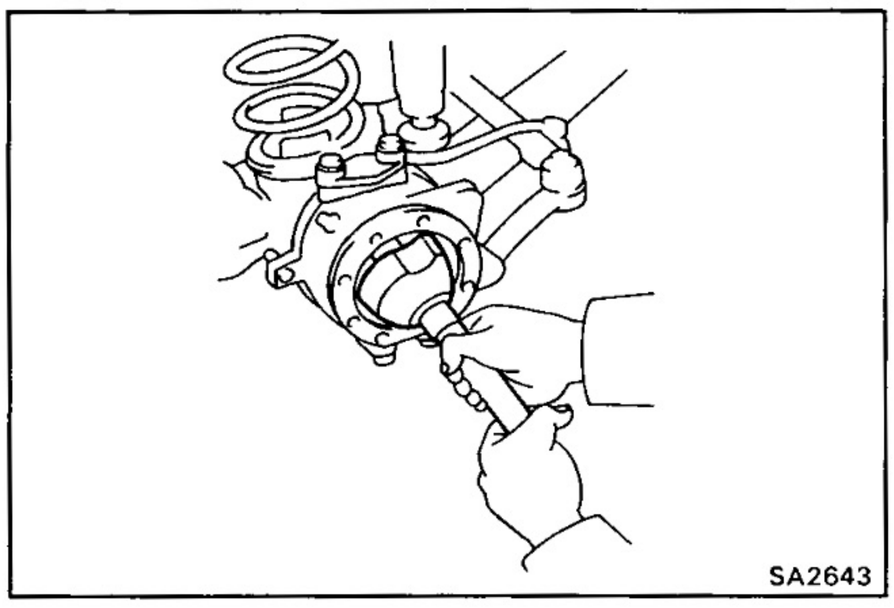
SA2643

8. INSTALL AXLE SHAFT

Position one flat part of the outer shaft upward, and install the shaft.

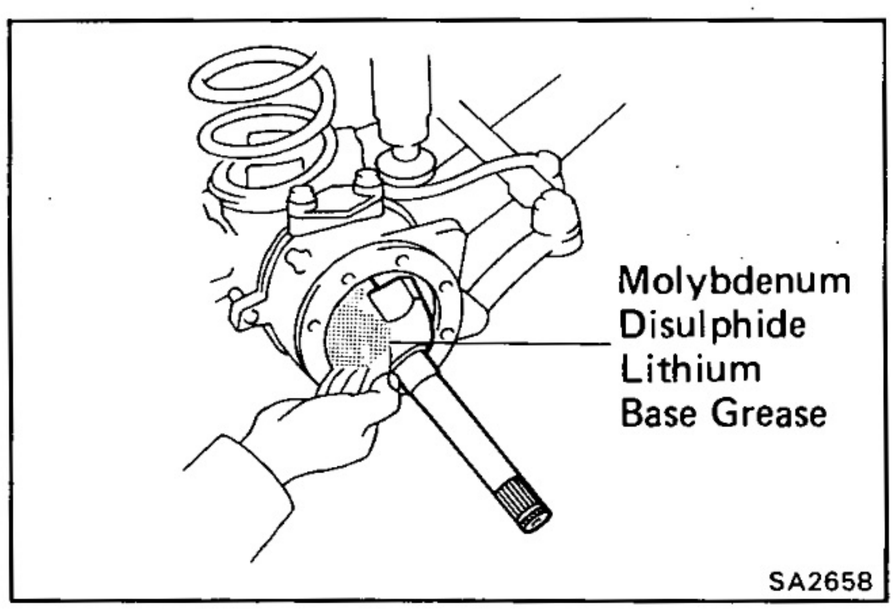

SA2658

9. PACK MOLYBDENUM DISULPHIDE LITHIUM BASE GREASE

Pack molybdenum disulphide lithium base grease into the knuckle to about three fourths of the knuckle.

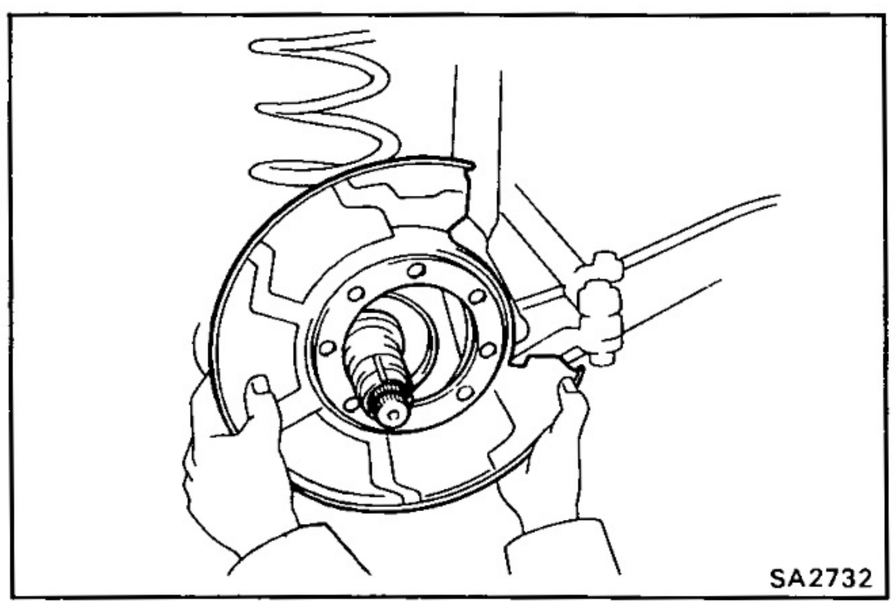
SA2732

10. INSTALL KNUCKLE SPINDLE DUST COVER WITH NEW GASKETS AND DUST SEAL

(a) Place a new gasket in the position on the knuckle and install the spindle.

(b) Place the gasket, dust cover and seal on the spindle.

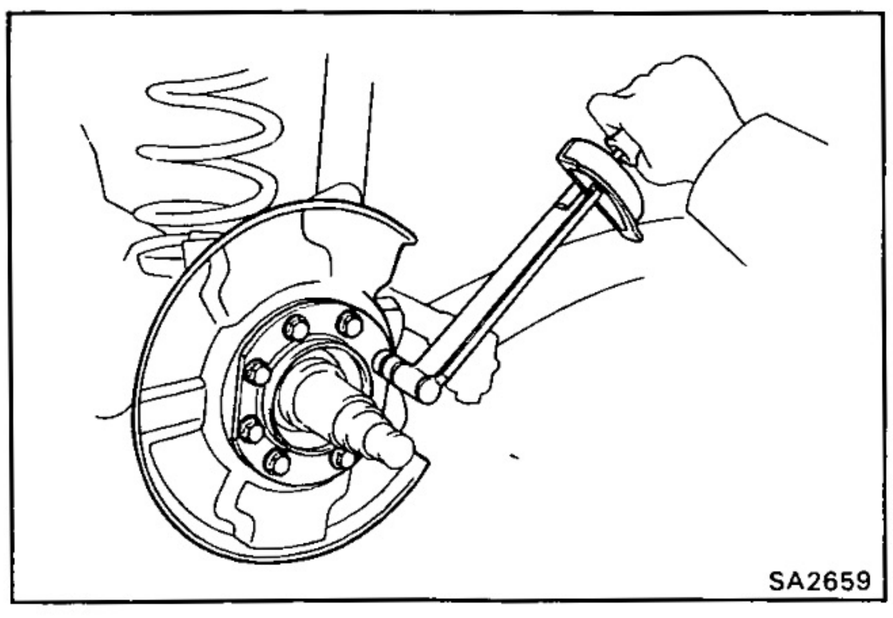
SA2659

(c) Install and torque the spindle mounting bolts.

Torque: 475 kg-cm (34 ft-lb, 47 N·m)

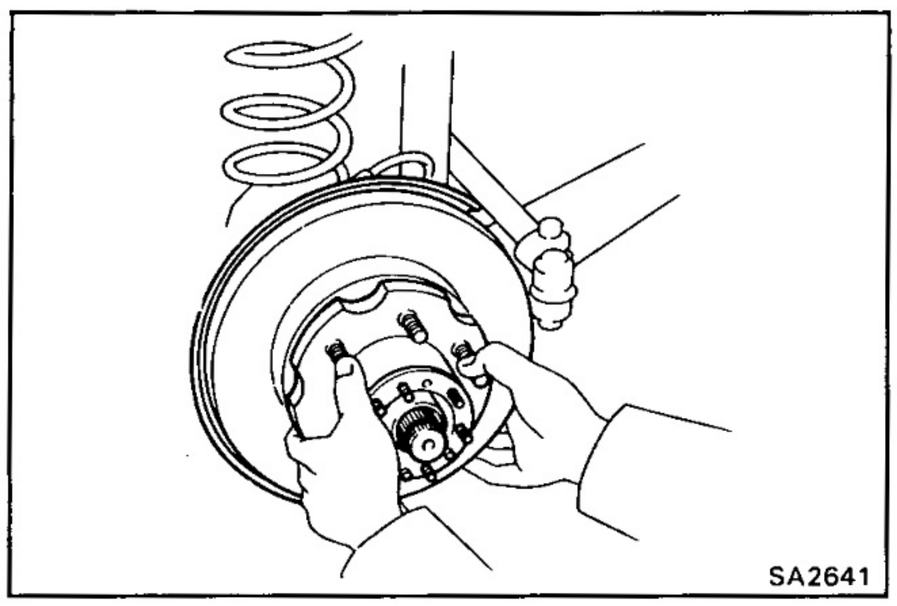

12. INSTALL AXLE HUB (See page SA-15)

FRONT DIFFERENTIAL

On-Vehicle Replacement of Rear Oil Seal

COMPONENTS

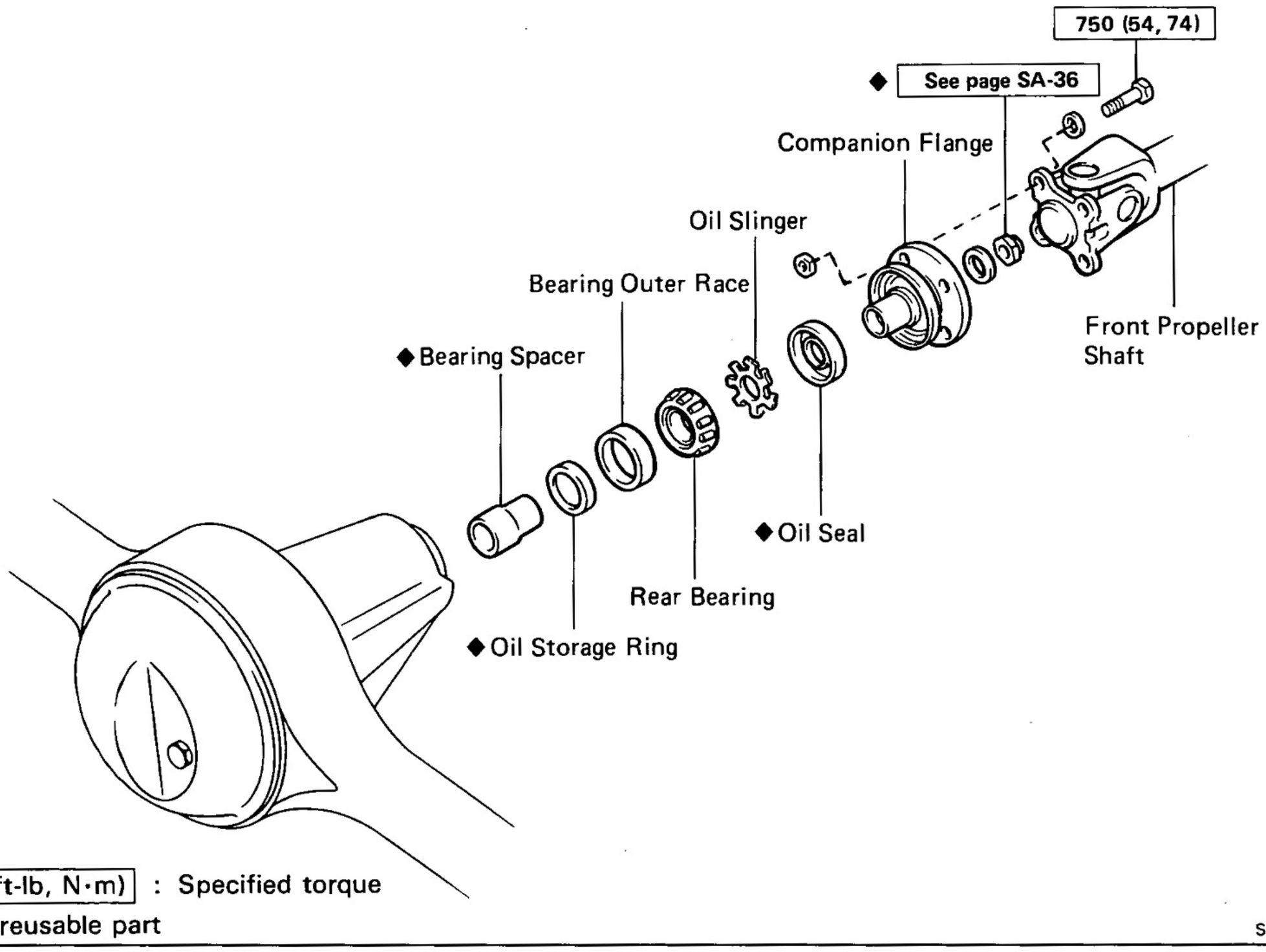

kg-cm (ft-lb, N·m) : Specified torque

◆ Non-reusable part

SA2385

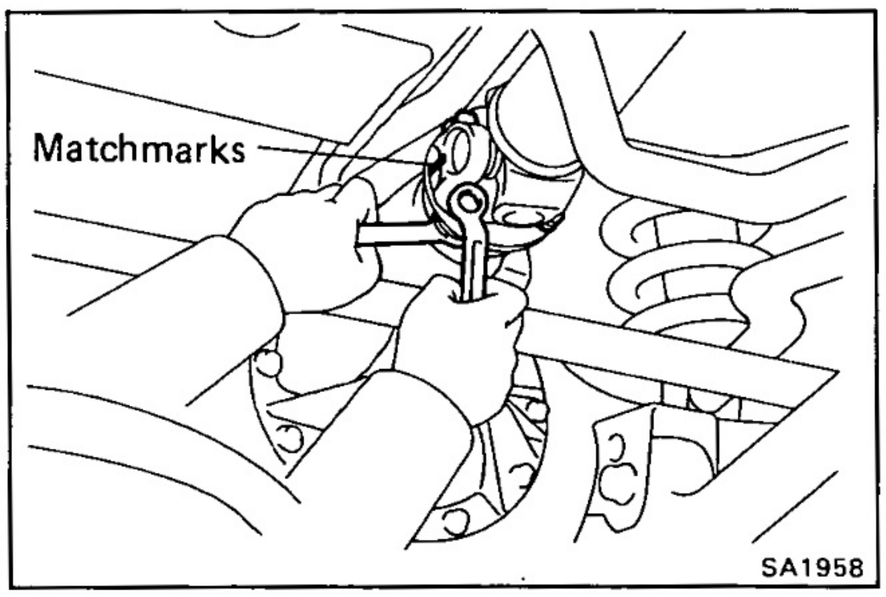

SA1958

1. DISCONNECT FRONT PROPELLER SHAFT

(a) Place matchmarks on the flanges.

(b) Remove the four bolts and nuts.

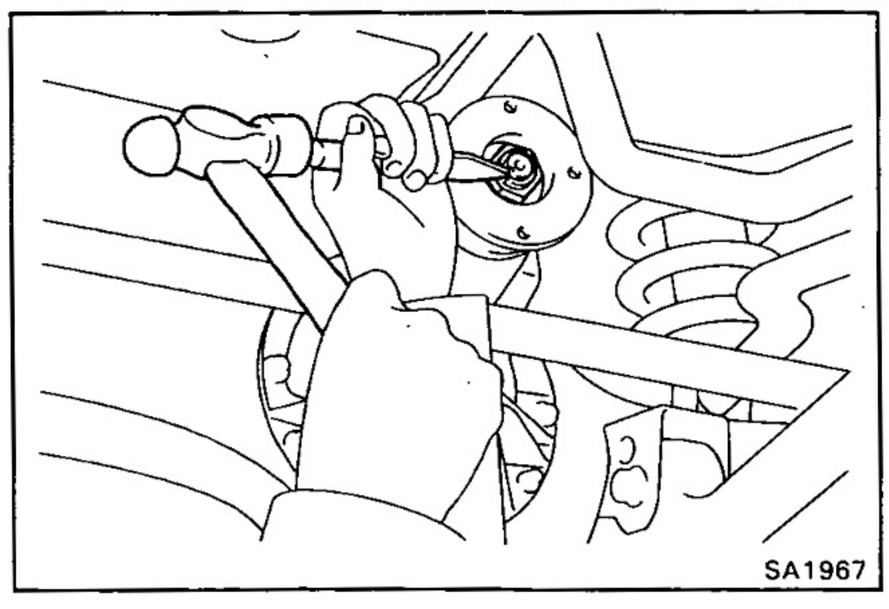

SA1967

2. REMOVE COMPANION FLANGE

(a) Using a chisel and hammer, loosen the staked part of nut.

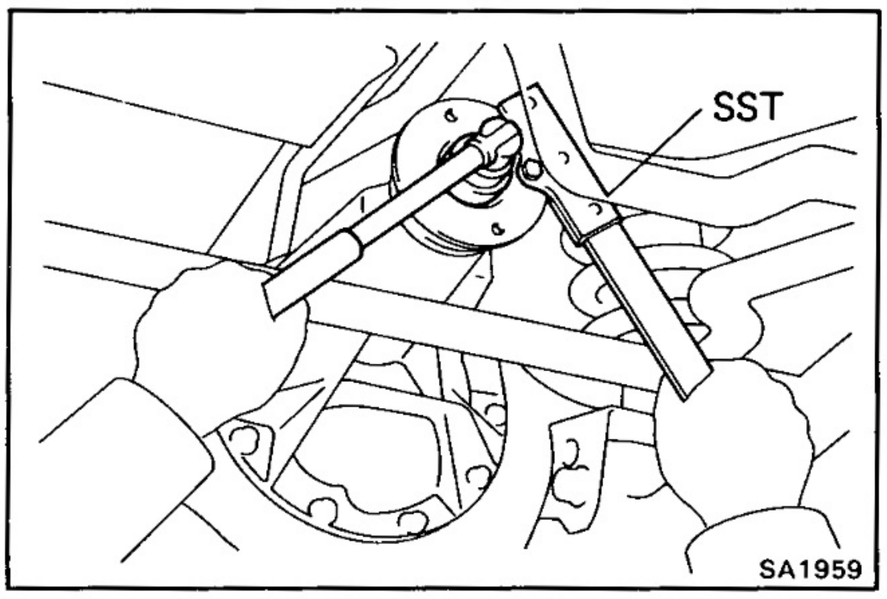

(b) Using SST to hold the flange, remove the nut and plate waster.

SST 09330-00021

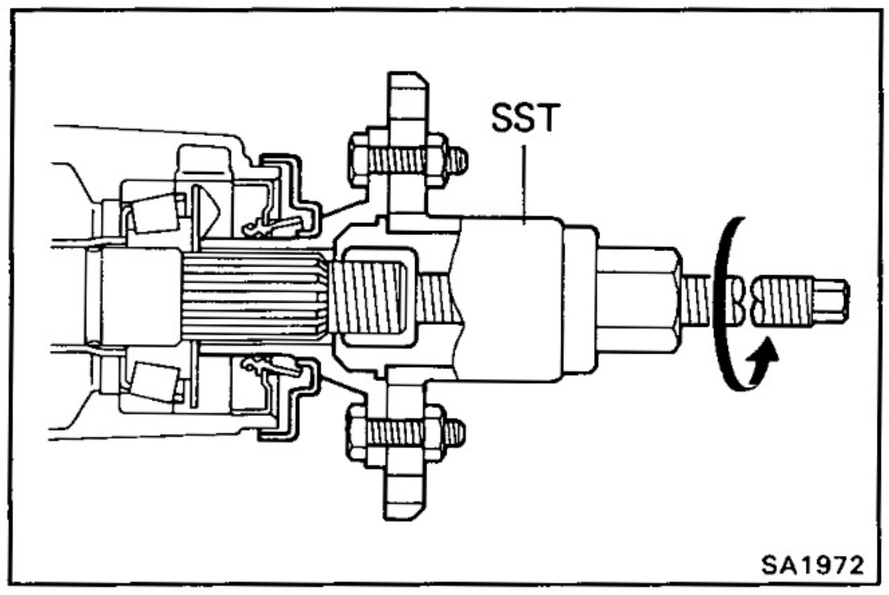

(c) Using SST, remove the companion flange.

SST 09557-22022 (09557-22050)

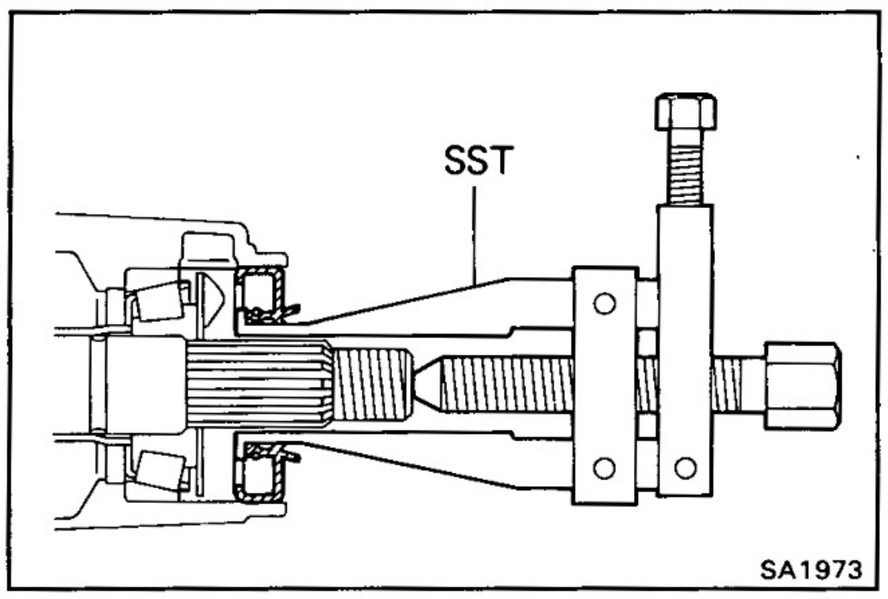

3. REMOVE OIL SEAL AND OIL SLINGER

(a) Using SST, remove the oil seal.

SST 09308-10010

(b) Remove the oil slinger.

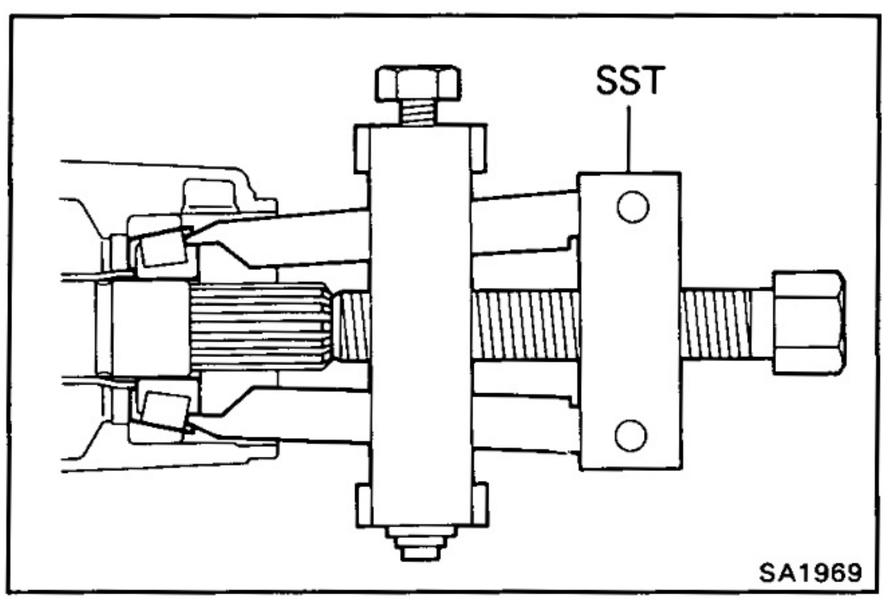

4. REMOVE REAR BEARING

Using SST, remove the rear bearing.

SST 09556-22010

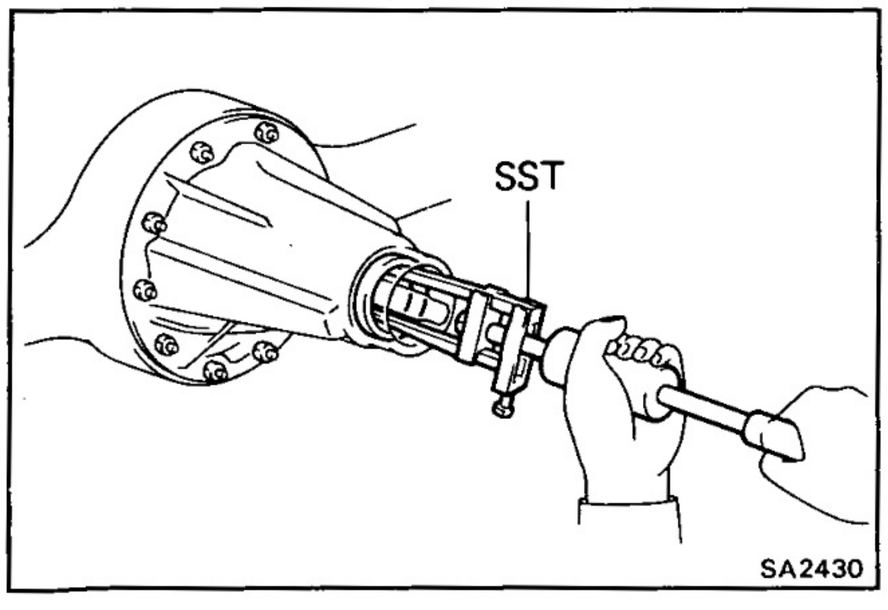

5. REMOVE BEARING OUTER RACE

Using SST, remove the bearing outer race.

SST 09308-00010

NOTICE: Do not scratch the taper surface of the outer race.

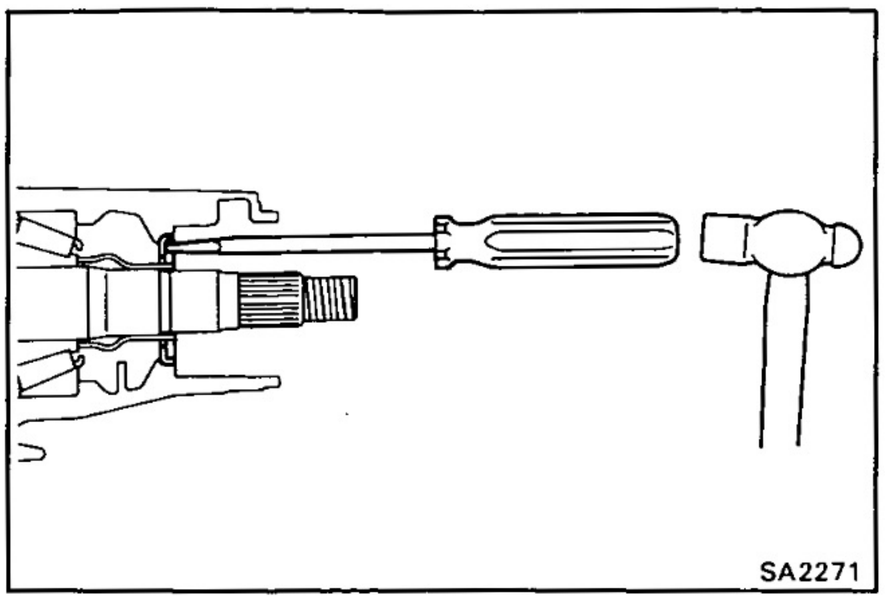

6. REMOVE OIL STORAGE RING

Using a screwdriver, bend the oil storage ring and drive it out.

7. REMOVE BEARING SPACER

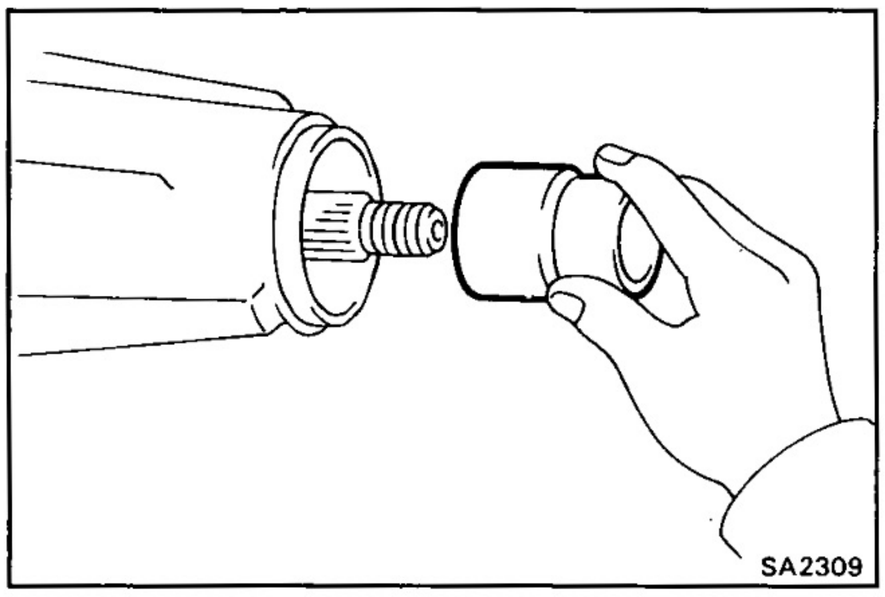

8. INSTALL NEW BEARING SPACER

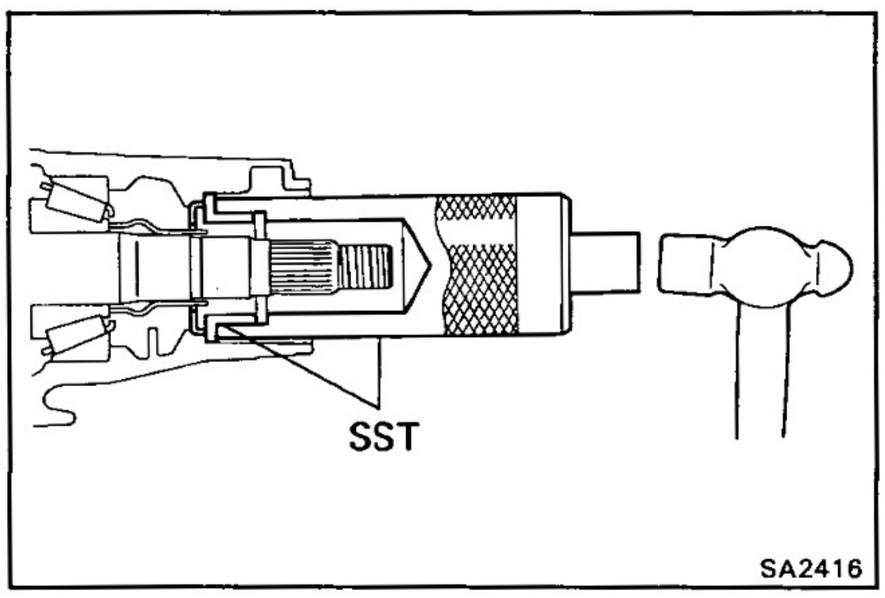

9. INSTALL NEW OIL STORAGE RING

Using SST, drive in a new oil storage ring.

SST 09316-60010 (09316-00010, 09316-00020)

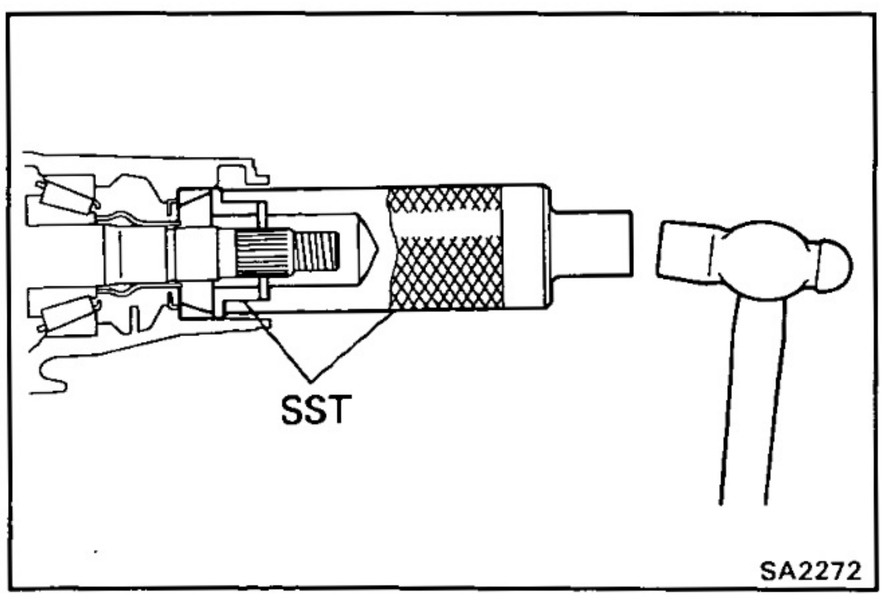

10. INSTALL BEARING OUTER RACE

Using SST, drive in the bearing outer race.

SST 09316-60010 (09316-00010, 09316-00020)

11. INSTALL REAR BEARING

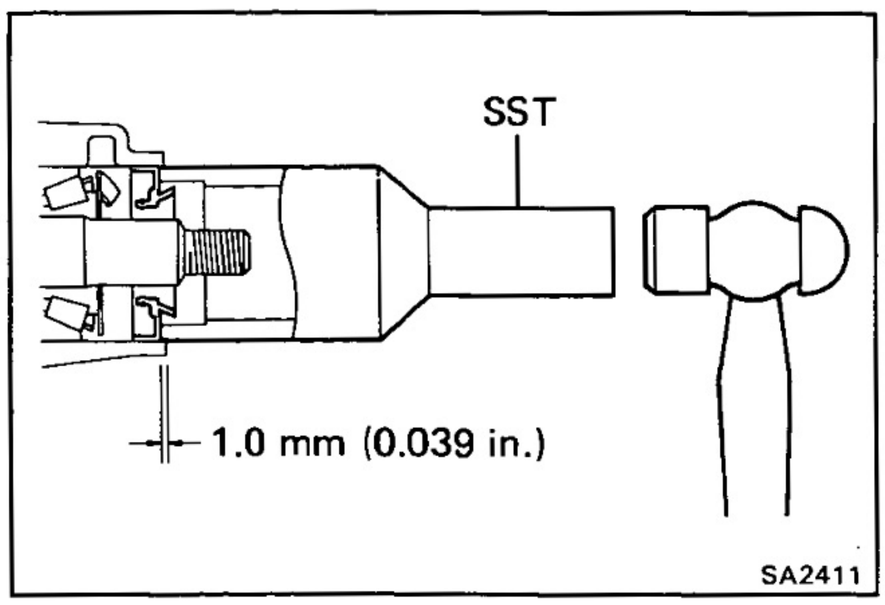

12. INSTALL OIL SLINGER AND NEW OIL SEAL

(a) Install the oil slinger facing as shown.

(b) Using SST, drive in a new oil seal as shown.

SST 09214-76011

Oil seal drive in depth: 1.0 mm (0.039 in.)

(c) Coat the lip of the oil seal with MP grease.

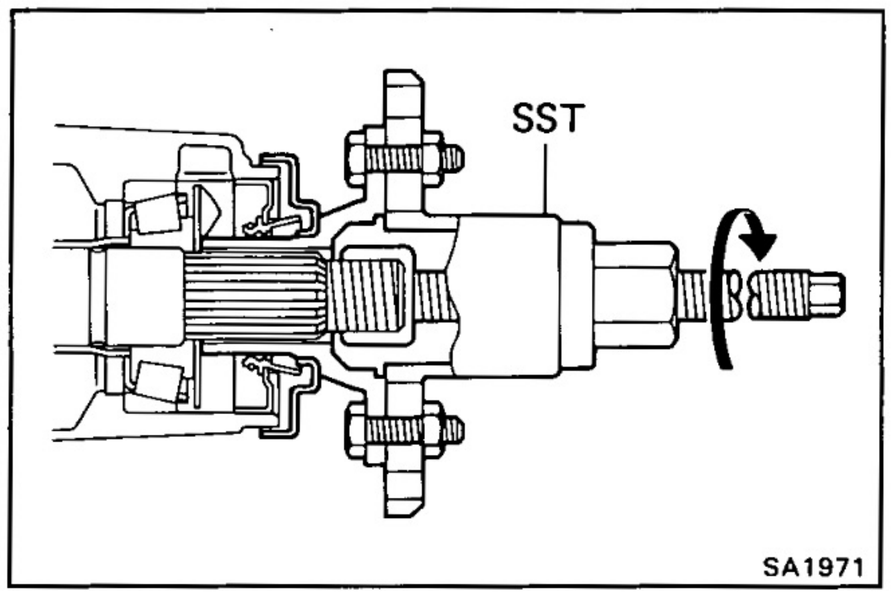

13. INSTALL COMPANION FLANGE

(a) Using SST, install the companion flange on the drive pinion.

SST 09557-22022 (09557-22050)

(b) Place the plate washer on the companion flange.

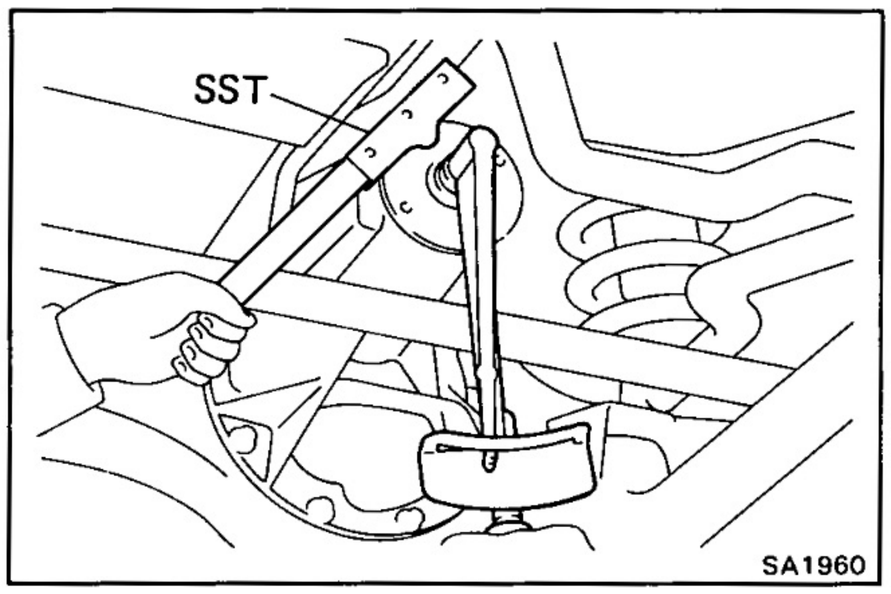

(c) Apply a light coat of gear oil on the threads of a new companion flange nut.

(d) Using SST to hold the flange, torque the nut.

SST 09330-00021

Torque: 2,000 kg-cm (145 ft-lb, 196 N·m)

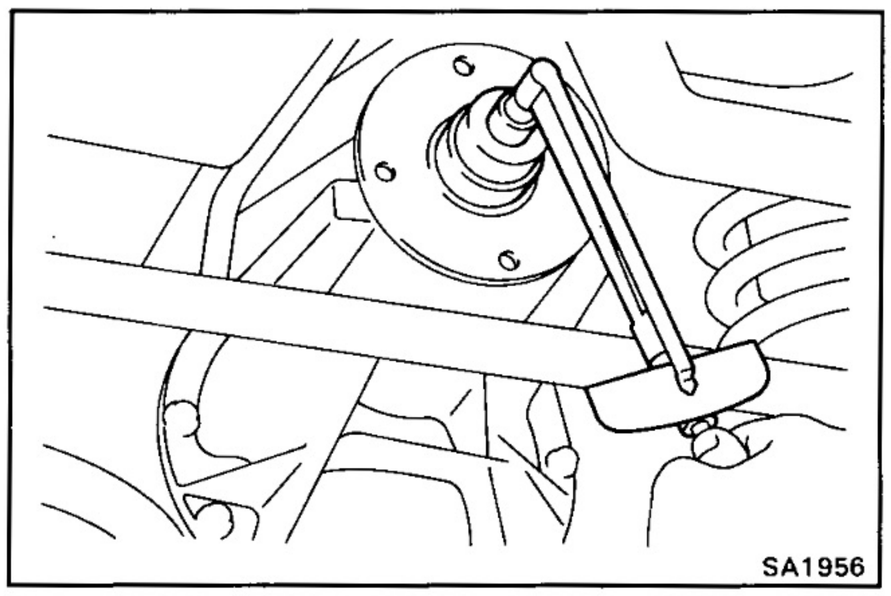

14. CHECK DRIVE PINION PRELOAD

Using a torque meter, measure the preload of the backlash between the drive pinion and ring gear.

Preload (at starting):

New bearing

10 — 16 kg-cm

(8.7 — 13.9 in.-lb, 0.9 — 1.6 N·m)

Reused bearing

5 — 8 kg-cm (4.3 — 6.9 in.-lb, 0.5 — 0.8 N·m)

- If the preload is greater than specification, replace the bearing spacer.
- If the preload is less than specification, retighten the nut 130 kg-cm (9 ft-lb, 13 N·m) a little at a time until the specified preload is reached.

If the maximum torque is exceeded while retightening the nut, replace the bearing spacer and repeat the preload procedure. Do not back off the pinion nut to reduce the preload.

Maximum torque: 3,500 kg-cm (253 ft-lb, 343 N·m)

If everything is normal, coat the threads with gear oil, then repeat the above operation.

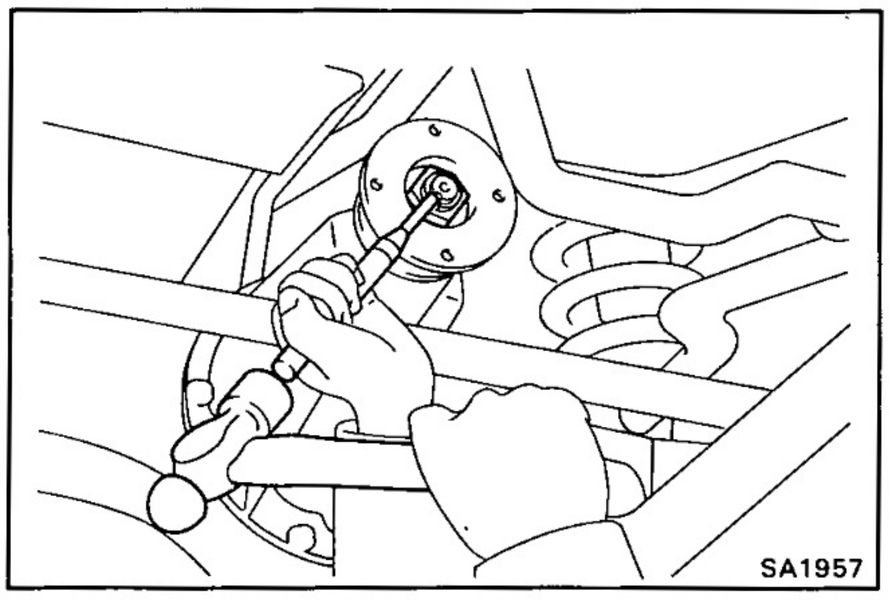

15. STAKE DRIVE PINION NUT

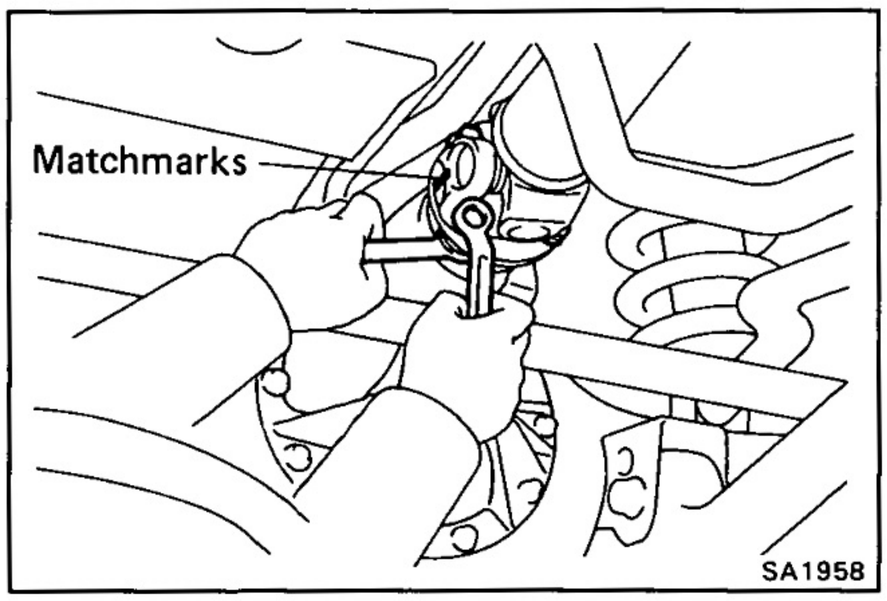

16. CONNECT FRONT PROPELLER SHAFT

(a) Align the matchmarks on the flanges and connect the flanges with four bolts, spring washers and nuts.

(b) Torque the bolts and nuts.

Torque: 750 kg-cm (54 ft-lb, 74 N·m)

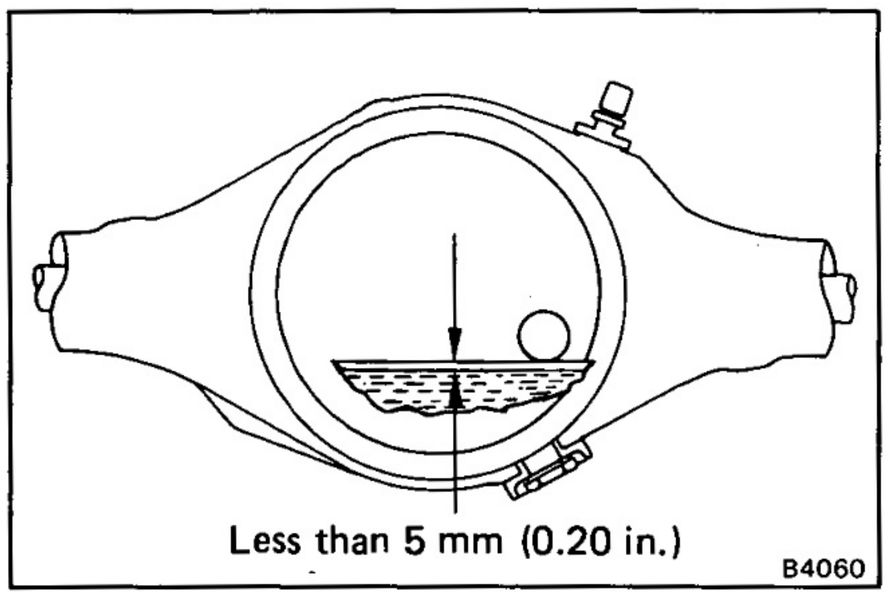

17. CHECK DIFFERENTIAL OIL LEVEL

Fill with hypoid gear oil if necessary.

Oil type: Hypoid gear oil API GL-5

Recommended oil viscosity:

Above −18°C (0°F) SAE 90
Below −18°C (0°F) SAE 80W or 80W-90

Capacity:

2 pinion type
2.8 liters (2.9 US qts, 2.4 Imp. qts)

w/ Differential lock
2.65 liters (2.8 US qts, 2.3 Imp. qts)

Removal and Installation of Front Differential

COMPONENTS

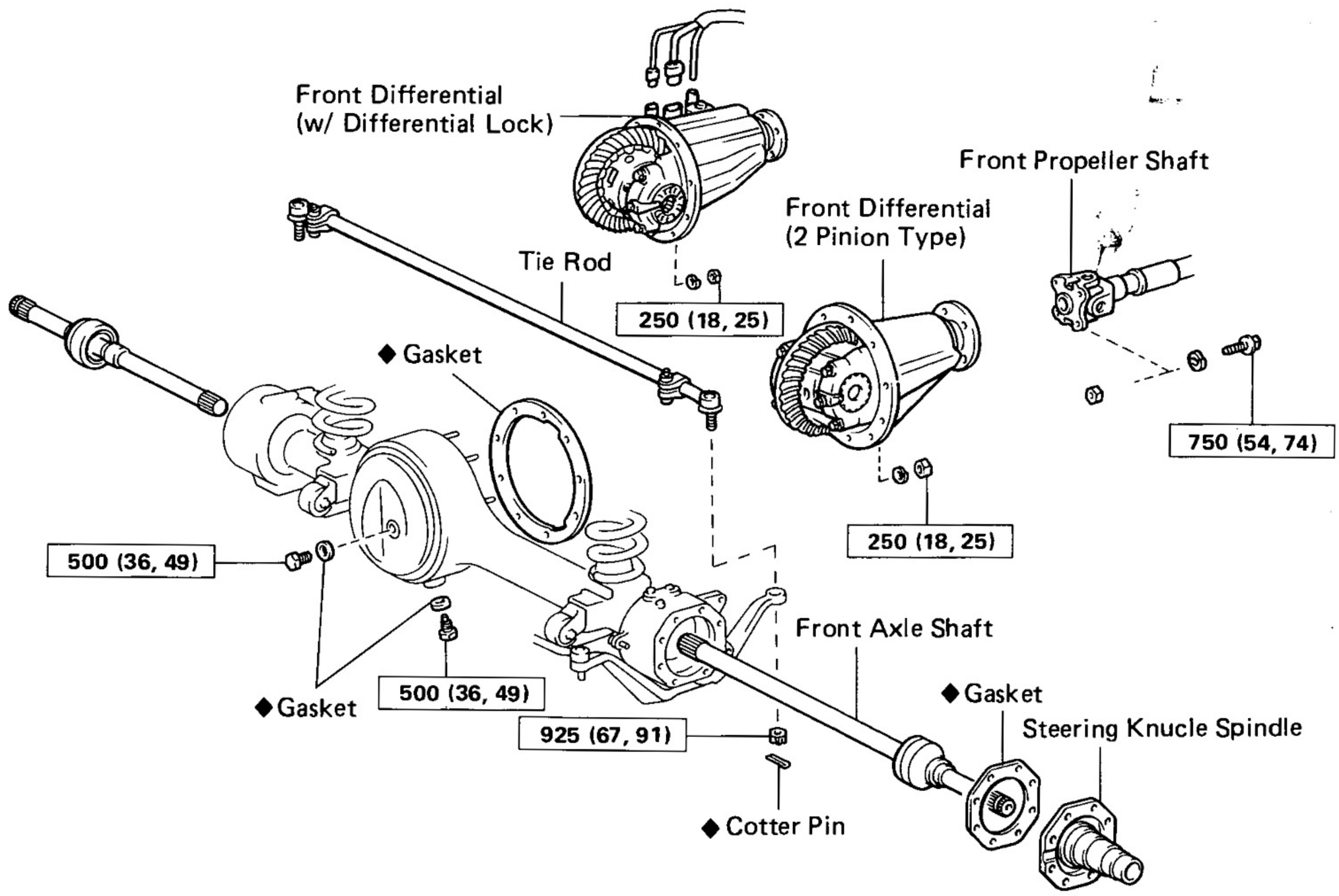

kg-cm (ft-lb, N·m) : Specified torque

◆ Non-reusable part

SA2387

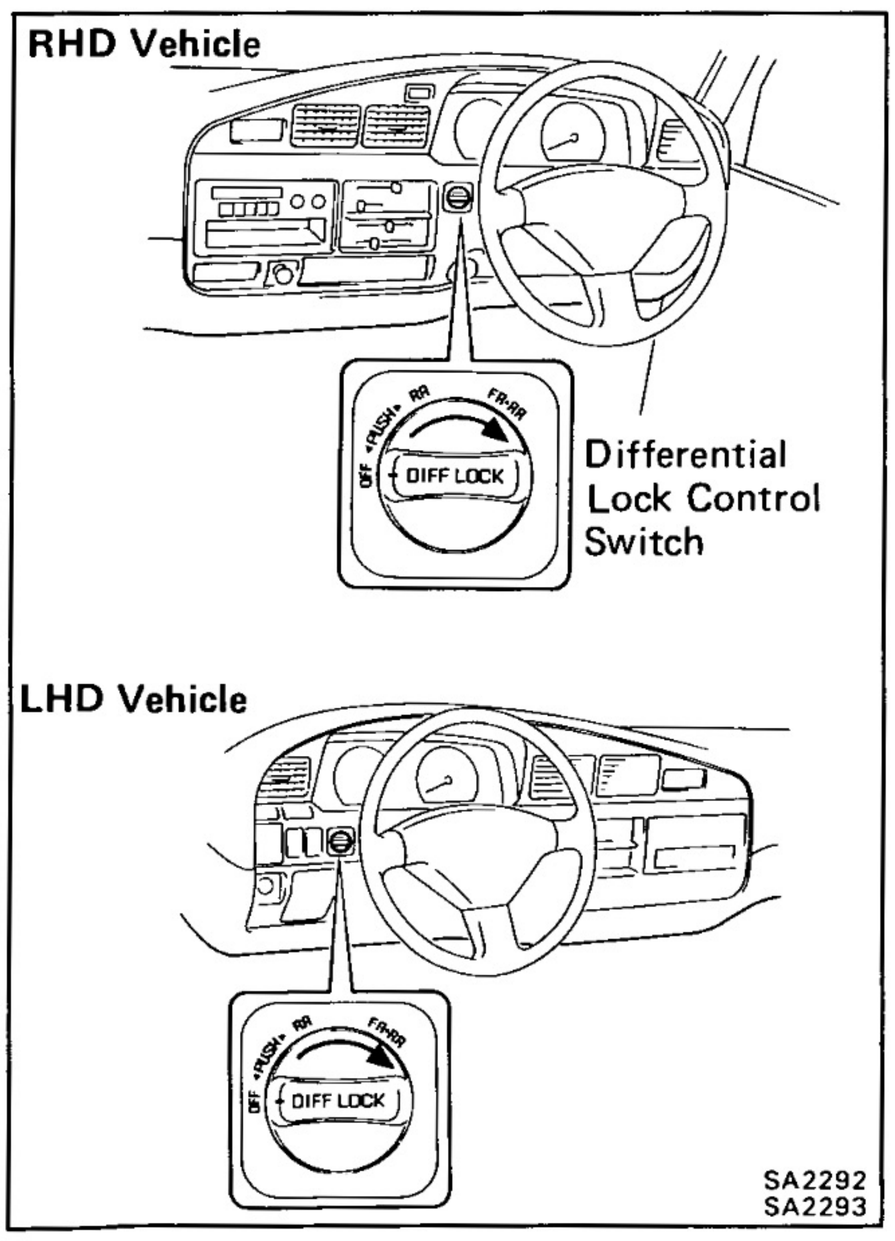

SA2292
SA2293

REMOVAL OF FRONT DIFFERENTIAL

1. **(w/ DIFFERENTIAL LOCK)**
   SHIFTING FRONT DIFFERENTIAL LOCK

   (a) Turn the ignition switch to ON position.

   (b) Keep the 4WD condition (Part-Time Models) or center differential lock condition (Full-Time Models).

   (c) Turn the differential lock control switch to FR·RR position and lock the front differential.

   HINT: Rotating the tires, check they are in the differential lock condition.

   (d) Disconnect the cable from the negative terminal of the battery.

2. **REMOVE DRAIN PLUG AND DRAIN DIFFERENTIAL OIL**

3. **REMOVE FRONT AXLE SHAFTS**
   (See steps 1 to 5 on page SA-24)

4. **REMOVE TIE ROD**
   (See step 6 on page SA-24)

5. **DISCONNECT FRONT PROPELLER SHAFT**
   (See step 1 on page SA-33)

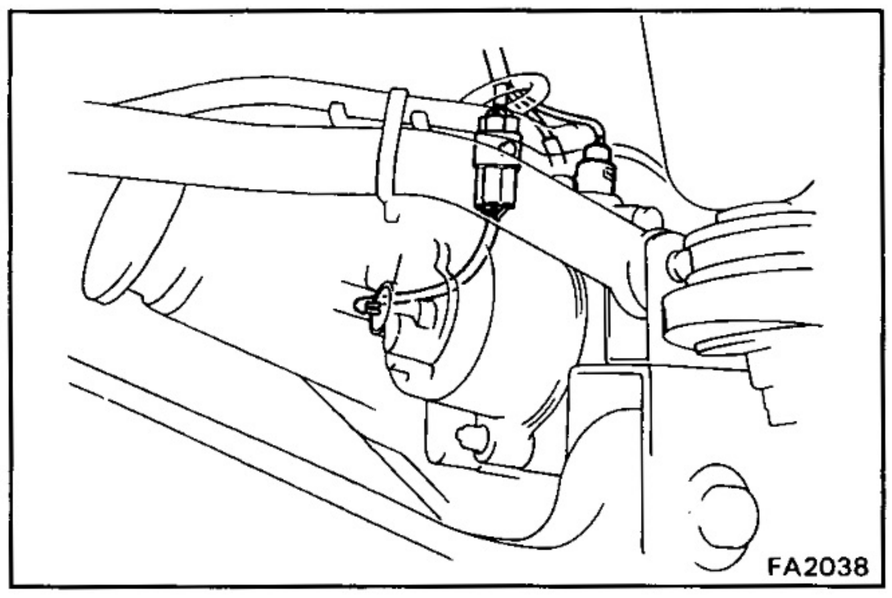

6. **(w/ DIFFERENTIAL LOCK)**
   DISCONNECT CONNECTORS AND TUBE

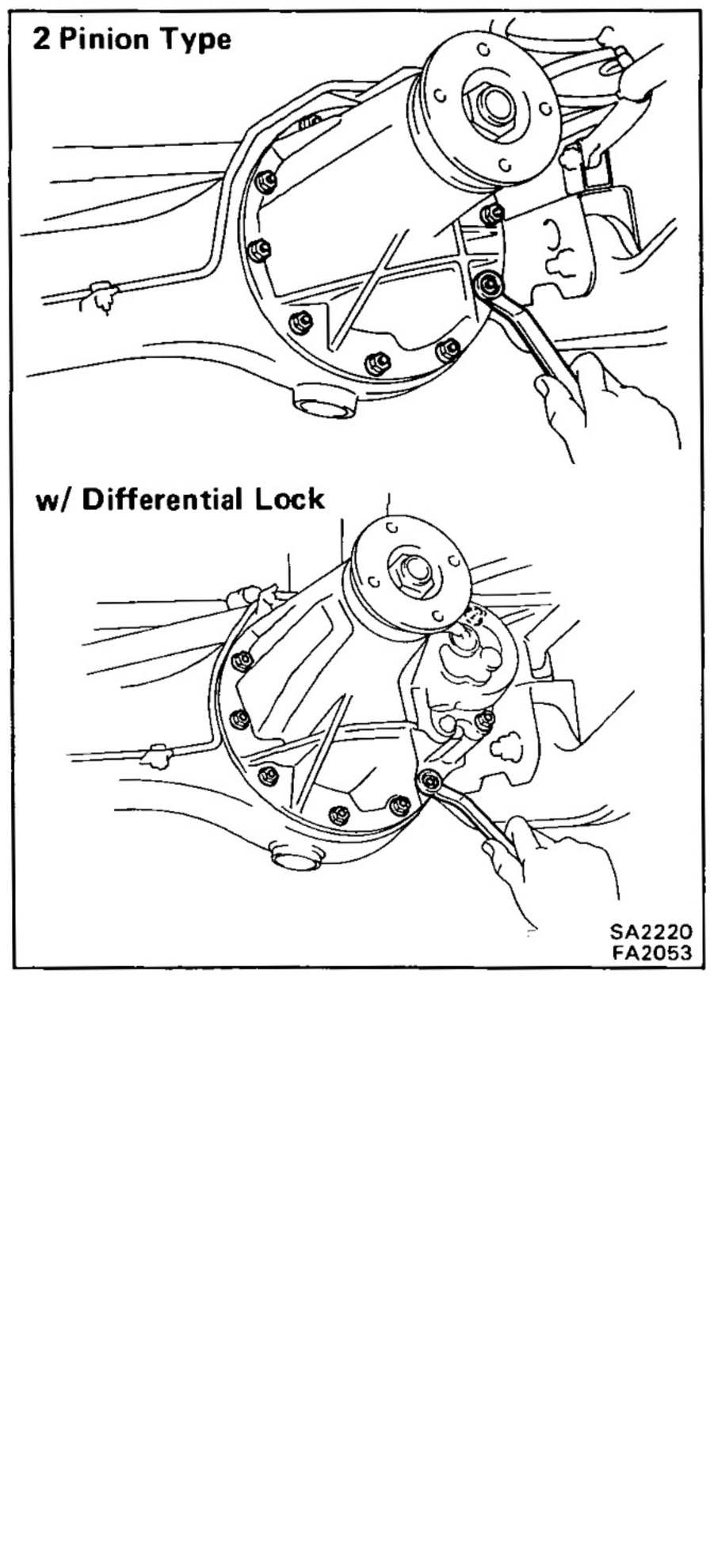

7. **REMOVE DIFFERENTIAL CARRIER ASSEMBLY**

   NOTICE: Do not scratch the installation surface.

INSTALLATION OF FRONT DIFFERENTIAL

(See page SA-38)

1. **(w/ DIFFERENTIAL LOCK)**
   CHECK DIFFERENTIAL LOCK OPERATION

   (a) Connect the connector of the actuator to the connector of the vehicle side, and check that the sleeve is on work with switching over the differential lock control switch.

   (b) After checking, lock the front differential.

2. **INSTALL A NEW GASKET**

3. **INSTALL DIFFERENTIAL CARRIER ASSEMBLY**

   Install the differential carrier assembly in the axle and install the ten nuts. Torque the nuts.

   Torque: 280 kg-cm (20 ft-lb, 27 N·m)

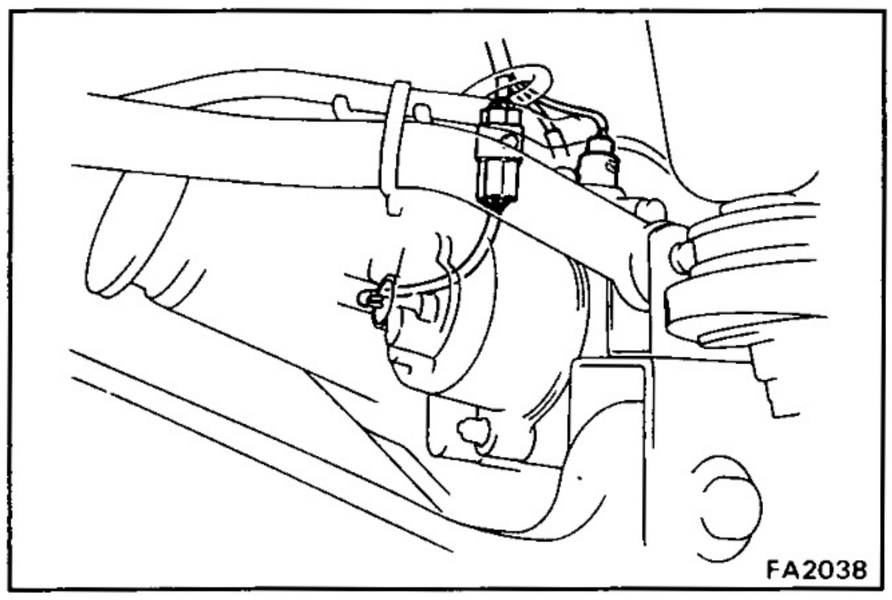
FA2038

4. (w/ DIFFERENTIAL LOCK) CONNECT CONNECTORS AND TUBE

HINT:

- When connecting the tube of the harness side to the hose of the actuator side, its depth of insertion is 15 mm (0.59 in.).
- Take care that water or the equivalent shall not adhere to the connector and hose.

5. CONNECT FRONT PROPELLER SHAFT
(See step 16 on page SA-37)

6. INSTALL TIE ROD
(See step 6 on page SA-30)

7. INSTALL FRONT AXLE SHAFTS
(See steps 8 to 12 on page SA-31)

8. INSTALL DRAIN PLUG

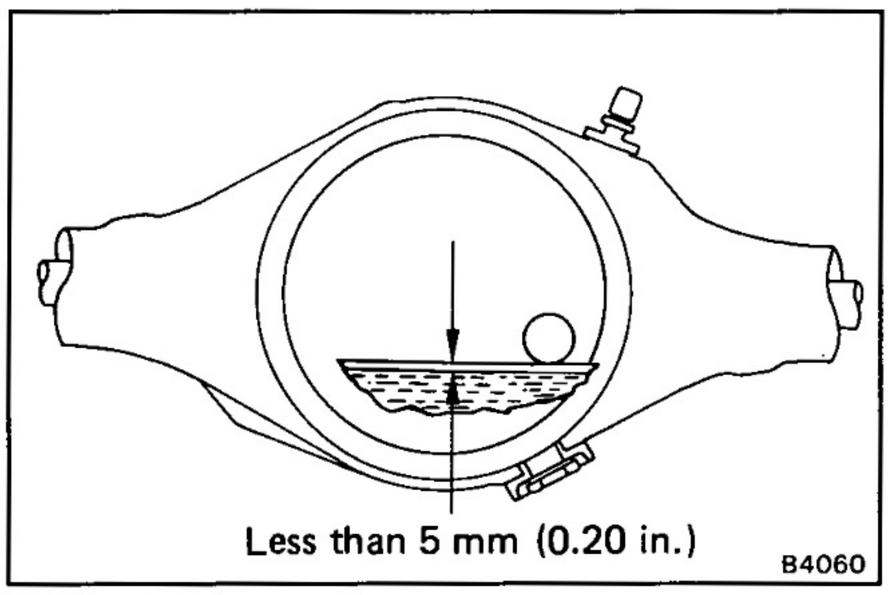
Less than 5 mm (0.20 in.)
B4060

9. FILL DIFFERENTIAL WITH GEAR OIL

Fill with hypoid gear oil.

Oil type: Hypoid gear oil API GL-5

Recommended oil viscosity:

Above −18°C (0°F) SAE 90
Below −18°C (0°F) SAE 80W or 80W-90

Capacity:

2 pinion type
2.8 liters (2.9 US qts, 2.4 Imp. qts)

w/ Differential lock
2.65 liters (2.8 US qts, 2.3 Imp. qts)

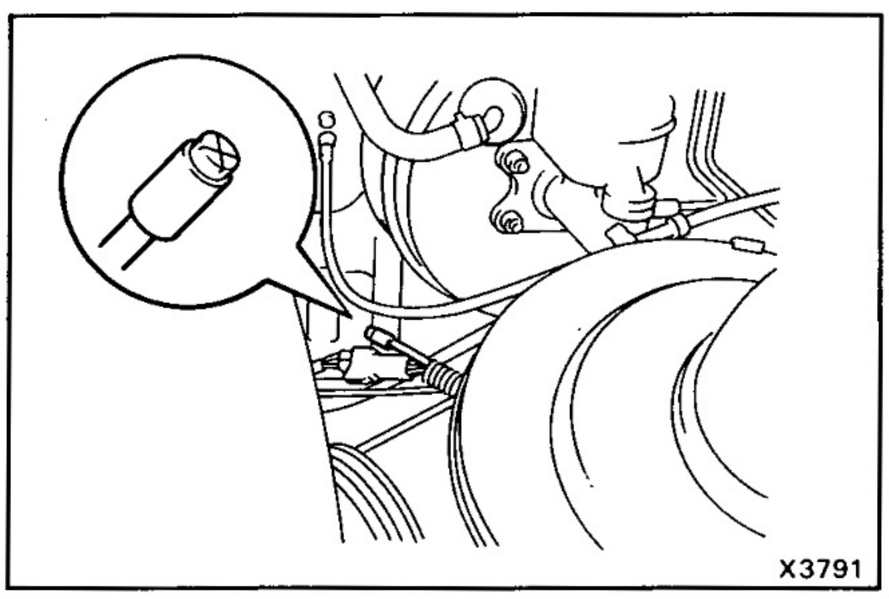
X3791

10. (w/ DIFFERENTIAL LOCK) CHECK BLEEDER PLUG

Check that the bleeder plug at the point of the bleeder tube (inside of the engine room) is not damaged or worn.

Differential Carrier

COMPONENTS

2 Pinion Type

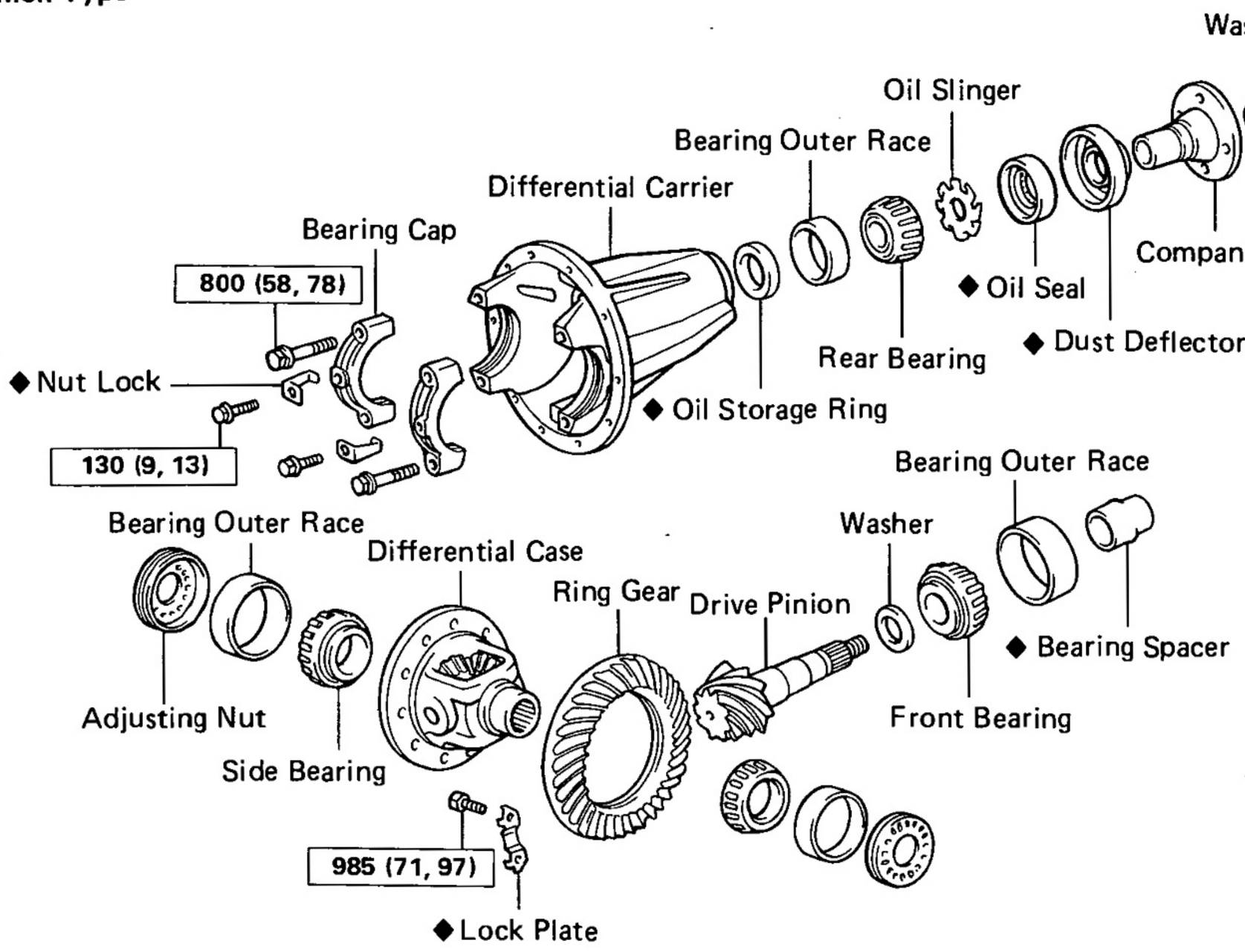

w/ Differential Lock (4 Pinion Type)

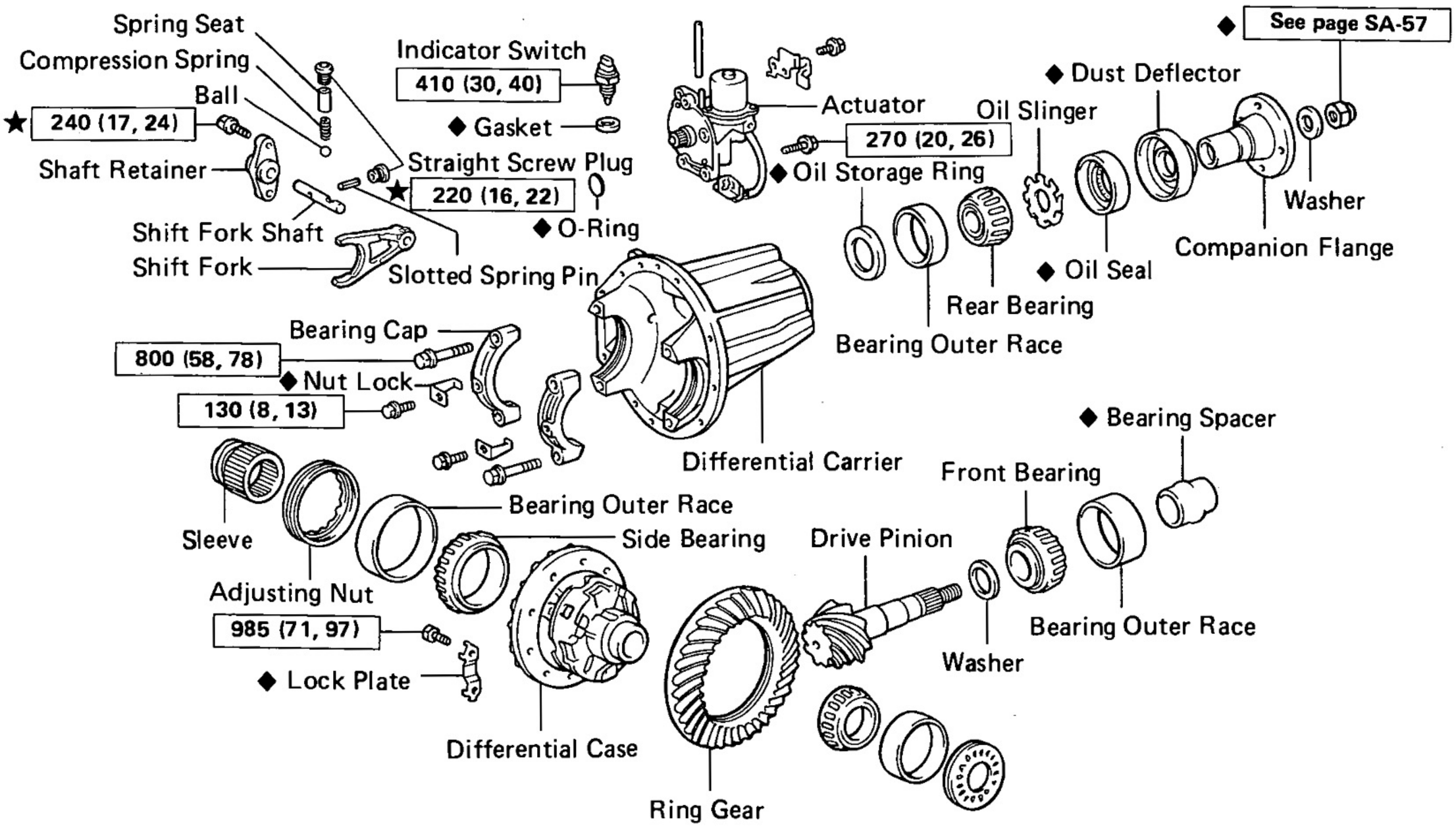

kg-cm (ft-lb, N·m) : Specified torque

◆ Non-reusable part

★ Precoated part

SA2579
SA2616

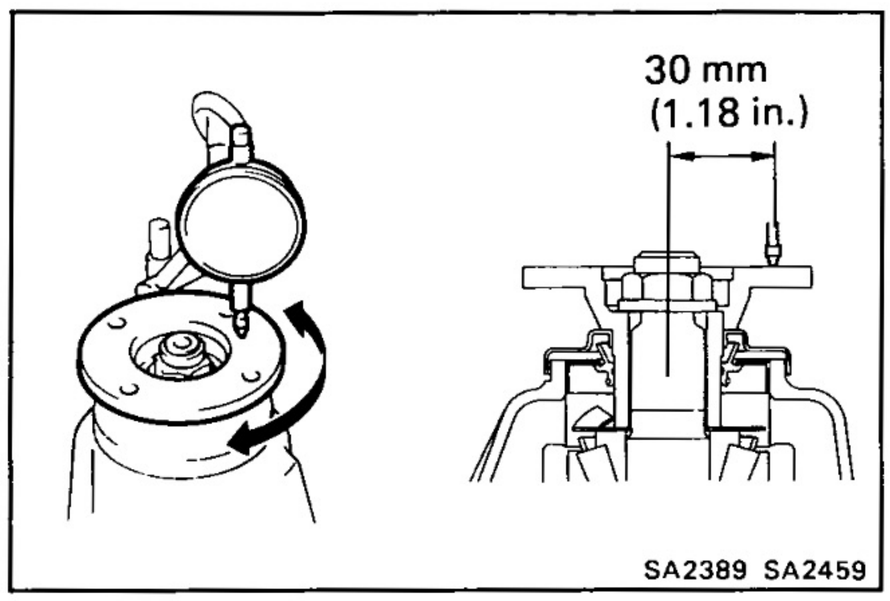

INSPECTION OF DIFFERENTIAL CARRIER

1. CHECK RUNOUT OF COMPANION FLANGE

Using a dial indicator, measure the vertical and lateral runout of the companion flange.

Maximum vertical runout: 0.10 mm (0.0039 in.)

Maximum lateral runout: 0.10 mm (0.0039 in.)

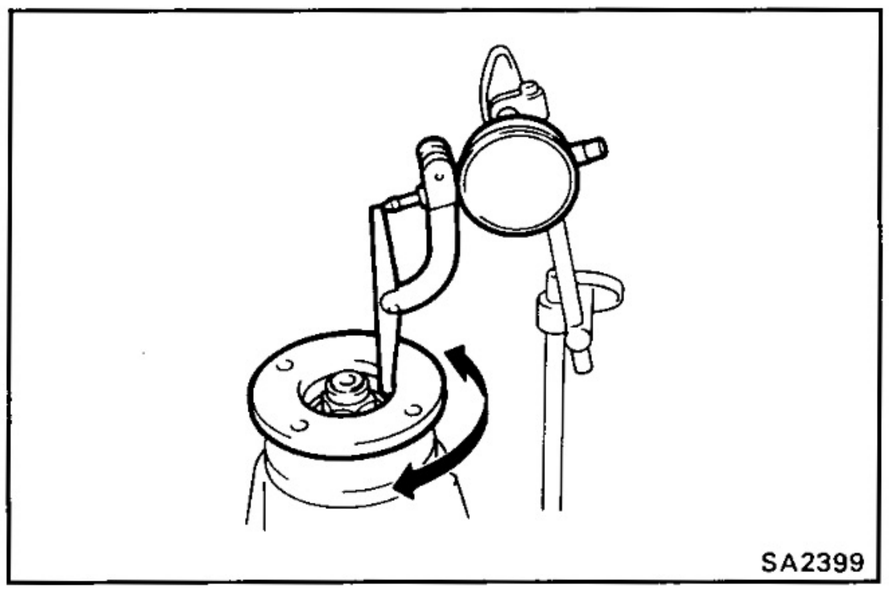

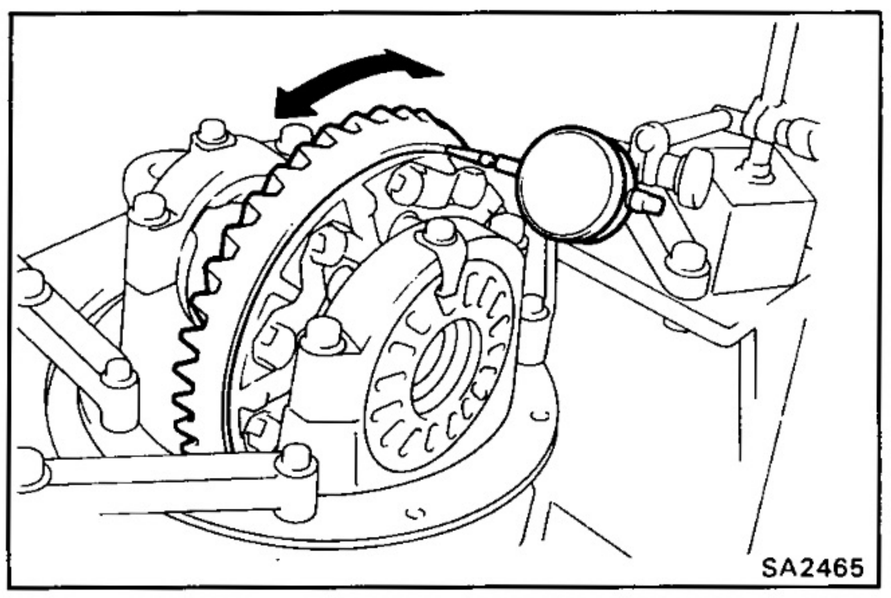

2. CHECK RING GEAR RUNOUT

If the runout is greater than maximum, replace the ring gear.

Maximum runout: 0.10 mm (0.0039 in.)

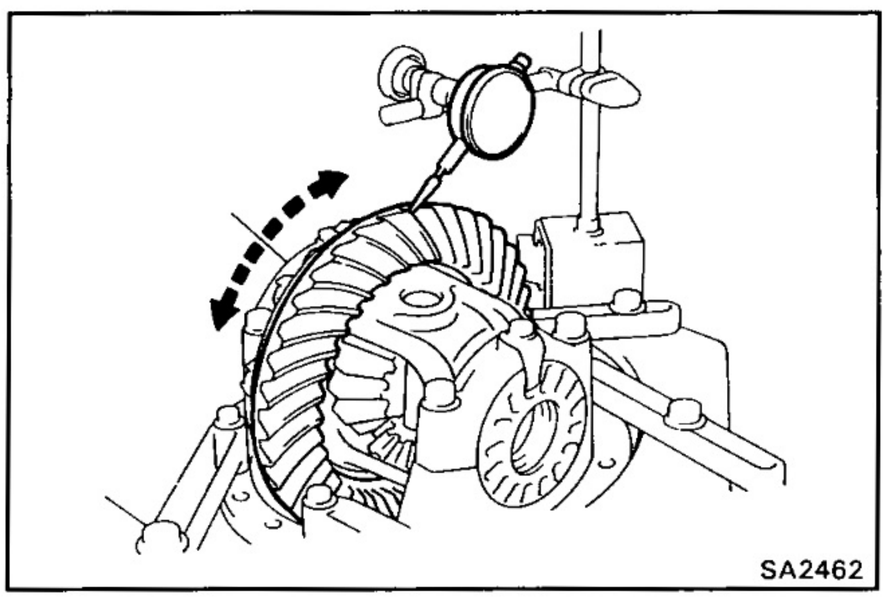

3. CHECK RING GEAR BACKLASH

If the backlash is not within specification, adjust the side bearing preload or repair as necessary.

Backlash: 0.13 — 0.18 mm (0.0051 — 0.0071 in.)

HINT: Perform the measurements at three or more positions around the circumference of the ring gear.

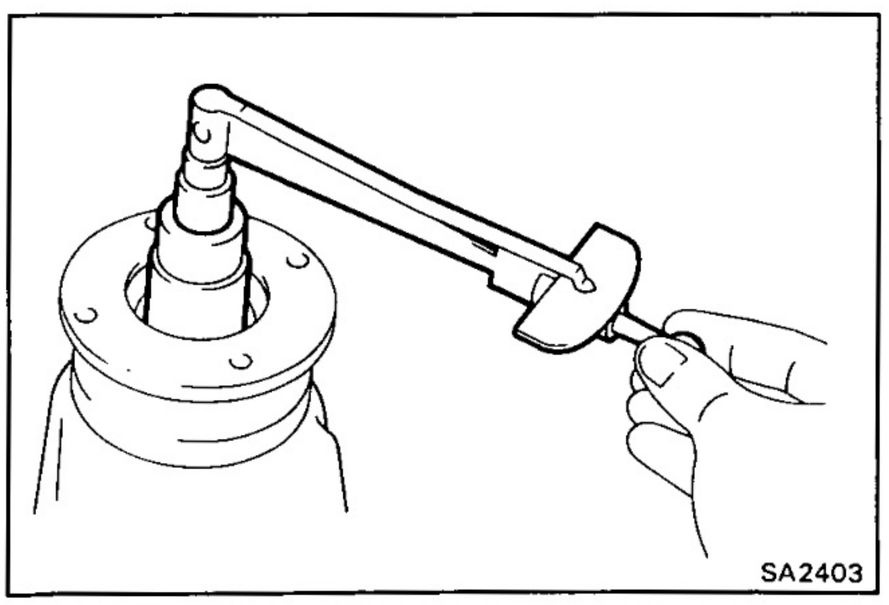

4. MEASURE DRIVE PINION PRELOAD

Measure the drive pinion preload, using the backlash of the drive pinion and ring gear.

Preload (at starting): 5 — 8 kg-cm (4.3 — 6.9 in.-lb, 0.5 — 0.8 N·m)

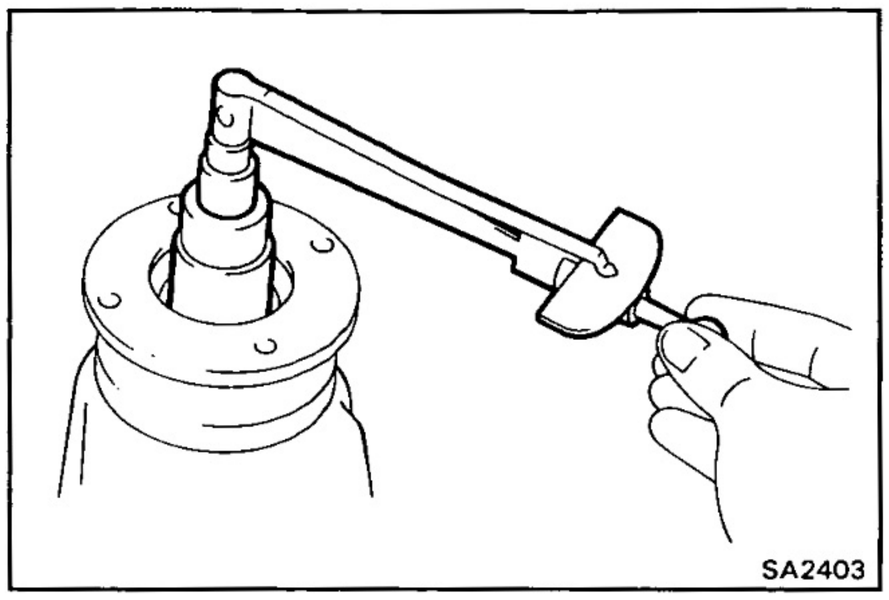

5. CHECK TOTAL PRELOAD

Using a torque meter, measure the total preload.

Total preload: In addition to drive pinion preload
4 — 6 kg-cm (3.5 — 5.2 in.-lb, 0.4 — 0.6 N·m)

If necessary, disassemble and inspect a differential.

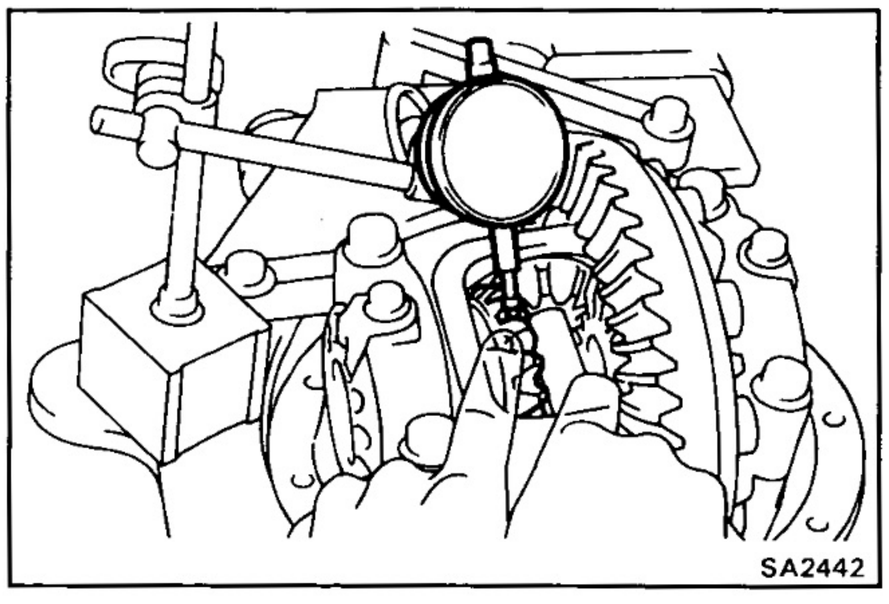

6. (2 PINION TYPE)
CHECK SIDE GEAR BACKLASH

Measure the side gear backlash while holding one pinion gear toward the case.

Standard backlash: 0.05 — 0.20 mm
(0.0020 — 0.0079 in.)

If the backlash is out of specification, install the correct thrust washers. (See page SA-63)

7. INSPECT TEETH CONTACT BETWEEN RING GEAR AND DRIVE PINION
(See step 11 on page SA-56)

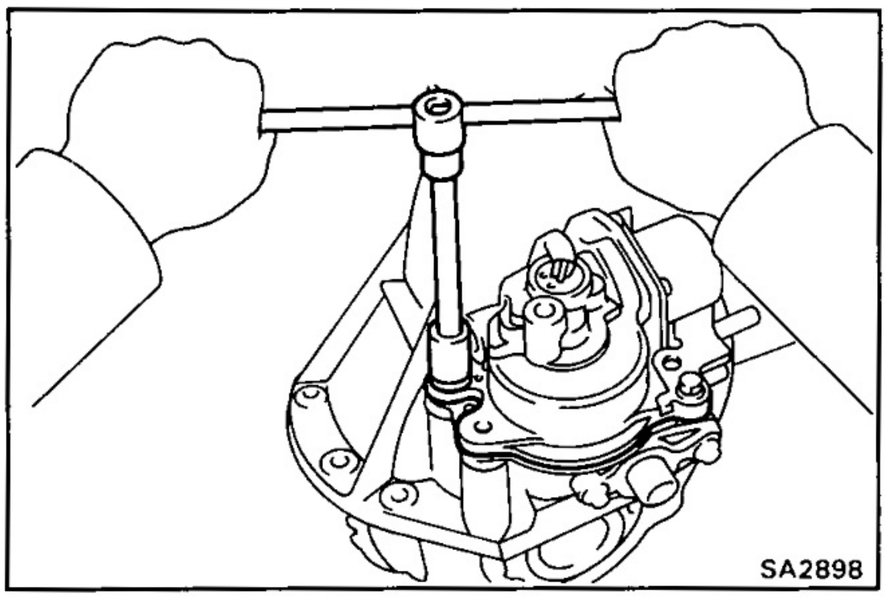

DISASSEMBLY OF DIFFERENTIAL CARRIER

(See page SA-41)

1. (w/ DIFFERENTIAL LOCK)
REMOVE ACTUATOR

(a) Remove the bolt and actuator from the differential carrier.

(b) Remove the O-ring.

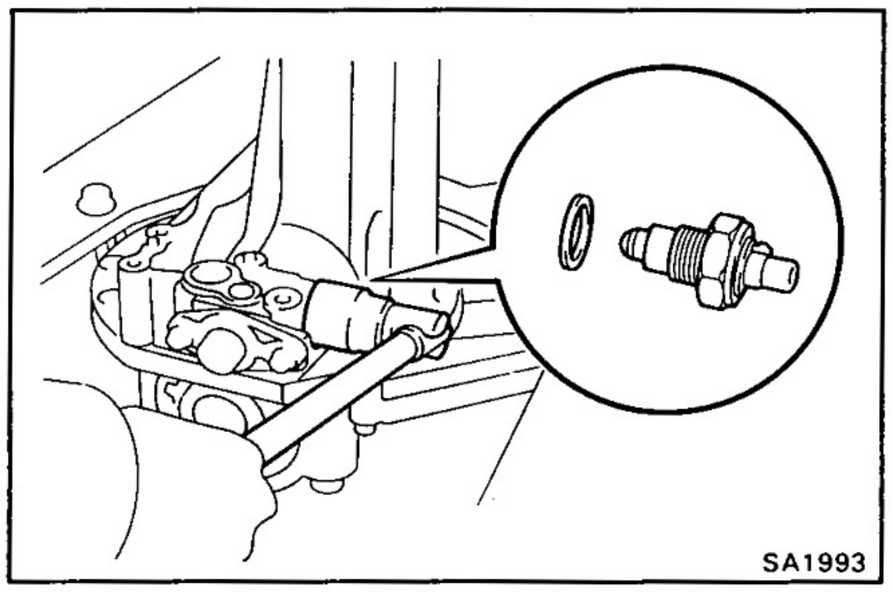

2. (w/ DIFFERENTIAL LOCK)
REMOVE INDICATOR SWITCH

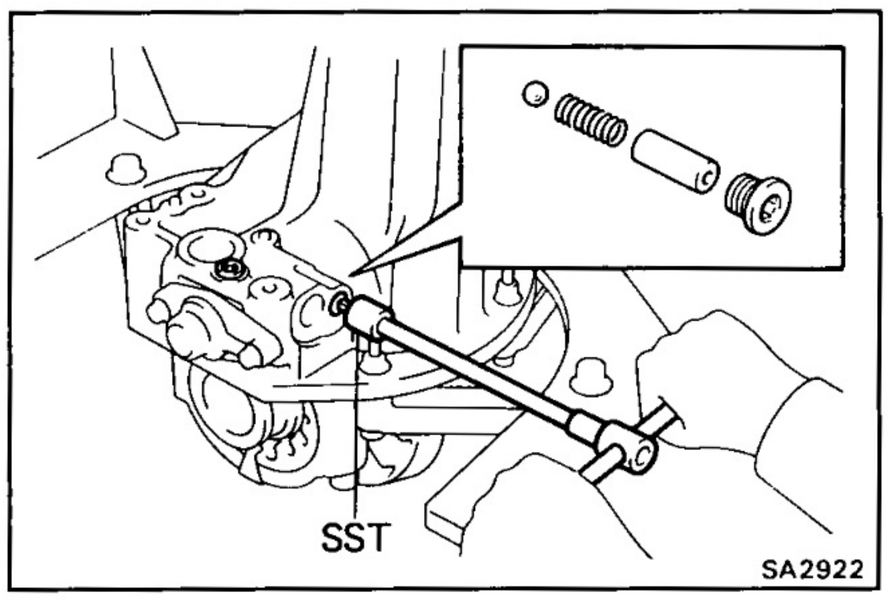

3. (w/ DIFFERENTIAL LOCK)
REMOVE SHIFT FORK SHAFT

(a) Using SST, remove the two straight screw plugs.

SST 09313-30021

(b) Remove the spring seat, compression spring and ball.

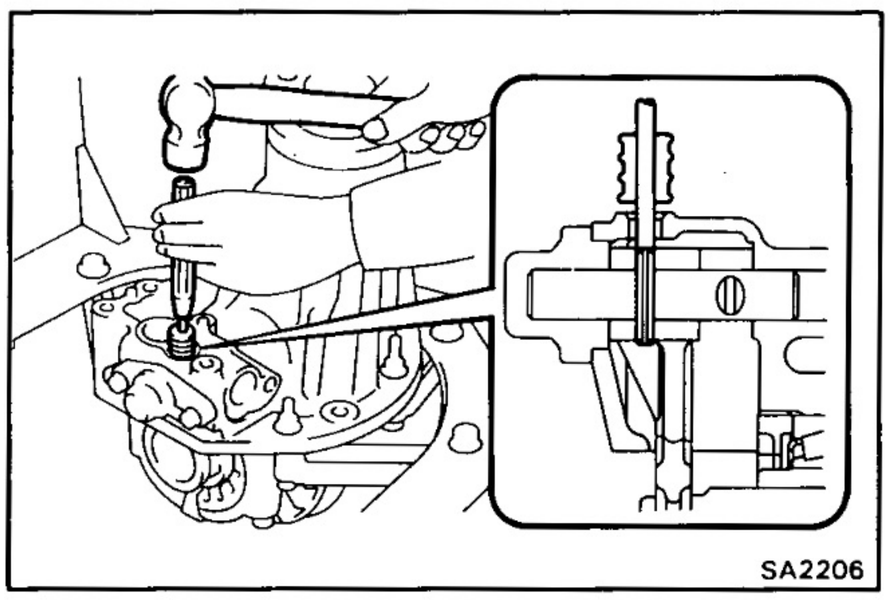

(c) Using a pin punch and hammer, drive out the slotted spring pin.

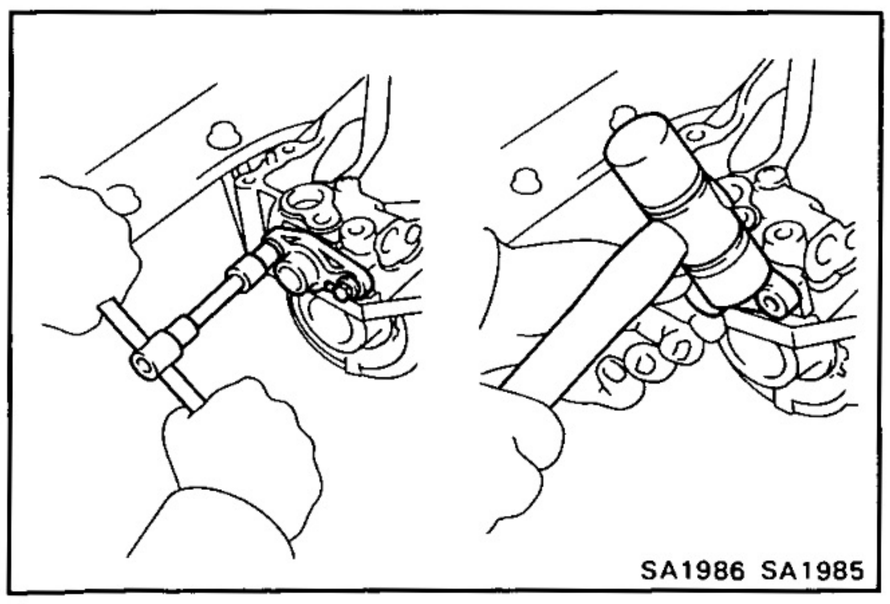

(d) Remove the two bolts from the shaft retainer.

(e) Using a prastic hammer, tap out the shaft retainer.

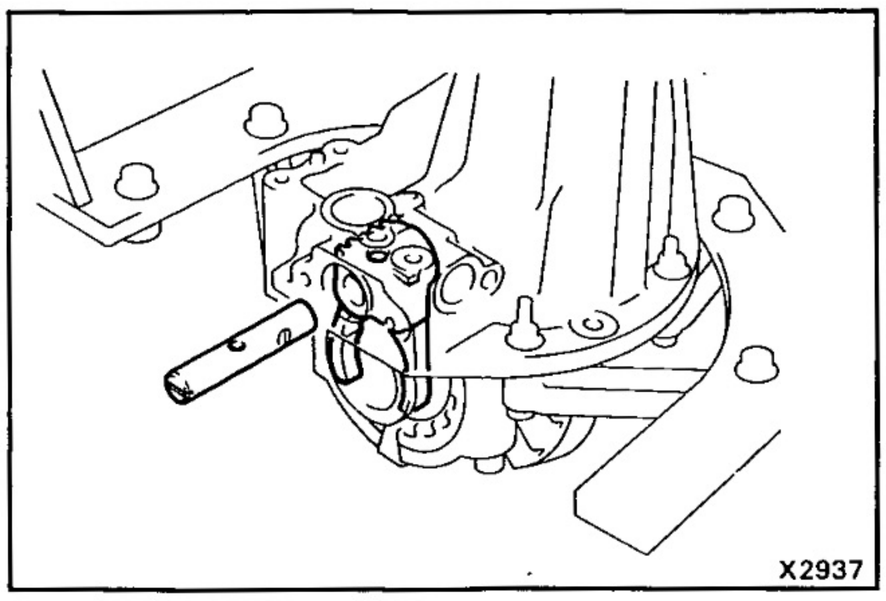

(f) Remove the shift fork shaft.

HINT: Pull out the shift fork shaft with the screwdriver turned round.

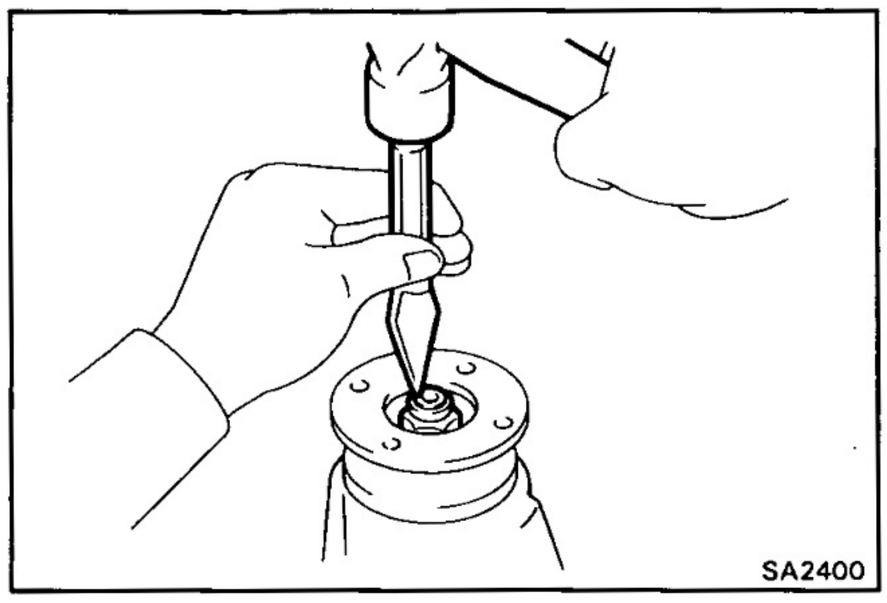

4. REMOVE COMPANION FLANGE

(a) Using a hammer and chisel, loosen the staked part of the nut.

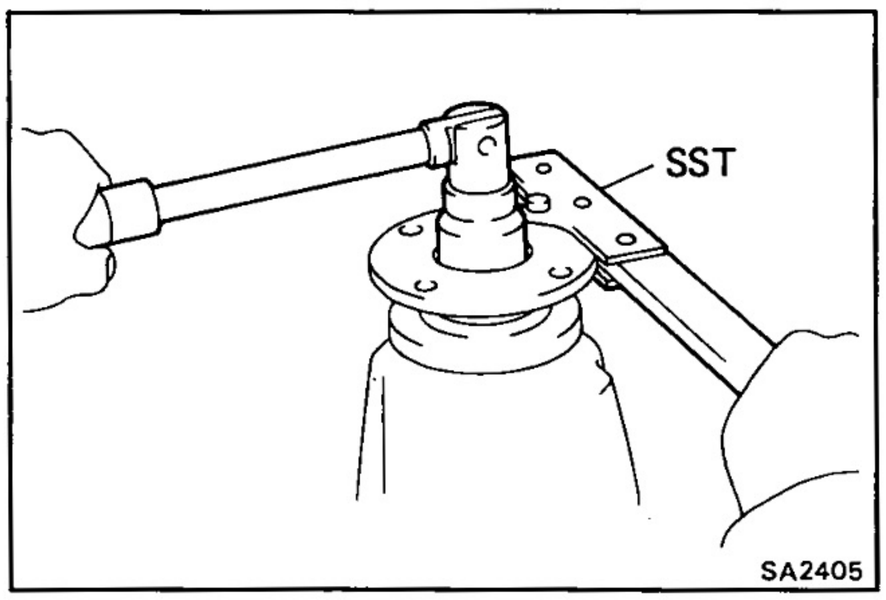

(b) Using SST to hold the flange, remove the nut and plate washer.

SST 09330-00021

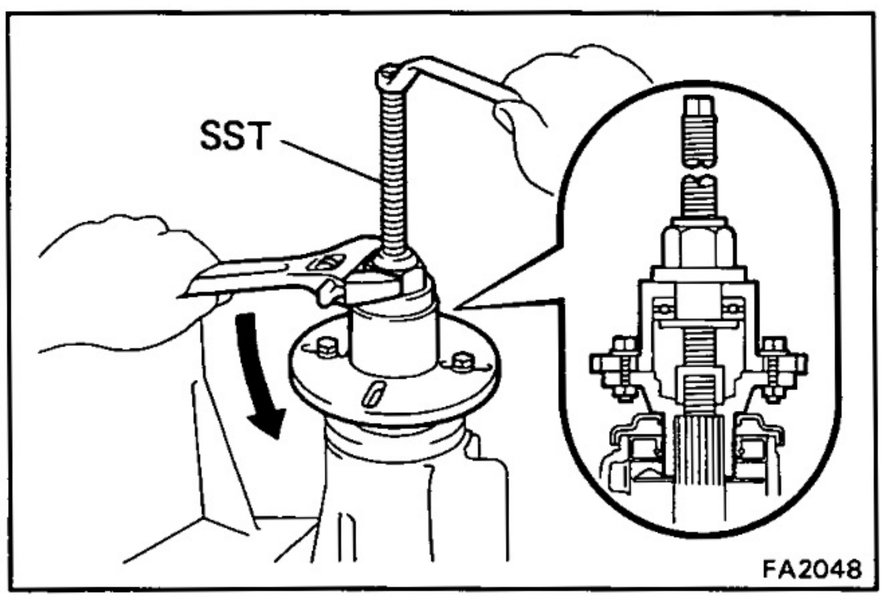

(c) Using SST, remove the companion flange.

SST 09557-22022 (09557-22050)

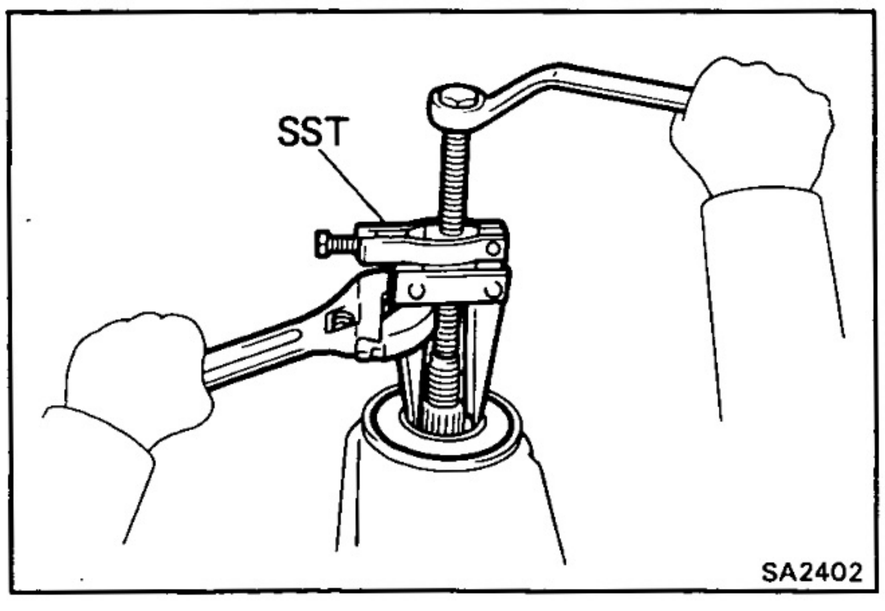

5. REMOVE REAR OIL SEAL AND OIL SLINGER

(a) Using SST, remove the oil seal from the housing.

SST 09308-10010

(b) Remove the oil slinger.

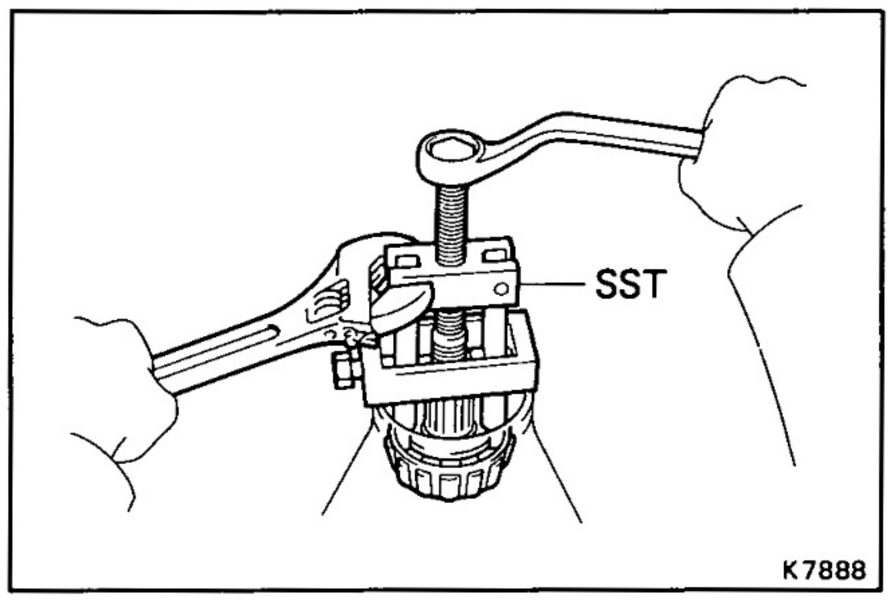

6. REMOVE REAR BEARING

Using SST, remove the bearing from the housing.

SST 09556-22010

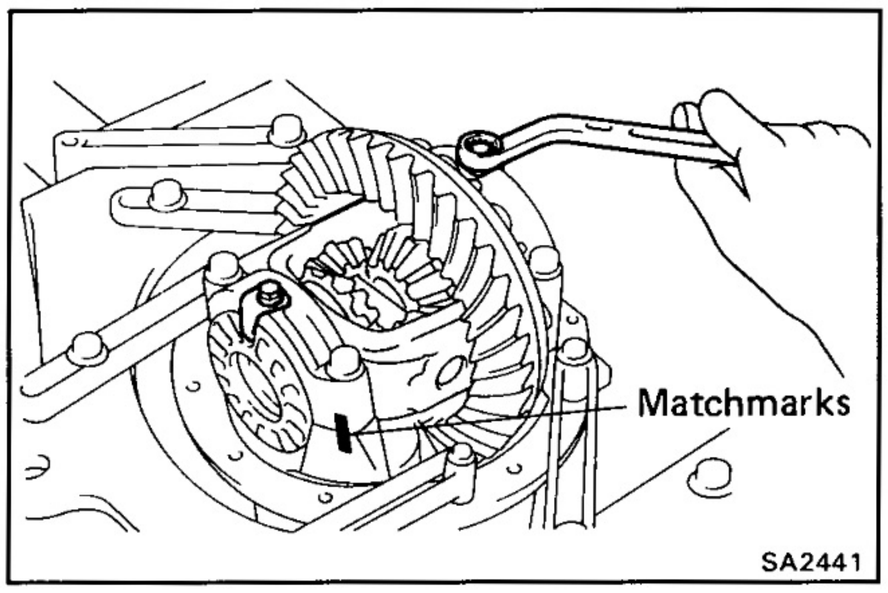

7. REMOVE DIFFERENTIAL CASE

(a) (2 pinion type only)
Place matchmarks on the bearing cap and differential carrier.

(b) Remove the two adjusting nut locks.

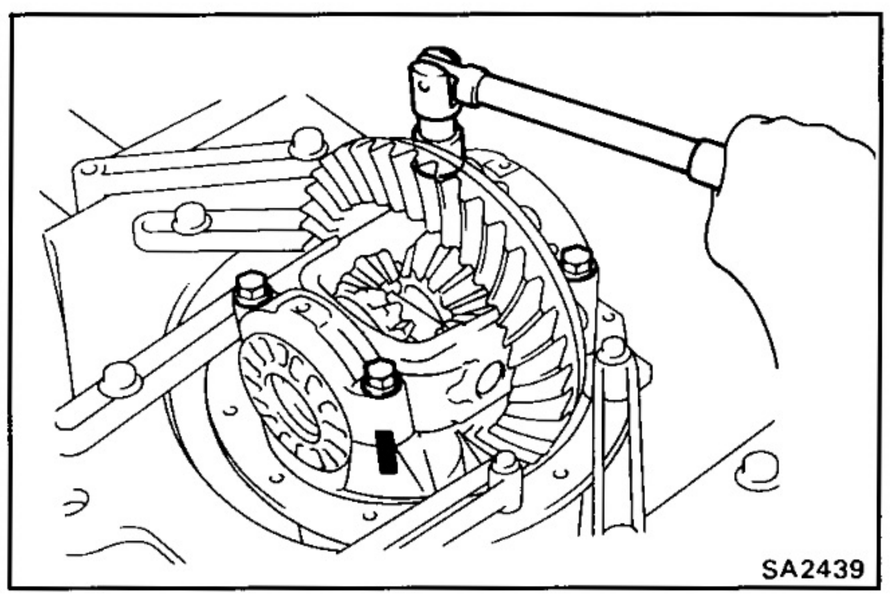

(c) Remove the four bolts and the two bearing caps.

(d) (2 pinion type only)
Remove the two adjusting nuts.

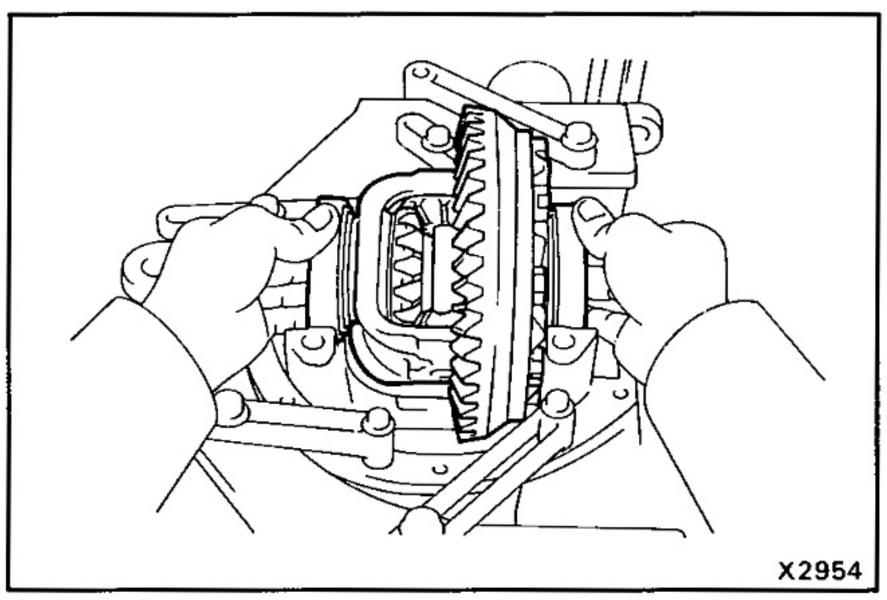

(e) (2 pinion type only)
Remove the differential case with the side bearing outer races from the differential carrier.

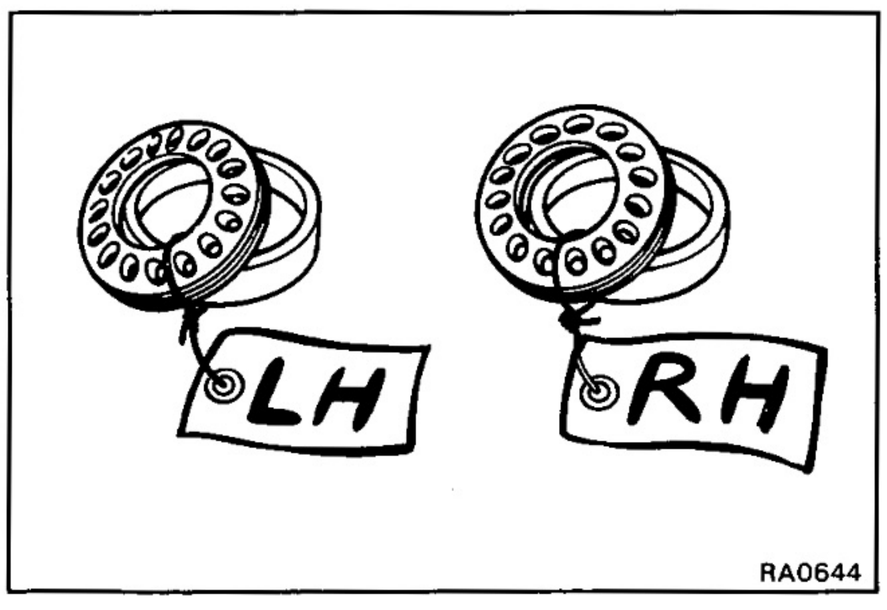

HINT: Tag the disassembled parts to show the location for reassembly.

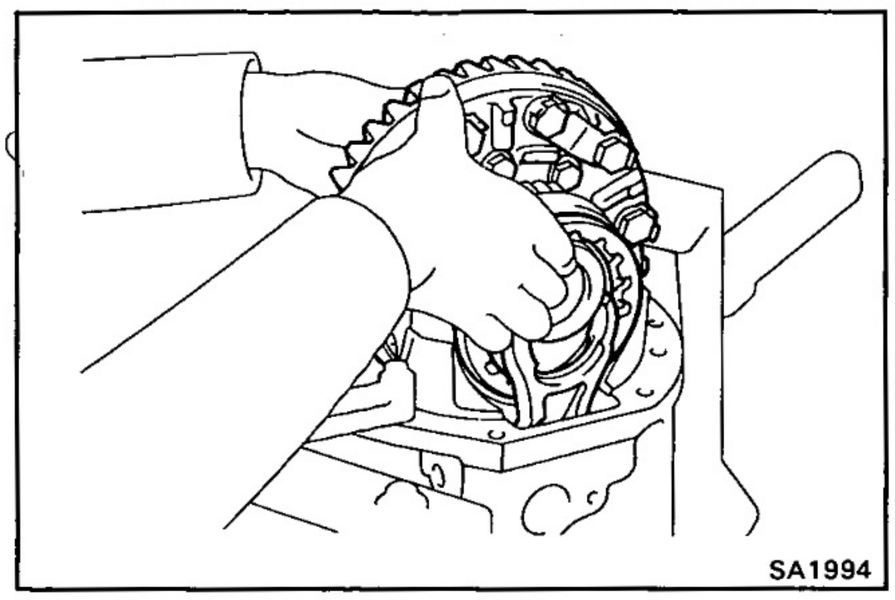

(f) (w/ Differential lock only)
Remove the differential case with both side bearing outer races, adjusting nuts and sleeve from the differential carrier.

(g) (w/ Differential lock only)
Remove the shift fork.

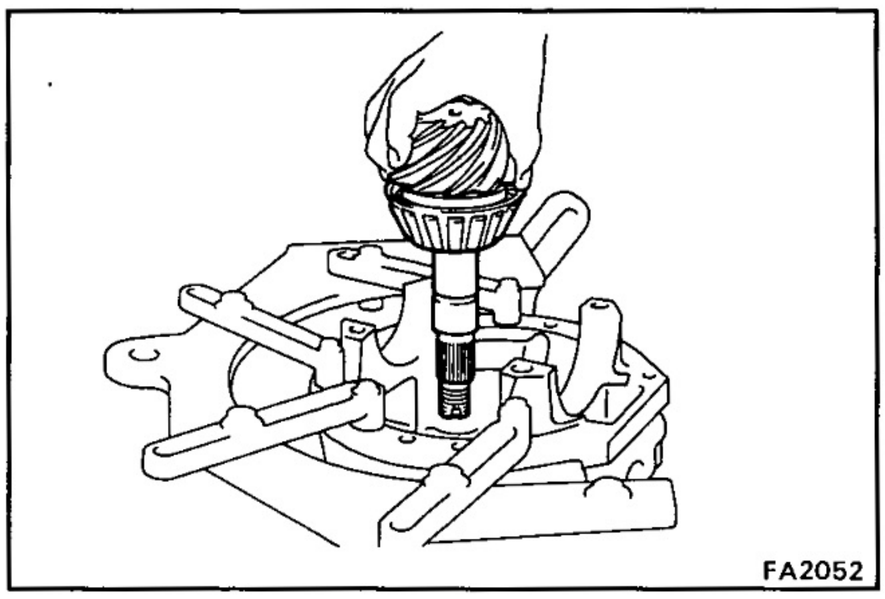

8. REMOVE DRIVE PINION AND BEARING SPACER

(a) Remove the drive pinion with the front bearing.

(b) Remove the bearing spacer.

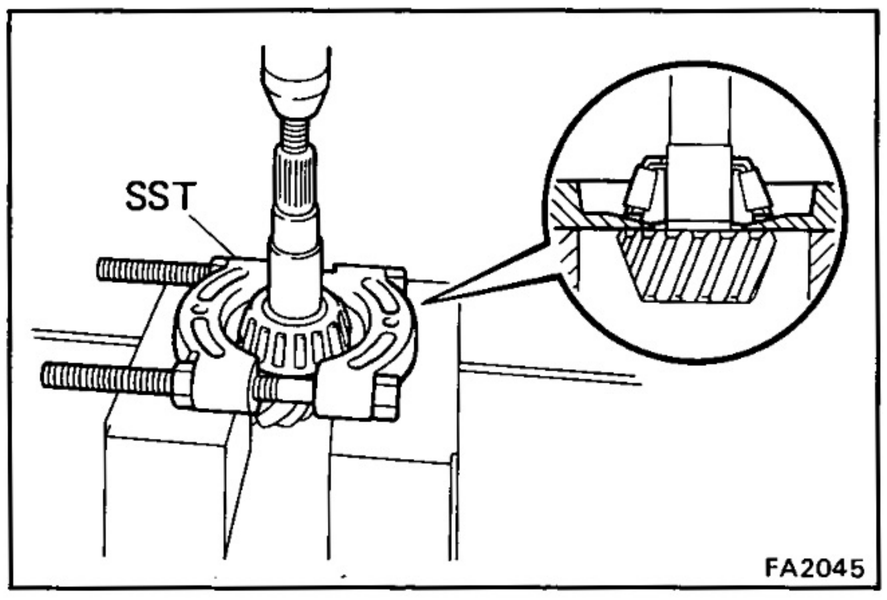

9. REMOVE DRIVE PINION FRONT BEARING

(a) Using SST and a press, remove the bearing from the drive pinion.

SST 09950-00020

HINT: If the drive pinion or ring gear are damaged, replace them as a set.

(b) Remove the washer from the drive pinion.

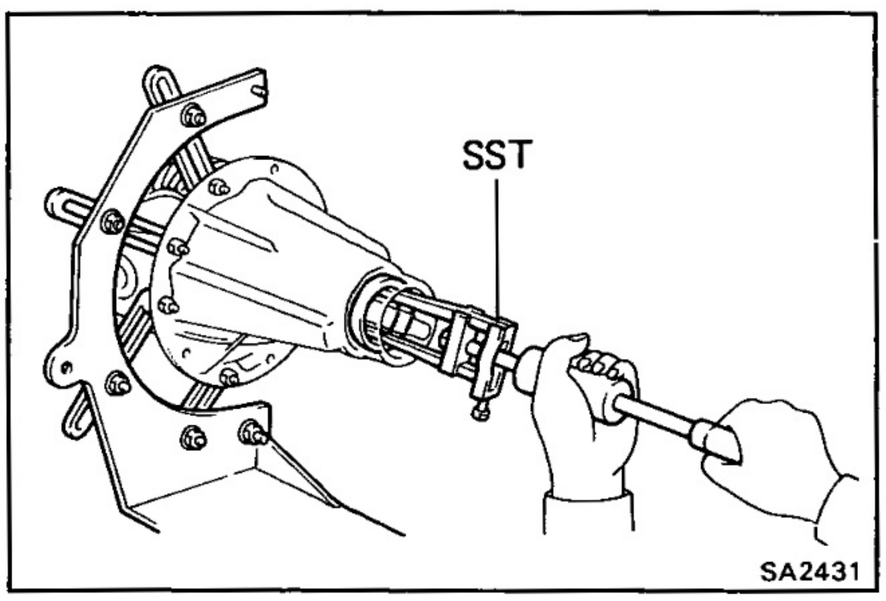

10. REMOVE FRONT, REAR BEARING OUTER RACES AND OIL STORAGE RING

(a) Using SST, remove the bearing outer race.

SST 09308-00010

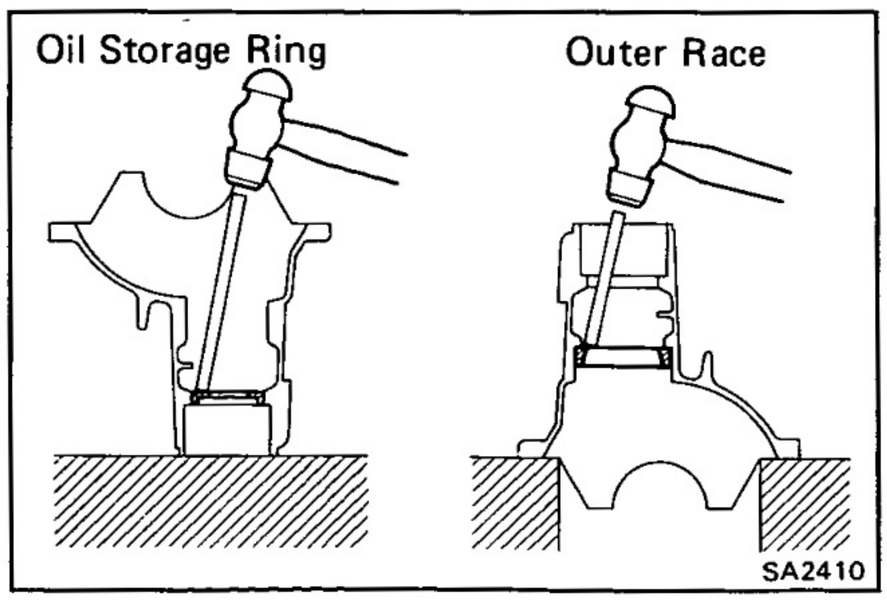

(b) Using a hammer and brass bar, drive out the oil storage ring and outer race from the carrier.

HINT: Do not remove the oil storage ring unless replacing it with a new one.

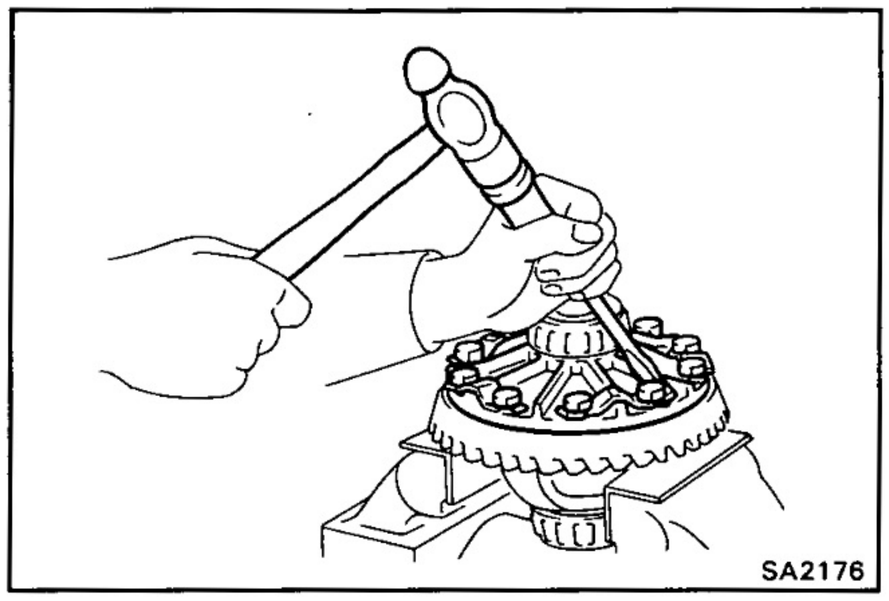
SA2176

11. REMOVE RING GEAR

(a) Using a screwdriver, unstake the lock plates.

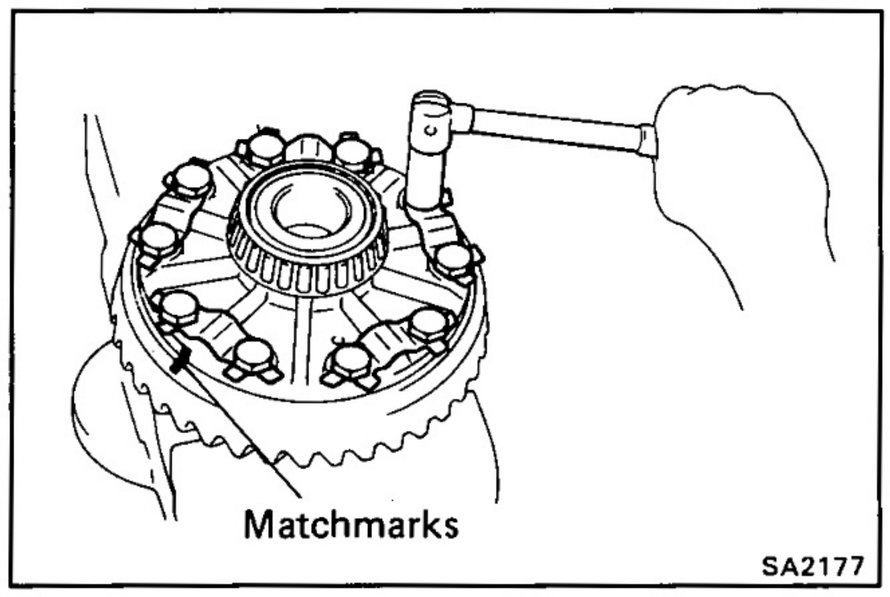

SA2177

(b) Place matchmarks on the ring gear and differential case.

(c) Remove the ten bolts and five lock plates.

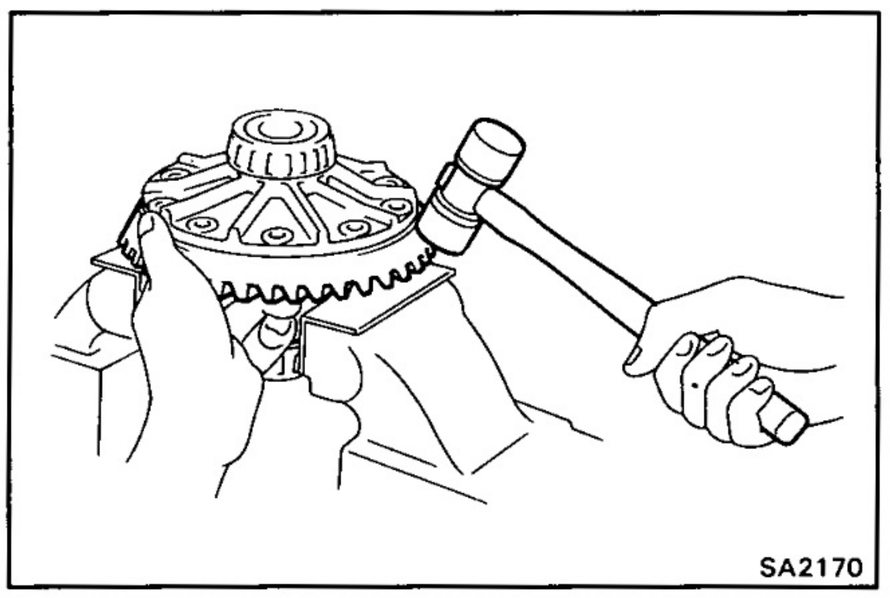
SA2170

(d) Using a plastic or copper hammer, tap on the ring gear to separate it from the differential case.

12. CHECK DIFFERENTIAL CASE RUNOUT

(a) Place the bearing outer races on their respective bearings. Check that the left and right outer races are not interchanged.

(b) Install the differential case in the differential carrier.

(c) When there is no play left in the side bearings, install the adjusting nuts.

(d) Align the matchmarks on the bearing cap and differential carrier.

(e) Install and uniformly tighten the four bearing cap bolts in several passes.

(f) Using a dial indicator, measure the differential case runout.

Maximum runout: 0.07 mm (0.0028 in.)

(g) Remove the differential case.
(See step 7 on page SA-46)

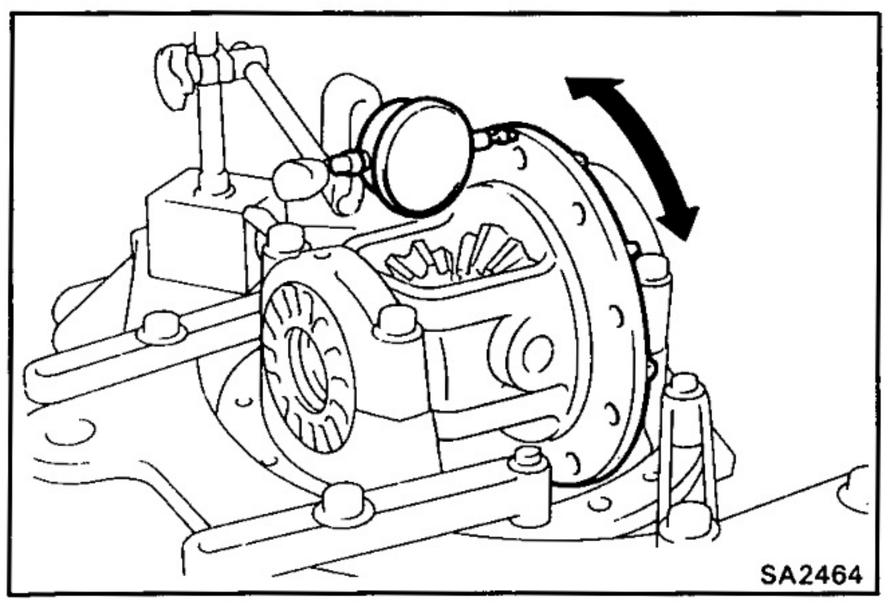
SA2464

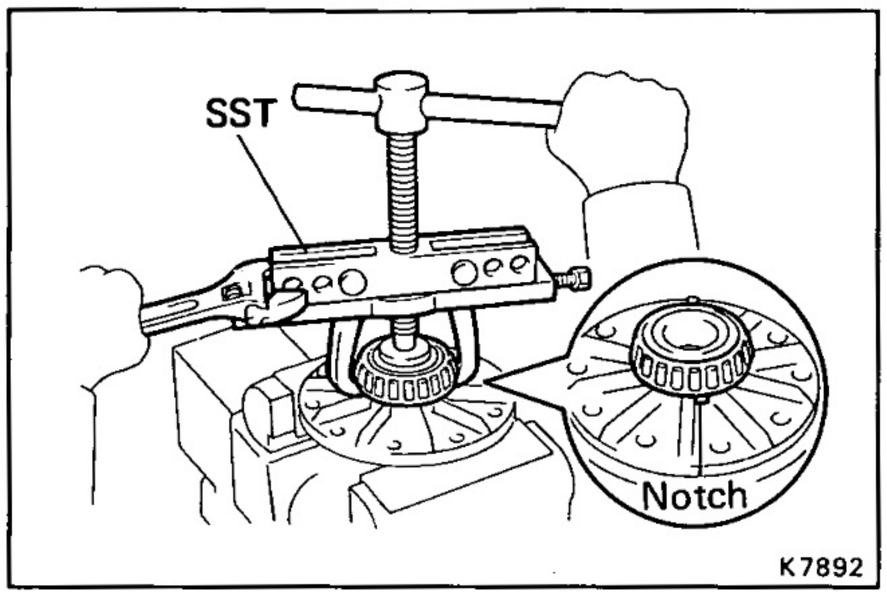

13. REMOVE SIDE BEARINGS

Using SST, remove the side bearing from the differential case.

SST 09950-20017

HINT: Fix the claws of SST to the notch in the differential case.

14. DISASSEMBLE DIFFERENTIAL CASE

2 pinion type: See page SA-62
w/ Differential lock (4 pinion type)
: See page SA-64

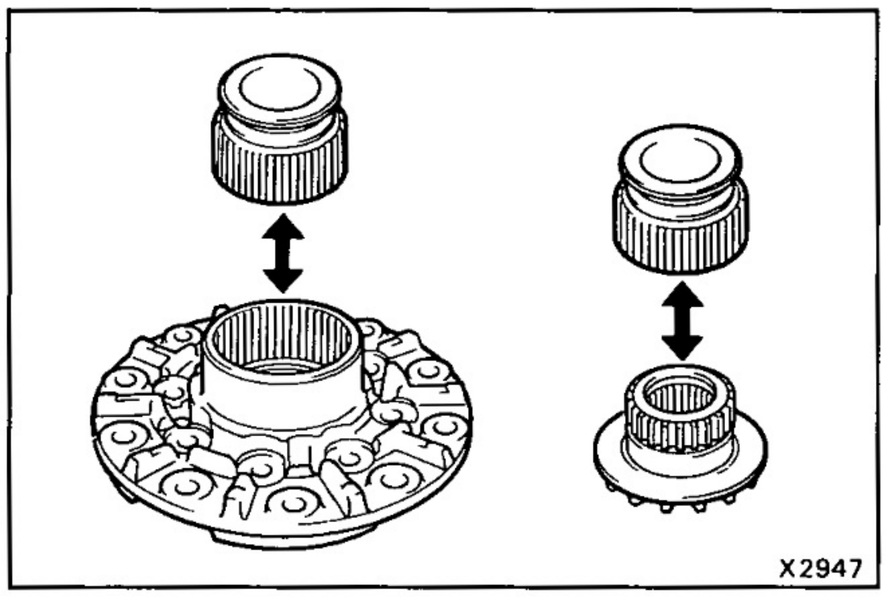

INSPECTION AND REPLACEMENT OF DIFFERENTIAL COMPONENTS

1. (w/ DIFFERENTIAL LOCK) INSPECT SLEEVE

(a) Install the sleeve to the differential case (LH) and check it moves smoothly.

(b) Install the sleeve to the side gear and check it moves smoothly.

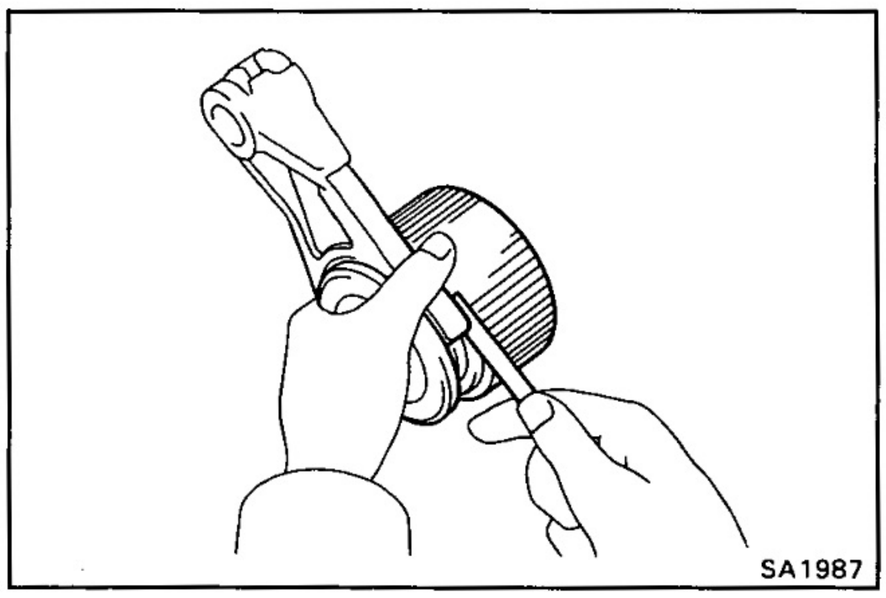

2. (w/ DIFFERENTIAL LOCK) MEASURE CLEARANCE OF SHIFT FORK AND SLEEVE

Using a feeler gauge, measure the clearance between the shift fork and sleeve.

Clearance (Reference): 0.15 — 0.35 mm (0.06 — 0.014 in.)

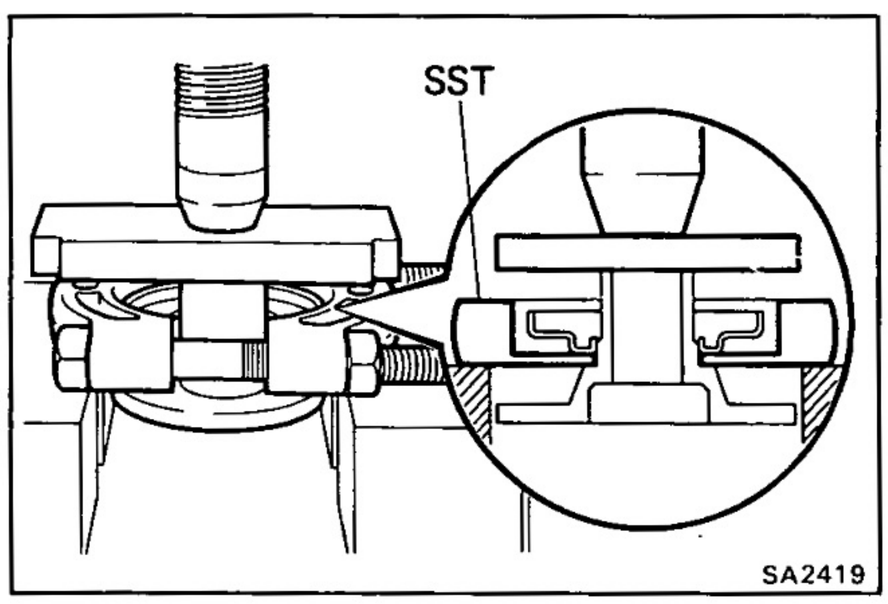

3. REPLACE COMPANION FLANGE DUST DEFLECTOR

(a) Using SST and a press, remove the dust deflector.

SST 09950-00020

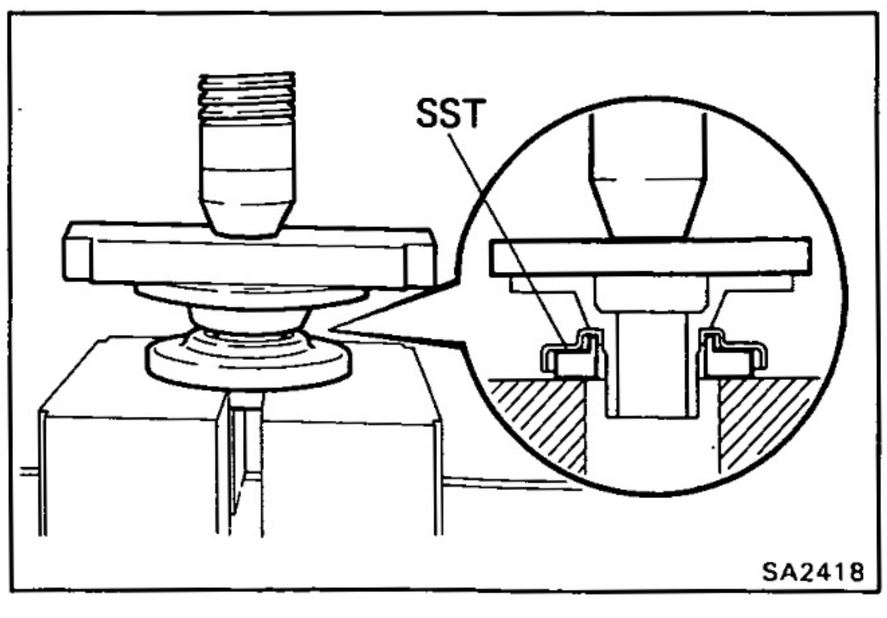

(b) Using SST and a press, install a new dust deflector.

SST 09726-40010

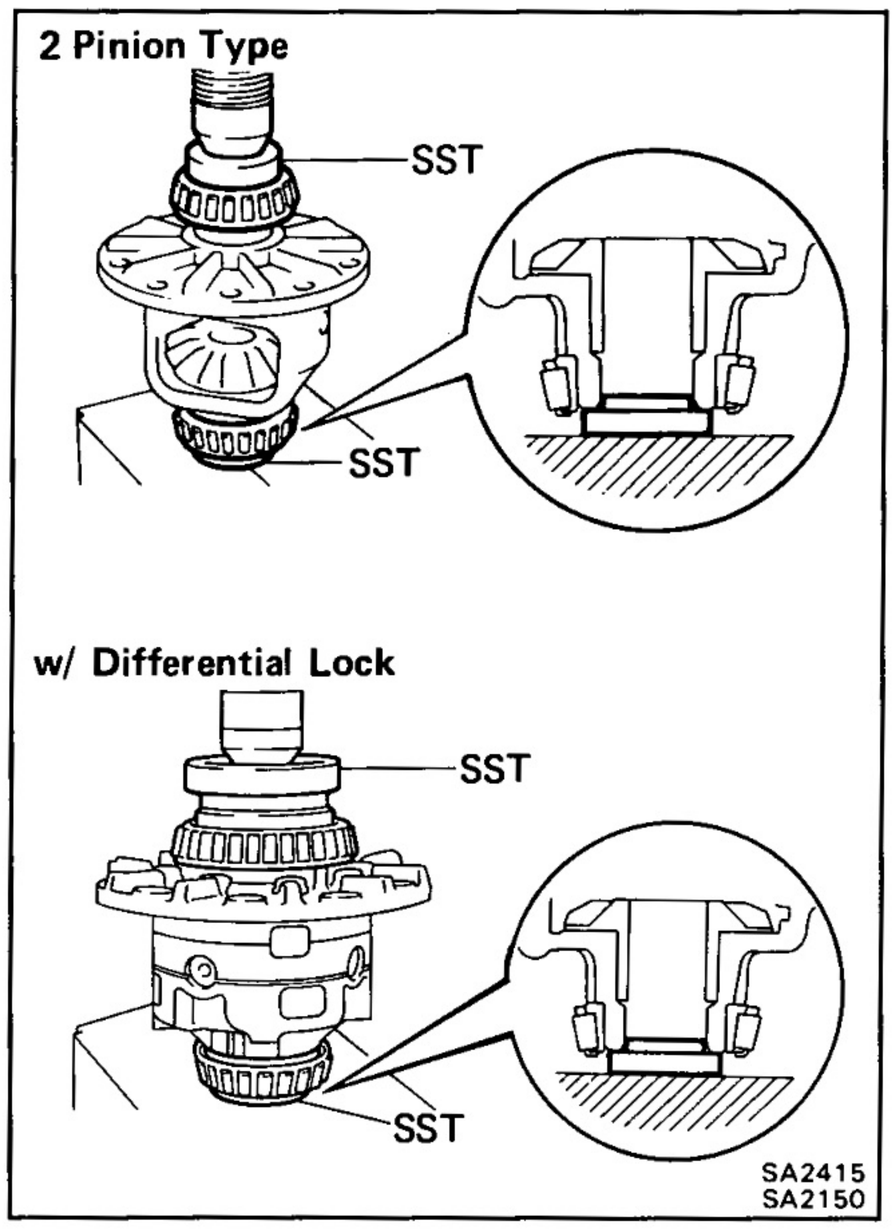

ASSEMBLY OF DIFFERENTIAL CARRIER

(See page SA-41)

1. INSTALL SIDE BEARINGS

Using SST and a press, install the two side bearings on the differential case.

SST 2 pinion type
09608-30012 (09608-00060, 09608-04060)
w/ Differential lock
09223-15020 and 09608-30012 (09608-04060)

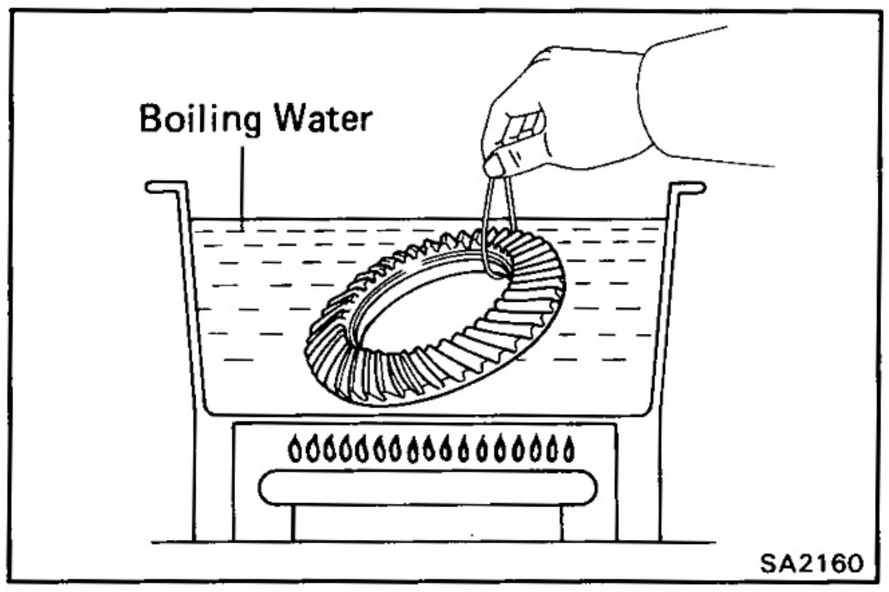

2. INSTALL RING GEAR ON DIFFERENTIAL CASE

(a) Clean the contact surfaces of the differential case and ring gear.

(b) Heat the ring gear in boiling water.

(c) After the moisture on the ring gear has completely evaporated, quickly install the ring gear to the differential case.

HINT: Align the matchmarks on the ring gear and the differential case.

(d) Temporarily install five new lock plates and the ten bolts so that the bolt holes in the ring gear and differential case are not misaligned.

NOTICE: The ring gear set bolts should not be tight until the ring gear has cooled sufficiently.

(e) After the ring gear has cooled sufficiently, torque the ring gear set bolts.

Torque: 985 kg-cm (71 ft-lb, 97 N·m)

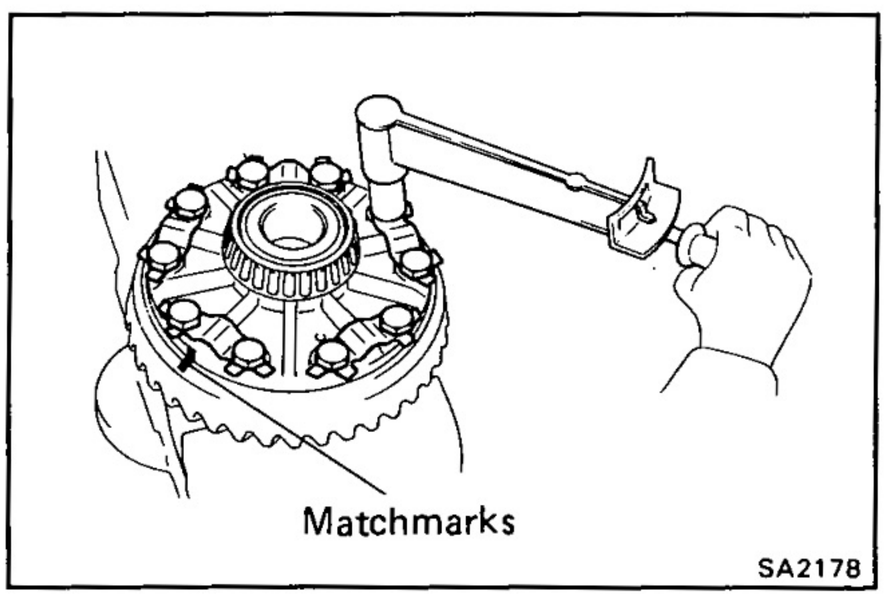

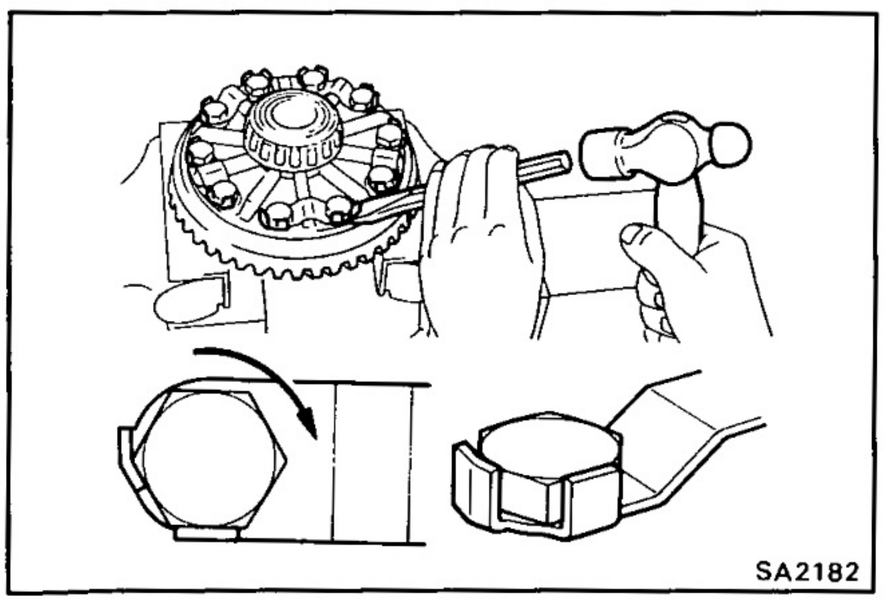

(f) Using a hammer and drift punch, stake the lock plates.

HINT: Stake one claw flush with the flat surface of the nut. For the claw contacting the protruding portion of the nut, stake the half on the tightening side.

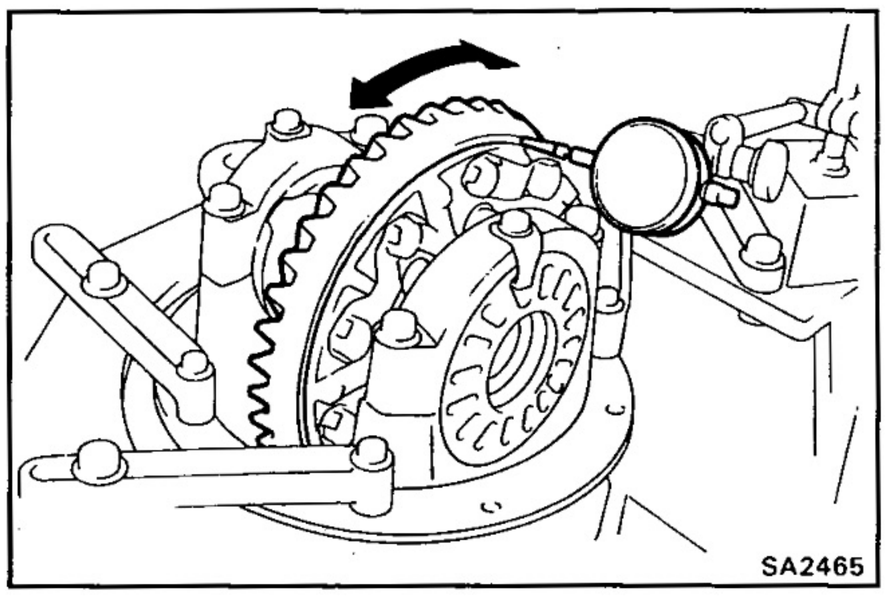

3. CHECK RING GEAR RUNOUT

(a) Install the differential case onto the carrier.

(b) Install bearing caps. (See page SA-53)

(c) Using a dial indicator, measure the runout of ring gear.

Maximum runout: 0.10 mm (0.0039 in.)

(d) Remove the differential case.
(See step 7 on page SA-46)

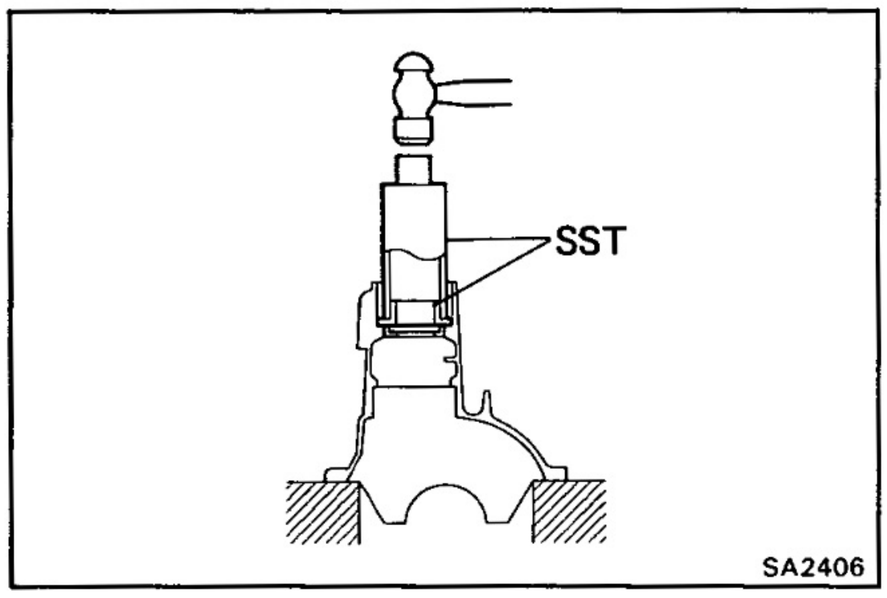

4. INSTALL OIL STORAGE RING

Using SST and a hammer, install a new oil storage ring.

SST 09316-60010 (09316-00010, 09316-00020)

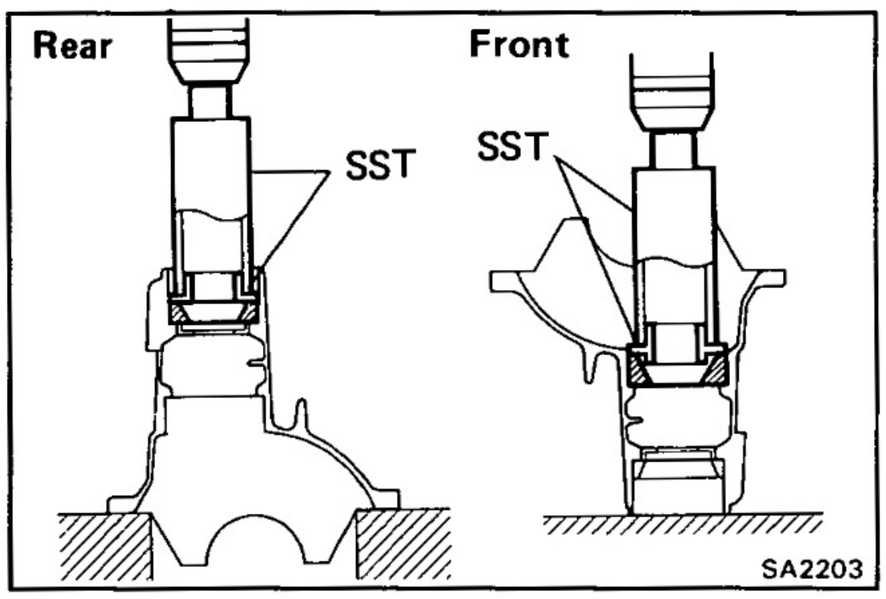

5. INSTALL DRIVE PINION FRONT AND REAR BEARING OUTER RACES

Using SST and a press, install the outer races.

SST 09316-60010

Rear (09316-00010, 09316-00020)
Front (09316-00010, 09316-00050)

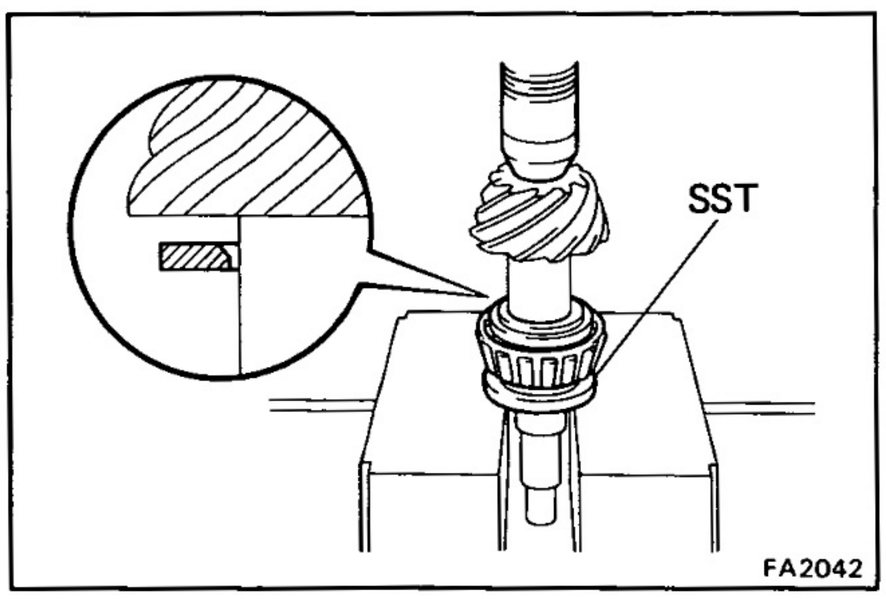

6. INSTALL DRIVE PINION FRONT BEARING

(a) Install the washer on the drive pinion with the chamfered end facing the pinion gear.

HINT: First fit a washer with the same thickness as the washer which was removed, then after checking the teeth contact pattern, replace the washer with one of a different thickness if necessary.

(b) Using SST and a press, install the front bearing to the drive pinion.

SST 09506-30012

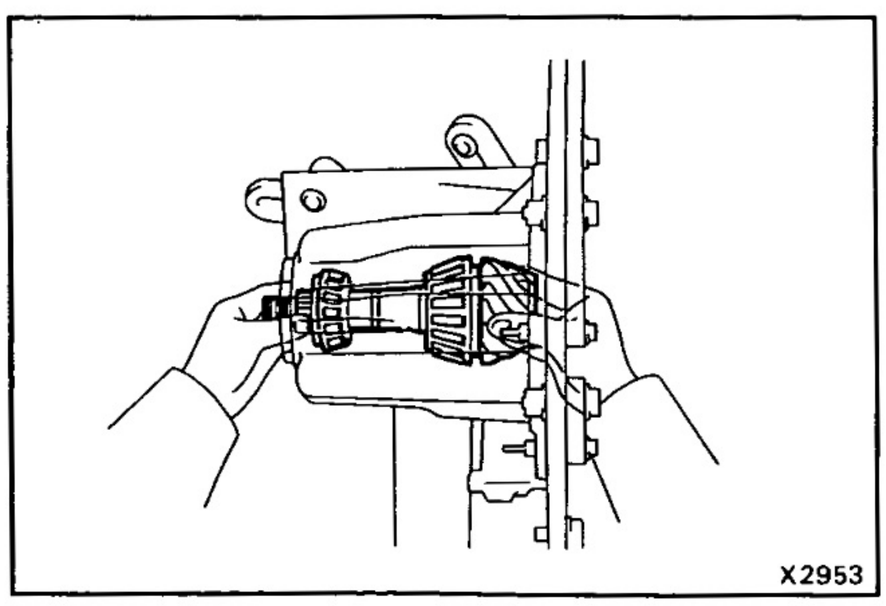

7. TEMPORARILY ADJUST DRIVE PINION PRELOAD

(a) Install the drive pinion, rear bearing and oil slinger.

HINT: Assemble the spacer and oil seal after adjusting the teeth contact pattern.

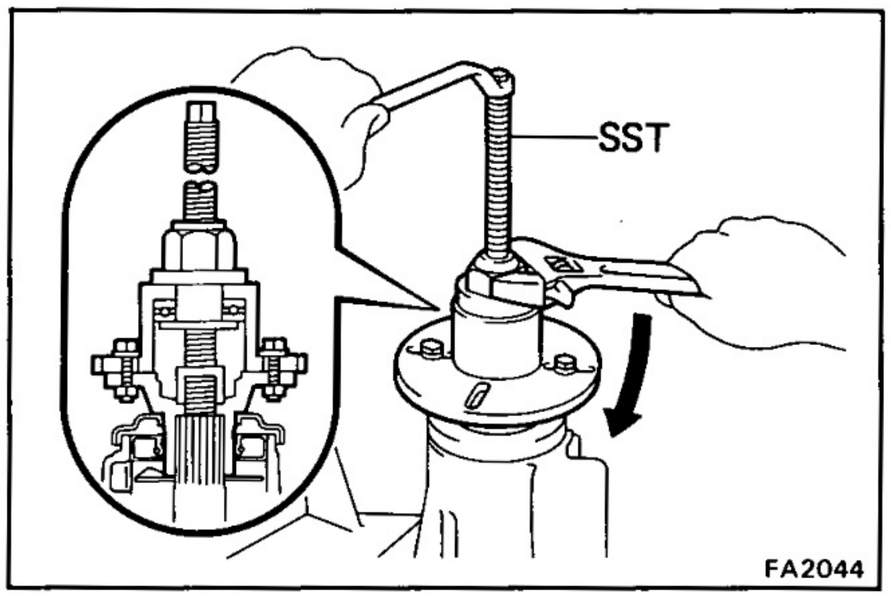

(b) Using SST, install the companion flange.

SST 09557-22022 (09557-22050)

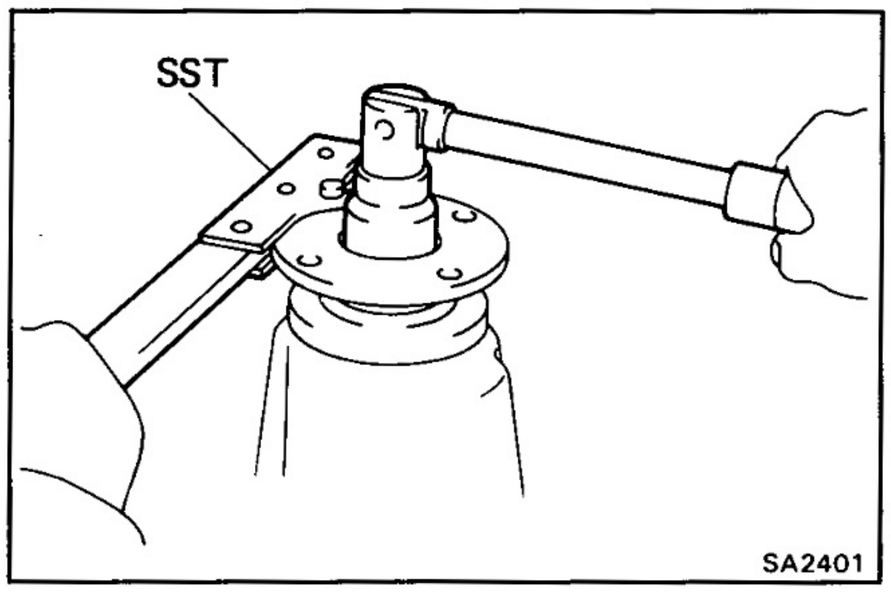

(c) Adjust the drive pinion preload by tightening the companion flange nut.

HINT: Using SST to hold the flange, tighten the nut.

SST 09330-00021

NOTICE: As there is no spacer, tighten the nut a little at a time, being careful not to overtighten it.

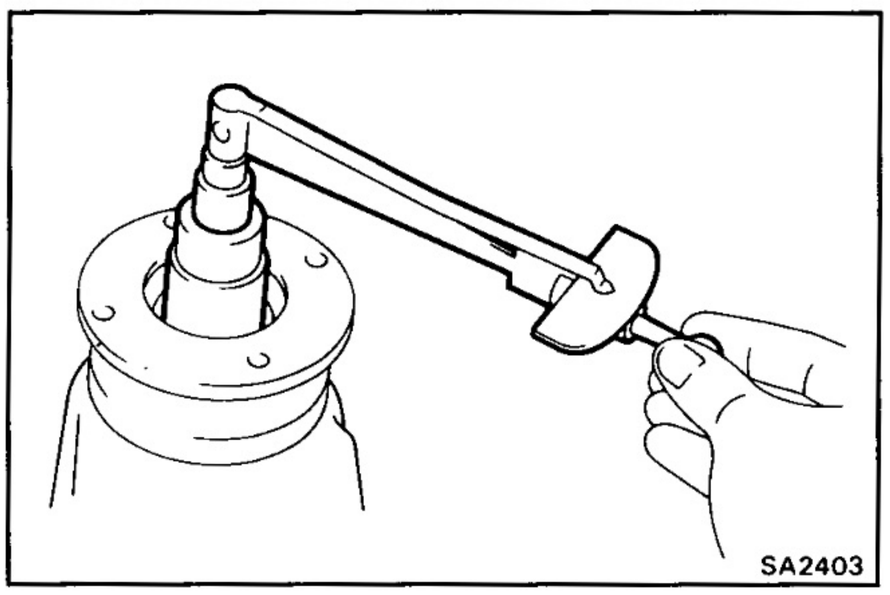

(d) Using a torque meter, measure the preload.

Preload (at starting):

New bearing

10 — 16 kg-cm

(8.7 — 13.9 in.-lb, 0.9 — 1.6 N·m)

Reused bearing

5 — 8 kg-cm (4.3 — 6.9 in.-lb, 0.5 — 0.8 N·m)

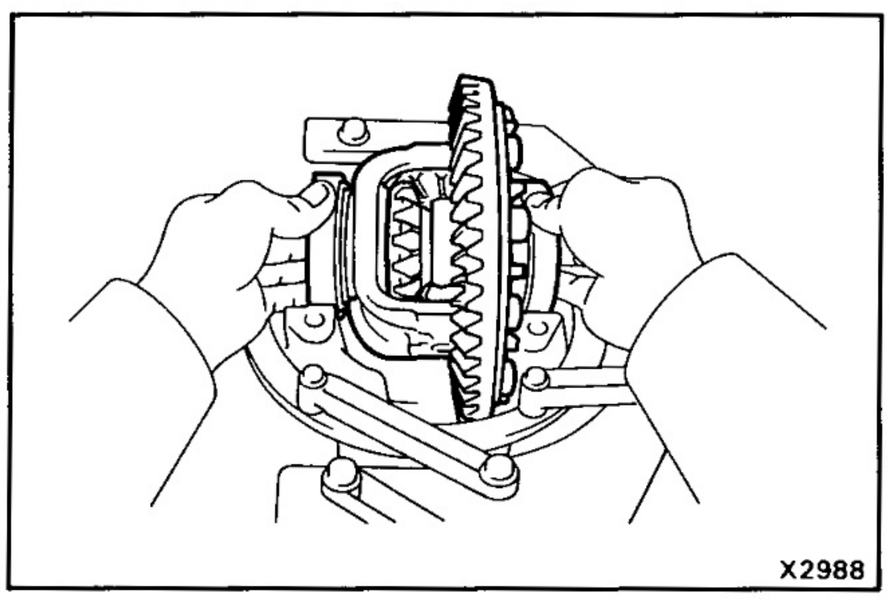

8. INSTALL DIFFERENTIAL CASE AND ADJUSTING NUTS (2 PINION TYPE)

(a) Place the bearing outer races on their respective bearings. Make sure that the left and right outer races are not interchanged.

(b) Install the case in the carrier.

HINT: Make sure that there is backlash between the ring gear and drive pinion.

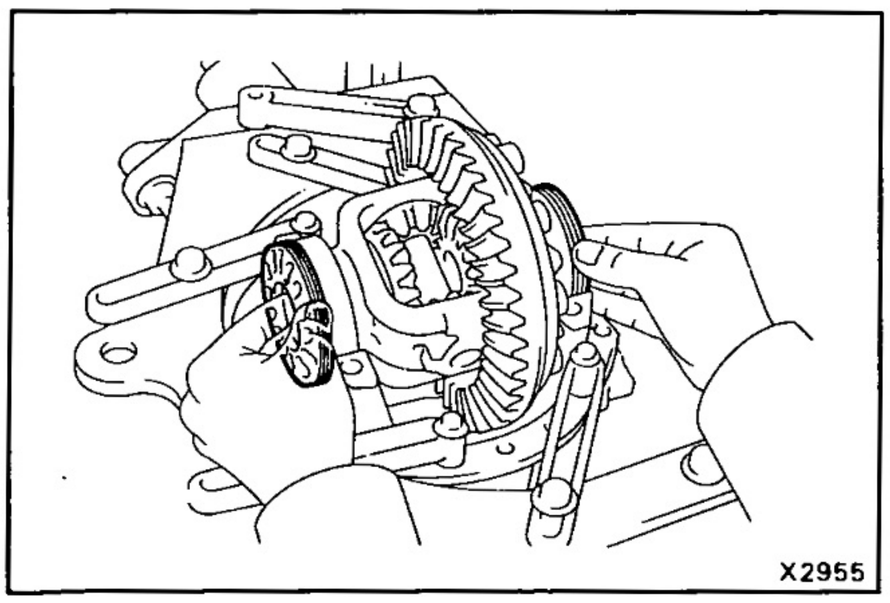

(c) Install the adjusting nuts on the carrier, making sure that the nuts are threaded properly.

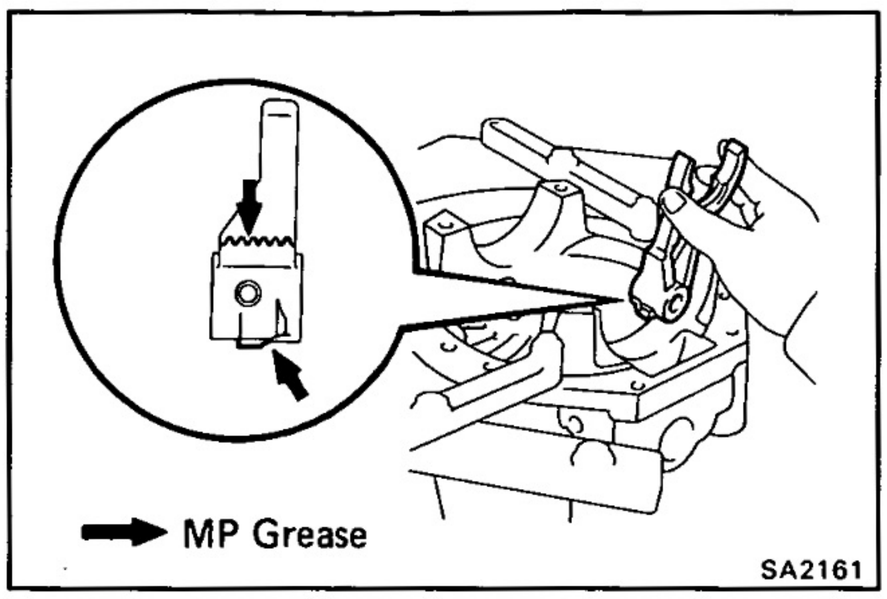

(w/ DIFFERENTIAL LOCK)

(a) Apply MP grease on the rack of the shift fork and connecting part of the indicator switch.

(b) Insert the shift fork into the differential carrier as shown.

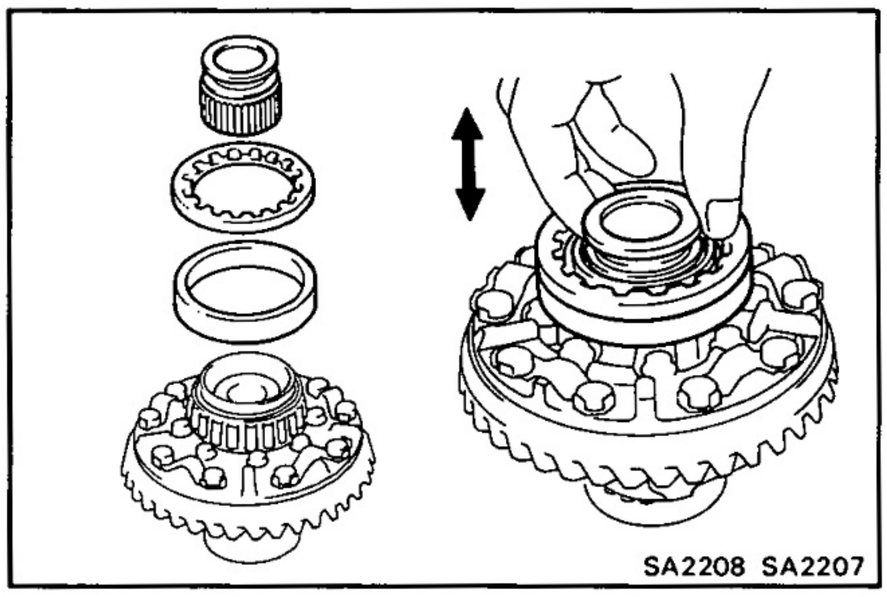

(c) Install both outer races, adjusting nuts and sleeve.

HINT: Check that the sleeve moves smothly.

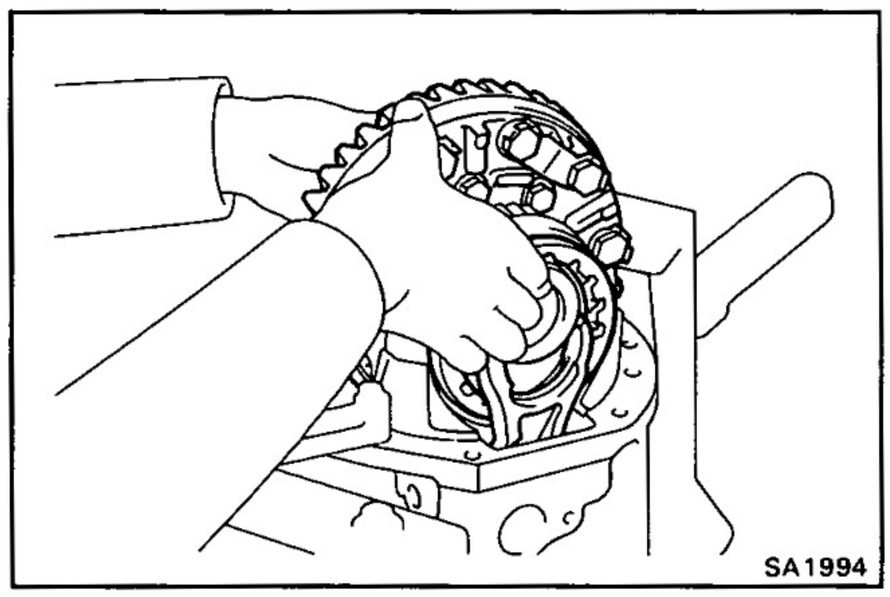

(d) Install the shift fork in the groove of the sleeve, holding it by hand, install the case in the carrier.

HINT: Make sure that there is backlash between the ring gear and drive pinion.

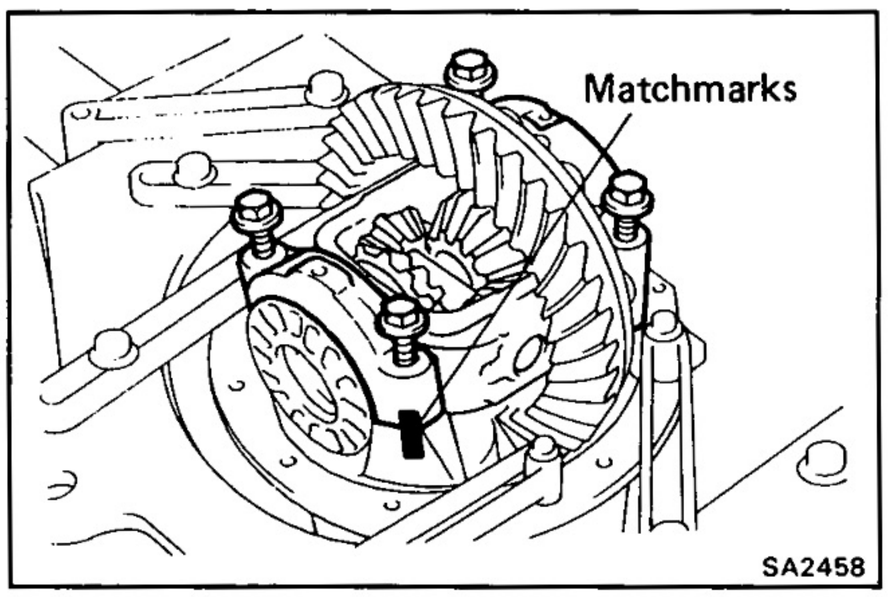

9. INSTALL BEARING CAPS

Align the matchmarks on the cap and carrier. Screw in the two bearing cap bolts two or three turns and press down the bearing cap by hand.

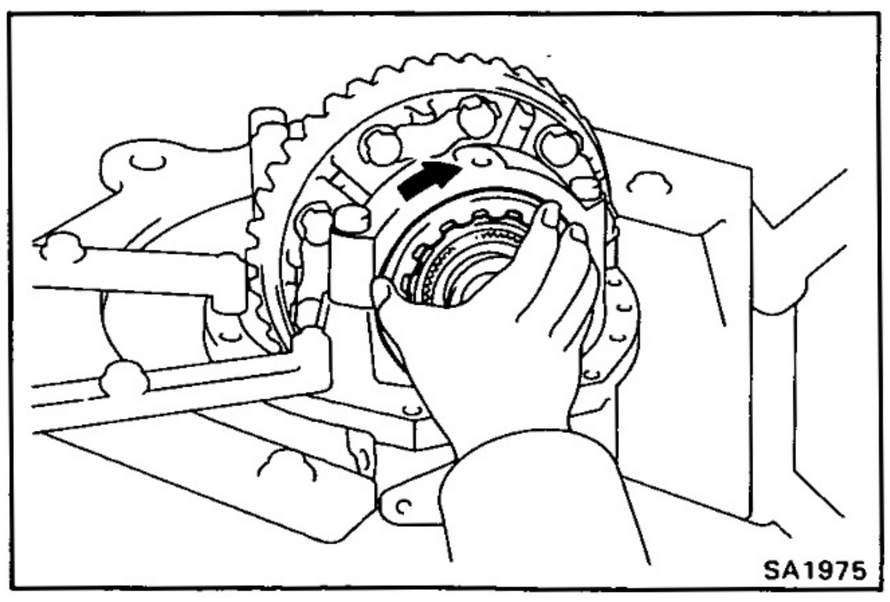

HINT: If the bearing cap does not fit tightly on the carrier, the adjusting nuts are not threaded properly.

Reinstall the adjusting nuts if necessary.

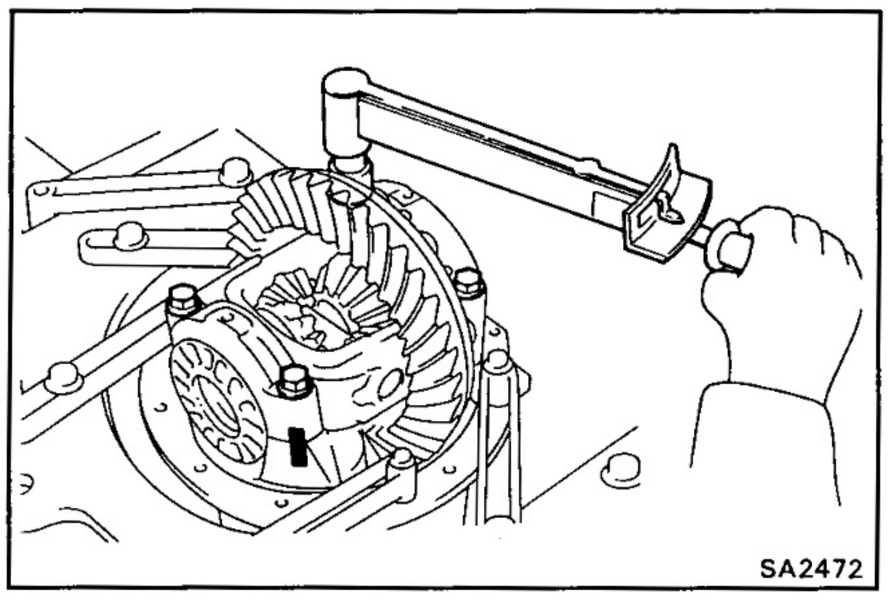

10. ADJUST SIDE BEARING PRELOAD

(a) Tighten the four bearing cap bolts to the specified torque, then loosen them to the point where they can be turned by hand.

Torque: 800 kg-cm (58 ft-lb, 78 N·m)

(b) Fully tighten the four bearing cap bolts by hand.

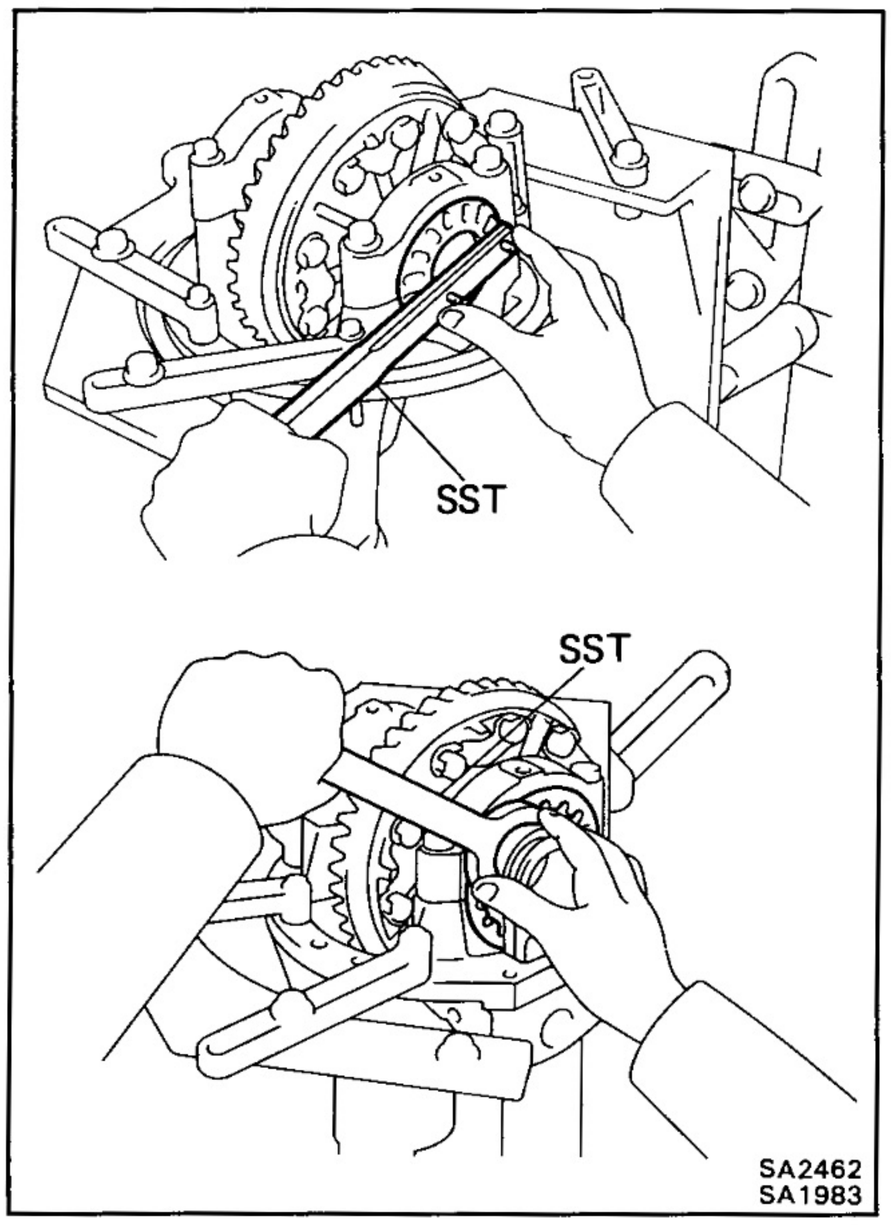

(c) Using SST, tighten the adjusting nut on the ring gear side until the ring gear has a backlash of about 0.2 mm (0.008 in.).

SST 09504-00011 or 09616-30020

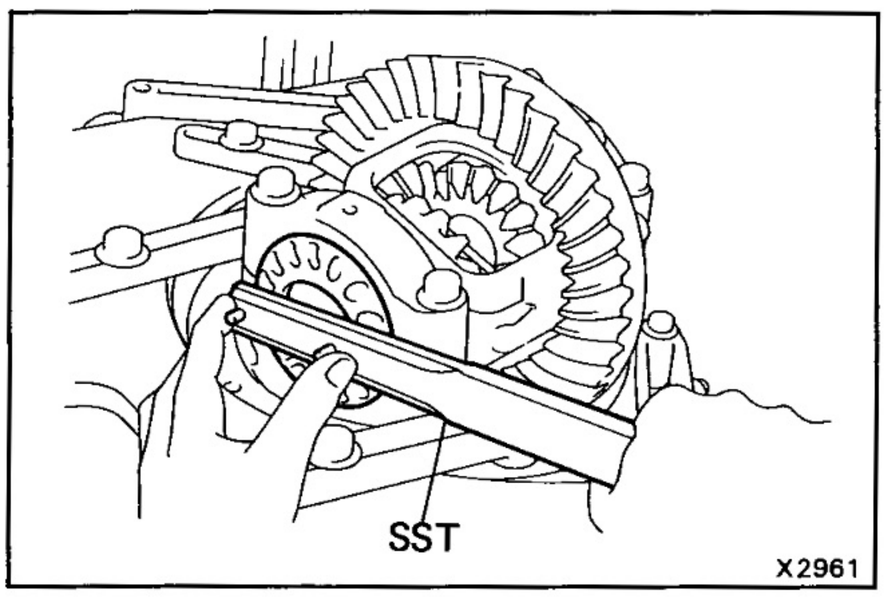

(d) While turning the ring gear, use SST to fully tighten the adjusting nut on the drive pinion side. After the bearings are settled, loosen the adjusting nut on the drive pinion side.

SST 09504-00011

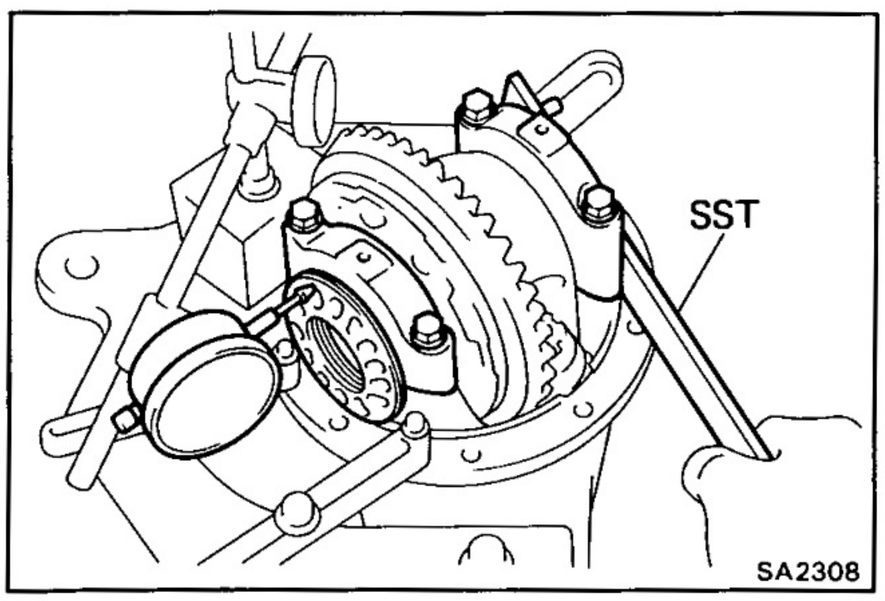

(e) Place a dial indicator on the top of the adjusting nut on the ring gear side.

(f) Adjust the side bearing for zero preload by tightening the other adjusting nut until the pointer on the indicator begins to move.

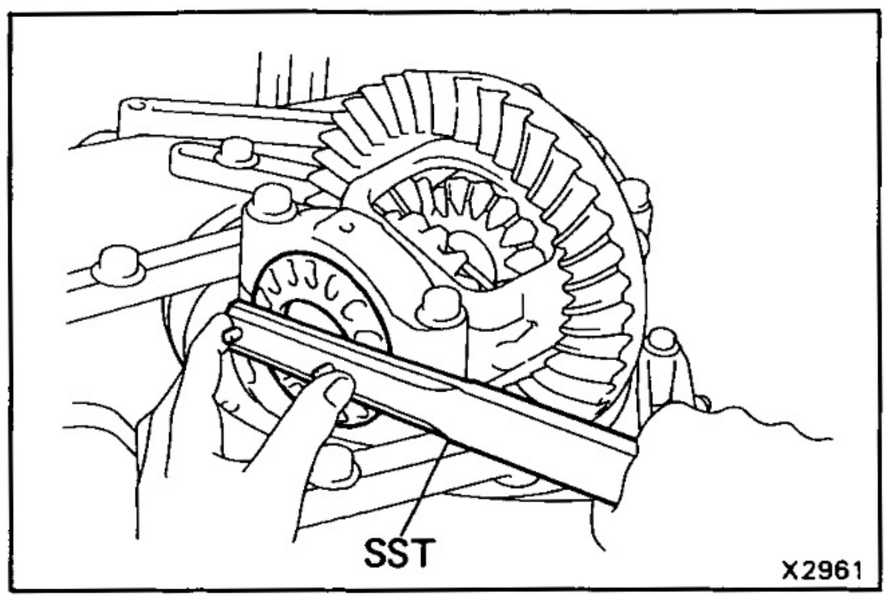

(g) Tighten the adjusting nut 1 — 1 1/2 notches from the zero preload position.

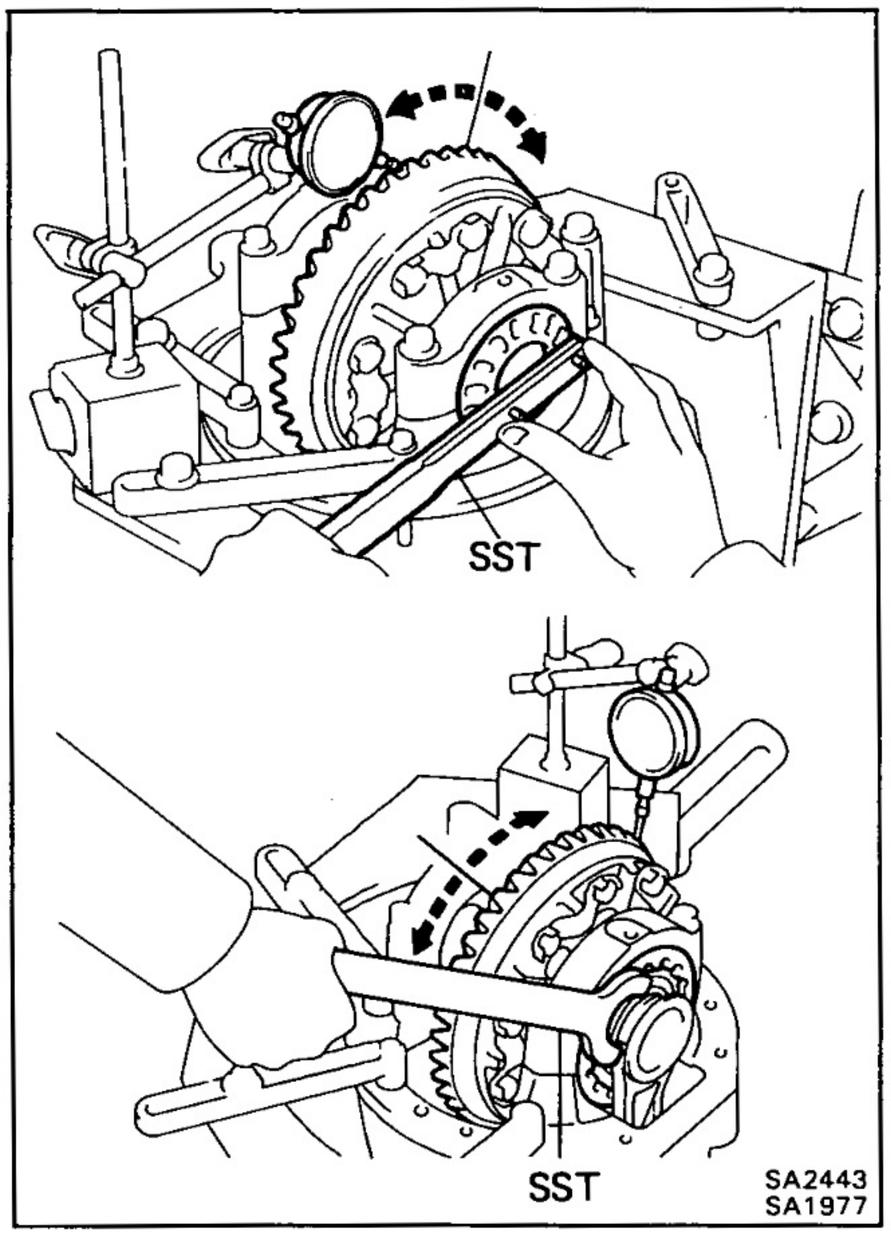

(h) Using a dial indicator, adjust the ring gear backlash until it is within specification.

Backlash: 0.13 — 0.18 mm (0.0051 — 0.0071 in.)

HINT: The backlash is adjusted by turning the left and right adjusting nuts equal amounts. For example, loosen the nut on the left side one notch and tighten the nut on the right side one notch.

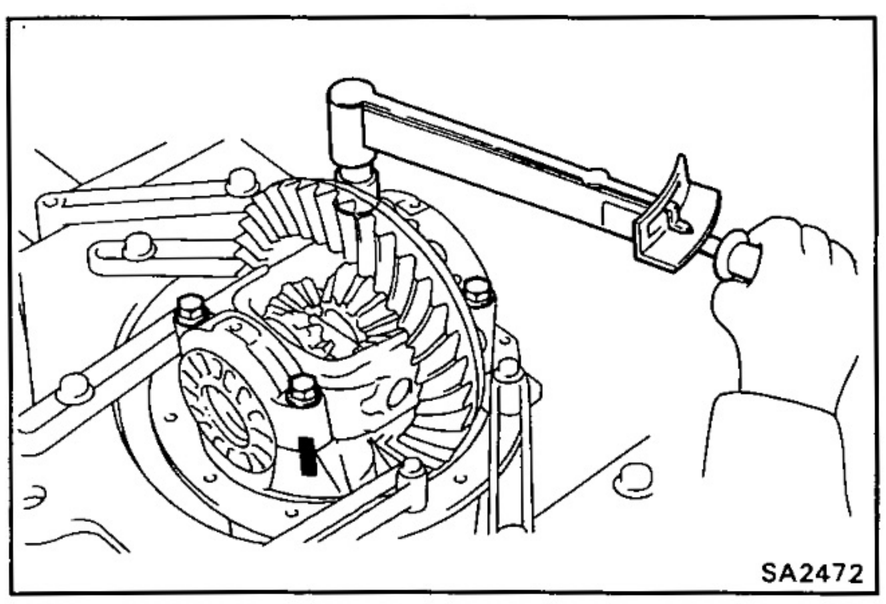

(i) Torque the bearing cap bolts.

Torque: 800 kg-cm (58 ft-lb, 78 N·m)

(j) Recheck the ring gear backlash.

Backlash: 0.13 — 0.18 mm (0.0051 — 0.0071 in.)

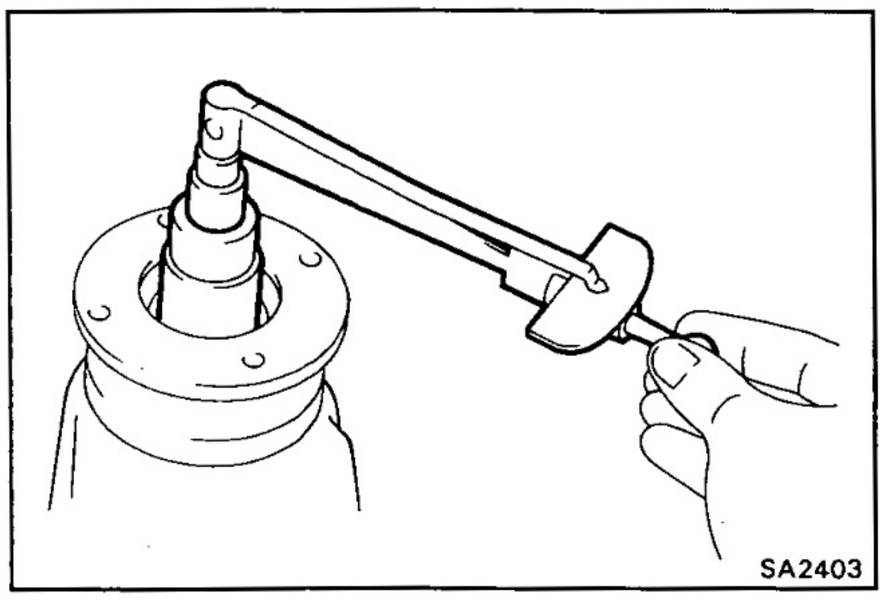

(k) Using a torque meter, measure the total preload.

Total preload (at starting):

Add drive pinion preload

4 — 6 kg-cm

(3.5 — 5.2 in.-lb, 0.4 — 0.6 N·m)

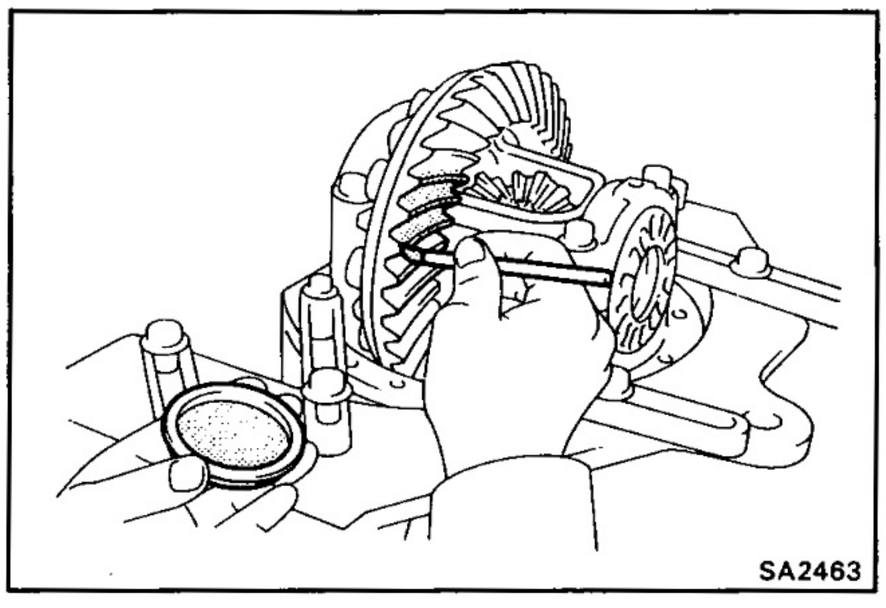
SA2463

11. INSPECT TEETH CONTACT BETWEEN RING GEAR AND DRIVE PINION

(a) Coat 3 or 4 teeth at three different positions on the ring gear with red lead.

(b) Hold the companion flange firmly and rotate the ring gear in both directions.

(c) Inspect the teeth pattern.

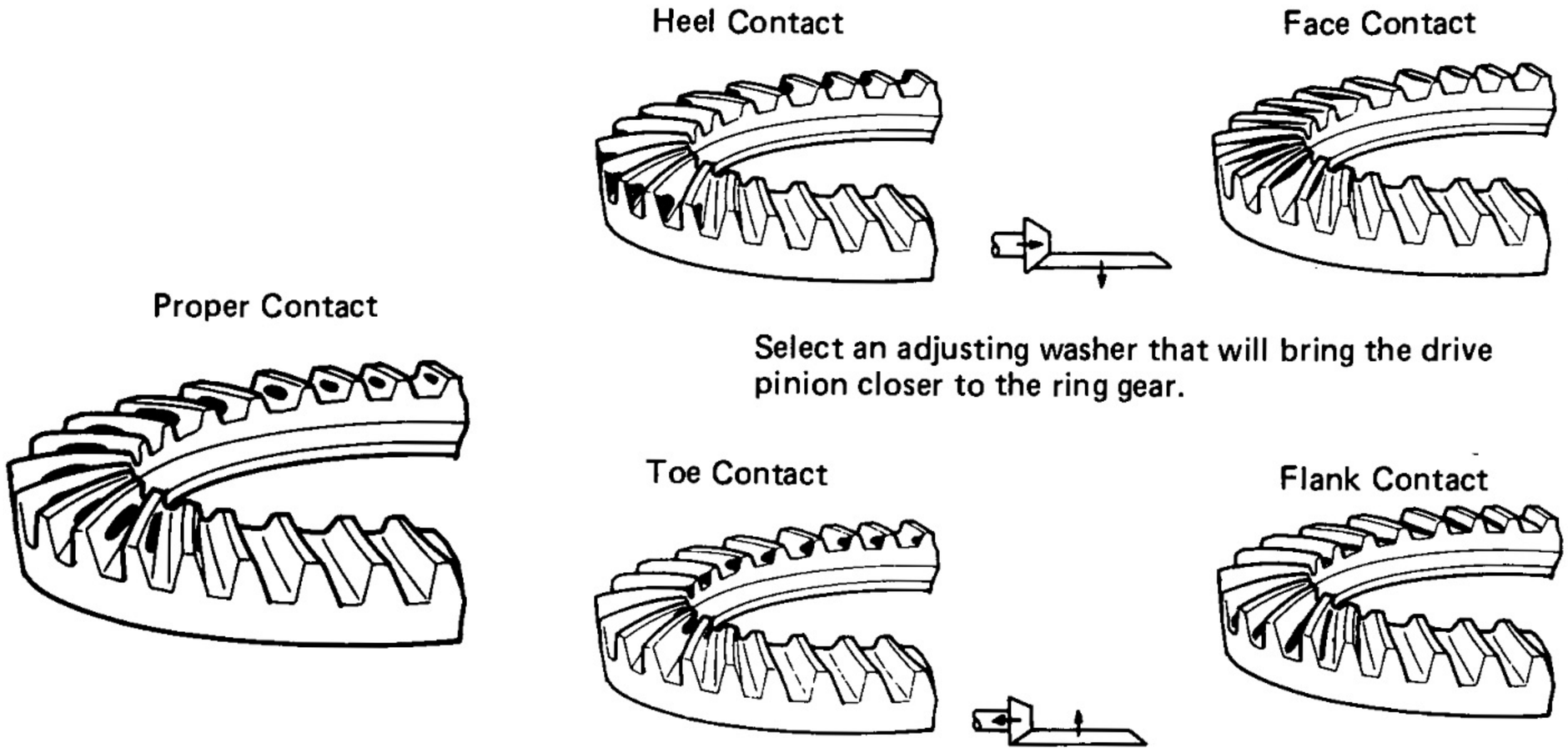

FA2013

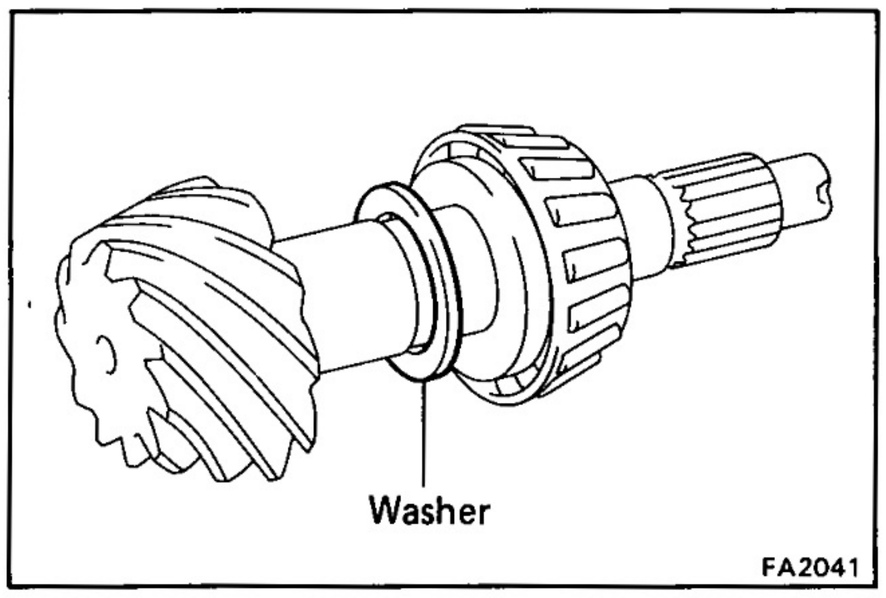

FA2041

If the teeth are not contacting properly, use the following chart to select a proper washer for correction.

HINT: In the case of face contact or flank contact, it may be possible to make the adjustment within the backlash specification limits.

Washer thickness mm (in.)	
1.70 (0.0669)	2.03 (0.0799)
1.73 (0.0681)	2.06 (0.0811)
1.76 (0.0693)	2.09 (0.0823)
1.79 (0.0705)	2.12 (0.0835)
1.82 (0.0717)	2.15 (0.0846)
1.85 (0.0728)	2.18 (0.0858)
1.88 (0.0740)	2.21 (0.0870)
1.91 (0.0752)	2.24 (0.0882)
1.94 (0.0764)	2.27 (0.0894)
1.97 (0.0776)	2.30 (0.0906)
2.00 (0.0787)	2.33 (0.0917)

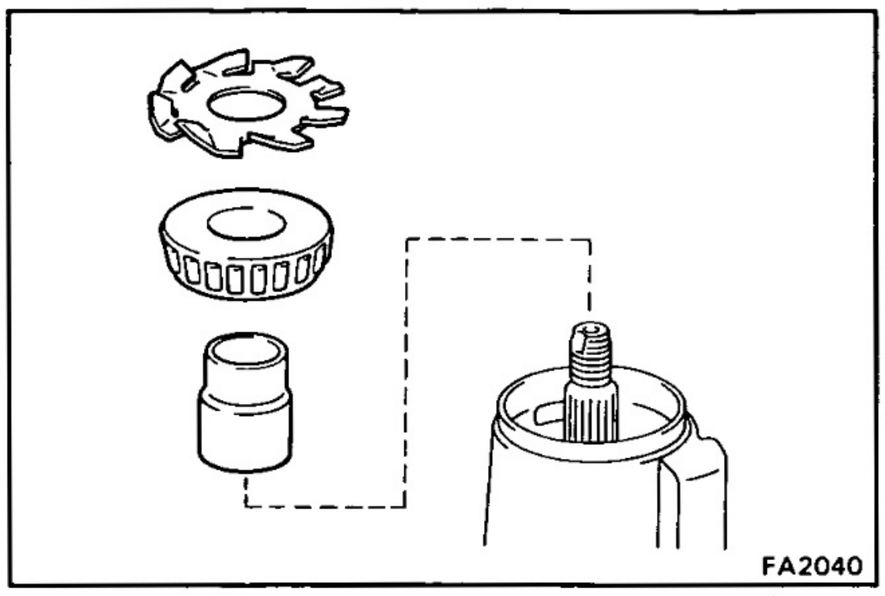

12. INSTALL NEW BEARING SPACER

(a) Remove the companion flange.
(See step 4 on page SA-45)

(b) Remove the oil slinger and rear bearing.
(See steps 5, 6 on pages SA-45, 46)

(c) Install a new bearing spacer.

(d) Install the rear bearing and oil slinger.

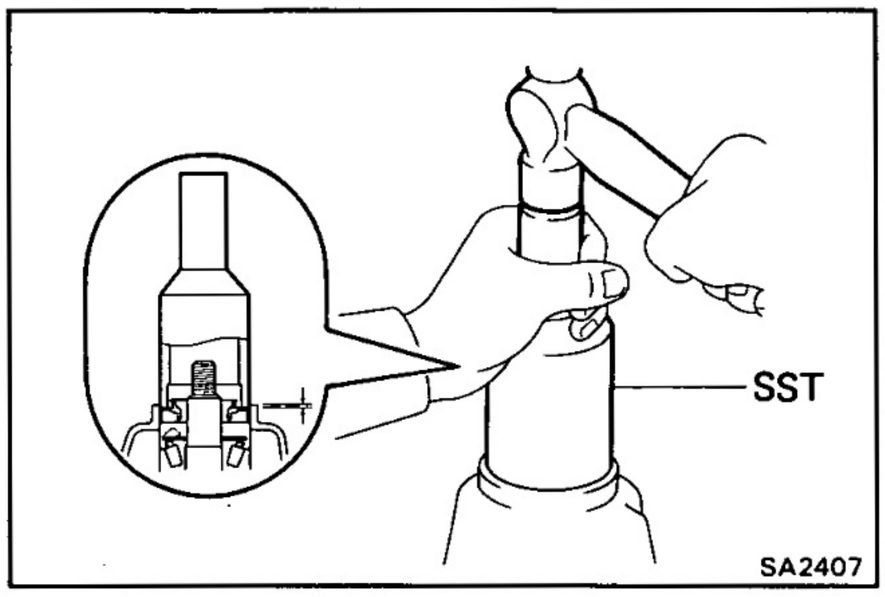

13. INSTALL OIL SEAL

(a) Using SST and a hammer, install a new oil seal.

SST 09214-76011

Oil seal drive in depth: 1.0 mm (0.039 in.)

(b) Coat the lip of oil seal with MP grease.

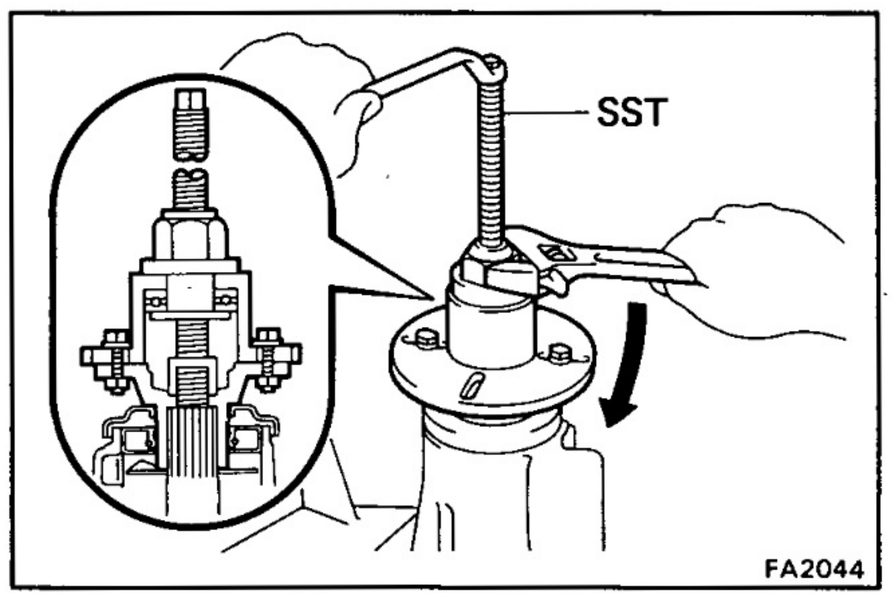

14. INSTALL COMPANION FLANGE

(a) Using SST, install the companion flange.

SST 09557-22022 (09557-22050)

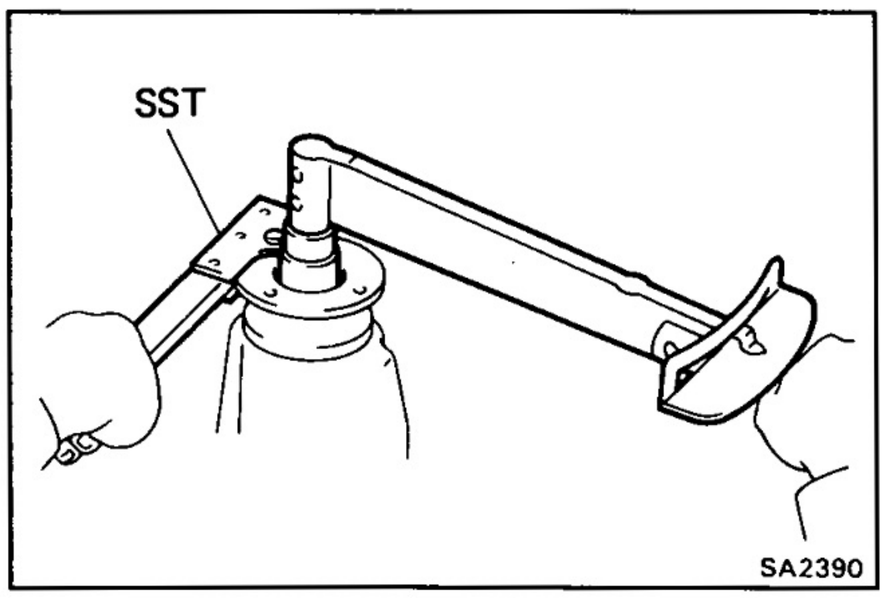

(b) Install the plate washer and a new nut.

HINT: Coat the threads of nut with gear oil.

(c) Using SST to hold the flange, tighten the nut.

SST 09330-00021

Torque: 2,000 kg-cm (145 ft-lb, 196 N·m)

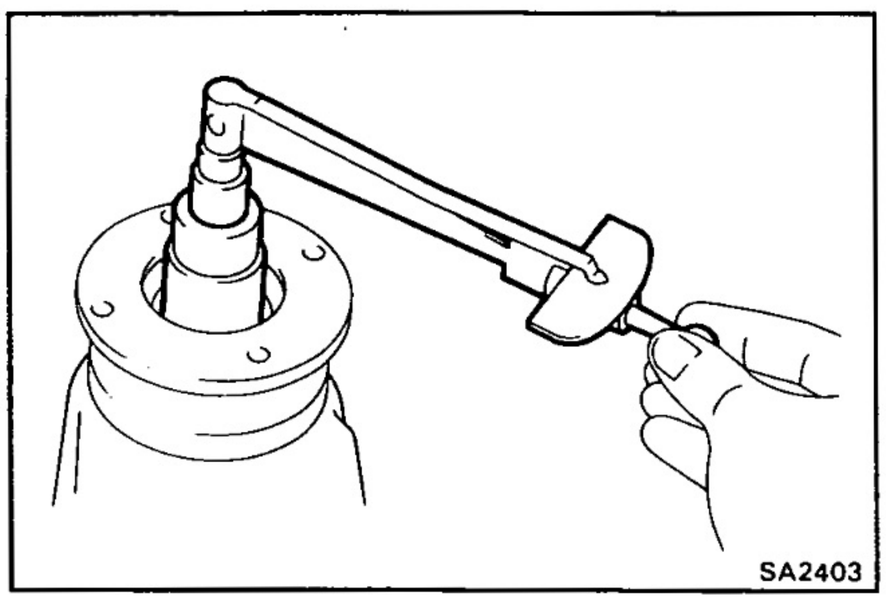

15. ADJUST DRIVE PINION PRELOAD

Using a torque meter, measure the preload of the backlash between the drive pinion and ring gear.

Preload (at starting):

New bearing

10 — 16 kg-cm

(8.7 — 13.9 in.-lb, 0.9 — 1.6 N·m)

Reused bearing

5 — 8 kg-cm (4.3 — 6.9 in.-lb, 0.5 — 0.8 N·m)

- If the preload is greater than specification, replace the bearing spacer.
- If the preload is less than specification, retighten the nut 130 kg-cm (9 ft-lb, 13 N·m) a little at a time until the specified preload is reached.

If the maximum torque is exceeded while retightening the nut, replace the bearing spacer and repeat the preload procedure. Do not back off the pinion nut to reduce the preload.

Maximum torque: 3,500 kg-cm (253 ft-lb, 343 N·m)

If everything is normal, coat the threads with gear oil, then repeat the above operation.

16. RECHECK RING GEAR BACKLASH
(See step 3 on page SA-42)

17. RECHECK TEETH CONTACT BETWEEN RING GEAR AND DRIVE PINION
(See step 11 on page SA-56)

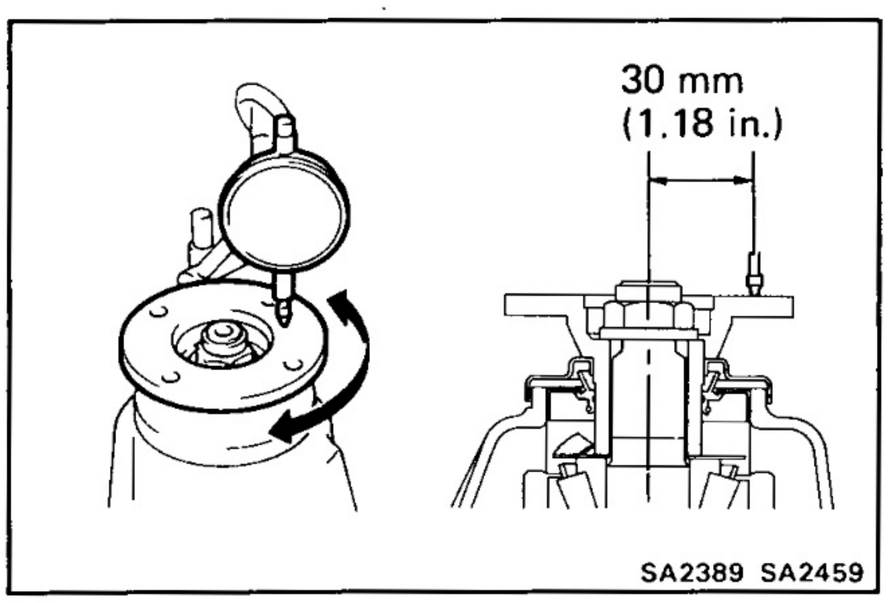

18. CHECK RUNOUT OF COMPANION FLANGE

Using a dial indicator, measure the vertical and lateral runout of the companion flange.

Maximum vertical runout: 0.10 mm (0.0039 in.)

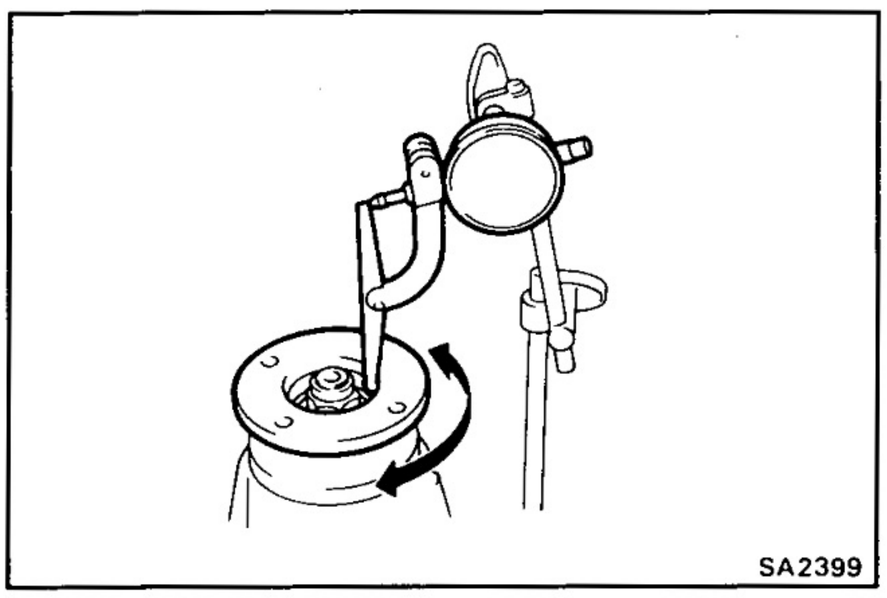

Maximum lateral runout: 0.10 mm (0.0039 in.)

If the runout is greater than the maximum, inspect the bearing.

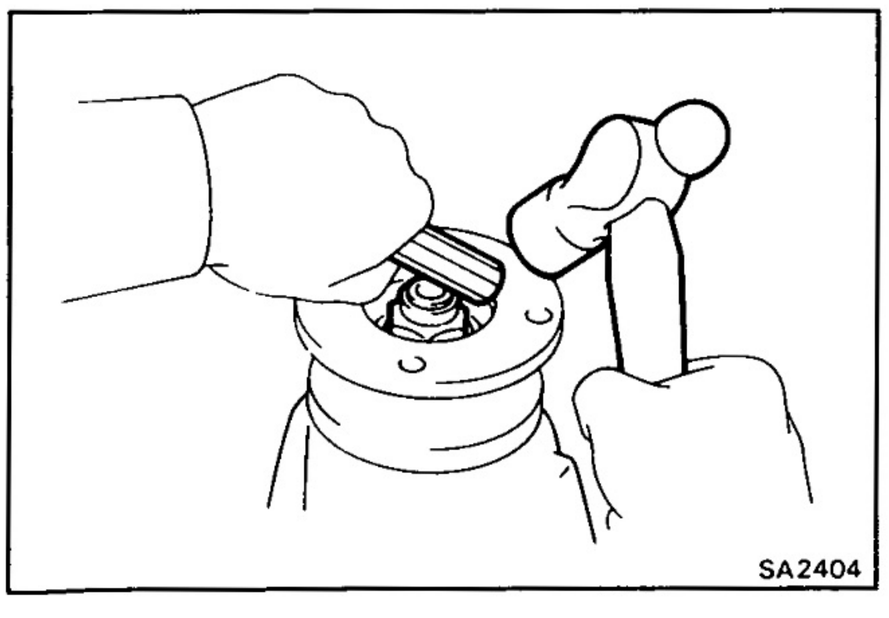

19. STAKE DRIVE PINION NUT

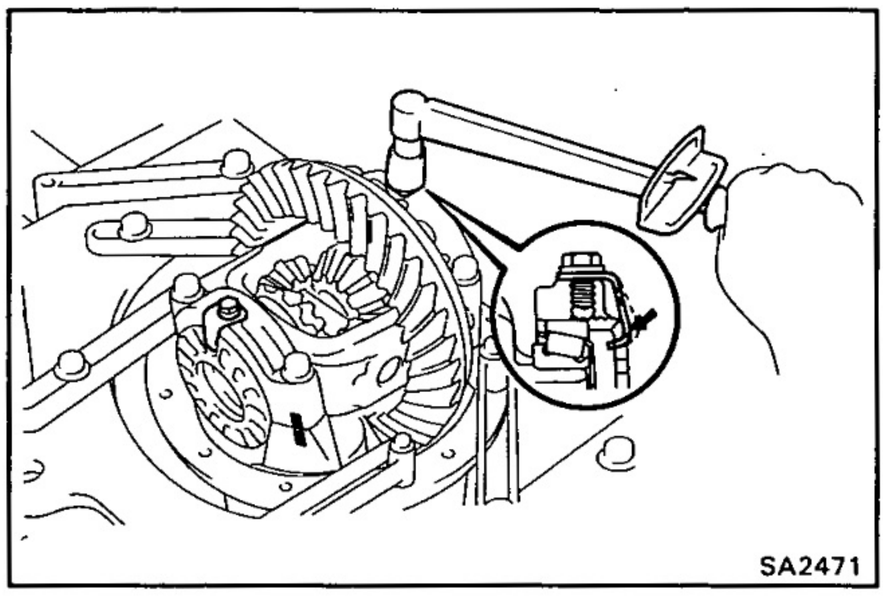

20. INSTALL ADJUSTING NUT LOCKS

(a) Install two new nut locks on the bearing caps.

Torque: 130 kg-cm (9 ft-lb, 13 N·m)

(b) After tightening bolts, the bend the nut locks.

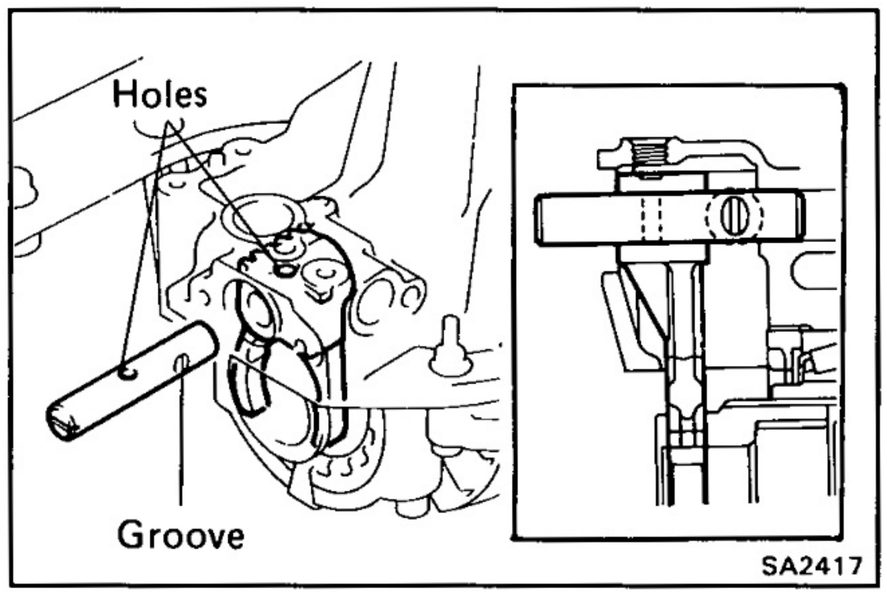

21. (w/ DIFFERENTIAL LOCK)
INSTALL SHIFT FORK SHAFT

(a) Apply MP gredse onto the outer circuit of the fork shaft.

(b) Install the fork shaft to match the hole of the shift fork and that of the shift fork shaft.

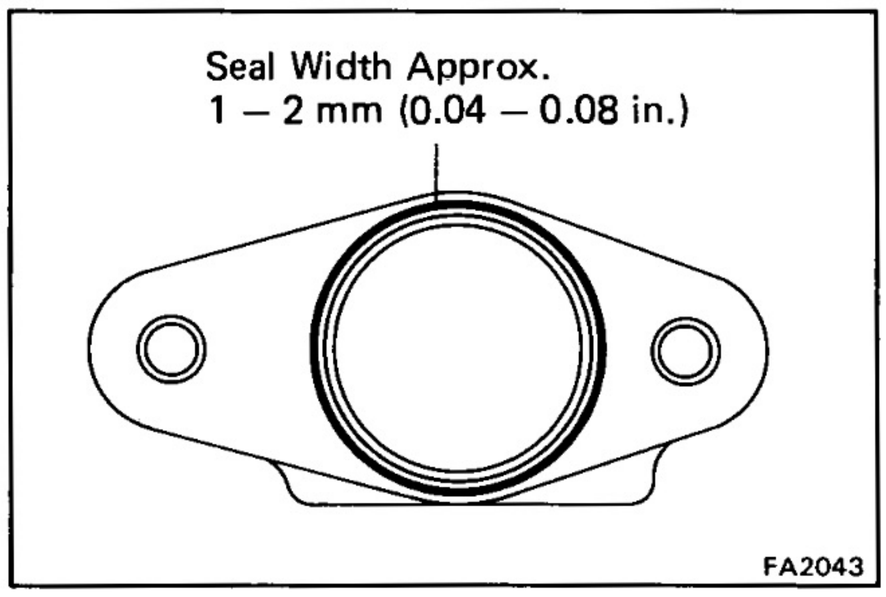

(c) Remove any packing material and be careful not to drop oil on the contacting surface of the differential carrier and shaft retainer.

(d) Apply seal packing to the carrier as shown.

Seal packing: Part No. 08826-00090, THREE BOND 1281 or equivalent

HINT: Install the shaft retainer within ten minutes after applying seal packing.

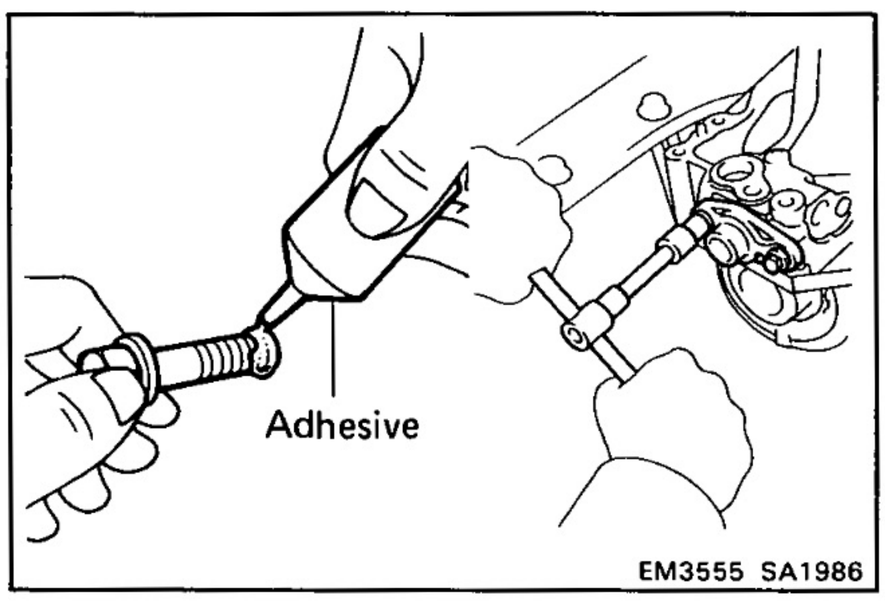

(e) Clean the threads of the bolts and retainer bolts holes with toluene or trichloroethylene.

(f) Apply adhesive to two or three threads of the mount bolt end.

Adhesive: Part No. 08833-00080, THREE BOND 1344, LOCTITE 242 or equivalent

(g) Tighten the shaft retainer with the two bolts.

Torque: 240 kg-cm (17 ft-lb, 24 N·m)

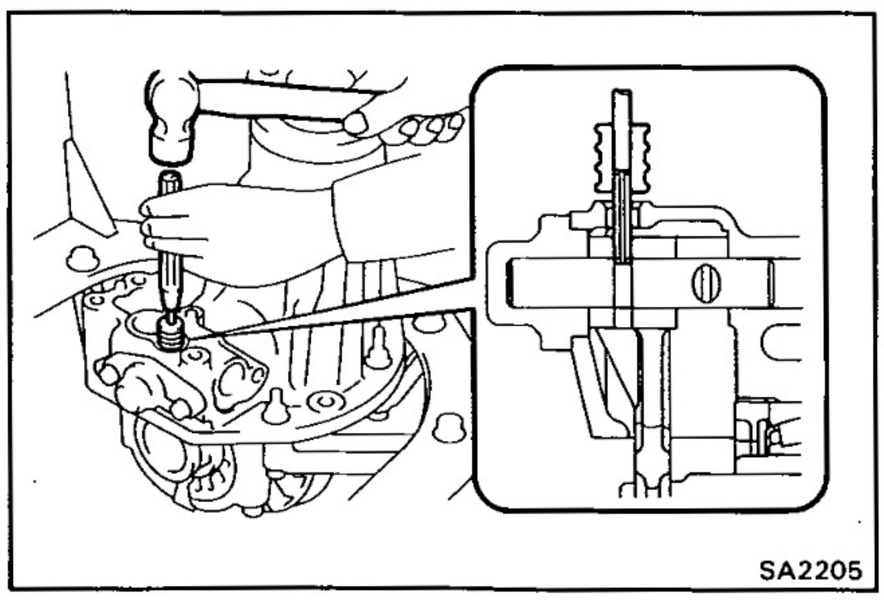

(h) Using a pin punch and hummer, drive in the slotted spring pin to the shift fork.

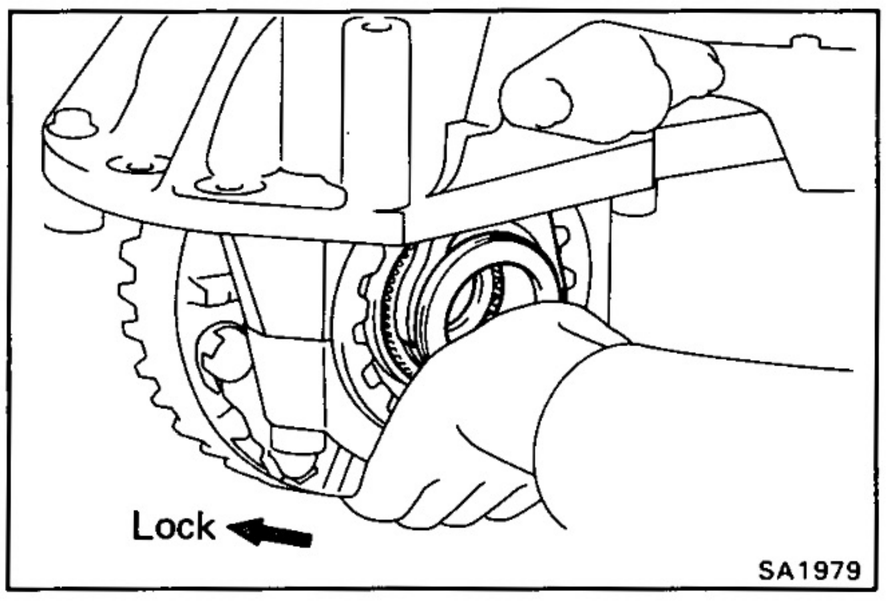

(i) Shift the fork deeply and keep the differential lock condition.

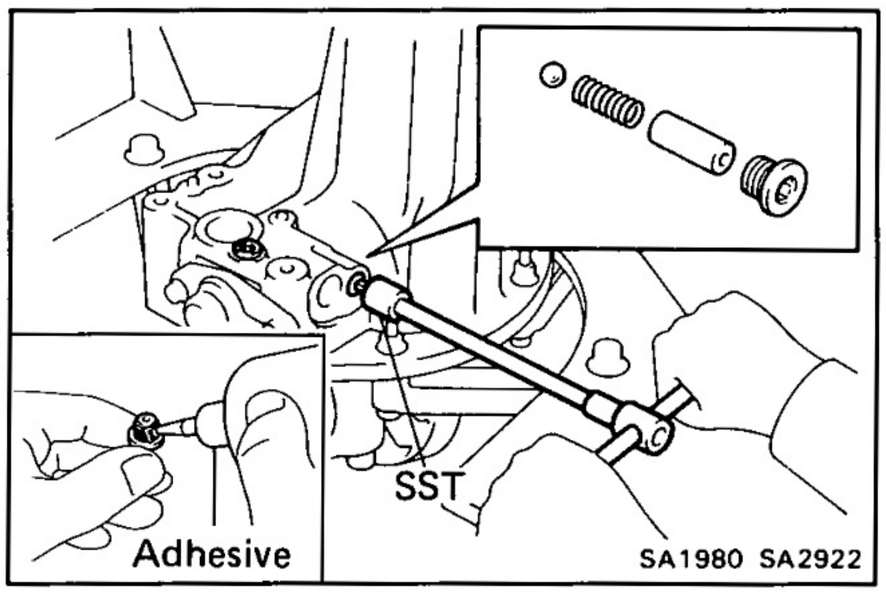

(j) Install the ball, compression spring and spring seat.

(k) Clean the threads of the two plugs and plug holes with toluene or thrichloroethylene.

(l) Apply adhesive to the plug threads.

Adhesive: Part No. 08833-00080, THREE BOND 1344, LOCTITE 242 or equivalent

(m) Using SST, install and tighten the screw plugs.

SST 09313-30021

Torque: 220 kg-cm (16 ft-lb, 22 N·m)

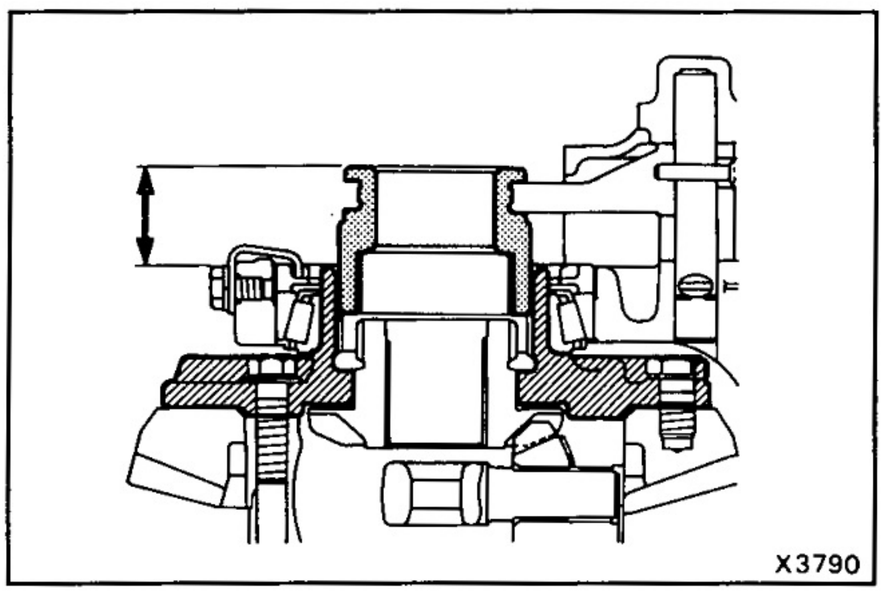

22. (w/ DIFFERENTIAL LOCK)
MEASURE DISTANCE BETWEEN SLEEVE AND DIFFERENTIAL CASE END SIDE

Measure the distance between the sleeve and tip of the differential case when differential is free and locked.

Standard distance:

LOCK	**32.40 — 33.90 mm (1.2756 — 1.3346 in.)**
FREE	**17.44 — 18.86 mm (0.6866 — 0.7425 in.)**

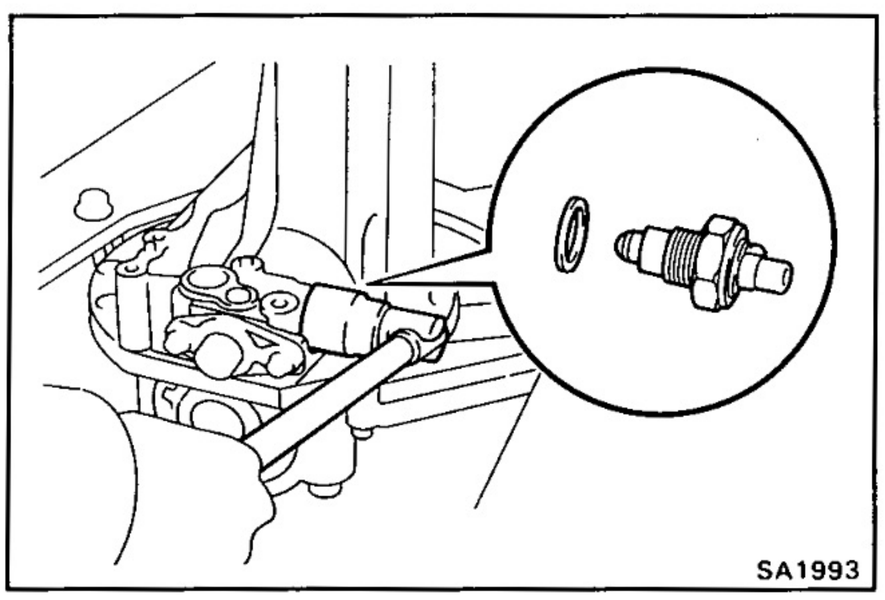

23. (w/ DIFFERENTIAL LOCK)
INSTALL INDICATOR SWITCH

Install the indicator switch with a new gasket.

Torque: 410 kg-cm (30 ft-lb, 40 N·m)

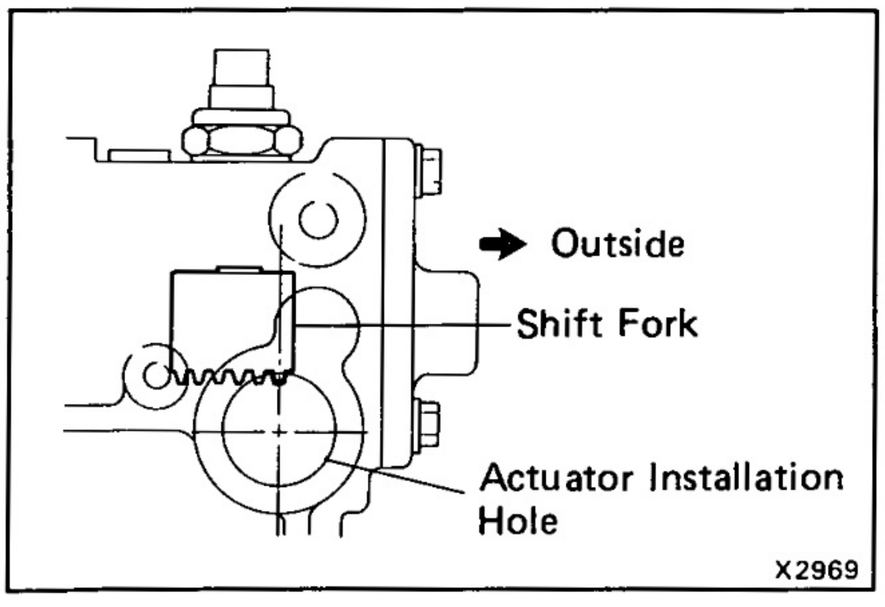

24. (w/ DIFFERENTIAL LOCK)
INSTALL ACTUATOR

(a) Check that the outermost rack tooth of the shift fork is virtually above the center line of the actuator installation hole.

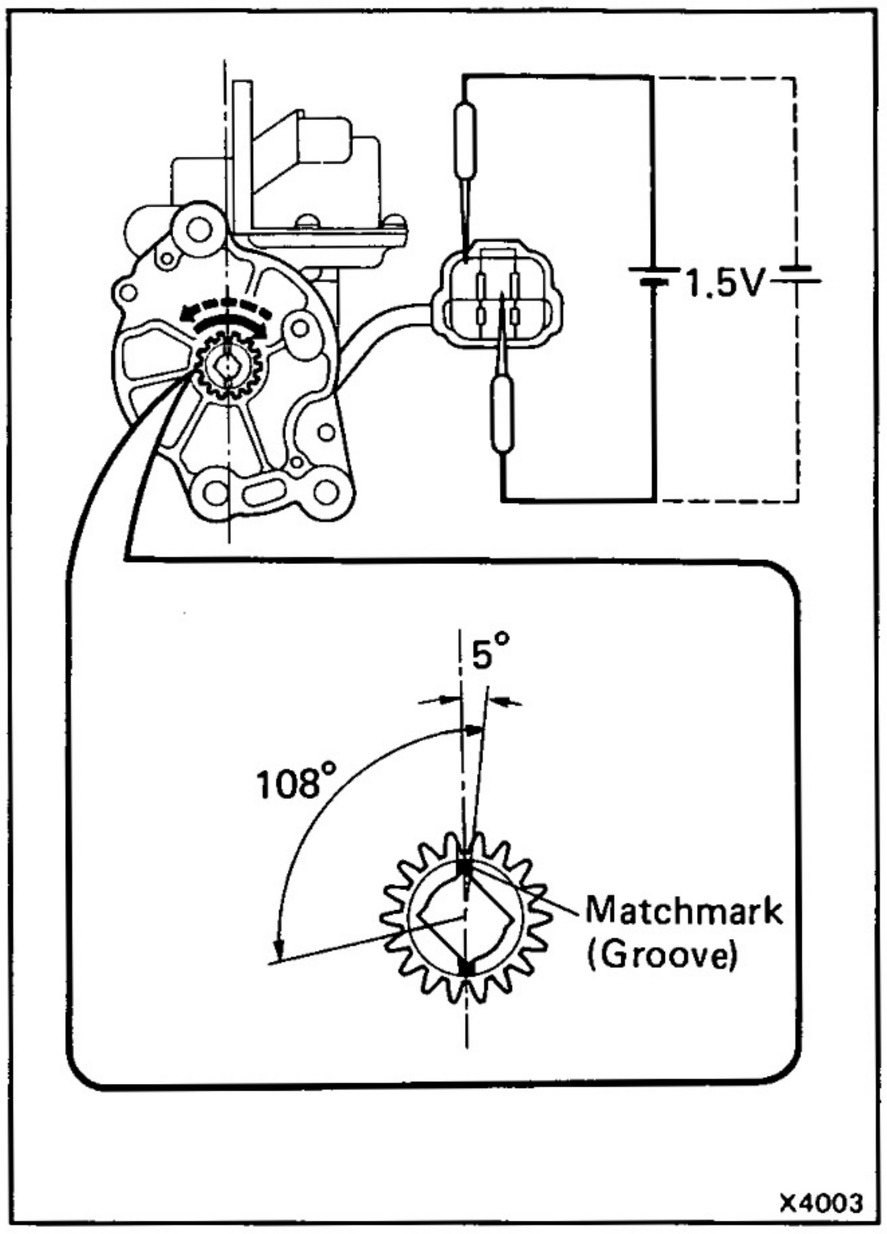

(b) Ensure that the matchmark of the pinion of the actuator is in the extent between 0 and 5 degrees clockwise above the center line of the actuator.

NOTICE:

- **If the matchmark is not in this extent, rotate the pinion to be matched.**
- **Don't supply the battery voltage directly between terminals.**
- **If the matchmark come to the extention limit of the rotation, don't electrify moreover.**

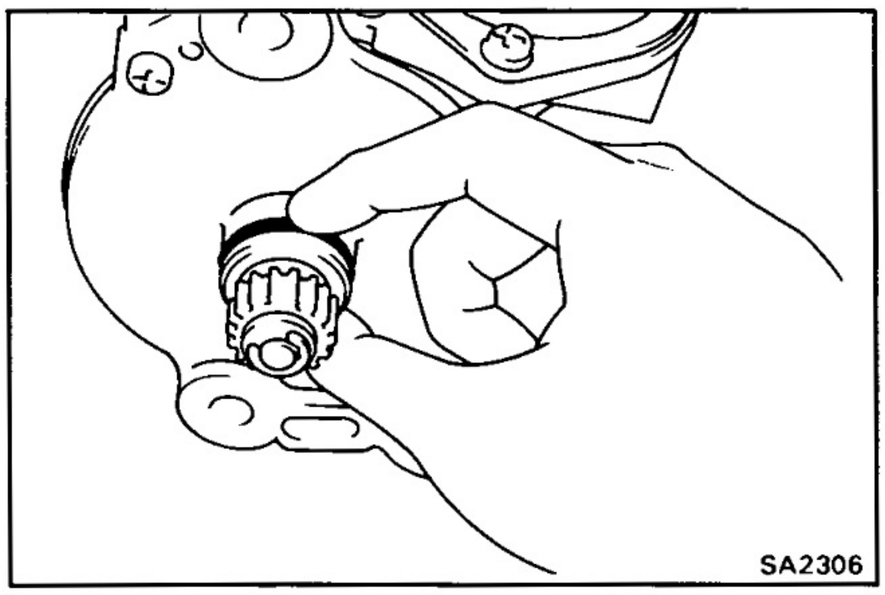

(c) Install a new O-ring to the actuator.

(d) Apply a light coat of gear oil on the O-ring.

(e) Apply MP grease to the gear part.

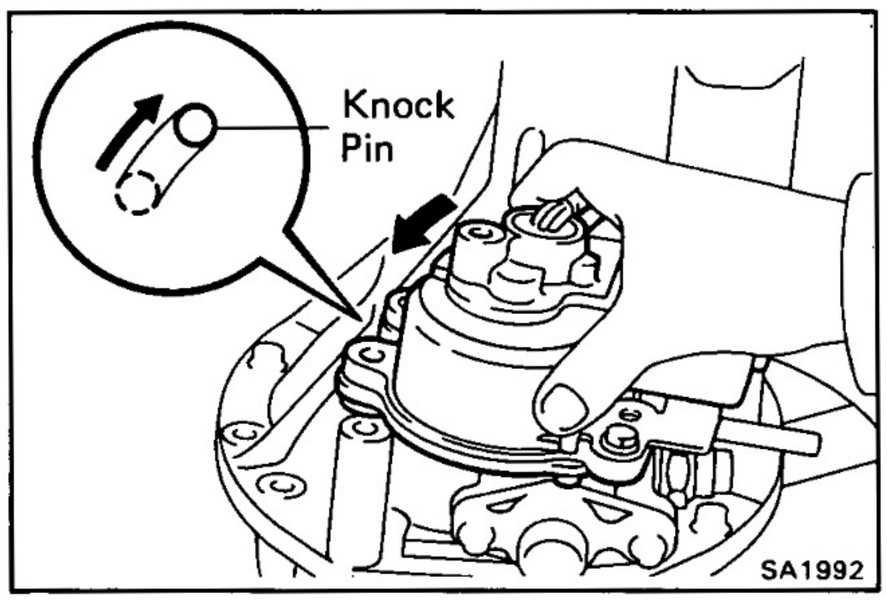

(f) Insert the actuator so that the long hole on the actuator side fits with the knock pin on the carrier side.

HINT: Don't damage the O-ring of the actuator.

(g) Align the actuator with the long hole and rotate the actuator counterclockwise when the knock pin reaches the right-hand side.

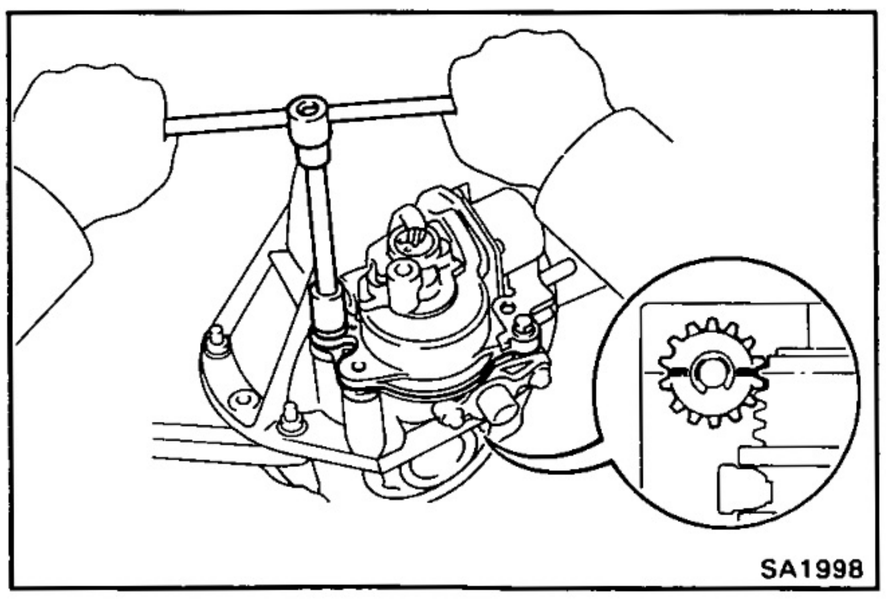

(h) Install the actuator to the differential carrier with bolt so that the outermost rack tooth of the shift fork shall fit the matchmark of the pinion of the actuator.

Torque: 270 kg-cm (20 ft-lb, 26 N·m)

Differential Case (2 Pinion Type)

COMPONENTS

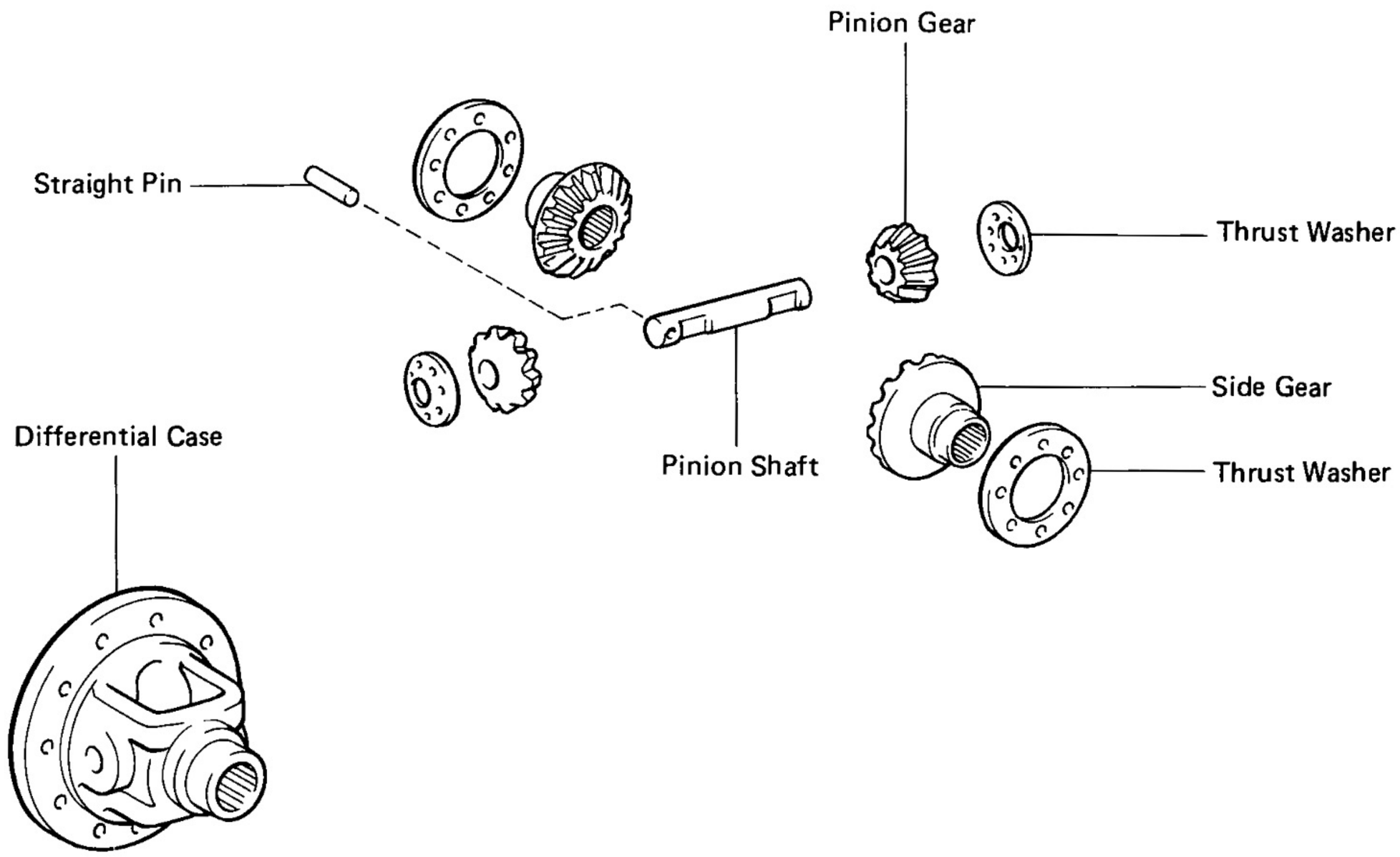

REMOVAL OF DIFFERENTIAL CASE

1. **REMOVE DIFFERENTIAL (See page SA-38)**
2. **REMOVE DIFFERENTIAL CASE FROM CARRIER (See page SA-41)**

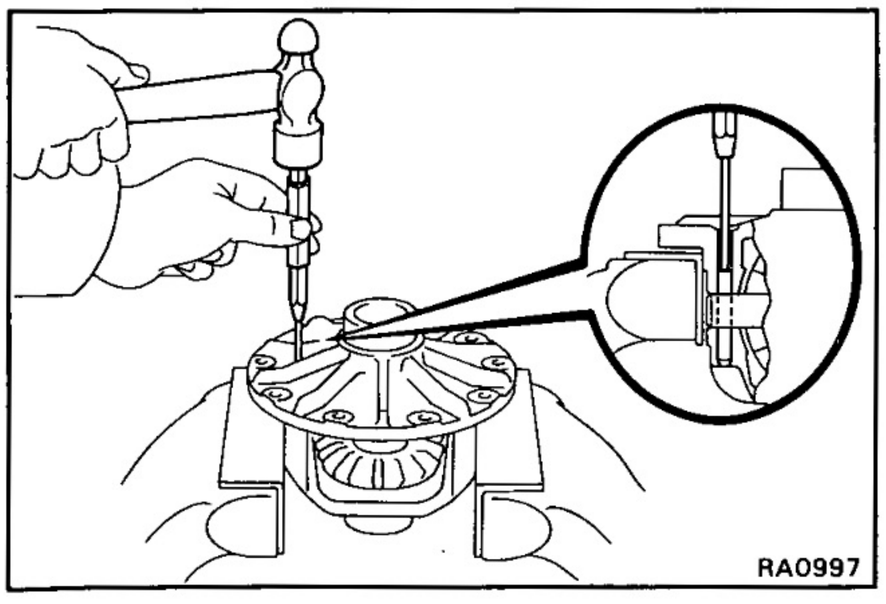

REPLACEMENT OF DIFFERENTIAL CASE COMPONENT PARTS

1. DISASSEMBLE DIFFERENTIAL CASE

Using a hammer and punch, drive out the straight pin. Remove the pinion shaft, two pinion gears, two side gears and four thrust washers.

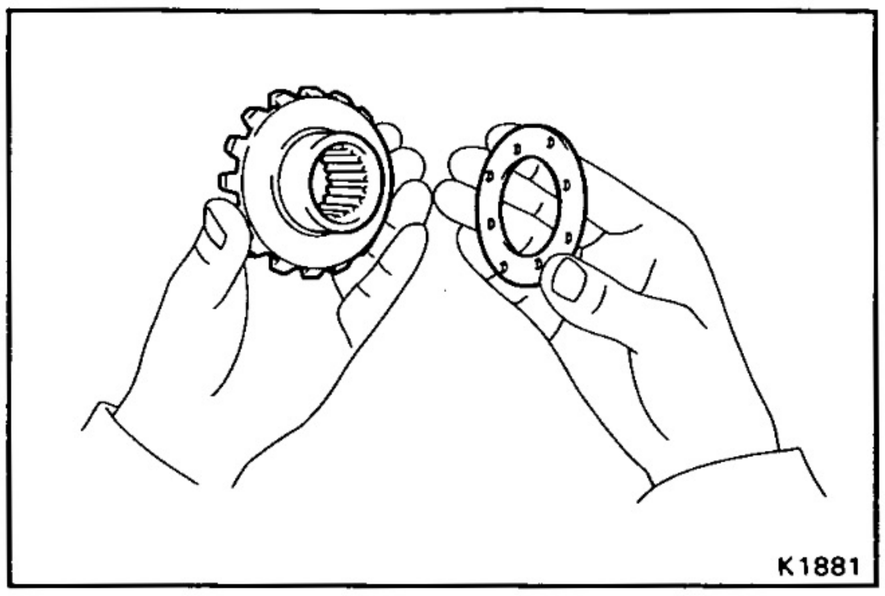
K1881

2. ASSEMBLE DIFFERENTIAL CASE

(a) Apply gear oil to each part.

(b) Install the proper thrust washers and side gears.

Using the table below, select thrust washers which will ensure that the backlash is within specification. Try to select washers of the same size for both sides.

Standard backlash: 0.05 — 0.20 mm (0.0020 — 0.0079 in.)

Thrust washer thickness mm (in.)
1.6 (0.063)
1.7 (0.067)
1.8 (0.071)

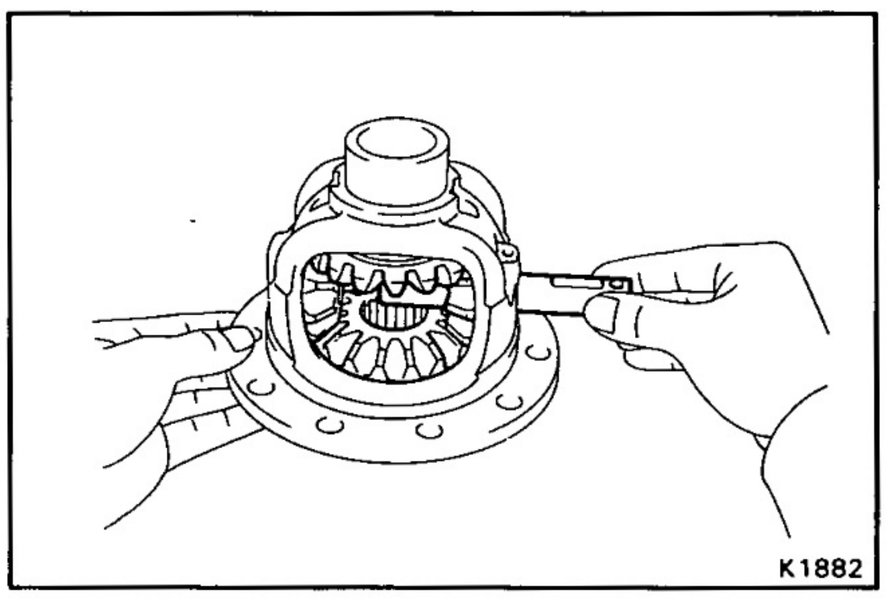
K1882

(c) Install thrust washers, side gears, pinion gears and pinion shaft in the differential case.

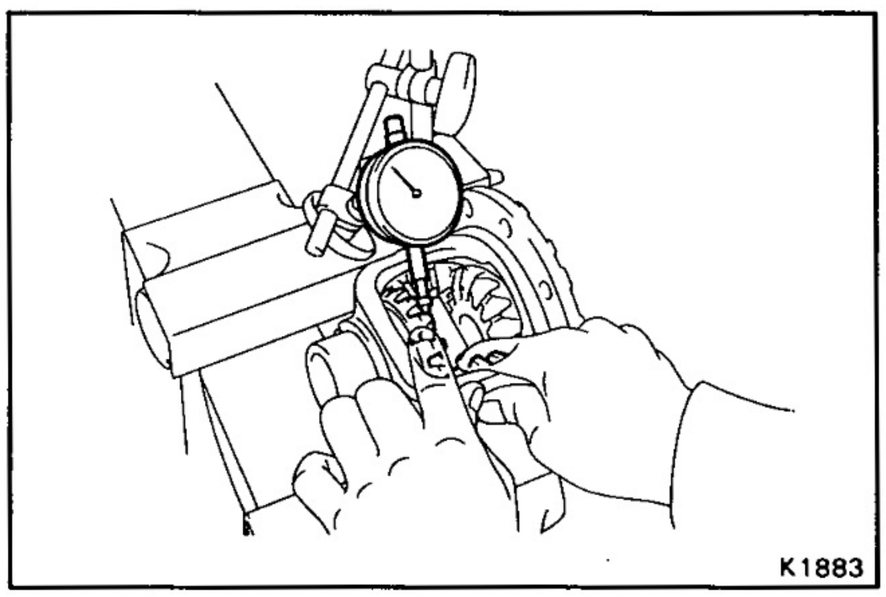
K1883

(d) Check the side gear backlash.

Measure the side gear backlash while holding one pinion gear toward the case.

Standard backlash: 0.05 — 0.20 mm (0.0020 — 0.0079 in.)

If the backlash is not within specification, install a thrust washer of different thickness.

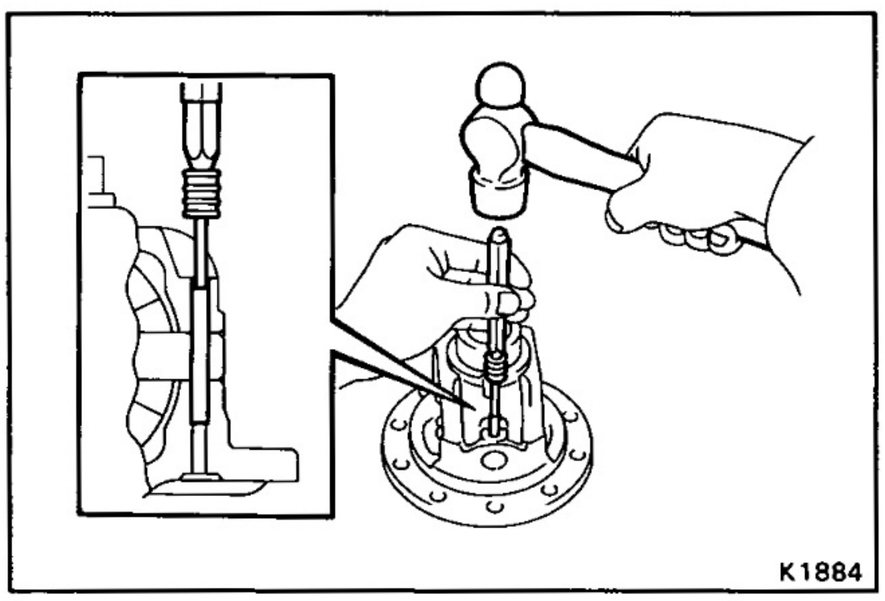
K1884

(e) Using a hammer and punch, install the straight pin through the case and hole of the pinion shaft.

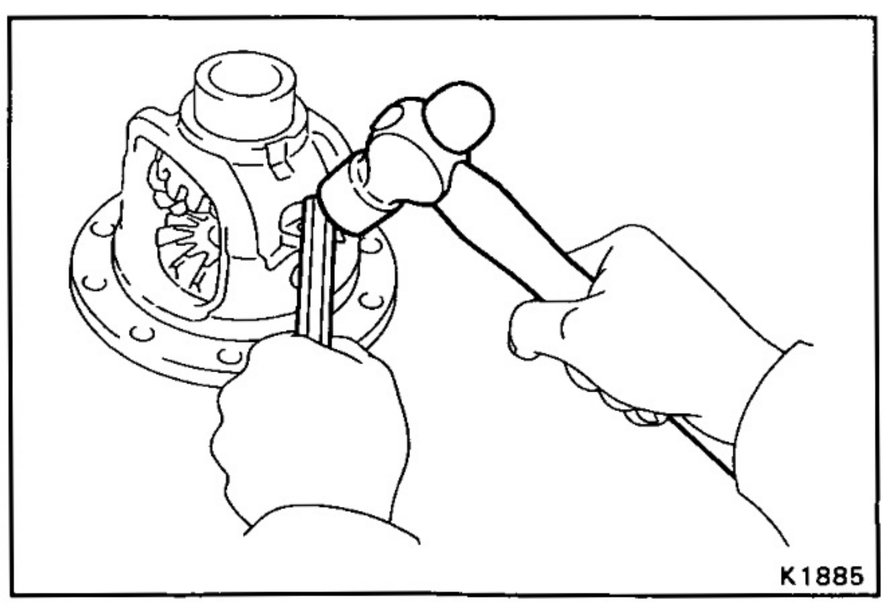
K1885

(f) Stake the differential case.

INSTALLATION OF DIFFERENTIAL

1. INSTALL DIFFERENTIAL CASE IN CARRIER

(See page SA-41)

2. INSTALL DIFFERENTIAL

(See page SA-38)

Differential Case (4 Pinion Type)

COMPONENTS

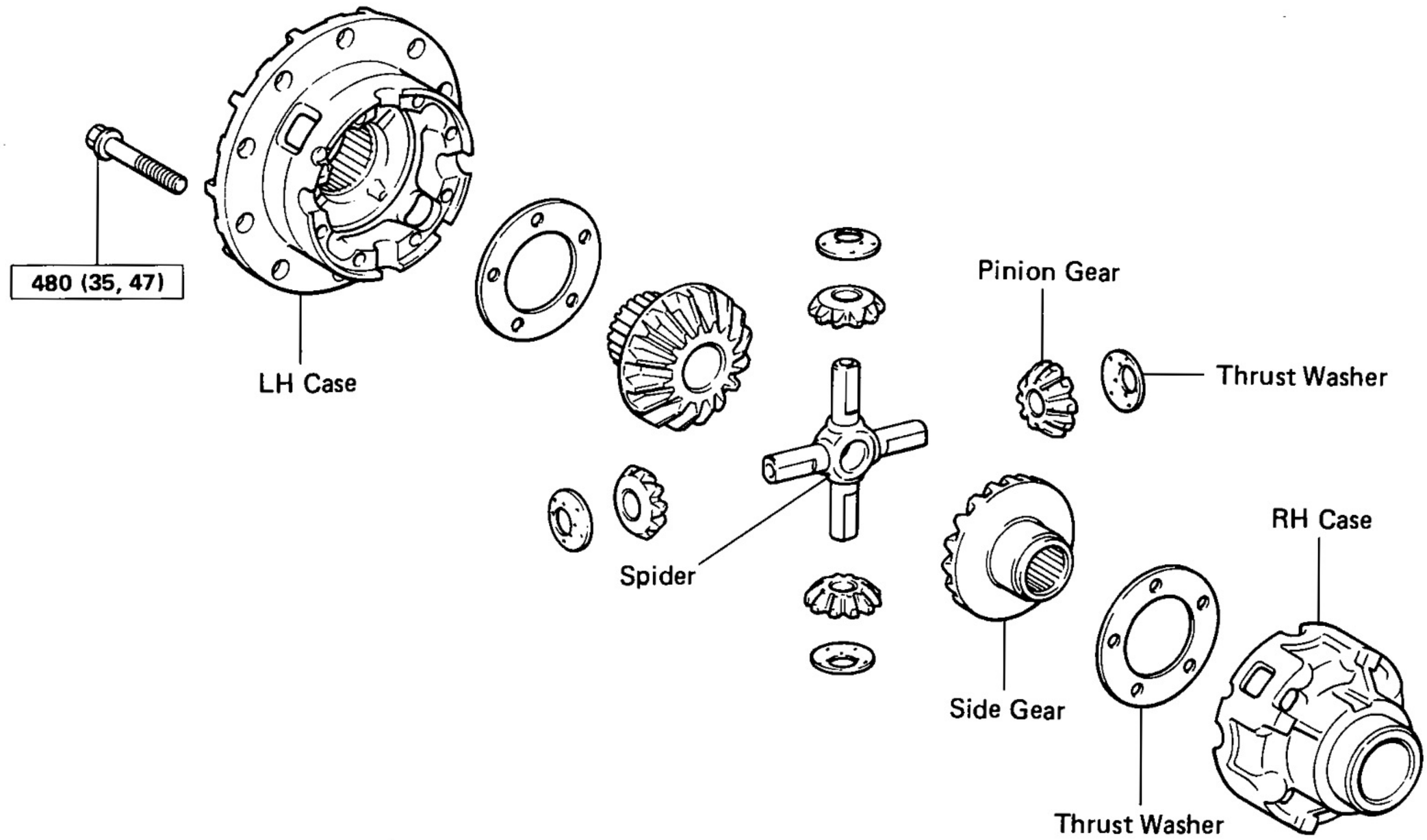

kg-cm (ft-lb, N·m) : Specified torque

SA2219

REMOVAL OF DIFFERENTIAL CASE

1. **REMOVE DIFFERENTIAL (See page SA-38)**
2. **REMOVE DIFFERENTIAL CASE FROM CARRIER (See page SA-41)**

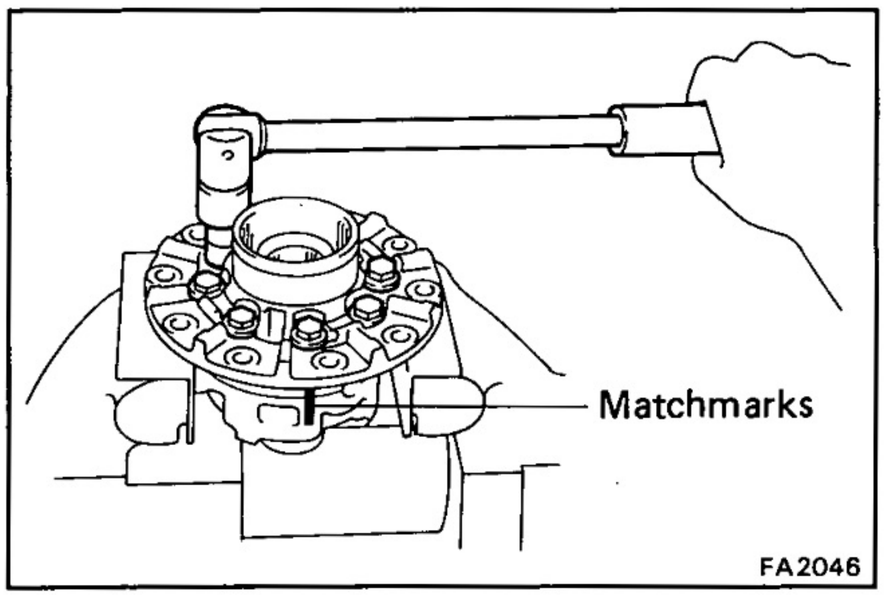

DISASSEMBLY OF DIFFERENTIAL CASE

1. **DISASSEMBLE DIFFERENTIAL CASE**
   (a) Place the matchmarks on the LH and RH cases.
   (b) Remove the eight bolts uniformly, a little at a time.
   (c) Using a plastic hammer, separate the LH and RH cases.

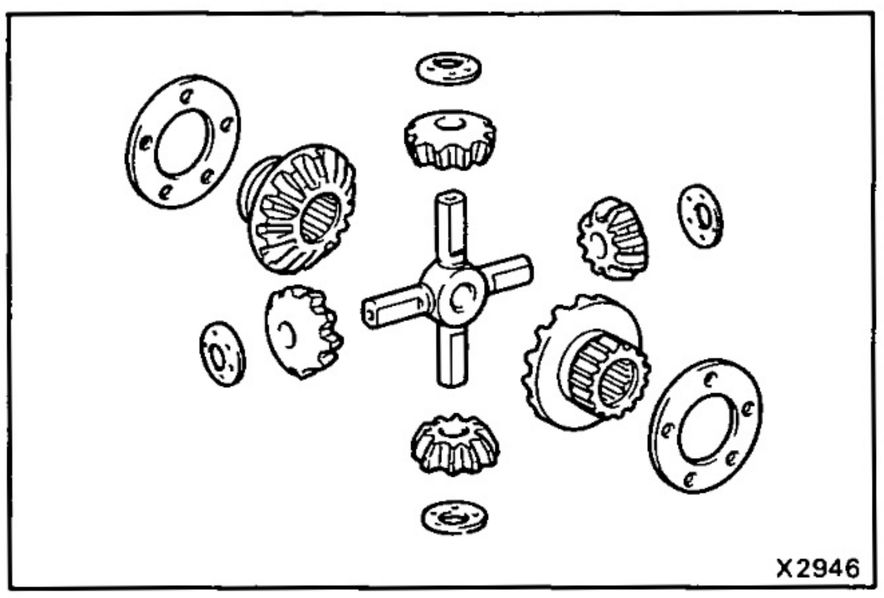

2. REMOVE FOLLOWING PARTS FROM CASE:

- Side gear (2 pieces)
- Side gear thrust washer (2 pieces)
- Spider
- Pinion gear (4 pieces)
- Pinion gear thrust washer (4 pieces)

ASSEMBLY OF DIFFERENTIAL CASE

1. MEASURE SIDE GEAR BACKLASH

(a) Apply gear oil to each part.

(b) Install the thrust washer to the side gear.

(c) Install the side gear to the RH case.

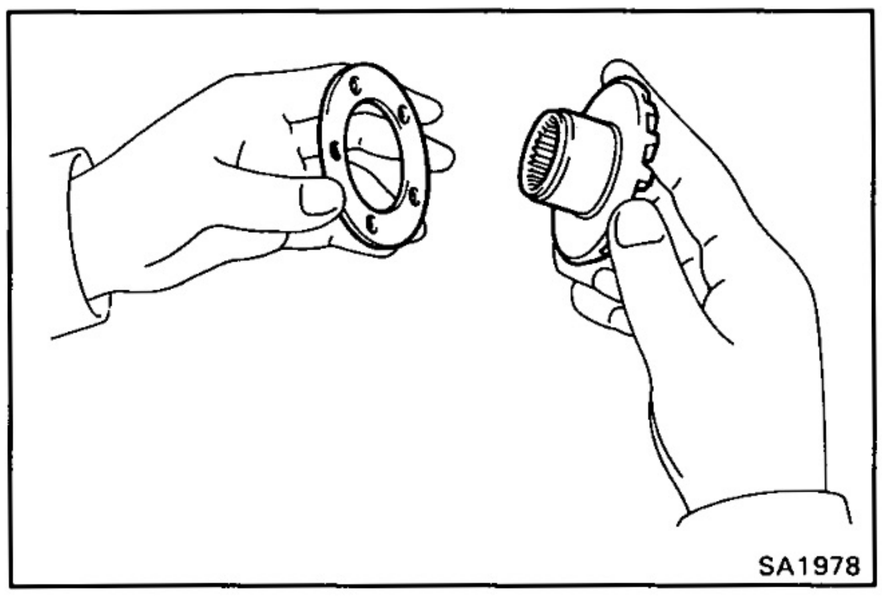

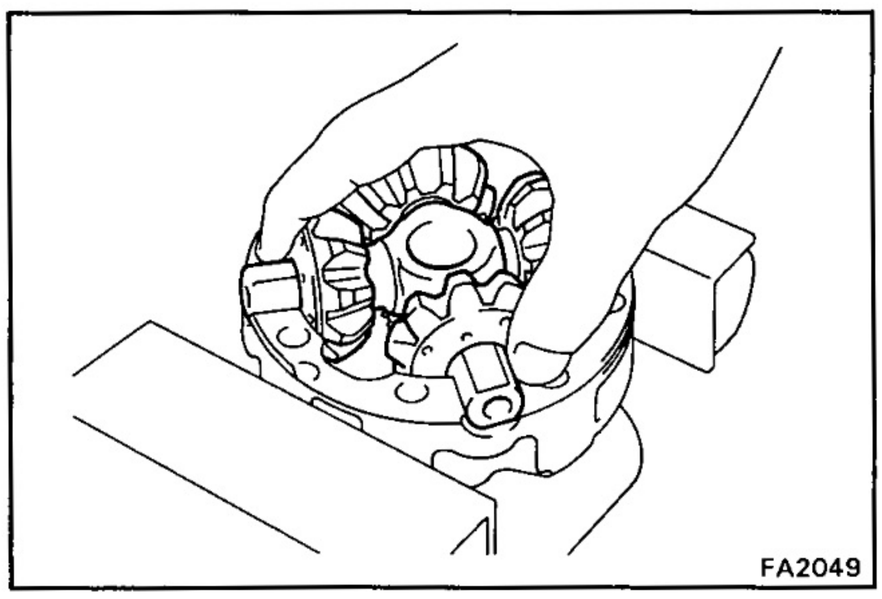

(d) Install the four pinion gears and thrust washers to the spider.

(e) Install the pinion gear and spider to the RH case.

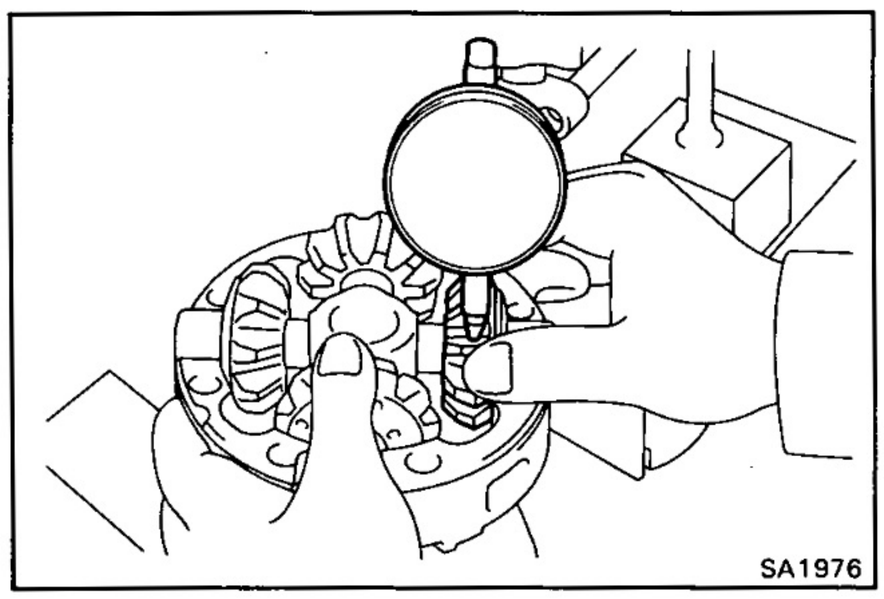

(f) Hold the side gear and spider, measure the side gear backlash.

Standard backlash: 0.05 — 0.20 mm (0.0020 — 0.0079 in.)

HINT:

- Measure at all four locations.
- Measure the backlash at the RH case at the LH case.

If the backlash is not within specification, install a thrust washer of a different thickness.

Thrust washer thickness mm(in.)	
0.9 (0.035) 1.0 (0.039) 1.1 (0.043)	1.2 (0.047) 1.3 (0.051)

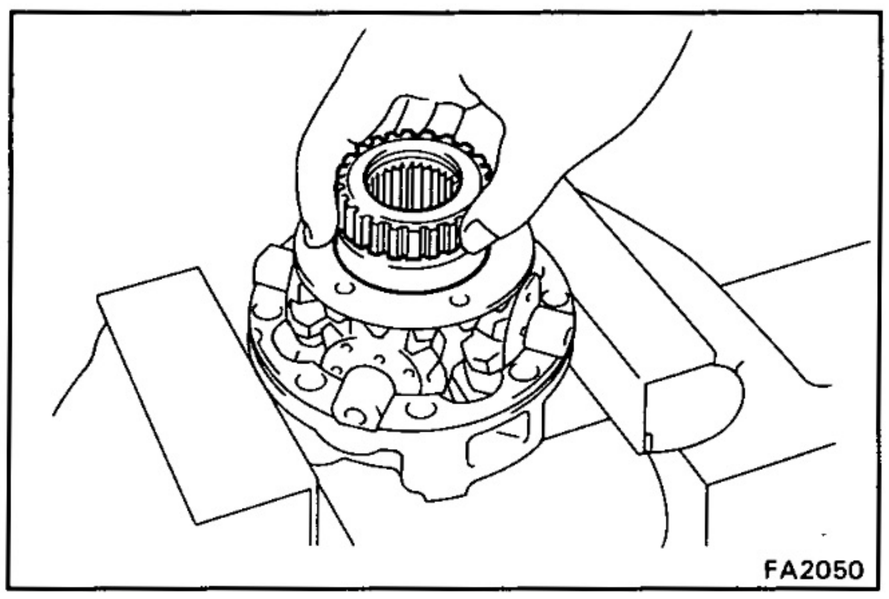

2. ASSEMBLE DIFFERENTIAL CASE

(a) Install the side gear and thrust washer to the RH case.

(b) Install the pinion gears and spider to the RH case.

(c) Install the side gear and thrust washer to the RH case.

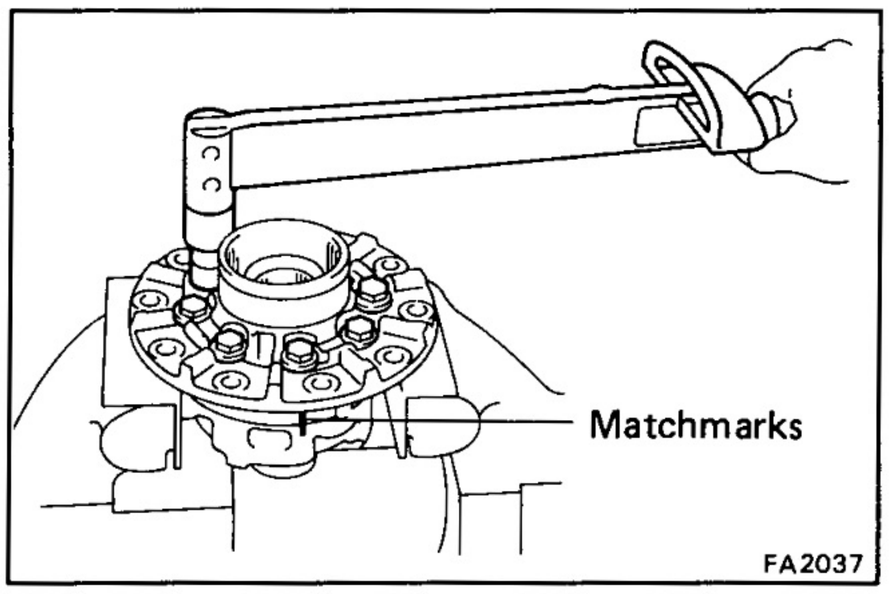

(d) Align the matchmarks on the LH and RH cases.

(e) Torque the eight bolts uniformly, a little at a time.

Torque: 480 kg-cm (35 ft-lb, 47 N·m)

INSTALLATION OF DIFFERENTIAL

1. INSTALL DIFFERENTIAL CASE IN CARRIER
(See page SA-41)

2. INSTALL DIFFERENTIAL
(See page SA-38)

FRONT SUSPENSION

COMPONENTS

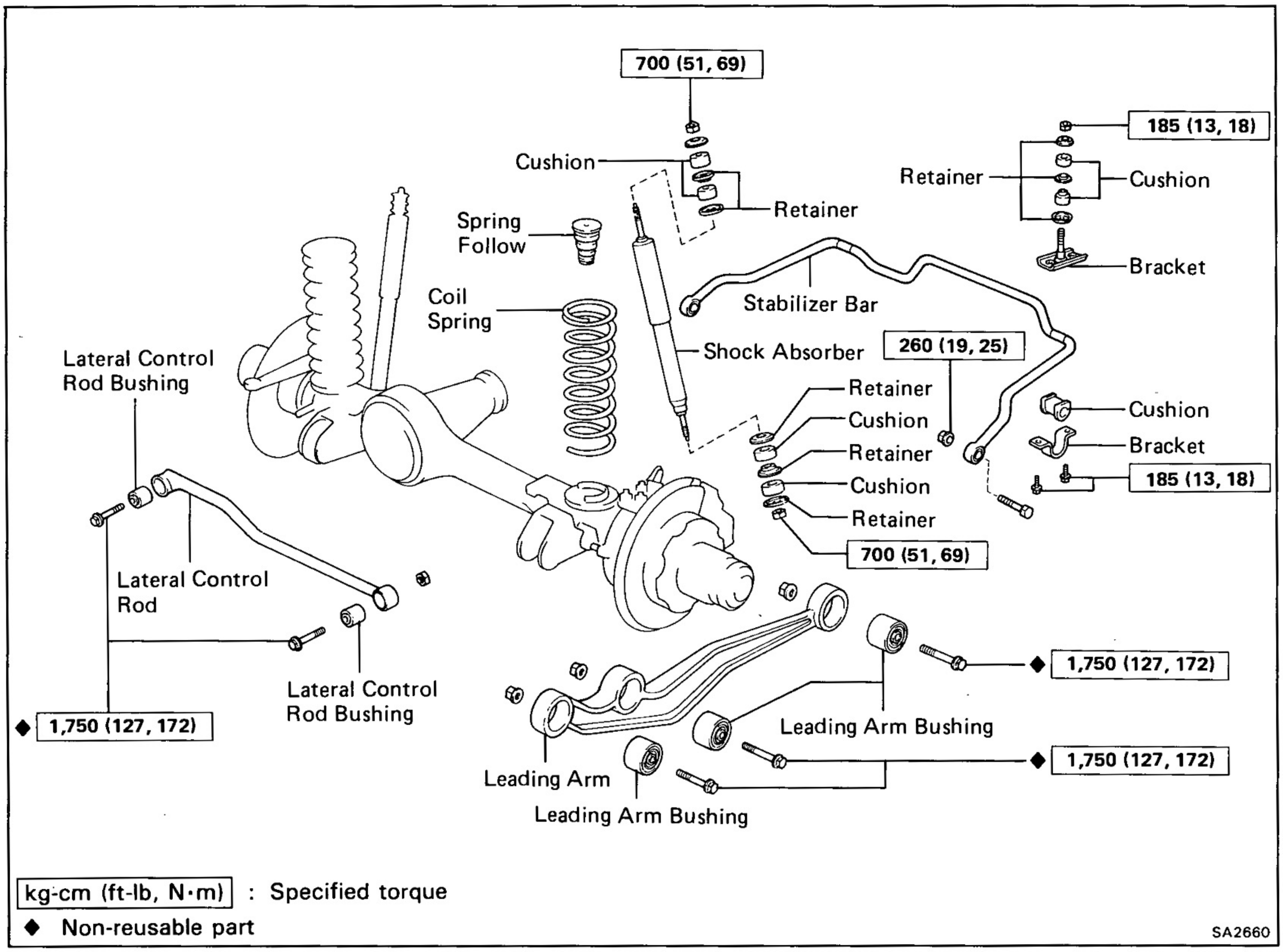

kg-cm (ft-lb, N·m) : Specified torque

◆ Non-reusable part

SA2660

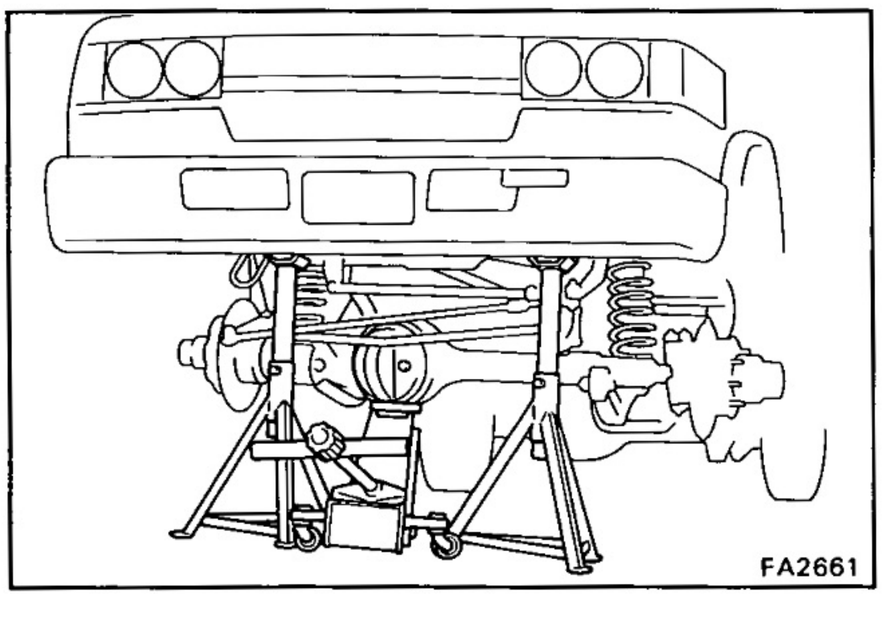

FA2661

Coil Spring and Shock Absorber

REMOVAL OF COIL SPRING AND SHOCK ABSORBER

1. JACK UP AND SUPPORT BODY

Jack up and support the body on stands.

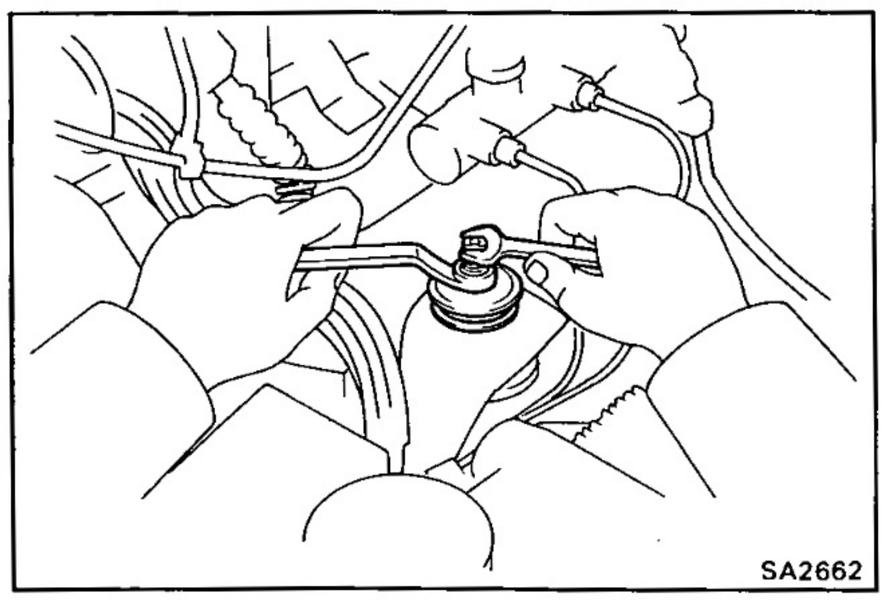

SA2662

2. REMOVE FRONT SHOCK ABSORBER

(a) Jack up and support the axle housing.

(b) Hold the piston rod, and remove the upper mounting nut.

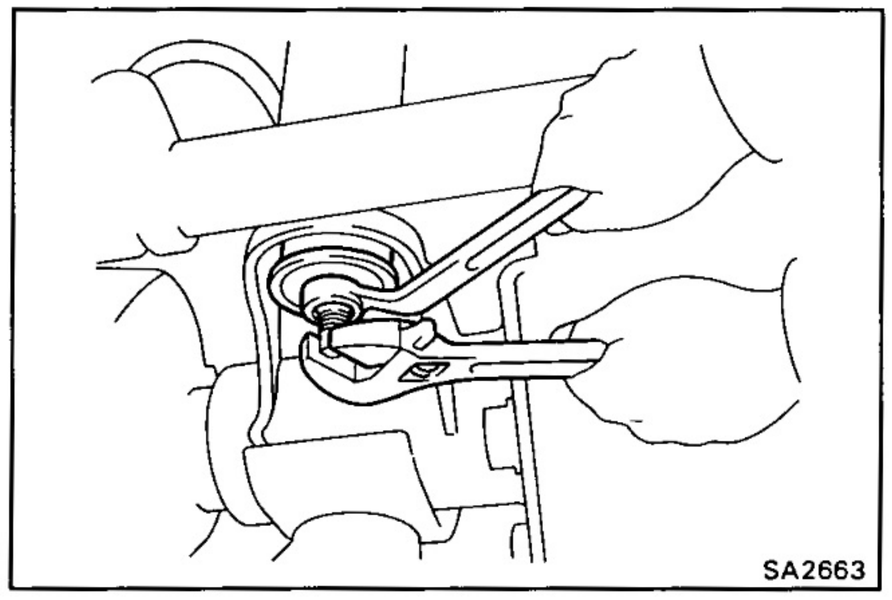

(c) Hold the shock absorber, and remove the lower mounting nut, shock absorber, cushions and retainer.

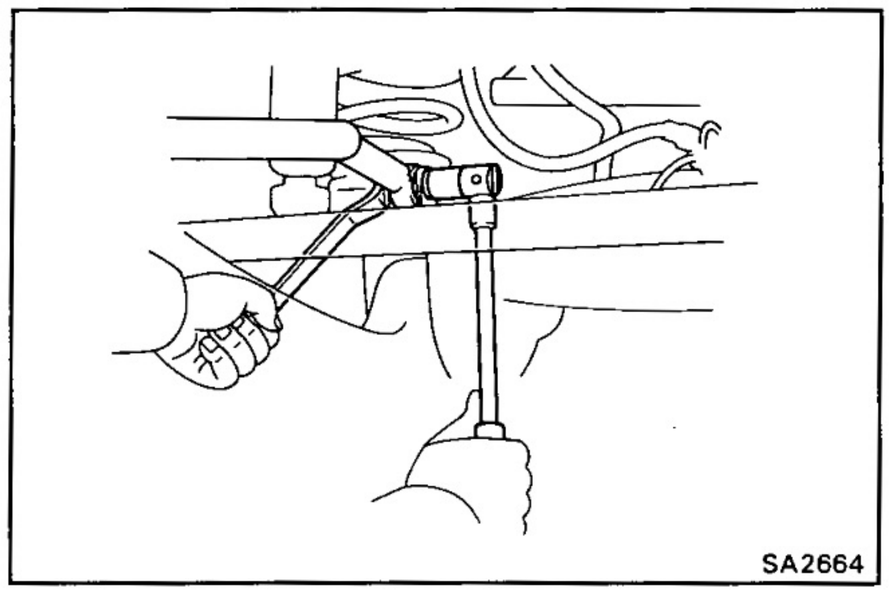

3. DISCONNECT STABILIZER BAR

Remove the bolt and nut, and disconnect the stabilizer bar with the cushion and bracket.

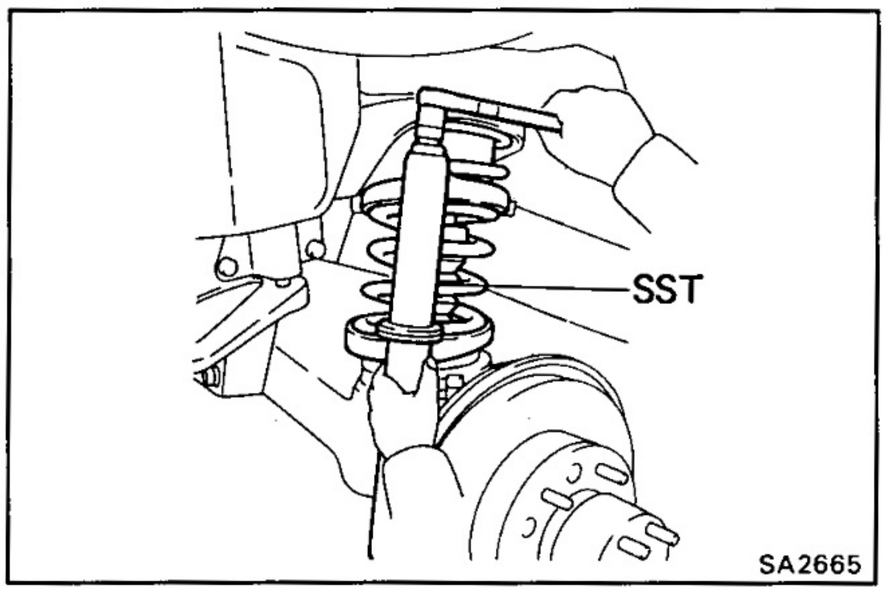

4. REMOVE COIL SPRING

(a) Jack down and support axle housing.

(b) Using SST, compress the coil spring.

SST 09727-30020

(c) Remove the coil spring.

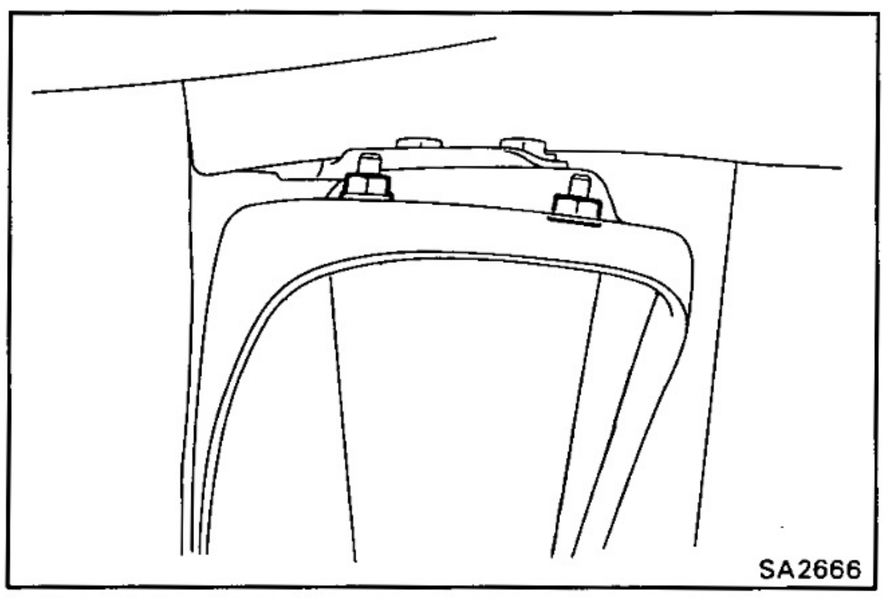

5. REMOVE SPRING FOLLOW

Remove the two nuts and the spring follow.

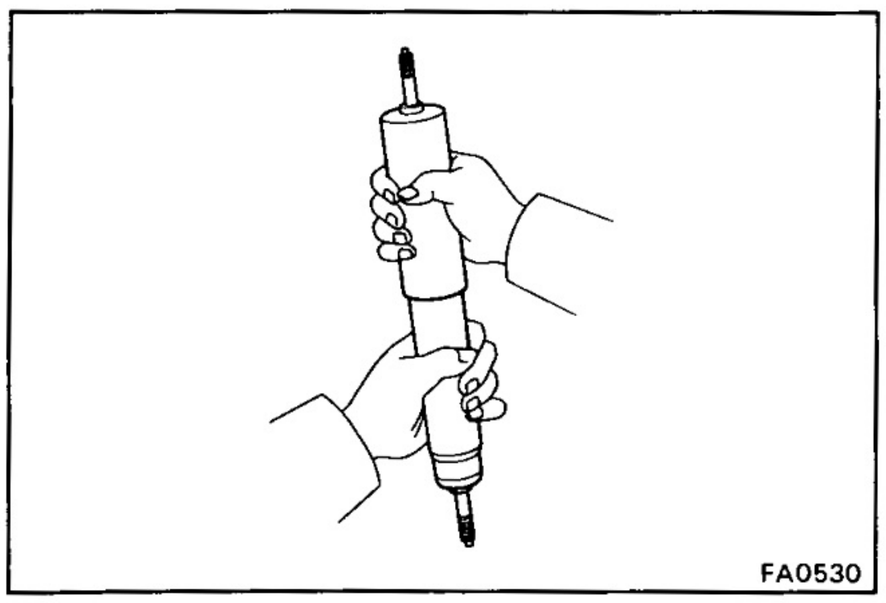

INSPECTION OF FRONT SHOCK ABSORBER

1. INSPECT OPERATION OF SHOCK ABSORBER

(a) While pushing the shock absorber, check that the pull throughout the stroke is even, and there is no abnormal resistance or noise.

(b) Push the shock absorber in fully and release it. Check that it returns at a contact speed throughout.

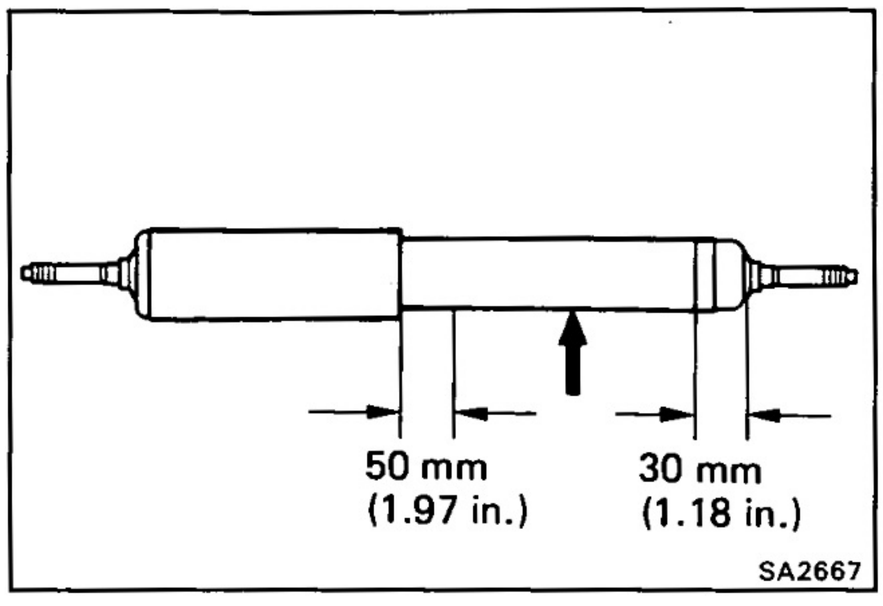

2. DISCARD SHOCK ABSORBER

Before discarding the shock absorber, drill a hole 2 — 3 mm (0.079 — 0.118 in.) in diameter at the location shown in the illustration to release the gas inside.

NOTICE:

- **When drilling, chips may fly out, so work carefully.**
- **The gas is colorless, odorless and non-poisonous.**

INSTALLATION OF COIL SPRING AND SHOCK ABSORBER

(See page SA-67)

1. INSTALL SPRING FOLLOW

Install the spring follow to the body with the two nuts.

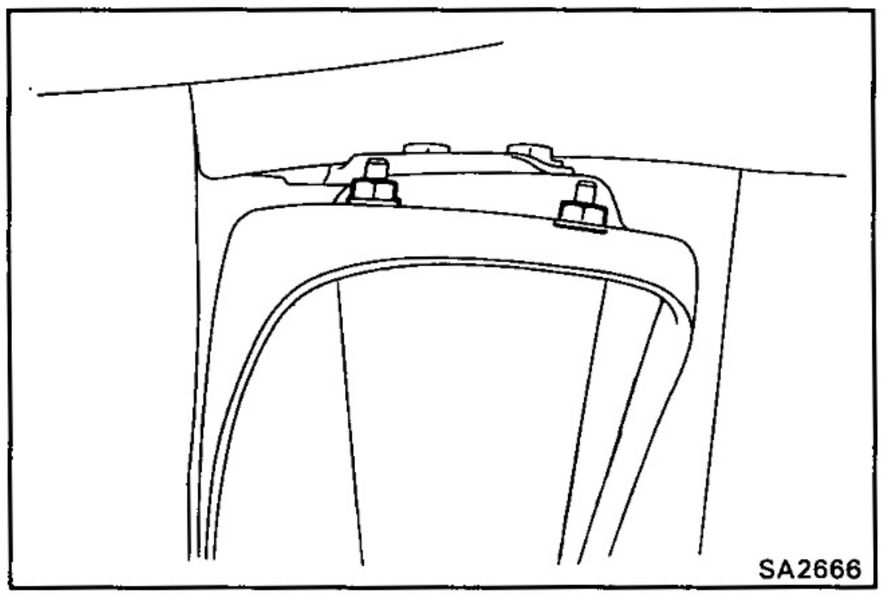

2. INSTALL COIL SPRING

(a) Using SST, compress the coil spring.

SST 09727-30020

(b) Install the coil spring with SST in position.

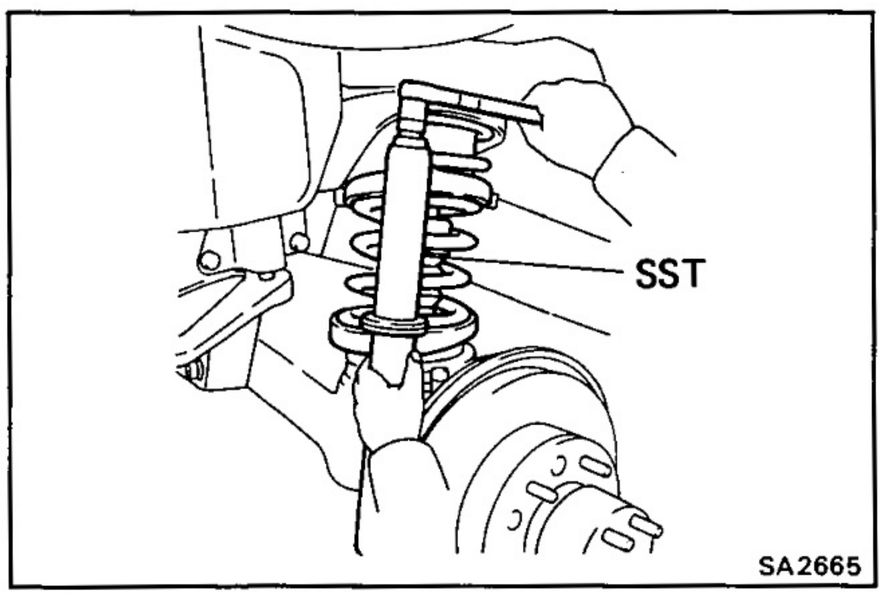

(c) Align the coil spring end with the lower seat and install.

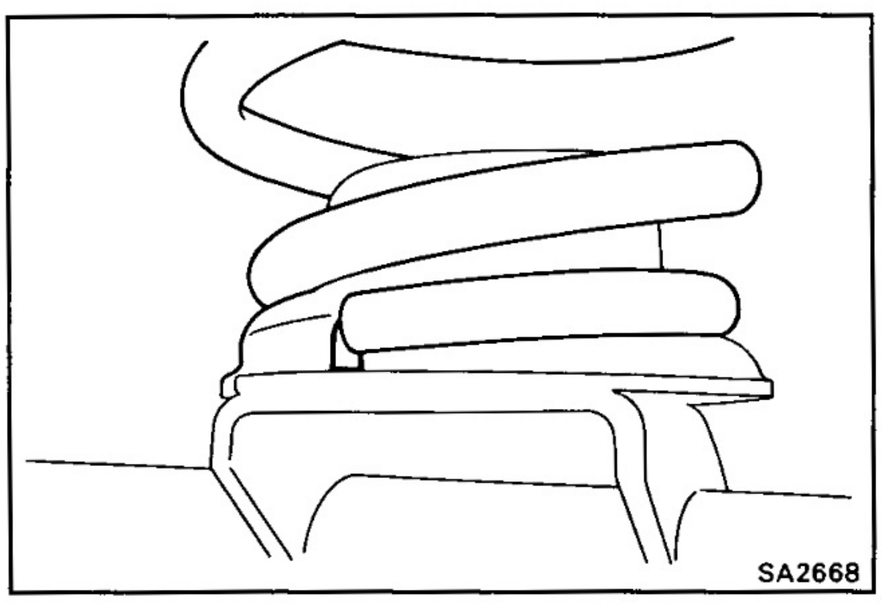

3. CONNECT STABILIZER

(a) Jack up and support axle housing.

(b) Connect the stabilizer bar to the axle housing with the bolts and nuts.

HINT: Insert the bolt from the outside.

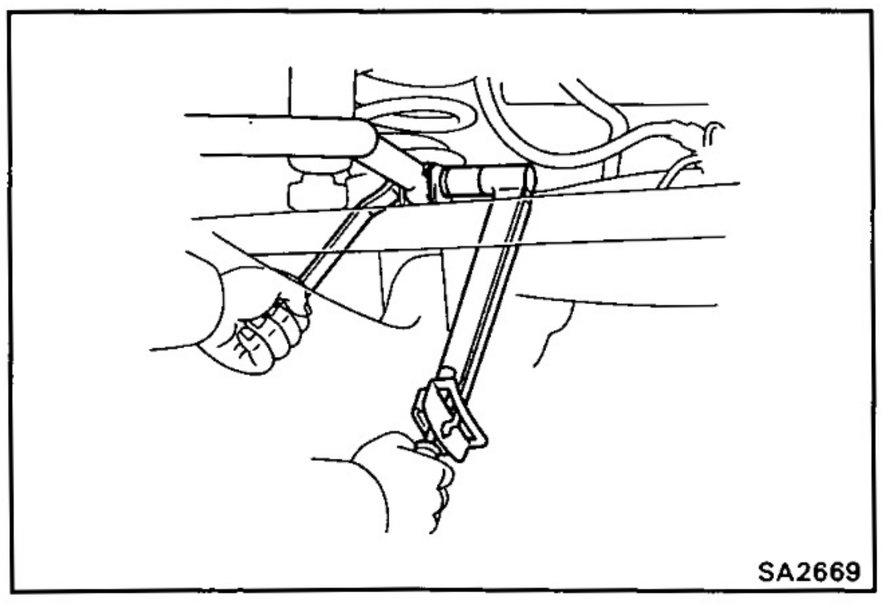

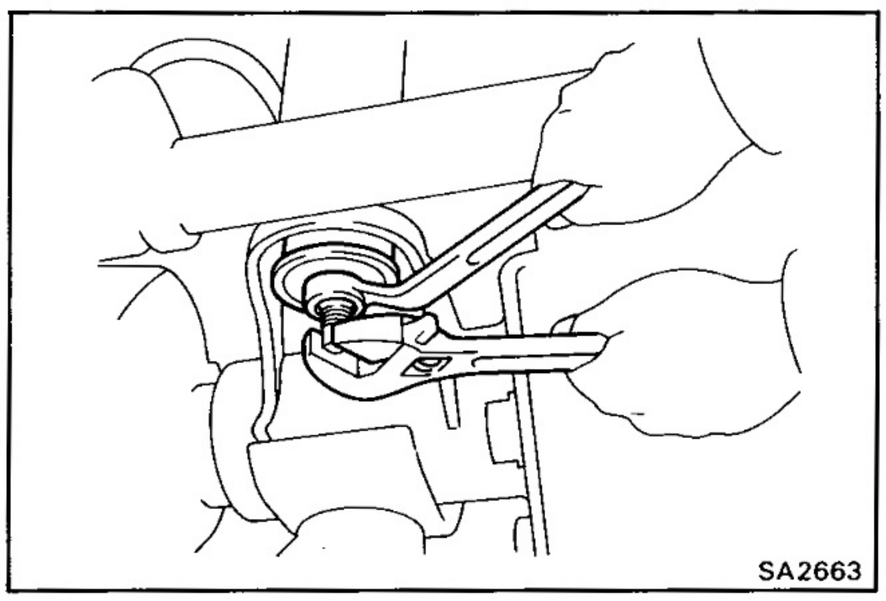
SA2663

4. INSTALL SHOCK ABSORBER

(a) Install the retainers, cushions and the shock absorber.

(b) Hold the shock absorber to the axle housing with the lower mounting nut.

Torque: 700 kg-cm (51 ft-lb, 69 N·m)

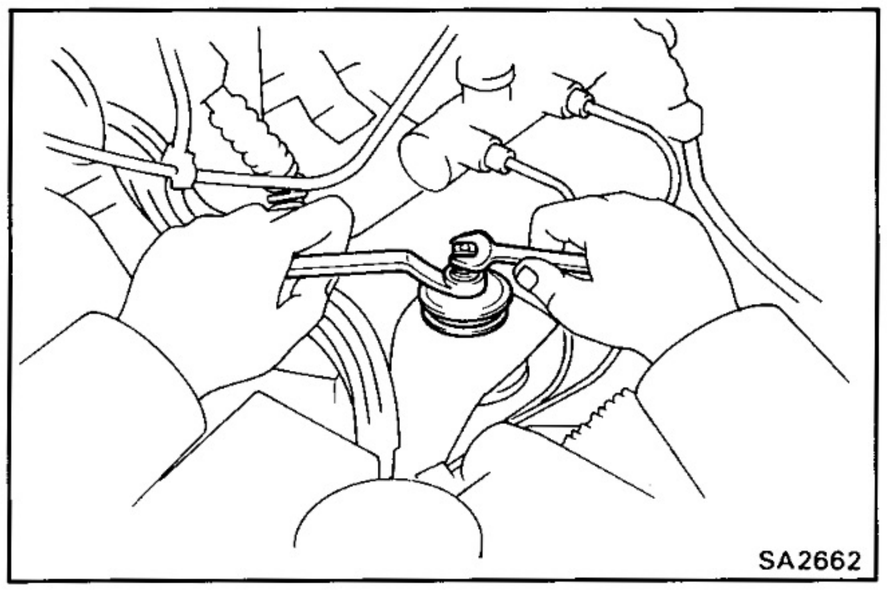
SA2662

(c) Install the cushions and the retainers.

(d) Hold the piston rod to the body with the upper mounting nut.

Torque: 700 kg-cm (51 ft-lb, 69 N·m)

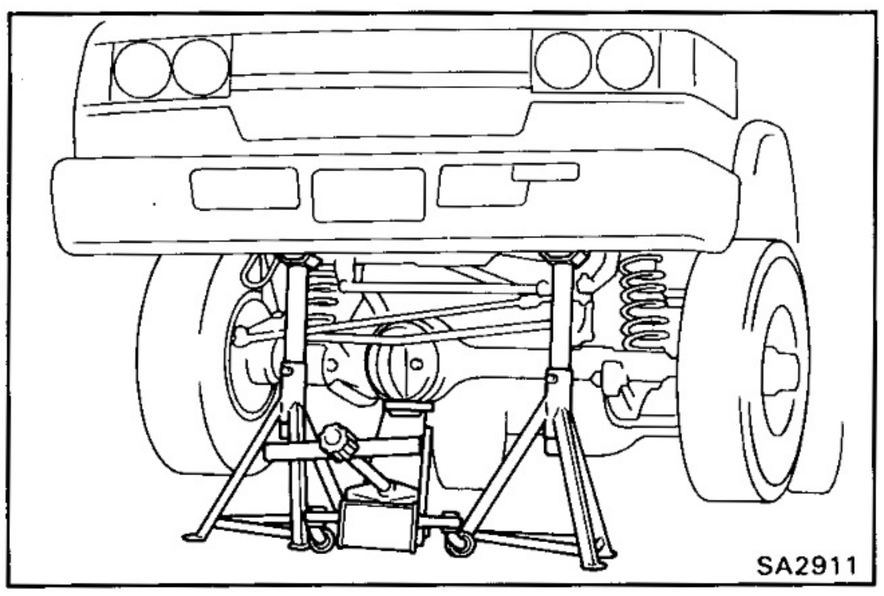
SA2911

Stabilizer Bar

REMOVAL OF STABILIZER BAR

(See page SA-67)

1. JACK UP AND SUPPORT VEHICLE WITH FRAME

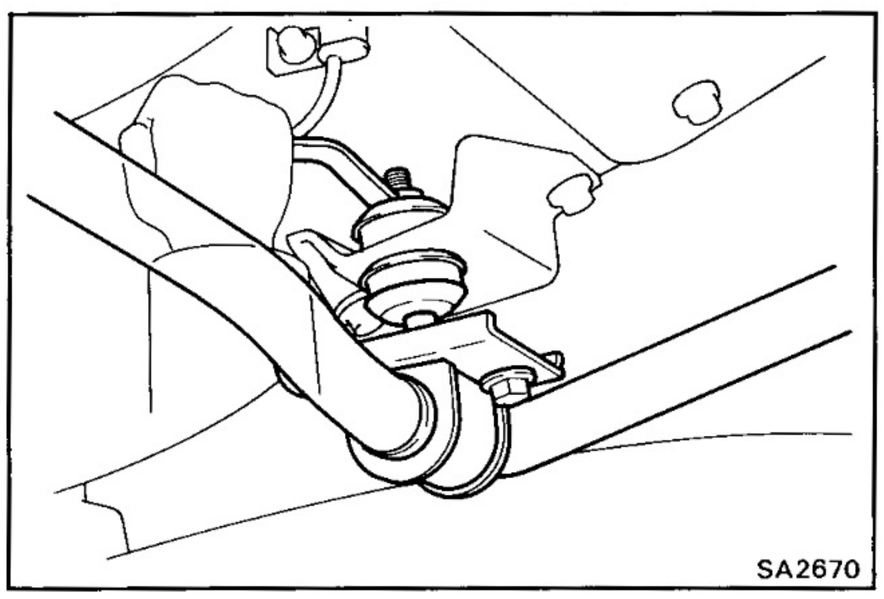
SA2670

2. REMOVE STABILIZER BAR

(a) Remove the nut and disconnect the stabilizer bar with the bracket and cushion from the frame.

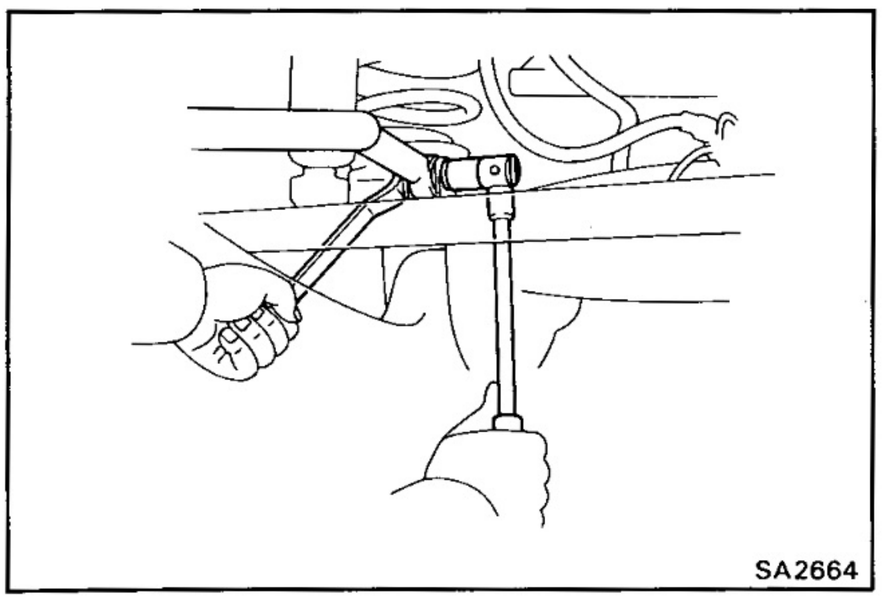
SA2664

(b) Remove the bolt and nut, and remove the stabilizer bar from the axle housing.

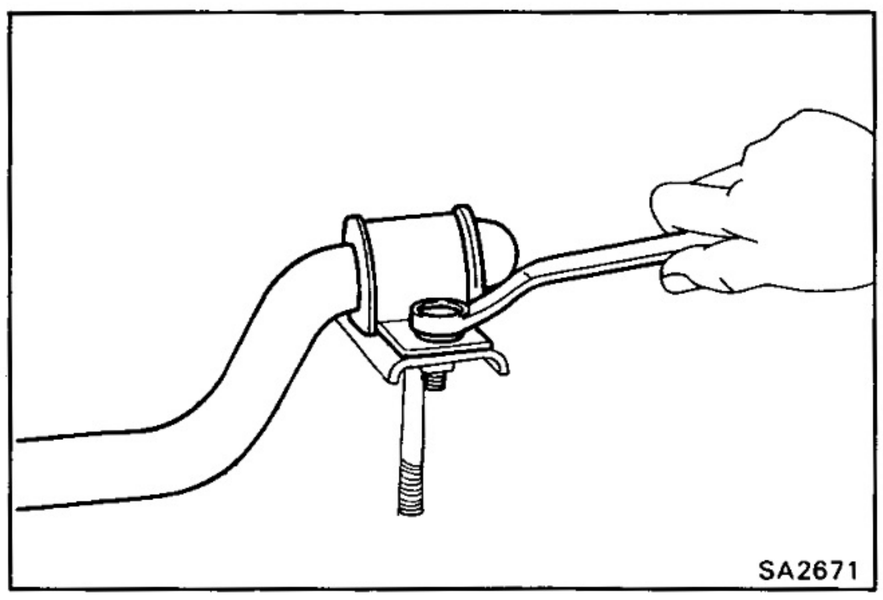
SA2671

(c) Remove the two bolts, bracket and cushion from the stabilizer bar.

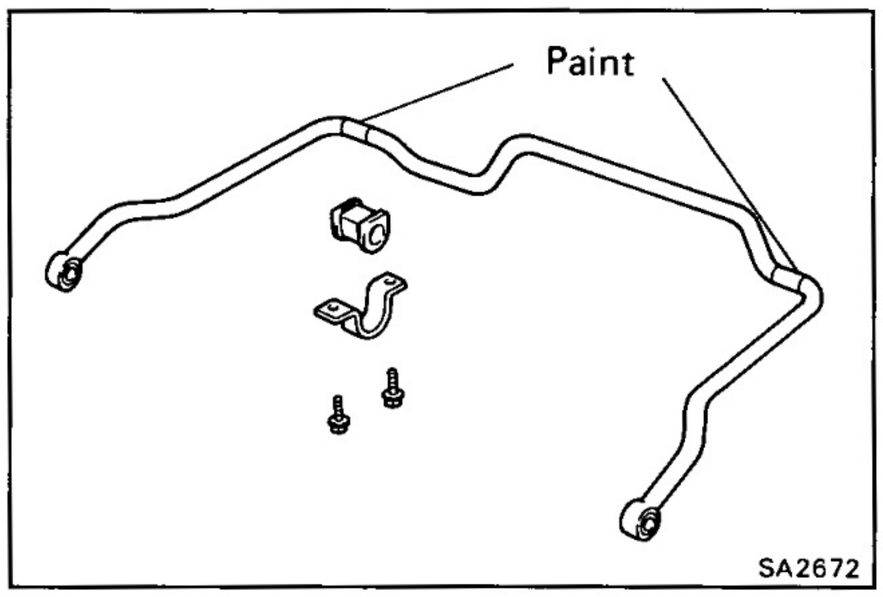

SA2672

INSTALLATION OF STABILIZER BAR

(See page SA-67)

1. INSTALL STABILIZER BAR

(a) Install the cushions on the lines painted on the stabilizer bar and install the brackets onto cushions.

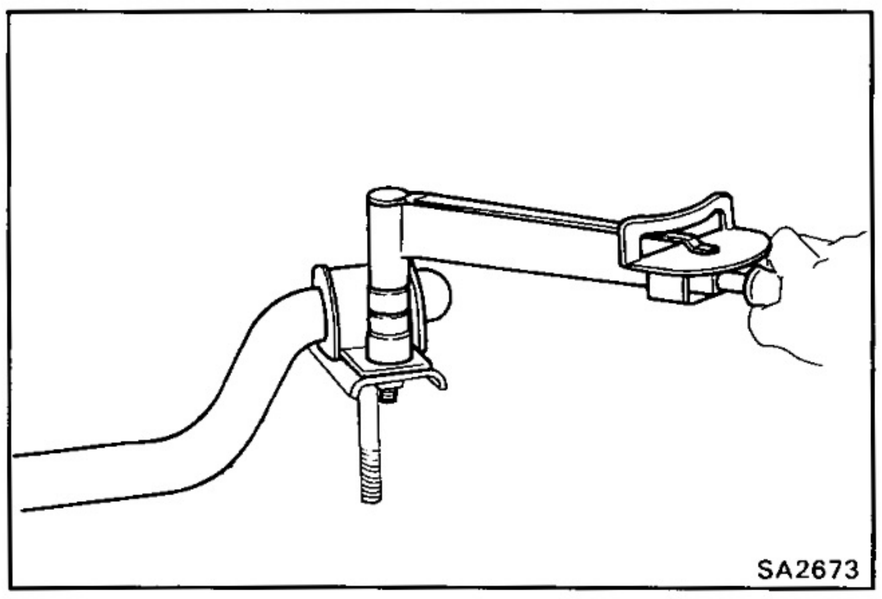
SA2673

(b) Install the brackets to stabilizer bar with four bolts.

Torque: 185 kg-cm (13 ft-lb, 18 N·m)

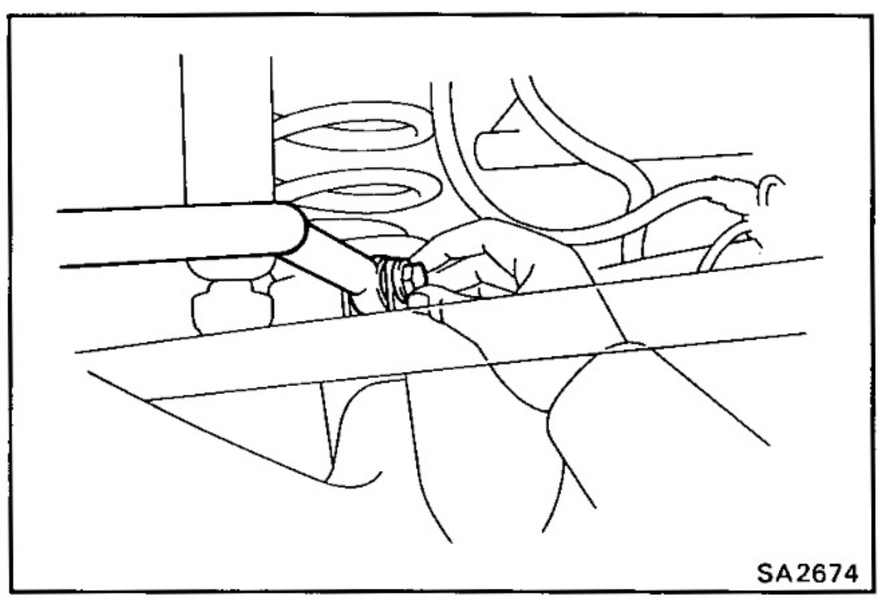
SA2674

(c) Install the stabilizer bar with brackets and cushions to the axle housing with the bolts and nuts.

HINT: Insert the bolt from the outside.

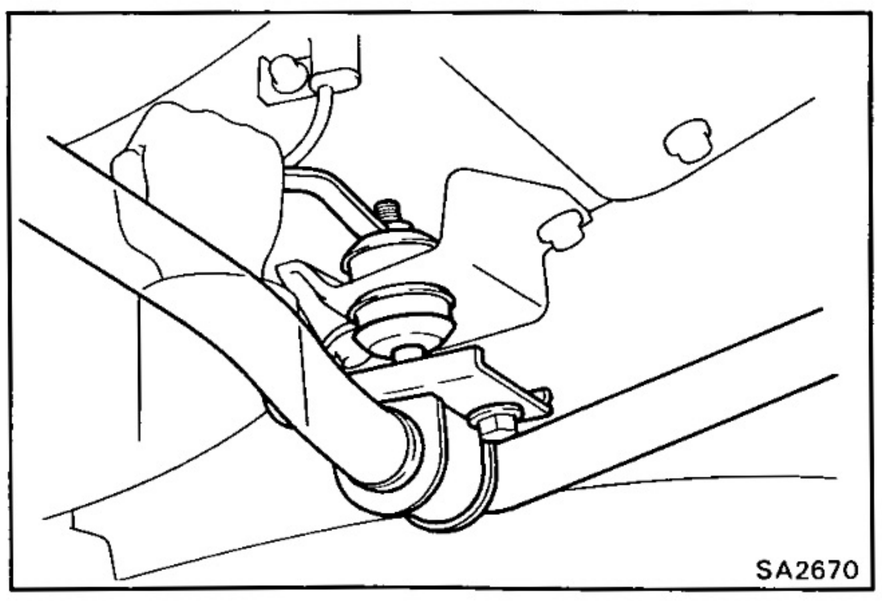
SA2670

(d) Temporarily install the stabilizer brackets to the frame with the cushions, retainers and nuts.

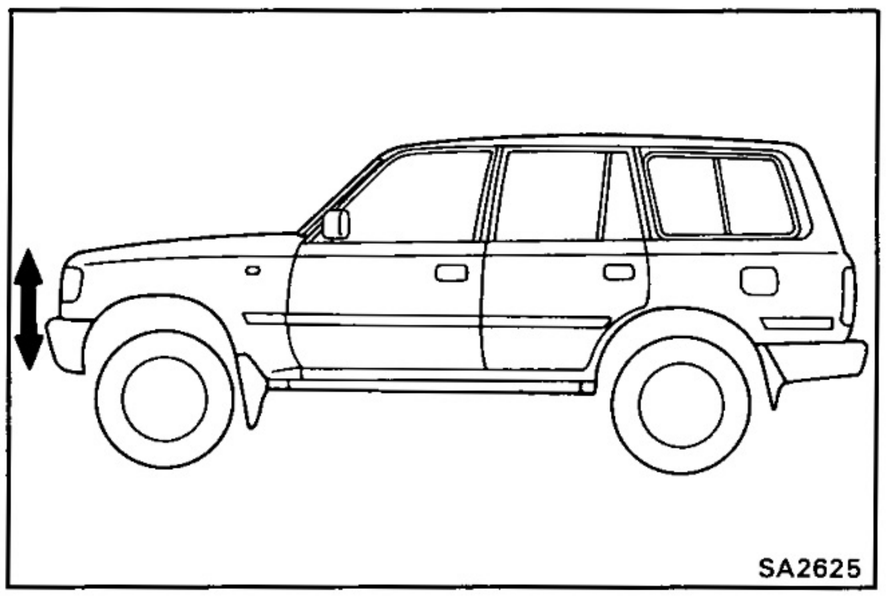

2. STABILIZE SUSPENSION

Lower the vehicle and bounce the vehicle up and down to stabilize the suspension.

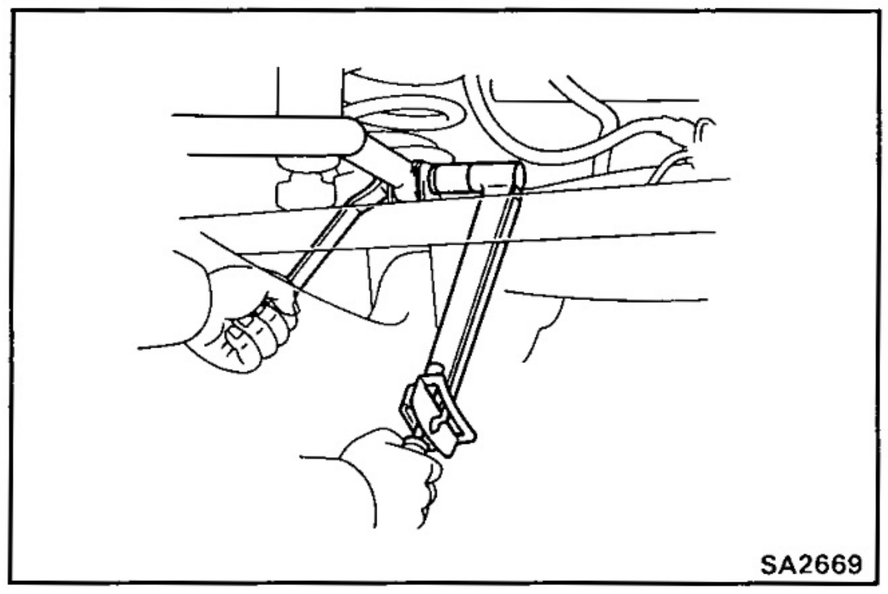

3. TORQUE STABILIZER BAR MOUNTING BOLT AND NUT

(a) Torque the bolts and nuts.

Torque: 260 kg-cm (19 ft-lb, 25 N·m)

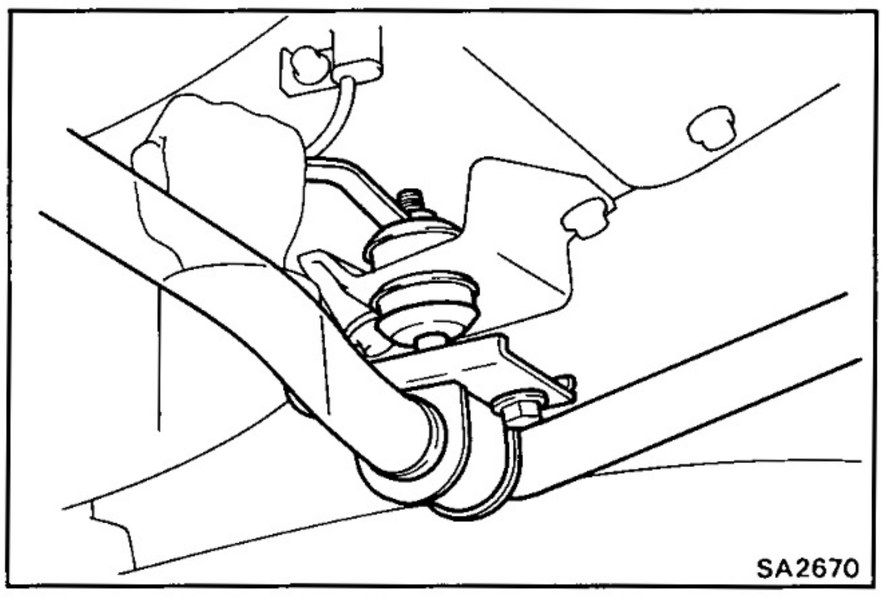

(b) Torque the nuts.

Torque: 185 kg-cm (13 ft-lb, 18 N·m)

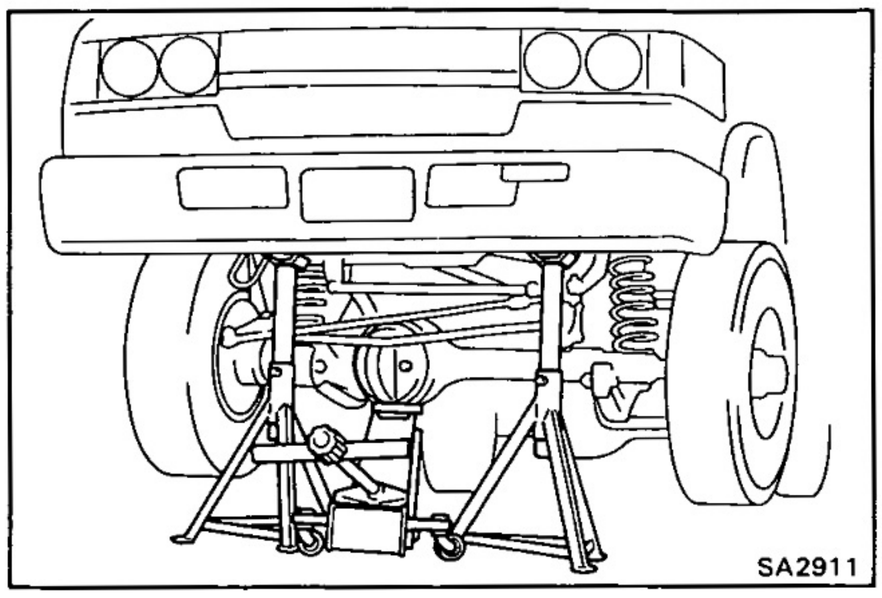

Lateral Control Rod

(See page SA-67)

REMOVAL OF LATERAL CONTROL ROD

1. JACK UP AND SUPPORT BODY

Jack up and support the body on the stands.

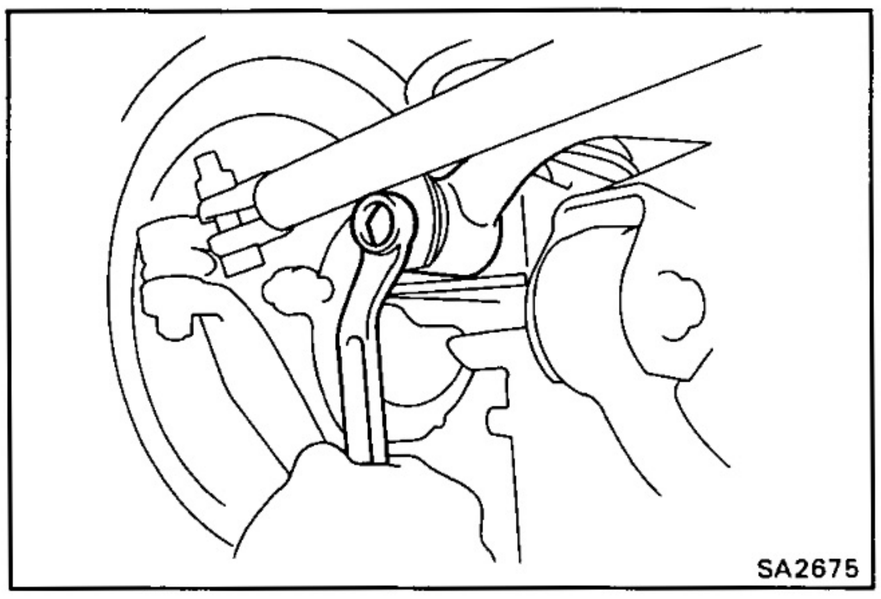

2. DISCONNECT LATERAL CONTROL ROD FROM AXLE HOUSING

Remove the nut, and disconnect the lateral control rod from the front axle housing.

HINT: Hold the lateral control rod with a jack.

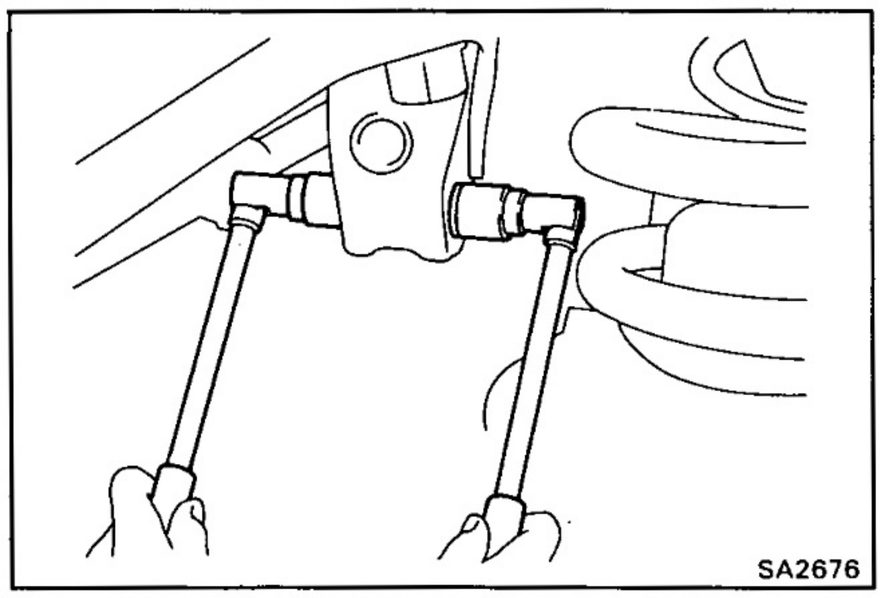

3. DISCONNECT LATERAL CONTROL ROD FROM FRAME

Remove the bolt, nut and the lateral control rod.

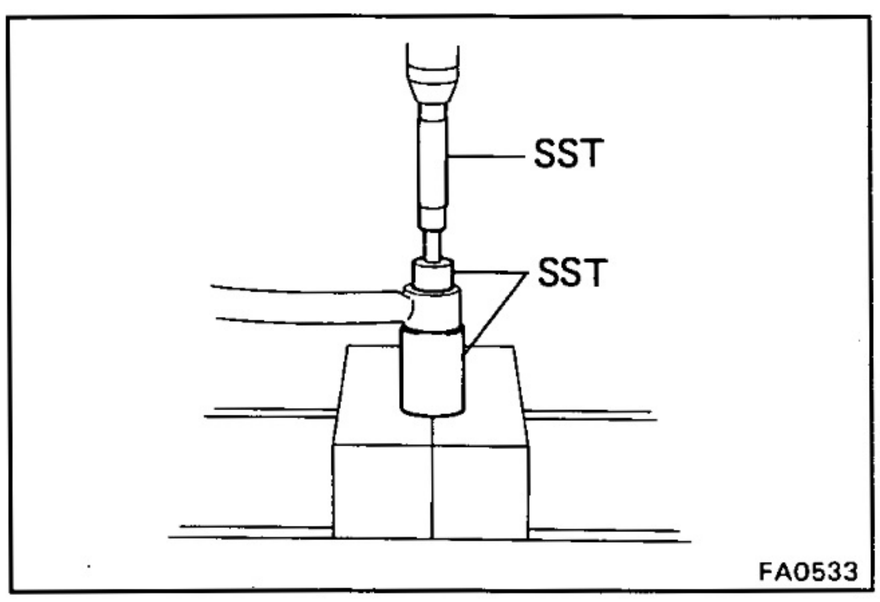

REPLACEMENT OF LATERAL CONTROL ROD BUSHING

1. REMOVE BUSHING

Using SST and a press, press out the bushing from the lateral control rod.

SST 09710-22041
(09710-02020, 09710-02050, 09710-02070)

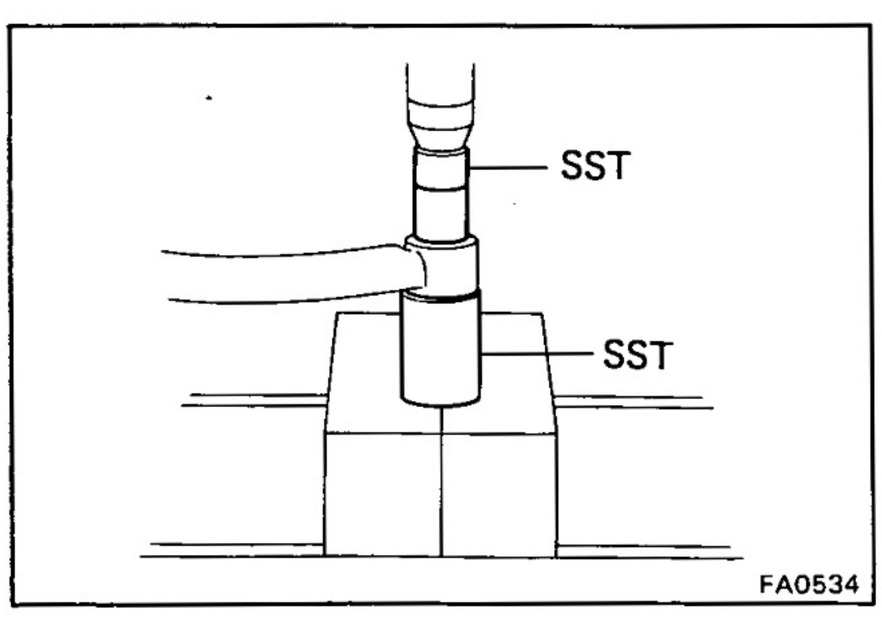

2. INSTALL BUSHING

Using SST and a press, press a new bushing into the lateral control rod.

SST 09710-22041 (09710-02050, 09710-02070)

HINT: Do not lubricant when pressing in the bushing.

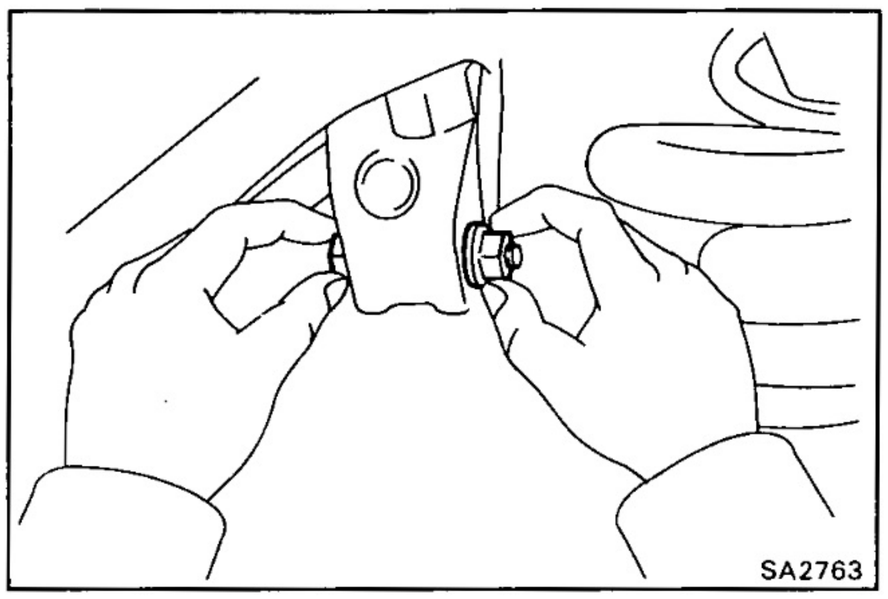
SA2763

INSTALLATION OF LATERAL CONTROL ROD

(See page SA-67)

1. INSTALL LATERAL CONTROL ROD TO FRAME

Temporarily install the lateral control rod to the frame with the bolt and nut.

HINT: Insert the bolt from the front side.

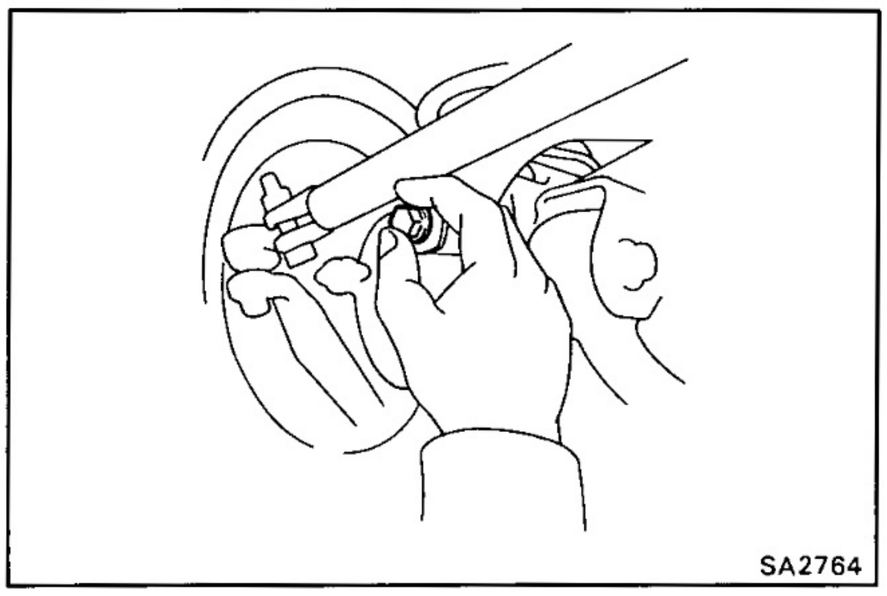
SA2764

2. CONNECT LATERAL CONTROL ROD TO AXLE HOUSING

Temporarily connect the lateral control rod to the axle housing with the bolt.

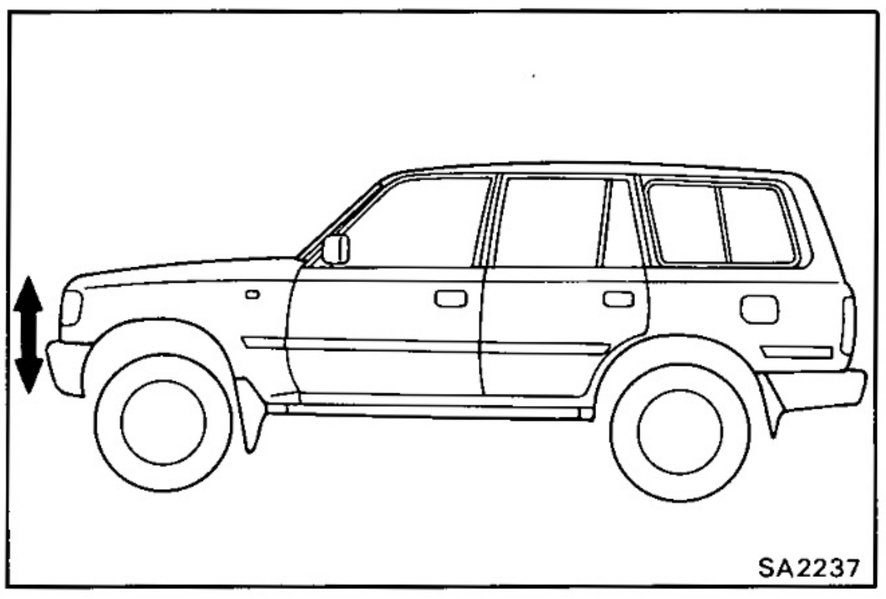
SA2237

3. STABILIZE SUSPENSION

Lower the vehicle and bounce the vehicle up and down to stabilize the suspension.

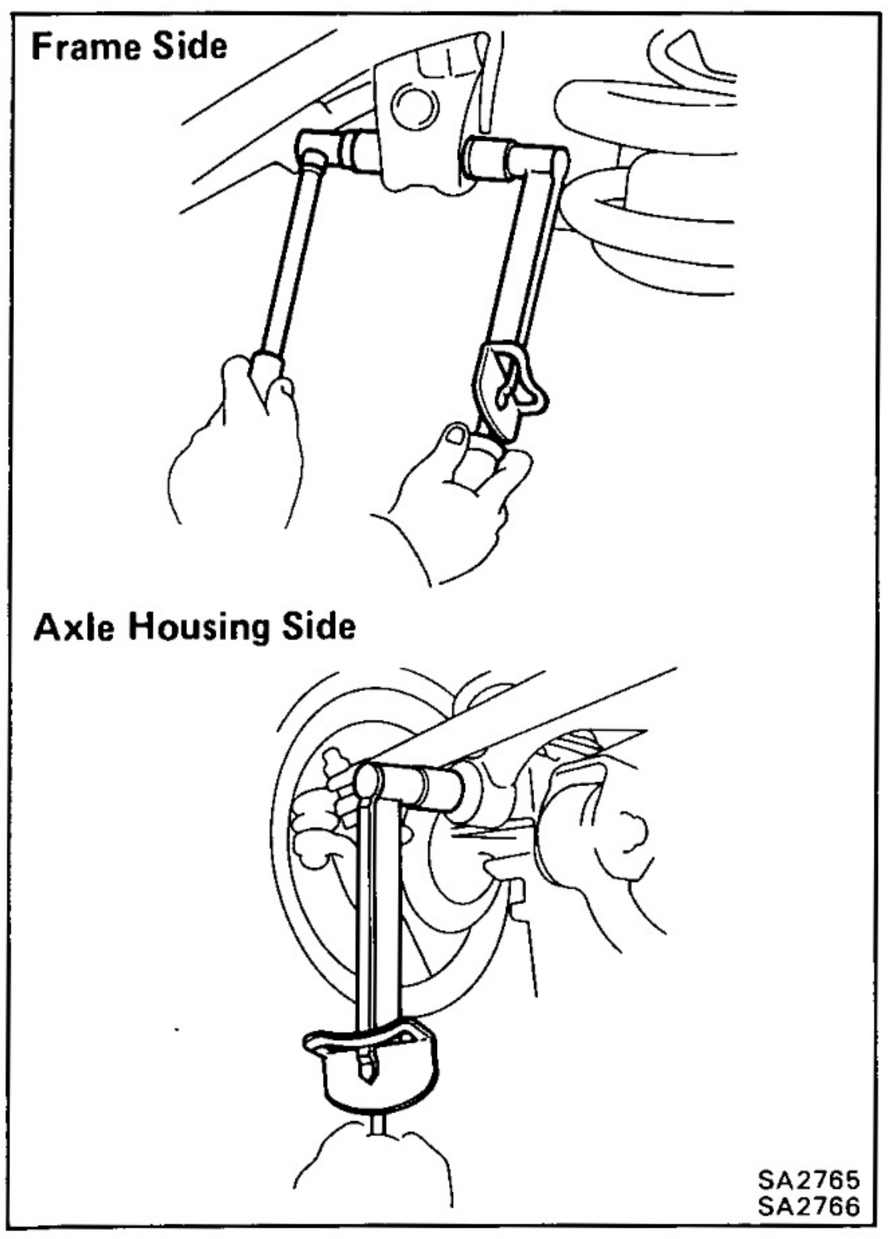

SA2765
SA2766

4. TORQUE BOLTS AND NUT

(a) Jack up the axle housing.

(b) Torque the bolts and nut.

Torque: 1,750 kg-cm (127 ft-lb, 172 N·m)

HINT: When tightening the lateral control rod set nut and bolt, lower the vehicle load until the lateral control rod is horizontal.

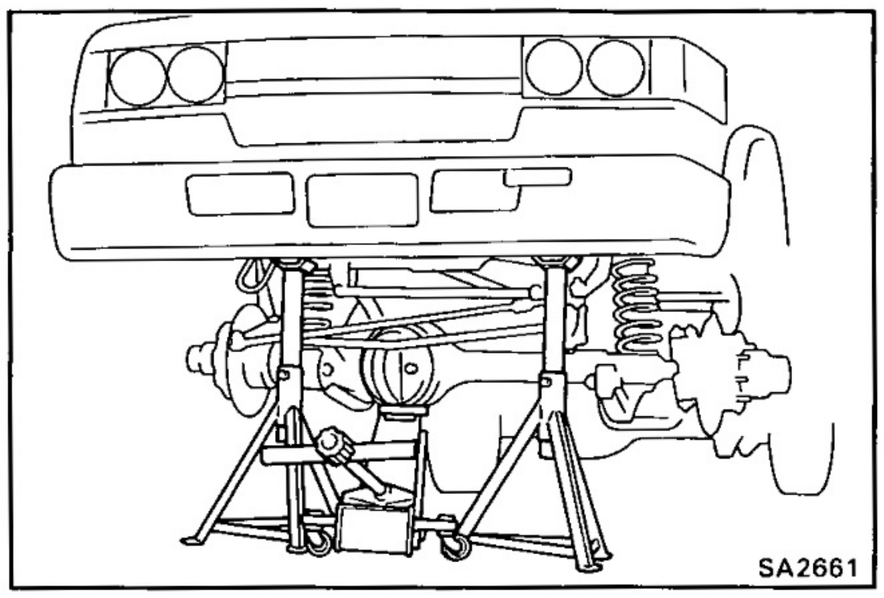

Leading Arm

(See page SA-67)

REMOVAL OF LEADING ARM

1. JACK UP VEHICLE

Jack up the and support the frame with stands.

Hold the front axle housing with a jack.

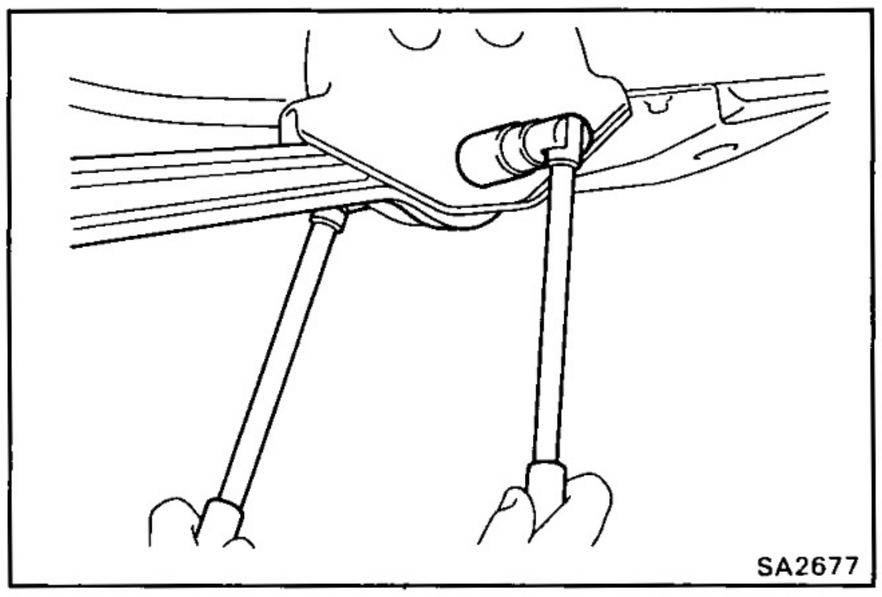

2. REMOVE LEADING ARM

(a) Remove the bolt and nut of the frame side.

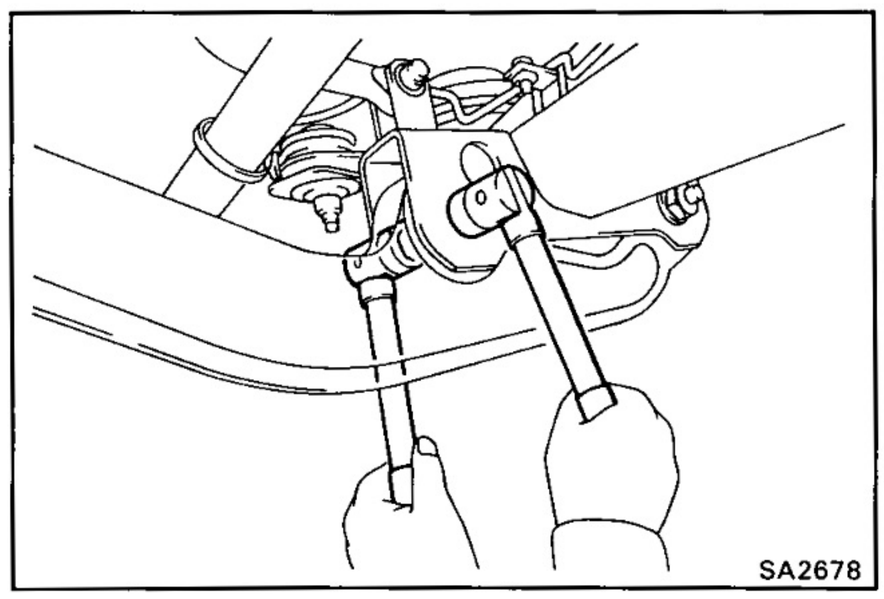

(b) Remove the two bolts and nuts of the axle housing side, then remove the leading arm.

REPLACEMENT OF LEADING ARM BUSHING

1. REMOVE BUSHINGS

Using SST and a press, press out the bushings from the leading arm.

SST 09228-22020, 09710-30030 (09710-03180)

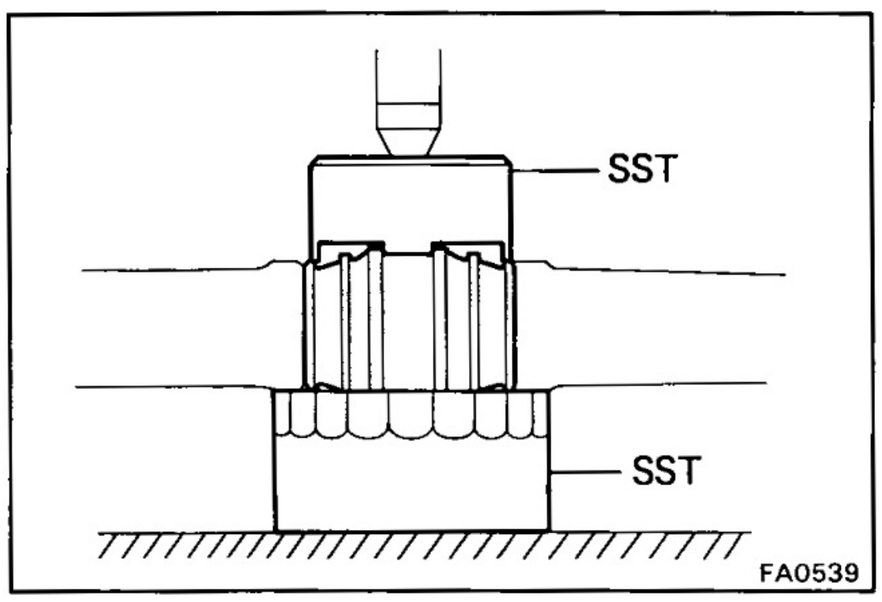

2. INSTALL BUSHINGS

Using SST and a press, press a new bushing into the leading arm.

SST 09228-22020, 09710-30020 (09710-03180)

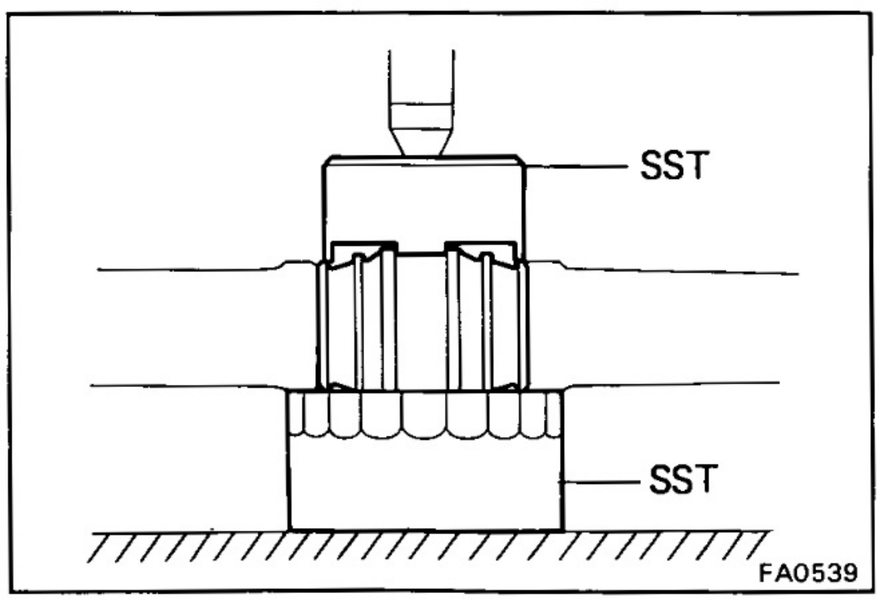

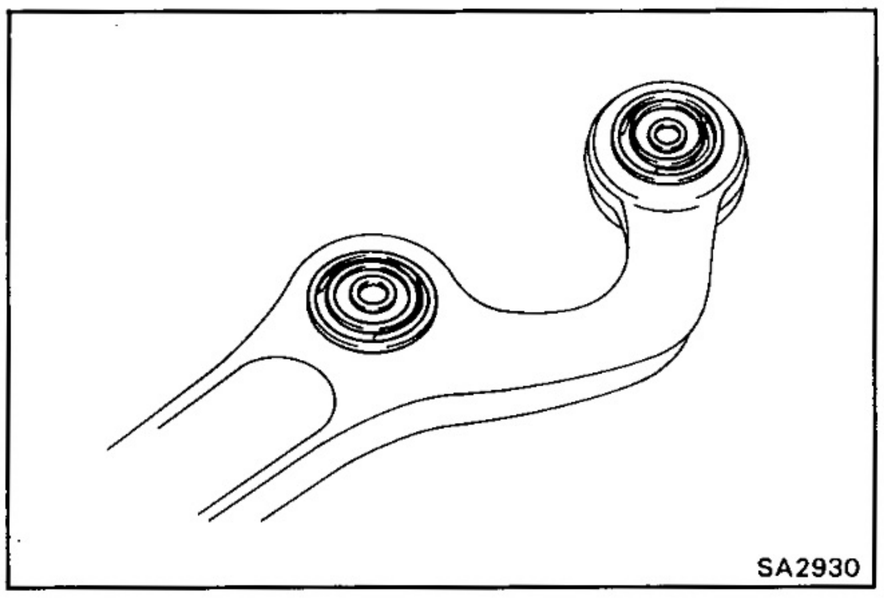
SA2930

HINT: When assembling the bushing, assemble it so its slits are vertical.

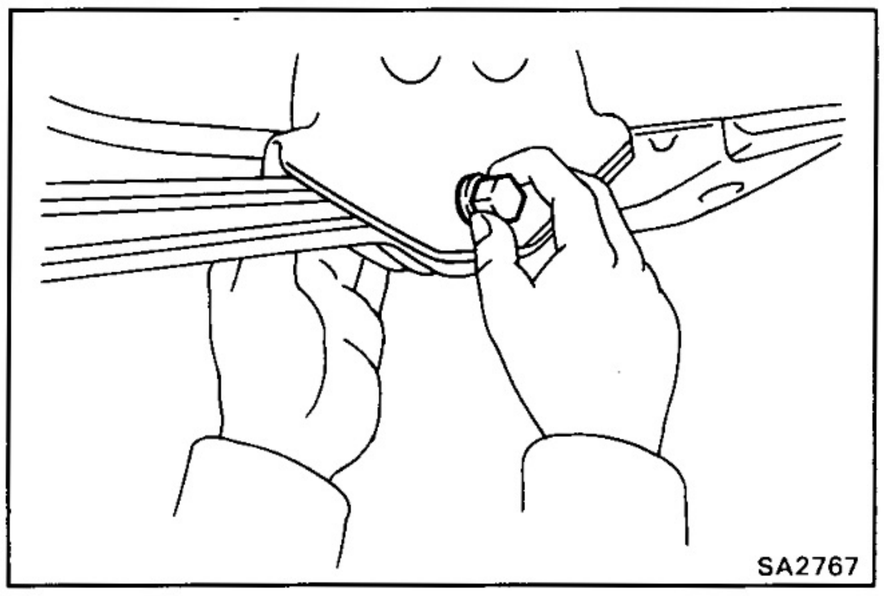
SA2767

INSTALLATION OF LEADING ARM

(See page SA-67)

1. INSTALL LEADING ARM TO FRAME

Temporarily install the leading arm to the body with the bolt and nut.

HINT: Insert the bolt from the outside.

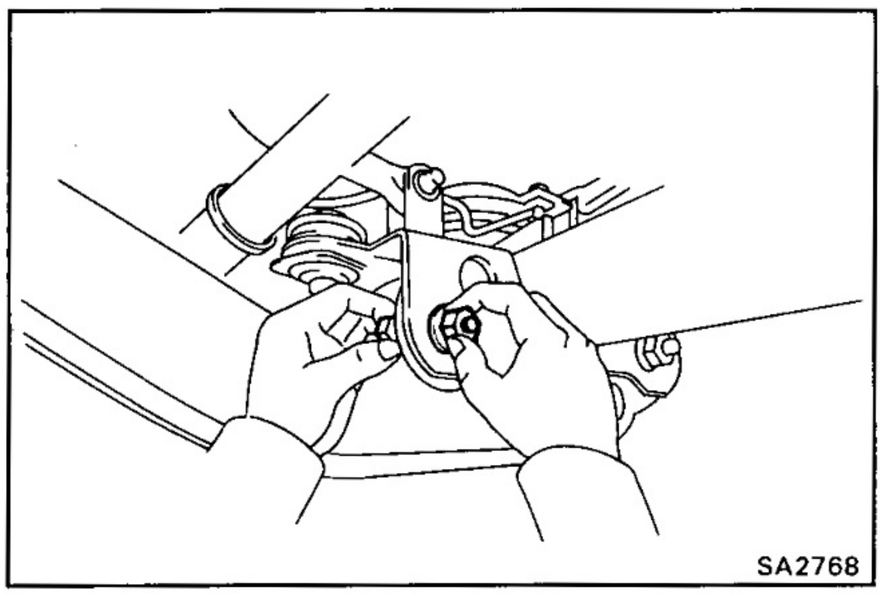
SA2768

2. INSTALL LEADING ARM TO AXLE HOUSING

Temporarily connect the leading arm to the axle housing with the two bolts and nuts.

HINT: Insert the bolts from the outside.

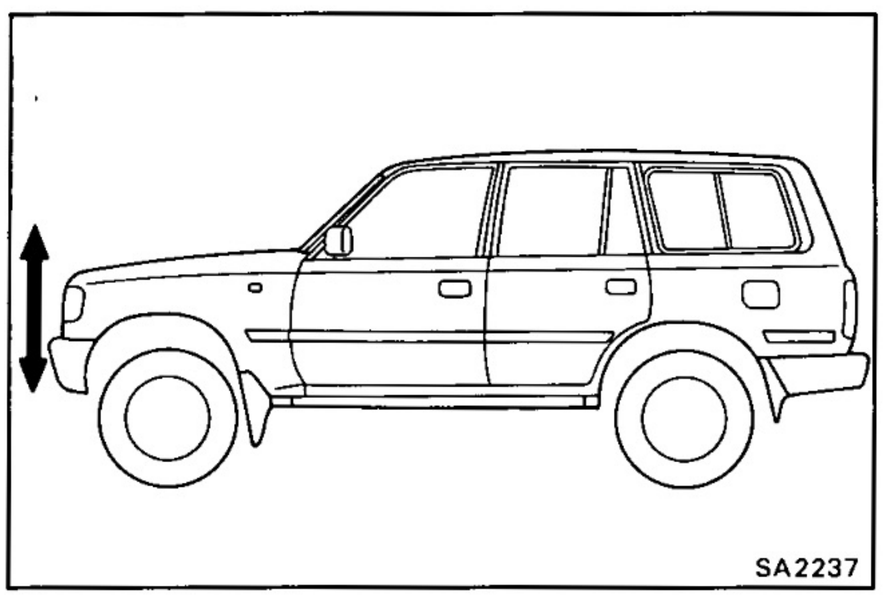
SA2237

3. STABILIZE SUSPENSION

Lower the vehicle and bounce the vehicle up and down to stabilize the suspension.

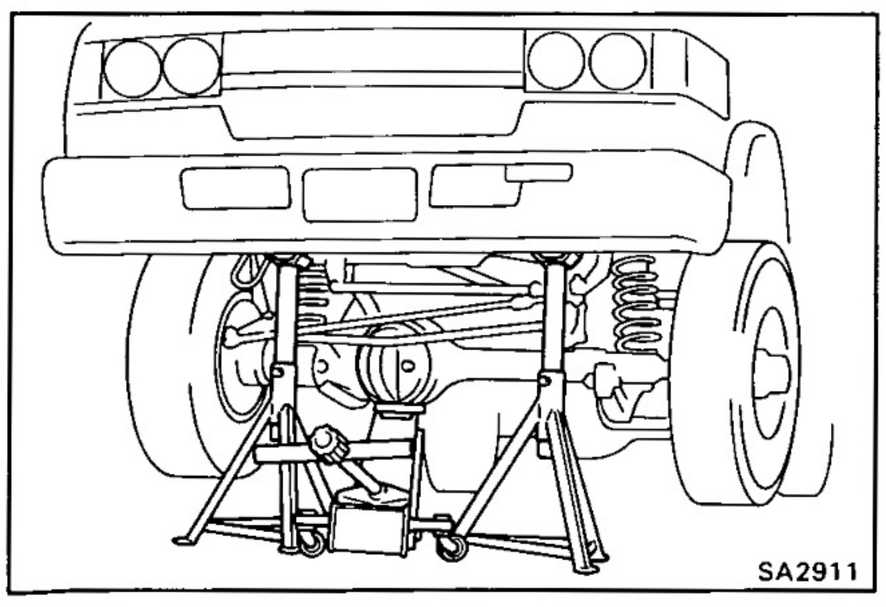
SA2911

4. TORQUE NUTS

(a) Jack up the axle housing.

HINT: For safety, place stands under either side of the vehicle's frame.

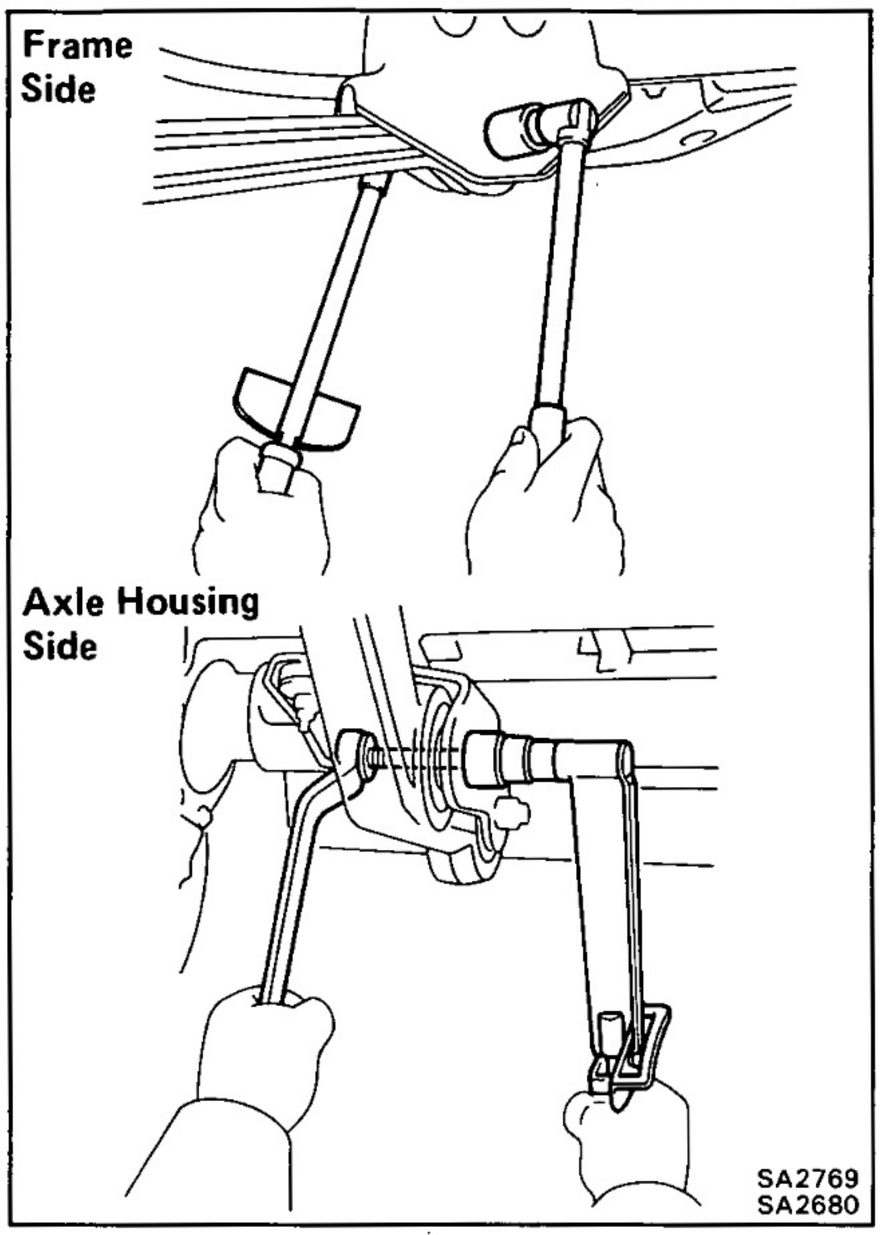

(b) Torque the nuts.

Torque: 1,750 kg-cm (127 ft-lb, 172 N·m)

HINT: When tightening the nuts, tighten with the vehicle's full weight applied to the axle housing.

REAR AXLE SHAFT
(Semi-Floating Type)
COMPONENTS

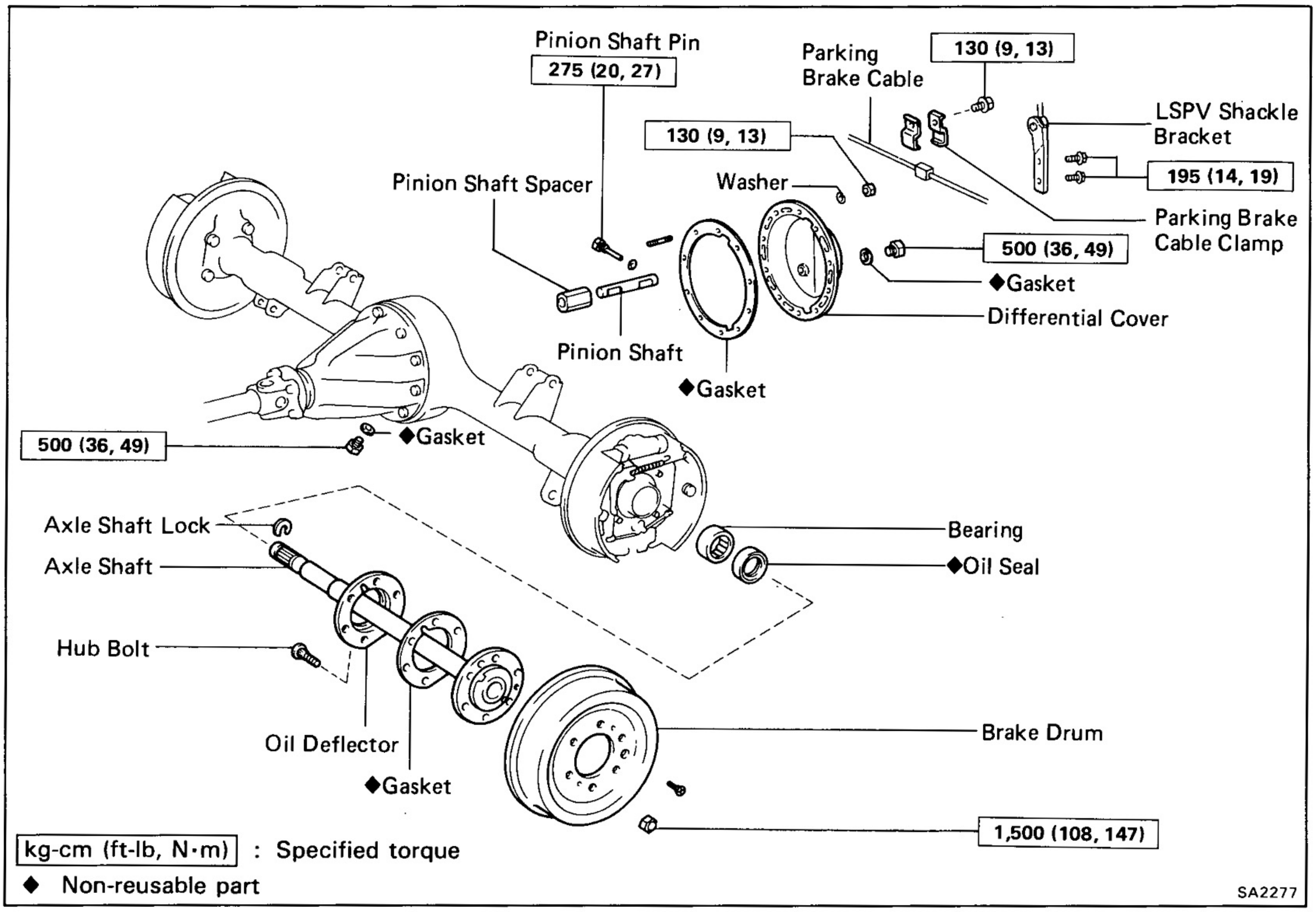

kg-cm (ft-lb, N·m) : Specified torque

◆ Non-reusable part

SA2277

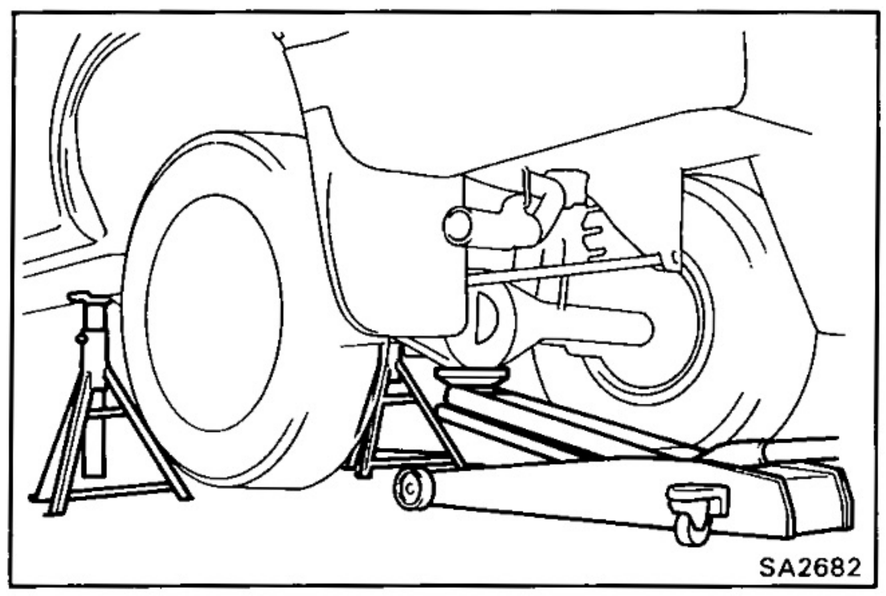

REMOVAL OF REAR AXLE SHAFT

1. JACK UP AND SUPPORT VEHICLE
2. REMOVE REAR WHEEL AND BRAKE DRUM

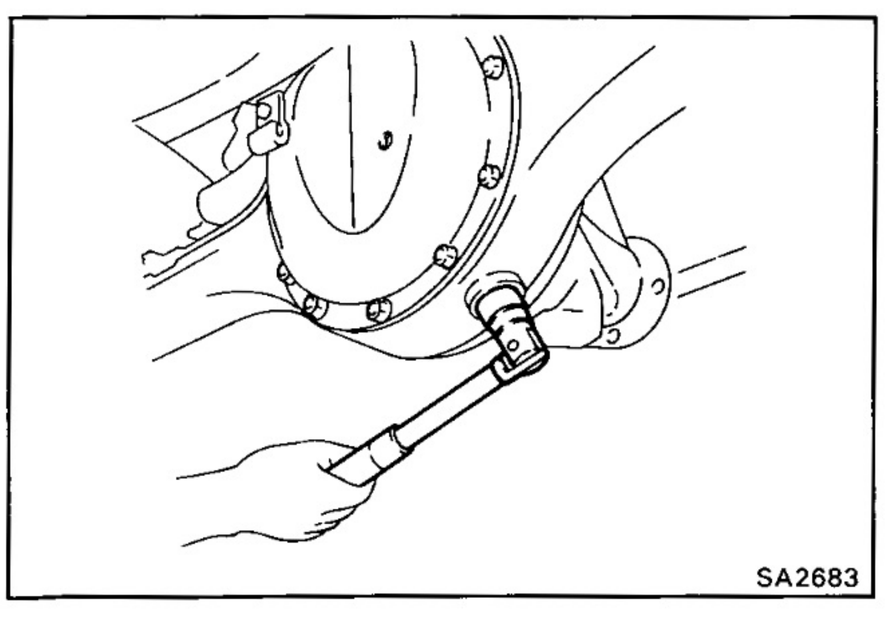

3. REMOVE DRAIN PLUG AND DRAIN DIFFERENTIAL OIL

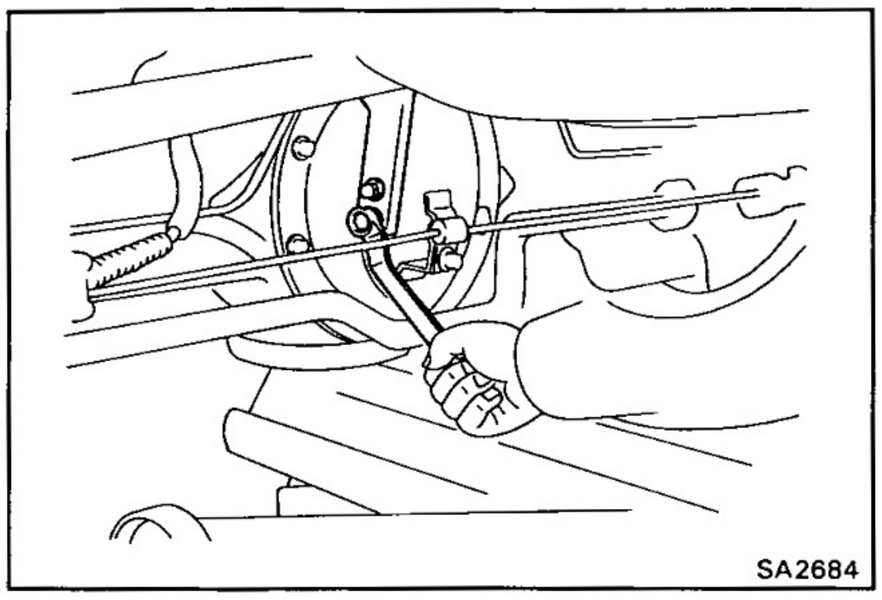

4. REMOVE LSPV SHACKLE BRACKET

Remove the two bolts and the shackle bracket from the differential cover.

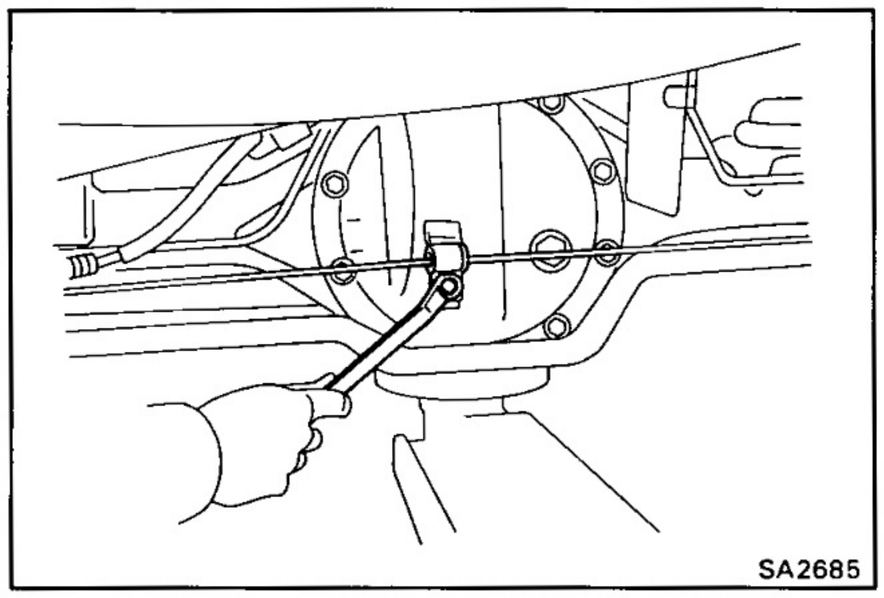

5. REMOVE PARKING BRAKE CABLE CLAMP

Remove the bolt and the clamp from the differential cover.

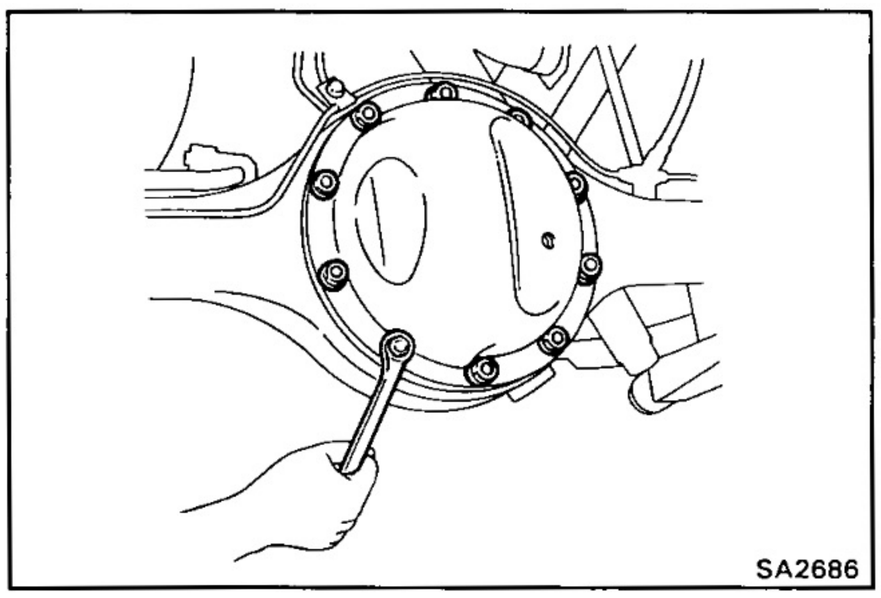

6. REMOVE DIFFERENTIAL COVER

(a) Remove the ten nuts and washers from the differential.

(b) Remove the differential cover with gasket from the differential.

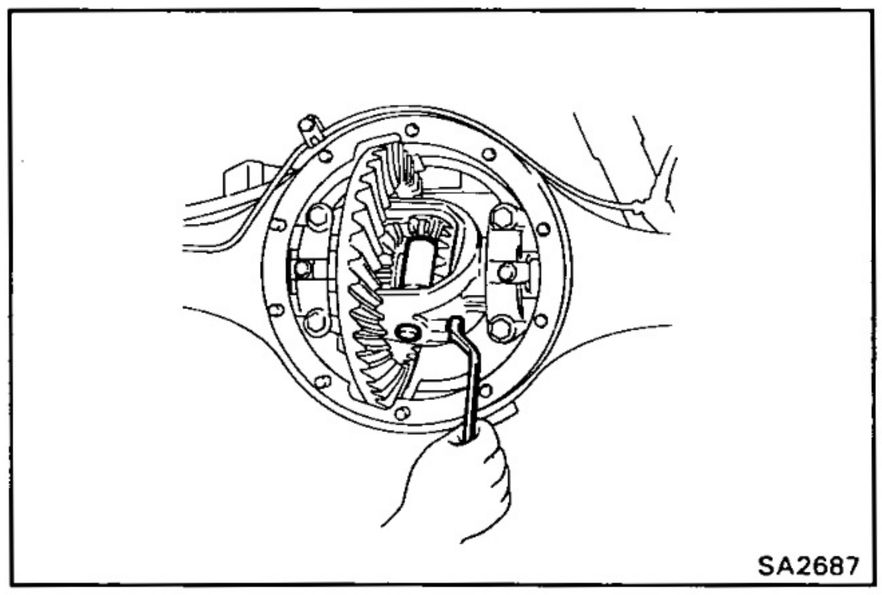

7. REMOVE PINION SHAFT AND SPACER

(a) Remove the pinion shaft pin from the differential.

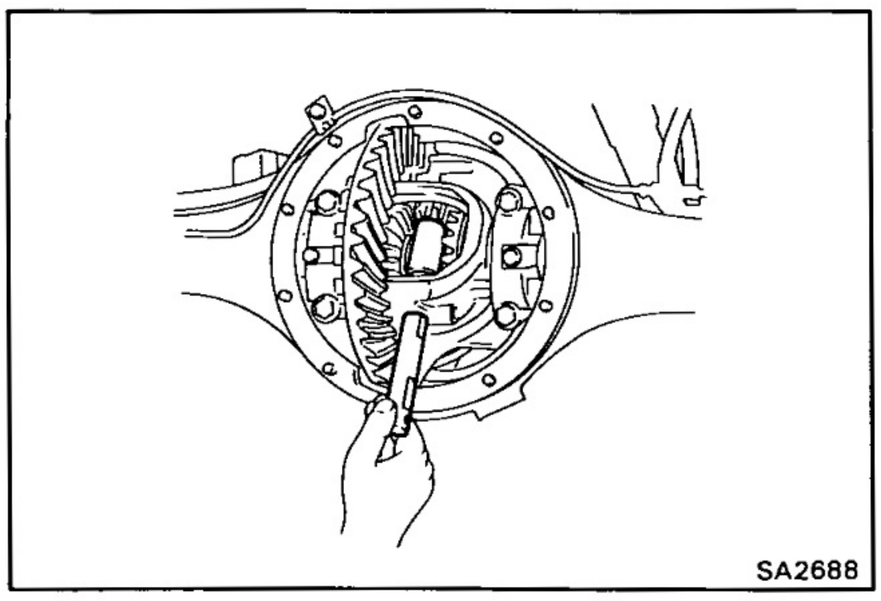

(b) Remove the pinion shaft and spacer.

HINT: When the pinion shaft is removed, the pinion gear and washer will come off also.

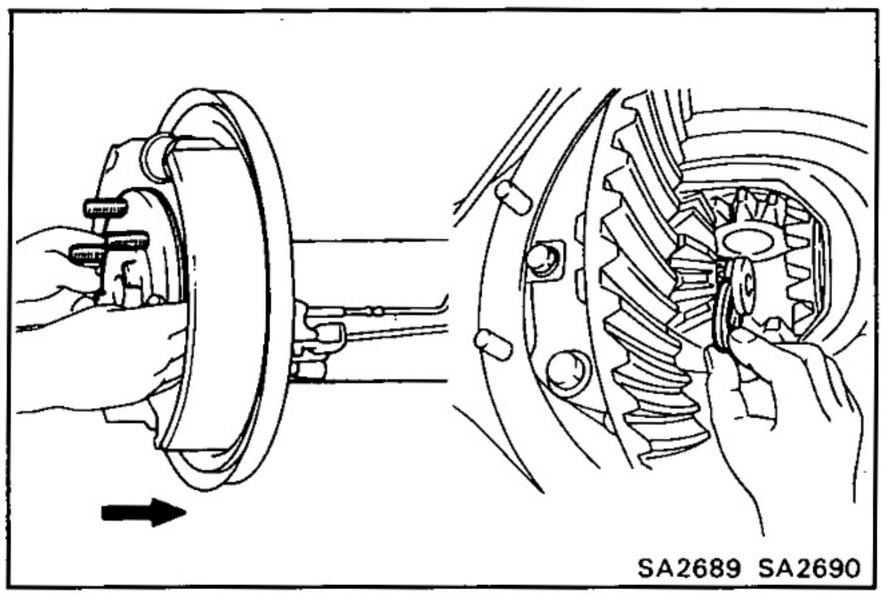

8. REMOVE AXLE SHAFT LOCK

Push the axle shaft to the differential side and remove the axle shaft lock.

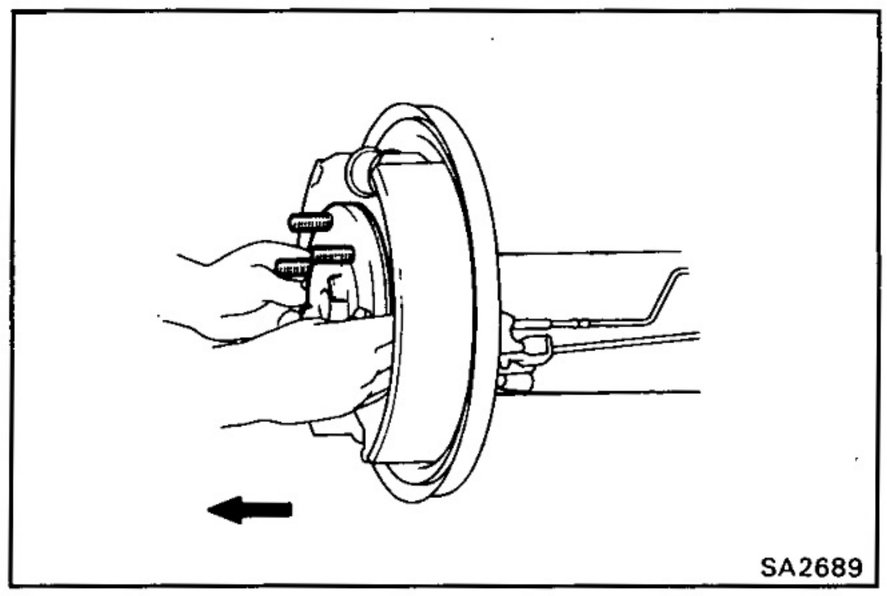

9. REMOVE AXLE SHAFT

NOTICE: When pulling out the axle shaft, be careful not to damage the oil seal.

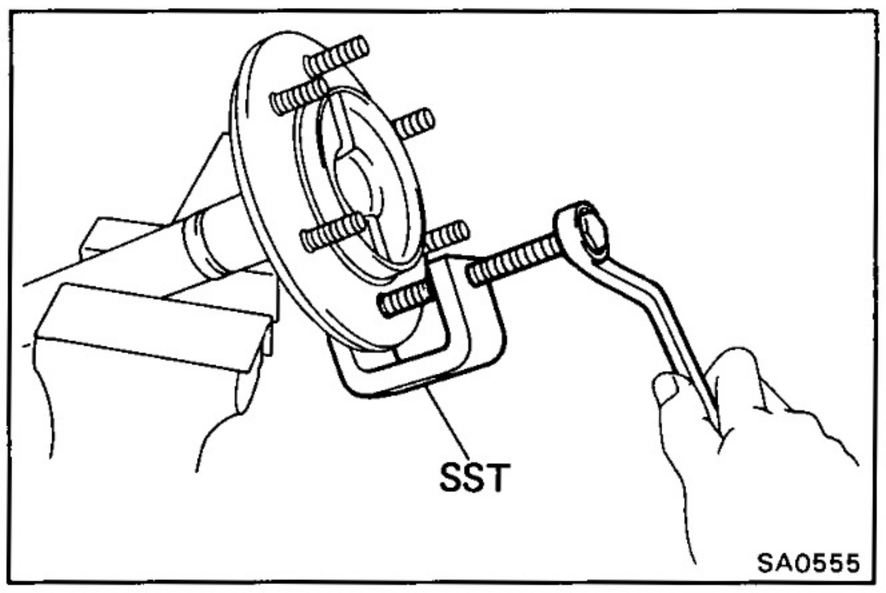

10. REMOVE OIL DEFLECTOR

Using SST, remove the hub bolts, oil deflector and gasket.

SST 09650-17011

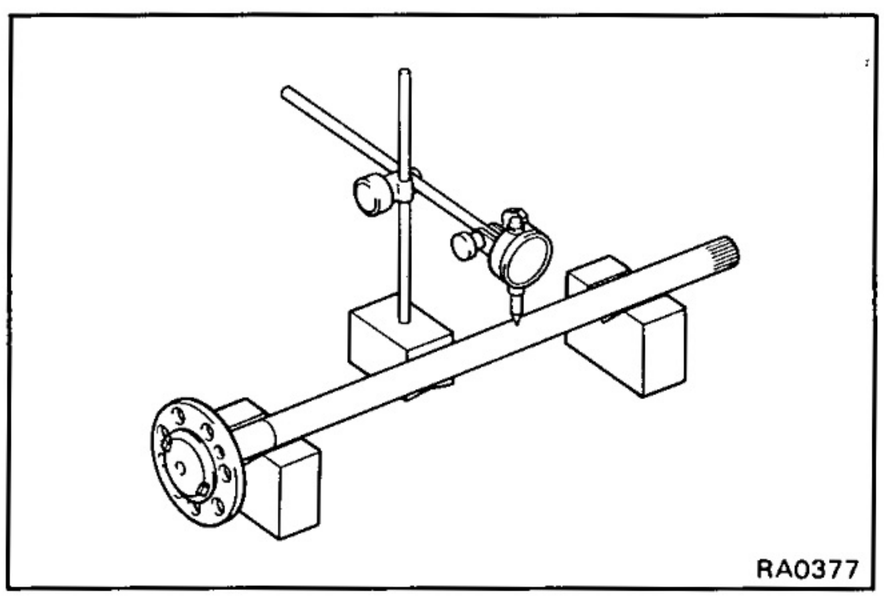

INSPECTION AND REPLACEMENT OF REAR AXLE SHAFT COMPONENTS

1. INSPECT REAR AXLE SHAFT

(a) Check for wear or damage.

(b) Check the runout of axle shaft.

Maximum runout: 0.8 mm (0.031 in.)

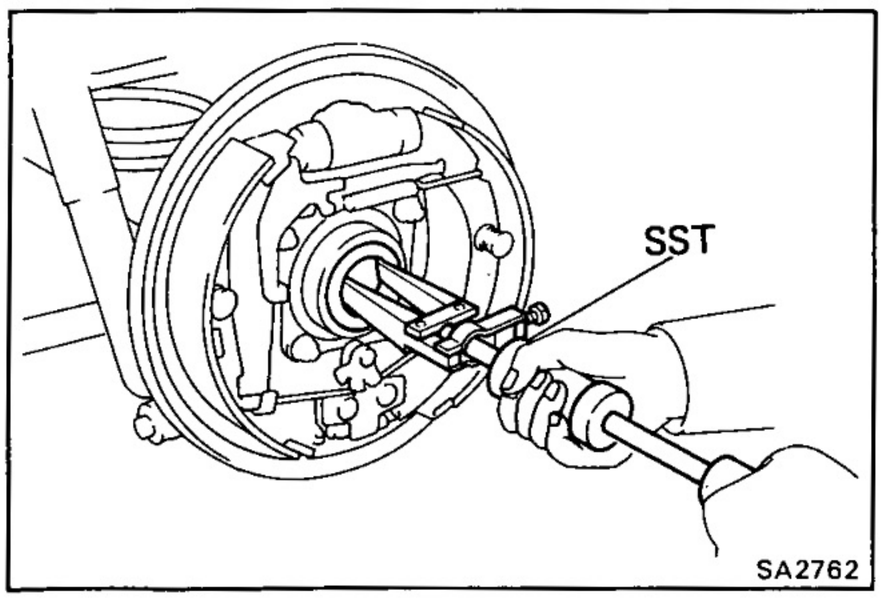

2. INSPECT OIL SEAL AND BEARING FOR WEAR OR DAMAGE

If the oil seal and bearing is damaged or worn, replace it.

3. REPLACE OIL SEAL AND BEARING

(a) Using SST, remove the oil seal.

SST 09308-00010

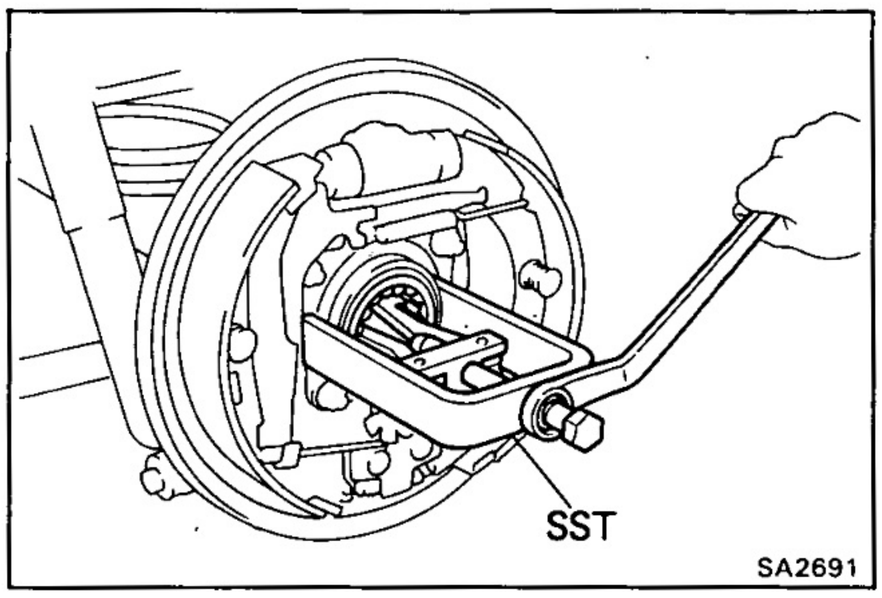

(b) Using SST, remove the bearing.

SST 09514-35011

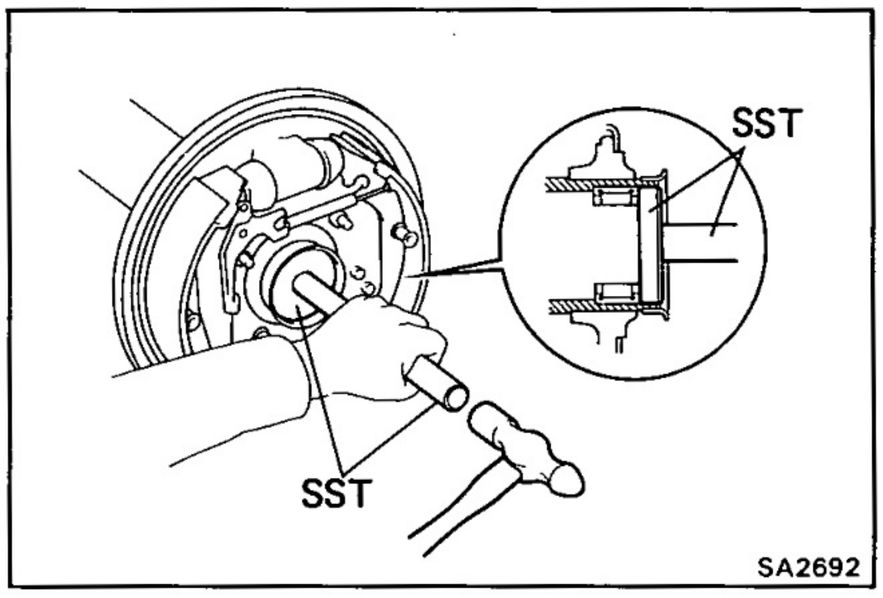

(c) Apply MP grease to the bearing.

(d) Using SST, drive in a new bearing.

SST 09608-20012 (09608-03020, 09608-03060)

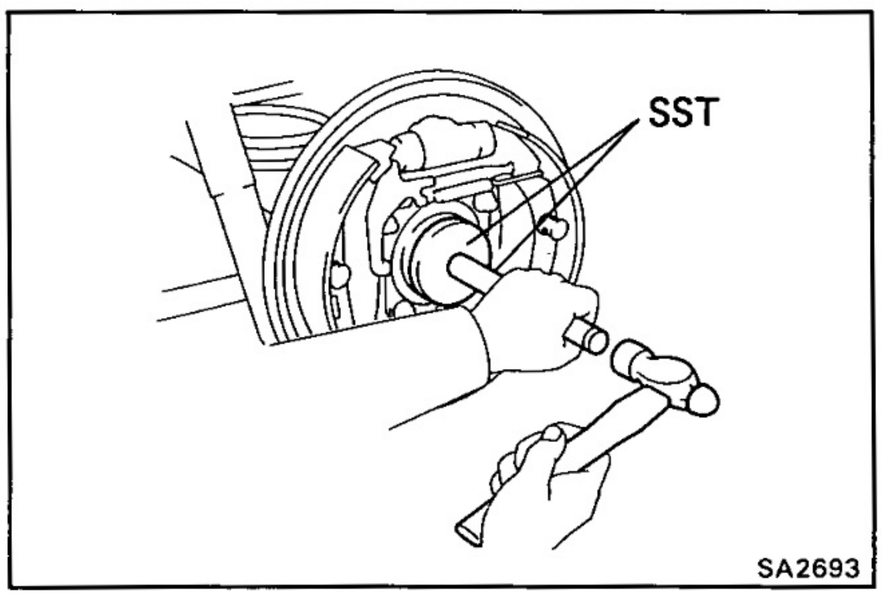

(e) Using SST, drive in a new oil seal.

SST 09608-20012 (09608-03020, 09608-03090)

(f) Apply MP grease to the oil seal lip.

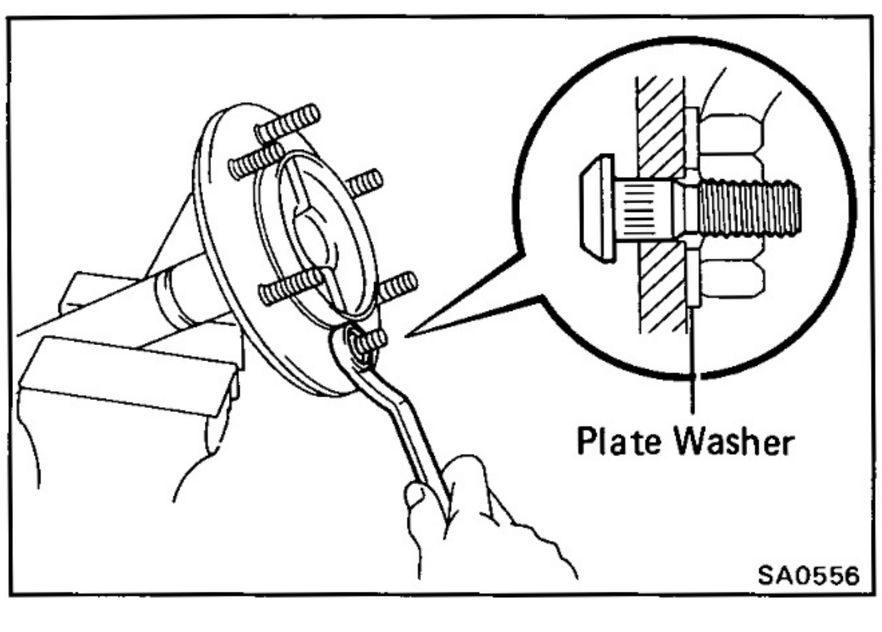

INSTALLATION OF REAR AXLE SHAFT

(See page SA-78)

1. INSTALL OIL DEFLECTOR

(a) Install a new gasket and the oil deflector.

(b) Install the plate washer on the hub bolt as shown in the illustration then tighten the nut to install the hub bolts.

(c) Remove the nut.

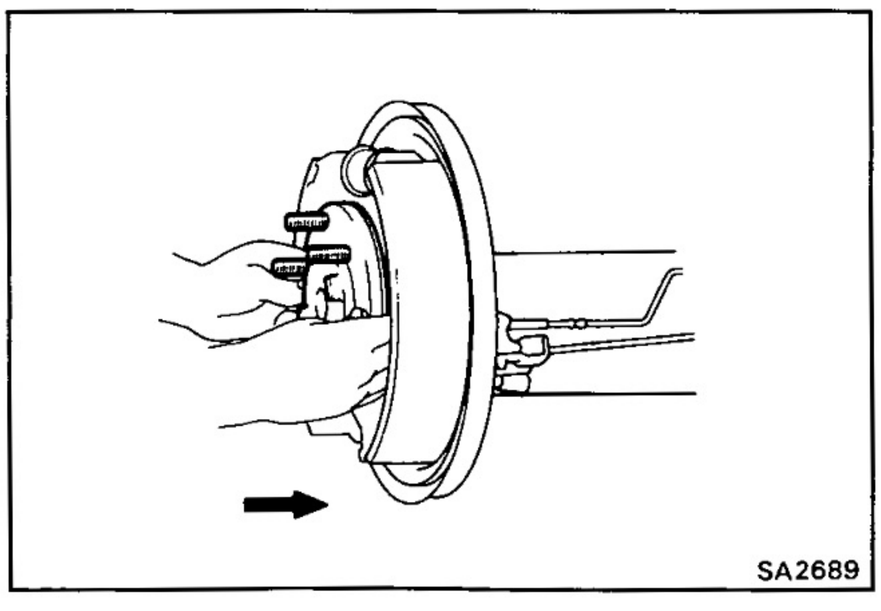

2. INSTALL REAR AXLE SHAFT IN AXLE HOUSING

Insert the axle shaft into the housing.

NOTICE: When inserting the axle shaft, be careful not to damage the oil seal.

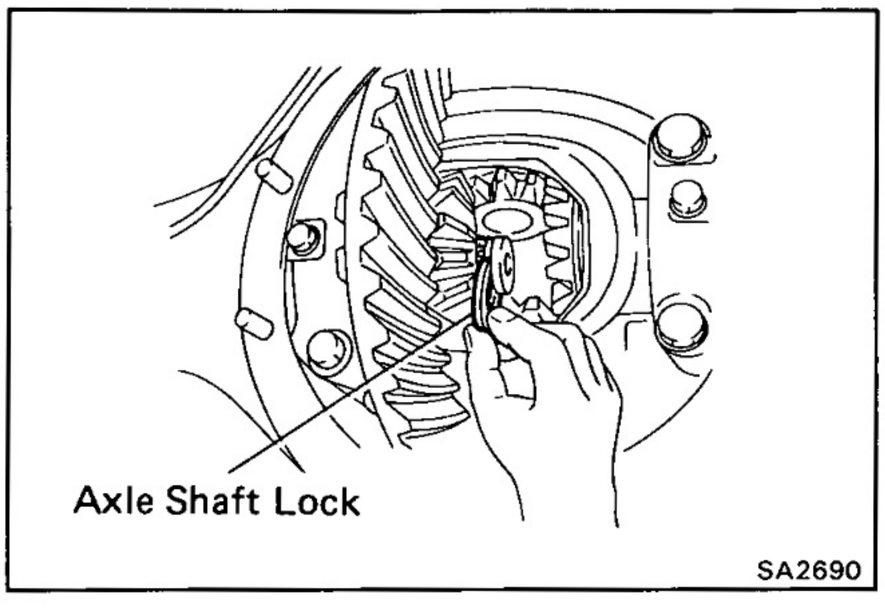

3. INSTALL AXLE SHAFT LOCK

(a) Install the axle shaft lock to axle shaft.

(b) Pull the axle shaft fully toward the outer side of the vehicle.

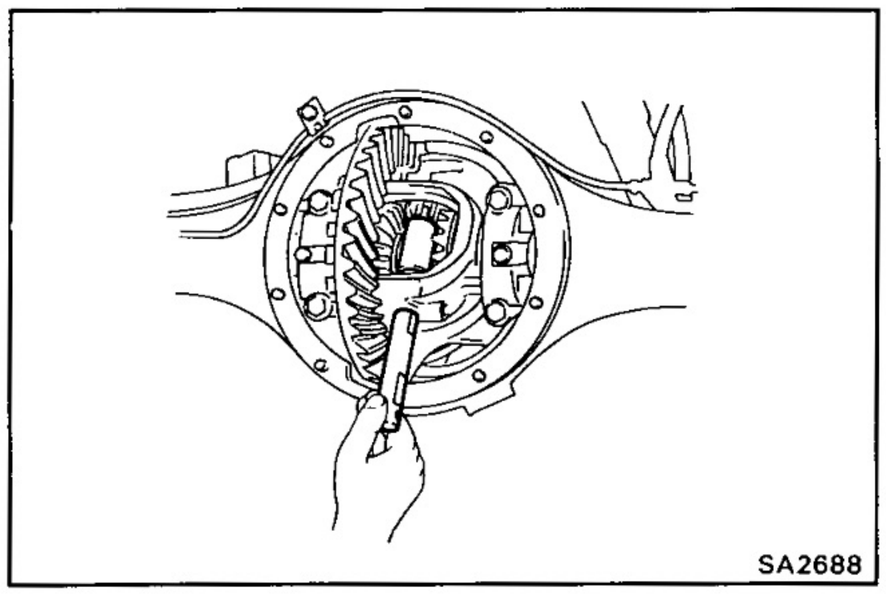

4. INSTALL PINION SHAFT AND PINION SHAFT SPACER

(a) Install the spacer and the pinion shaft to the differential.

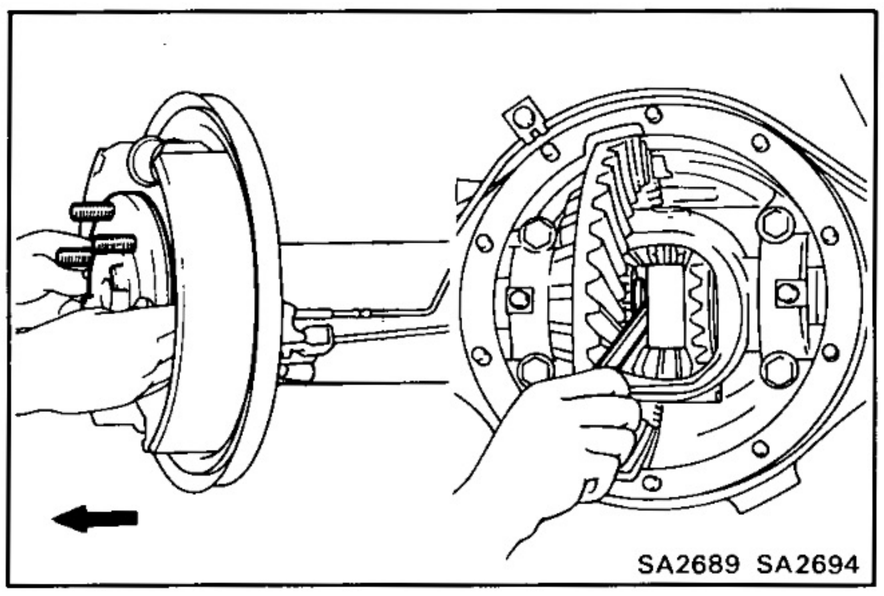

(b) Measure the thrust clearance between the axle shaft and spacer.

Maximum clearance: 0.5 mm (0.0020 in.)

If necessary, select the spacer.

Spacer thickness

Thickness mm (in.)
29.0 (1.142)
29.4 (1.157)
29.8 (1.173)
30.2 (1.189)
30.6 (1.205)

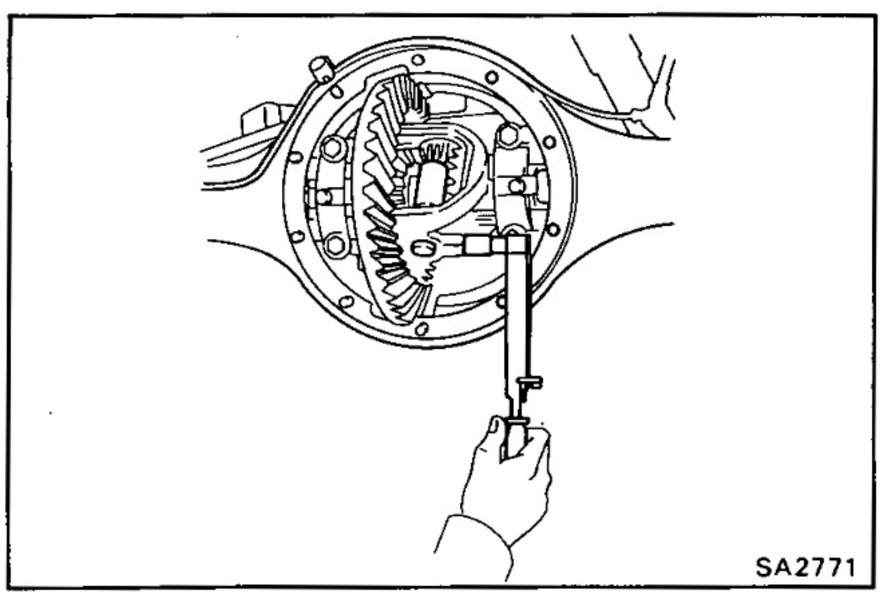

(c) Install the pinion shaft pin.

Torque: 275 kg-cm (20 ft-lb, 27 N·m)

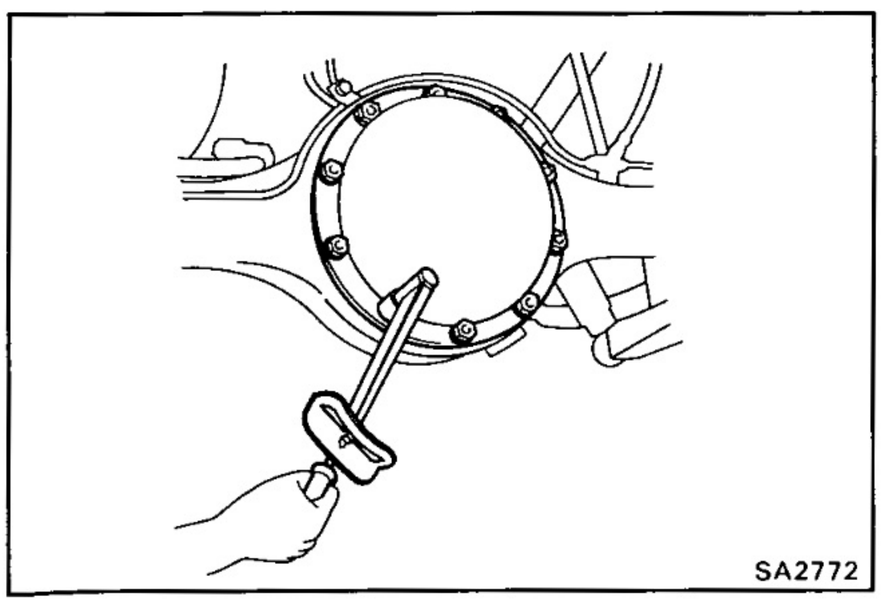

5. INSTALL DIFFERENTIAL COVER

(a) Install a new gasket and differential cover to the axle housing.

(b) Install the ten washers and nuts.

Torque: 130 kg-cm (9 ft-lb, 13 N·m)

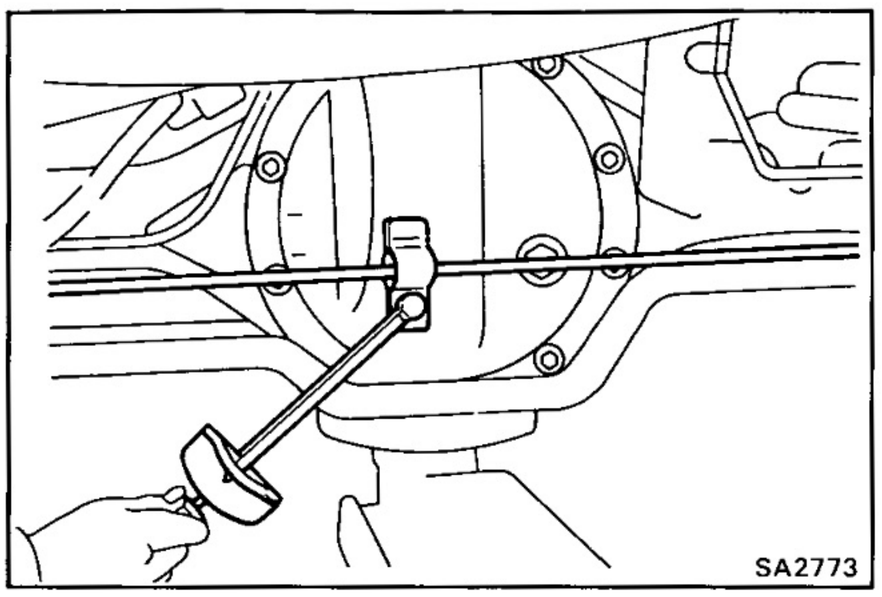

6. INSTALL PARKING BRAKE CABLE CLAMP

Install the clamp of the parking brake cable to the differential cover with the bolt.

Torque: 130 kg-cm (9 ft-lb, 13 N·m)

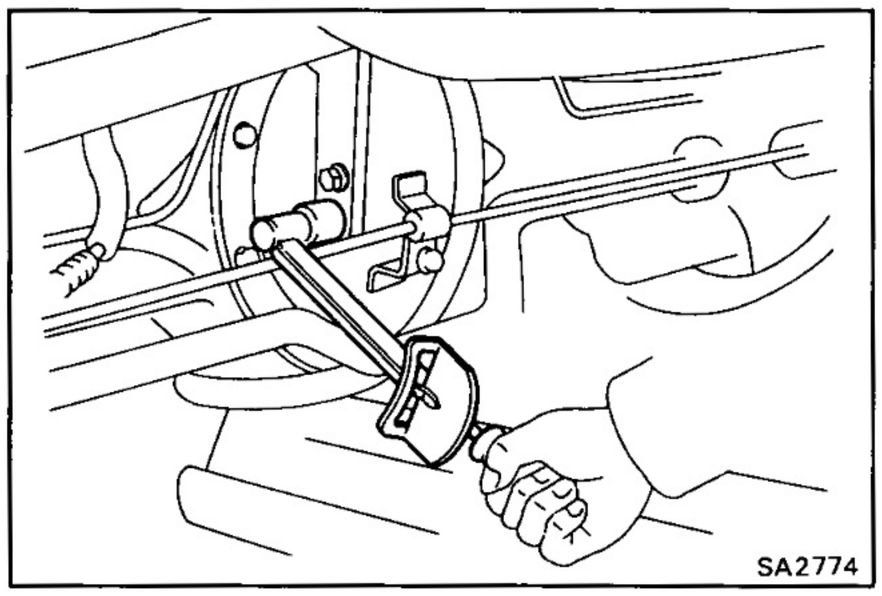

7. INSTALL LSPV SHACKLE BRACKET

Install the shackle bracket to differential cover with the two bolts.

Torque: 195 kg-cm (14 ft-lb, 19 N·m)

8. INSTALL BRAKE DRUM AND WHEEL

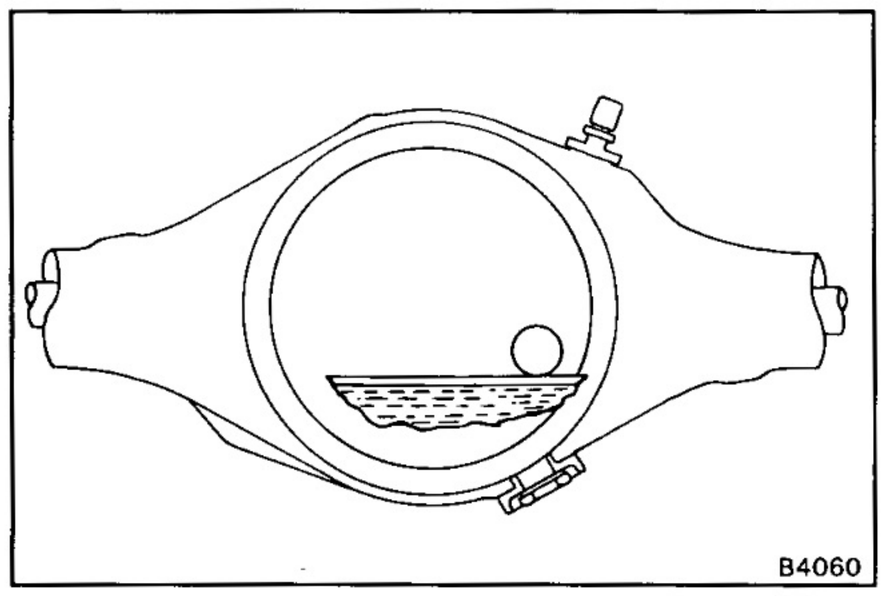

9. FILL DIFFERENTIAL WITH GEAR OIL

Fill with hypoid gear oil.

Oil type:

w/o LSD API GL-5
w/ LSD API GL-5 for LSD

Viscosity:

Above −18°C (0°F) SAE 90
Below −18°C (0°F) SAE 80 W or 80 W-90

Capacity: 2.8 liters (2.9 US qts, 2.4 Imp.qts)

10. LOWER VEHICLE

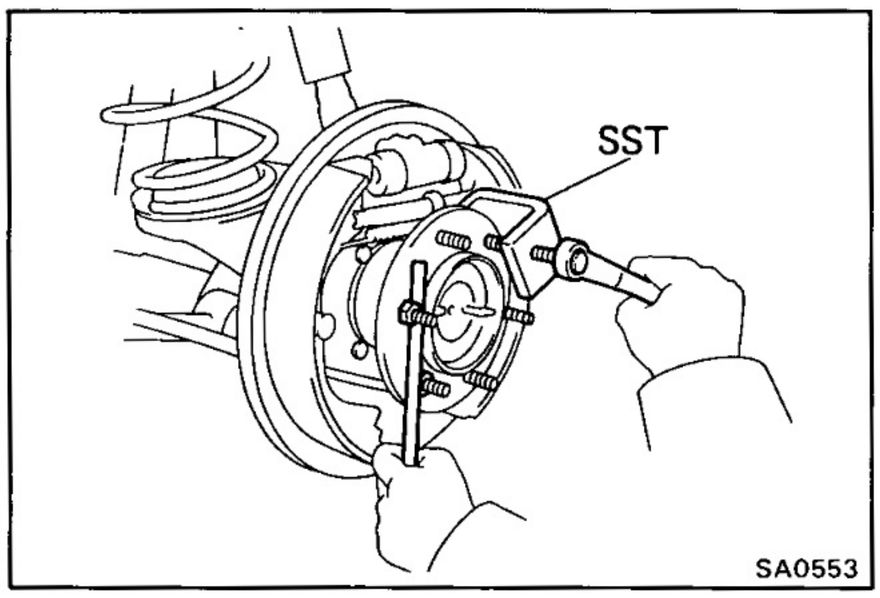

REPLACEMENT OF HUB BOLT

1. JACK UP AND SUPPORT VEHICLE

2. REMOVE WHEEL AND BRAKE DRUM

3. REMOVE HUB BOLT

Using SST, remove the hub bolt.

SST 09650-17011

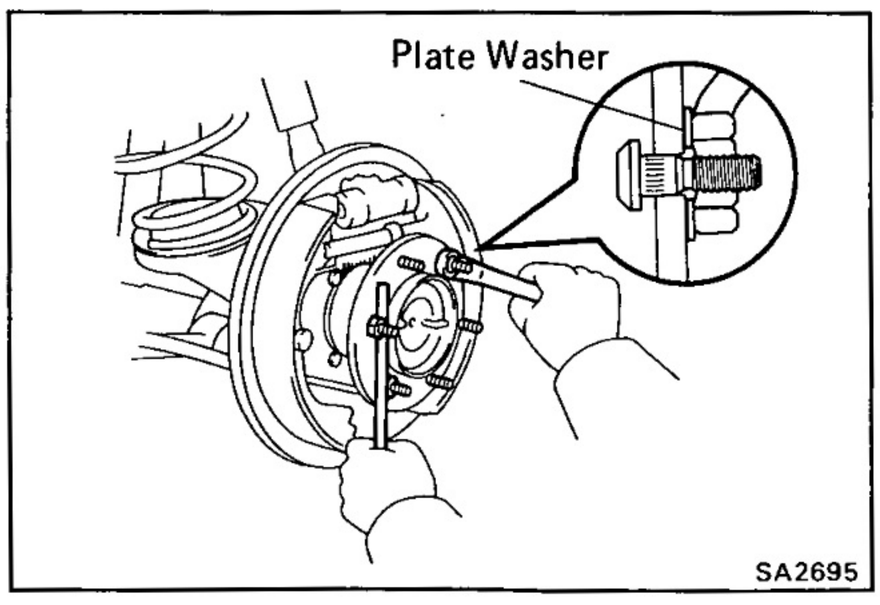

4. INSTALL HUB BOLT

Hold the axle shaft, using plate washers and nuts, install new hub bolts.

5. INSTALL BRAKE DRUM AND WHEEL

6. LOWER VEHICLE

REAR AXLE SHAFT AND AXLE HUB (Full-Floating Type)

COMPONENTS

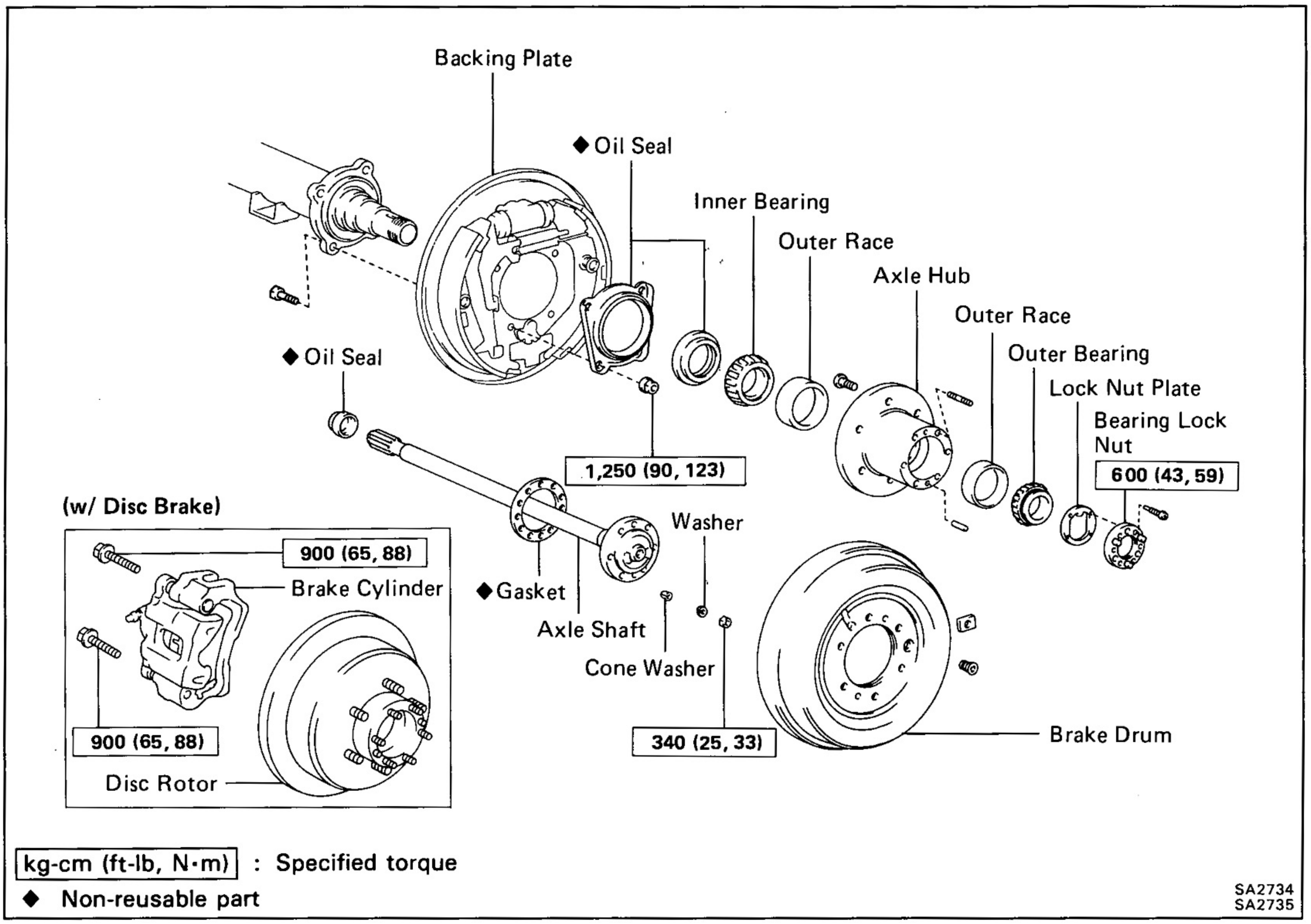

kg-cm (ft-lb, N·m) : Specified torque

◆ Non-reusable part

SA2734
SA2735

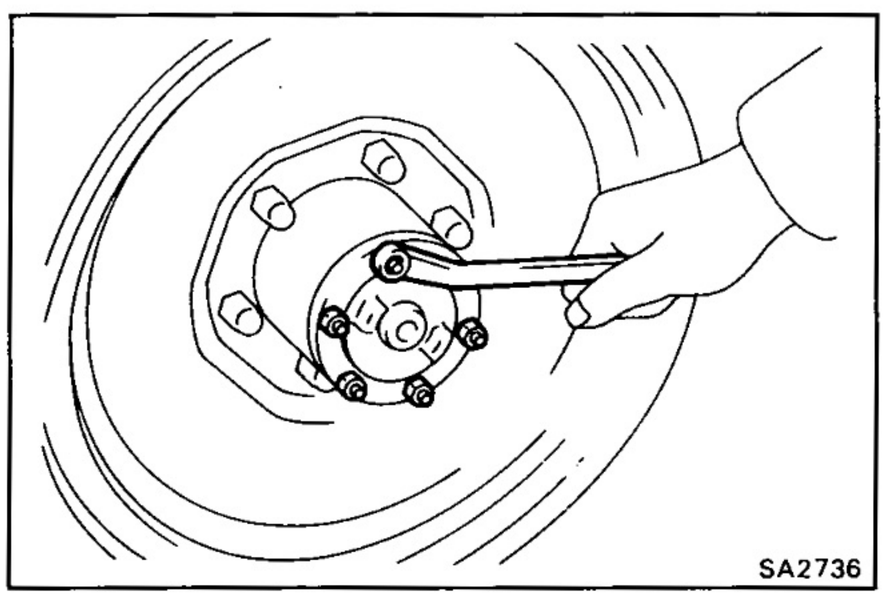

REMOVAL OF REAR AXLE SHAFT

1. REMOVE AXLE SHAFT SET NUT

Remove the six set nuts and washers.

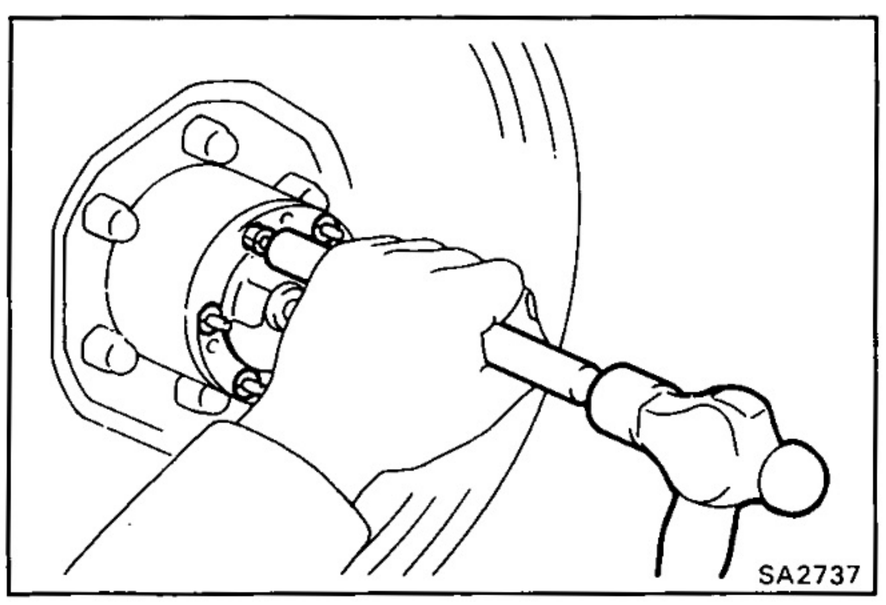

2. REMOVE CONE WASHER

Using a hammer and brass bar, drive on the bolt and remove the six cone washers.

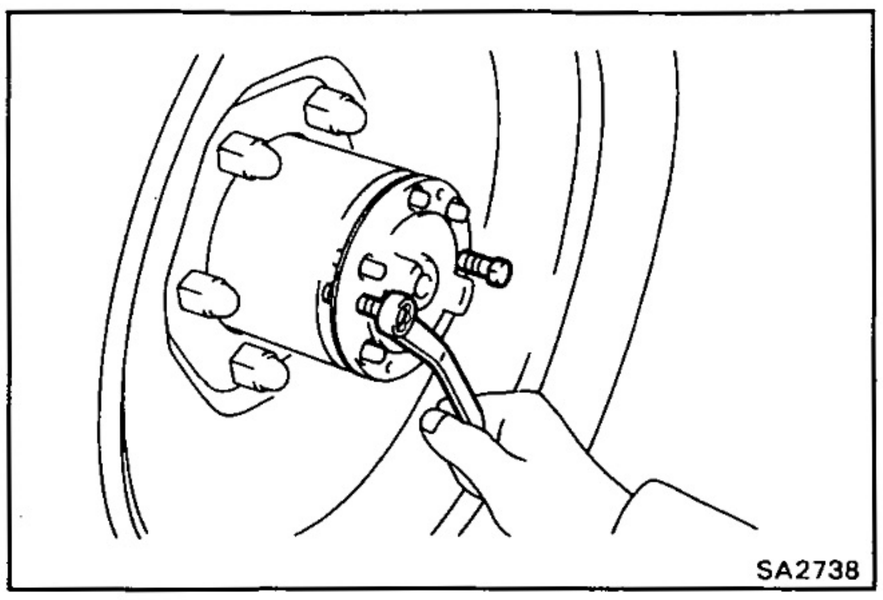

3. REMOVE REAR AXLE SHAFT

(a) Install the two service bolts to the service hole and tighten them.

(b) If the axle shaft separates, remove the two service bolts.

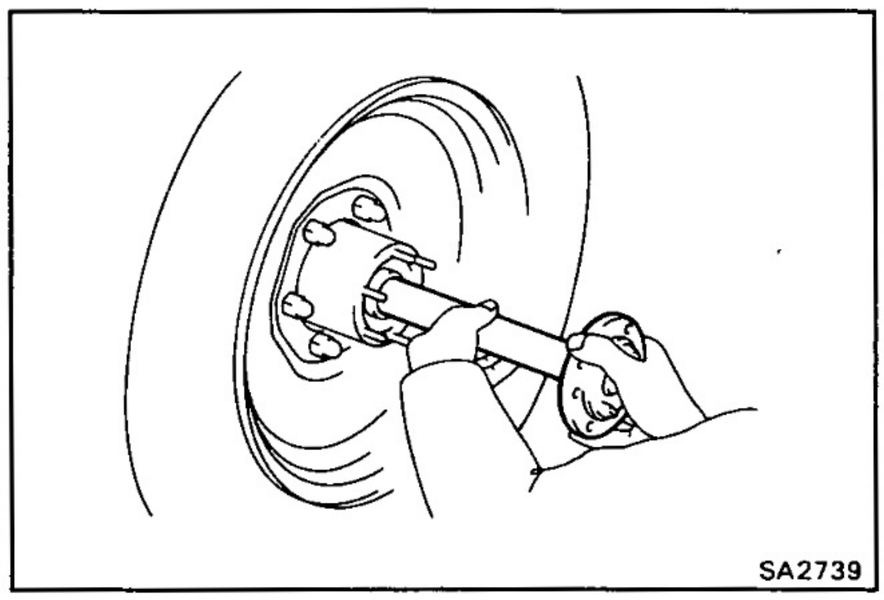

(c) Remove the axle shaft with the gasket.

NOTICE: When pulling out the axle shaft, be careful not to damage the oil seal.

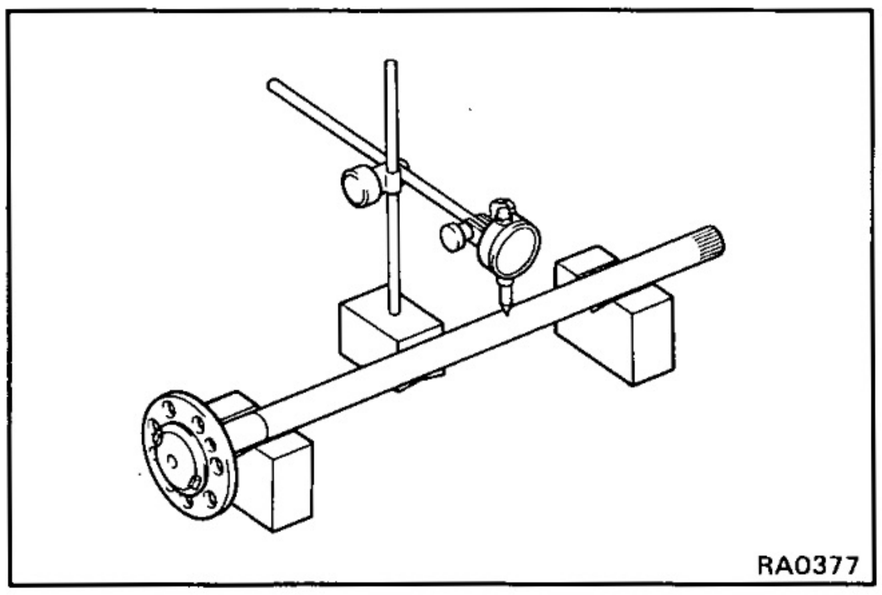

INSPECTION OF REAR AXLE SHAFT COMPONENTS

1. INSPECT REAR AXLE SHAFT

Inspect the rear axle shaft for wear, damage or runout.

Maximum runout: 0.8 mm (0.031 in.)

If the rear axle shaft is damaged or worn, or if runout is greater than maximum, replace the rear axle shaft.

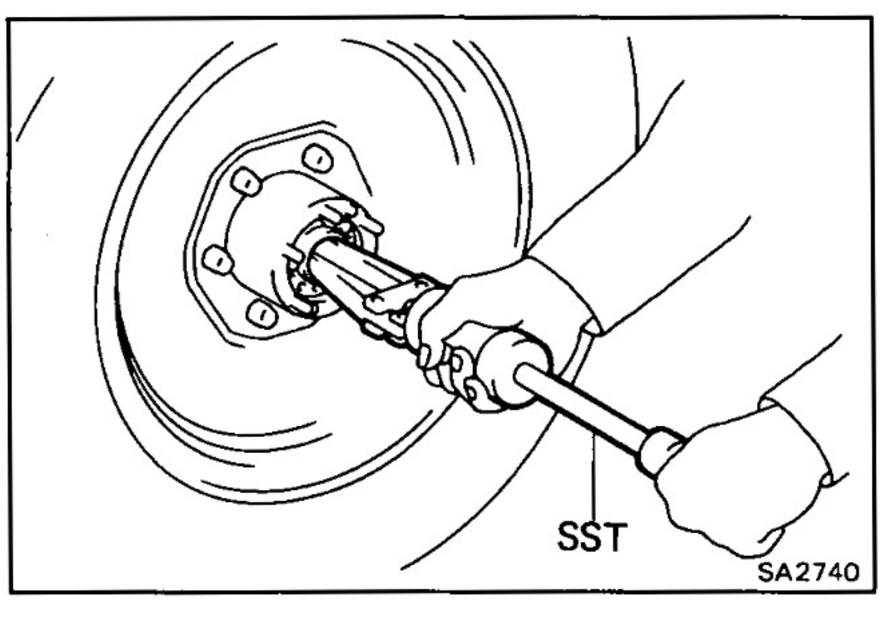

2. INSPECT OIL SEAL FOR WEAR OR DAMAGE

If the oil seal is damaged or worn, replace it.

3. IF NECESSARY, REPLACE OIL SEAL

(a) Using SST, remove the oil seal.

SST 09308-00010

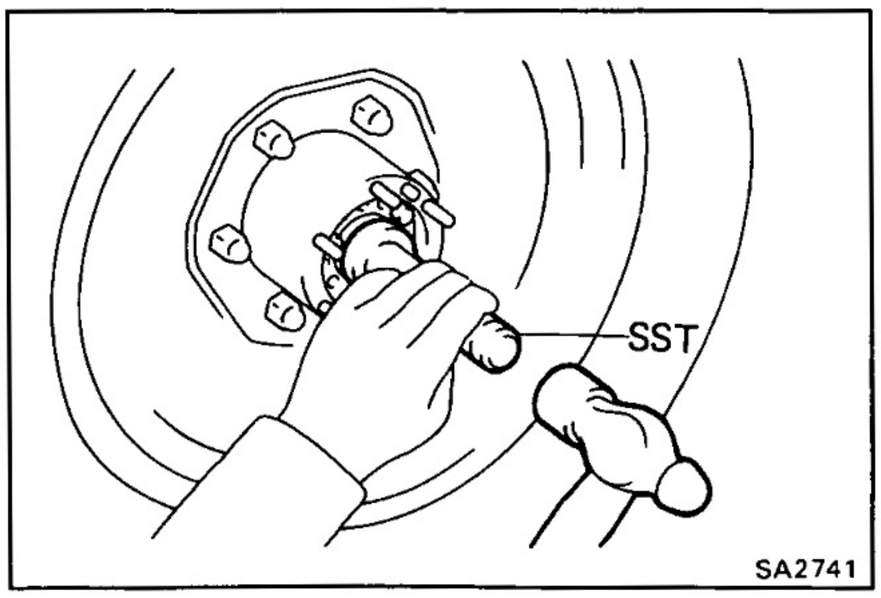

(b) Using SST, drive in a new oil seal.

SST 09517-36010

(c) Apply MP grease to the oil seal lip.

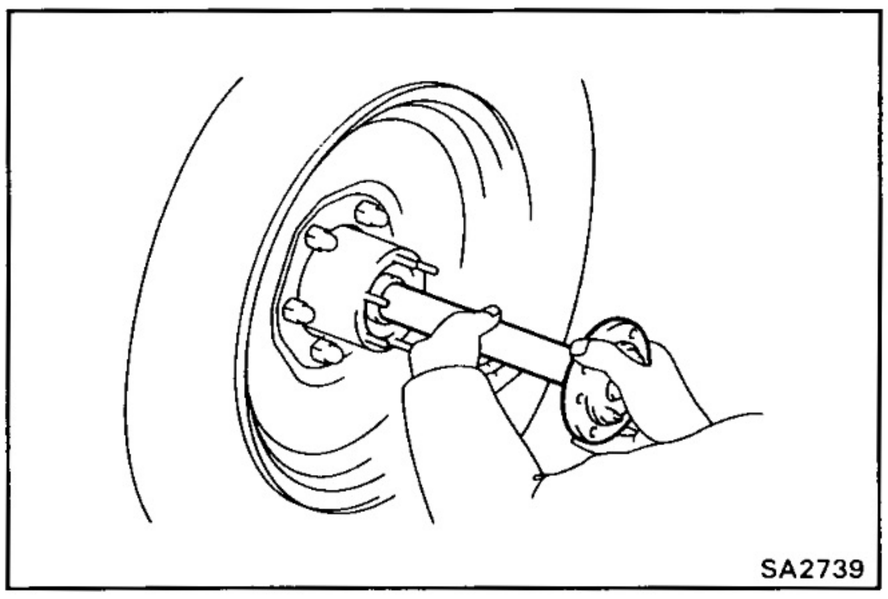
SA2739

INSTALLATION OF REAR AXLE SHAFT

(See page SA-84)

1. APPLY MP GREASE TO OIL SEAL LIP

2. INSTALL NEW GASKET AND INSERT AXLE SHAFT

NOTICE: When inserting the axle shaft, be careful not to damage the oil seal.

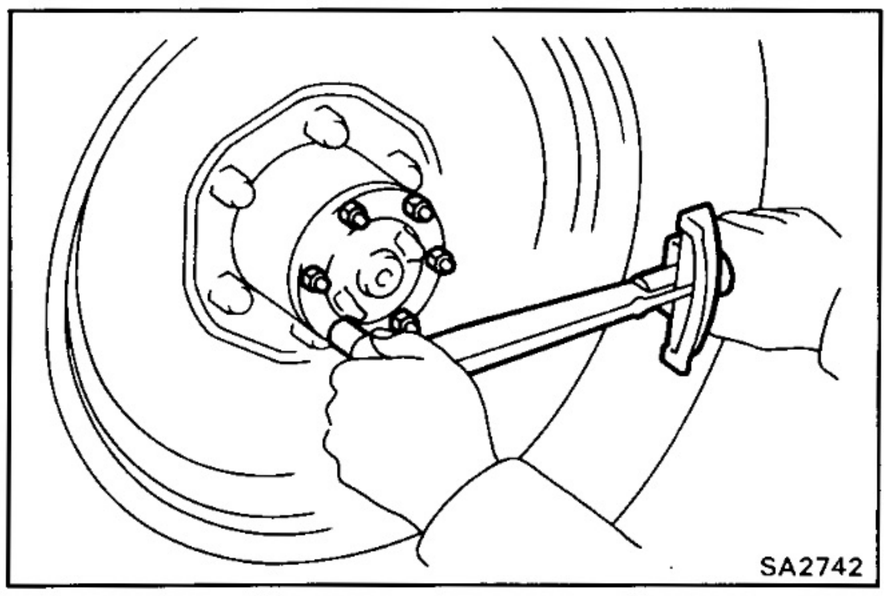
SA2742

3. INSTALL CONE WASHER AND SET NUT

Install the cone washers, spring washers and six nuts. Torque the nuts.

Torque: 340 kg-cm (25 ft-lb, 33 N·m)

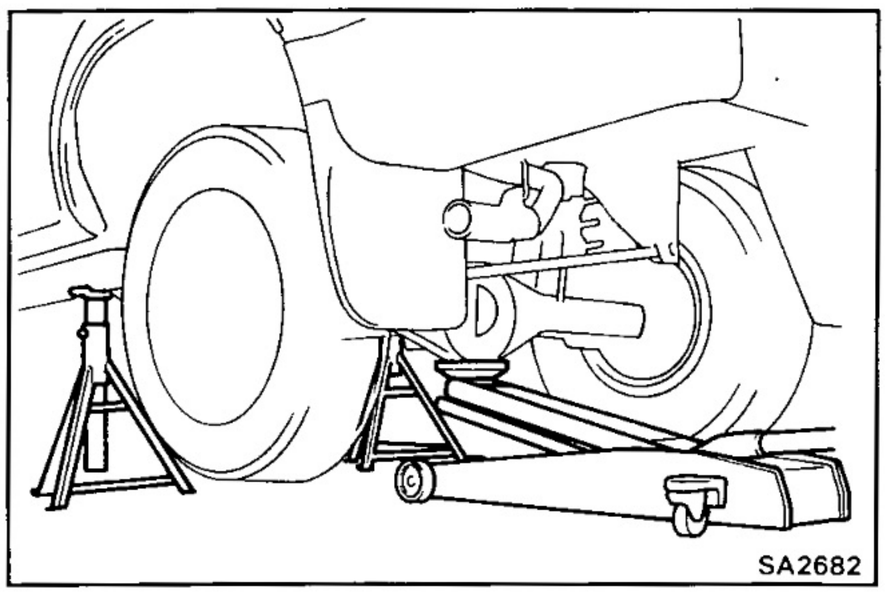
SA2682

REMOVAL OF REAR AXLE HUB

(See page SA-84)

1. JACK UP VEHICLE AND REMOVE WHEEL

2. REMOVE REAR AXLE SHAFT
(See page SA-84)

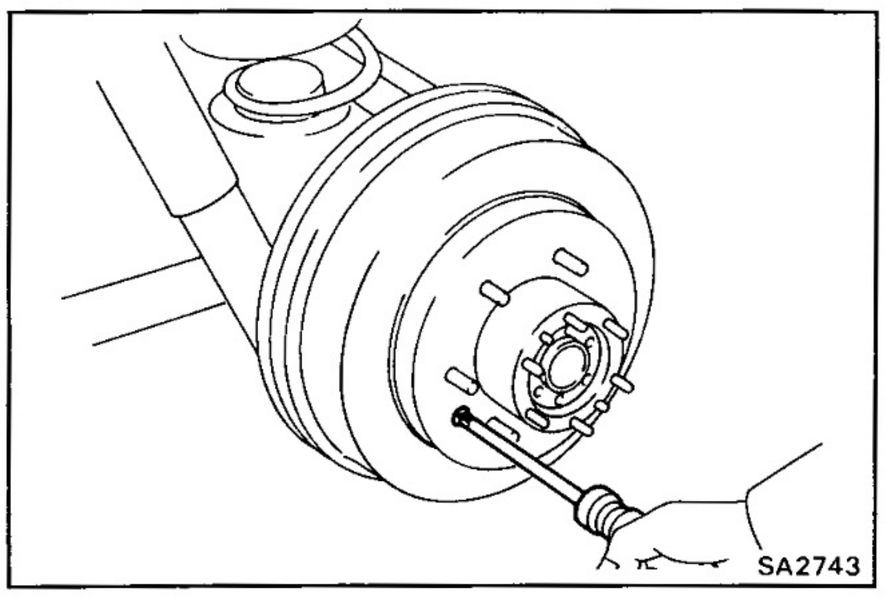
SA2743

3. (w/ DRUM BRAKE TYPE)
REMOVE BRAKE DRUM

(a) Remove the screw from the brake drum.

(b) Remove the brake drum from the axle hub.

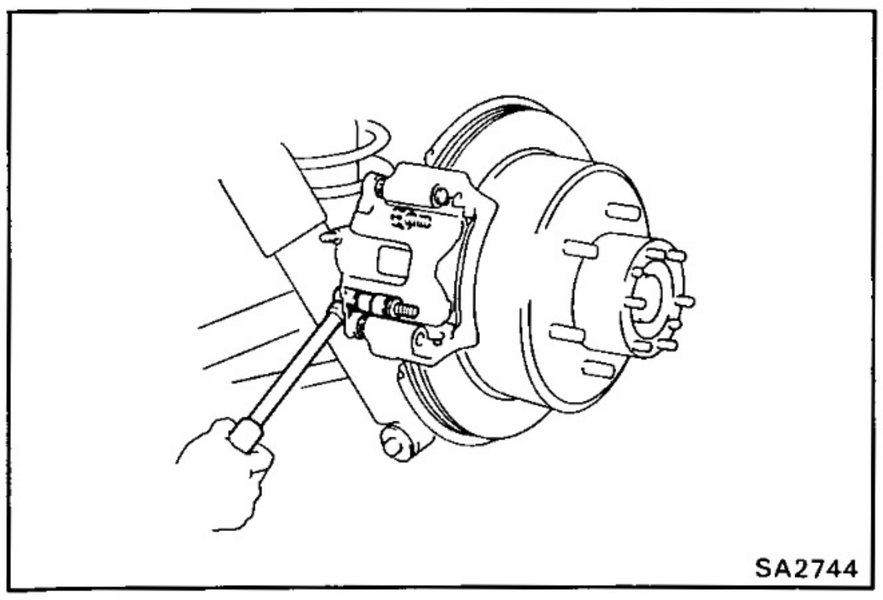
SA2744

4. (w/ DISC BRAKE TYPE)
REMOVE DISC BRAKE ASSEMBLY

Remove the two bolts and the cylinder with torque plate from the rear axle carrier.

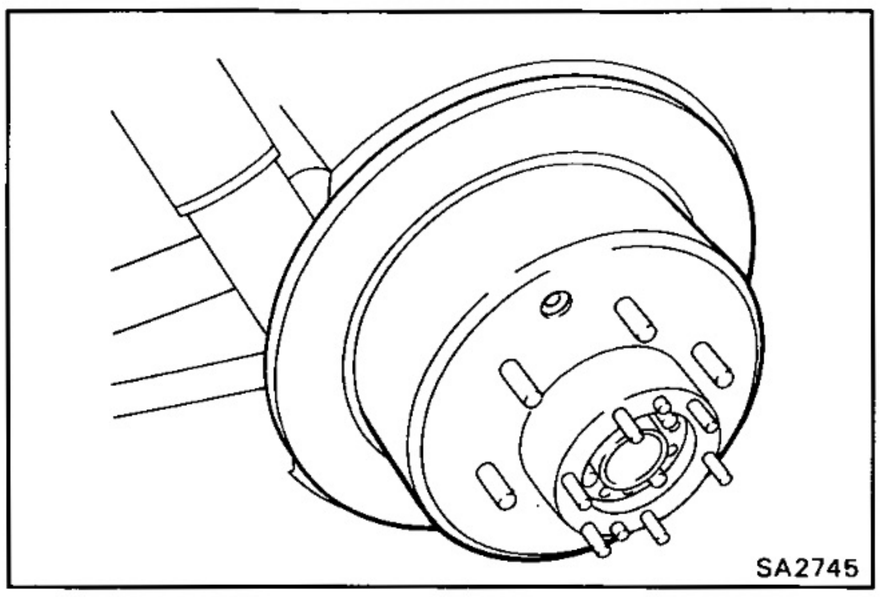

5. (w/ DISC BRAKE TYPE) REMOVE ROTOR DISC

Remove the rotor disc from the axle hub.

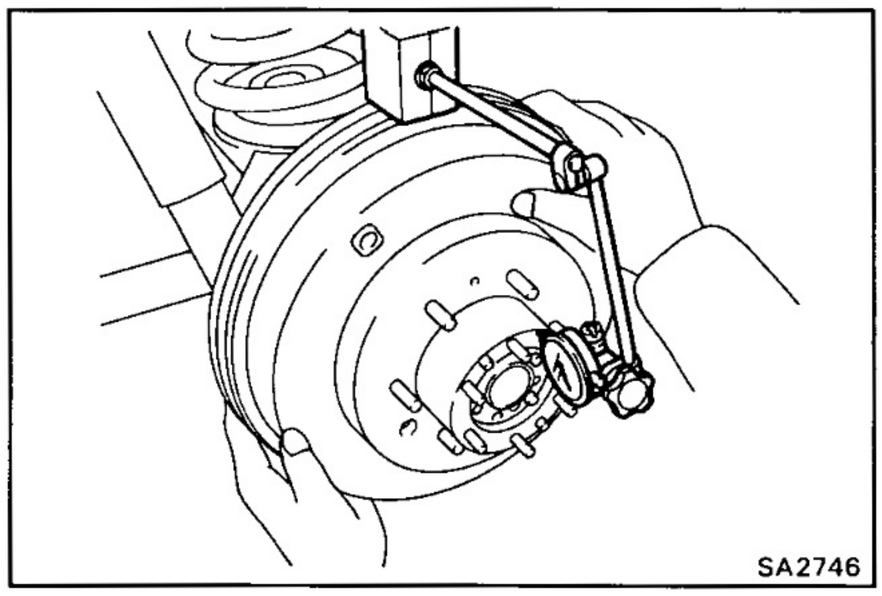

6. REMOVE BEARING LOCK NUT

(a) Check the movement of the drum or the hub.

(b) Check the hub axial play.

Hub axial play: Less than 0.1 mm (0.004 in.)

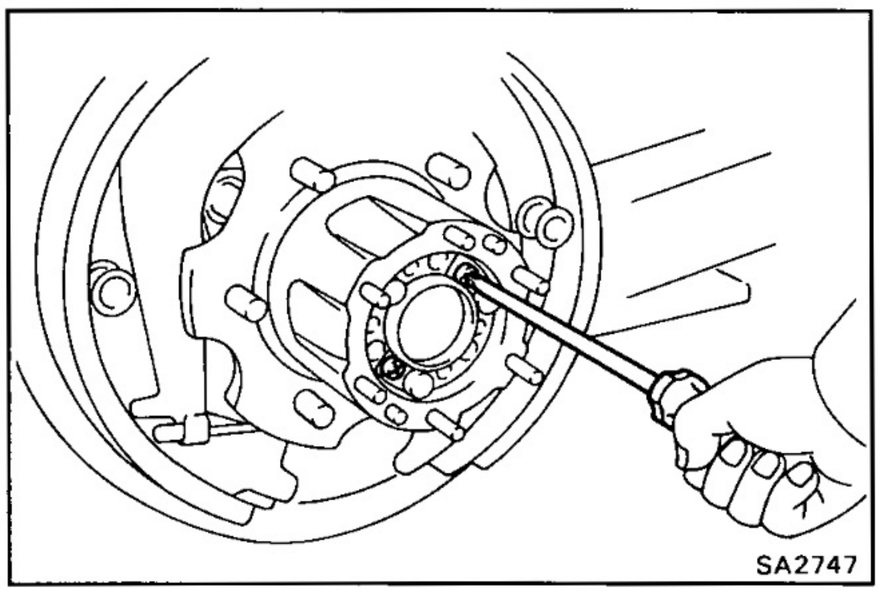

(c) Remove the two lock nut screws.

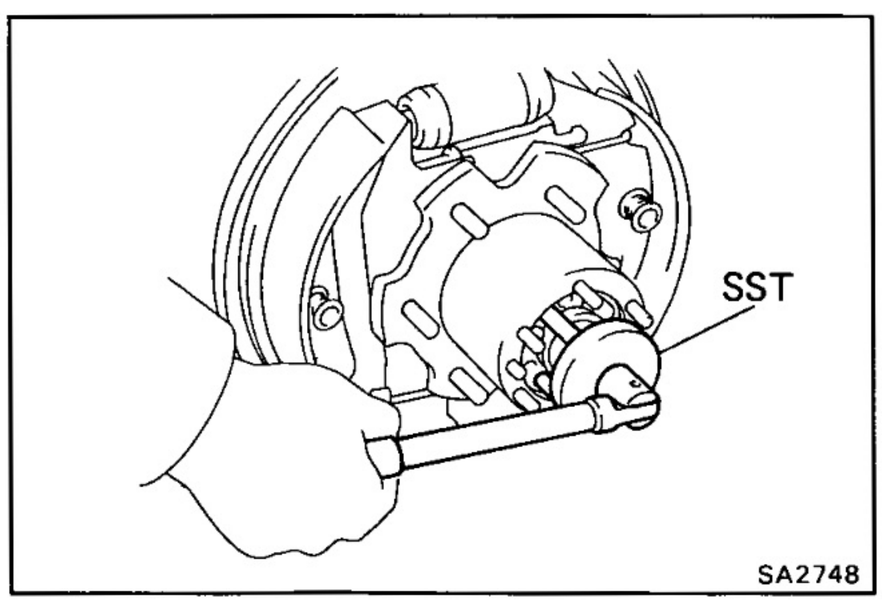

(d) Using SST, remove the lock nut.

SST 09509-25011

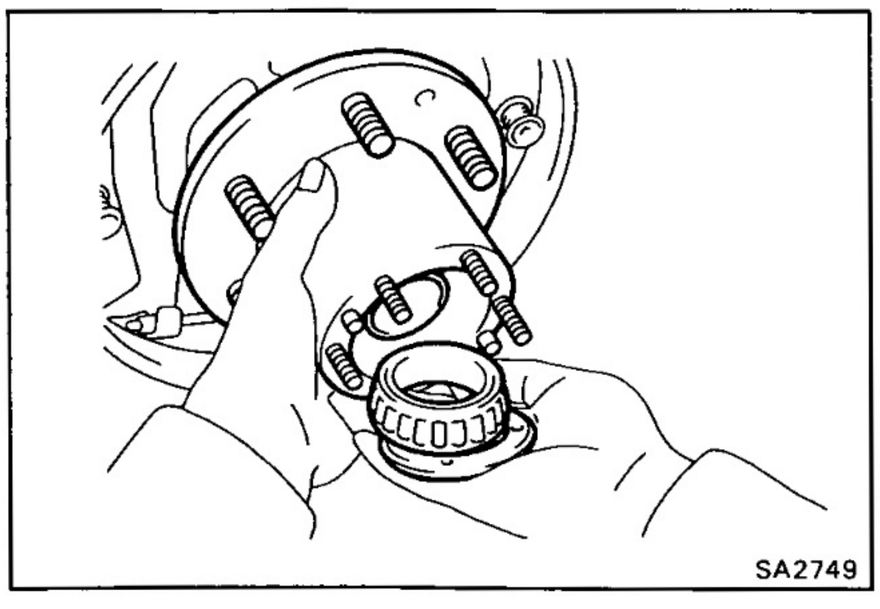

7. REMOVE REAR AXLE HUB

Remove the axle hub with the lock nut plate and outer bearing.

8. REMOVE BACKING PLATE AND OIL SEAL

Remove the four nuts and bolts and remove the oil seal and backing plate.

REPLACEMENT OF AXLE HUB COMPONENTS

1. INSPECT AXLE HOUSING

Using a magnetic flaw detector or flaw detecting penetrant, check for damage or cracks.

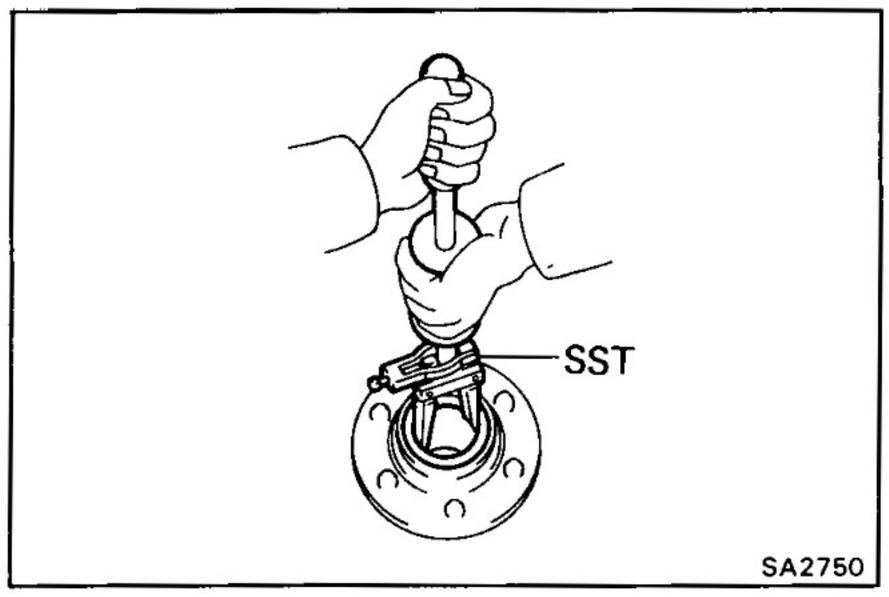

2. REMOVE OIL SEAL AND INNER BEARING

(a) Using SST, remove the oil seal.

SST 09308-00010

(b) Remove the inner bearing from the axle hub.

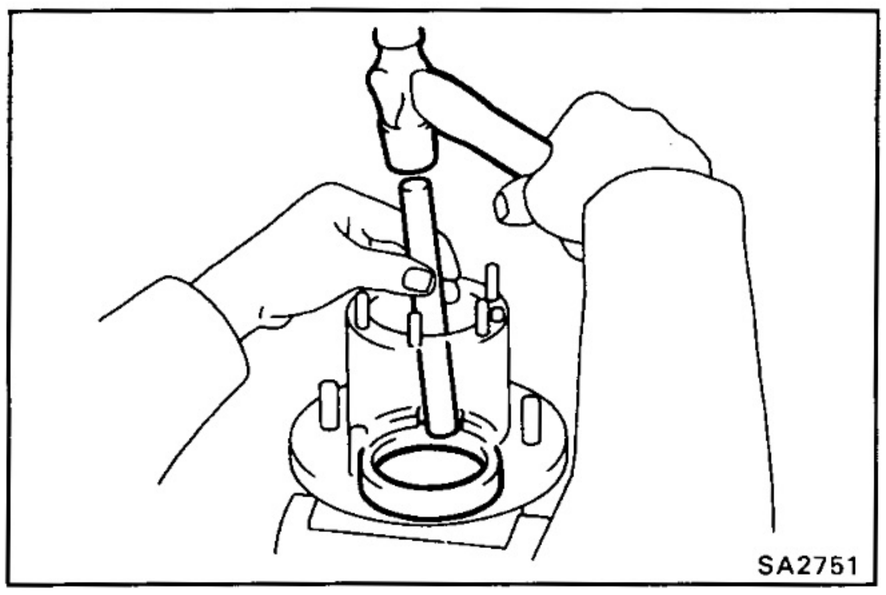

3. REMOVE BEARING OUTER RACE

Using a hammer and brass bar, drive out the bearing outer race from the axle hub.

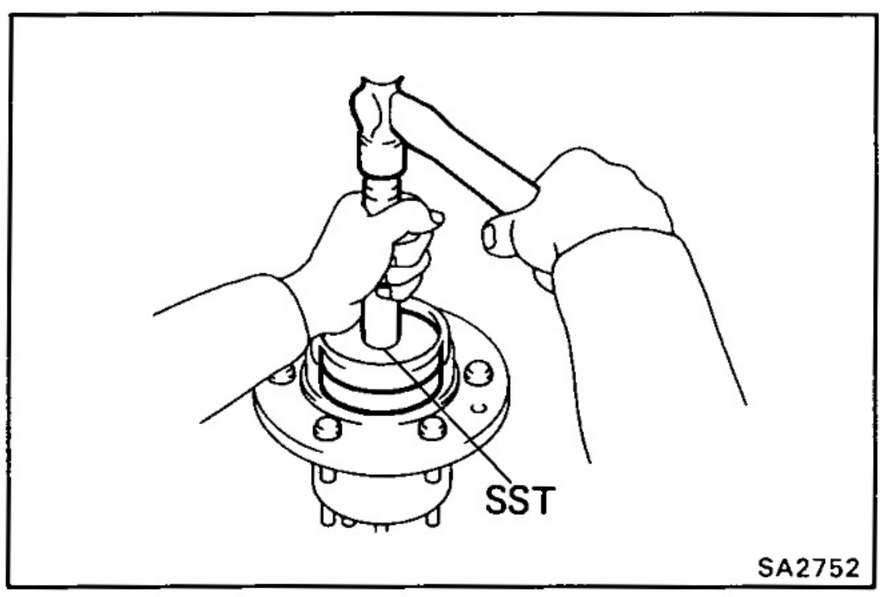

4. INSTALL BEARING OUTER RACE

Using SST, drive in the bearing outer race to the axle hub.

SST 09608-35014
(09608-06020, 09608-06200, 09608-06210)

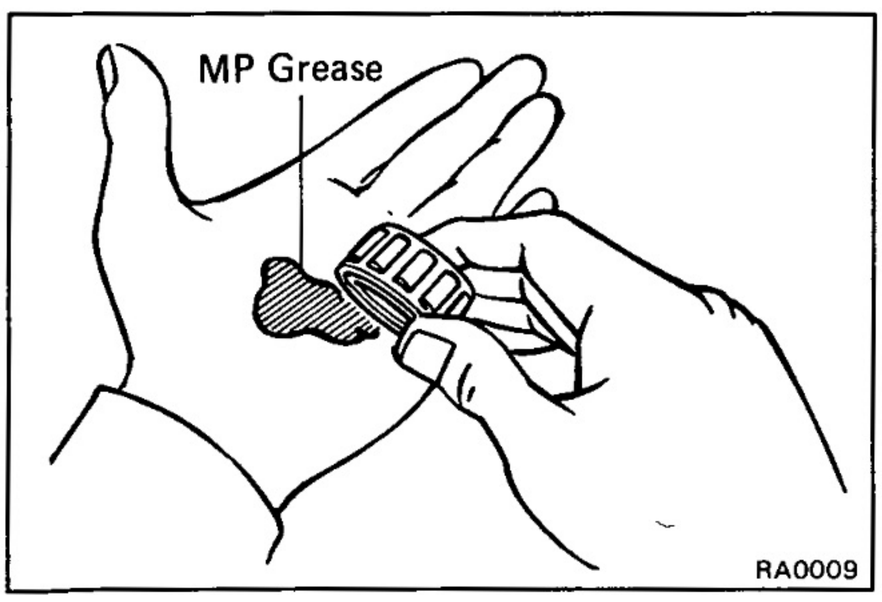

5. COAT BEARING WITH MP GREASE

(a) Place MP grease in the palm of your hand.

(b) Pack grease into the bearing, continuing until the grease oozes out from the other side.

(c) Do the same around the bearing circumference.

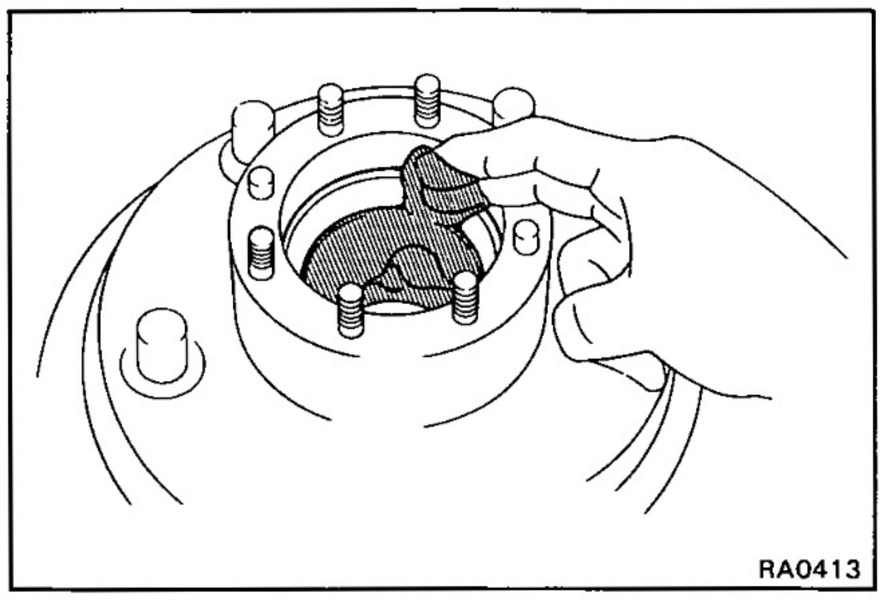

6. COAT INSIDE OF HUB WITH MP GREASE

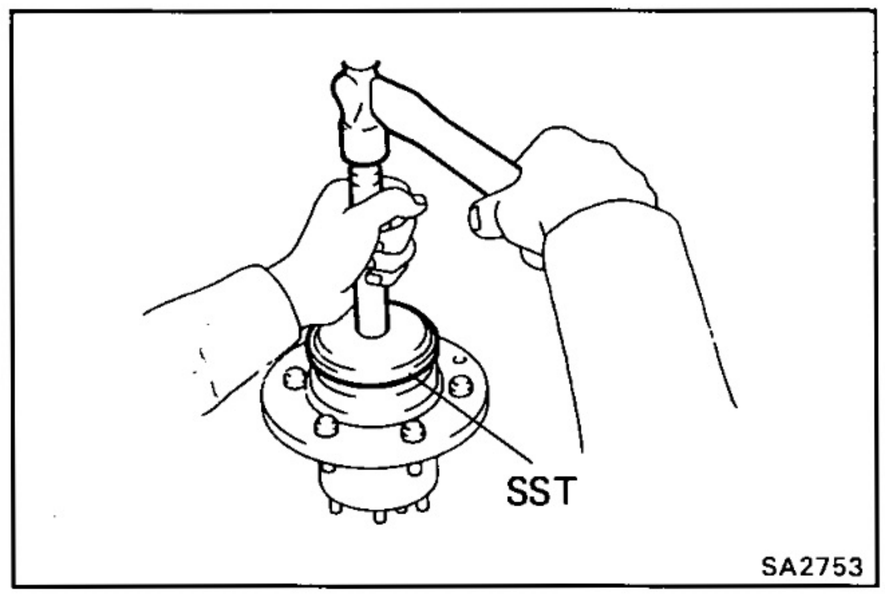

7. INSTALL INNER BEARING AND OIL SEAL

(a) Install the inner bearing to the axle hub.

(b) Using SST, drive in the oil seal to the axle hub.

SST 09608-35014 (09608-06020, 09608-06150)

(c) Coat MP grease to the oil seal lip.

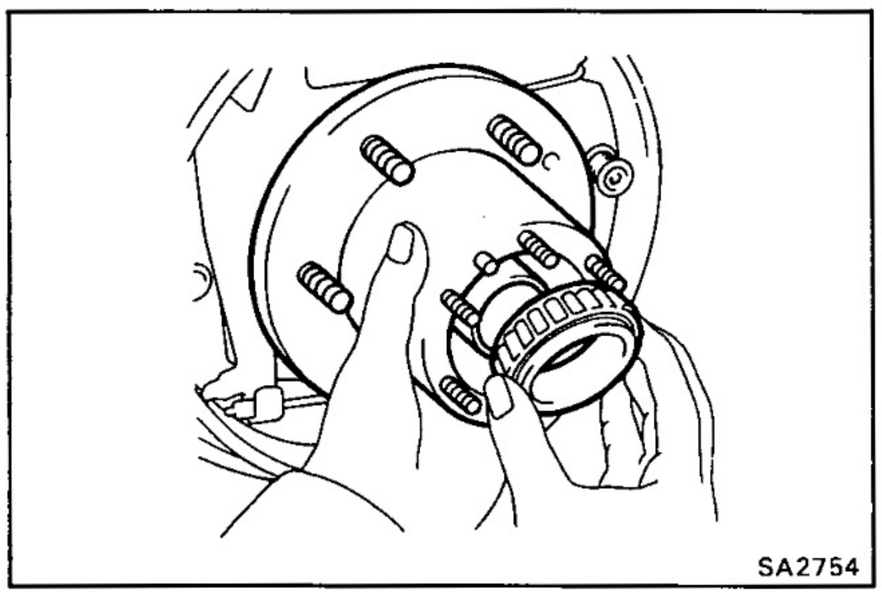

INSTALLATION OF REAR AXLE HUB

(See page SA-84)

1. INSTALL AXLE HUB

(a) Install the backing plate and oil seal to the axle housing with the four bolts and nuts.

(b) Install the axle hub to the axle housing.

NOTICE: Be careful not to damage the oil seal.

(c) Install the outer bearing.

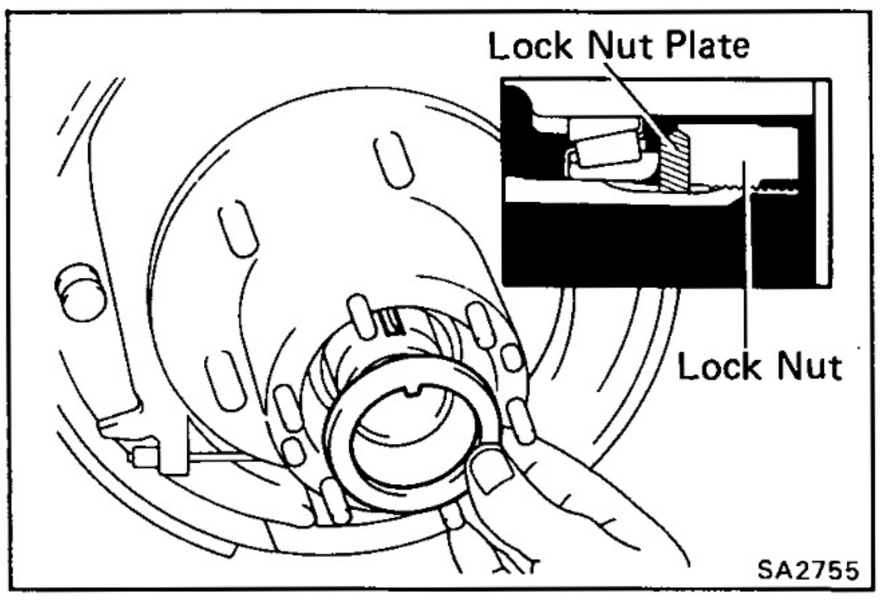

2. INSTALL LOCK NUT PLATE AND BEARING LOCK NUT

(a) After fully pushing in the outer bearing, position the protrusion of the lock nut plate into the axle housing groove.

(b) Temporarily install the bearing lock nut.

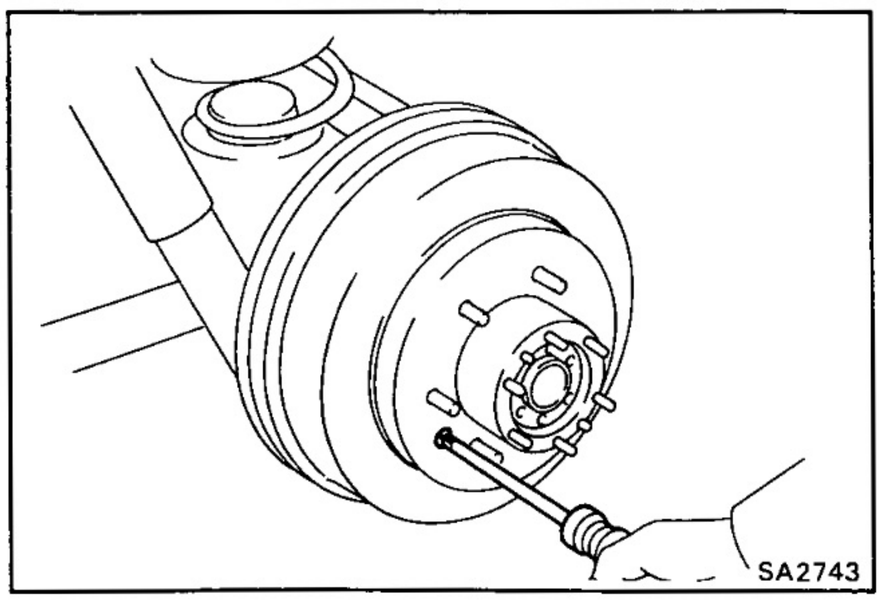

3. (w/ DRUM BRAKE TYPE) INSTALL BRAKE DRUM

(a) Install the brake drum to the axle hub.

(b) Install the screw to the brake drum.

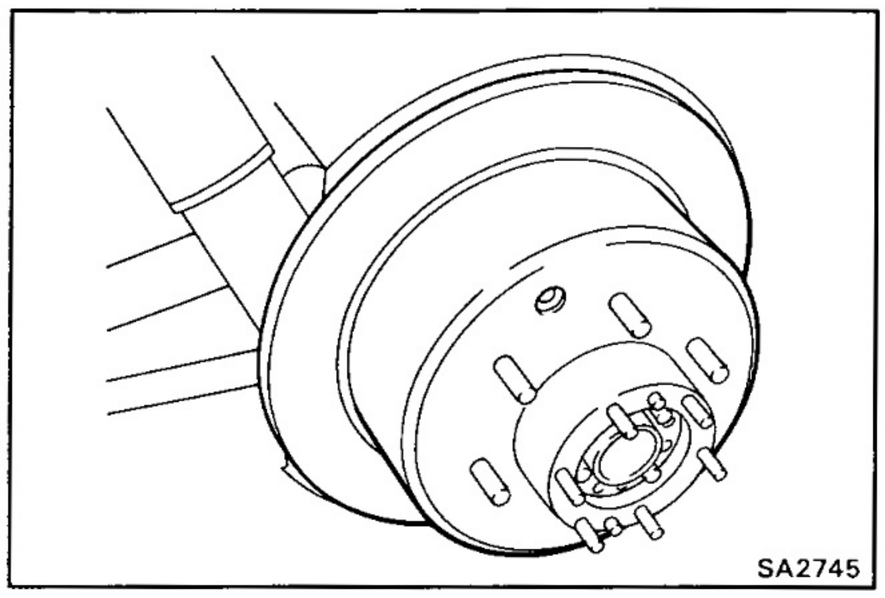

4. (w/ DISC BRAKE TYPE)
INSTALL ROTOR DISC

Install the rotor disc to the axle hub.

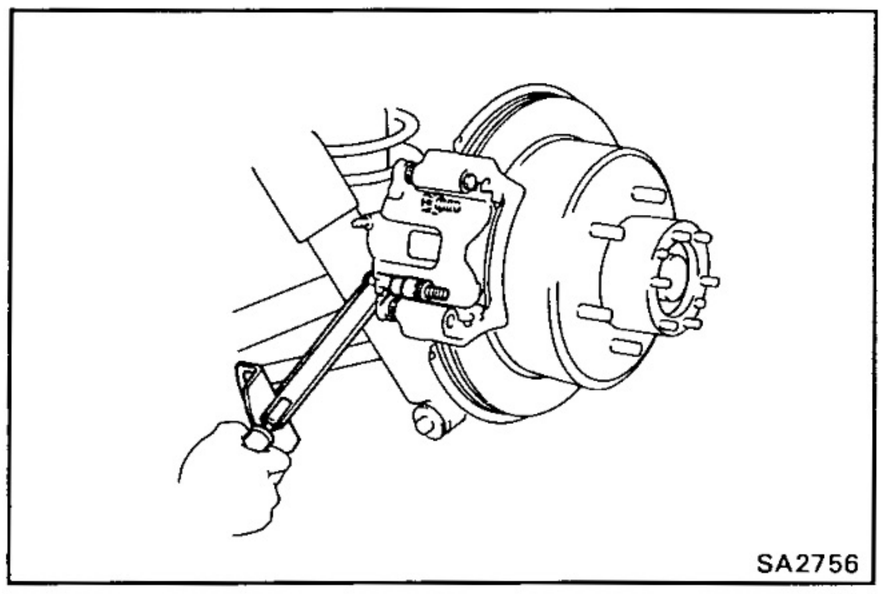

5. (w/ DISC BRAKE TYPE)
INSTALL DISC BRAKE ASSEMBLY

Install the brake cylinder with torque plate to the rear carrier with the two bolts.

Torque: 900 kg-cm (65 ft-lb, 88 N·m)

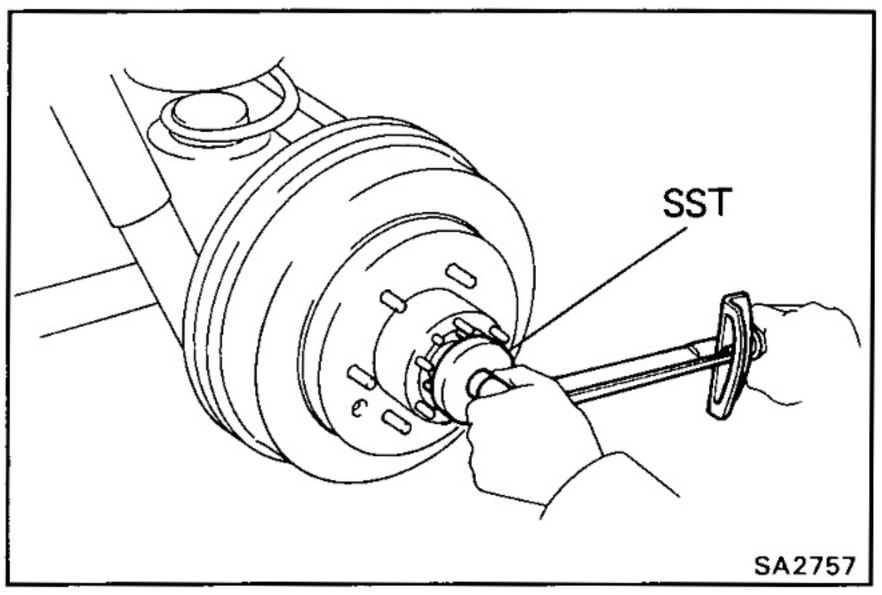

6. ADJUST PRELOAD

(a) Using SST, torque the bearing lock nut.

SST 09509-25011

Torque: 600 kg-cm (43 ft-lb, 59 N·m)

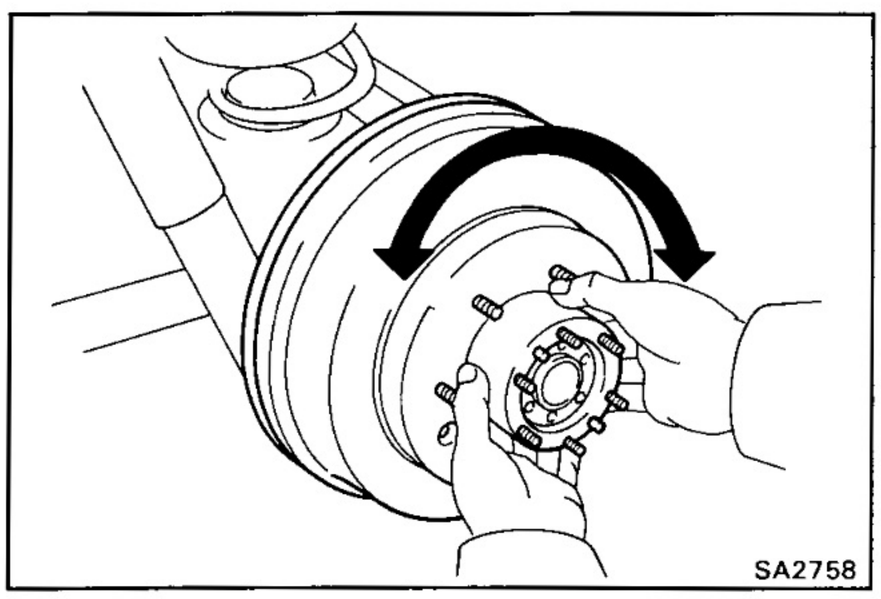

(b) Snug down the bearing by turning the hub several times.

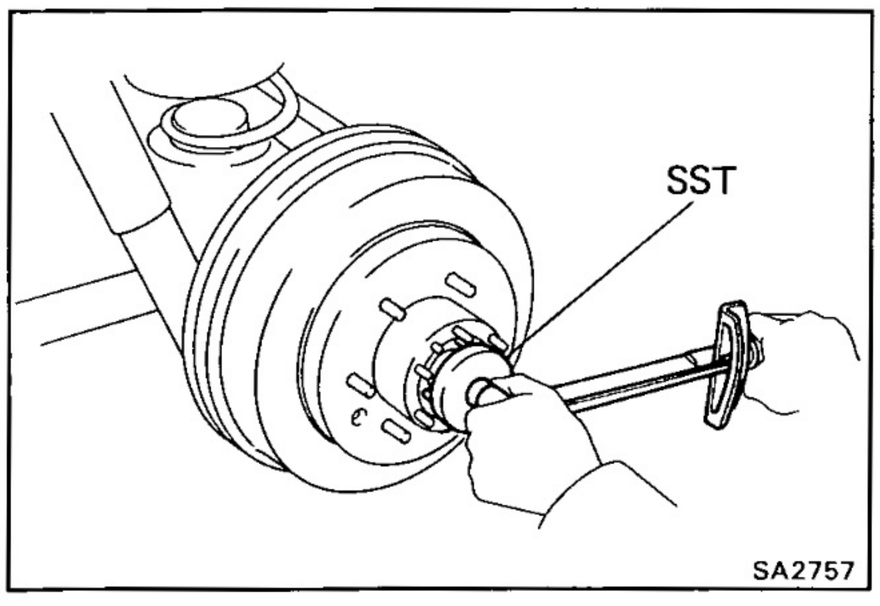

(c) Using SST, retighten the bearing lock nut.

SST 09509-25011

Torque: 600 kg-cm (43 ft-lb, 59 N·m)

(d) Using SST, loosen the bearing lock nut until you can rotate it by hand.

SST 09509-25011

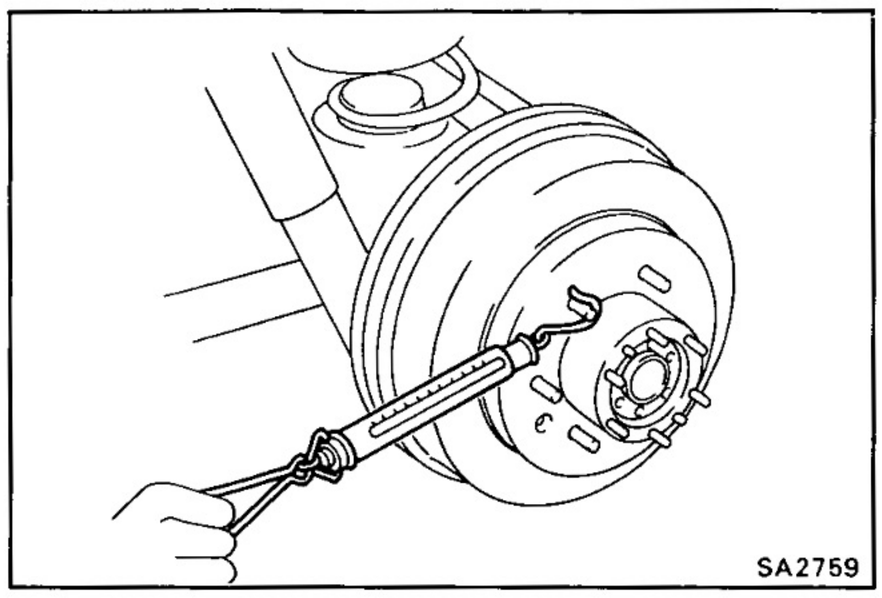

(e) Using a spring tension gauge, measure the frictional force of the oil seal.

Rear wheel bearing preload (at starting):
0.6 — 1.4 kg (1.3 — 7.2 lb, 5.8 — 14 N)

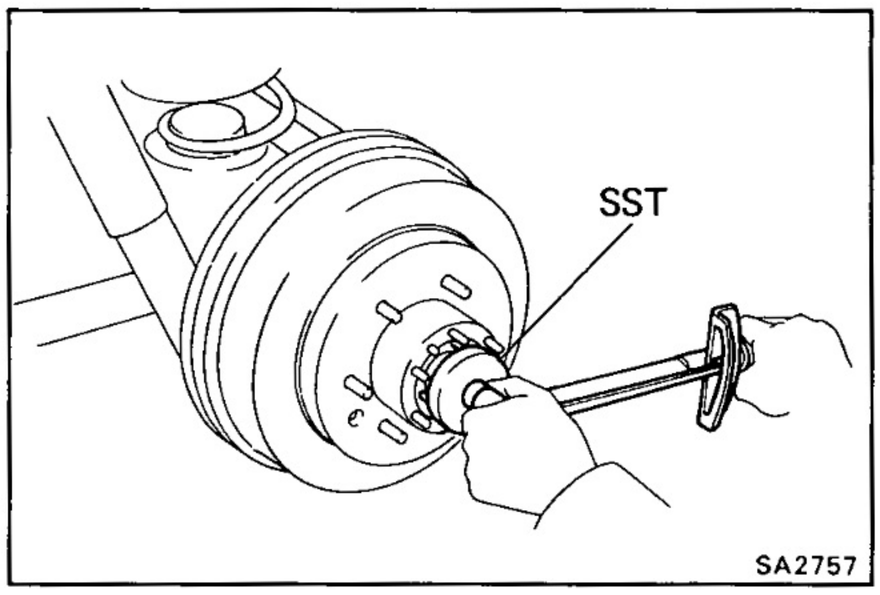

(f) Using SST, retighten the bearing lock nut.

SST 09509-25011

Torque: 600 kg-cm (43 ft-lb, 59 N·m)

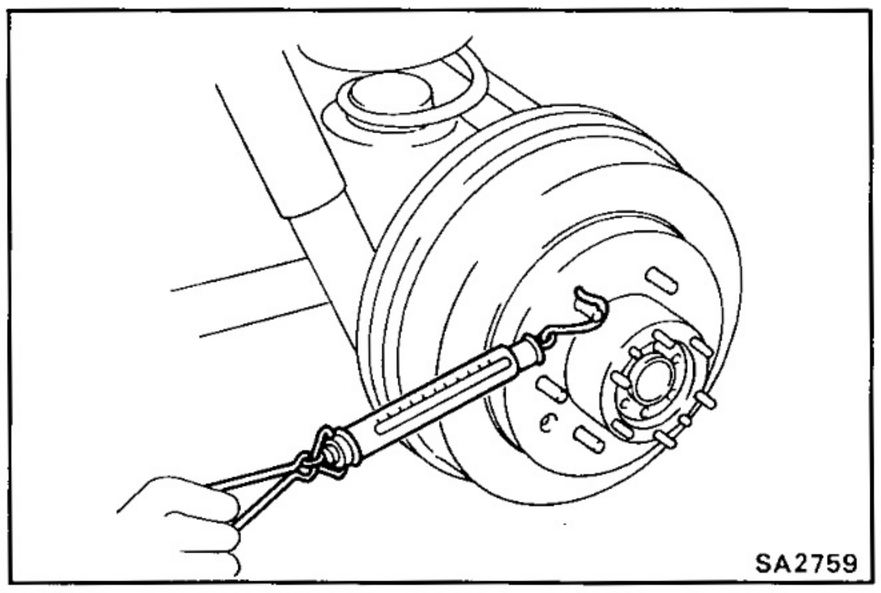

(g) Using a spring tension gauge, measure the preload at the hub bolt.

Rear wheel bearing preload (at starting):
0.6 — 1.4 kg (1.3 — 7.2 lb, 5.8 — 14 N)

If preload is not with in specification, the procedure above must be repeated.

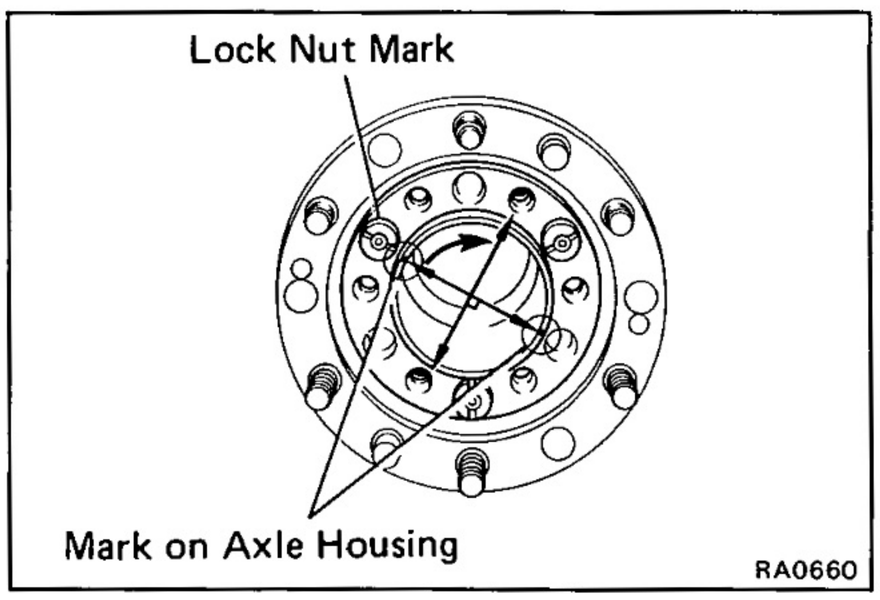

(h) Align the lock nut mark with one of the marks on the axle housing, and place lock screws in the holes at right angles to the lock nut.

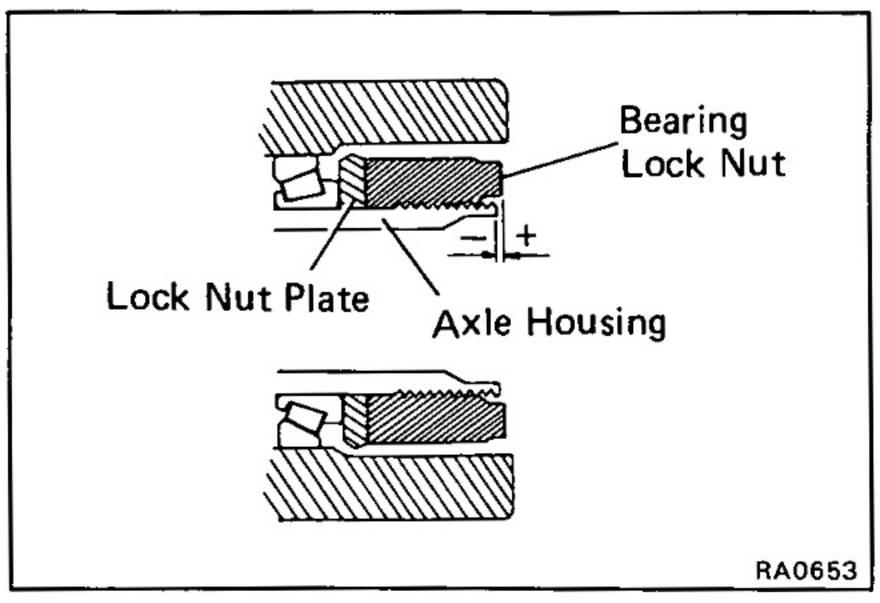

(i) Measure the distance between the top surface of axle housing and the lock nut.

Standard distance: —0.2 — 0.9 mm
(—0.008 — 0.035 in.)

If not within specification, reinstall the axle hub.

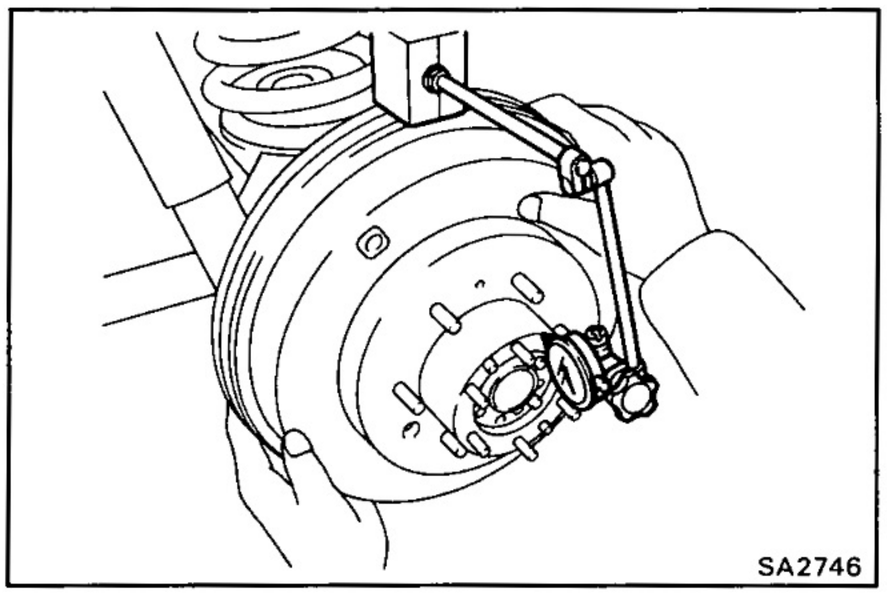
SA2746

(j) Check the movement of the drum.

(k) Check the hub axial play.

Hub axial play: Less than 0.1 mm (0.004 in.)

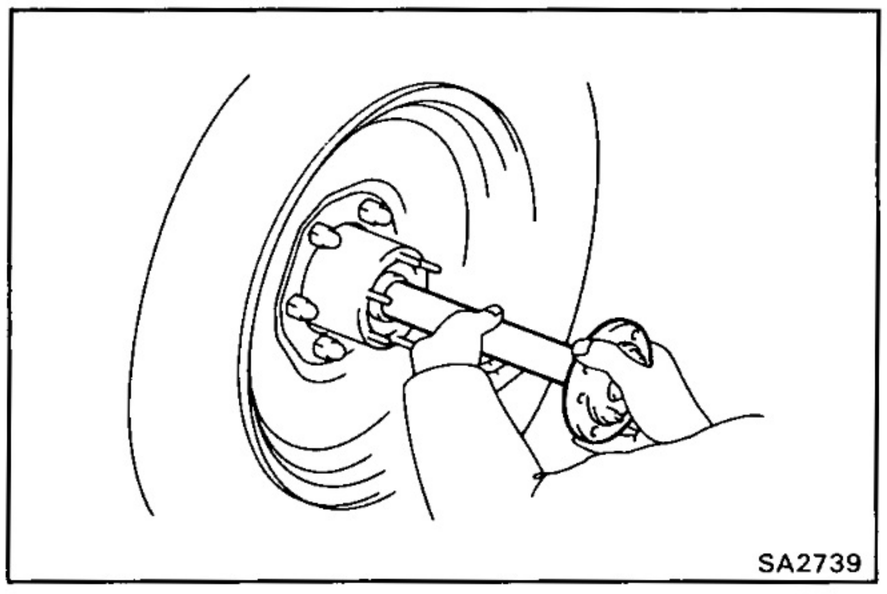
SA2739

6. INSTALL REAR AXLE SHAFT
(See page SA-86)

7. INSTALL WHEEL AND LOWER VEHICLE

REAR DIFFERENTIAL

On-Vehicle Replacement of Front Oil Seal

COMPONENTS

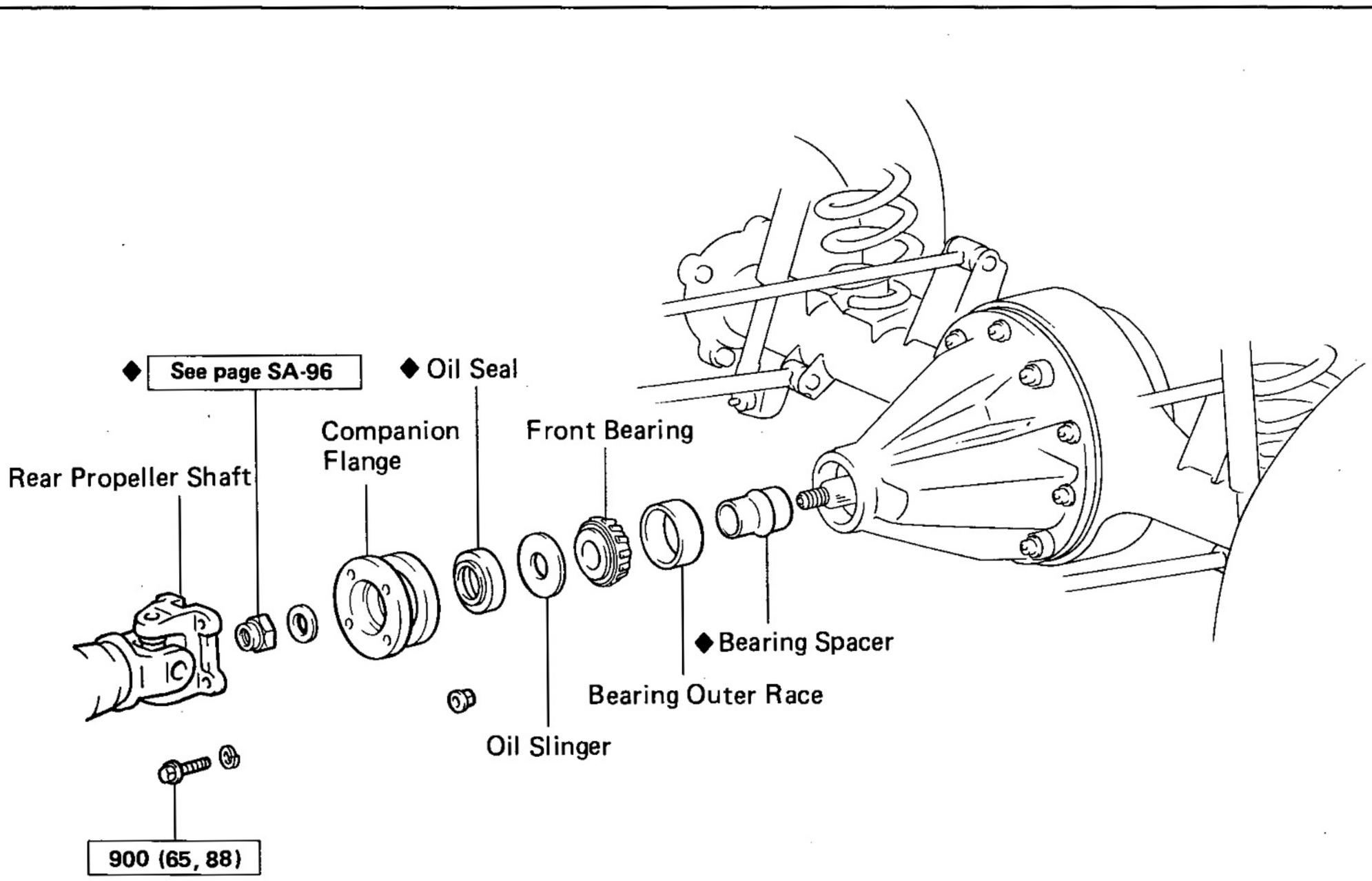

kg-cm (ft-lb, N·m) : Specified torque

◆ Non-reusable part

SA2273

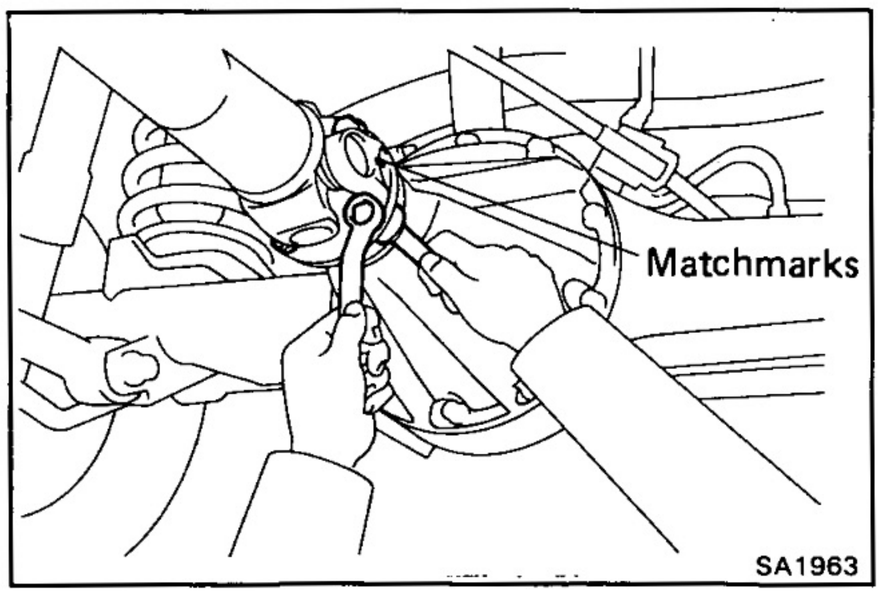

SA1963

1. **DISCONNECT REAR PROPELLER SHAFT**
   (a) Place matchmarks on the flanges.
   (b) Remove the four bolts and nuts.

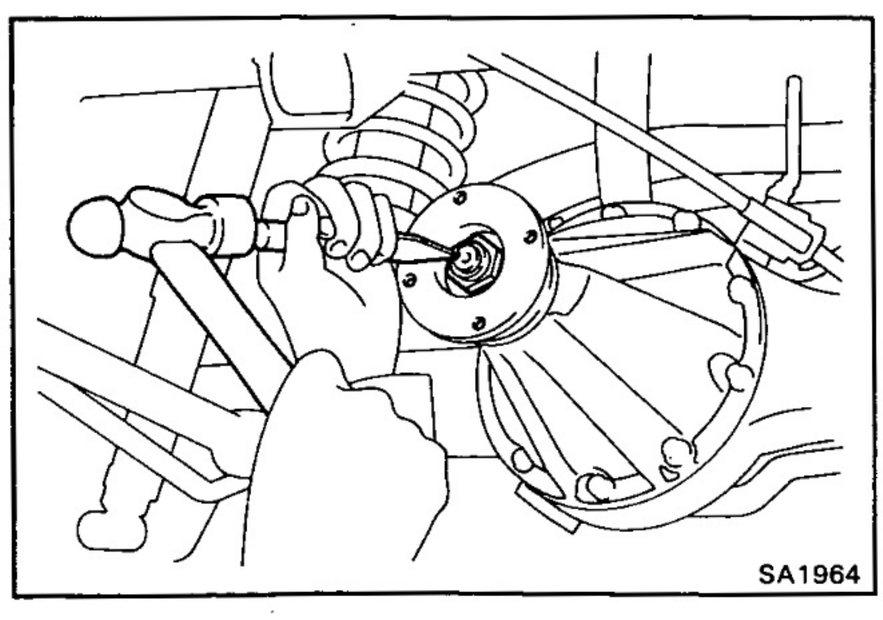

SA1964

2. **REMOVE COMPANION FLANGE**
   (a) Using a chisel and hammer, loosen the staked part of nut.

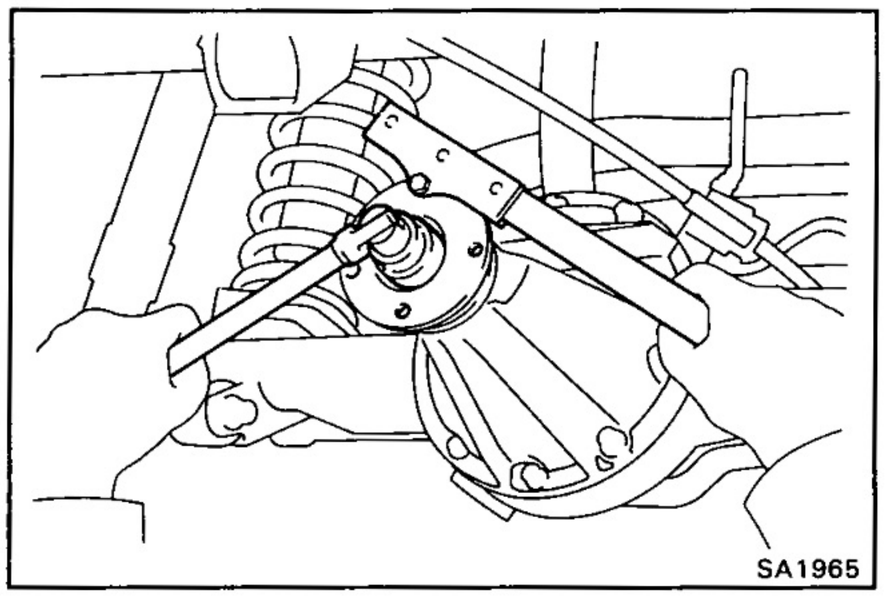

(b) Using SST to hold the flange, remove the nut and plate washer.

SST 09330-00021

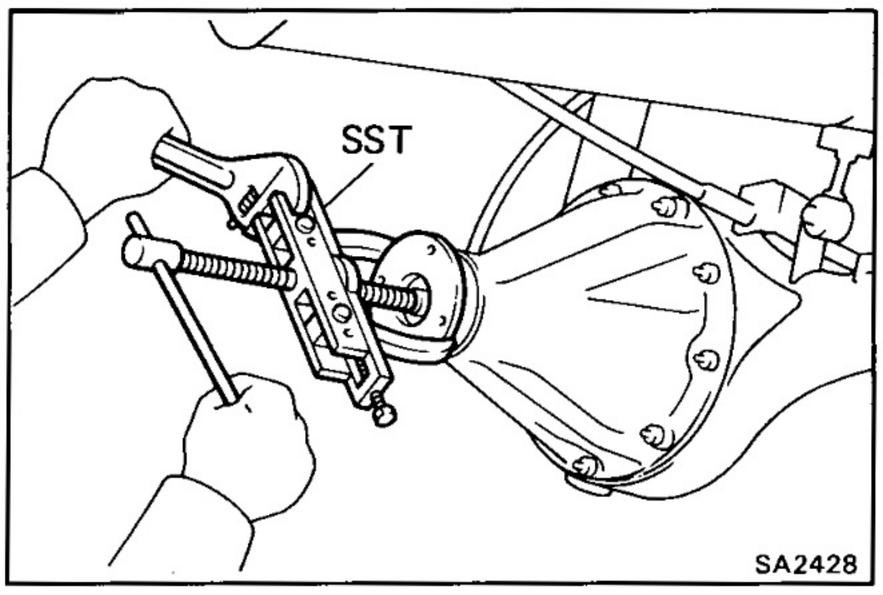

(c) Using SST, remove the companion flange.

SST 09950-20017

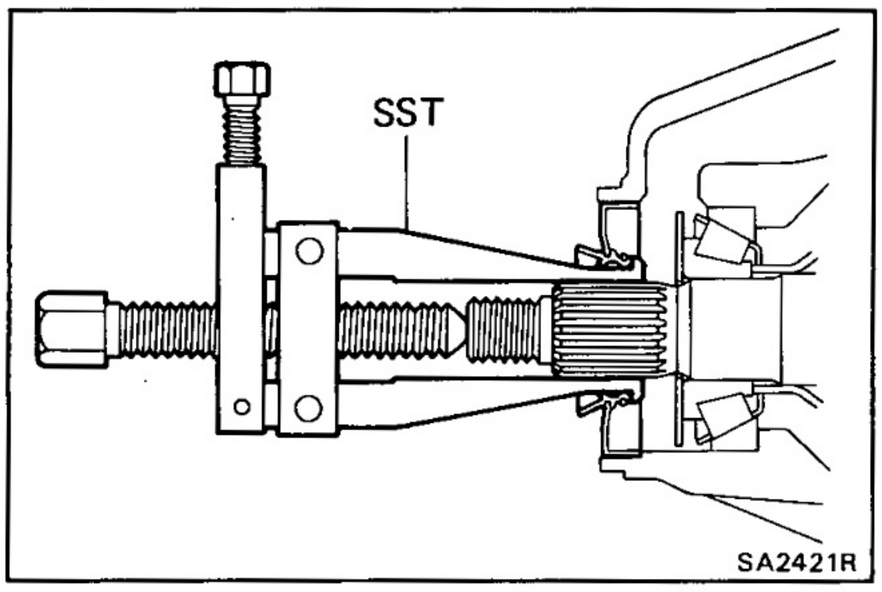

3. REMOVE OIL SEAL AND OIL SLINGER

(a) Using SST, remove the oil seal.

SST 09308-10010

(b) Remove the oil slinger.

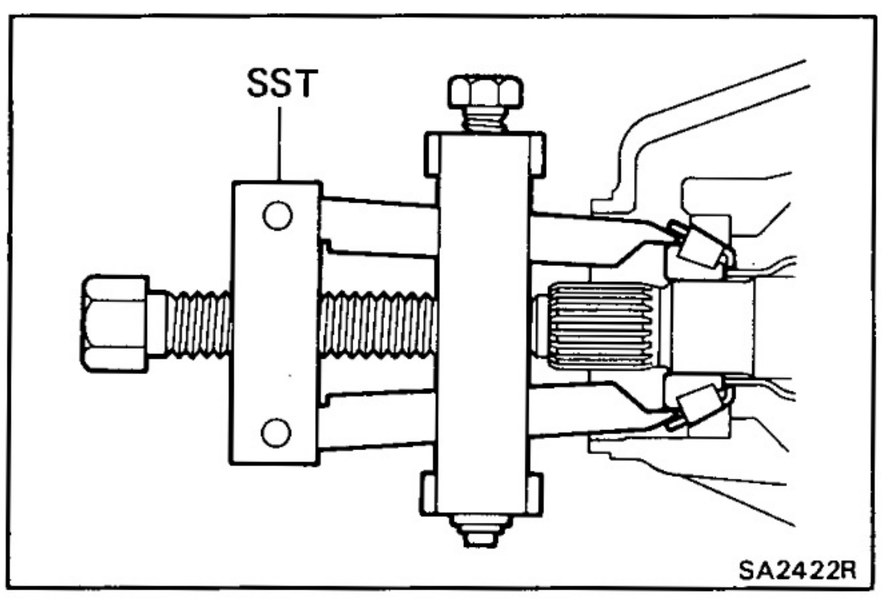

4. REMOVE FRONT BEARING

Using SST, remove the front bearing.

SST 09556-22010

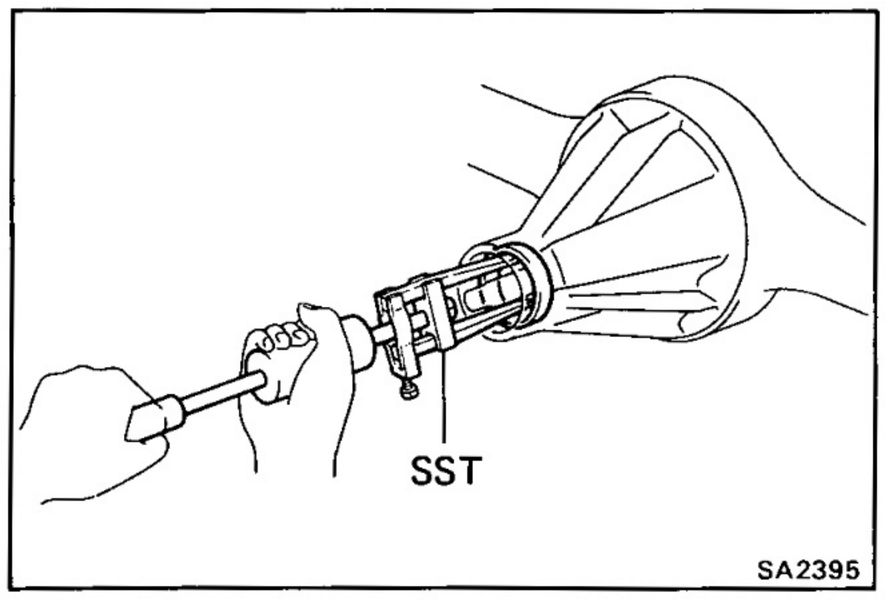

5. REMOVE BEARING OUTER RACE

Using SST, remove the bearing outer race.

SST 09308-00010

NOTICE: Do not scratch the taper surface of the outer race.

6. REMOVE BEARING SPACER

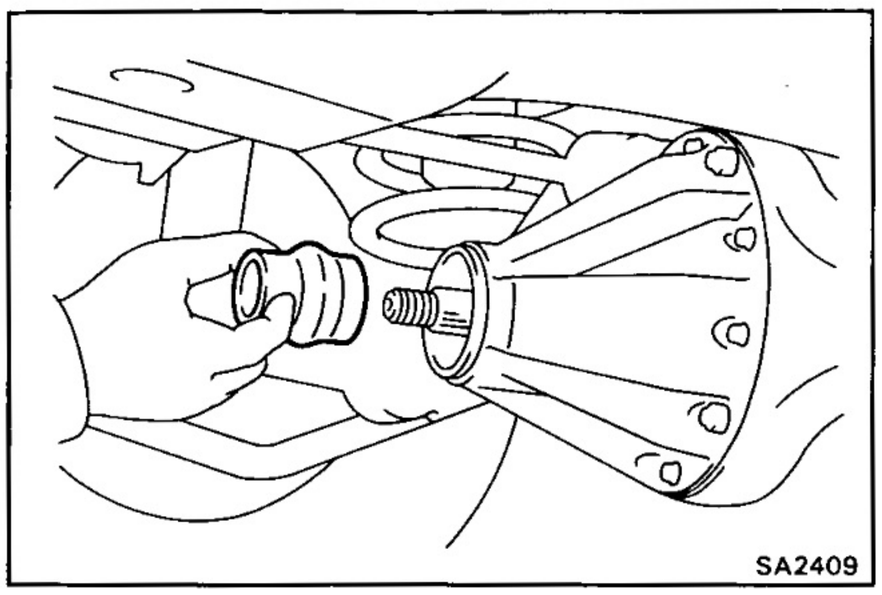

7. INSTALL NEW BEARING SPACER

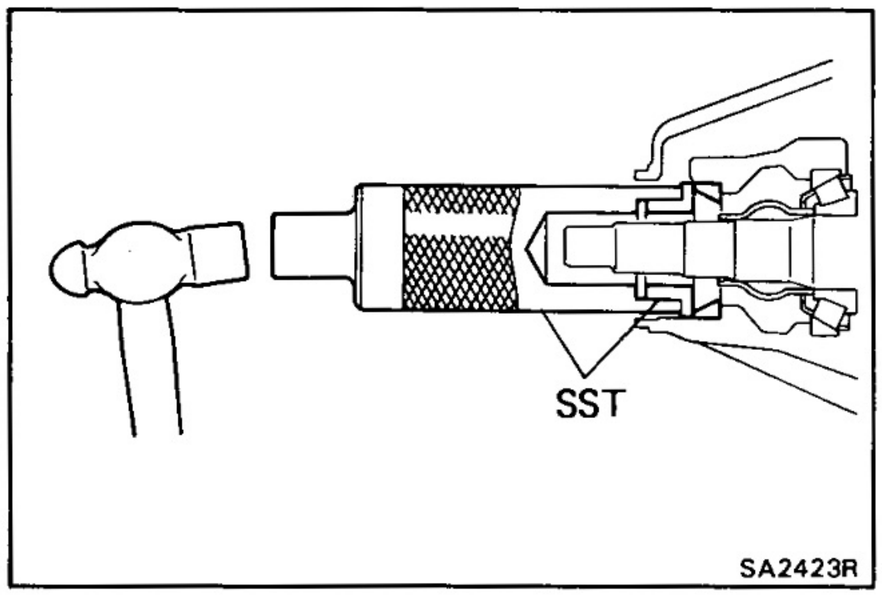

8. INSTALL BEARING OUTER RACE

Using SST, drive in bearing outer race.

SST 09316-60010 (09316-00010, 09316-00020)

9. INSTALL FRONT BEARING

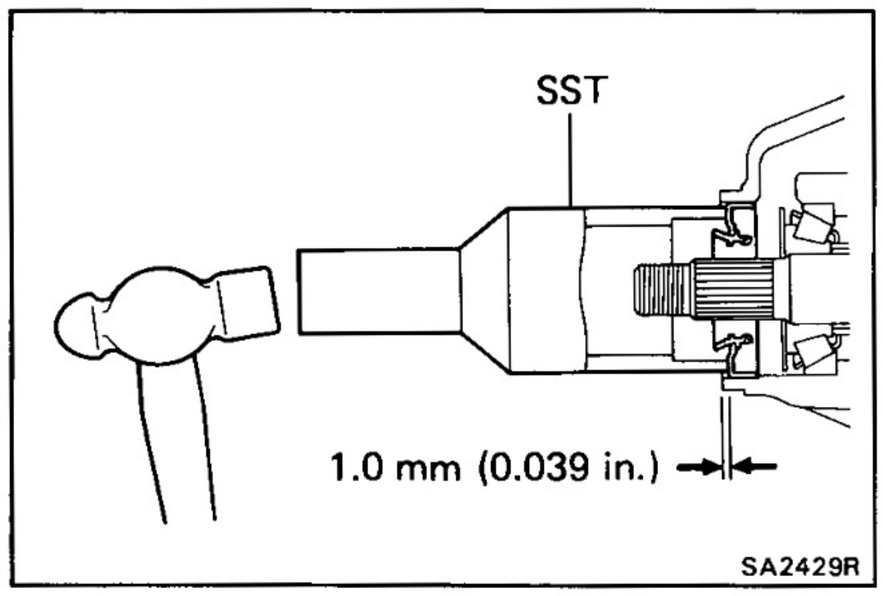

10. INSTALL OIL SLINGER AND NEW OIL SEAL

(a) Install the oil slinger facing as shown.

(b) Using SST, drive in a new oil seal as shown.

SST 09214-76011

Oil seal drive in depth: 1.0 mm (0.039 in.)

(c) Coat the lip of the oil seal with MP grease.

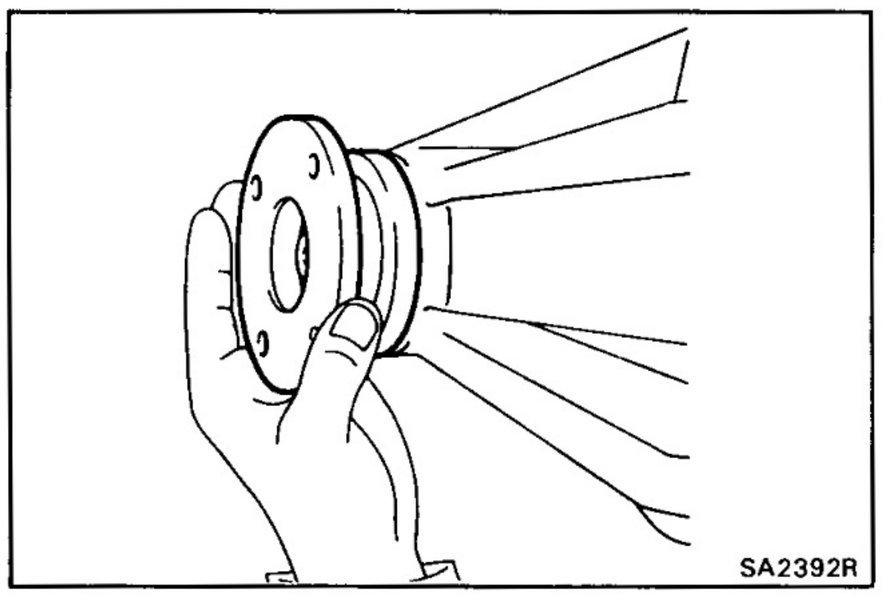

11. INSTALL COMPANION FLANGE

(a) Install the companion flange and plate washer.

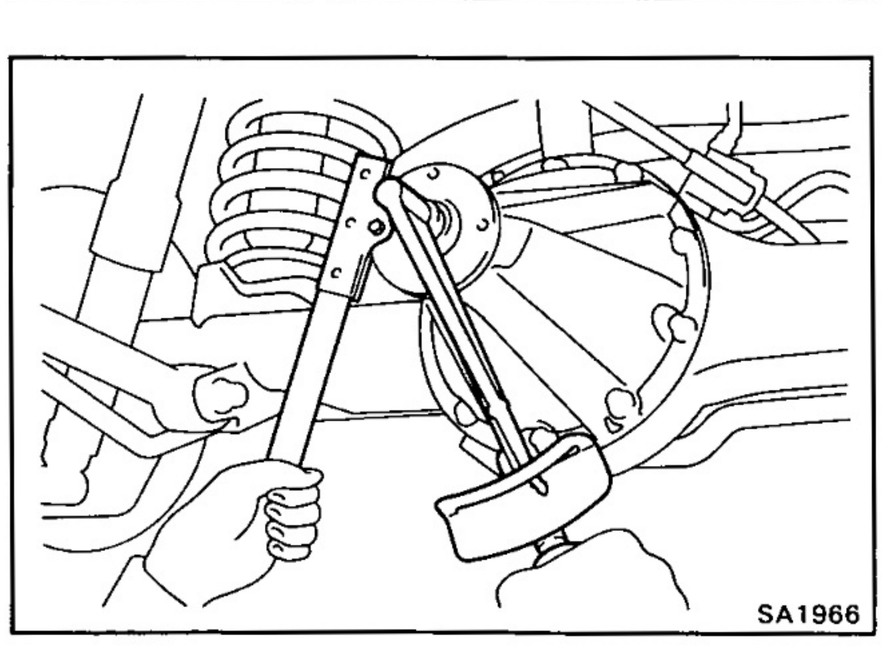

(b) Apply a light coat of gear oil on the threads of a new companion flange nuts.

(c) Using SST to hold the flange, torque the nut.

SST 09330-00021

Torque: 2,500 kg-cm (181 ft-lb, 245 N·m)

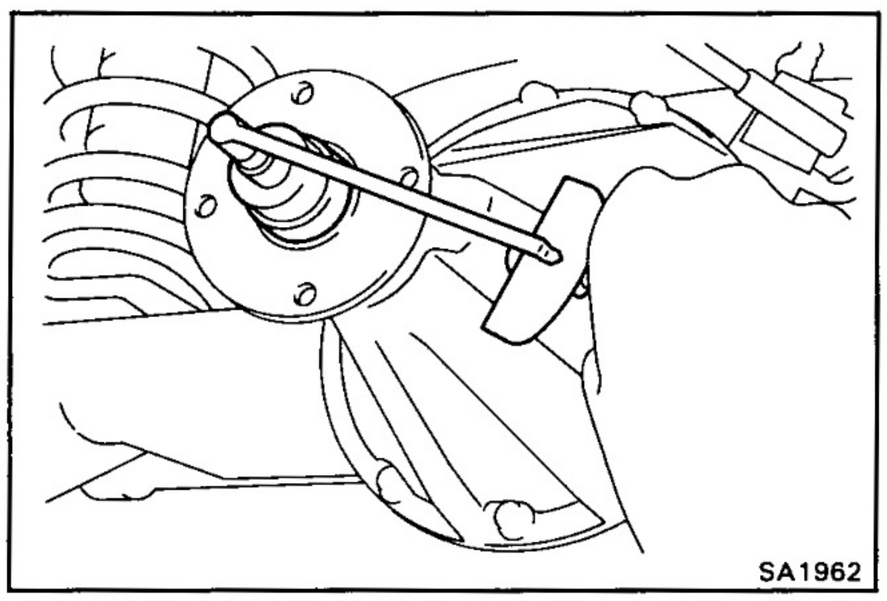

12. CHECK DRIVE PINION PRELOAD

Using a torque meter, measure the preload of the backlash between the drive pinion and ring gear.

Preload (at starting):

New bearing

13 — 20 kg-cm

(11.3 — 17.4 in.-lb, 1.3 — 2.0 N·m)

Reused bearing

7 — 10 kg-cm

(6.1 — 8.7 in.-lb, 0.7 — 1.0 N·m)

- If preload is greater than specification, replace the bearing spacer.
- If preload is less than specification, retighten the nut 130 kg-cm (9 ft-lb, 13 N·m) at a time until the specified preload is reached.

If the maximum torque is exceeded while retightening the nut, replace the bearing spacer and repeat the preload procedure. Do not back off the pinion nut to reduce the preload.

Maximum torque: 4,500 kg-cm (325 ft-lb, 441 N·m)

If everything is normal, coat the threads with gear oil, then repeat the above operation.

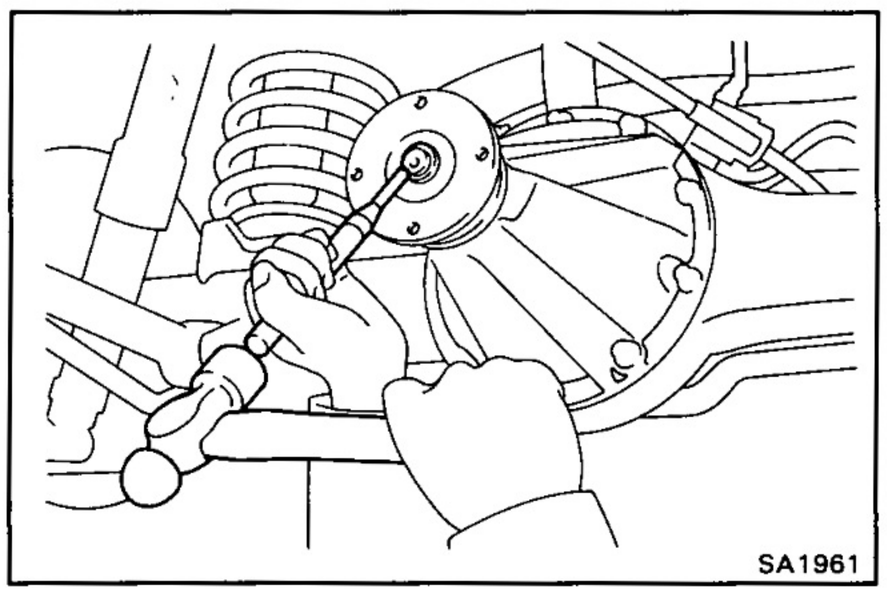

13. STRIKE DRIVE PINION NUT

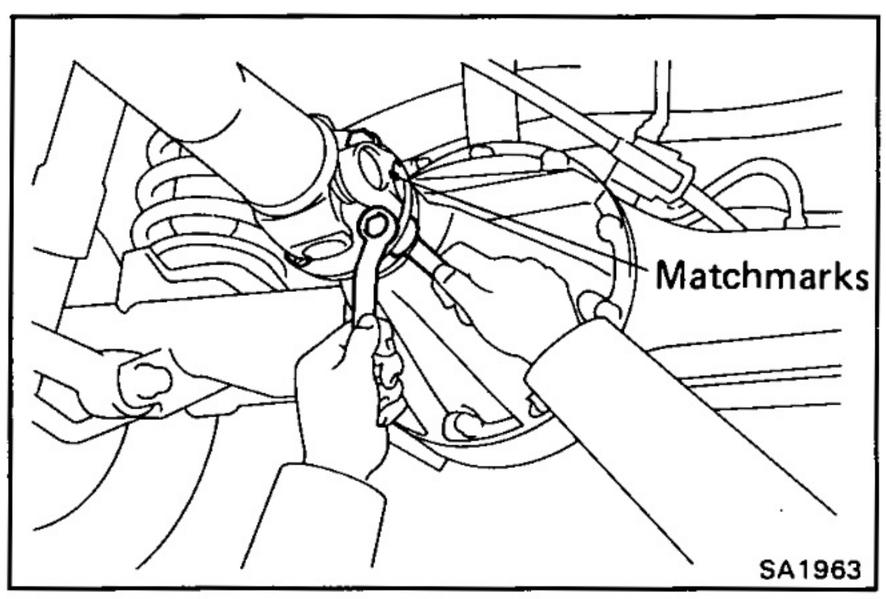

14. CONNECT REAR PROPELLER SHAFT

(a) Align the matchmarks on the flanges and connect the flanges with four bolts, spring washers and nuts.

(b) Torque the bolts and nuts.

Torque: 900 kg-cm (65 ft-lb, 88 N·m)

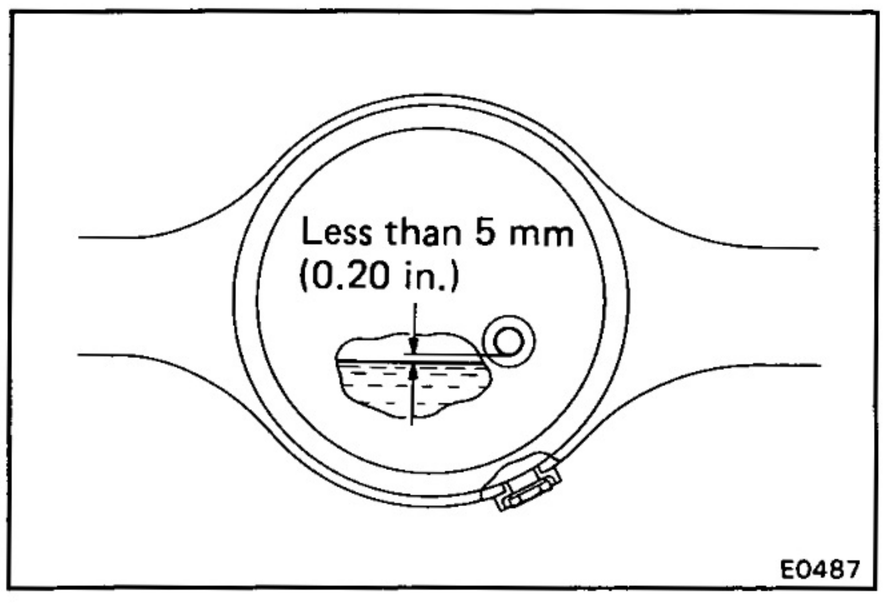

15. CHECK DIFFERENTIAL OIL LEVEL

Fill with hypoid gear oil if necessary.

Oil type:

w/o LSD API GL-5

w/ LSD API GL-5 for LSD

Recommended oil viscosity:

Above −18°C (0°F) SAE 90

Below −18°C (0°F) SAE 80W or 80W-90

Capacity: 2.8 liters (2.9 US qts, 2.4 Imp. qts)

Removal and Installation of Rear Differential

COMPONENTS

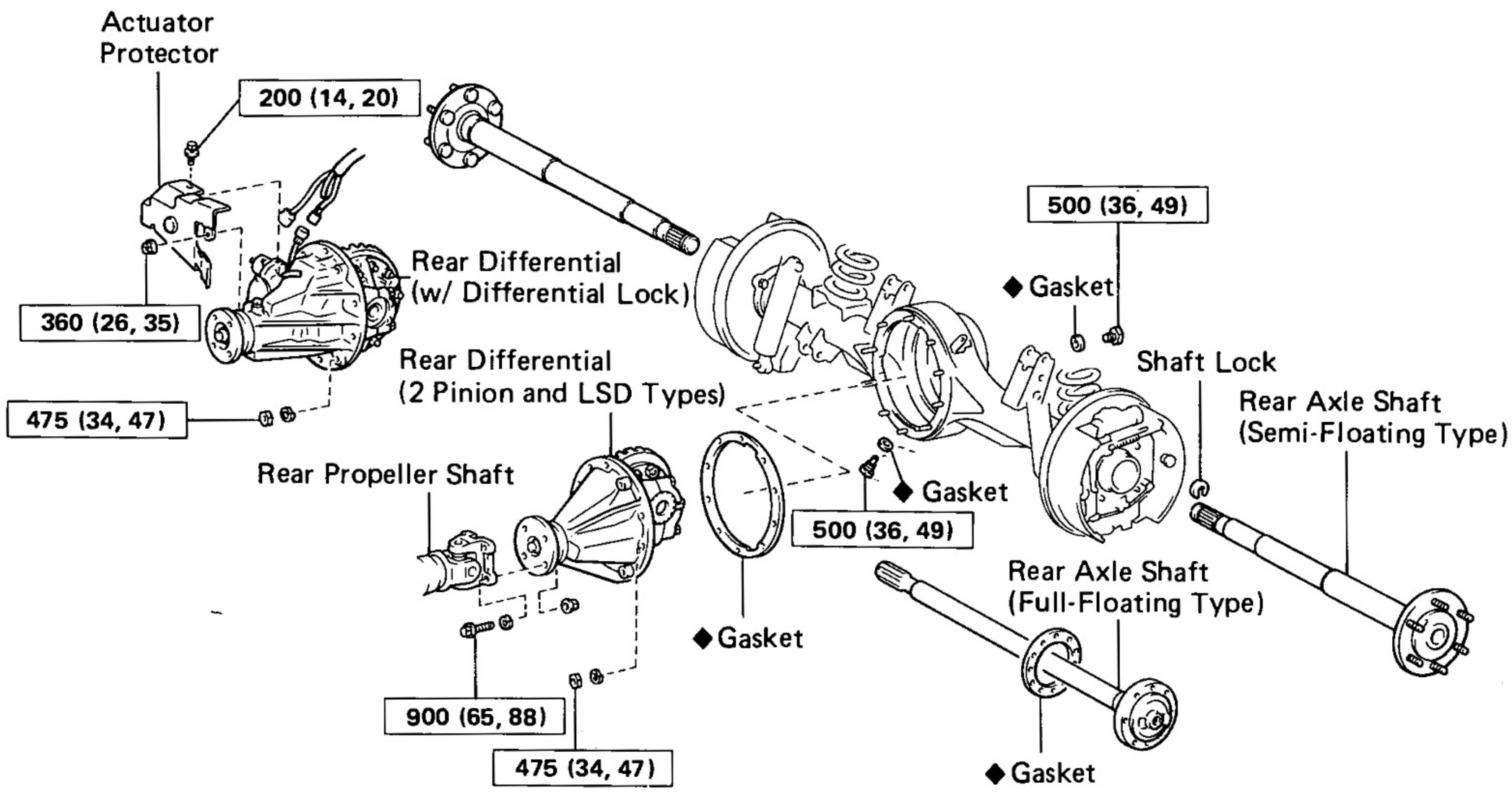

kg-cm (ft-lb, N·m) : Specified torque

◆ Non-reusable part

SA2388

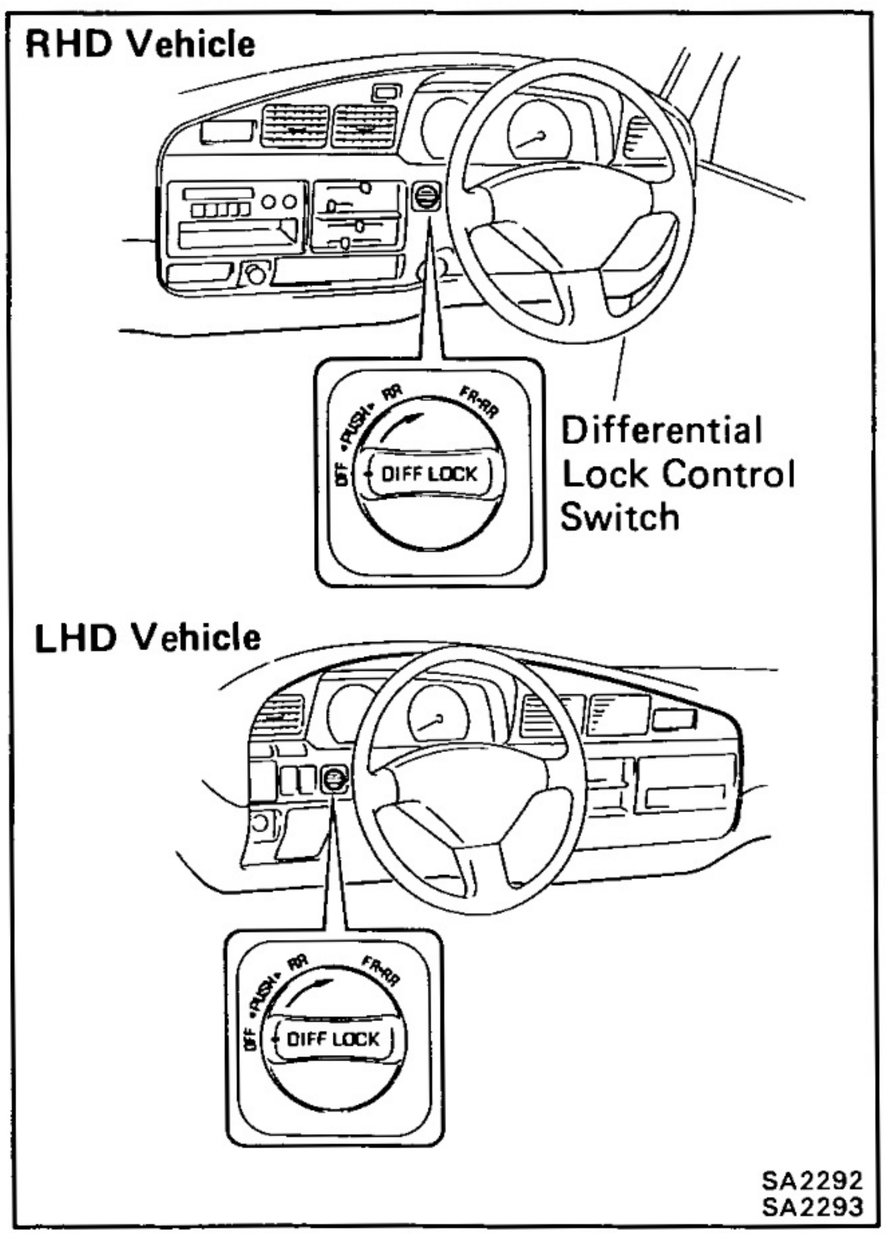

SA2292
SA2293

REMOVAL OF REAR DIFFERENTIAL

1. **(w/ DIFFERENTIAL LOCK) SHIFTING REAR DIFFERENTIAL LOCK**

   (a) Turn the ignition switch to ON position.

   (b) Keep the 4WD condition (Part-Time Models) or center differential lock condition (Full-Time Models).

   (c) Turn the differential lock control switch to RR or FR·RR position and lock the rear differential.

   HINT: Rotating the tires, check they are in the differential lock condition.

   (d) Disconnect the cable from the negative terminal of battery.

2. REMOVE DRAIN PLUG AND DRAIN DIFFERENTIAL OIL

3. REMOVE REAR AXLE SHAFTS
(Semi-Floating Type: See page SA-78)
(Full-Floating Type: See page SA-84)

4. DISCONNECT REAR PROPELLER SHAFT
(See step 1 on page SA-93)

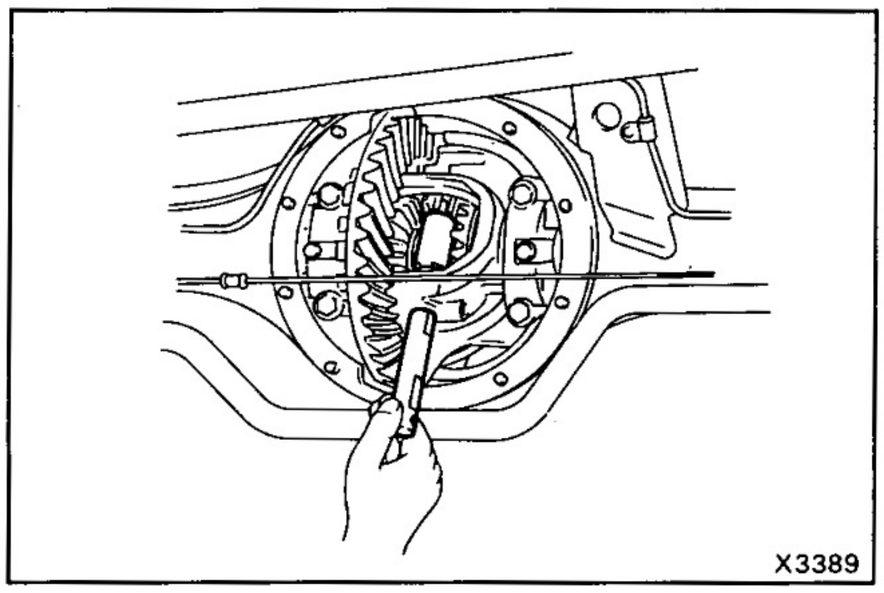

5. (2 PINION TYPE)
INSTALL PINION SHAFT AND PINION SPACER

(a) Install the spacer and pinion shaft to the differential.

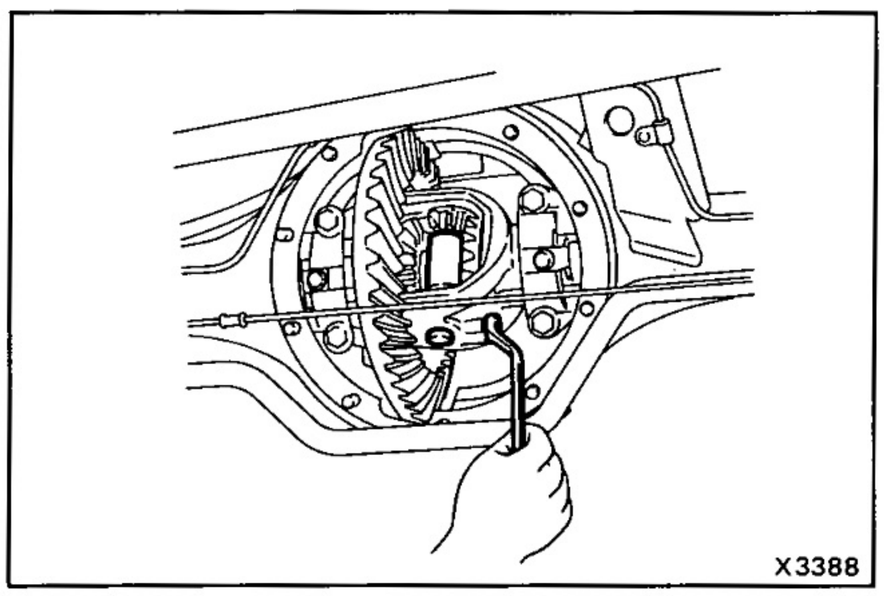

(b) Install the pinion shaft pin.

Torque: 275kg-cm (20 ft-lb, 27 N·m)

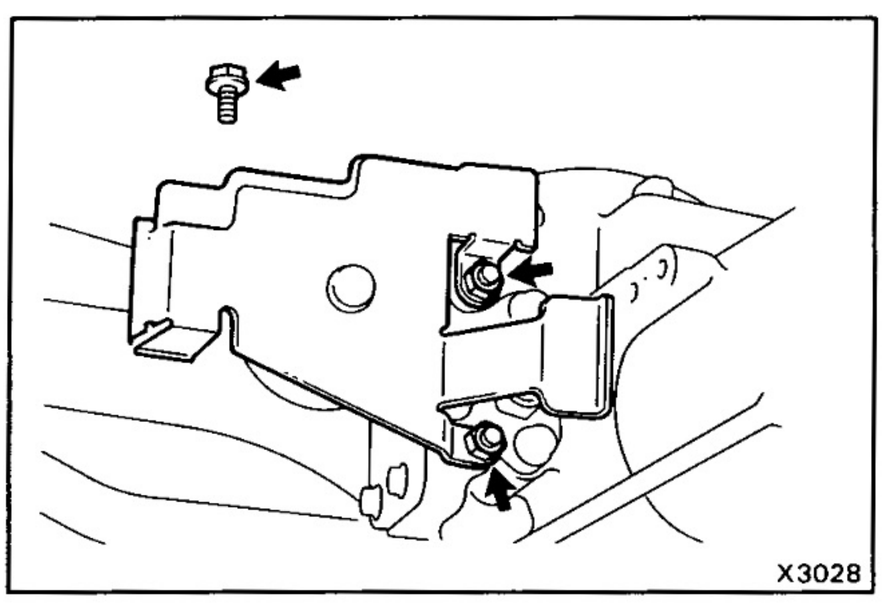

6. (w/ DIFFERENTIAL LOCK)
REMOVE ACTUATOR PROTECTOR

Remove the two nuts and bolt, remove the protector.

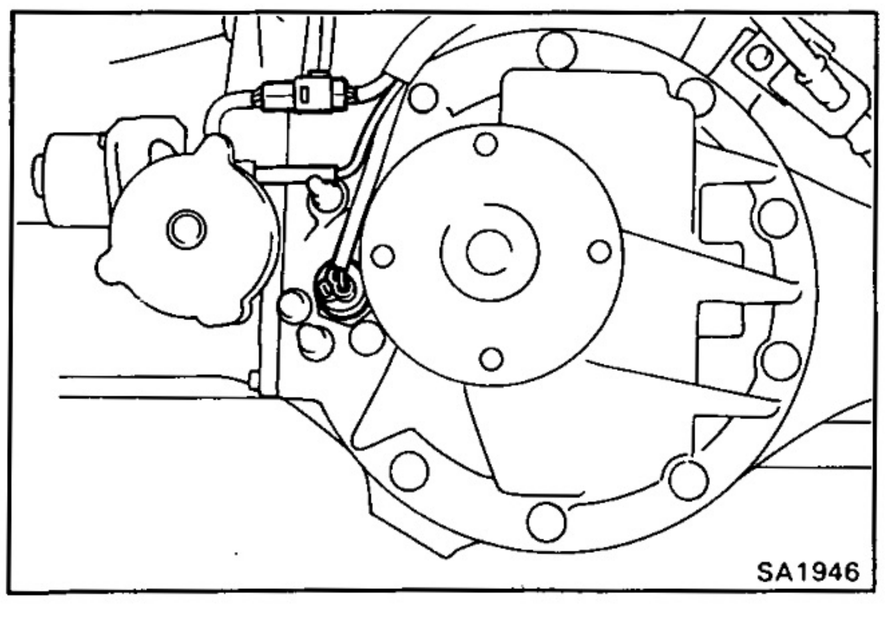

7. (w/ DIFFERENTIAL LOCK)
DISCONNECT CONNECATORS AND HOSE

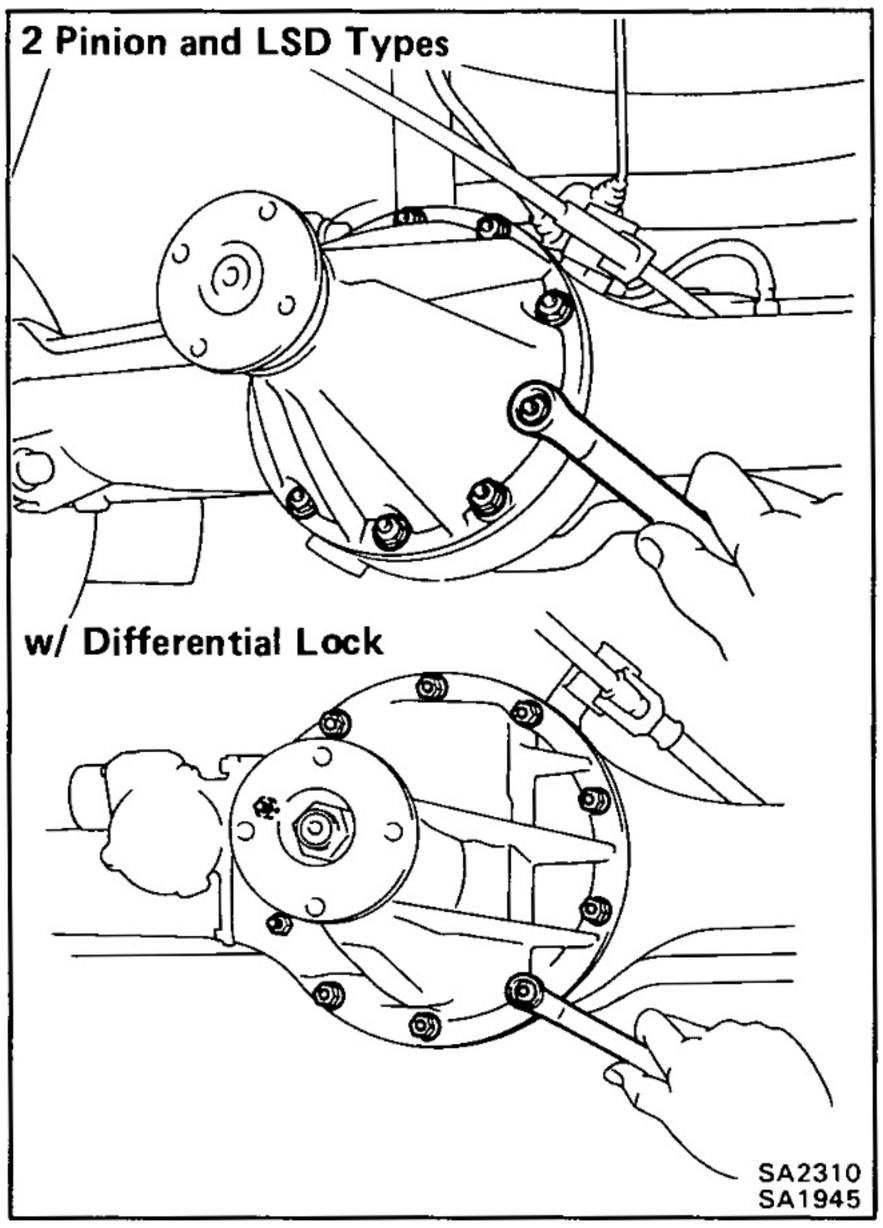

8. REMOVE DIFFERENTIAL CARRIER ASSEMBLY

NOTICE: Do not scratch the installation surface.

INSTALLATION OF REAR DIFFERENTIAL

(See page SA-97)

**1. (w/ DIFFERENTIAL LOCK)
CHECK DIFFERENTIAL LOCK OPERATION**

(a) Connect the connector of the actuator to the connector of the vehicle side, and check that the sleeve is on work with switching over the differential lock control switch.

(b) After checking lock the rear differential.

2. INSTALL A NEW GASKET

3. INSTALL DIFFERENTIAL CARRIER ASSEMBLY

Install the differential carrier assembly in the axle and install the ten nuts. Torque the nuts.

Torque: 475 kg-cm (34 ft-lb, 47 N·m)

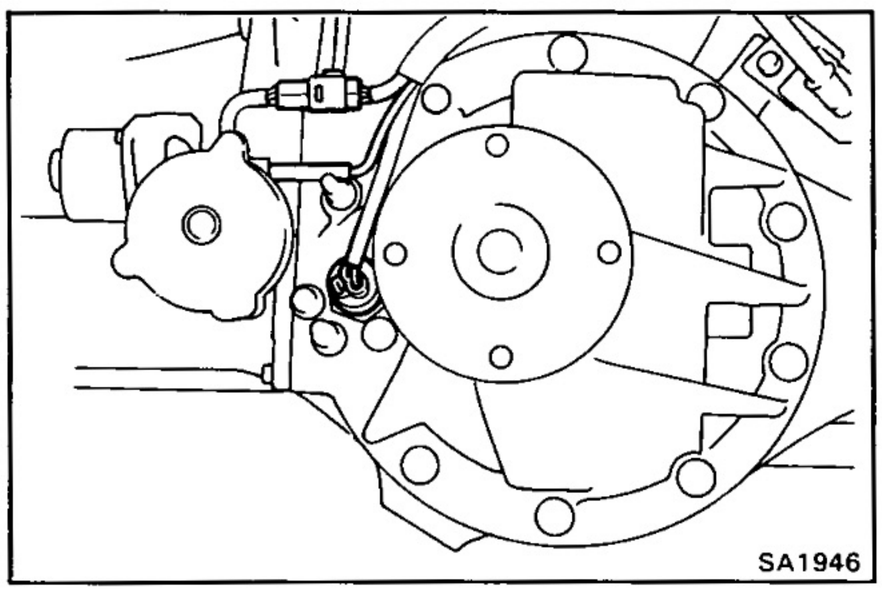

**4. (w/ DIFFERENTIAL LOCK)
CONNECT CONNECTORS AND TUBE**

HINT:

- When connecting the tube of the harness side to the hose of the actuator side, the depth of the insertion is 15 mm (0.59 in.).
- Take care that water or the equivalent shall not adhere to the connectors and hose.

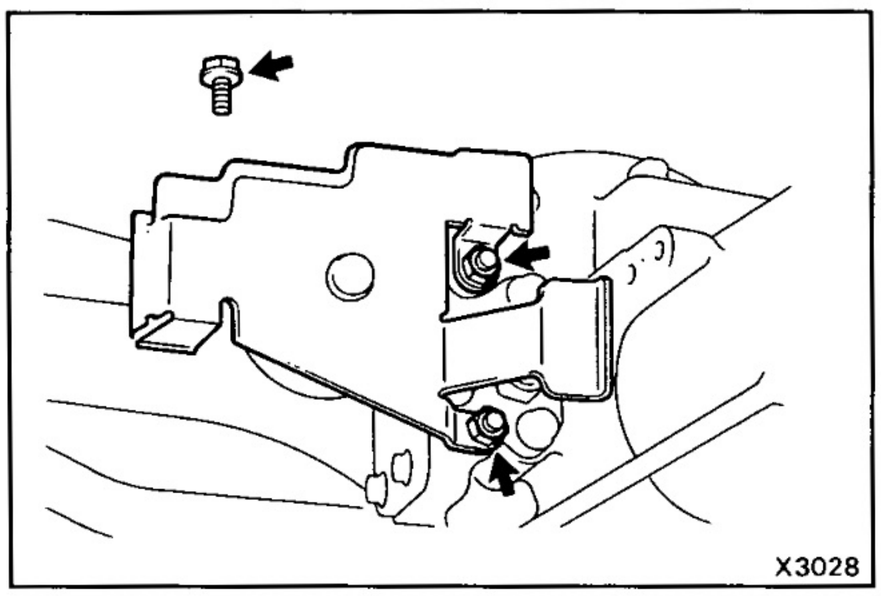

**5. (w/ DIFFERENTIAL LOCK)
INSTALL ACTUATOR PROTECTOR**

Install the protector with the two nuts and bolt.

**Torque: Nut 360 kg-cm (26 ft-lb, 35 N·m)
Bolt 200 kg-cm (14 ft-lb, 20 N·m)**

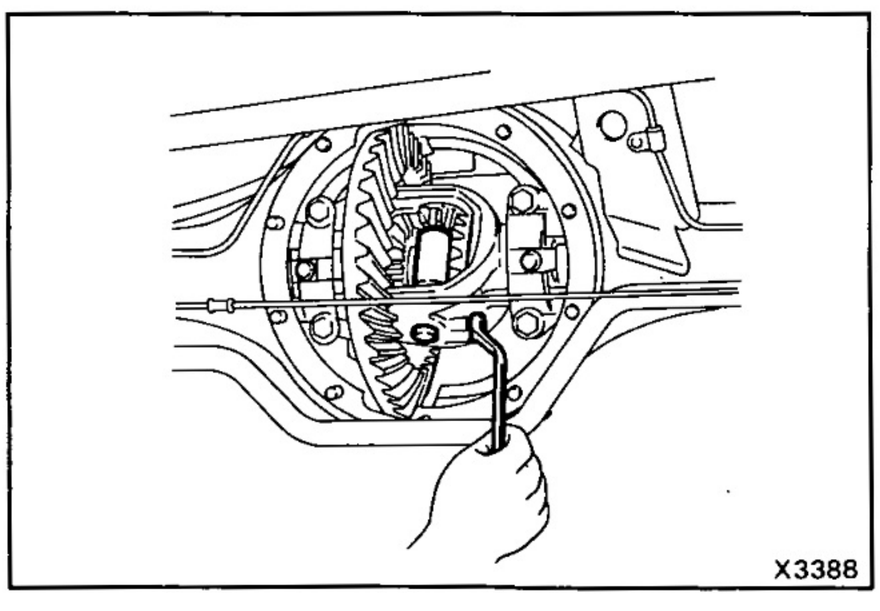

**6. (2 PINION TYPE)
REMOVE PINION SHAFT AND PINION SPACER**

(a) Remove the pinion shaft pin from the differential.

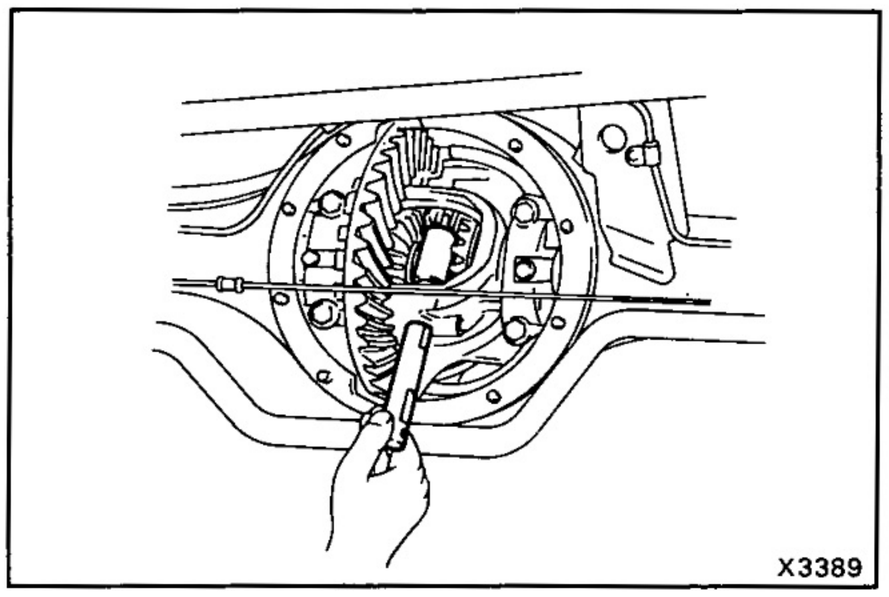

(b) Remove the pinion shaft and spacer.

HINT: When the pinion shaft is removed, the pinion gear and thrust washer will come off also.

7. CONNECT REAR PROPELLER SHAFT
(See step 14 on page SA-96)

8. INSTALL REAR AXLE SHAFTS
(Semi-Floating Type: See page SA-78)
(Full-Floating Type: See page SA-84)

9. INSTALL DRAIN PLUG

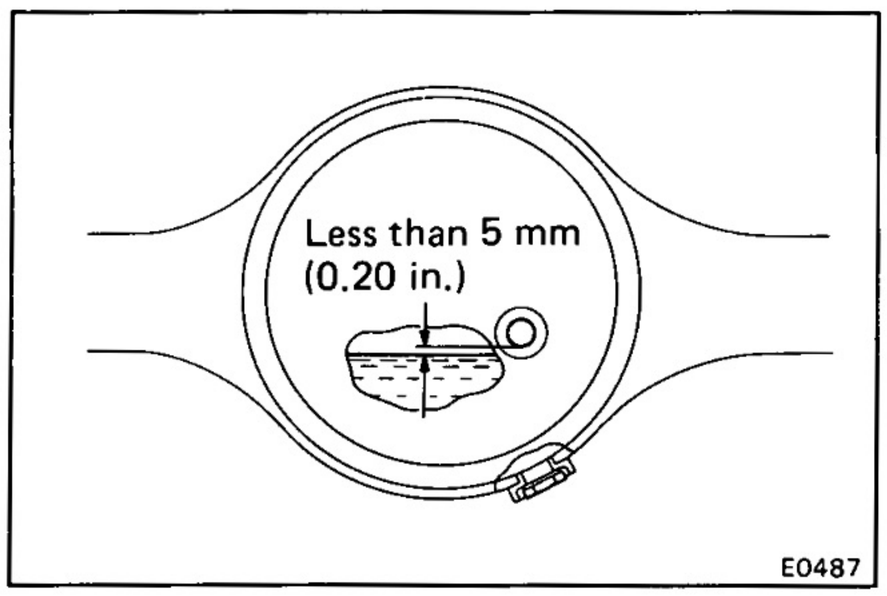

10. FILL DIFFERENTIAL WITH GEAR OIL

Fill with hypoid gear oil.

Oil type:
w/o LSD API GL-5
w/ LSD API GL-5 for LSD
Viscosity:
Above −18°C (0°F) SAE 90
Below −18°C (0°F) SAE 80W or 80W-90
Capacity: 2.8 liters (2.9 US qts, 2.4 Imp.qts)

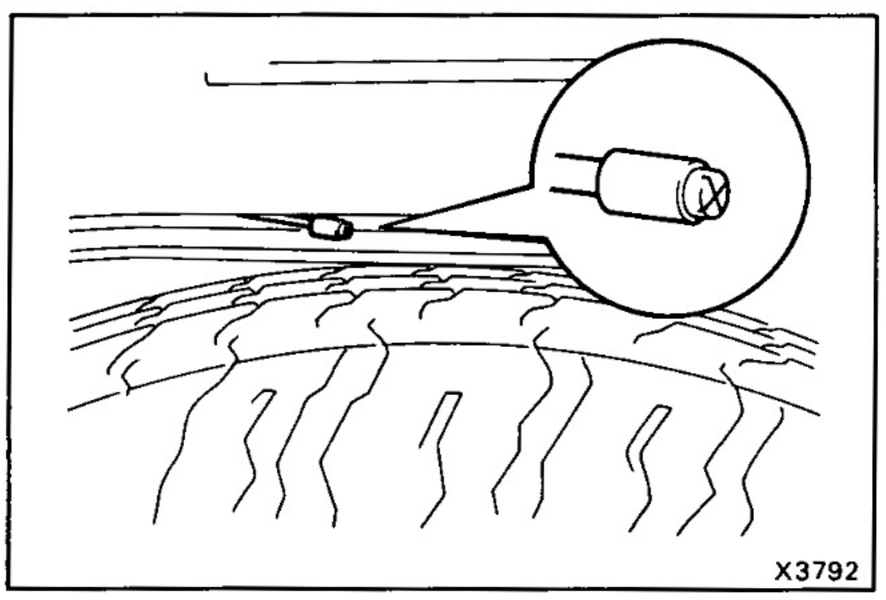

11. (w/ DIFFERENTIAL LOCK)
CHECK BLEEDER PLUG

Check that the bleeder plug at the point of the bleeder tube (above the left side frame) is not damage or worn.

Differential Carrier

COMPONENTS

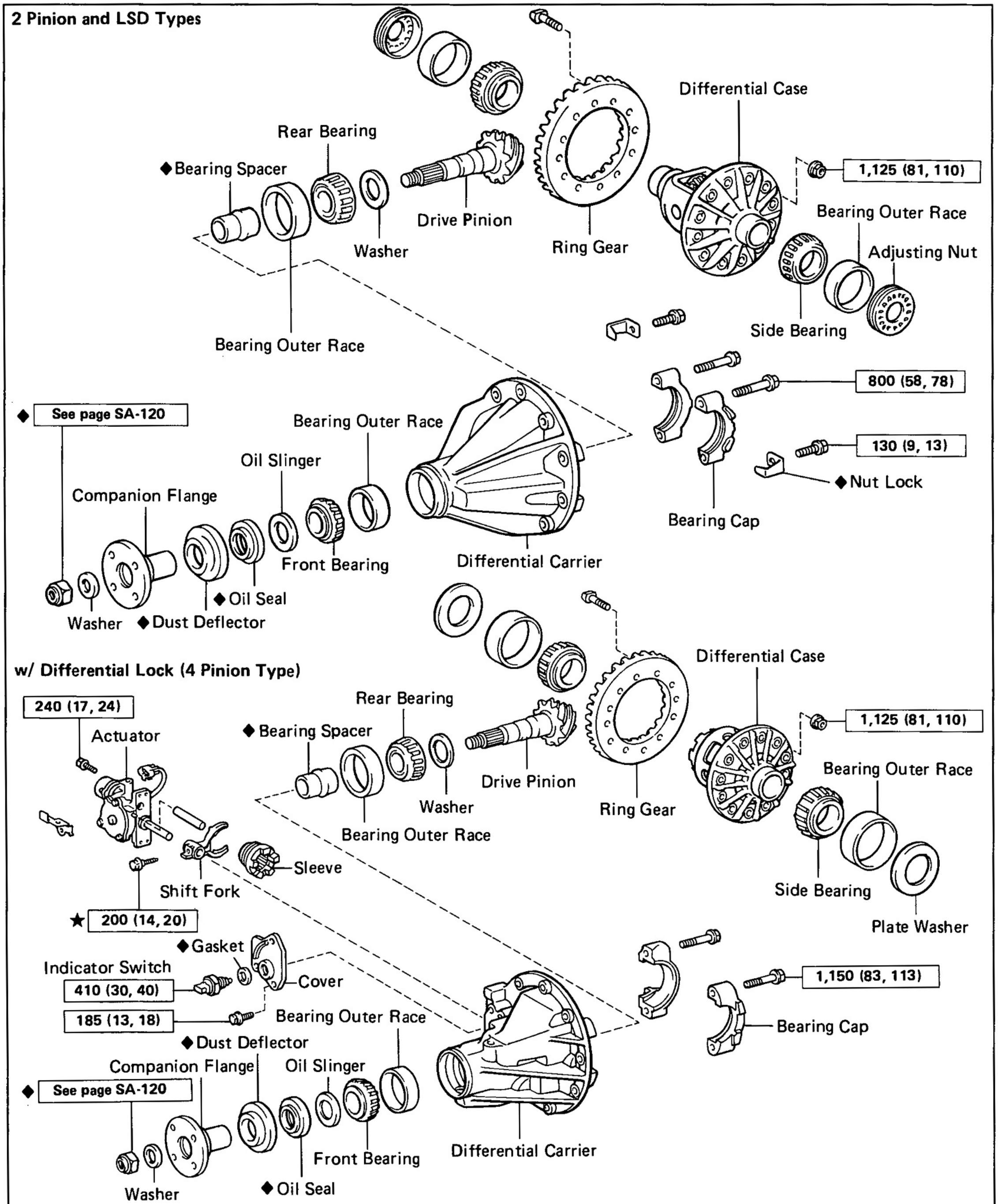

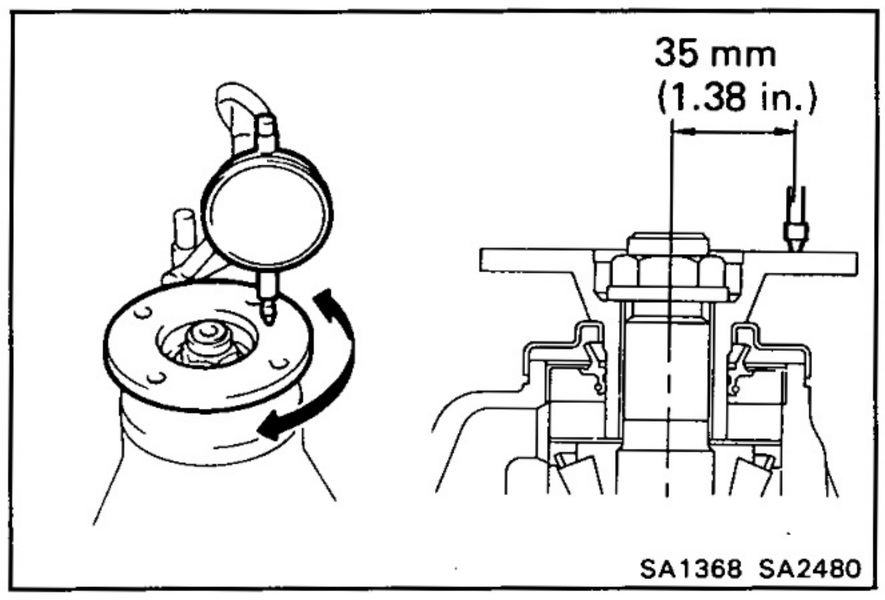

INSPECTION OF DIFFERENTIAL CARRIER

1. CHECK RUNOUT OF COMPANION FLANGE

Using a dial indicator, measure the vertical and lateral runout of the companion flange.

Maximum vertical runout: 0.10 mm (0.0039 in.)

Maximum lateral runout: 0.10 mm (0.0039 in.)

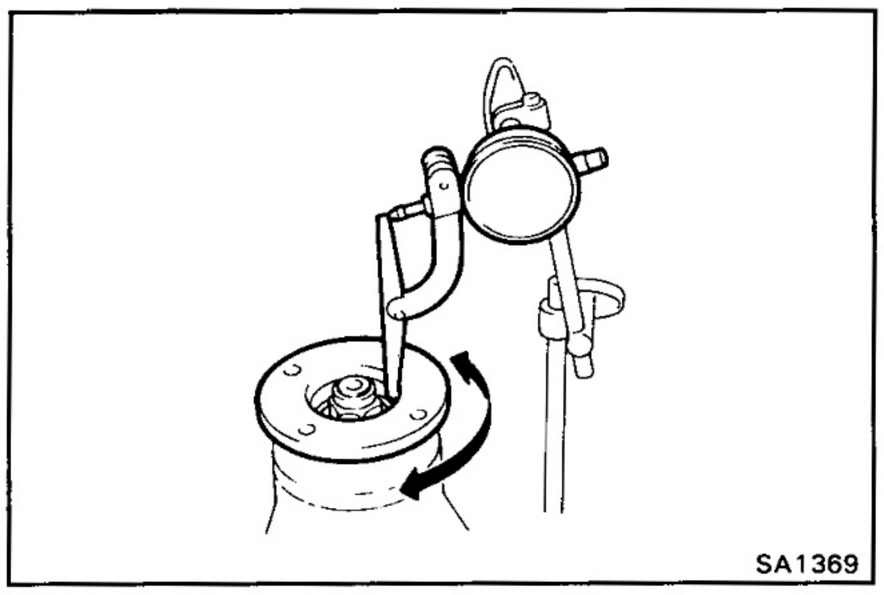

2. CHECK RING GEAR RUNOUT

If the runout is greater than maximum, replace the ring gear.

Maximum runout: 0.10 mm (0.0039 in.)

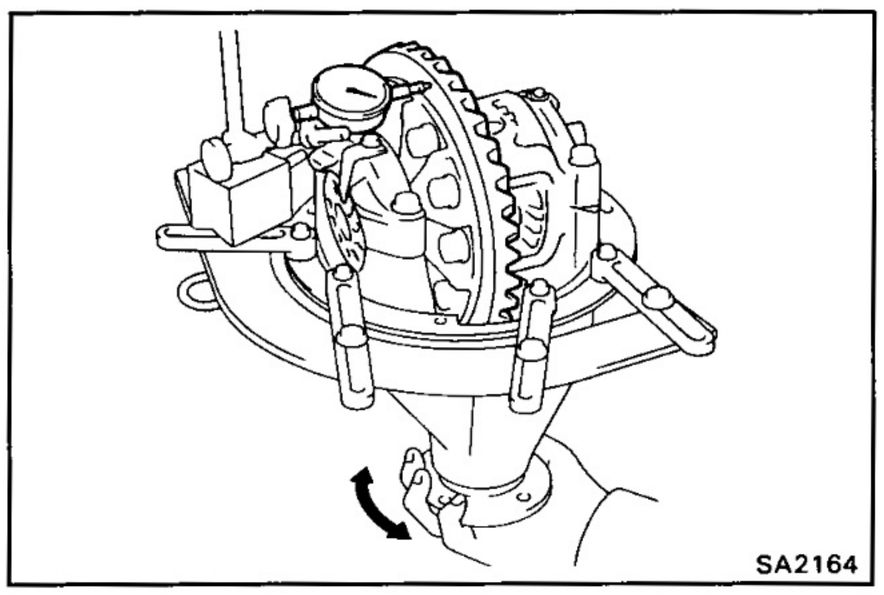

3. CHECK RING GEAR BACKLASH

If the backlash is not within specification, adjust the side bearing preload or repair as necessary.

Backlash: 0.15 — 0.20 mm (0.0059 — 0.0079 in.)

HINT: Perform the measurements at three or more positions around the circumference of the ring gear.

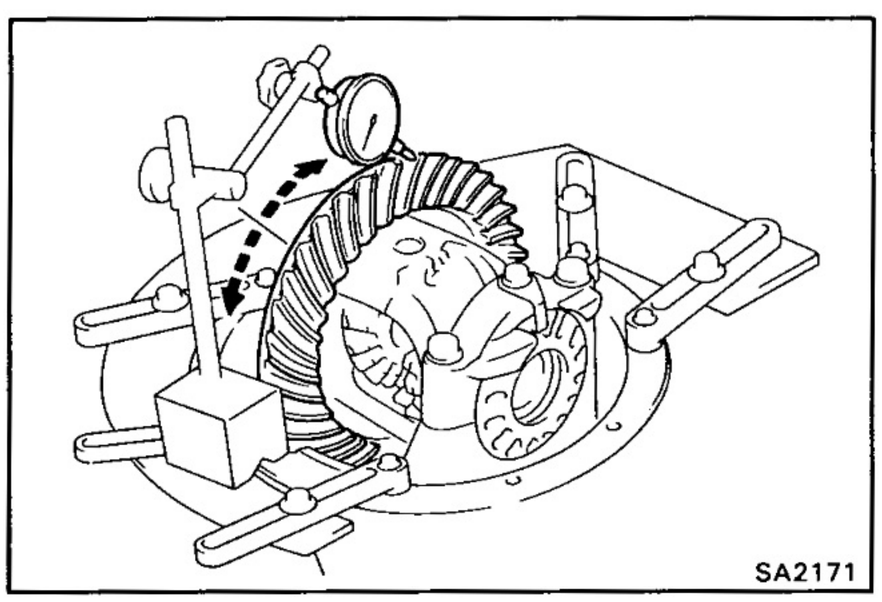

4. MEASURE DRIVE PINION PRELOAD

Measure the drive pinion preload using the backlash of the drive pinion and ring gear.

Preload (at starting): 7 — 10 kg-cm (6.1 — 8.7 in.-lb, 0.7 — 1.0 N·m)

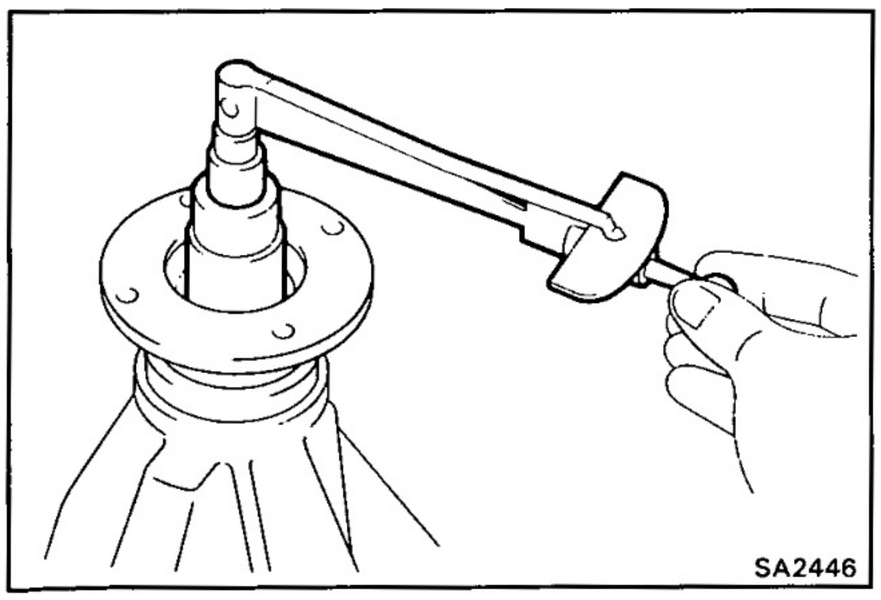

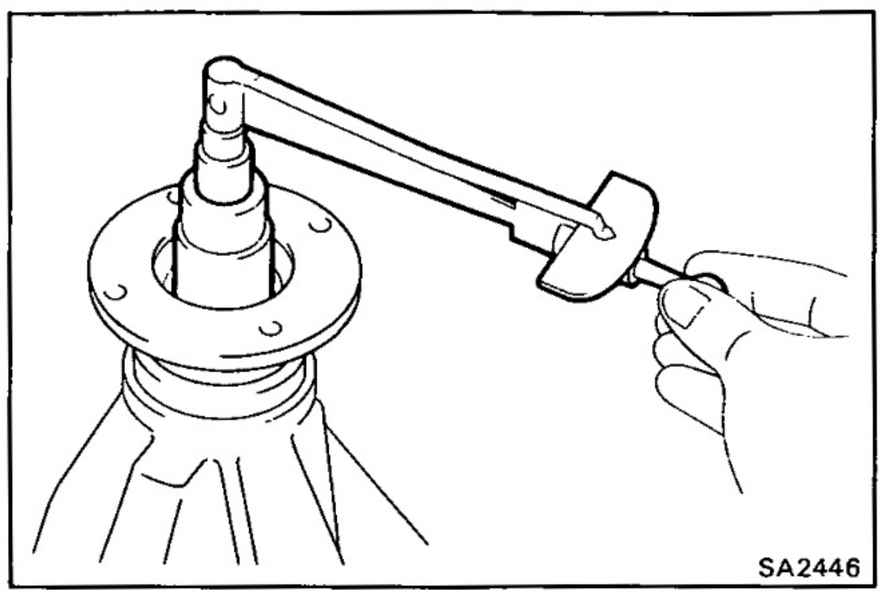

5. CHECK TOTAL PRELOAD

Using a torque meter, measure the total preload.

Total preload: In addition to drive pinion preload

2 pinion and LSD types
4 — 6 kg-cm (3.5 — 5.2 in.-lb, 0.4 — 0.6 N·m)

w/ Differential lock
3 — 7 kg-cm (2.6 — 6.1 in.-lb, 0.3 — 0.7 N·m)

If necessary, disassemble and inspect a differential.

6. CHECK SIDE GEAR BACKLASH

Measure the side gear backlash while holding one pinion gear toward the case.

Standard backlash: 0.02 — 0.20 mm (0.0008 — 0.0079 in.)

If the backlash is out of specification, install the correct thrust washers. (See pages SA-125, 128)

2 Pinion Type

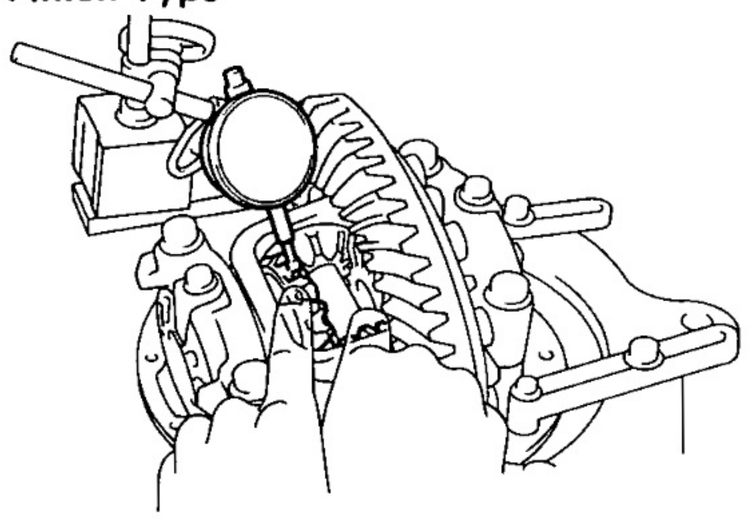

w/ Differential Lock

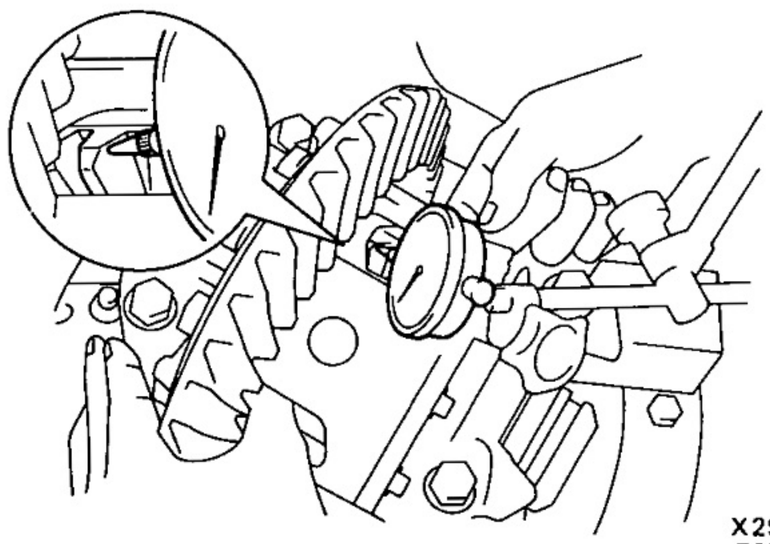

7. INSPECT TEETH CONTACT BETWEEN RING GEAR AND DRIVE PINION
(See step 14 on page SA-118)

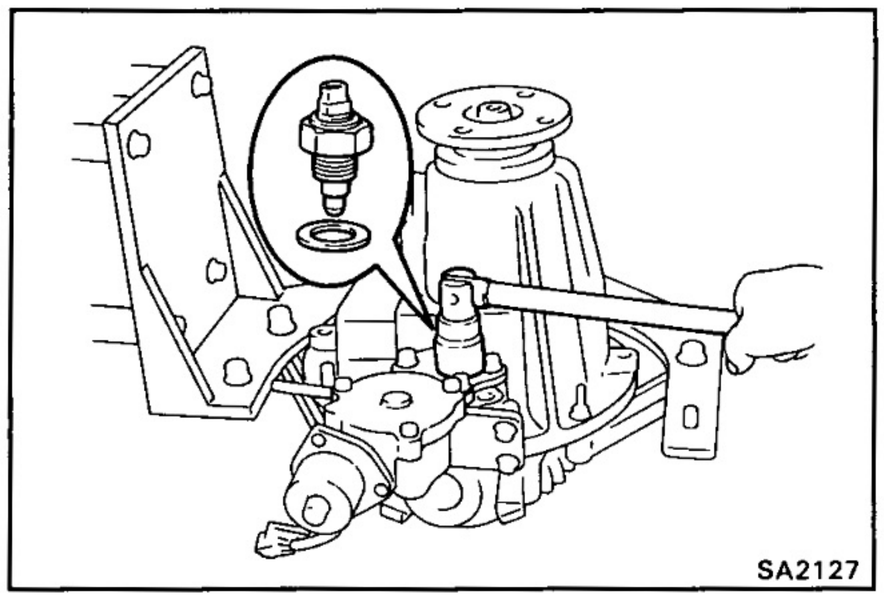

DISASSEMBLY OF DIFFERENTIAL CARRIER

(See page SA-101)

**1. (w/ DIFFERENTIAL LOCK)
REMOVE INDICATOR SWITCH**

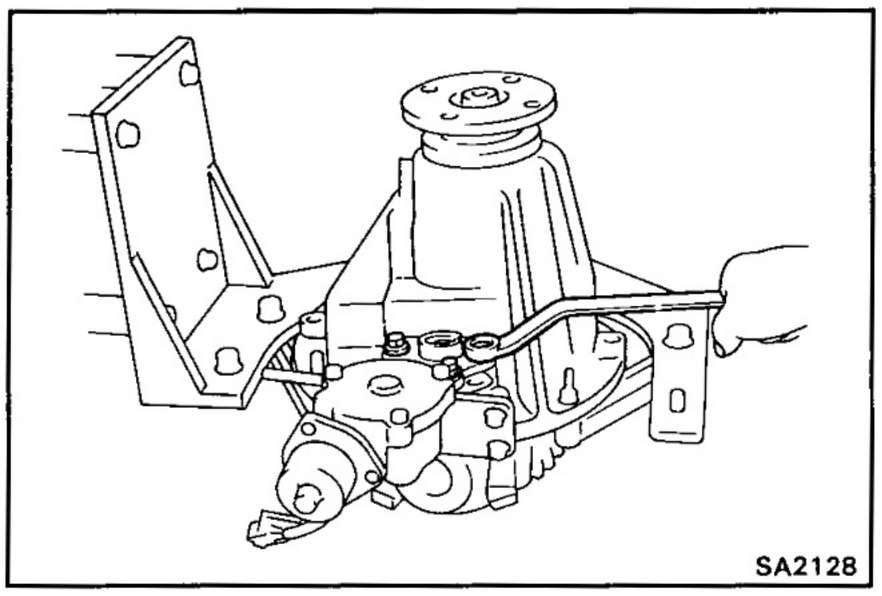

**2. (w/ DIFFERENTIAL LOCK)
REMOVE COVER**

(a) Remove the three bolts.

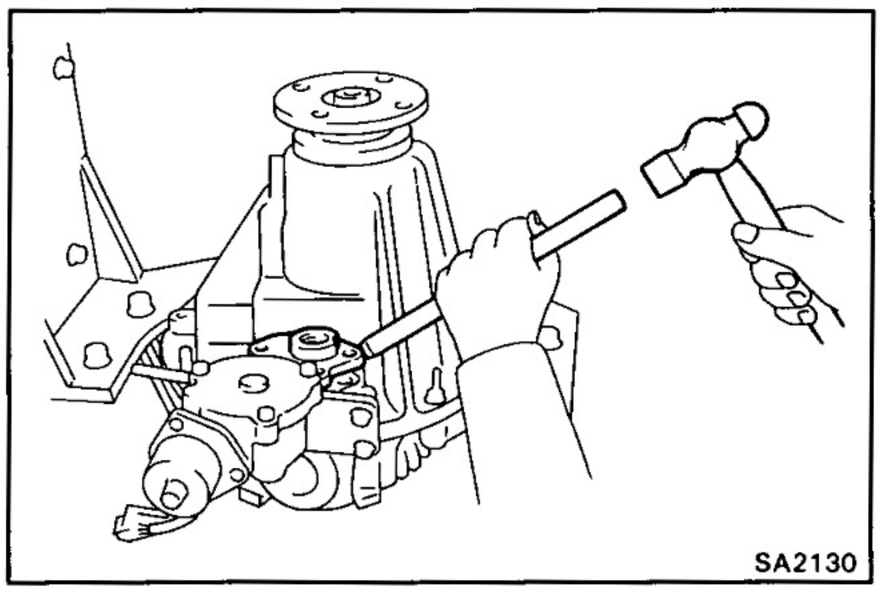

(b) Using a brass bar and hammer, remove the cover.

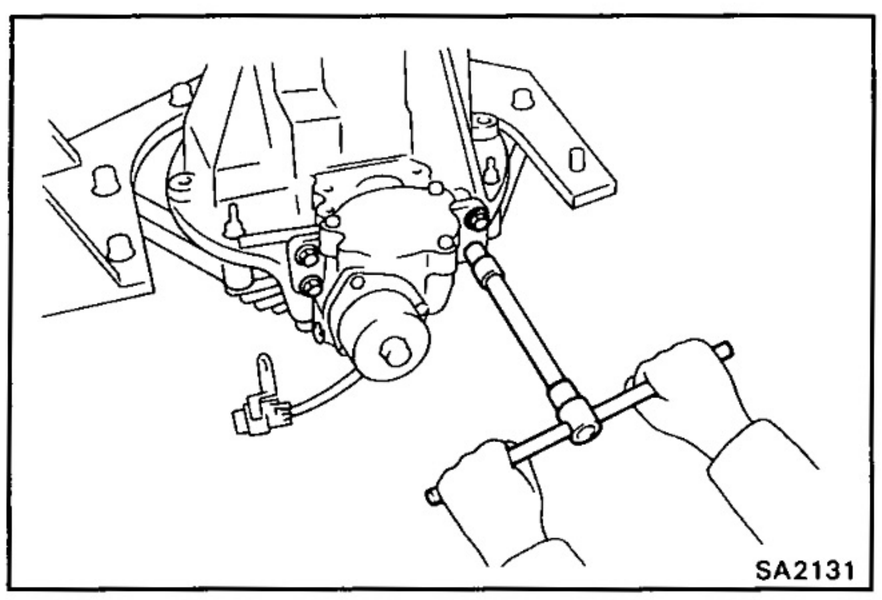

**3. (w/ DIFFERENTIAL LOCK)
REMOVE SLEEVE**

(a) Remove the four bolts.

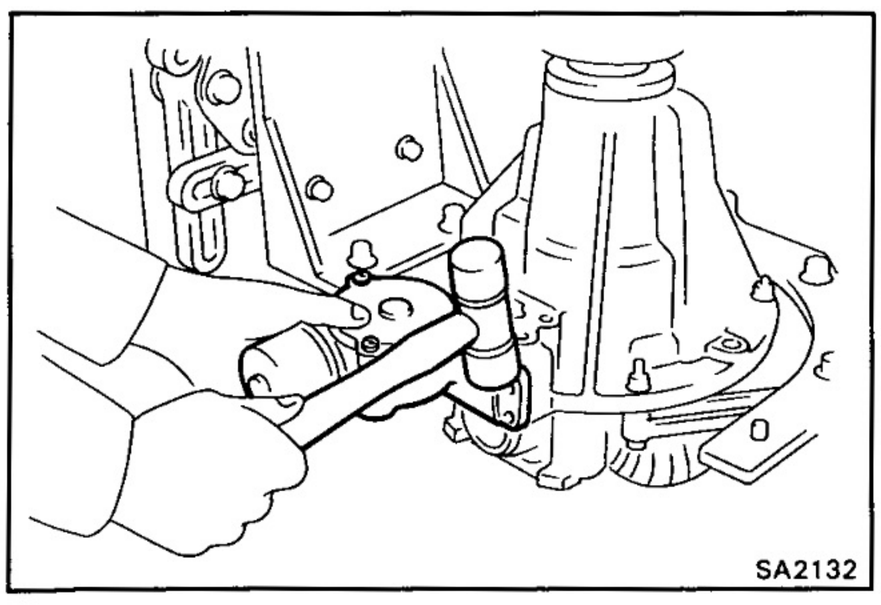

(b) Using a plastic hammer, tap off the actuator.

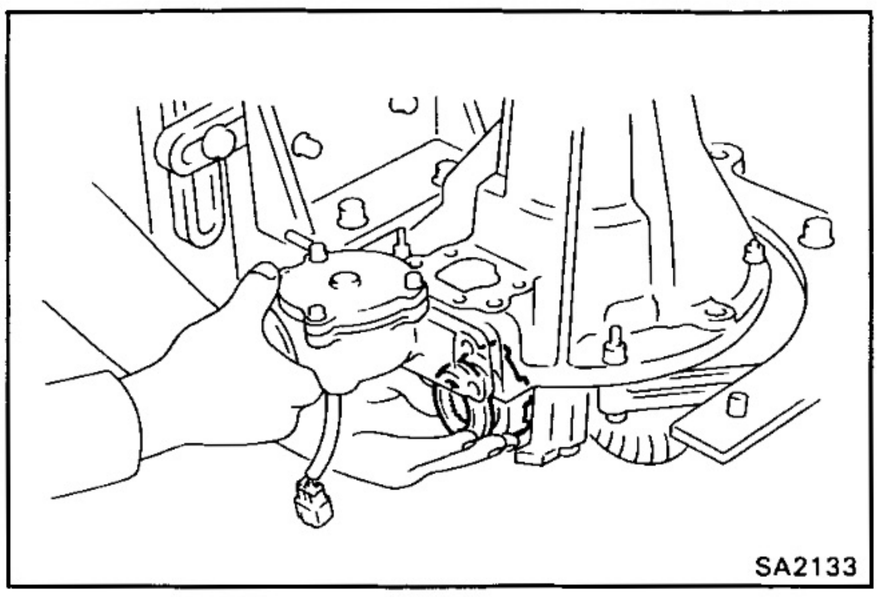

(c) Pull the actuator, remove the sleeve.

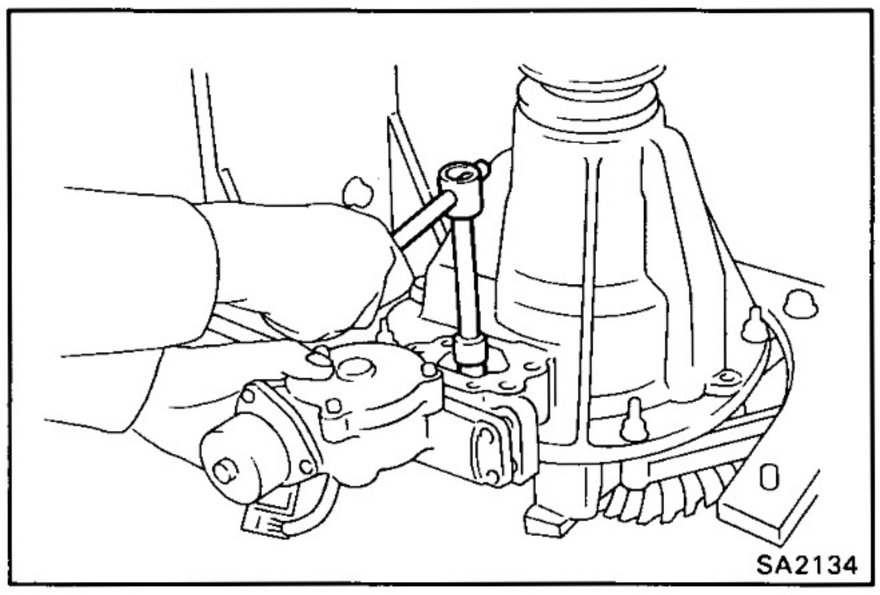

**4. (w/ DIFFERENTIAL LOCK)
REMOVE ACTUATOR AND SHIFT FORK**

(a) Remove the shift fork shaft bolt.

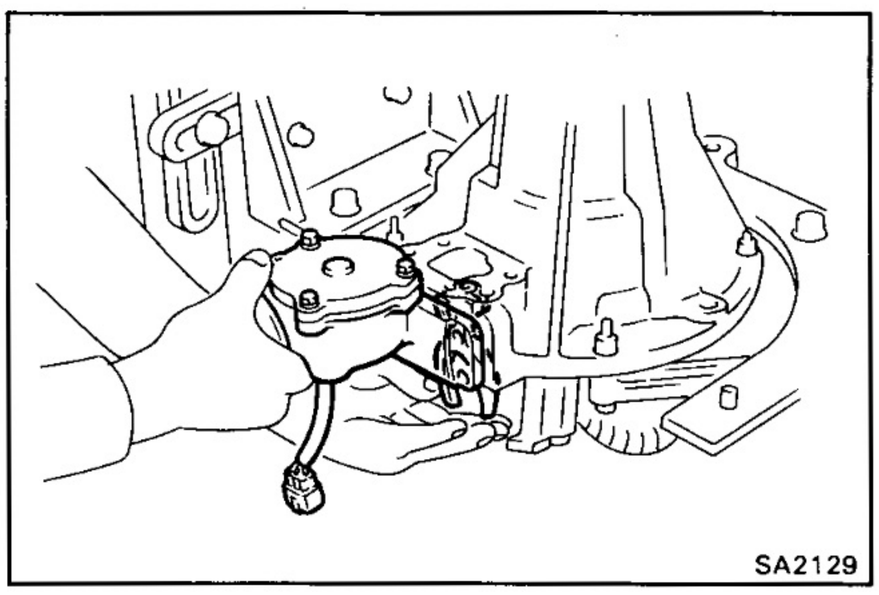

(b) Pull out the actuator, remove the shift fork.

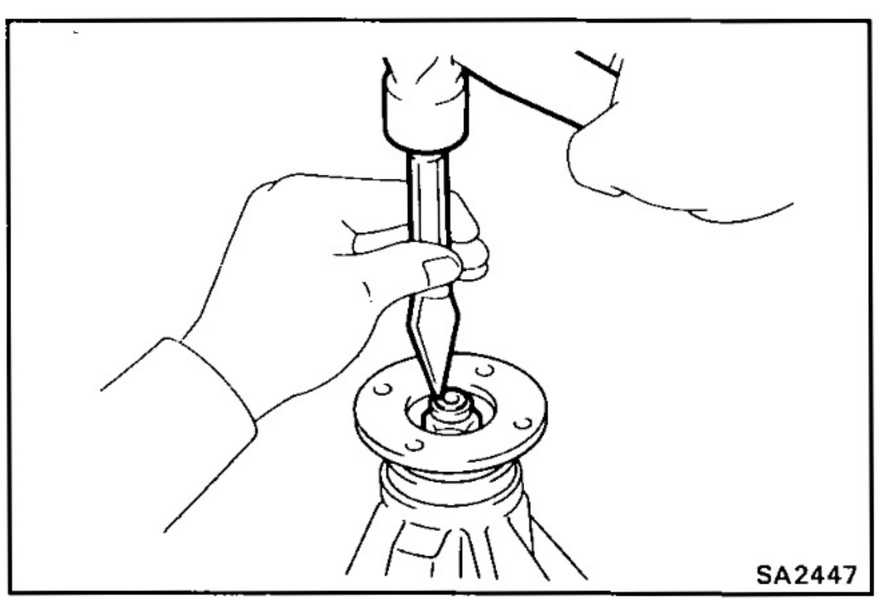

5. REMOVE COMPANION FLANGE

(a) Using a hammer and chisel, loosen the staked part of the nut.

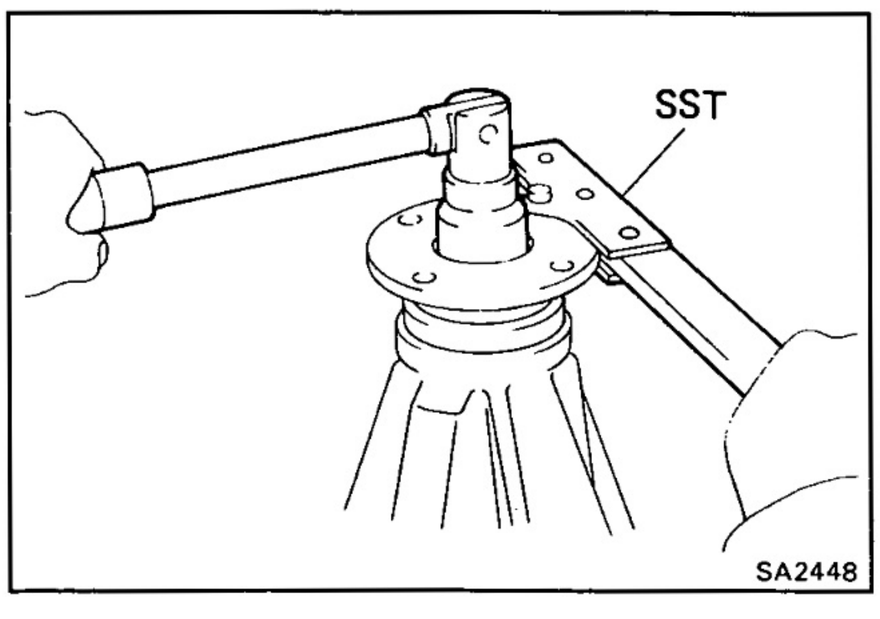

(b) Using SST to hold the flange, remove the nut and plate washer.

SST 09330-00021

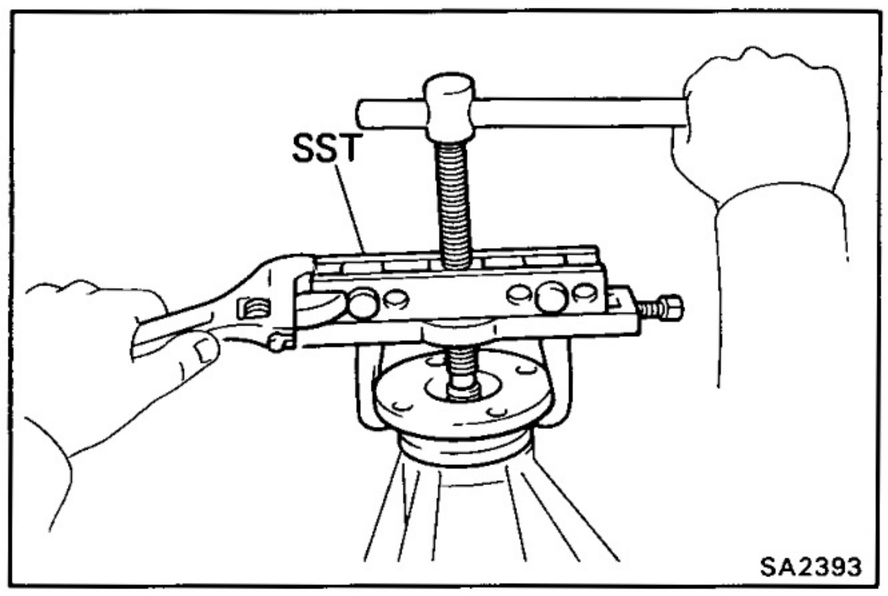

(c) Using SST, remove the companion flange.

SST 09950-20017

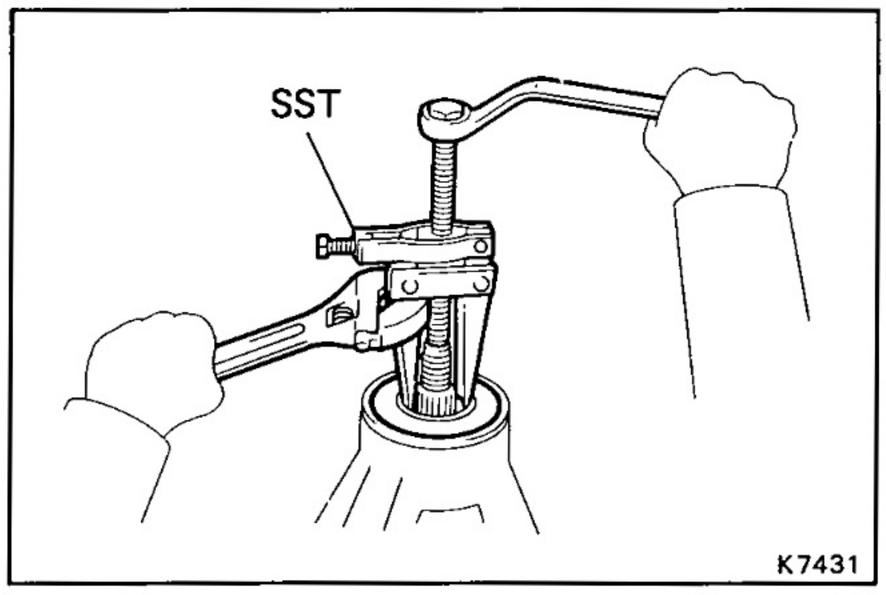

6. REMOVE FRONT OIL SEAL AND OIL SLINGER

(a) Using SST, remove the oil seal from the housing.

SST 09308-10010

(b) Remove the oil slinger.

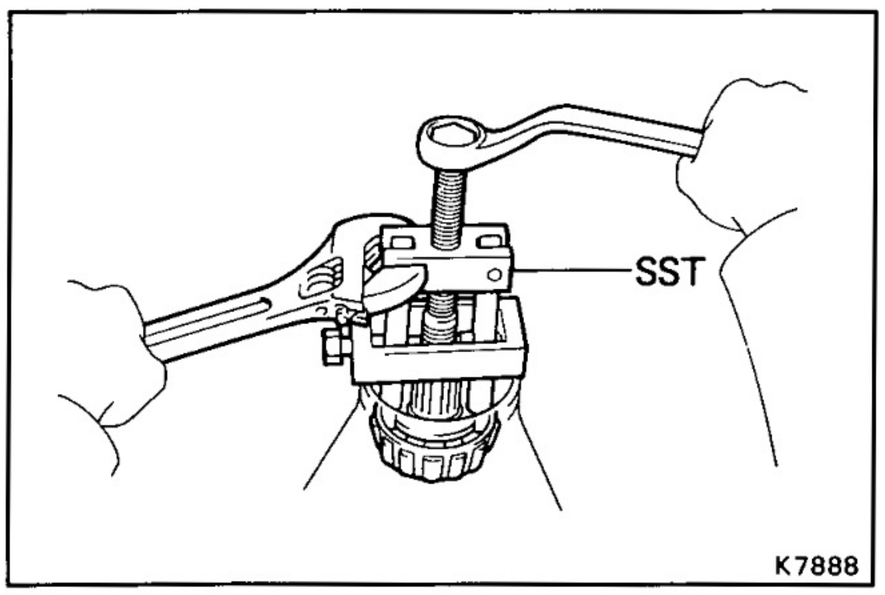

7. REMOVE FRONT BEARING

Using SST, remove the bearing from the housing.

SST 09556-22010

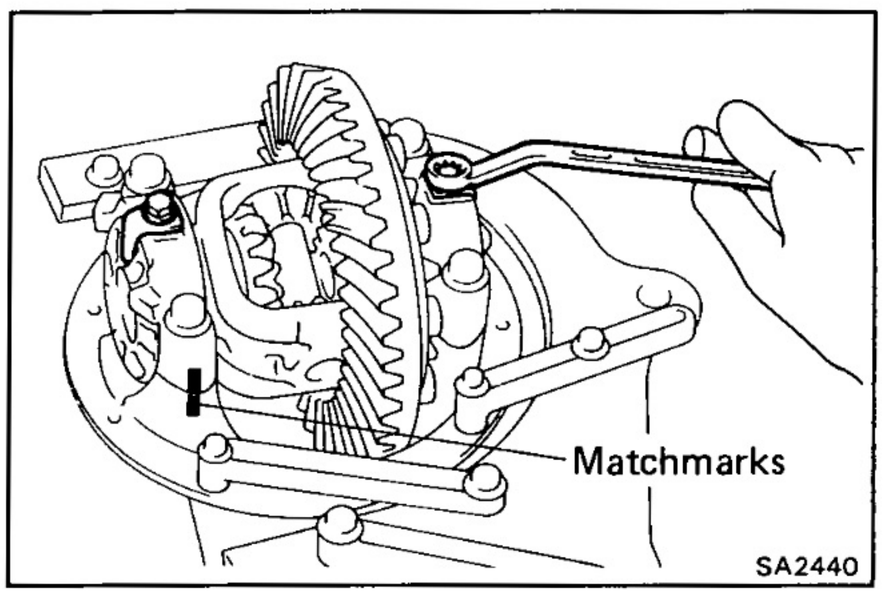

8. REMOVE DIFFERENTIAL CASE (2 PINION AND LSD TYPES)

(a) Place matchmarks on the bearing cap and differential carrier.

(b) Remove the two adjusting nut locks.

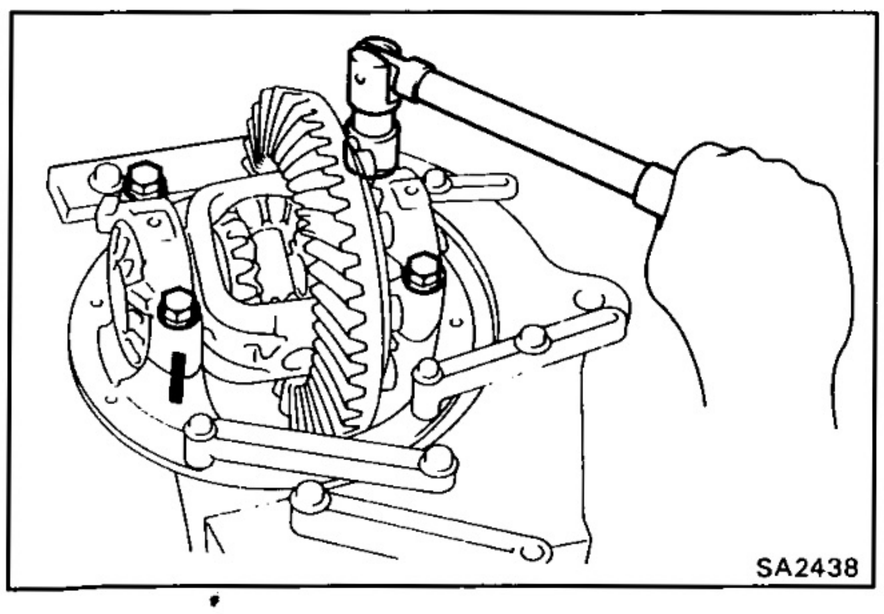

(c) Remove the four bolts and the two bearing caps.

(d) Remove the two adjusting nuts.

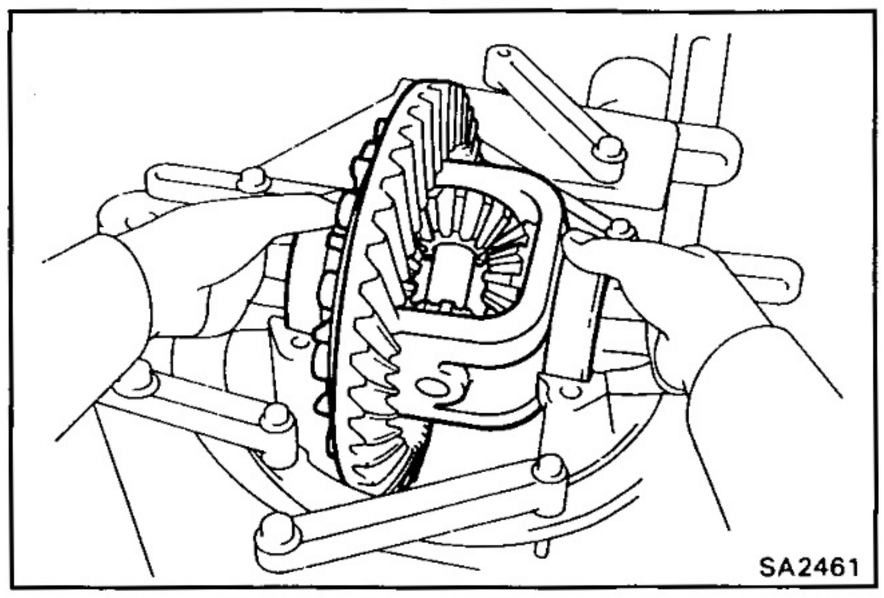

(e) Remove the differential case with the side bearing outer races from the differential carrier.

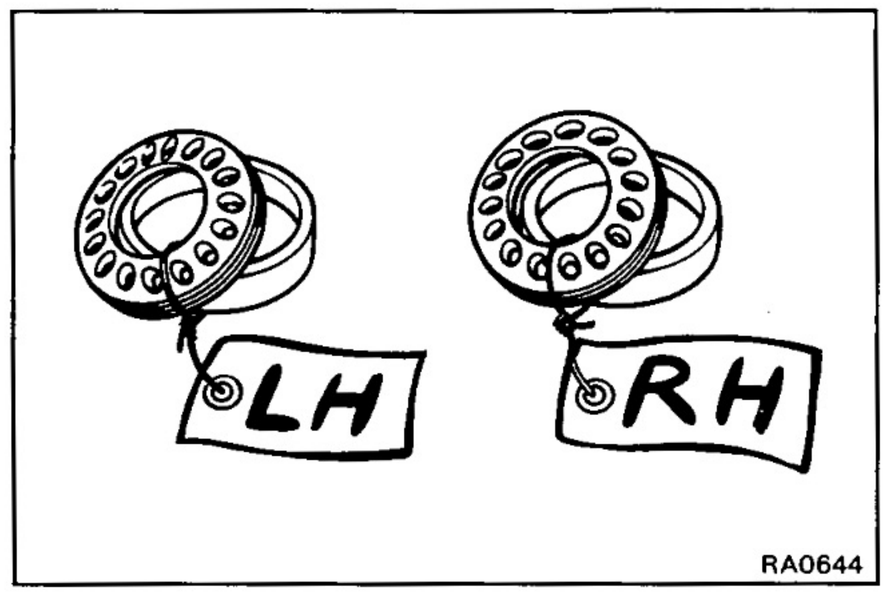

HINT: Tag the disassembled parts to show the location for reassembly.

(w/ DIFFERENTIAL LOCK)

(a) Place matchmarks on the bearing cap and differential carrier.

(b) Remove the four bolts and the two bearing caps.

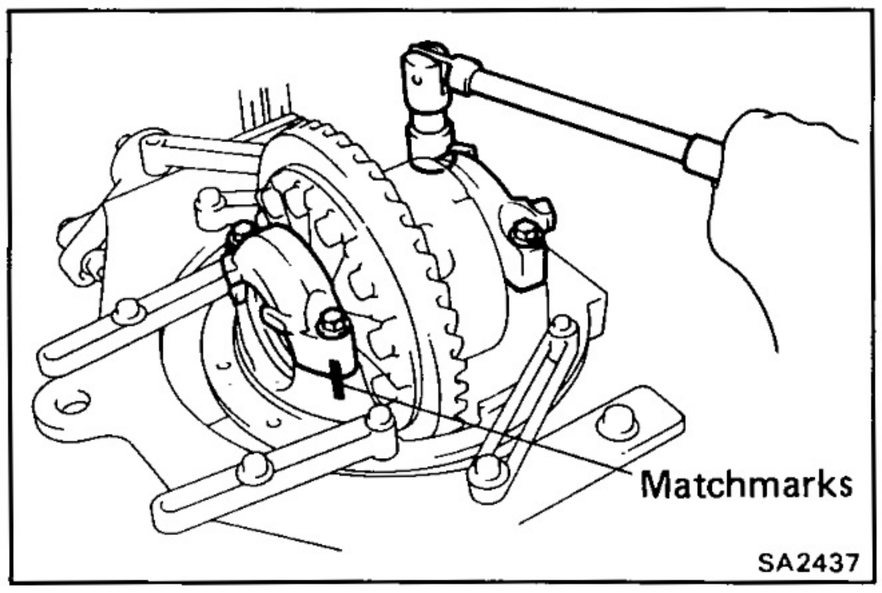

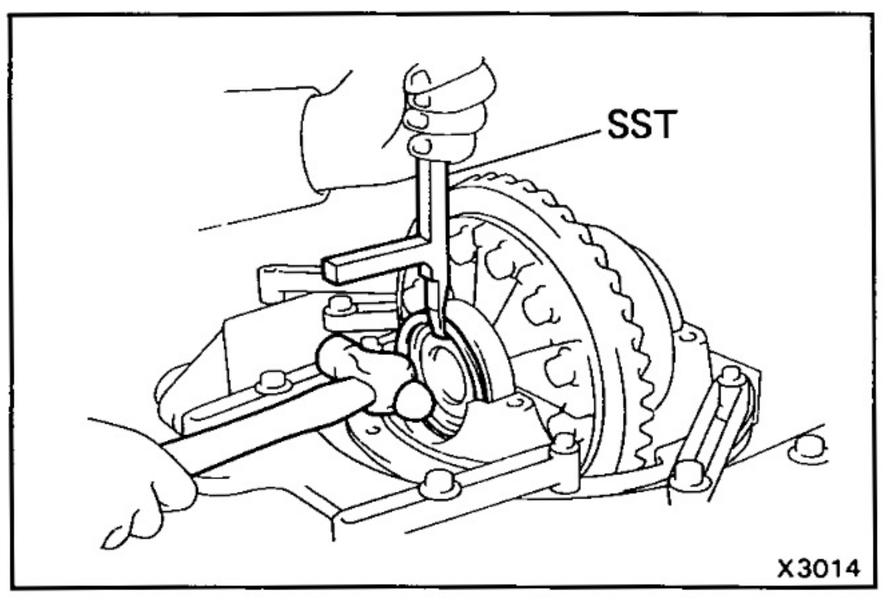

(c) Using SST, remove the plate washer.

SST 09504-22010

HINT: Measure the plate washer thickness and note it.

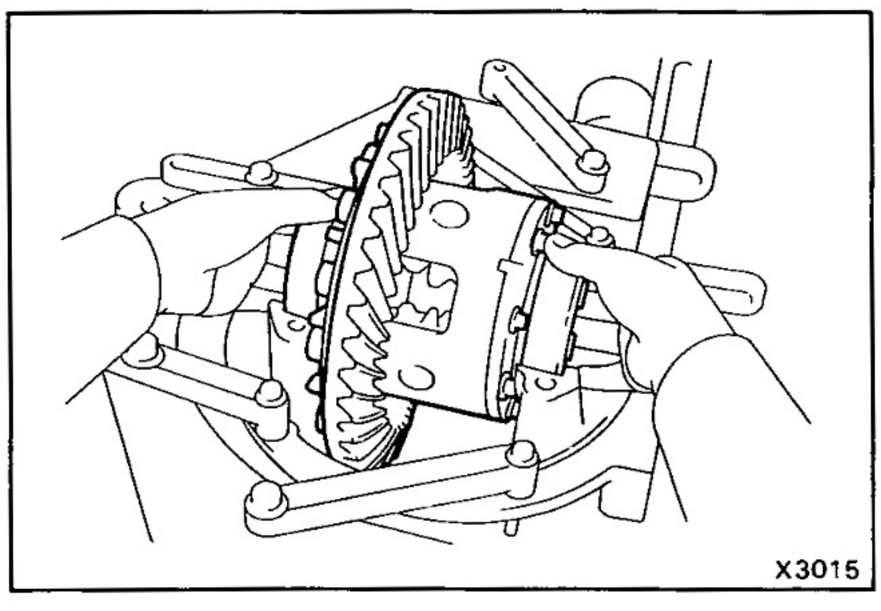

(d) Remove the differential case with the side bearing outer races from the differential carrier.

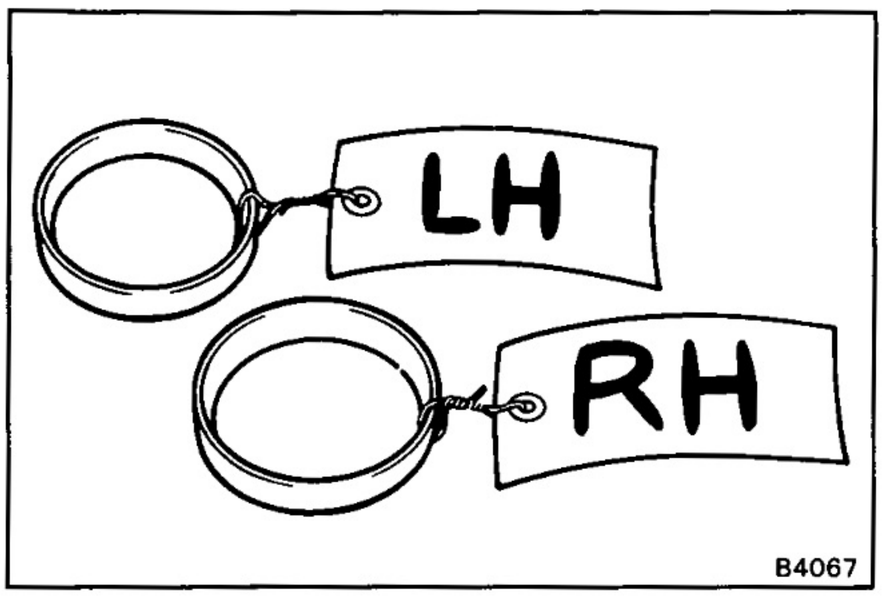

HINT: Tag the bearing outer races to show the location for reassembly.

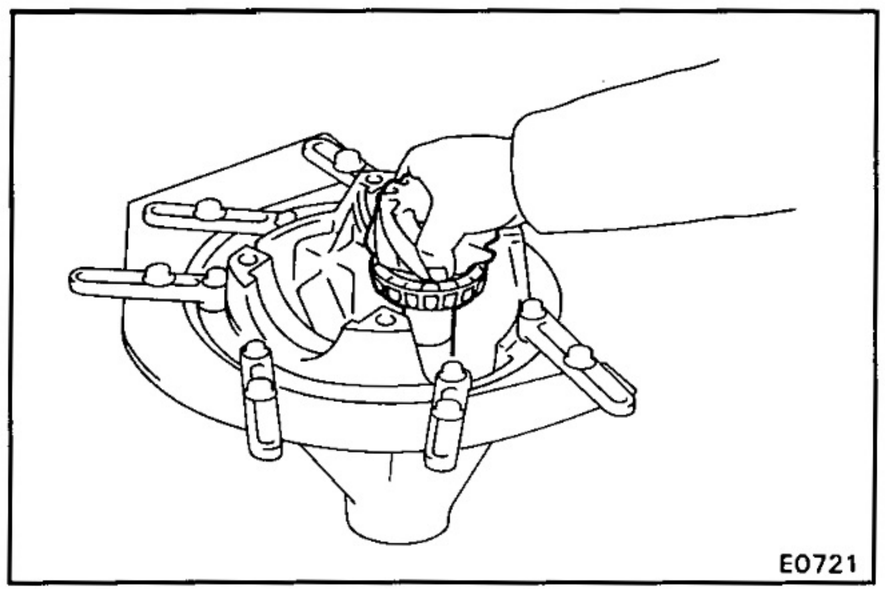

9. REMOVE DRIVE PINION AND BEARING SPACER

(a) Remove the drive pinion with the rear bearing.

(b) Remove the bearing spacer.

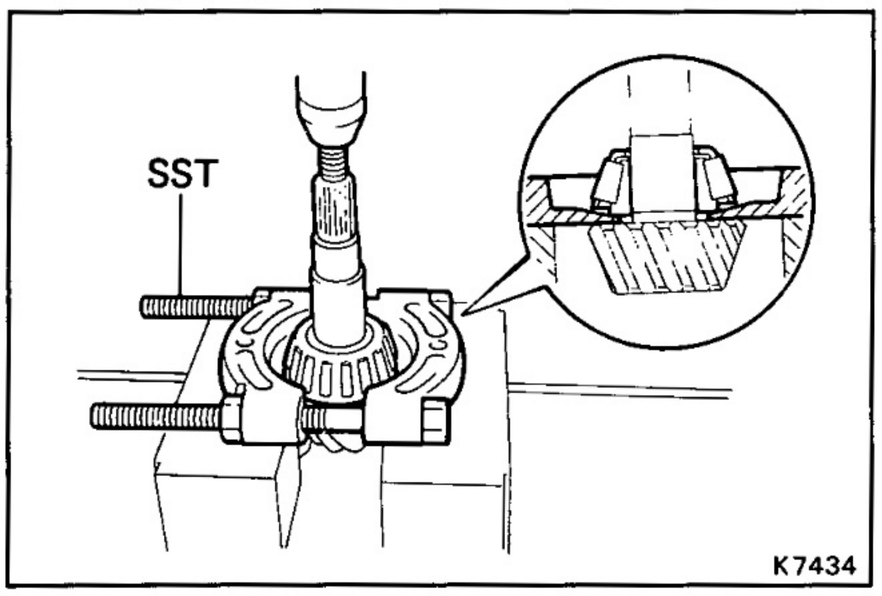

10. REMOVE DRIVE PINION REAR BEARING

(a) Using SST, press out the rear bearing from the drive pinion.

SST 09950-00020

HINT: If the drive pinion or ring gear are damaged replace them as a set.

(b) Remove the washer from the drive pinion.

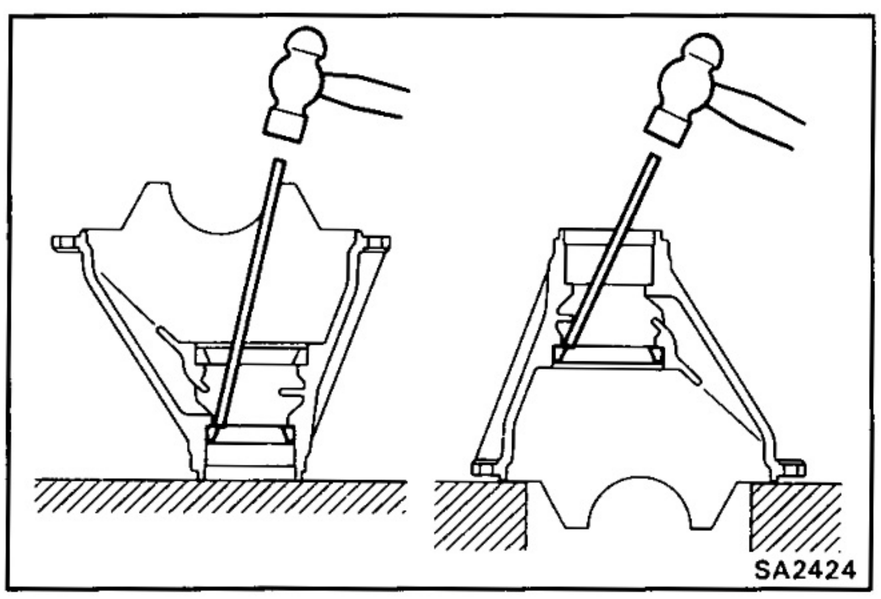

11. REMOVE FRONT AND REAR BEARING OUTER RACE

Using a hammer and brass bar, drive out the outer race from the carrier.

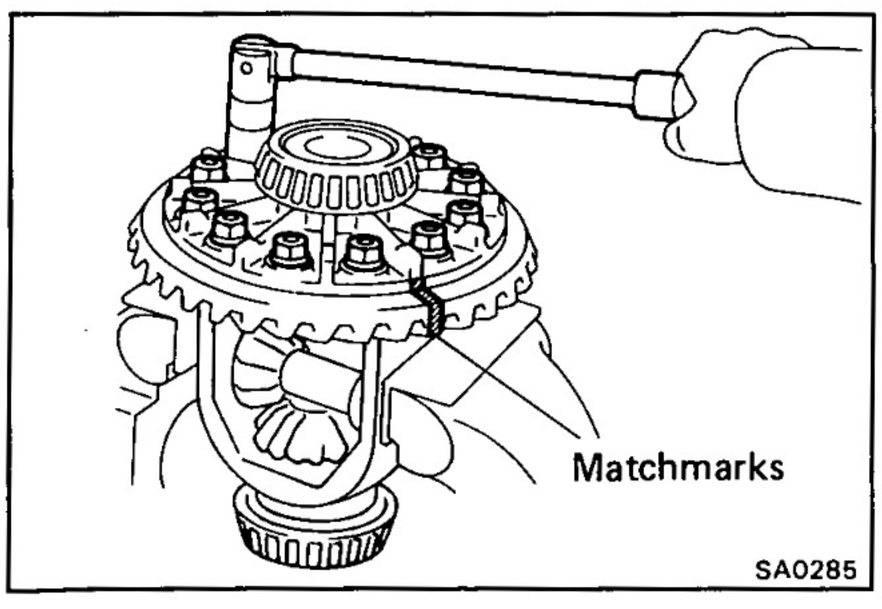

12. REMOVE RING GEAR

(a) Place matchmarks on the ring gear and differential case.

(b) Remove the twelve nuts and twelve bolts.

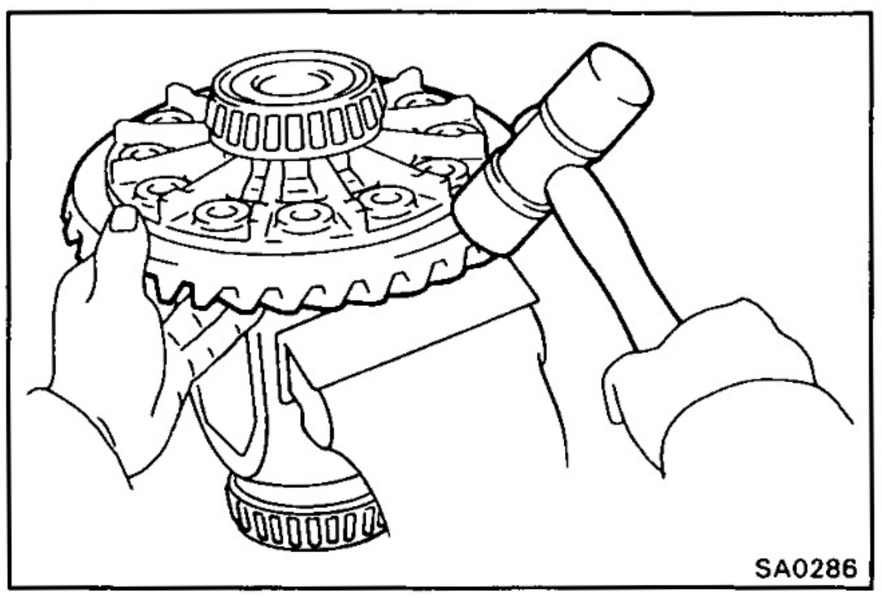

(c) Using a plastic hammer or copper hammer, tap on the ring gear to separate it from differential case.

13. CHECK DIFFERENTIAL CASE RUNOUT

(a) Place the bearing outer races on their respective bearings. Check that the left and right outer races are not interchanged.

(b) Install the differential case in the differential carrier.

(c) When there is no play left in the side bearings, install the adjusting nuts.

(d) Align the matchmarks on the bearing cap and differential carrier.

(e) Install and uniformly tighten the four bearing cap bolts in several passes.

(f) Using a dial indicator, measure the differential case runout.

Maximum runout: 0.07 mm (0.0028 in.)

(g) Remove the differential case.
(See step 8 on pages SA-106, 107)

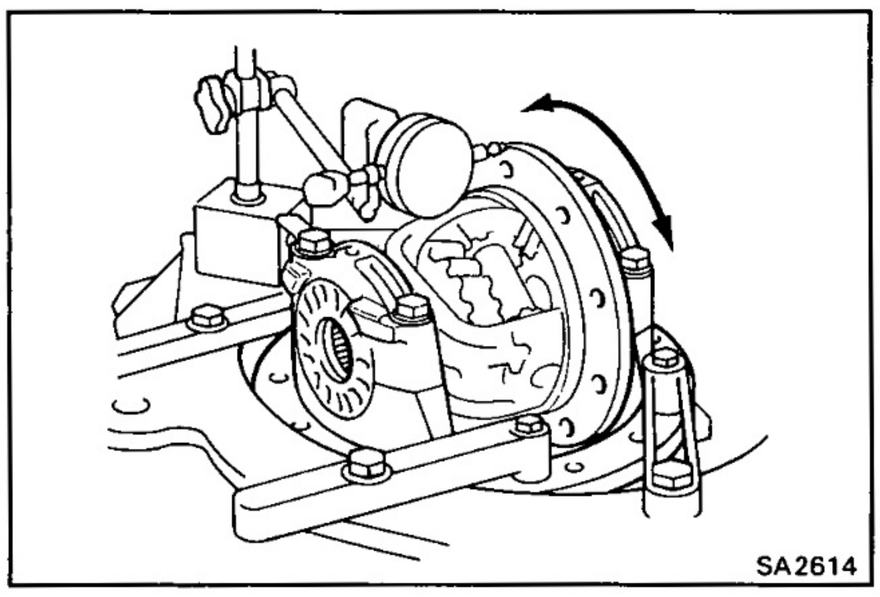

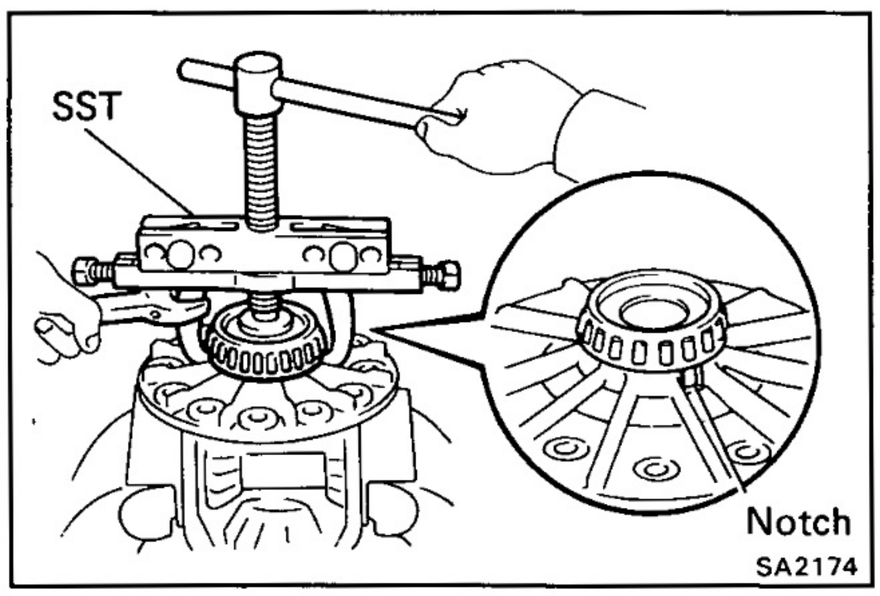

14. REMOVE SIDE BEARINGS (2 PINION AND LSD TYPES)

Using SST, remove the side bearing from the differential case.

SST 09950-20017

(w/ DIFFERENTIAL LOCK)

(a) Using SST, remove the side bearing (ring gear side).

SST 09950-20017

HINT: Fix the claws of SST to the notch in the differential case.

(b) Using four bolts and SST, remove the side bearing (cover side).

HINT: Fix the claws of SST to the notch in the differential case.

SST 09550-10012 (09252-10010, 09557-10010)

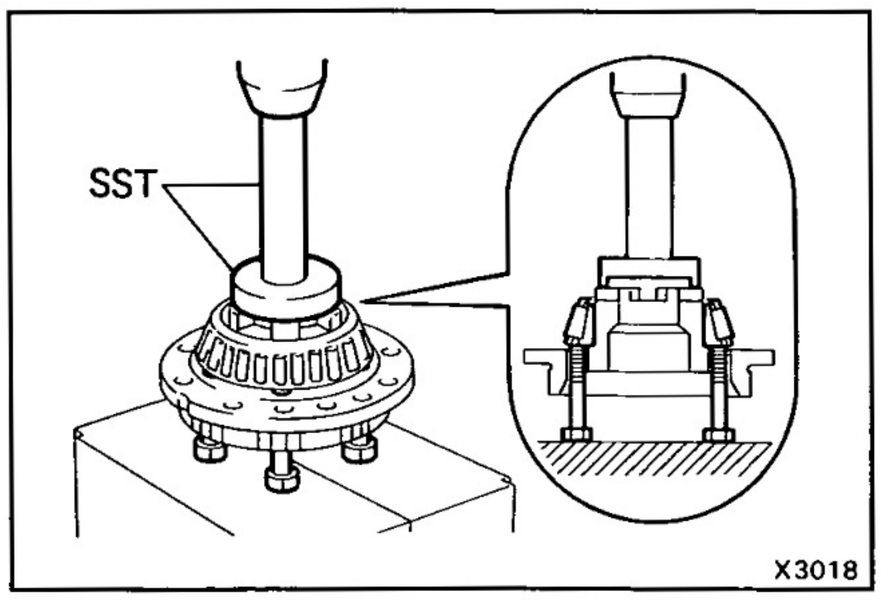

15. DISASSEMBLE DIFFERENTIAL CASE

2 pinion type: See page SA-124

w/ Differential lock
(4 pinion type): See page SA-126

LSD type : See page SA-129

REPLACEMENT OF DIFFERENTIAL COMPONENTS

REPLACE COMPANION FLANGE DUST DEFLECTOR

(a) Using SST and a press, remove the dust deflector.

SST 09950-00020

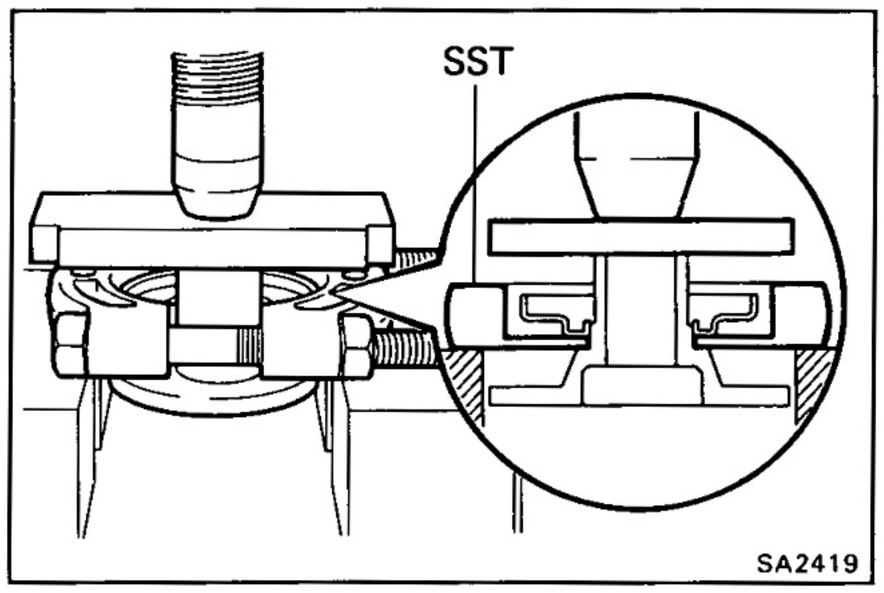

(b) Using SST and a press, install a new dust deflector.

SST 09726-40010

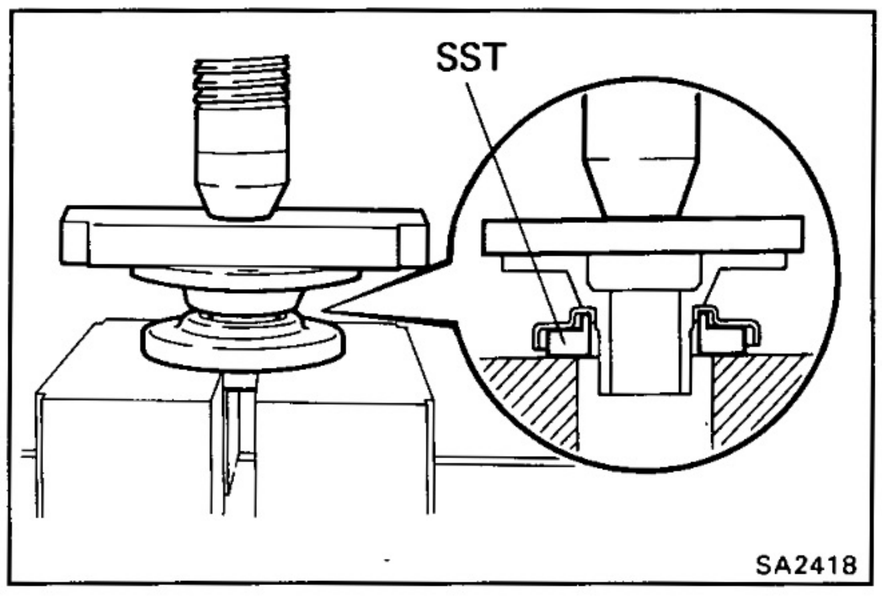

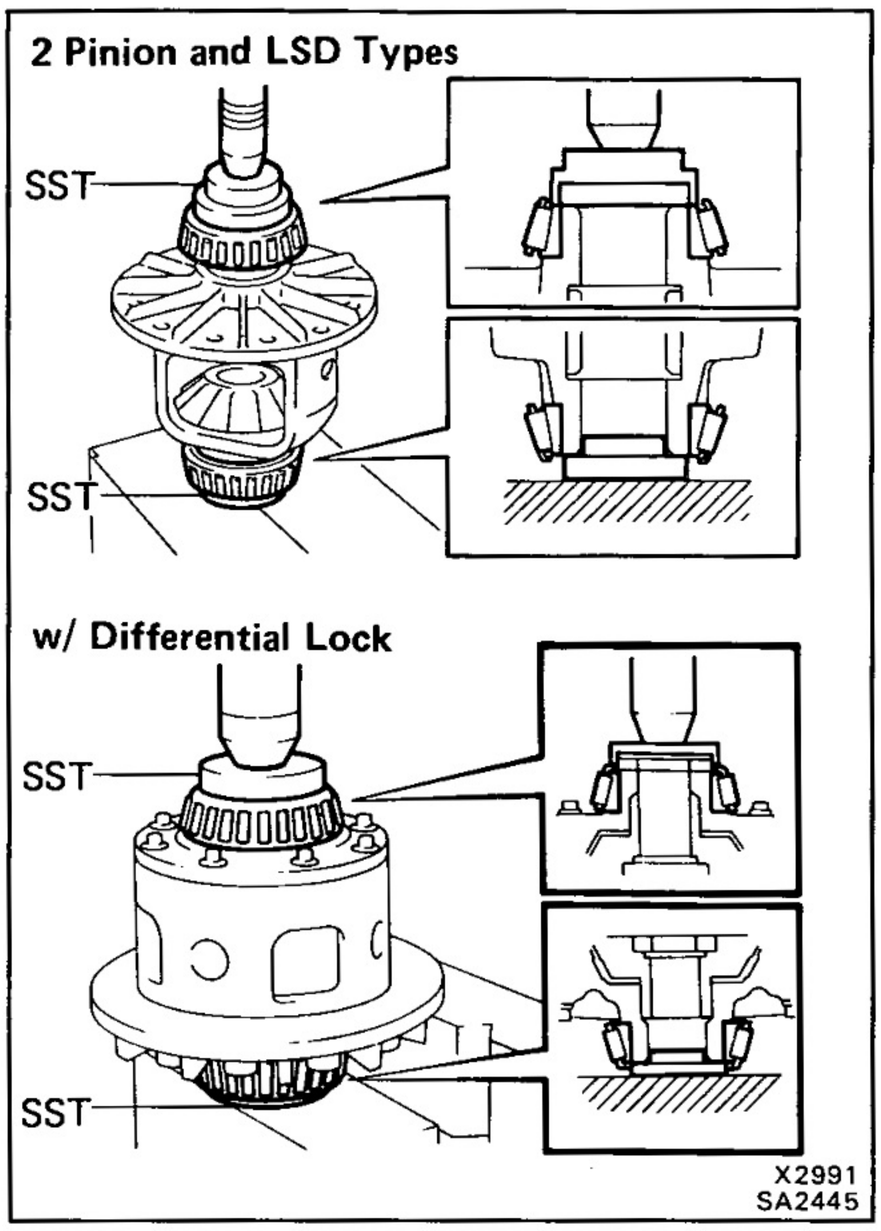

ASSEMBLY OF DIFFERENTIAL CARRIER

(See page SA-101)

1. INSTALL SIDE BEARINGS

Using SST and a press, install the two side bearings on the differential case.

SST 2 pinion and LSD types
09315-00021 and 09550-10012 (09558-10010)

w/ Differential lock
09550-60010 and 09550-10012 (09558-10010)

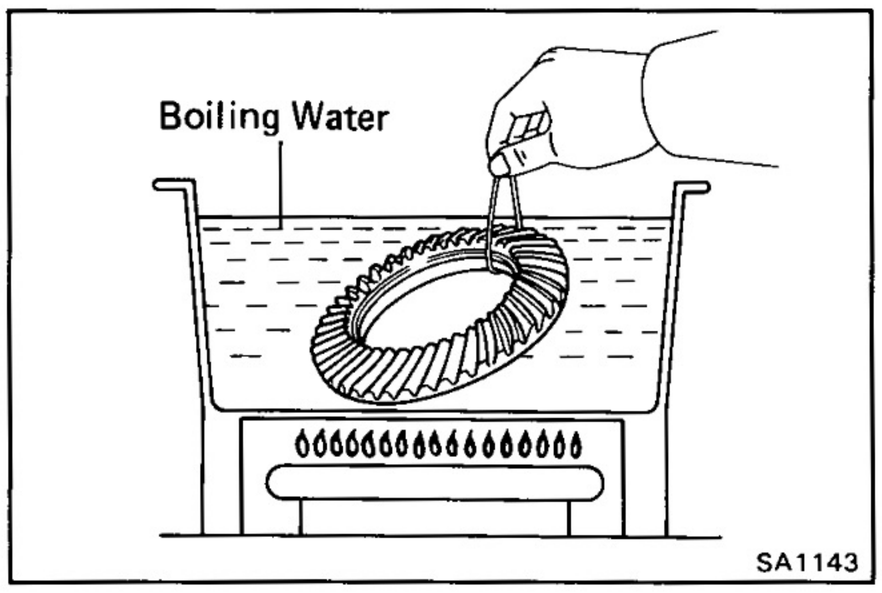

2. INSTALL RING GEAR ON DIFFERENTIAL CASE

(a) Clean the contact surfaces of the differential case and ring gear.

(b) Heat the ring gear in boiling water.

(c) After the moisture on the ring gear has completely evaporated, quickly install the ring gear to the differential case.

HINT: Align the matchmarks on the ring gear and the differential case.

(d) Temporarily install the twelve bolts and nuts so that the bolt holes in the ring gear and differential case are not misaligned.

NOTICE:

- **The ring gear set bolts should be not tighten until the ring gear has cooled sufficiently.**
- **Install the bolts so that the taped part of the bolt is on the ring gear side.**

(e) After the ring gear has cooled sufficiently, torque the ring gear set nuts.

Torque: 1,125 kg-cm (81 ft-lb, 110 N·m)

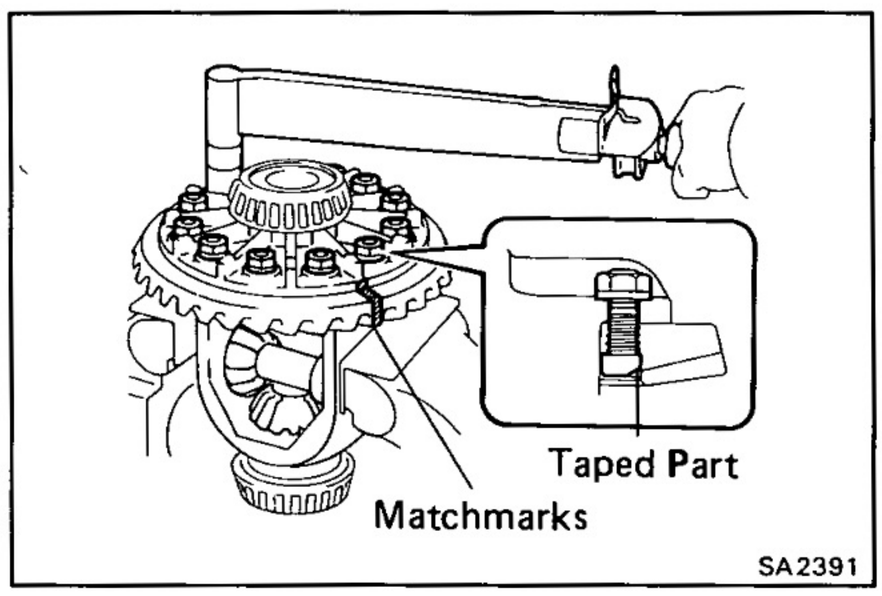

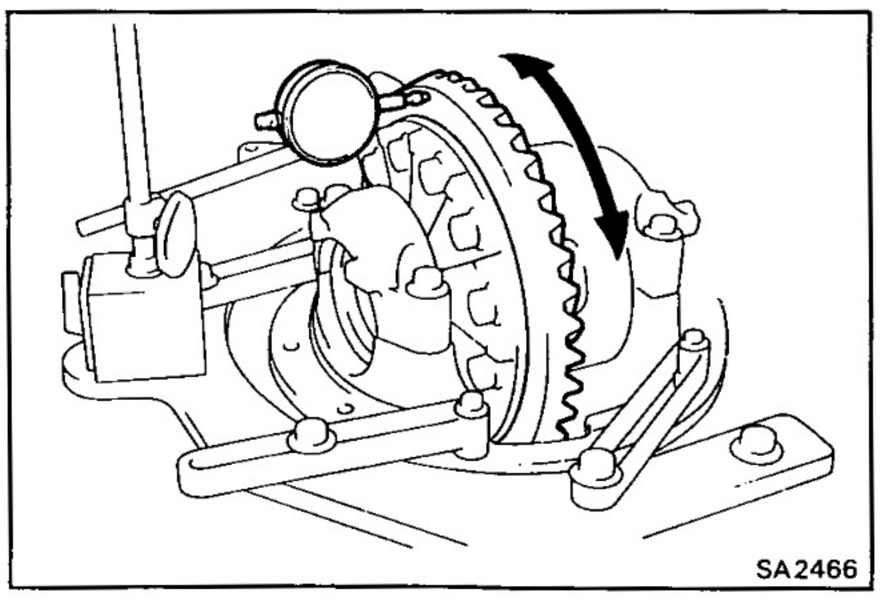

3. INSPECT RING GEAR RUNOUT

(a) Install the differential case onto the carrier.

(b) Install bearing caps. (See page SA-116)

(c) Using a dial indicator, measure the runout of ring gear.

Maximum runout: 0.10 mm (0.0039 in.)

(d) Remove the differential case.
(See step 8 on page SA-106)

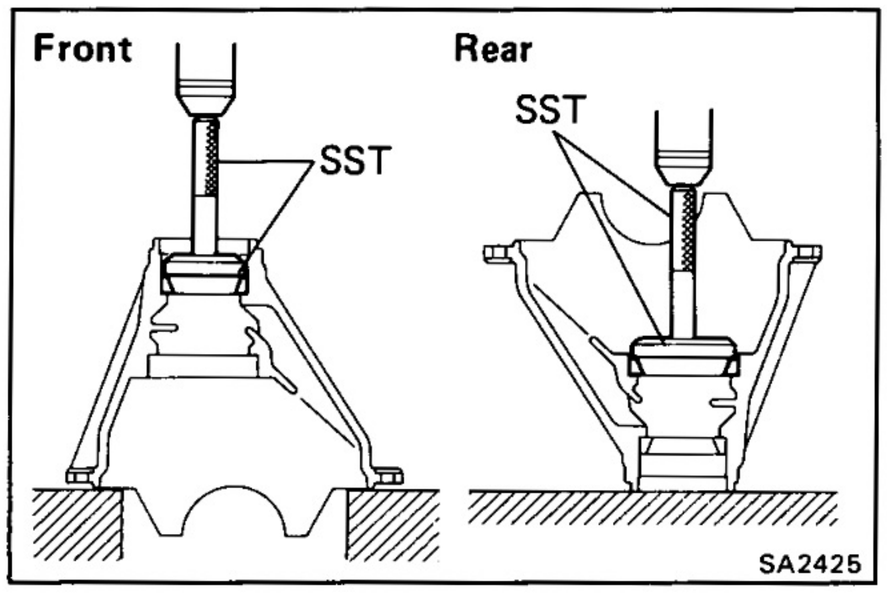

4. INSTALL DRIVE PINION FRONT AND REAR BEARING OUTER RACES

Using SST and a press, install the outer races.

SST 09608-35014

Front (09608-06020, 09608-06110)
Rear (09608-06020, 09608-06180)

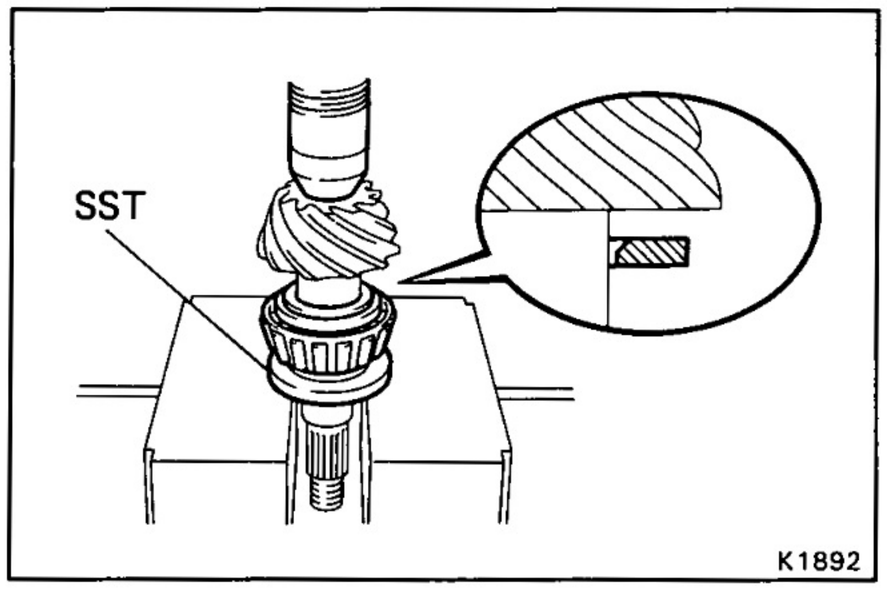

5. INSTALL DRIVE PINION REAR BEARING

(a) Install the washer on the drive pinion with the chamfered end facing the pinion gear.

HINT: First fit a washer with the same thickness as the washer which was removed, then after checking the teeth contact pattern, replace the washer with one of a different thickness if necessary.

(b) Using SST and a press, install the rear bearing to the drive pinion.

SST 09506-35010

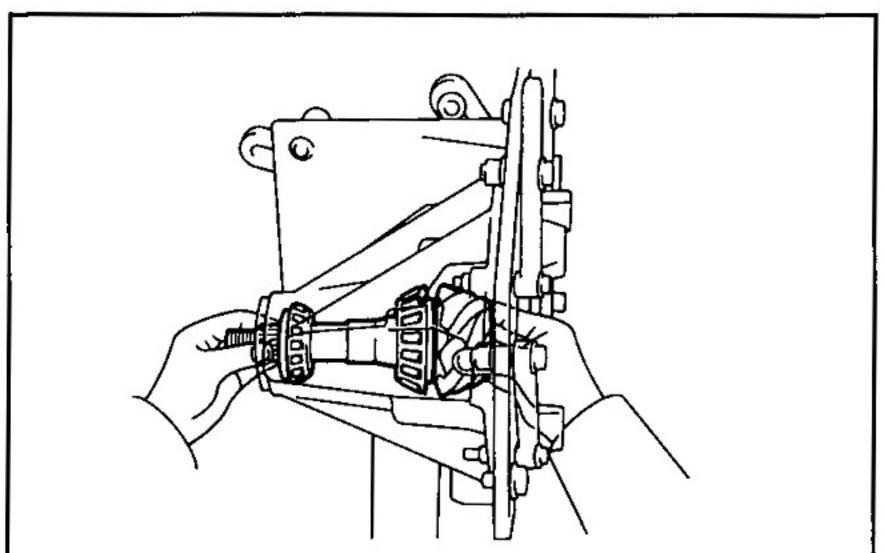

6. TEMPORARILY ADJUST DRIVE PINION PRELOAD

(a) Install the drive pinion, front bearing and oil slinger.

HINT: Assemble the spacer and oil seal after adjusting the teeth contact pattern.

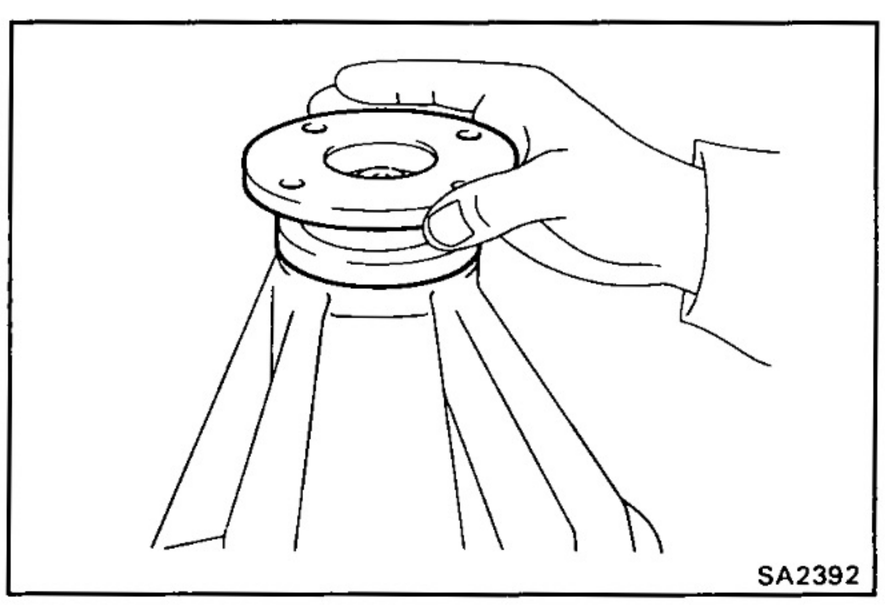

(b) Install the companion flange.

(c) Coat the threads of the nut with MP grease.

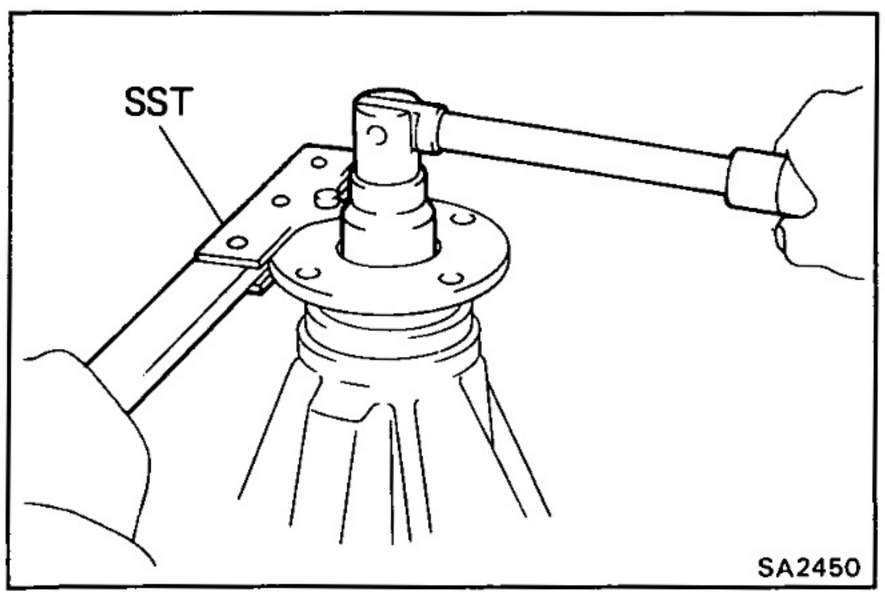

(d) Adjust the drive pinion preload by tightening the companion flange nut.

HINT: Using SST to hold the flange, tighten the nut.

SST 09330-00021

NOTICE: As there is no spacer, tighten the nut a little at a time, being careful not to overtighten it.

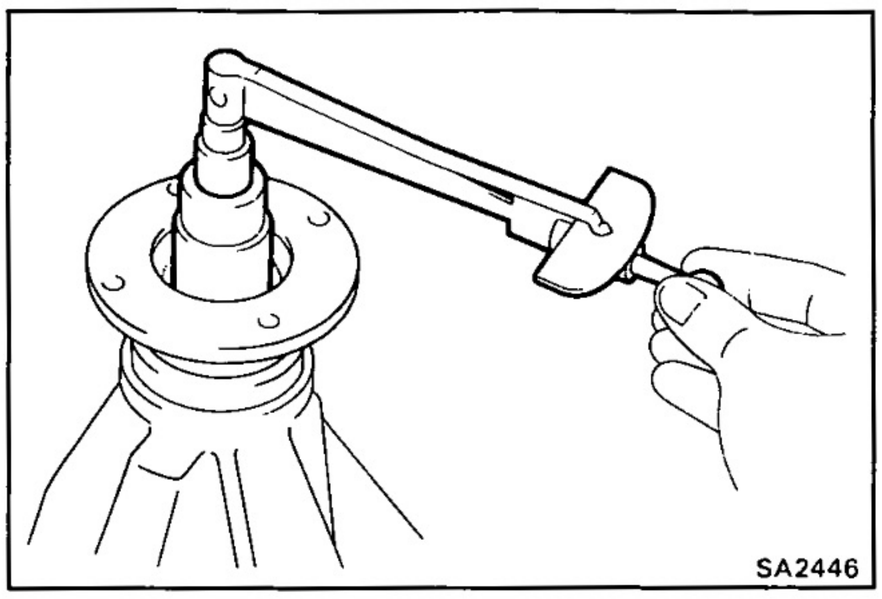

(e) Using a torque meter, measure the preload.

Preload (at starting):

New bearing

13 — 20 kg-cm
(11.3 — 17.4 in.-lb, 1.3 — 2.0 N·m)

Reused bearing

7 — 10 kg-cm
(6.1 — 8.7 in.-lb, 0.7 — 1.0 N·m)

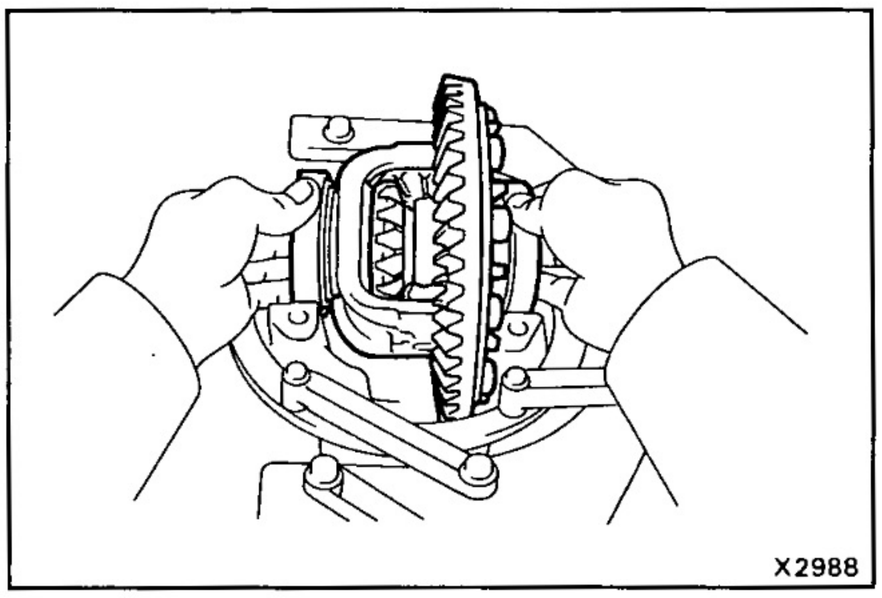

7. INSTALL DIFFERENTIAL CASE IN CARRIER (2 PINION AND LSD TYPES)

(a) Place the bearing outer races on their respective bearings. Make sure that the left and right outer races are not interchanged.

(b) Install the case in the carrier.

HINT: Make sure that there is backlash between the ring gear and drive pinion.

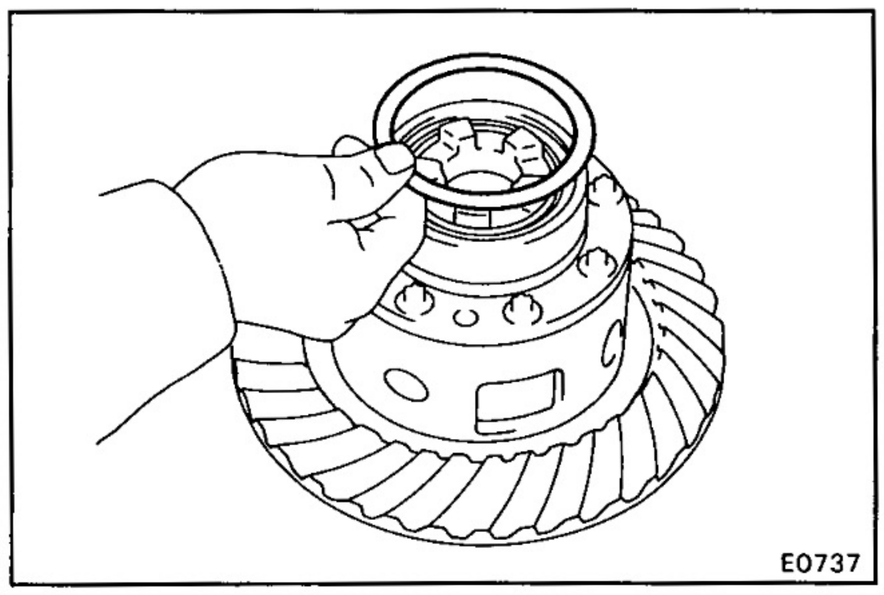

(w/ DIFFERENTIAL LOCK)

(a) Place the bearing outer races on their respective bearings. Make sure the left and right races are not interchanged.

(b) Install the assembled plate washer onto the side bearing.

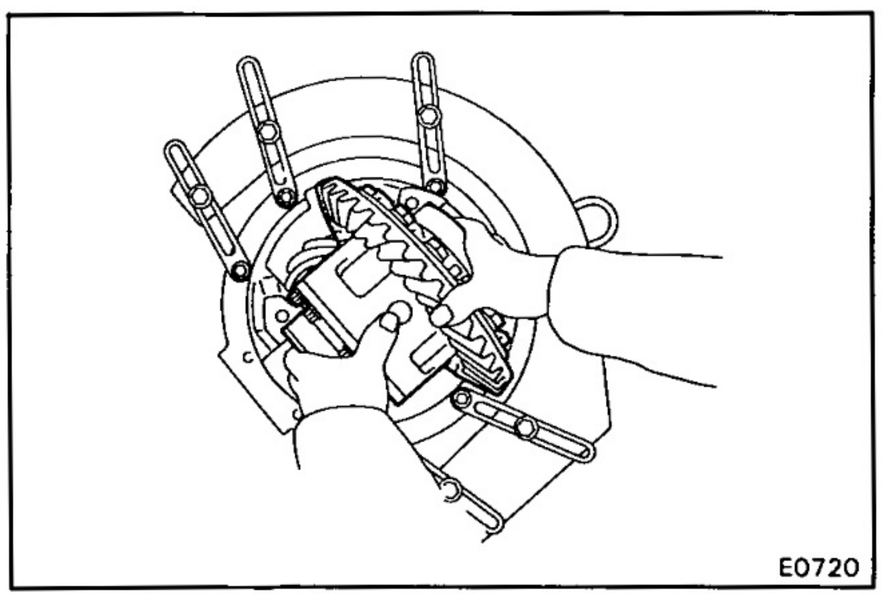

(c) Install the differential case in the carrier.

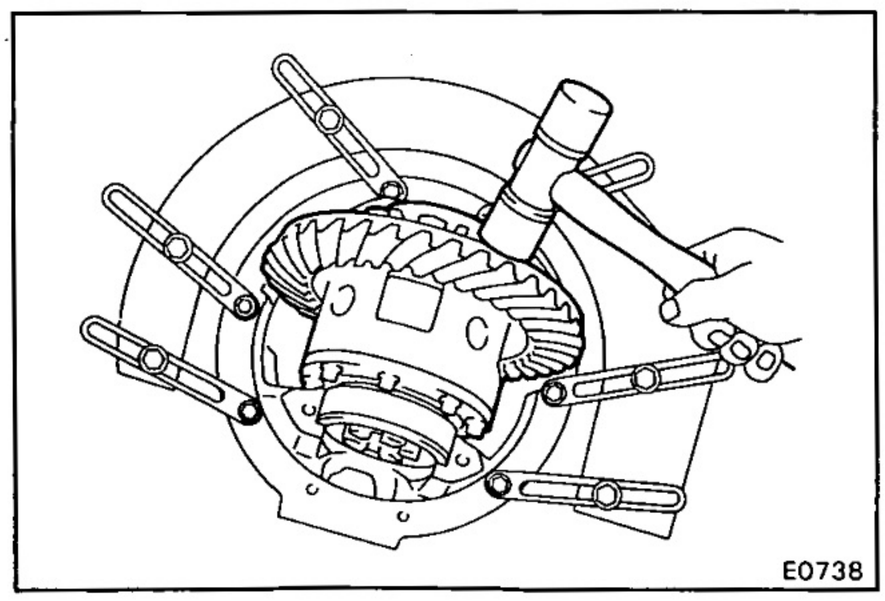

(d) Snug down the washer and bearing by tapping on the ring gear with a plastic hammer.

HINT: If it is difficult to install the differential case into the carrier, replace the plate washer with a thinner one. However, select a plate washer that allows no clearance between it and the carrier.

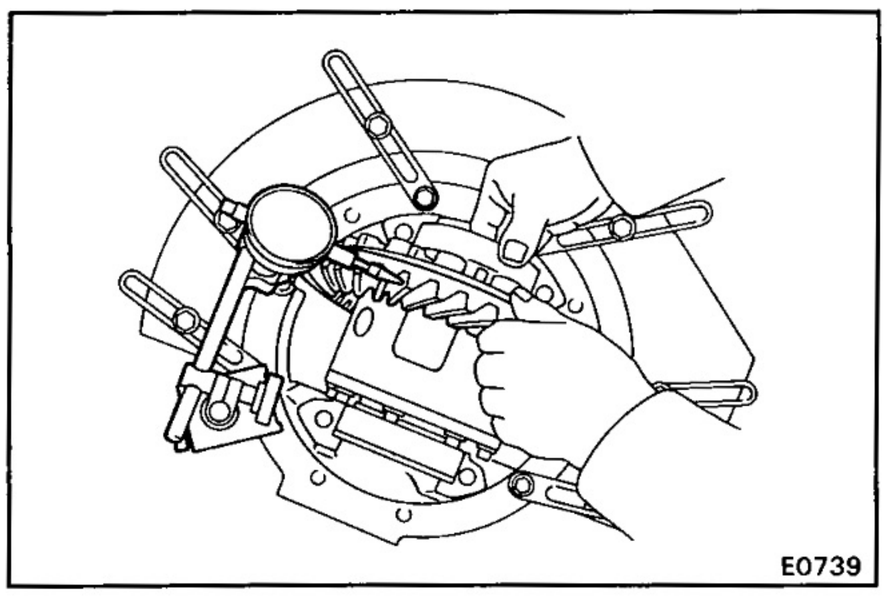

8. (w/ DIFFERENTIAL LOCK)
ADJUST RING GEAR BACKLASH

(a) Hold the side bearing of the ring gear side and measure the backlash.

Backlash (reference): 0.15 mm (0.0059 in.)

(b) Select a case cover side plate washer using the backlash as reference.

Side plate washer thickness

Mark	Thickness mm (in.)	Mark	Thickness mm (in.)	Mark	Thickness mm (in.)	Mark	Thickness mm (in.)
1	2.67 (0.1051)	7	2.85 (0.1122)	13	3.03 (0.1193)	19	3.21 (0.1264)
2	2.70 (0.1063)	8	2.88 (0.1134)	14	3.06 (0.1205)	20	3.24 (0.1276)
3	2.73 (0.1075)	9	2.91 (0.1146)	15	3.09 (0.1217)	21	3.27 (0.1287)
4	2.76 (0.1087)	10	2.94 (0.1157)	16	3.12 (0.1228)	22	3.30 (0.1299)
5	2.79 (0.1098)	11	2.97 (0.1169)	17	3.15 (0.1240)	23	3.33 (0.1311)
6	2.82 (0.1110)	12	3.00 (0.1181)	18	3.18 (0.1252)		

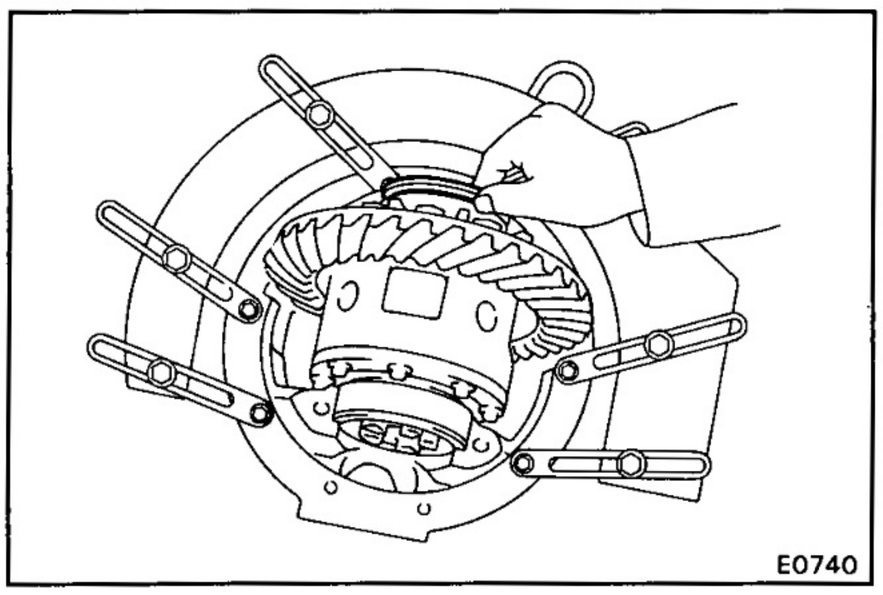

(c) Select a ring gear side plate washer of a thickness which eliminates any clearance between the plate washer and carrier.

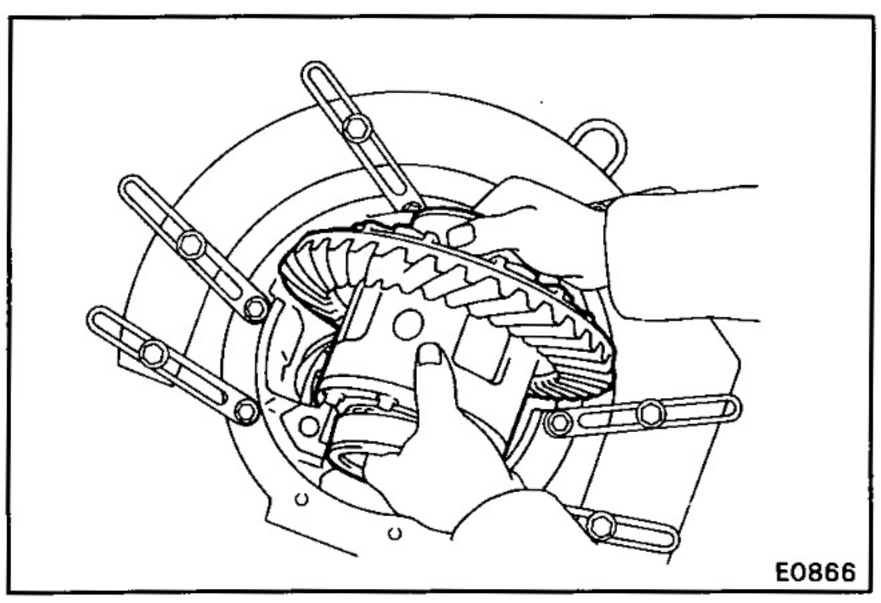

(d) Remove the plate washers and differential case.

(e) Install the plate washer into the lower part of the carrier.

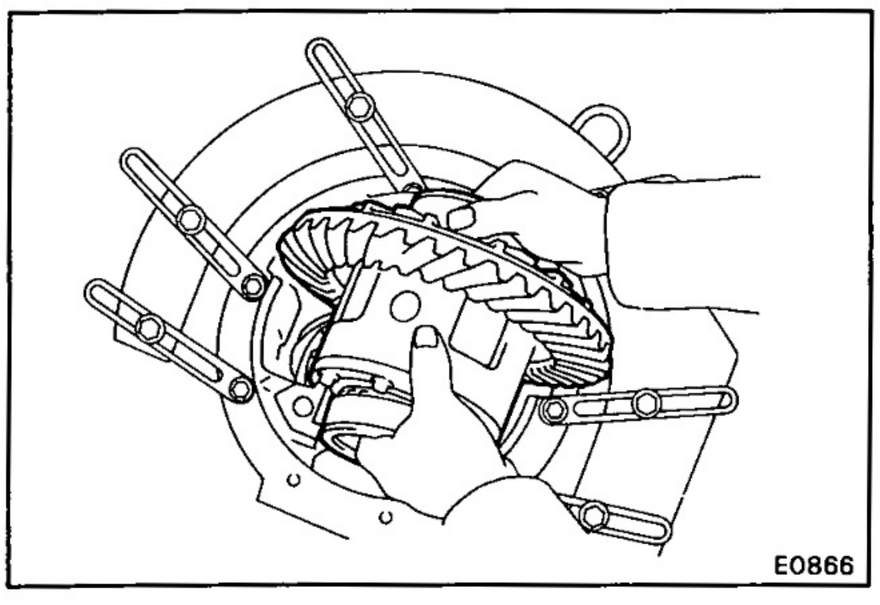

(f) Place the plate washer onto the differential case together with the outer race, and install the differential case with the outer race into the carrier.

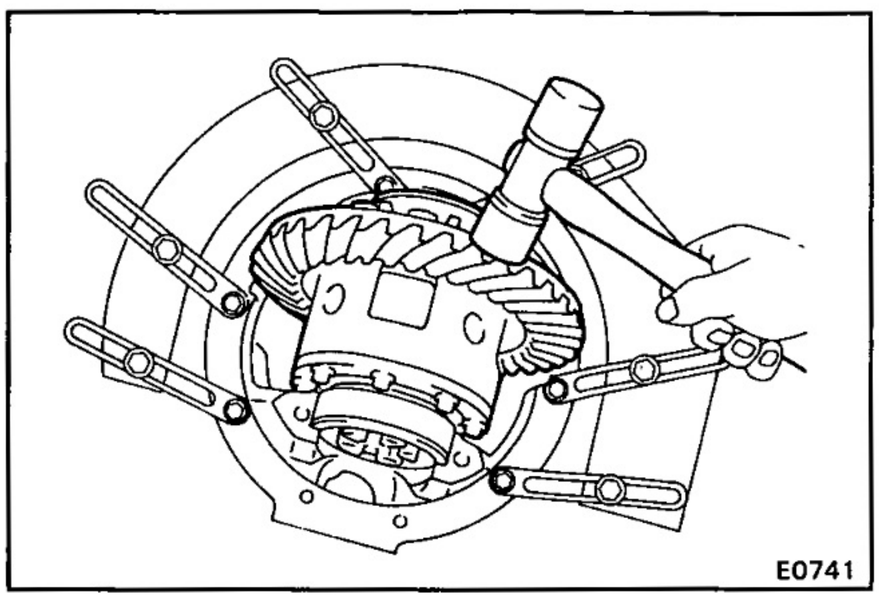

(g) Using a plastic hammer, snug down the washer and bearing by tapping the ring gear.

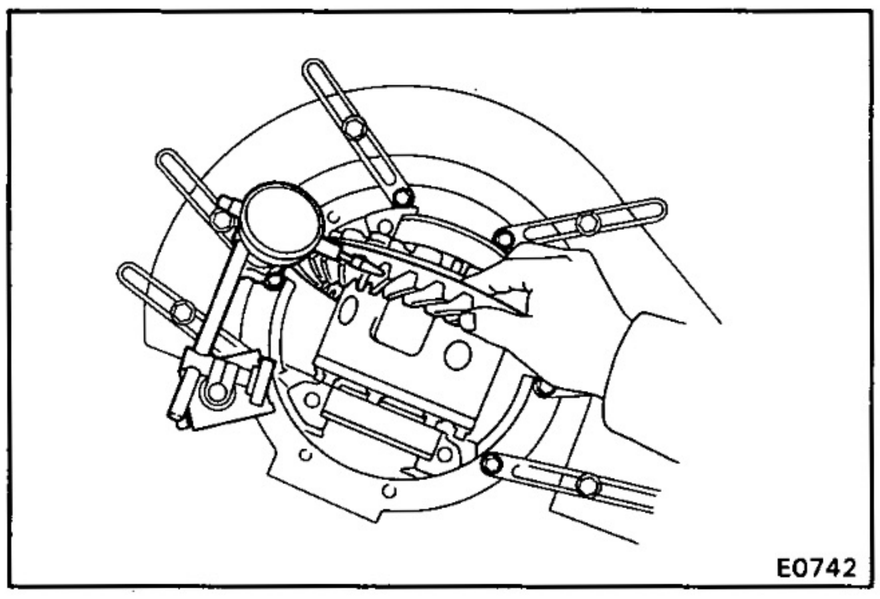

(h) Measure the ring gear backlash.

Backlash: 0.15 — 0.20 mm (0.0059 — 0.0079 in.)

If not within specification, adjust by either increasing or decreasing the number of washers on both sides by an equal amount.

HINT : There should be no clearance between the plate washer and case.

Insure that there is ring gear backlash.

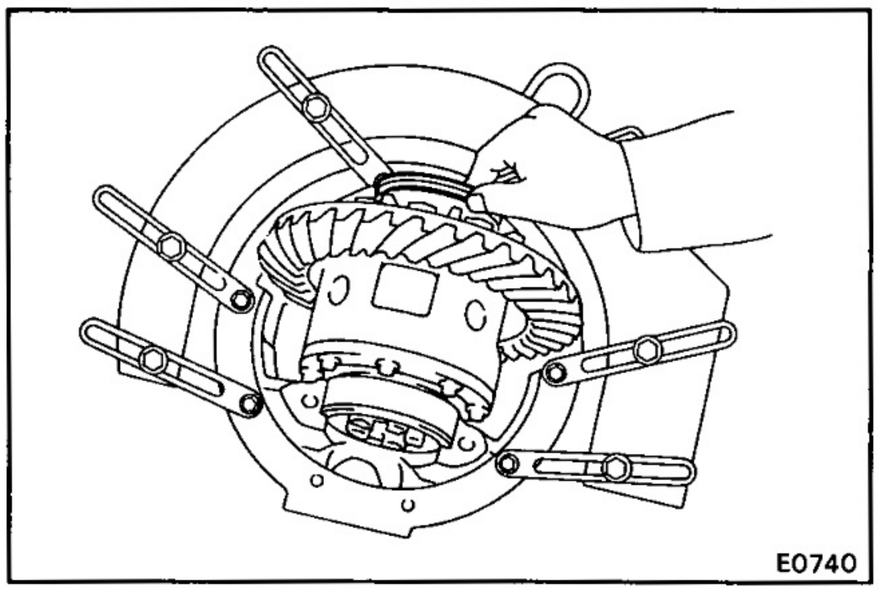

9. (w/ DIFFERENTIAL LOCK)
ADJUST SIDE BEARING PRELOAD

(a) After adjustment with the backlash as reference, remove the ring gear side plate washer.

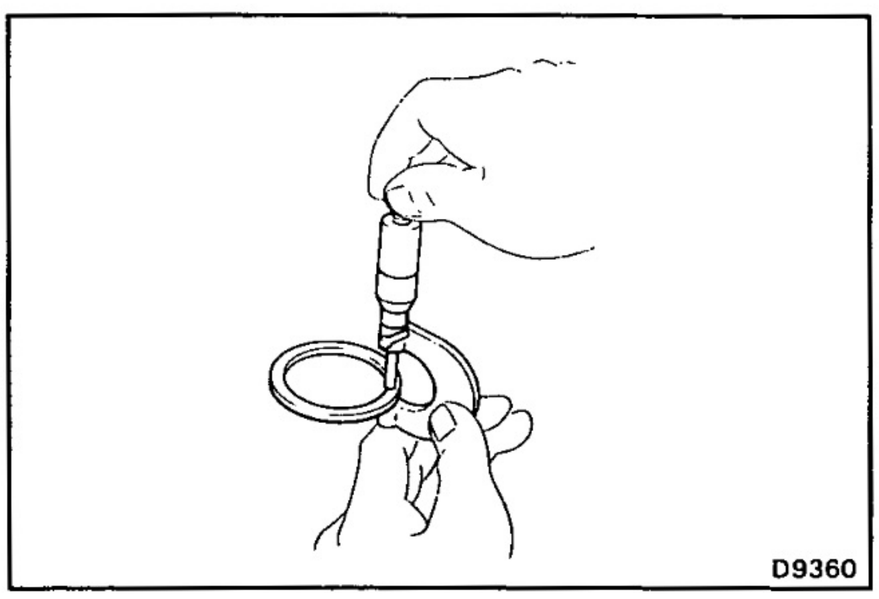

(b) Measure the thickness of the removed plate washer.

(c) Install a new thicker washer of 0.06 — 0.09 mm (0.0024 — 0.0035 in.) than the washer removed.

HINT: Select a washer which can be pressed in 2/3 of the way with finger.

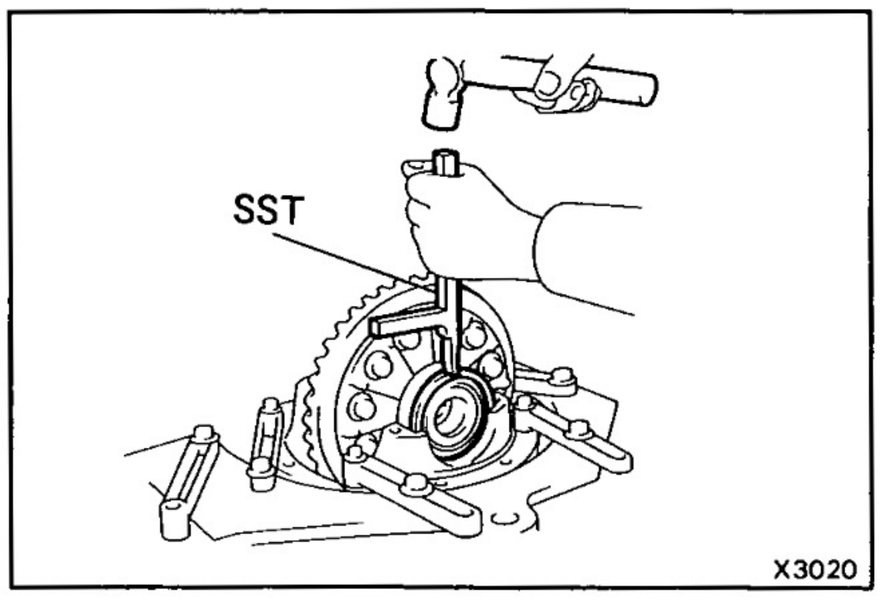

(d) Using SST, tap in the plate washer.

SST 09504-22010

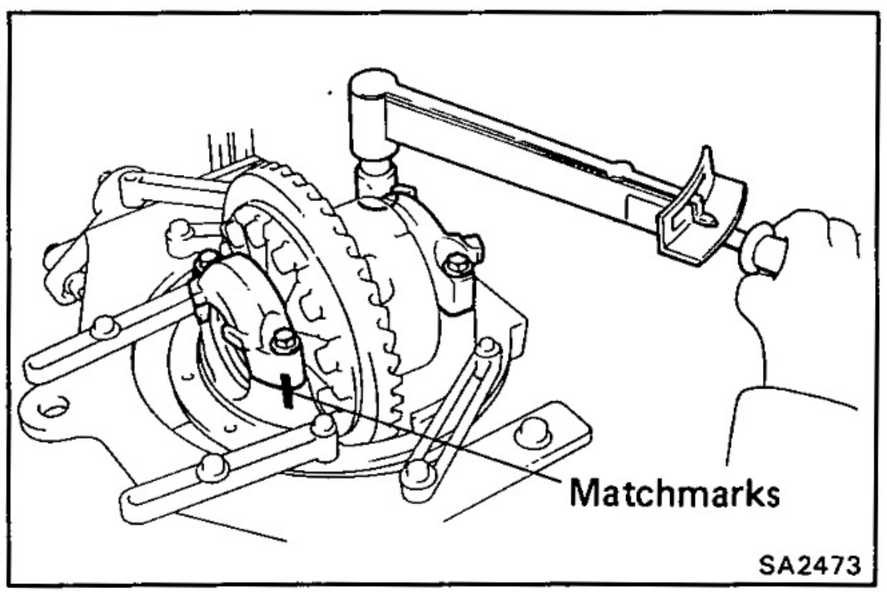

(e) Align the matchmarks on the cap and carrier.

(f) Tighten the four bearing cap bolts to the specified torque.

Torque: 1,150 kg-cm (83 ft-lb, 113 N·m)

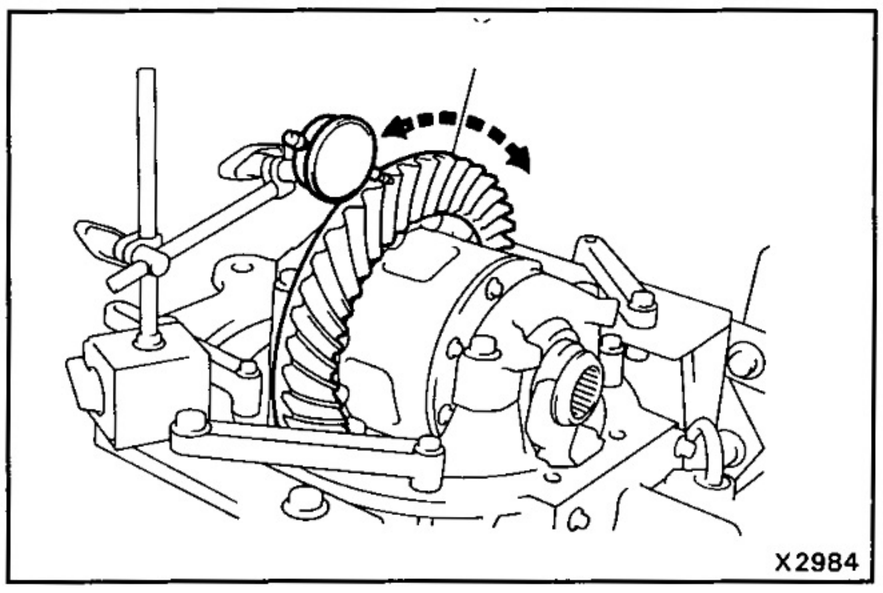

(g) Using a dial indicator, adjust the ring gear backlash until it is within specification.

Backlash: 0.15 — 0.20 mm (0.0059 — 0.0079 in.)

If not within standard, follow the procedure listed below.

If backlash is greater than specification:

Replace the cover side washer with a thinner washer. When doing so replace the ring gear side plate washer with one having a thickness equalling the amount the cover side plate washer thickness was decreased.

If backlash is less than specification:

Replace the cover side plate washer with a thicker washer. When doing so replace the ring gear side plate washer with one having a thinness equalling the amount the cover side plate washer thickness was increased.

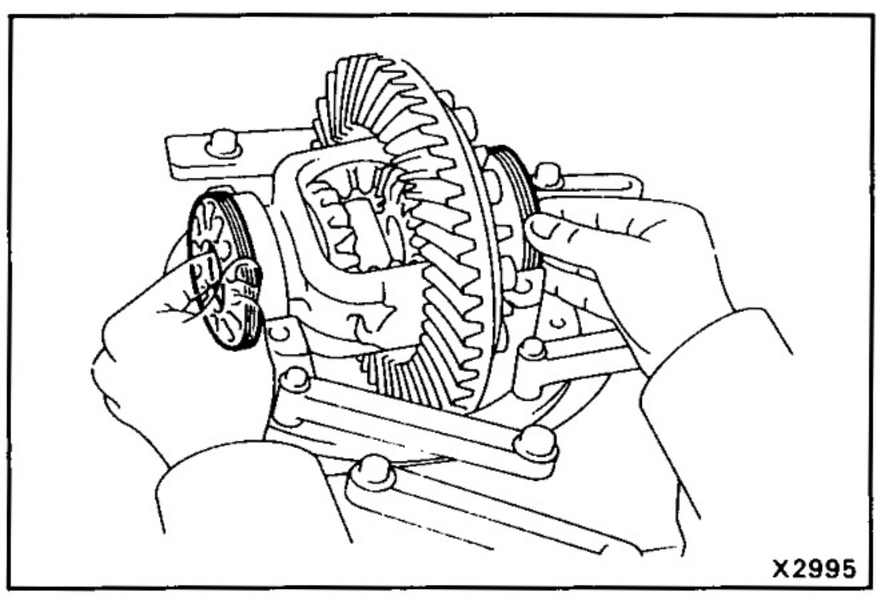

10. (2 PINION AND LSD TYPES) INSTALL ADJUSTING NUTS

Install the adjusting nuts on the carrier, making sure that the nuts are threaded properly.

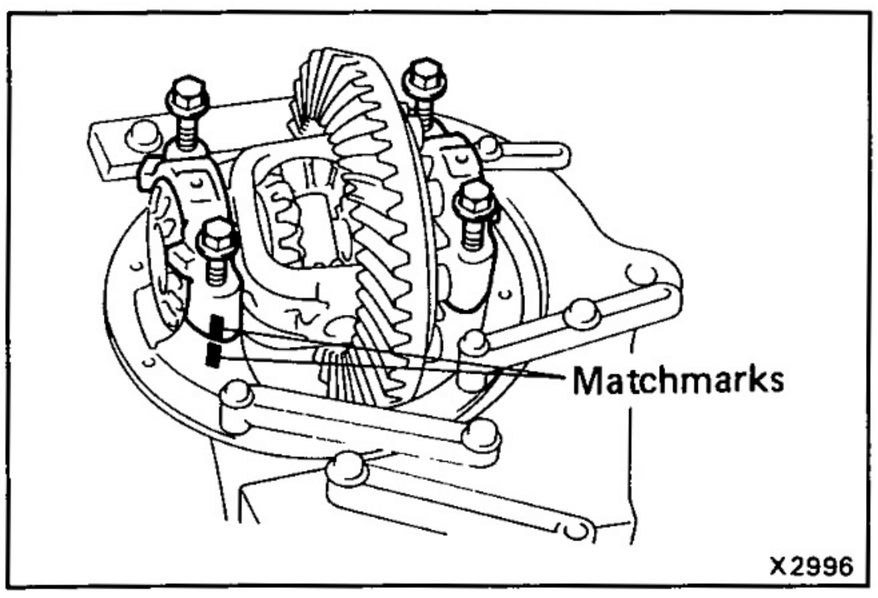

11. (2 PINION AND LSD TYPES) INSTALL BEARING CAPS

Align the matchmarks on the cap and carrier. Screw in the two bearing cap bolts two or three turns and press down the bearing cap by hand.

HINT: If the bearing cap does not fit tightly on the carrier, the adjusting nuts are not threaded properly.

Reinstall the adjusting nuts if necessary.

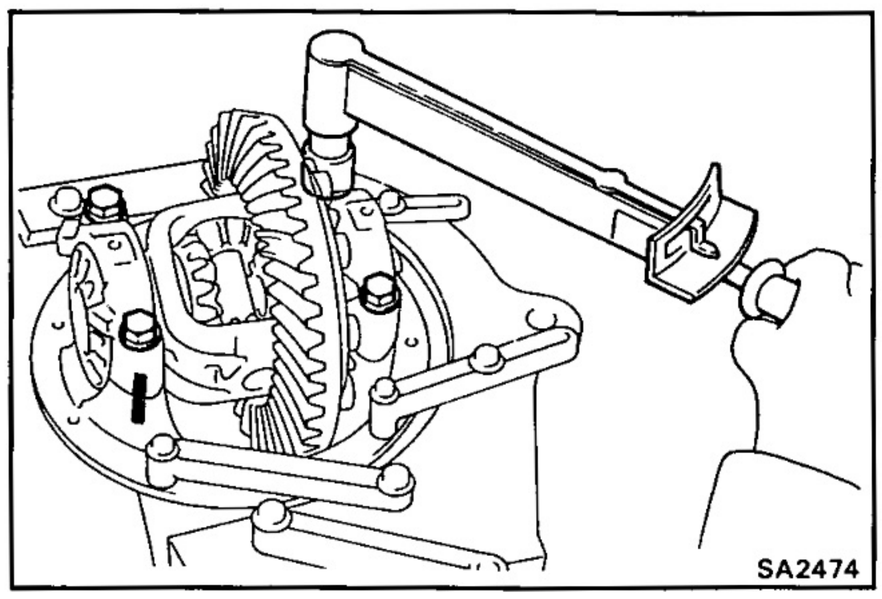

12. (2 PINION AND LSD TYPES) ADJUST SIDE BEARING PRELOAD

(a) Tighten the four bearing cap bolts to the specified torque, then loosen them to the point where they can be turned by hand.

Torque: 800 kg-cm (58 ft-lb, 78 N·m)

(b) Fully tighten the four bearing cap bolts by hand.

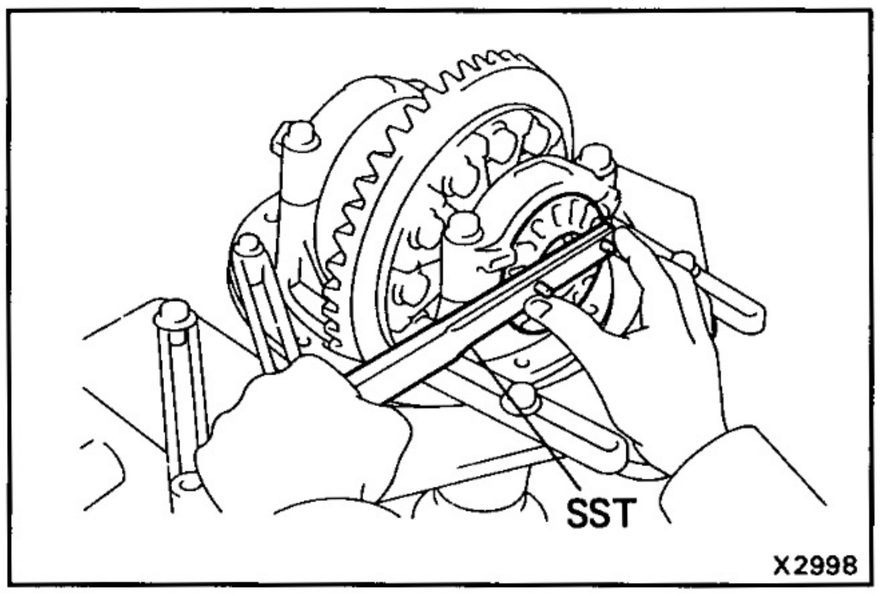

(c) Using SST, tighten the adjusting nut on the ring gear side until the ring gear has a backlash of about 0.2 mm (0.008 in.).

SST 09504-00011

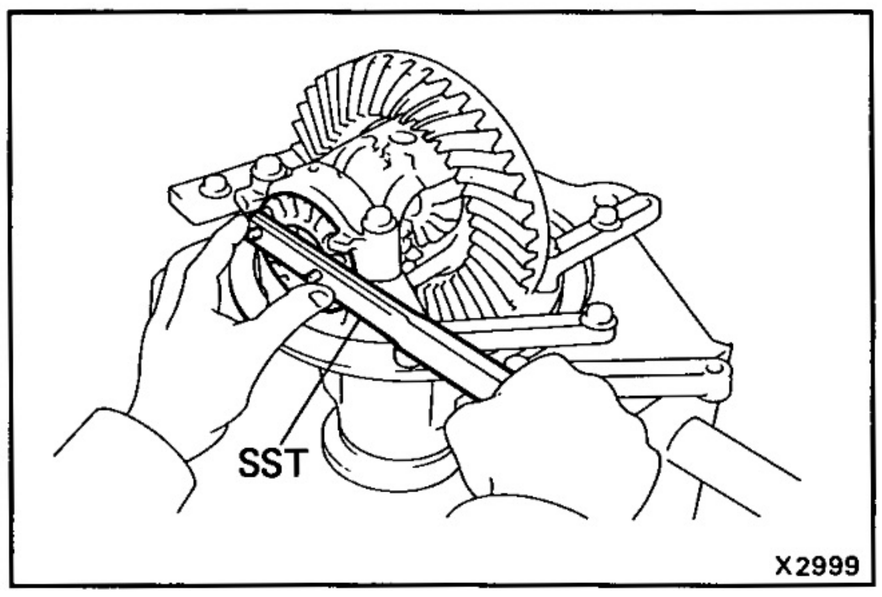

(d) While turning the ring gear, use SST to fully tighten the adjusting nut on the drive pinion side. After the bearings are settled, loosen the adjusting nut on the drive pinion side.

SST 09504-00011

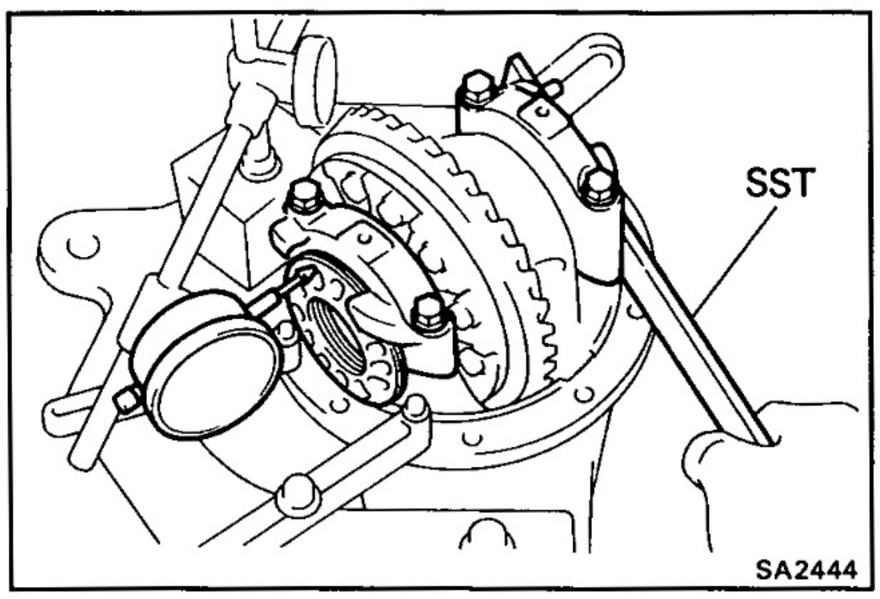

(e) Place a dial indicator on the top of the adjusting nut on the ring gear side.

(f) Adjust the side bearing for zero preload by tightening the other adjusting nut until the pointer on the indicator begins to move.

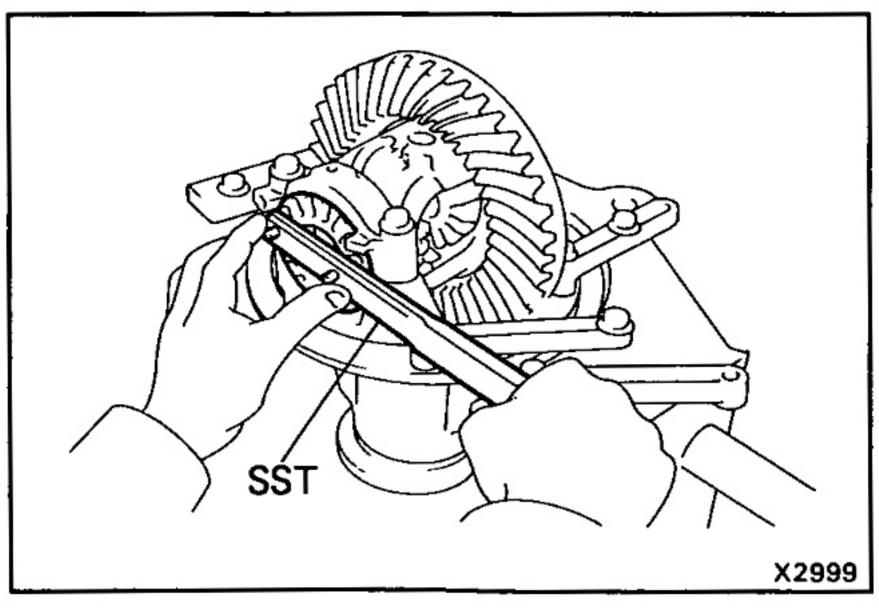

(g) Tighten the adjusting nut 1 — 1 1/2 notches from the zero preload position.

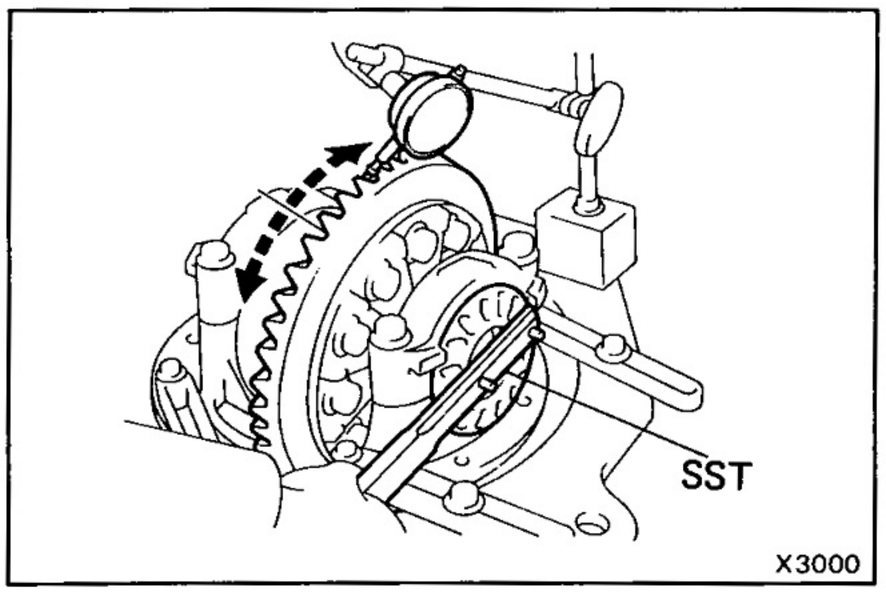

(h) Using a dial indicator, adjust the ring gear backlash until it is within specification.

Backlash: 0.15 — 0.20 mm (0.0059 — 0.0079 in.)

HINT: The backlash is adjusted by turning the left and right adjusting nuts equal amounts. For example, loosen the nut on the left side one notch and tighten the nut on the right side one notch.

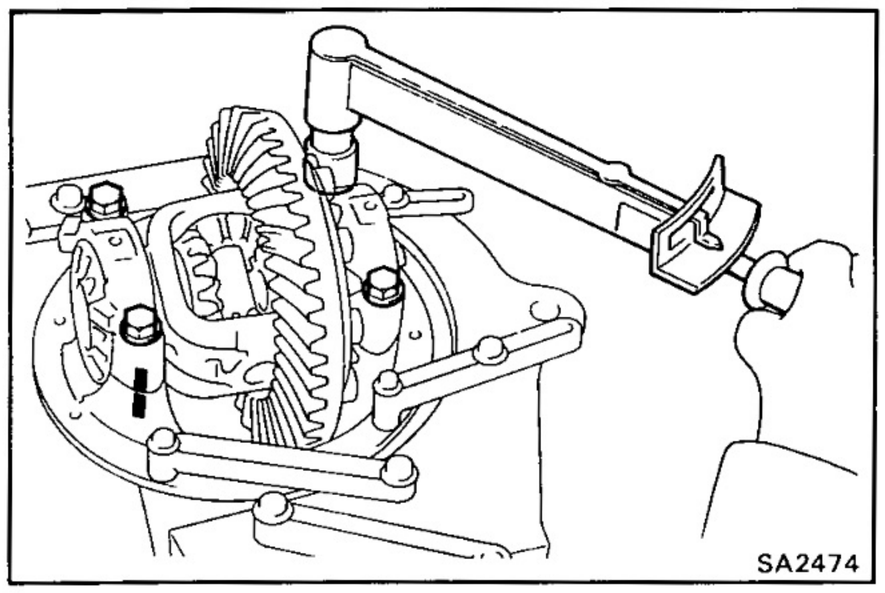

(i) Torque the bearing cap bolts.

Torque: 800 kg-cm (58 ft-lb, 78 N·m)

(j) Recheck the ring gear backlash.

Backlash: 0.15 — 0.20 mm (0.0059 — 0.0079 in.)

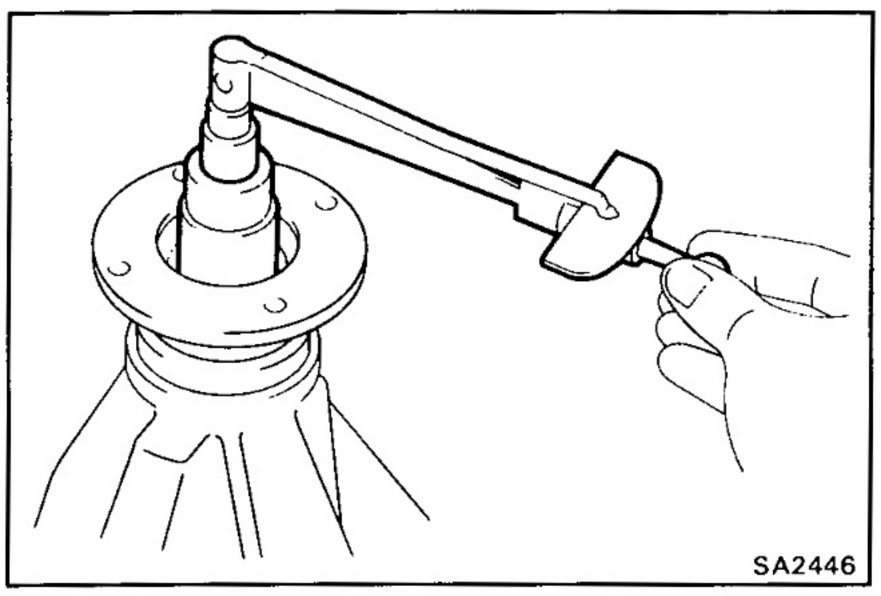

13. MEASURE TOTAL PRELOAD

Using a torque meter, measure the total preload.

Total preload (at starting): Add drive pinion preload
2 pinion and LSD types
4 — 6 kg-cm (3.5 — 5.2 in.-lb, 0.4 — 0.6 N·m)
w/ Differential lock
3 — 7 kg-cm (2.6 — 6.1 in.-lb, 0.3 — 0.7 N·m)

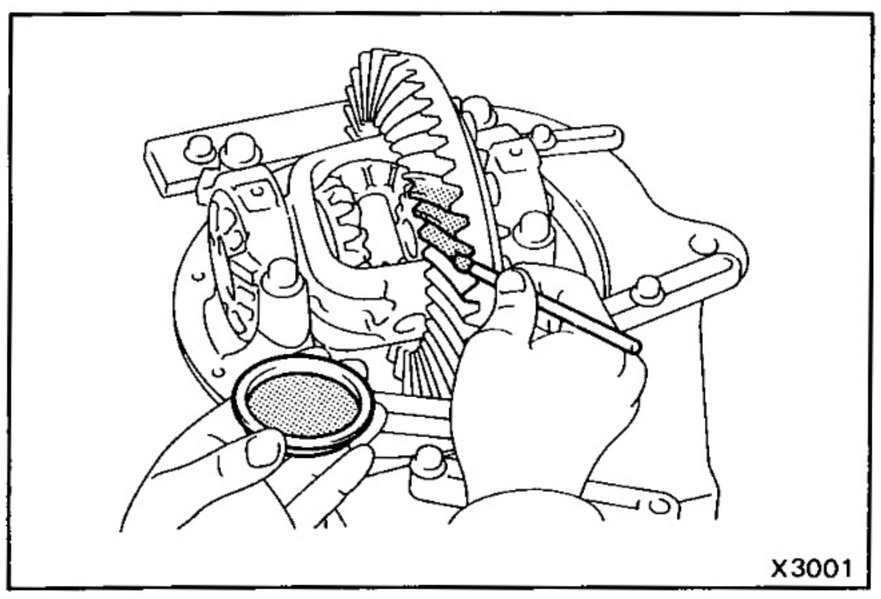

14. INSPECT TEETH CONTACT BETWEEN RING GEAR AND DRIVE PINION

(a) Coat 3 or 4 teeth at three different positions on the ring gear with red lead.

(b) Hold the companion flange firmly and rotate the ring gear in both directions.

(c) Inspect the teeth pattern.

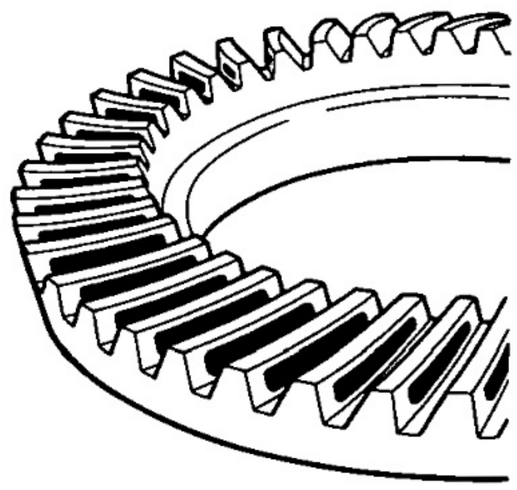

Proper Contact

Heel Contact

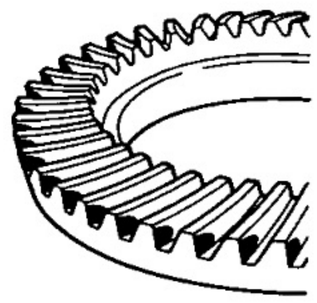

Face Contact

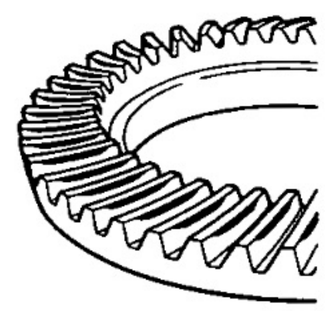

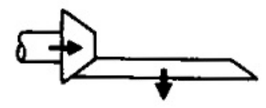

Select an adjusting washer that will bring the drive pinion closer to the ring gear.

Toe Contact

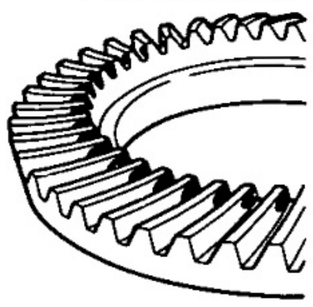

Flank Contact

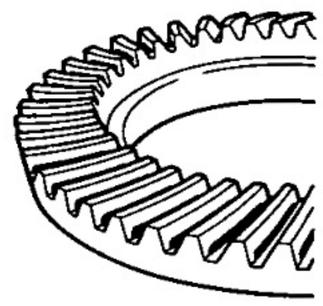

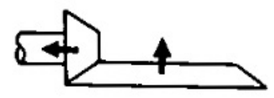

Select an adjusting washer that will shift the drive pinion away from the ring gear.

K3673

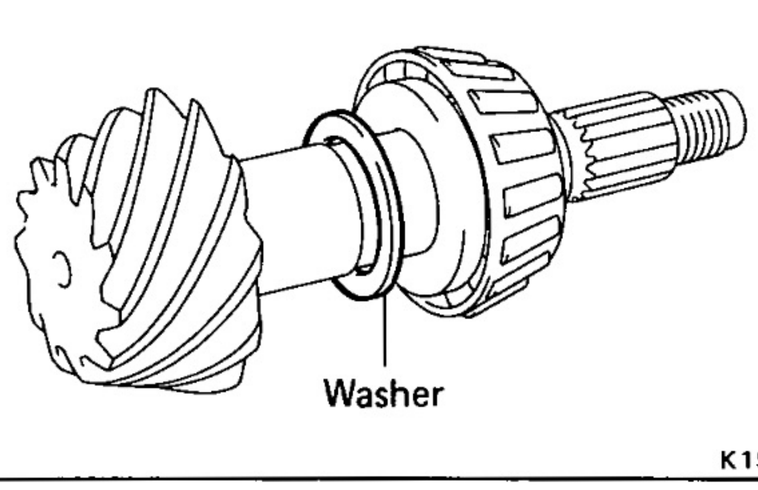

K1912

If the teeth are not contacting properly, use the following chart to select a proper washer for correction.

Washer thickness mm (in.)	
1.05 (0.0413)	1.35 (0.0531)
1.10 (0.0433)	1.40 (0.0551)
1.15 (0.0453)	1.45 (0.0571)
1.20 (0.0472)	1.50 (0.0591)
1.25 (0.0492)	1.55 (0.0610)
1.30 (0.0512)	

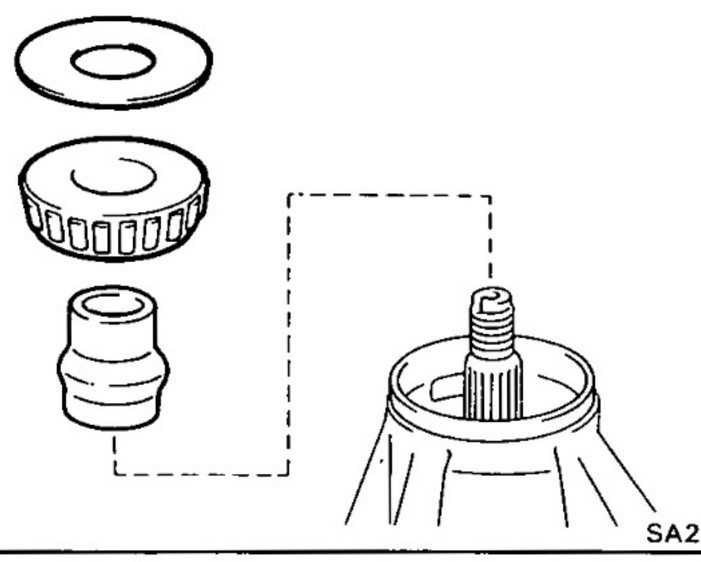

SA2394

15. INSTALL BEARING SPACER

(a) Remove the companion flange.
(See step 5 on page SA-105)

(b) Remove the oil slinger and front bearing.
(See steps 6, 7 on page SA-106)

(c) Install a new bearing spacer.

(d) Install the front bearing and oil slinger.

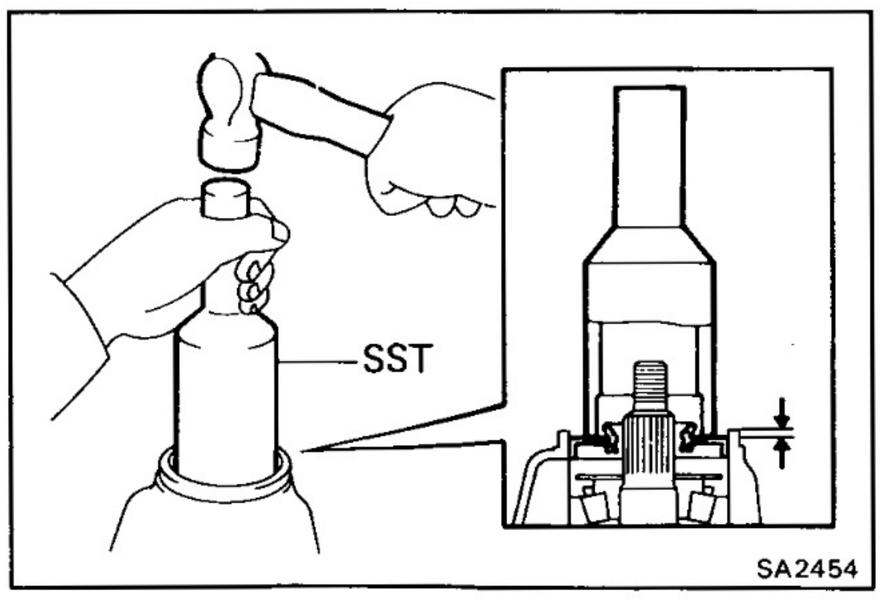

SA2454

16. INSTALL OIL SEAL

(a) Using SST and a hammer, install a new oil seal.

SST 09214-76011

Oil seal drive in depth: 1.0 mm (0.039 in.)

(b) Coat the lip of oil seal with MP grease.

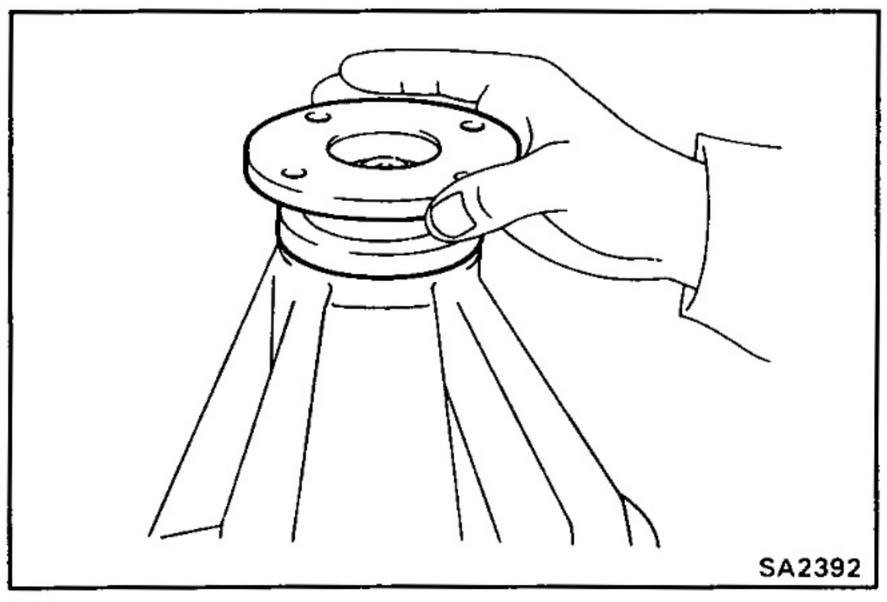

17. INSTALL COMPANION FLANGE

(a) Install the companion flange.

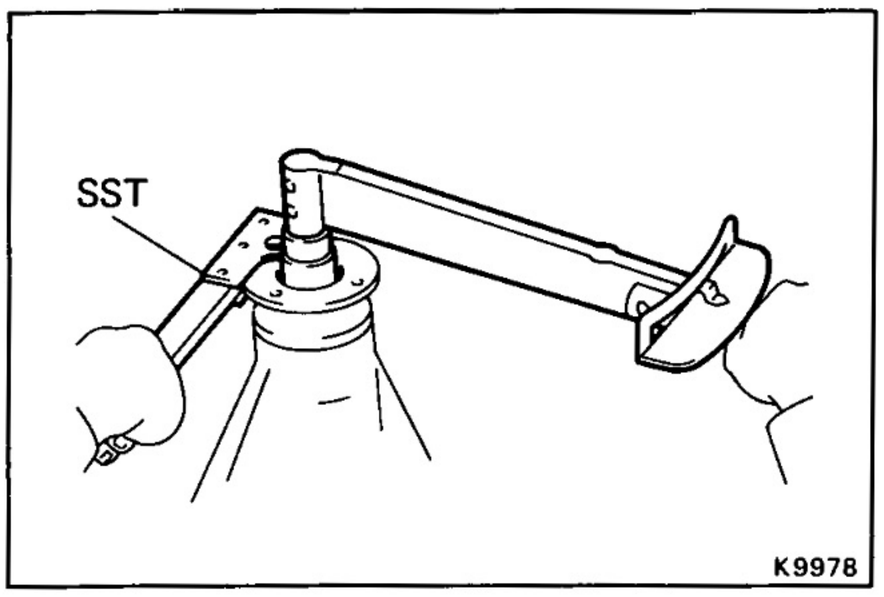

(b) Install the plate washer and a new nut.

HINT: Coat the threads of nut with gear oil.

(c) Using SST to hold the flange, tighten the nut.

SST 09330-00021

Torque: 2,500 kg-cm (181 ft-lb, 245 N·m)

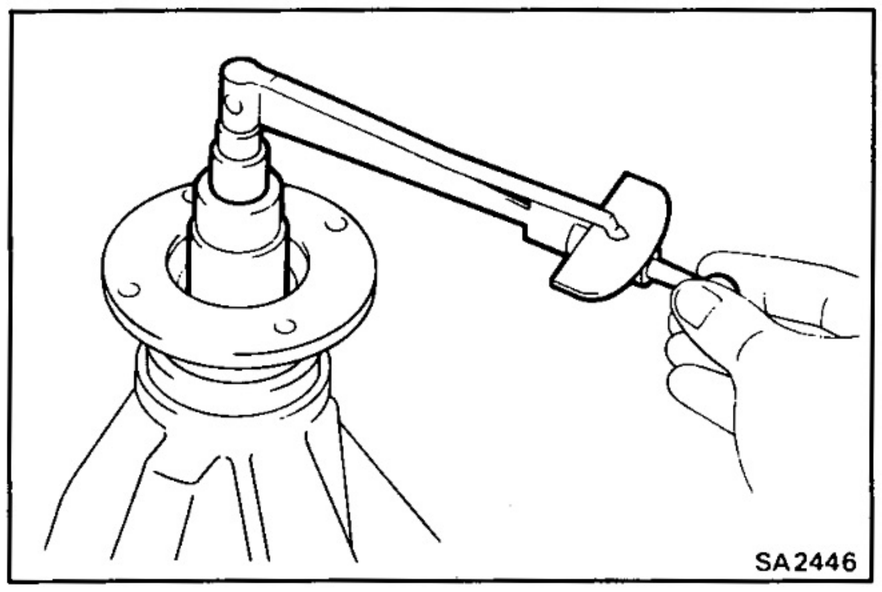

18. ADJUST DRIVE PINION PRELOAD

Using a torque meter, measure the preload of the backlash between the drive pinion and gear.

Preload (at starting):

New bearing

13 — 20 kg-cm

(11.3 — 17.4 in.-lb, 1.3 — 2.0 N·m)

Reused bearing

7 — 10 kg-cm

(6.1 — 8.7 in.-lb, 0.7 — 1.0 N·m)

If the preload is greater than specification, replace the bearing spacer.

If the preload is less than specification, retighten the nut 130 kg-cm (9 ft-lb, 13 N·m) a little at a time until the specified preload is reached.

If the maximum torque is exceeded while retightening the nut, replace the bearing spacer and repeat the preload procedure. Do not back off the pinion nut to reduce the preload.

Maximum torque: 4,500 kg-cm (326 ft-lb, 441 N·m)

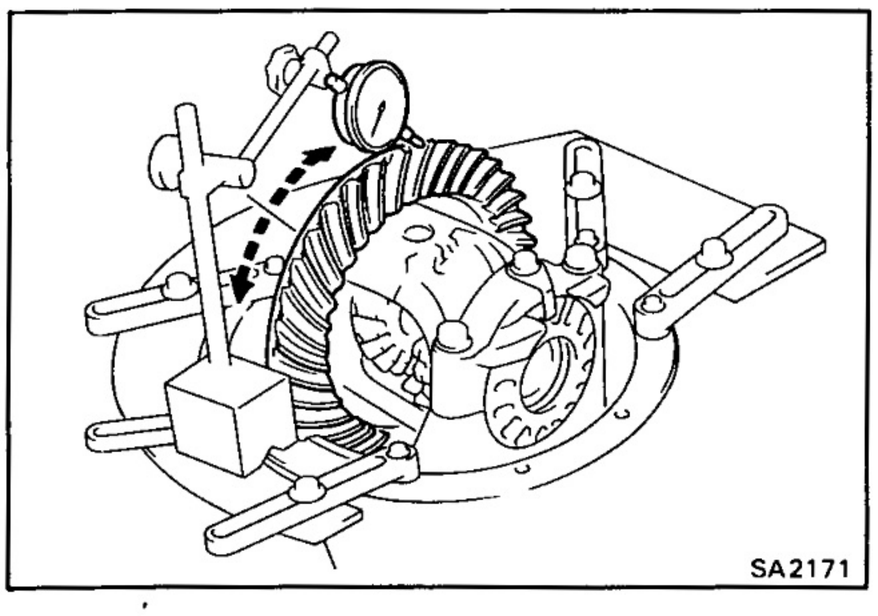

19. RECHECK RING GEAR BACKLASH

(See step 3 on page SA-102)

20. RECHECK TEETH CONTACT BETWEEN RING GEAR AND DRIVE PINION

(See step 14 on page SA-118)

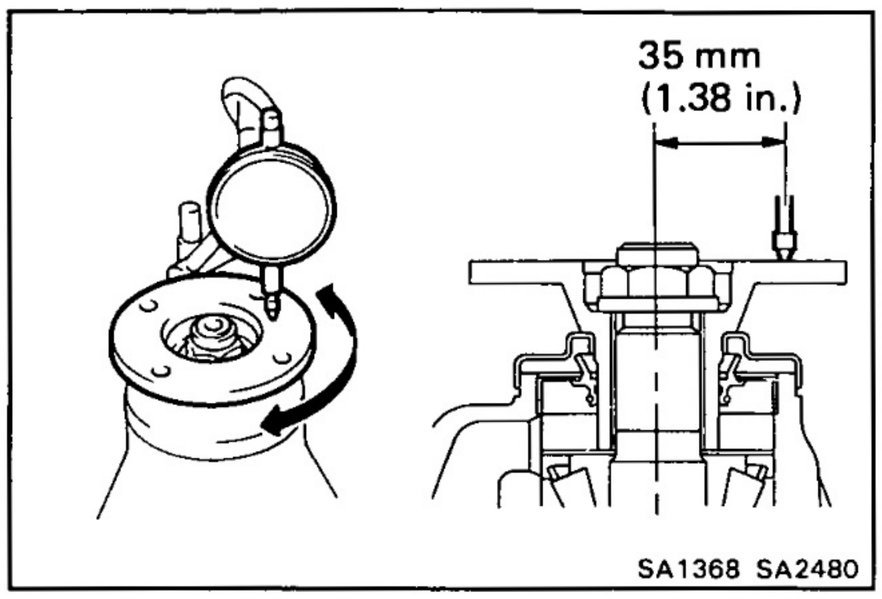

21. CHECK RUNOUT OF COMPANION FLANGE

Using a dial indicator, measure the vertical and lateral runout of the companion flange.

Maximum vertical runout: 0.10 mm (0.0039 in.)

Maximum lateral runout: 0.10 mm (0.0039 in.)

If the runout is greater than the maximum, inspect the bearing.

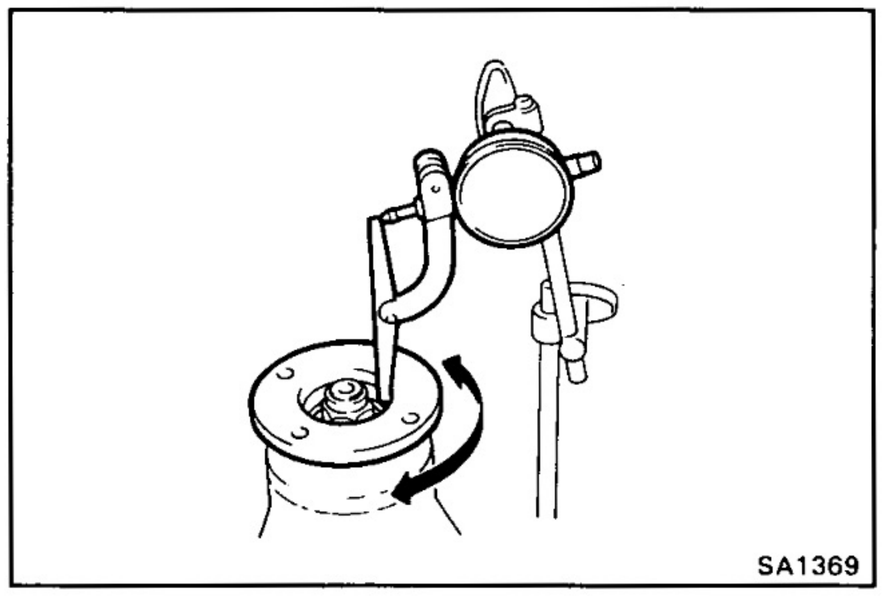

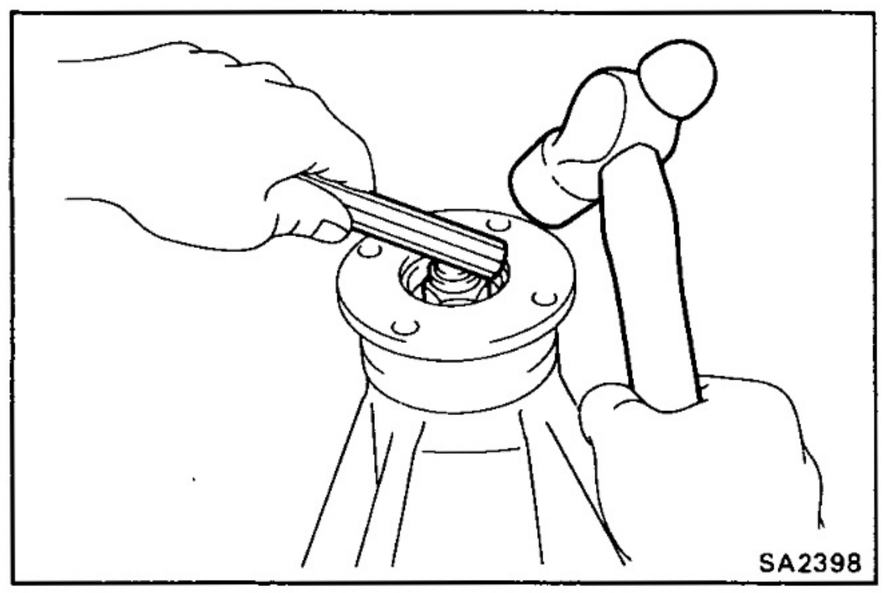

22. STAKE DRIVE PINION NUT

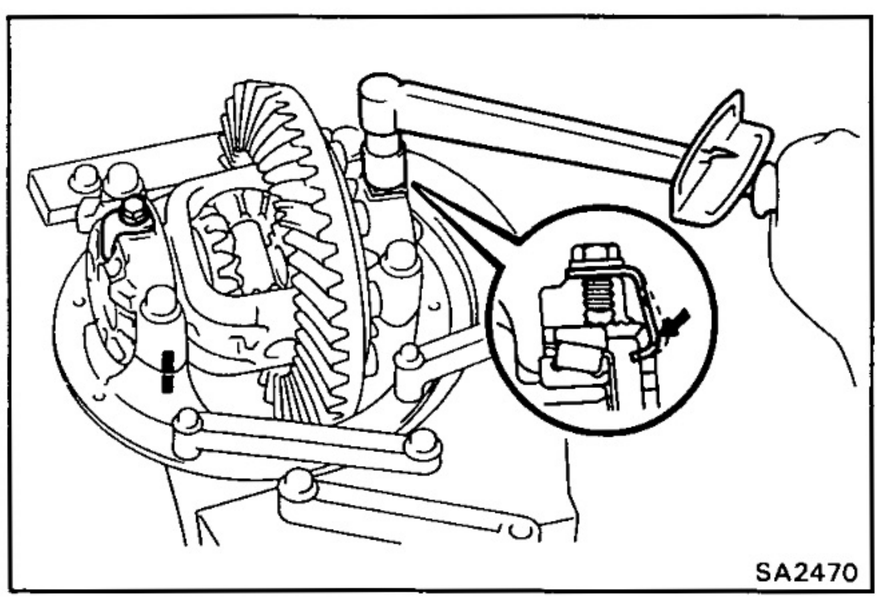

23. (2 PINION AND LSD TYPES)
INSTALL ADJUSTING NUT LOCKS

(a) Install two new lock nuts on the bearing caps.

Torpue: 130 kg-cm (9 ft-lb, 13 N·m)

(b) After tightening the bolts, bend the nut locks.

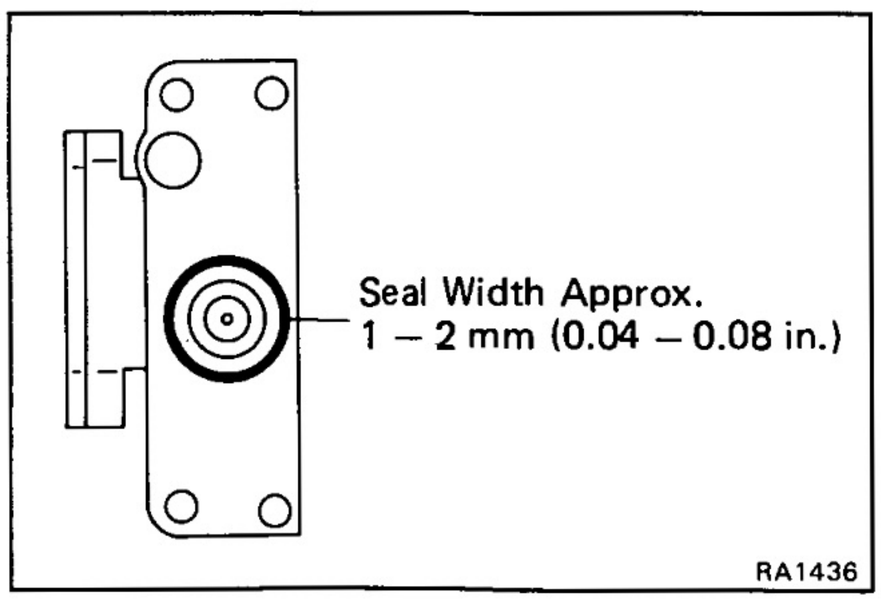

24. (w/ DIFFERENTIAL LOCK)
INSTALL ACTUATOR, SHIFT FORK AND SLEEVE

(a) Clean contacting surfaces of any residual packing material using gasoline or alcohol.

(b) Apply seal packing to the actuator.

Seal packing: Part No. 08826-00090, THREE BOND 1281 or equivalent

HINT: Install the actuator within ten minutes after applying seal packing.

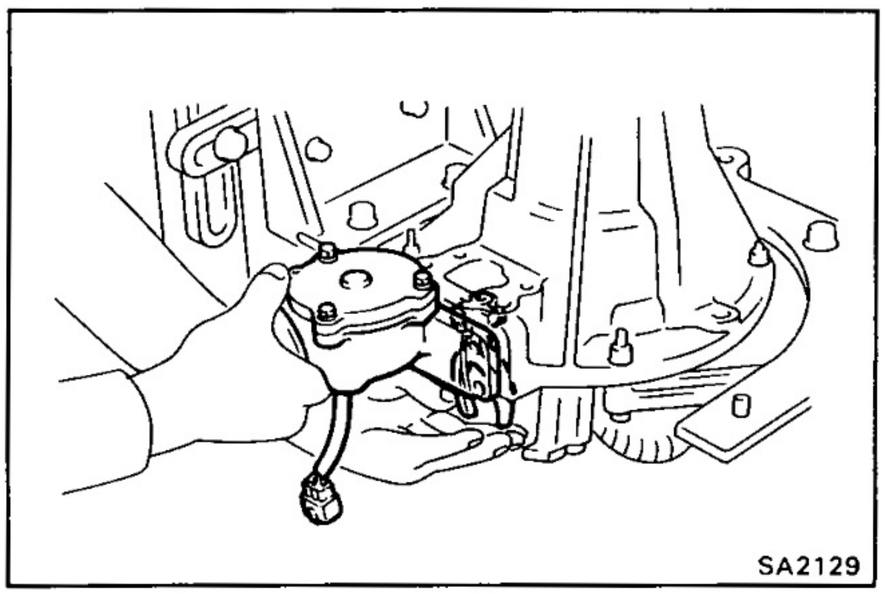

(c) Install the actuator to the differential and match the shaft with the shaft fork hole.

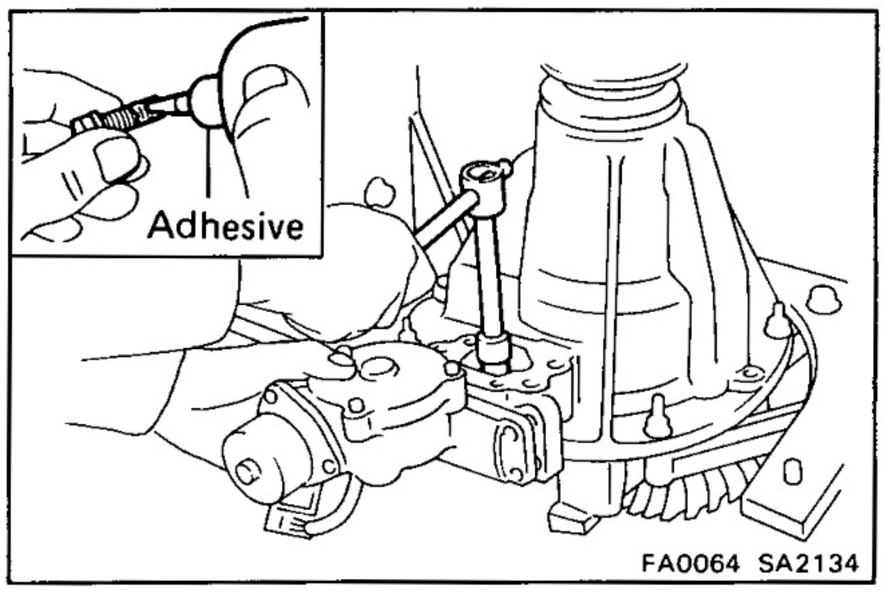

(d) Clean the threads of the set bolt and fork shaft with the white gasoline.

Coat the threads of the set bolt with adhesive.

Adhesive: Part No. 08833-00070, THREE BOND 1324 or equivalent

(e) Tighten the shift fork shaft set bolt.

Torque: 200 kg-cm (14 ft-lb, 20 N·m)

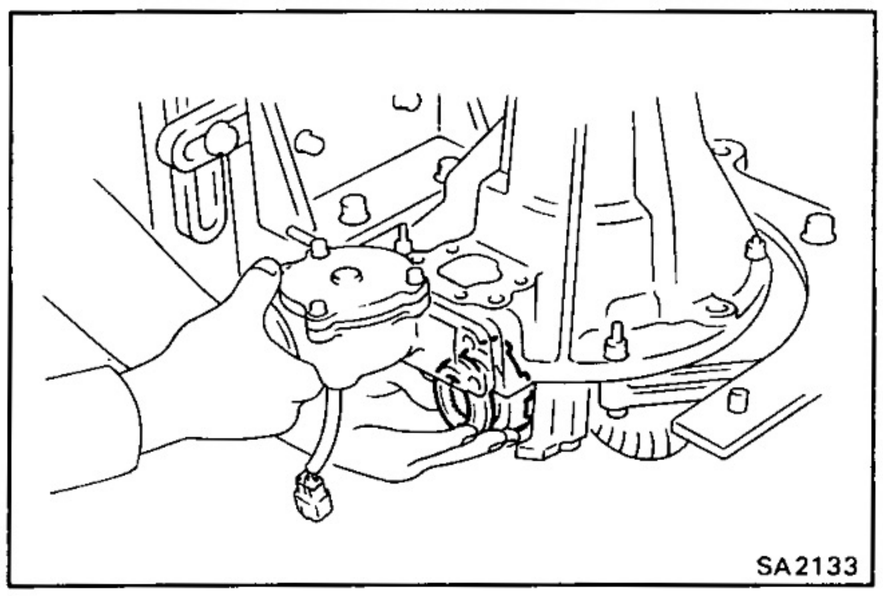

(f) Engage the sleeve with the dog clutch of the differential case.

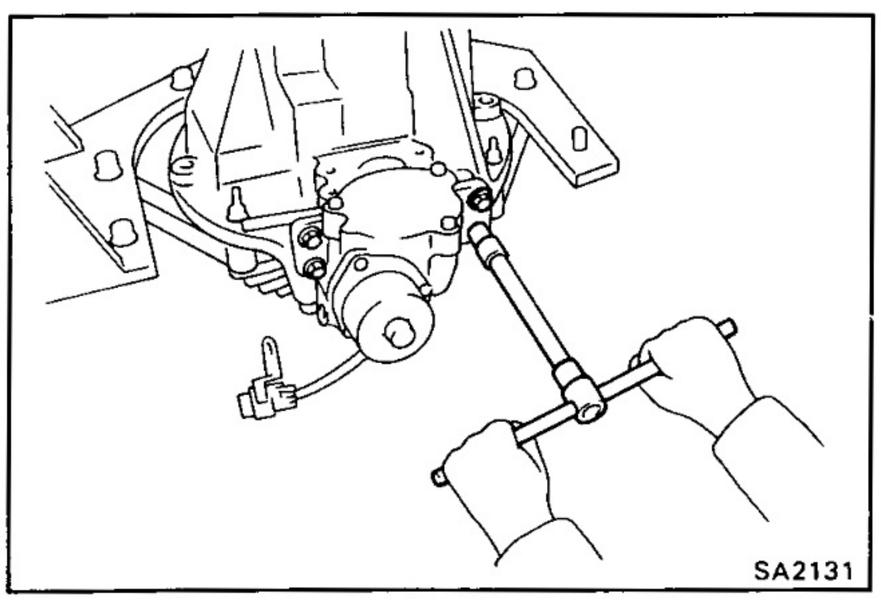

(g) Tighten the four bolts.

Torque: 240 kg-cm (17 ft-lb, 24 N·m)

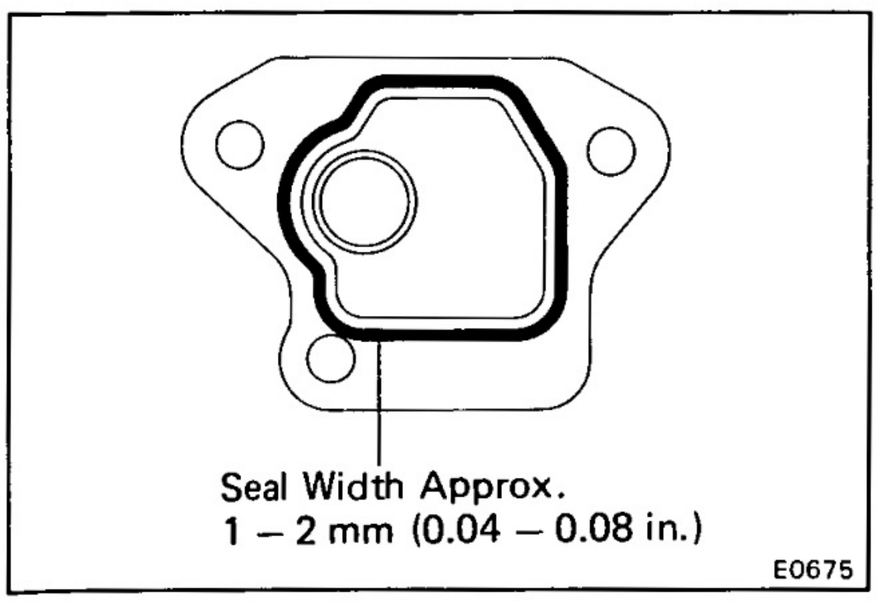

25. (w/ DIFFERENTIAL LOCK) INSTALL COVER

(a) Clean contacting surfaces of any residual packing material using gasoline or alcohol.

(b) Apply seal packing to the cover.

Seal packing: Part No. 08826-00090, THREE BOND 1281 or equivalent

HINT: Install the cover within ten minutes after applying seal packing.

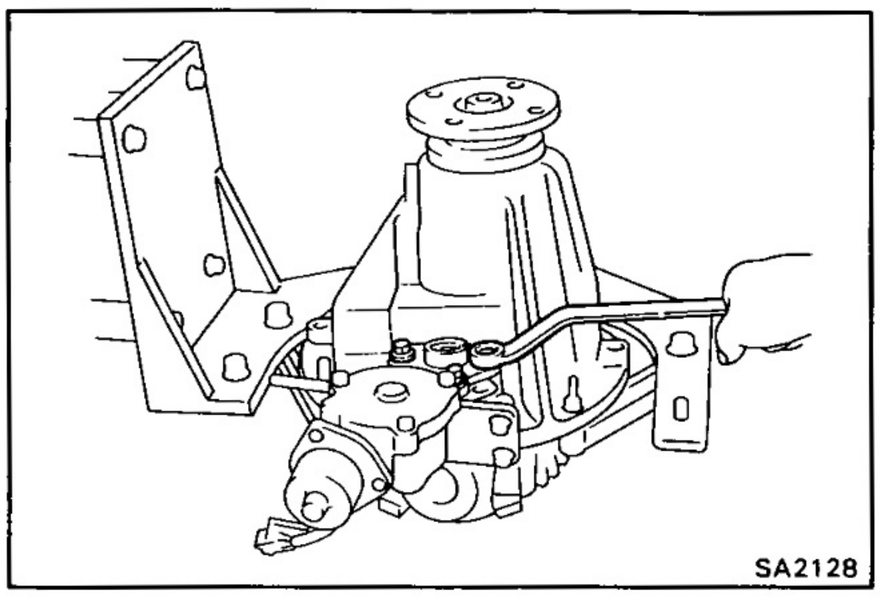

(c) Tighten the three bolts.

Torque: 185 kg-cm (13 ft-lb, 18 N·m)

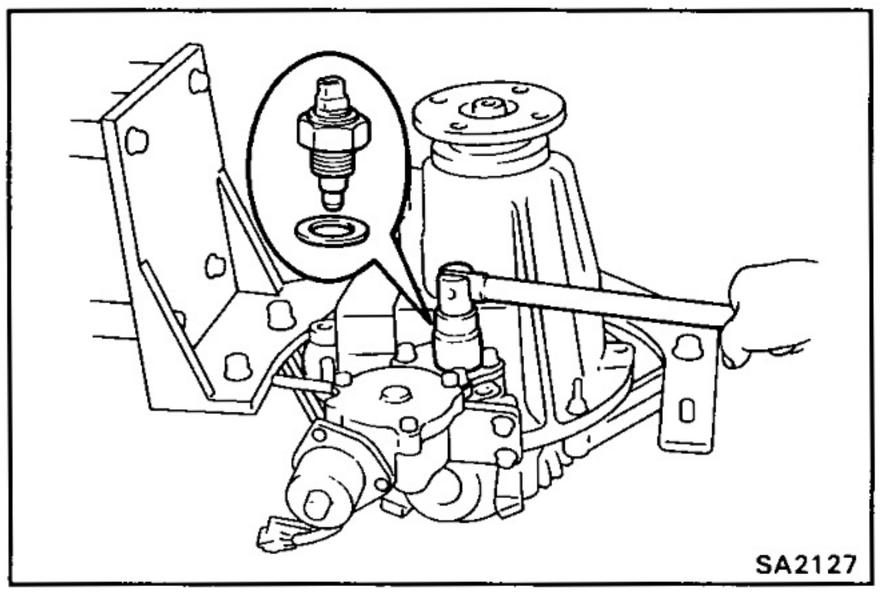

26. (w/ DIFFERENTIAL LOCK)
INSTALL INDICATOR SWITCH

Install the indicator switch with a new gasket.

Torque: 410 kg-cm (30 ft-lb, 40 N·m)

Differential Case (2 Pinion Type)

COMPONENTS

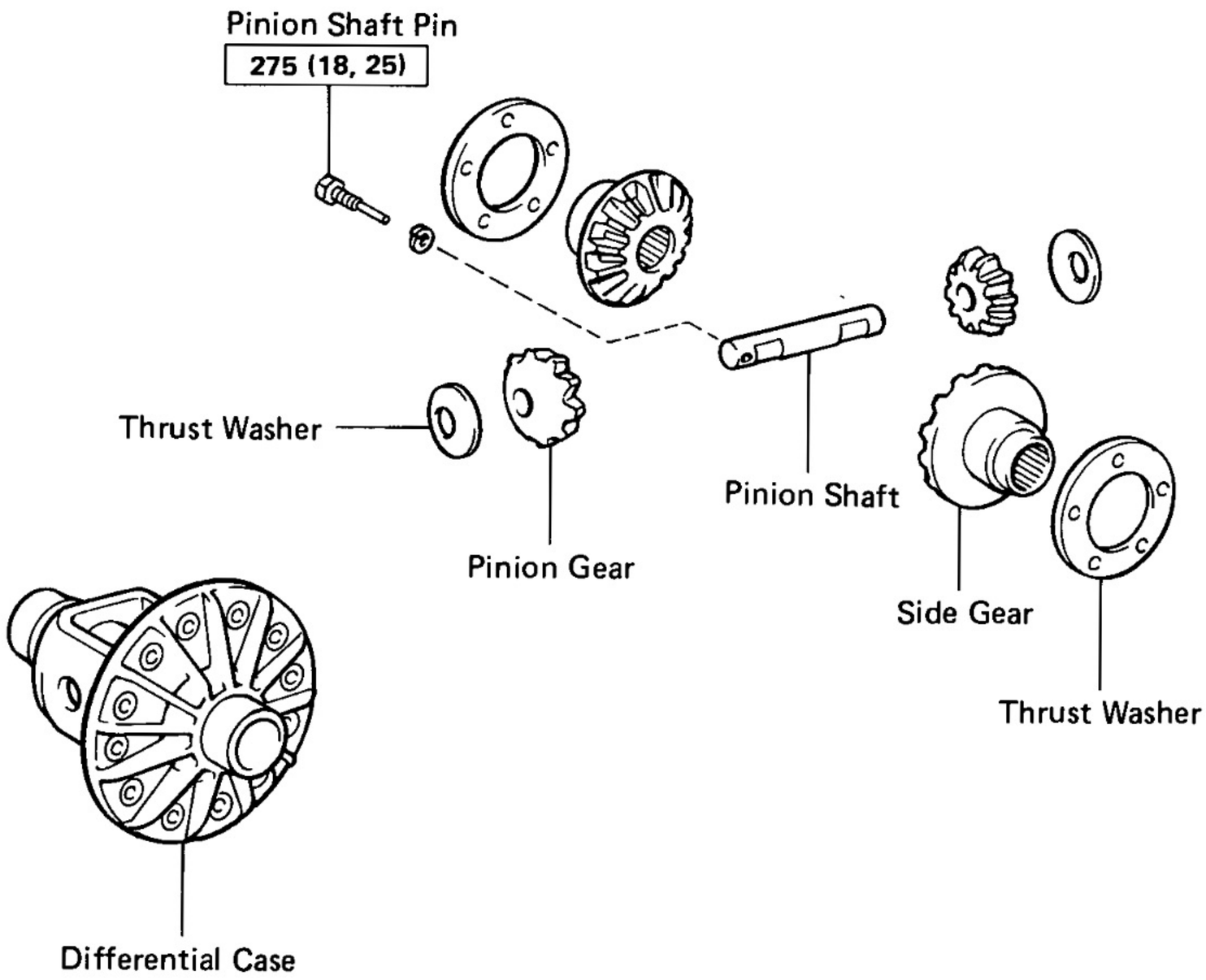

kg-cm (ft-lb, N·m) : Specified torque

SA2584

REMOVAL OF DIFFERENTIAL CASE

1. **REMOVE DIFFERENTIAL (See page SA-97)**
2. **REMOVE DIFFERENTIAL CASE FROM CARRIER (See page SA-101)**

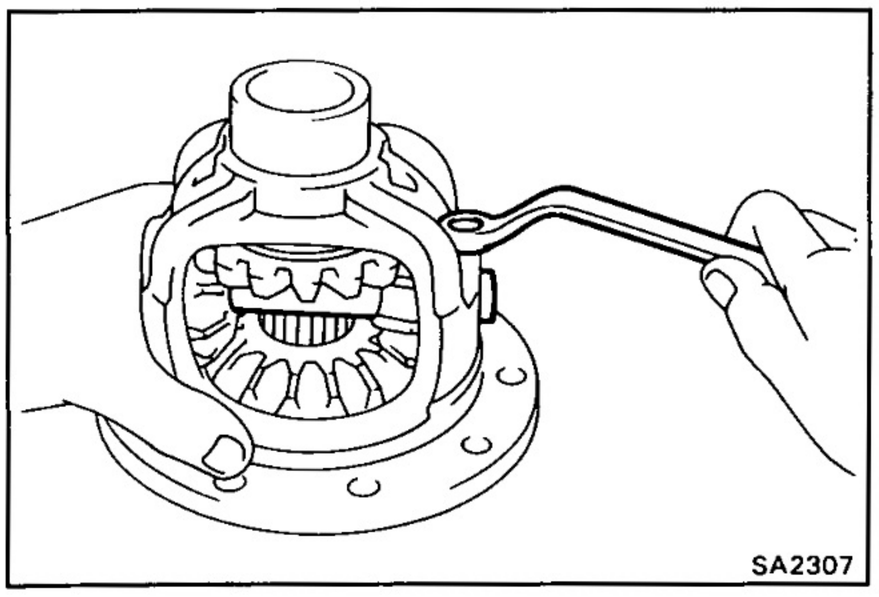

SA2307

REPLACEMENT OF DIFFERENTIAL CASE COMPONENT PARTS

1. DISASSEMBLE DIFFERENTIAL CASE

(a) Remove the pinion shaft pin.

(b) Remove the pinion shaft, two pinion gears, two side gears and four thrust washers.

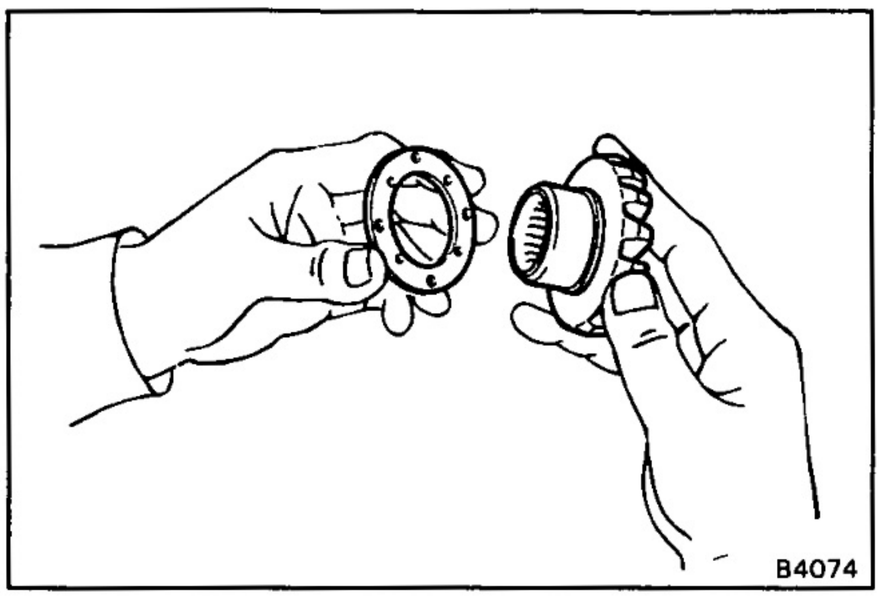

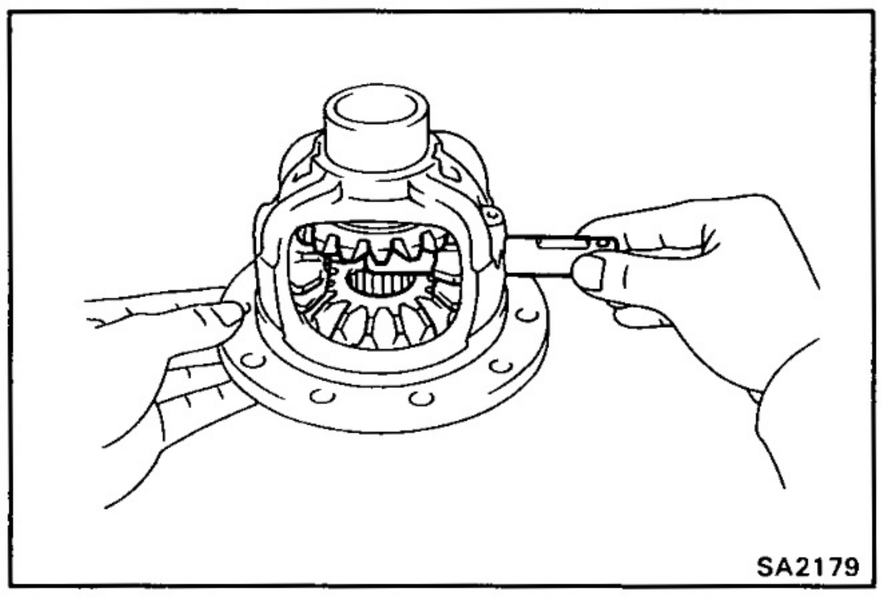

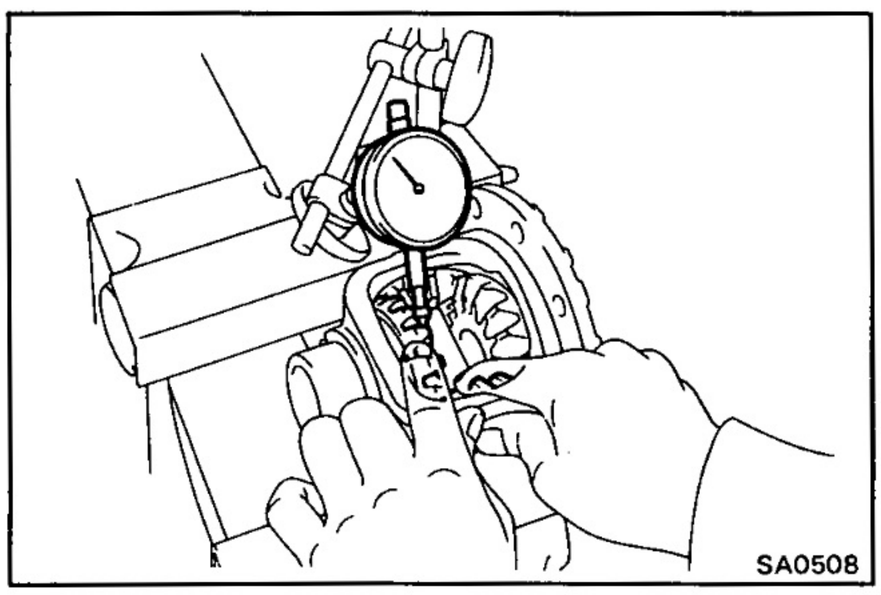

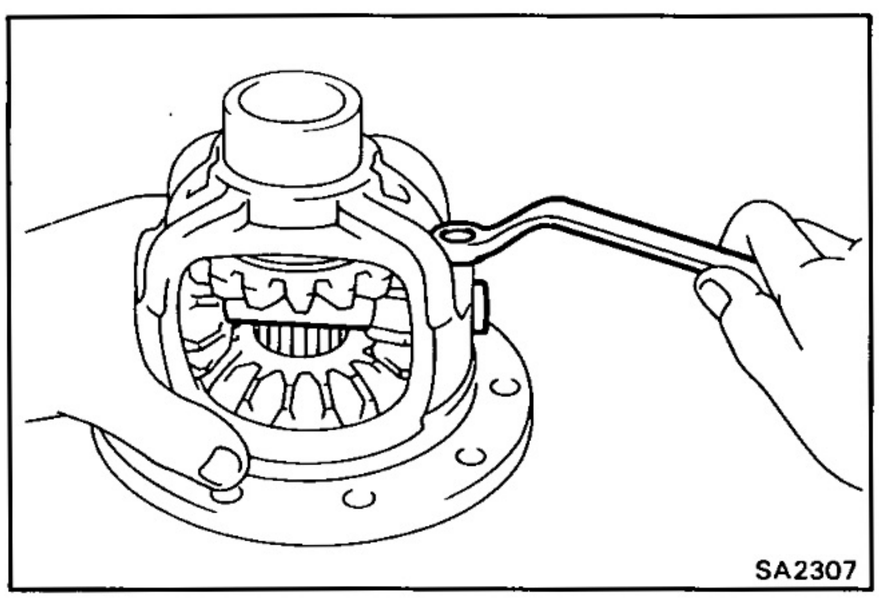

2. ASSEMBLE DIFFERENTIAL CASE

(a) Apply gear oil to each part.

(b) Install the proper thrust washers and side gears.

Using the table below, select thrust washers which will ensure that the backlash is within specification. Try to select washers of the same size for both sides.

Standard backlash: 0.02 — 0.20 mm (0.0008 — 0.0079 in.)

Thrust washer thickness mm(in.)	
1.60 (0.0630)	1.90 (0.0748)
1.75 (0.0689)	2.05 (0.0807)

(c) Install thrust washers, side gears, pinion gears and pinion shaft in the differential case.

(d) Check the side gear backlash.

Measure the side gear backlash while holding one pinion gear toward the case.

Standard backlash: 0.02 — 0.20 mm (0.008 — 0.0079 in.)

If the backlash is not within specification, install a thrust washer of different thickness.

(e) Install the pinion shaft pin.

Torque: 275 kg-cm (18 ft-lb, 25 N·m)

INSTALLATION OF DIFFERENTIAL

1. INSTALL DIFFERENTIAL CASE IN CARRIER

(See page SA-101)

2. INSTALL DIFFERENTIAL

(See page SA-97)

Differential Case (4 Pinion Type)

COMPONENTS

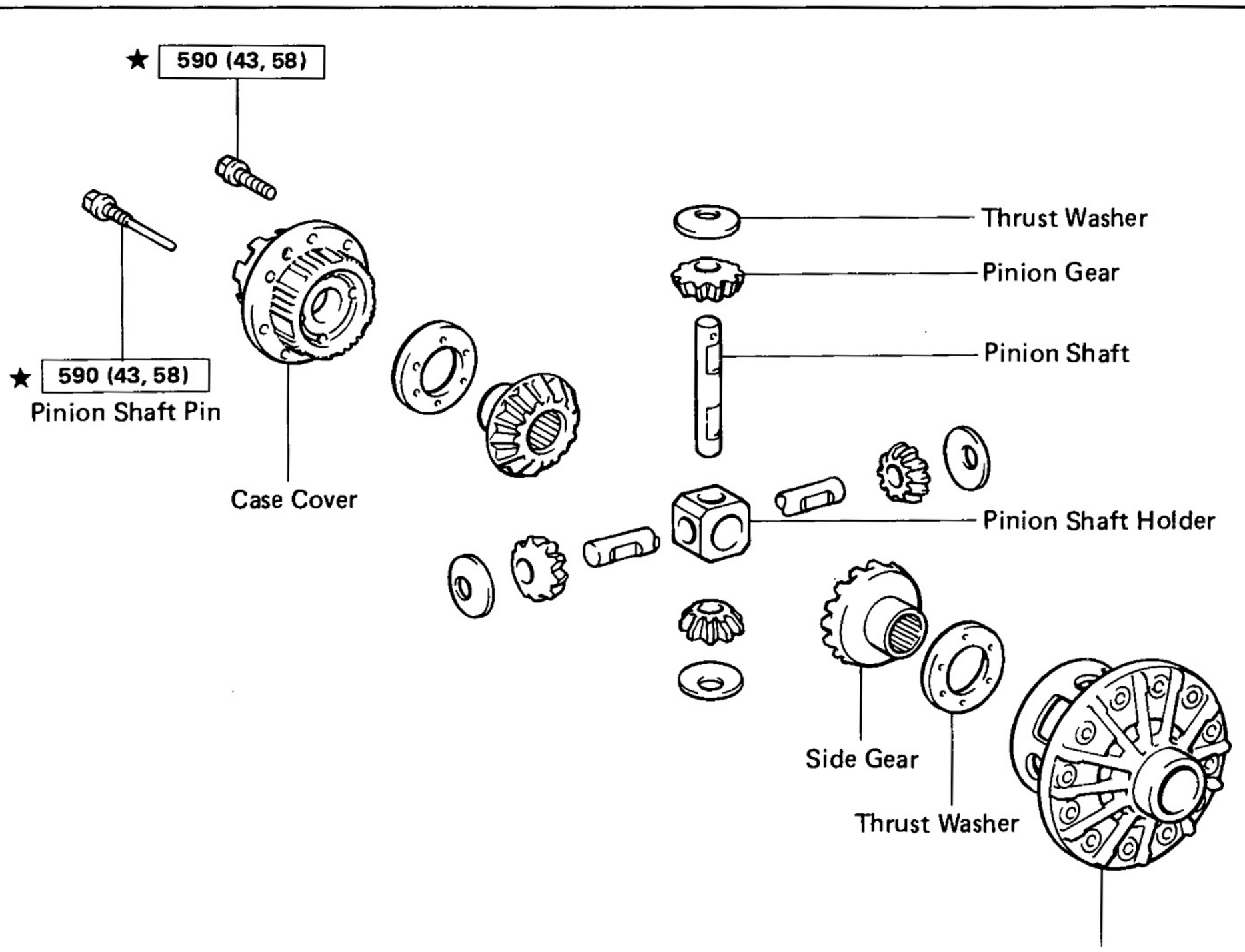

kg-cm (ft-lb, N·m) : Specified torque

★ Precoated part

SA2585

REMOVAL OF DIFFERENTIAL CASE

1. **REMOVE DIFFERENTIAL (See page SA-97)**

2. **REMOVE DIFFERENTIAL CASE FROM CARRIER (See page SA-101)**

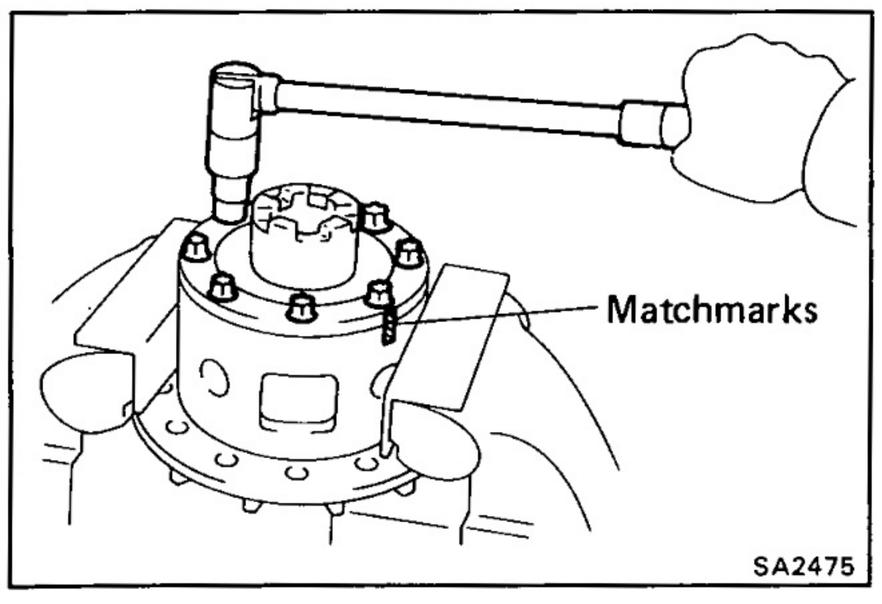

DISASSEMBLY OF DIFFERENTIAL CASE

1. DISASSEMBLE DIFFERENTIAL CASE

(a) Place matchmarks on the case and cover.

(b) Using a torx socket wrench (09044-00020), remove the five set bolts and three pinion shaft pins.

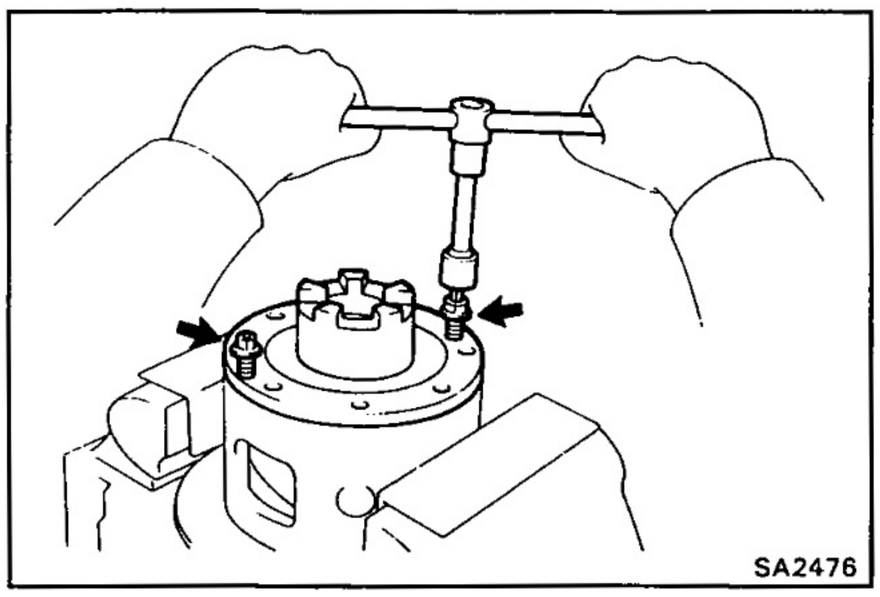

(c) Using two cover installation bolts, separate the cover and case.

(d) Remove the two cover installation bolts.

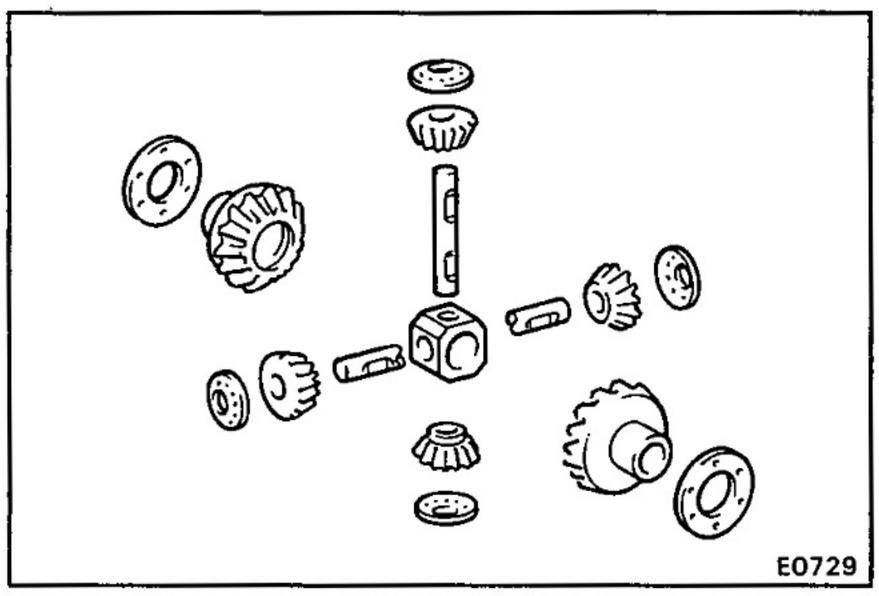

2. REMOVE FOLLOWING PARTS FROM CASE:

- Side gear (2 pieces)
- Side gear thrust washer (2 pieces)
- Pinion gear (4 pieces)
- Pinion thrust washer (4 pieces)
- Pinion shaft (3 pieces)
- Pinion shaft holder

ASSEMBLY OF DIFFERENTIAL CASE

1. MEASURE SIDE GEAR BACKLASH

(a) Apply gear oil to each part.

(b) Install the thrust washer to the side gear.

(c) Install the thrust washer to the pinion.

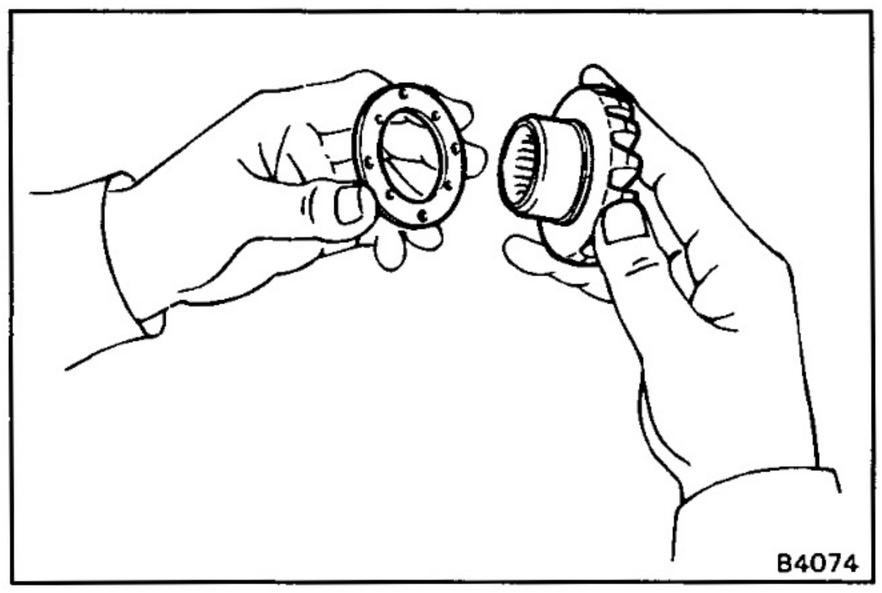

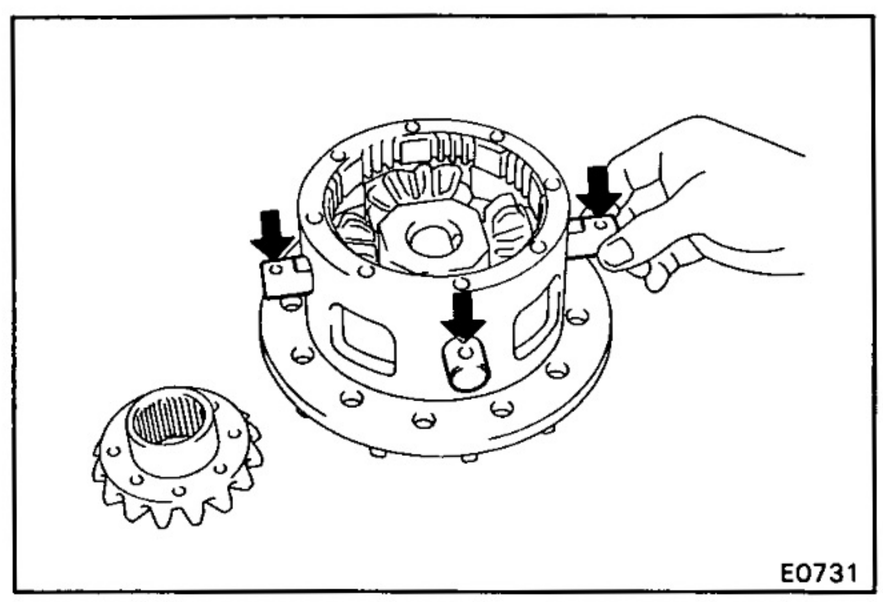

(d) Install the side gear into the case.

(e) Install the holder into the case.

(f) Install the four pinions.

(g) Align the pinion shaft hold and case pinion shaft pin hole, and install the pinion shaft.

(h) Install the side gear to the cover.

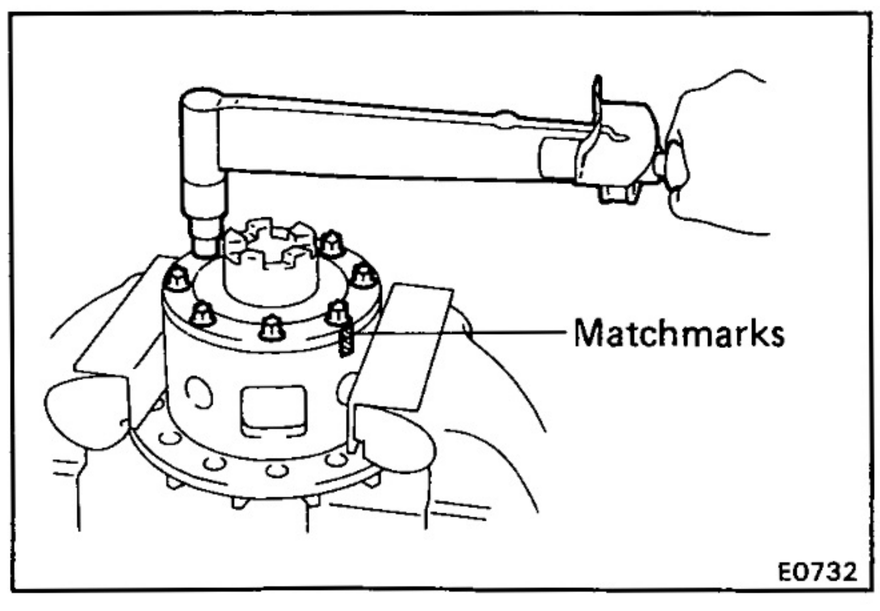

(i) Align the matchmarks, install the case and cover.

(j) Using a torx socket wrench (09044-00020), torque the five bolts and three pinion shaft pins.

Torque: 590 kg-cm (43 ft-fb, 58 N·m)

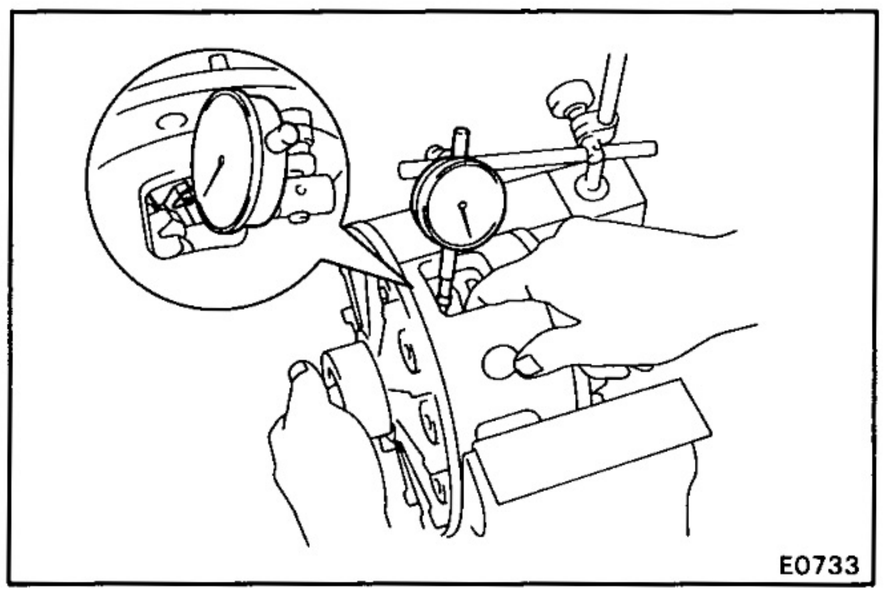

(k) Holding the side gear, measure the backlash.

Backlash: 0.02 — 0.20 mm (0.0008 — 0.0079 in.)

HINT: Measure at all four locations.

If the backlash is not within specification, install the thrust washer of a different thickness.

Thrust washer thickness mm (in.)	
1.60 (0.0630)	1.90 (0.0748)
1.75 (0.0689)	2.05 (0.0807)

(l) After measuring backlash, remove the five set bolts and three pinion shaft pins.

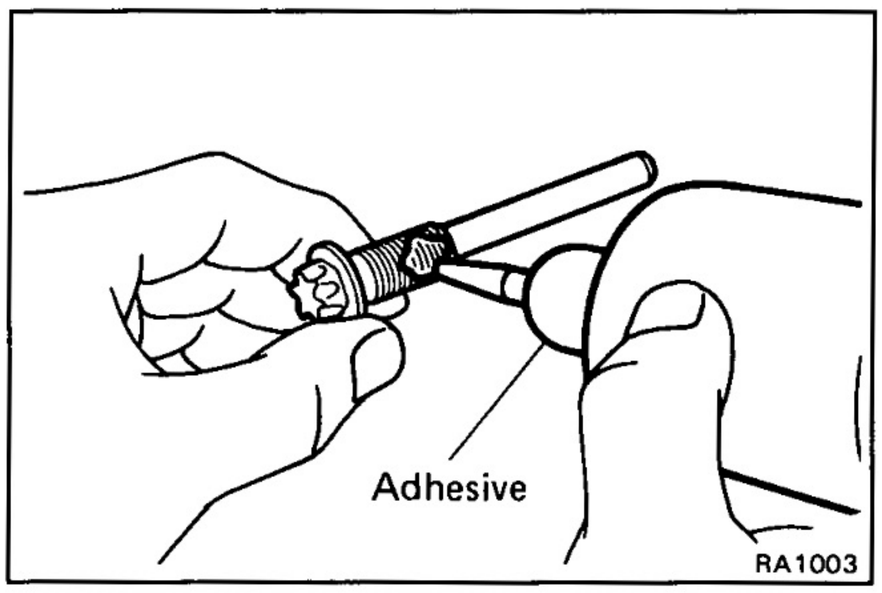

2. ASSEMBLE DIFFERENTIAL CASE

(a) Clean the threads of the bolts, pinion shaft pins, case and cover with the white gasoline.

(b) Coat the threads of the bolts and pinion shaft pins with adhesive.

Adhesive: Part No. 08833-00070, THREE BOND 1324 or equivalent

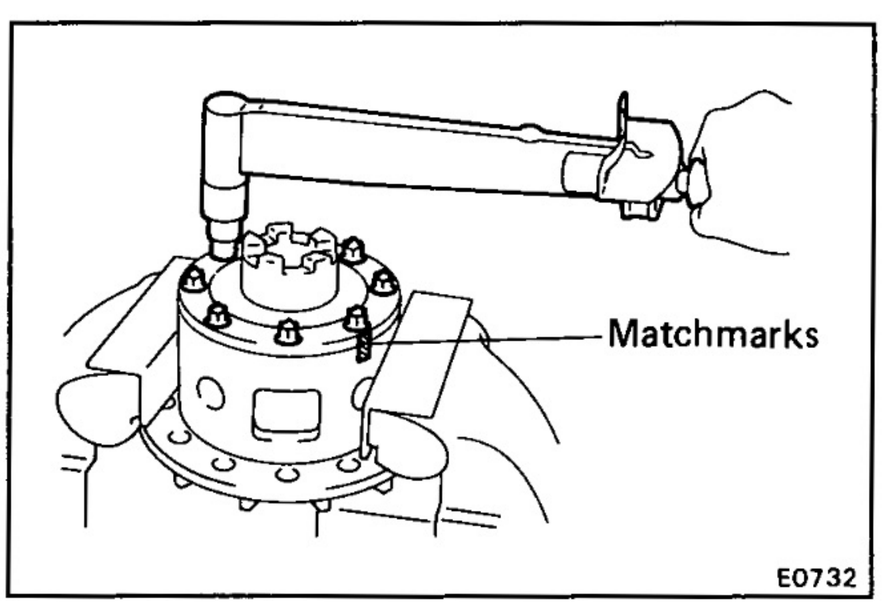

(c) Align the matchmarks, install the case and cover.

(d) Using a torx socket wrench (09044-00020), torque the five bolts and three pinion shaft pins.

Torque: 590 kg-cm (43 ft-lb, 58 N·m)

INSTALLATION OF DIFFERENTIAL

1. INSTALL DIFFERENTIAL CASE IN CARRIER

(See page SA-101)

2. INSTALL DIFFERENTIAL

(See page SA-97)

Differential Case (Limited Slip Differential)

COMPONENTS

HINT: *These thrust washers (thicker than the others) are used only by the manufacturer to adjust the pinion gear backlash and are not available as spare parts. For after-sales service, when replacing the thrust washers, replace them with a set of eight of the thinner thrust washers and adjust the pinion gear backlash using separately available adjusting shims.

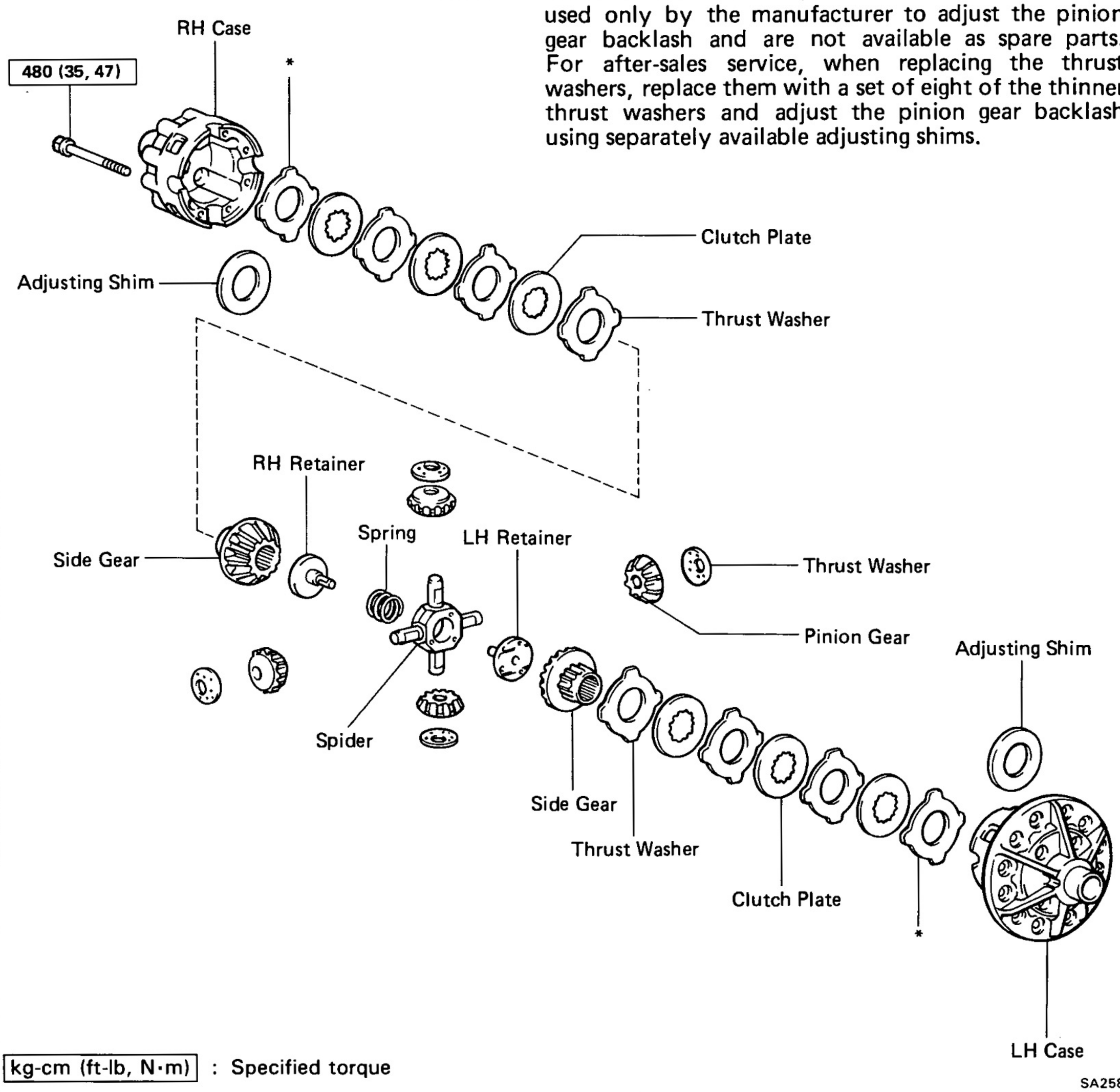

kg-cm (ft-lb, N·m) : Specified torque

SA2586

REMOVAL OF DIFFERENTIAL CASE

1. REMOVE DIFFERENTIAL (See page SA-97)
2. REMOVE DIFFERENTIAL CASE FROM CARRIER (See page SA-101)

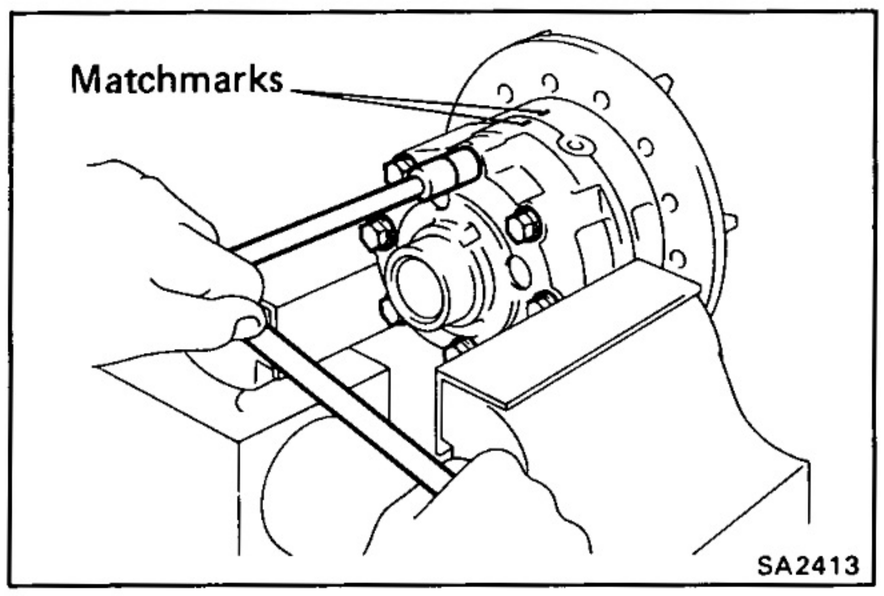

DISASSEMBLY OF DIFFERENTIAL CASE

(See page SA-129)

1. DISASSEMBLE DIFFERENTIAL CASE

(a) Place the matchmarks on the LH and RH cases.

(b) Remove the eight bolts uniformly, a little at a time.

(c) Using a plastic hammer, separate the LH and RH cases.

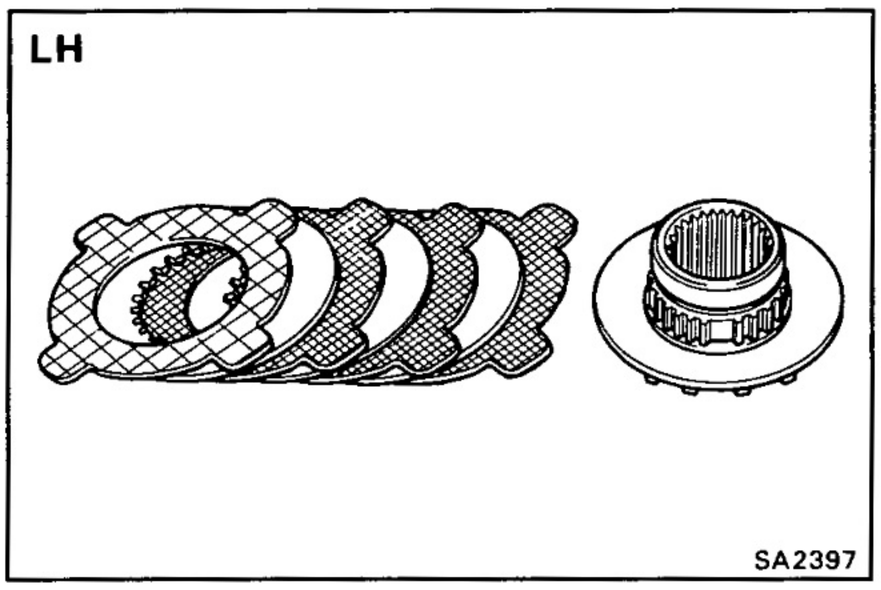

2. REMOVE FOLLOWING PARTS FROM CASE:

HINT: Keep the disassembled parts in order.

(a) Remove the following parts from the LH case:

(1) Side gear

(2) Side gear thrust washer (4 pieces)

(3) Clutch plate (3 pieces)

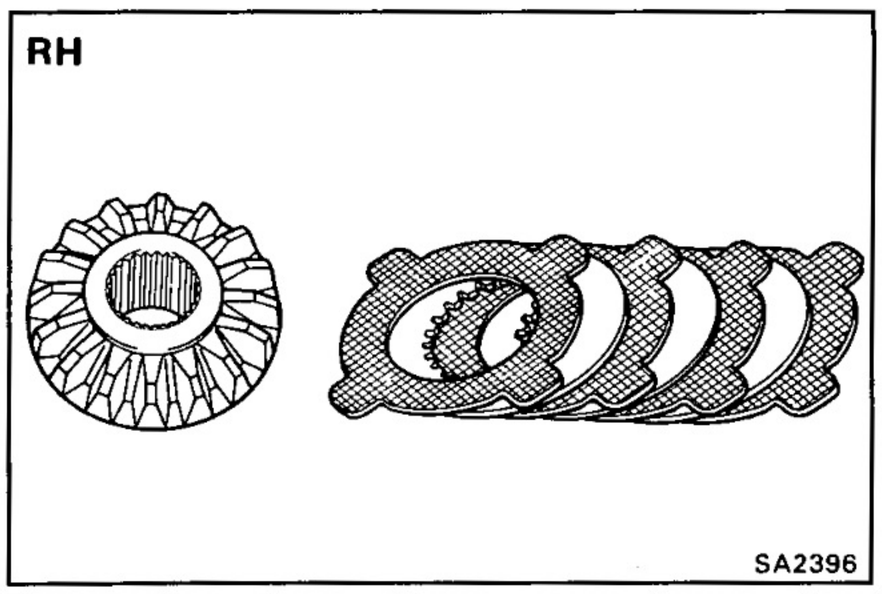

(b) Remove the following parts from the RH case:

(1) Spring LH retainer and two springs

(2) Spider with pinion gear

(3) Spring RH retainer

(4) Side gear

(5) Side gear thrust washer (4 pieces)

(6) Clutch plate (3 pieces)

INSPECTION OF COMPONENTS

1. REPLACE PARTS THAT ARE DAMAGED OR WORN

HINT: If replacing the side gear, also replace the thrust washer contacting it.

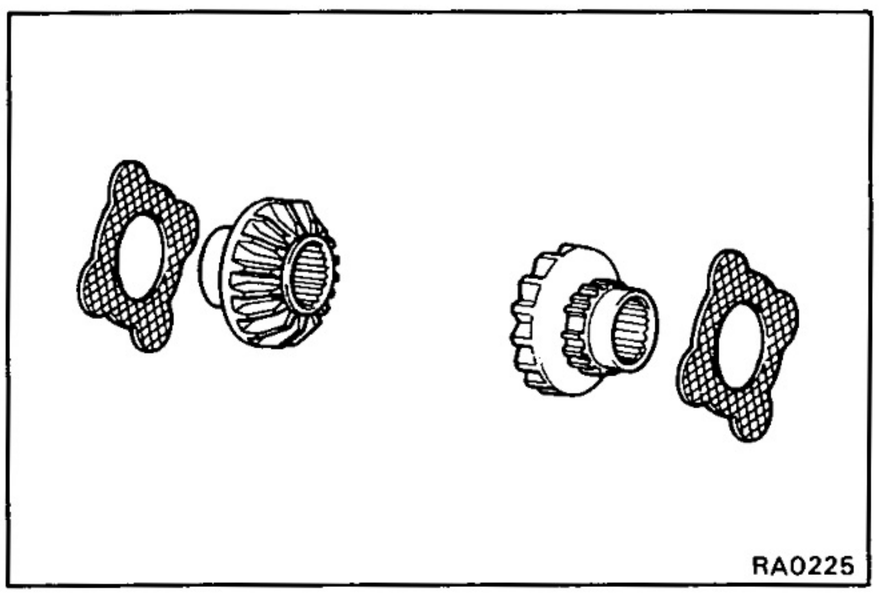

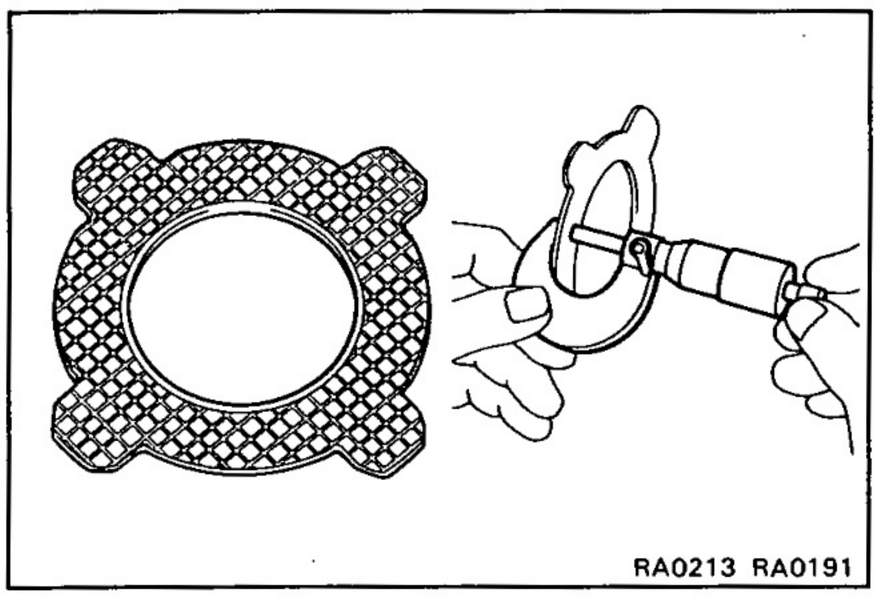

2. INSPECT THRUST WASHERS FOR WEAR OR DAMAGE

Check that the contact surface of the thrust washer is even and that no bare metal is showing.

(For reference) Thickness limit:

1.97 — 2.05 mm (0.0776 — 0.0807 in.)

If necessary, replace the thrust washers.

HINT: If replacing the thrust washer, also replace the clutch plate contacting it.

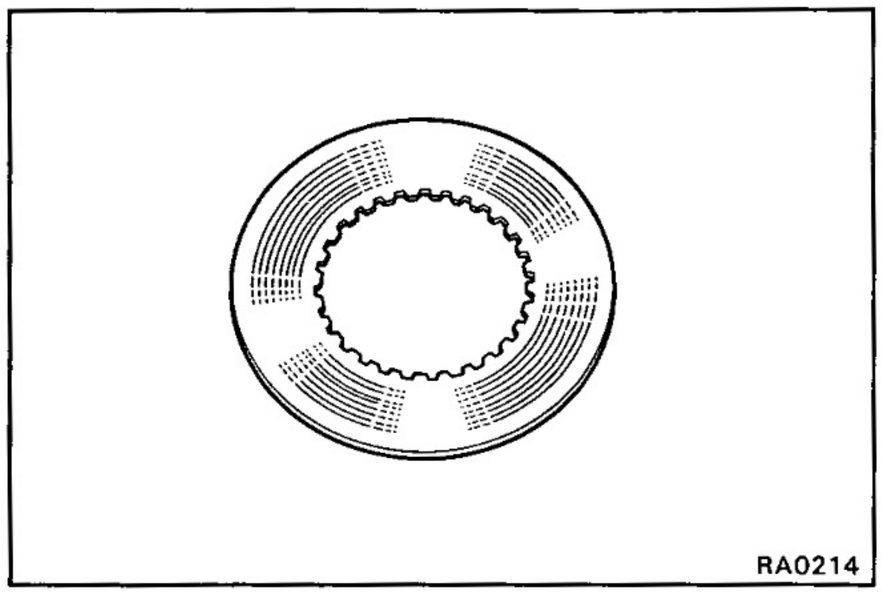

3. INSPECT CLUTCH PLATE FOR WEAR OR DAMAGE

Check that there is no abnormal wear.

(For reference) Thickness:

1.97 — 2.03 mm (0.0776 — 0.0799 in.)

If necessary, replace the clutch plate.

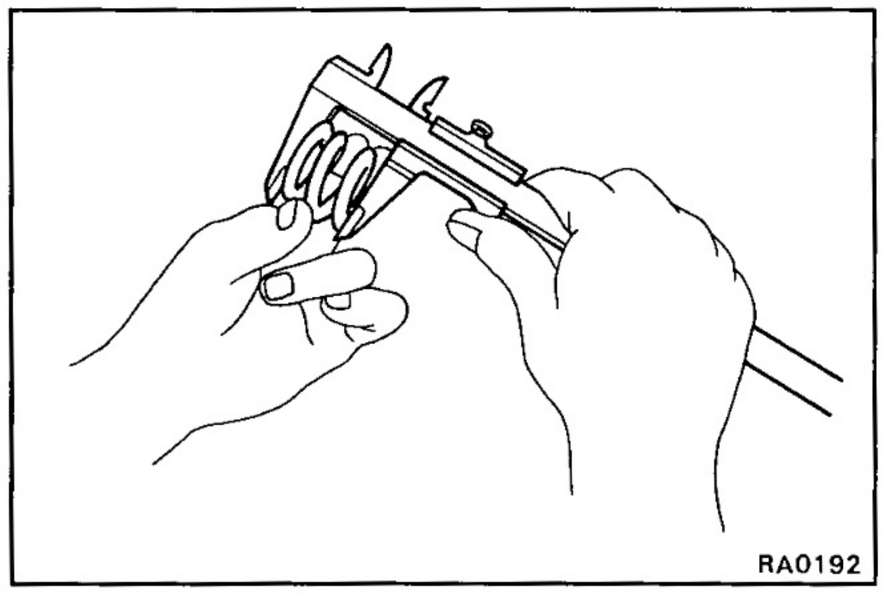

4. INSPECT SPRING FREE LENGTH

Measure the free lenght of the spring.

(For reference) Length:

38.0 — 39.3 mm (1.49 — 1.55 in.)

ASSEMBLY OF DIFFERENTIAL CASE

(See page SA-129)

HINT:

- Using a rag, clean off any foreign matter from the parts.
- Apply LSD oil to the contact surfaces of the clutch plates and the thrust washers.
- When installing, the thrust washers (Marking A — M) are not used. To adjust the backlash, use one new thrust washer or the adjusting shim.

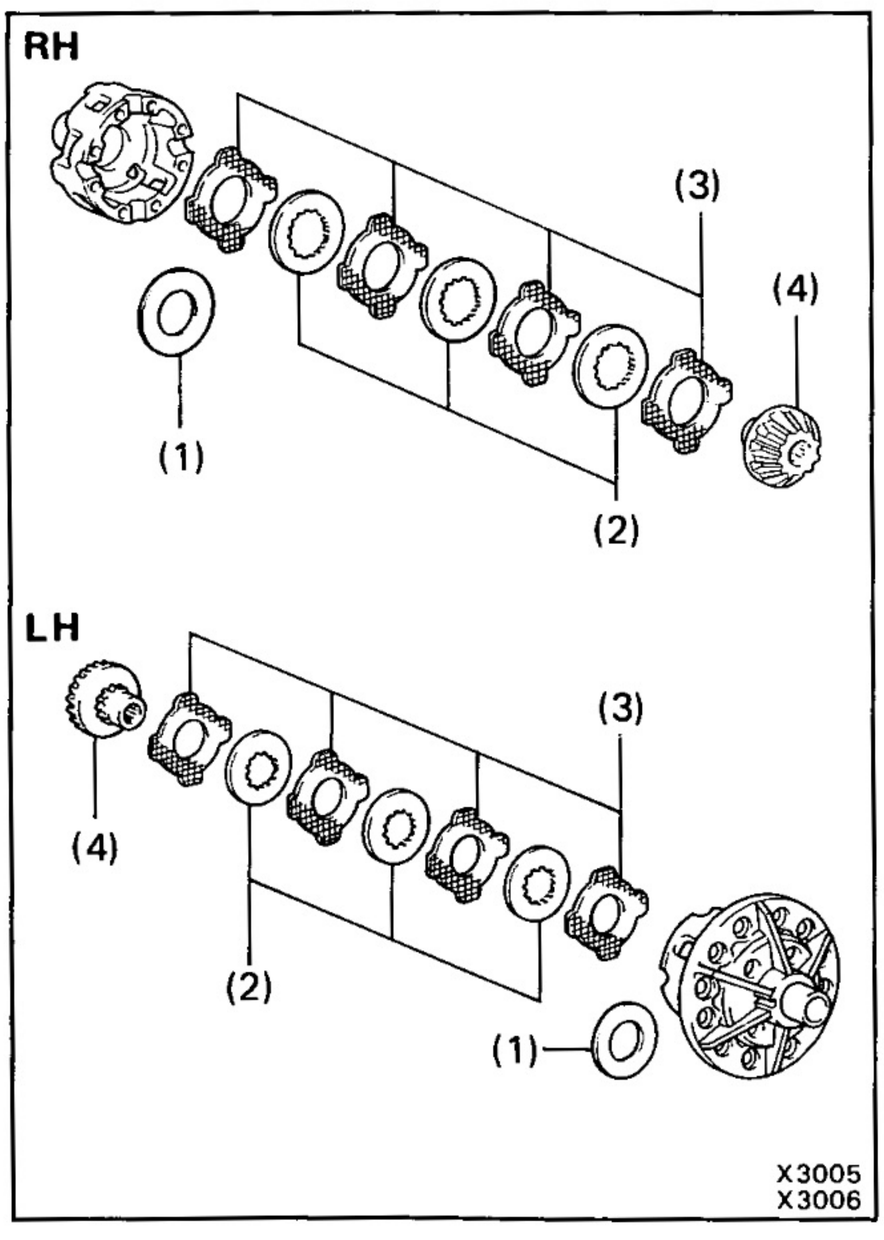

1. MEASURE SIDE GEAR BACKLASH

(a) Install the following parts to the LH and RH cases:

(1) Adjusting shim (0 to 3 pieces)

(2) Clutch plate (3 pieces)

(3) Side gear thrust washer (4 pieces)

(4) Side gear

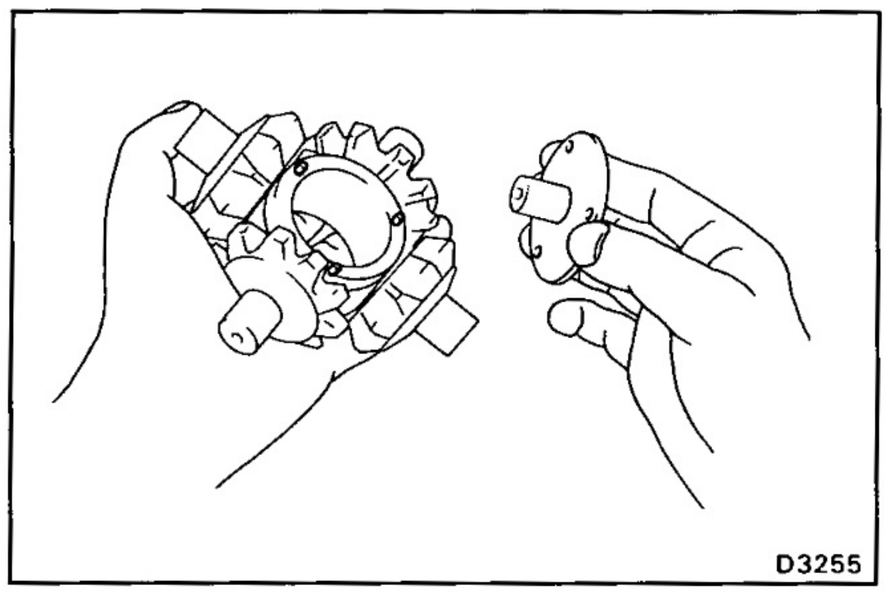

(b) Install the four pinion gears and thrust washers to the spider.

(c) Align the LH retainer holes with the spider knock pins and install the LH retainer.

(d) Install the pinion gear and spider to the LH case.

HINT: Install the spider to the LH case tightely, and don't move the spring retainer.

(e) Hold the side gear and spider, measure the side gear backlash.

Backlash: 0.02 — 0.24 mm (0.0008 — 0.0094 in.)

HINT:

- Measure at all four locations.
- Measure the backlash at the LH case and at the RH case.

If the backlash is not within specification, install a thrust washer of a different thickness.

Thickness	mm (in.)
0.20 (0.0079)	0.30 (0.0118)
0.25 (0.0098)	0.35 (0.0138)

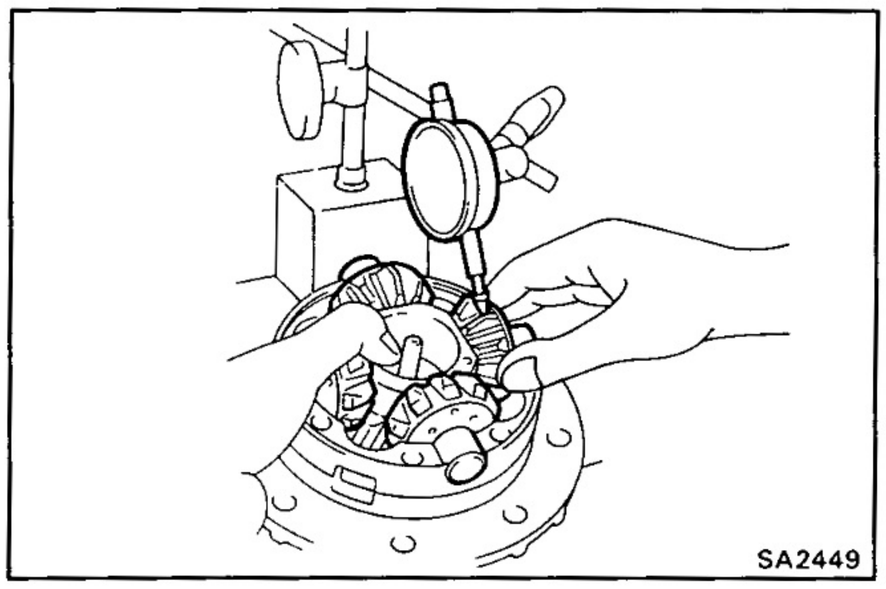

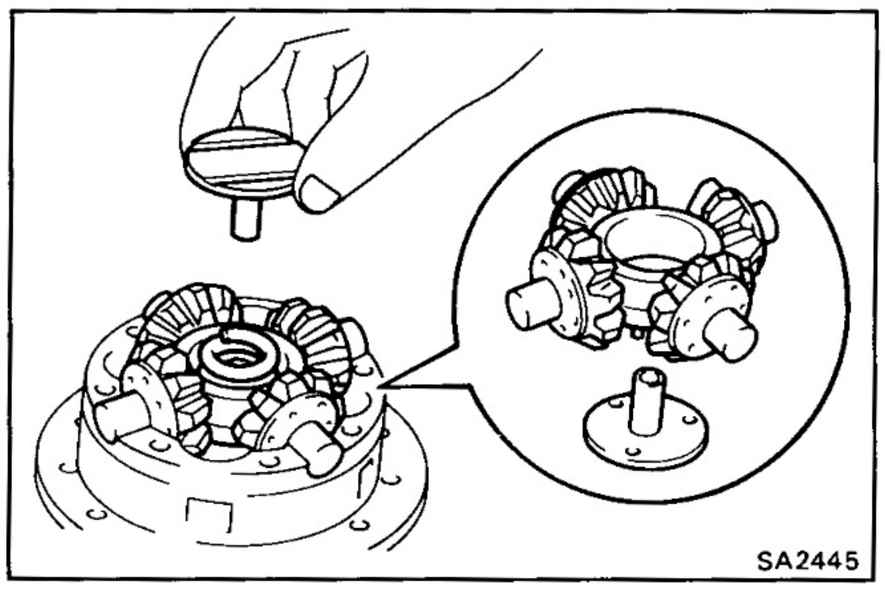

2. ASSEMBLE DIFFERENTIAL CASE

(a) Reinstall the spider and spring LH retainer to the LH case.

HINT: Install the spider to the LH case tightly, and don't move the spring.

(b) Install the compression spring and spring RH retainer.

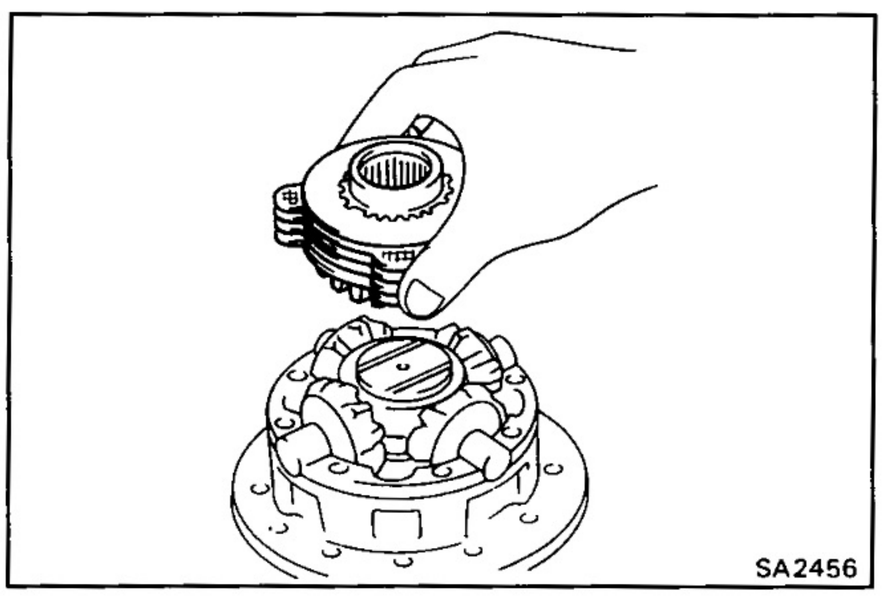

(c) Install the side gear, thrust washers and clutch plates.

(d) Align the matchmarks and assemble the RH and LH cases.

HINT: Be careful not to drop the side gear, and check the pinion and side gear alignment.

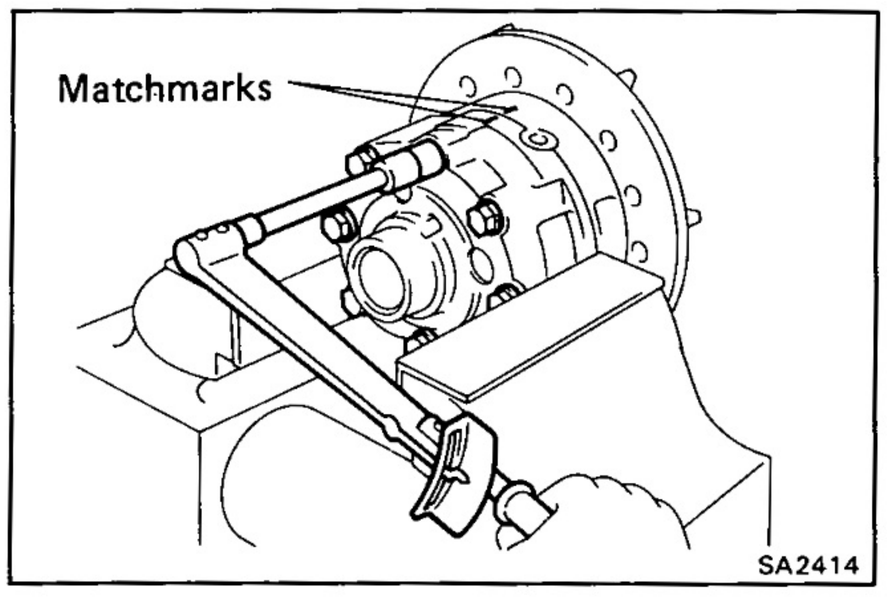

(e) Tighten the eight bolts uniformly, a little at a time.

Torque: 480 kg-cm (35 ft-lb, 47 N·m)

INSTALLATION OF DIFFERENTIAL

1. INSTALL DIFFERENTIAL CASE IN CARRIER
(See page SA-101)

2. INSTALL DIFFERENTIAL
(See page SA-97)

DIFFERENTIAL LOCKING SYSTEM

Description

- The differential locking system slides the differential lock sleeve which is meshed to the axle shaft, and by meshing with the differential case, restricts the operation of the differential.
- In the vehicles, an electrical motor is used to slide the differential lock sleeve. Driving of the motor is accomplished by the ECU (Electronic Control Unit) in accordance with signals from the differential lock control switch on the instrument panel and from various other switches and sensors. This motor is built into the differential lock actuator.

Parts Location and System Diagram

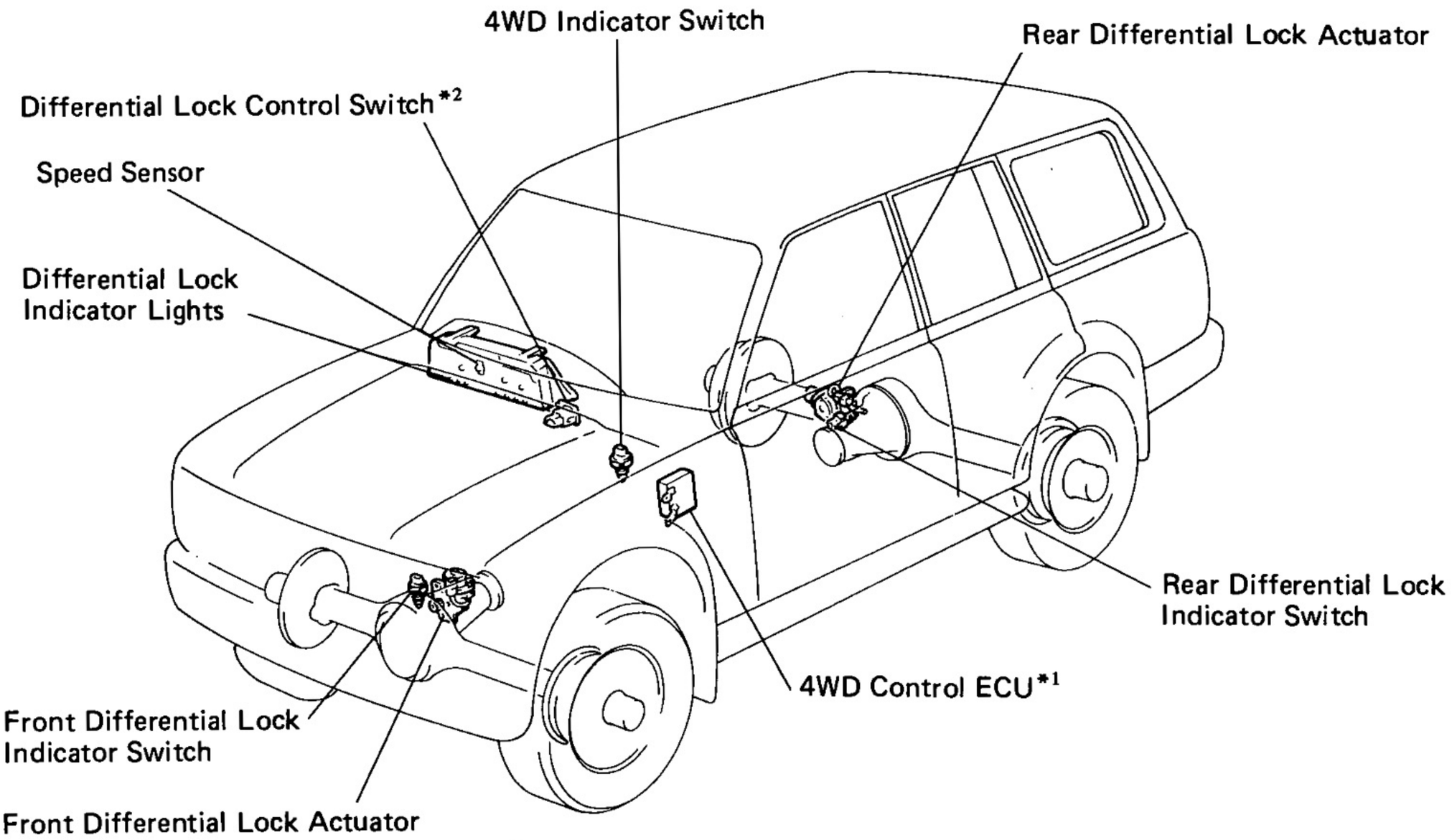

*1 : Right side for LHD vehicles
*2 : Light side of steering column of LHD vehicle

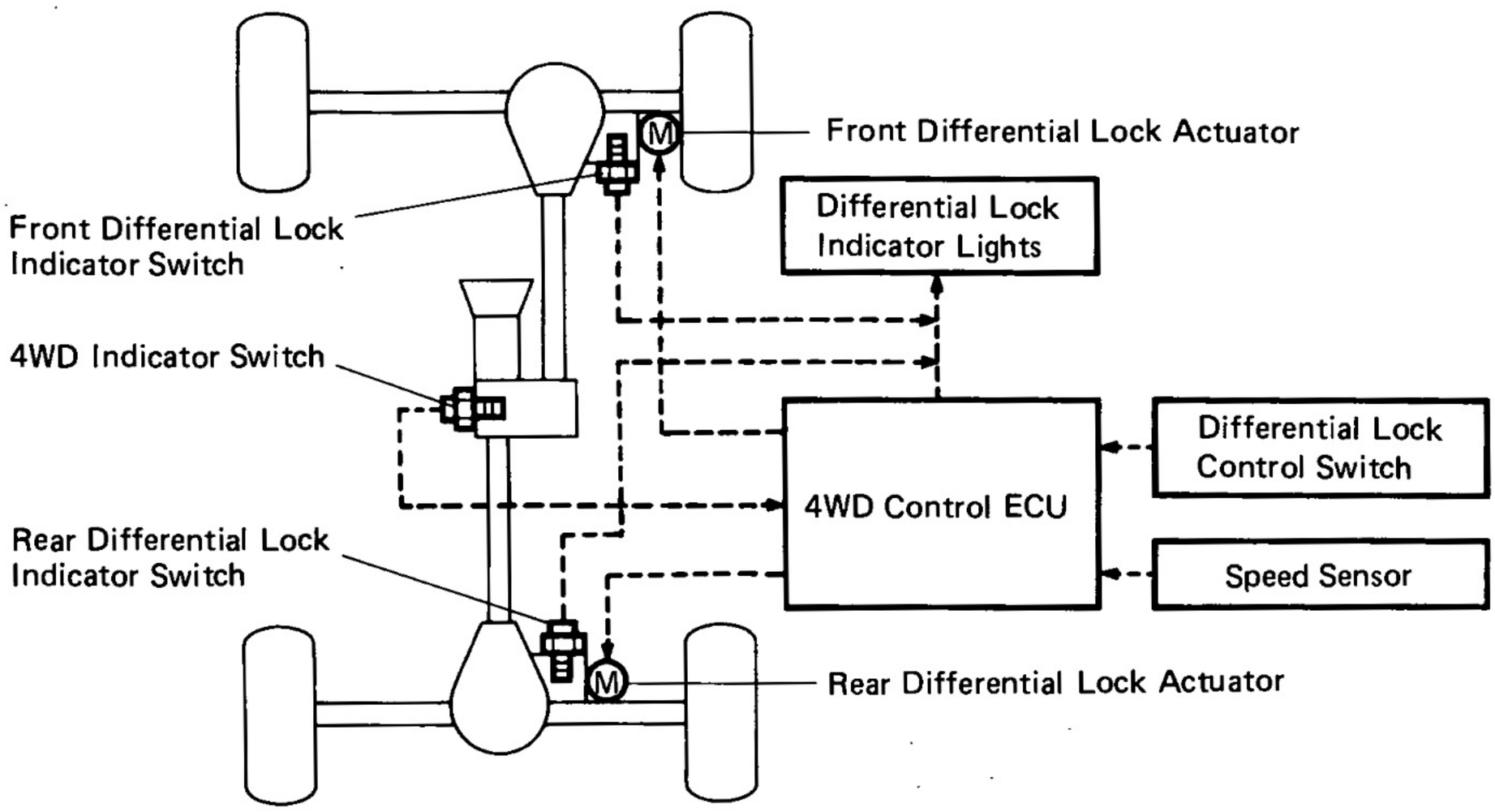

SA2354
SA2353

Wiring and Connector Diagrams

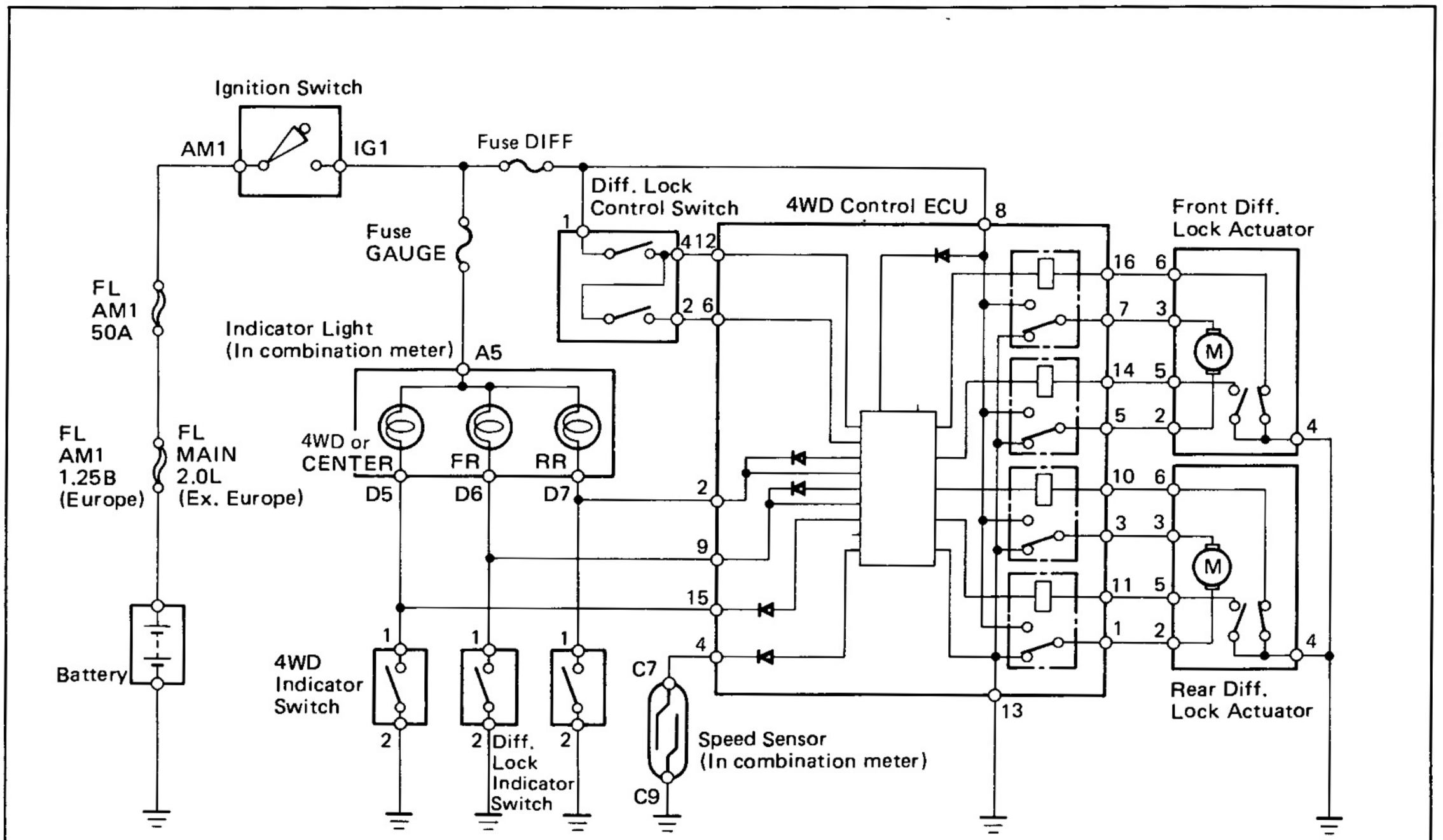

Diff. Lock Control Switch

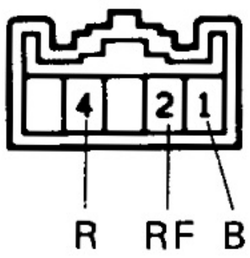

4WD Control ECU

Front Diff. Lock Actuator

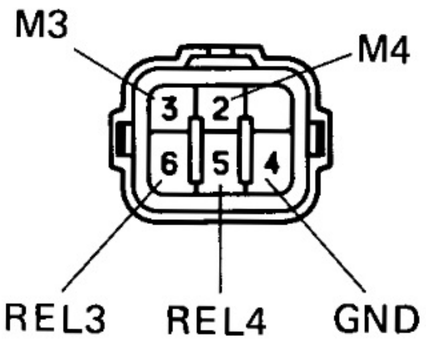

4WD Indicator Switch
Diff. Lock Indicator Switch

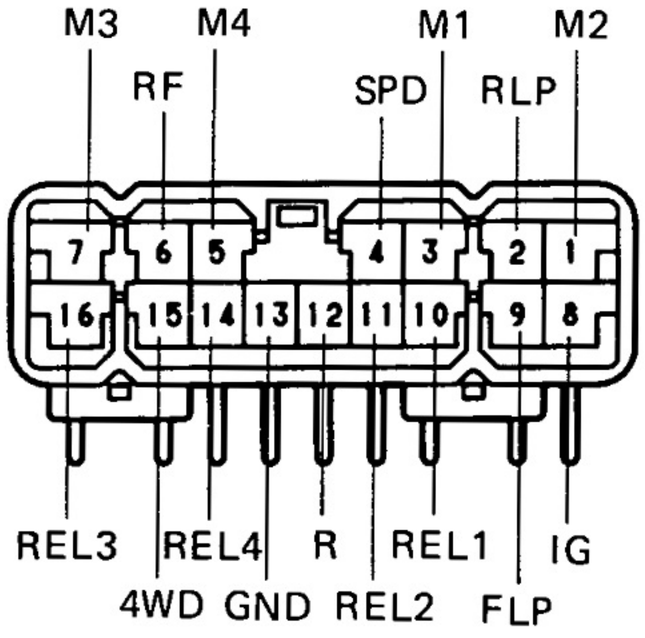

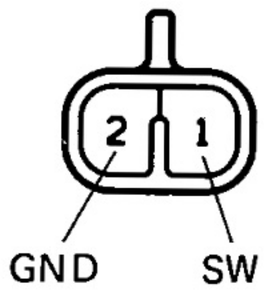

Rear Diff. Lock Actuator

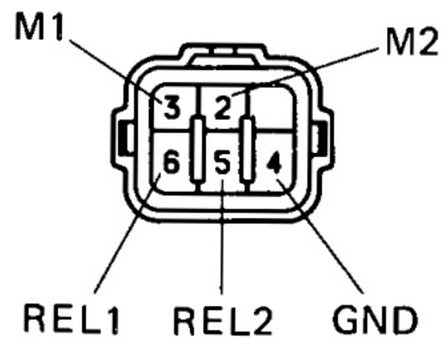

Combination Meter

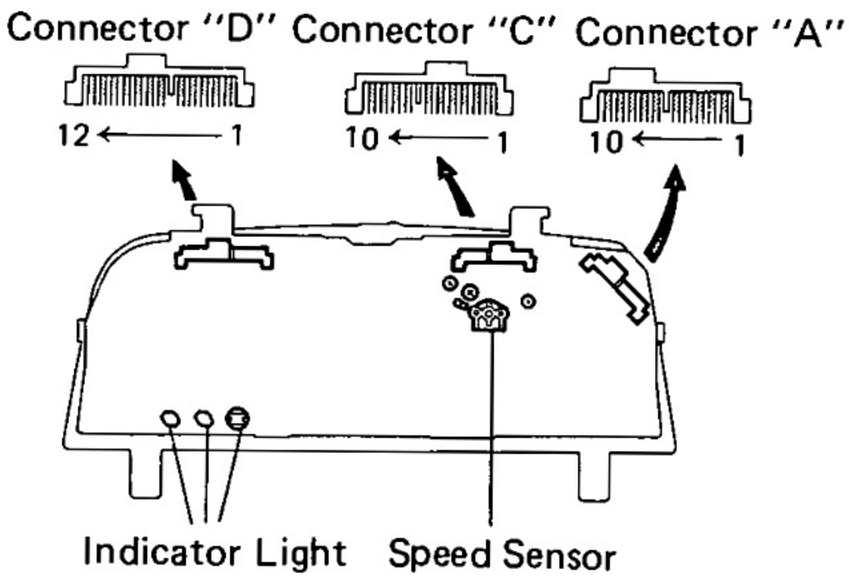

SA2224
S-5-2-A IS-6-2 IS-6-2
e-16-2-A IS-2-2-E SA2290

Troubleshooting

NOTICE:

- **Check that 4WD mode (Part-Time Models) or center differential lock mode (Full-Time Models) is set.**
- **When switching differential Free ↔ Lock, the indicator lamp will blink if the gears of the differential lock sleeve are not meshed. If this occurs, when the tires are rotated to apply differential power to the differential, the differential locks and the indicator lamp light up.**

Problem	Possible cause	Remedy	Page
Indicator lights do not light up.	Fusible link blown	Replace fusible link	
	GAUGE fuse blown	Replace fuse and check for short	
	Bulb burned out	Replace bulb	
	Wiring or ground faulty	Repair as necessary	
Indicator lights do not light up.(Diff. lock control switch RR or FR·RR position)	DIFF fuse blown	Replace fuse and check for short	
	Diff. lock switch control switch	Check switch	SA-144
	4WD control ECU faulty	Check ECU	SA-136, 138
	Wiring or ground faulty	Repair as necessary	
Differential lock does not operate.	Diff. lock indicator switch faulty	Check switch	SA-144
	Diff. lock actuator faulty	Check actuator	SA-138
	4WD control ECU faulty	Check ECU	SA-136, 138
	Differential carrier (Diff. lock) faulty	Repair as necessary	SA-41, 101
	Wiring or ground faulty	Repair as necessary	
After differential lock, lock not released when vehicle speed is higher than approx. 8 km/h (5 mph).	Speed sensor faulty	Check sensor	BE-55
	4WD control ECU faulty	Check ECU	SA-136, 138
	Wiring or ground faulty	Repair as necessary	

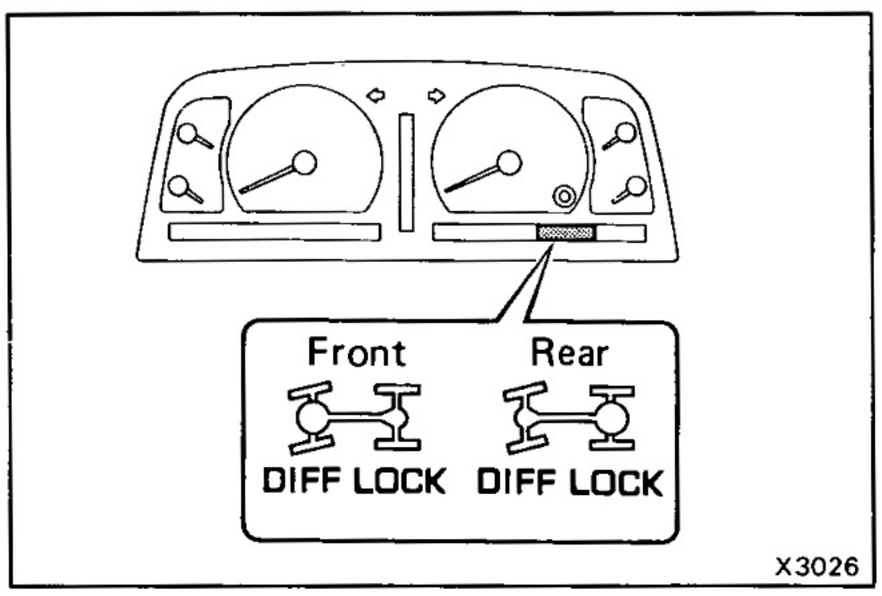

System Inspection

1. **INSPECT INDICATOR LIGHTS**

   Check that the indicator lights (front side and rear side) light up for approx. one second when the ignition switch is turned ON.

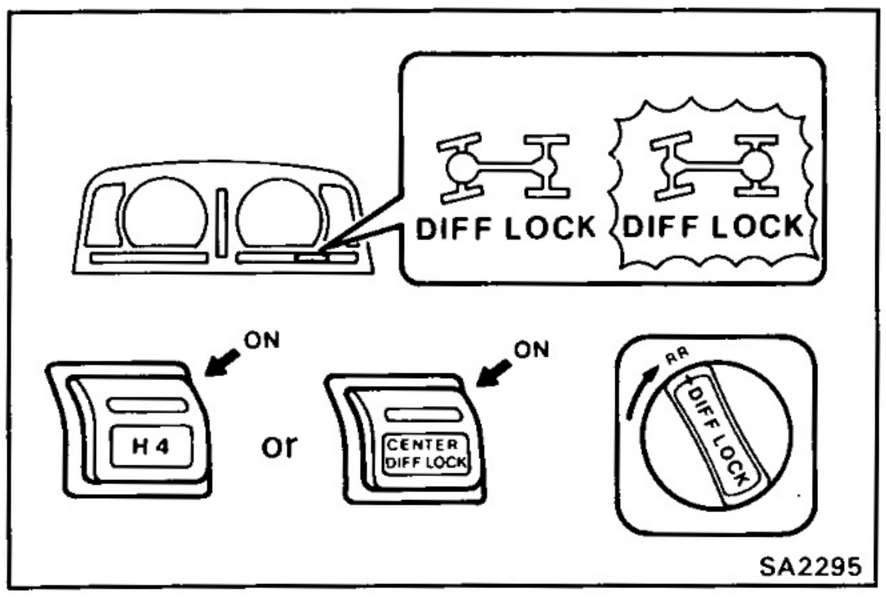

2. INSPECT DIFFERENTIAL LOCK OPERATION

HINT: Put the shift lever on neutral.

(a) Jack up the vehicle then start the engine.

(b) Put on the 4WD switch (Part-Time Models) or the center differential lock (Full-Time Models).

(c) When the diff. lock control switch is set to RR position, the indicator light (rear side) is turned on. Differential lock is applied to the rear wheel at this time.

HINT: If the gears of the differential lock system are not meshed, the indicator light remains blinking, so rotate the tires to mesh the gears.

(d) When the diff. lock control switch is at OFF position, the indicator light goes off. Differential lock is released for the rear wheel at this time.

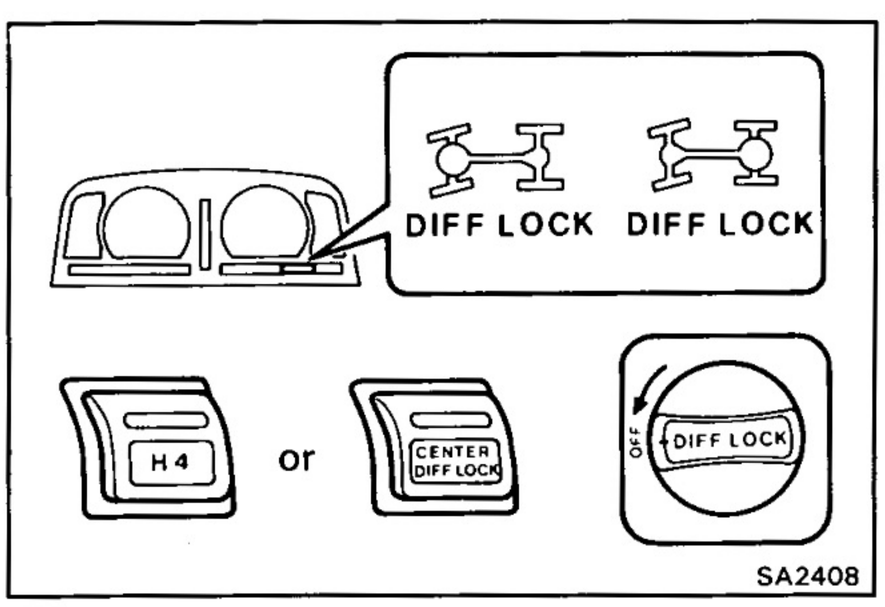

(e) When the diff. lock control switch is set to FR·RR position, the indicator lights (front side and rear side) are turned on. Differential lock is applied to both the front wheels and rear wheels at this time.

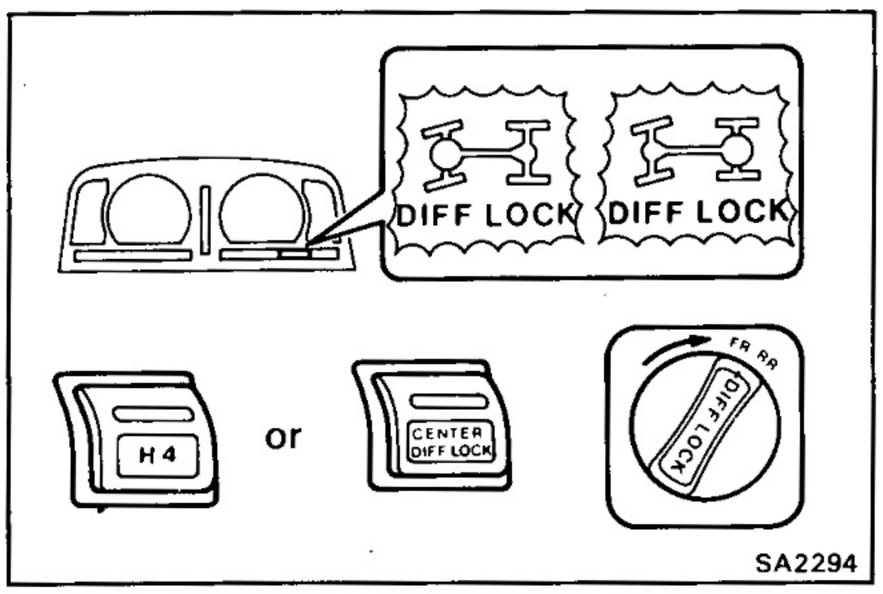

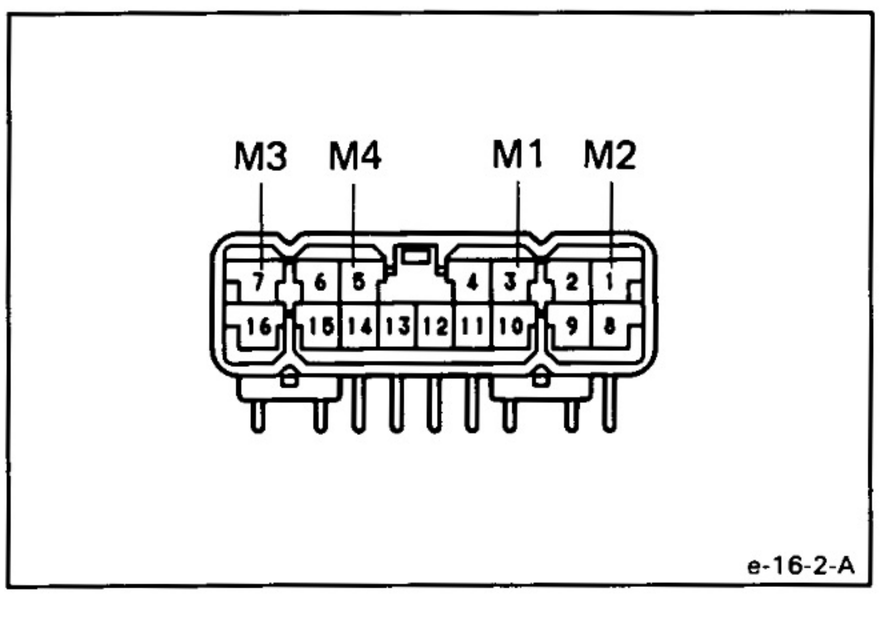

(f) Check the voltage between the terminals of the 4WD control ECU when switching the diff. lock control switch with the speedometer, registering approx. 8 km/h (5 mph) or more.

Diff. lock control switch	Terminal	Specified value
OFF → RR	3 (M1) — 1 (M2)	0.5 V or less (on change)
RR → FR·RR	7 (M3) — 5 (M4)	0.5 V or less (on change)

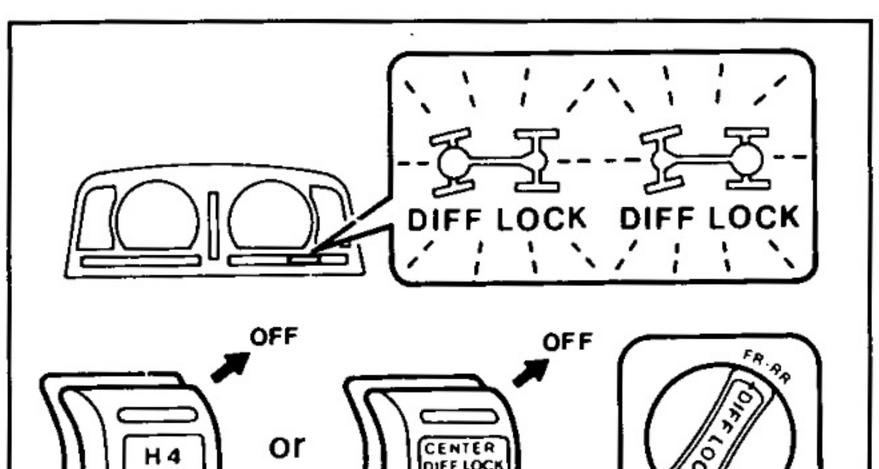

(g) Check that the indicator lights blink when 2WD mode (Part-Time Models) or center diff. lock release mode (Full-Time Models)is set. Differential lock is released for both the front wheels and rear wheels at this time.

(h) Return the diff. lock control switch to OFF.

(i) Stop the engine and jack down the vehicle.

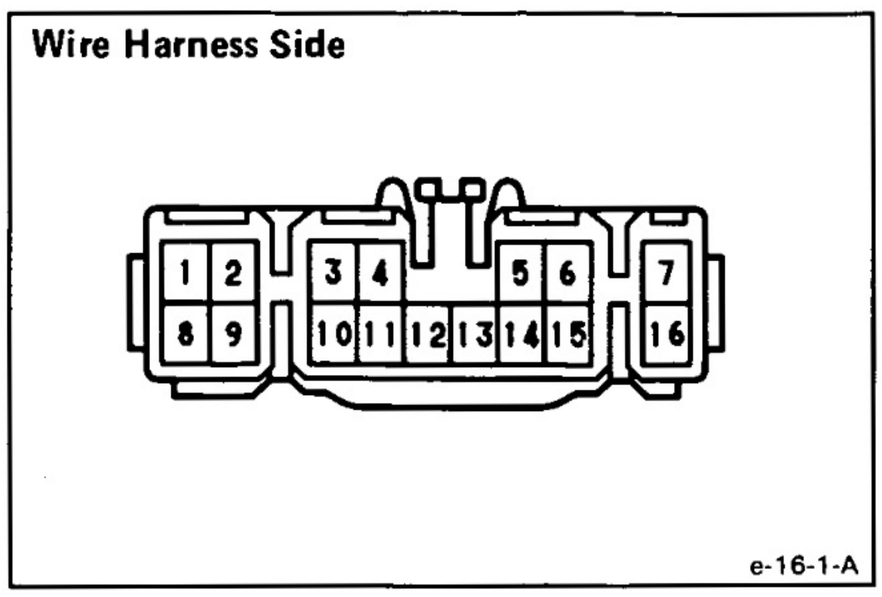

Differential Locking System Circuit

INSPECTION OF SYSTEM CIRCUIT

1. INSPECT SYSTEM CIRCUIT WITH CONNECTOR DISCONNECTED

Disconnect the connector from the 4WD control ECU and inspect the connector on the wire harness side as shown in the chart.

Trouble Part	Tester Connection	Check item	Condition		Specified Value
Rear Differential Lock Actuator	1 — 3 (M2) (M1)	Resistance	—		Less than 100 Ω
Front Differential Lock Actuator	5 — 7 (M4) (M3)				Less than 100 Ω
Body Ground	13 — Body (GND) ground	Continuity			Continuity
Speed Sensor	4 — Body (SPD) ground		Vehicle moving slowly		1 pulse each 40 cm (15.75 in.)
DIFF Fuse	8 — Body (IG) ground	Voltage	Ignition switch ON		Battery voltage
Rear Differential Lock Indicator Switch	2 — Body (RLP) ground		Ignition switch ON	Indicator light (Rear) ON	About 0 V
				Indicator light (Rear) OFF	Battery voltage
Front Differential Lock Indicator Switch	9 — Body (FLP) ground			Indicator light (Front) ON	About 0 V
				Indicator light (Front) OFF	Battery voltage
4WD Indicator Switch	15 — Body (4WD) ground			Indicator light (4WD or Center diff. lock) ON	About 0 V
				Indicator light (4WD or Center diff. lock) OFF	Battery voltage
Differential Lock Control Switch	12 — Body (R) ground			Diff. lock control switch RR or FR·RR	Battery voltage
				Diff. lock control switch OFF	About 0 V
	6 — Body (RF) ground			Diff. lock control switch FR·RR	Battery voltage
				Diff. lock control switch OFF or RR	About 0 V

HINT: When a signal enters the ECU to LOCK the front differential and set the rear differential to FREE (when battery voltage is inputted to terminal 6 (RF) of ECU and about 0V is inputted to terminal 12 (R)), or a signal to FREE both the front and rear differentials, the indicator lights keep blinking until the ignition switch is turned off. (Fail-safe function)

If the circuit is not as specified, check and repair or replace the trouble part shown in the table above.

2. INSPECT BATTERY OF VOLTAGE

Battery voltage: 10 — 14.5 V

3. INSPECT SYSTEM CIRCUIT WITH CONNECTOR CONNECTED

(a) Turn the ignition switch to ON position.

(b) Keep the 4WD condition (Part-Time Models) or center differential lock condition (Full-Time Models).

(c) Remove the 4WD control ECU.

(d) Using voltmeter, measure the voltage when the differential lock control switch is in the positions as shown below.

ECU Side

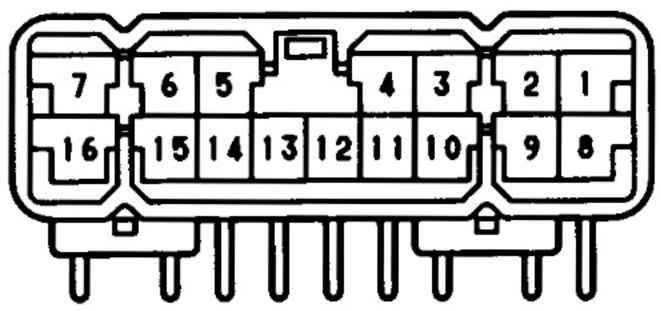

e-16-2-A

Tester connection ⊕ — ⊖	Switch position	Specified valve
15 (4WD) — 13 (GND)	—	0.5 V or less
9 (FLP) — 13 (GND)	FR·RR	
2 (RLP) — 13 (GND)	RR or FR·RR	
3 (M1) — 1 (M2)	OFF → RR	0.5 V or less ↓ 10 — 14.5 V (Approx. 1 sec) ↓ 0.5 V or less
1 (M2) — 3 (M1)	RR → OFF	
7 (M3) — 5 (M4)	OFF or RR → FR·RR	
5 (M4) — 7 (M3)	FR·RR → RR or OFF	

If the circuit is not as specified, replace the ECU.

(e) Install the ECU in place.

Heater Main Relay

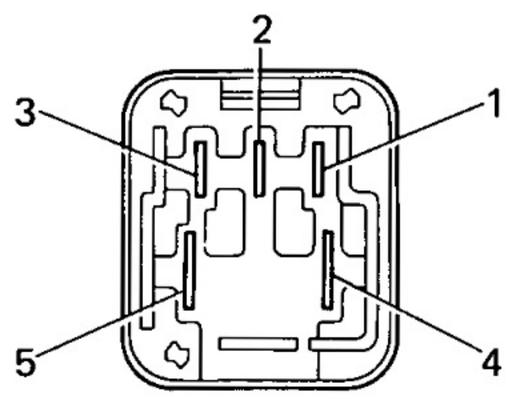

BE1013

Differential Lock Actuator

INSPECTION OF ACTUATOR

INSPECT RELAY OPERATION

(a) Jack up the vehicle.

(b) Use the heater main relay and connect it as shown below.

(c) Rotate the tire and check that differential lock has occurred.

If opereation is not as specified, replace the actuator.

Free → Lock

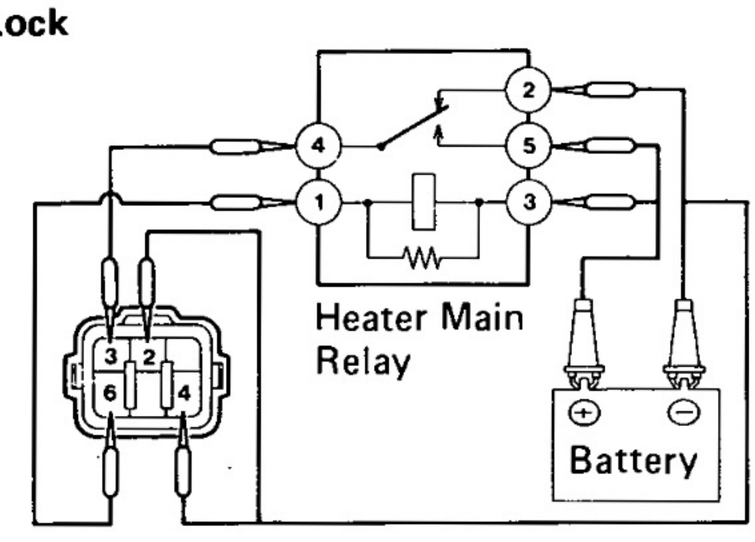

K7972

Lock → Free

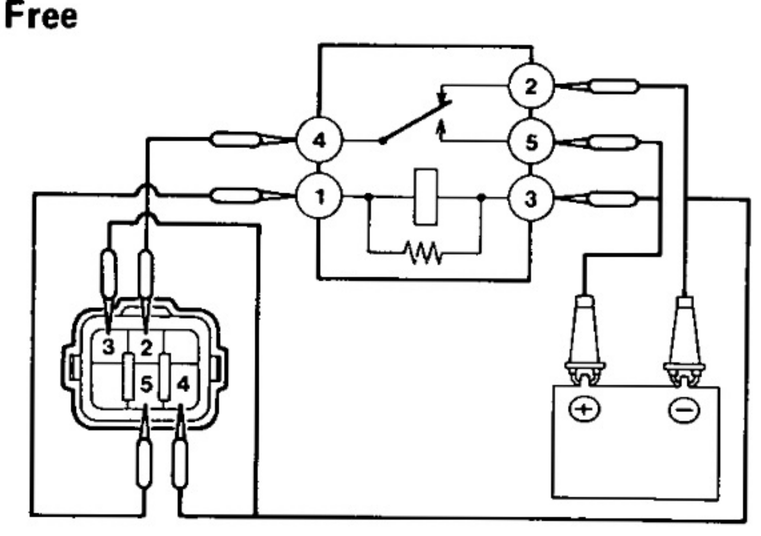

K7973

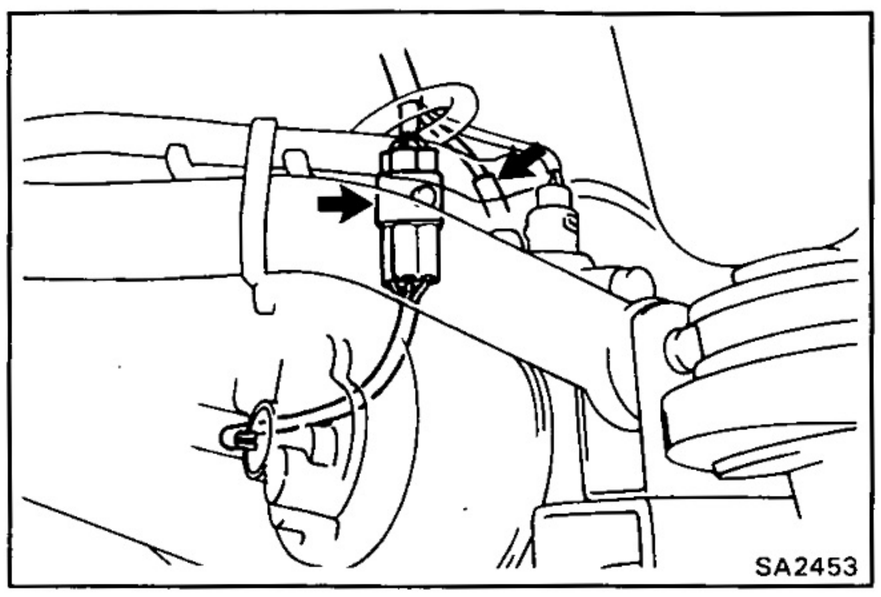

REMOVAL AND INSTALLATION OF FRONT ACTUATOR

1. SHIFTING FRONT DIFFERENTIAL LOCK
(See step 1 on page SA-38)

2. REMOVE ACTUATOR

(a) Disconnect the connector and tube.

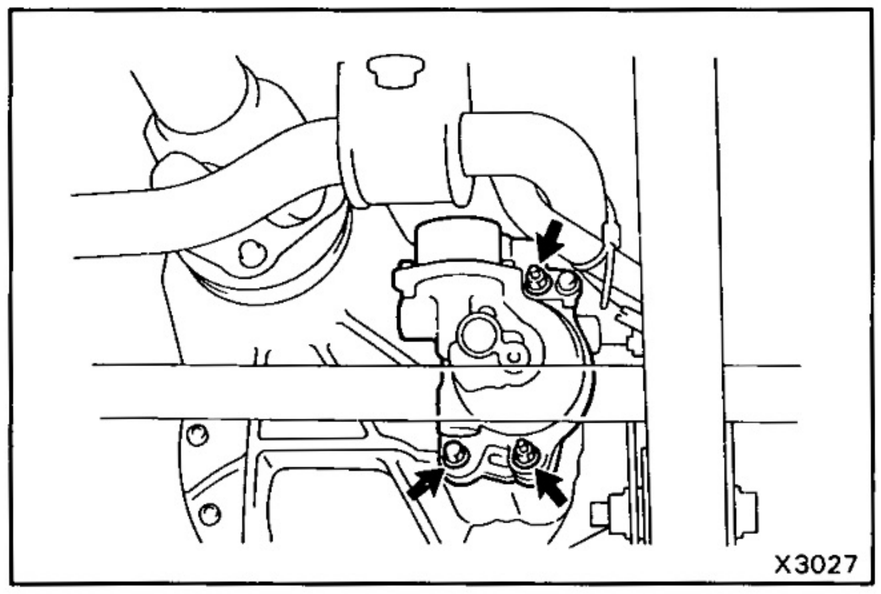

(b) Remove the two nuts, bolt and actuator.

(c) Remove the O-ring from the actuator.

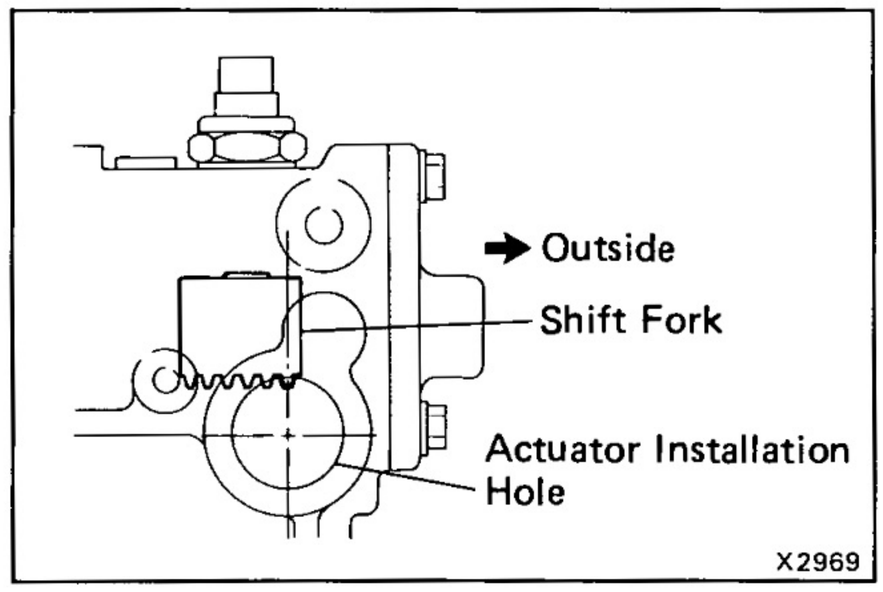

3. INSTALL ACTUATOR

(a) Check that the outermost rack tooth of the shift fork is virtually above the center line of the actuator installation hole.

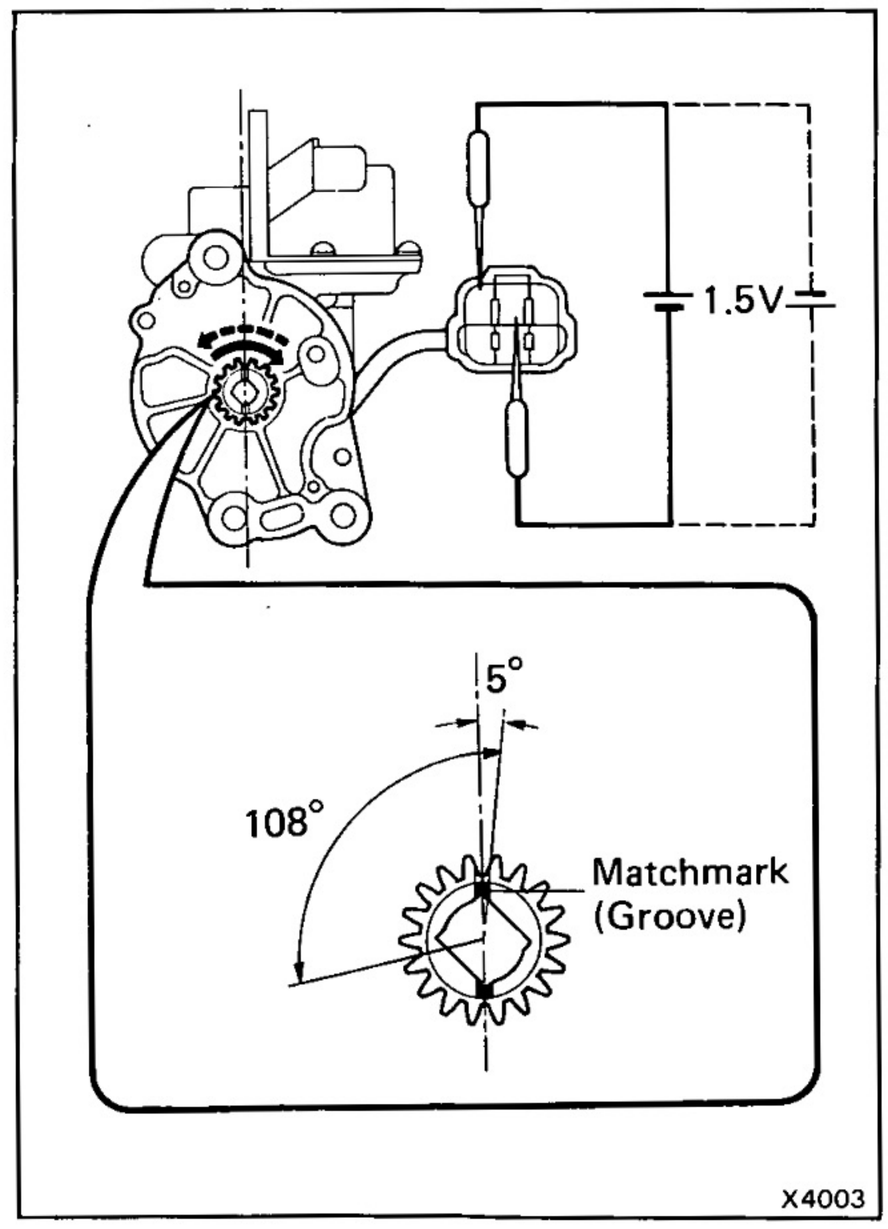

(b) Using a dry cell battery, align the matchmark on the actuator pinion with the center line of the actuator.

NOTICE:

- **If the pinion of the actuator is not in the specified place, the actuator is difficult to be installed.**
- **Don't supply the battery voltage between terminals.**
- **If the matchmark comes to the extention limit of the rotation, don't electrify moreover.**

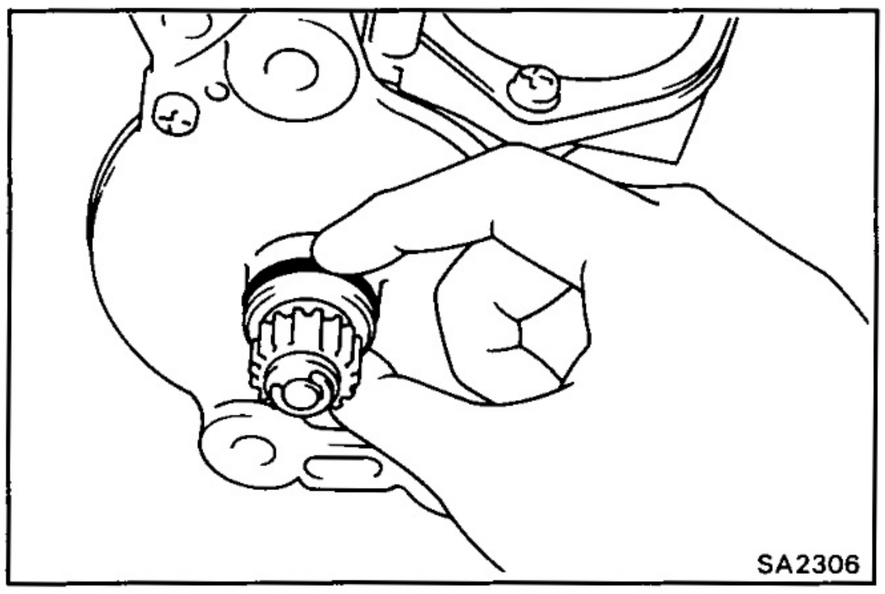

(c) Install a new O-ring to the acutuator.

(d) Apply a light coat of gear oil on the O-ring.

(e) Apply MP grease to the gear part of the actuator.

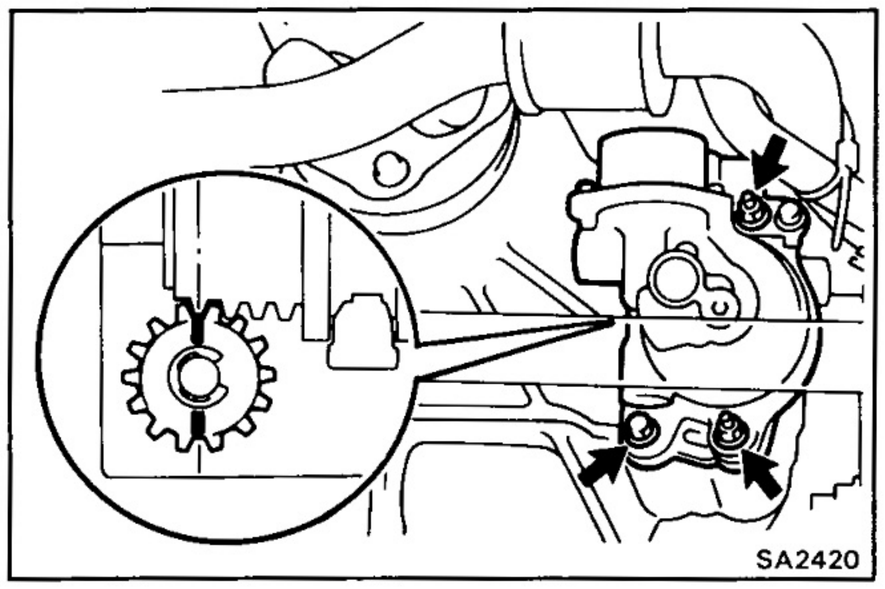

(f) Install the actuator to the differential with two nuts and bolt, so that the outermost rack tooth of the shift fork shall fit matchmark of the pinion of the actuator.

HINT: Don't damage the O-ring of the actuator.

Torque: 270 kg-cm (20 ft-lb, 26 N·m)

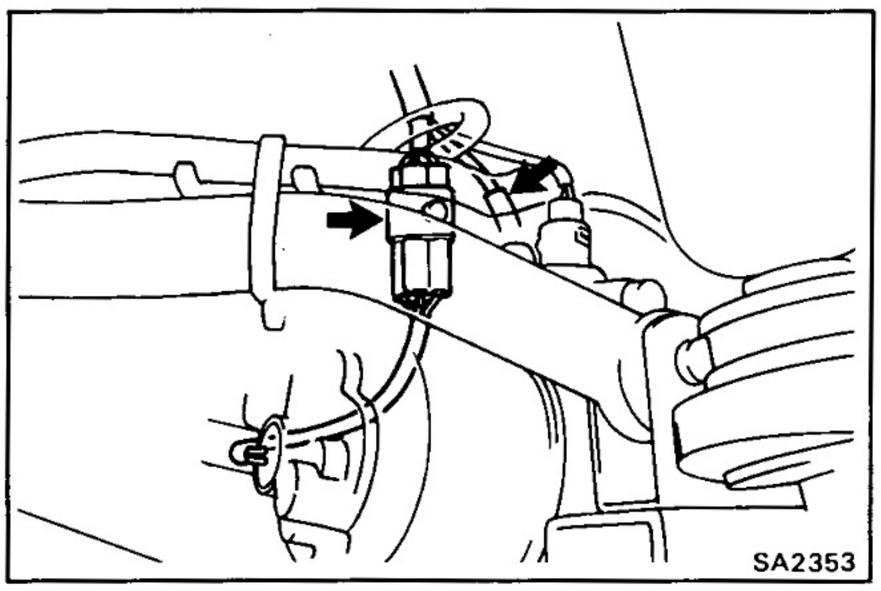

(g) Connect the connector and tube.

HINT:

- The depth of the insertion of the bleeder tube into the hose is approx. 15 mm (0.59 in.).
- Take care that water or the equivalent shall not adhere to the connector and hose.

4. CANCEL FRONT DIFFERENTIAL LOCK

With the ignition switch ON, turn the differential lock control switch to OFF to cancel the differential lock.

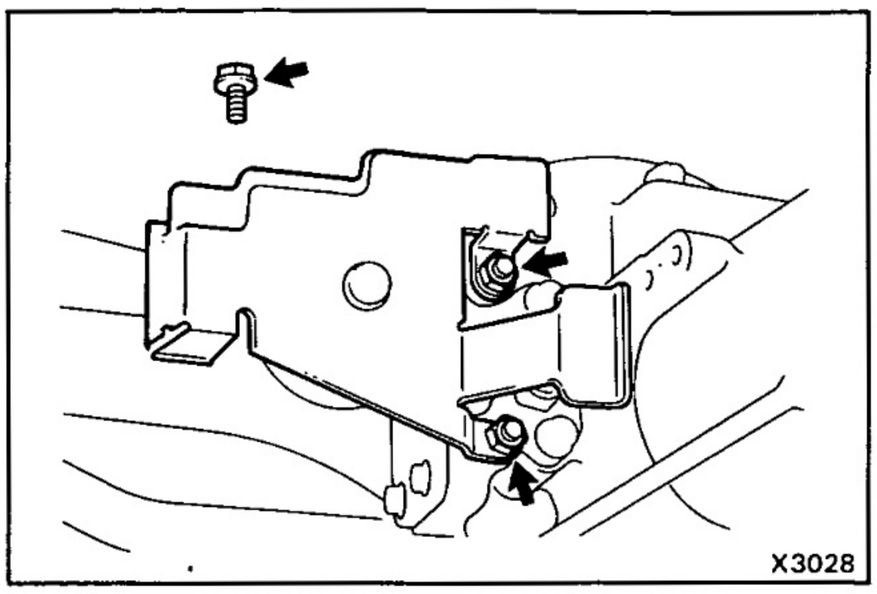

REMOVAL AND INSTALLATION OF REAR ACTUATOR

1. SHIFTING REAR DIFFERENTIAL LOCK
(See step 1 on page SA-97)

2. REMOVE ACTUATOR PROTECTOR

Remove the two nuts, bolt and protector.

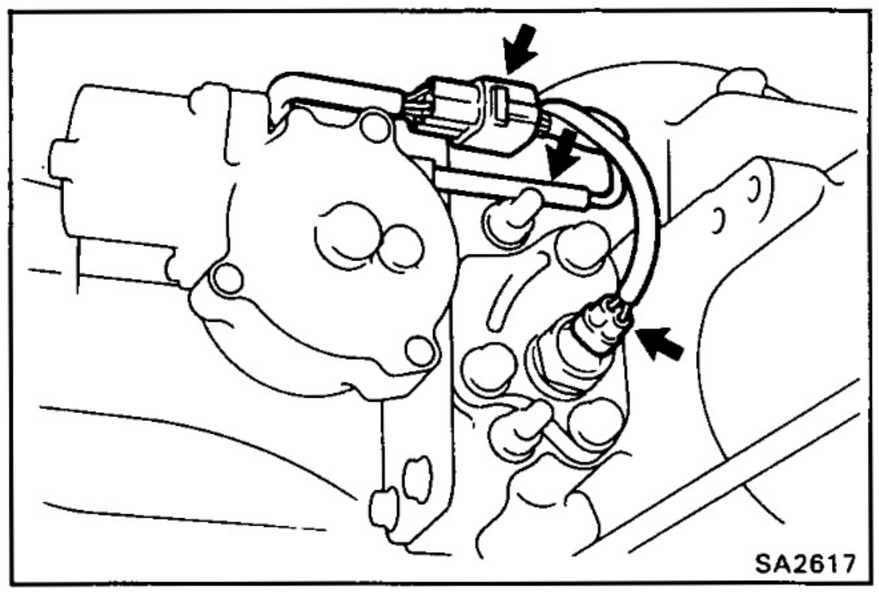

3. DISCONNECT CONNECTORS AND TUBE

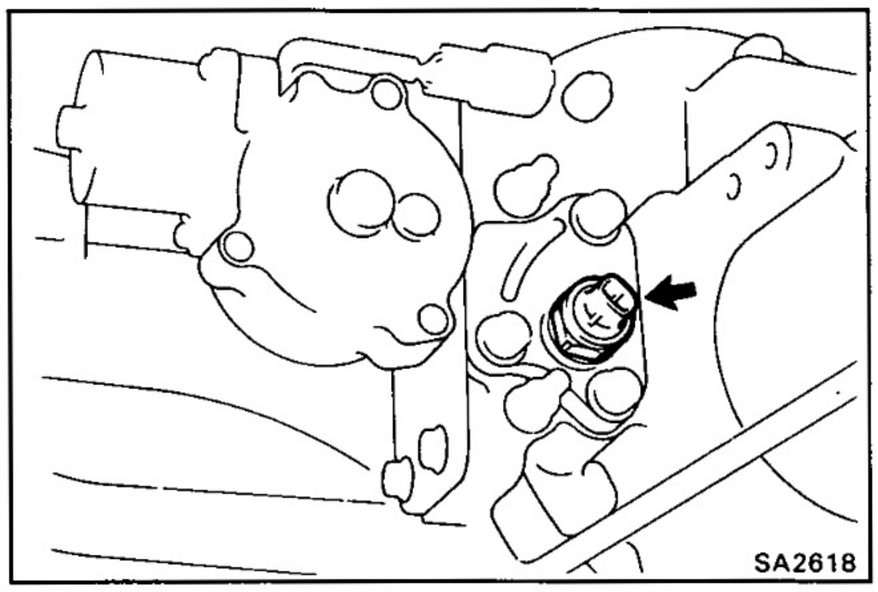

4. REMOVE INDICATOR SWITCH

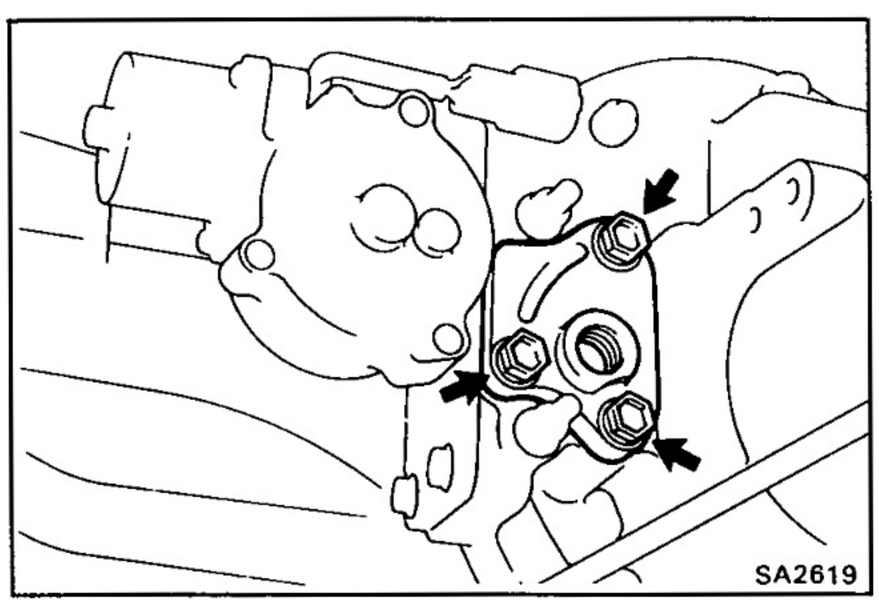

5. REMOVE COVER

(a) Remove the three bolts.

(b) Using a brass bar and hammer, remove the cover.

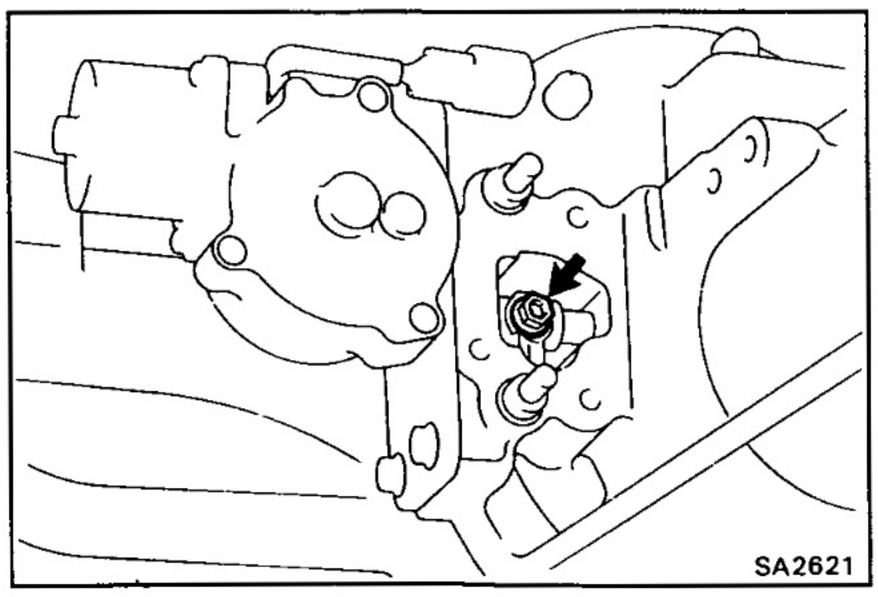

6. REMOVE ACTUATOR

(a) Remove the shift fork shaft bolt.

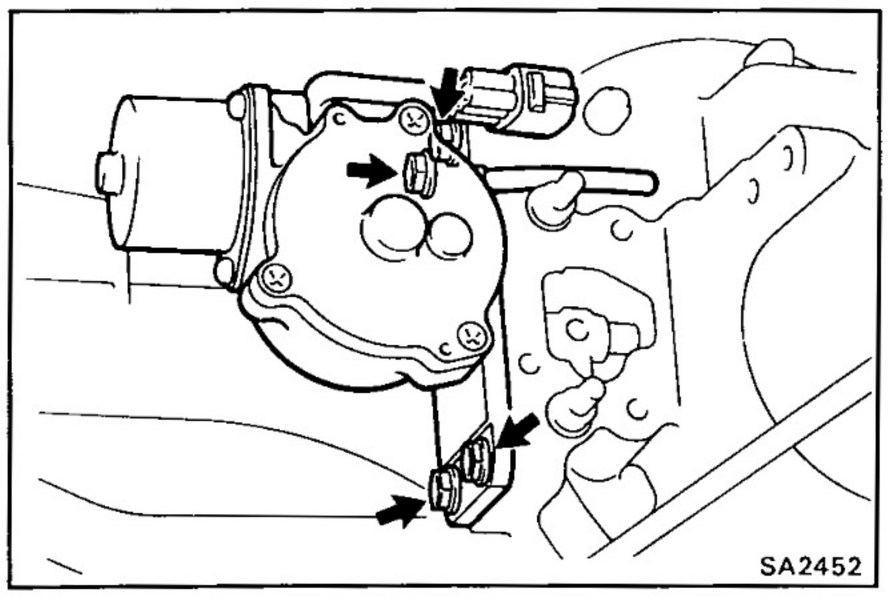

(b) Remove the four bolts.

(c) Using a screwdriver, pry out the actuator.

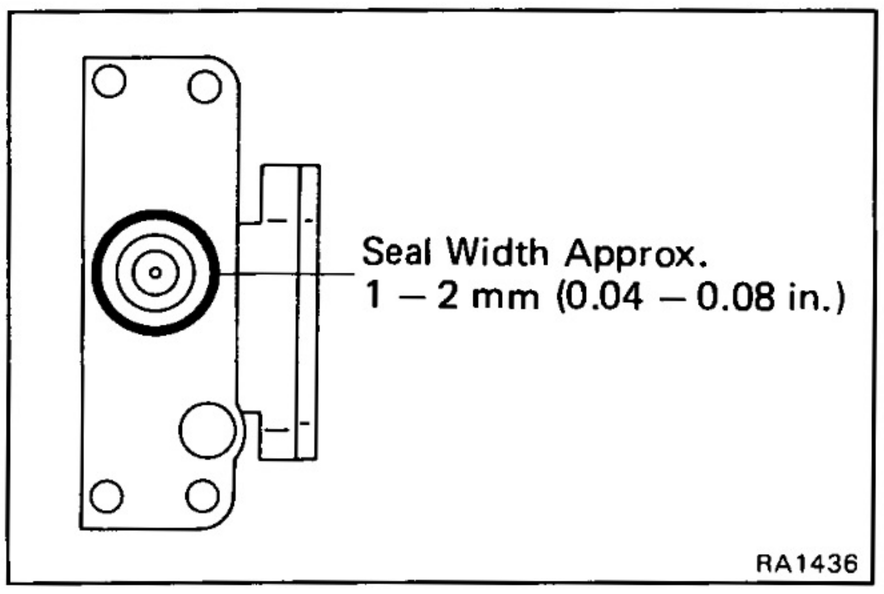

7. INSTALL ACTUATOR

(a) Clean contacting surfaces of any residual packing material using gasoline or alcohol.

(b) Apply seal packing to the actuator.

Seal packing: Part No. 08826-00090, THREE BOND 1281 or equivalent

HINT: Install the actuator within ten minutes after applying seal packing.

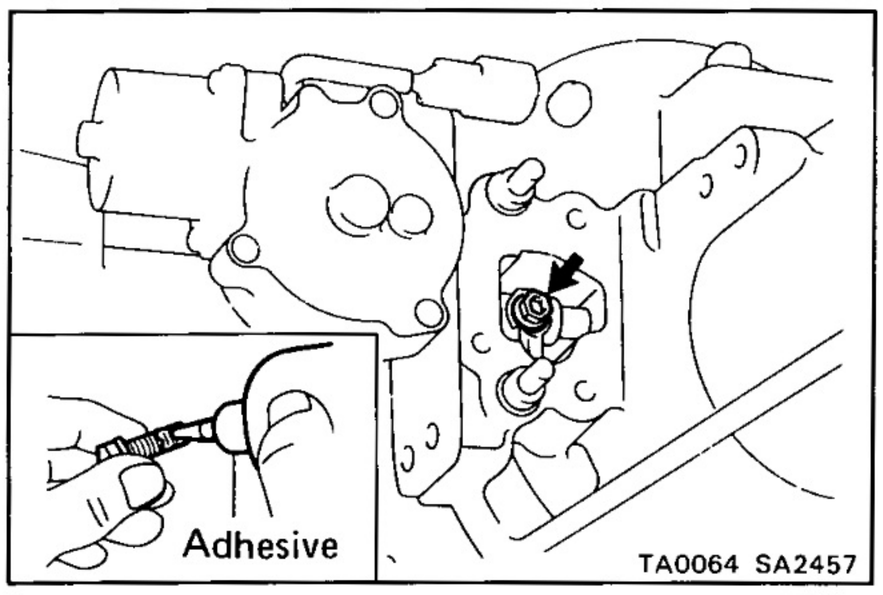

(c) Install the actuator to the differential and match the shaft with the shaft fork hole.

(d) Clean the threads of the set bolt and fork shaft with the white gasoline.

(e) Coat the threads of the set bolt with adhesive.

Adhesive: Part No. 08833-00070, THREE BOND 1324 or equivalent

(f) Tighten the shift fork shaft set bolt.

Torque: 200 kg-cm (14 ft-lb, 20 N·m)

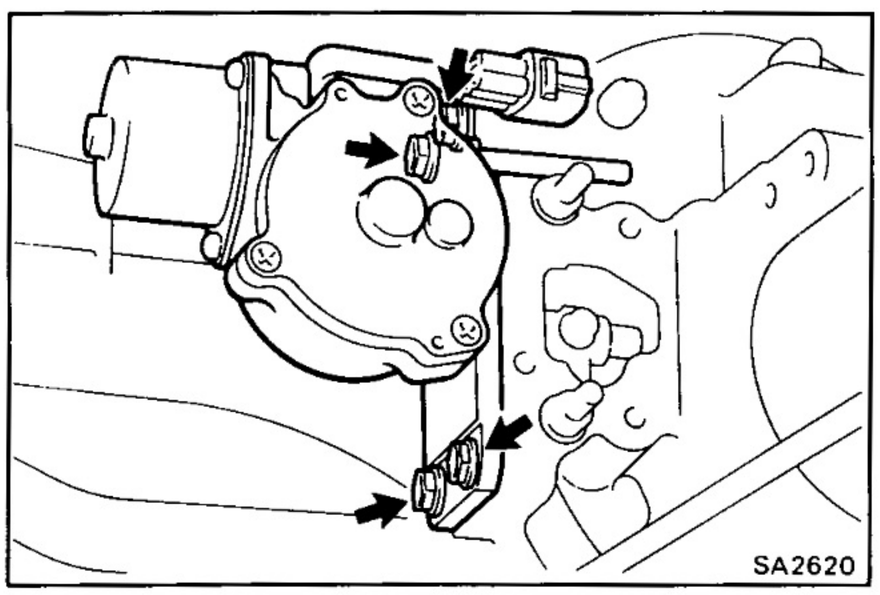

(g) Tighten the four bolts uniformly, a little at a time.

Torque: 240 kg-cm (17 ft-lb, 24 N·m)

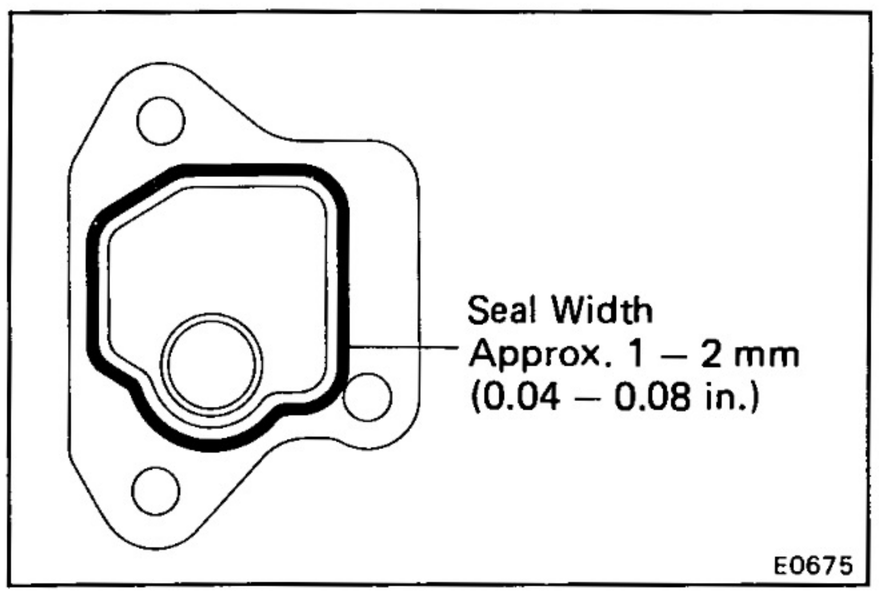

8. INSTALL COVER

(a) Clean contacting surfaces of any residual packing material using gasoline or alcohol.

(b) Apply seal packing to the cover.

Seal packing: Part No. 08826-00090, THREE BOND 1281 or equivalent

HINT: Install the cover ten minutes after applying seal packing.

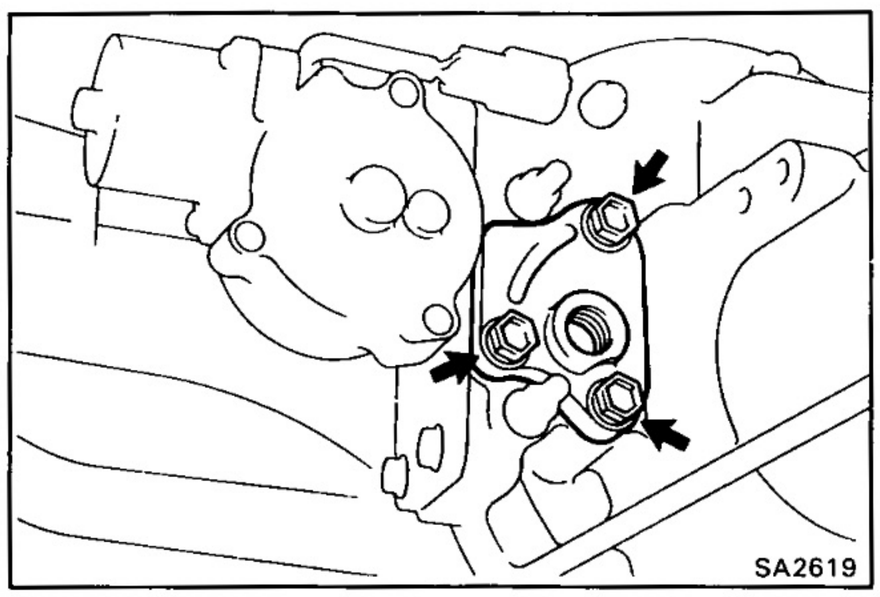

(c) Tighten the three bolts.

Torque: 185 kg-cm (13 ft-lb, 18 N·m)

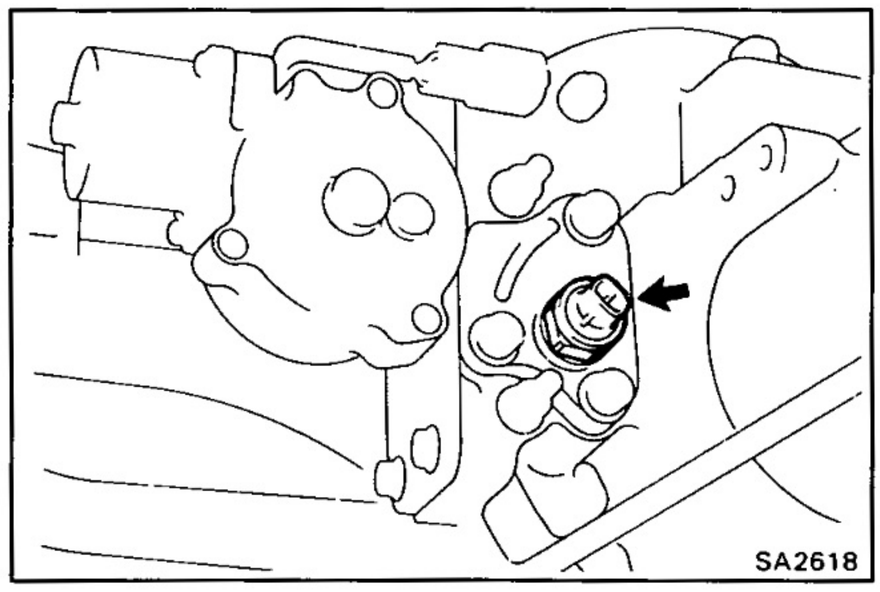

9. INSTALL INDICATOR SWITCH

Install the indicator switch with a new gasket.

Torque: 410 kg-cm (30 ft-lb, 40 N·m)

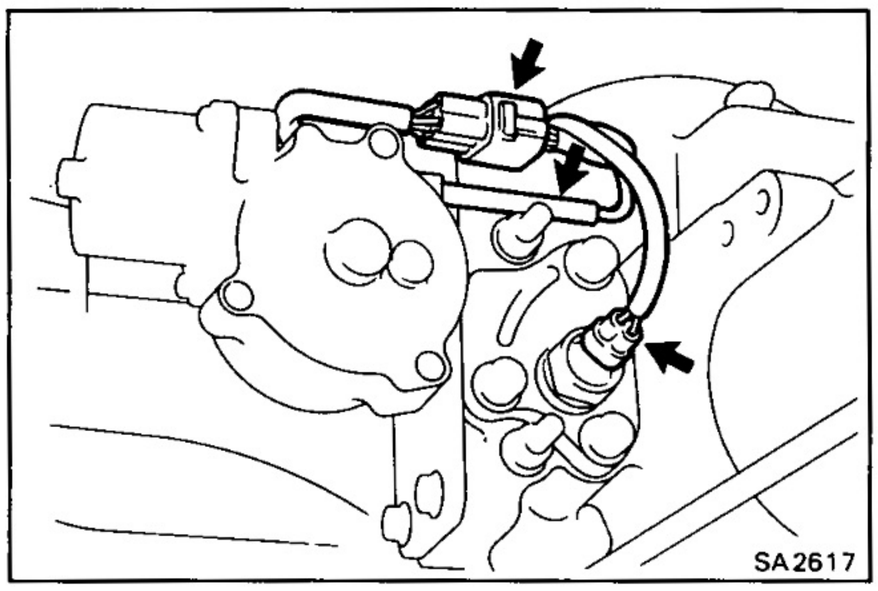

10. CONNECT CONNECTORS AND TUBE

HINT:

- The depth of the insertion of the bleeder tube into the hose is approx. 15 mm (0.59 in.)
- Take care the water or the equivalent shall not adhere to the connectors and hose.

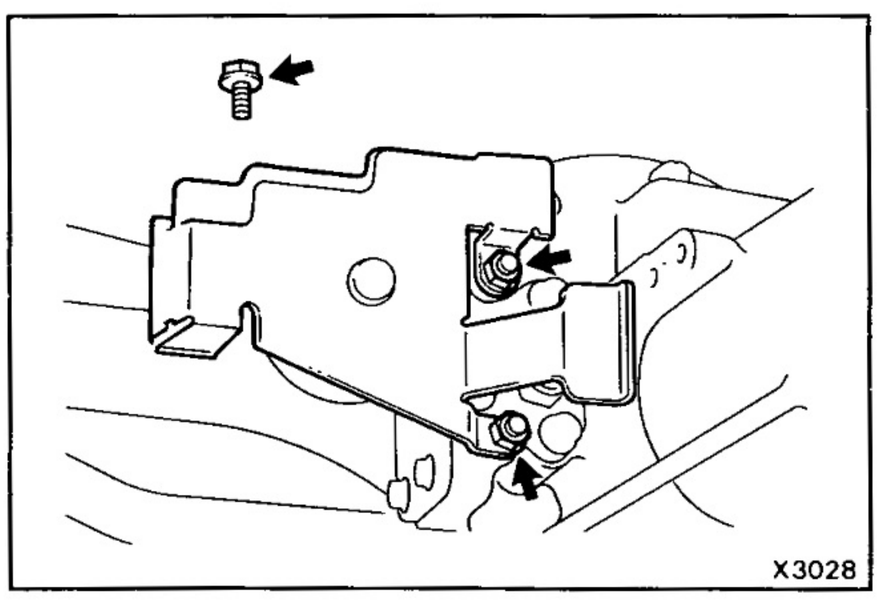

11. INSTALL ACTUATOR PROTECTOR

Install the protector with the two nuts and bolt.

Torque: Nut 360 kg-cm (26 ft-lb, 35 N·m)
Bolt 200 kg-cm (14 ft-lb, 20 N·m)

12. CANCEL REAR DIFFERENTIAL LOCK

With the ignition switch ON, turn the differential lock control switch to OFF to cancel the differential lock.

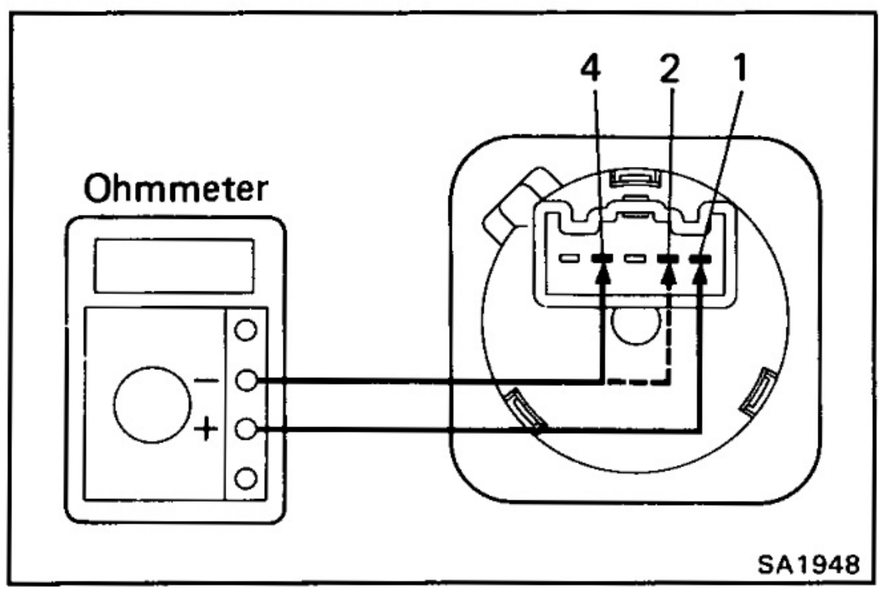

Differential Lock Control Switch

INSPECTION OF DIFFERENTIAL LOCK CONTROL SWITCH

INSPECT SWITCH CONTINUITY

Inspect switch continuity between terminals as shown.

Terminal / Switch position	1 (B)	2 (RF)	4 (R)
OFF			
RR	○		○
FR·RR	○	○	○

If continuity is not as specified, replace the switch.

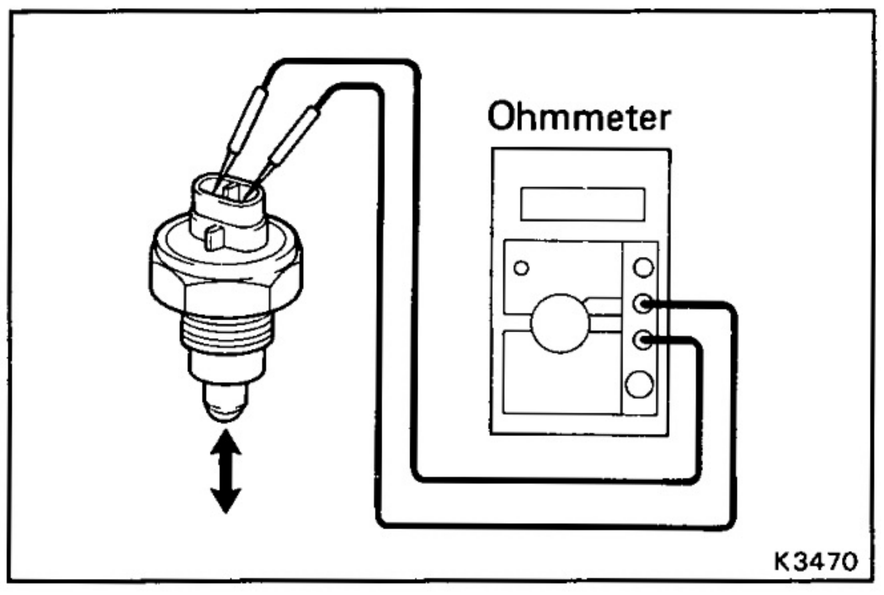

Indicator Switch

INSPECTION OF INDICATOR SWITCH

1. **INSPECT DIFFERENTIAL LOCK INDICATOR SWITCH (FRONT AND REAR)**

   (a) Check that there is continuity between terminals when the switch is pushed (differential connected position).

   (b) Check that there is no continuity when the switch is free (differential disconnected position).

   If operation is not as specified, replace the switch.

2. **INSPECT 4WD INDICATOR SWITCH**
   (See page TF-11)

Combination Meter

INSPECTION OF SPEED SENSOR AND INDICATOR LIGHT

1. **INSPECT SPEED SENSOR**
   (See page BE-55)

2. **INSPECT INDICATOR LIGHT**

REAR SUSPENSION

COMPONENTS

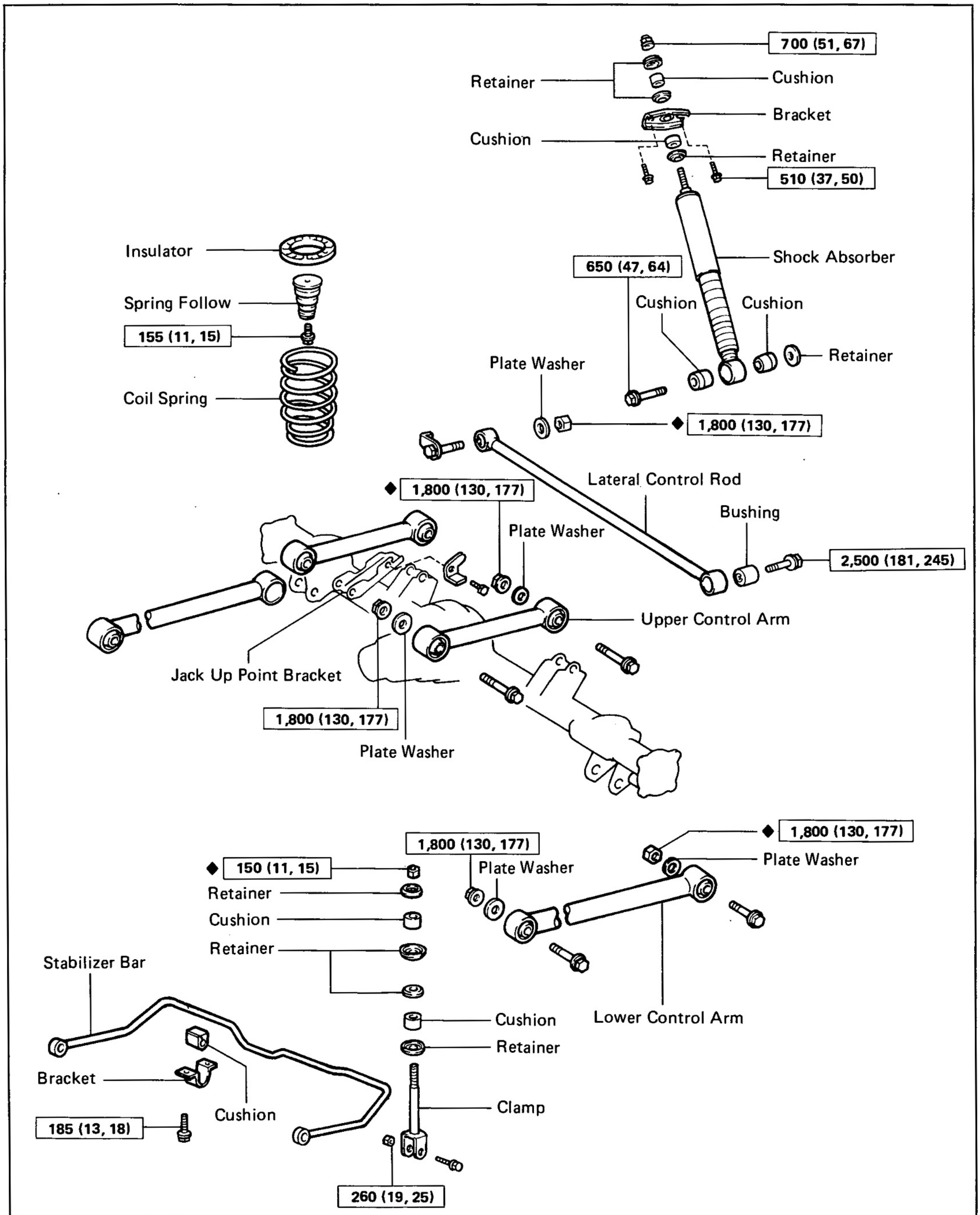

kg-cm (ft-lb, N·m) : Specified torque

◆ Non-reusable part

SA2696

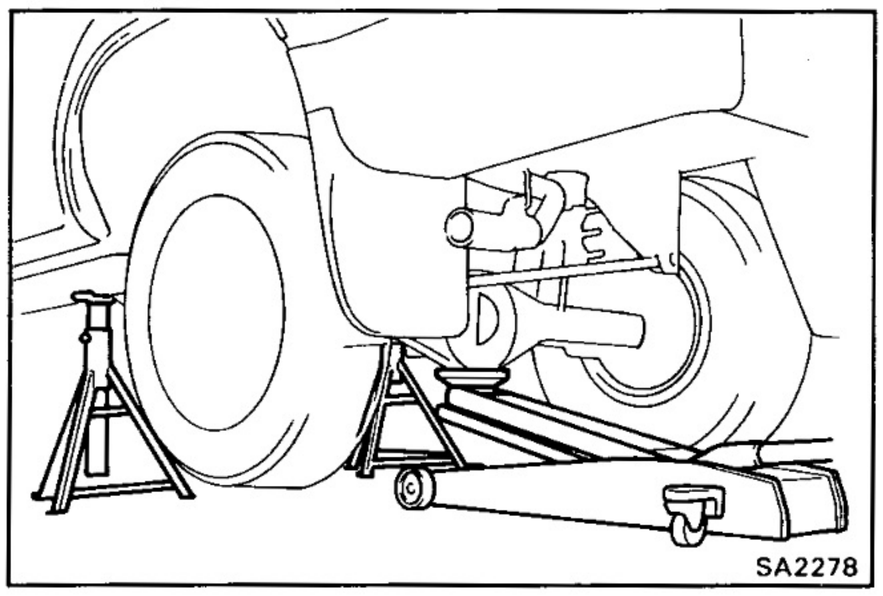

Coil Spring and Shock Absorber

(See page SA-145)

REMOVAL OF COIL SPRING AND REAR SHOCK ABSORBER

1. JACK UP AND SUPPORT VEHICLE

Jack up the rear axle housing and support the frame with stands. Hold the rear axle housing with a jack.

2. REMOVE WHEEL

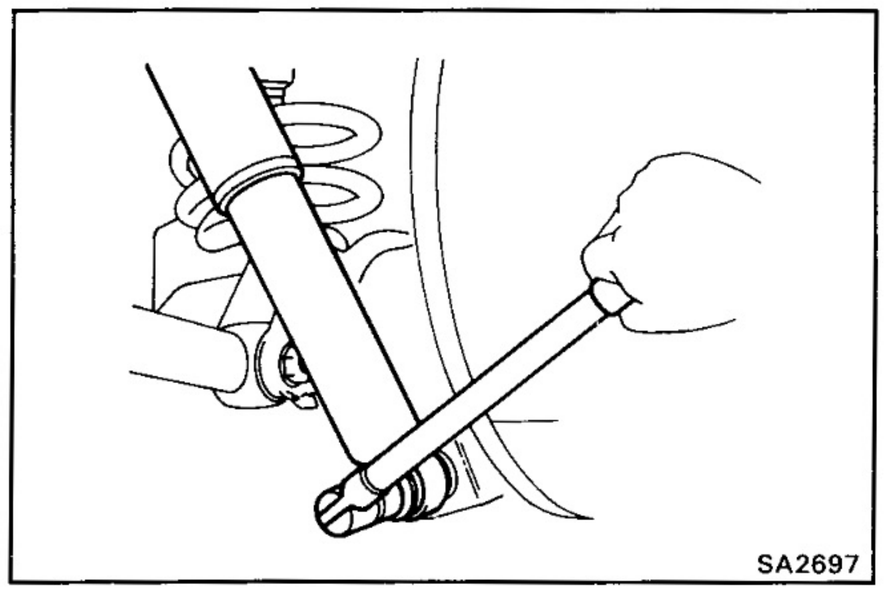

3. DISCONNECT REAR SHOCK ABSORBER

(a) Remove the bolt holding the shock absorber to the rear axle housing and disconnect the shock absorber.

(b) Remove the two cushions.

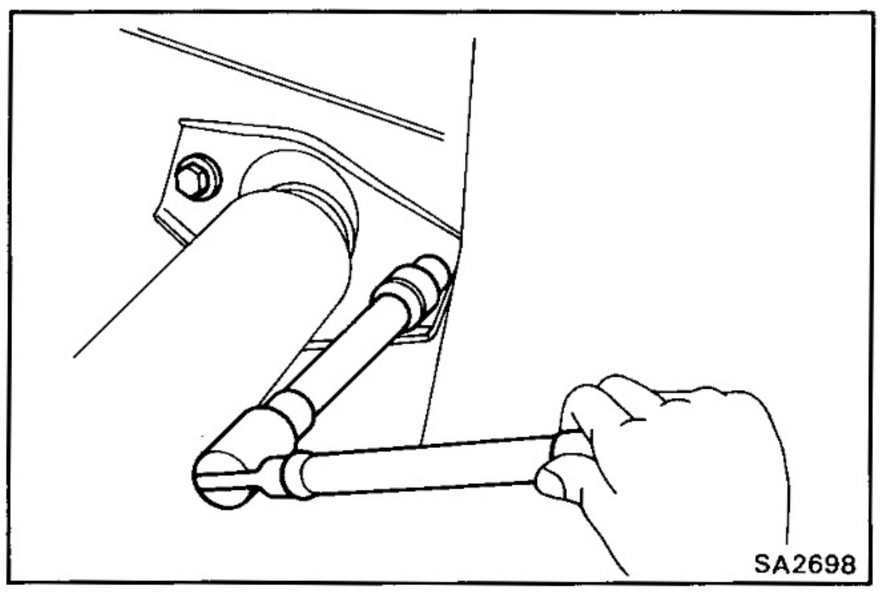

(c) If replacing the shock absorber, remove the nut holding the shock absorber to the frame, and remove the shock absorber.

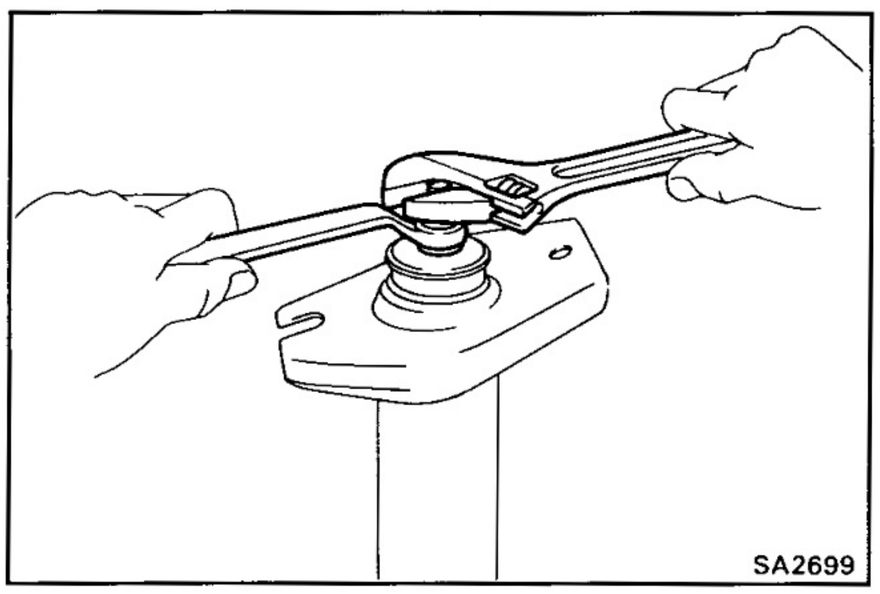

(d) Hold the piston rod, and remove the nut.

(e) Remove the retainers, cushions and bracket.

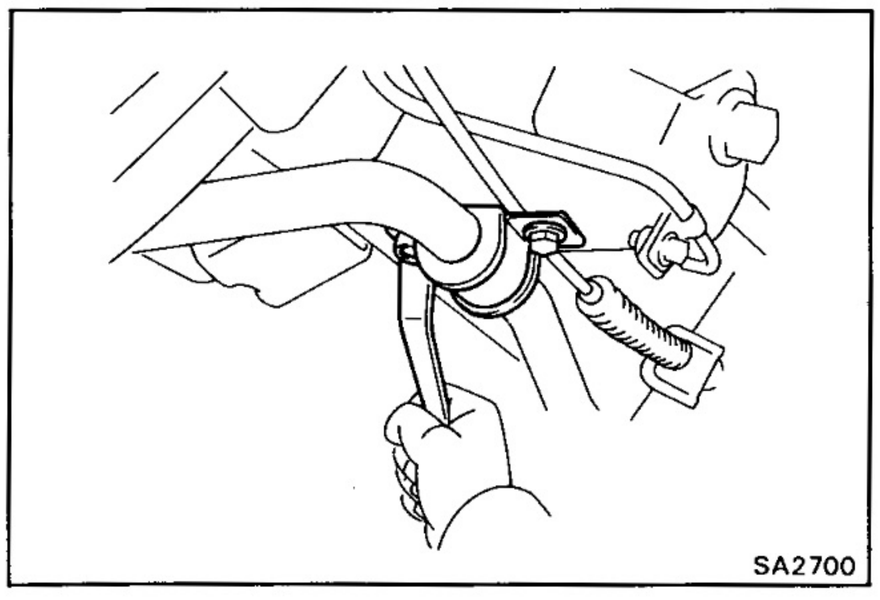

4. DISCONNECT STABILIZER BAR BRACKETS

Remove the two bolts holding the stabilizer bar bracket from the rear axle housing.

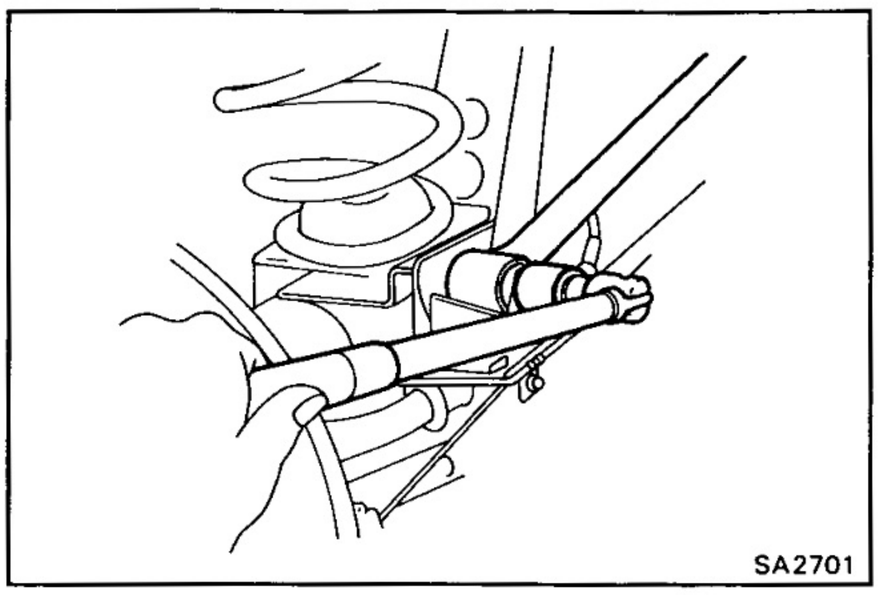
SA2701

5. DISCONNECT LATERAL CONTROL ROD

(a) Remove the bolt and disconnect the lateral control rod from axle housing.

(b) Remove the bushing.

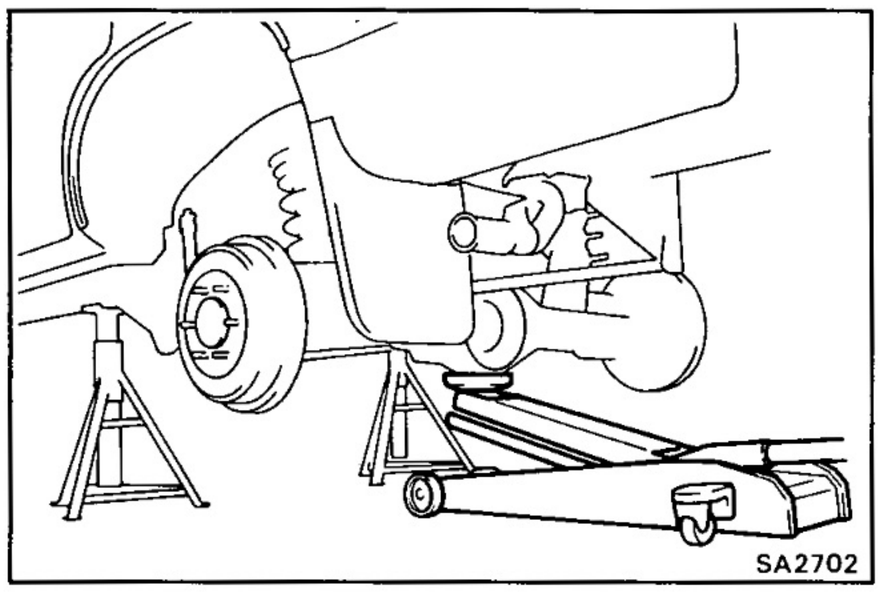
SA2702

6. REMOVE COIL SPRING

(a) Begin to lower the rear axle housing.

HINT: Be careful not to snap the brake line and parking brake cable.

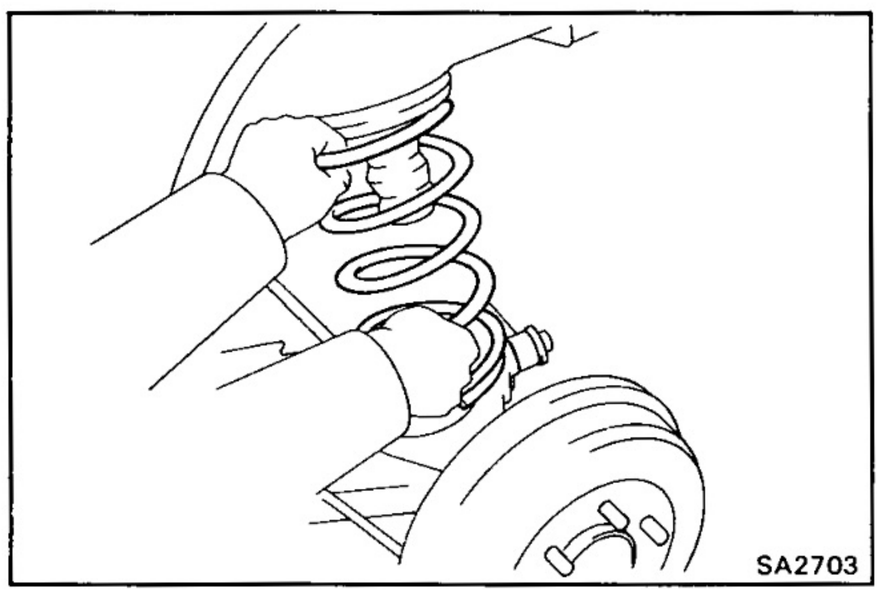
SA2703

(b) While lowering the rear axle housing, remove the coil spring and upper insulator.

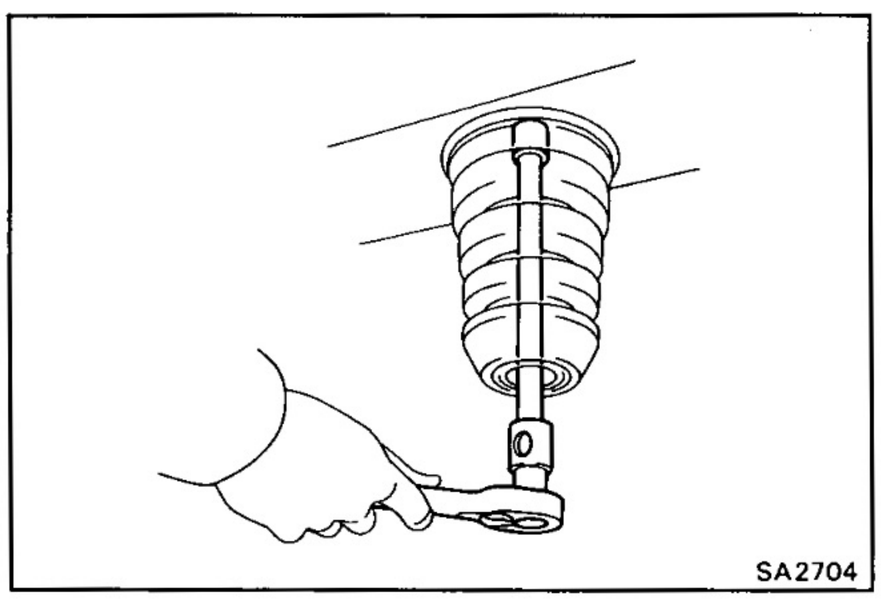
SA2704

(c) Remove the bolt and the spring follow from the frame.

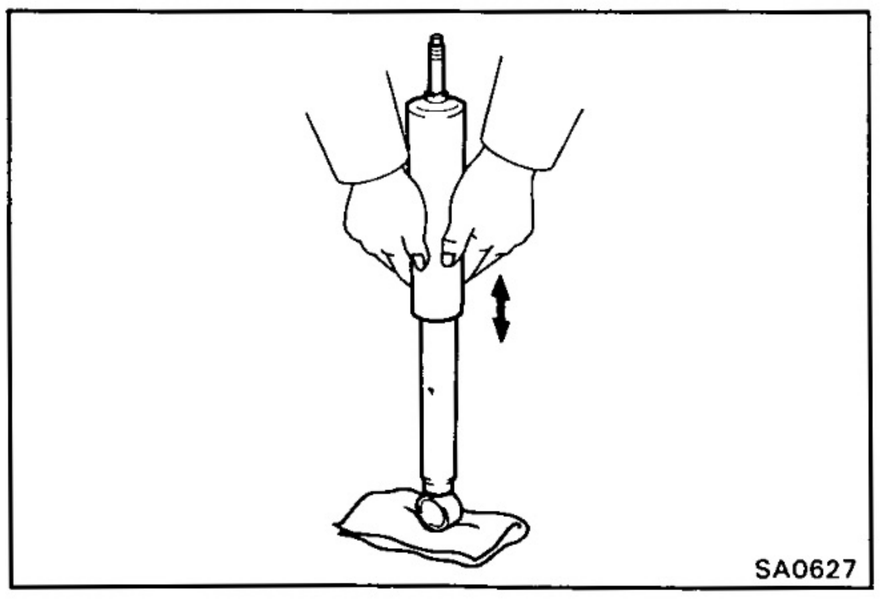
SA0627

INSPECTION OF REAR SHOCK ABSORBER

1. INSPECT OPERATION OF SHOCK ABSORBER

(a) While pushing the shock absorber, check that the pull throughout the stroke is even, and there is no abnormal resistance or noise.

(b) Push the shock absorber in fully and release it. Check that it returns at a constant speed throughout.

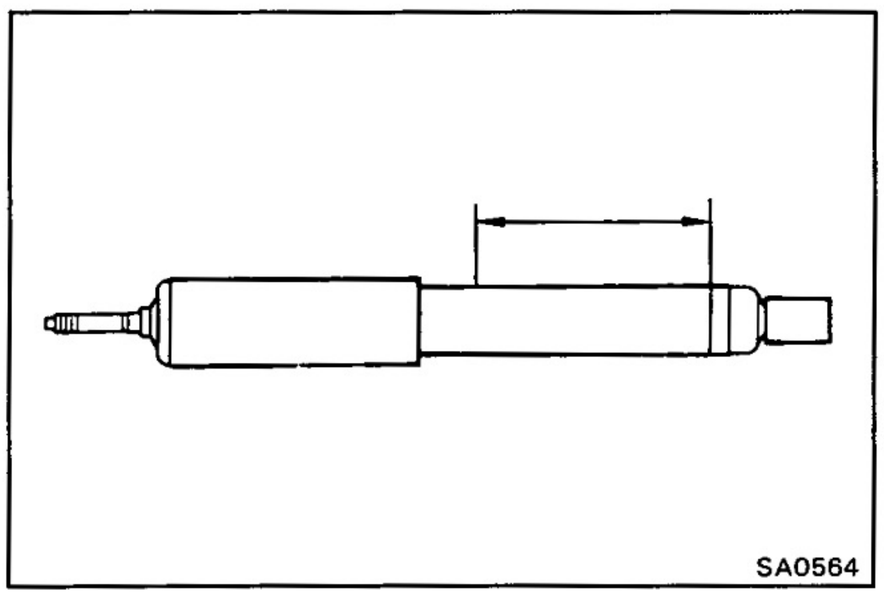

2. DISCARD SHOCK ABSORBER

Before discarding the shock absorber, drill a hole 2 — 3 mm (0.079 — 0.118 in.) in diameter at the location shown in the illustration to release the gas inside.

NOTICE:

- **When drilling, chips may fly out, work carefully.**
- **The gas is colorless, odorless, and non-poisonous.**

INSTALLATION OF COIL SPRING AND REAR SHOCK ABSORBER

(See page SA-145)

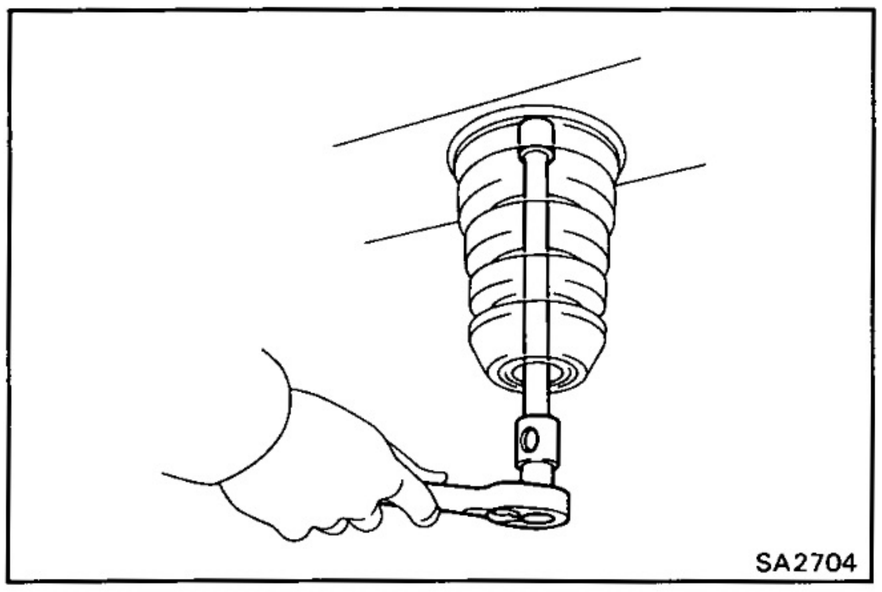

1. INSTALL SPRING FOLLOW

Install the spring follow to the frame with the bolt.

Torque: 155 kg-cm (11 ft-lb, 15 N·m)

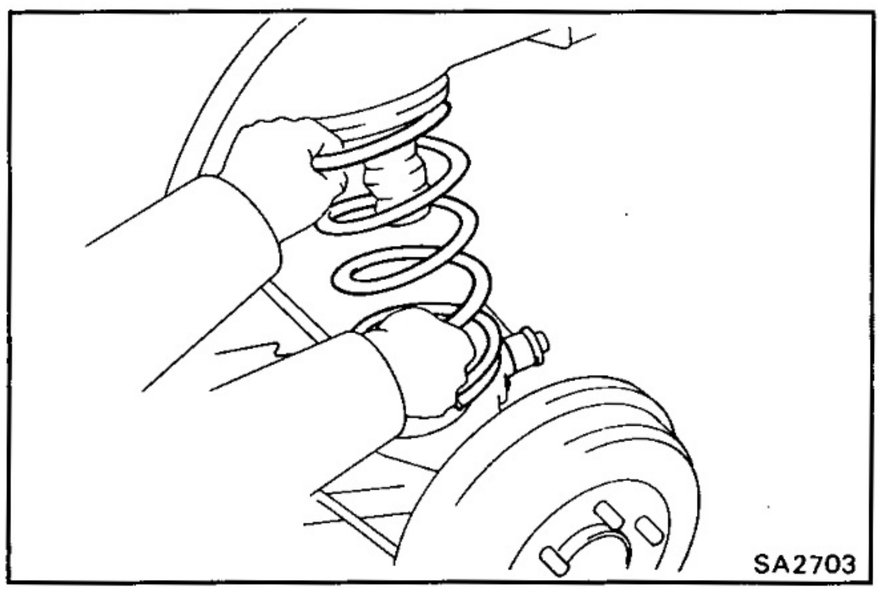

2. INSTALL COIL SPRING

3. JACK UP REAR AXLE HOUSING

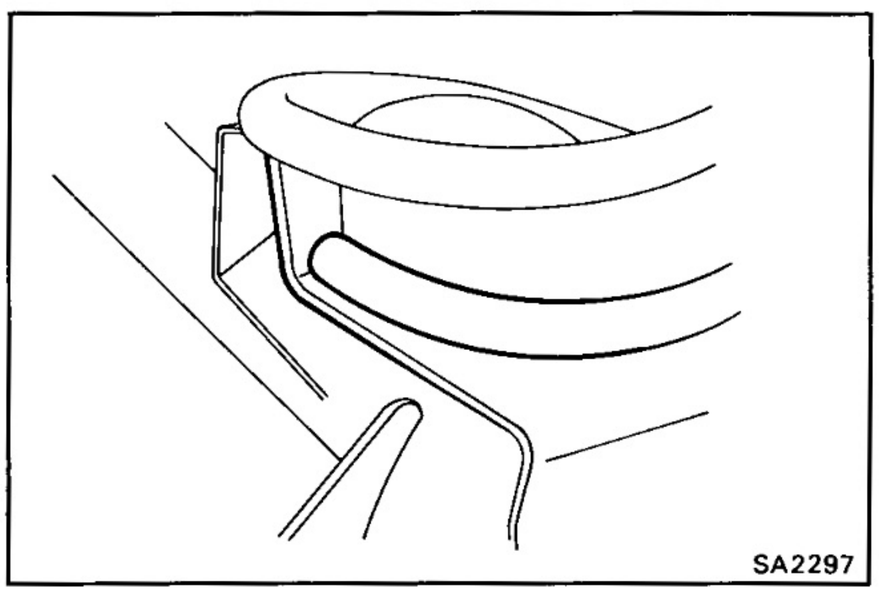

4. CHECK POSITION OF COIL SPRING END

Check that the coil spring end is installed correctly.

If the coil spring end is not in correct position, reinstall the coil spring.

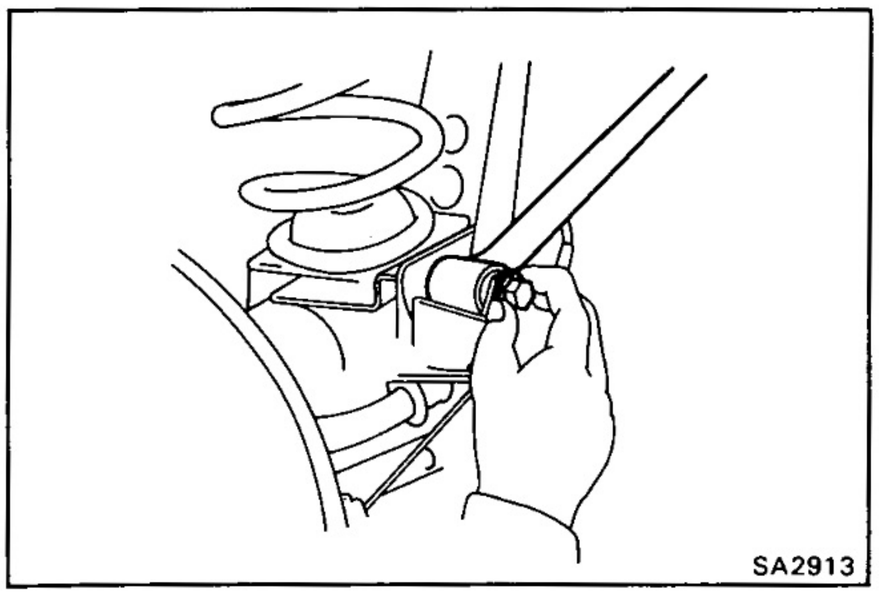

5. CONNECT LATERAL CONTROL ROD

Temporarily connect the lateral control rod to the axle housing with the bolt, washer and bushing.

HINT: Insert the bolt from the front of the vehicle (shock absorber side.).

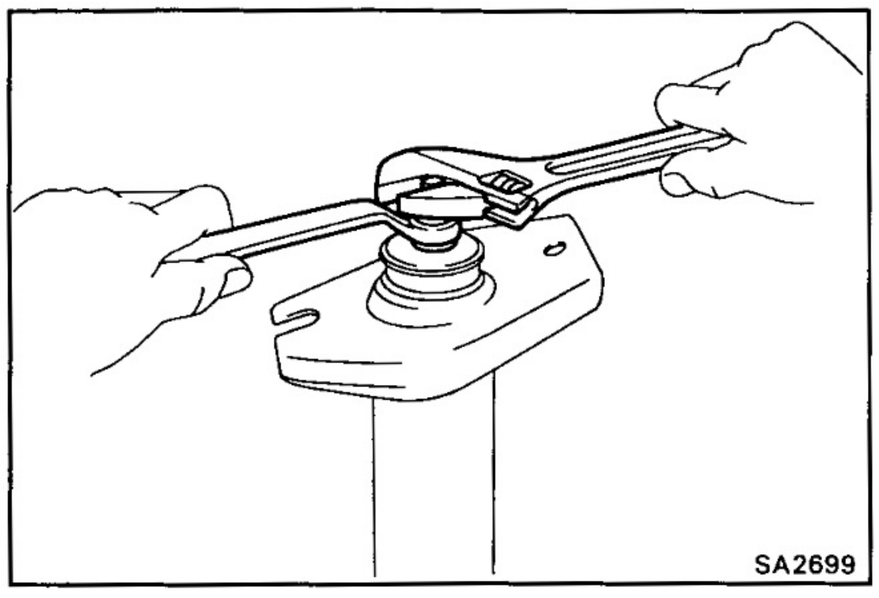

6. INSTALL SHOCK ABSORBER

(a) Install the retainers, cushions and bracket to shock absorber with the nut.

Torque: 700 kg-cm (51 ft-lb, 67 N·m)

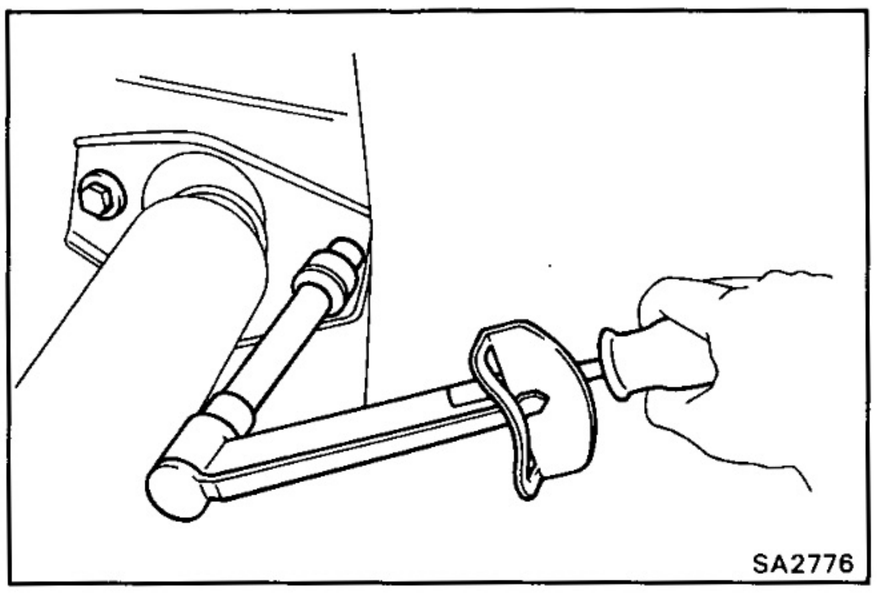

(b) Install the shock absorber to the frame with the two bolts.

Torque: 510 kg-cm (37 ft-lb, 50 N·m)

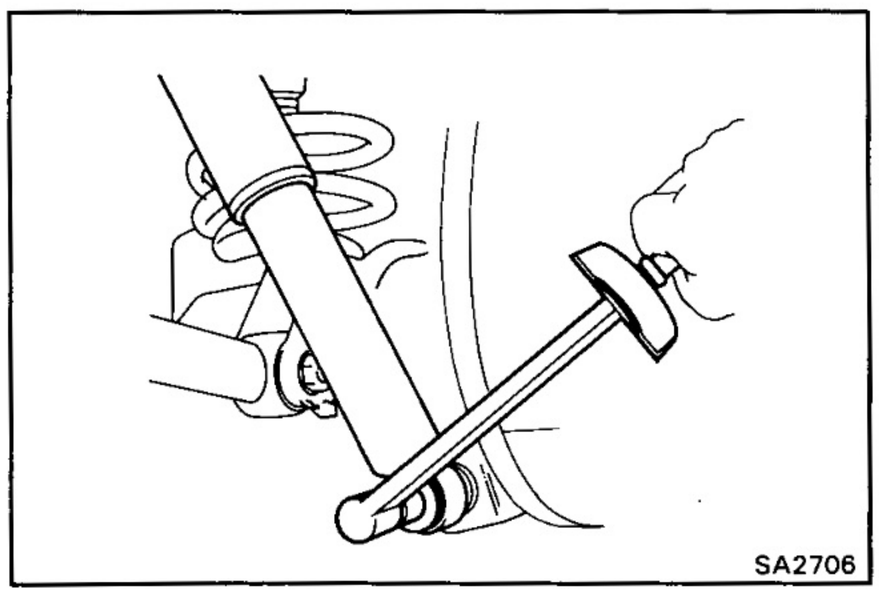

(c) Connect the shock absorber, cushions and retainer to the axle housing with bolt.

Torque: 650 kg-cm (47 ft-lb, 64 N·m)

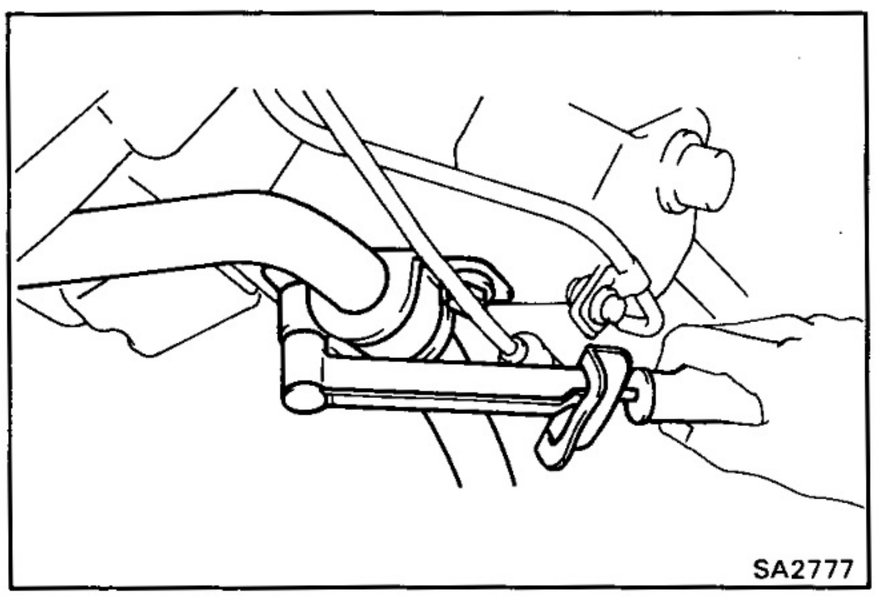

7. INSTALL STABILIZER BAR BRACKETS TO REAR AXLE SHAFT

Install the stabilizer bar and bracket to the axle housing with the two bolts.

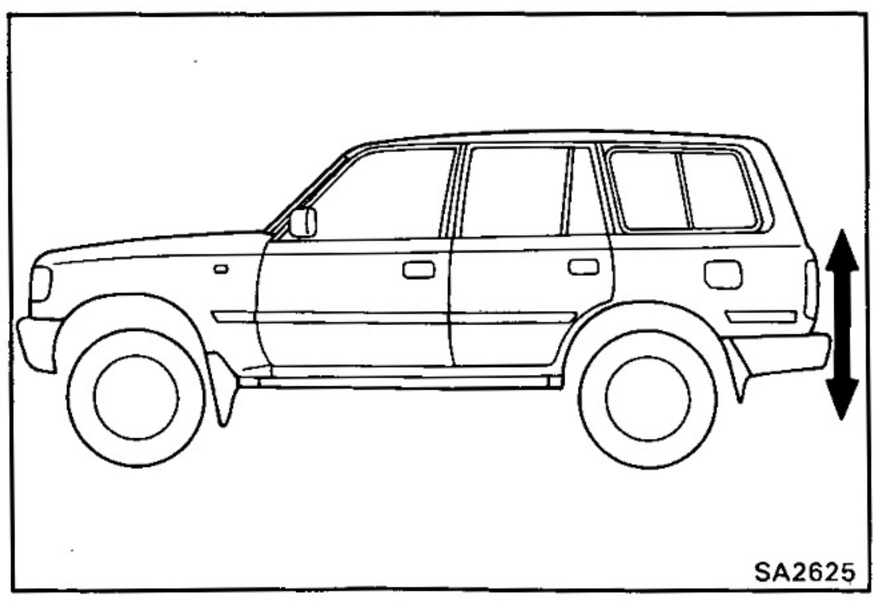

8. INSTALL WHEEL AND LOWER VEHICLE

9. STABILIZE SUSPENSION

(a) Lower the vehicle.

(b) Bounce the vehicle up and down to stabilize the suspension.

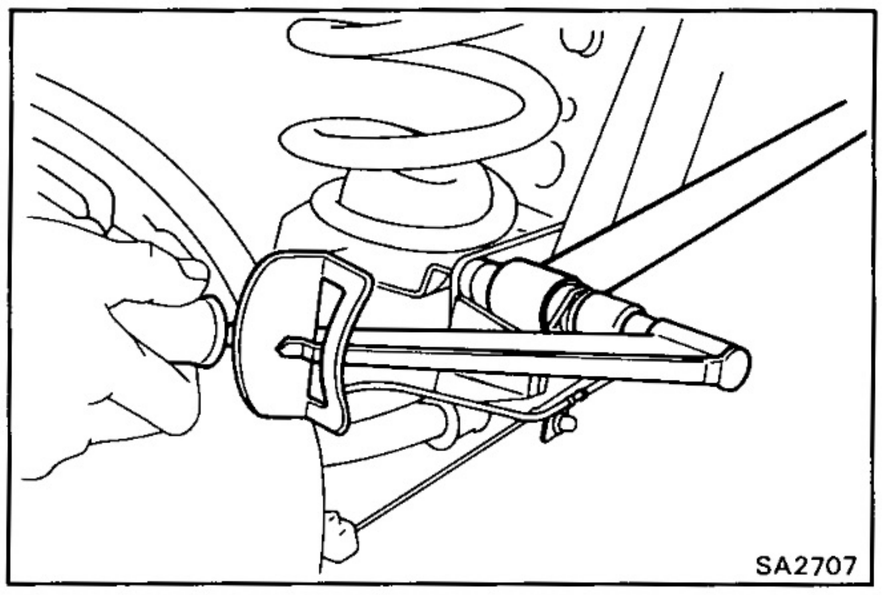

10. TIGHTEN LATERAL CONTROL ROD NUT

(a) Jack up the rear axle housing and support it with stands.

(b) Torque the lateral control rod nut.

Torque: 2,500 kg-cm (181 ft-lb, 245 N·m)

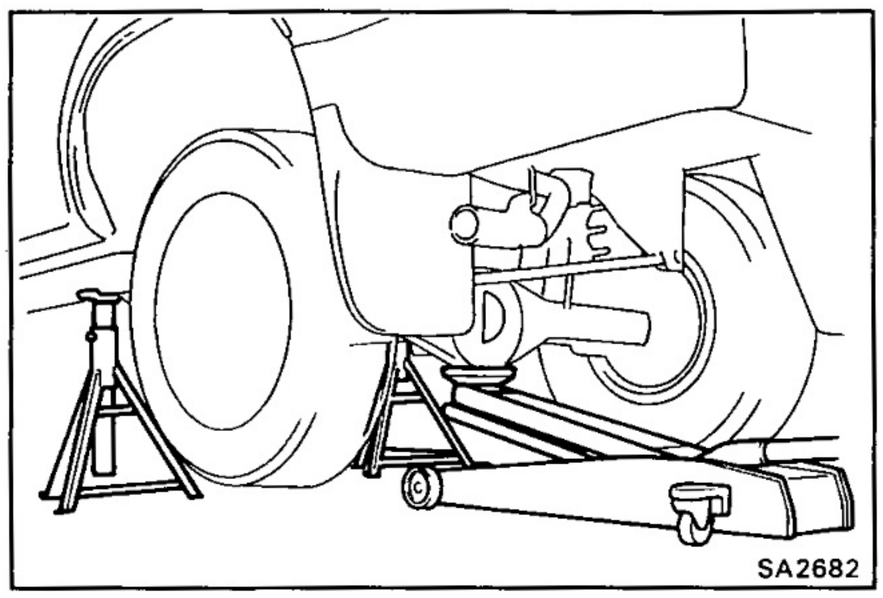

Lateral Control Rod

(See page SA-145)

REMOVAL OF LATERAL CONTROL ROD

1. JACK UP AND SUPPORT VEHICLE

Jack up the rear axle housing and support the frame with stands. Hold the rear axle housing with a jack.

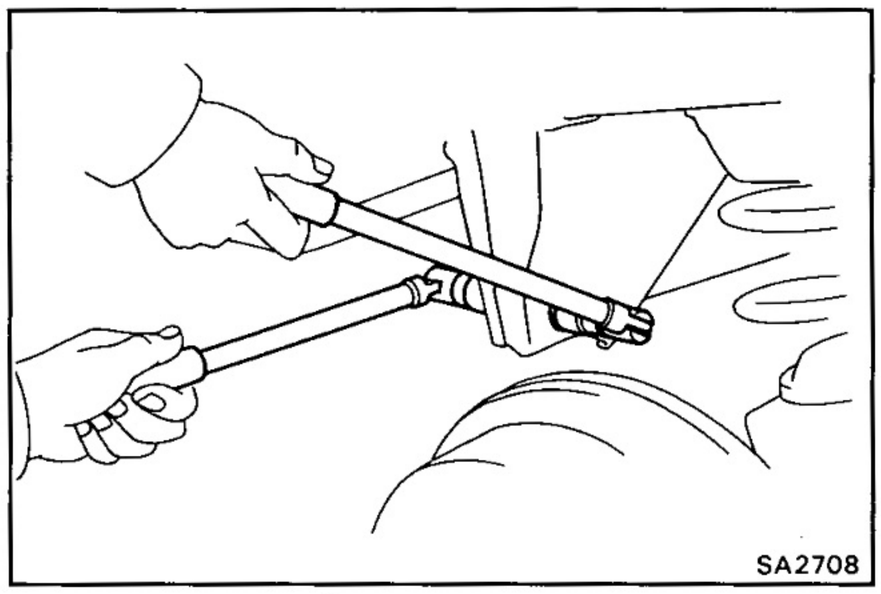

2. REMOVE LATERAL CONTROL ROD

(a) Remove the bolt and nut holding the lateral control rod to the frame and disconnect the lateral control rod.

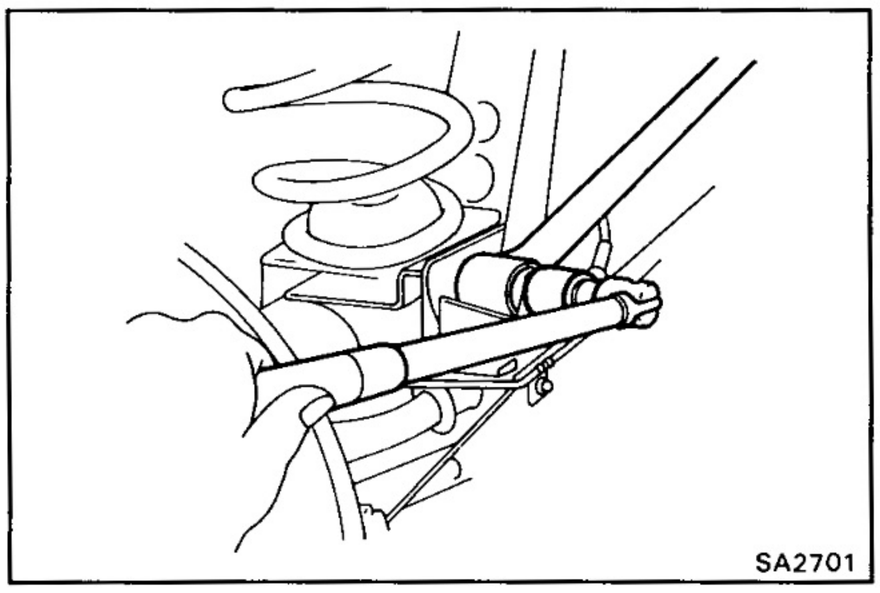

(b) Remove the bolt holding the lateral control rod to the rear axle housing, and remove the lateral control rod.

(c) Remove the bushing.

INSTALLATION OF LATERAL CONTROL ROD

(See page SA-145)

1. INSTALL LATERAL CONTROL ROD

(a) Raise the axle housing until the frame is free from the stands.

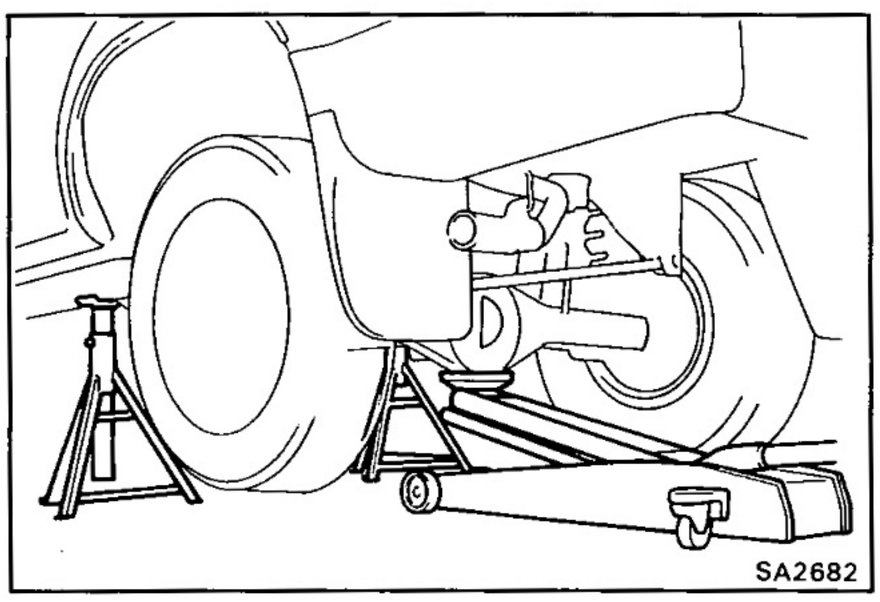

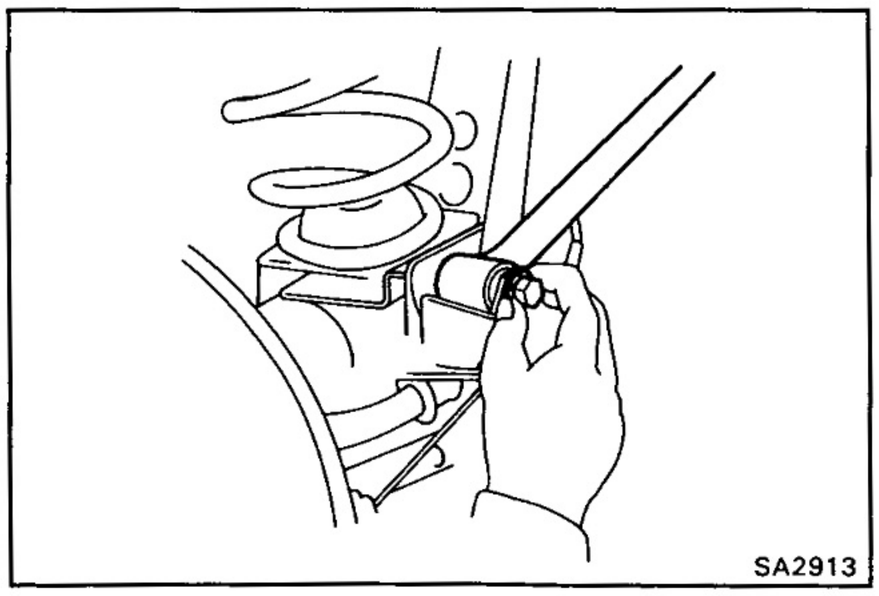

(b) In this order, temporarily install the bushing, lateral control rod and bolt on the rear axle housing.

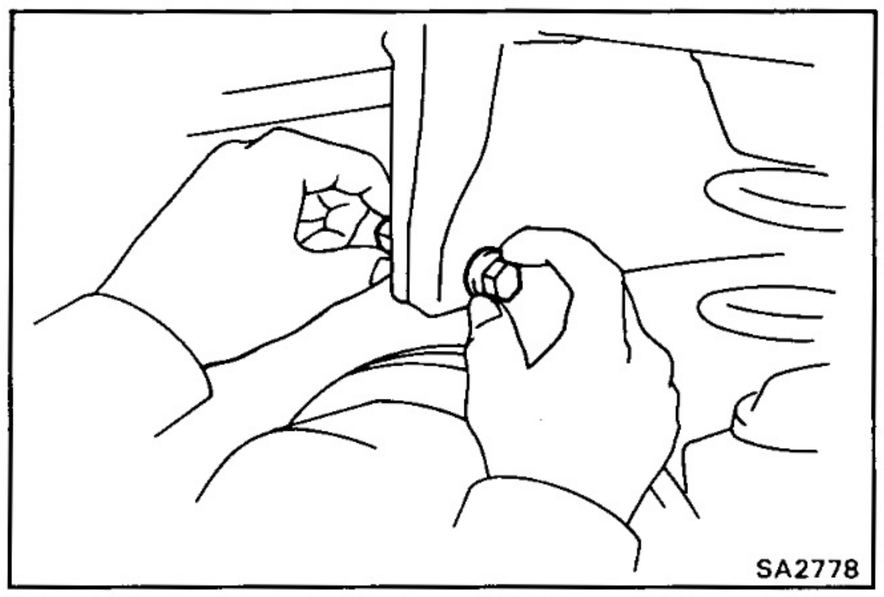

(c) Temporarily install the lateral control rod to the frame with the bolt, plate washer and nut.

HINT: Insert the bolt from the front of the vehicle (shock absorber side).

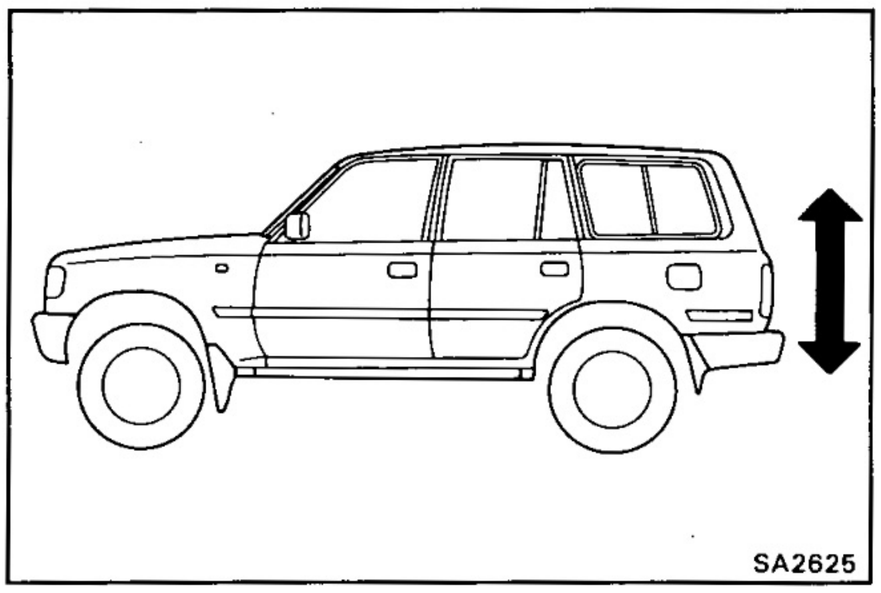

2. STABILIZE SUSPENSION

Lower the vehicle and boucne the vehicle up and down to stabilize the suspension.

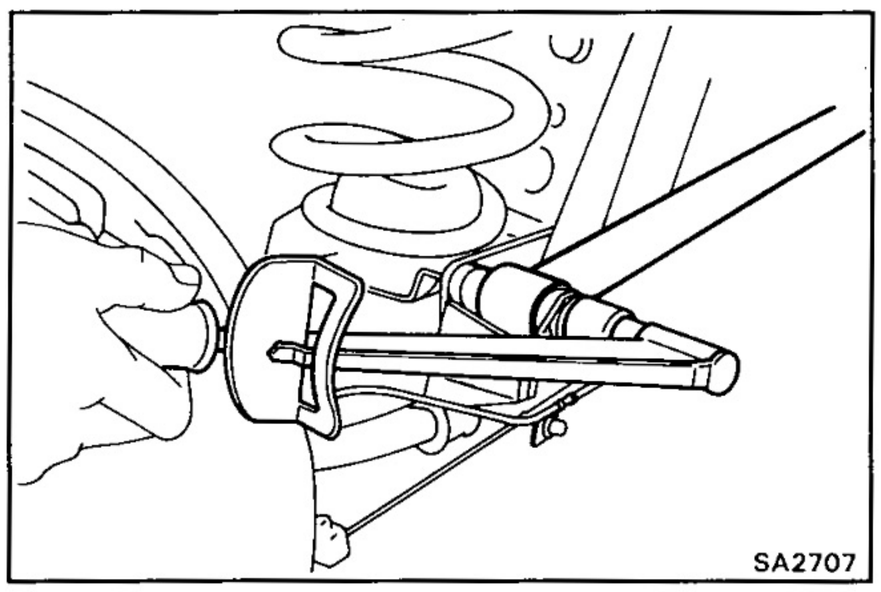

3. TIGHTEN NUT HOLDING LATERAL CONTROL ROD TO REAR AXLE HOUSING

Torque: 2,500 kg-cm (181 ft-lb, 245 N·m)

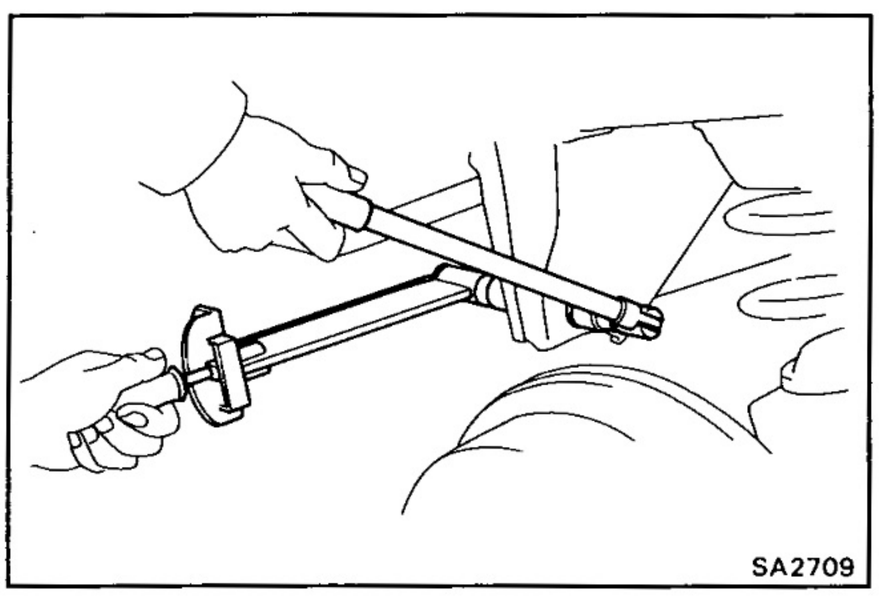

4. TIGHTEN NUT HOLDING LATERAL CONTROL ROD TO FRAME

Torque: 1,800 kg-cm (130 ft-lb, 177 N·m)

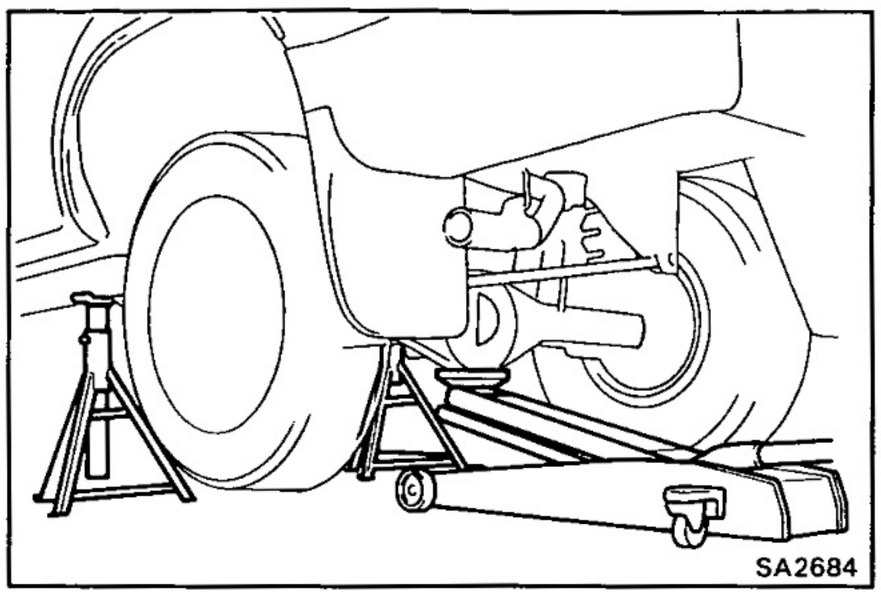
SA2684

Upper and Lower Control Arms

(See page SA-145)

REMOVAL OF UPPER AND LOWER CONTROL ARMS

1. JACK UP AND SUPPORT VEHICLE

Jack up the rear axle housing and support the frame with stands.

Hold the rear axle housing with a jack.

2. REMOVE UPPER CONTROL ARM

(a) Remove the bolt, plate washer and nut holding the upper control arm to the frame.

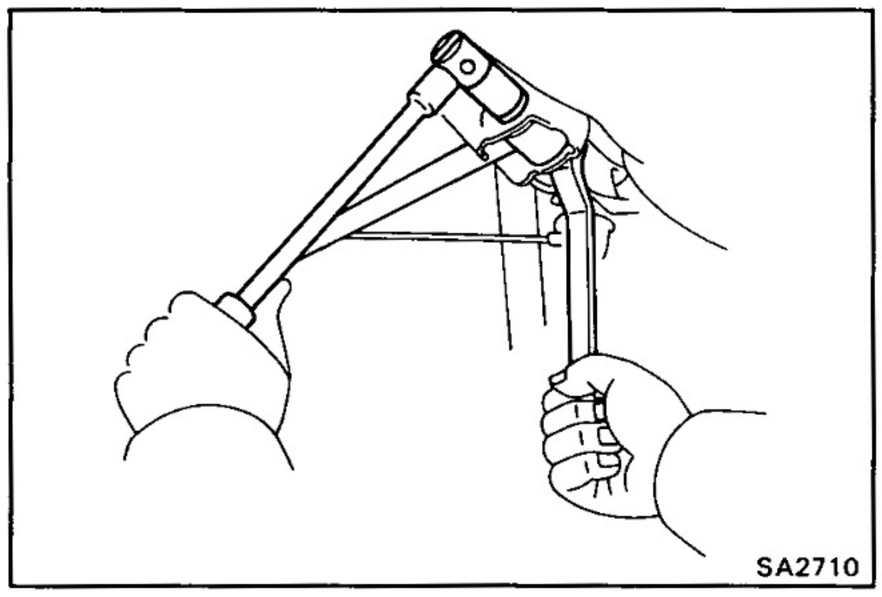
SA2710

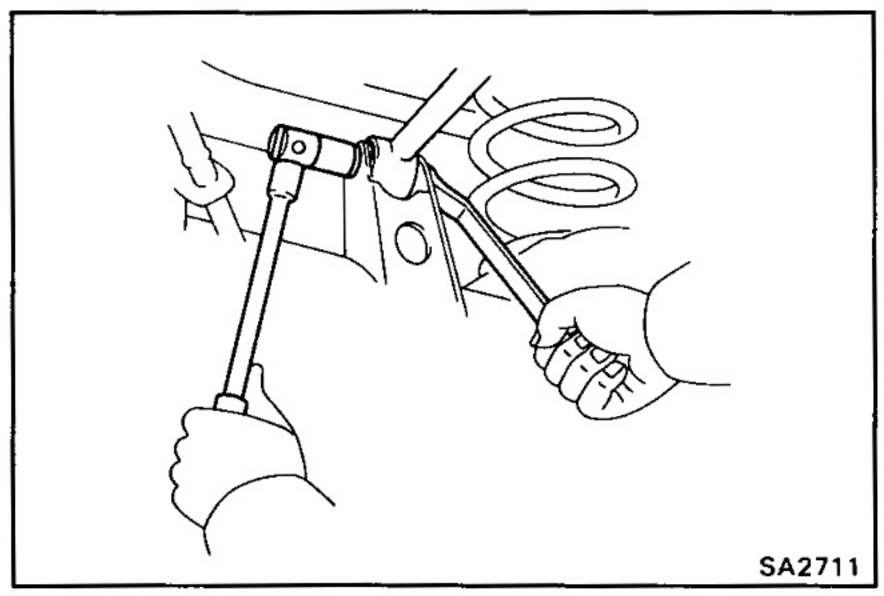
SA2711

(b) Remove the bolt, plate washer and nut holding the upper control arm to the rear axle housing, and remove the upper control arm.

3. REMOVE LOWER CONTROL ARM

(a) Remove the bolt, plate washer and nut holding the lower control arm to the frame.

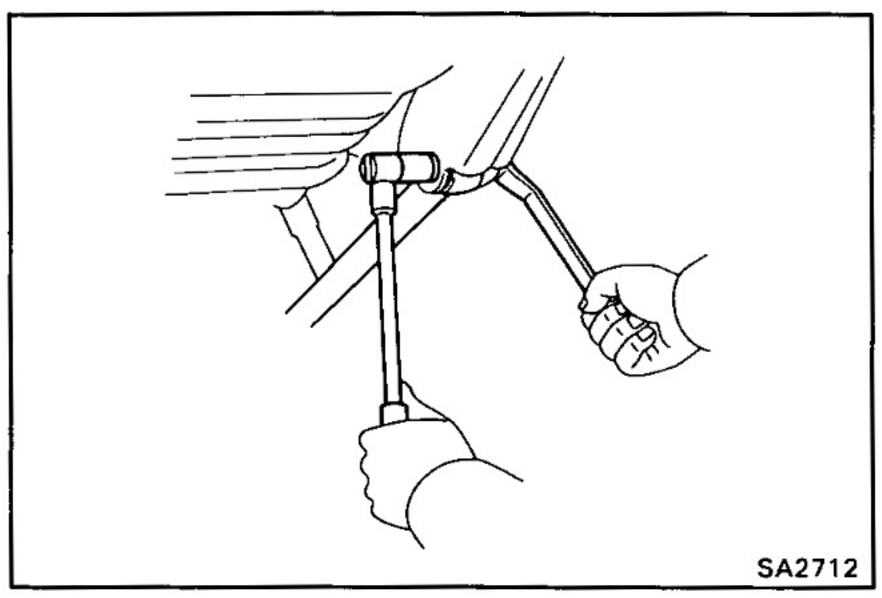
SA2712

(b) Remove the bolt, plate washer and nut holding the lower control arm to the rear axle housing, and remove the lower control arm.

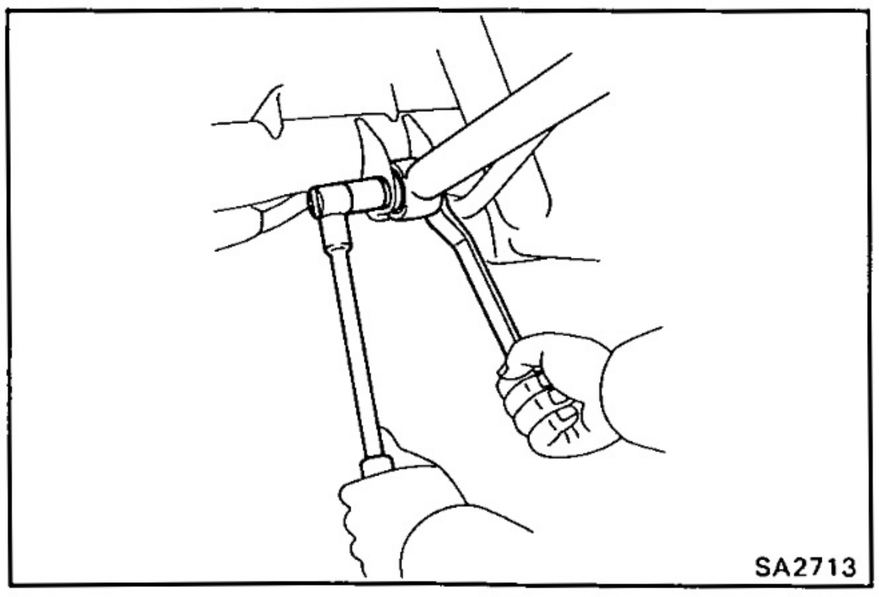
SA2713

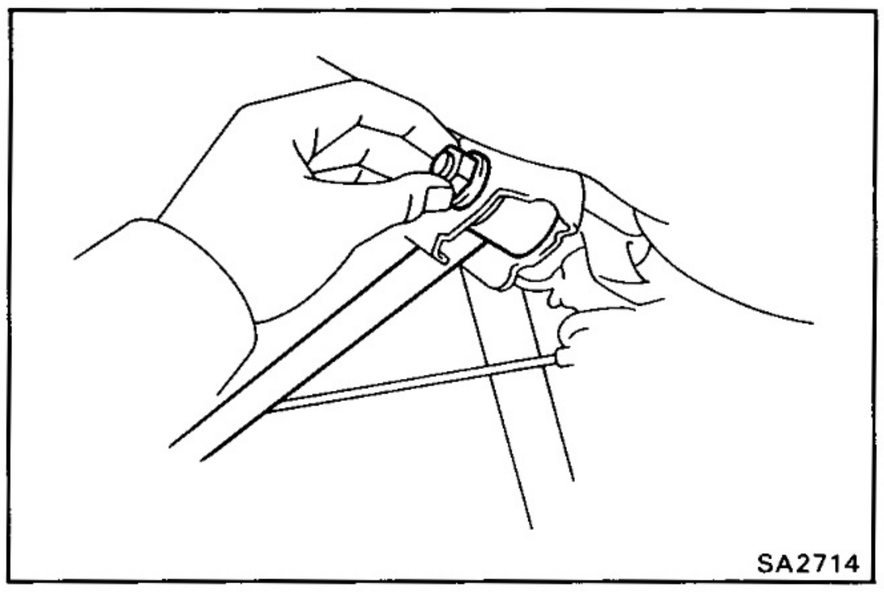
SA2714

INSTALLATION OF UPPER AND LOWER CONTROL ARMS

(See page SA-145)

1. INSTALL UPPER CONTROL ARM

(a) Temporarily install the upper control arm on the frame with the bolt, plate washer and nut.

HINT: Insert the bolt from the outside of the vehicle.

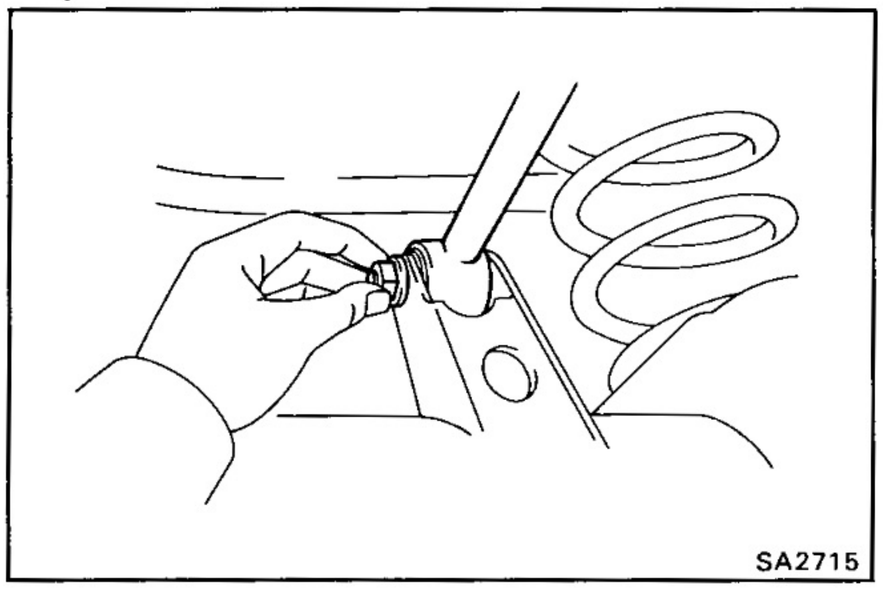
SA2715

(b) Temporarily install the upper control arm on the rear axle housing with the bolt, plate washer and nut.

HINT: Insert the bolt from the outside of the vehicle.

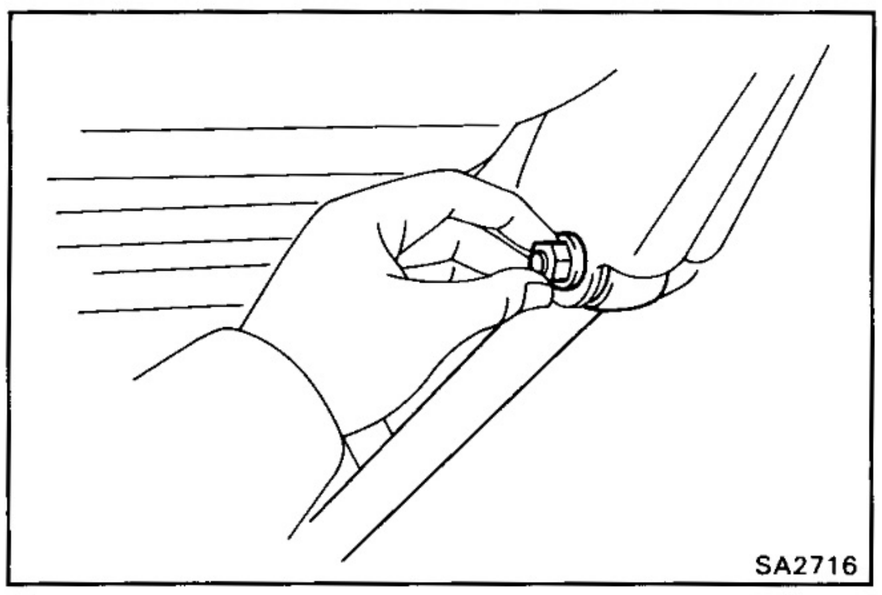
SA2716

2. INSTALL LOWER CONTROL ARM

(a) Temporarily install the lower control arm on the frame with the bolt, plate washer and nut.

HINT: Insert the bolt from the outside of the vehicle.

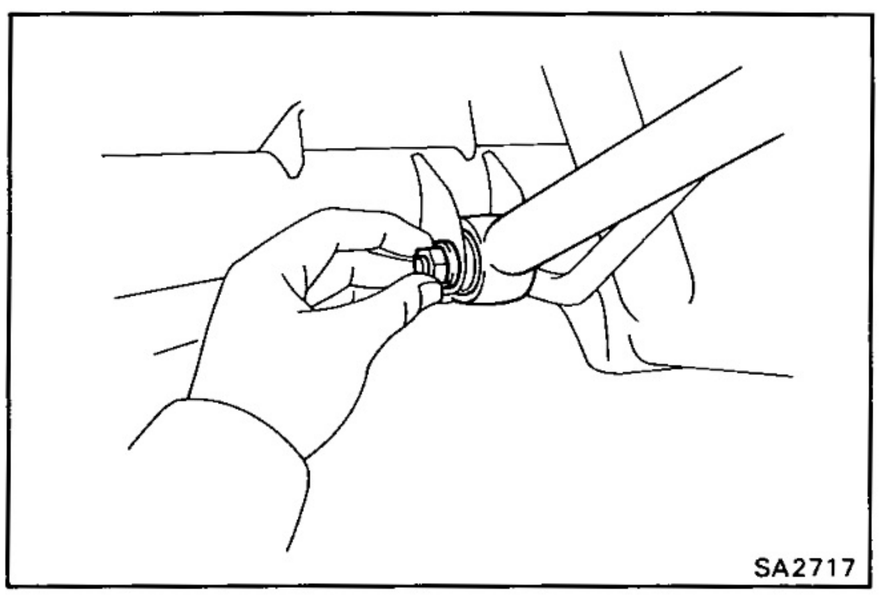
SA2717

(b) Temporarily install the lower control arm on the rear axle housing with the bolt, plate washer and nut.

HINT: Insert the bolt from the outside of the vehicle.

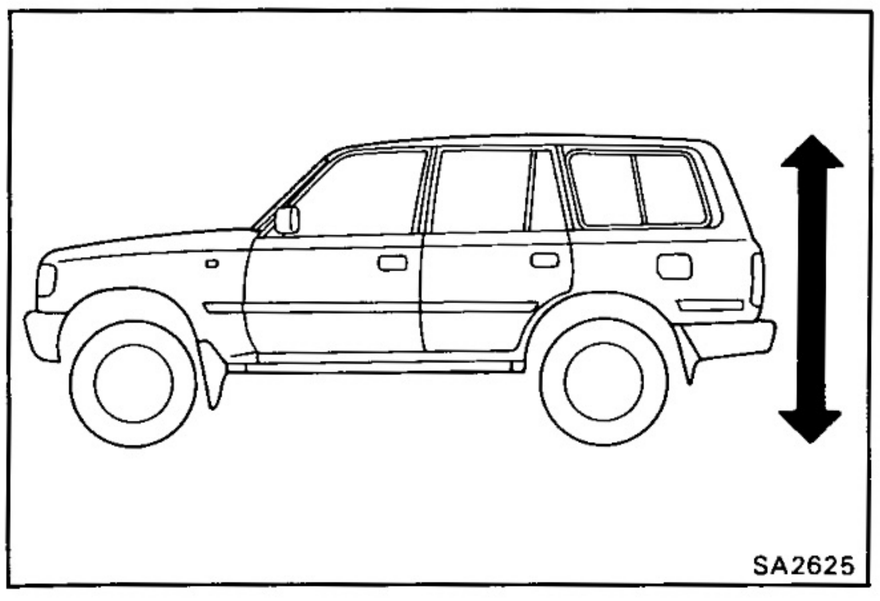
SA2625

3. STABILIZE SUSPENSION

(a) Lower the vehicle.

(b) Bounce the vehicle up and down to stabilize the suspension.

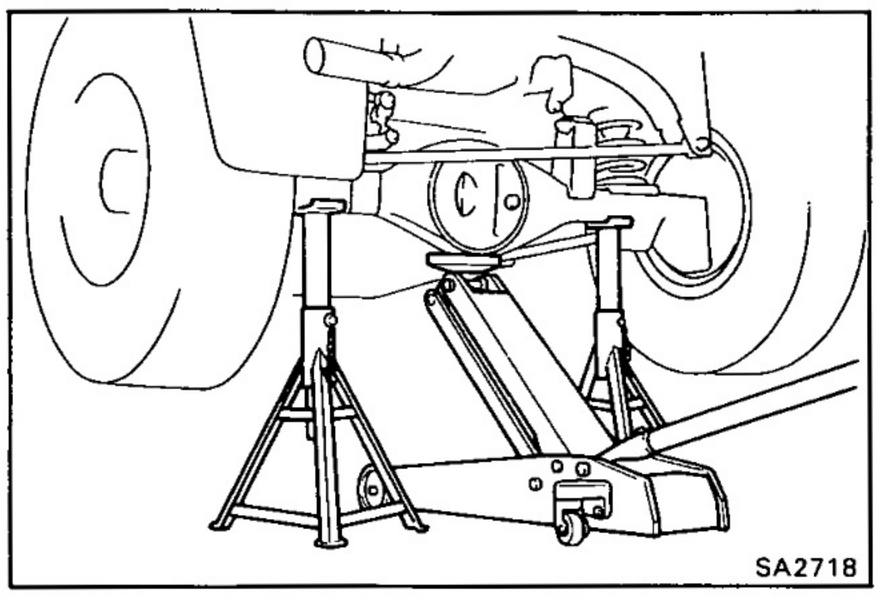

4. JACK UP VEHICLE

Jack up the rear axle housing and support it with stands.

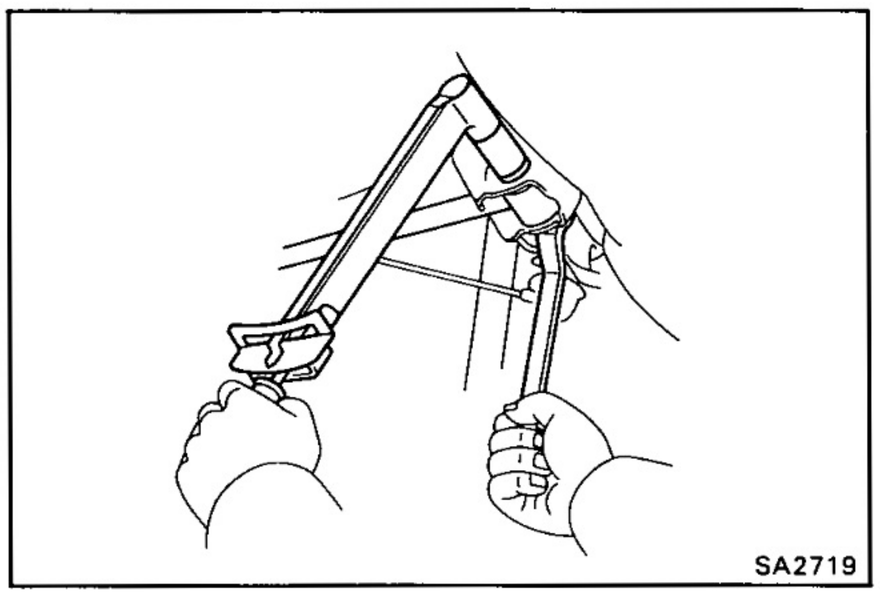

5. TORQUE BOLT AND NUT HOLDING UPPER CONTROL ARM TO FRAME

Torque: 1,800 kg-cm (130 ft-lb, 177 N·m)

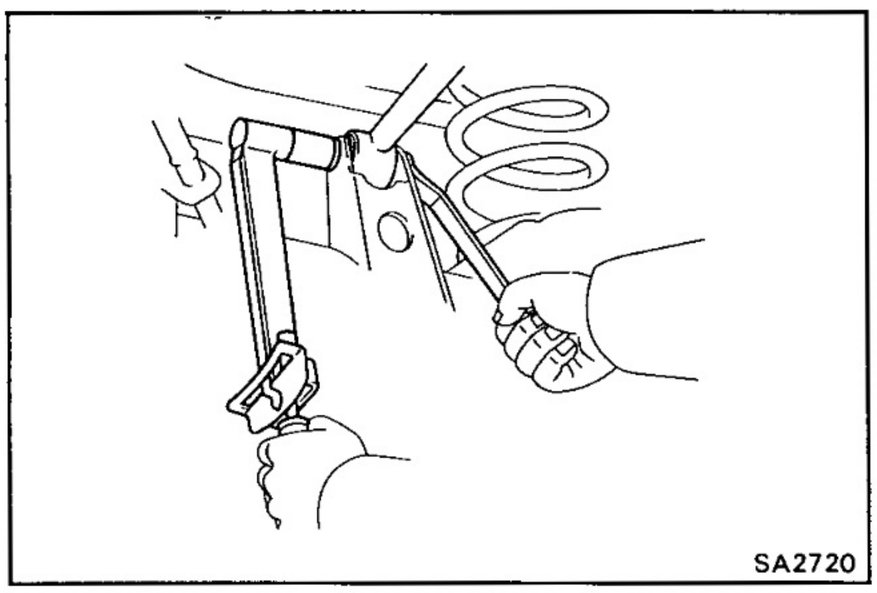

6. TORQUE BOLT AND NUT HOLDING UPPER CONTROL ARM TO REAR AXLE HOUSING

Torque: 1,800 kg-cm (130 ft-lb, 177 N·m)

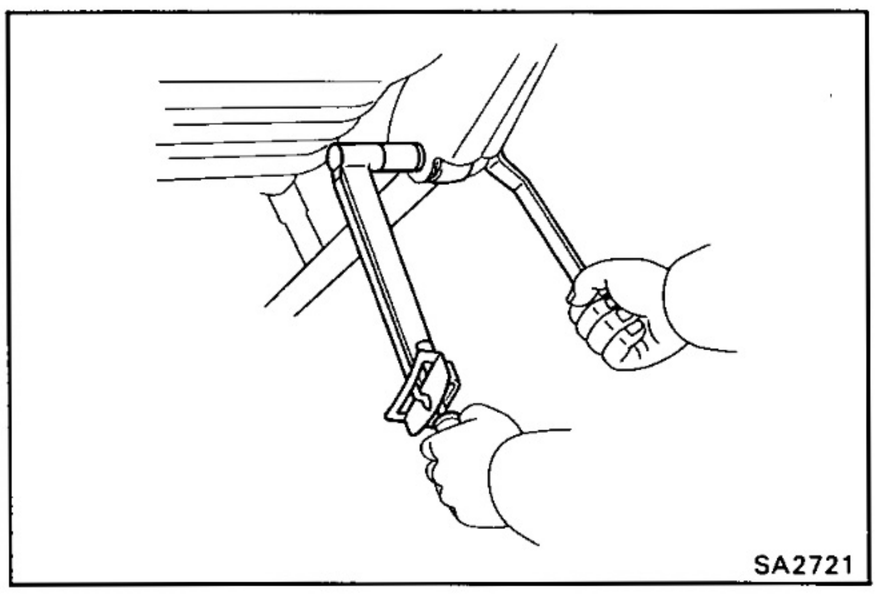

7. TORQUE BOLT AND NUT HOLDING LOWER CONTROL ARM TO FRAME

Torque: 1,800 kg-cm (130 ft-lb, 177 N·m)

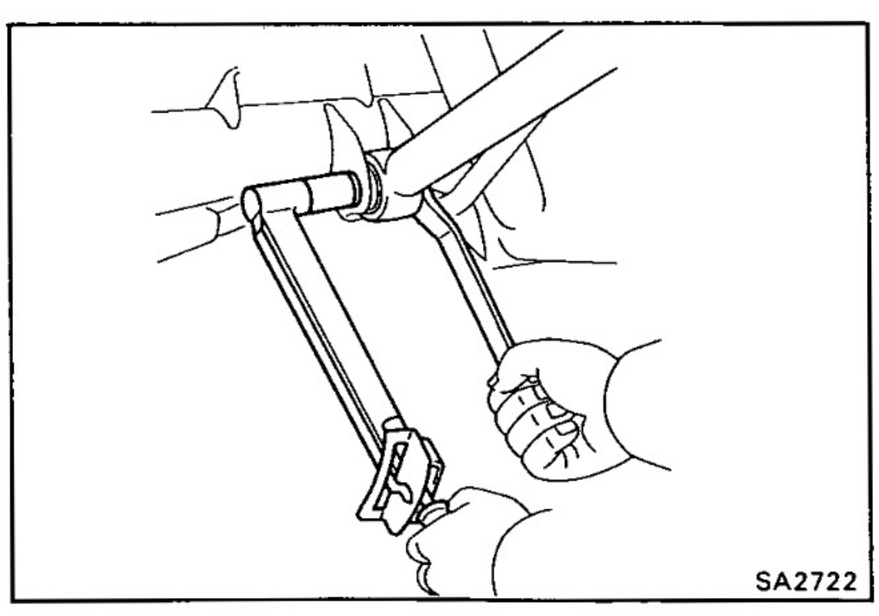

8. TORQUE BOLT AND NUT HOLDING LOWER CONTROL ARM TO REAR AXLE HOUSING

Torque: 1,800 kg-cm (130 ft-lb, 177 N·m)

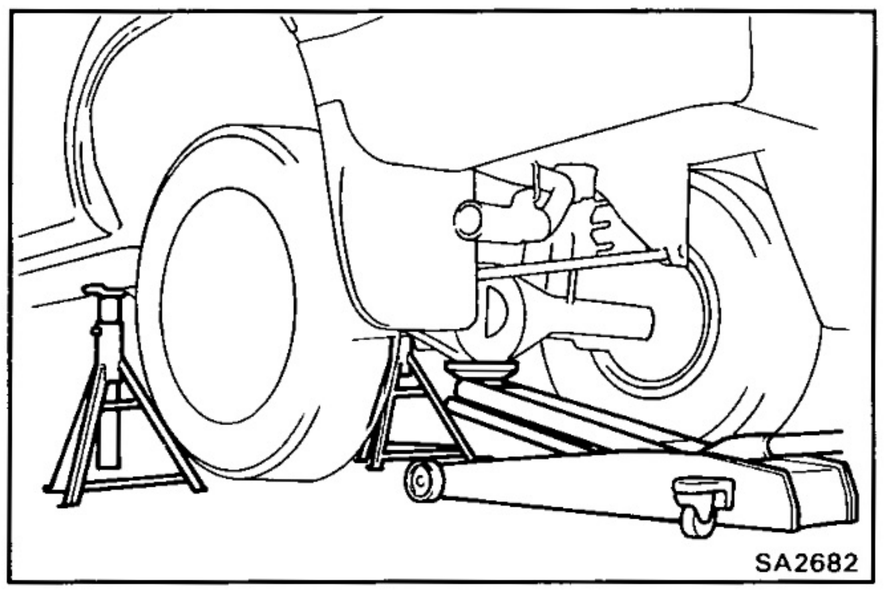

Stabilizer Bar

(See page SA-145)

REMOVAL OF STABILIZER BAR

1. JACK UP AND SUPPORT VEHICLE

Jack up and support the vehicle on the stands.

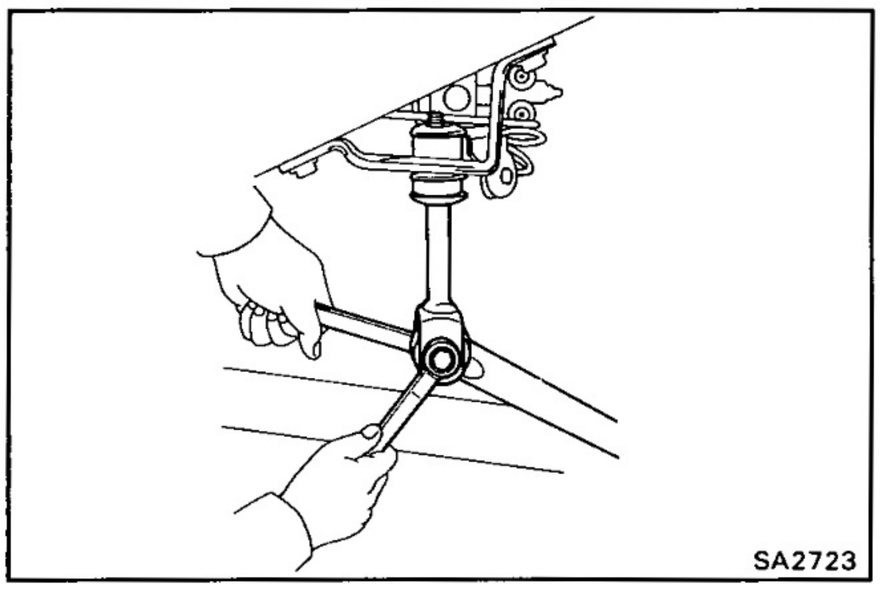

2. REMOVE STABILIZER BAR

(a) Loosen the bolt and nut.

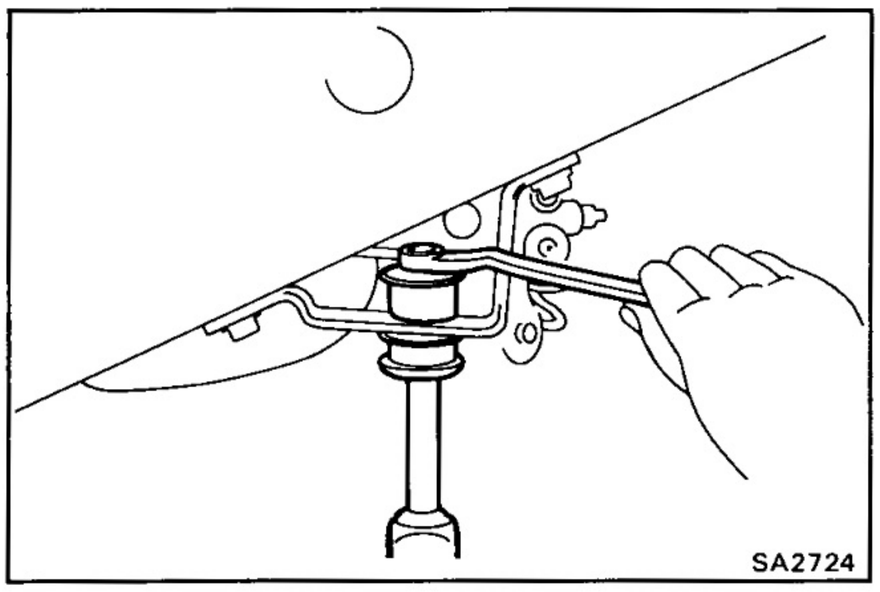

(b) Remove the nut, retainers and cushions, and disconnect the stabilizer bar with the clamp from the frame.

(c) Remove the bolt, nut and clamp from the stabilizer bar.

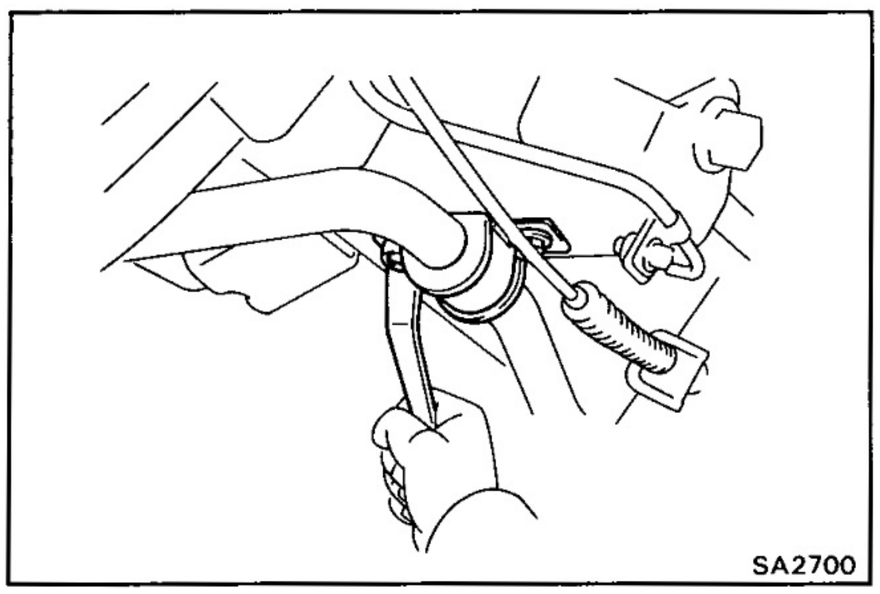

(d) Remove the two bolts and stabilizer bar with the bracket from the axle housing.

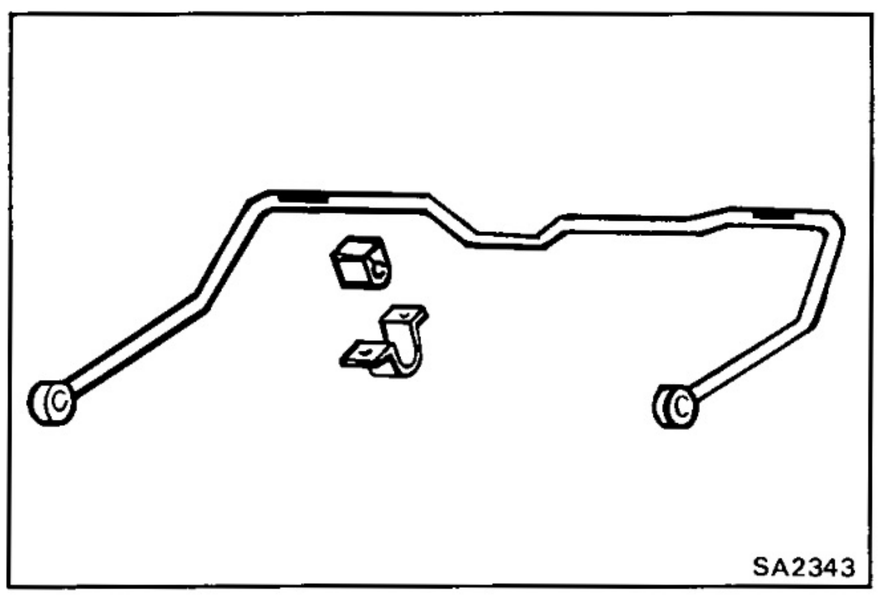

(e) Remove the brackets and cushions from the stabilizer bar.

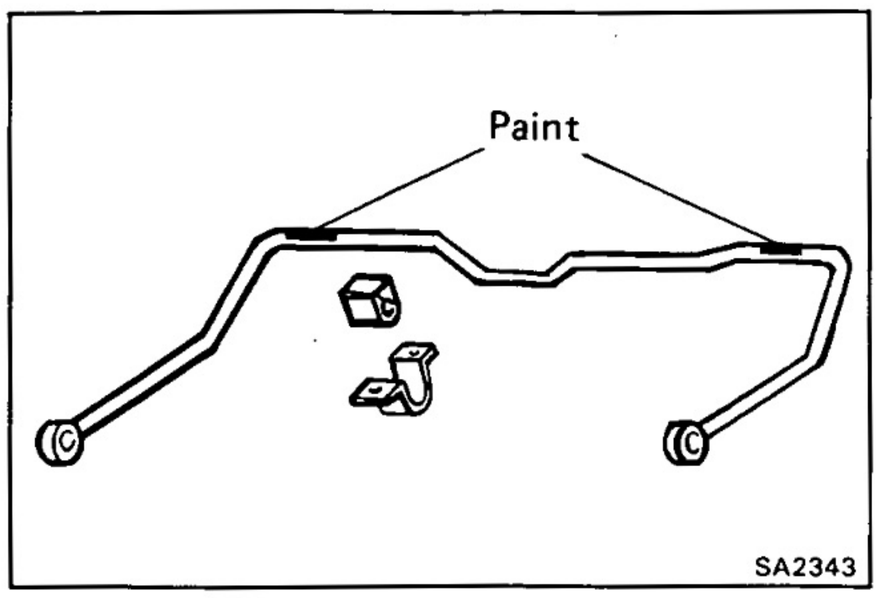

INSTALLATION OF STABILIZER BAR

(See page SA-145)

1. INSTALL STABILIZER BAR

(a) Install the cushions on the lines painted on the stabilizer bar and install the brackets onto the cushions.

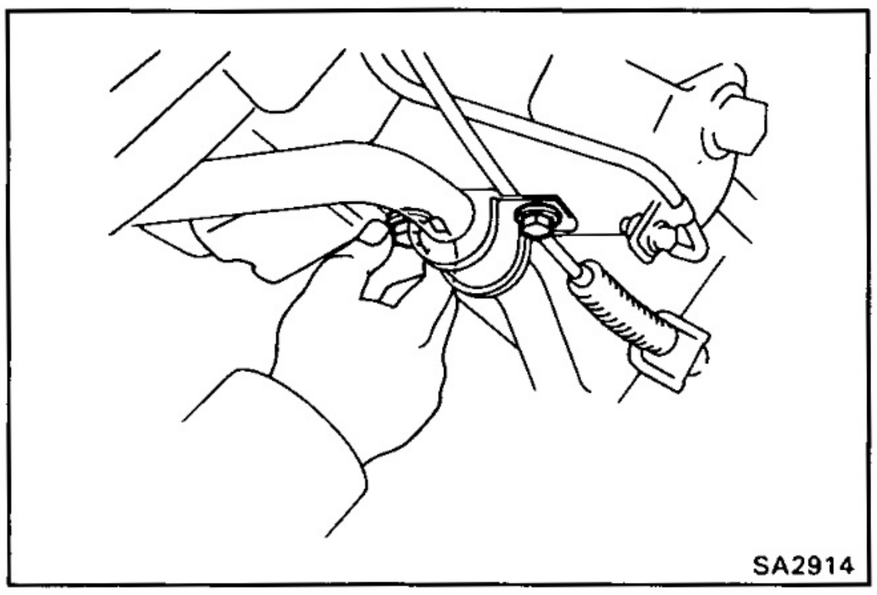

(b) Temporarily install the stabilizer bar with bracket to the axle housing with the two bolts.

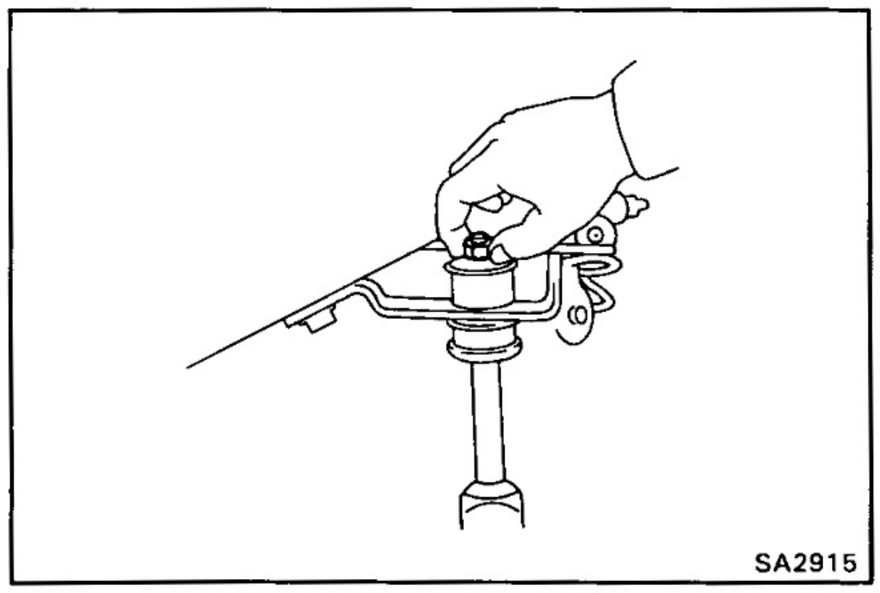

(c) Temporarily install the clamp to the frame with retainers, cushions and nut.

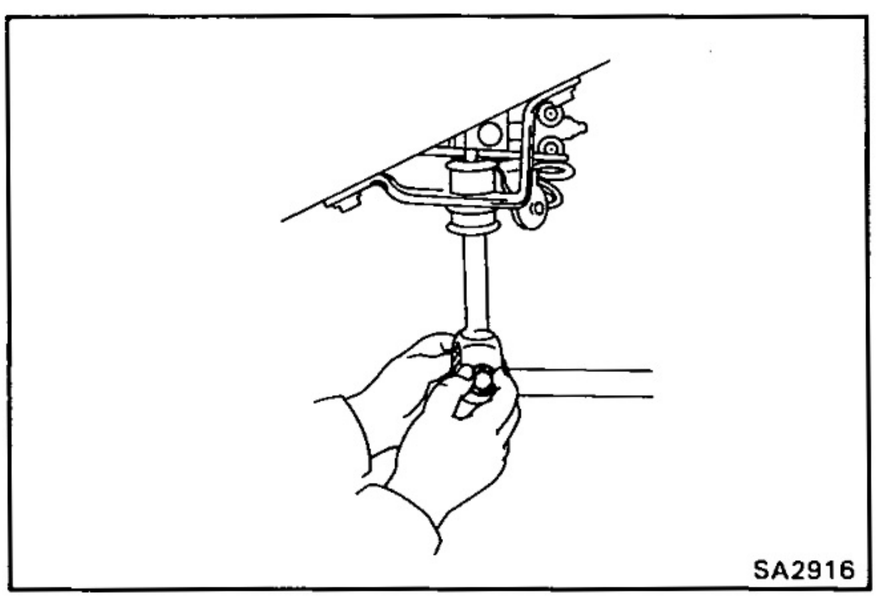

(d) Temporarily install the stabilizer bar to the clamp with bolt and nut.

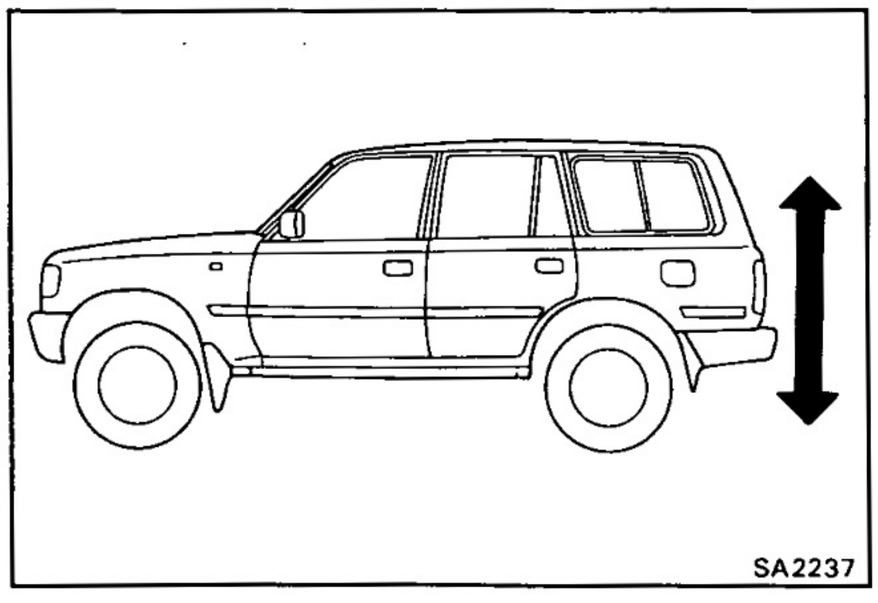

2. STABILIZE SUSPENSION

(a) Lower the vehicle.

(b) Bounce the vehicle up and down to stabilizer the suspension.

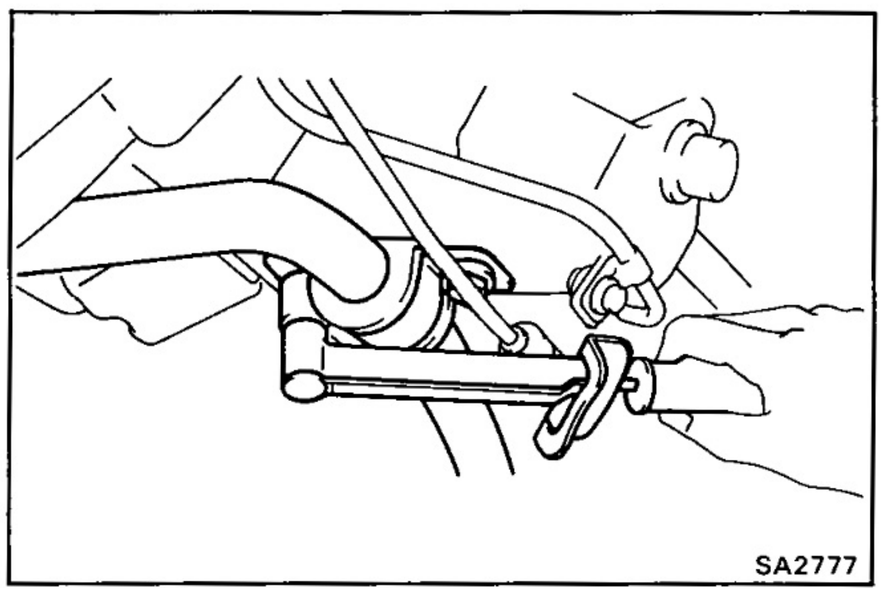

3. TORQUE BRACKET AND CLAMP

(a) Torque the bracket.

Torque: 185 kg-cm (13 ft-lb, 18 N·m)

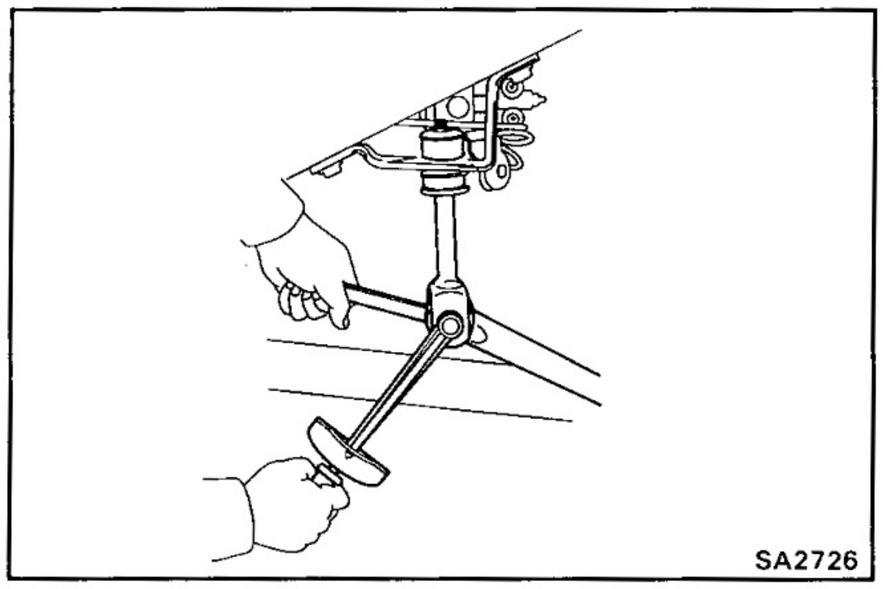

(b) Torque the bolt and nut.

Torque: 260 kg-cm (19 ft-lb, 25 N·m)

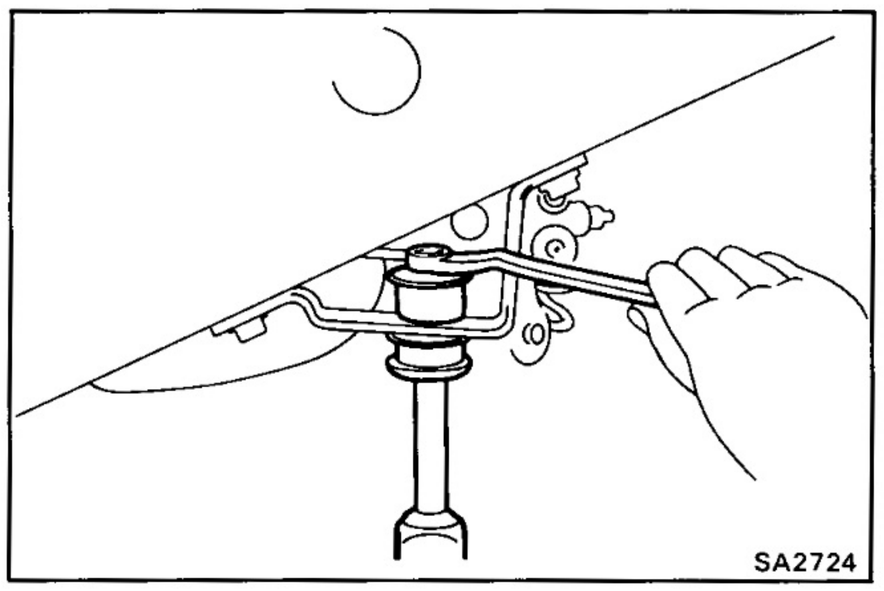

(c) Torque the nut.

Torque: 150 kg-cm (11 ft-lb, 15 N·m)

BRAKE SYSTEM

	Page
PRECAUTIONS	BR-2
TROUBLESHOOTING	BR-2
CHECKS AND ADJUSTMENTS	BR-6
MASTER CYLINDER	BR-9
BRAKE BOOSTER	BR-16
VACUUM PUMP	BR-28
FRONT BRAKE	BR-34
REAR BRAKE	
Drum Brake	BR-41
Disc Brake	BR-50
Parking Brake	BR-57
LOAD SENSING PROPORTIONING AND BY-PASS VALVE (LSP & BV)	BR-66

PRECAUTIONS

1. **Care must be taken to replace each part properly as it could affect the performance of the brake system and result in a driving hazard. Replace the parts with parts of the same part number or equivalent.**

2. **It is very important to keep parts and the area clean when repairing the brake system.**

TROUBLESHOOTING

Problem	Possible cause	Remedy	Page
Low or spongy pedal	Linings worn	Replace brake shoes	BR-41, 57
	Leak in brake system	Repair leak	
	Master cylinder faulty	Repair or replace master cylinder	BR-9
	Air in brake system	Bleed brake system	BR-7
	Wheel cylinder faulty	Repair wheel cylinder	BR-41, 57
	Piston seals worn or damaged	Repair brake cylinder	BR-34, 50
	Rear brake automatic adjuster faulty	Repair or replace adjuster	BR-41, 57
Brakes drag	Parking brake out of adjustment	Adjust parking brake	BR-8
	Binding parking brake wire	Repair as necessary	
	Booster push rod out of adjustment	Adjust push rod	BR-16
	Tension or return spring faulty	Replace spring	BR-41, 57
	Brake line restricted	Repair as necessary	
	Lining cracked or distorted	Replace shoe	BR-34, 50
	Wheel cylinder or caliper piston sticking	Repair as necessary	BR-34, 50
	Adjuster broken	Replace adjuster	BR-41, 57
	Master cylinder faulty	Repair or replace master cylinder	BR-9
Brakes pull	Tires improperly inflated	Inflate tires to proper pressure	
	Oil or grease on shoes or pads	Check for cause. Replace shoes or pads	BR-34, 50
	Brake shoes distorted, linings worn or glazed	Replace brake shoes	BR-34, 50
	Brake pads distorted, worn or glazed	Replace pads	BR-34, 50
	Drum or disc out of round	Replace drum or disc	BR-34, 41 50, 57
	Tension or return spring faulty	Replace spring	BR-41, 57
	Wheel cylinder faulty	Repair wheel cylinder	BR-41, 57
	Piston frozen in brake cylinder	Repair cylinder	BR-34, 50
	Brake pad sticking	Replace pads	BR-34, 50

TROUBLESHOOTING (Cont'd)

Problem	Possible cause	Remedy	Page
Hard pedal but	Oil or grease on linings	Check for cause. Replace shoes brakes inefficient or pads	BR-34, 50
	Brake shoes distorted, linings worn or glazed, drums worn	Replace brake shoes	BR-34, 50
	Brake pads distorted, worn or glazed	Replace pads	BR-34, 50
	Piston frozen in brake cylinder	Repair cylinder	BR-34, 50
	Brake booster faulty	Repair booster	BR-16
	Vacuum leaks	Repair as necessary	
	Brake line restricted	Repair as necessary	
Snapping or clicking noise when brakes are applied	(Drum brake) Brake shoes binding at backing plate ledges	Lubricate	BR-41, 57
	Backing plate ledges worn	Replace and lubricate ledges	BR-41, 57
	Loose or missing shoe hold-down spring	Replace shoe hold-down spring	BR-41, 57
	Loose set bolt at backing plate (Disk brake)	Tighten	BR-41, 45
	Loose or missing pad support plate	Replace pad support plate	BR-34, 50
	Loose installation bolt	Tighten	BR-34, 50
	Wear on slide bushing	Replace slide bushing	BR-34, 50
Scraping or grinding noise when brakes are applied	Worn brake linings or pads	Replace or refinish drums or rotors if heavily scored	BR-34, 41 50, 57
	Caliper to wheel or rotor interference	Replace as required	BR-34, 50
	Dust cover to rotor or backing plate to drum interference	Correct or replace	BR-34, 50
	Other brake system components faulty	Repair or replace as necessary	
	Tires rubbing against chassis and/or body	Repair as necessary	

TROUBLESHOOTING (Cont'd)

Problem	Possible cause	Remedy	Page
Squeaking, squealing groaning or chattering noise when brakes are applied HINT: Brake friction materials inherently generate noise and heat in order to dissipate energy. As a result, occasional squeal is normal and is aggravated by severe environmental conditions such as cold, heat, wetness, snow,salt, mud, etc. This occasional squeal is not a functional problem and does not indicate any loss of brake effectiveness	Brake drums and linings, rotors and pads worn or scored	Inspect, repair or replace	BR-34, 50
	Dirty, greased, contaminated or glazed linings or pads	Clean or replace	
	Improper linings or pads using	Inspect for correct usage or replace	
	Maladjustment of brake pedal or booster push rod	Inspect and adjust	BR-6, 16
	(Disc brake)		
	Missing or damaged brake pad anti-squeal shim	Replace	BR-34, 50
	Pad wear and pad wear indicator making contact with the rotor	Replace	BR-34, 50
	Burred or rusted calipers	Clean or deburr	BR-34, 50
	(Drum brake)		
	Weak damaged or incorrect shoe hold-down springs, loose or damaged shoe hold-down spring pins and springs and grooved backing plate ledges	Inspect, repair or replace	BR-41, 57
Squealing and squeaking noise when brakes are not applied	Maladjustment of brake pedal or booster push rod	Inspect and adjust	BR-6, 16
	Poor return of brake booster or master cylinder or wheel cylinder	Inspect, repair or replace	BR-9, 16
	(Disc brake)		
	Rusted or stuck piston	Inspect and lubricate as necessary	BR-34, 50
	Improper positioning of pad in caliper	Reinstall correctly	BR-34, 50
	Rotor rubbing against caliper housing	Inspect and replace	BR-34, 50
	Improper installation of disc brake pad support plate	Reinstall correctly	BR-34, 50
	Pad wear and pad wear indicator making contact with the rotor	Replace	BR-34, 50
	(Drum brake)		
	Weak, damaged or incorrect shoe hold-down springs	Replace	BR-41, 57
	Grooved backing plate ledges	Replace	BR-41, 57
	Bent or warped backing plate causing interference with drum	Repair or replace	
	Improper machining of drum causing interference with backing plate or shoe	Replace drum	BR-41, 57
	Other brake system components: Loose or extra parts in brakes Rear drum adjustment too tight causing lining to glaze Worn, damaged or insufficiently lubricated wheel bearings	Inspect, repair or replace as necessary	BR-41, 57

TROUBLESHOOTING (Cont'd)

Problem	Possible cause	Remedy	Page
Groaning, clicking or rattling noise when brakes are not applied	Stones or foreign material trapped inside wheel covers	Remove foreign material	
	Loose wheel nuts	Tighten to correct torque Replace if stud holes are elongated	
	Maladjustment of brake pedal or booster push rod	Inspect and adjust	BR-6, 16
	Worn, damaged or dry wheel bearings	Inspect and lubricate or replace	
	(Disc brake)		
	Loose or missing anti-rattle spring or pad support plate or crimping on outer pad	Inspect, repair or replace	BR-34, 50
	Failure of shim	Inspect, replace if necessary	BR-34, 50
	Wear on slide bushing	Inspect, replace if necessary	BR-34, 50
	Loose installation bolt	Inspect, tighten if necessary	BR-34, 50
	Poor return of piston	Inspect, repair or replace	BR-34, 50
	(Drum brake)		
	Loose or extra parts	Inspect and repair	BR-41, 57

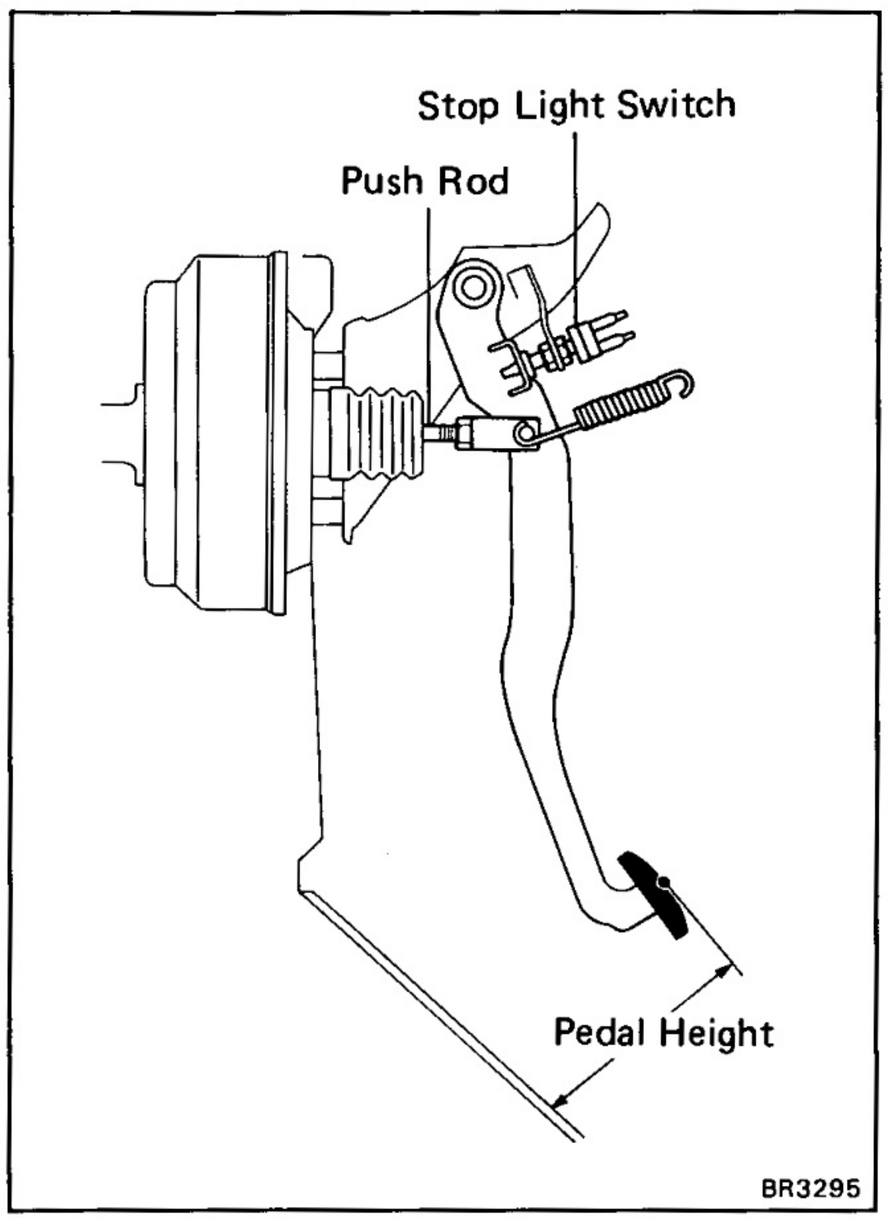

CHECKS AND ADJUSTMENTS

CHECK AND ADJUSTMENT OF BRAKE PEDAL

1. CHECK THAT PEDAL HEIGHT IS CORRECT

Pedal height from asphalt sheet:
161 — 171 mm (6.34 — 6.73 in.)

If incorrect, adjust the pedal height.

2. IF NECESSARY, ADJUST PEDAL HEIGHT

(a) Sufficiently loosen the stop light switch.

(b) Loosen the clevis lock nut.

(c) Adjust the pedal height by turning the pedal push rod.

(d) Return the stop light switch until its body lightly contacts the pedal stopper.

(e) After adjusting the pedal height, check and adjust the pedal freeplay.

(f) Tighten the clevis lock nut.

Torque: 375 kg-cm (27 ft-lb, 37 N·m)

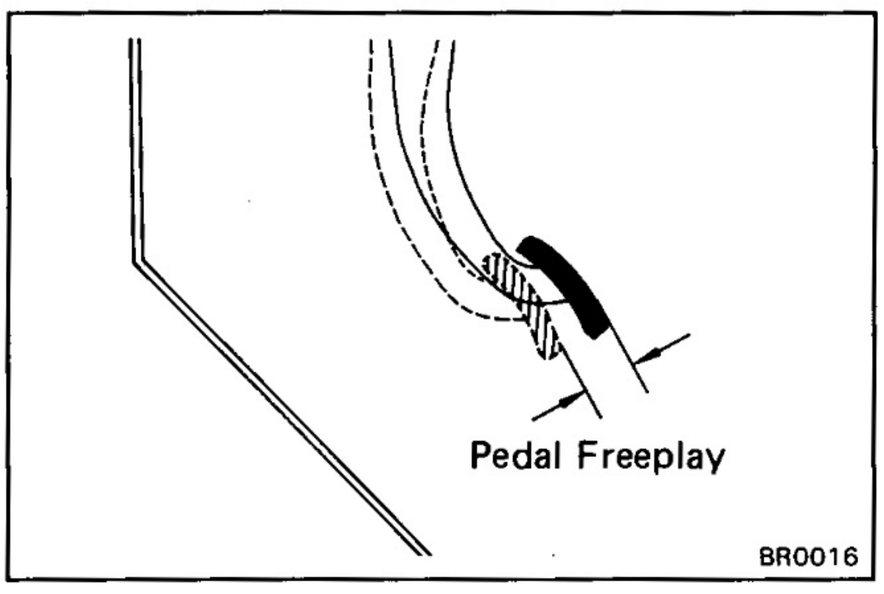

3. CHECK PEDAL FREEPLAY

(a) Stop the engine and depress the brake pedal several times until there is no more vacuum left in the booster.

(b) Push in the pedal by hand until the begining of the second resistance is felt, measure the distance, as shown.

Pedal freeplay: 3 — 6 mm (0.12 — 0.24 in.)

HINT: The freeplay to the first resistance is due to the play between the clevis and pin. And it is 1 — 3 mm (0.04 — 0.12 in.) on the pedal.

4. IF NECESSARY, ADJUST PEDAL FREEPLAY

(a) If incorrect, adjust the pedal freeplay by turning the pedal push rod.

(b) Start the engine and confirm that pedal freeplay exists.

(c) After adjusting the pedal freeplay, check the pedal height.

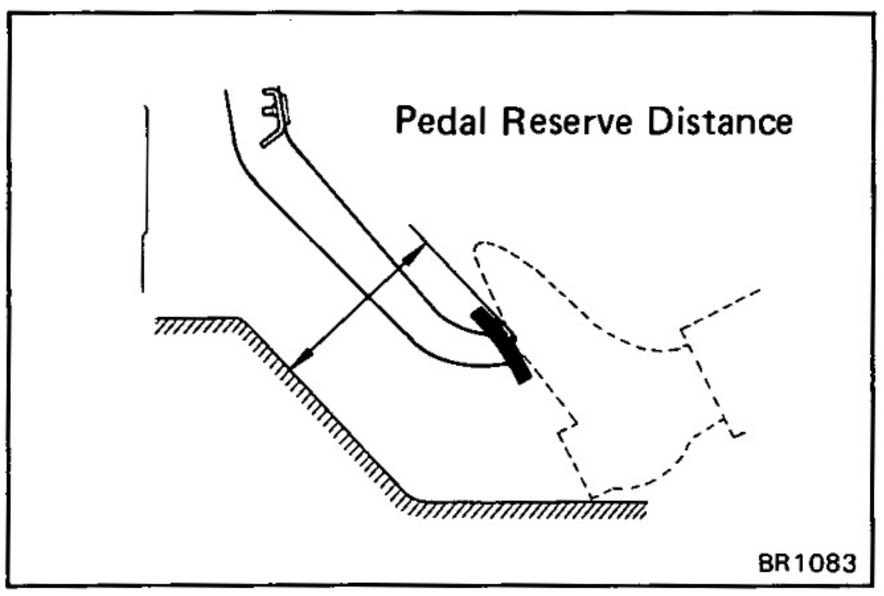

5. CHECK THAT PEDAL RESERVE DISTANCE IS CORRECT

Release the parking brake lever.

With the engine running, depress the pedal and measure the pedal reserve distance, as shown.

Pedal reserve distance from asphalt sheet at 50 kg (110 lb, 490 N): More than 59 mm (2.32 in.)

If incorrect, troubleshoot the brake system.

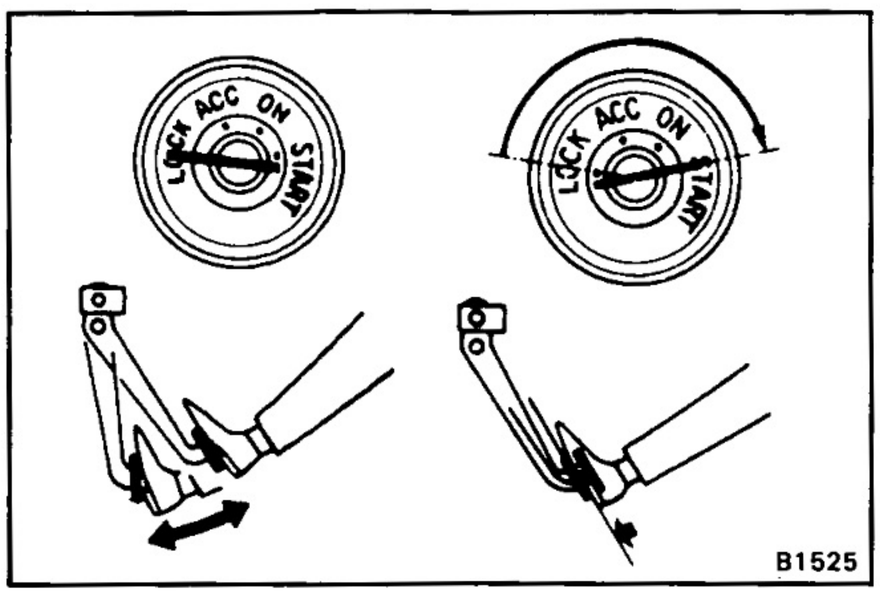

OPERATIONAL TEST OF BRAKE BOOSTER

HINT: If the booster leaks or lacks of vacuum, repair before testing.

1. OPERATING CHECK

(a) Depress the brake pedal several times with the engine off, and check that there is no change in the pedal reserve distance.

(b) Depress the brake pedal and start the engine. If the pedal goes down slightly, operation is normal.

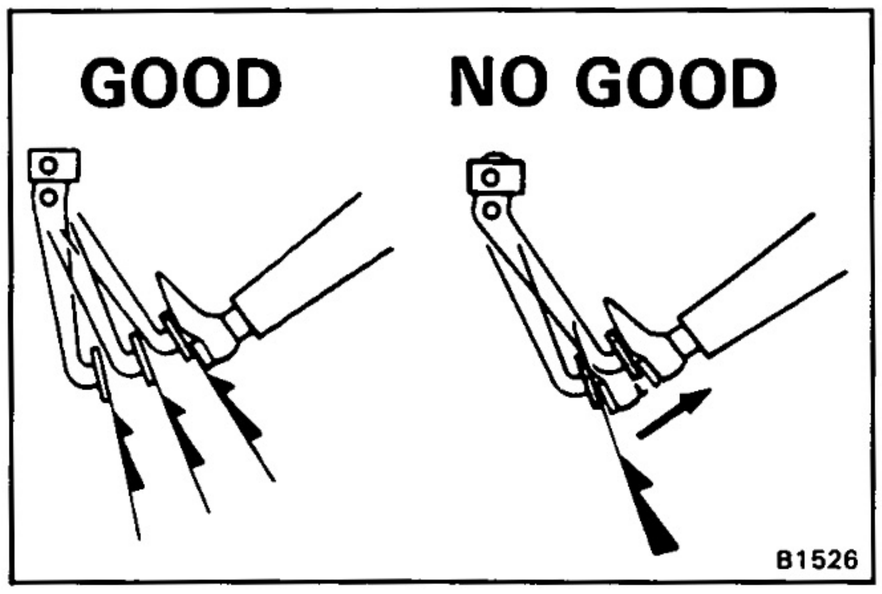

2. AIR TIGHTNESS CHECK

(a) Start the engine and stop it after one or two minutes. Depress the brake pedal several times slowly. If the pedal goes down the farthest the first time, but gradually rises after the second or third time, the booster is air tight.

(b) Depress the brake pedal while the engine is running, and stop it with the pedal depressed. If there is no change in pedal reserve travel after holding the pedal for thirty seconds, the booster is air tight.

BLEEDING OF BRAKE SYSTEM

HINT: If any work is done on the brake system or if air is suspected in the brake lines, bleed the system of air.

NOTICE: Do not let brake fluid remain on a painted surface. Wash it off immediately.

1. FILL BRAKE RESERVOIR WITH BRAKE FLUID

Check the reservoir after bleeding each wheel. Add fluid, if necessary.

Fluid type: SAE J1703 or FMVSS NO. 116 DOT3

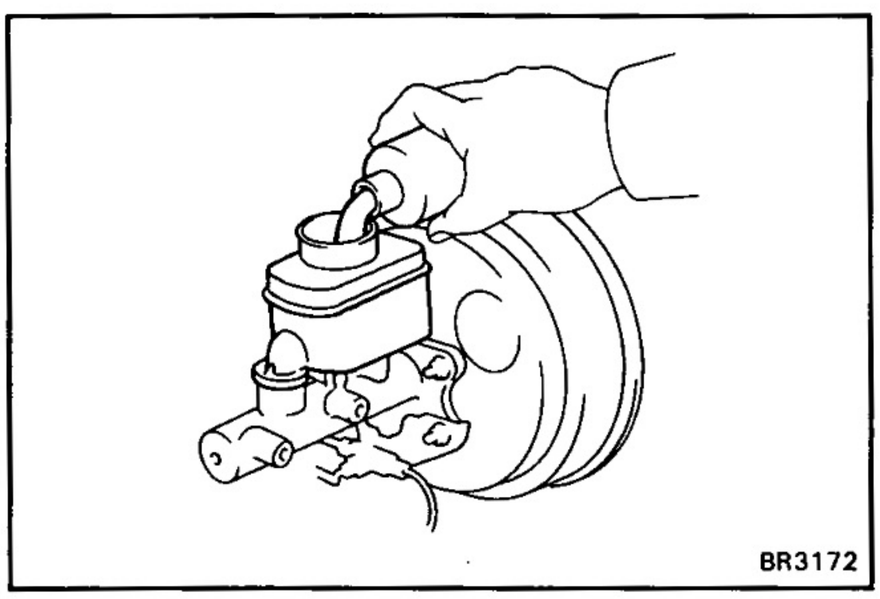

2. BLEED MASTER CYLINDER

HINT: If the master cylinder was disassembled or if the reservoir becomes empty, bleed the air from the master cylinder.

(a) Disconnect the brake tubes from the master cylinder. Use a container to catch the brake fluid.

(b) Slowly depress the brake pedal and hold it.

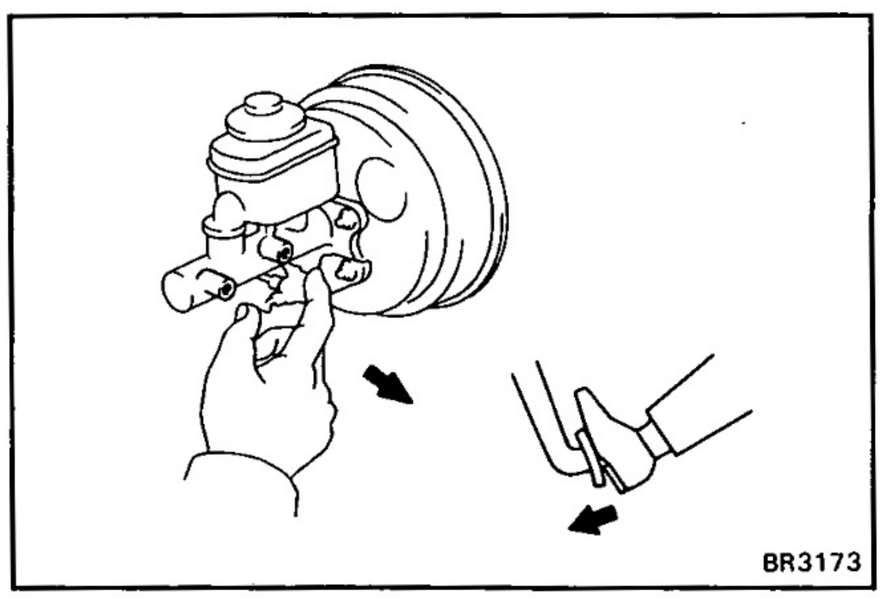

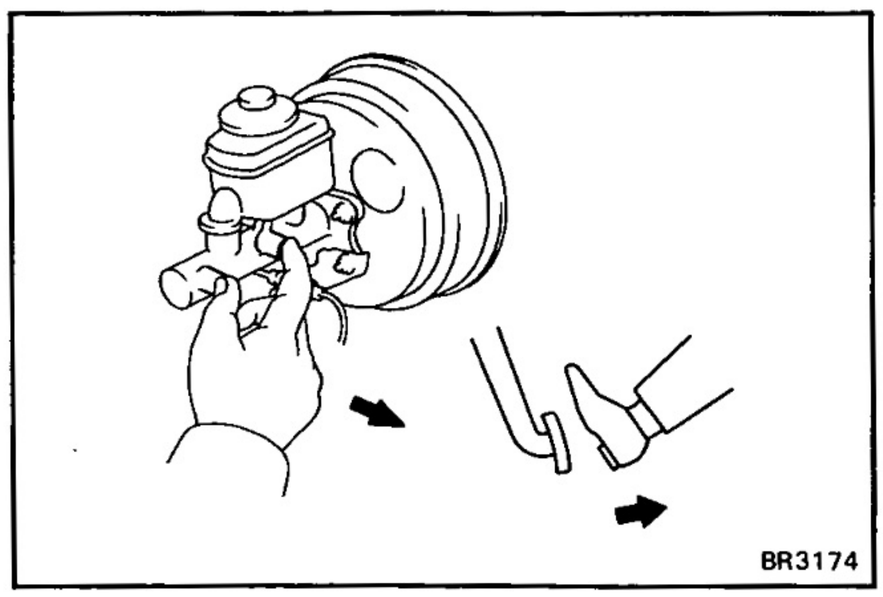

(c) Block off the outlet holes with your fingers, and release the brake pedal.

(d) Repeat (b) and (c) three or four times.

(e) Connect the brake tubes to the master cylinder.

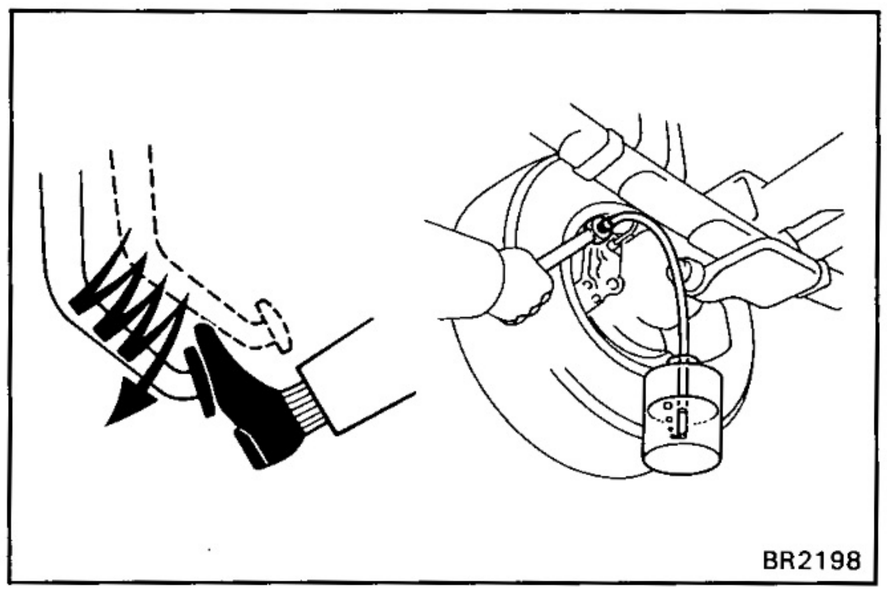
BR2198

3. CONNECT VINYL TUBE TO WHEEL CYLINDER BLEEDER PLUG

Insert other end of the tube in a half-full container of brake fluid.

HINT: Begin air bleeding from the wheel cylinder with the longest hydraulic line.

4. BLEED AIR FROM BRAKE LINE

(a) Slowly pump the brake pedal several times.

(b) While an assistant press on the pedal, loosen the bleeder plug until fluid starts to run out. Then close the bleeder plug.

(c) Repeat this procedure until there are no more air bubbles in the fluid.

Bleeder plug tightening torque:
110 kg-cm (8 ft-lb, 11 N·m)

5. REPEAT PROCEDURE FOR EACH WHEEL

6. BLEED LOAD SENSING PROPORTIONING AND BY-PASS VALVE

CHECK AND ADJUSTMENT OF PARKING BRAKE

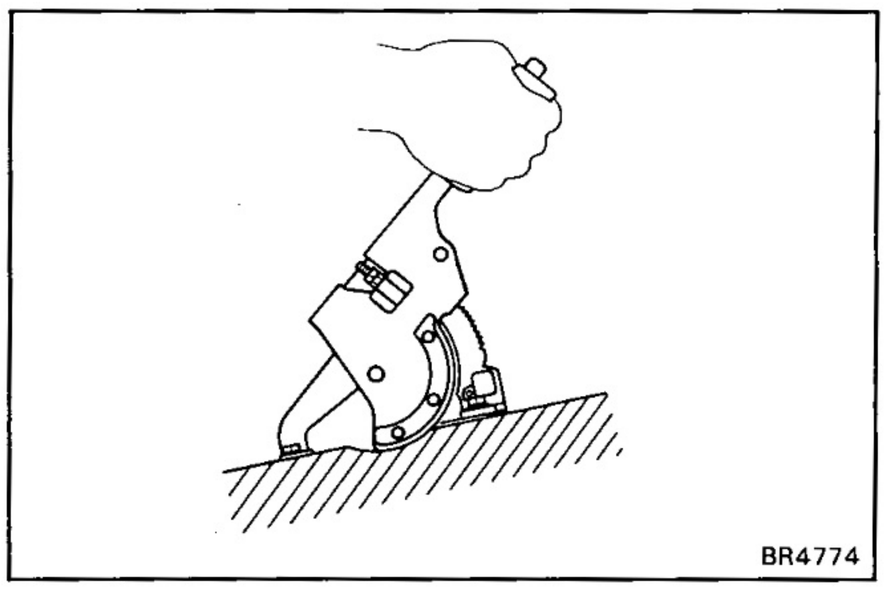
BR4774

1. CHECK THAT PARKING BRAKE LEVER TRAVEL IS CORRECT

Pull the parking brake lever all the way up, and count the number of clicks.

Parking brake lever travel at 20 kg (44.1 lb, 196 N):
7 — 9 clicks

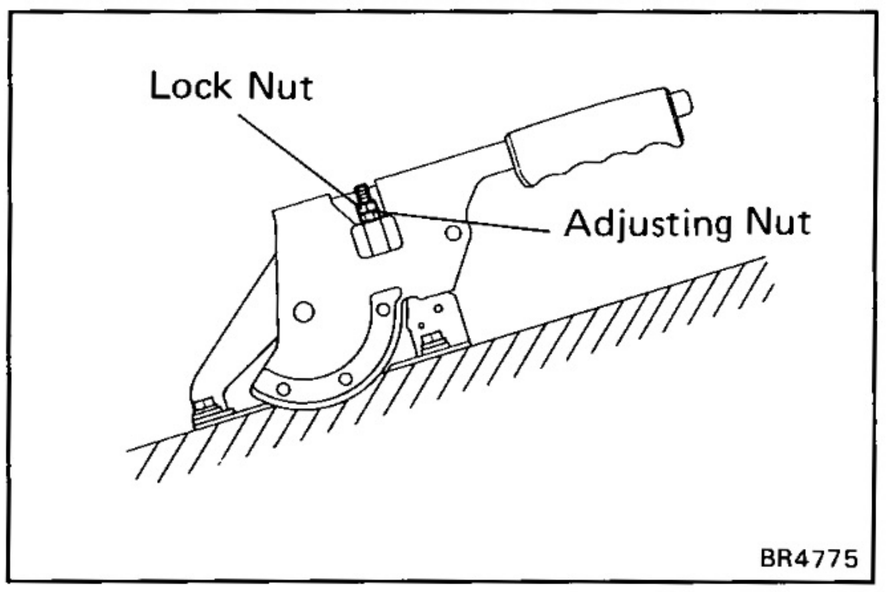

BR4775

2. IF NECESSARY, ADJUST PARKING BRAKE LEVER TRAVEL

HINT: Before adjusting the parking brake, make sure that the rear brake shoe clearance has been adjusted.

For shoe clearance adjustment, see step 9 on page BR-49 or see step 11 on page BR-65.

(a) Remove the parking brake lever cover.

(b) Loosen the adjusting cap and turn the adjusting nut until the travel is correct.

(c) Tighten the adjusting cap.

(d) Install the parking brake lever cover.

MASTER CYLINDER

COMPONENTS

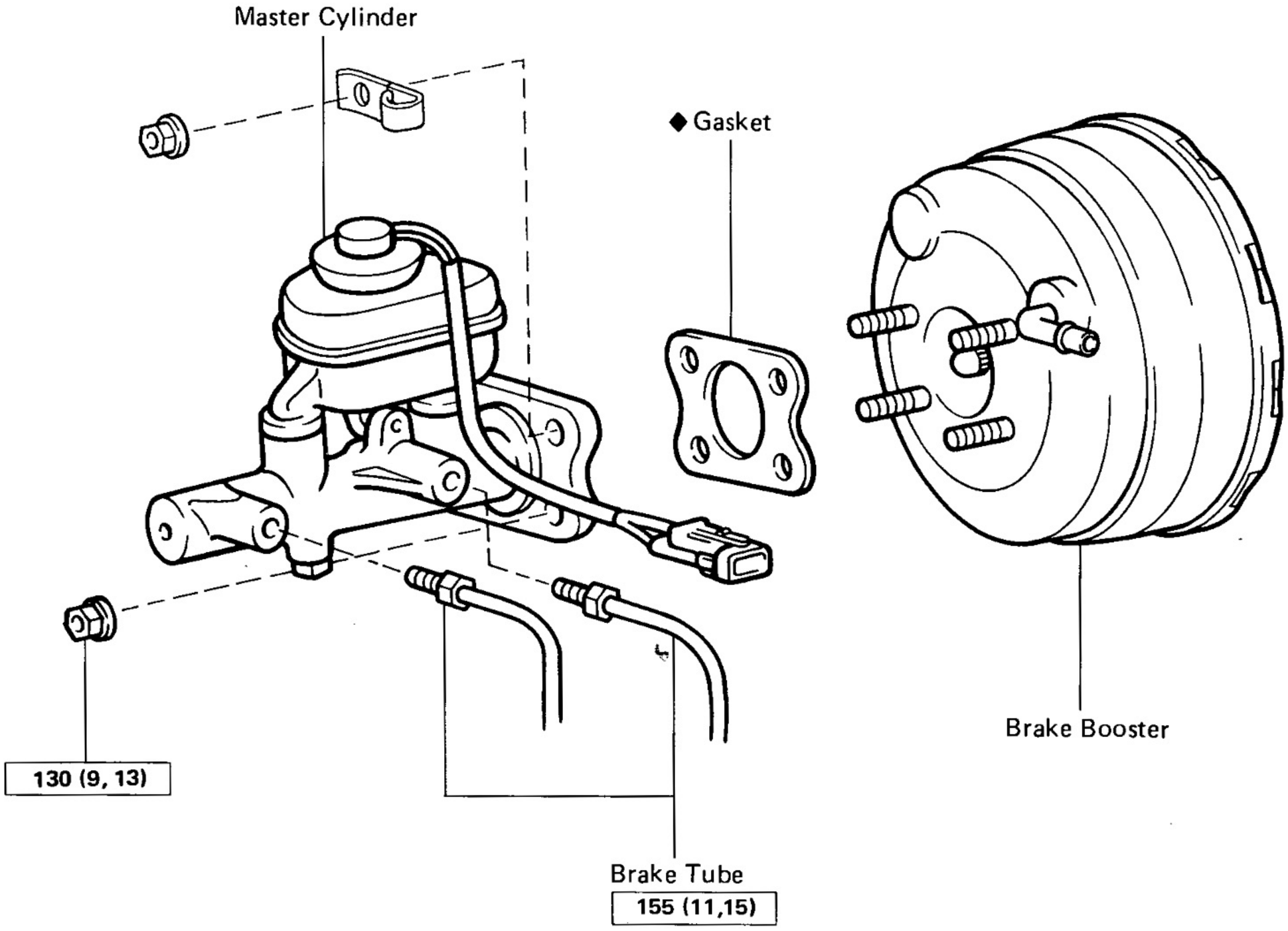

kg-cm (ft-lb, N·m) : Specified torque
◆ Non-reusable part

BR4791

REMOVAL OF MASTER CYLINDER

1. **DISCONNECT LEVEL WARNING SWITCH CONNECTOR**

2. **DRAW OUT FLUID WITH SYRINGE**

   NOTICE: Do not let brake fluid remain on a painted surface. Wash it off immediately.

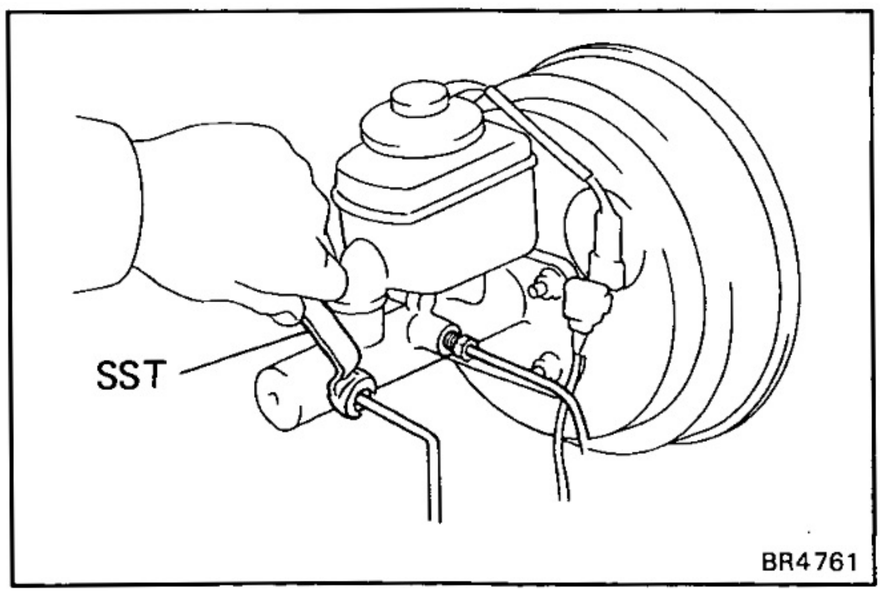

3. **DISCONNECT TWO BRAKE TUBES**

   Using SST, disconnect two brake tubes from the master cylinder.

   SST 09751-36011

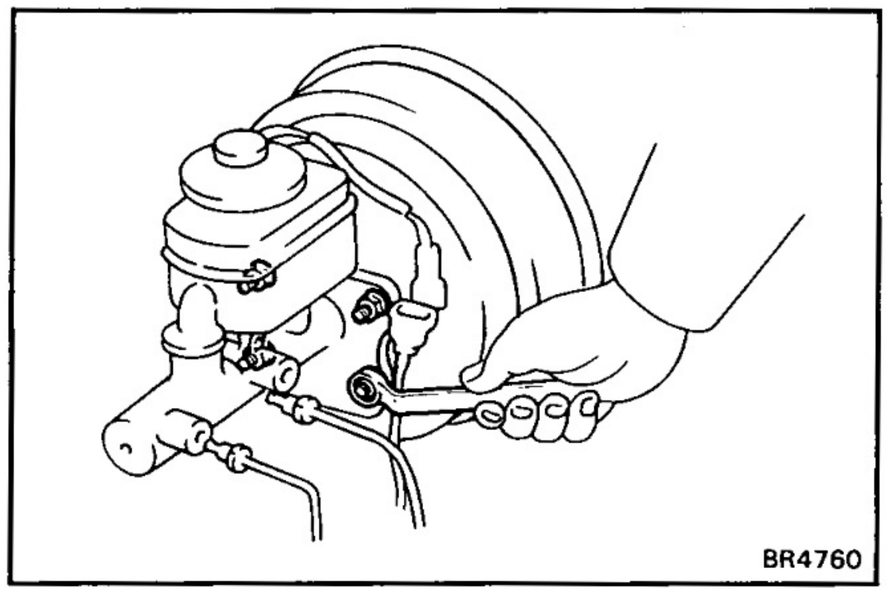

4. REMOVE MASTER CYLINDER

(a) Remove the four nuts.

(b) Remove the master cylinder, clamp and gasket from the brake booster.

COMPONENTS

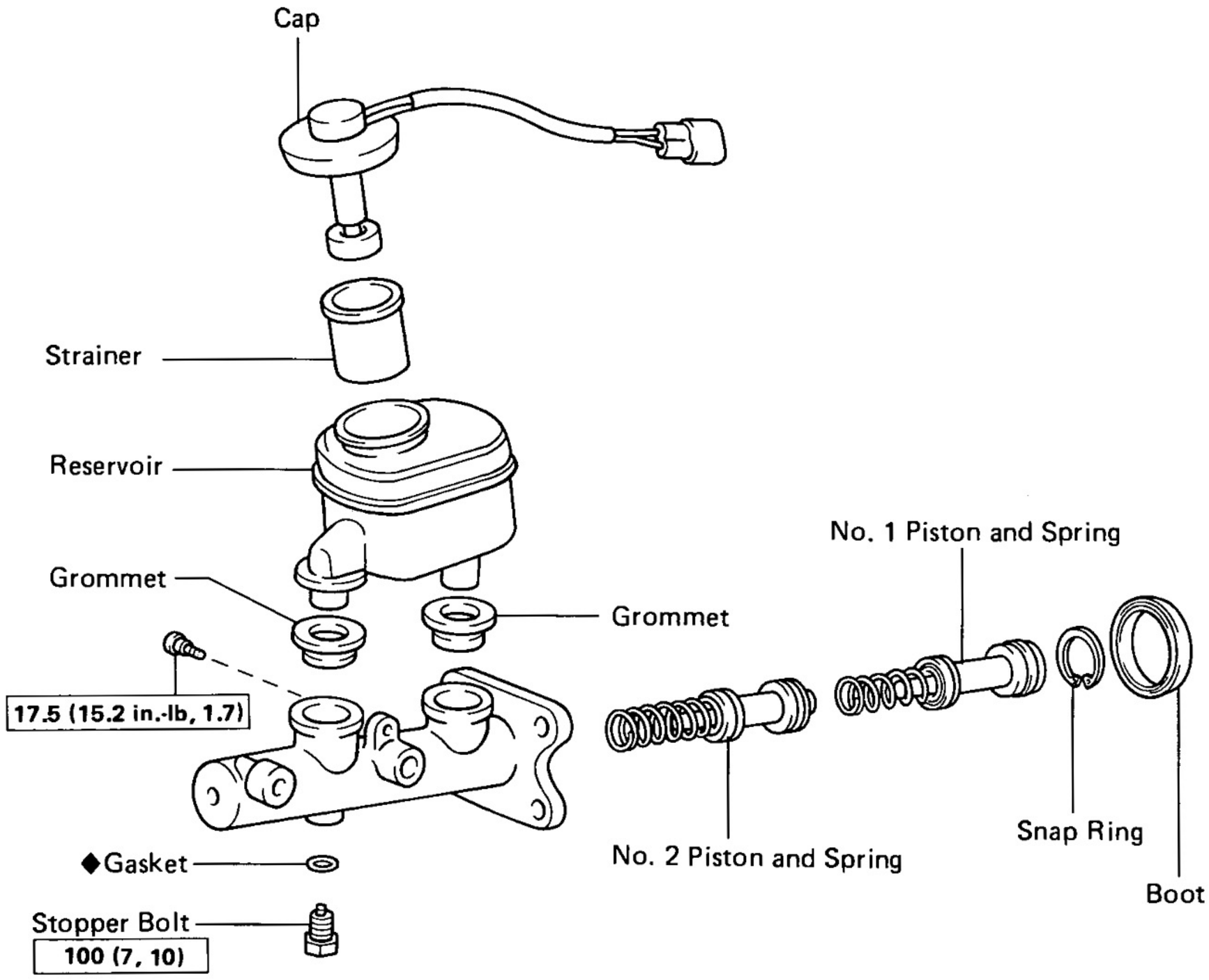

kg-cm (ft-lb, N·m) : Specified torque

◆ Non-reusable part

BR3124

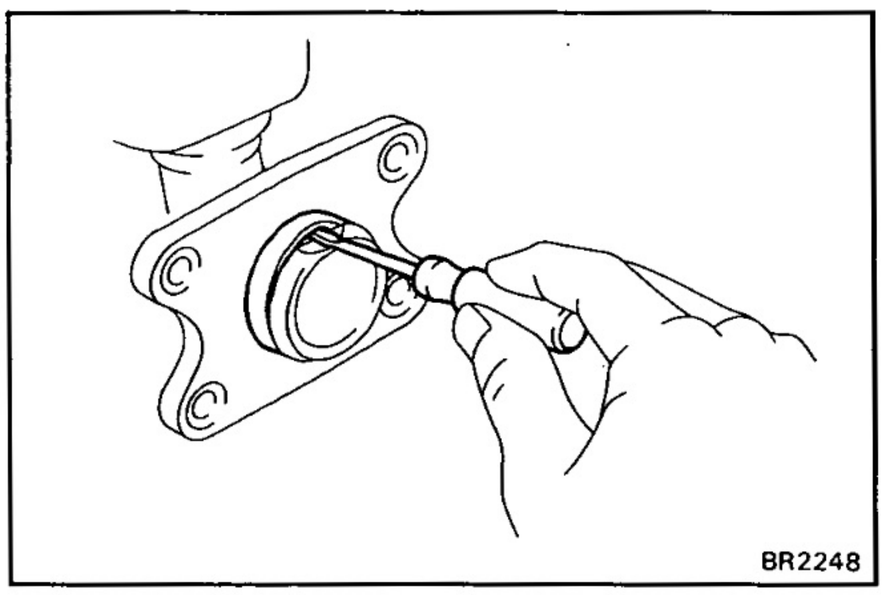

BR2248

DISASSEMBLY OF MASTER CYLINDER

1. REMOVE MASTER CYLINDER BOOT

Using a screwdriver, remove the master cylinder boot.

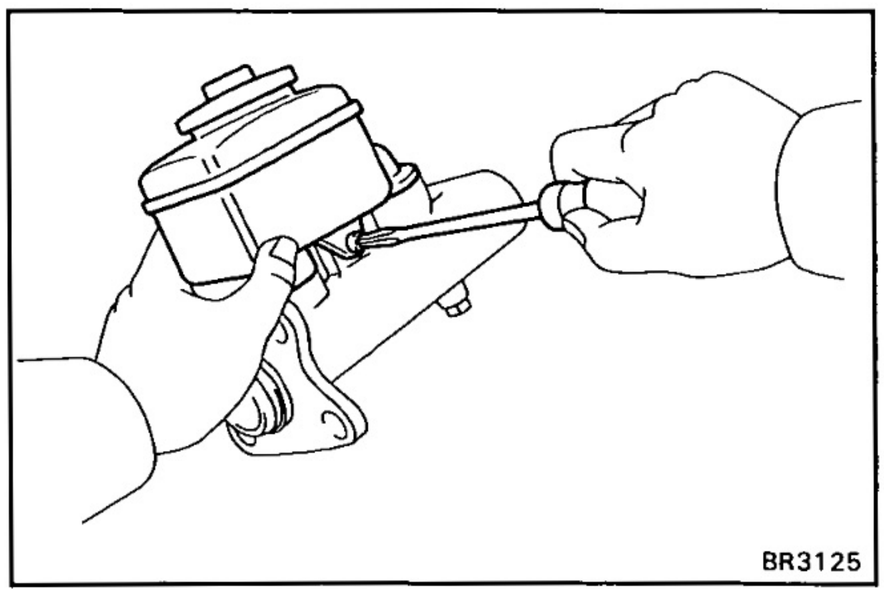

BR3125

2. REMOVE RESERVOIR

(a) Remove the set screw and pull out the reservoir.

(b) Remove the cap and strainer from the reservoir.

3. REMOVE TWO GROMMETS

4. PLACE CYLINDER IN VISE

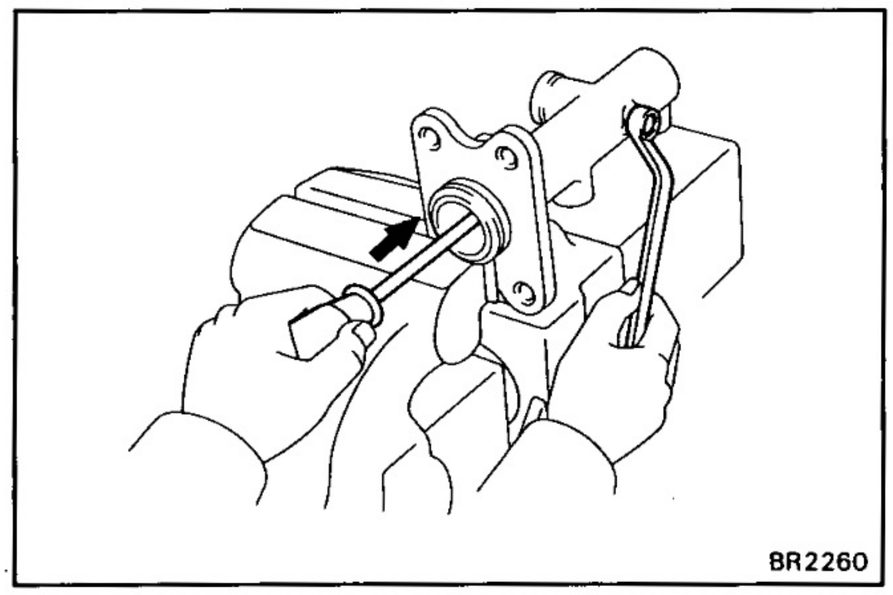
BR2260

5. REMOVE PISTON STOPPER BOLT

Using a screwdriver, push the pistons in all the way and remove the piston stopper bolt and gasket.

HINT: Tape the screwdriver tip before use.

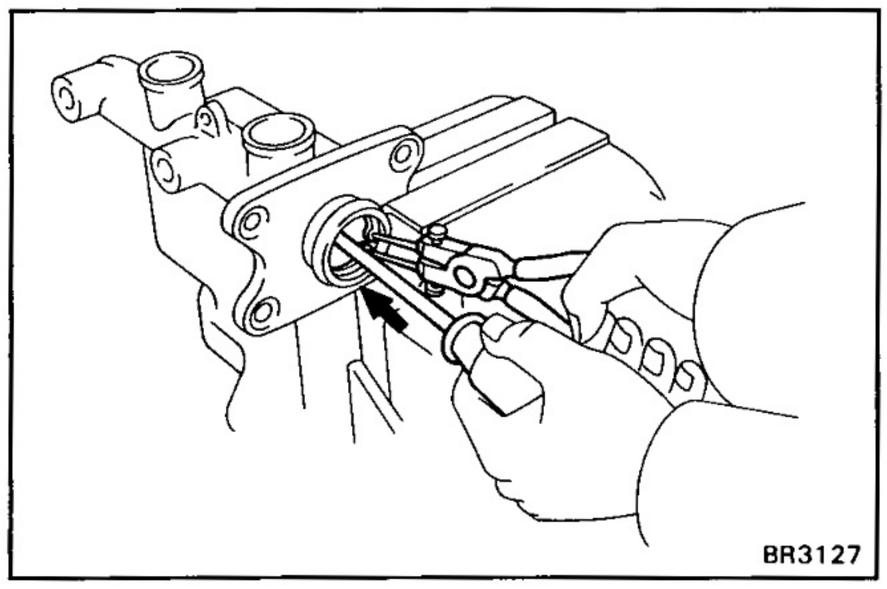
BR3127

6. REMOVE TWO PISTONS AND SPRINGS

(a) Push in the piston with a screwdriver and remove the snap ring with snap ring pliers.

(b) Remove the No.1 piston and spring by hand, pulling straight out, not at an angle.

NOTICE: If pulled out at an angle, there is posibility of damaging the cylinder bore.

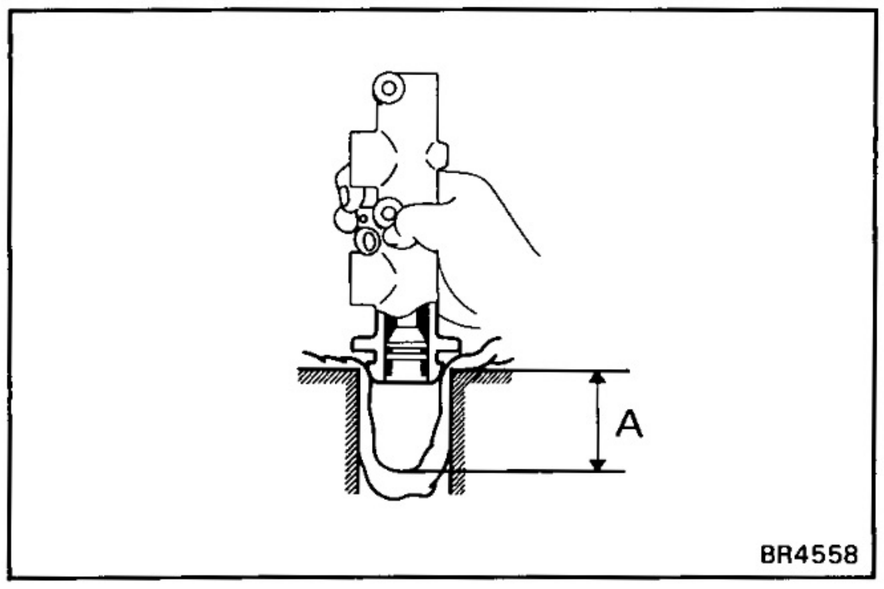

BR4558

(c) Place a rag and two wooden block on the work table and lightly tap the cylinder flange against the block edges until the piston drops out of the cylinder.

HINT: Make sure the distance (A) from the rag to the top of the block is at least 100 mm (0.394 in.)

INSPECTION OF MASTER CYLINDER COMPONENTS

HINT: Clean the disassembled parts with compressed air.

1. INSPECT CYLINDER BORE FOR RUST AND SCORING

2. INSPECT CYLINDER FOR WEAR OR DAMAGE

If necessary, clean or replace the cylinder.

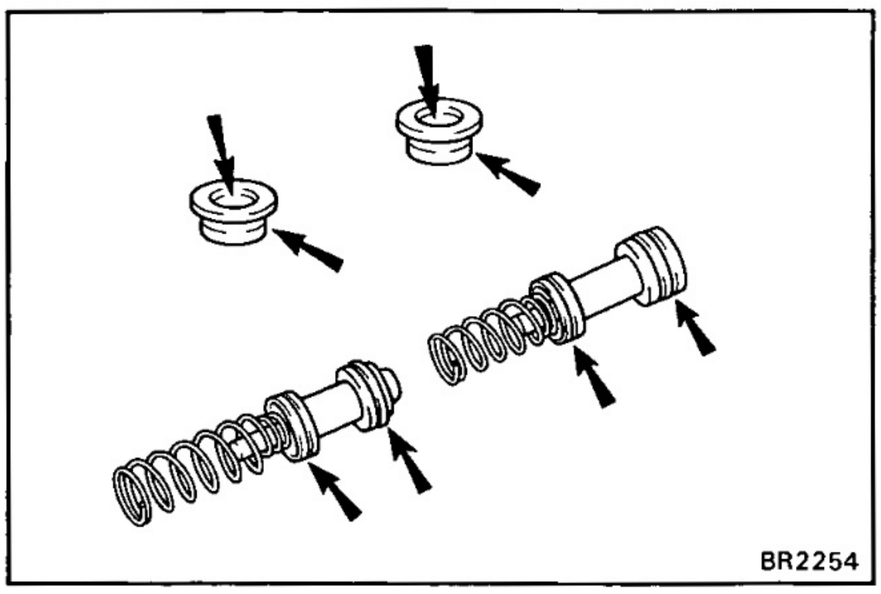
BR2254

ASSEMBLY OF MASTER CYLINDER

(See page BR-11)

1. **APPLY LITHIUM SOAP BASE GLYCOL GREASE TO RUBBER PARTS INDICATED BY ARROWS**

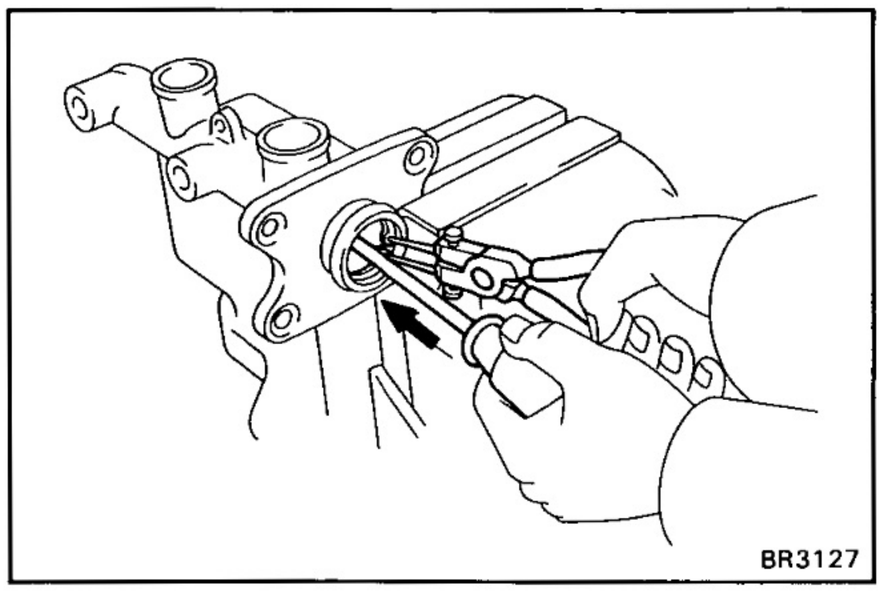
BR3127

2. **INSTALL TWO SPRING AND PISTONS**

NOTICE: Be careful not to damage the rubber lips on the pistons.

(a) Insert two springs and pistons straight in, not at an angle.

NOTICE: If inserted at an angle, there is posibility of damaging the cylinder bore.

(b) Push in the piston with a screwdriver and install the snap ring with snap ring pliers.

HINT: Tape the screwdriver tip before use.

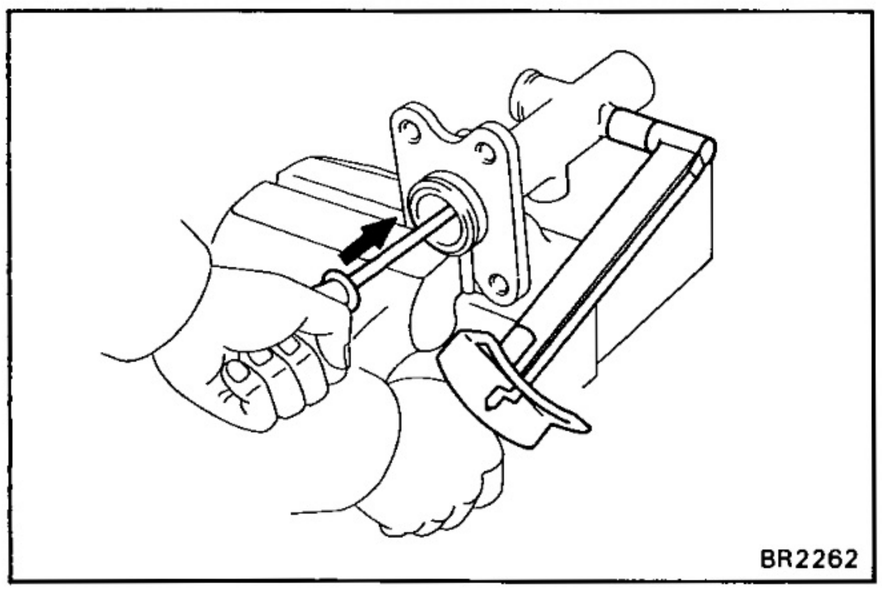
BR2262

3. **INSTALL PISTON STOPPER BOLT AND NEW GASKET**

Using a screwdriver, push the pistons in all the way and install the piston stopper bolt over a new gasket.

Torque the bolt.

Torque: 100 kg-cm (7 ft-lb, 10 N·m)

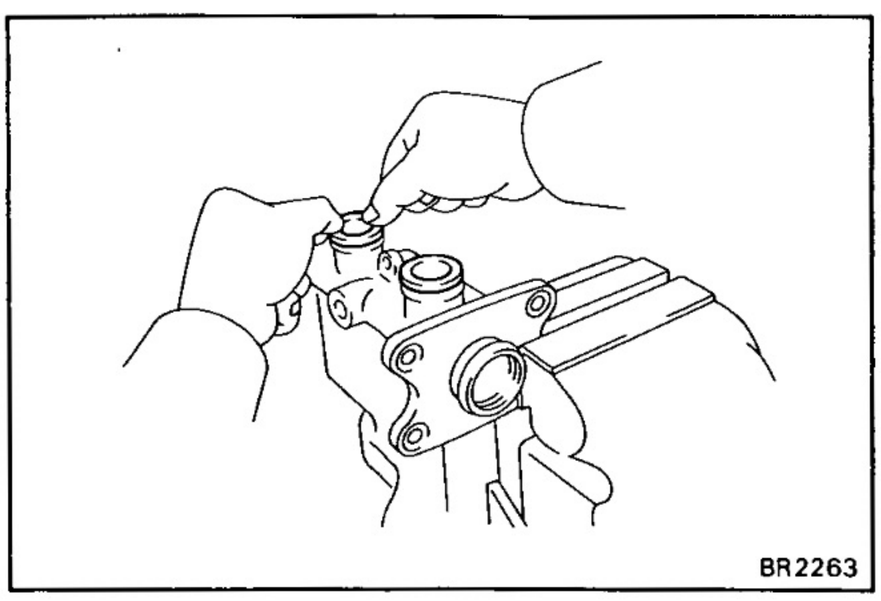
BR2263

4. **INSTALL TWO GROMMETS**

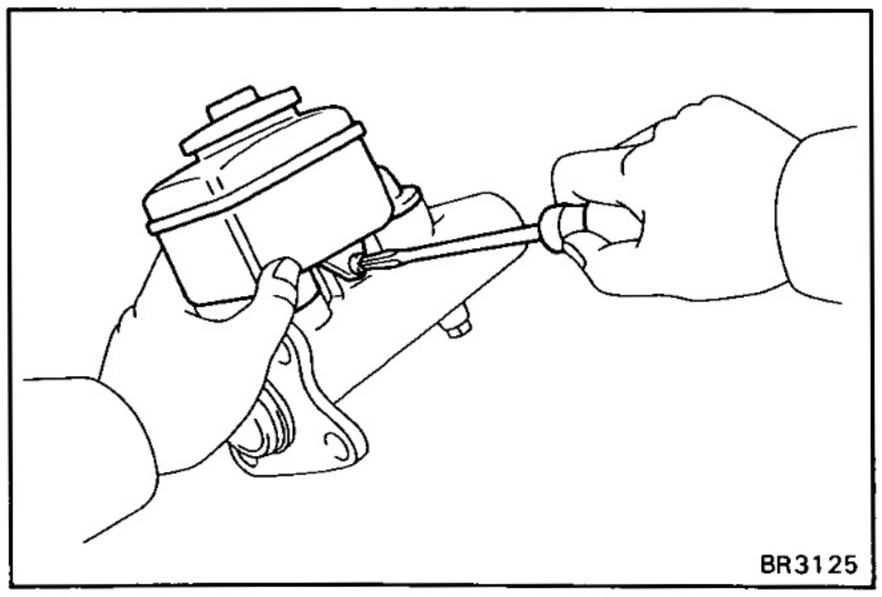
BR3125

5. **INSTALL RESERVOIR**

(a) Install the cap and strainer to the reservoir.

(b) Install the reservoir onto the cylinder.

(c) Install the set screw while pushing on the reservoir.

Torque: 17.5 kg-cm (15.2 in.-lb, 1.7 N·m)

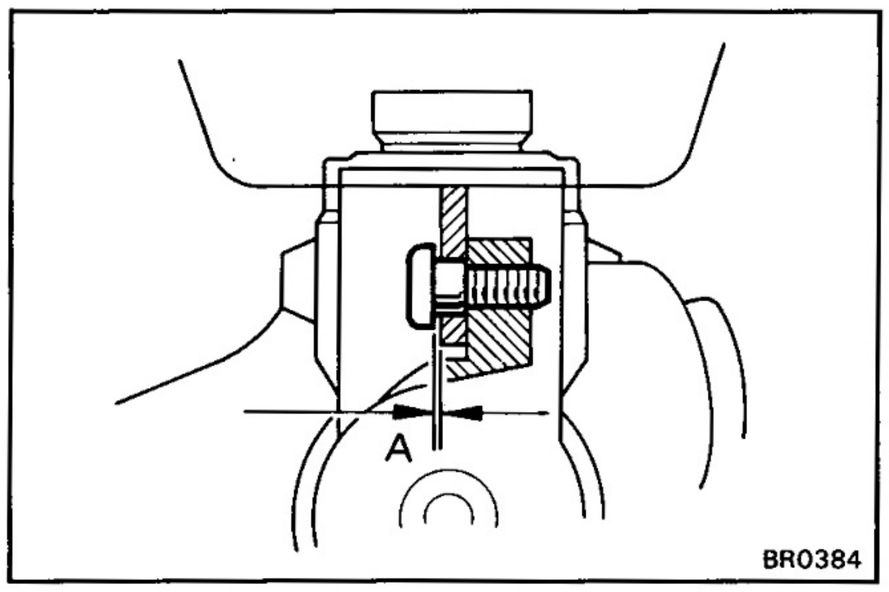

NOTICE: Because the master cylinder and reservoir tank union is a grommet type, the set screw is designed not to separate the reservoir from the cylinder and will not tighten down the reservoir.

Therefore, there is a clearance at point A. Do no insert washers or an equivalent when tightening.

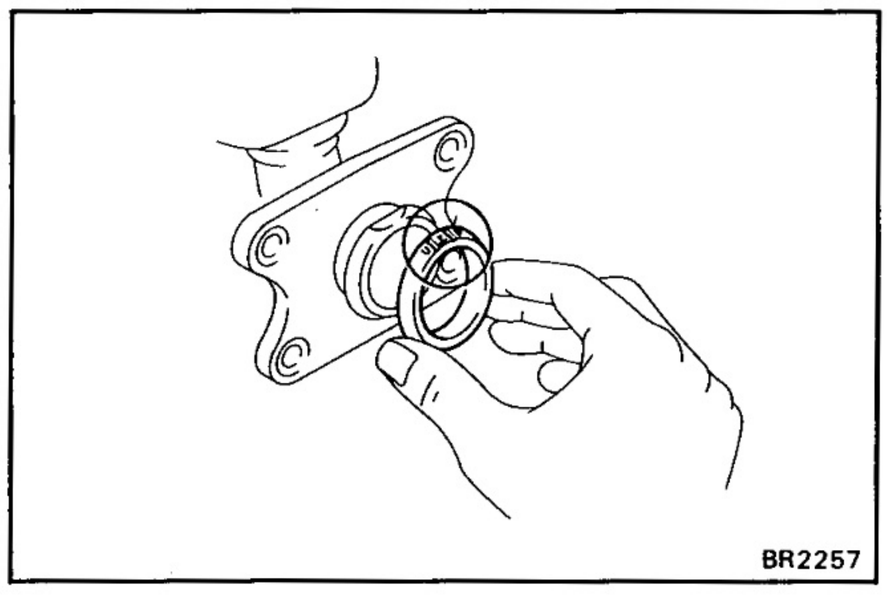

6. INSTALL MASTER CYLINDER BOOT

Facing the up mark on the master cylinder boot upwards, install the cylinder boot to the master cylinder.

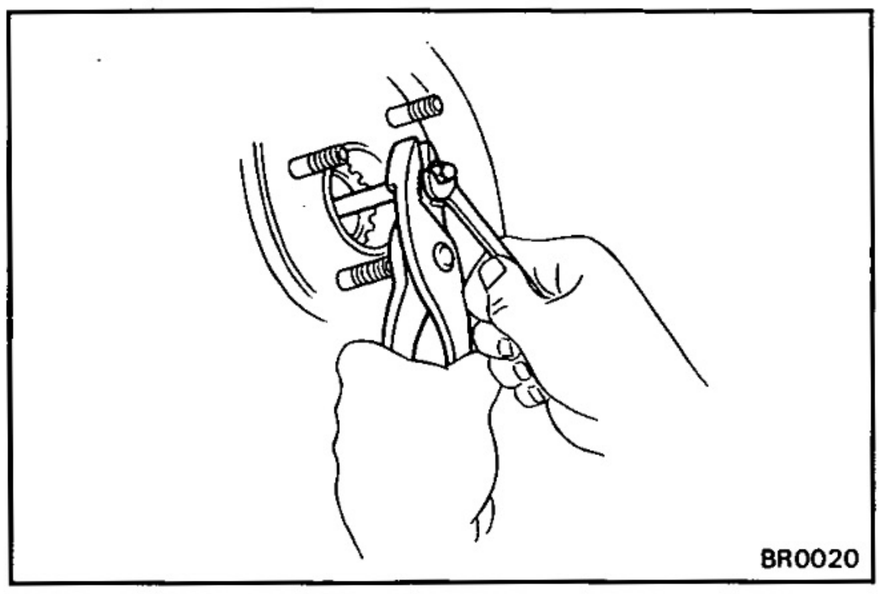

INSTALLATION OF MASTER CYLINDER

1. **ADJUST LENGTH OF BRAKE BOOSTER PUSH ROD BEFORE INSTALLING MASTER CYLINDER**
(See page BR-26)

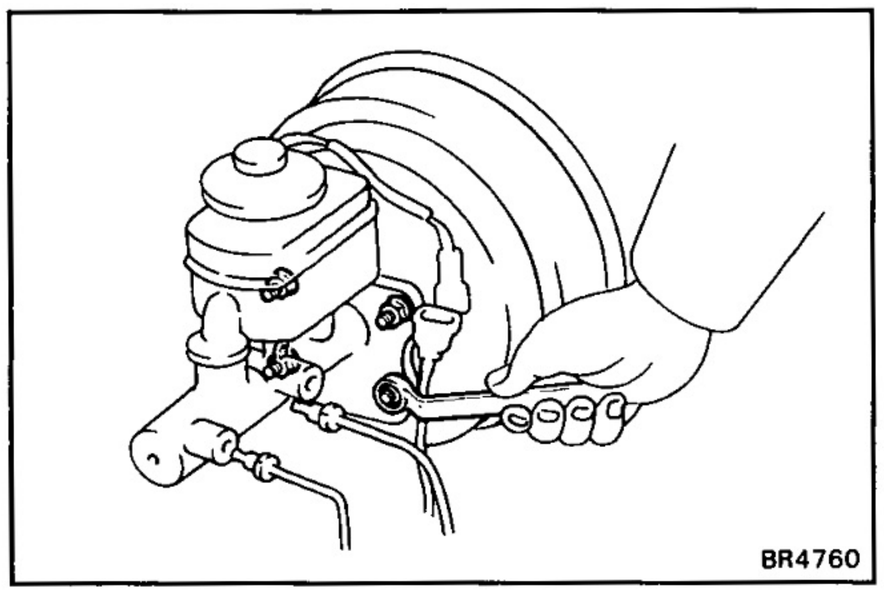

2. **INSTALL MASTER CYLINDER**

Install the master cylinder and clamp on the brake booster with the four nuts over a new gasket.

Torque: 130 kg-cm (9 ft-lb, 13 N·m)

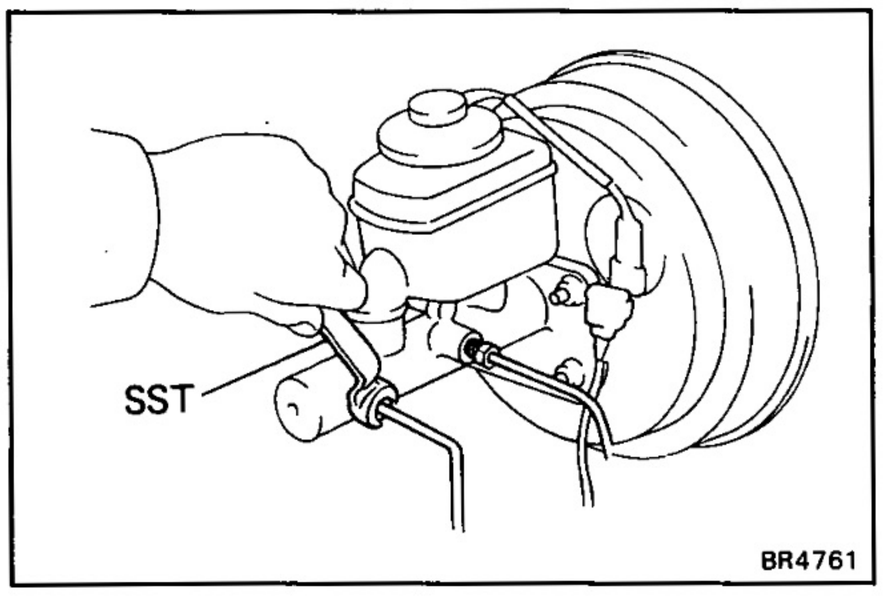

3. **CONNECT TWO BRAKE TUBES**

(a) Finger tighten the union nuts.

(b) Using SST, torque the union nuts.

SST 09751-36011

Torque: 155 kg-cm (11 ft-lb, 15 N·m)

4. **CONNECT LEVEL WARNING SWITCH CONNECTOR**

5. **FILL BRAKE RESERVOIR WITH BRAKE FLUID AND BLEED BRAKE SYSTEM**
(See page BR-7)

6. **CHECK FOR FLUID LEAKAGE**

7. **CHECK AND ADJUST BRAKE PEDAL**
(See page BR-7)

BRAKE BOOSTER

REMOVAL OF BRAKE BOOSTER

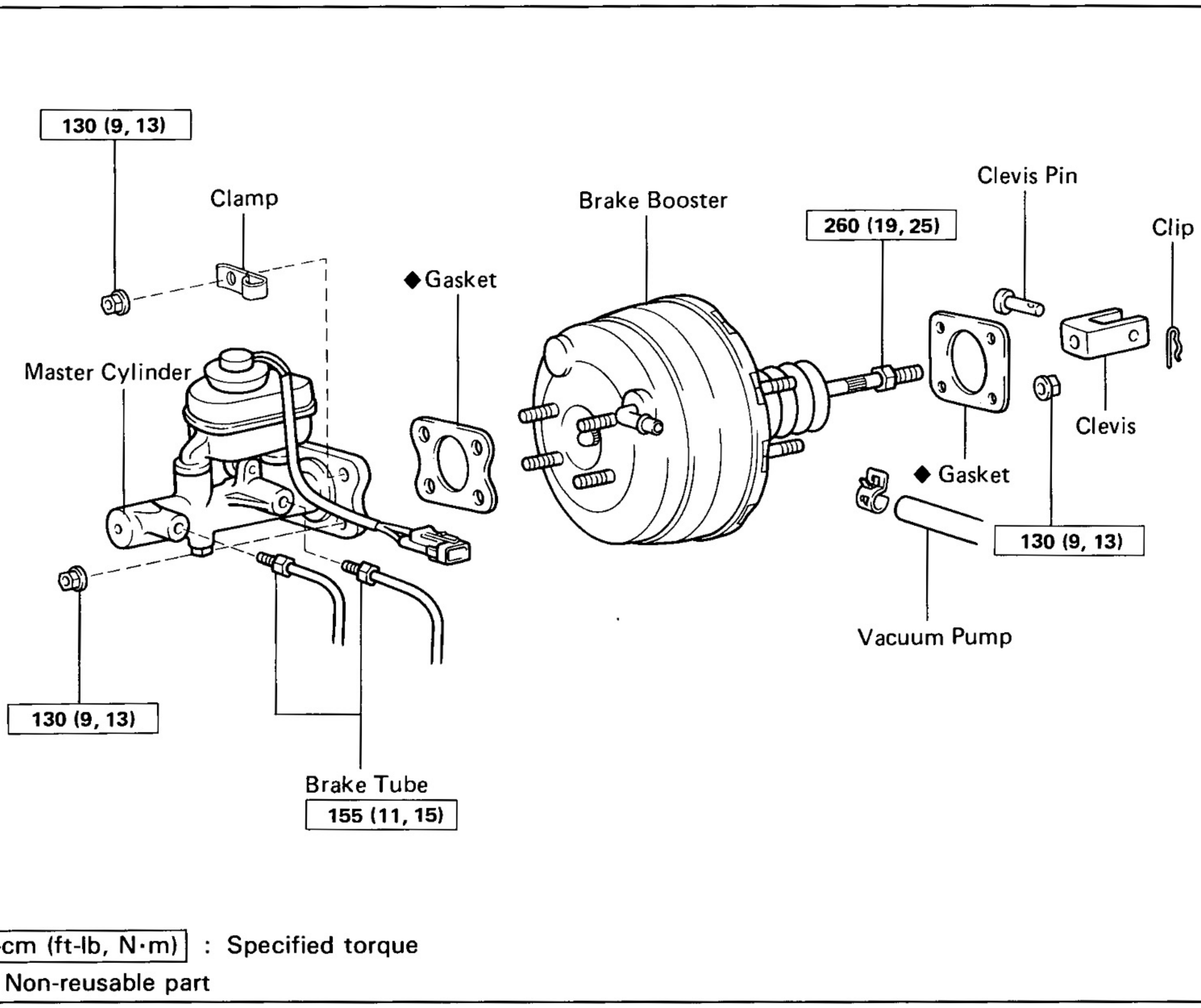

kg-cm (ft-lb, N·m) : Specified torque

◆ Non-reusable part

BR4792

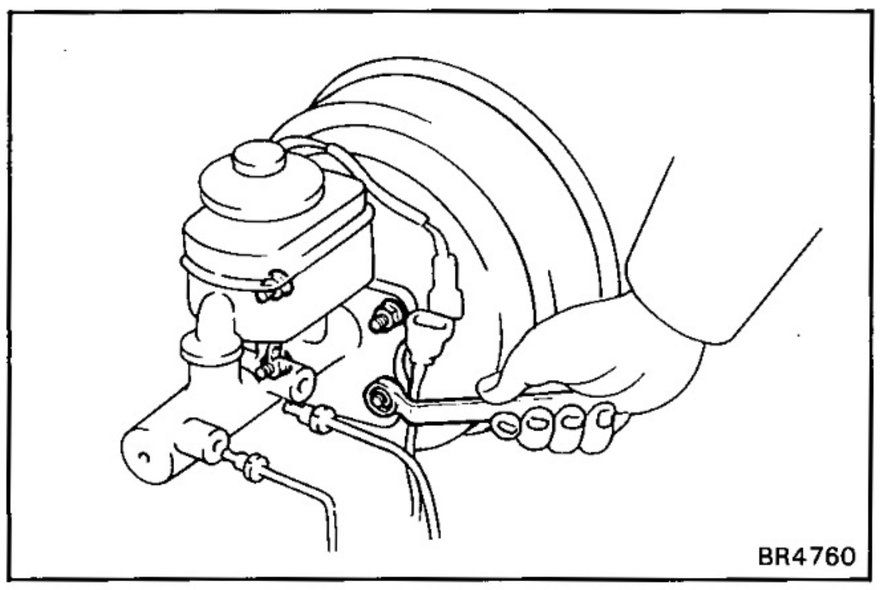

BR4760

1. **REMOVE MASTER CYLINDER**
   (See page BR-9)

2. **DISCONNECT VACUUM HOSE FROM BRAKE BOOSTER**

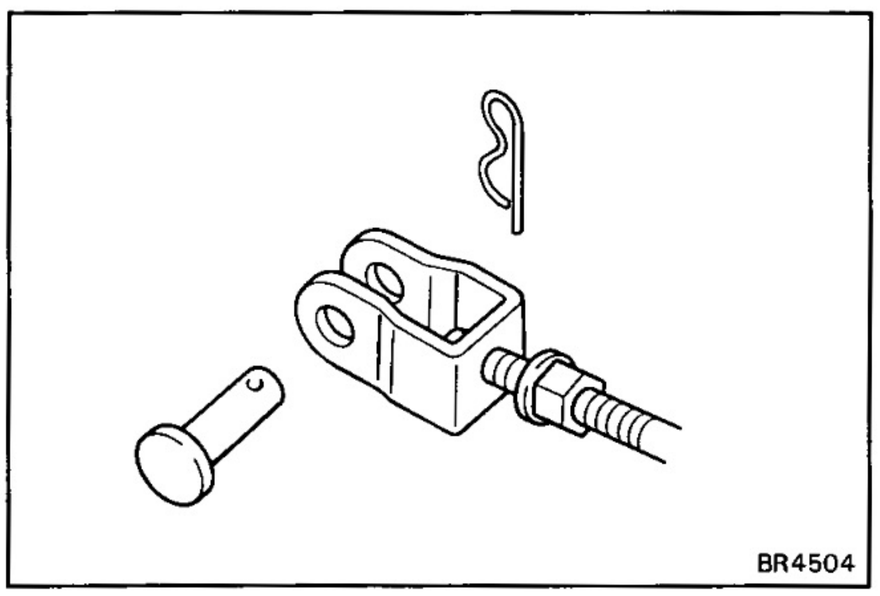

BR4504

3. **REMOVE CLIP AND CLEVIS PIN**
   (a) Remove the clip.
   (b) Loosen the lock nut.
   (c) Remove the clevis pin.

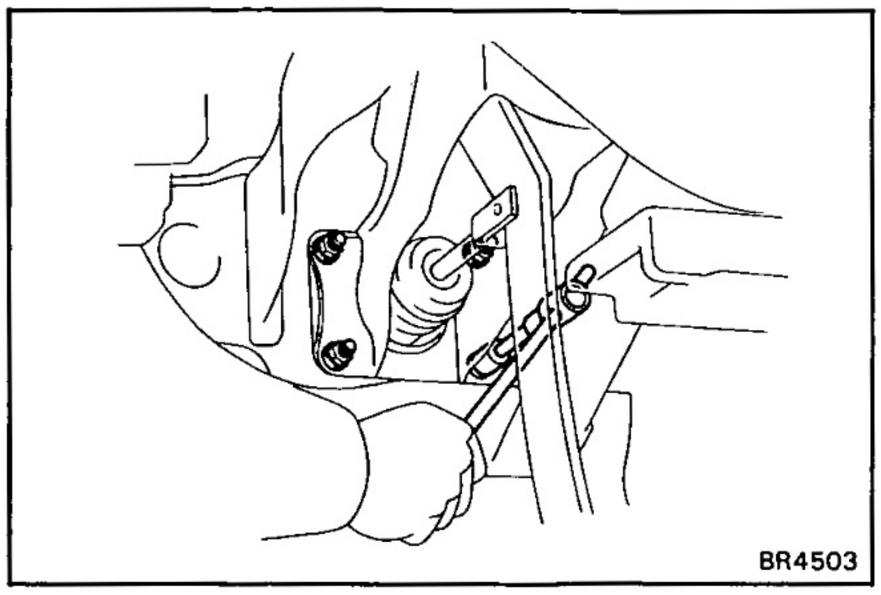

4. REMOVE BRAKE BOOSTER

Remove the four nuts, and pull out the brake booster with gasket.

DISASSEMBLY OF BRAKE BOOSTER

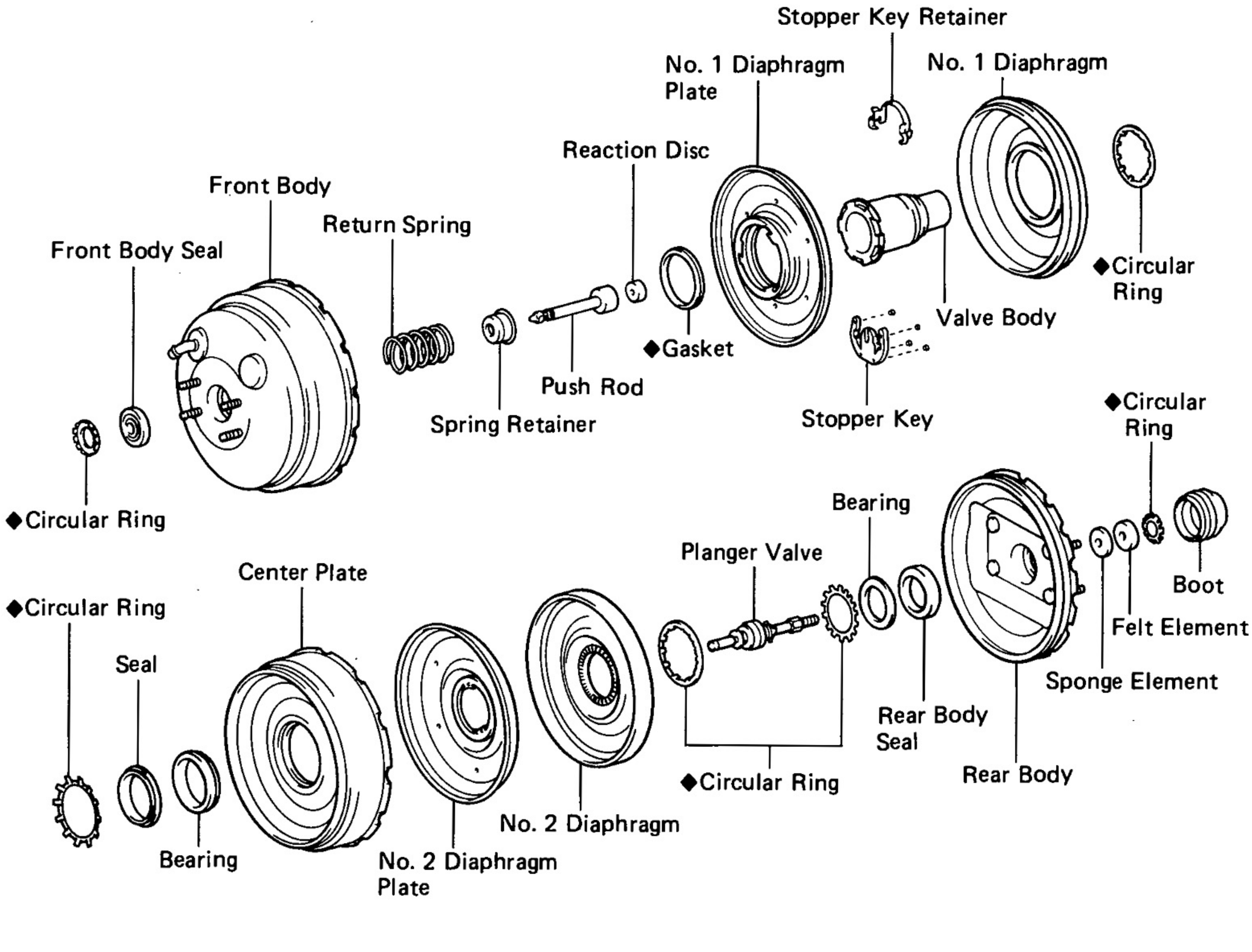

◆ Non-reusable part

BR4508

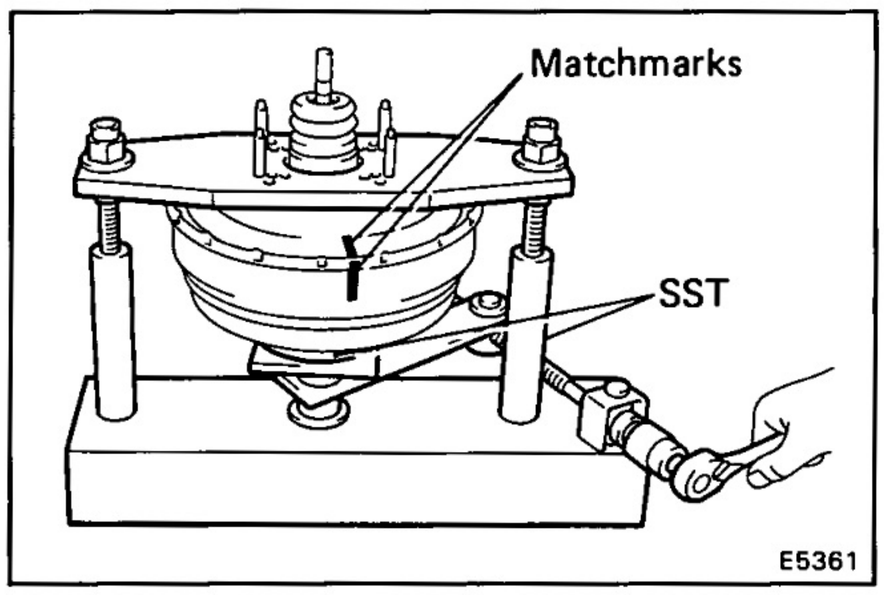

E5361

1. SEPARATE FRONT AND REAR BODIES

(a) Set the booster in SST.

SST 09753-00013 and 09753-40010

NOTICE: Be careful not to tighten the two nuts of the SST too tight.

(b) Put matchmarks on the front and rear bodies.

(c) Turn the front body clockwise to separate the front and rear bodies.

(d) Remove the rear body, push rod, spring retainer and piston return spring from the front body.

2. REMOVE BOOT FROM REAR BODY

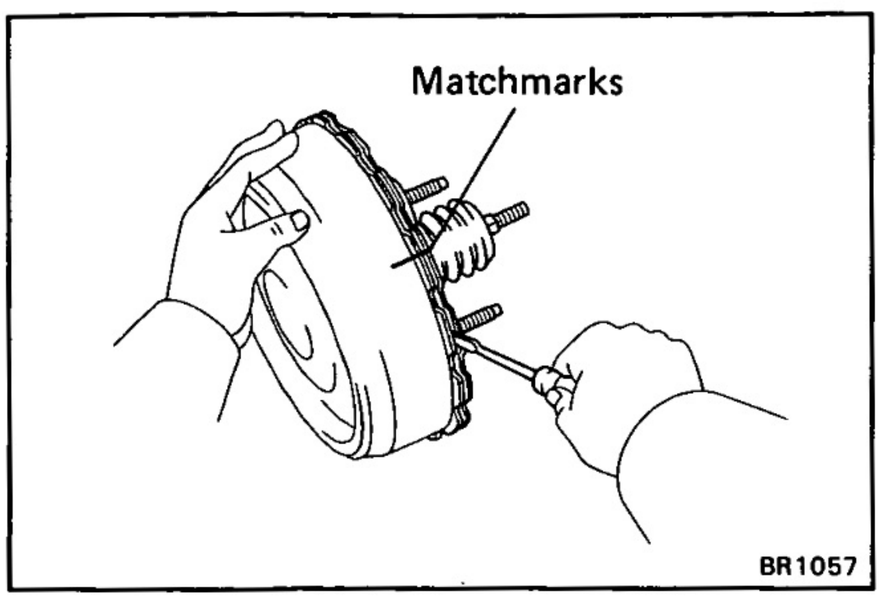

3. REMOVE REAR BODY FROM CENTER PLATE ASSEMBLY

Using a screwdriver, separate and remove the rear body from center plate assembly.

HINT: Tape the screwdriver tip before use.

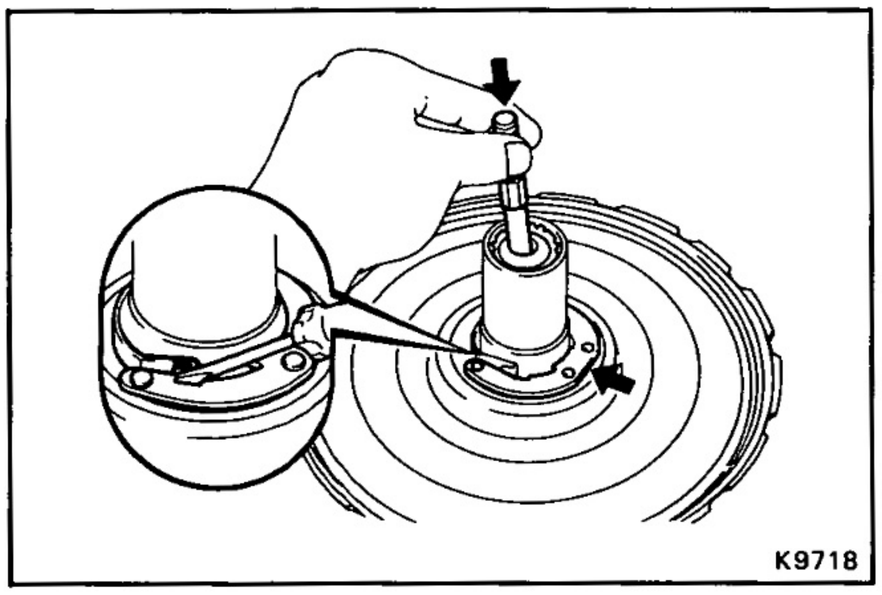

4. REMOVE PLUNGER VALVE

(a) Using a screwdriver, crush the protrusion of the stopper key retainer as shown in the illustration.

(b) While pushing in the plunger valve, remove the stopper key.

(c) Remove the stopper key retainer.

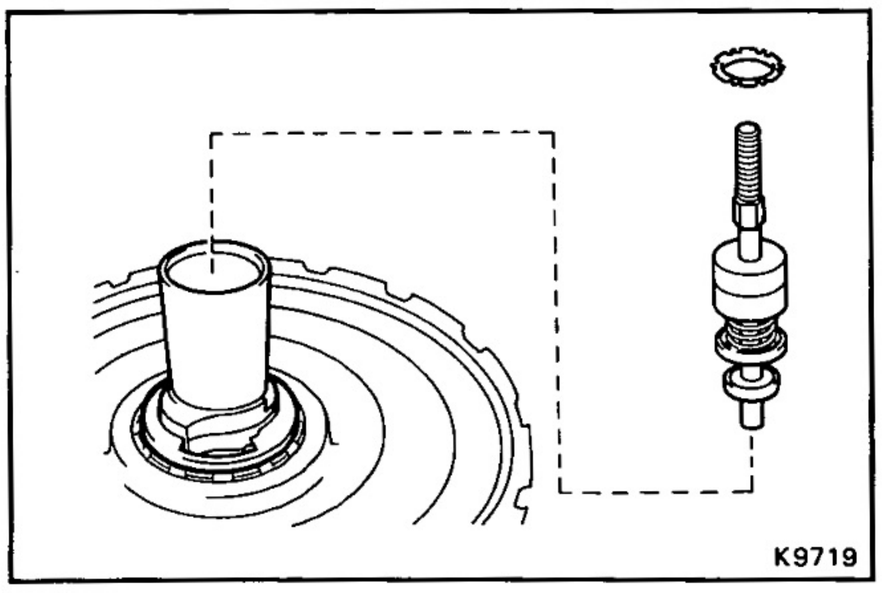

(d) Using a screwdriver, pry out the circular ring.

(e) Remove the plunger valve with the sponge and felt elements from the valve body.

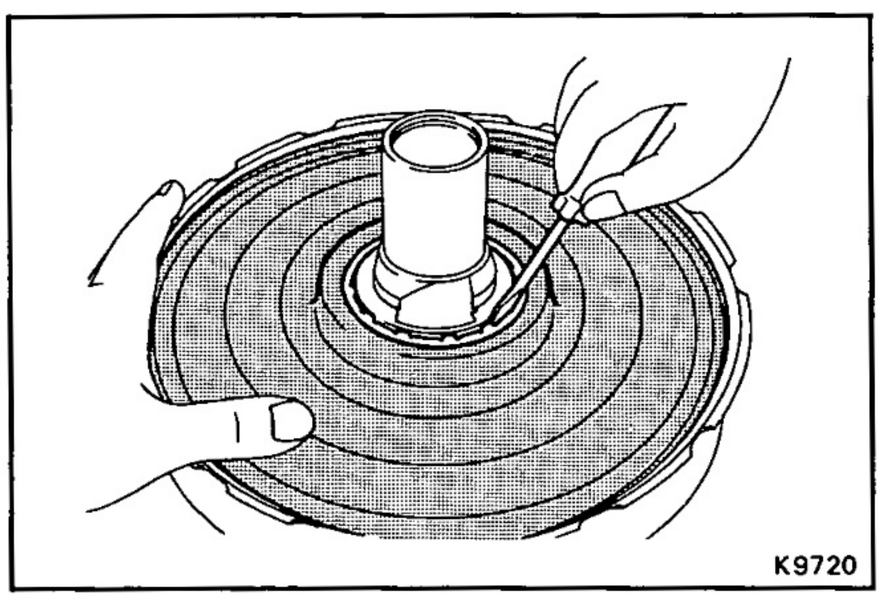

5. REMOVE NO. 2 DIAPHRAGM

(a) Using a screwdriver, pry out the circular ring.

(b) Remove the No. 2 diaphragm.

(c) Remove the No. 2 diaphragm plate.

6. REMOVE CENTER PLATE FROM ASSEMBLY

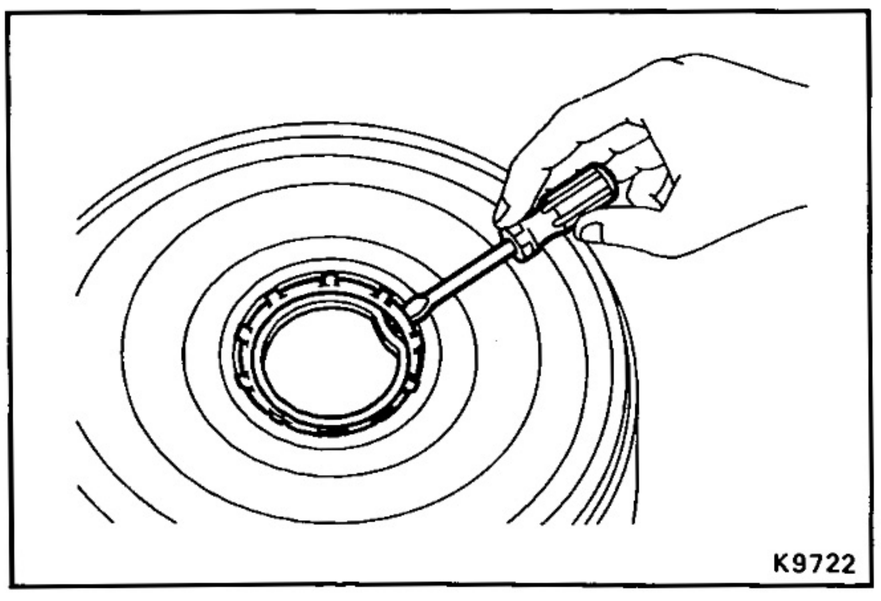

7. REMOVE SEAL AND BEARING FROM CENTER PLATE

(a) Using a screwdriver, pry out the circular ring from the center plate.

(b) Remove the seal and bearing.

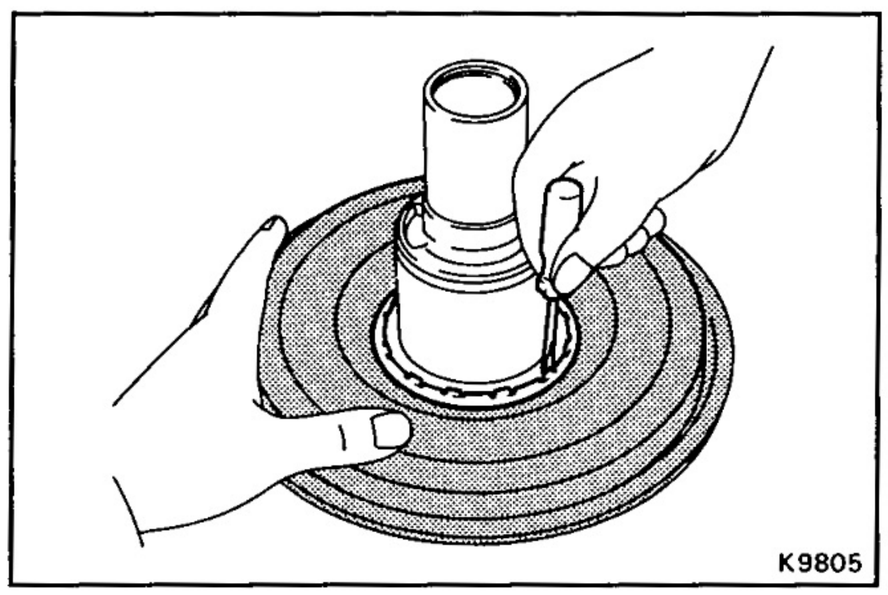

8. REMOVE NO. 1 DIAPHRAGM

(a) Using a screwdriver, pry out the circular ring.

(b) Remove the No. 1 diaphragm.

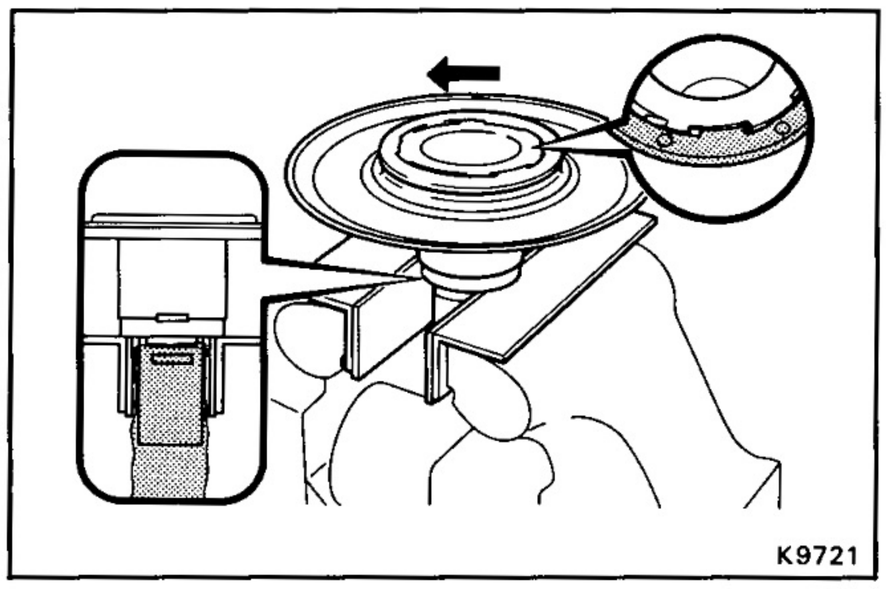

9. REMOVE NO. 1 DIAPHRAGM PLATE

(a) Wind a cloth or an equivalent to the valve body, and using soft jaws, clamp the diaphragm plate assembly in vise.

NOTICE: Do not tighten the vise too tight.

(b) Using a screwdriver, lift up the protrusion of the No. 1 diaphragm plate and turn the plate one third of one turn counterclockwise.

(c) Remove the No. 1 diaphragm plate and gasket.

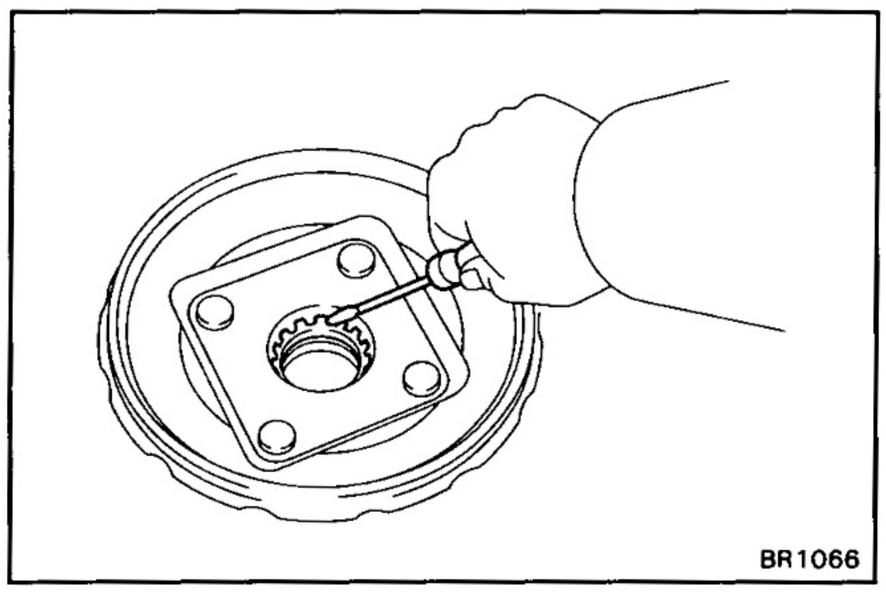

10. REMOVE BODY SEAL AND BEARING FROM REAR BODY

(a) Using a screwdriver, pry out the circular ring from the rear body.

(b) Remove the body seal and bearing.

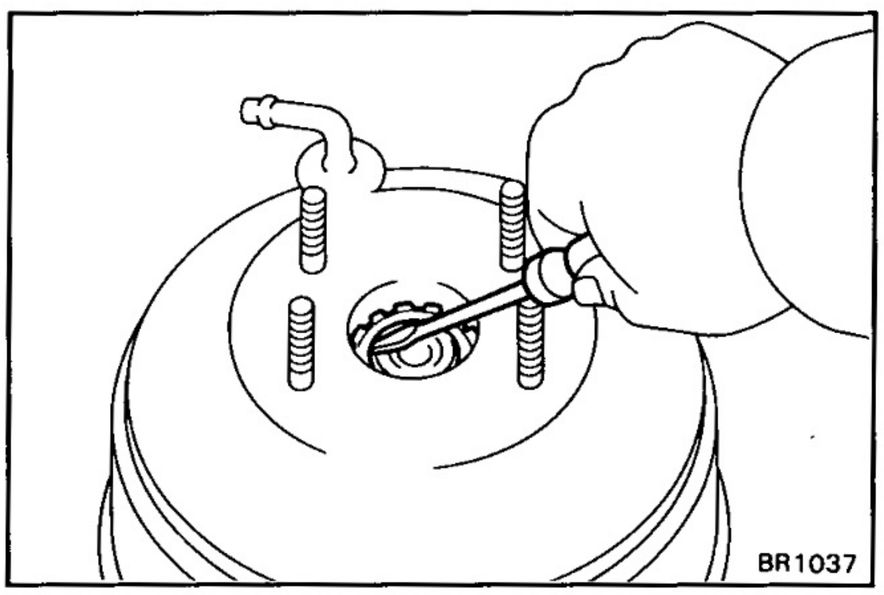

11. REMOVE BODY SEAL FROM FRONT BODY

(a) Using a screwdriver, pry out the circular ring.

(b) Remove the body seal.

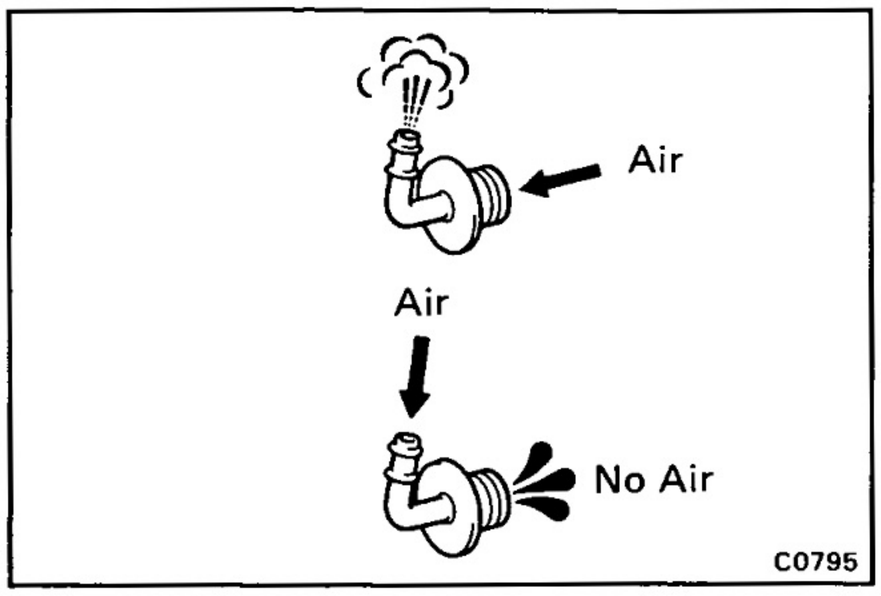

INSPECTION OF BRAKE BOOSTER COMPONENTS

INSPECT CHECK VALVE OPERATION

(Gasoline Engine)

(a) Remove the check valve.

(b) Check that air flows from the booster side to the engine side.

(c) Check that air does not flow from the engine side to the booster side.

If necessary, replace the check valve.

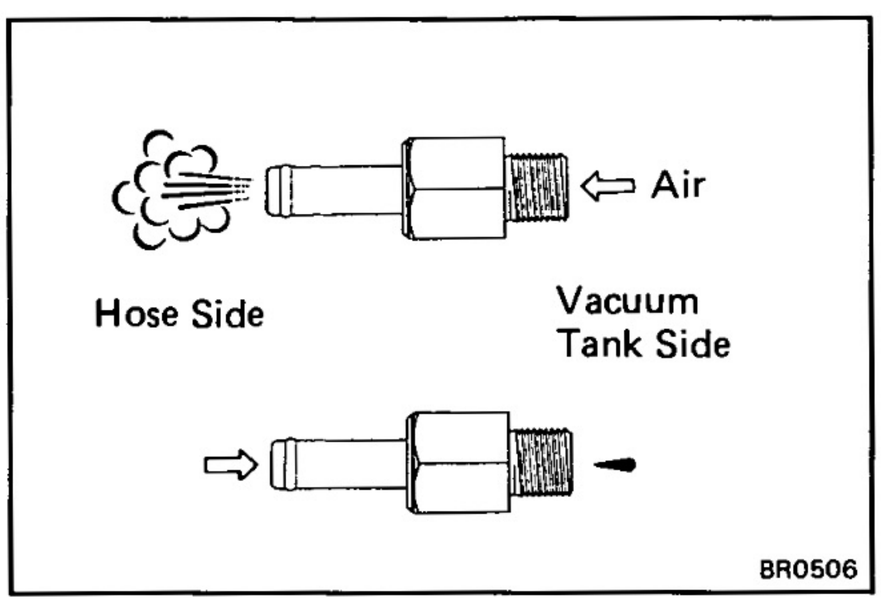

(Diesel Engine)

(a) Remove the check valve from the vacuum tank.

(b) Check that air flows from the vacuum tank side to the hose side.

(c) Check that air does not flow from the hose side to the vacuum tank side.

If necessary, replace the check valve.

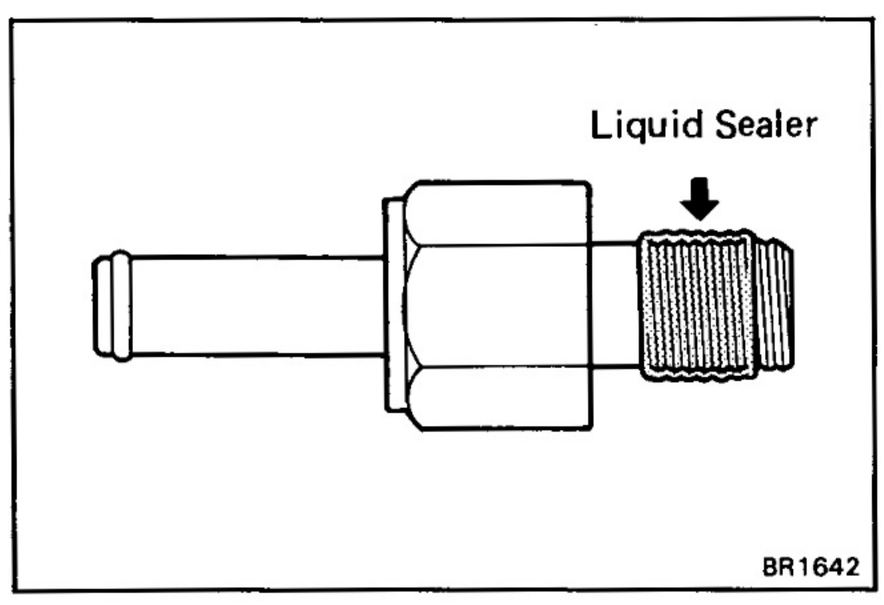

(d) Apply liquid sealer to the check valve as shown.

Sealant: Part No. 08826-00080 or equivalent

(e) Install the check valve.

Torque: 300 kg-cm (22 ft-lb, 29 N·m)

(f) Install the vacuum hose to the check valve with hose clamp.

ASSEMBLY OF BRAKE BOOSTER

(See page BR-18)

1. APPLY SILICONE GREASE TO PARTS SHOWN BELOW

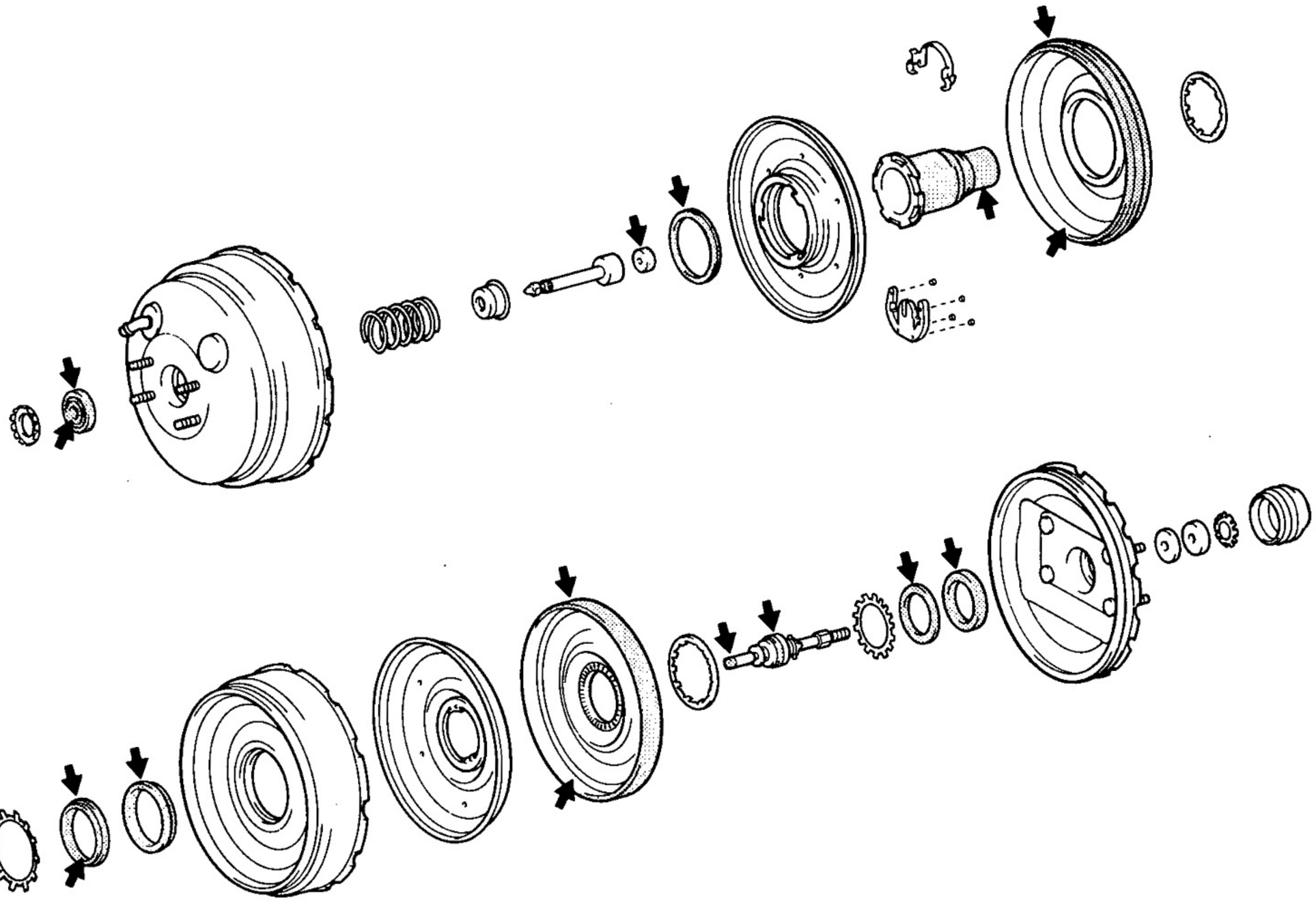

BR4509

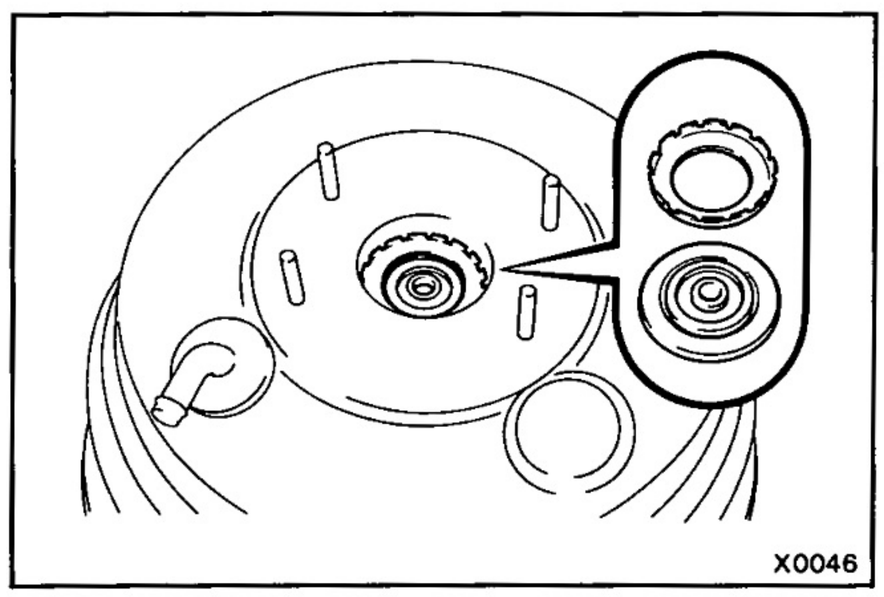

X0046

2. INSTALL BODY SEAL TO FRONT BODY

(a) Apply silicone grease to the body seal and install it to the front body.

(b) Secure the body seal with a new circular ring.

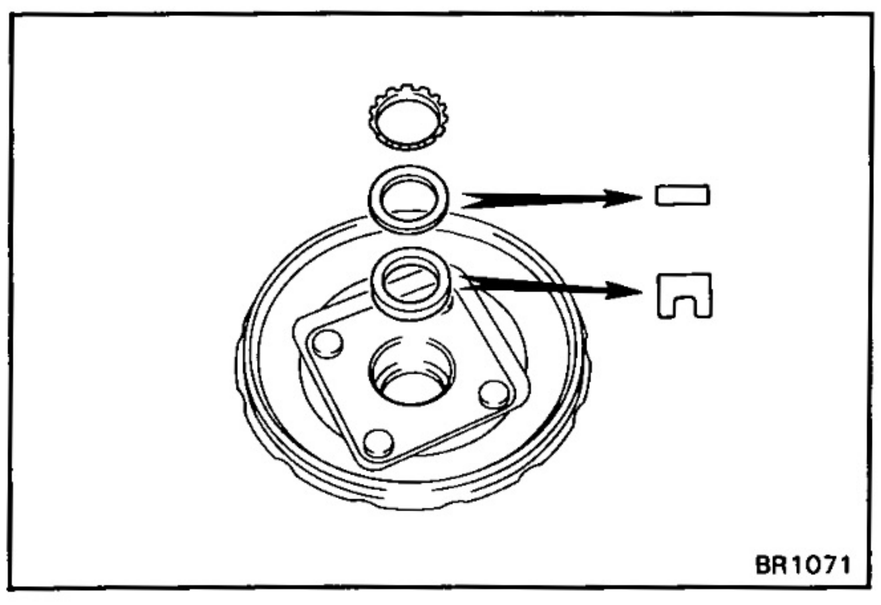

BR1071

3. INSTALL BODY SEAL TO REAR BODY

(a) Apply silicone grease to the body seal and install it to the rear body.

(b) Install the bearing and secure the body seal and bearing with a new circular ring.

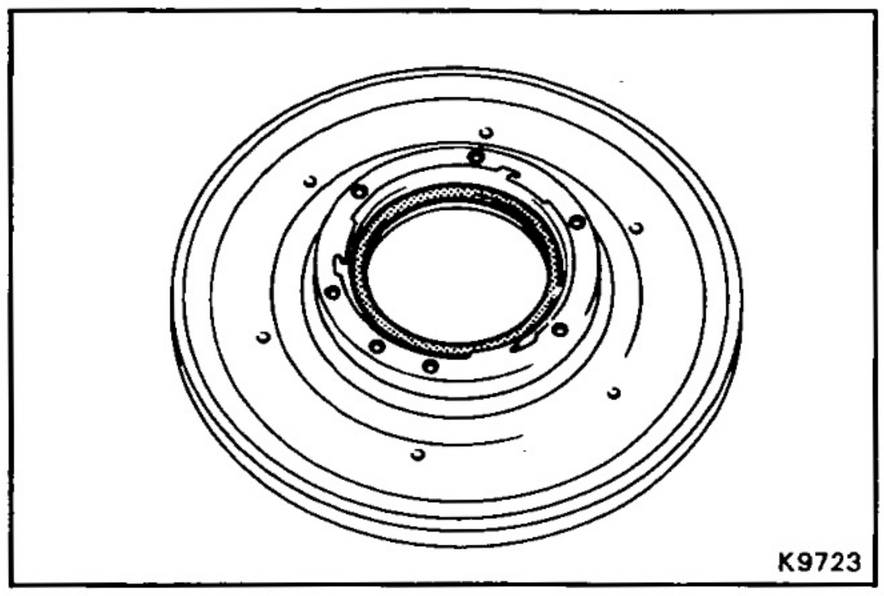

4. INSTALL NO. 1 DIAPHRAGM PLATE TO VALVE BODY

(a) Install a new gasket to the No. 1 diaphragm plate.

(b) Set the No. 1 diaphragm plate on the valve body.

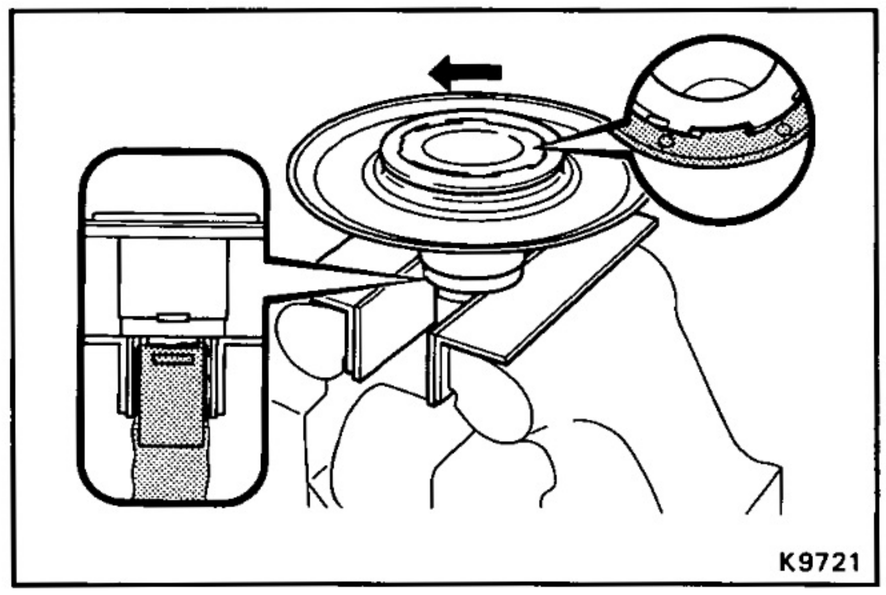

(c) Wind a cloth or and equivalent to the valve body, and using soft jaws, clamp the diaphragm plate assembly in the vise.

NOTICE: Do not tighten the vise too tight.

(d) Align the protrusion of the No. 1 diaphragm plate and cut portion of the valve body, then turn the plate one third of one turn counterclockwise.

(e) Stake the protrusion of the No. 1 diaphragm plate.

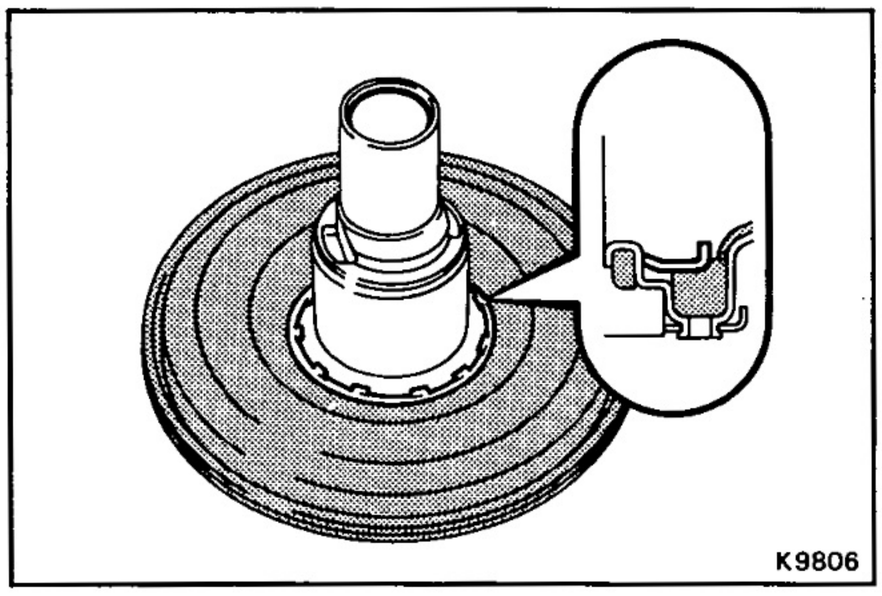

5. INSTALL NO. 1 DIAPHRAGM

(a) Install the No. 1 diaphragm onto the No. 1 diaphragm plate.

(b) Secure the diaphragm with the new circular ring.

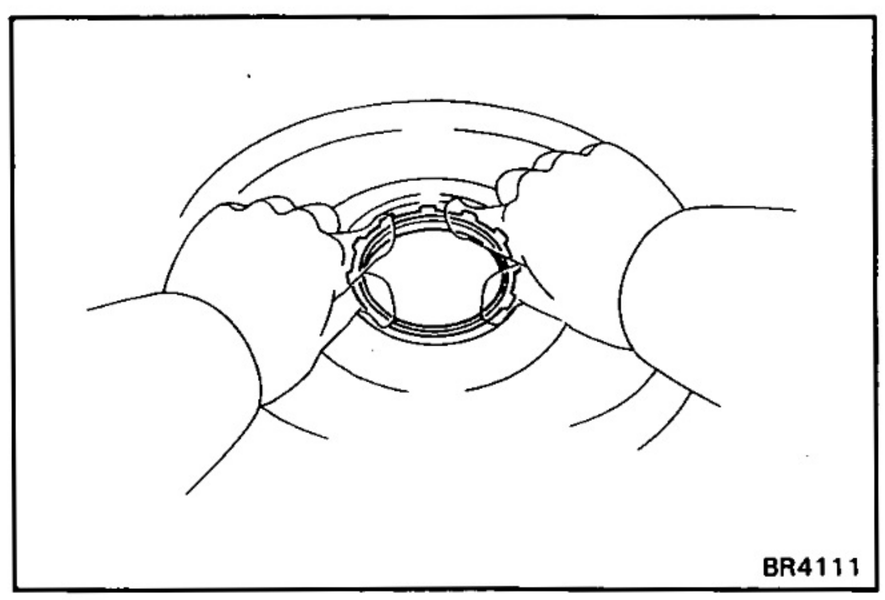

6. ASSEMBLE CENTER PLATE ASSEMBLY

(a) Install the bearing and a new circular ring to the seal.

(b) Install the seal assembly to the center plate.

(c) Apply silicone grease on the circular ring with the thickness about 2.0 mm (0.79 in.).

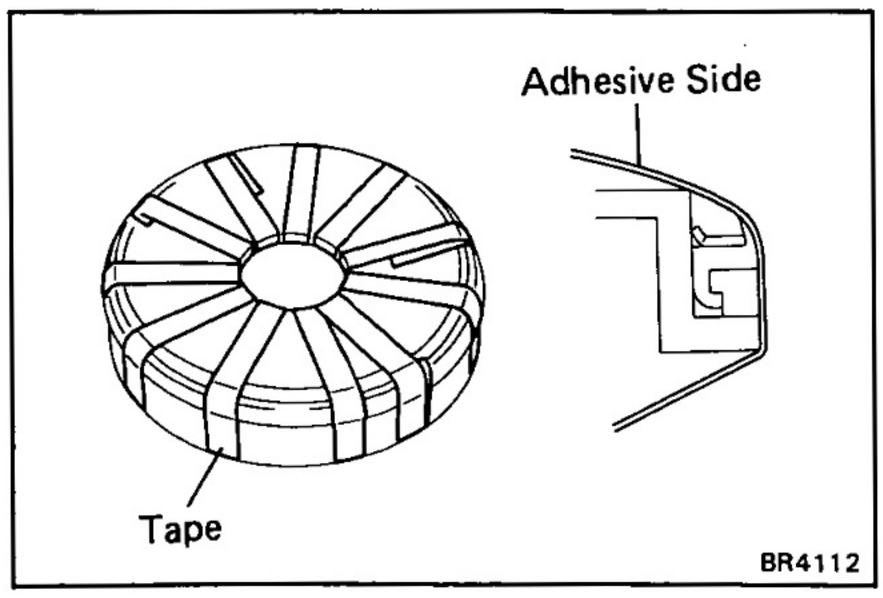

(d) Wind the thin tape to the center plate as shown in the illustration so as not to the seal lip fold under when inserting the valve body.

HINT: Wind the tape so the adhesive side faces the outside.

(e) Apply silicon grease to the tape and valve body contact portions.

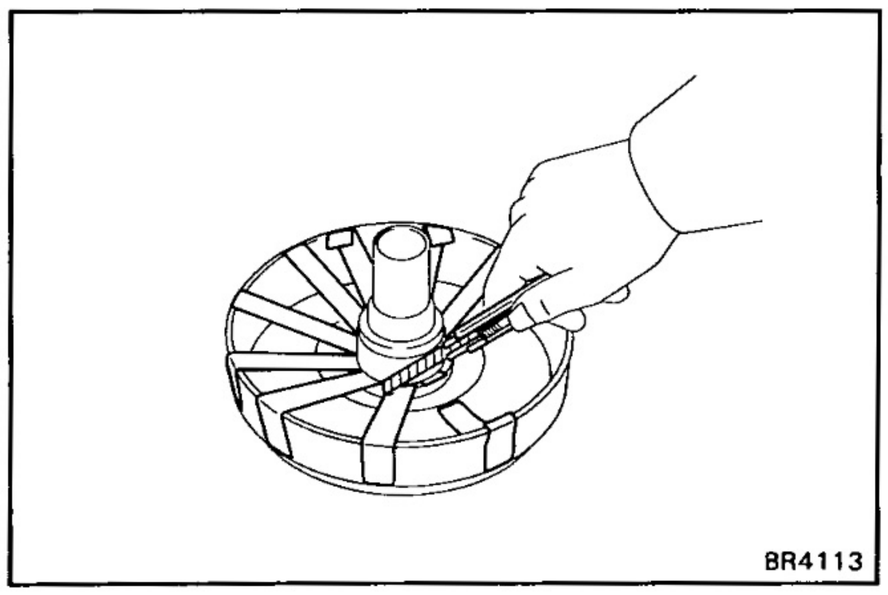
BR4113

(f) Install the center plate to the valve body.

NOTICE: Be careful not to the seal lip fold under.

(g) Cut off the tapes and pull out them.

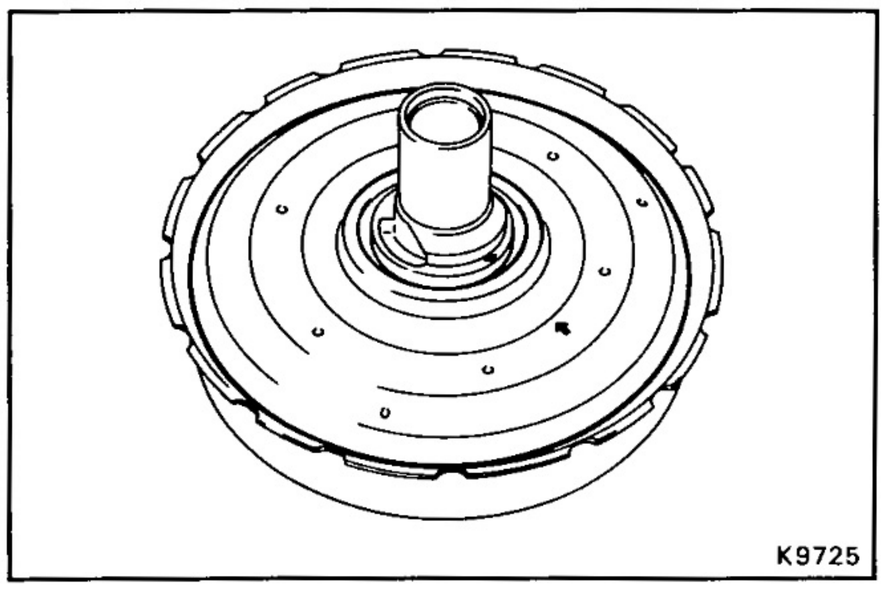
K9725

7. INSTALL NO. 2 DIAPHRAGM PLATE

Align the arrows on the valve body and No. 2 diaphragm plate, then install the diaphragm plate to the valve body.

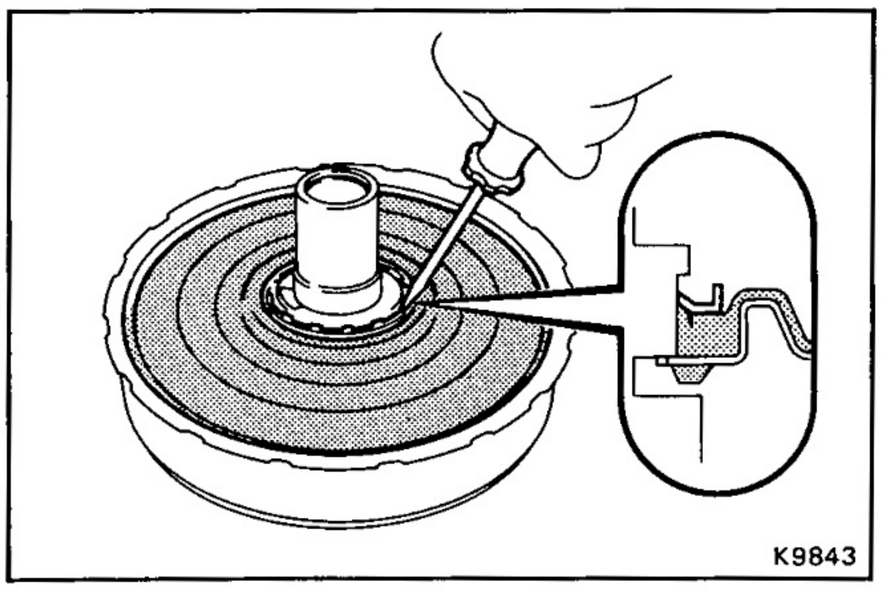
K9843

8. INSTALL NO. 2 DIAPHRAGM

(a) Install the No. 2 diaphragm onto the No. 2 diaphragm plate.

(b) Secure the diaphragm with a new circular ring.

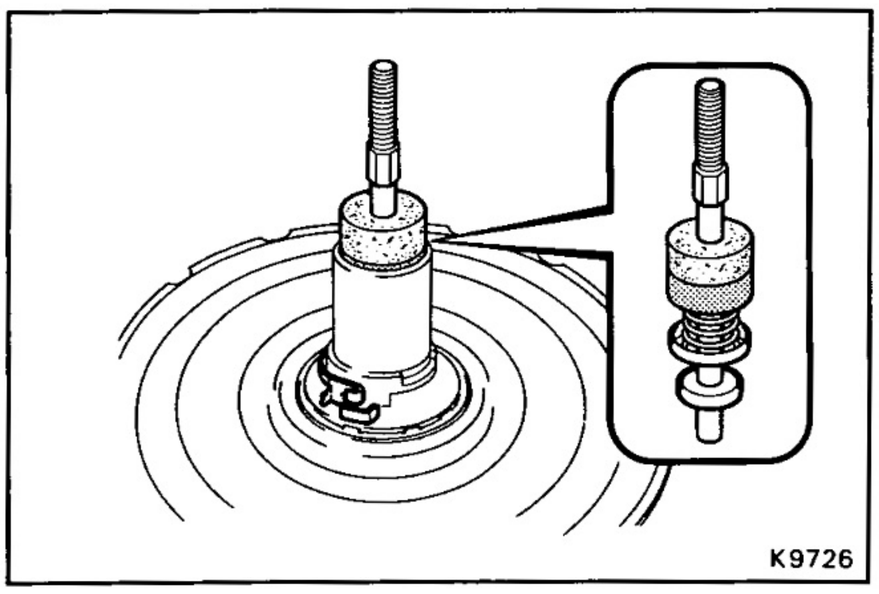
K9726

9. INSTALL PLUNGER VALVE

(a) Install the sponge and felt elements to the plunger valve.

(b) Install the plunger valve to the valve body.

(c) Install the stopper key retainer to the valve body.

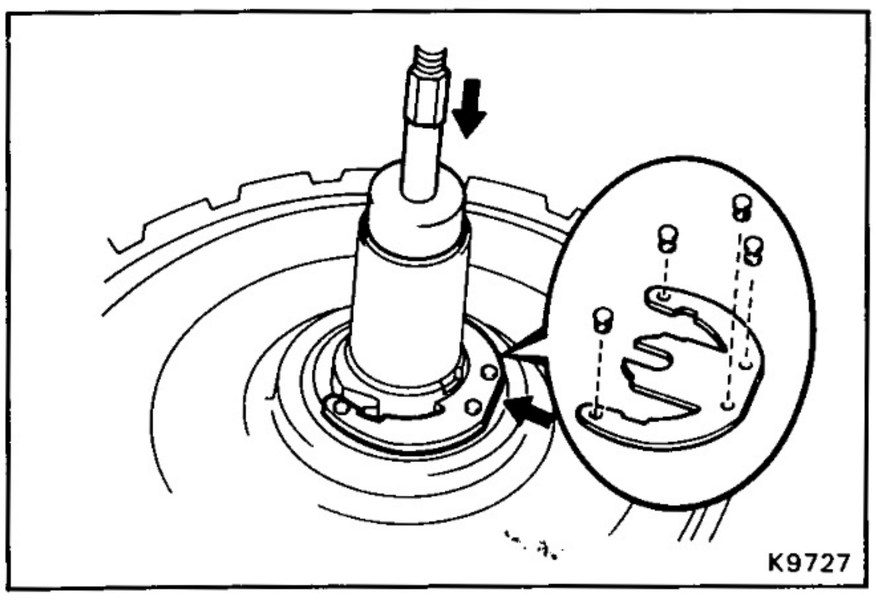
K9727

(d) While pushing in the plunger valve, install the stopper key.

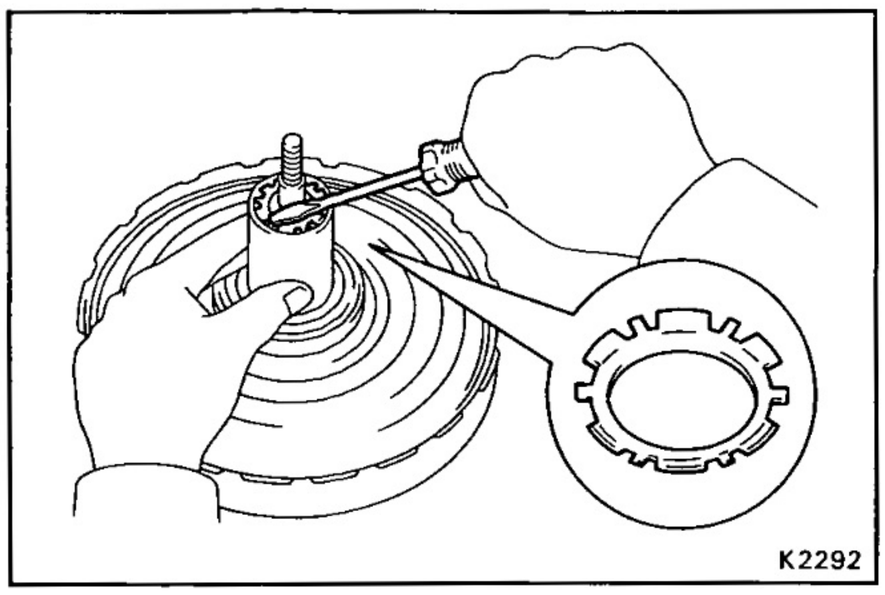

(e) Secure the plunger valve with a new circular ring.

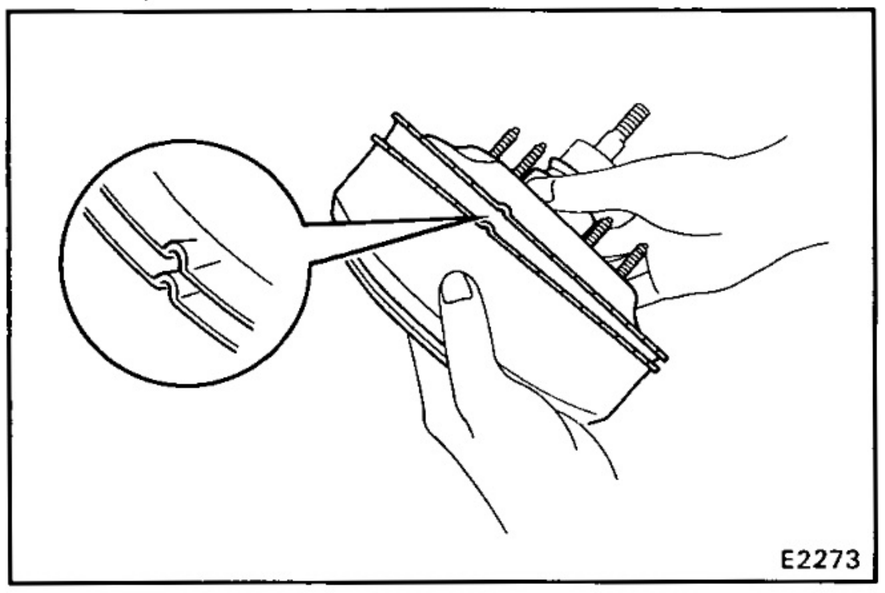

10. INSTALL REAR BODY TO CENTER PLATE ASSEMBLY

Align the each protrusions of the center plate and rear body, install the rear body to the center plate assembly.

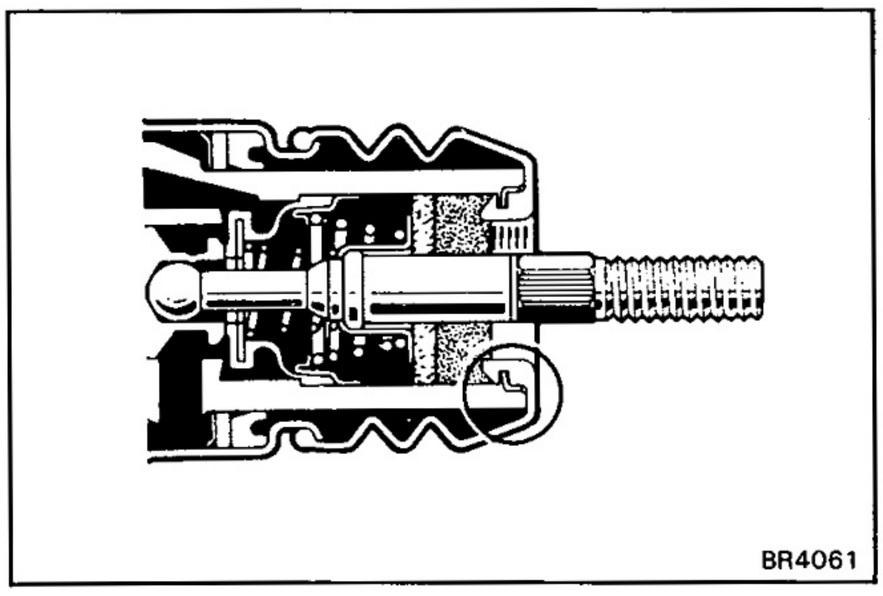

11. INSTALL BOOT

(a) Install the boot to the assembly.

(b) Check that the circular ring fit into the groove of the boot as shown in the illustration.

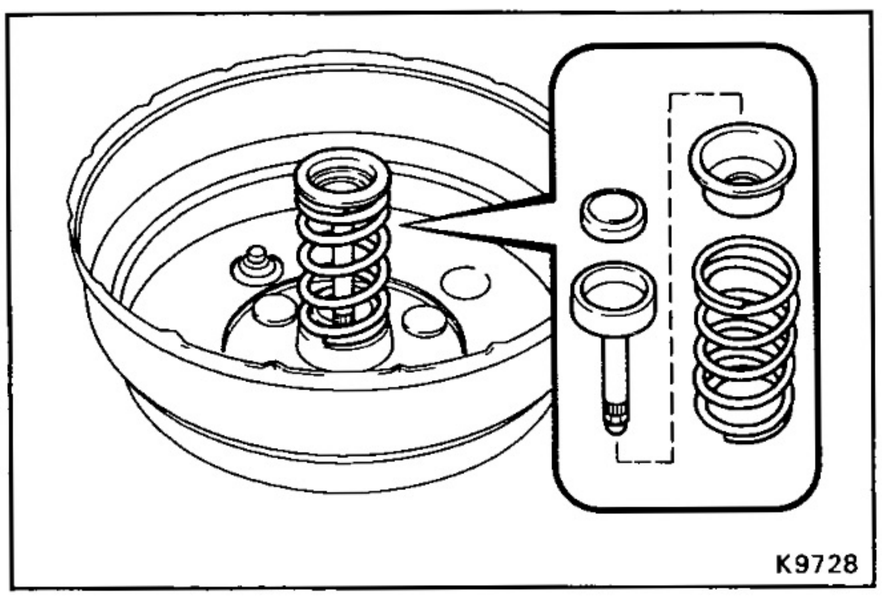

12. ASSEMBLE FRONT AND REAR BODIES

(a) Place the front body on SST.

SST 09753-00013 and 09753-40010

(b) Install the following parts to the front body.

- Return spring
- Spring retainer
- Push rod
- Reaction disc

HINT: Before installing the reaction disc, apply silicon grease to the reaction disc.

(c) Place the rear body assembly into the front body.

(d) Using SST, compress the spring between the front and rear bodies.

SST 09753-00013 and 09753-40010

NOTICE: Be careful not to tighten the two nuts of SST too tight.

(e) Assemble the front and rear bodies by turning the front body counterclockwise until the matchmarks match.

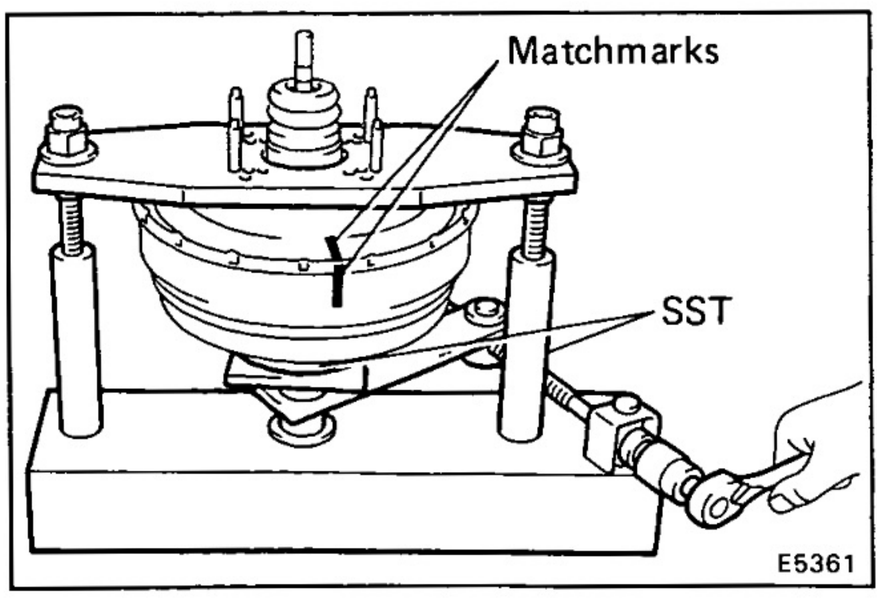

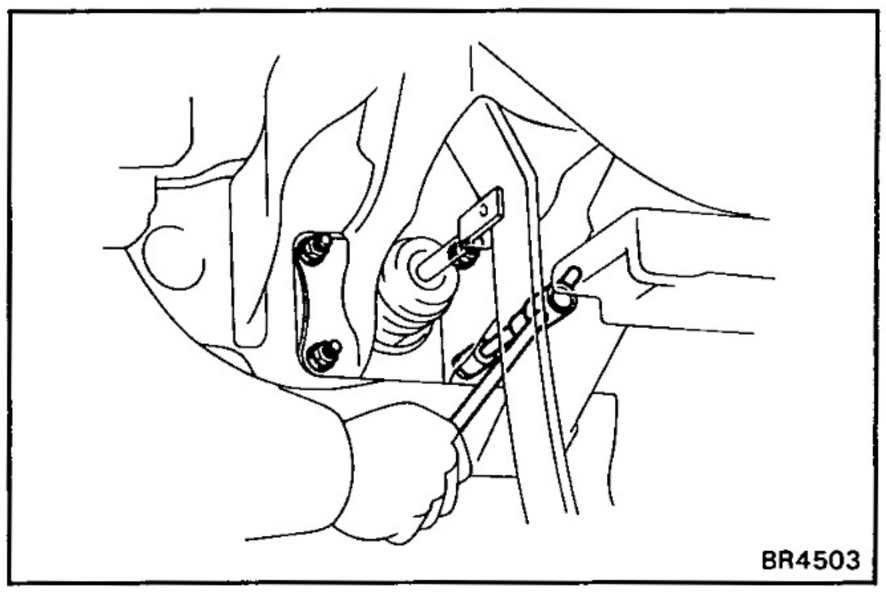

INSTALLATION OF BRAKE BOOSTER

(See page BR-18)

1. INSTALL BRAKE BOOSTER

Install the brake booster, and torque four nuts.

Torque: 130 kg-cm (9 ft-lb, 13 N·m)

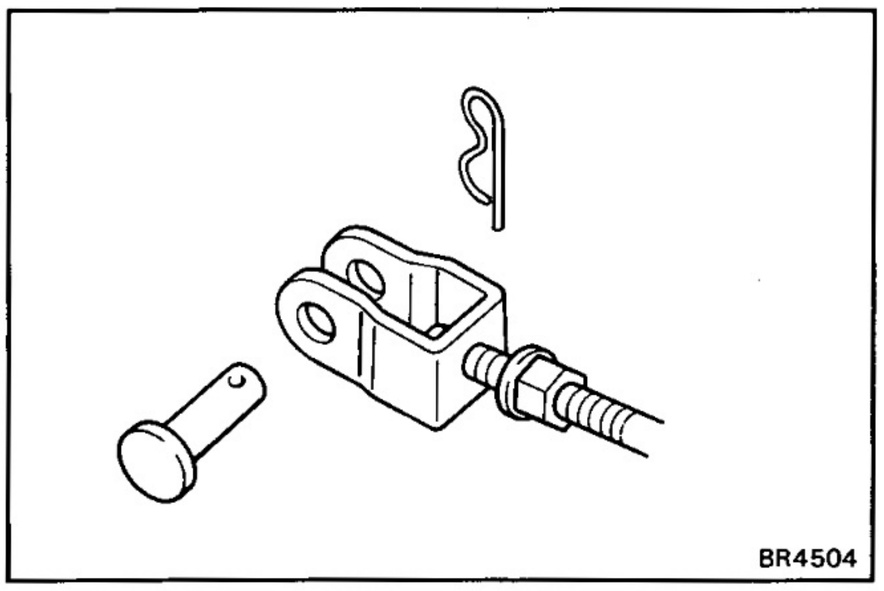

2. CONNECT CLEVIS TO BRAKE PEDAL

(a) Install the clevis pin to the clevis through the brake pedal.

(b) Secure the pin with a clip.

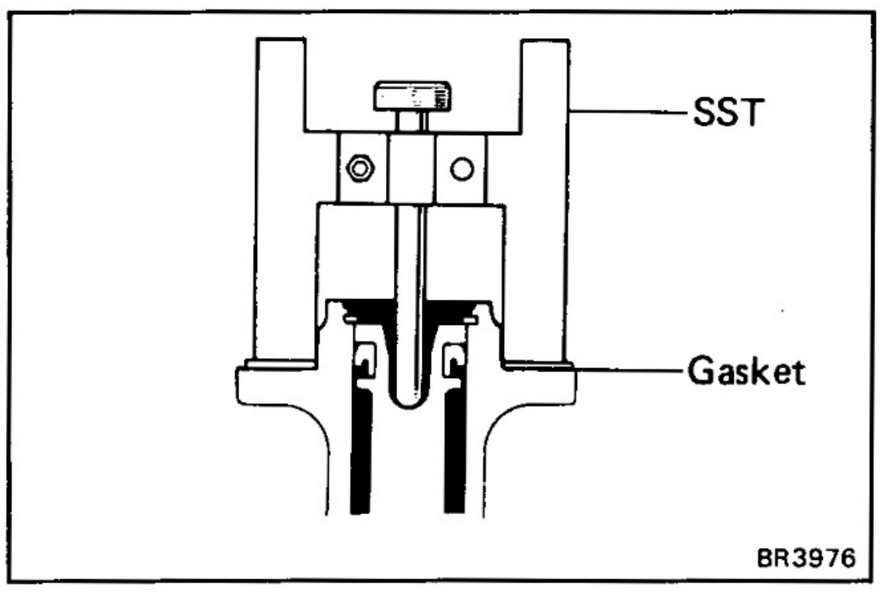

3. ADJUST LENGTH OF BOOSTER PUSH ROD

(a) Install the gasket on the master cylinder.

(b) Set SST on the master cylinder, and lower the pin until its tip slightly touches the piston.

SST 09737-00010

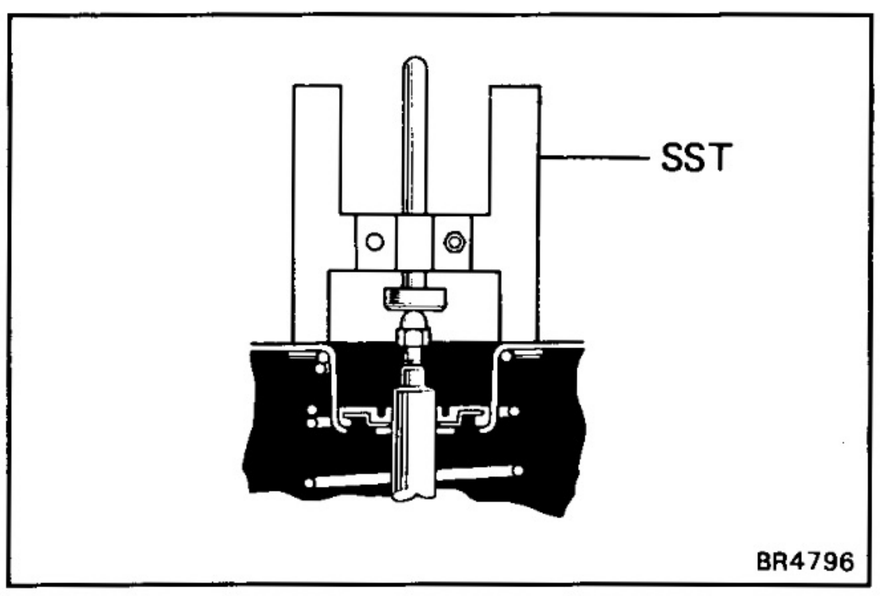

(c) Turn SST upside down, and position it on the booster.

SST 09737-00010

(d) Measure for clearance between the booster push rod and pin head (SST).

Clearance:

Gasoline Engine	**0 mm (0 in.)**
Diesel Engine	**0.2 mm (0.008 in.)**

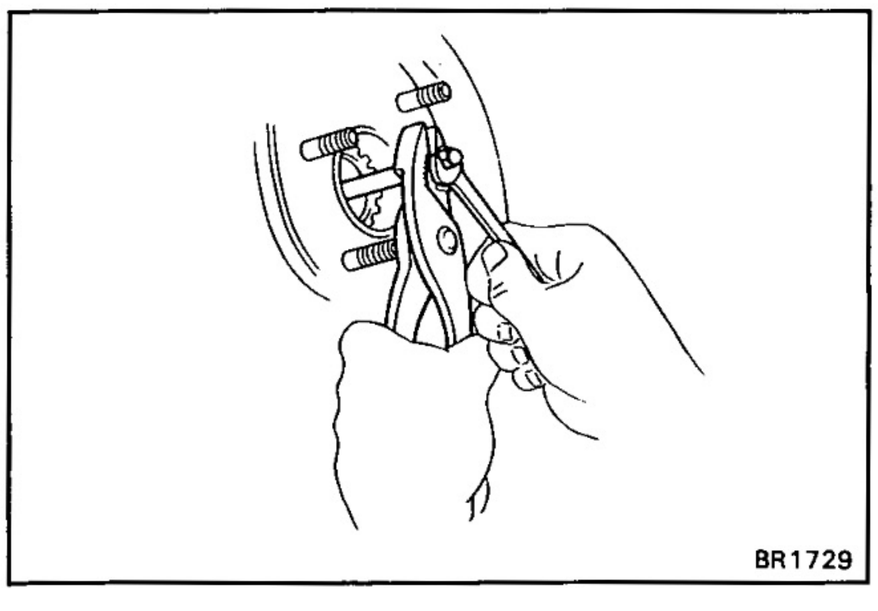

(e) While depressing the brake pedal, adjust the booster push rod length so that the push rod lightly touches the pin head after releasing the brake pedal.

(f) Measure the clearance again.

4. CONNECT VACUUM HOSE TO BRAKE BOOSTER

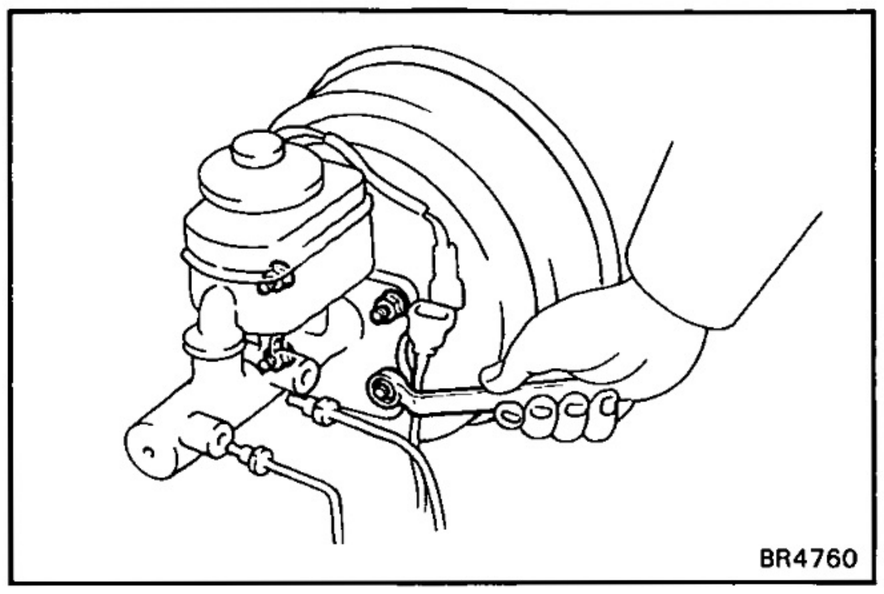

5. **INSTALL MASTER CYLINDER**
   (See page BR-9)

6. **FILL BRAKE RESERVOIR WITH BRAKE FLUID AND BLEED BRAKE SYSTEM**
   (See page BR-7)

7. **CHECK FOR FLUID LEAKAGE**

8. **CHECK AND ADJUST BRAKE PEDAL**
   (See page BR-6)

9. **PERFORM OPERATIONAL CHECK**
   (See page BR-7)

VACUUM PUMP

COMPONENTS

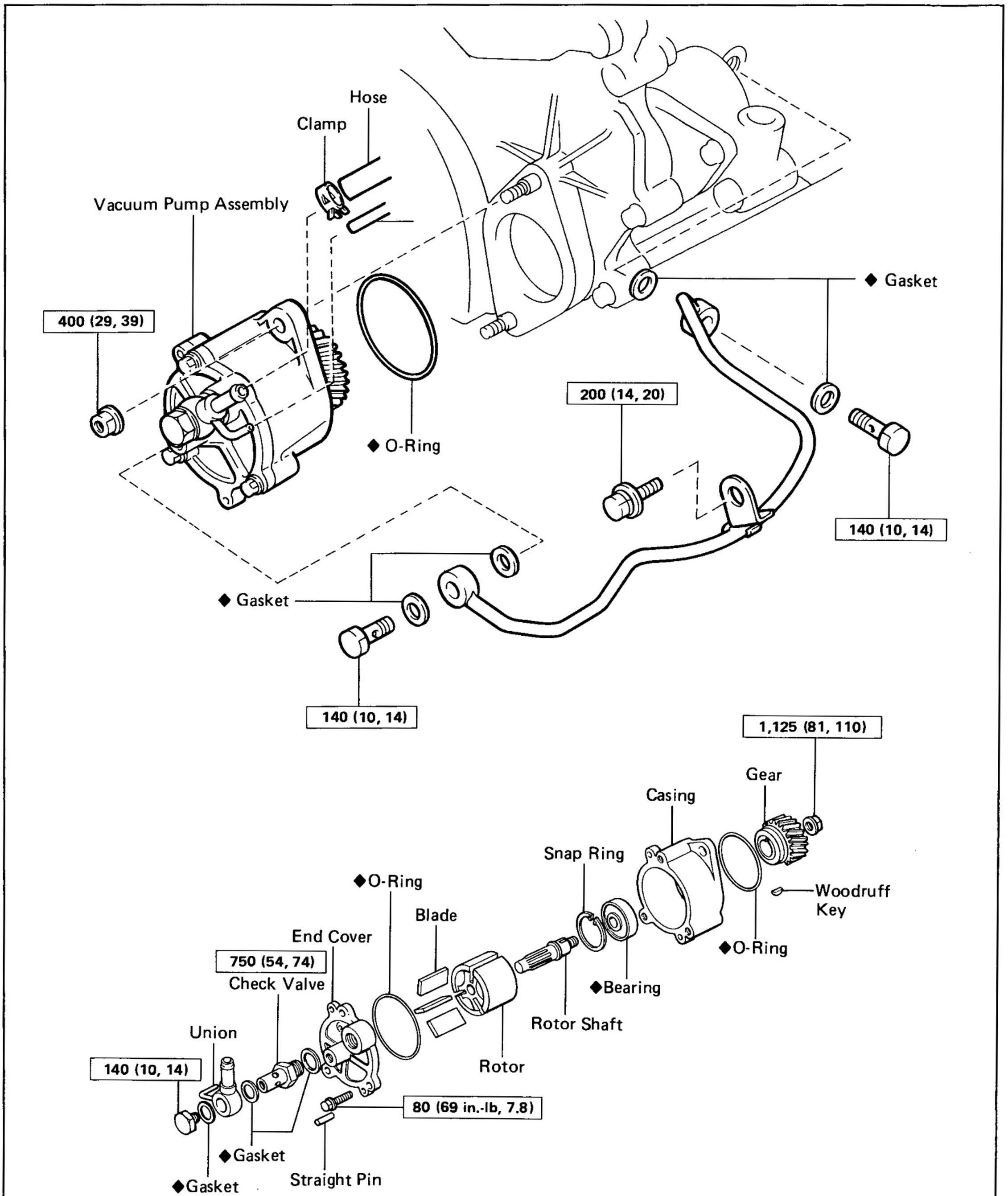

kg-cm (ft-lb, N·m) : Specified torque

◆ Non-reusable part

X3519
BR4507

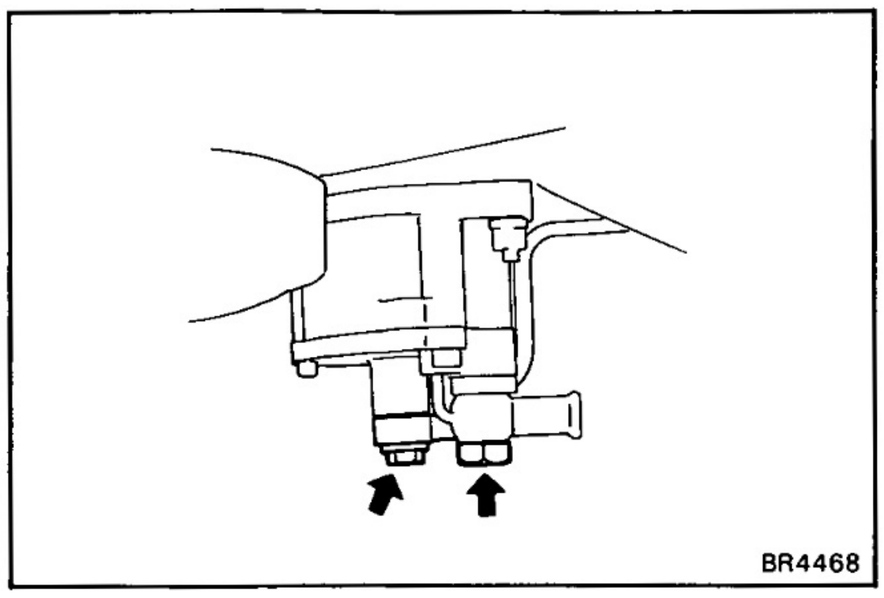

REMOVAL OF VACUUM PUMP

REMOVE VACUUM PUMP

(a) Remove the two union bolt and disconnect oil tube from the vacuum pump.

(b) Using pliers, disconnect the two hoses from the vacuum pump.

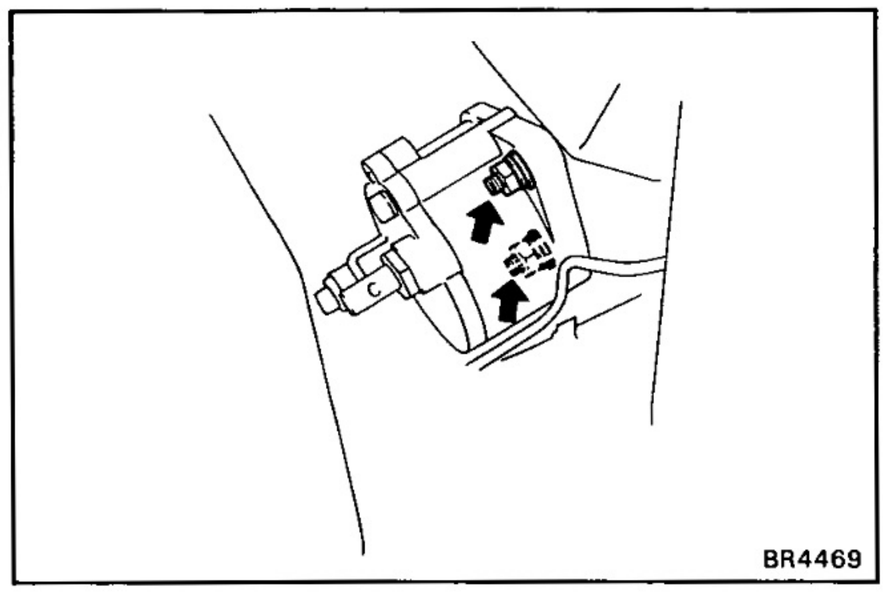

(c) Remove the two bolts and remove the pump from the engine.

(d) Remove the O-ring.

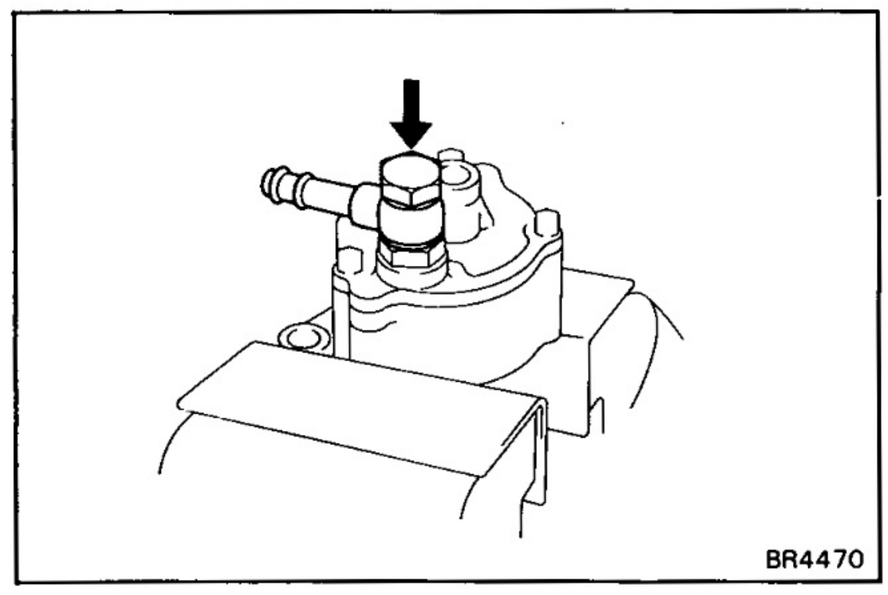

DISASSEMBLY OF VACUUM PUMP

1. REMOVE VACUUM HOSE UNION

(a) Using soft jaws on the vise, place the vacuum pump in the vise.

NOTICE: Do not tighten the vise too tight.

(b) Remove the union bolt, union and two gaskets.

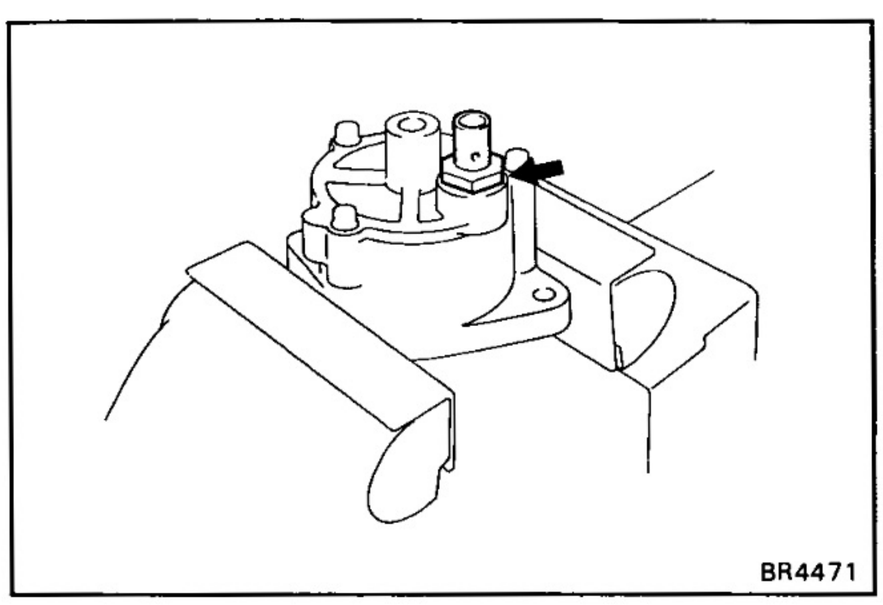

2. REMOVE CHECK VALVE

Remove the check valve and gasket.

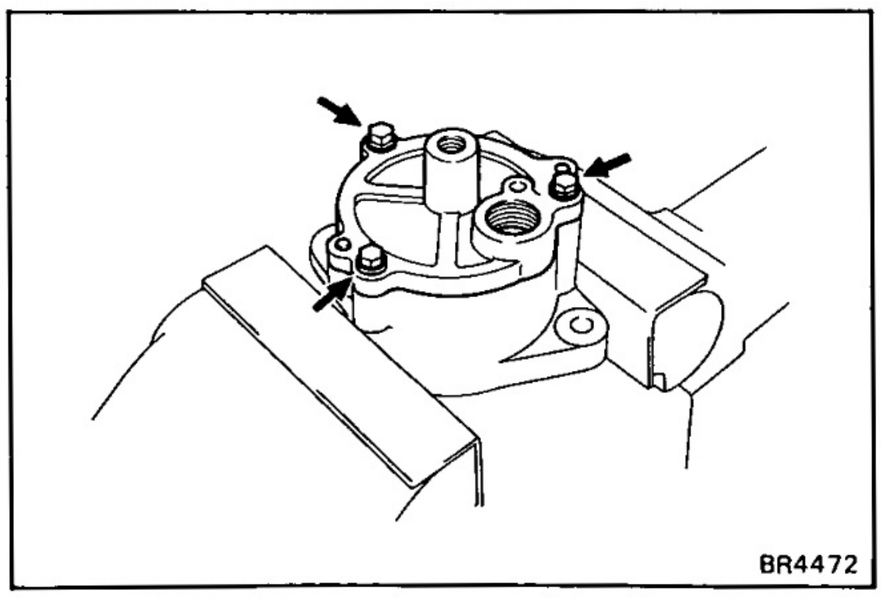

3. REMOVE END COVER

(a) Remove the three bolts.

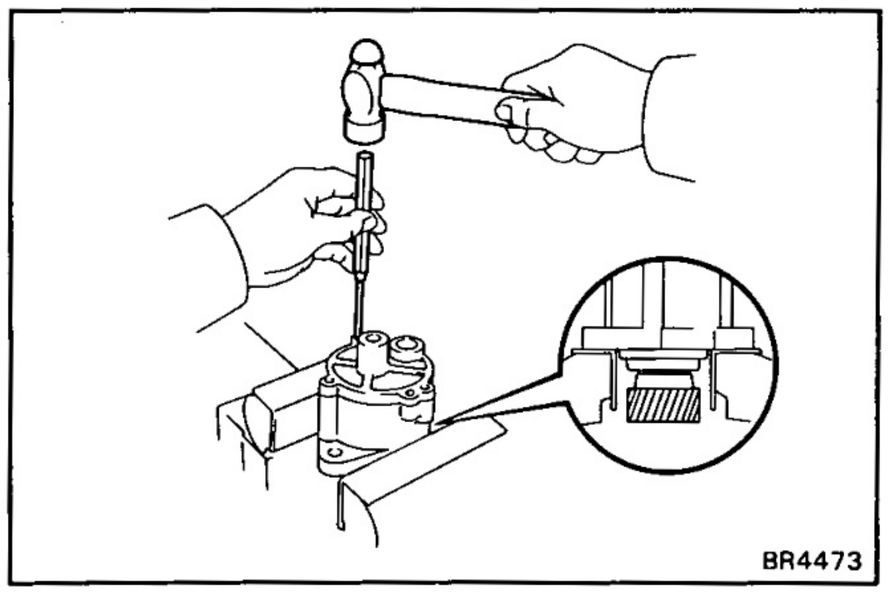

(b) Place the vacuum pump on vise as shown in the illustration.

NOTICE: Do not tighten the vise.

(c) Using a pin punch and a hammer, drive out the two straight pins.

(d) Remove the end cover and O-ring.

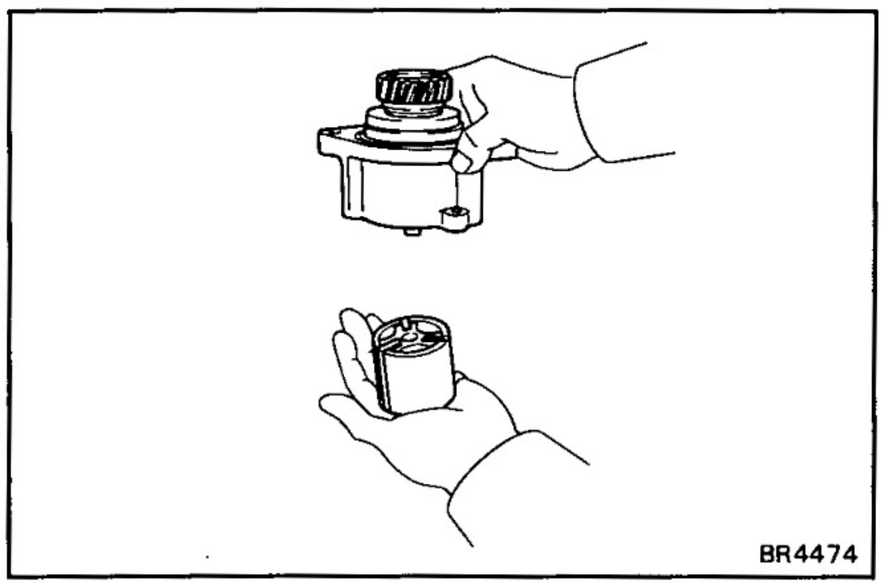

4. REMOVE ROTOR AND THREE BLADES

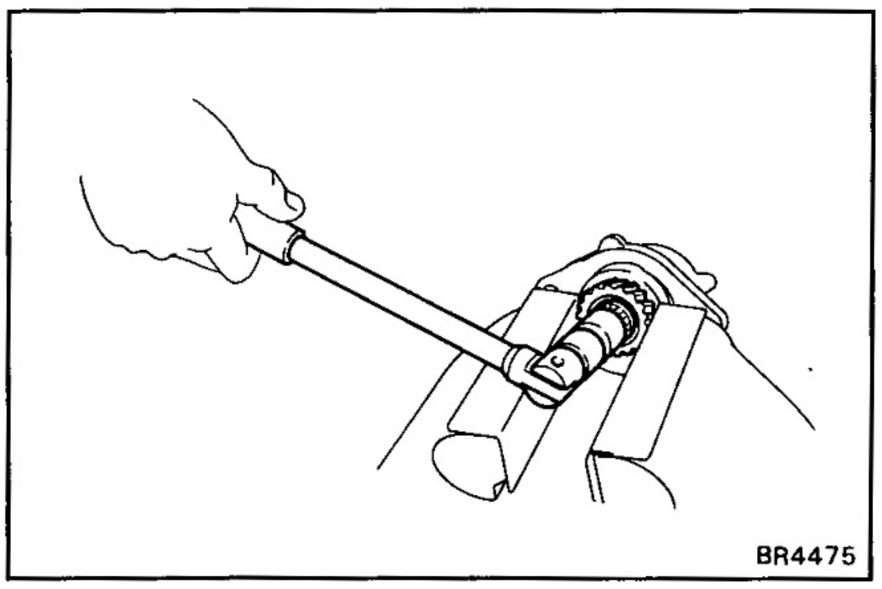

5. REMOVE GEAR

(a) Using soft jaws on the vise, clamp the gear in the vise.

(b) Remove the gear lock nut.

(c) Remove the gear and woodruff key.

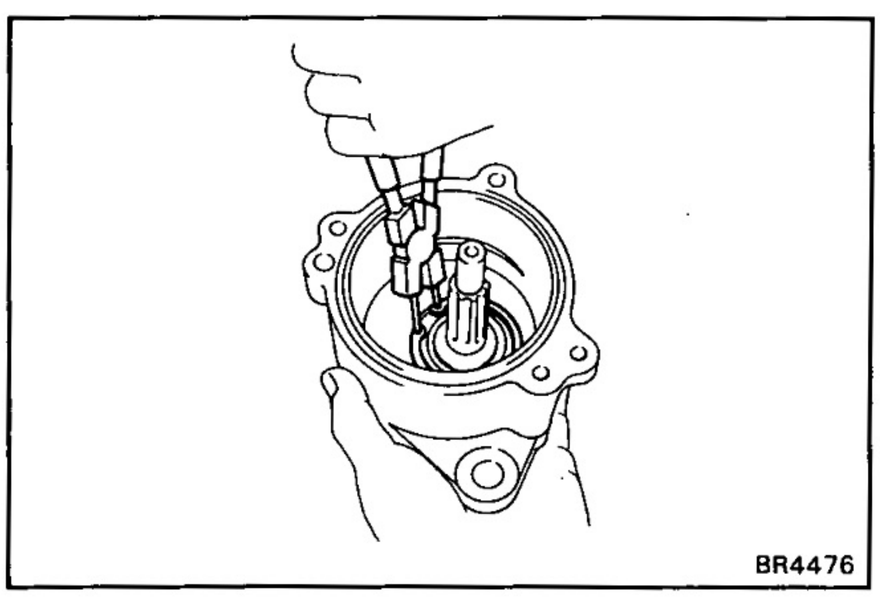

6. REMOVE SNAP RING

Using snap ring pliers, remove the snap ring.

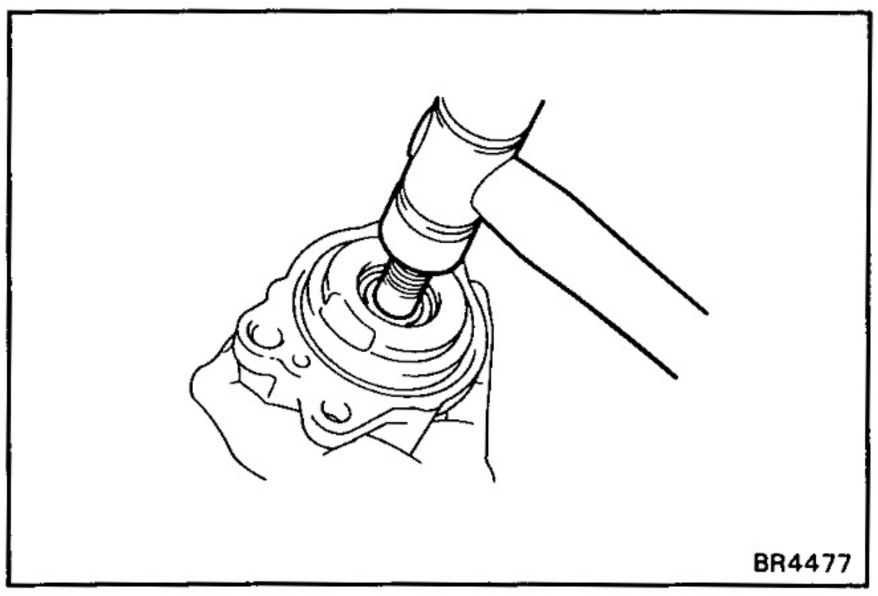

7. REMOVE ROTOR SHAFT

Using a plastic hammer, tap out the rotor shaft.

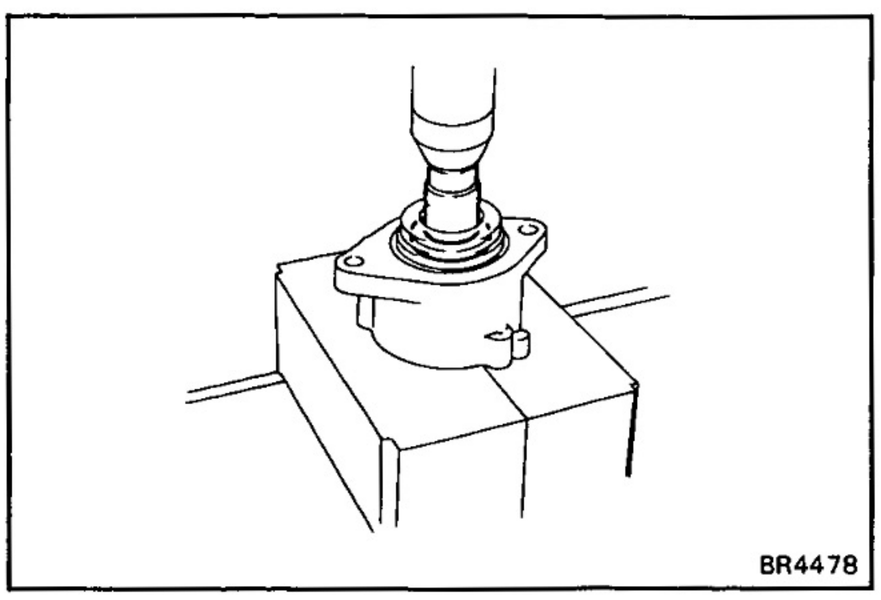

8. REMOVE BEARING

Using a press and 17 mm socket wrench, press out the bearing.

INSPECTION OF VACUUM PUMP

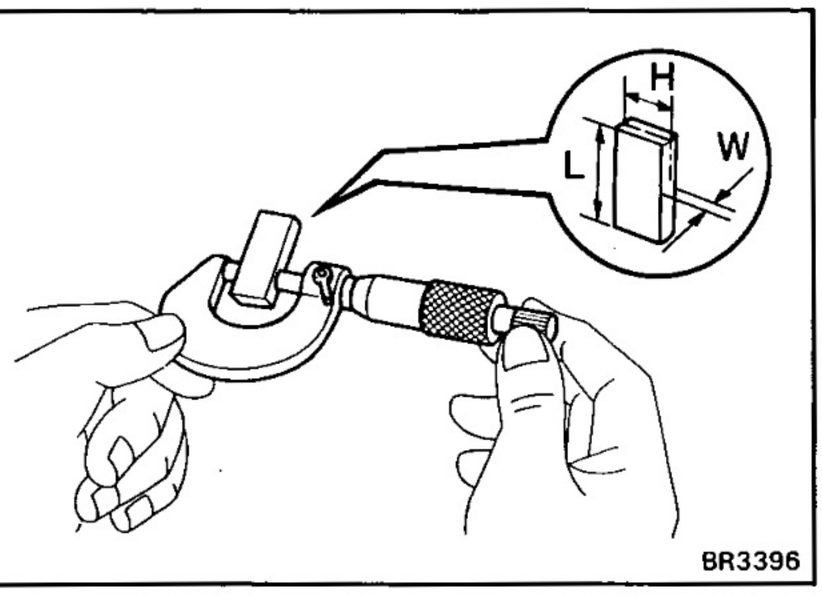

1. INSPECT BLADES

(a) Check the blades for wear or damage.

(b) Using a micrometer, measure the height, width and length of the blades.

Minimum height: 16.50 mm (0.6496 in.)

Minimum width: 4.95 mm (0.1949 in.)

Minimum length: 44.96 mm (1.7701 in.)

If necessary, replace the blades.

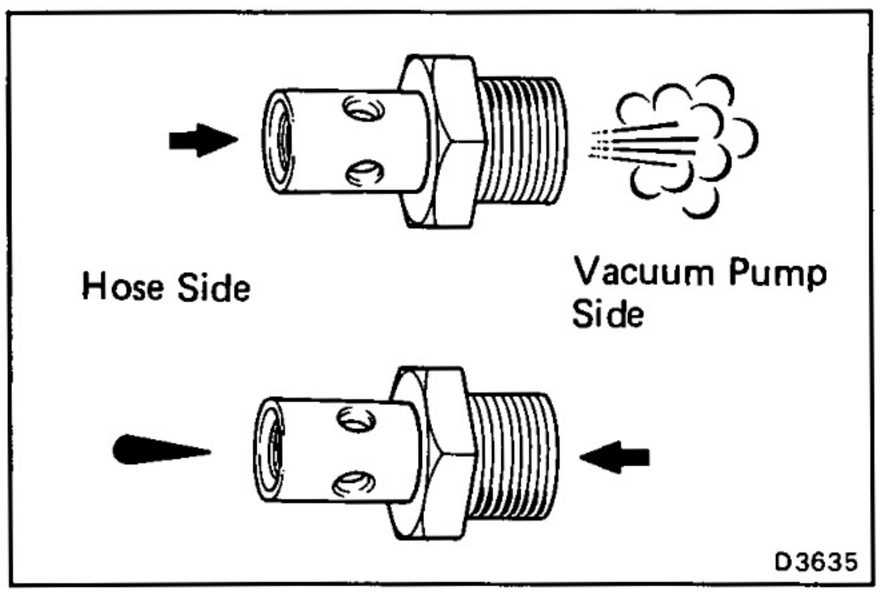

2. INSPECT CHECK VALVE OPERATION

(a) Check that air flows from the hose side to the pump side.

(b) Check that air does not flow from the pump side to the hose side.

If necessary, replace the check valve.

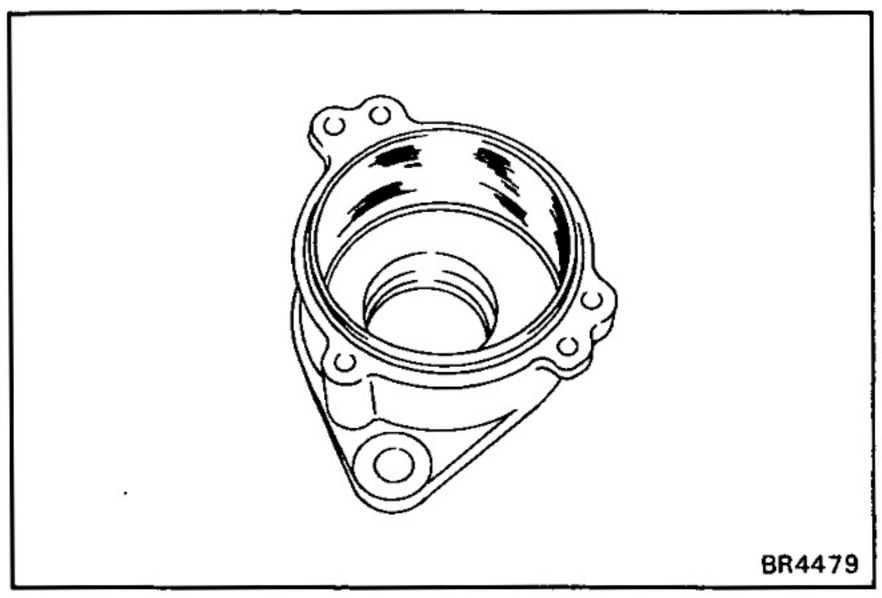

3. INSPECT INSIDE SURFACE OF CASING

Inspect the inside surface of the casing for scoring.

If necessary, replace the vacuum pump assembly.

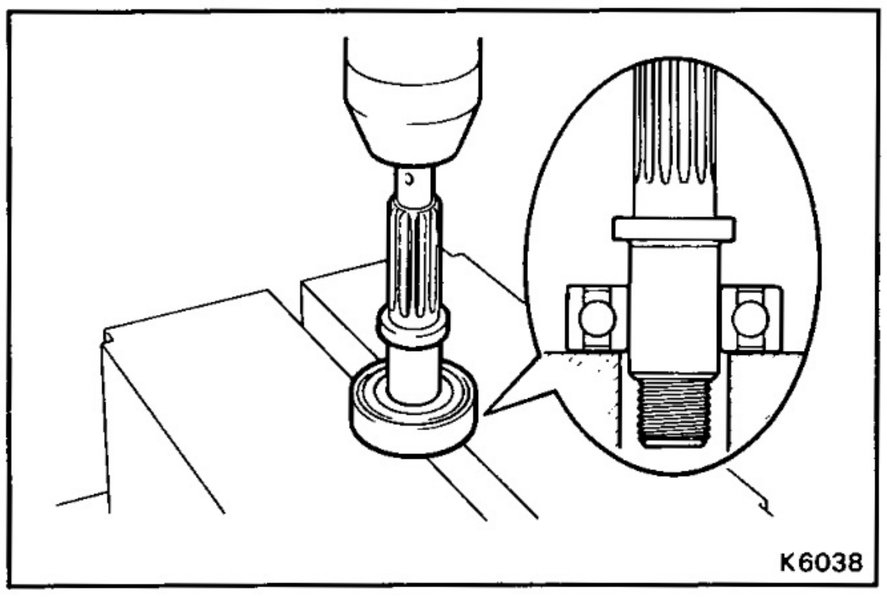

ASSEMBLY OF VACUUM PUMP

(See page BR-28)

1. INSTALL BEARING TO ROTOR SHAFT

Using a press, install a new bearing to the rotor shaft.

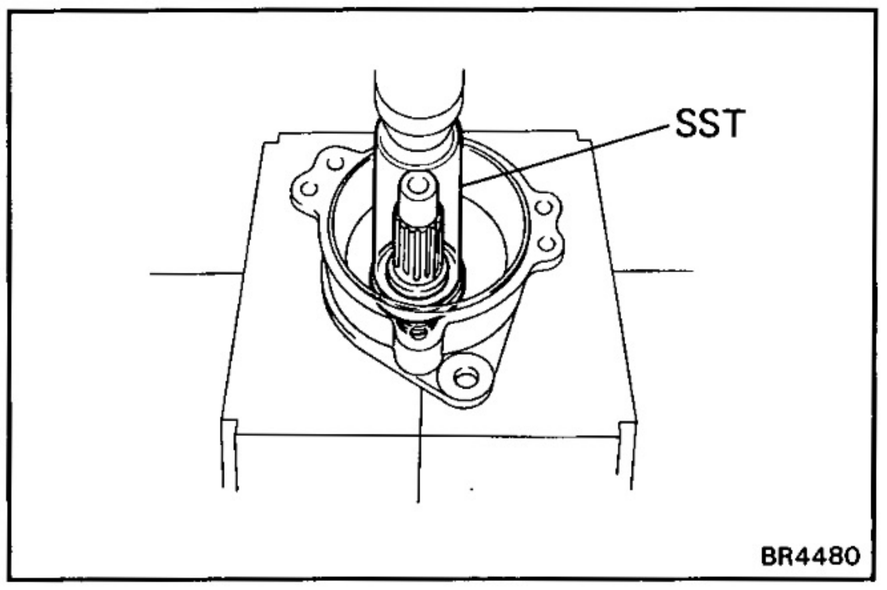

2. INSTALL ROTOR SHAFT

Using SST and press, install the rotor shaft to the casing.

SST 09608-30012 (09608-04030)

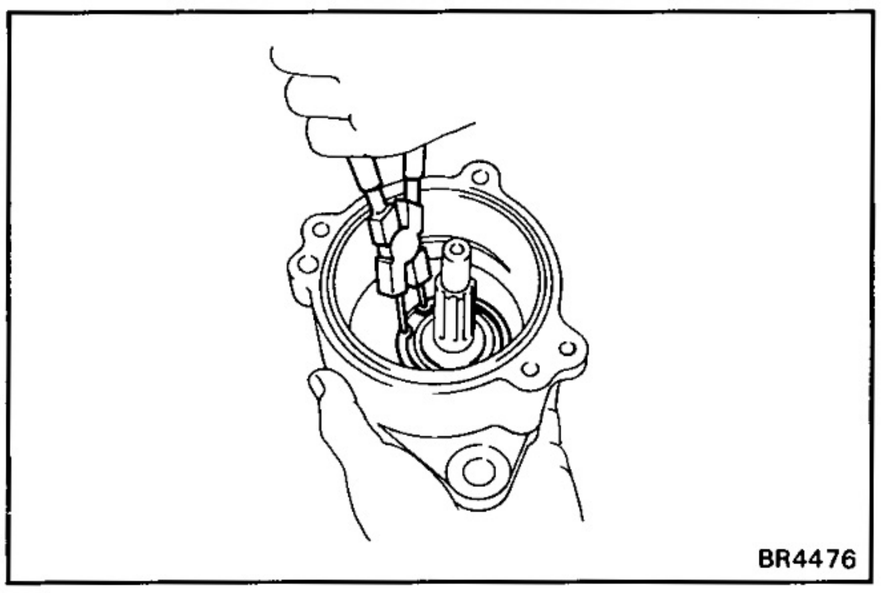

3. INSTALL SNAP RING

Using snap ring pliers, install the snap ring.

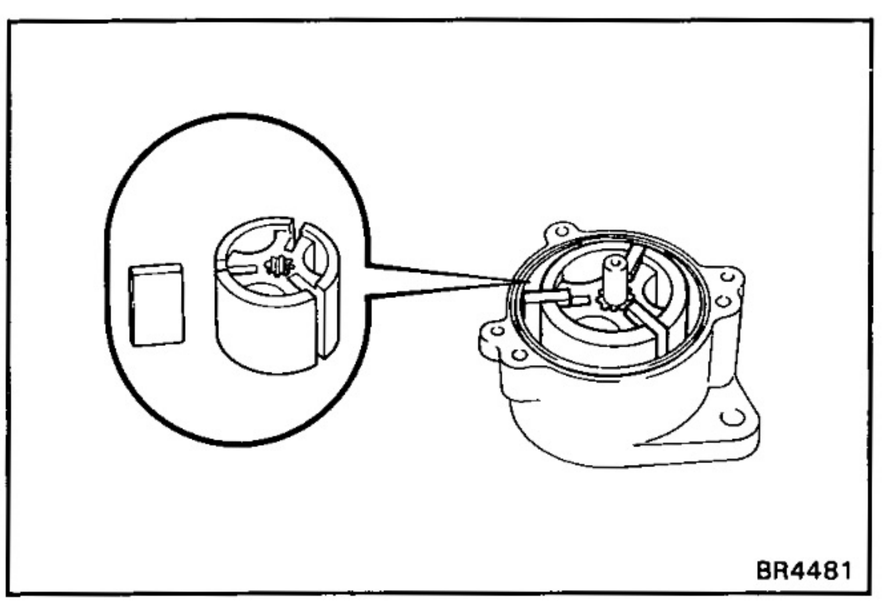

4. INSTALL ROTOR INTO CASING

Apply engine oil to the rotor and install it to the rotor shaft.

5. INSTALL THREE BLADES

(a) Apply engine oil to the blades.

(b) Install the three blades with the round end facing outward.

(c) Be sure that the blades and rotor surfaces are even.

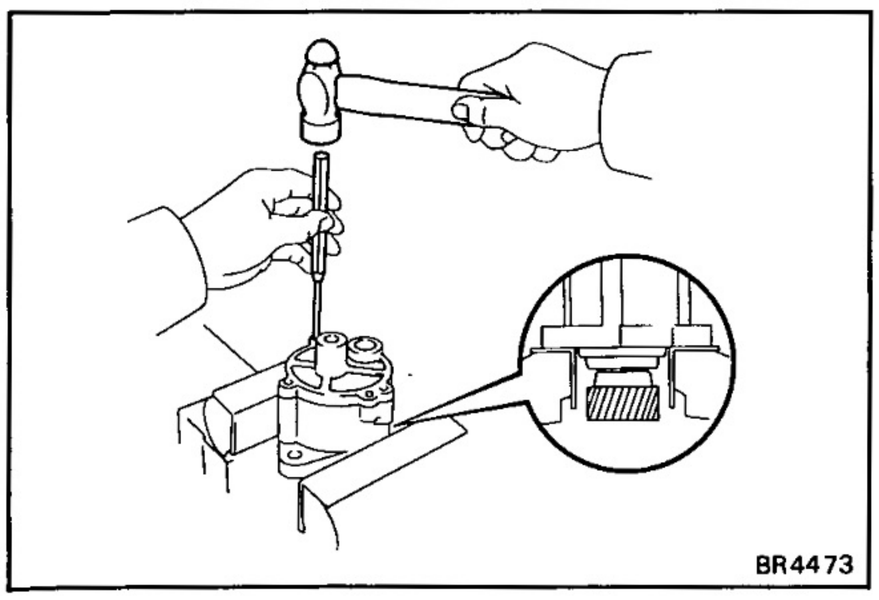

6. INSTALL END COVER

(a) Place the vacuum pump on vise as shown in the illustration.

NOTICE: Do not tighten the vise.

(b) Install the new O-ring.

(c) Install the end cover in place and temporarily install the three bolts.

(d) Using a pin punch and a hammer, drive in the two straight pins.

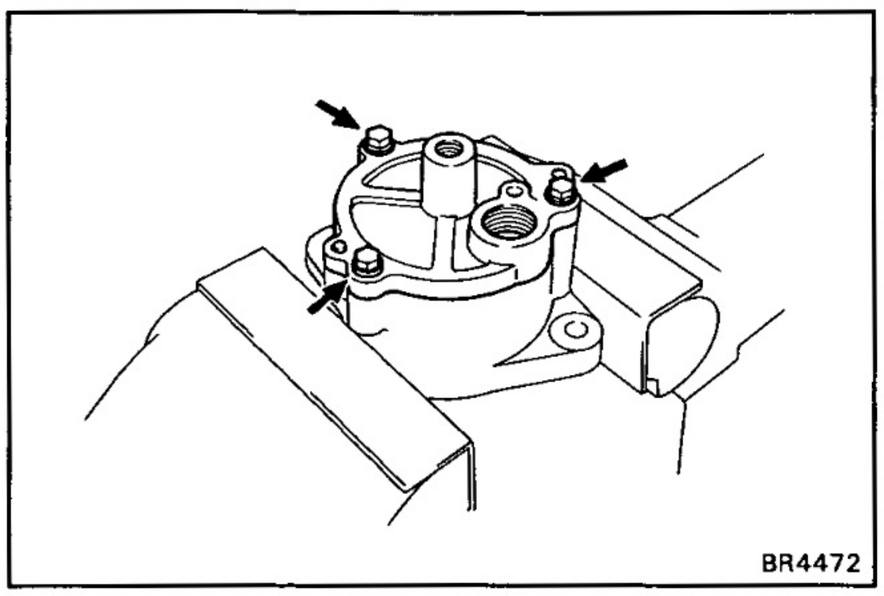

(e) Using soft jaws on the vise, place the vacuum pump in the vise.

NOTICE: Do not tighten the vise too tightly.

(f) Tighten the three bolts.

Torque: 80 kg-cm (69 in.-lb, 7.8 N·m)

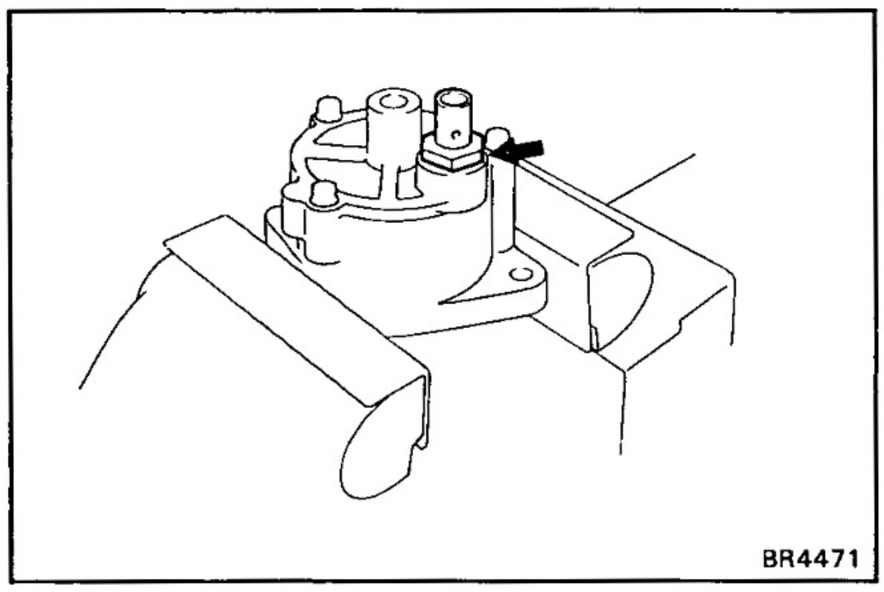

7. INSTALL CHECK VALVE

Install a new gasket and install the check valve.

Torque: 750 kg-cm (54 ft-lb, 74 N·m)

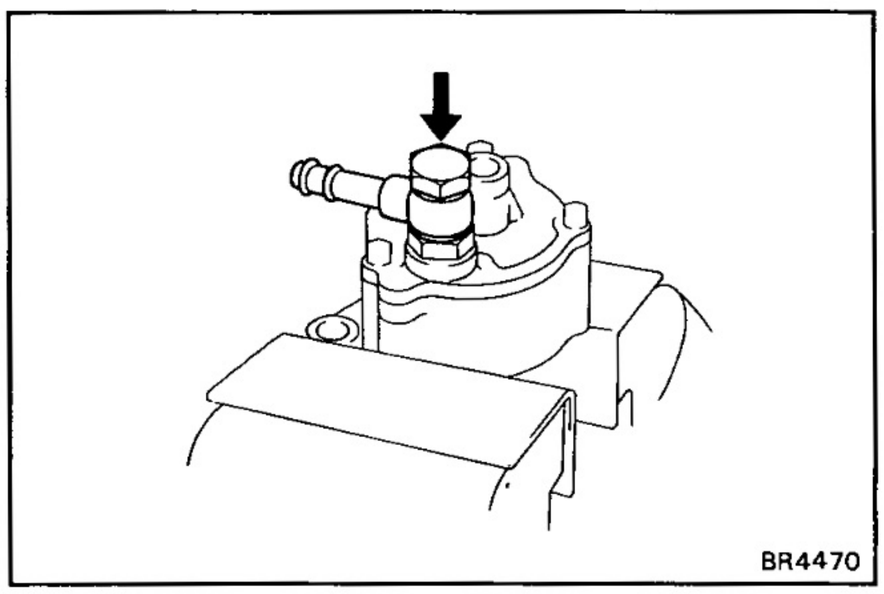

8. INSTALL VACUUM HOSE UNION

Install the vacuum hose union with the two new gaskets and, install and torque the union bolt.

Torque: 140 kg-cm (10 ft-lb, 14 N·m)

HINT: Align and insert the union pin into the matching portion of the casing.

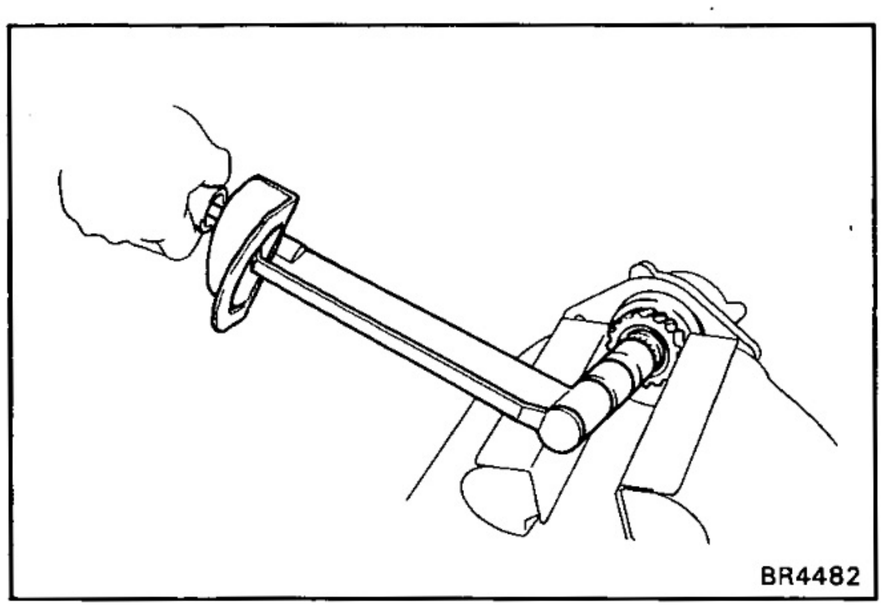

9. INSTALL GEAR

(a) Temporarily install the woodruff key, gear and lock nut to the pump.

(b) Using soft jaws on the vise, clamp the gear in the vise.

(c) Tighten the gear lock nut.

Torque: 1,125 kg-cm (81 ft-lb, 110 N·m)

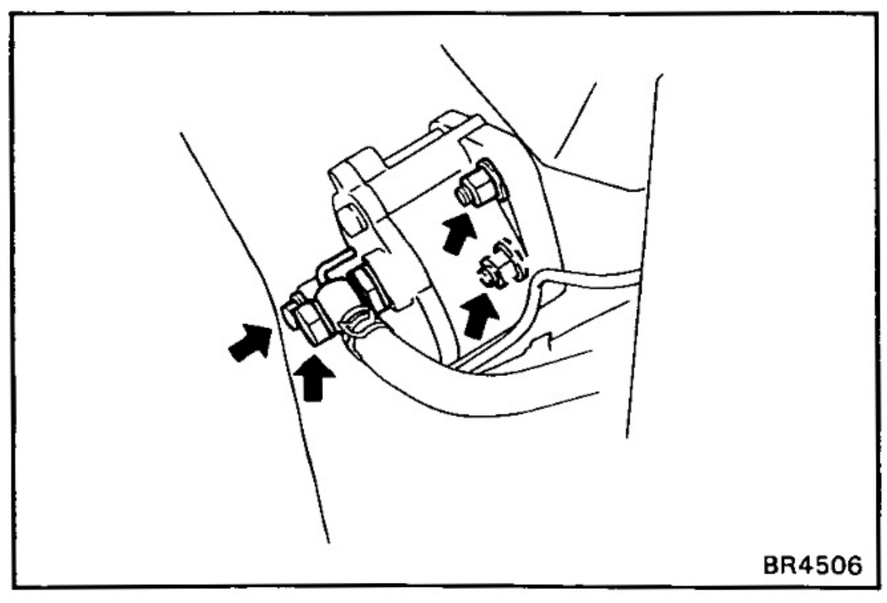

INSTALLATION OF VACUUM PUMP

INSTALL VACUUM PUMP

(a) Install the new O-ring to the vacuum pump.

(b) Install the vacuum pump in place and, install and tighten the two bolts.

Torque: 400 kg-cm (29 ft-lb, 39 N·m)

(c) Set the oil tube and new gaskets in place and install the union bolt.

(d) Using pliers, set the vacuum hoses in place.

FRONT BRAKE

COMPONENTS

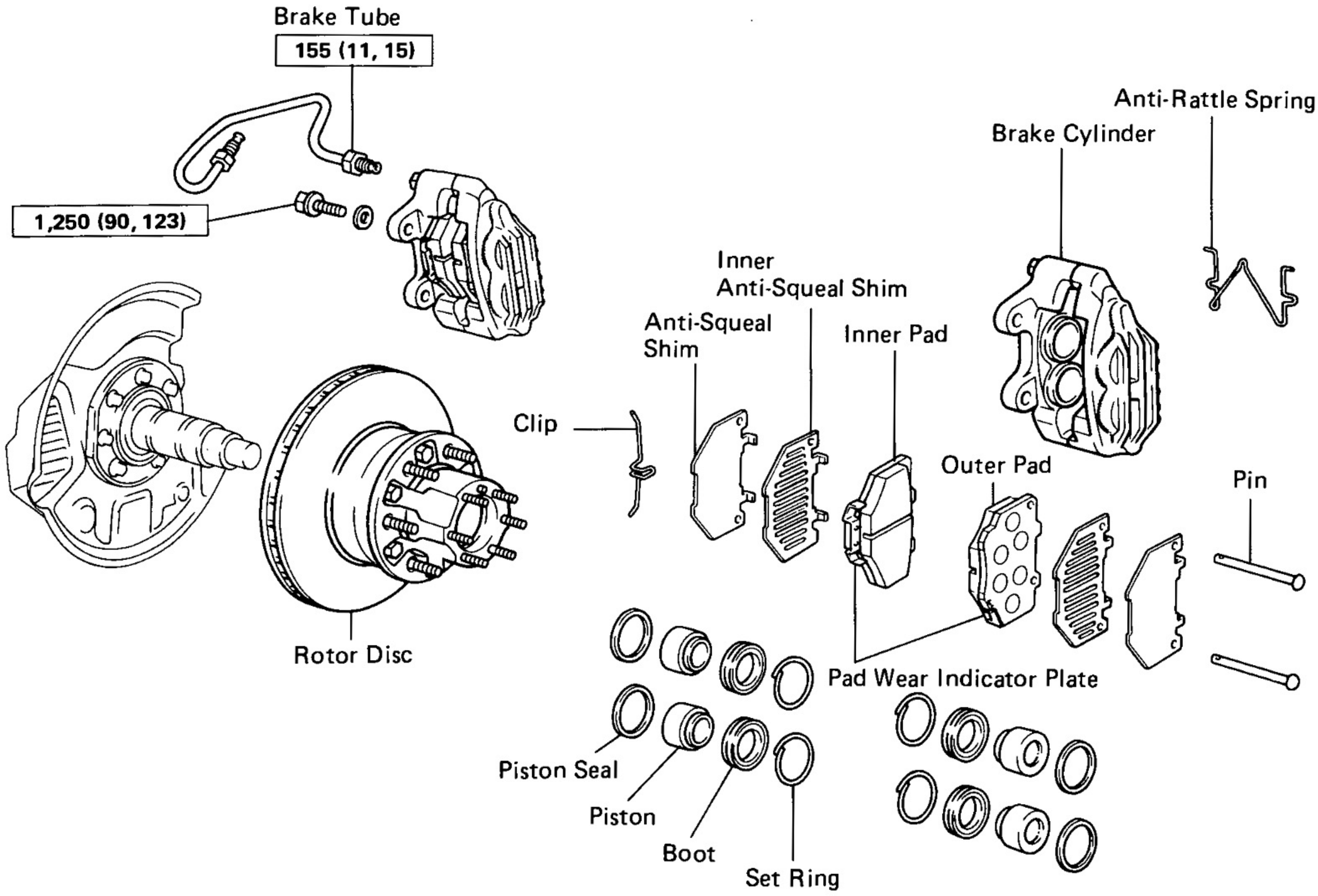

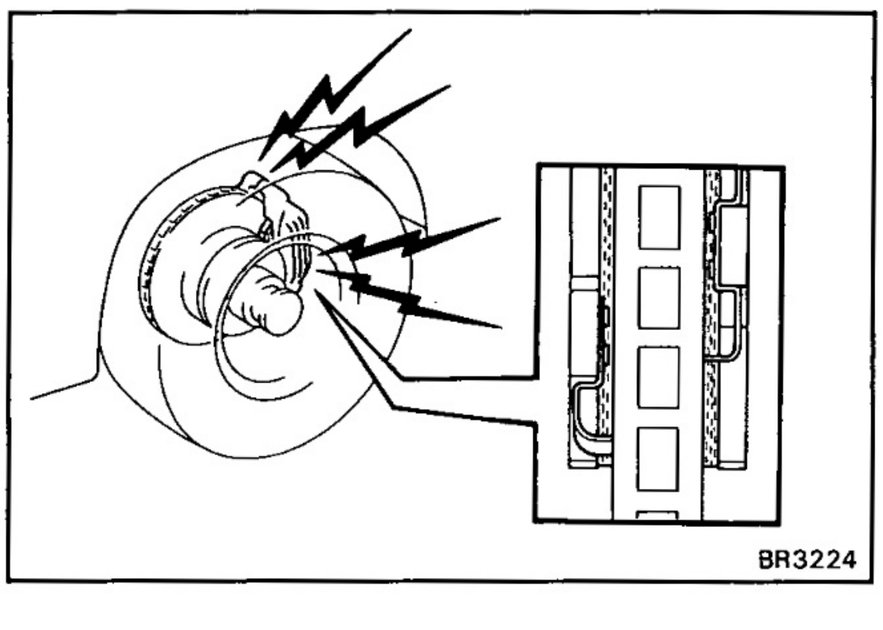

REPLACEMENT OF BRAKE PADS

HINT: If a squealing noise occurs from the brakes while driving, check the pad wear indicator plate. If the pad wear indicator plate contacts the rotor disc, the brake pads should be replaced.

1. REMOVE FRONT WHEEL

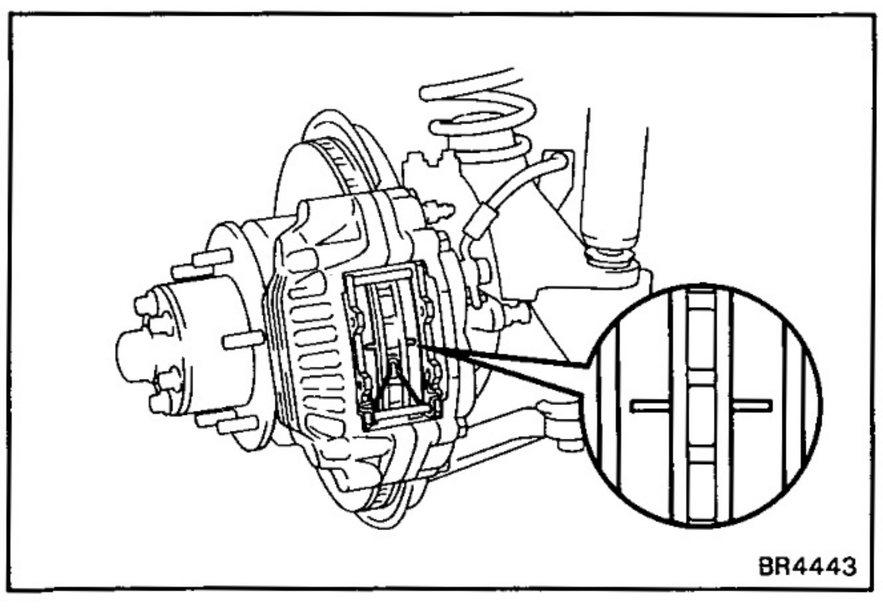

2. INSPECT PAD LINING THICKNESS

Check the pad thickness and replace pads if not within specification.

Minimum thickness:

Australia:	**4.0 mm (0.157 in.)**
Ex. Australia:	**1.0 mm (0.039 in.)**

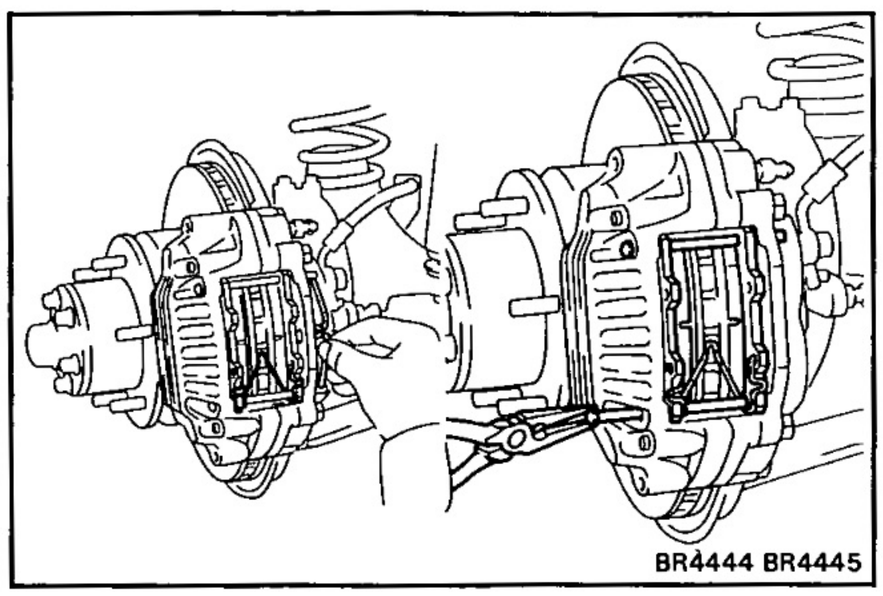
BR4444 BR4445

3. REMOVE FOLLOWING PARTS

(a) Clip

(b) Two pins

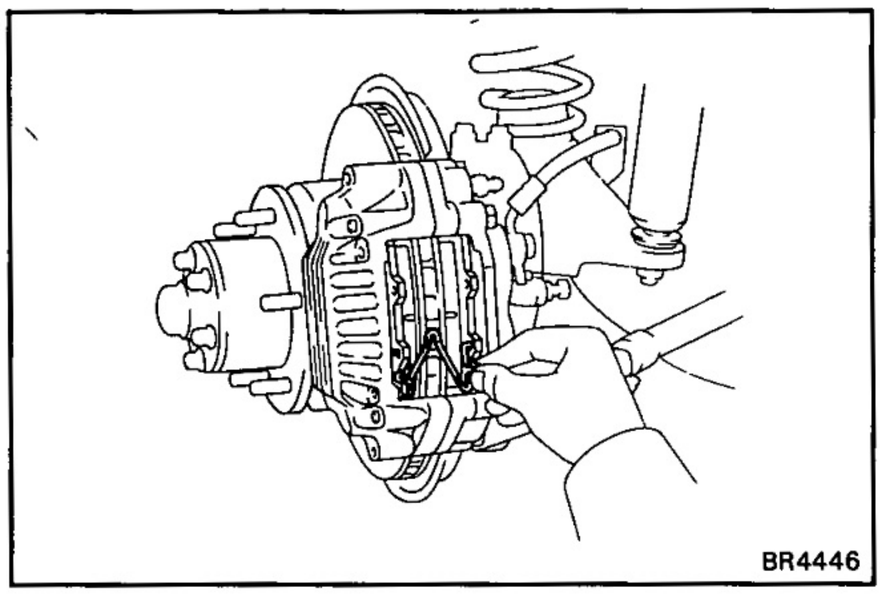
BR4446

(c) Anti-rattle spring

(d) Two pads

(e) Four anti-squeal shims

4. CHECK ROTOR DISC THICKNESS

(See step 2 on page BR-38)

5. CHECK ROTOR DISC RUNOUT

(See step 3 on page BR-38)

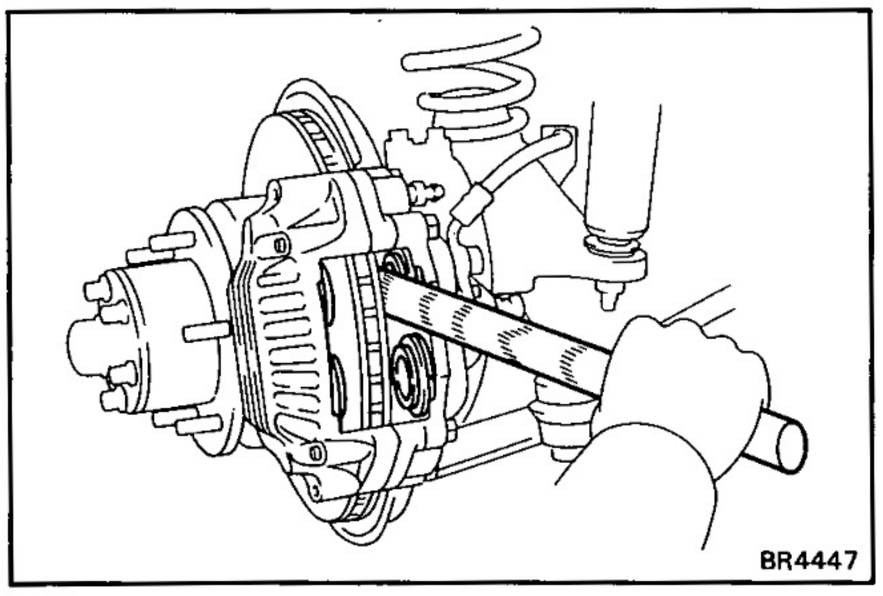
BR4447

6. INSTALL NEW PADS

(a) Draw out a small amount of brake fluid from the reservoir.

(b) Press in the pistons with a hammer handle or an equivalent.

HINT: Always change the pads on one wheel at a time as there is possibility of the opposite piston flying out.

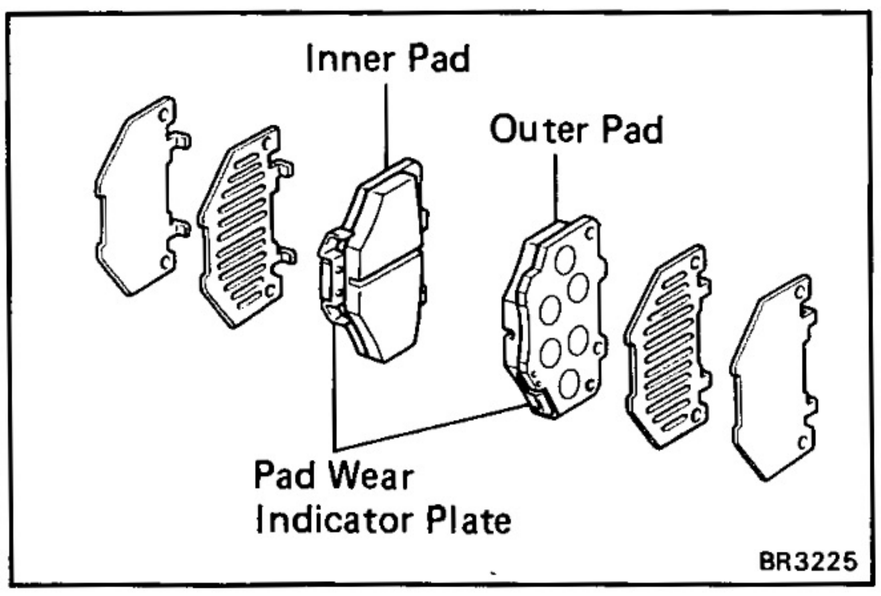

BR3225

(c) Install the four anti-squeal shims to new pads as shown.

HINT: Apply disc brake grease to both sides of the inner anti-squeal shims.

(d) Install the two pads into the cylinder.

NOTICE: Do not allow oil or grease to get on the rubbing face.

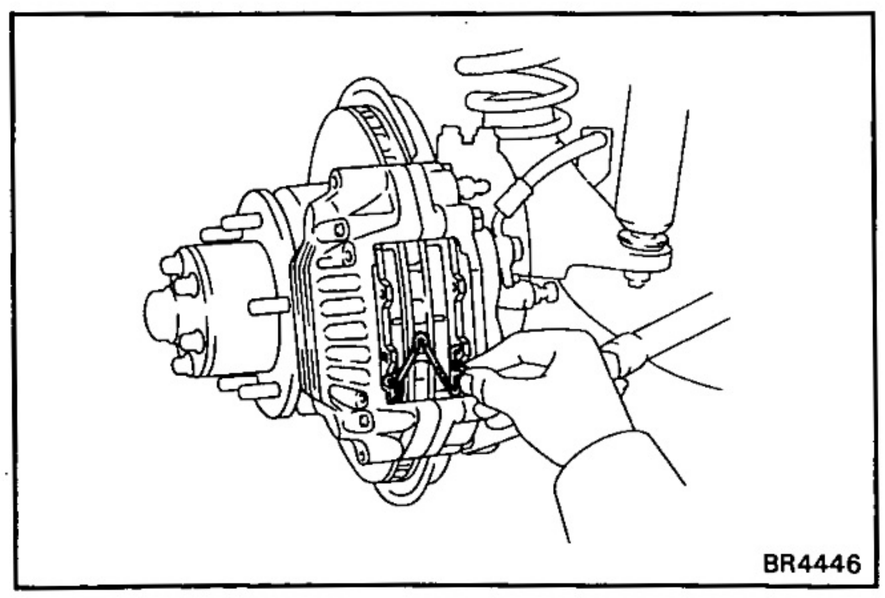
BR4446

7. INSTALL ANTI-RATTLE SPRING

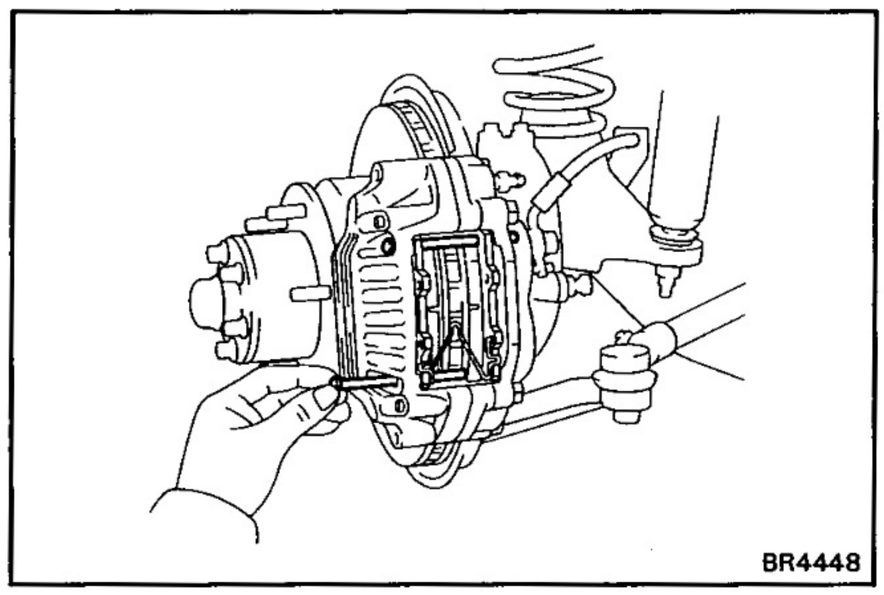

8. INSTALL TWO PINS

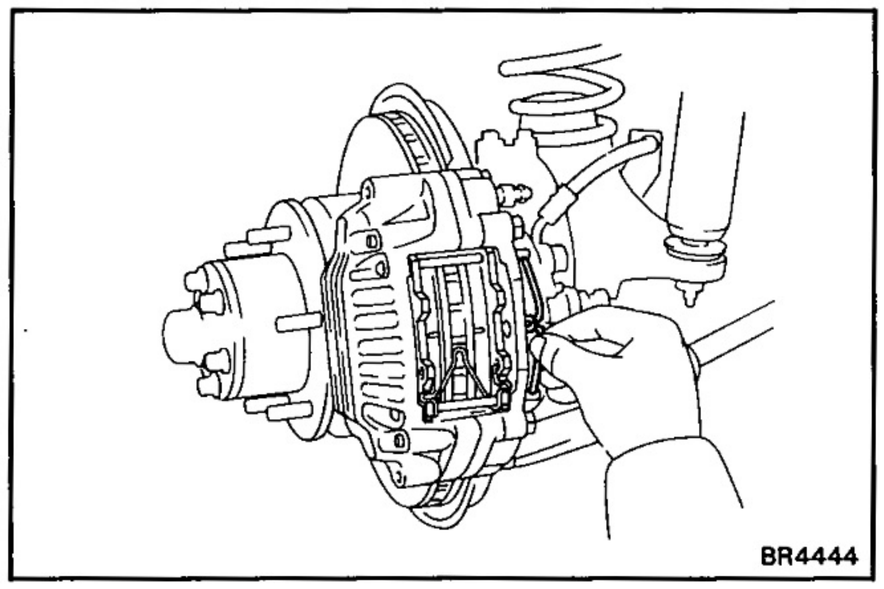

9. INSTALL CLIP

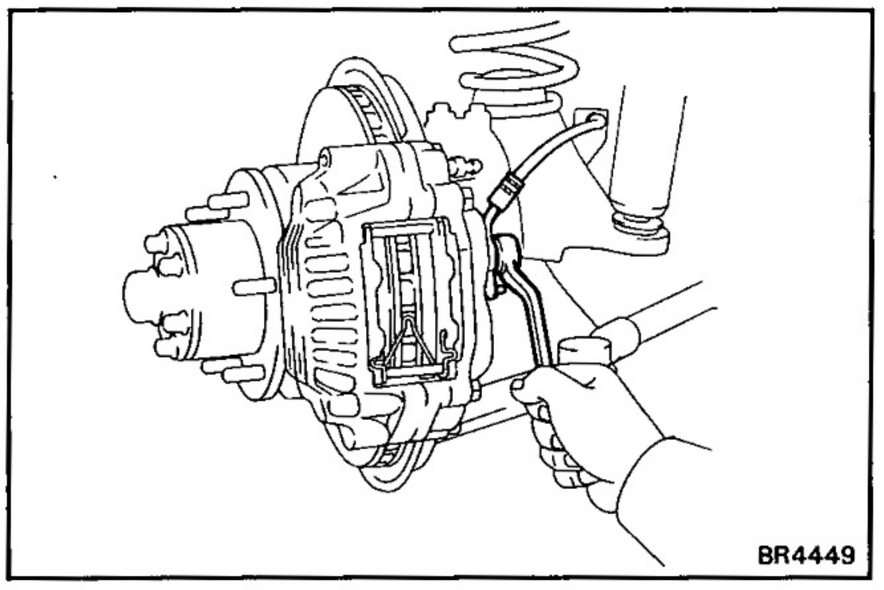

REMOVAL OF CYLINDER

(See page BR-34)

1. REMOVE FRONT WHEEL

2. DISCONNECT BRAKE LINE

Disconnect the brake hose. Use a container to catch the brake fluid.

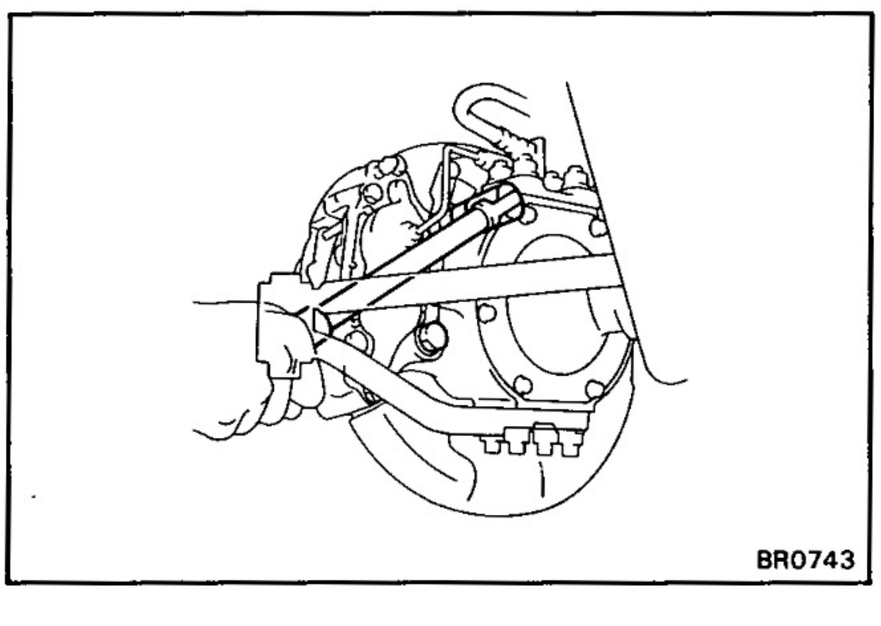

3. REMOVE CYLINDER

Remove the two mounting bolts and remove the cylinder.

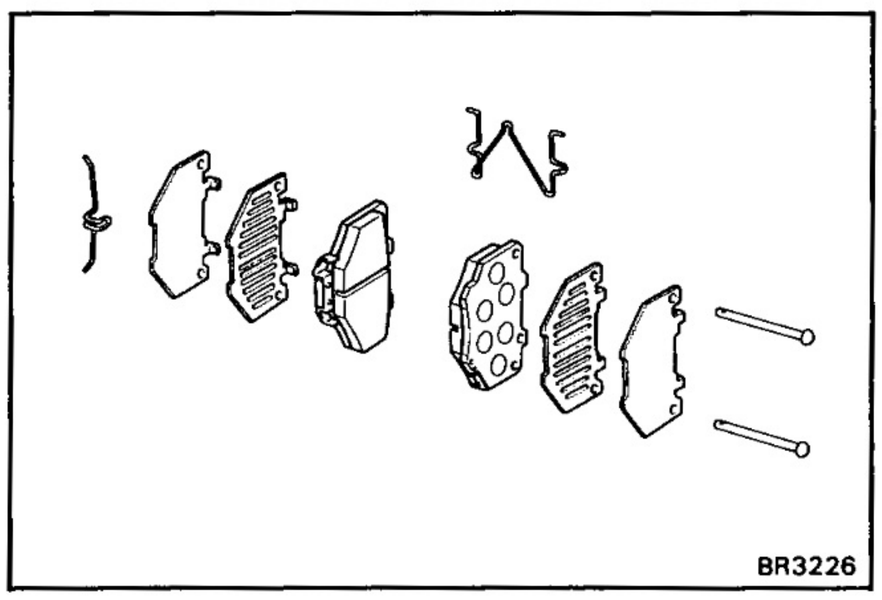

4. REMOVE FOLLOWING PARTS

(a) Clip

(b) Two pins

(c) Anti-rattle spring

(d) Two pads

(e) Four anti-squeal shims

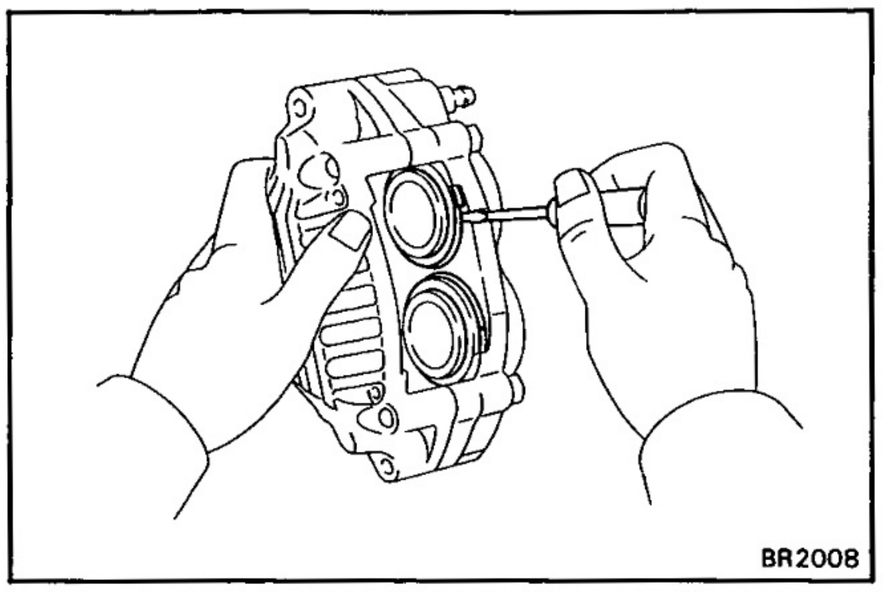

DISASSEMBLY OF CYLINDER

(See page BR-34)

1. REMOVE CYLINDER BOOT SET RINGS AND BOOTS

Using a screwdriver, remove the four cylinder boot set rings and four boots.

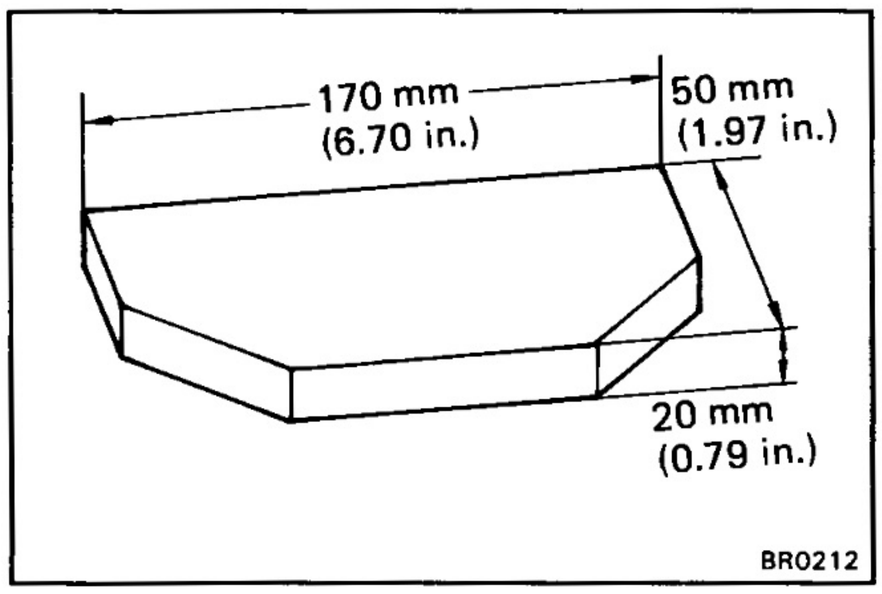

2. REMOVE PISTONS FROM CYLINDER

(a) Prepare the wooden plate as shown in the illustration to hold the pistons.

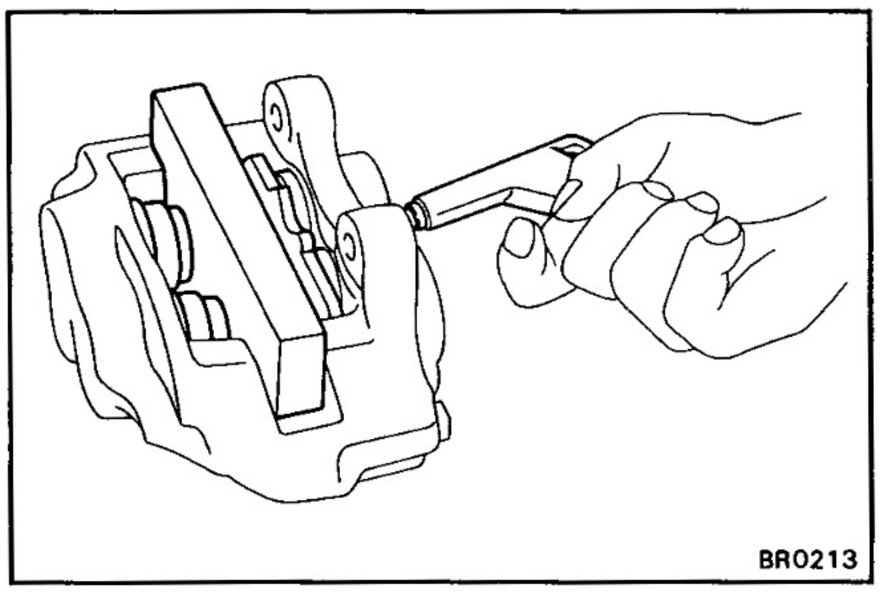

(b) Place the plate between the pistons and insert a pad at one side.

(c) Use compressed air to remove the pistons alternately from the cylinder.

NOTICE: Do not place your fingers in front of the pistons when using compressed air.

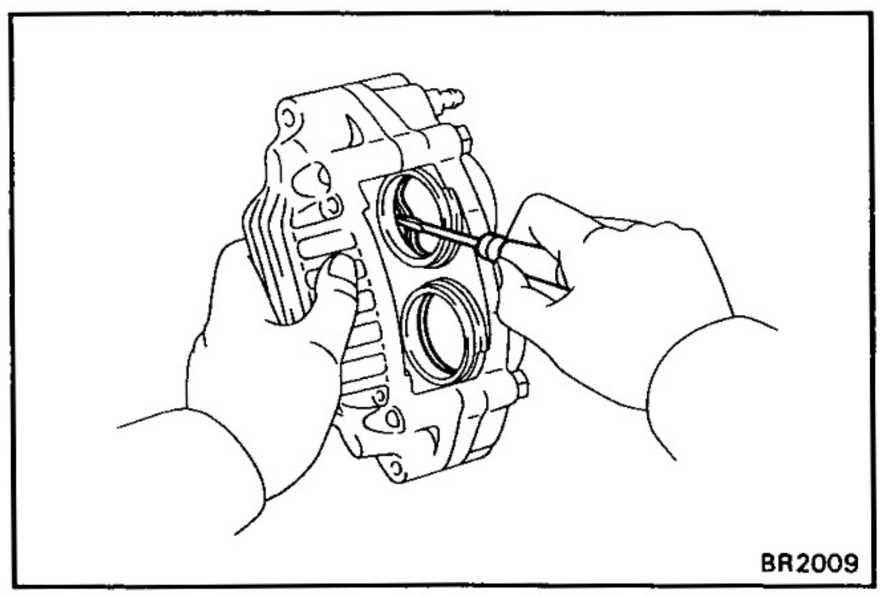

3. REMOVE PISTON SEALS

Using a screwdriver, remove the four seals from the cylinder.

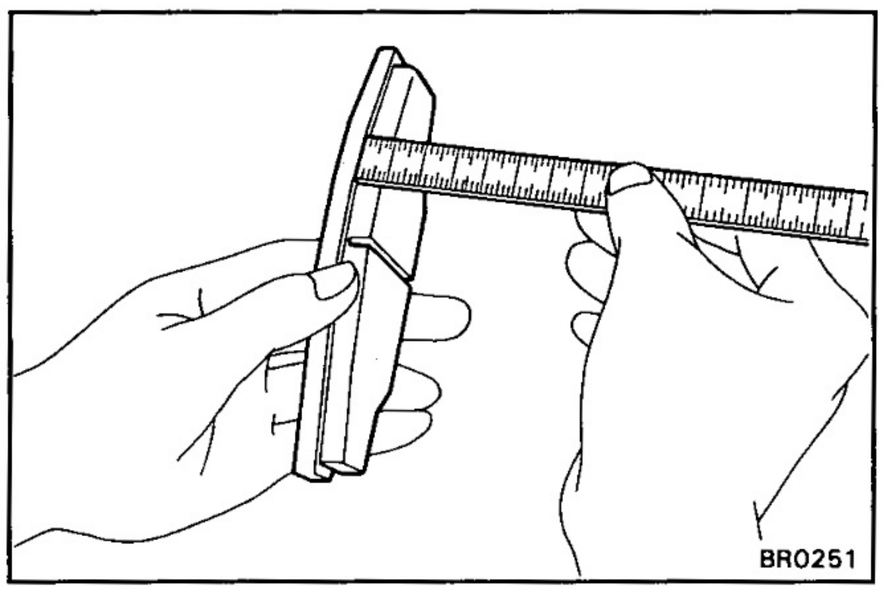

INSPECTION AND REPAIR OF FRONT BRAKE COMPONENTS

1. MEASURE PAD LINING THICKNESS

Minimum thickness:

Australia: 4.0 mm (0.157 in.)

Except Australia: 1.0 mm (0.039 in.)

Standard thickness: 10.0 mm (0.394 in.)

Replace the pads if the thickness is less than the minimum or if it shows sign of uneven wear.

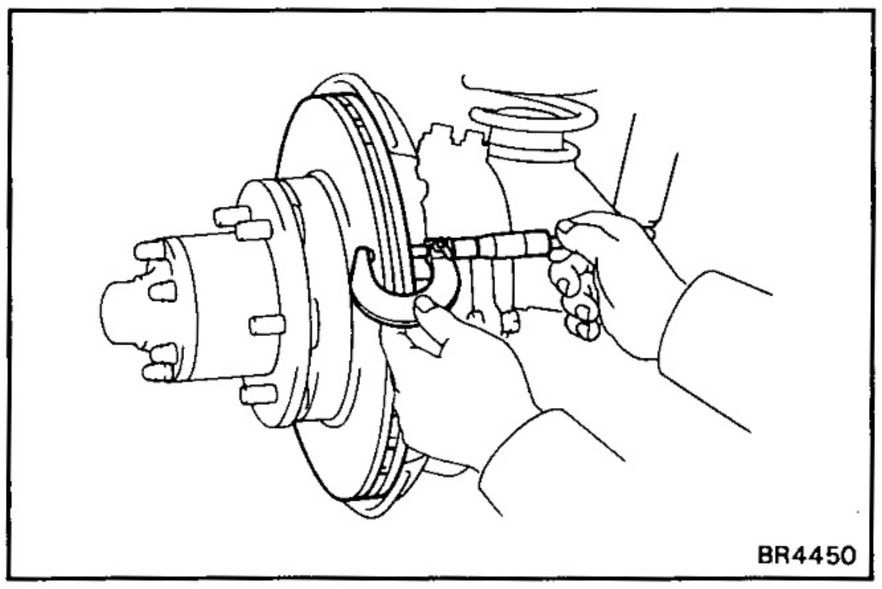

2. MEASURE ROTOR DISC THICKNESS

Minimum thickness: 23.0 mm (0.906 in.)

Standard thickness: 25.0 mm (0.984 in.)

If the disc is scored or worn, or if thickness is less than minimum, repair or replace the disc.

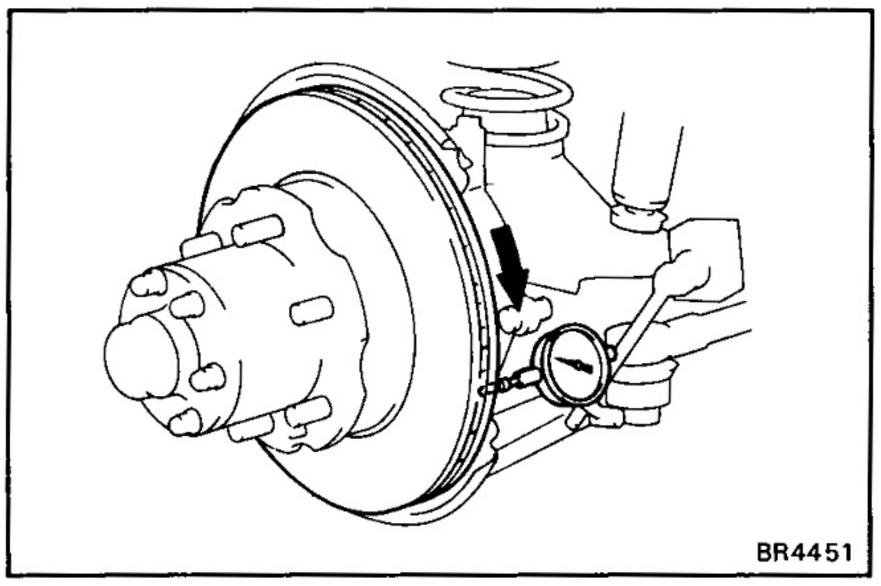

3. MEASURE ROTOR DISC RUNOUT

Measure the rotor disc runout at 10 mm (0.39 in.) from the outer edge of the rotor disc.

Maximum disc runout: 0.15 mm (0.0059 in.)

If the runout is greater than maximum, replace the rotor disc.

HINT: Before measuring the runout, confirm that the front bearing play is within specification.

4. IF NECESSARY, REPLACE ROTOR DISC

(a) Remove the front axle hub.
(See page SA-15)

(b) Remove the disc from the axle hub.

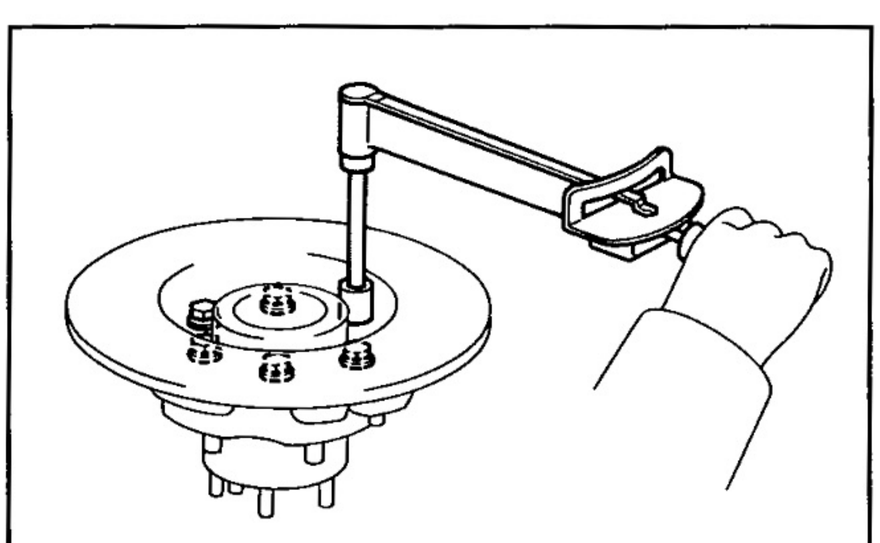

(c) Install a new rotor disc and torque the bolts.

Torque: 750 kg-cm (54 ft-lb, 74 N·m)

(d) Install the axle hub and adjust the front bearing preload.
(See page SA-19)

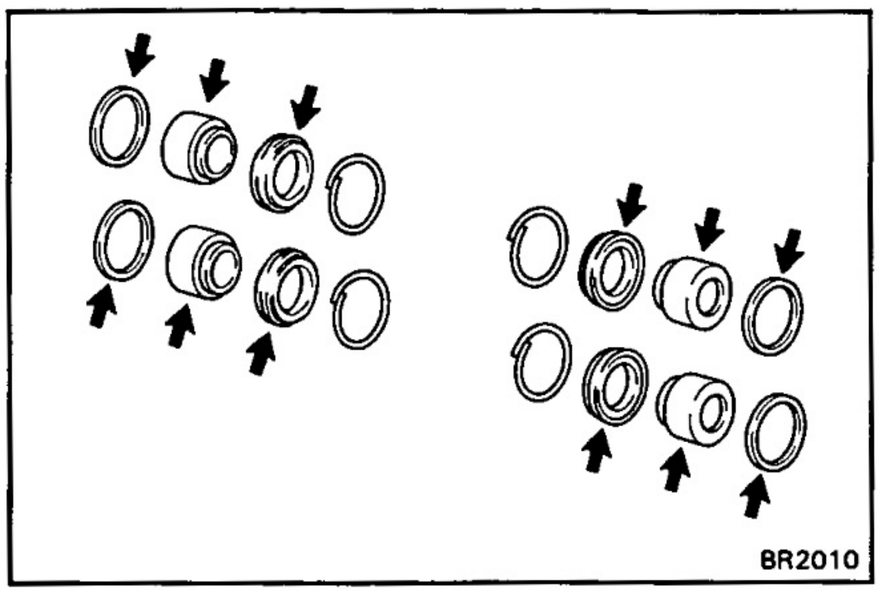

ASSEMBLY OF CYLINDER

(See page BR-34)

1. APPLY LITHIUM SOAP BASE GLYCOL GREASE TO PARTS INDICATED BY ARROWS

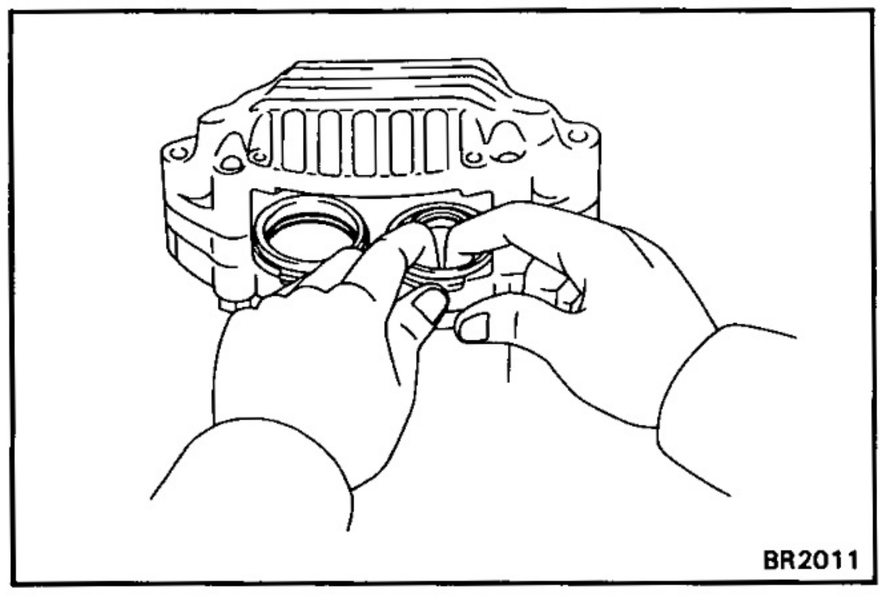

2. INSTALL PISTON SEALS INTO CYLINDER

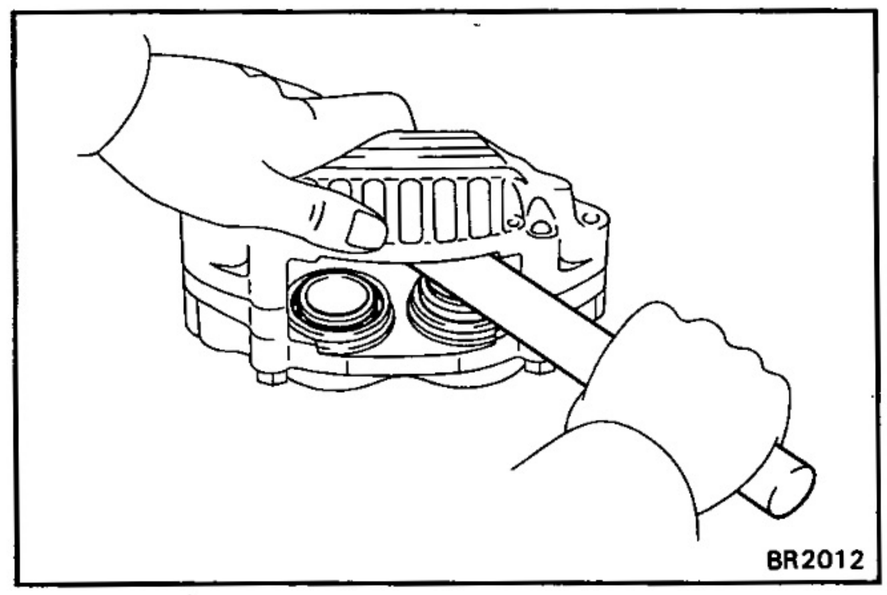

3. INSTALL PISTONS INTO CYLINDER

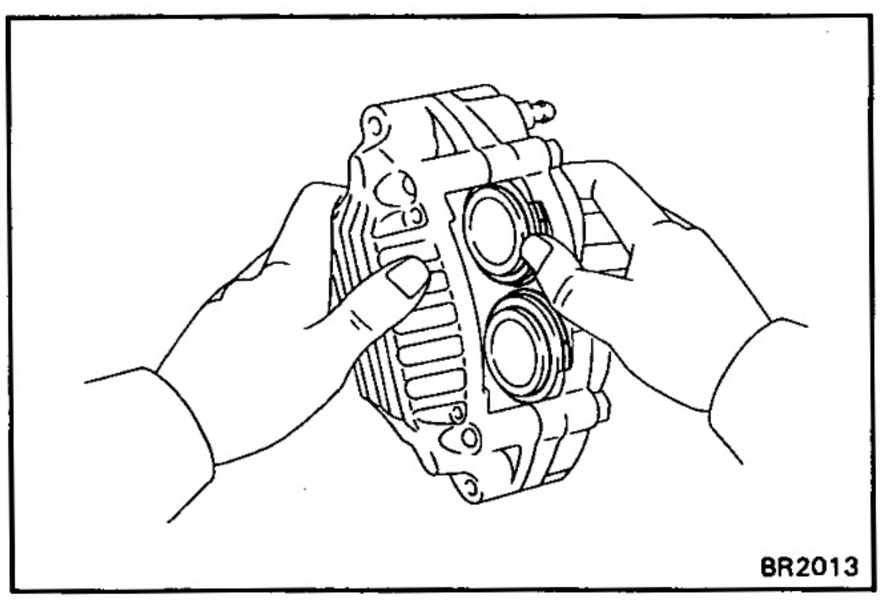

4. INSTALL CYLINDER BOOTS AND SET RINGS INTO CYLINDER

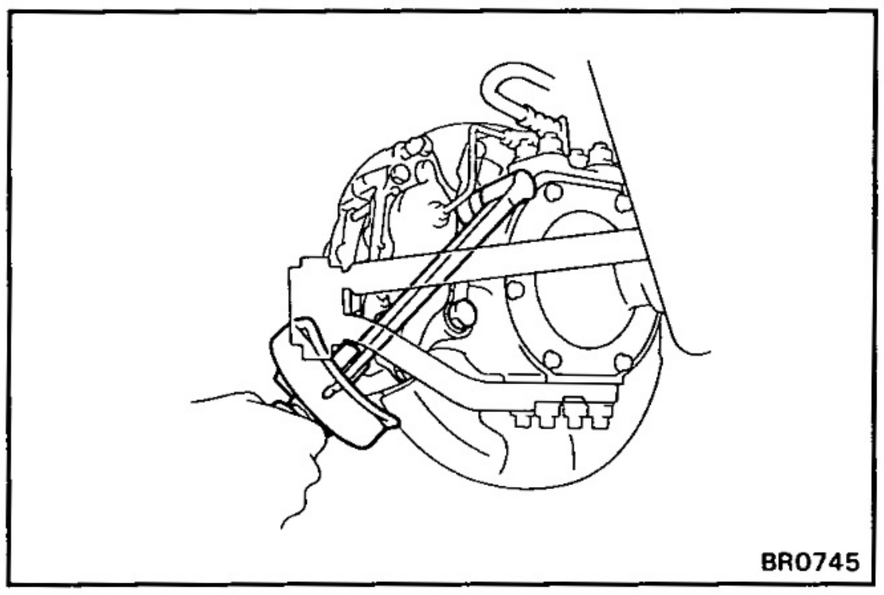
BR0745

INSTALLATION OF CYLINDER

(See page BR-34)

1. INSTALL CYLINDER

Install the brake cylinder, and torque the two mounting bolts.

Torque: 1,250 kg-cm (90 ft-lb, 123 N·m)

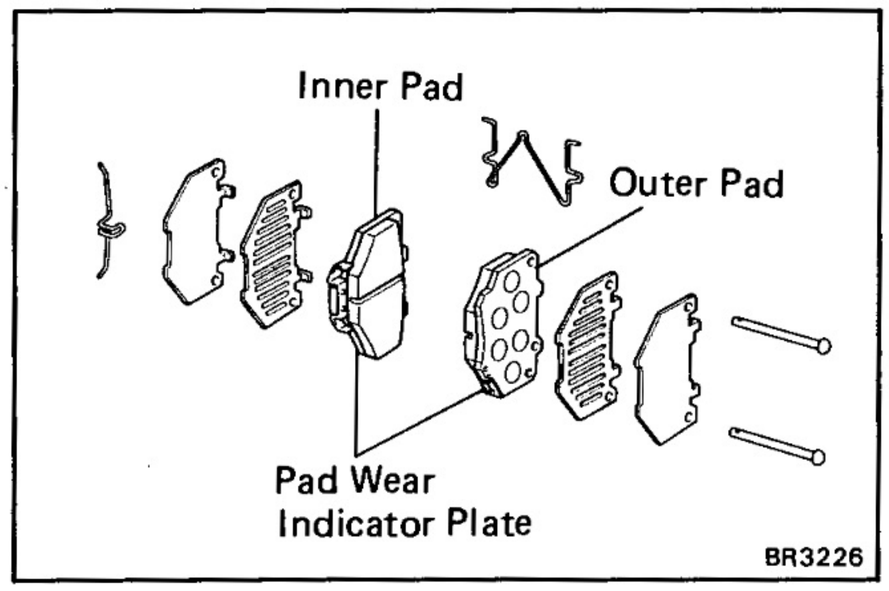

BR3226

2. INSTALL PADS

(See steps 4 to 5 on pages BR-35 and 36)

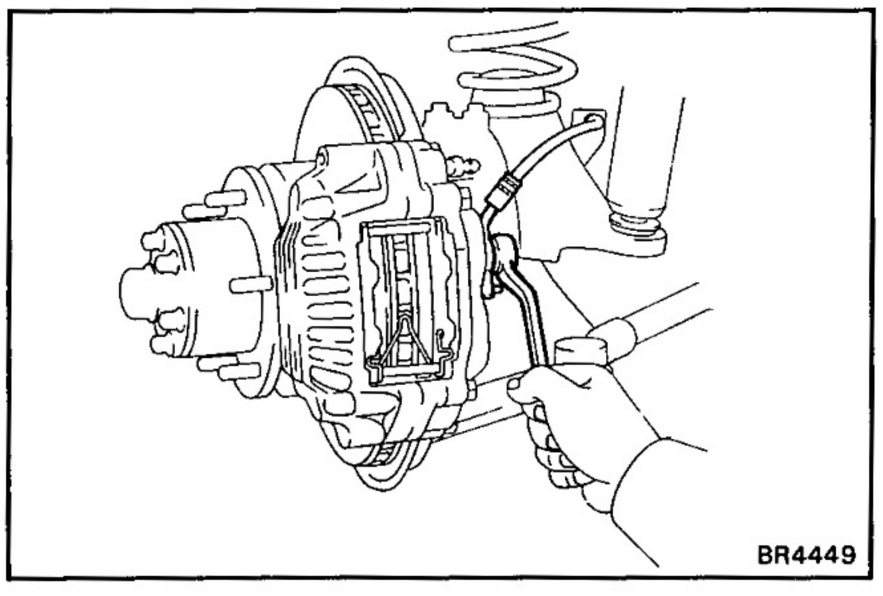
BR4449

3. INSTALL BRAKE TUBE

Using SST, connect the brake tube.

Torque: 235 kg-cm (17 ft-lb, 23 N·m)

4. FILL BRAKE RESERVOIR WITH BRAKE FLUID AND BLEED BRAKE SYSTEM

(See page BR-7)

5. CHECK FOR FLUID LEAKAGE

6. INSTALL FRONT WHEEL

REAR BRAKE

Drum Brake

COMPONENTS

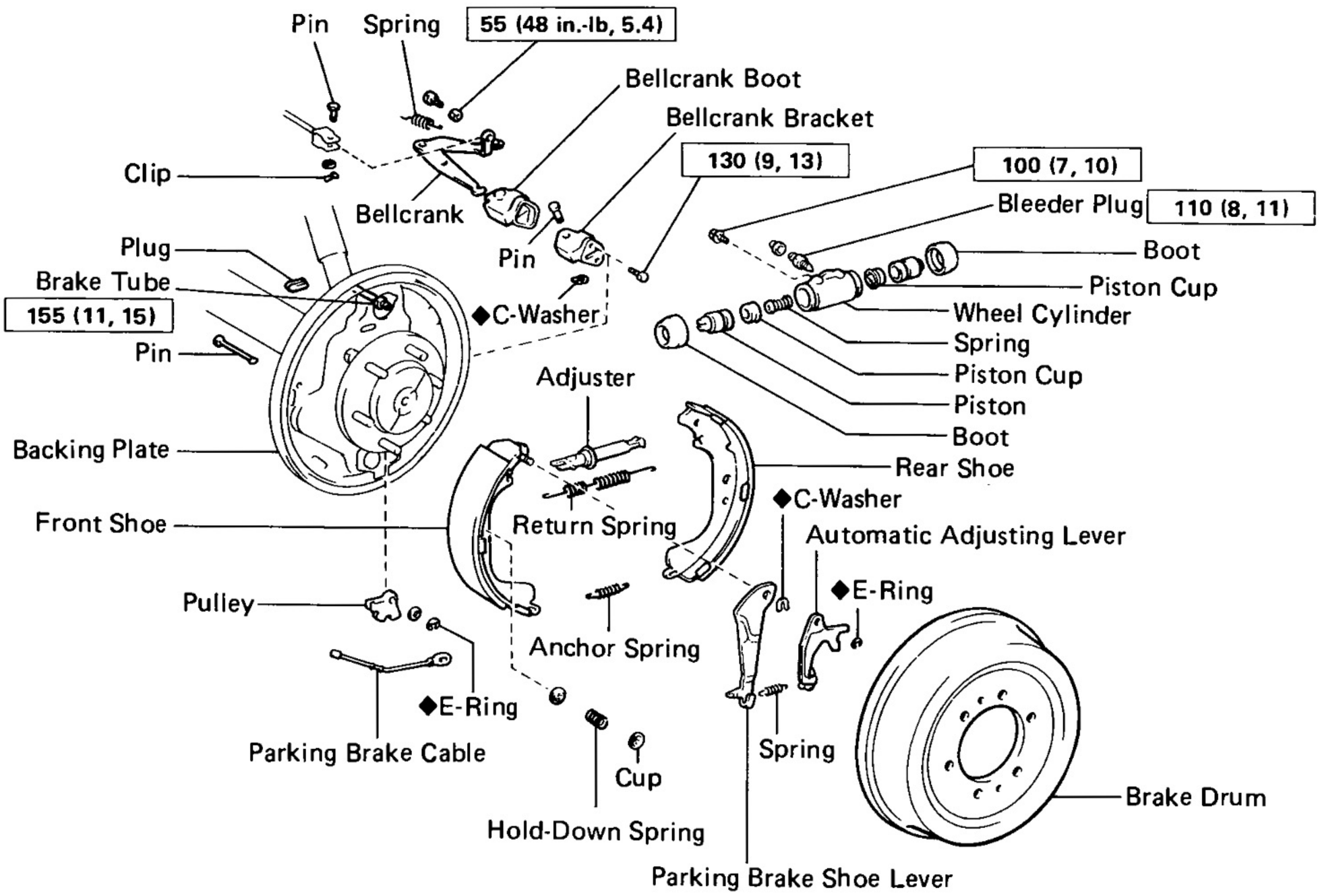

kg-cm (ft-lb, N·m) : Specified torque

◆ Non-reusable part

BR4118

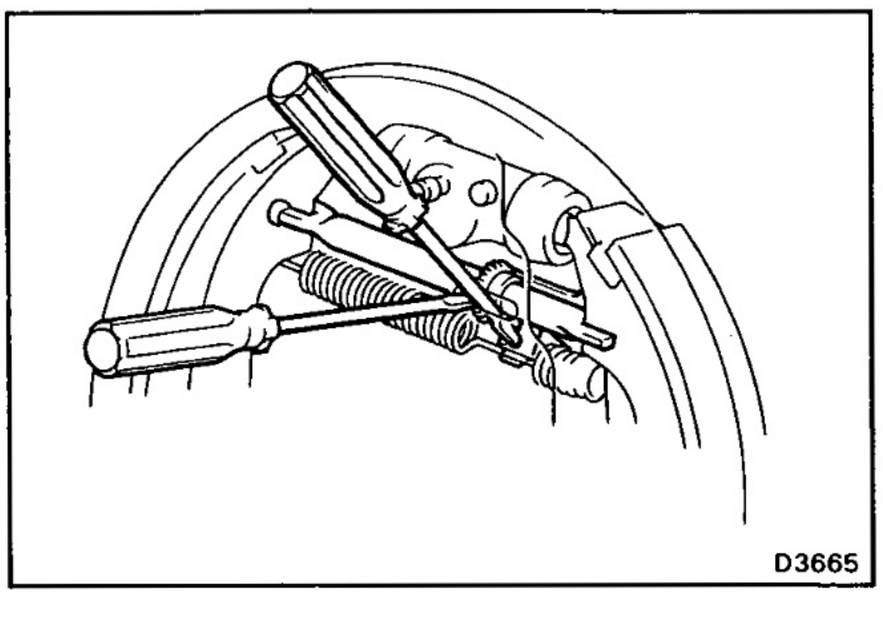

D3665

REMOVAL OF REAR BRAKE

1. REMOVE REAR WHEEL AND BRAKE DRUM

HINT: If the brake drum cannot be removed easily, perform the following steps.

(a) Insert a screwdriver through the hole in the backing plate, and hold the automatic adjusting lever away from the adjusting bolt.

(b) Using another screwdriver, reduce the brake shoe adjustment by turning the adjusting bolt.

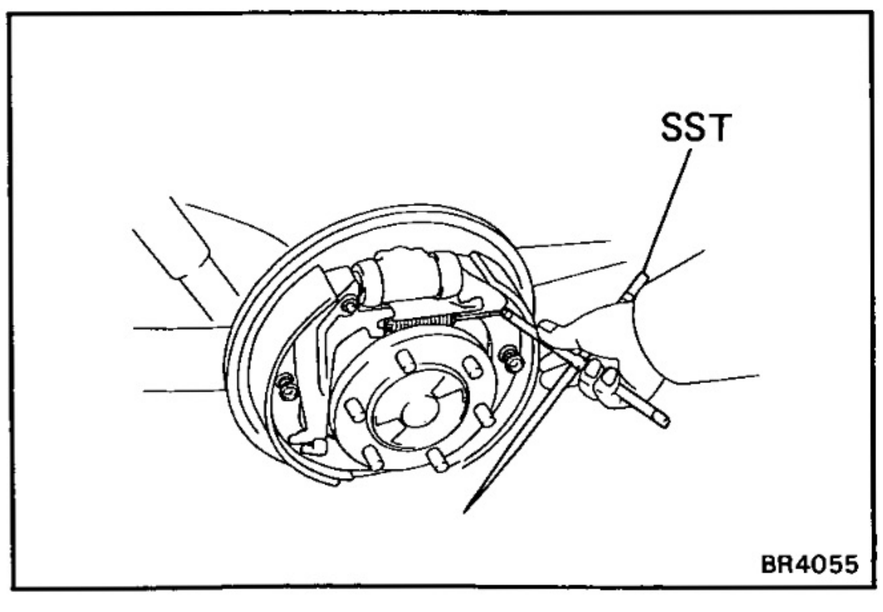

BR4055

2. REMOVE REAR SHOE

(a) Using SST, remove the return spring.

SST 09703-30010

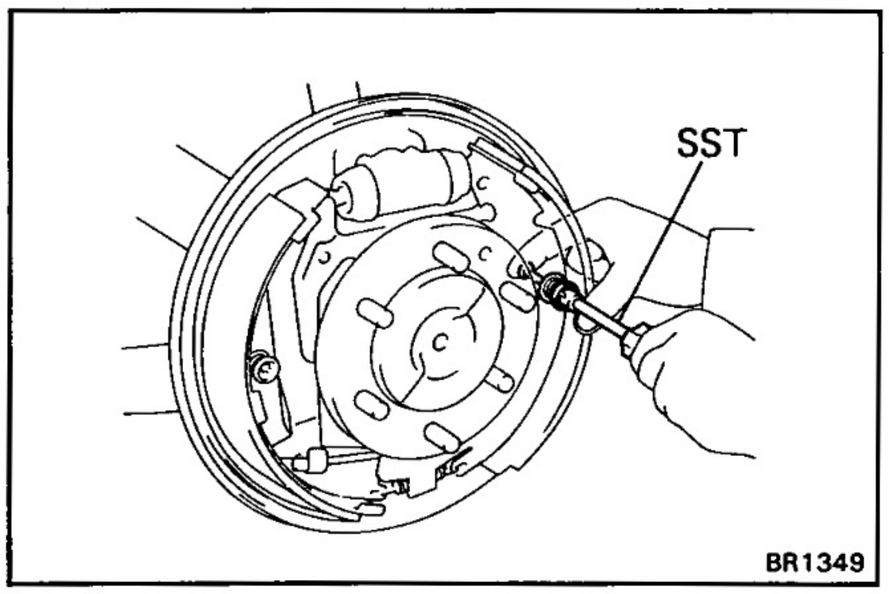

(b) Using SST, remove the two cups, shoe hold- down spring and a pin.

SST 09718-00010

(c) Remove the rear brake shoe and anchor spring.

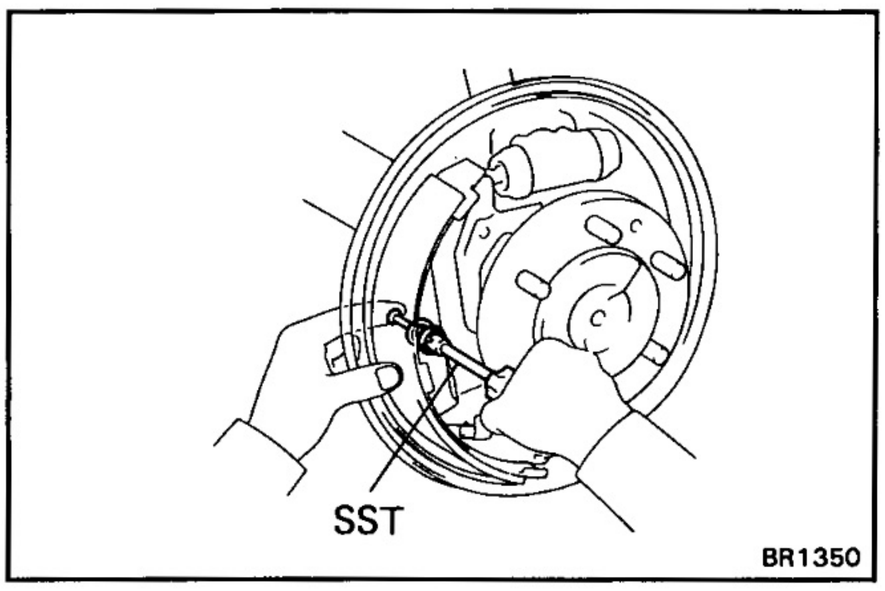

3. REMOVE FRONT SHOE

(a) Using SST, remove the two cups, shoe hold- down spring and a pin.

SST 09718-00010

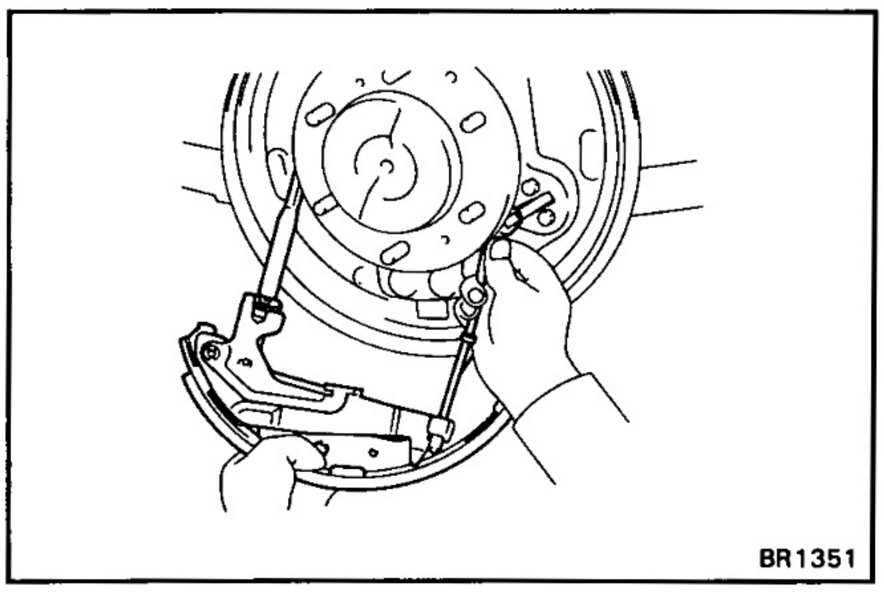

(b) Disconnect the parking brake cable from the parking brake bellcrank.

(c) Remove the front shoe with adjuster.

(d) Disconnect the parking brake cable from the front shoe.

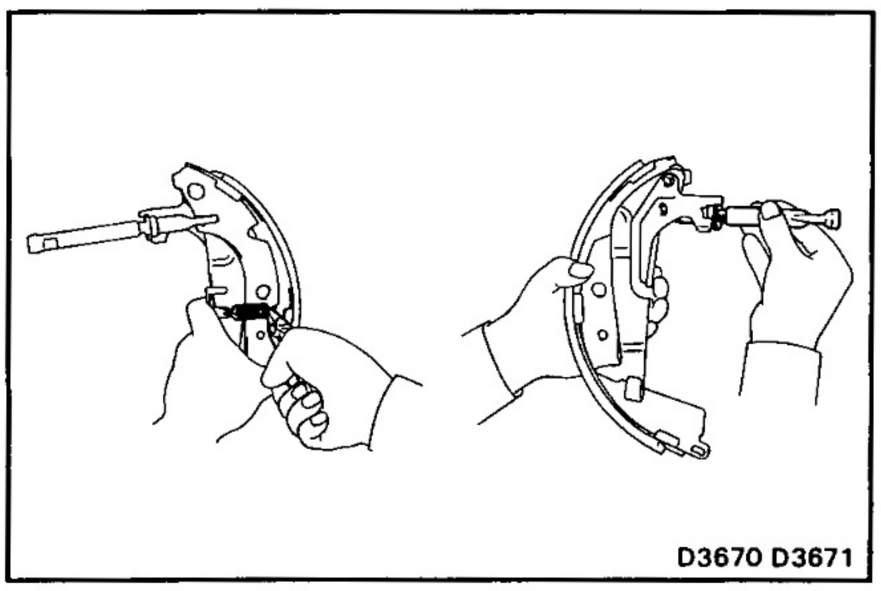

4. REMOVE ADJUSTER FROM FRONT SHOE

(a) Remove the adjusting lever spring.

(b) Remove the adjuster.

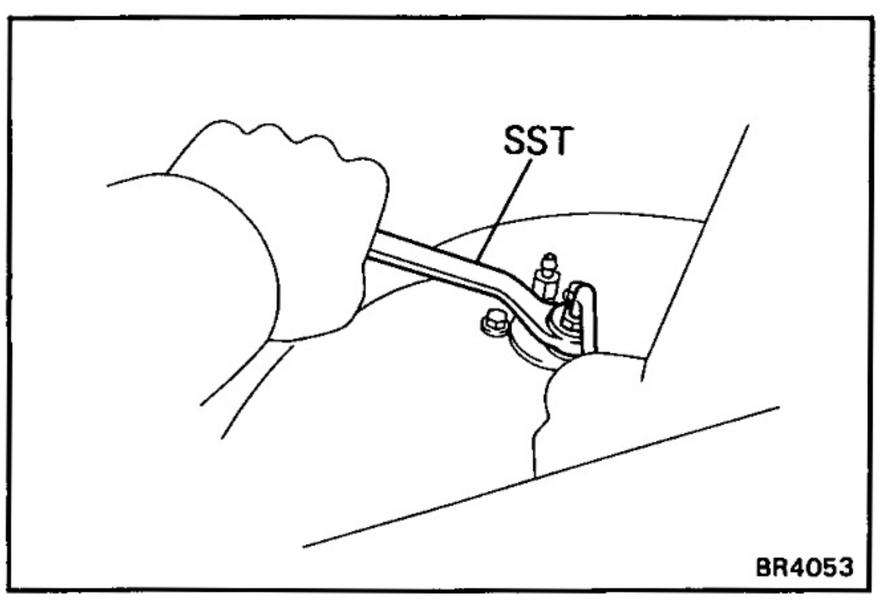

5. IF NECESSARY, REMOVE WHEEL CYLINDER

(a) Using SST, disconnect the brake tube.

SST 09751-36011

(b) Remove the two bolts and the wheel cylinder.

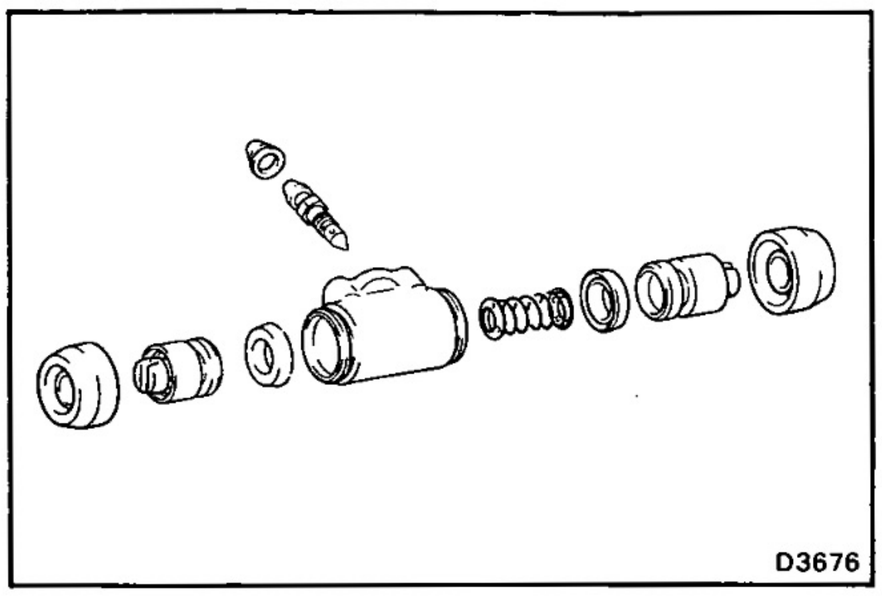

6. DISASSEMBLE WHEEL CYLINDER

Remove the following parts from the wheel cylinder.

- Two boots
- Two pistons
- Two piston cups
- Spring

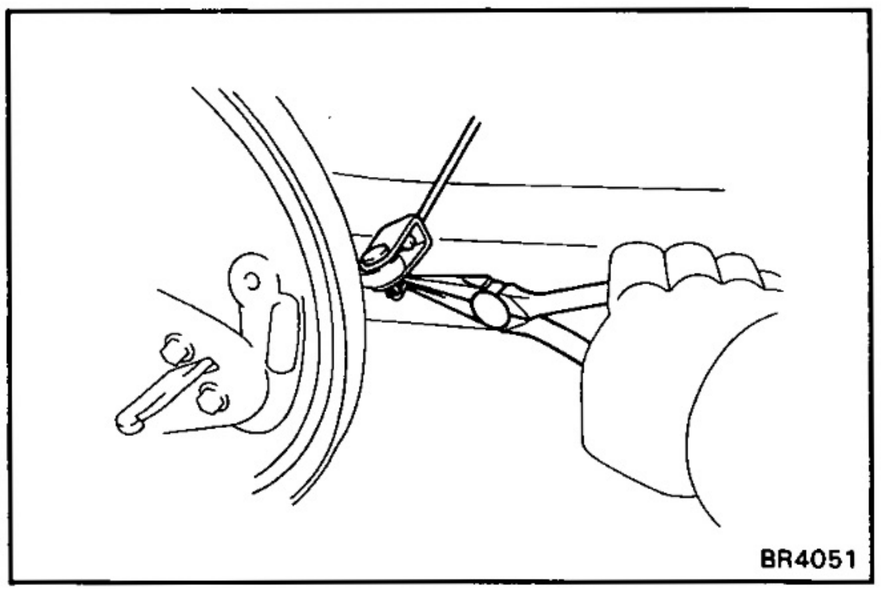

7. IF NECESSARY, REMOVE AND DISASSEMBLE PARKING BRAKE BELLCRANK ASSEMBLY

(a) Remove the clip.

(b) Remove the pin and wave washer, then disconnect the parking brake cable.

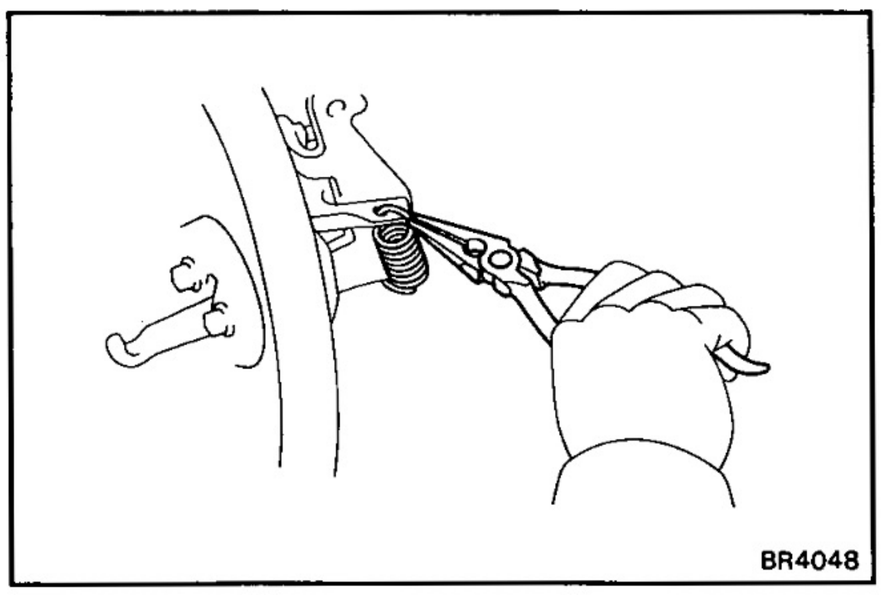

(c) Remove the two tension springs.

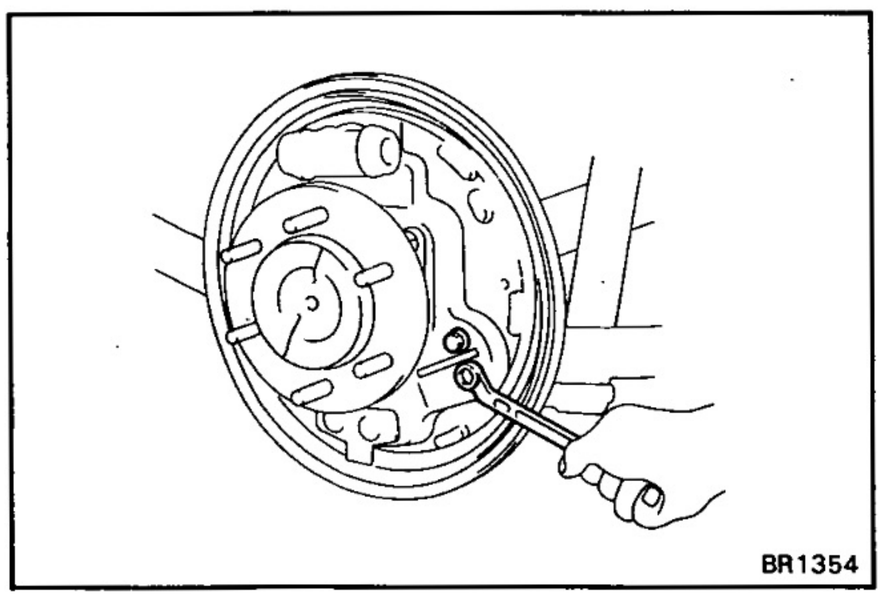

(d) Remove the two bolts and parking brake bellcrank assembly.

(e) Remove the boot from the parking brake bellcrank bracket.

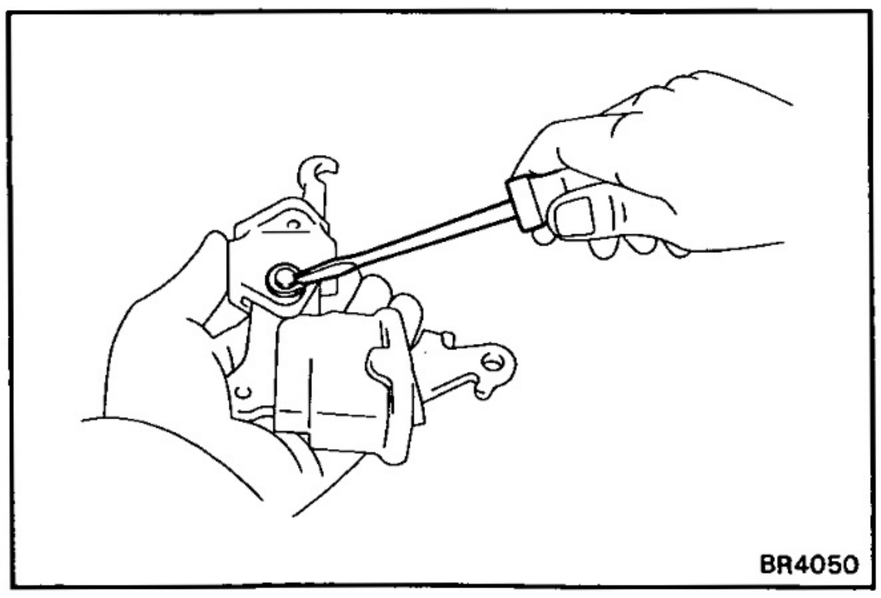

(f) Using a screwdriver, remove the C-washer and pin.

(g) Remove the parking brake bellcrank from the crank bracket.

(h) Remove the boot.

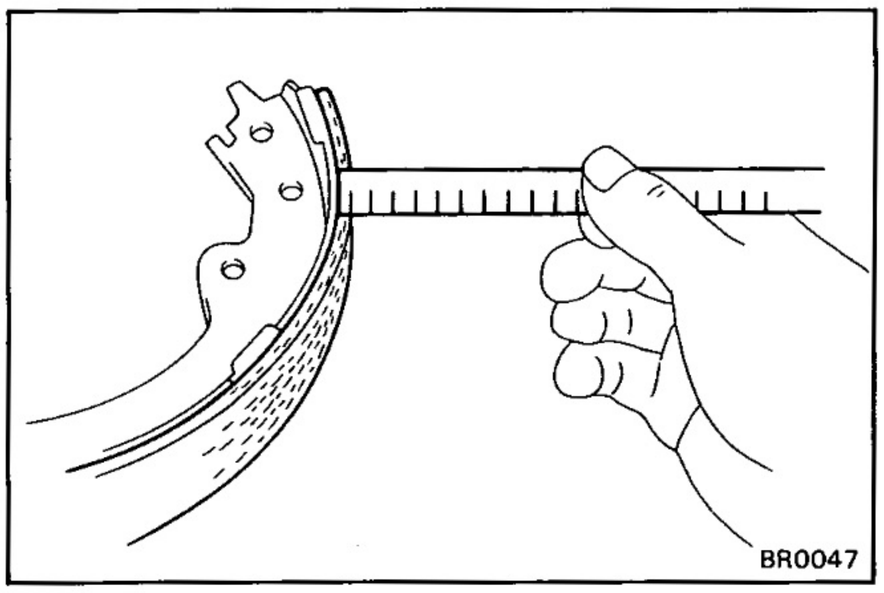

INSPECTION OF REAR BRAKE COMPONENTS

1. MEASURE BRAKE SHOE LINING THICKNESS

Minimum thickness: 1.5 mm (0.059 in.)

Standard thickness: 6.5 mm (0.265 in.)

If the shoe lining is less than minimum or shows signs of uneven wear, replace the brake shoes.

HINT: If any of the brake shoes have to be replaced, replace all of the brake shoes in order to maintain even braking.

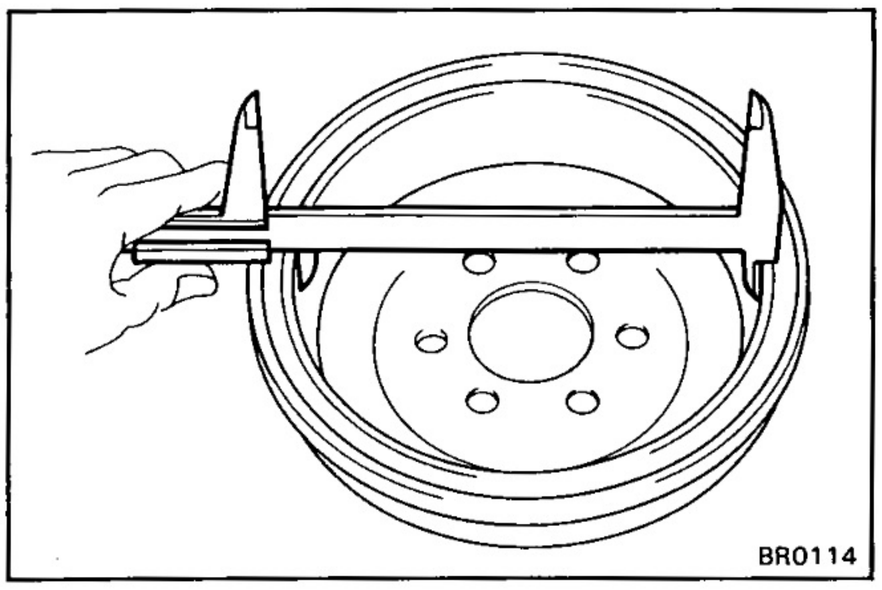

2. MEASURE BRAKE DRUM INSIDE DIAMETER

Maximum inside diameter: 297.0 mm (11.693 in.)

Standard inside diameter: 295.0 mm (11.614 in.)

If the drum is scoured or worn, the brake drum may be lathed to the maximum inside diameter.

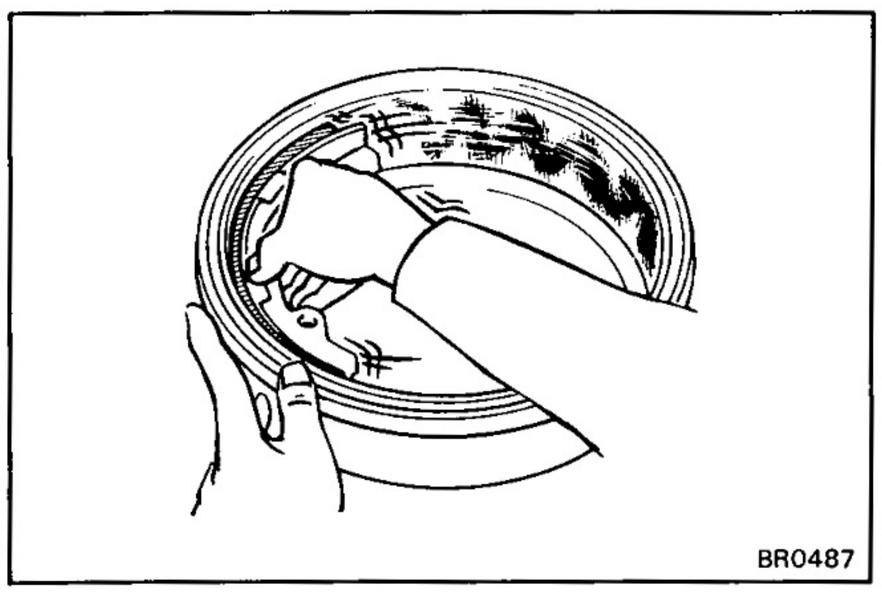

3. INSPECT BRAKE LINING AND DRUM FOR PROPER CONTACT

If the contact between the brake lining and drum is improper, repair the lining with a brake shoe grinder, or replace the brake shoe assembly.

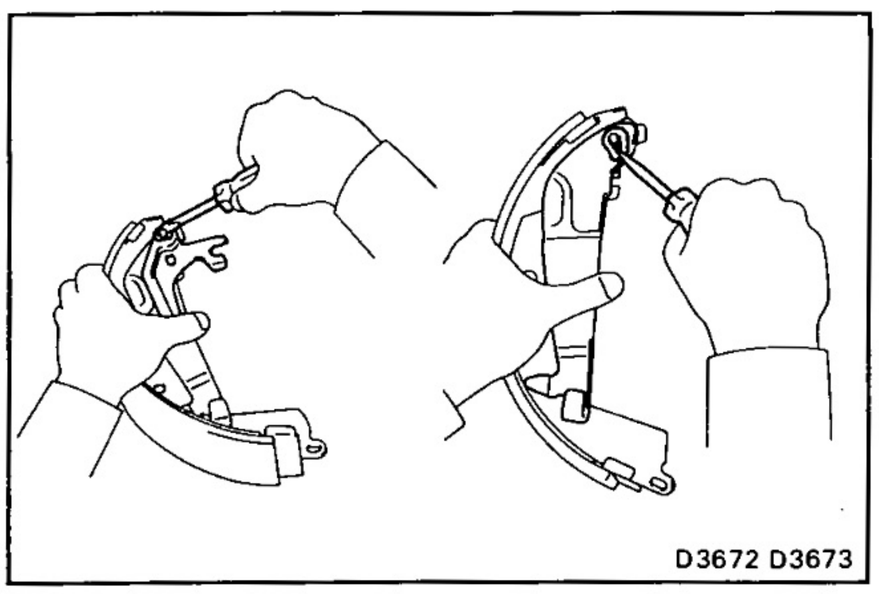

4. IF NECESSARY, REPLACE BRAKE SHOES

(a) Using a screwdriver, remove the automatic adjusting lever from the front shoe.

(b) Using a screwdriver, remove the parking brake shoe lever from the front shoe.

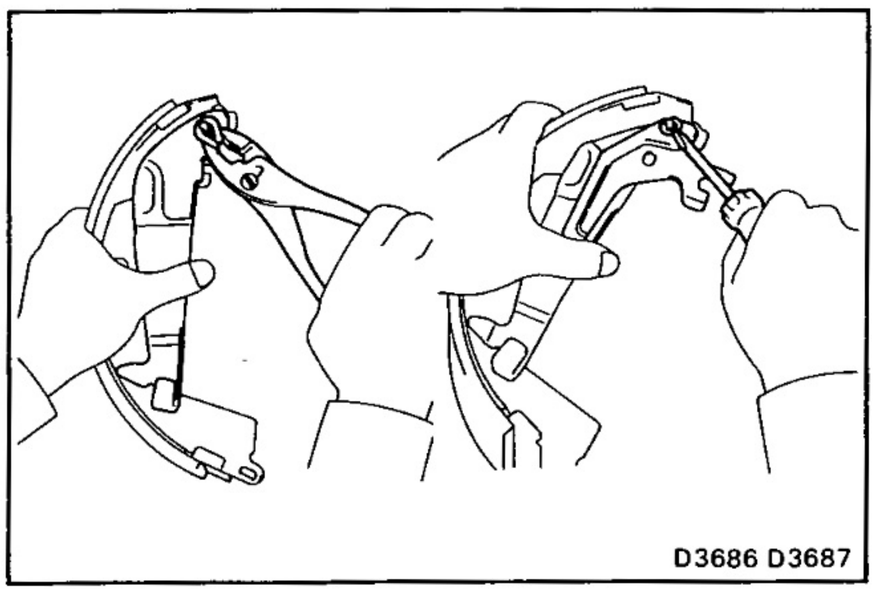

(c) Using pliers, install the parking brake shoe lever with a new C-washer.

(d) Install the automatic adjusting lever with a new E-ring.

5. INSPECT WHEEL CYLINDER FOR CORROSION OR DAMAGE

6. INSPECT BACKING PLATE FOR WEAR OR DAMAGE

7. INSPECT BELLCRANK PARTS FOR BENDING, WEAR OR DAMAGE

ASSEMBLY OF REAR BRAKE

(See page BR-41)

HINT: Assemble the parts in the correct direction as shown below.

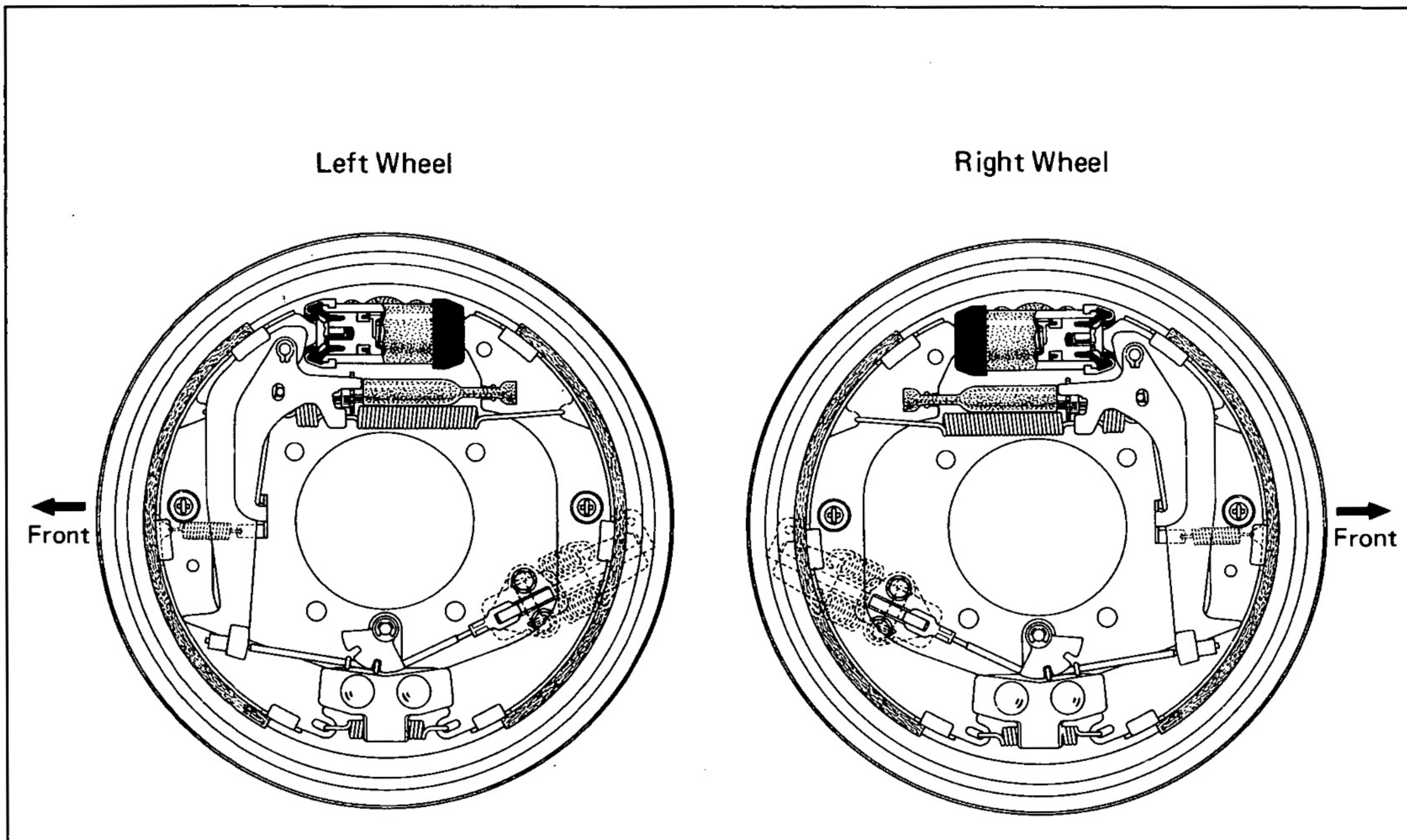

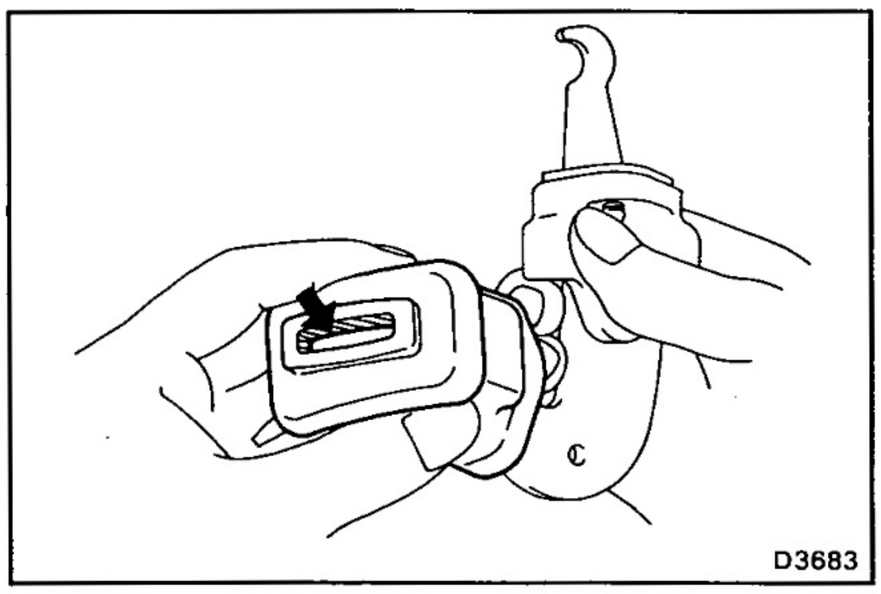

1. IF NECESSARY, ASSEMBLE AND INSTALL PARKING BRAKE BELLCRANK ASSEMBLY

(a) Apply lithium soap base glycol grease to the boot.

(b) Install the boot to the parking brake bellcrank.

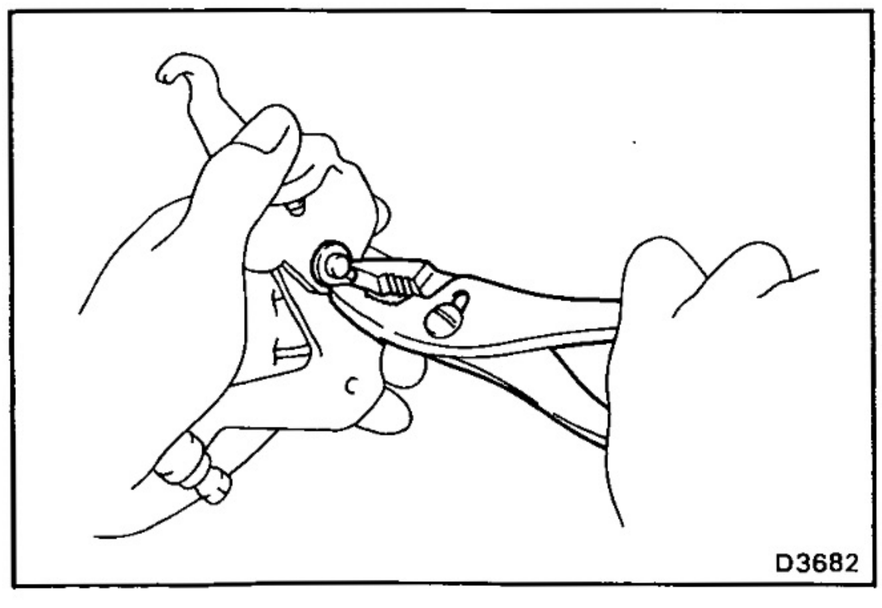

(c) Install the parking brake bellcrank to the bellcrank bracket.

(d) Install the pin with a new C-washer.

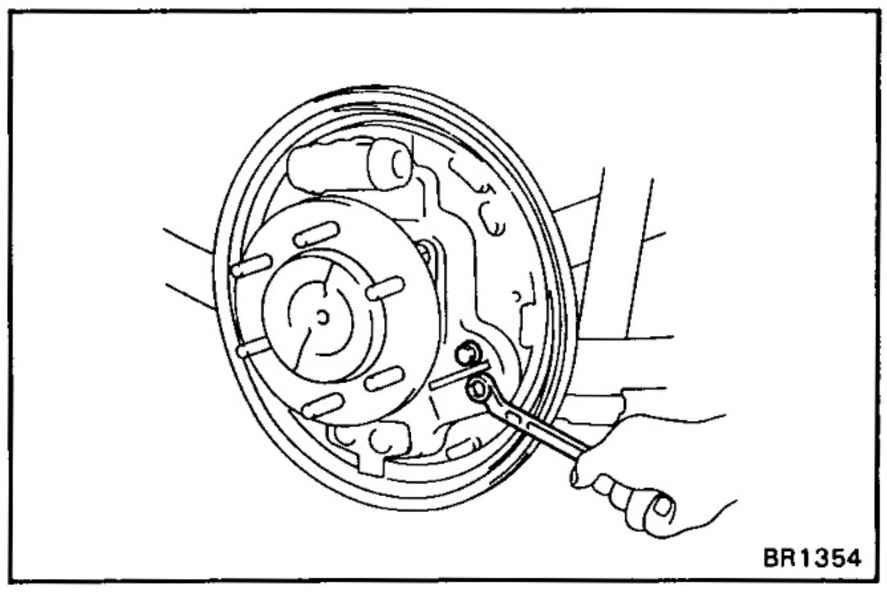

(e) Install the parking brake bellcrank assembly on the backing plate with two bolts.

(f) Torque the bolts.

Torque: 130 kg-cm (9 ft-lb, 13 N·m)

(g) Connect the parking brake cable to the bellcrank assembly with the pin, wave washer and clip.

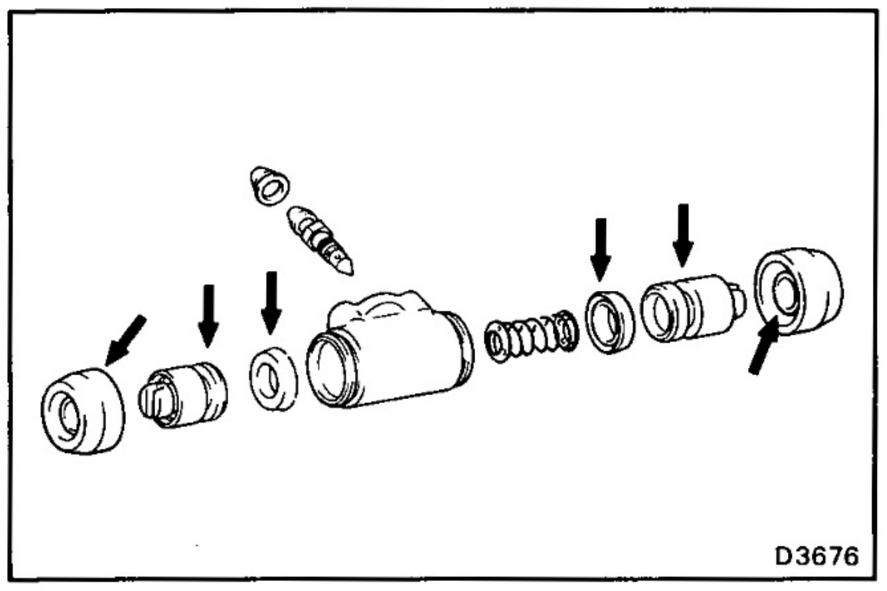

2. IF NECESSARY, ASSEMBLE AND INSTALL WHEEL CYLINDER

(a) Apply lithium soap base glycol grease to the piston cups, boots and pistons.

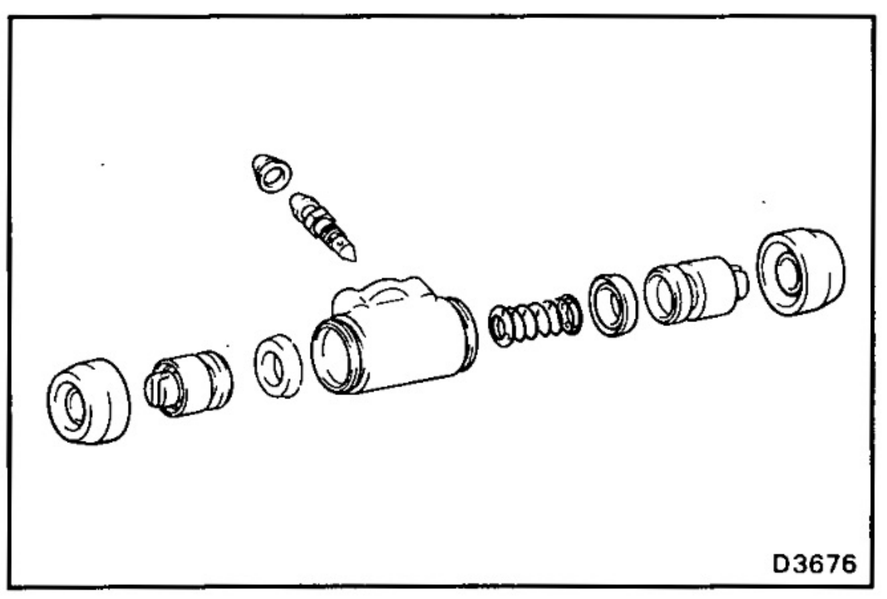

(b) Install the spring and two piston cups into the wheel cylinder.

HINT: Make sure the flanges of the cups are pointed inward.

(c) Install the two pistons, boots into the cylinder.

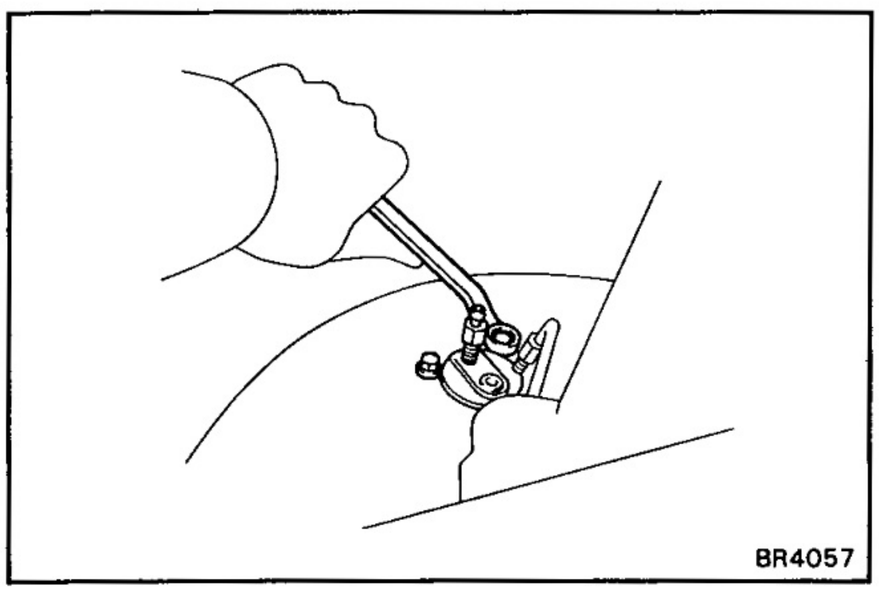

(d) Install the wheel cylinder on the backing plate with two bolts.

Torque: 100 kg-cm (7 ft-lb, 10 N·m)

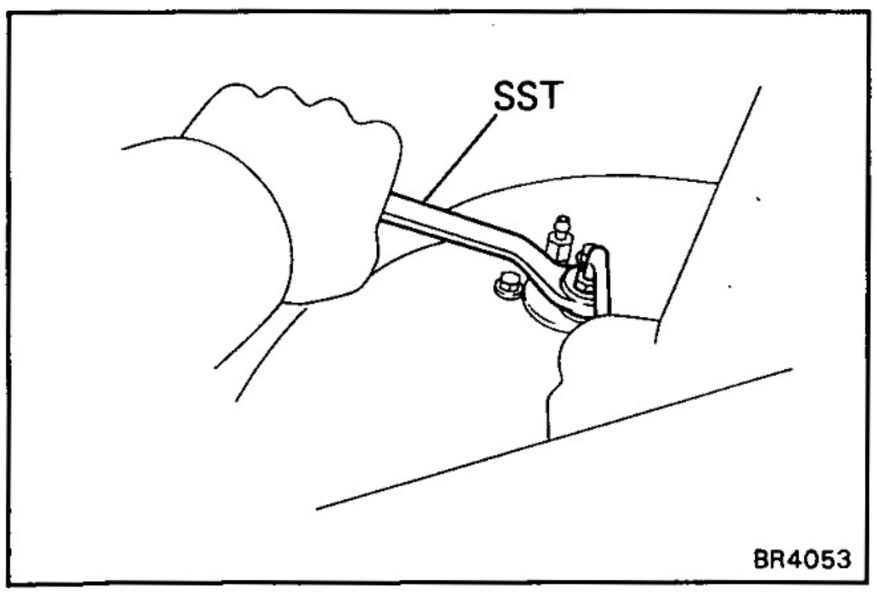

(e) Using SST, connect the brake tube.

SST 09751-36011

Torque: 155 kg-cm (11 ft-lb, 15 N·m)

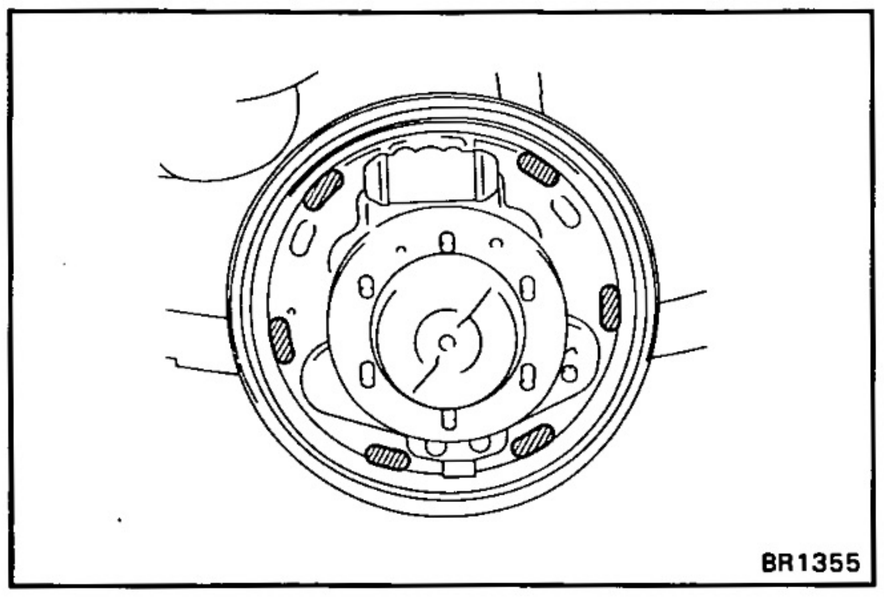

3. APPLY HIGH TEMPERATURE GREASE TO BACKING PLATE AS SHOWN

Apply high temperature grease to the sliding surfaces of the shoe.

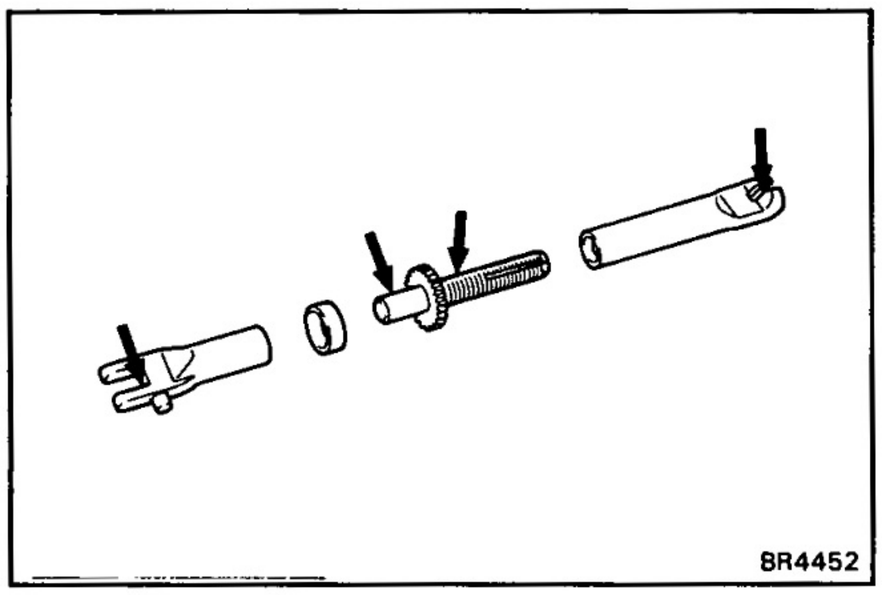

4. APPLY HIGH TEMPERATURE GREASE TO ADJUSTER

Apply high temperature grease to the adjuster bolt threads and ends.

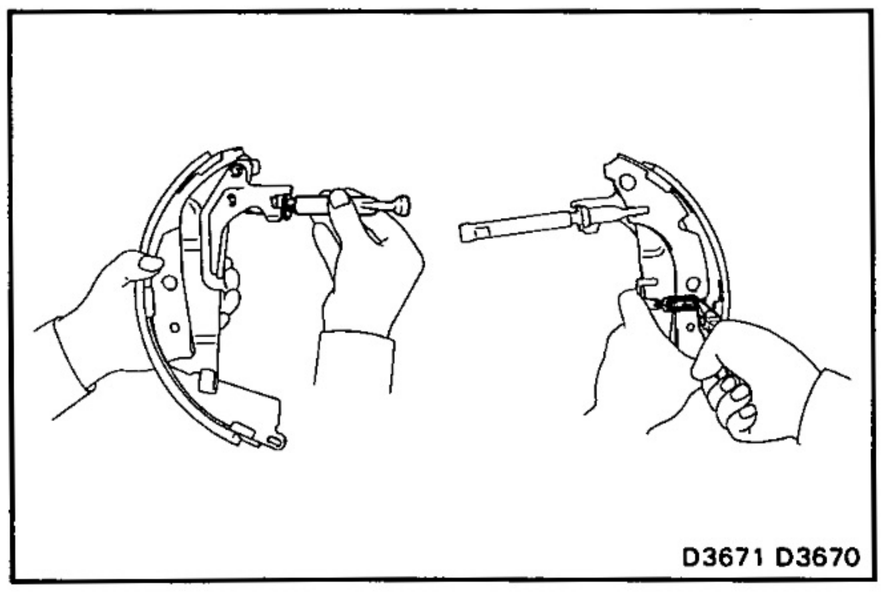

5. INSTALL ADJUSTER TO FRONT SHOE

(a) Install the adjuster to the adjusting lever.

(b) Install the adjusting lever spring.

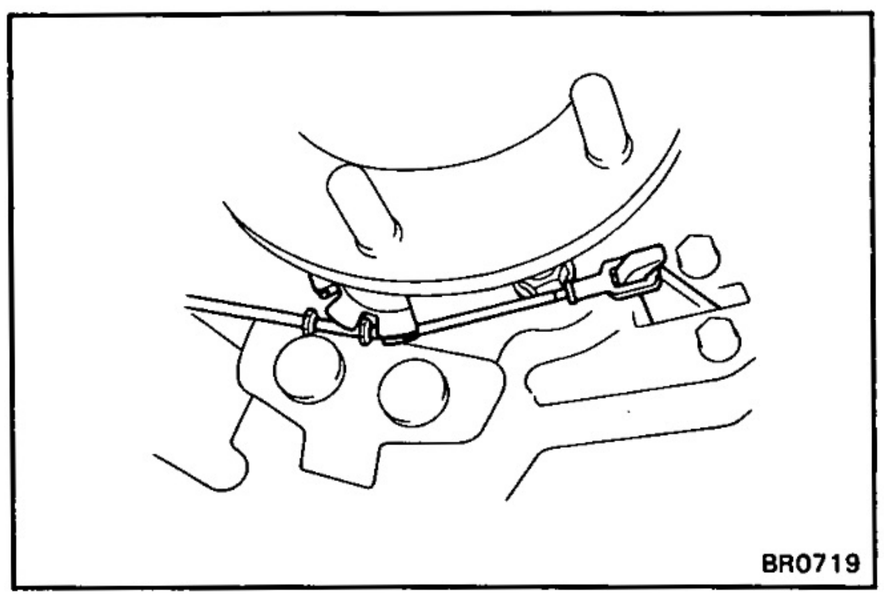

6. INSTALL FRONT SHOE

(a) Install the parking brake cable to the parking brake shoe lever.

(b) Install the parking cable to the bellcrank as shown.

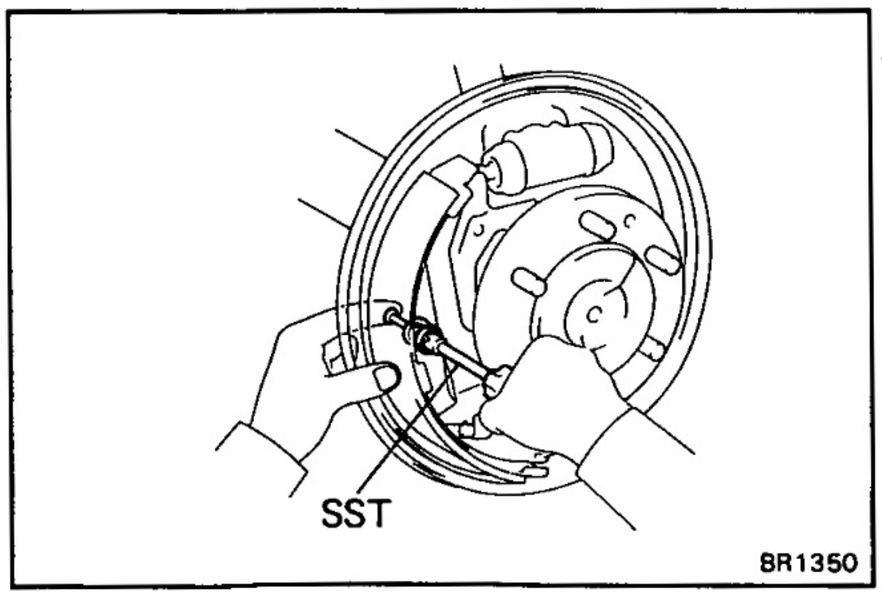

(c) Set the front shoe in place with the end of the shoe inserted in the piston.

(d) Using SST, install the shoe hold-down spring, two cups and a pin.

SST 09718-00010

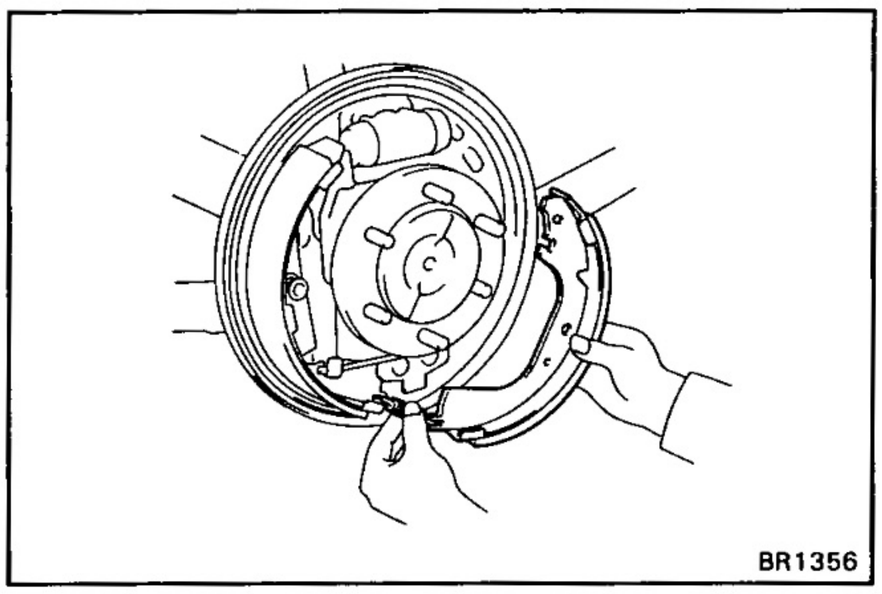

7. INSTALL REAR SHOE

(a) Install the anchor spring between the front shoe and rear shoe.

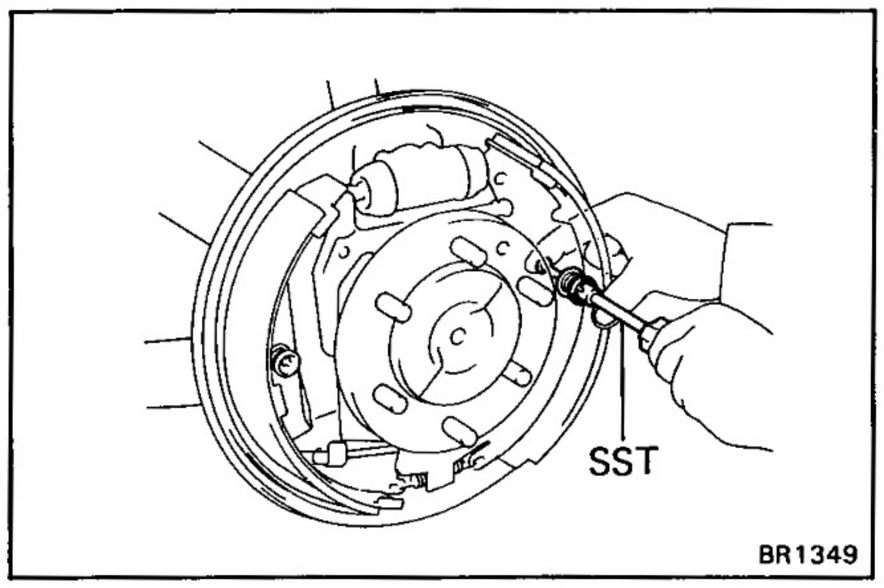

(b) Set the rear shoe in place with the end of the shoe inserted in the piston.

(c) Using SST, install the shoe hold-down spring, two cups and a pin.

SST 09718-00010

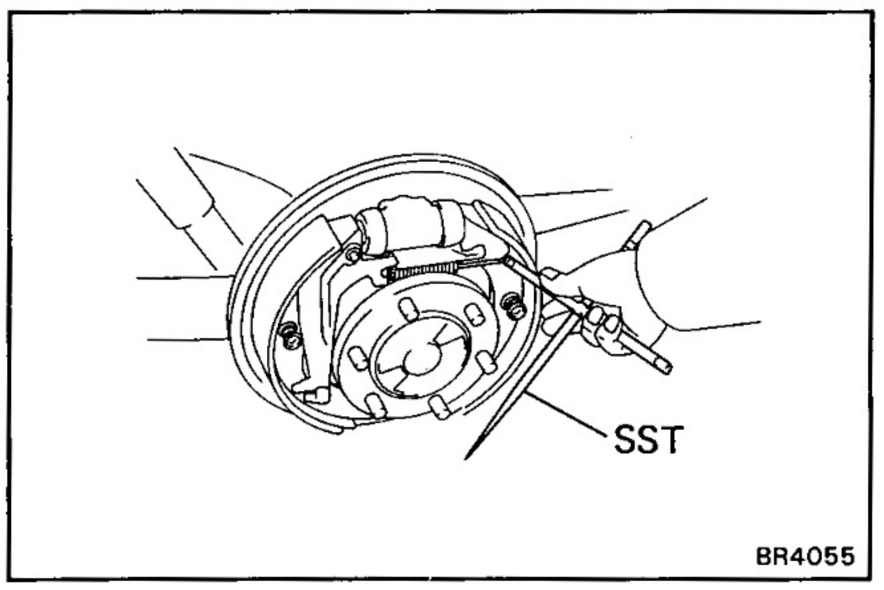

(d) Using SST, install the return spring.

SST 09703-30010

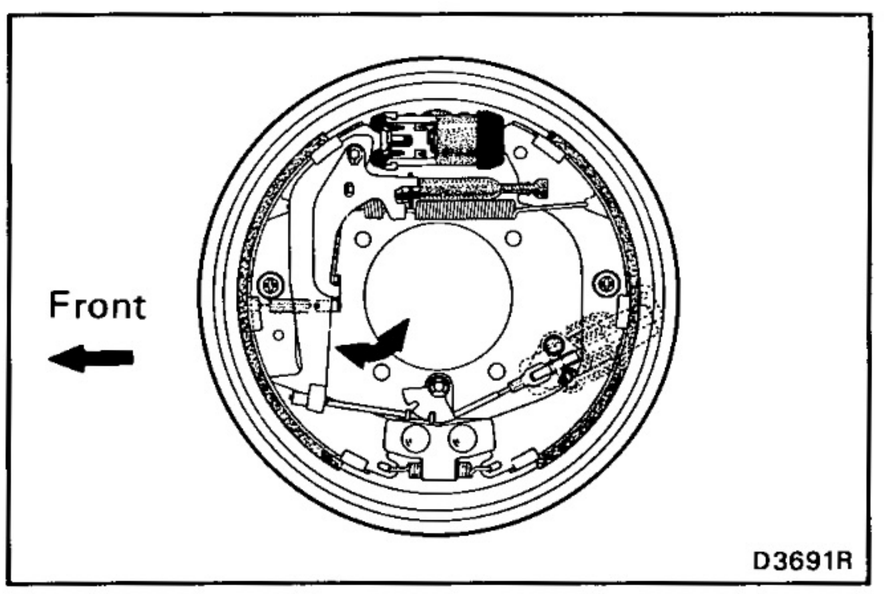

8. CHECK OPERATION OF AUTOMATIC ADJUSTER MECHANISM

(a) Pull the parking brake cable backward as shown, and release. Check that the adjusting bolt turns.

If the bolt does not turn, check for incorrect installation of the rear brakes.

(b) Adjust the adjuster to the shortest possible length.

(c) Install the drum.

(d) Connect the No. 2 parking brake cable to the bellcrank.

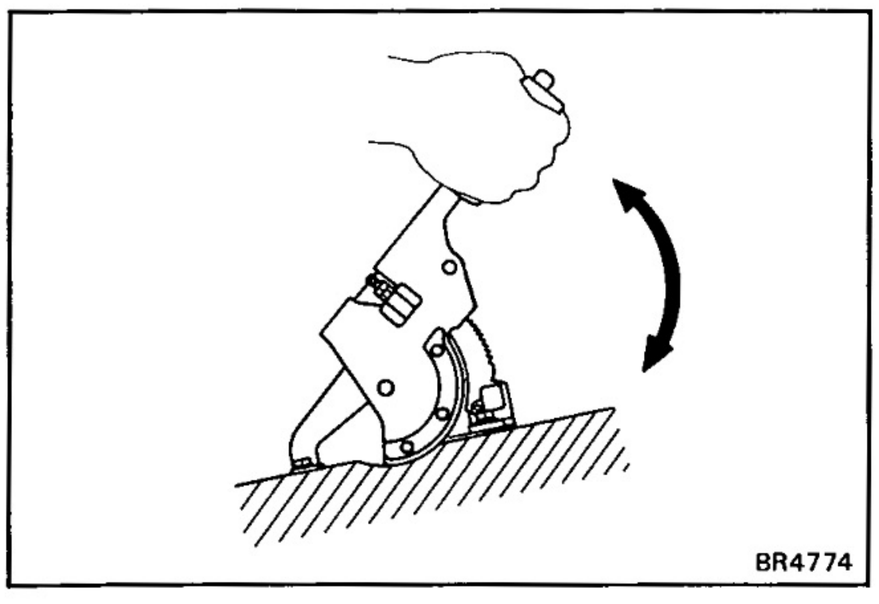

(e) Pull the parking brake lever all the way up and down until a clicking sound can no longer be heard.

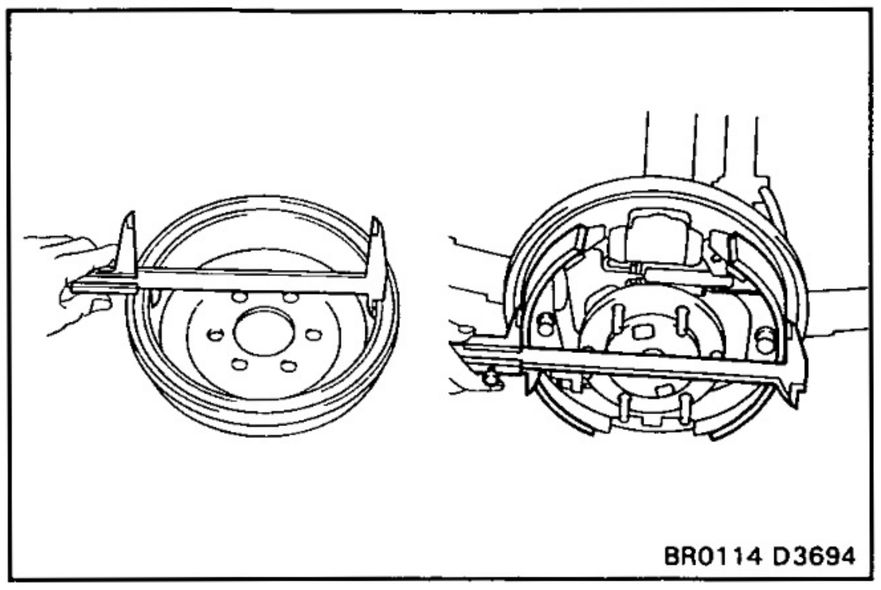

9. CHECK CLEARANCE BETWEEN BRAKE SHOES AND DRUM

(a) Remove the brake drum.

(b) Measure the brake drum inside diameter and diameter of the brake shoes. Check that the difference between the diameter is correct shoe clearance.

Shoe clearance: 0.6 mm (0.024 in.)

If incorrect, check the parking brake system.

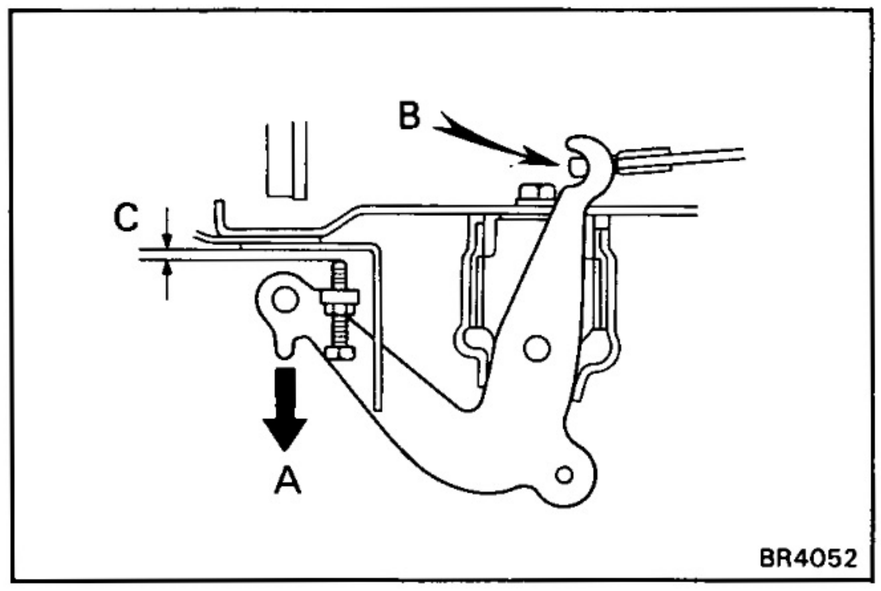

10. IF NECESSARY, ADJUST BELLCRANK

(a) Lightly pull the bellcrank in direction A until there is no slack at part B.

(b) In this condition, turn the adjusting bolt so that dimension C will be 0.4 - 0.8 mm (0.016 - 0.031 in.).

(c) Lock the adjust bolt with the lock nut.

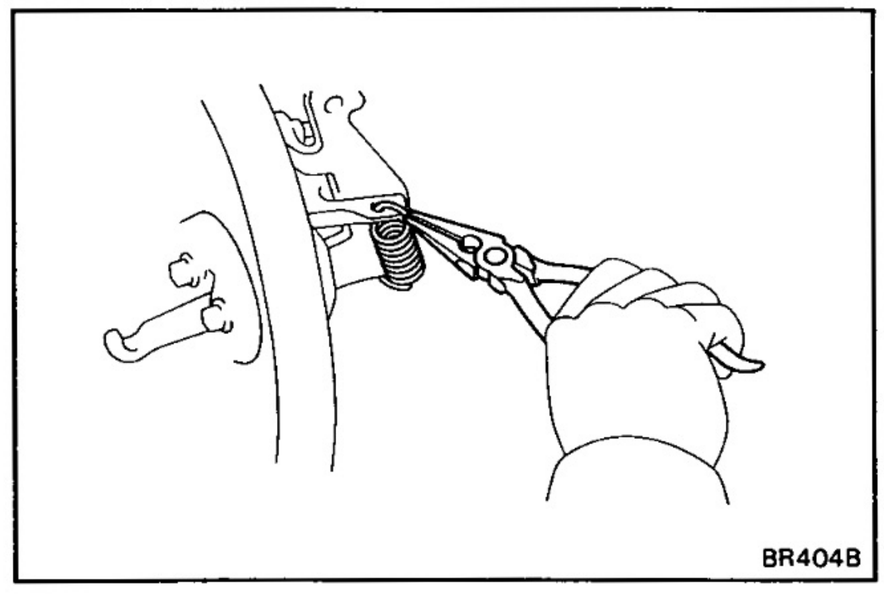

(d) Install the two tension springs.

11. INSTALL BRAKE DRUM AND REAR WHEEL

12. FILL BRAKE RESERVOIR WITH BRAKE FLUID AND BLEED BRAKE SYSTEM
(See page BR-7)

13. CHECK FOR FLUID LEAKAGE

Disc Brake

COMPONENTS

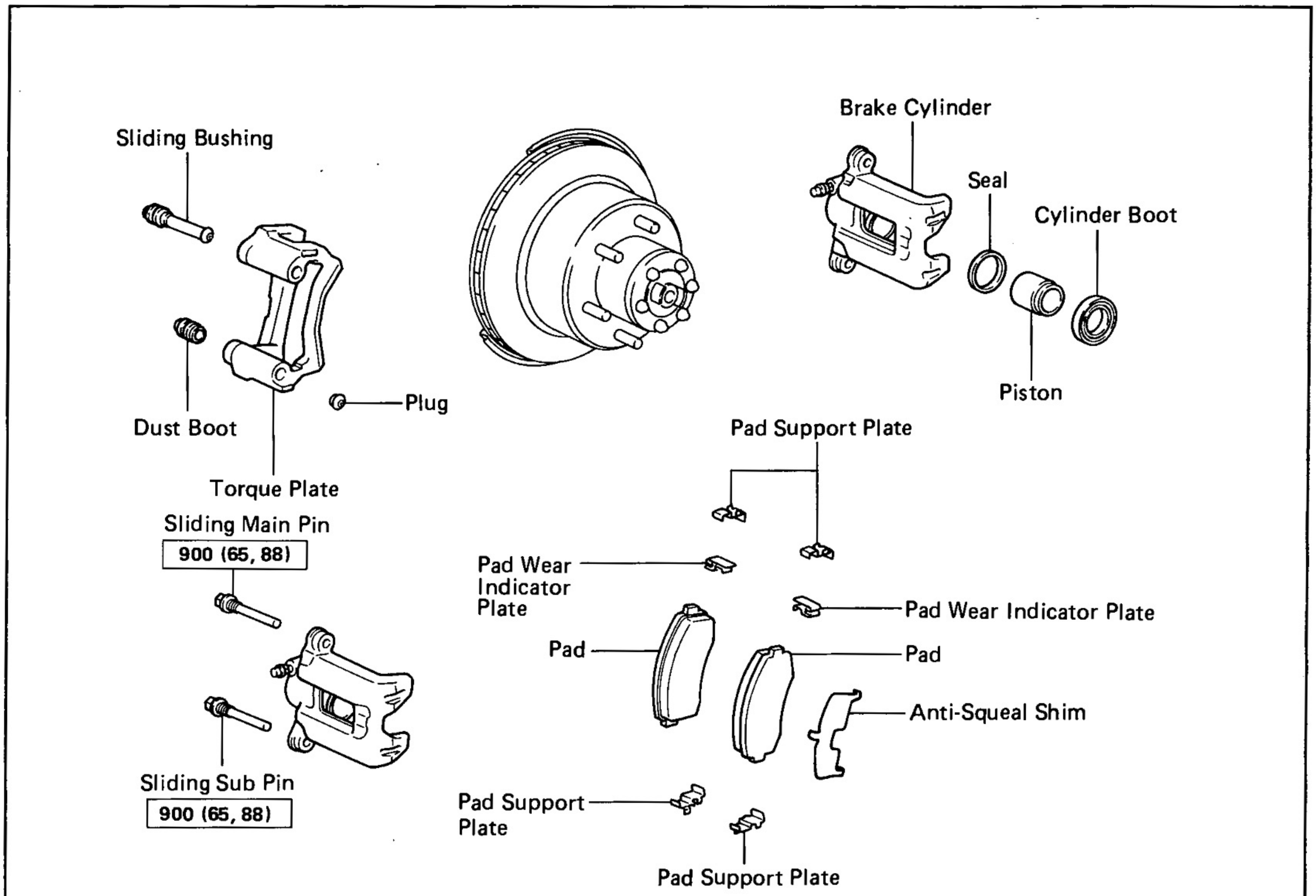

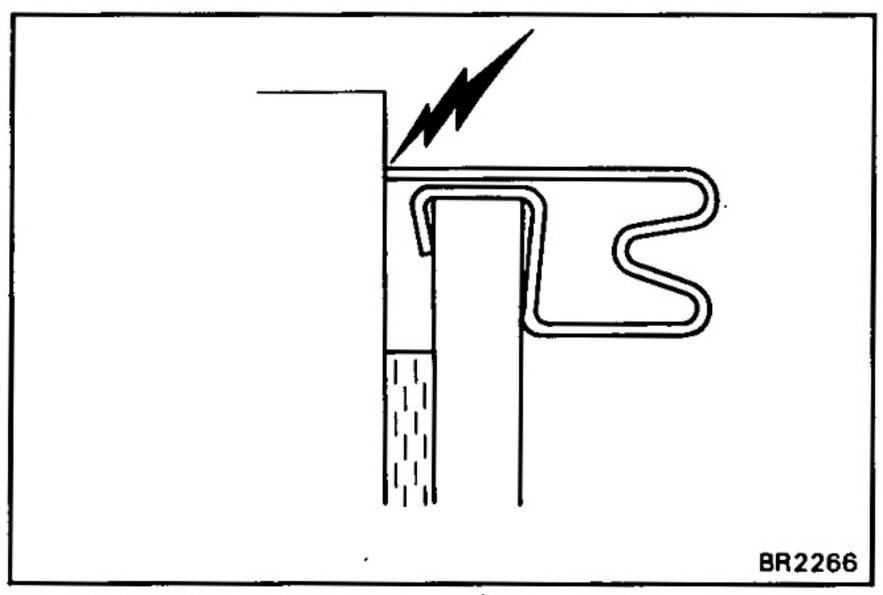

REPLACEMENT OF BRAKE PADS

HINT: If a squealing noise occurs from the brakes while driving, check the pad wear indicator plate. If the pad wear indicator plate contacts the rotor disc, the brake pads should be replaced.

1. REMOVE REAR WHEEL

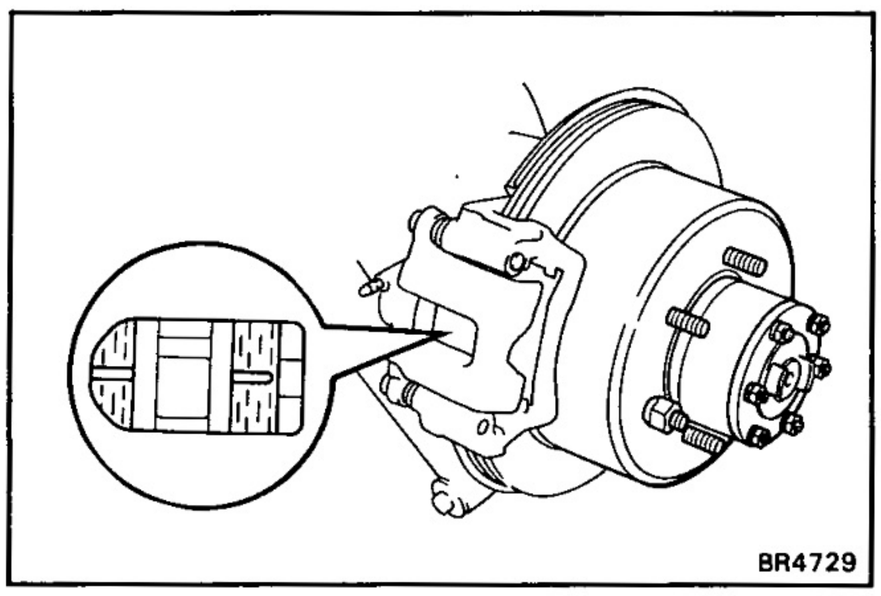

2. INSPECT PAD LINING THICKNESS

Check the pad thickness through the cylinder inspection hole and replace pads if not within specification.

Minimum thickness: 1.0 mm (0.039 in.)

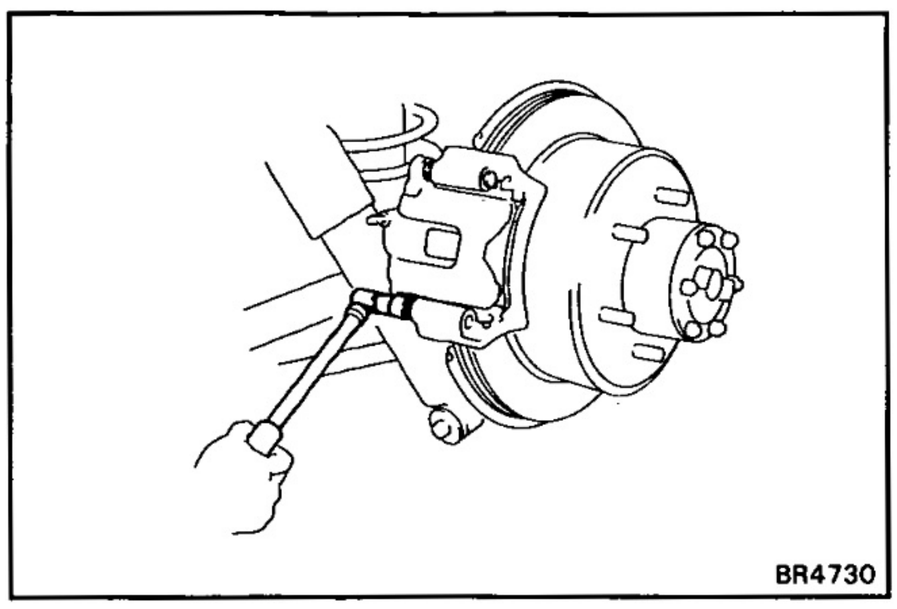
BR4730

3. REMOVE BRAKE CYLINDER

(a) Remove the sliding main pin and sliding sub pin.

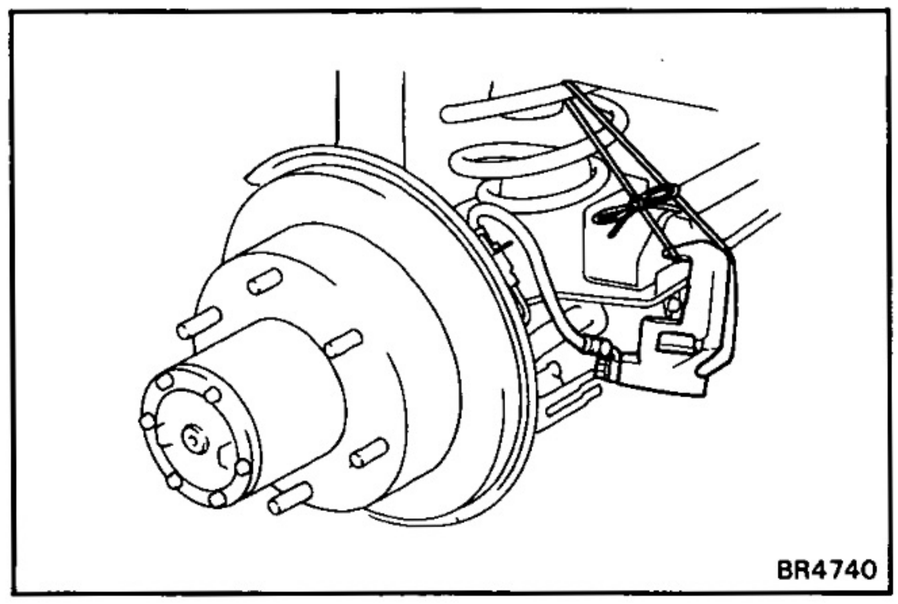
BR4740

(b) Remove the brake cylinder and suspend it so the hose is not stretched.

HINT: Do not disconnect the brake hose.

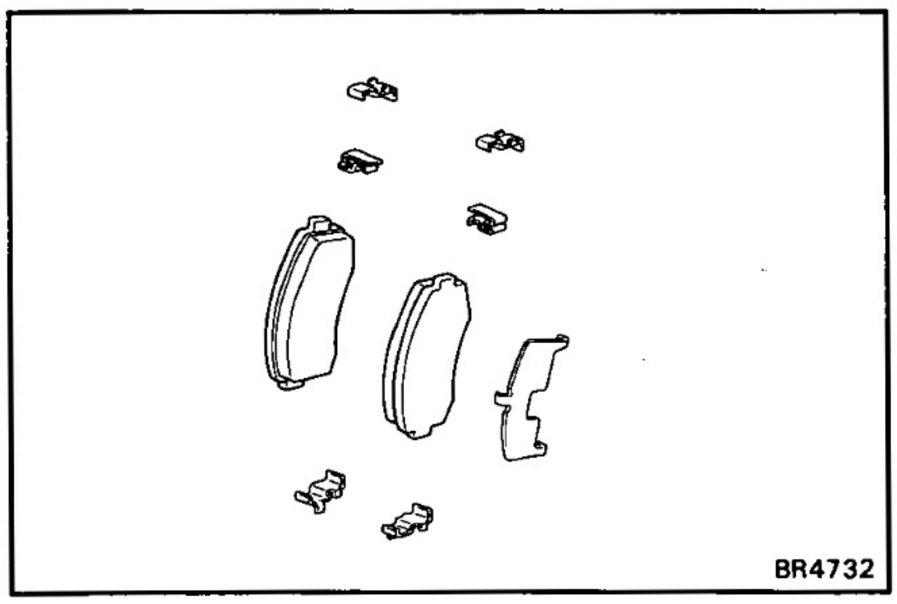
BR4732

4. REMOVE FOLLOWING PARTS

(a) Two brake pads

(b) Anti-squeal shim

(c) Two pad wear indicator plates

(d) Four pad support plates

5. CHECK ROTOR DISC THICKNESS

(See step 2 on page BR-54)

6. CHECK ROTOR DISC RUNOUT

(See step 3 on page BR-54)

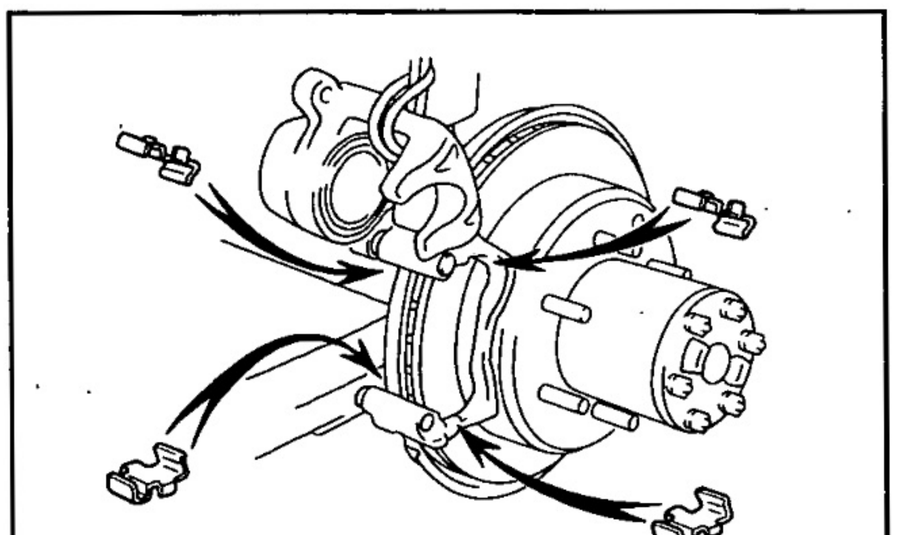
BR4722

7. INSTALL PAD SUPPORT PLATES

Install the four pad support plates.

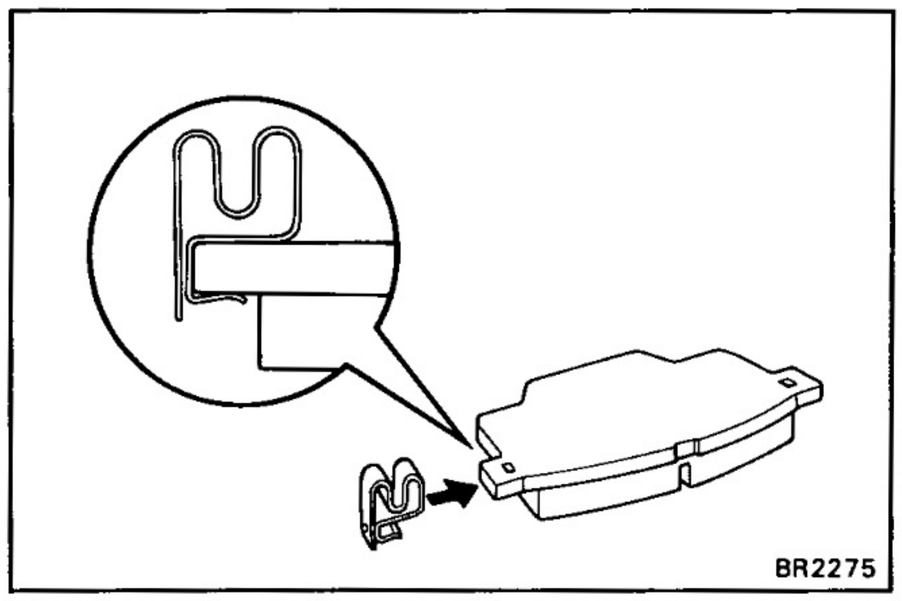
BR2275

8. INSTALL NEW PADS

(a) Install pad wear indicator plate to each pads.

(b) Install the two anti-squeal shims to the each pads.

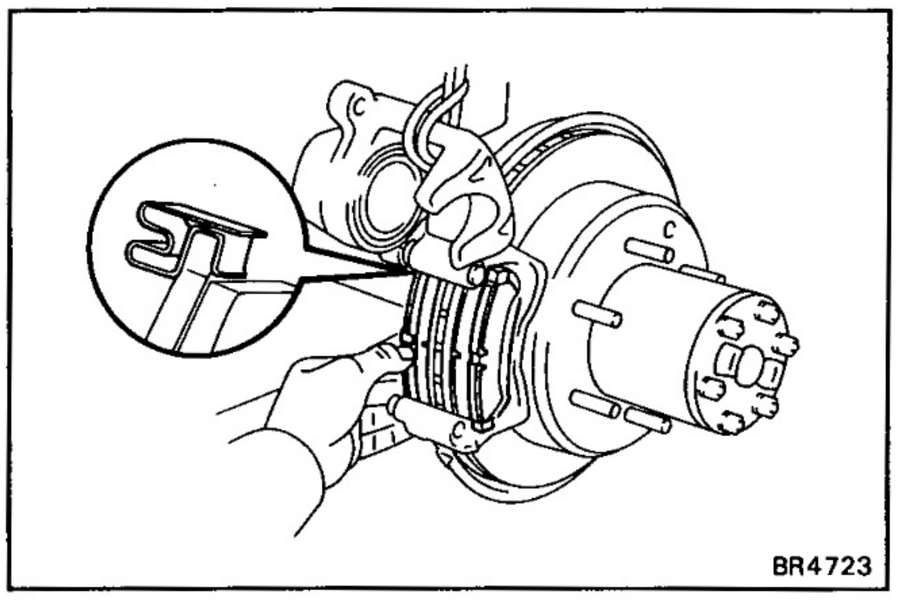
BR4723

(c) Install the two pads so the wear indicator plate is facing upward.

NOTICE: Do not allow oil or grease to get on the rubbing face.

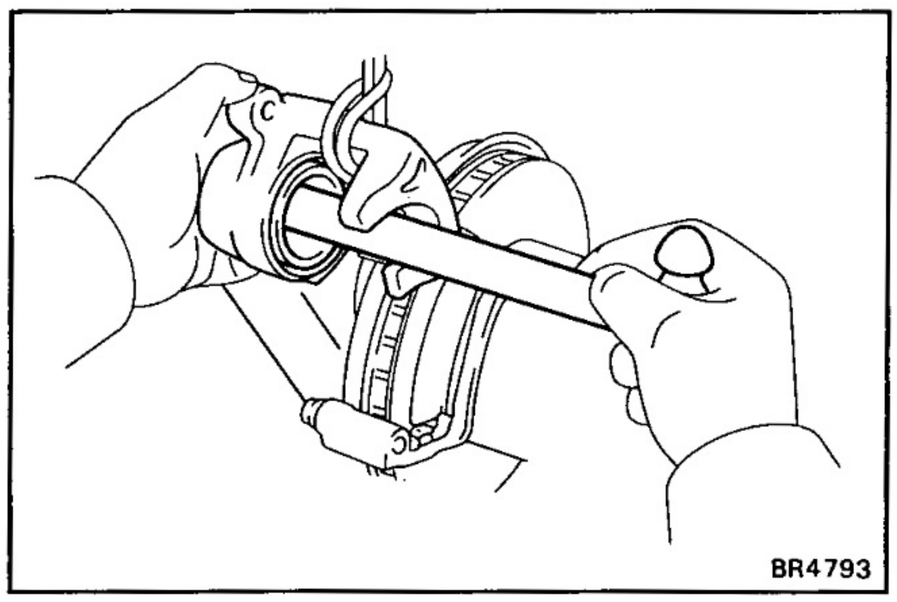
BR4793

9. INSTALL CYLINDER

(a) Draw out a small amount of brake fluid from reservoir.

(b) Press in piston with a hammer handle or an equivalent.

HINT: Always change the pads on one wheel at a time as there is a possibility of the opposite piston flying out.

(c) Install the brake cylinder carefully so the boot is not wedged.

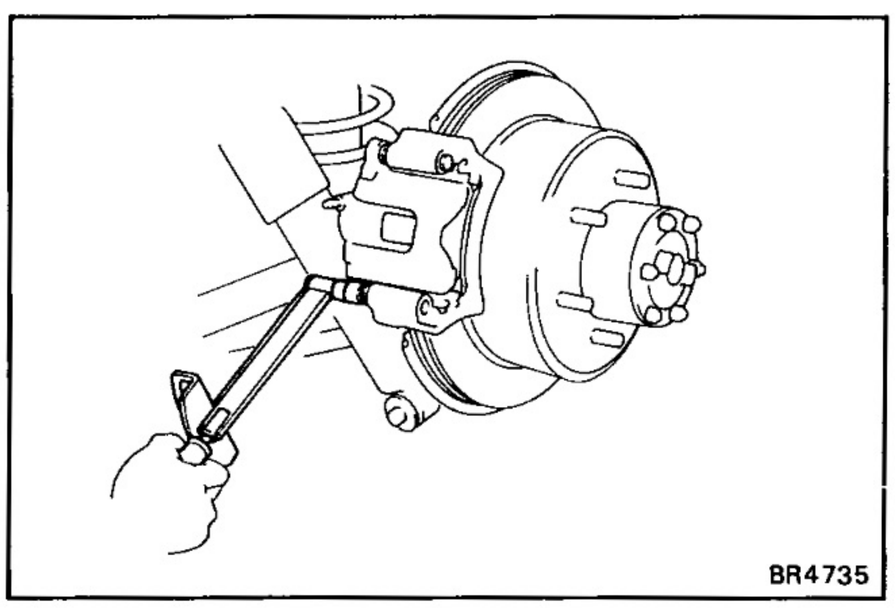
BR4735

(d) Install and torque the sliding main pin and sub pin.

Torque: 900 kg-cm (65 ft-lb, 88 N·m)

10. INSTALL REAR WHEEL

11. FILL BRAKE FLUID

REMOVAL OF CYLINDER

(See page BR-50)

1. **DISCONNECT BRAKE HOSE**

   Remove the union bolt and disconnect the brake hose.

   Use a container to catch the brake fluid.

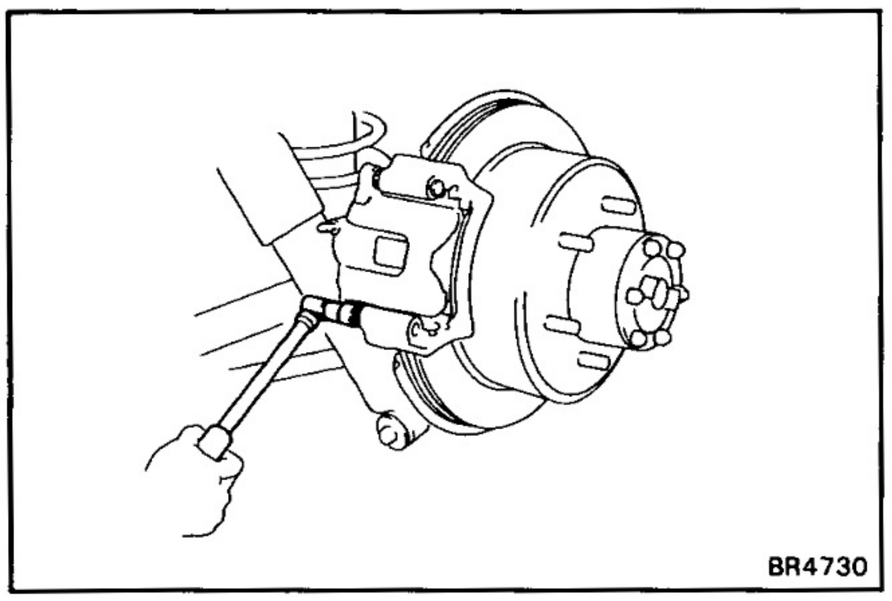

2. **REMOVE CYLINDER FROM TORQUE PLATE**

   Remove the two sliding pins and cylinder.

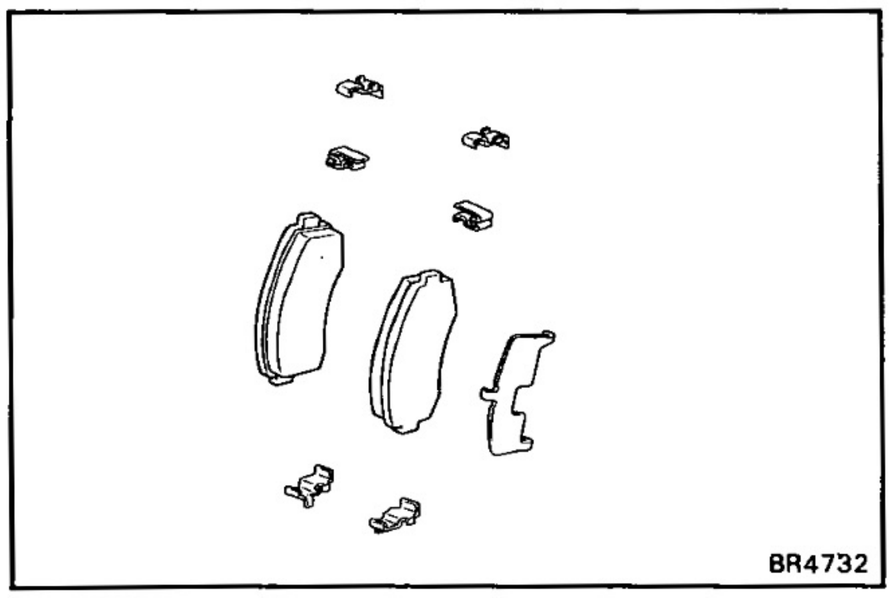

3. **REMOVE PADS**

(See step 3 on page BR-51)

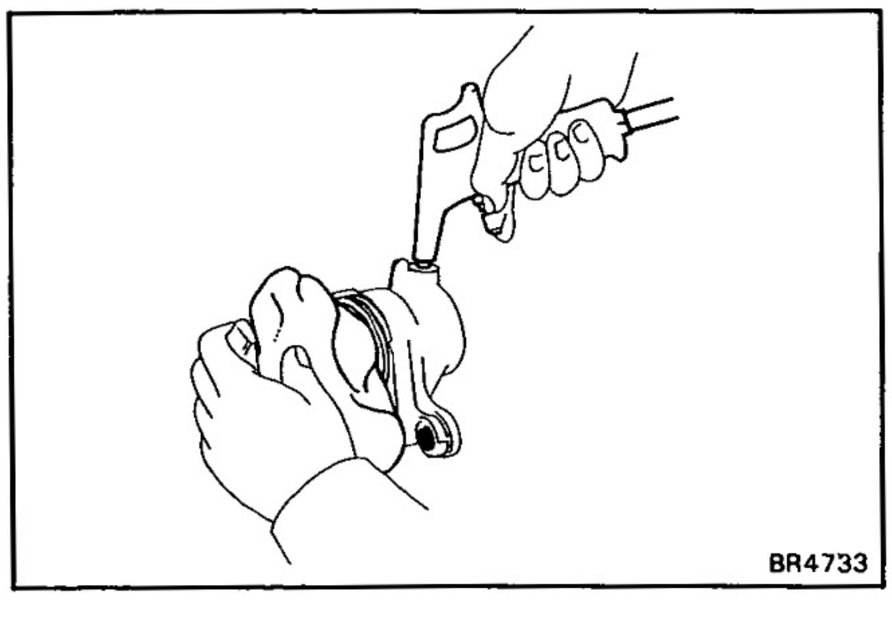

DISASSEMBLY OF CYLINDER

(See page BR-50)

1. **REMOVE PISTON FROM CYLINDER**

   (a) Put a piece of cloth or equivalent between the piston and cylinder.

   (b) Use compressed air to remove the piston and cylinder boot from the cylinder.

   NOTICE: Do not place your fingers in front of the piston when using compressed air.

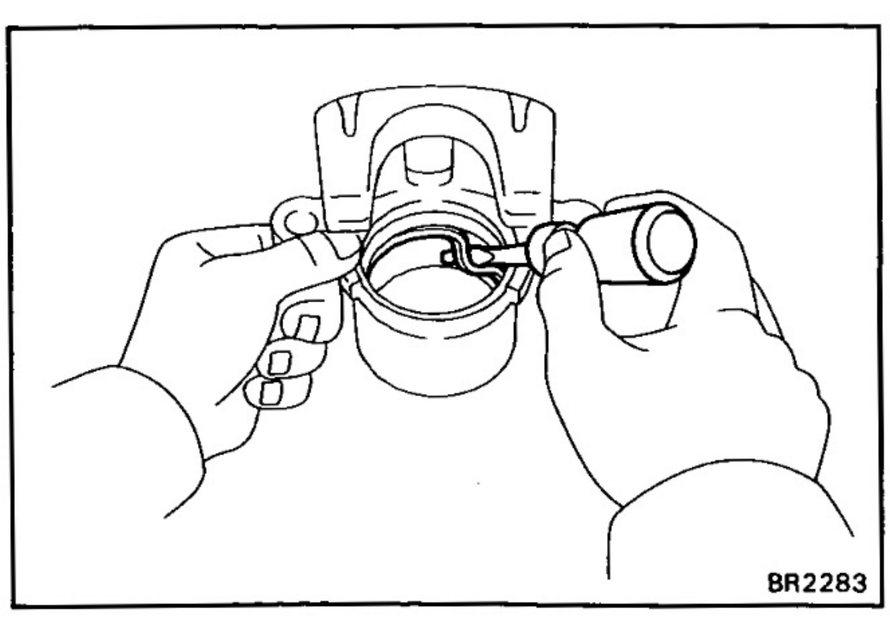

2. **REMOVE PISTON SEAL FROM BRAKE CYLINDER**

   Using a screwdriver, remove the piston seal.

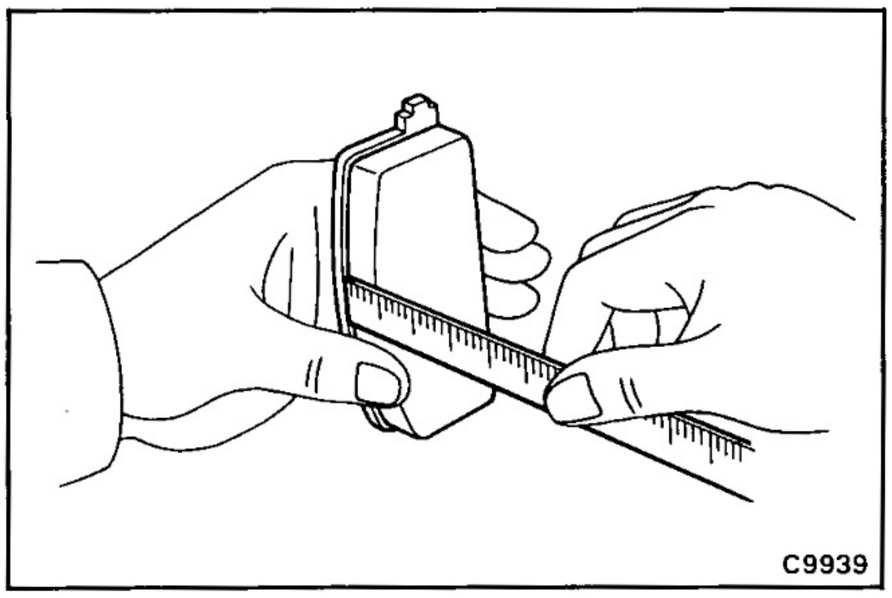

INSPECTION AND REPAIR OF REAR BRAKE COMPONENTS

1. MEASURE PAD LINING THICKNESS

Minimum thickness: 1.0 mm (0.039 in.)

Standard thickness: 10.0 mm (0.394 in.)

Replace the pad if the thickness is less than the minimum or if it shows sign of uneven wear.

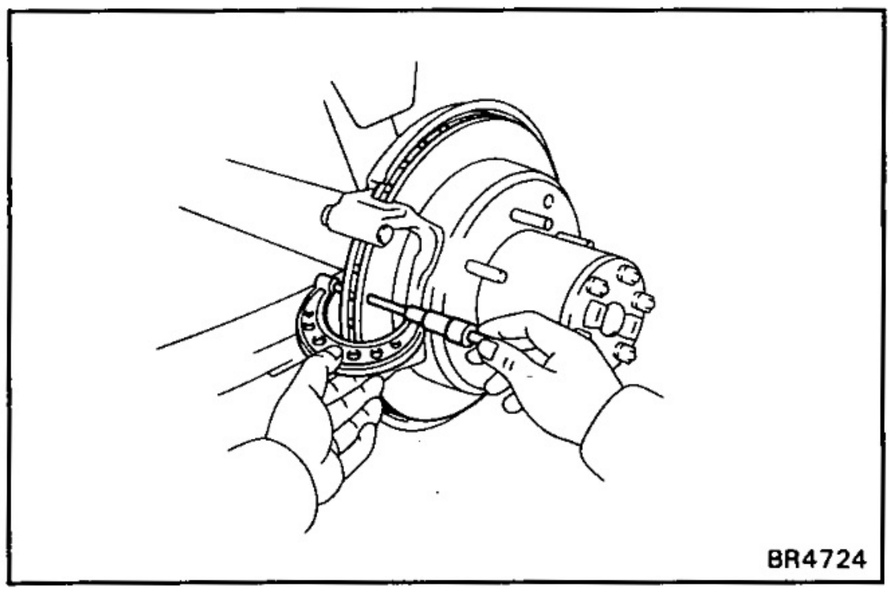

2. MEASURE ROTOR DISC THICKNESS

Minimum thickness: 16.0 mm (0.630 in.)

Standard thickness: 18.0 mm (0.709 in.)

If the disc is scored or worn, or if thickness is less than minimum, or replace the disc.

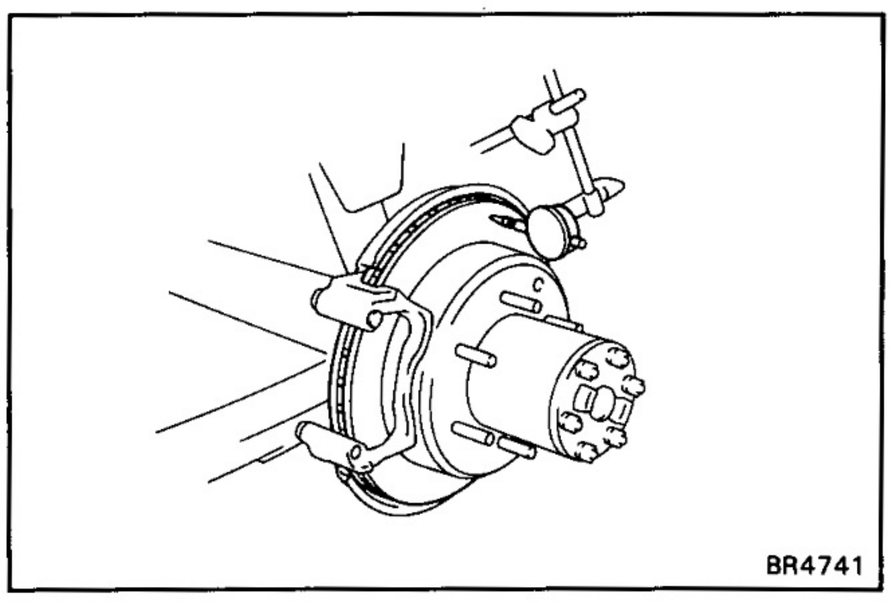

3. MEASURE ROTOR DISC RUNOUT

Measure the rotor disc runout at 10 mm (0.39 in.) from the outer edge of rotor disc.

Maximum disc runout: 0.15 mm (0.0059 in.)

If the runout is greater than maximum, replace the disc.

HINT: Before measuring the runout, confirm that the front bearing play is within specification.

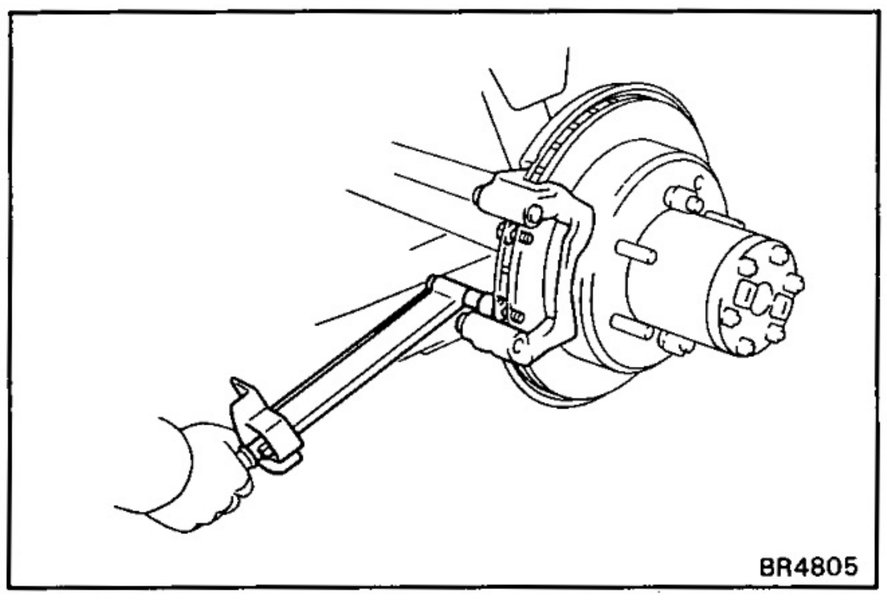

4. IF NECESSARY, REPLACE ROTOR DISC

(a) Remove the torque plate from the knuckle.

(b) Remove the wheel nuts of temporarily installed rotor disc and pull off the rotor disc from the axle hub.

(c) Install a new rotor disc and temporarily fasten it with the wheel nuts.

(d) Install the torque plate onto knuckle.

Torque: 1,050 kg-cm (76 ft-lb, 103 N·m)

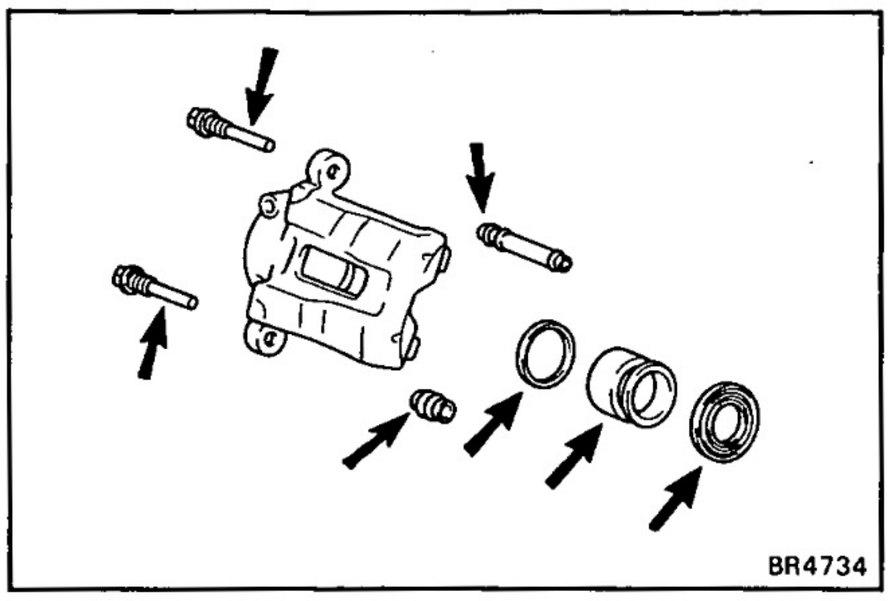

ASSEMBLY OF CYLINDER

(See page BR-50)

1. **APPLY LITHIUM SOAP BASE GLYCOL GREASE TO FOLLOWING PARTS**
   (a) Sliding bushing, hole plug and dust boot.
   (b) Piston, piston seal and cylinder boot.
   (c) Sliding pins.

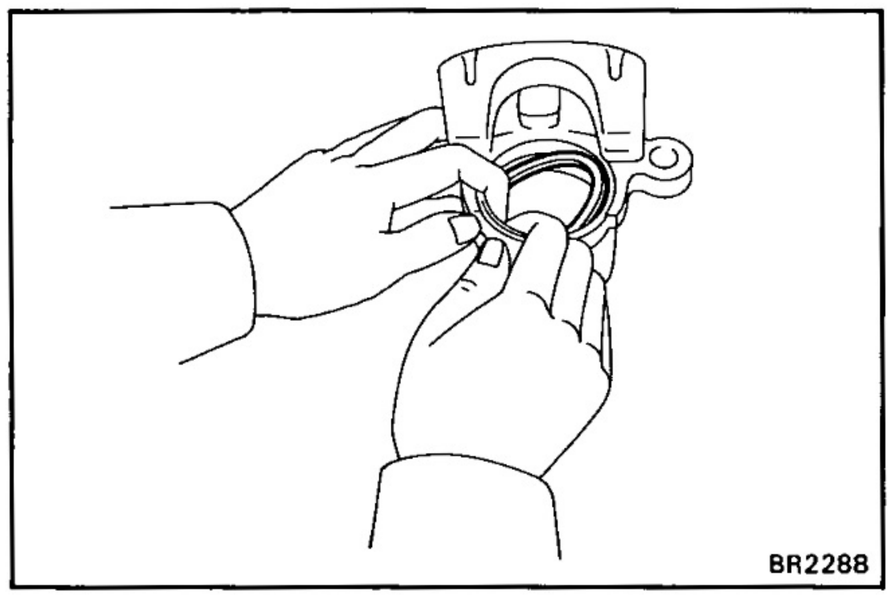

2. **INSTALL PISTON SEAL AND PISTON IN CYLINDER**
   (a) Install the piston seal into the cylinder.

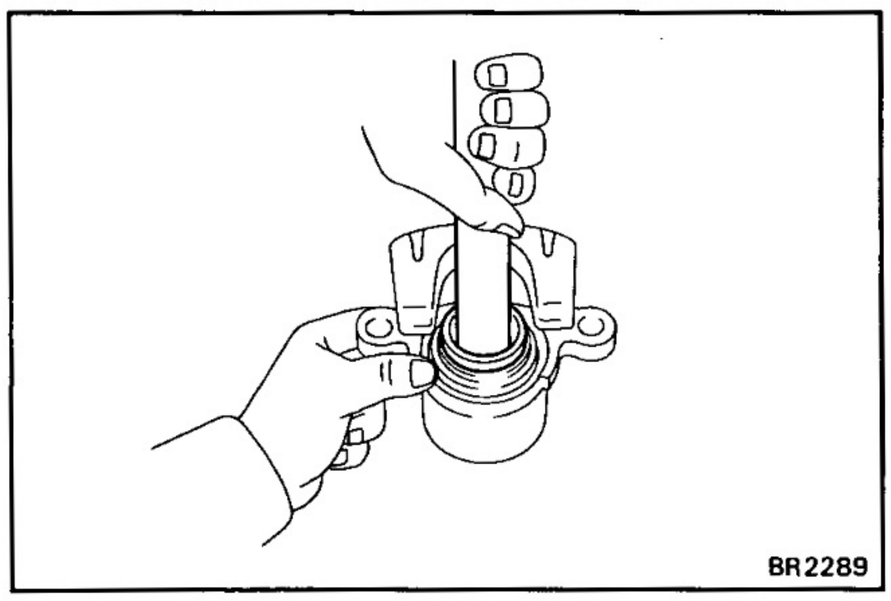

   (b) Install the piston into the cylinder.

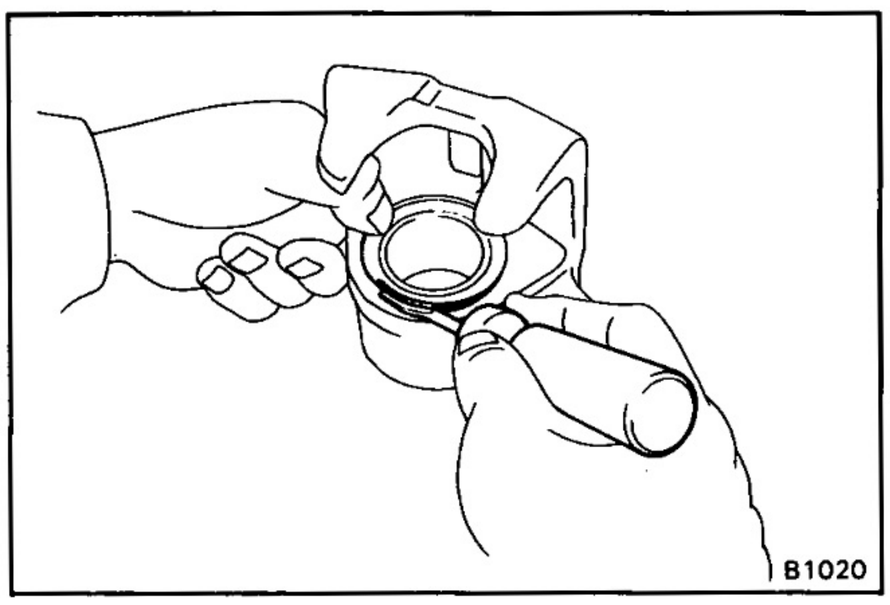

3. **INSTALL CYLINDER BOOT AND SET RING IN CYLINDER**

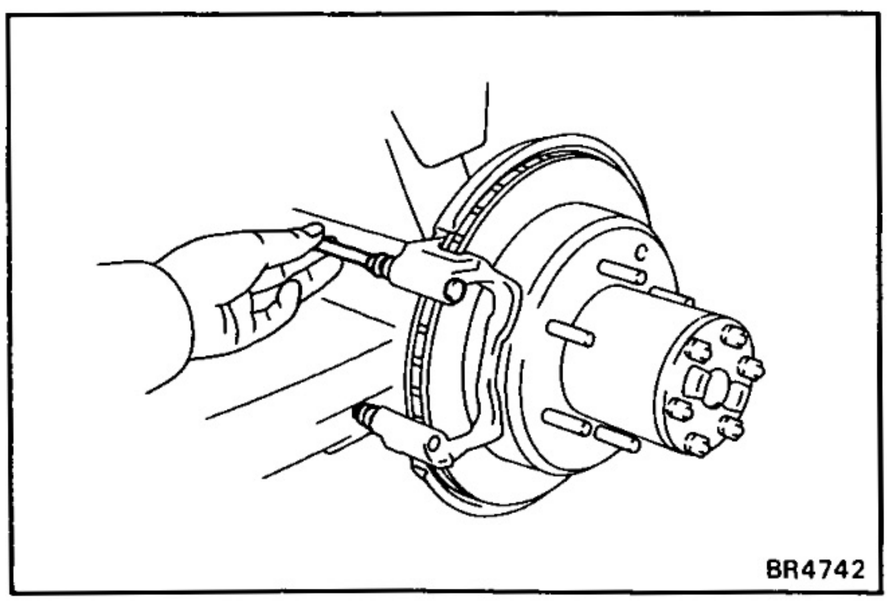

4. **INSTALL PIN BOOTS AND SLIDING BUSHING**
   (a) Install the pin boot into the sliding main pin side.
   (b) Using a plastic bar, install the cylinder sliding bushing into the sliding sub pin side.

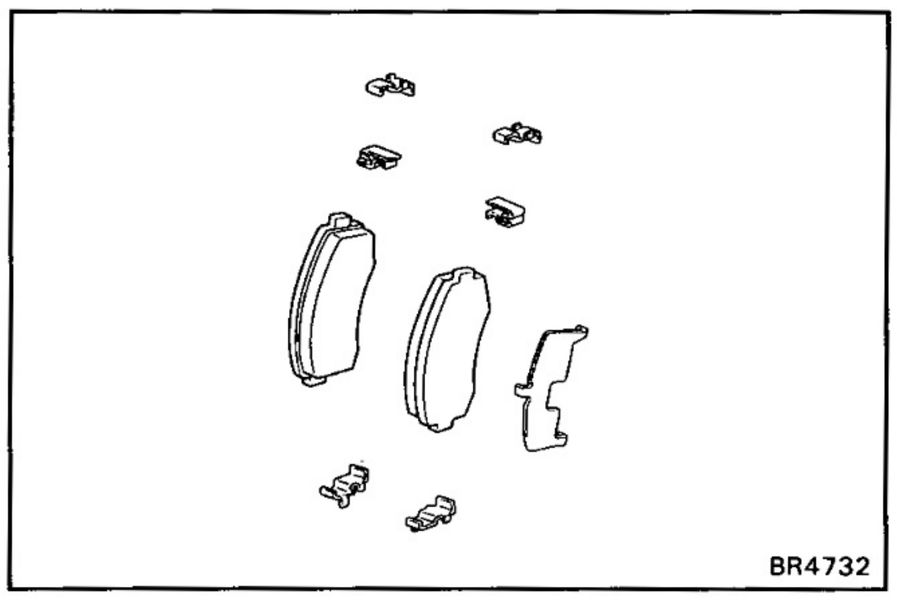
BR4732

INSTALLATION OF CYLINDER

(See page BR-50)

1. INSTALL PADS

(See steps 7 to 8 on pages BR-51 and 52)

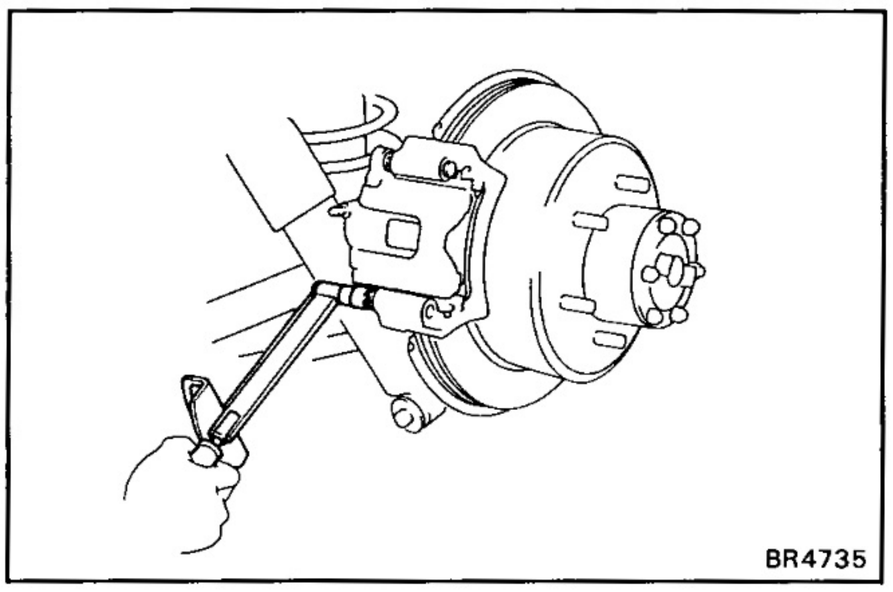
BR4735

2. INSTALL CYLINDER

(a) Insert the brake cylinder.

(b) Install and torque the two installation bolts.

Torque: 900 kg-cm (65 ft-lb, 88 N·m)

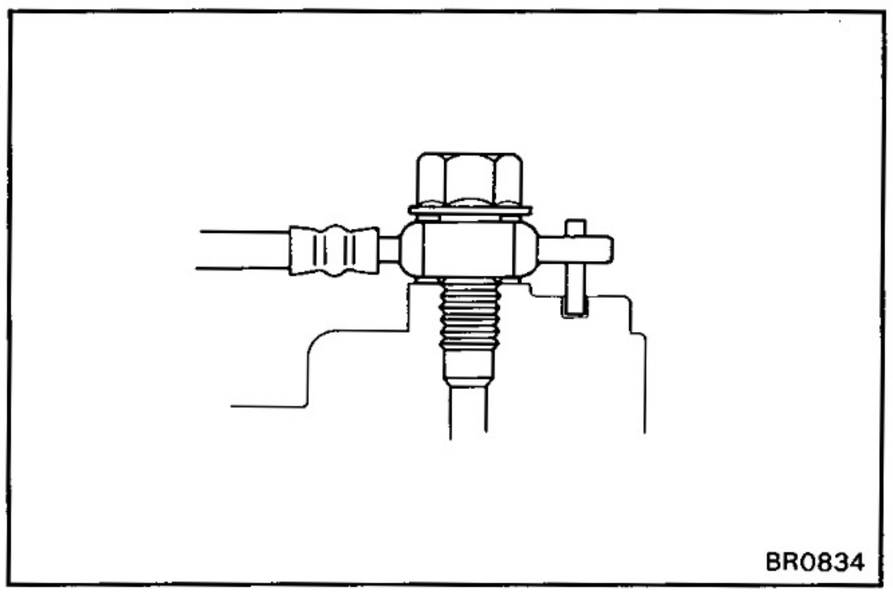
BR0834

3. CONNECT BRAKE HOSE TO CYLINDER

Set the brake hose and new gaskets in position and install the union bolt.

Torque: 195 kg-cm (14 ft-lb, 19 N·m)

4. FILL BRAKE RESERVOIR WITH BRAKE FLUID AND BLEED BRAKE SYSTEM

(See page BR-7)

5. CHECK FOR FLUID LEAKAGE

Parking Brake (w/ Rear Disc Brake)

COMPONENTS

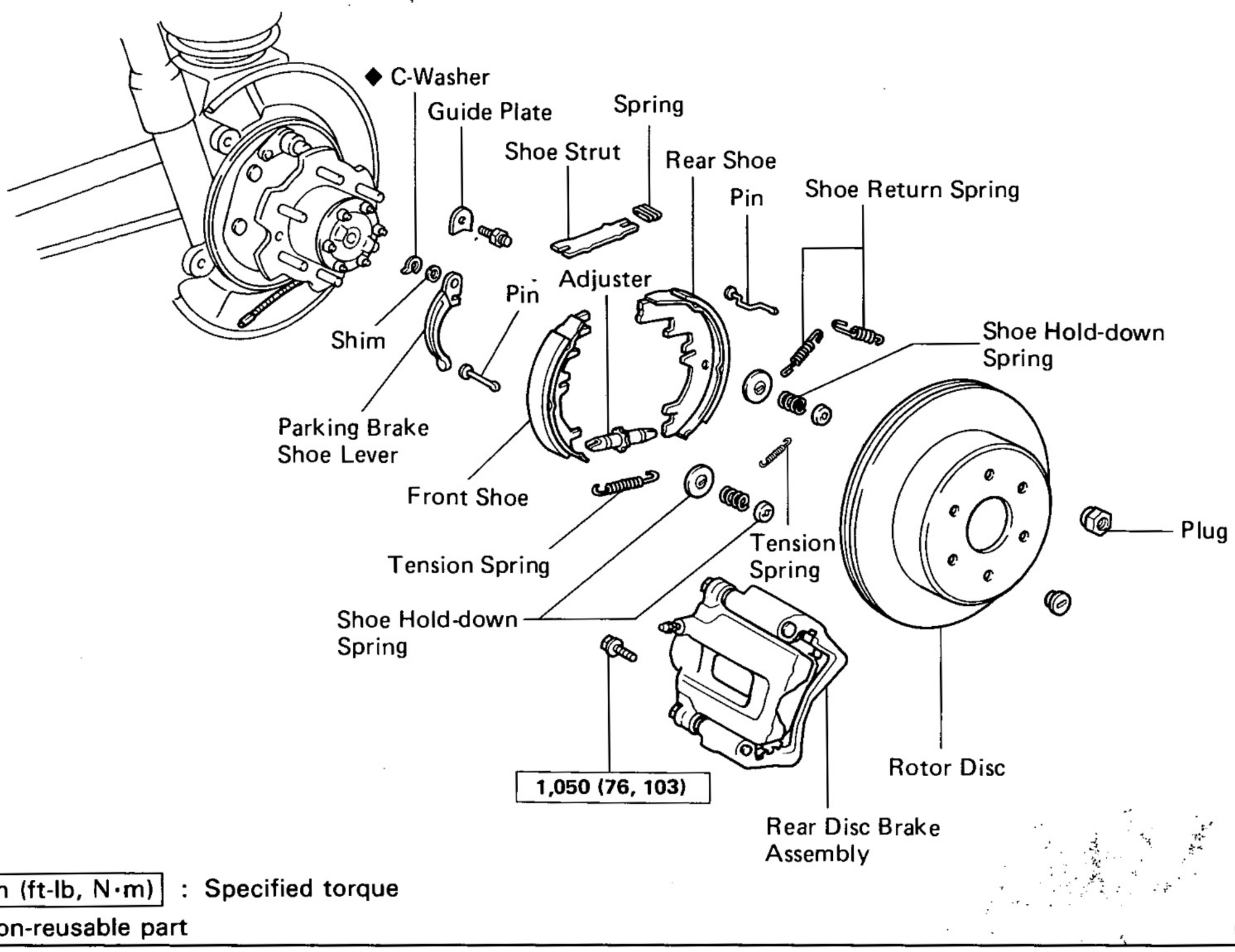

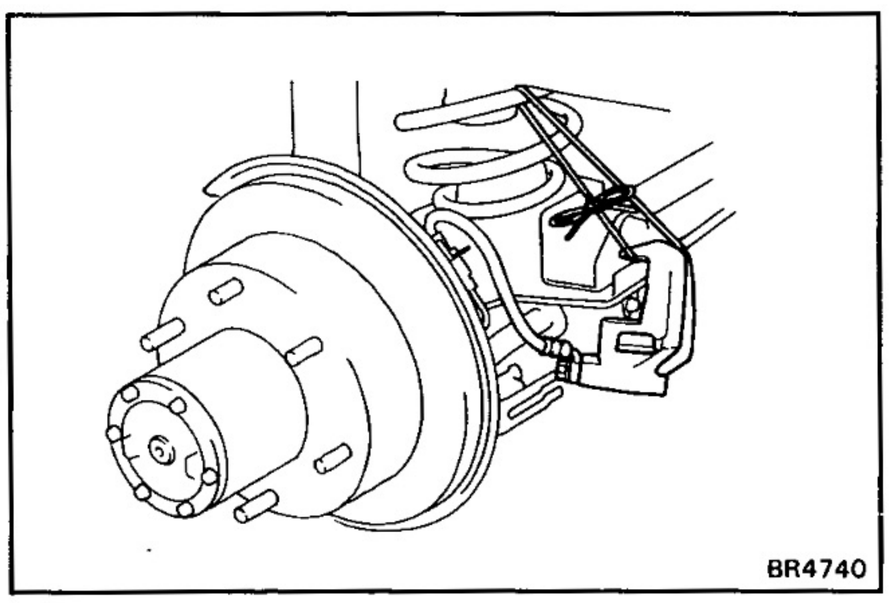

DISASSEMBLY OF PARKING BRAKE

1. REMOVE REAR DISC BRAKE ASSEMBLY

(a) Remove the two mounting bolts and remove the disc brake assembly.

(b) Suspend the disc brake so the hose is not stretched.

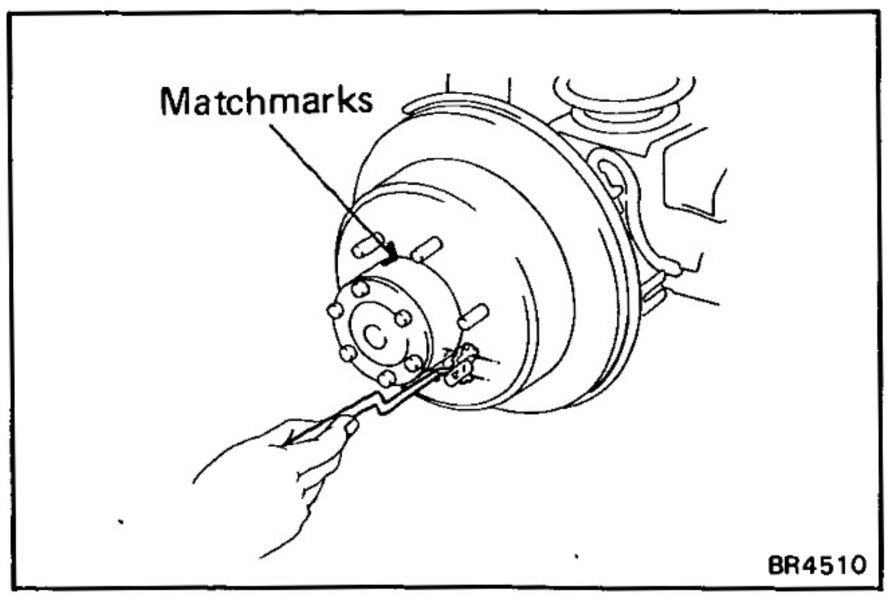

2. REMOVE ROTOR DISC

Place the matchmarks on the rotor disc and rear axle shaft, and remove the rotor disc.

HINT: If the drum cannot be removed easily, return the shoe adjuster until the wheel turns freely.

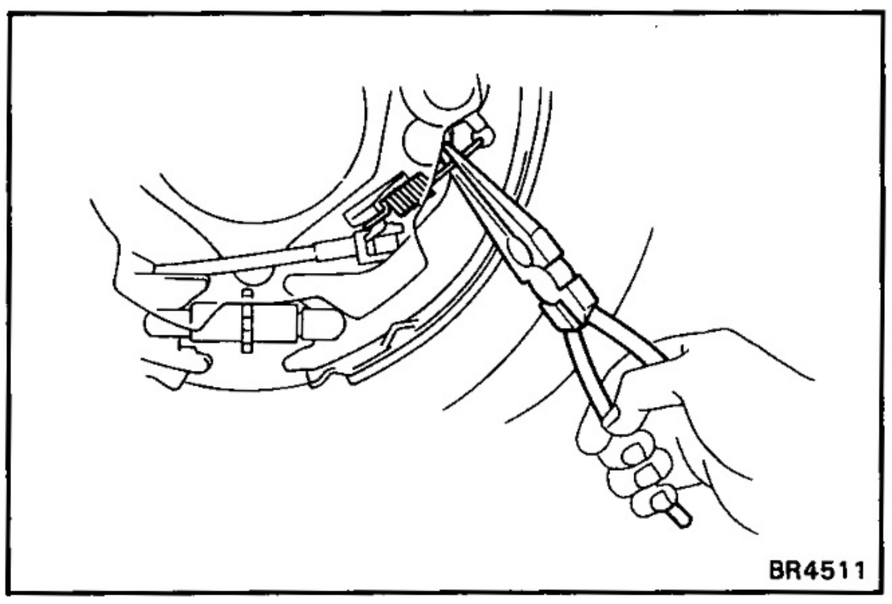

3. REMOVE TENSION SPRING

Using pliers, remove the tension spring.

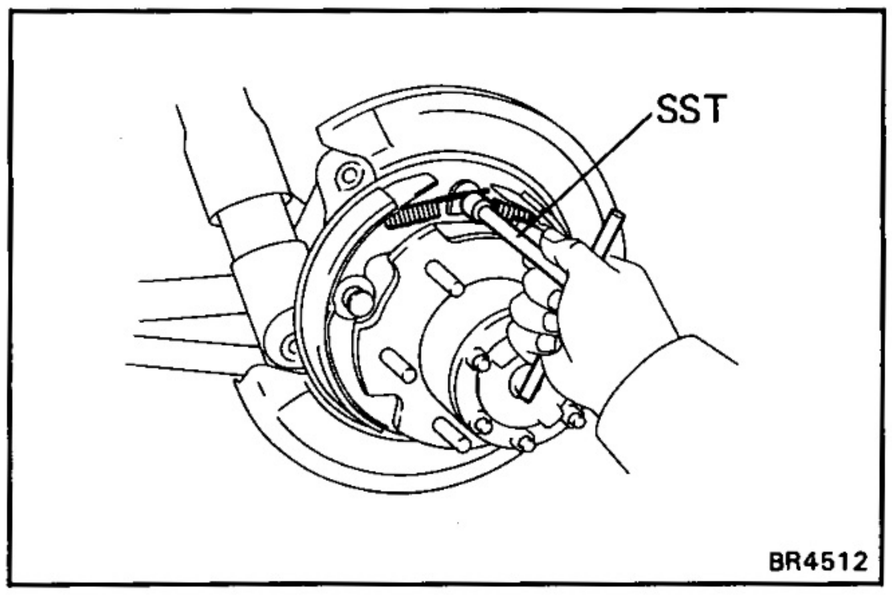

4. REMOVE SHOE RETURN SPRINGS

Using SST, remove the shoe return springs.

SST 09717-20010

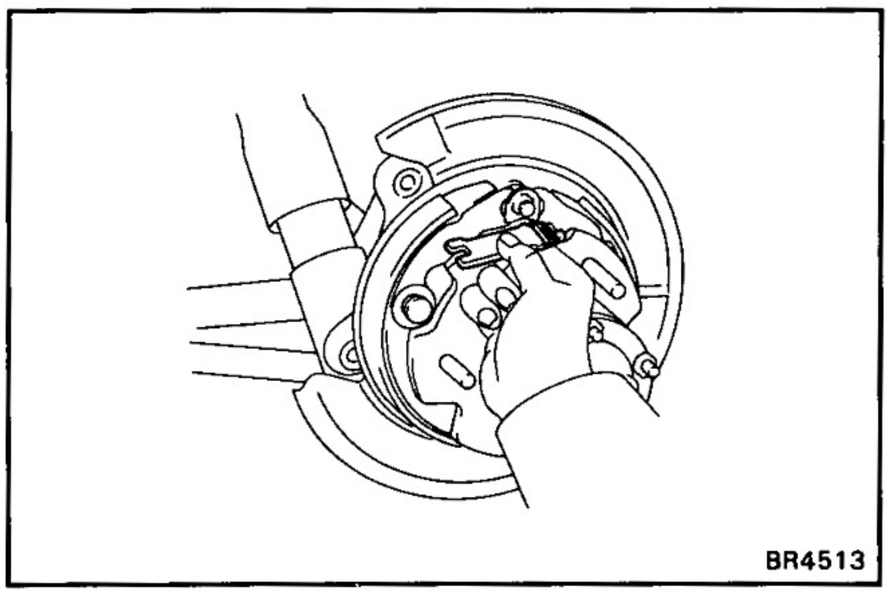

5. REMOVE SHOE STRUT WITH SPRING

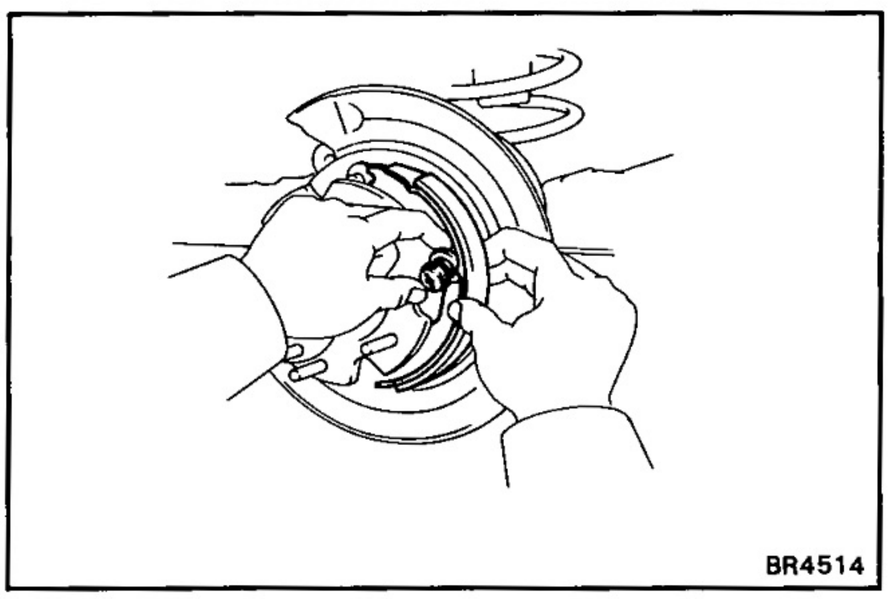

6. REMOVE REAR SHOE, ADJUSTER AND TENSION SPRING

(a) Slide out the rear shoe, and remove the rear shoe and adjuster.

(b) Remove the lower side tension spring.

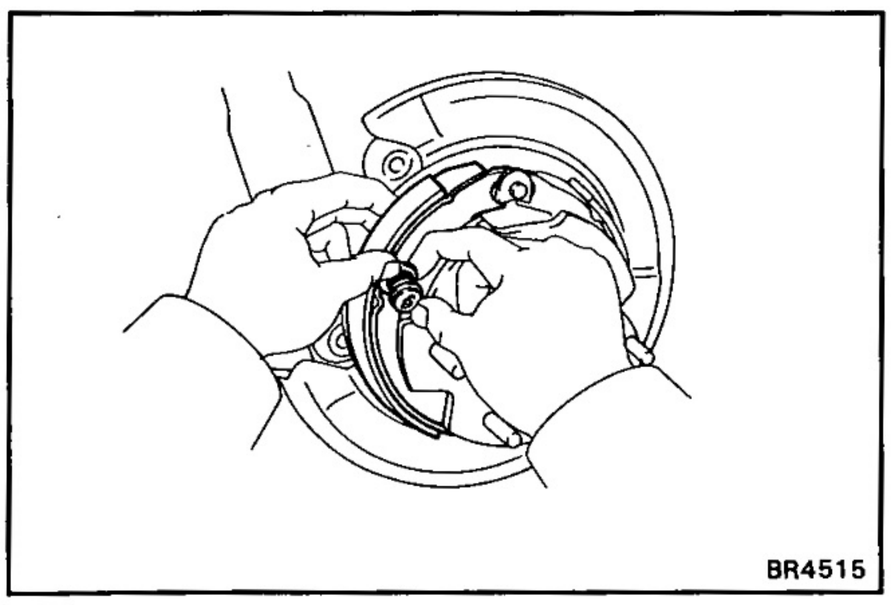

7. REMOVE FRONT SHOE

(a) Slide out front shoe.

(b) Disconnect the parking brake cable from the parking brake shoe lever.

(c) Remove the shoe hold-down spring cups, springs and pins.

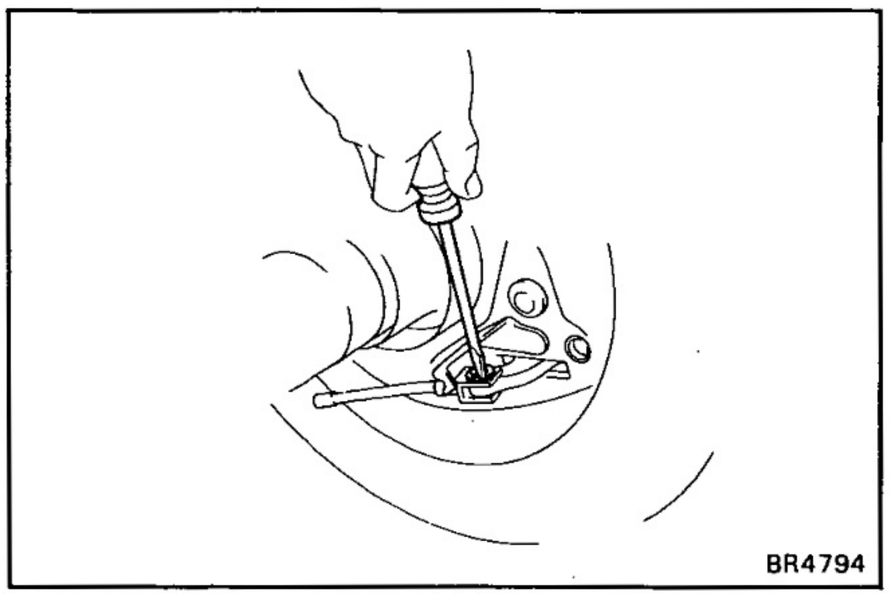

8. IF NECESSARY, REMOVE AND DISASSEMBLE PARKING BRAKE BELLCRANK ASSEMBLY

(a) Using a screwdriver, remove the C-washer.

(b) Remove the pin and disconnect the parking brake cable No. 2 from the bellcrank.

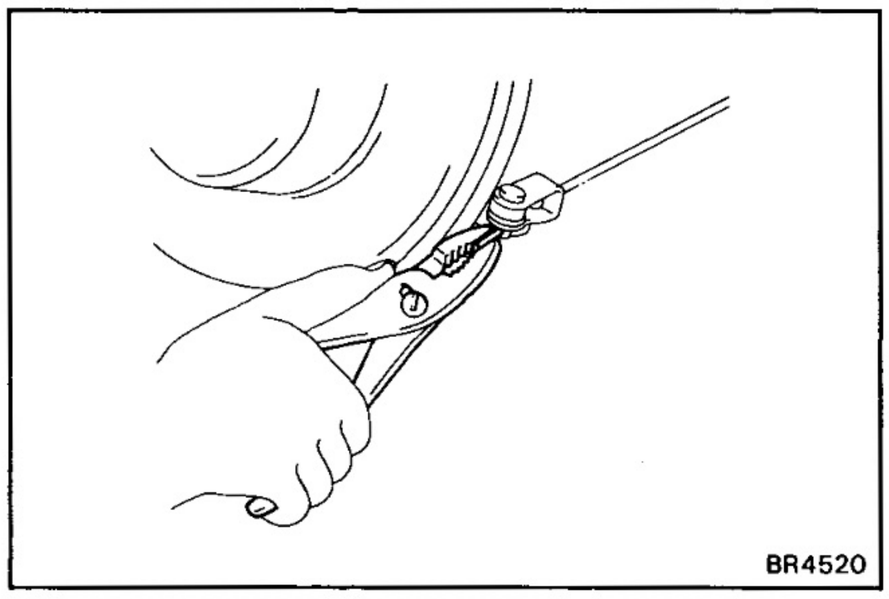

(c) Remove the clip.

(d) Remove the pin and wave washer, then disconnect the parking brake cable.

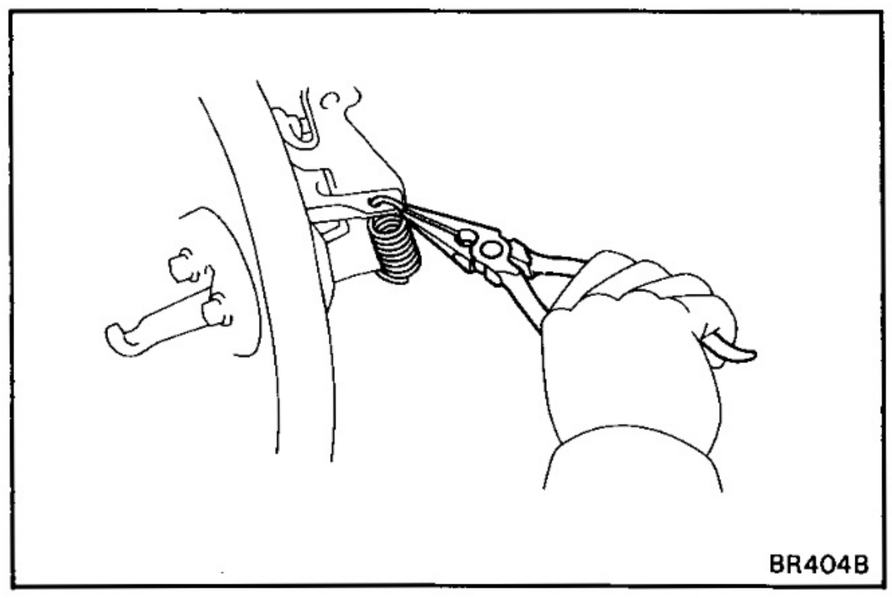

(e) Remove the tension spring.

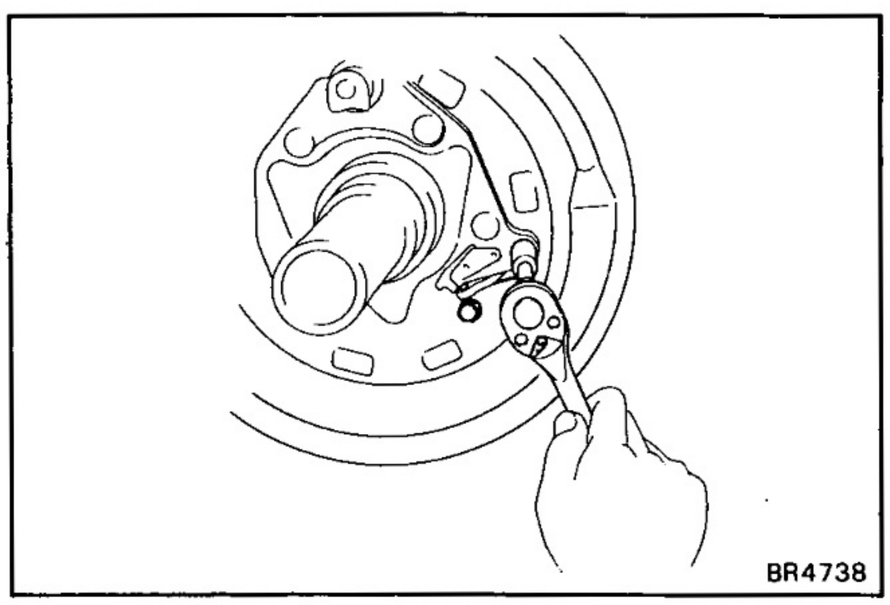

(f) Remove the two bolts and parking brake bellcrank assembly.

(g) Remove the boot from parking brake bellcrank bracket.

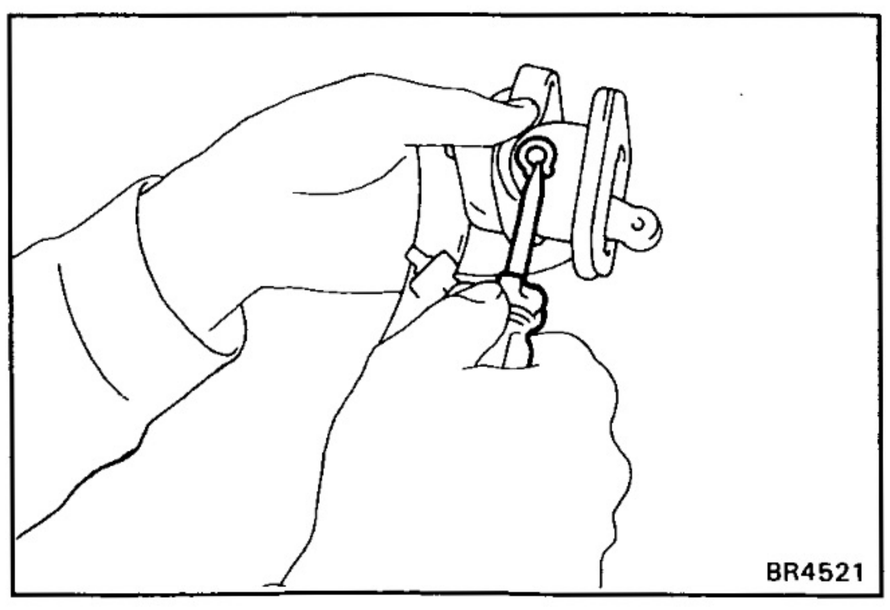

(h) Using a screwdriver, remove the C-washer and pin.

(i) Remove the parking brake bellcrank from the crank bracket.

(j) Remove the boot.

INSPECTION AND REPAIR OF PARKING BRAKE COMPONENTS

1. INSPECT DISASSEMBLED PARTS

Inspect the disassembled parts for wear, rust or damage.

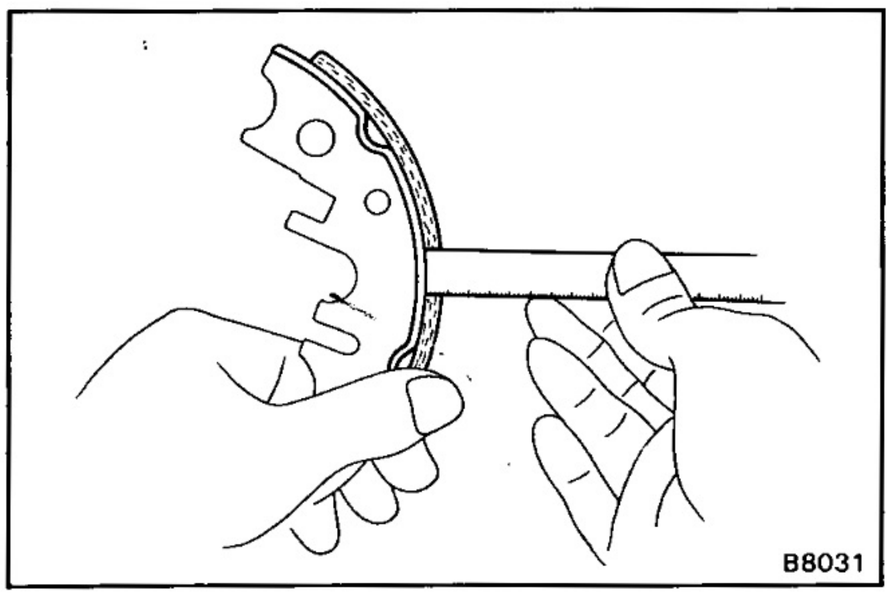

2. MEASURE BRAKE SHOE LINING THICKNESS

Minimum thickness: 1.0 mm (0.039 in.)

Standard thickness: 4.0 mm (0.157 in.)

If the shoe lining is less than minimum or shows signs of uneven wear, replace the parking brake shoes.

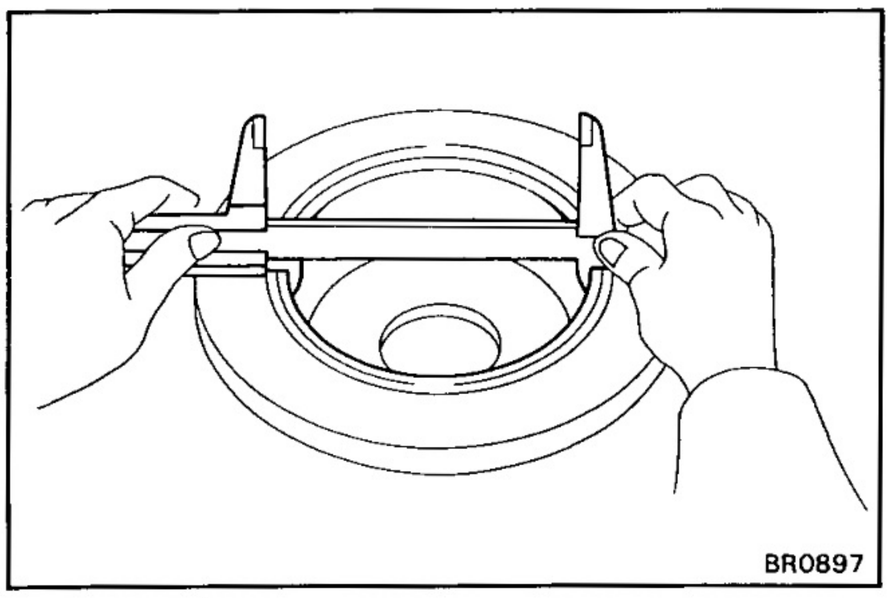

3. MEASURE BRAKE DISC INNER DIAMETER

Maximum inner diameter: 211 mm (8.31 in.)

Standard inner diameter: 210 mm (8.27 in.)

If the disc is scored or worn, the brake disc may be lathed to the maximum inner diameter.

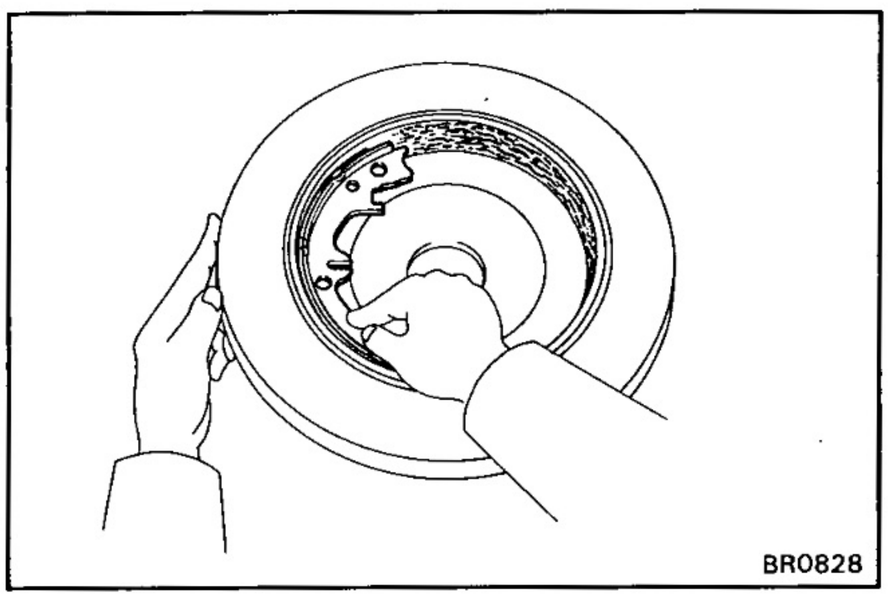

4. INSPECT PARKING BRAKE SHOE LINING AND DISC FOR PROPER CONTACT

If the contact between the brake lining and disc is improper, repair the lining with a brake shoe grinder, or replace the brake shoe assembly.

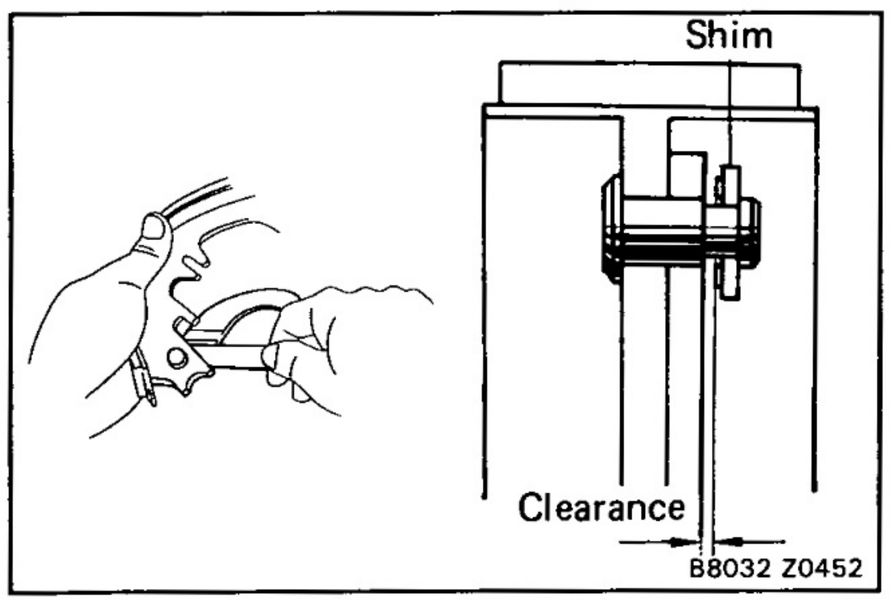

5. MEASURE CLEARANCE BETWEEN PARKING BRAKE SHOE AND LEVER

Using a feeler gauge, measure the clearance.

Standard clearance: Less than 0.35 mm (0.0138 in.)

If the clearance is not within specification, replace the shim with one of the correct size.

Thickness mm (in.)	
0.3 (0.012) 0.6 (0.024)	0.9 (0.035)

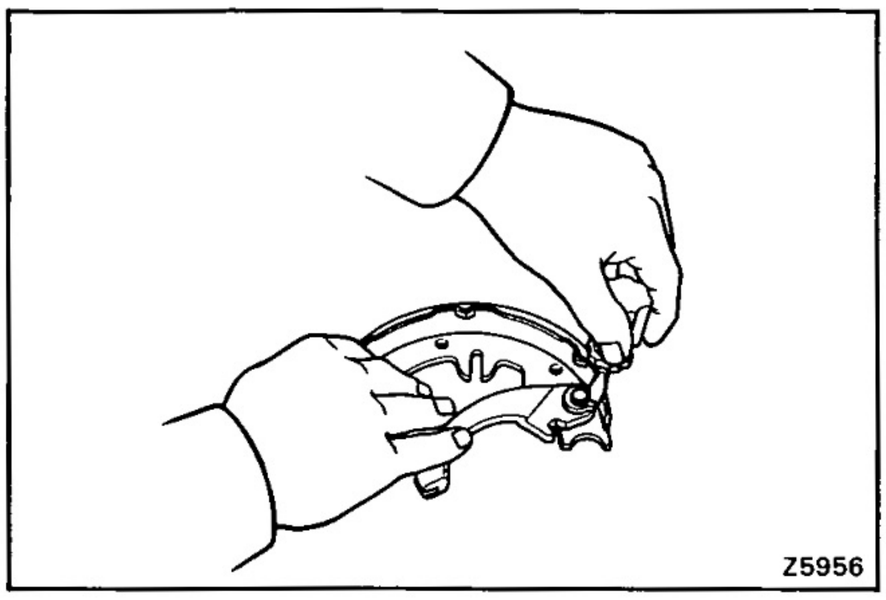

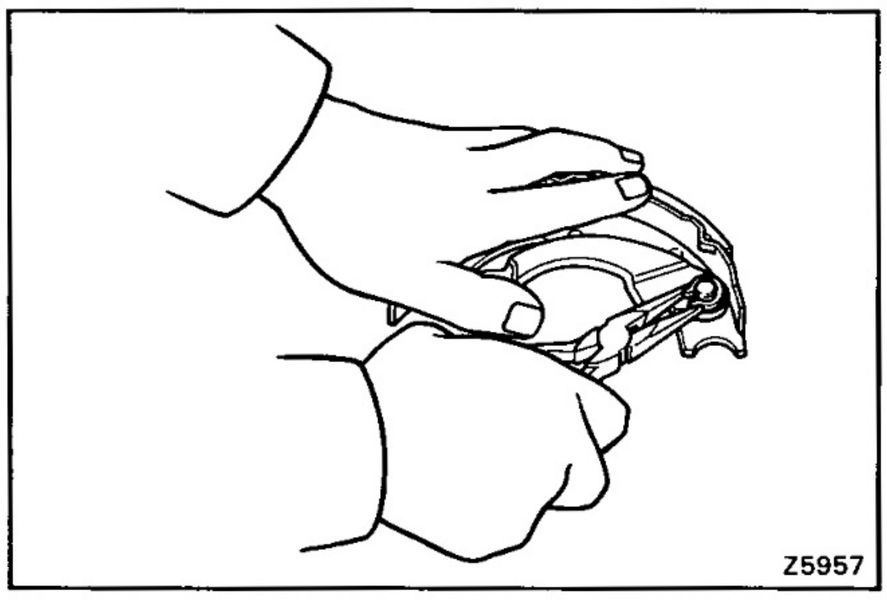

6. IF NECESSARY, REPLACE SHIM

(a) Remove the parking brake shoe lever, and install the correct size shim.

(b) Install the parking brake shoe lever with a new C-washer.

(c) Remeasure the clearance.

ASSEMBLY OF PARKING BRAKE

(See page BR-57)

HINT: Assemble the parts in the correct direction as shown.

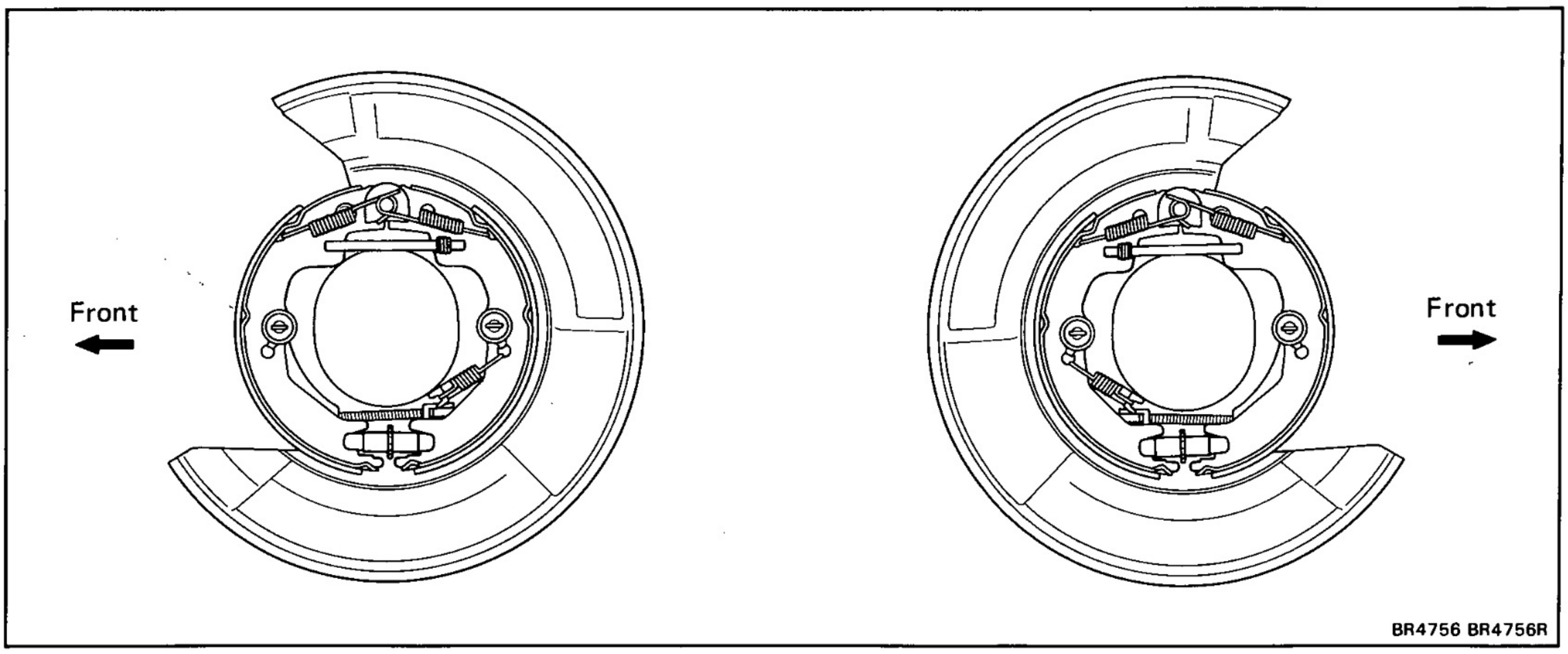

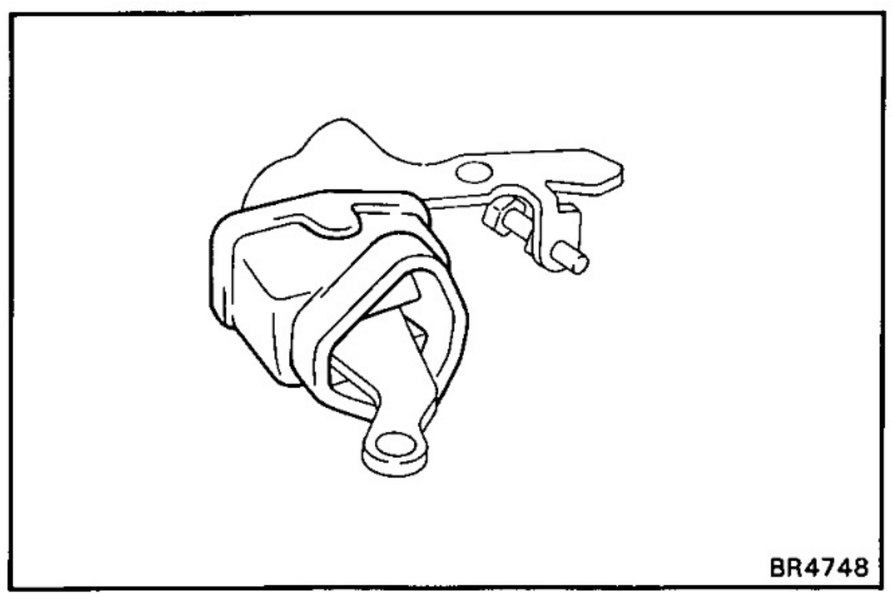

1. IF NECESSARY, ASSEMBLE AND INSTALL PARKING BRAKE BELLCRANK ASSEMBLY

(a) Apply lithium soap base glycol grease to the boot.

(b) Install the boot to the parking brake bellcrank.

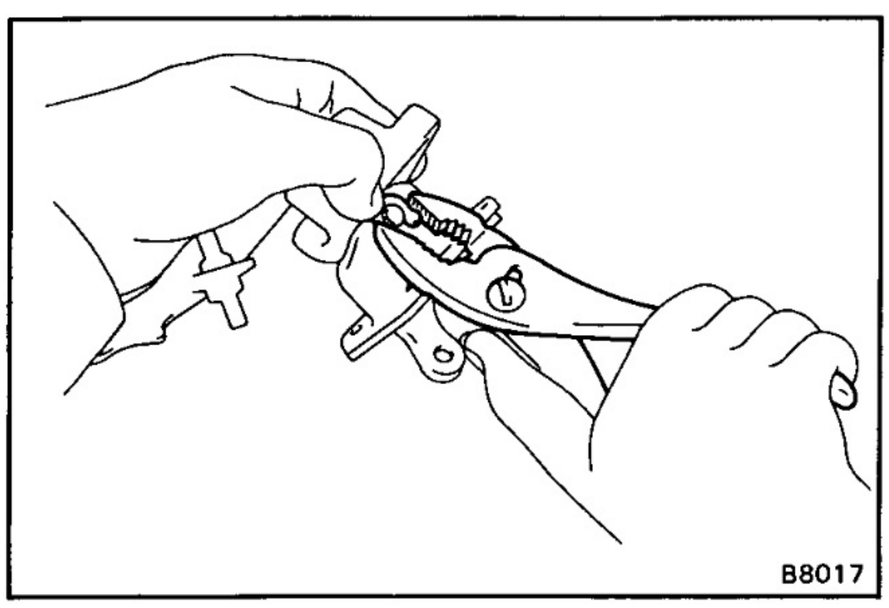

(c) Install the parking brake bellcrank to the bellcrank bracket.

(d) Install the pin with a new C-washer.

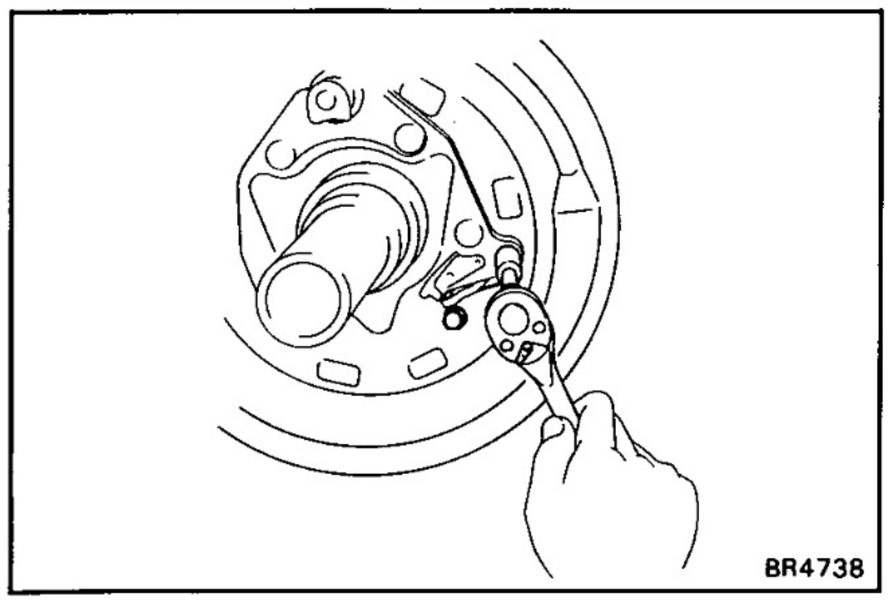

(e) Install the parking brake bellcrank assembly on the backing plate with two bolts.

(f) Torque the bolts.

Torque: 130 kg-cm (9 ft-lb, 13 N·m)

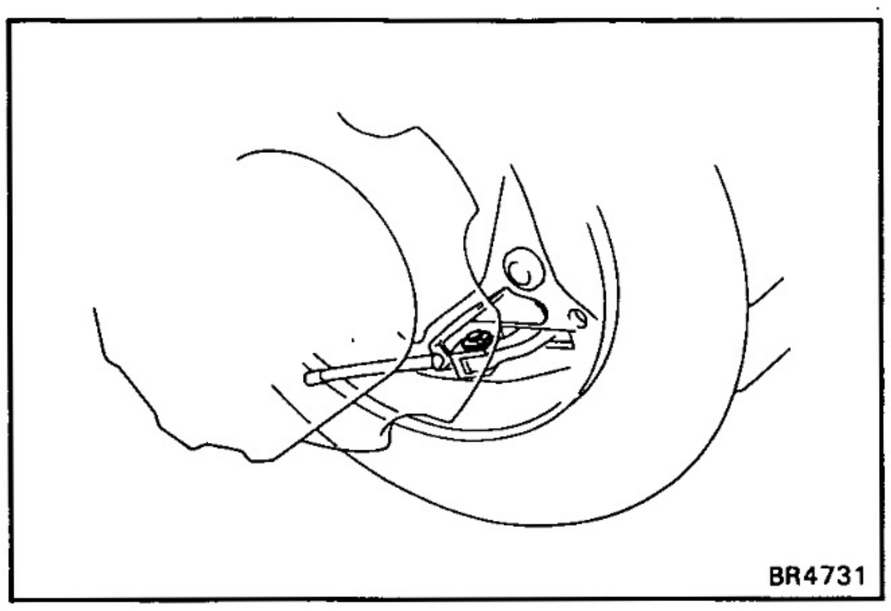

(g) Using pliers, connect parking brake cable No. 2 to the bellcrank with the pin and a new C- washer.

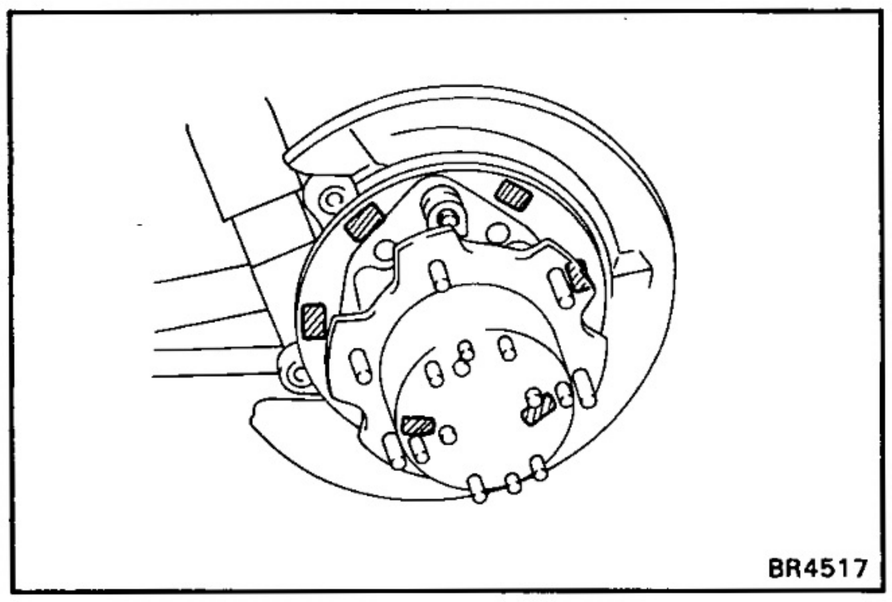

2. APPLY HIGH TEMPERATURE GREASE ON BACKING PLATE AS SHOWN

Apply high temperature grease to the sliding surfaces of the shoe.

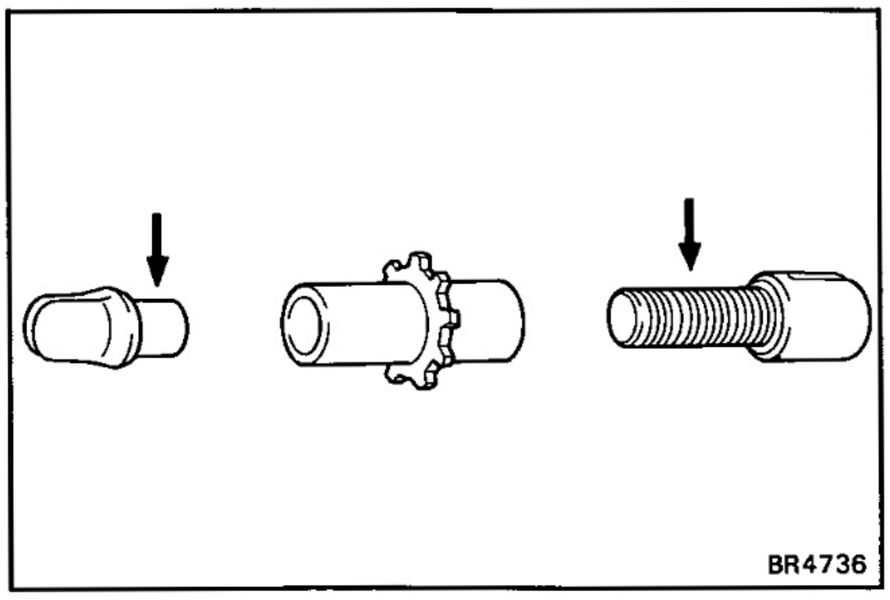

3. APPLY HIGH TEMPERATURE GREASE TO ADJUSTER AS SHOWN

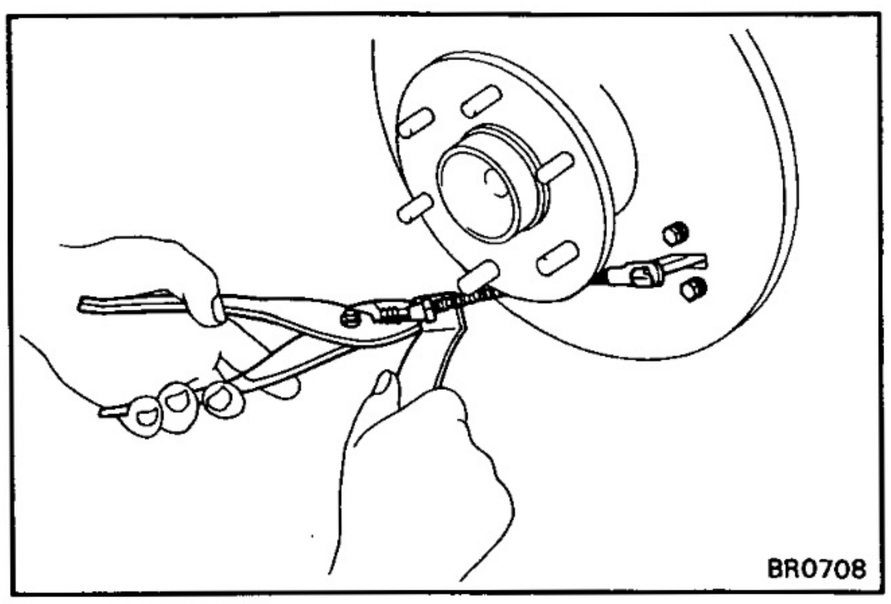

4. CONNECT PARKING BRAKE CABLE TO FRONT SHOE

Connect the parking brake cable to the front shoe.

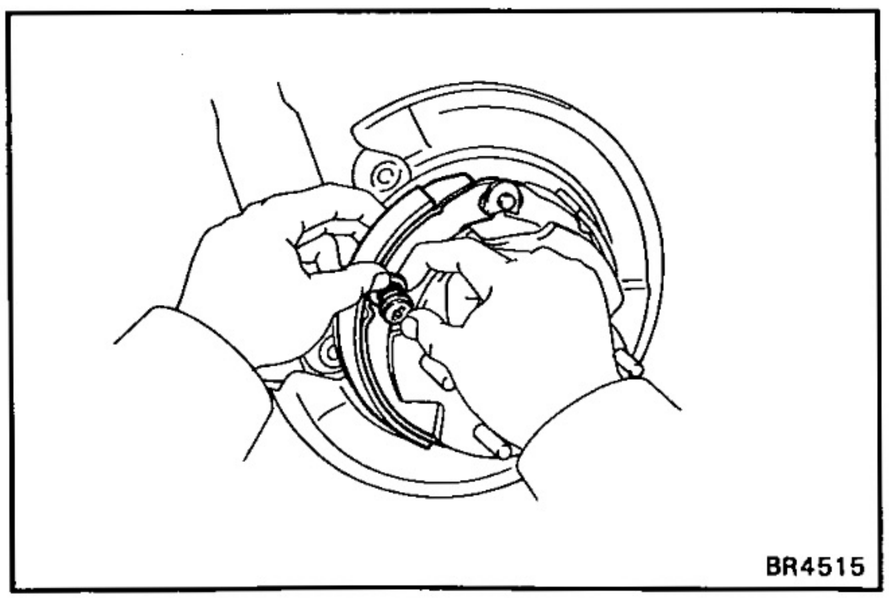

5. INSTALL FRONT SHOE

(a) Install the pins, cups and shoe hold-down springs to the backing plate.

(b) Slide in the front shoe between the shoe hold-down spring cup and the backing plate.

NOTICE: Do not allow oil or grease to get on the rubbing face.

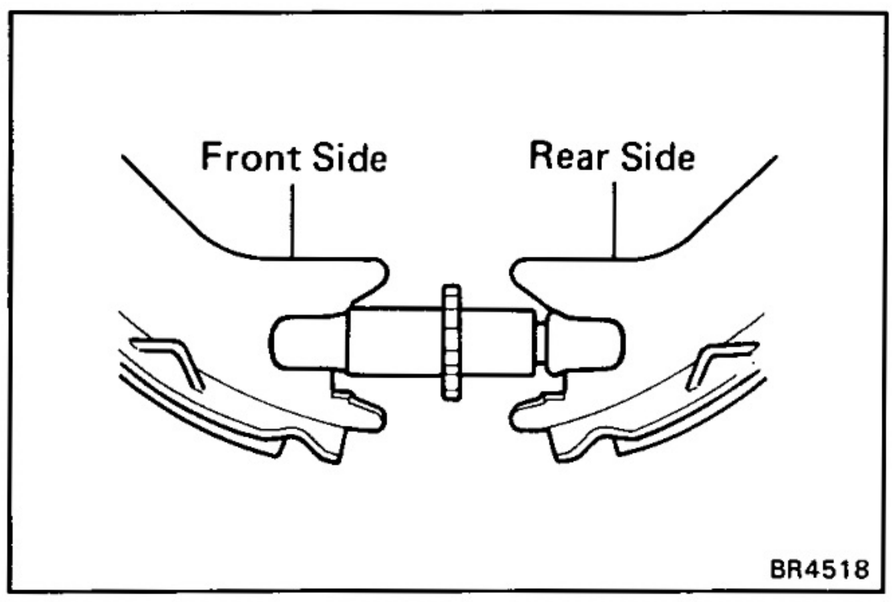

6. INSTALL TENSION SPRING, REAR SHOE AND ADJUSTER

(a) Install the lower side tension spring to the front shoe.

(b) Install the rear shoe to the tension spring.

(c) Install the adjuster between the front and rear shoes.

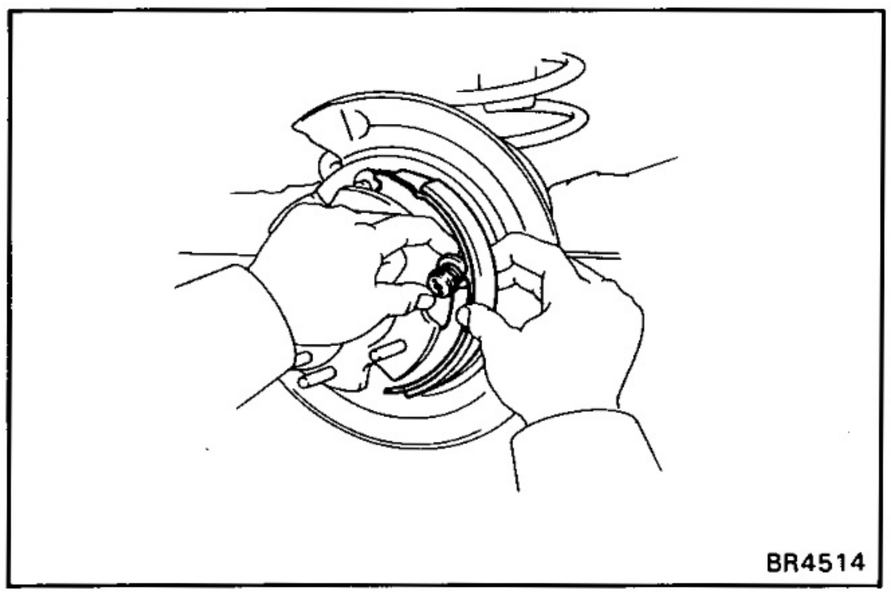

(d) Slide in the rear shoe between the shoe hold-down spring cup and the backing plate.

NOTICE: Do not allow oil or grease on the rubbing face.

(e) Using pliers, install the tension spring.

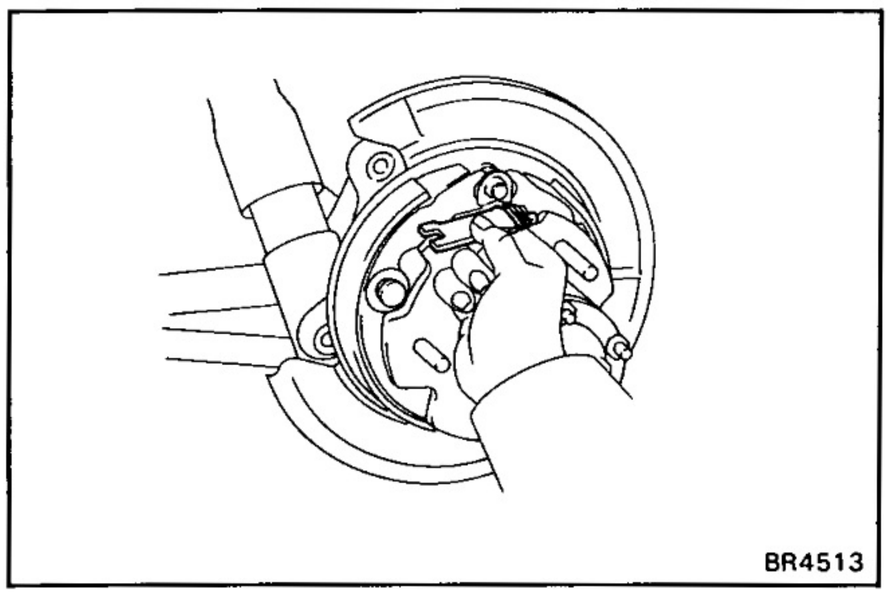

7. INSTALL STRUT WITH SPRING

Install the strut and spring with the spring facing rearward.

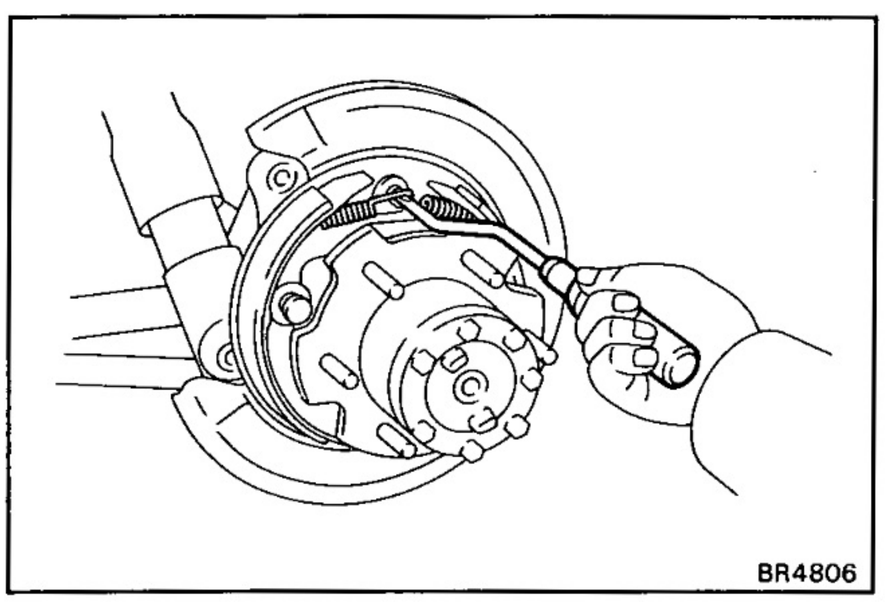

8. INSTALL SHOE RETURN SPRINGS

Using SST, install the front return spring and then install the rear return spring.

SST 09718-20010

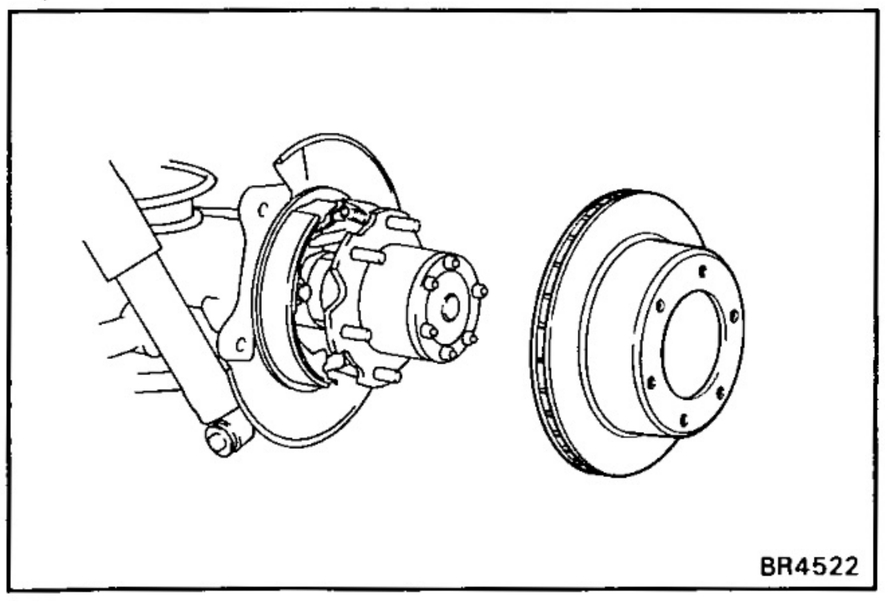

9. INSTALL ROTOR DISC

Align the matchmarks on the rear axle shaft and rotor disc, and install the rotor disc.

HINT: If there are no matchmarks, align the groove on the rear axle shaft flange with the service hole on the disc.

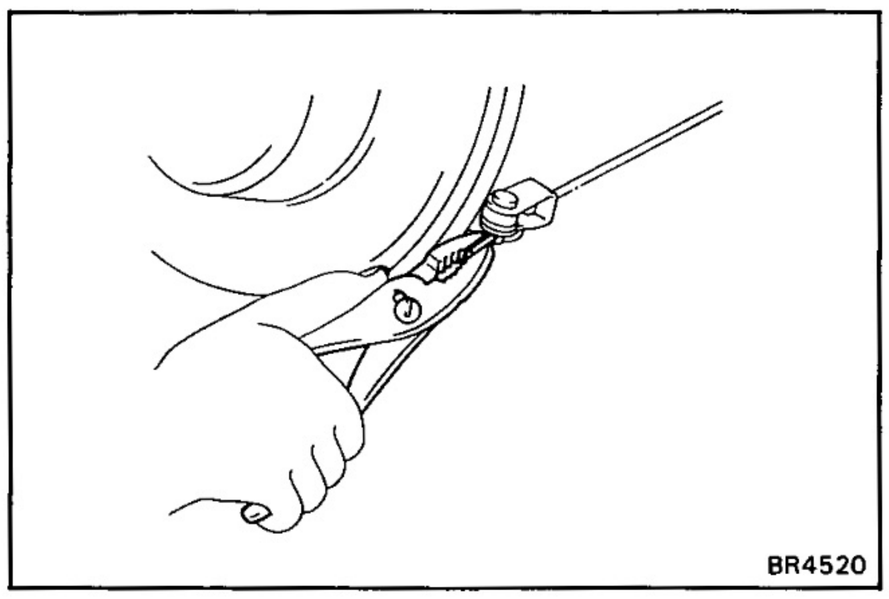

10. CONNECT PARKING BRAKE CABLE

(a) Connect the parking brake cable to the bellcrank assembly with the pin, wave washer and clip.

(b) Using pliers, install the cotter pin.

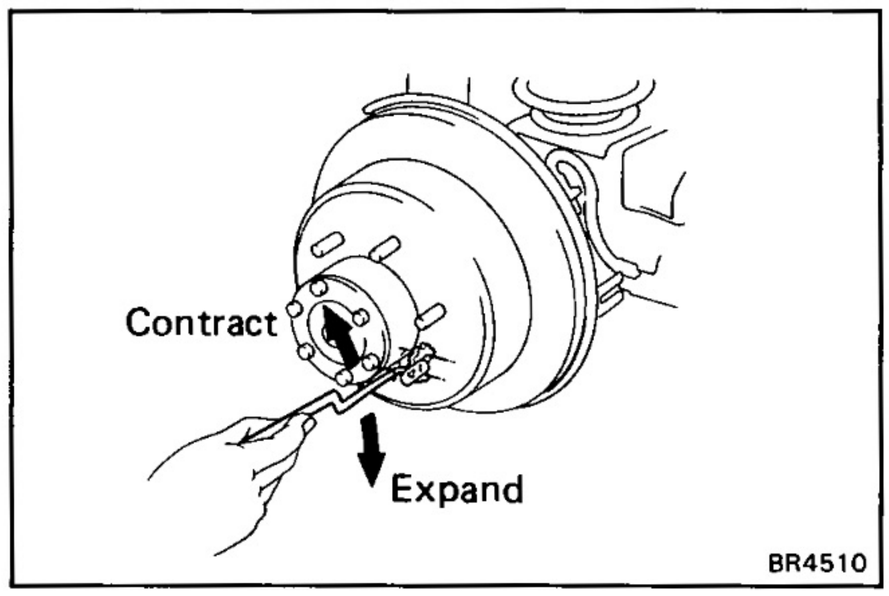

11. ADJUST PARKING BRAKE SHOE CLEARANCE

(a) Temporarily install the hub nuts.

(b) Remove the hole plug.

(c) Turn the adjuster and expand the shoes until rotor disc locks.

(d) Return the adjuster eight notches.

(e) Install the hole plug.

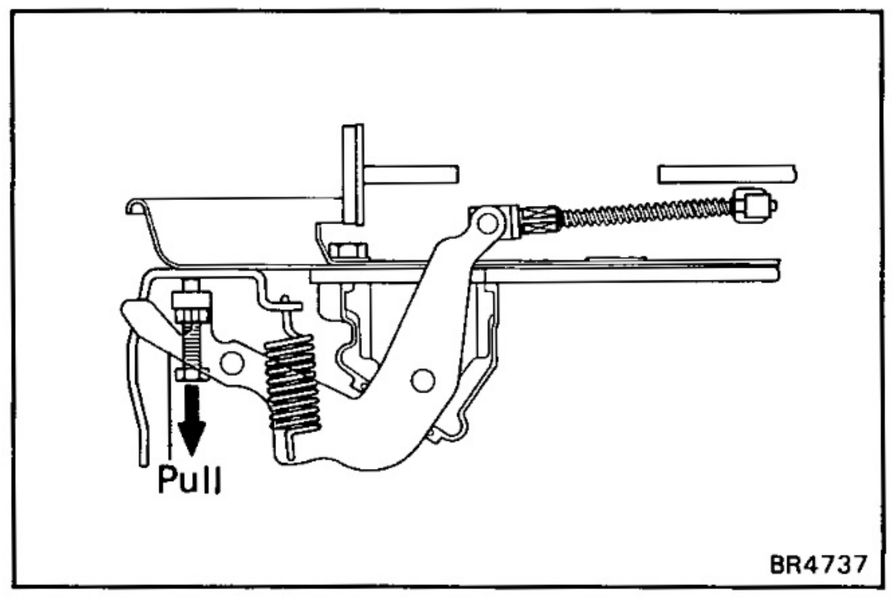

12. IF NECESSARY ADJUST BELLCRANK

(a) Pull the bellcrank until all play in the interior linkage is taken up.

(b) Screw in the bellcrank adjusting bolt to where it contacts on the dust seal.

(c) Loosen if one turn, and lock it at that position with the lock nut.

Torque: 55 kg-cm (47.7 ft-lb, 5.4 N·m)

(d) Install the bellcrank spring.

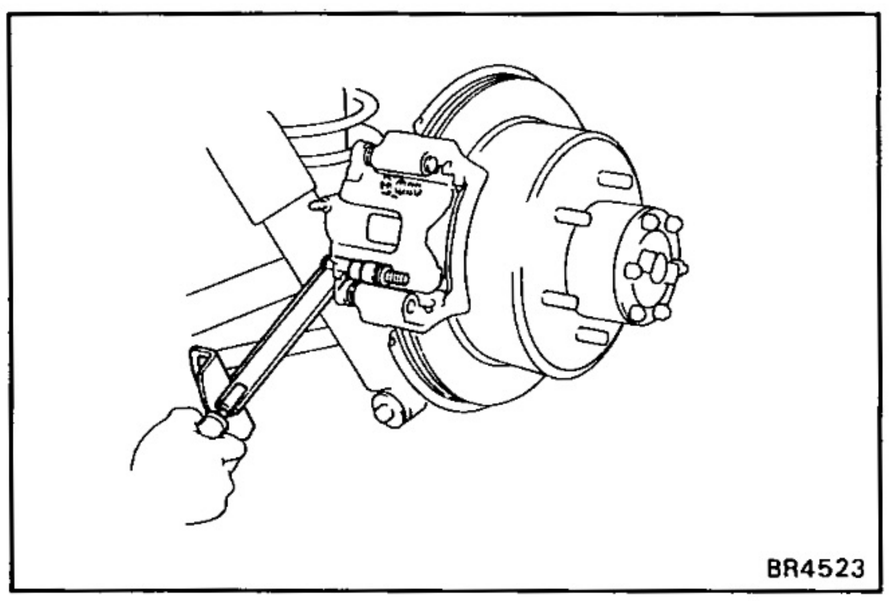

13. INSTALL REAR DISC BRAKE ASSEMBLY

Install the disc brake assembly and torque the two mounting bolts.

Torque: 1,050 kg-cm (76 ft-lb, 103 N·m)

14. INSTALL REAR WHEEL

15. BEDDING DOWN PARKING BRAKE SHOES AND DISC

(a) Drive the vehicle at about 50 km/h (31 mph) on a safe, level and dry road.

(b) With the parking brake release button pushed in, pull on the lever with 9 kg (19.8 lb, 88 N) of force.

(c) Drive the vehicle for about 400 meters (0.25 mile) in this condition.

(d) Repeat this procedure two or three times.

16. RECHECK AND ADJUST PARKING BRAKE LEVER TRAVEL

LOAD SENSING PROPORTIONING AND BY-PASS VALVE

COMPONENTS

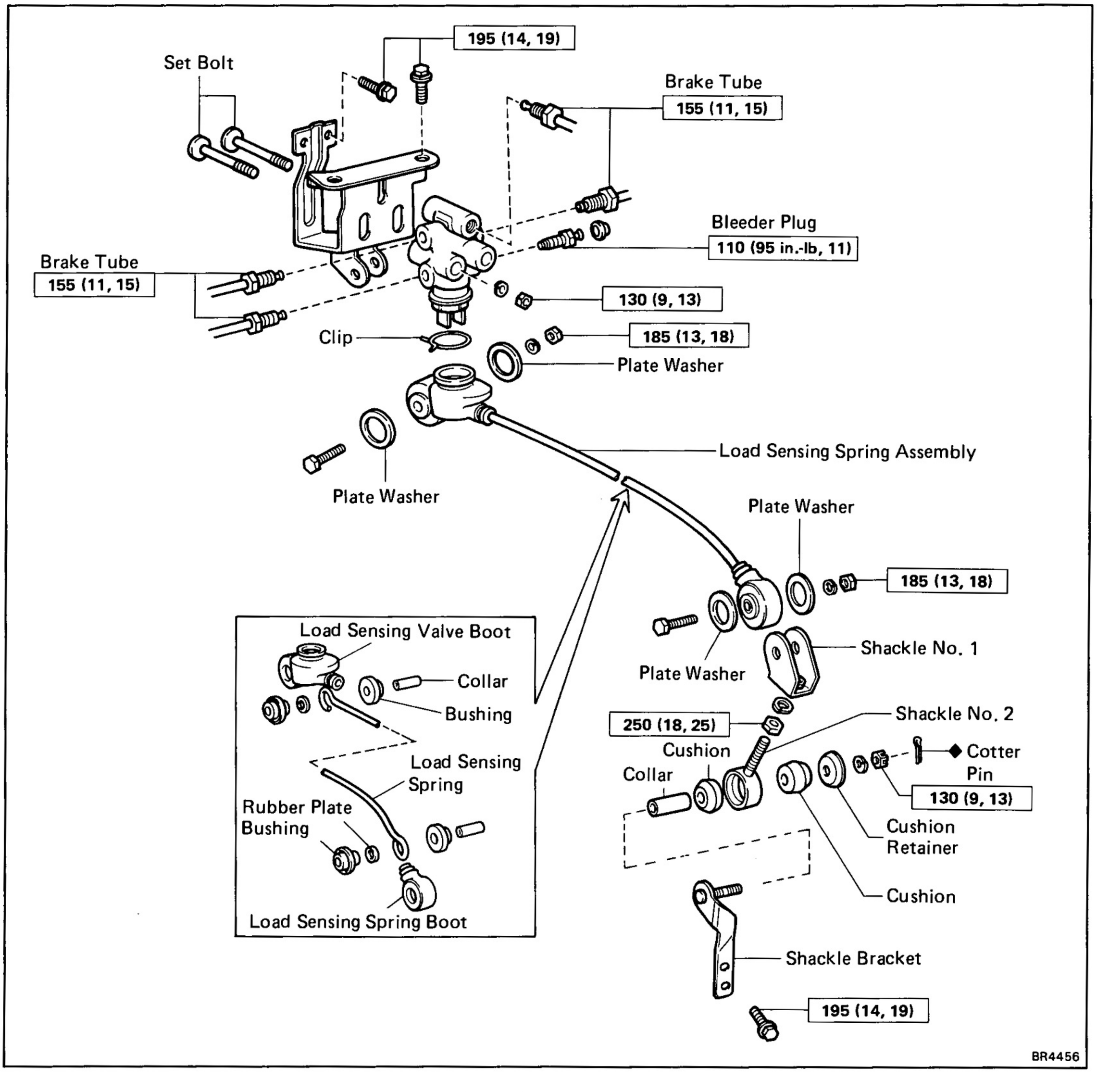

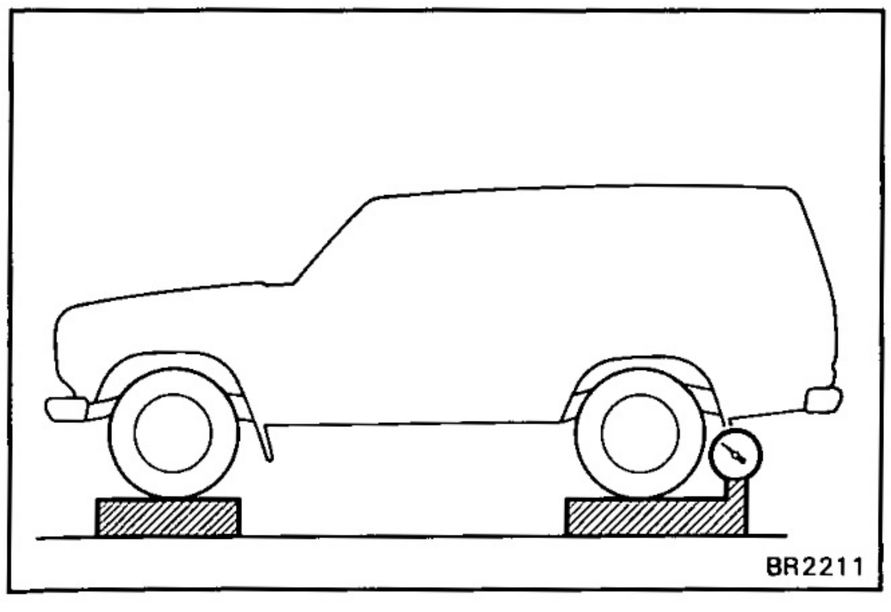

CHECK AND ADJUSTMENT OF FLUID PRESSURE

1. SET REAR AXLE LOAD

Rear axle load (include vehicle weight):
1,150 kg (2,535 lb)

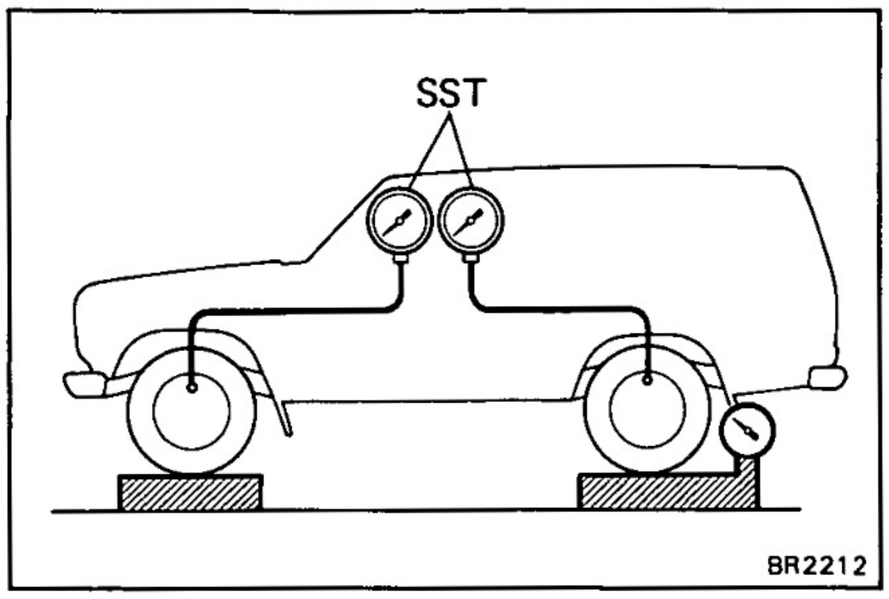

2. INSTALL LSPV GAUGE (SST) AND BLEED AIR

SST 09709-29017

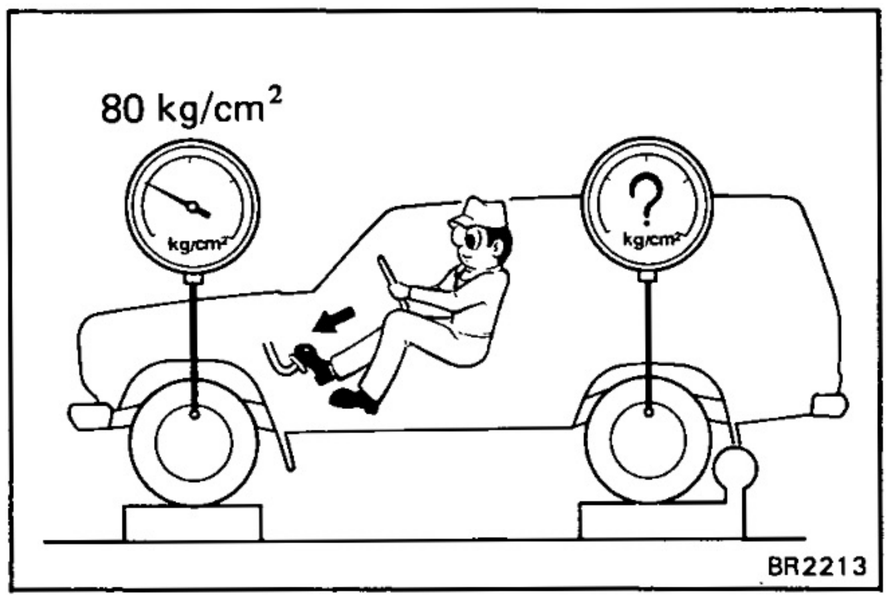

3. RAISE FRONT BRAKE PRESSURE TO 80 kg/cm² (1,138 psi, 7,845 kPa) AND CHECK REAR BRAKE PRESSURE

Rear brake pressure:

45 ± 6 kg/cm² (640 ± 85 psi, 4,413 ± 588 kPa)

HINT: The brake pedal should not be depressed twice and/or returned while setting to the specified pressure. Read the value of rear brake pressure two seconds after adjusting the specified fluid pressure.

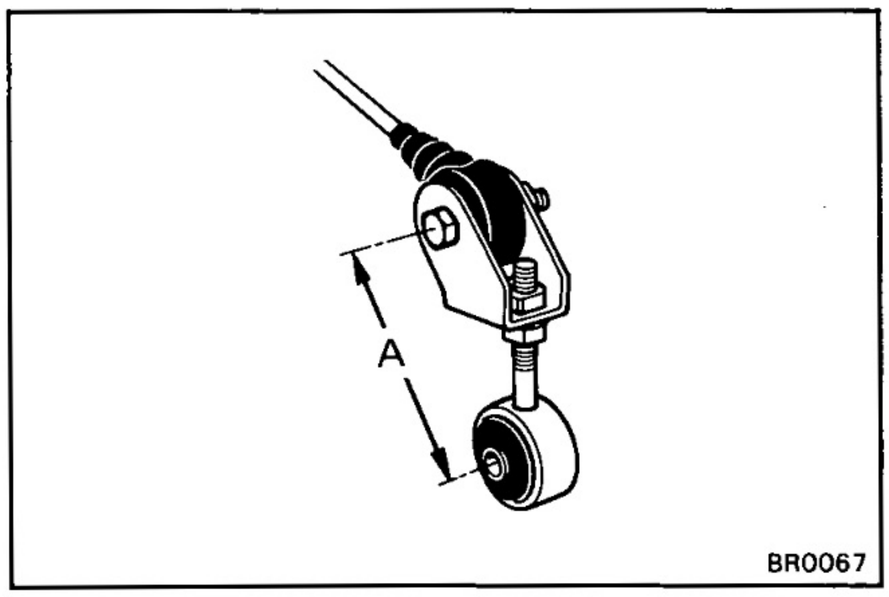

4. IF NECESSARY, ADJUST FLUID PRESSURE

(a) Disconnect the No. 2 shackle from the shackle bracket.

(b) Adjust the length of the No. 2 shackle turning it.

Low pressure — Lengthen A
High pressure — Shorten A

Initial set: 90 mm (3.54 in.)

Adjusting range: 84 — 96 mm (3.31 — 3.78 in.)

HINT: One turn of the No. 2 shackle changes the fluid pressure about following specification.

1.0 kg/cm² (14.2 psi, 98.1 kPa)

(c) In the event pressure cannot be adjusted by the No. 2 shackle, raise or lower the valve body.

Low pressure — Lower
High pressure — Raise

(d) Torque the nuts.

Torque: 130 kg-cm (9 ft-lb, 13 N·m)

(e) Adjust the length of the No. 2 shackle again.

If it cannot be adjusted, inspect the valve housing.

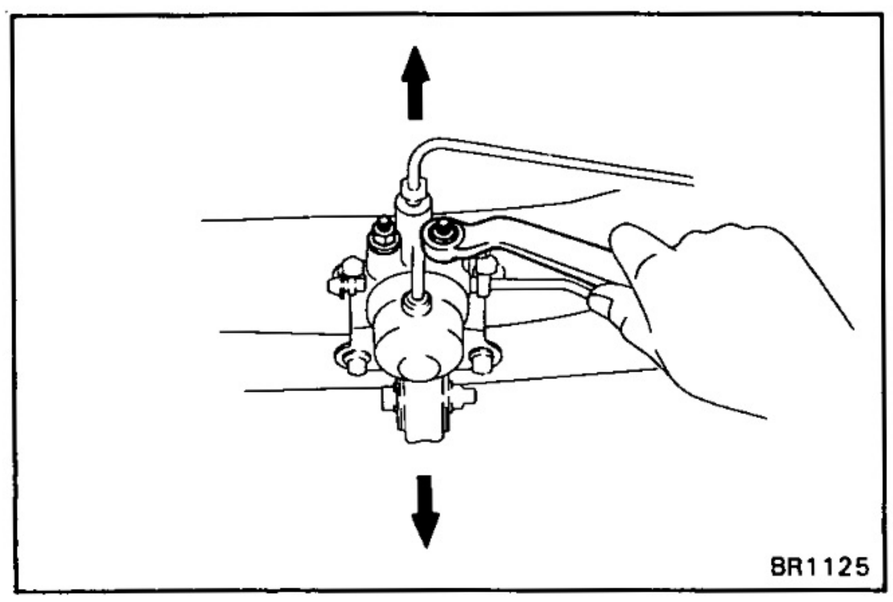

(f) Connect the No.2 shackle to the shackle bracket.

5. IF NECESSARY, CHECK VALVE BODY

(a) Assemble the valve body in the upper most position.

HINT: When the brakes are applied, the piston will move down about 1 mm (0.04 in.). Even at this time, the piston should not make contact with or move the load sensing spring.

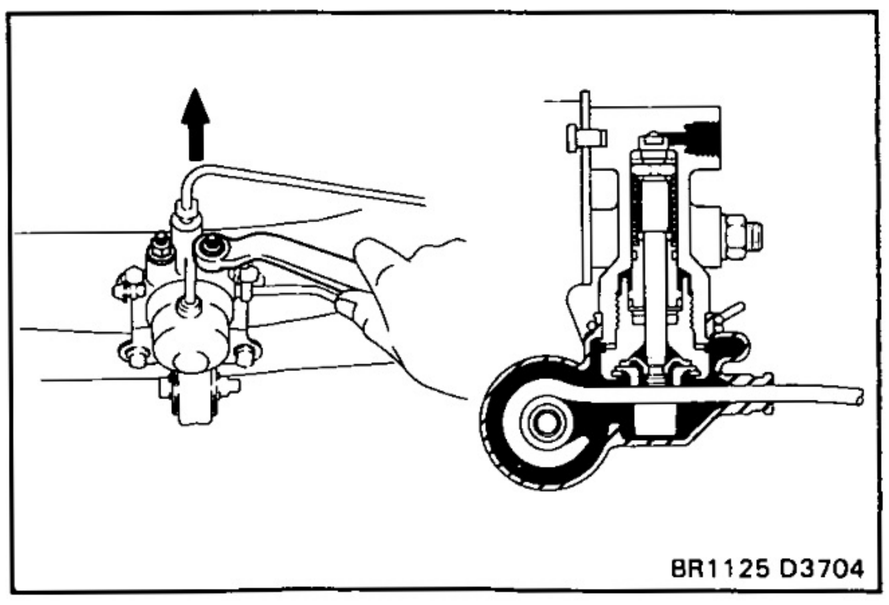

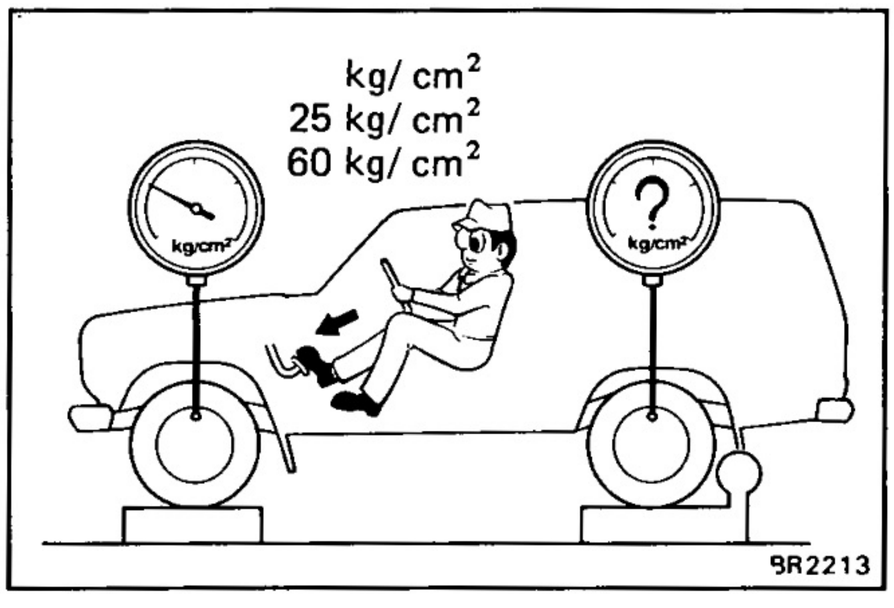

(b) In this position, check the rear brake pressure.

kg/cm² (psi, kPa)

Front brake pressure	Rear brake pressure
10 (142, 981)	10 (142, 981)
25 (356, 2,452)	11.8 — 15.8 (168 — 225, 1,157 — 1,549)
60 (853, 5,884)	19.0 — 26.0 (270 — 370, 1,863 — 2,550)

If the measured value is not within standard, replace the valve body.

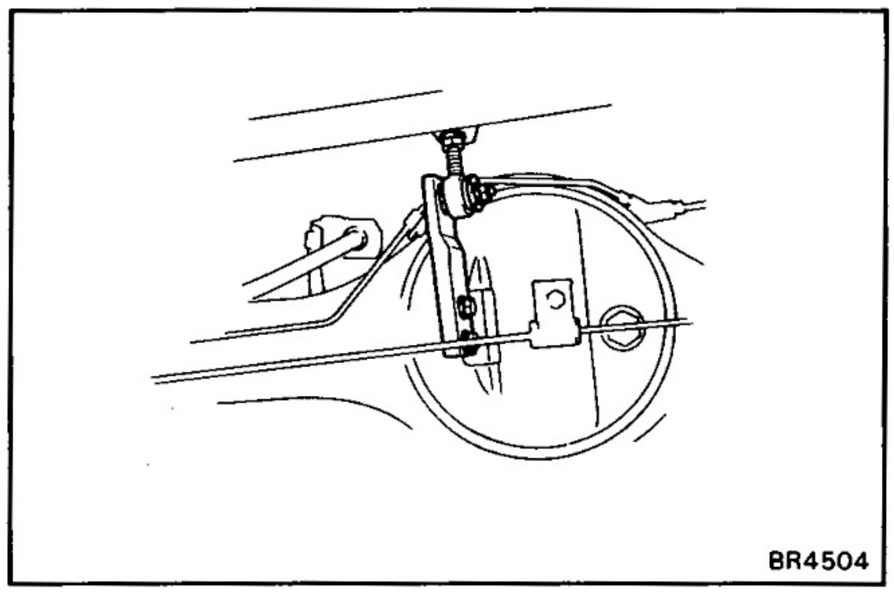

REMOVAL OF LSP & BV

(See page BR-66)

1. DISCONNECT SHACKLE NO. 2 FROM BRACKET

(a) Remove the cotter pin.

(b) Remove the nut and disconnect the shackle No. 2 from the bracket.

(c) Remove the two retainers, two bushings and collar.

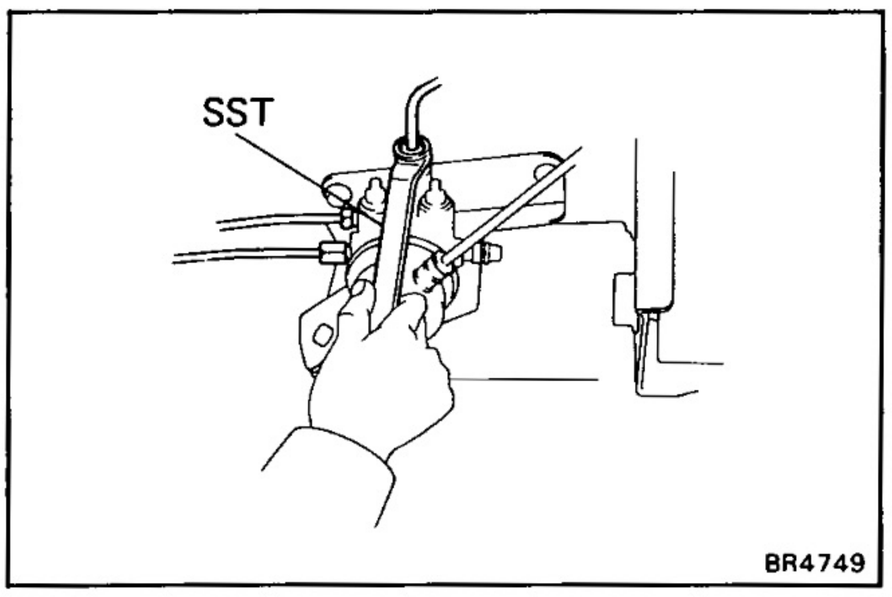

2. REMOVE LSP & BV ASSEMBLY

(a) Using SST, disconnect the brake tubes from the valve body.

SST 09751-36011

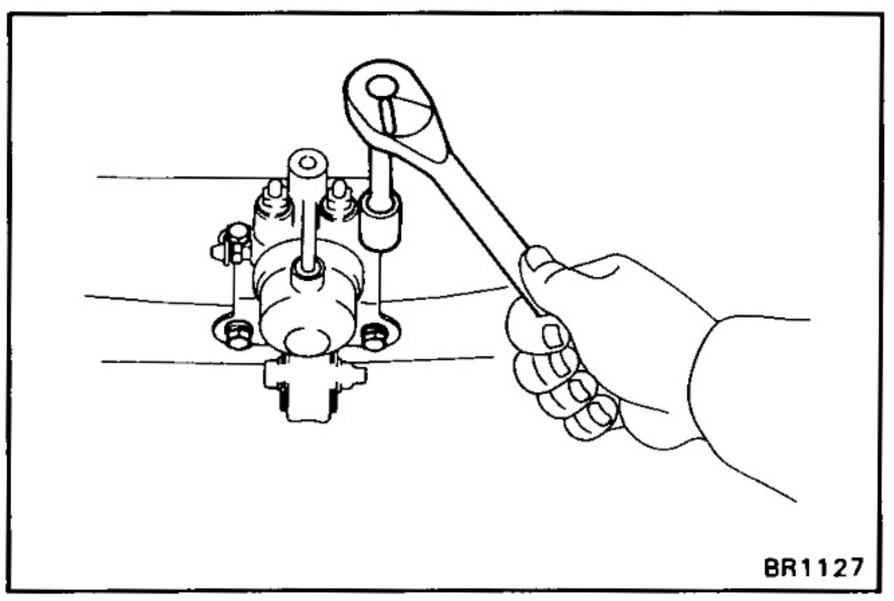

(b) Remove the valve bracket mounting bolts and nut, then remove the LSP & BV assembly.

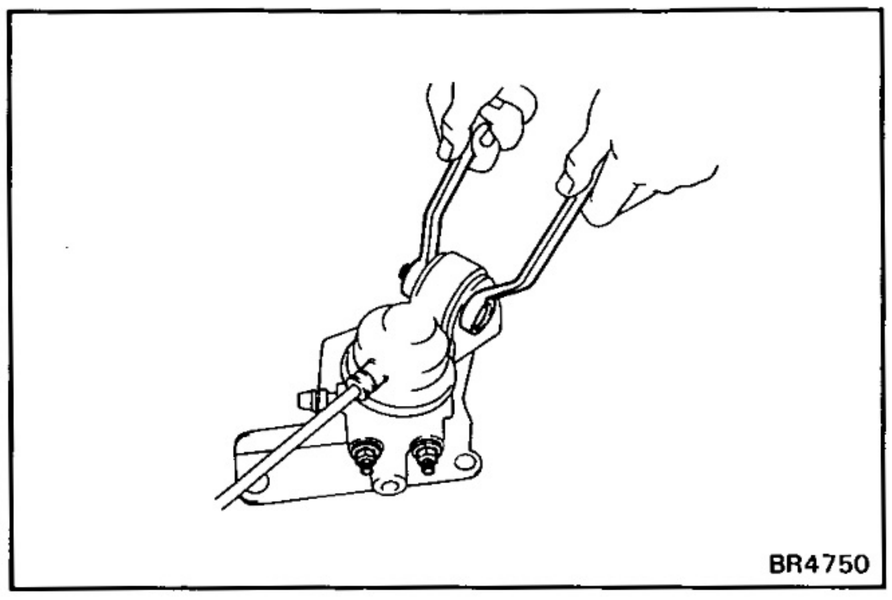

DISASSEMBLY OF LSP & BV ASSEMBLY

1. REMOVE VALVE BRACKET

(a) Remove the nut and bolt as shown.

(b) Remove the two nuts, and remove the bracket and set plate from the valve body.

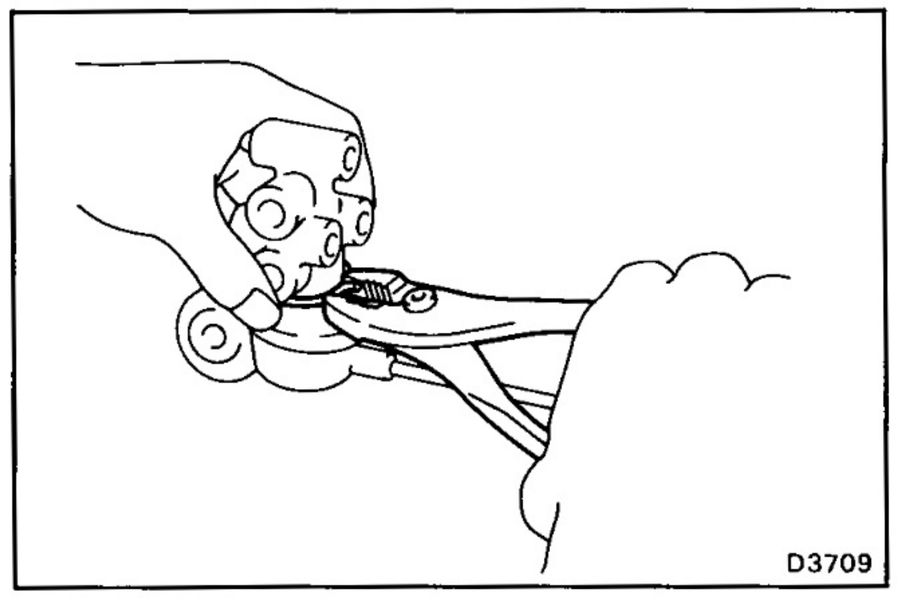

2. DISCONNECT SPRING FROM VALVE

Using pliers, remove the clip, and remove the spring from the valve.

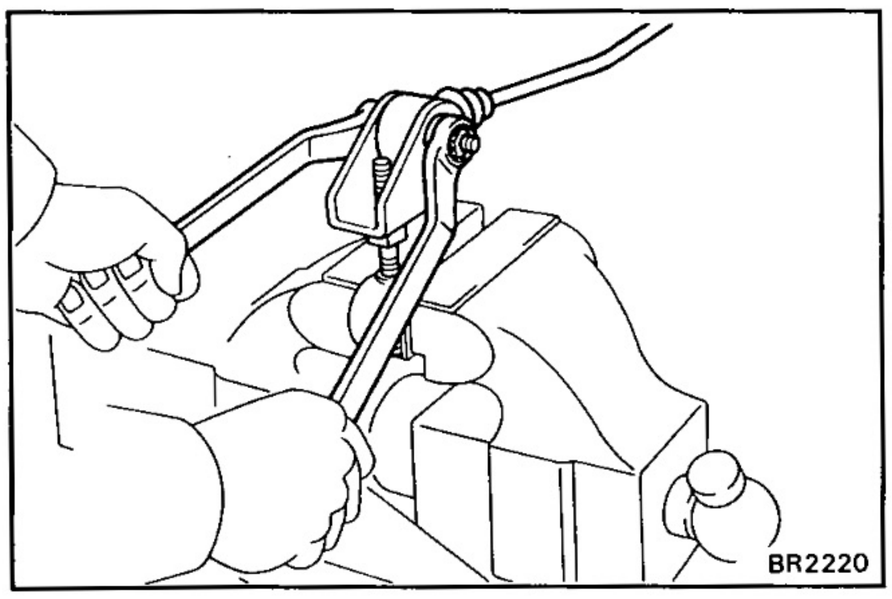

3. REMOVE SHACKLE NO. 1 AND NO. 2

(a) Remove the bolt and nut, then remove the following parts.

- Load sensing spring
- Two plate washers

(b) Loosen the lock nut, and remove the shackle No. 1 from the shackle No. 2.

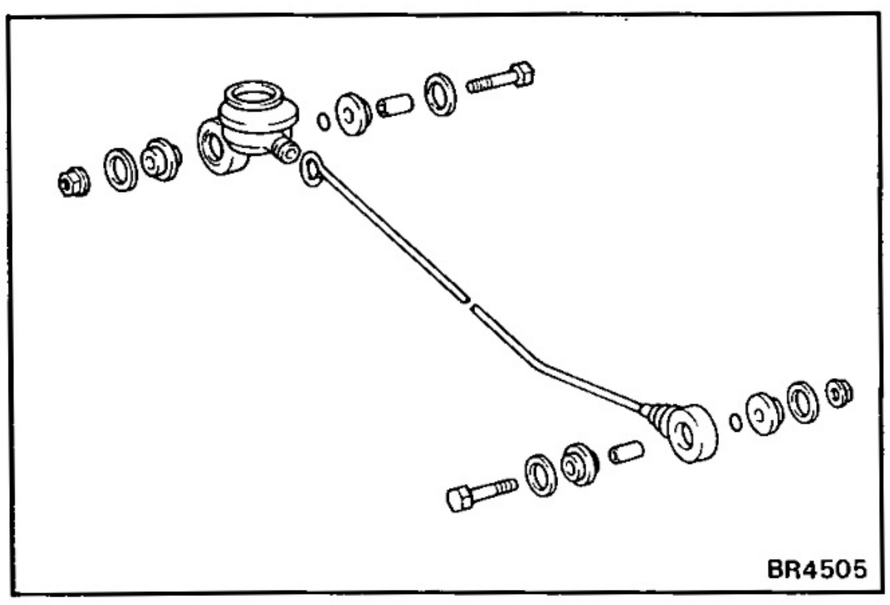

4. DISASSEMBLE LOAD SENSING SPRING

Disassemble the following parts.

(a) Bushings

(b) Collars

(c) Rubber plates

(d) Load sensing valve boot

(e) Load sensing spring boot

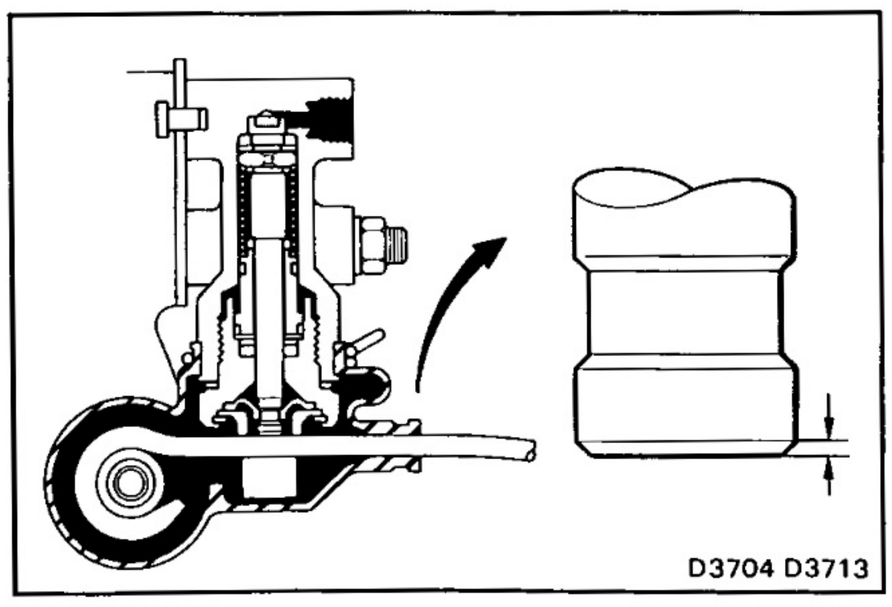

INSPECTION OF LSP & BV

INSPECT VALVE PISTON PIN AND LOAD SENSING SPRING CONTACT SURFACE FOR WEAR

Wear limit: 0.7 mm (0.028 in.)

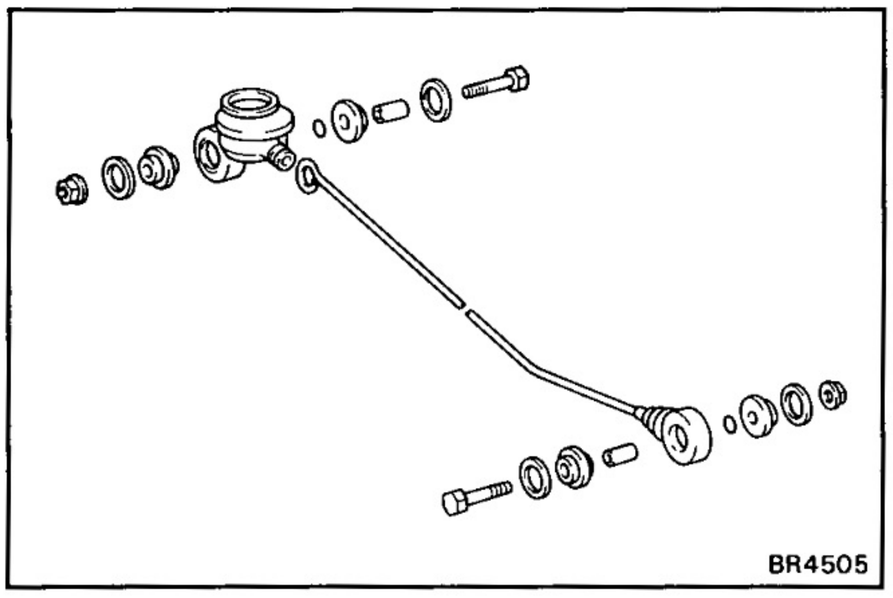

ASSEMBLY OF LSP & BV ASSEMBLY

(See page BR-66)

1. ASSEMBLE FOLLOWING PARTS TO LOAD SENSING SPRING

(a) Load sensing valve boot

(b) Load sensing spring boot

(c) Collars

(d) Rubber plates

(e) Bushings

HINT:

- Apply lithium soap base glycol grease to all rubbing areas.
- Do not mistake the valve side for the shackle side of the load sensing spring.

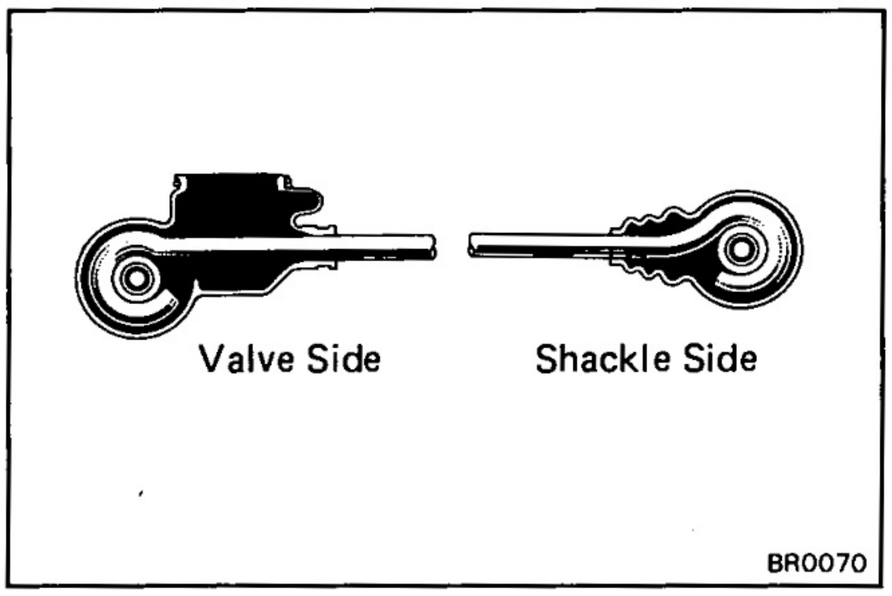

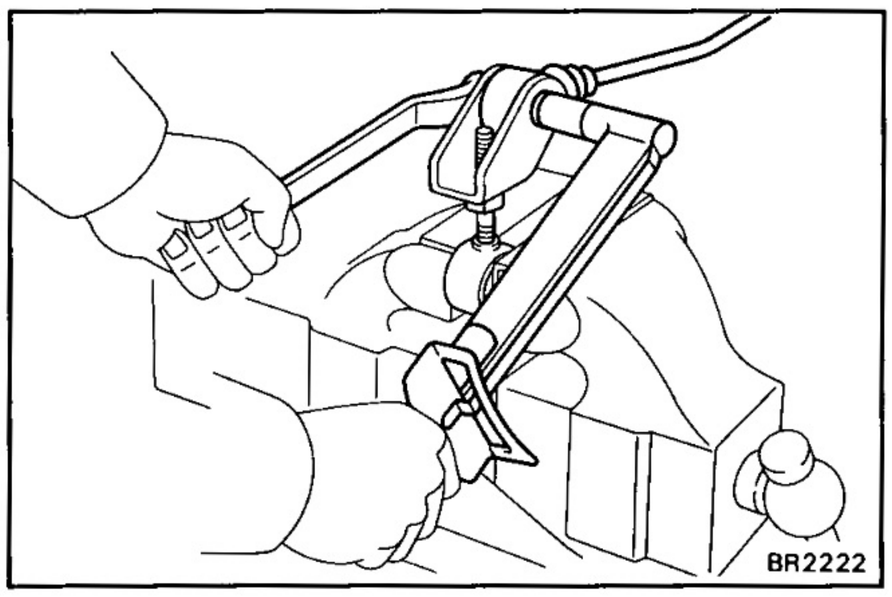

2. INSTALL SHACKLE NO. 1 AND NO. 2 TO LOAD SENSING SPRING

(a) Install the lock nut and shackle No. 1 to the shackle No. 2.

(b) Install the shackle to the load sensing spring through the two plate washers.

Torque: 185 kg-cm (13 ft-lb, 18 N·m)

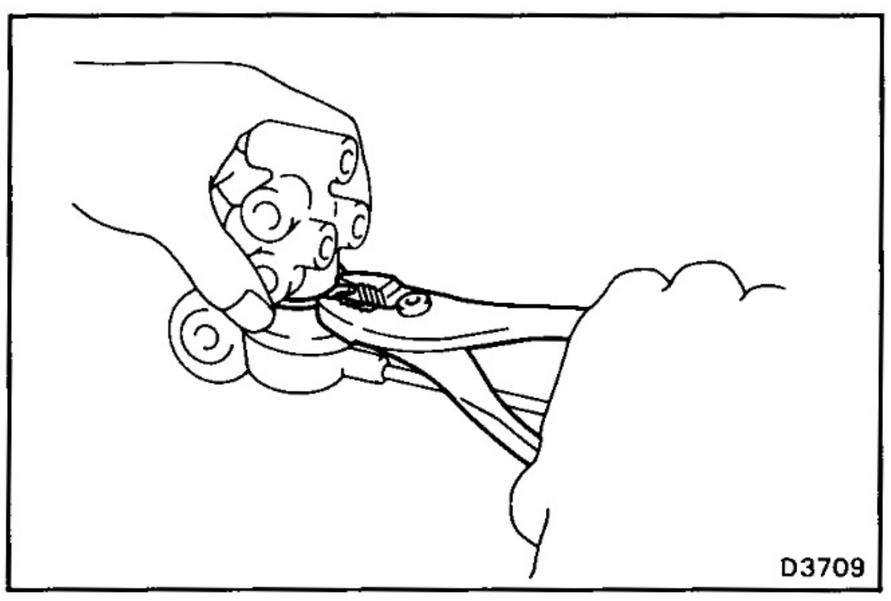

3. INSTALL LOAD SENSING SPRING TO VALVE BODY

Install the load sensing spring assembly to the load sensing valve with a clip.

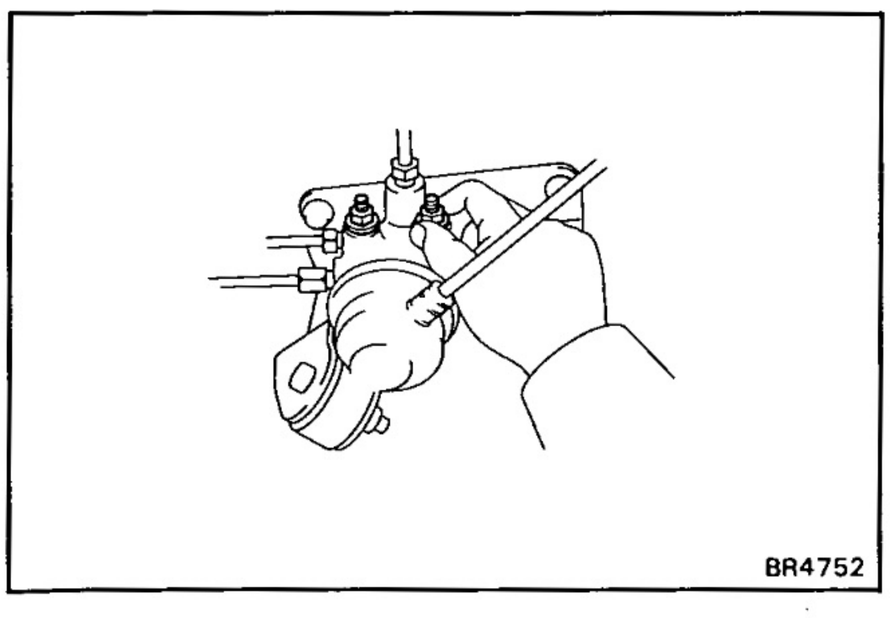

4. INSTALL VALVE BRACKET

(a) Install the set plate to the valve assembly through the valve bracket and temporarily tighten the two valve body mounting nuts.

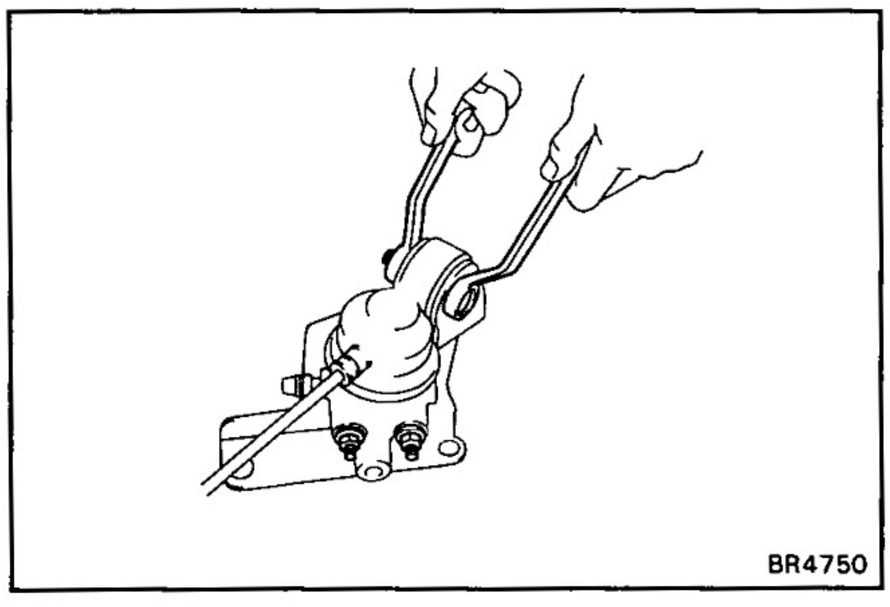

(b) Torque the bolt and nut of load sensing spring boot through the two plate washers.

Torque: 185 kg-cm (13 ft-lb, 18 N·m)

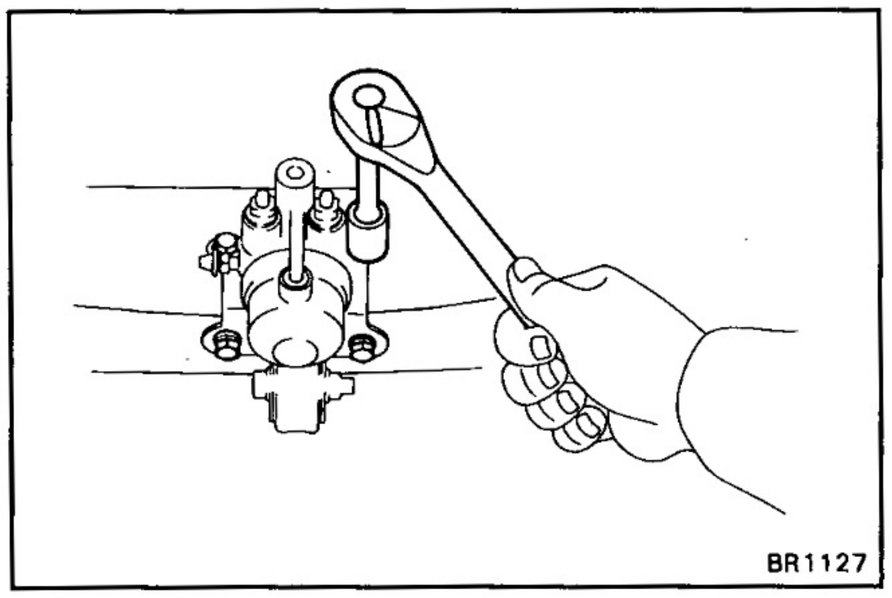

INSTALLATION OF LSP & BV

1. INSTALL LSP & BV ASSEMBLY

Install the LSP & BV assembly to the frame with four bolts.

Torque: 195 kg-cm (14 ft-lb, 19 N·m)

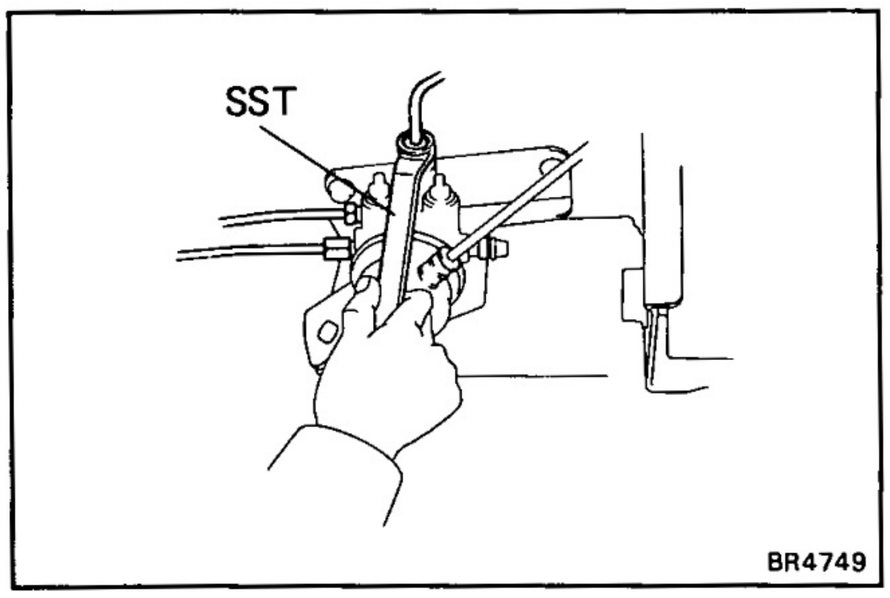

2. CONNECT BRAKE TUBES

Using SST, connect the brake tubes.

SST 09751-36011

Torque: 155 kg-cm (11 ft-lb, 15 N·m)

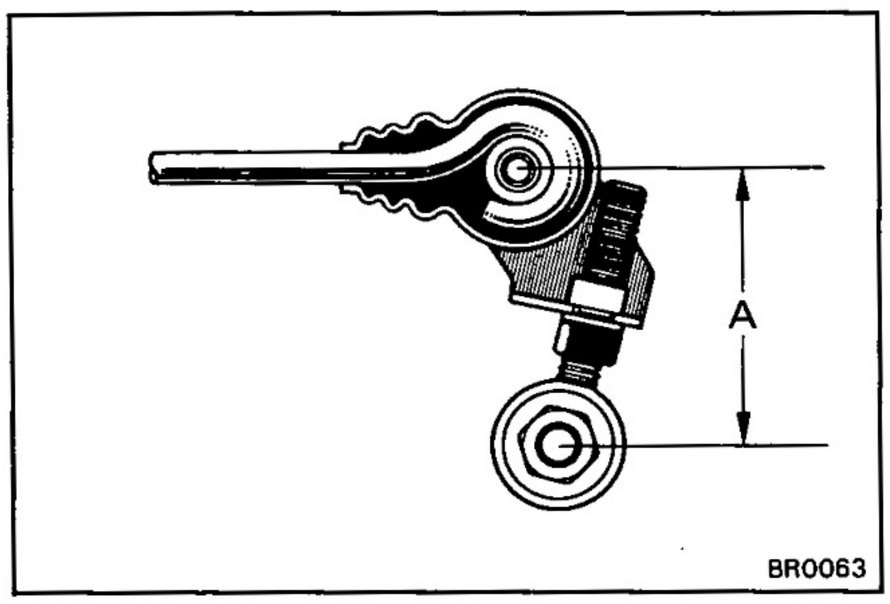

3. CONNECT SHACKLE NO. 2 TO BRACKET

(a) Set the dimension A by turning the shackle No. 2.

Initial set: 90 mm (3.54 in.)

(b) Tighten the lock nut.

Torque: 250 kg-cm (18 ft-lb, 25 N·m)

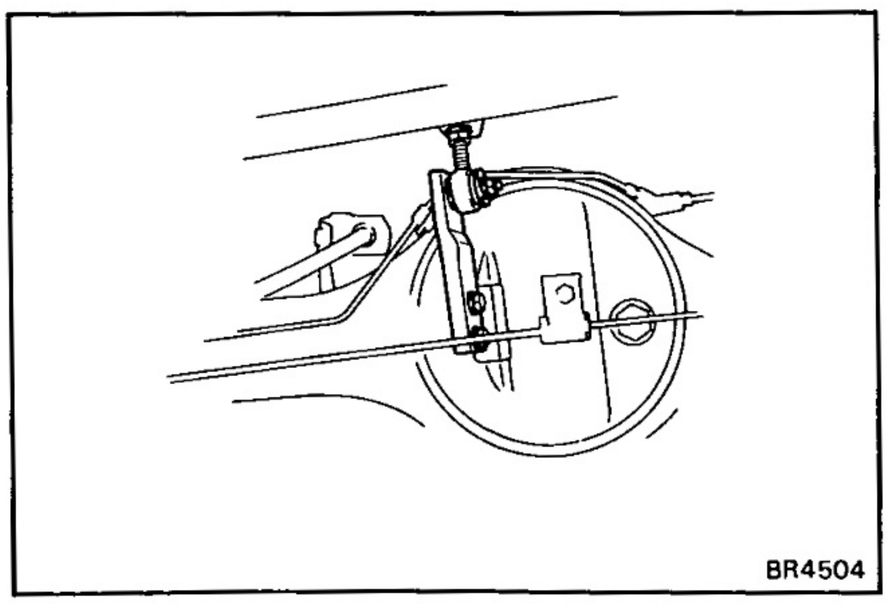

(c) Install the two bushings and a collar to the load sensing spring shackle.

(d) Install the load sensing spring to the shackle bracket with the two retainer and a nut.

Torque: 130 kg-cm (9 ft-lb, 13 N·m)

(e) Install a new cotter pin.

4. SET REAR AXLE LOAD

(See page BR-66)

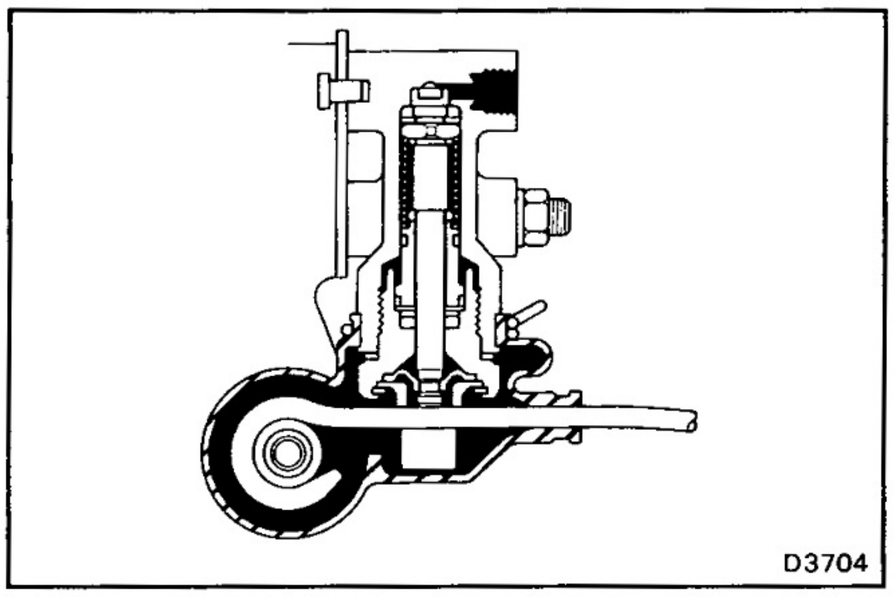

5. SET VALVE BODY

(a) When pulling down the load sensing spring, confirm that the valve piston moves down smoothly.

(b) Position the valve body so that the valve piston lightly contacts the load sensing spring.

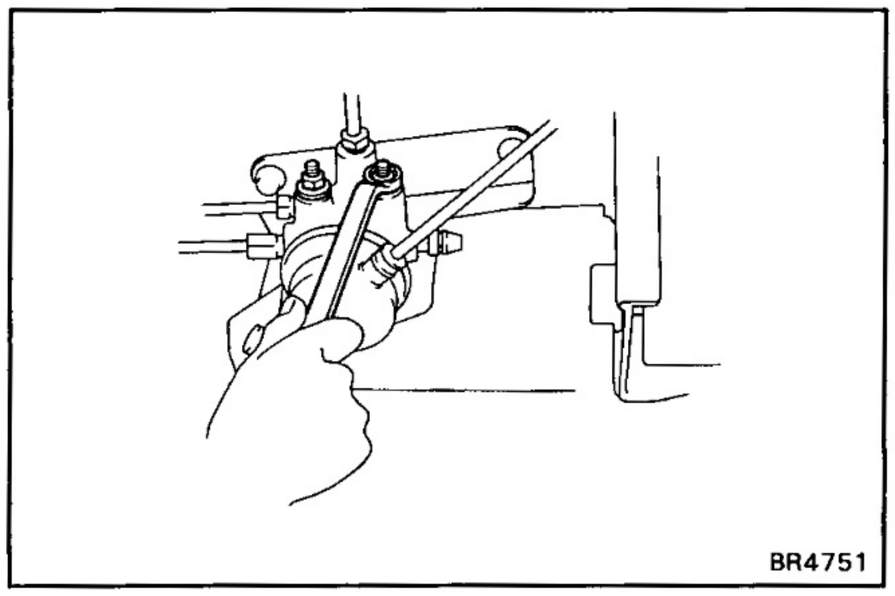

(c) Tighten the valve body mounting nuts.

Torque: 130 kg-cm (9 ft-lb, 13 N·m)

6. BLEED BRAKE SYSTEM
(See page BR-7)

7. CHECK FOR FLUID LEAKAGE

8. CHECK AND ADJUST LSP & BV FLUID PRESSURE
(See page BR-67)

STEERING

	Page
PRECAUTION	SR-2
TROUBLESHOOTING	SR-2
ON-VEHICLE INSPECTION	SR-3
STEERING COLUMN	SR-4
Non-Tilt Steering Column	SR-6
Tilt Steering Column	SR-10
MANUAL GEAR HOUSING	SR-19
POWER STEERING	SR-28
Description	SR-28
On-Vehicle Inspection	SR-32
Power Steering Pump	SR-38
Gear Housing	SR-54
Electronic Control System	SR-65
STEERING LINKAGE	SR-71

PRECAUTION

Care must be taken to replace parts properly because they may affect the performance of the steering system and result in a driving hazard.

TROUBLESHOOTING

Problem	Possible cause	Remedy	Page
Hard steering	Tires improperly inflated	Inflate tires to proper pressure	A-14
	Insufficient lubricant	Lubricate suspension	
	Excessive caster	Check front wheel alignment	SA-3
	Steering system joints worn	Replace steering system joints	SR-19, 54
	Steering column binding	Inspect steering column	SA-4
	Steering gear out of adjustment or broken	Adjust or repair steering gear	SR-19, 54
	Power steering belt loose	Adjust belt	SR-32
	Fluid level in reservoir low	Check reservoir	SR-33
	Power steering unit faulty	Check power steering unit	SR-38, 54
	Solenoid valve faulty	Inspect solenoid valve	SR-69
	Electronic control faulty	Inspect electronic control	SR-65
Poor return	Tires improperly inflated	Inflate tires to proper pressure	A-14
	Insufficient lubricant	Lubricate suspension	
	Wheel alignment incorrect	Check front wheel alignment	SA-3
	Steering column binding	Inspect steering column	SR-4
	Steering gear out of adjustment or broken	Adjust or repair steering gear	SR-19, 54
Excessive play	Front wheel bearing worn	Replace front wheel bearing	SA-15
	Main shaft yoke or intermediate shaft yoke worn	Replace main shaft or intermediate shaft	SR-4
	Steering system joints worn	Replace steering system joints	SR-19, 54
	Steering gear out of adjustment or broken	Adjust or repair steering gear	SR-19, 54
Abnormal noise	Steering linkage loose	Tighten steering linkage	SR-71
	Steering system joints worn	Replace steering system joints	SR-19, 54
	Steering gear out of adjustment or broken	Adjust or repair steering gear	SR-19, 54

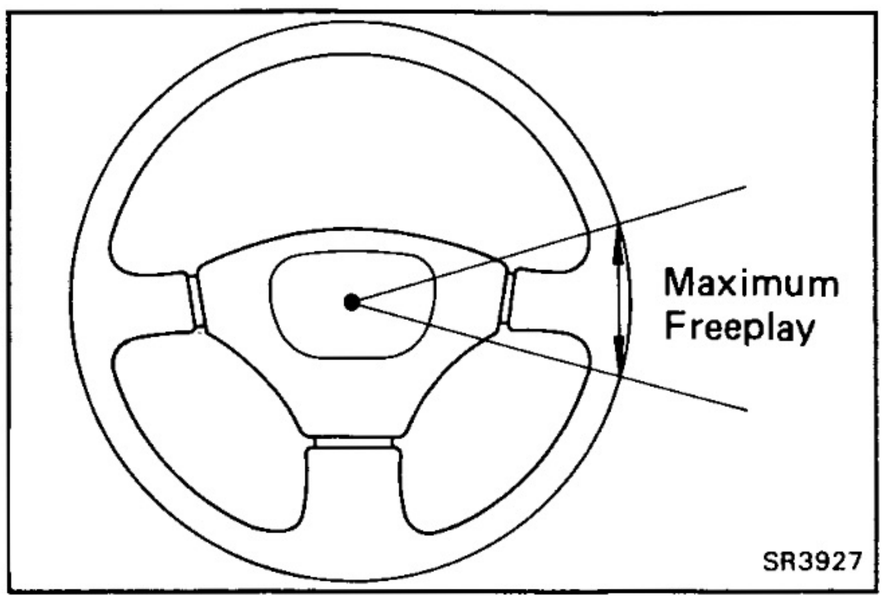

ON-VEHICLE INSPECTION

STEERING WHEEL FREEPLAY

1. CHECK THAT STEERING WHEEL FREEPLAY IS CORRECT

With the vehicle stopped and pointed straight ahead, rock the steering wheel gently back and forth with light finger pressure. Freeplay should not exceed the maximum limit.

Maximum play: 30 mm (1.18 in.)

If incorrect, adjust or repair as required.

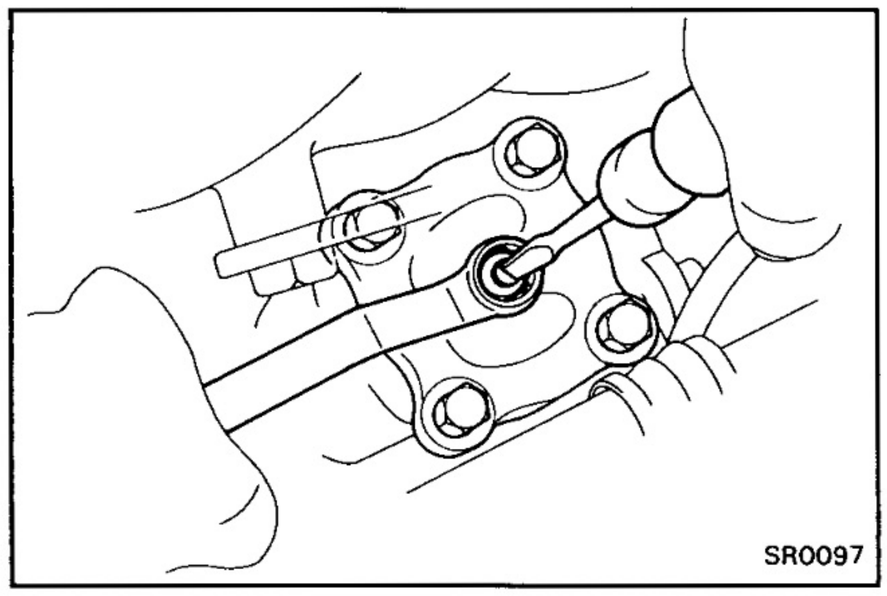

2. POINT WHEELS STRAIGHT AHEAD

3. ADJUST STEERING GEAR HOUSING

(a) Loosen the lock nut.

(b) Turn the adjusting screw clockwise to decrease wheel freeplay and counterclockwise to increase it.

HINT: Turn the adjusting screw in small increments and check the wheel freeplay between each adjustment.

4. CHECK THAT STEERING DOES NOT BIND

Turn the steering wheel half way around in both directions.

Check that the freeplay is correct and steering is smooth and without rough spots.

5. HOLD ADJUSTING SCREW AND TIGHTEN LOCK NUT

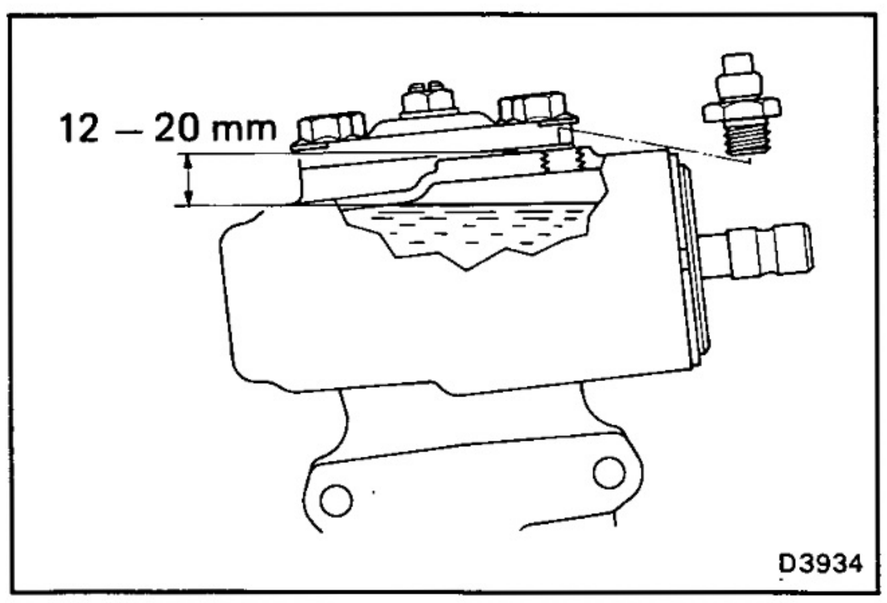

OIL LEVEL

CHECK STEERING GEAR HOUSING OIL LEVEL

Oil level: 12 – 20 mm (0.47 – 0.79 in.)

If low, fill with gear oil and check for leakage.

STEERING COLUMN

REMOVAL AND INSTALLATION OF STEERING COLUMN

Remove and install the parts as shown.

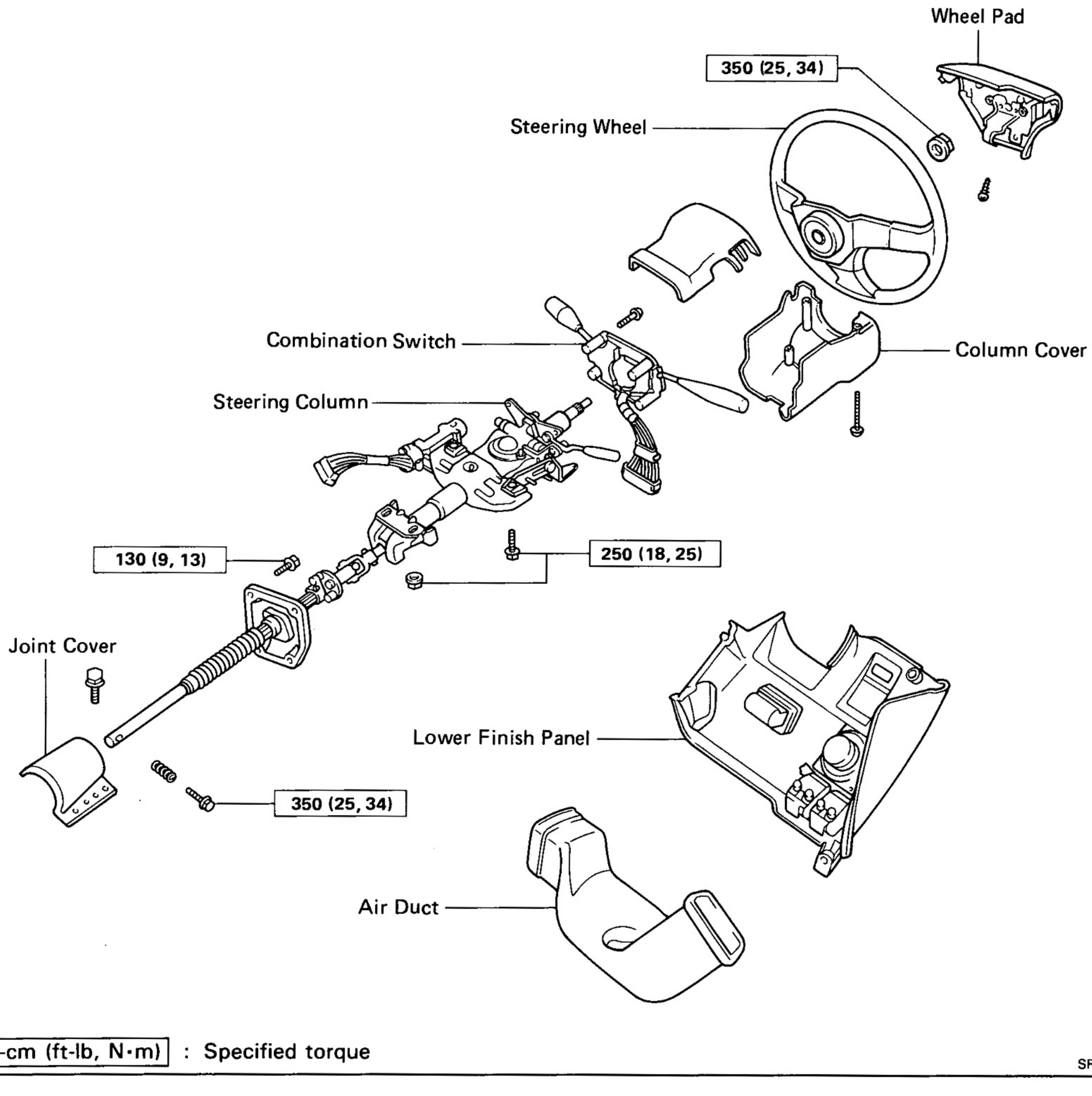

kg-cm (ft-lb, N·m) : Specified torque

SR3928

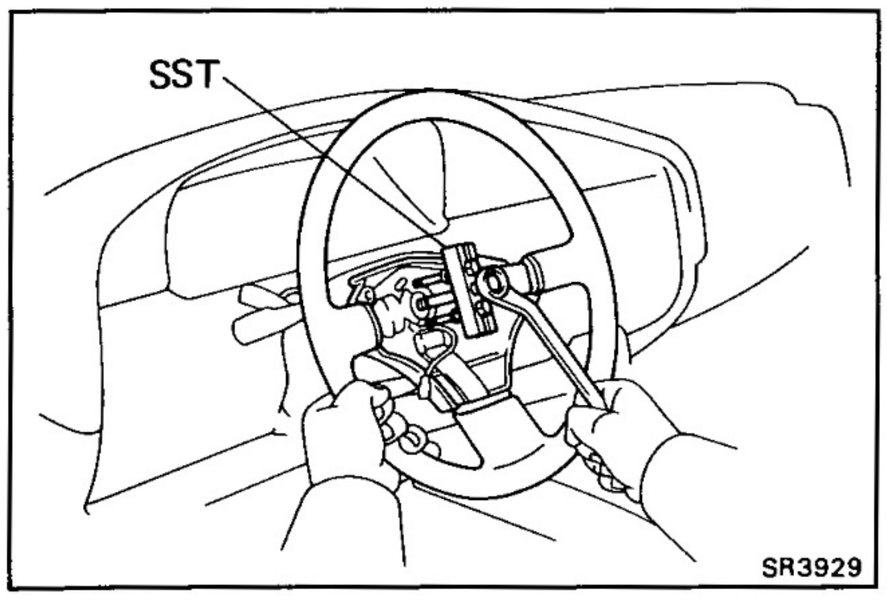

(MAIN POINT OF REMOVAL)

1. **REMOVE STEERING WHEEL**

   Using SST, remove the steering wheel.

   SST 09609-20011

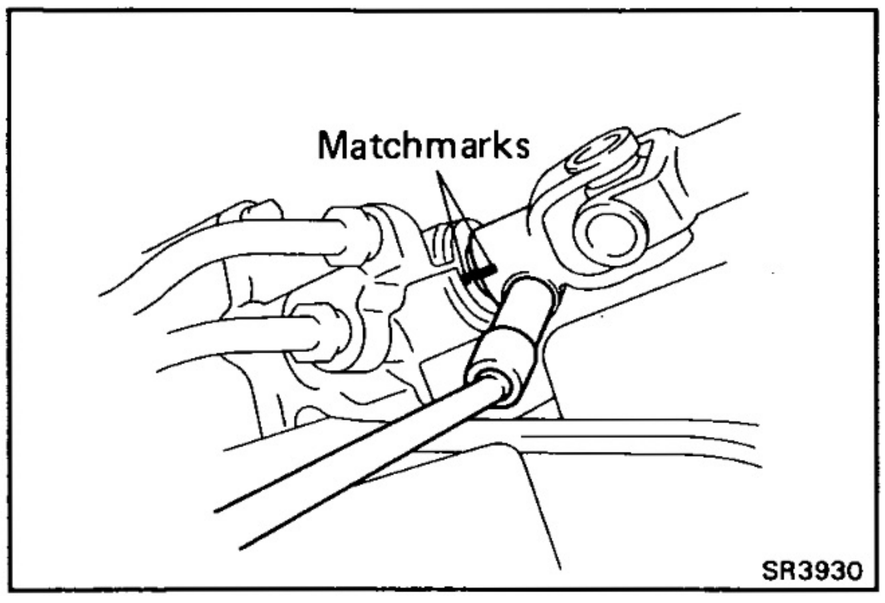

2. DISCONNECT MAIN SHAFT

(a) Place matchmarks on the worm shaft and main shaft.

(b) Disconnect the main shaft from the worm shaft.

Non-Tilt Steering Column

COMPONENTS

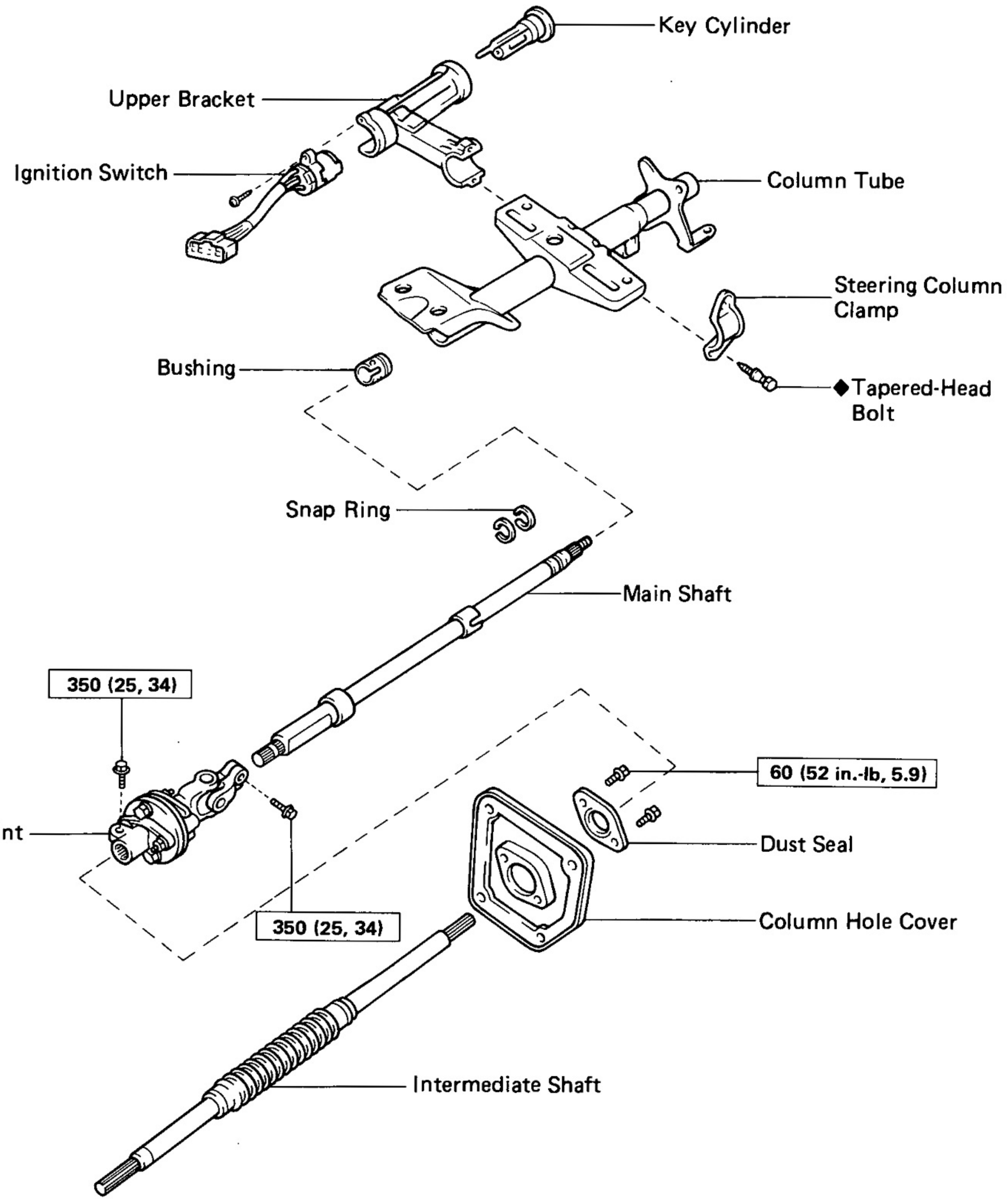

kg-cm (ft-lb, N·m) : Specified torque

◆ Non-reusable part

SR4107

DISASSEMBLY OF STEERING COLUMN

1. **DISCONNECT UNIVERSAL JOINT**
(See page SR-11)

2. **REMOVE COLUMN HOLE COVER**
(See page SR-11)

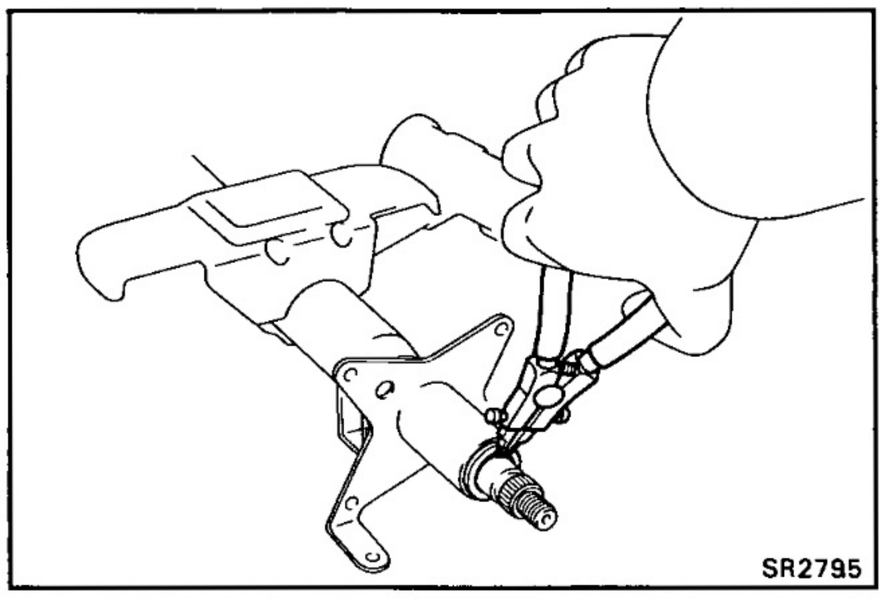

3. **PULL OUT MAIN SHAFT**

(a) Using snap ring pliers, remove the snap ring.

(b) Pull out main shaft from the upper tube.

HINT: Do not place the ignition key at the LOCK position.

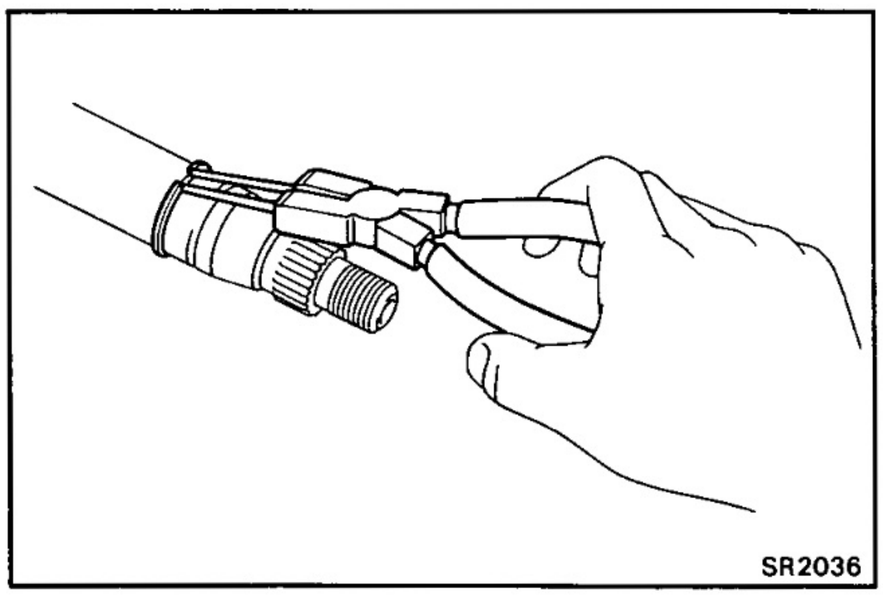

(c) Using snap ring pliers, remove the snap ring.

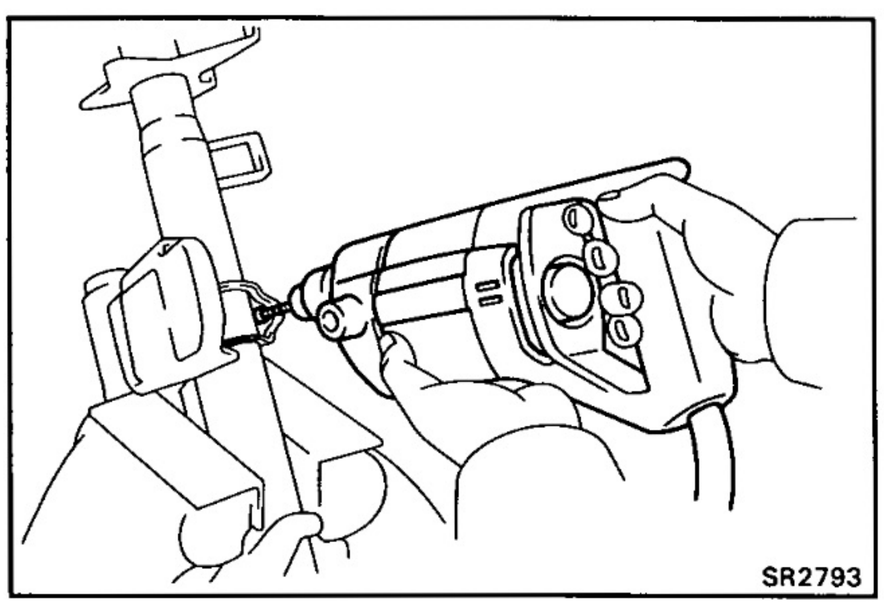

4. **REMOVE UPPER BRACKET**

(a) Using a centering punch, mark the center of the tapered-head bolts.

(b) Using a 3 — 4 mm (0.12 — 0.16 in.) drill, drill into the tapered-head bolts.

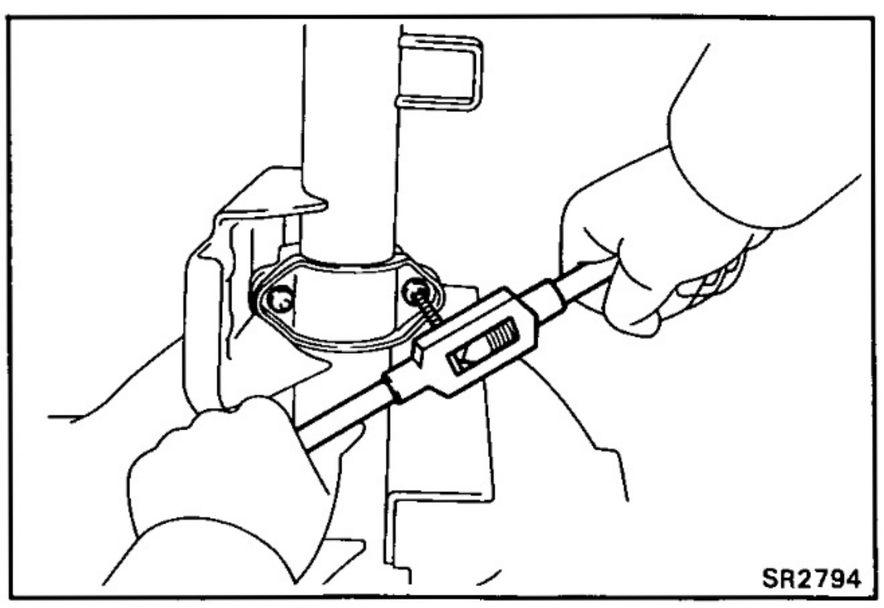

(c) Using a screw extractor, remove the tapered-head bolts.

(d) Remove the two bolts and separate the upper bracket and column tube.

INSPECTION AND REPLACEMENT OF NON-TILT STEERING COLUMN

1. **INSPECT UPPER BRACKET**
(See page SR-14)

2. **IF NECESSARY, REPLACE IGNITION KEY CYLINDER**
(See page SR-14)

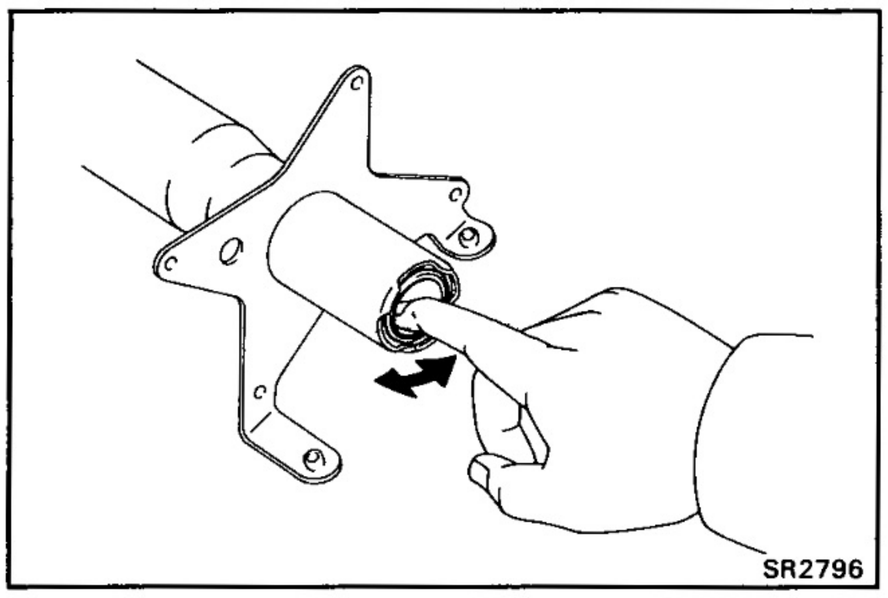

3. **INSPECT UPPER BEARING**

Check the upper bearing rotation condition and check for abnormal noise.

If the bearing is worn or damaged, replace the column tube assembly.

4. **IF NECESSARY, REPLACE BUSHING**
(See page SR-14)

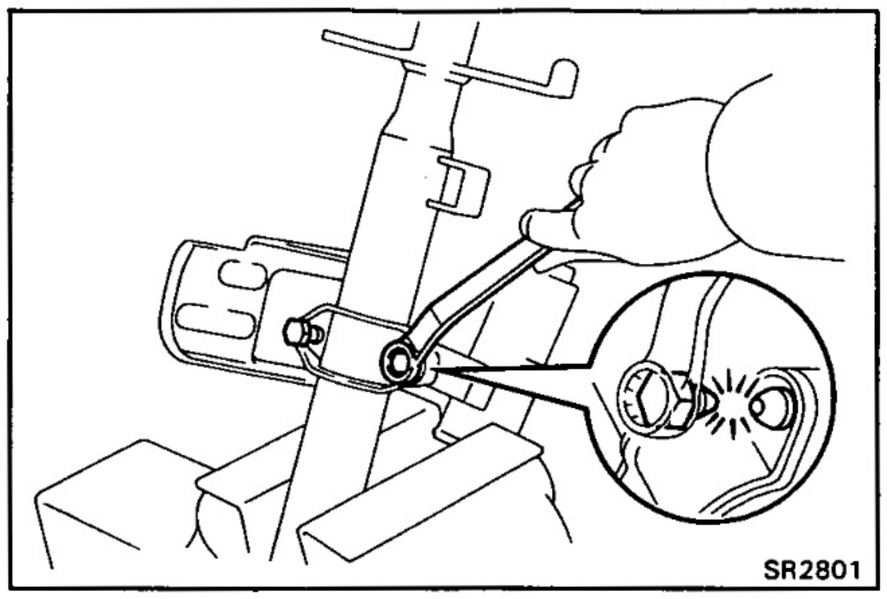

ASSEMBLY OF NON-TILT STEERING COLUMN

(See page SR-6)

1. INSTALL UPPER BRACKET TO COLUMN TUBE

(a) Install the upper bracket with new two tapered-head bolts.

(b) Tighten the tapered-head bolts until the bolt heads break off.

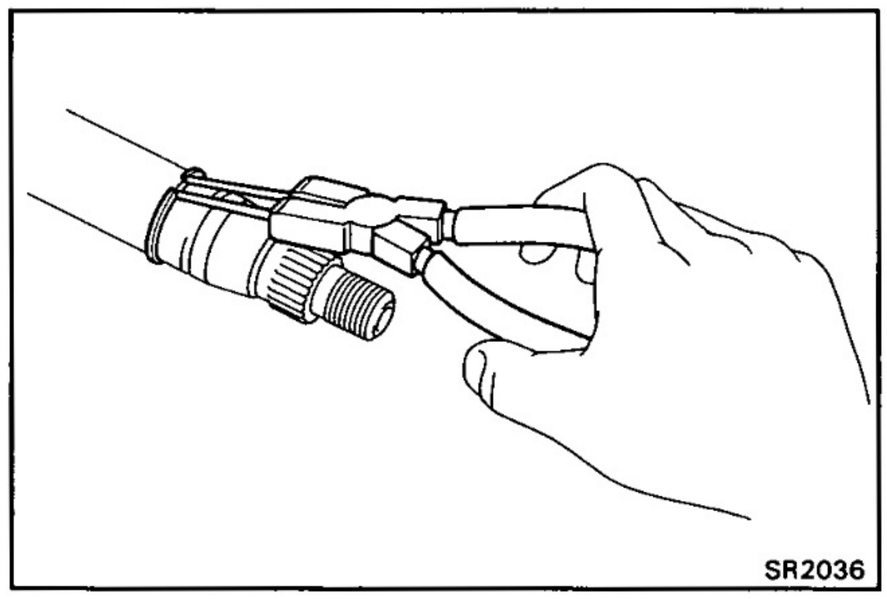

2. INSTALL MAIN SHAFT TO COLUMN TUBE

(a) Using snap ring pliers, install the snap ring in the lower groove of the main shaft.

(b) Insert the main shaft in the column tube.

HINT: Do not place the ignition key at LOCK position.

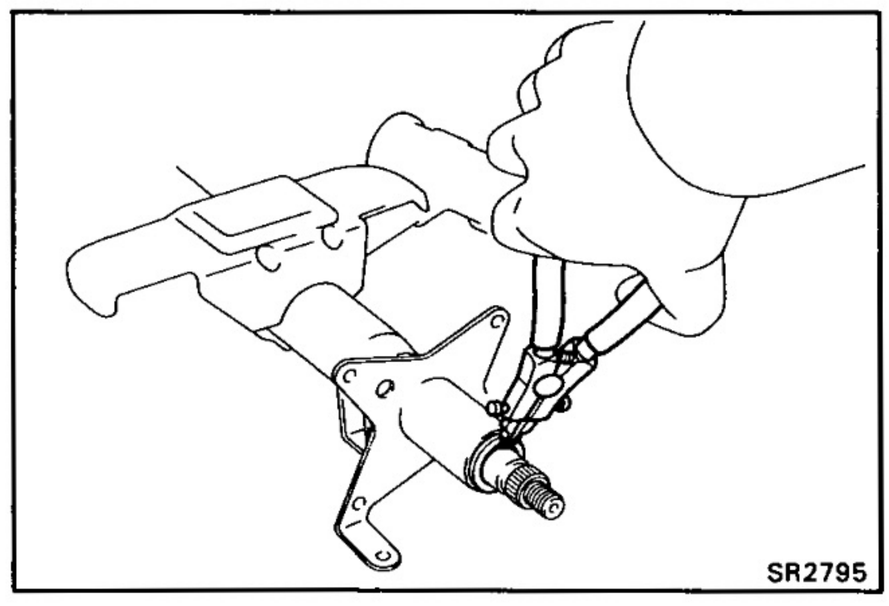

(c) Using snap ring pliers, install the upper snap ring.

3. INSTALL COLUMN HOLE COVER

(See page SR-18)

4. CONNECT UNIVERSAL JOINT

(See page SR-18)

Tilt Steering Column

COMPONENTS

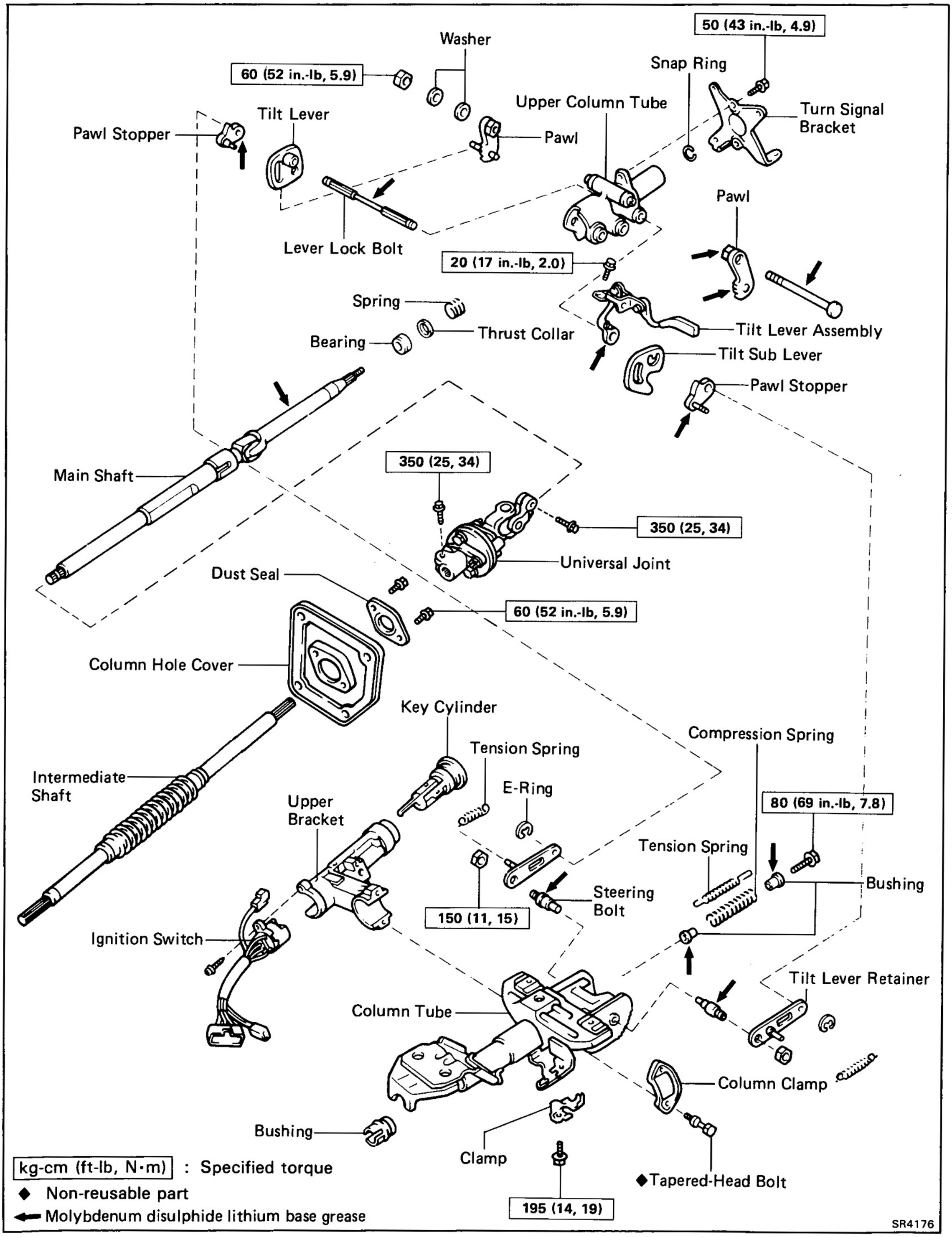

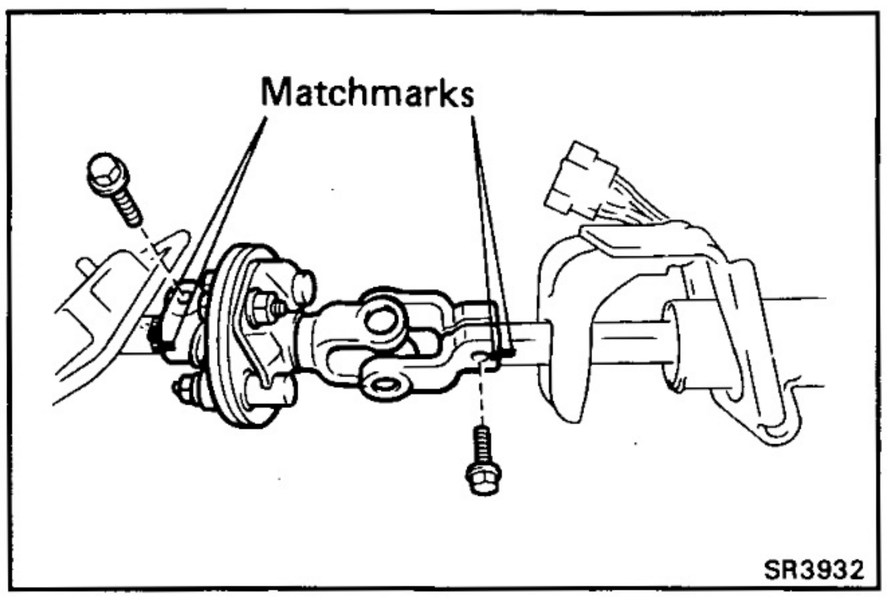

DISASSEMBLY OF STEERING COLUMN

(See page SR-10)

1. DISCONNECT UNIVERSAL JOINT

Place matchmarks on the universal joint and the shaft, then remove the bolt and the universal joint.

2. REMOVE COLUMN HOLE COVER

(a) Place matchmarks on the flexible coupling and the shaft, then remove the bolt and the shaft.

(b) Remove two bolts and the dust seal.

(c) Remove the column hole cover.

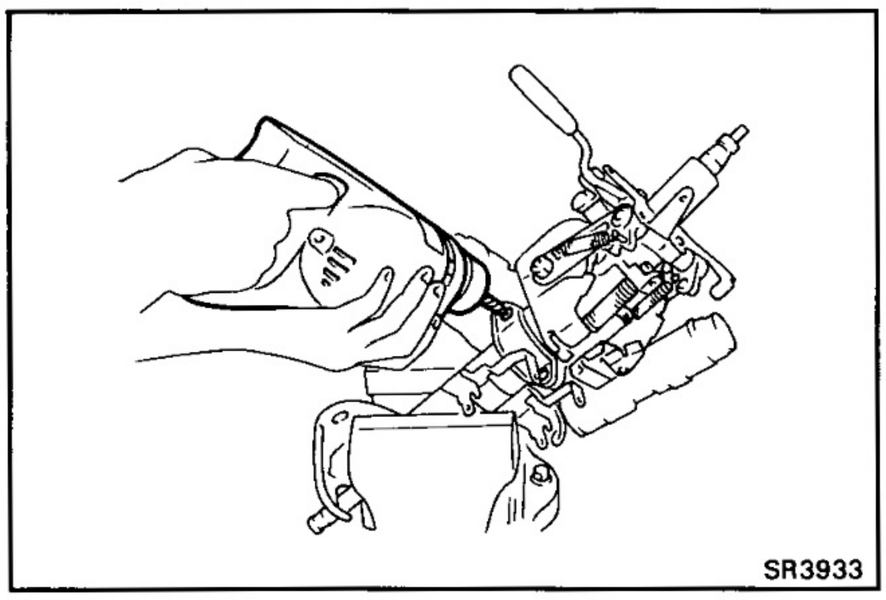

3. REMOVE UPPER BRACKET

(a) Using a centering punch, mark the center of the tapered-head bolt.

(b) Using a 3 — 4 mm (0.12 — 0.16 in.) drill, drill into the tapered-head bolt.

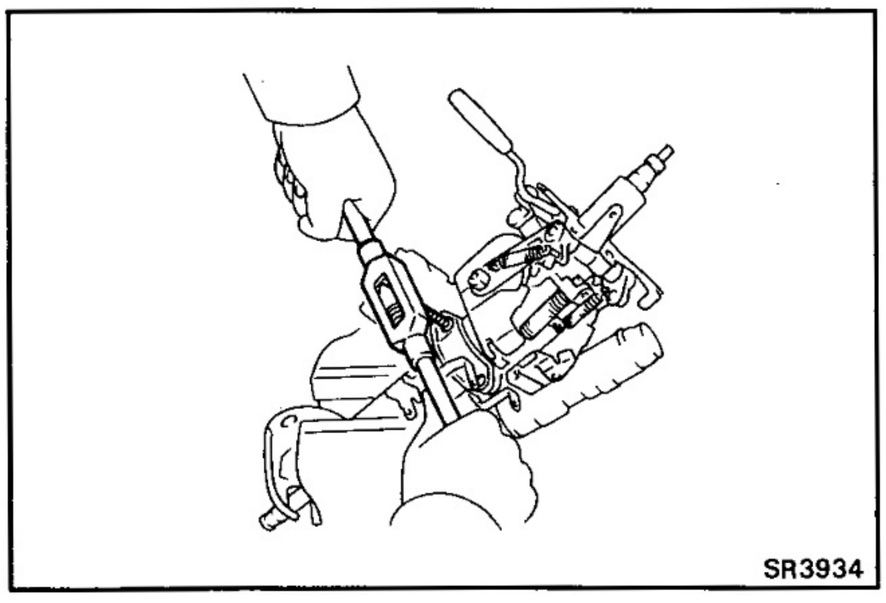

(c) Using a screw extractor, remove the tapered-head bolt.

(d) Remove the two bolts, and separate the upper bracket and the column tube.

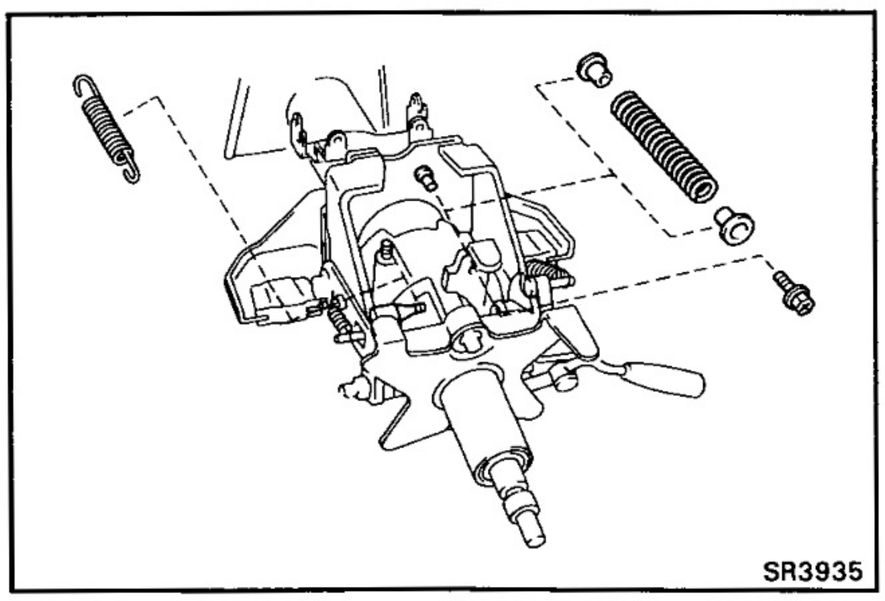

4. REMOVE COMPRESSION SPRING AND TENSION SPRING

(a) Remove the wire harness clamp.

(b) Remove the bolt with the compression spring.

(c) Remove the bushings from the spring.

(d) Remove the tension spring.

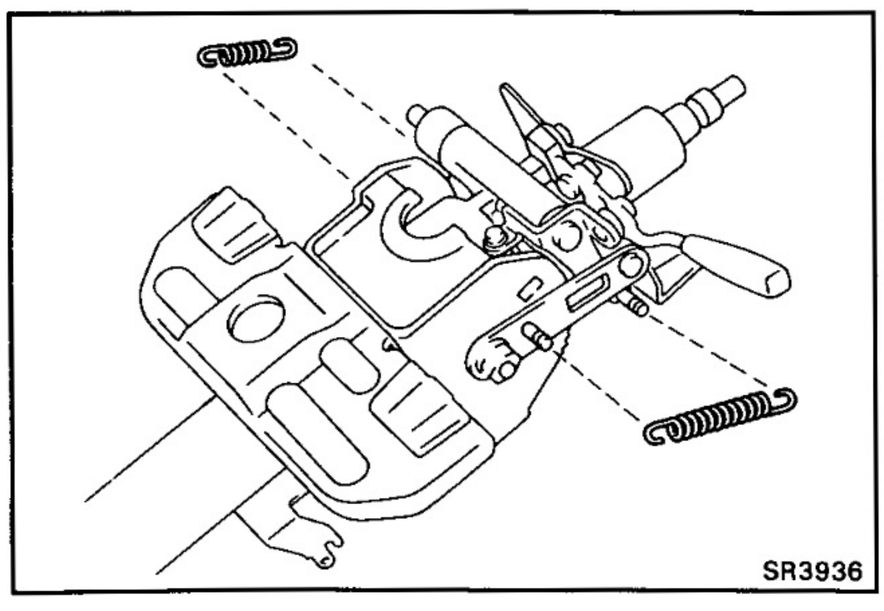

5. REMOVE TWO TENSION SPRINGS

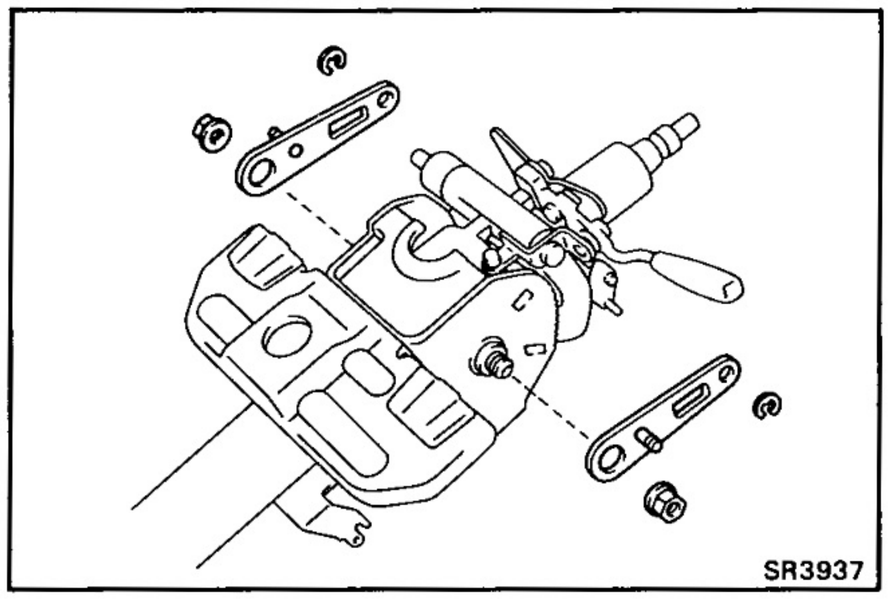

6. REMOVE TWO TILT LEVER RETAINERS

(a) Remove the E-rings from the retainers.

(b) Remove the retainers with the nuts.

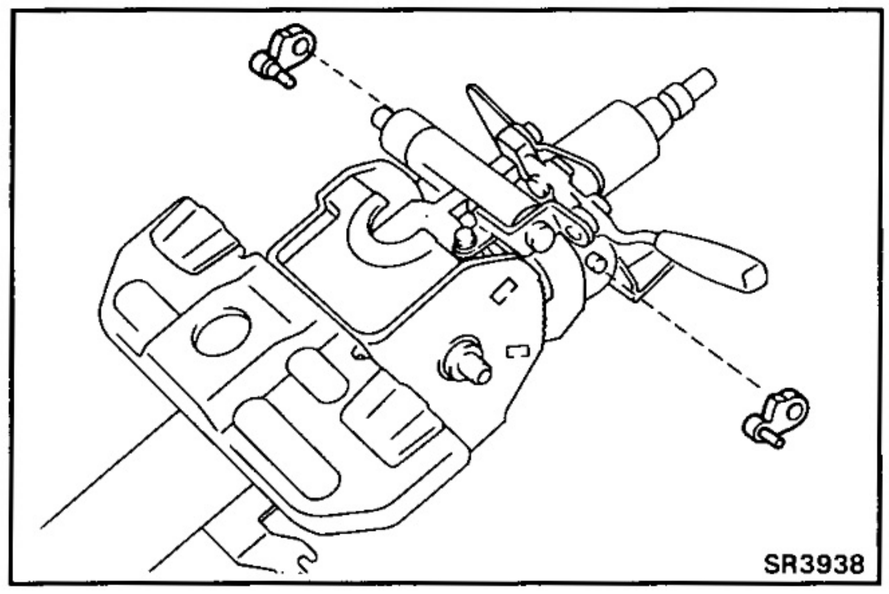

7. REMOVE TWO PAWL STOPPERS

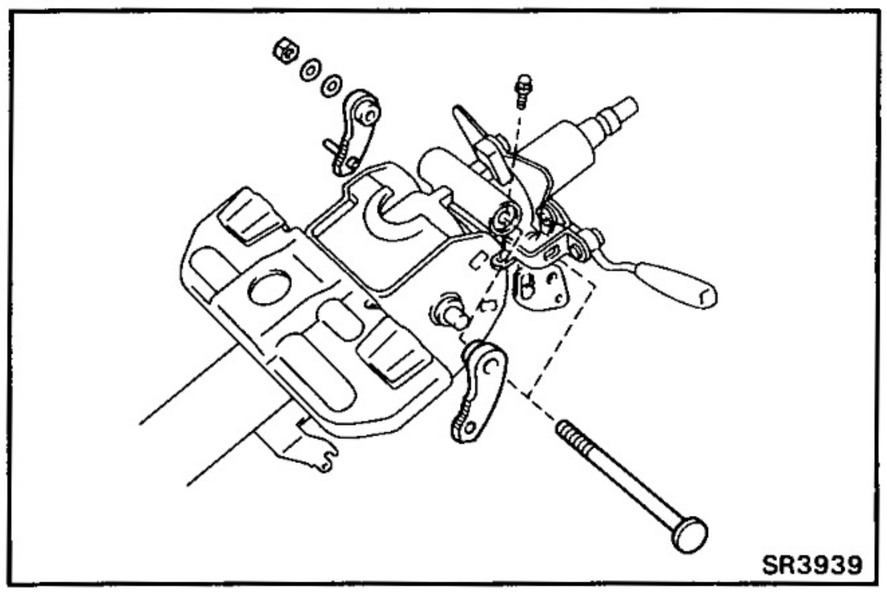

8. REMOVE TWO TILT PAWLS

(a) Remove the nut and bolt.

(b) Remove the bolt from the tilt lever assembly.

(c) Remove the two pawls with the collars.

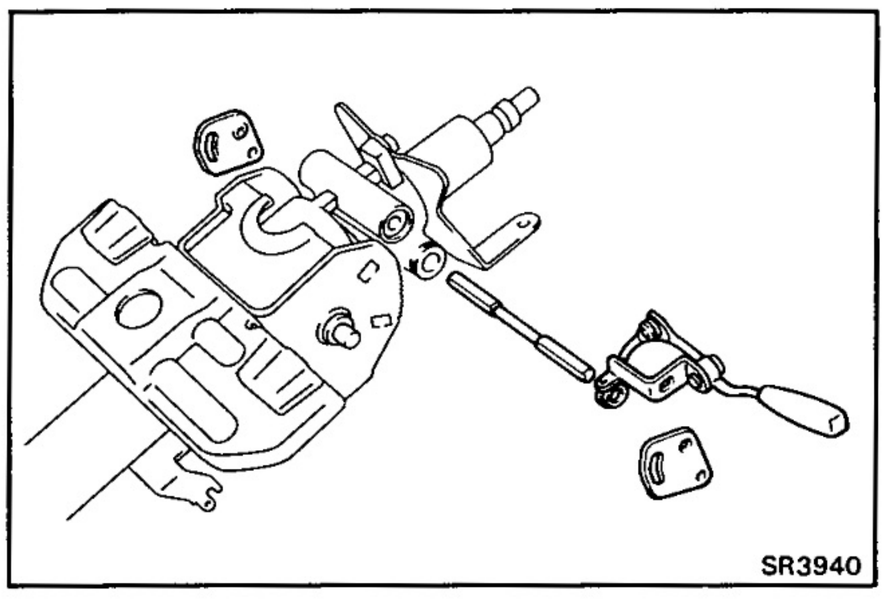

9. REMOVE TILT LEVER ASSEMBLY, TILT LEVER, TILT SUB LEVER AND LEVER LOCK BOLT

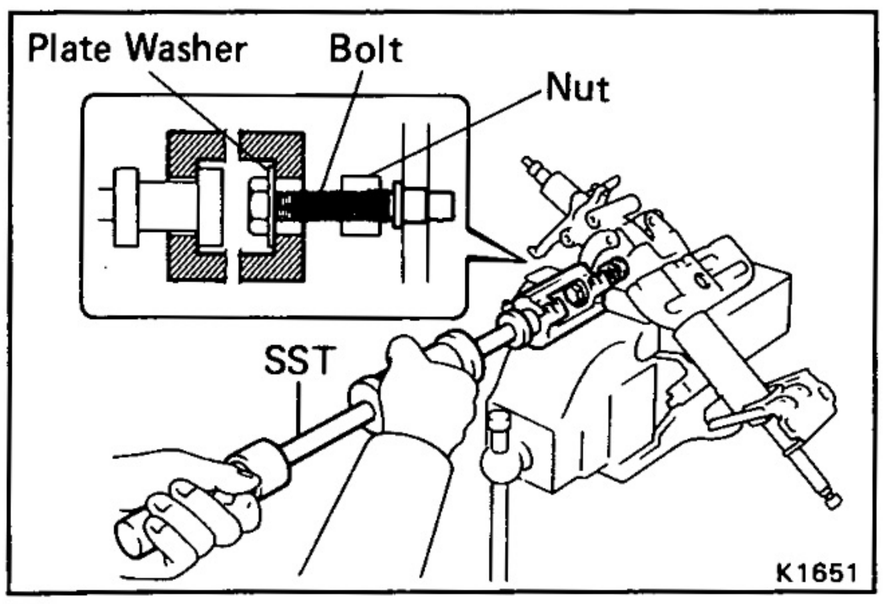

10. REMOVE UPPER COLUMN TUBE

(a) Set SST, the nut (10 mm nominal diameter, 1.25 mm pitch), plate washer (36 mm outer diameter) and bolt (10 mm nominal diameter, 1.25 mm pitch, 50 mm length) as shown. And then remove the two bolts.

SST 09910-00015 (09911-00011, 09912-00010)

(Reference)	Nut	90170-10004
	Plate washer	90201-10201
	Bolt	91111-51050

(b) Remove the upper column tube from the lower column tube.

(c) Remove the stopper.

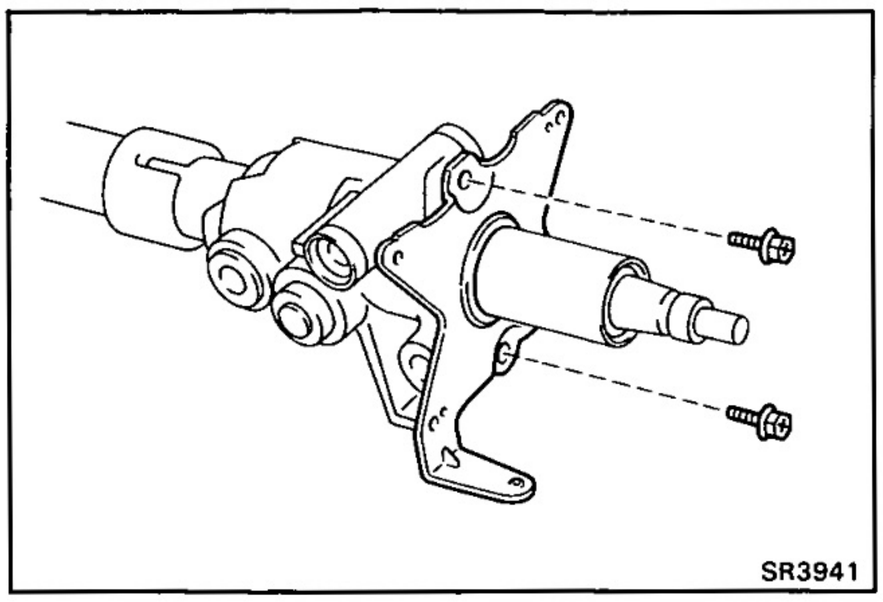

11. REMOVE TURN SIGNAL BRACKET

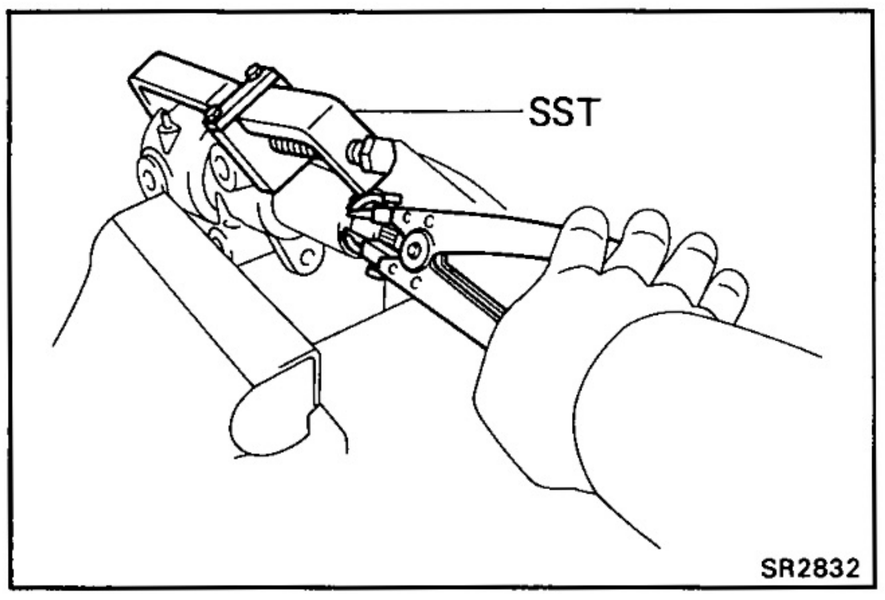

12. REMOVE MAIN SHAFT

(a) Using SST to hold the main shaft, remove the snap ring with snap ring pliers.

SST 09950-20017

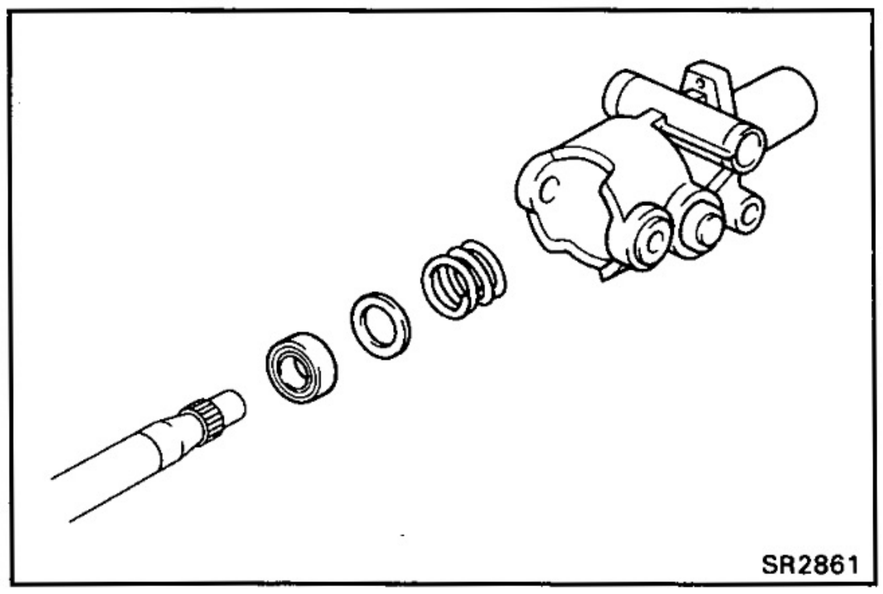

(b) Remove the main shaft from the column tube.

(c) Remove the spring, thrust collar and bearing.

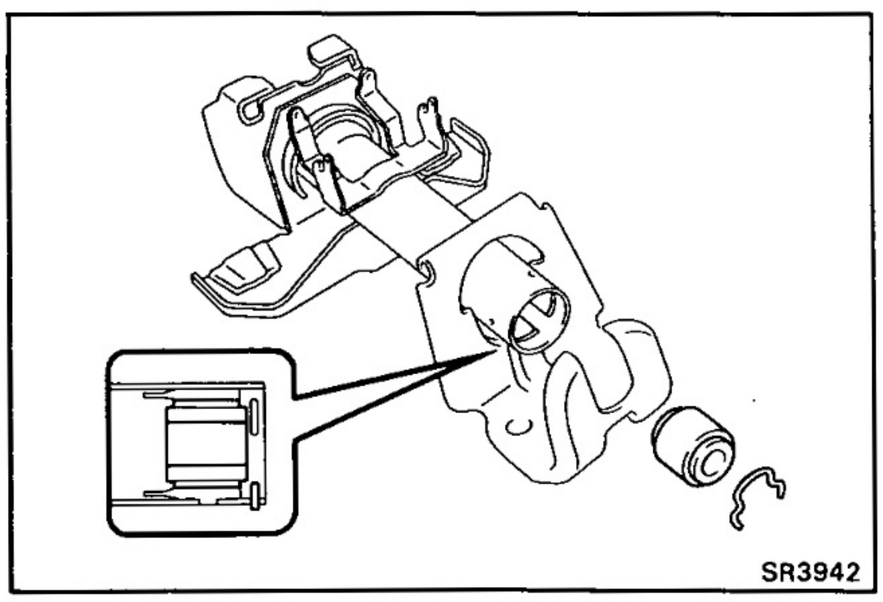

13. REMOVE MAIN SHAFT COLLAR

(a) Remove the snap ring from the lower column tube.

(b) Remove the main shaft collar.

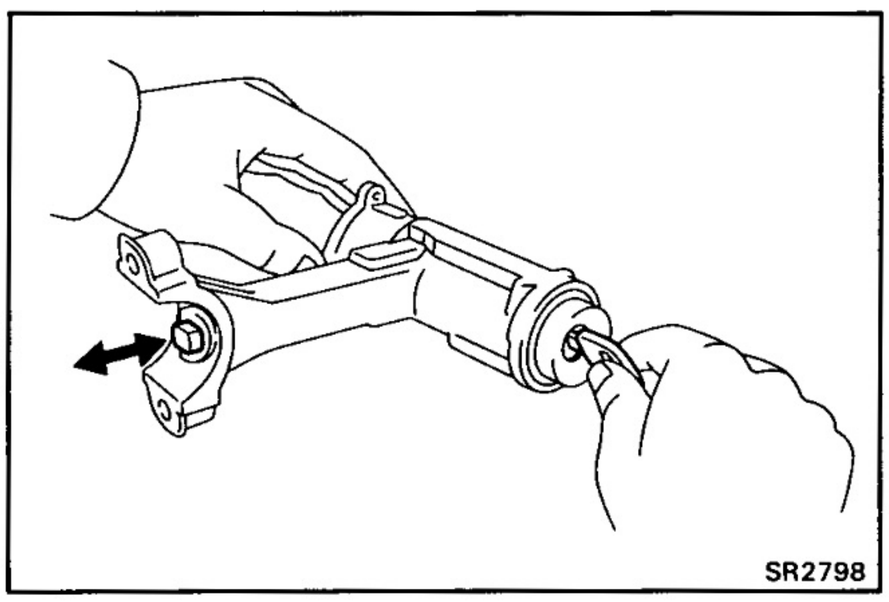

INSPECTION AND REPLACEMENT OF STEERING COLUMN

1. INSPECT KEY CYLINDER

Check that the steering lock mechanism operates properly.

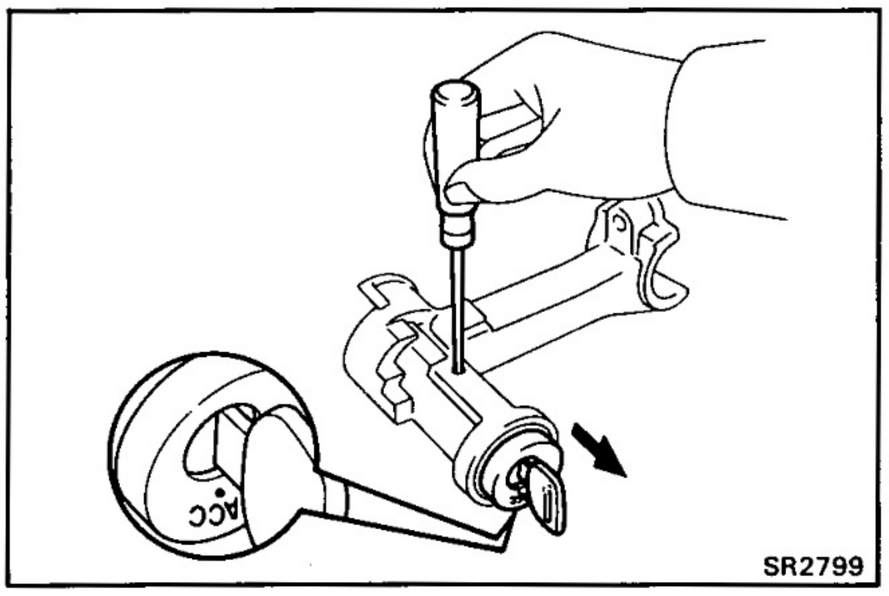

2. IF NECESSARY, REPLACE KEY CYLINDER

(a) Place the ignition key at the ACC position.

(b) Push down the stop key with a thin rod, and pull out the key cylinder.

(c) Make sure that the ignition key at the ACC position.

(d) Install a new key cylinder.

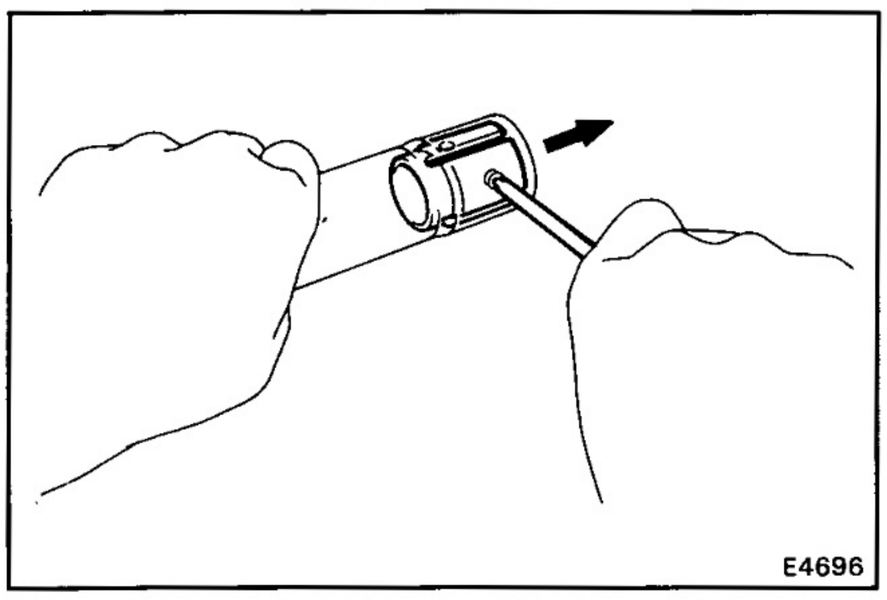

3. IF NECESSARY, REPLACE MAIN SHAFT BUSHING

(a) Using a screwdriver, remove the bushing.

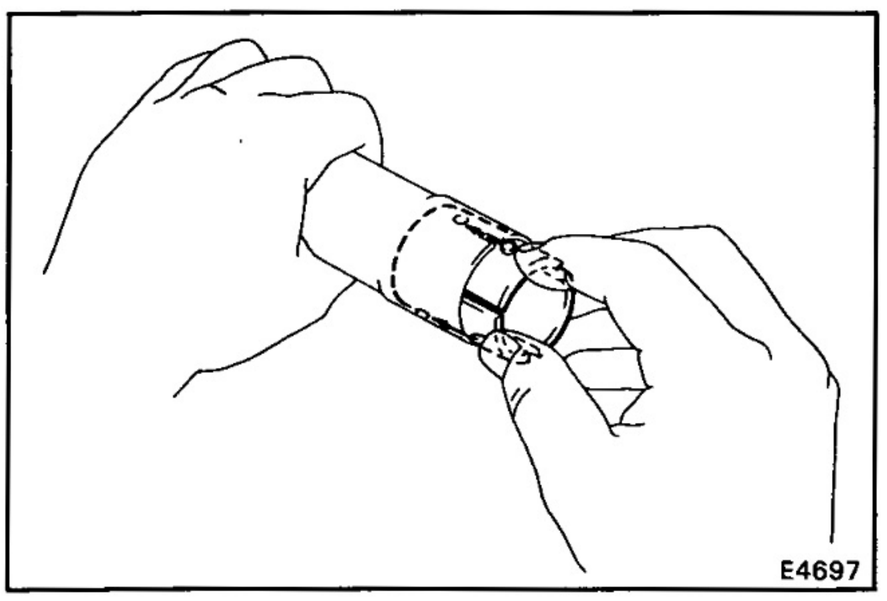

(b) Align the holes of the tube and the projections of a new bushing, and insert the bushing in the column tube.

ASSEMBLY OF TILT STEERING COLUMN

(See page SR-10)

1. COAT MOLYBDENUM DISULPHID LITHIUM BASE GREASE ON FOLLOWING PARTS (See page SR-10)

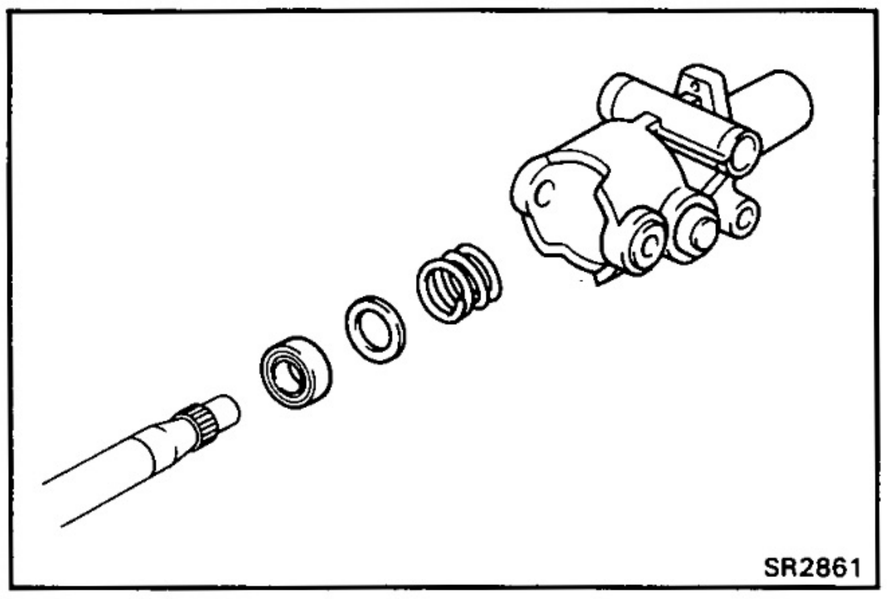

2. INSTALL MAIN SHAFT

(a) Install the main shaft with the bearing, collar and spring.

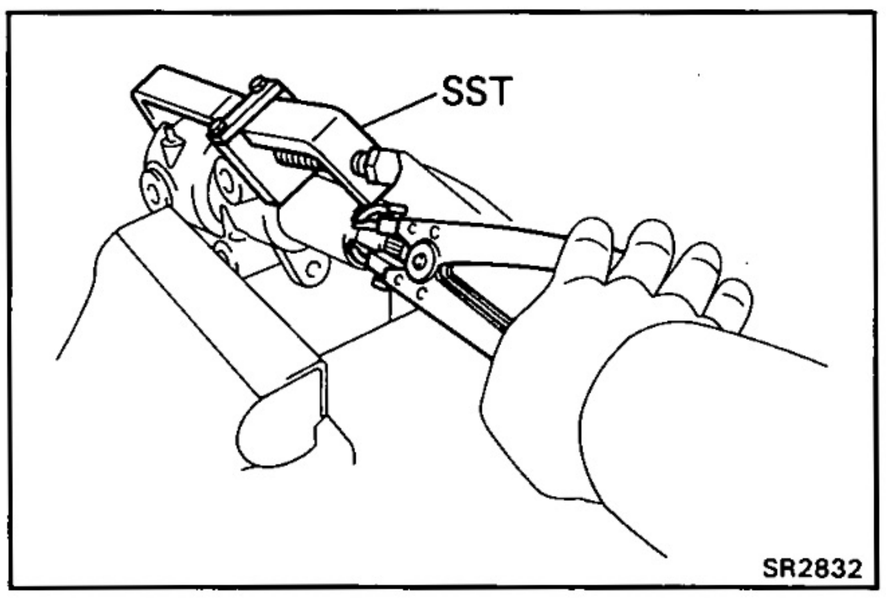

(b) Using SST to hold the main shaft, install the snap ring with a snap ring pliers.

SST 09950-20017

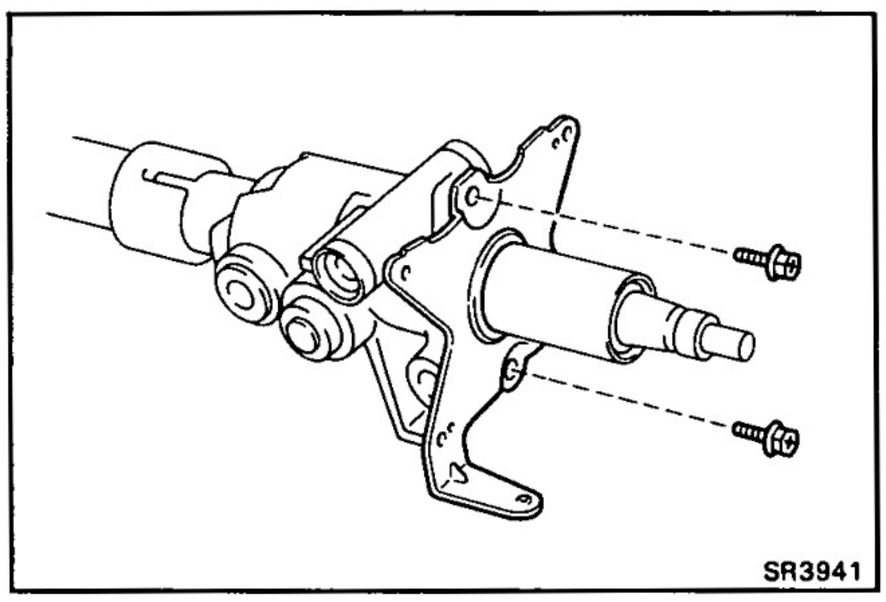

3. INSTALL TURN SIGNAL BRACKET

Install the two bolts.

Torque: 50 kg-cm (43 in.-lb, 4.9 N·m)

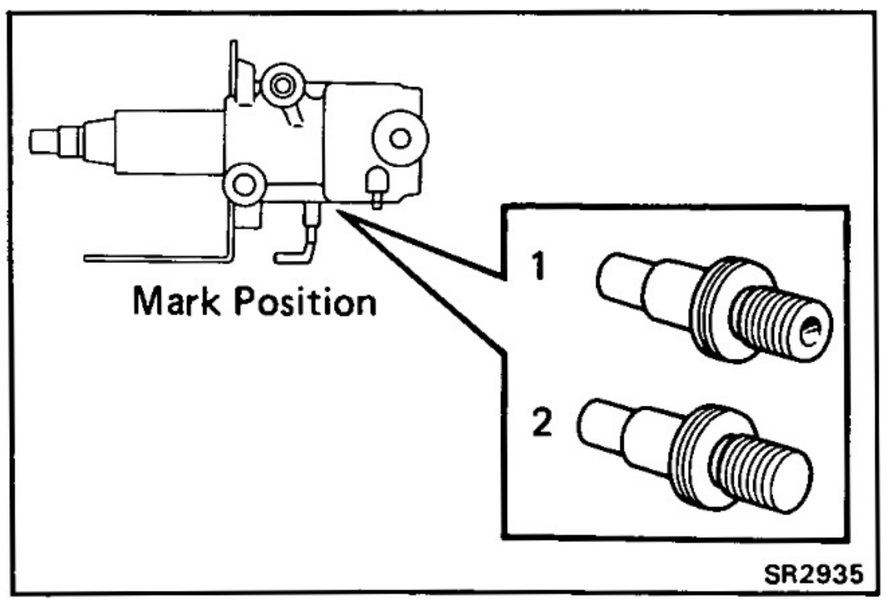

4. SELECT STEERING BOLT AND UPPER COLUMN TUBE

Select the bolt with center hole when the upper column tube mark is 1, and select the bolt without hole when the mark is 2.

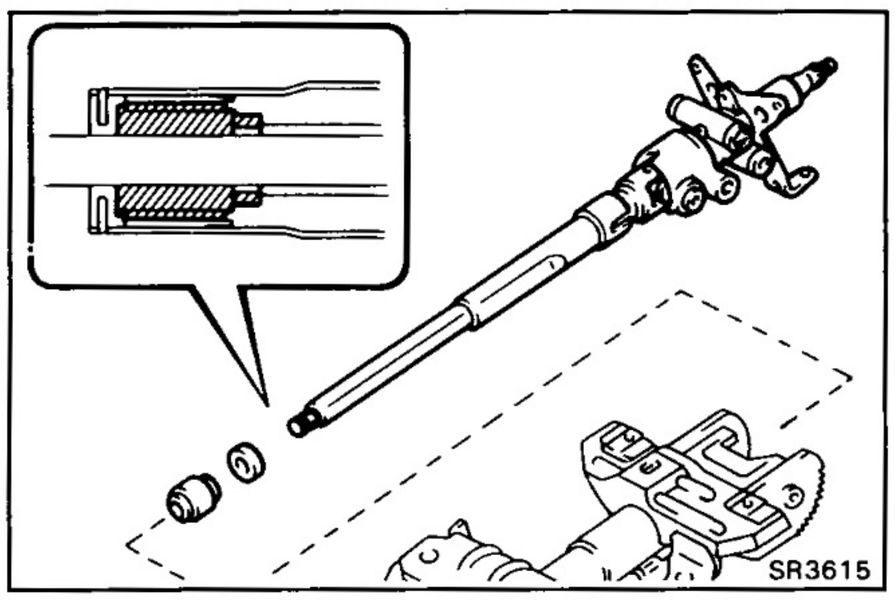

5. INSTALL MAIN SHAFT WITH UPPER COLUMN TUBE

(a) Install the stopper and main shaft collar to the main shaft as shown.

(b) Install the main shaft to the lower column tube.

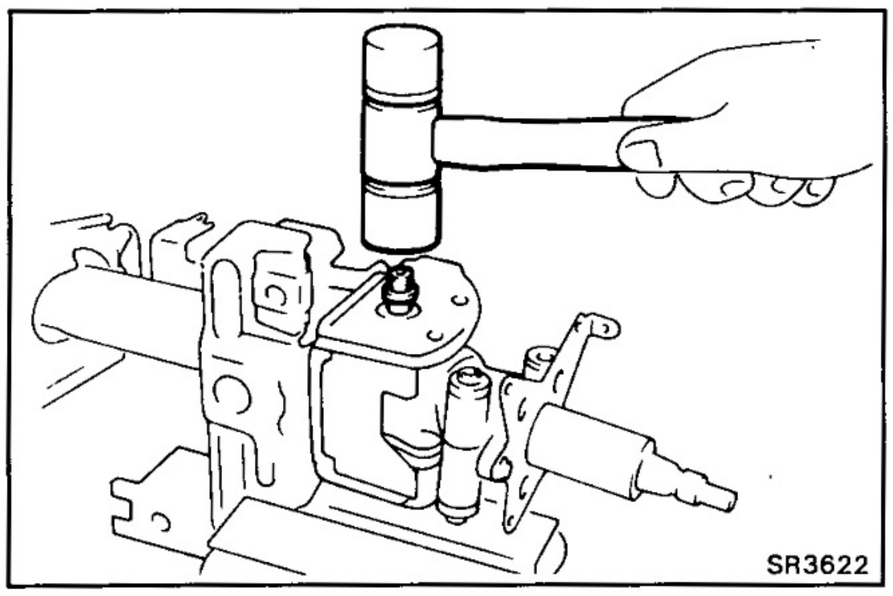

(c) Using a plastic hammer, drive in the steering bolts.

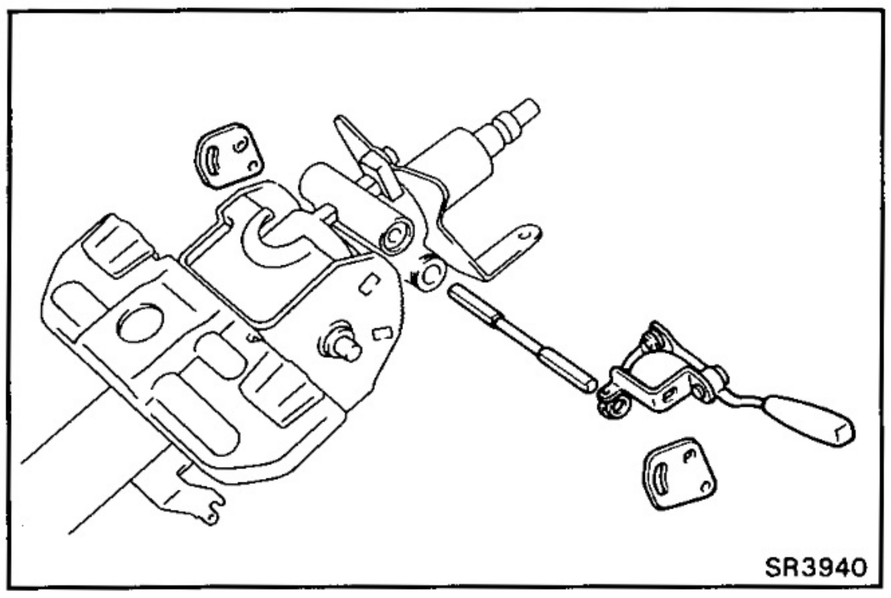

6. INSTALL TILT LEVER LOCK BOLT, TILT LEVER ASSEMBLY, TILT LEVER AND TILT SUB LEVER

(a) Install the tilt lever lock bolt to the upper column tube.

(b) Install the tilt lever assembly.

(c) Install the tilt lever and the tilt sub lever.

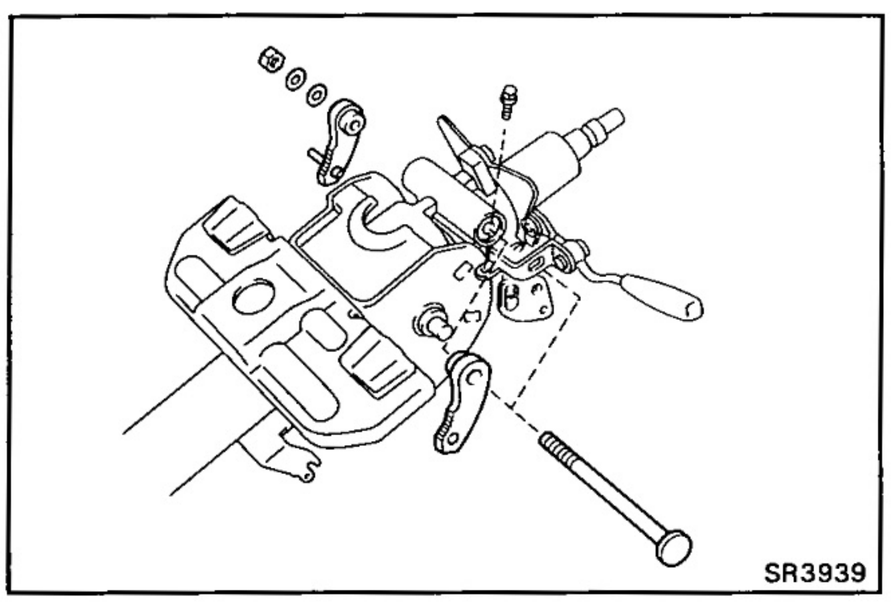

7. INSTALL TWO TILT PAWLS

(a) Temporarily install the tilt pawls.

(b) Install the bolt.

Torque: 20 kg-cm (17 in.-lb, 2.0 N·m)

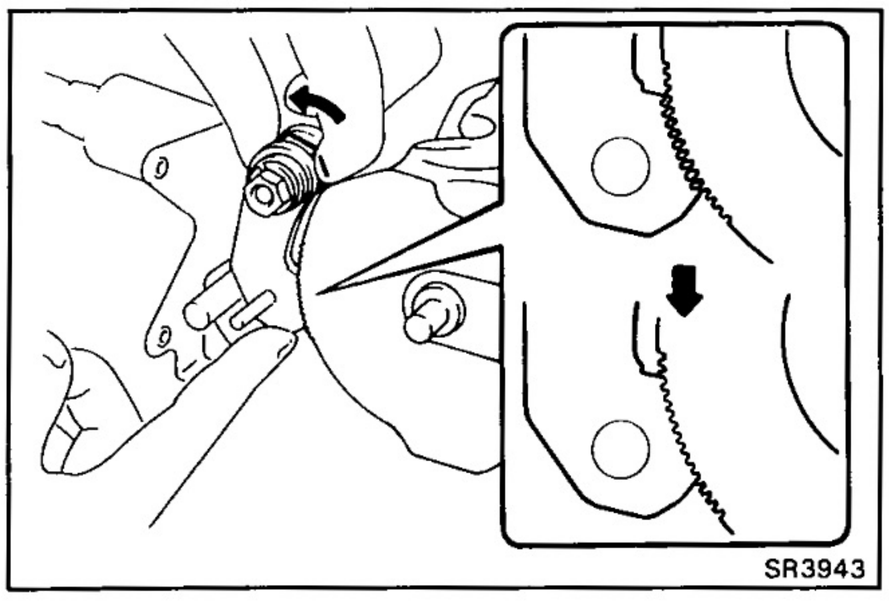

8. ENGAGE AND ADJUST TILT PAWL

(a) Engage the tilt sub lever side pawl to the center of the ratchet.

(b) While turning the tilt lever side collar, engage the tilt lever side pawl to the ratchet completely.

(c) Tighten the nut.

Torque: 60 kg-cm (52 in.-lb, 5.9 N·m)

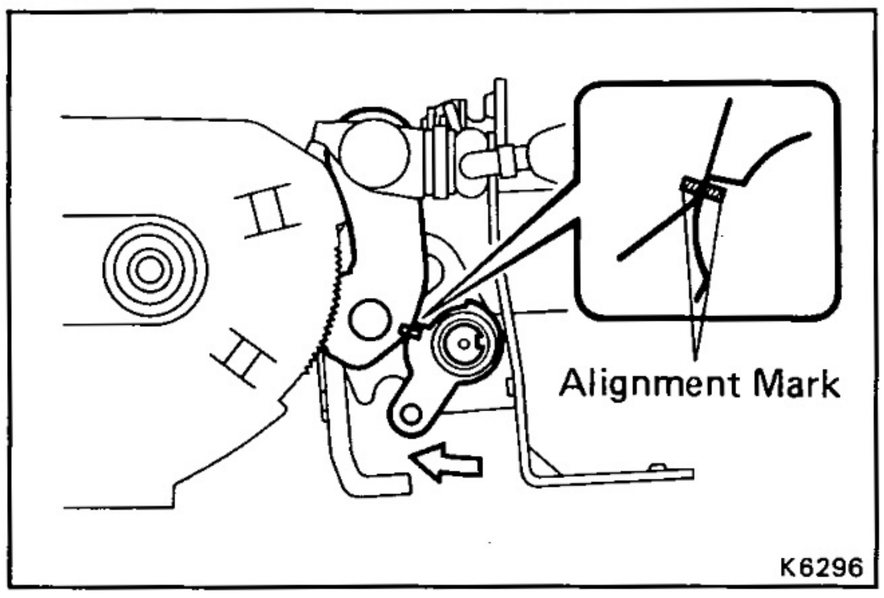

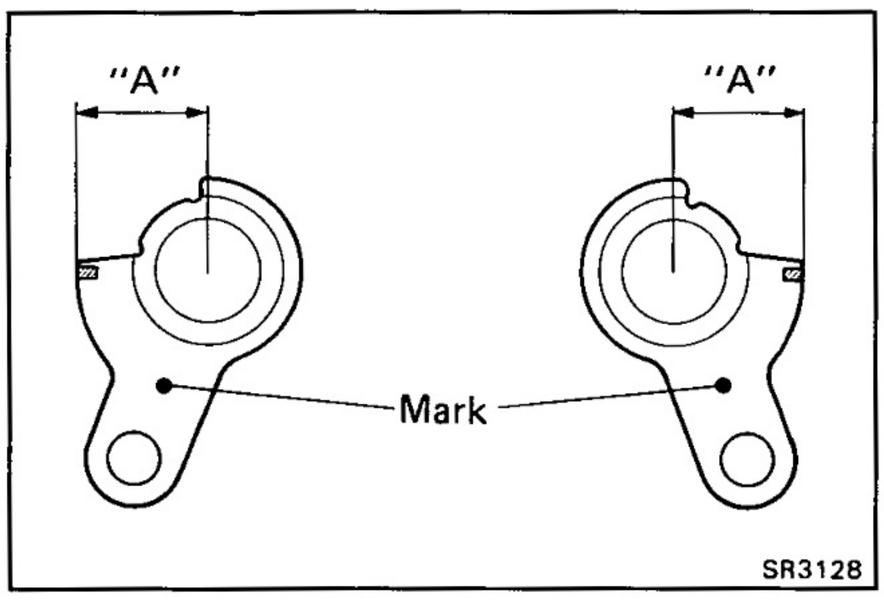

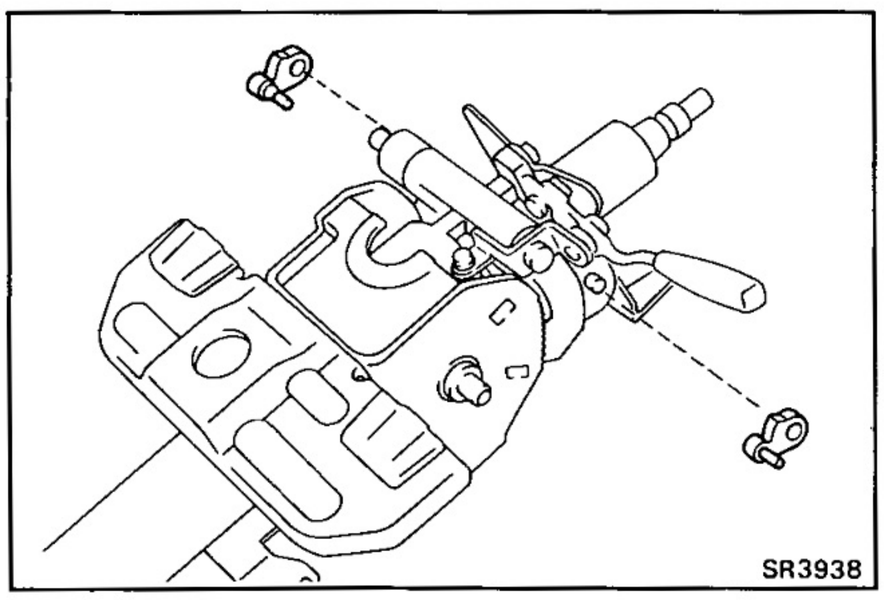

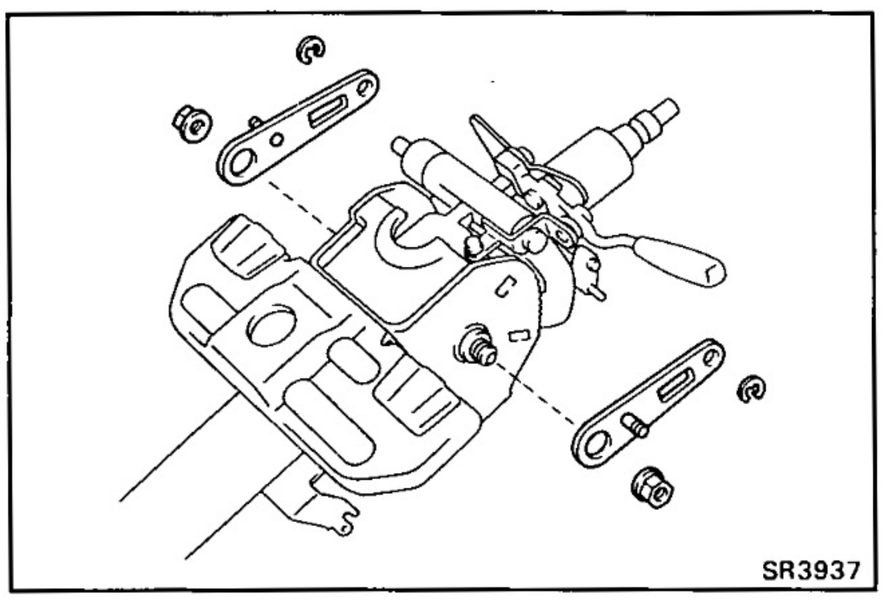

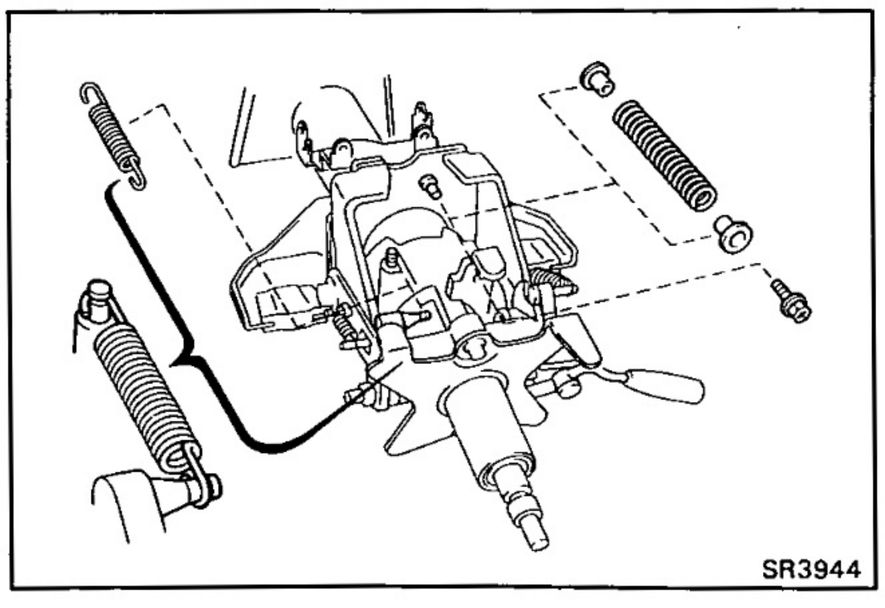

9. SELECT PAWL STOPPERS

(a) With the tilt pawl and ratchet engaged, install two pawl stoppers.

(b) Check that the alignment marks on the stopper and pawl align when the stopper is rotated to the pawl side.

(c) If the alignment marks do not align, select pawl stoppers according to the following table.

Tilt lever side	Tilt sub lever side	Dimension "A" mm (in.)
1	A	12.65 – 12.75 (0.4980 – 0.5020)
2	B	12.55 – 12.65 (0.4941 – 0.4980)
3	C	12.45 – 12.55 (0.4902 – 0.4941)
4	D	12.35 – 12.45 (0.4862 – 0.4902)
5	E	12.25 – 12.35 (0.4823 – 0.4862)

(d) After selecting the stoppers, check that on both sides the pawl and ratchet are fully engaged.

10. INSTALL TWO TILT PAWL STOPPERS

11. INSTALL TWO TILT LEVER RETAINERS

(a) Install the two tilt lever retainers and torque the nuts.

Torque: 150 kg-cm (11 ft-lb, 15 N·m)

(b) Install the E-rings.

12. INSTALL COMPRESSION SPRING AND TENSION SPRING

(a) Install the bushings to the compression spring.

(b) Install the spring and bolt.

Torque: 80 kg-cm (69 in.-lb, 7.8 N·m)

(c) Install the tension spring.

(d) Install the wire harness clamp.

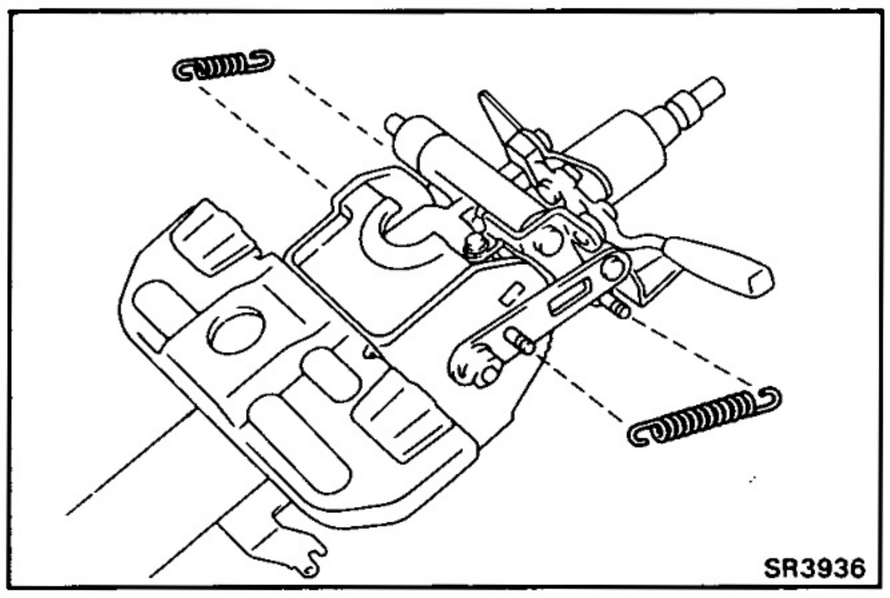
SR3936

13. INSTALL TWO TENSION SPRINGS

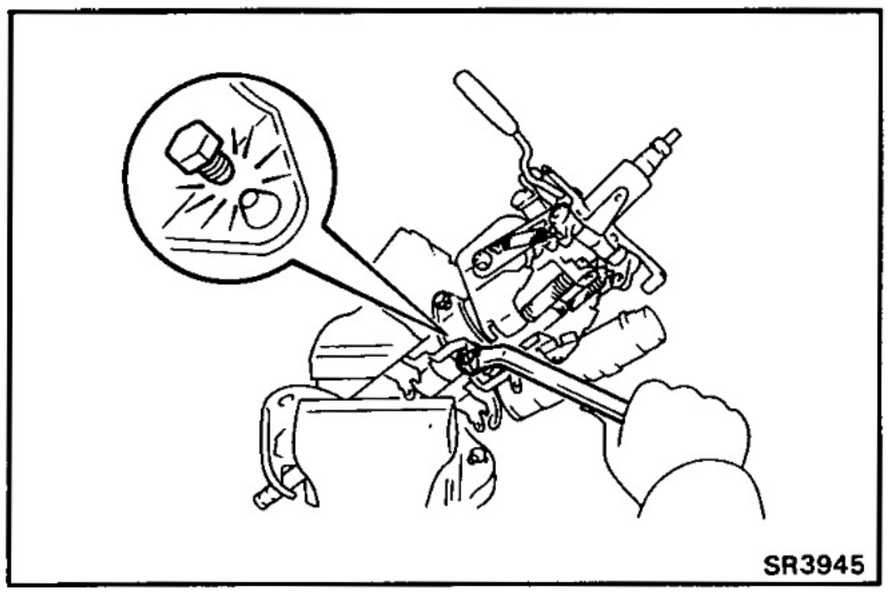
SR3945

14. INSTALL UPPER BRACKET

(a) Install the upper bracket with two new tapered-head bolts.

(b) Tighten the tapered-head bolts until the bolt heads break off.

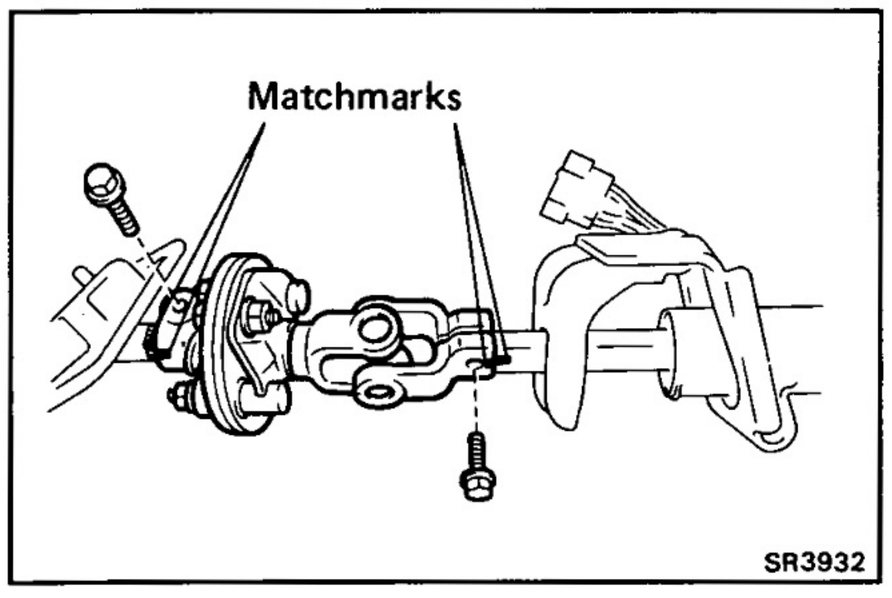

SR3932

15. INSTALL COLUMN HOLE COVER

(a) Install the column hole cover.

(b) Install two bolts and the dust seal.

Torque: 60 kg-cm (52 in.-lb, 5.9 N·m)

(c) Align the matchmarks on the shaft and flexible coupling, then torque the bolt.

Torque: 350 kg-cm (25 ft-lb, 34 N·m)

16. CONNECT UNIVERSAL JOINT

Align the matchmarks on the universal joint and the shaft, the torque the bolt.

Torque: 350 kg-cm (25 ft-lb, 34 N·m)

17. CHECK OPERATION OF TILT STEERING LEVER AND SUPPORT

(a) Check that there is no axial play at the end of the main shaft.

(b) With the main shaft in the neutral position, raise the tilt lever and check that the main shaft rises to the uppermost position.

(c) Lower the main shaft, and check that it locks in the lowermost position.

MANUAL GEAR HOUSING

REMOVAL AND INSTALLATION OF MANUAL GEAR HOUSING

Remove and install the parts as shown.

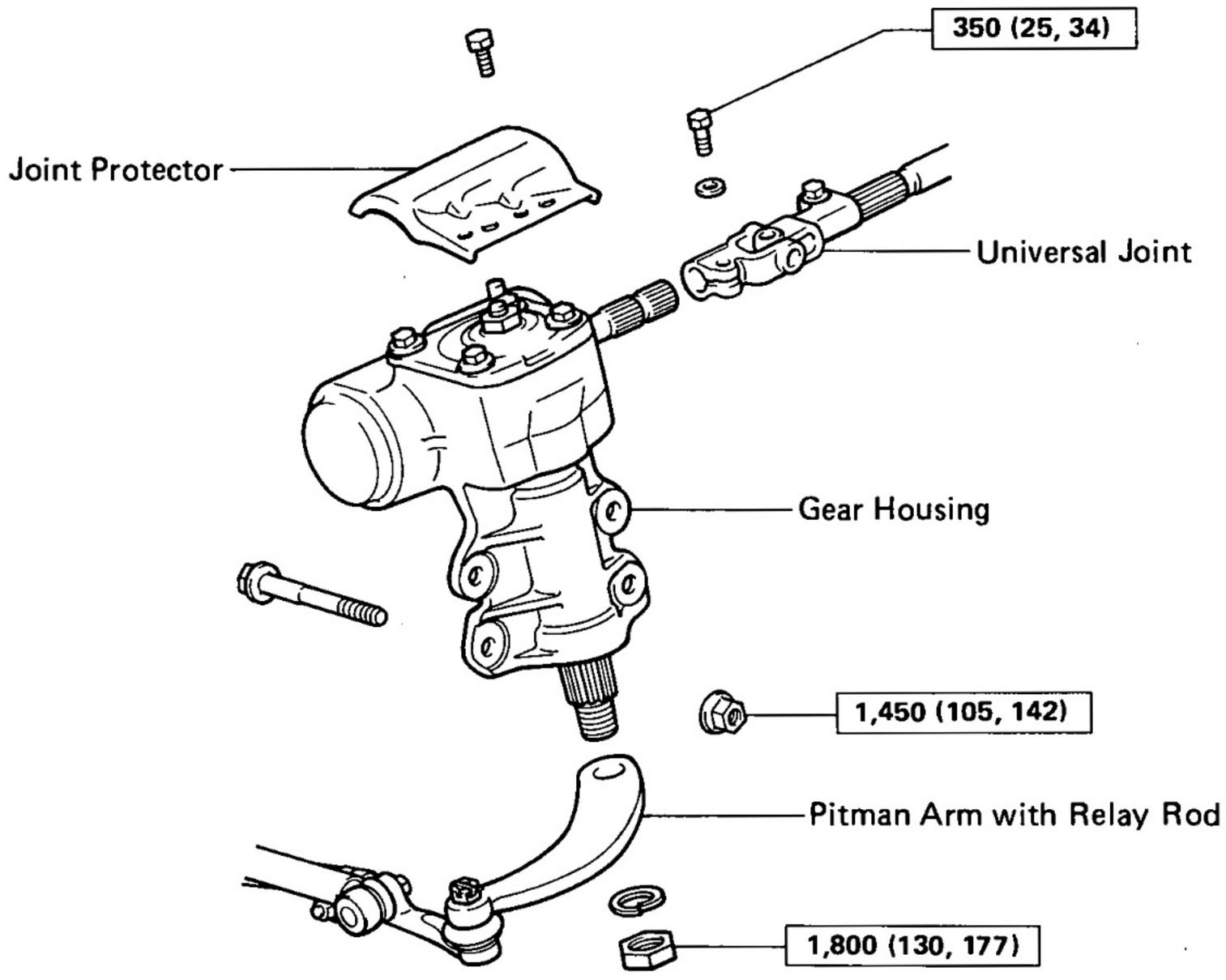

kg-cm (ft-lb, N·m) : Specified torque

SR4108

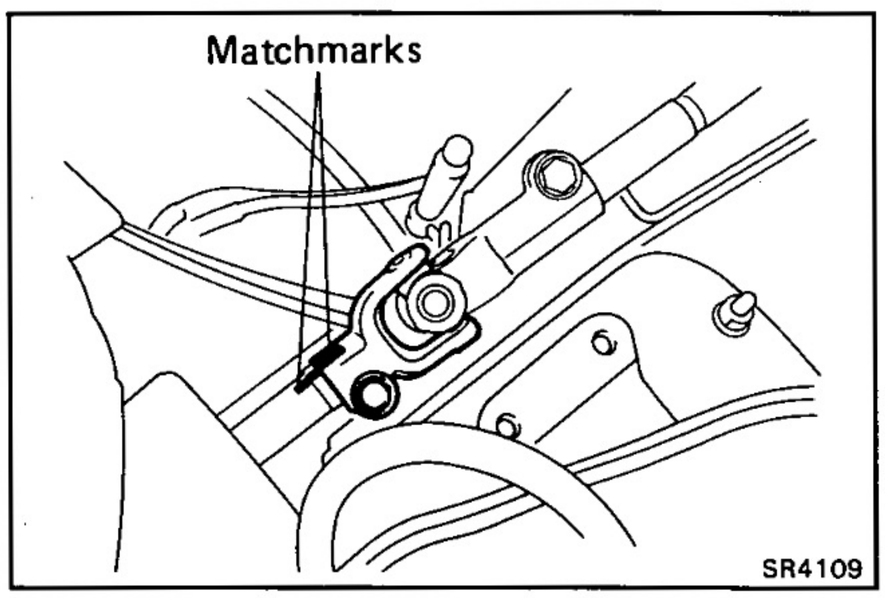

SR4109

(MAIN POINT OF REMOVAL AND INSTALLATION)

1. DISCONNECT UNIVERSAL JOINT

(a) Loosen the column side set bolt.

(b) Remove the gear side set bolt.

(c) Place matchmarks on the universal joint and worm shaft.

(d) Slide the shaft rearward to disconnect the shaft from the worm shaft.

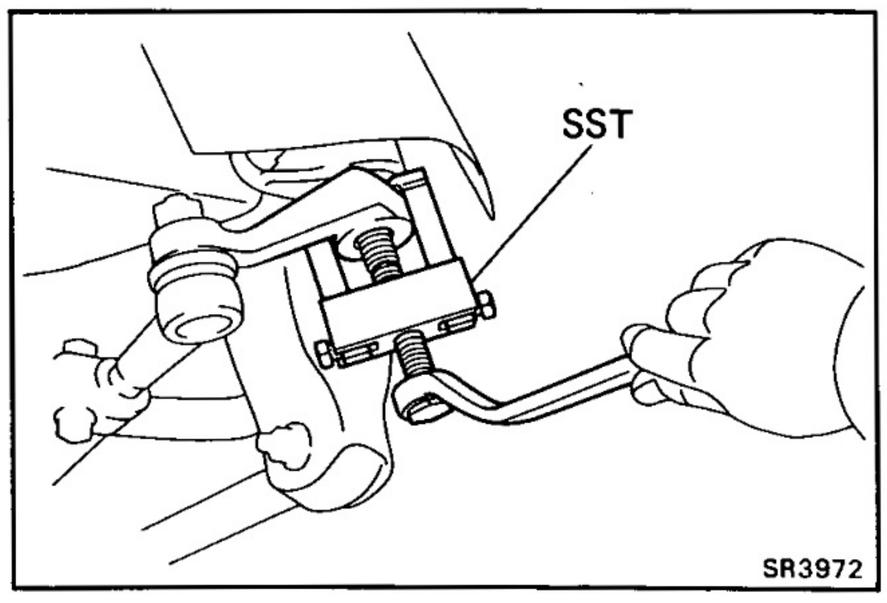

SR3972

2. DISCONNECT PITMAN ARM FROM GEAR HOUSING

(a) Loosen the pitman arm nut.

(b) Using SST, disconnect pitman arm from the gear housing.

SST 09628-62011

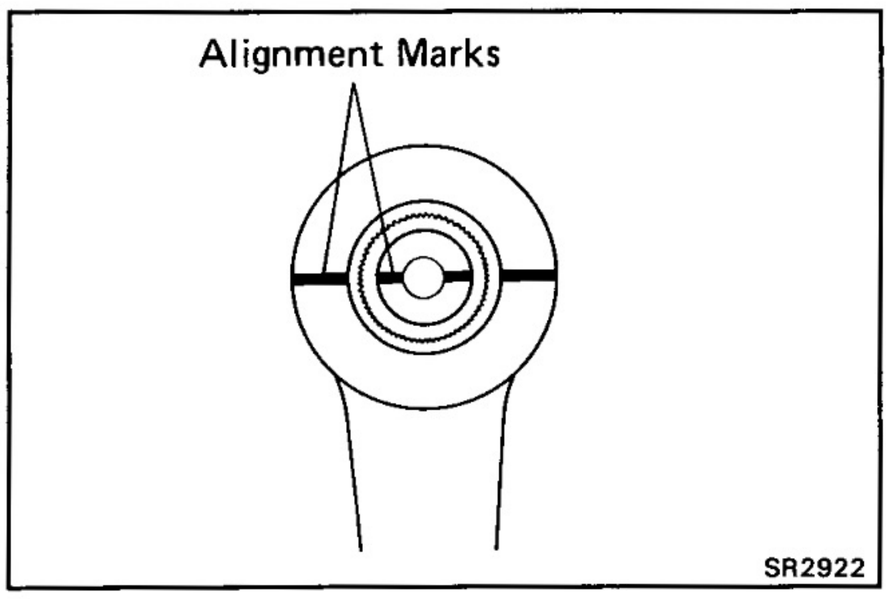

3. CONNECT PITMAN ARM TO GEAR HOUSING

(a) Align the alignment marks on the sector shaft and pitman arm and install the spring washer and arm.

(b) Tighten the pitman arm nut.

Torque: 1,800 kg-cm (130 ft-lb, 177 N·m)

COMPONENTS

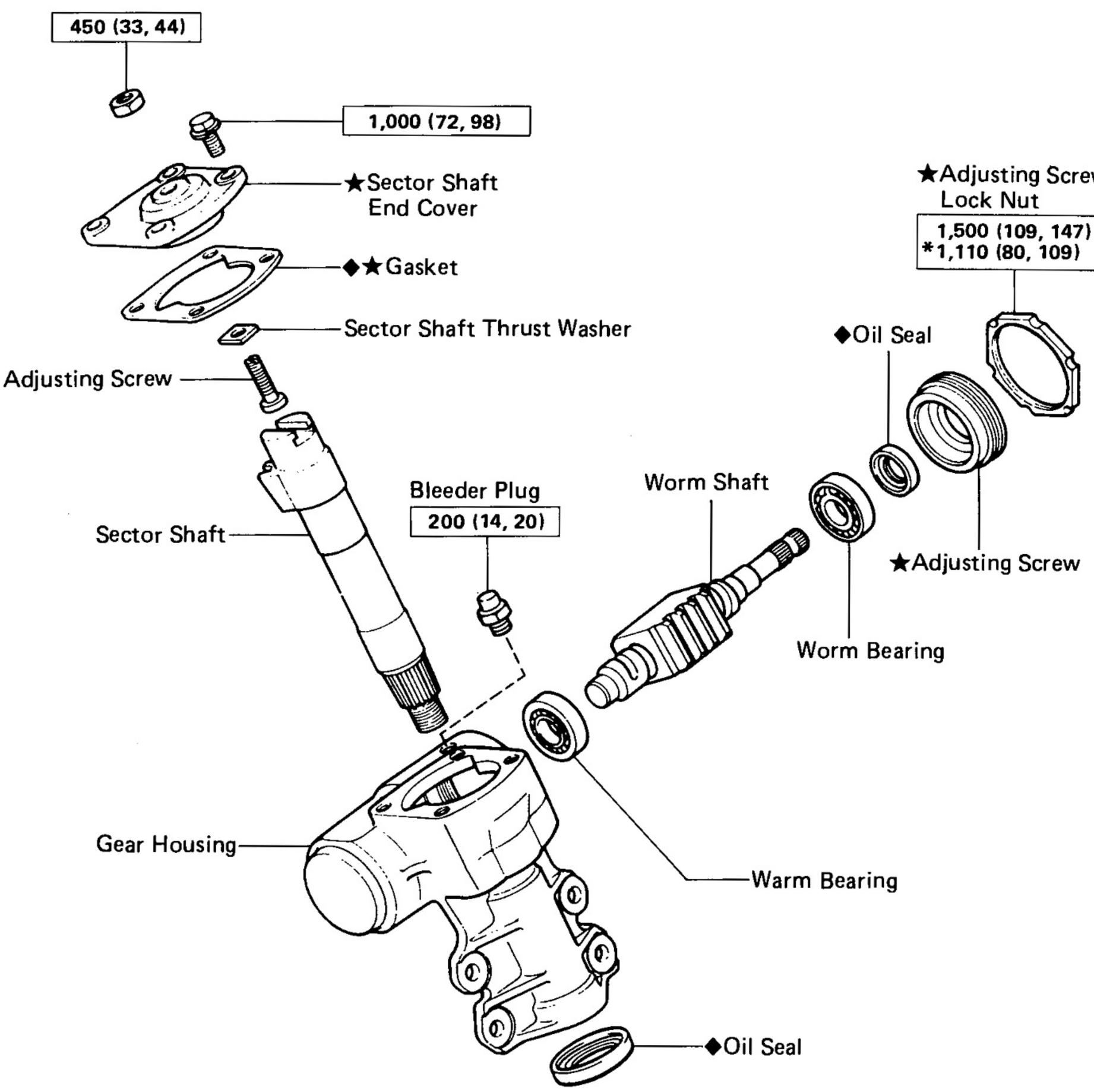

kg-cm (ft-lb, N·m) : Specified torque

◆ Non-reusable part

★ Precoated part

* For use with SST

SR4110

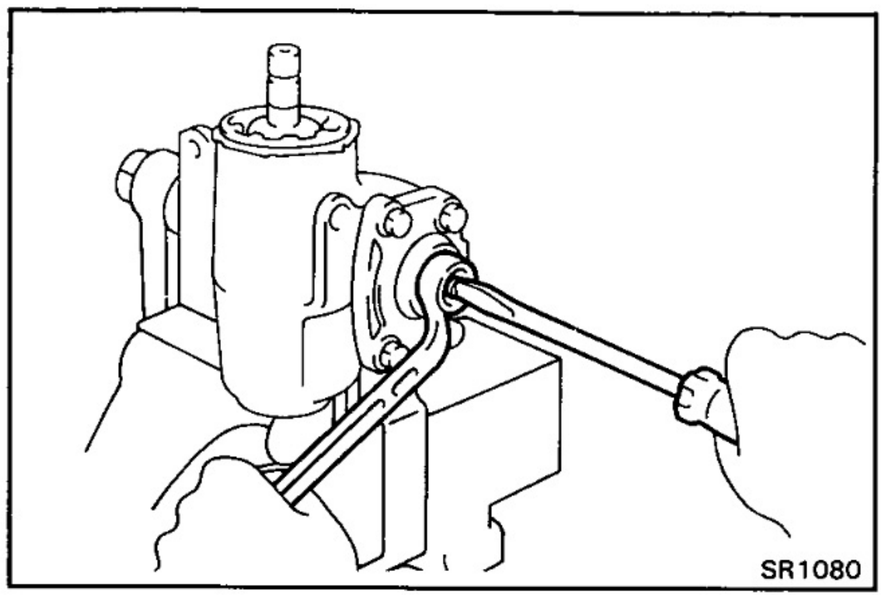

DISASSEMBLY OF MANUAL GEAR HOUSING

(See page SR-20)

1. REMOVE BLEEDER PLUG AND DRAIN GEAR OIL

2. REMOVE END COVER AND SECTOR SHAFT

(a) Remove the adjusting screw lock nut and four bolts.

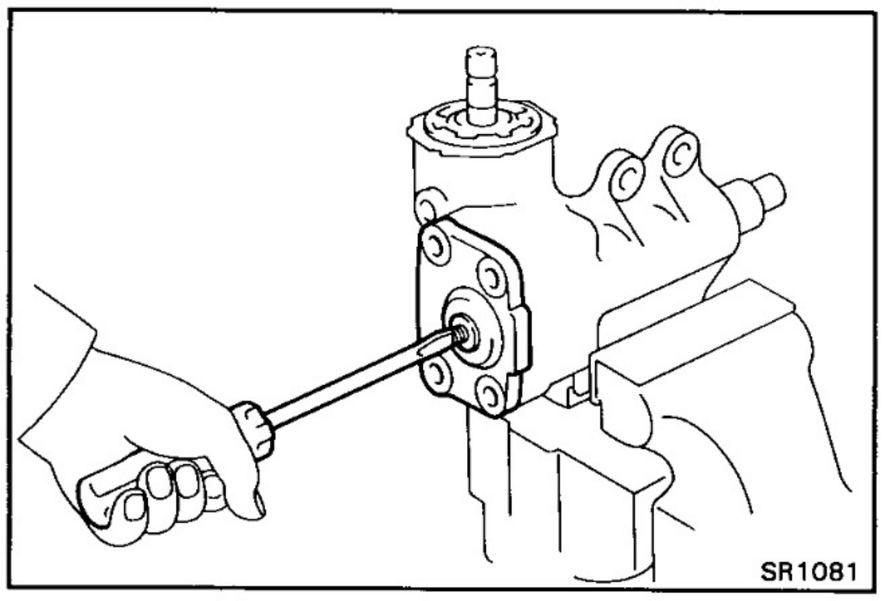

(b) Remove the end cover by turning the adjusting screw clockwise with a screwdriver.

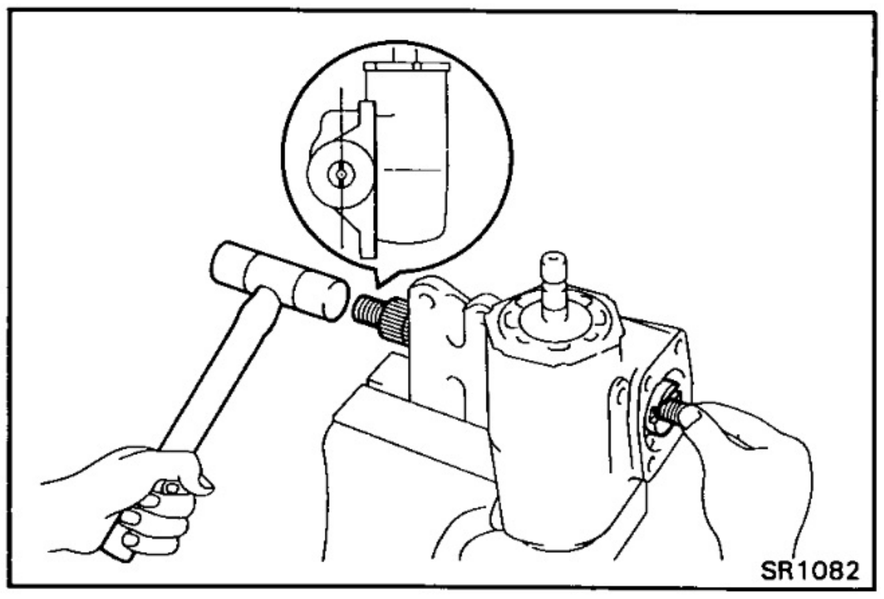

(c) Using a plastic hammer, tap out the sector shaft and adjusting screw from the gear housing.

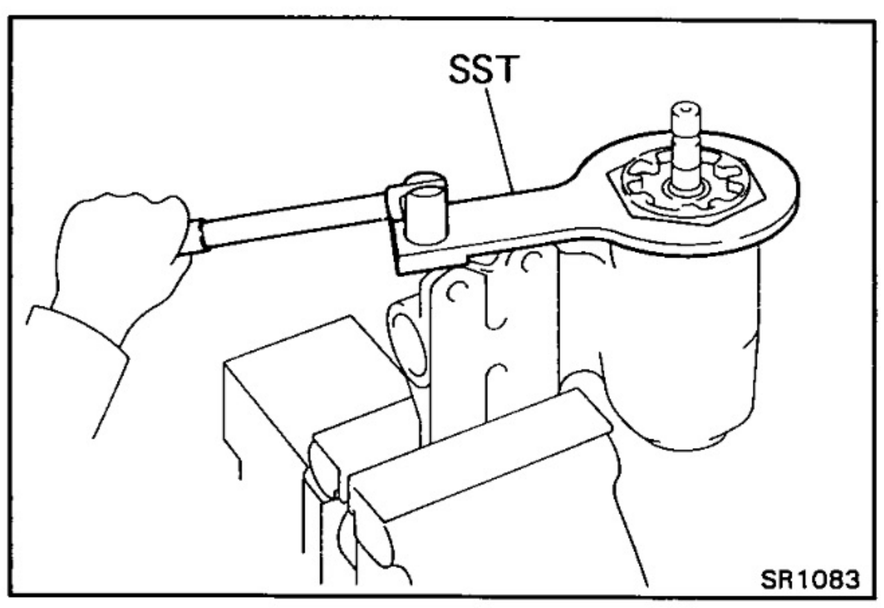

3. REMOVE LOCK NUT

Using SST, remove the lock nut.

SST 09617-60010

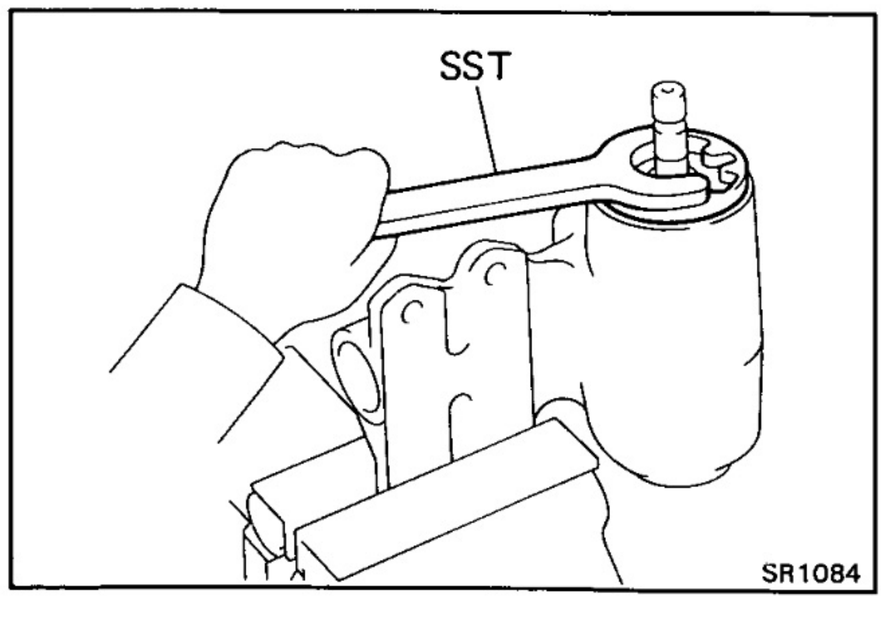

4. REMOVE BEARING ADJUSTING SCREW

Using SST, remove the adjusting screw.

SST 09616-30020

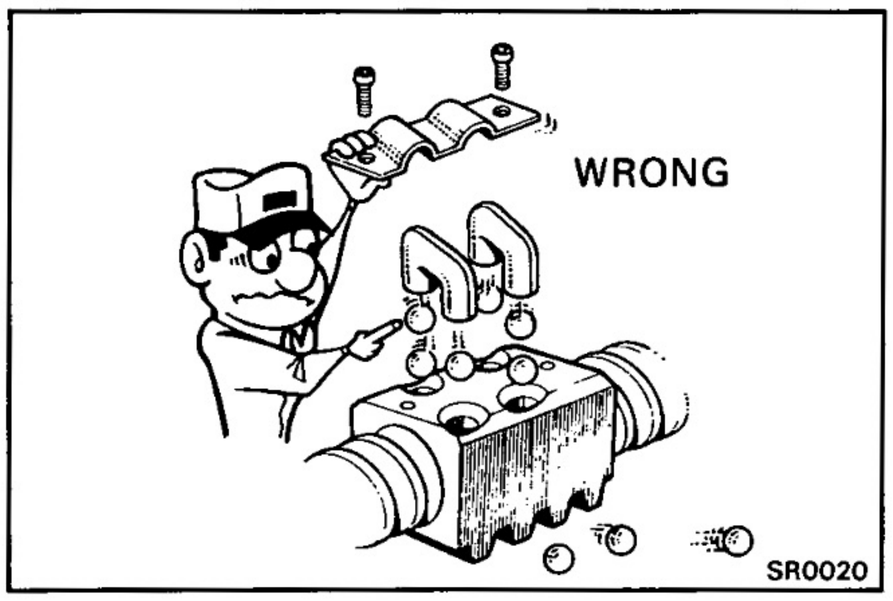

5. REMOVE WORM SHAFT

Pull the worm shaft out of the gear housing.

NOTICE: Do not disassemble the ball nut from the steering worm shaft.

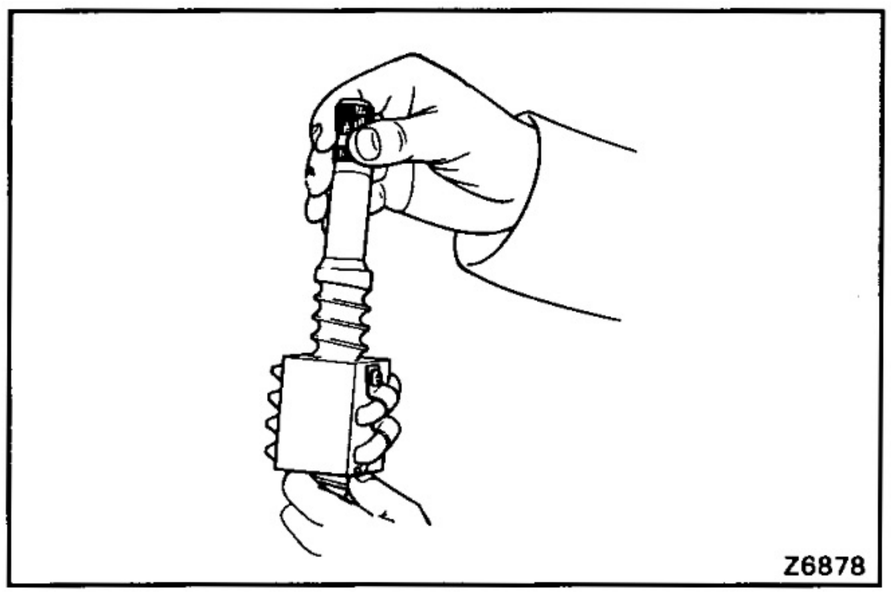

INSPECTION AND REPLACEMENT OF MANUAL GEAR HOUSING

1. INSPECT WORM AND BALL NUT

(a) Check the worm and ball nut for wear or damage.

(b) Check that the nut rotates smoothly down the shaft by its own weight.

If a problem is found, repair or replace the worm.

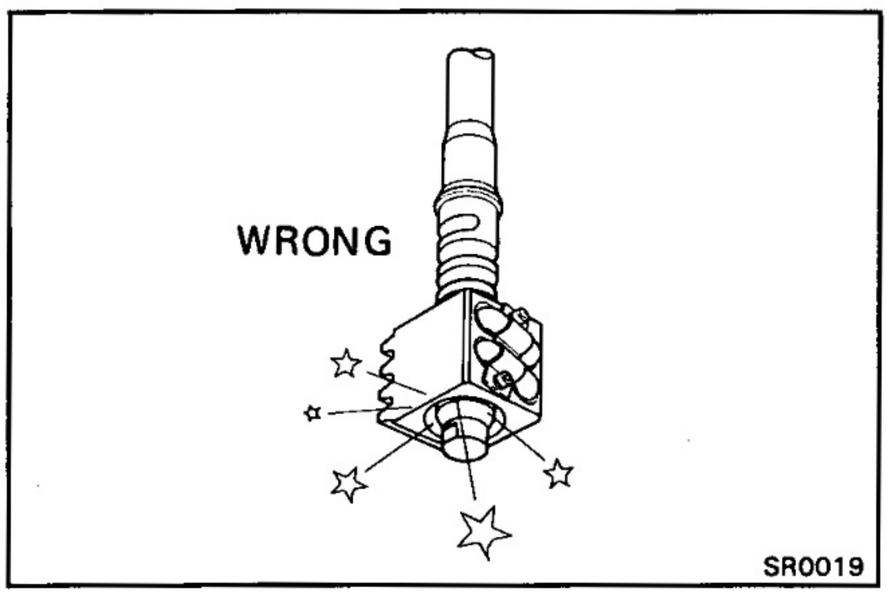

NOTICE: Do not allow the ball nut to hit the end of the worm shaft.

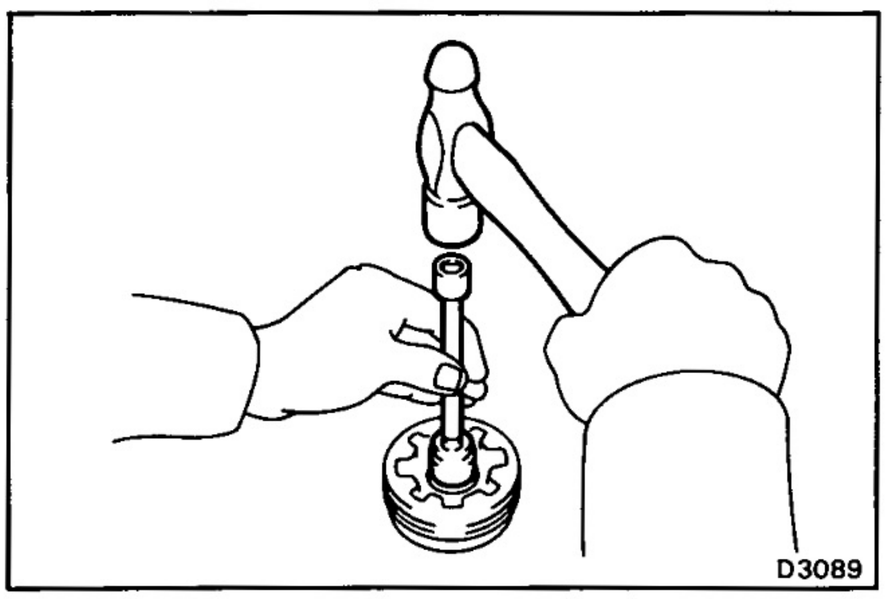

2. INSPECT WORM BEARINGS AND OIL SEAL

Check for wear or damage.

If a problem is found, replace the bearings, bearing races and oil seal.

3. IF NECESSARY, REPLACE OIL SEAL

(a) Using a 19 mm socket wrench, drive out the oil seal.

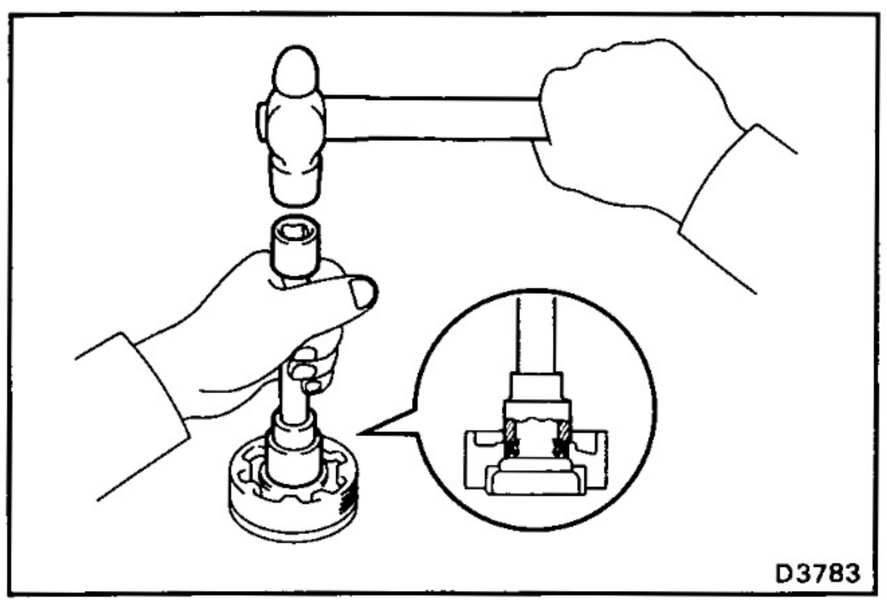

(b) Using a 23 mm socket wrench, drive in the oil seal.

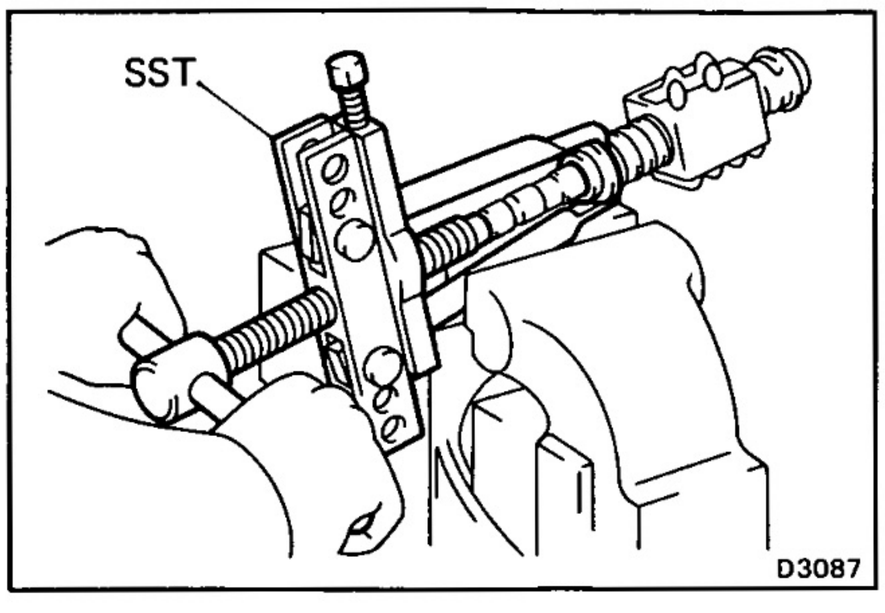

4. IF NECESSARY, REPLACE WORM BEARINGS

(a) Using SST, remove the both side bearings.

SST 09950-20017

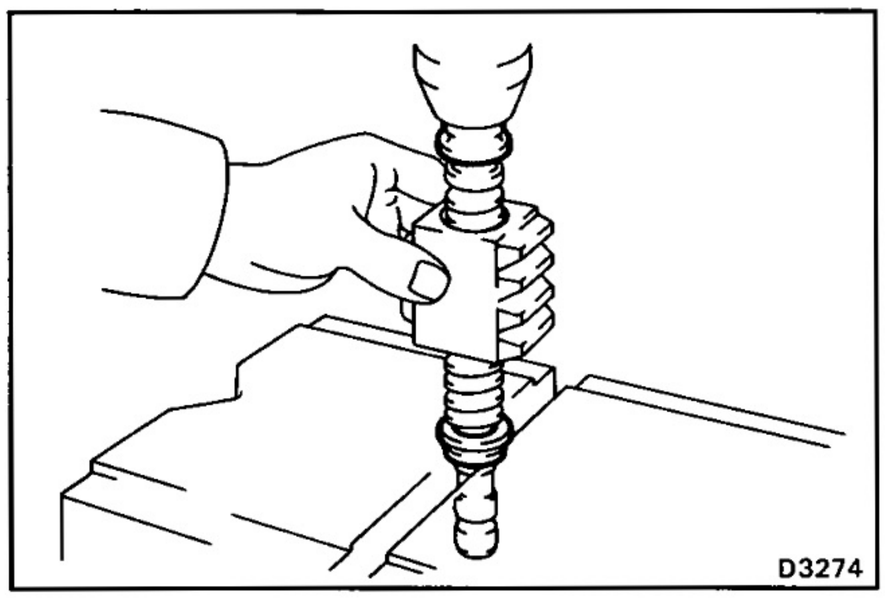

(b) Using a press, install the both side bearings.

NOTICE: Be careful not to damage the ball nut while holding it by hand.

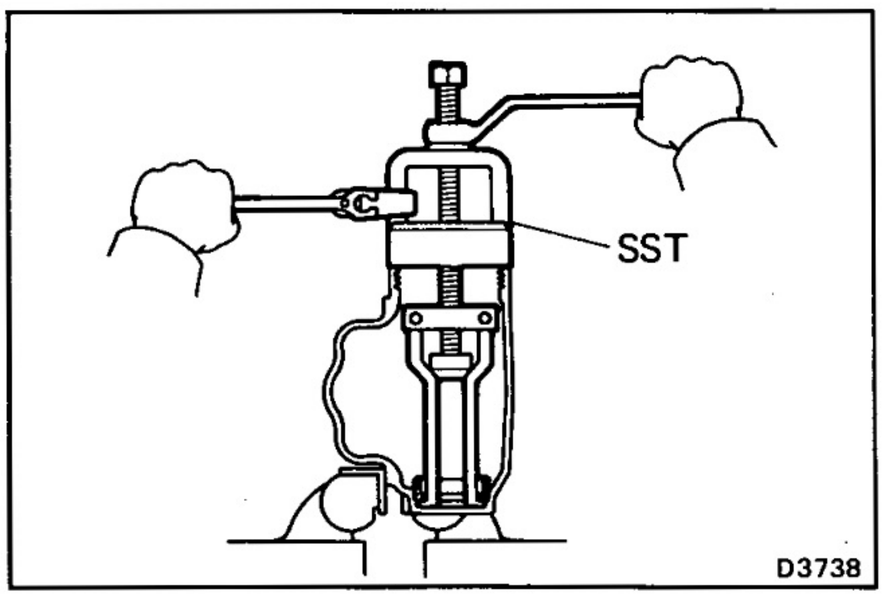

(c) Using SST, remove the outer race from the gear housing.

SST 09612-65014 (09612-01030)

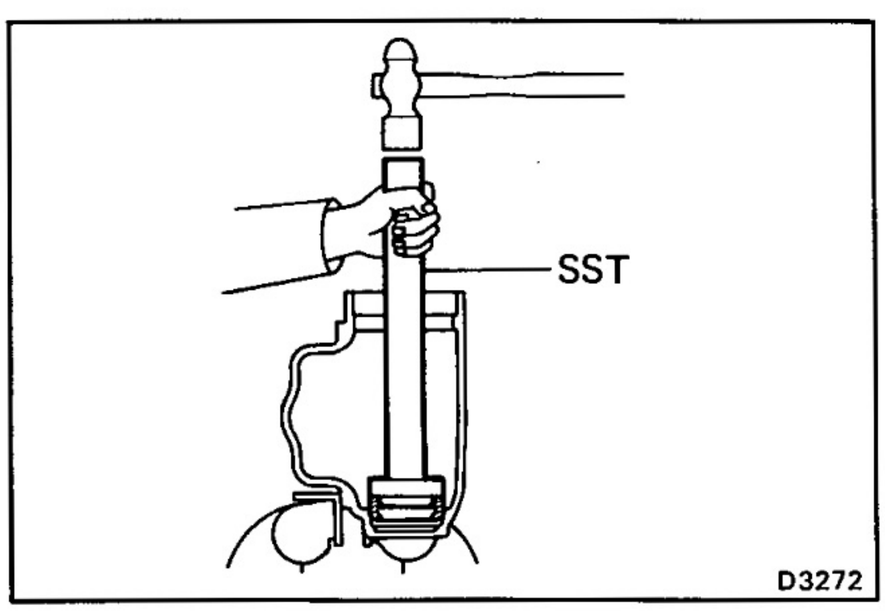

(d) Using SST, drive in the outer race into the gear housing.

SST 09550-10012 (09552-10010, 09559-10010)

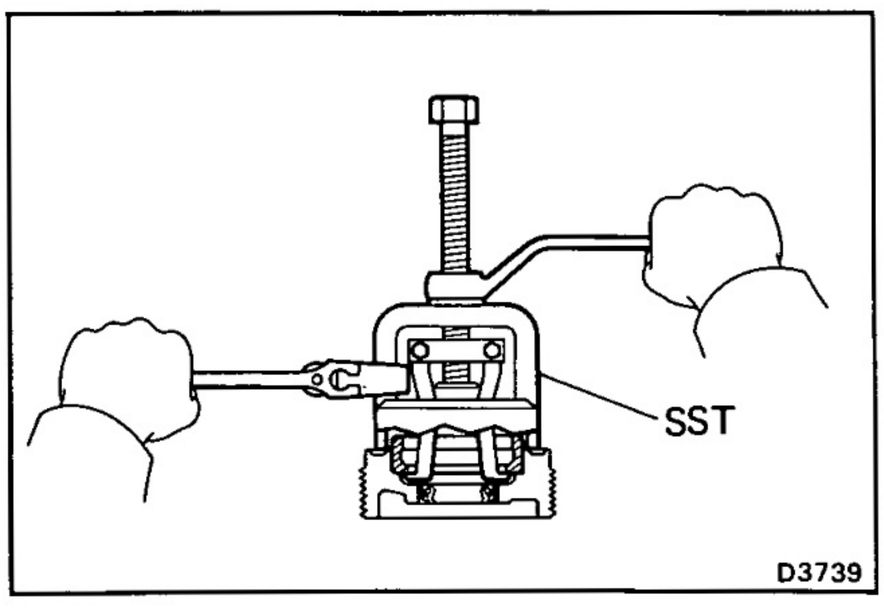

(e) Using SST, remove the outer race from the adjusting screw.

SST 09612-65014 (09612-01040)

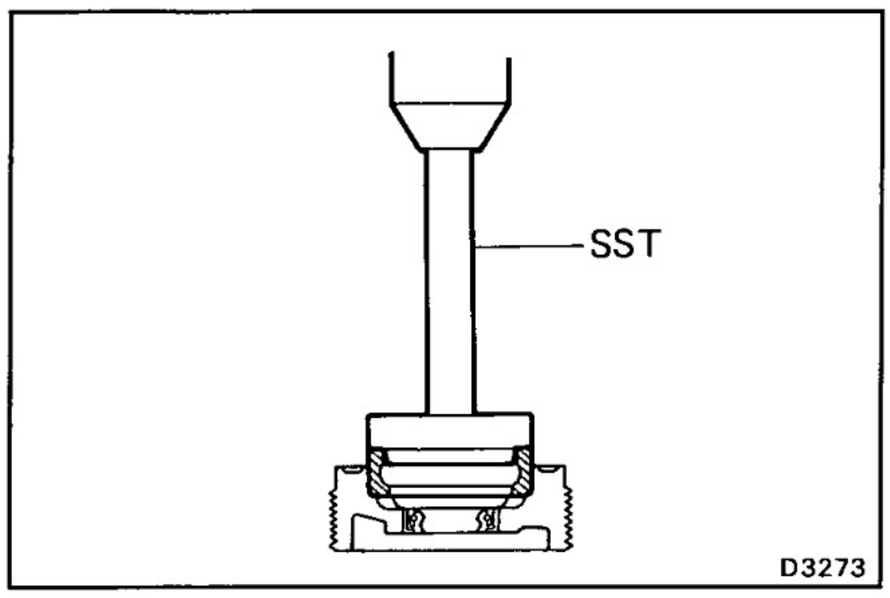

(f) Using SST, press in the outer race into the adjusting screw.

SST 09550-10012 (09552-10010, 09559-10010)

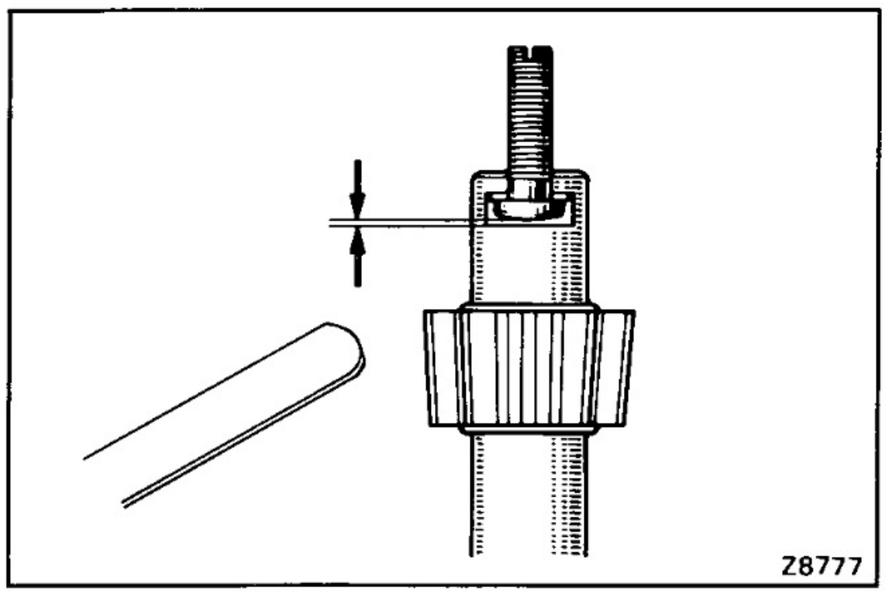

5. INSPECT SECTOR SHAFT

Measure shaft thrust clearance with a feeler gauge.

Maximum clearance: 0.05 mm (0.0020 in.) or less

If necessary, install a new thrust washer which will provide the minimum clearance between the sector shaft and the adjusting screw.

Thrust washer thickness mm (in.)	
1.95 (0.0768)	2.05 (0.0807)
2.00 (0.0787)	

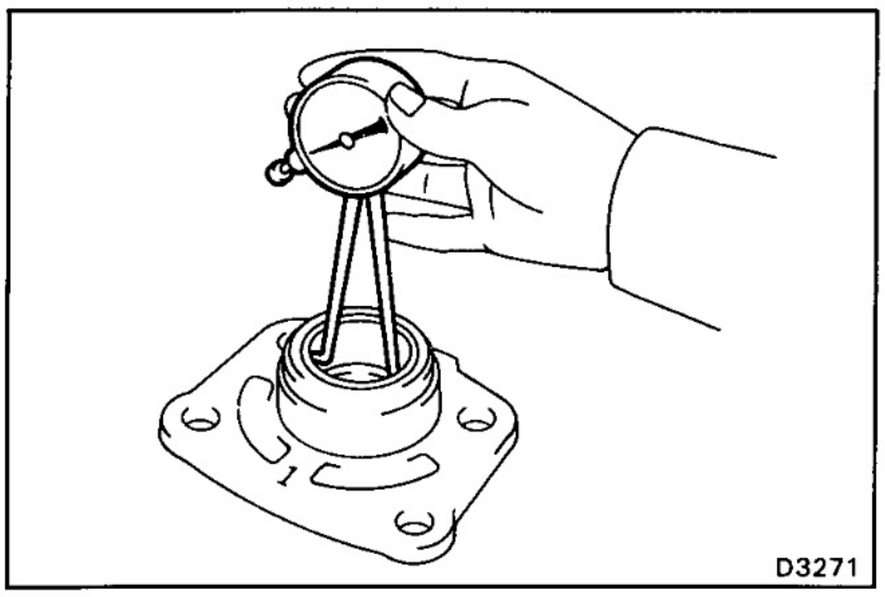

6. INSPECT SECTOR SHAFT END COVER

(a) Check for damage.

(b) Check the bushing for wear or damage.

If necessary, replace the end cover.

HINT: When replacing the end cover, replace with one bearing the same number.

No.	Bushing inside diameter mm (in.)
1	36.055 — 36.065 (1.4195 — 1.4199)
2	36.045 — 36.055 (1.4191 — 1.4195)
3	36.035 — 36.045 (1.4187 — 1.4191)
4	36.025 — 36.035 (1.4183 — 1.4187)

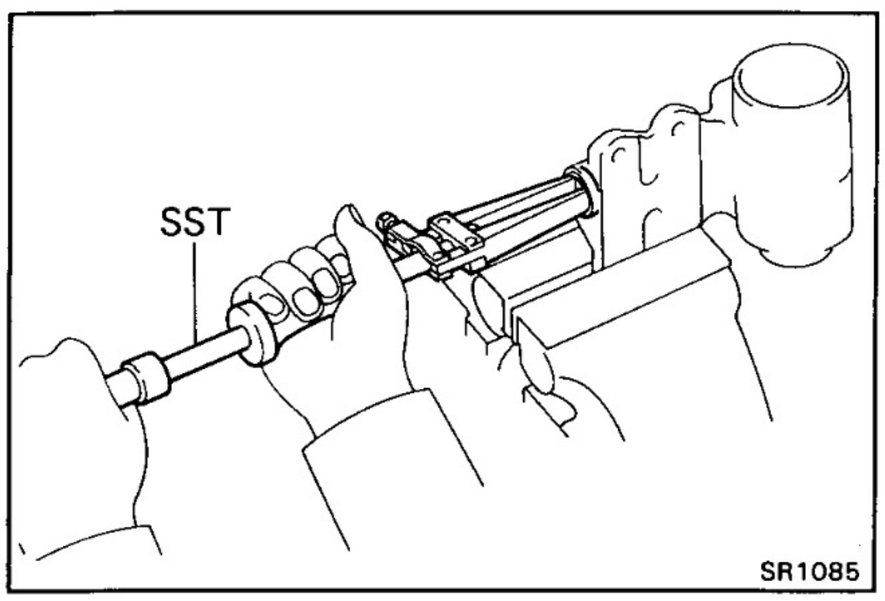

7. IF NECESSARY, REPLACE OIL SEAL

(a) Using SST, remove the oil seal.

SST 09308-00010

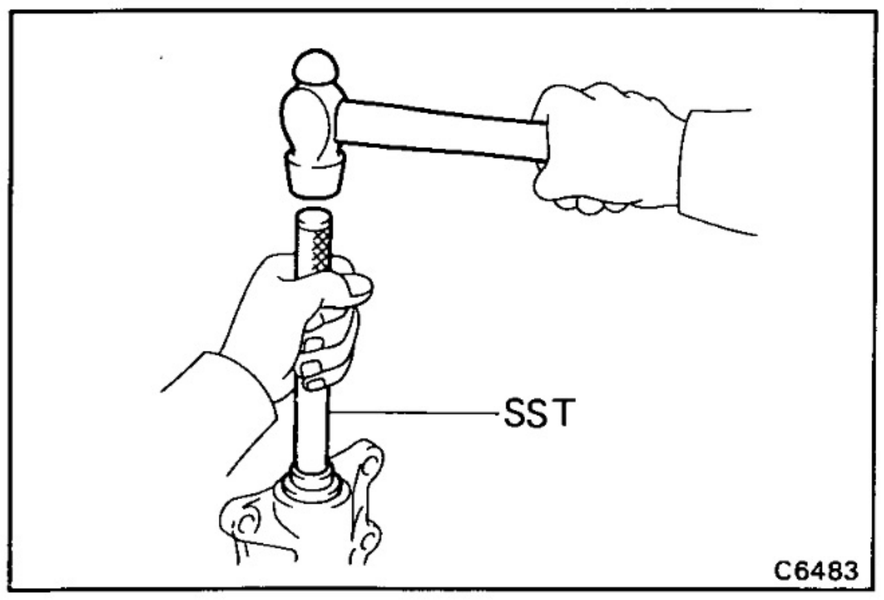

(b) Using SST, drive in the new oil seal.

SST 09550-10012 (09558-10010, 09552-10010)

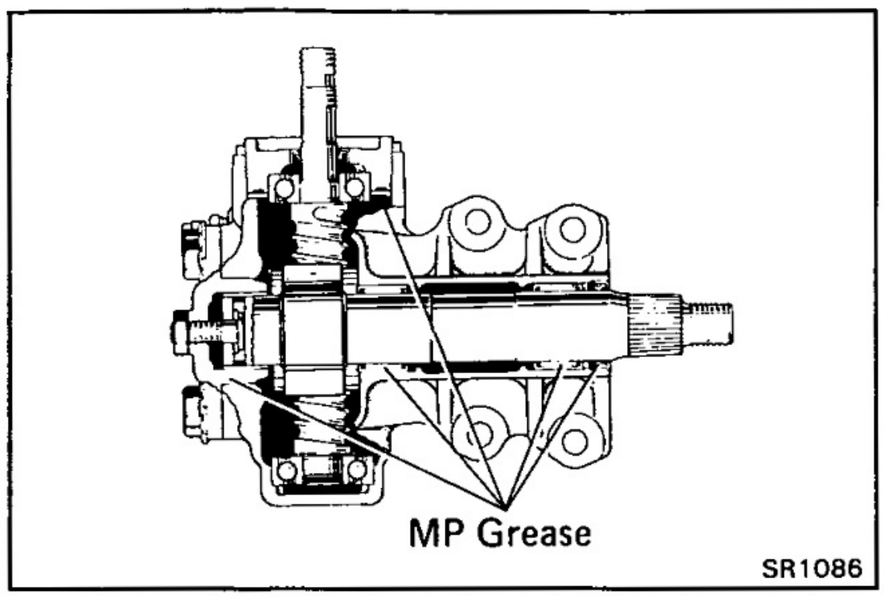

ASSEMBLY OF STEERING GEAR HOUSING

(See page SR-20)

1. APPLY MP GREASE TO BUSHING, NEEDLE ROLLER BEARINGS AND OIL SEALS

2. INSERT WORM SHAFT INTO GEAR HOUSING

Place the worm bearings on the shaft and insert the shaft into the housing.

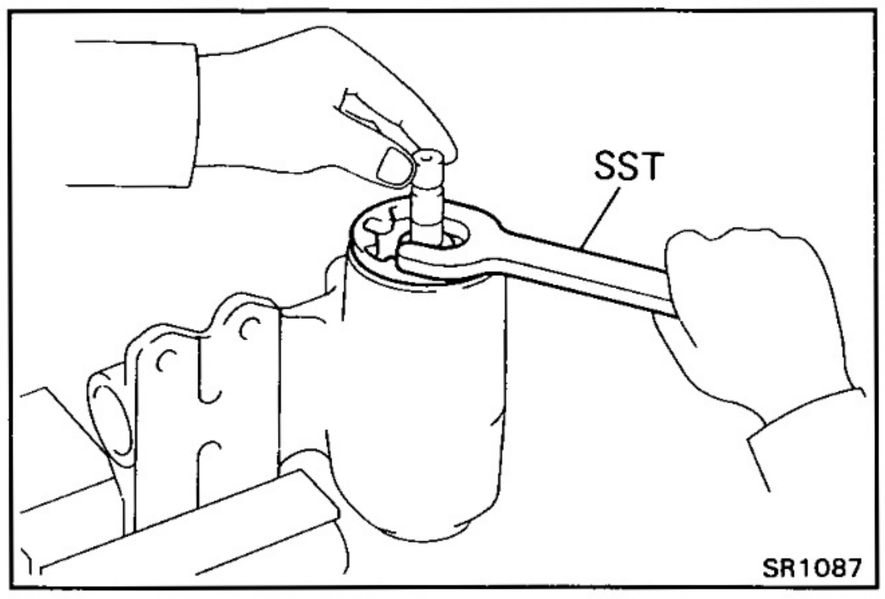

3. INSTALL AND ADJUST BEARING ADJUSTING SCREW

(a) Using SST, gradually tighten the adjusting screw until it is snug.

SST 09616-30020

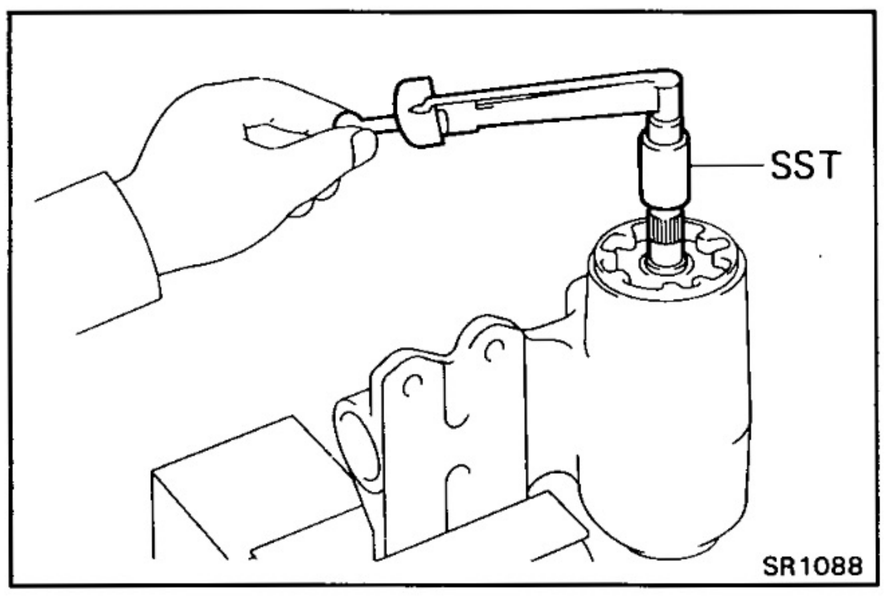

(b) Using a torque meter and SST, measure the bearing preload in both directions. Turn the adjusting screw until the preload is correct.

Preload (starting):
3.5 — 5 kg-cm (3.0 — 4.3 in.-lb, 0.34 — 0.49 N·m)

SST 09616-00010

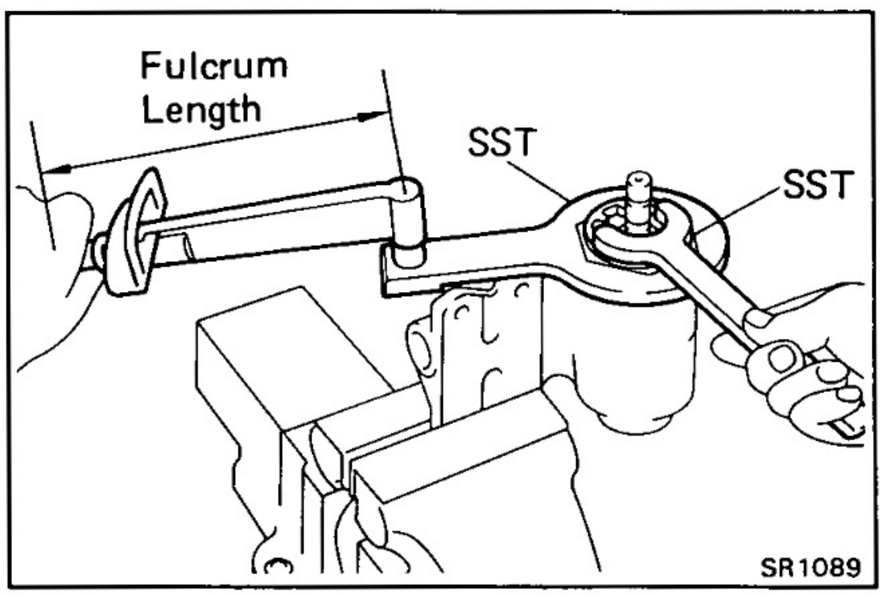

(c) Apply sealant to the lock nut.

Sealant: Part No. 08833-00080, THREE BOND 1344, LOCTITE 242 or equivalent

(d) Hold the adjusting screw in position with SST and tighten the lock nut with SST.

Torque: 1,110 kg-cm (80 ft-lb, 109 N·m)

SST 09616-30020, 09617-60010

HINT:

- Check that the bearing preload is still correct.
- Use a torque wrench with a fulcrum length of 425 mm (16.73 in.)

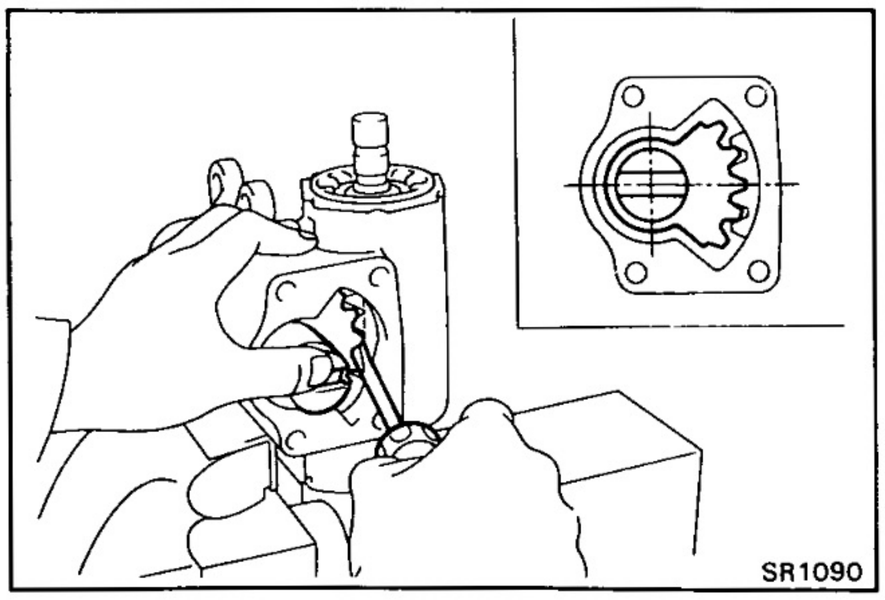

4. INSTALL SECTOR SHAFT

(a) Install the adjusting screw and thrust washer onto the sector shaft.

(b) Set the ball nut at the center of the worm shaft. Insert the sector shaft into the gear housing so that the center teeth mesh together.

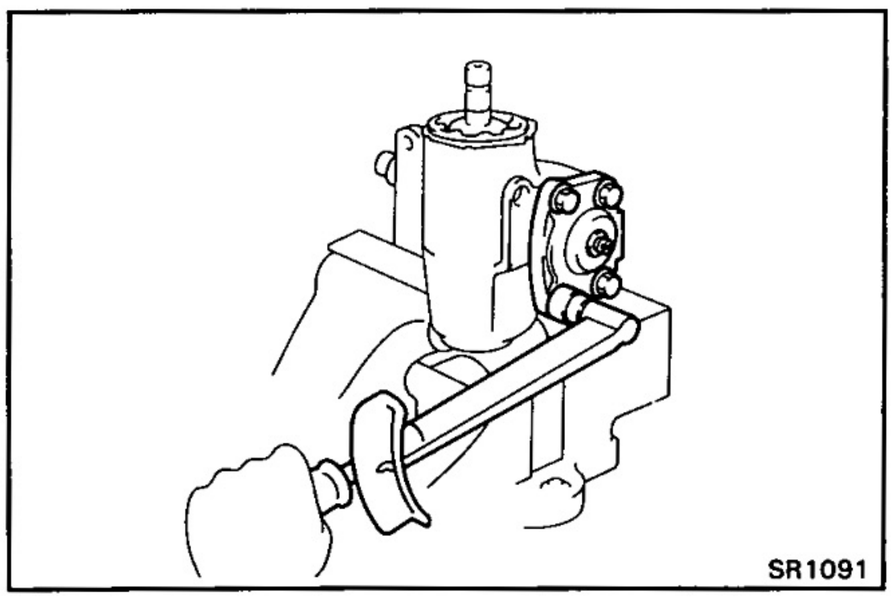

5. INSTALL END COVER

(a) Apply sealant to the gasket.

Sealant: Part No. 08833-00080, THREE BOND 1344, LOCTITE 242 or equivalent

(b) Install the end cover over the gasket.

(c) Using a screwdriver, loosen the adjusting screw as far as possible.

(d) Torque the four cover bolts.

Torque: 1,000 kg-cm (72 ft-lb, 98 N·m)

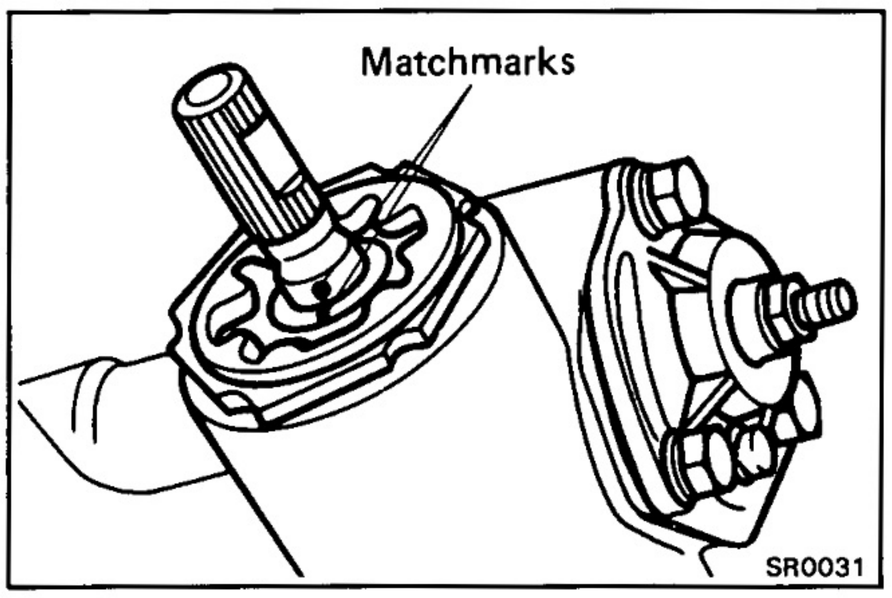

6. PLACE WORM SHAFT IN NEUTRAL POSITION

(a) Count the total shaft rotations and turn the shaft back half of that number.

(b) The worm shaft is now in neutral position.

(c) Place matchmarks on the worm shaft and housing to show neutral position.

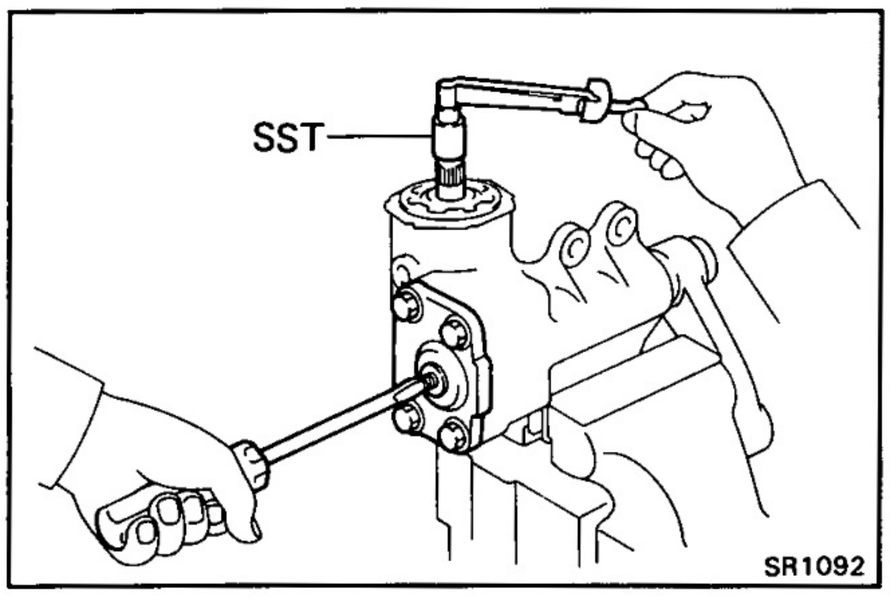

7. ADJUST TOTAL PRELOAD

Using a torque meter and SST, turn the adjusting screw while measuring the preload until it is correct.

HINT: Be sure that the worm shaft is in neutral position.

Preload (starting): 8 — 11 kg-cm (6.9 — 9.5 in.-lb, 0.78 — 1.08 N·m)

SST 09616-00010

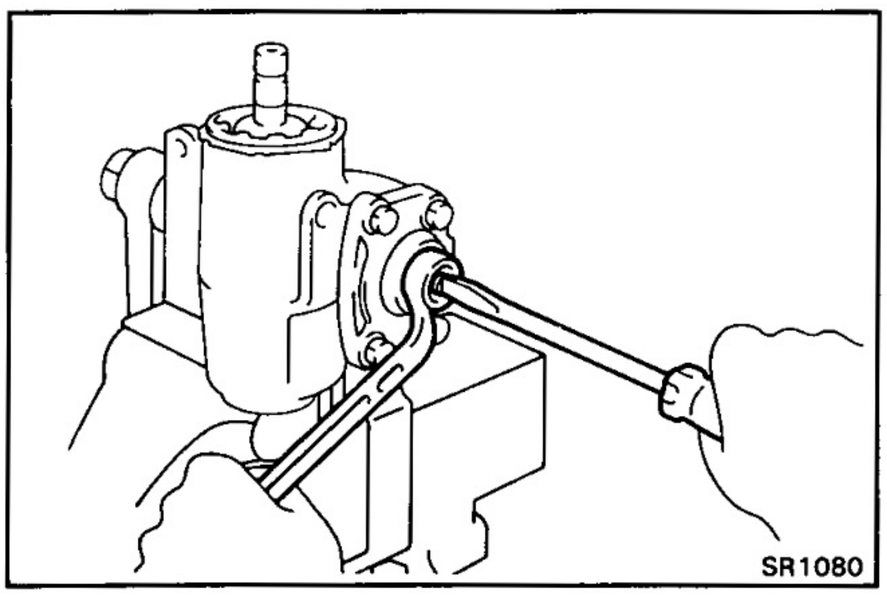

8. TIGHTEN ADJUSTING SCREW LOCK NUT

(a) Apply sealant to the lock nut.

Sealant: Part No. 08833-00080, THREE BOND 1344, LOCTITE 242 or equivalent

(b) Hold the screw with a screwdriver while tightening the lock nut.

(c) Torque the lock nut.

Torque: 450 kg-cm (33 ft-lb, 44 N·m)

HINT: Check that the preload is still correct.

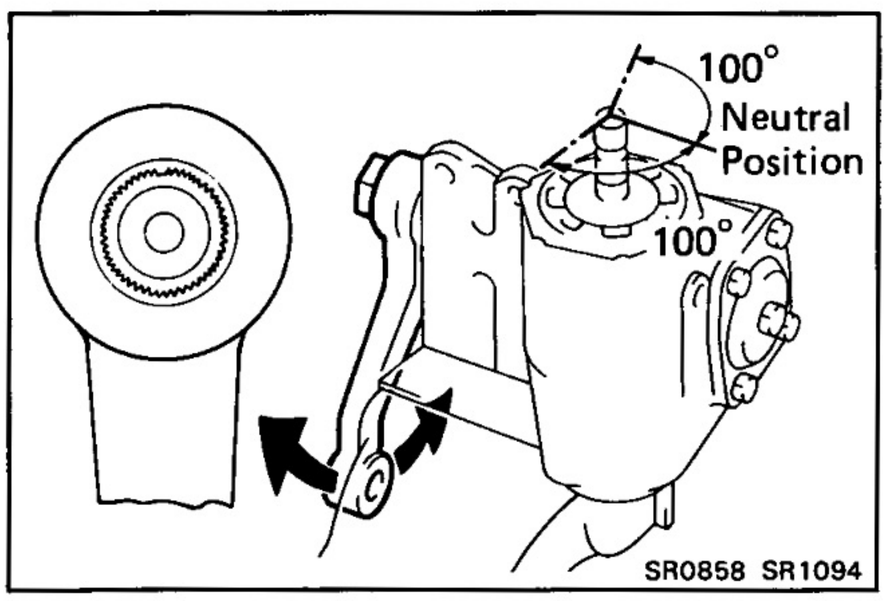

9. MEASURE SECTOR SHAFT BACKLASH

(a) Align the alignment marks on the pitman arm and-sector shaft, and install the nut by hand.

(b) Install a dial indicator. Check that the sector shaft has no backlash within 100 degrees of the left and right sides from neutral position.

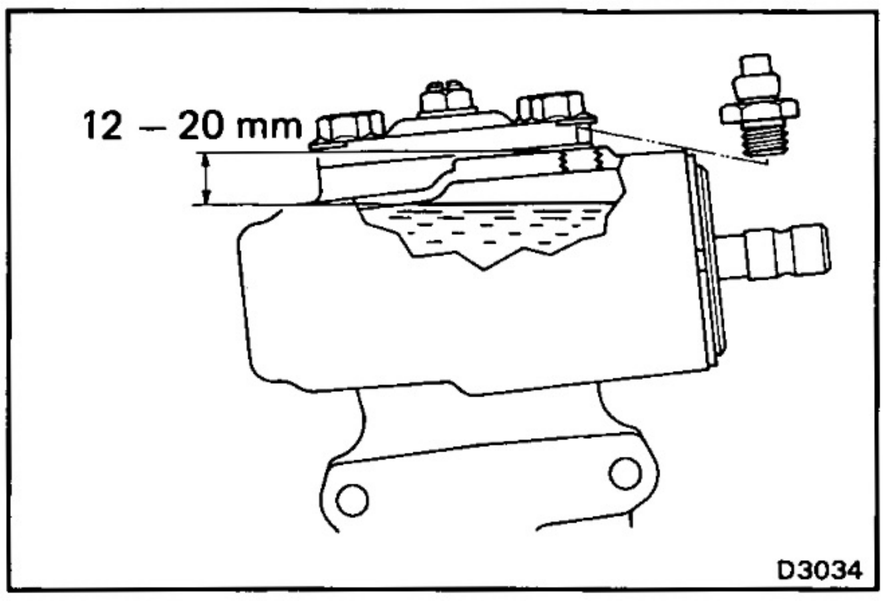

10. REPLENISH WITH GEAR OIL

Oil type: API GL-4, SAE 90

Capacity (Minimum): 640 cc (39.1 cu in.)

Oil level: (at installation)
12 – 20 mm (0.47 – 0.79 in.) from top

11. INSTALL BLEEDER PLUG

Torque: 200 kg-cm (15 ft-lb, 20 N·m)

POWER STEERING

Description

Two types of power steering are the standard type and the PPS (progressive power steering) type. Both these types have a recirculating ball system and rotary type hydraulic control valve.

PPS TYPE

Vehicle speed is detected by a speed sensor and fluid pressure acting on the piston is varied accordingly. When the vehicle is stopped or when moving at low speed, fluid pressure is increased to lighten the force required for steering. At high speed, pressure is reduced to lessen the amount of assist and provide appropriate steering wheel response.

PRINCIPLES OF POWER STEERING

Power steering is one type of a hydraulic device for utilizing engine power as a steering effort. Consequently, the engine is used to drive a pump to develop fluid pressure, and this pressure acts on a piston within the power cylinder so that the pinion assists the rack effort. The amount of this assistance depends on the extent of pressure acting on the piston. Therefore, if more steering force is required, the pressure must be raised. The variation in the fluid pressure is accomplished by a control valve which is linked to the steering main shaft.

• NEUTRAL (STRAIGHT-AHEAD) POSITION

Fluid from the pump is sent to the control valve. If the control valve is in the neutral position, all the fluid will flow pass through the control valve into the relief port and back to the pump. At this time, hardly any pressure is created and because the pressure on the cylinder piston is equal on both sides, the piston will not move in either direction.

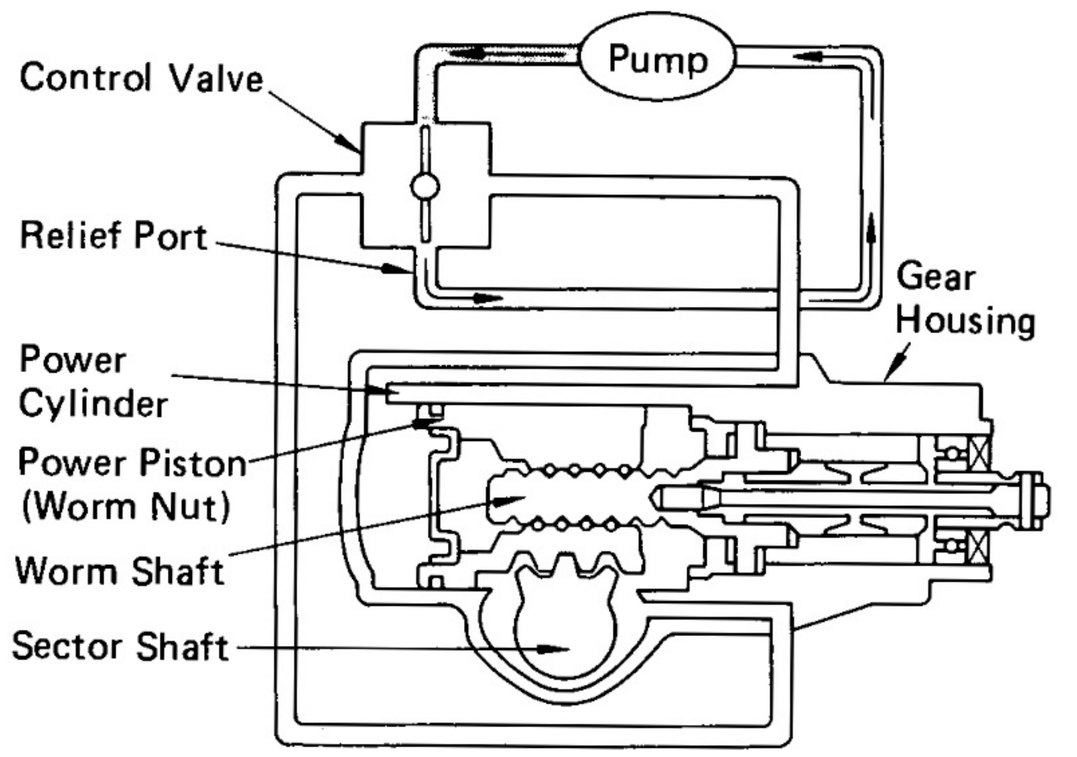

SR2452

• WHEN TURNING

When the steering main shaft is turned in either direction, the control valve also moves, closing one of the fluid passages. The other passage then opens wider, causing a change in fluid flow volume and, at the same time, pressure is created. Consequently, a pressure difference occurs between both sides of the piston and the piston moves in the direction of the lower pressure so that the fluid in that cylinder is forced back to the pump through the control valve.

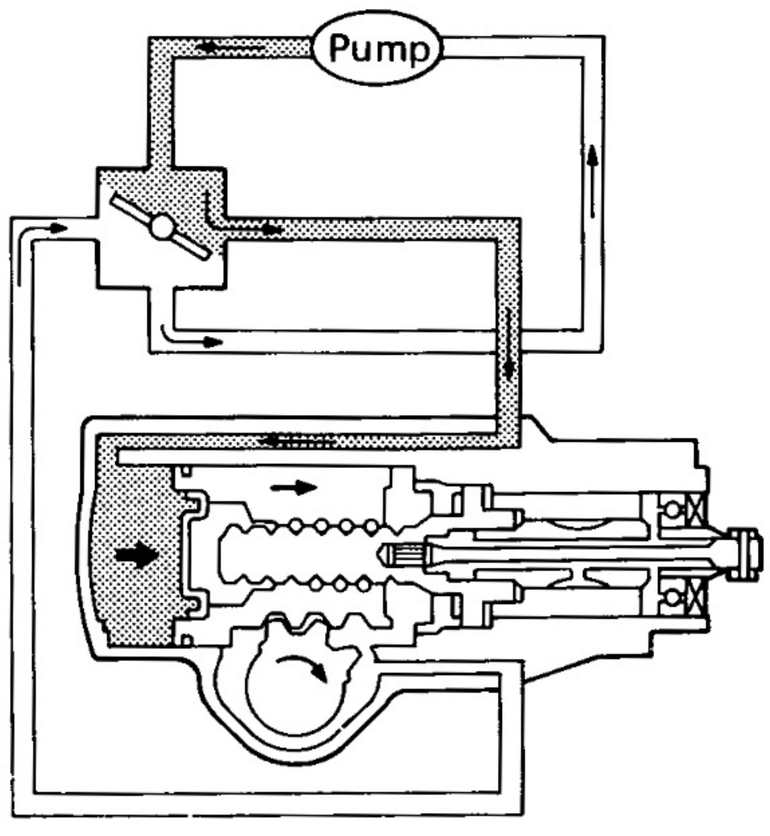

SR2453

SERVICE HINT

Troubles with the power steering system are usually concerned with hard steering due to the fact that there is no assist. In such case, before attempting to make repairs, it is necessary to determine whether the trouble lies with the pump or with the gear housing. To do this, an on-vehicle inspection can be made by using a pressure gauge.

ON-VEHICLE INSPECTION

Power steering is a hydraulic device and any problems are normally due to insufficient fluid pressure acting on the piston. This could be caused by either the pump not producting the specified fluid pressure or the control valve in the gear housing not functioning properly so that the proper amount of fluid pressure can be obtained.

If the fault lies with the pump, the same symptoms will generally occur whether the steering wheel is turned fully to the right or left. On the other hand, if the fault lies with the control valve, there will generally be a difference between the amount of assist when the steering wheel is turned to the left and right, causing harder steering. However, if the piston seal of the power cylinder is worn, there will be a loss of fluid pressure whether the steering wheel is turned to the right or left and symptoms will be the same for both.

Before performing an on-vehicle inspection, a check must first be made to confirm that the power steering system is completely free of any air. If there is any air in the system, the volume of this air will change when the fluid pressure is raised, causing a fluctuation in the fluid pressure so that the power steering will not function properly. To determine if there is any air in the system, check to see if there is a change of fluid level in the reservoir tank when the steering wheel is turned fully to the right or left.

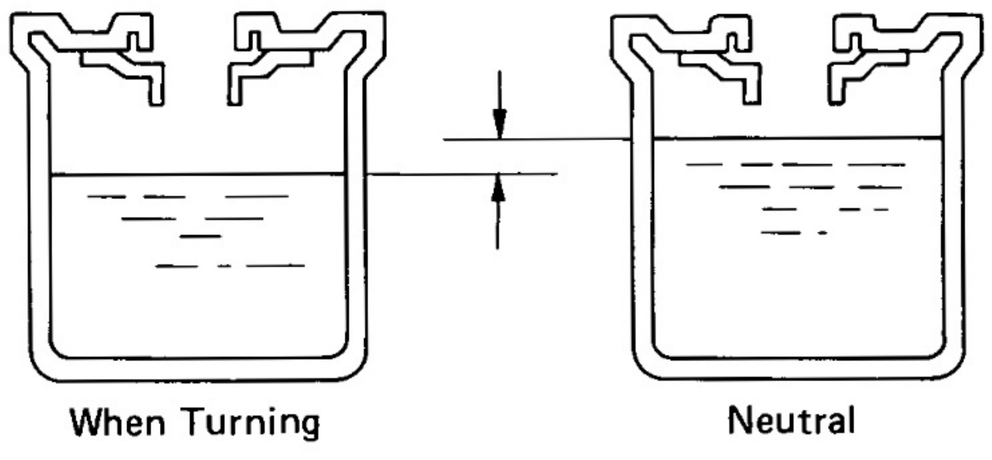

SR2392 SR2393

Also, air in the system will sometimes result in an abnormal noise occurring from the pump or gear housing when the steering wheel is fully turned in either direction. This on-vehicle inspection must always be performed to insure that the power steering system is working properly after overhauling or repairing the pump or gear housing.

VANE PUMP

The main component parts of the vane pump, such as the cam ring, rotor, vanes and flow control valve are highly precision parts and must be handled carefully. Also, because this pump produces a very high fluid pressure, O-rings are used for sealing each part. When reassembling the pump, always use new O-rings.

In the flow control valve, there is a relief valve which controls the maximum pressure of the pump. The amount of this maximum pressure is very important; if it is too low, there will be insufficient power steering assist and if too high, it will have an adverse effect on the pressure hoses, oil seals, etc. If the maximum pressure is either too high or too low due to a faulty relief valve, do not disassemble or adjust the relief valve, but replace the flow control valve as an assembly.

The clearance between the flow control valve and pump body installation hole is very important. When replacing the flow control valve, be sure to do so with one having the same mark in order to insure the proper clearance.

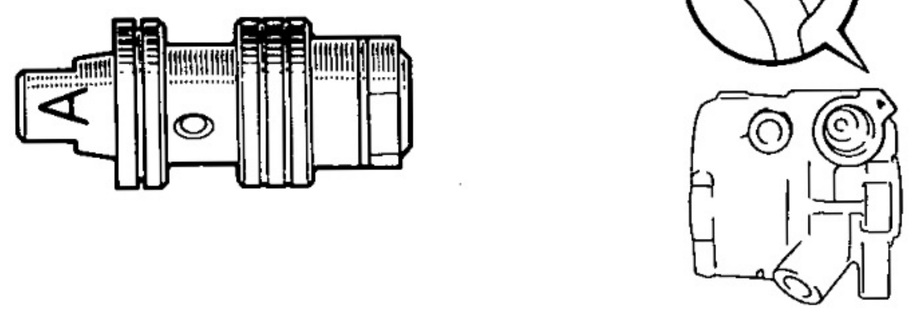

B1325 SR2434

The function parts of the pump which produce fluid pressure are the cam ring, rotor and vanes, and these should be checked to wear. If the clearance between each is not within standard when reassembling, any worn parts should be replaced. In this case, the replaces cam ring and rotor should be of the same length (have the same mark), and the vanes should be replaced with those having a length corresponding to that mark, otherwise the proper thrust clearance cannot be obtained. If there is too much thrust clearance, there will be insufficient fluid pressure at low speeds. If there is too little thrust clearance, it may result seizure of the vanes.

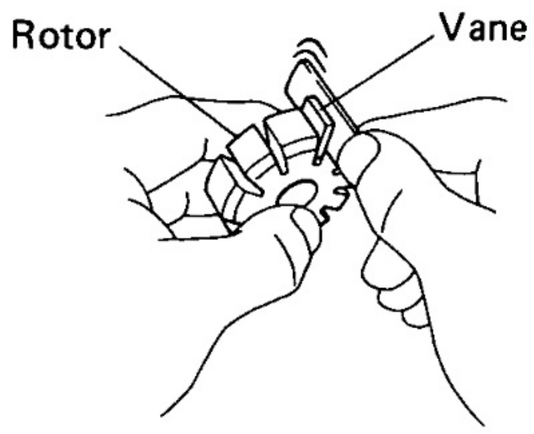

SR2397

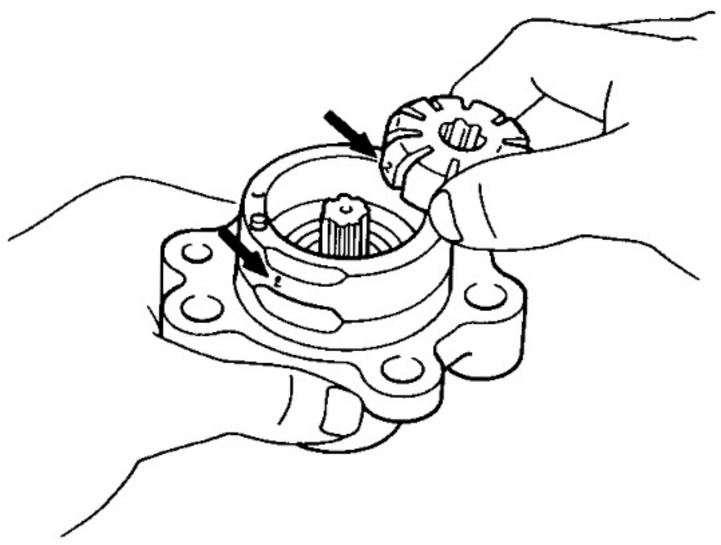

SR2398

GEAR HOUSING

Because of the high pressure, even the slightest scratch will cause fluid leakage, resulting in an inoperative power steering system.

Teflon rings are used for the cross shaft, piston and control valve. These teflon rings are highly durable against wear, but if it is necessary to replace them, be careful not to stretch the new ones. After installing a teflon ring into its groove, snug it down into the groove before assembly of the cylinder or housing to prevent possible damage.

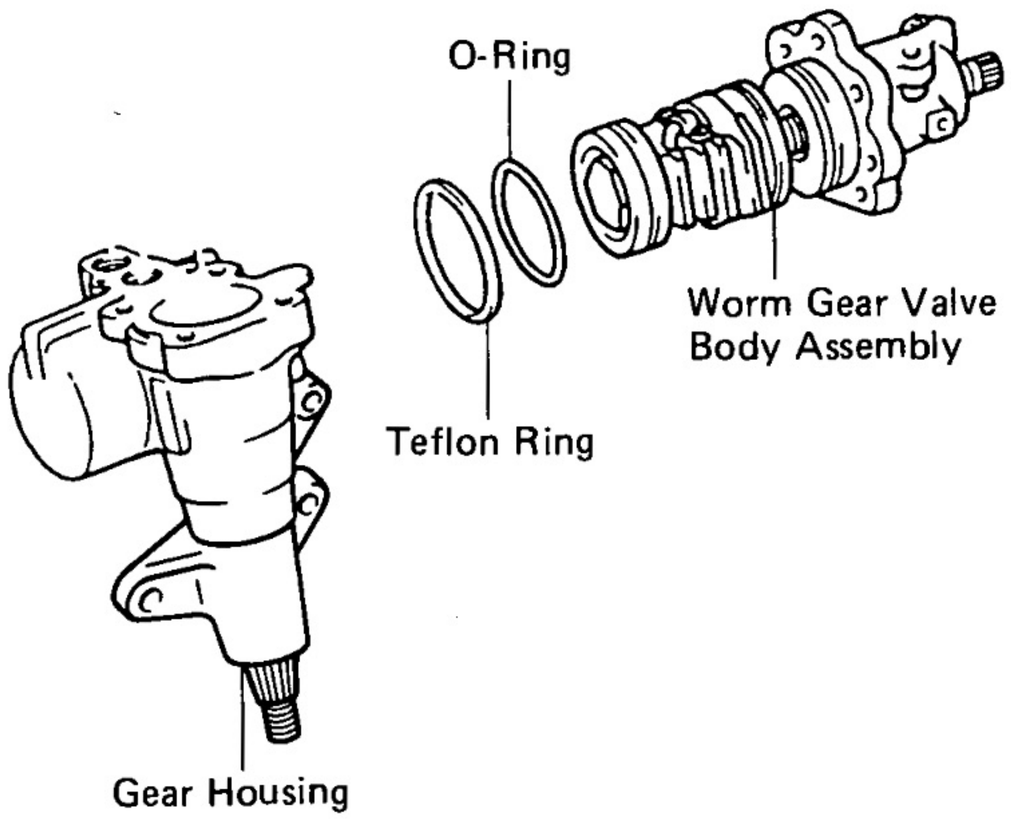

SR3616

As with the recirculating ball type steering, preload is very important. If the preload is not correct, it could result in such trouble as steering wheel play or lack of durability so always make sure that it is correct.

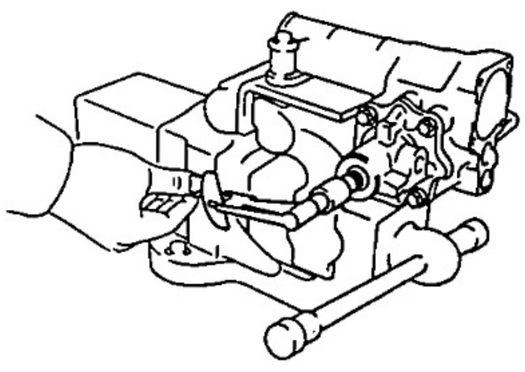

Check the worm gear preload

SR2455

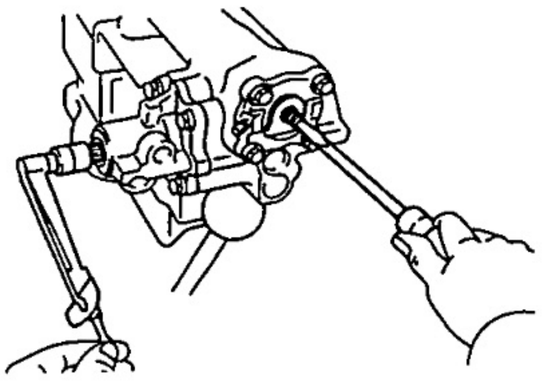

Adjust total preload

SR2456

IDLE-UP DEVICE

The pump produces the maximum fluid pressure when the steering wheel is turned fully to the right or left and, at this time, there is a maximum load on the pump which causes a decrease in engine idle rpm. To slove this problem, some vehicles are equipped with an idle-up device which acts to raise the engine idle rpm whenever there is a heavy load on the pump.

EFI ENGINES

On EFI engines, when the piston of the air control valve is pushed by fluid pressure, the air valve opens and the volume of air by-passing the throttle valve is increased to regulate engine rpm.

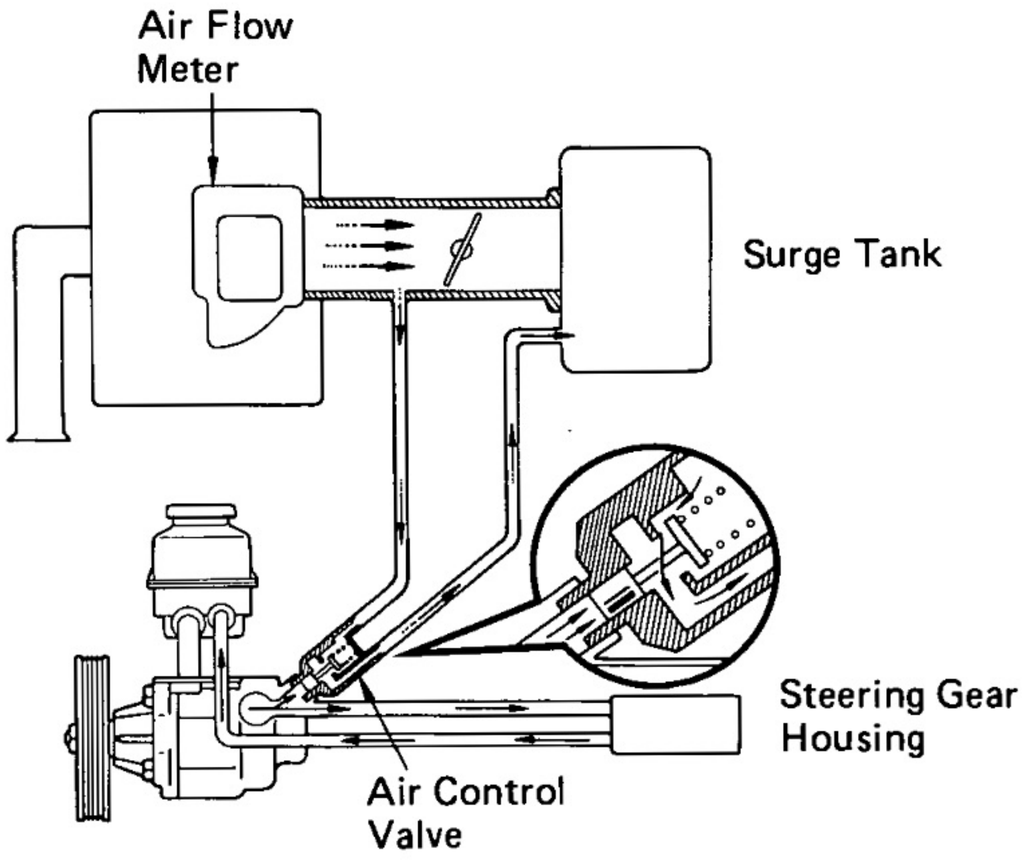

SR3154

The idle-up device functions to raise engine idle rpm when pump fluid pressure acts on the air control valve, installed to the pump body, to control the flow of air.

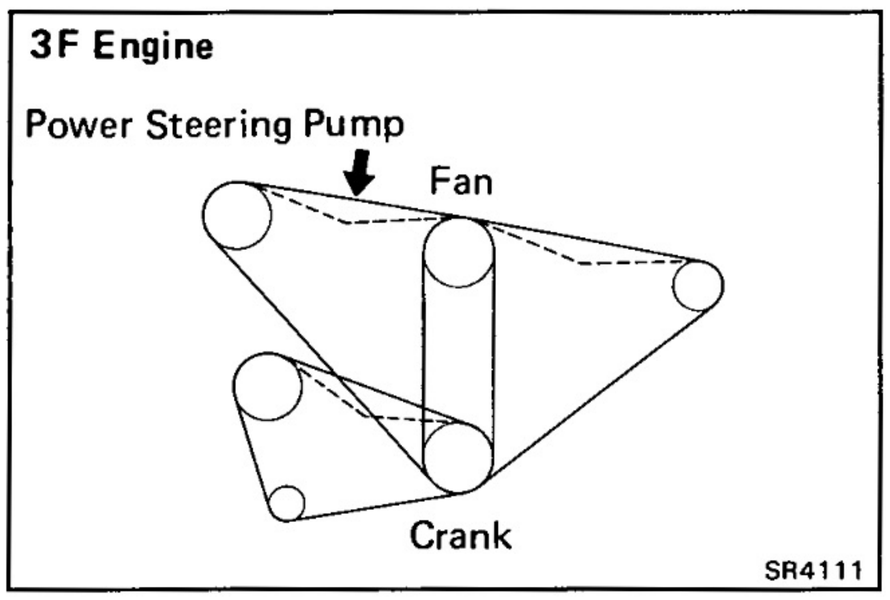

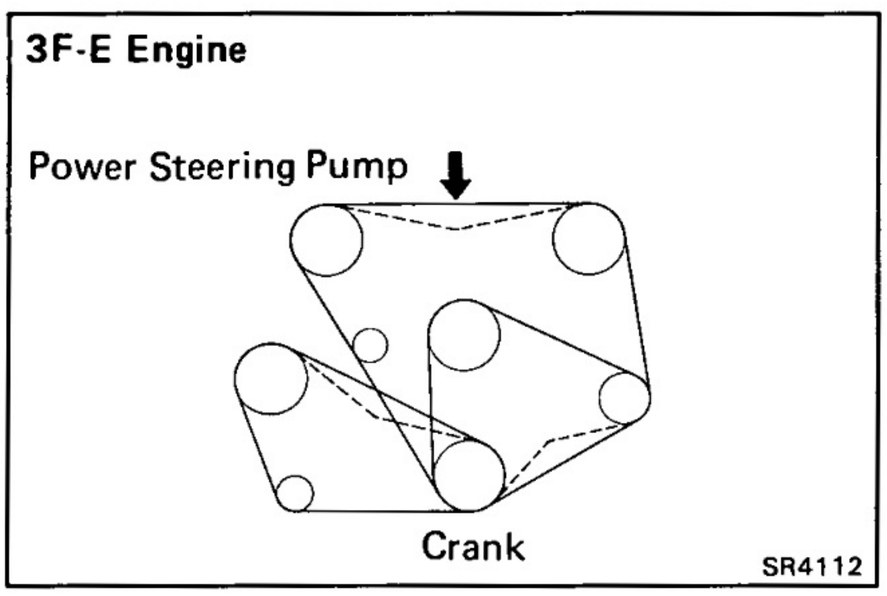

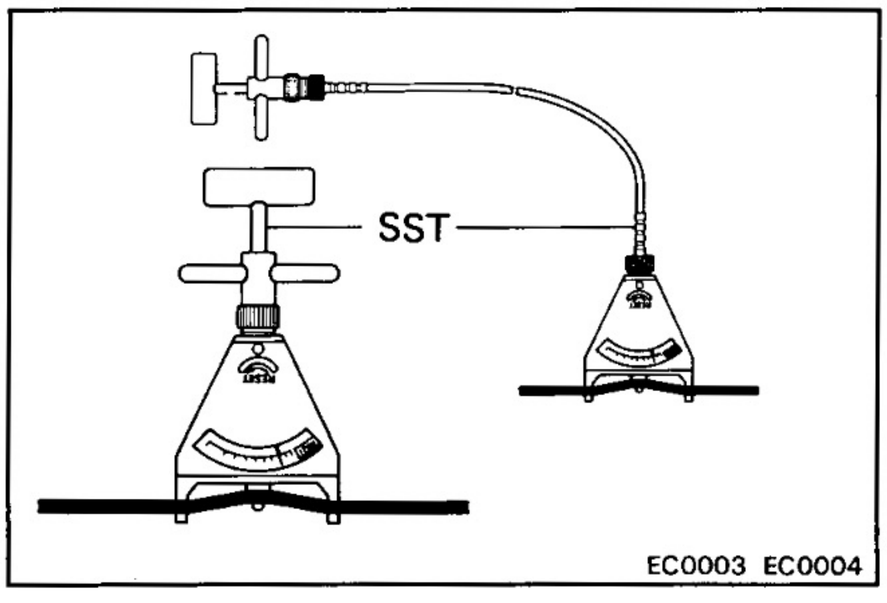

On-Vehicle Inspection

CHECK DRIVE BELT TENSION

Measure the drive belt tension.

Drive belt tension:

New belt: 7 — 9.5 mm (0.28 — 0.37 in.)
Used belt: 8 — 10 mm (0.32 — 0.39 in.)

HINT:

- "New belt" refers to a belt which has been less than 5 minutes on a running engine.
- "Used belt" refers to a belt which has been used on a running engine for 5 minutes or more.

(Reference)

- Using SST, check the drive belt tension.

SST 09216-00020 and 09216-00030

Drive belt tension:

New belt: 45 — 55 kg
Used belt: 20 — 35 kg

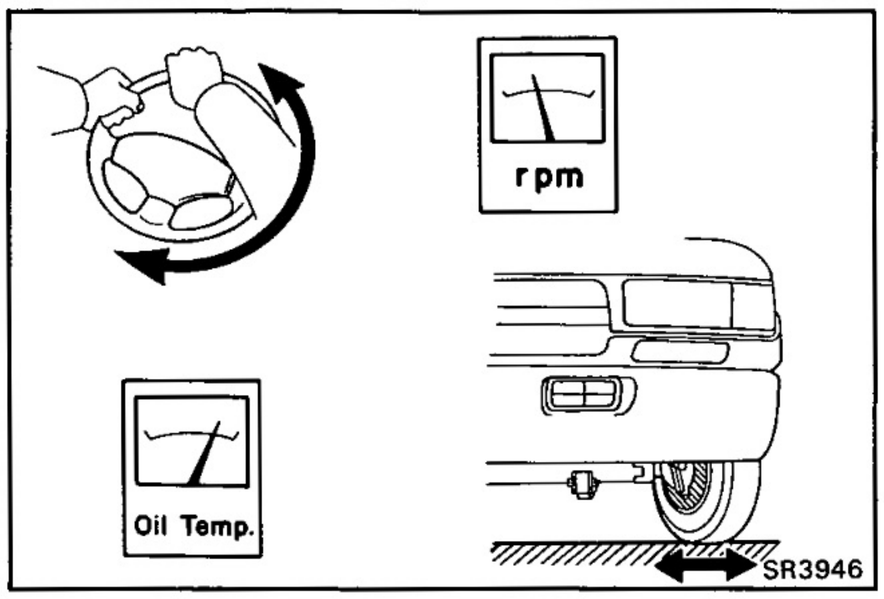

FLUID LEVEL CHECK

1. KEEP VEHICLE LEVEL

2. BOOST FLUID TEMPERATURE

With the engine idling at 1,000 rpm or less, turn the steering wheel from lock to lock several times to boost fluid temperature.

Fluid temperature: 80°C (176°F)

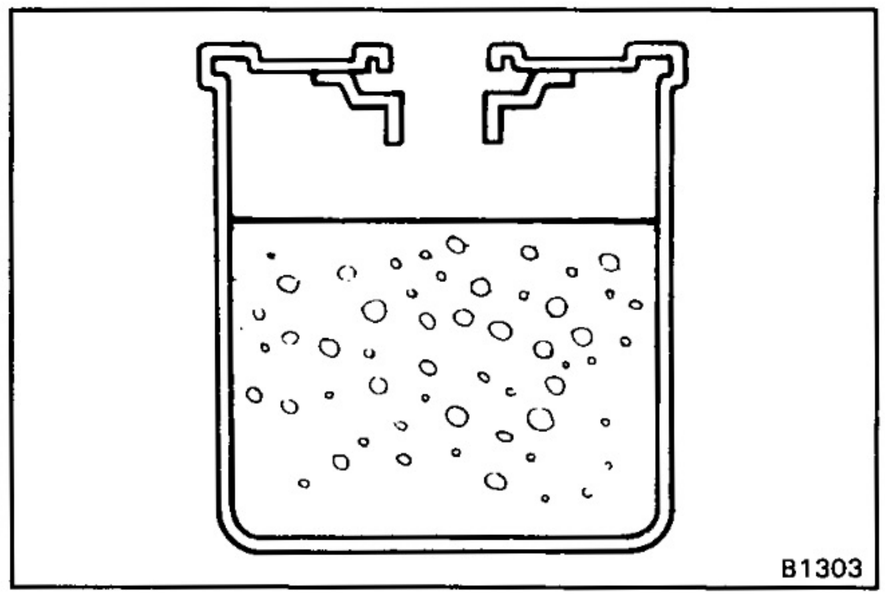

3. CHECK FOR FOAMING OR EMULSIFICATION

HINT: Foaming and emulsification indicate either the existence of air in the system or that the fluid level is too low.

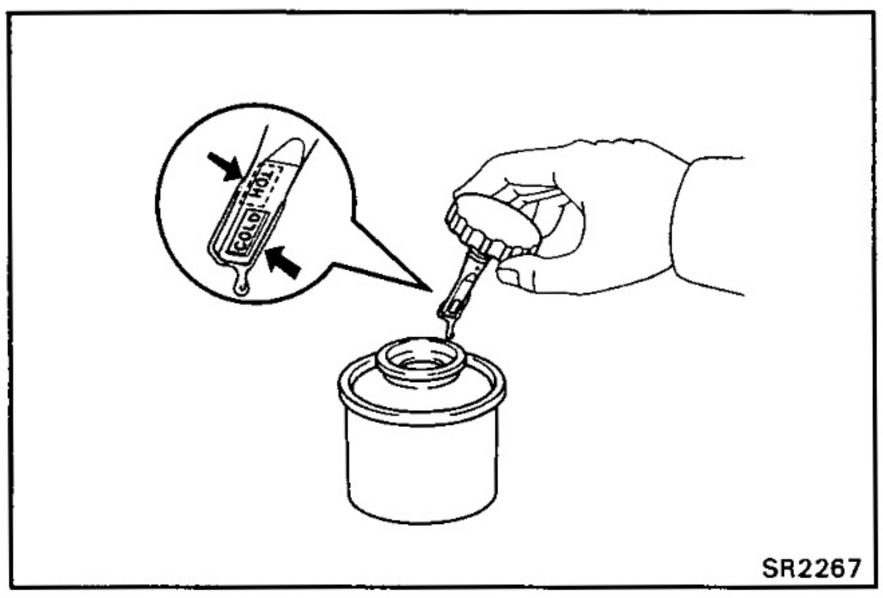

4. CHECK FLUID LEVEL IN RESERVOIR

Check the fluid level and add fluid if necessary.

Fluid: ATF DEXRON® II

HINT: Check that the fluid level is within the HOT LEVEL of the dipstick. If the fluid is cold, check that it is within the COLD LEVEL of the dipstick.

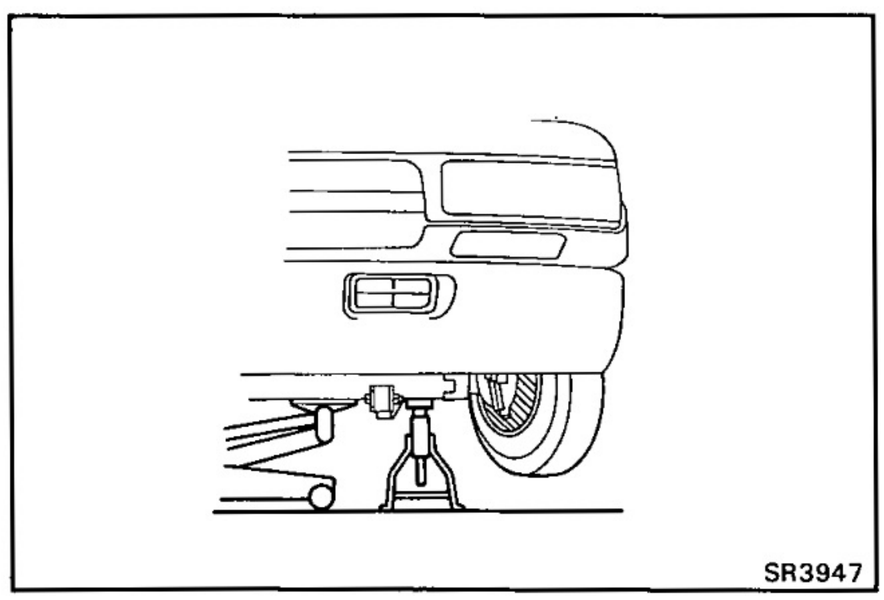

REPLACEMENT OF POWER STEERING FLUID

1. JACK UP FRONT OF VEHICLE AND SUPPORT IT WITH STANDS

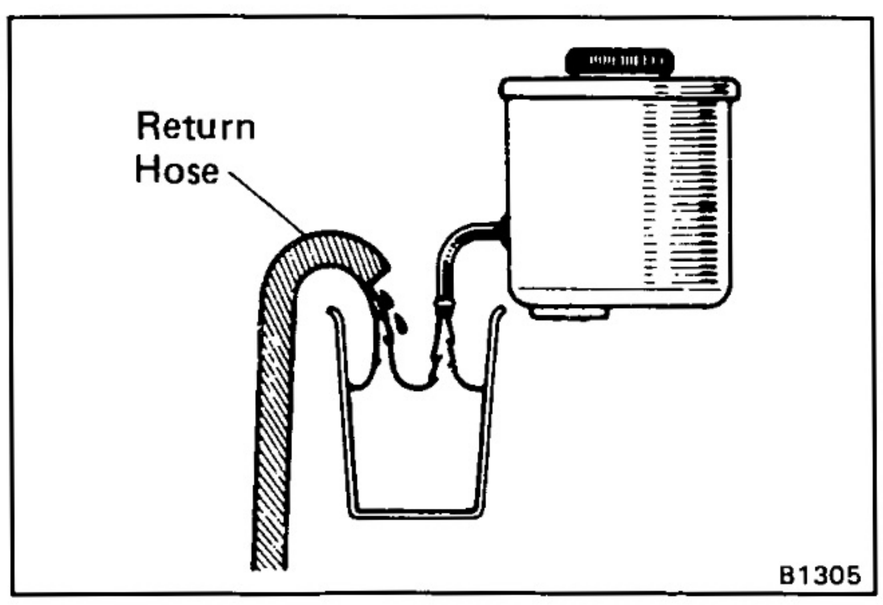

2. REMOVE FLUID RETURN HOSE FROM RESERVOIR TANK AND DRAIN FLUID INTO CONTAINER

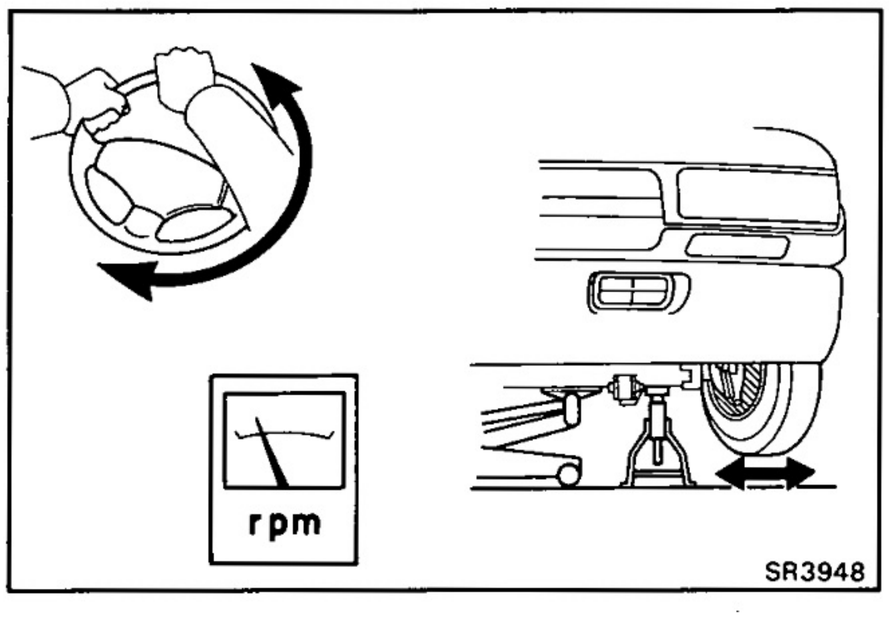

3. TURN STEERING WHEEL FROM LOCK TO LOCK WHILE DRAINING FLUID

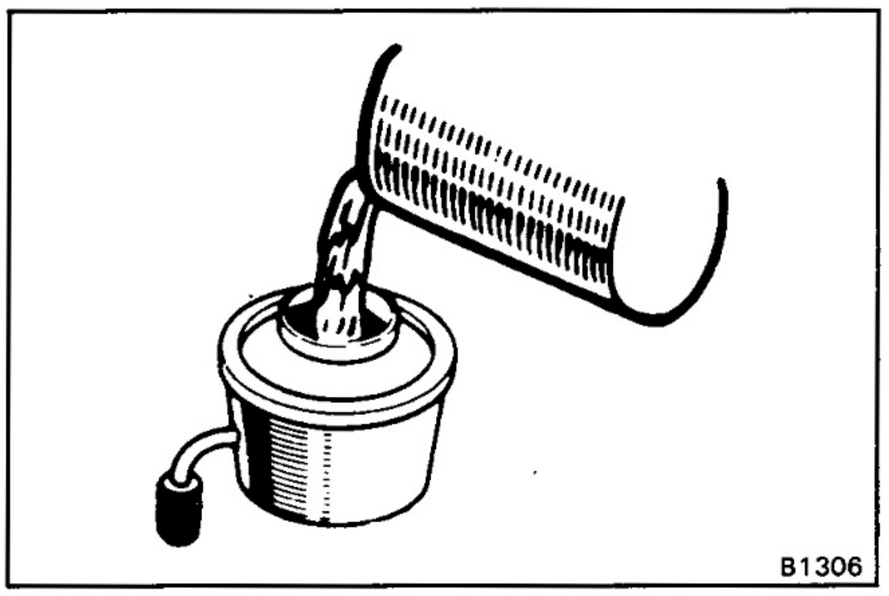

4. FILL RESERVOIR TANK WITH FRESH FLUID

Fluid : ATF DEXRON® II

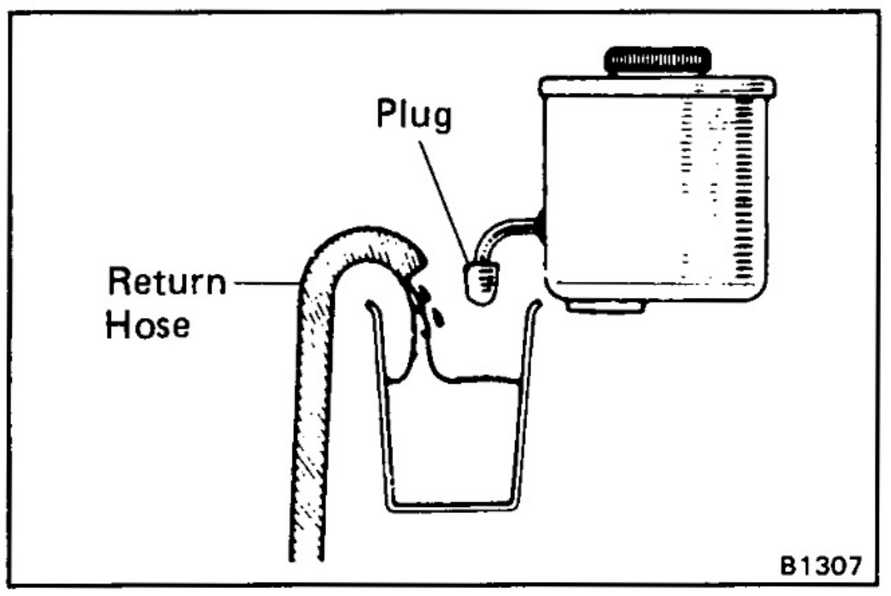

5. START ENGINE AND RUN IT AT 1,000 RPM

After 1 or 2 seconds, fluid will begin to discharge from the return hose. Stop the engine immediately at this time.

NOTICE: Take care that some fluid remains left in the reservoir tank.

6. REPEAT STEPS 4 AND 5 FOUR OR FIVE TIMES UNTIL THERE IS NO MORE AIR IN FLUID

7. CONNECT RETURN HOSE TO RESERVOIR TANK

8. BLEED POWER STEERING SYSTEM

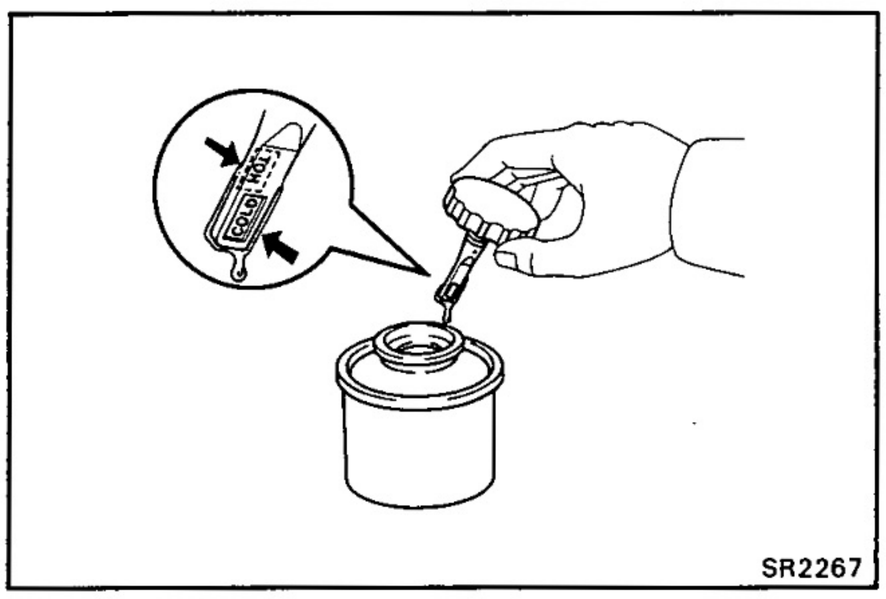

BLEEDING OF POWER STEERING SYSTEM

1. CHECK FLUID LEVEL IN RESERVOIR TANK

Check the fluid level and add fluid if necessary.

Fluid: ATF DEXRON® II

HINT: Check that the fluid level is within the HOT LEVEL of the dipstick. If the fluid is cold, check that it is within the COLD LEVEL of the dipstick.

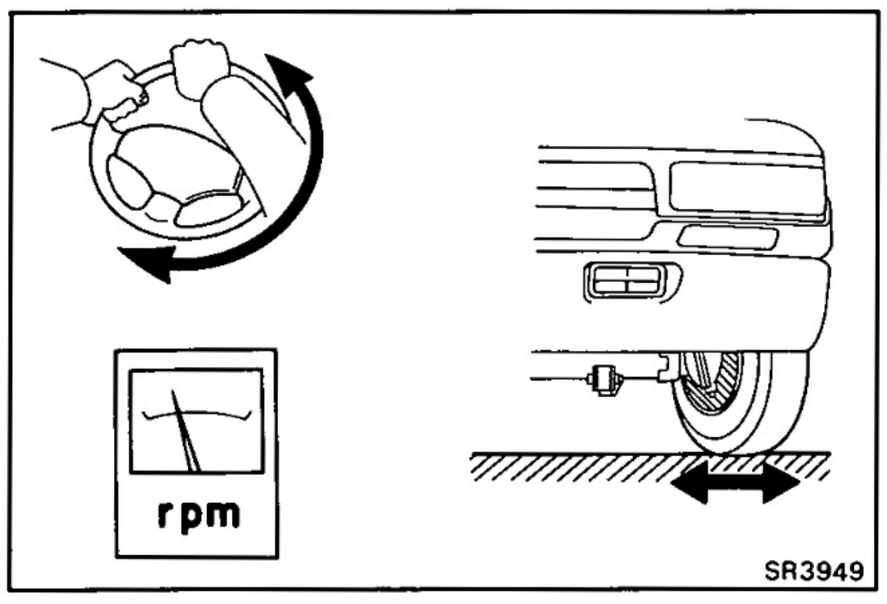

2. START ENGINE AND TURN STEERING WHEEL FROM LOCK TO LOCK THREE OR FOUR TIMES

With the engine speed below 1,000 rpm, turn the steering wheel to left or right full lock and keep it there for 2 — 3 seconds, then turn the wheel to the reverse full lock and keep it there for 2 — 3 seconds.

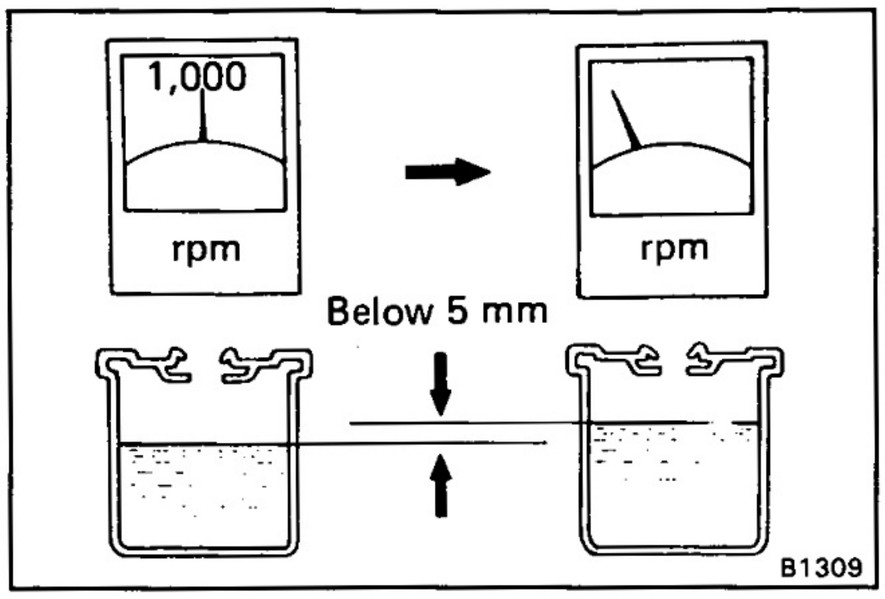

3. CHECK THAT FLUID IN RESERVOIR IS NOT FOAMY OR CLOUDY AND DOES NOT RISE OVER MAXIMUM WHEN ENGINE IS STOPPED

Measure the fluid level with the engine running. Stop the engine and measure the fluid level.

Maximum rise: 5 mm (0.20 in.)

If a problem is found, repeat steps 4 and 5 on page SR-34.

Repair the PS if the problem persists.

OIL PRESSURE CHECK

1. CONNECT PRESSURE GAUGE

(a) Using SST, disconnect the pressure line joint.

SST 09631-22020

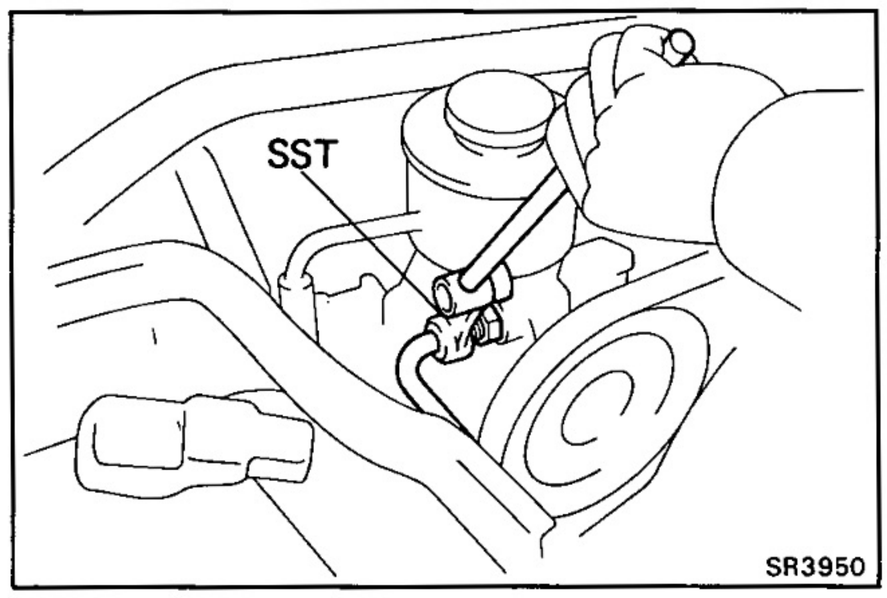

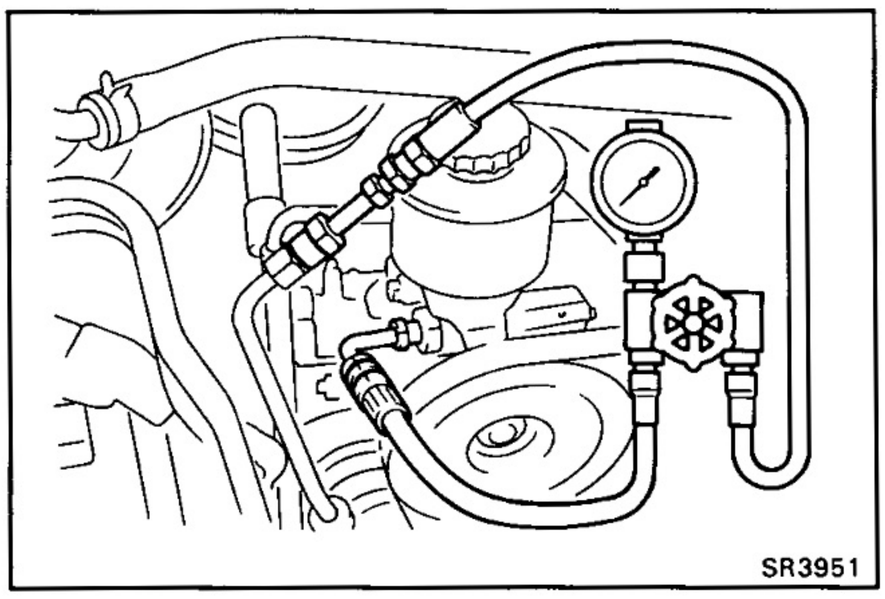

(b) Connect the gauge side of the pressure gauge to the PS pump side and the valve side to the pressure line side.

(c) Bleed the system. Start the engine and turn the steering wheel from lock to lock two or three times.

(d) Check that the fluid level is correct.

2. CHECK THAT FLUID TEMPERATURE IS AT LEAST 80°C (176°F)

3. START ENGINE AND RUN IT AT IDLE

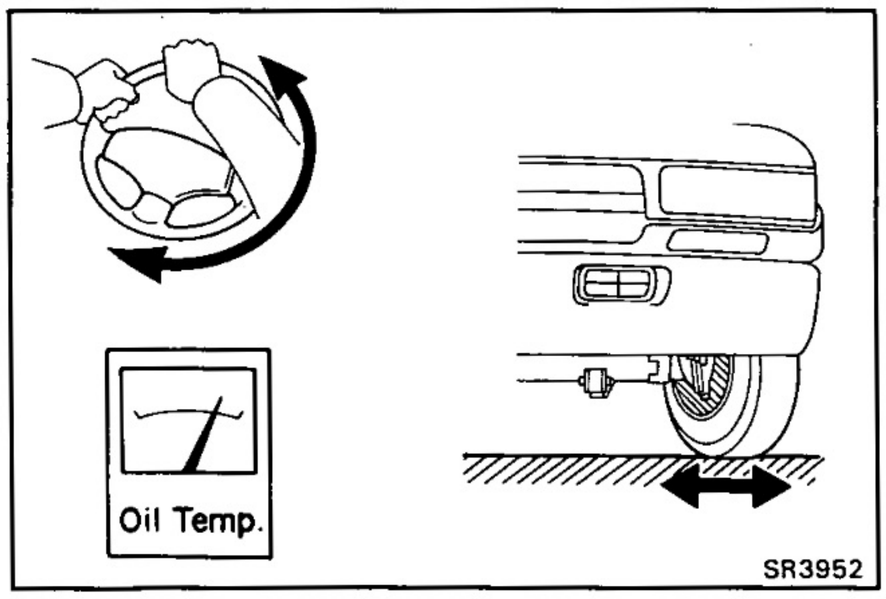

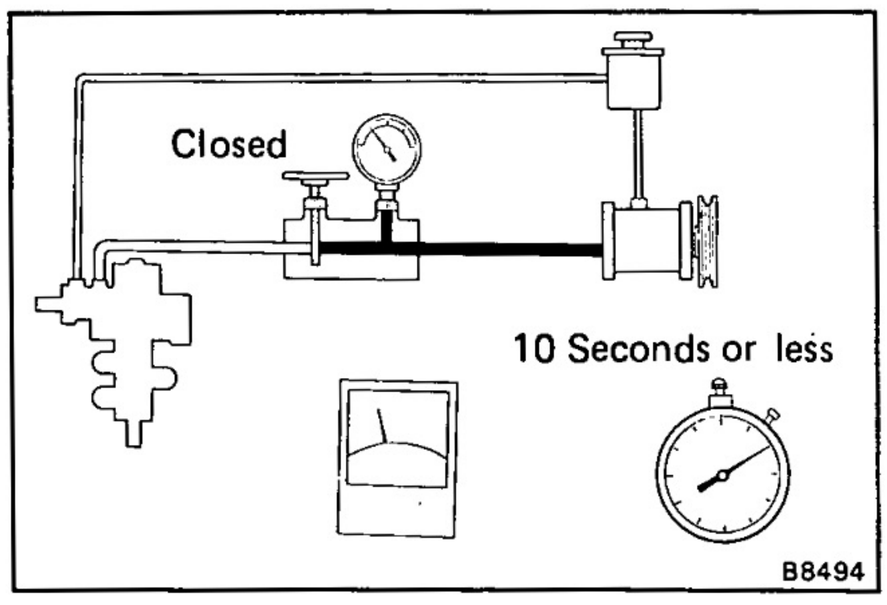

4. CHECK FLUID PRESSURE READING WITH VALVE CLOSED

Close the pressure gauge valve and observe the reading on the gauge.

Minimum pressure:

FJ series	**80 kg/cm² (1,138 psi, 7,845 kPa)**
HZJ and HDJ series	**85 kg/cm² (1,209 psi, 8,336 kPa)**

NOTICE:

- **Do not keep the valve closed for more than 10 seconds.**
- **Do not let the fluid temperature become too high.**

If pressure is low, repair or replace the PS pump.

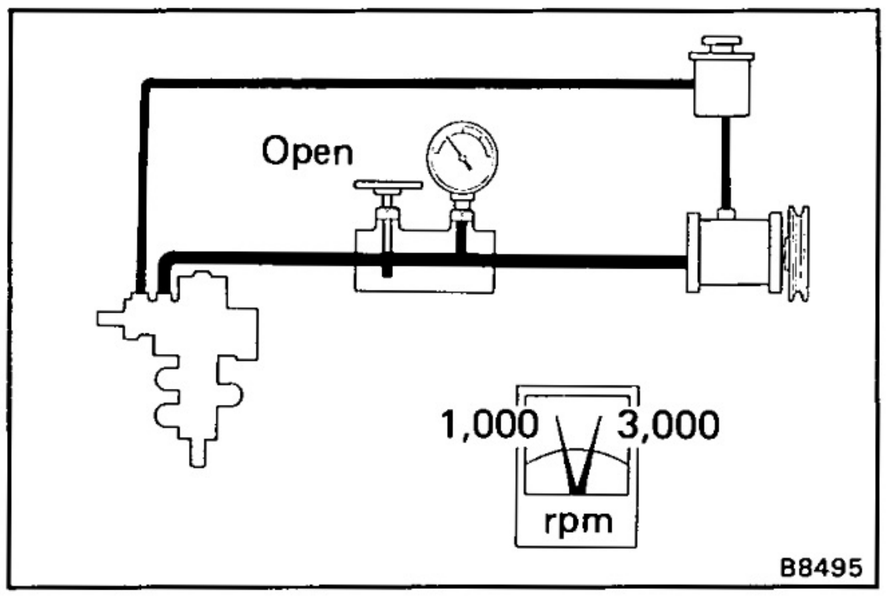

5. **OPEN VALVE FULLY**

6. **CHECK AND RECORD PRESSURE READING AT 1,000 RPM**

7. **CHECK AND RECORD PRESSURE READING AT 3,000 RPM**

Check that there is 5 kg/cm^2 (71 psi, 490 kPa) or less difference in pressure between the 1,000 rpm and 3,000 rpm checks.

If the difference is excessive, repair or replace the flow control valve of the PS pump.

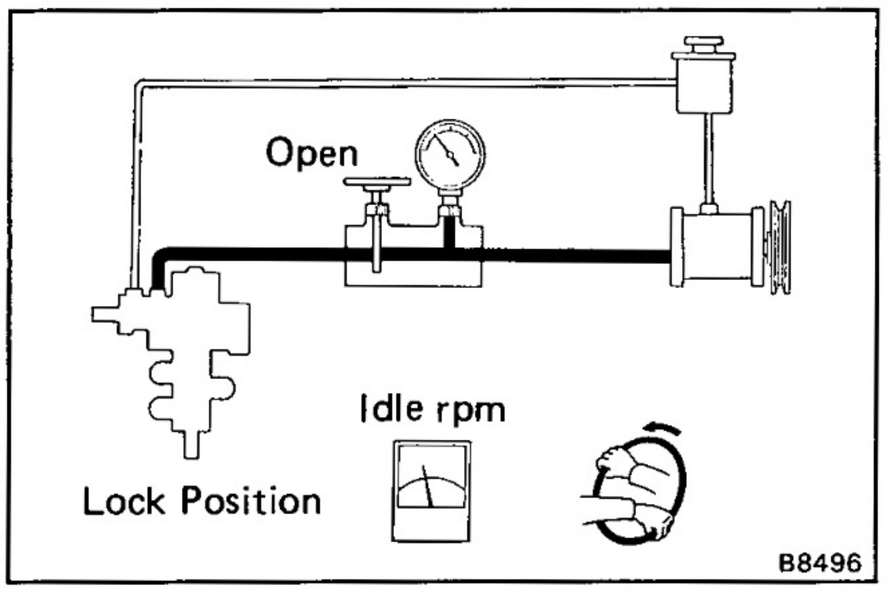

8. **CHECK PRESSURE READING WITH STEERING WHEEL TURNED TO FULL LOCK**

[Standard type power steering]

Be sure the pressure gauge valve is fully opened and the engine idling.

Minimum pressure:

FJ series	**80 kg/cm^2 (1,138 psi, 7,845 kPa)**
HZJ and HDJ series	**85 kg/cm^2 (1,209 psi, 8,336 kPa)**

If pressure is low, the gear housing has an internal leak and must be repaired or replaced.

[Pregressive power steering]

(a) Turn the steering wheel to full lock position.

(b) Disconnect the solenoid connector.

(c) Be sure the pressure gauge valve is fully opened and the engine is running at 1,000 rpm.

Minimum pressure:

FJ series	**80 kg/cm^2 (1,138 psi, 7,845 kPa)**
HDJ series	**85 kg/cm^2 (1,209 psi, 8,336 kPa)**

If pressure is low, the gear housing has an internal leak or the solenoid is faulty.

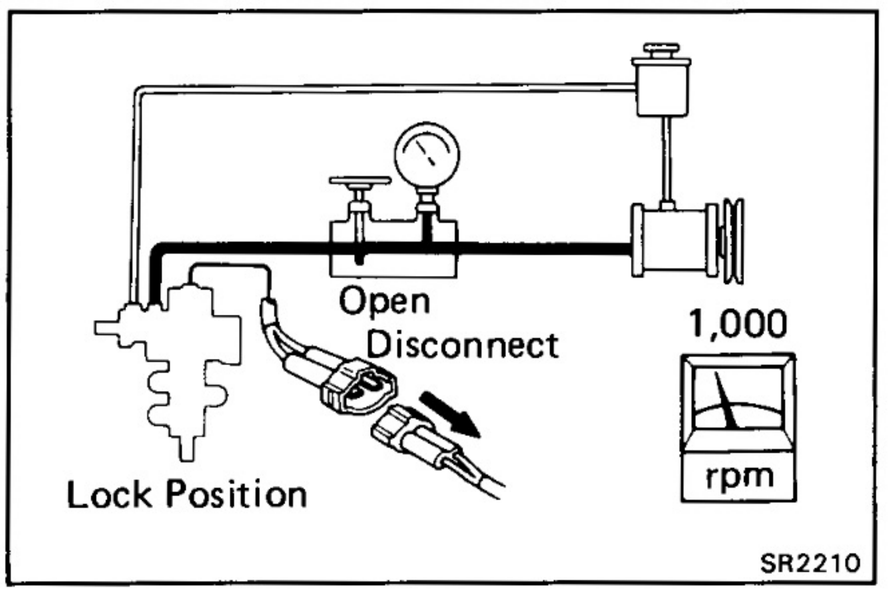

(d) Apply battery voltage to the solenoid.

NOTICE:

- **Do not apply voltage more than 30 seconds to avoid burning out the solenoid.**
- **If repeating this step, wait until the solenoid cools down enough that it can be touched by hand.**

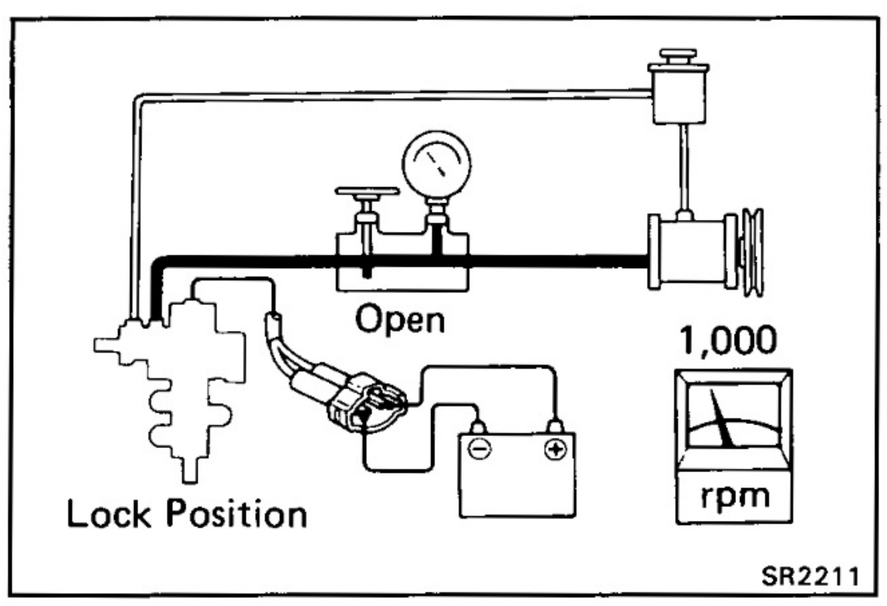

(e) Check the oil pressure.

(Reference)

Maximum pressure: Approx. 40 kg/cm^2 (569 psi, 3,923 kPa)

If pressure is high, check the solenoid.

(f) Connect the solenoid connector and check the oil pressure.

Minimum pressure:

FJ series	**80 kg/cm^2 (1,138 psi, 7,845 kPa)**
HDJ series	**85 kg/cm^2 (1,209 psi, 8,336 kPa)**

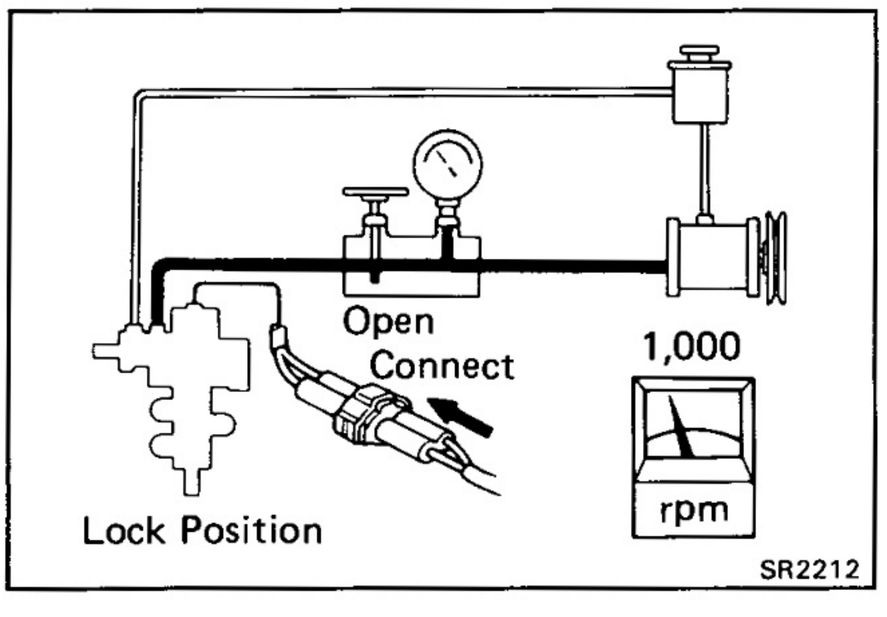

If pressure is low, the progressive power steering system is faulty.

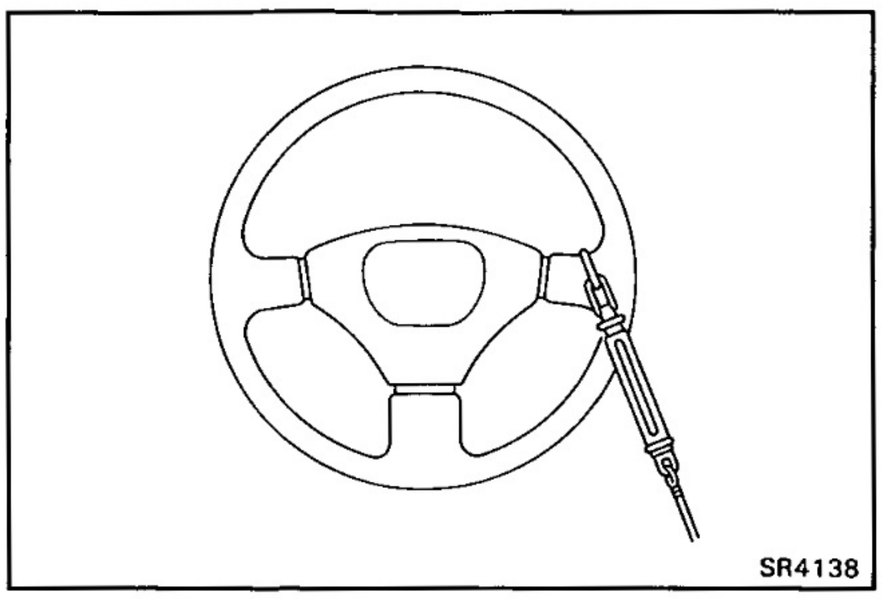

9. MEASURE STEERING EFFORT

[Standard type power steering]

(a) Center the steering wheel and run the engine at idle.

(b) Using a spring scale, measure the steering effort in both directions.

Maximum steering effort: 4 kg (8.8 lb, 39 N)

If steering effort is excessive, repair the power steering unit.

HINT: Be sure to consider tire type, pressure and contact surface before making your diagnosis.

[Progressive power steering]

(a) Center the steering wheel and run the engine at idle.

(b) Using a spring scale, measure the steering effort in both directions.

Maximum steering effort: 3 kg (6.6 lb, 29 N)

If steering effort is excessive, repair the power steering unit.

(c) Apply battery voltage to the solenoid.

NOTICE:

- **Do not apply voltage more than 30 seconds to avoid burning out the solenoid.**
- **If repeating this step, wait until the solenoid cools down enough that it can be touched by hand.**

(d) Check that the steering effort is heavier than it was before battery voltage was applied to the solenoid.

(Reference)

Maximum steering effort: 12 kg (26 lb, 118 N)

(e) If steering effort is not heavier, check the solenoid.

HINT: Be sure to consider tire type, pressure and contact surface before making your diagnosis.

Power Steering Pump

REMOVAL AND INSTALLATION OF POWER STEERING PUMP

Remove and install the parts as shown.

FJ Series

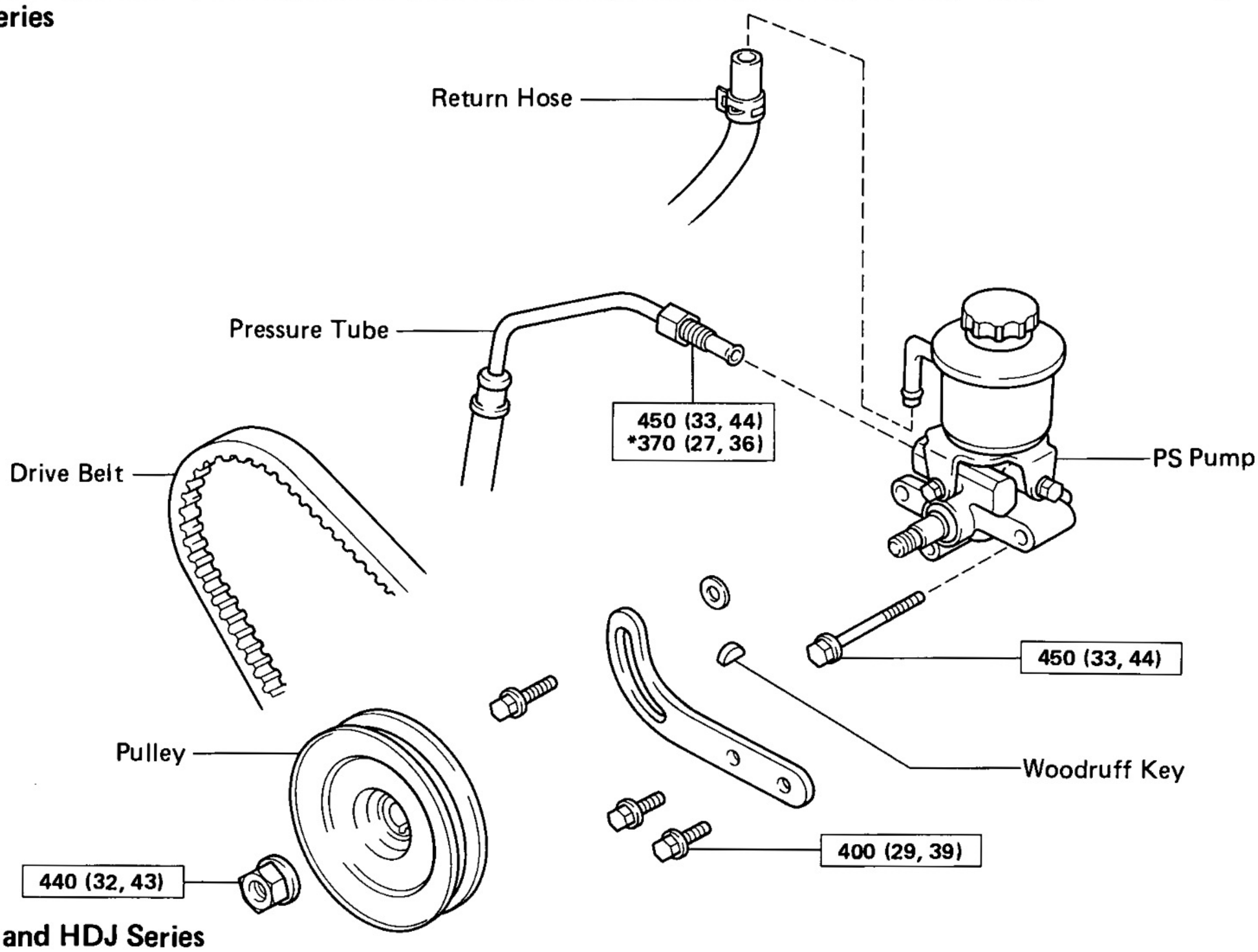

HZJ and HDJ Series

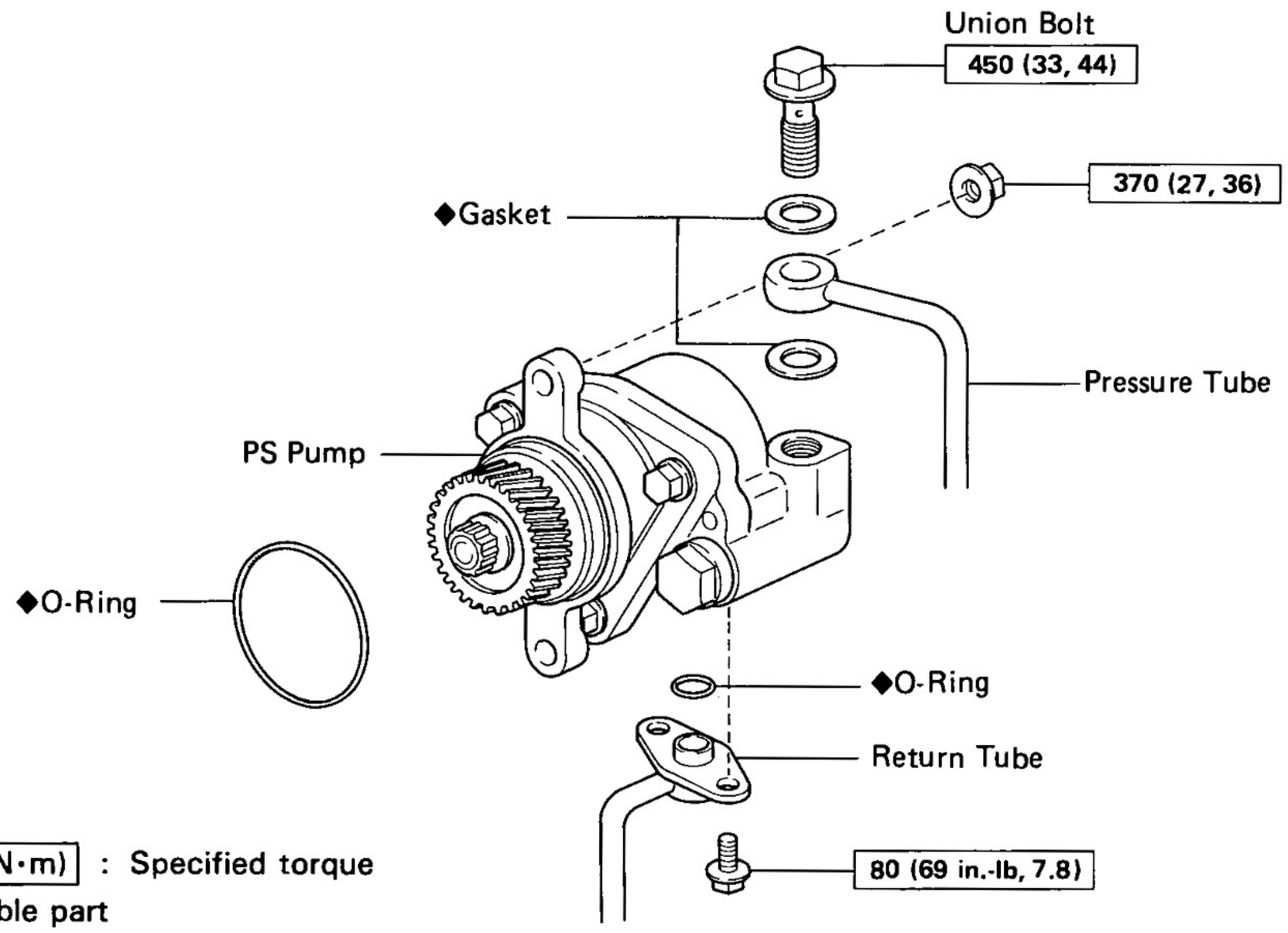

kg-cm (ft-lb, N·m) : Specified torque
◆ Non-reusable part
* For use of SST

SR3953
SR4139

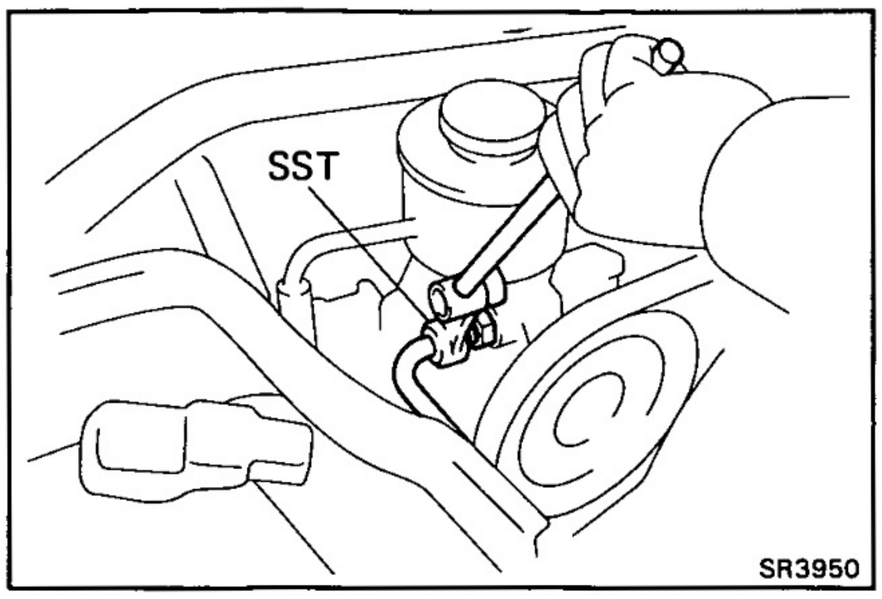

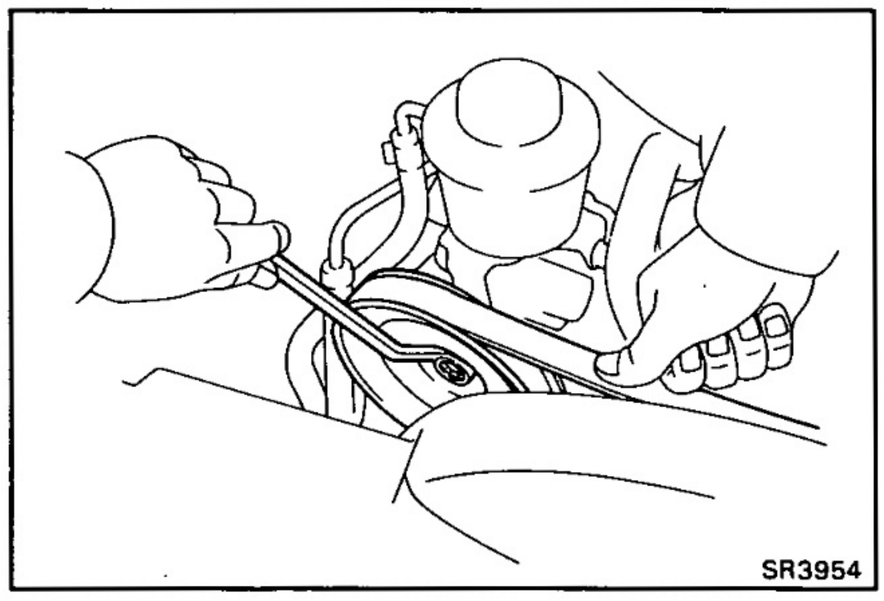

(MAIN POINT OF REMOVAL AND INSTALLATION)

1. **(FJ Series)**
DISCONNECT AND CONNECT PRESSURE TUBE

Using SST, disconnect and connect the pressure tube from/to the PS pump.

SST 09631-22020

Torque: 370 kg-cm (27 ft-lb, 36 N·m)

HINT: Use a torque wrench with a fulcrum length of 300 mm (11.81 in.).

2. **(FJ Series)**
LOOSEN PULLEY NUT

Push on the drive belt with your hand to hold the pulley in place and loosen the pulley nut.

3. **(FJ Series)**
ADJUST DRIVE BELT TENSION AFTER INSTALLING PS PUMP
(See page SR-32)

COMPONENTS (FJ series)

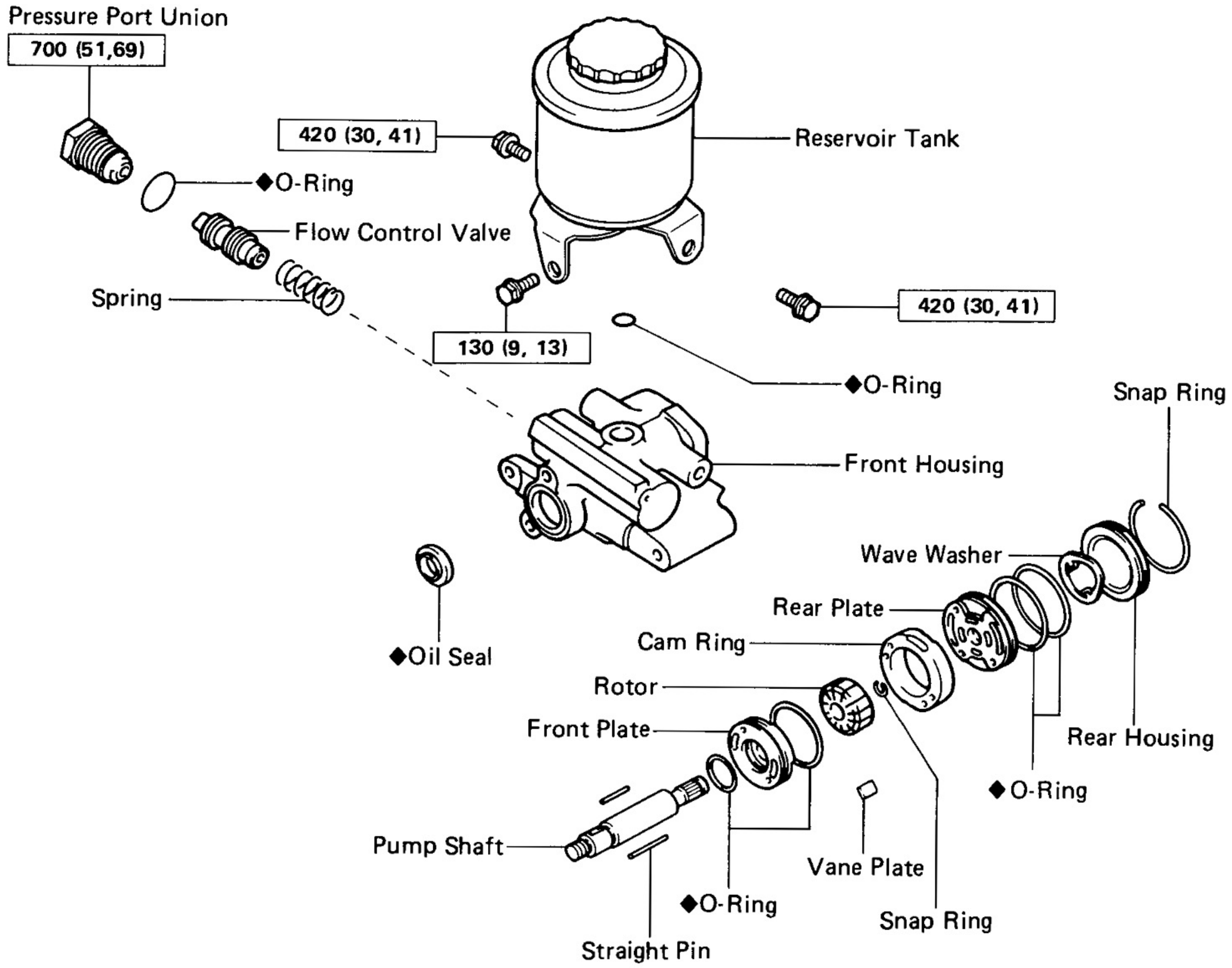

kg-cm (ft-lb, N·m) : Specified torque

◆ Non-reusable part

SR3955

DISASSEMBLY OF POWER STEERING PUMP

1. CLAMP PS PUMP IN VISE

NOTICE: Do not tighten the vise too tight.

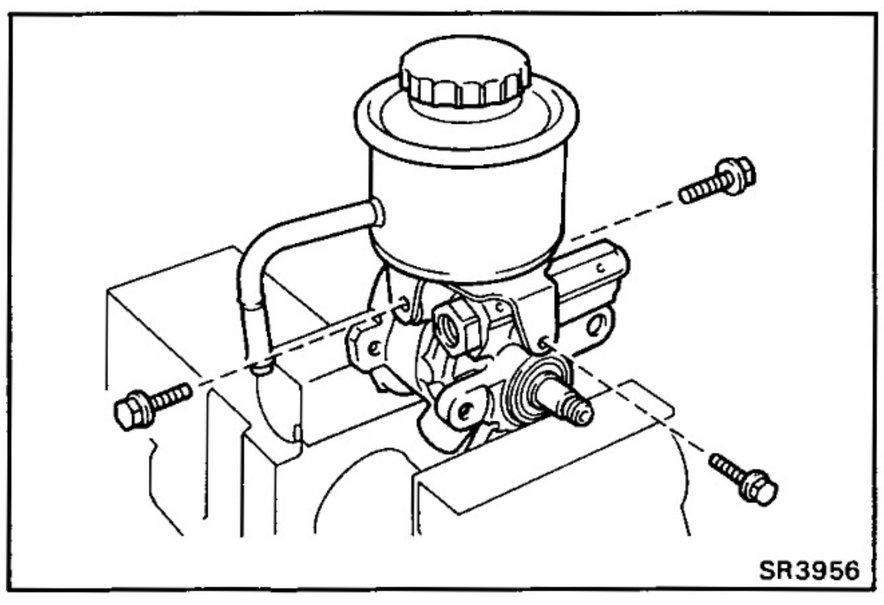

SR3956

2. REMOVE RESERVOIR TANK

(a) Remove the three bolts and reservoir tank.

(b) Remove the O-ring from the reservoir tank.

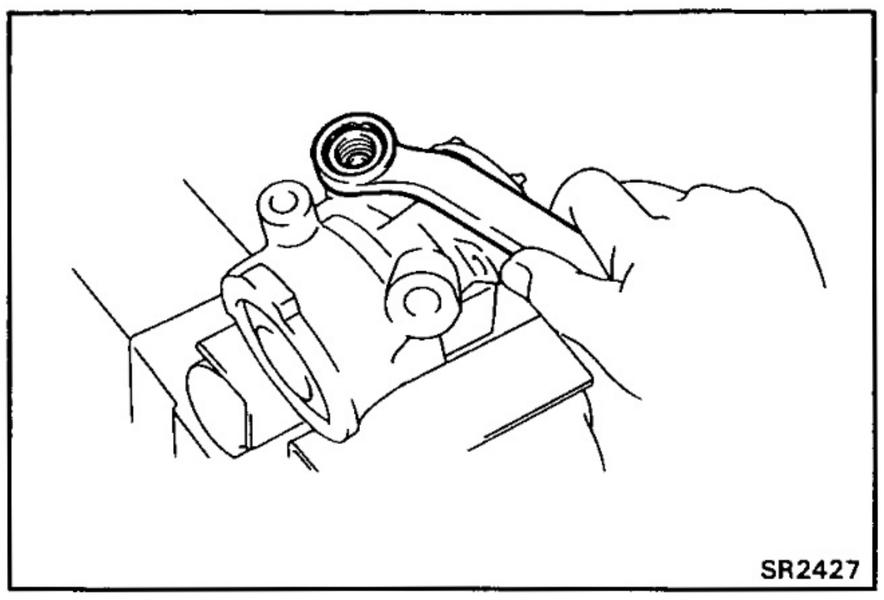
SR2427

3. REMOVE PRESSURE PORT UNION AND FLOW CONTROL VALVE

(a) Remove the pressure port union.

(b) Remove the O-ring from the pressure port union.

(c) Remove the flow control valve and spring.

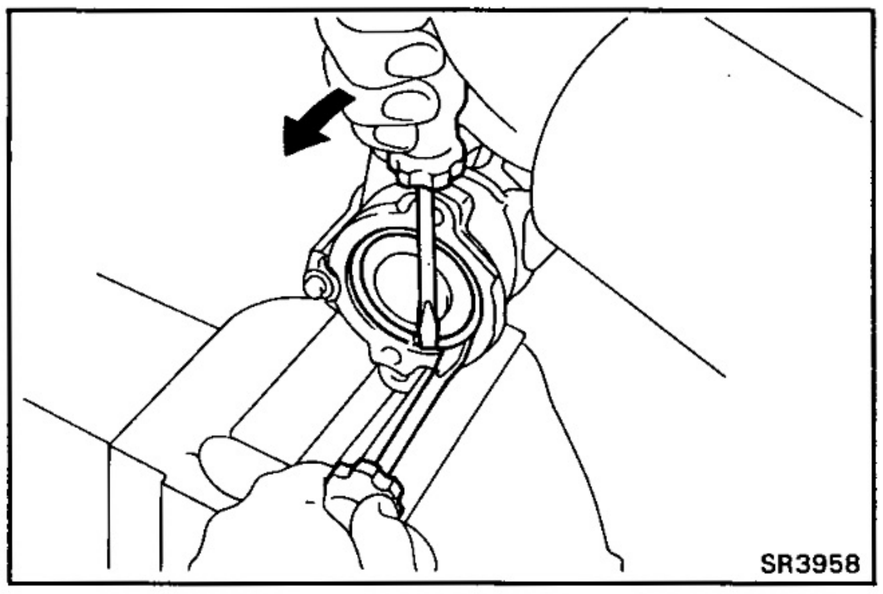
SR3958

4. REMOVE REAR HOUSING

(a) Using two screwdrivers, remove the snap ring.

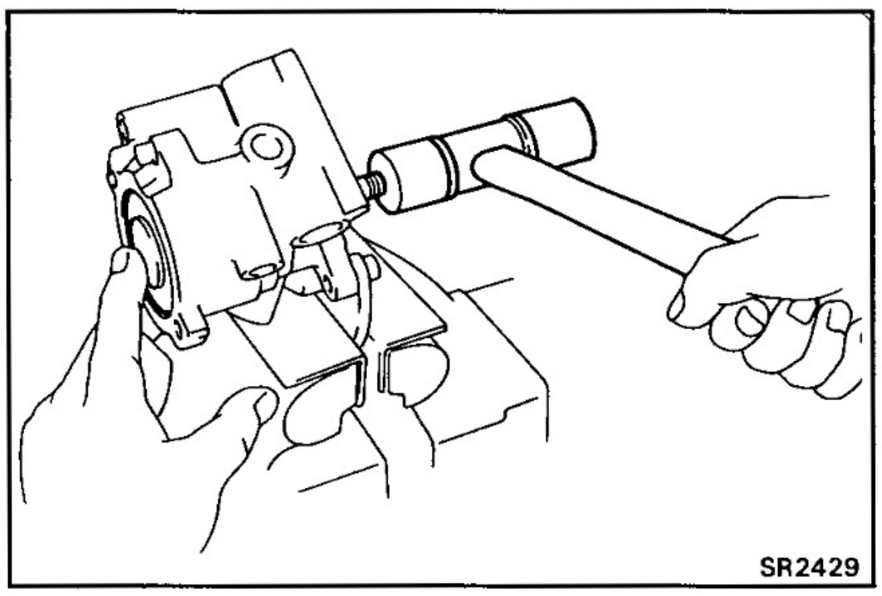
SR2429

(b) Using a plastic hammer, tap out the rear housing and wave washer.

(c) Remove the O-ring from the rear housing.

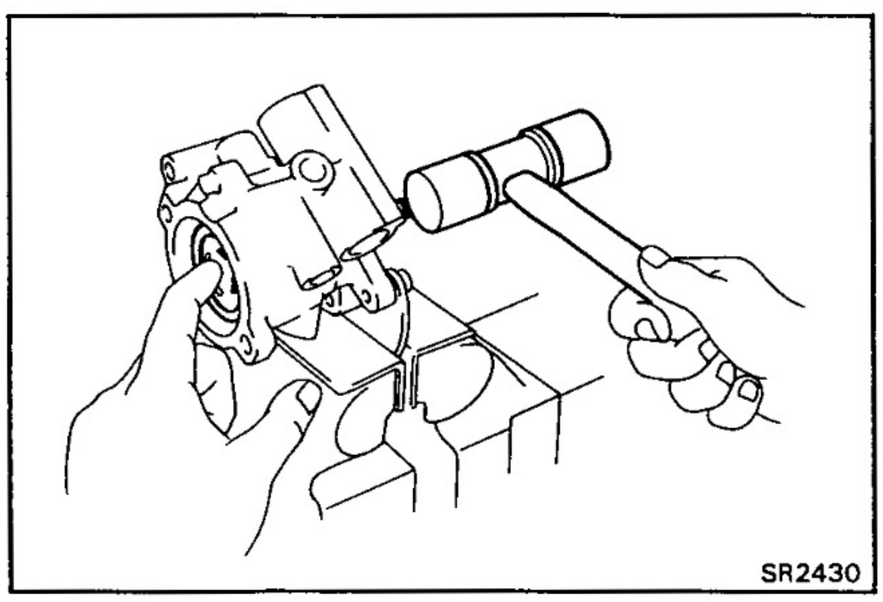
SR2430

5. REMOVE REAR PLATE

(a) Using a plastic hammer, tap the shaft end and remove the rear plate.

(b) Remove the O-ring from the rear plate.

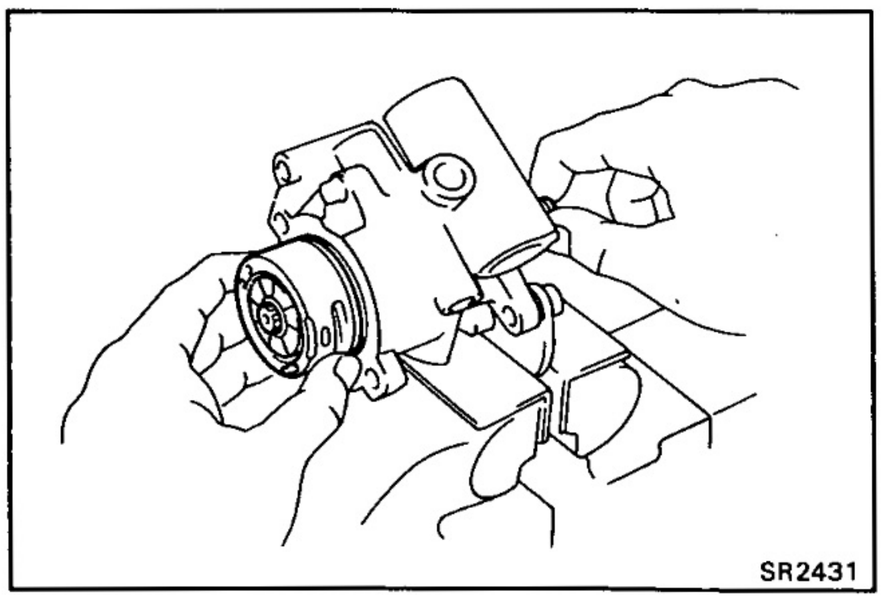
SR2431

6. REMOVE PUMP SHAFT, CAM RING AND VANE PLATES

(a) Remove the pump shaft with the camring, vane plates from the front housing.

(b) Remove the cam ring and ten vane plates from the pump shaft.

(c) Remove the longer straight pin from the front housing.

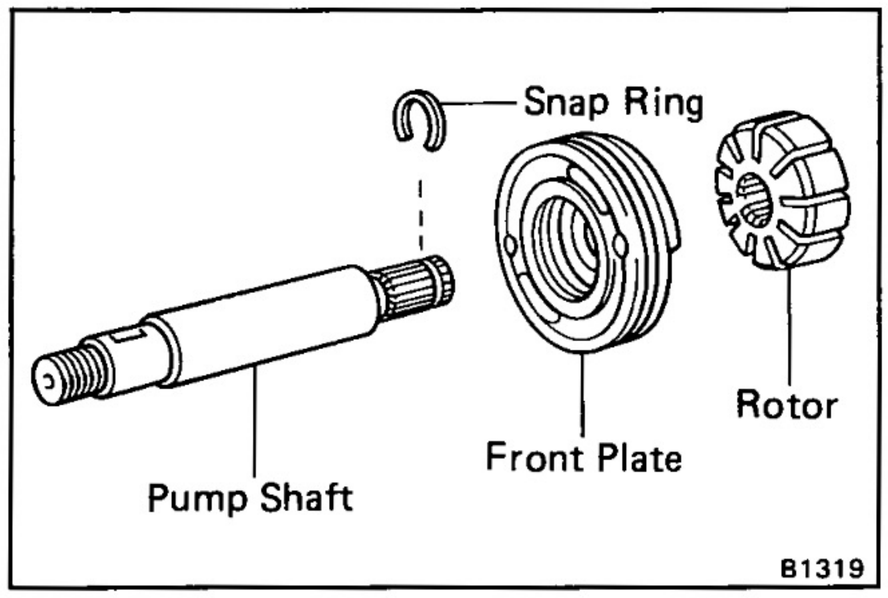

7. REMOVE ROTOR AND FRONT PLATE

(a) Using a screwdriver, remove the snap ring.

(b) Remove the rotor and front plate from the pump shaft.

(c) Remove the two O-rings from the front plate.

(d) Remove the straight pin from the front plate.

INSPECTION OF POWER STEERING PUMP

1. CHECK OIL CLEARANCE OF SHAFT AND BUSHING

Using a micrometer and calipers, check the oil clearance.

Standard clearance: 0.01 — 0.03 mm (0.0004 — 0.0012 in.)

Maximum clearance: 0.07 mm (0.0028 in.)

If more than maximum, replace the entire PS pump.

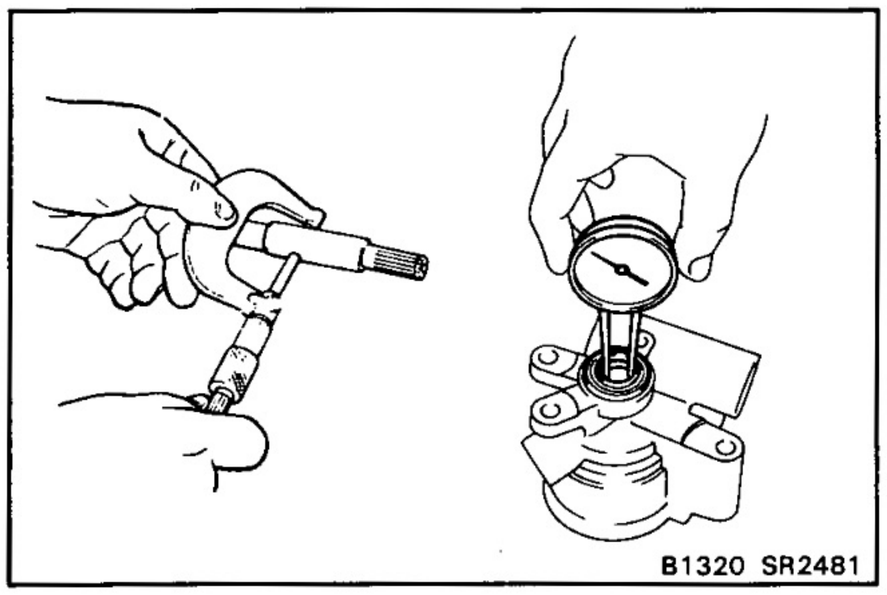

2. INSPECT ROTOR AND VANE PLATES

(a) Using a micrometer, measure the height, thickness and length of the vane plate.

Minimum height: 8.1 mm (0.319 in.)

Minimum thickness: 1.797 mm (0.0707 in.)

Minimum length: 14.988 mm (0.5901 in.)

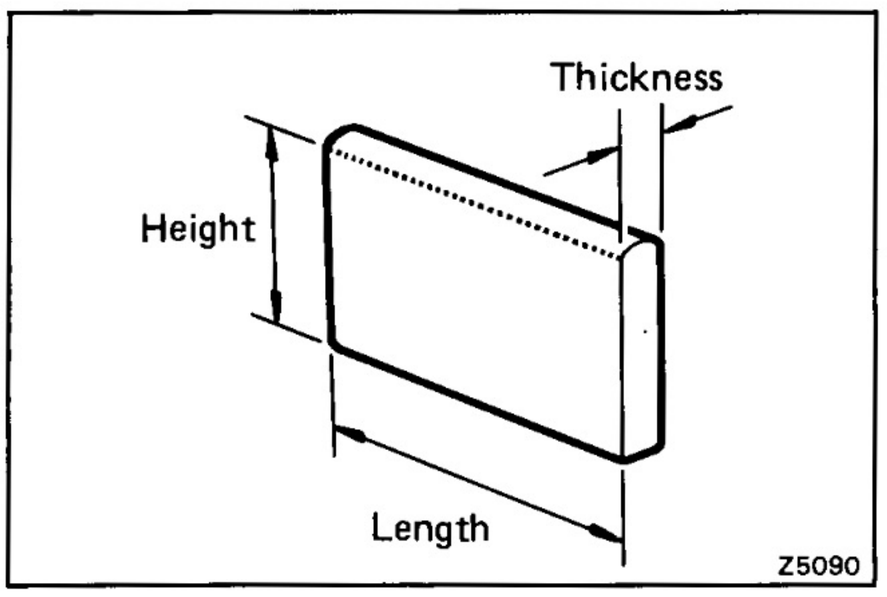

(b) Using a feeler gauge, measure the clearance between the rotor groove and vane plate.

Maximum clearance: 0.028 mm (0.0011 in.)

If more than maximum, replace the pump plate and/or rotor with one having the same mark stamped on the cam ring.

Inscribed mark: 1, 2, 3, 4 or None

HINT: There are five vane lengths with the following rotor and cam ring marks:

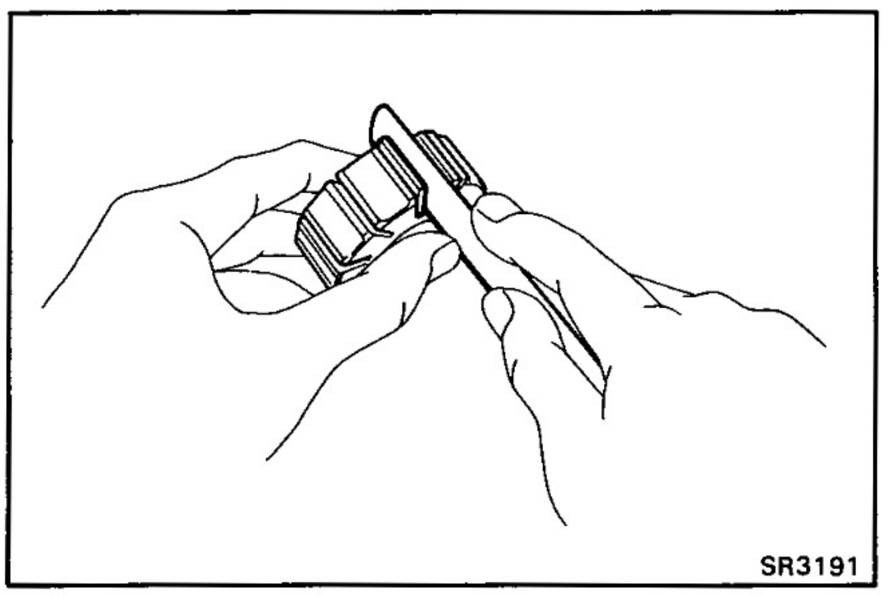

Rotor and cam ring mark	Vane length mm (in.)
None	14.996 — 14.998 (0.5904 — 0.5905)
1	14.994 — 14.996 (0.5903 — 0.5904)
2	14.992 — 14.994 (0.5902 — 0.5903)
3	14.990 — 14.992 (0.59016 — 0.59024)
4	14.988 — 14.990 (0.5901 — 0.5902)

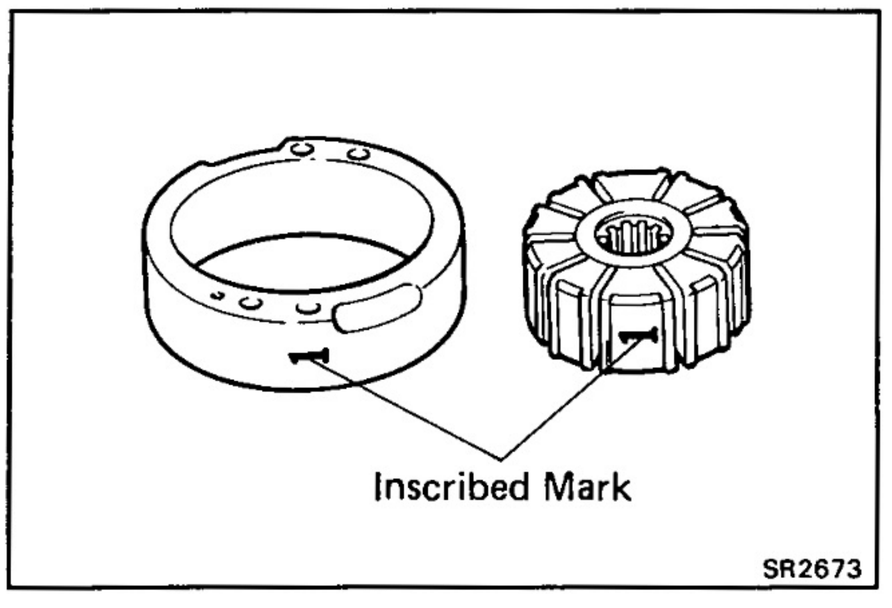

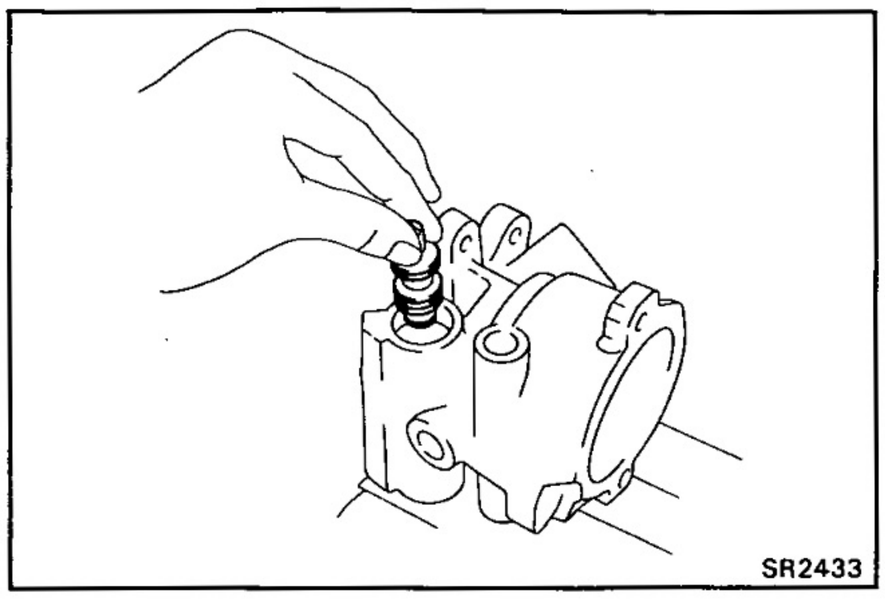
SR2433

3. INSPECT FLOW CONTROL VALVE

(a) Coat the valve with power steering fluid and check that it falls smoothly into the valve hole by its own weight.

(b) Check the flow control valve for leakage.

Close one of the holes and apply compressed air [4 or 5 kg/cm^2 (57 or 71 psi, 392 or 490 kPa)] into the opposite side, and confirm that air does not come out from the end hole.

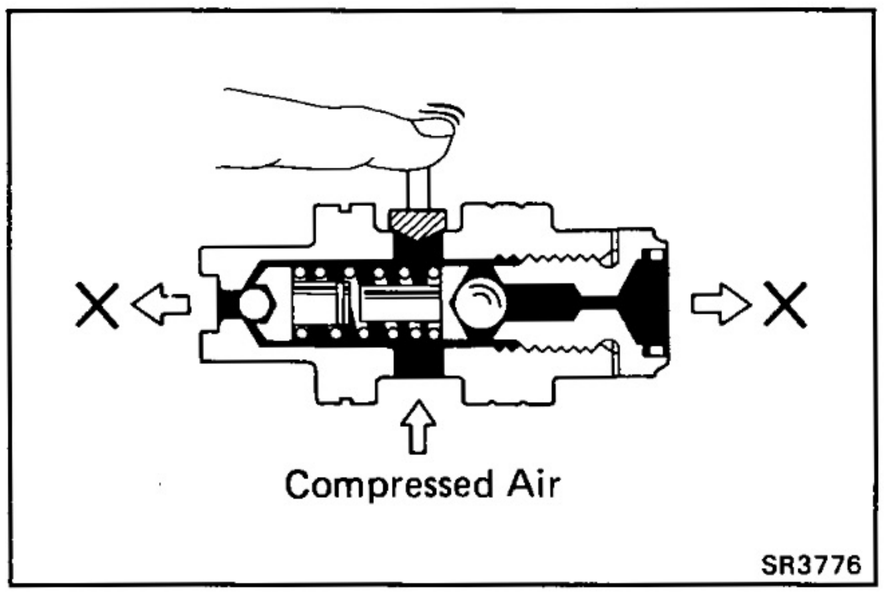

SR3776

If necessary, replace the valve with one having the same letter as inscribed on the front housing.

Inscribed mark: A, B, C, D, E or F

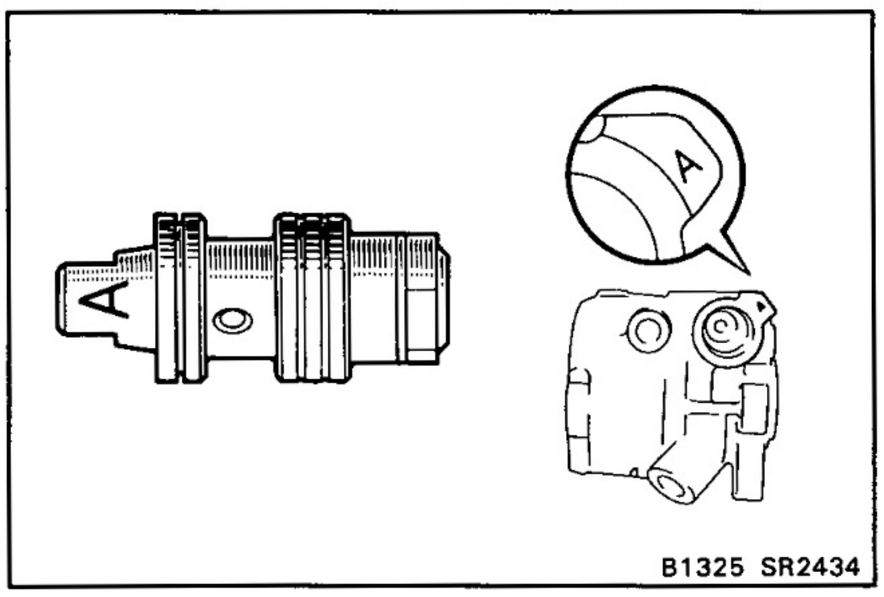

B1325 SR2434

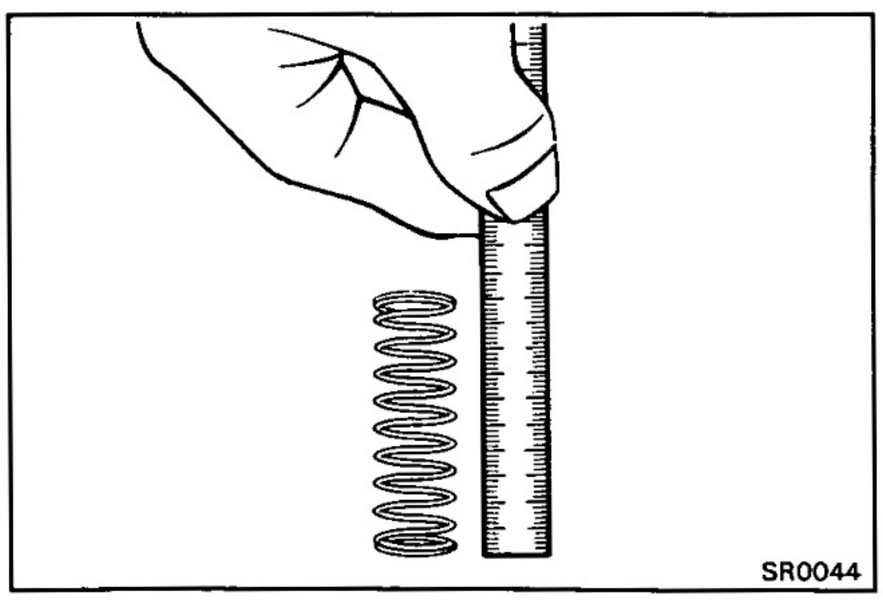
SR0044

4. INSPECT FLOW CONTROL SPRING

Using a scale, measure the free length of the spring.

Spring length: 35 — 37 mm (1.38 — 1.46 in.)

If not within specification, replace the spring.

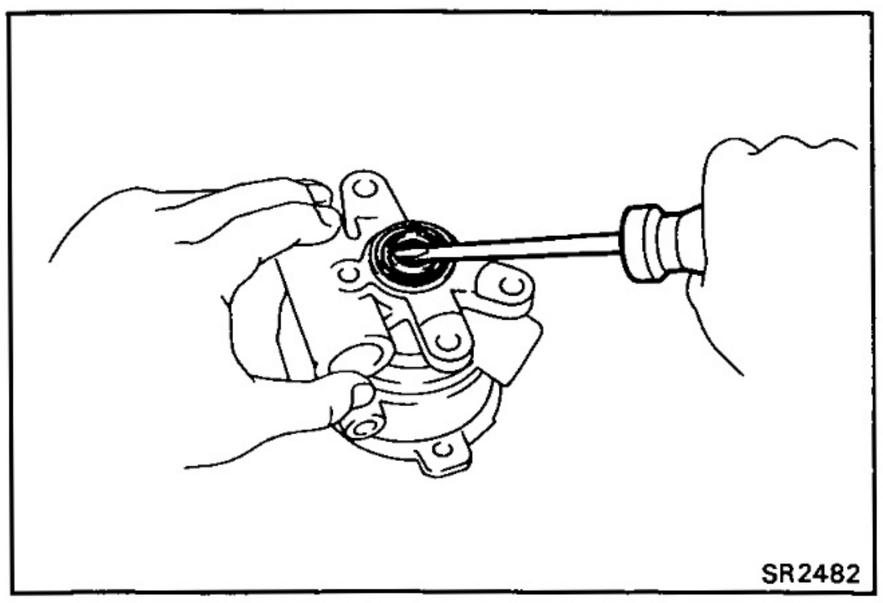
SR2482

5. IF NECESSARY, REPLACE OIL SEAL

(a) Using a screwdriver, pry out the oil seal.

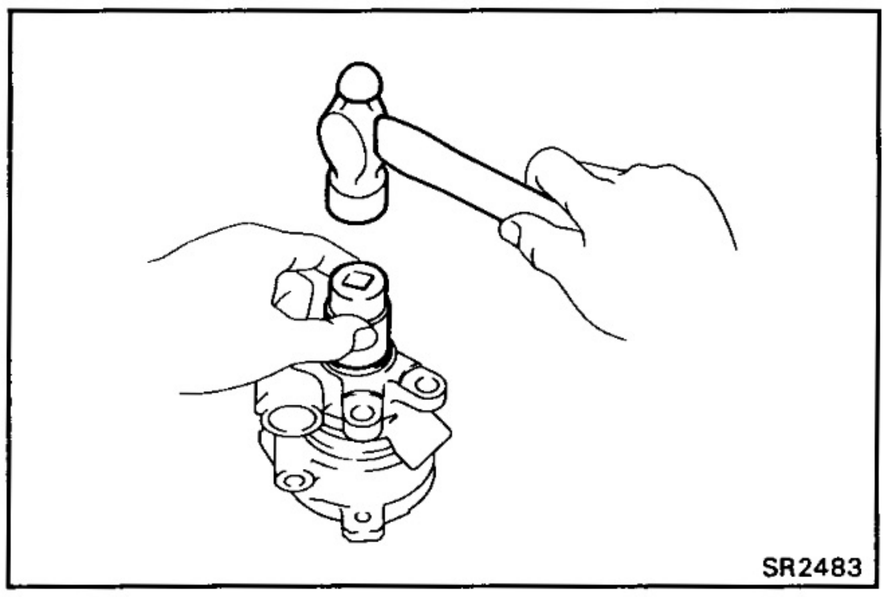

(b) Using a socket wrench and hammer, drive in a new oil seal.

ASSEMBLY OF POWER STEERING PUMP

(See page SR-40)

1. **COAT ALL SLIDING SURFACES WITH POWER STEERING FLUID BEFORE ASSEMBLY**

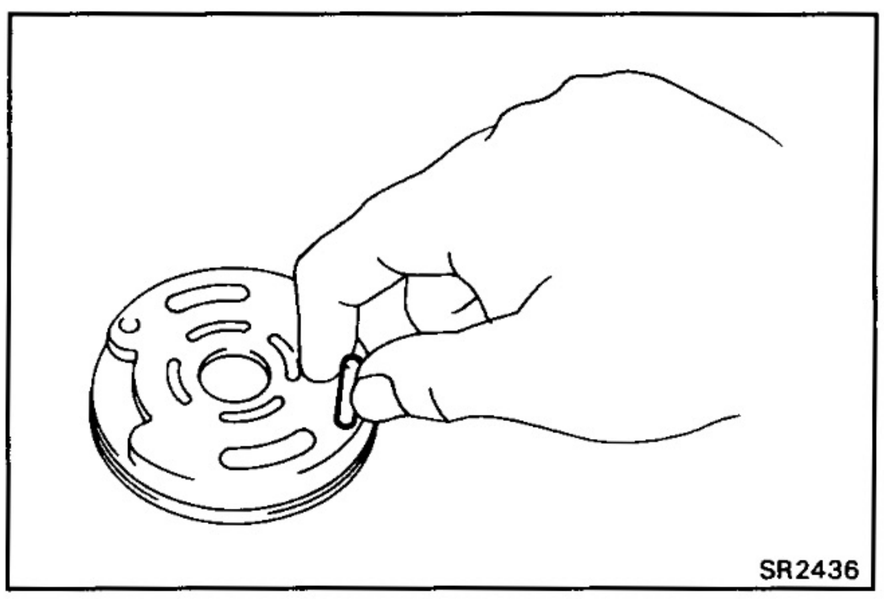

2. **INSTALL FRONT PLATE AND ROTOR TO PUMP SHAFT**

(a) Install the shorter straight pin to the front plate.

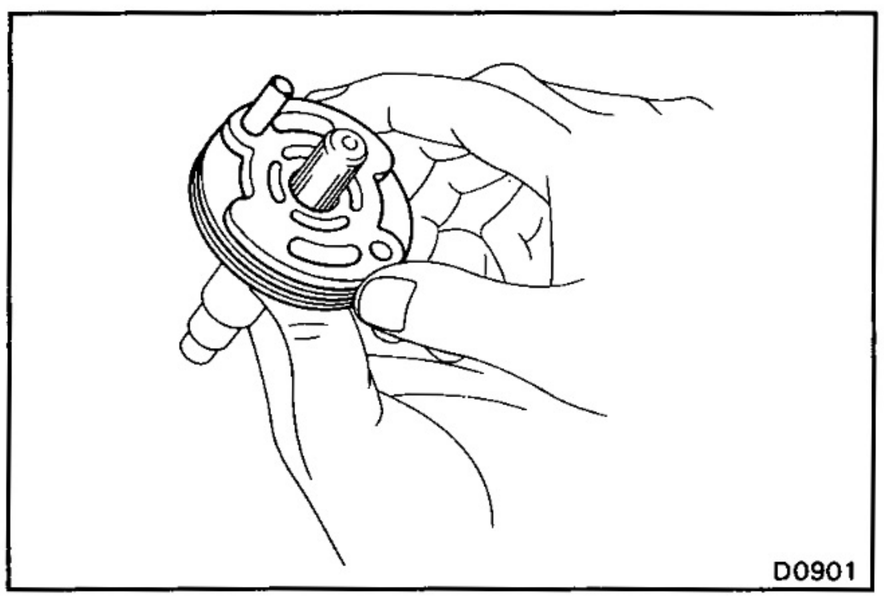

(b) Install two new O-rings to the front plate.

(c) Install the front plate to the pump shaft.

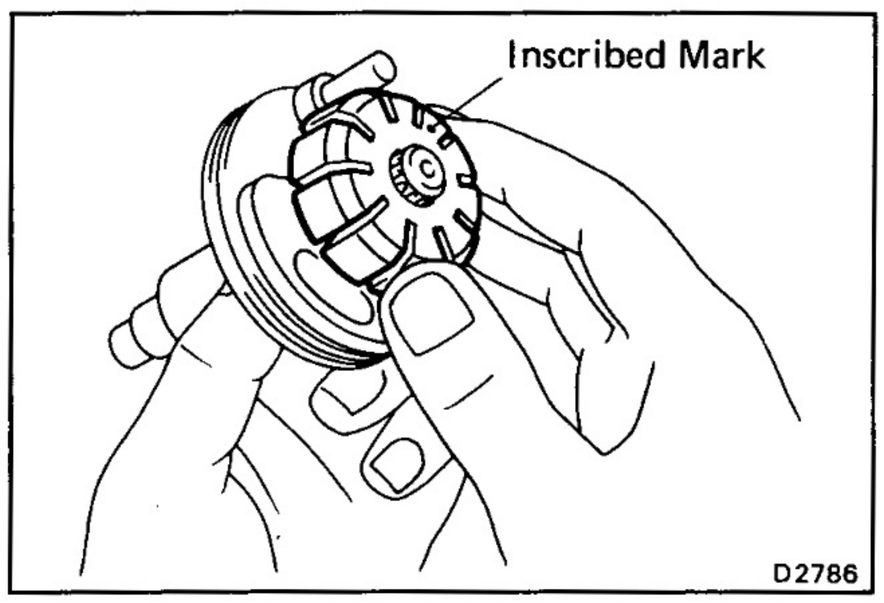

(d) Install the rotor to the pump shaft with the inscribed mark facing outward.

(e) Install the snap ring.

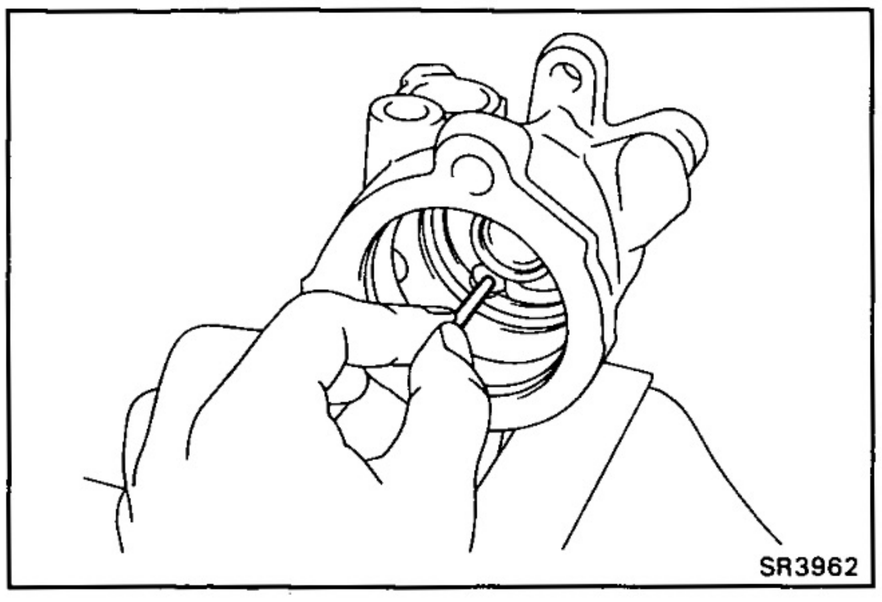

3. INSTALL PUMP SHAFT TO FRONT HOUSING

(a) Coat the oil seal lip with MP grease.

(b) Install the longer straight pin to the front housing.

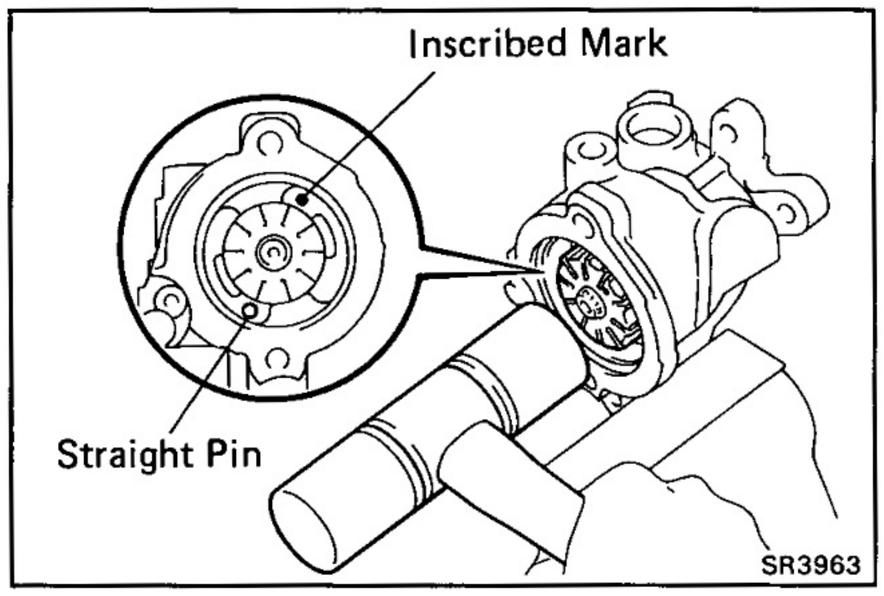

(c) Align the hole of the front plate and straight pin and tap in the pump shaft with a plastic hammer.

HINT: Be careful not to damage the oil seal and O-rings.

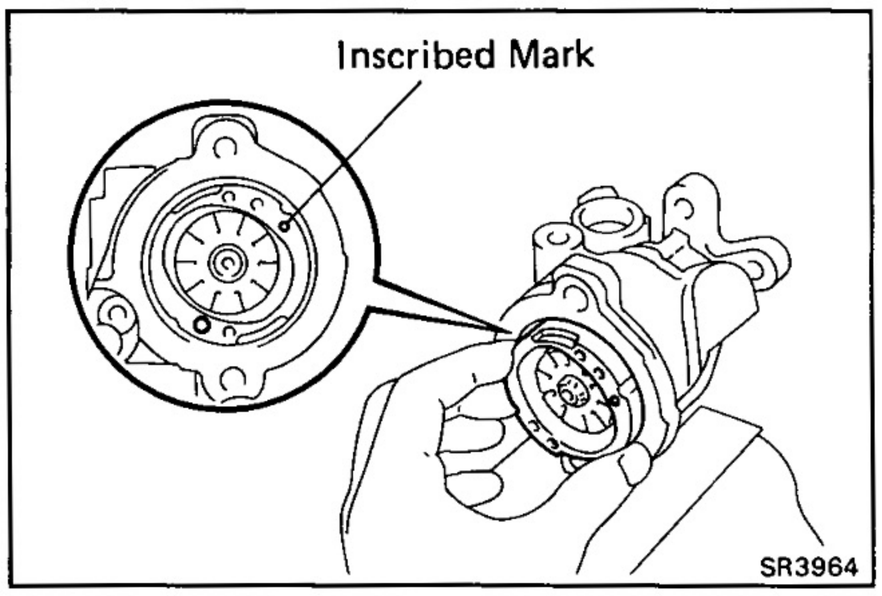

4. INSTALL CAM RING

Align the oval hole of the cam ring and longer straight pin, and insert the cam ring with the inscribed mark facing outward.

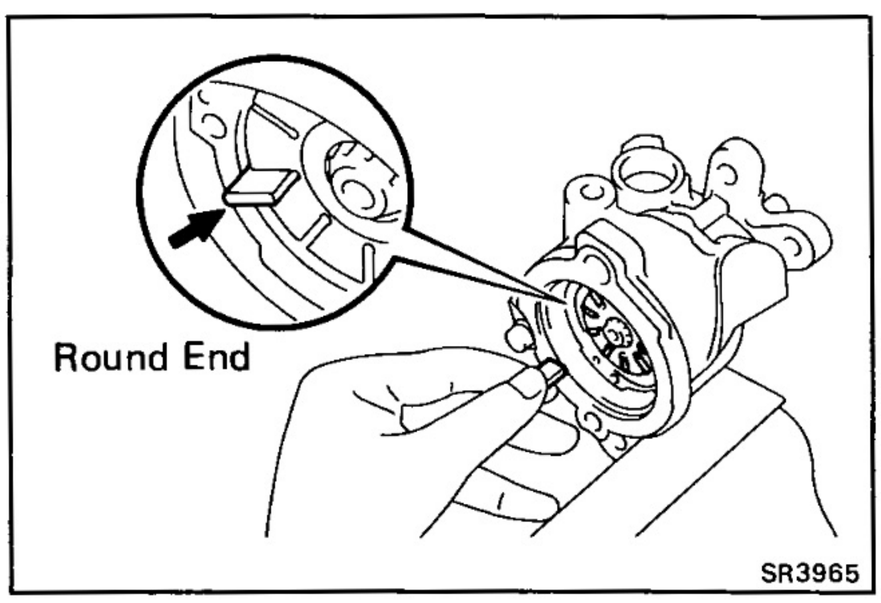

5. INSTALL VANE PLATES

Install the ten vane plates with the round end facing outward.

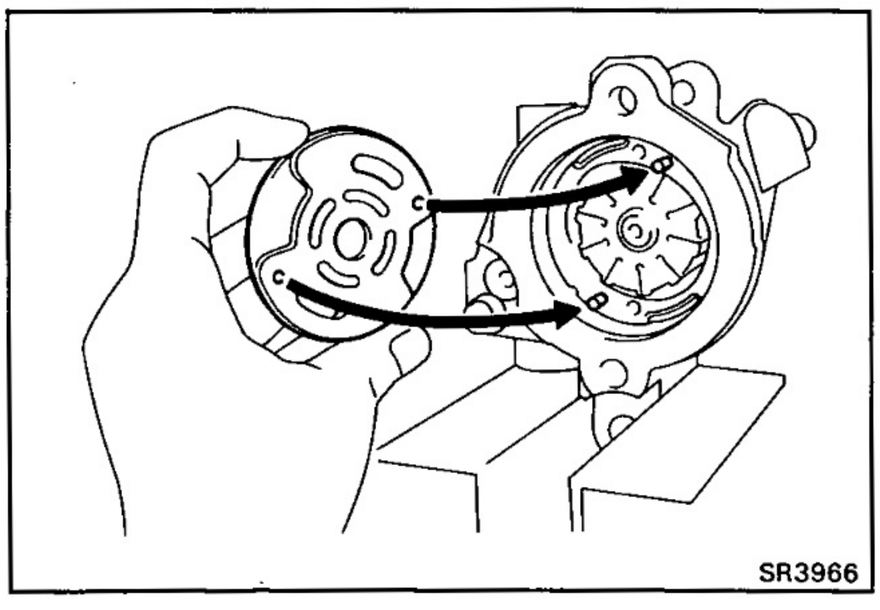

6. INSTALL REAR PLATE

(a) Install a new O-ring to the rear plate.

(b) Align the holes of the rear plate with the pins, and install the plate.

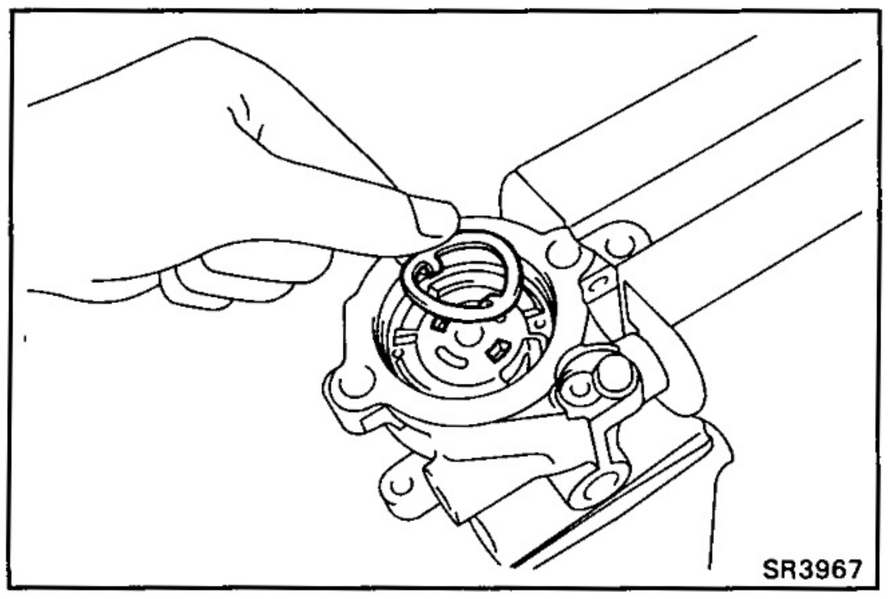
SR3967

7. INSTALL REAR HOUSING

(a) Install the wave washer.

(b) Install a new O-ring to the rear housing.

(c) Using a plastic hammer, tap in the rear housing.

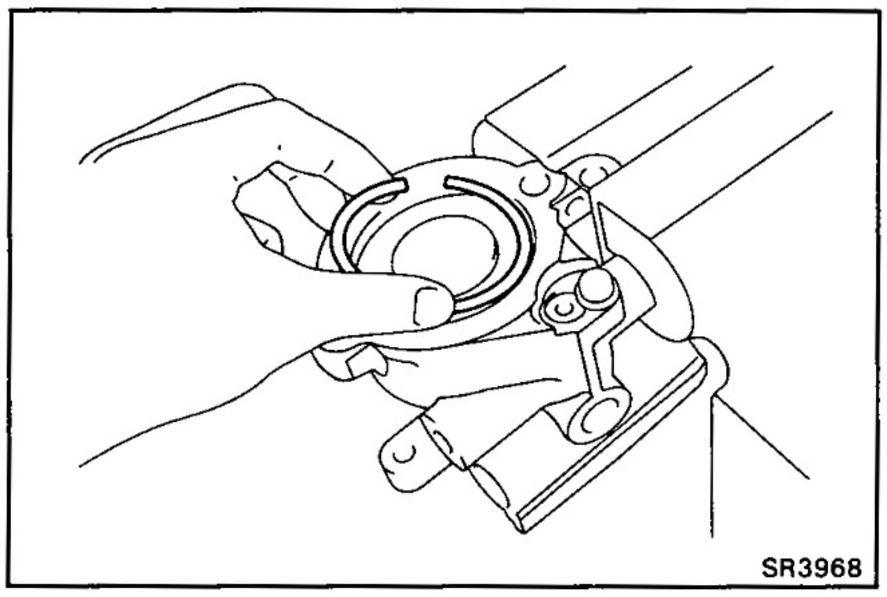
SR3968

(d) Install the snap ring.

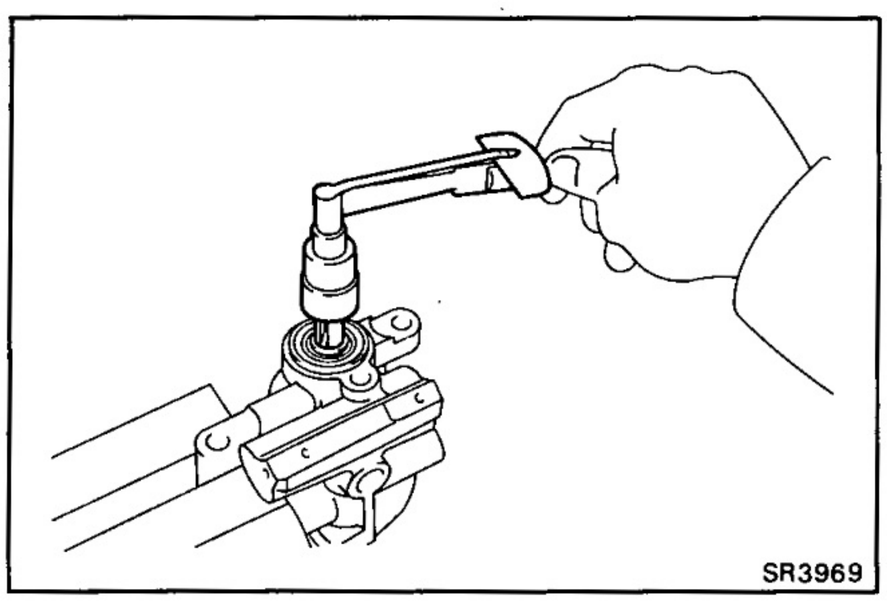
SR3969

8. CHECK PUMP SHAFT PRELOAD

(a) Check that the shaft rotates smoothly without abnormal noise.

(b) Temporarily install the pulley nut and check the rotating torque.

Rotating torque: 2.8 kg-cm (2.4 in.-lb, 0.3 N·m) or less

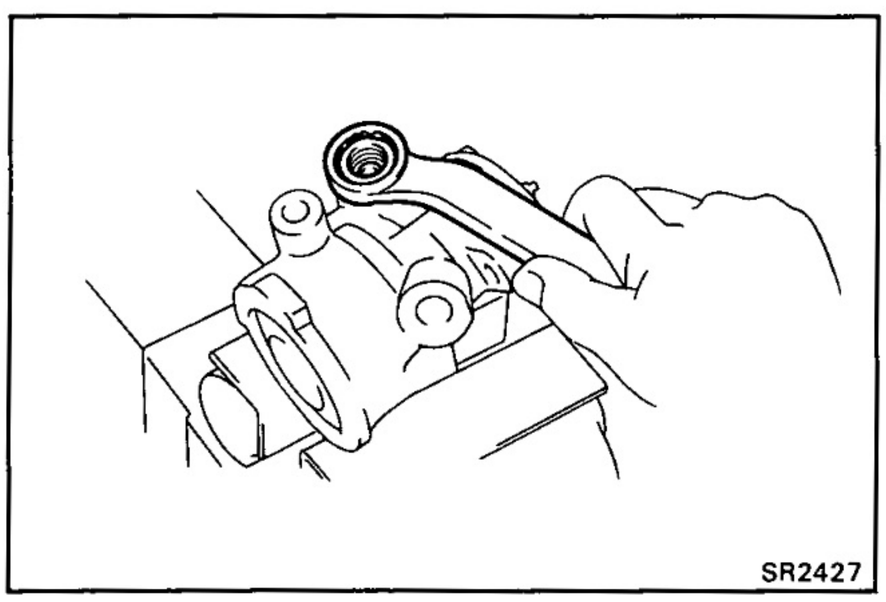
SR2427

9. INSTALL SPRING, FLOW CONTROL VALVE AND PRESSURE PORT UNION

(a) Install the spring and the valve into the housing.

(b) Install a new O-ring in the groove of the pressure port union.

(c) Install and torque the pressure port union.

Torque: 700 kg-cm (51 ft-lb, 69 N·m)

10. INSTALL RESERVOIR TANK

(a) Install a new O-ring to the reservoir tank.

(b) Install the reservoir tank to the housing and torque the three bolts.

Torque: 12 mm bolt 130 kg-cm (9 ft-lb, 13 N·m)
14 mm bolt 420 kg-cm (30 ft-lb, 41 N·m)

COMPONENTS (HZJ and HDJ series)

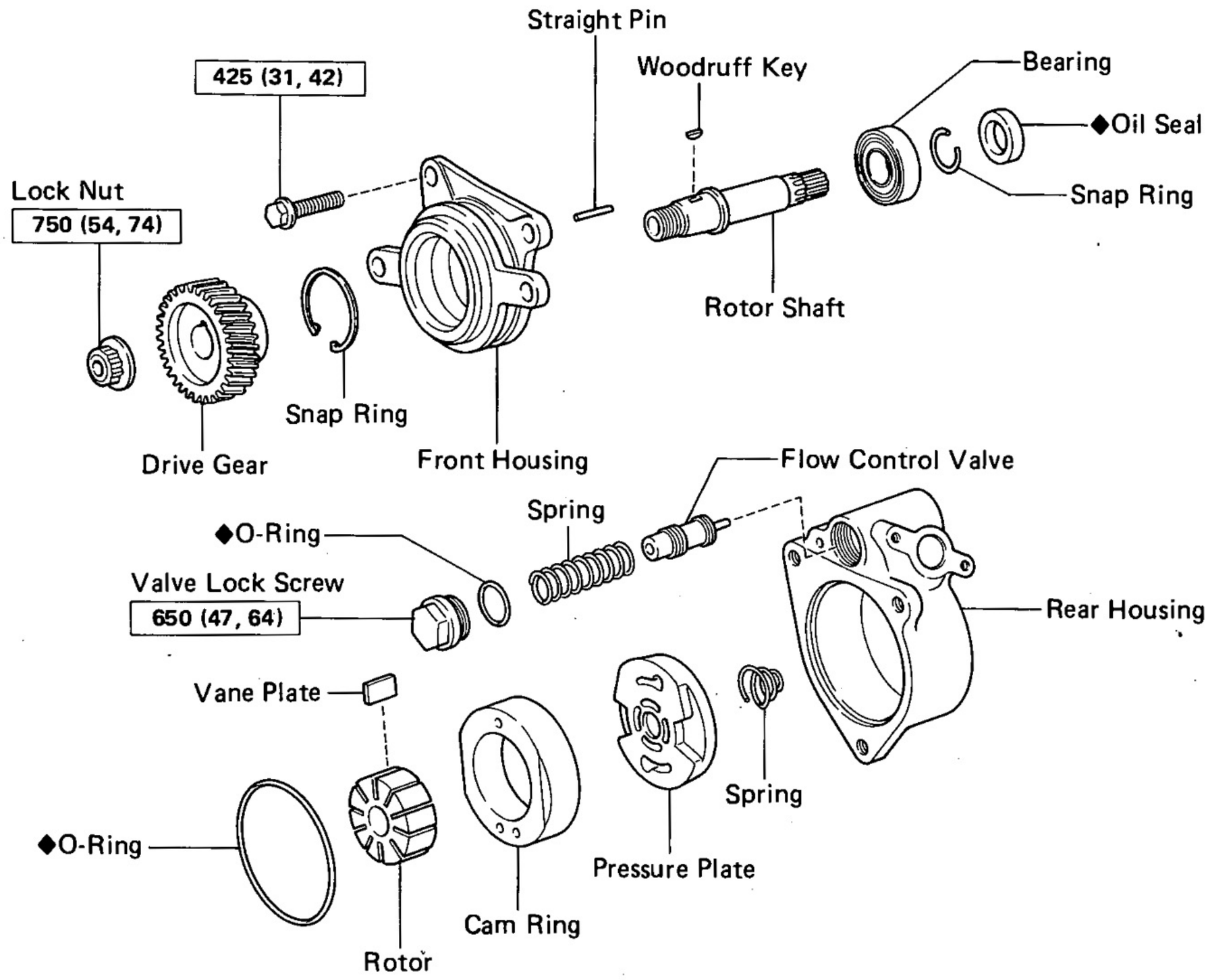

kg-cm (ft-lb, N·m) : Specified torque

◆ Non-reusable part

SR4113

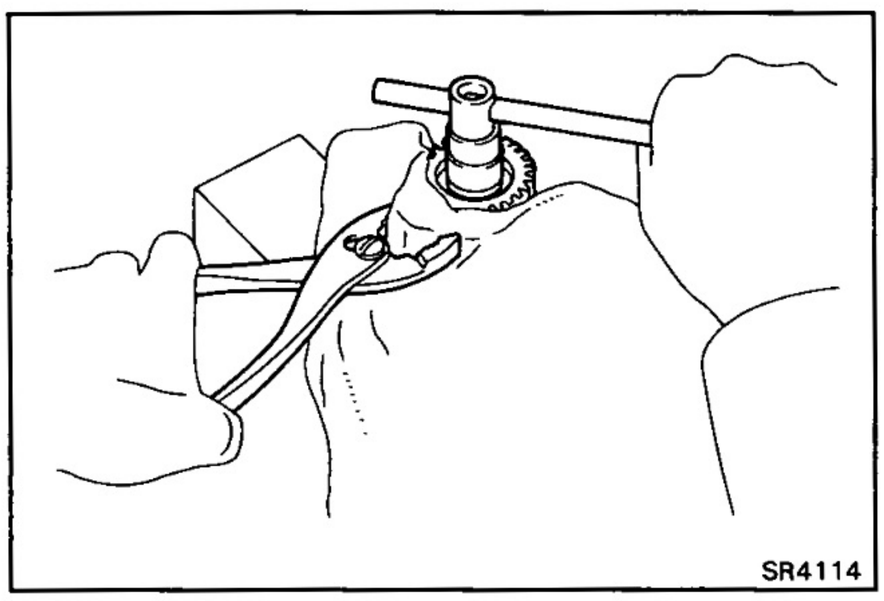

SR4114

DISASSEMBLY OF POWER STEERING PUMP

1. REMOVE DRIVE GEAR

(a) While holding the driver gear with pliers, remove the lock nut.

HINT: Place the workshop rag over the gear to prevent damaging it.

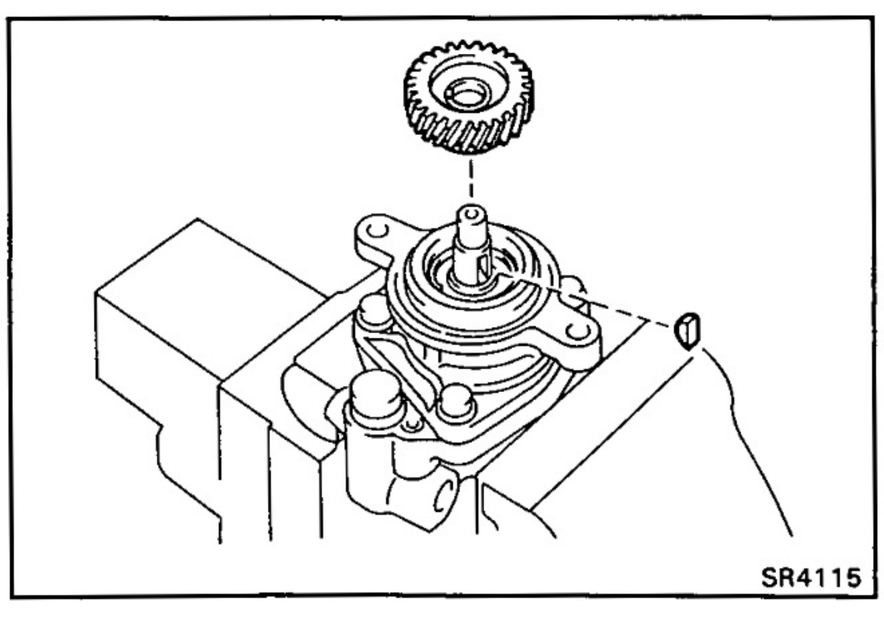

SR4115

(b) Remove the gear and woodruff key.

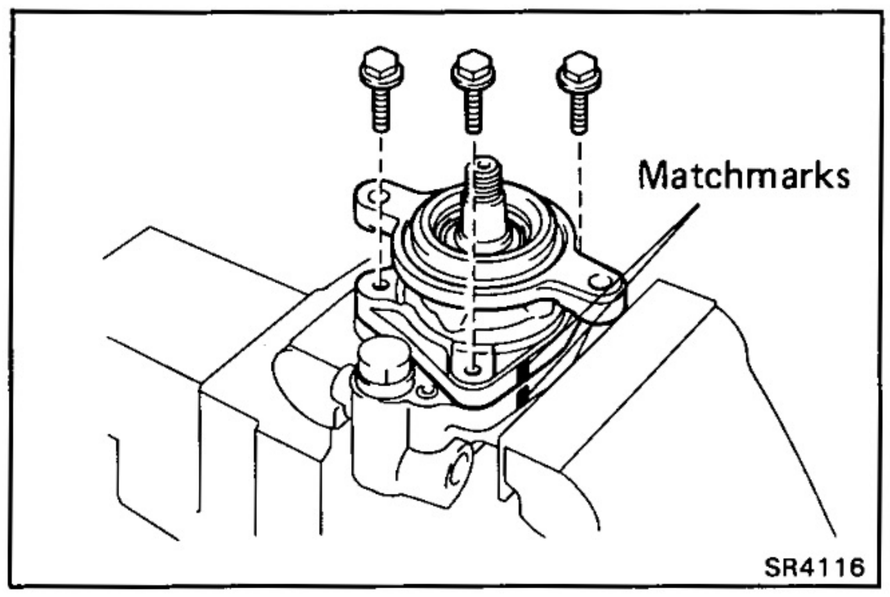

2. REMOVE FRONT HOUSING

(a) Place matchmarks on the front and rear housing.

(b) Remove three bolts and the front housing.

(c) Remove the O-ring from the front housing.

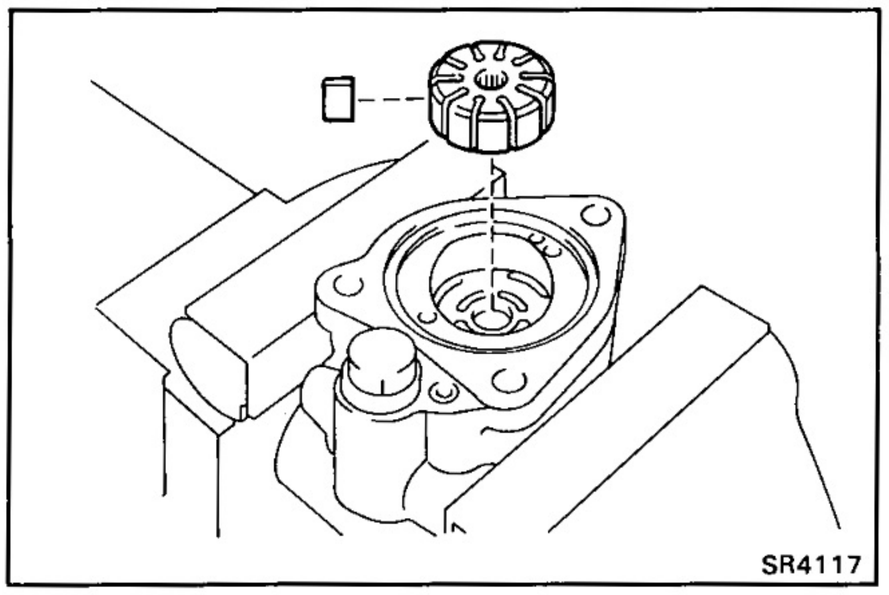

3. REMOVE ROTOR AND VANE PLATE

NOTICE: Be careful that the vane plates and rotor do not fall out.

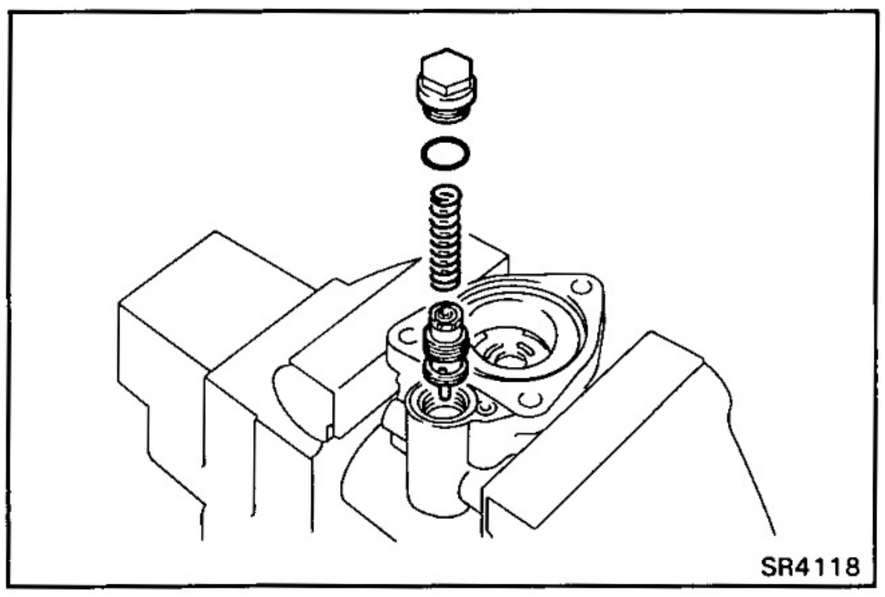

4. REMOVE VALVE LOCK SCREW, SPRING AND FLOW CONTROL VALVE

(a) Remove the valve lock screw, spring and control valve.

(b) Remove the O-ring from the valve lock screw.

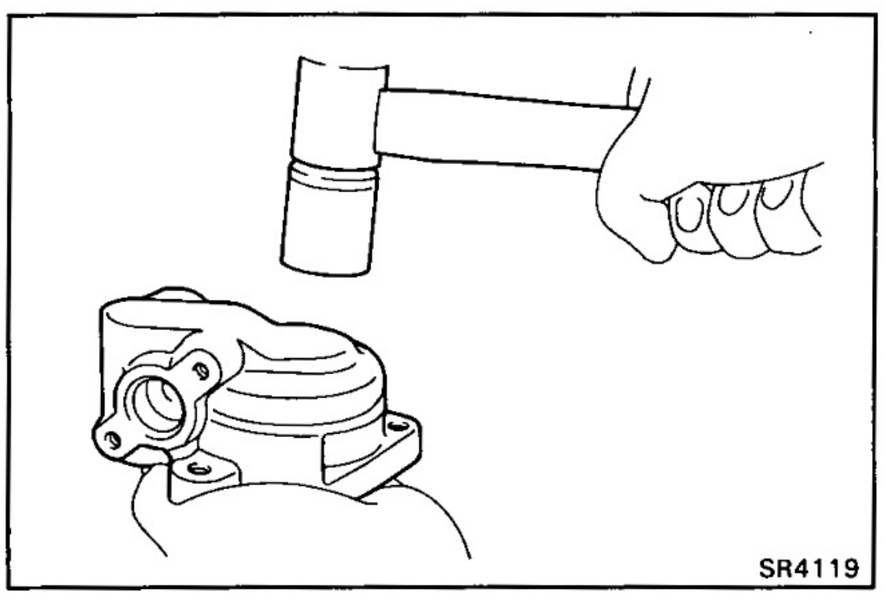

5. REMOVE CAM RING, PRESSURE PLATE AND SPRING

(a) Using a plastic hammer, tap the bottom end of the rear housing, and remove the pressure plate and spring.

NOTICE: Be careful not to scratch the front side of the pressure plate.

(b) Remove the O-ring from the pressure plate.

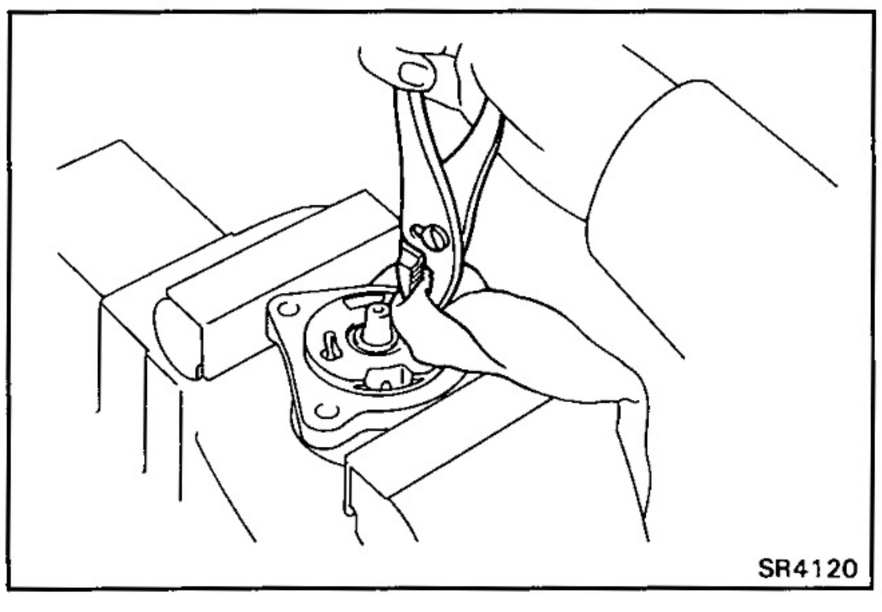

6. REMOVE STRAIGHT PIN

Using pliers, remove the straight pin.

HINT: Place a workshop rag over the pin to prevent damaging it.

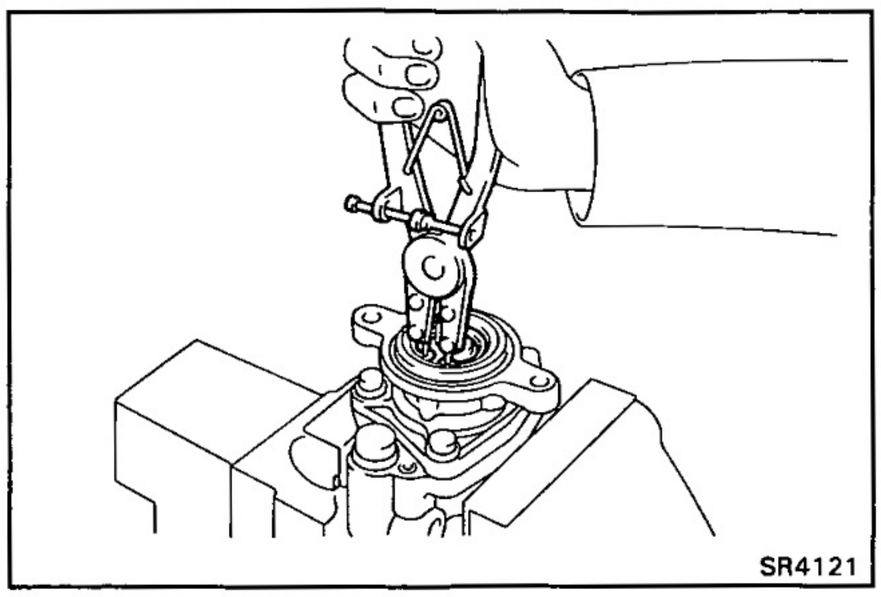

7. REMOVE ROTOR SHAFT

(a) Using snap ring pliers, remove the snap ring.

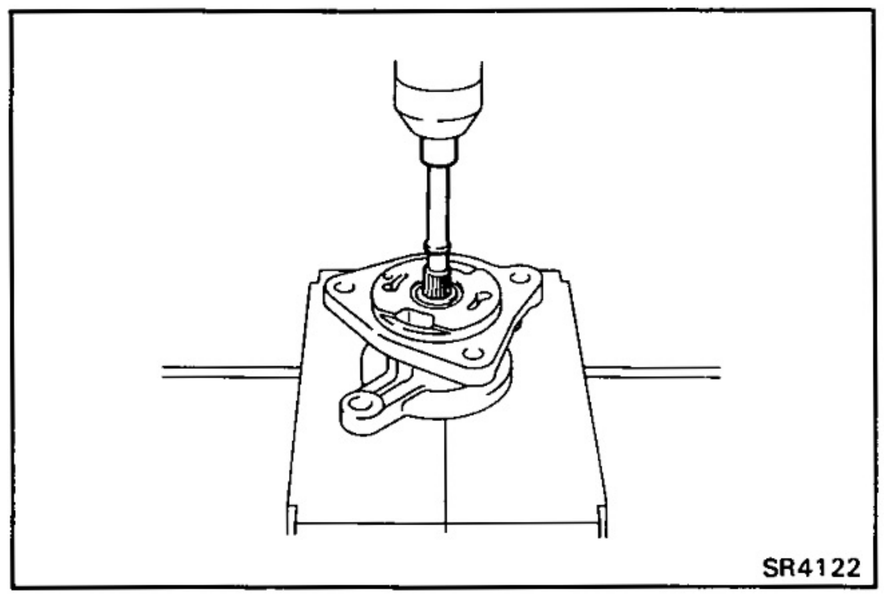

(b) Using a extension bar and press, press out the rotor shaft with bearing.

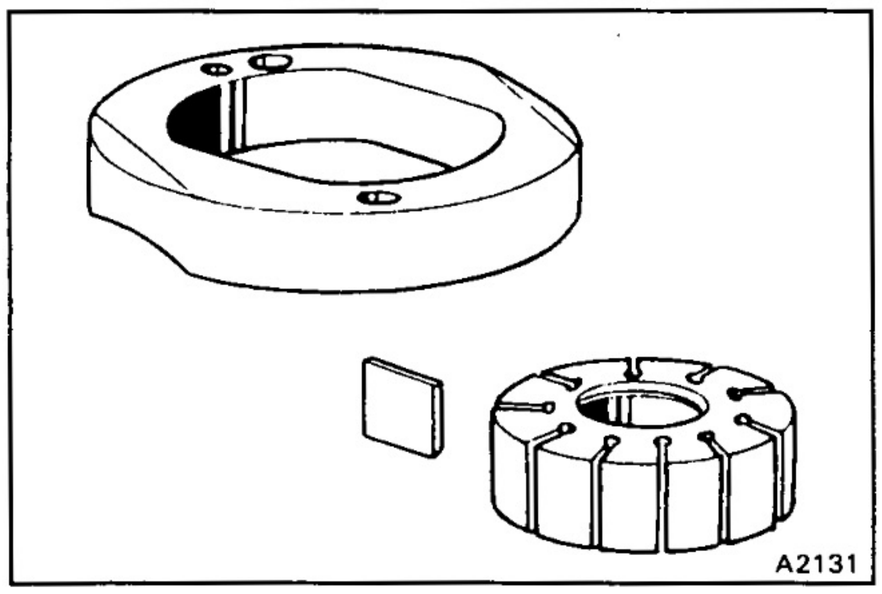

INSPECTION OF POWER STEERING PUMP

1. INSPECT ROTOR, CAM RING AND VANE PLATES

Check the cam ring for wear or scratches. If necessary, replace the cam ring with the rotor and the vane plates.

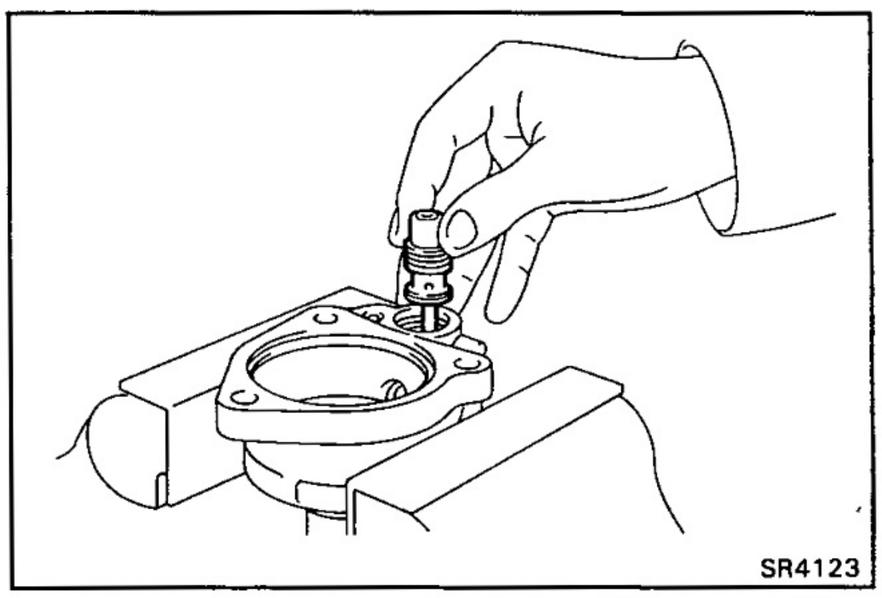

2. INSPECT FLOW CONTROL VALVE

(a) Check the flow control valve for wear or damage.

(b) Apply fluid to the valve and check that it falls smoothly into the valve hole by its own weight.

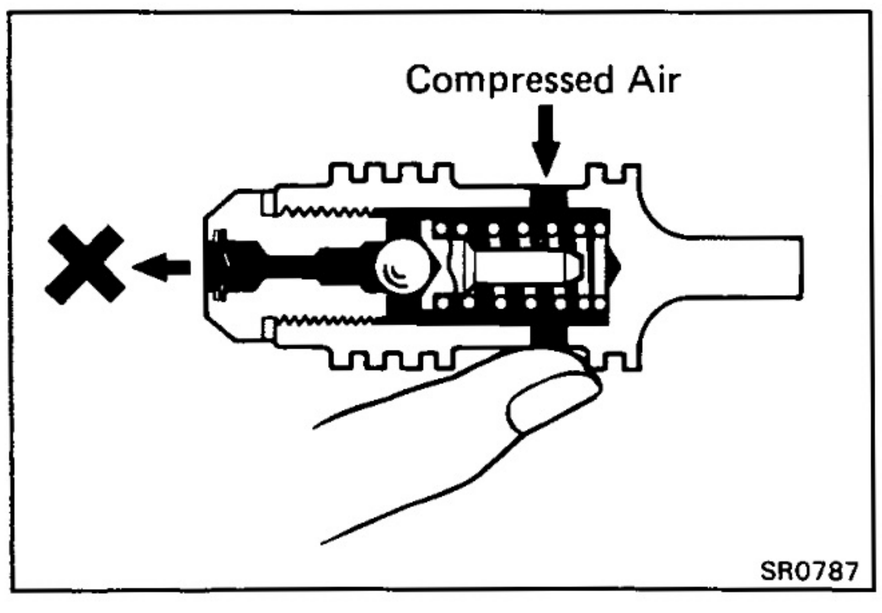

(c) Check the flow control valve for leakage. Close one of the holes and apply compressed air [4 or 5 kg/cm^2 (57 or 71 psi, 392 or 490 kPa)] into the opposite side, and confirm that air does not come out from the end hole.

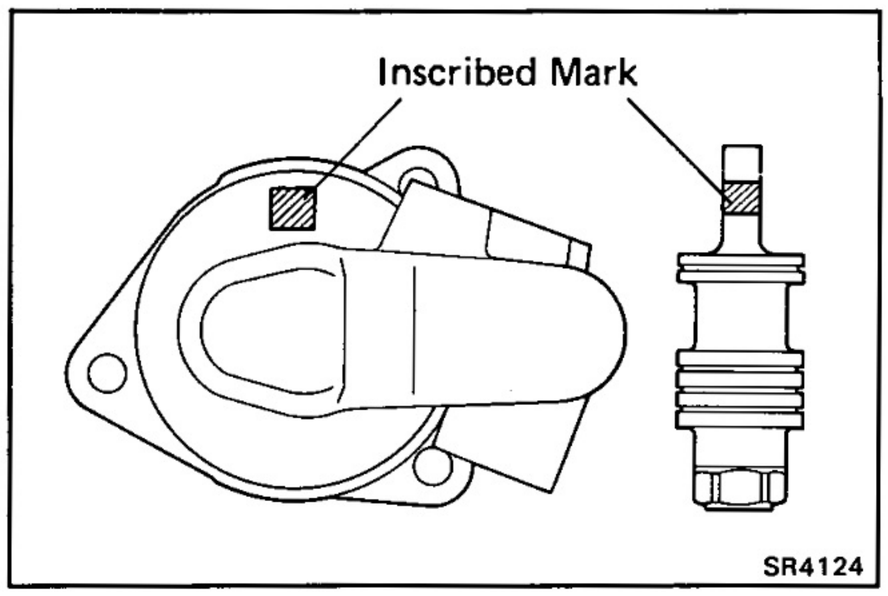

(d) If necessary, replace the valve with one having the letter as inscribed on the rear housing.

Pump housing number	Valve cutter mark
0	II
1	I
2	None

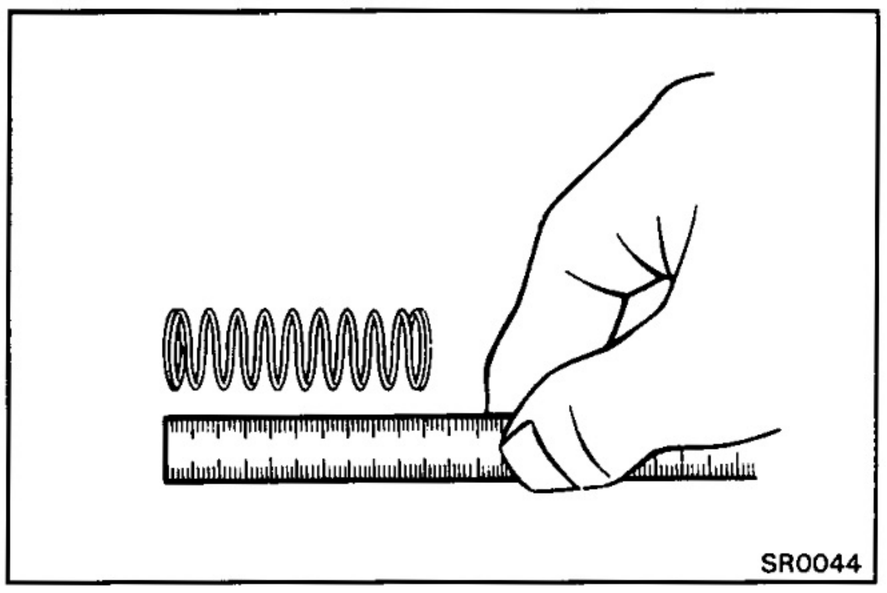

3. INSPECT FLOW CONTROL VALVE SPRING

Check that the spring length is within specification.

Spring length: 50 — 55 mm (1.97 — 2.17 in.)

If the spring is not within specification, replace it.

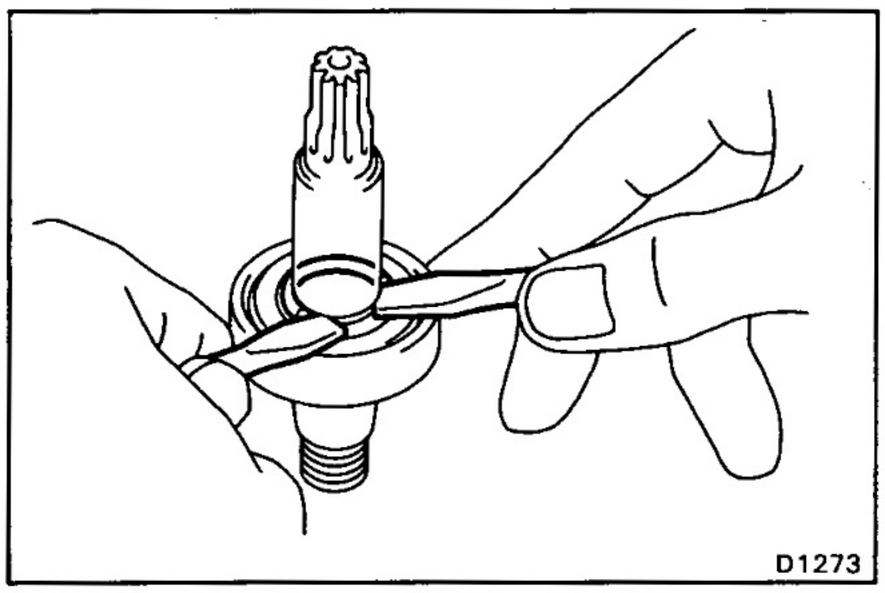

4. IF NECESSARY, REPLACE ROTOR SHAFT BEARING

(a) Using two screwdrivers, remove the snap ring.

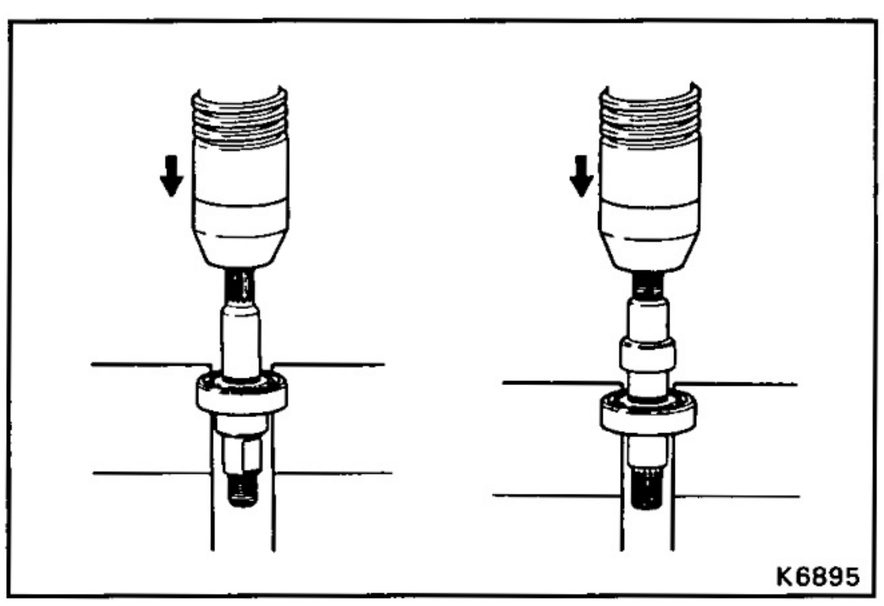

(b) Using a press, press out the bearing.

(c) Using a press, press in a new bearing.

NOTICE: Be careful not to scratch the rotor shaft contact surface with oil seal and bearing.

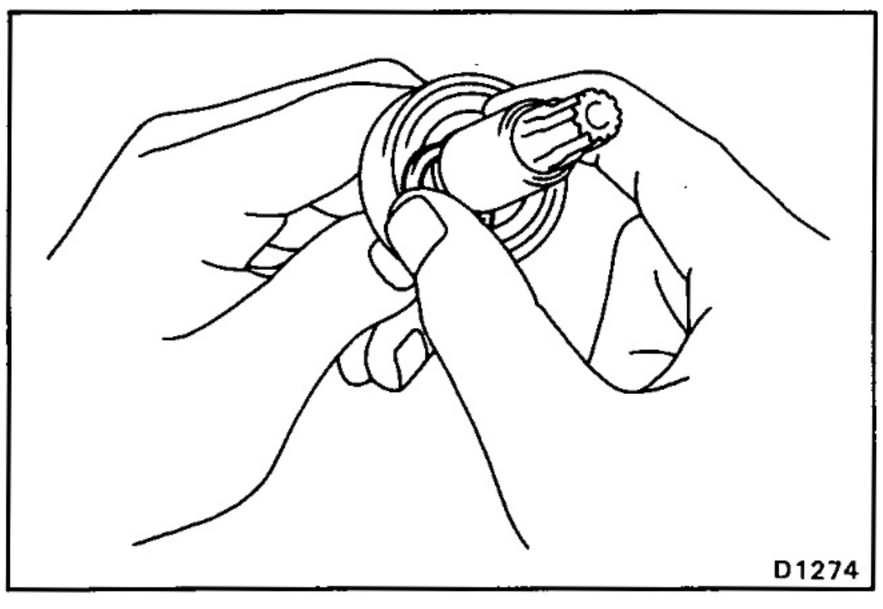

(d) Install the snap ring.

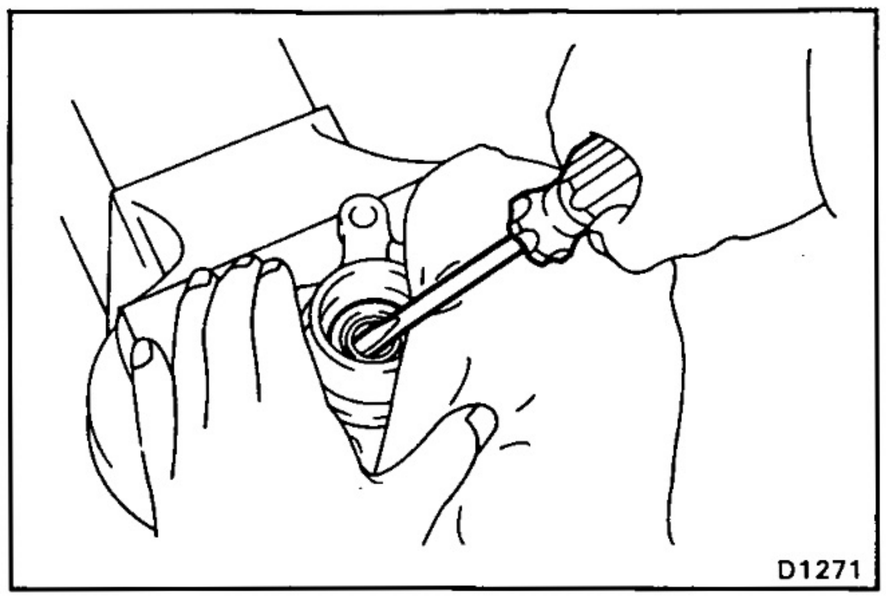

5. IF NECESSARY, REPLACE OIL SEAL

(a) Clamp the front housing in a vise.

NOTICE: Do not tighten the vise too tight.

(b) Using a screwdriver, remove the oil seal.

NOTICE: Be careful not to scratch the housing with a screwdriver.

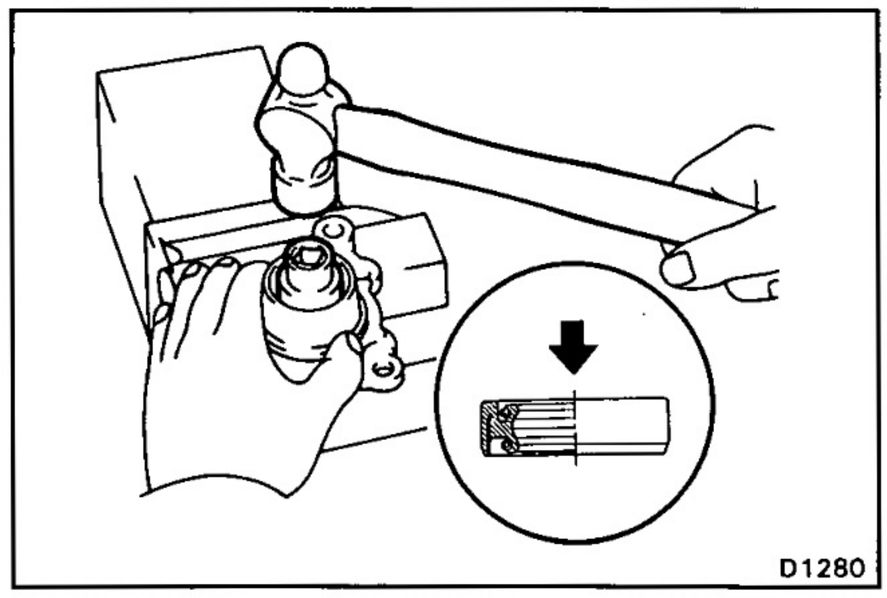

(c) Apply MP grease to the oil seal lip.

(d) Using 23 mm socket wrench, install a new oil seal.

NOTICE: Be careful not to scratch the frictional surface of the rotor.

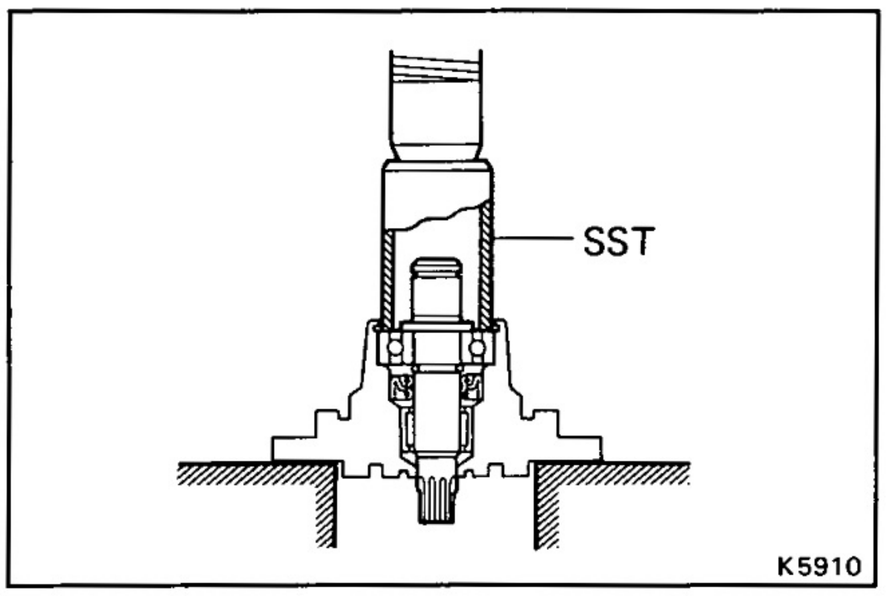

ASSEMBLY OF POWER STEERING PUMP

(See page SR-47)

1. COAT POWER STEERING FLUID ON EACH PARTS

2. INSTALL ROTOR SHAFT

(a) Using SST and a press, press in the rotor shaft to the front housing.

SST 09632-36010

NOTICE: Be careful not to scratch the oil seal lip and the rotor frictional surface.

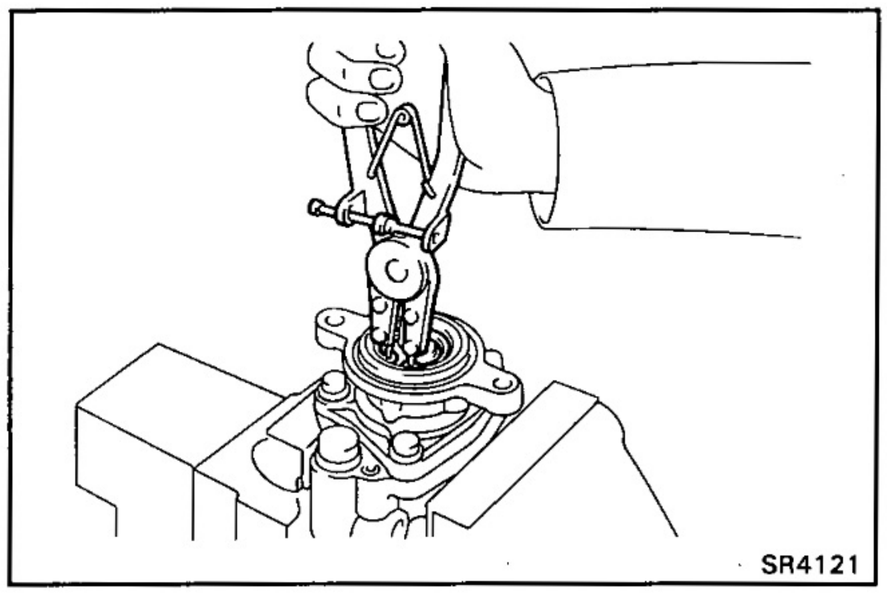

(b) Using snap ring pliers, install the snap ring.

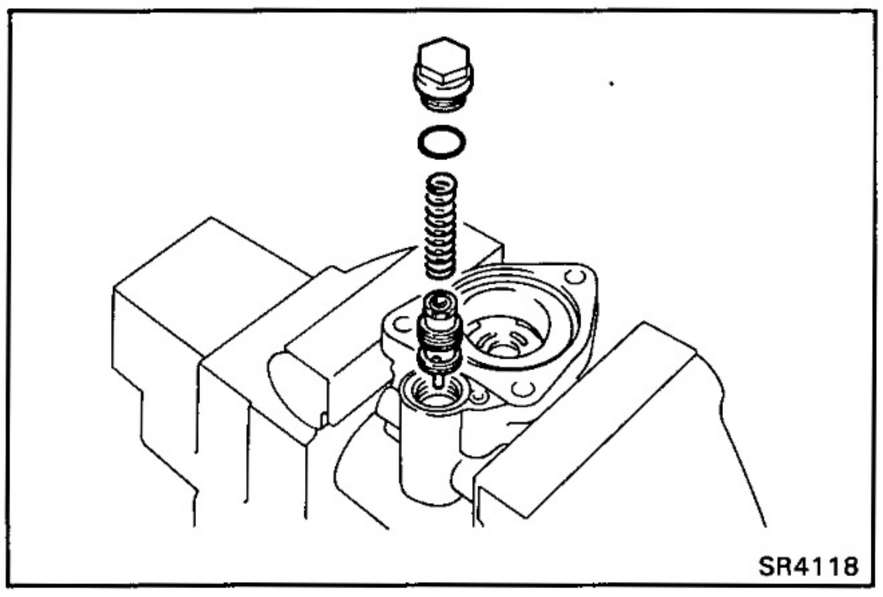

3. INSTALL VALVE LOCK SCREW, SPRING AND FLOW CONTROL VALVE

(a) Coat power steering fluid to new O-ring.

(b) Install the O-ring to the valve lock screw.

(c) Install the flow control valve and the spring.

(d) Install the valve lock screw.

Torque: 650 kg-cm (47 ft-lb, 64 N·m)

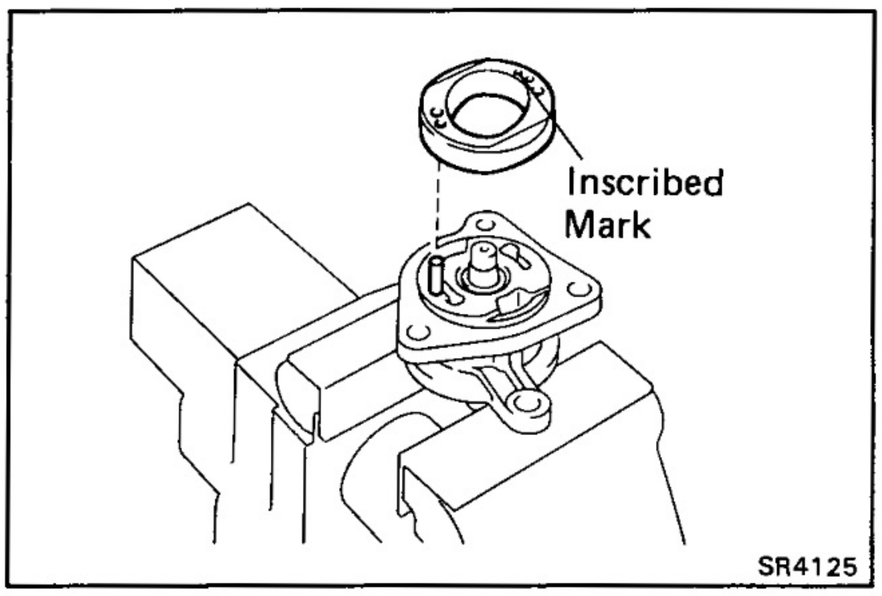

4. INSTALL CAM RING

(a) Install the straight pin to the front housing.

(b) Install the cam ring with the inscribed mark facing upper side.

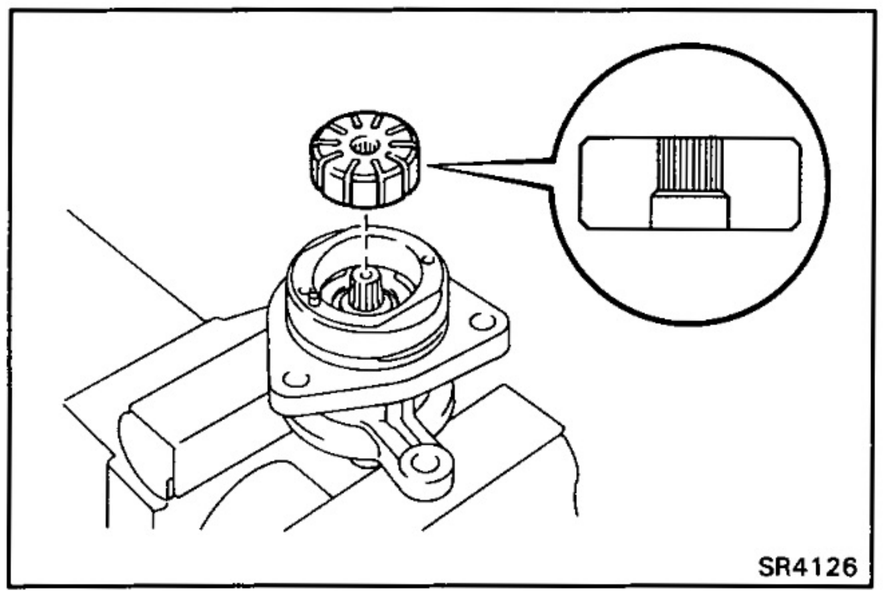

5. INSTALL ROTOR

Install the rotor as shown.

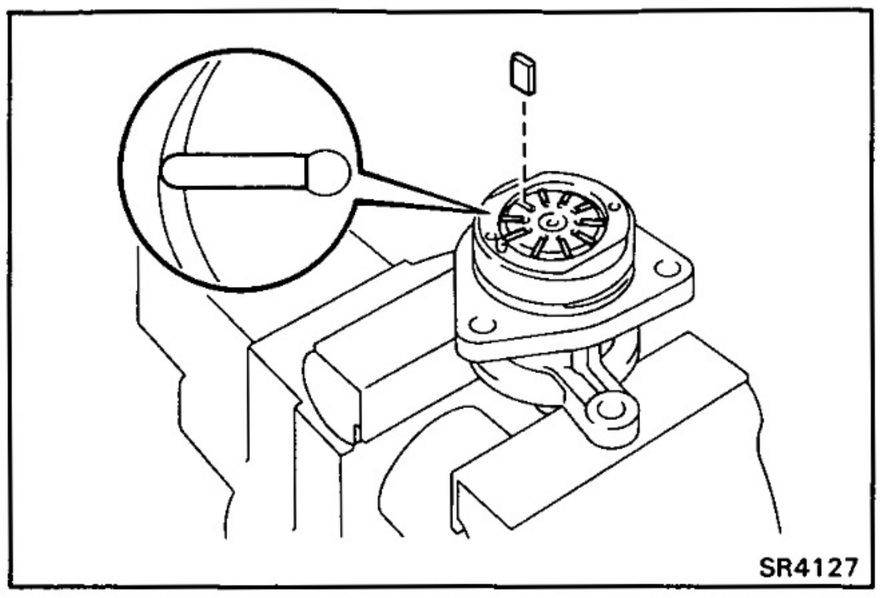

6. INSTALL VANE PLATES

Install the vane plates with the round end facing outward.

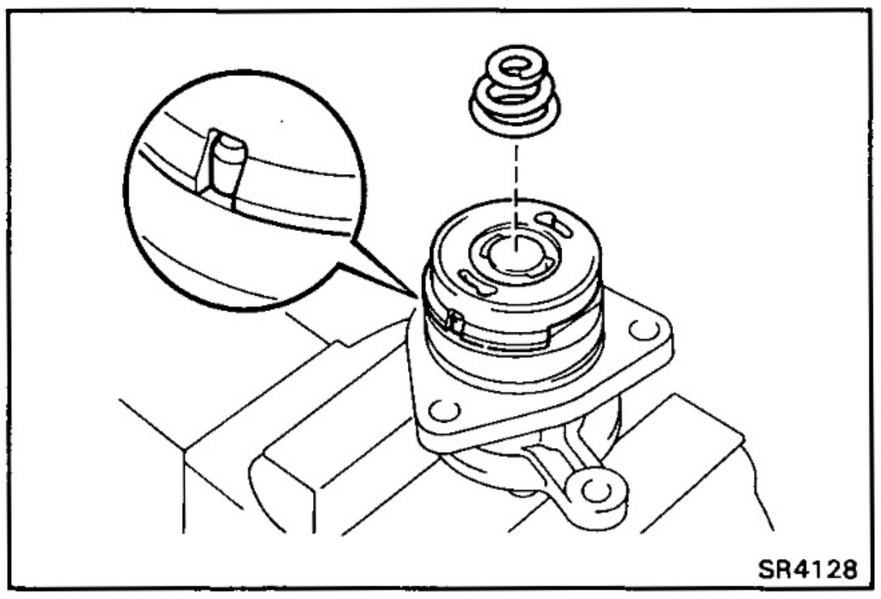

7. INSTALL PRESSURE PLATE AND SPRING

(a) Align the cut portion of the pressure plate to the straight pin and install it.

(b) Place the spring on the pressure plate.

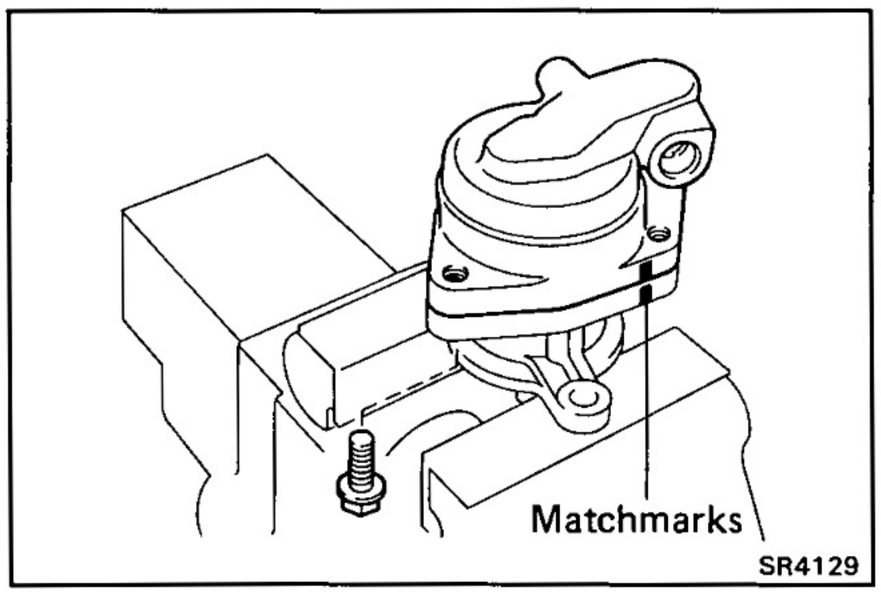

8. INSTALL REAR HOUSING

(a) Coat a new O-ring with power steering fluid.

(b) Install the O-ring to the rear housing.

(c) Align the matchmarks on the front and rear housing and assemble them.

(d) Torque the three bolts.

Torque: 425 kg-cm (31 ft-lb, 42 N·m)

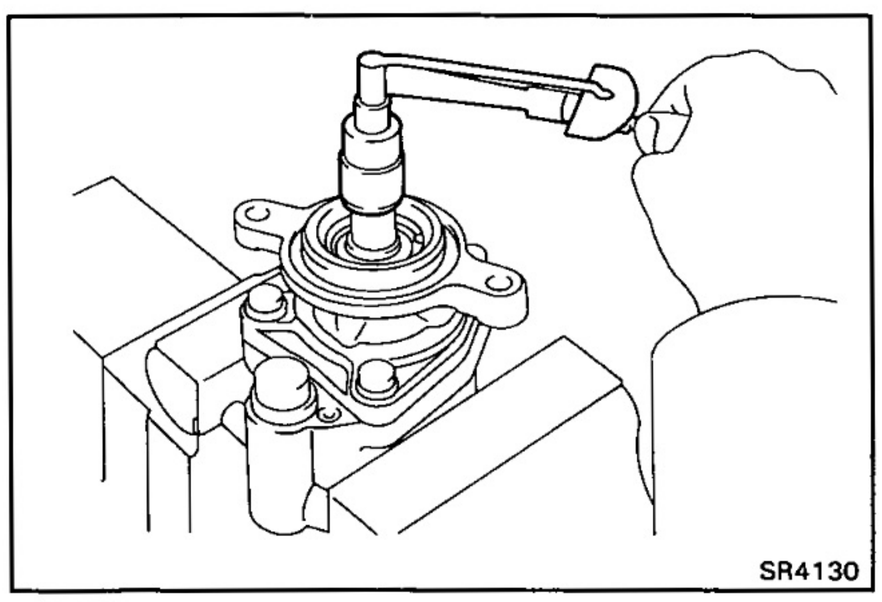

9. CHECK ROTOR SHAFT ROTATION CONDITION

(a) Check that the rotor shaft rotates smoothly without abnormal noise.

(b) Temporarily install the gear lock nut and check the rotation torque.

Rotation torque: 2.8 kg-cm (2.4 in.-lb, 0.3 N·m) or less

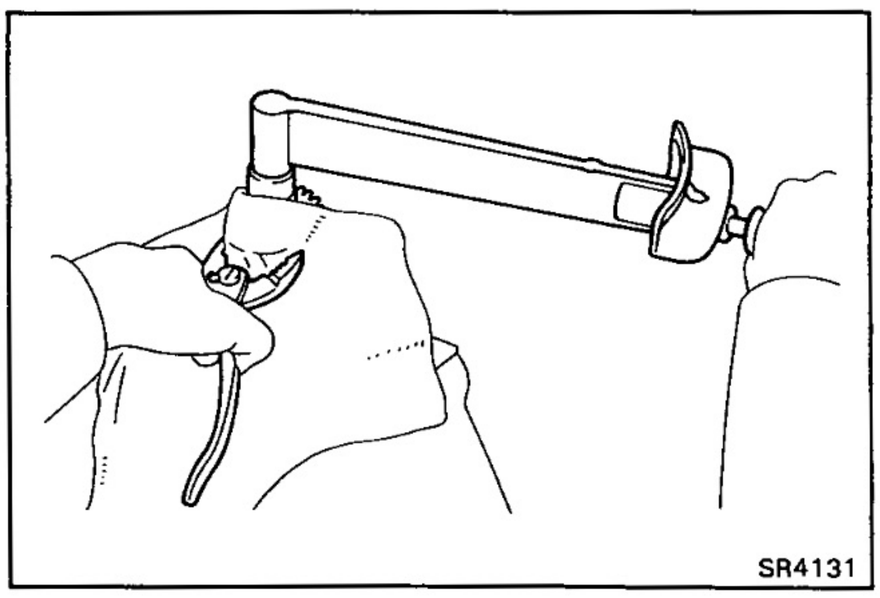

10. INSTALL DRIVE GEAR

(a) Install the gear and woodruff key.

(b) While holding the gear with pliers, install the lock nut.

HINT: Place the workshop rag over the gear to prevent damaging it.

Torque: 750 kg-cm (54 ft-lb, 74 N·m)

Gear Housing

REMOVAL AND INSTALLATION OF GEAR HOUSING

Remove and install the parts as shown.

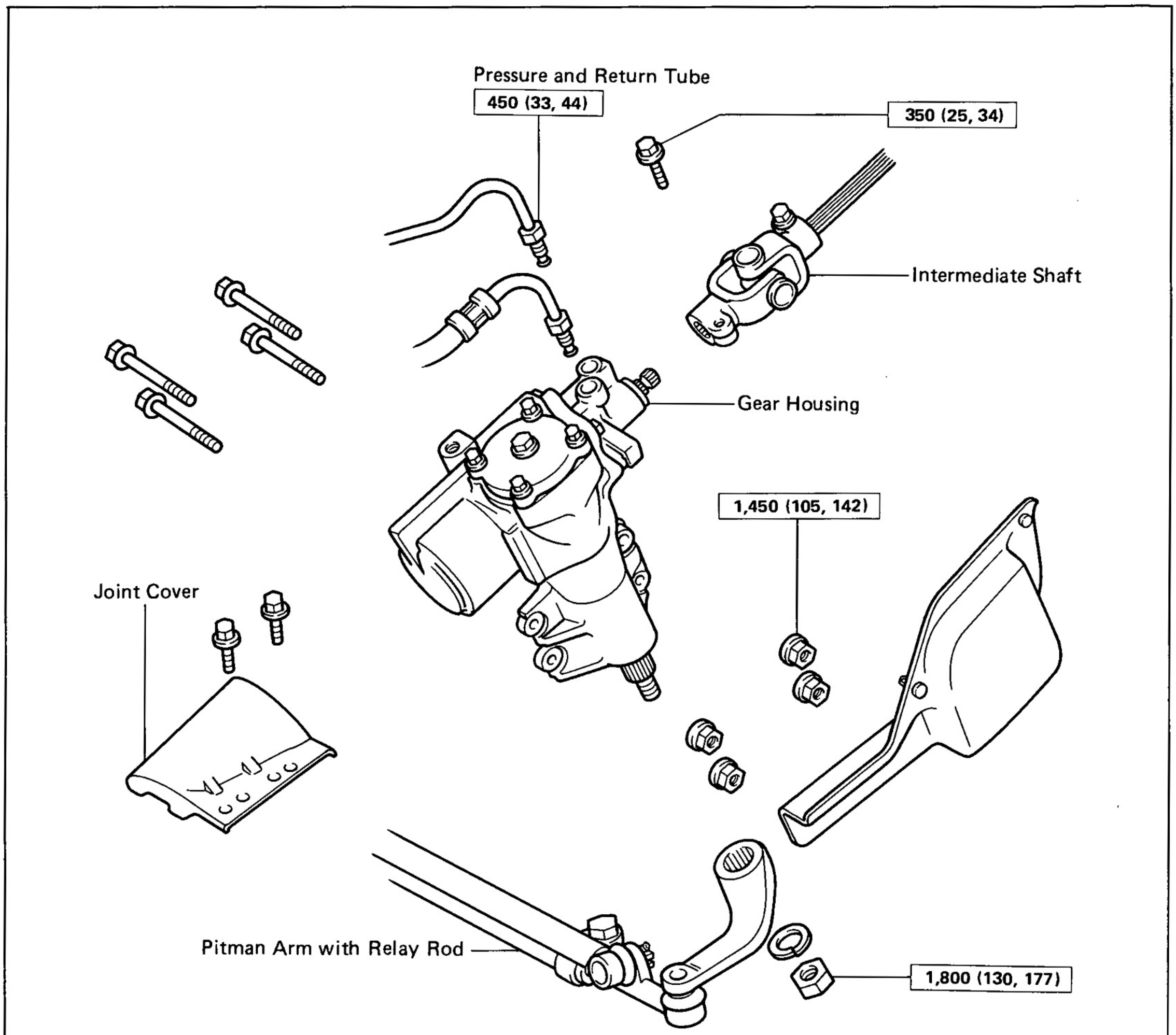

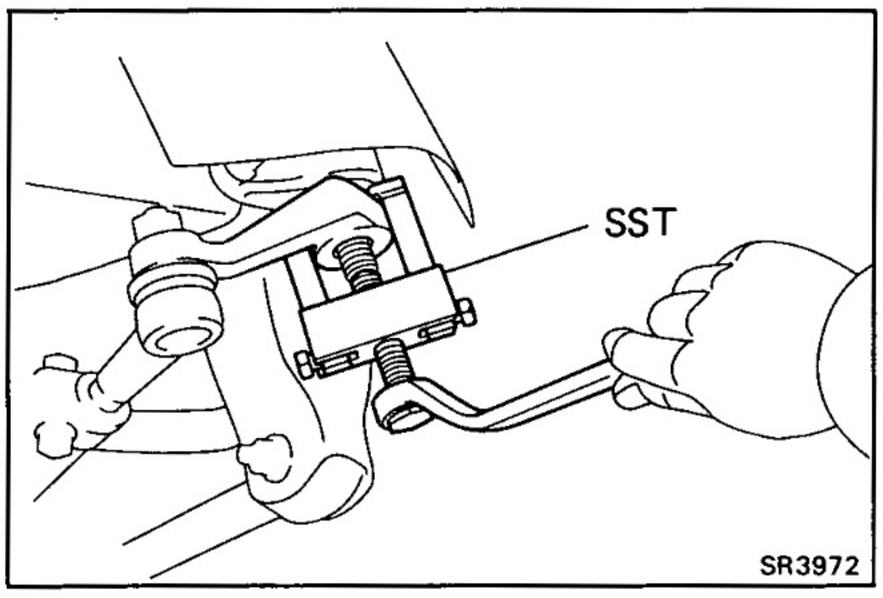

(MAIN POINTS OF REMOVAL AND INSTALLATION)

1. DISCONNECT PITMAN ARM

(a) Loosen the pitman arm nut.

(b) Using SST, disconnect the pitman arm from the sector shaft.

SST 09628-62011

(c) Remove the nut, the spring washer and the arm.

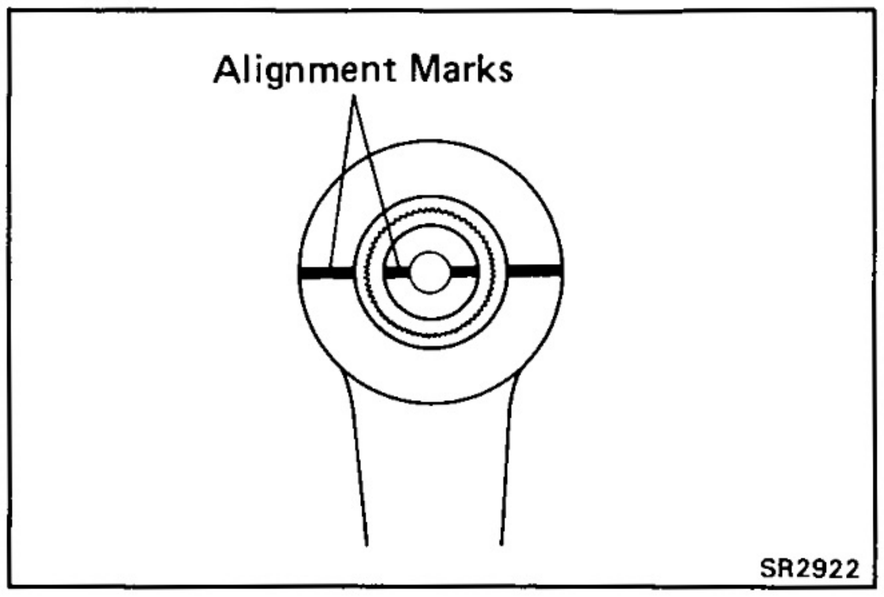

(d) When connecting the pitman arm, align alignment marks on the pitman arm and the sector shaft, and install the spring washer and nut.

Torque: 1,800 kg-cm (130 ft-lb, 177 N·m)

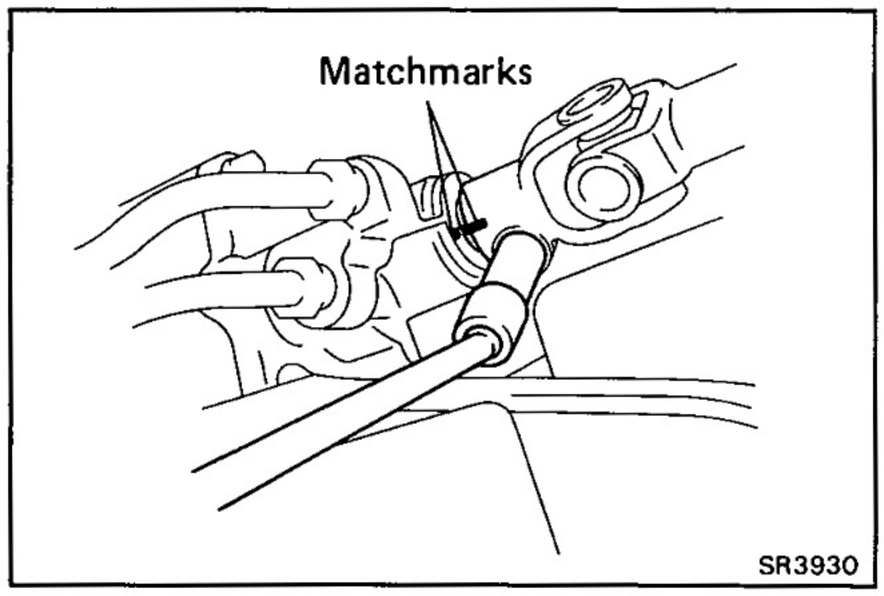

2. DISCONNECT UNIVERSAL JOINT FROM GEAR HOUSING

(a) Place matchmarks on the universal joint and the worm shaft.

(b) Loosen the universal joint upper bolt.

(c) Remove the universal joint lower bolt.

(d) Slide the joint backward to disconnect the joint from the worm shaft.

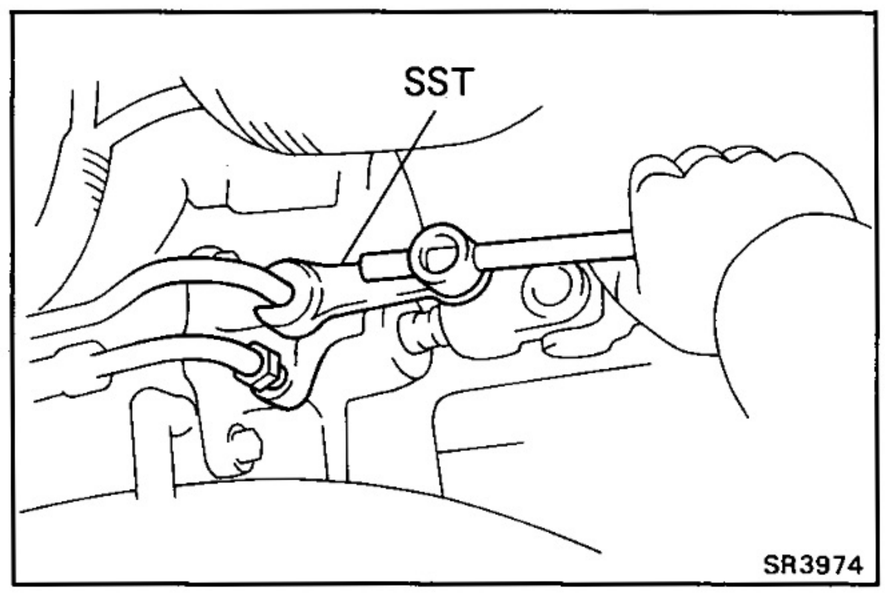

3. DISCONNECT PRESSURE AND RETURN TUBES

Using SST, disconnect the pressure and return tubes from the gear housing.

SST 09631-22022

COMPONENTS

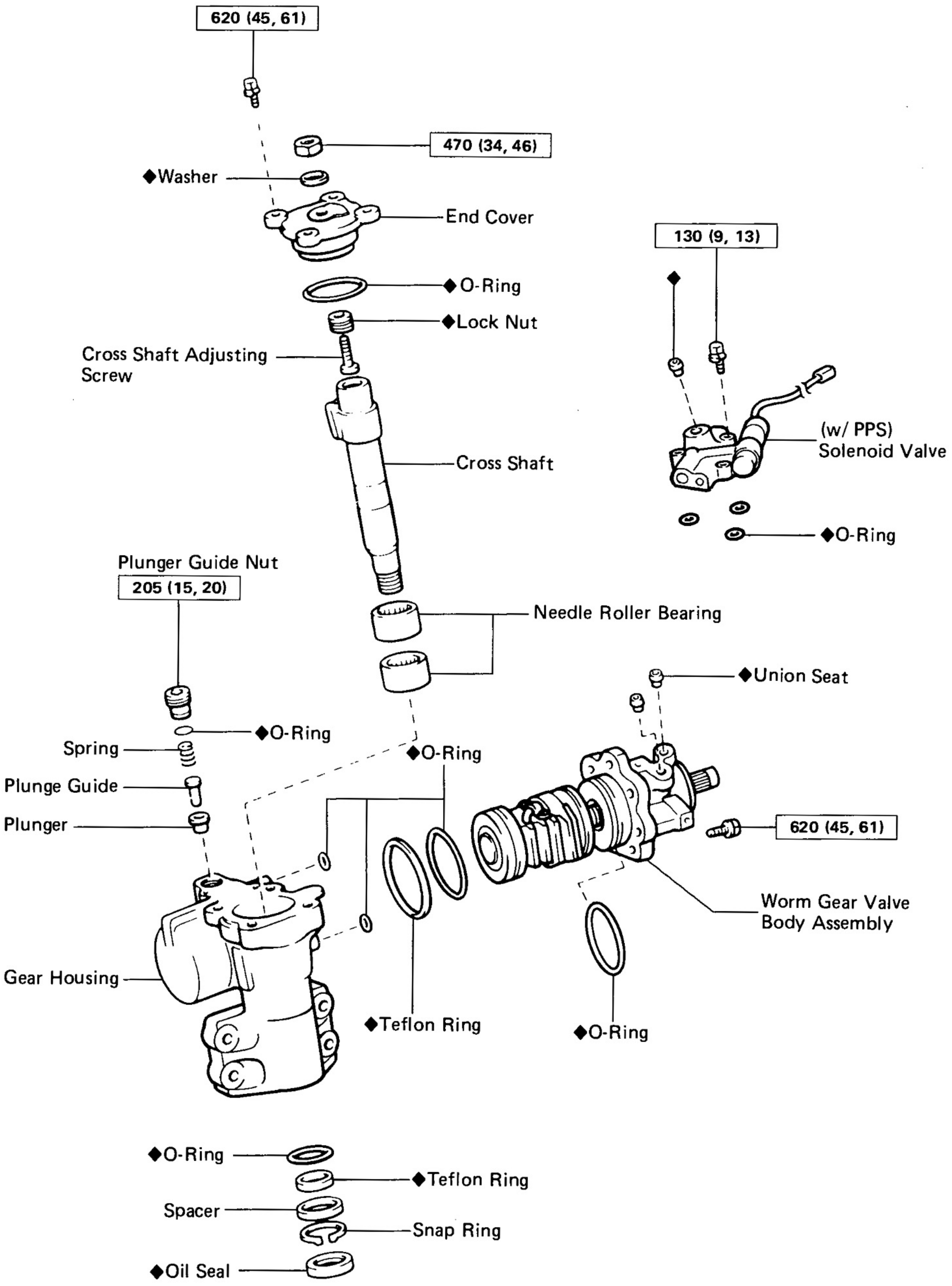

kg-cm (ft-lb, N·m) : Specified torque

◆ Non-reusable part

SR4132

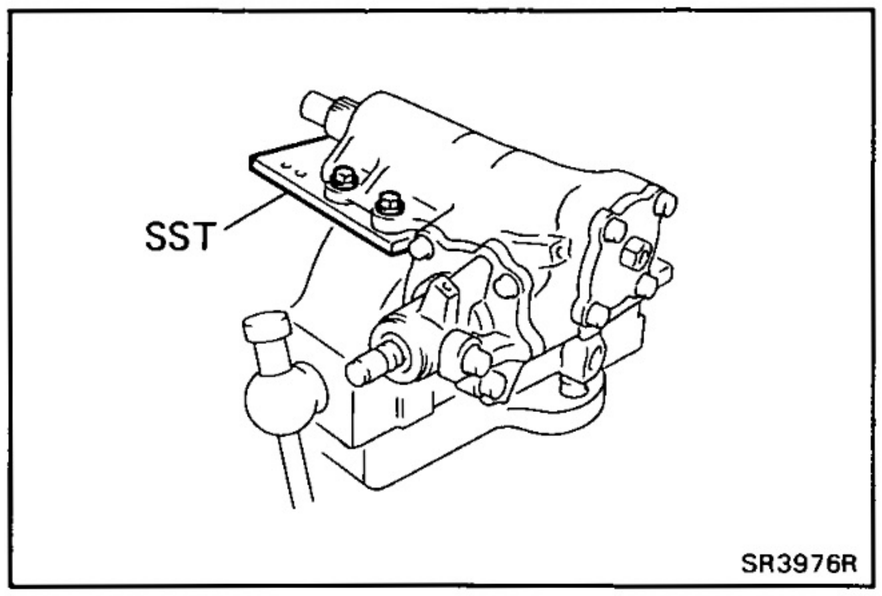

DISASSEMBLY OF GEAR HOUSING

(See page SR-56)

1. MOUNT HOUSING ON STAND

Mount the gear housing on SST and clamp SST in a vise.

SST 09630-00012 (09631-00140)

2. (w/ PPS)
REMOVE SOLENOID VALVE

(a) Remove three bolts and the valve.

(b) Remove the O-rings.

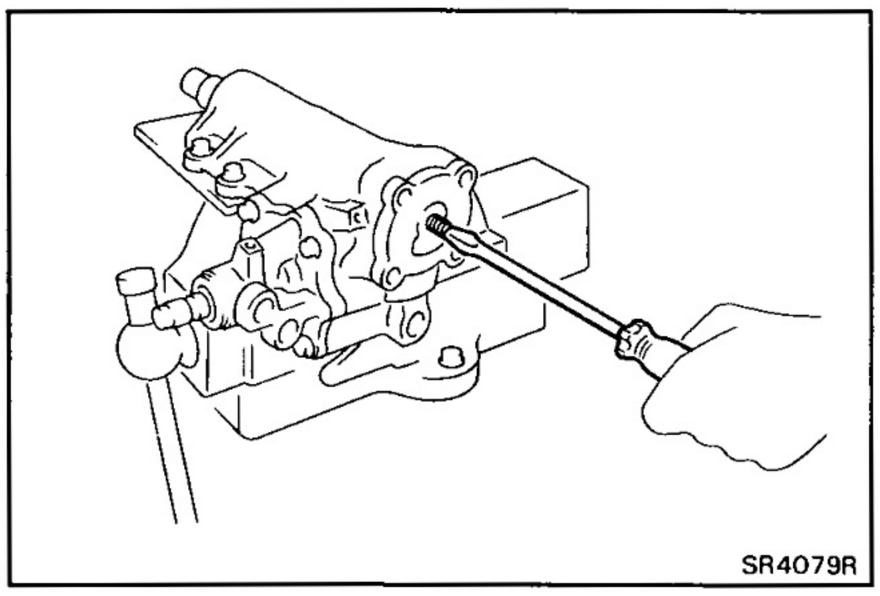

3. REMOVE END COVER

(a) Remove the adjusting screw lock nut.

(b) Remove the four bolts.

(c) Screw in the adjusting screw until the cover comes off.

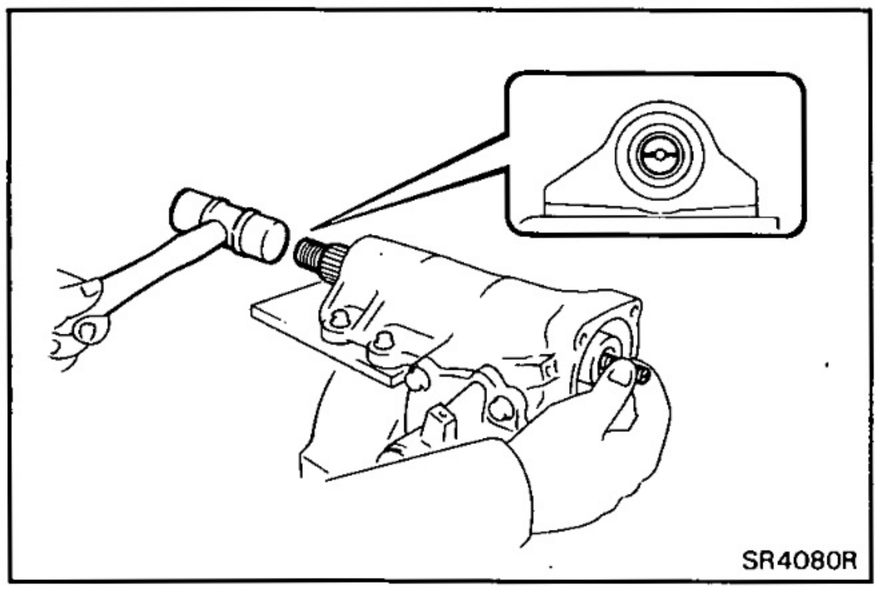

4. REMOVE CROSS SHAFT

Using a plastic hammer, tap on the cross shaft end and pull out the shaft.

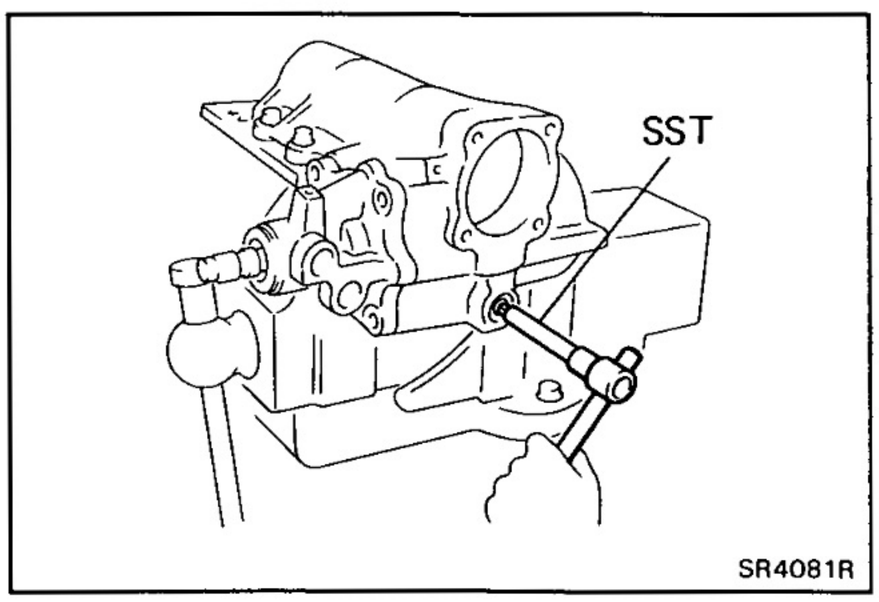

5. REMOVE PLUNGER GUIDE NUT

(a) Using SST, remove the plunger guide nut.

SST 09043-38100

(b) Remove the spring, plunger and plunger guide.

(c) Remove the O-ring.

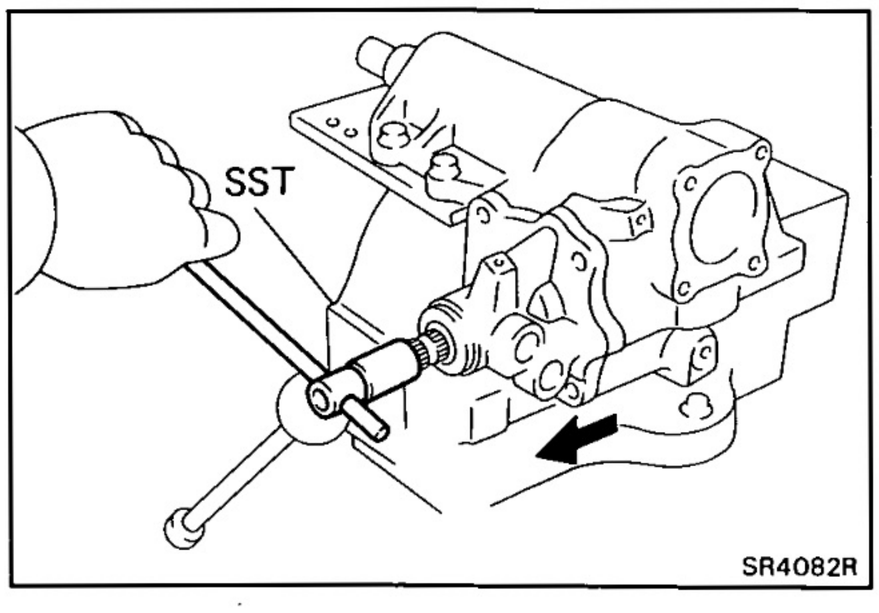

6. REMOVE WORM GEAR VALVE BODY ASSEMBLY

(a) Remove the four cap bolts from the housing.

(b) Using SST, turn the shaft clockwise to disconnect the worm gear valve body assembly from gear housing.

SST 09616-00010

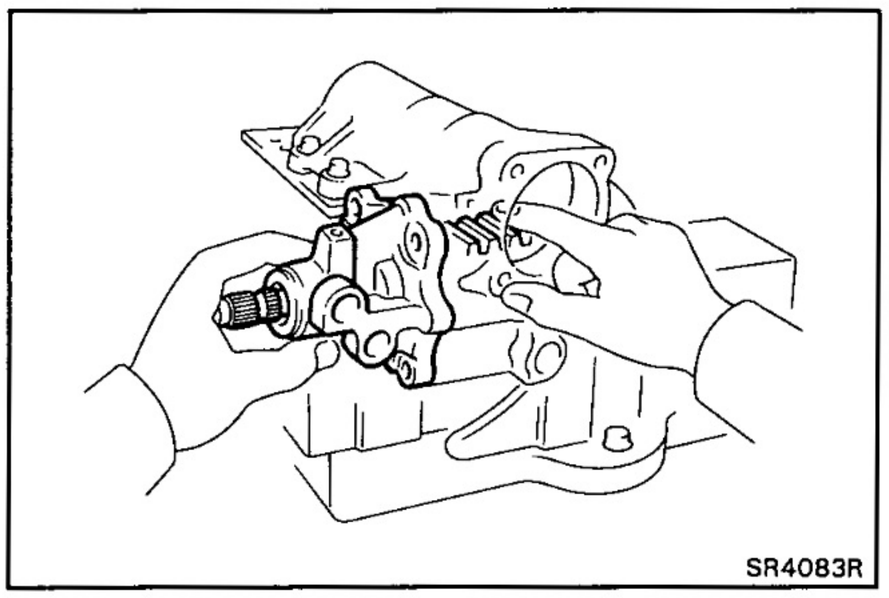

(c) Hold the power piston nut with your thumb so it cannot move, then withdraw the valve body and power piston assembly.

NOTICE: Ensure that the power piston nut does not come off the worm shaft.

(d) Remove the O-ring.

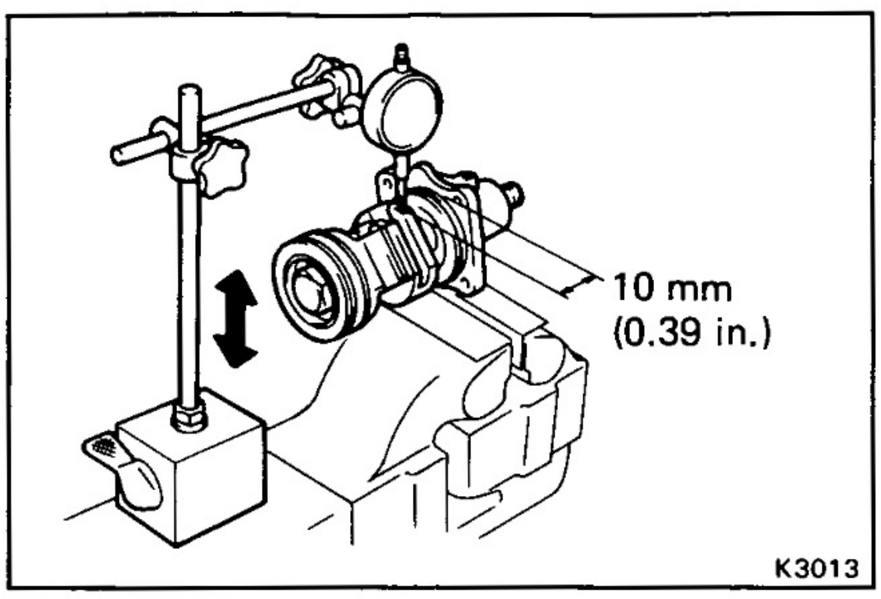

INSPECTION AND REPLACEMENT OF GEAR HOUSING

1. CHECK BALL CLEARANCE

(a) Mount the valve body in a vise.

(b) Using a dial indicator, check the ball clearance. Move the worm gear up and down.

Maximum ball clearance: 0.15 mm (0.0059 in.)

If clearance is excessive, the power control valve assembly must be replaced.

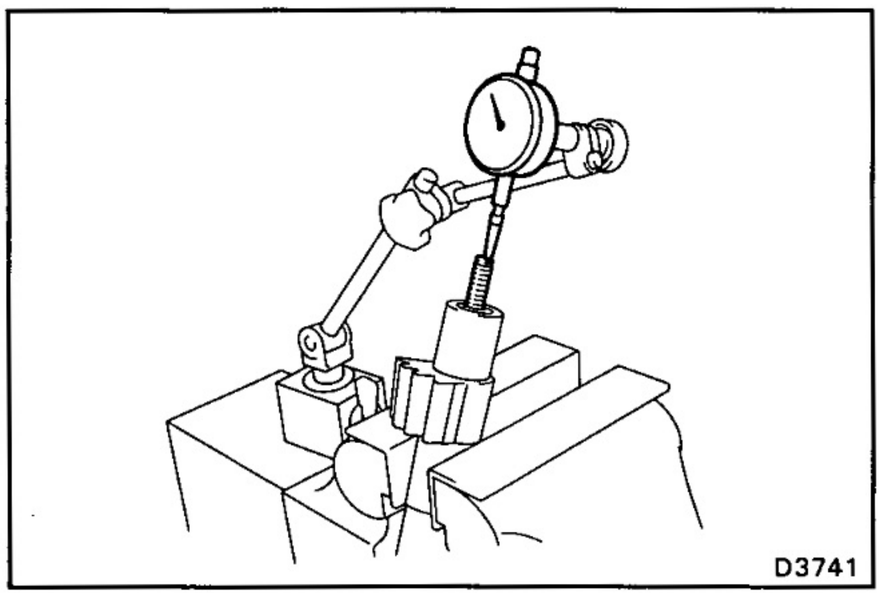

2. INSPECT CROSS SHAFT ADJUSTING SCREW THRUST CLEARANCE

(a) Clamp the cross shaft in a vise.

(b) Using a dial indicator, measure the thrust clearance.

Thrust clearance: 0.03 — 0.05 mm (0.0012 — 0.0020 in.)

If thrust clearance is not correct, adjust the thrust clearance.

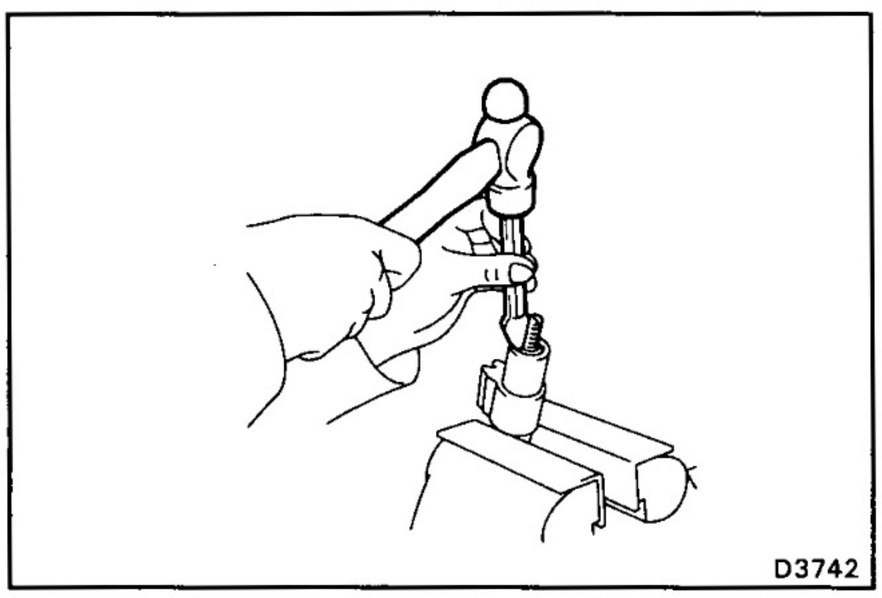

3. IF NECESSARY, ADJUST THRUST CLEARANCE

(a) Using a chisel and hammer, remove the lock nut stake.

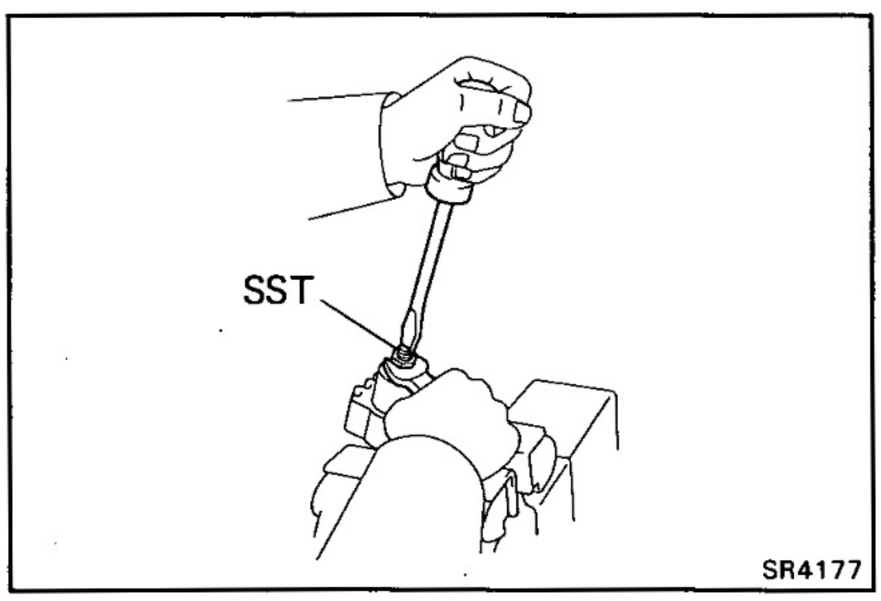

(b) Using SST, remove the lock nut.

SST 09630-00012 (09631-00050)

(c) Adjust the adjusting screw for correct thrust clearance and tighten a new lock nut.

(d) Stake the lock nut.

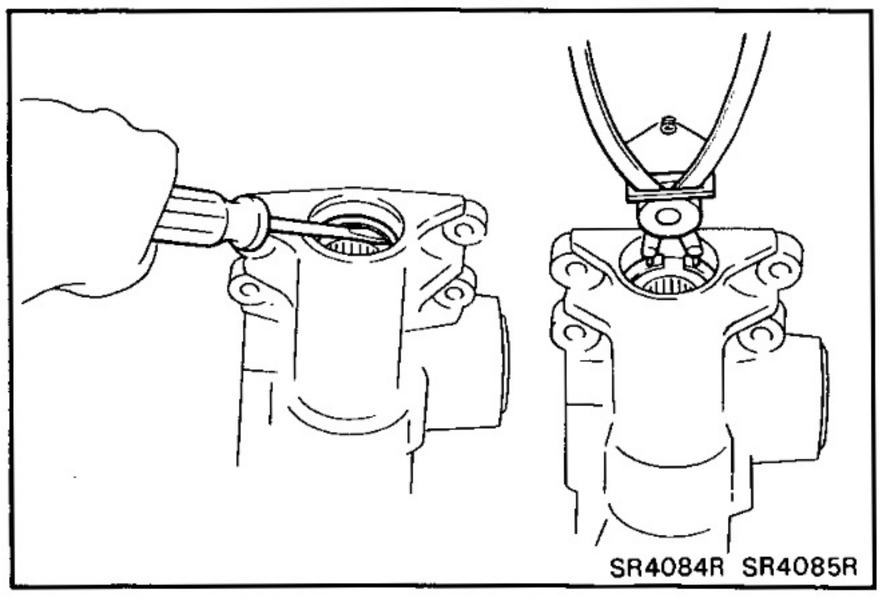

4. IF NECESSARY, REPLACE NEEDLE ROLLER BEARING

(a) Using a screwdriver, pry out the oil seal.

(b) Using snap ring pliers, remove the snap ring.

(c) Remove the metal spacer, teflon ring and O-ring.

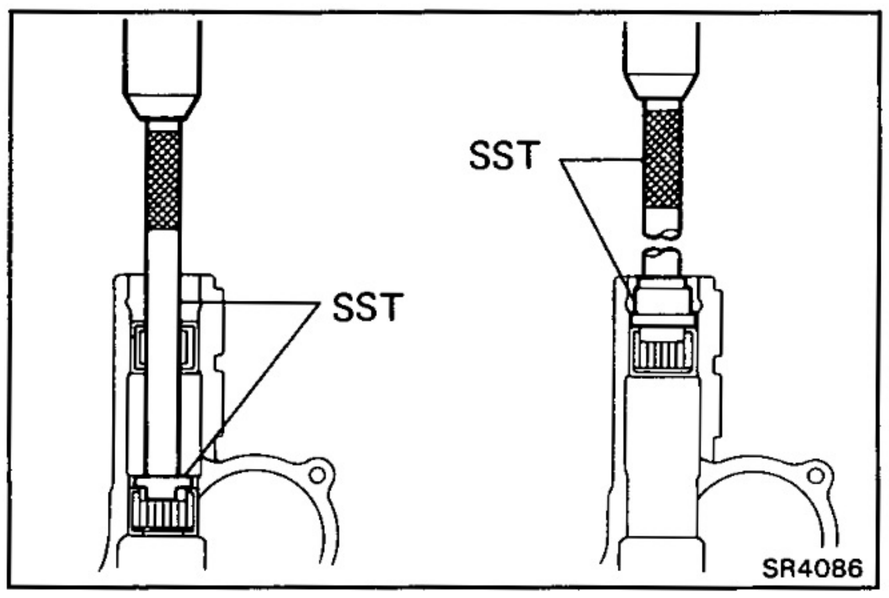

(d) Using SST, press out the upper bearing.

SST 09630-00012 (09631-00020, 09631-00070)

(e) Using SST, press out the lower bearing.

SST 09630-00012 (09631-00020, 09631-00090)

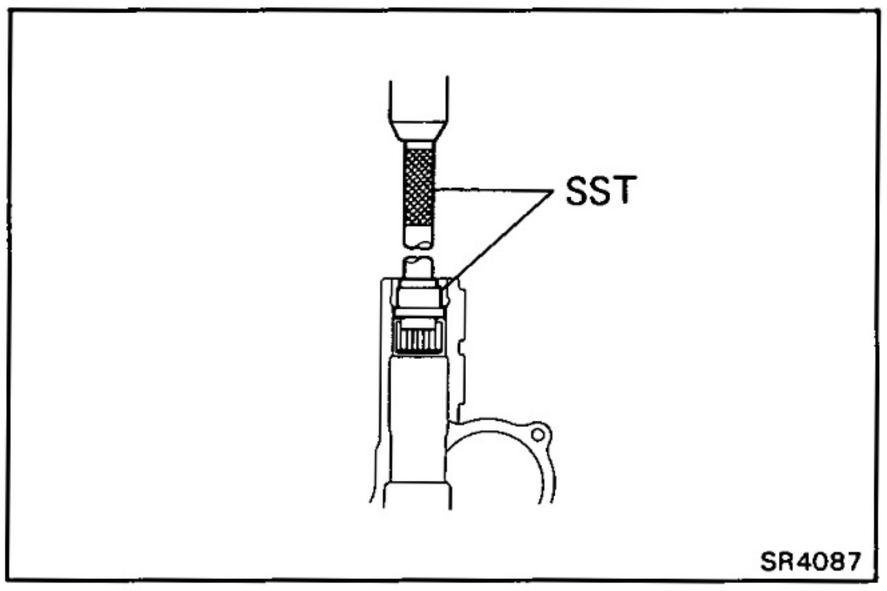

(f) Using SST, press in a new lower bearing.

SST 09630-00012 (09631-00020, 09631-00090)

HINT: Install the lower bearing so that it is positioned 23.1 mm (0.909 in.) away from the housing inner end surface.

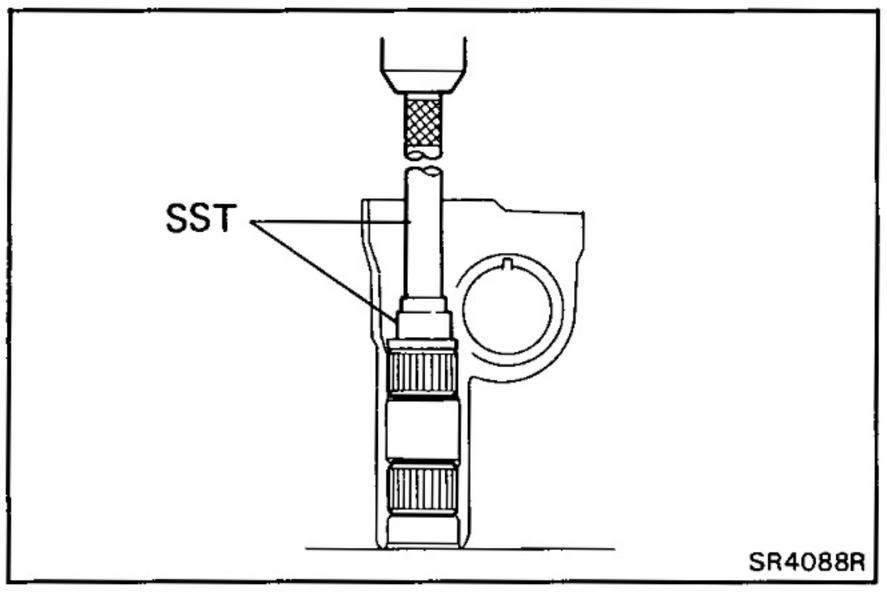

(g) Using SST, press in a new upper bearing.

SST 09630-00012 (09631-00020, 09631-00090)

HINT: The bearing's top end should be installed so that it aligns with the housing end surface.

(h) Install a new O-ring and metal spacer.

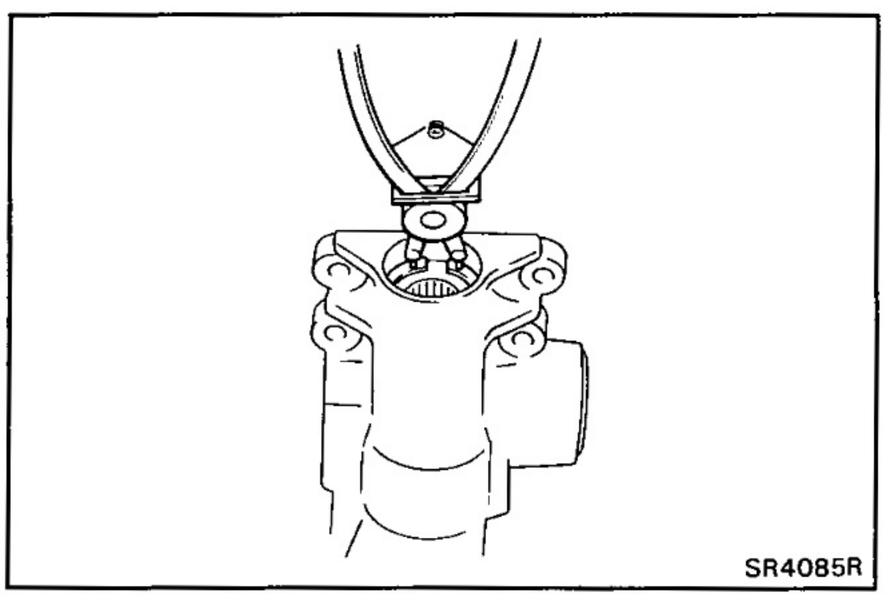

(i) Using snap ring pliers, install the snap ring.

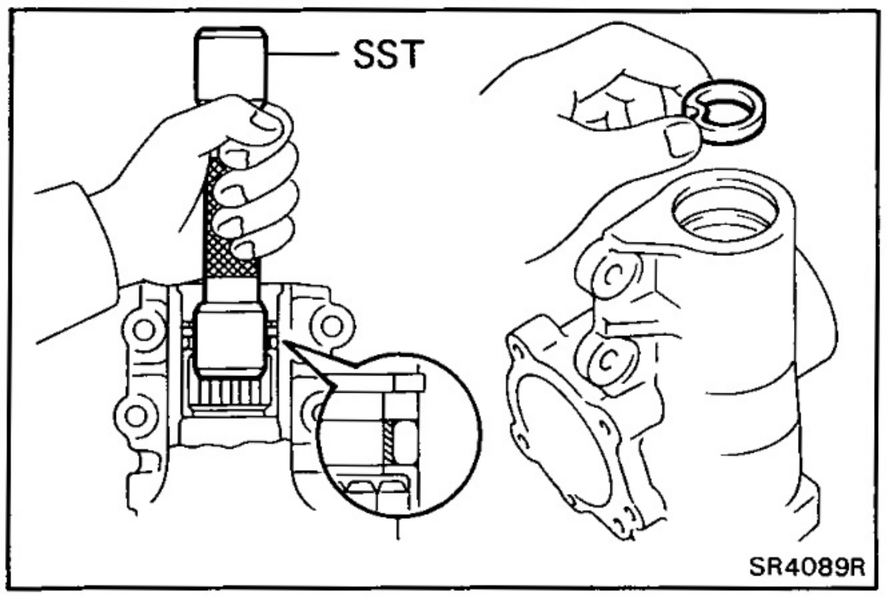

(j) Form a new teflon ring into a heart shapeand install it with hand.

(k) Using SST, form the teflon ring.

NOTICE: The teflon ring must be squeezed before inserting the sector shaft or damage will result.

SST 09630-00012 (09631-00120)

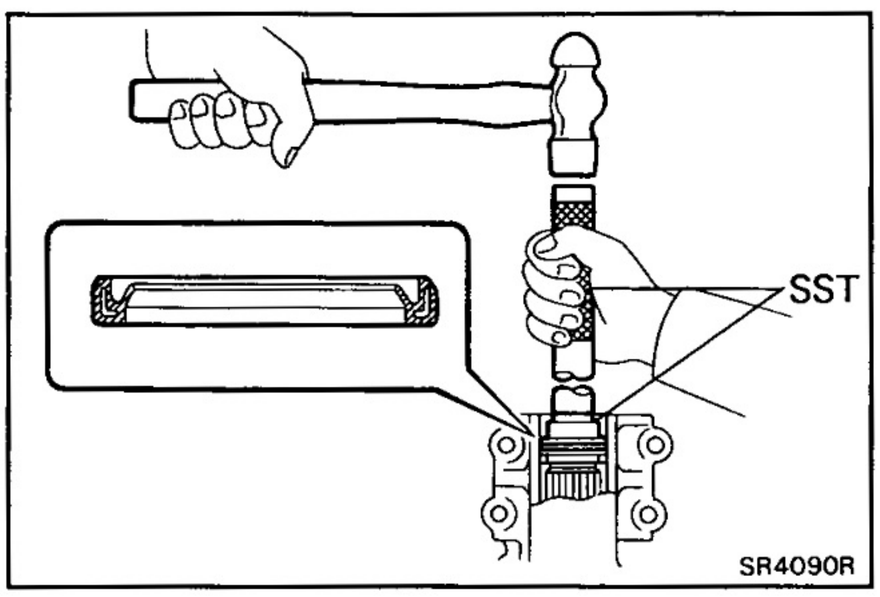

(l) Using SST, drive a new oil seal into the gear housing.

SST 09630-00012 (09631-00020, 09631-00090)

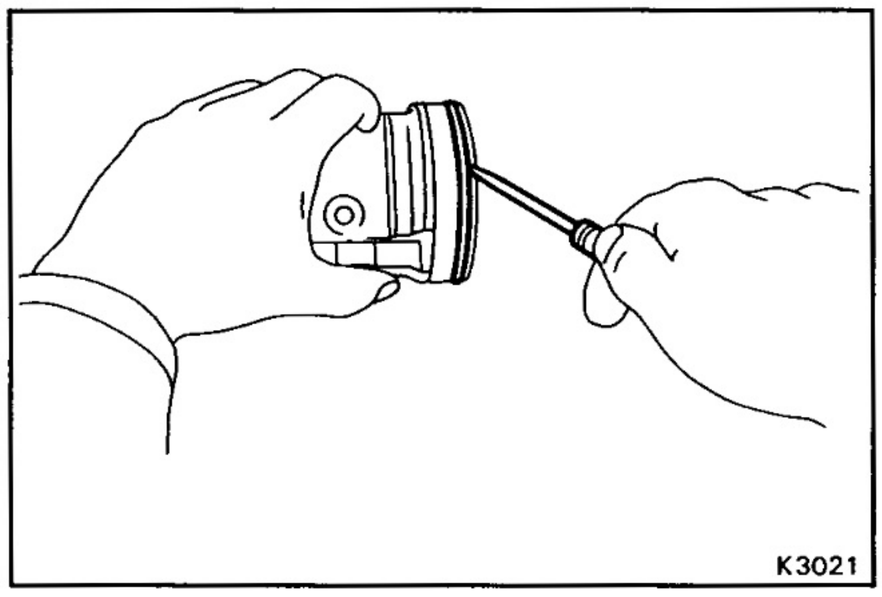

5. IF NECESSARY, REPLACE CONTROL VALVE TEFLON RING

(a) Using a screwdriver, remove the teflon ring and O-ring.

NOTICE: Be careful not to damage the control valve.

(b) Install a new O-ring.

(c) Expand a new teflon ring with your fingers.

NOTICE: Be careful not to over-expand the teflon ring.

(d) Install a new teflon ring.

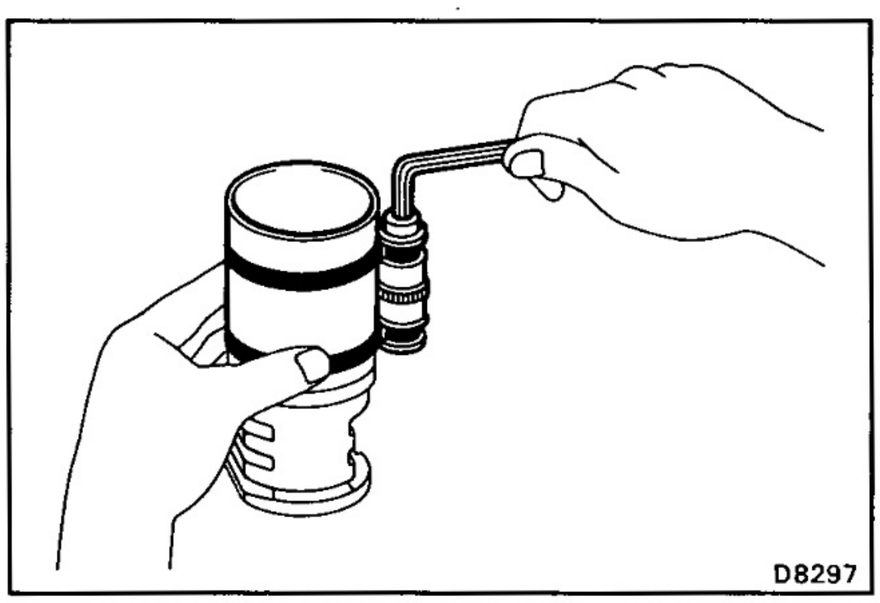

(e) Coat the teflon ring with power steering fluid and snug it down with piston ring compressor for 5 — 7 minutes.

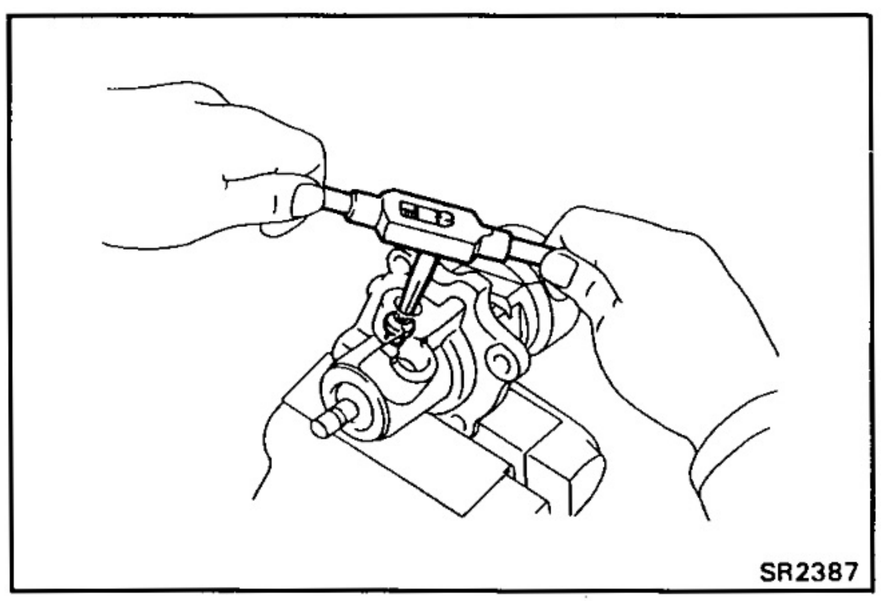

6. IF NECESSARY, REPLACE UNION SEAT

(a) Using a screw extractor, remove the union seat.

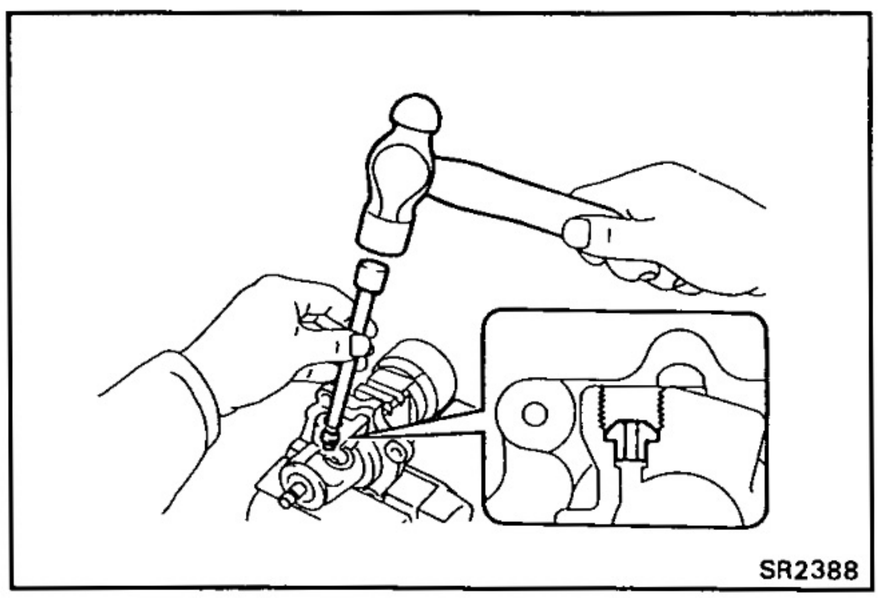

(b) Using a plastic hammer and extension bar, tap in a new union seat.

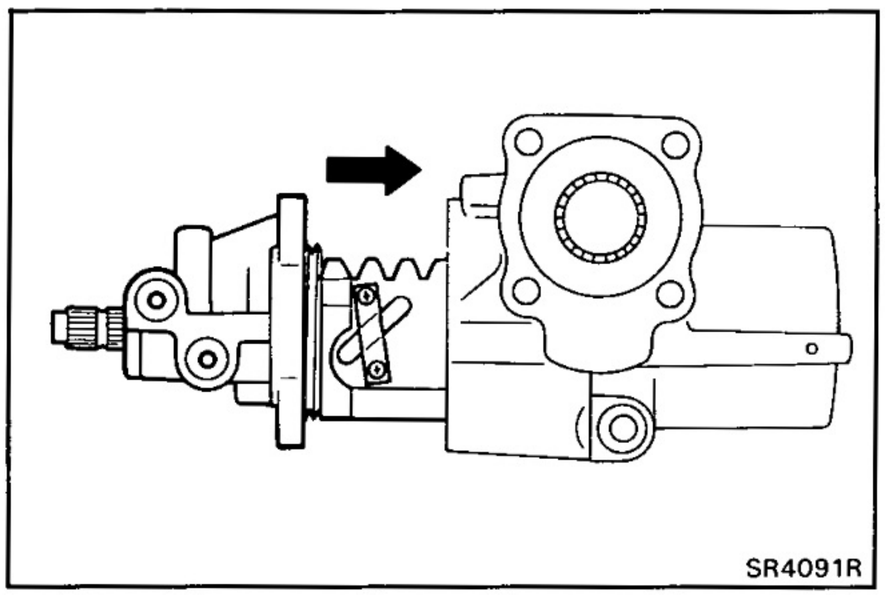
SR4091R

ASSEMBLY OF GEAR HOUSING

(See page SR-56)

1. INSTALL WORM GEAR VALVE BODY ASSEMBLY

(a) Install the three O-rings to the gear housing and valve body.

(b) Mount the gear housing on SST and clamp SST in vise.

SST 09630-00012 (09631-00140)

(c) Insert the worm gear valve body assembly to the gear housing as shown.

(d) Install and torque the four bolts.

Torque: 620 kg-cm (45 ft-lb, 61 N·m)

NOTICE: Be careful not to damage the teflon ring.

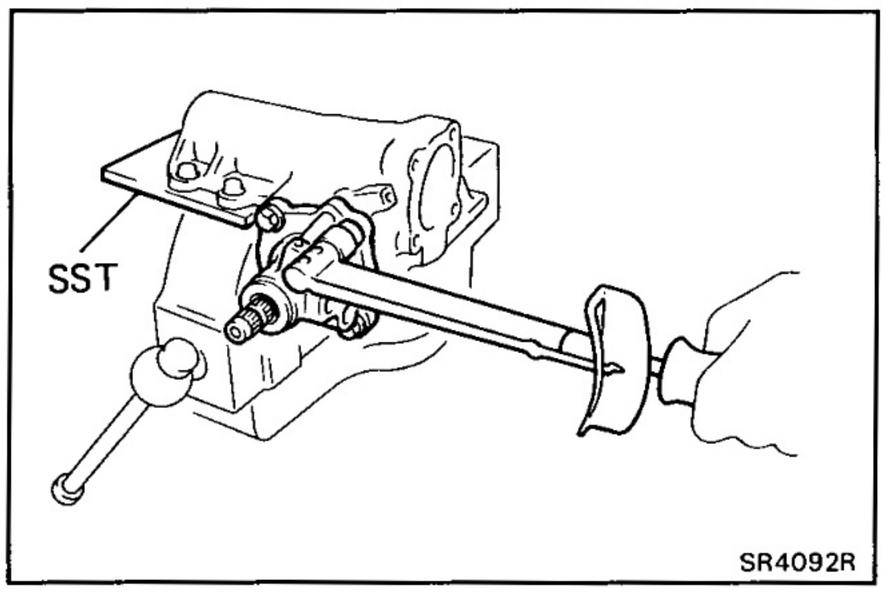

SR4092R

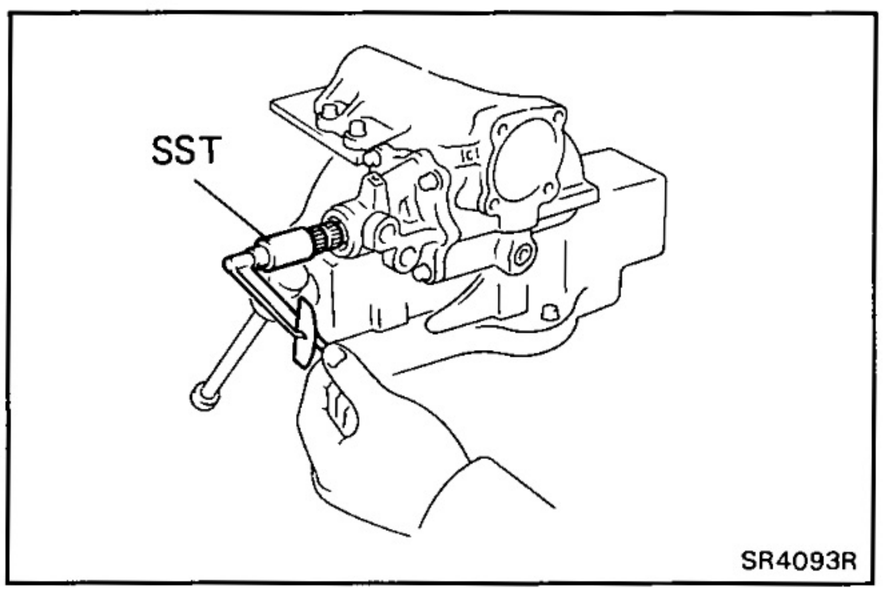

SR4093R

(e) Using SST, check the worm gear preload.

SST 09616-00010

Preload: (at starting)
3 — 5.5 kg-cm (2.6 — 4.8 in.-lb, 0.3 — 0.5 N·m)

HINT: Hold the power piston nut to prevent it from turning.

If preload is not correct, replace the worm gear assembly.

2. INSTALL PLUNGER GUIDE NUT

(a) Install the plunger, plunger guide and spring.

(b) Install a new O-ring to the plunger guide nut and install the plunger guide nut with SST.

SST 09043-38100

Torque: 205 kg-cm (15 ft-lb, 20 N·m)

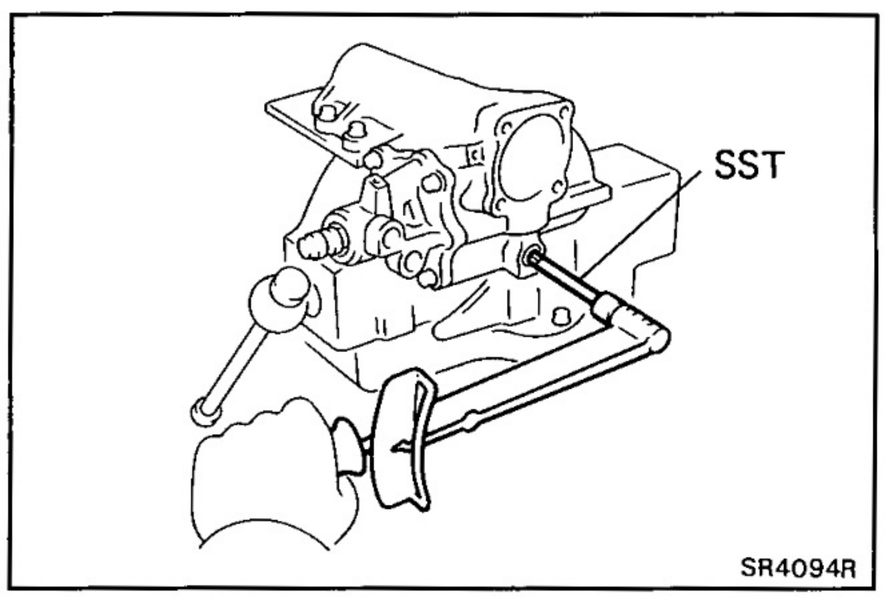

SR4094R

3. INSTALL CROSS SHAFT AND END COVER

(a) Install a new O-ring on the end cover.

(b) Using a screwdriver, assemble the cross shaft to the end cover.

HINT: Fully loosen the adjusting screw.

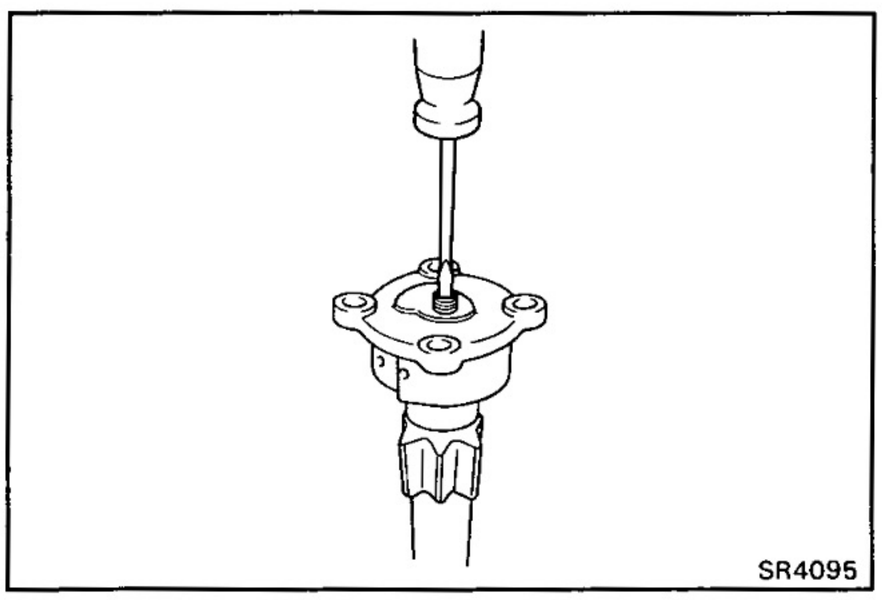
SR4095

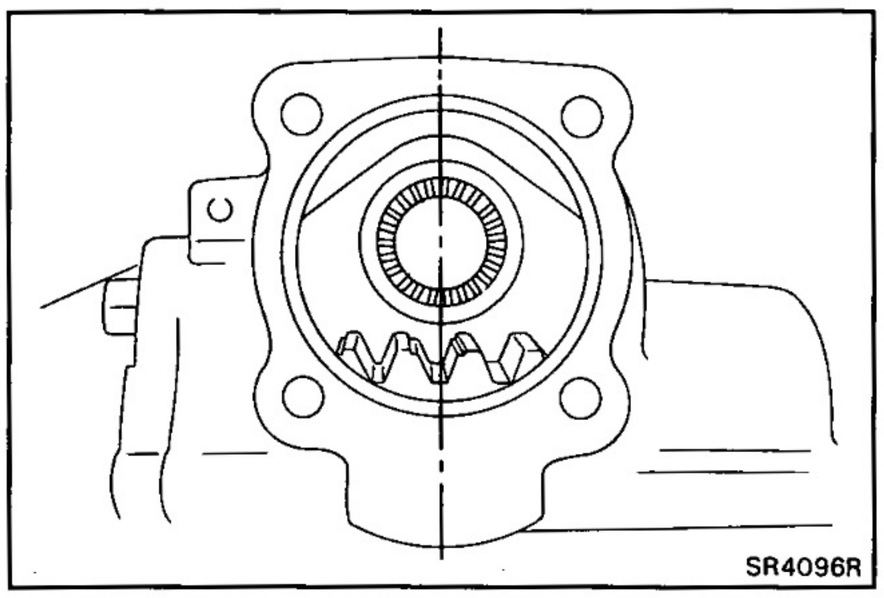

(c) Set the worm gear at the center of the gear housing.

(d) Insert and push the cross shaft into the gear housing so that the center teeth mesh together.

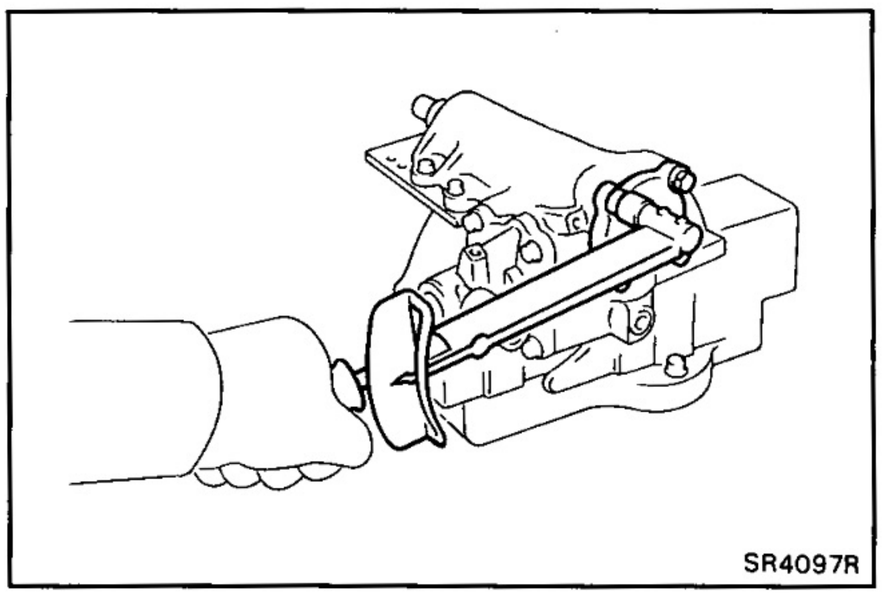

(e) Install the four cap bolts. Torque the bolts in a diagonal pattern.

Torque: 620 kg-cm (45 ft-lb, 61 N·m)

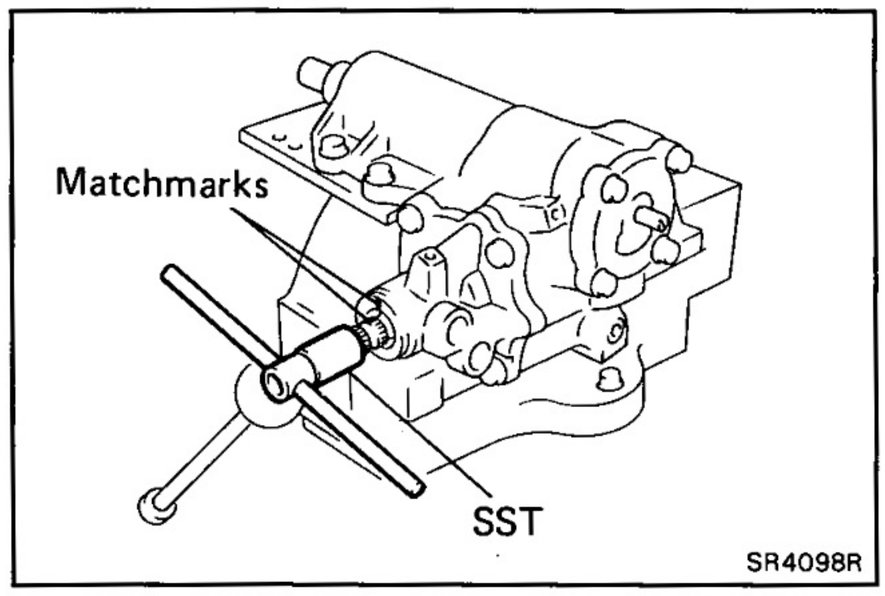

4. DETERMINE CENTER POSITION OF GEAR HOUSING

(a) Using SST, turn the worm shaft so full lock in both directions and determine the exact center.

SST 09616-00010

(b) Place matchmarks on the worm shaft and housing to show neutral position.

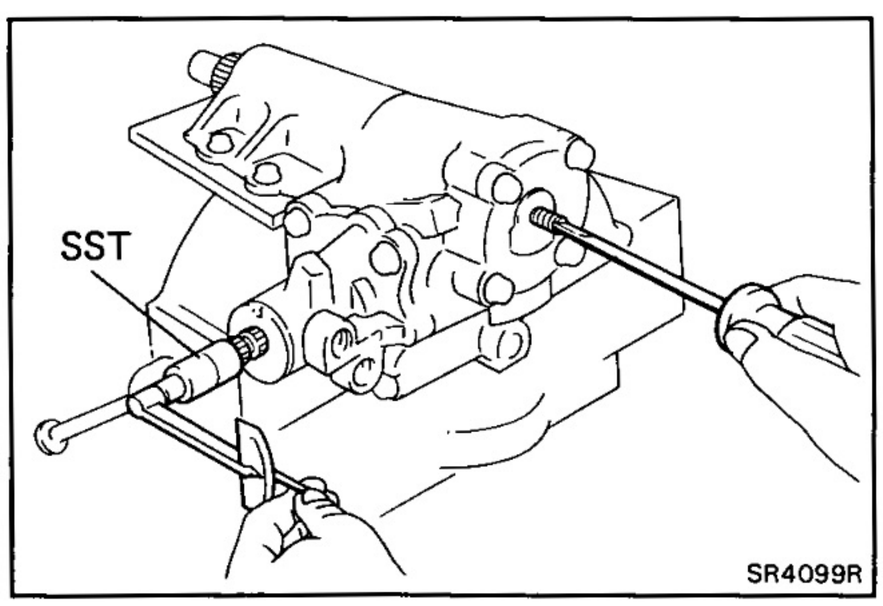

5. ADJUST CROSS SHAFT ADJUSTING SCREW

(a) Install SST with a torque meter on the worm shaft.

SST 09616-00010

(b) Turn the adjusting screw while measuring the preloaduntilit is correct.

Total preload: (at starting)
7.5 — 11 kg-cm (6.5 — 9.6 in.-lb, 0.74 — 9.6 N·m)

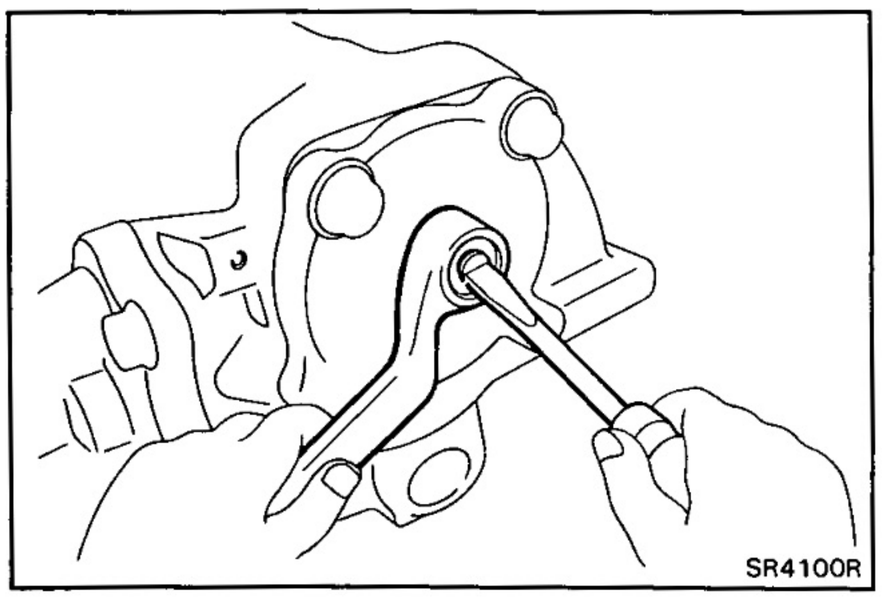

6. INSTALL NEW WASHER

7. INSTALL AND TIGHTEN LOCK NUT

Torque the lock nut while holding the adjusting screw.

Torque: 470 kg-cm (34 ft-lb, 46 N·m)

8. CHECK TOTAL PRELOAD

9. **(w/ PPS)**
INSTALL SOLENOID VALVE

(a) Install new O-rings to the solenoid valve.

(b) Install the three bolts and the valve.

Torque: 130 kg-cm (9 ft-lb, 13 N·m)

Electronic Control System

PRECAUTION

Do not open the cover or the case of the ECU and various computers unless absolutely necessary.(If the IC terminals are touched, the IC may be destroyed by static electricity.)

ELECTRONIC CIRCUIT

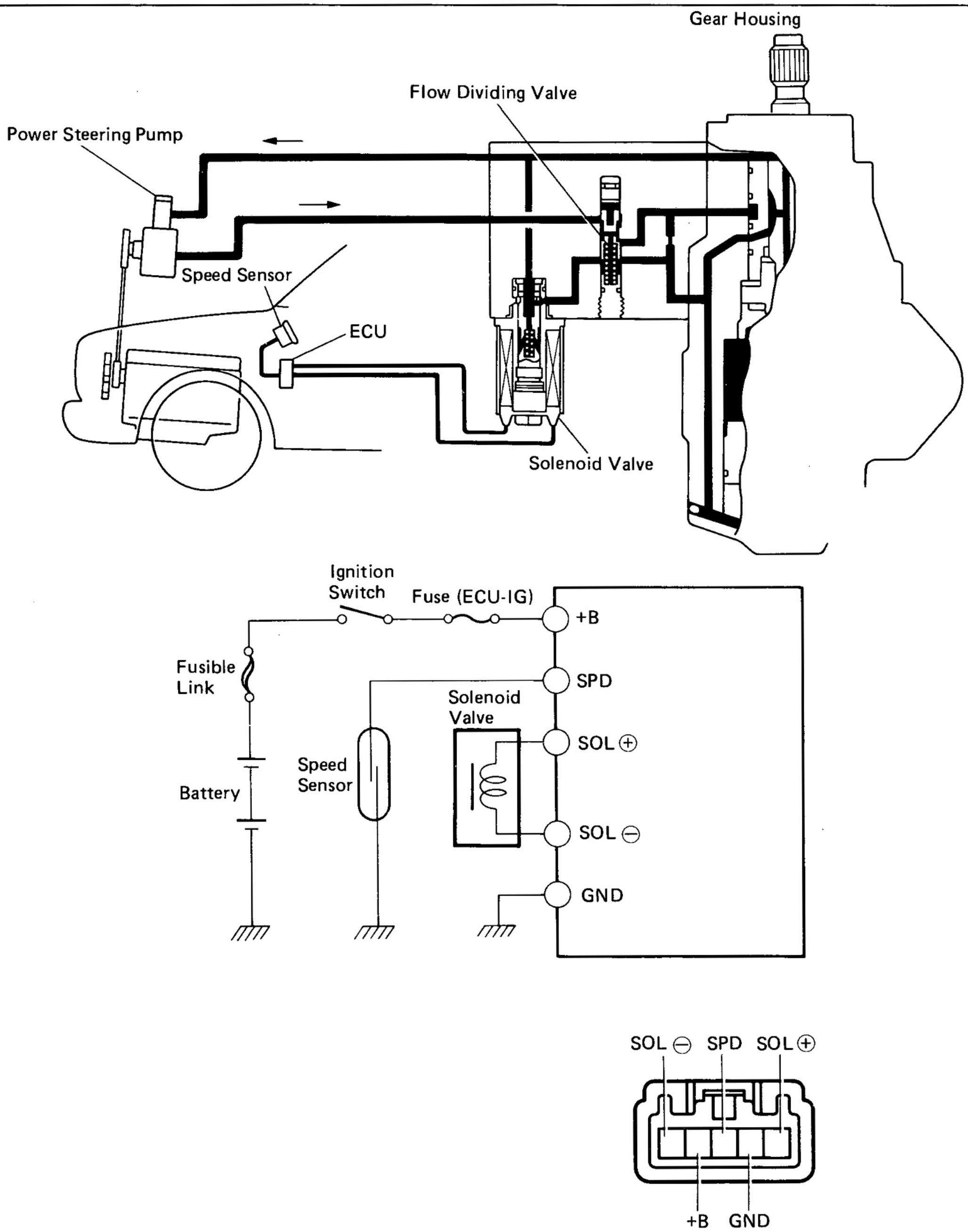

SR4134
B8578
K6535

TROUBLESHOOTING FLOW-CHART

Trouble

- **Hard steering at idle or low-speed driving.**
- **Steering too sensitive during high-speed driving.**

Preliminary Check

- Check tire pressure.
- Check lubrication of suspension and steering linkage.
- Check front wheel alignment.
- Check steering system joint and suspension arm ball joint.
- Check for bent steering column.
- Check that all connectors are secure.
- Check PS pump fluid pressure. (See page SR-35)

Turn ignition switch on.

↓

Is ECU-IG fuse normal?

No → Replace fuse. Is operation normal?

No → Short circuit in wire harness between fuse and ECU terminal +B.

Yes → Fuse faulty.

Yes

↓

Disconnect the ECU connector.

↓

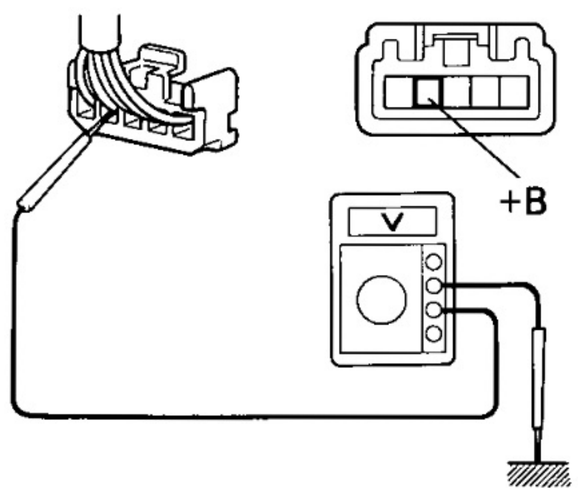

SR3340

Check 1.
Check that is the battery voltage between the ECU terminal +B and body ground.

Yes

↓

No → Open circuit in wire harness between the fuse and ECU terminal +B.

CONTINUED ON NEXT PAGE

Yes

CONTINUED FROM PREVIOUS PAGE

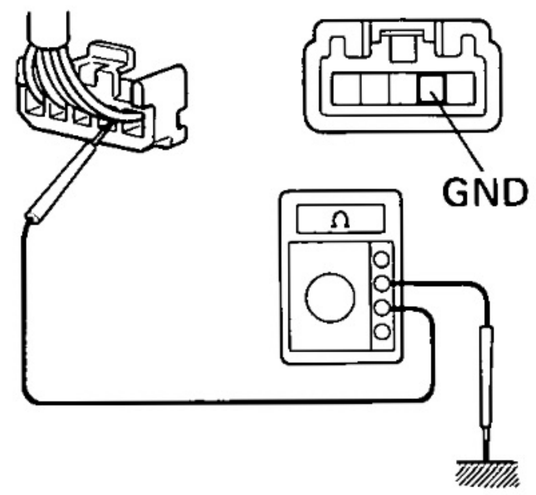

Check 2.
Check that there is continuity between the ECU terminal GND and body ground.

Yes

No

- Open circuit in wire harness between the ECU terminal GND and body ground.
- Body ground faulty.

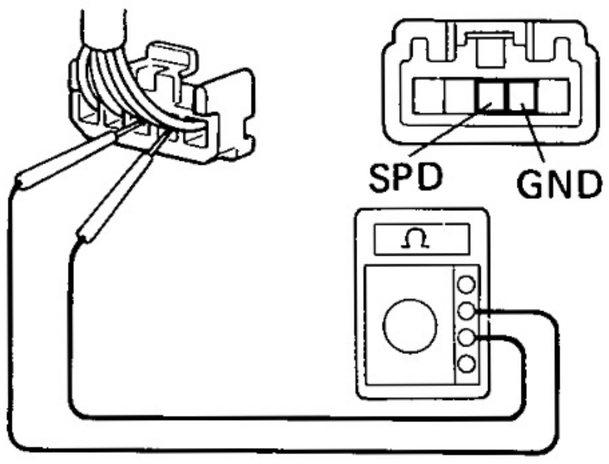

Check 3.
(a) Jack up the vehicle and support it on stands.
(b) Connect an ohmmeter between the ECU connector terminals SPD and GND.
(c) Spin the wheels and check the resistance.
Resistance (Ω) 0 Ω → ∞ → 0 Ω

Yes

No

- Open or short circuit in wire harness between the ECU terminal SPD and speed sensor.
- Speed sensor faulty (See page BE-55).

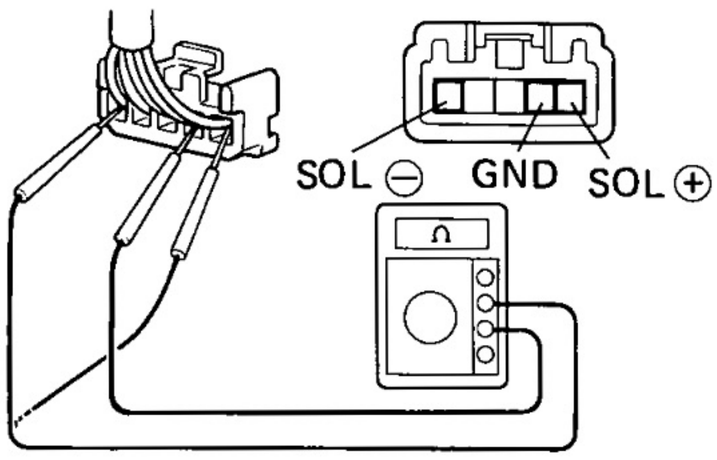

Check 4.
Check that there is no continuity between terminals SOL ⊕ or SOL ⊖ and GND.

Yes

No

- Short circuit in wire harness between the terminals SOL ⊕ and SOL ⊖ .
- Solenoid valve faulty.

CONTINUED ON NEXT PAGE

Yes

CONTINUED FROM PREVIOUS PAGE

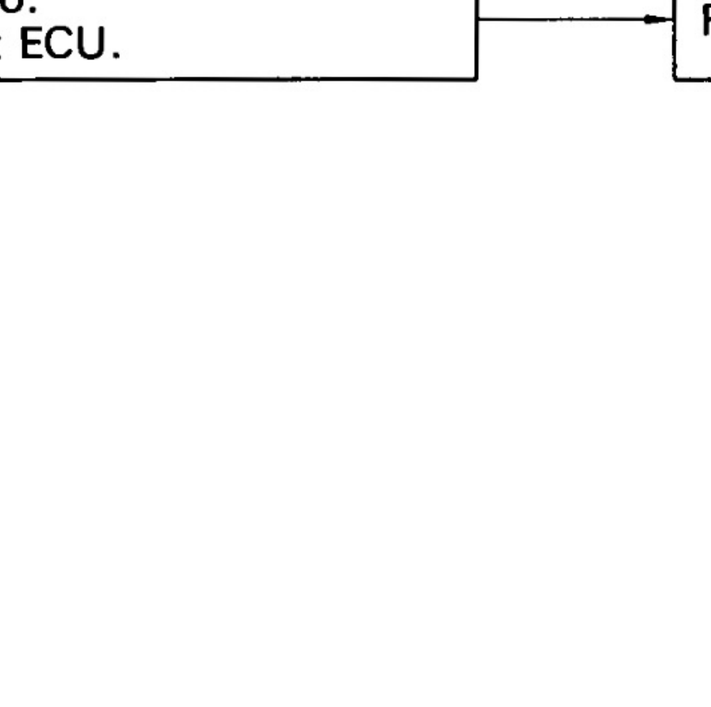

Check 5.
Measure the resistance between terminals SOL ⊕ and SOL ⊖.
Standard resistance: 6.0 — 11.0 Ω

Yes

No

- Open circuit in wire harness between the terminals SOL ⊕ and SOL ⊖.
- Solenoid valve faulty.

Check 6.
Inspect ECU.

Bad

Replace ECU.

INSPECTION OF ELECTRONIC CONTROL COMPONENTS

Solenoid Valve

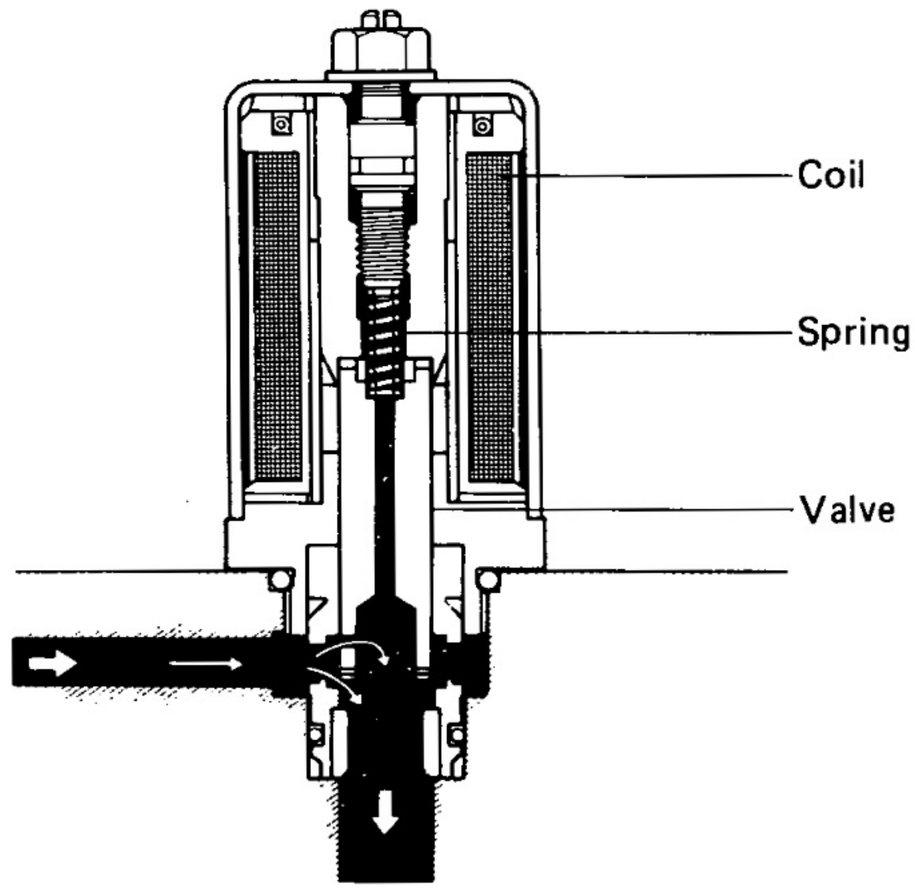

SR4135

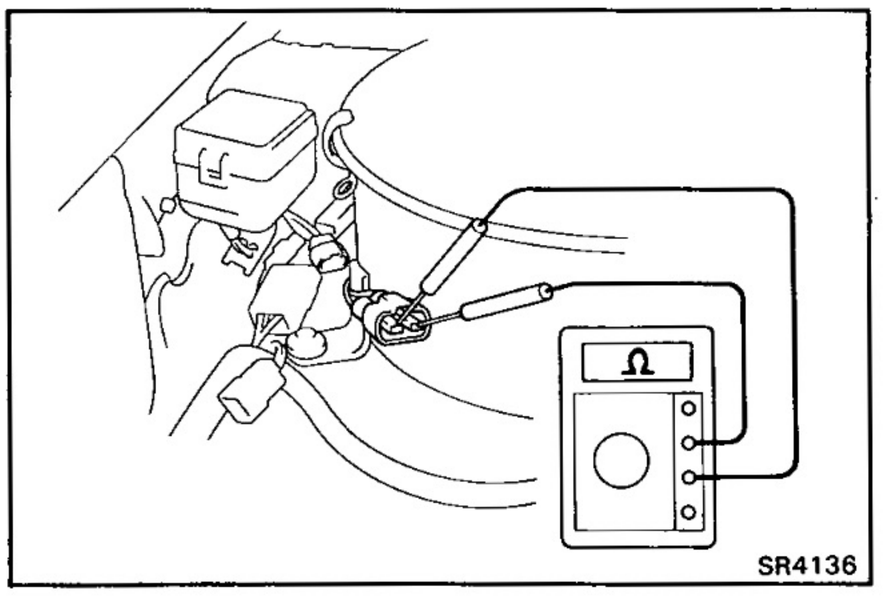

SR4136

1. DISCONNECT WIRING CONNECTOR

2. MEASURE RESISTANCE

Measure the resistance between SOL ⊕ and SOL ⊖.

Resistance: 6 — 11 Ω

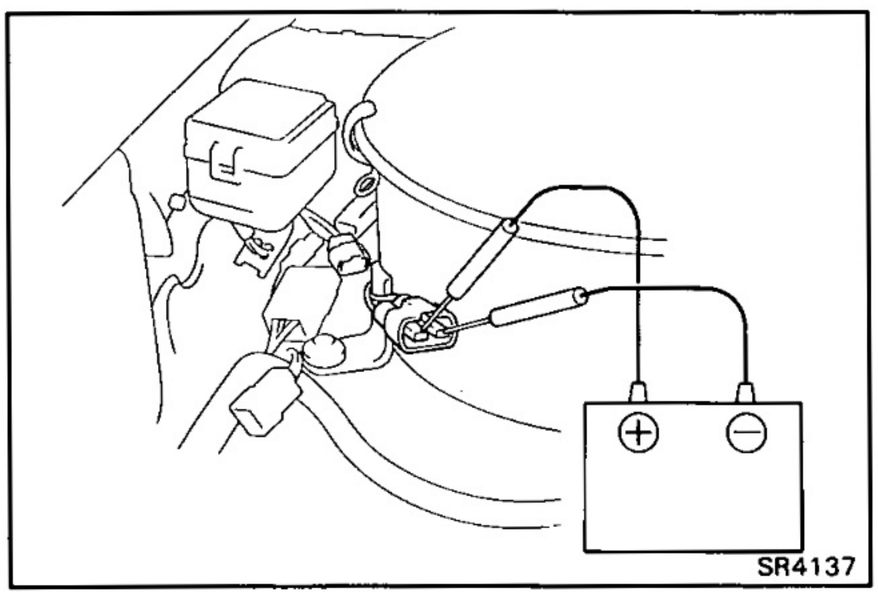

SR4137

3. CHECK SOLENOID OPERATION

(a) Connect the battery positive terminal to the solenoid terminal SOL ⊕.

(b) Connect the battery negative terminal to the solenoid terminal SOL ⊖.

(c) Check that the solenoid is clicked.

If faulty, replace the pressure control valve with the solenoid valve.

NOTICE:

- **Do not apply voltage for more than 30 seconds to avoid burning out the solenoid.**
- **If repeating this step, wait until the solenoid cools down enough that it can be touched by hand.**

4. CONNECT WIRING CONNECTOR

Power Steering ECU

1. **JACK UP VEHICLE AND SUPPORT IT ON STANDS**

2. **REMOVE LH COWL SIDE TRIM**

   HINT: Do not disconnect the ECU connector.

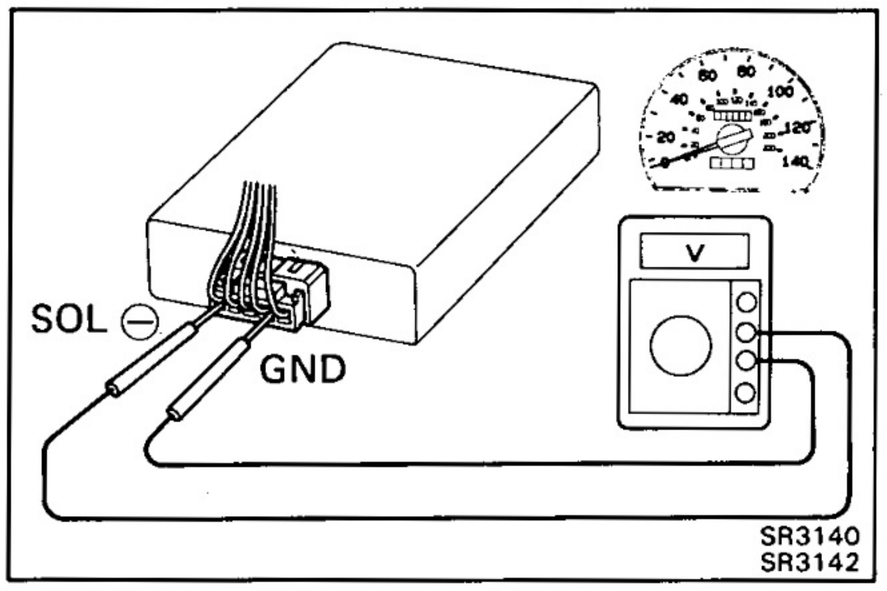

3. **START ENGINE**

4. **MEASURE VOLTAGE OF ECU**

   (a) Using a voltmeter, check that there is no voltage between ECU terminals GND and SOL ⊖ while the engine is idling.

   Standard voltage: 0.28 – 0.38 V

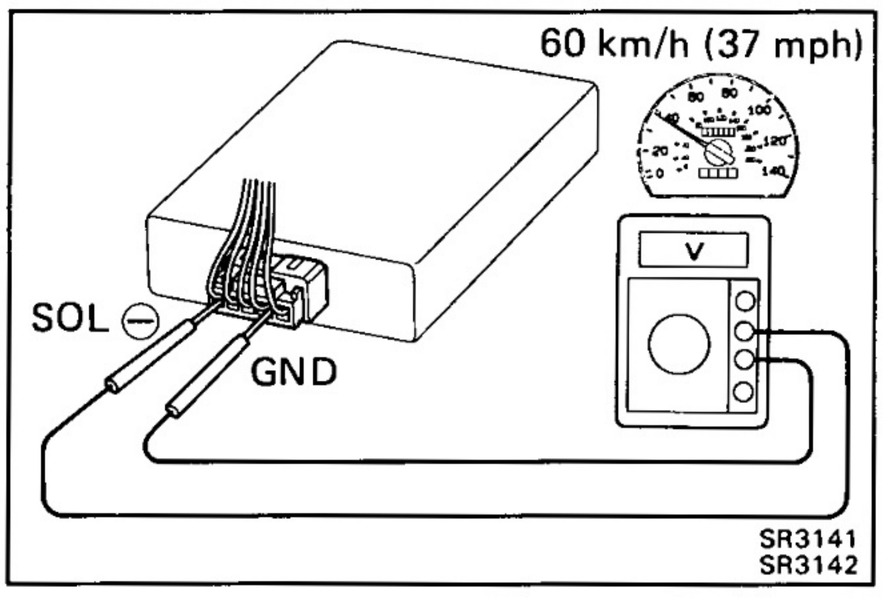

   (b) Place the transmission in gear and while traveling at about 60 km/h (37 mph), measure the voltage between ECU terminals GND and SOL ⊖.

   Standard voltage: Voltage measure in (a) above, minus 0.13 – 0.21 V

   If no voltage, try another ECU.

5. **INSTALL LH COWL SIDE TRIM**

6. **LOWER VEHICLE**

STEERING LINKAGE

REMOVAL AND INSTALLATION OF STEERING LINKAGE

Remove and install the parts as shown.

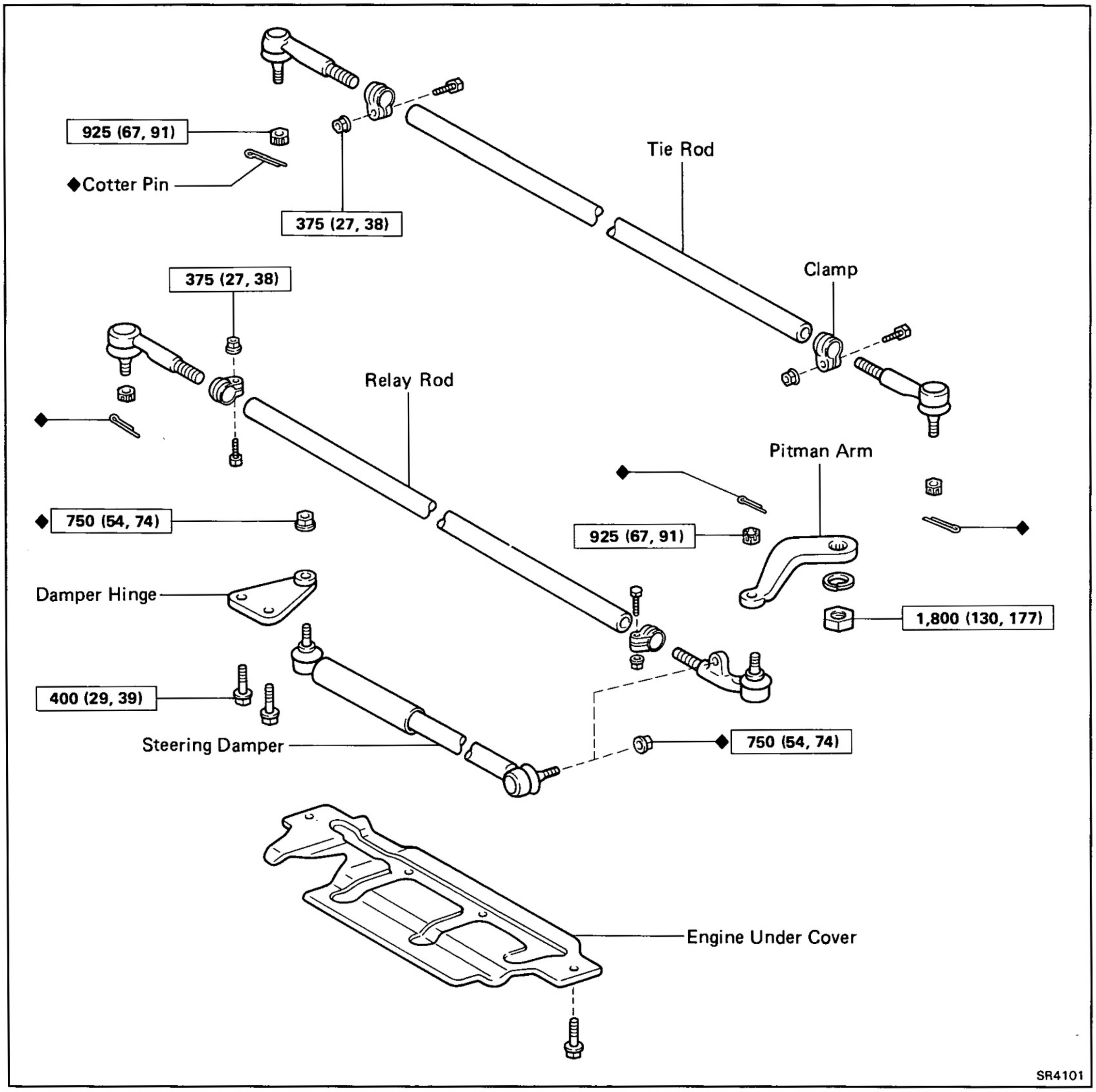

SR4101

HINT:

- When connecting the ball stud to the arm or rod, remove the grease on the joint surfaces.
- After torquing the ball stud nut to specified torque, advance the nut just enough to insert the cotter pin.
- After installing any of the steering linkage components, check the front wheel alignment and side slip. (See page SA-3)

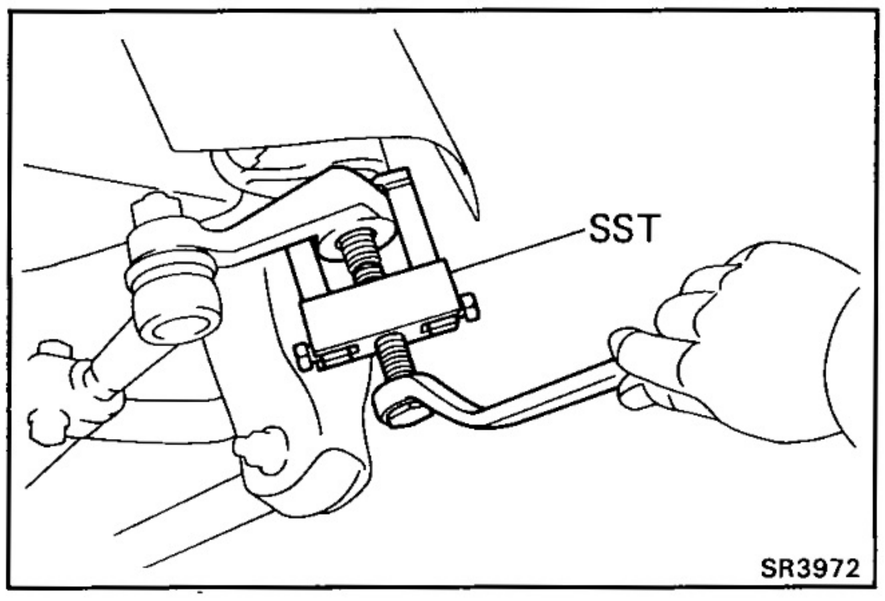

(MAIN POINTS OF REMOVAL AND INSTALLATION)

1. DISCONNECT AND CONNECT PITMAN ARM FROM/TO SECTOR SHAFT

(a) Loosen the pitman arm nut.

(b) Using SST, disconnect pitman arm from sector shaft.

SST 09628-62011

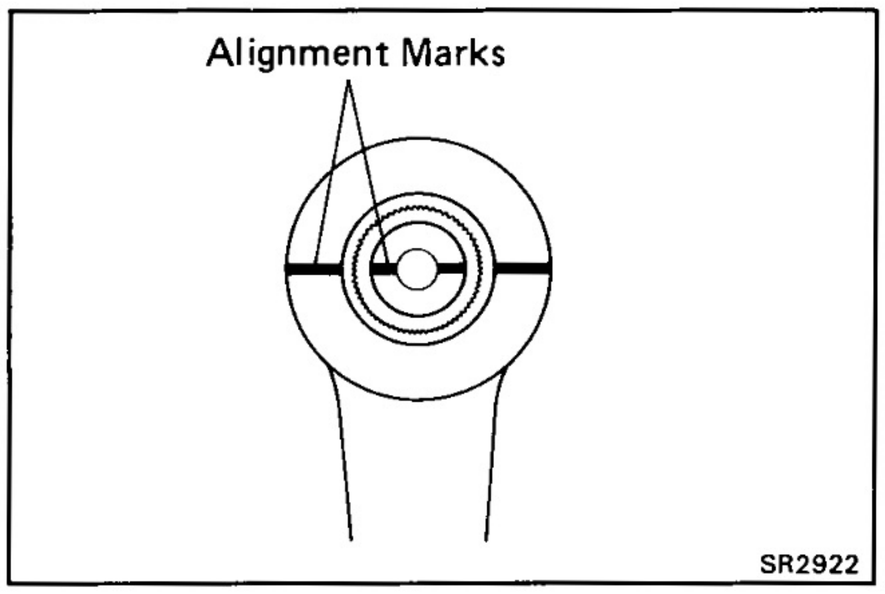

(c) When connecting, align the alignment marks on the pitman arm and the sector shaft, and install the spring washer and nut.

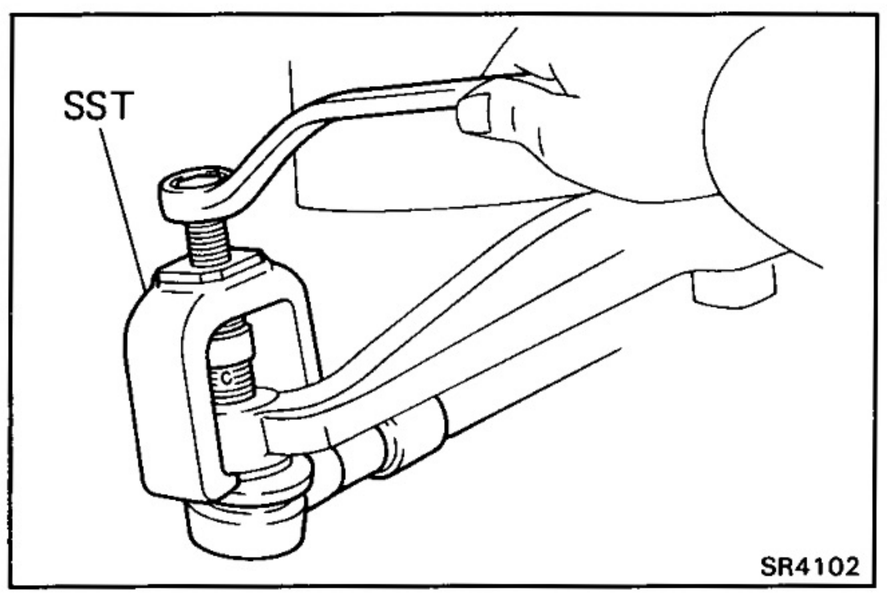

2. DISCONNECT RELAY ROD FROM PITMAN ARM

Using SST, disconnect the pitman arm from the relay rod.

SST 09611-22012

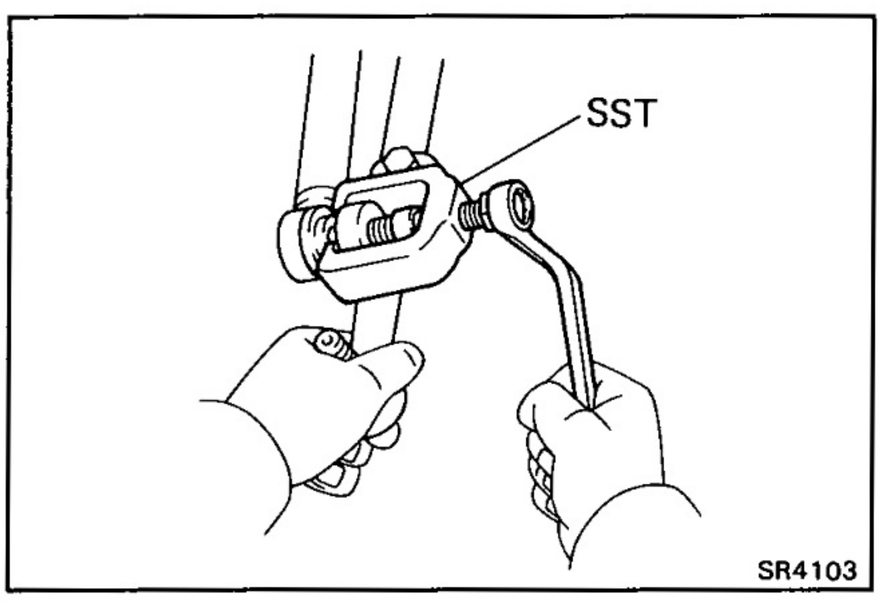

3. DISCONNECT STEERING DAMPER FROM RELAY ROD

Using SST, disconnect the steering damper from the relay rod.

SST 09611-22012

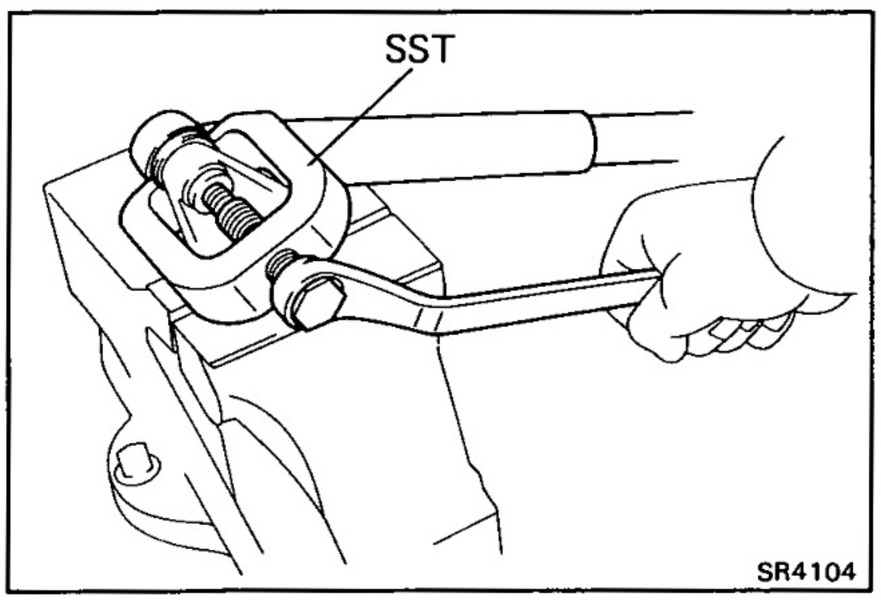

4. DISCONNECT STEERING DAMPER FROM DAMPER HINGE

(a) Remove the damper with hinge.

(b) Using SST, disconnect the damper from the hinge.

SST 09610-55012

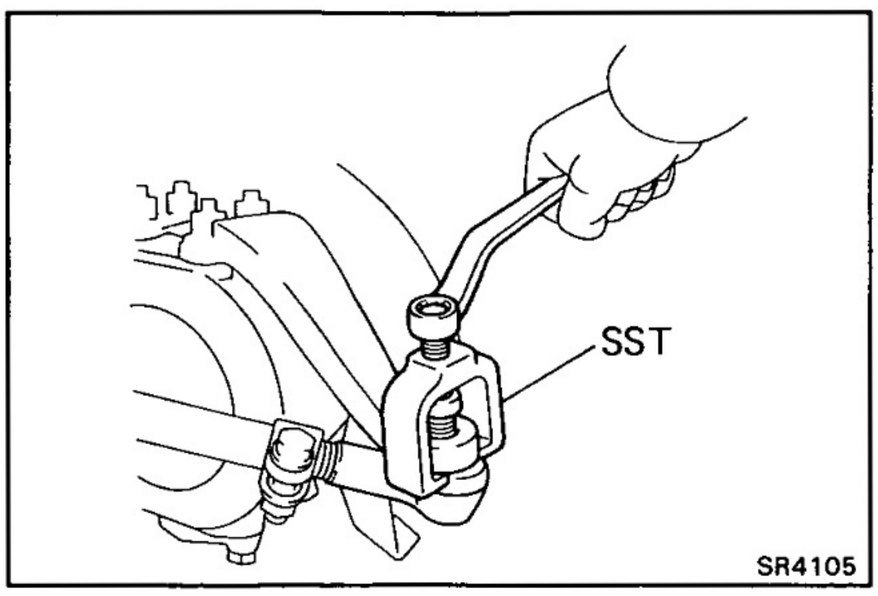

5. DISCONNECT RELAY ROD FROM KNUCKLE ARM

Using SST, disconnect relay rod from knuckle arm.

SST 09611-22012

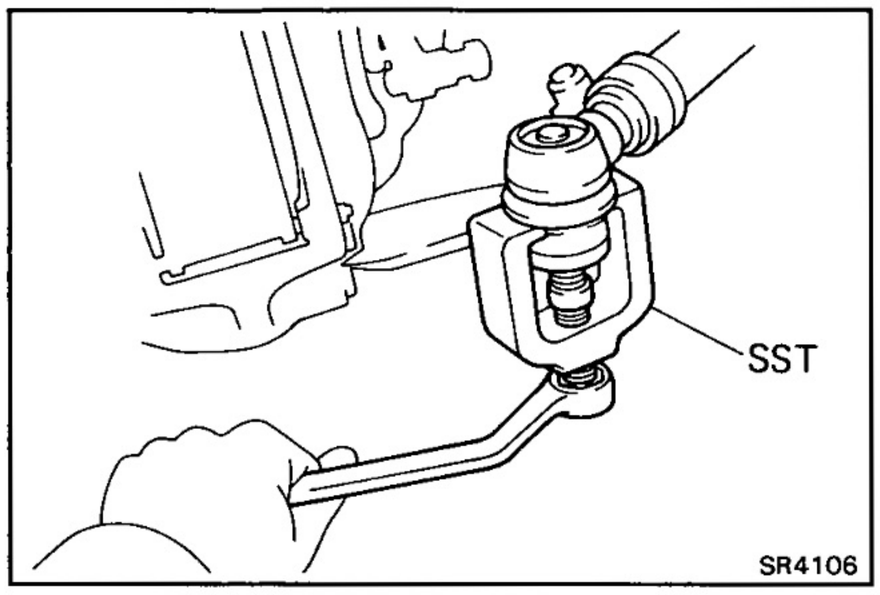

6. DISCONNECT TIE ROD FROM KNUCKLE ARM

Using SST, disconnect tie rod from knuckle arm.

SST 09611-22012

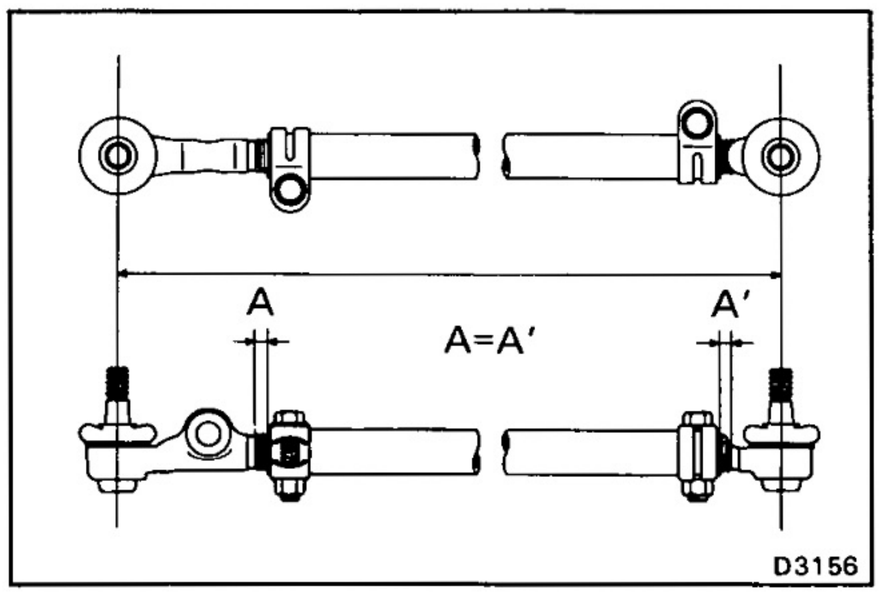

7. IF NECESSARY, REPLACE TIE OR RELAY ROD END

(a) Loosen the tie or relay rod end clamp and remove the tie rod end.

(b) Turn the rod ends equal amounts into the rod tube. Tie rods should be approximately 1,207 mm (47.51 in.). Relay rods should be approximately 1,076 mm (42.34 in.).

(c) The remaining length of threads on both tie rod ends should be equal.

(d) Temporarily tighten the tie rod end clamp.

BODY ELECTRICAL SYSTEM

	Page
GENERAL INFORMATION	BE-2
POWER SOURCE	BE-7
IGNITION SWITCH	BE-12
LIGHTING SYSTEM	BE-14
HEADLIGHT CLEANER SYSTEM	BE-34
WIPER AND WASHER SYSTEM	BE-36
COMBINATION METER	BE-47
DEFOGGER SYSTEM	BE-71
POWER WINDOW CONTROL SYSTEM	BE-75
POWER DOOR LOCK CONTROL SYSTEM	BE-83
SLIDING ROOF SYSTEM	BE-90
POWER MIRROR CONTROL SYSTEM	BE-95
POWER SEAT CONTROL SYSTEM	BE-97
SEAT HEATER SYSTEM	BE-99
CRUISE CONTROL SYSTEM	BE-103
FUEL TRANSFER SYSTEM	BE-126
AUDIO SYSTEM	BE-129
CLOCK	BE-162

GENERAL INFORMATION

Wiring Color Code

Wire colors are indicated by an alphabetical code.

B = Black	L = Blue	R = Red
BR = Brown	LG = Light Green	V = Violet
G = Green	O = Orange	W = White
GR = Gray	P = Pink	Y = Yellow

The first letter indicates the basic wire color and the second letter indicated the color of the stripe.

Example:

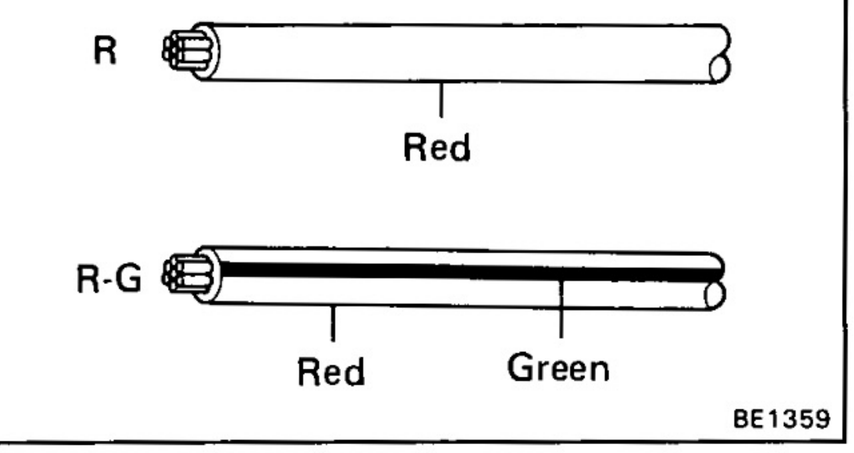

Connector

1. **PIN NUMBER OF FEMALE CONNECTOR**

   Numbered in order from upper left to lower right.

2. **PIN NUMBER OF MALE CONNECTOR**

   Numbered in order from upper right to lower left.

   HINT: When connectors with different or the same number of terminals are used with the same parts, each connector name (letter of the alphabet) and pin number is specified.

Example:

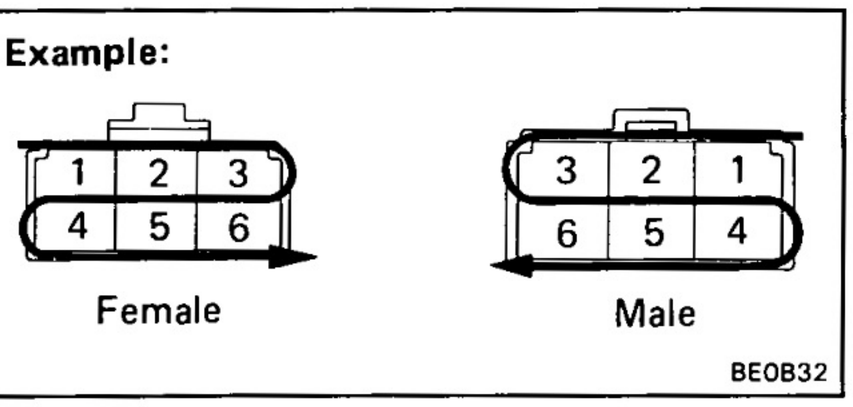

Example:

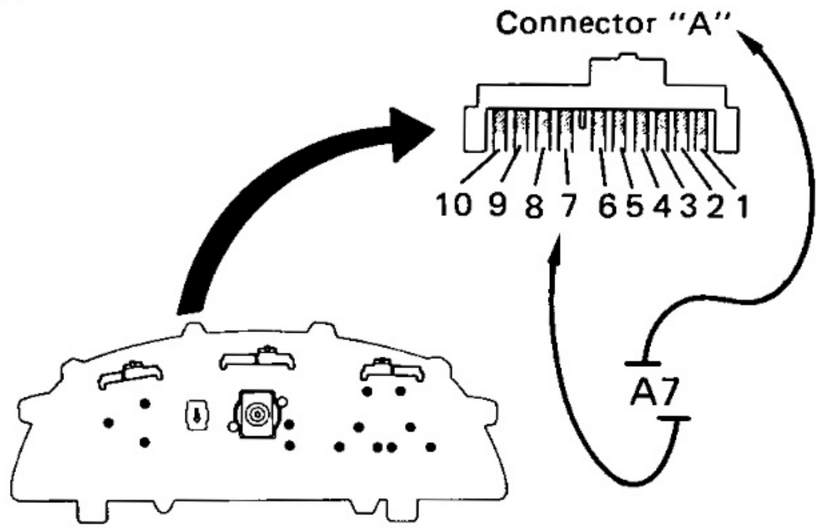

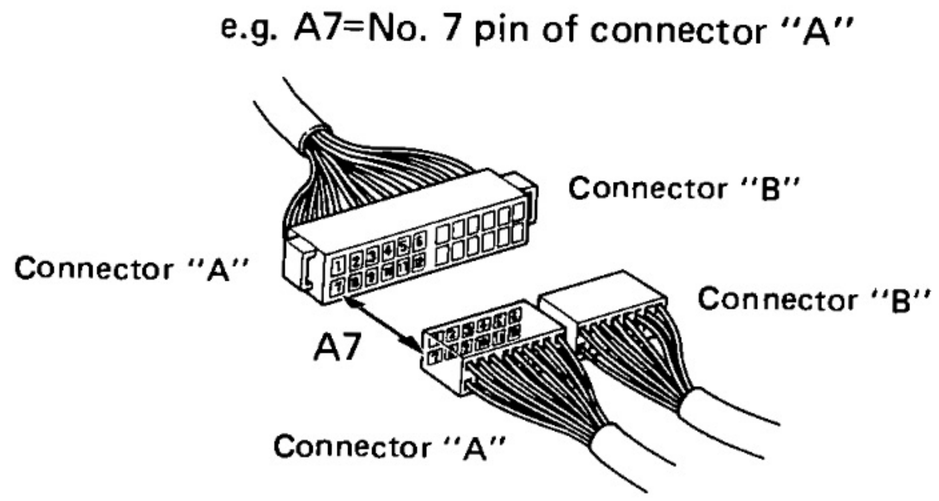

Example:

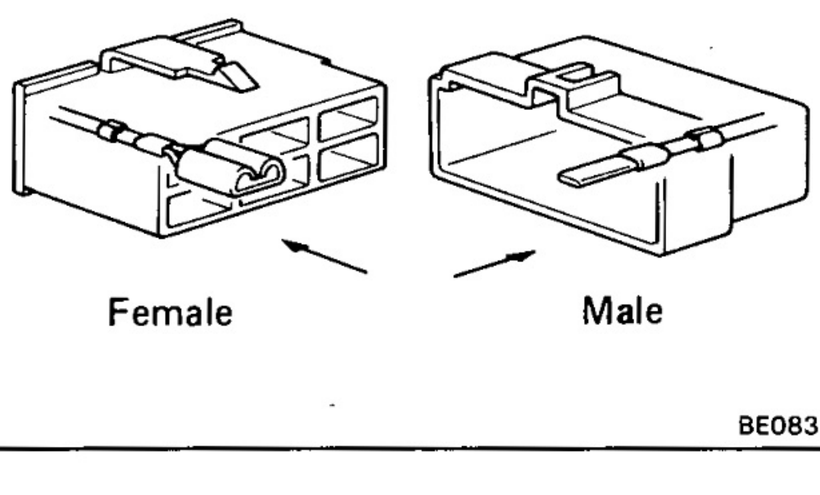

3. DISTINCTION OF MALE AND FEMALE CONNECTORS

Male and female connectors are distinguished by shape of their internal pins.

(a) All connectors are shown from the open end, and the lock is on top.

(b) To pull apart the connectors, pull on the connector itself, not the wires.

HINT: Check to see what kind of connector you are disconnecting before pulling apart.

Example:

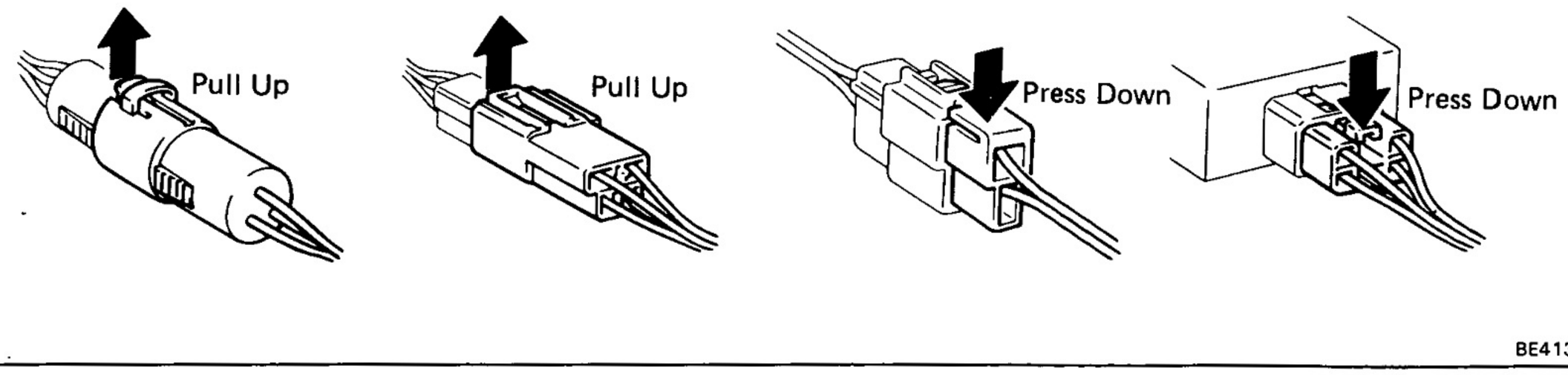

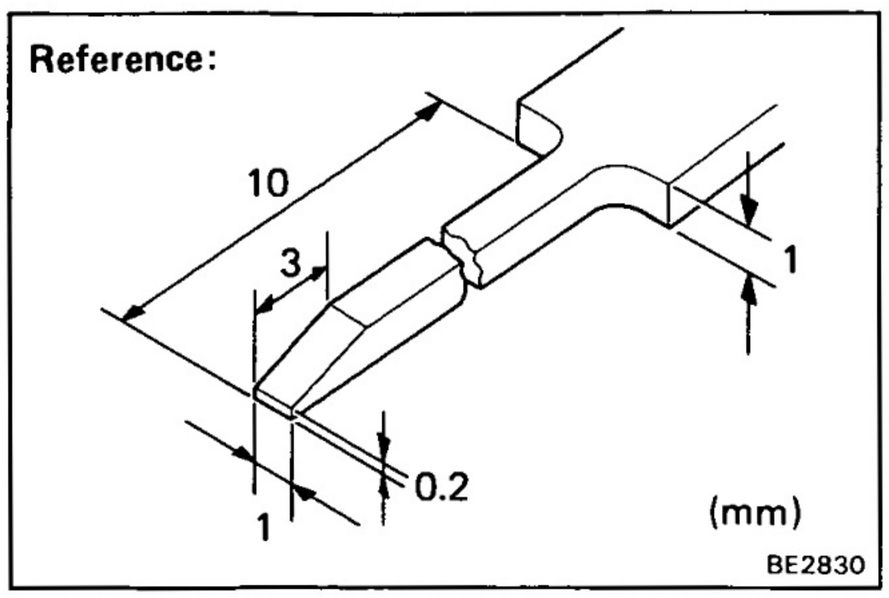

How to Replace Terminal

(with Terminal Retainer Type)

HINT: To remove the terminal for this type of connector, please construct and use the special tool or like object shown on the left.

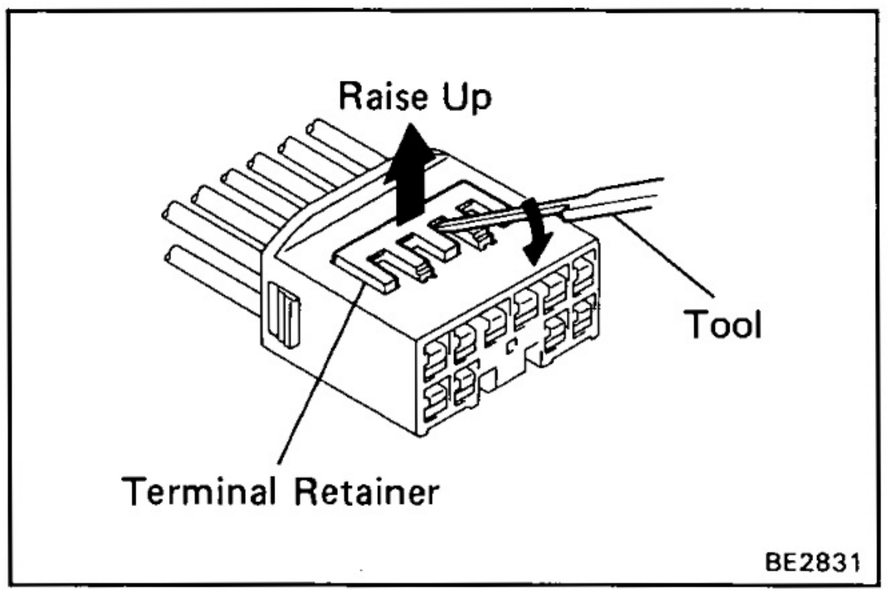

1. DISCONNECT CONNECTOR

Disconnect the connector according to the instructions on BE-2.

2. DISCONNECT TERMINAL FROM CONNECTOR

(a) Using the special tool, raise the retainer up to the temporary lock position.

HINT: The needle insertion position varies according to the connector's shape (number of terminals, etc.), so check the position before inserting it.

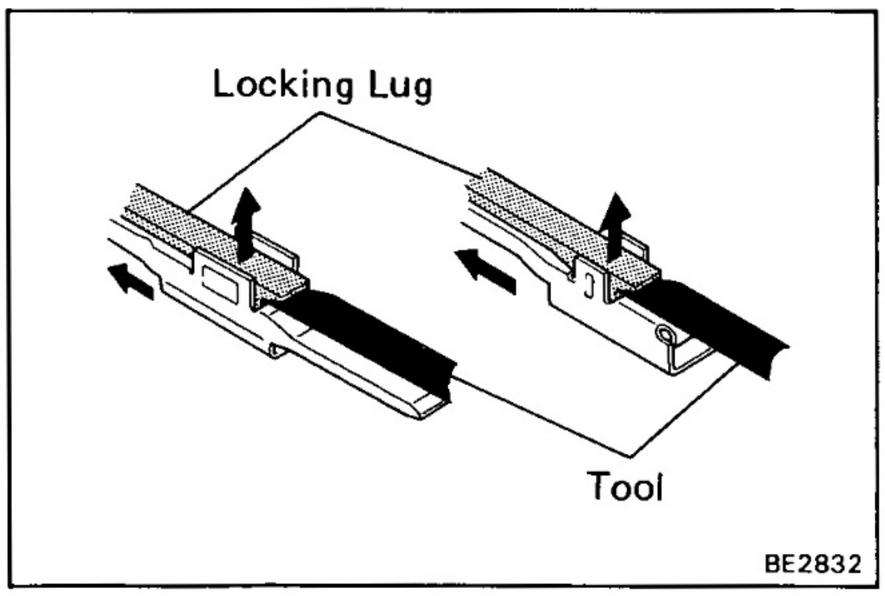

(b) Using the special tool, release the locking lug and pull the terminal out from rear.

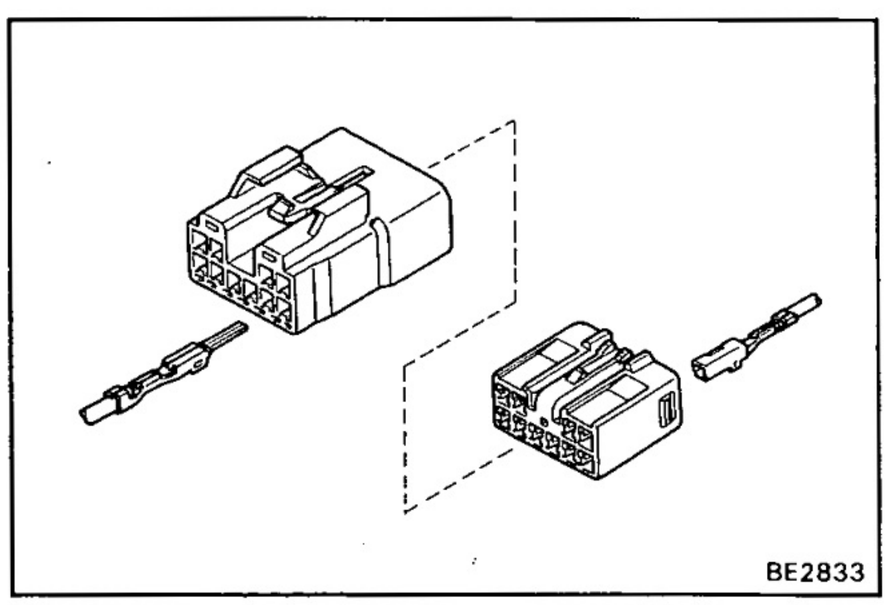

3. INSTALL TERMINAL TO CONNECTOR

(a) Insert the terminal.

HINT:

1. Make sure the terminal is positioned correctly.
2. Insert the terminal until the locking lug locks firmly.
3. Insert the terminal with retainer in the temporary lock position.

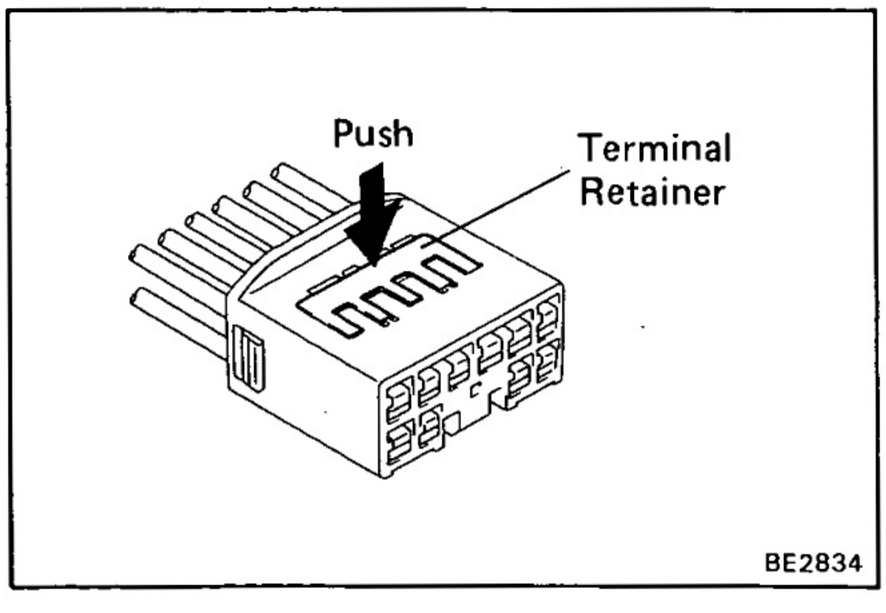

(b) Push the retainer in as far as the full lock position.

4. CONNECT CONNECTOR

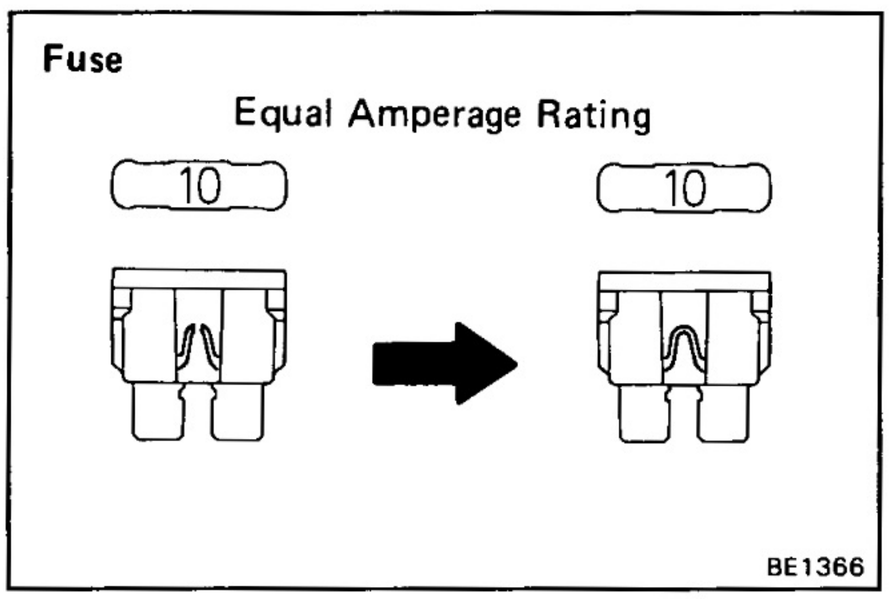

Replacement of High Current Fuse, Medium Current Fuse and Fuse

HINT: If replacing the fuse, be sure to replace it with a fuse with an equal amperage rating.

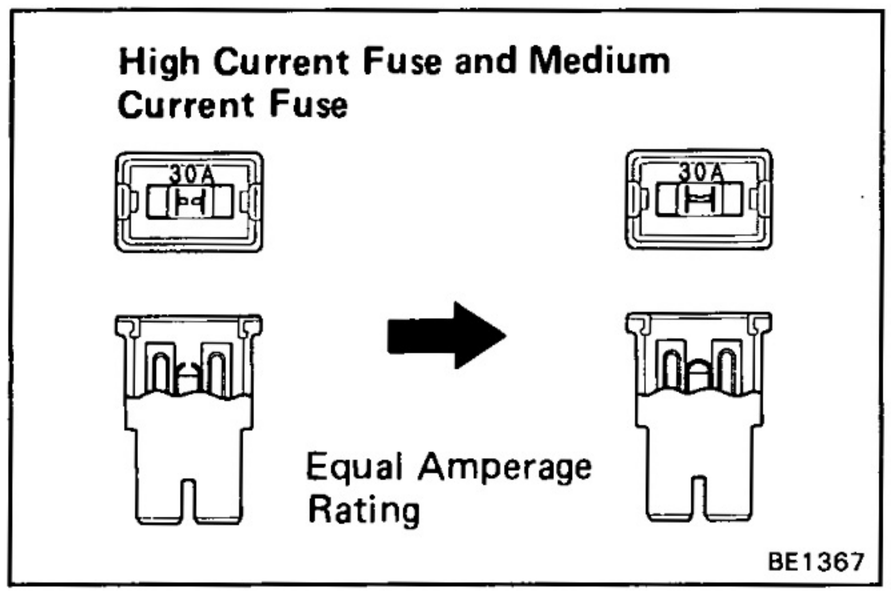

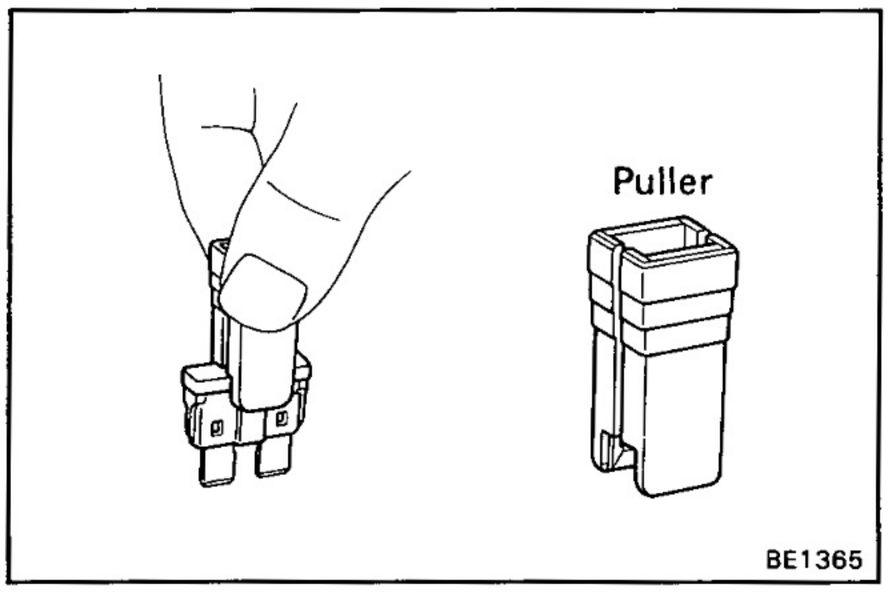

NOTICE:

1. **Turn off all electrical components and the ignition switch before replacing a fuse. Do not exceed the fuse or fusible link amperage rating.**
2. **Always use a fuse puller for removing and inserting a fuse. Remove and insert straight in and out without twisting. Twisting could force open the terminals too much, resulting in a bad connection.**

If a fuse continues to blow, a short circuit is indicated. The system must be checked by a qualified technician.

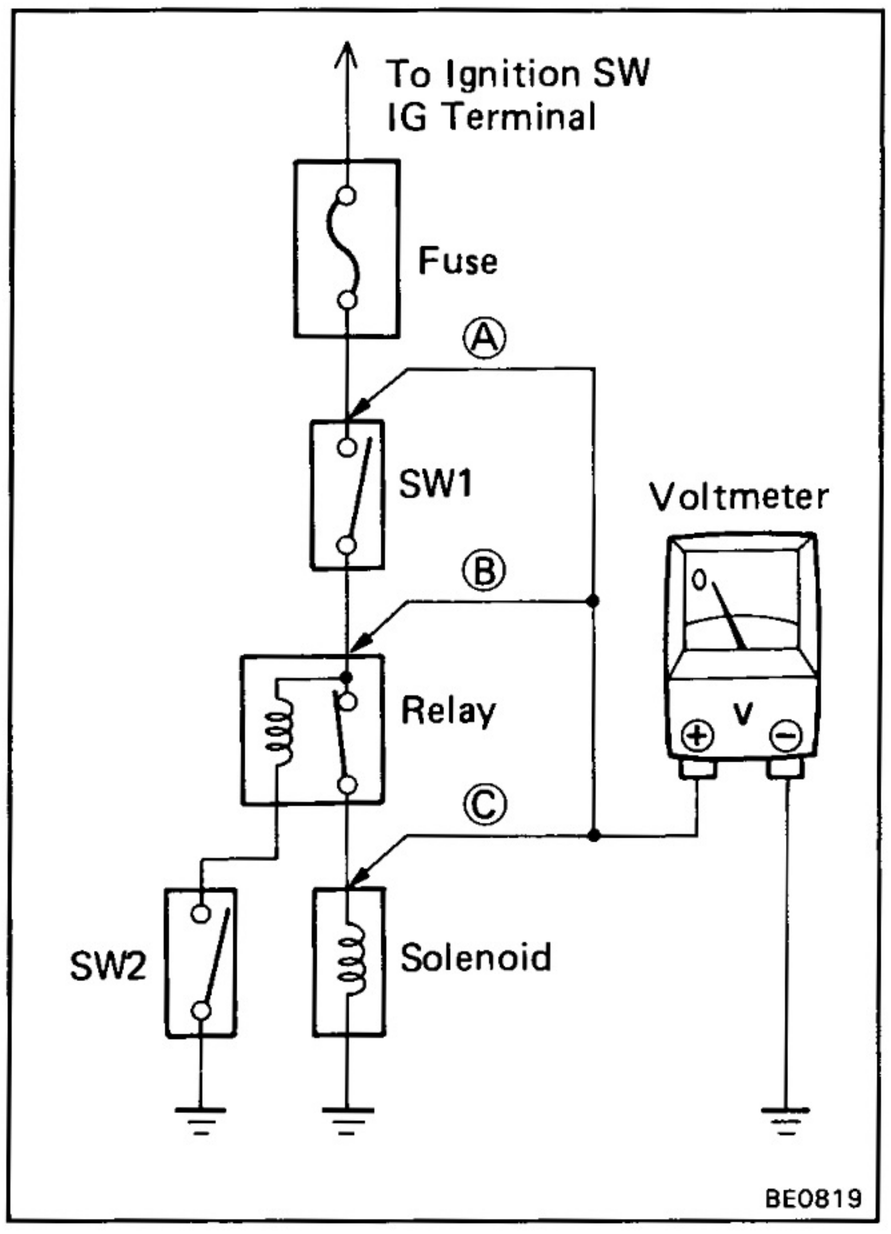

Check for Voltage

(a) Establish conditions in which voltage is present at the check point.

Example:

Ⓐ — Ignition switch on.

Ⓑ — Ignition switch and switch 1 (SW1) on.

Ⓒ — Ignition switch, switch 1 (SW1) and relay on (switch 2 (SW2) off).

(b) Using a voltmeter, connect the negative (—) lead to a good ground point or negative (—) battery terminal and the positive (+) lead to the connector or component terminal. This check can be done with a test bulb instead of a voltmeter.

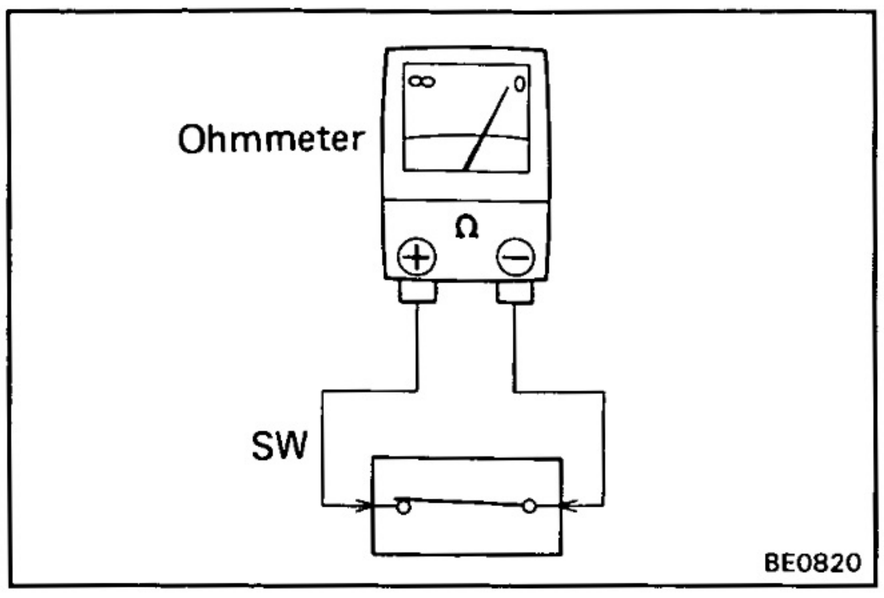

Check for Continuity and Resistance

(a) Disconnect the battery terminal or wire so there is no voltage between the check points.

(b) Contact the two leads of an ohmmeter to each of the check points.

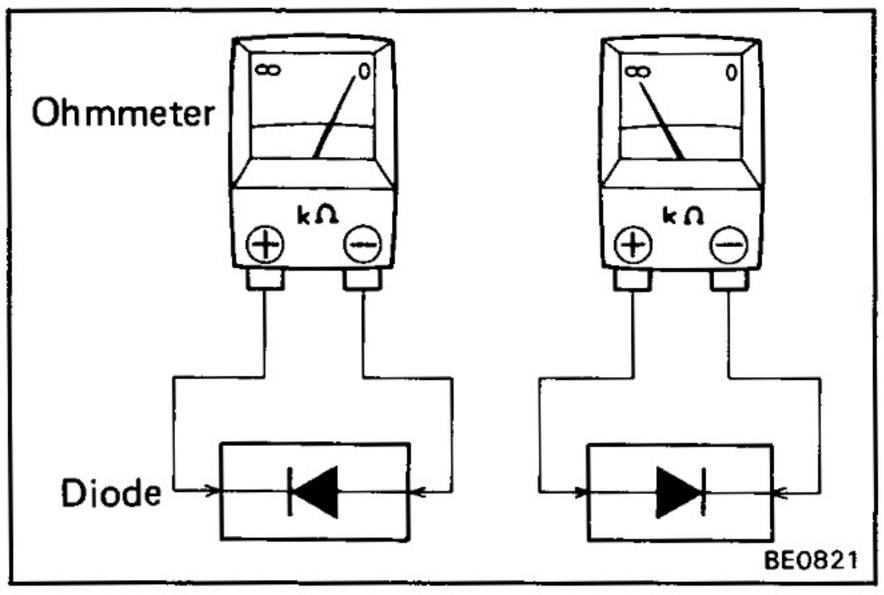

If the circuit has diodes, reverse the two leads and check again.

When contacting the negative (—) lead to the diode positive (+) side and the positive (+) lead to the negative (—) side, there should be continuity.

When contacting the two leads in reverse, there should be on continuity.

HINT: Specifications may vary depending on the type of tester, so refer to the tester's instruction manual before performing the inspection.

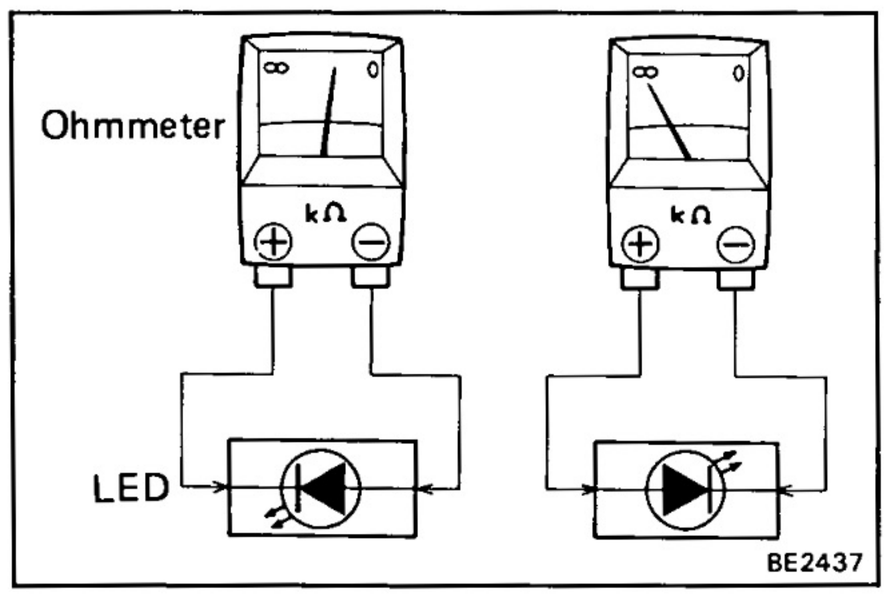

Check LED (Light Emitting Diode) in the same manner as that for diodes.

- Use a tester with a power source of 3V or greater to overcome the circuit resistance.
- If a suitable tester is not available, apply battery voltage and check that the LED that the LED lights up.

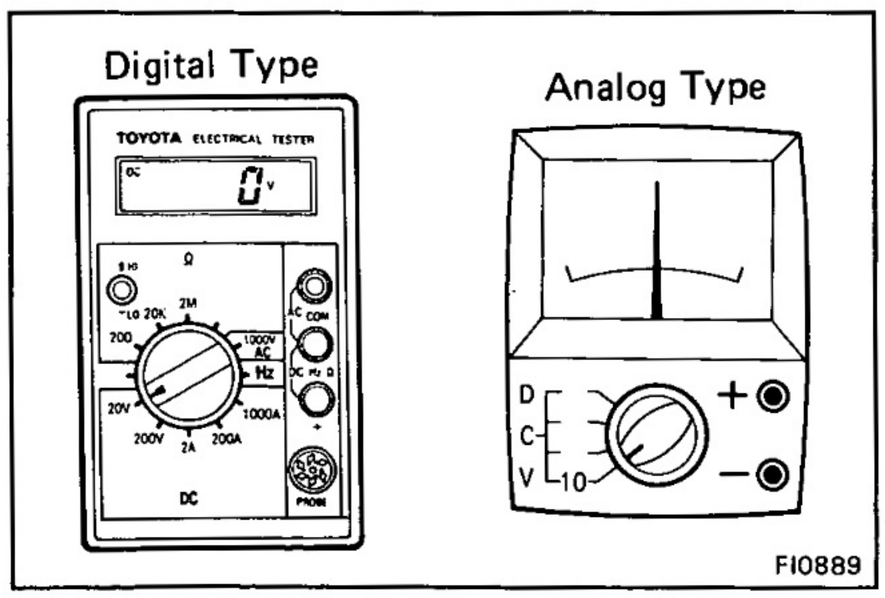

(c) Use a volt/ohmmeter with high impedance (10 k/V minimum) for troubleshooting of the electrical circuit.

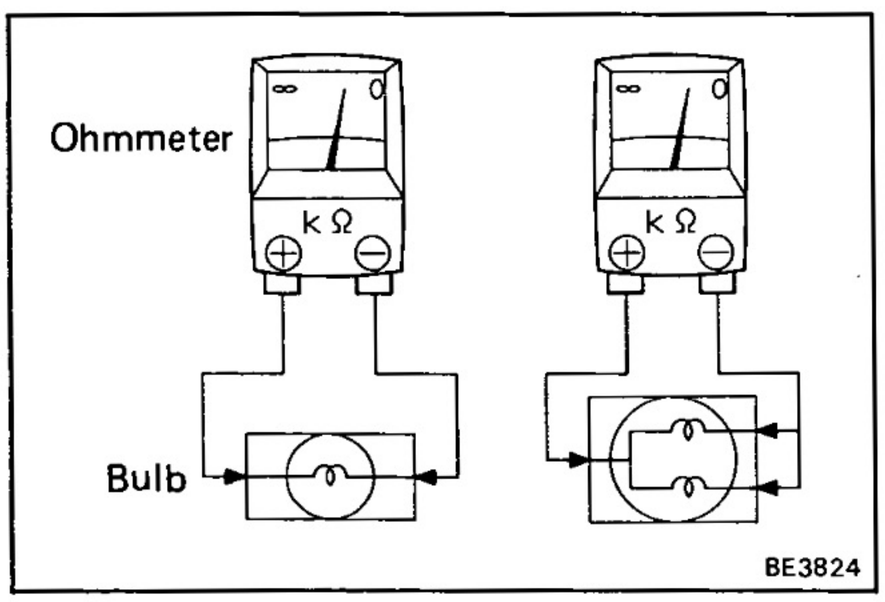

Check the Bulb

(a) Remove the bulb.

(b) There should be continuity between the respective terminals of the bulb together with a certain amount of resistance.

(c) Apply the two leads of the ohmmeter to each of the terminals.

(d) Apply battery voltage and check that the bulb light up.

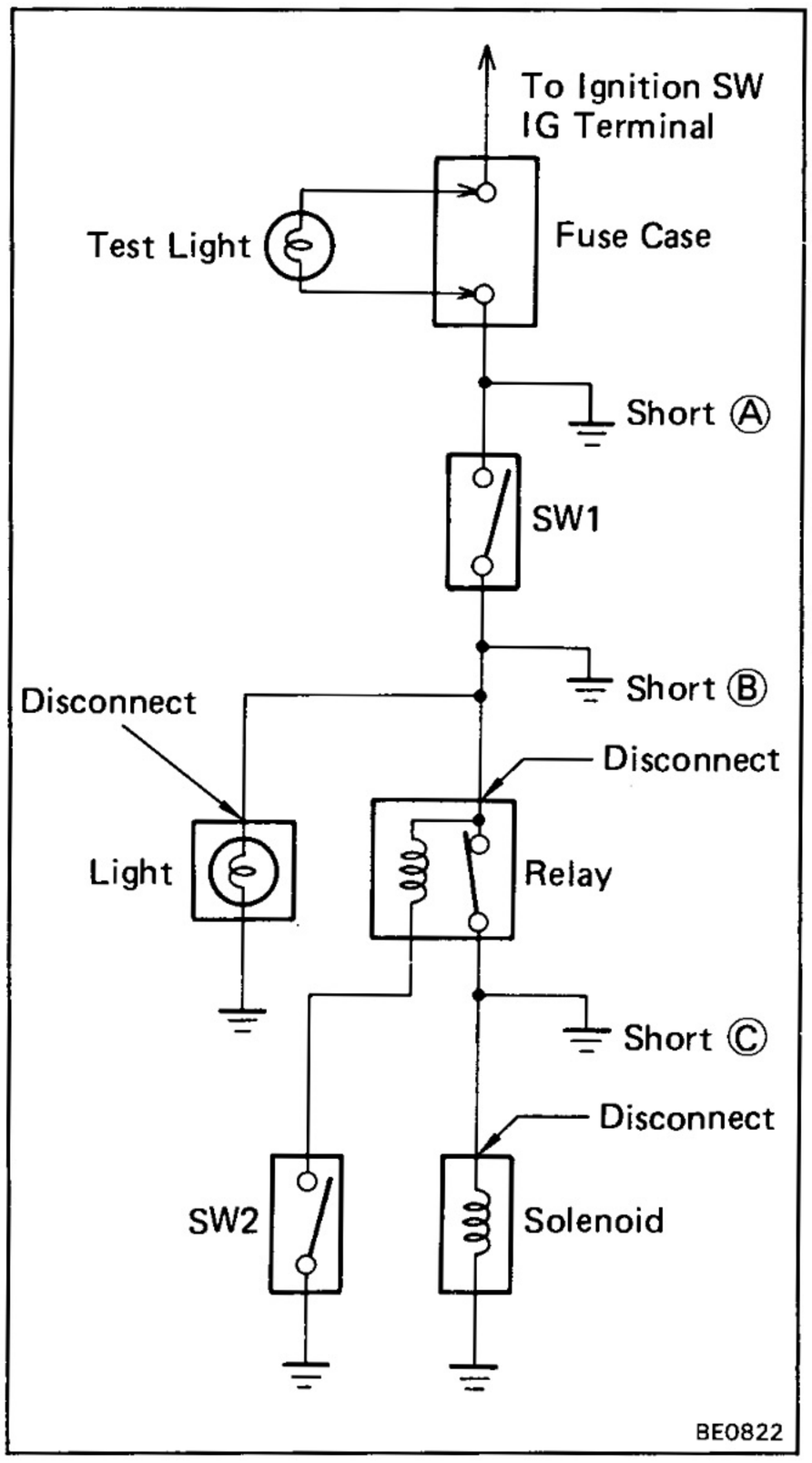

Check for Short Circuit

(a) Remove the blown fuse and eliminate all loads from the fuse.

(b) Connect a test bulb in place of the fuse.

(c) Establish conditions in which the test bulb comes on.

Example:

Ⓐ — Ignition switch on.

Ⓑ — Ignition switch and switch 1 (SW1) on.

Ⓒ — Ignition switch, switch 1 (SW1) and relay on (connect the relay) and switch 2 (SW2) off (or disconnect switch 2 (SW2)).

(d) Disconnect and reconnect the connectors while watching the test bulb.

The short lies between the connector where the test bulb stays lit and the connector where the bulb goes out.

(e) Find the exact location of the short by lightly shaking the problem wire along the body.

POWER SOURCE

Parts Location

Gasoline Engine

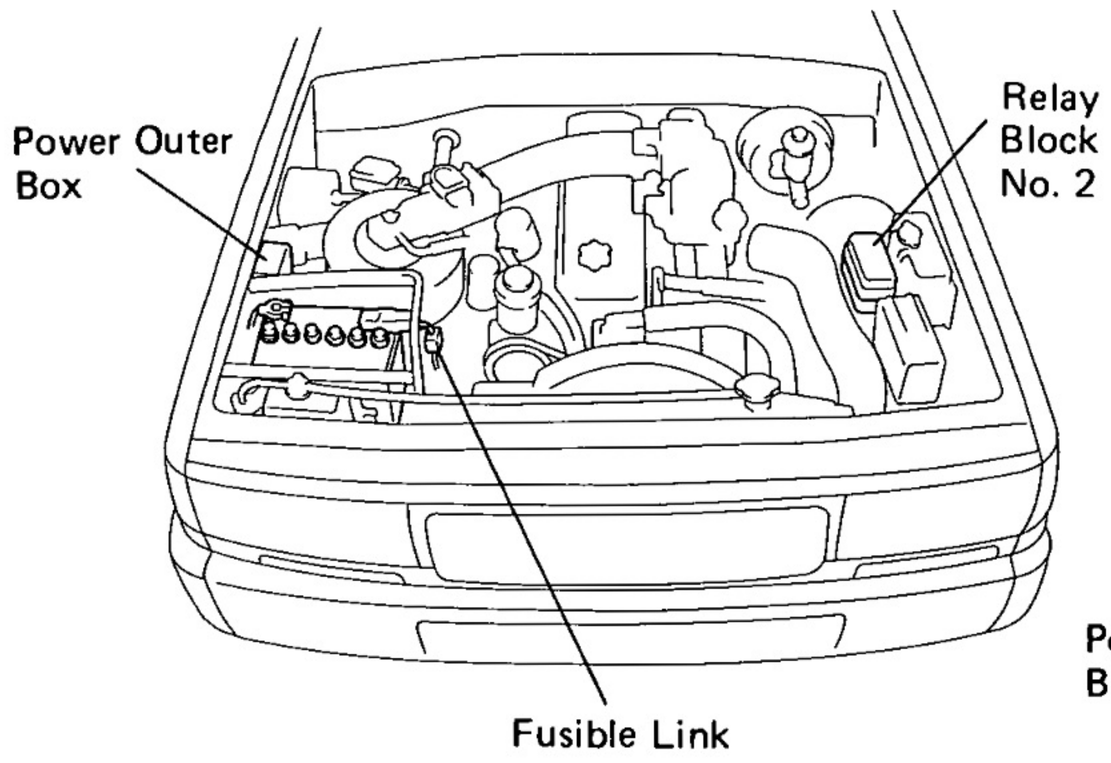

Diesel Engine
(w/o 12/24 Volt Switchover System)

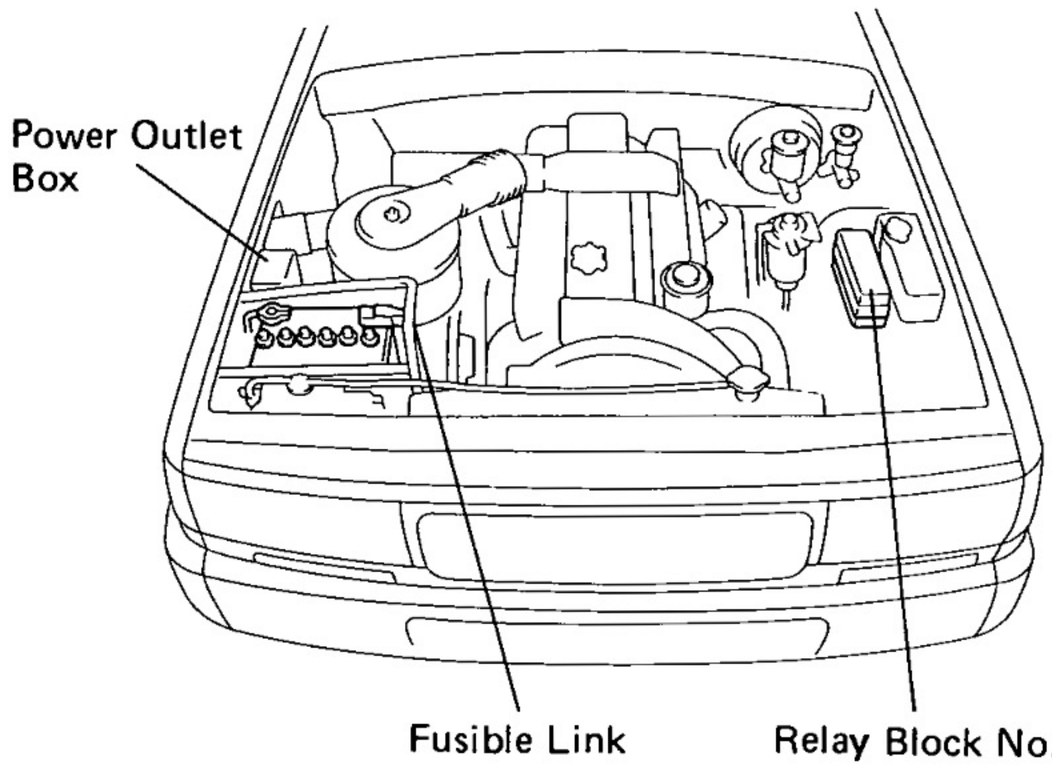

Diesel Engine
(w/ 12/24 Volt Switchover System)

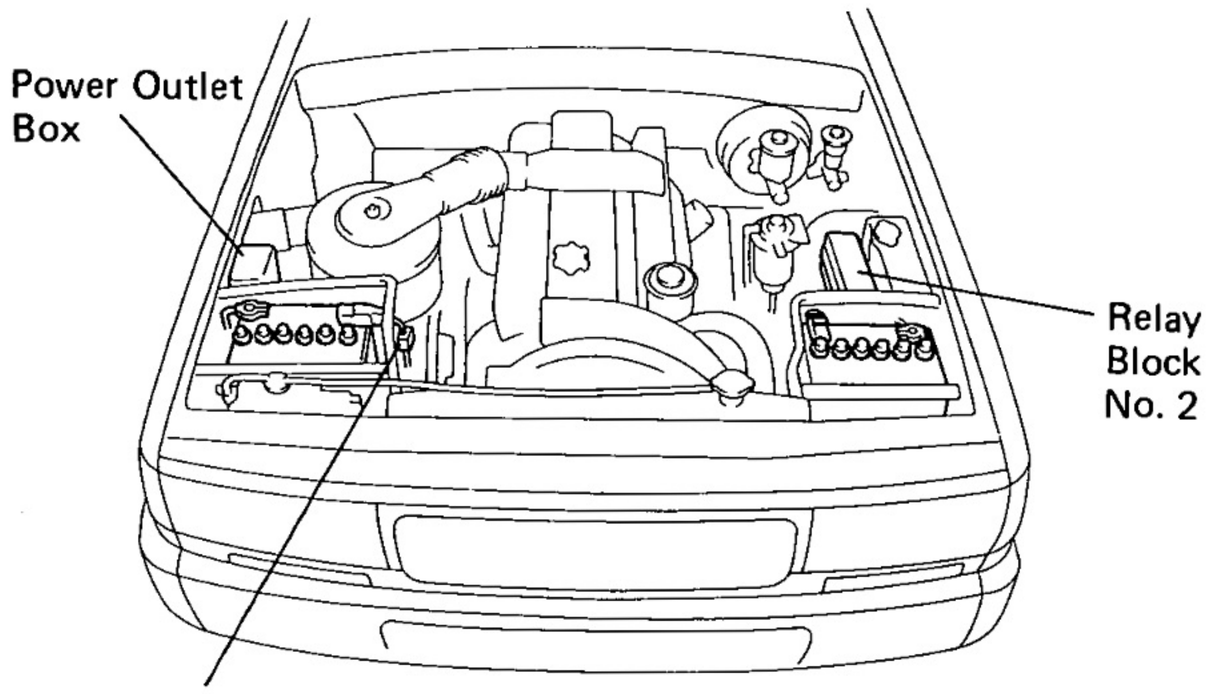

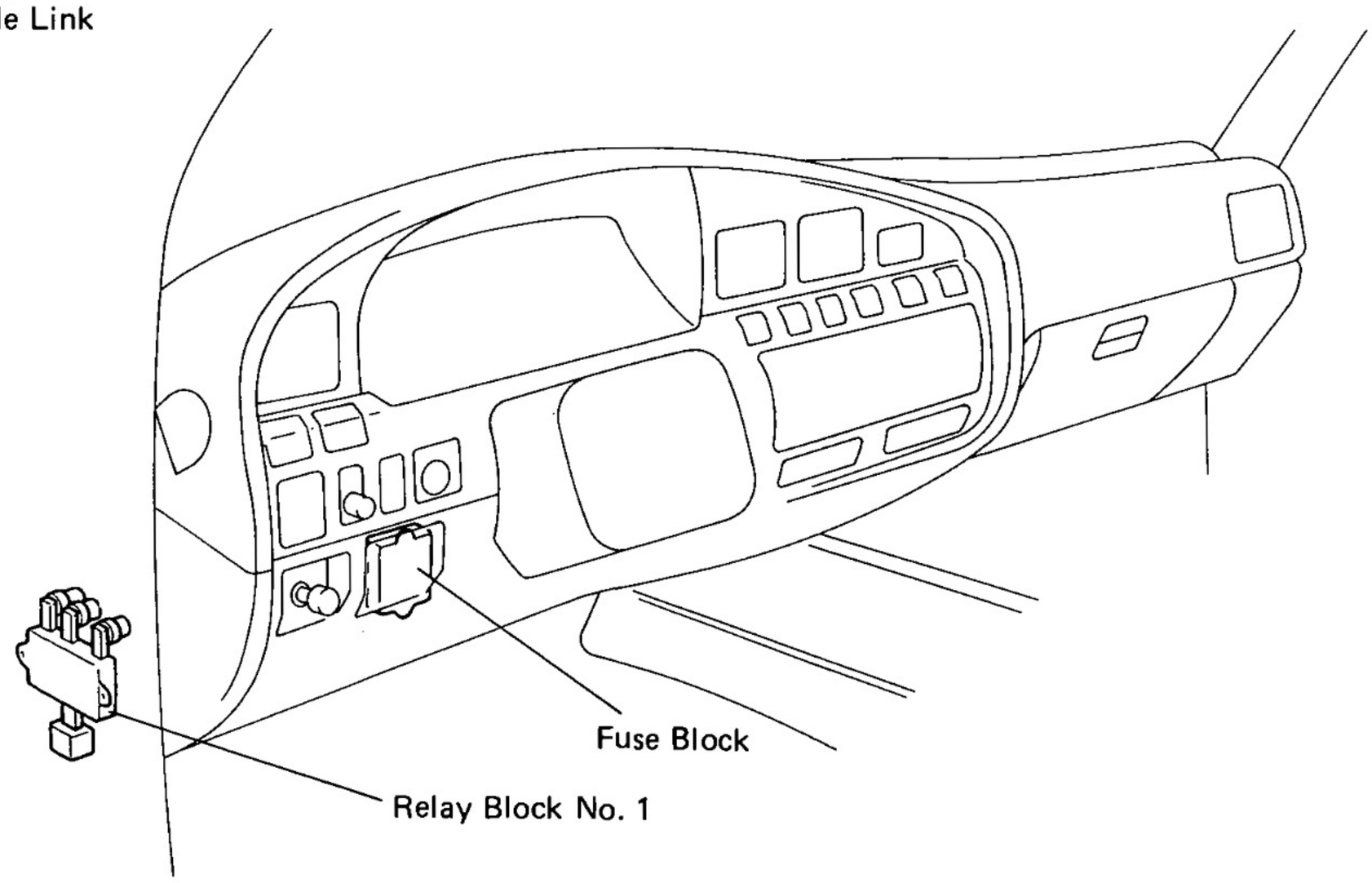

BE5122
BE5126 BE5125
BE5124

Parts Location (Cont'd)

Relay Block No. 2

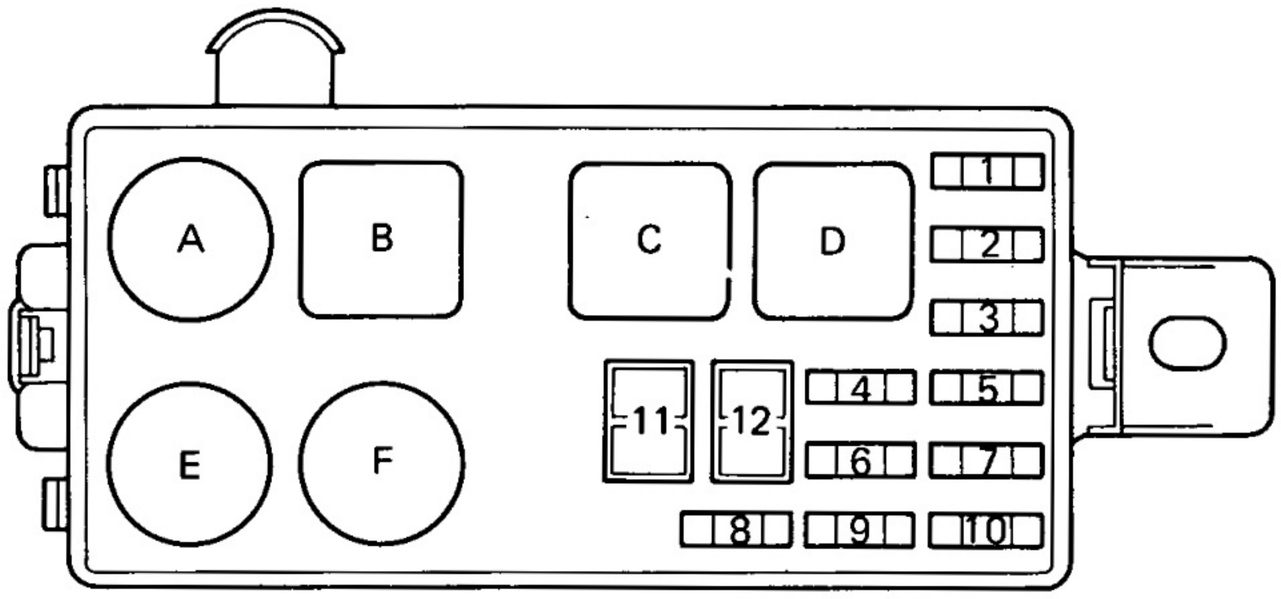

Fuses and High Current Fuses

1.	HEAD (RH)	15A
	HEAD (RH-HI)	15A*1
2.	HEAD (LH)	15A
	HEAD (LH-HI)	15A*1
3.	HEAD (RH-LO)	15A*1
4.	CHARGE	7.5A
5.	HEAD (LH-LO)	15A*1
6.	EFI	15A*2
	FUEL-HTR	20A*3
7.	HAZ-HORN	15A
8.	—	
9.	CDS-FAN	20A
10.	DOME	10A
11.	AM1	50A
12.	—	

Relays

A. EFI Main Relay*2
Fuel Heater Relay*3
B. Charge Light Relay *4
C. Headlight Control Relay
D. Dimmer Relay *1
E. HORN Relay
F. Condenser Fan Relay

*1 : Europe
*2 : 3F-E Engine
*3 : Diesel Engine
*4 : Gasoline Engine w/ IC Alternator

Fuse Block

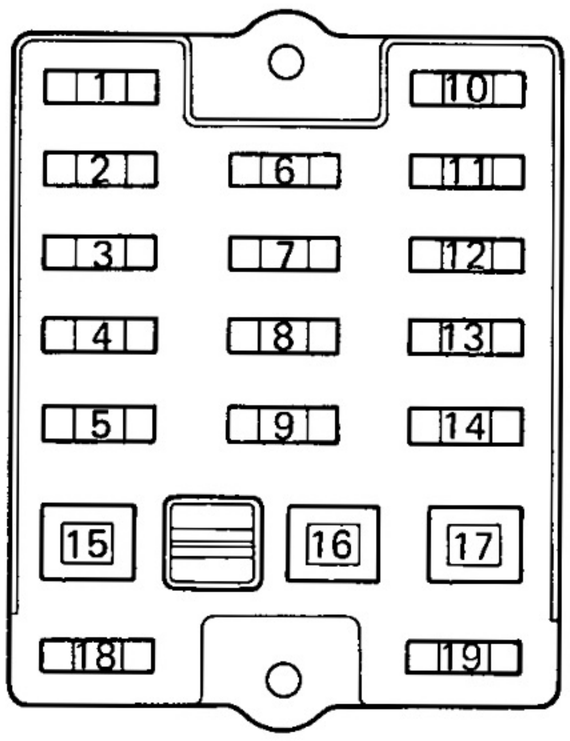

Fuses and Midium Current Fuse

1.	CIG	15A	10.	ECU-B	10A
2.	TAIL	15A	11.	REAR-HTR	20A
	TAIL (RH)	10A*1	12.	IGN	7.5A
3.	TAIL (LH)	10A*1	13.	A/C	10A
4.	STOP	10A	14.	DIFF	30A
5.	DEFOG	20A	16.	HEATER	30A
6.	WIPER	20A	17.	POWER	30A
7.	GAUGE	10A	18.	Spear	
8.	TURN	7.5A	19.	Spear	
9.	ECU-IG	15A			

*1 : Europe

BE4989
BE4988

Parts Location (Cont'd)

Relay Block No. 1

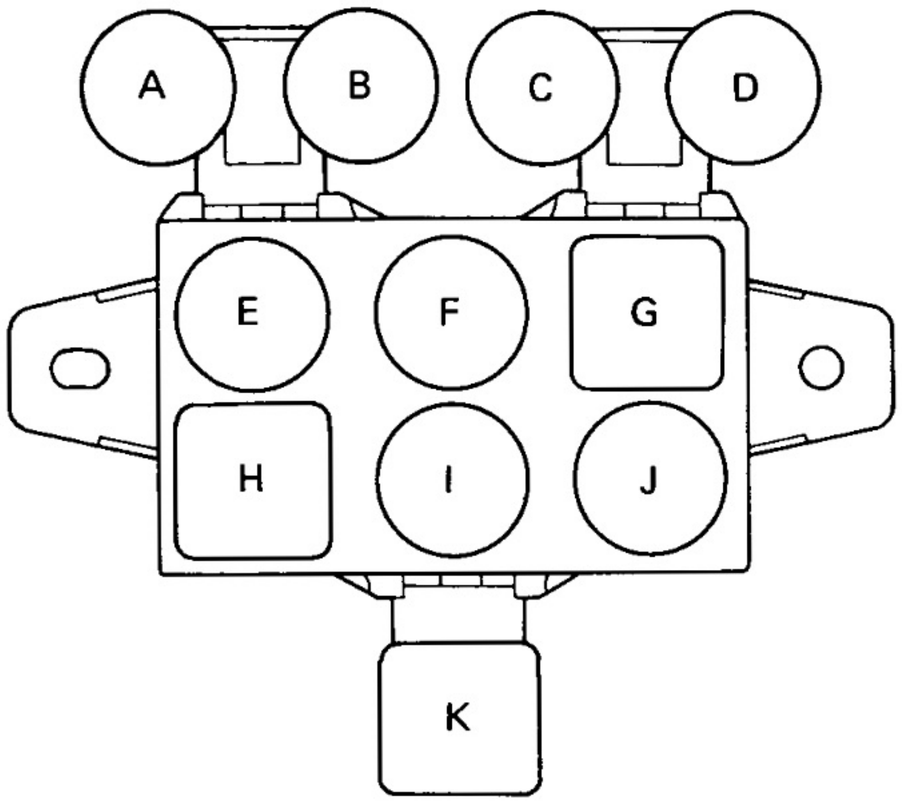

Relays

A. Cooling Fan Relay
B. Bulb Check Relay (Australia)
C. Rear Fog Light Relay (Europe)
   Blower Hi Relay (G.C.C. w/ A/C)
D. —
E. Deffoger Relay
F. Power Main Relay
G. Turn Signal Flasher
H. Heater Relay
I. Taillight Control Relay
J. —
K. Circuit Opening Relay

Power Outlet Box

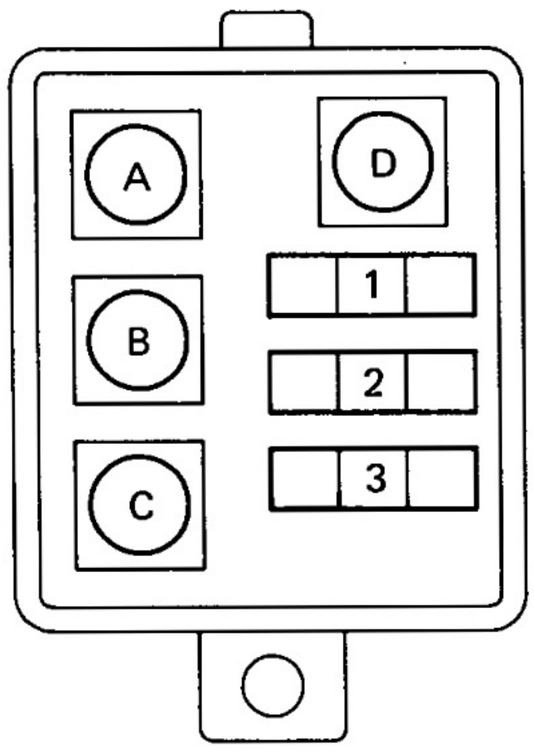

Fuse

1. ACC 10A
2. IG 10A
3. +B 20A

Terminal

No.	Terminal Name	Connected Parts
A	ACC	Ignition Switch ACC
B	IG	Ignition Switch IG1
C	+B	FL MAIN
D	—E	Ground

BE5303
BE511B

Wiring Diagram

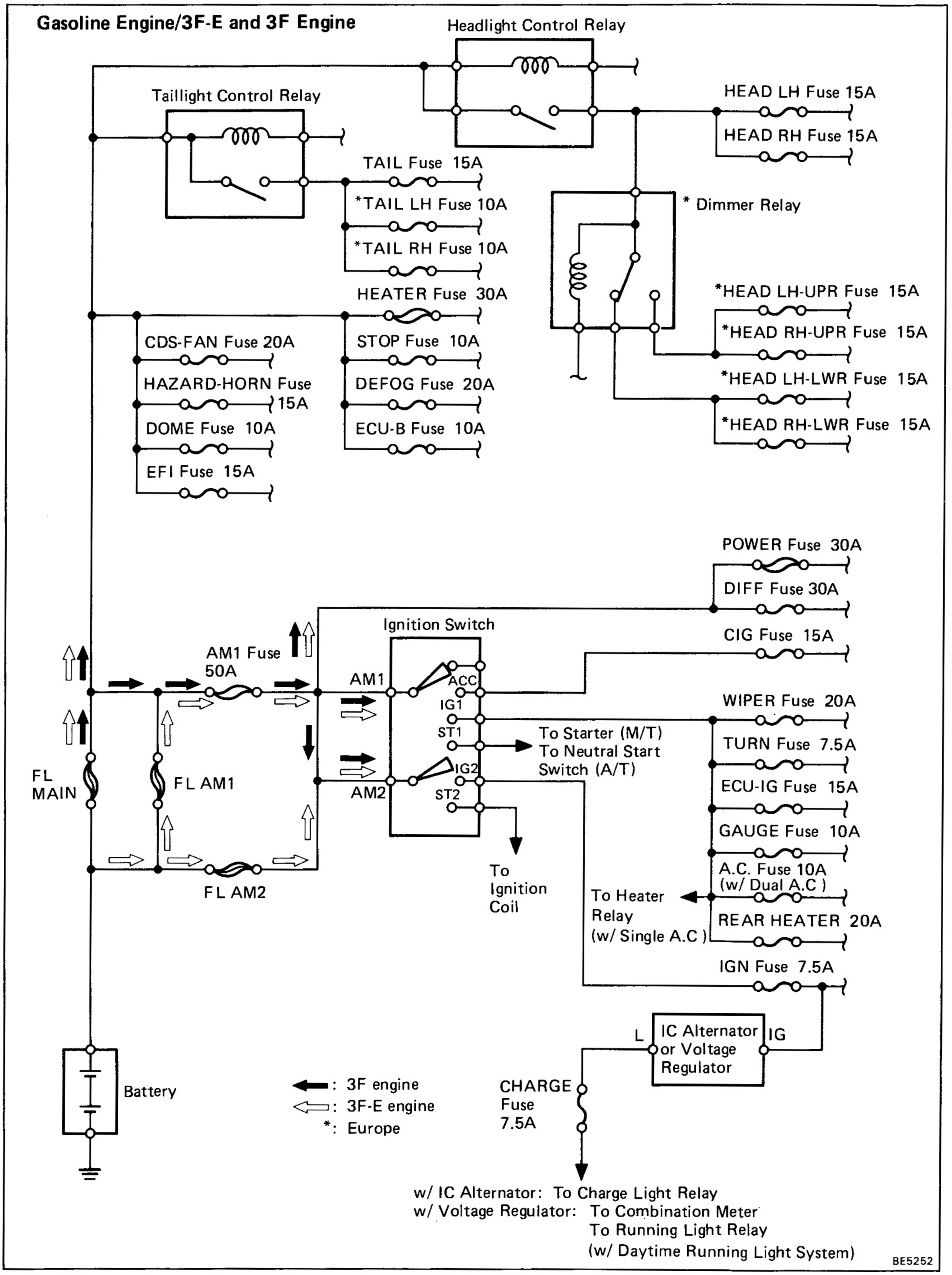

Wiring Diagram (Cont'd)

Diesel Engine/1HD-T and 1HZ Engine

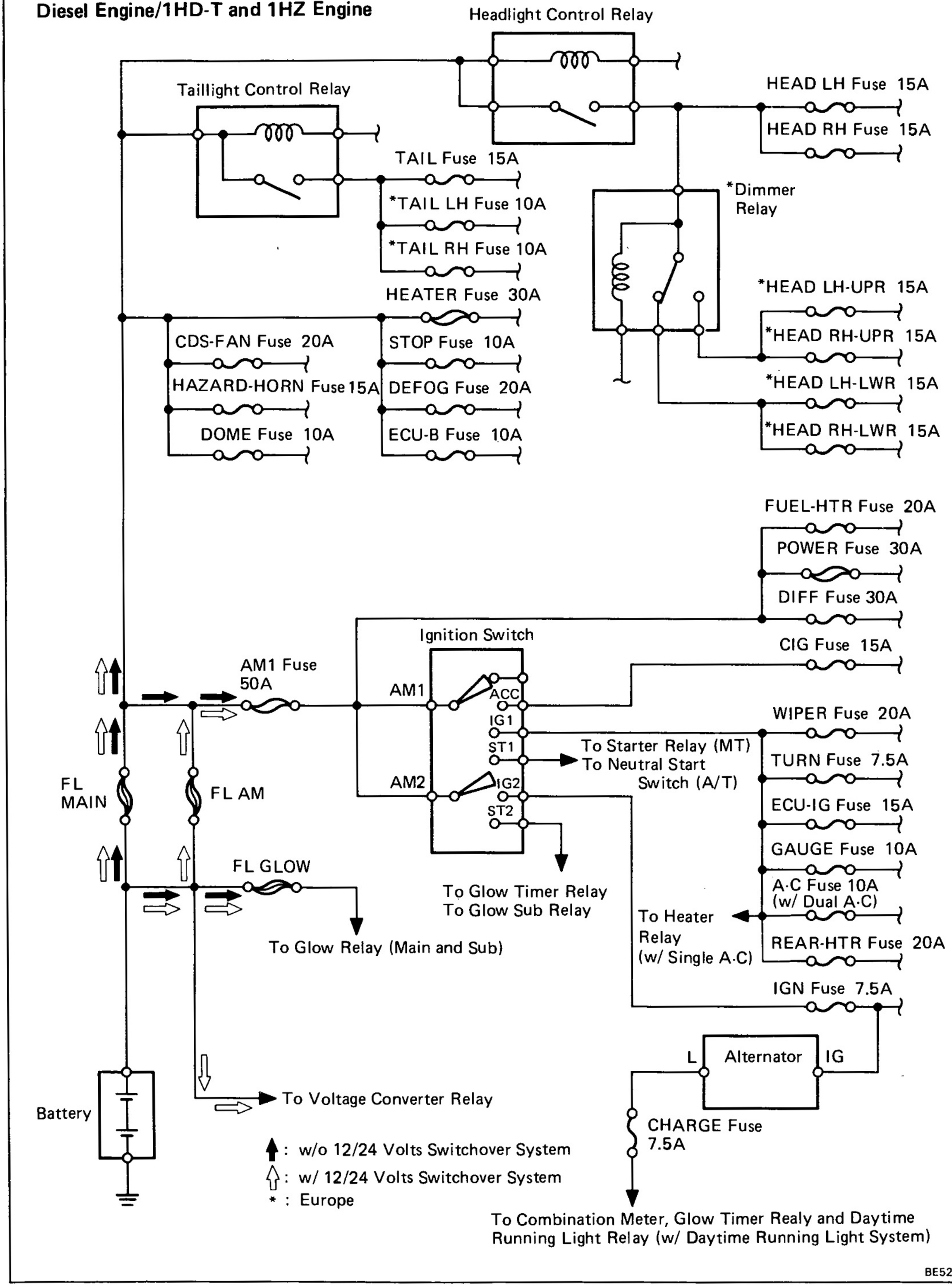

IGNITION SWITCH

Parts Location

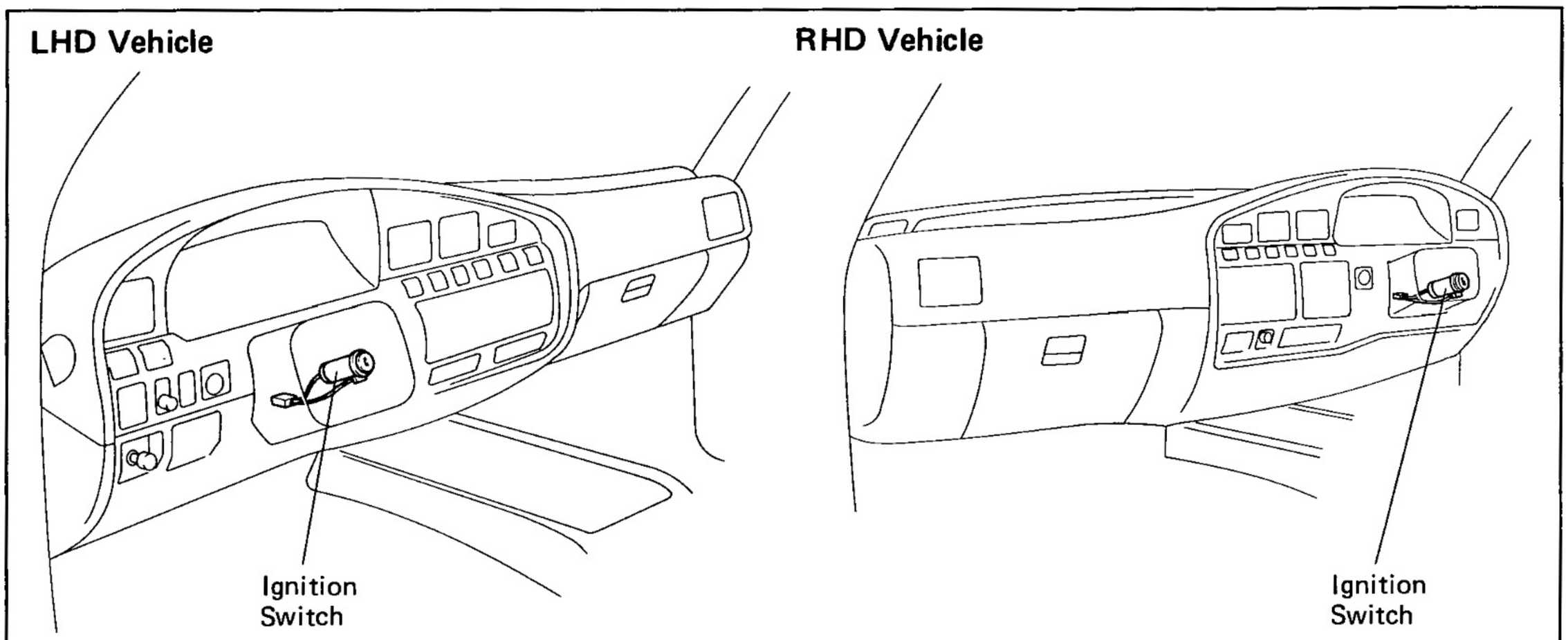

Wiring and Connector Diagrams

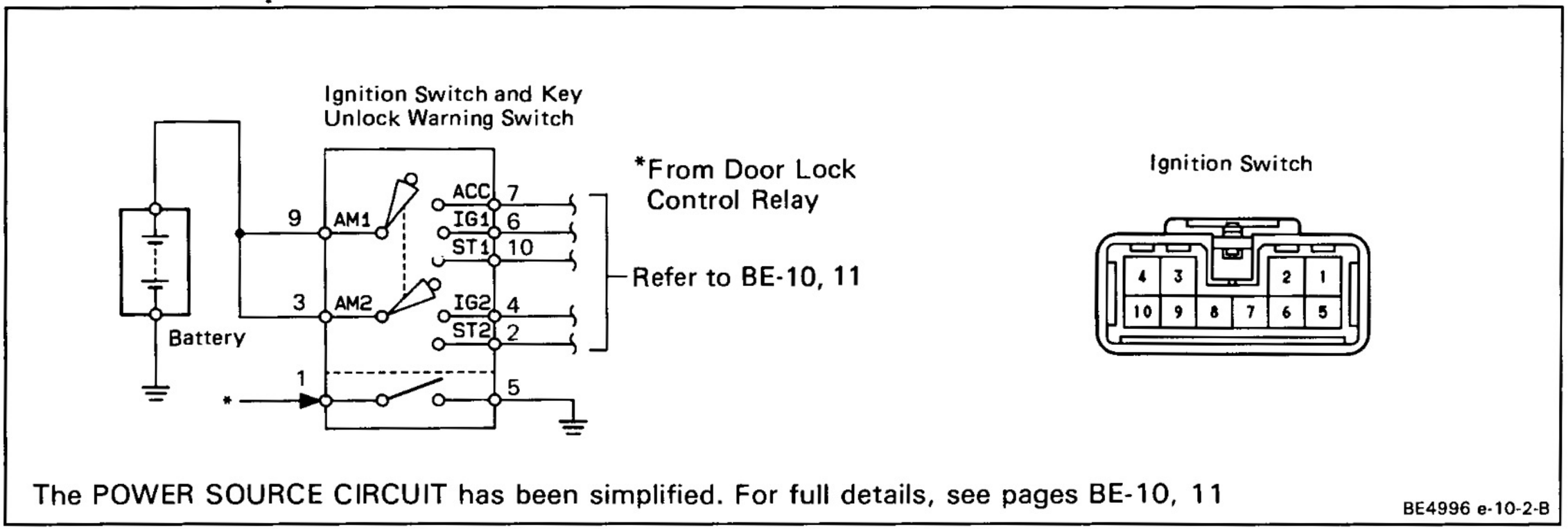

Parts Inspection

Ignition System

INSPECT SWITCH
(Ignition Switch/Continuity)

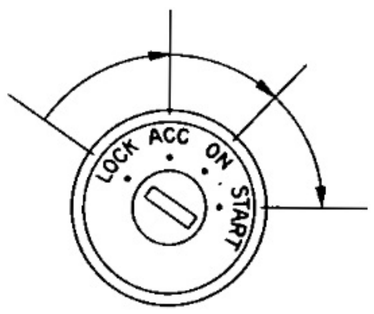

Terminal / Switch position	2	3	4	6	7	9	10
LOCK							
ACC					○—○		
ON		○—○		○—○	○—○		
START	○—○	○—○		○—○		○—○	

If continuity is not as specified, replace the switch.

Key Confine Prevention System

INSPECT SWITCHES
(Key Unlock Warning Switch/Continuity)

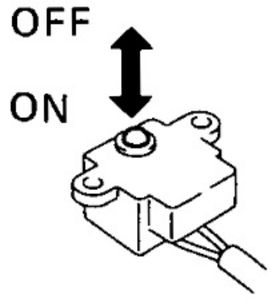

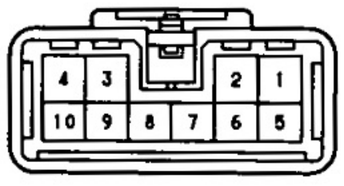

BE2193 e-10-2-B

Terminal / Switch position	1	5
OFF (Ignition Key removed)		
ON (Ignition Key set)	○———	———○

If continuity is not as specified, replace the switch.

LIGHTING SYSTEM

Parts Location

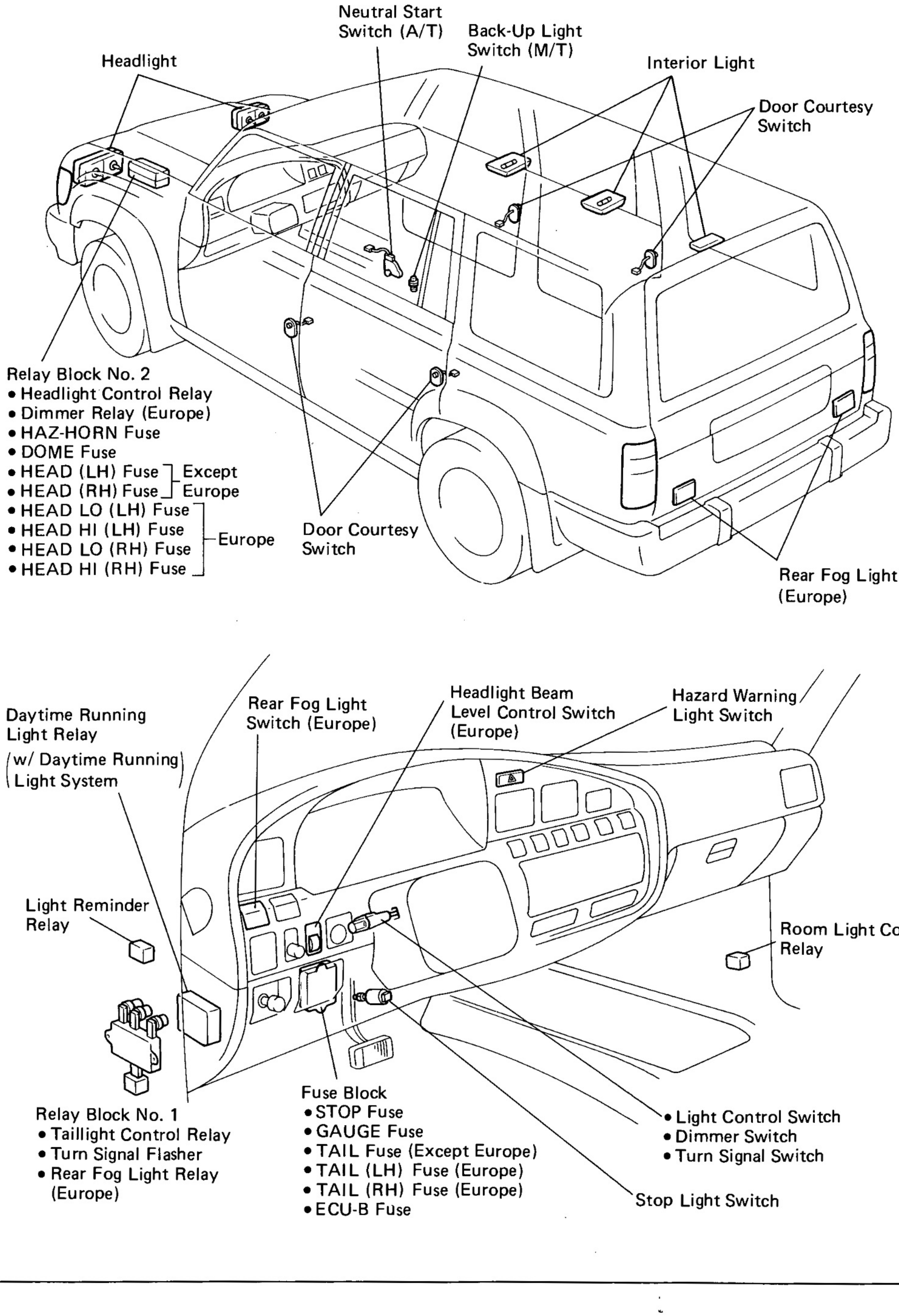

BE5256
BE5257

Wiring and Connector Diagrams

(Headlight and Taillight System)

• **Except Europe**

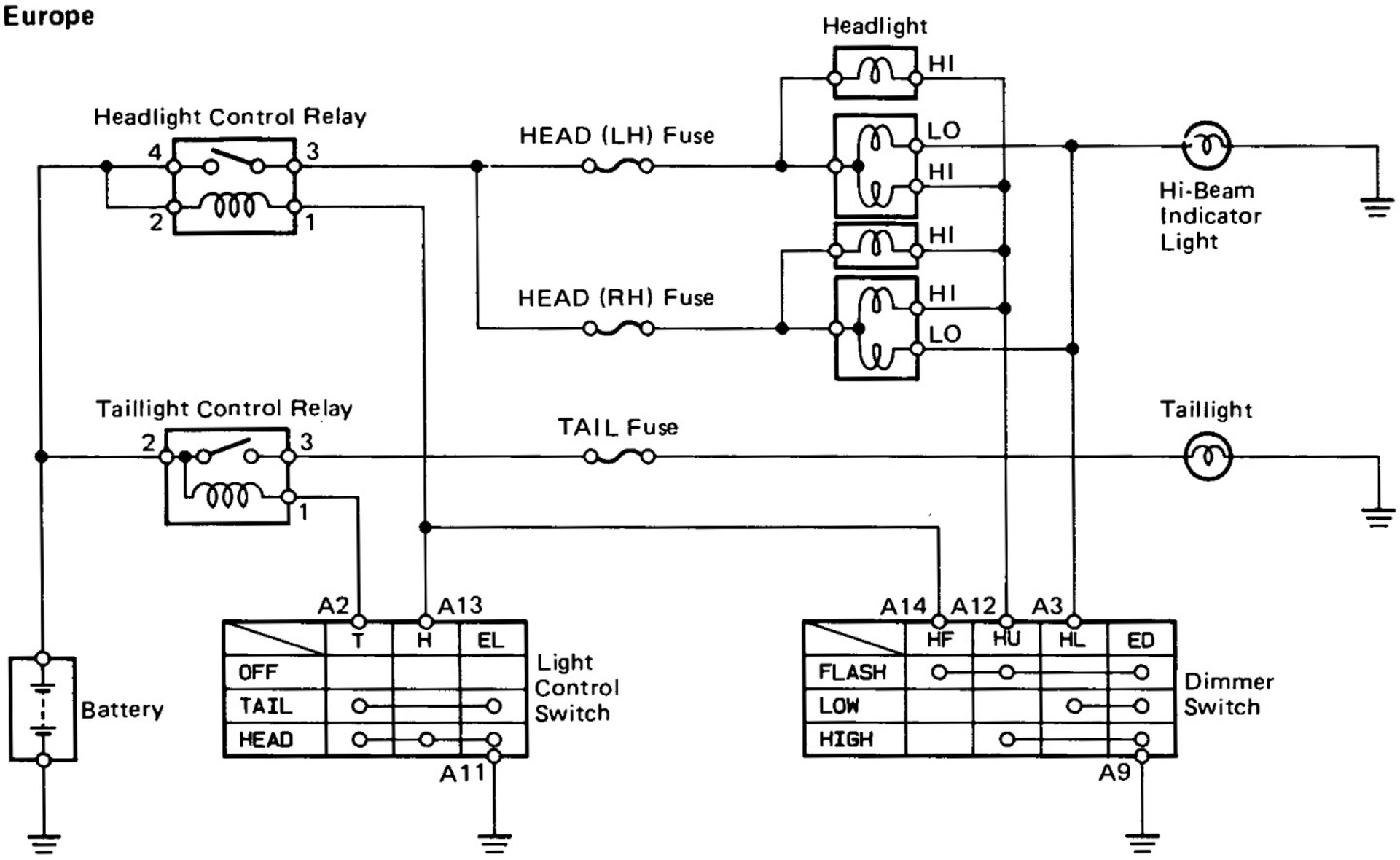

• **Europe**

• Light Control Switch
• Dimmer Switch

Connector "A" Connector "B"

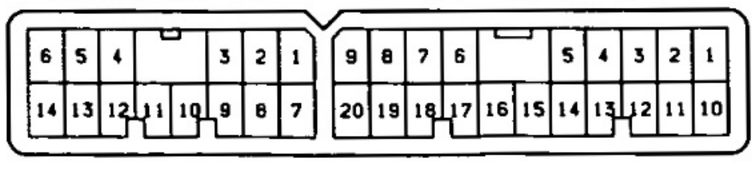

Headlight Control Relay

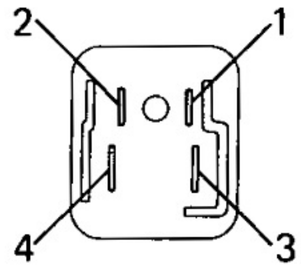

Taillight Control Relay

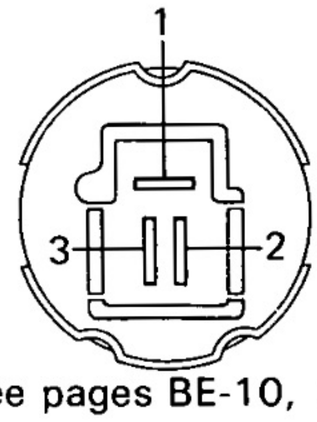

Dimmer Relay

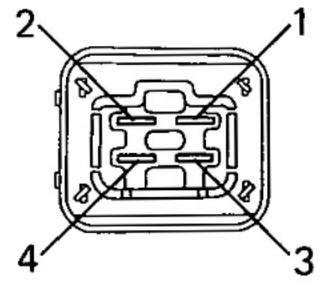

The POWER SOURCE CIRCUIT has been simplified. For full details, see pages BE-10, 11

BE4983
V-34-2 BE1838 BE2763 BE1839 BE5029

• With Daytime Running Light System (with Rear Fog Light System)

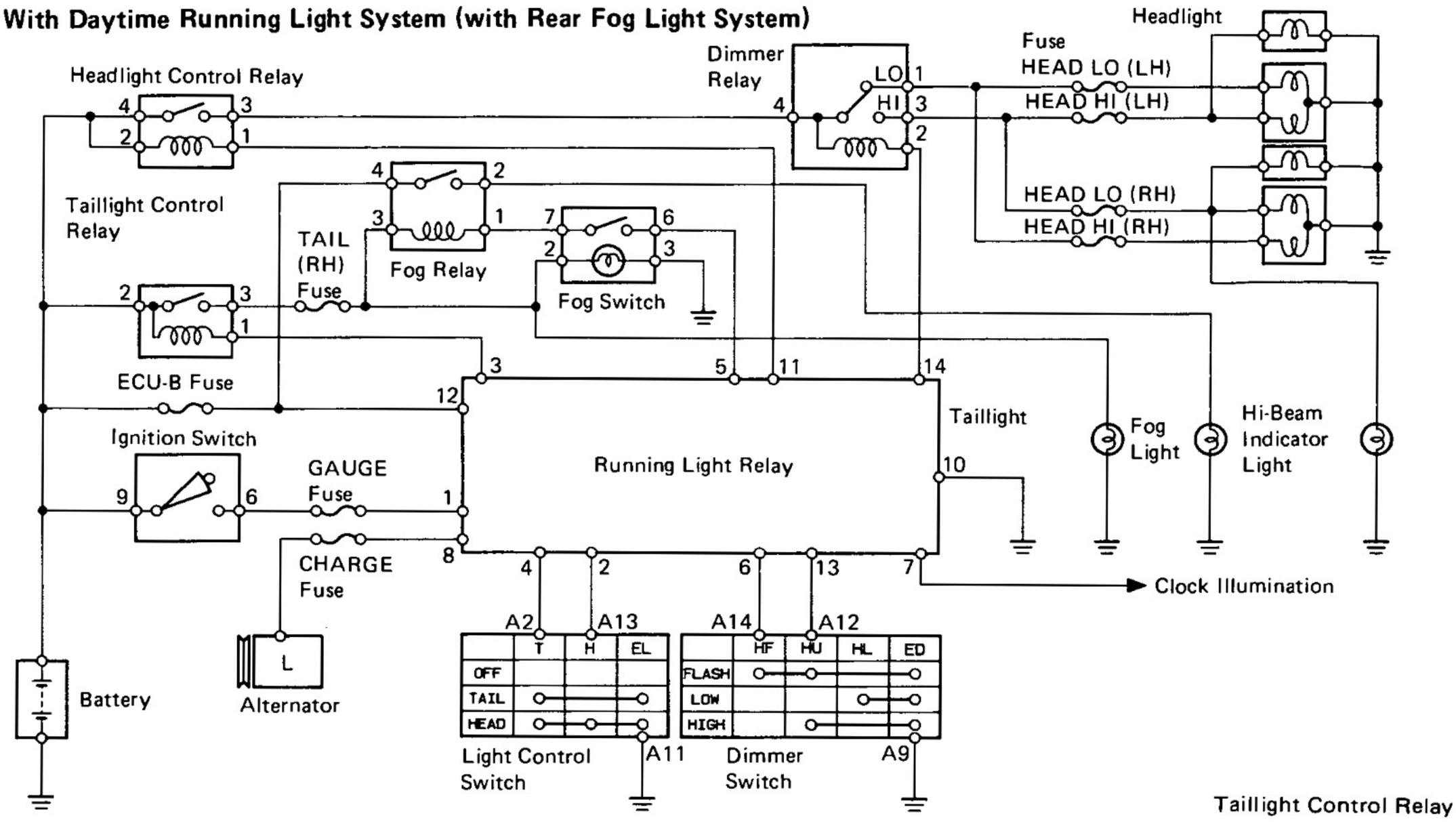

• Light Control Switch
• Dimmer Switch

Connector "A" Connector "B"

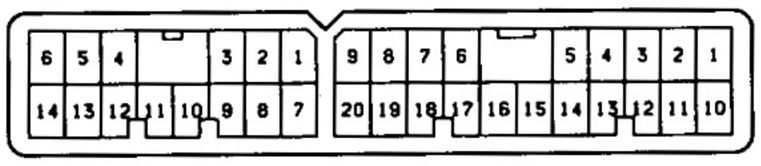

Daytime Running Light Relay

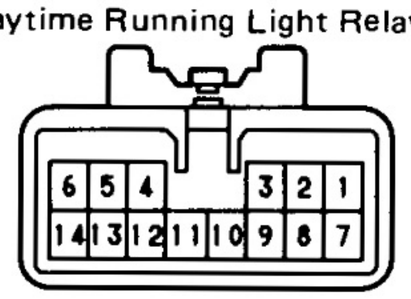

Headlight Control Relay

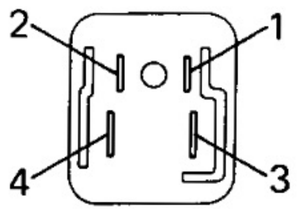

Taillight Control Relay

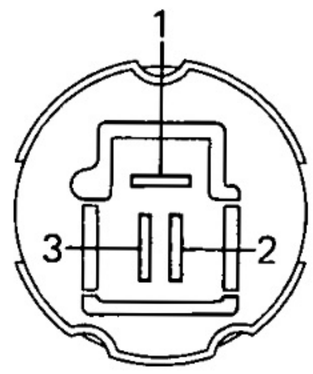

Rear Fog Switch

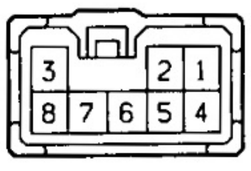

Dimmer Relay

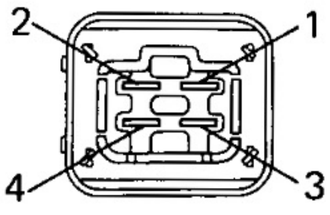

Rear Fog Relay

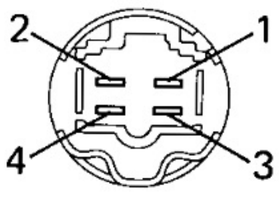

The POWER SOURCE CIRCUIT has been simplified. For full details, see pages BE-10, 11

BE5023
V-34-2 e-14-2-A BE1838 BE2763
S-8-2 BE1839 BE1647

(Headlight Beam Level Control System)

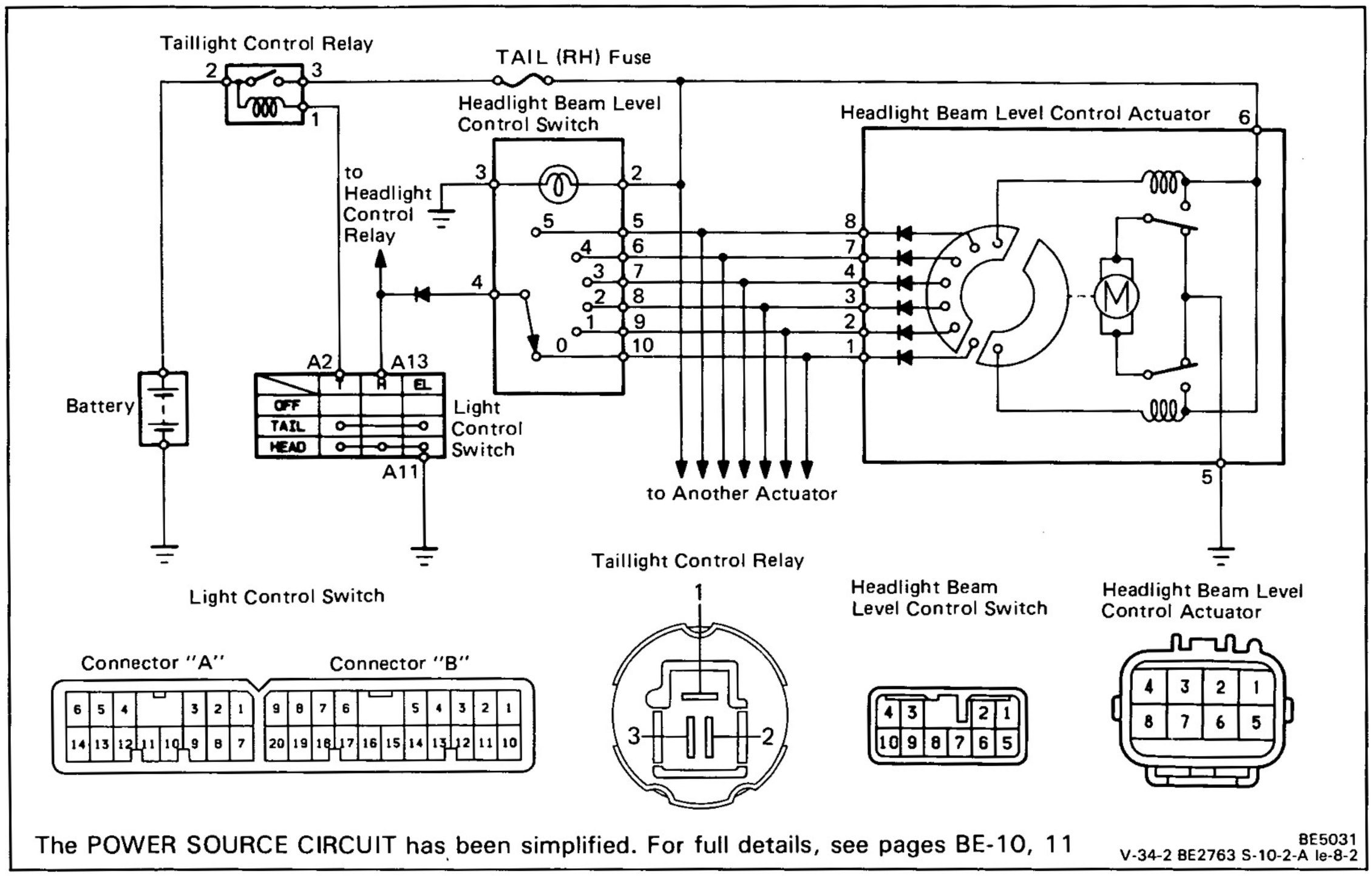

The POWER SOURCE CIRCUIT has been simplified. For full details, see pages BE-10, 11

BE5031
V-34-2 BE2763 S-10-2-A Ie-8-2

(Turn Signal and Hazard Warning System)

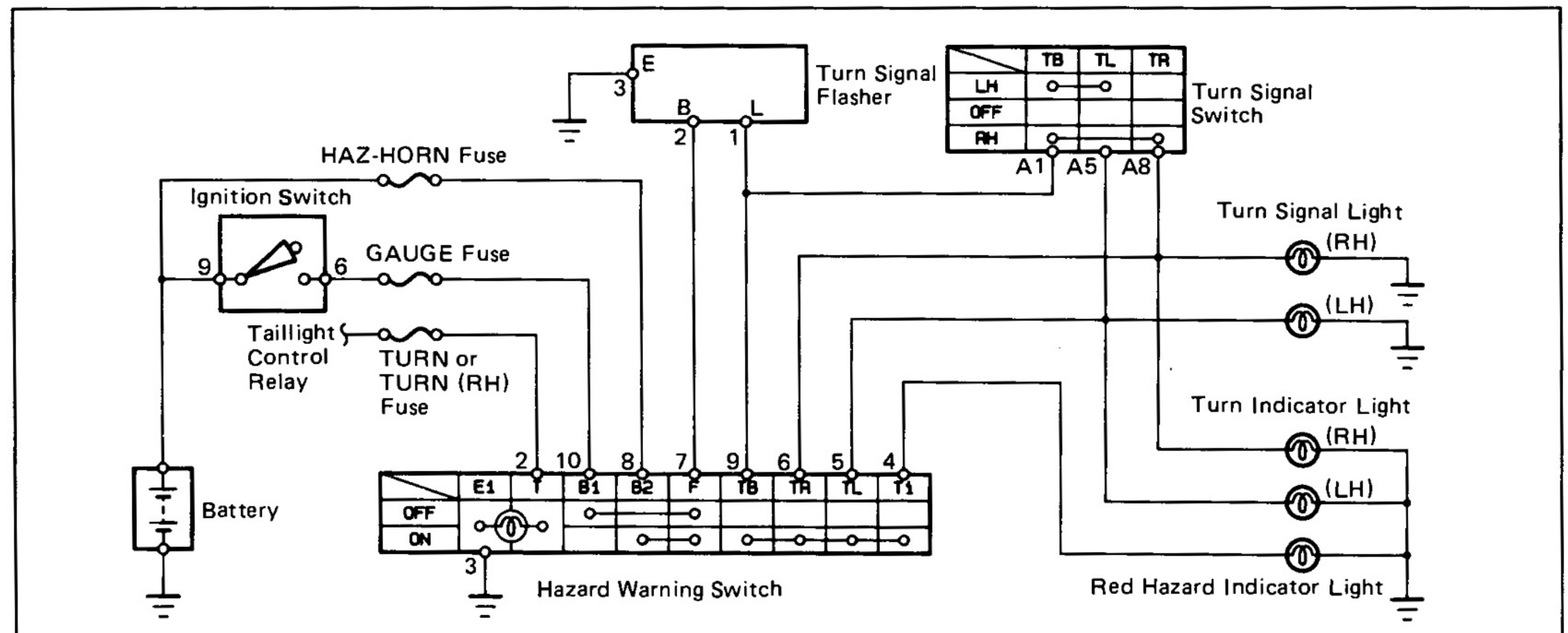

The POWER SOURCE CIRCUIT has been simplified. For full details, see pages BE-10, 11

BE4152
V-34-2 S-10-2 BE2896

(Rear Fog Light System)

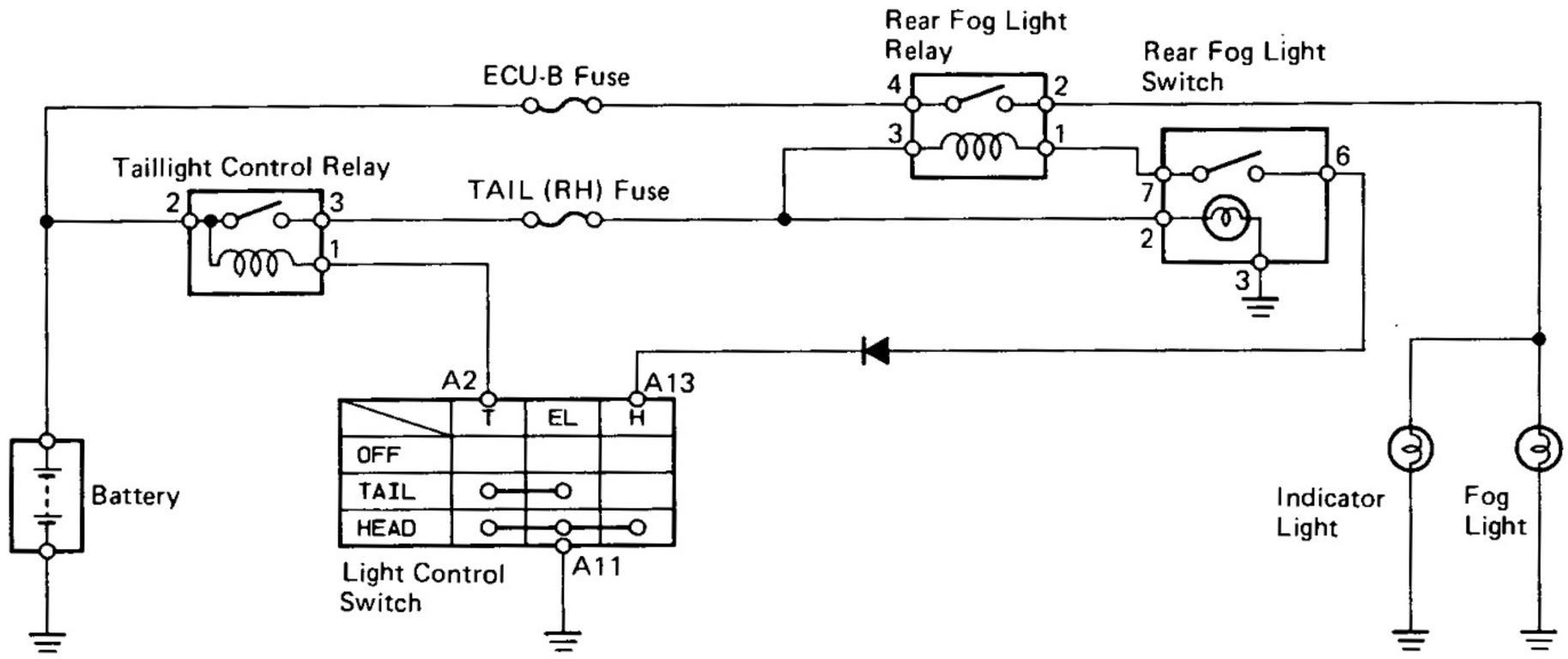

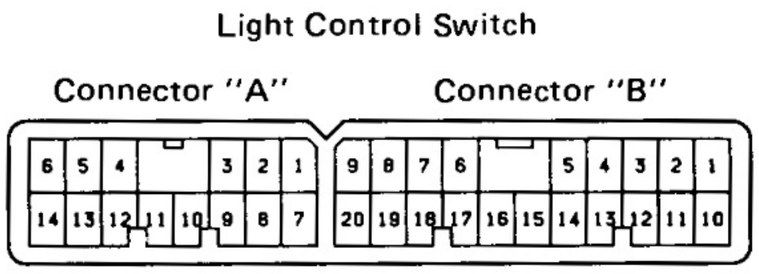

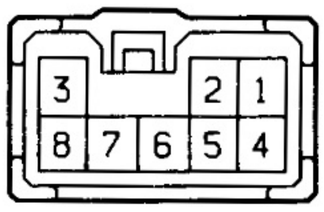

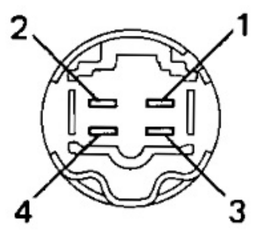

The POWER SOURCE CIRCUIT has been simplified. For full details, see pages BE-10, 11

BE5024
V-34-2 S-8-2 8E1647

(Lights-On Warning System)

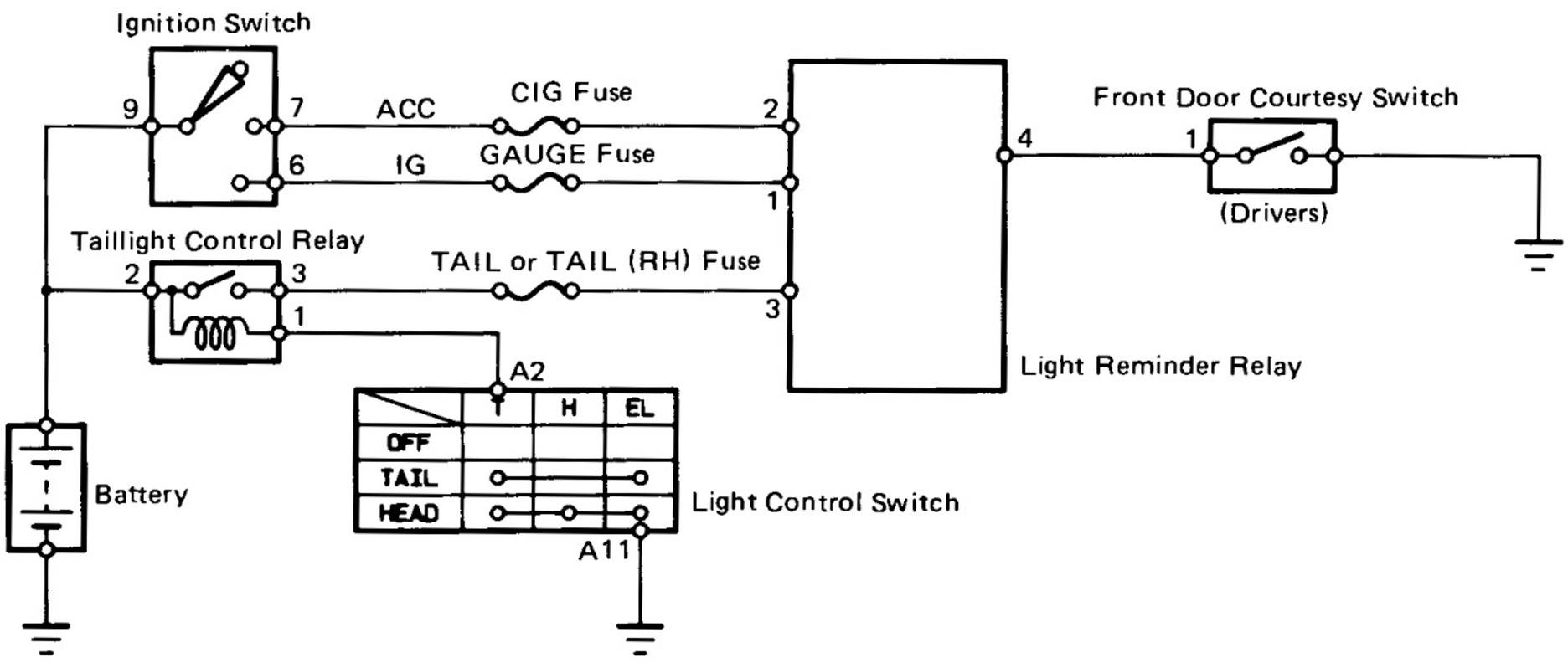

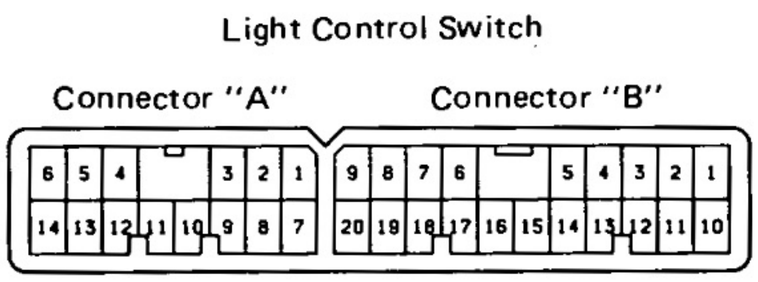

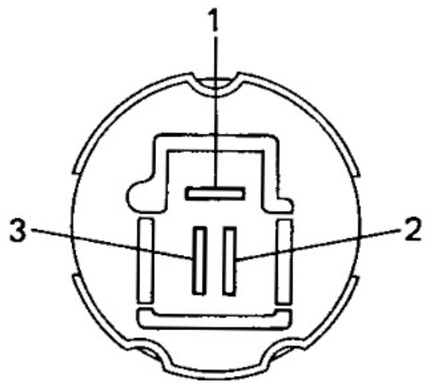





The POWER SOURCE CIRCUIT has been simplified. For full details, see pages BE-10, 11

BE4155
V-34-2 BE2763 H-4-2 S-1-1-B

(Illuminated Entry System)

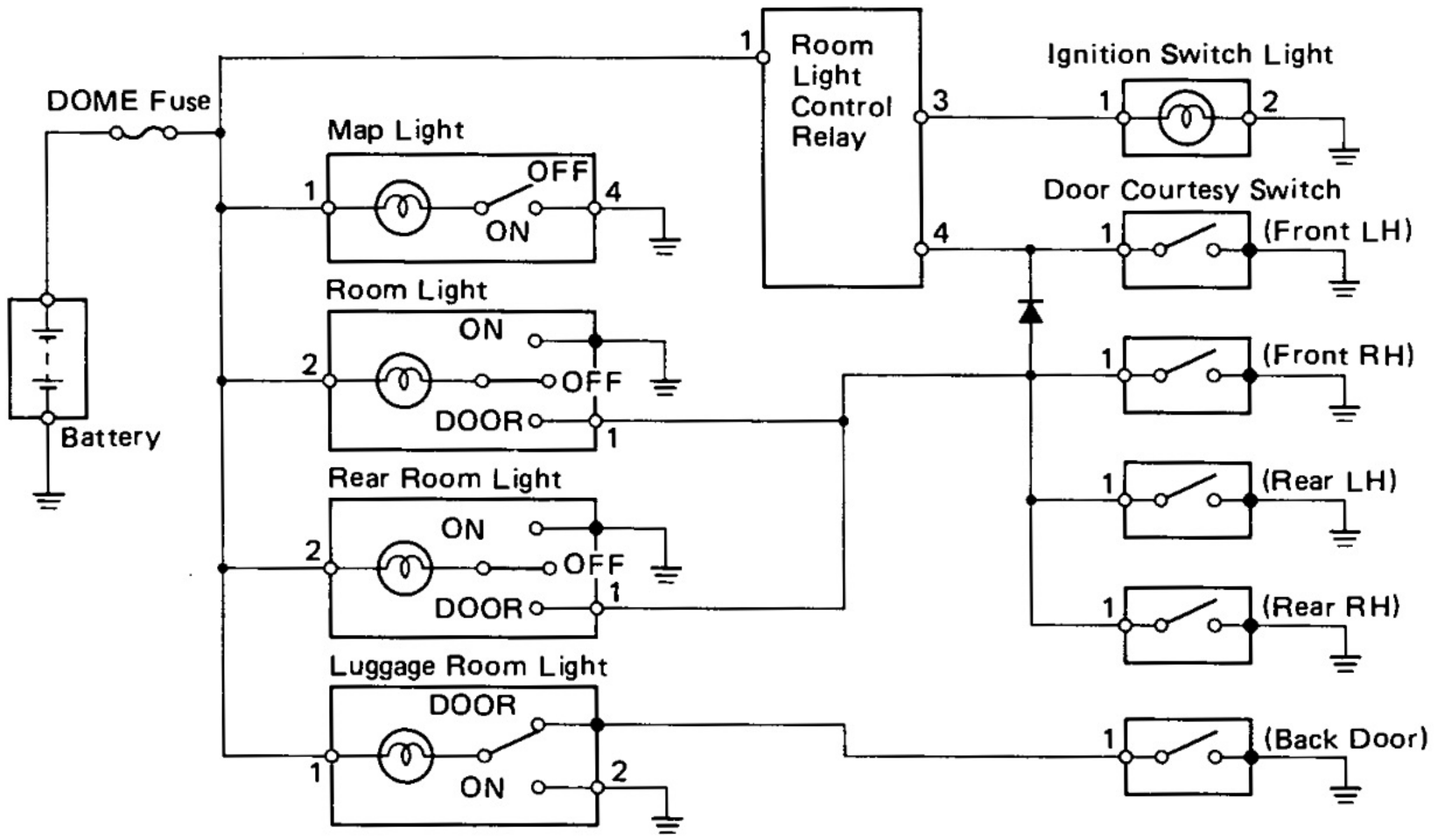

The POWER SOURCE CIRCUIT has been simplified. For full details, see pages BE-10, 11

BE5258
D-4-2 S-6-2B S-1-1-B BE4123

(Stop Light System)

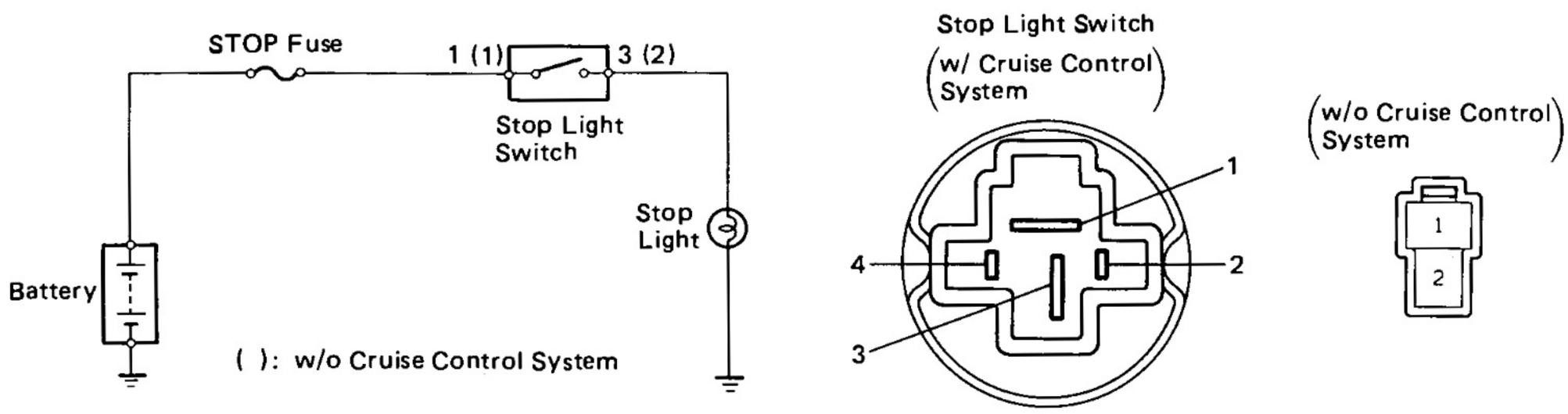

The POWER SOURCE CIRCUIT has been simplified. For full details, see pages BE-10, 11

H-2-2
BE4985 BE0336

(Back-up Light System)

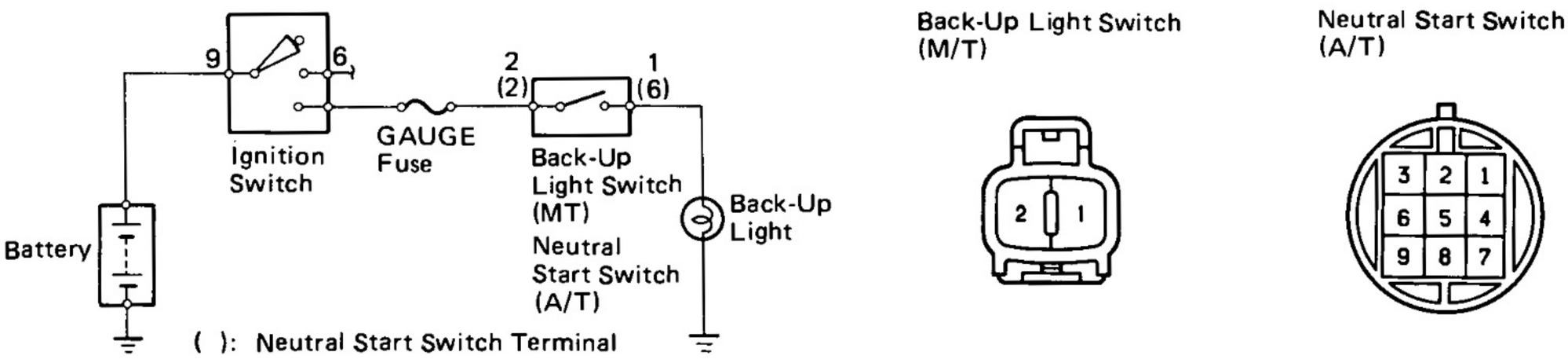

The POWER SOURCE CIRCUIT has been simplified. For full details, see pages BE-10, 11

BE4984 le-2-2M 1H-9-2

System Description

(Daytime Running Light System)

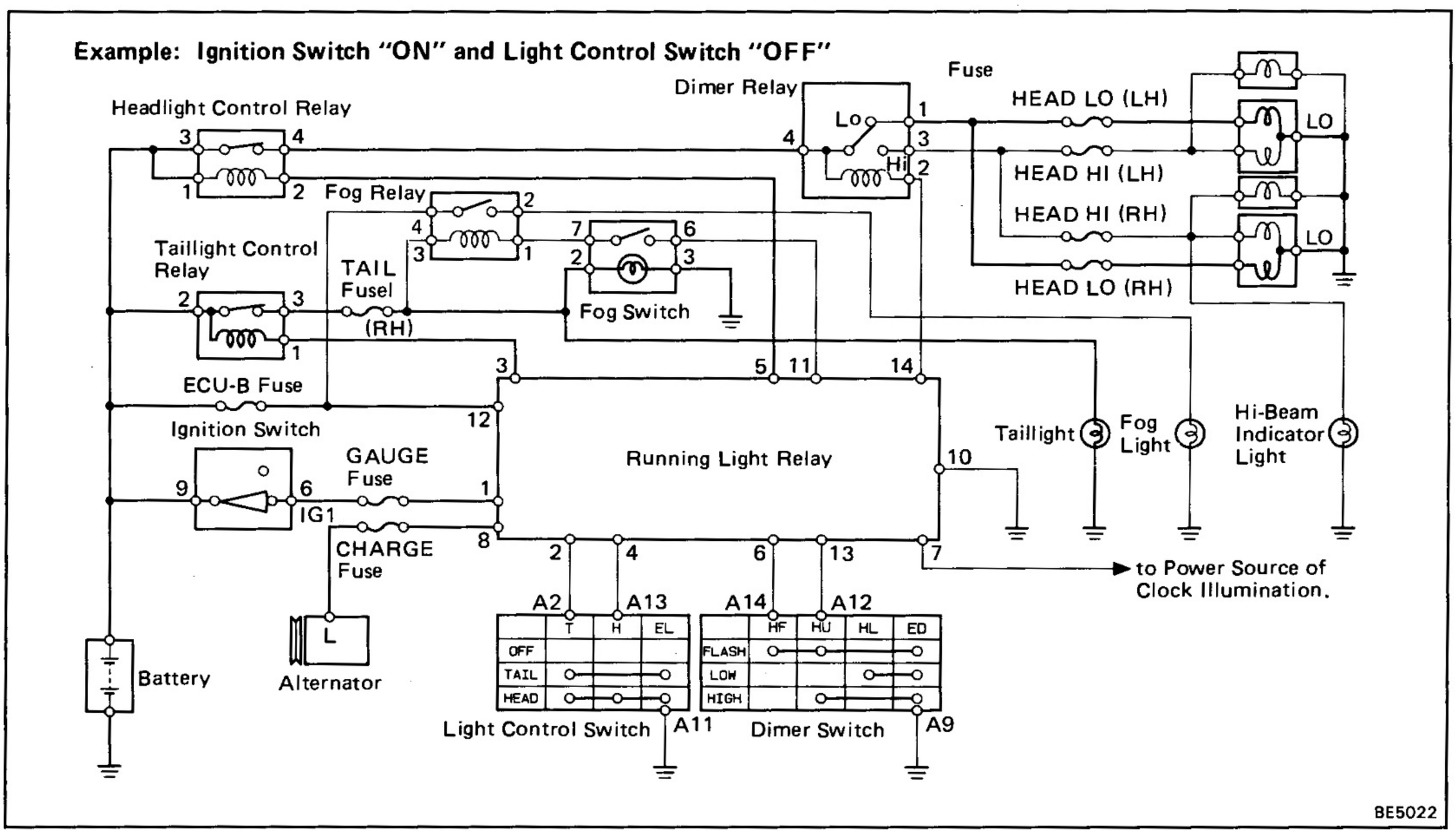

Standby Operation

- Current flows from the battery to terminal 12 of the Running Light Relay.
- When the engine is started, alternator voltage is applied from terminal L of the alternator to terminal 8 of the Running Light Relay.

Operation

1. **IGNITION SWITCH "ON" AND LIGHT CONTROL SWITCH "OFF"**
   When the switches are set, current flows from the battery to terminal 1 of the Running Light Relay. Also, because continuity is made between terminal 3 of the Running Light Relay and ground, and terminal 5 of the Running Light Relay and ground, the Taillight control Relay and Headlight Control Relay are turned on. Then the taillights and headlights light up.
   HINT: Because terminal 14 of the Running Light Relay is not grounded at all times, the Headlight Dimmer Relay is off, so the headlights light up at low beam.
2. **IGNITION SWITCH "ON" AND LIGHT CONTROL SWITCH AT "TAIL"**
   When the switches are set, continuity is made between terminal 2 of the Running Light Relay and ground. Also, because continuity is made between terminal 3 of the Running Light Relay and ground at all times, the taillights light up.
   (Fog Light): Also, because continuity is made between terminal 11 of the Running Light Relay and ground, the Fog Light Relay is turned on. Then the fog lights light up on standby.
3. **IGNITION SWITCH "ON" AND LIGHT CONTROL SWITCH AT "HEAD"**
   When the switches are set, continuity is made between terminal 4 of the Running Light Relay and ground, and terminal 2 of the Running Light Relay and ground. Also, because continuity is made between terminal 5 of Running Light Relay and ground, and terminal 3 of the Running Light Relay and ground at all times, the taillights and headlights light up.
   HINT: When the Headlight Dimmer Switch is set to "HIGH", continuity is made between terminal 13 of the Running Light Relay and ground. Also, because continuity is made between terminal 14 of the Running Light Relay and Ground, the Headlight Dimmer Relay is turned on. Then the headlights go on at high beam.
4. **HEADLIGHT DIMMER SWITCH AT "FLASH"**
   When the switch is set, continuity is made between terminal 6 of the Running Light Relay and ground, and terminal 13 of the Running Light Relay and ground. Also, because the continuity is made between terminal 5 of the Running Light Relay and ground, and terminal 14 of the Running Light Relay and ground, the headlights flash.

Headlight Beam Level Control System

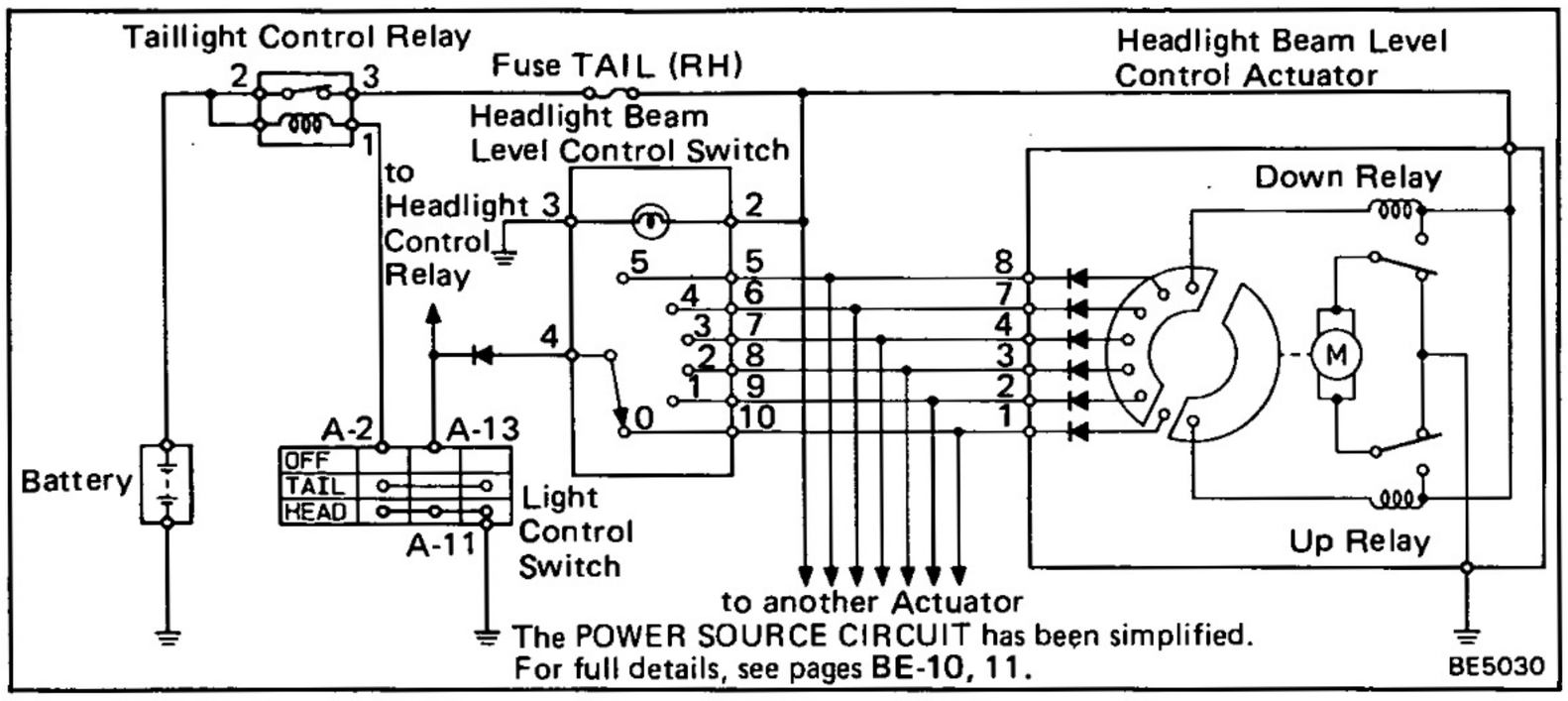

- Continuity always exists between terminal 5 of the Headlight Beam Level Control Actuator (here-after called "Actuator") and the ground.
- When the light Control Switch is turned to HEAD position, continuity is made between terminal 4 of the Headlight Beam Level Control Switch (hereafter called "Level Switch") and the ground through terminals A-13 and A-11 of the Light Control Switch. Also, continuity is made between terminal 1 of the Taillight Control Relay and the ground through terminals A-2 and A-11 of the Light Control Switch, the Taillight Control Relay is turned on, then current flows from the battery to terminal 6 of the Actuator.

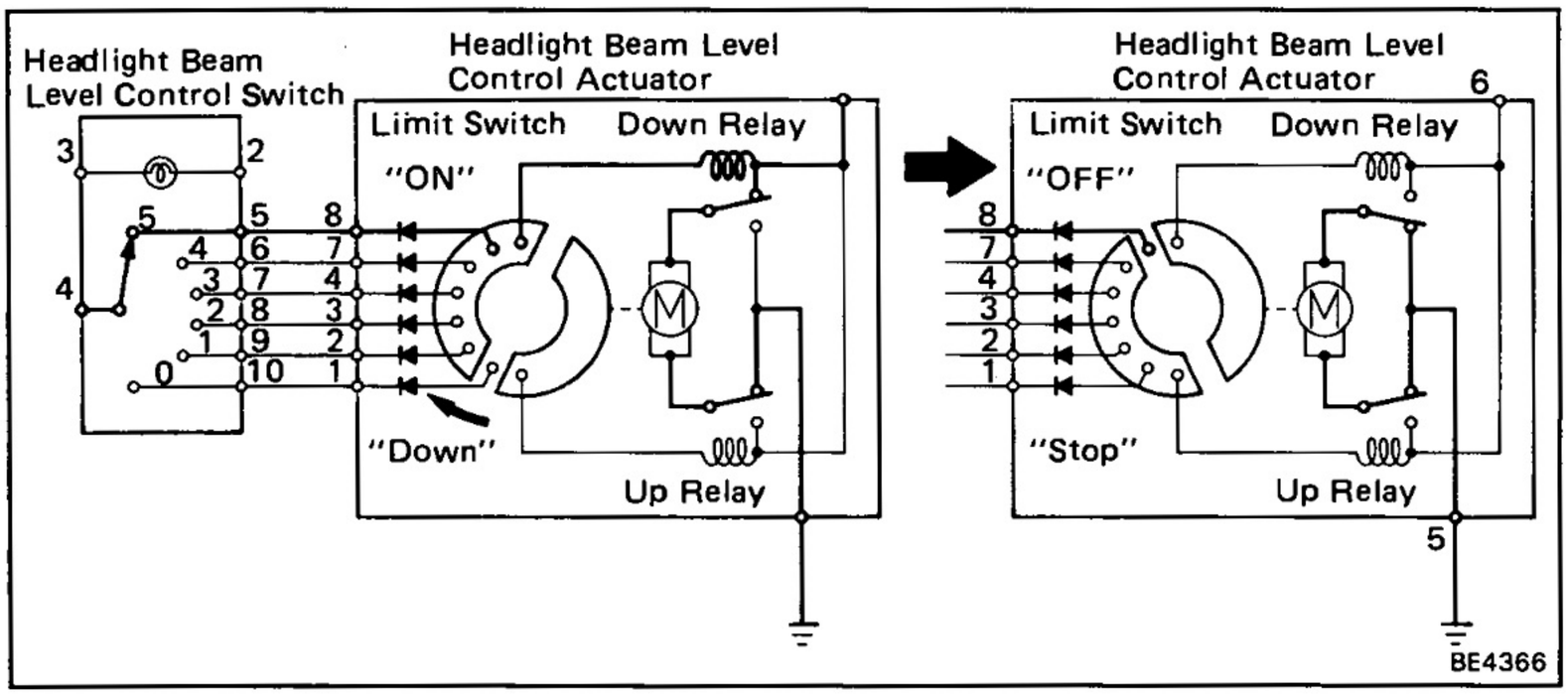

LEVEL SWITCH IN "5" POSITION

When the switch is set, Current flows from terminal 6 of Actuator → terminal 8 of the Actuator → terminal 5 of the Level Switch → ground, and the Down Relay is activated. Then current flows from terminal 6 of the Actuator → Down Relay → Motor → Up Relay → terminal 5 of the Actuator → ground, and the Motor operates to lower the headlight. When the headlights are lowered, the Limit Switch operates, so that continuity between terminals 6 and 8 of the Actuator is broken. As a result, the Down Relay is open and the headlights stay in level "5" position.

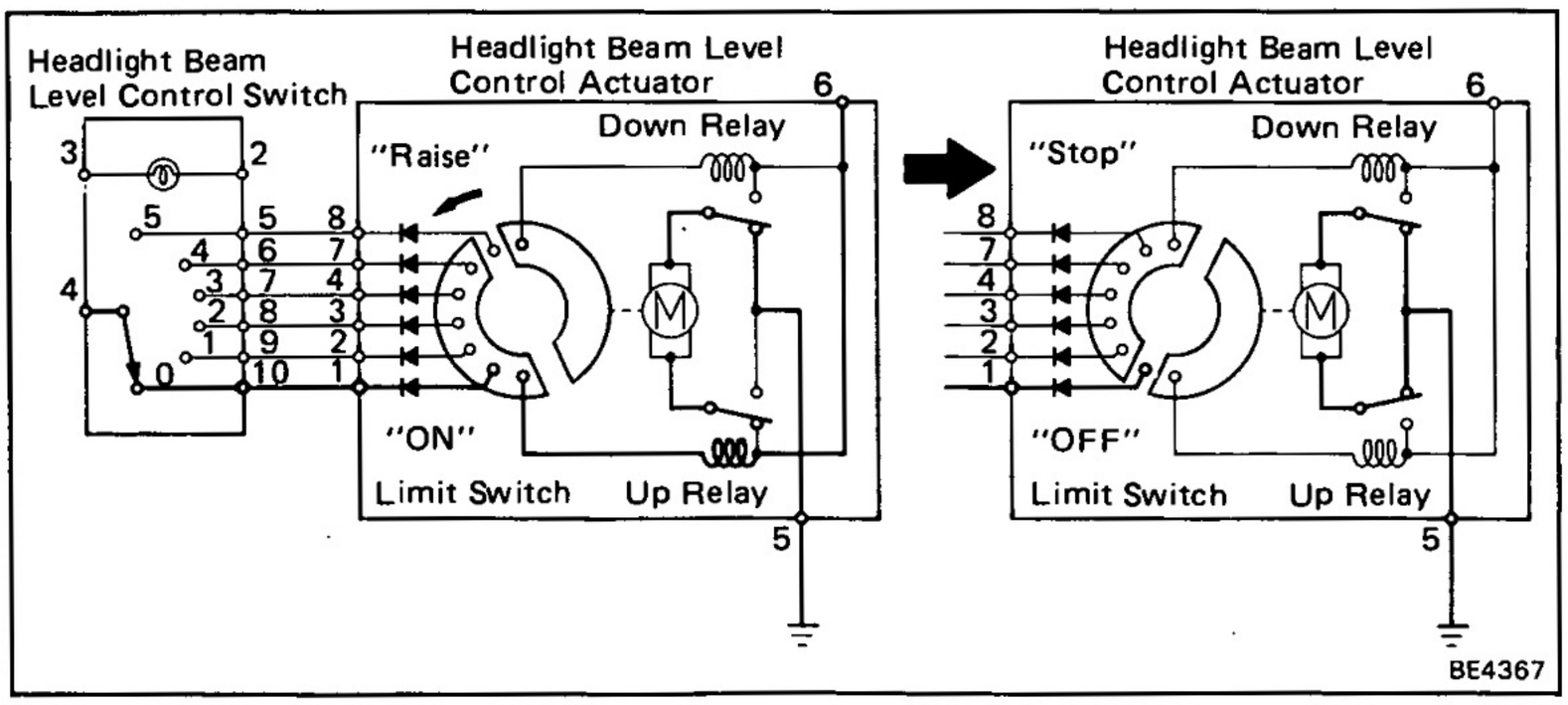

LEVEL SWITCH IN "0" POSITION

When the switch is set, current flows from terminal 6 of Actuator → terminal 1 of the Actuator → terminal 10 of the Level Switch → ground, and the Up Relay is activated. Then current flows from terminal 6 of the Actuator → Up Relay → Motor → Down Relay → terminal 5 of the Actuator → ground, and the motor operates to raise the headlight. When the headlights are raised, the Limit switch operates, so that continuity between terminals 6 and 1 of the Actuator is broken. As a result, the Up Relay is open and the headlights stay in level "0" position.

Troubleshooting

Problem	Possible cause	Remedy	Page
Only one light does not light up	Light bulb burned out Socket, wire or ground faulty	Check or replace the bulb Repair as necessary	BE-4, 5, 6
Headlight do not light up	HEAD fuse blown Headlight control relay faulty Light control switch faulty Dimmer switch faulty Wiring or ground faulty	Replace fuse and check for short Check relay Check switch Check switch Repair as necessary	BE-4, 6 BE-27 BE-27 BE-27
Head beam headlights or headlight flashers do not operate	Light control switch faulty Dimmer switch faulty Wiring or ground faulty	Check switch Check switch Repair as necessary	BE-27 BE-27
Tail, parking and license light do not light up	TAIL fuse blown Taillight control relay faulty Light control switch faulty Wiring or ground faulty	Replace fuse and check for short Check relay Check switch Repair as necessary	BE-4, 6 BE-27 BE-27
Stop lights do not light up	STOP fuse blown Stop light switch faulty Wiring or ground faulty	Replace fuse and check for short Adjust or check switch Repair as necessary	BE-4, 6 BE-33 BR-6
Stop lights stay on	Stop light switch faulty	Adjust or check switch	BE-33
Combination meter lights do not light up (taillights light up)	Light control rheostat faulty Wiring or ground faulty	Check rheostat Repair as necessary	BE-67
Turn signal does not flash on one side	Turn signal switch faulty Wiring or ground faulty	Check switch Repair as necessary	BE-27
Turn signals do not operate	TURN fuse blown Turn signal flasher faulty Turn signal switch faulty Hazard switch faulty Wiring or ground faulty	Replace fuse and check for short Check flasher Check switch Check switch Repair as necessary	BE-4, 6 BE-29 BE-27 BE-29
Hazard warning lights do not operate	HAZ-HORN fuse blown Turn signal flasher faulty Turn signal switch faulty Hazard switch faulty Wiring or ground faulty	Replace fuse and check for short Check flasher Check switch Check switch Repair as necessary	BE-4, 6 BE-29 BE-27 BE-29
Back-up light do not light up	GAUGE fuse blown Neutral switch faulty (A/T) Back-up light switch (M/T) Wiring or ground faulty	Replace fuse and check for short Check switch Check switch Repair as necessary	BE-4, 6 AT-28 MT-24

Troubleshooting (Cont'd)

Problem	Possible cause	Remedy	Page
Daytime running light system does not operate	TAIL (RH) fuse blown GAUGE fuse blown ECU-B fuse blown	Replace blown fuse and check for short	BE-4, 6
	Daytime running light relay faulty	Check relay	BE-28
	Headlight control relay faulty	Check relay	BE-27
	Taillight control relay faulty	Check relay	BE-27
	Headlight dimmer relay faulty	Check relay	BE-27
	Ignition switch faulty	Check switch	BE-12
	Light control/dimmer switch faulty	Check switch	BE-27
	Wiring or ground faulty	Repair as necessary	
Rear fog light system does not operate	ECU-B fuse blown TAIL fuse blown	Replace blown fuse and check for short	BE-4, 6
	Rear fog light relay faulty	Check relay	BE-29
	Taillight control relay faulty	Check relay	BE-27
	Daytime Running Light Relay faulty (w/ Daytime Running Light System)	Check relay	BE-28
	Rear fog light switch faulty	Check switch	BE-29
	Light control switch faulty	Check switch	BE-27
	Wiring or ground faulty	Repair as necessary	
Illuminated entry system does not operate	DOME fuse blown	Replace fuse and check for short	BE-4, 6
	Room light control relay faulty	Check relay	BE-32
	Door courtesy switch faulty	Check switch	BE-32
	Wiring or ground faulty	Repair as necessary	
Headlight beam level control system does not operate	TAIL fuse blown	Replace fuse and check for short	BE-4, 6
	Taillight control relay faulty	Check relay	BE-27
	Headlight beam level control actuator faulty	Check actuator	BE-30
	Headlight beam level control switch faulty	Check switch	BE-30
	Light control switch faulty	Check switch	BE-27
Lights-on warning system does not operate	CIG fuse blown GAUGE fuse blown TAIL fuse blown	Replace fuse and check for short	BE-4, 6
	Light reminder relay faulty	Check relay	BE-31
	Door courtesy switch faulty	Check switch	BE-31
	Wiring or ground faulty	Repair as necessary	

Parts Adjustment

Adjustment of Headlight Aim

● **Four-Rectangular Type**

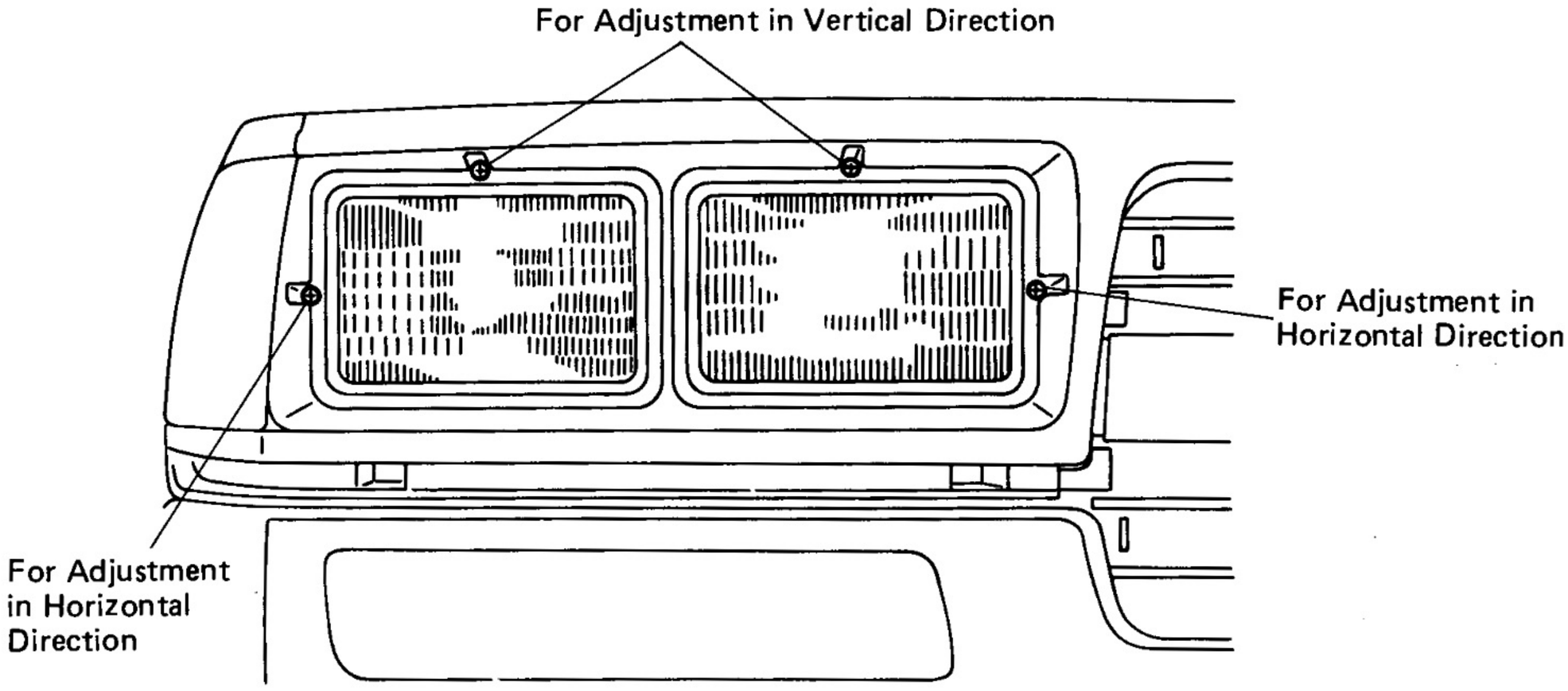

● **Aero-Styled Type**

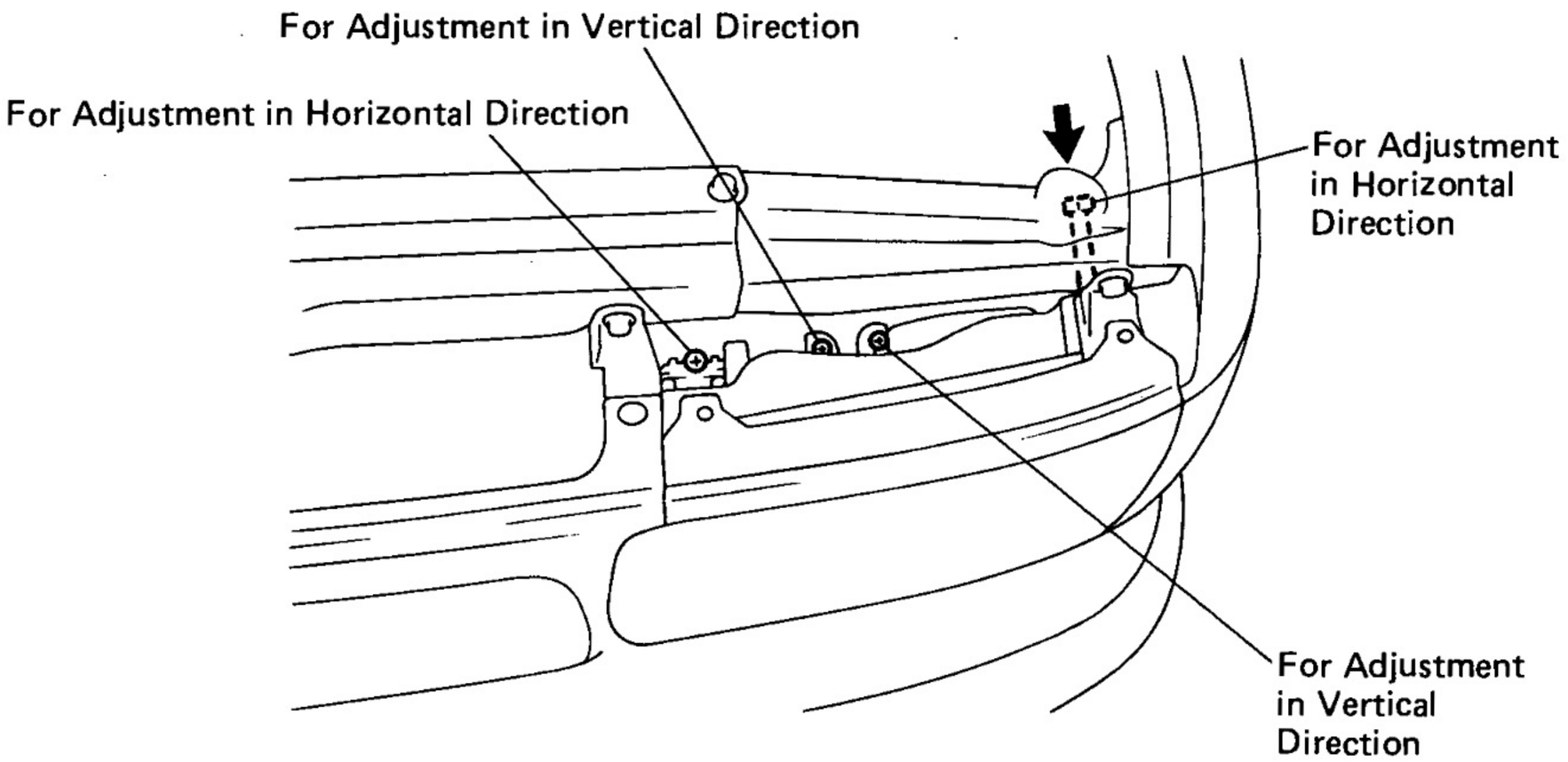

BE5204
BE5027

HINT: Before adjusting headlights equipped with a headlight beam level control system, first return the headlights to standard position by moving the control switch to ''0'' position.

Parts Replacement

Components

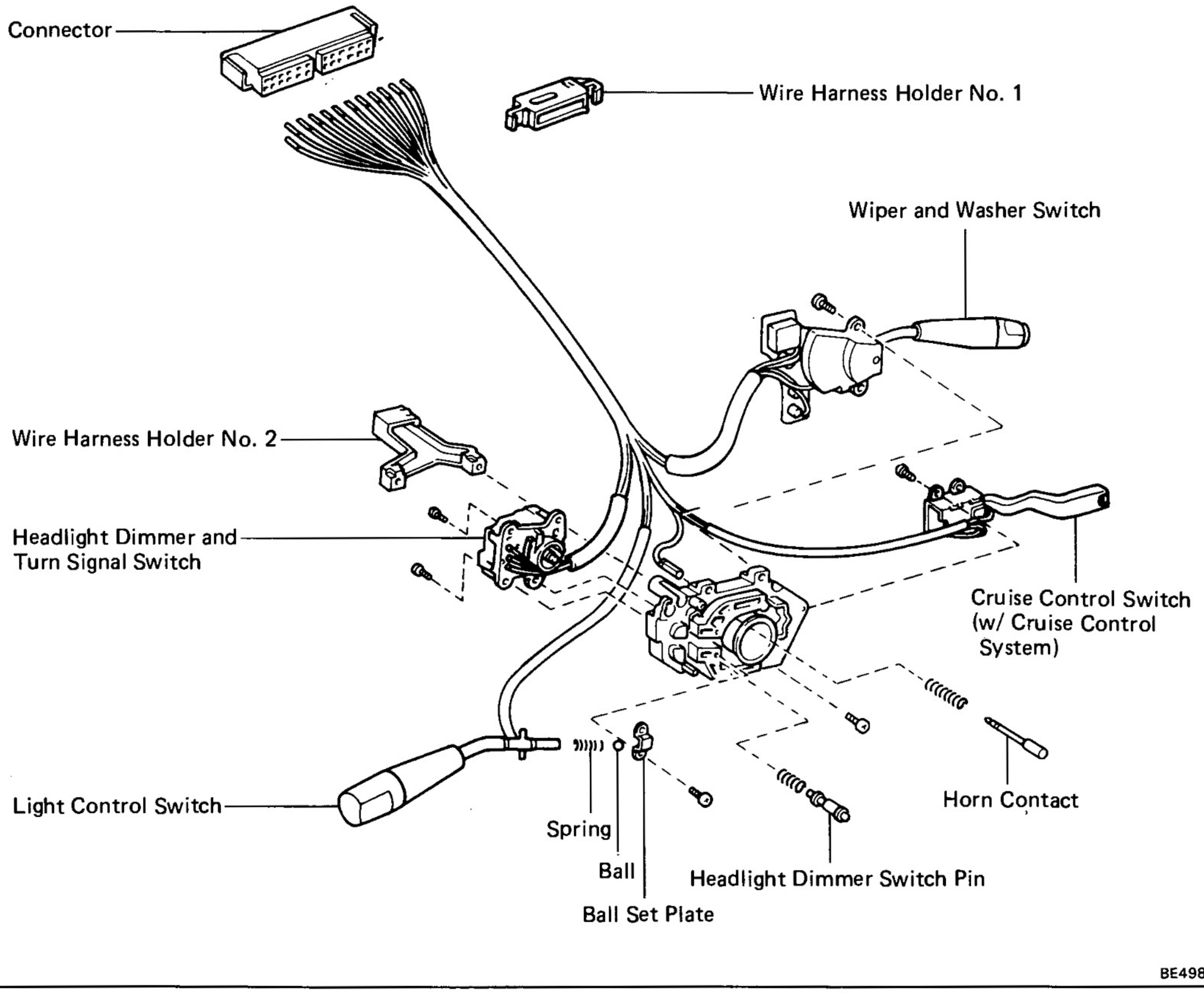

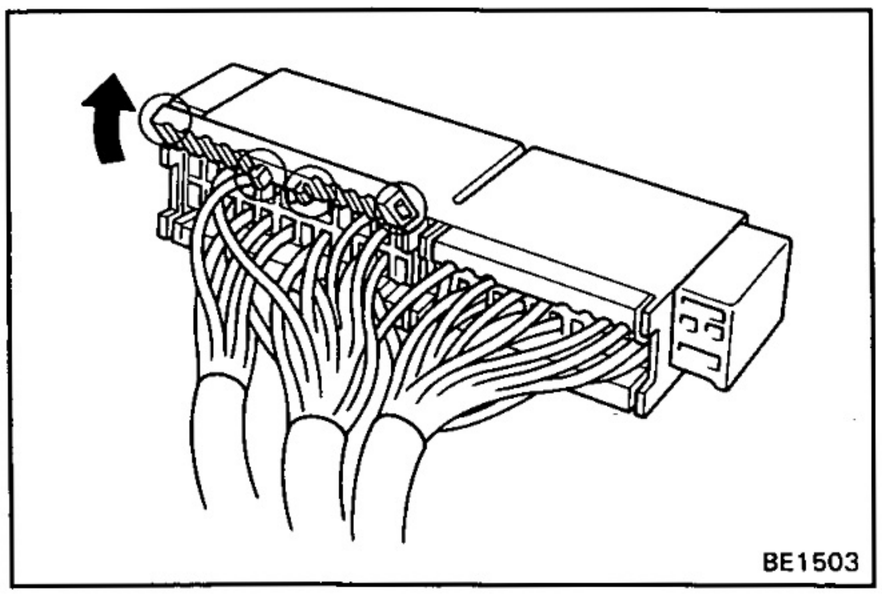

Disassembly of Combination Switch

1. **REMOVE WIRE HARNESS CLAMP FROM WIRE HARNESS**

   Pry loose two locking lugs and remove the clamp from the wire harness.

2. **REMOVE TERMINALS FROM CONNECTOR**

   (a) Release four tabs and open the terminal cover.

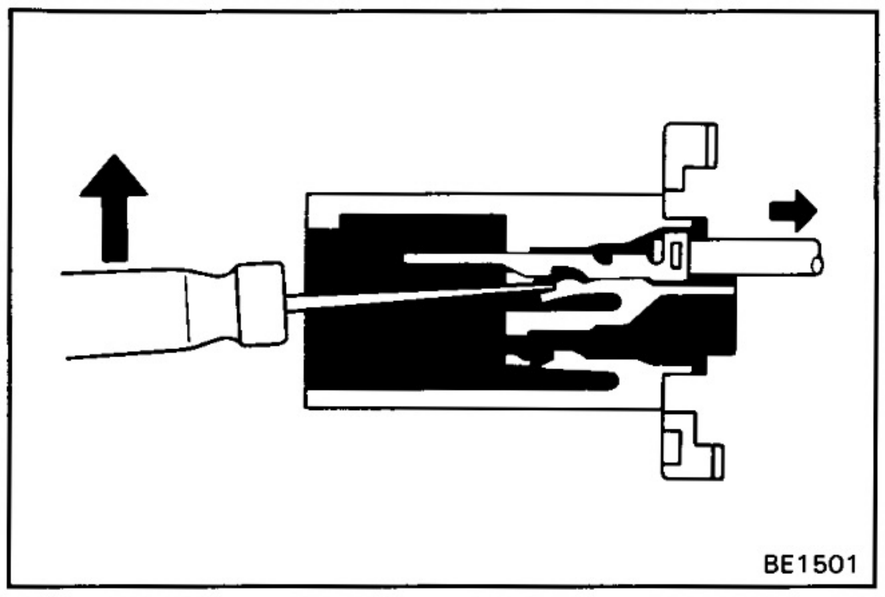

(b) From the open end, insert a miniature screwdriver between the locking lug and terminal.

(c) Pry down the locking lug with the screwdriver and pull the terminal out from the rear.

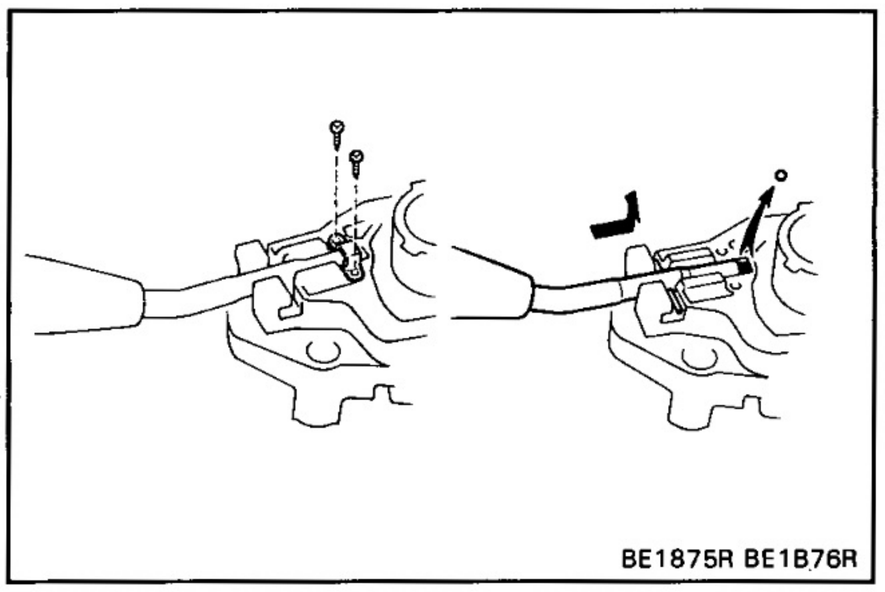

3. REMOVE LIGHT CONTROL SWITCH

(a) Remove two screws and the ball set plate from the switch body.

(b) Remove the ball and slide out the switch from the switch body with the spring.

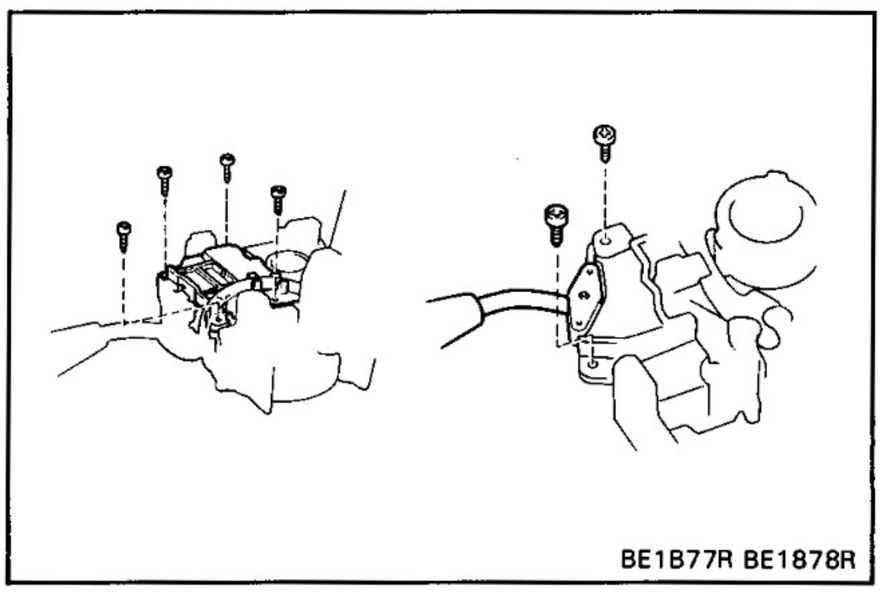

4. REMOVE HEADLIGHT DIMMER AND TURN SIGNAL SWITCH

Remove four screws and the switch from the switch body.

5. REMOVE WIPER AND WASHER SWITCH

Remove two screws and the switch from the switch body.

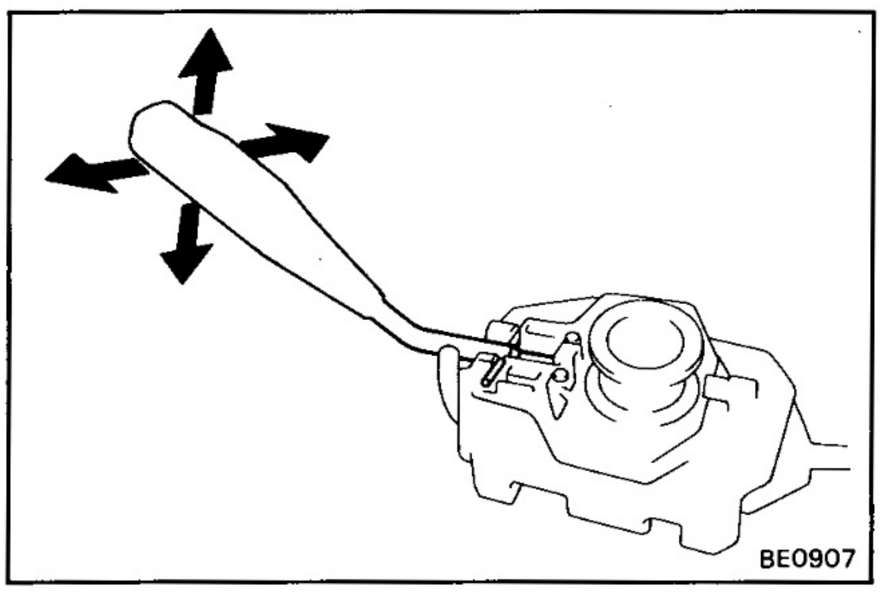

Assembly of Combination Switch

INSTALL PARTS OF COMBINATION SWITCH IN REVERSE SEQUENCE OF REMOVAL

HINT:

- After installing the switch to the switch body, insert that the switch operates in smoothly.

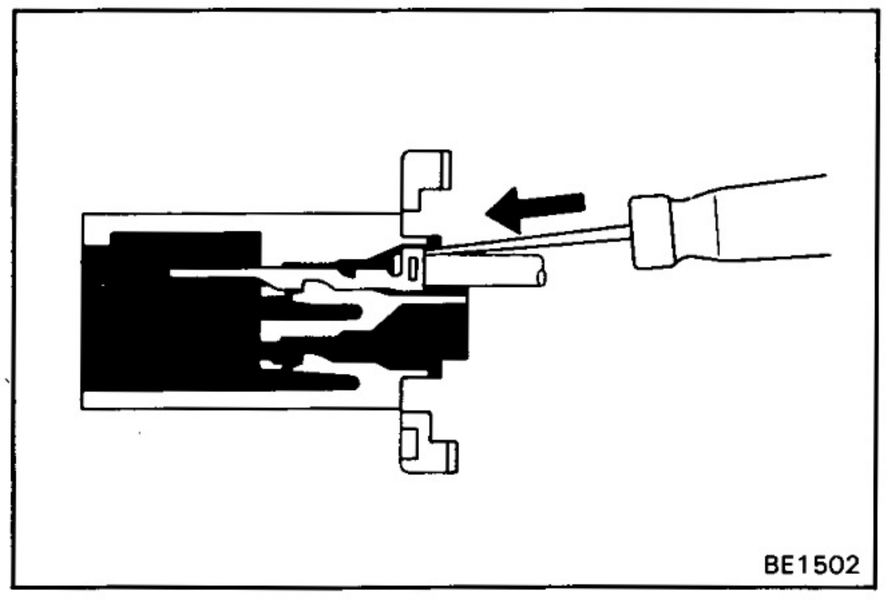

- Push in the terminal until it is securely locked in the connector lug.

Reference: LHD Vehicles

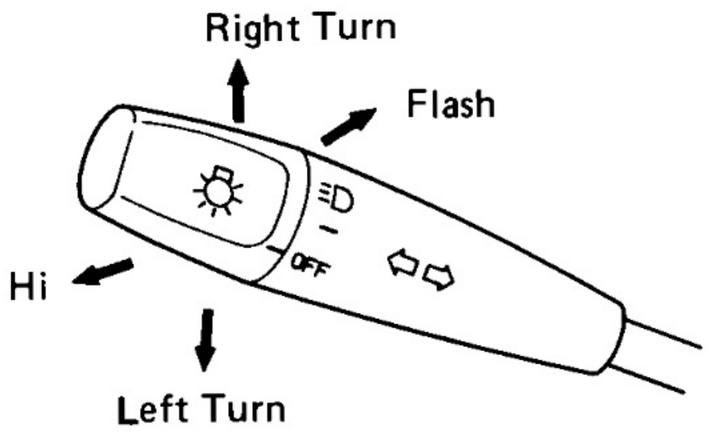

Connector "A" Connector "B"

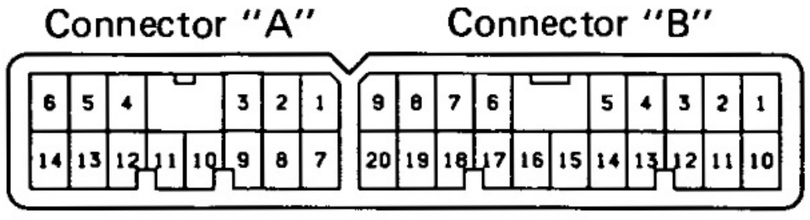

Reference: For RHD vehicles, the switch is always symmetrically opposite to LHD vehicles.

BE4164
V-34-2

Parts Inspection

Headlight and Taillight System

1. INSPECT COMBINATIN SWITCH (Light Control Switch/Continuity)

Terminal (Color) / Switch position	A2 (W)	A11 (W)	A13 (R)
OFF			
TAIL	○——	——○	
HEAD	○——	——○	——○

(Headlight Dimmer and Turn Signal Switch/Continuity)

Headlight Dimmer Switch

Terminal (Color) / Switch position	A3 (R-G)	A9 (W-B)	A12 (R-Y)	A14 (R-W)
Flash		○——	——○	——○
Low beam	○——	——○		
High beam		○——	——○	

Turn Signal Switch

Terminal (Color) / Switch position	A1 (G-W)	A5 (G-B)	A8 (G-Y)
Left turn	○——	——○	
Neutral			
Right turn	○——		——○

If continuity is not as specified, replace the switch.

2. INSPECT RELAY (Headlight Control Relay/Continuity)

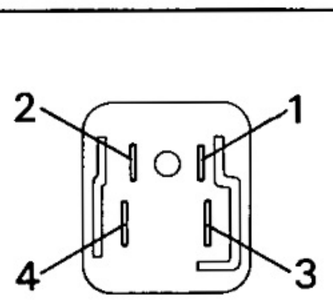

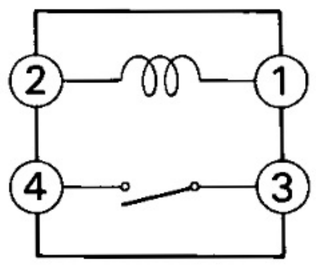

BE1838 BE1840

Terminal / Condition	1	2	3	4
Constant	○—∿∿—○			
Apply battery voltage to terminals 1 and 2.			○——	——○

(Taillight Control Relay/Continuity)

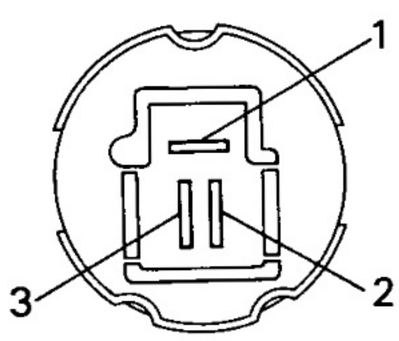

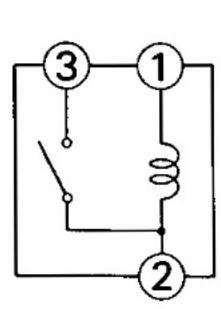

8E2763 BE2505

Terminal / Condition	1	2	3
Constant	○—∿∿—○		
Apply battery voltage to terminals 1 and 2.		○——	——○

(Headlight Dimmer Relay/Continuity)

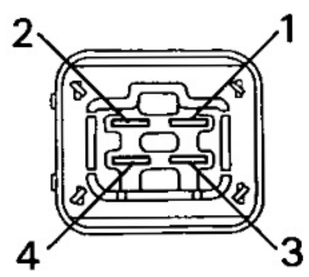

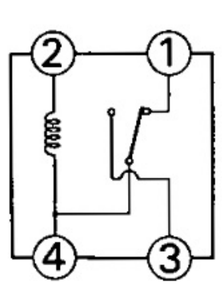

BE1839 BE1842

Terminal / Condition	1	2	3	4
Constant	○——	○——∿∿——○		——○
Apply battery voltage to terminals 2 and 4.		○——	——○	——○

If continuity is not as specified, replace the relay.

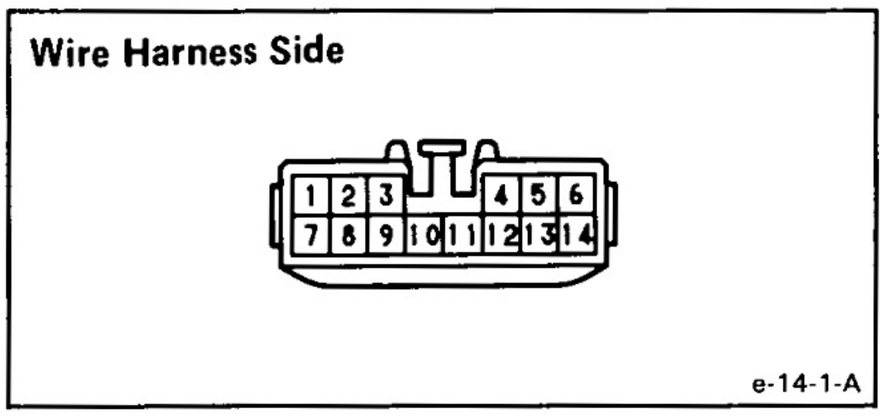

Daytime Running Light System

Inspect Daytime Running Light Relay

(Relay Circuit)

Disconnect the connector from the relay and inspect the connector on the wire harness side as shown in the chart.

Check for	Tester connection	Condition		Specified value
Continuity	2 — Ground	Light control switch position	OFF	No continuity
			TAIL or HEAD	Continuity
	4 — Ground	Light control switch position	OFF or TAIL	No continuity
			HEAD	Continuity
	6 — Ground	Headlight dimmer switch position	Low beam or High beam	No continuity
			Flash	Continuity
	7 — Ground 10 — Ground	Constant		Continuity
	13 — Ground	Headlight dimmer switch position	Low beam	No continuity
			High beam or Flash	Continuity
Voltage	1 — Ground	Ignition switch position	LOCK or ACC	No voltage
			ON	Battery voltage
	3 — Ground 5 — Ground	Constant		Battery voltage
	8 — Ground	Engine condition	Stop	No voltage
			Running	Battery voltage
	11 — Ground	Constant		No voltage
		Ground terminal 3		Battery voltage
	12 — Ground	Constant		Battery voltage
	14 — Ground	Constant		No voltage
		Ground terminal 5		Battery voltage

If circuit is as specified, inspect relay operation.

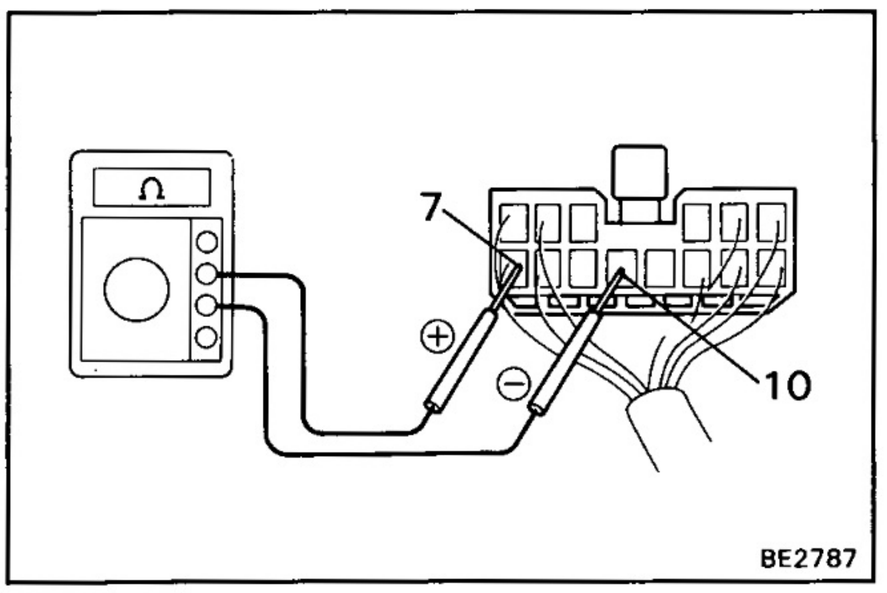

(Relay Operation)

(a) Connect the positive (+) lead from the voltmeter to terminal 7 and negative (—) lead to terminal 10.

(b) Check that there is battery voltage with light control switch is turned on.

If operation is not as specified, replace the relay.

Rear Fog Light System

1. INSPECT SWITCH (Continuity)

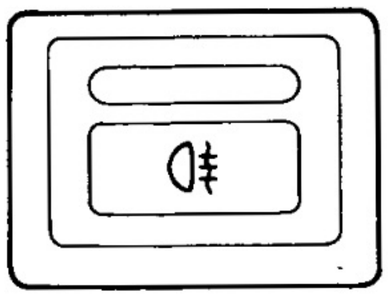

BE5028 S-8-2

Terminal / Switch position	6	7	Illumination 2	Illumination 3
OFF			○—◎—○	
ON	○——	——○		

If continuity is not as specified, replace the switch.

2. INSPECT RELAY (Rear Fog Light Relay/Continuity)

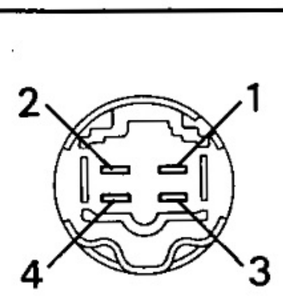

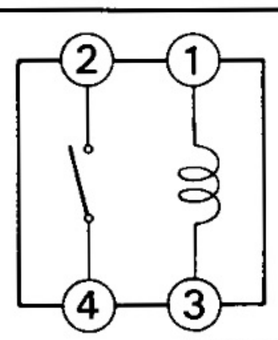

BE1647 BE1840

Terminal / Condition	1	2	3	4
Constant	○——	——◠◠◠——	——○	
Apply battery voltage to terminals 1 and 3.		○——	———	——○

If continuity is not as specified, replace the relay.

Turn Signal and Hazard Warning System

1. INSPECT SWITCHES

(Turn Signal Switch/Continuity)

See Headlight dimmer and Turn Signal Switch on page BE-27.

(Hazard Warning Switch/Continuity)

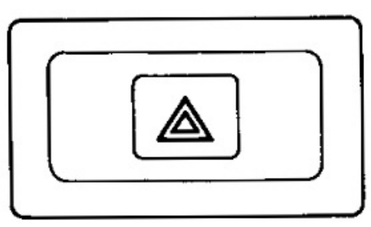

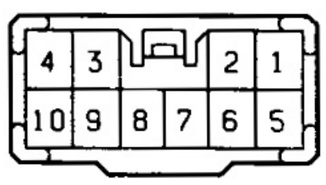

BE2415 S-10-2

Terminal / Switch position	4	5	6	7	8	9	10	Illumination 2	Illumination 3
OFF				○————			——○		
ON	○—	—○—	—○—	○—	—○	———○		○—◎—○	

If continuity is not as specified, replace the switch.

2. INSPECT TURN SIGNAL FLASHER (Operation)

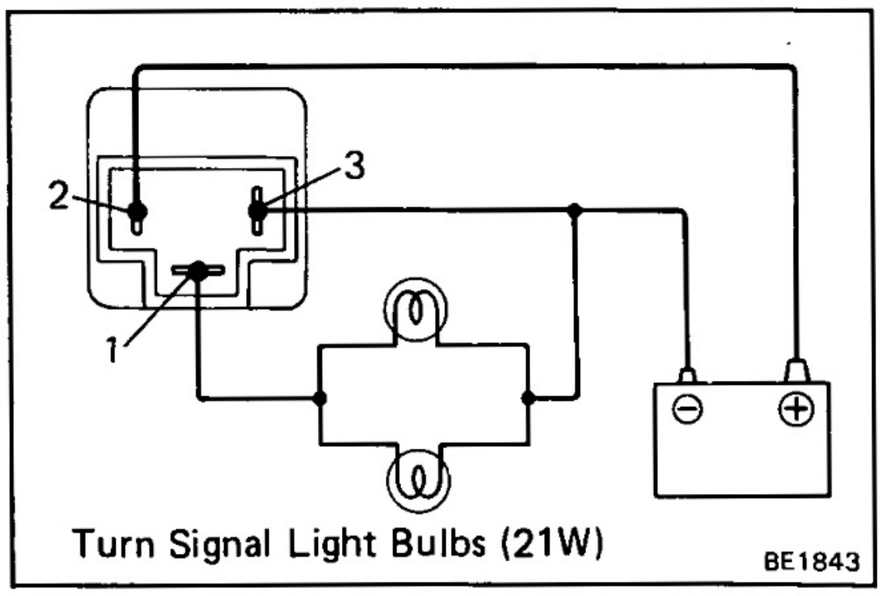

Turn Signal Light Bulbs (21W)

BE1843

(a) Connect the positive (+) lead from the battery to terminal 2 and the negative (—) lead to terminal 3.

(b) Connect the two turn signal light bulbs parallel to each other to terminals 1 and 3, check that the bulbs flash.

HINT: The turn signal lights should flash 60 to 120 times per minute.

If one of the front or rear turn signal lights has an open circuit, the number of flashers will be more than 140 per minute.

If operation is not as specified, replace the flasher.

Headlight Beam Level Control System

1. INSPECT SWITCH (Continuity)

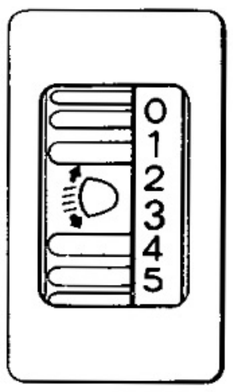

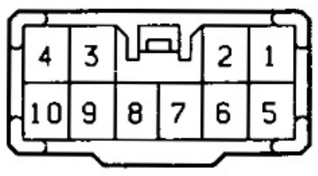

BE4369 S-10-2

Terminal / Switch position	4	5	6	7	8	9	10	Illumination 2	Illumination 3
0	○	—	—	—	—	—	○		
1	○	—	—	—	—	○			
2	○	—	—	—	○				
3	○	—	—	○					
4	○	—	○						
5	○	○							

If continuity is not as specified, replace the switch.

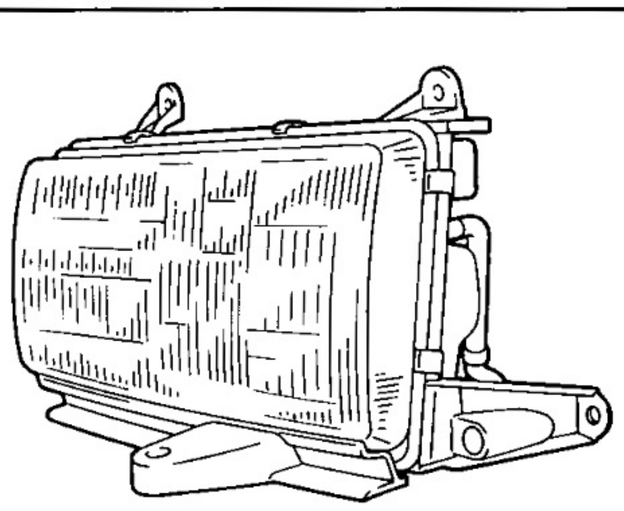

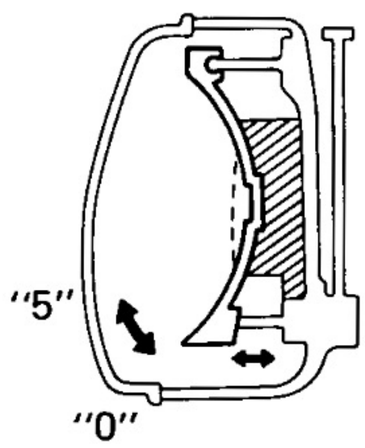

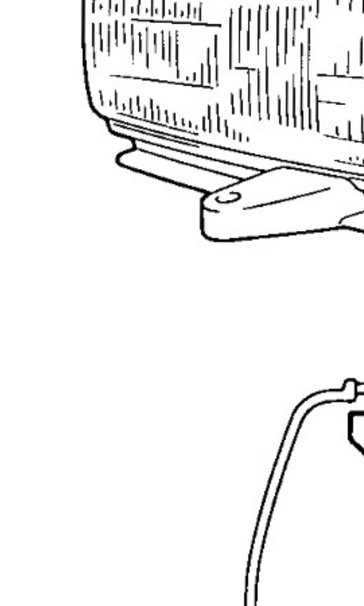

BE5025
BE5026
BE4370 le-8-2

2. INSPECT ACTUATOR

(a) Connect the positive (+) lead from the battery to terminal 6 and the negative (—) lead to terminal 5.

(b) Ground each terminal and check that each mode operates as shown in the chart and illustration.

Terminal	Headlight Beam Level
1 — ground	"0"
2 — ground	"1"
3 — ground	"2"
4 — ground	"3"
7 — ground	"4"
8 — ground	"5"

If operation is not as specified, replace the actuator.

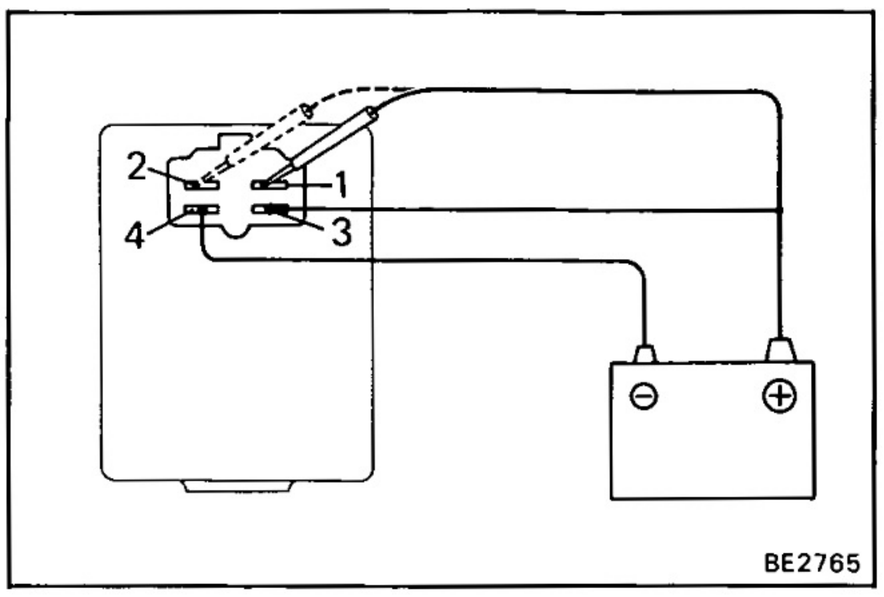

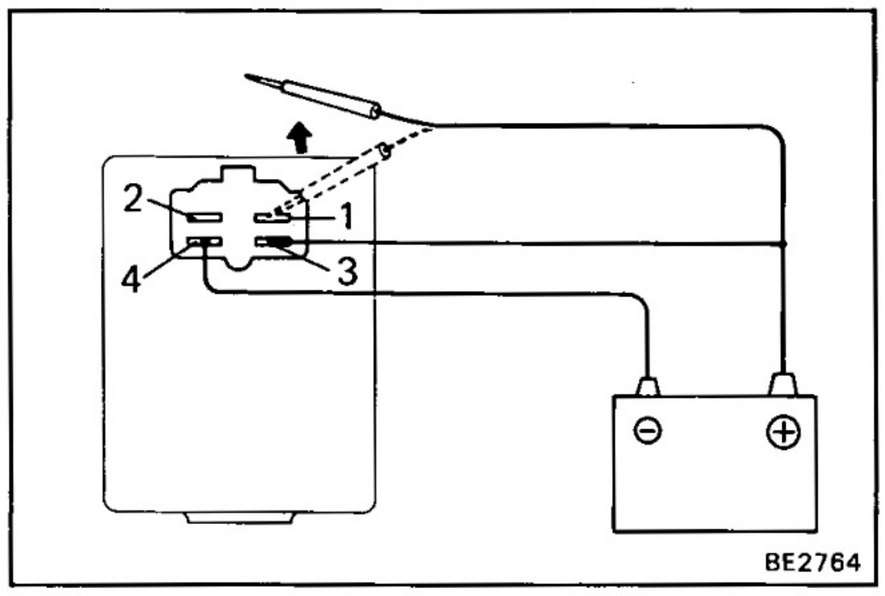

Lights-On Warning System

1. INSPECT DRIVER'S DOOR COURTESY SWITCH

See step 2 of Open Door Warning System on page BE-64.

2. INSPECT LIGHT REMINDER RELAY
(Operation)

(a) Connect the positive (+) lead from the battery to terminal 3 and the negative (−) lead to terminal 4.

(b) Check that the buzzer does not sound when connected terminal 1 or 2 from the positive (+) lead.

(c) Check that the buzzer sounds when disconnecting terminal 1 or 2 from the positive (+) lead.

If operation is not as specified, replace the relay.

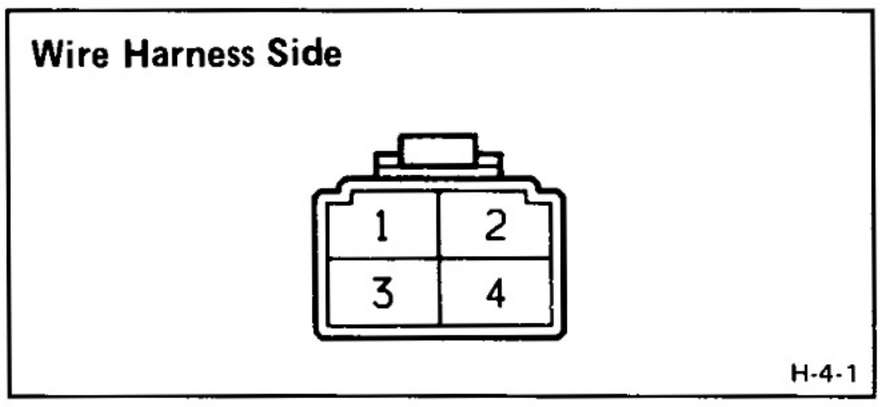

(Relay Circuit)

Disconnect the connector from the relay and inspect the connector on the wire harness side as shown in the chart.

Check for	Tester connection	Condition		Specified value
Continuity	4 — Ground	Driver's door position	Closed (Courtesy switch OFF)	No continuity
			Opened (Courtesy switch ON)	Continuity
Voltage	1 — Ground	Ignition switch position	LOCK or ACC	No voltage
			ON	Battery voltage
	2 — Ground	Ignition switch position	LOCK	No voltage
			ACC or ON	Battery voltage
	3 — Ground	Light control Switch	OFF	No voltage
			TAIL or HEAD	Battery voltage

If circuit is as specified, replace the relay.

If circuit is not as specified, refer to BE-18 wiring diagram and inspect the circuits connected to other parts.

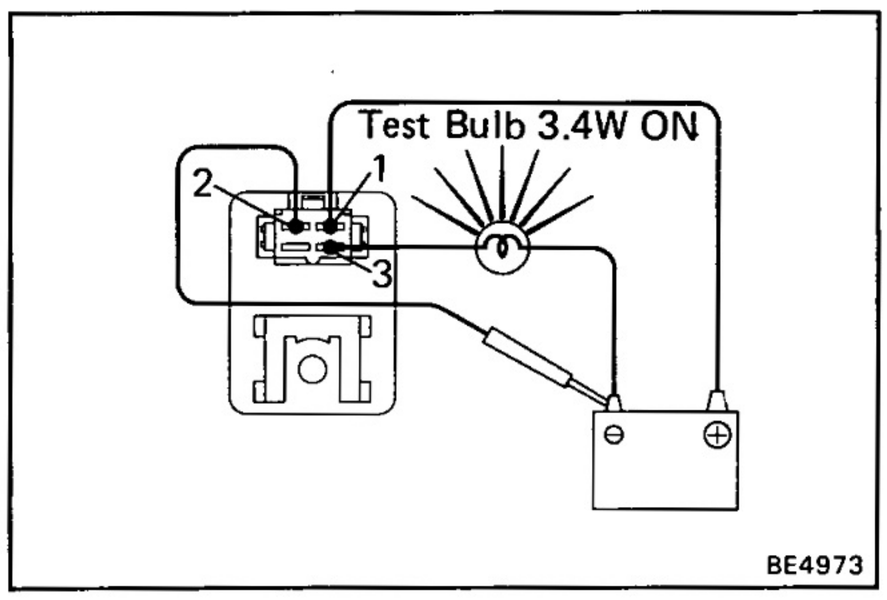

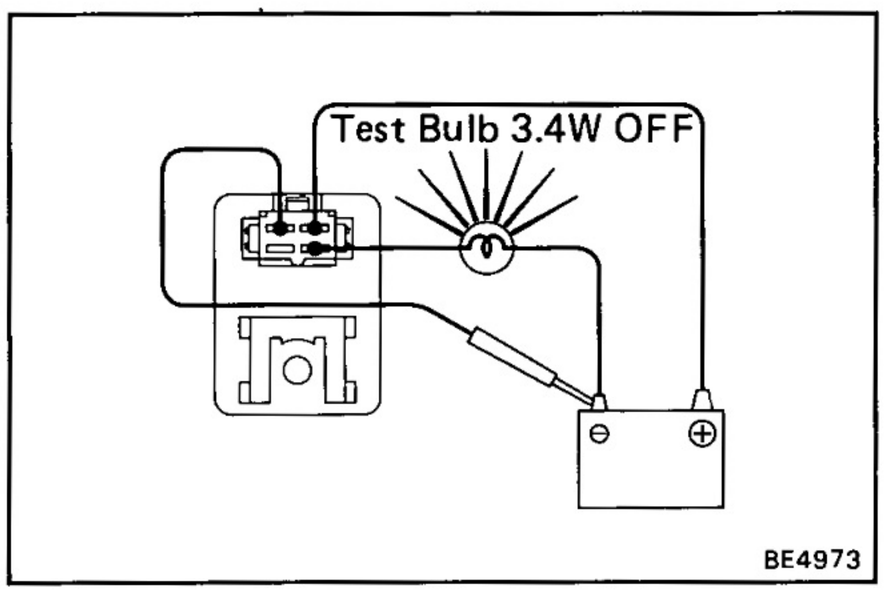

Illuminated Entry System

1. INSPECT FRONT DOOR COURTESY SWITCH

See step 2 of Open Door Warning System on page BE-64.

2. INSPECT ROOM LIGHT CONTROL RELAY

(Operation)

(a) Connect the positive (+) lead from the battery to terminal 1. Connect the negative (—) lead to terminal 2.

(b) Connect a 3.4 W bulb between terminal 3 and the battery negative (—), and then check that the bulb lights.

(c) Disconnect the negative (—) lead from the battery, and check that the bulb goes out approx. 5 seconds later as shown in the chart.

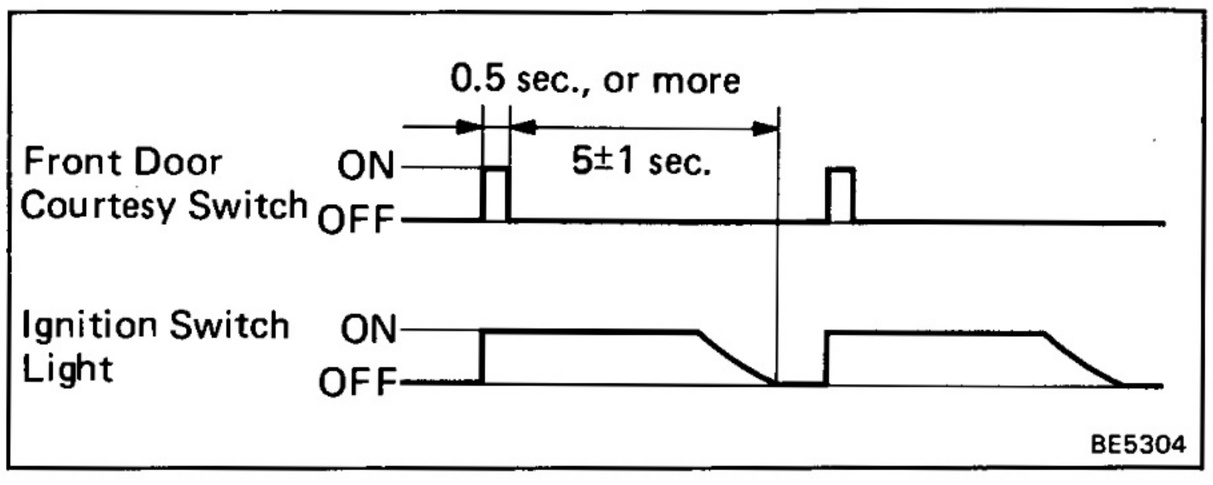

If operation is not as specified, replace the relay.

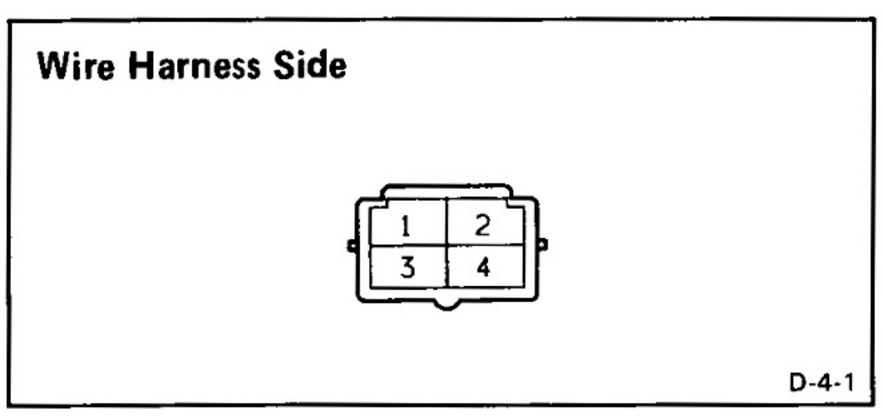

(Relay Circuit)

Disconnect the connector from the relay and inspect the connector on the wire harness side as shown in the chart.

Check for	Tester connection	Condition		Specified value
Continuity	3 — Ground	Constant		Continuity
	4 — Ground	Driver's door position	Closed (Courtesy switch OFF)	No continuity
			Opend (Courtesy switch ON)	Continuity
Voltage	1 — Ground	Constant		Battery voltage

If circuit is as specified, replace the relay.

If circuit is not as specified, refer to BE-19 wiring diagram and inspect the circuits to other parts.

Stop light System

INSPECT SWITCH
(Stop Light Switch/Continuity)

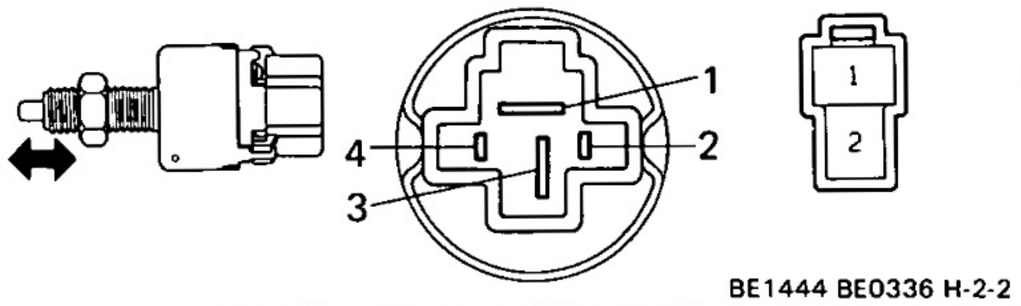

Terminals / Switch position	1(1)	2	3(2)	4
Switch pin free (Brake pedal depressed)	○		○	
Switch pin pushed in (Brake pedal released)		○		○

( ): w/o Cruise Control System

If continuity is not as specified, replace the switch.

Back-up Light System

INSPECT SWITCHES
(Neutral Start Switch)

See page AT-28.

(Back-up Light Switch)

See page MT-24.

HEADLIGHT CLEANER SYSTEM

Parts Location

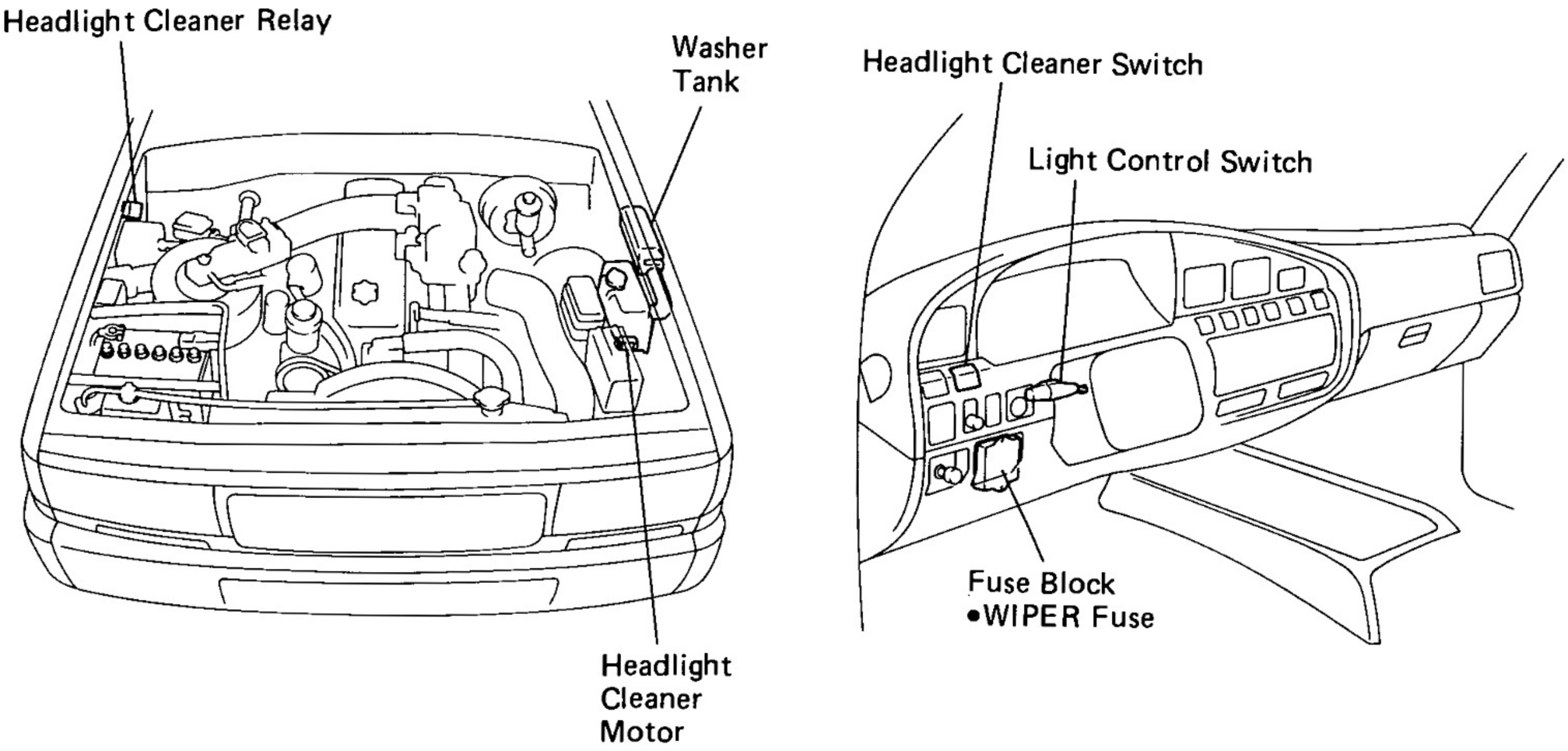

BE5078 BE5079

Wiring and Connector Diagrams

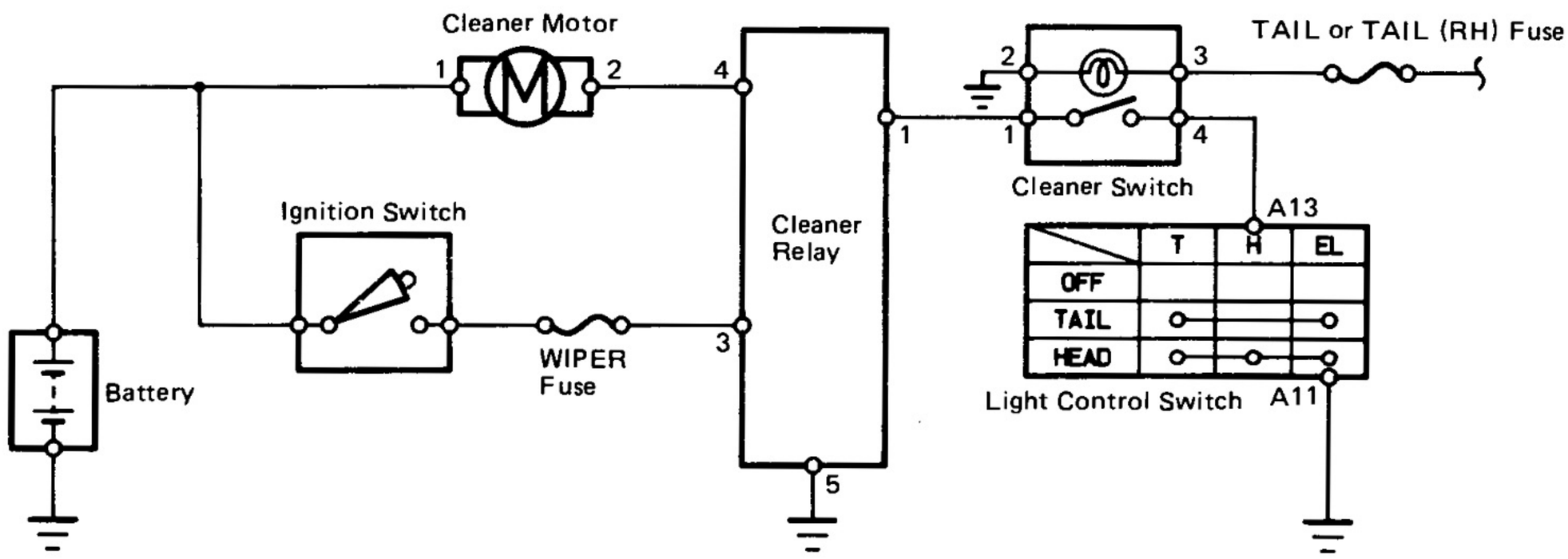

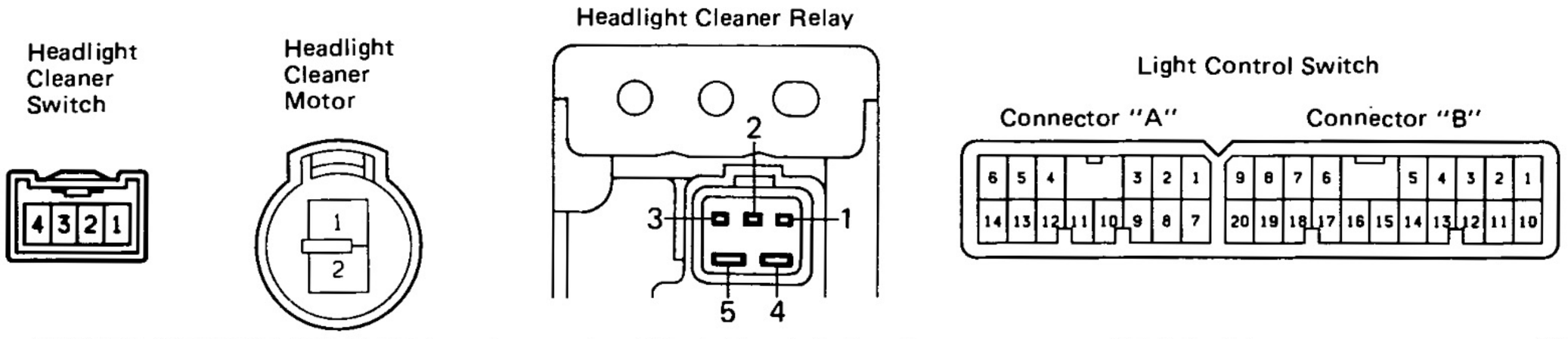

The POWER SOURCE CIRCUIT has been simplified. For full details, see pages BE-10, 11

BE4188
S-4-2-C IC-2-2 BE0234 V-34-2

Troubleshooting

Problem	Possible cause	Remedy	Page
Headlight cleaner do not operate	WIPER fuse blown	Replace fuse and check for short	BE-4, 6
	Cleaner hose or nozzle clogged	Repair as necessary	
	Cleaner motor faulty	Check motor	BE-35
	Cleaner switch faulty	Check switch	BE-35
	Wiring or ground faulty	Repair as necessary	

Parts Inspection

1. INSPECT SWITCH (Continuity)

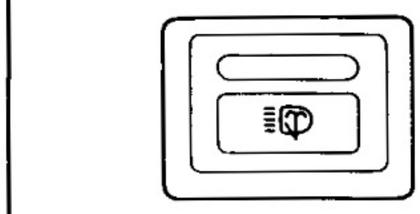

Terminal / Switch position	1	4	Illumination 2	Illumination 3
OFF				
ON	○——	——○		

If continuity is not as specified, replace the switch.

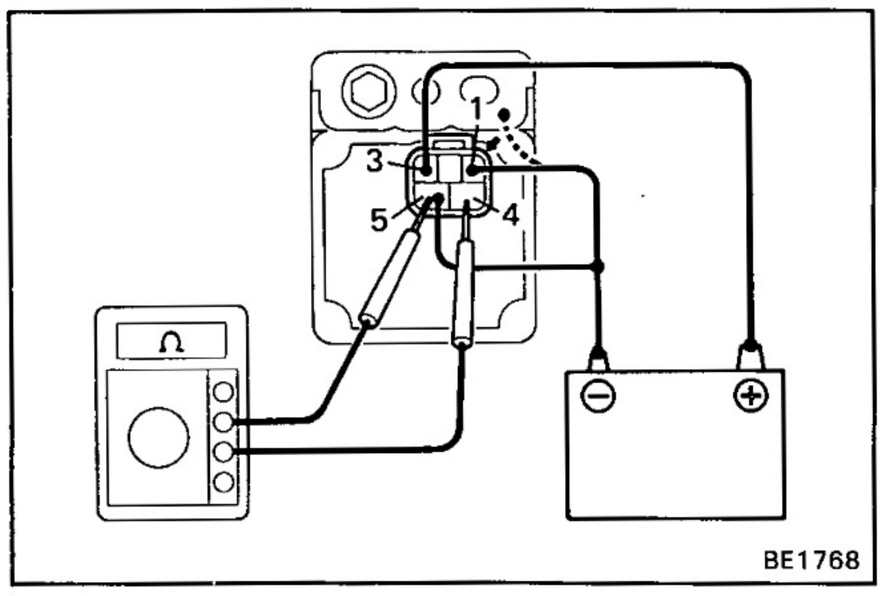

2. INSPECT HEADLIGHT CLEANER RELAY

(a) Check that there is no continuity between terminals 4 and 5.

(b) Connect the positive (+) lead from the battery to terminal 3 and the negative (—) lead to terminal 5.

(c) Connect the negative (—) lead from the battery to terminal 1, check that there is continuity between terminals 4 and 5 for 0.40 — 0.58 sec., then there is no continuity.

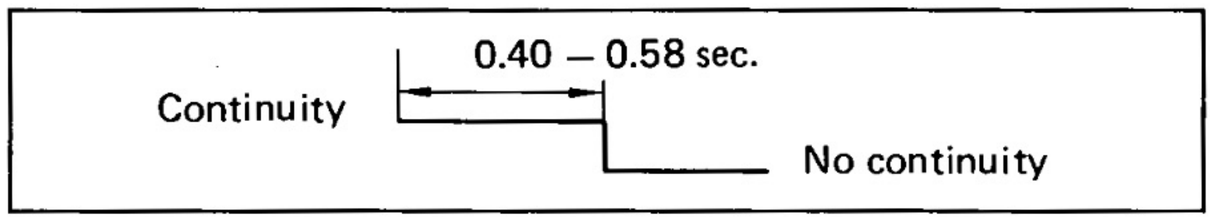

If operation is not as specified, replace the relay.

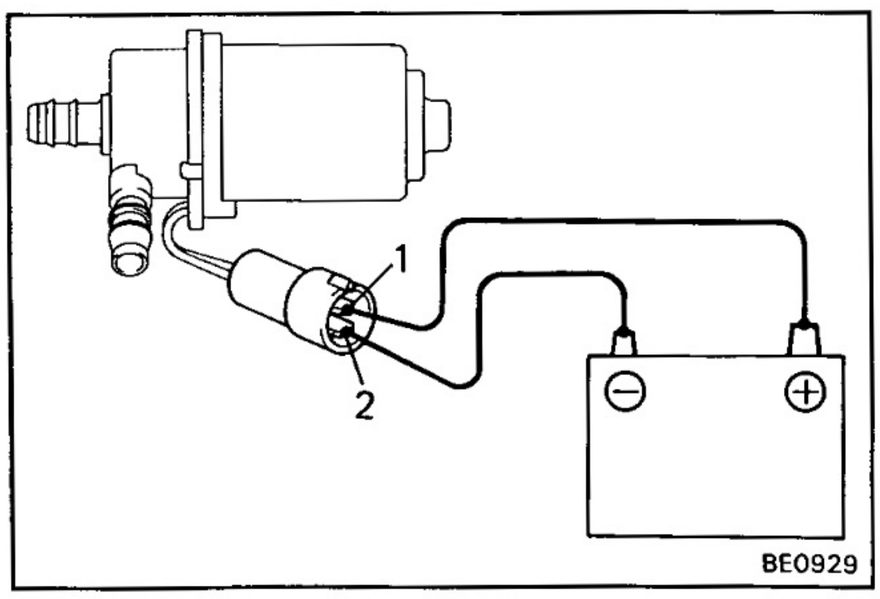

3. INSPECT HEADLIGHT CLEANER MOTOR

Connect the positive (+) lead from the battery to terminal 1 and the negative (—) lead to terminal 2, check that the motor operates.

NOTICE: These test must be performed quickly (within 3 — 5 seconds) to prevent the coil from burning out.

If operation is not as specified, replace the motor.

WIPER AND WASHER SYSTEM

Parts Location

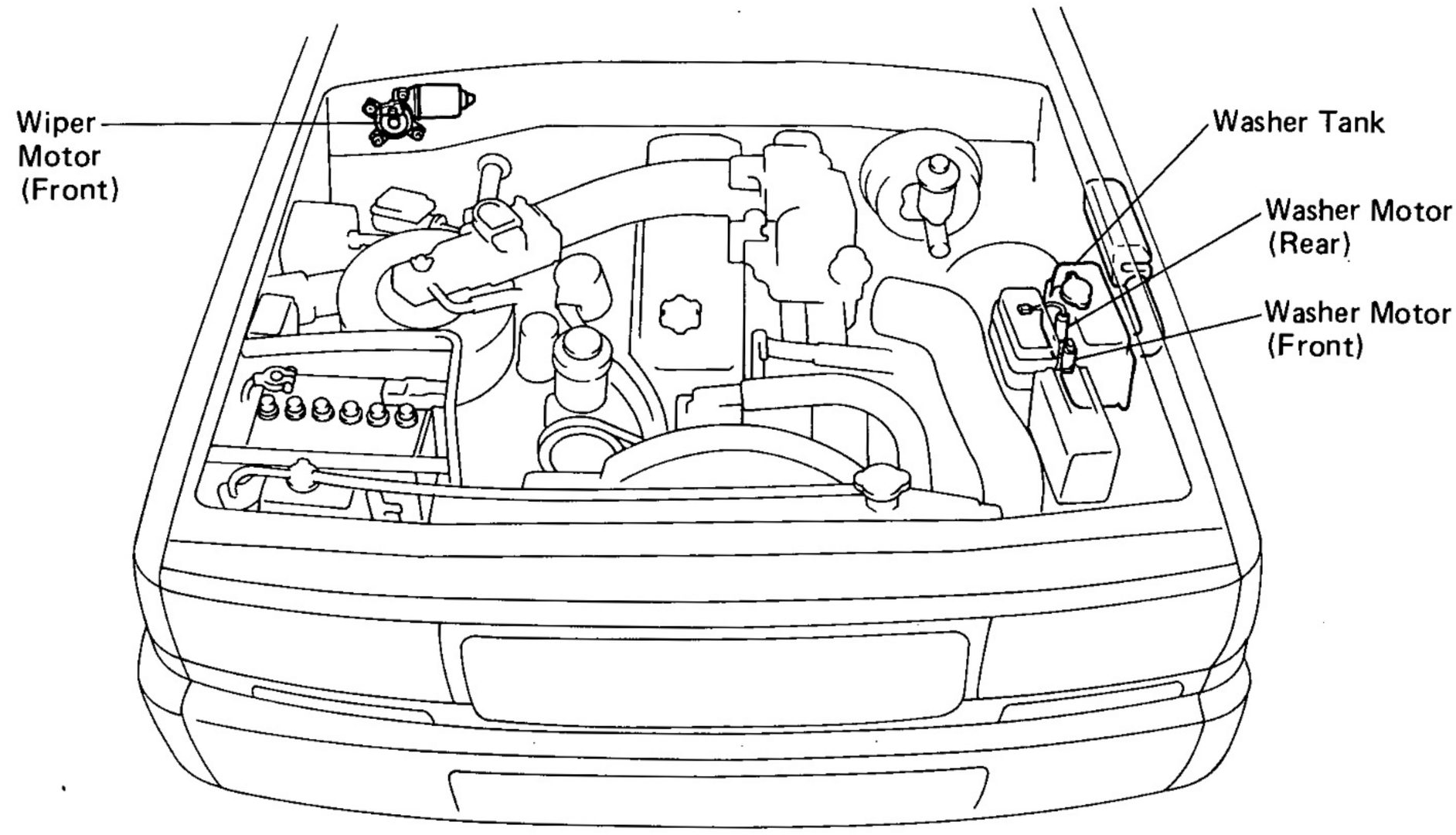

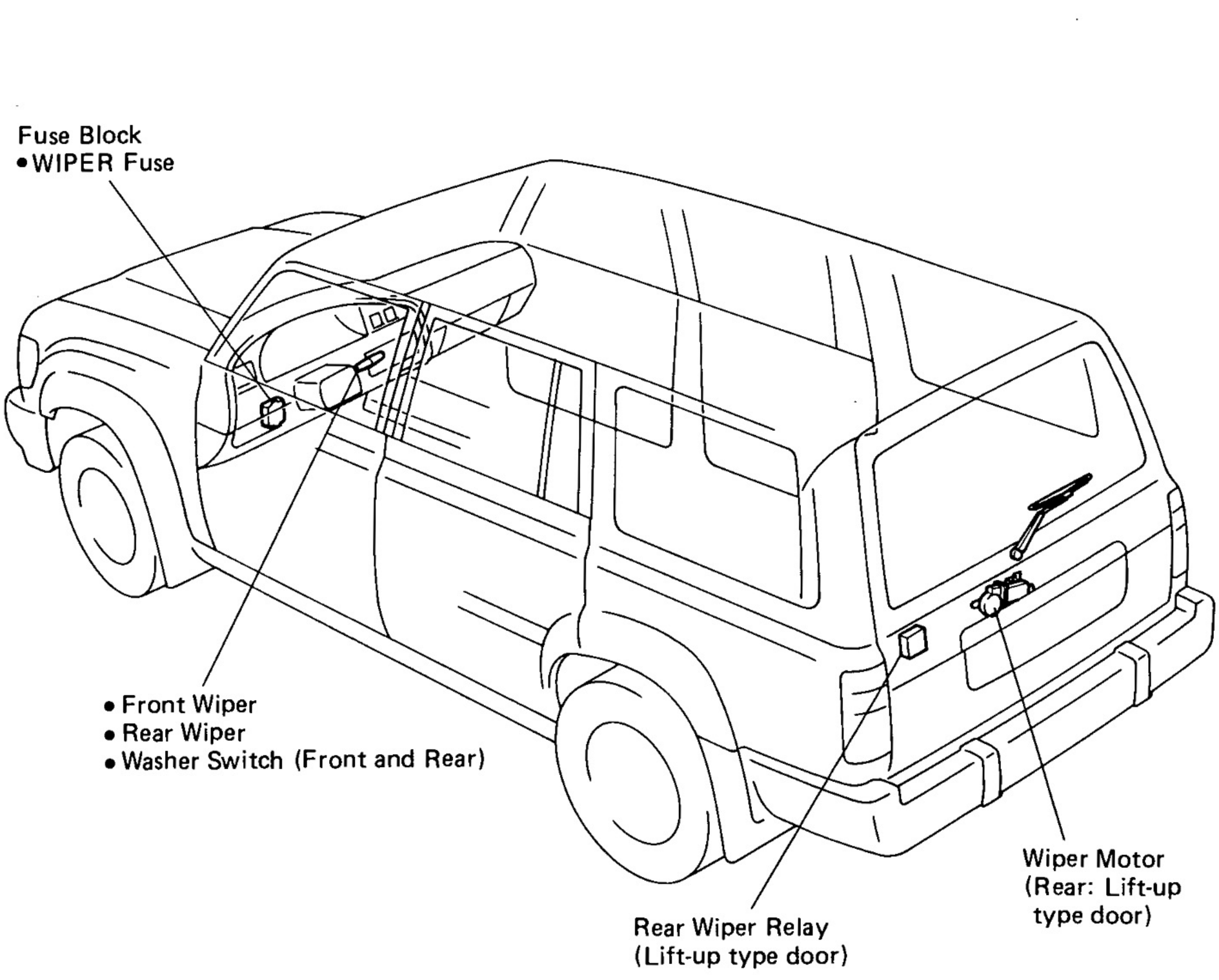

BE5081
BE5080

Parts Location (Cont'd)

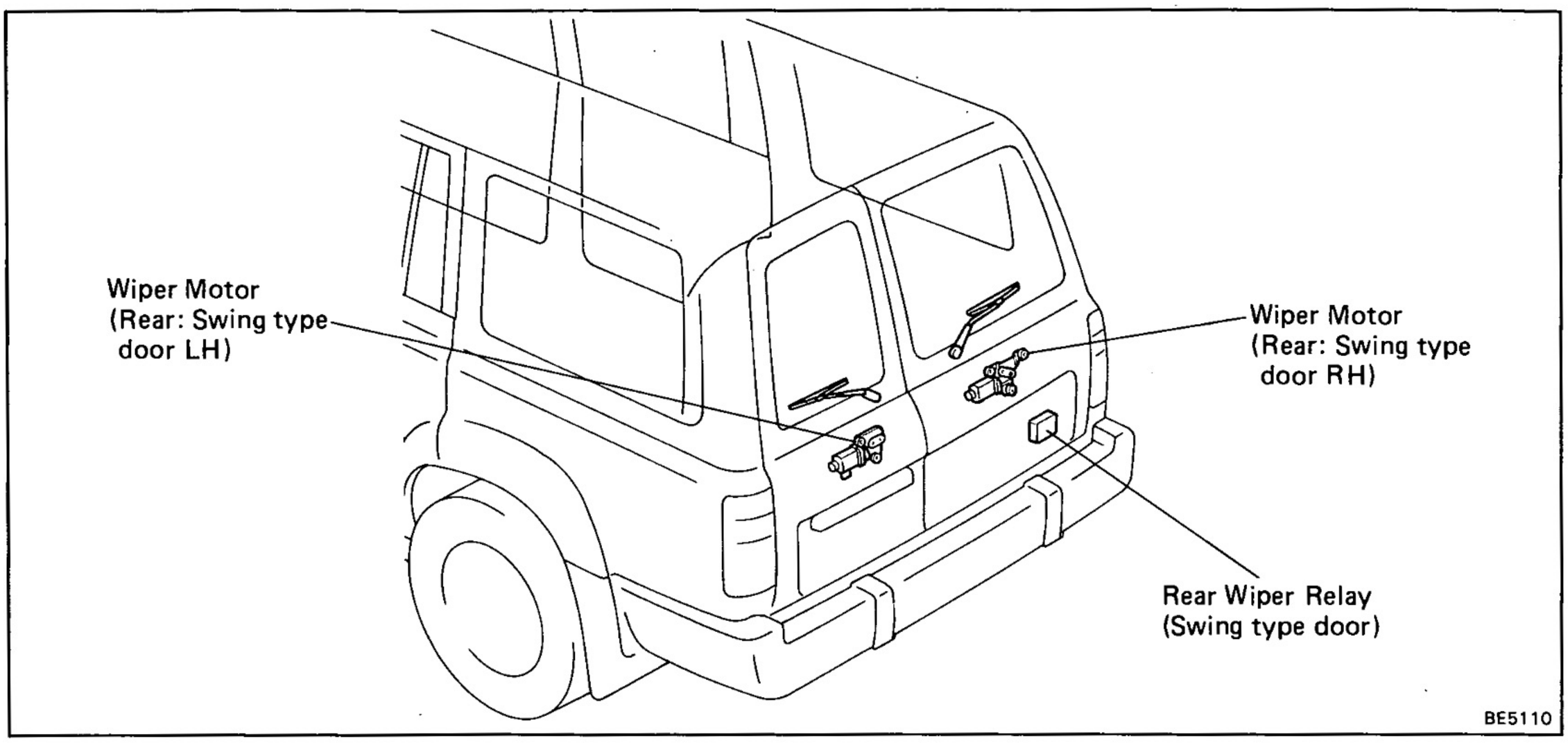

Wiring and Connector Diagrams

(Front: Mist Type)

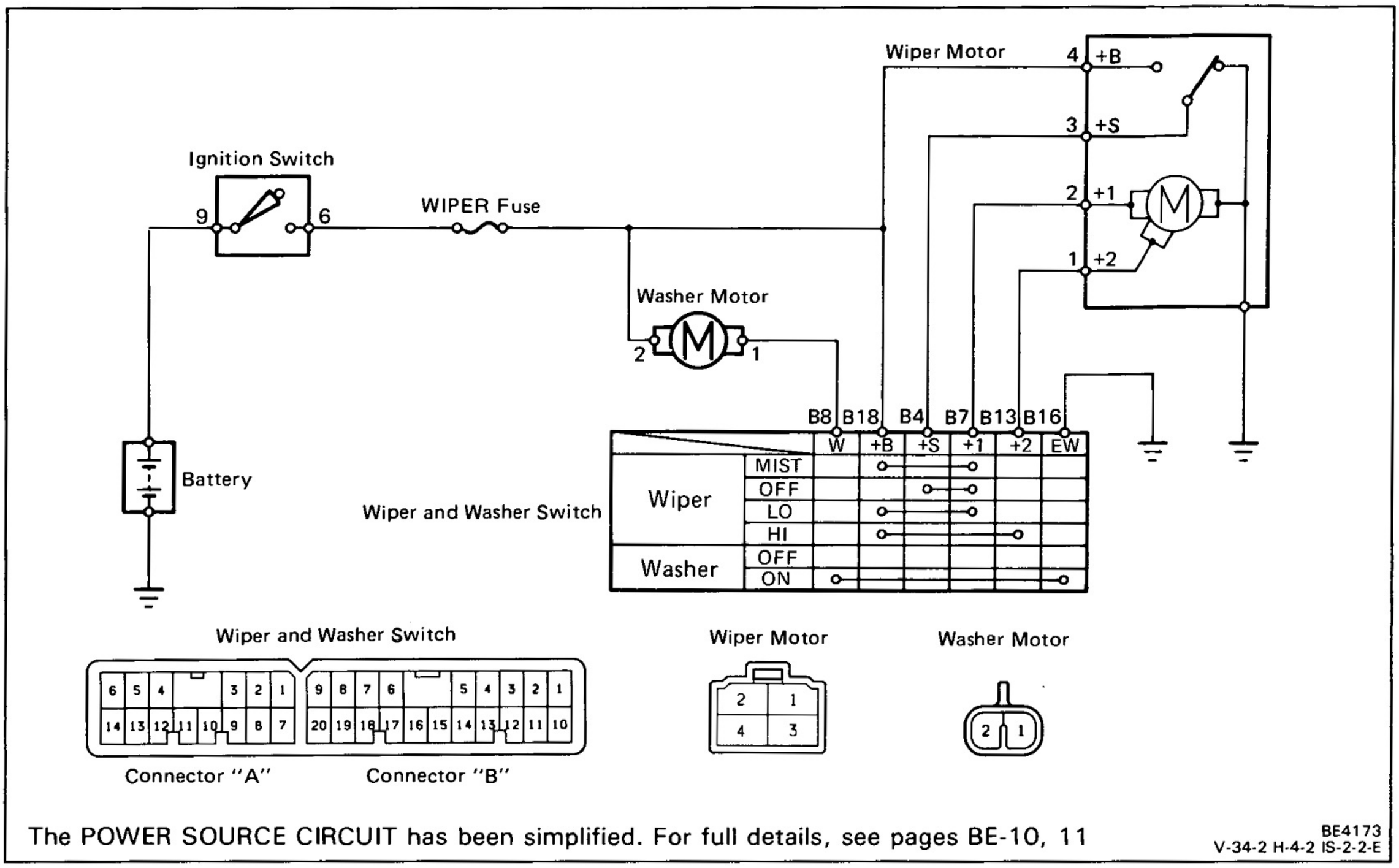

The POWER SOURCE CIRCUIT has been simplified. For full details, see pages BE-10, 11

BE4173
V-34-2 H-4-2 IS-2-2-E

(Front: Intermittent Type)

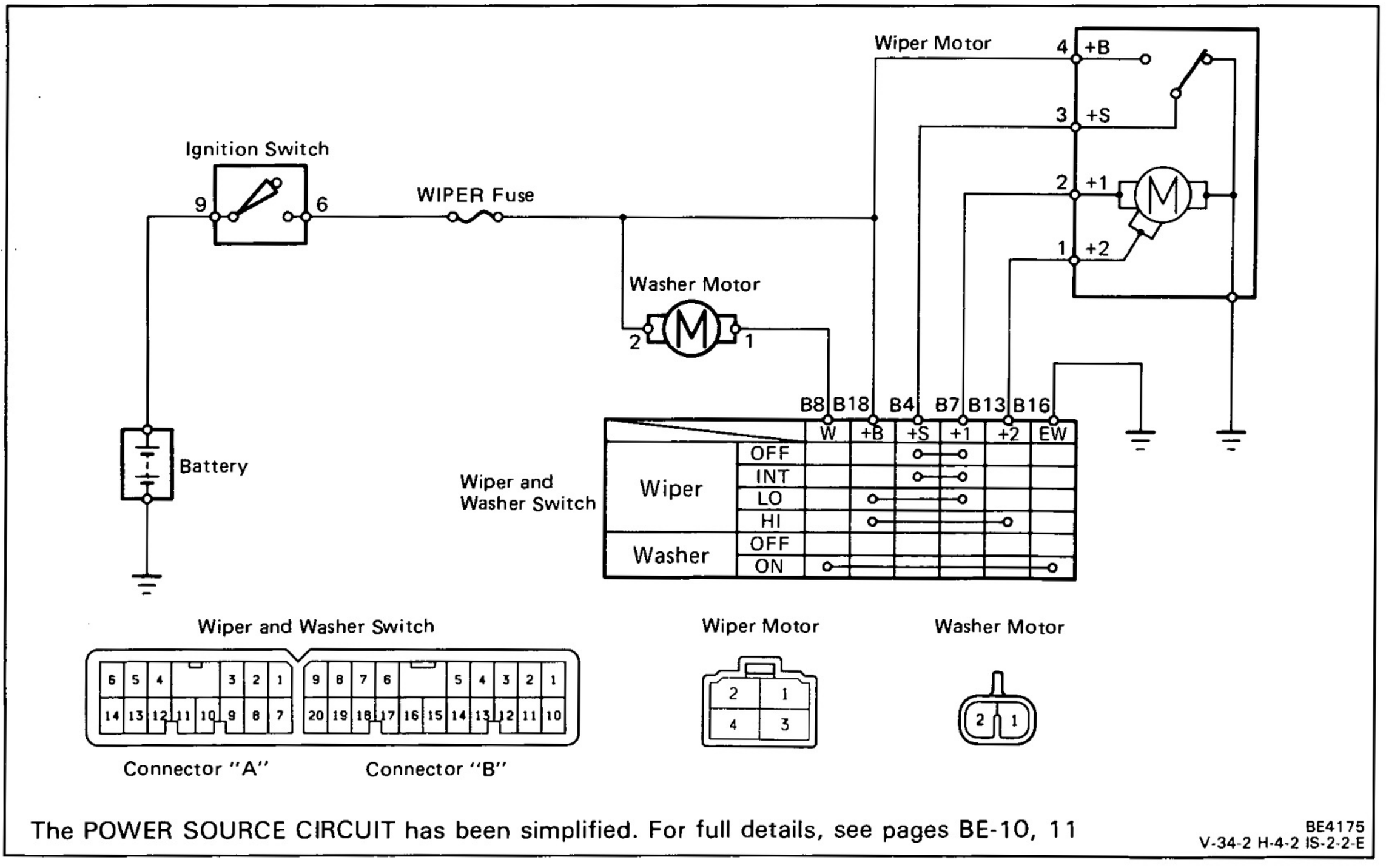

The POWER SOURCE CIRCUIT has been simplified. For full details, see pages BE-10, 11

BE4175
V-34-2 H-4-2 IS-2-2-E

(Rear: Lift-up type door)

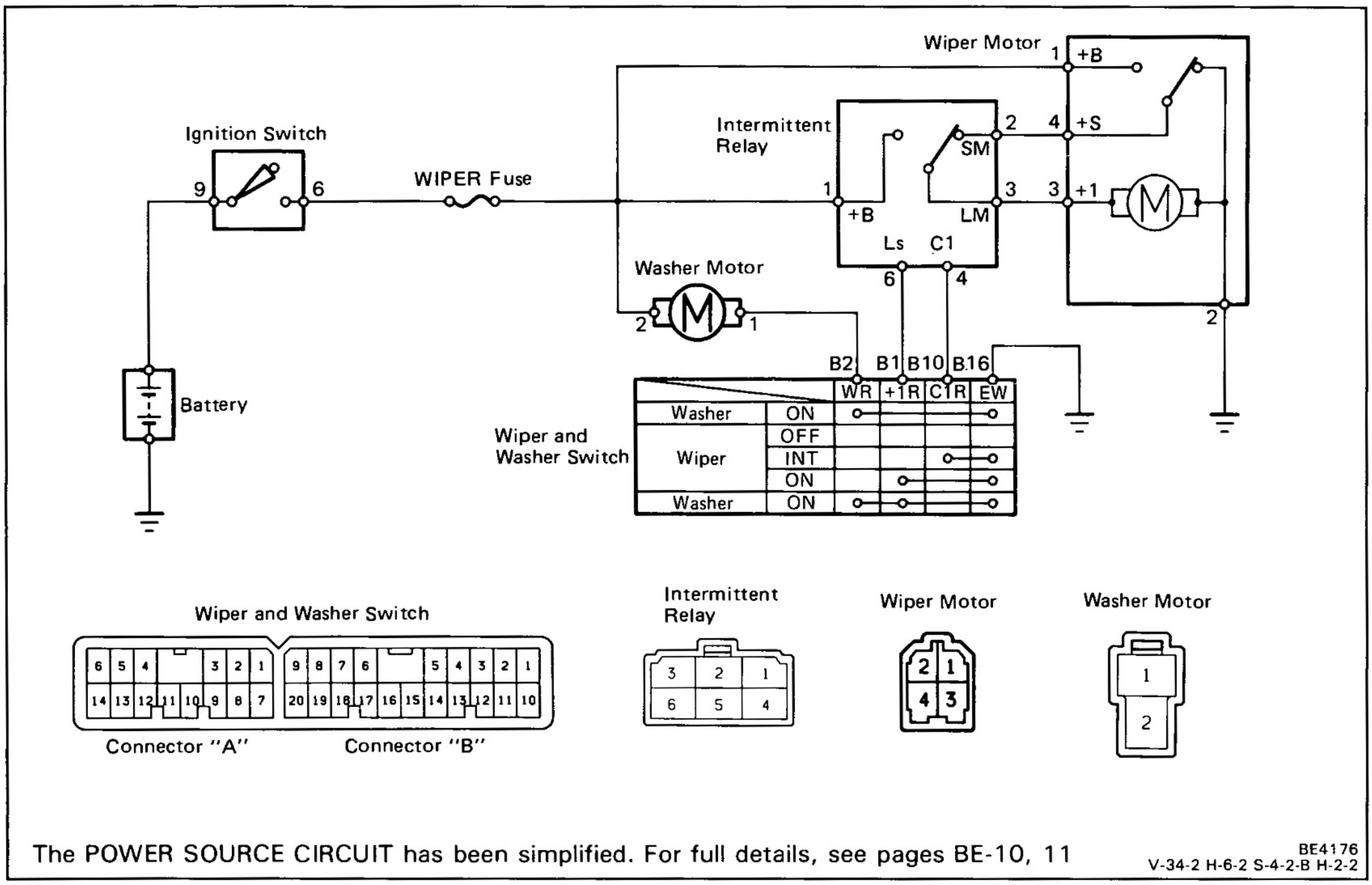

The POWER SOURCE CIRCUIT has been simplified. For full details, see pages BE-10, 11

BE4176
V-34-2 H-6-2 S-4-2-B H-2-2

(Rear: Swing type door)

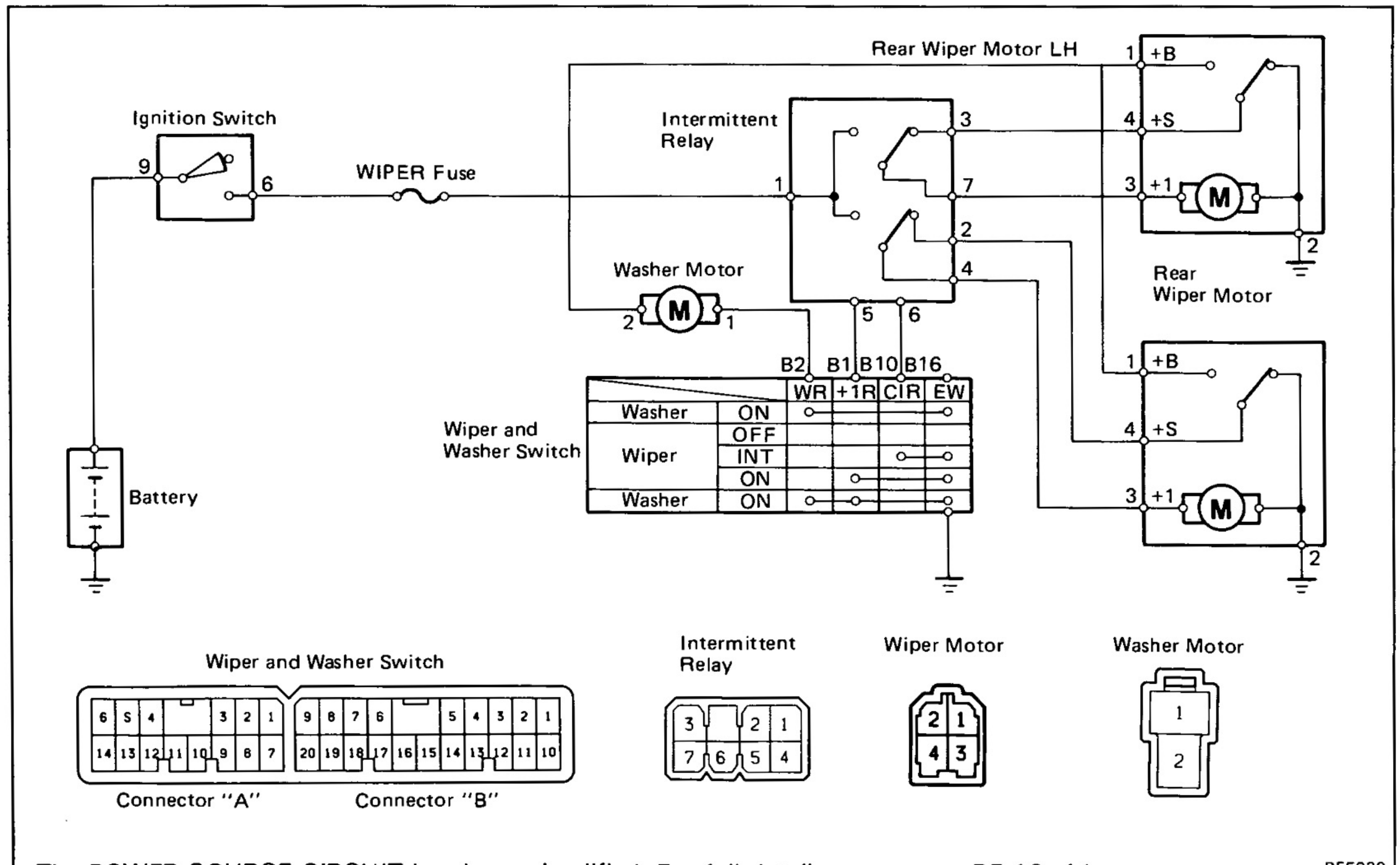

The POWER SOURCE CIRCUIT has been simplified. For full details, see pages BE-10, 11

BE5038
V-34-2 G-7-2 S-4-2-B H-2-2

Troubleshooting

Problem	Possible cause	Remedy	Page	
			Front	Rear
Wiper do not operate or return to off position	WIPER fuse blown Wiper motor faulty Wiper switch faulty Wiring or ground faulty	Replace fuse and check for short Check motor Check switch Repair as necessary	BE-4, 6 BE-44 BE-41	BE-4, 6 BE-45,46 BE-41
Wiper do not operate in Mist position	Wiper switch faulty Wiper motor faulty Wiring or ground faulty	Check switch Check motor Repair as necessary	BE-41 BE-44	— — —
Wiper do not operate in Intermittent (INT) position	Wiper relay faulty Wiper switch faulty Wiper motor faulty Wiring or ground faulty	Check relay Check switch Check motor Repair as necessary	BE-42 BE-41 BE-44	BE-42,43 BE-41 BE-45,46
Washer do not operate	Washer hose or nozzle clogged Washer motor faulty Washer switch faulty Wiring or ground faulty	Repair as necessary Check motor Check switch Repair as necessary	BE-44 BE-41	BE-45,46 BE-41

Parts Replacement

See Parts Replacement of Combination Switch on page BE-25.

Reference: LHD Vehicles

Mist Wiper Switch

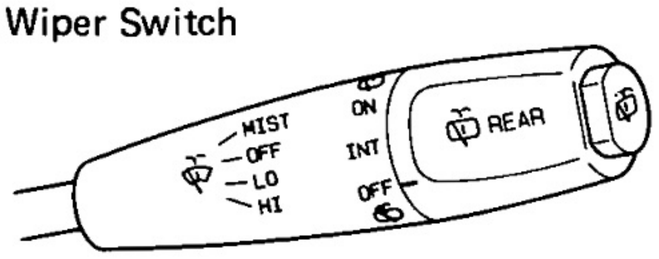

Intermittent Wiper Switch
(w/o Interval Adjuster)

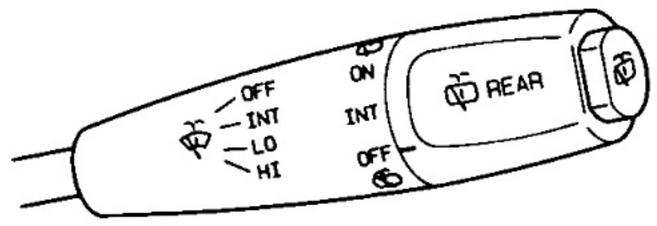

Connector "A" Connector "B"

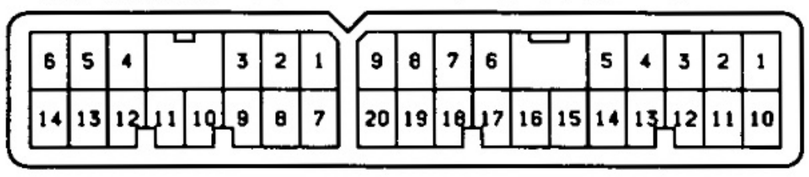

Reference: For RHD vehicles, the switches are always symmetrically opposite to those of LHD vehicles.

BE4177
BE4178
V-34-2

Parts Inspection

Wiper System

1. INSPECT SWITCHES

(Front Wiper and Washer Switch/Continuity)

(Mist Wiper)

Terminal (Color) / Switch position		B4 (L-R)	B7 (L-B)	B8 (L)	B13 (L-O)	B16 (B)	B18 (L-W)
Wiper	OFF		○				○
	MIST	○	○				
	LO		○				○
	HI				○		○
Washer	OFF						
	ON			○		○	

(Intermittent Wiper)

Terminal (Color) / Switch position		B4 (L-R)	B7 (L-B)	B8 (L)	B12 (Y-B)	13 (L-O)	B16 (B)	B18 (L-W)
Wiper	OFF	○	○					
	INT	○	○		○		○	
	LO		○					○
	HI					○		○
Washer	OFF							
	ON			○			○	

(Rear Wiper and Washer Switch/Continuity)

Terminal (Color) / Switch position		B1 (G)	B2 (V)	B10 (O)	B16 (B)
Washer	ON		○		○
Wiper	OFF				
	INT			○	○
	ON	○			○
Washer	ON	○	○		○

If continuity is not as specified, replace the switch.

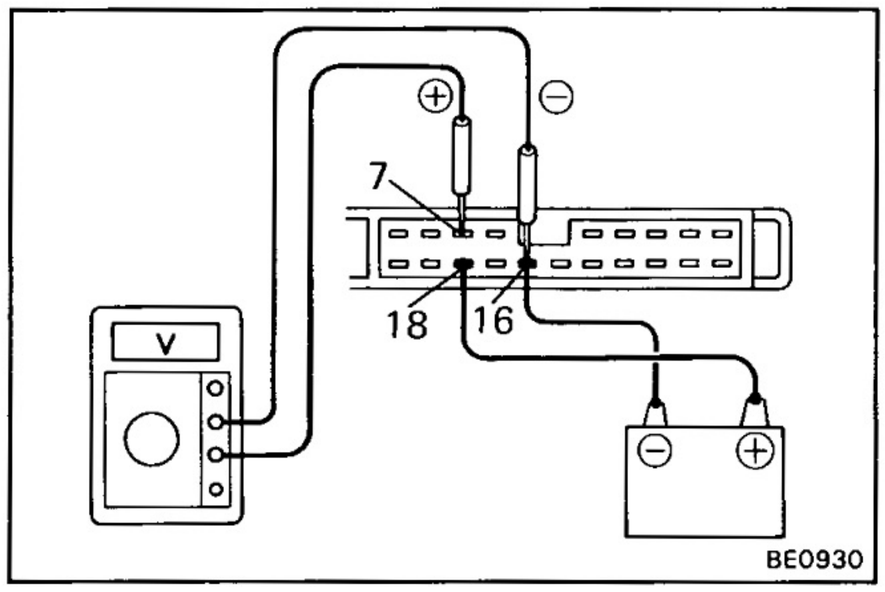

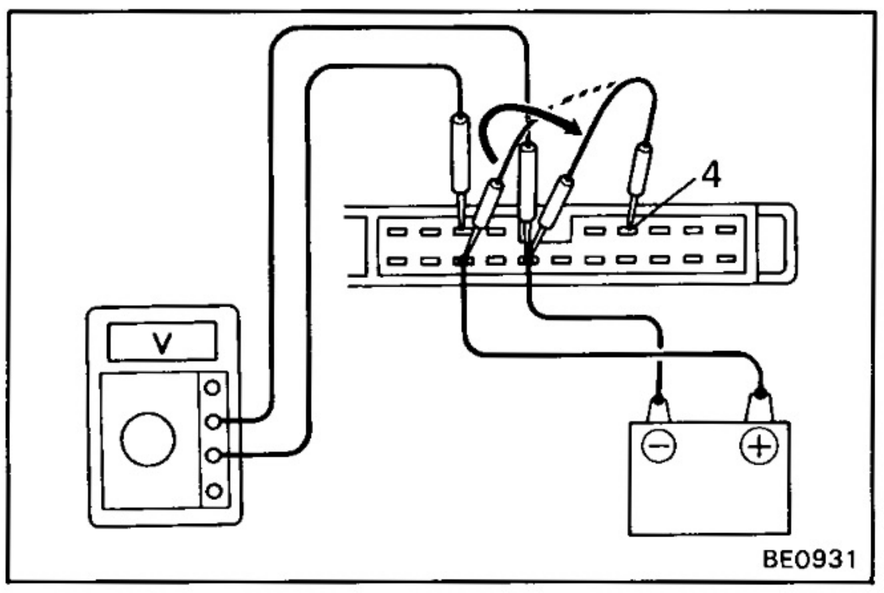

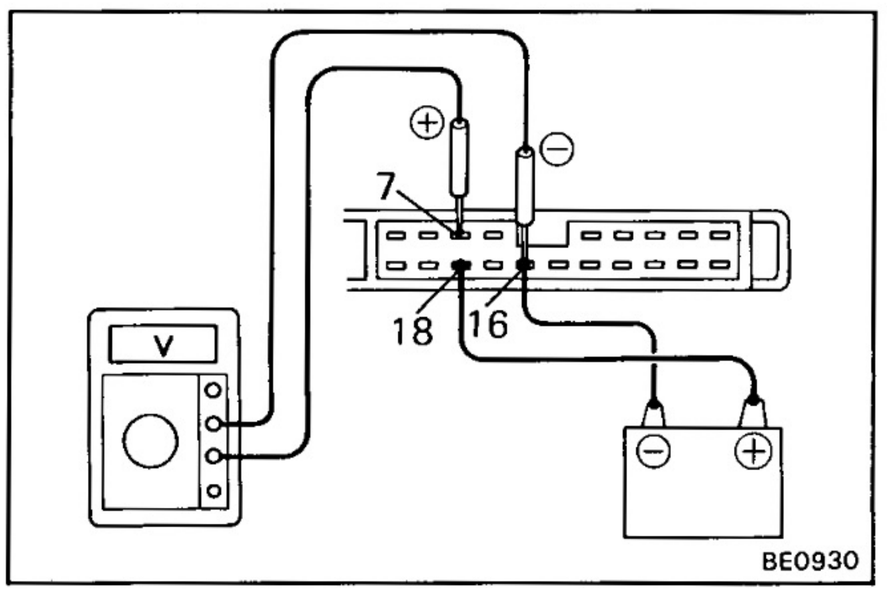

2. INSPECT FRONT WIPER RELAY
(Intermittent wiper: Front)

(Operation at Intermittent)

(a) Turn the wiper switch to INT position.

(b) Turn the intermittent time control switch to FAST position.

(c) Connect the positive (+) lead from the battery to terminal B18 and the negative (—) lead to terminal B16.

(d) Connect the positive (+) lead from the voltmeter to terminal B7 and the negative (—) lead to terminal B16, check that the meter needle indicates battery voltage.

(e) After connecting terminal B4 to terminal B18, connect to terminal B16.
Then, check that the voltage rises from 0 volt to battery voltage within the times as shown in the table.

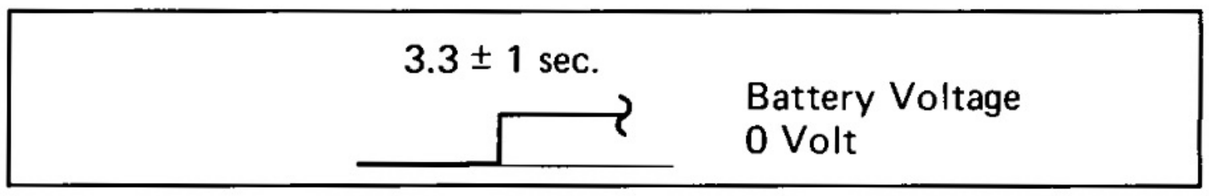

If operation is not as specified, replace the switch.

(Operation as Washer Linked)

(a) Connect the positive (+) lead from the battery to terminal B18 and the negative (—) lead to terminal B16.

(b) Connect the positive (+) lead from the voltmeter to terminal B7 and the negative (—) lead to terminal B16.

(c) Push in the washer switch. Check that the voltage changes as shown in the table.

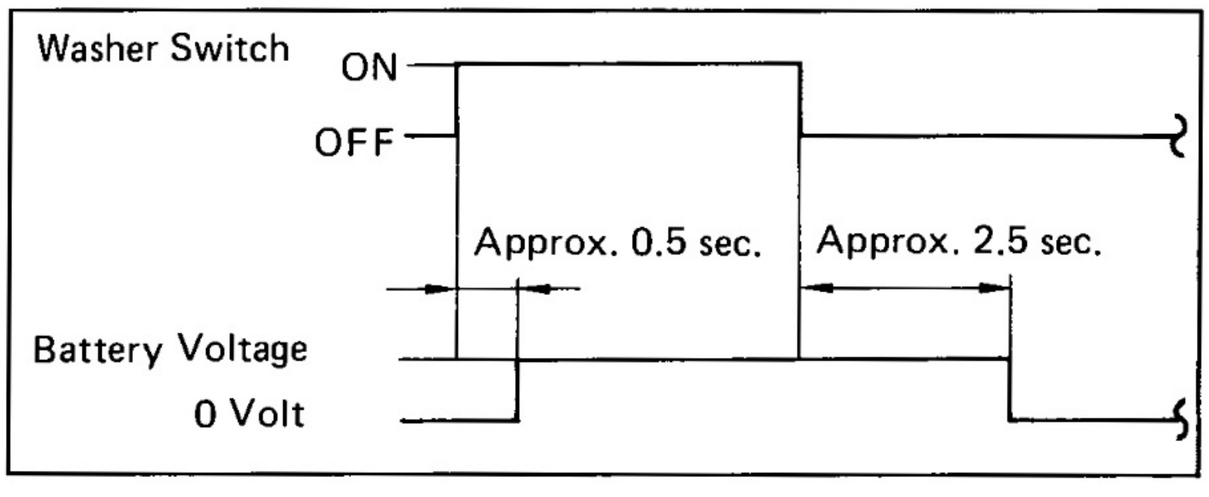

If operation is not as specified, replace the switch.

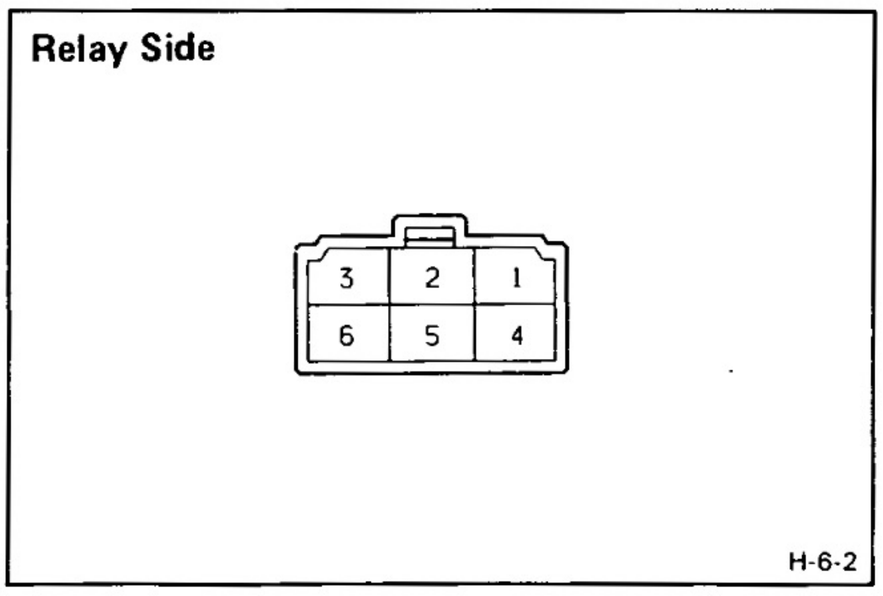

3. INSPECT REAR WIPER RELAY
(Continuity/Lift-up type door)

(a) Check that there is no continuity between terminals 1 and 3.

(b) Check that there is continuity between terminals 2 and 3.

If continuity is not as specified, replace the relay.

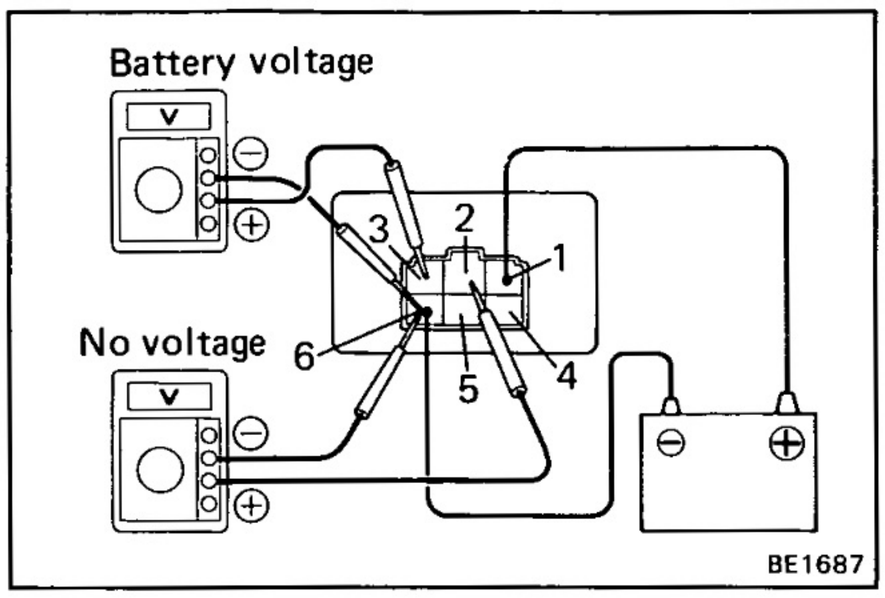

(Operation/Lift-up type door)

(a) Connect the positive (+) lead from the battery to terminal 1 and the negative (—) lead to terminal 6.

(b) Connect the positive (+) lead from the voltmeter to terminal 2 and the negative (—) lead to terminal 6, check that the meter needle indicates to 0 volts.

(c) Connect the positive (+) lead from the voltmeter to terminal 3 and the negative (—) lead to terminal 6, check that the meter needle indicates to battery boltage.

If operation is not as specified, replace the relay.

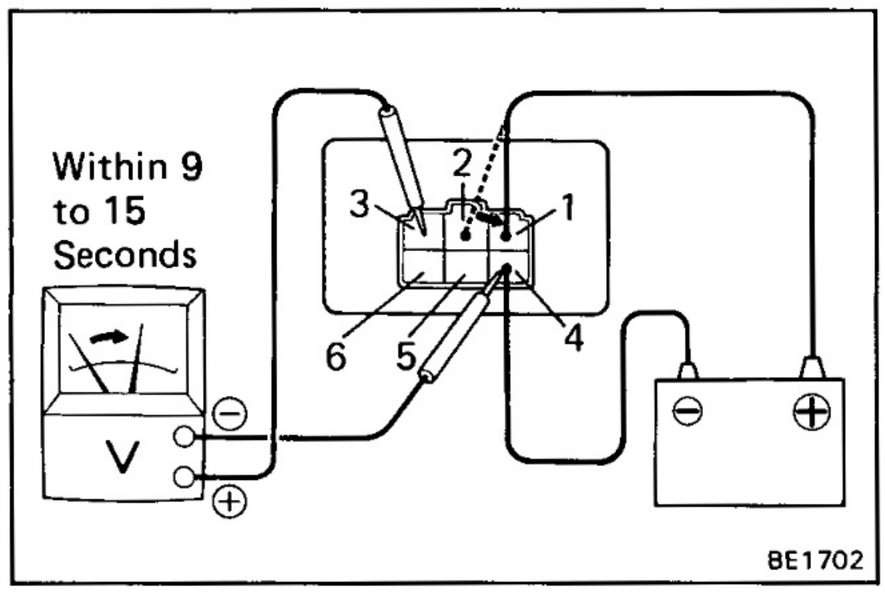

(Intermittent Operation/Lift-up type door)

(a) Connect the positive (+) lead from the battery to terminal 2 and the negative (—) lead to terminal 4.

(b) Connect the positive (+) lead from the voltmeter to terminal 3 and the negative (—) lead to terminal 4.

(c) After disconnecting the positive (+) lead from terminal 2, connect it to terminal 1, and then, check that the meter needle rises from 0 volts to battery voltage within 9 to 15 seconds.

If operation is not as specified, replace the relay.

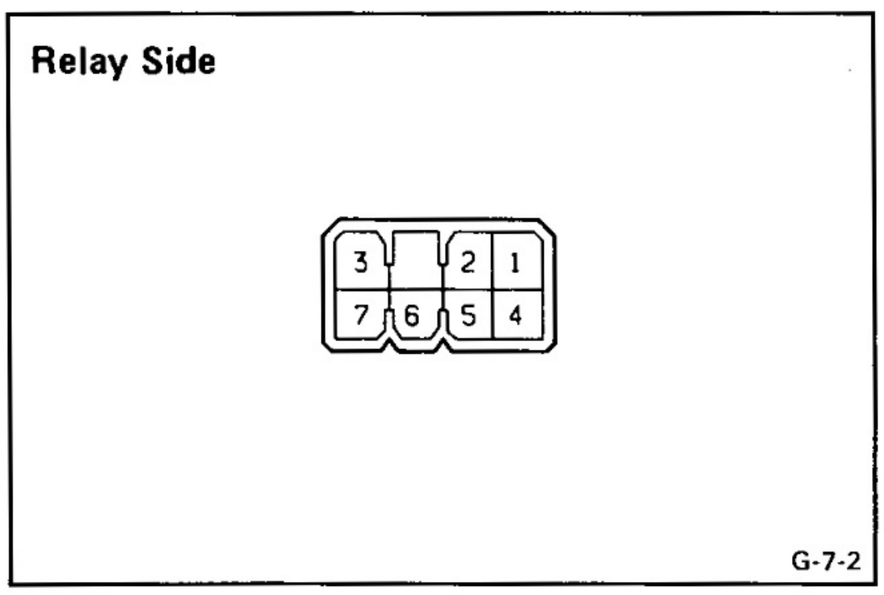

(Continuity/Swing type door)

(a) Check that there is no continuity between terminals 1 and 3 (for left side wiper motor).

(b) Check that there is continuity between terminals 3 and 7 (for left side wiper motor).

(c) Check that there is no continuity between terminals 1 and 4 (for right side wiper motor).

(d) Check that there is continuity between terminals 4 and 2 (for right side wiper motor).

If continuity is not as specified, replace the relay.

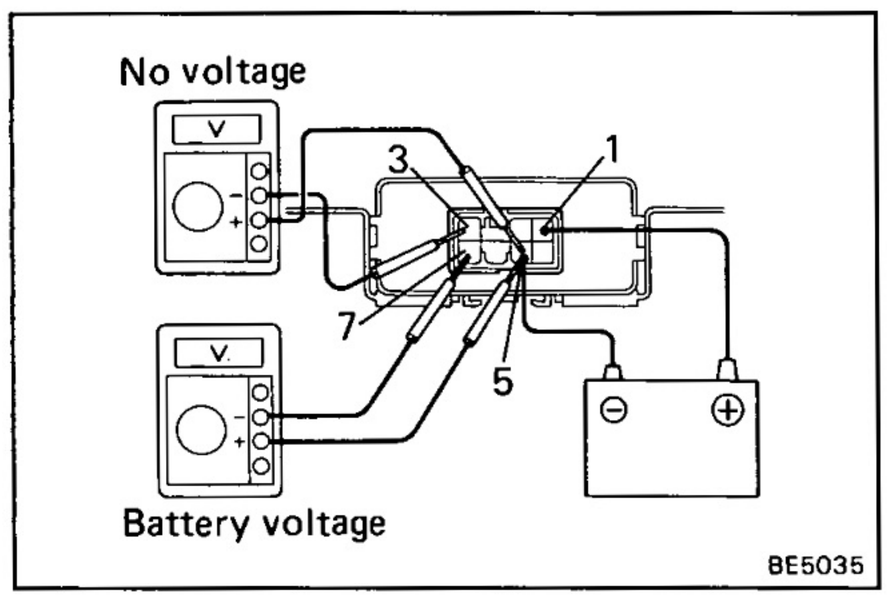

(Operation/Swing type door)

(for left side wiper motor)

(a) Connect the positive (+) lead from the battery to terminal 1 and the negative (—) lead to terminal 5.

(b) Connect the positive (+) lead from the voltmeter to terminal 3 and the negative (—) lead to terminal 5, check that the meter needle indicates to 0 volts.

(c) Connect the positive (+) lead from the voltmeter to termianl 7 and the negative (—) lead to terminal 5, check that the meter needle indicates to battery boltage.

If operation is not as specified, replace the relay.

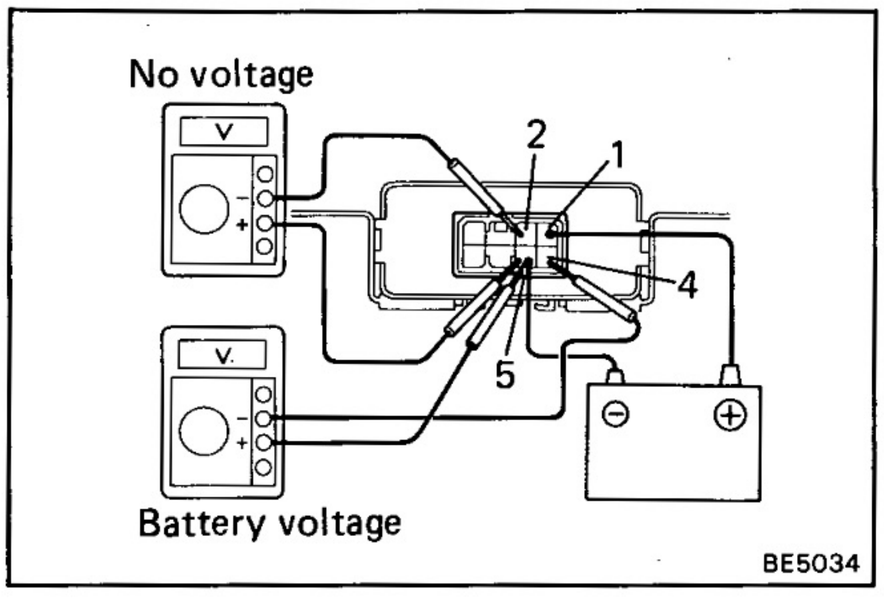

(for right side wiper motor)

(a) Connect the positive (+) lead from the battery to terminal 1 and the negative (—) lead to terminal 5.

(b) Connect the positive (+) lead from the voltmeter to terminal 2 and the negative (—) lead to terminal 5, check that the meter needle indicates to 0 volts.

(c) Connect the positive (+) lead from the voltmeter to terminal 4 and the negative (—) lead to terminal 5, check that the meter needle indicates to battery boltage.

If operation is not as specified, replace the relay.

(Intermittent Operation/Swing type door)

(for left side wiper motor)

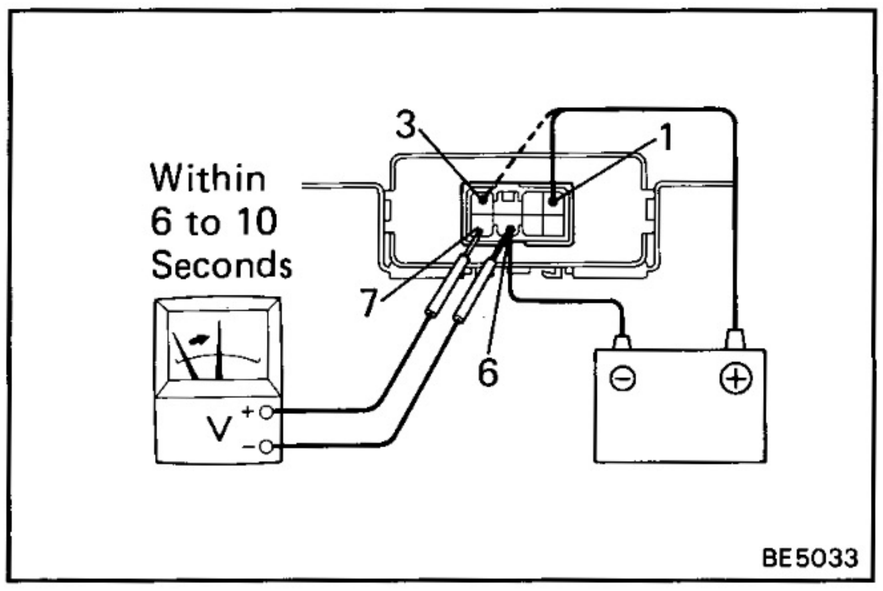

(a) Connect the positive (+) lead from the battery to terminal 1 and the negative (—) lead to terminal 6.

(b) Connect the positive (+) lead from the voltmeter to terminal 7 and the negative (—) lead to terminal 6.

(c) After disconnecting the positive (+) lead from terminal 3, connect it to terminal 1, and then, check that the meter needle rises from 0 volts to battery voltage within 6 to 10 seconds.

If operation is not as specified, replace the relay.

(for right side wiper motor)

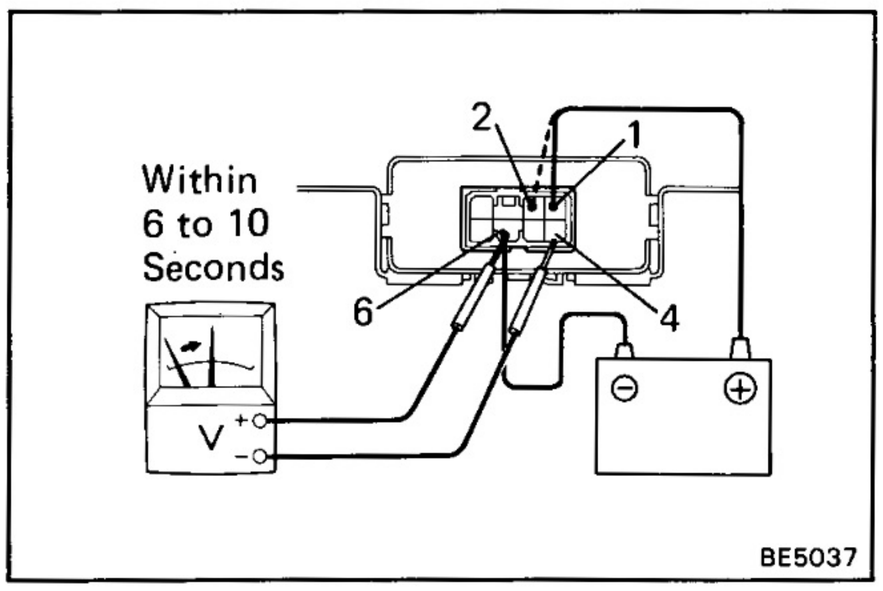

(a) Conncet the positive (+) lead from the battery to terminal 1 and the negative (—) lead to terminal 6.

(b) Connect the positive (+) lead from the voltmetr to terminal 4 and the negative (—) lead to terminal 6.

(c) After disconnecting the positive (+) lead from terminal 1, connect it to terminal 1, and then, check that the meter needle rises from 0 volts to battery voltage within 6 to 10 seconds.

If operation is not as specified, replace the relay.

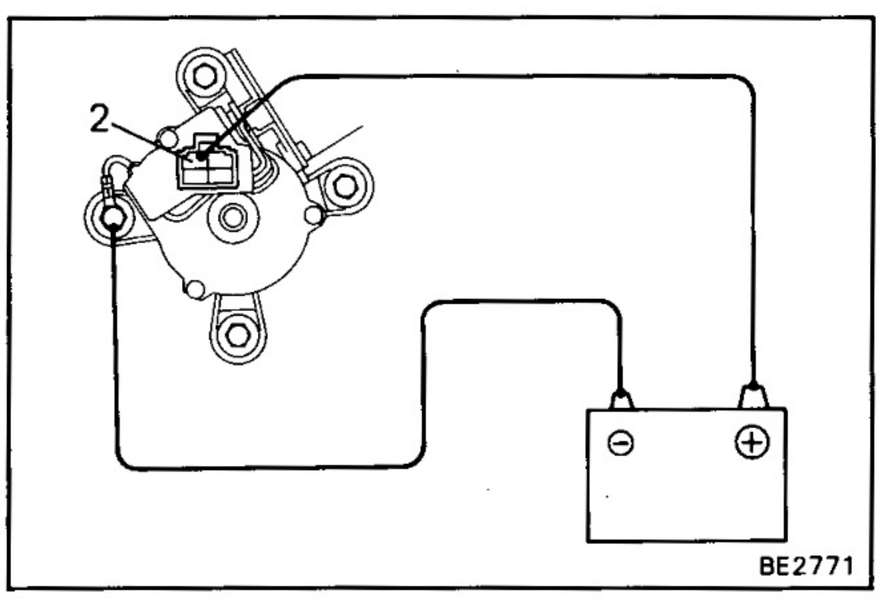

3. INSPECT FRONT WIPER MOTOR

(Operation at Low Speed)

Connect the positive (+) lead from the battery to terminal 2 and the negative (—) lead to the motor body, check that the motor operates as low speed.

If operation is not as specified, replace the motor.

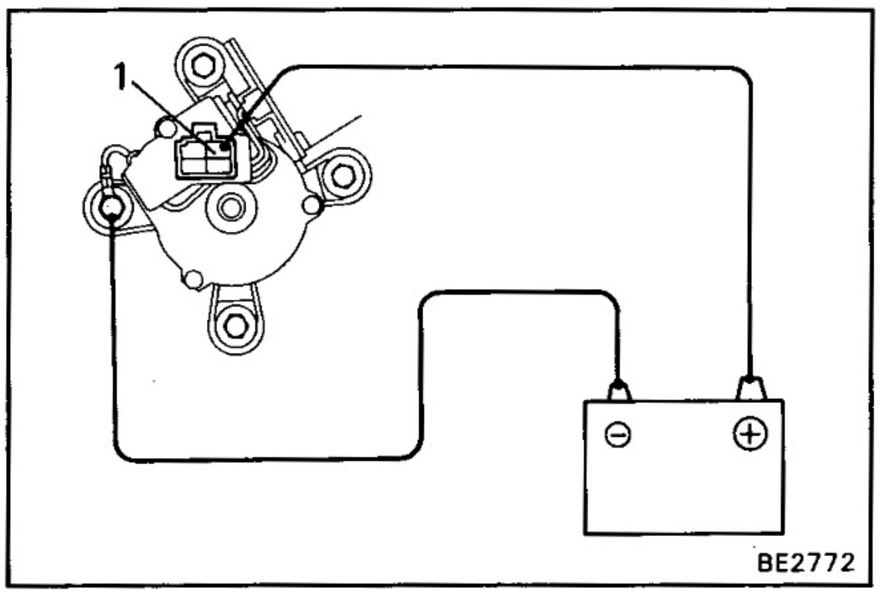

(Operation at High Speed)

Connect the positive (+) lead from the battery to terminal 1 and the negative (—) lead to the motor body, check that the motor operation at high speed.

If operation is not as specified, replace the motor.

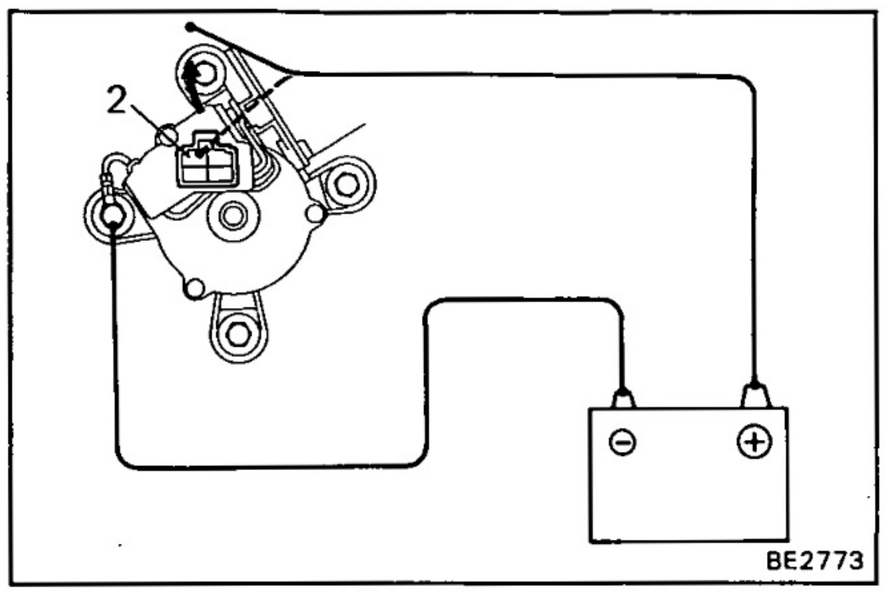

(Operation, Stopping at Stop Position)

(a) Operate the motor at low speed and stop the motor operation anywhere except at the stop position by disconnecting positive (+) lead from terminal 2.

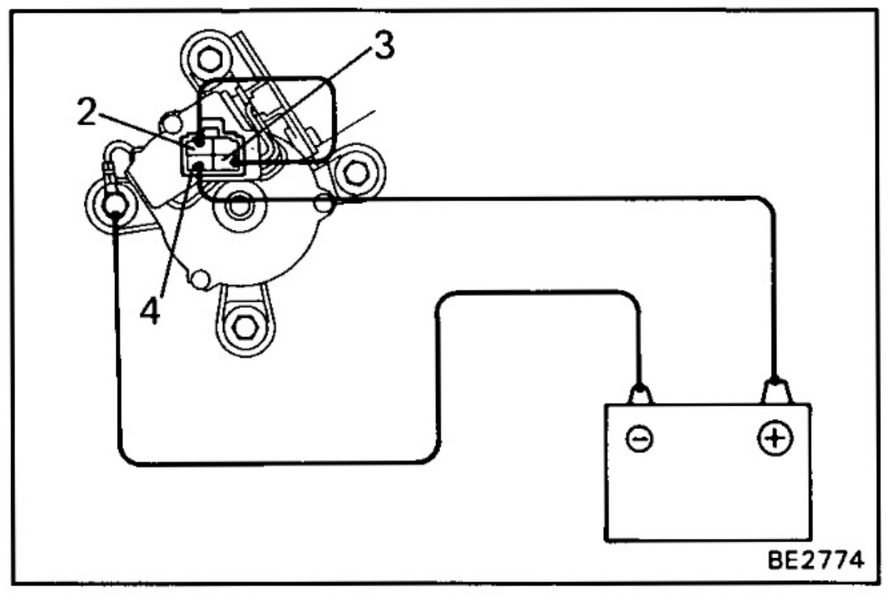

(b) Connect terminals 2 and 3.

(c) Connect the positive (+) lead from the battery to terminal 4 and the negative (—) lead to the motor body, check that the motor stops running at the stop position after the motor operates again.

If operation is not as specified, replace the motor.

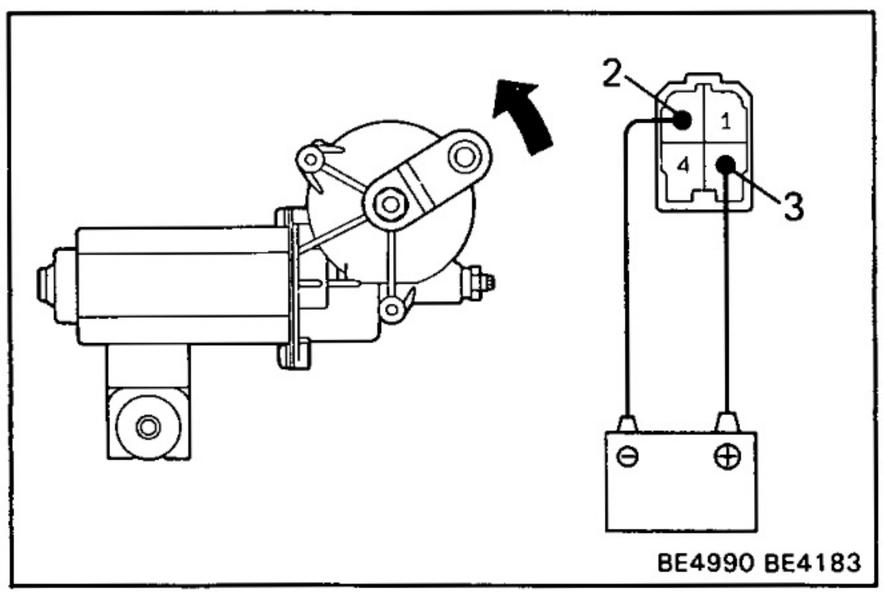

4. INSPECT REAR WIPER MOTOR

(Lift-up type door/Operation at Low Speed)

Connect the positive (+) lead from the battery to terminal 3 and the negative (—) lead to terminal 2, check that the motor operates as low speed.

If operation is not at specified, replace the motor.

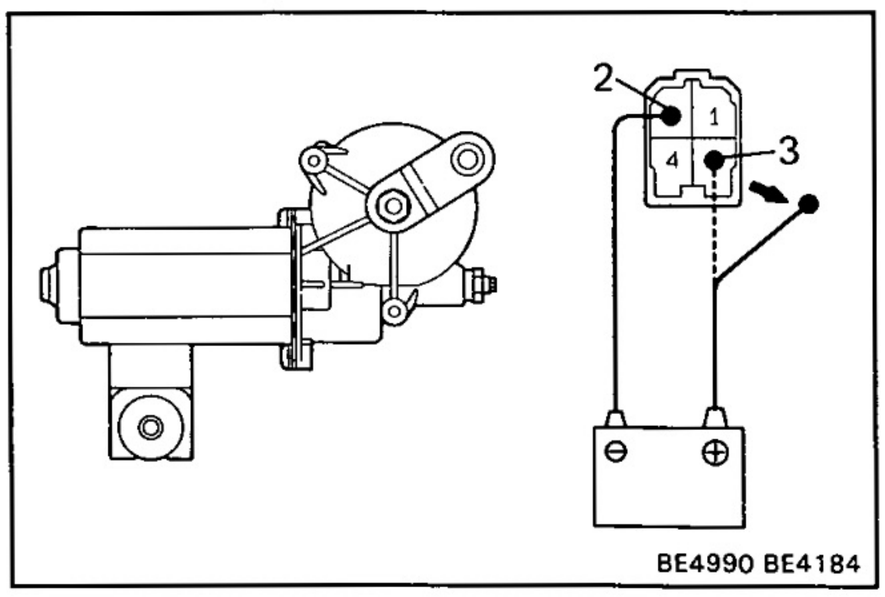

(Lift-up type door/Operation, Stopping at Stop Position)

(a) Operate the motor at low speed and stop the motor operation anywhere except at the stop position by disconnecting positive (+) lead from terminal 3.

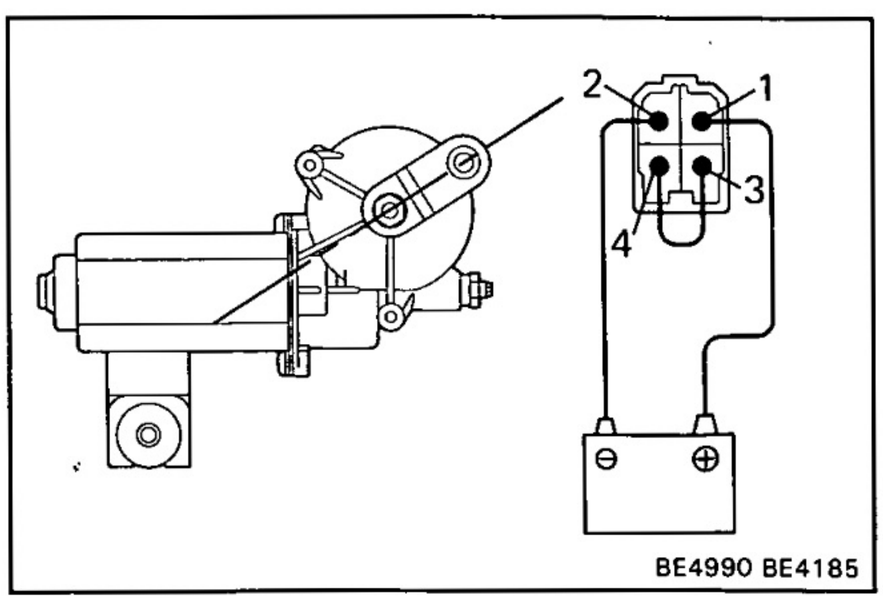

(b) Connect terminals 3 and 4.

(c) Connect the positive (+) lead from the battery to terminal 1 and the negative (—) lead to terminal 2, check that the motor stops running at the stop position after the motor operates again.

If operation is not as specified, replace the motor.

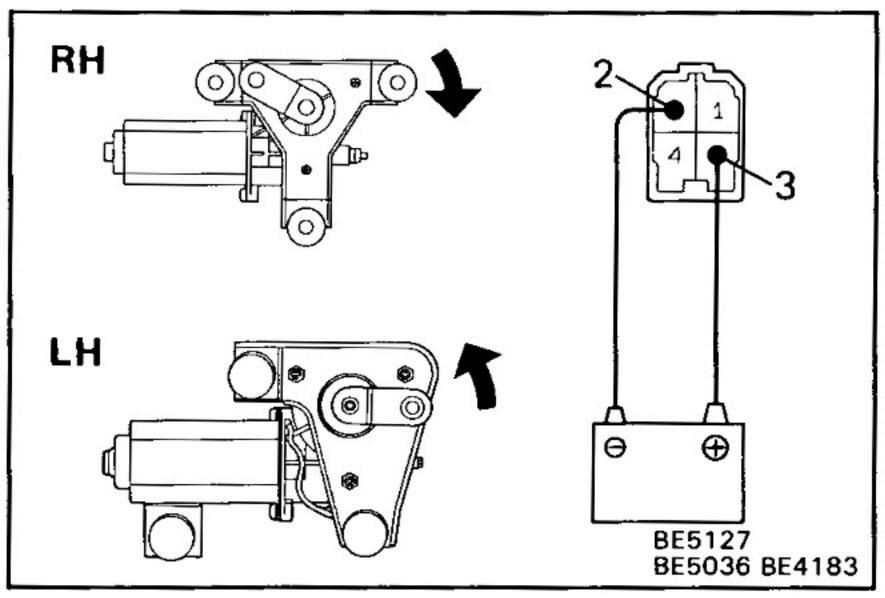

(Swing type door/Operation at Low Speed)

Connect the positive (+) lead from the battery to terminal 3 and the negative (—) lead to terminal 2, check that the motor operates as low speed.

If operation is not as specified, replace the motor.

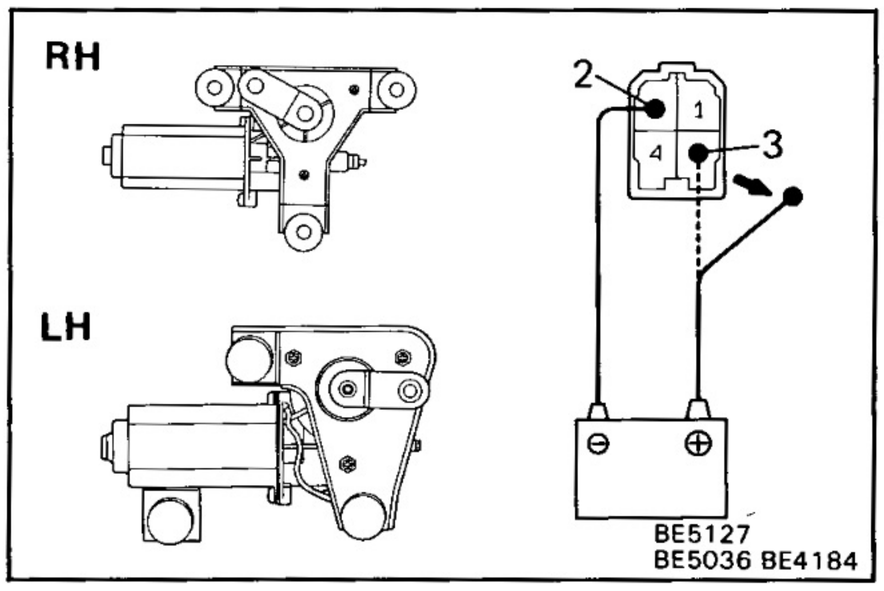

(Swing type door/Operation, Stopping at Stop Position)

(a) Operate the motor at low speed and stop the motor operation anywhere except at the stop position by disconnecting positive (+) lead from terminal 3.

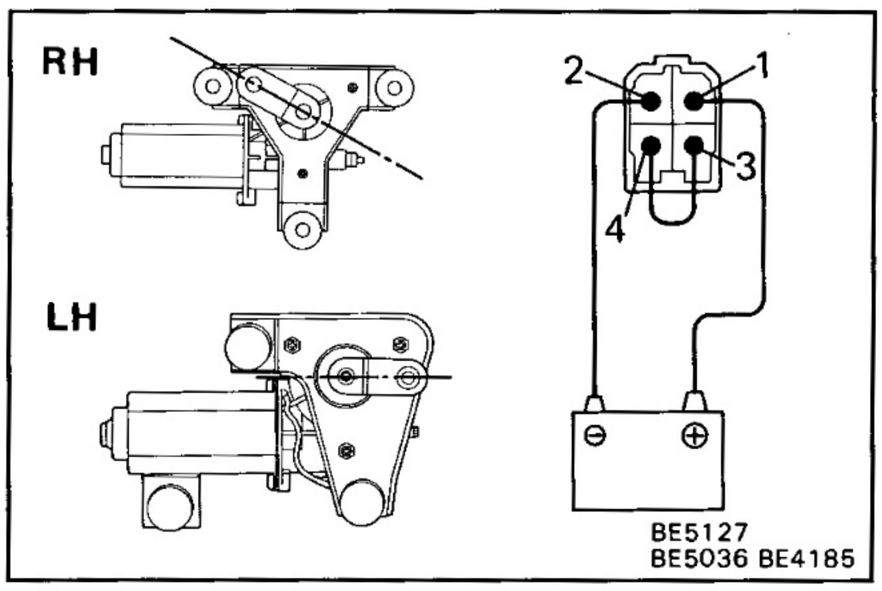

(b) Connect terminals 3 and 4.

(c) Connect the positive (+) lead from the battery to terminal 1 and the negative (—) lead to terminal 2, check that the motor stops running at the stop position after the motor operates again.

If operation is not as specified, replace the motor.

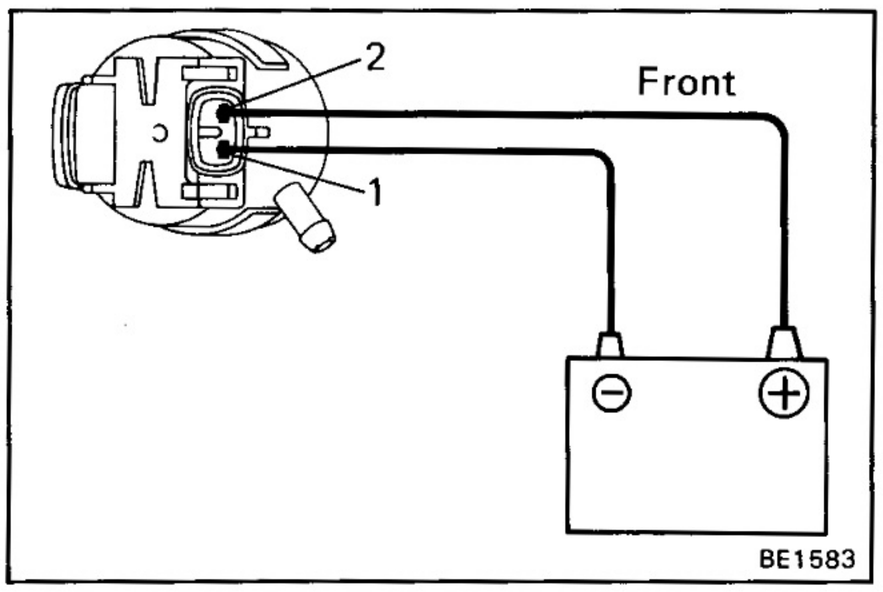

Washer System

1. INSPECT WASHER SWITCH
(Washer Switch)

See Wiper and Washer Switch on page BE-41.

2. INSPECT WASHER MOTOR

Connect the positive (+) lead from the battery to terminal 2 and the negative (—) lead to terminal 1, check that the motor operates.

NOTICE: These tests must be performed quickly (within 20 seconds) to prevent the coil from burning out.

If operation is not as specified, replace the motor.

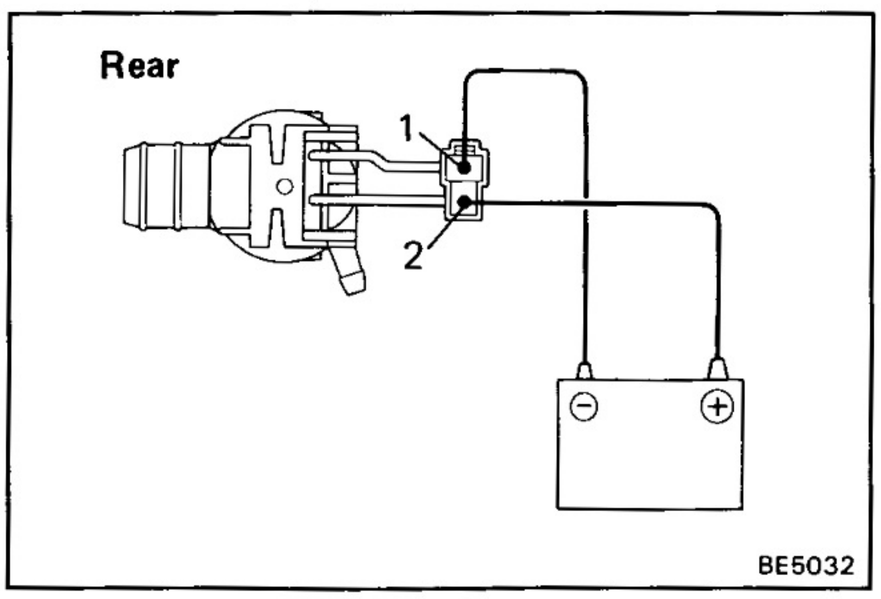

COMBINATION METER

Parts Location

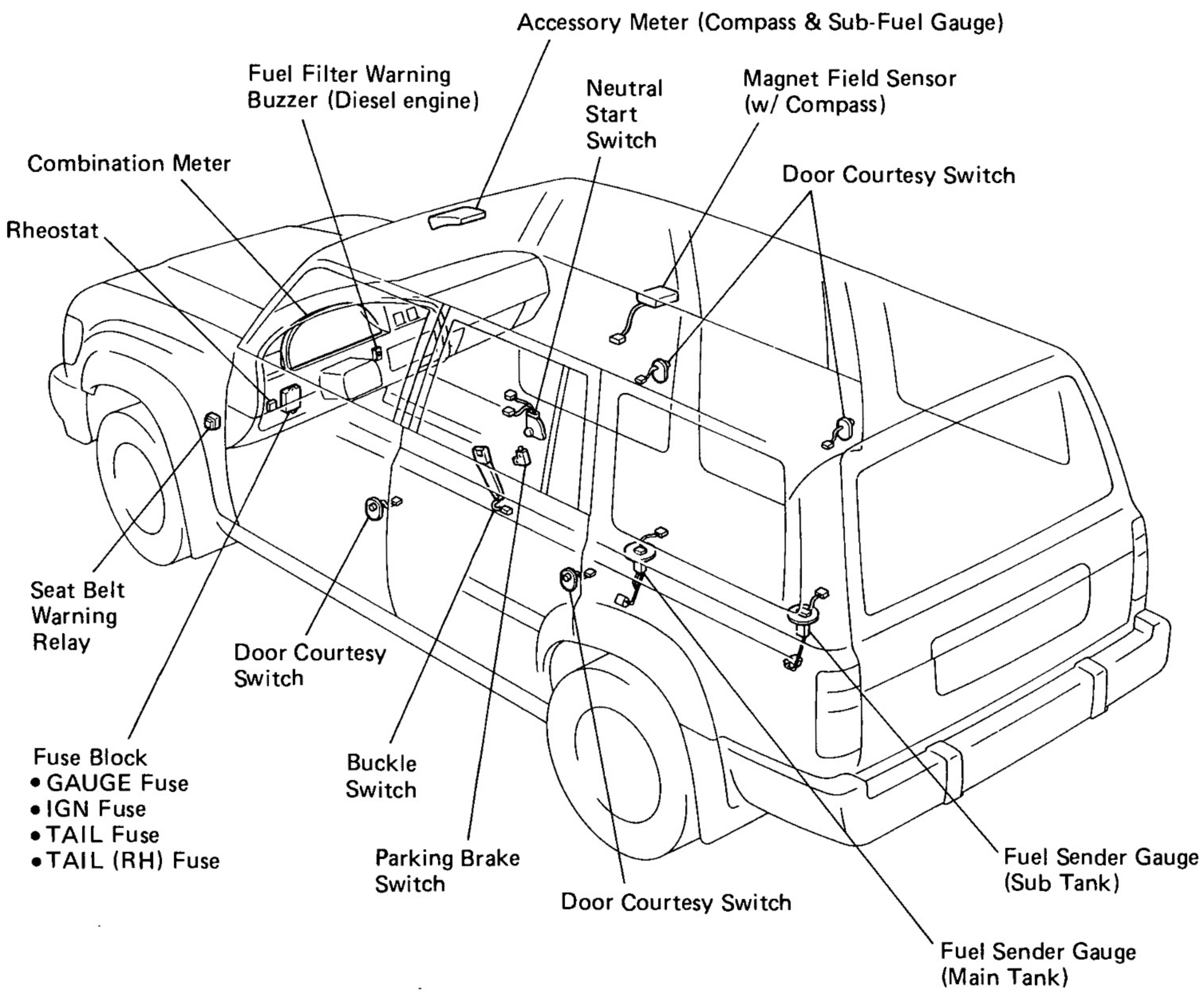

BE5264

Parts Location (Cont'd)

3F-E, 3F Engine

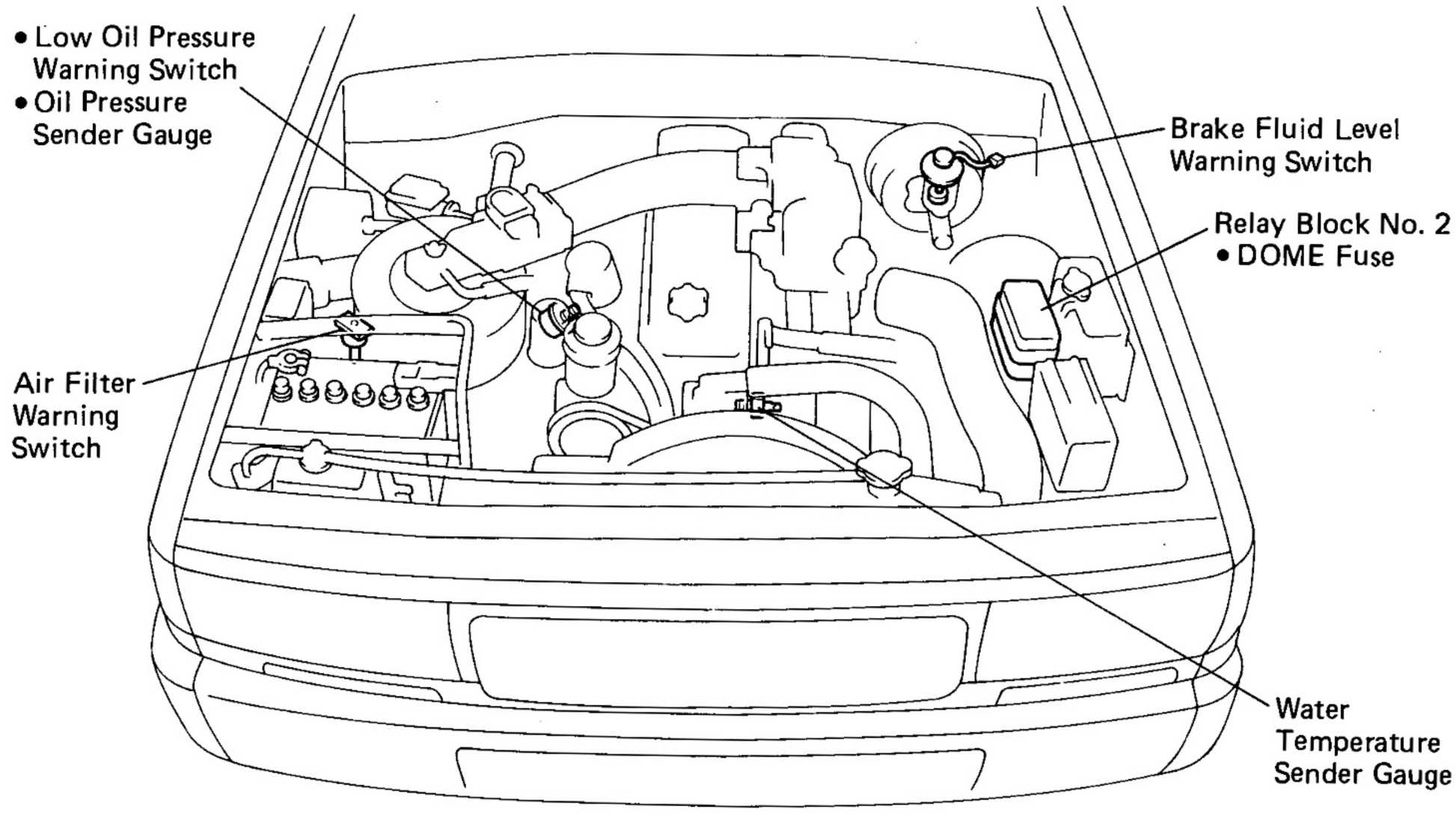

1HD-T, 1HZ Engine

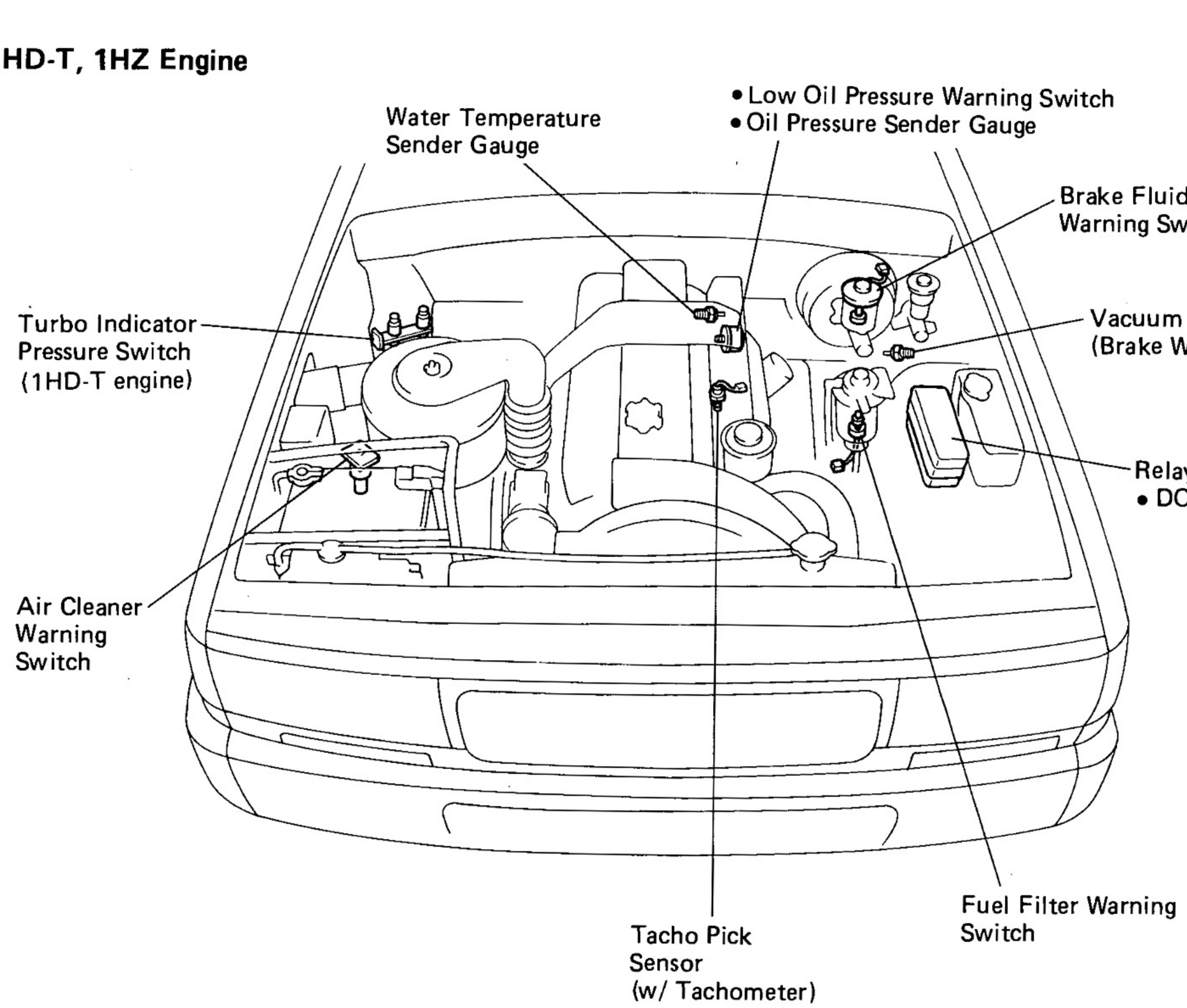

BE5265
BE5121

Meter Circuit

(w/o Tachometer: Except G.C.C.)

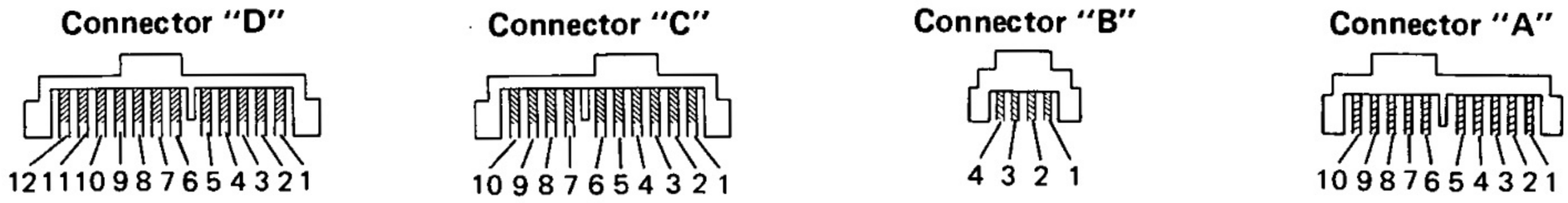

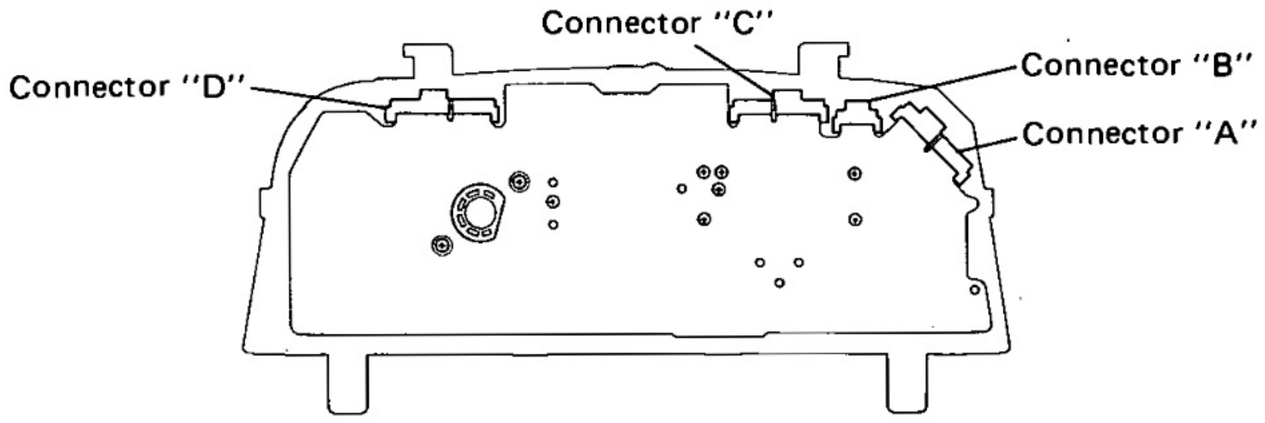

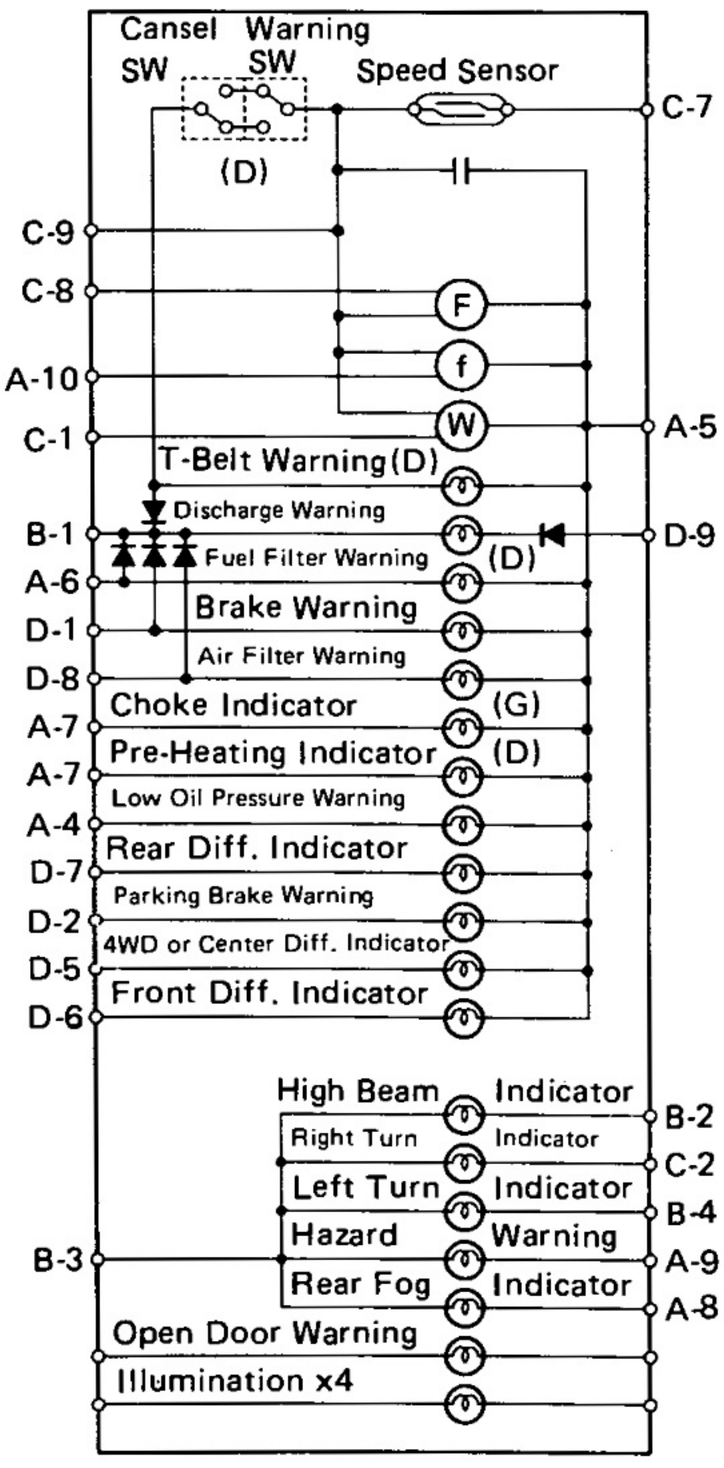

Ⓕ : Fuel Gauge
ⓕ : Fuel Gauge (for Sub-Tank)
Ⓦ : Water Temperature Gauge
(D) : Diesel engine
(G) : Gasoline engine

BE5119

BE1266 BE1270 BE5017 BE2576 BE5117

No.		Wiring connector side
A	4	Low oil pressure warning switch
	5	GAUGE fuse
	6	Fuel filter warning switch and buzzer (Diesel engine)
	7	Choke switch (Gasoline engine) or glow timer relay (Diesel engine)
	8	Rear fog light switch (Europe)
	9	Hazard warning light switch (Europe)
	10	Fuel sender gauge (Sub-Tank)
B	1	CHARGE fuse (w/o IC ALT) or charge light relay (w/ IC ALT)
	2	Headlight Lo-beam
	3	Ground
	4	Turn signal light switch (Left)
C	1	Water temperature sender gauge
	2	Turn signal light switch (Right)
	3	TAIL fuse or TAIL (RH) fuse
	7	Speed control unit
	8	Fuel sender gauge (Main-Tank)
	9	Ground
	10	Ground or rheostat
D	1	Brake fluid level warning switch (Europe) and vacuum warning switch (Diesel) Brake fluid level warning switch (Except Europe) and parking Brake switch (Except Europe) and vacuum warning switch (Diesel)
	2	Parking brake switch (Europe)
	5	4WD indicator switch
	6	Front diff. lock indicator switch
	7	Rear diff. lock indicator switch
	8	Air Filter warning switch
	9	IGN fuse
	11	DOME fuse
	12	Door courtesy switch

(w/ Tachometer)

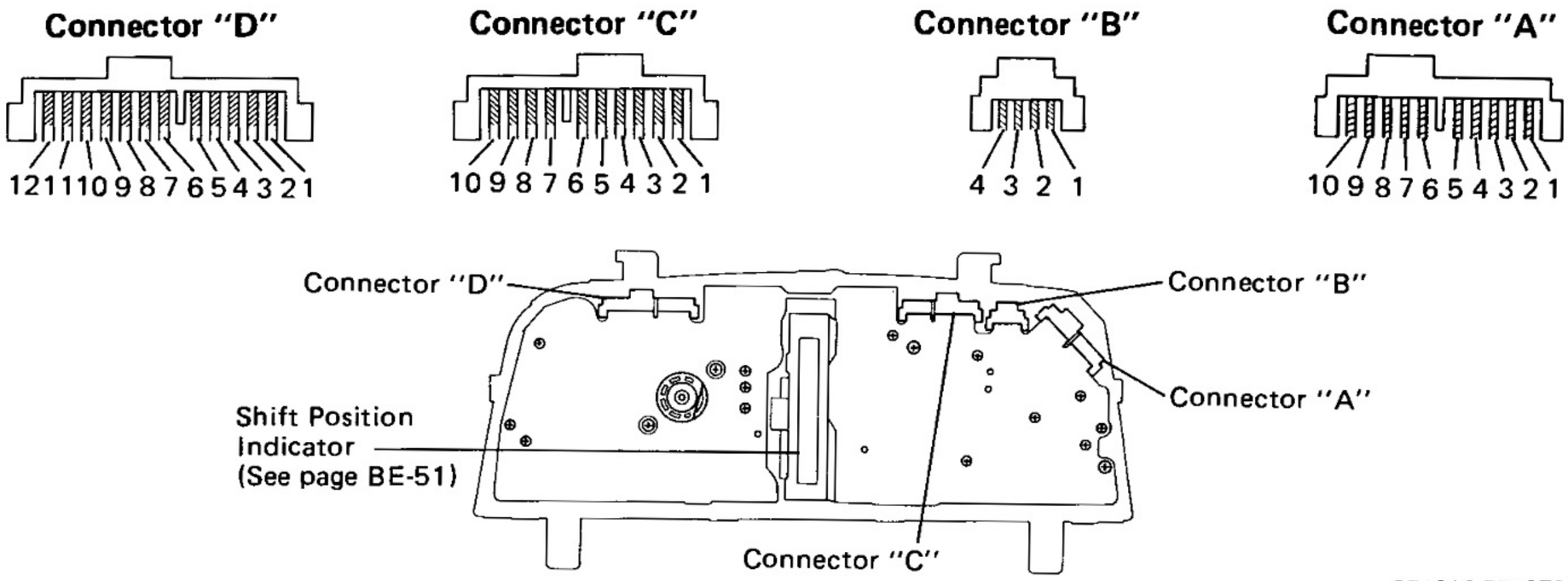

BE1266 BE1270 BE5017 BE2576 BE5005

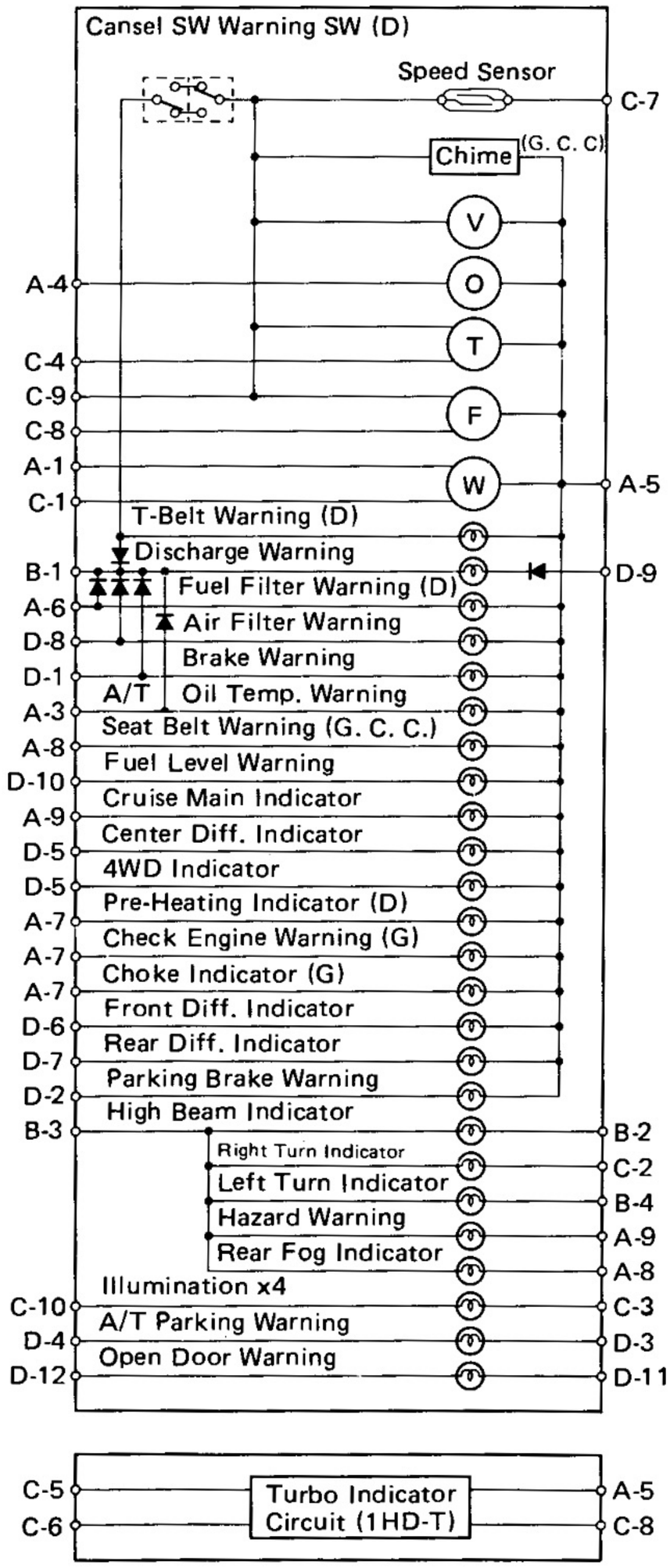

BE5120

No.		Wiring connector side
A	1	Ground
	3	A/T fluid temperature sensor (A/T)
	4	Oil pressure sendor gauge
	5	GAUGE fuse
	6	Fuel filter warning switch and buzzer (Diesel engine)
	7	Glow timer relay (Diesel engine) EFI ECU (3F-E engine) Choke switch (3F engine)
	8	Rear fog light switch (Europe) or seat belt warning relay (G.C.C.)
	9	Hazard warning light switch (Europe) or cruise control ECU (w/ Cruise Control System)
B	1	CHARGE fuse (w/o IC ALT) or charge light relay (w/ IC ALT)
	2	Headlight Hi-Beam
	3	Ground
	4	Turn signal light switch (Left)
C	1	Water temperature sender gauge
	2	Turn signal light switch (Right)
	3	TAIL or TAIL (RH) fuse
	4	Tacho pick sensor (Diesel engine) or Igniter (Gasoline engine)
	5	High pressure switch (1HD-T engine)
	6	Low pressure switch (1HD-T engine)
	7	Speed control unit
	8	Fuel sender gauge
	9	Ground
	10	Rheostat or ground
D	1	Brake fluid level warning SW (Europe) and vacuum warning switch (Diesel) or brake fliud level warning SW and parking brake SW (Except. Europe) and vacuum warning switch (Diesel)
	2	Parking brake SW (Europe)
	3	Neutral start switch (A/T)
	4	Neutral position switch (A/T)
	5	4WD indicator switch
	6	Front diff. lock indicator switch
	7	Rear diff. lock indicator switch
	8	Air filter warning switch
	9	IGN fuse
	10	Fuel sender gauge
	11	DOME fuse
	12	Door courtesy switch

(w/o Tachometer: G.C.C.)

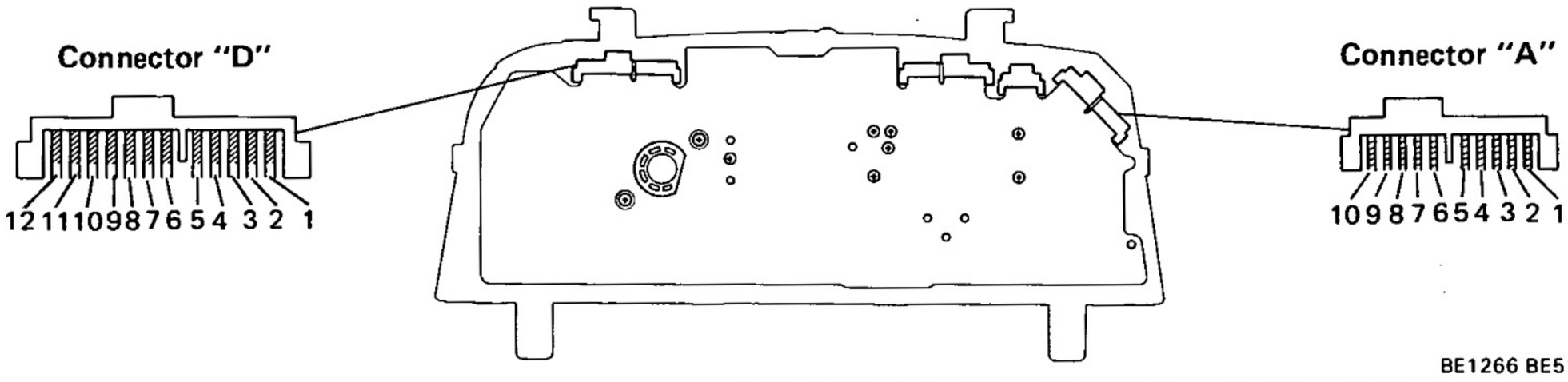

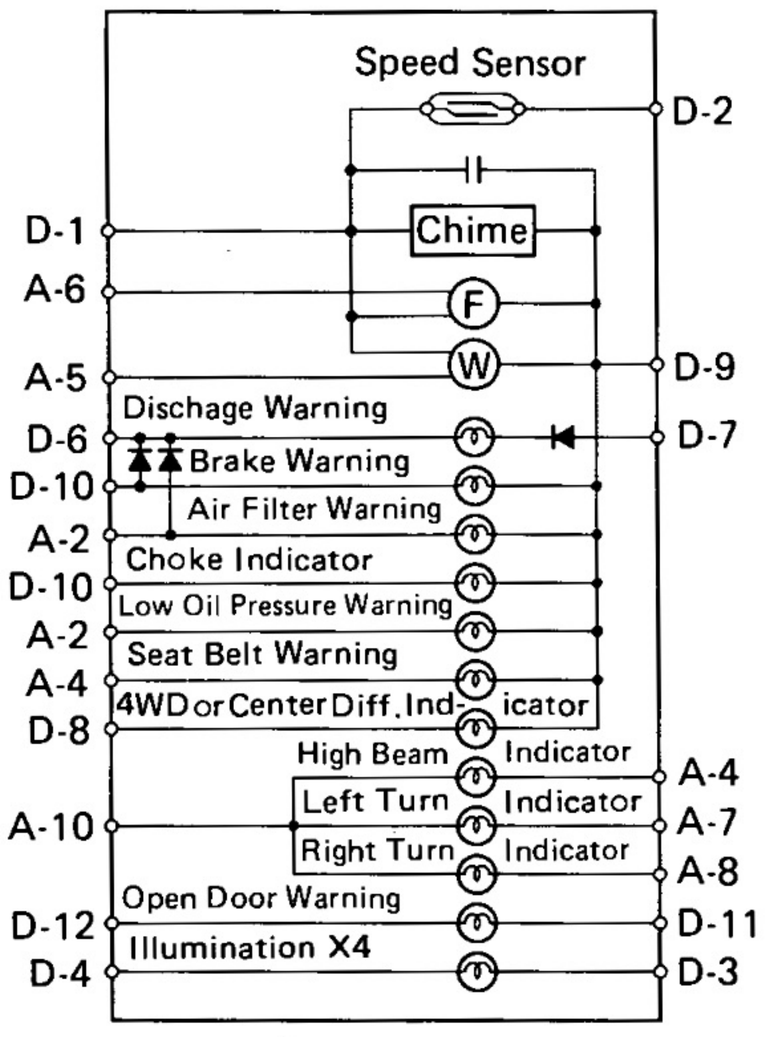

No.		Wiring connector side
A	1	Low oil pressure warning switch
	2	Choke switch
	3	Seat belt warning relay
	4	Headlight Hi-beam
	5	Water temperature sender gauge
	6	Fuel sender gauge
	7	Turn signal switch (Left)
	8	Turn signal switch (Right)
	10	Ground
D	2	Speed control unit
	3	TAIL fuse
	4	Ground
	5	Brake fluid level warning switch and parking brake switch
	6	IGN fuse
	7	CHARGE fuse (w/o IC ALT) or charge light relay (w/ IC ALT)
	8	4WD indicator switch
	9	GAUGE fuse
	10	Air filter warning switch
	11	DOME fuse
	12	Door courtesy switch

(Shift Position Indicator)

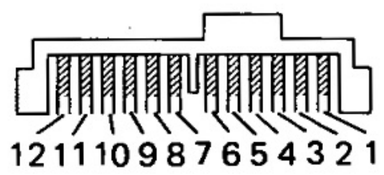

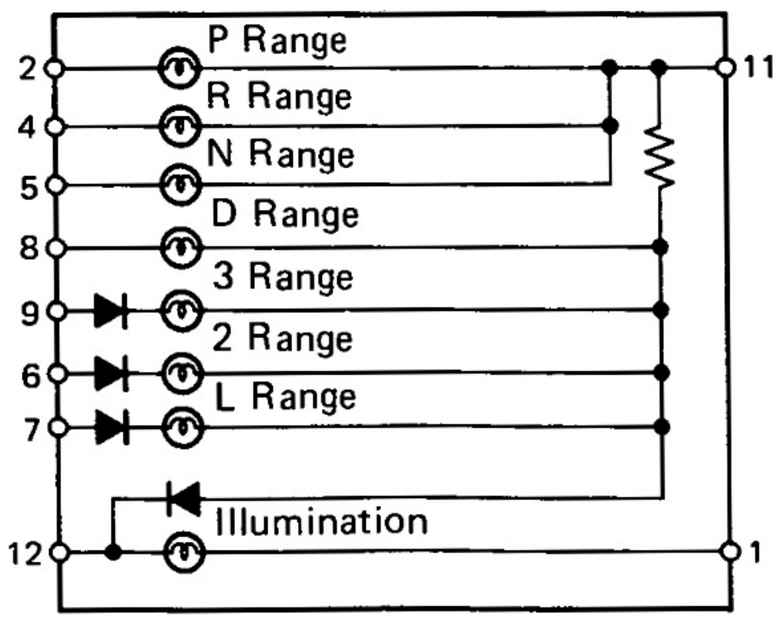

No.	Wiring connector side
1	Light control rheostat—terminal A2
2	Neutral start switch—terminal 6
4	Neutral start switch—terminal 8
5	Neutral start switch—terminal 1
6	Neutral start switch—terminal 4
7	Neutral start switch—terminal 3
8	Neutral start switch—terminal 5
9	Neutral start switch—terminal 7
11	Ground
12	TAIL Fuse

(Accessory Meter/Over Head Console)

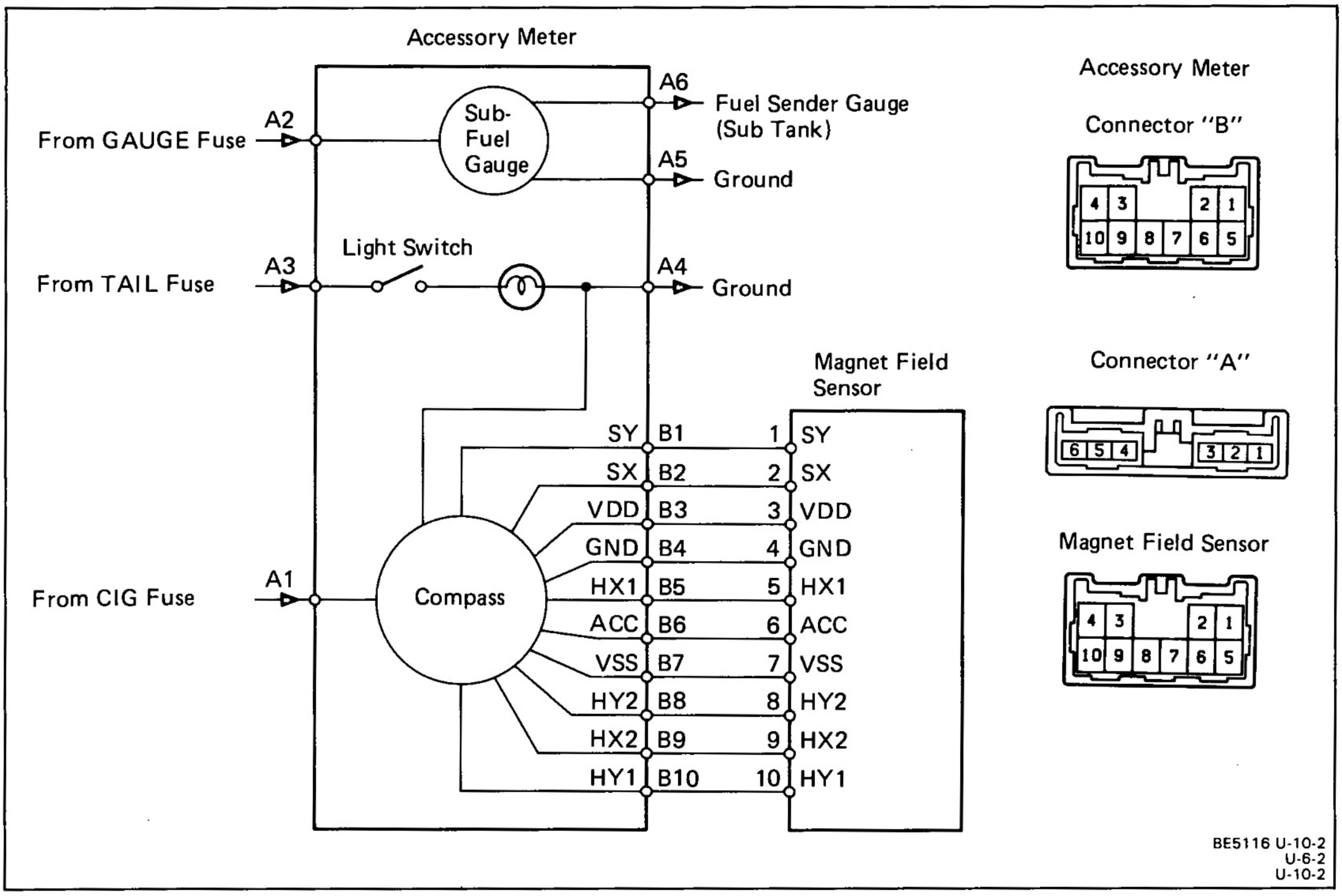

Troubleshooting

Problem	Possible cause	Remedy	Page
Combination meter does not operate	GAUGE fuse blown Wiring or ground faulty	Replace fuse and check for short Repair as necessary	BE-4, 6
Speedometer does not operate	Speedometer cable faulty Speedometer faulty	Check cable Check speedometer	 BE-55
Speed warning chime does not sound	Speed warning chime faulty Speed warning switch faulty Wiring or ground faulty	Check speed warning chime Check speed warning switch Repair as necessary	BE-56 BE-55
Tachometer does not operate	Tachometer faulty Pick-up sensor faulty Wiring or ground faulty	Check tachometer Check pick-up sensor Repair as necessary	BE-56 BE-56
Fuel gauge does not operate (Main)	Receiver gauge faulty Sender gauge faulty Wiring or ground faulty	Check gauge Check gauge Repair as necessary	BE-57 BE-57
Fuel level warning light does not light up	Bulb burned out Warning switch faulty Wiring or ground faulty	Replace or check bulb Check switch Repair as necessary	BE-5 BE-59
Fuel filter warning light does not light, warning buzzer does not sound	Bulb burned out Warning switch faulty Warning buzzar faulty Wiring or ground faulty	Replace or check bulb Check switch Check buzzar Repair as necessary	BE-5 BE-60 BE-60
Water temperature gauge does not operate	Receiver gauge faulty Sender gauge faulty Wiring or ground faulty	Check gauge Check gauge Repair as necessary	BE-60 BE-60
Low oil pressure warning light does not light up	Buld burned out Warning switch faulty Wiring or ground faulty	Replace or check bulb Check switch Repair as necessary	BE-5 BE-61
Park warning light does not light up	Bulb burned out Parking brake switch faulty Wiring or ground faulty	Replace or check bulb Check switch Repair as necessary	BE-5 BE-63

Troubleshooting (Cont'd)

Problem	Possible cause	Remedy	Page
Breake warning light does not light up	Bulb burned out Level Warning switch faulty Vacuum switch faulty Parking brake switch faulty Wiring or ground faulty	Replace or check bulb Check switch Check switch Check switch Repair as necessary	BE-5 BE-64 BE-64 BE-63
Seat belt warning light does not light up	Bulb burned out Warning switch faulty Warning relay faulty Wiring or ground faulty	Replace or check bulb Check switch Check relay Repair as necessary	BE-5 BE-65 BE-66
Open door warning light does not light up	Bulb burned out Courtesy switch faulty Wiring or ground faulty	Replace or check bulb Check switch Repair as necessary	BE-5 BE-64
Timing belt warning light does not light up	Bulb burned out Warning switch faulty Wiring or ground faulty	Replace or check bulb Check switch Repair as necessary	BE-5 BE-66
Fuel gauge does not operate (Sub)	Receiver gauge faulty Sender gauge faulty Wiring or ground faulty	Check gauge Check gauge Repair as necessary	BE-58 BE-59
Voltmeter does not operate	Battery faulty Receiver gauge faulty Wiring or ground faulty	Check battery Check gauge Repair as necessary	BE-62
Oil pressure gauge does not operate	Receiver gauge faulty Sender gauge faulty Wiring or ground faulty	Check gauge Check gauge Repair as necessary	BE-62 BE-62
Meter illumination control system does not operate	Bulb burned out Rheostat faulty Wiring or ground faulty	Replace or check bulb Check rheostat Repair as necessary	BE-5 BE-67
Shift position indicator light does not light up (A/T)	Bulb burned out Switch faulty Wiring or ground faulty	Replace or check bulb Check switch Repair as necessary	BE-5 AT-28
Airfilter warning light does not light	Bulb burned out Warning switch faulty Wiring or ground faulty	Replace or check bulb Check switch Repair as necessary	BE-5 BE-67
Turbo indicator does not operate	Drive circuit faulty Pressure switch faulty Wiring or ground faulty	Check drive circuit Check switch Repair as necessary	BE-68 BE-67
Compass does not operate	Accessory meter faulty Magnet field sensor faulty Wiring or ground faulty	Check meter Check sensor Repair as necessary	BE-69 BE-70

Parts Adjustment

(Diesel Engine)

Adjustment of Interval Switch for Timing Belt Warning System

NOTICE: Work carefully so that components are not damaged in any way.

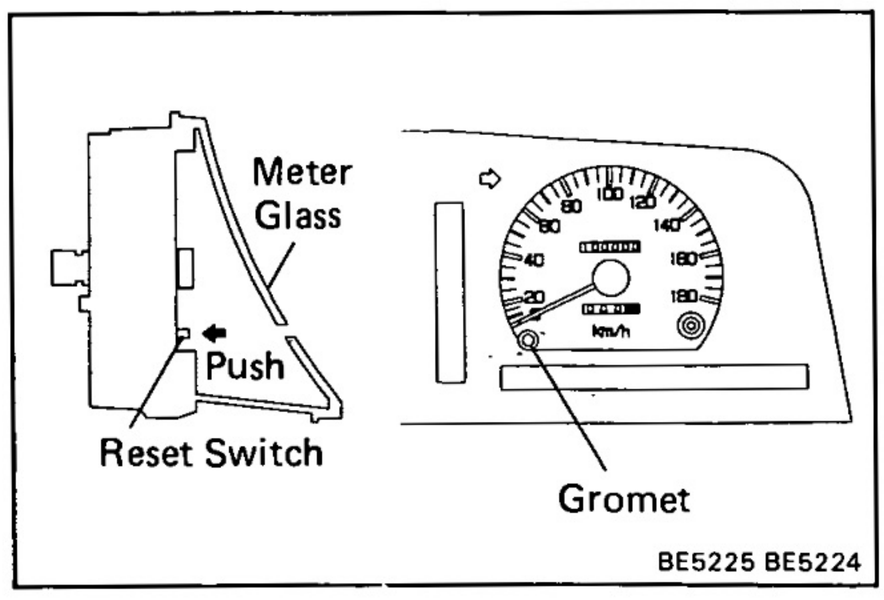

RESET CANCEL SWITCH

(a) Remove the gromet from the meter glass.

(b) Push the reset switch.

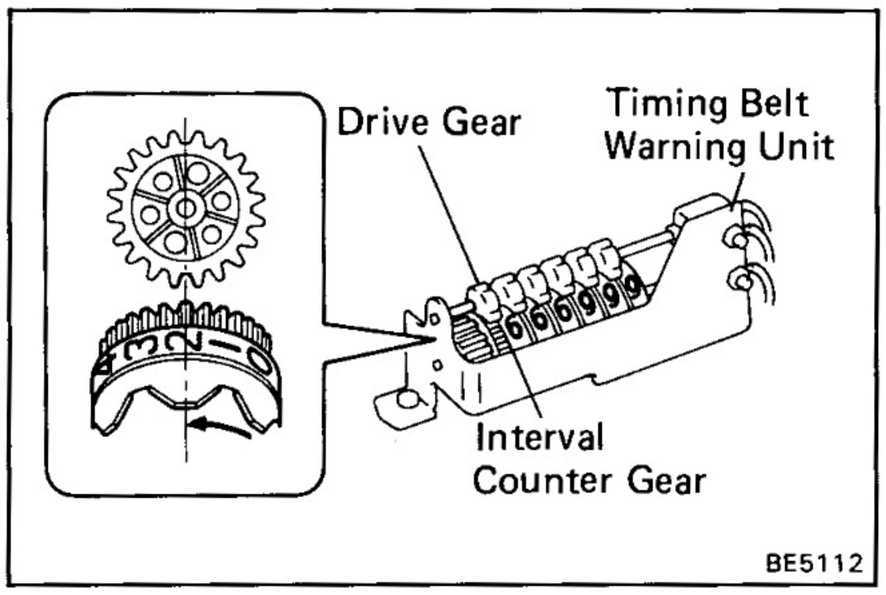

IF REPLACING TIMING BELT BEFORE WARNING LIGHT LIGHT UP

(a) Remove the timing belt warning unit from the speedometer.

(b) When installing the timing belt warning unit to the speedometer, rotate the interval counter gear in the direction of the arrow so that the tooth at number "2" on the interval counter gear engages with the drive gear on the speedometer side.

HINT: If the tooth at number "2" on the interval counter gear does not engage with the drive gear, move the tooth at number "2" slightly in the direction of the arrow until the tooth engage.

(c) Install the timing belt warning unit to the speedometer.

HINT: If turn on the timing belt warning light, reset the cancel switch.

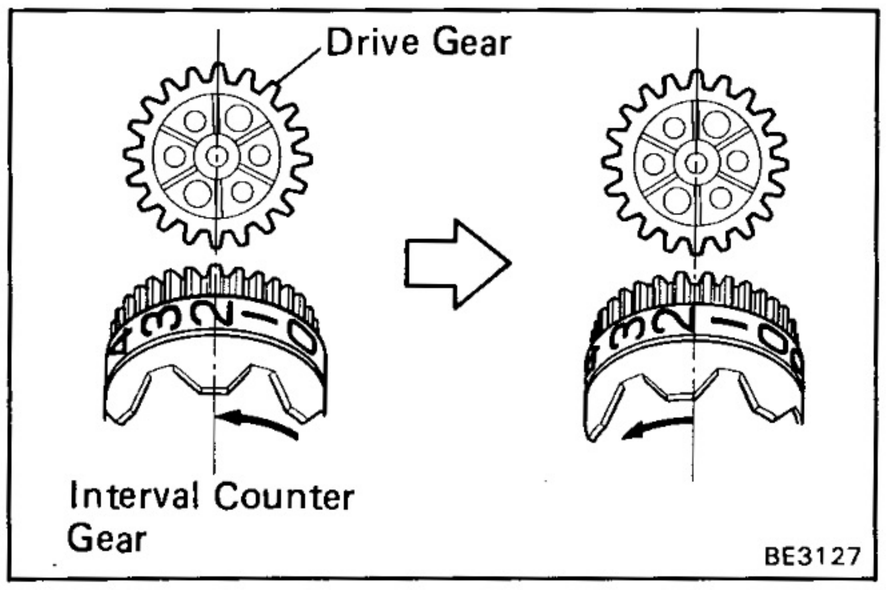

Old odometer reading value (b)	(c) Adjustment number for interval counter gear	
	km/h display	MPH display
10000	1	7
20000	0	6
30000	9	5
40000	8	4
50000	7	3
60000	6	2
70000	5	1
80000	4	0
90000	3	A
100000	2	B
110000	1	9
120000	0	8
130000	9	7
140000	8	6
150000	7	5
•	•	•
•	•	•
•	•	•

IF REPLACING SPEEDOMETER

(a) Remove the timing belt warning unit from the speedometer.

(b) Read the value in tens of thousands from the old odometer (taken to the next highest figure when the thousands column shows on thousand or more).

(c) Find the value from (b) in the table on the left, then find the corresponding number from adjustment of the interval counter gear.

Example: When the old odometer shows.

013251 km/h
↓
(b) = 020000
↓
(c) = "0" for the interval counter gear number.

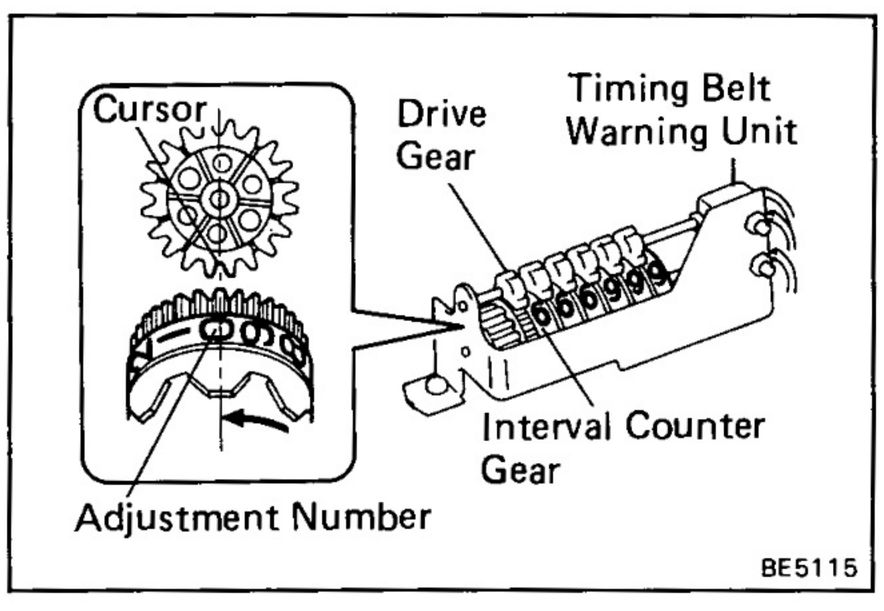

(d) When installing the timing belt warning unit to the speedometer, rotate the interval counter gear in the direction of the arrow so that the number (c) on the interval counter gear alighs with the cursor on the drive gear on the speedometer side.

HINT: Check that the tooth beside to number on the counter gear engages the gap on the cursor port on the drive gear.

(e) Install the timing belt warning unit to the speedometer.

(mph)

Standard indication	Allowable range
20	21 — 23.5
40	41.5 — 44
60	62.5 — 66
80	83 — 87
100	104 — 108.5

(km/h)

Standard indication	Allowable range	
	Australia	Ex. Australia
20	17.5 — 21.5	21 — 25
40	38 — 42	41.5 — 46
60	58 — 63	62.5 — 67
80	78 — 84	83 — 88
100	99 — 104.5	104 — 109
120	119.5 — 125.5	125 — 130.5
140	139.5 — 146.5	145.5 — 151.5
160	159.5 — 167.5	166 — 173

w/ Tachometer

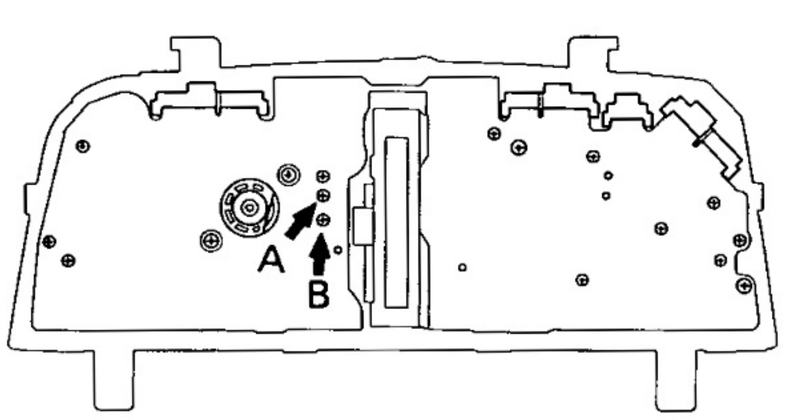

BE5005

w/o Tachometer

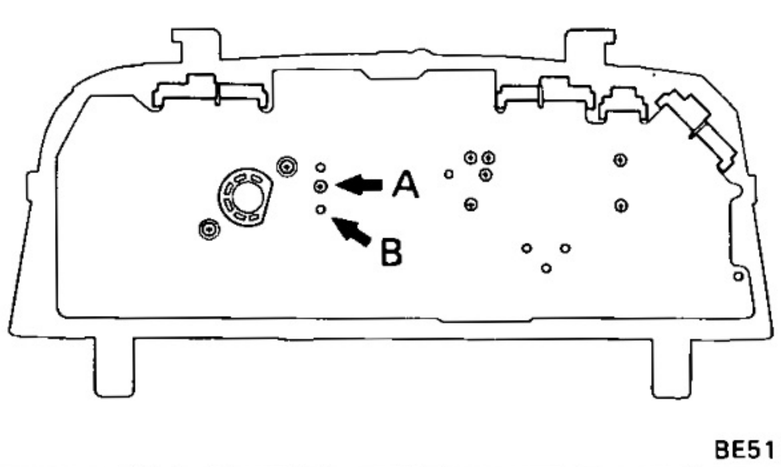

BE5117

Parts Inspection

Speedometer System

1. INSPECT SPEEDOMETER (ON-VEHICLE)

(a) Using a speedometer tester, inspect the speedometer for allowable indication error and check the operation of the odometer.

HINT: Tire wear and tire over or under inflation will increase the indication error.

(b) Check the speedometer for pointer vibration and abnormal noise.

HINT: Pointer vibration can be caused by a loose speedometer cable.

2. INSPECT SPEED SENSOR

Check that there is continuity between terminals A and B four times per each revolution of the speedometer shaft.

If operation is not as specified, replace the speedometer.

3. INSPECT SPEED WARNING CHIME SWITCH

(a) Press down on the tabs and remove the combination meter glass from the combination meter case.

NOTICE: Be careful not to dirty or damage the speedometer panel.

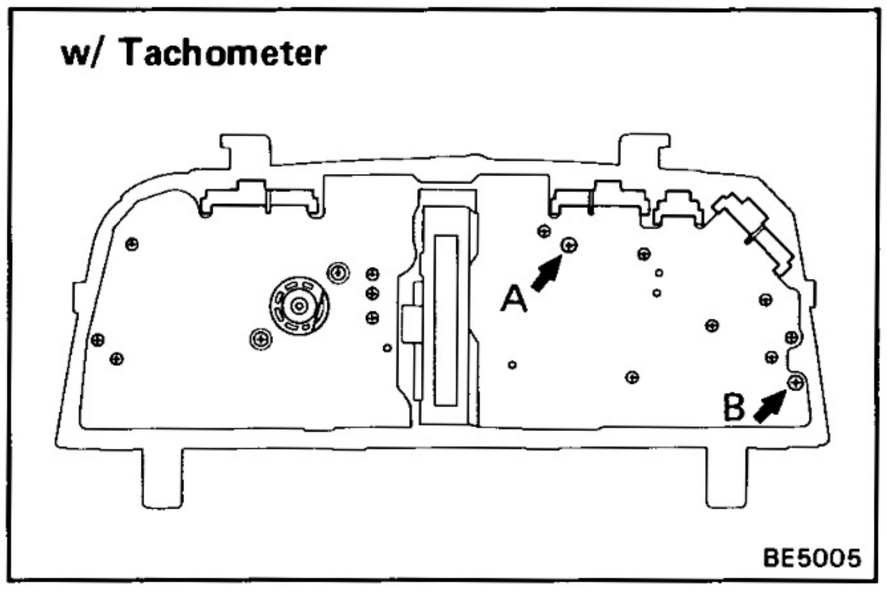

(b) Move the speedometer needle to the 124 km/h or 77 mph mark and fix it there.

(c) Keep on turning the speedometer shaft, check that the continuity between terminals A and B repeatedly fluctuates.

If operation is not as specified, replace the speedometer.

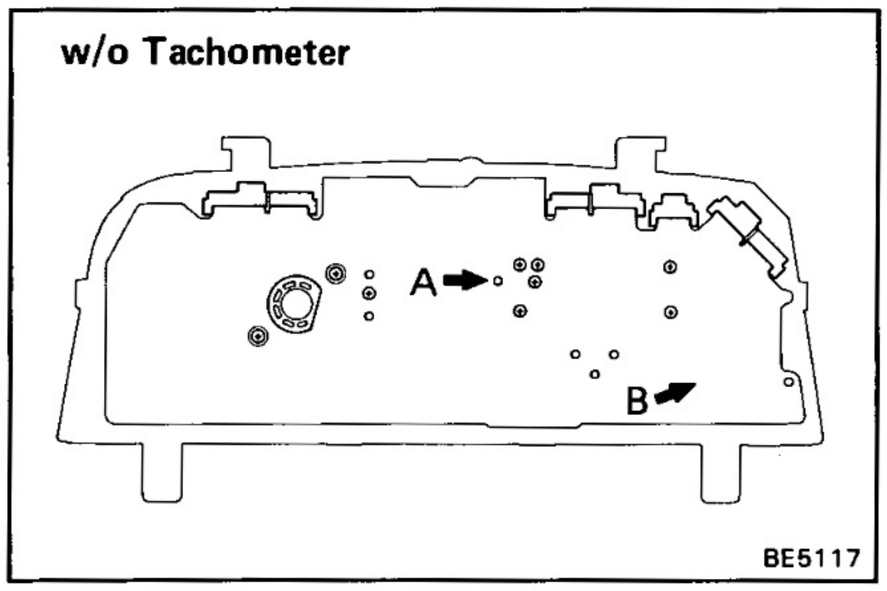

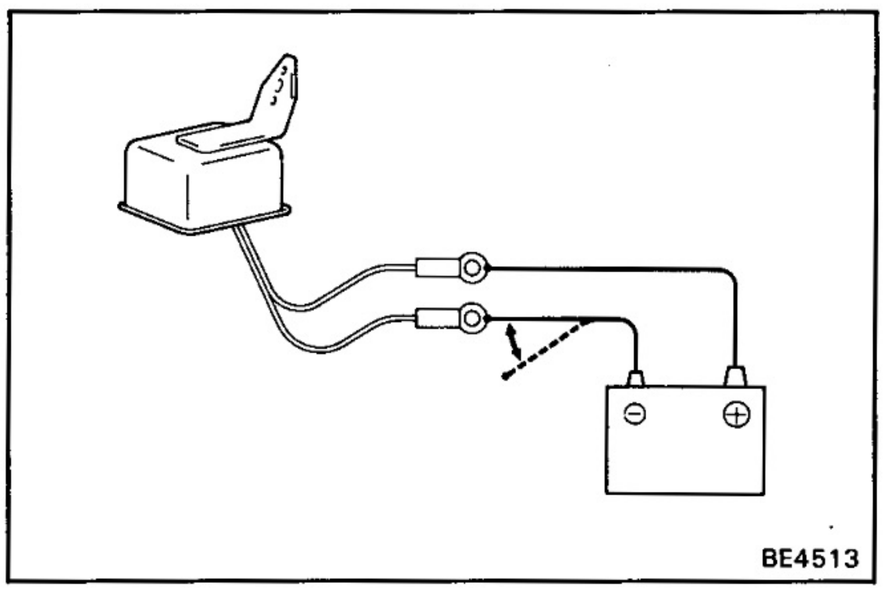

4. INSPECT SPEED WARNING CHIME

Apply battery voltage intermittently between terminals of the chime, check that the chime sounds.

HINT: The sound will be distorted if the chime is tilted.

If operation is not as specified, replace the chime.

DC 13.5 V 20°C (68°F) rpm	
Standard indication	Allowable range
700	610 — 750
1,000	900 — 1,100
2,000	1,875 — 2,125
3,000	2,850 — 3,150
4,000	3,850 — 4,150
5,000	4,850 — 5,150

Tachometer System

1. INSPECT TACHOMETER (ON-VEHICLE)

(a) Connect a tune-up test tachometer, and start the engine.

NOTICE:

- **Reversing the connection of the tachometer will damage the transistors and diodes inside.**
- **When removing or installing the tachometer, be careful not to drop or subject it to heavy shocks.**

(b) Compare the tester and tachometer indications.

If error is excessive, replace the tachometer.

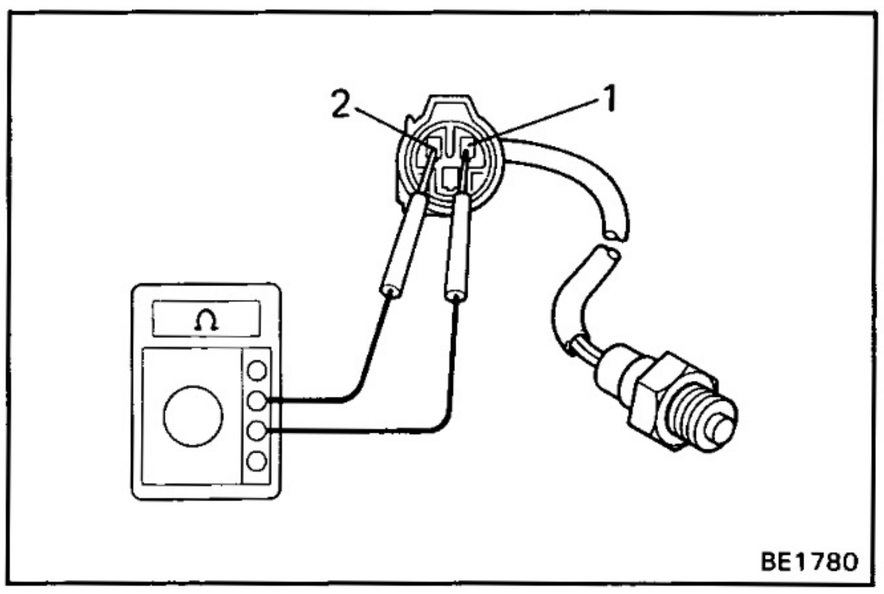

2. (Diesel Engine) INSPECT PICK-UP SENSOR

Measure the resistance between terminals 1 and 2.

Resistance: approx. 730 Ω

If resistance value is not as specified, replace the sensor.

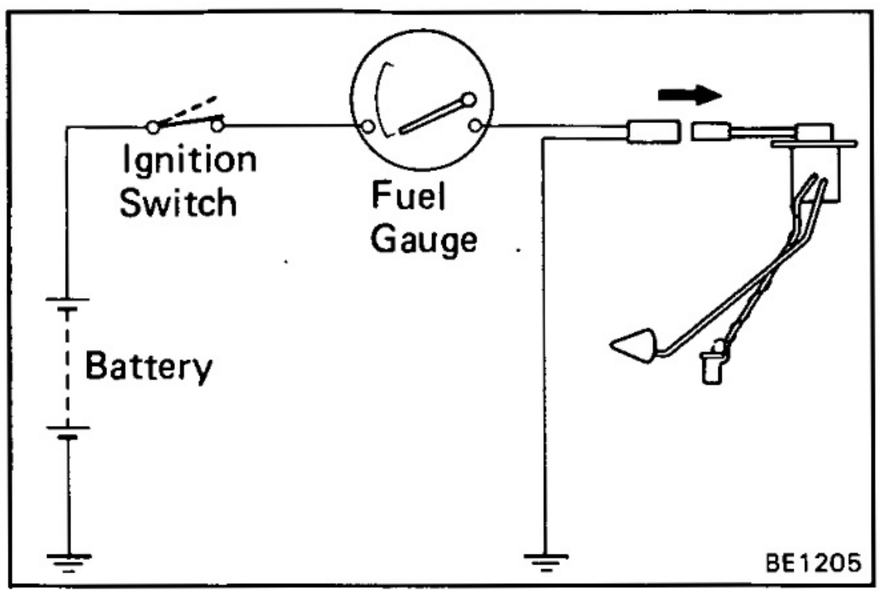

Fuel Gauge System (Main)

1. INSPECT RECEIVER GAUGE
(Operation)

(a) Disconnect the connector from the sender gauge.

(b) Turn the ignition switch ON, check that the receiver gauge needle indicates EMPTY.

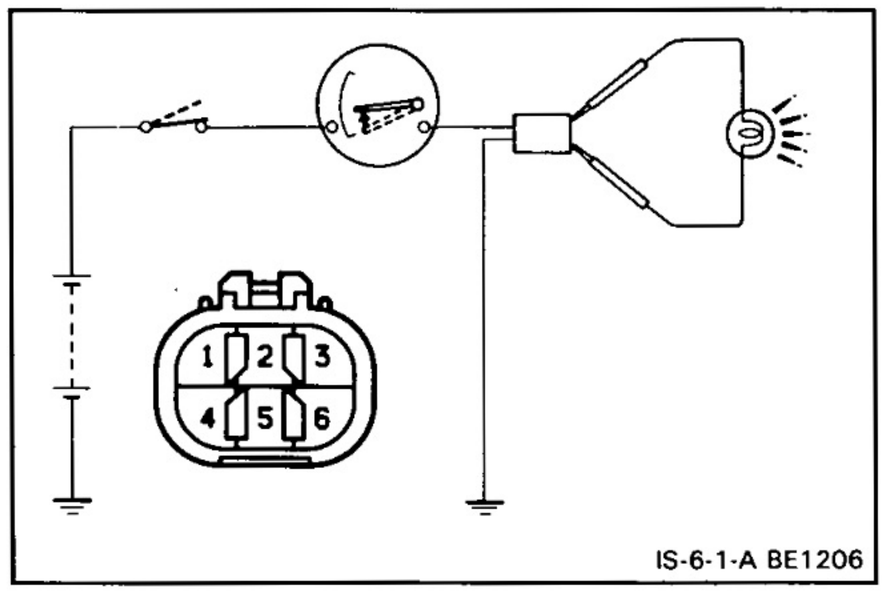

(c) Connect terminals 4 and 5 on the wire harness side connector through a 3.4 watts test bulb.

(d) Turn the ignition switch ON, check that the bulb lights up and the receiver gauge needle moves towards the full side.

HINT: Because of the silicon oil in the gauge, it will take a short time for needle to stabilize.

If operation is not as specified, inspect the receiver gauge resistance.

(Resistance)

Measure the resistance between terminals.

(w/ Tachometer)

Between terminals	Resistance (Ω)
IGN — Sender	85.5 — 105.5
IGN — Ground	126 — 150
Sender — Ground	*90 — 110
*: Include voltmeter resistance.	

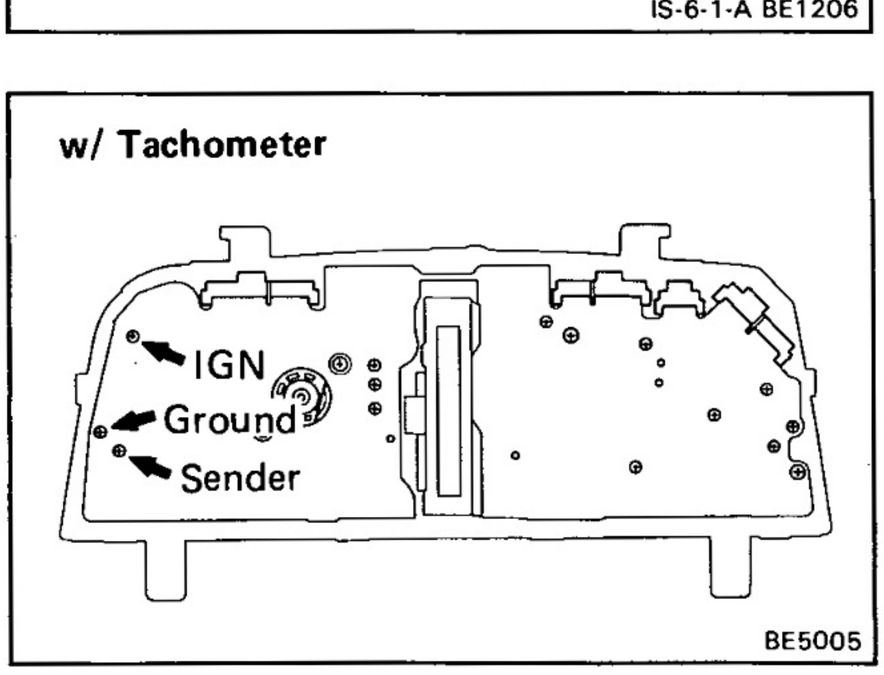

(w/ Tachometer)

Between terminals	Resistance (Ω)
IGN — Sender	49 — 61
IGN — Ground	99 — 121
Sender — Ground	148 — 182

If resistance value is not as specified, replace the receiver gauge.

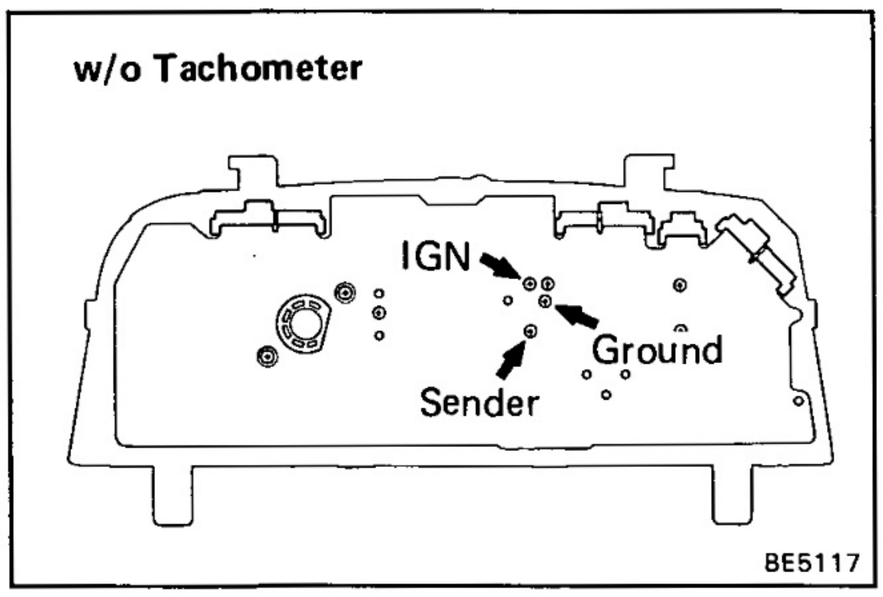

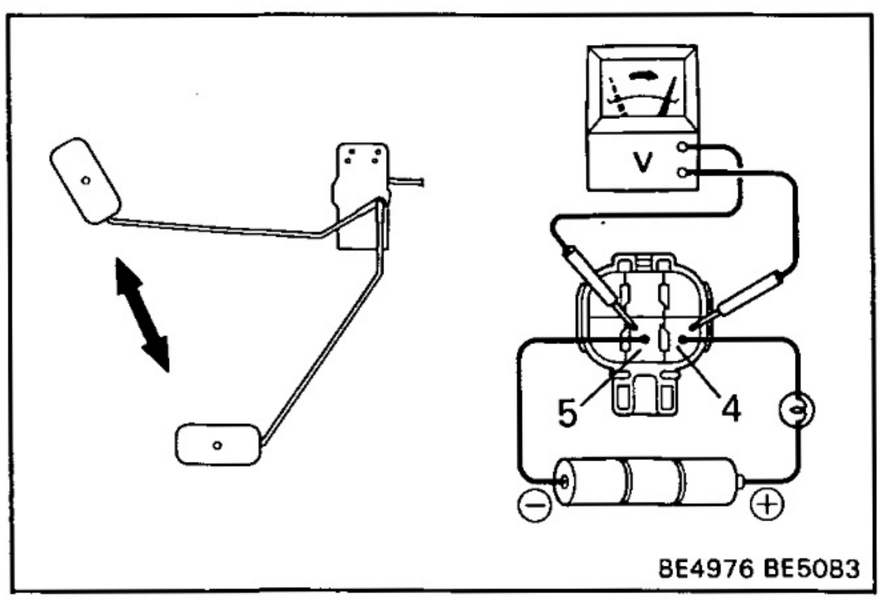

2. INSPECT SENDER GAUGE
(Operation)

(a) Connect a series of three 1.5 volts dry cell batteries.

(b) Connect the positive (+) lead from the dry cell batteries to terminal 4 through a 3.4 watts test bulb and the negative (—) lead to terminal 5.

(c) Connect the positive (+) lead from the voltmeter to terminal and the negative (—) lead to terminal.

(d) Check that the voltage rises as the float is moved from the full to empty position.

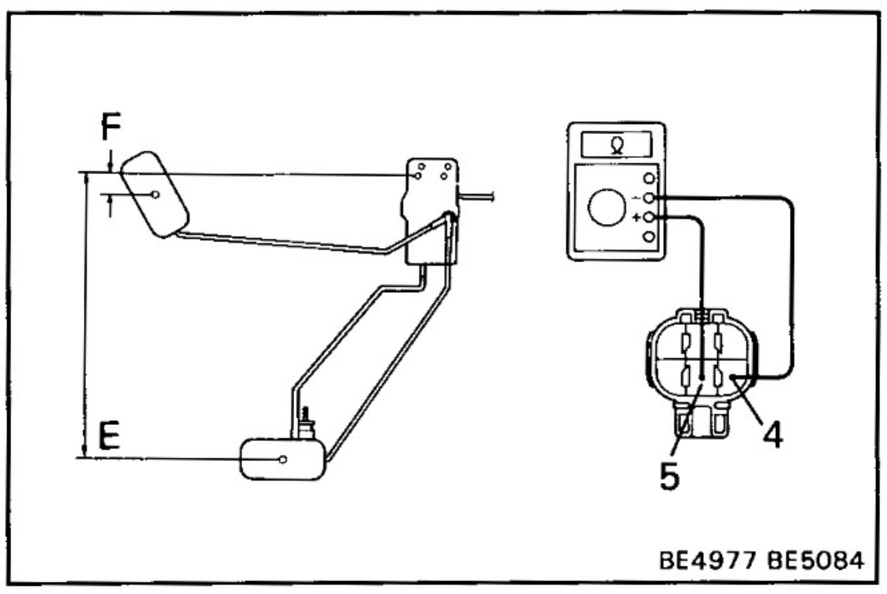

(Resistance)

Measure the resistance between terminals 4 and 5.

Float position mm (in.)	Resistance (Ω)
F approx. 15 (0.59)	approx. 3
E approx. 200 (7.87)	approx. 110

If resistance value is not as specified, replace the sender gauge.

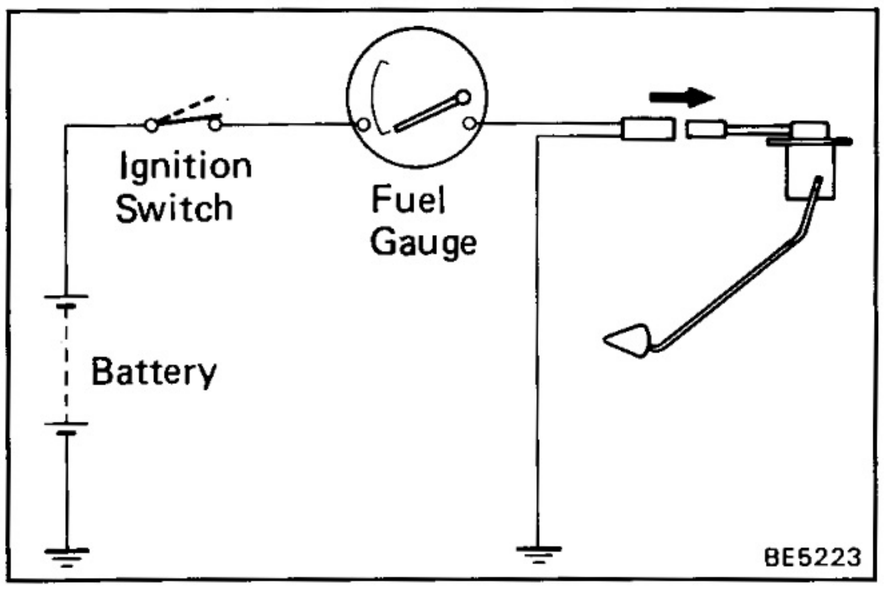

Fuel Gauge System (Sub)

1. **INSPECT RECEIVER GAUGE**
(Operation)

(a) Disconnect the connector from the sender gauge.

(b) Turn the ignition switch ON, check that the receiver gauge needle indicates EMPTY.

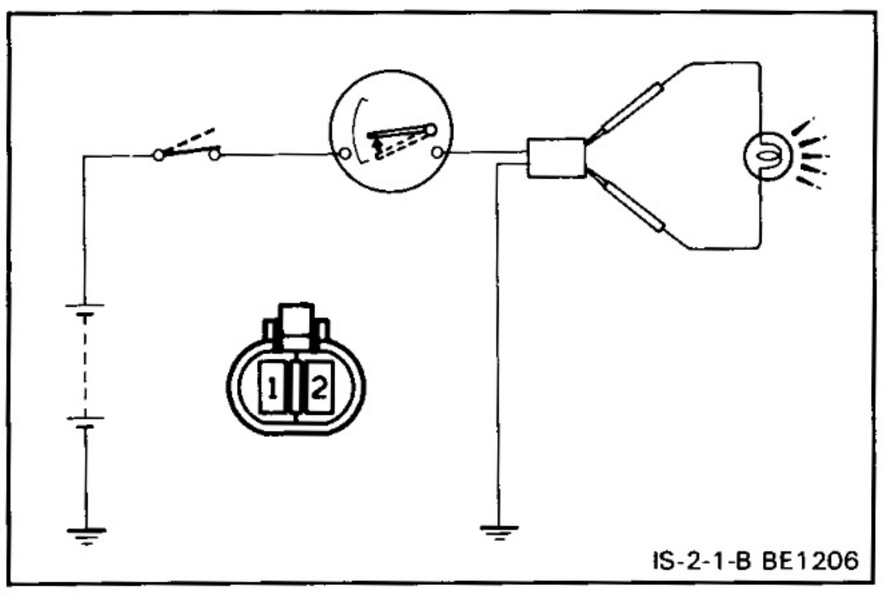

(c) Connect terminals 1 and 2 on the wire harness side connector through a 3.4 watts test bulb.

(d) Turn the ignition switch ON, check that the bulb lights up and the receiver gauge needle moves towards the full side.

HINT: Because of the silicon oil in the gauge, it will take a short time for needle to stabilize.

If operation is not as specified, inspect the receiver gauge resistance.

(Resistance)

Measure the resistance between terminals.

(w/ Tachometer)

Between terminals	Resistance (Ω)
IGN — Sender	approx. 86
IGN — Ground	approx. 241
Sender — Ground	approx. 155

w/ Tachometer/Accessory Meter Side

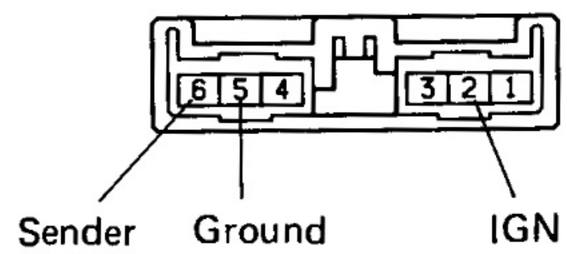

(w/o Tachometer)

Between terminals	Resistance (Ω)
IGN — Sender	approx. 123
IGN — Ground	approx. 260
Sender — Ground	approx. 137

If resistance value is not as specified, replace the receiver gauge.

w/o Tachometer/Combination Meter

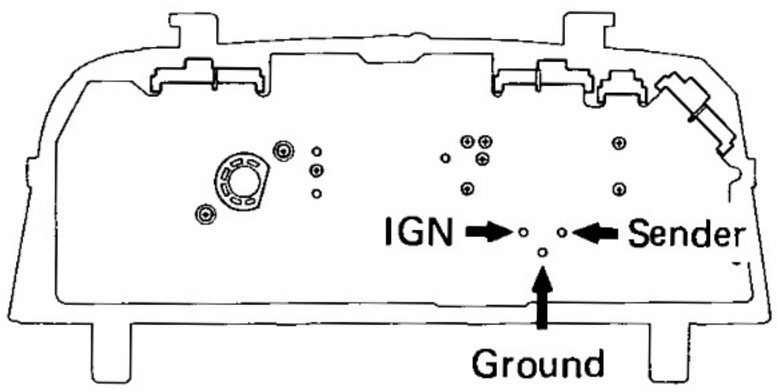

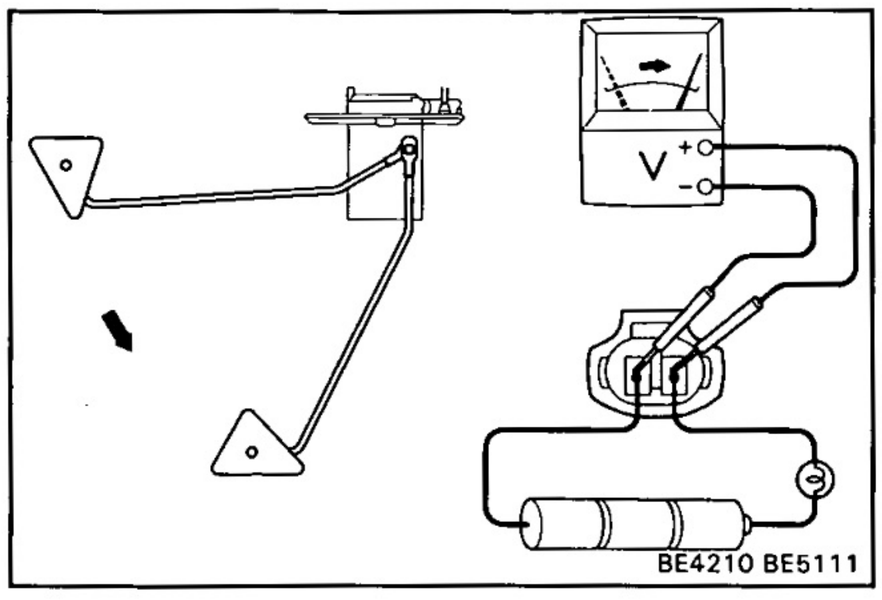

2. INSPECT SENDER GAUGE
(Operation)

(a) Connect a series of three 1.5 volts dry cell batteries.

(b) Connect the positive (+) lead from the dry cell batteries to terminal 1 through a 3.4 watts test bulb and the negative (—) lead to terminal 2.

(c) Connect the positive (+) lead from the voltmeter to terminal 1 and the negative (—) lead to terminal 2.

(d) Check that the voltage rises as the float is moved from the full to empty position.

(Resistance)

Measure the resistance between terminals 1 and 2.

Float position mm (in.)	Resistance (Ω)
F approx. 53 (2.09)	approx. 3
E approx. 156 (6.14)	approx. 110

If resistance value is not as specified, replace the sender gauge.

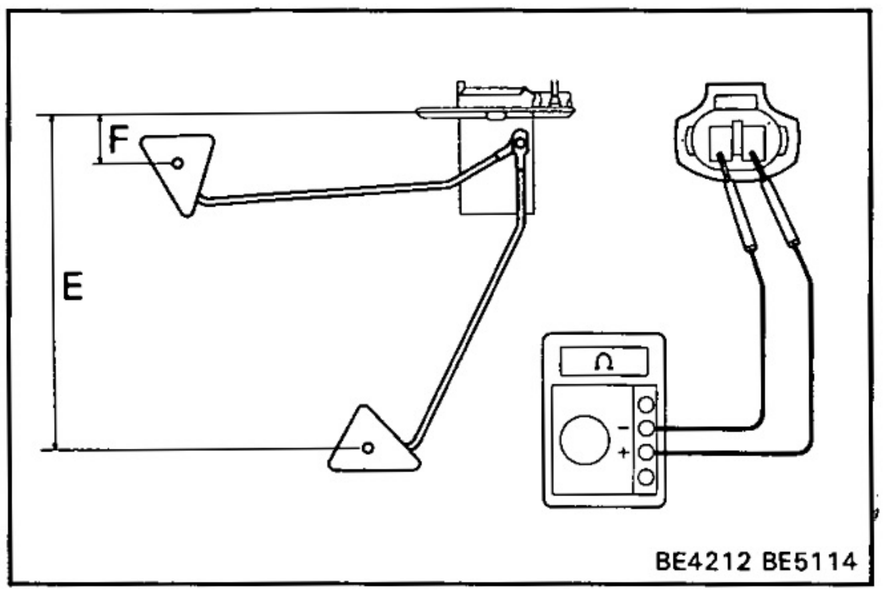

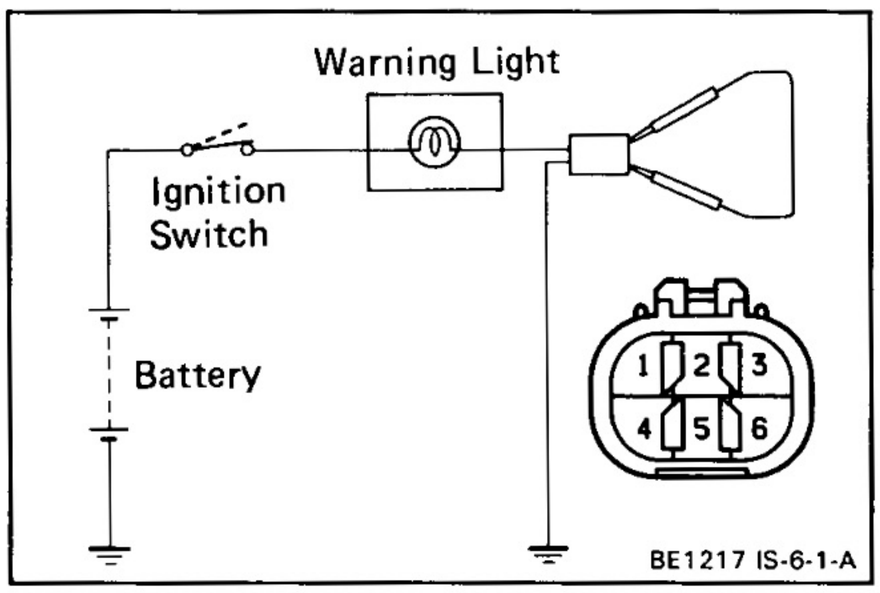

Fuel Level Warning System

1. INSPECT WARNING LIGHT

(a) Disconnect the connector from the sender gauge.

(b) Connect terminals 1 and 5 on the wire harness side connector.

(c) Turn the ignition switch ON, check that the warning light lights up.

If the warning light does not light up, test the bulb.

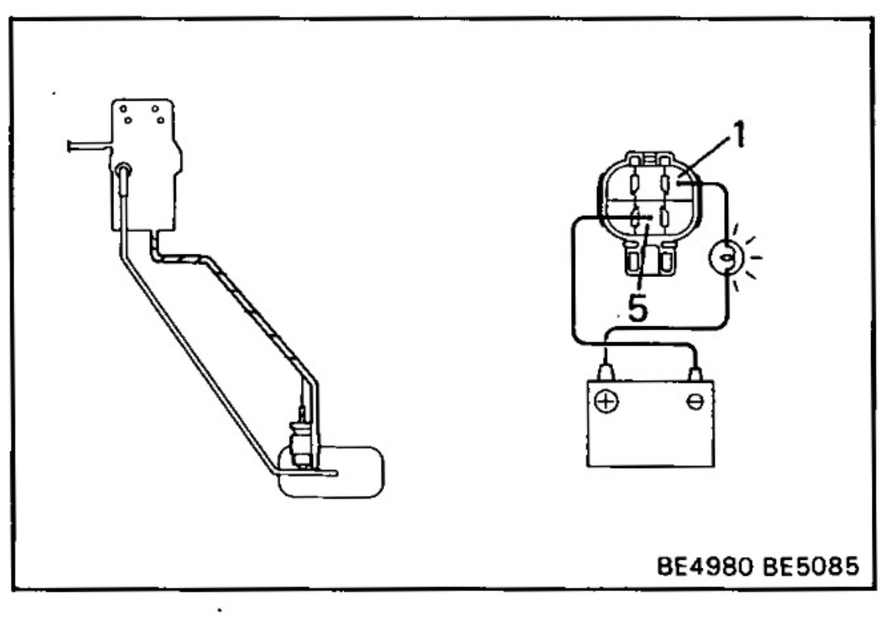

2. INSPECT WARNING SWITCH

(a) Apply battery voltage between terminals 1 and 5 through a 3.4 watts test bulb, check that the bulb lights up.

HINT: It will take a short time for the bulb to light up.

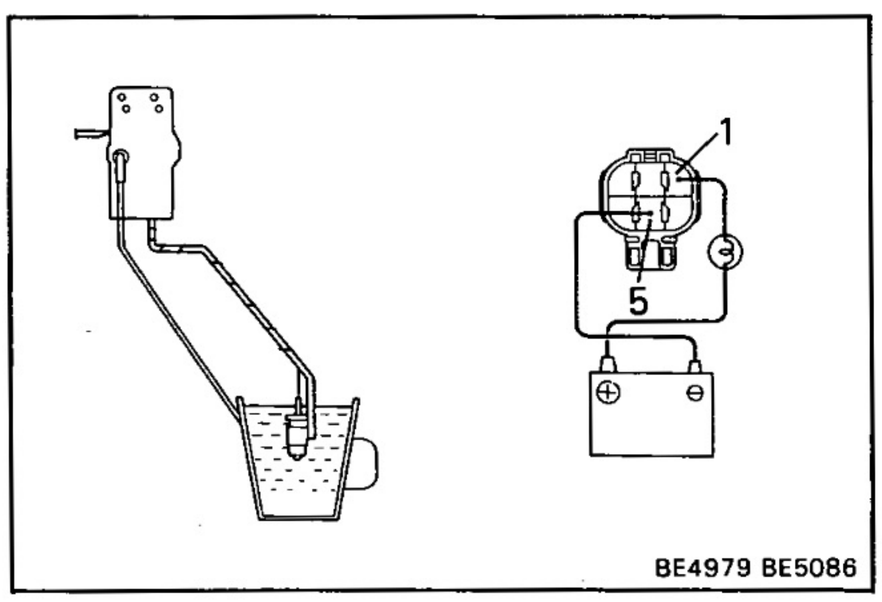

(b) Submerge the switch in fuel, check that the bulb goes out.

If operation is not as specified, replace the sender gauge.

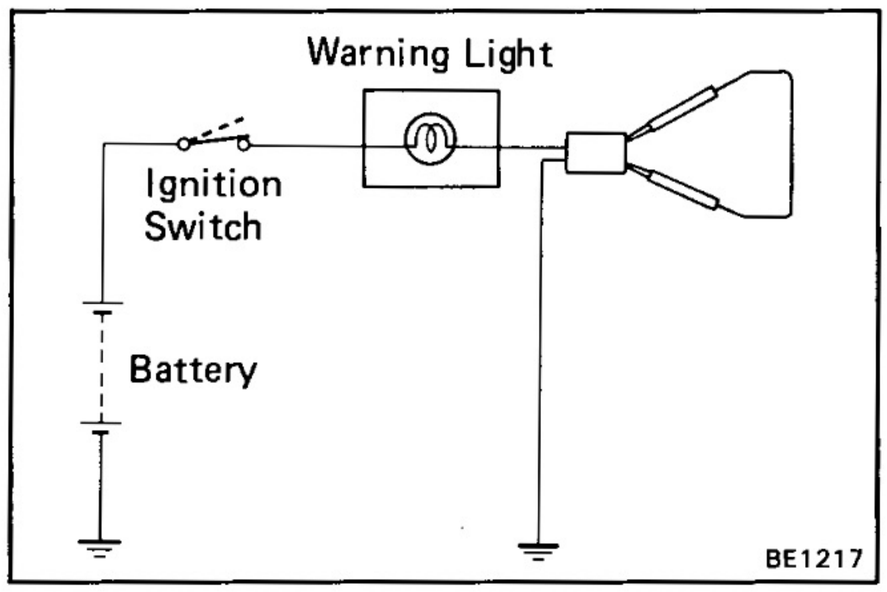

Fuel Filter Warning System

1. INSPECT WARNING LIGHT

(a) Disconnect the connector from the warning switch and connect terminals on the wire harness side connector.

(b) Remove the CHARGE fuse and turn the ignition switch ON.

(c) Check that the warning light lights up and the warning buzzer sounds.

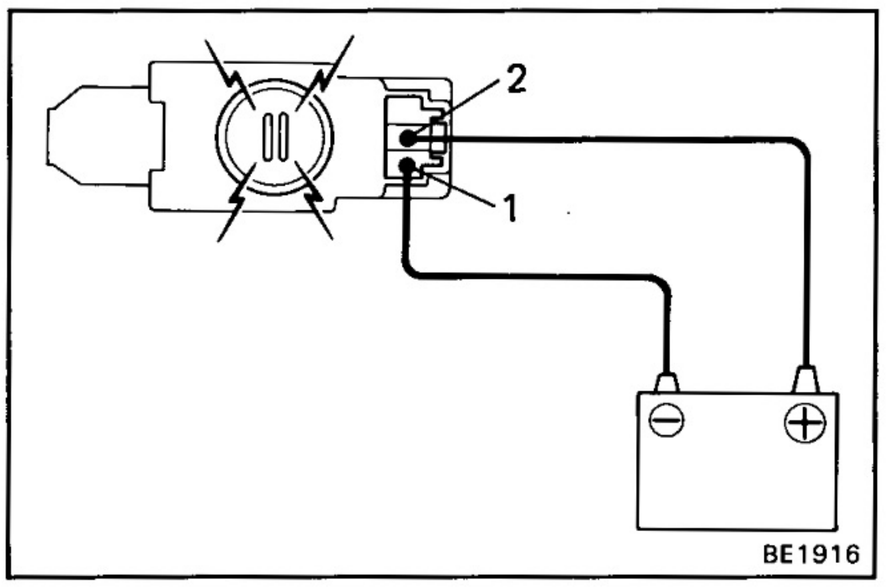

2. INSPECT WARNING BUZZER

Connect the positive (+) lead from the battery to terminal 2 and the negative (—) lead to terminal 1, check that the buzzer sounds.

If buzzer does not sound, replace the buzzer.

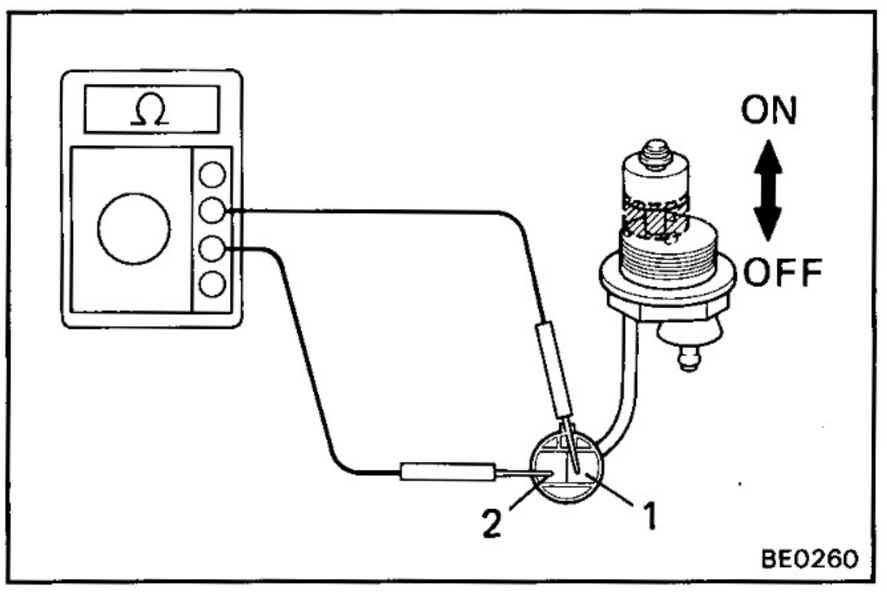

3. INSPECT WARNING SWITCH

(a) Check that there is no continuity between terminals with the warning switch OFF (float down).

(b) Check that there is continuity between terminals with the warning switch ON (float up).

If operation is not as specified, replace the switch.

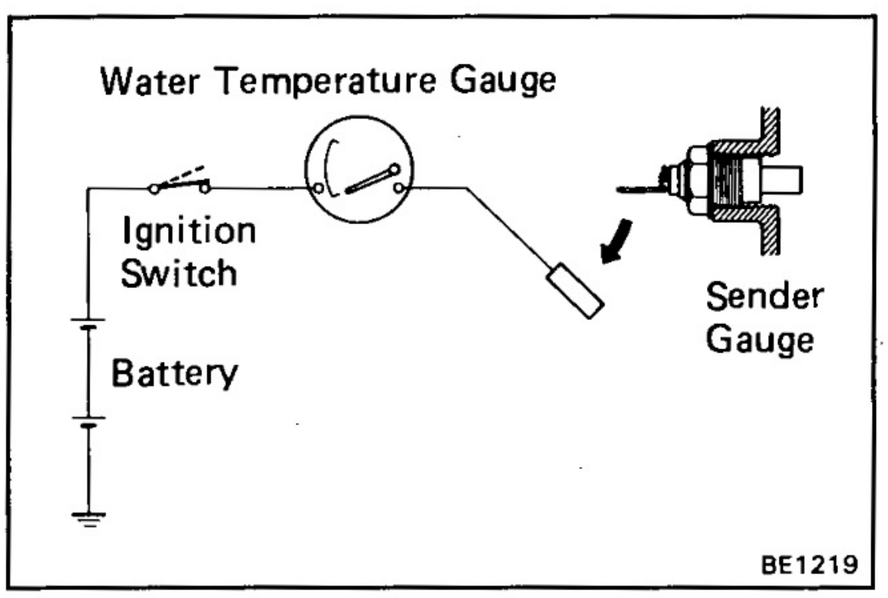

Water Temperature Gauge System

INSPECT RECEIVER GAUGE

(Operation)

(a) Disconnect the connector from the sender gauge.

(b) Turn the ignition switch ON, check that the receiver gauge needle indicates COOL.

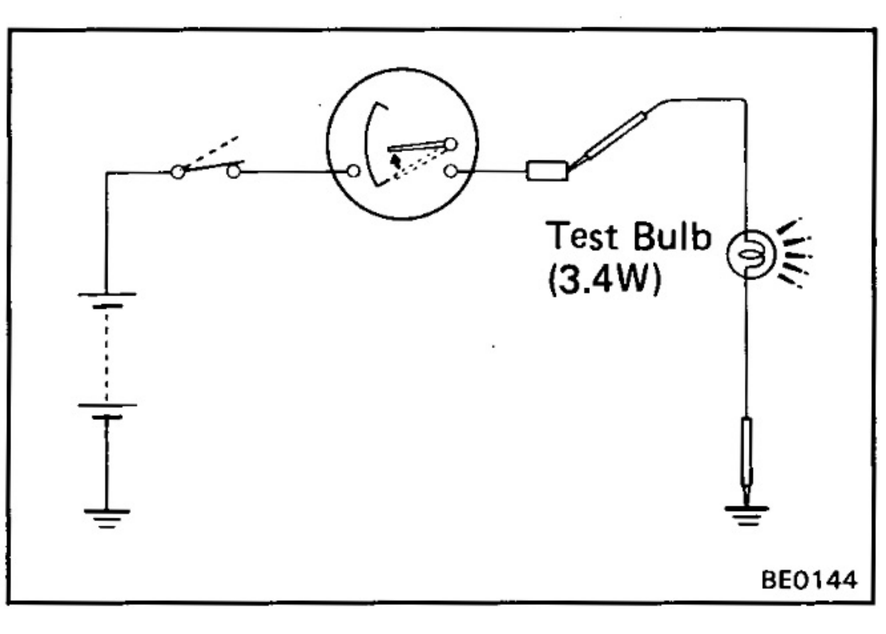

(c) Ground terminal on the wire harness side connector through a 3.4 watts test bulb.

(d) Turn the ignition switch ON, check that the bulb lights up and the receiver gauge needle moves to the hot side.

If operation is as specified, replace the sender gauge. Then, recheck system.

If operation is not as specified, measure the receiver gauge resistance.

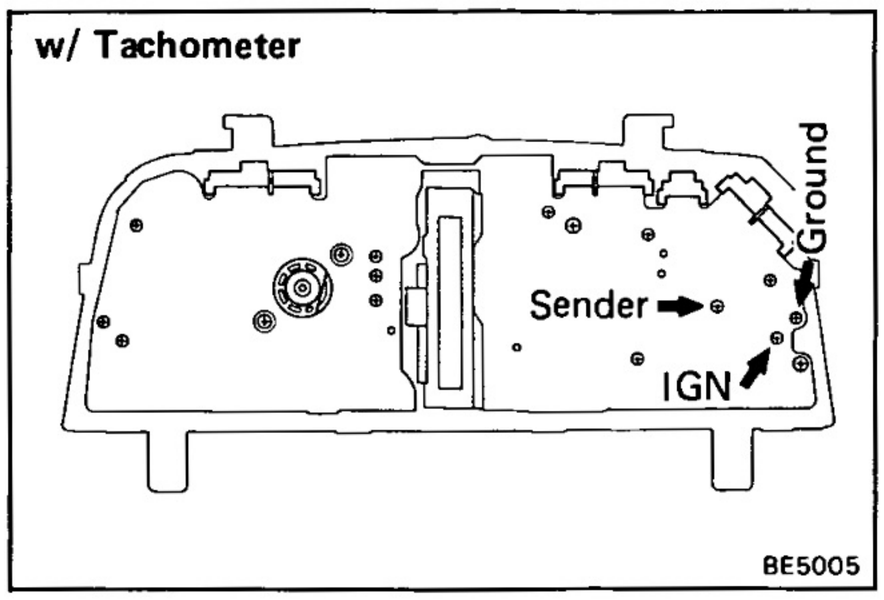

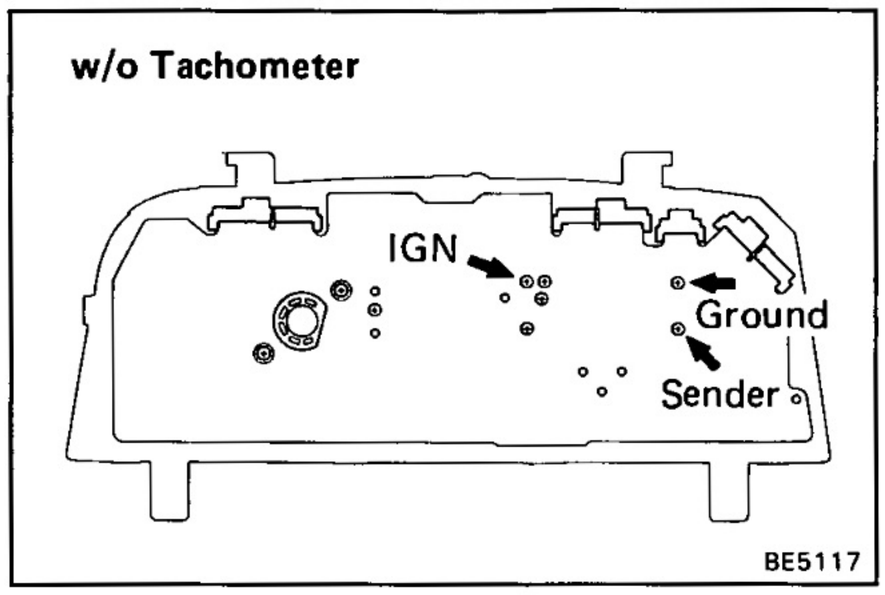

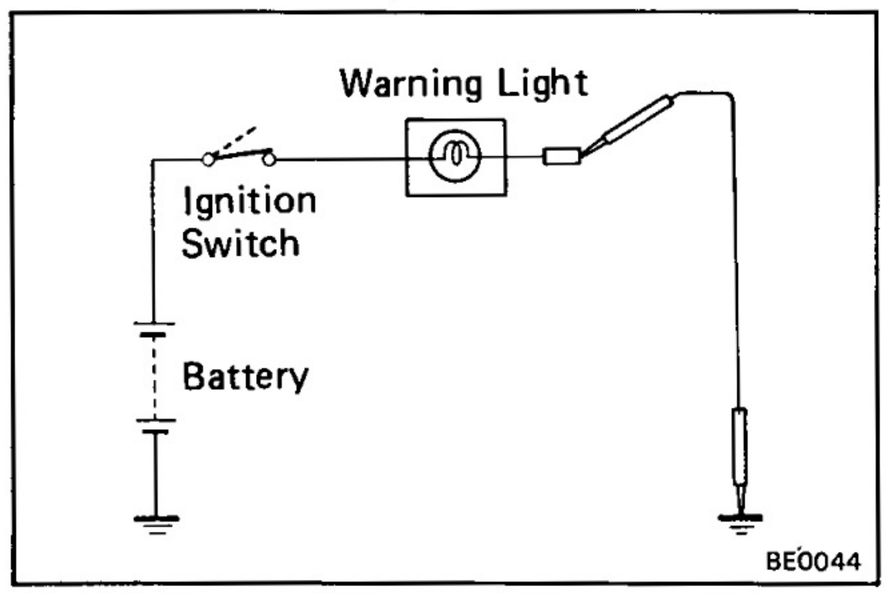

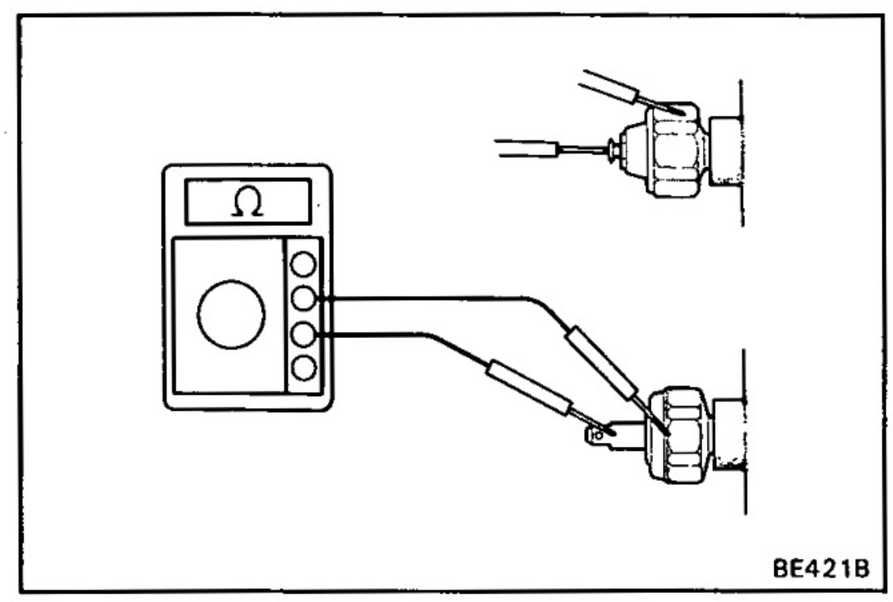

(Resistance)

Measure the resistance between terminals.

(w/ Tachometer)

Between terminals	Resistance (Ω)
IGN — Sender	71 — 79
IGN — Ground	117 — 141
Ground — Sender	185 — 215

(w/o Tachometer)

Between terminals	Resistance (Ω)
IGN — Sender	22 — 28
IGN — Ground	121 — 149
Ground — Sender	22 — 28

HINT: Connect the test leads so that the current from the ohmmeter can flow according to the above order. This circuit include the diode.

If resistance value is not as specified, replace the receiver gauge.

Low Oil Pressure Warning System

1. INSPECT WARNING LIGHT

(a) Disconnect the connector from the warning switch and ground terminal on the wire harness side connector.

(b) Turn the ignition switch ON, check that the warning light lights up.

If the warning light does not light up, test the bulb.

2. INSPECT WARNING SWITCH

(a) Disconnect the connector from the switch.

(b) Check that there is continuity between terminal and ground with the engine stopped.

(c) Check that there is no continuity between terminal and ground with the engine running.

HINT: Oil pressure should be over 0.5 kg/cm² (7.1 psi 49 kPa)

If operation is not as specified, replace the switch.

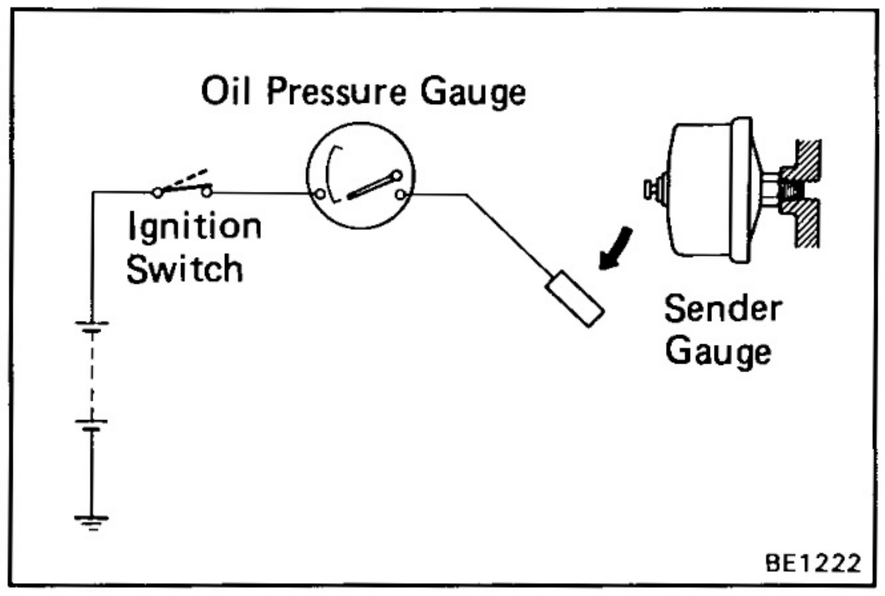

Oil Pressure Gauge System

1. INSPECT RECEIVER GAUGE
(Operation)

(a) Disconnect the connector from the sender gauge.

(b) Turn the ignition switch ON, check that the receiver gauge needle indicates to the low.

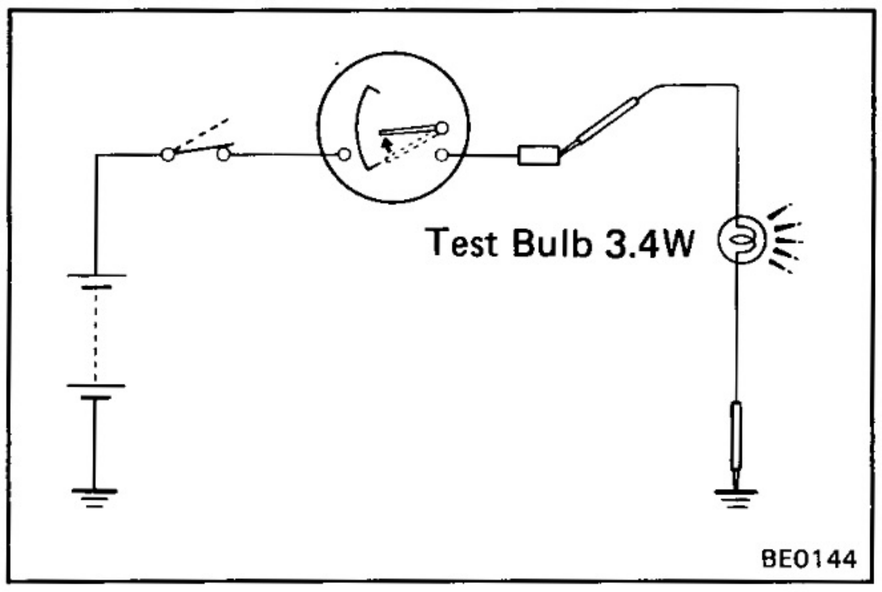

(c) Ground the terminal on the wire harness side through a 3.4 W test bulb.

(d) Turn the ignition switch ON, check that the bulb lights and the receiver gauge needle, moves to the high side.

If operation is not as specified, measure the receiver gauge resistance.

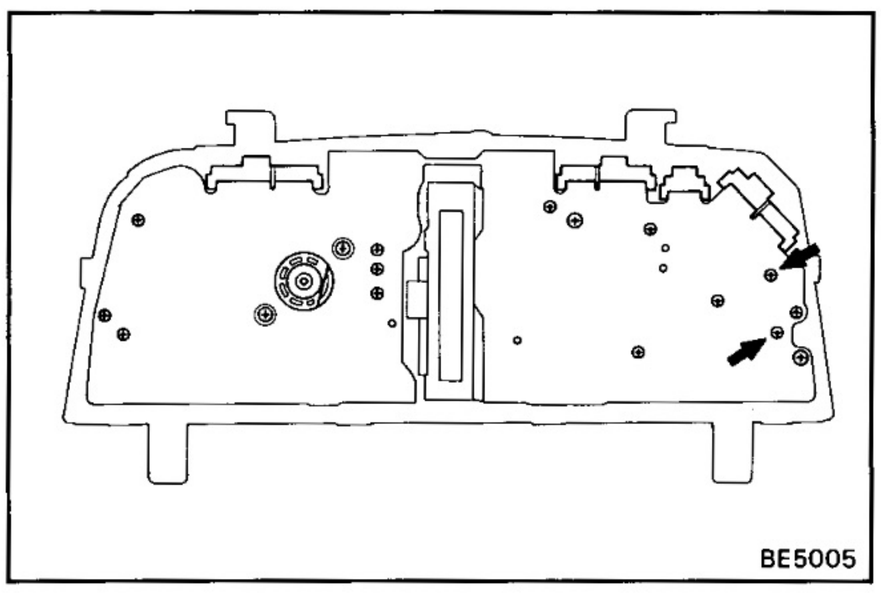

(Resistance)

Measure the receiver gauge resistance between terminals.

Resistance: 22 — 28 Ω

If resistance value is not as specified, replace the receiver gauge.

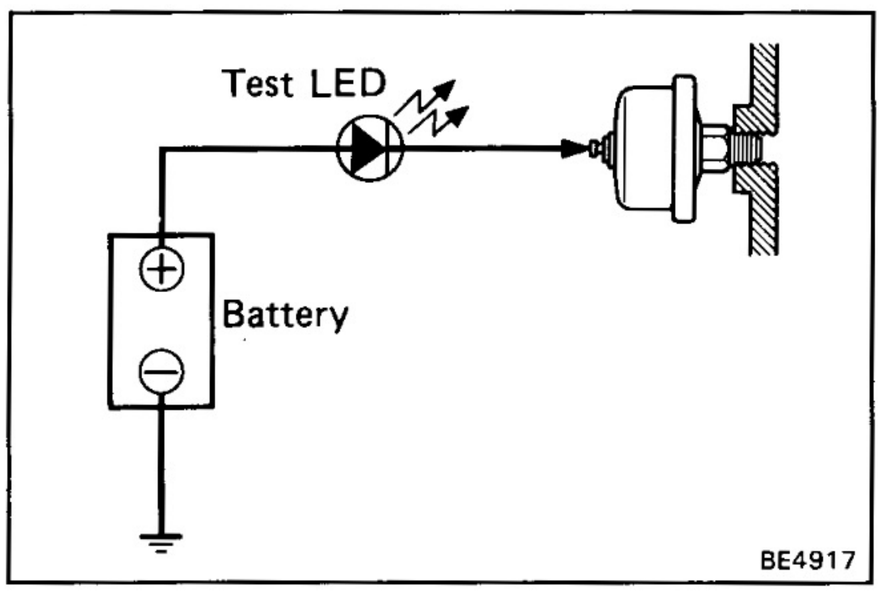

2. INSPECT SENDER GAUGE

(a) Disconnect the connector from the sender gauge.

(b) Apply battery voltage to the sender gauge terminal through a test LED.

(c) Check that the bulb does not light when the engine is stopped.

(d) Check that the LED flashes when the engine is running. The number of flashed should vary with engine speed.

If operation is not as specified, replace the sender gauge.

Voltmeter System

INSPECT VOLTMETER

(ON-VEHICLE)

Compare the tester and voltmeter indications.

If error is excessive, replace the voltmeter.

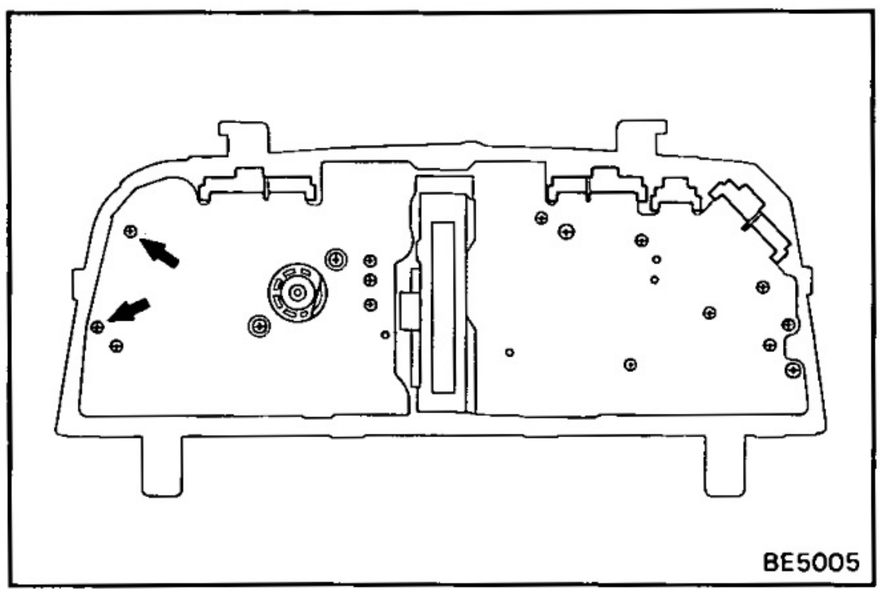

(Resistance)

Measure the resistance between terminals.

Resistance: 90 — 110 Ω

If resistance value is not as specified, replace the voltmeter.

HINT: This resistance include fuel receiver gauge resistance.

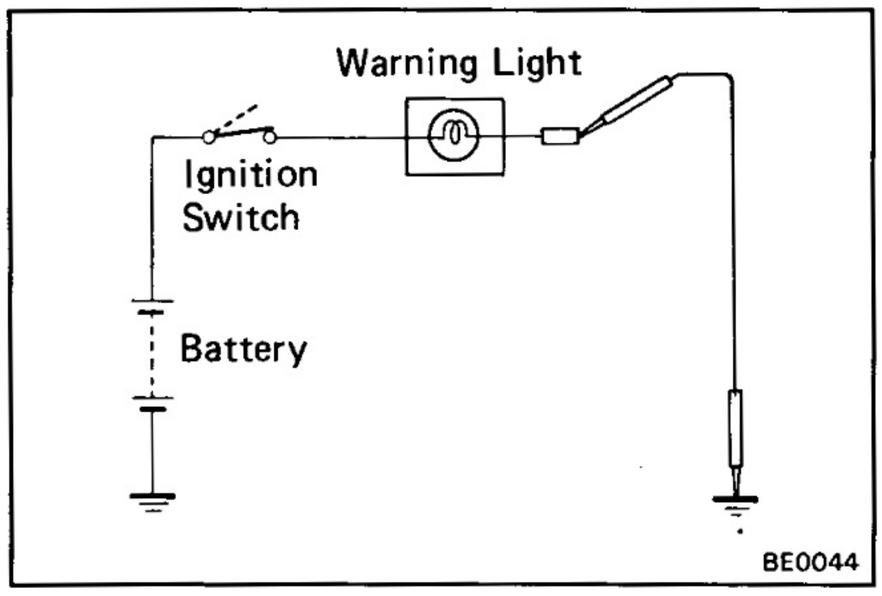

Park Brake Warning System

1. INSPECT WARNING LIGHT

(a) Disconnect the connector from the parking brake switch and ground terminal on the wire harness side connector.

(b) Turn the ignition switch ON, check that the warning light lights up.

If the warning light does not light up, test the bulb.

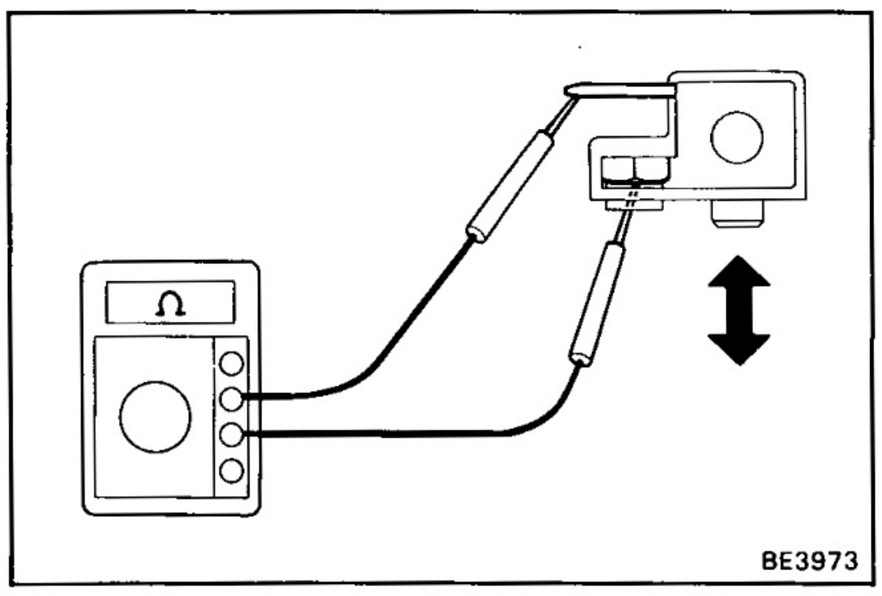

2. INSPECT SWITCHES

(a) Check that there is continuity between terminal and the switch set nut with switch pin released. (parking brake lever pulled up)

(b) Check that there is no continuity between terminal and the switch set nut with switch pin pushed in. (parking brake lever released)

If operation is not as specified, replace the switch.

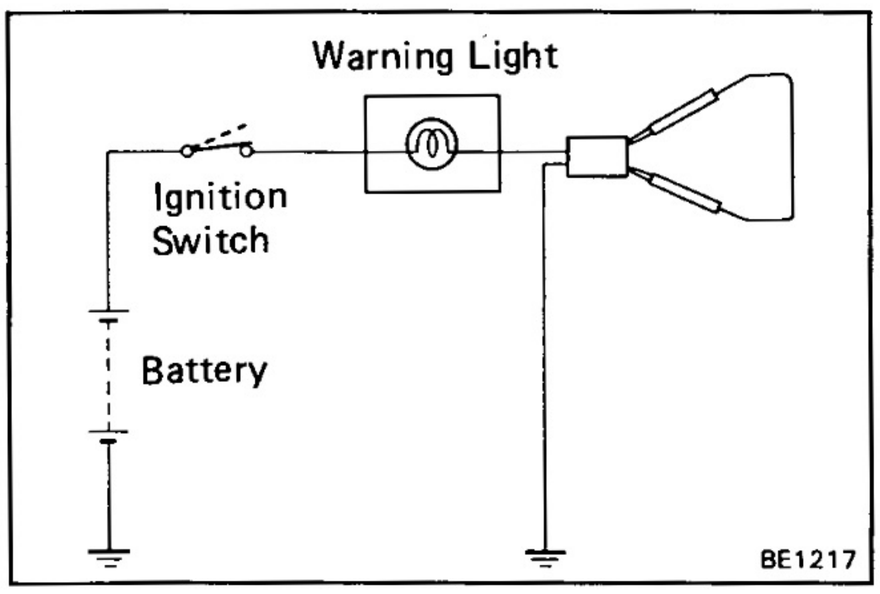

Brake Warning System

1. INSPECT WARNING LIGHT

(a) (w/o Park Brake Warning System)

Disconnect the connectors from the level warning switch, parking brake switch and (Diesel Engine) vacuum warning switch.

(w/Park Brake Warning System)

Disconnect the connectors from the level warning switch and (Diesel Engine) vacuum warning switch.

(b) Connect terminals on the wire harness side connector of the level warning switch connector.

(c) Turn the ignition switch ON, check that the warning light lights up.

If the warning light does not light up, test the bulb.

2. INSPECT SWITCHES

(Parking Brake Switch: w/o Park Brake Warning System)

See step 2 on page BE-63.

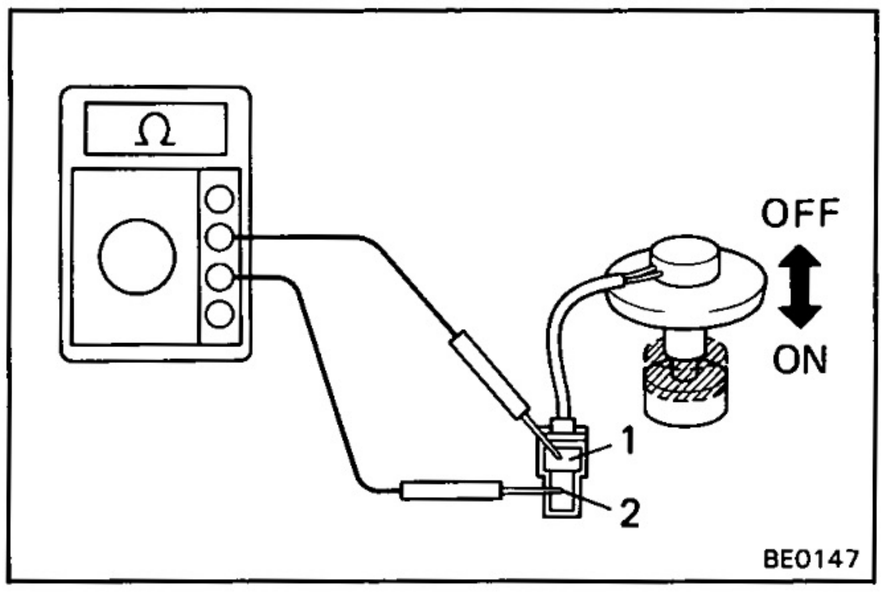

(Brake Fluid Level Warning Switch)

(a) Check that there is no continuity between terminals with the switch OFF (float up).

(b) Check that there is continuity between terminals with the switch ON (float down).

If operation is not as specified, replace the switch.

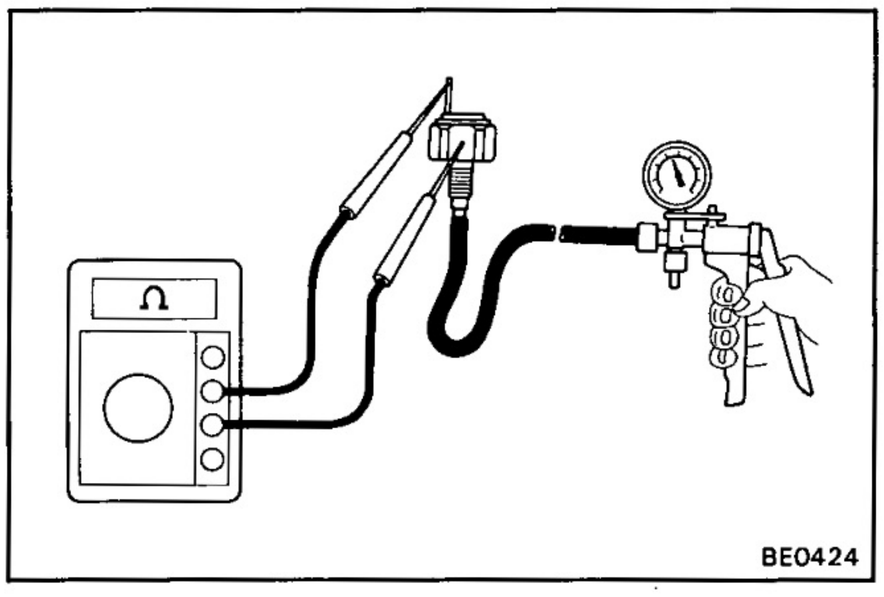

(Vacuum Warning Switch: Diesel Engine)

(a) Check that there is continuity between terminal and the switch body with a no vacuum.

(b) Apply 200 ± 40 mmHg (7.87 ± 1.57 in.Hg, 26.7 ± 5.3 kPa) of pressure.

(c) Check that there is no continuity between terminal and the switch body.

If operation is not as specified, replace the switch.

3. INSPECT RELAY

(Bulb Check Relay: Australia/Continuity)

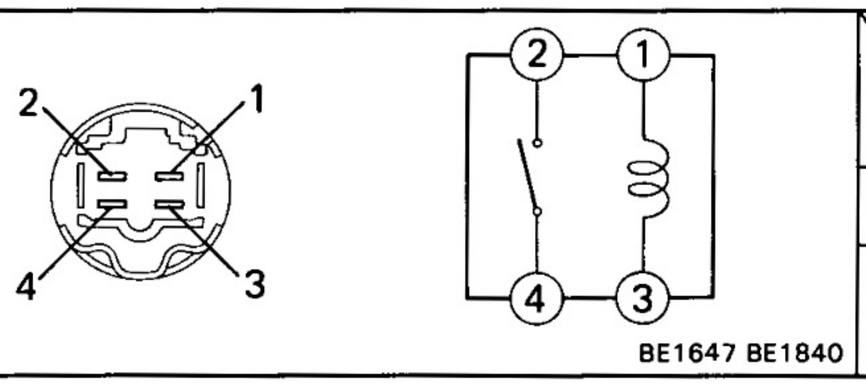

Terminal / Condition	1	2	3	4
Constant	○	∿∿	○	
Apply battery voltage to terminals 1 and 3.		○		○

If continuity is not as specified, replace the relay.

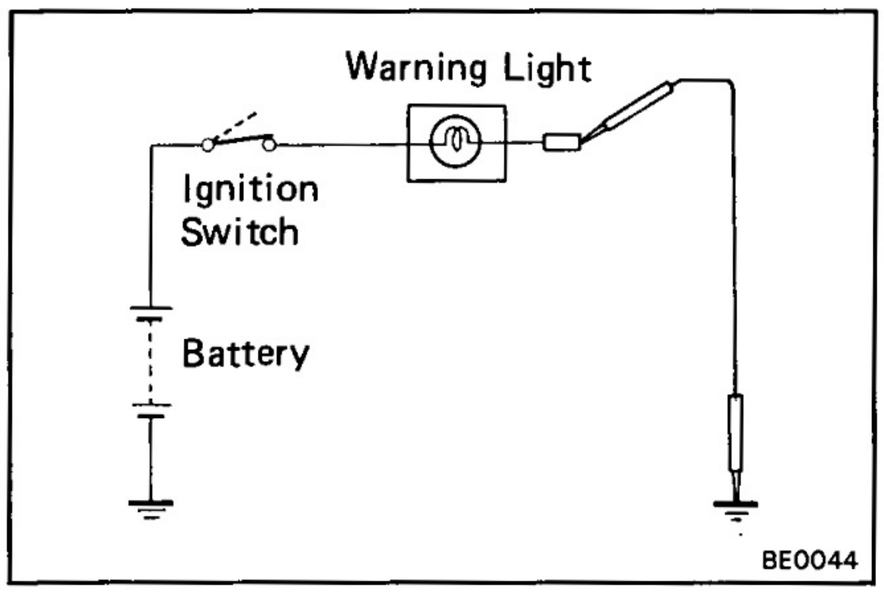

Open Door Warning System

1. INSPECT WARNING LIGHT

(a) Disconnect the connector from the door courtesy switch and ground terminal on the wire harness side connector.

(b) Turn the ignition switch ON, check that the warning light lights up.

If the warning light does not light up, test the bulb.

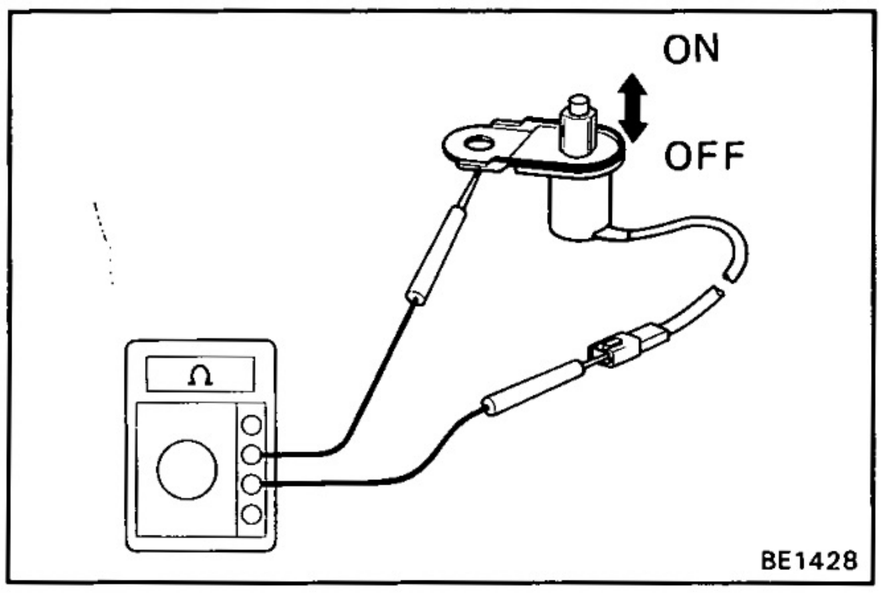

2. INSPECT COURTESY SWITCH

(a) Check that there is continuity between terminal and the switch body with the ON (switch pin released: opened door).

(b) Check that there is no continuity between terminal and the switch body with the OFF (switch pin pushed in: closed door).

If operation is not as specified, replace the switch.

Seat Belt Warning System

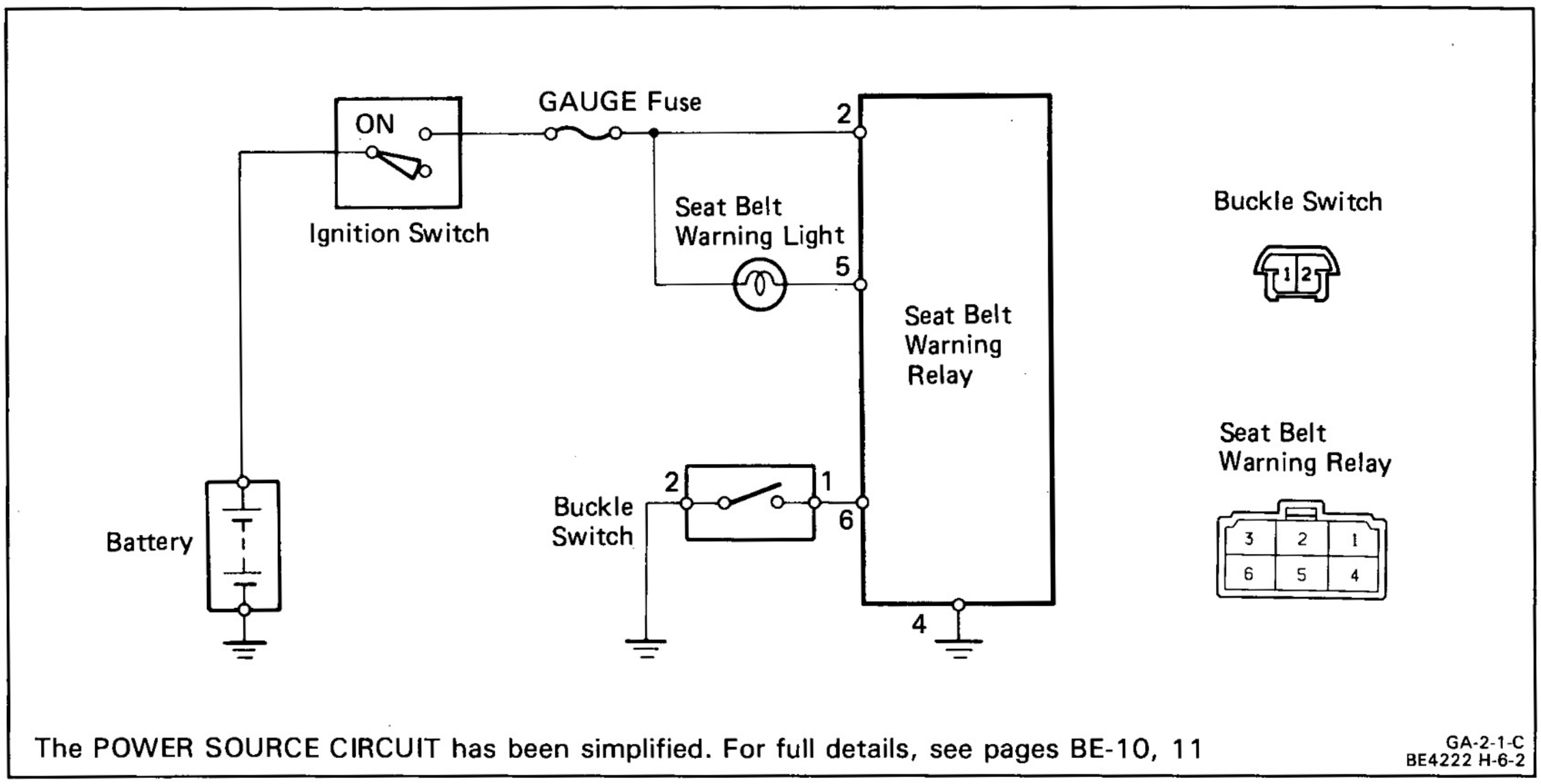

The POWER SOURCE CIRCUIT has been simplified. For full details, see pages BE-10, 11

GA-2-1-C
BE4222 H-6-2

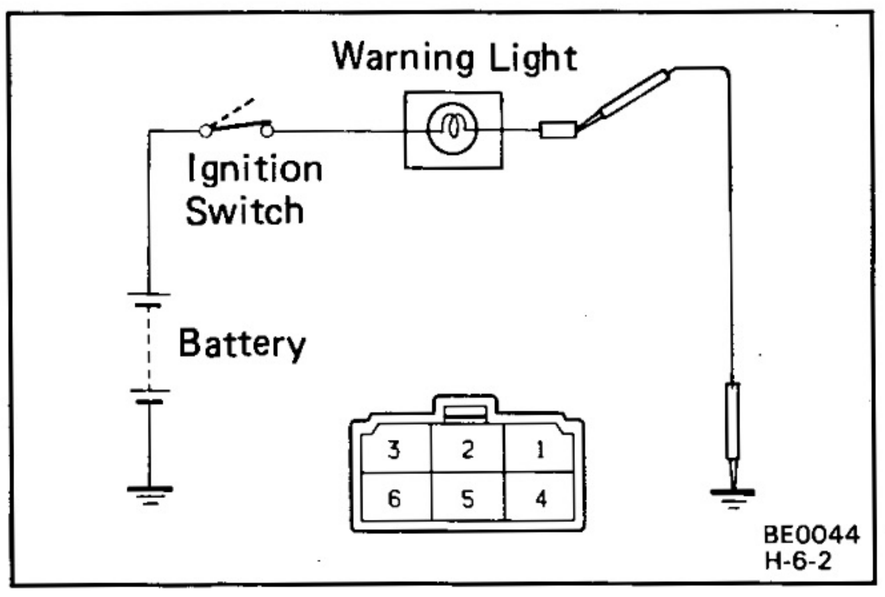

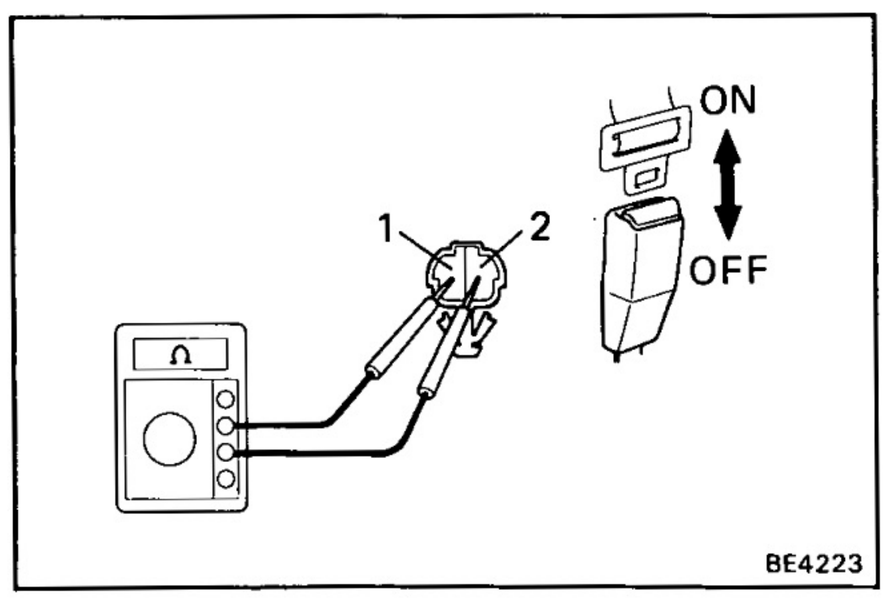

1. INSPECT WARNING LIGHT

(a) Disconnect the connector from the seat belt warning relay.

(b) Ground terminal 5 on the wire harness side connector.

(c) Turn the ignition switch ON, check that the warning light lights up.

If the warning light does not light, test the bulb.

2. INSPECT SWITCHES (Buckle Switch)

(a) Check that there is no continuity between terminals with the switch ON (belt unfastened).

(b) Check that there is continuity between terminals with the switch OFF (belt fastened).

If operation is not as specified, replace the seat belt inner.

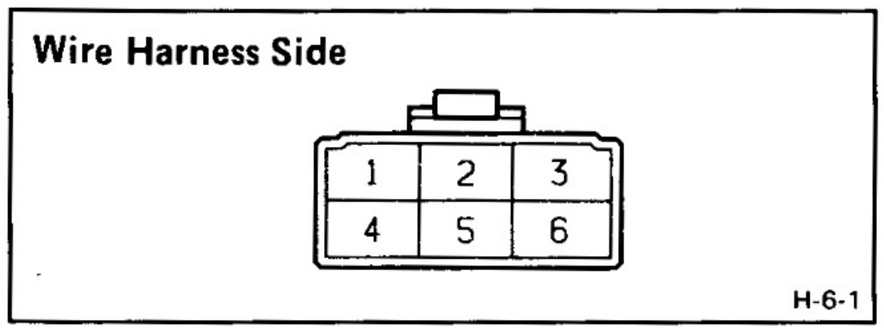

3. INSPECT SEAT BELT RELAY (Relay Circuit)

Disconnect the connector from the relay and inspect the connector on the wire harness side as shown in the chart.

Check for	Tester connection	Condition		Specified value
Continuity	4 — Ground	Constant		Continuity
	6 — Ground	Buckle switch position	ON (Belt fastened)	No continuity
			OFF (Belt unfastened)	Continuity
Voltage	2 — Ground	Ignition switch position	LOCK or ACC	No voltage
			ON	Battery voltage
	5 — Ground	Ignition switch position	LOCK or ACC	No voltage
			ON	Battery voltage

If circuit is as specified, replace the relay.

If circuit is not as specified, refer to BE-65 wiring diagram and inspect the circuits connected to other parts.

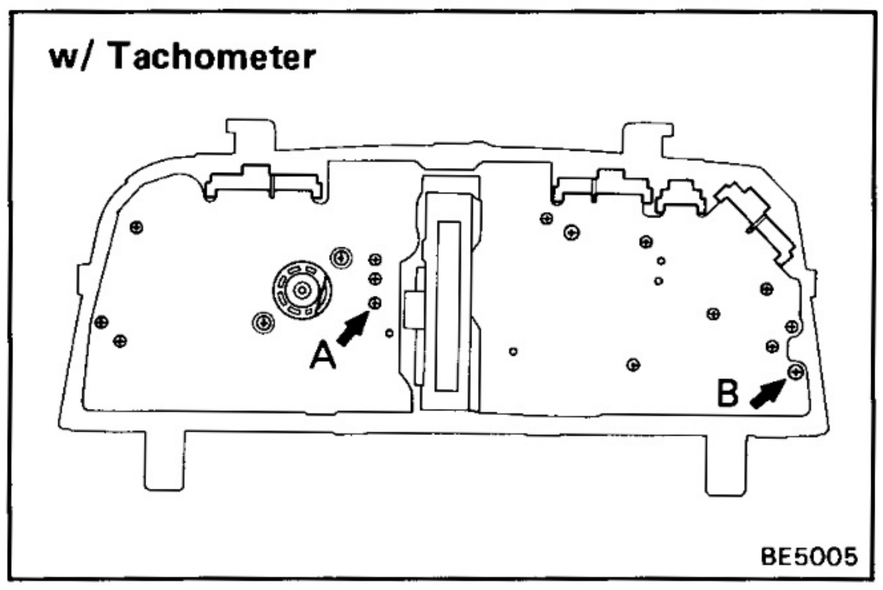

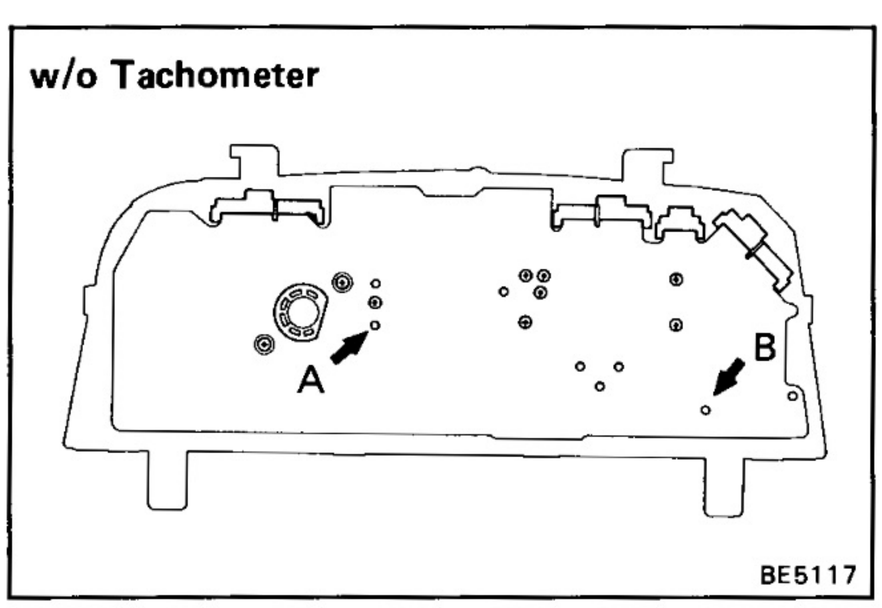

Timing Belt Warning System

1. INSPECT WARNING LIGHT

(a) Remove the combination meter with connectors connected.

(b) Connect terminals A and B.

(c) Remove CHARGE fuse and turn the ignition switch ON, check that the warning light lights up.

If the warning light does not light up, test the bulb.

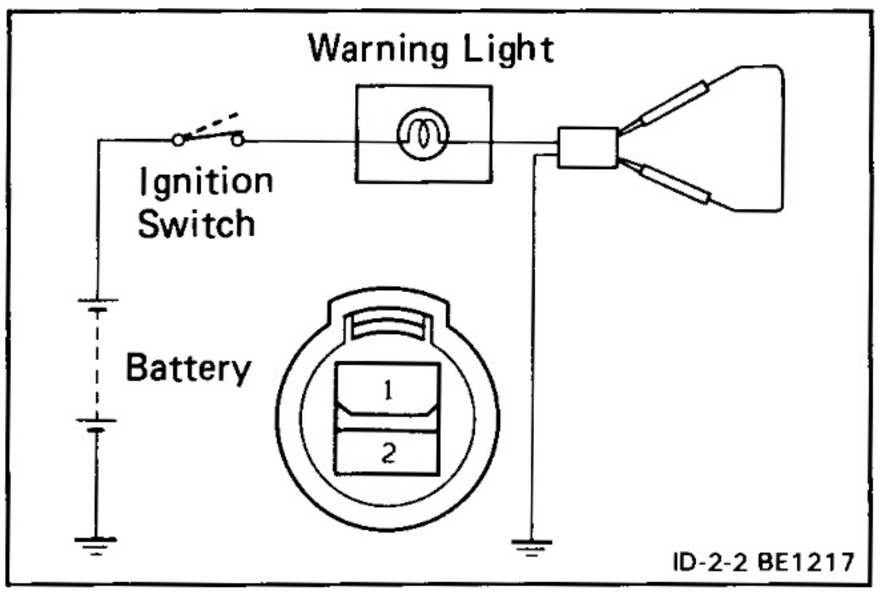

Air Cleaner Warning System

1. INSPECT WARNING LIGHT

(a) Disconnect the connector from the vacuum switch.

Connect the wire harness side connector terminals 1 and 2.

(b) Start the engine. Check that the bulb lights.

If the warning light does not light up, test the bulb.

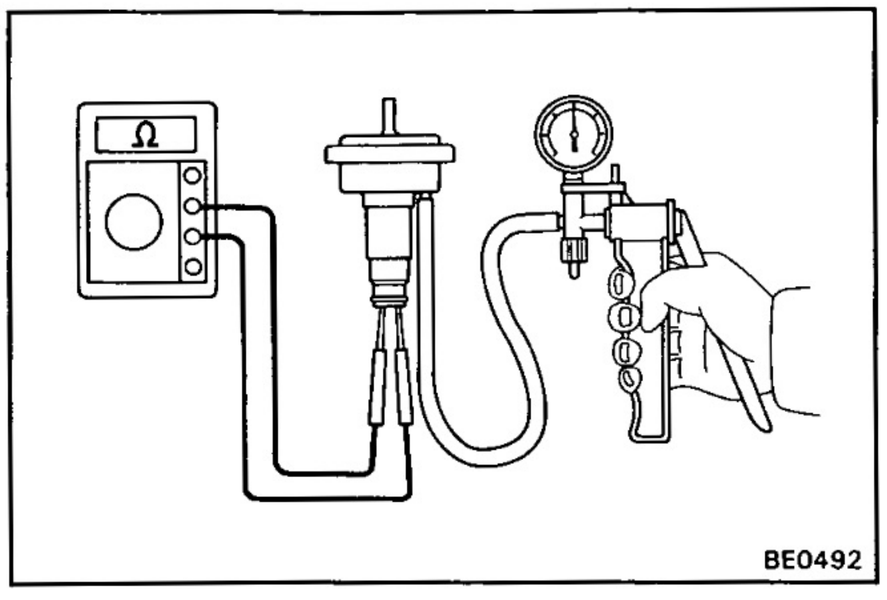

2. INSPECT VACUUM SWITCH

(a) With a vacuum of 29.4 ± 3.7 mmHg (1.157 ± 0.146 in.Hg, 3.9 ± 0.5 kPa) or above, check that there is continuity between terminals.

(b) Check that there is no continuity between terminals with no vacuum.

If operation is not as specified, replace the switch.

Meter Illumination Control System

INSPECT LIGHT CONTROL RHEOSTAT

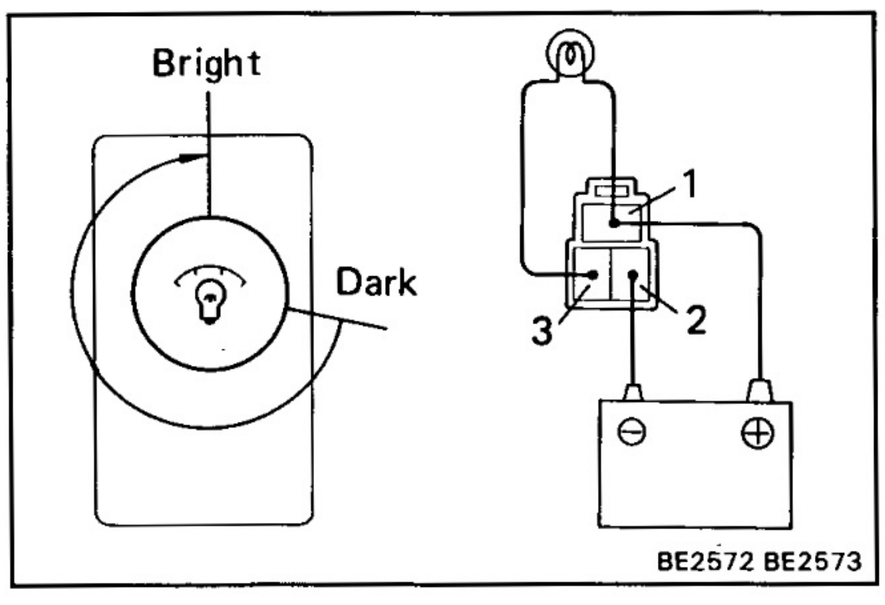

(a) Connect terminals 1 and 3 through a 3.4 watts test bulb.

(b) Connect the positive (+) lead from the battery to terminal 1 and the negative (−) lead to terminal 2.

(c) Gradually turn the rheostat knob to clockwise, check that the test bulb brightness changes from dark to bright.

If operation is not as specified, replace the rheostat.

Turbo Indicator and Warning System

1. INSPECT INDICATOR AND WARNING LIGHT OPERATION (Refer to EM Section of ENGINE Repair Manual)

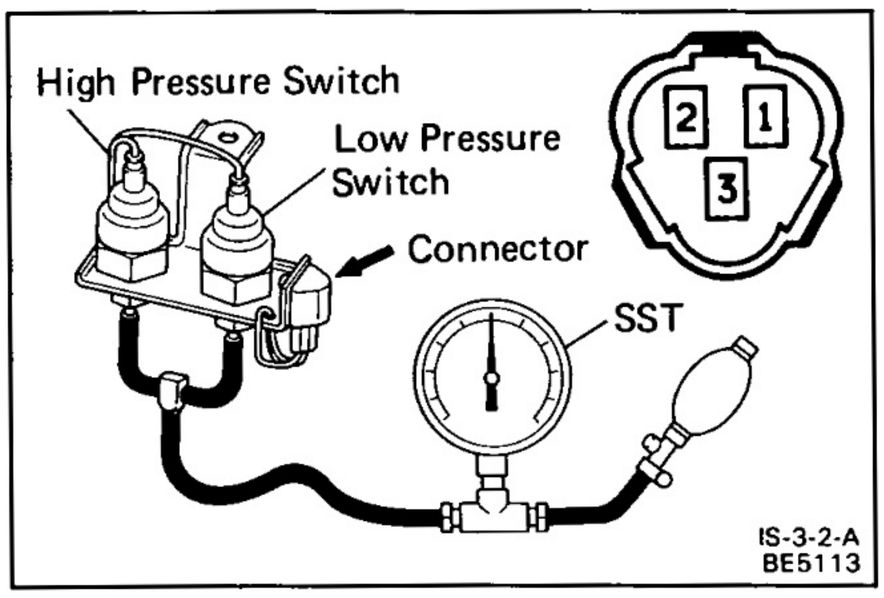

2. INSPECT PRESSURE SWITCH OPERATION

(a) At the 3-way union, disconnect the pressure hose from the compressor elbow and connect a turbocharger pressure gauge (SST).

SST 09992-00241

(b) Check that the low and high pressure switch are continuity between terminals as shown in the chart.

(High Pressure Switch)

Terminal / Condition	1	2	3
No pressure	○——	——○	
Apply 0.84 kg/cm² (11.9 psi, 82.4 kPa) of pressure			

(Low Pressure Switch)

Terminal / Condition	1	2	3
No pressure		○——	——○
Apply 0.14 kg/cm² (2.0 psi, 13.7 kPa) of pressure			

If operation is not as specified, replace the switch.

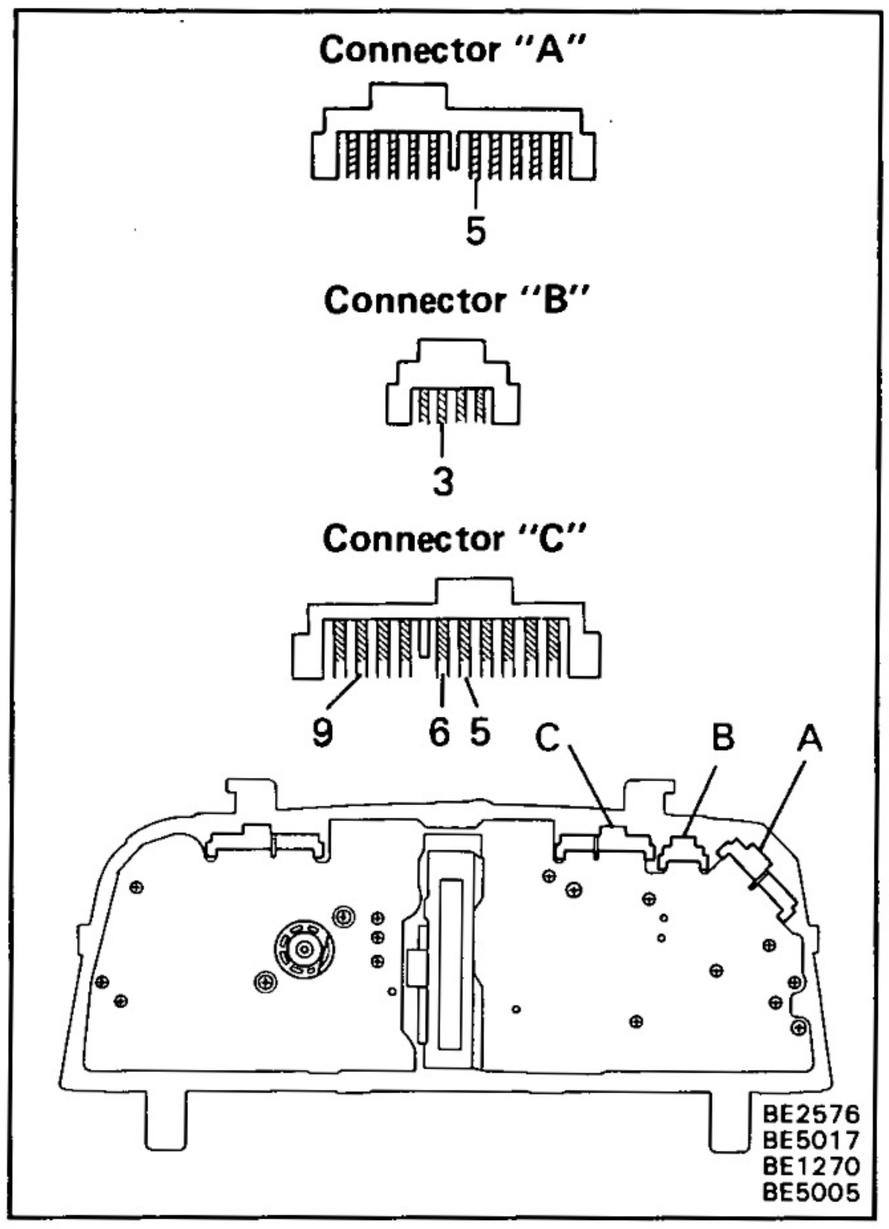

3. INSPECT TURBO INDICATOR AND WARNING LIGHT DRIVE CIRCUIT

(a) Remove the Combination Meter.

(b) Connect the positive (+) lead and negative (—) lead from the battery to combination meter terminals as shown in the chart and check that the LED operation.

Condition	Positive (+) Combination meter terminal	Negative (—) Combination meter terminal	LED condition	
			Green	Ammber
1	(A5)	(B3, C5, C6, C9)	OFF	OFF
2	(A5)	(B3, C5, C9)	ON	OFF
3	(A5)	(B3, C9)	OFF	ON
4	(A5)	(B3, C6, C9)	OFF	ON
5	(A5)	(B1, B3, C9)	ON	ON

If operation is not as specified, replace the combination meter.

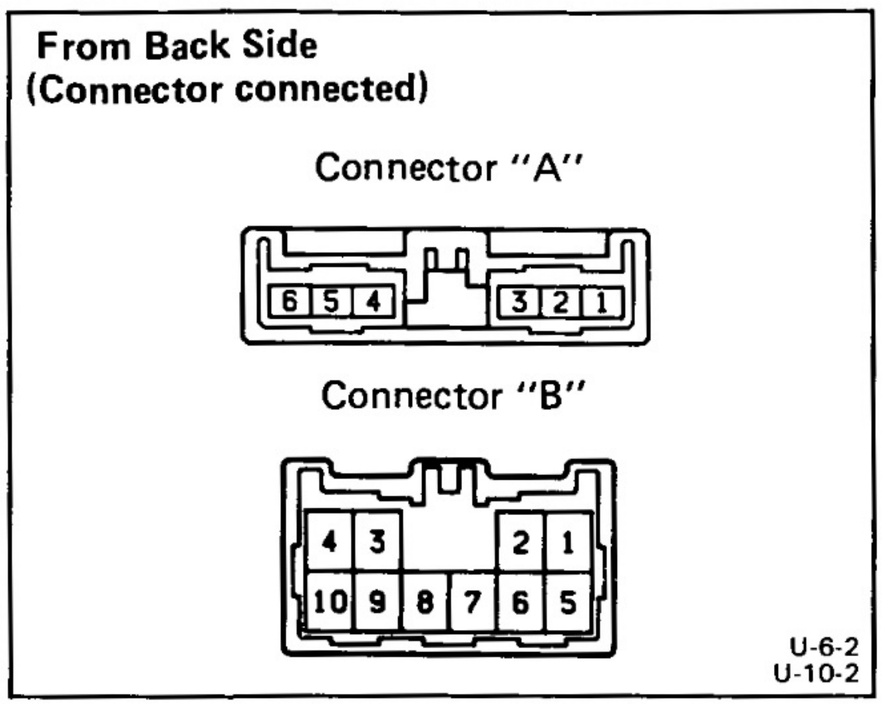

Compass System

1. **INSPECT ACCESSORY METER**
(Circuit)

Connect connector "A" and "B" to accessory meter and inspect connectors from the back side as shown in the chart.

NOTICE: Perform the inspection in a place free from magnetic influence.

Terminal Name	Check for	Tester connection	Condition		Specified value
ACC	Voltage	A1 — A4	Ignition switch turned to ACC or ON		10 — 14 V
TAIL		A3 — A4	Light control switch turned to TAIL or HEAD		10 — 14 V
GROUND	Continuity	A4 — Ground	Constant		Continuity
GND		B4 — Ground	Constant		Continuity
ACC	Voltage	B6 — B4	Ignition switch turned to ACC or ON		10 — 14 V
HX1		B5 — B4	Knob "N" position	Turned fully counter clockwise	6.2 — 6.8 V
				Neutral	3.7 — 4.3 V
				Turned full clockwise	1.2 — 1.8 V
			Knob "E" turned to clockwise and knob "N" turned to neutral position		3.7 — 4.3 V
HY2		B8 — B4	Knob "N" position	Turned fully counter clockwise	0.54 — 0.56 V
				Neutral	0.53 — 0.55 V
				Turned fully clockwise	0.49 — 0.50 V
			Knob "E" turned to clockwise and knob "N" turned to neutral position		0.53 — 0.55 V
HX2		B9 — B4	Knob "N" position	Turned fully counter clockwise	0.54 — 0.56 V
				Neutal	0.53 — 0.55 V
				Turned fully clockwise	0.49 — 0.51 V
			Knob "E" turned to clockwise and knob "N" turned to neutral position		0.53 — 0.55 V
HY1		B10 — B4	Knob "N" position	Turned fully counter clockwise	6.2 — 6.8 V
				Neutal	3.7 — 4.3 V
				Turned fully clockwise	1.2 — 1.8 V
			Knob "E" turned to clockwise and knob "N" turned to neutral position		3.7 — 4.3 V

If the circuit is not as specified, refer to BE-51 wiring diagram and inspect the circuits connected to other parts or wire harness.

Sensor Side

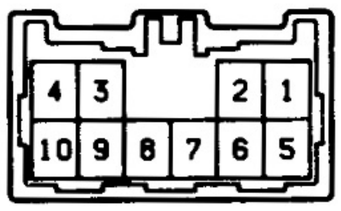

U-10-2

From Back Side
(Connector connected)

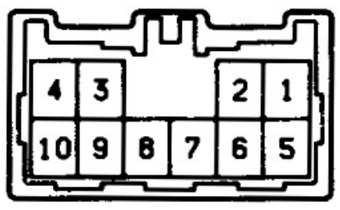

U-10-2

2. INSPECT MAGNET FIELD SENSOR

(Resistance)

Measure the resistance between terminals B5 and B9.

Resistance: 81 — 111 Ω

If resistance value is not as specified, replace the sender gauge.

(Circuit)

Connect connector to sensor and inspect connector from the back side as shown in the chart.

Terminal Name	Check for	Tester connection	Condition		Specified value
SX	Voltage	1 — 4	Face the car north, then turn the car in a circle.	Facing North	Approx. 4.2 V
				Facing East	Approx. 4.0 V
				Facing South	Approx. 3.8 V
				Facing West	Approx. 4.0 V
SY		2 — 4	Face the car north, then turn the car in a circle.	Facing North	Approx. 4.0 V
				Facing East	Approx. 3.8 V
				Facing South	Approx. 4.0 V
				Facing West	Approx. 4.2 V
VDD		3 — 4	Ignition switch turned to ACC		Approx. 8.0 V
ACC		6 — 4	Ignition switch turned to ACC		10 — 14 V
VSS		7 — 4	Ignition switch turned to ACC		Approx. 4.0 V
GND	Continuity	4 — Ground	Constant		Continuity

If circuit is not as specified, refer to BE-51 wiring diagram and inspect the circuits connected to other parts or wire harness.

DEFOGGER SYSTEM

Parts Location

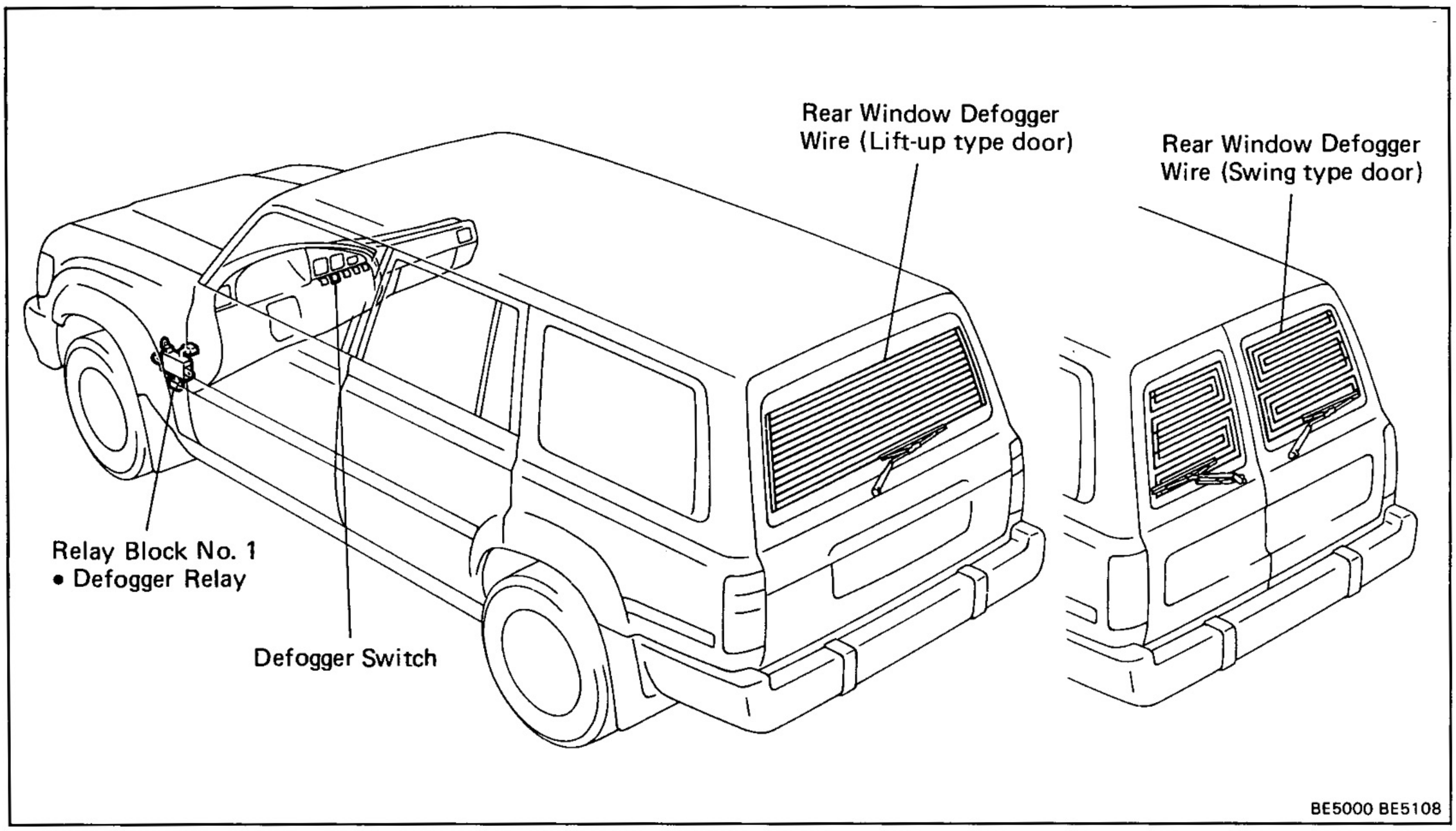

Wiring and Connector Diagrams

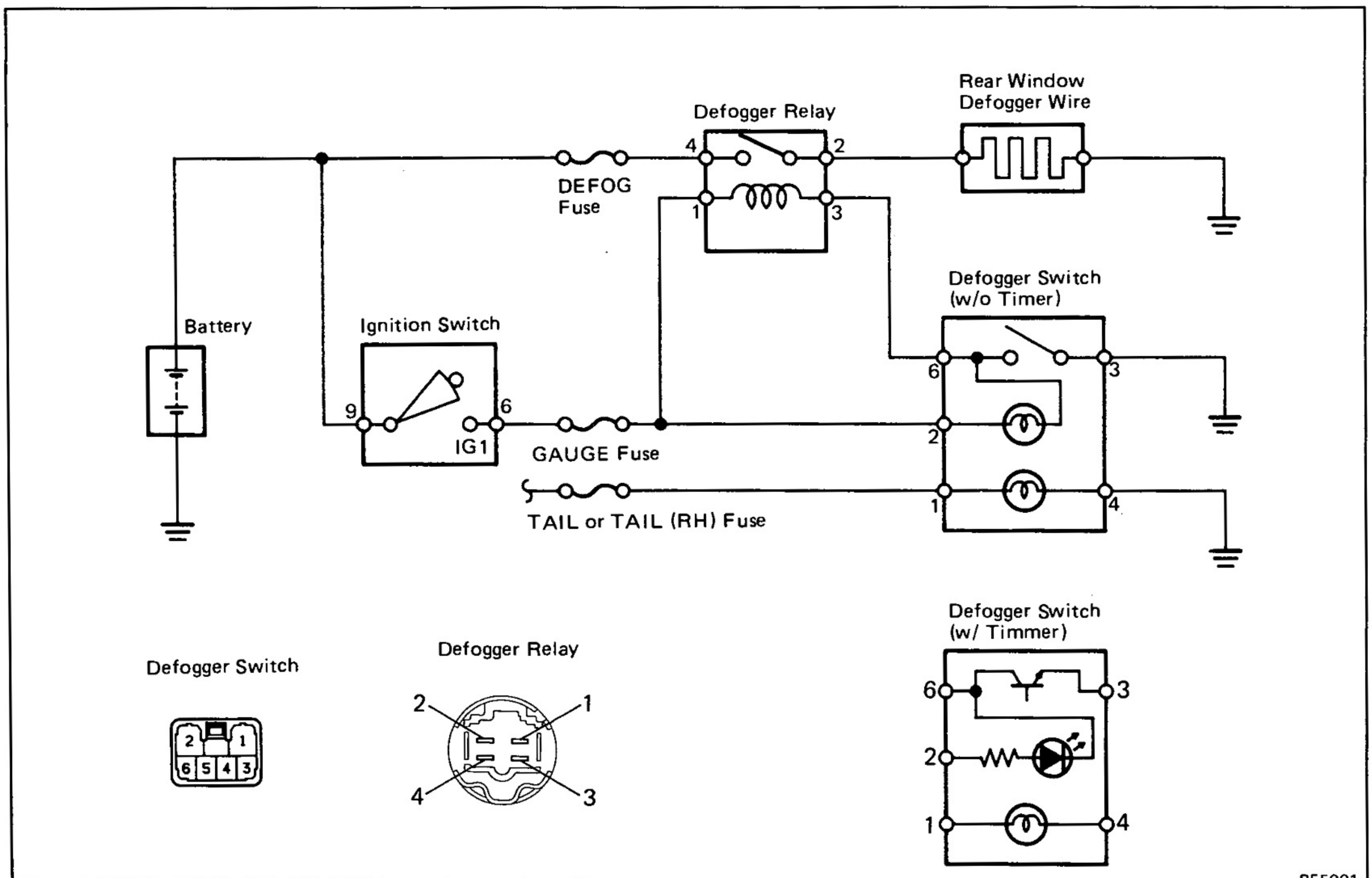

Troubleshooting

Problem	Possible cause	Remedy	Page
Rear window defogger system do not operate	DEFOG fuse blown	Replace fuse and check for short	BE-4, 6
	GAUGE fuse blown	Replace fuse and check for short	BE-4, 6
	Defogger switch faulty	Check switch	BE-72
	Defogger relay faulty	Check relay	BE-73
	Defogger wire broken	Check wires	BE-73
	Wiring or ground faulty	Repair as necessary	

Parts Inspection

1-1. (w/o Timer)
INSPECT DEFOGGER SWITCH
(Continuity)

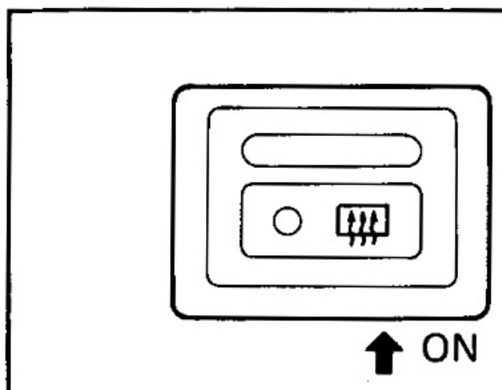

Terminal / Switch position	2	3	6	Illumination 1	Illumination 4
OFF					
ON	●	●	●	●	●

If continuity is not as specified, check the bulb or replace the switch.

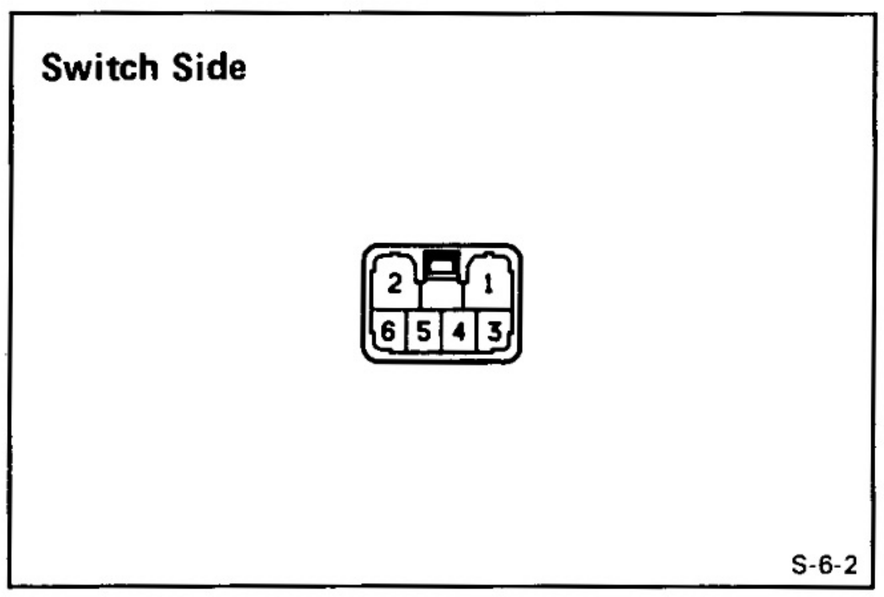

1-2. (w/ Timer)
INSPECT DEFOGGER SWITCH
(Illumination Light/Continuity)

Check that there is continuity between terminals 1 and 4.

If continuity is not as specified, check the bulb.

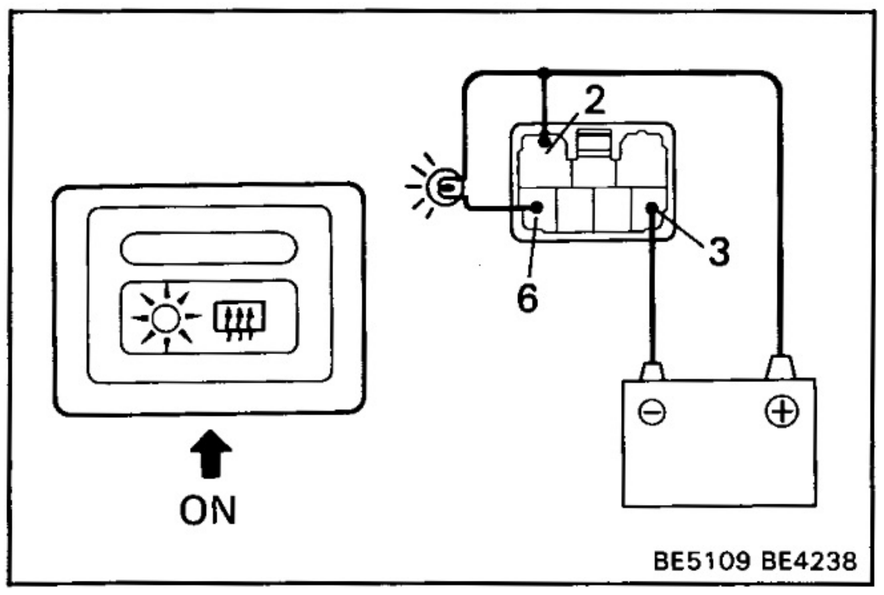

(Timer Operation)

(a) Connect the positive (+) lead from the battery to terminals 2 and the negative (−) lead to terminal 3.

(b) Connect the positive (+) lead from the battery to terminals 6 through a 3.4 watts test bulb.

(c) Push the defogger switch ON, check that the indicator light and test bulb lights up for 12 to 18 minutes, then the indicator light and test bulb lights goes out.

If operation is not as specified, replace the switch.

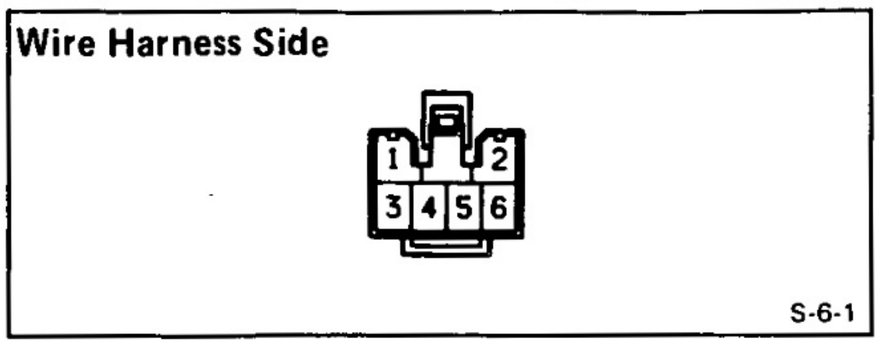

(Timer Circuit)

Disconnect the connector from the switch and inspect the connector on the wire harness side as shown in the chart.

Check for	Tester connection	Condition		Specified value
Continuity	3 — Ground	Constant		Continuity
Voltage	2 — Ground	Ignition switch position	LOCK or ACC	No voltage
			ON	Battery voltage
	6 — Ground	Ignition switch position	LOCK or ACC	No voltage
			ON	Battery voltage
Operation	—	Connect the terminals 6 and 3		Defogger system operation is normal

If the circuit is as specified, replace the switch.

2. INSPECT DEFOGGER RELAY (Continuity)

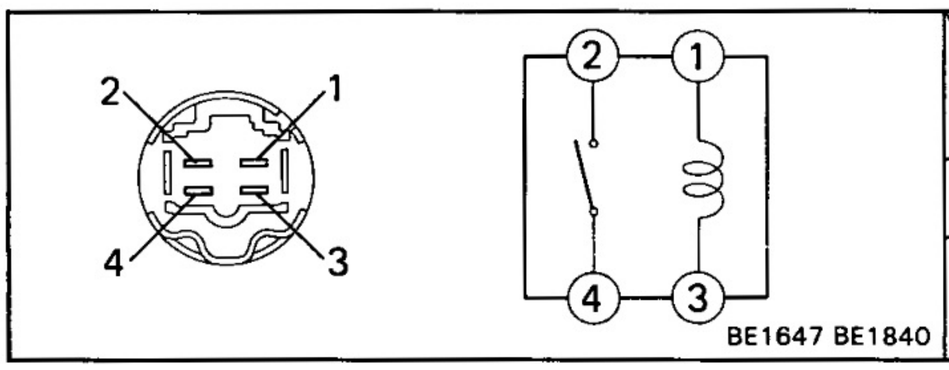

Terminal / Condition	1	2	3	4
Constant	○	∿	○	
Apply battery voltage to terminals 1 and 3.		○		○

If continuity is not as specified, replace the relay.

3. INSPECT DEFOGGER WIRES

NOTICE:

- **When cleaning the glass, use a soft, dry cloth, and wipe the glass in the direction of the wire. Take care not to damage the wires.**
- **Do not use detergents or glass cleaners with abrasive ingredients.**
- **When measuring voltage, wind a piece of tin foil around the top of the negative (—) probe and press the foil against the wire with your finger as shown.**

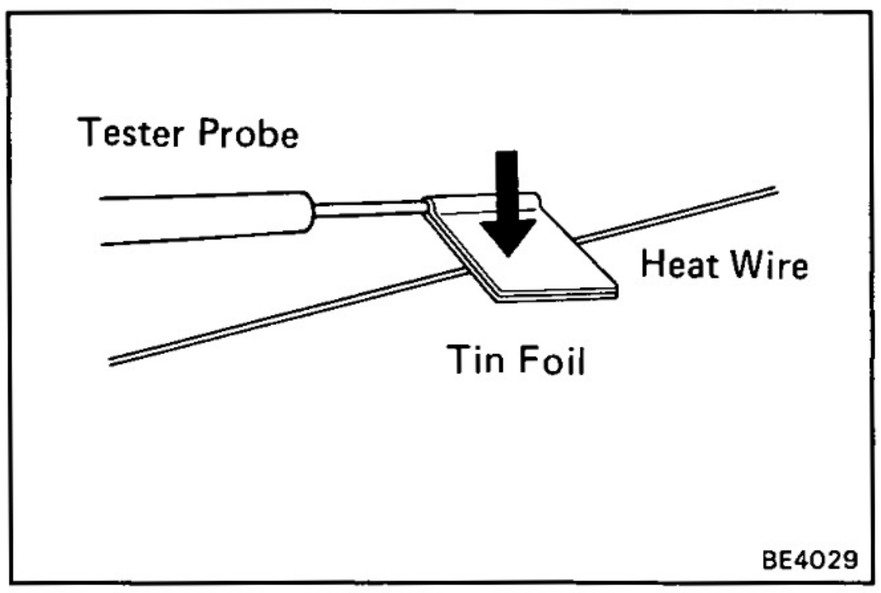

(Wire Breakage)

(a) Turn the ignition switch ON.

(b) Push in the defogger switch.

(c) Inspect the voltage at the center of each heat wire as shown.

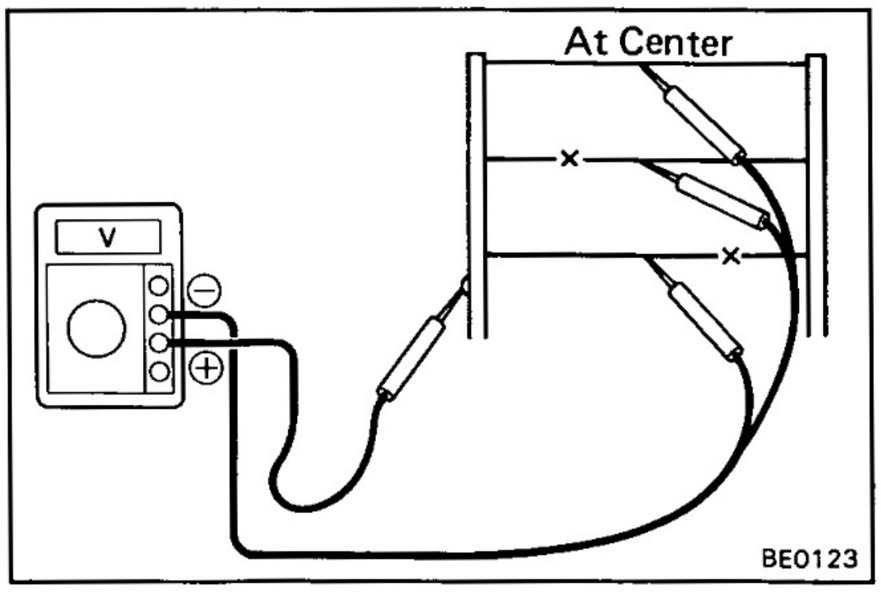

Voltage	Criteria
approx. 5 V	Okey (No break in wire)
approx. 10 V or 0 V	Broken wire

HINT: If there is 10 V, the wire is broken between the center of the wire and positive (+) end. If there is no voltage, the wire is broken between the center of the wire and ground.

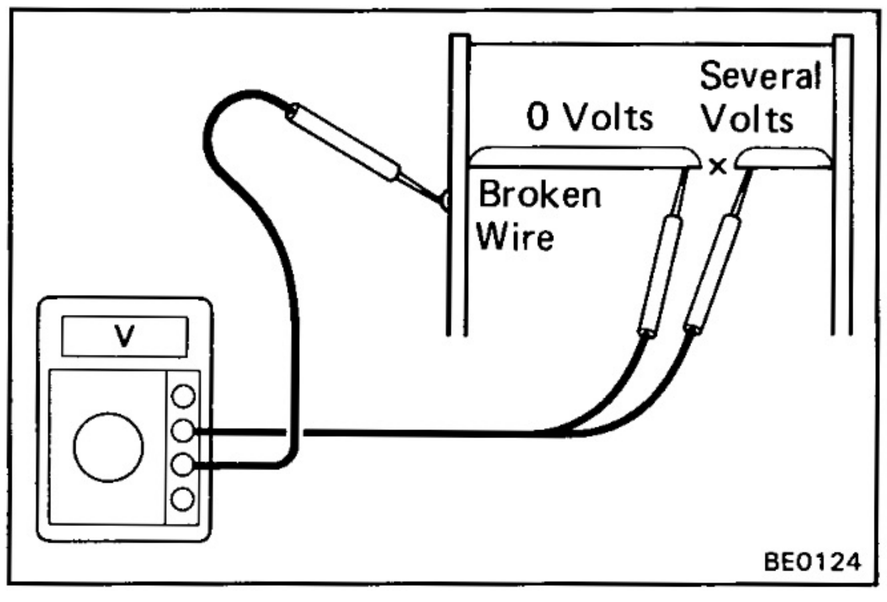

(Wire Breakage Point)

(a) Place the boltmeter positive (+) lead against the defogger positive (+) terminal.

(b) Place the boltmeter negative (—) lead with the foil strip against the heat wire at the positive (+) terminal end and slide it toward the negative (—) terminal end.

(c) The point where the voltmeter deflects from zero to several volts is the place where the heat wire is broken.

HINT: If the heat wire is not broken, the voltmeter indicates 0 volts at the positive (+) end of the heat wire but gradually increases to about 12 volts as the meter probe is moved to the other end.

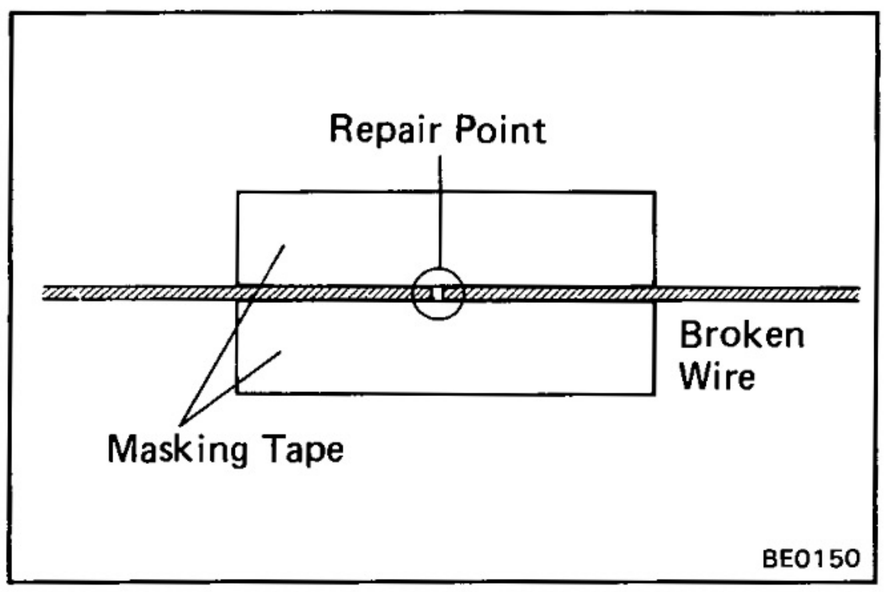

4. REPAIR DEFOGGER WIRES

(a) Clean the broken wire tips with a grease, wax and silicone remover.

(b) Place the masking tape along both sides of the wire to be repaired.

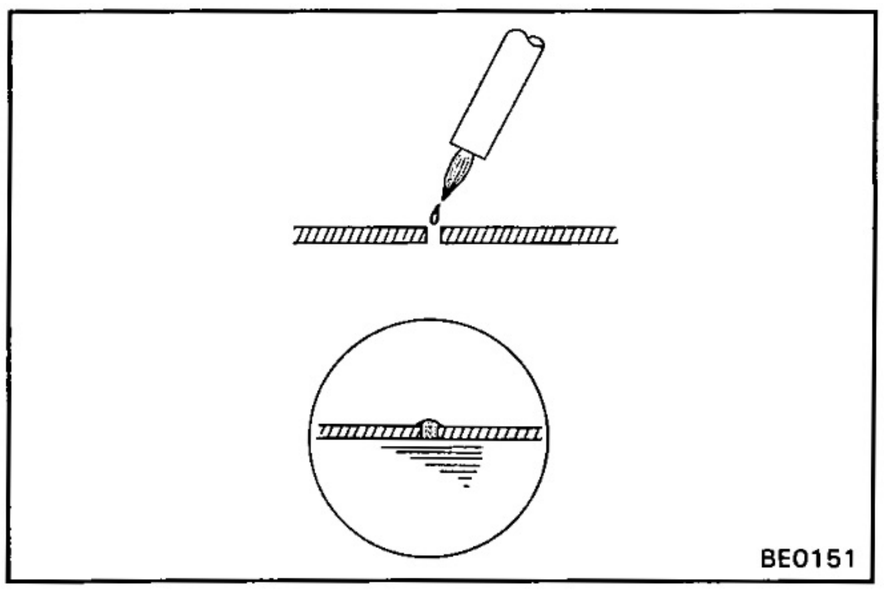

(c) Thoroughly mix the repair agent (Dupont paste No.4817 or equivalent).

(d) Using a fine tip brush, apply a small amount to the wire.

(e) After a few minutes, remove the masking tape.

(f) Allow the repair to stand at least 24 hours.

POWER WINDOW CONTROL SYSTEM

Parts Location

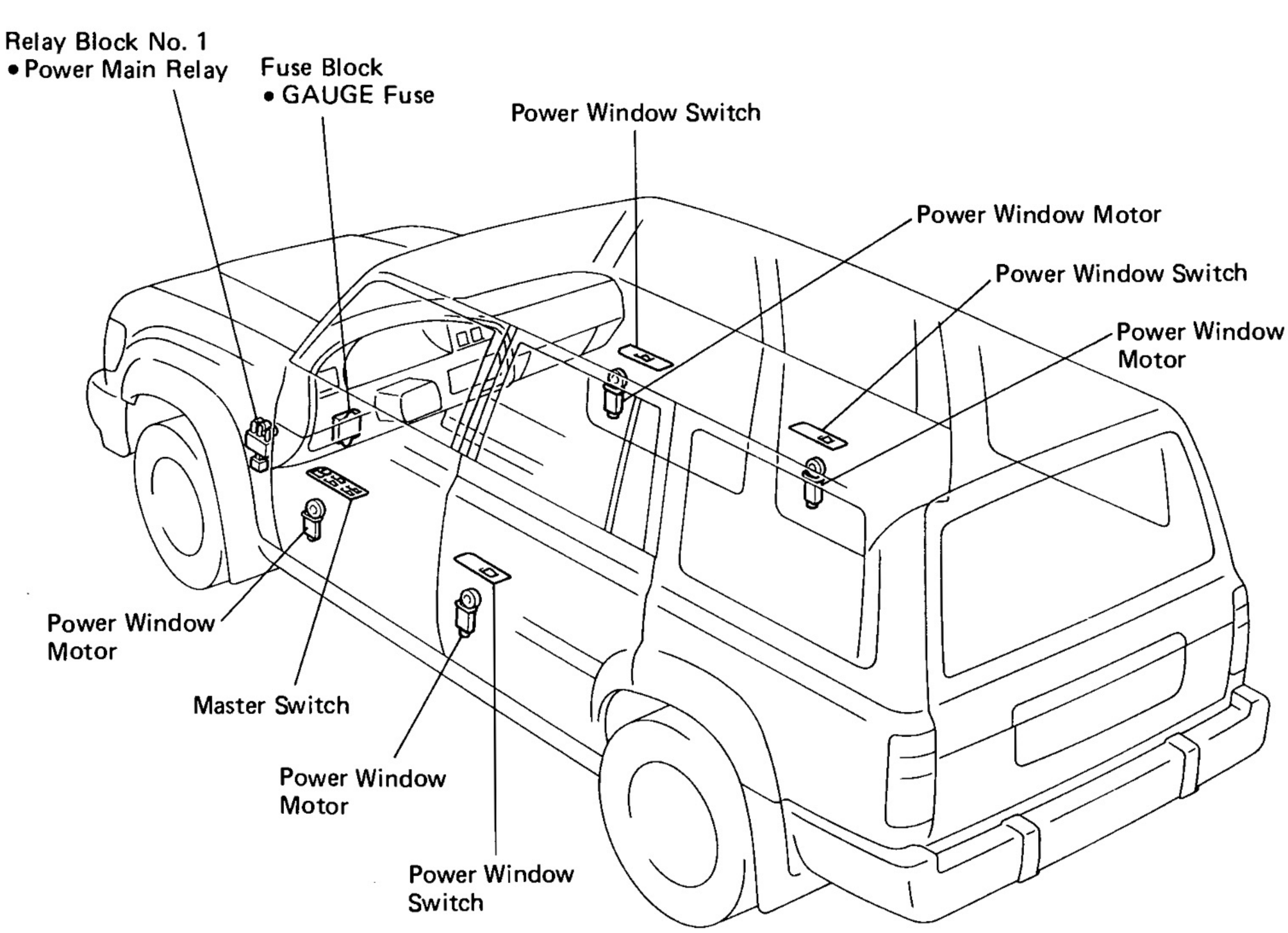

BE5088

Wiring and Connector Diagrams

HINT: The numbers in ( ) mean for RHD vehicles.

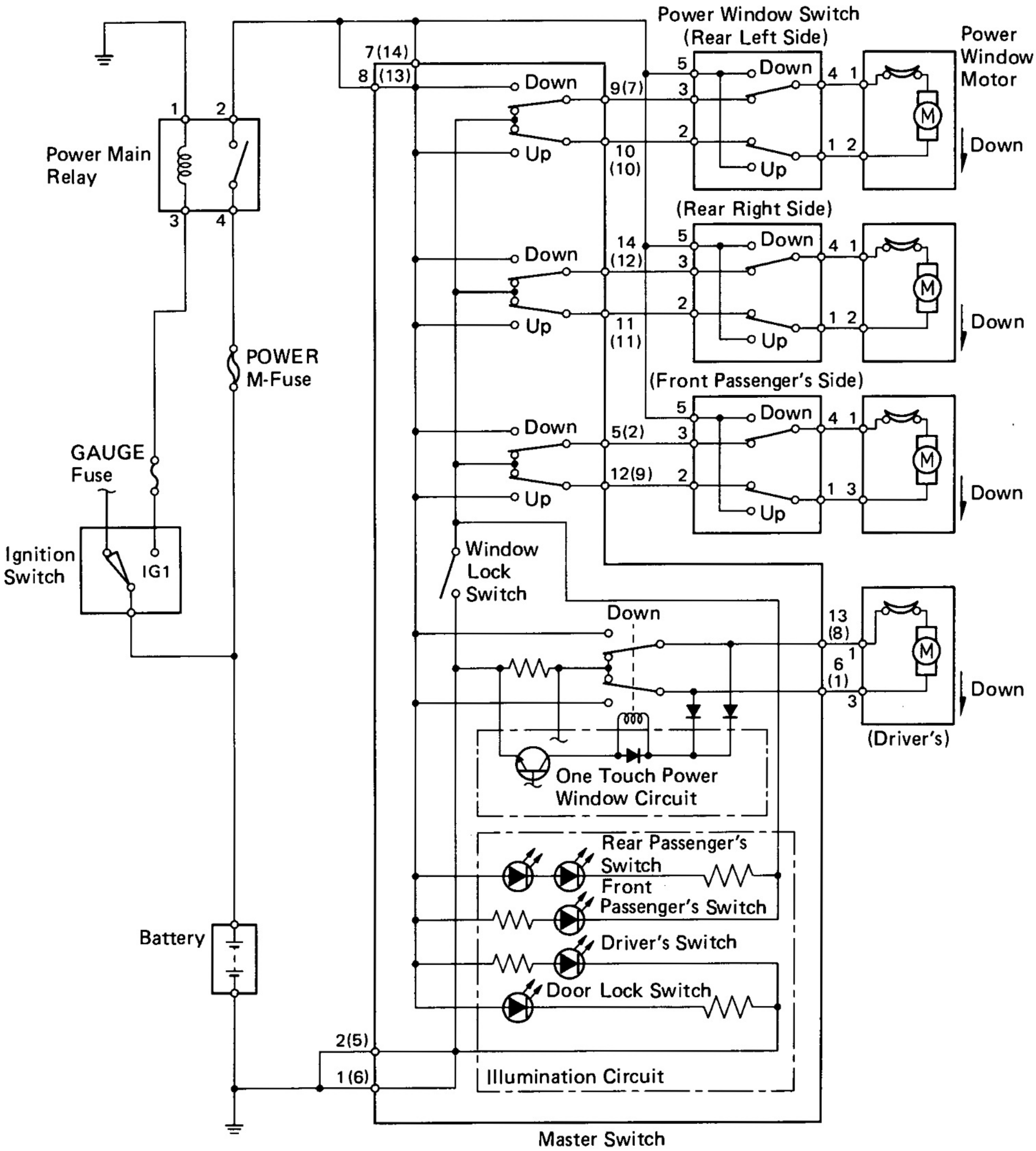

Master Switch

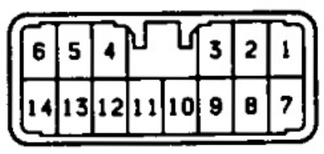

Power Window Switch

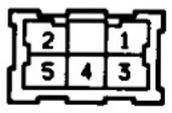

Power Window Motor

(Front) (Rear)

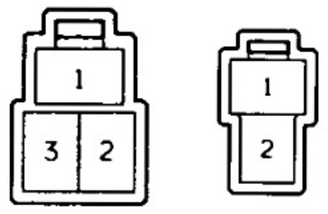

Power Main Relay

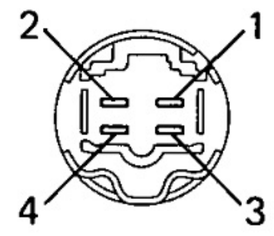

The POWER SOURCE CIRCUIT has been simplified. For full details, see pages BE-10, 11.

BE5002

S-14-2B G-5-2-A H-3-2 H-2-2 BE1647

Troubleshooting

Problem	Possible cause	Remedy	Page
Power window does not operate at all	GAUGE fuse blown POWER fuse blown Power main relay faulty Wiring or ground faulty	Replace fuse and check for short Replace fuse and check for short Check relay Repair as necessary	BE-4, 6 BE-4, 6 BE-82
One-touch power window does not operate	Power window master switch faulty	Check switch	BE-77
Only one window does not operate	Power window master switch faulty Power window switch faulty Power window motor faulty Wiring or ground faulty	Check switch Check switch Check motor Repair as necessary	BE-77 BE-80 BE-80

Parts Inspection

1. INSPECT SWITCHES (Master Switch/Continuity)

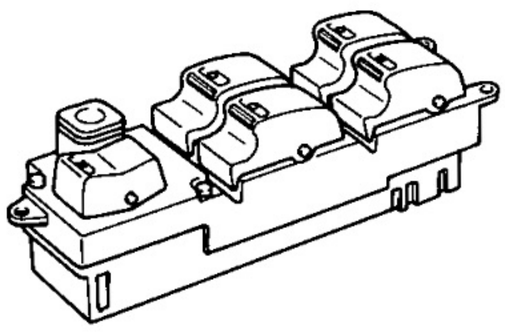

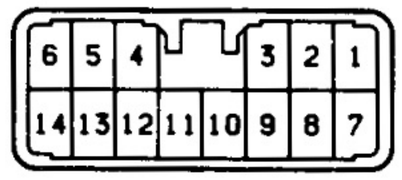

BE2594 S-14-2-B

Window operation		Front								Rear							
		Driver's				Passenger's				Left				Right			
Terminal	LHD	1 or 2	6	7 or 8	13	1 or 2	5	7 or 8	12	1 or 2	7 or 8	9	10	1 or 2	7 or 8	11	14
Switch position	RHD	5 or 6	1	13 or 14	8	5 or 6	2	13 or 14	9	5 or 6	13 or 14	7	10	5 or 6	13 or 14	11	12
Window unlock	UP		○—○	○—○	○	○—○		○—○			○—○	○—○			○—○		
	OFF	○—○	○—○		○	○—○			○	○—○	○—○	○		○—○		○—○	
	DOWN	○—○	○—○	○—○	○		○—○	○—○		○—○	○—○		○	○—○	○—○		
Window lock	UP		○—○	○—○	○			○—○			○—○	○—○			○—○		
	OFF	○—○	○—○		○		○—○		○			○—○				○—○	
	DOWN	○—○	○—○	○—○	○		○—○	○			○—○	○			○—○		○

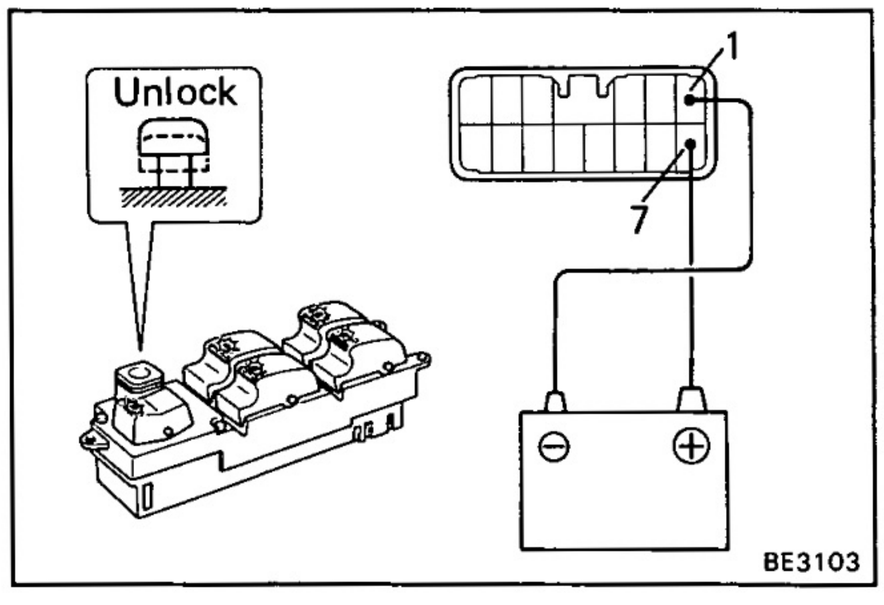

BE3103

If continuity is not as specified, replace the master switch.

(Master Switch: Illumination/Operation)

LHD:

(a) Set the window lock switch to the unlock position.

(b) Connect the positive (+) lead from the battery to terminal 7 and the negative (—) lead to terminal 1, check that all the illuminations light up.

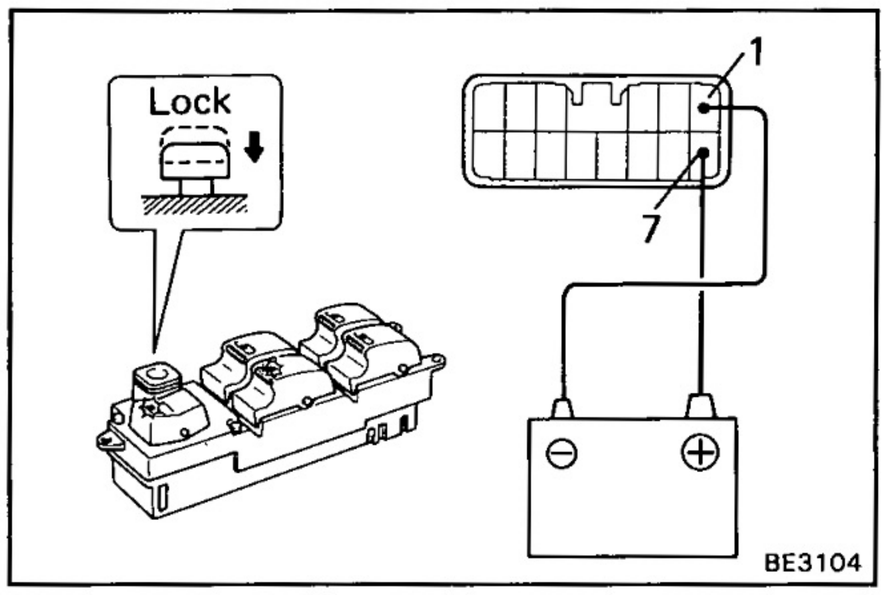

(c) Set the window lock switch to the lock position, check that the passenger's illumination go out.

If operation is not as specified, replace the master switch.

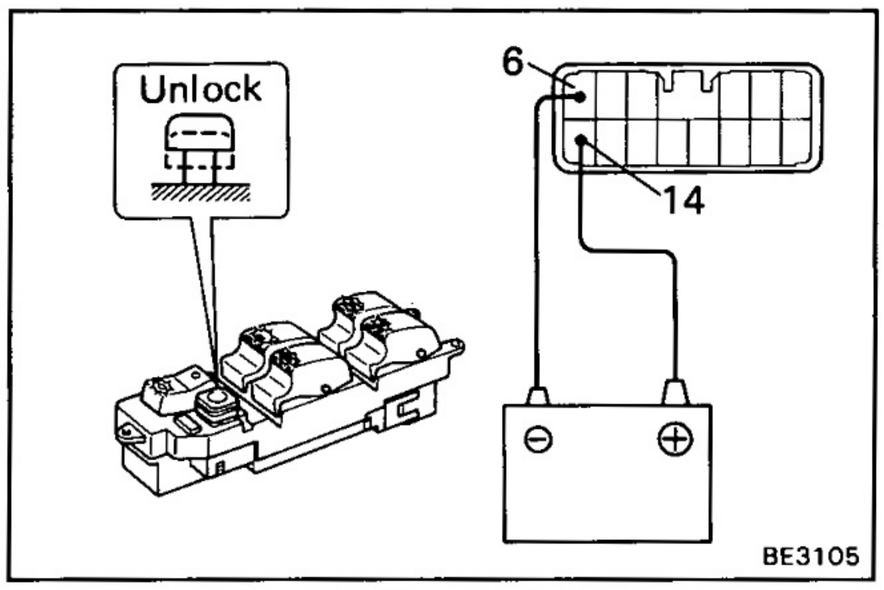

RHD:

(a) Set the window lock switch to the unlock position.

(b) Connect the positive (+) lead from the battery to terminal 14 and the negative (—) lead to terminal 6, check that all the illuminations light up.

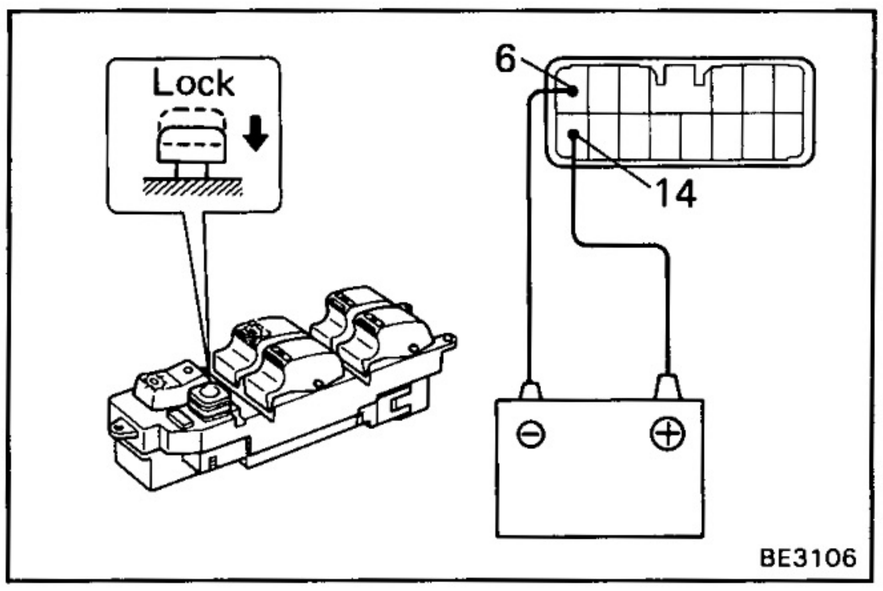

(c) Set the window lock switch to the lock position, check that all the passenger's illuminations go out.

If operation is not as specified, replace the master switch.

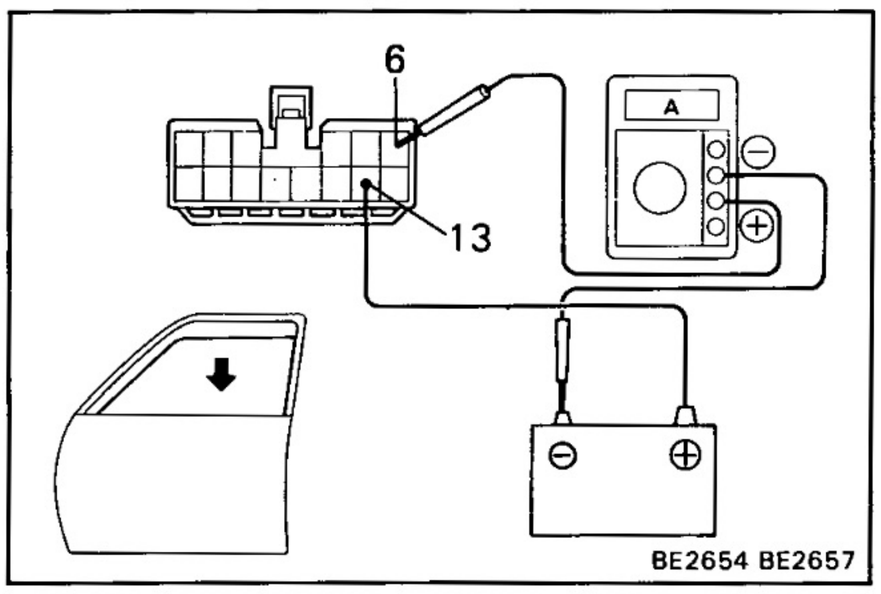

(Master Switch: One Touch Power Window System/ Current of Circuit)

LHD:

Inspection using an ammeter

(a) Disconnect the connetor from the master switch.

(b) Connect the positive (+) lead from the ammeter to terminal 6 on the wire harness side connector and the negative (—) lead to negative (—) terminal of the battery.

(c) Connect the positive (+) lead from the battery to terminal 13 on the wire harness side.

(d) As the window goes down, check that the current flows approximately 7 amperes.

(e) Check that the current increases approximately 14.5 amperes or more when the window stops going down.

HINT: The circuit breaker opens some 4 — 40 seconds after the window stops going down, so that check must be made before the circuit breaker operates.

If the operation is as specified, replace the master switch.

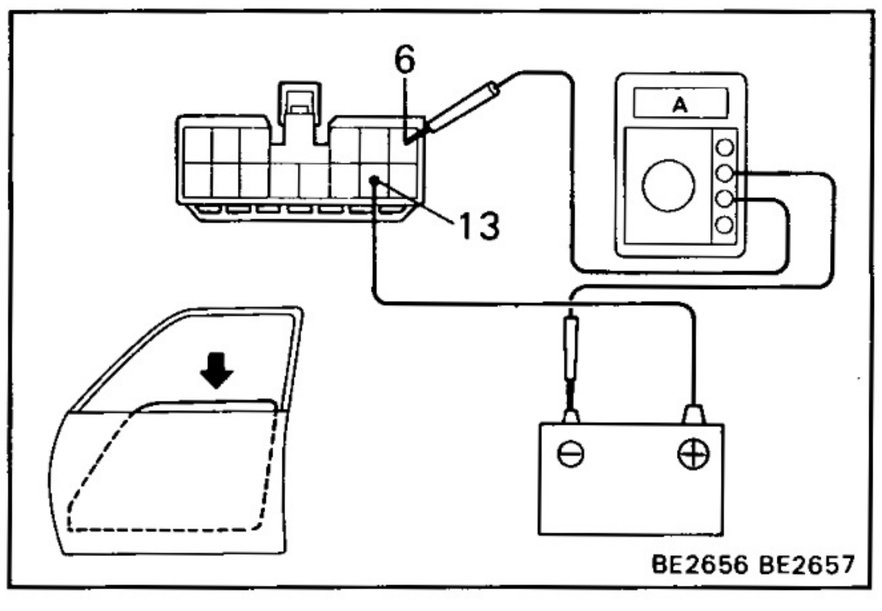

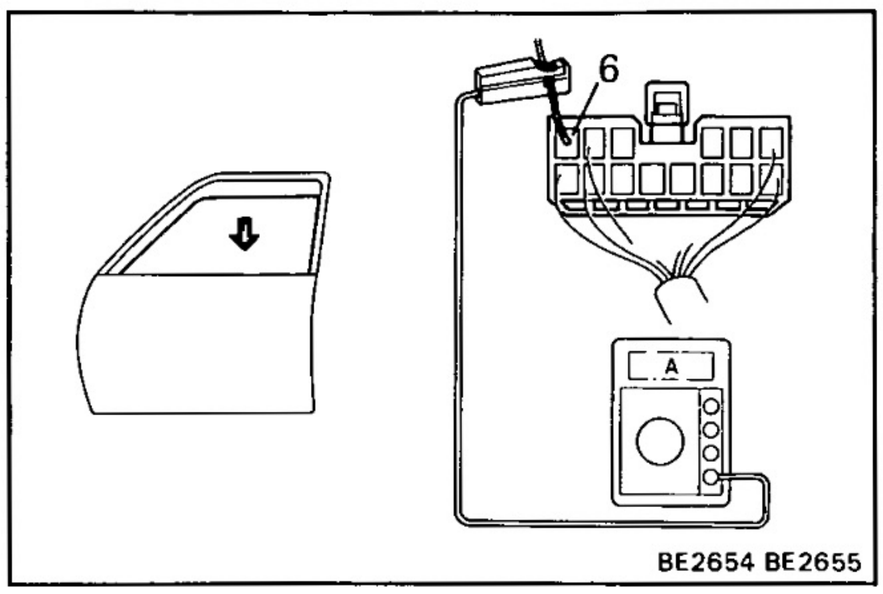

Inspection using an ammeter with a current-measuring probe.

(a) Remove the master switch with connector connected.

(b) Attach a current-measuring probe to terminal 6 of the wire harness.

(c) Turn the ignition switch ON and set the power wind switch in the down position.

(d) As the window goes down, check that the current flows approximately 7 amperes.

(e) Check that the current increases approximately 14.5 amperes or more when the window stops going down.

HINT: The circuit breaker opens some 4 — 40 seconds after the window stops going down, so that check must be made before the circuit breaker operates.

If operation is as specified, replace the master switch.

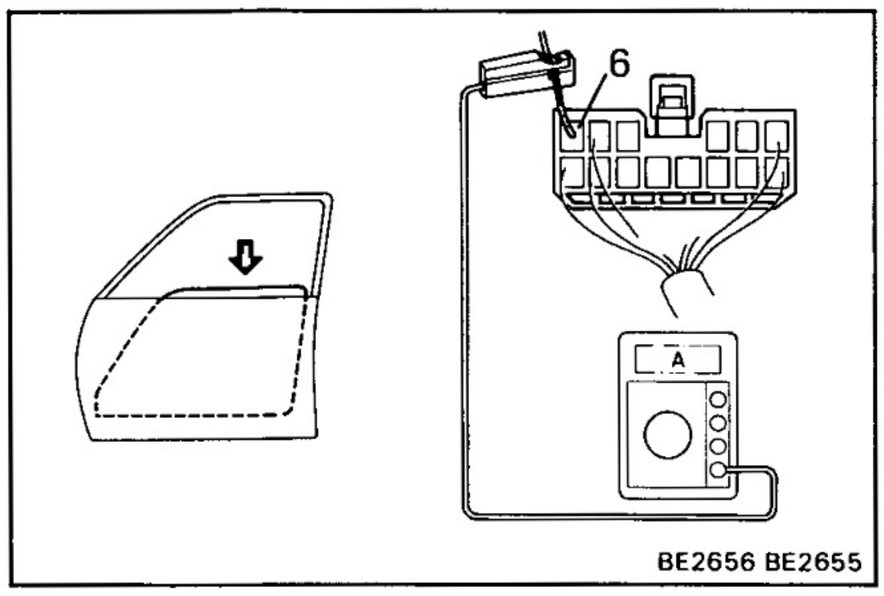

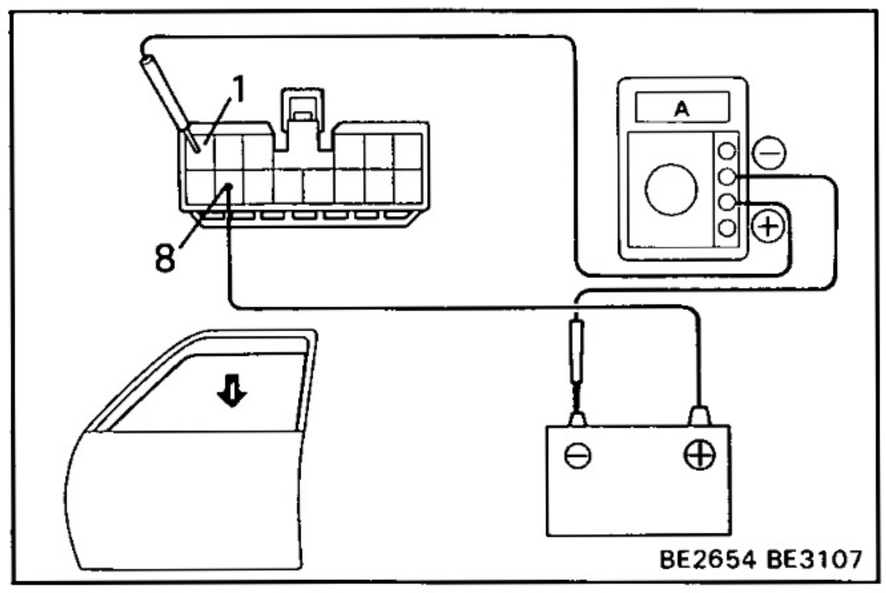

RHD:

Inspection using an ammeter

(a) Disconnect the connetor from the master switch.

(b) Connect the positive (+) lead from the ammeter to terminal 1 on the wire harness side connector and the negative (—) lead to negative (—) terminal of the battery.

(c) Connect the positive (+) lead from the battery to terminal 8 on the wire harness side.

(d) As the window goes down, check that the current flows approximately 7 amperes.

(e) Check that the current increases approximately 14.5 amperes or more when the window stops going down.

HINT: The circuit breaker opens some 4 — 40 seconds after the window stops going down, so that check must be made before the circuit breaker operates.

If operation is as specified, replace the master switch.

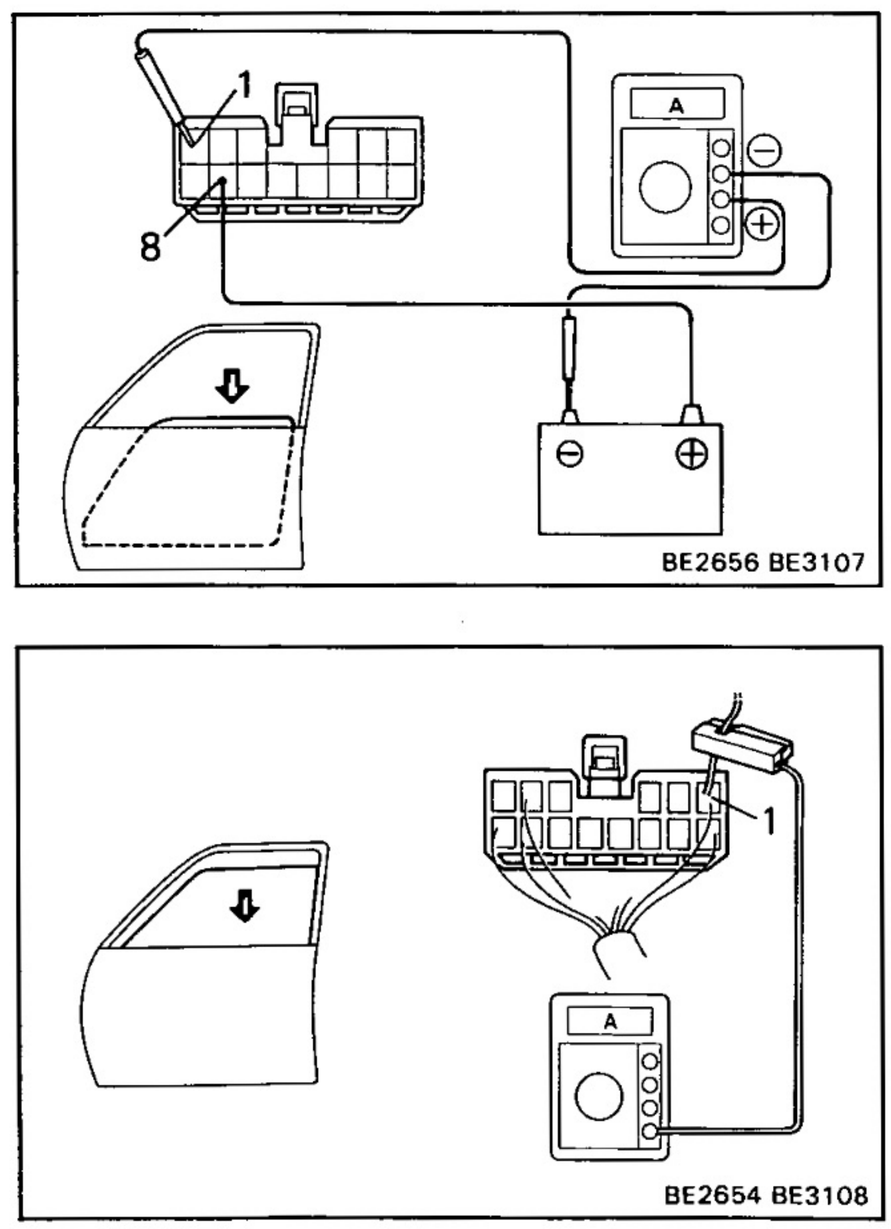

Inspection using an ammeter with a current-measuring probe.

(a) Remove the master switch with connector connected.

(b) Attach a current-measuring probe to terminal 1 of the wire harness.

(c) Turn the ignition switch ON and set the power wind switch in the down position.

(d) As the window goes down, check that the current flows approximately 7 amperes.

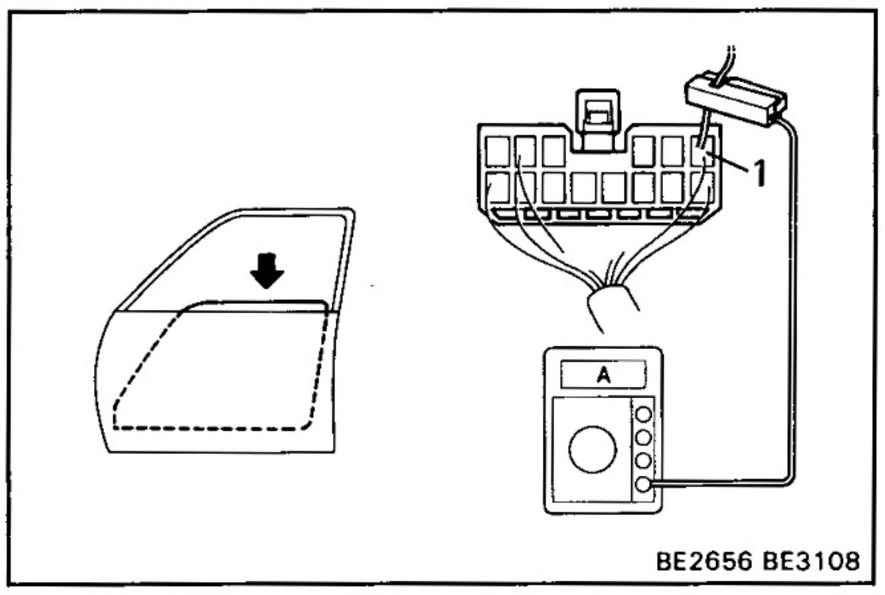

(e) Check that the current increases approximately 14.5 amperes or more when the window stops going down.

HINT: The circuit breaker opens some 4 — 40 seconds after the window stops going down, so that check must be made before the circuit breaker operates.

If operation is as specified, replace the master switch.

(Power Window Switch/Continuity)

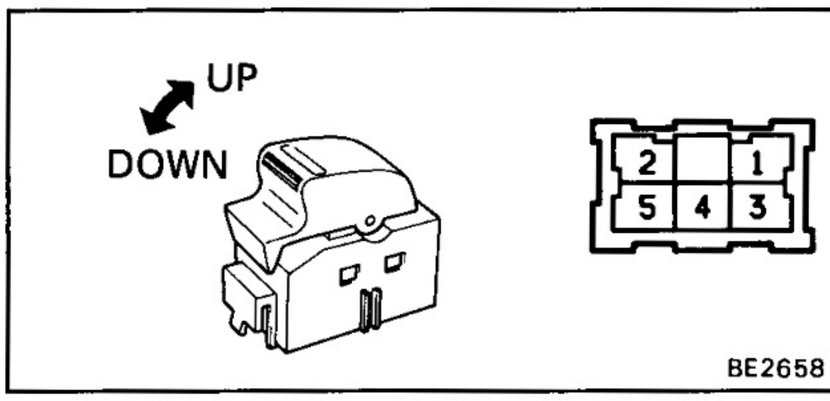

Switch position \ Terminal	1	2	3	4	5
UP	○				○
			○	○	
OFF	○	○	○	○	
DOWN	○	○		○	○

If continuity is not as specified, replace the switch.

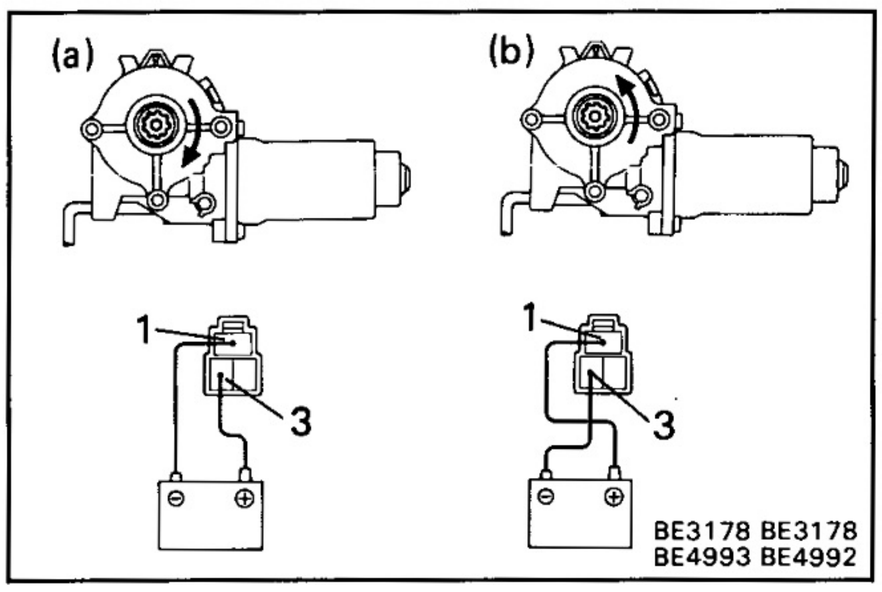

2. INSPECT POWER WINDOW MOTOR

(Left Side Door Motor/Motor Operation)

Front Door:

(a) Connect the positive (+) lead from the battery to terminal 3 and the negative (—) lead to terminal 1, check that the motor turns clockwise.

(b) Reverse the polarity, check that the motor turns counterclockwise.

If operation is not as specified, replace the motor.

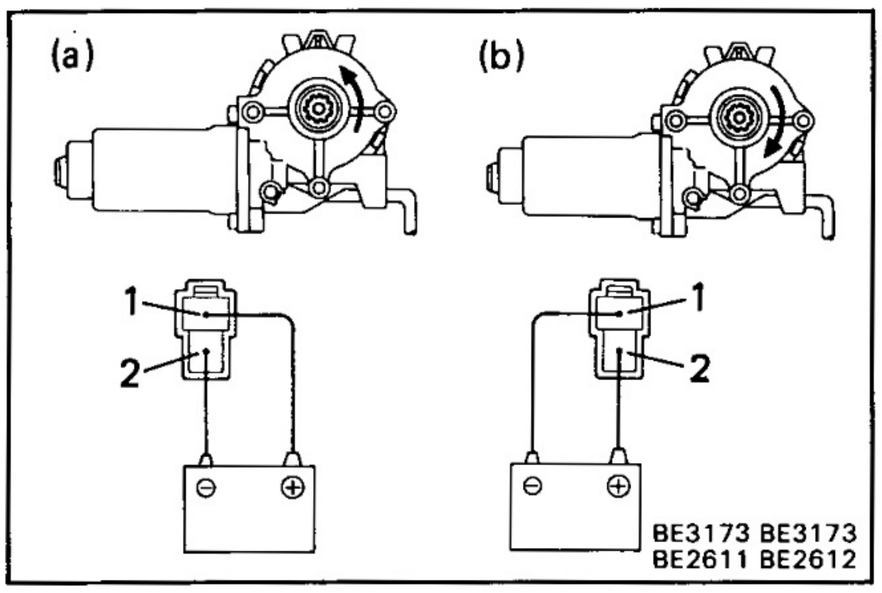

Rear Door:

(a) Connect the positive (+) lead from the battery to terminal 1 and the negative (—) lead to terminal 2, check that the motor turns counterclockwise.

(b) Reverse the polarity, check that the motor turns clockwise.

If operation is not as specified, replace the motor.

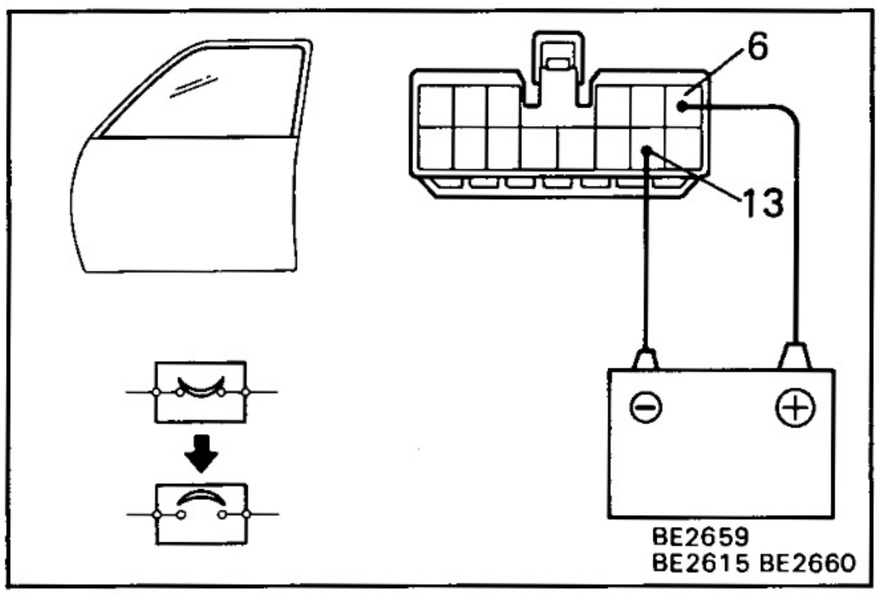

(Left Side Door Motor/Circuit Breaker Operation)

Driver's Door:

(a) Disconnect the connector from the master switch.

(b) Connect the positive (+) lead from the battery to terminal 6 and the negative (—) lead to terminal 13 on the wire harness side connector and raise the window to full closed position.

(c) Continue to apply voltage, check that there is a circuit breaker operation noise within approximately 4 to 40 seconds.

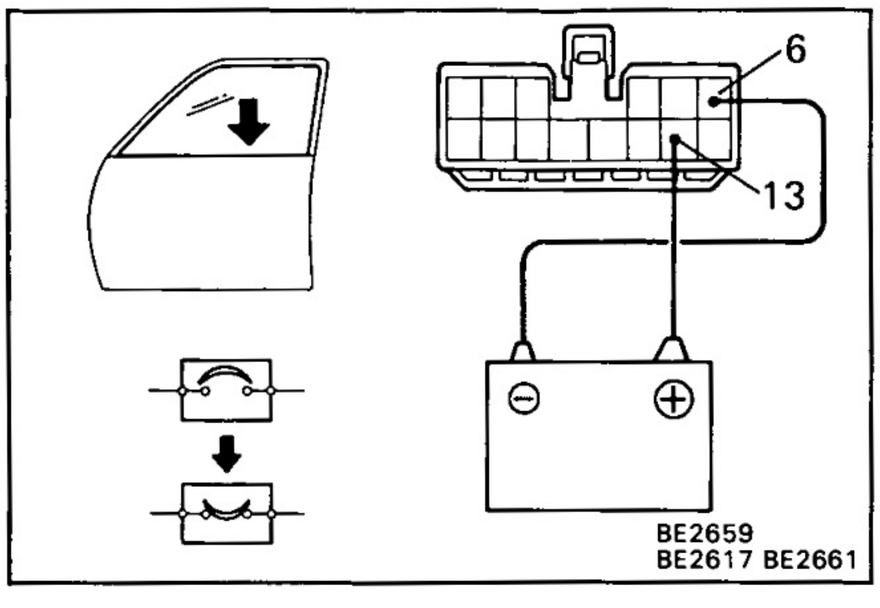

(d) Reverse the polarity, check that the window begins to descend within approximately 60 seconds.

If operation is not as specified, replace the motor.

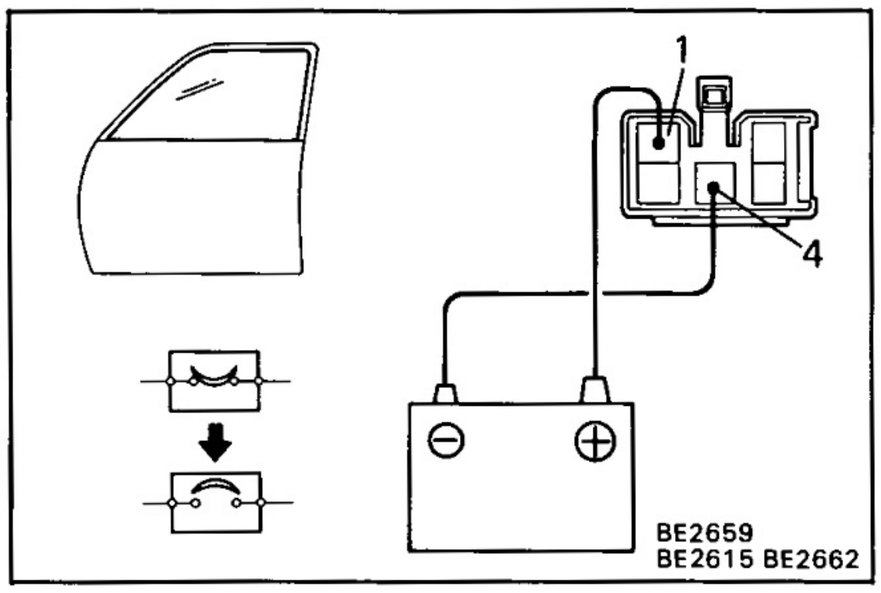

Passenger's Door:

(a) Disconnect the connector from the power window switch.

(b) Connect the positive (+) lead from the battery to terminal 1 and the negative (—) lead to terminal 4 on the wire harness side connector, and raise the window to full closed position.

(c) Continue to apply voltage, check that there is a circuit breaker operation noise within approximately 4 to 40 seconds.

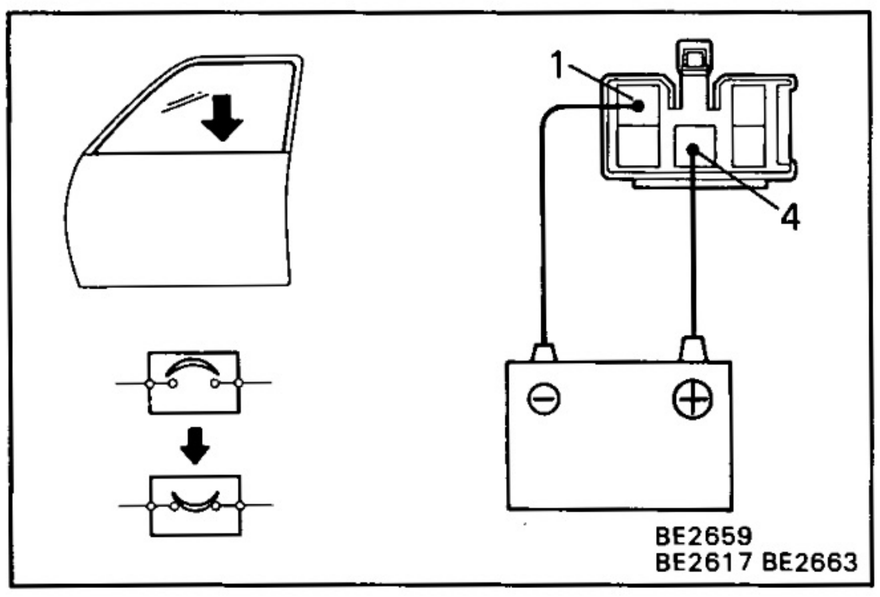

(d) Reverse the polarity, check that the window begins to descend within approximately 60 seconds.

If operation is not as specified, replace the motor.

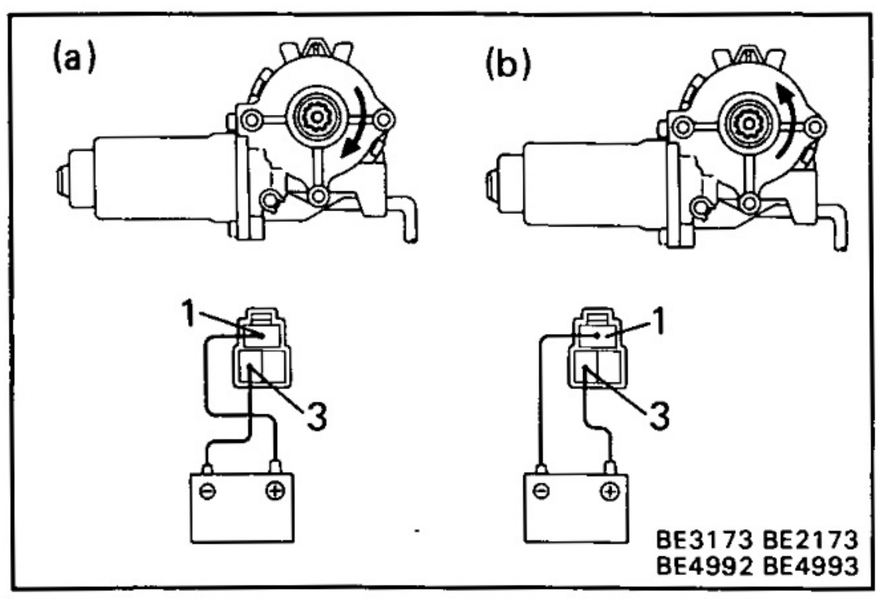

(Right Side Door Motor/Motor Operation)

Front Door:

(a) Connect the positive (+) lead from the battery to terminal 1 and the negative (—) lead to terminal 3, check that the motor turns clockwise.

(b) Reverse the polarity, check that the motor turns counterclockwise.

If operation is not as specified, replace the motor.

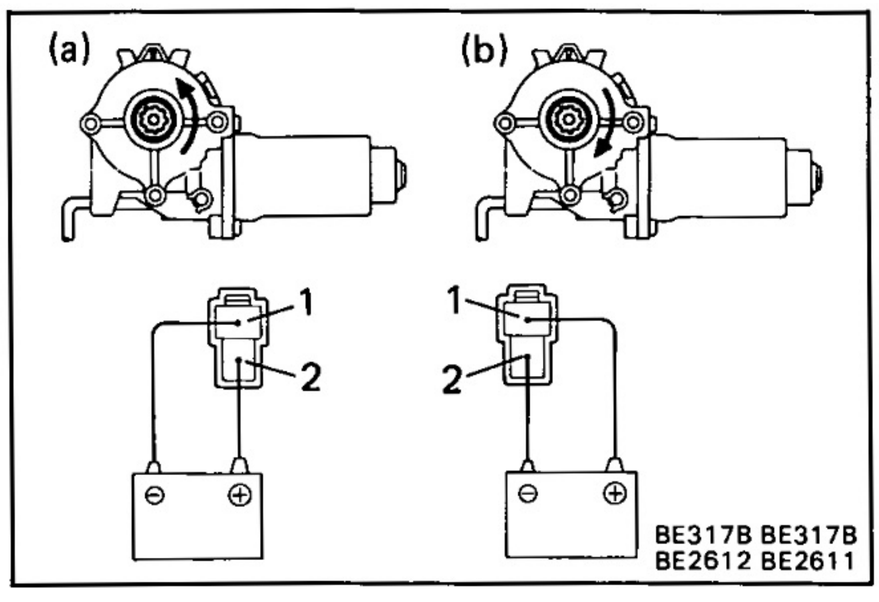

Rear Door:

(a) Connect the positive (+) lead from the battery to terminal 2 and the negative (—) lead to terminal 1, check that the motor turns counterclockwise.

(b) Reverse the polarity, check that the motor turns clockwise.

If operation is not as specified, replace the motor.

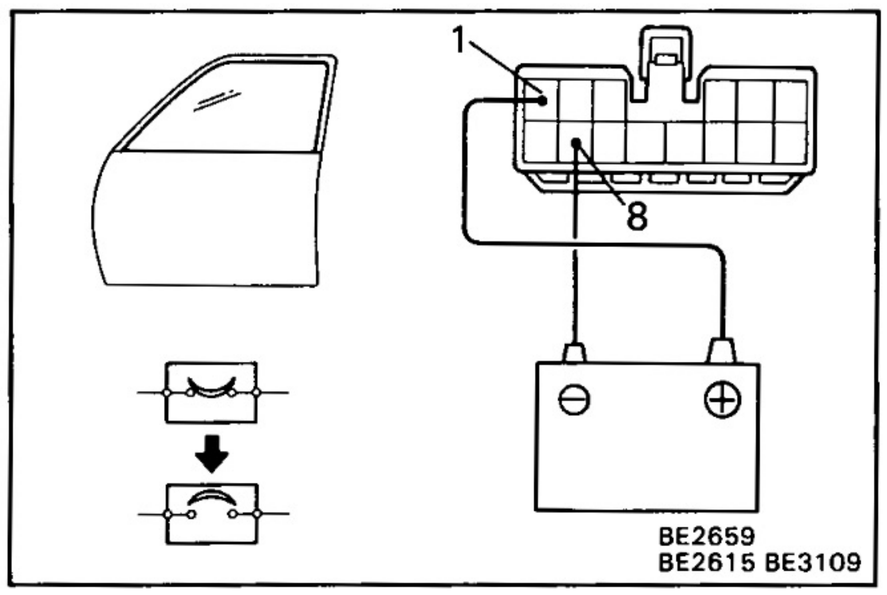

(Right Side Door Motor/Circuit Breaker Operation)

Driver's Door:

(a) Disconnect the connector from the master switch.

(b) Connect the positive (+) lead from the battery to terminal 1 and the negative (—) lead to terminal 8 on the wire harness side connector, and raise the window to full closed position.

(c) Continue to apply voltage, check that there is a circuit breaker operation noise within approximately 4 to 40 seconds.

(d) Reverse the polarity, check that the window begins to descend within approximately 60 seconds.

If operation is not as specified, replace the motor.

Passenger's Door:

See Left Side Door Motor on page BE-80.

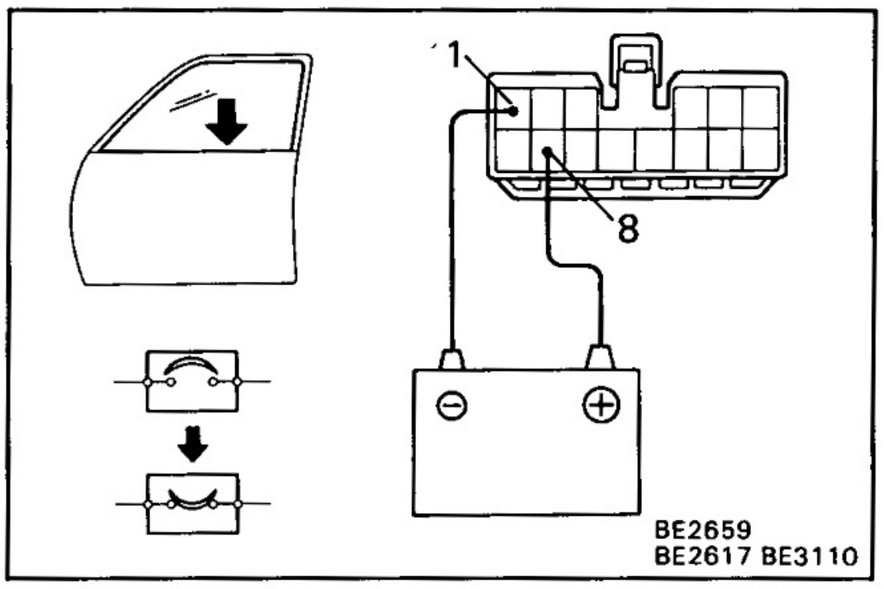

3. INSPECT POWER MAIN RELAY

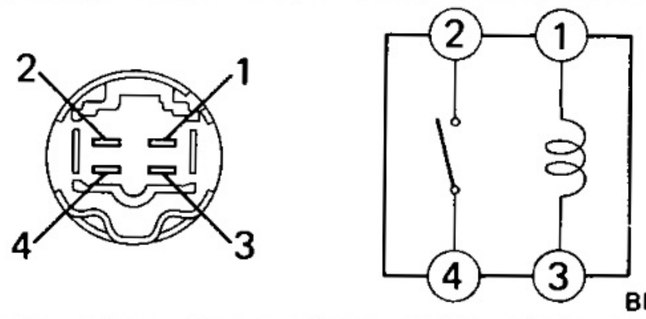

Terminal / Condition	1	2	3	4
Constant	○	⌇	○	
Apply battery voltage to terminals 1 and 3.		○		○

If continuity is not as specified, replace the relay.

POWER DOOR LOCK CONTROL SYSTEM

Parts Location

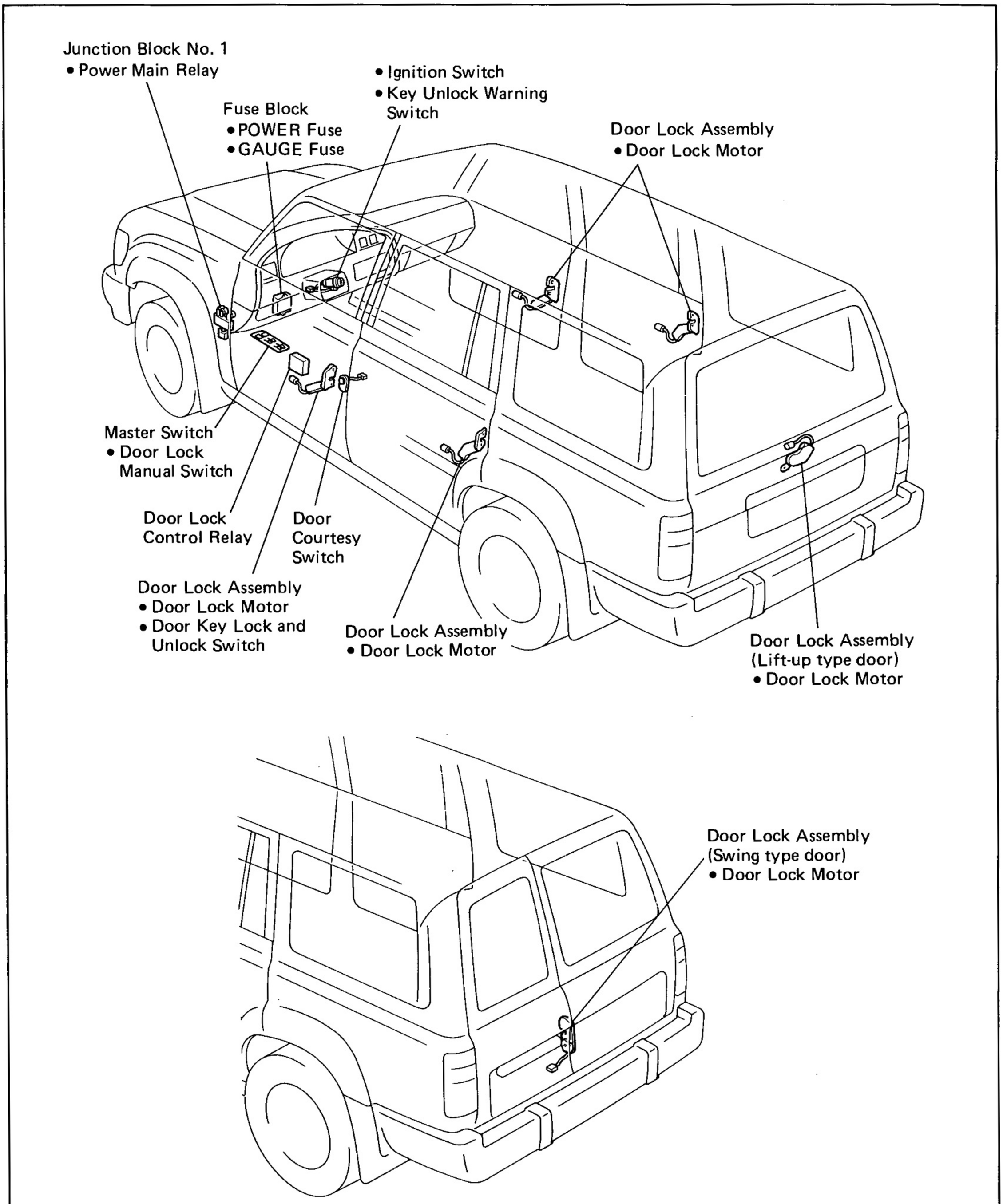

BE5266
BE5267

Wiring and Connector Diagrams

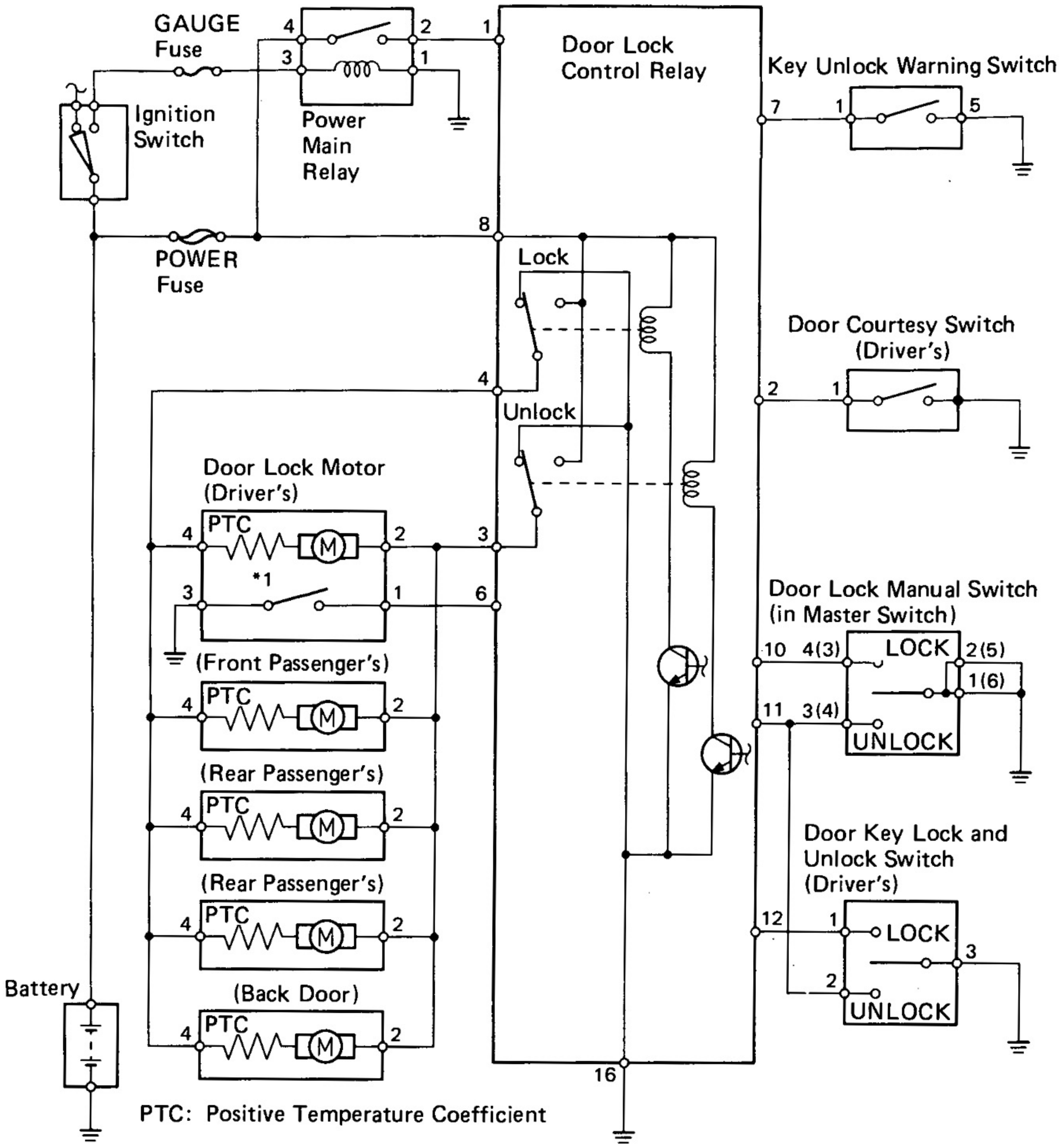

Door Key Lock and Unlock Switch



Key Unlock Warning Switch

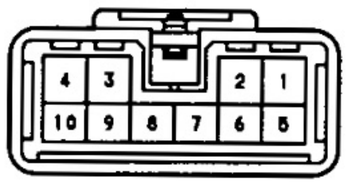

Door Courtesy Switch



Door Lock Manual Switch (in Master Switch)

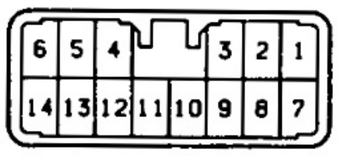

Door Lock Control Relay

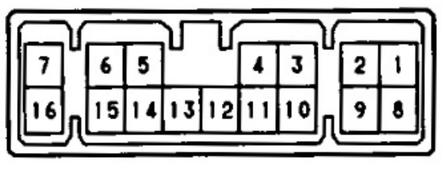

Power Main Relay

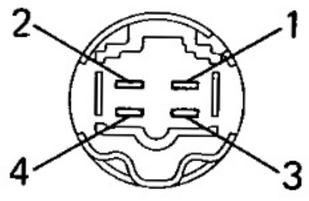

Door Lock Motor

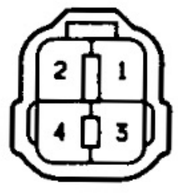

The POWER SOURCE CIRCUIT has been simplified. For full details, see pages BE-10, 11.

BE5270
S-14-2-B
IS-4-2-B
IU-3-2 e-10-2-B S-1-1-B
S-16-2-A BE1647

Troubleshooting

Problem	Possible cause	Remedy	Page
Power door lock do not operate	POWER fuse faulty	Check fuse	BE-4, 6
	Door lock motor faulty	Check motor	BE-86
	Door lock switch faulty	Check switch	BE-85
	Power main relay faulty	Check relay	BE-87
	Door lock control relay faulty	Check relay	BE-88
	Wiring or ground faulty	Repair as necessary	
Fault in key confine prevention operation	Door lock control relay faulty	Check relay	BE-88
	Key unlock warning switch faulty	Check switch	BE-85
	Door courtesy switch faulty	Check switch	BE-85
	Wiring or ground faulty	Repair as necessary	

Parts Inspection

1. **INSPECT SWITCHES**
(Master Switch: Driver's Door Lock Manual Switch/ Continuity)

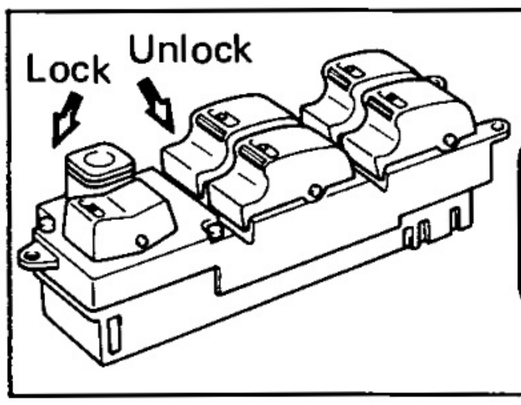

Terminal / Switch position	LHD	1	2	3	4
	RHD	6	5	4	3
LOCK		○——	——○		——○
OFF		○——	——○		
UNLOCK		○——	——○	——○	

If continuity is not as specified, replace the switch.

(Door Key Lock and Unlock Switch/Continuity)

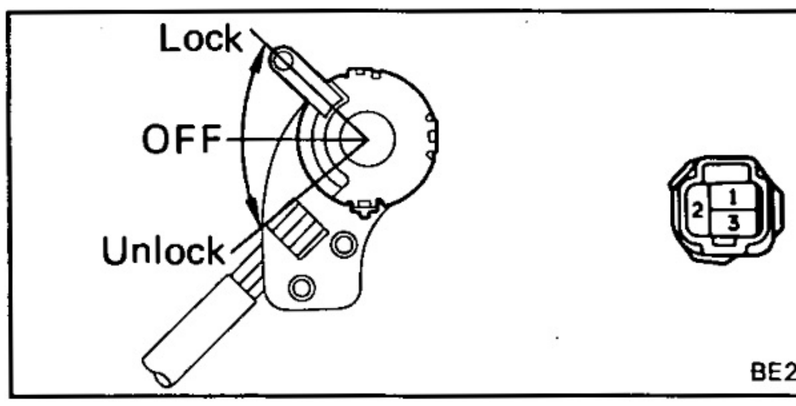

Terminal / Switch position	1	2	3
LOCK	○——		——○
OFF			
UNLOCK		○——	——○

HINT: Door key lock and unlock switch is built into the front door lock assembly.

If continuity is not as specified, replace the switch.

(Key Unlock Warning Switch/Continuity)

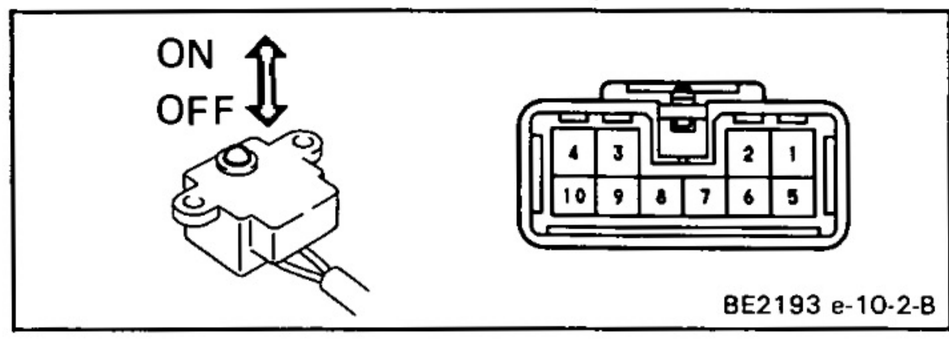

Terminal / Switch position	1	5
OFF (Ignition key removed)		
ON (Ignition key set)	○——	——○

If continuity is not as specified, replace the switch.

(Door Courtesy Switch/Continuity)

See step 2 of Open Door Warning System on page BE-64.

2. INSPECT DOOR LOCK MOTOR
(Motor Operation)

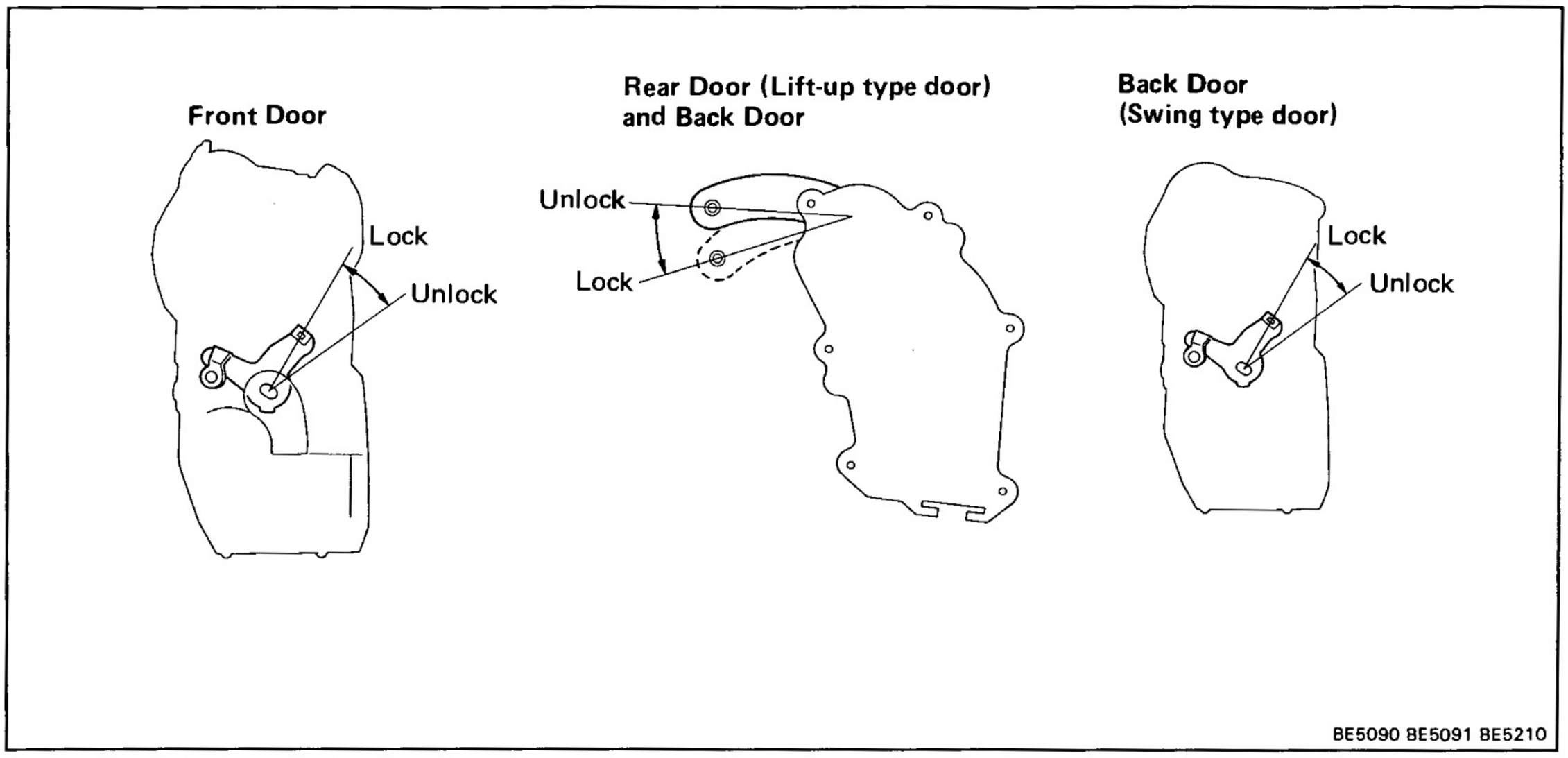

BE5090 BE5091 BE5210

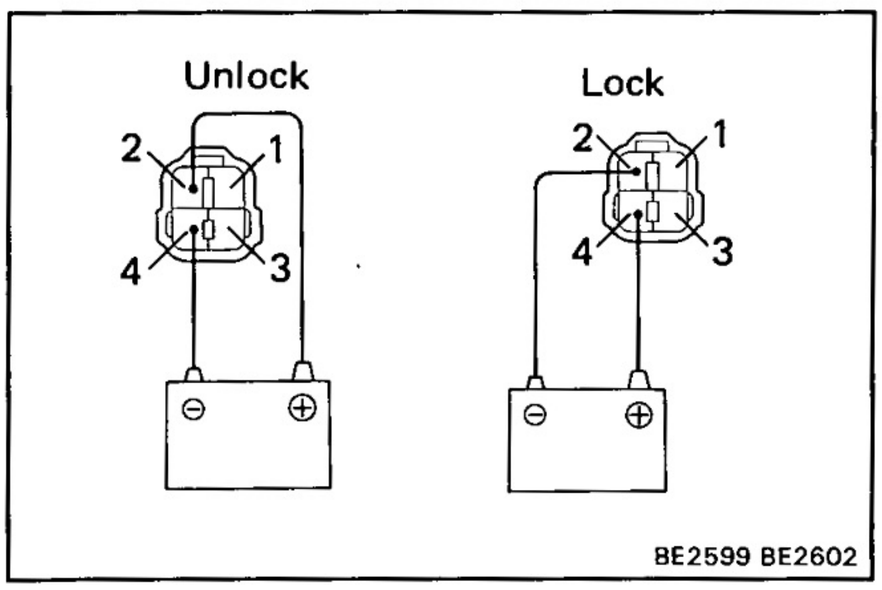

BE2599 BE2602

(a) Connect the positive (+) lead from the battery to terminal 2 and the negative (—) lead to terminal 4, check that the door lock link moves to UNLOCK position.

(b) Remove the polarity, check that the door lock link move to LOCK position.

If operation is not as specified, replace the door lock assembly.

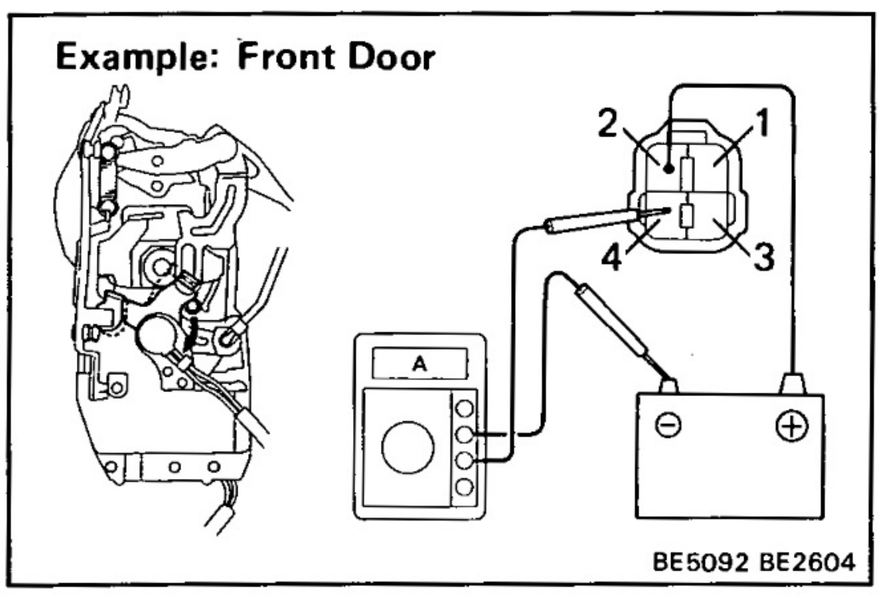

BE5092 BE2604

(PTC Thermistor Operation)

Inspection using an ammeter.

(a) Connect the positive (+) lead from the battery to terminal 2.

(b) Connect the positive (+) lead from the ammeter to terminal 4 and the negative (—) lead to battery negative (—) terminal, check that the current changes from approximately 3.2 ampere to less than 0.5 ampere with 20 to 70 seconds.

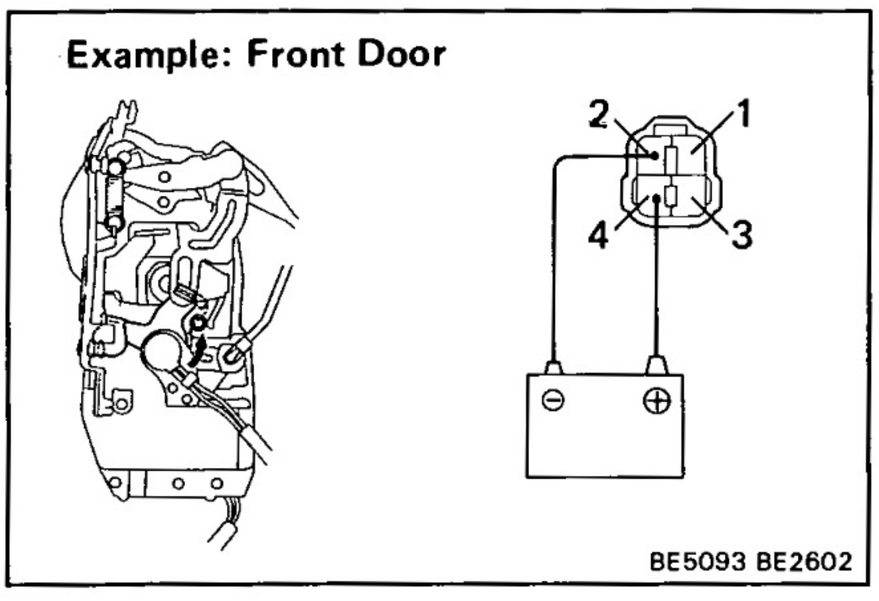

BE5093 BE2602

(c) Disconnect the leads from terminals.

(e) Approximately 60 seconds later, connect the positive (+) lead from the battery to terminal 4 and the negative (—) lead to terminal 2 check that the door lock moves to LOCK position.

If operation is not as specified, replace the door lock assembly.

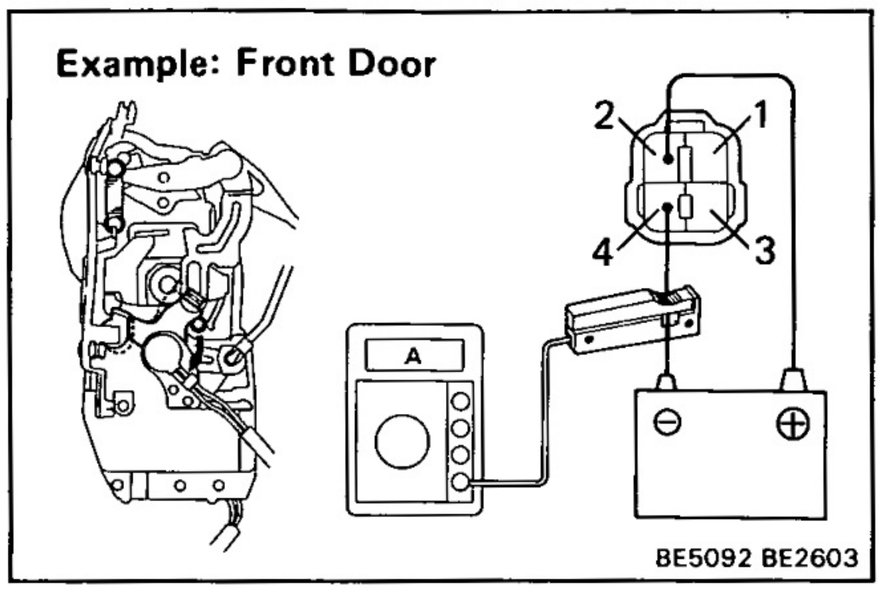

Inspection using an ammeter with a current-measuring probe.

(a) Connect the positive (+) lead from the battery to terminal 2 and the negative (—) lead to terminal 4.

(b) Attach a current-measuring probe to either the positive (+) lead or the negative (—) lead, check that the current changes from approximately 3.2 ampere to less than 0.5 ampere within 20 to 70 seconds.

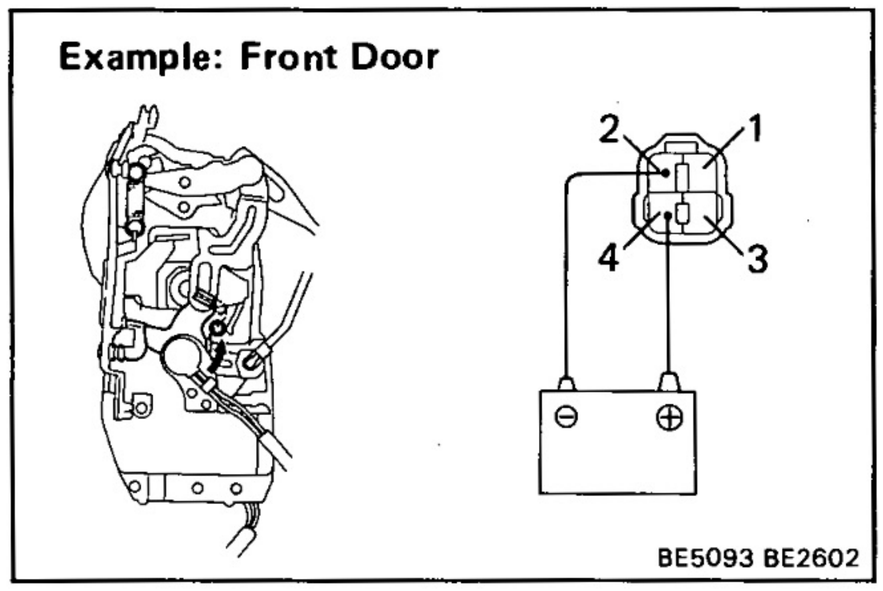

(c) Disconnect the leads from terminals.

(d) Approximately 60 seconds later, reverse the polarity, check that the door lock moves to LOCK position.

If operation is not as specified, replace the door lock assembly.

HINT: Perform inspection of PTC thermistor operation of other door lock motors the same way as for the front door.

(Door Lock Unlock Switch/Continuity)

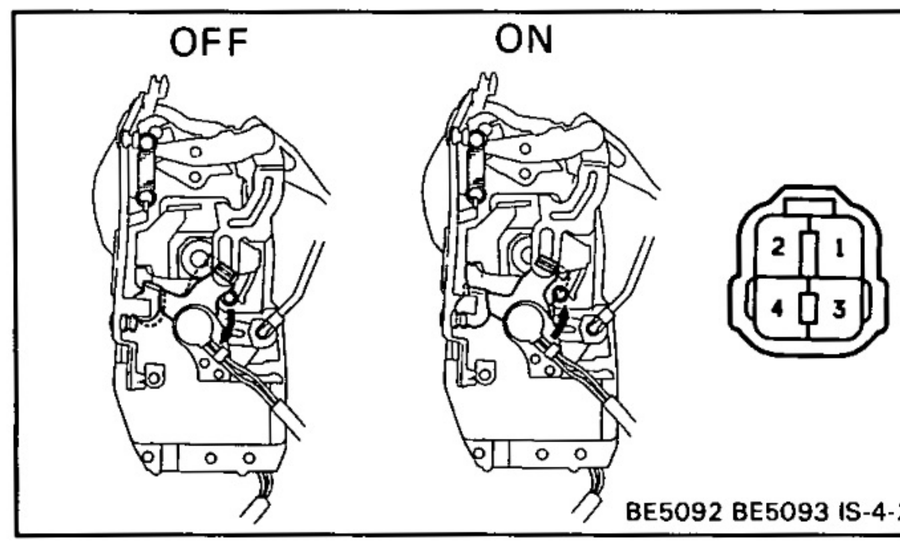

Terminal / Switch position	1	3
OFF (Door lock set to LOCK)		
ON (Door lock set to UNLOCK)	○	○

If continuity is not as specified, replace the door lock assembly.

3. INSPECT POWER MAIN RELAY

See inspect power main relay on page BE-82.

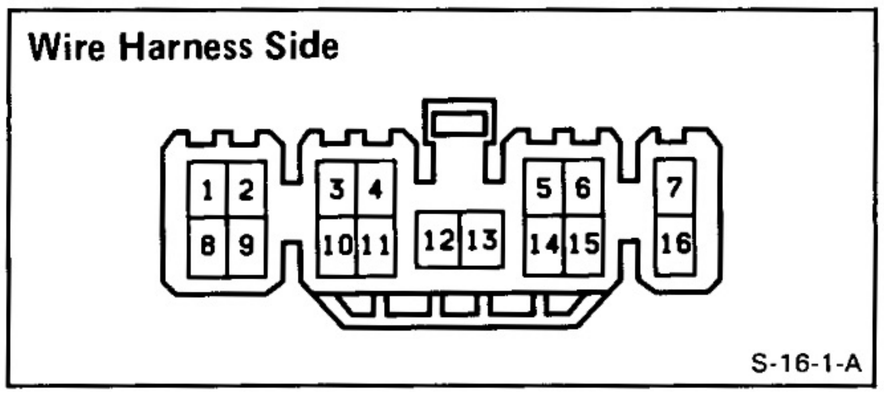

4. INSPECT DOOR LOCK CONTROL RELAY (Relay Circuit)

Disconnect the connector from the relay and inspect the connector on the wire harness side as shown in the chart.

Check for	Tester connection	Condition		Specified value
Continuity	2—Ground	Driver's door courtesy switch position	OFF (Door closed)	No continuity
			ON (Door opened)	Continuity
	6—Ground	Driver's door lock and unlock switch position	OFF (Door locked)	No continuity
			ON (Door unlocked)	Continuity
	7—Ground	Key unlock warning switch position	OFF (Ignition key removed)	No continuity
			ON (Ignition key set)	Continuity
	10—Ground	Door lock manual switch position	OFF or UNLOCK	No continuity
			LOCK	Continuity
	11—Ground	Door lock manual switch position	OFF or LOCK	No continuity
			UNLOCK	Continuity
	12—Ground	Door key lock and unlock switch position	OFF or UNLOCK (Door key free or turned to UNLOCK)	No continuity
			LOCK (Door key turned to LOCK)	Continuity
	11—Ground	Door key lock and unlock switch position	OFF or LOCK (Door key free or turned to LOCK)	No continuity
			UNLOCK (Door key turned to UNLOCK)	Continuity
	16—Ground	Constant		Continuity
Voltage	1—Ground	Ignition switch position	LOCK	No voltage
			ACC or ON	Battery voltage
	8—Ground	Constant		Battery voltage

If circuit is as specified, inspect the door lock signal.

If the circuit is not as specified, refer to BE-84 wiring diagram and inspect the circuits connected to other parts.

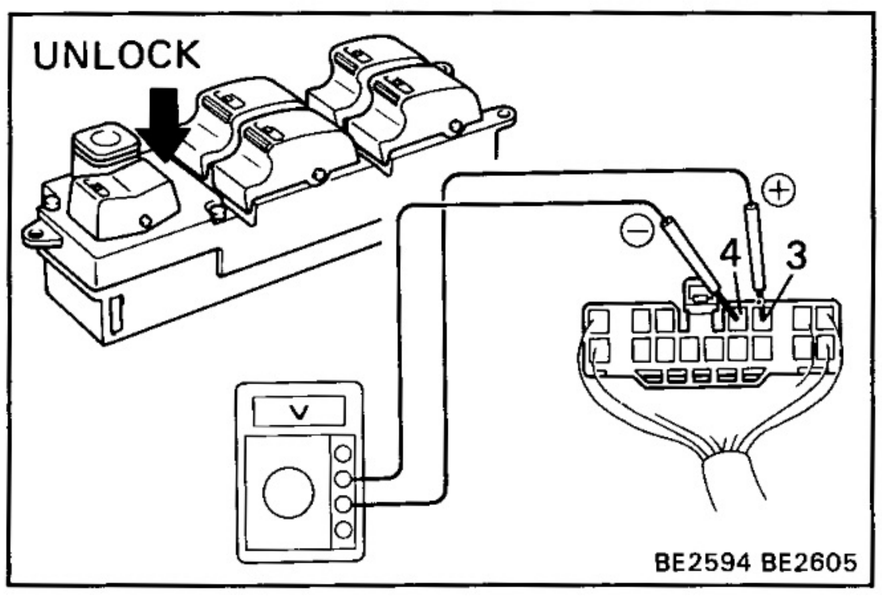

(Door Lock Signal)

HINT: When the relay circuit is as specified, inspect the door lock signal.

(a) Connect the connector to the relay.

(b) Connect the positive (+) lead from the voltmeter to terminal 3 and the negative (—) lead to terminal 4.

(c) Set the door lock manual switch to UNLOCK, check that the voltage rises from 0 volts to battery voltage for approximately 0.2 seconds.

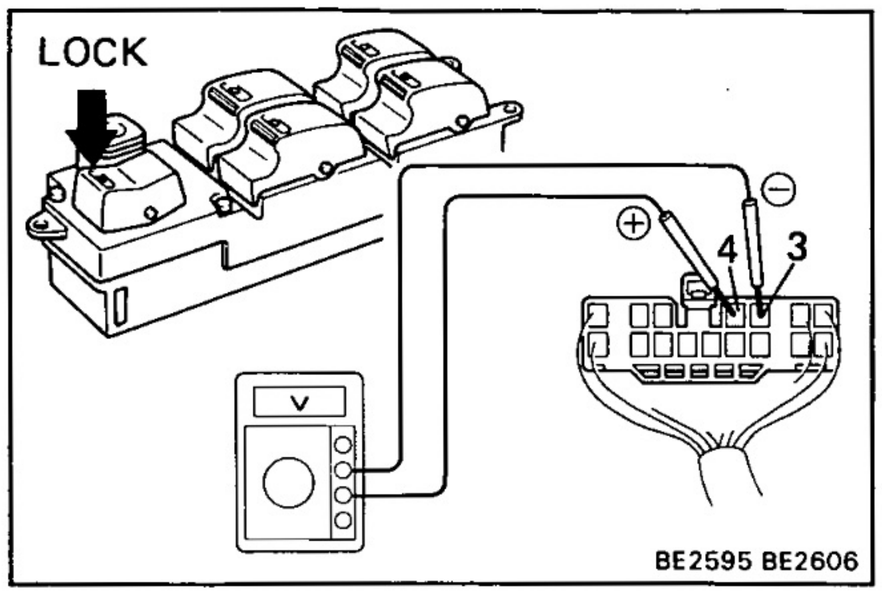

(d) Reverse the polarity of the voltmeter leads.

(e) Set the door lock manual switch to LOCK, check that the voltage rises from 0 volts to battery voltage for approximately 0.2 seconds.

If operation is not as specified, replace the relay.

SLIDING ROOF SYSTEM

Parts Location

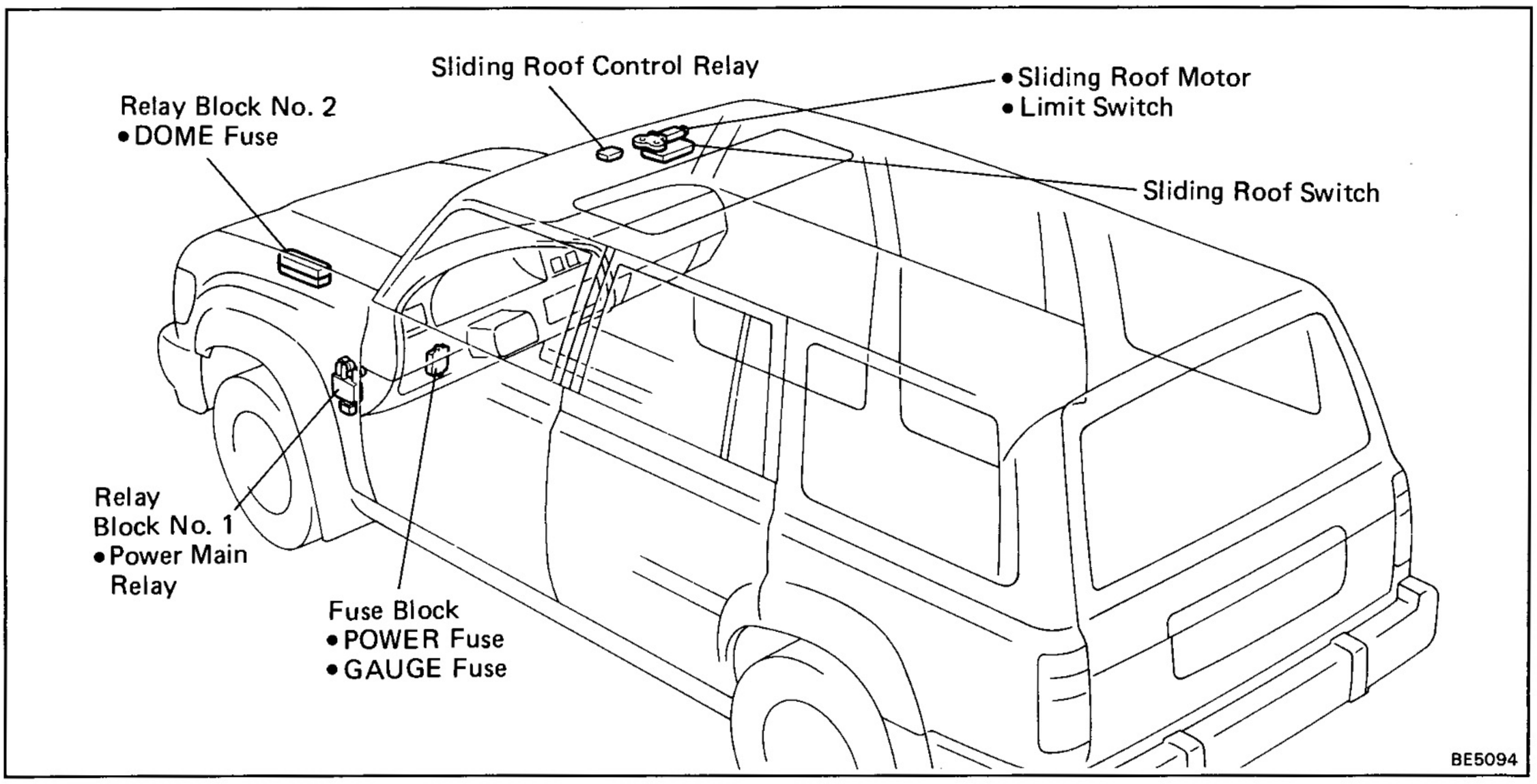

Wiring and Connector Diagrams

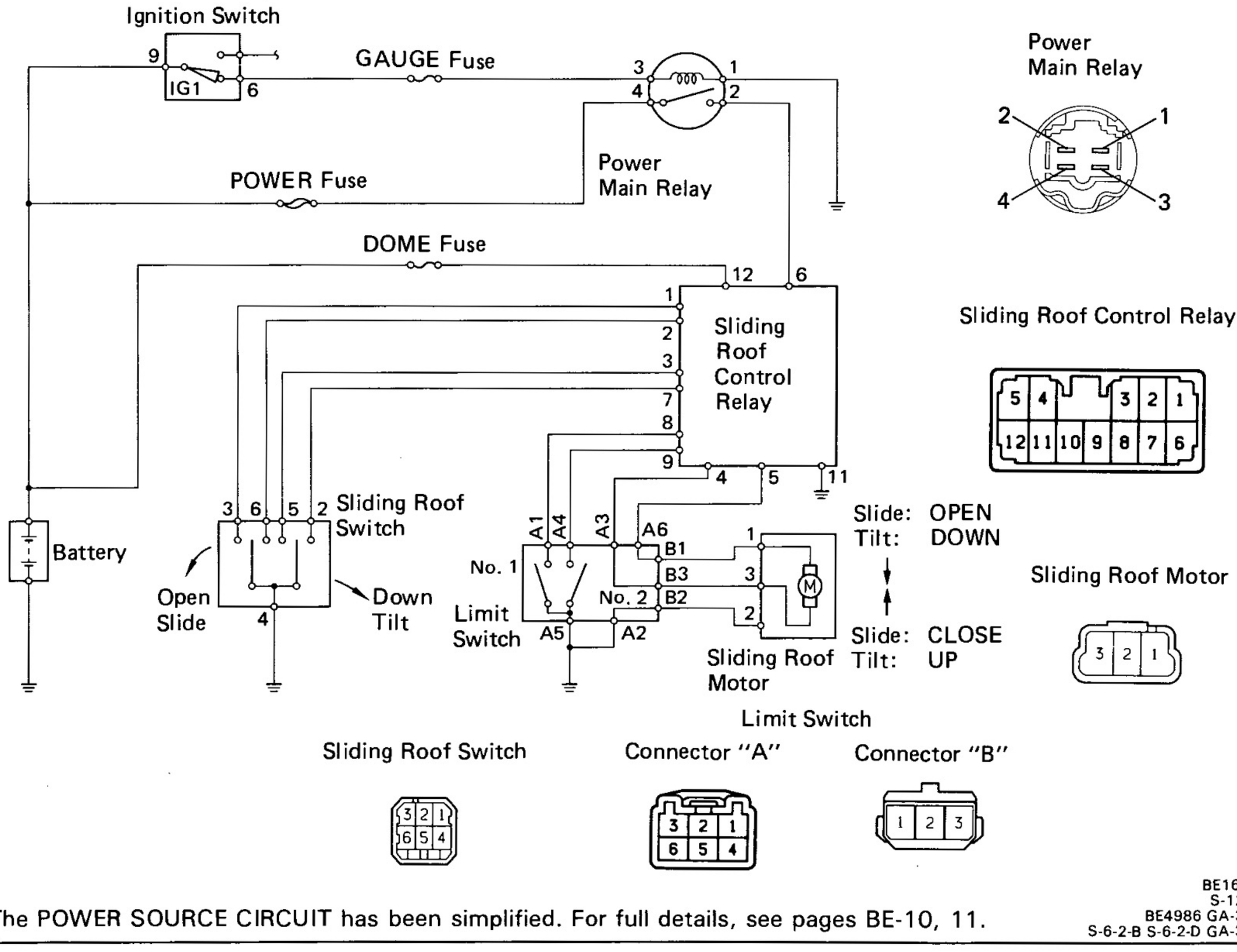

The POWER SOURCE CIRCUIT has been simplified. For full details, see pages BE-10, 11.

BE1647
S-12-2
BE4986 GA-3-2
S-6-2-B S-6-2-D GA-3-1

Limit Switch Operation

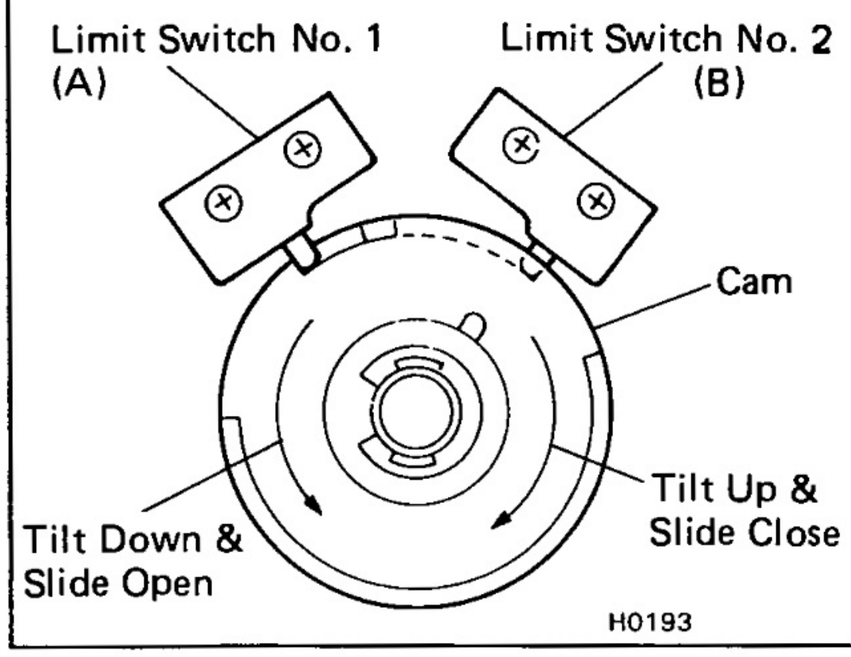

Roof Position			Fully Opened	Momentary Stop		Fully Closed	Down	Up
Function			← Sliding Period			Idling Period	Tilting Period →	
Limit Switch	(A)	ON						
		OFF						
	(B)	ON						
		OFF						
Sliding Roof Control Switch	OPEN		○	○	○	○	×	
	CLOSE		○	○	○	×	×	
	UP		×	×	×	○	○	
	DOWN		×	×	×	×	○	

○: Operational ×: Non-operational

System Description

Standby Operation

- Current flows from the DOME fuse to terminal 12 of the Sliding Roof Relay (hereafter called relay)
- When the ignition switch is on, the current flows from the POWER fuse to terminal 6 of the relay.

Operation

1. OPEN operation

When the switch on the "OPEN" side of the control switch is pushed, continuity is produced between terminal 1 of the relay and body ground. Then, the relay operates, the current flows through terminal 6 of the relay → terminal 5 → terminal 1 of the sliding roof motor → terminal 3 → terminal 4 of the relay → terminal 11 → the body ground, and the motor starts to run in order to open the sliding roof.

2. CLOSE operation

When the switch on the "CLOSE" side of the control switch is pushed, continuity is produced between terminal 2 of the relay and body ground. Then, the relay operates, the current flows through terminal 6 of the relay → terminal 4 → terminal 3 of the sliding roof motor → terminal 1 → terminal 5 of the relay → terminal 11 → the body ground, and the motor starts to run in order to close the sliding roof.

Momentary Stop

When the sliding roof reaches about 100 mm (3.94 in.) short of the fully closed position, limit switch A is turned from ON to OFF, so there is no continuity between terminal 8 of the relay and the body ground. As a result, because the relay ceases to operate, and the sliding roof stops at that position. Release the control switch, then press the "CLOSE" side of the control switch again.
Then the sliding roof moves to fully closed position.

3. Tilt up operation (Fully close position)

When the switch on the "UP" side of the control switch is pushed, continuity is produced between terminal 3 of the relay and body ground. Then, the relay operates, the current flows through terminal 6 of the relay → terminal 4 → terminal 3 of the sliding roof motor → terminal 1 → terminal 5 of the relay → terminal 11 → the body ground, and the motor starts to run in order to tilt up sliding roof.

4. Tilt Down operation (Fully close position)

When the switch on the "DOWN" side of the control switch is pushed, continuity is produced between terminal 7 of the relay and body ground. Then the relay operates, the current flows through terminal 6 of the relay → terminal 5 → terminal 1 of the sliding roof motor → terminal 3 → terminal 4 of the relay → terminal 11 → the body ground, and the motor starts to run in order to tilt down the sliding roof.

5. Warning buzzer operation

When the ignition switch is turned to LOCK position while the sliding roof is still in "Tilt up" position, a buzzer sounds to warn the driver that the sliding roof is in "Tilt up" position.

Troubleshooting

Problem	Possible cause	Remedy	Page
Sliding roof does not operate	GAUGE fuse blown	Replace fuse and check for short	BE-4, 6
	POWER fuse blown	Replace fuse and check for short	BE-4, 6
	Power main relay faulty	Check relay	BE-94
	Control switch faulty	Check switch	BE-92
	Limit switch faulty	Check switch	BE-92
	Sliding roof motor faulty	Check motor	BE-92
	Sliding roof control relay faulty	Check relay	BE-93
	Wiring faulty	Repair as necessary	

Parts Inspection

1. INSPECT SWITCHES (Control Switch/Continuity)

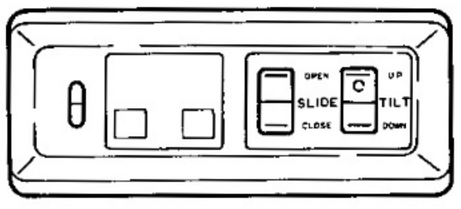

BE4999 S-6-2-B

Switch position		Terminal 2	3	4	5	6
SLIDE	OPEN		○	○		
	OFF					
	CLOSE			○		○
TILT	DOWN	○		○		
	OFF					
	UP			○	○	

If continuity is not as specified, replace the switch.

(Limit Switch/Continuity)

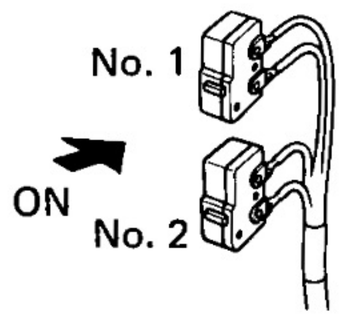

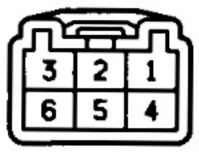

BE2859 S-6-2-D

Switch position		Terminal 1	4	5
Limit switch No.1	OFF (SW pin released)			
	ON (SW pin pushed in)	○		○
Limit switch No.2	OFF (SW pin released)			
	ON (SW pin pushed in)		○	○

If continuity is not as specified, replace the switch.

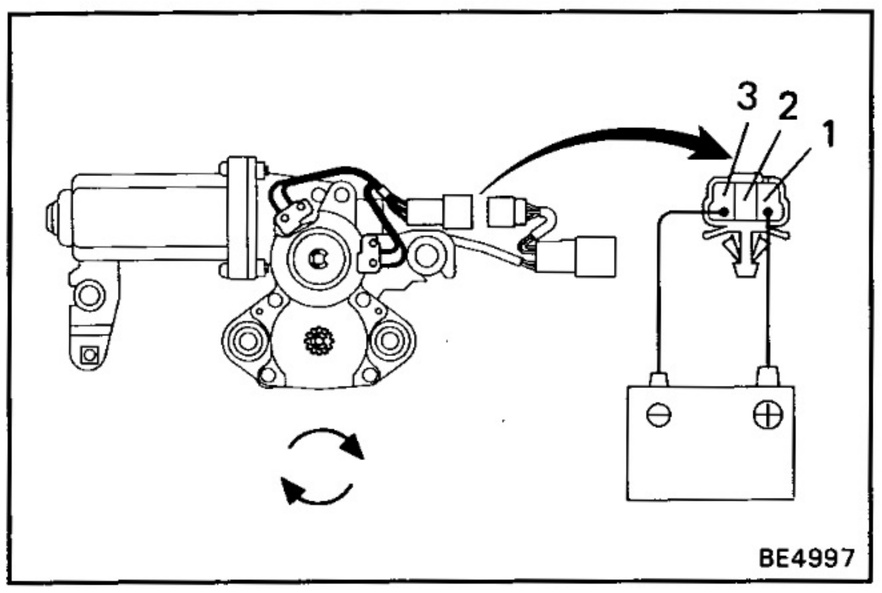

BE4997

2. INSPECT SLIDING ROOF MOTOR (Motor Operation)

(a) Connect the positive (+) lead from the battery to terminal 3 and the negative (—) lead to terminal 1, check that the motor turns to clockwise.

(b) Reverse the polarity, check that the motor turns to clockwise.

If operation is not as specified, replace the motor.

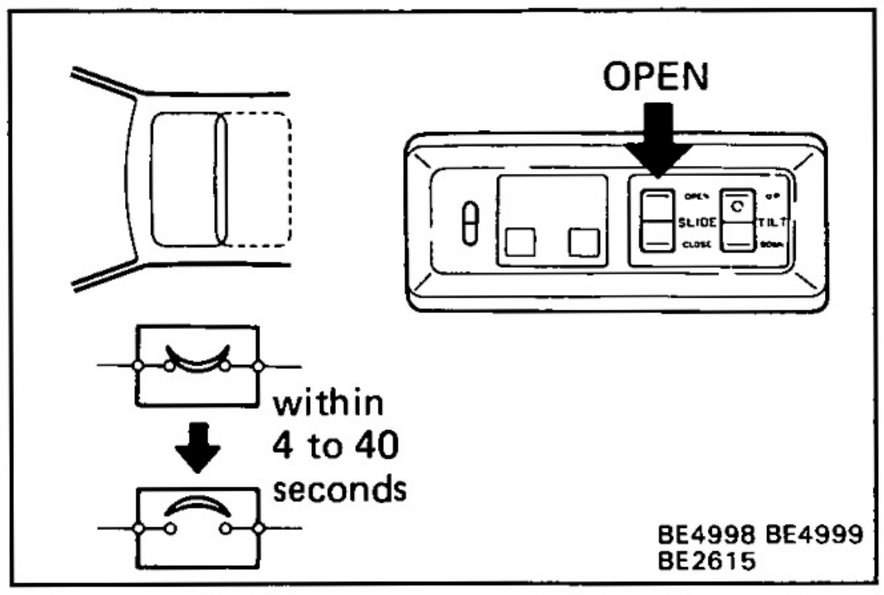

(Circuit Breaker Operation)

(a) With the sliding roof in the fully opened position, hold the control switch in "OPEN" position and check that there is a circuit breaker operation noise within 4 to 40 seconds.

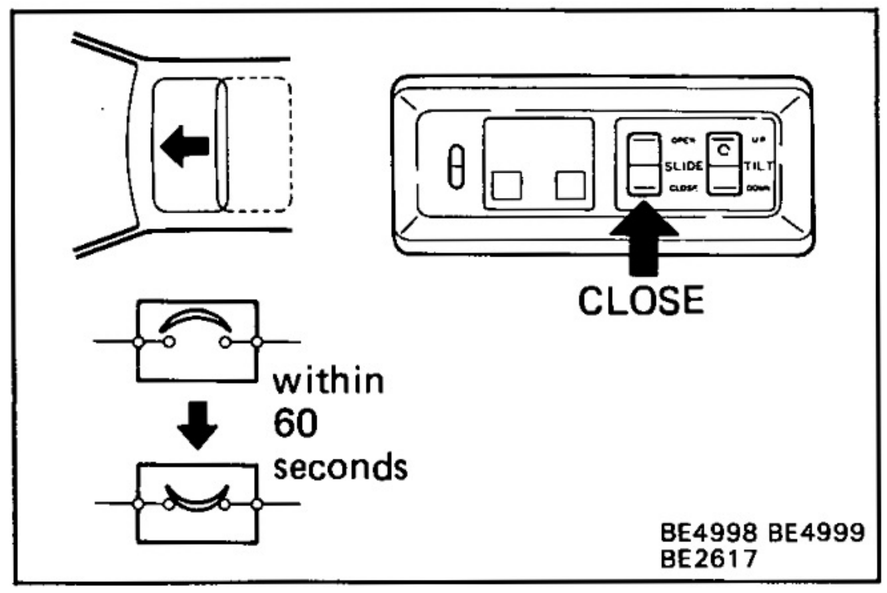

(b) With the sliding roof in fully opened position, hold the control switch in "CLOSE" position and check that the sliding roof begins to close within 60 seconds.

If operation is not as specified, replace the motor.

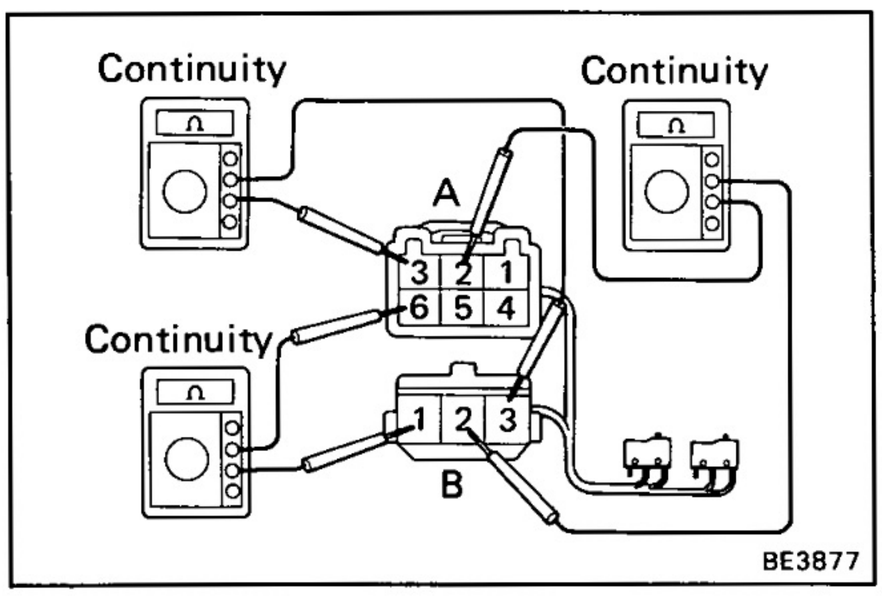

(Motor Wire Circuit)

(a) Check that there is continuity between terminals A2 and B2.

(b) Check that there is continuity between terminals A3 and B3.

(c) Check that there is continuity between terminals A6 and B1.

If continuity is not as specified, replace the switch.

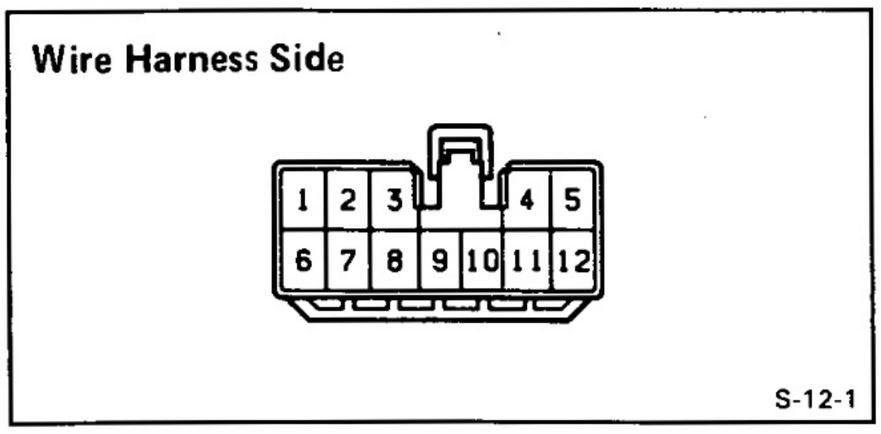

3. INSPECT SLIDING ROOF CONTROL RELAY

(Relay Circuit)

Disconnect the connector from the relay and inspect the connector on the wire harness side as shown in the chart.

Check for	Tester connection	Condition		Specified value
Continuity	1 — Ground	Sliding roof control switch position (SLIDE)	OFF or CLOSE	No continuity
			OPEN	Continuity
	2 — Ground	Sliding roof control switch position (SLIDE)	OFF or OPEN	No continuity
			CLOSE	Continuity
	3 — Ground	Sliding roof control switch position (TILT)	OFF or DOWN	No continuity
			UP	Continuity
	4 — 5	Constant		*Continuity

*: There is resistance because this circuit include the motor.

Check for	Tester connection	Condition		Specified value
Continuity	7 — Ground	Sliding roof control switch position (TILT)	OFF or UP	No continuity
			DOWN	Continuity
	8 — Ground	Limit switch No.1 (A) position	OFF (Sliding roof tilt up or approx. 100 mm (3.94 in.) opened)	No continuity
			ON (Except for conditions mentioned above)	Continuity
	9 — Ground	Limit switch No.2 (B) position	OFF (Sliding roof tilt-up)	Continuity
			ON (Sliding roof opened)	No continuity
	11 — Ground	Constant		Continuity
Voltage	6 — Ground	Ignition switch position	LOCK or ACC	No voltage
			ON	Battery voltage
	12 — Ground	Constant		Battery voltage

If circuit is as specified, replace the relay.

4. INSPECT POWER MAIN RELAY

See power main relay on page BE-82.

POWER MIRROR CONTROL SYSTEM

Parts Location

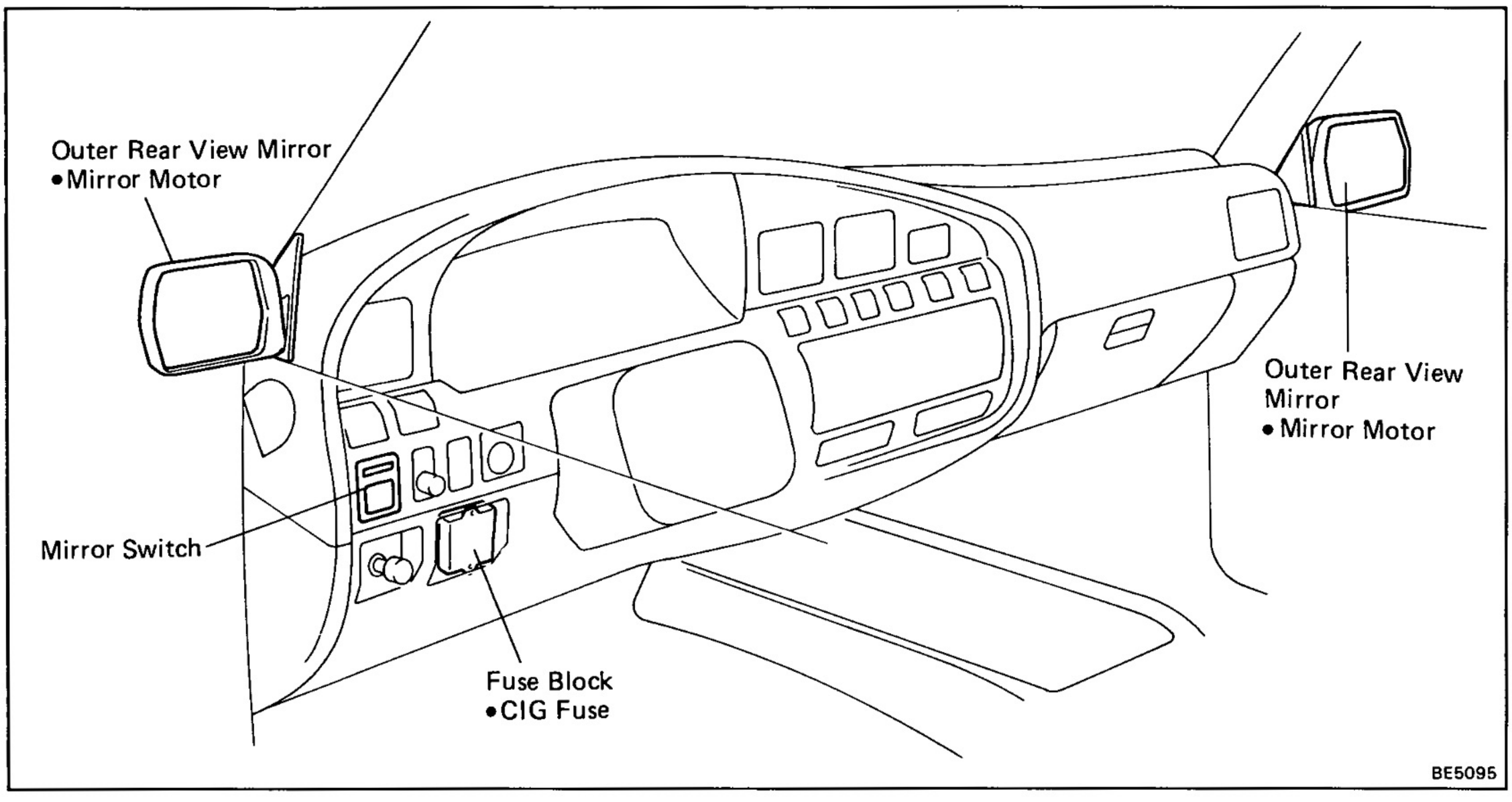

Wiring and Connector Diagrams

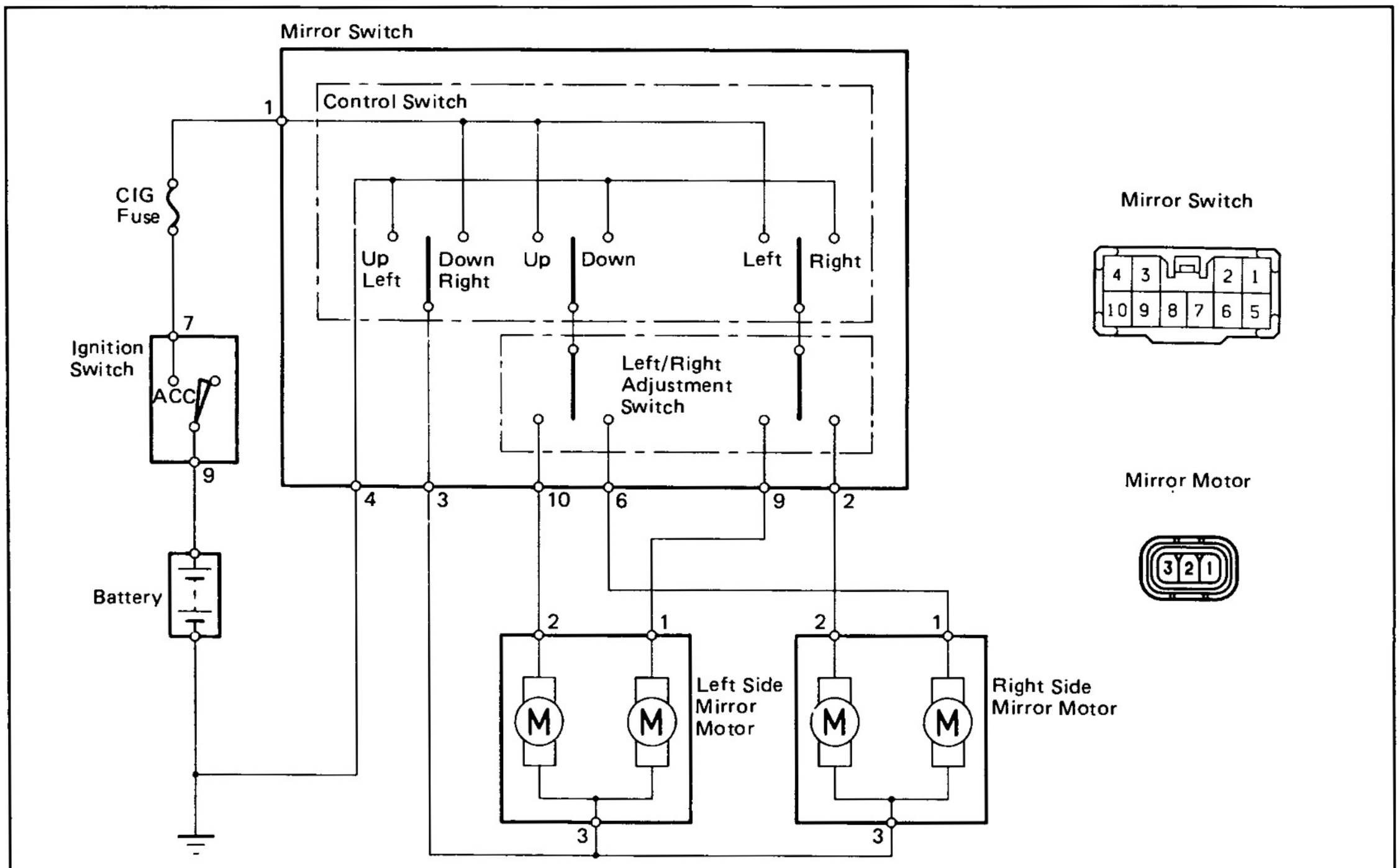

The POWER SOURCE CIRCUIT has been simplified. For full details, see pages BE-10, 11.

Troubleshooting

Problem	Possible cause	Remedy	Page
Remote control mirror system does not operate	CIG fuse faulty	Replace fuse and check for short	BE-4, 6
	Mirror switch faulty	Check switch	BE-96
	Mirror motor faulty	Check motor	BE-96
	Wiring or ground fault	Repair as necessary	

Parts Inspection

1. **INSPECT MIRROR SWITCH (Continuity)**

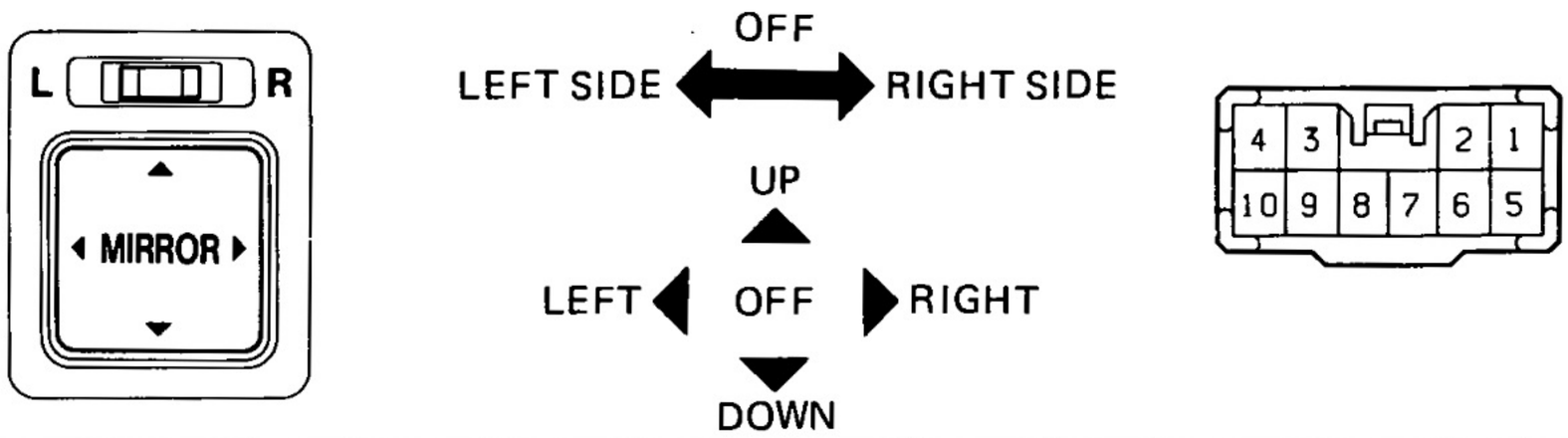

Left/Right adjustment switch position	LEFT SIDE					OFF			RIGHT SIDE				
Terminal / Control switch position	1	3	4	9	10	1	3	4	1	2	3	4	6
OFF													
UP	○	○	○		○		○	○	○		○	○	○
DOWN	○	○	○		○	○	○		○		○	○	○
LEFT	○	○	○	○			○	○	○	○	○	○	
RIGHT	○	○	○	○		○	○		○	○	○	○	

If continuity is not as specified, replace the switch.

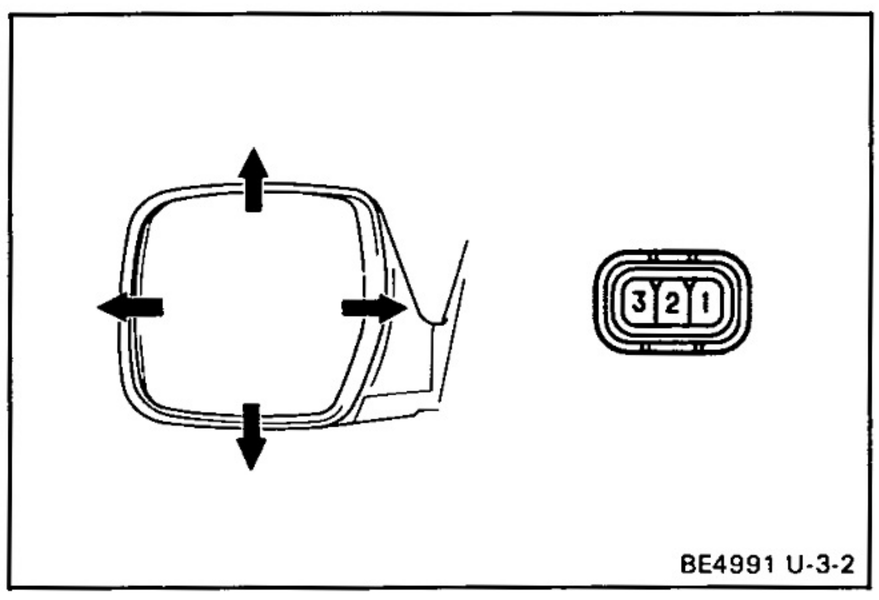

2. **INSPECT MIRROR MOTOR**

Connect the positive (+) lead from the battery to terminal in column "A" and the negative (—) lead to terminal in column "B", check that the mirror operates in column "C".

A (+)	B (—)	C (Operation)
2	3	Mirror turns upward
3	2	Mirror turns downward
1	3	Mirror turns to left side
3	1	Mirror turns to right side

If operation is not as specified, replace the mirror assembly.

POWER SEAT CONTROL SYSTEM

Parts Location

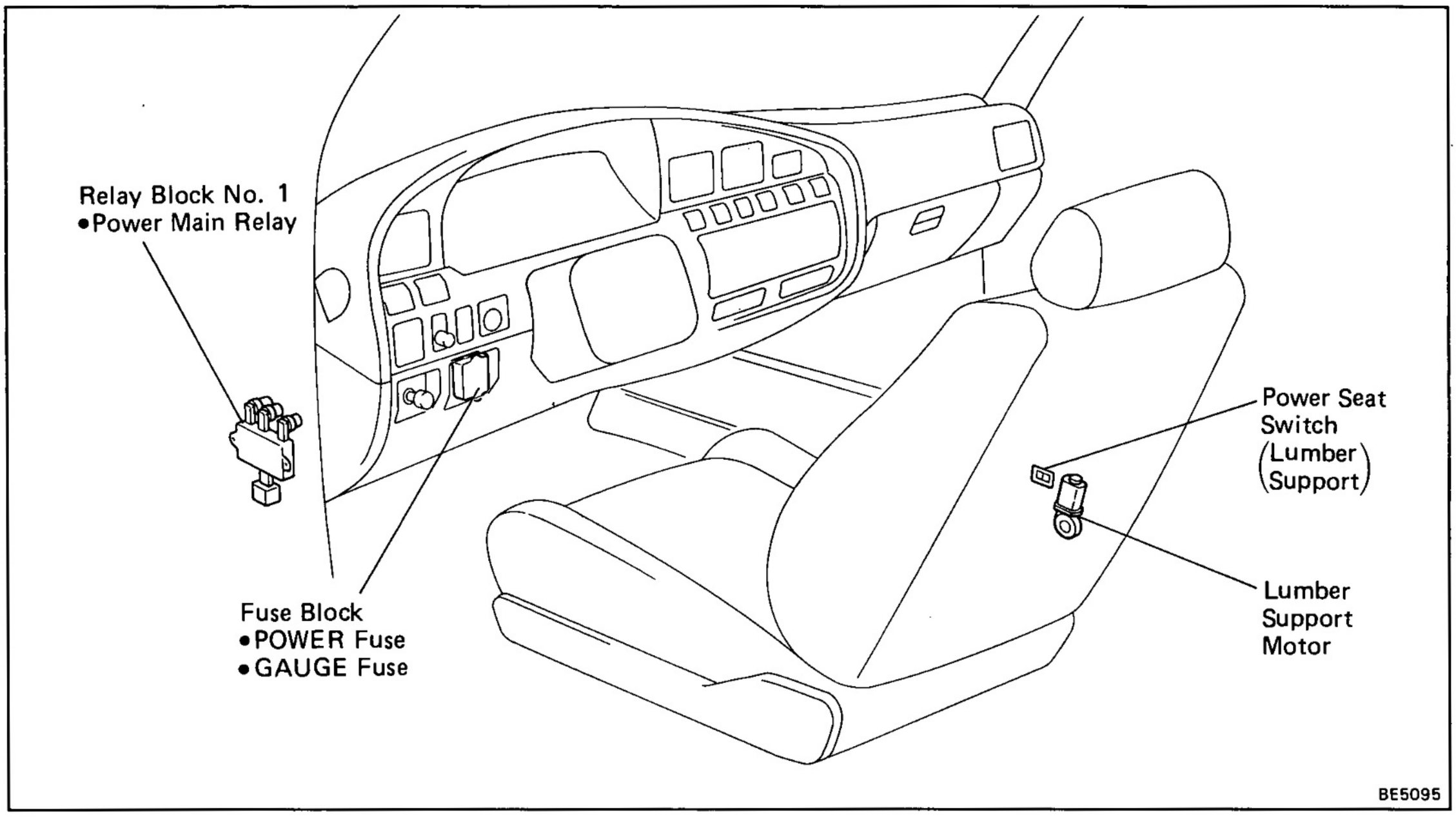

Wiring and Connector Diagrams

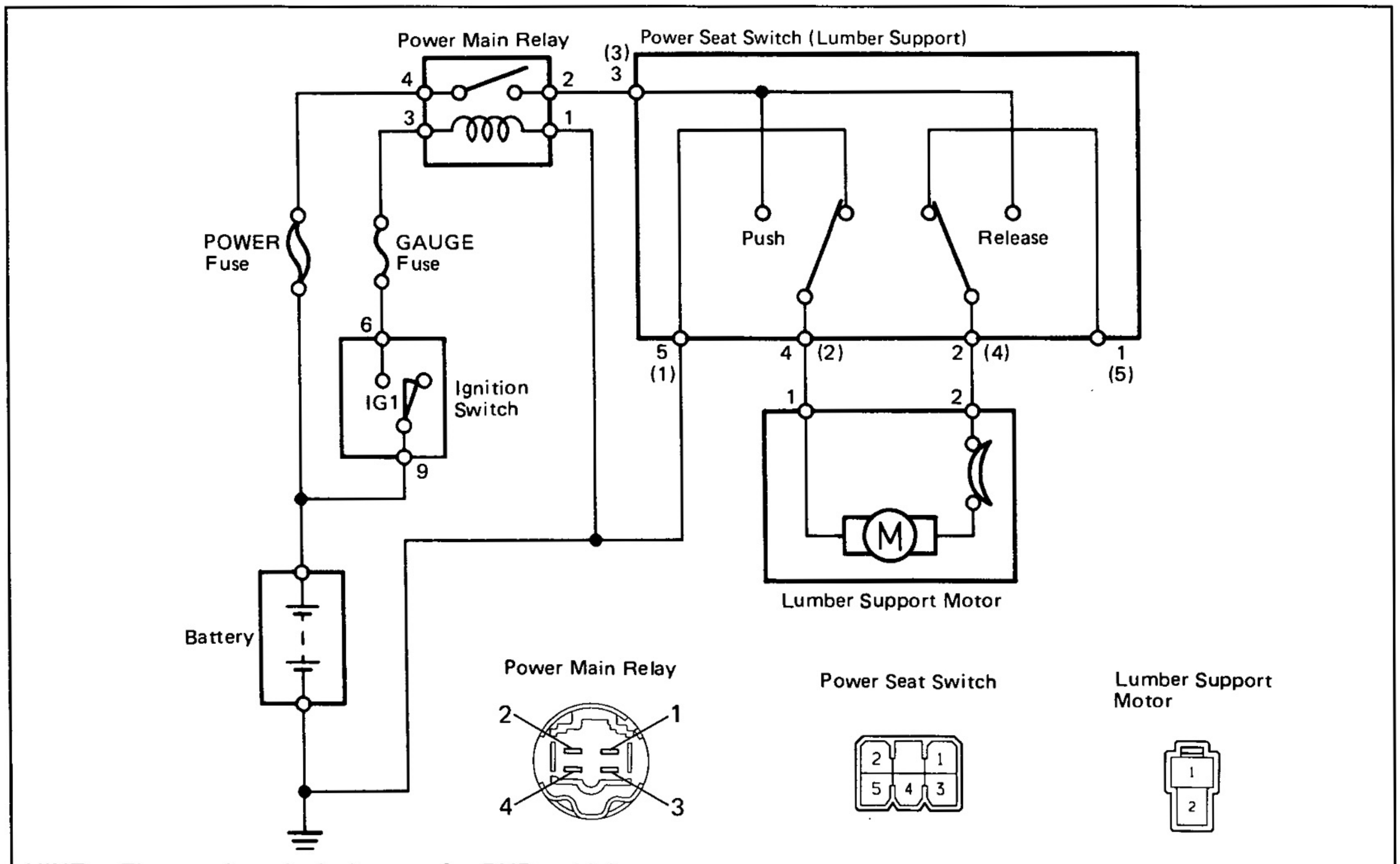

HINT: The numbers in ( ) mean for RHD vehicles.

The POWER SOURCE CIRCUIT has been simplified. For full details, see pages BE-10, 11.

BE5043
BE1647 G-5-2 H-2-2

Troubleshooting

Problem	Possible cause	Remedy	Page
Power seat control system does not operate	"GAUGE" fuse faulty	Replace fuse and check for short	BE-4, 6
	"POWER" fuse faulty	Replace fuse and check for short	BE-4, 6
	Power main relay faulty	Check relay	BE-98
	Power seat switch faulty	Check switch	BE-98
	Seat motor faulty	Check motor	BE-98
	Wiring or ground faulty	Repair as necessary	

Parts Inspection

1. INSPECT POWER SEAT SWITCH (Continuity)

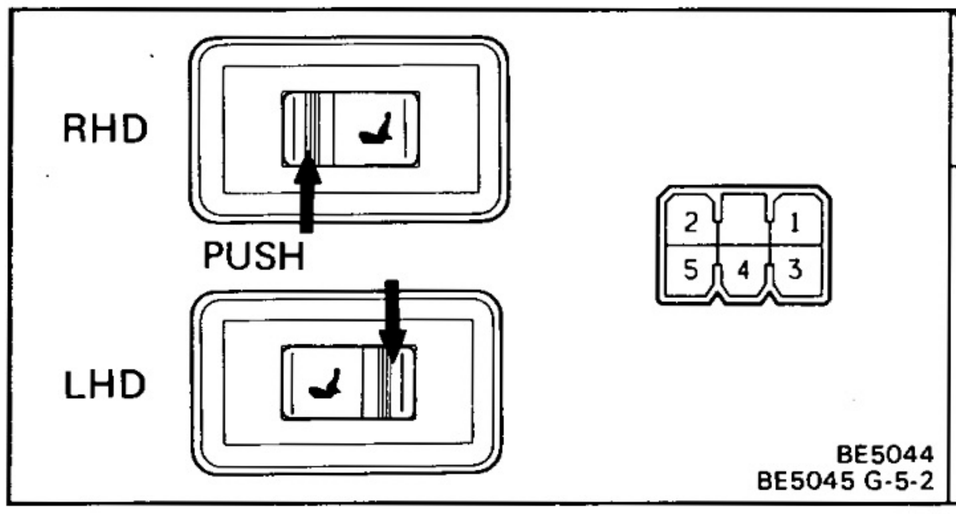

	Terminal / Switch position	LHD	1	2	3	4	5
		RHD	5	4	3	2	1
Lumber Support Switch	PUSH		○—○		○—○		
	OFF		○—○			○—○	
	RELEASE			○—○			○—○

If continuity is not as specified, replace the switch.

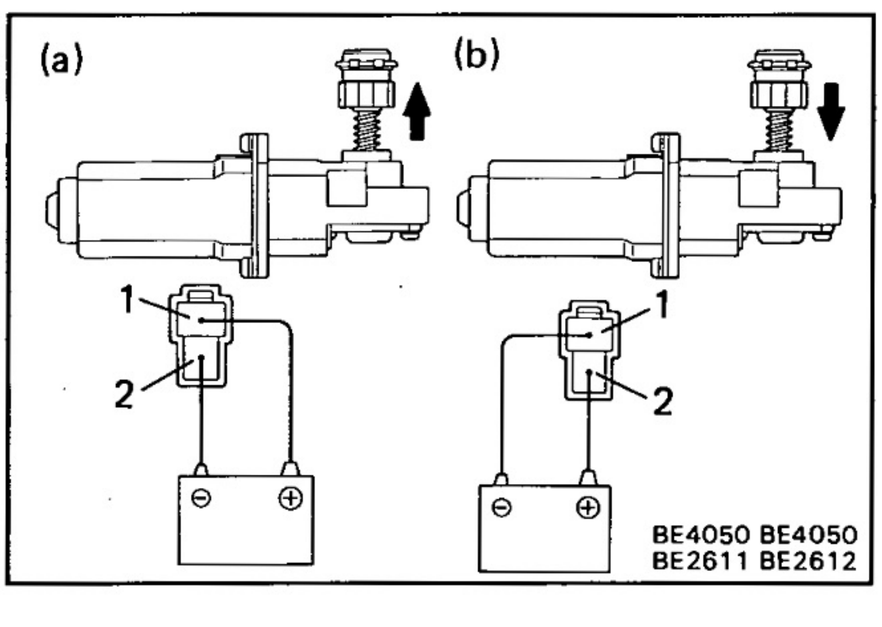

2. INSPECT POWER MAIN RELAY

See Power Main Relay on page BE-82.

3. INSPECT MOTORS (Lumber Support Motor/Motor Operation)

(a) Connect the positive (+) lead from the battery to terminal 1 and the negative (−) lead to terminal 2, check that the motor moves upward.

(b) Reverse the polarity, check that the motor moves downward.

If operation is not as specified, replace the motor.

(Lumber Support Motor/Circuit Breaker Operation)

(a) Set the power seat switch to push operation and move the lumber support to the most forward position.

(b) Continue push operation and check that there is a circuit breaker operation noise within 4 to 60 seconds.

(c) Reverse the polarity, check that the lumber support starts to move rearward within approximately 60 seconds.

If operation is not as specified, replace the motor.

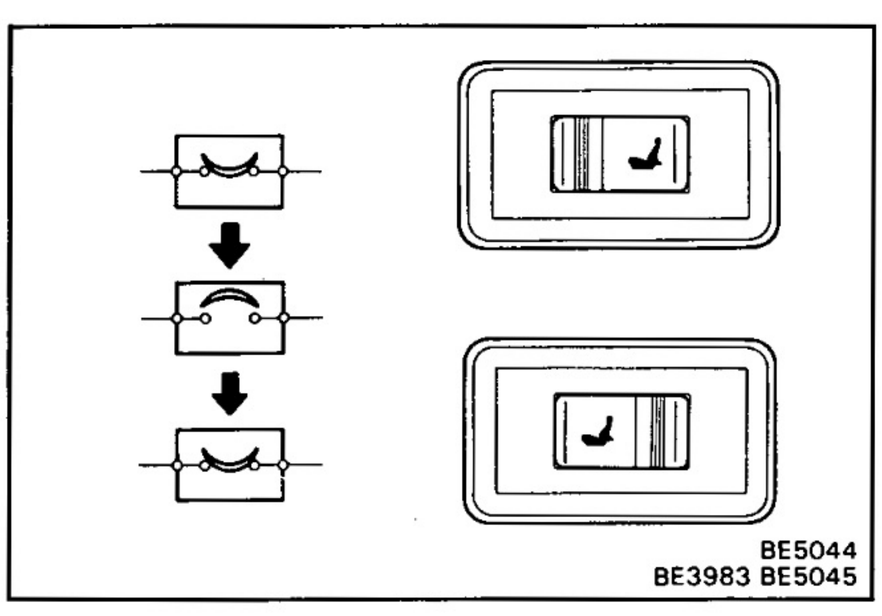

SEAT HEATER SYSTEM

Parts Location

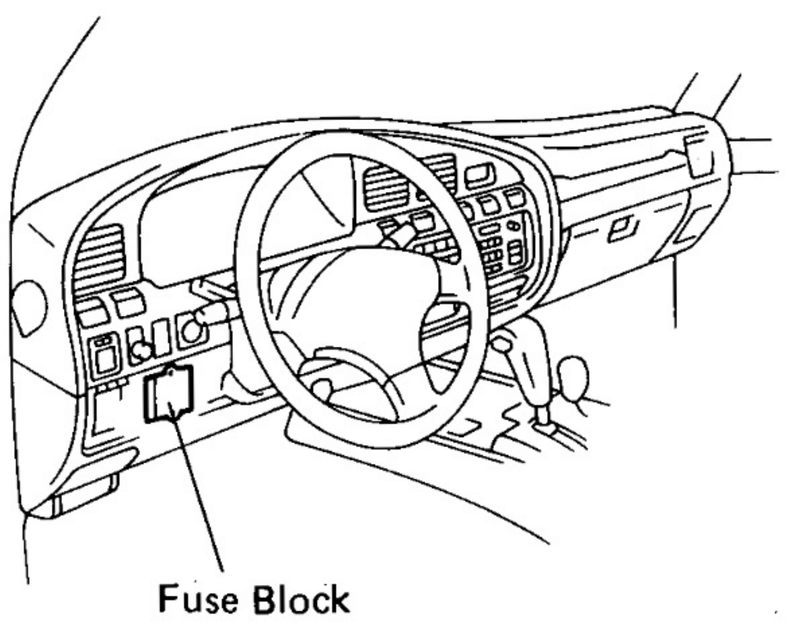

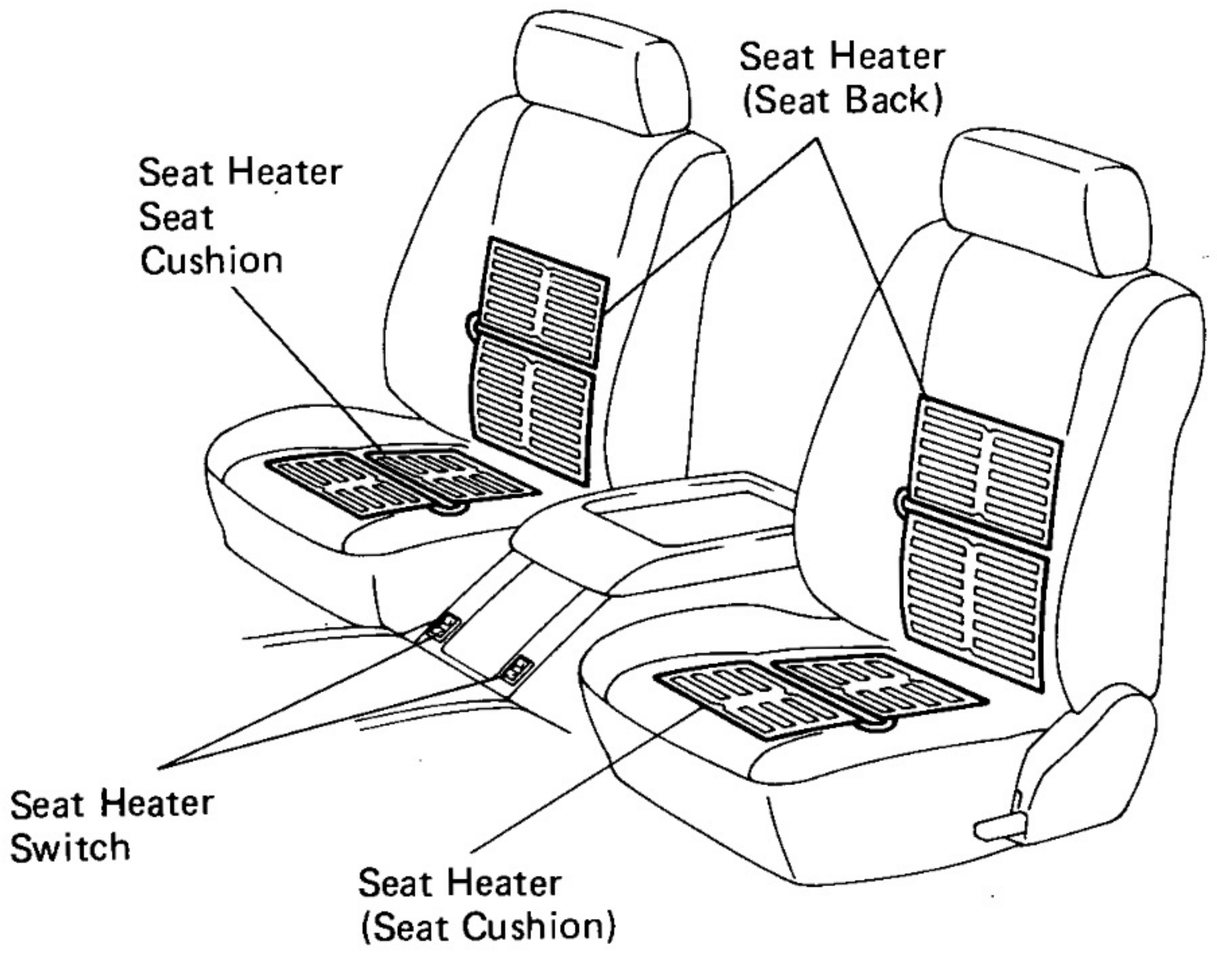

BE5039 BE5040

Wiring and Connector Diagrams

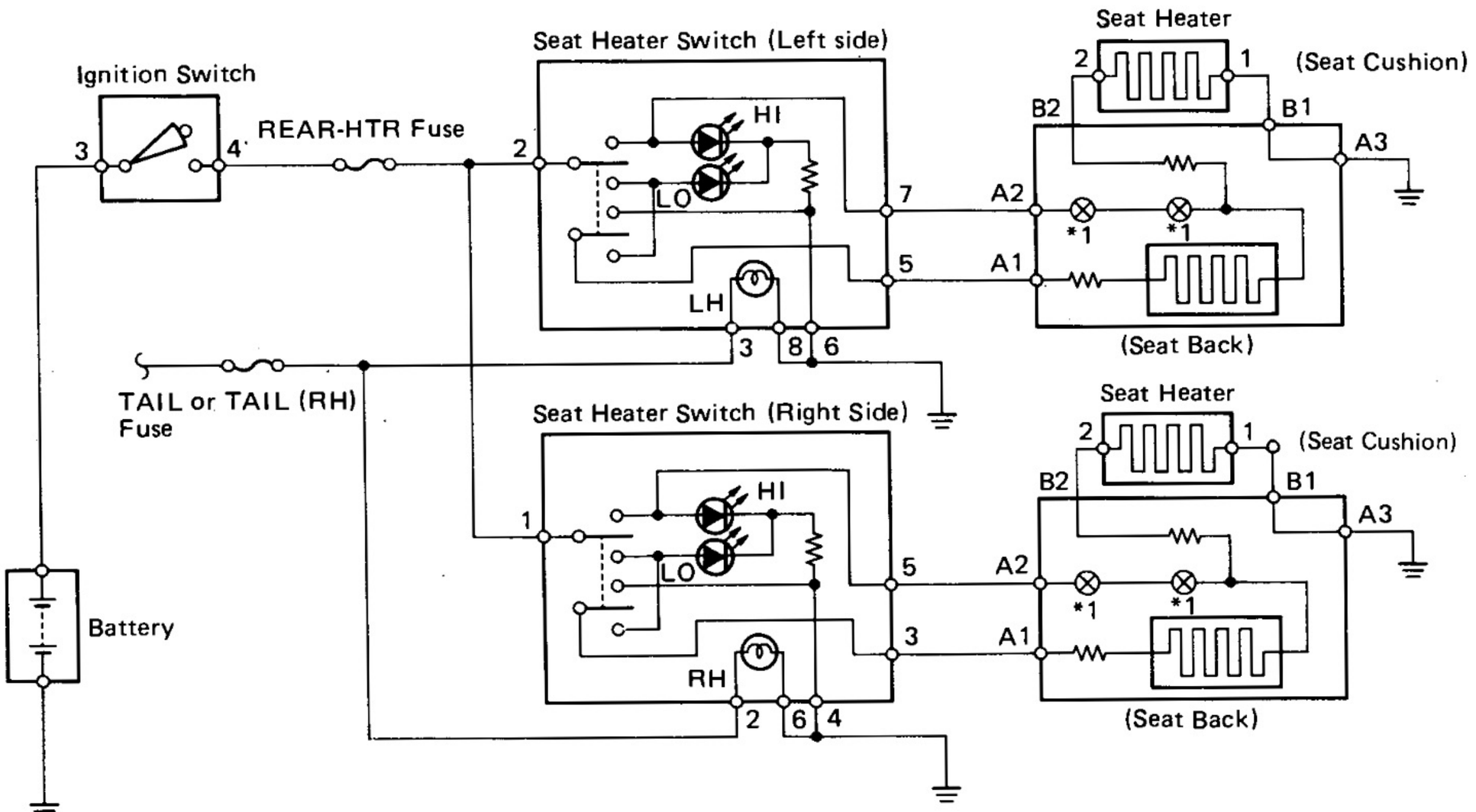



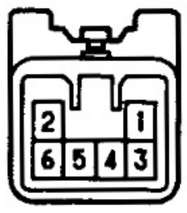

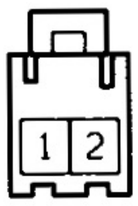

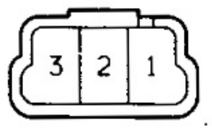

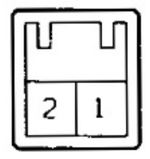

The POWER SOURCE CIRCUIT has been simplified. For full details, see pages BE-10, 11.

BE5042
e-8-2 e-6-2 G-2-1 G-2-2 GA-3-2

System Description

HINT: The number in ( ) is for the right side.

Standby Operation

- When the Ignition Switch is on, current flows from the battery to terminal 2 (1) of the Seat Heater Switch.

Operation

"HI" Operation

When the Seat Heater Switch is set to the "HI" position, current flows through terminal 2 (1) of the Seat Heater Switch → terminal 7 (5) of the Seat Heater Switch → terminal A2 (A2) of the seat back side → the seat back, where it is divided into a parallel circuit. Then current flows through terminal B2 (B2) of the seat back → terminal 2 (2) of the seat cushion → terminal 1 (1) of the seat cushion → terminal B1 (B1) of the seat back → terminal A3 (A3) of the seat back → ground, so that the seat cushion can be warmed. At the same time, current also flows through terminal A1 (A1) of the seat back → terminal 5 (3) of the Seat Heater Switch → terminal 6 (4) of the Seat Heater Switch → ground, so that the seat back can be warmed.

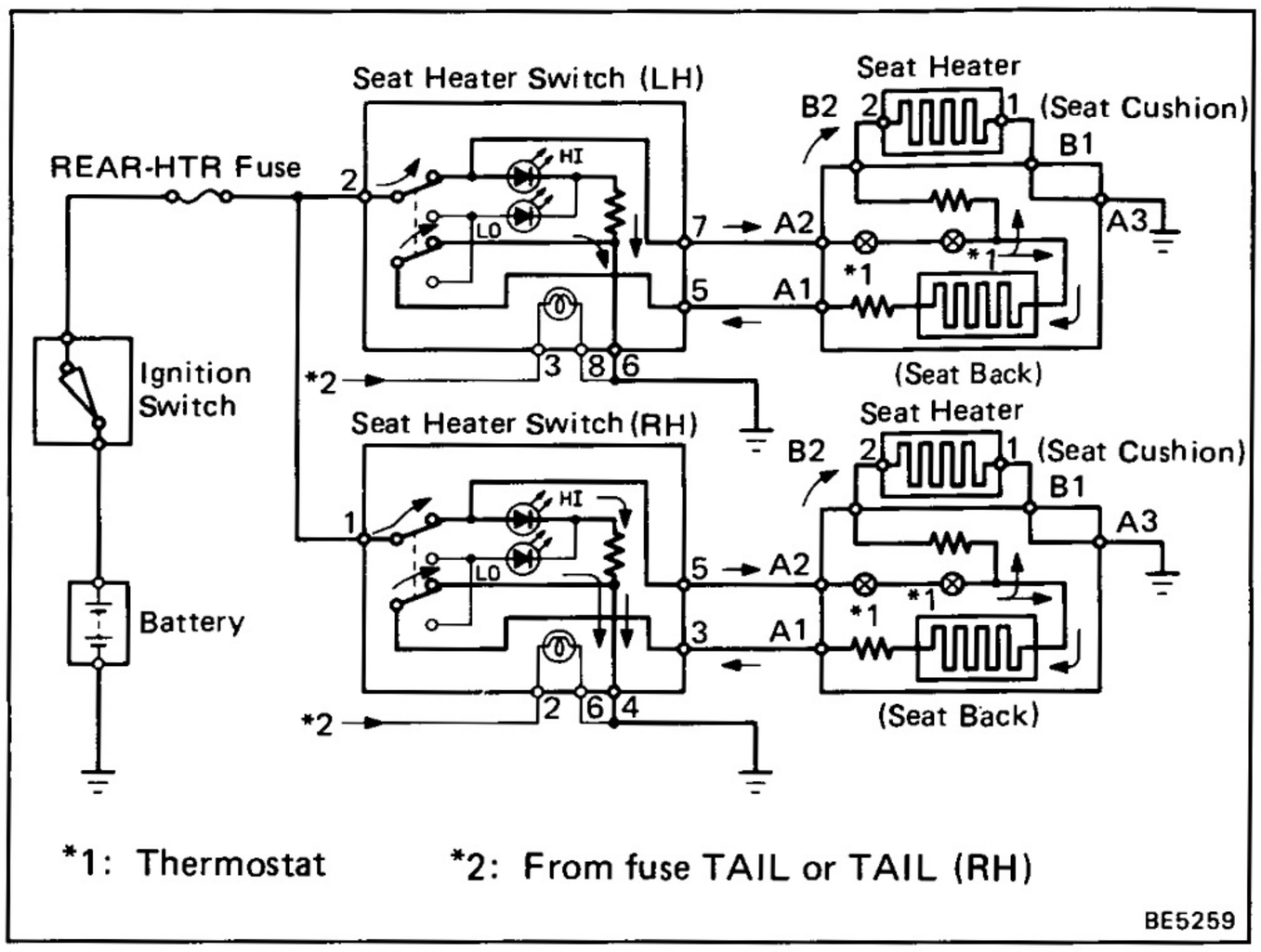

When the seat surface temperature reaches over approx. 40 °C (140 °F), current is shout off by the thermostat so that the temperature cannot increase any more. When it decreases below approx. 20 °C (68 °F), the contact is made again by the thermostat so that the seat can be warmed.

"LO" Operation

When the Seat Heater Switch is set to the "LO" position, current flows in series through terminal 2 (1) of the Seat Heater Switch → terminal 5 (3) of the Seat Heater Switch → terminal A1(A1) of the seat back → terminal B2 (B2) of the seat back → terminal 2 (2) of the seat cushion → terminal 1 (1) of the seat cushion → terminal B1 (B1) of the seat back → terminal A3 (A3) of the seat back → ground, so that the seat cushion and back can be warmed.

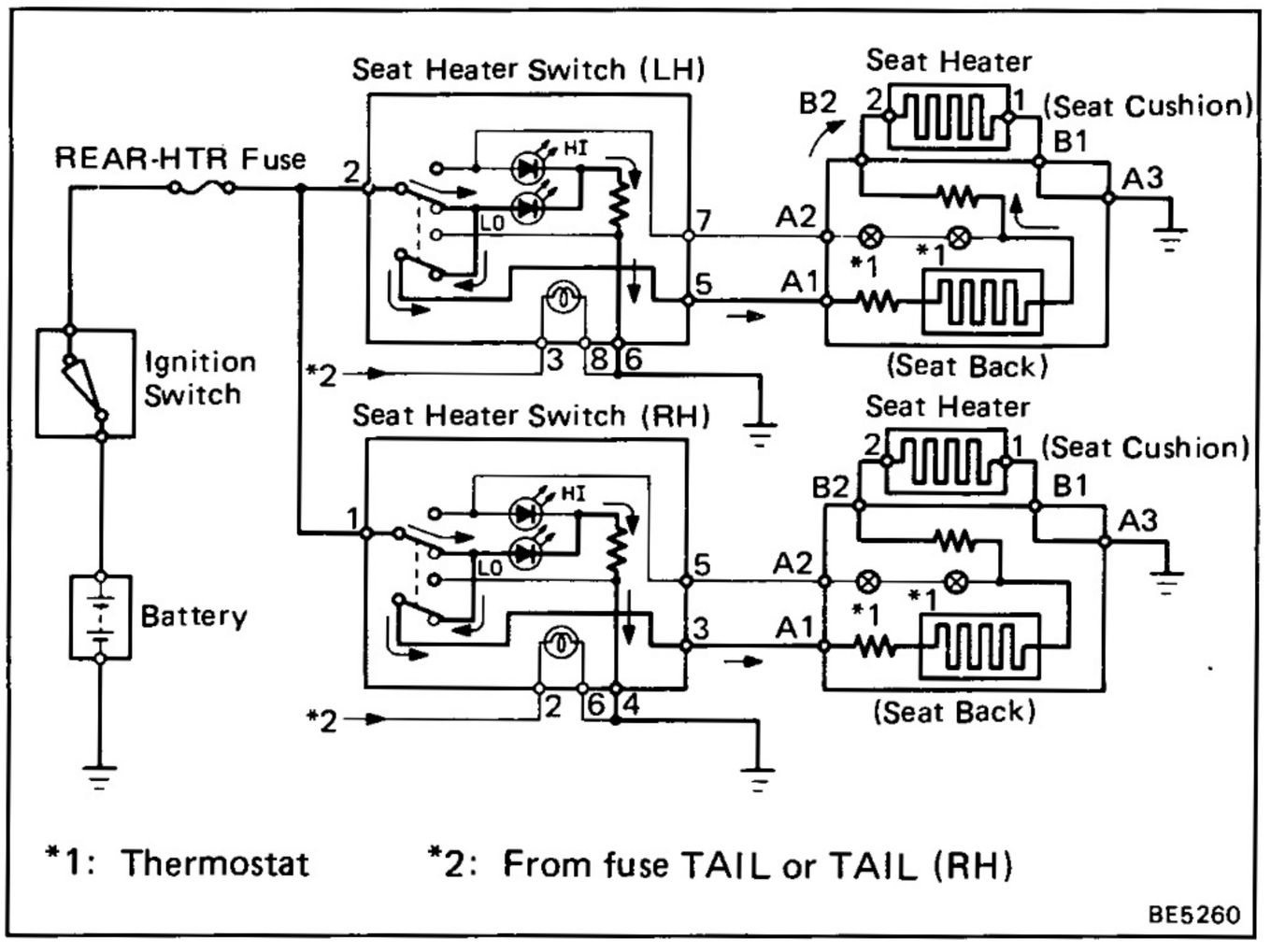

Troubleshooting

Problem	Possible cause	Remedy	Page
Seat heater do not operate	REAR-HTR fuse blown	Replace fuse and check for short	BE-4, 6
	Heat wire faulty	Check heat wire	BE-102
	Thermostat faulty	Check thermostat	BE-102
	Seat heater switch faulty	Check switch	BE-101
	Wiring or ground faulty	Repair as necessary	

Parts Inspection

1. INSPECT SEAT HEATER SWITCH

(Continuity)

( ): Right side

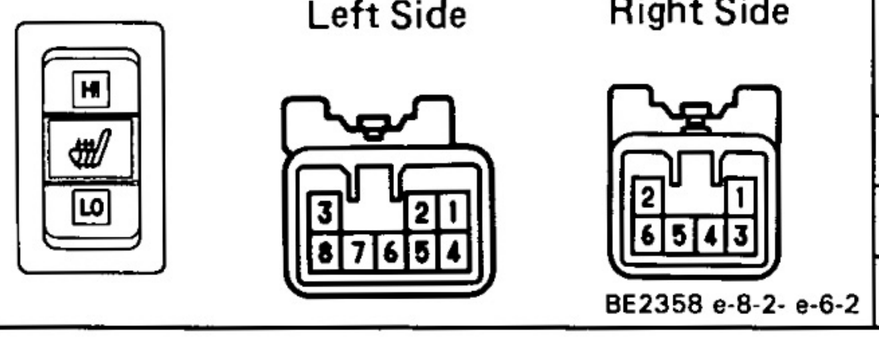

Terminal / Switch position	2 (1)	7 (5)	5 (3)	6 (4)	Illumination 3 (2)	Illumination 8 (6)
HI	○	○	○	○	○	○
OFF						
LO	○		○			

If continuity is not as specified, replace the switch.

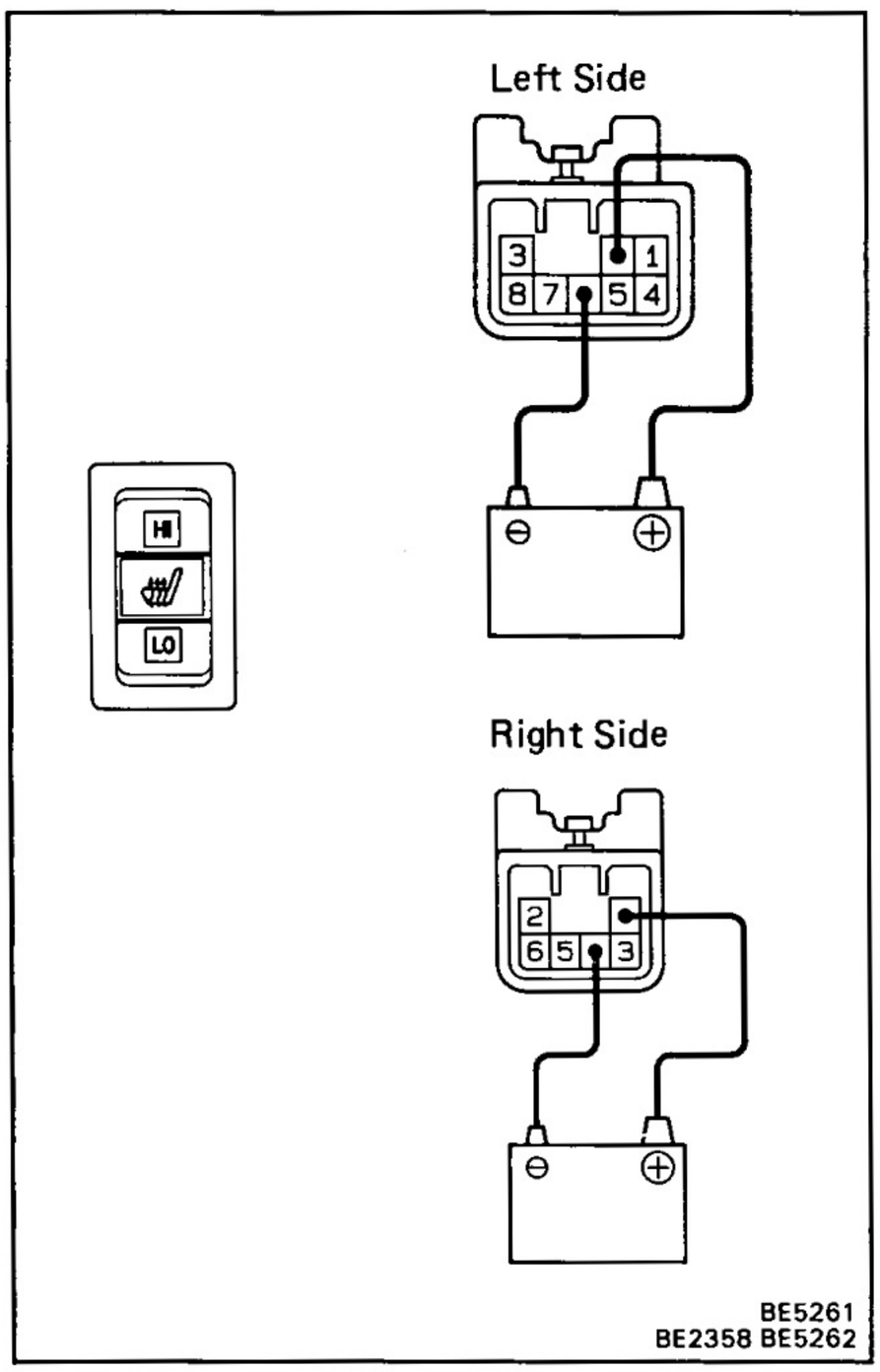

(Indicator Light/Operation)

(a) (Left side)
Connect the positive (+) lead from the battery to terminal 2 and the negative (−) lead to terminal 6.

(Right side)
Connect the positive (+) lead from the battery to terminal 1 and the negative (−) lead to terminal 4.

(b) Push the switch to HI or LO, check that the indicator light of the pushed side lights up.

If operation is not as specified, replace the switch.

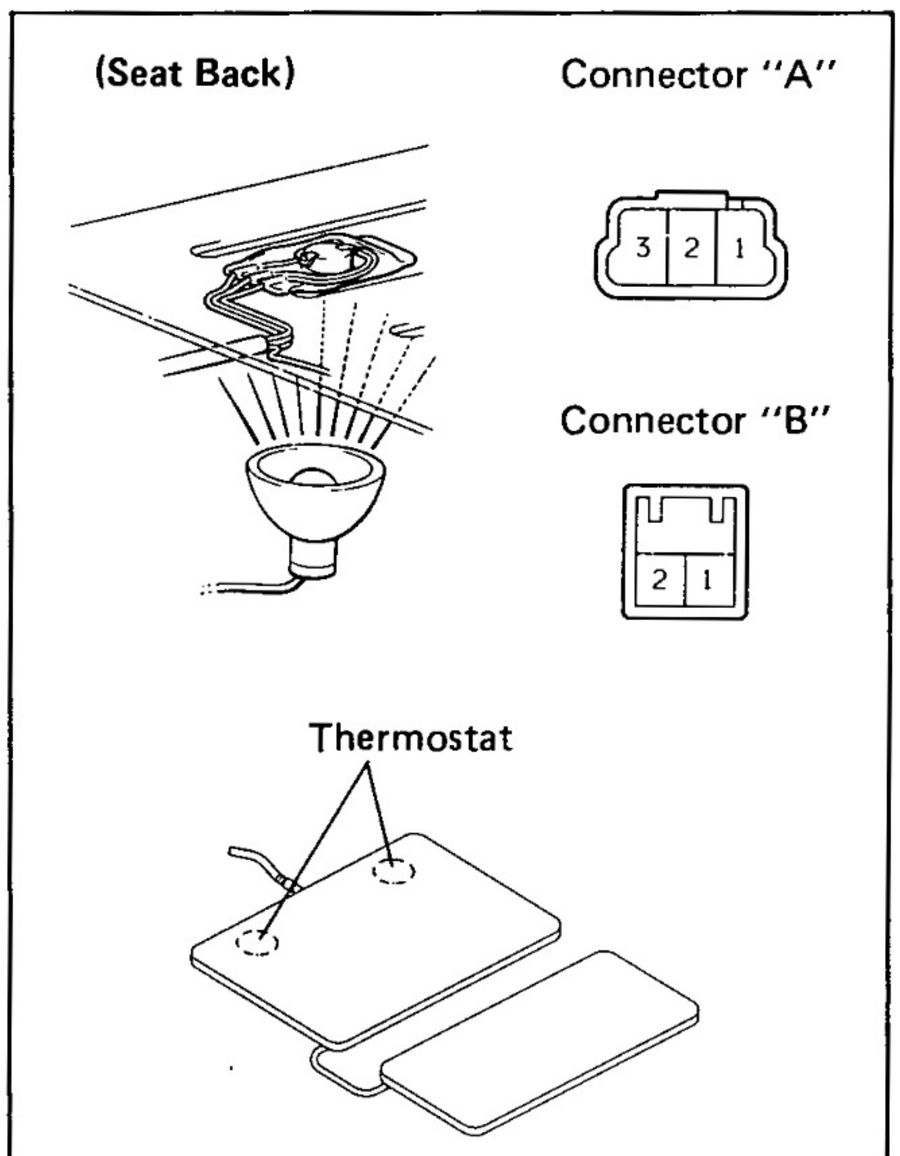

BE1417 GA-3-2
BE5041 G-2-2

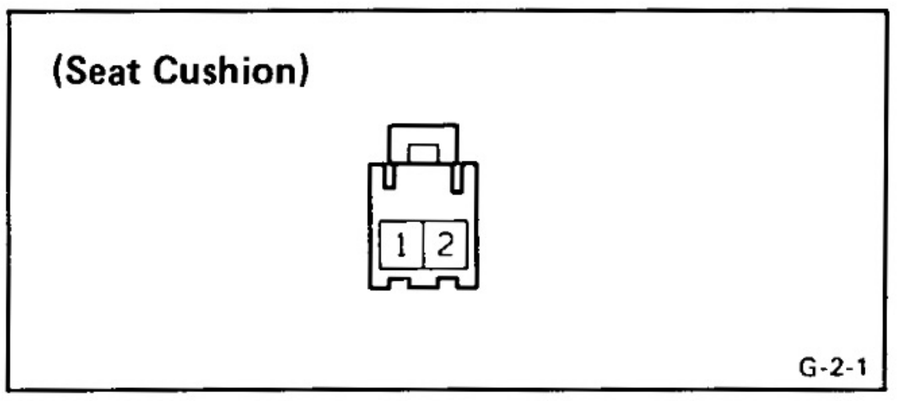

G-2-1

2. INSPECT SEAT HEATER

(Seat Back Side/Continuity)

Tester connection	Condition	Specified Value
A3 — B1	Constant	Continuity
A1 — B2	Constant	Continuity *1
A1 — A2	Heat the thermostat to apporx. 45°C (113°F) or more	No continuity
A2 — B2	Cool the thermostat to approx. 15°C (59°F) or less	Continuity

*1: There is resistance in the circuit.

If operation is not as specified, replace the seat heater.

(Seat Cushion Side/Continuity)

Check that there is continuity between terminals. If continuity is not as specified, replace the seat heater.

CRUISE CONTROL SYSTEM

Parts Location

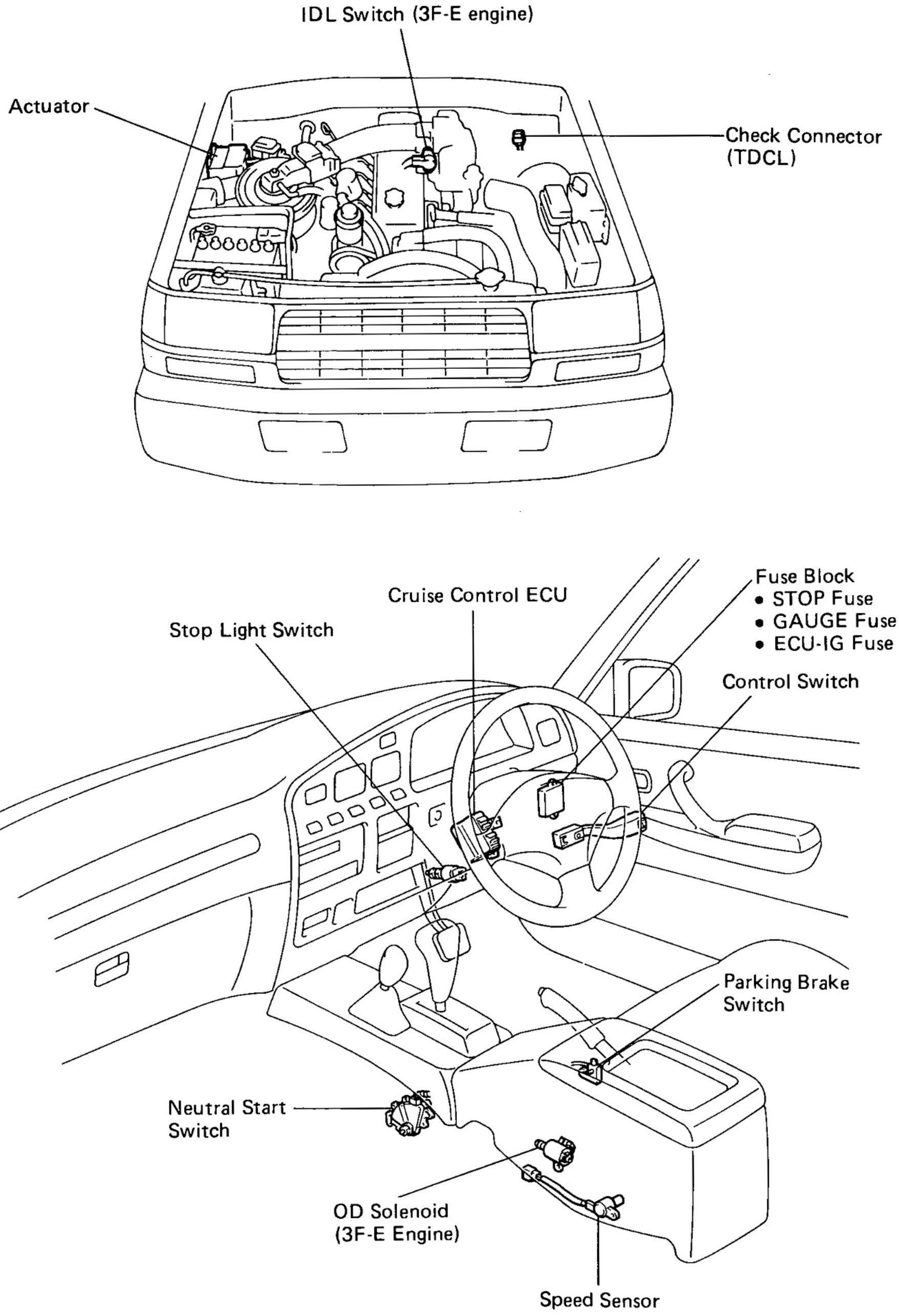

BE5263
BE5305

Wiring Diagram

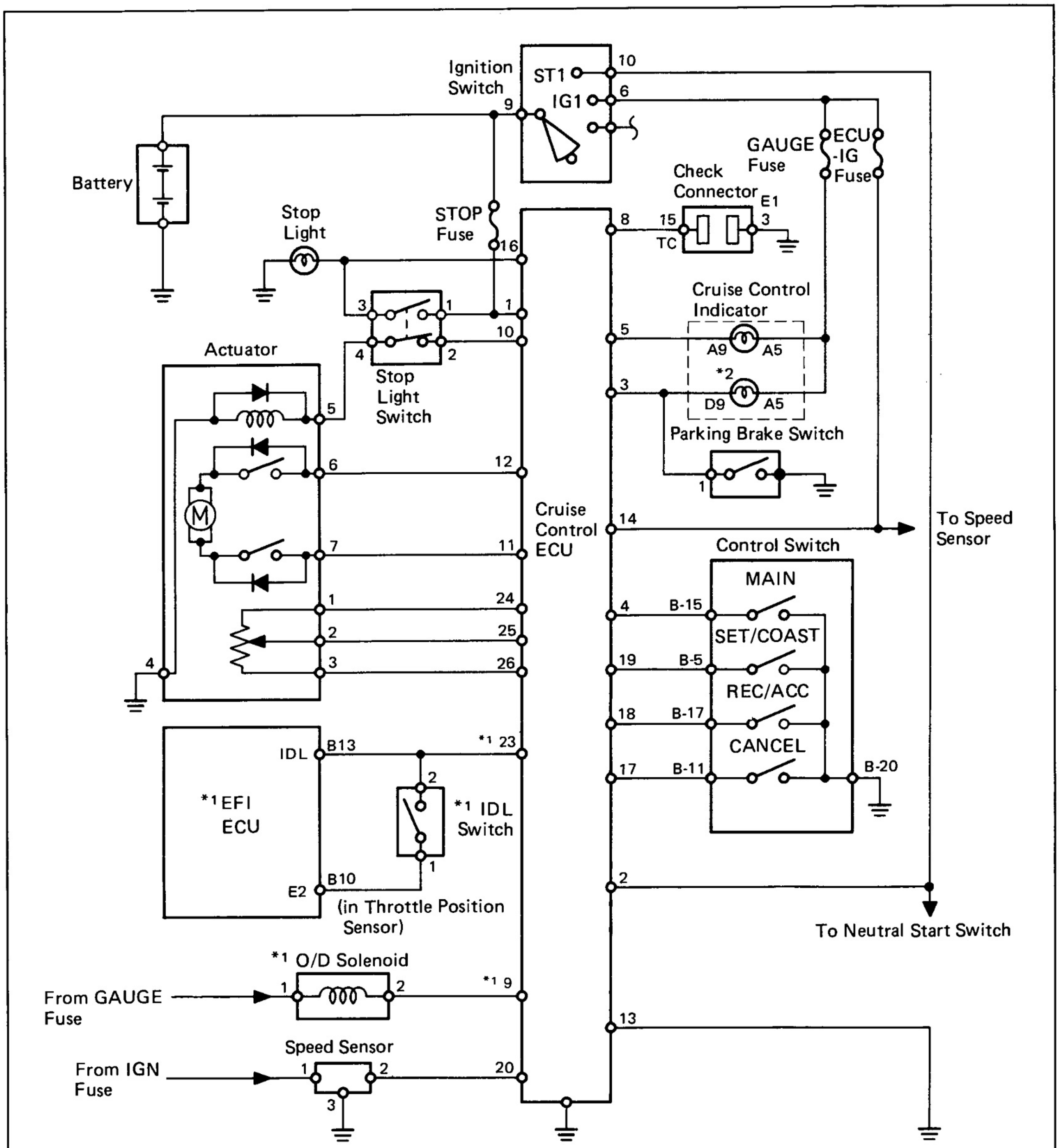

*1: 3F-E engine
*2: Brake Warning Light
[ ]: Combination Meter

The POWER SOURCE CIRCUIT has been simplified. For full details, see pages BE-10, 11.

BE5004

Connector Diagrams

Cruise Control ECU

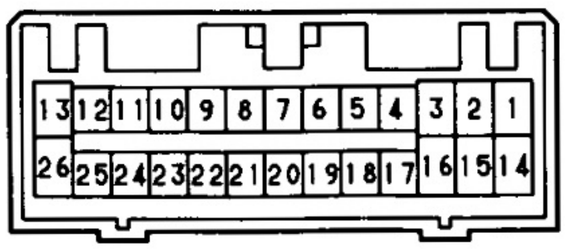

Control Switch (in Combination Switch)

Connector "A" Connector "B"

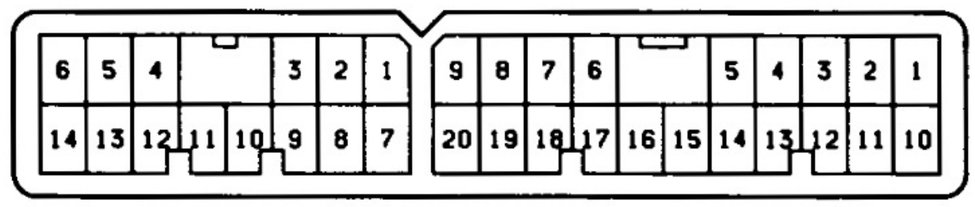

Stop Light Switch

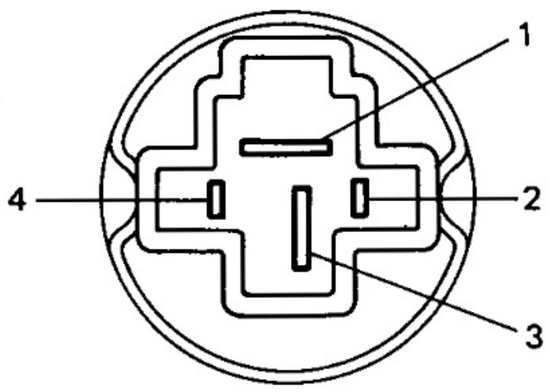

Parking Brake Switch

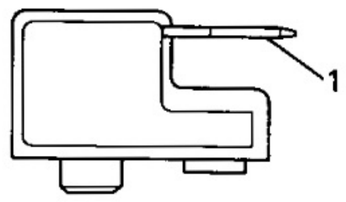

Speed Sensor



Actuator

O/D Solenoid
(3F-E)

Throttle Position Sensor
(3F-E)

Ignition Switch

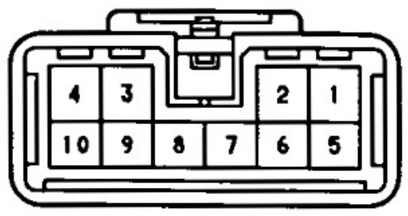

Check Connector
(TDCL)

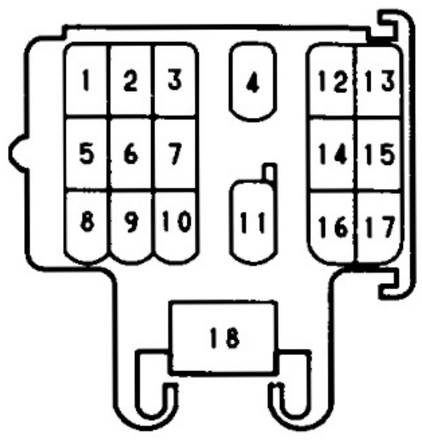

Combination Meter
(Cruise Control Indicator)

Connector "A"

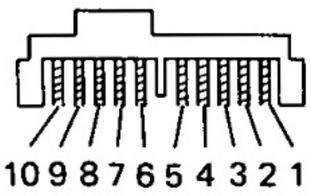

(Brake Warning)

Connector "D"

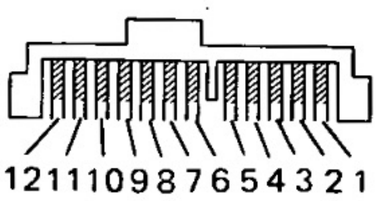

EFI ECU (3F-E)

Connector "C" Connector "B" Connector "A"

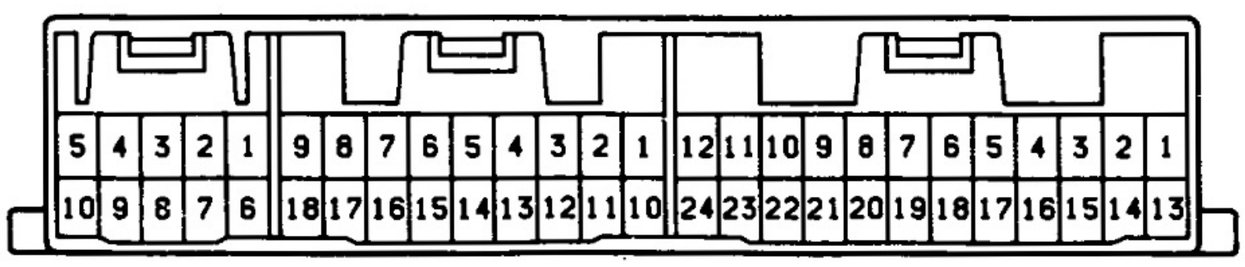

Vd-26-2-B V-34-2
BE0336 BE1412 IS-3-2-A
Ie-7-2 IS-3-2-A AC2241
BE2576
e-10-2-B SH-18-1 BE1266
R-52-2

System Description

- When the ignition switch is turned ON, current flows from the battery to terminal 14 of the cruise control (CC) ECU.
- Terminal 13 of the CC ECU is always grounded.

Basic Operation

HINT: For all explanations below, the ignition switch is in the ON position.

1. MAIN SWITCH OPERATION

When the main switch is pushed ON, current flows from terminal 4 of the CC ECU → terminal B-15 of the control switch → terminal B-20 of the switch → ground.

As a result, the CC ECU is on standby and terminal 5 of the CC ECU is grounded. Therefore the CC indicator lights up.

2. CONTROL SWITCH OPERATION

The control switch controls the SET, COAST, RESUME, ACCEL and CANCEL functions. When the control switch is turned to each position, current flows from terminals 19, 18 or 17 of the CC ECU → terminals B-5, B-11 or B-15 of the control switch → terminal B-20 of the switch → ground.

In the way, the CC ECU detects each position the control switch is turned to, and starts operation.

HINT: The SET function is detected by the CC ECU when the control switch released from SET/COAST.

3. SPEED CONTROL OPERATION

When the vehicle speed is set by the control switch, the ECU sends signal from terminal 10 → terminal 2 of the stop light switch → terminal 4 of the switch → terminal 5 of the actuator → (safety magnetic clutch) → terminal 4 of the actuator → ground.

At the same time, the CC ECU sends the signal from terminal 24 → terminal 1 of the actuator → (position sensor) → terminal 3 of the actuator → terminal 26 of the CC ECU. When the occurs, the position sensor sends the position of the actuator arm as a signal (voltage) from terminal 2 of the actuator to terminal 25 of the CC ECU.

When the actual vehicle speed drops below the set speed, the CC ECU sends a signal (voltage) from terminal 12 → terminal 6 of actuator → (motor) → terminal 7 of actuator → terminal 11 of CC ECU. This causes the motor to rotate the actuator arm in the throttle opening direction, increasing the vehicle speed. Then, when the arm reaches the prescribed angle, the CC ECU detects this at terminal 25 and stops the signal from 12.

When the actual vehicle speed rises above the set speed, the CC ECU sends a signal from terminal 11, turning the motor in the opposite direction so that the vehicle speed is reduced.

4. MANUAL CANCEL OPERATION

The CC system has the following methods of cancellation:

- **Speed Control Switch (CANCEL)**

  When the control switch is turned to CANCEL position.

- **Parking Brake Switch**

  When the parking brake lever is pulled, the parking brake switch is turned ON and sends a cancellation signal (ground voltage) to terminal 3 of the CC ECU.

- **Neutral Start Switch (A/T)**

  When the shift lever is set to ''N'' or ''P'' range, the neutral start switch is turned ON and sends a cancellation signal (ground voltage) to terminal 2 of the CC ECU.

- **Stop Light Switch**

  When the brake pedal is depressed, SW B of the stop light switch is turned OFF, the safty magnetic clutch (in actuator) is released, and SW A of the stop light switch is turned ON and sends a cancellation signal (battery voltage) to terminal 16 of the CC ECU.

When the CC ECU detects any of the above signals, it stops output of signals to the actuator, and cancels cruise control.

Diagnosis System

Output of Diagnostic Code

READ DIAGNOSTIC CODE

(Type A)

(a) Turn the ignition switch on.

(b) Turn the control switch to SET/COAST position, and keep it there.

(c) Push the main switch ON.

(d) Check that the indicator light "CRUISE" lights-up in the combination meter.

(e) Turn the SET/COAST switch off.

(f) Meet the conditions listed in the table below.

(g) Read the diagnosis code on the cruise control ingicator light.

No.	Conditions	Indication code	Diagnosis
1	Turn the control switch to SET/COAST position.	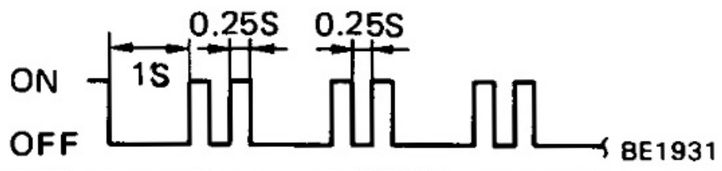	SET/COAST circuit is normal.
2	Turn the control switch to RES/ACC position.		RES/ACC circuit is normal.
3	Each cancel switch is turned ON. • Control switch (to CANCEL) • Stop light switch • Parking brake switch • Neutral start switch (to N or P range)	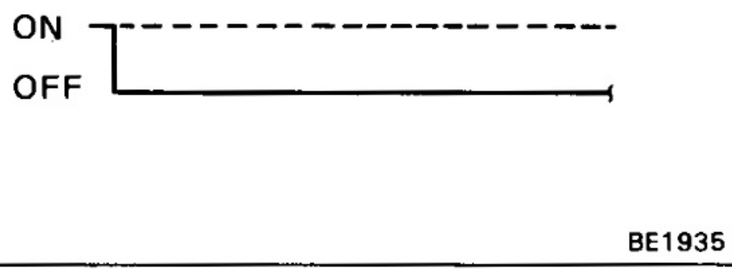	Each cancel switch is normal.
4	Drive at approx. 40 km/h (25 mph) or below.	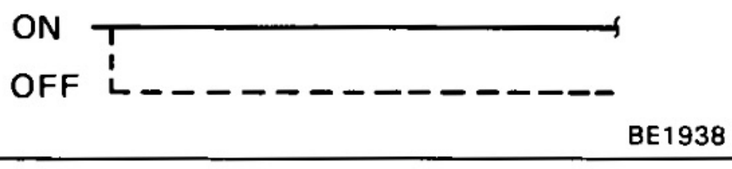	Speed sensor circuit is normal.
	Drive at approx. 40 km/h (25 mph) or over	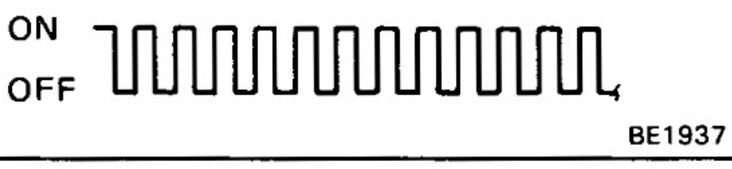	Speed sensor circuit is normal.

HINT:

- Indication codes appear in order from No.1.
- If there is no indication code, perform troubleshooting and inspection. (See page BE-110)
- Indication is stopped when the MAIN switch is repushed.

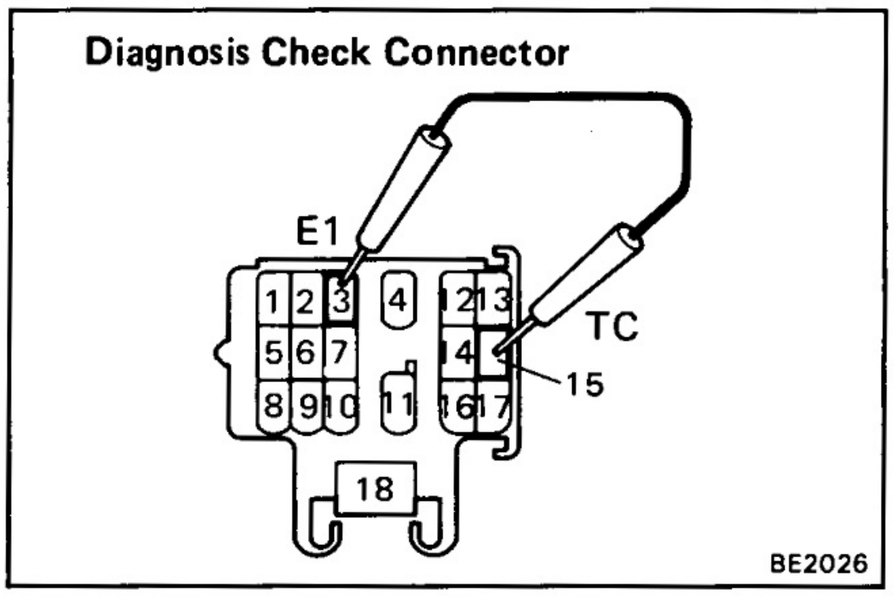

(Type B)

(a) If while driving with the cruise control on, the system is canceled by a malfunction in either the actuator, speed sensor or speed control switch circuit, the cruise control indicator light "CRUISE" will blink 5 times.

(b) While stopped, connect terminals 3 and 15 of the check connector.

HINT: If the ignition switch is turned off, the diagnostic code will be erased from the computer memory.

(c) Read the diagnostic code on the indicator light "CRUISE".

Indication code		Diagnosis
	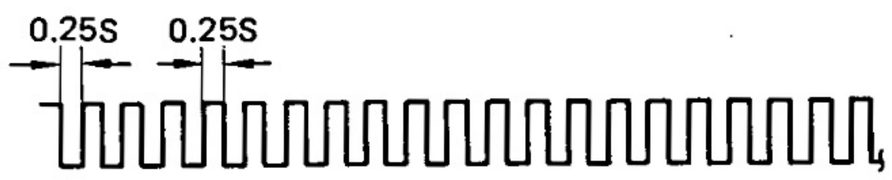 BE1939	Normal
11	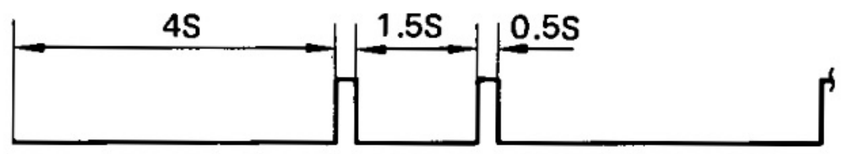 BE1940	Excessive current flowed to motor or safety magnetic clutch drive circuit.
12	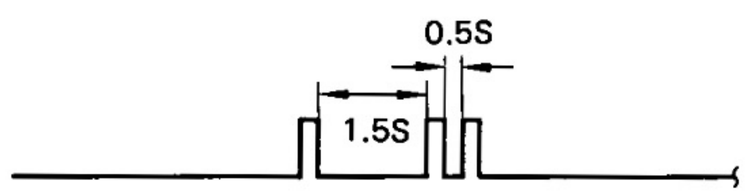 BE2711	Open circuit in safety magnetic clutch circuit.
13	 BE4344	• Position sensor circuit abnormal. • Open circuit in motor.
21	 BE1941	Vehicle speed signal not sent for 140 msec. or longer
23	 BE1943	*Vehicle speed has decreased by 16 km/h (10 mph) or more from the set speed during cruising.
31	 BE1944	RESUME/ACCEL switch is ON always when MAIN switch is pushed ON.
33	 BE2712	SET/COAST switch signal and RES/ACC switch signal turned on simultaneously.

CONTINUED ON NEXT PAGE

CONTINUED FROM PREVIOUS PAGE

Indication code		Diagnosis
41	 BE4345	ECU malfunction.
* If the set speed can be maintained when the speed control switch is again set at SET/COAST, there is no malfunction.		

HINT:

- Indication codes appear in order from No.11.
- If there is no indication code, perform troubleshooting and inspection. (See page BE-110)

Troubleshooting

You will find the source of the trouble more easily by properly using the table shown below. In this table, the numbers indicate the order of priority of the causes of trouble. Check each part in the order shown.

Chart No.				D	C	C	F	H	G	E	I	J		
Inspection Item / Diagnosis Code / Problem	Type B	Type A		CC ECU	Actuator	Main Switch (in Control Switch)	Control Switch	Stop Light Switch	Neutral Start Switch	Parking Brake Switch	Speed Sensor, or Speedometer Cable	OD Solenoid Circuit (3F-E engine)	Throttle Position Sensor (3F-E engine)	Speed Control Cable and Control Link	Other Parts
• "CRUISE" indicator light blinks 5 times. • Cruise control system does not set. • Cruise control system does not operate.	11			2	1										
	12			3	1			2							
	21			2							1				
	23				3						2			1	
	31			2			1								
	33			2			1								
	41			1											
	Normal	4	OK	8	7	1	2	3	4	5				6	9*
			NG	2							1				
Set speed deviates on high or low side.				4	3						1			2	
Large speed increase or speed drop when the speed control switch turned to SET.				3	2								1		
Vehicle speed fluctuates when speed control switch turned to SET.				4	3						1			2	
Set speed does not cancel when brake pedal depressed.	3		OK	3	1			2							
			NG	2				1							
Set speed does not cancel when parking brake lever pulled.	3		OK	2	1										
			NG	2						1					
Set speed does not cancel when shifted to "N" range.	3		OK	2	1										
			NG	2					1						
Vehicle speed does not decrease when speed control switch turned to COAST.	1		OK	4	1						3			2	
			NG	2			1								
Vehicle speed does not accelerate when speed control switch turned to ACCEL.	2		OK		1						3	4		2	
			NG	2			1								
Vehicle speed does not return to memorized speed when control switch turned on RESUME.	2		OK	4	1						3			2	
			NG	2			1								
Set speed does not cancel when speed control switch turned to CANCEL.	3		OK	2	1										
			NG	2			1								
Speed can be set below about 40 km/h (25 mph).	4		OK	2	1										
			NG	2							1				
Cruise control will not disengage even at about 40 km/h (25 mph).	4		OK	2	1										
			NG	2							1				
Acceleration response is sluggish when speed control switch turned to "ACCEL" or "RESUME".				6	3		1					4	5	2	

*: Inspect the wire harness.

A POWER SOURCE CIRCUIT

HINT: While carrying out the following inspection, make certain that the connectors and terminals are properly connected.

Is ECU-IG fuse normal?

No

Replace fuse and turn ignition switch ON.
Is fuse normal?

Yes

Fuse faulty.

Yes

No

CC EUC

Disconnect connector from CC ECU and inspect connector on wire harness side as follows.

Disconnect connectors from CC ECU.
Replace fuse and turn ignition switch ON.
Is fuse normal?

No

Short circuit in wire harness on vehicle side.

Yes

Replace CC ECU. The recheck system.

INSPECT GROUND CONNECTION
Is there continuity between terminal 13 and ground?

No

- Open circuit in wire harness between terminal 13 of CC ECU and ground.
- Ground faulty.

Yes

INSPECT POWER SOURCE
Turn ignition switch ON.
Is there battery voltage between terminal 14 and ground?

No

Open circuit in wire harness between terminal 14 of CC ECU and ground.

Yes

Replace CC ECU. Then recheck system.

CC: Cruise Control

B CRUISE CONTROL INDICATOR CIRCUIT

HINT: While carrying out the following inspection, make certain that the connectors and terminals are properly connected.

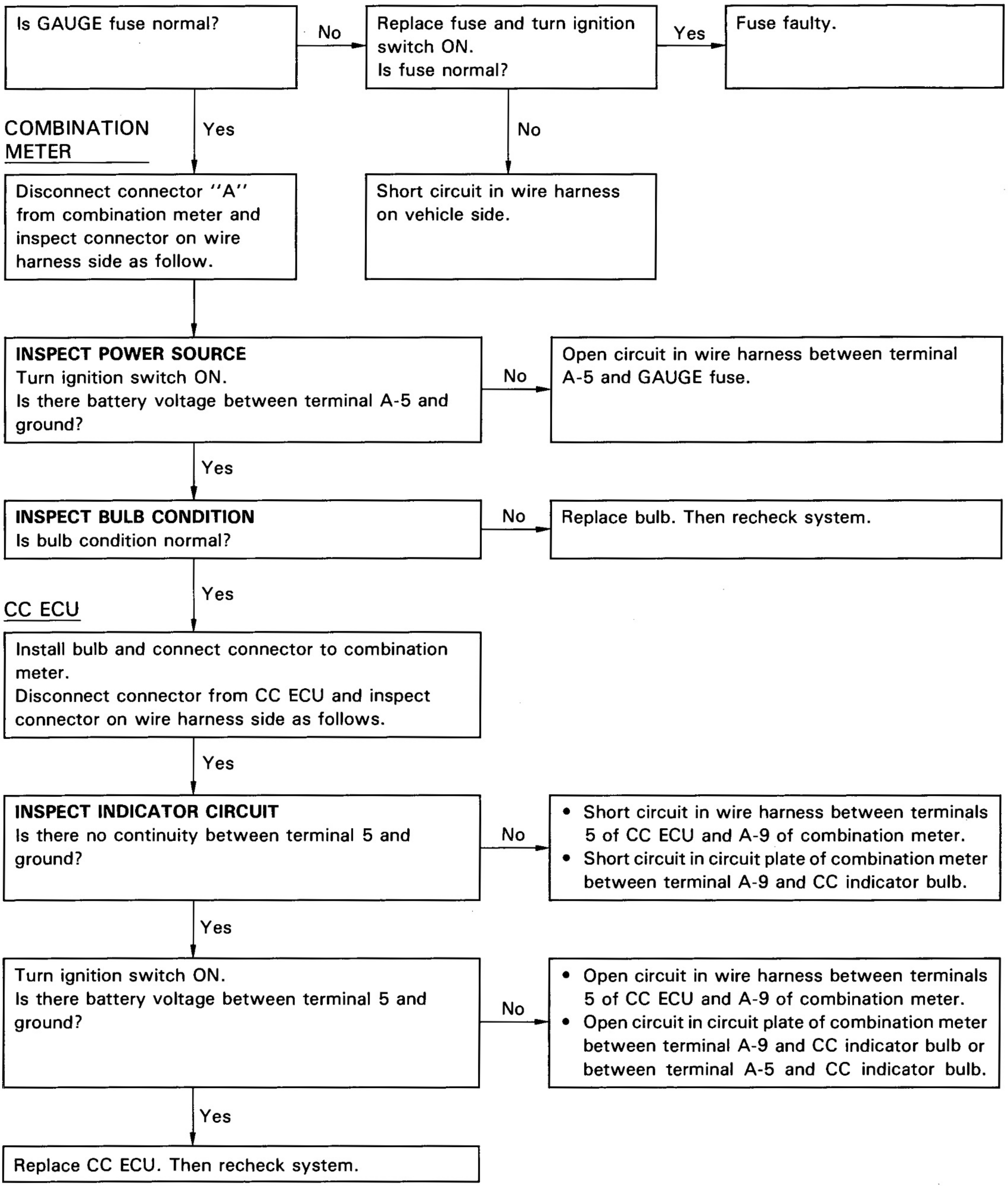

CC: Cruise Control

C CONTROL SWITCH CIRCUIT

HINT: While carrying out the following inspection, make certain that the connectors and terminals are properly connected.

CONTROL SWITCH

Disconnect connector from control switch and inspect connector on wire harness side as follows.

INSPECT GROUND CONNECTION
Is there continuity between terminal B-20 and ground?

No → • Open circuit in wire harness between terminal B-20 of control switch and ground.
• Ground faulty.

Yes

INSPECT CONTROL SWITCH (See page BE-123)
Is control switch operation normal?

No → Replace control switch. Then recheck system.

Yes

CC ECU

Connect connector to control switch.
Disconnect connectors from CC ECU and inspect connectors on wire harness side as follows.

INSPECT MAIN SWITCH CIRCUIT
Is there no continuity between terminal 4 and ground with main switch OFF?

No → Short circuit in wire harness between terminals 4 of CC ECU and B-15 of control switch.

Yes

Is there continuity between terminal 4 and ground with main switch ON?

No → Open circuit in wire harness between terminals 4 of CC ECU and B-15 of control switch.

Yes

INSPECT CONTROL SWITCH CIRCUIT
Is there no continuity between terminal 19, 18 or 17 and ground with control switch OFF?

No → Short circuit in wire harness between terminals 19, 18, 17 of CC ECU and B-5, B-17, B-11 of control switch.

Yes

Is there continuity as shown in table below between terminal XX and ground when control switch is turned to each position?

Position	Terminal XX
SET/COAST	19
RES/ACC	18
CANCEL	17

No → Open circuit in wire harness between terminals XX of CC ECU and YY of control switch.

Terminal XX	Terminal YY
18	B—17
19	B—5
17	B—11

Yes

Replace CC ECU. Then recheck system.

CC: Cruise Control

D ACTUATOR CIRCUIT

HINT: While carrying out the following inspection, make certain that the connectors and terminals are properly connected.

ACTUATOR

Disconnect connector from actuator and inspect connector on wire harness side as follows.

↓

INSPECT GROUND CONNECTION
Is there continuity between terminal 4 and ground?

No → • Open circuit in wire harness between terminal 4 of actuator and ground.
• Ground faulty.

↓ Yes

INSPECT ACTUATOR (See page BE-124)
Is actuator operation normal?

No → Replace actuator. Then recheck system.

↓ Yes

STOP LIGHT SWITCH

INSPECT STOP LIGHT SWITCH INSTALLATION
Is stop light switch installed properly?

No → Reinstall stop light switch properly. Then recheck system.

↓ Yes

Connect connector to actuator.
Disconnect connector from stop light switch and inspect connector on wire harness side as follows.

↓

INSPECT SAFETY MAGNETIC CLUTCH CIRCUIT
Is there approx. 38.5 Ω between terminal 4 and ground?

No → Open or short circuit in wire harness between terminals 4 of stop light and 5 of actuator.

↓ Yes

INSPECT STOP LIGHT SWITCH (See page BE-123)
Is stop light switch operation normal?

No → Replace stop light switch. Then recheck system.

↓ Yes

CONTINUED ON NEXT PAGE

CC: Cruise Control

CONTINUED FROM PREVIOUS PAGE

CC ECU

Connect connector to stop light switch.
Disconnect connectors from CC ECU and inspect connectors on wire harness side as follows.

INSPECT SAFETY MAGNETIC CLUTCH CIRCUIT
Is there approx. 38.5 Ω between terminal 10 and ground?

No → Open or short circuit in wire harness between terminals 10 of CC ECU and 5 of actuator.

Yes

INSPECT MOTOR CIRCUIT
Is there no continuity between terminal 12 and ground?

No → Short circuit in wire harness between terminals 12 of CC ECU and 6 of actuator.

Yes

Is there no continuity between terminal 11 and ground?

No → Short circuit in wire harness between terminals 11 of CC ECU and 7 of actuator.

Yes

Is there continuity between terminals 12 and 11 with actuator arm in a position except max. open or max. close?

No → Open circuit in wire harness between terminals 12 of CC ECU and 6 of actuator or between terminals 11 of CC ECU and 7 of actuator.

Yes

INSPECT POSITION SENSOR CIRCUIT
Is there no continuity between terminal 24 and ground?

No → Short circuit in wire harness between terminals 24 of CC ECU and 1 of actuator.

Yes

Is there approx. 2 kΩ between terminals 24 and 26?

No →
- Open circuit in wire harness between terminals 26 of CC ECU and 3 of actuator.
- Open circuit in wire harness between terminals 24 of CC ECU and 1 of actuator.

Yes

Does resistance change even between terminals 26 and 25?

No → Open or short circuit in wire harness between terminals 25 of CC ECU and 2 of actuator.

Yes

Replace CC ECU. Then recheck system.

CC: Cruise Control

E SPEED SENSOR CIRCUIT

HINT: While carrying out the following inspection, make certain that the connectors and terminals are properly connected.

SPEED SENSOR

Disconnect connector from speed sensor and inspect connector on wire harness side as follows.

↓

INSPECT GROUND CONNECTION
Is there continuity between terminal 3 and ground?

No → • Open circuit in wire harness between terminal 3 of speed sensor and ground.
• Ground faulty.

↓ Yes

INSPECT SPEED SENSOR (See page BE-123)
Is speed sensor operation normal?

No → Replace speed sensor. Then recheck system.

↓ Yes

CC ECU

Connect connector to speed sensor.
Disconnect connector from CC ECU and inspect connector on wire harness side as follows.

↓

INSPECT SPEED SENSOR CIRCUIT
Is there continuity repeatedly between terminal 20 and ground?

No → • Open or short circuit in wire harness between terminals 20 of CC ECU and 2 of speed sensor.

↓ Yes

Replace CC ECU. Then recheck system.

CC: Cruise Control

F STOP LIGHT SWITCH CIRCUIT

HINT: While carrying out the following inspection, make certain that the connectors and terminals are properly connected.

INSPECT STOP LIGHT SYSTEM
Is stop light system operation normal?
- Yes → Inspect CC ECU on next page.
- No →

Is STOP fuse normal?
- No → Replace fuse. Is fuse normal?
  - Yes → Fuse faulty.
  - No →

Disconnect connector from CC ECU and replace fuse. Is fuse normal?
- No →
  - Short circuit in wire harness between terminal 1 of stop light switch and STOP fuse.
  - Short circuit in wire harness between terminal 16 of CC ECU and STOP fuse.
- Yes →

Replace fuse and depress brake pedal. Is fuse normal?
- No →
  - Short circuit in wire harness between terminal 3 of stop light switch and stop light.
  - Short circuit in wire harness between terminals 1 of CC ECU and 3 of stop light switch.
- Yes →

Replace CC ECU. Then recheck system.

Is STOP fuse normal?
- Yes →

STOP LIGHT SWITCH

INSPECT STOP LIGHT SWITCH INSTALLATION
Is stop light switch installed properly?
- No → Reinstall stop light switch properly. Then recheck system.
- Yes →

CC: Cruise Control

CONTINUED ON NEXT PAGE

CONTINUED FROM PREVIOUS PAGE

STOP LIGHT SWITCH

Disconnect connector from stop light switch and inspect connector on wire harness side as follows.

INSPECT POWER SOURCE
Is there battery voltage between terminal 1 and ground?

No → Open circuit in wire harness between terminal 1 of stop light switch and STOP fuse.

Yes

INSPECT STOP LIGHT CIRCUIT
Connect terminals 1 and 3.
Do stop lights light up?

No →
- Open circuit in wire harness between terminal 3 of stop light switch and ground.
- Ground faulty.

Yes

INSPECT STOP LIGHT SWITCH (See page BE-123)
Is stop light switch operation normal?

No → Replace stop light switch. Then recheck system.

Yes

CC ECU

Connect connector to stop light switch.
Disconnect connector from CC ECU and inspect connector on wire harness side as follows.

If stop light system operation is normal, start inspection from this step.

INSPECT STOP LIGHT SWITCH CIRCUIT
Is there battery voltage between terminal 1 and ground?

No → Open circuit in wire harness between terminal 1 of CC ECU and STOP fuse.

Yes

Is there battery voltage between terminal 16 and ground when brake pedal depressed?

No → Open circuit in wire harness between terminals 16 of CC ECU and 3 of stop light switch.

Yes

Replace CC ECU. Then recheck system.

CC: Cruise Control

G PARKING BRAKE SWITCH CIRCUIT

HINT: While carrying out the following inspection, make certain that the connectors and terminals are properly connected.

INSPECT PARKING BRAKE SWITCH
(See page BE-63)
Is parking brake switch operation normal?

No → Replace parking brake switch. Then recheck system.

Yes

CC ECU

Connect connector to parking brake switch.
Disconnect connector from CC ECU and inspect connector on wire harness side as follows.

INSPECT PARKING BRAKE SWITCH CIRCUIT
Is there continuity between terminal 3 and ground when parking brake lever is pulled?

No → Short circuit in wire harness between terminal 3 of CC ECU and parking brake switch.

Yes

Is there no continuity between terminal 3 and ground when parking brake lever is released?

No → Open circuit in wire harness between terminal 3 of CC ECU and parking brake switch.

Yes

Replace CC ECU. Then recheck system.

CC: Cruise Control

H NEUTRAL START SWITCH CIRCUIT

HINT: While carrying out the following inspection, make certain that the connectors and terminals are properly connected.

INSPECT STARING SYSTEM
Is starting system normal?

No → Repair staring system. Then recheck system.

Yes ↓

CC ECU

Disconnect conncetor from CC ECU and inspect connector on wire harness side as follows.

↓

INSPECT NEUTRAL START SWITCH CIRCUIT
Is there continuity between terminal 2 and ground when shift lever is shifted to P or N range?

No → Open circuit in wire harness between terminals 2 of CC ECU and neutral start switch.

Yes ↓

Is there no continuity between terminal 2 and ground when shift lever is shifted to L, 2, 3, or R range?

No → Short circuit in wire harness between terminals 2 of CC ECU and neutral start switch.

Yes ↓

Replace CC ECU. Then recheck system.

CC: Cruise Control

I OD SOLENOID CIRCUIT (w/ 3F-E Engine)

HINT: While carrying out the following inspection, make certain that the connectors and terminals are properly connected.

INSPECT ECT SYSTEM
Is ECT system normal?

No → Repair ECT system. Then recheck system.

Yes ↓

CC ECU

Disconnect connector from CC ECU and inspect connector on wire harness side as follows.

↓

INSPECT OD SOLENOID
(See page AT-28)
Is OD solenoid operation normal?

No → Replace OD solenoid. Then recheck system.

Yes ↓

Replace CC ECU. Then recheck system.

CC: Cruise Control

J IDL SIGNAL CIRCUIT (w/ 3F-E Engine)

HINT: While carrying out the following inspection, make certain that the connectors and terminals are properly connected.

THROTTLE POSITION SENSOR

INSPECT THROTTLE POSITION SENSOR ADJUSTMENT (Refer to FI Section of ENGINE Repair Manual.) Is throttle position sensor adjustment normal?

No → Adjust position sensor position. Then recheck system.

Yes ↓

INSPECT THROTTLE POSITION SENSOR (Refer to FI Section of ENGINE Repair Manual.) Is throttle postion sensor operation normal?

No → Replace throttle position sensor. Then recheck system.

Yes ↓

CC ECU

Connect connector to throttle position sensor. Disconnect connector from CC ECU and inspect connector on wire harness side as follows.

↓

INSPECT IDL SIGNAL CIRCUIT Is there continuity between terminal 23 and ground when acceleration pedal is released?

No → Open circuit in wire harness between terminals 23 of CC ECU and 2 of throttle position sensor.

Yes ↓

Is there no continuity between terminal 23 and ground when acceleration pedal is depressed?

No → Short circuit in wire harness between terminals 23 of CC ECU and 2 of throttle position sensor.

Yes ↓

Replace CC ECU. Then recheck system.

CC: Cruise Control

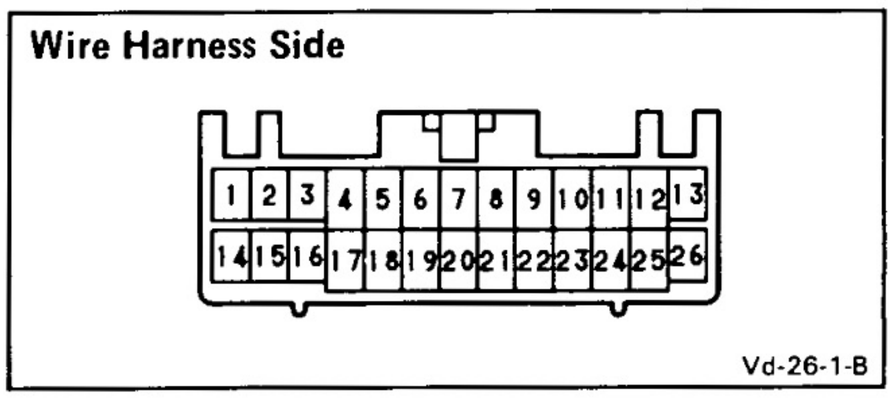

Cruise Control ECU Circuit

INSPECT ECU CIRCUIT

Disconnect connector and inspect connector on wire harness side as shown in the chart.

Check for	Measured item	Tester connection	Condition		Specified value
Continuity	Neutral start switch	2 — ground	Shift lever position	N or P	Continuity
				L, 2, D or R	No continuity
	Parking brake switch	3 — ground	Parking brake lever position	released	No continuity
				pulled	Continuity
	Control switch	4 — ground	Main switch position	OFF	No continuity
				ON	Continuity
	Ground connection	13 — ground	Constant		Continuity
	Control switch	18 — ground	Control switch position	RES/ACC	Continuity
		19 — ground	Control switch position	SET/COAST	Continuity
		17 — ground	Control switch position	CANCEL	Continuity
	Actuator (motor)	*11 — 12	Actuator arm position	max. OPEN	(12 → 11) Continuity
				max. CLOSE	(11 → 12) Continuity
				any position except above position	(12 → 11) Continuity
	TDCL circuit	8 — ground	Constant		No continuity
			Terminals Tc and E1 connected		Continuity
	Throttle position sensor (IDL: 3F-E Engine)	23 — ground	Acceleration pedal position	released	Continuity
				depressed	No continuity
	Speed sensor	20 — ground	With ignition switch ON, speedometer shaft or speed sensor shaft turned.		Continuity ↕ No continuity
Resistance	Actuator (position sensor)	24 — 26	Constant		Approx. 2 kΩ
		24 — 25	Actuator arm turned		Resistance change even
	Actuator (Safety magnetic clutch)	10 — ground	Brake pedal position	released	Approx. 38.5 Ω
				depressed	No continuity
Voltage	Power source	14 — ground	Ignition switch position	LOCK or ACC	No voltage
				ON	Battery voltage
	STOP fuse	1 — ground	Constant		Battery voltage
	Stop light	16 — ground	Brake pedal position	released	No voltage
				depressed	Battery voltage
	O/D solenoid valve (3F-E Engine)	9 — ground	Ignition switch position	LOCK or ACC	Battery voltage
				ON	No voltage

*: This circuit includes the diode. If the circuit shown no continuity, change the positive and negative proves and recheck system.

If circuit is as specified, try another ECU.
If circuit is not as specified, refer to BE-104 wiring diagram and inspect the circuits connected to other parts.

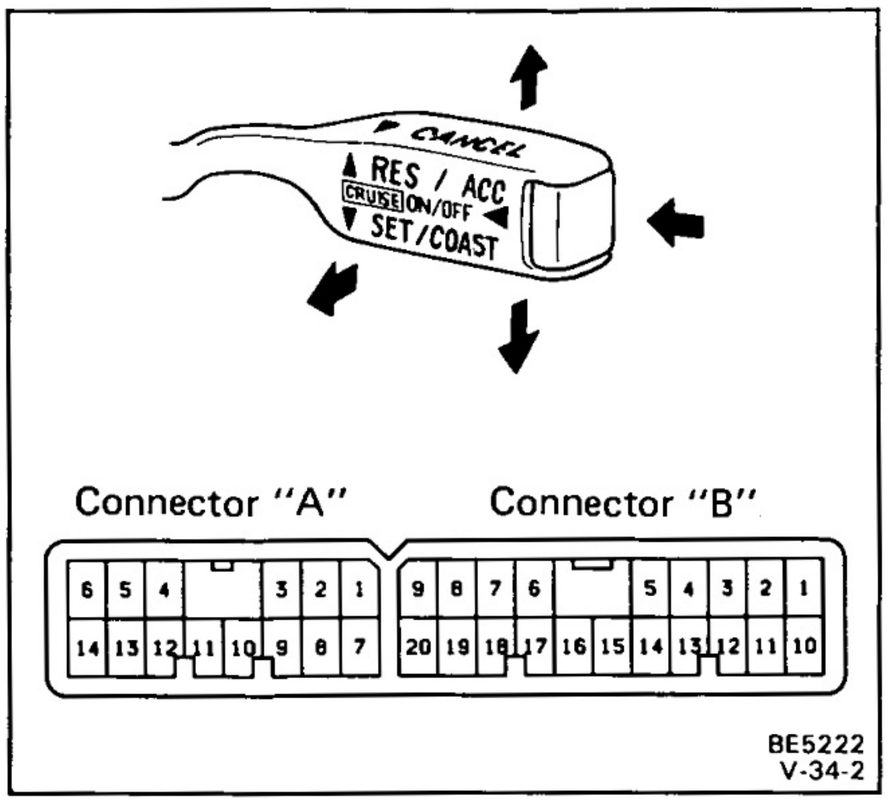

Parts Inspection

1. INSPECT SWITCHES (Control Switch/Continuity)

	Terminal / Switch position	B20	B11	B5	B17	B15
Main	ON	○				○
	OFF					
Control	RES/ACC	○			○	
	SET/COAST	○		○		
	CANCEL	○	○			

If the continuity is not as specified, replace the control switch.

(Stop Light Switch/Continuity)

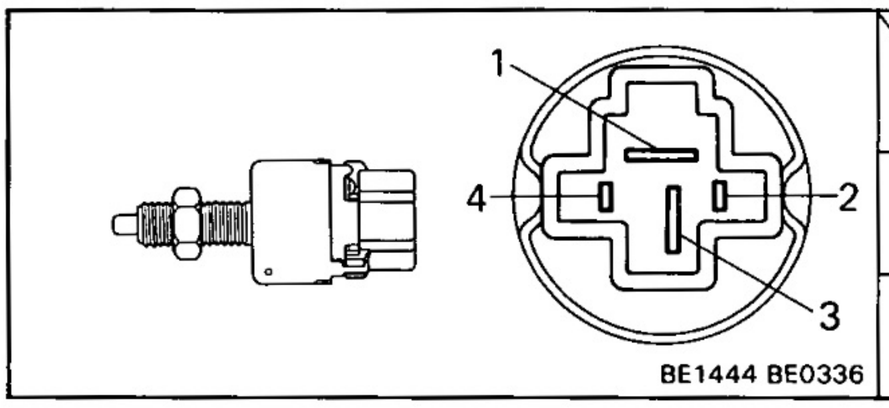

Terminal / Switch position	1	2	3	4
Switch pin free (Brake pedal depressed)	○		○	
Switch pin pushed in (Brake pedal released)		○		○

If continuity is not as specified, replace the stop light switch.

(Neutral Start Switch)

See page AT-28.

(Parking Brake Switch)

See page BE-63.

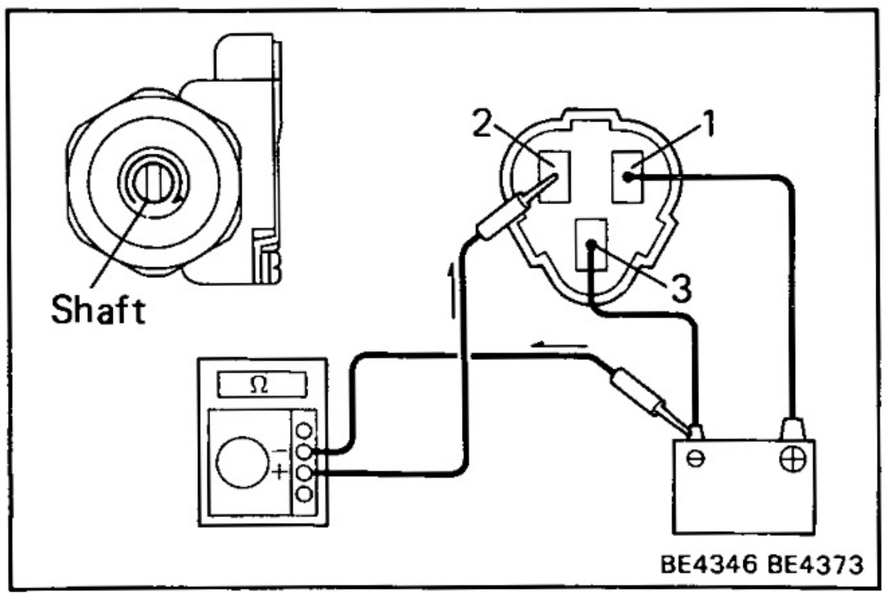

2. INSPECT SPEED SENSOR

(a) Connect the positive (+) lead from the battery to terminal 1 and the negative (—) lead to terminal 3.

(b) Check that there is continuity between terminal 2 and the battery negative (—) terminal four times per each revolution of the shaft.

HINT: Connect the test leads so that the current from the ohmmeter can flow from terminal 2 to battery negative (—) terminal.

If operation is not as specified, replace the speed sensor.

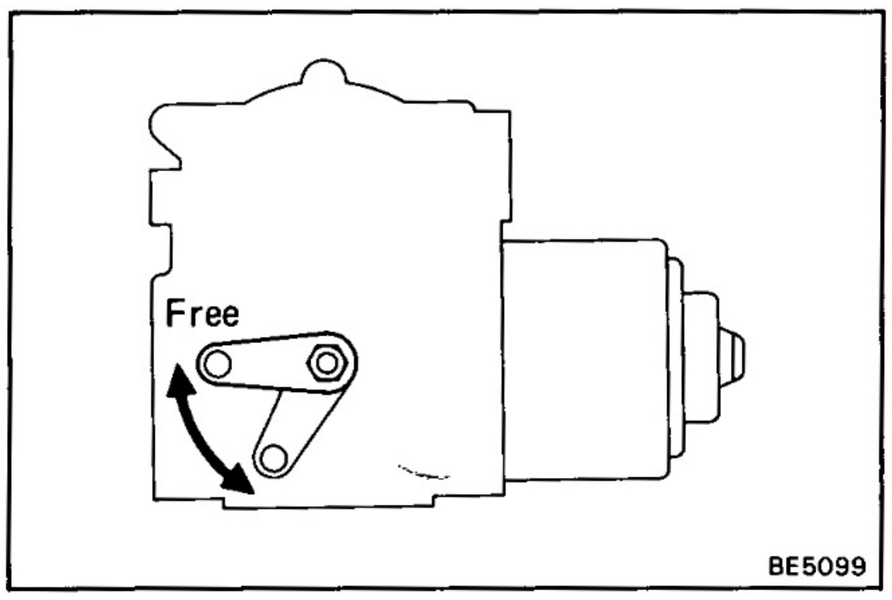

3. INSPECT ACTUATOR

(Safety Magnet Clutch)

(a) Check that the arm moves smoothly by hand.

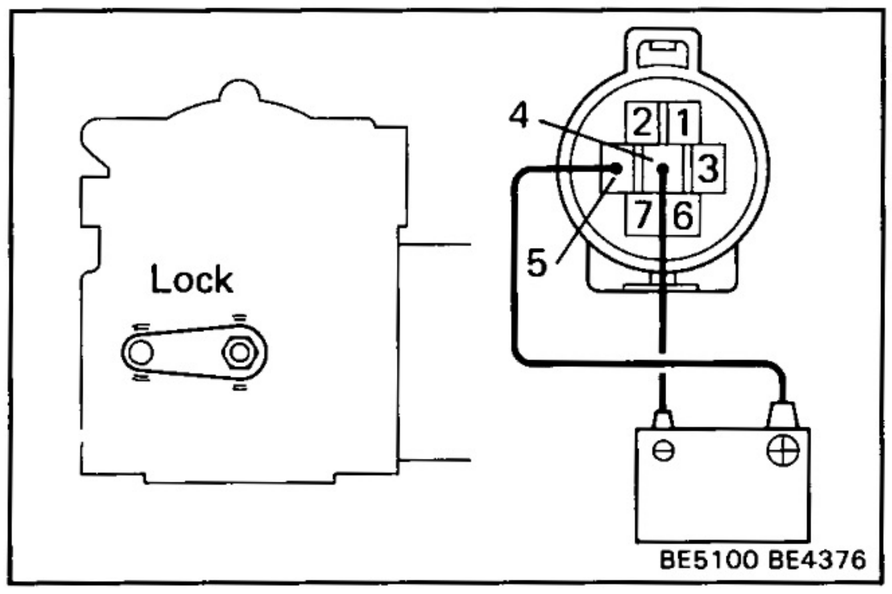

(b) Connect the positive (+) lead from the battery to terminal 5 and the negative (−) lead to terminal 4. (Safety magnet clutch turned ON)

(c) Check that the arm does not move by hand.

If operation is not as specified, replace the motor.

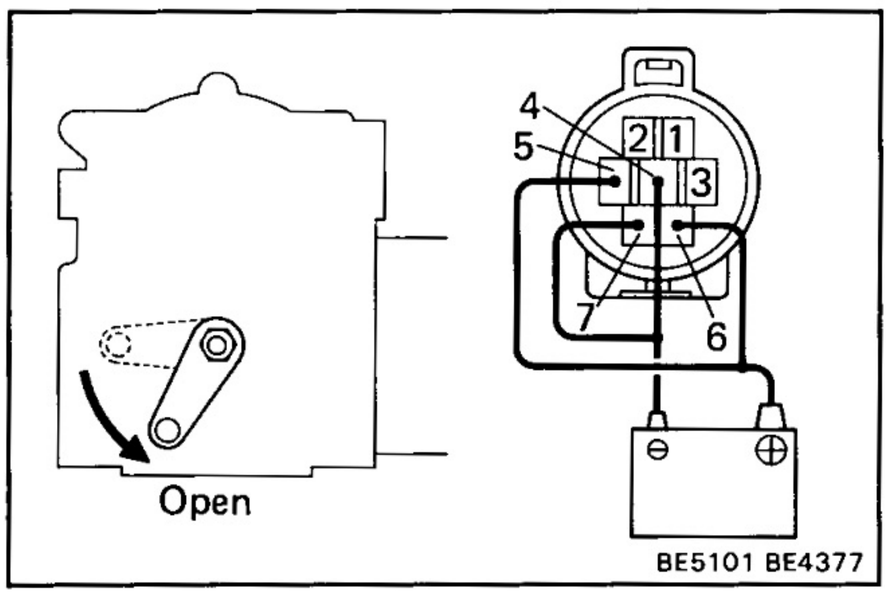

(Motor)

(a) With the safety magnetic clutch ON, connect the positive (+) lead from the battery to terminal 6 and the negative (−) lead to teminal 7, check that the arm moves to the open side.

(b) When the arm reached to the open position, check that the motor operation stops.

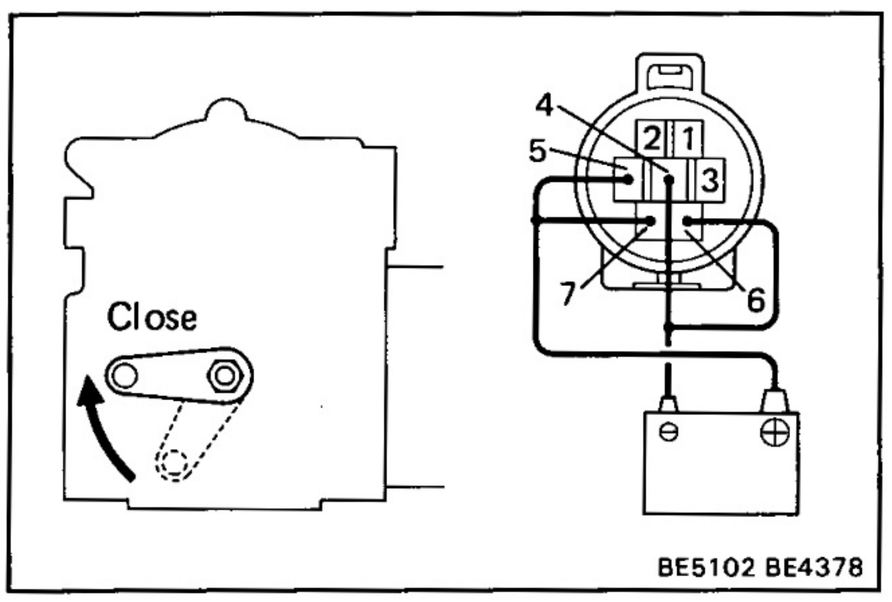

(c) With the safety magnetic clutch ON, connect the positive (+) lead from the battery to terminal 7 and the negative (−) lead to terminal 6, check that the arm moves to the close side.

(d) When the arm reaches to the closed position, check that the motor operation stops.

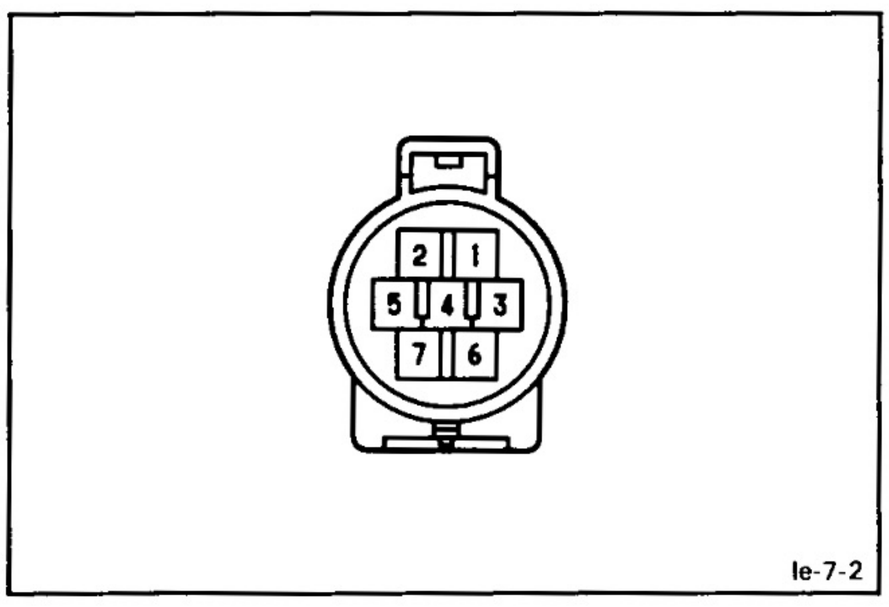

(Position Sensor)

(a) Measure the resistance between terminals 1 and 3.

Resistance: Approx. 2 kΩ

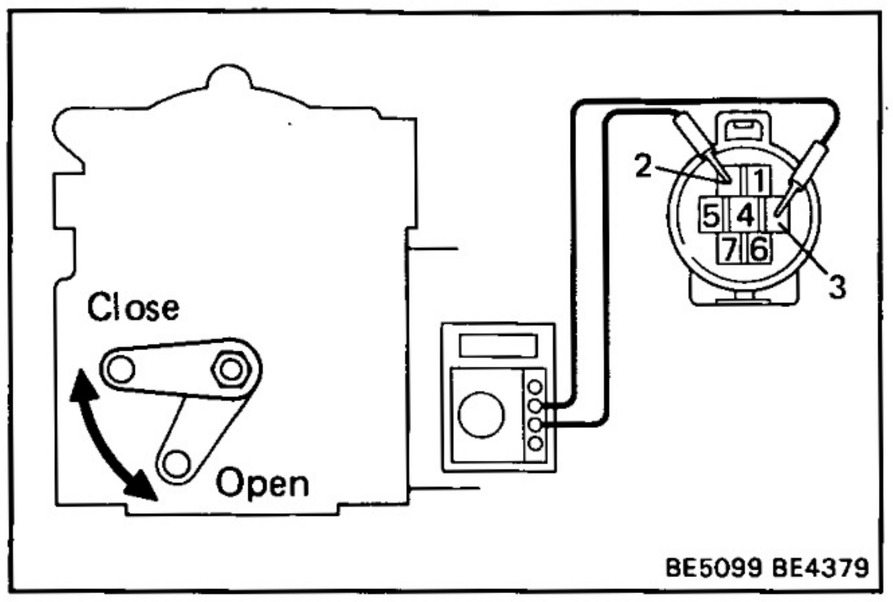

(b) When the arm is moving from the closed to open position, check that resistance between terminals 2 and 3 increases from approx. 0.5 to 1.7 kΩ.

If operation is not as specified, replace the motor.

4. **(3F-E Engine)**
INSPECT THROTTLE POSITION SWITCH
(Refer to FI section of Engine Repair Manual)

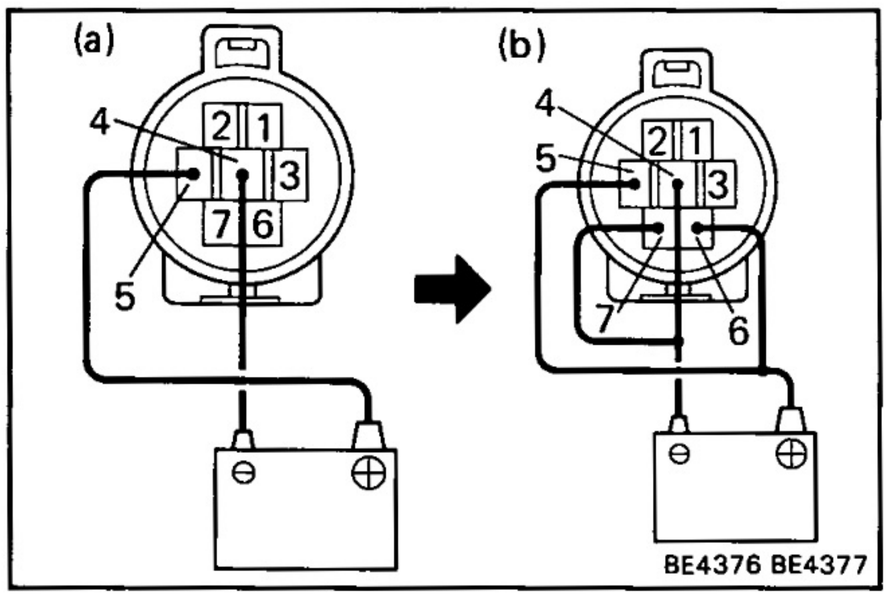

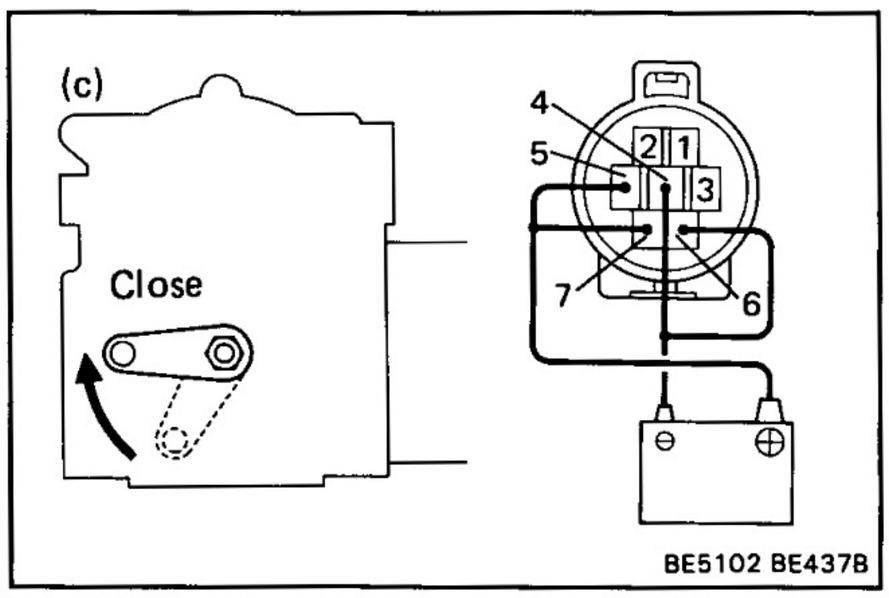

Adjustment of Control Link Assembly

ADJUST CONTROL LINK ASSEMBLY

(a) Connect the positive (+) lead from the battery to terminal 5 and the negative (—) lead to terminal 4 of the actuator.
(Safety magnet clutch turned ON)

NOTICE: Keep the safety magnet clutch ON until adjustment of control link assembly is completed.

(b) With the safety magnetic clutch ON, connect the positive (+) lead from the battery to terminal 6 and the negative (—) lead to terminal 7.
(Arm moves to the open side.)

(c) With the safety magnetic clutch ON, connect the positive (+) lead from the battery to terminal 7 and the negative (—) lead to terminal 6.
(Arm moves to the close side.)

(d) Install the control link assembly to the actuator.

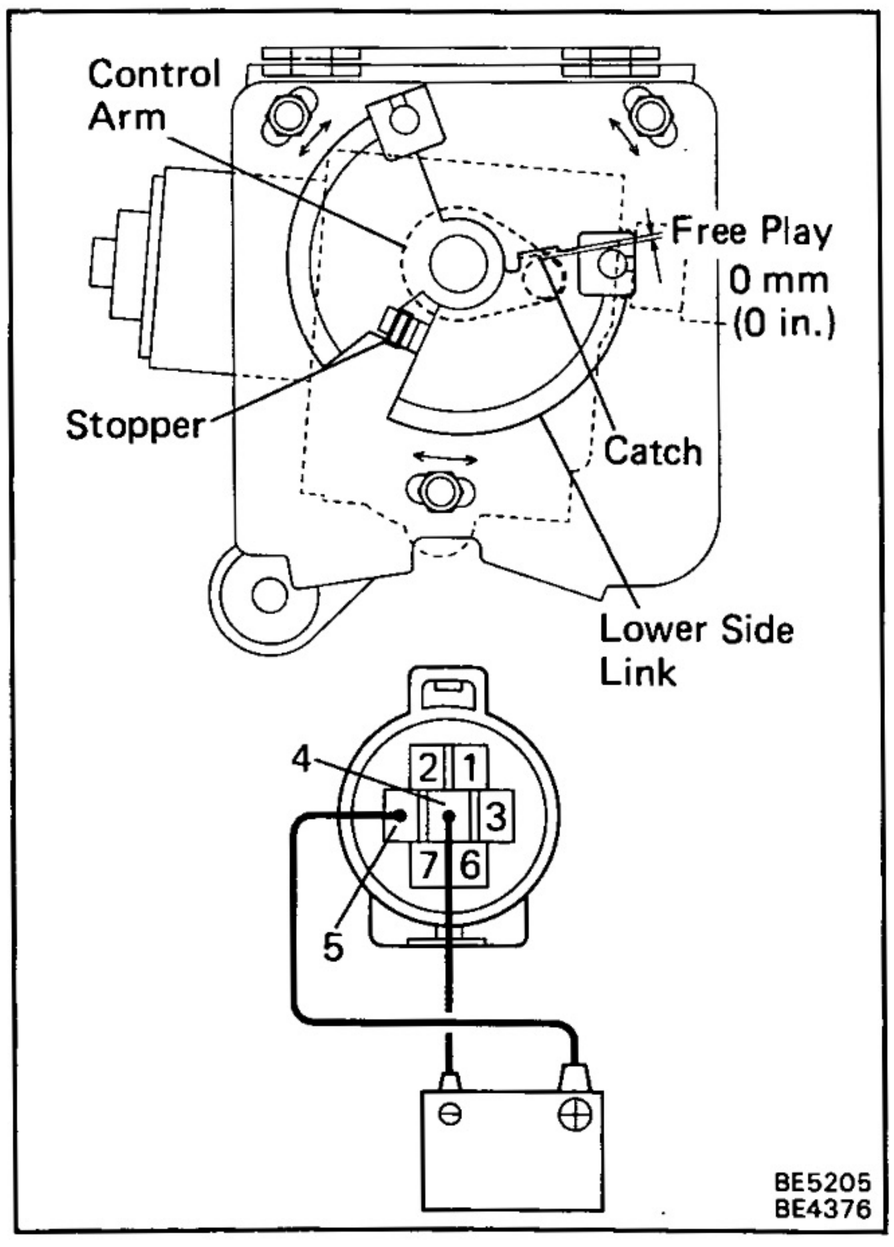

(e) Rotate the control link assembly so that the catch of the control link assembly's lower side link comes in contact with the actuator control arm (Free play 0).

Free play: 0 mm (0 in.)

NOTICE: Rotate the lower side link to the right until it touches the stopper.

(f) In condition (d), install and torque the three nuts.

(g) Disconnect lead wire from the actuator.

FUEL TRANSFER SYSTEM

Parts Location

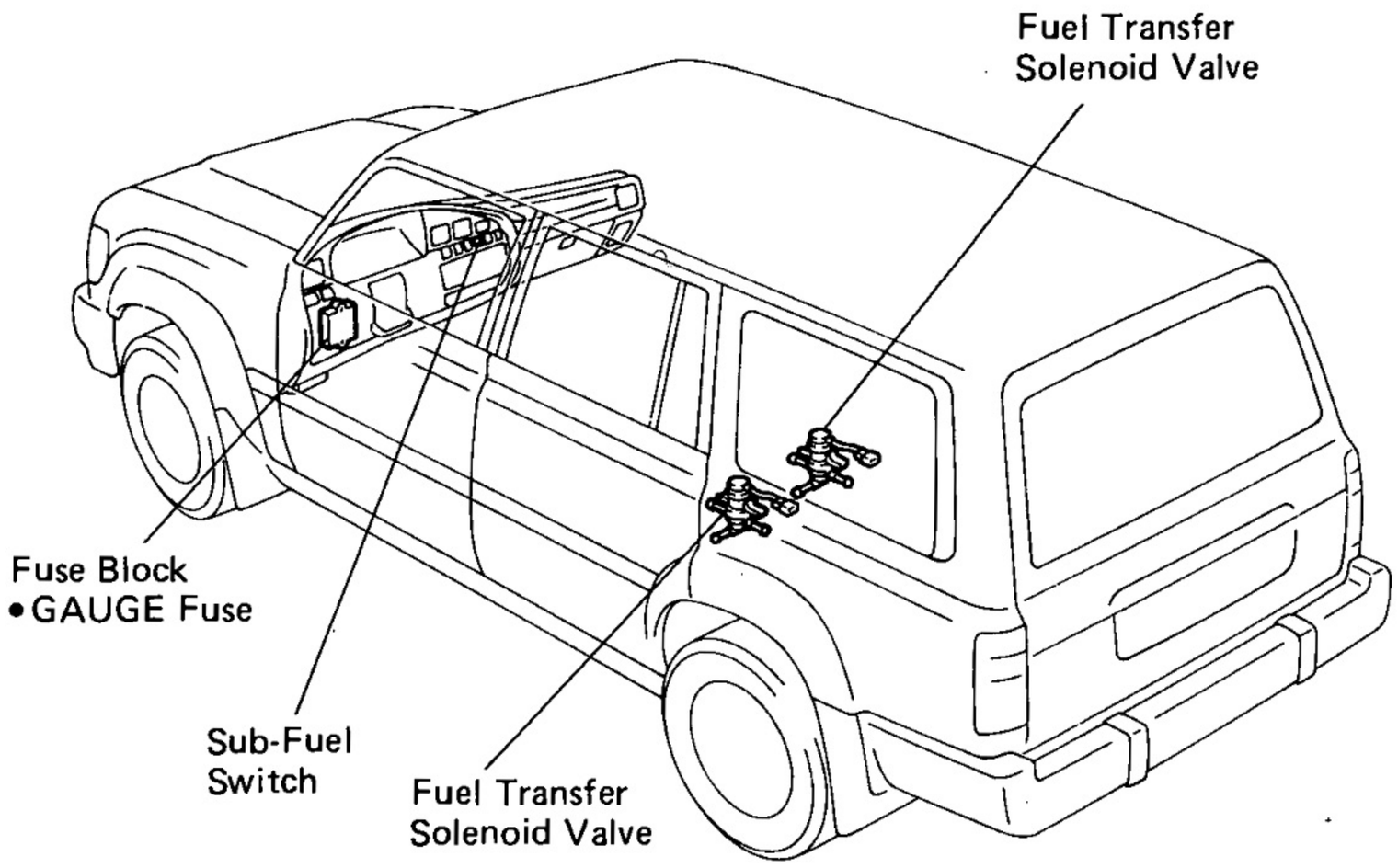

BE5103

Wiring and Connector Diagrams

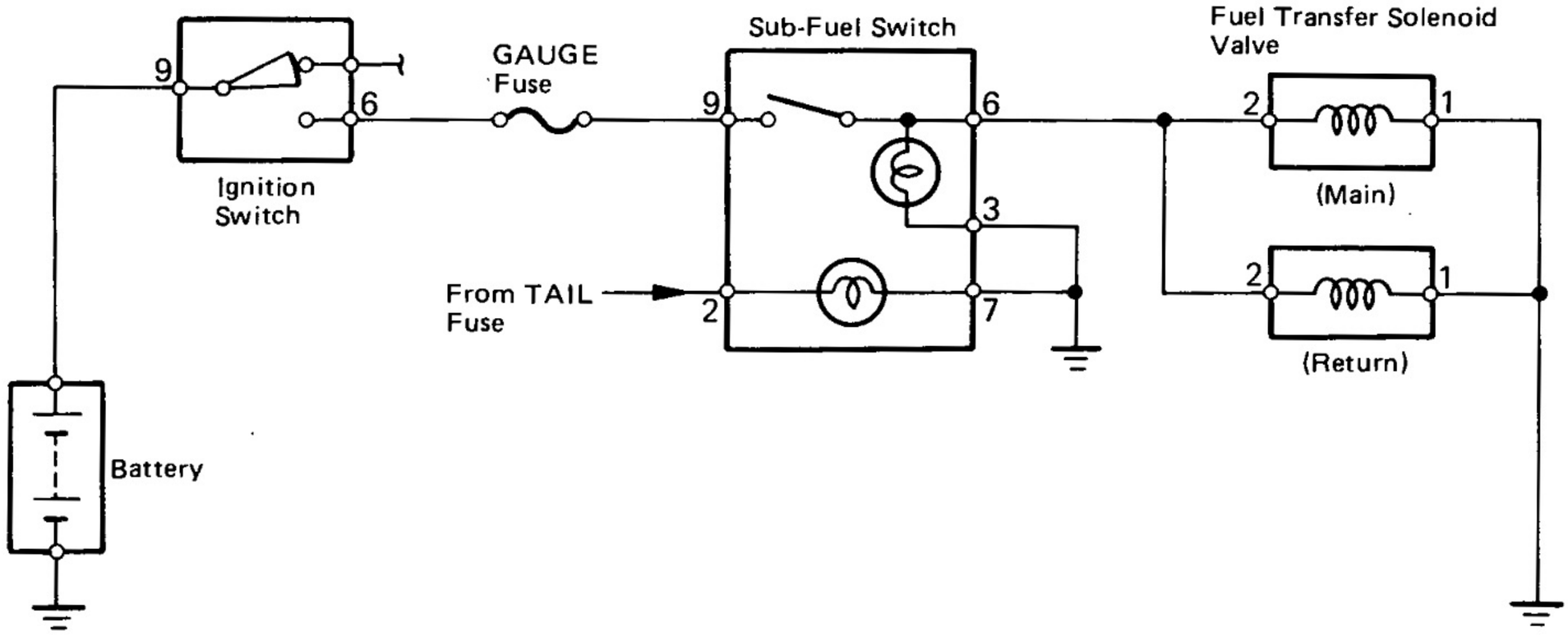

Ignition Switch

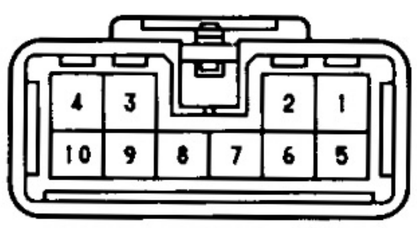

Sub-Fuel Switch

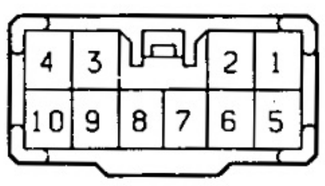

Fuel Transfer Solenoid Valve (Main and Return)



The POWER SOURCE CIRCUIT has been simplified. For full details, see pages BE-10, 11.

BE5104
e-10-2-B S-10-2 le-2-2-F

System Description

Standby Operation

- When the Ignition Switch is on, current flows from the battery to terminal 9 of the Sub Fuel Switch.

Operation

Sub-Fuel Switch "OFF" (Fuel)

Fuel tank (Main) → Solenoid valve (Main) C port → Solenoid valve (Main) B port → Engine → Solenoid valve (Return) B port → Solenoid valve (Return) C port → Fuel tank (Main)

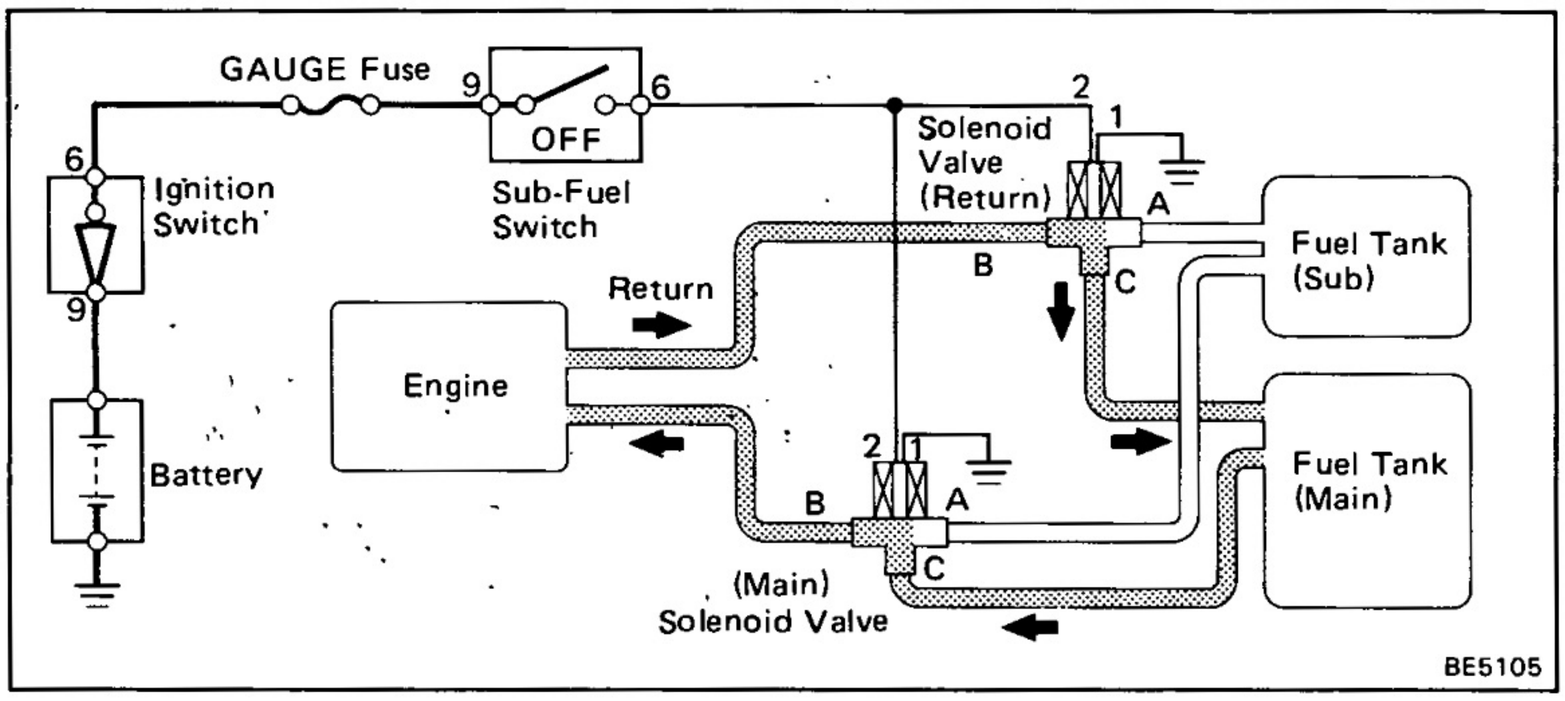

Sub-Fuel Switch "ON" (Current)

When the Sub-fuel switch is set to "ON" current flows through terminal 9 of sub-fuel switch → terminal 6 → terminal 2 of solenoid valve (Main and Return) → terminal 1 → ground

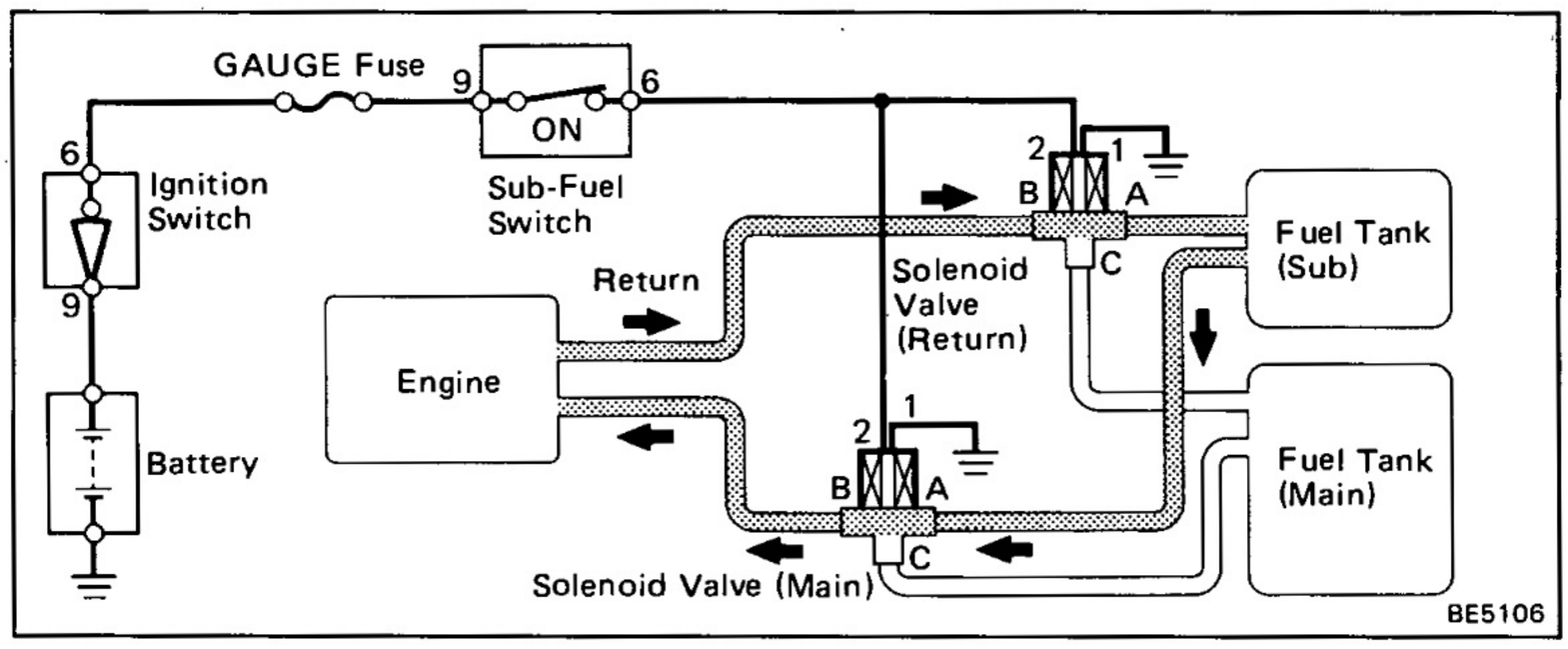

(Fuel)

Fuel tank (sub) → Solenoid valve (Main) A port → Solenoid valve (Main) B port → Engine → Solenoid valve (Return) B port → Solenoid valve (Return) A port → Fuel tank (Sub)

Troubleshooting

Problem	Possible cause	Remedy	Page
Fuel Transfer System do not operate	GAUGE fuse blown	Replace fuse and check for short	BE-4, 6
	Sub fuel switch faulty	Check switch	BE-128
	Fuel transfer solenoid valve (Main and return) faulty	Check solenoid valve	BE-128
	Wiring or ground faulty	Repair as necessary	

Parts Inspection

1. INSPECT SUB FUEL SWITCH

(Continuity)

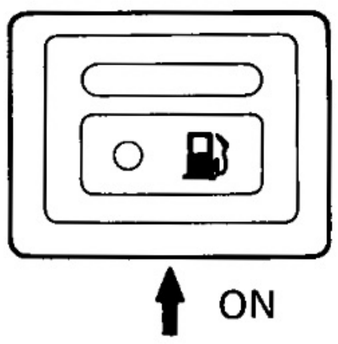

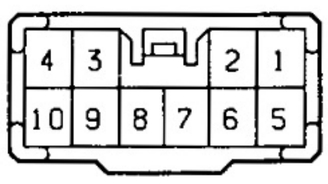

BE5107 S-10-2

Terminal / Switch Position	3	6	9	Illumination 2	Illumination 7
OFF					
ON	○	○	○	○	○

If continuity is not as specified, check the bulb or replace the switch.

2. INSPECT FUEL TRANSFER SOLENOID VALVE (Main)

(a) Check that the air flows between ports B and C. Check that the air does not flow between ports A and B.

Port / Condition	A	B	C
No voltage		○	○

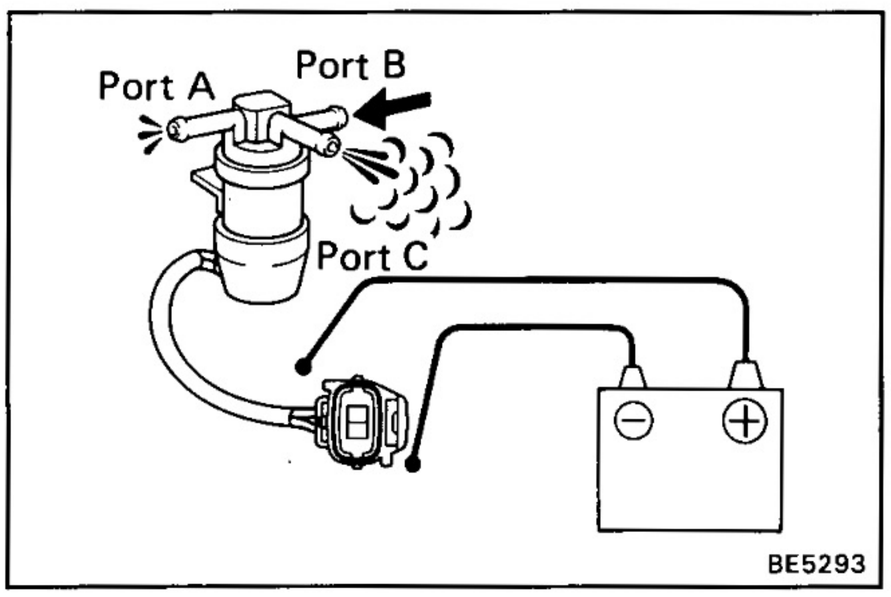

BE5293

(b) Apply the battery voltage across the terminals. Check that the air flows between ports A and B. Check that the air does not flow between ports B and C.

Port / Condition	A	B	C
Apply the battery voltage	○	○	

If operation is not as specified, replace the solenoid.

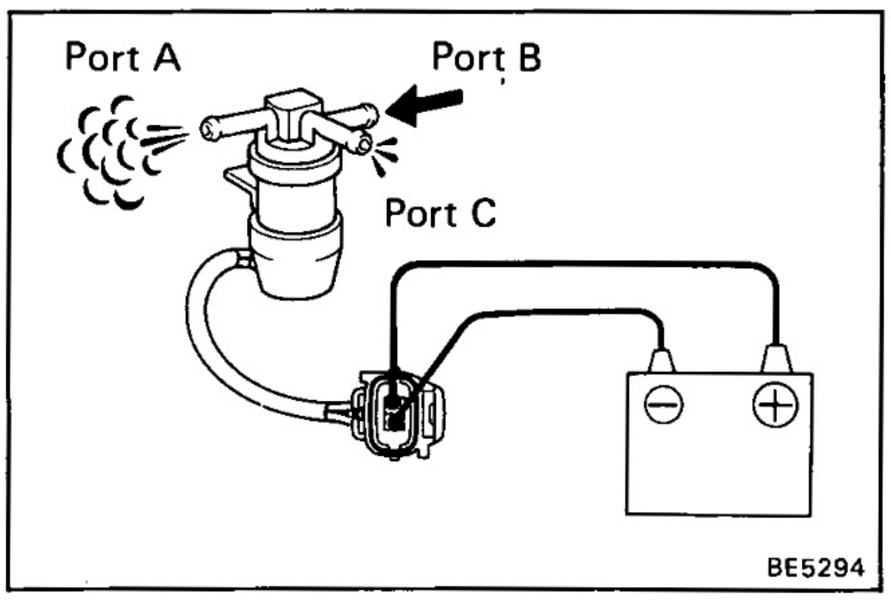

BE5294

(Return)

The inspection is the same as for the main solenoid valve.

AUDIO SYSTEM

Parts Location

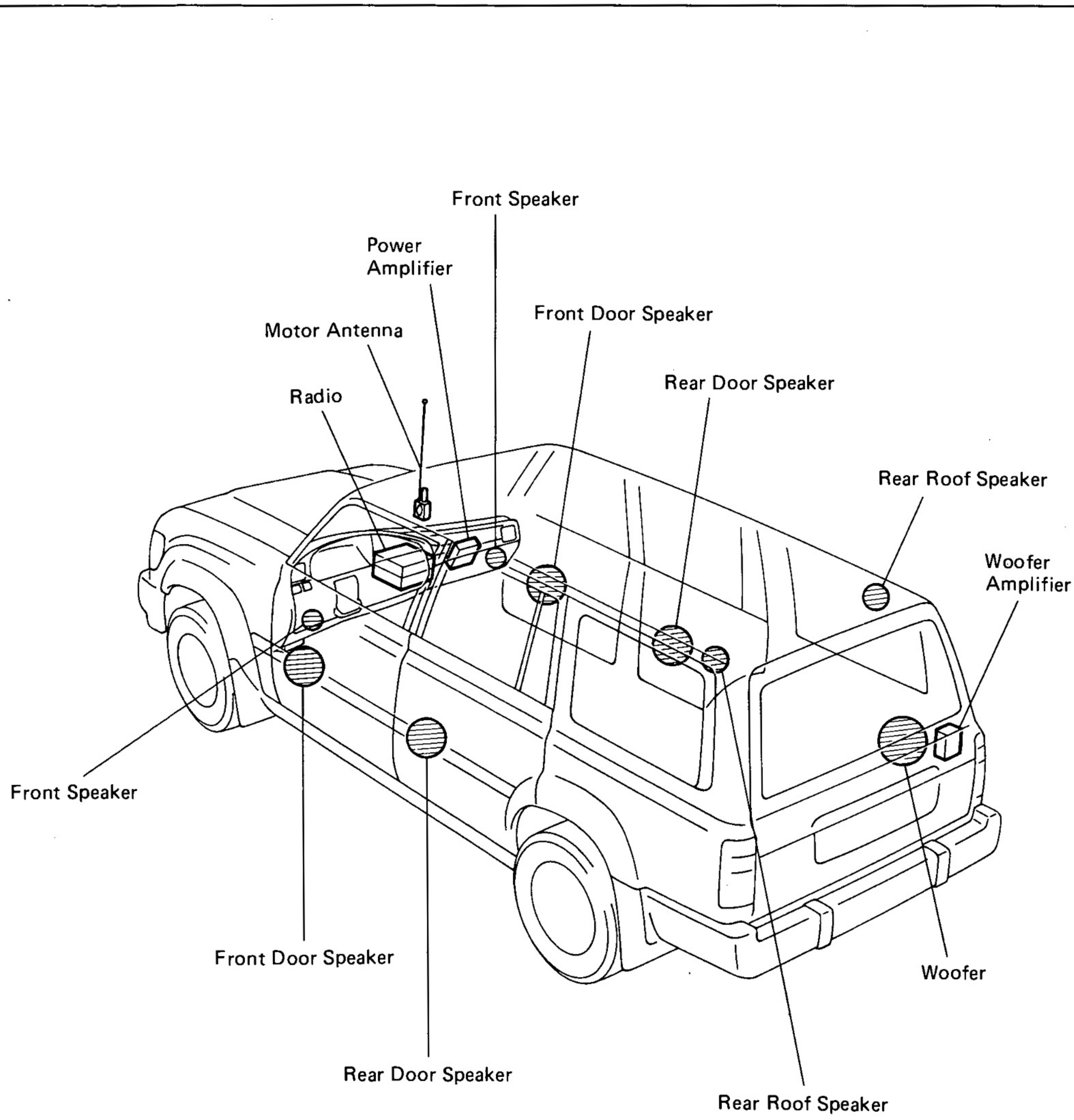

BE5048

Wiring and Connector Diagrams

Radio, 1 Speaker: Symbol R

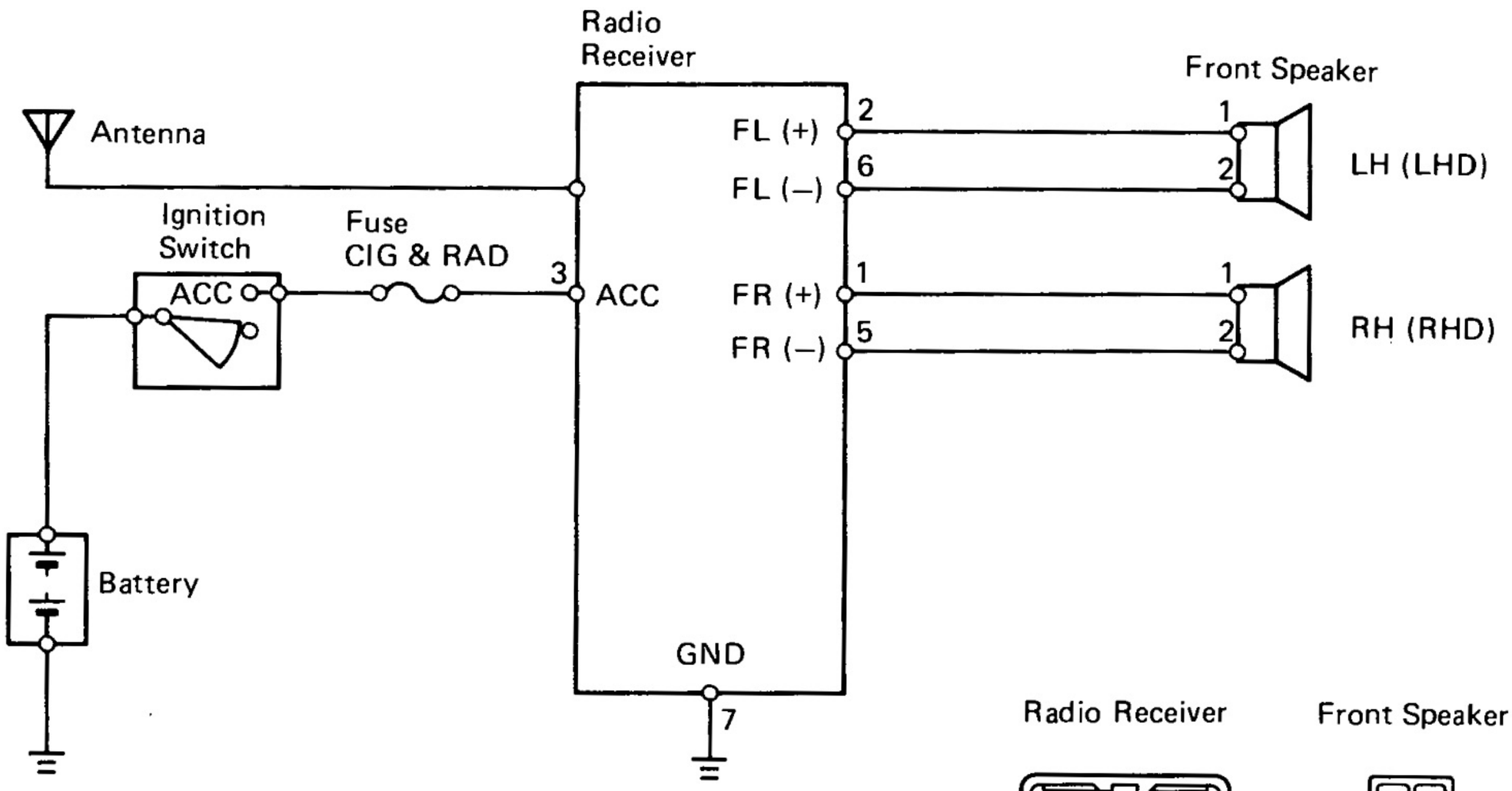

Radio, ETR, 2 Speaker: Symbol R

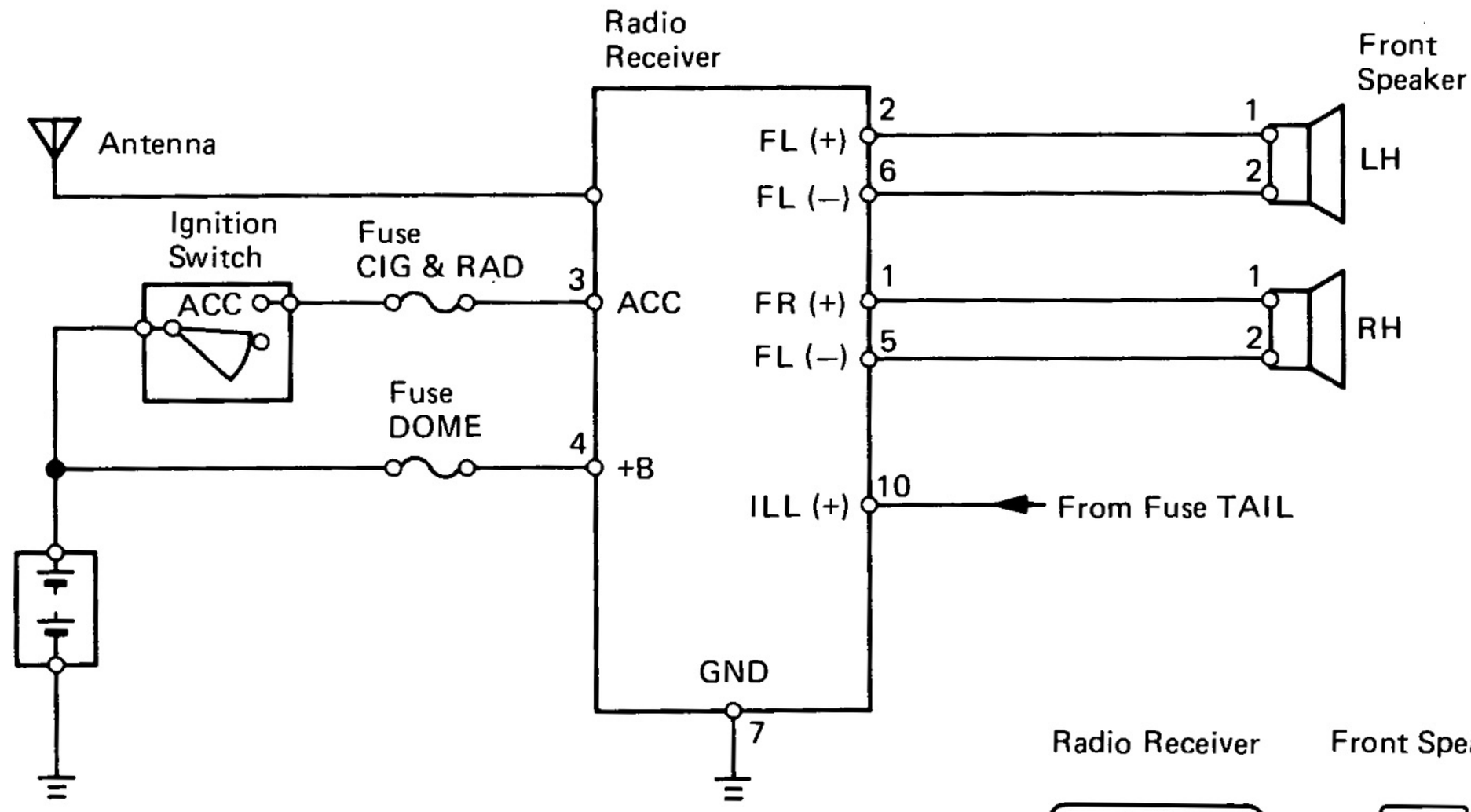

BE4696
S-10-2-A T-2-2
BE4697
S-10-2-A T-2-2

Radio, ETR, 2 Speaker + Tape Player: Symbol S

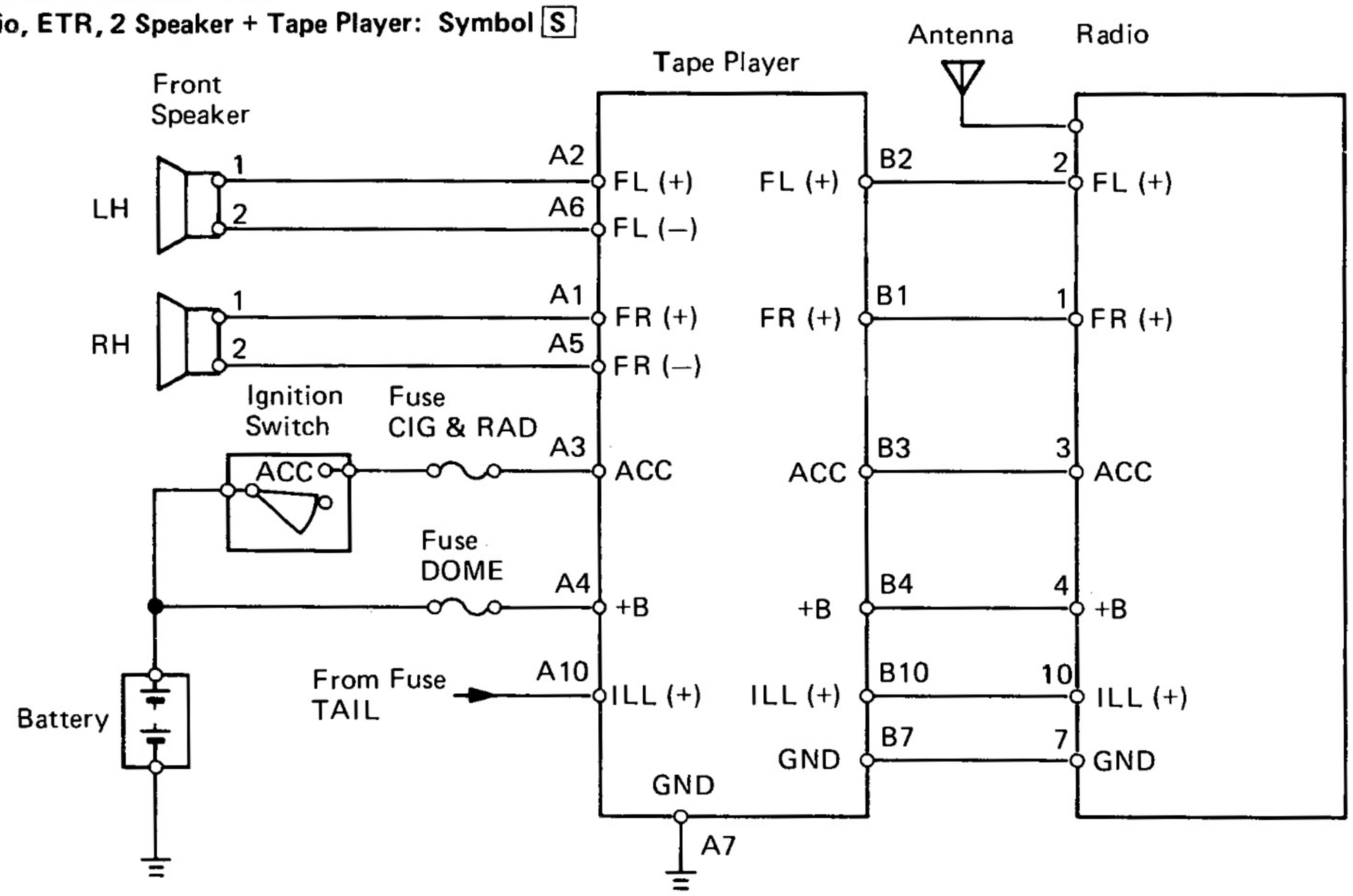

Tape Player Connector "A"

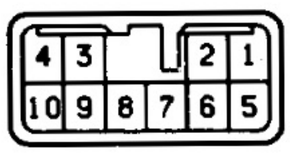

Connector "B"

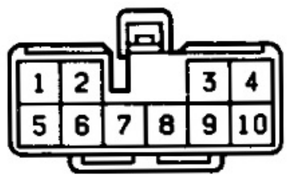

Radio

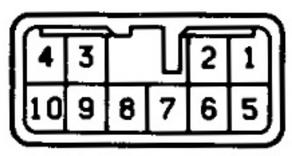

Speaker



Radio — Tape Player, 5 Speaker: Symbol U

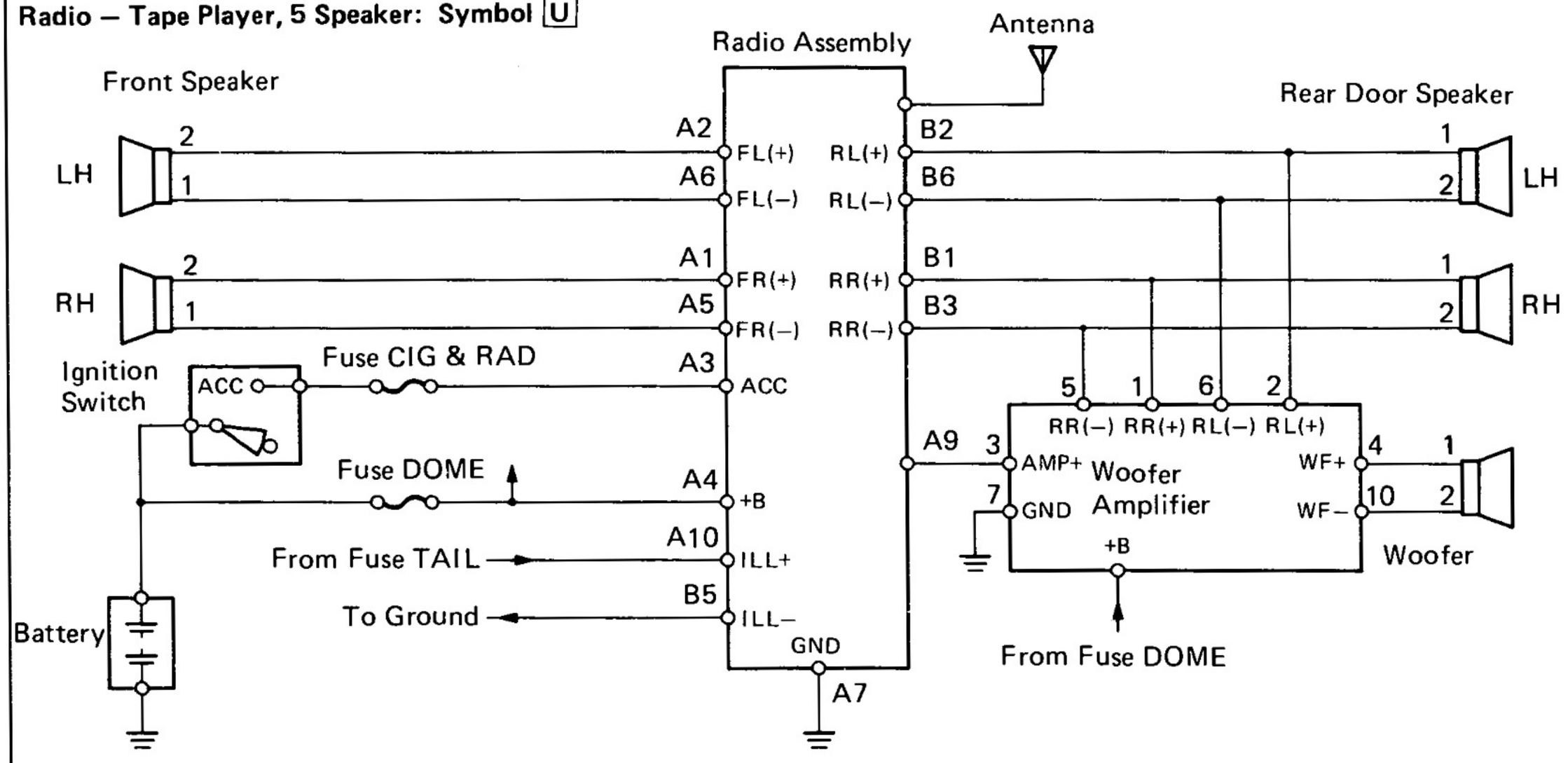

Radio Assembly Connector "A"

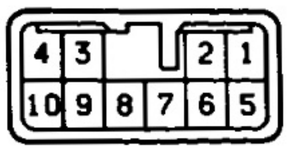

Connector "B"

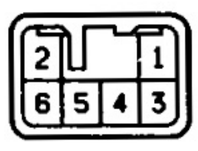

Woofer Amplifier

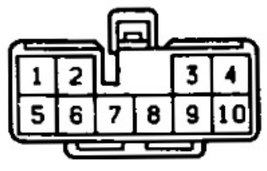

Front Seaker

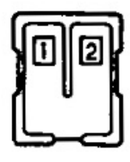

Rear Door Speaker



Woofer

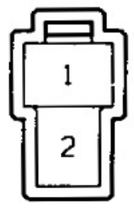

BE4698
S-10-2-A S-10-1-A S-10-2-A T-2-2
BE5069
S-10-2-A S-6-2-E S-10-1-A T-2-2 IS-2-2-B H-2-2

Radio – Tape Player, 5 Speaker, w/ Radio Linked Motor Antenna: Symbol U

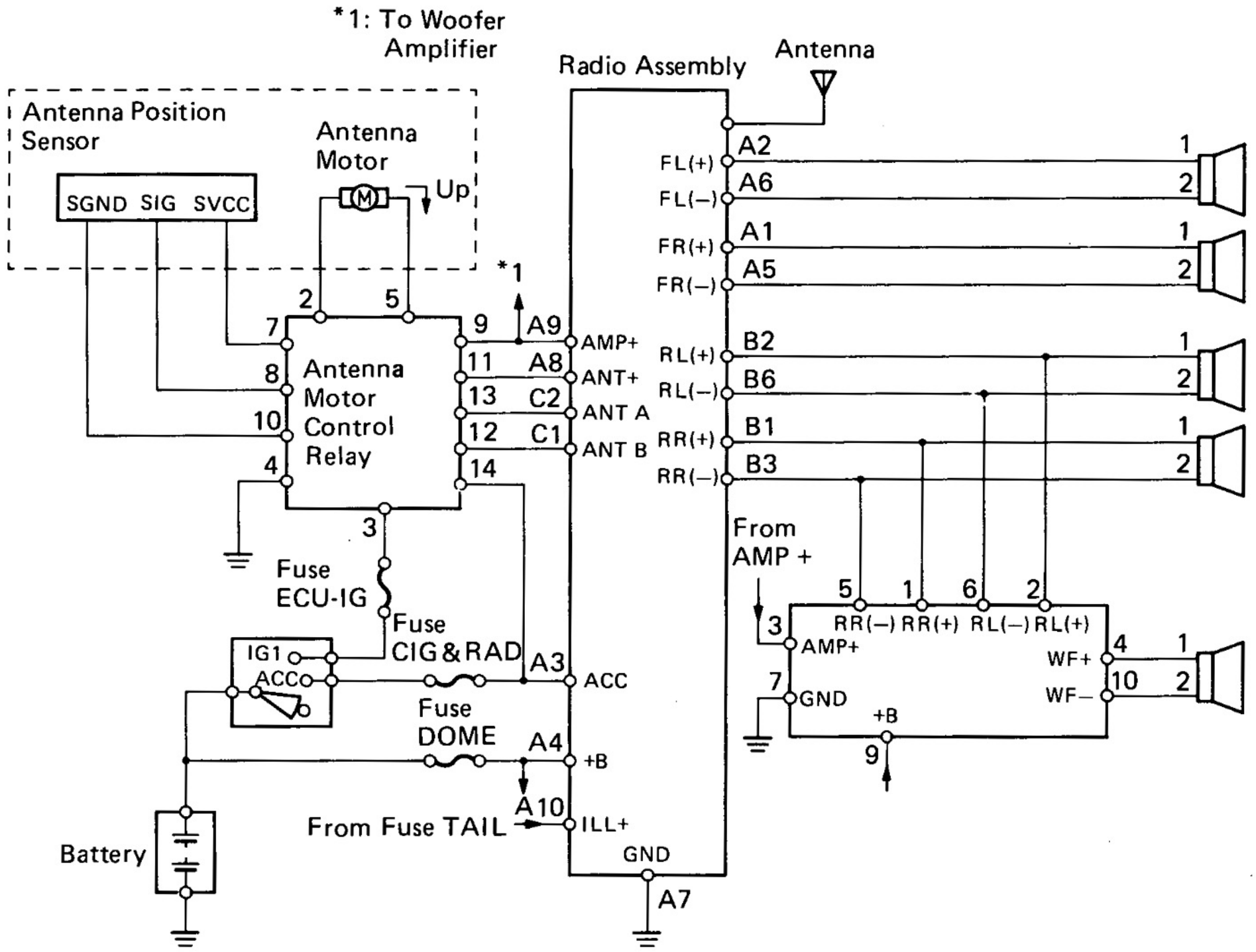

Radio Assembly Connector "A"

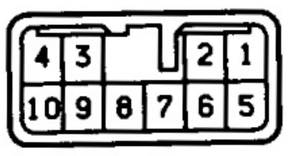

Connector "B"

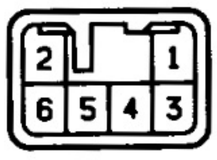

Connector "C"



Antenna Motor Control Relay

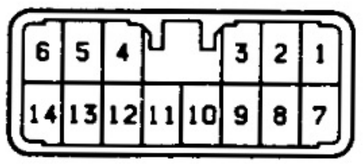

Woofer Amplifier

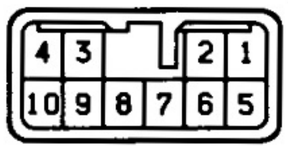

Front Speaker



Rear Speaker



Woofer

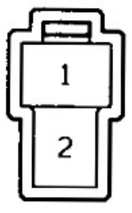

BE5070
S-10-2-A S-6-2-E GA-2-2-C S-14-2-B S-10-2-A
T-2-2 IS-2-2-B H-2-2

Radio — Tape Player, 9 Speaker
Radio — Tape Player, 9 Speaker + CD Player } **Symbol** [P]

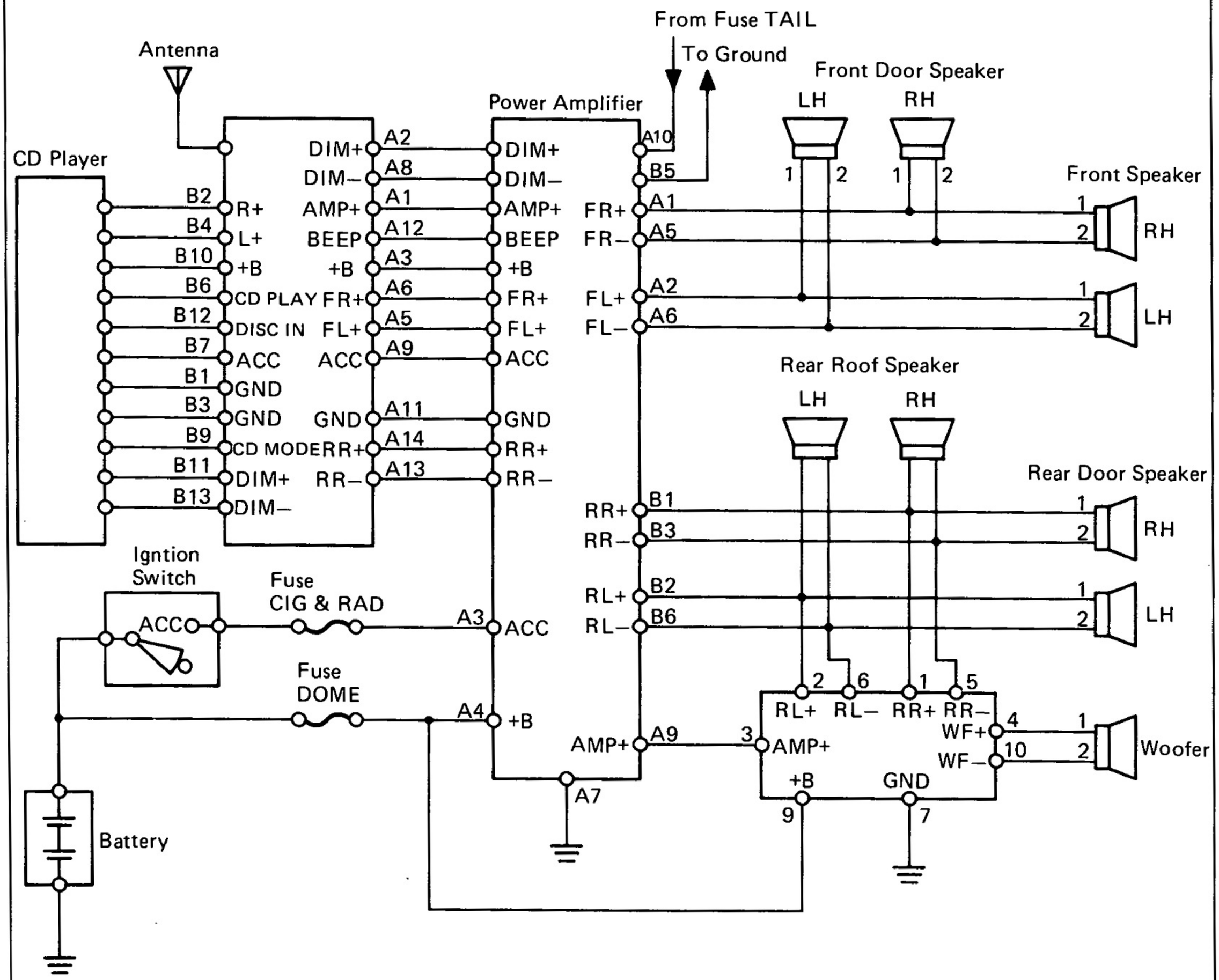

Power Amplifier
Connector "A" Connector "B"

Radio Assembly
Connector "A" Connector "B"

Woofer Amplifier

Front Speaker



Front Door Speaker



Rear Door Speaker



Rear Roof Speaker



Woofer

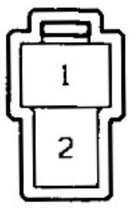

BE5071
S-10-2-A S-6-2-E Y-14-2 BE3309 S-10-2-A
T-2-2 IS-2-2-B IS-2-2-B GA-2-2-C H-2-2

Motor Antenna (Except Radio Linked Type)

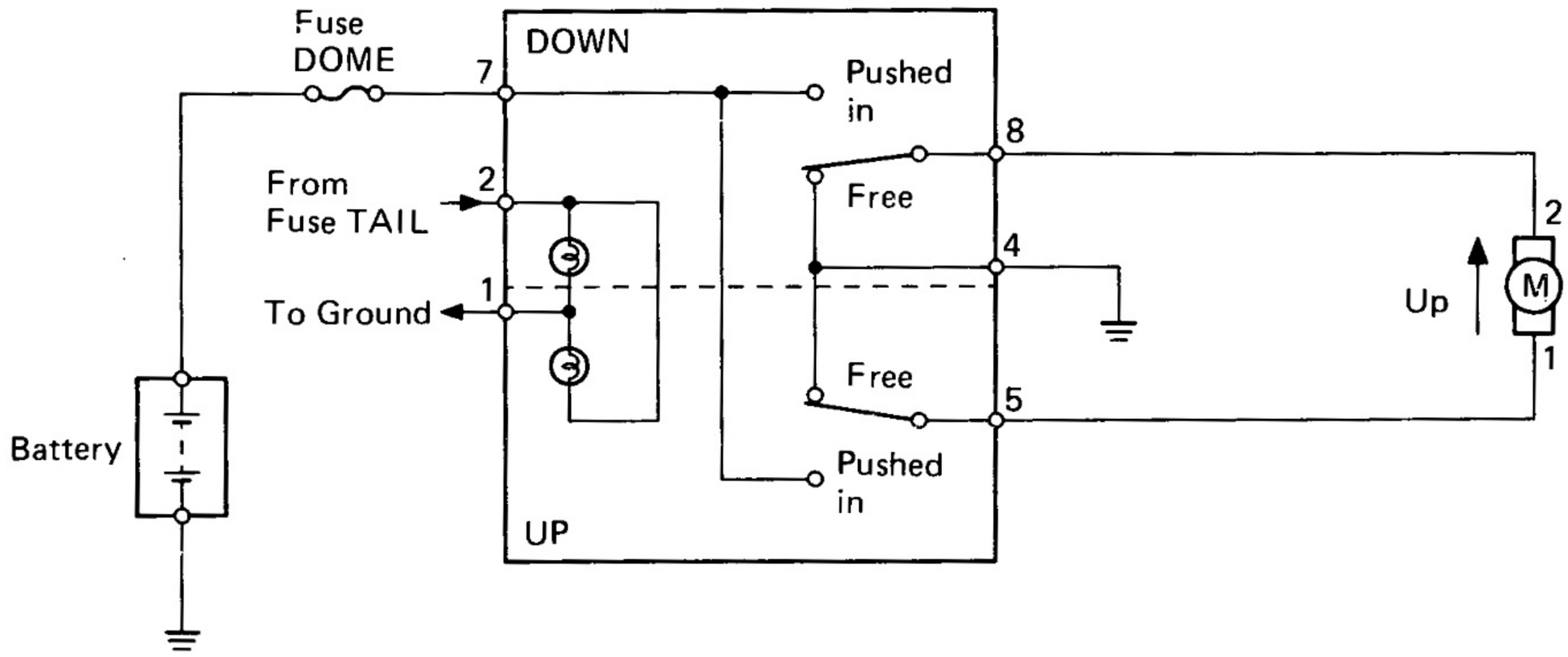

Antenna Switch

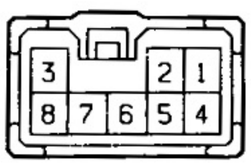

Antenna Motor

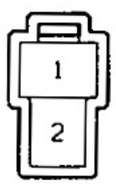

BE5074
S-8-2 H-2-2

System Description

RADIO WAVE BAND

The radio wave bands used in radio broadcasting are as follows:

Frequency	30 kHz	300 kHz	3 MHz	30 MHz	300 MHz
Designation	LF	MF	HF	VHF	
Radio wave	LW ←→	AM(MW) ←→	SW ←→	FM(UKW) ←→	
Modulation method	Amplitude modulation			Frequency modulation	

LF: Low Frequency MF: Medium Frequency HF: High Frequency VHF: Very High Frequency

HINT: In this section, the term "AM" includes LW, MW and SW, and the term "FM" includes UKW.

SERVICE AREA

There is great difference in the size of the service area for AM, FM monaural, and FM stereo broadcasting. Thus it may happen that FM broadcast cannot be received even though AM comes in very clearly.
Not only does FM stereo have the smallest service area, but it slso picks up static and other types of interference ("noise") the most easily.

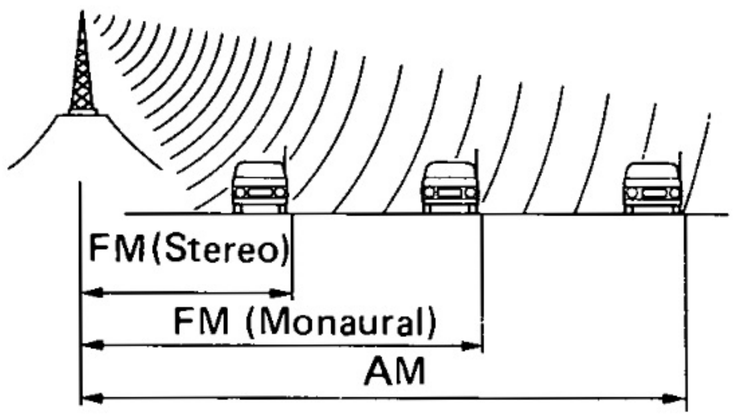

RECEPTION PROBLEMS

Besides the problem of static, there are also the problems called "fading", "multipath", and "fade out". These problems are caused not by electrical noise but by the nature of the radio waves themselves.

Fading

Besides electrical interference, AM broadcasts are also susceptible to other types of interference, especially at night. This is because AM radio waves bounce off the ionosphere at night. These radio waves then interfere with the signals from the same transmitter that reach the vehicle's antenna directly. This type of interference is called "fading".

Fading Ionosphere BE2818

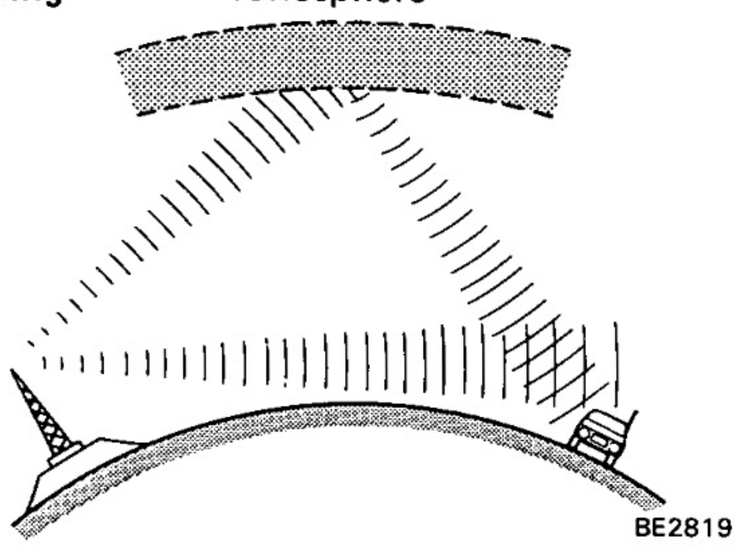

BE2819

Multipath

One type of interference caused by the bouncing of radio waves off of obstructions is called "multipath". Multipath occurs when a signal from the broadcast transmitter antenna bounces off of buildings and mountains and interferes with the signal that is received directly.

Multipath

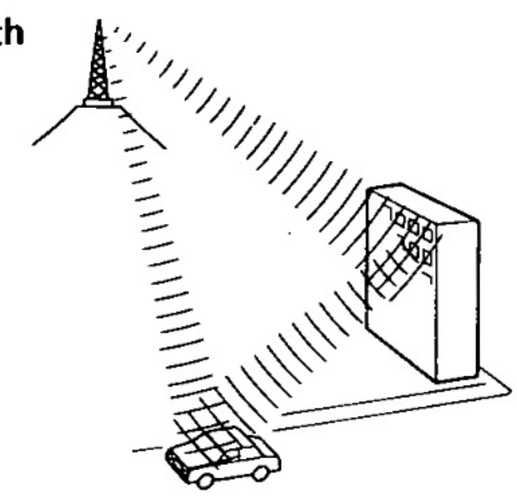

BE2820

Fade Out

Because FM radio waves are of higher frequencies than AM radio waves, they bounce off of buildings, mountains, and other obstructions. For this reason, FM signals often seem to gradually disappear or fade away as the vehicle goes behind a building or other obstruction. This is called "fade out".

Fade Out

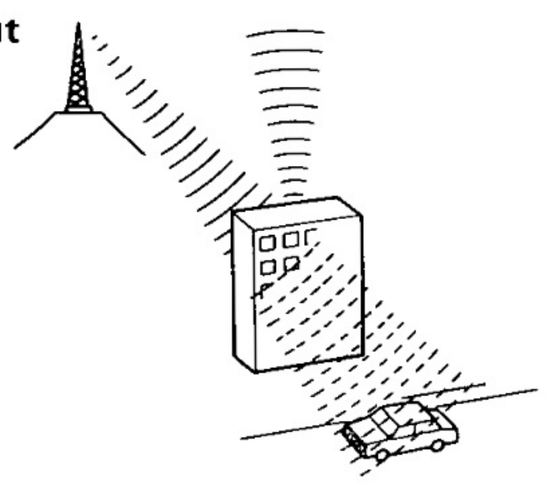

BE2821

ADJUST ANTENNA TRIMMER

(Ex. Electronic Tuning Radio)

(a) Fully lengthen antenna.

(b) With volume and tone at maximum, turn the dial to around 1,400 kHz where there is no reception.

(c) Adjust the trimmer to where static is loudest.

HINT: The position of the antenna trimmer may vary according to the type of radio, but is always on the front side.

Example:

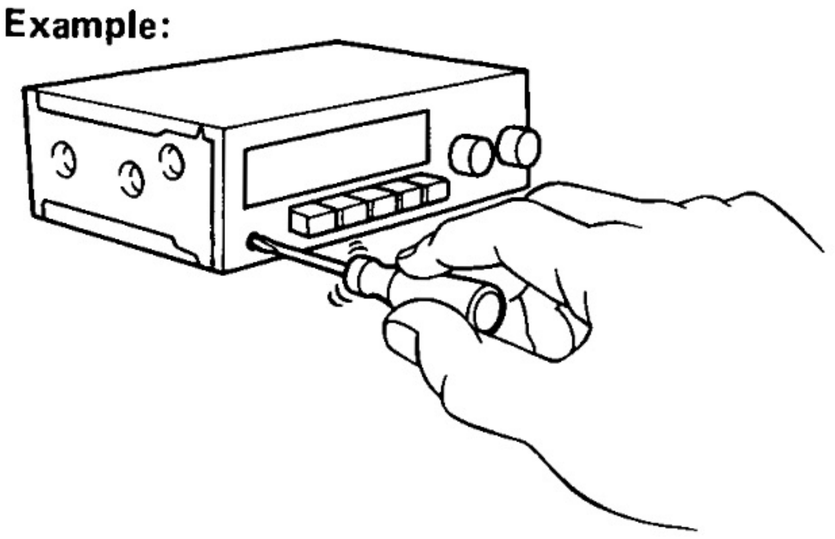

BE0183

COMPACT DISC PLAYER

Compact Disc (hereafter called "CD") players use a laser beam pick-up to read the digital signals recorded on the CD and reproduce analog signals of the music, etc. There are 4.7 in. (12 cm) and 3.2 in. (8 cm) CD available.

HINT: Never attempt to disassemble or oil any part of the player unit. Do not insert any object other than a disc into the slot.

NOTICE: CD players use invisible laser beam which could cause hazardous radiation explosure if directed. Be sure to operate the player correctly as instructed.

MAINTENANCE

(Tape Player)

Head Cleaning

(a) Raise the cassette door with your finger.
Next using a pencil or like object, push in the guide.

(b) Using a cleaning pen or cotton applicator soaked in cleaner, clean the head surface, pinch rollers and capstans.

Example:

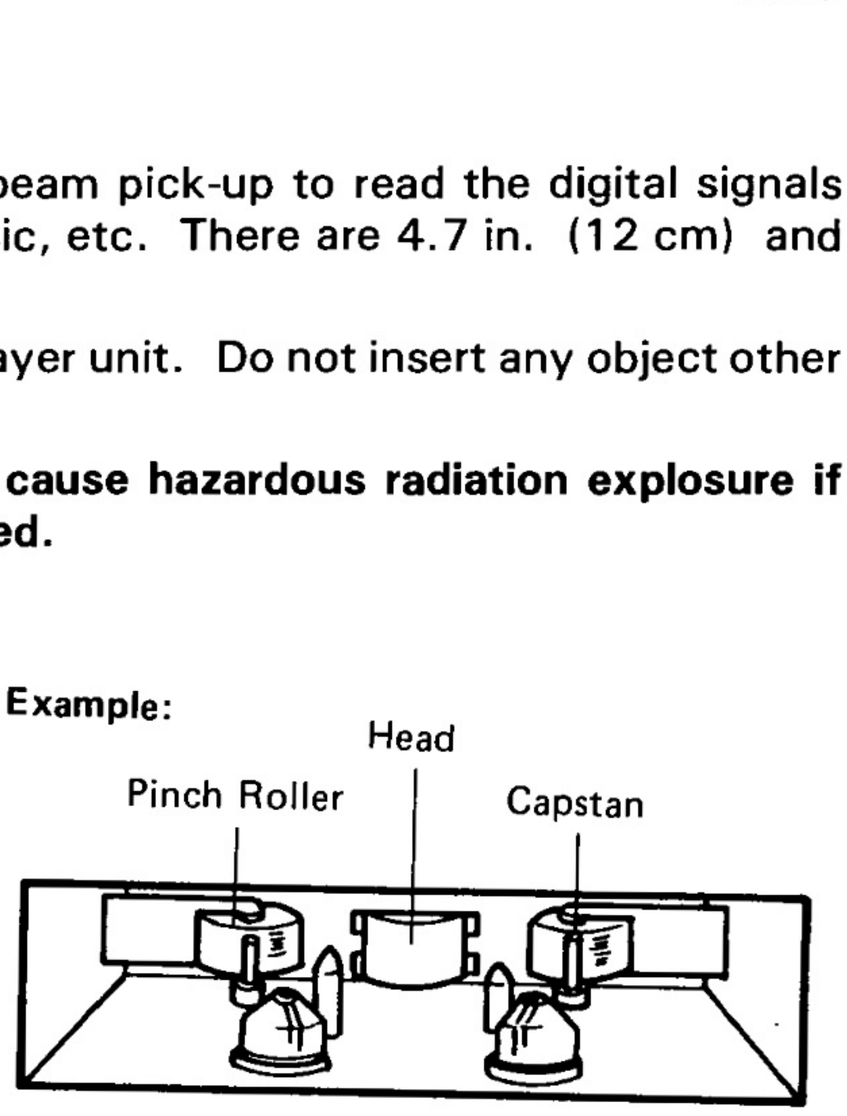

CO192

(CD Player)

Disc Cleaning

If the Disc gets dirty, clean the Disc by wiping the surfaces from the center to outside in the radial directions with a soft cloth.

NOTICE: Do not use a conventional record cleaner or anti-static record preservative.

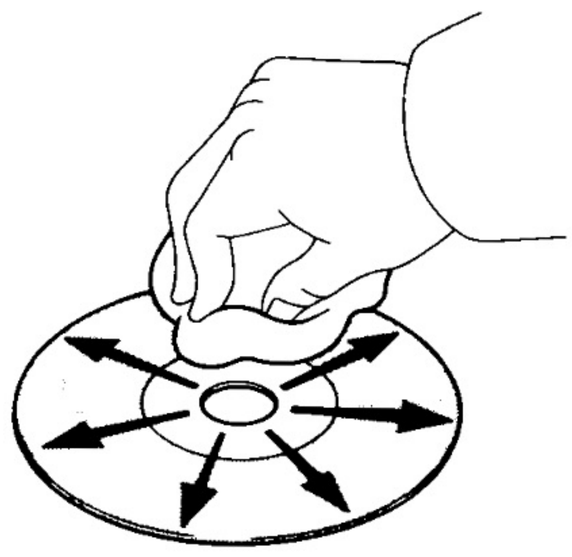

BE4331

HOW TO USE DIAGNOSTIC CHART

1	Radio	NO POWER COMING IN

① [R]: w/o Tape Player [S]: Radio-Tape Player (Separate)
[U]: Radio-Tape Player Unit w/o Power Amplifier [P]: w/ Power Amplifier

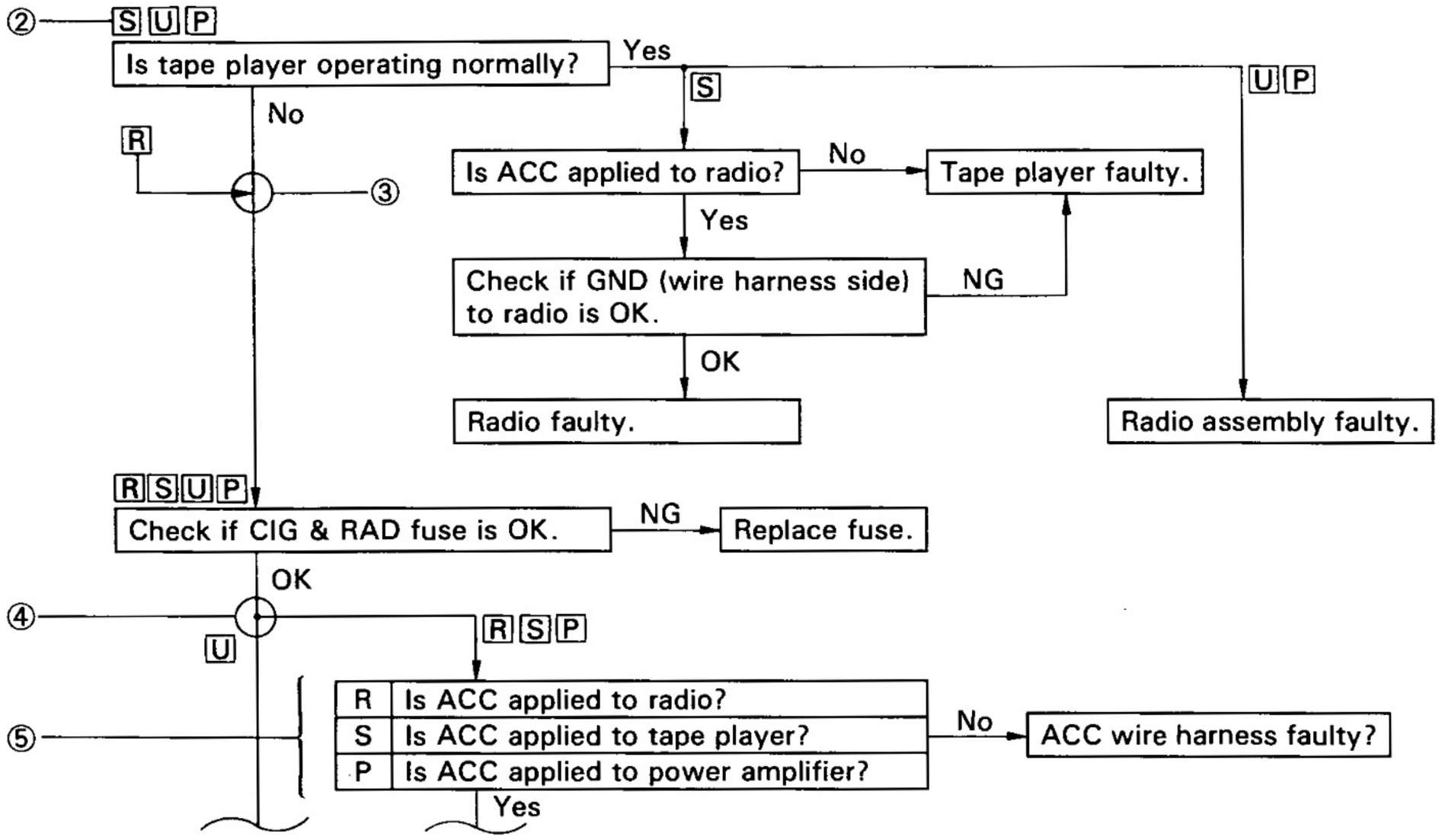

① Audio system type and symbol used.
HINT: Confirm the applicable type of audio system.

② Symbol for type of audio system the question applies to.
HINT: If the audio system type is not applicable, proceed to next question below.

③ Junction without black circle.
HINT: Proceed to next question below.

④ Junction with black circle.
HINT: Proceed to question for applicable audio system type.

⑤ HINT: Select question for applicable audio system type.

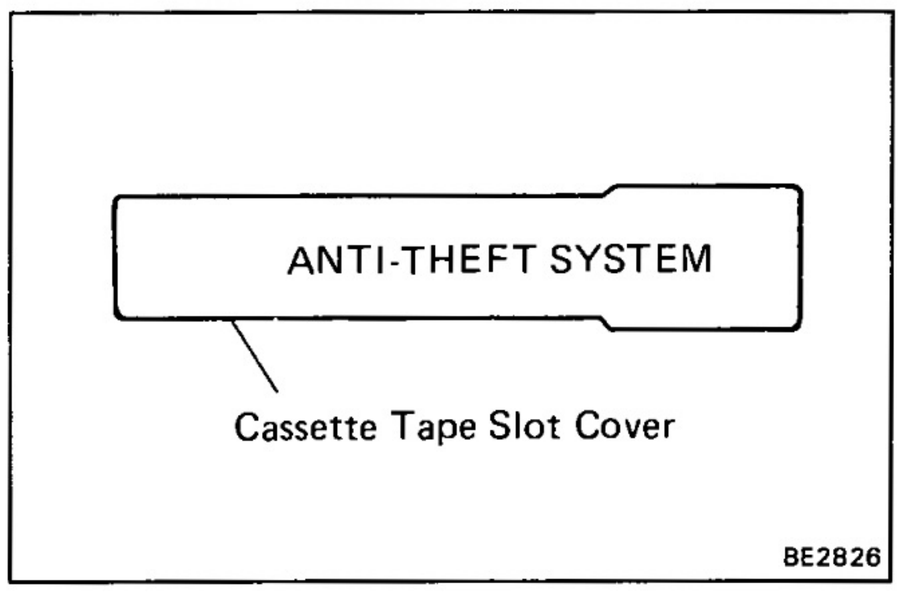

Anti-Theft System

The anti-theft system is only provided for audio systems equipped with an Acoustic Flavor function.

HINT: The words ''ANTI-THEFT SYSTEM'' are displayed on the cassette tape slot cover.
For operation instructions for the anti-theft system, please consult the audio system section in the Owner's Manual.

1. SETTING SYSTEM

The system is in operation once the customer has pushed the required buttons and entered the customer-selected 3-digit ID number.
(Refer to the Owner's Manual ''SETTING THE ANTI-THEFT SYSTEM'').

HINT:

- When the audio system is shipped the ID number has not been input, so the anti-theft system is not in operation.
- If the ID number has not been input, the audio system remains the same as a normal audio system.

2. ANTI-THEFT SYSTEM OPERATION

If the normal electrical power source (connector or battery terminal) is cut off, the audio system becomes inoperable, even if the power supply resumes.

3. CANCELLING SYSTEM

The ID number chosen by the customer is input to cancel the anti-theft system.
(Refer to the Owner's Manual, ''IF THE SYSTEM IS ACTIVATED'')

HINT: To change or cancel the ID number, please refer to the Owner's Manual, ''CANCELLING THE SYSTEM''.

Troubleshooting

NOTICE: When replacing the internal mechanism (computer part) of the audio system, be careful that no part of your body or clothing comes in contact with the terminals of the leads from the IC, etc. of the replacement part (spare part).

HINT: This inspection procedure is a simple troubleshooting which should be carried out on the vehicle during system operation and was prepared on the assumption of system component troubles (except for the wires and connectors, etc.).
Always inspect the trouble taking the following items into consideration.

- Open or short circuit of the wire harness
- Connector or terminal connection fault
- For audio systems with anti-theft system, troubleshooting items marked (*) indicate that "Troubleshooting for ANTI-THEFT SYSTEM" should be carried out first.

Problem		No.
Radio	No power coming in.	*1
	Power coming in, but radio not operating.	*2
	Noise present, but AM–FM not operating.	3
	Either speaker does not work.	4
	Either AM or FM does not work.	5
	Reception poor (Volume faint).	5
	Few preset tuning bands.	5
	Sound quality poor.	6
	Auto-Radio Information (ARI) not received.	7
	Cannot set station select button.	8
	Preset memory disappears.	8
Tape Player	Cassette tape cannot be inserted.	9
	Cassette tape inserts, but no power.	*10
	Power coming in, but tape player not operating.	11
	Either speaker does not work.	12
	Sound quality poor (Volume faint).	13
	Tape jammed, malfunction with tape speed or auto-reverse.	14
	APS, SKIP, RPT buttons not operating.	15
	Cassette tape will not eject.	*16
CD Player	CD cannot be inserted.	17
	CD inserts, but no power.	18
	Power coming in, but CD player not operating.	19
	Sound jumps.	20
	Sound quality poor (Volume faint).	21
	Either speaker does not work.	22
	CD will not eject.	23
Antenna	Antenna–related.	24
Noise	Noise produced by vibration or shock whille driving.	25
	Noise produced when engine starts.	26

Troubleshooting for ANTI-THEFT SYSTEM

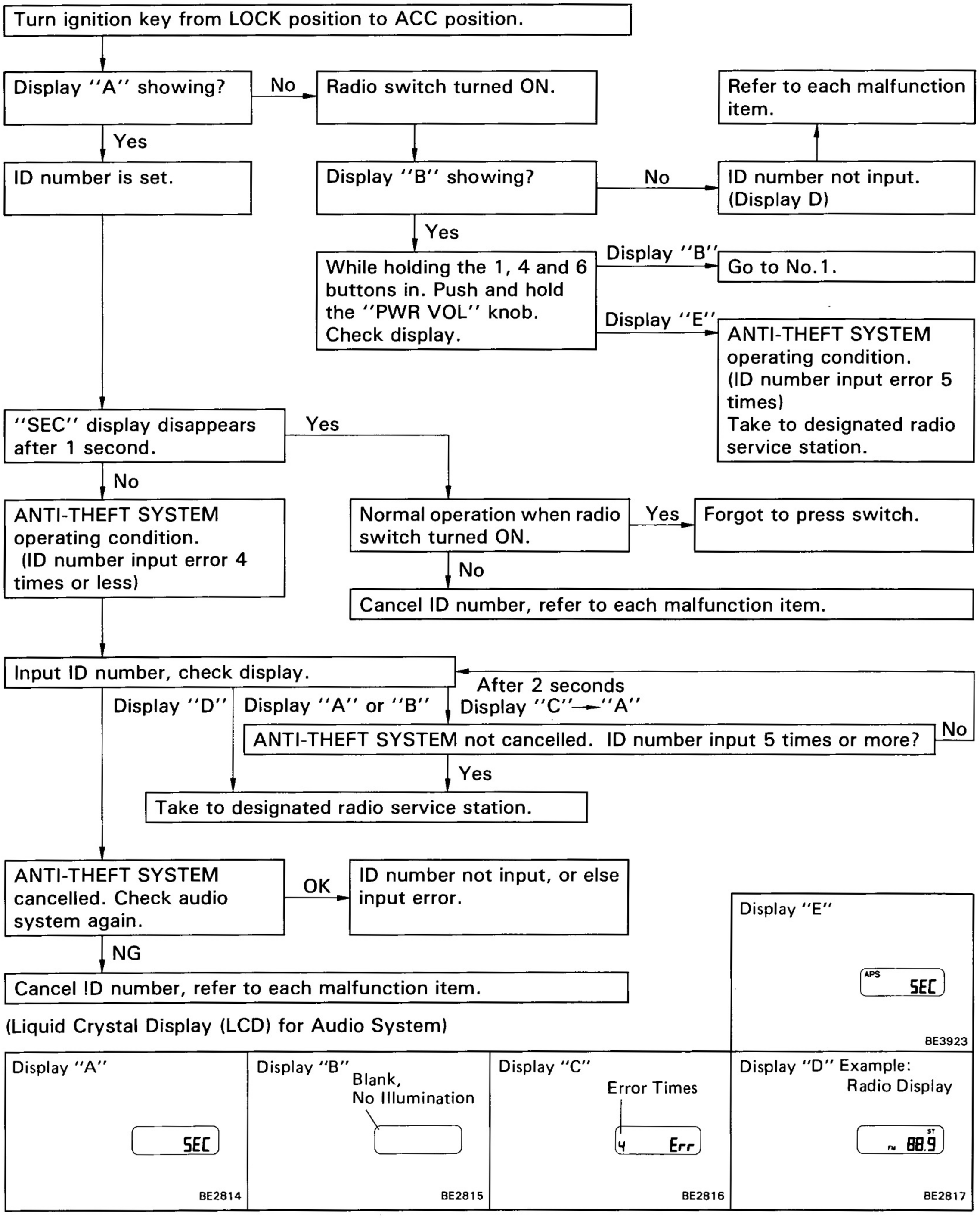

(Liquid Crystal Display (LCD) for Audio System)

Display "A"	Display "B"	Display "C"	Display "D" Example:
SEC	Blank, No Illumination	Error Times: 4 Err	Radio Display: ST 88.9
BE2814	BE2815	BE2816	BE2817

Display "E"

BE3923

HINT:

- Refer to Owner's Manual for operation details of ANTI-THEFT SYSTEM.
- When the ID number has been cancelled, reset the same number after completing the operation, or inform the customer that it has been cancelled.

1	Radio	NO POWER COMING IN

[R] : Radio [S] : Radio+Tape Player [U] : Radio−Tape Player (Built-in Power Amplifier)
[P] : Radio−Tape Player (Separate Power Amplifier)

[S][U][P]

Is tape player operating normally?

Yes →

S		Radio faulty.
U	P	Radio assembly faulty.

No

[R] →

Check if CIG & RAD fuse is OK.

NG → Replace fuse.

OK

[P]

[R][S][U]

Is ACC applied to power amplifier?

No → ACC wire hareness faulty.

Yes

Is ACC for the radio assembly being output from the power amplifier?

No → Power amplifier faulty.

Yes

Check if GND (wire harness side) to power amplifier is OK.

NG → GND faulty.

OK

[R][S][U][P]

Is ACC applied to radio assembly?

No → ACC wire harness faulty.

Yes

Check if GND (wire harness side) to radio is OK.

NG →

P			Power Amplifier faulty.
R	S	U	GND wire harness faulty.

OK

R	S	Radio faulty.
U	P	Radio assembly faulty.

2 Radio — POWER COMING IN, BUT RADIO NOT OPERATING

[R] : Radio [S] : Radio + Tape Player [U] : Radio – Tape Player (Built-in Power Amplifier)
[P] : Radio – Tape Player (Separate Power Amplifier)

[S][U][P]
Is tape player operating normally?
- Yes → Go to No.24.
  - If radio side faulty
    - S: Radio faulty.
    - U, P: Radio assembly faulty.
- No
  - [R] →
  - [R][S][U][P]
    Is there continuity in speaker wire harness?
    - No → Speaker wire harness faulty.
    - Yes
      Temporarily install another speaker. Functions OK?
      - Yes → Speaker faulty.
      - No
        - [R][S][U]
          - R, S: Radio faulty.
          - U: Radio assembly faulty.
        - Hissing sound from speaker?
          - No → Power amplifier faulty. Recheck system after repair.
          - Yes → Radio assembly faulty. Recheck system after repair.

3 Radio — NOISE PRESENT, BUT AM-FM NOT OPERATING

[R] : Radio [S] : Radio + Tape Player [U] : Radio – Tape Player (Built-in Power Amplifier)
[P] : Radio – Tape Player (Separate Power Amplifier)

[S][U][P]
Is tape player operating normally?
- Yes → Go to No.24.
  - If radio side faulty
    - R, S: Radio faulty.
    - U, P: Radio assembly faulty.
- No
  - [P]
    Hissing sound from speaker?
    - No → Power amplifier faulty. Recheck system after repair.
  - [S][U]
  - [S][U][P]
    Radio assembly faulty.
- [R] (Yes)

4	Radio	EITHER SPEAKER DOES NOT WORK

[R] : Radio [S] : Radio+Tape Player [U] : Radio–Tape Player (Built-in Power Amplifier)
[P] : Radio–Tape Player (Separate Power Amplifier)

[S][U][P]

Is tape player operating normally?

Yes →

S		Radio faulty.
U	P	Radio assembly faulty.

No

[R] →

[R][S][U][P]

Is hiss produced by non-functioning speaker?

Yes →

R	S	Radio faulty
U		Radio assembly faulty.
P		Radio assembly faulty. Recheck system after repair.

No

Is there continuity in speaker wire harness?

No → Speaker wire harness faulty.

Yes

Temporarily install another speaker. Functions OK?

Yes → Speaker faulty.

No

R	S	Radio faulty
U		Radio assembly faulty.
P		Power amplifier faulty. Recheck system after repair.

5	Radio	EITHER AM OR FM DOES NOT WORK, RECEPTION POOR (VOLUME FAINT), FEW PRESET TUNING BANDS

[R] : Radio [S] : Radio + Tape Player [U] : Radio – Tape Player (Built-in Power Amplifier)
[P] : Radio – Tape Player (Separate Power Amplifier)

Problem with radio wave signals or location? (See page BE-135)
- Yes → Poor signals, poor location.
- No ↓

Are both AM and FM defective?
- No → Electronic Tuning Radio type?
  - Yes → Radio or radio assembly faulty.
  - No ↓
- Yes ↓

Which bond is poor?
- FM → Radio faulty.
- AM ↓

Adjust antenna trimmer. (See page BE-136)

Go to No.24.

If radio side faulty ↓

Is tape player operating normary?
- Yes → Radio assembly faulty.
- No ↓

Temporarily install another speaker. Functions OK?
- Yes → Speaker faulty.
- No ↓

[R] [S] [U]

R	S	Radio faulty.
U		Radio assembly.

[P]

Hissing sound from speaker?
- No → Power amplifier faulty. Recheck system after repair.
- Yes ↓

Radio assembly faulty. Recheck system after repair.

6 Radio — SOUND QUALITY POOR

[R] : Radio [S] : Radio+Tape Player [U] : Radio–Tape Player (Built-in Power Amplifier)
[P] : Radio–Tape Player (Separate Power Amplifier)

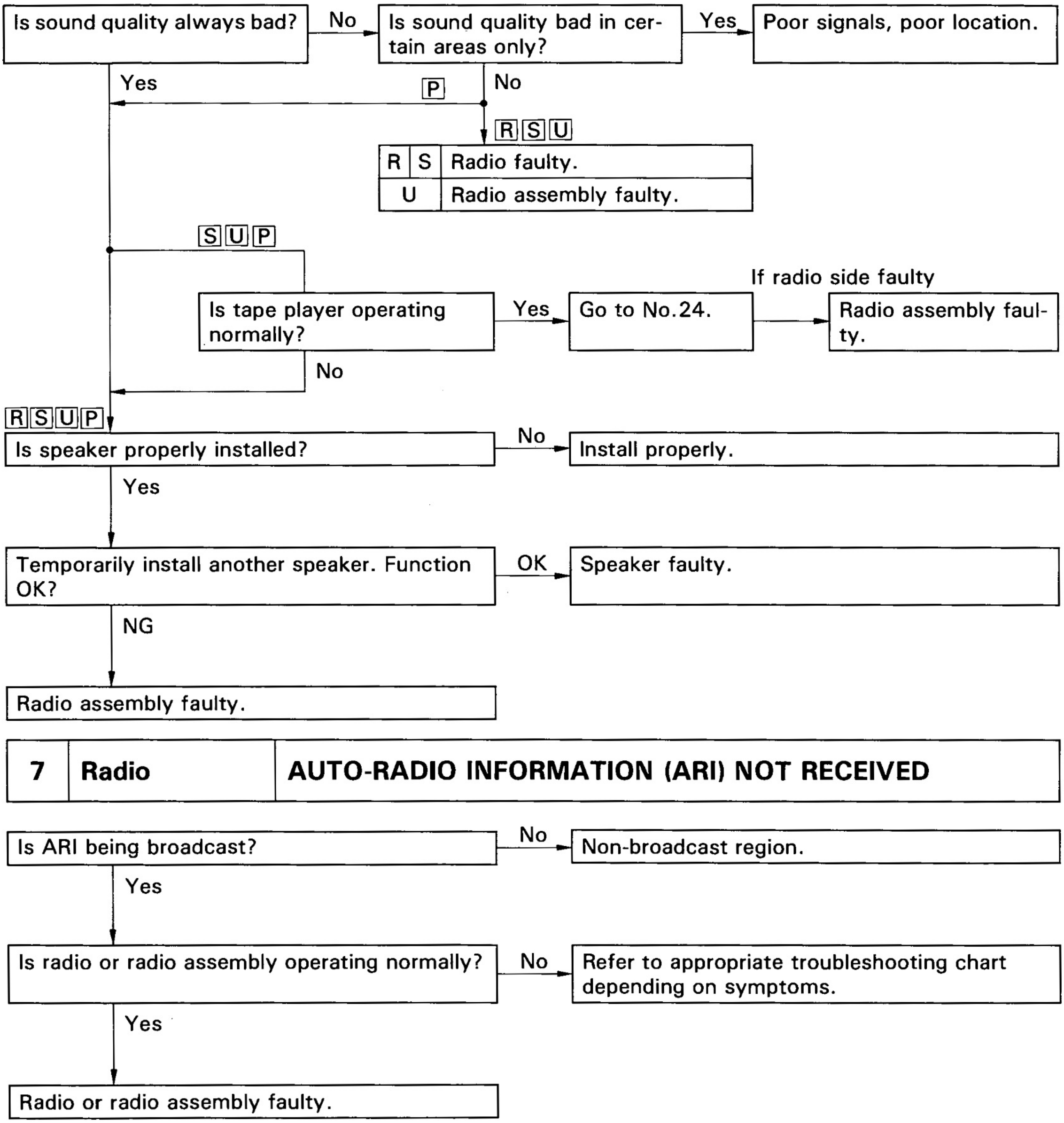

7 Radio — AUTO-RADIO INFORMATION (ARI) NOT RECEIVED

8	Radio	CANNOT SET STATION SELECT BUTTON, PRESET MEMORY DISAPPEARS

[R] : Radio [S] : Radio + Tape Player [U] : Radio – Tape Player (Built-in Power Amplifier)
[P] : Radio – Tape Player (Separate Power Amplifier)

[S][U][P]

Can cassette tape be inserted in tape player? — Yes → Radio assembly faulty.

No

[R] →

Check if DOME fuse is OK? — NG → Replace fuse.

OK

[R][S][U] → [P]

Is +B applied to power amplifier? — No → +B wire harness faulty.

Yes

Check if GND (wire harness side) to power amplifier? — NG → GND faulty.

OK

[R][S][U][P]

Is +B applied to radio or radio assembly? — No →

R	S	U	+B wire harness faulty.
P			Power amplifier faulty.

Yes

Check if GND (wire harness side) to radio or radio assembly? — NG →

R	S	U	GND faulty.
P			Power amplifier faulty.

OK

Radio or radio assembly faulty.

9	Tape Player	CASSETTE TAPE CANNOT BE INSERTED

[S] : Radio+Tape Player [U] : Radio−Tape Player (Built-in Power Amplifier)
[P] : Radio−Tape Player (Separate Power Amplifier)

[S][U][P]

Is there a foreign object inside tape player? — Yes → Remove foreign object.

No

Is radio operating normally? — Yes →

S	Tape player faulty.
U P	Radio assembly faulty.

No

Check if DOME fuse is OK? — NG → Replace fuse.

OK

[U]

[S][P]

S	Is +B applied to tape player?	No → +B wire harness faulty.
P	Is +B applied to power amplified?	

Yes

S	Check if GND (wire harness side) to tape player is OK?	NG → GND faulty.
P	Check if GND (wire harness side) to power amplifier is OK?	

OK

[P]

[S]

Tape player faulty.

Is +B applied to radio assembly? — No →

U	+B wire harness faulty.
P	Power amplifier faulty.

Yes

Check if GND (wire harness side) to radio assembly is OK? — NG →

U	GND faulty.
P	Power amplifier faulty.

OK

Radio assembly faulty.

10	Tape Player	CASSETTE TAPE INSERTS, BUT NO POWER

[S] : Radio+Tape Player [U] : Radio−Tape Player (Built-in Power Amplifier)
[P] : Radio−Tape Player (Separate Power Amplifier)

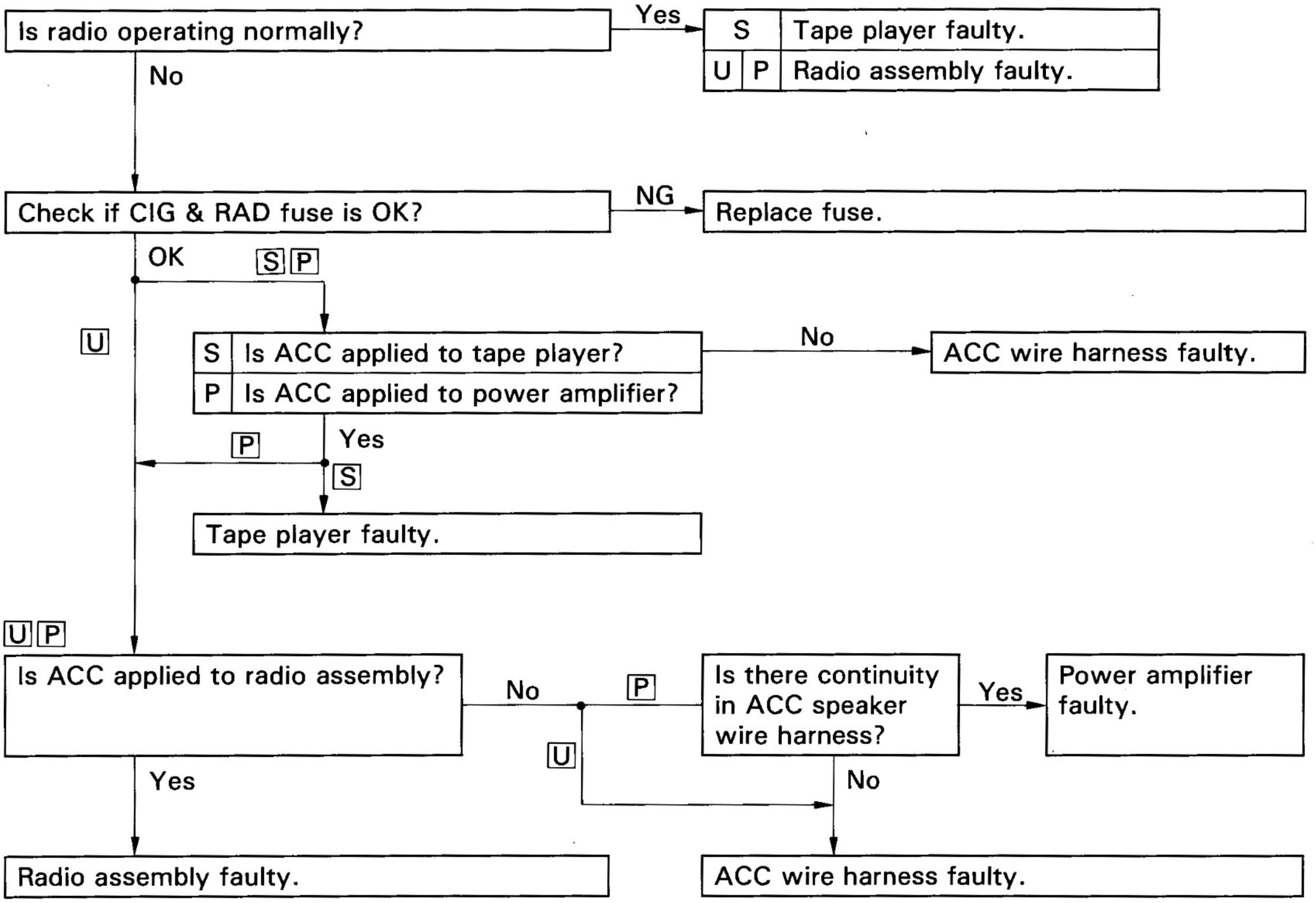

11 Tape Player — POWER COMING IN, BUT TAPE PLAYER NOT OPERATING

[S] : Radio + Tape Player [U] : Radio – Tape Player (Built-in Power Amplifier)
[P] : Radio – Tape Player (Separate Power Amplifier)

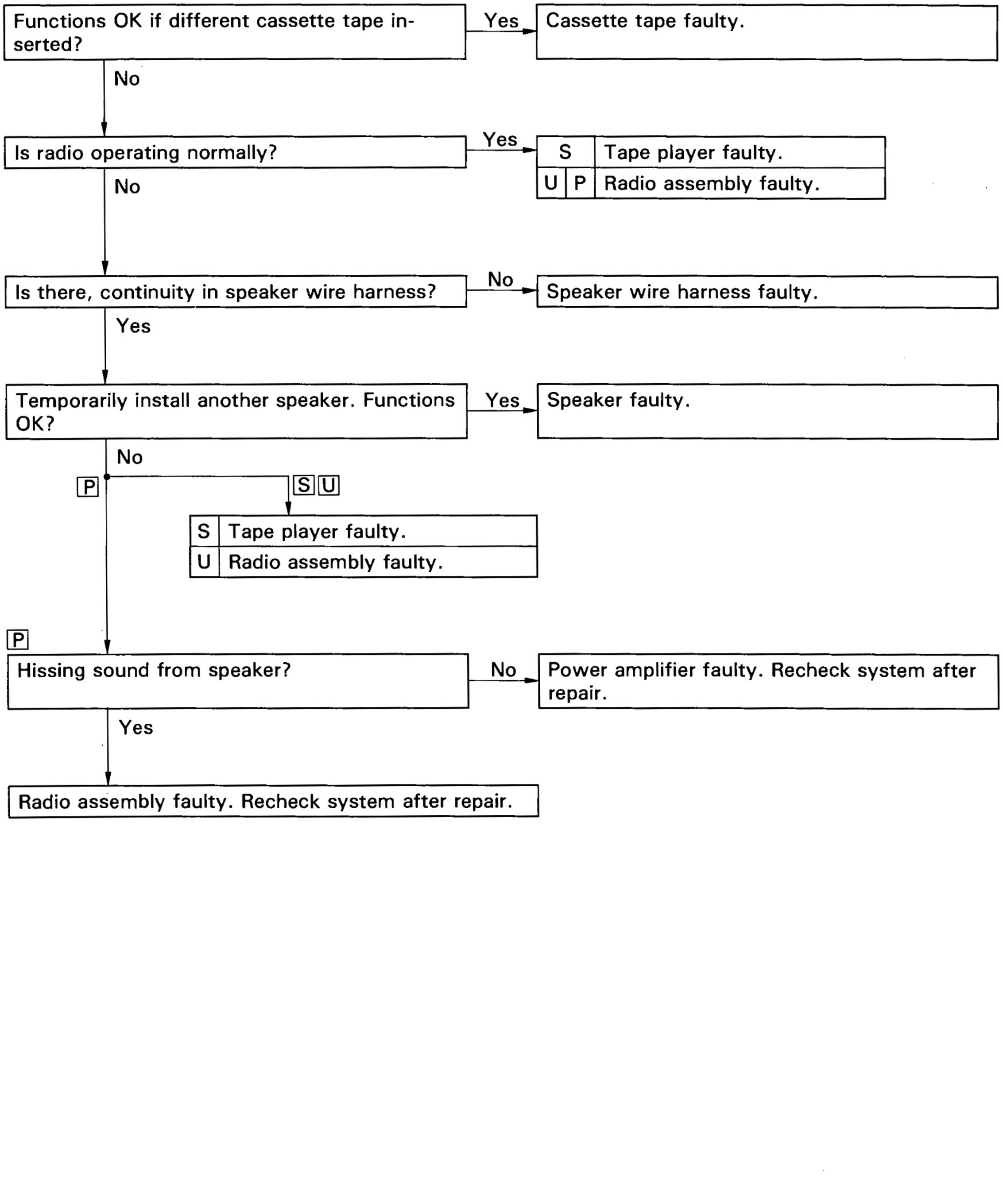

12 Tape Player — EITHER SPEAKER DOES NOT WORK

[S] : Radio + Tape Player [U] : Radio – Tape Player (Built-in Power Amplifier)
[P] : Radio – Tape Player (Separate Power Amplifier)

Is radio operating normally?

Yes →

S		Tape player faulty.
U	P	Radio assembly faulty.

No

Is hiss produced by non-functioning speaker?

Yes →

S	Tape player faulty.
U	Radio assembly faulty.
P	Radio assembly faulty. Recheck system after repair.

No

Is there continuity in speaker wire harness?

No → Speaker wire harness faulty.

Yes

Temporarily install another speaker. Functions OK?

OK → Speaker faulty.

NG

S	Tape player faulty.
U	Radio assembly faulty.
P	Radio assembly faulty. Recheck system after repair.

13 Tape Player — SOUND QUALITY POOR (VOLUME FAINT)

[S] : Radio + Tape Player [U] : Radio – Tape Player (Built-in Power Amplifier)
[P] : Radio – Tape Player (Separate Power Amplifier)

Functions OK if different cassette tape inserted? — Yes → Cassette tape faulty.

No ↓

Operates normally after cleaning the heads? (See page BE-136) — Yes → Head dirty.

No ↓

Is radio operating normally? — Yes → Radio assembly faulty.

No ↓

Is speaker properly installed? — No → Install properly.

Yes ↓

Temporarily install another speaker. Functions OK? — Yes → Speaker faulty.

No ↓

S	Tape player faulty.
U	Radio assembly faulty.
P	Radio assembly faulty. Recheck system after repair.

14 Tape Player — TAPE JAMMED, MALFUNCTION WITH TAPE SPEED OR AUTO-REVERSE

[S] : Radio + Tape Player [U] : Radio – Tape Player (Built-in Power Amplifier)
[P] : Radio – Tape Player (Separate Power Amplifier)

Functions OK if different tape (less than 120 mins.) is inserted? — Yes → Cassette tape faulty.

No ↓

Is there a foreign object inside tape player? — Yes → Remove foreign object.

No ↓

Operates normally after cleaning the heads? (See page BE-136) — Yes → Head dirty.

No ↓

S		Tape player faulty.
U	P	Radio assembly faulty.

15 Tape Player — APS, SKIP, RPT BUTTONS NOT OPERATING

[S] : Radio+Tape Player [U] : Radio−Tape Player (Built-in Power Amplifier)
[P] : Radio−Tape Player (Separate Power Amplifier)

Functions OK if different cassette tape inserted? — No → Radio assembly faulty.

Yes ↓

Cassette tape faulty. (Less than 3 secs. of silence between songs (APS, RPT). Less than 15 secs. of silence (SKIP).)

16 Tape Player — CASSETTE TAPE WILL NOT EJECT

[S] : Radio+Tape Player [U] : Radio−Tape Player (Built-in Power Amplifier)
[P] : Radio−Tape Player (Separate Power Amplifier)

Is tape player operating normally? — No → Cassette tape jammed.

Yes ↓

Is radio operating normally? — Yes →

S	Tape player faulty.
U P	Radio assembly faulty.

↓

Check if DOME fuse is OK? — NG → Replace fuse.

OK ↓

Is +B applied to power amplifier? — No → +B wire harness faulty.

Yes ↓

S	Is +B applied to tape player?	No → [P]
U P	Is +B applied to radio assembly?	No → [S] [U]

Yes ↓

S	Tape player faulty.
U P	Radio assembly faulty.

[P] Is there continuity in +B wire harness between power amplifier and radio assembly? — Yes → Power amplifier faulty.

No ↓

+B wire harness faulty.

17 CD Player — CD CANNOT BE INSERTED

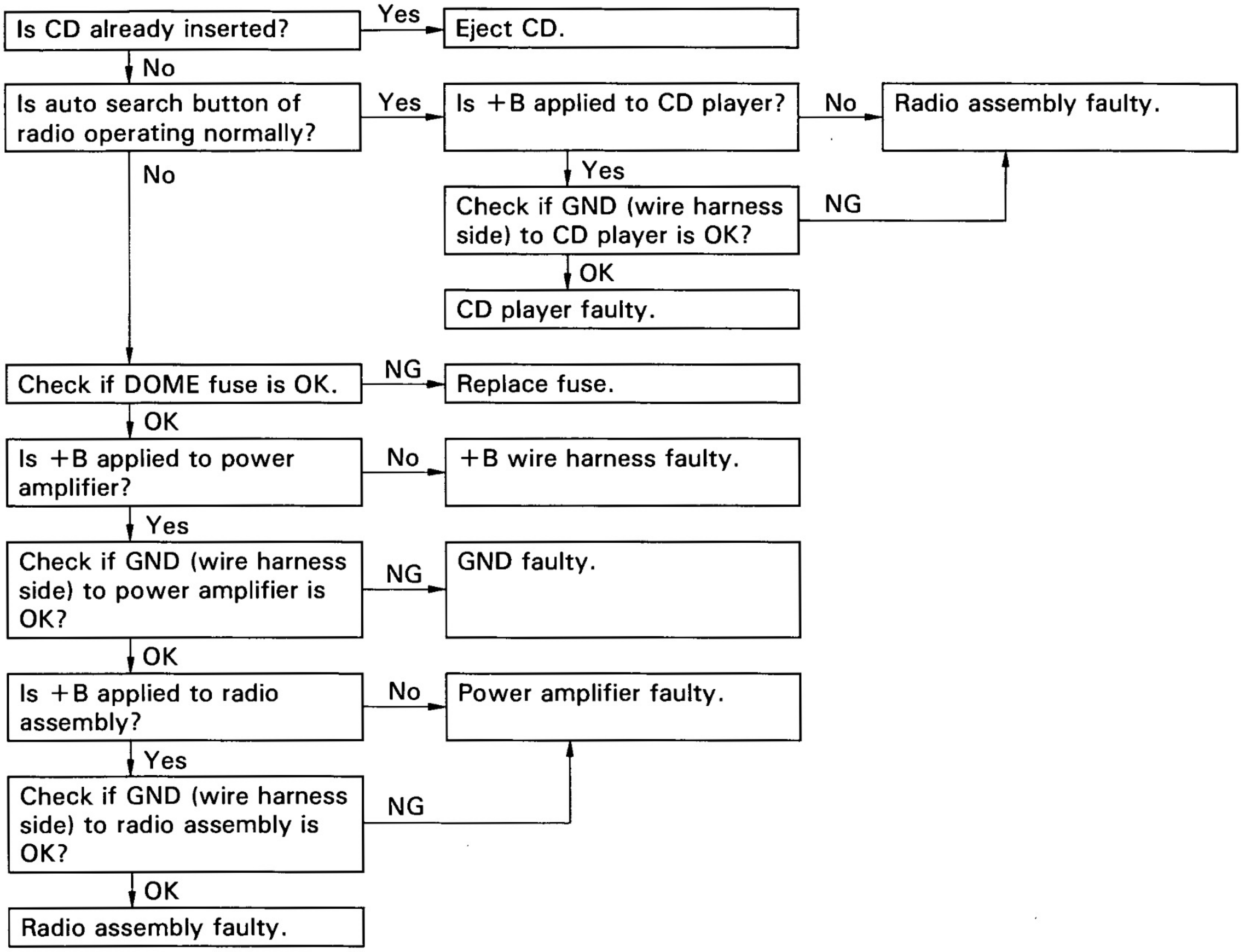

18 CD Player — CD INSERTS, BUT NO POWER

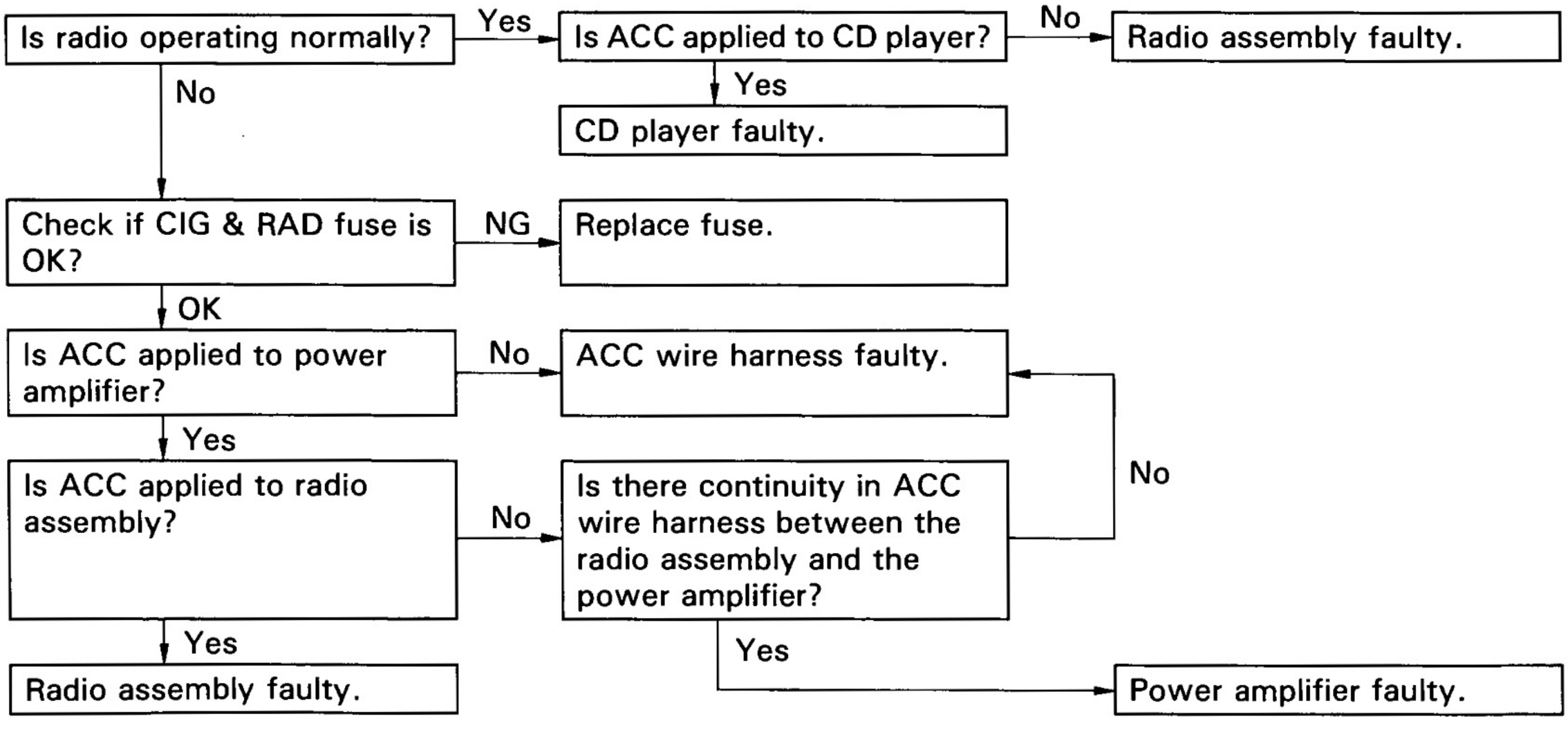

19 CD Player — POWER COMING IN, BUT CD PLAYER NOT OPERATING

- Is CD inserted correct side up?
  - No → Insert correctly.
  - Yes ↓
- Functions OK if different CD inserted?
  - Yes → CD faulty.
  - No ↓
- Is radio operating normally?
  - Yes → Is temperature inside cabin hot?
    - Yes → Protective circuit in operation.
    - No ↓
      - Has sudden temperature change occurred inside cabin?
        - Yes → Formation of condensation due to temp. change.
        - No ↓
          - CD player faulty.
  - No ↓
- Is there continuity in speaker wire harness?
  - No → Speaker wire harness faulty.
  - Yes ↓
- Temporarily install another speaker. Functions OK?
  - Yes → Speaker faulty.
  - No ↓
- Hissing sound from speaker?
  - No → Power amplifier faulty. Recheck system after repair.
  - Yes ↓
- Radio assembly faulty. Recheck system after repair.

20 CD Player — SOUND JUMPS

- Does sound jump only during strong vibration?
  - Yes → Jumping caused by vibration.
  - No ↓
- Is CD player properly installed?
  - No → Install properly.
  - Yes ↓
- Functions OK if different CD inserted?
  - Yes → CD faulty.
  - No ↓
- Has sudden temperature change occurred inside cabin?
  - Yes → Formation of condensation due to temp. change.
  - No ↓
- CD player faulty.

21 CD Player — SOUND QUALITY POOR (VOLUME FAINT)

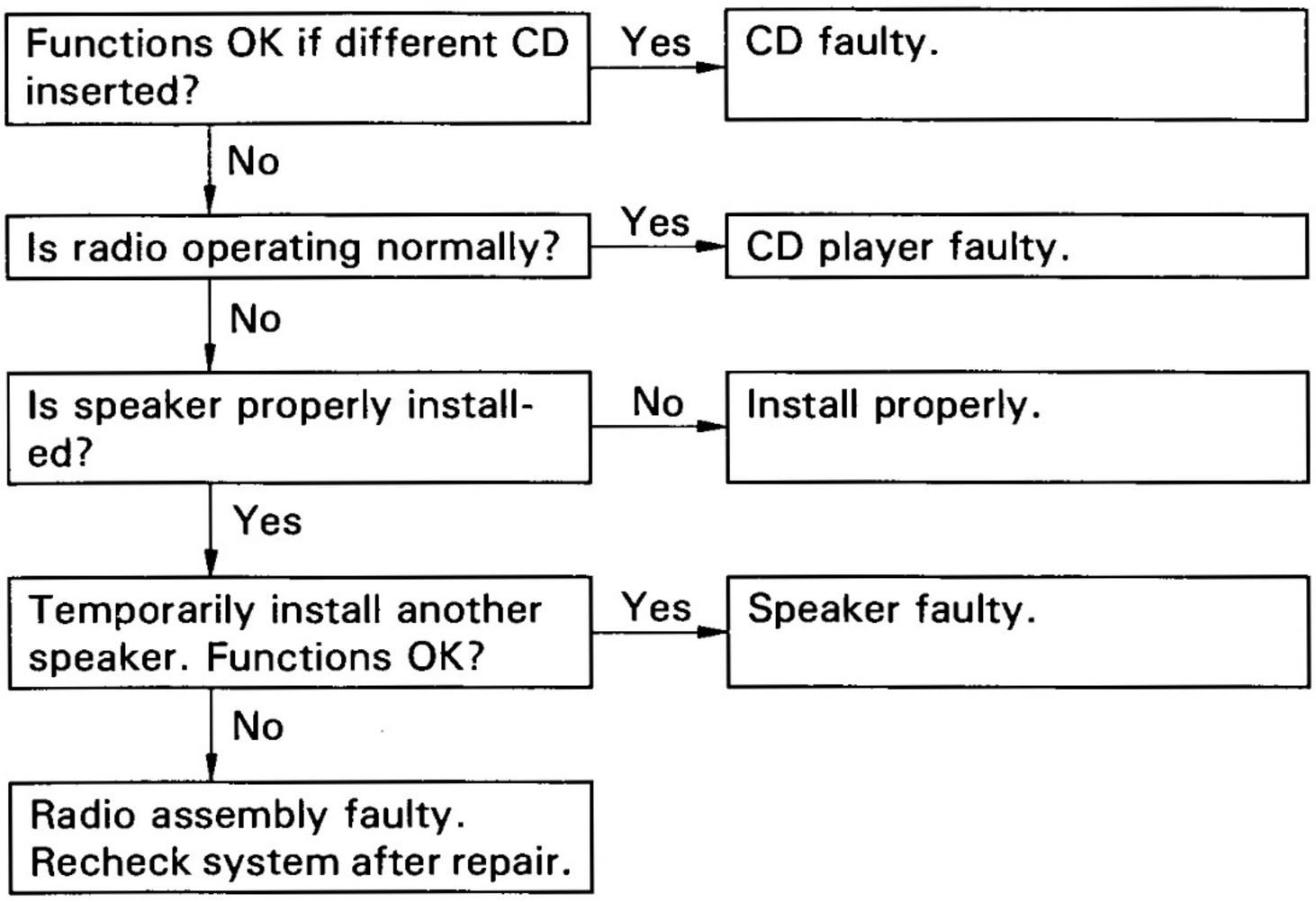

22 CD Player — EITHER SPEAKER DOES NOT WORK

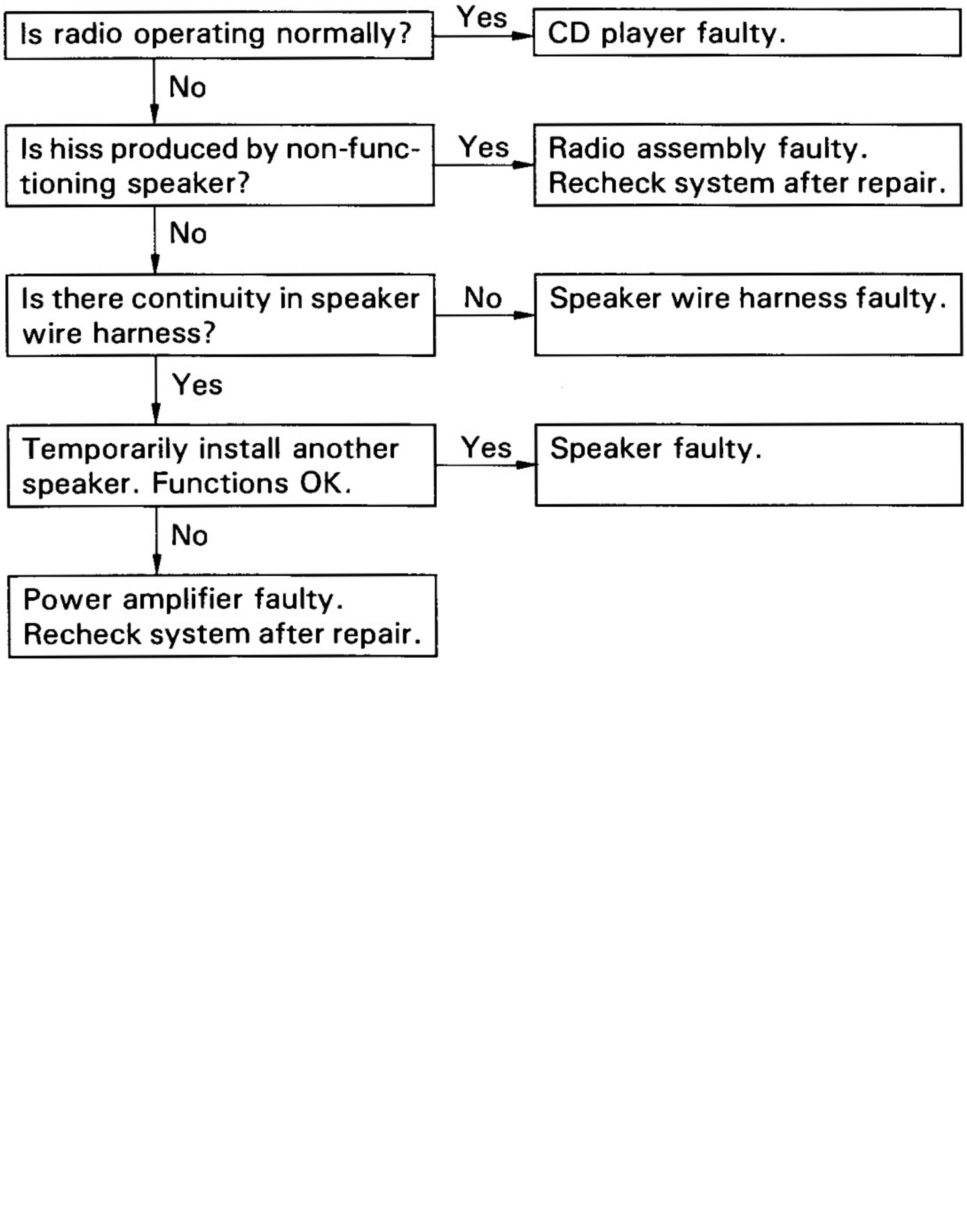

23	CD Player	CD WILL NOT EJECT

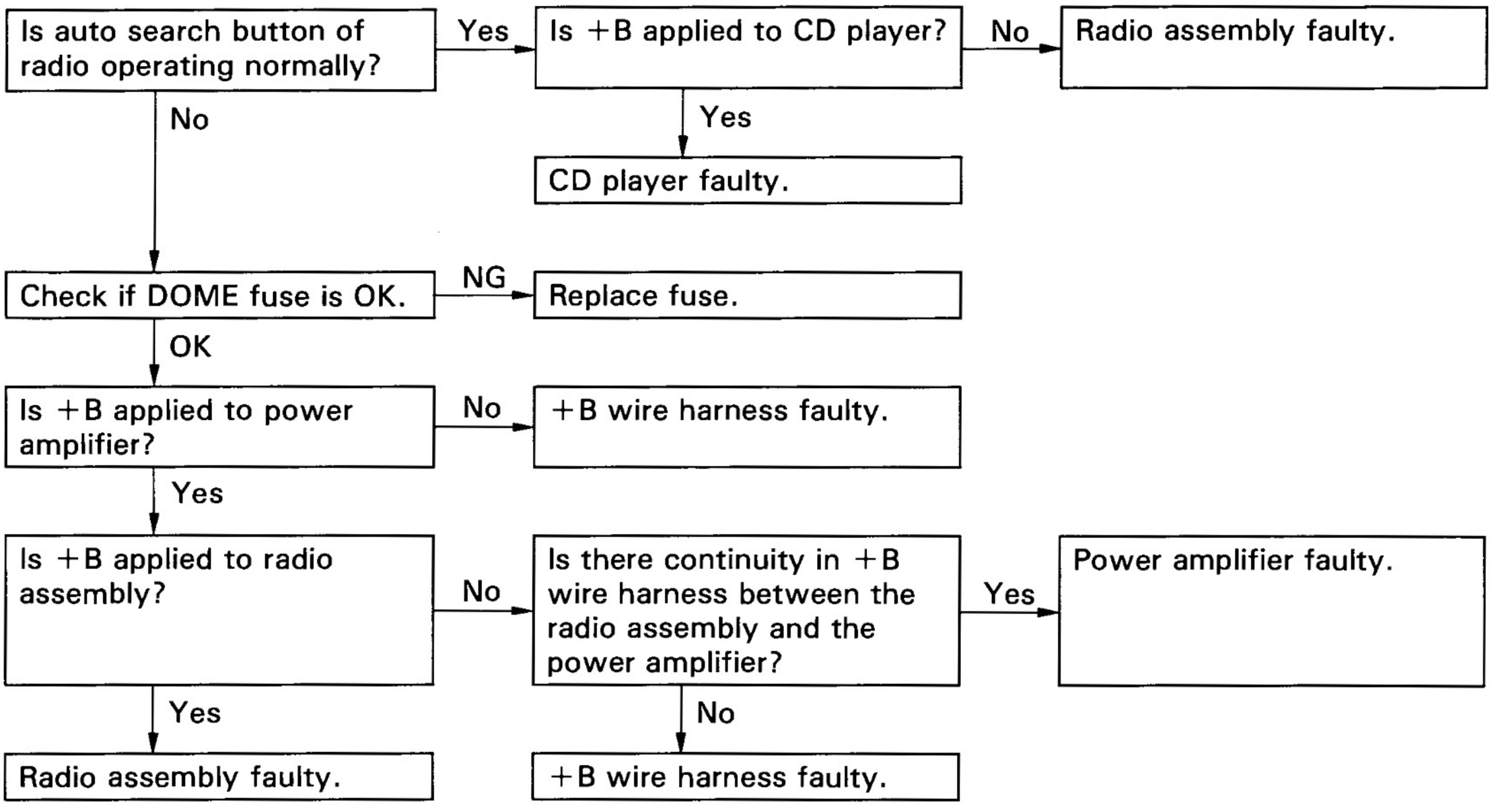

24 Antenna — ANTENNA-RELATED

24—a: Pole Antenna

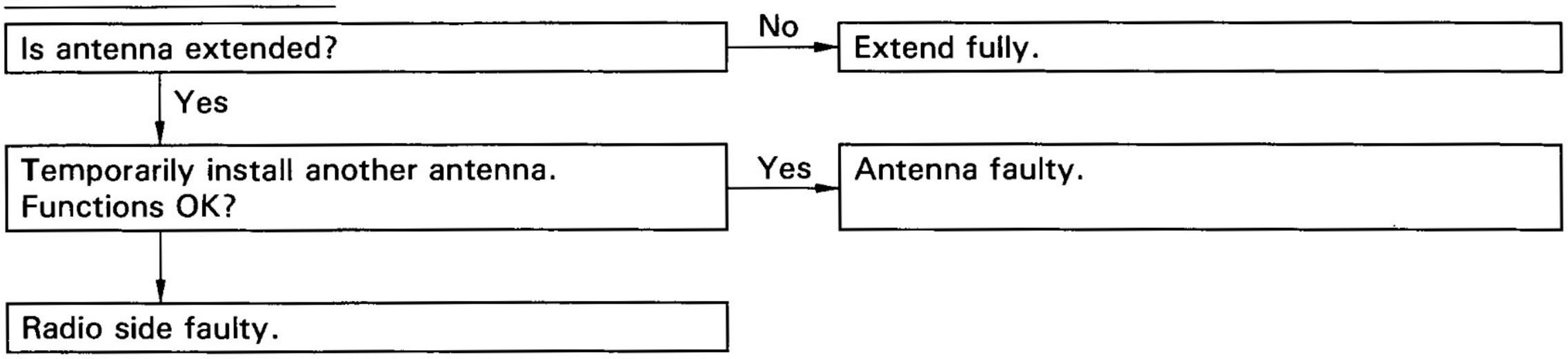

24—b: Motor Antenna

M : Motor Antenna (Radio Linked Type) N : Motor Antenna (Except Radio-Linked Type)

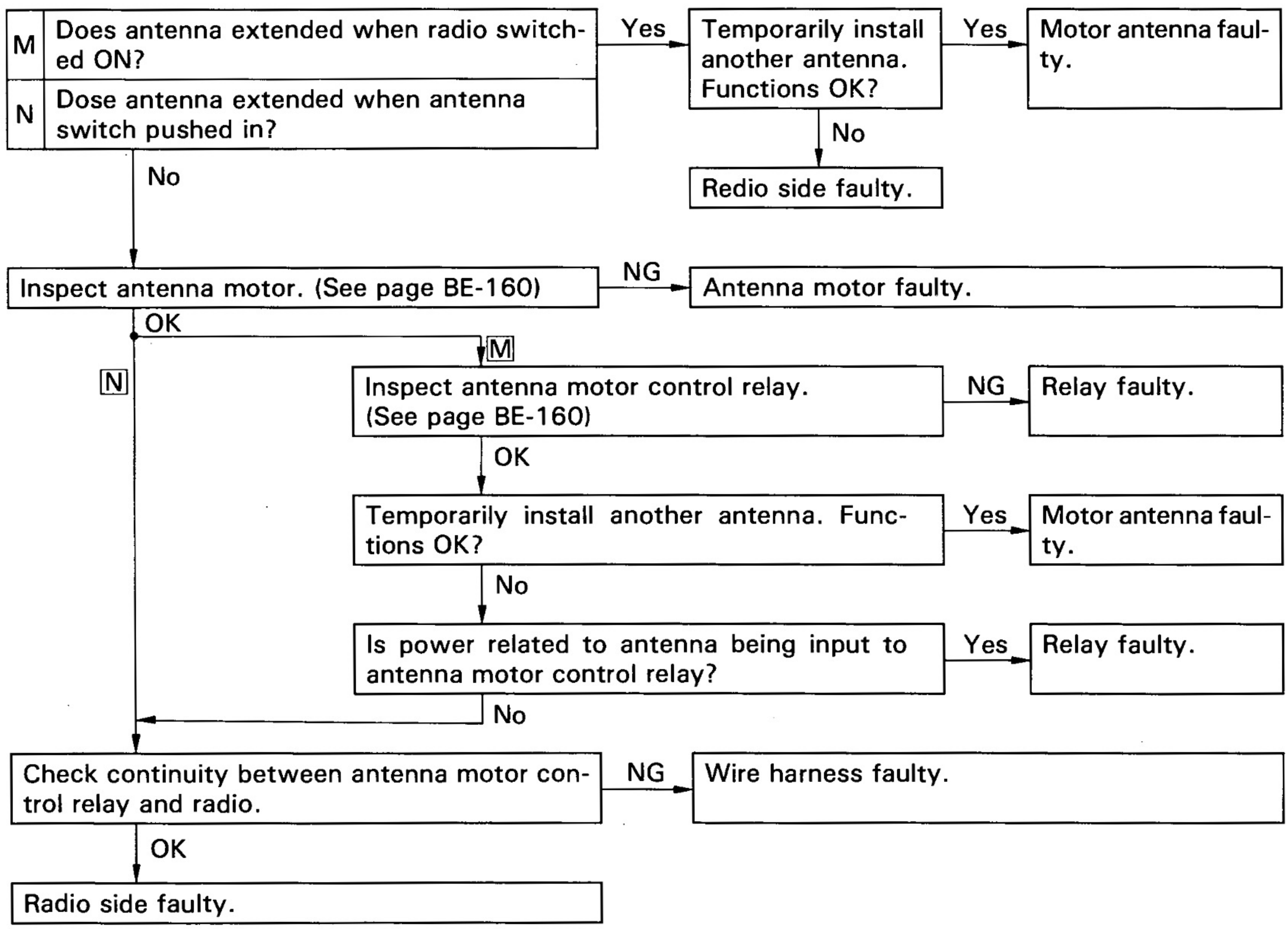

25	Noise	NOISE PRODUCED BY VIBRATION OR SHOCK WHILE DRIVING

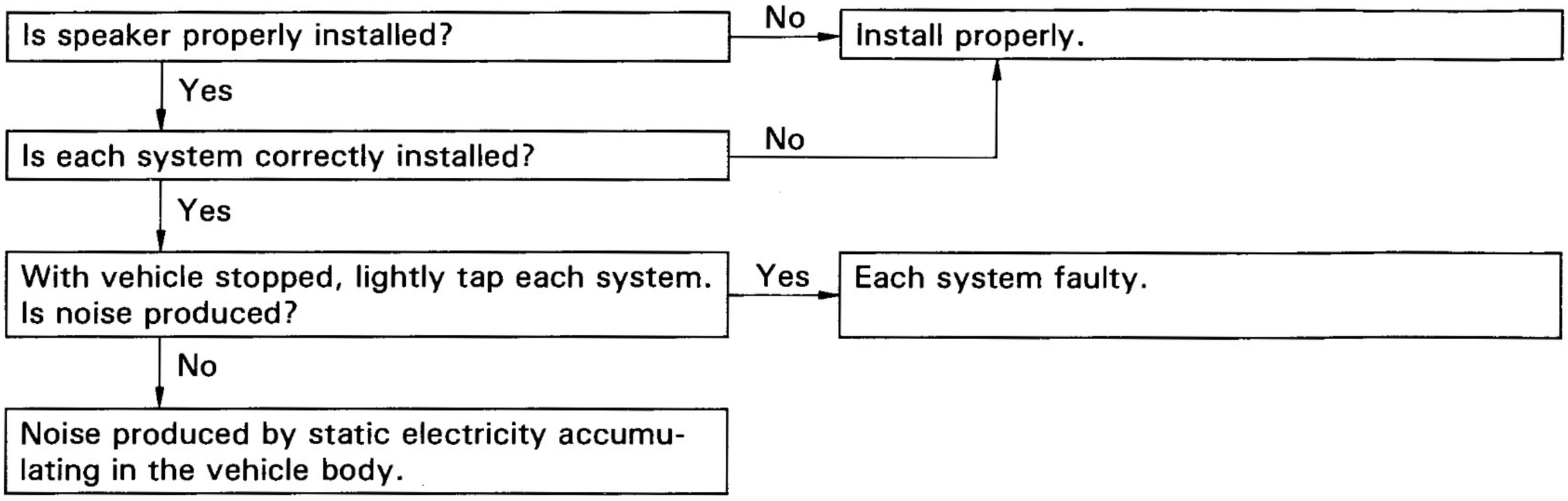

26	Noise	NOISE PRODUCED WHEN ENGINE STARTS

Whistling noise which becomes high-pitched when accelerator strongly depressed, disappears shortly after engine stops.
- Yes → Alternator noise.
- No ↓

Whining noise occurs when A/C is operating.
- Yes → A/C noise.
- No ↓

Scratching noise occurs during sudden acceleration, driving on rough roads or when ignition switch is turned on.
- Yes → Fuel gauge noise.
- No ↓

Clicking sound heard when horn button is pressed, then released. Whirring/grating sound when pushed continuously.
- Yes → Horn noise.
- No ↓

Murmuring sound, stops when engine stops.
- Yes → Ignition noise.
- No ↓

Tick-tock noise, occurs in co-ordination with blinking of flasher.
- Yes → Turn signal noise.
- No ↓

Noise occurs during window washer operation.
- Yes → Washer noise.
- No ↓

Scratching noise occurs while engine is running, continues a while even after engine stops.
- Yes → Water temp. gauge noise.
- No ↓

Scraping noise in time with wiper beat.
- Yes → Wiper noise.
- No ↓

Other type of noise.

Parts Inspection

(with Motor Antenna)

1. INSPECT ANTENNA SWITCH

(Except Radio-Linked Type/Continuity)

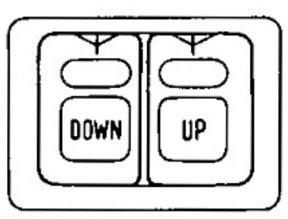

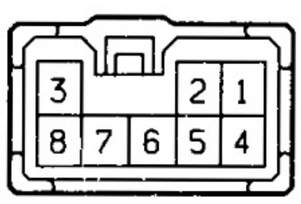

BE4972 S-8-2

Terminal / Switch position		4	5	7	8	Illumination 1	Illumination 2
UP Button	Free	○—○				○—◎—○	
	Pushed in		○—○				
DOWN Button	Free	○—	—	—	—○	○—◎—○	
	Pushed in			○—	—○		

If continuity is not as specified, replace the switch.

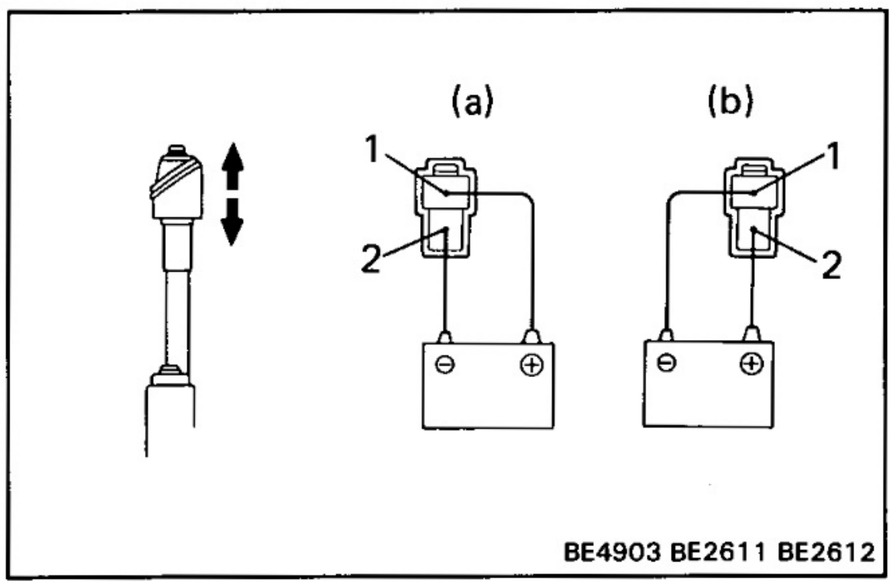

BE4903 BE2611 BE2612

2. INSPECT ANTENNA MOTOR

(a) Connect the positive (+) lead from the battery to terminal 1 and the negative (−) lead to terminal 2, check that the motor turns (moves upward.)

(b) Then, reverse the polarity, check that the motor turns the opposite way (moves downward.)

If operation is not as specified, replace the motor.

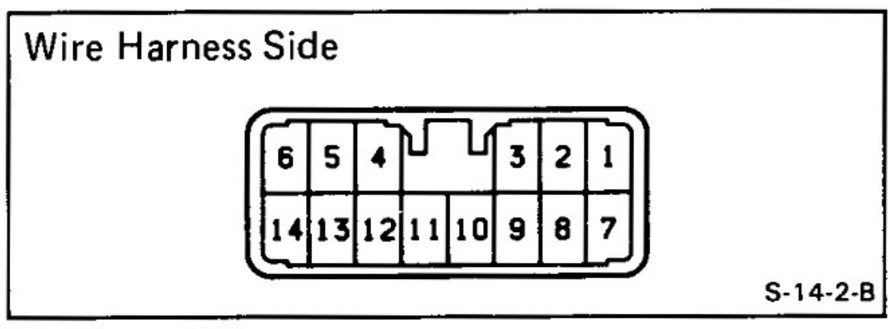

S-14-2-B

3. INSPECT ANTENNA MOTOR CONTROL RELAY

(Radio – Linked Type / Relay circuit)

Disconnect the connector from the relay and inspect the connector on wire harness side as shown in the chart.

Check for	Tester connection	Condition		Specified value
Continuity	2 — 5	Constant		Continuity
	4 — Ground	Constant		Continuity
Voltage	3 — Ground	Constant		Battery voltage
	6 — Ground	Ignition swich position	LOCK or ACC	No voltage
			ON	Battery voltage
	14 — Ground	Ignition swich position	LOCK	No voltage
			ACC or ON	Battery voltage

Continued on Next Page.

Continued from Previous Page.

Check for	Taster connection	Condition				Specified value
		Ignition switch	Radio switch	Radio band	Casette	
Voltage	9 – Ground	LOCK	–	–	–	No voltage
		ACC or ON	OFF	–	OFF	No voltage
		ACC or ON	ON	–	–	Battery voltage
		ACC or ON	–	–	ON	Battery voltage
	11 – Ground	LOCK	–	–	–	No voltage
		ACC or ON	OFF	–	–	No voltage
		ACC or ON	ON	–	OFF	Battery voltage
		ACC or ON	ON	–	ON	No voltage
	12 – Ground	LOCK	–	–	–	No voltage
		ACC or ON	OFF	–	–	No voltage
		ACC or ON	ON	AM	OFF	Battery voltage
		ACC or ON	ON	AM	ON	No voltage
		ACC or ON	ON	FM	OFF	No voltage
	13 – Ground	LOCK	–	–	–	No voltage
		ACC or ON	OFF	–	–	No voltage
		ACC or ON	ON	–	OFF	Battery voltage
		ACC or ON	ON	–	ON	No voltage

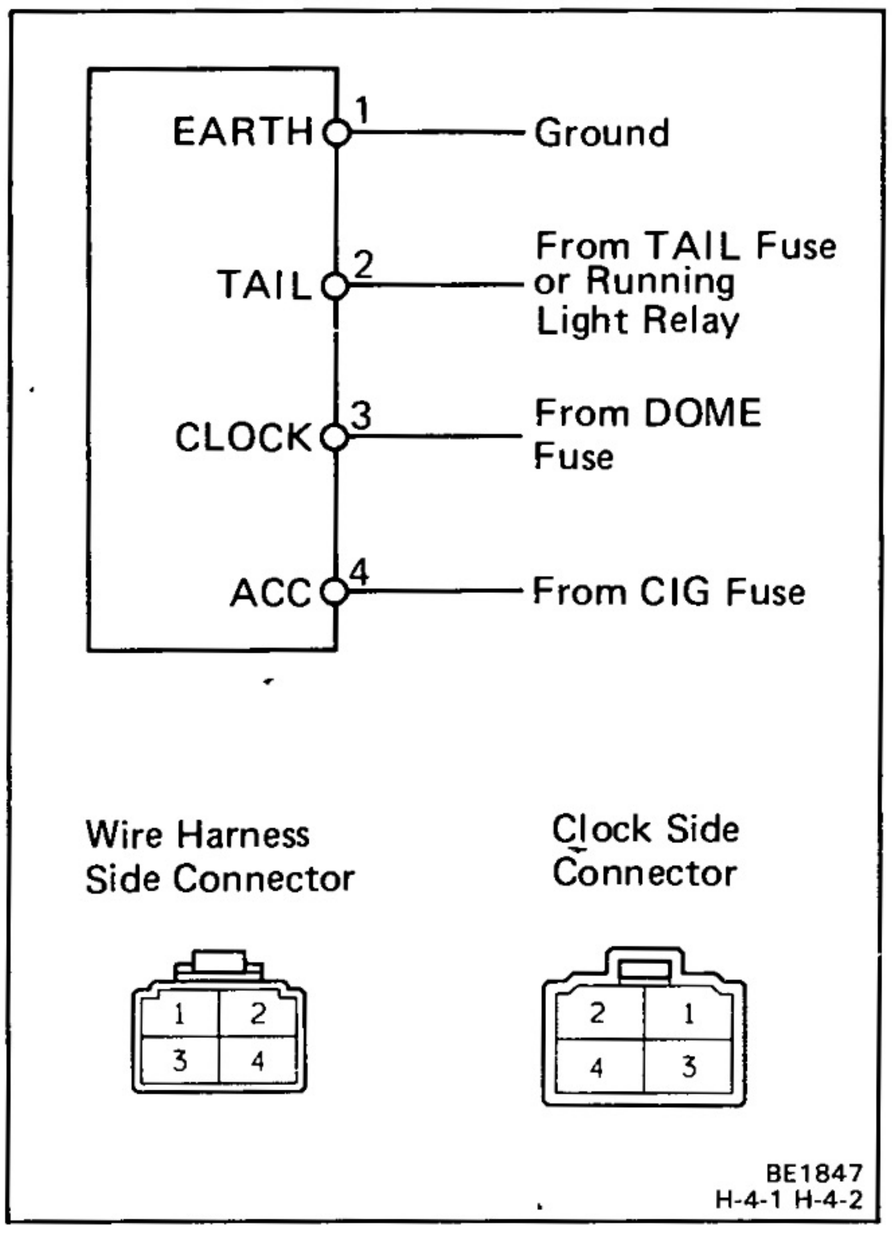

CLOCK

Troubleshooting

As shown in the illustration, those are clock circuit and connector diagrams. Inspect each terminal for applicable trouble.

Terminal		Condition	Specified value
1	EARTH	Constant	Continuity
3	CLOCK	Constant	Battery Voltage
2	TAIL	Turn light control switch ON	
4	ACC	Turn ignition switch ON or ACC	

Allowable error: ±1.5 seconds/day

BODY

	Page
GENERAL INFORMATION	BO-2
HOOD	BO-5
FRONT DOOR	BO-7
REAR DOOR	BO-18
BACK DOOR	
Lift-up Type	BO-29
Swing Out Type	BO-38
MOULDING	
Windshield Moulding	BO-48
Body Outside Moulding	BO-49
Side Protection Moulding	BO-51
Back Door Moulding	BO-54
Wheel Opening Extension	BO-55
WINDSHIELD	BO-57
QUARTER WINDOW GLASS	BO-62
BACK DOOR GLASS	BO-67
MOON ROOF	BO-69
INSTRUMENT PANEL	BO-77
SEAT	BO-83
SEAT BELTS	BO-86
ROOF CARRIER AND ROOF RACK	BO-92
SIDE STEP	BO-93
SPARE WHEEL CARRIER	BO-94
FUEL TANK AND LINE	BO-96
FRAME DIMENSIONS	BO-99

GENERAL INFORMATION

If there is a possiblility that the body and / or parts may be damaged, first remove the danger before performing repair operations.

Example:

1. Apply protection tape to the body adjacent to the body part when removeding and installing.

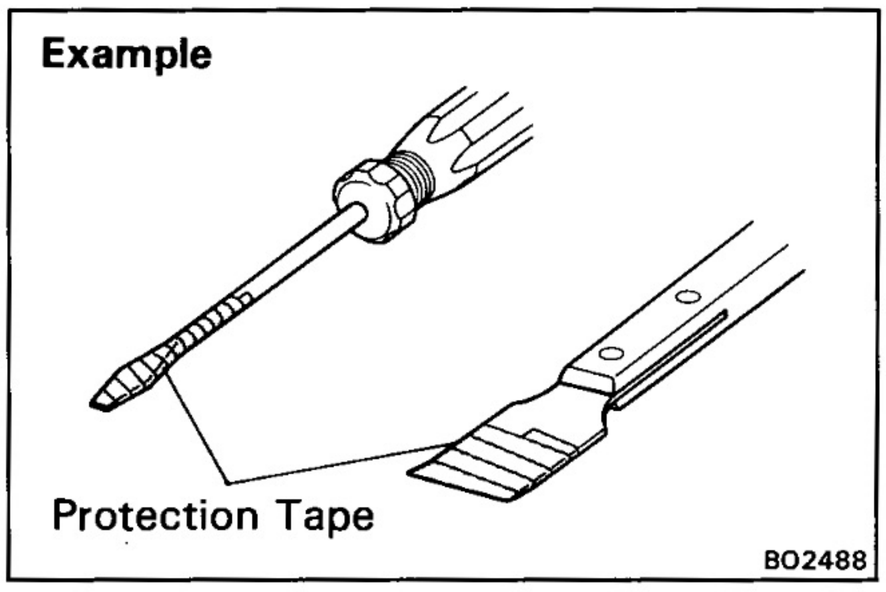

2. When prying off the body parts with a screwdriver or scraper etc., be sure to apply protection tape to the tip or blade to prevent damage to the paint film or body part.

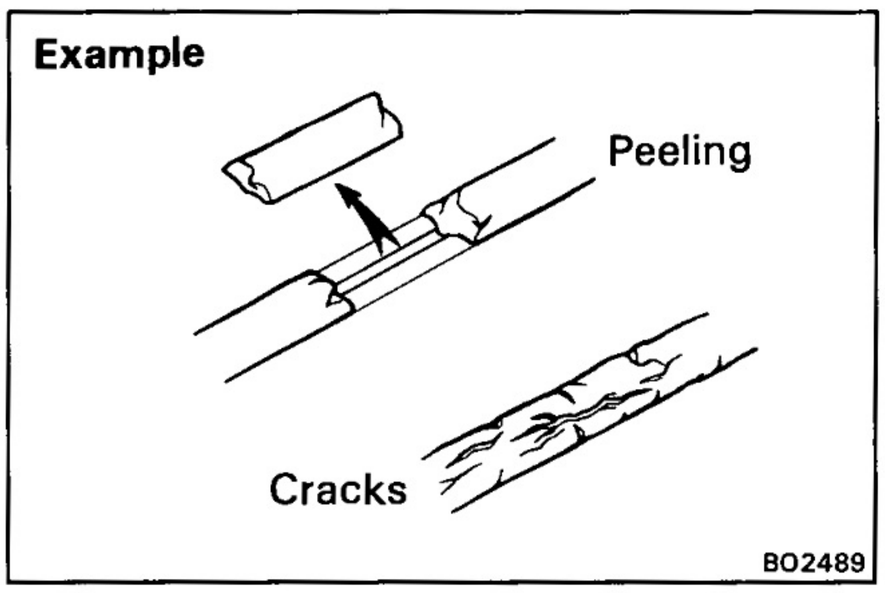

If anti-rust agents are damaged while repairing other parts, be sure to repair the anti-rust agent.

Example:

1. If body sealer, paint film or undercoat are damaged by peeling, cracks etc., be sure to repair each with an anti-rust agent.

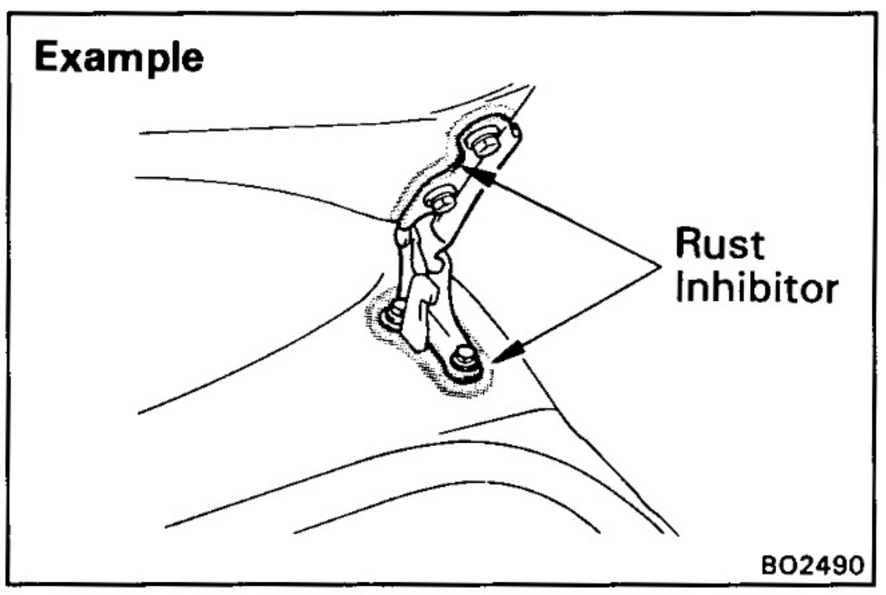

2. If a hinge or exterior body panel is loosened or removed, be sure to apply rust inhibitor after repairs.

CLIPS

The removal and installation methods of typical clips used in body parts are shown in the table below.

HINT: If the clip is damaged during the operation, always replace it with a new clip.

Shape (Example)	Removal/Installation
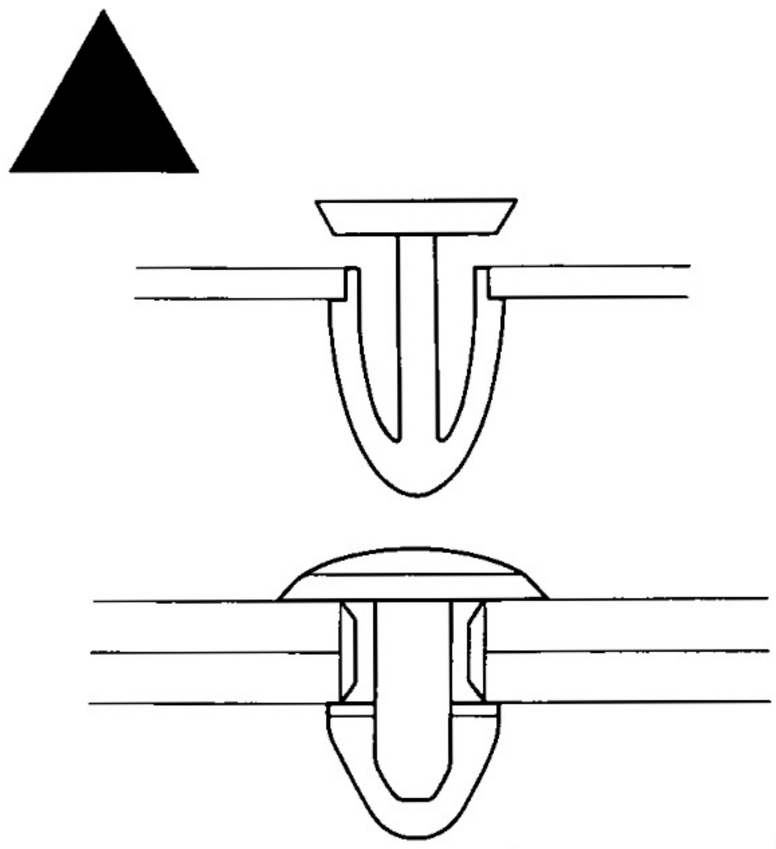 BO4116	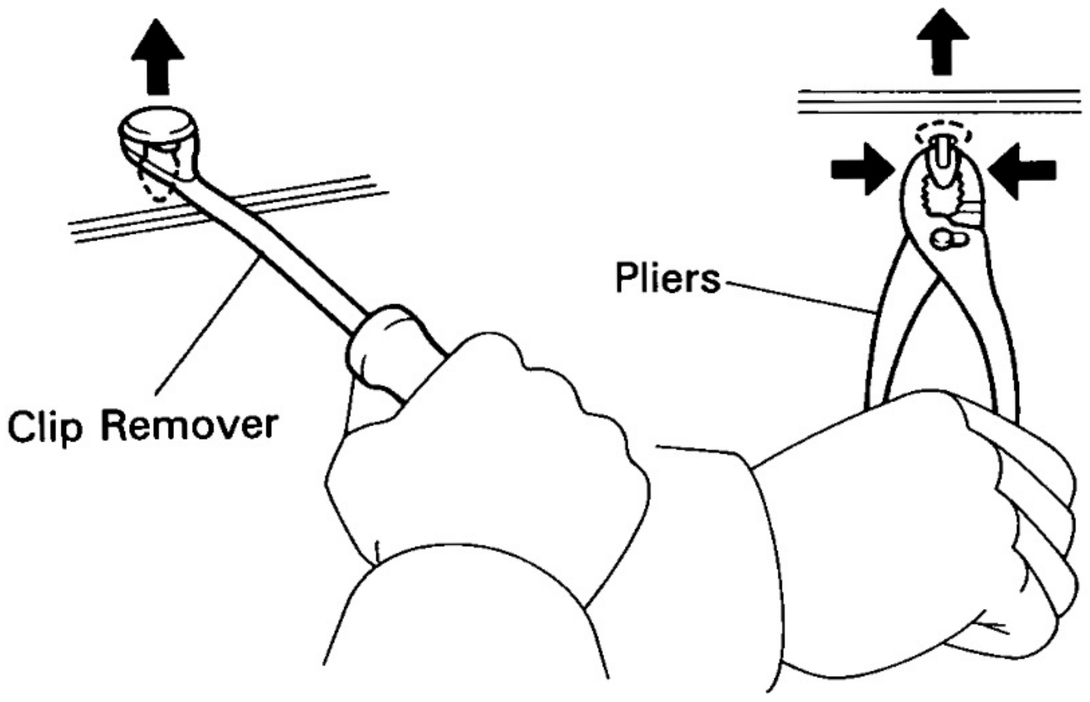 BO4117
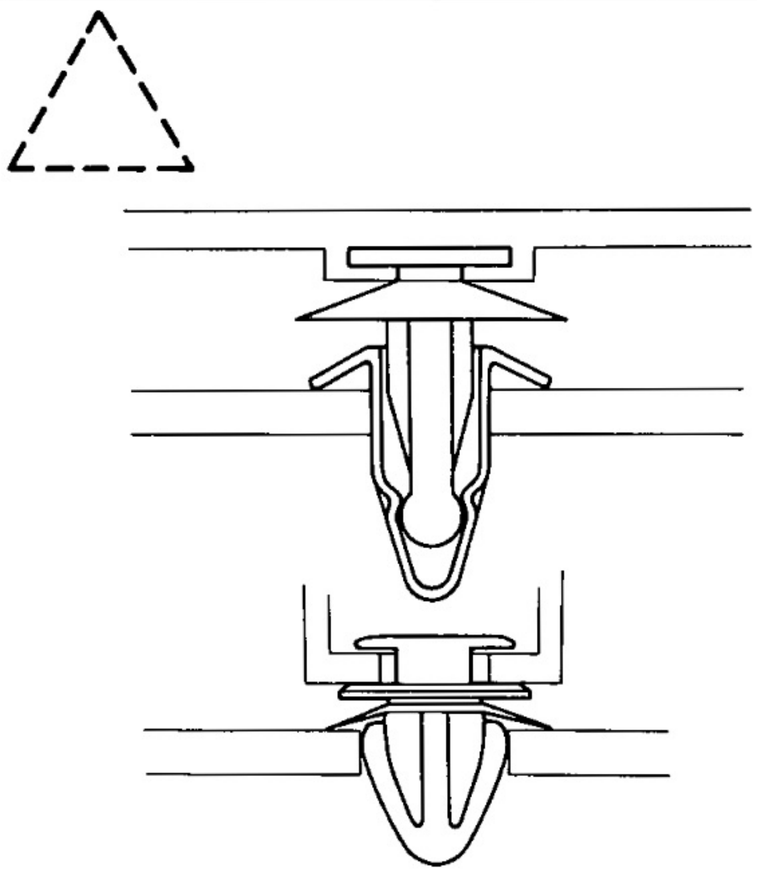 BO4118	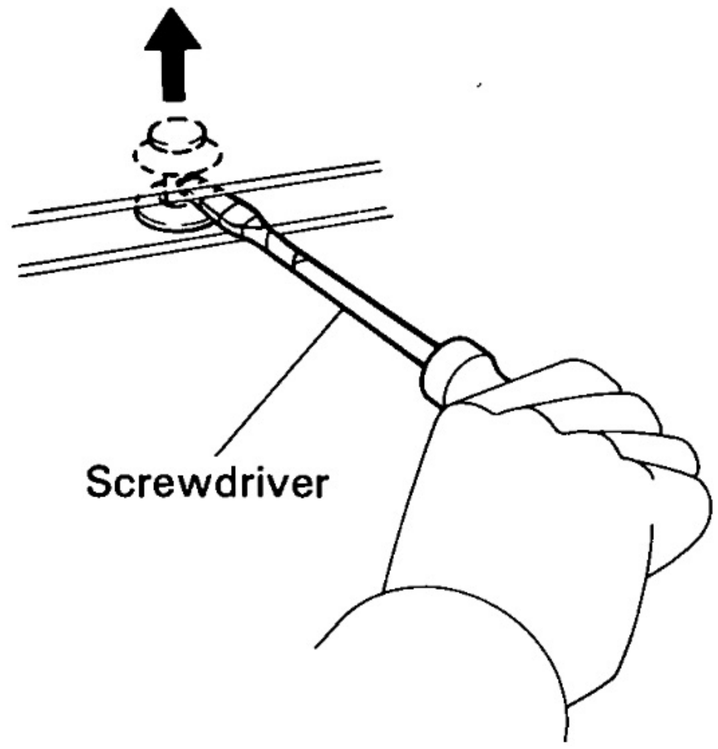 BO4119
BO4120	BO4121

CLIPS (Cont'd)

Shape (Example)	Removal/Installation
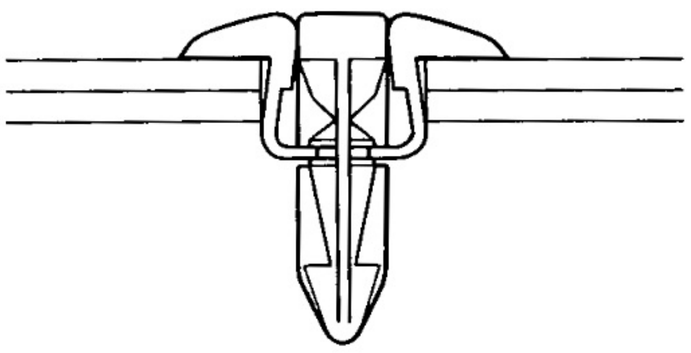 BO4122	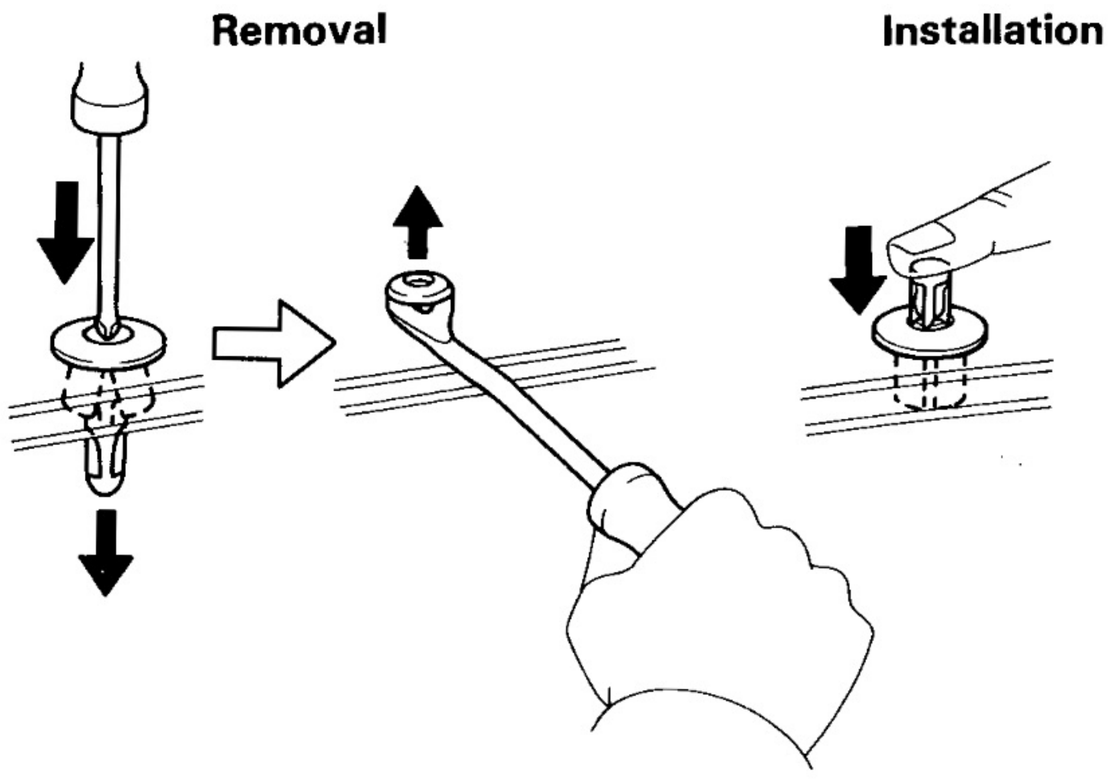 BO4123
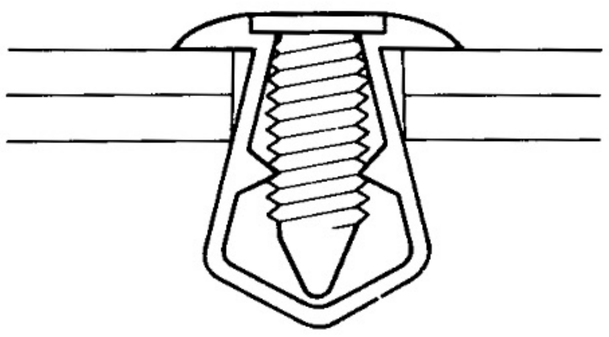 BO4124	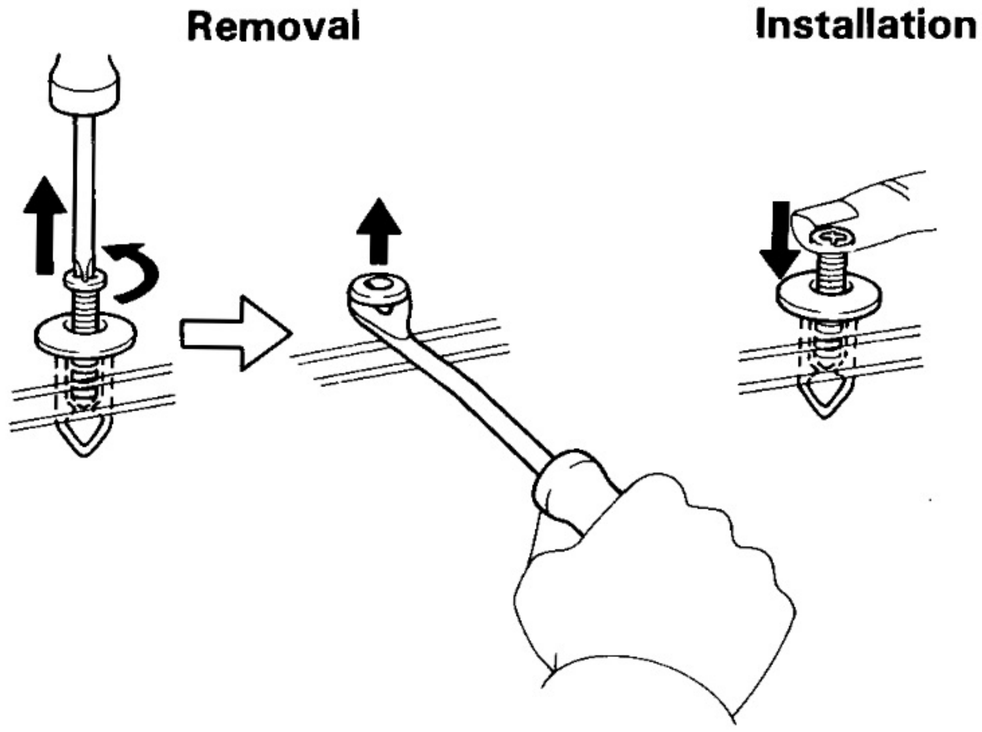 BO4125

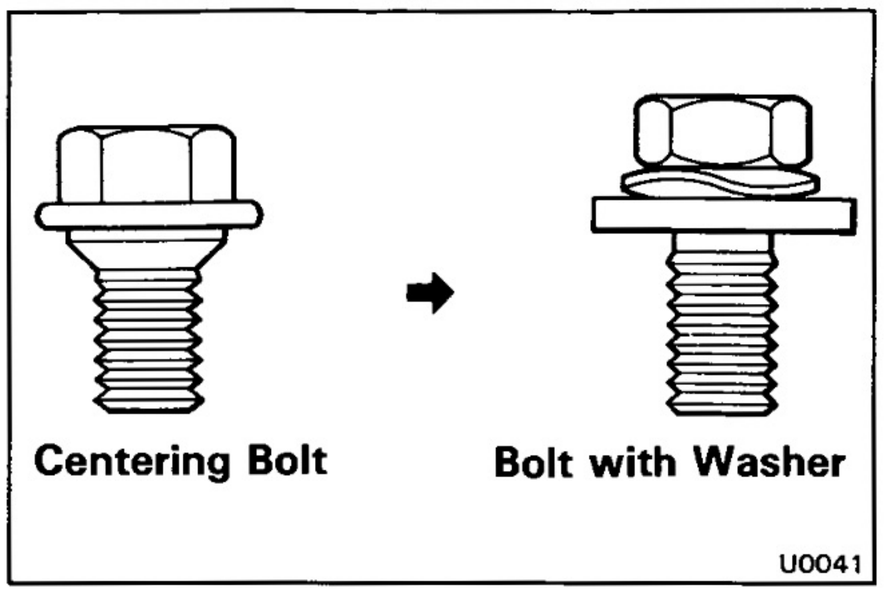

HOOD

ADJUSTMENT OF HOOD

HINT: Since the centering bolt is used as the hood hinge and lock set bolt, the hood and lock cannot be adjusted with it on. Substitute the bolt with washer for the centering bolt.

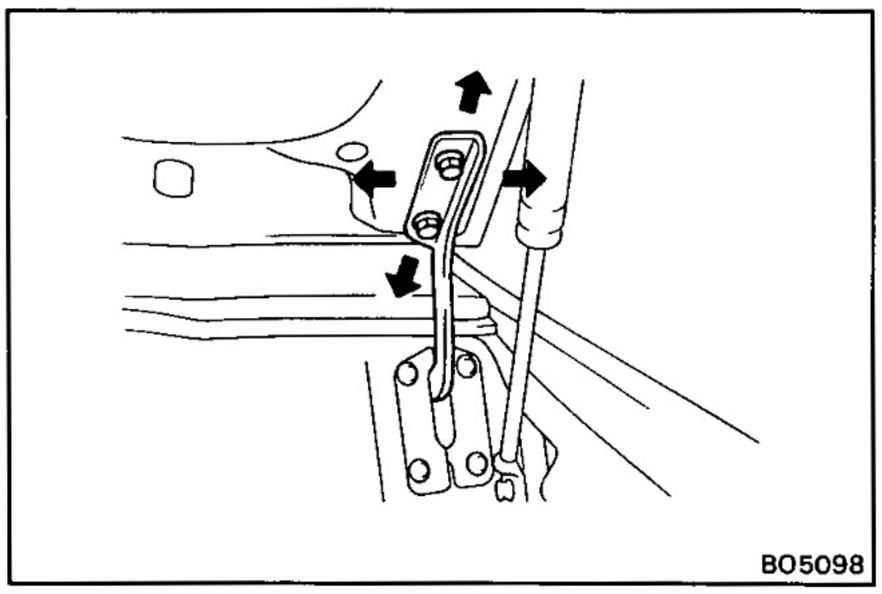

1. ADJUST HOOD IN FORWARD/REARWARD AND LEFT/RIGHT DIRECTIONS

Adjust the hood by loosening the hood side hinge bolts.

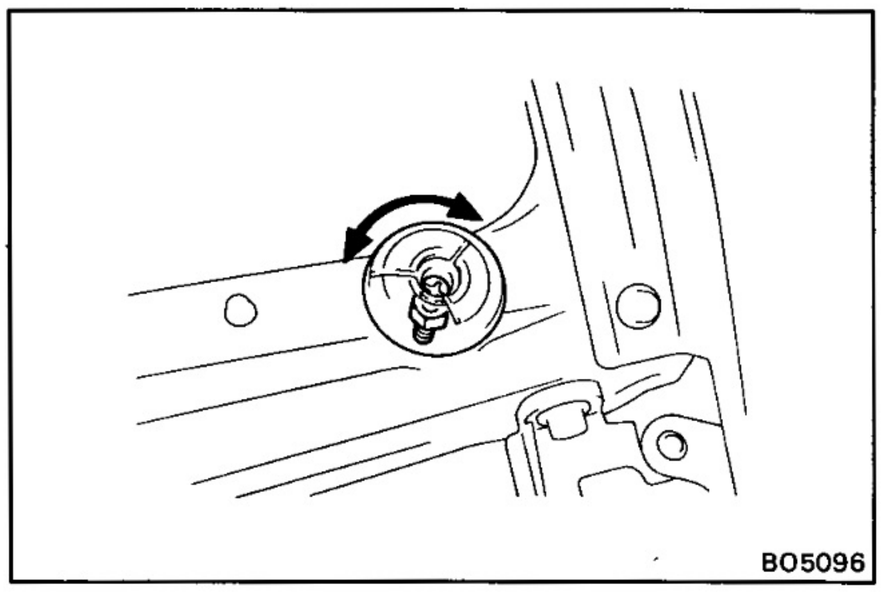

2. ADJUST FRONT EDGE OF HOOD IN VERTICAL DIRECTION

(a) Loosen the lock nut.

(b) Adjust the hood by turning the hood cushions.

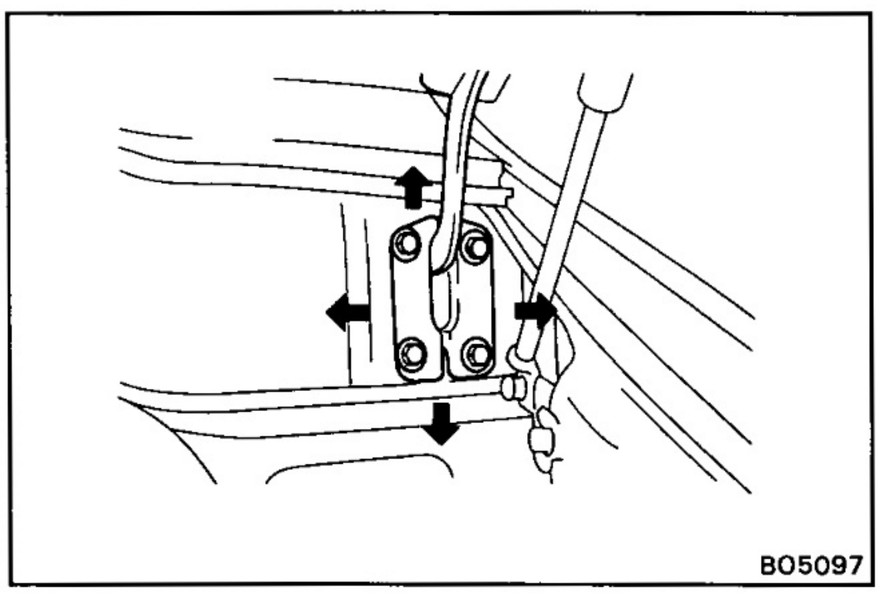

3. ADJUST REAR EDGE OF HOOD IN VERTICAL DIRECTION

Adjust the hood by loosening the body side hinge bolts.

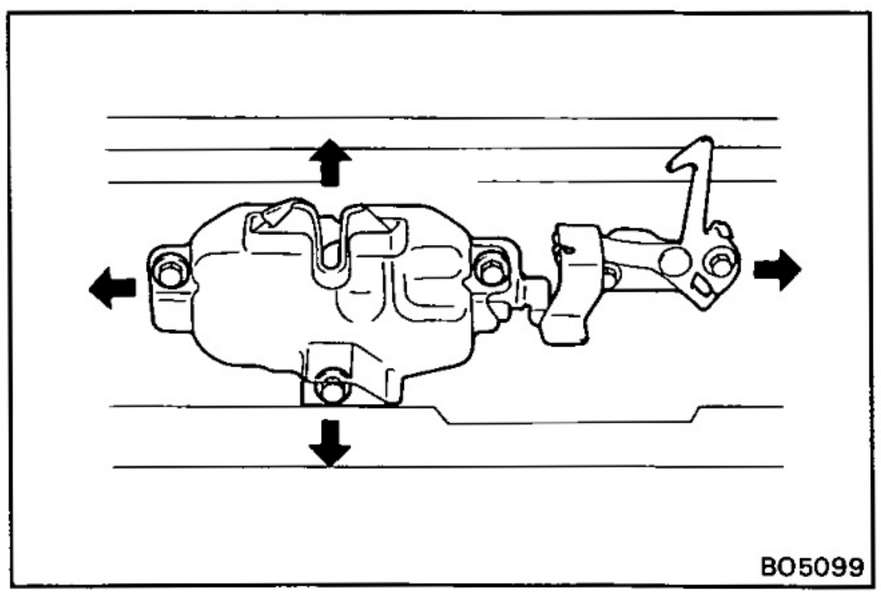

4. ADJUST HOOD LOCK

Adjust the hood lock by loosening the mounting bolts.

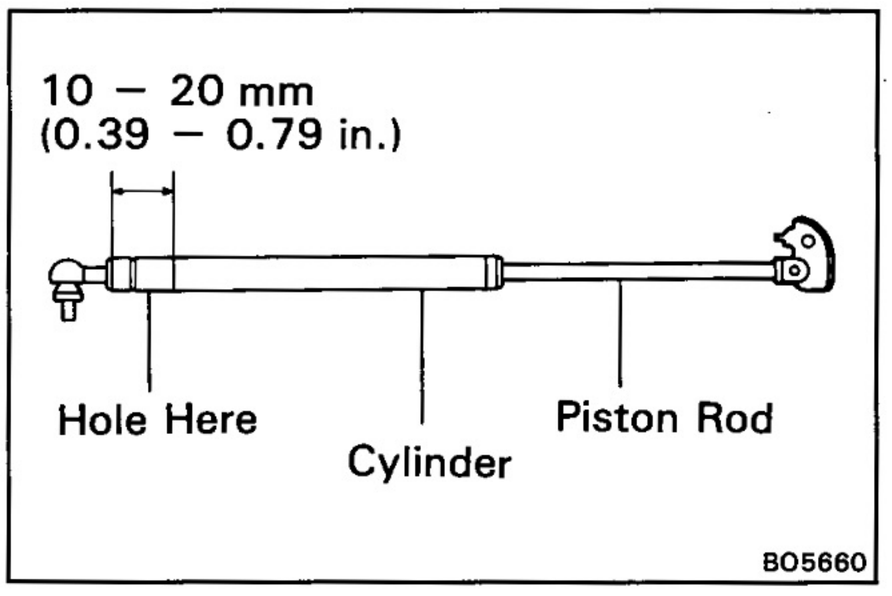

HOOD DAMPER STAY

NOTICE: Handling the damper.

(a) Do not disassemble the damper because the cylinder is filled with pressurized gas.

(b) If the damper is to be replaced, drill a 2.0 – 3.0 mm (0.079 – 0.118 in.) hole in the bottom of the removed damper cylinder to completely release the high-pressure gas before disposing of it.

(c) When drilling, chips may fly out so work carefully.

(d) The gas is colorless, odorless and non-toxic.

(e) When working, handle the damper carefully. Never score or scratch the exposed part of the piston rod, and never allow paint or oil to get on it.

(f) Do not turn the piston rod and cylinder with the damper fully extended.

FRONT DOOR

COMPONENTS

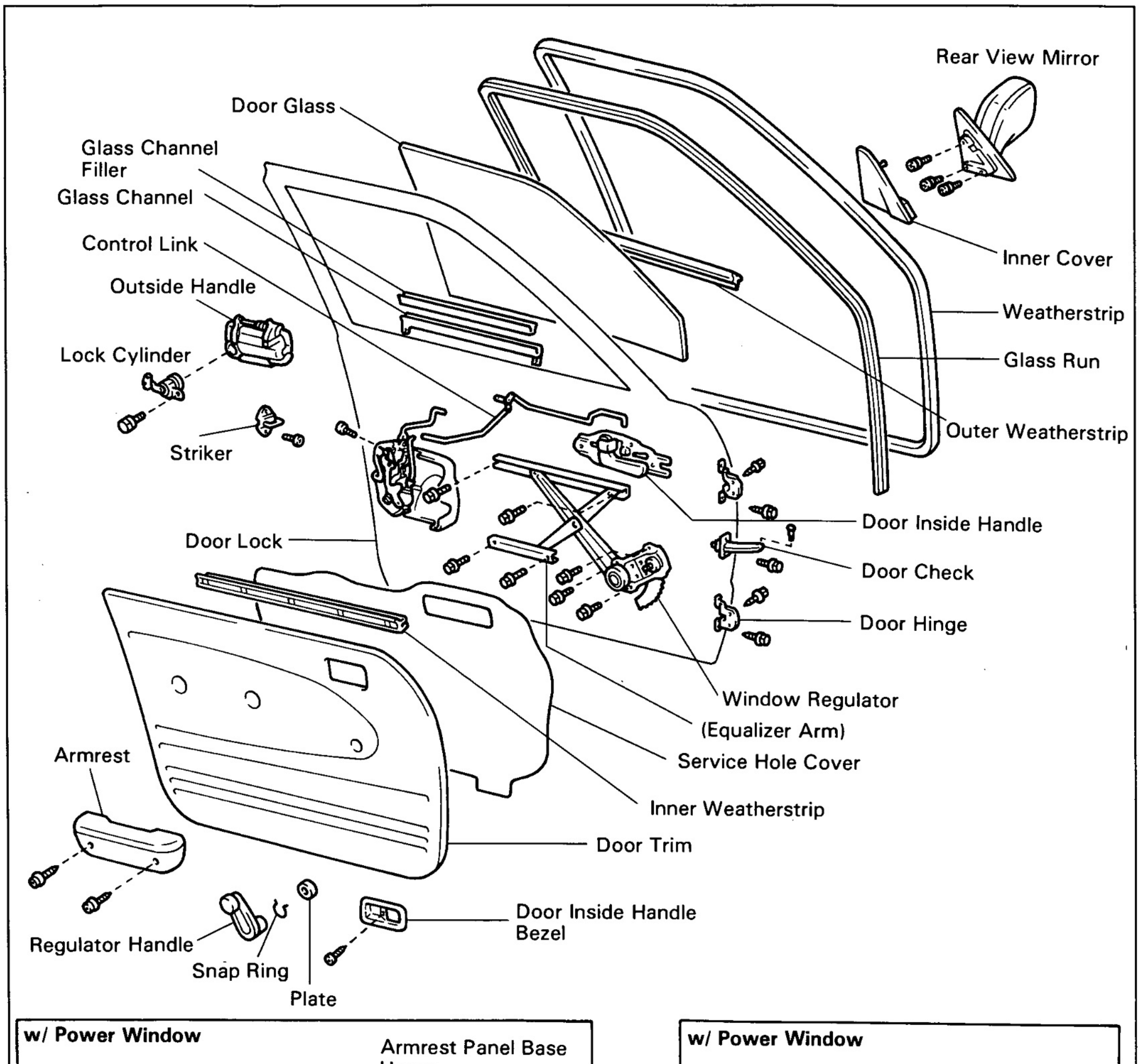

w/ Power Window

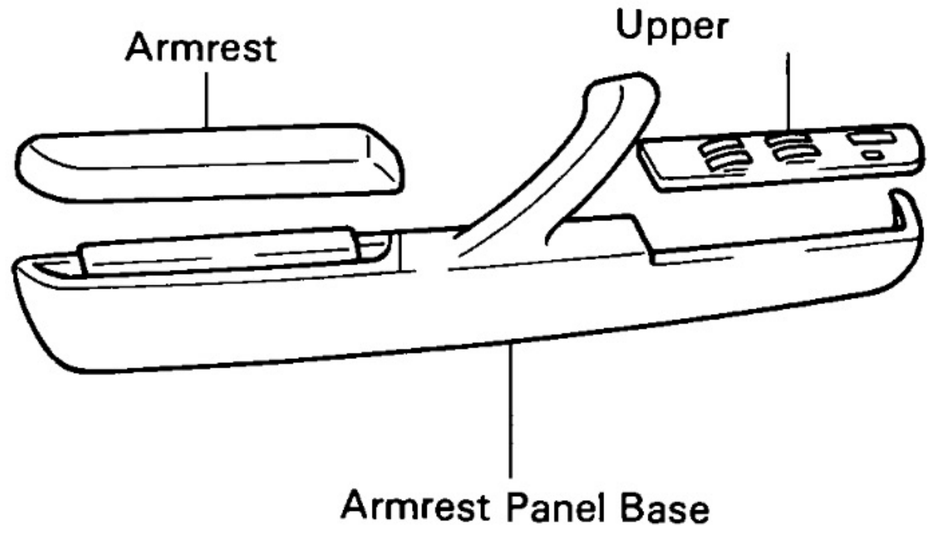

w/ Power Window

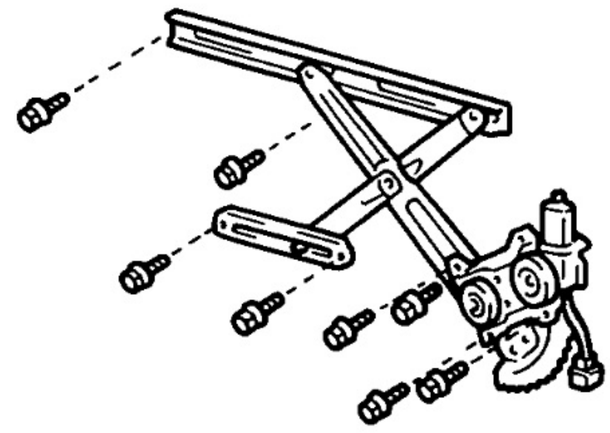

BO5634

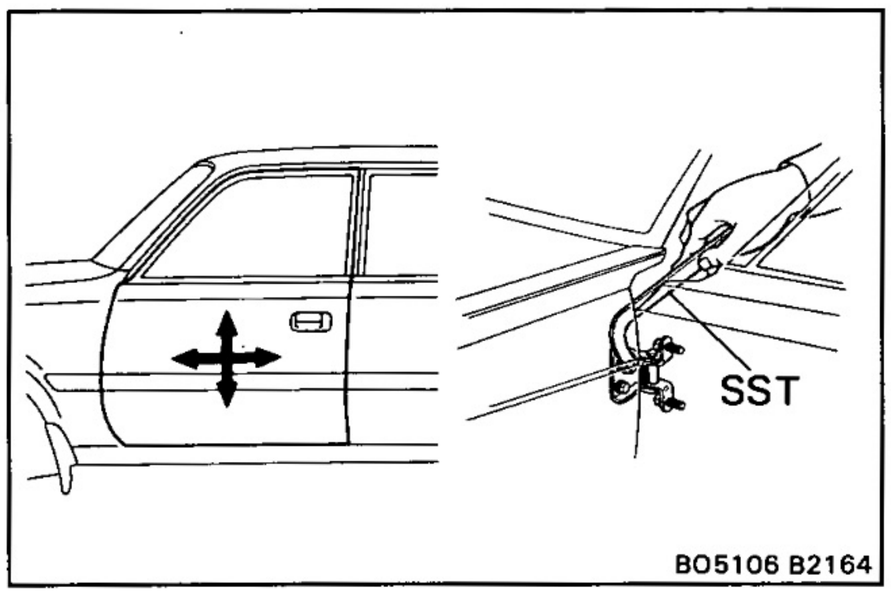

ADJUSTMENT OF FRONT DOOR

1. ADJUST DOOR IN FORWARD/REARWARD AND VERTICAL DIRECTION

Using SST, adjust the door by loosening the body side hinge bolts.
SST 09812-00010

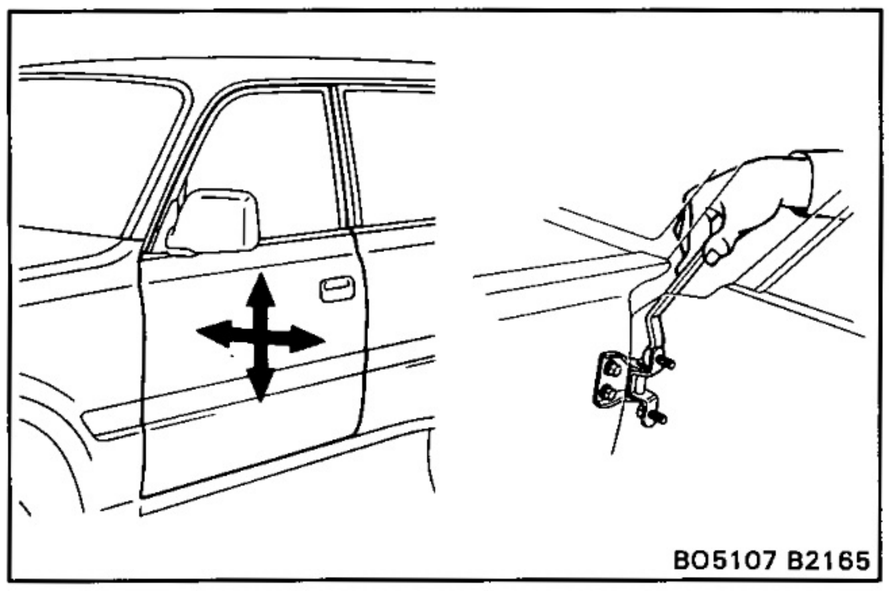

2. ADJUST DOOR IN LEFT/RIGHT AND VERTICAL DIRECTIONS

Adjust the door by loosening the door side hinge bolts.

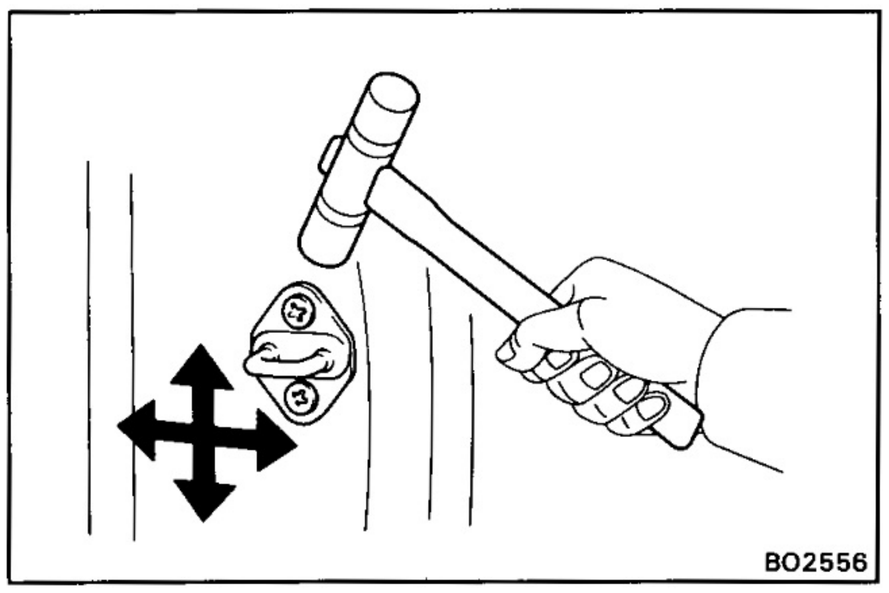

3. ADJUST DOOR LOCK STRIKER

(a) Check that the door fit and door lock linkages are adjusted correctly.

(b) Adjust the striker position by slightly loosening the striker mounting screws, and hitting the striker with a hammer. Tighten the striker mounting screws again.

DISASSEMBLY OF FRONT DOOR

(See page BO-7)

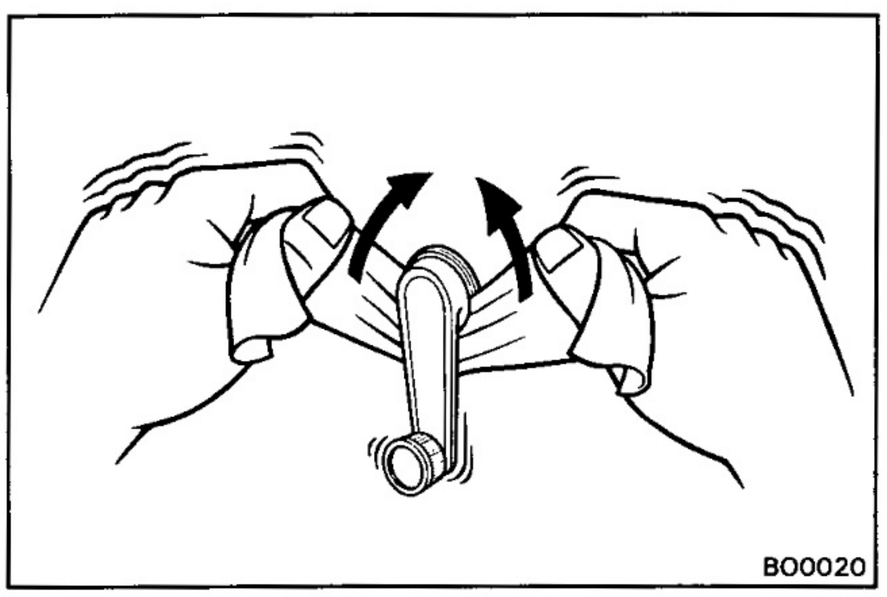

1. (w/o Power Window) REMOVE REGULATOR HANDLE

Pull off the snap ring with a shop rag and remove the regulator handle and plate.

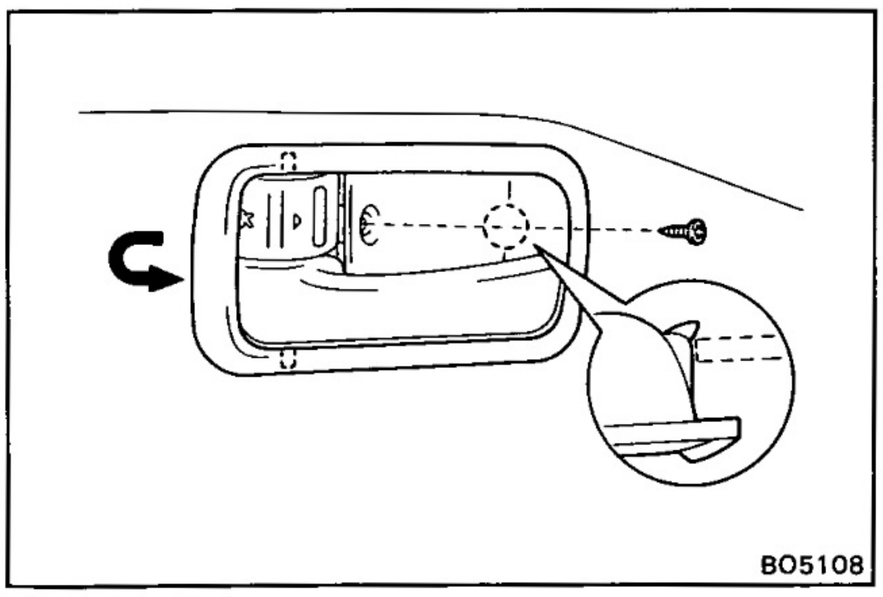

2. REMOVE DOOR INSIDE HANDLE BEZEL

Remove the screw and pull the inside handle bezel.

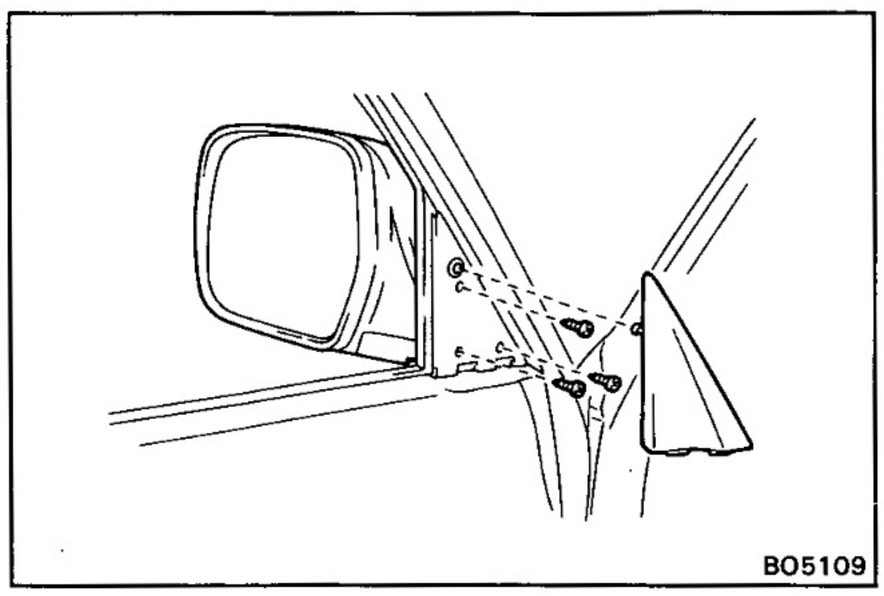

3. REMOVE REAR VIEW MIRROR

(a) Remove the cover.

(b) (w/ Remote Control Mirror)
Disconnect the connector from the mirror.

(c) Remove three screws and the rear view mirror.

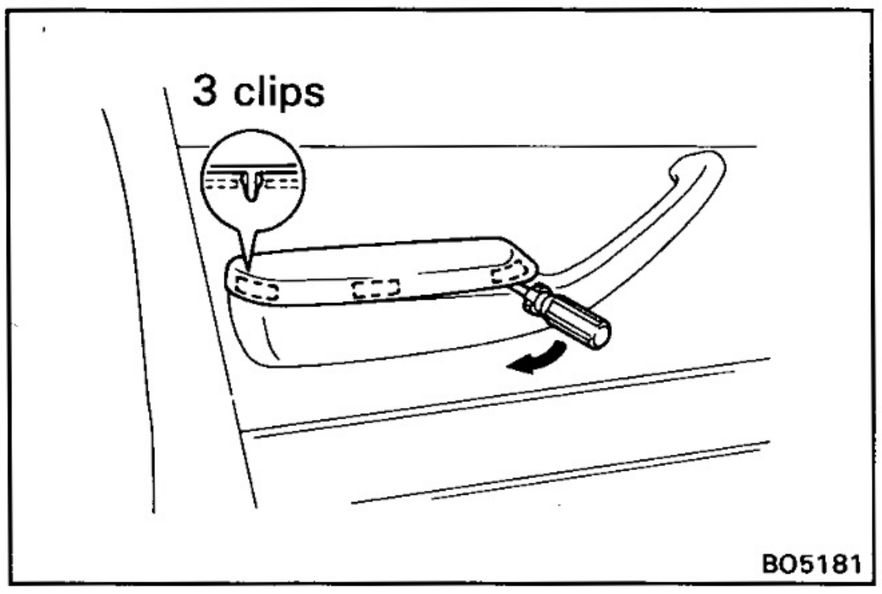

4. REMOVE ARMREST

(a) Insert the screwdriver between the armrest and the armrest panel base to pry out.

HINT: Tape the screwdriver tip before use.

(b) Remove the armrest.

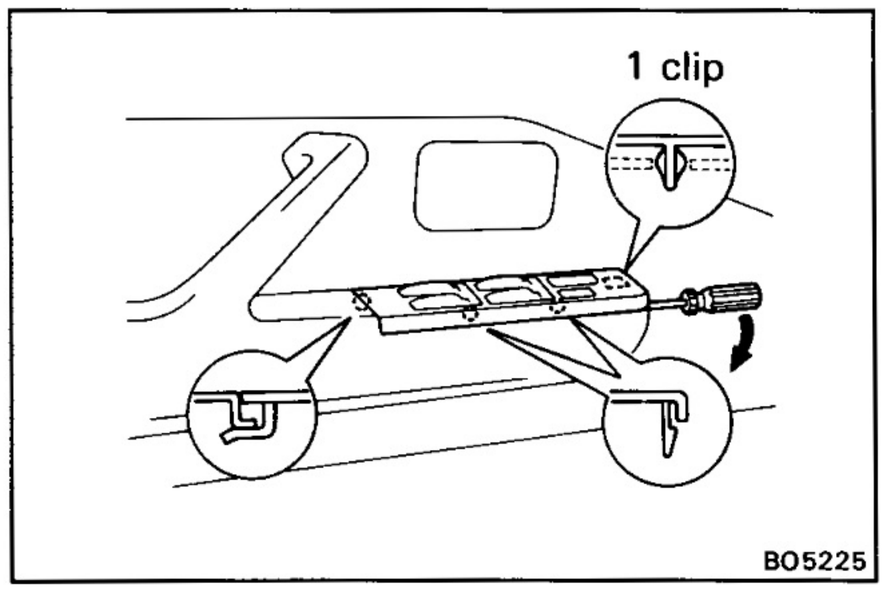

5. (w/ Power Window)
REMOVE ARMREST PANEL BASE UPPER

(a) Insert the screwdriver between the armrest panel base and the armrest panel base upper to pry out.

HINT: Tape the screwdriver tip before use.

(b) Slide the armrest panel base upper forward to remove it, then disconnect the connectors.

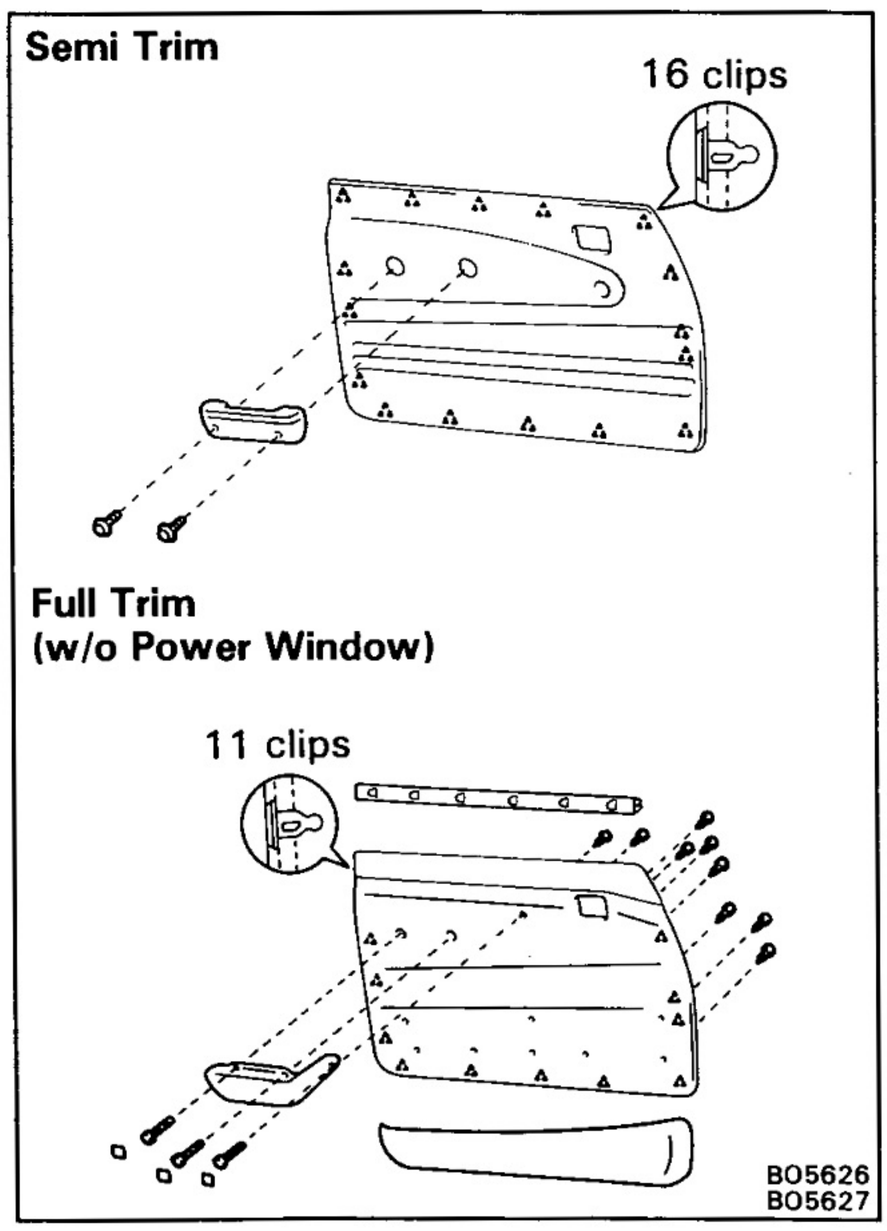

6. REMOVE DOOR TRIM

(a) (Semi Trim)
Remove two screws and the armrest.

(Full Trim)
Remove three screws from the inside door panel.

(b) Insert a screw driver between the retainers and door trim to pry it loose.

HINT: Tape the screwdriver tip before use.

(c) Remove the door trim.

(d) (Full Trim, w/o Power Window)
Remove three screws and the armrest from the door trim.

(Full Trim, w/ Power Window)
Remove eleven screws and the armrest from the door trim.

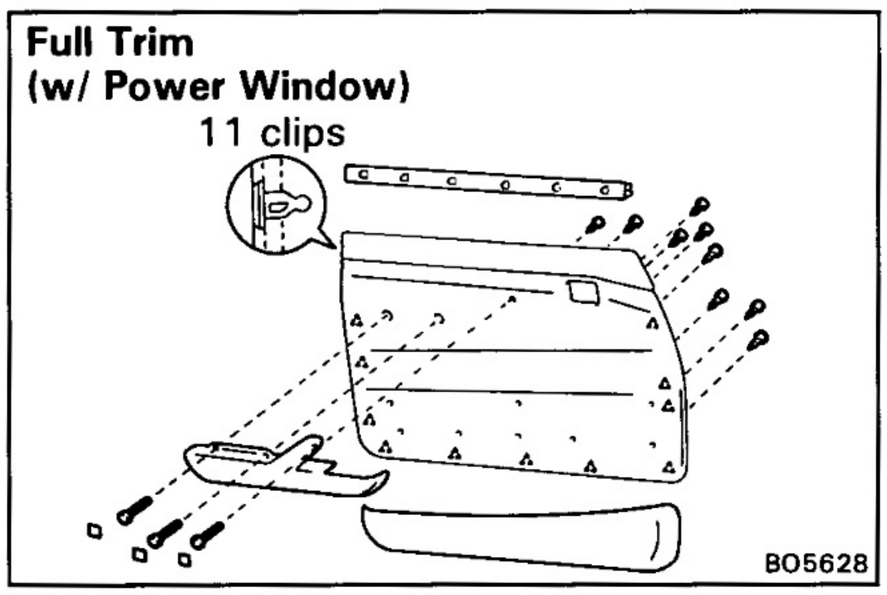

(e) Remove the inner weatherstrip from the door trim.

(f) (Full Trim)
Remove eight screws and the door pocket.

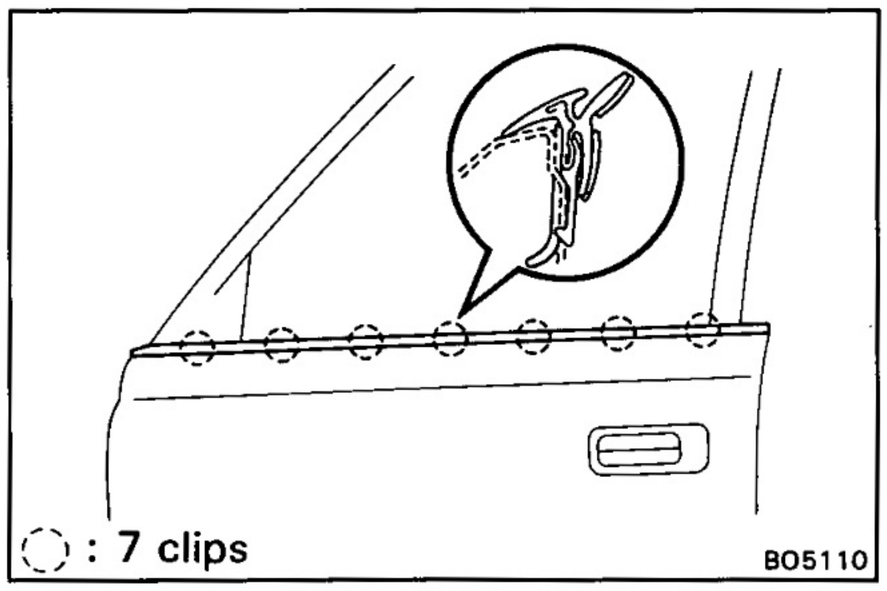

7. REMOVE DOOR BELT MOULDING

Pry out the clips from the edge of the panel, and remove the moulding.

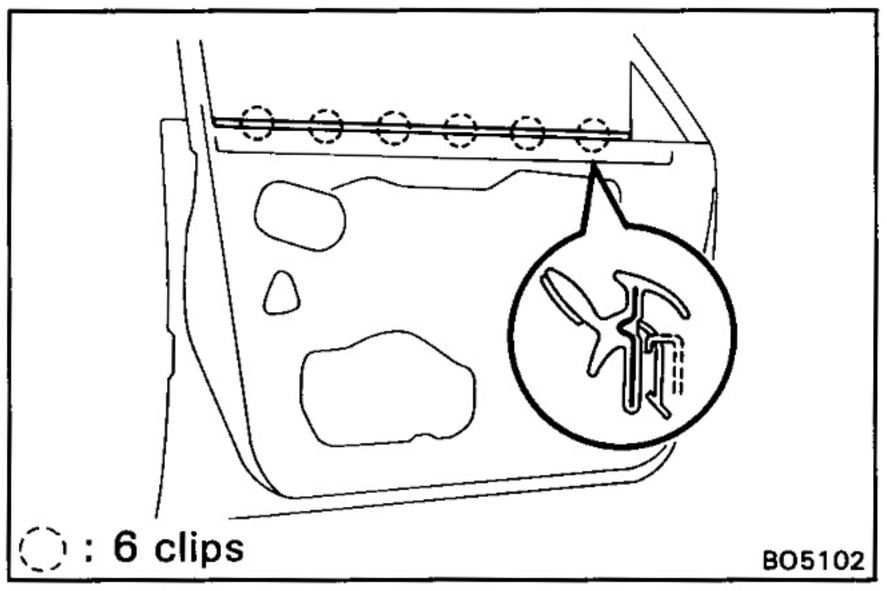

8. (Semi Trim)
REMOVE INNER WEATHERSTRIP

Pry out the clips from the edge of the panel, and remove the inner weatherstrip.

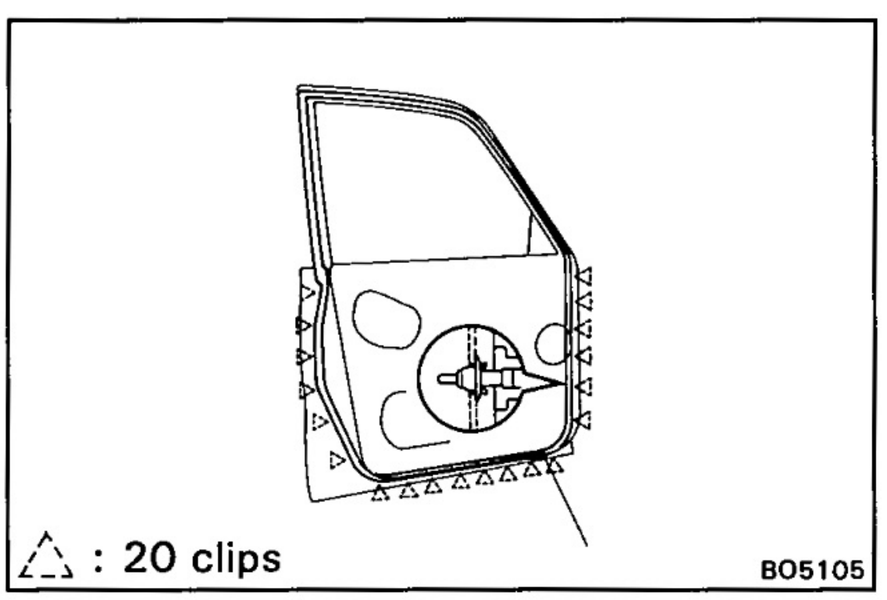

9. REMOVE DOOR WEATHERSTRIP

While pulling the weatherstrip by hand, remove twenty clips using a clip remover.

HINT: Do not pull strongly on the weatherstrip as it may tear.

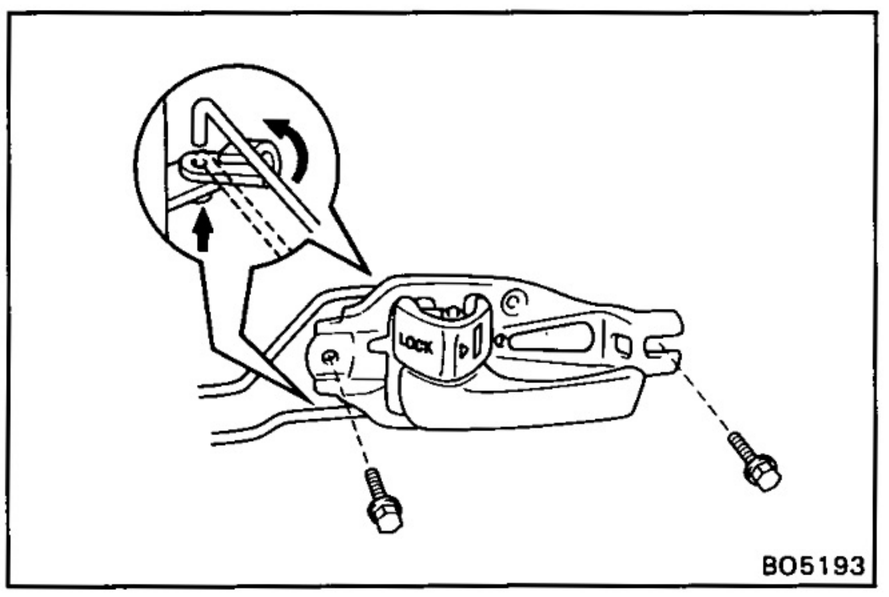

10. REMOVE DOOR INSIDE HANDLE

(a) Remove two bolts.

(b) Disconnect two links from the inside handle.

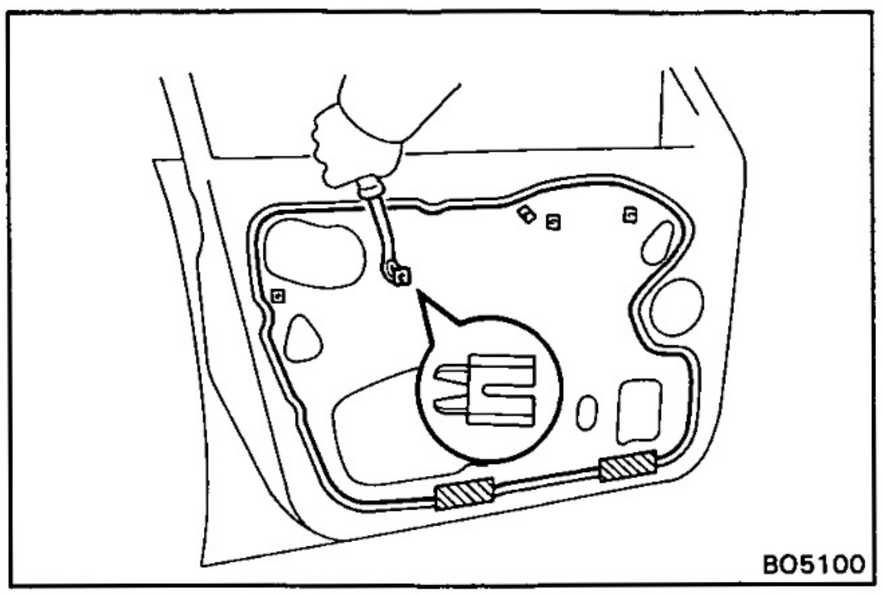

11. REMOVE SERVICE HOLE COVER

(a) (Semi Trim)
Using the clip remover, remove four screw grommets.

(Full Trim)
Using the clip remover, remove five screw grommets.

(b) Remove service hole cover.

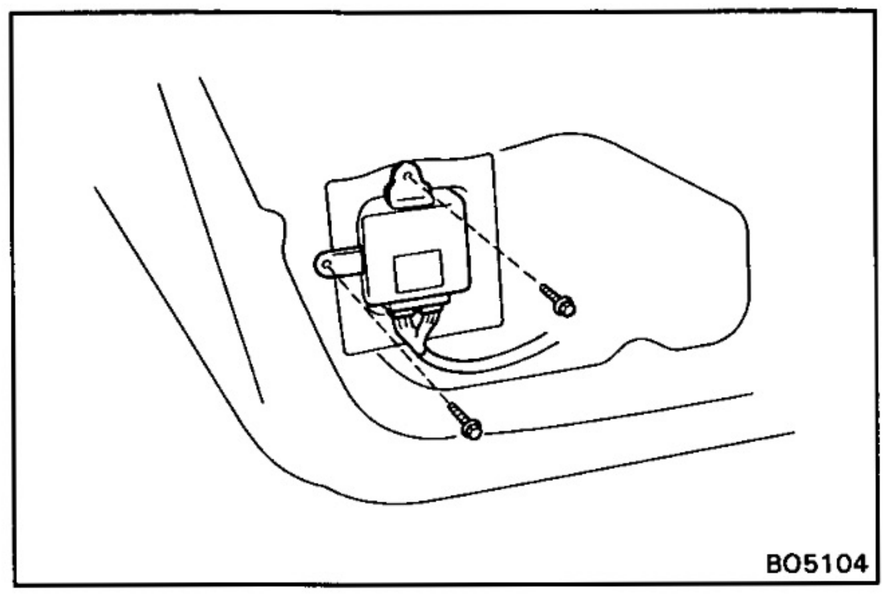

12. (w/ Power Door Lock)
REMOVE DOOR LOCK CONTROL RELAY

Remove two bolts and the relay, then disconnect the connector.

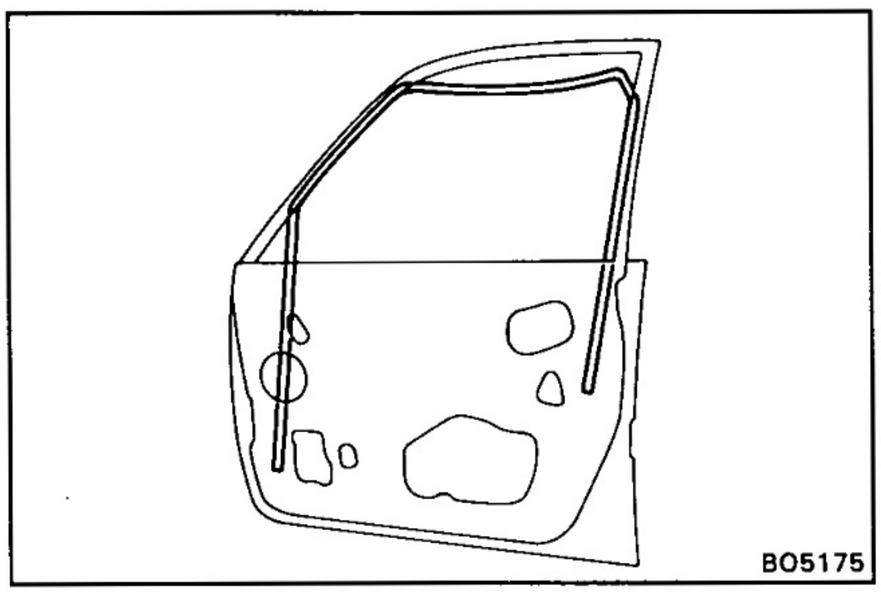

13. REMOVE DOOR GLASS RUN

Pull out the glass run from the door frame.

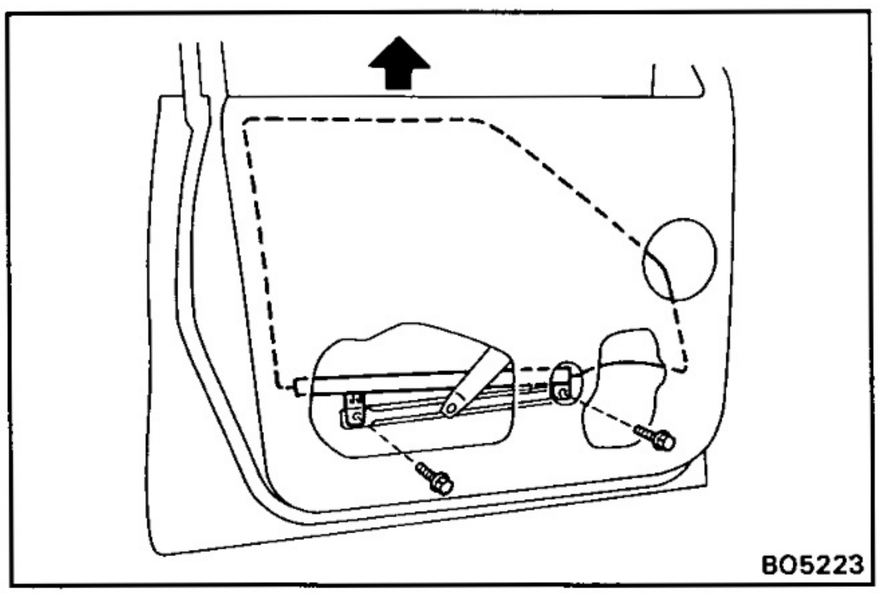

14. REMOVE DOOR GLASS

(a) Remove two glass mounting bolts.

(b) Remove the door glass by pulling it up ward.

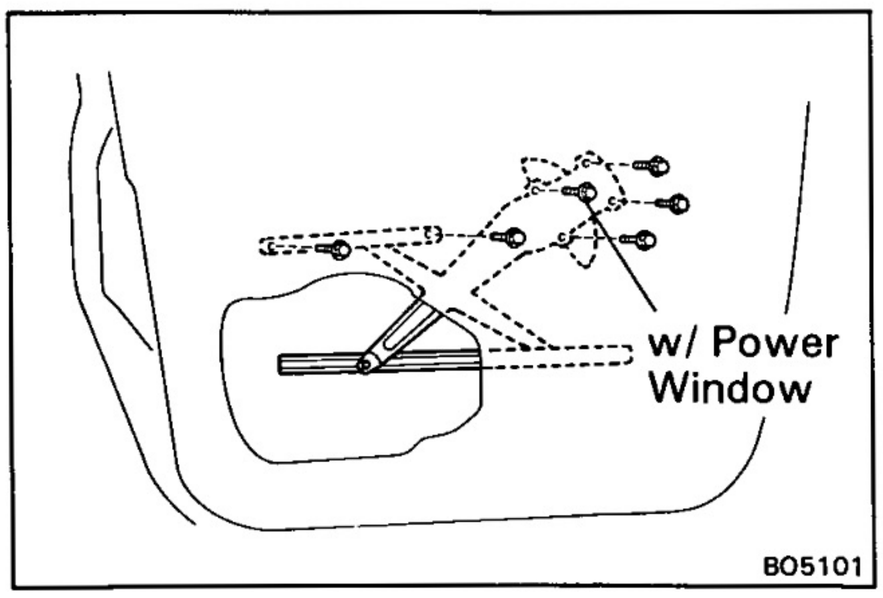

15. REMOVE WINDOW REGULATOR

(a) (w/ Power Window)
Disconnect the connector.

(b) Remove two equalizer arm bracket mounting bolts.

(c) (w/ Power Window)
Remove four regulator mounting bolts.

(w/o Power Window)
Remove three regulator mounting bolts.

(d) Remove the regulator through the service hole.

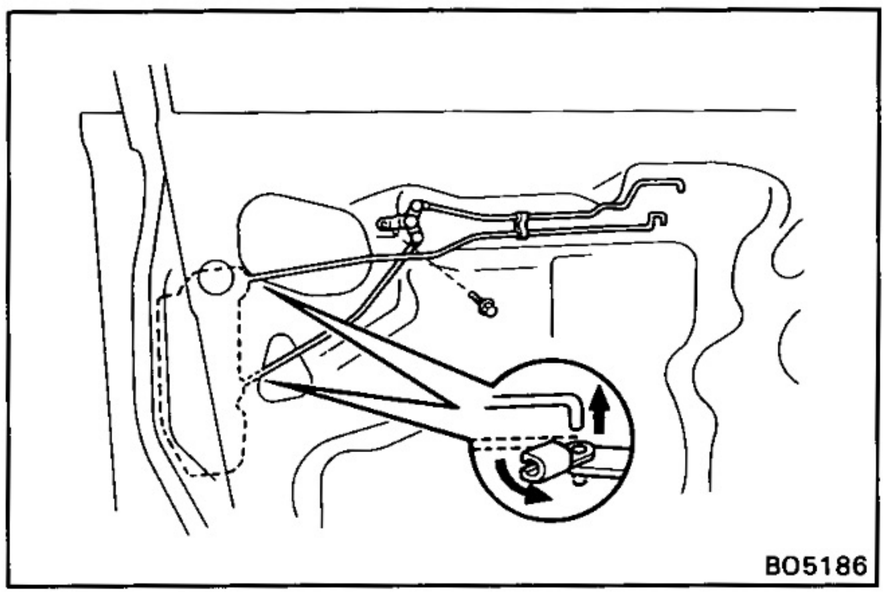

16. REMOVE LOCKING AND OPENING CONTROL LINK

(a) Disconnect two links from the door lock.

(b) Remove the bolt and the locking link.

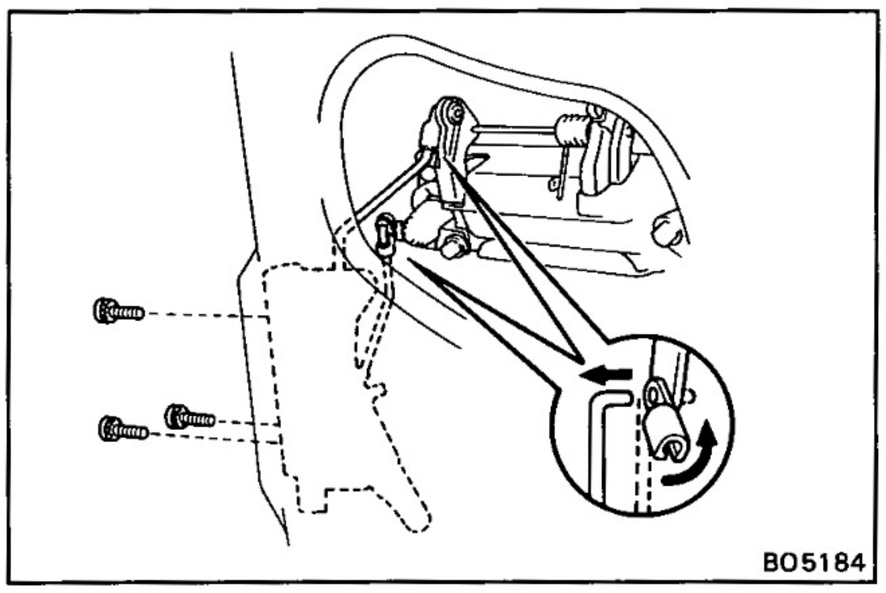

17. REMOVE DOOR LOCK

(a) Disconnect two links from outside handle and the door lock cylinder.

(b) (w/ Power Door Lock)
Disconnect the connector.

(c) Remove three screws.

(d) Remove the door lock through the service hole.

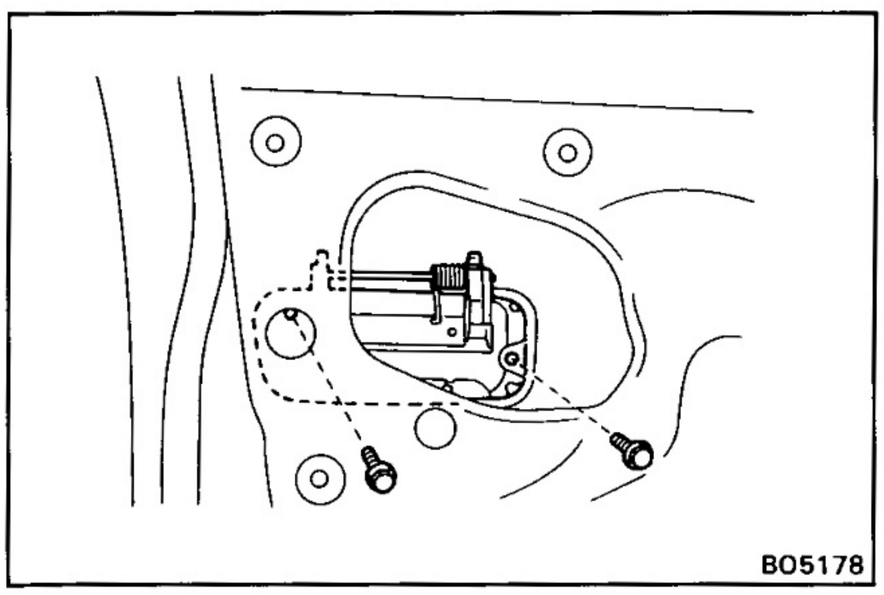

18. REMOVE OUTSIDE HANDLE WITH DOOR LOCK CYLINDER

Remove two bolts and the outside handle with the lock cylinder.

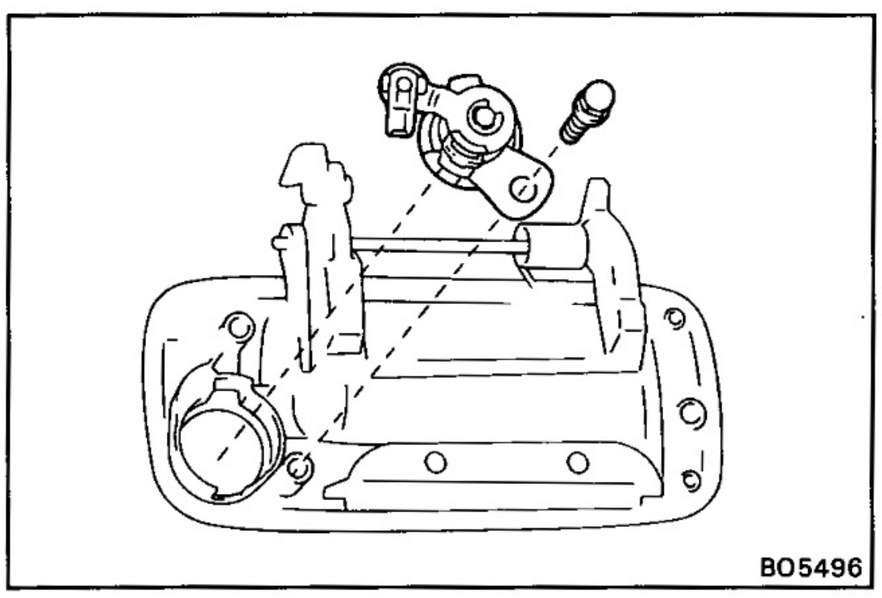

19. REMOVE DOOR LOCK CYLINDER

(a) Remove the bolt from the outside handle.

(b) Turn the lock cylinder clockwize until it stops turning, then pull the lock cylinder straight out.

20. (w/ Speaker)
REMOVE SPEAKER

Remove three screws and the speaker, then disconnect the connector.

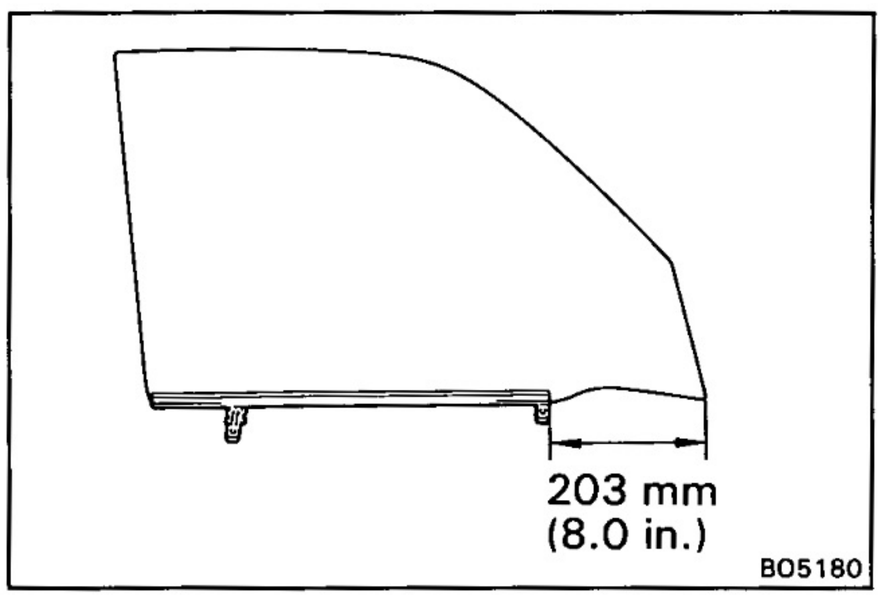

REPLACEMENT OF GLASS

1. REMOVE GLASS CHANNEL WITH SCREWDRIVER OR LIKE OBJECT

2. APPLY SOAPY WATER TO INSIDE OF WEATHERSTRIP

3. INSTALL CHANNEL BY TAPPING IT WITH PLASTIC HAMMER

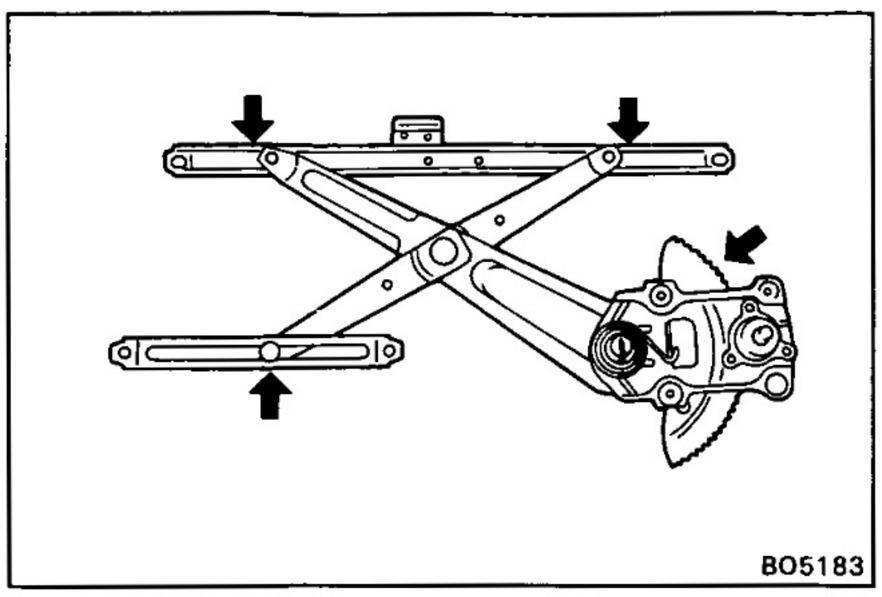

ASSEMBLY OF FRONT DOOR

(See page BO-7)

1. BEFORE INSTALLING PARTS, COAT THEM WITH MP GREASE

(a) Apply MP grease to the sliding surface and gears of the window regulator.

NOTICE: DO not apply MP grease to the spring of the window regulator.

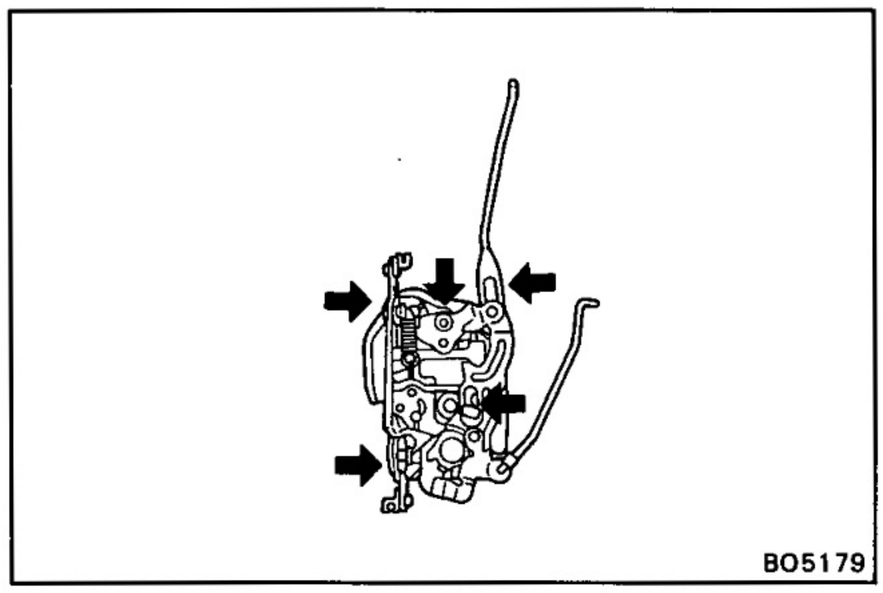

(b) Apply MP grease to the sliding surface of the door lock.

2. (w/ Speaker)
INSTALL SPEAKER

Connect the connector and install the speaker with three screws.

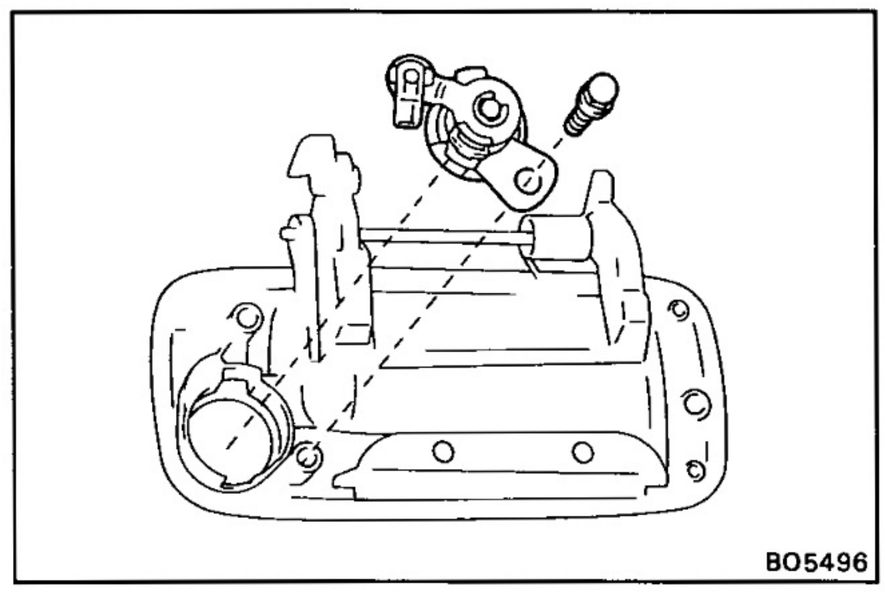

3. INSTALL DOOR LOCK CYLINDER

Install the lock cylinder to the outside handle, turn the lock cylinder anti-clockwize untill it stops with the bolt.

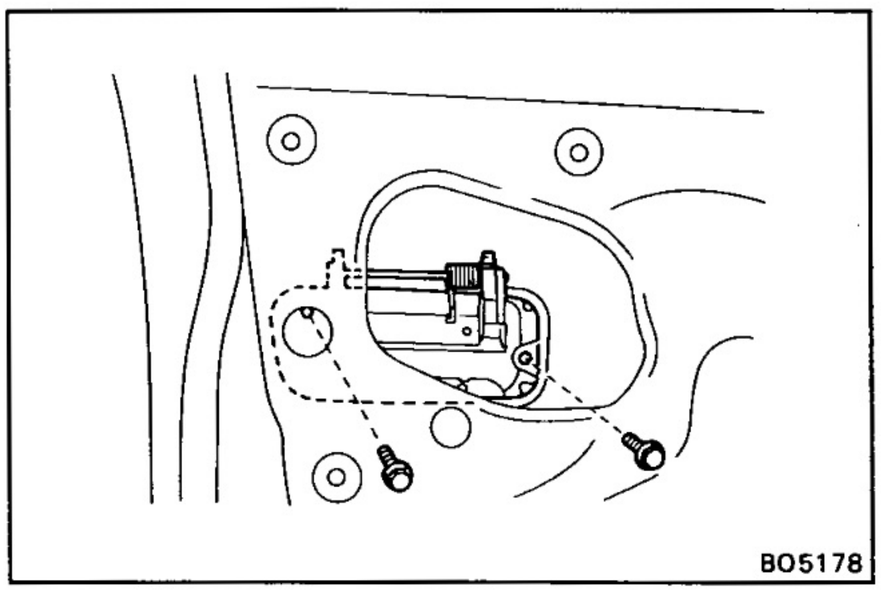

4. INSTALL OUTSIDE HANDLE WITH DOOR LOCK CYLINDER

Install the outside handle with door lock cylinder with two bolts.

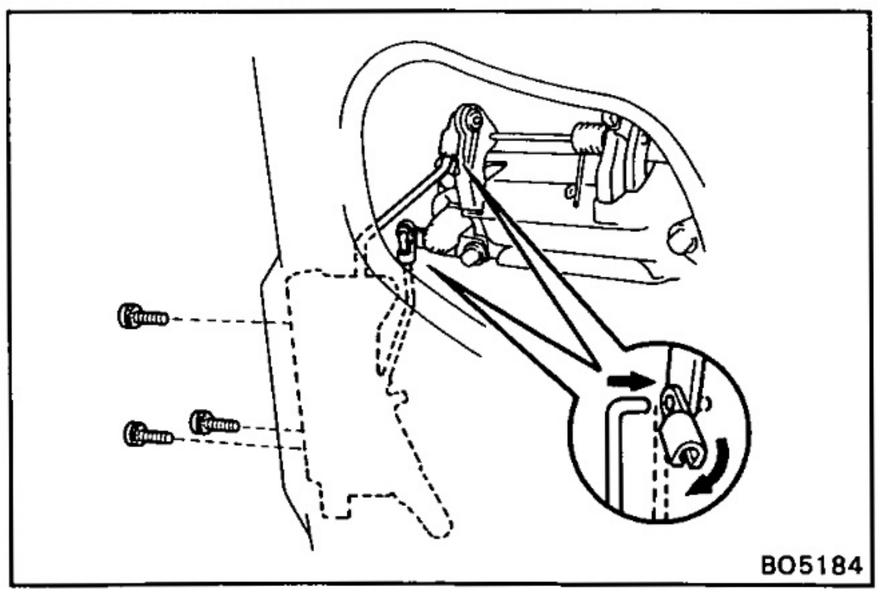

5. INSTALL DOOR LOCK

(a) Install the door lock with three screws.

(b) (w/ Power Door Lock)
Connect the connector.

(c) Connect two links to the outside handle and the door lock cylinder.

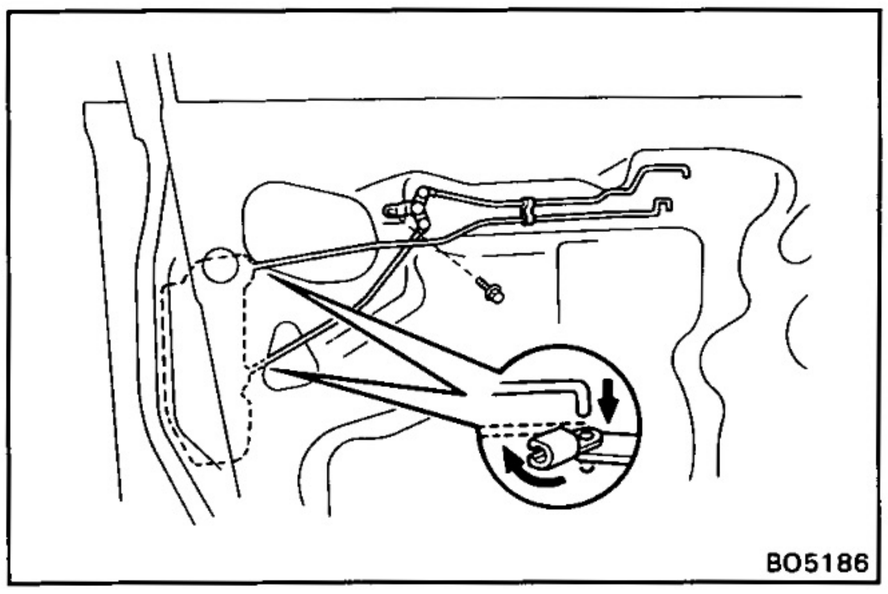

6. INSTALL LOCKING AND OPENING CONTROL LINK

(a) Connect two links to the door lock.

(b) Install the locking link with the bolt.

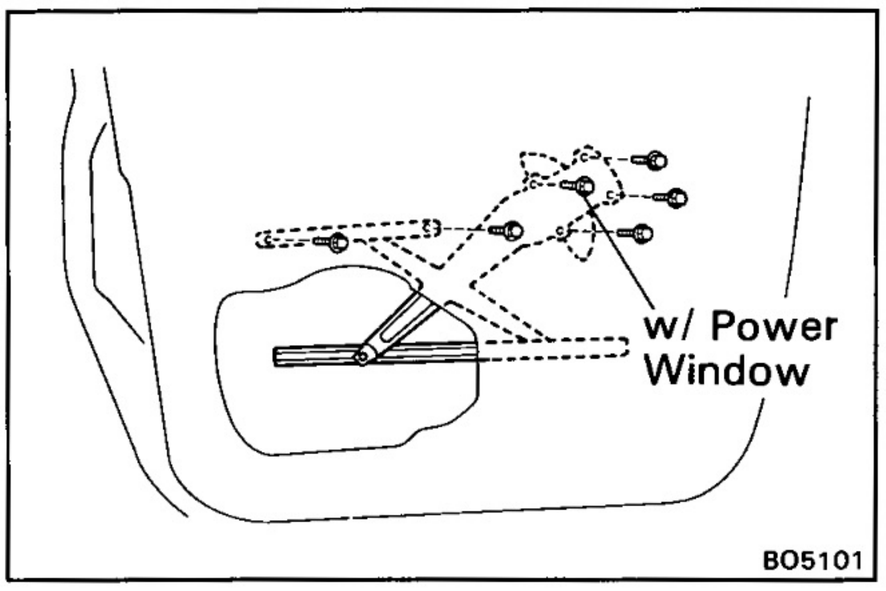

7. INSTALL WINDOW REGULATOR

(a) Place the regulator through the service hole.

(b) (w/ Power Window)
Install four regulator mounting bolts.

(w/o Power Window)
Install three regulator mounting bolts.

(c) Temporarily tighten two equalizer arm bracket bolts.

(d) (w/ Power Window)
Connect the connector.

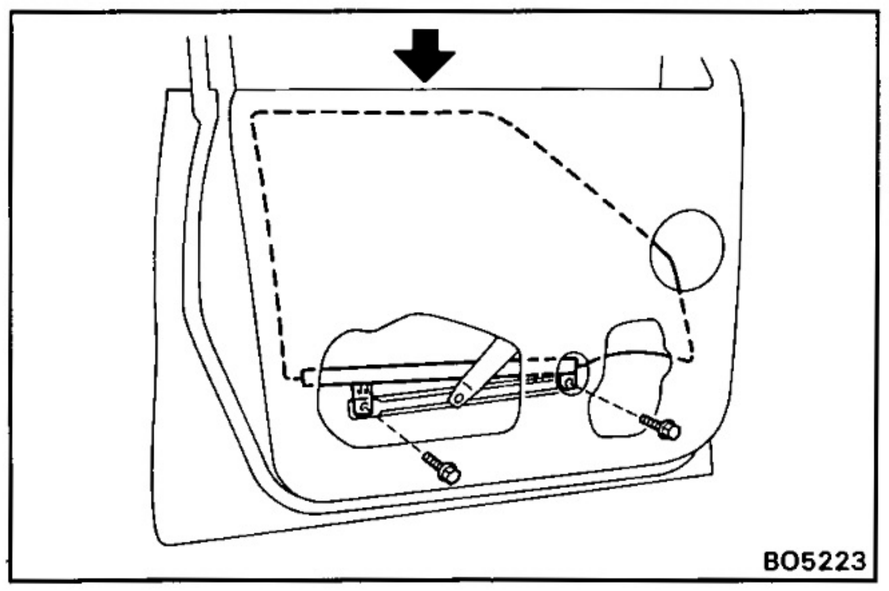

8. INSTALL DOOR GLASS

(a) Insert the glass to the glass guides.

(b) Install the glass to the regulator with two mounting bolts.

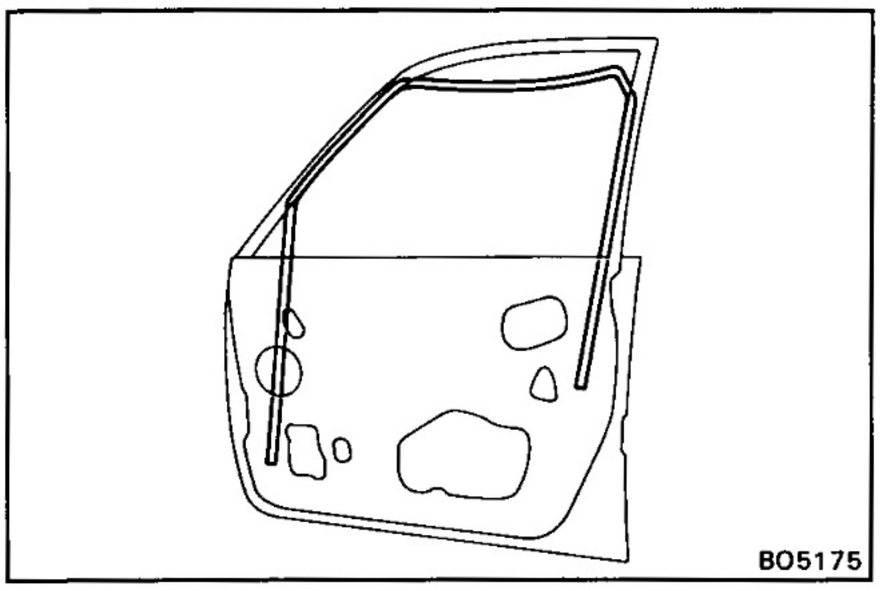

9. INSTALL DOOR GLASS RUN

Install the glass run to the door frame.

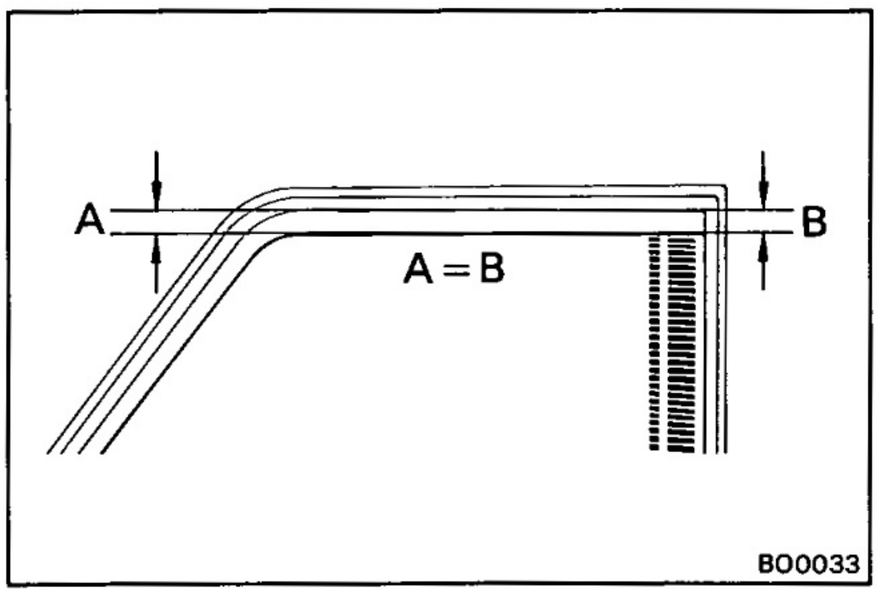

10. ADJUST DOOR GLASS

Adjust the equalizer arm up to down and tighten if where dimensions A and B, as shown are equal.

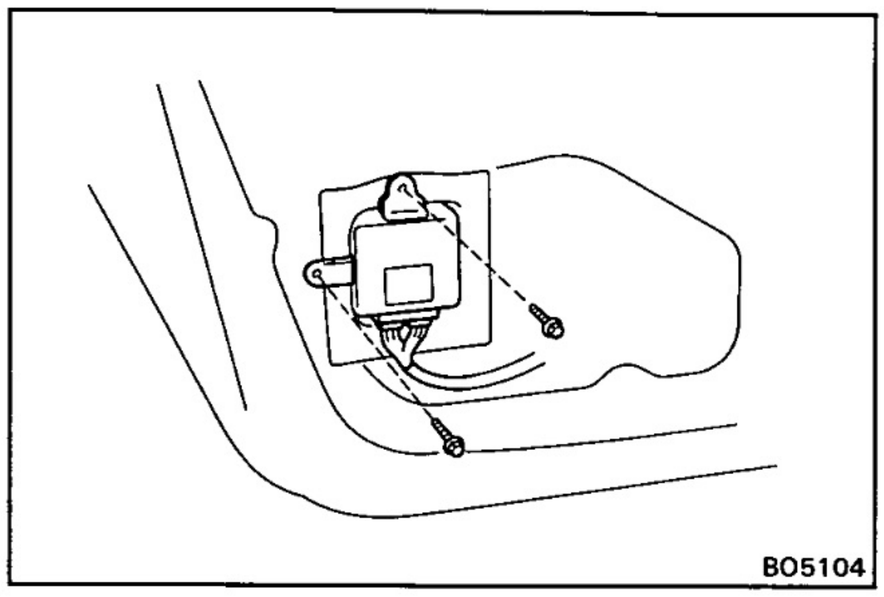

11. (w/ Power Door Lock)
INSTALL DOOR LOCK CONTROL RELAY

Install the relay with two bolts, then connect the connector.

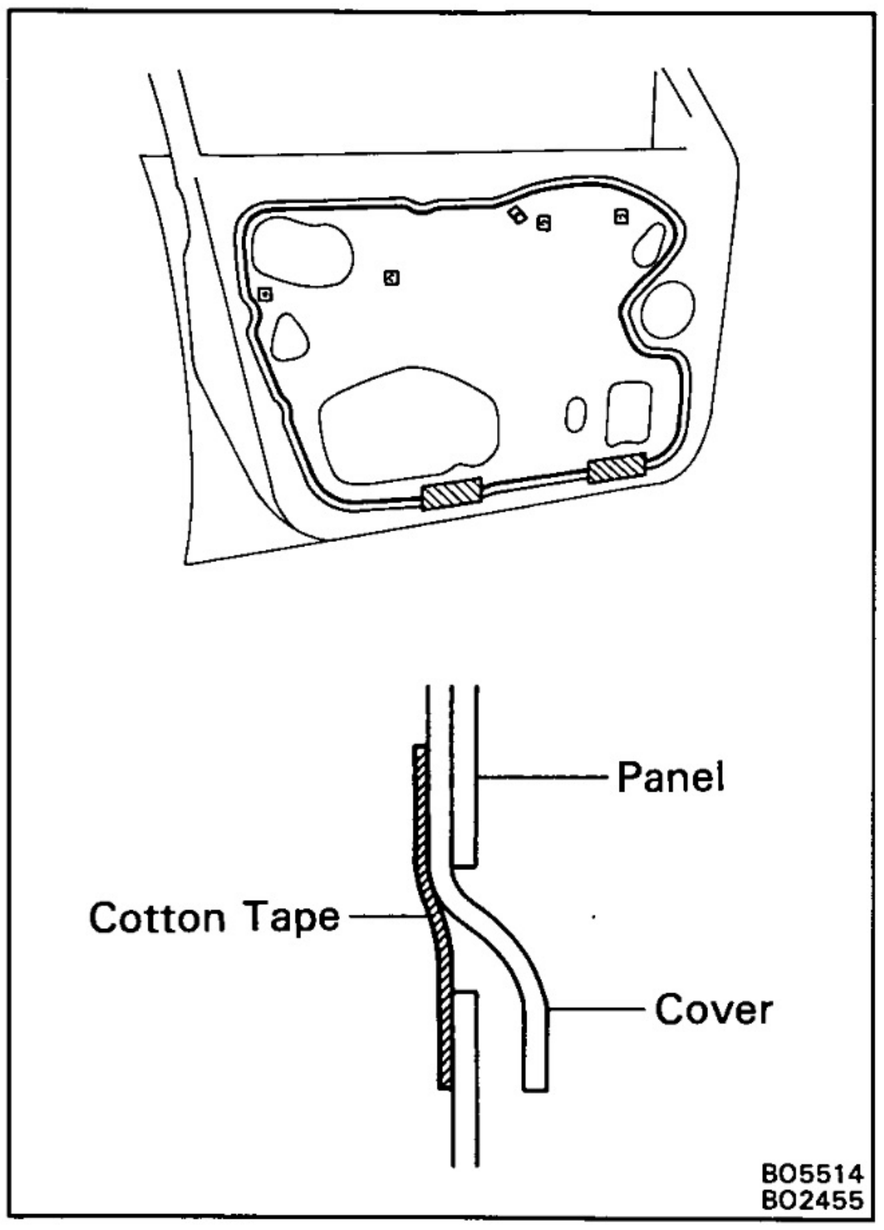

12. INSTALL SERVICE HOLE COVER

(a) Seal the service hole cover with adhesive.

HINT: Bring out the link through the service hole cover.

(b) Insert the lower edge of the cover into the panel slit.

(c) Seal the panel slit with cotton tape.

NOTICE: Do not block the trim clip sealing with the tape.

(d) (Semi Trim)
Install four screw grommets.

(Full Trim)
Install five screw grommets.

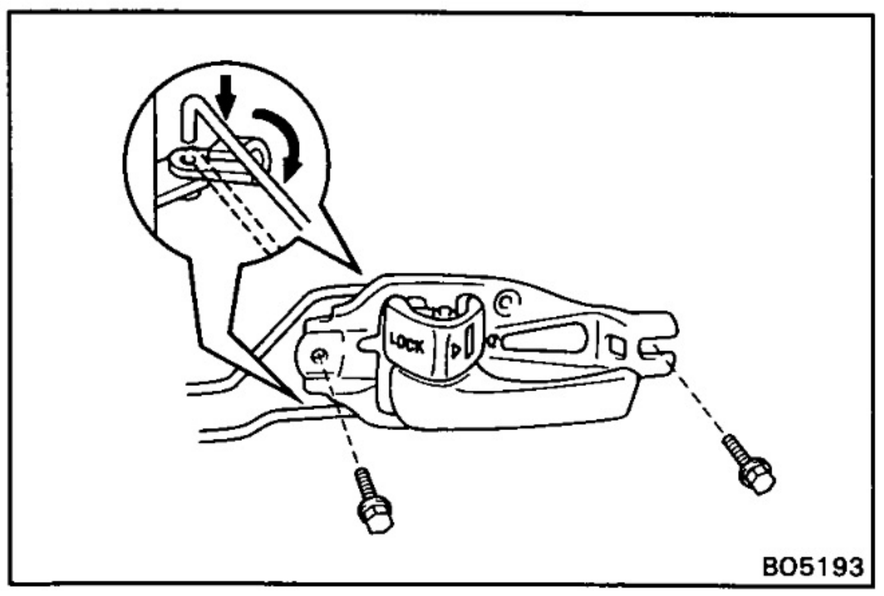

13. INSTALL DOOR INSIDE HANDLE

(a) Connect two links to the inside handle.

(b) Install the inside handle with two bolts.

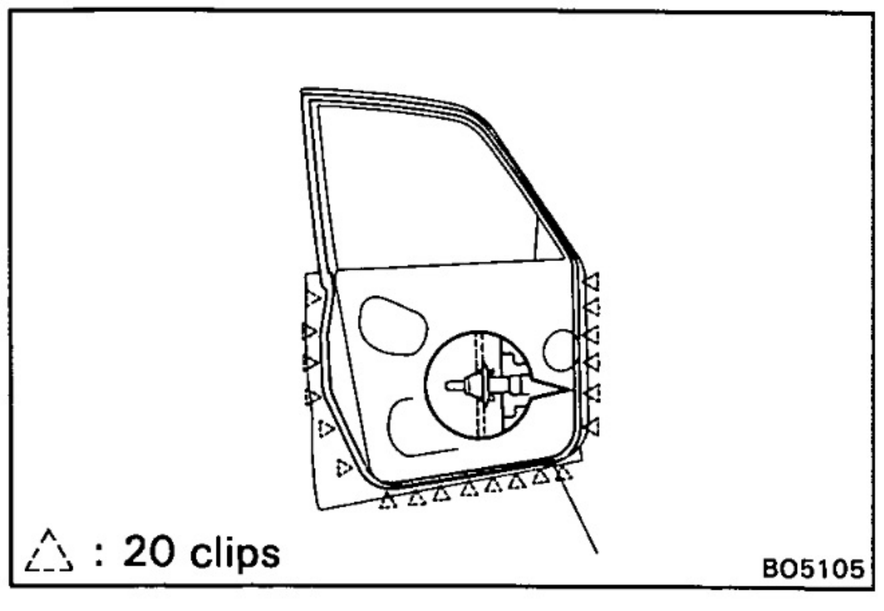

14. INSTALL DOOR WEATHERSTRIP

Install the weatherstrip with clips to the panel.

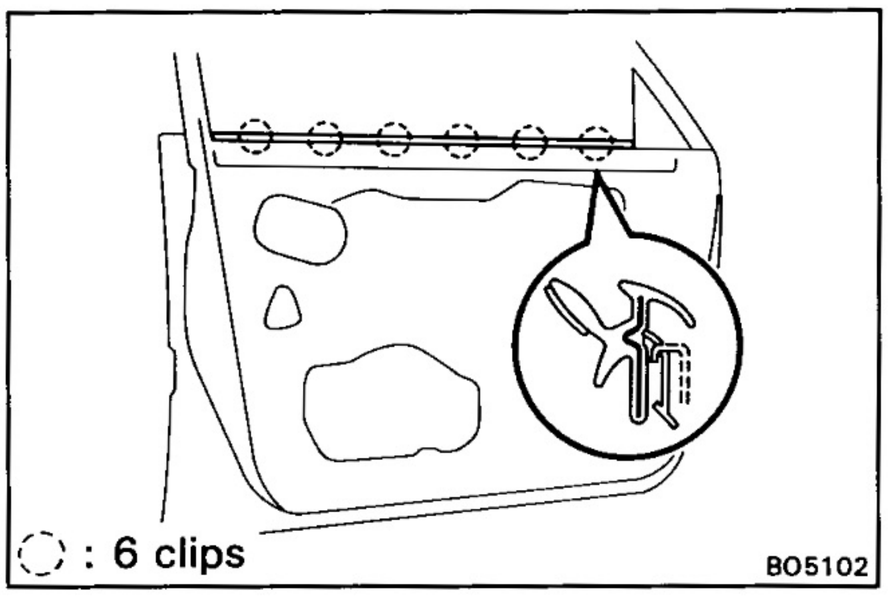

15. (Semi Trim)
INSTALL INNER WEATHERSTRIP

Insert the claw of the clips into the upper panel slit and push the moulding onto the panel.

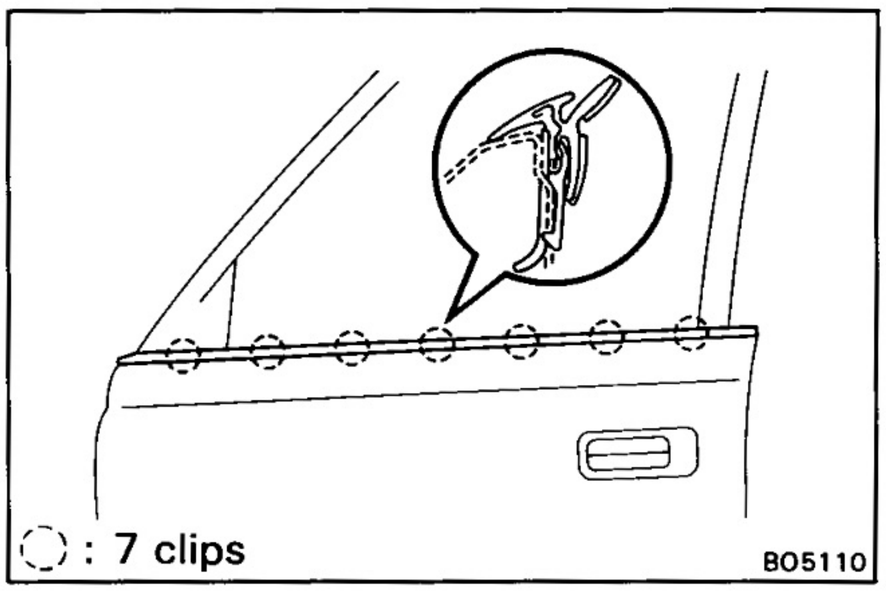

16. INSTALL DOOR BELT MOULDING

Insert the claw of the clips into the upper panel slit and push the moulding onto the panel.

17. INSTALL DOOR TRIM

(a) (Full Trim)
Install the door pocket with eight screws to the door trim.

(b) Install the inner weatherstrip to the door trim.

(c) (Full Trim, w/o Power Window)
Install the armrest base with three screws to the door trim.

(Full Trim, w/ Power Window)
Install the armrest base with eleven screws to the door trim.

(d) Install the door trim with retainers to the inside panel by tapping.

(e) (Semi Trim)
Install the armrest with two screws.

(Full Trim)
Install the armrest with three screws.

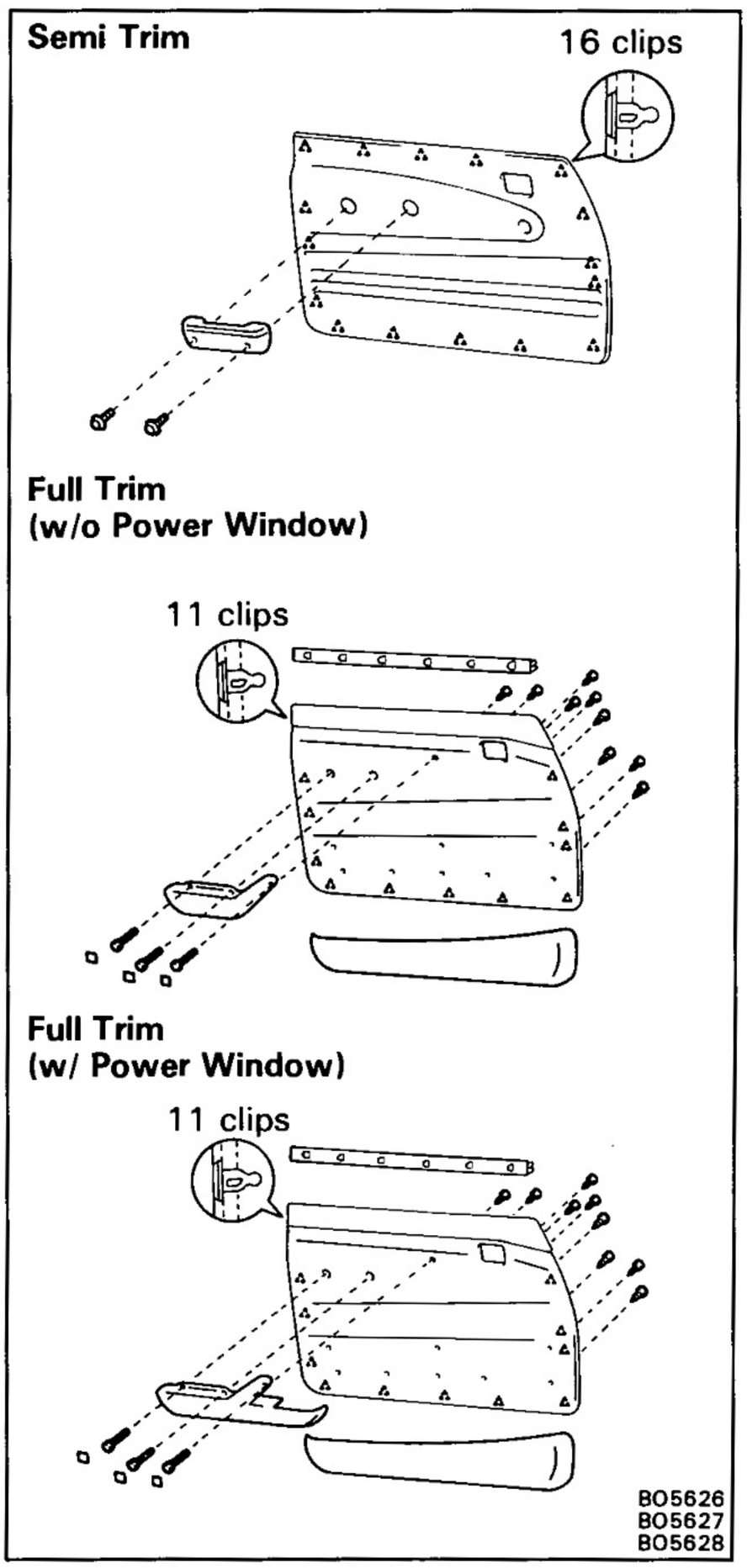

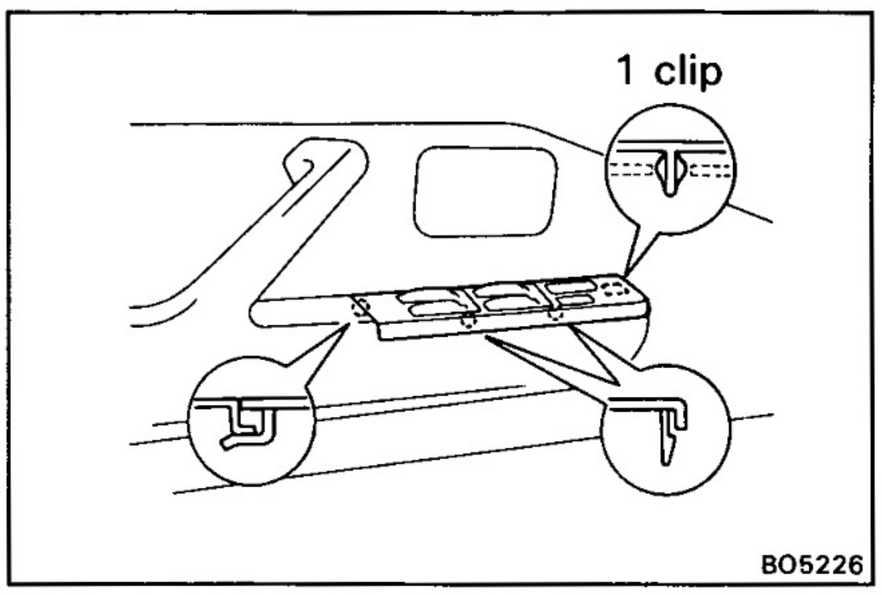

18. (w/ Power Window)
INSTALL ARMREST PANEL BASE UPPER

(a) Connect the connector.

(b) Slide the panel rearward and tap the panel to install it.

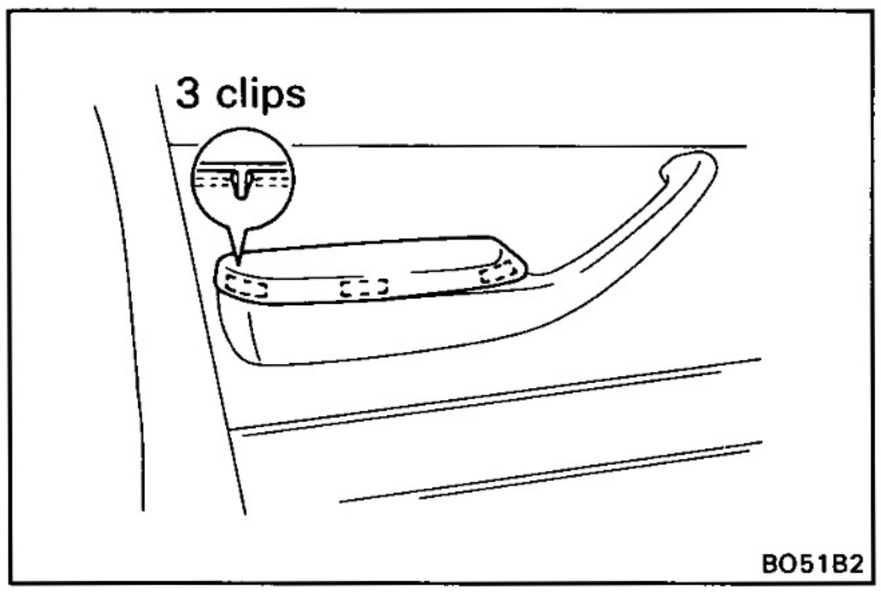

19. INSTALL ARMREST

Install the armrest to the armrest panel base by tapping.

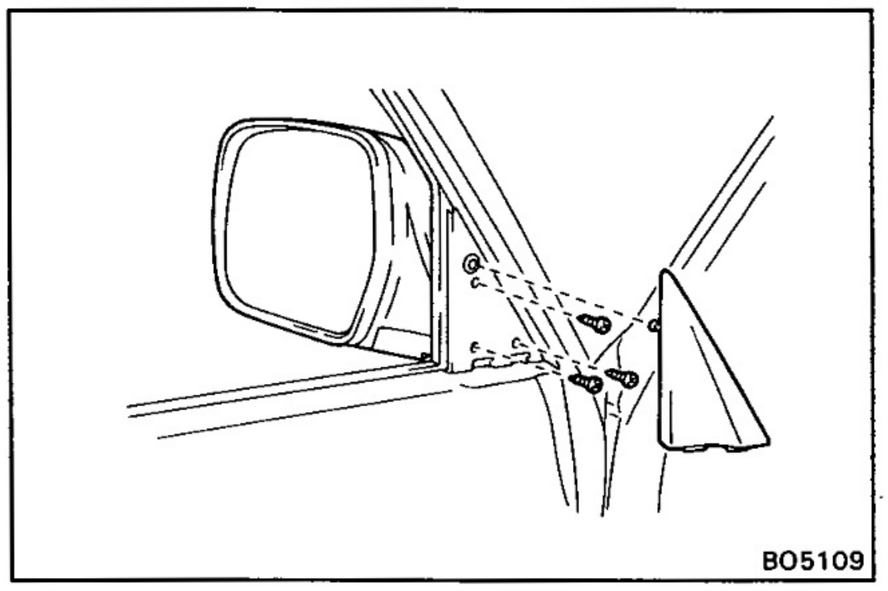

20. INSTALL REAR VIEW MIRROR

(a) (w/ Remote Control Mirror)
Connect the connector to the mirror.

(b) Install the rear view mirror with three screws.

(c) Install the cover.

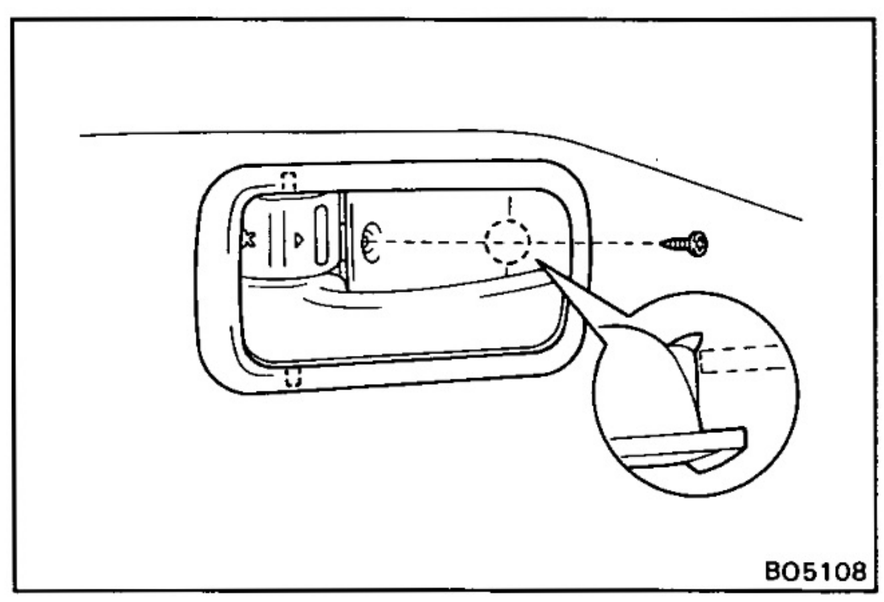

21. INSTALL DOOR INSIDE HANDLE BEZEL

(a) Push in the bezel to install it.

(b) Install the screw.

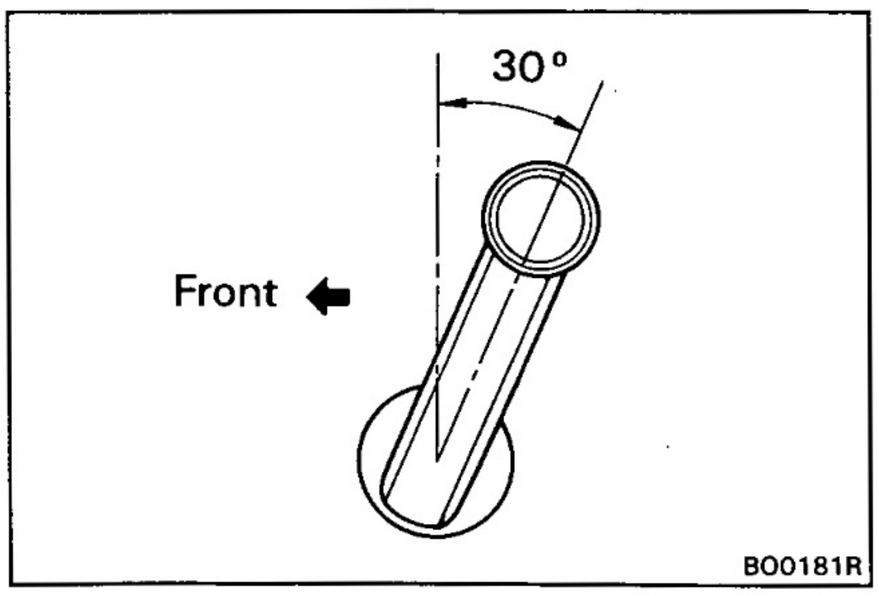

22. (w/o Power Window)
INSTALL REGULATOR HANDLE

With door window fully closed, install the plate and the regulator handle with snap ring as shown.

REAR DOOR

COMPONENTS

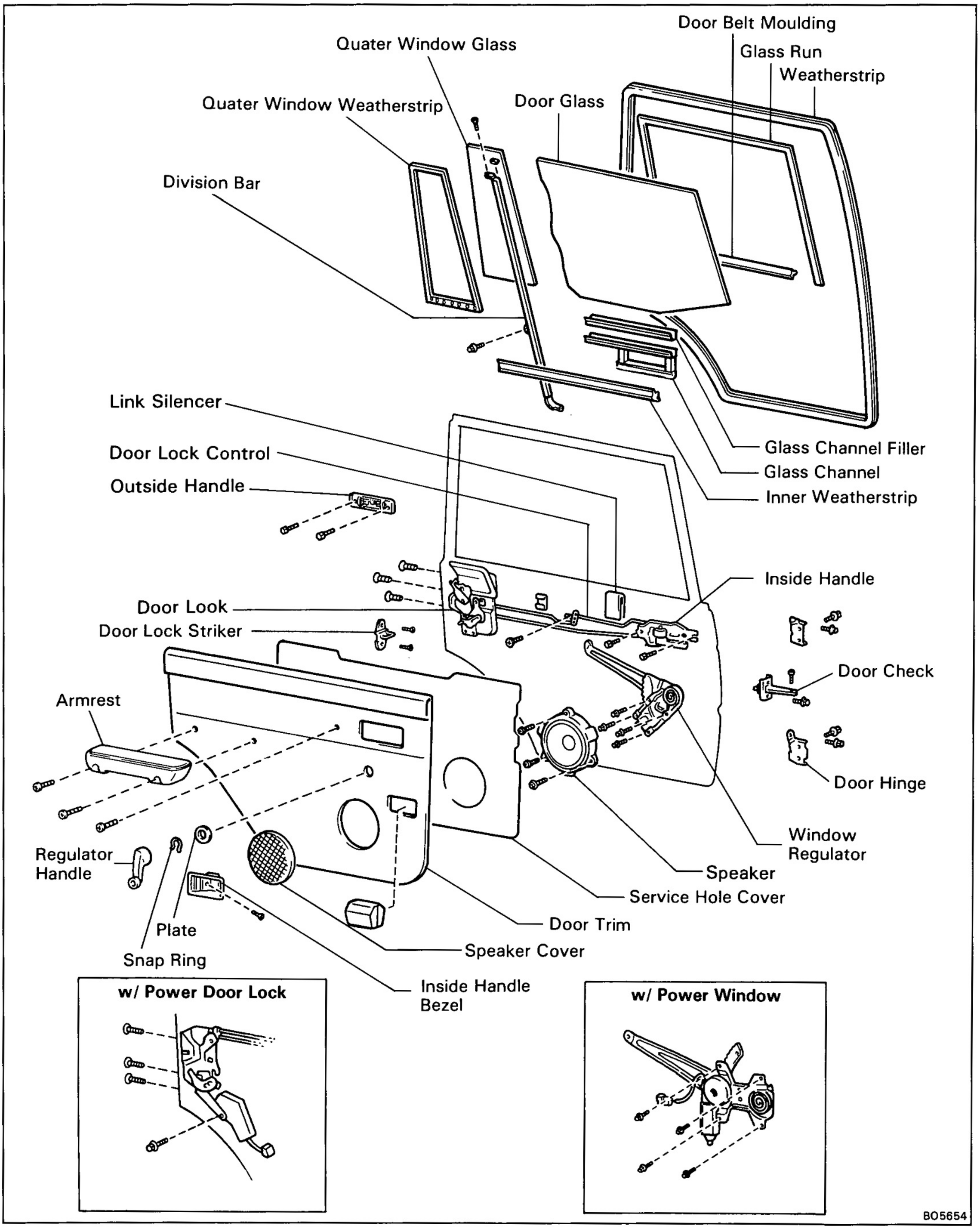

BO5654

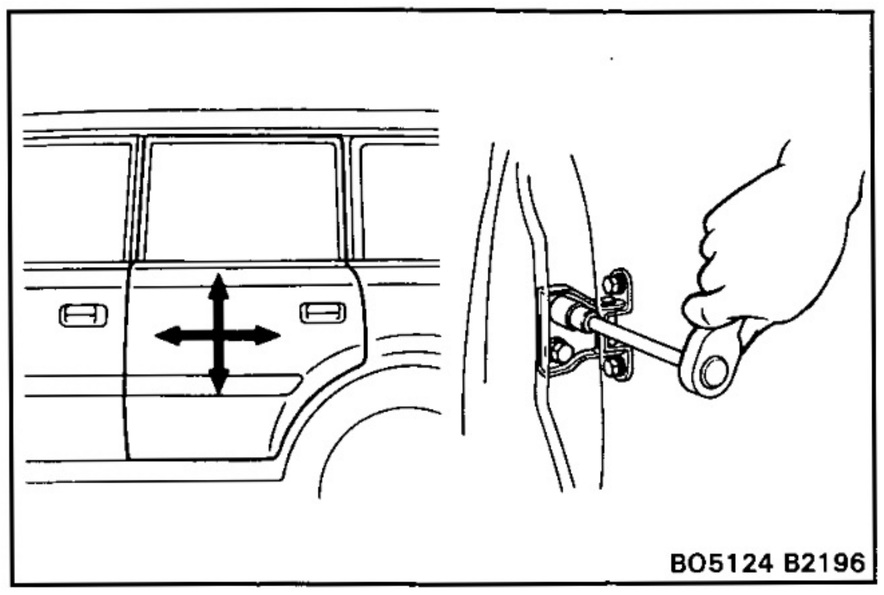

ADJUSTMENT OF REAR DOOR

1. ADJUST DOOR IN FORWARD/REARWARD AND VERTICAL DIRECTIONS

Adjust the door by loosening the body side hinge bolts.

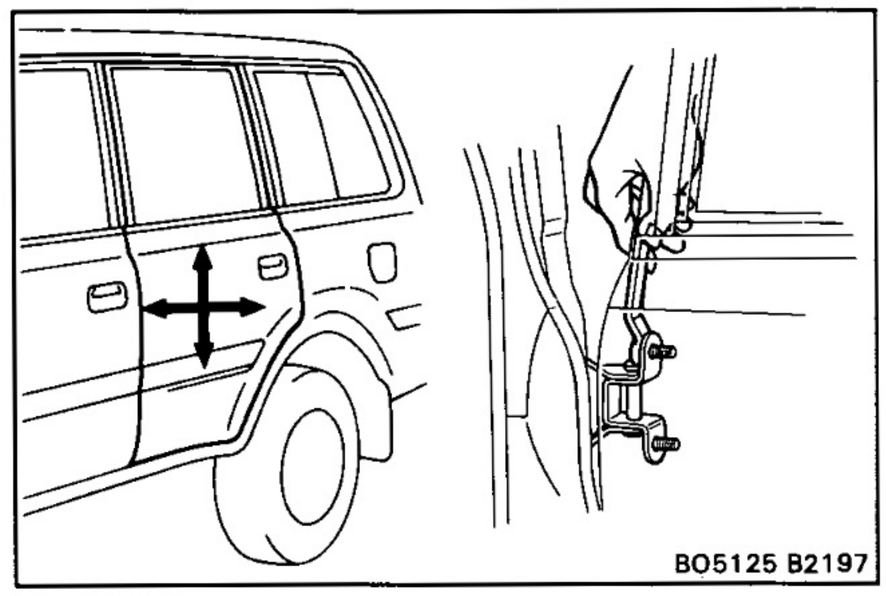

2. ADJUST DOOR IN LEFT/RIGHT AND VERTICAL DIRECTIONS

Adjust the door by loosening the door side hinge bolts.

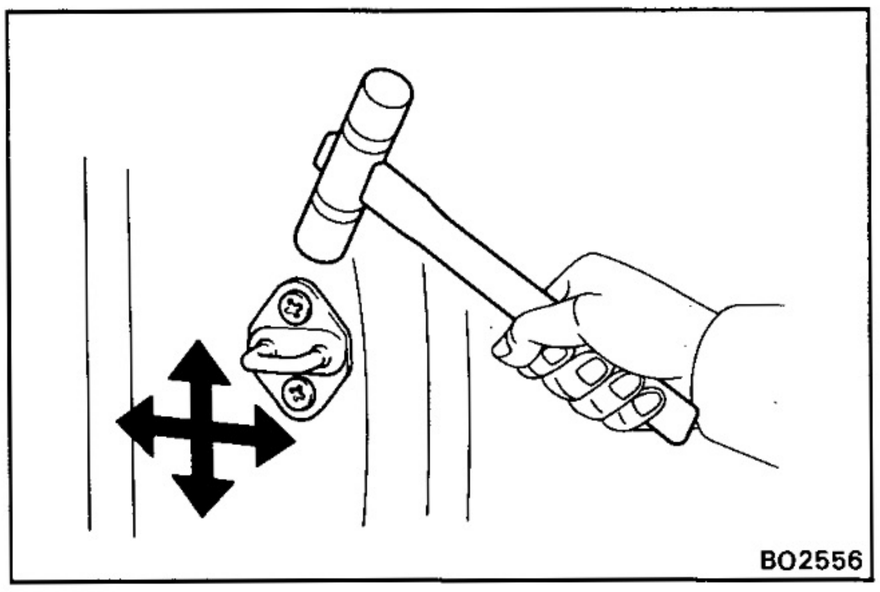

3. ADJUST DOOR LOCK STRIKER

(a) Check that the door fit and door lock linkages are adjusted correctly.

(b) Adjust the striker position by slightly loosening the striker mounting screws, and hitting the striker with a hammer. Tighten the striker mounting screws again.

DISASSEMBLY OF REAR DOOR

1. (w/o Power Window) REMOVE REGULATOR HANDLE

Pull off the snap ring with shop rag and remove the regulator handle and plate.

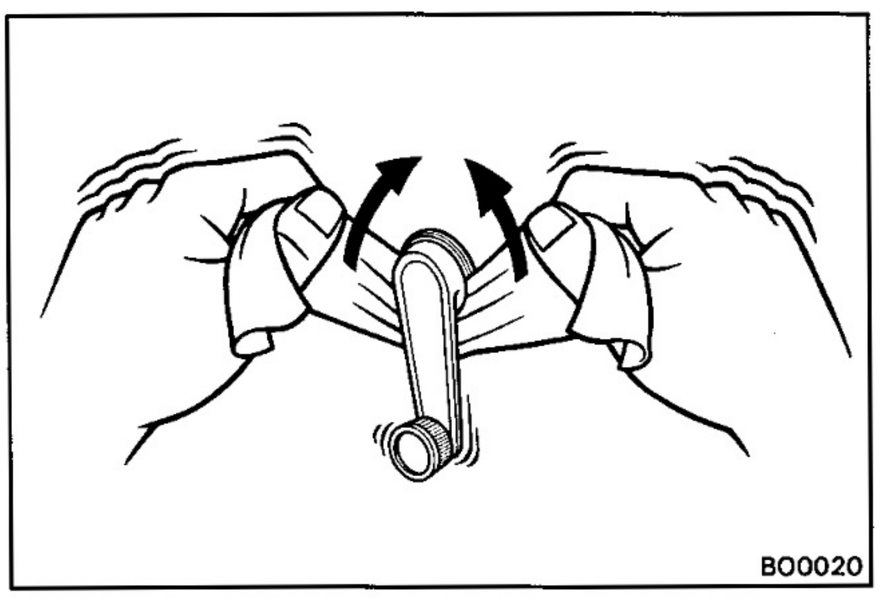

2. REMOVE DOOR INSIDE HANDLE BEZEL

Remove the screw and pull the inside handle bezel.

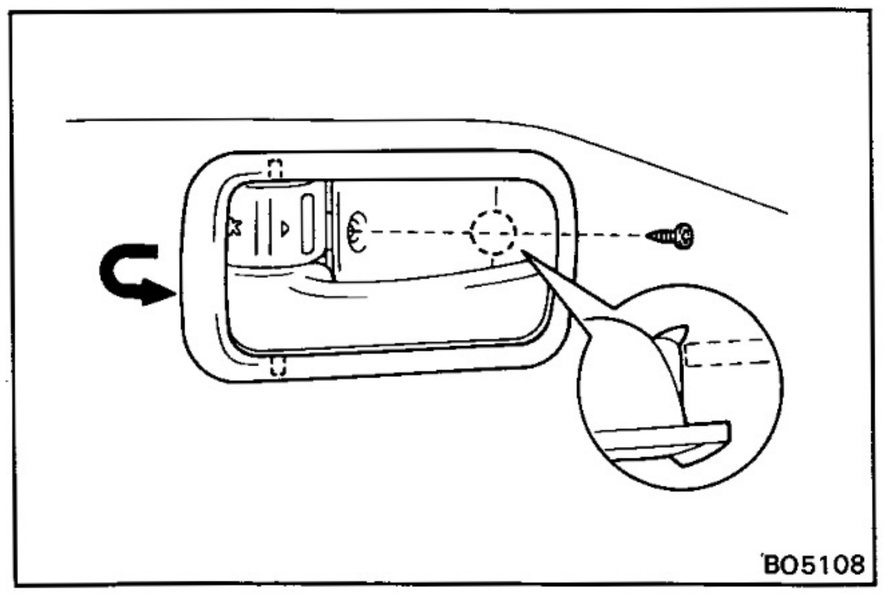

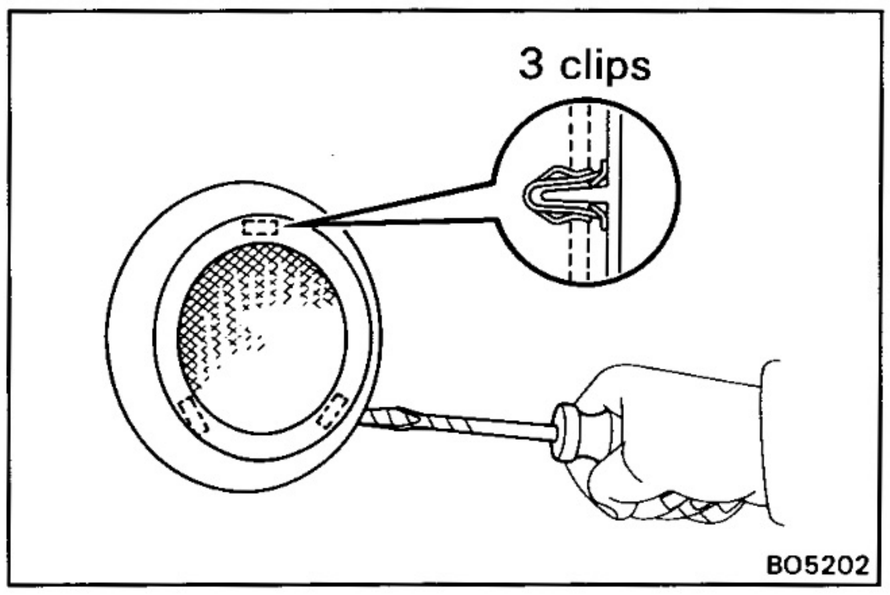

3. (w/ Speaker)
REMOVE SPEAKER COVER

Insert the screwdriver between the door trim and the speaker cover.

HINT: Tape the screw driver tip before use.

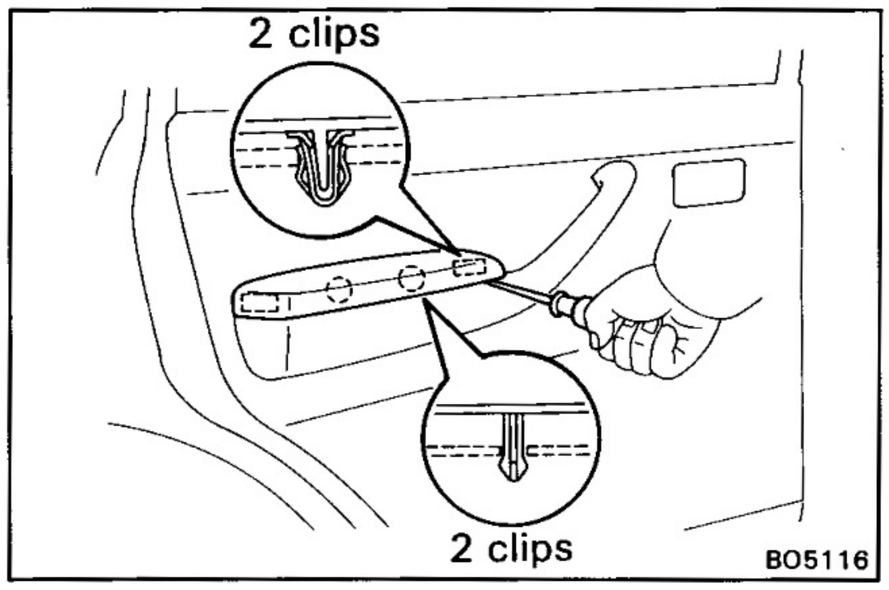

4. REMOVE ARMREST PANEL BASE

(a) Insert the screwdriver between the armrest and the armrest panel base to pry out.

HINT: Tape the screwdriver tip before use.

(b) Remove the armrest.

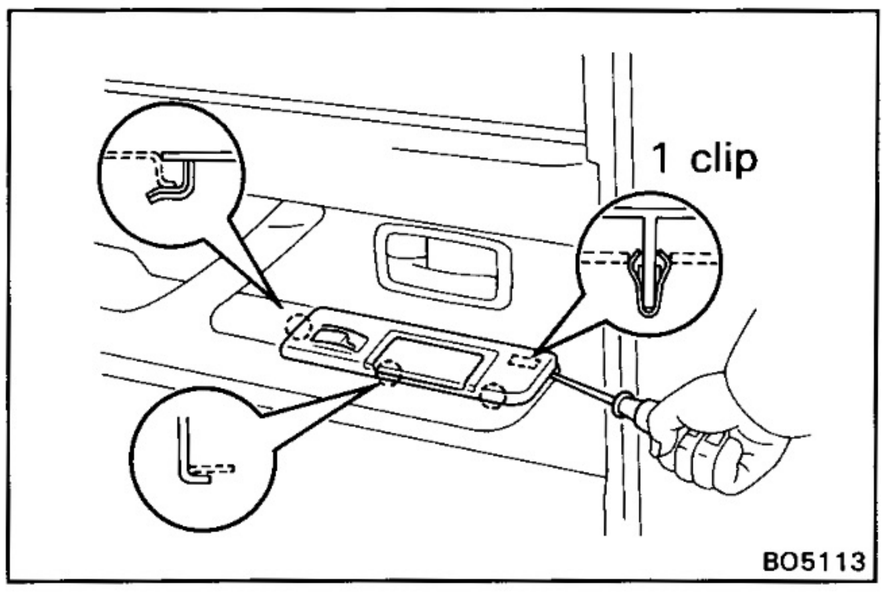

5. (w/ Power Window)
REMOVE ARMREST PANEL BASE UPPER

(a) Remove the ash tray.

(b) Insert the screwdriver between the armrest panel base and the armrest panel base upper to pry out, then disconnect the connector.

HINT: Tape the screwdriver tip before use.

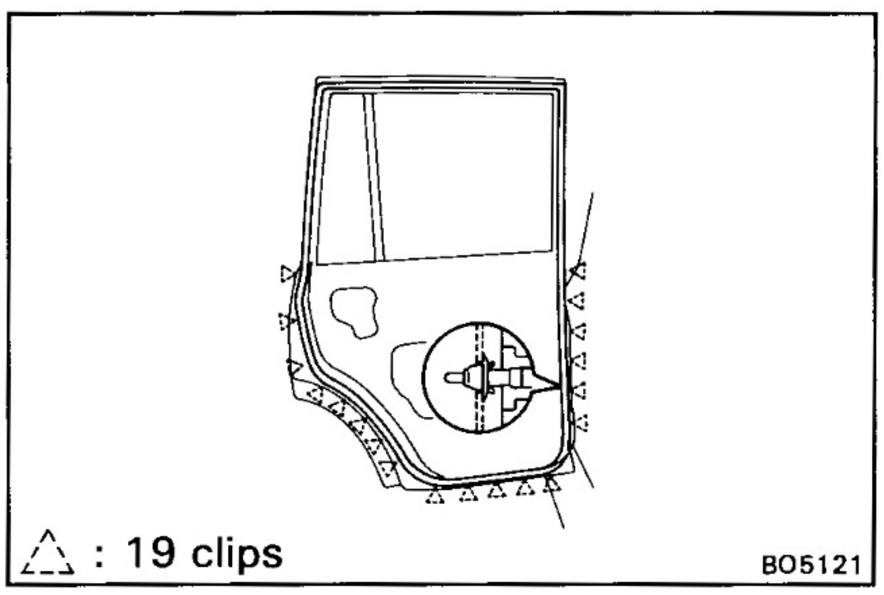

6. REMOVE DOOR WEATHERSTRIP

While pulling the weatherstrip by hand, remove nineteen clips using a clip remover.

HINT: Do not pull strongly on the weatherstrip as it may tear.

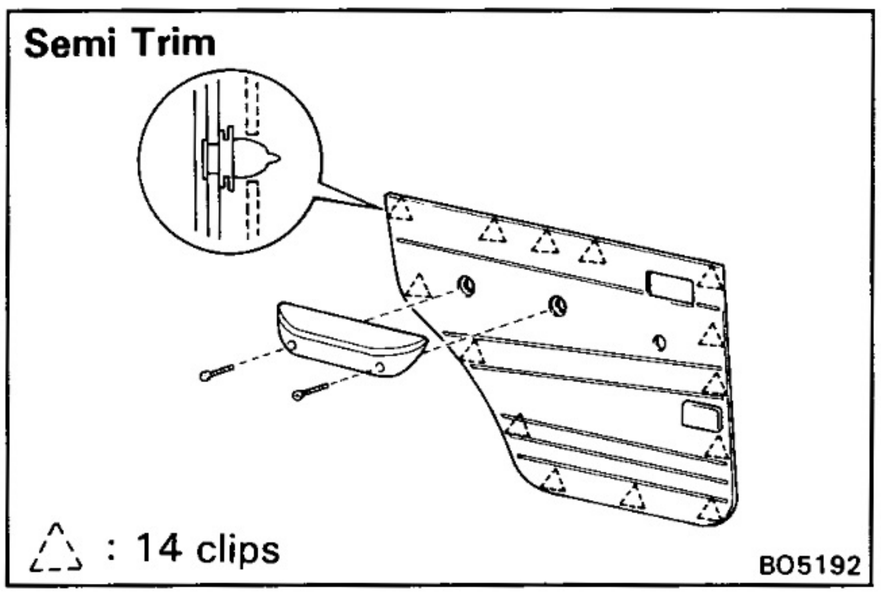

7. REMOVE DOOR TRIM

(a) (Semi Trim)
Remove two screws and arm rest.

(Full Trim)
Remove three screws from the inner door panel.

(b) (Semi Trim)
Insert the screwdriver between the trim and the panel to pry out.

HINT: Tape the screwdriver tip before use.

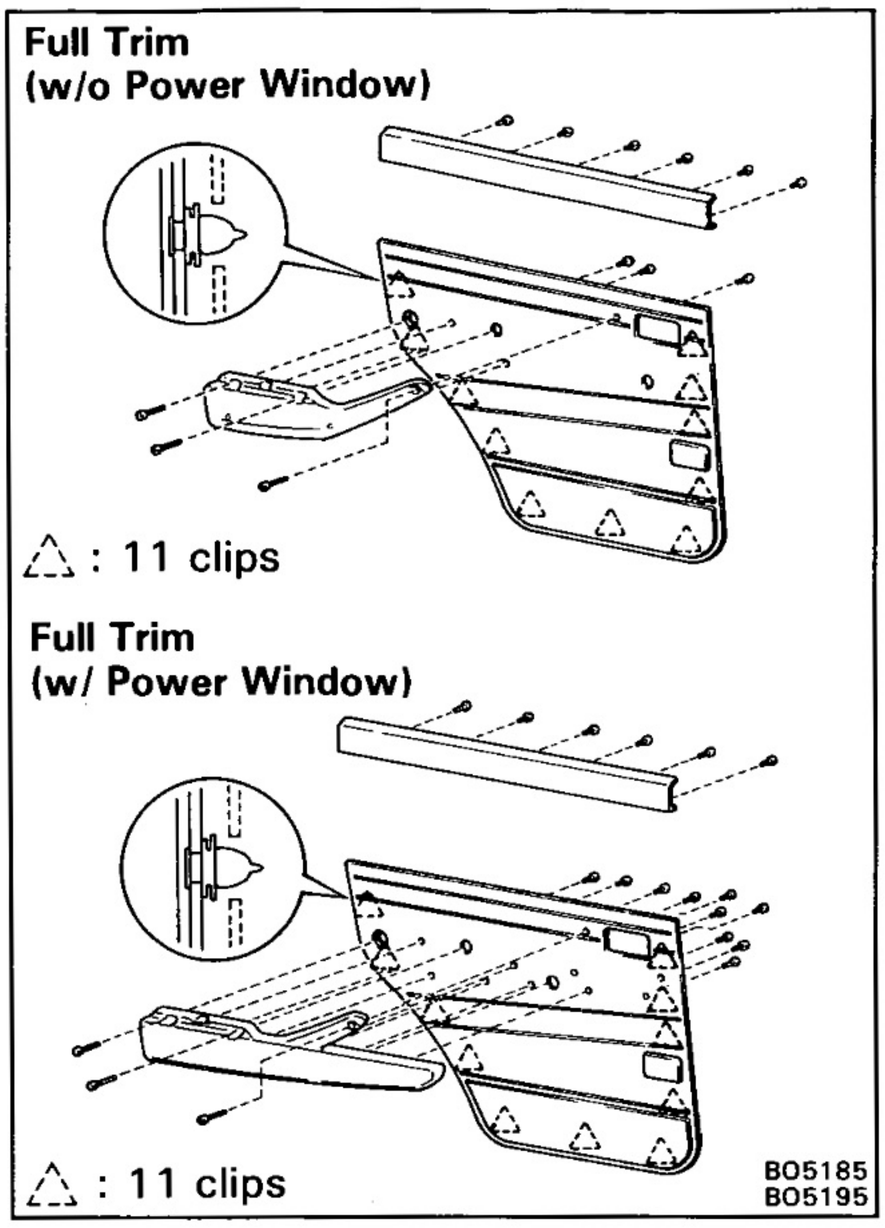

(Full Trim)
Insert the screwdriver between the trim and the panel to pry out, then the trim by pull it upward.

(c) (Full Trim)
Remove the inner weatherstrip from the door trim.

(d) (Full Trim, w/o Power Window)
Remove three screws and the armrest panel base from the door trim.

(Full Trim, w/ Power Window)
Remove ten screws and the armrest panel base from the door trim.

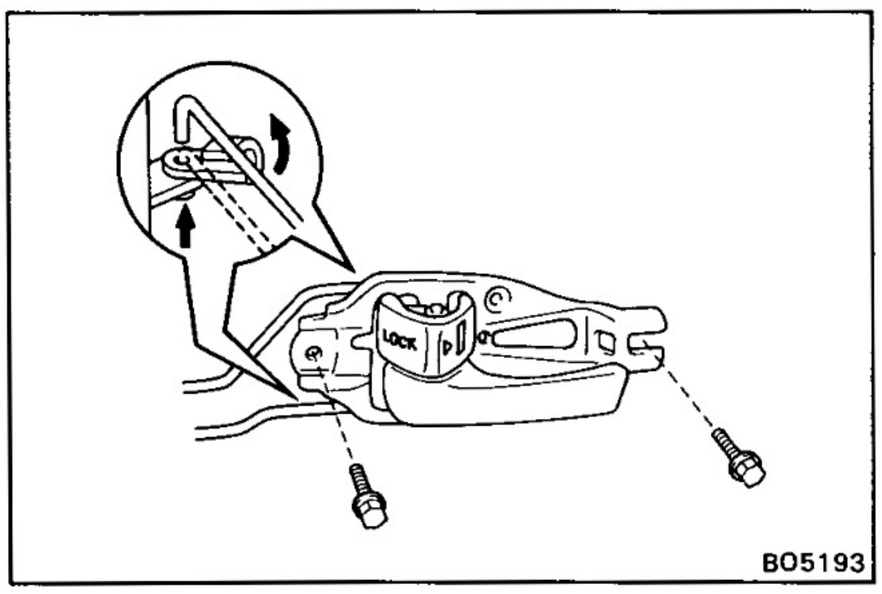

8. REMOVE DOOR INSIDE HANDLE

(a) Remove two bolts.

(b) Disconnect two links from the inside handle.

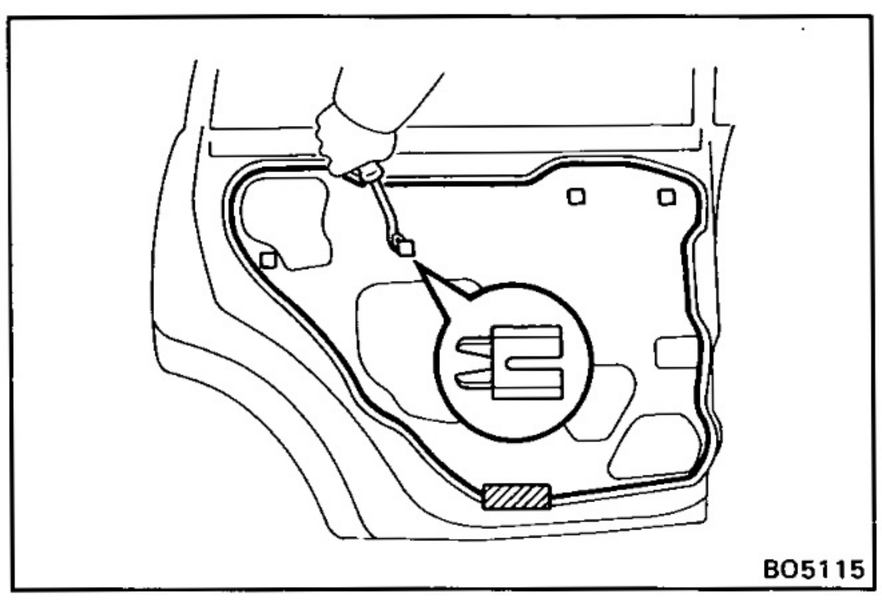

9. REMOVE SERVICE HOLE COVER

(a) (Semi Trim)
Using the clip remover, remove four screw grommets.

(Full Trim)
Using the clip remover, remove five screw grommets.

(b) Remove service hole cover.

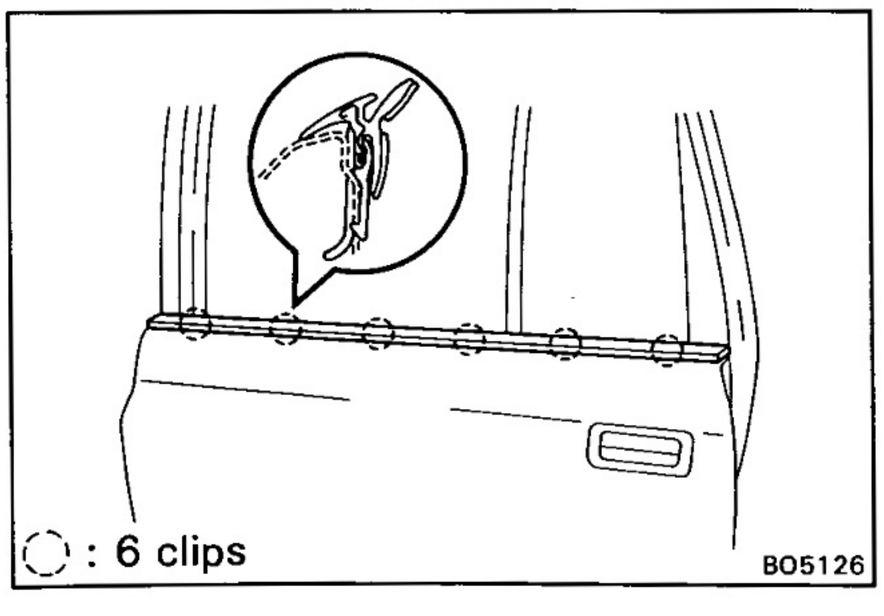

10. REMOVE DOOR BELT MOULDING

Pry out the clips from the edge of the panel, and remove the moulding.

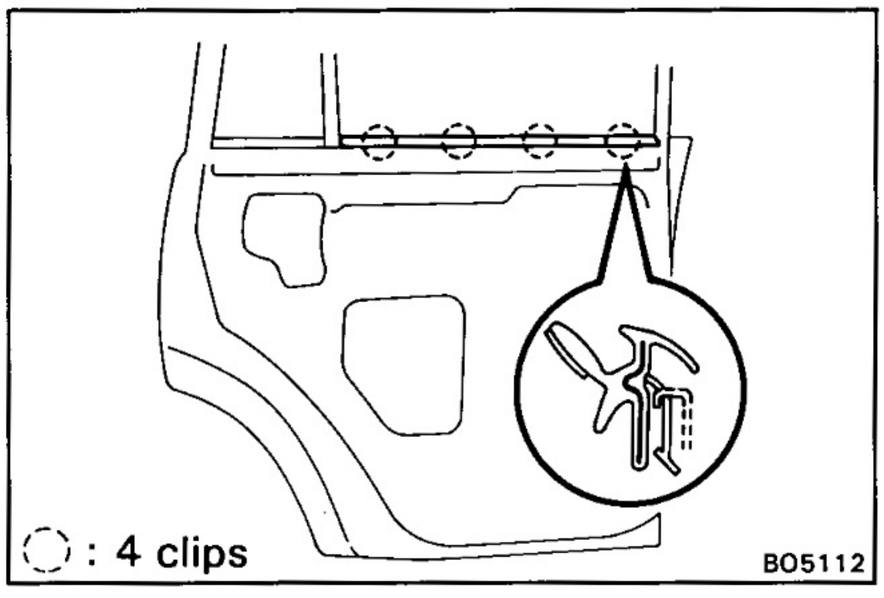

11. (Semi Trim)
REMOVE INNER WEATHERSTRIP

Pry out the clips from the edge of the panel, and remove the inner weatherstrip.

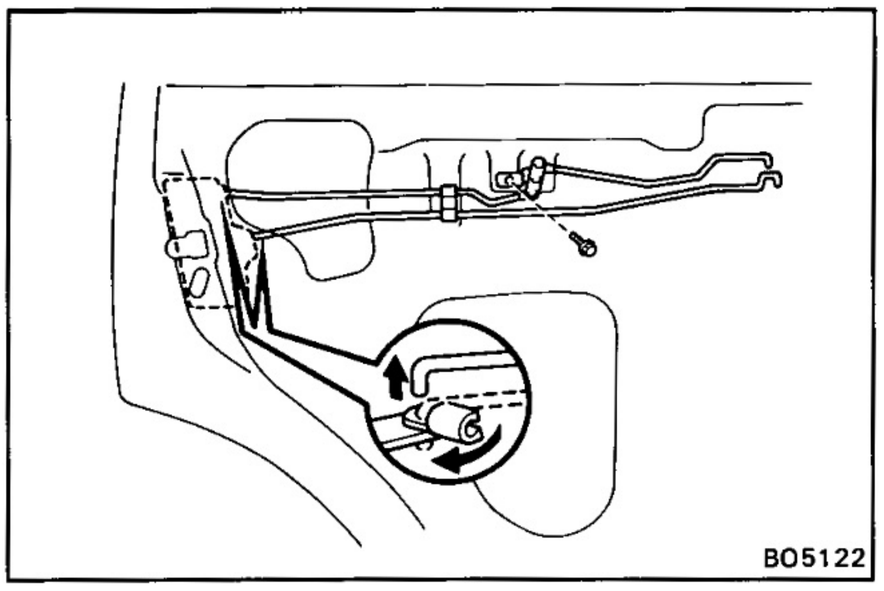

12. REMOVE LOCKING LINK AND DOOR OPENING LINK

Remove the bolt and disconnect two links.

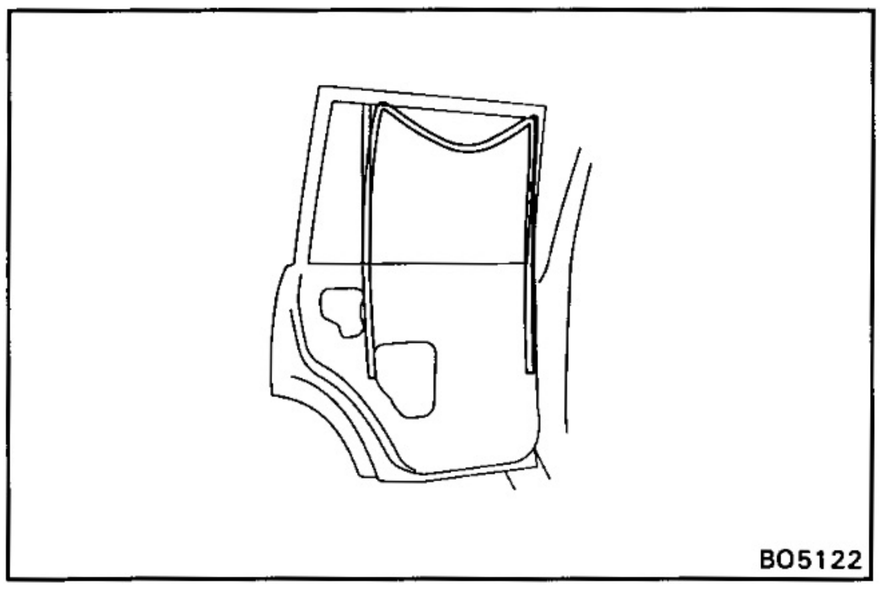

13. REMOVE DOOR GLASS RUN

Pull out the glass run from the door frame.

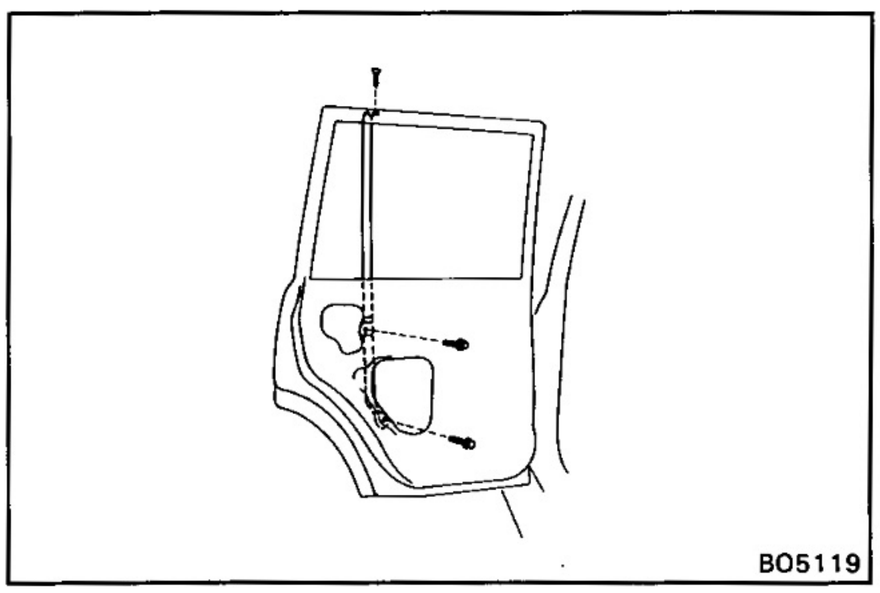

14. REMOVE DEVISION BAR

(a) Remove the screw from the door frame.

(b) Remove two bolts from the door panel.

(c) Pull out the devision bar from the door panel.

15. REMOVE QUARTER WINDOW GLASS WITH WEATHERSTRIP

Remove the quarter window glass together with the weatherstrip by pulling it forward.

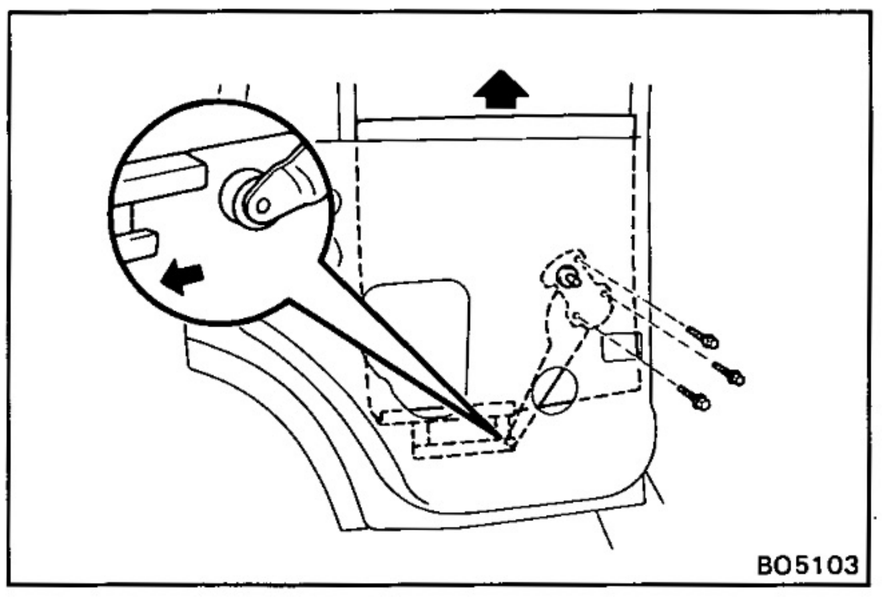

16. REMOVE DOOR GLASS

Remove the door glass by pulling it upward.

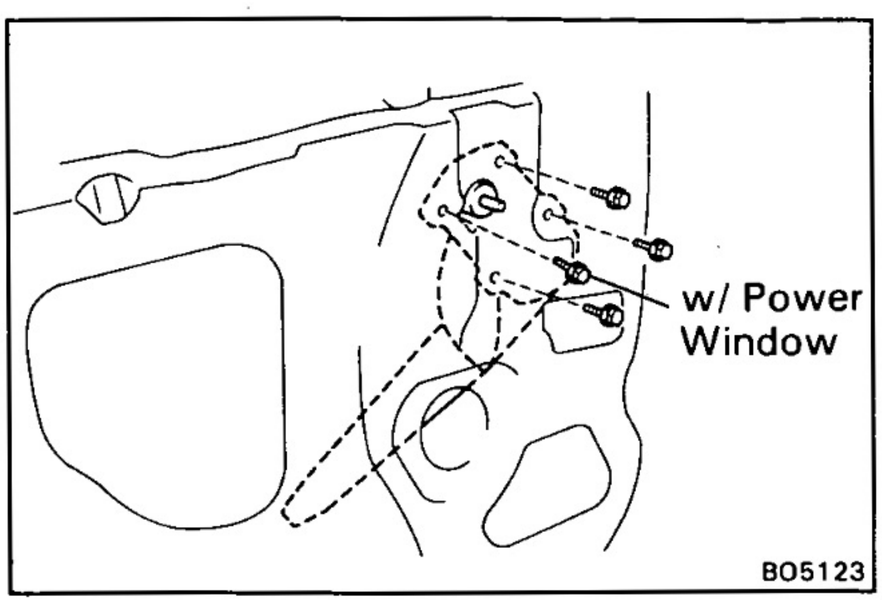

17. REMOVE WINDOW REGULATOR

(a) (w/ Power Window)
Disconnect the connector.

(b) (w/ Power Window)
Remove four regulator mounting bolts.

(w/o Power Window)
Remove three regulator mounting bolts.

(c) Remove the regulator through the service hole.

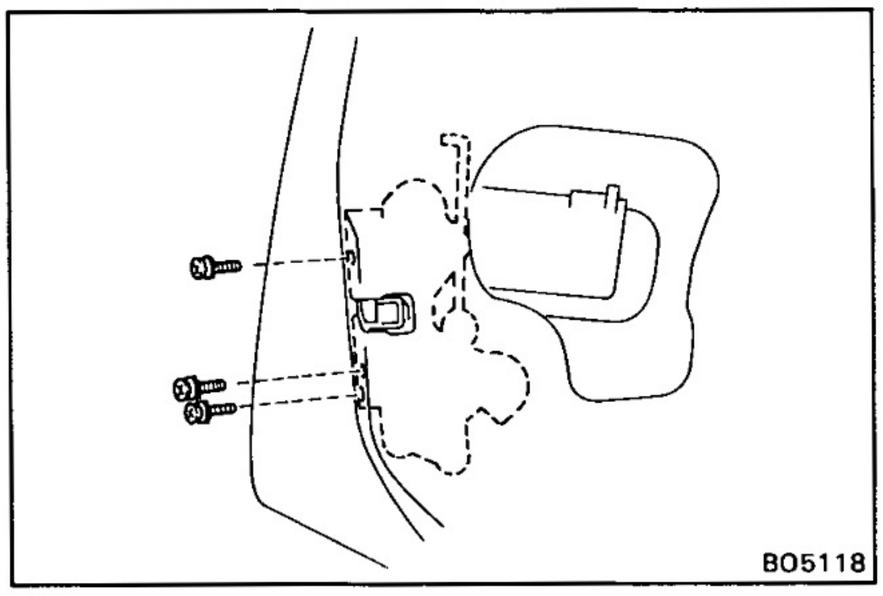

18. REMOVE DOOR LOCK

(a) Remove the link from outside handle.

(b) (w/ Power Door Lock)
Disconnect the connectors.

(c) Remove three screws and the door lock.

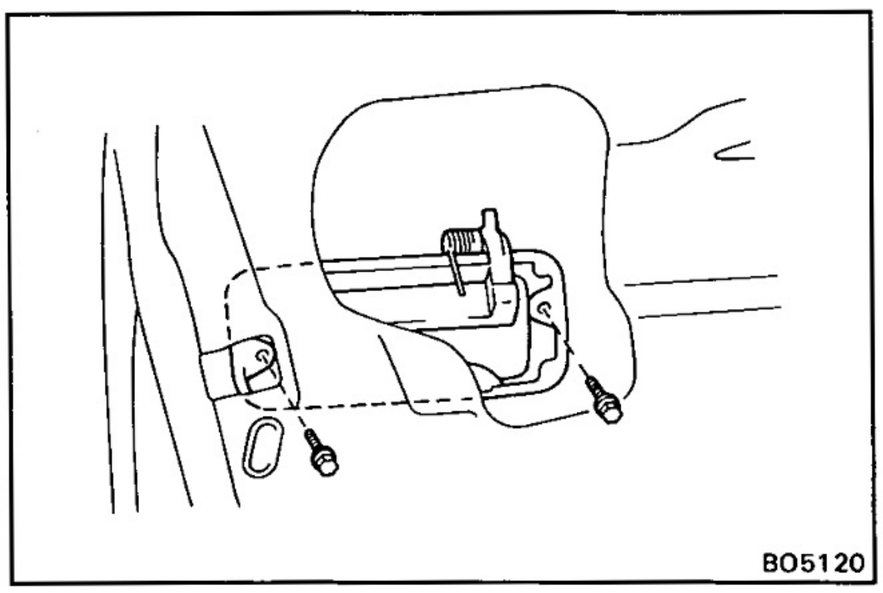

19. REMOVE OUTSIDE HANDLE

Remove two bolts and the outside handle.

20. (w/ Speaker)
REMOVE SPEAKER

Remove three screws and speaker, then disconnect the connector.

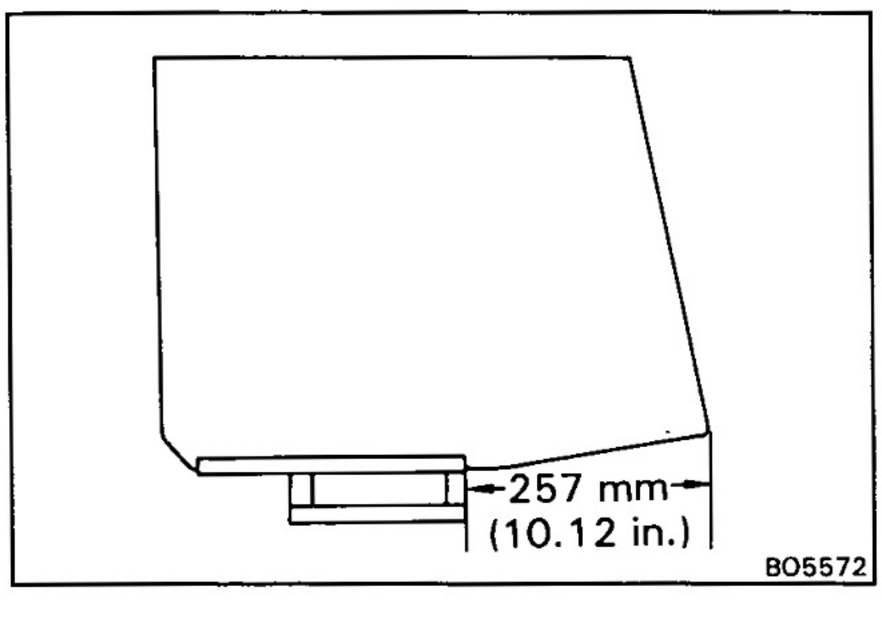

REPLACEMENT OF GLASS

1. REMOVE GLASS CHANNEL WITH SCREWDRIVER OR LIKE OBJECT

2. APPLY SOAPY WATER TO INSIDE OF WEATHERSTRIP

3. INSTALL CHANNEL BY TAPPING IT WITH PLASTIC HAMMER

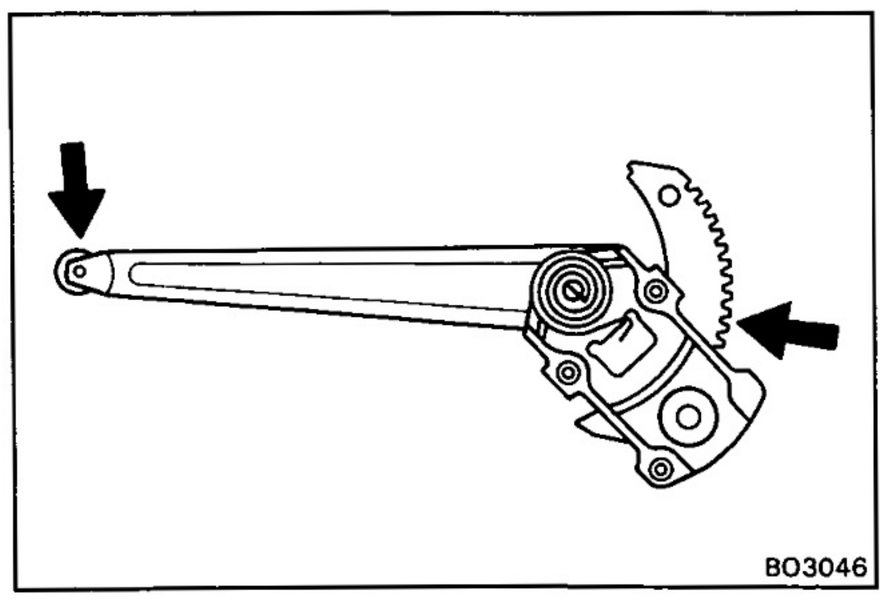

ASSEMBLY OF REAR DOOR

(See page BO-18)

1. BEFORE INSTALLING PARTS COAT THEM WITH MP GREASE

(a) Apply MP grease to the sliding surface and gears of the window regulator.

NOTICE: Do not apply MP grease to the spring of the window regulator.

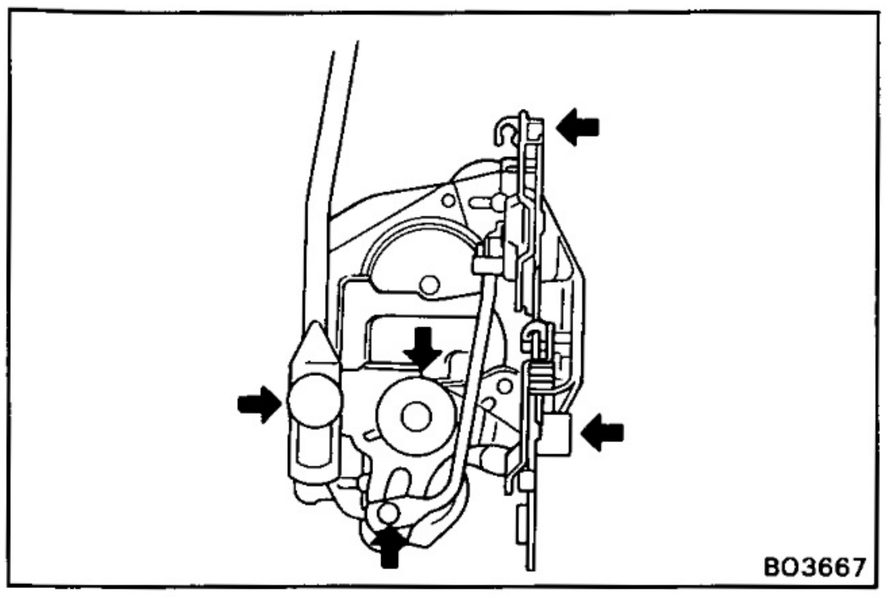

(b) Apply MP grease to the sliding surface of the door lock.

2. **(w/ Speaker)**
INSTALL SPEAKER

Connect the connector and install speaker with three screws.

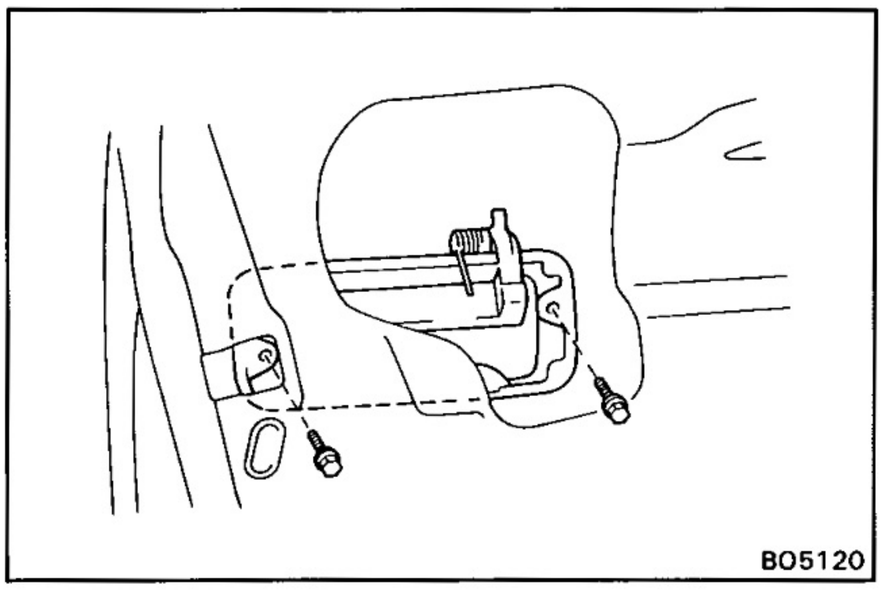

3. **INSTALL OUTSIDE HANDLE**

Install outside handle with two bolts.

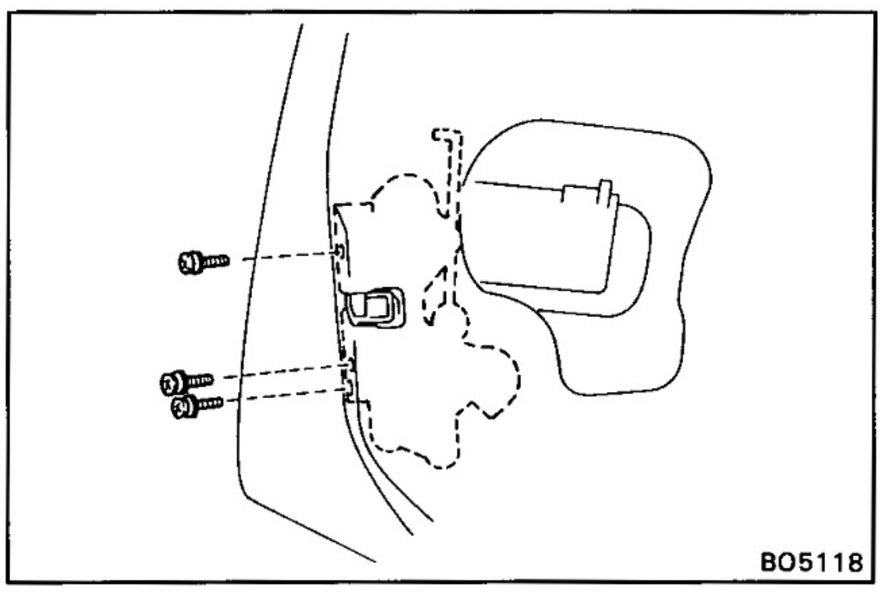

4. **INSTALL DOOR LOCK**

(a) Install the door lock with three screws.

(b) (w/ Power Door Lock)
Connect the connector.

(c) Connect the link to the outside handle.

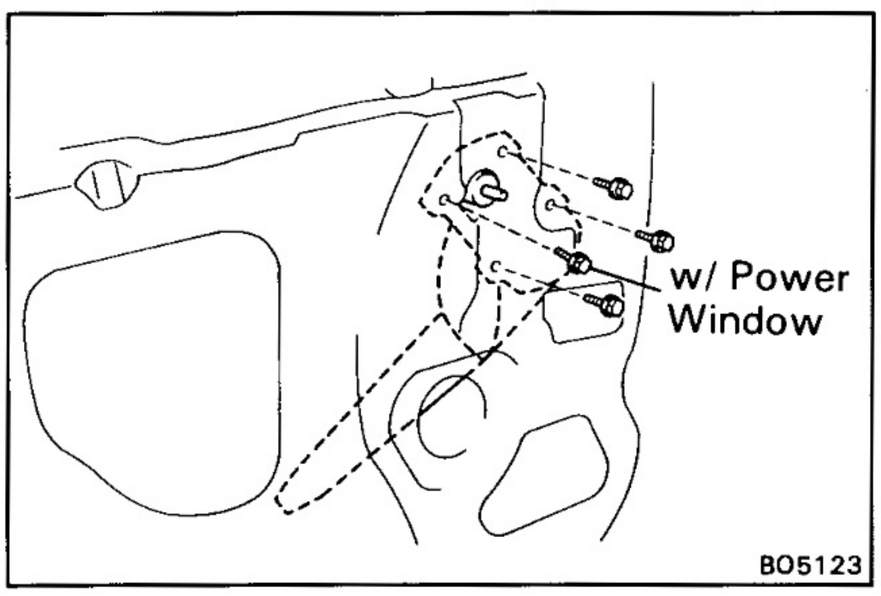

5. **INSTALL WINDOW REGULATOR**

(a) Place the regulator through the service hole.

(b) (w/ Power Window)
Install four regulator mounting bolts.

(w/o Power Window)
Install three regulator mounting bolts.

(c) (w/ Power Window)
Connect the connector.

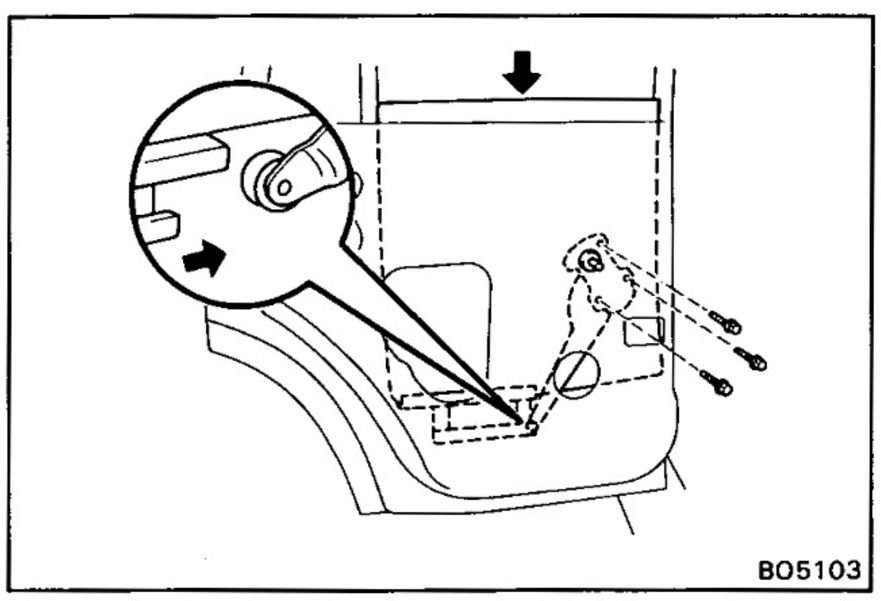

6. **INSTALL DOOR GLASS**

(a) Place the glass in the door cavity.

(b) Attach the glass to the window regulator arm.

7. **INSTALL QUARTER WINDOW GLASS WITH WEATHER-STRIP**

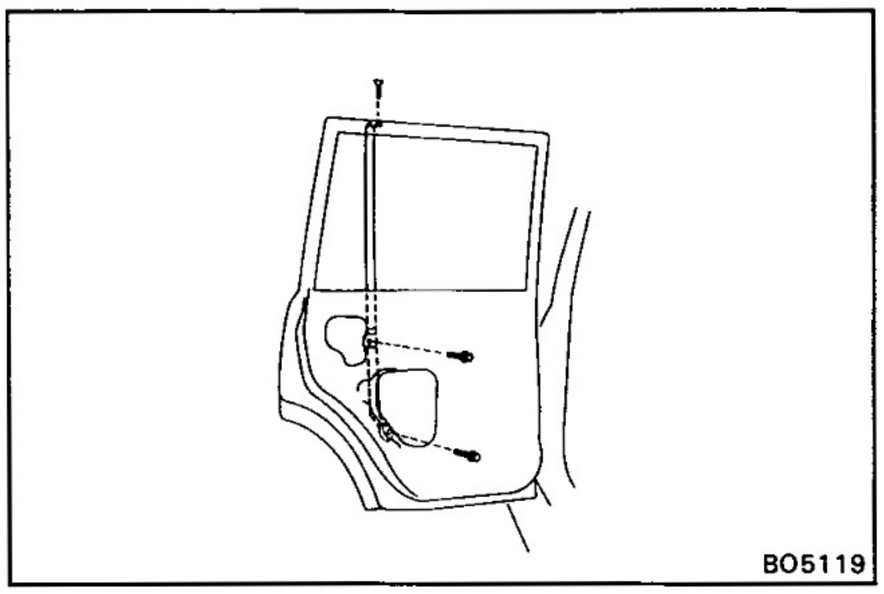

8. INSTALL DIVISION BAR

Install division bar with the screw and two bolts.

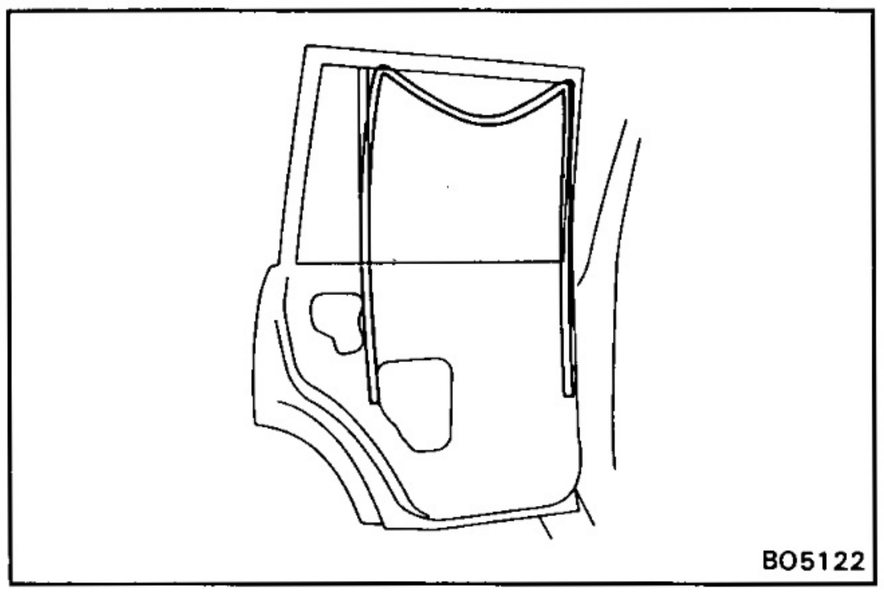

9. INSTALL DOOR GLASS RUN

Install the glass run to the door frame.

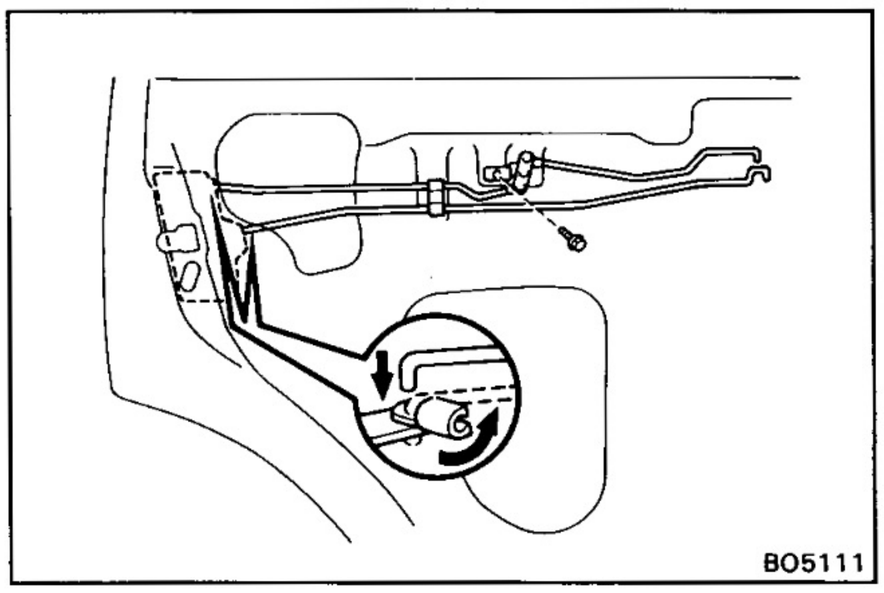

10. INSTALL LOCKING LINK AND DOOR OPENING LINK

Connect two links and install the bolt.

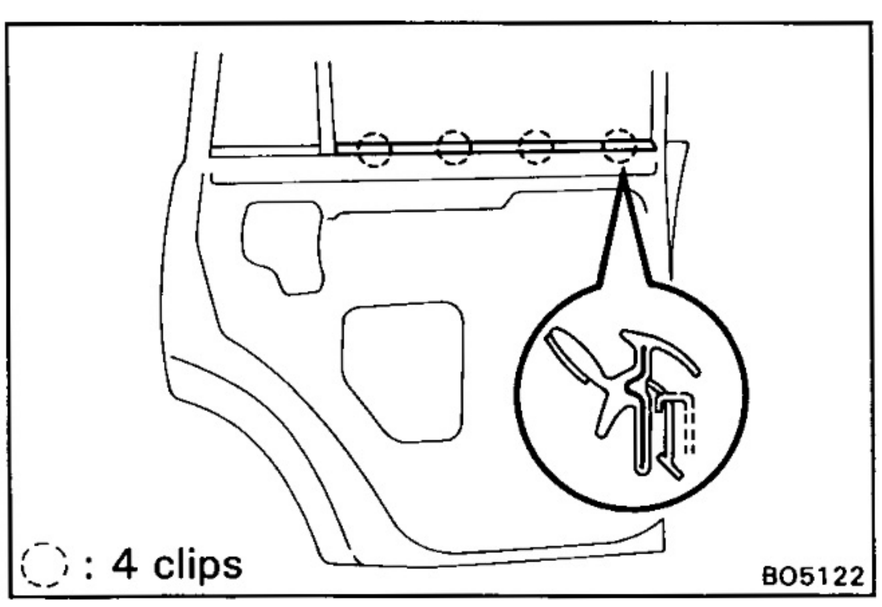

11. (Semi Trim)
INSTALL INNER WEATHERSTRIP

Insert the claw of the clips into the upper panel slit and push the weatherstrip onto the panel.

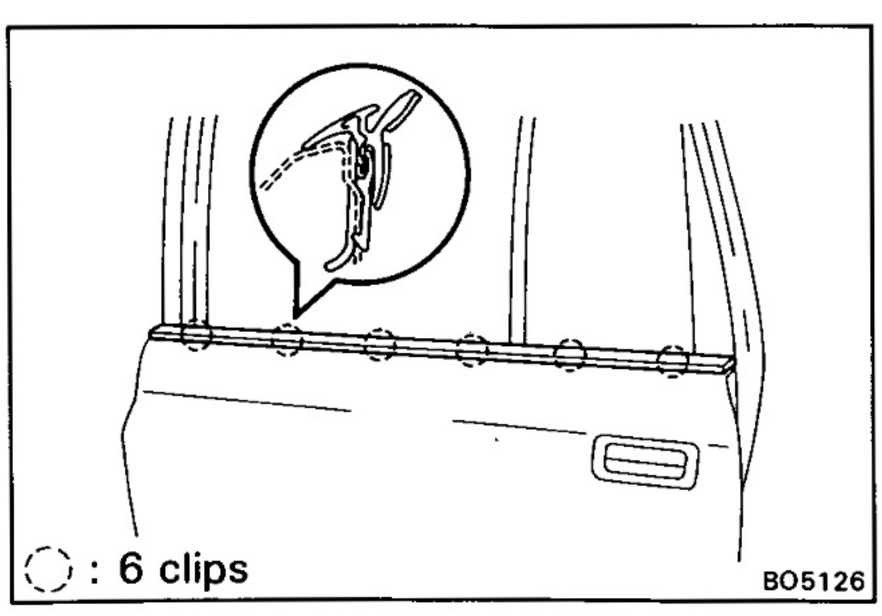

12. INSTALL DOOR BELT MOULDING

Insert the claw of the clips into the upper panel slit and push the moulding onto the panel.

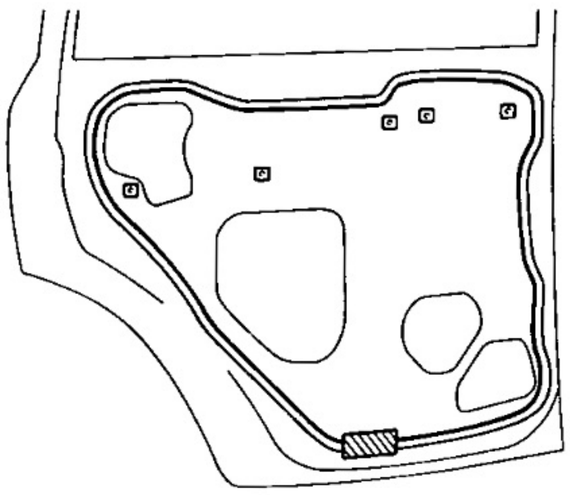

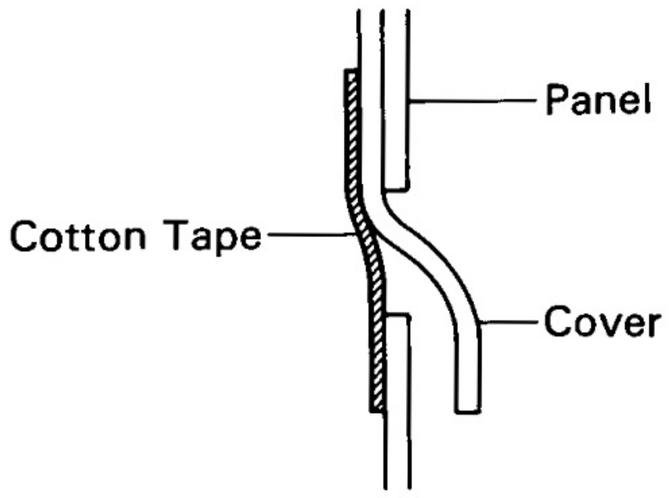

13. INSTALL SERVICE HOLE COVER

(a) Seal the service hole cover with adhesive.

HINT: Bring out the link through the service hole cover.

(b) Insert the lower edge of the service hole cover into the panel slit.

(c) Seal the panel slit with the cotton tape.

NOTICE: Do not block the trim clip sealing with the tape.

(d) Install five screw grommets.

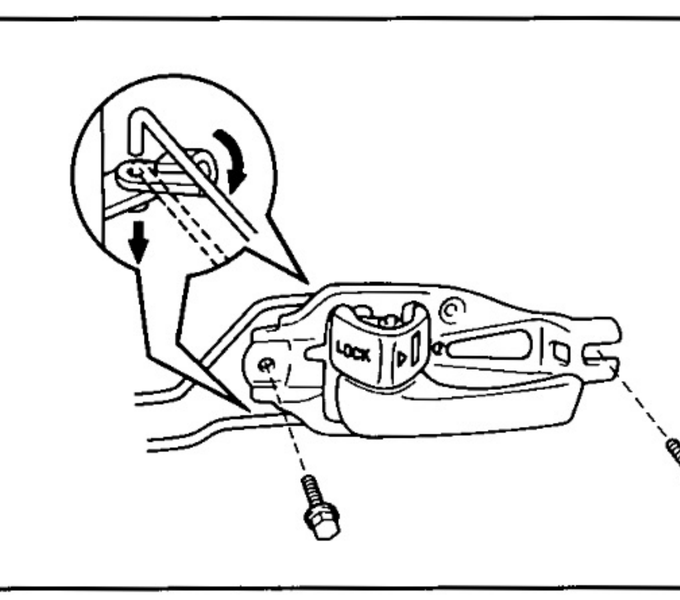

14. INSTALL DOOR INSIDE HANDLE

Connect two links to the inside handle and install two bolts.

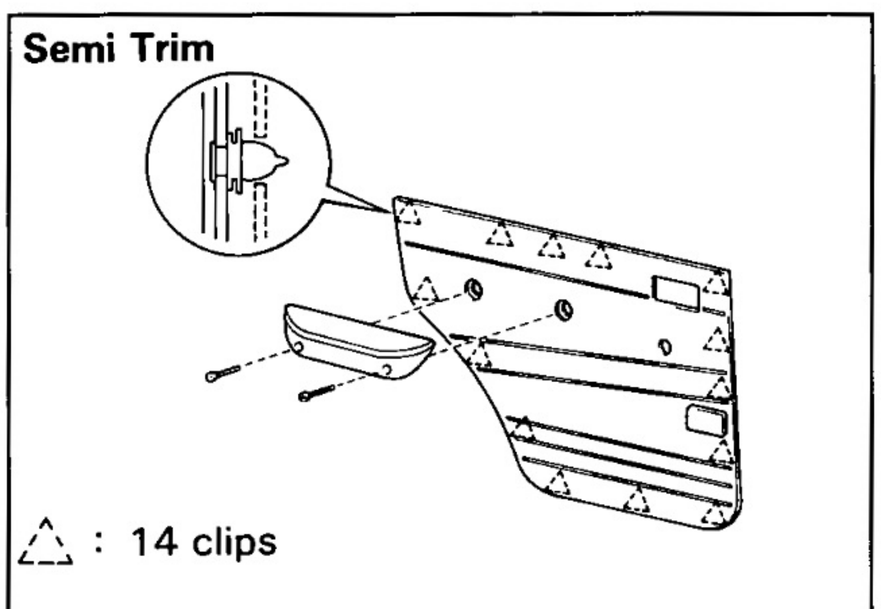

15. INSTALL DOOR TRIM

(a) (Full Trim, w/o Power Window)
Install the armrest panel base with three screws to the door trim.

(Full Trim, w/ Power Window)
Install the armrest panel base with eleven screws to the door trim.

(b) (Full Trim)
Install the inner weatherstrip to the door trim.

(c) (Semi Trim)
Install the door trim with clips to the inside door panel by tapping.

(Full Trim)
Insert the upper edge of the trim from above, tap the trim by hand and fix it in place with the retainers.

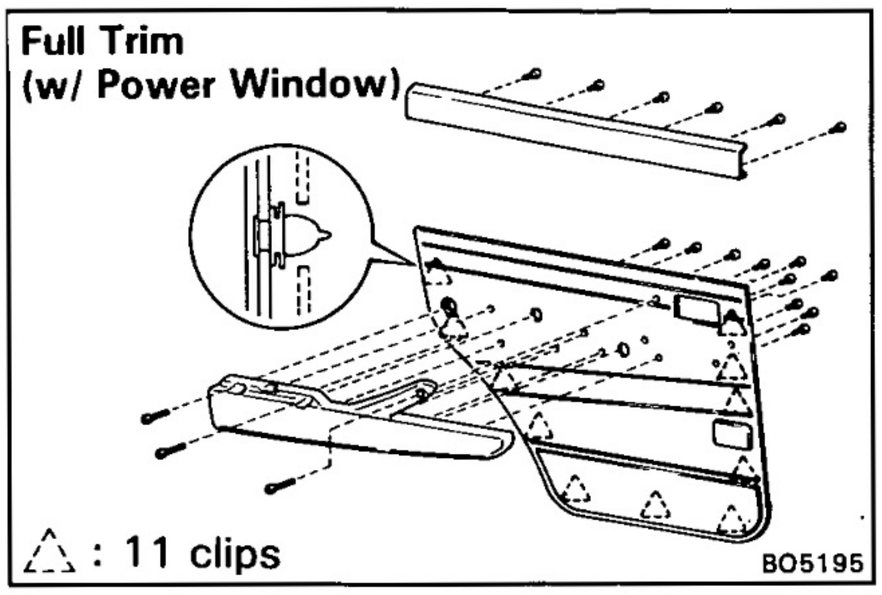

(d) (Semi Trim)
Install the armrest with two screws to the door panel.

(Full Trim)
Install the armrest with three screws to the door panel.

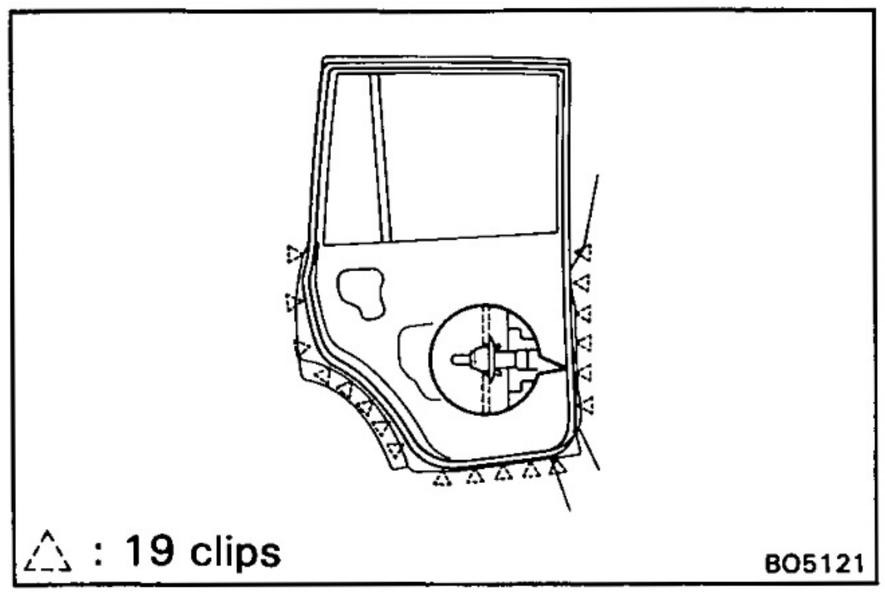

16. INSTALL DOOR WEATHERSTRIP

Install the weatherstrip with clips to the panel.

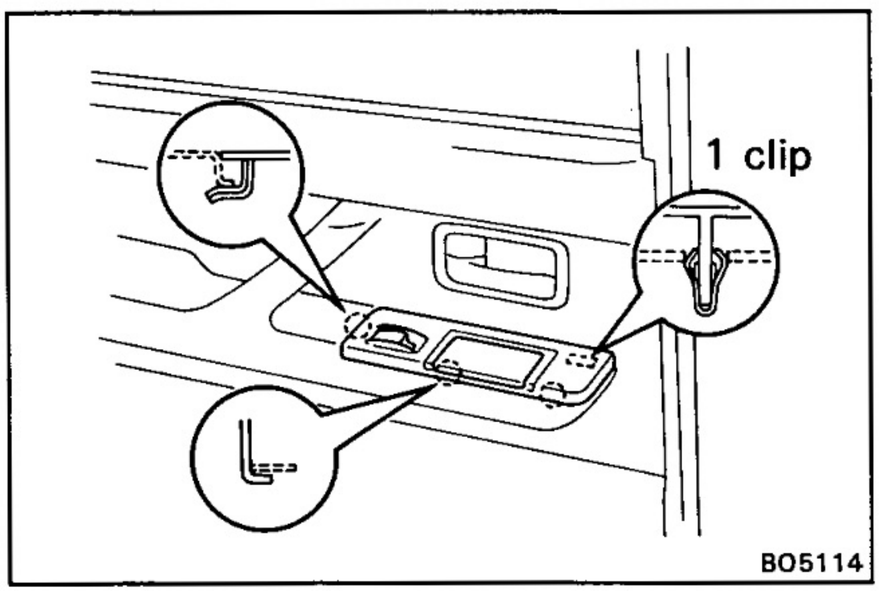

17. (w/ Power Window)
INSTALL ARMREST PANEL BASE UPPER

(a) Connect the connector and install the armrest panel base upper.

(b) Install the ash tray.

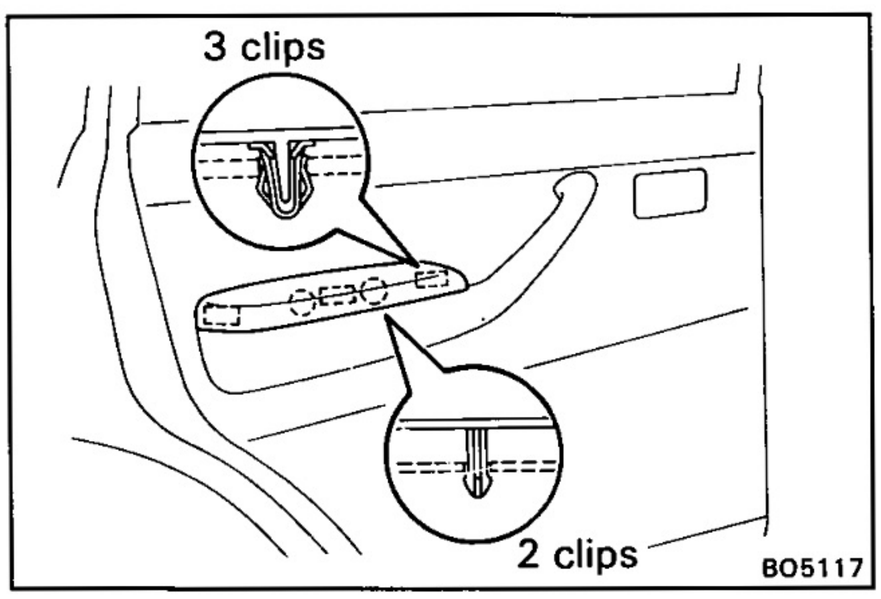

18. INSTALL ARMREST

Install the armrest to the armrest panel base by tapping.

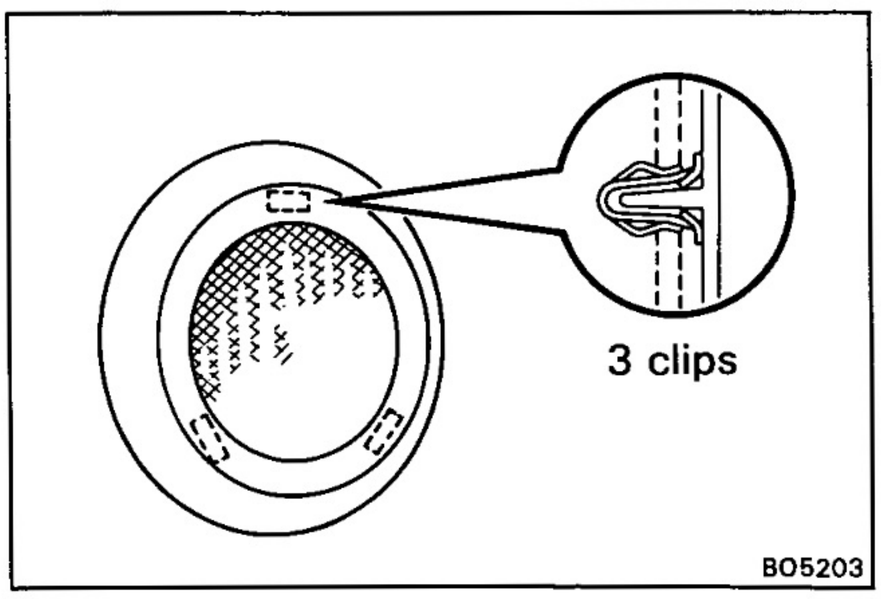

19. (w/ Speaker)
INSTALL SPEAKER COVER

Install the speaker cover to the door panel.

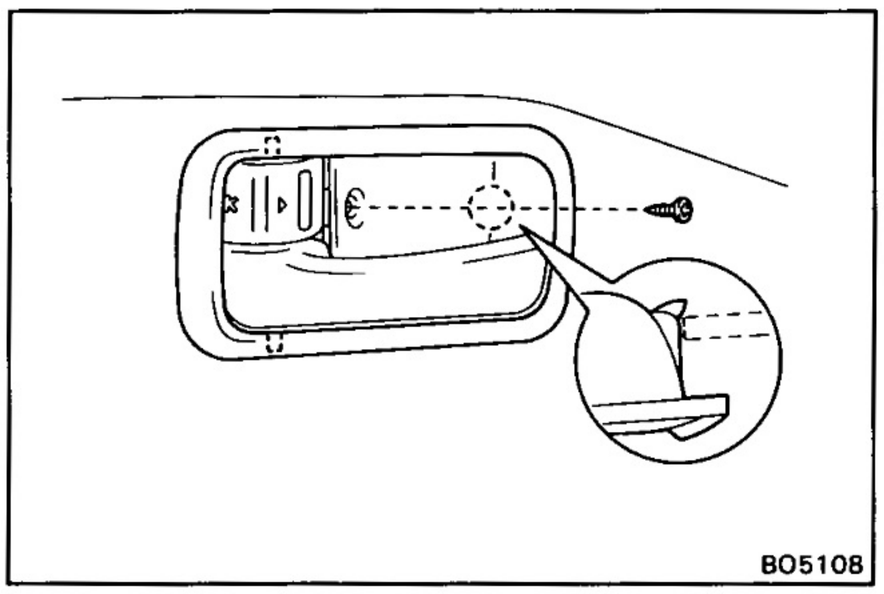

20. INSTALL DOOR INSIDE HANDLE BEZEL

(a) Push in the bezel to install it.

(b) Install the screw.

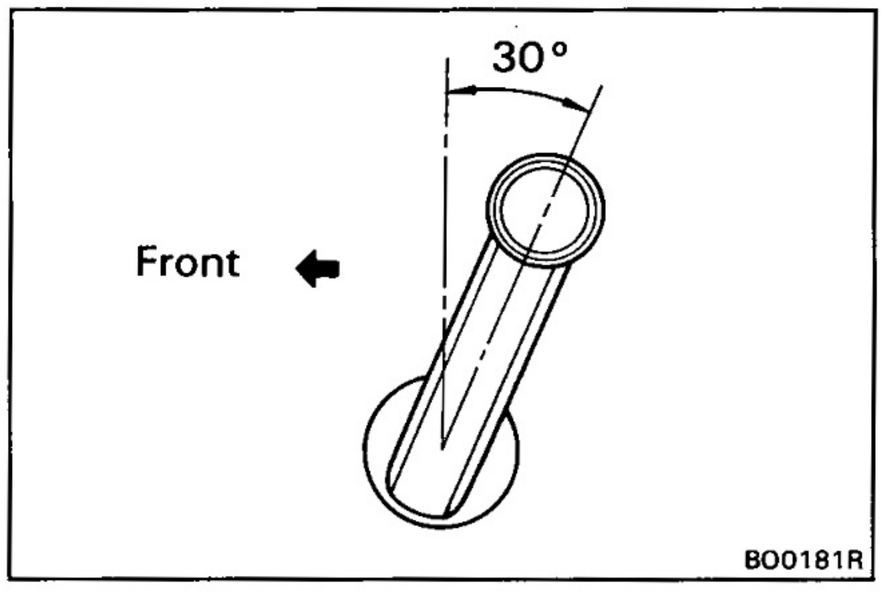

21. (w/o Power Window)
INSTALL REGULATOR HANDLE

With door window fully closed, install the plate and regulator handle with the snap ring as shown.

BACK DOOR (Lift-up Type)

COMPONENTS

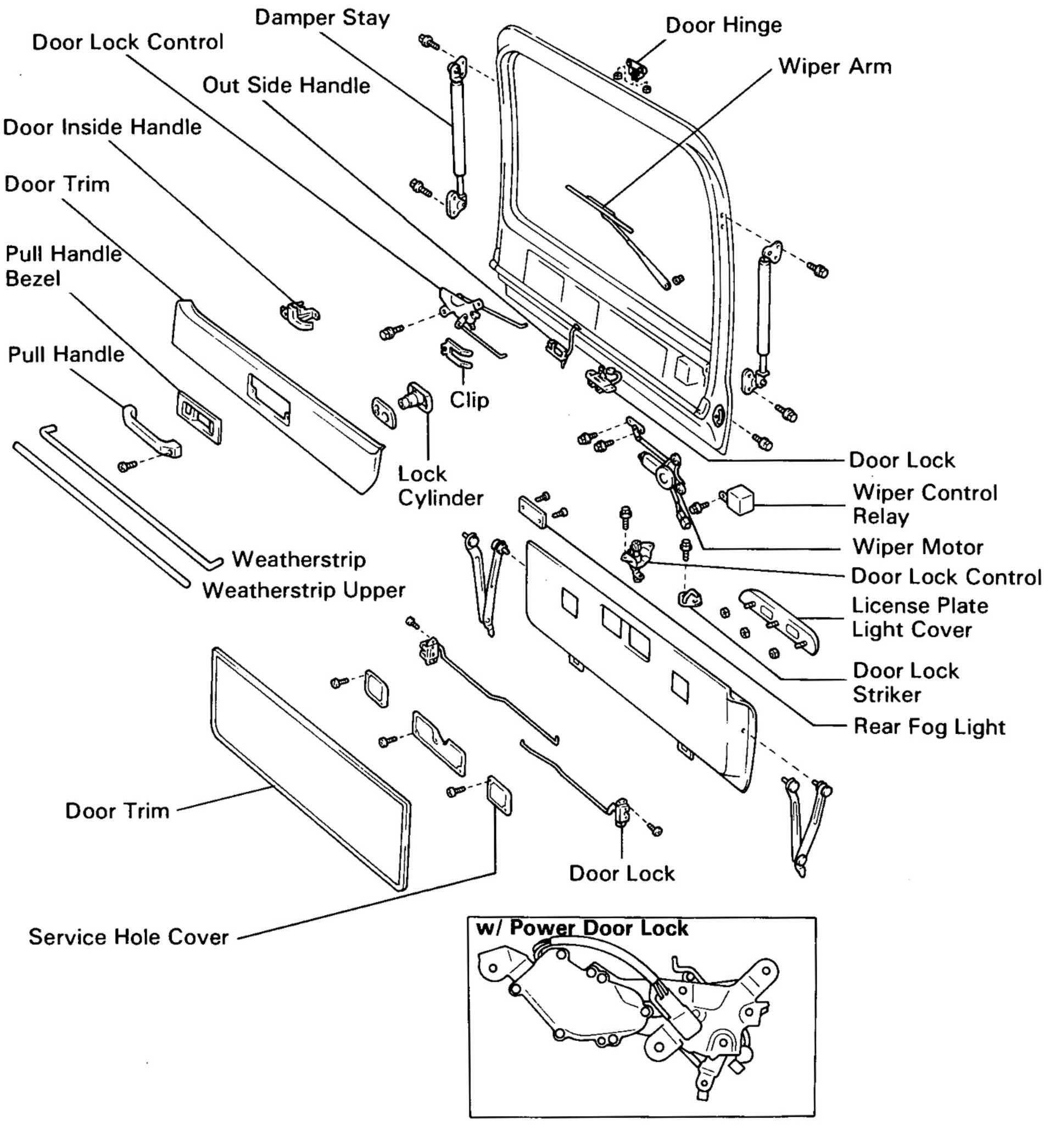

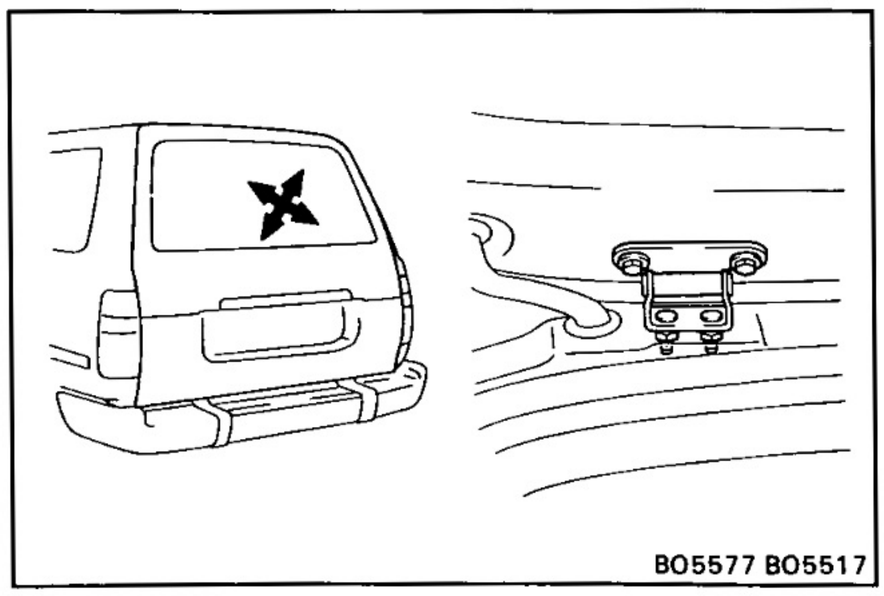

Upper Back Door

ADJUSTMENT OF UPPER BACK DOOR

1. **ADJUST DOOR IN FORWARD/REARWARD AND LEFT/RIGHT DIRECTIONS**

   Adjust the door by loosening the door side hinge nuts.

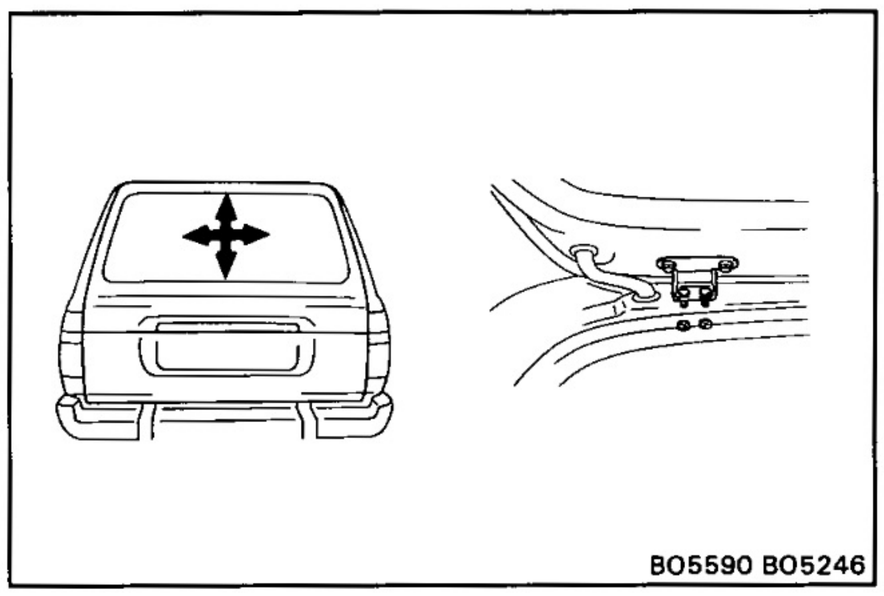

2. ADJUST DOOR IN LEFT/RIGHT AND VERTICAL DIRECTIONS

Adjust the door by loosening the body side hinge bolts.

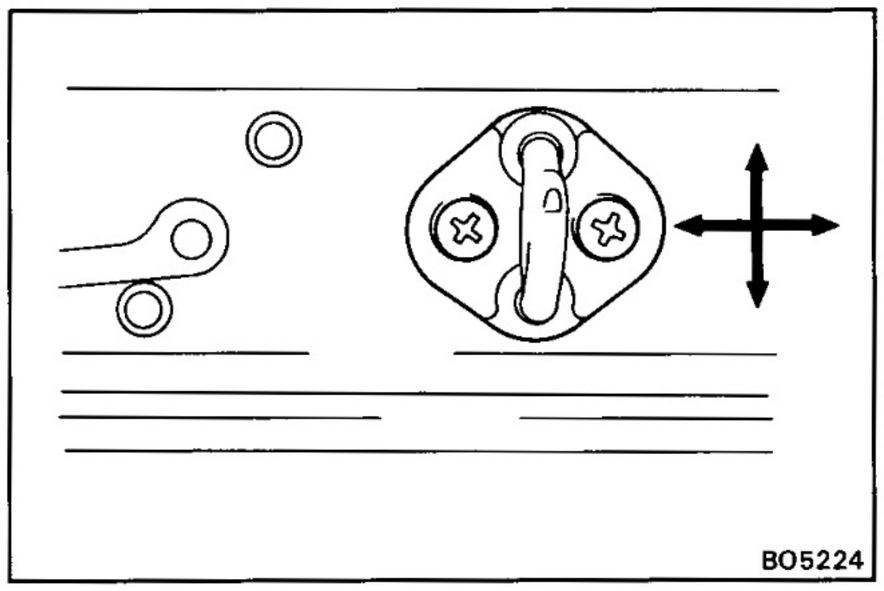

3. ADJUST DOOR LOCK STRIKER

(a) Check that the door fit and door lock linkages are adjusted correctly.

(b) Adjust the striker position by slightly loosening the striker mounting screws, and hitting the striker with a hammer. Tighten the striker mounting screw again.

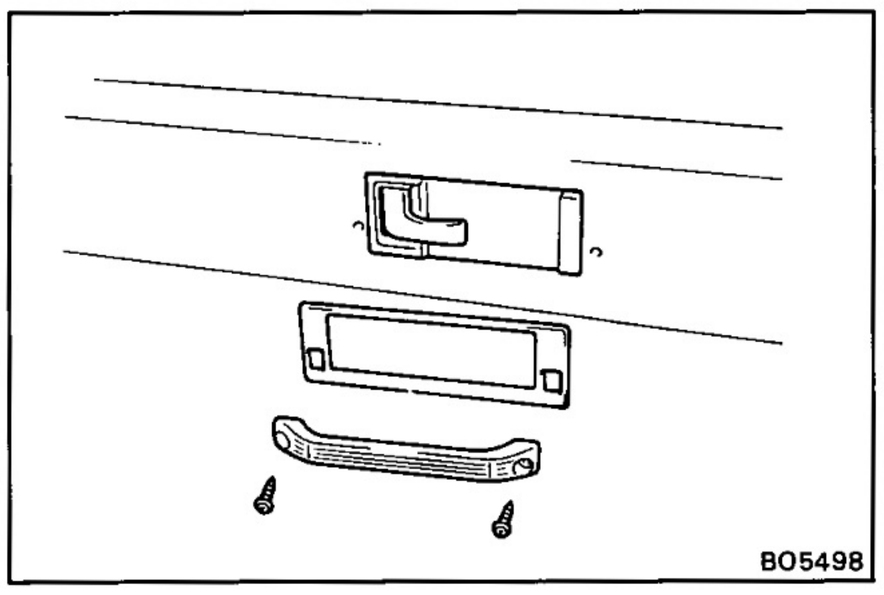

DISASSEMBLY OF UPPER BACK DOOR

(See page BO-29)

1. REMOVE PULL HANDLE AND PULL HANDLE BEZEL

Remove two screws and pull handle, then remove the bezel.

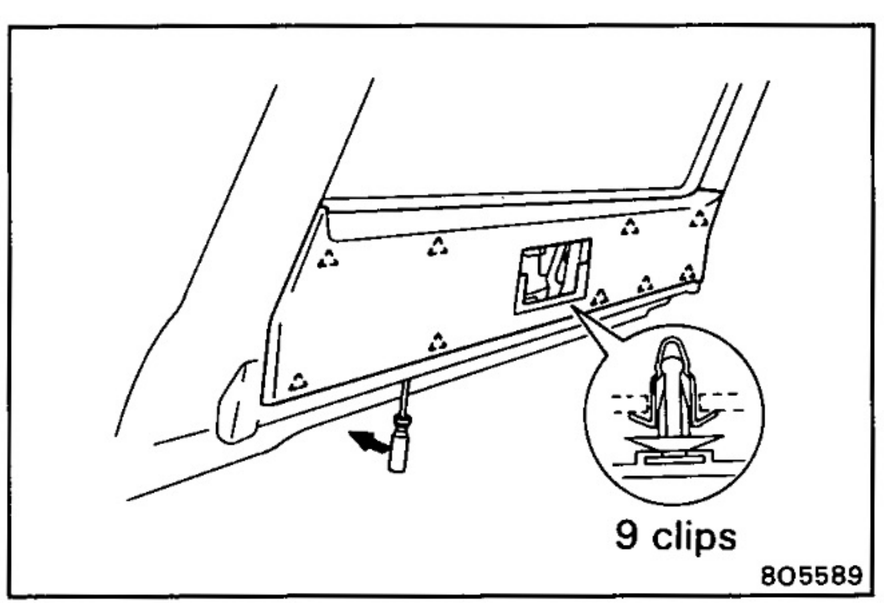

2. REMOVE DOOR TRIM

(a) Insert a screwdriver, between the retainers and the door trim to pry it loose.

HINT: Tape the screwdriver tip before use.

(b) Remove the door trim.

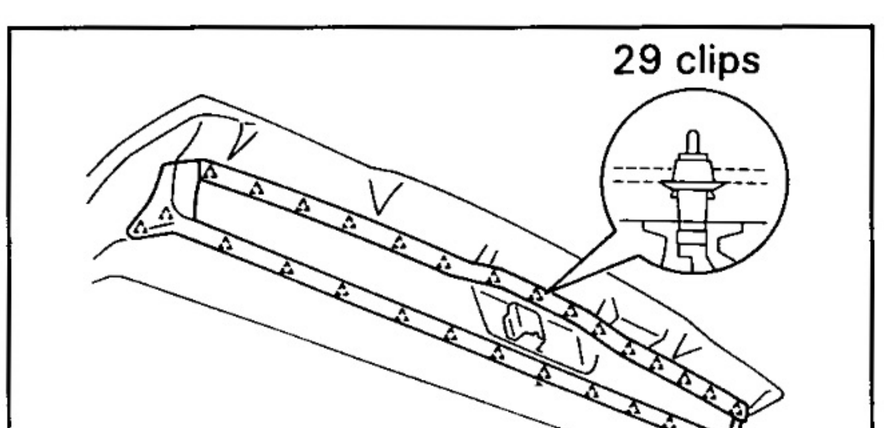

3. REMOVE DOOR WEATHERSTRIP AND WEATHERSTRIP UPPER

While pulling the weatherstrips by hand, remove the clips using the dip remover.

HINT: Do not pull strongly on the weatherstrips as it may tear.

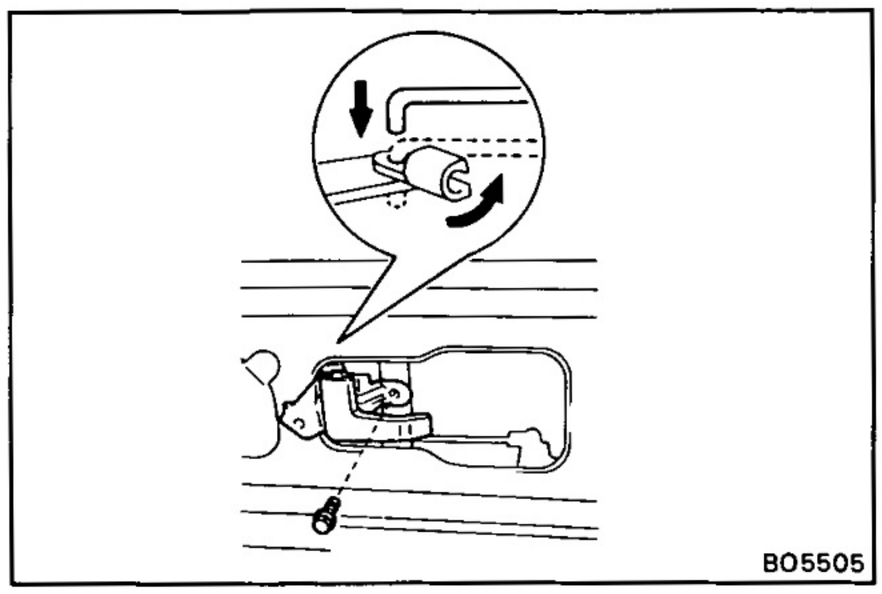

4. REMOVE DOOR INSIDE HANDLE

Remove a bolt and the handle, then disconnect the link.

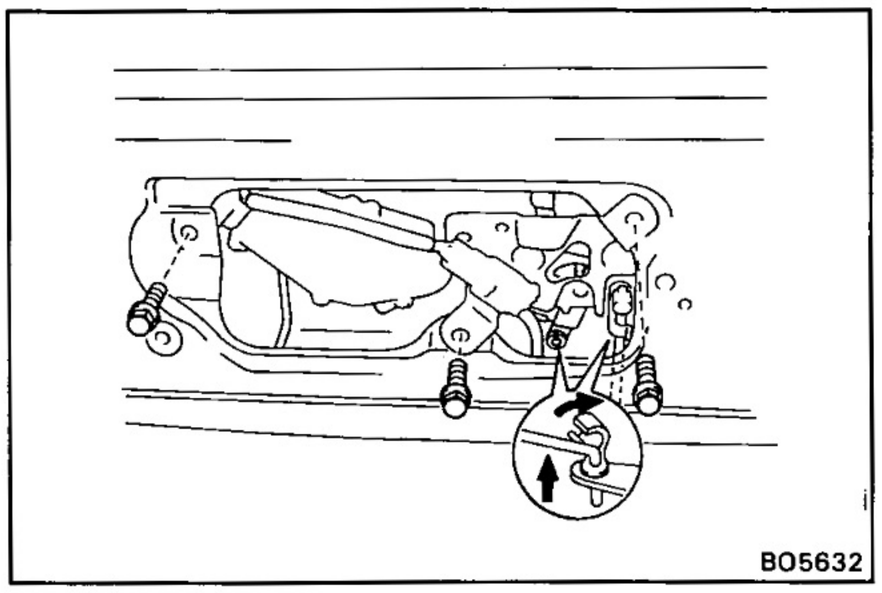

5. REMOVE DOOR LOCK CONTROL

(w/o Power Door Lock)
Remove two bolts and the lock control, then disconnect three links.

(w/ Power Door Lock)
Remove three bolts and the lock control, then disconnect three links and the connector.

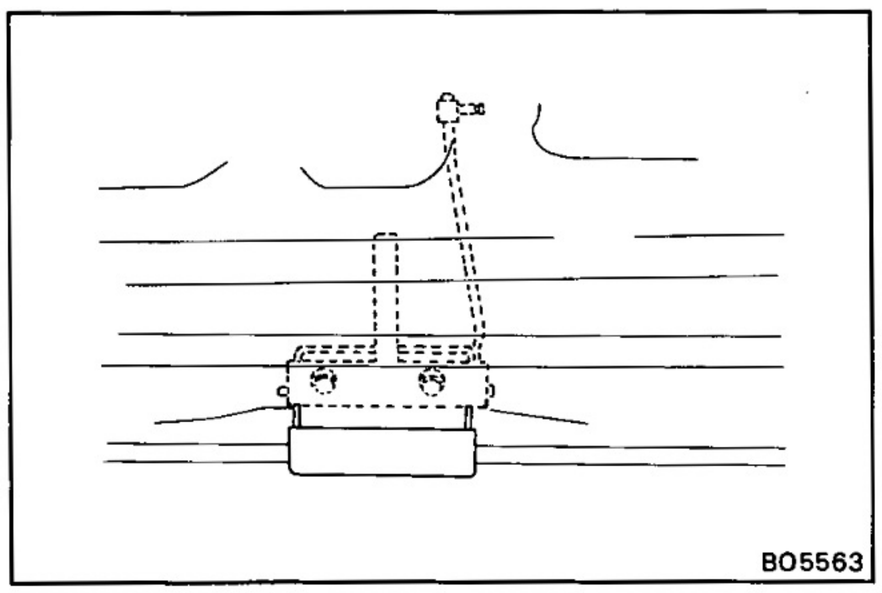

6. REMOVE OUTSIDE HANDLE

Remove two bolts, the handle and the outside handle.

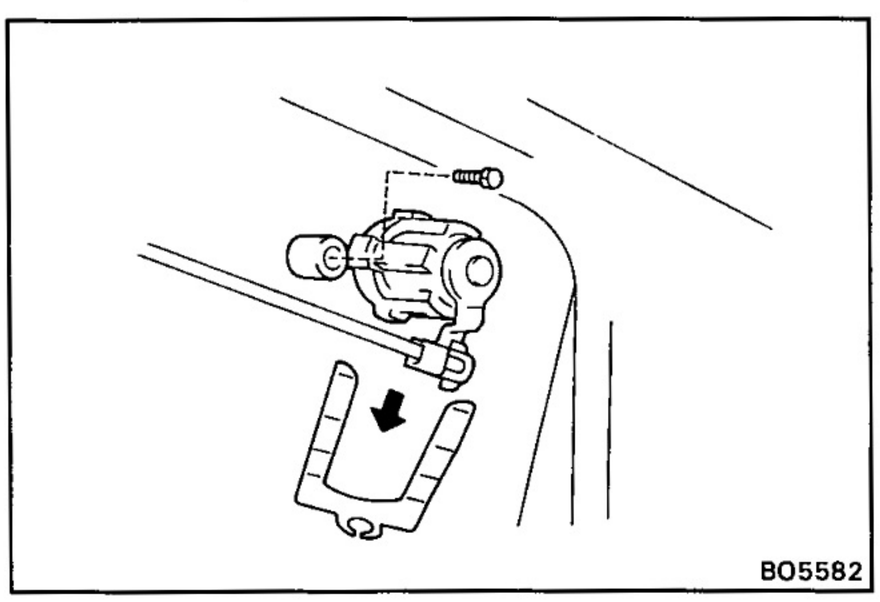

7. REMOVE DOOR LOCK CYLINDER

(a) Disconnect the link from the cylinder.

(b) Remove the clip and the bolt from the cylinder.

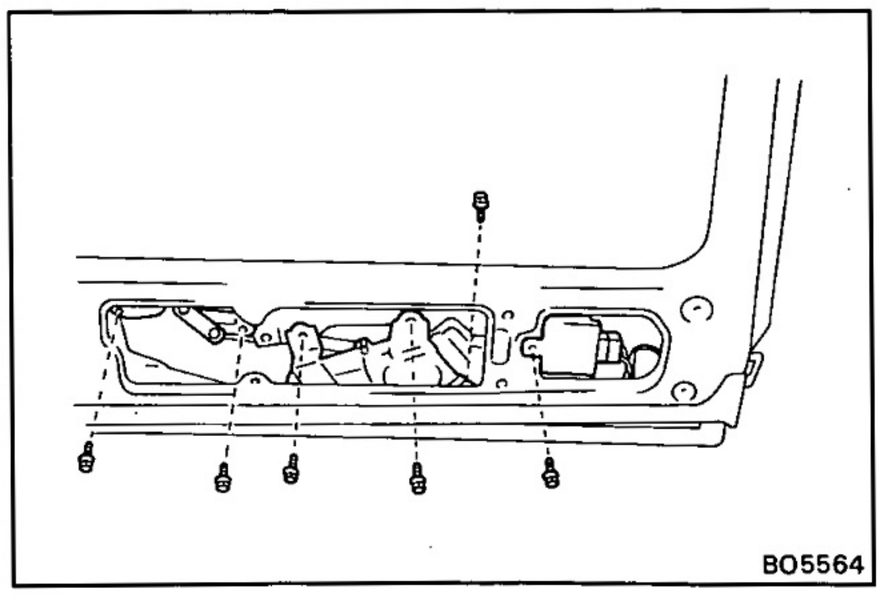

8. (w/ Rear Wiper)
REMOVE WIPER ARM, MOTOR AND RELAY

(a) Open the cap, then remove the nut and the wiper arm.

(b) Remove five bolts and the motor, then disconnect the connector.

(c) Remove a bolt and the wiper relay, then disconnect the connector.

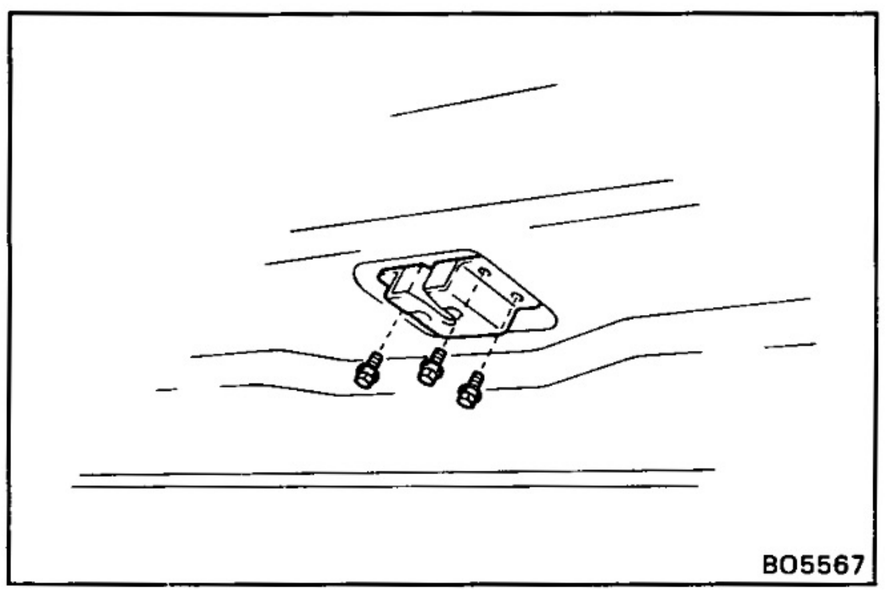

9. REMOVE DOOR LOCK

Remove three bolts and the door lock, then disconnect the connector.

ASSEMBLY OF UPPER BACK DOOR

(See page-29)

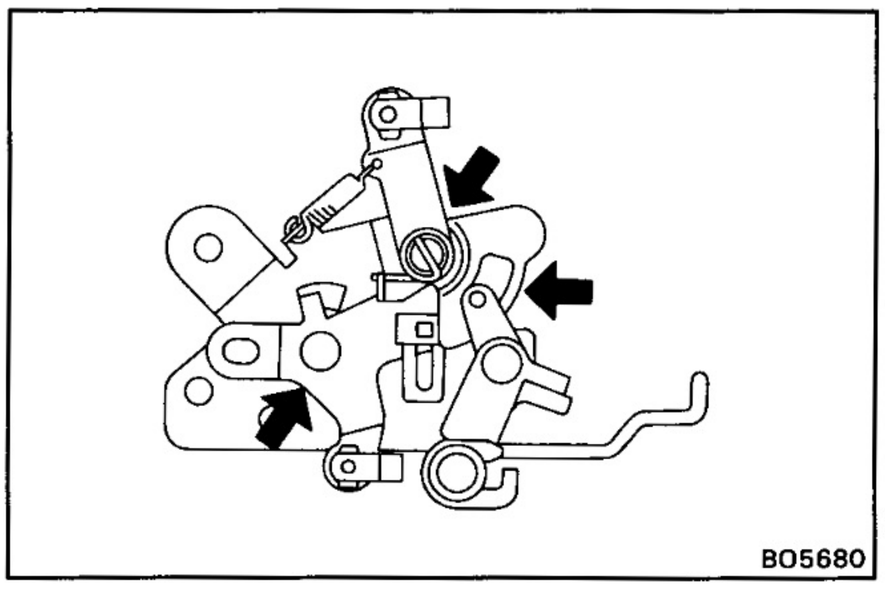

1. APPLY MP GREASE TO LOCK CONTROL

Apply MP grease to the sliding surface of the lock control.

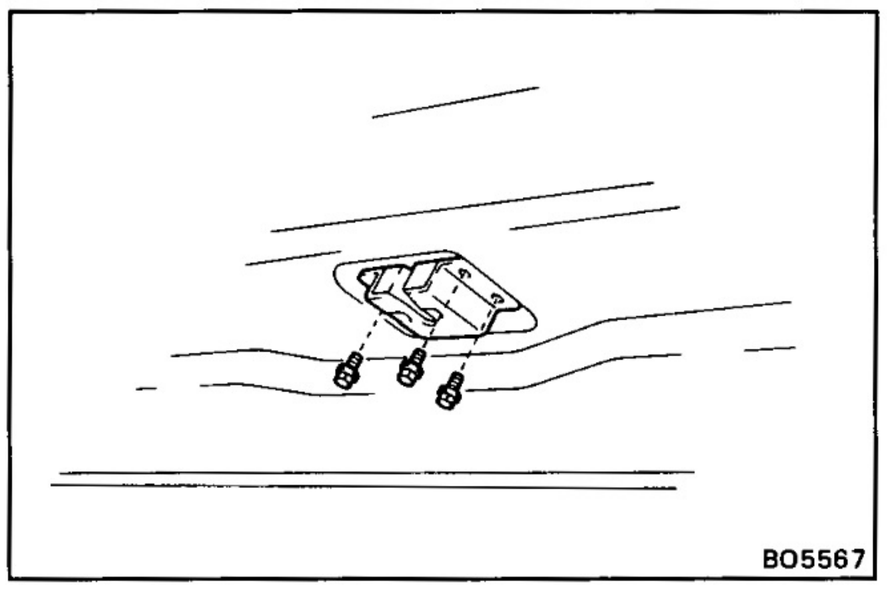

2. INSTALL DOOR LOCK

Install the door lock with three bolts, then connect the connector.

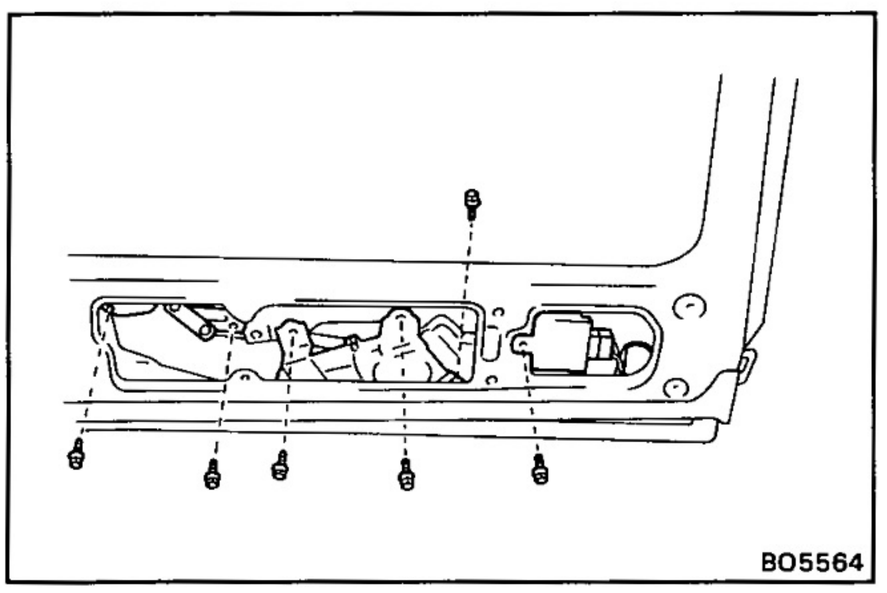

3. (w/ Rear Wiper)
INSTALL WIPER ARM, MOTOR AND REAR WIPER CONTROL RELAY

(a) Connect the connector, then install the wiper control relay with the bolt.

(b) Connect the connector.

(c) Install the motor with five bolts.

(d) Install the wiper arm with the nut.

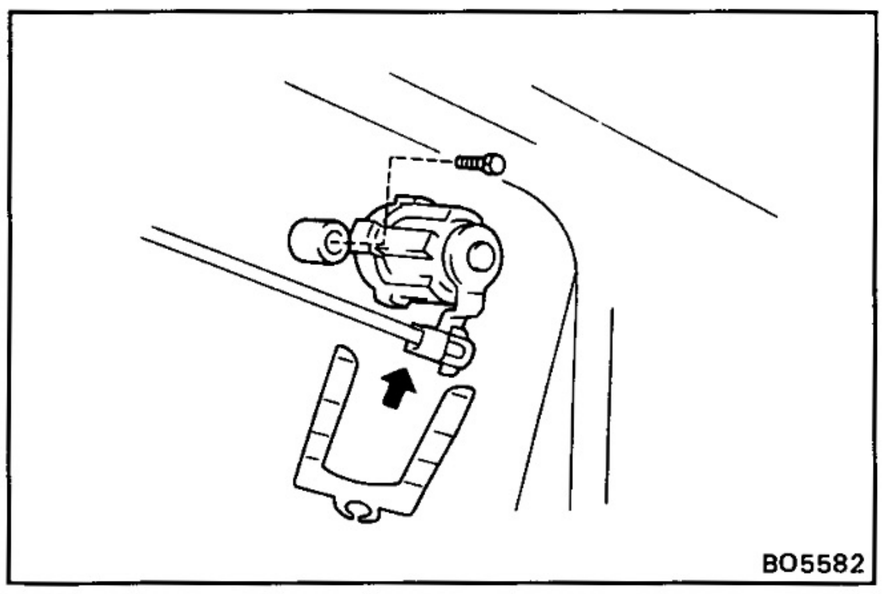

4. INSTALL DOOR LOCK CYLINDER

(a) Install the cylinder with the clip and the bolt.

(b) Connect the link to the cylinder.

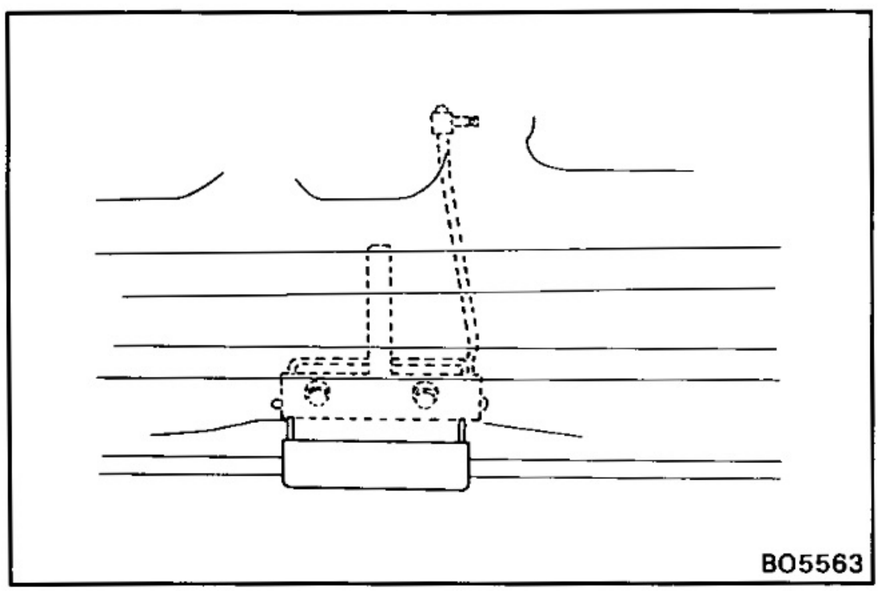

5. INSTALL OUTSIDE HANDLE

Install the outside handle and the handle with two bolts.

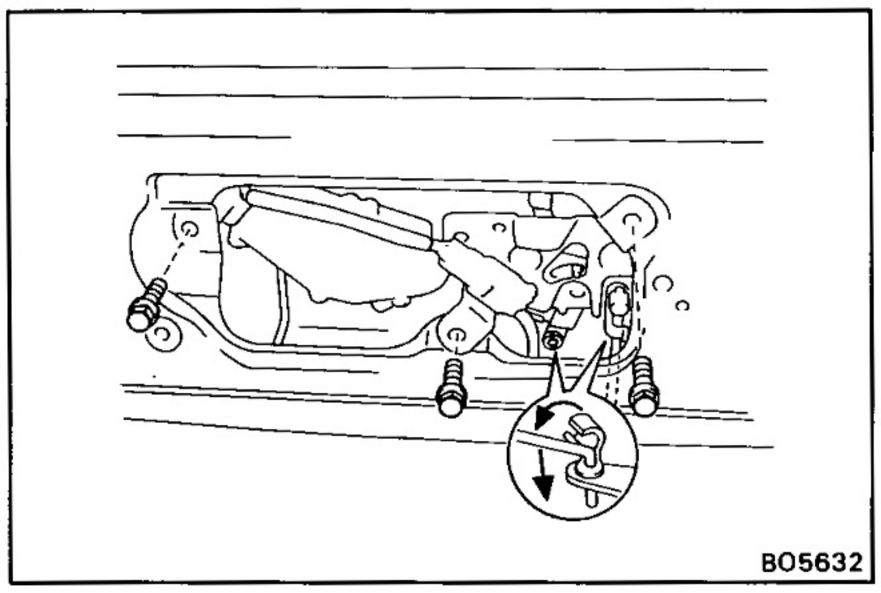

6. INSTALL DOOR LOCK CONTROL

(w/o Power Door Lock)
Install the lock control with two bolts, then connect three links.

(w/ Power Door Lock)
Install the lock control with three bolts, then connect three links and the connector.

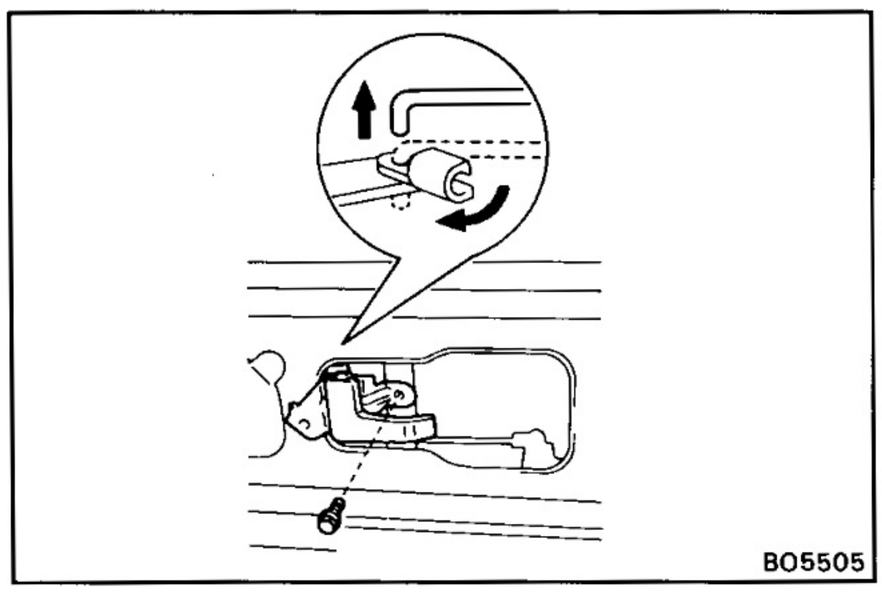

7. INSTALL DOOR INSIDE HANDLE

(a) Connect the link.

(b) Install the handle with the bolt.

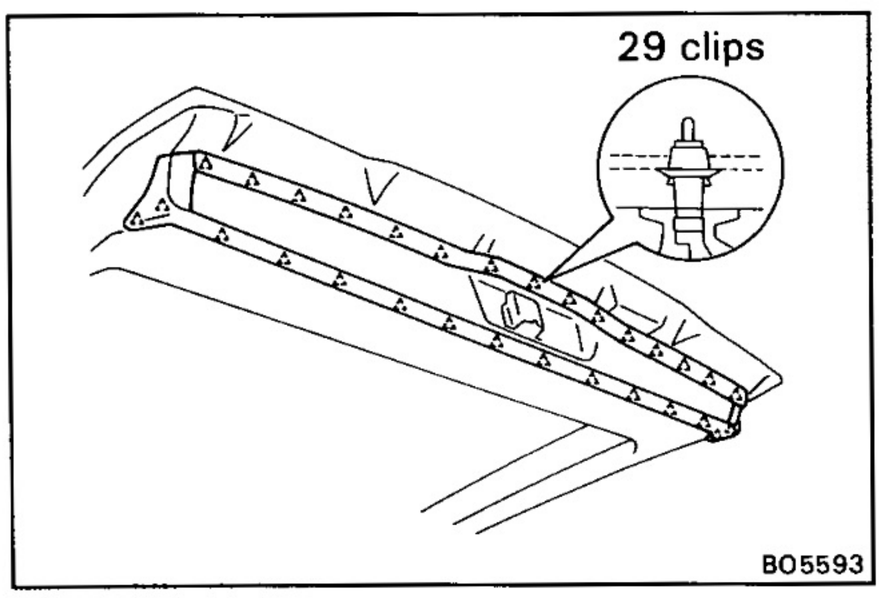

8. INSTALL DOOR WEATHERSTRIP AND WEATHERSTRIP UPPER

Install the weatherstrips with clips to the door.

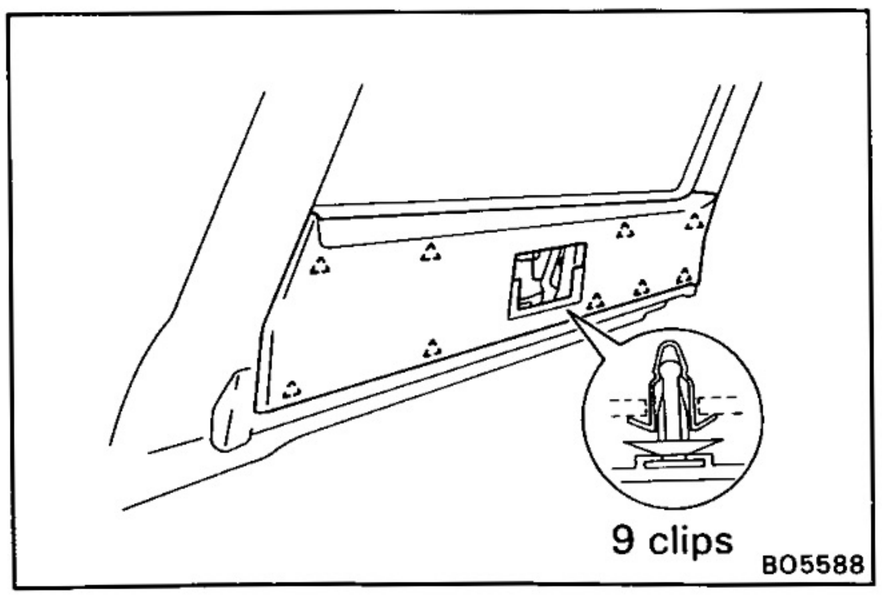

9. INSTALL DOOR TRIM

Install the door trim with retainers to the door panel by tapping.

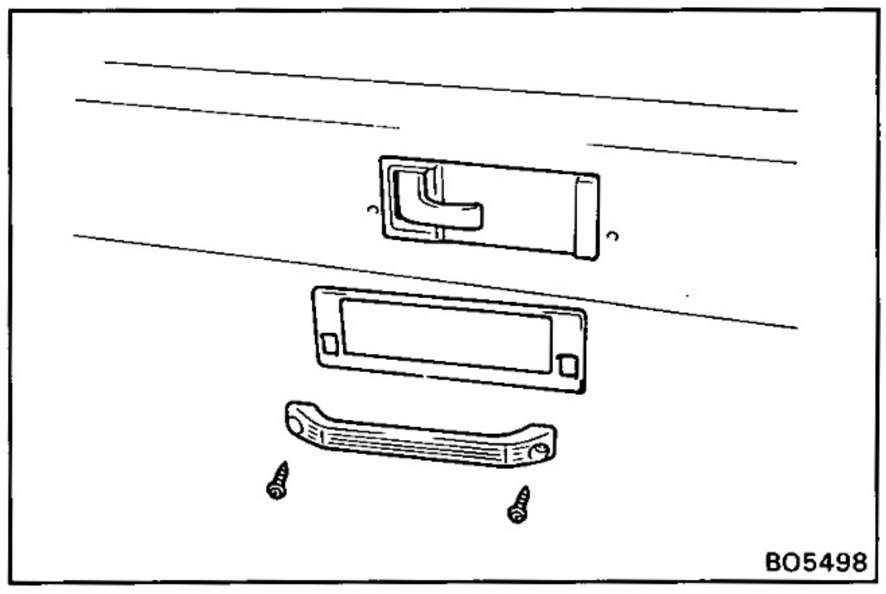

10. INSTALL PULL HANDLE AND PULL HANDLE BEZEL

Install the bezel and the pull handle with two screws.

Lower Back Door

ADJUSTMENT OF LOWER BACK DOOR

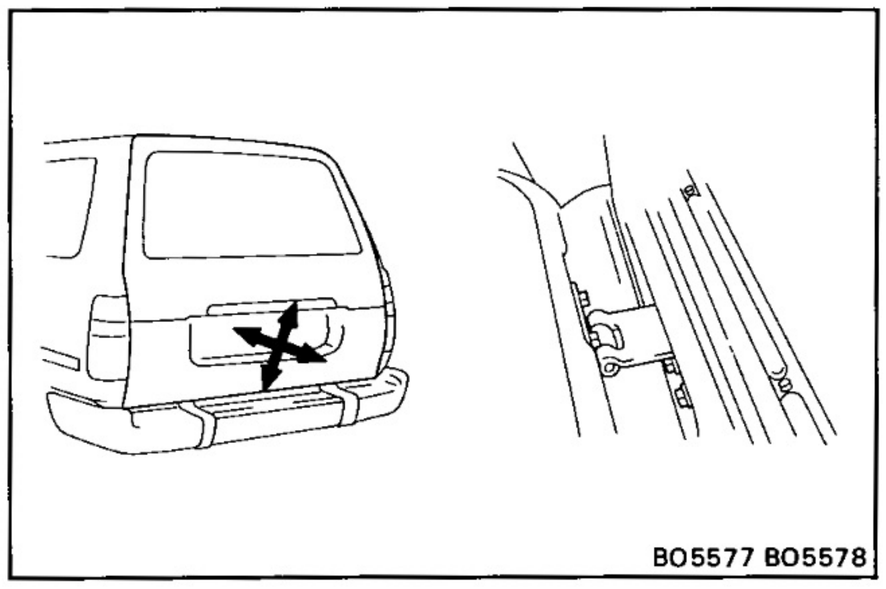

1. ADJUST DOOR IN FORWARD/REARWARD AND LEFT/RIGHT DIRECTIONS

Adjust the door by loosening the door side hinge bolts.

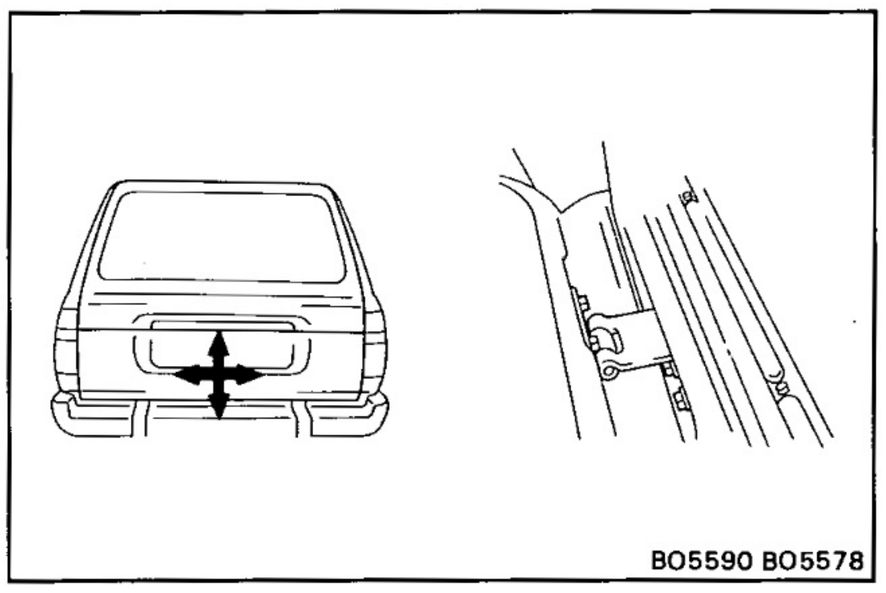

2. ADJUST DOOR IN LEFT/RIGHT AND VERTICAL DIRECTIONS

Adjust the door by loosening the body side hinge bolts.

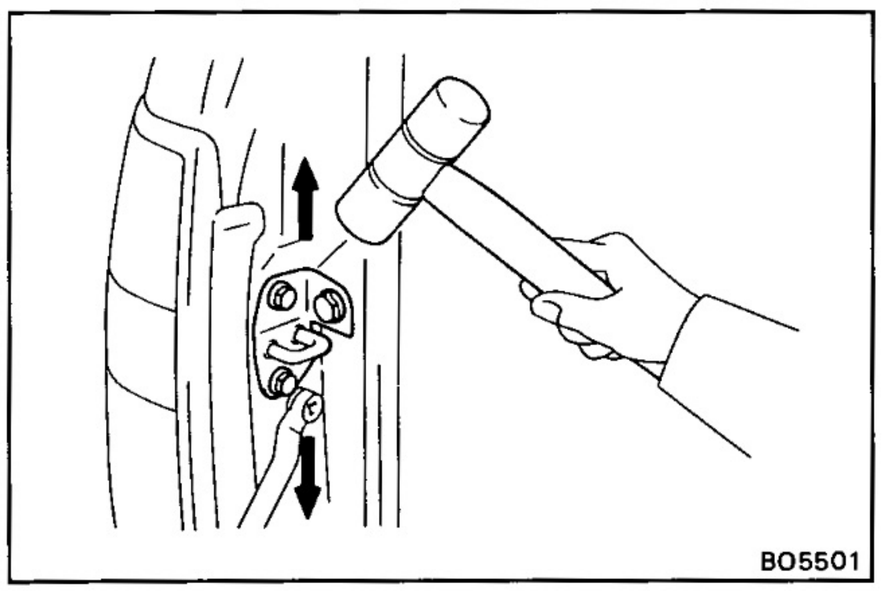

3. ADJUST DOOR LOCK STRIKER

(a) Check that the door fit and door lock linkages are adjusted correctly.

(b) Adjust the striker position by slightly loosening the striker mounting screws, and hitting the striker with a hammer.

(c) Tighten the striker mounting screws again.

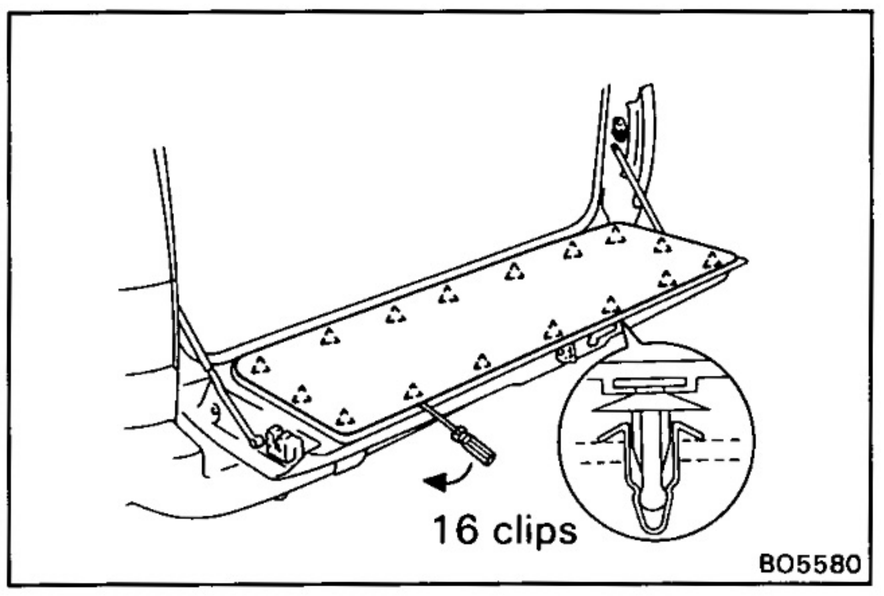

DISASSEMBLY OF BACK DOOR

(See page BO-29)

1. REMOVE DOOR TRIM

(a) Insert a screwdriver, between the retainers and the door trim to pry it loose.

HINT: Tape the screwdriver tip before use.

(b) Remove the door trim.

2. REMOVE SERVICE HOLE COVER

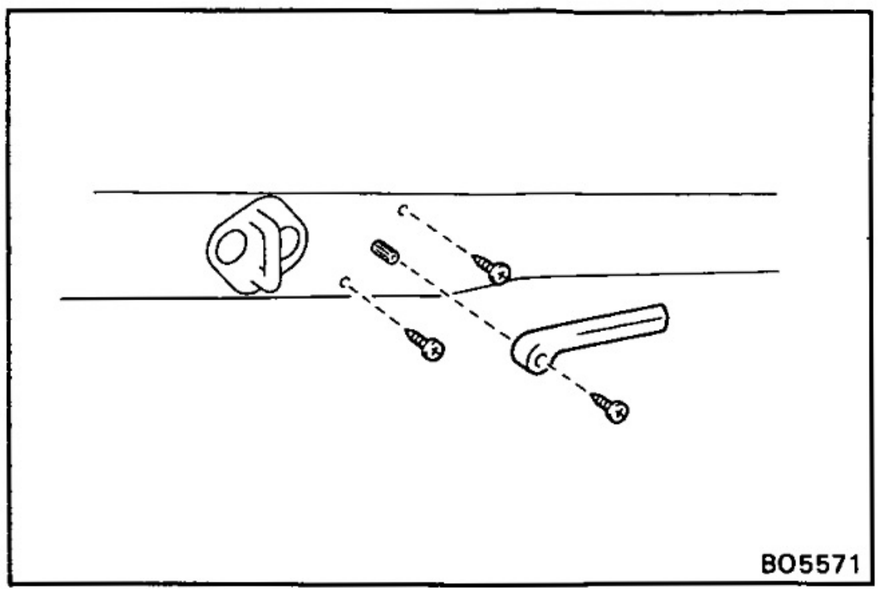

3. REMOVE DOOR LOCK CONTROL

(a) Disconnect two links from the door lock control.

(b) Remove the screw and the inside handle.

(c) Remove two screws, bush and the door lock control.

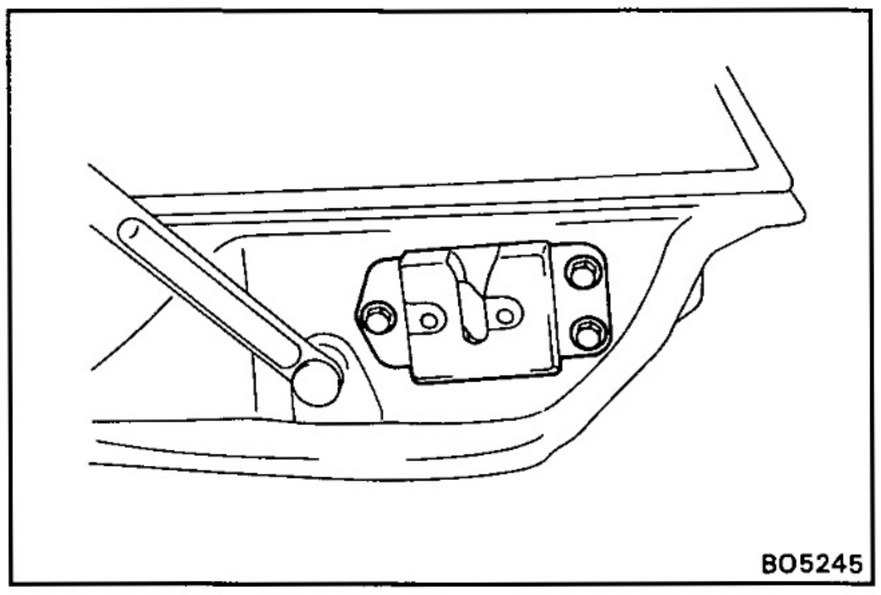

4. REMOVE DOOR LOCK

Remove three bolts and the door lock.

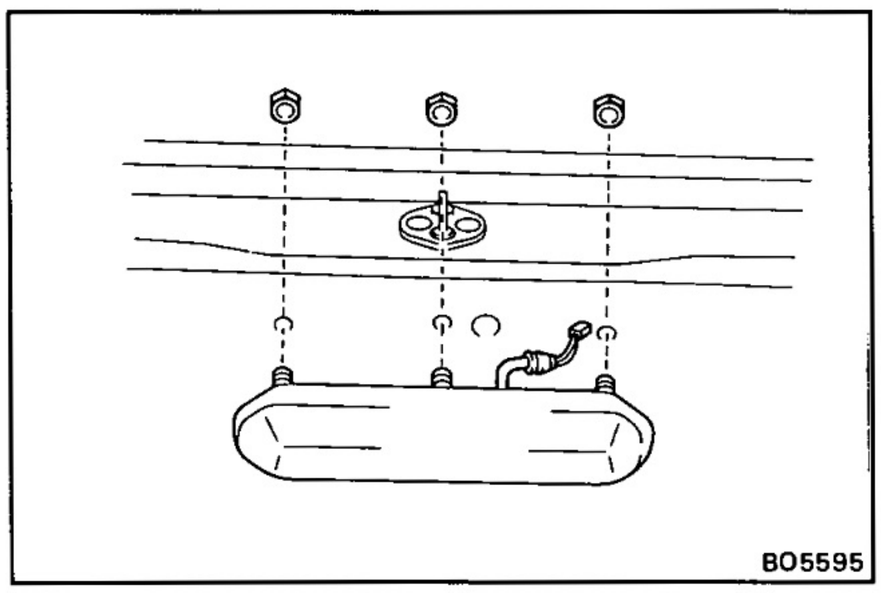

5. REMOVE LICENSE PLATE LIGHT COVER

Remove three nuts and the light cover, then disconnect the connector.

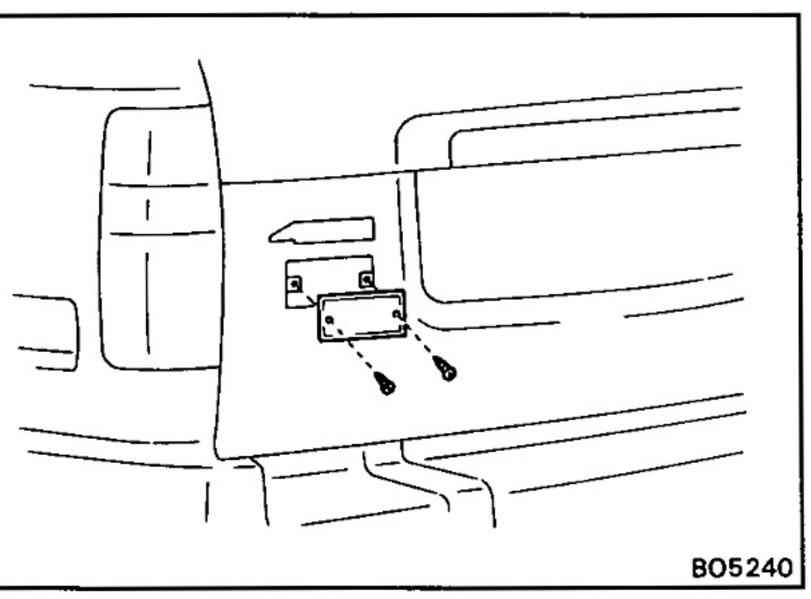

6. (w/ Fog Light)
REMOVE FOG LIGHT

Remove two screws and the fog light, then disconnect the connector.

ASSEMBLY OF LOWER BACK DOOR

(See page BO-29)

1. (w/ Fog Light)
INSTALL FOG LIGHT

Connect the connector and install the fog light with two screws.

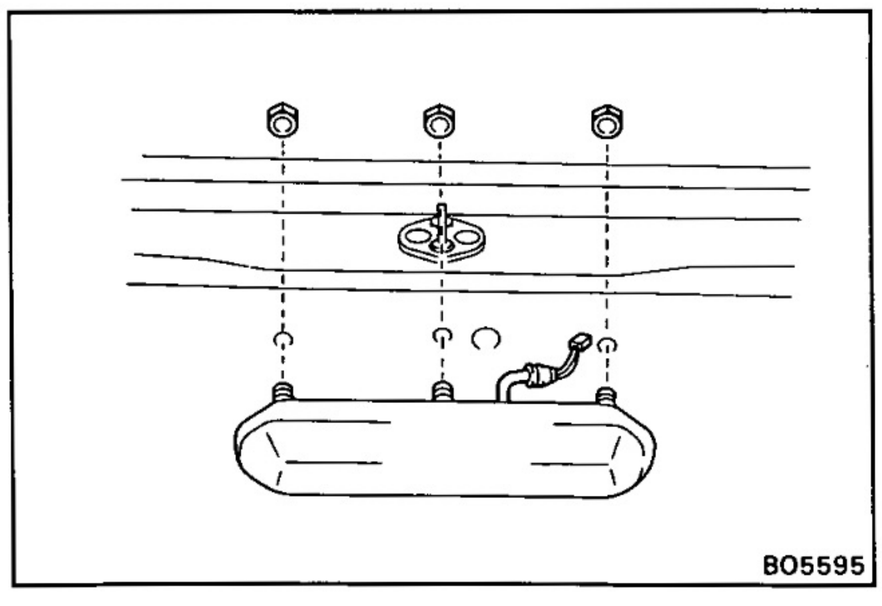

2. INSTALL LICENSE PLATE LIGHT COVER

Connect the connector and install the light cover with three nuts.

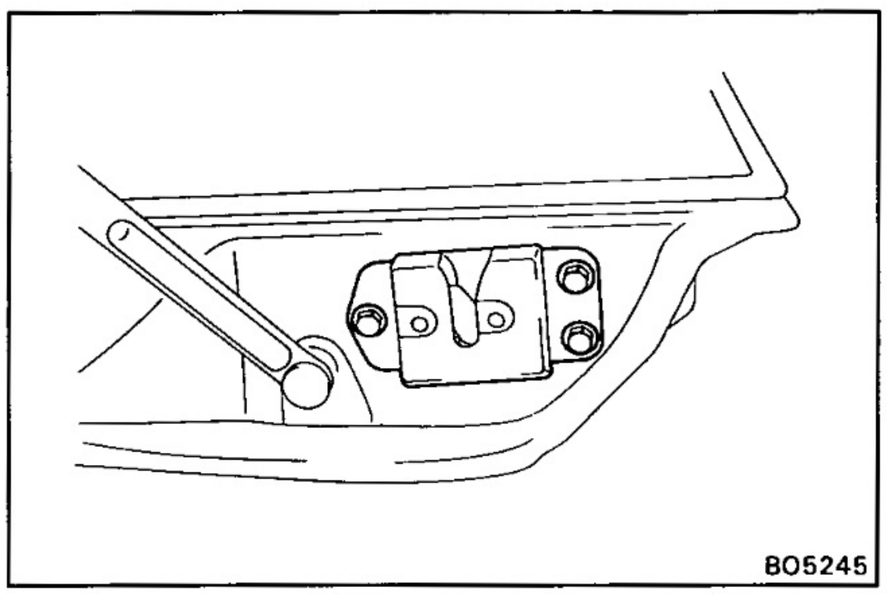

3. INSTALL DOOR LOCK

Install the door lock with three bolts.

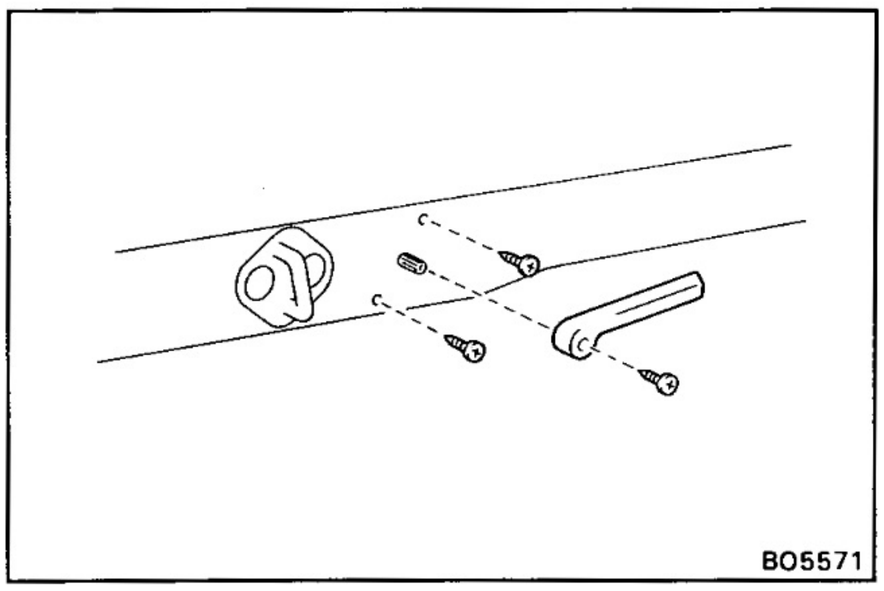

4. INSTALL DOOR LOCK CONTROL

(a) Install the bush and the door lock control with two screws.

(b) Install the inside handle with the screw.

(c) Connect two links to the door lock control.

5. INSTALL SERVICE HOLE COVER

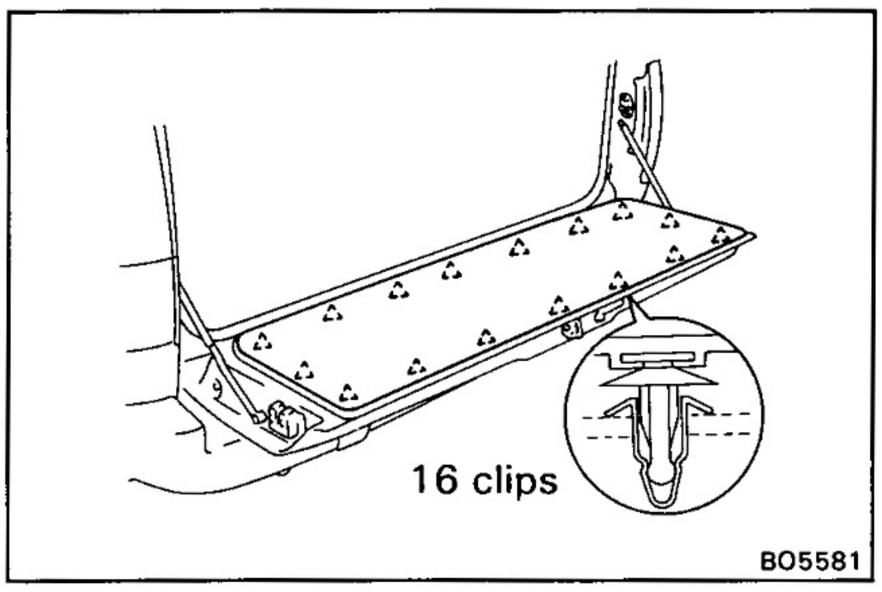

6. INSTALL DOOR TRIM

Install the door trim with clips to the inside door panel by tapping.

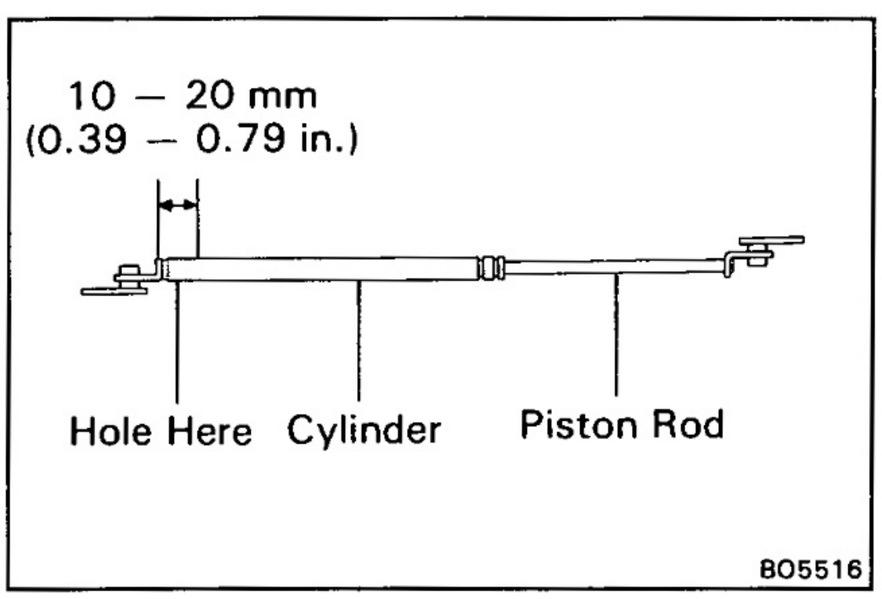

Back Door Damper Stay

NOTICE: Handling the damper.

(a) Do not disassemble the damper because the cylinder is filled with pressurized gas.

(b) If the damper is to be replaced, drill a 2.0 – 3.0 mm (0.079 – 0.118 in.) hole in the bottom of the removed damper cylinder to completely release the high-pressure gas before disposing of it.

(c) When drilling, chips may fly out so work carefully.

(d) The gas is colorless, odorless and non-toxic.

(e) When working, handle the damper carefully. Never score or scratch the exposed part of the piston rod, and never allow paint or oil to get on it.

(f) Do not turn the piston rod and cylinder with the damper fully extended.

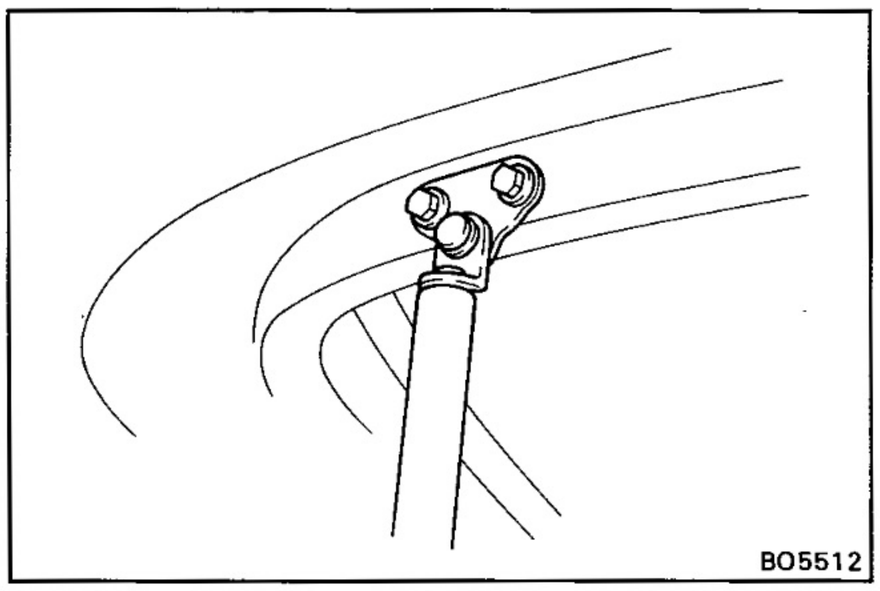

REMOVAL OF DAMPER STAY

REMOVE DAMPER STAY

(a) Remave two bolts and the damper stay upper end from back door.

(b) Remove two bolts and the damper stay lower end from body.

INSTALLATION OF DAMPER STAY

INSTALL DAMPER STAY

(a) Install damper stay upper end to back door with two bolts.

(b) Install damper stay lower end to body with two bolts.

BACK DOOR (Swing Out Type)

Right Back Door

COMPONENTS

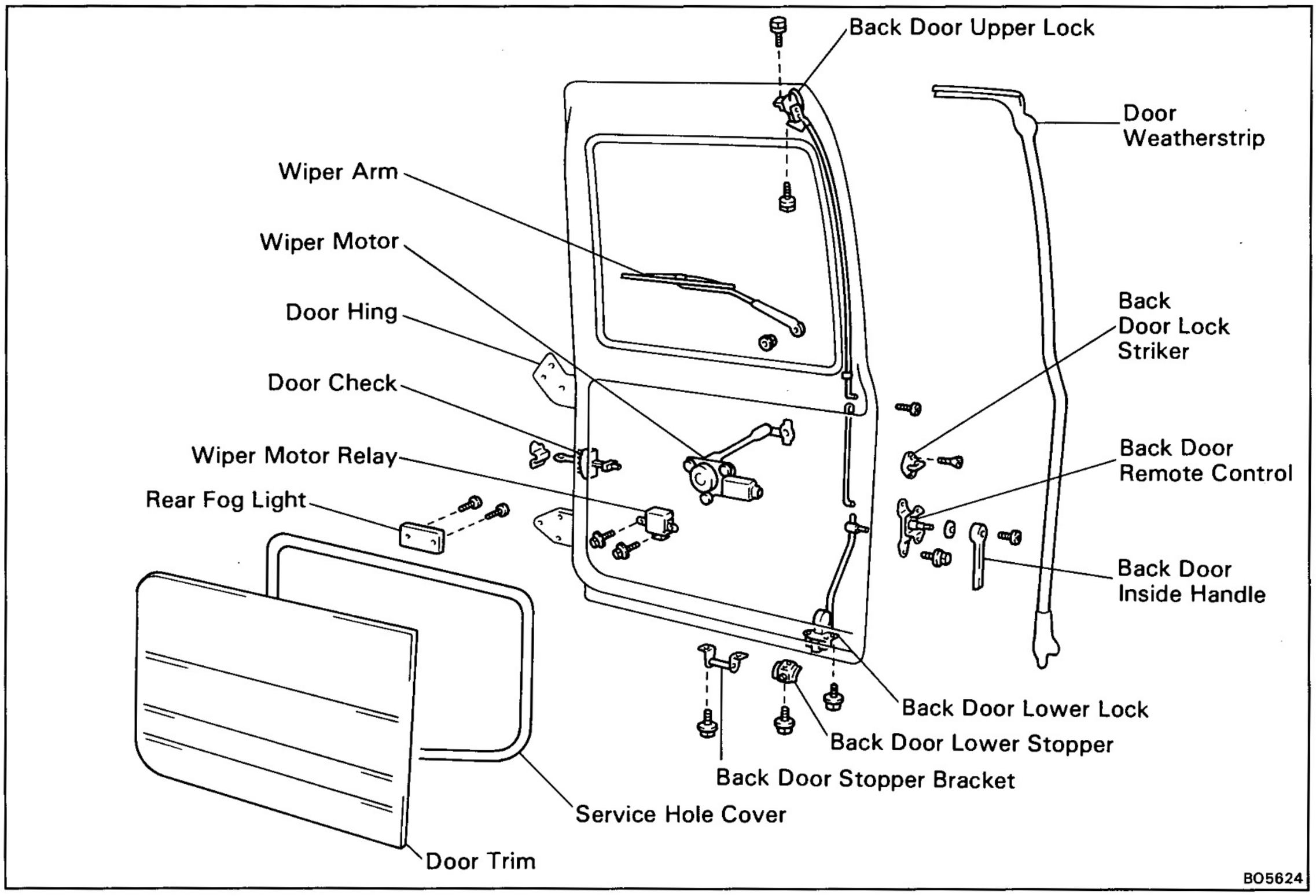

BO5624

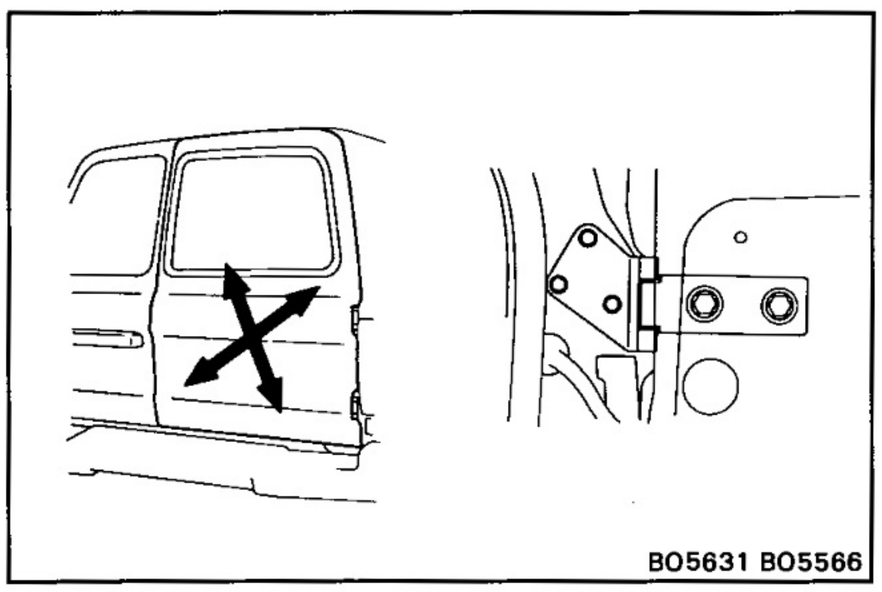

BO5631 BO5566

ADJUSTMENT OF RIGHT BACK DOOR

1. **ADJUST DOOR IN FORWARD/REARWARD AND VERTICAL DIRECTIONS**

   Adjust the door by loosening the body side hinge bolts.

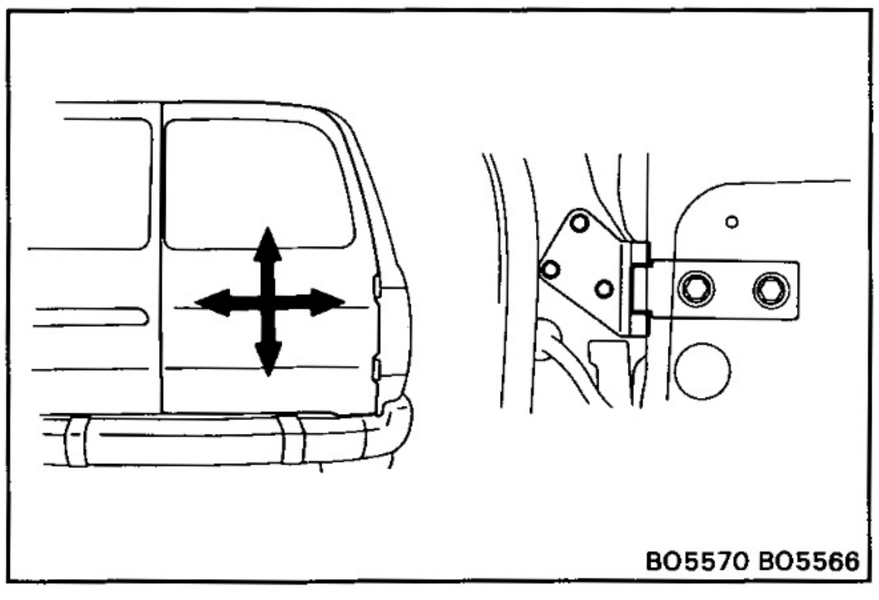

BO5570 BO5566

2. **ADJUST DOOR IN LEFT/RIGHT AND VERTICAL DIRECTIONS**

   Adjust the door by loosening the door side hinge bolts.

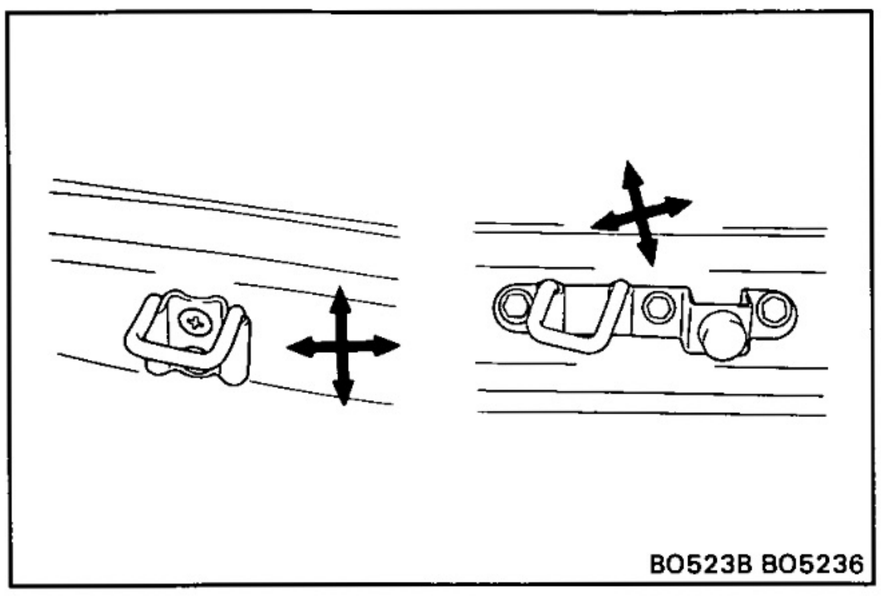

3. ADJUST DOOR LOCK STRIKER

(a) Check that the door fit and door lock linkages are adjusted correctly.

(b) Adjust the striker position by slightly loosening the striker mounting screws, and hitting the striker with a hammer. Tighten the striker mounting screws again.

DISASSEMBLY OF RIGHT BACK DOOR

(See page BO-38)

1. REMOVE DOOR TRIM

Insert a screwdriver between the trim retainers and door panel to pry it loose.

HINT: Tape the screwdriver tip before use.

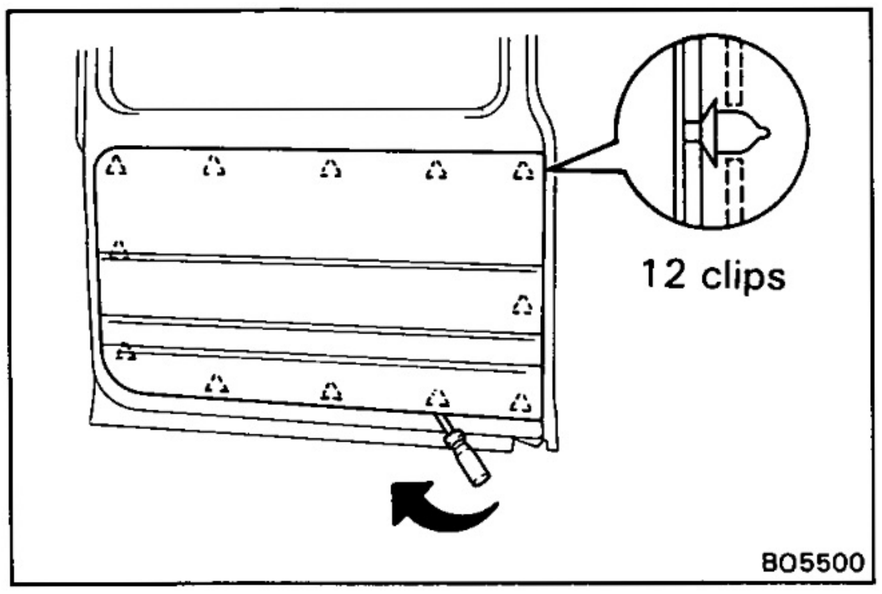

2. REMOVE SERVICE HOLE COVER

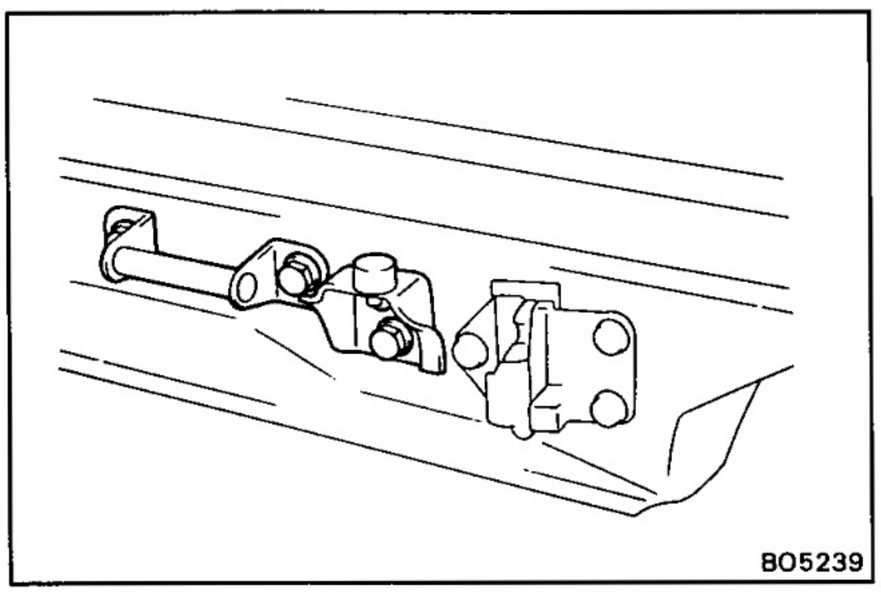

3. REMOVE DOOR STOPPER

Remove two bolts and the door stopper.

4. REMOVE DOOR STOPPER BRACKET

Remove two bolts and the bracket.

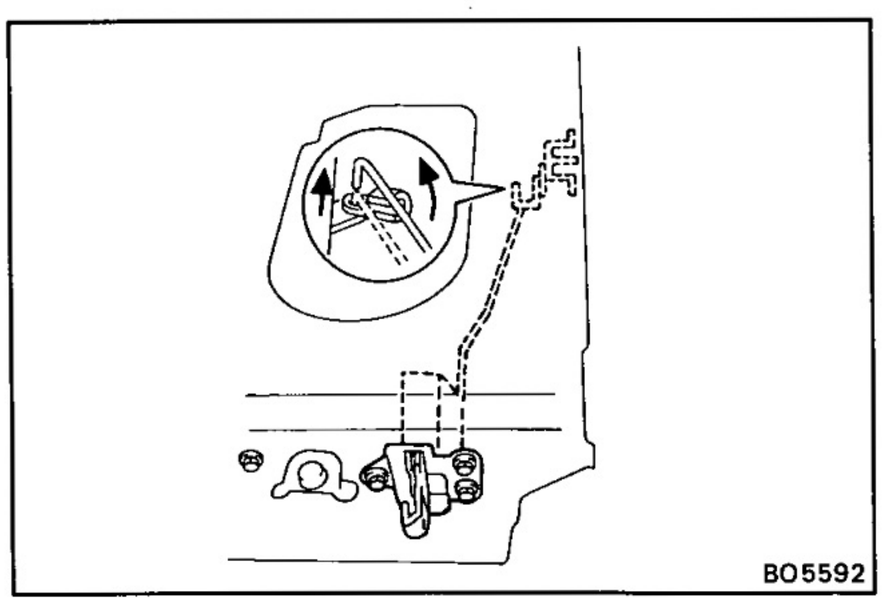

5. REMOVE LOWER DOOR LOCK

(a) Disconnect the link from the door lock control.

(b) Remove the three bolts and the lower door lock.

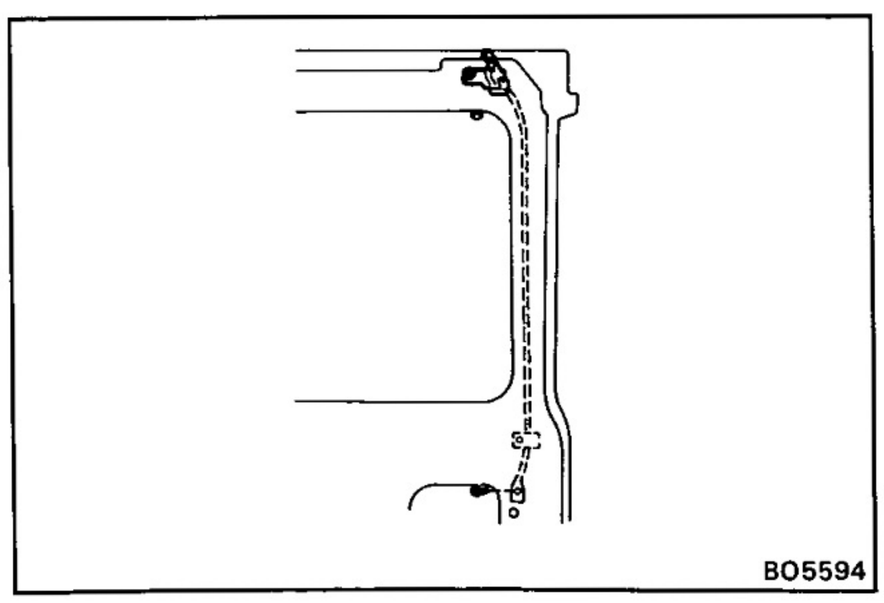

6. REMOVE UPPER DOOR LOCK

(a) Remove the screw from the control link.

(b) Remove the control link from the clip.

(c) Remove two bolts and upper door lock.

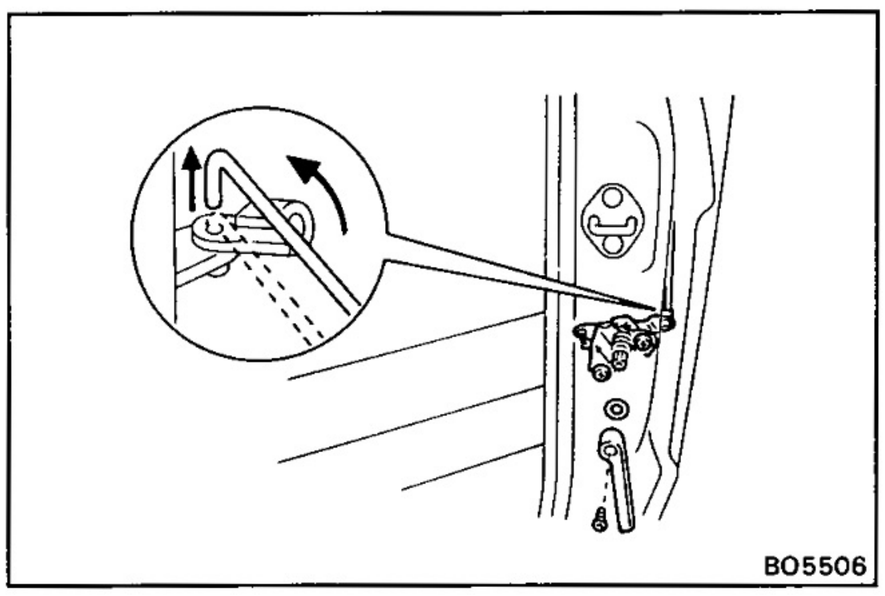

7. REMOVE DOOR LOCK CONTROL

(a) Remove control link from the door lock.

(b) Remove the screw and the handle.

(c) Remove two screws, bush and the door lock control.

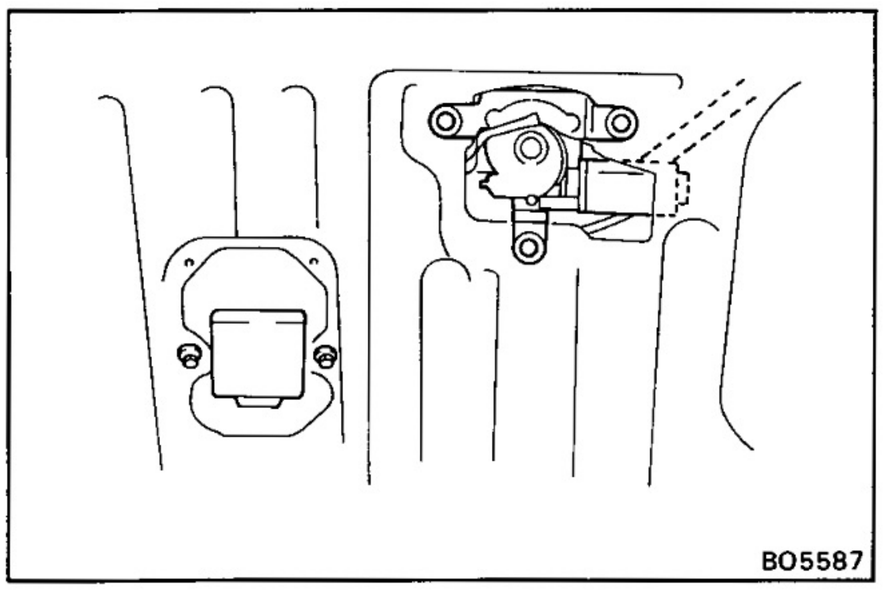

8. (w/ Rear Wiper)
REMOVE WIPER ARM, MOTOR AND WIPER CONTROL RELAY

(a) Remove a nut and wiper arm.

(b) Remove three bolts and wiper motor, then disconnect the connector.

(c) Remove two bolts and relay, then disconnect the connector.

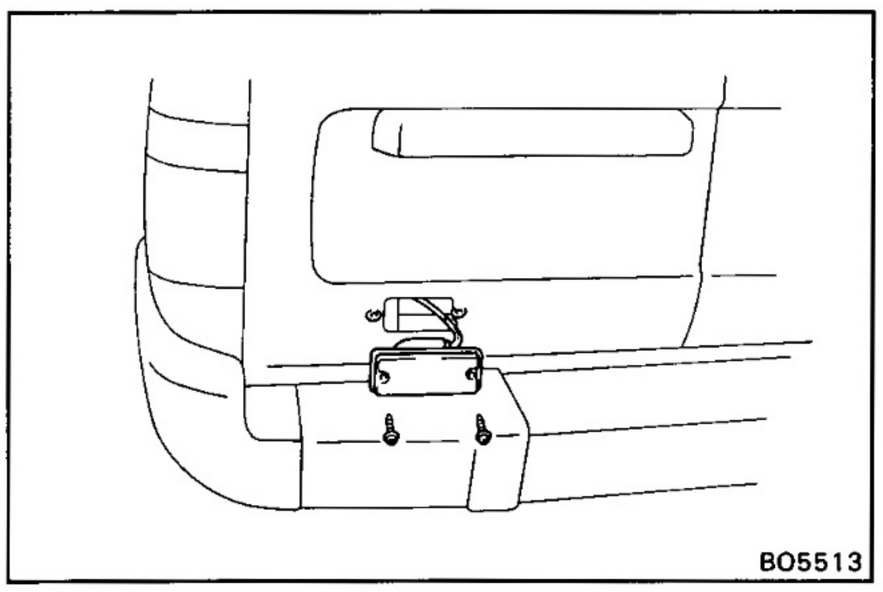

9. (w/ Fog Light)
REMOVE FOG LIGHT

Remove two screws and the light, then disconnect the connector.

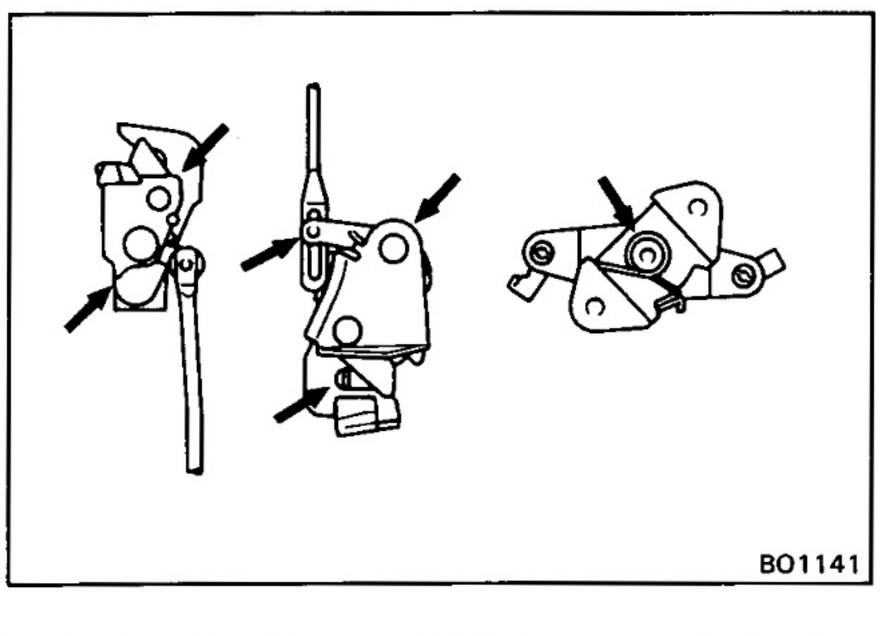

ASSEMBLY OF RIGHT BACK DOOR

(See page BO-38)

1. BEFORE INSTALLING PARTS, APPLY MP GREASE TO THEM

(a) Apply MP grease to the sliding surface of the door lock.

(b) Apply MP grease to the sliding surface of the door lock control.

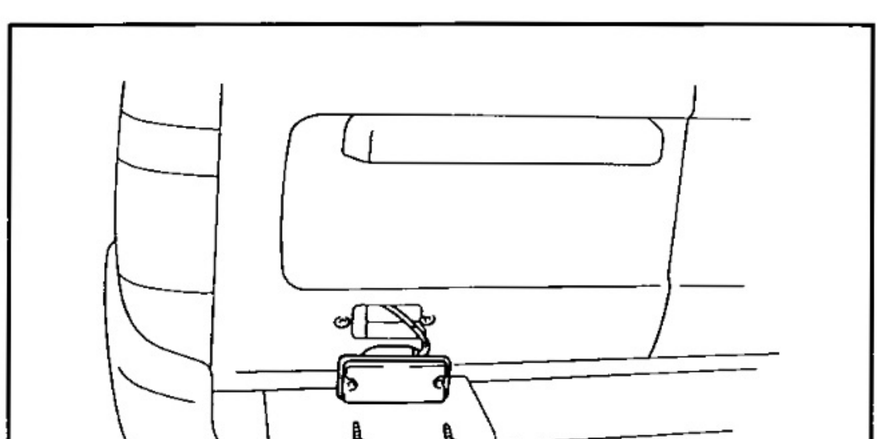

2. (w/ Fog Light)
INSTALL REAR FOG LIGHT

Connect the connector and install the light with two screws.

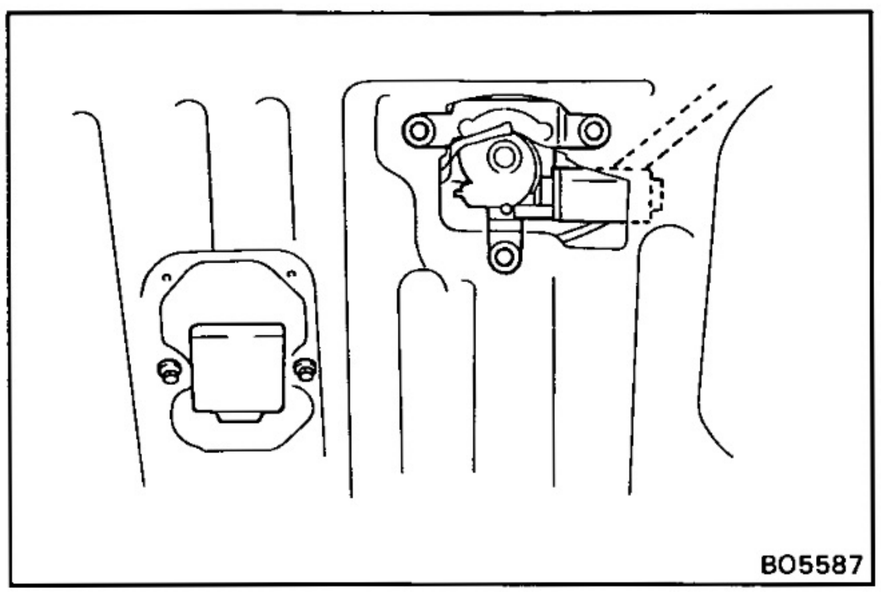

3. **(w/ Rear Wiper)**
INSTALL WIPER ARM, MOTOR AND WIPER CONTROL RELAY

(a) Connect the connector and install the relay with two bolts.

(b) Connect the connector and install the motor with three bolts.

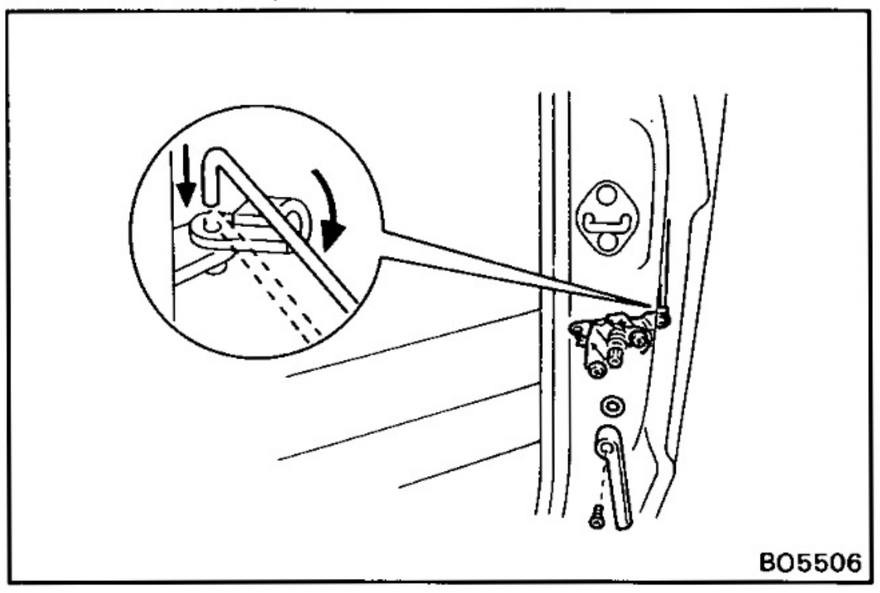

4. **INSTALL DOOR LOCK CONTROL**

(a) Install the bush and the lock control with two screws.

(b) Install the inside handle with a screw.

(c) Connect the control link to the door lock.

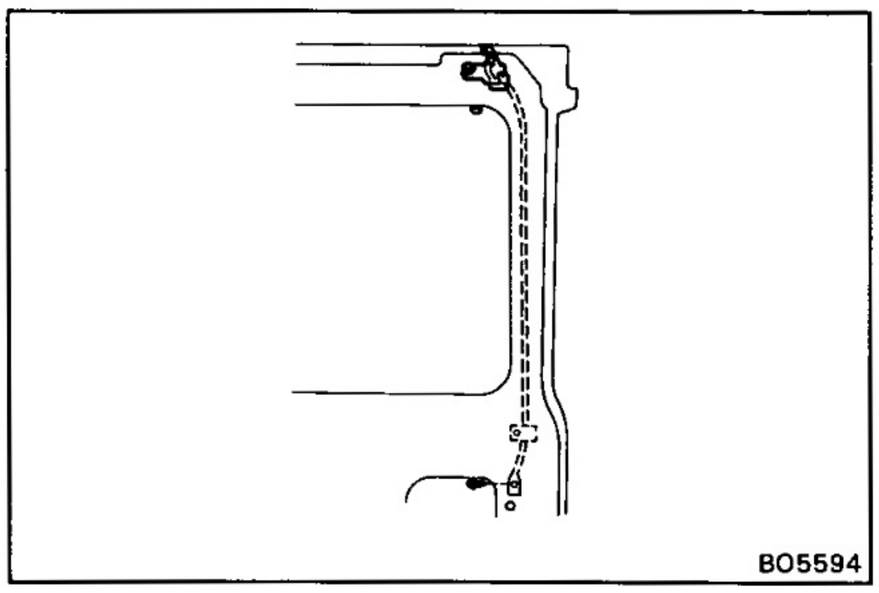

5. **INSTALL UPPER DOOR LOCK**

(a) Install the upper door lock with two bolts.

(b) Install the control link to the clip.

(c) Install the link with the screw.

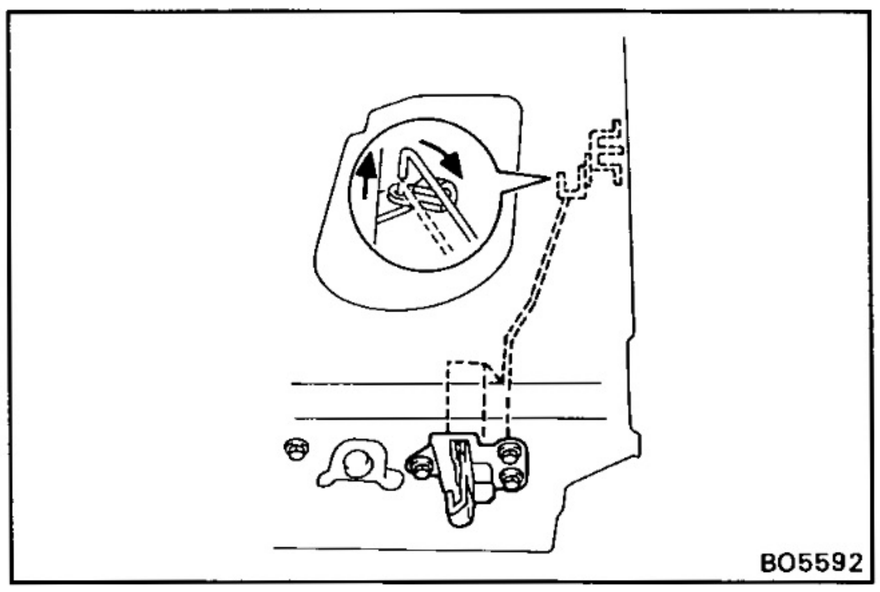

6. **INSTALL LOWER DOOR LOCK**

(a) Install the lower door lock with the three bolts.

(b) Connect the link to the door lock control.

7. **CHECK DOOR LOCK OPERATION**

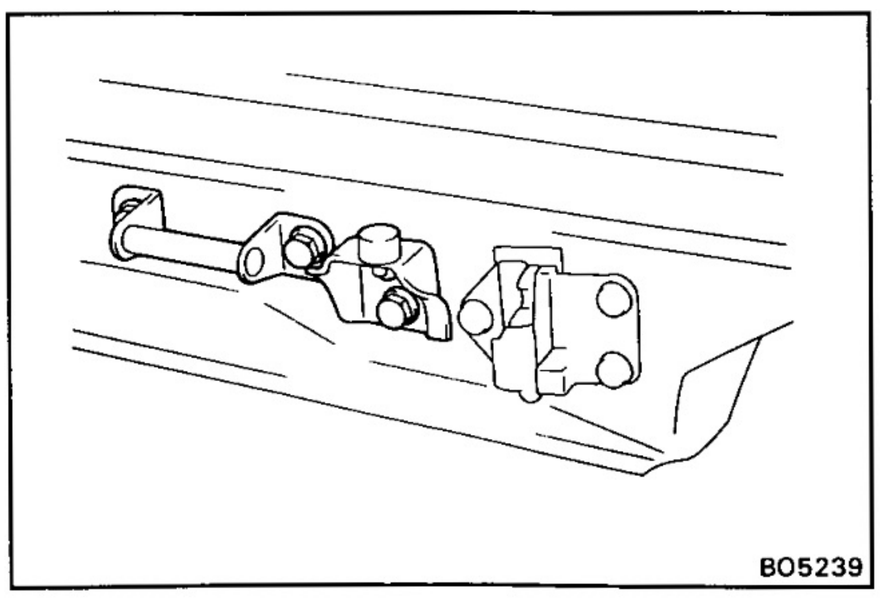

8. **INSTALL DOOR STOPPER BRACKET**

Install the door stopper bracket with two bolts.

9. **INSTALL DOOR STOPPER**

Install the door stopper with two bolts.

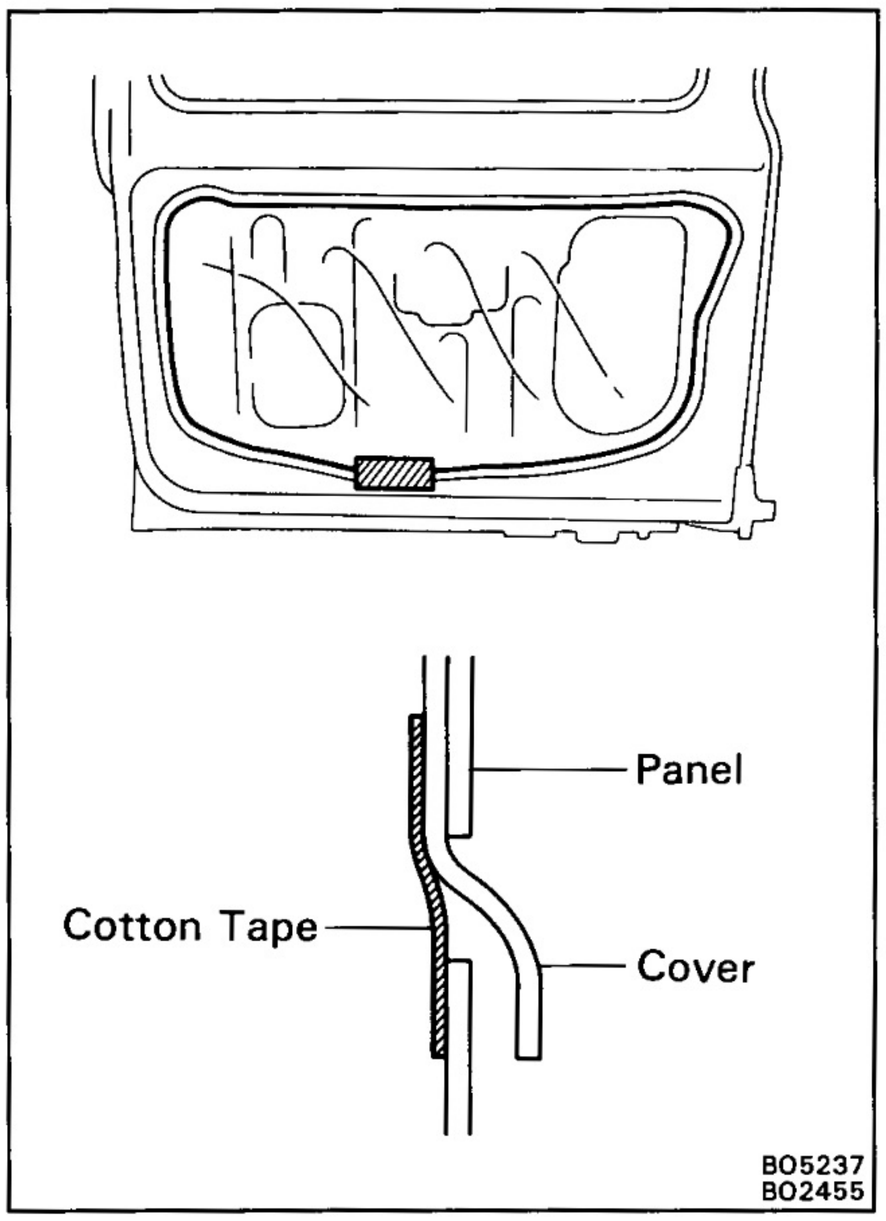

10. INSTALL SERVICE HOLE COVER

(a) Seal the service hole cover with adhesive.

(b) Insert the lower edge of the service hole cover into the panel slit.

(c) Seal the panel slit with cotton tape.

NOTICE: Do not block the trim clip seating with the tape.

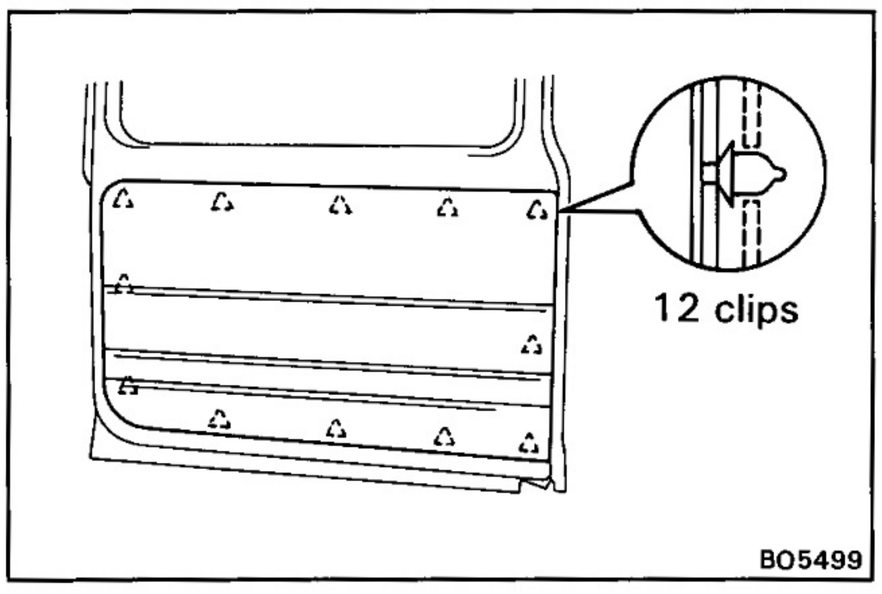

11. INSTALL DOOR TRIM

Install the door trim with clips to the inside door panel by tapping.

BACK DOOR (Swing Out Type)

Left Back Door

COMPONENTS

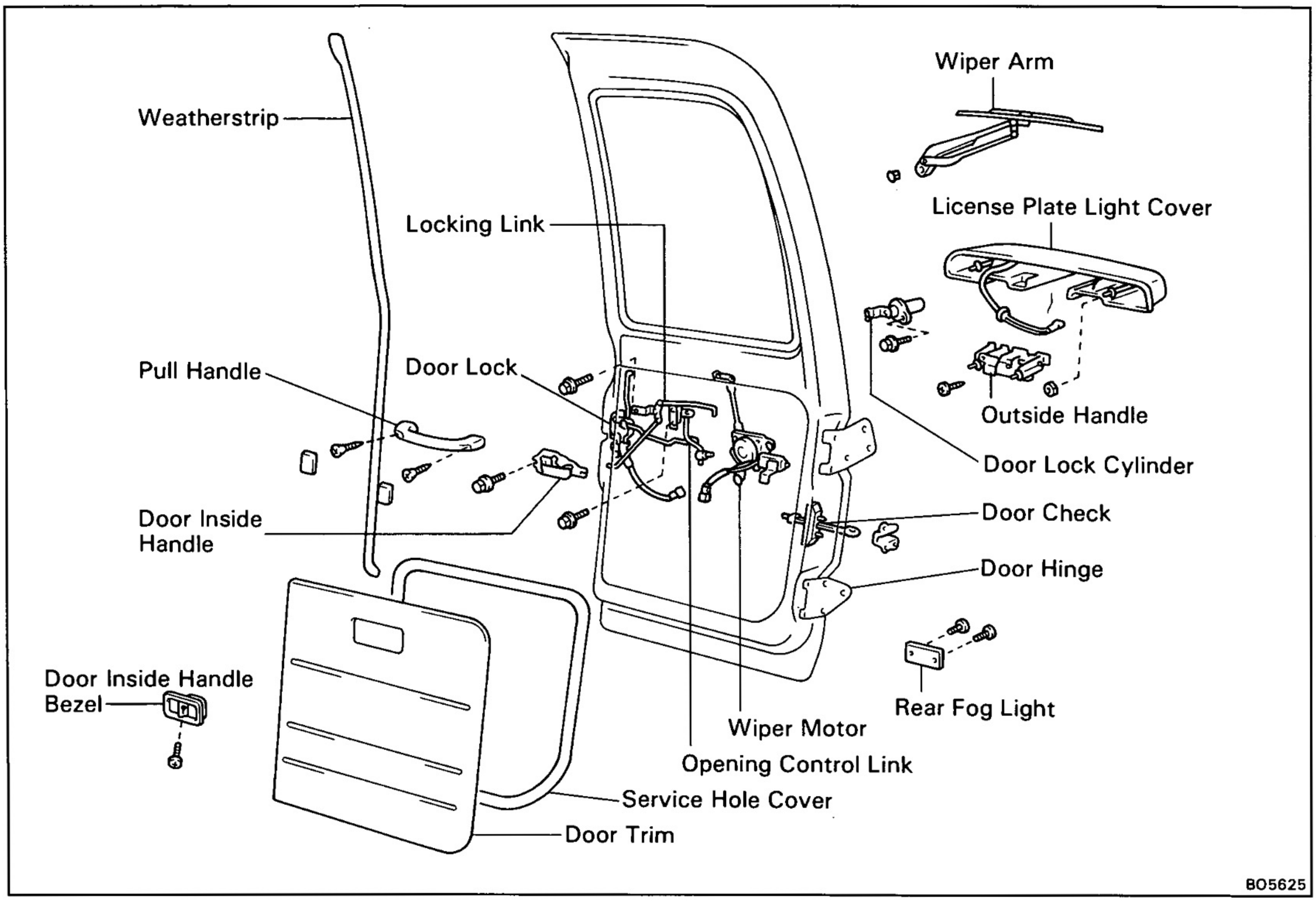

BO5625

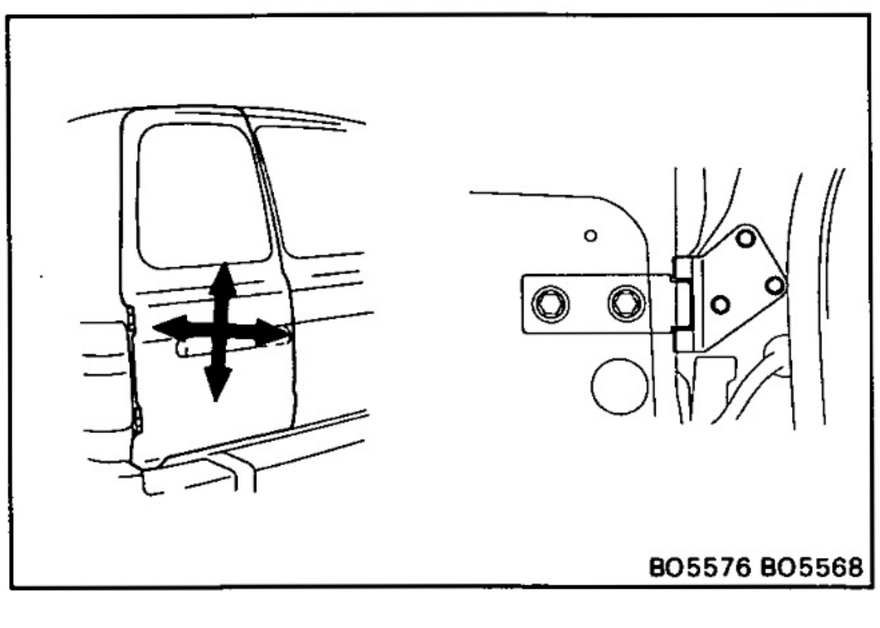

BO5576 BO5568

ADJUSTMENT OF LEFT BACK DOOR

1. ADJUST DOOR IN FORWARD/REARWARD AND VERTICAL DIRECTIONS

Adjust the door by loosening the body side hinge bolts.

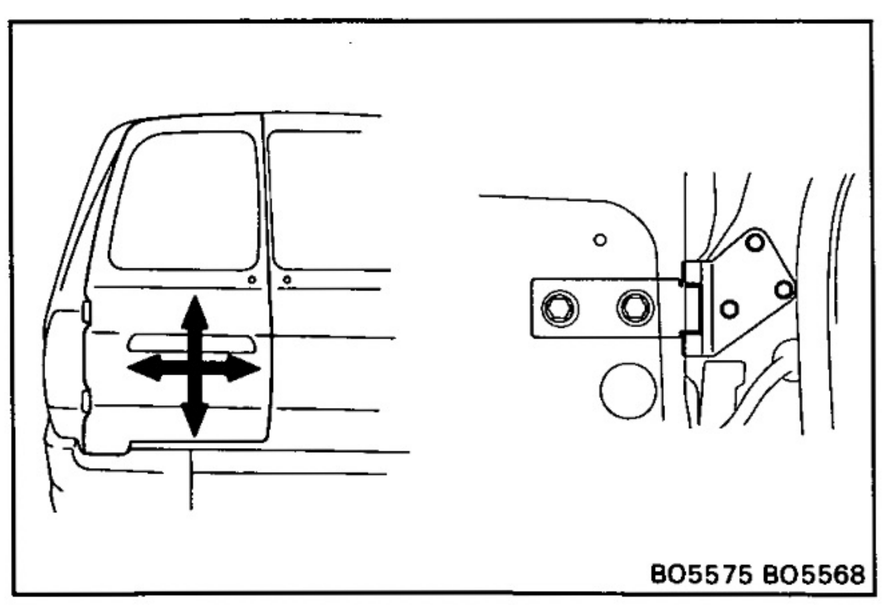

BO5575 BO5568

2. ADJUST DOOR IN LEFT/RIGHT AND VERTICAL DIRECTIONS

Adjust the door by loosening the door side hinge bolts.

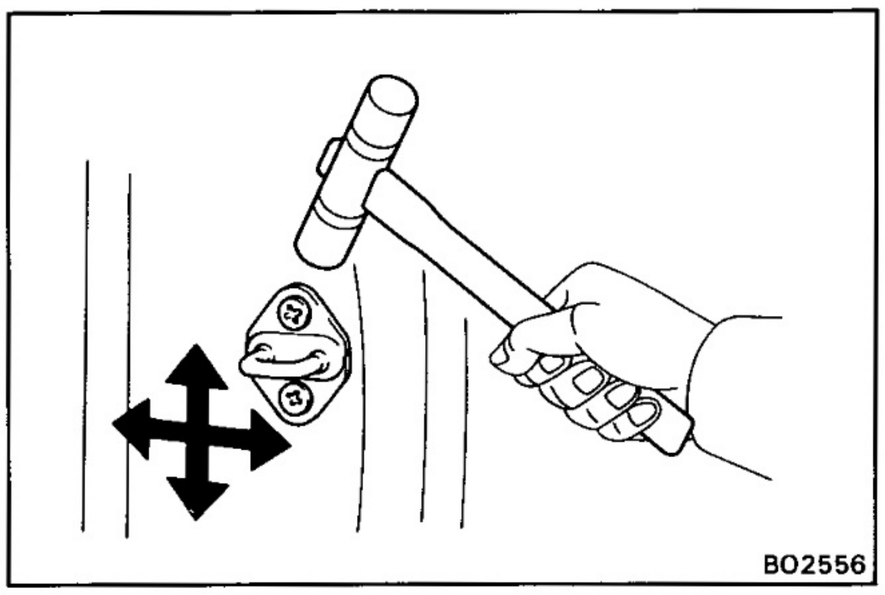

3. ADJUST DOOR LOCK STRIKER

(a) Check that the door fit and door lock linkages are adjusted correctly.

(b) Adjust the striker position by slightly loosening the striker mounting screws, and hitting the striker with a hammer. Tighten the striker mounting screws again.

DISASSEMBLY OF LEFT BACK DOOR

(See page BO-43)

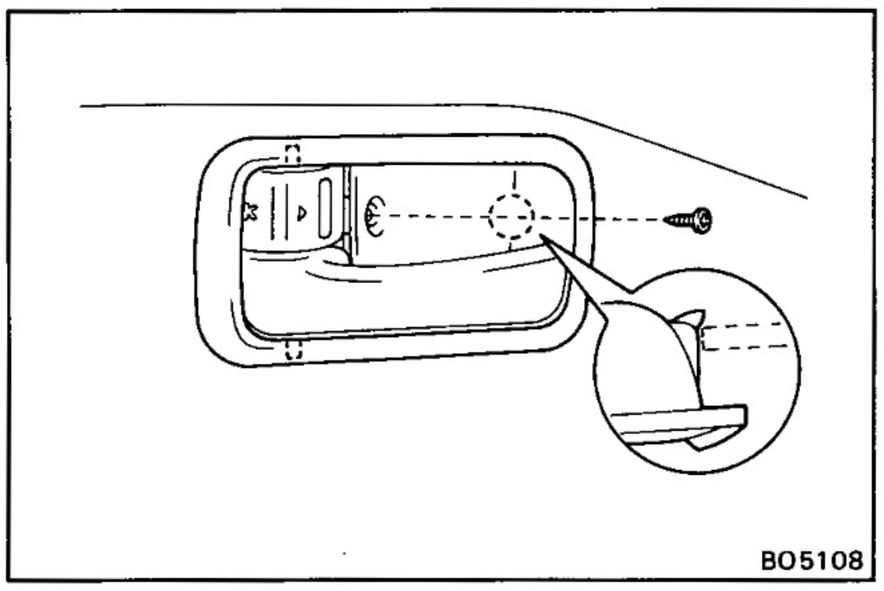

1. REMOVE PULL HANDLE

Remove two covers, two screws and pull handle.

2. REMOVE DOOR INSIDE HANDLE BEZEL

(a) Remove the screw.

(b) Pry loose the clip and claws of the bezel to remove it.

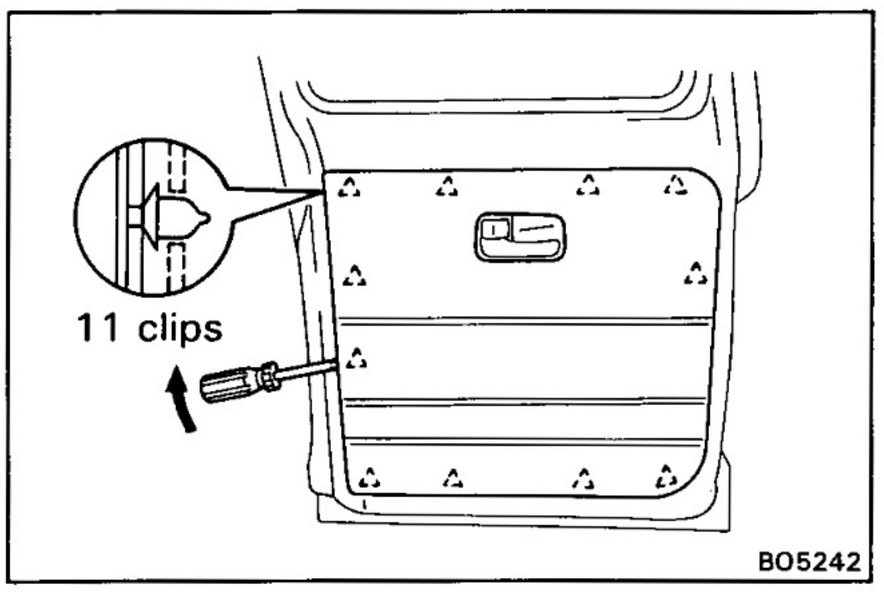

3. REMOVE DOOR TRIM

Insert a screwdriver between the trim retainers and door panel to pry it lose.

HINT: Tape the screw driver tip before use.

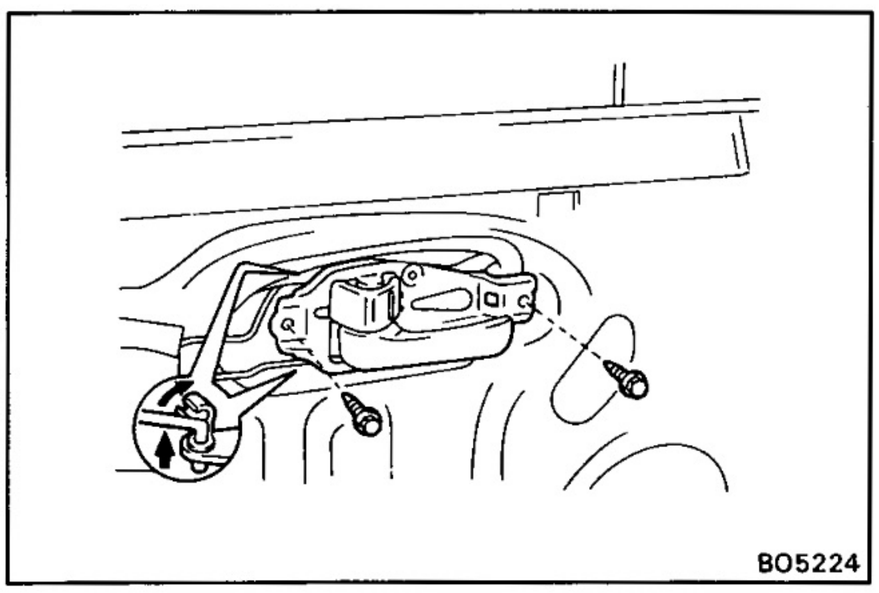

4. REMOVE DOOR INSIDE HANDLE

(a) Remove two bolts.

(b) Disconnect two links from the inside handle.

5. REMOVE SERVICE HOLE COVER

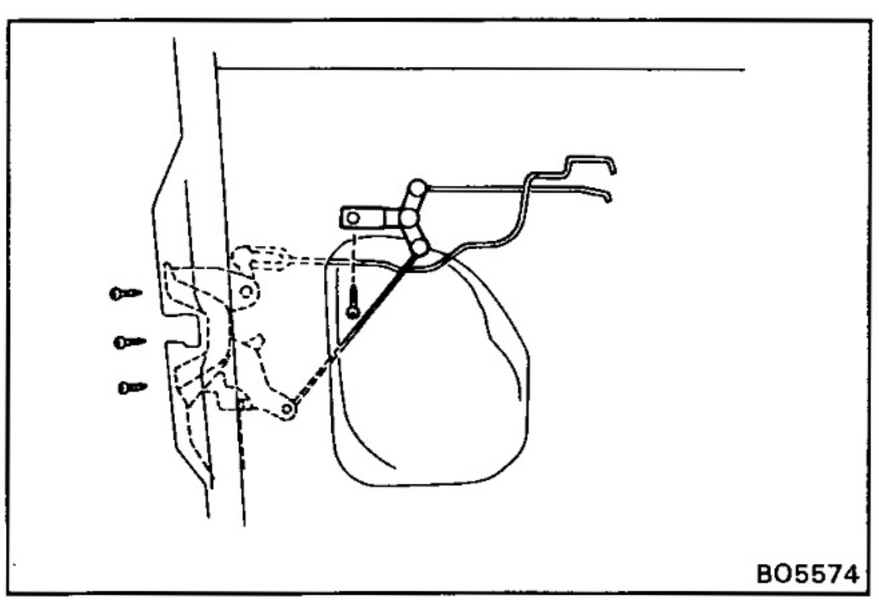

6. REMOVE DOOR LOCK

(a) Remove a screw of control link.

(b) Disconnect three links from the door lock control and the door lock cylinder.

(c) Remove three screws and the door lock.

(d) Remove the control link from the outside handle, then remove the two bolts and the lock control.

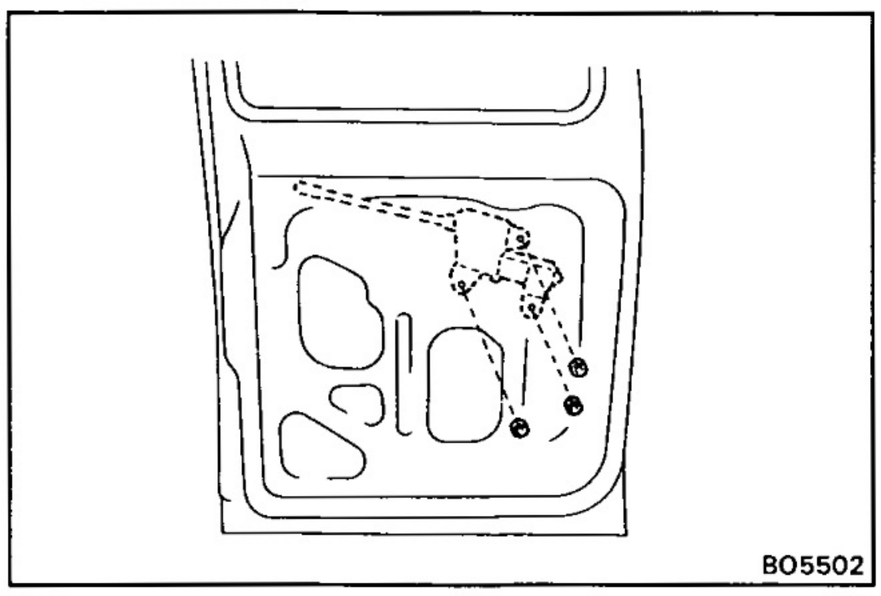

7. **(w/ Wiper)**
REMOVE WIPER ARM AND MOTOR

(a) Remove the nut and the wiper arm.

(b) Remove three nuts and the wiper motor, then disconnect the connector.

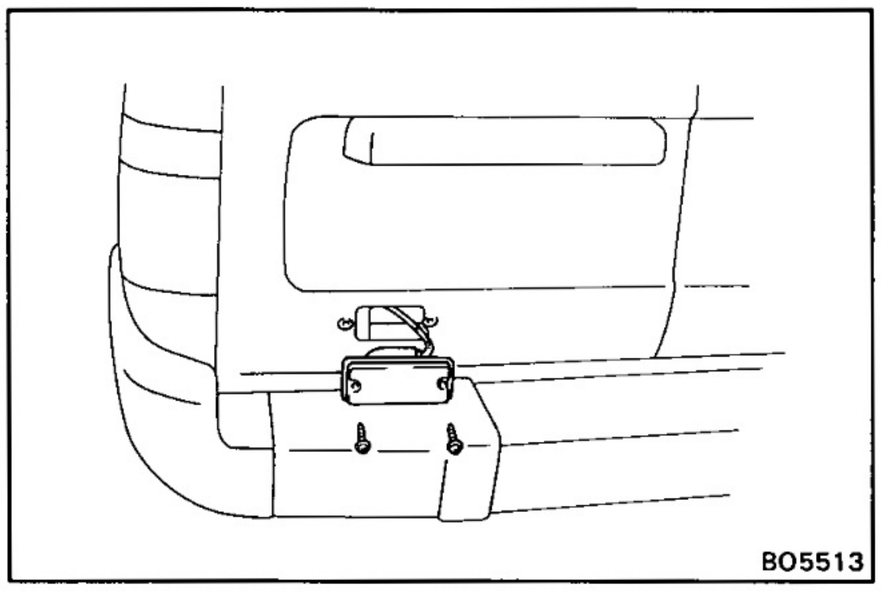

8. **(w/ Fog Light)**
REMOVE FOG LIGHT

Remove two screws and the light, then disconnect the connector.

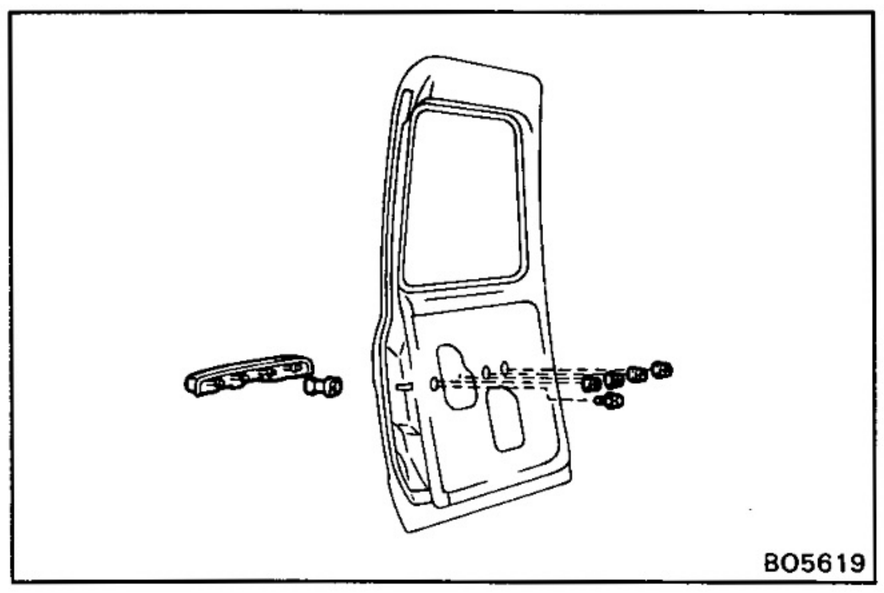

9. **REMOVE LICENSE PLATE LIGHT COVER AND DOOR LOCK CYLINDER**

(a) Remove four nuts and the light cover, then disconnect the connector.

(b) Remove the bolt from the lock cylinder.

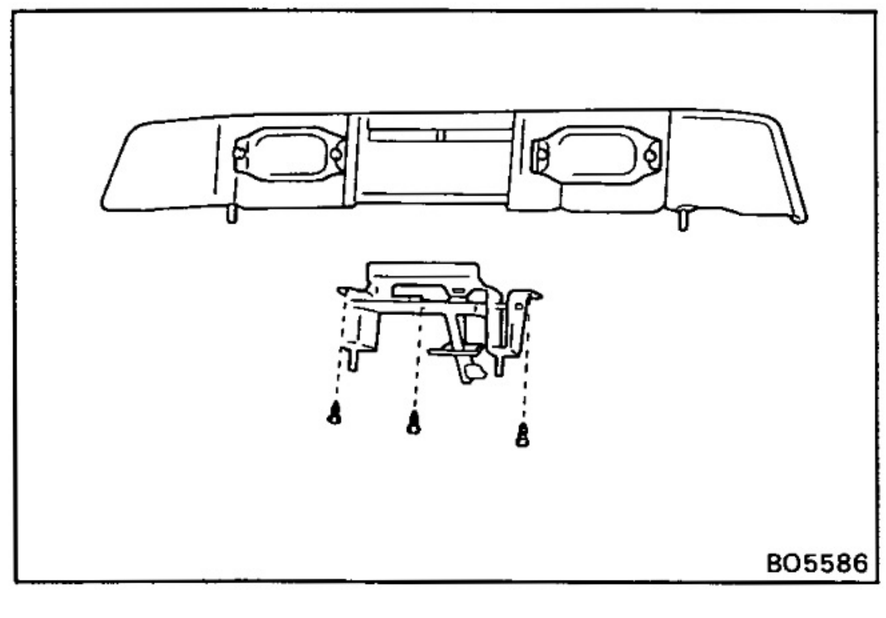

10. **REMOVE OUTSIDE HANDLE**

Remove three screws and the outside handle from the license plate lamp cover.

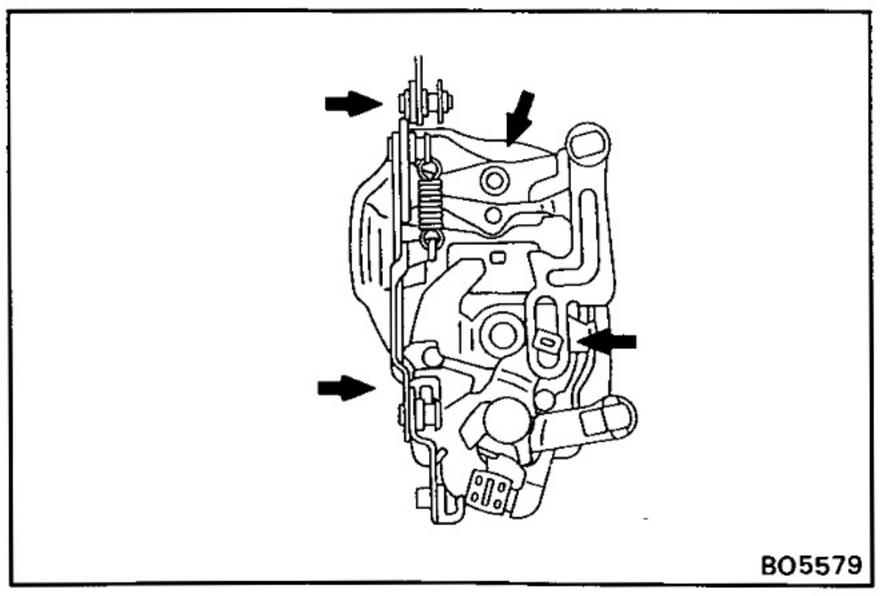

ASSEMBLY OF LEFT BACK DOOR

(See page BO-43)

1. **APPLY OF MP GREASE TO DOOR LOCK**

Apply MP grease to the sliding surface of the door lock.

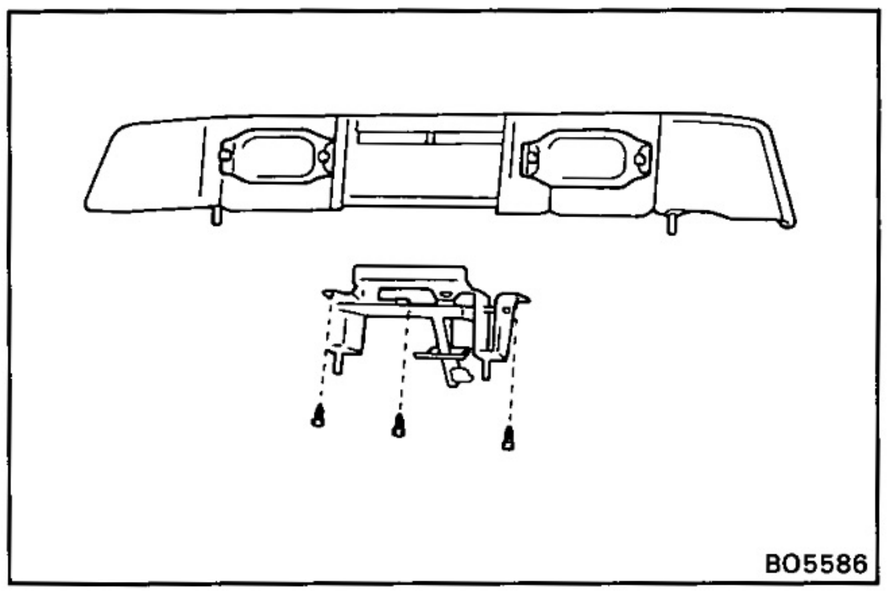

2. INSTALL OUTSIDE HANDLE

Install the outside handle with three screws to the license plate light cover.

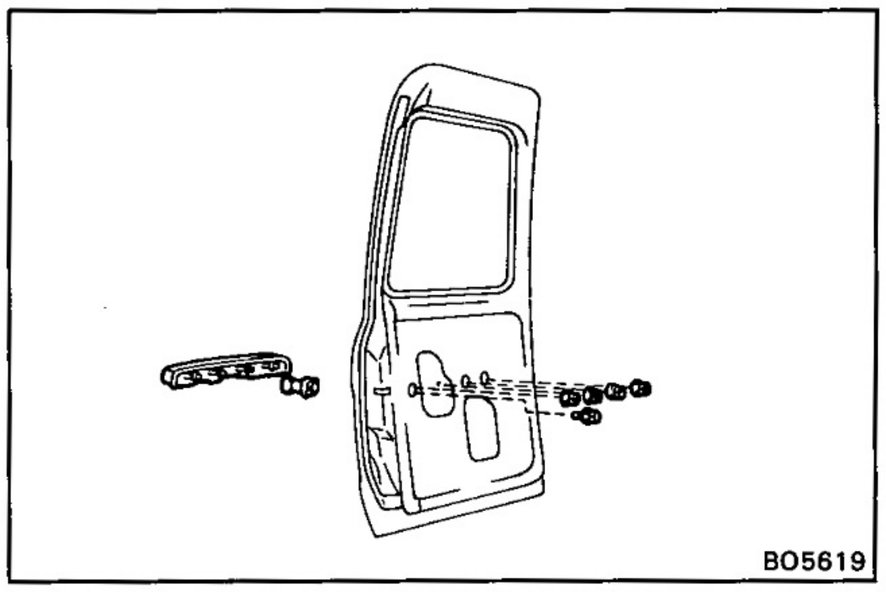

3. INSTALL LICENSE PLATE LIGHT COVER AND DOOR LOCK CYLINDER

(a) Install the lock cylinder with the blot.

(b) Install the light cover with four nuts, then connect the connector.

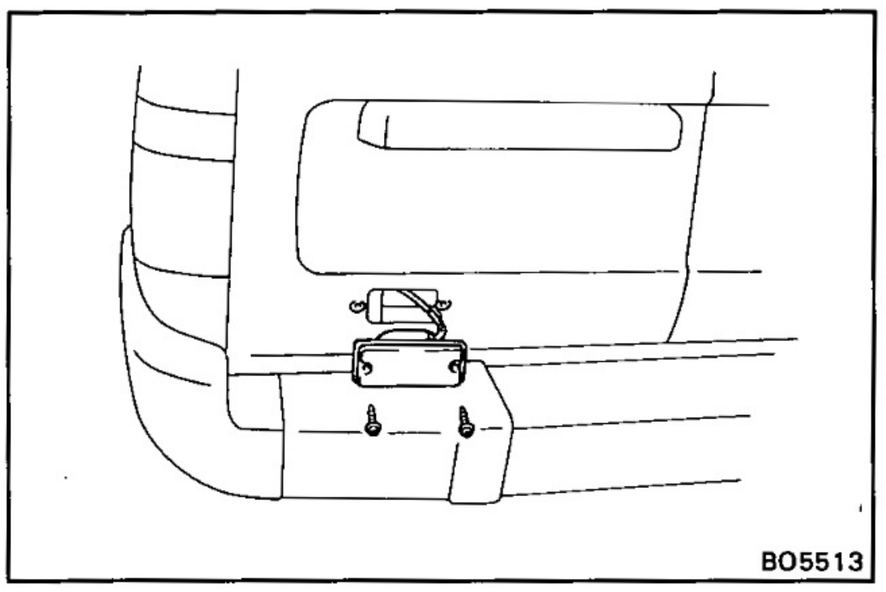

4. (w/ Fog Light)
INSTALL FOG LIGHT

Connect the connector, then install the fog light with two screws.

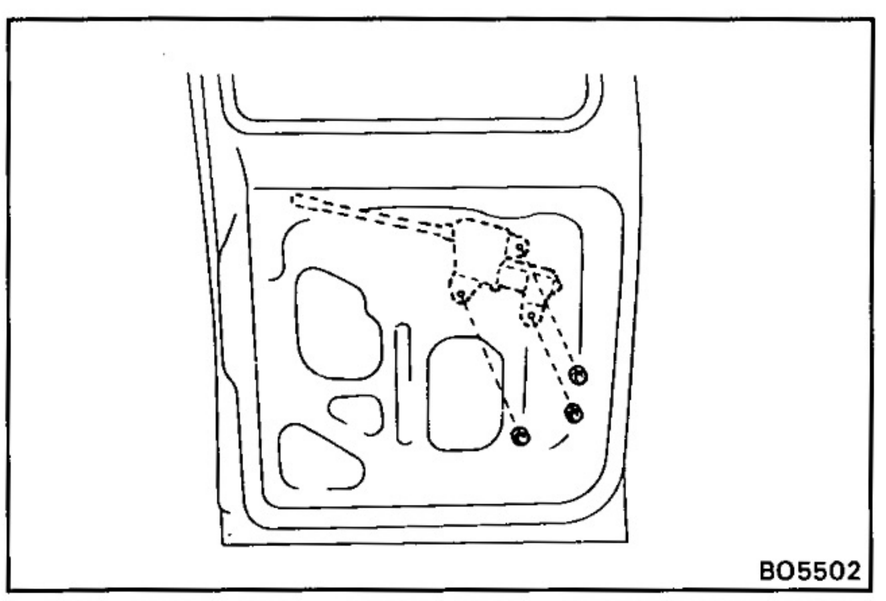

5. (w/ Wiper)
INSTALL WIPER ARM AND MOTOR

(a) Install the wiper arm with three nuts, then connect the connector.

(b) Install the wiper arm with the nut.

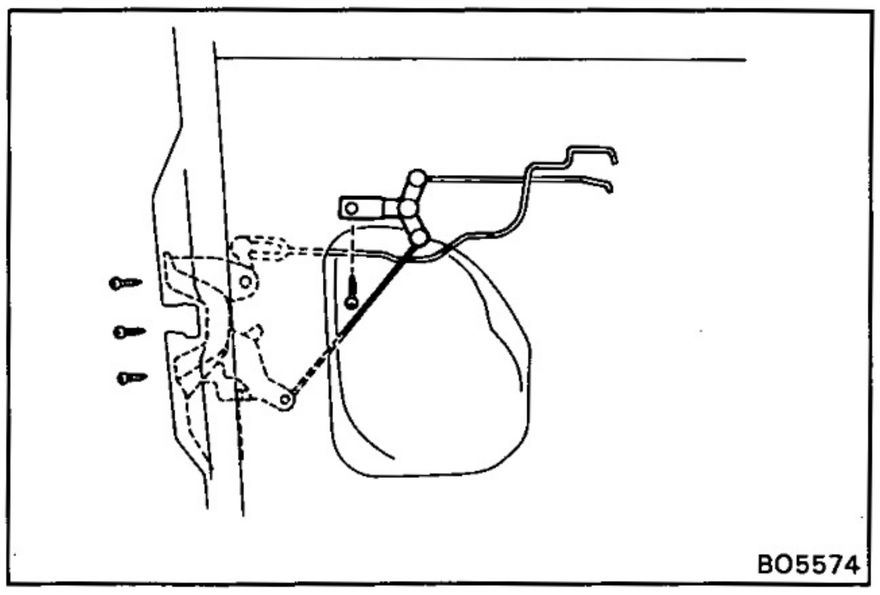

6. INSTALL DOOR LOCK

(a) Install the control link to the outside handle then, install the two bolts and the lock control.

(b) Install the door lock with three screws.

(c) Connect three links to the door lock control and the door lock cylinder.

(d) Install the control link with the screw.

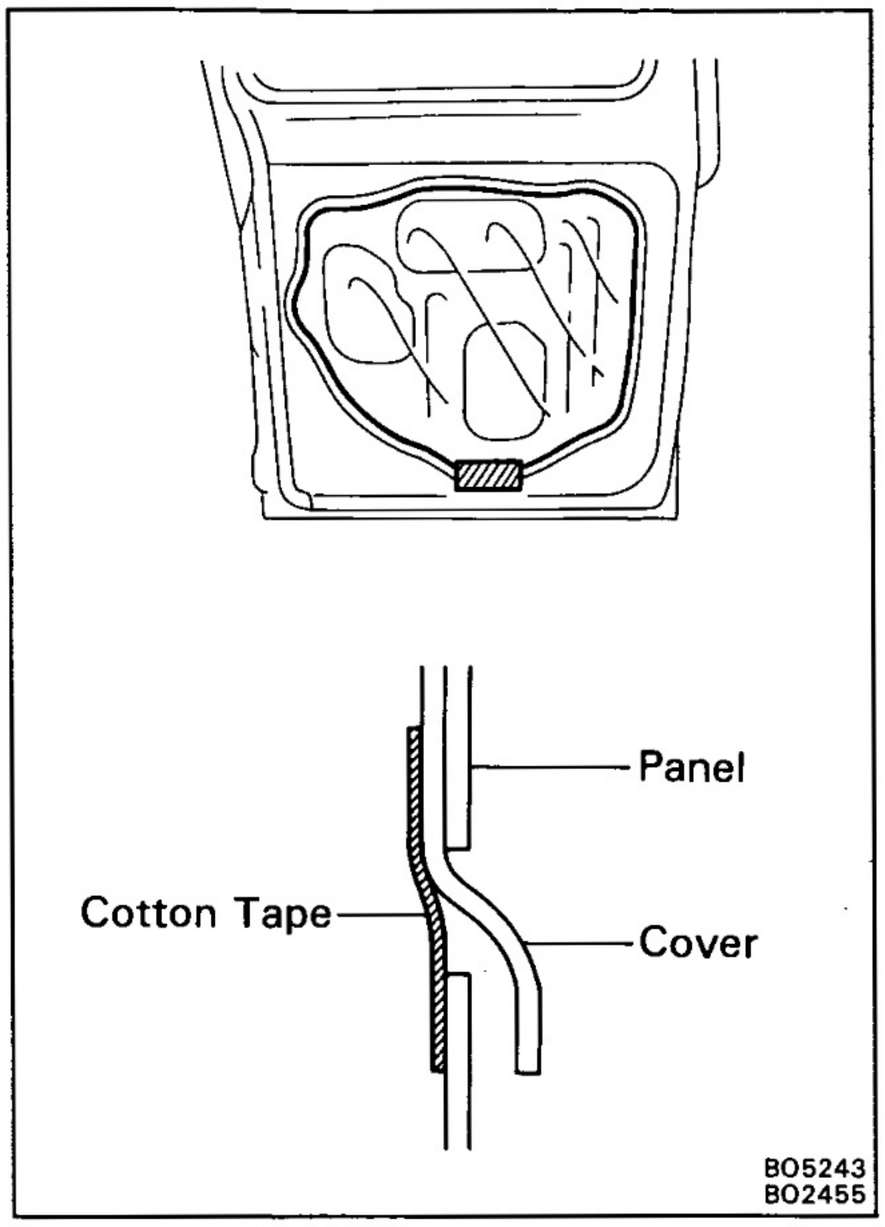

7. INSTALL SERVICE HOLE COVER

(a) Seal the service hole cover with adhesive.

(b) Insert the lower edge of the service hole cover into the panel slit.

(c) Seal the panel slit with cotton tape.

NOTICE: Do not block the trim clip seating with the tape.

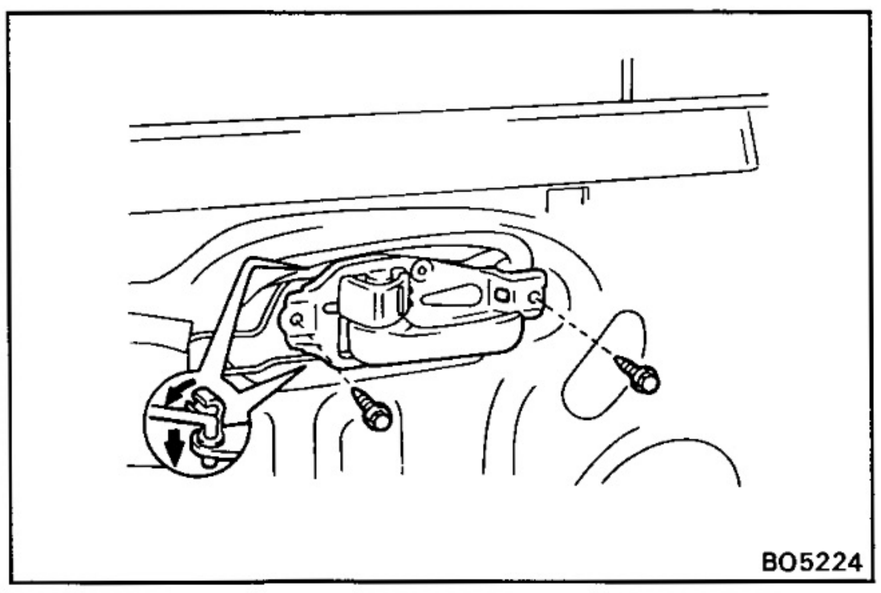

8. INSTALL DOOR INSIDE HANDLE

Connect two links to the inside handle, then install it with two bolts.

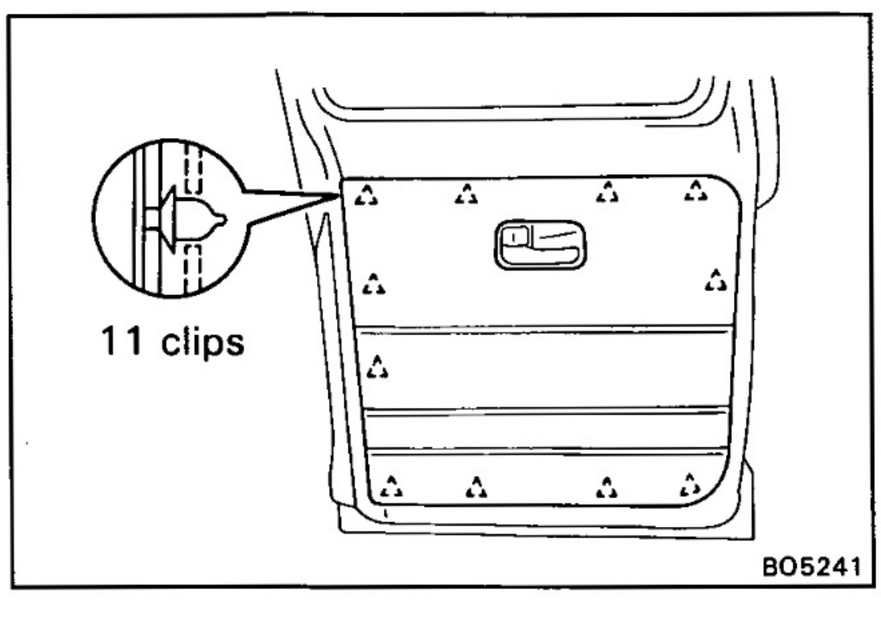

9. INSTALL DOOR TRIM

Install the door trim with clips to the inside door panel by tapping.

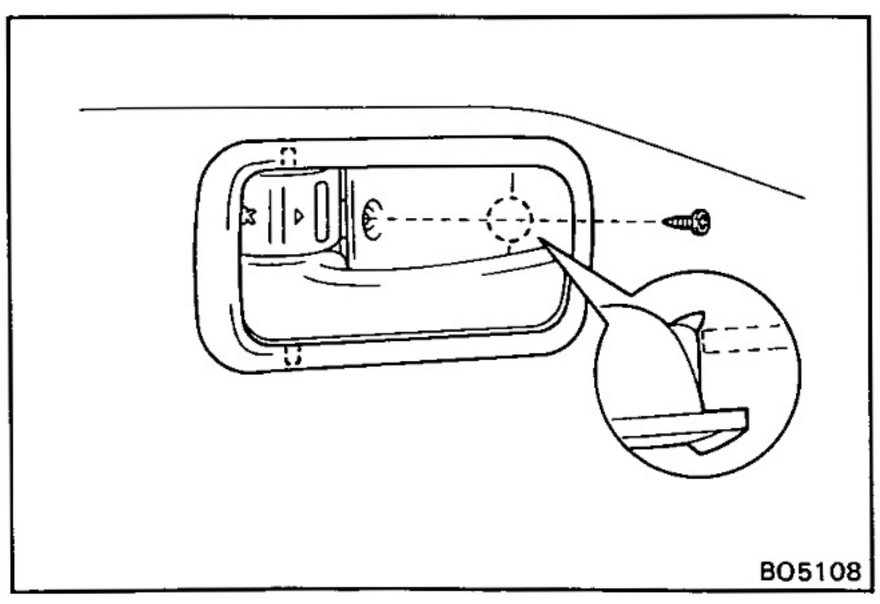

10. INSTALL DOOR INSIDE HANDLE BEZEL

(a) Push in the bezel to install it.

(b) Install the screw.

11. INSTALL PULL HANDLE

Install the pull handle with two screws, then install two covers.

MOULDING

Windshield Moulding

COMPONENTS

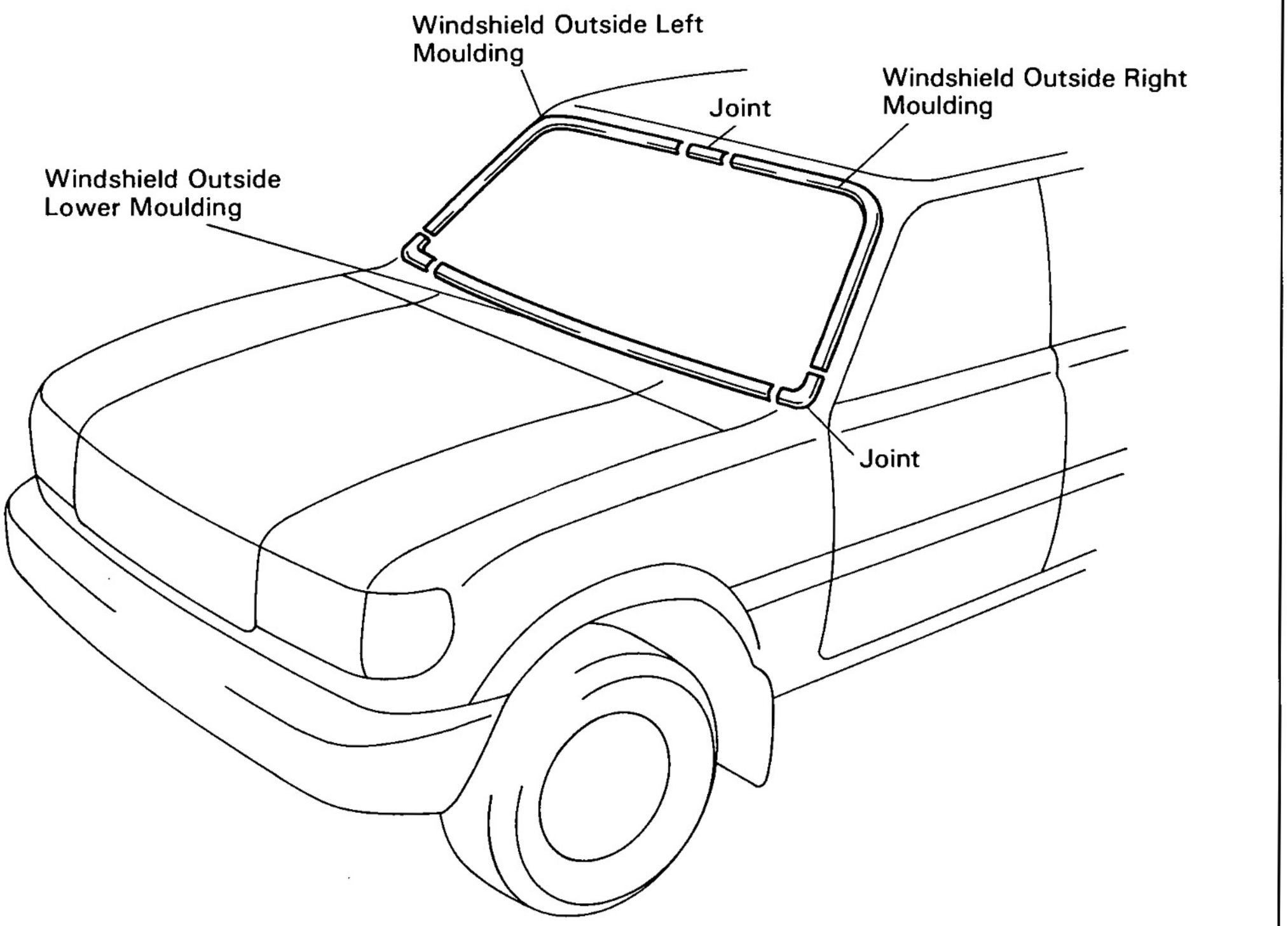

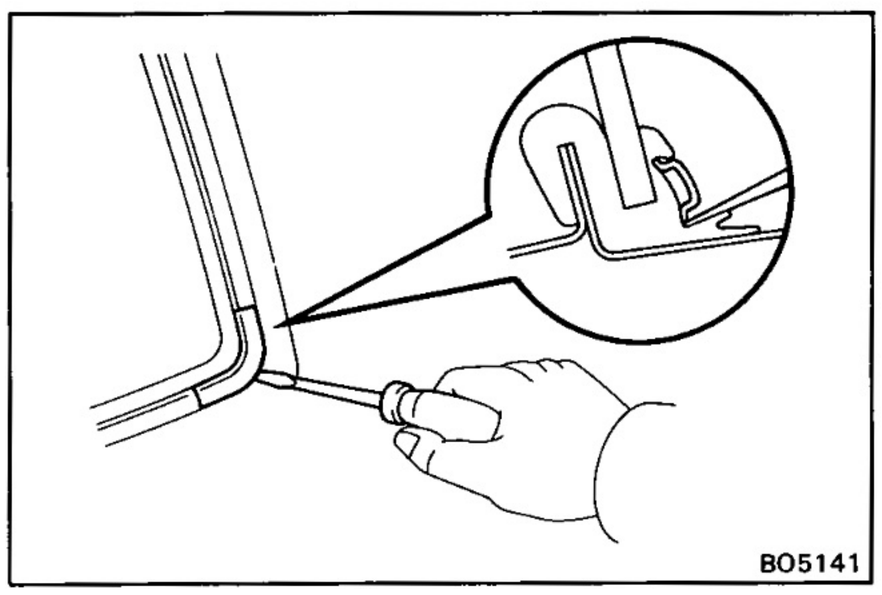

REMOVAL OF WINDSHIELD MOULDING

REMOVE WINDSHIELD OUTSIDE MOULDING

(a) Using a screwdriver, pull off the joint cover.

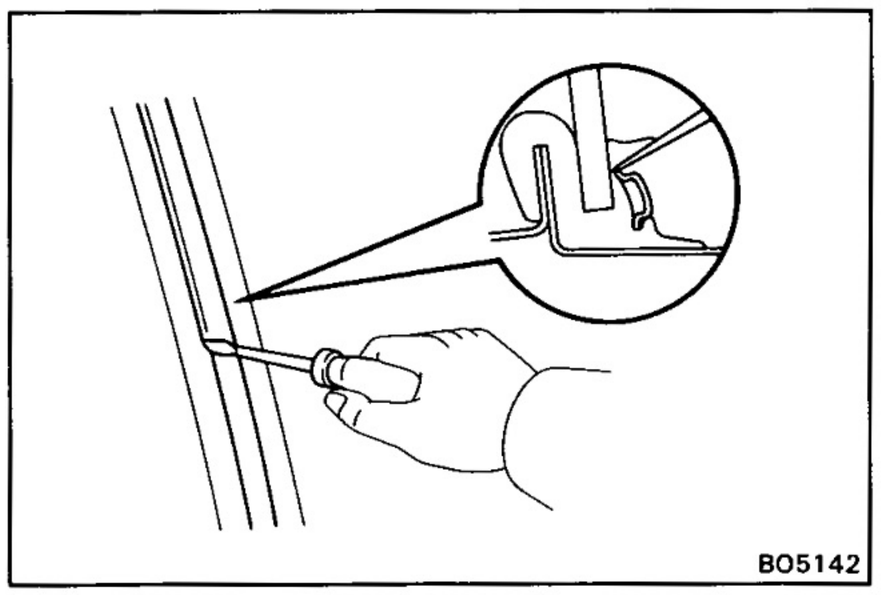

(b) Using a screwdriver, pull off the moulding from the end.

INSTALLATION OF WINDSHIELD MOULDING

INSTALL WINDSHIELD OUTSIDE MOULDING

Using a screwdriver, install the moulding and joint cover.

Body Outside Moulding

COMPONENTS

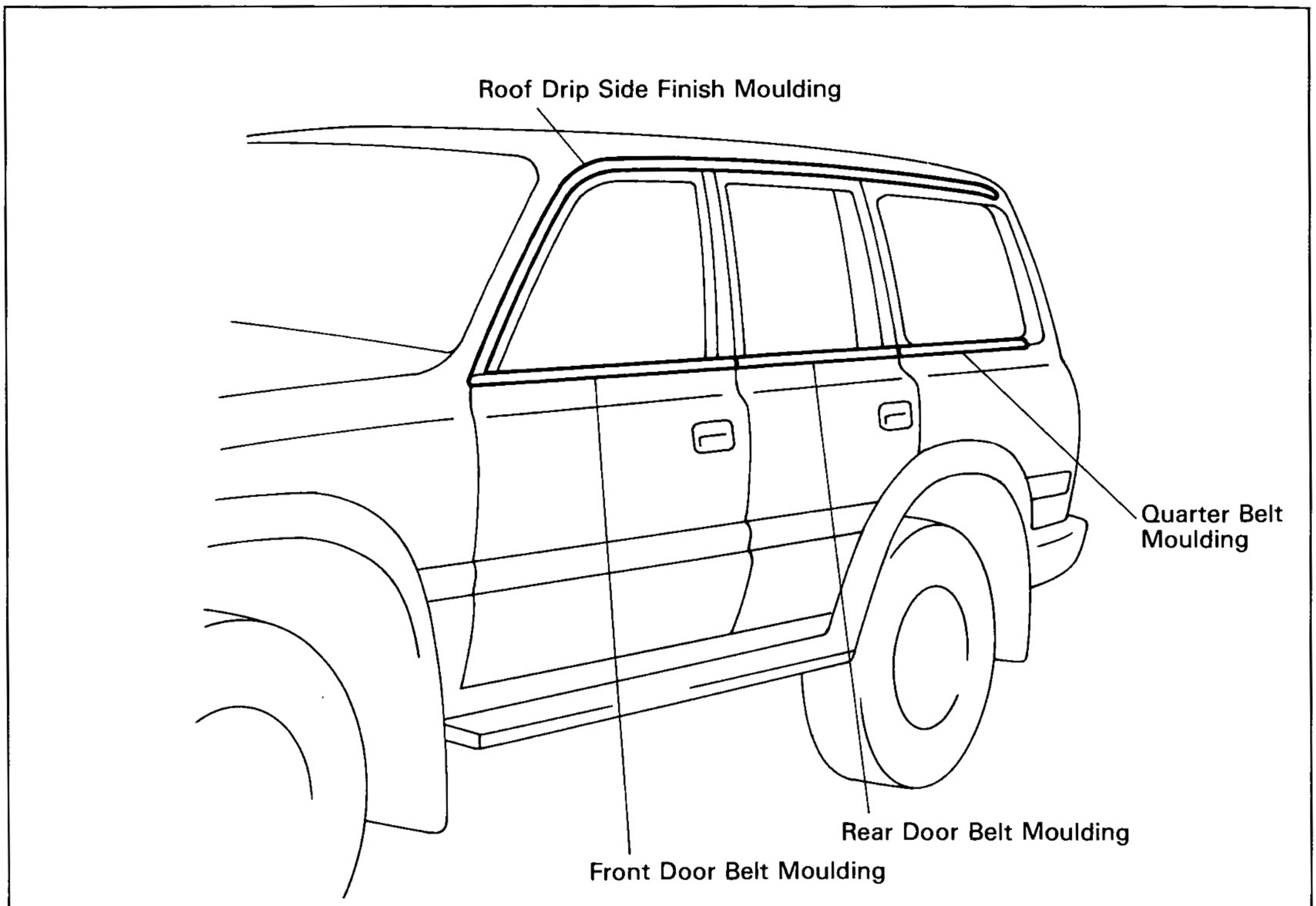

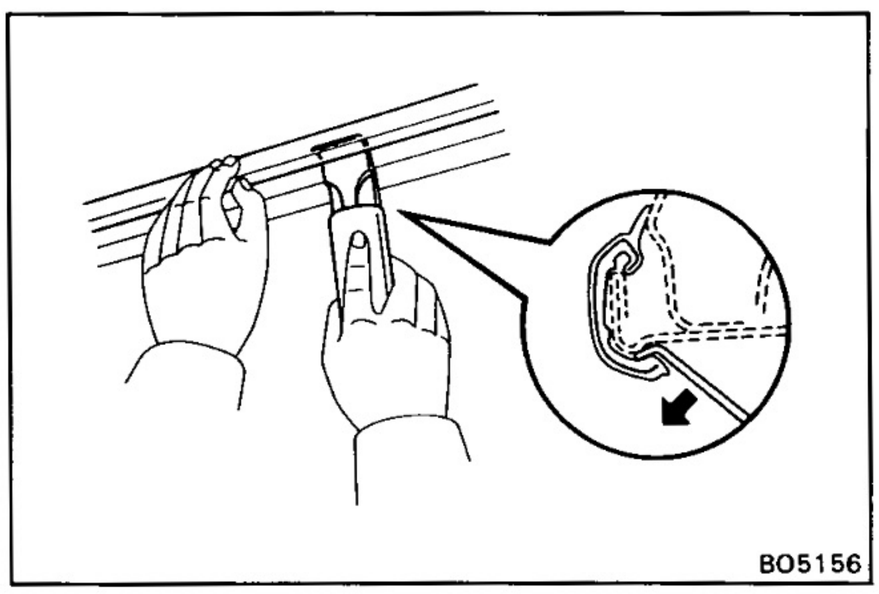

Roof Drip Side Finish Moulding

REMOVAL OF ROOF DRIP SIDE FINISH MOULDING

REMOVE ROOF DRIP SIDE FINISH MOULDING

Using SST, pull off the roof drip moulding from front ends.

SST 09806-30010

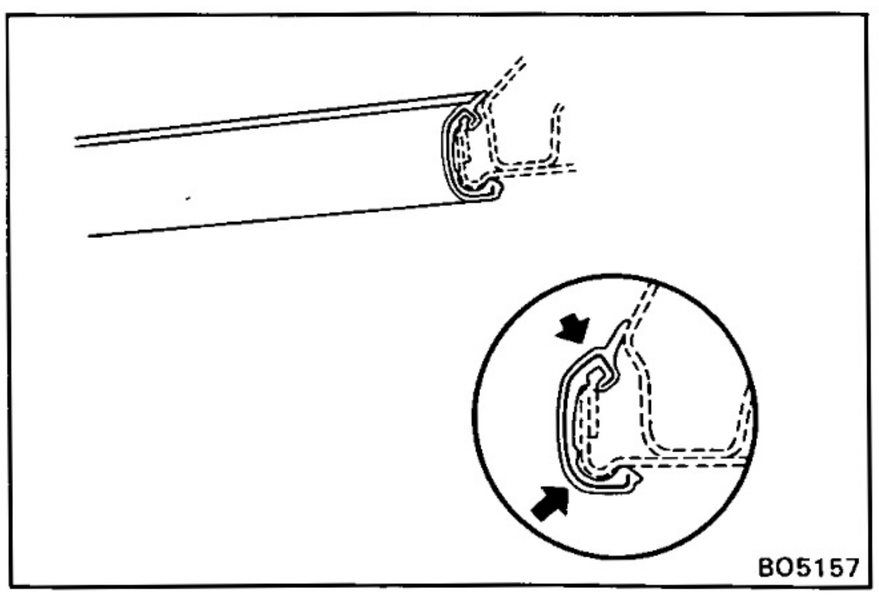

INSTALLATION OF ROOF DRIP SIDE FINISH MOULDING

INSTALL ROOF DRIP SIDE FINISH MOULDING

Attach the upper edge of the moulding to the body flange. Tap on the moulding by hand.

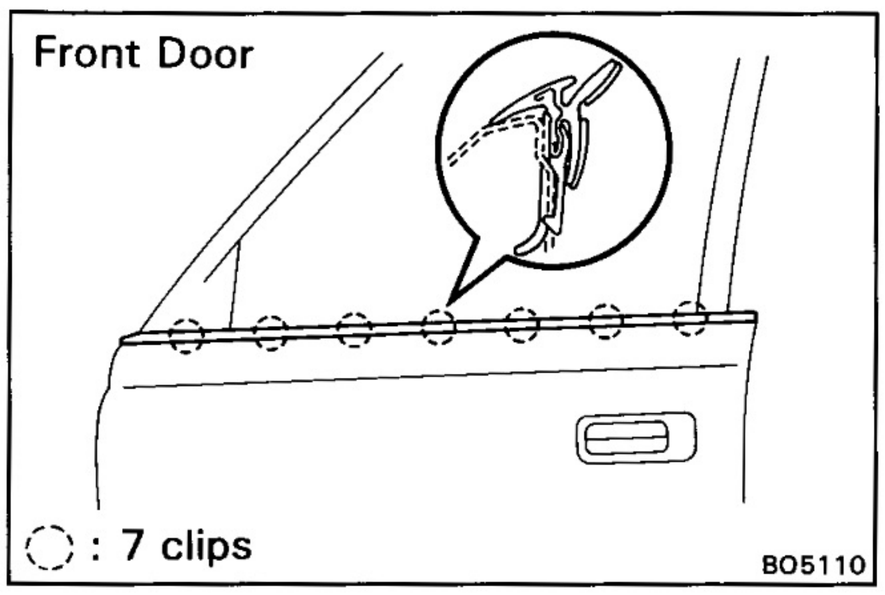

Door Belt Moulding

REMOVAL OF DOOR BELT MOULDING

1. **REMOVE FRONT DOOR BELT MOULDING**
   (See step 7 on page BO-10)

2. **REMOVE REAR DOOR BELT MOULDING**
   (See step 10 on page BO-21)

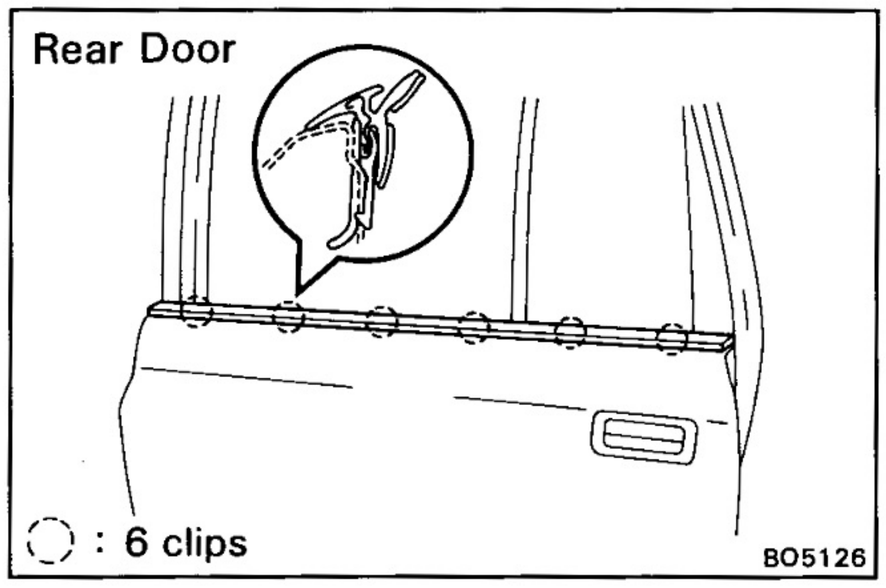

INSTALLATION OF DOOR BELT MOULDING

1. **INSTALL FRONT DOOR BELT MOULDING**
   (See step 16 on page BO-16)

2. **INSTALL REAR DOOR BELT MOULDING**
   (See step 12 on page BO-25)

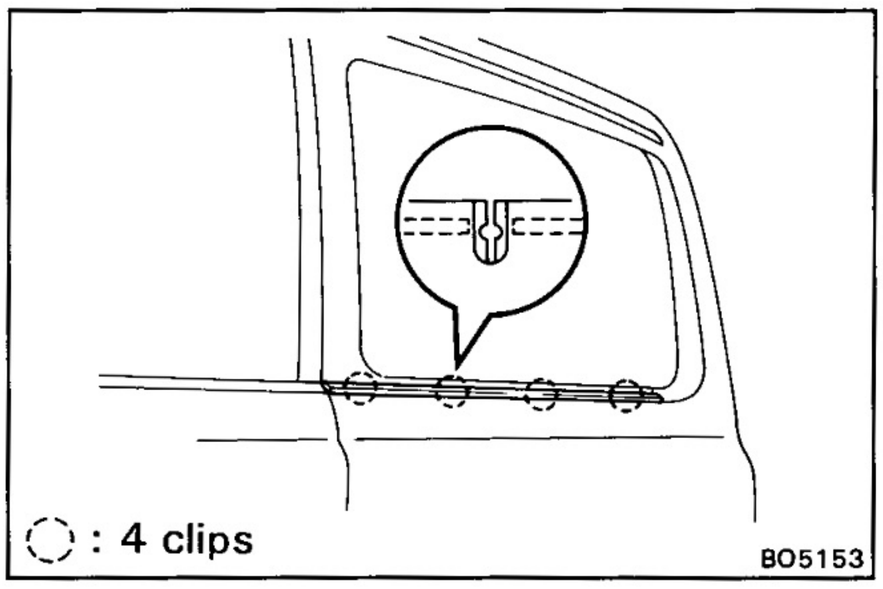

Quarter Belt Moulding

REMOVAL OF QUARTER BELT MOULDING

REMOVE QUARTER BELT MOULDING

Pry out the clips from the edge of the panel, and remove the moulding.

INSTALLATION OF QUARTER BELT MOULDING

INSTALL QUARTER BELT MOULDING

Insert the claw of the clips into the upper panel slit and push the moulding onto the panel.

Side Protection Moulding

PREPARE ITEMS LISTED

Part No.	Part name	Quantity
08850-00051	Adhesive (Super special) 20g (0.71 oz.)	1
	Cleaner (for cleaning body and removing body oil stains) Heat light	

Precautions for storing moulding material:

- Store in cool place, avoiding direct sunlight, high temperature and dust.
- The moulding is of polyvinyl chloride, so do not allow it to come in contact with thinner or other solvent, open flame, or boiling water.
- The storage time for the moulding and adhesive are limited to about 9 months.

COMPONENTS

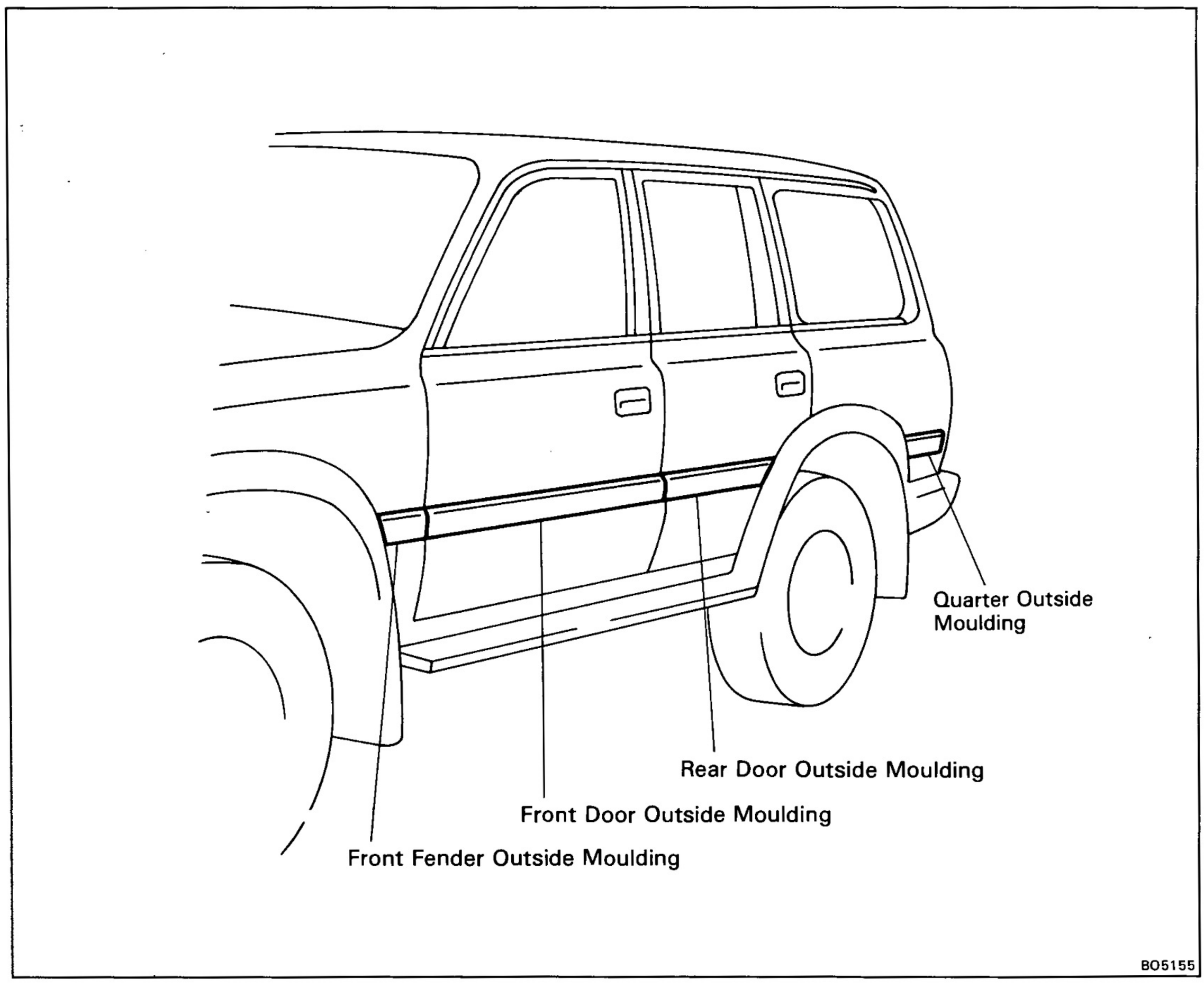

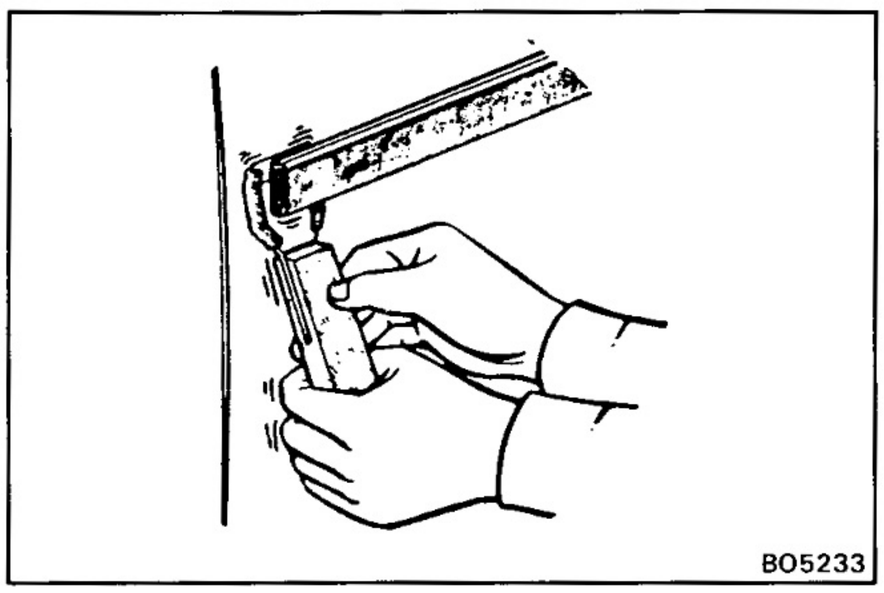

REMOVAL OF SIDE PROTECTION MOULDING

(See page BO-51)

1. REMOVE ENDS OF MOULDING

Using a scraper, pry the moulding loose about 30 mm (1.18 in.) from the ends.

HINT: Tape the scraper tip befoer use.

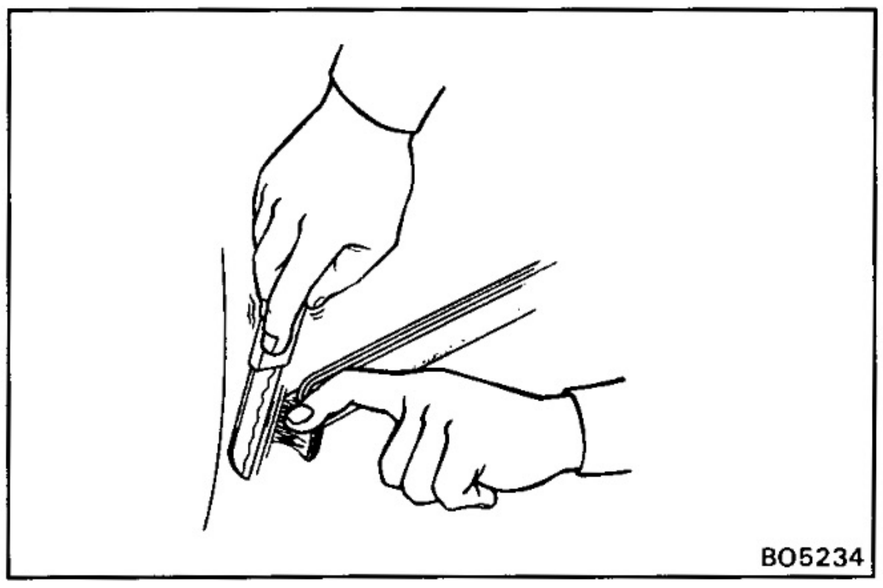

2. REMOVE MOULDING AND ADHESIVE

(a) Pull off the moulding by cutting the adhesive with a knife.

(b) Scrape off adhesive from the body with a cutter or sandpaper.

NOTICE:

- **Remember that 30 — 80 mm (1.18 — 3.15 in.) of the ends of the moulding are glued tightly with a strong adhesive.**
- **Do not reuse moulding.**

INSTALLATION OF SIDE PROTECTION MOULDING

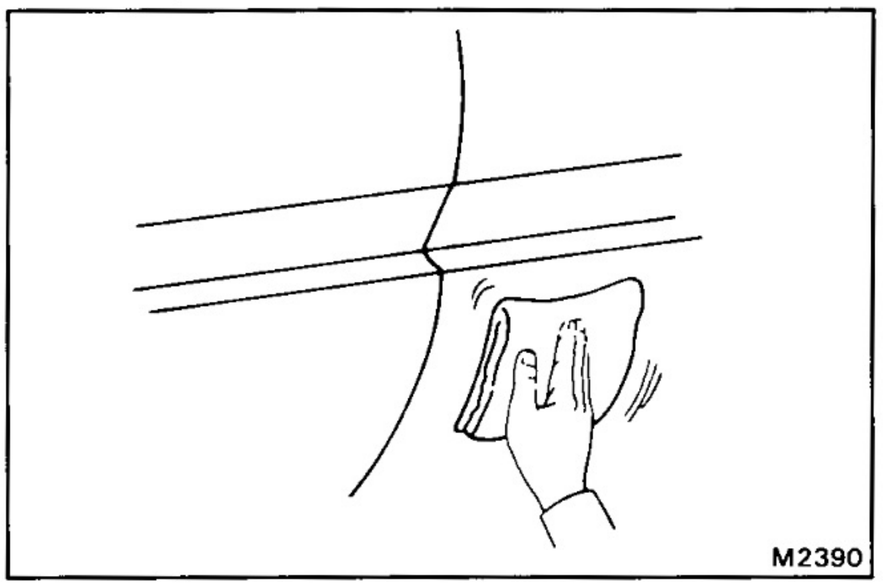

1. CLEAN MOULDING MOUNTING SURFACE

Wipe off stains with cleaner.

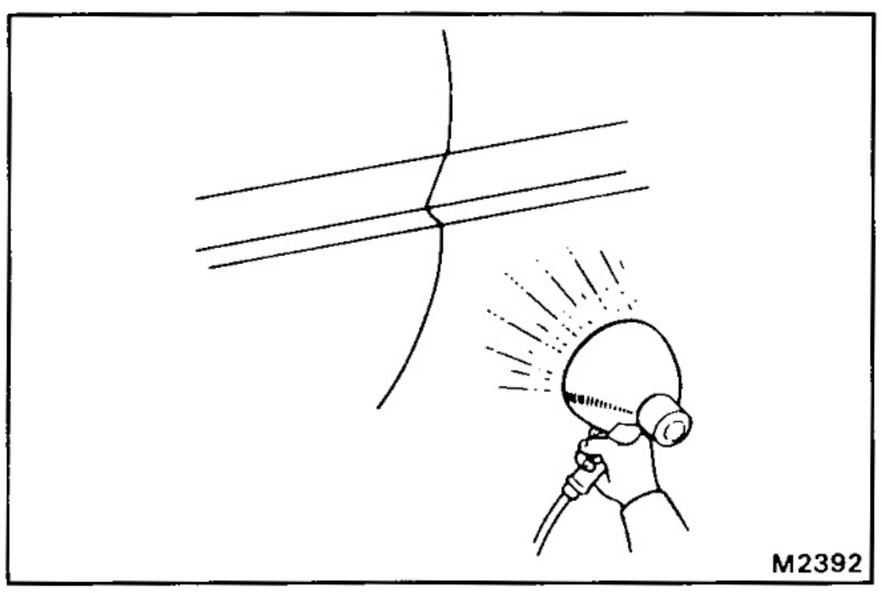

2. HEAT BODY MOUNTING SURFACE

Using a heat light, heat the body mounting surface to 30 — 50°C (86 — 122°F).

NOTICE: When the moulding is installed, the temperature of the mounting surface should be 20°C (68°F) or higher.

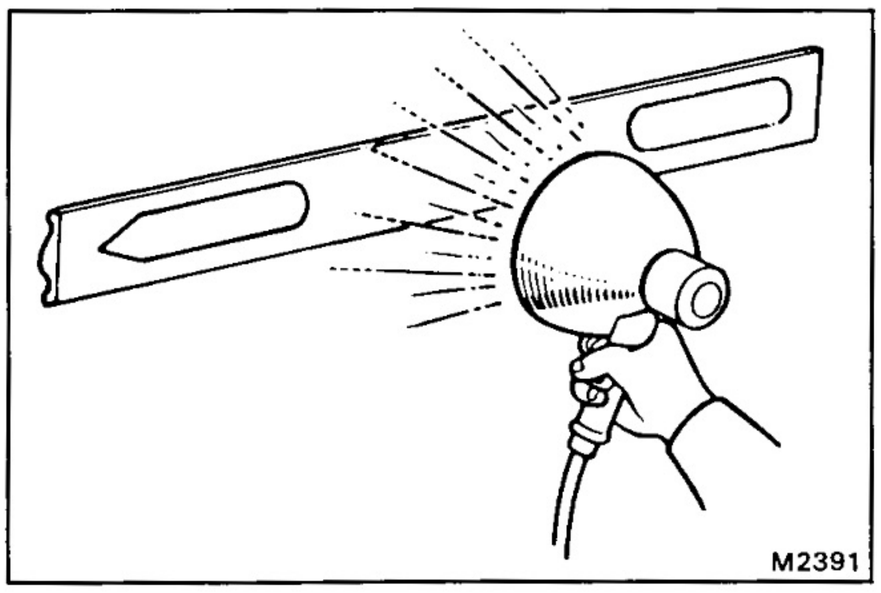

3. HEAT MOULDING

Using a heat light, heat the moulding to 30 — 60°C (86 — 140°F).

NOTICE: Do not heat moulding excessively.

The temperature should not be higher than 80°C (176°F).

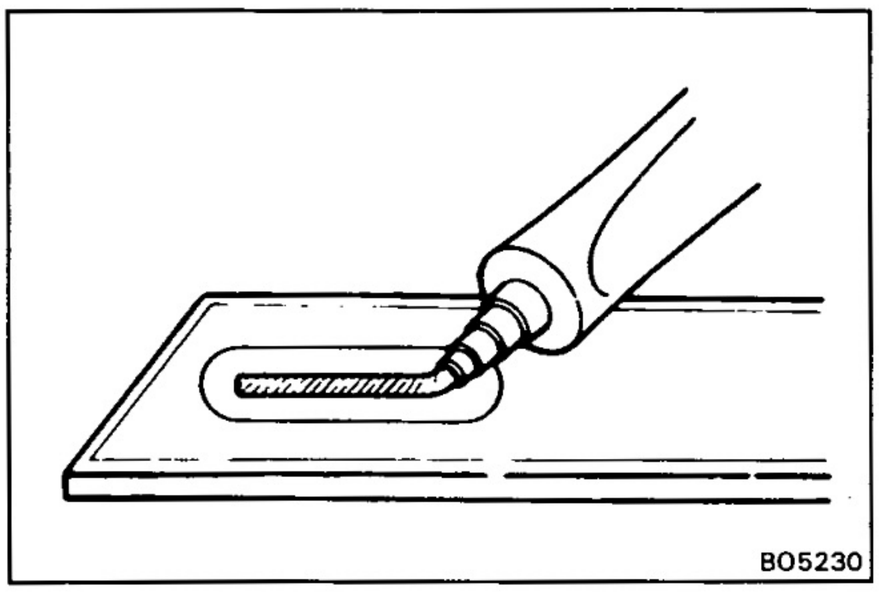

4. APPLY ADHESIVE TO MOULDING

Apply adhesive to both punched out ends of the moulding.

NOTICE: Install the moulding within 7 minutes after applying the adhesive.

5. LIFT MOULDING RELEASE SHEET FROM FACE OF MOULDING

NOTICE: When the moulding release sheet is removed, be sure that no dirt or dust can get onto the uncovered ared.

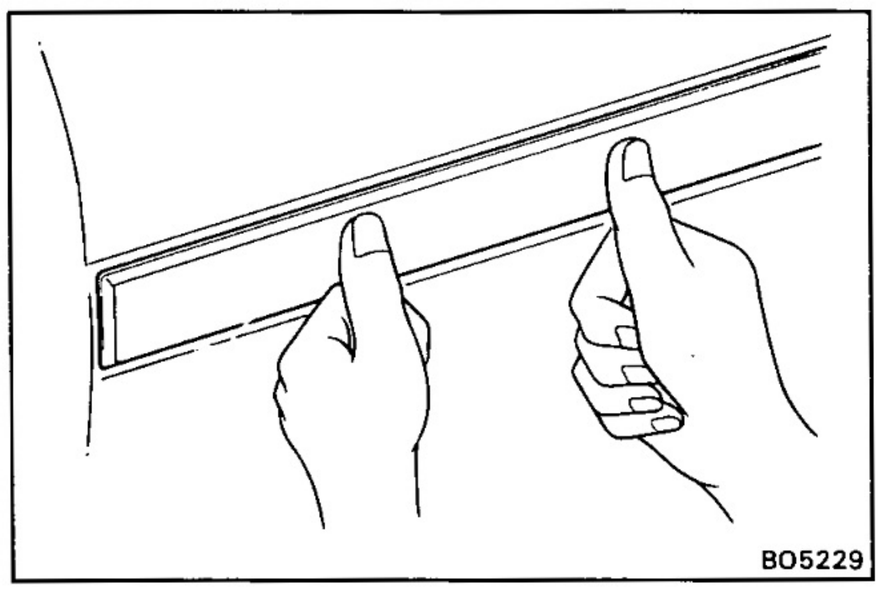

6. INSTALL MOULDING

Align the bosses on the moulding with the body holes, and push the moulding to the body.

NOTICE:

- **Be sure that the body and moulding are heated to the proper temperature.**
- **Do not depress the adhesive-coated parts excessively just hold them down with your thumb.**
- **Scrape off any overflowing adhesive with a plastic spatula and clean the surface with a dry rag.**
- **After installation, do not wash the vehicle for 24 hours.**

Back Door Moulding

COMPONENTS

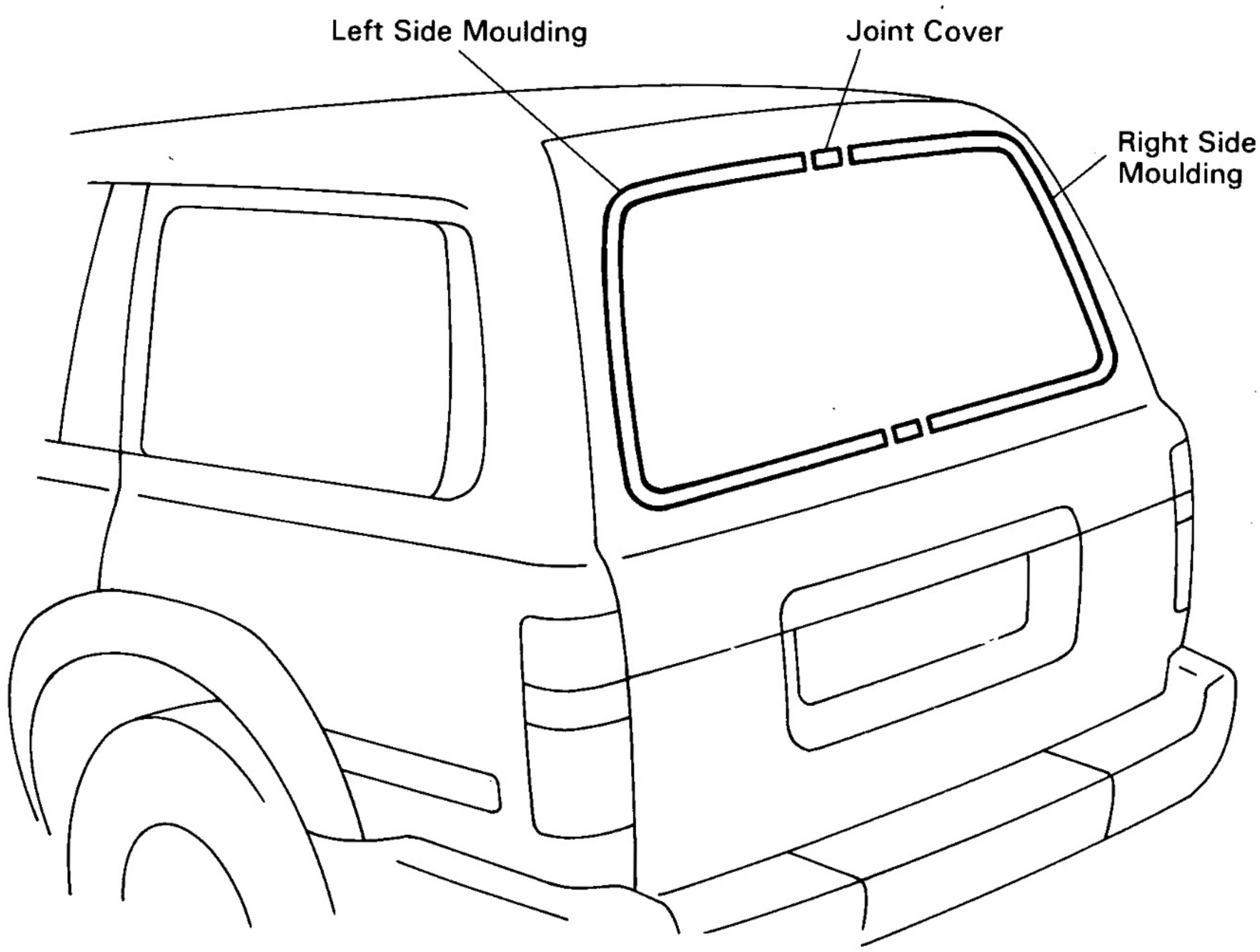

BO5158

REMOVAL OF BACK DOOR MOULDING

HINT: Remove the moulding in the same manner as the windshield moulding. (See page BO-48)

INSTALLATION OF BACK DOOR MOULDING

HINT: Install the moulding in the same manner as the windshield moulding. (See page BO-48)

Wheel Opening Extension

COMPONENTS

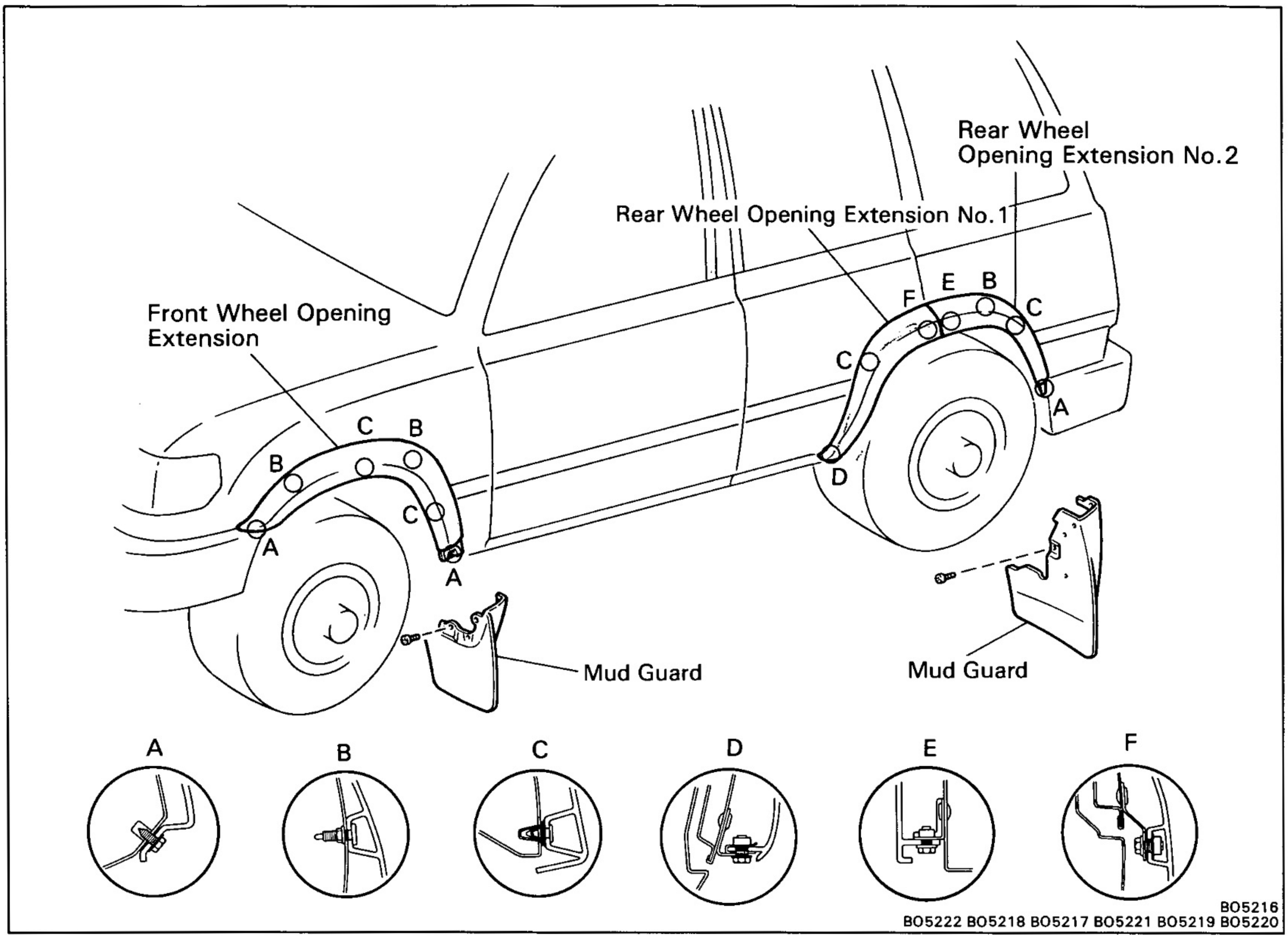

REMOVAL OF FRONT WHEEL OPENING EXTENSION

1. REMOVE FRONT MUD GUARD

Remove six screws and the mud guard.

2. REMOVE FRONT WHEEL OPENING EXTENSION

(a) Remove two bolts and two nuts.

(b) Remove the extension by pulling.

REMOVAL OF REAR WHEEL OPENING EXTENSION NO.1

REMOVE REAR WHEEL OPENING EXTENSION

(a) Remove two bolts.

(b) Remove the extension by pulling.

REMOVAL OF REAR WHEEL OPENING EXTENSION NO.2

(See page BO-43)

1. **REMOVE REAR MUD GUARD**

   Remove eight screws and the mud guard.

2. **REMOVE REAR WHEEL OPENING EXTENSION NO.2**

   (a) Remove two bolts and the nut.

   (b) Remove the extension by pulling.

INSTALL OF FRONT WHEEL OPENING EXTENSION

(See page BO-43)

1. **INSTALL FRONT WHEEL OPENING EXTENSION**

   (a) Tap the extension to install it.

   (b) Install two bolts and two nuts.

2. **INSTALL FRONT MUD GUARD**

   Install the mud guard with six screws.

INSTALL OF REAR WHEEL OPENING EXTENSION NO.1

(See page BO-43)

INSTALL REAR WHEEL OPENING EXTENSION NO.1

(a) Tap the extension to install it.

(b) Install two bolts.

INSTALL OF REAR WHEEL OPENING EXTENSION NO.2

(See page BO-43)

1. **INSTALL REAR WHEEL OPENING EXTENSION NO.2**

   (a) Tap the extension to install it.

   (b) Install two bolts and the nut.

2. **INSTALL MUD GUARD**

   Install the mud guard with eight screws.

WINDSHIELD

PREPARE ITEMS LISTED

Part name and No.	Contents of set
Auto glass sealer (08833-00030 or equivalent)	
Materials required	Cleaner (for cleaning adhering surfaces)

COMPONENTS

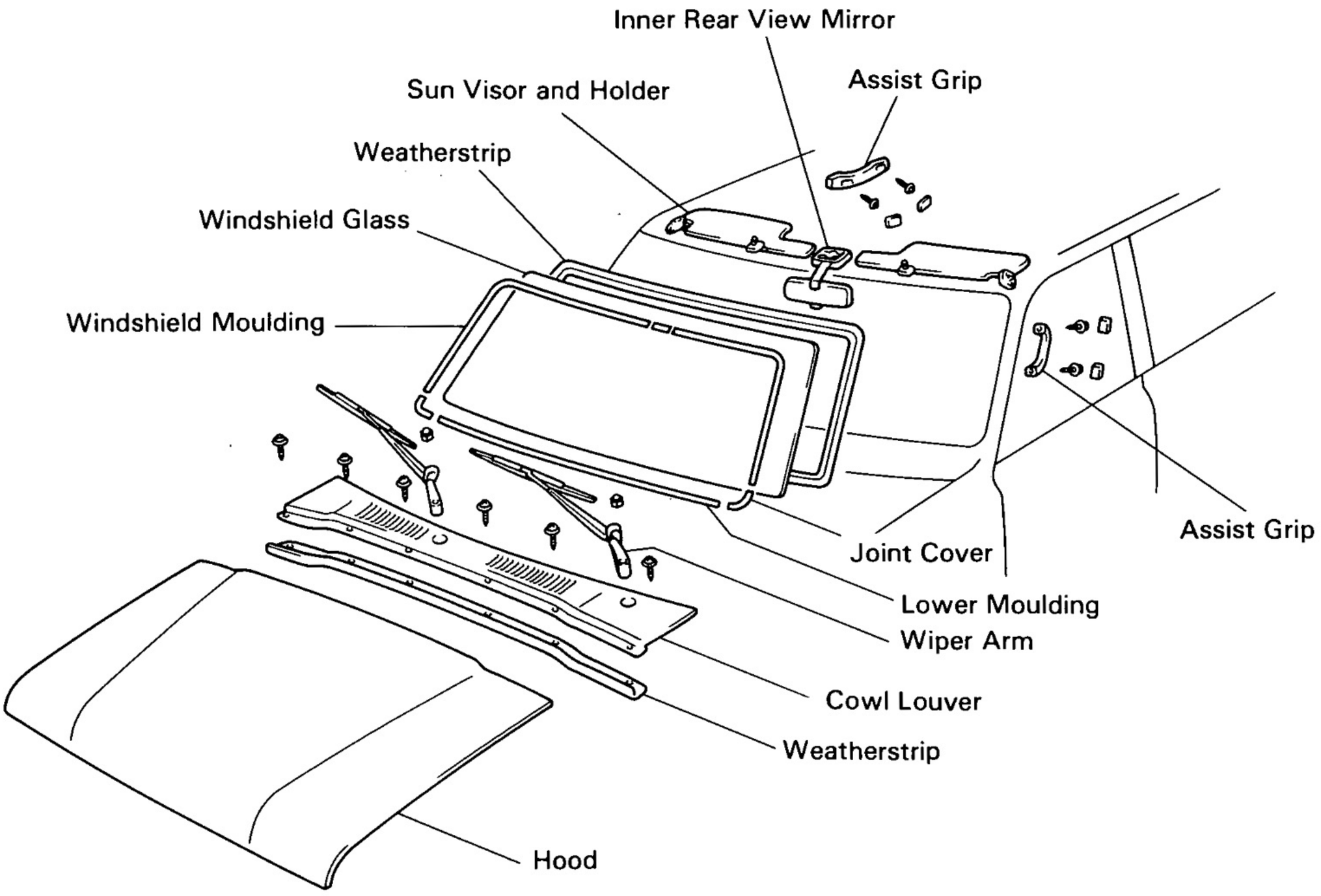

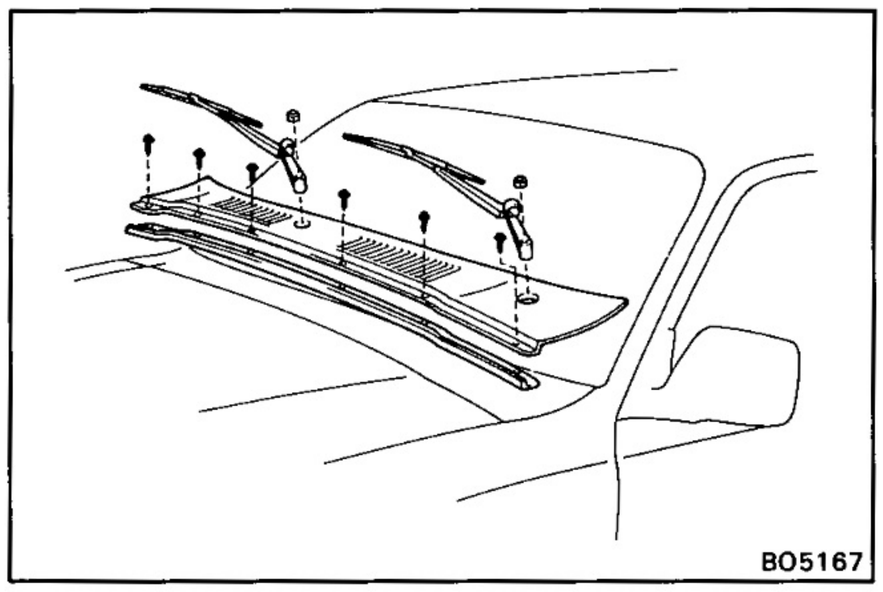

REMOVAL OF WINDSHIELD

(See page BO-57)

1. **REMOVE FRONT HOOD**

2. **REMOVE WIPER ARMS**
   (a) Open two caps.
   (b) Remove two nuts and the wiper arms.

3. **REMOVE COWL LOUVER**
   Remove sixs screws, cowl louver and weatherstrip.

4. **REMOVE FOLLOWING PARTS:**
   - Inner rear view mirror
   - Sun visors and holders.
   - Assist grips

5. **(w/ Windshield Moulding)**
   REMOVE WINDSHIELD MOULDING
   (See page BO-48)

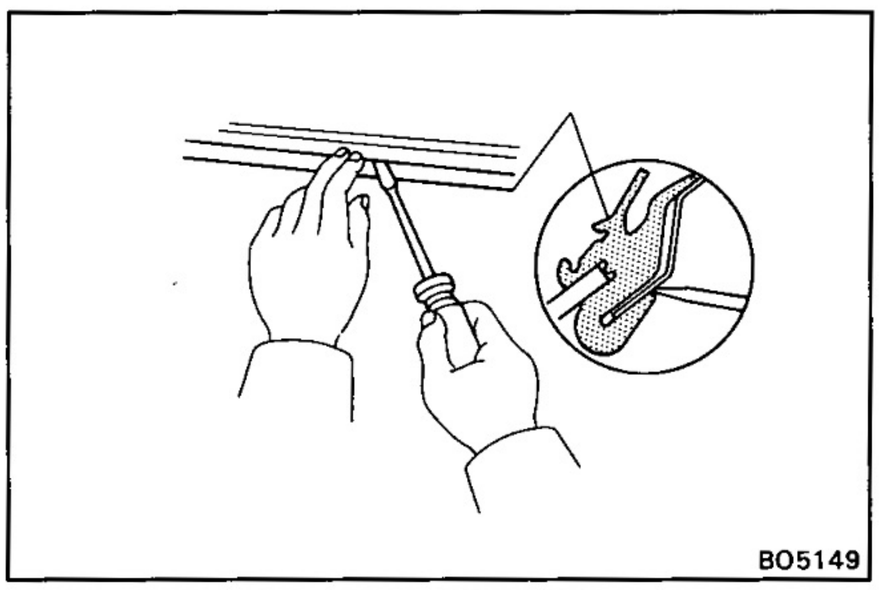

6. **REMOVE WINDSHIELD GLASS**

If reusing the weatherstrip:

(a) Using a screwdriver, loosen the weatherstrip from the body.

NOTICE: Be careful not to damage the boldy.

(b) Pry the lip of the weatherstrip outward from the interior part of the body flange.

(c) Pull the glass outwards and remove it with the weatherstrip.

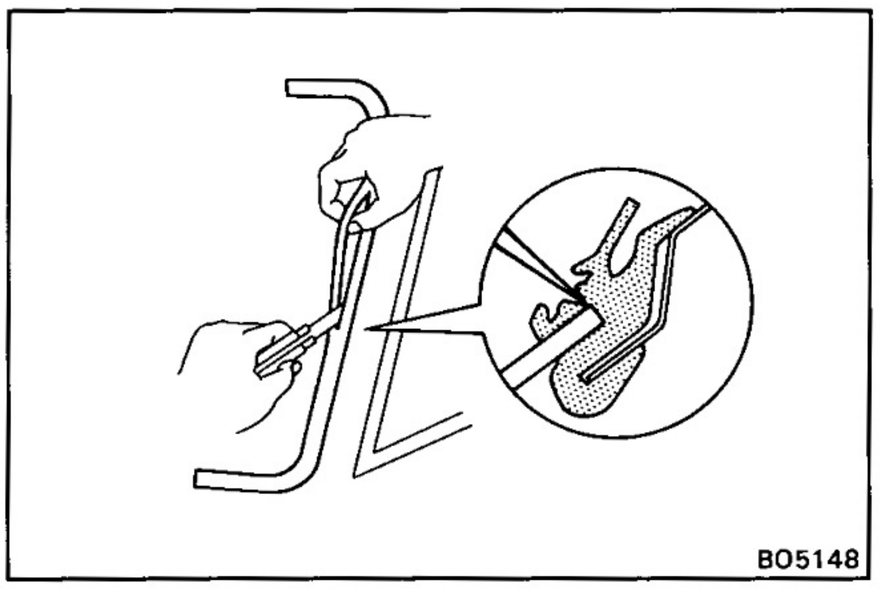

If using a new weatherstrip

(a) From the outside of the vehicle, cut off the weatherstrip lip with a knife.

HINT: Do not damage the body.

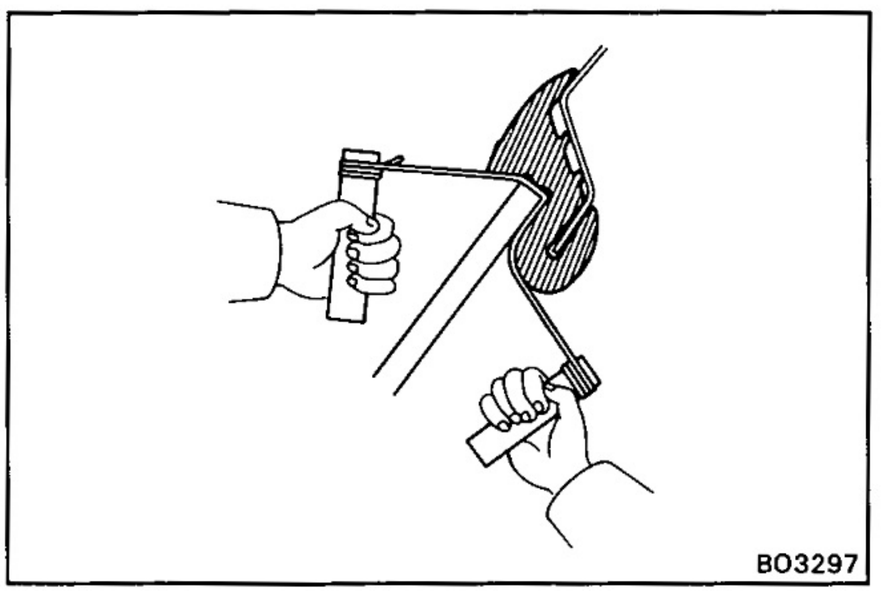

(b) Push piano wire through from the interior.

(c) Tie both wire ends to the wooden blocks or equivalent.

NOTICE: When separating, take care not to damage the paint or interior ornaments.
To prevent scratching the safety pad when removing the windshield, place a plastic sheet between the piano wire and safety pad.

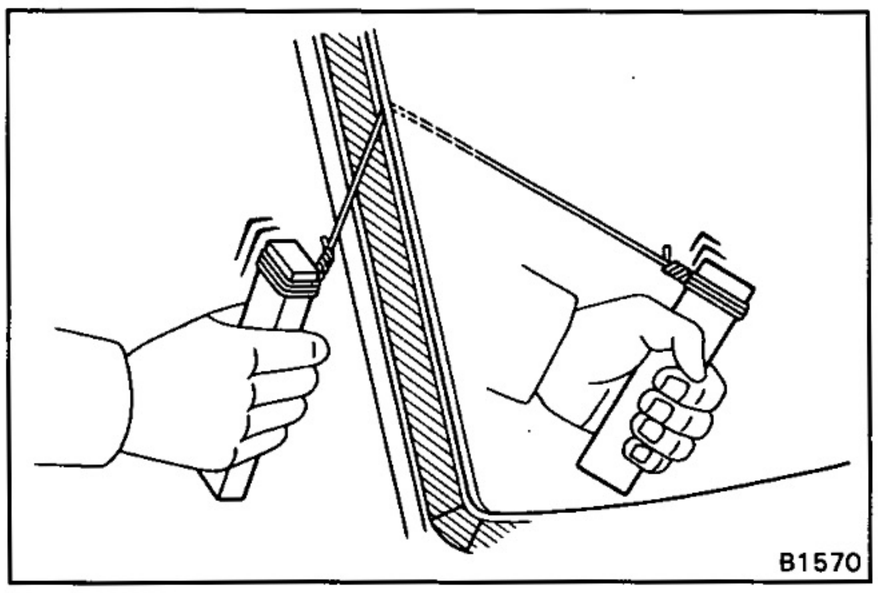

(d) Cut the adhesive by pulling the piano wire around it.

(e) Remove the glass.

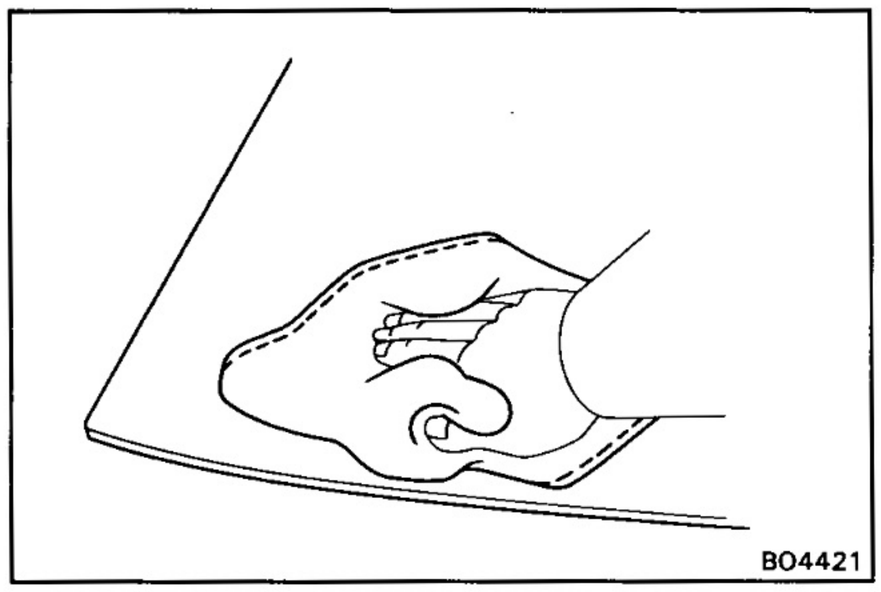

INSTALLATION OF WINDSHIELD

(See page BO-57)

1. CLEAN BODY AND GLASS

Using cleaner, clean the weatherstrip contacting surface of the body and the glass.

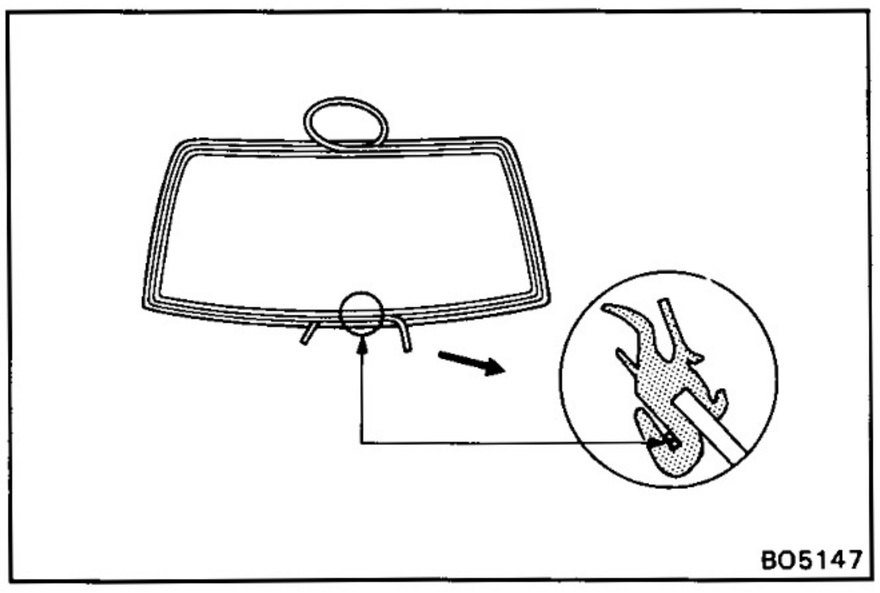

2. INSTALL WEATHERSTRIP ON GLASS

(a) Attach the weatherstrip to the glass.

NOTICE: If the weatherstrip has hardened, it way develop water leaks. Use a new one if possible.

(b) Apply a working cord along the weatherstrip groove as shown.

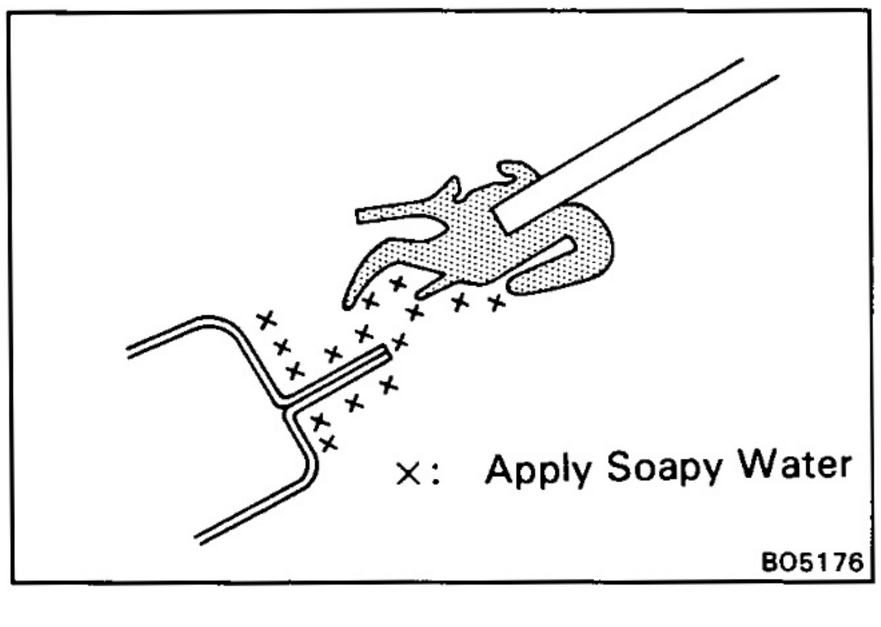

3. INSTALL GLASS

(a) Apply soapy water to the contact surface of the weatherstrip lip and to the body flange.

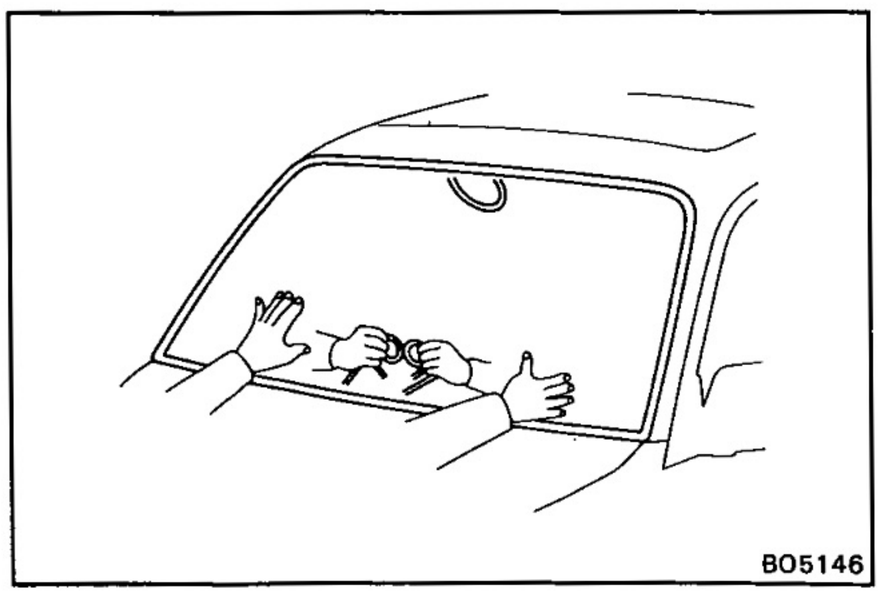

HINT: Begin installation in the middle of the lower part of the glass.

(b) Hold the glass in position on the body.

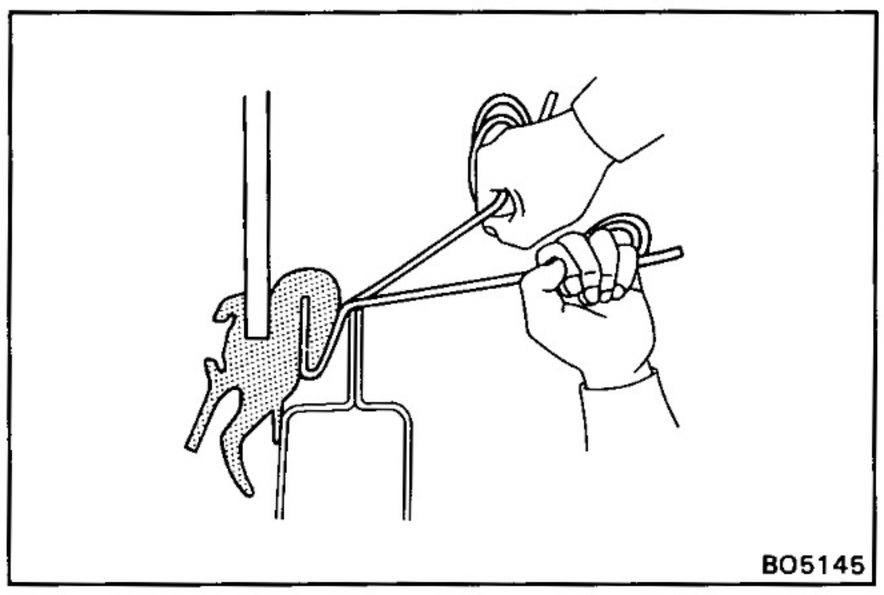

(c) From the inside, pull on one cord at an angle so it pulls the lip over the flange. From the outside, press the glass along the weatherstrip until the glass is installed.

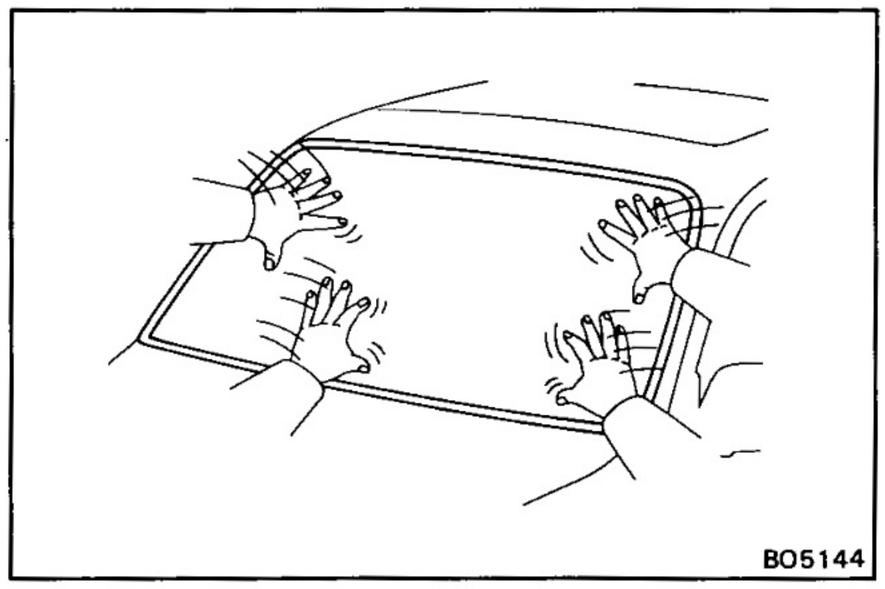

4. SNUG DOWN GLASS

To snug down the glass, tap from the outside with your open hand.

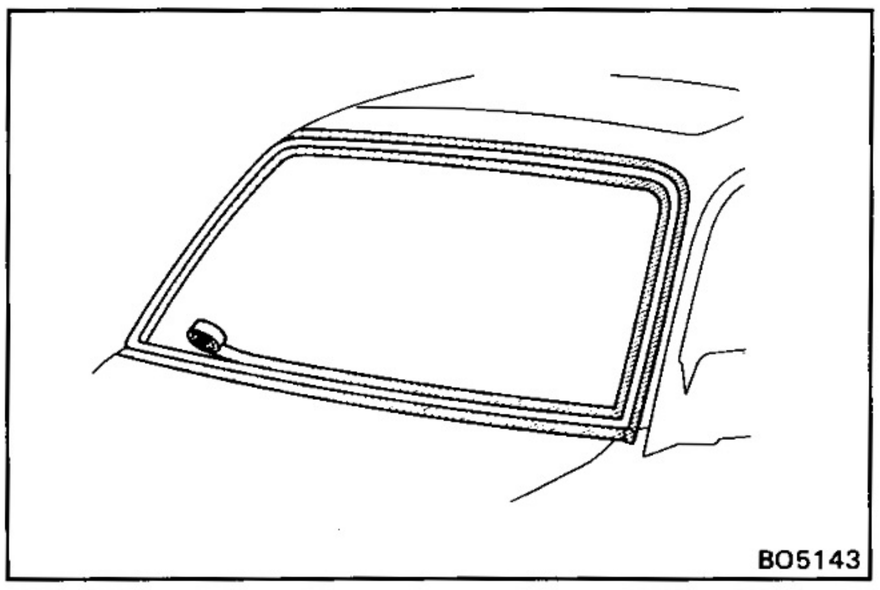

5. APPLY ADHESIVE

(a) Put masking tape around the weatherstrip to protect the paint and the glass.

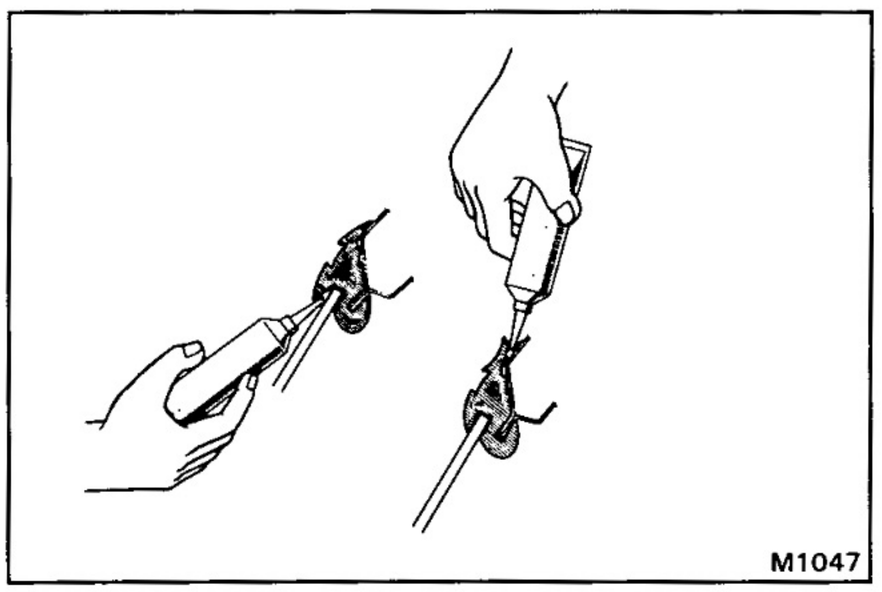

(b) Apply auto glass sealer to the weatherstrip lip as shown.

Part No. 08833-00030 or equivalent

6. CLEANING SEALER SURFACE

(a) After auto glass sealer dry, remove the masking tape.

HINT: The auto glass sealer will harden in about 15 hours.

(b) Clean off the sealer oozing out from the masking tape with a clean rag saturated in cleaner.

7. INSPECT FOR LEAKS AND REPAIR

(a) Perform a leak test.

(b) Seal any leaks with auto glass sealer.

Part No. 08833-00030 or equivalent

8. (w/ Windshield Moulding)
INSTALL WINDSHIELD MOULDING
(See page BO-48)

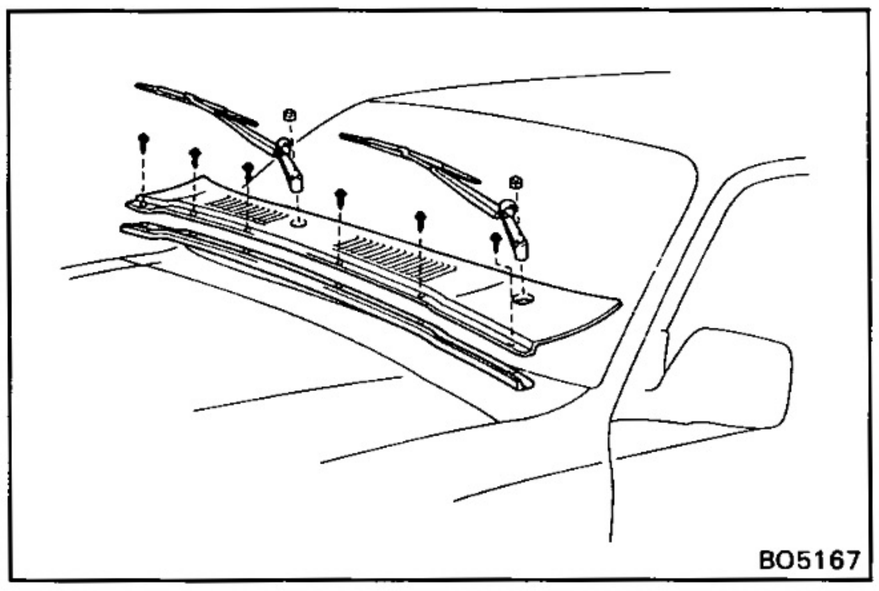

9. INSTALL COWL LOUVER

Install the weatherstrip, the cowl louver with six screws.

10. INSTALL WIPER ARM

(a) Install the wiper arms with two bolts.

(b) Close two caps.

11. INSTALL HOOD

12. ADJUST HOOD
(See page BO-5)

13. INSTALL FOLLOWING PARTS

- Sun visor and holder
- Inner rear view mirror
- Assist grips

QUARTER WINDOW GLASS

COMPONENTS

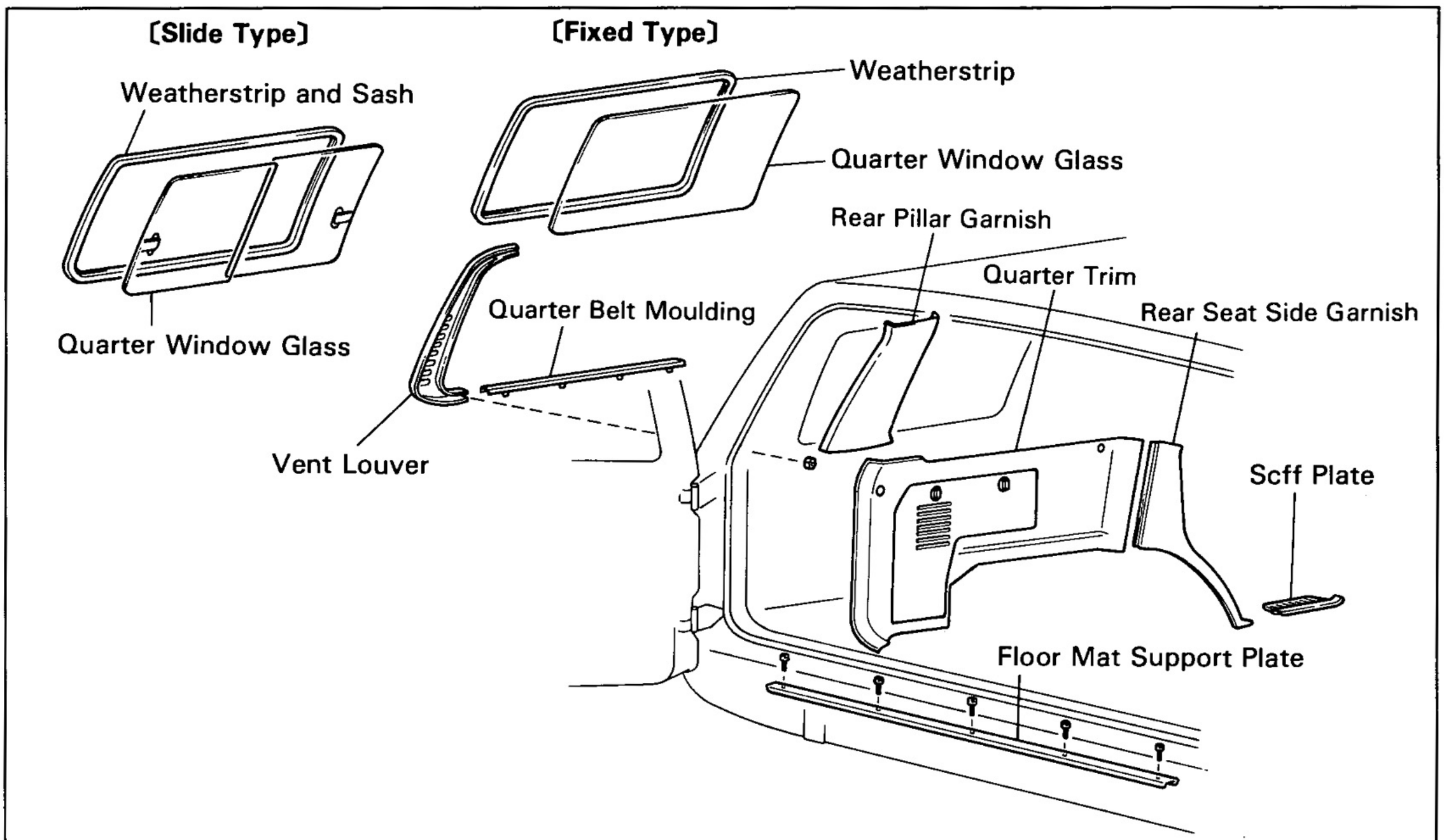

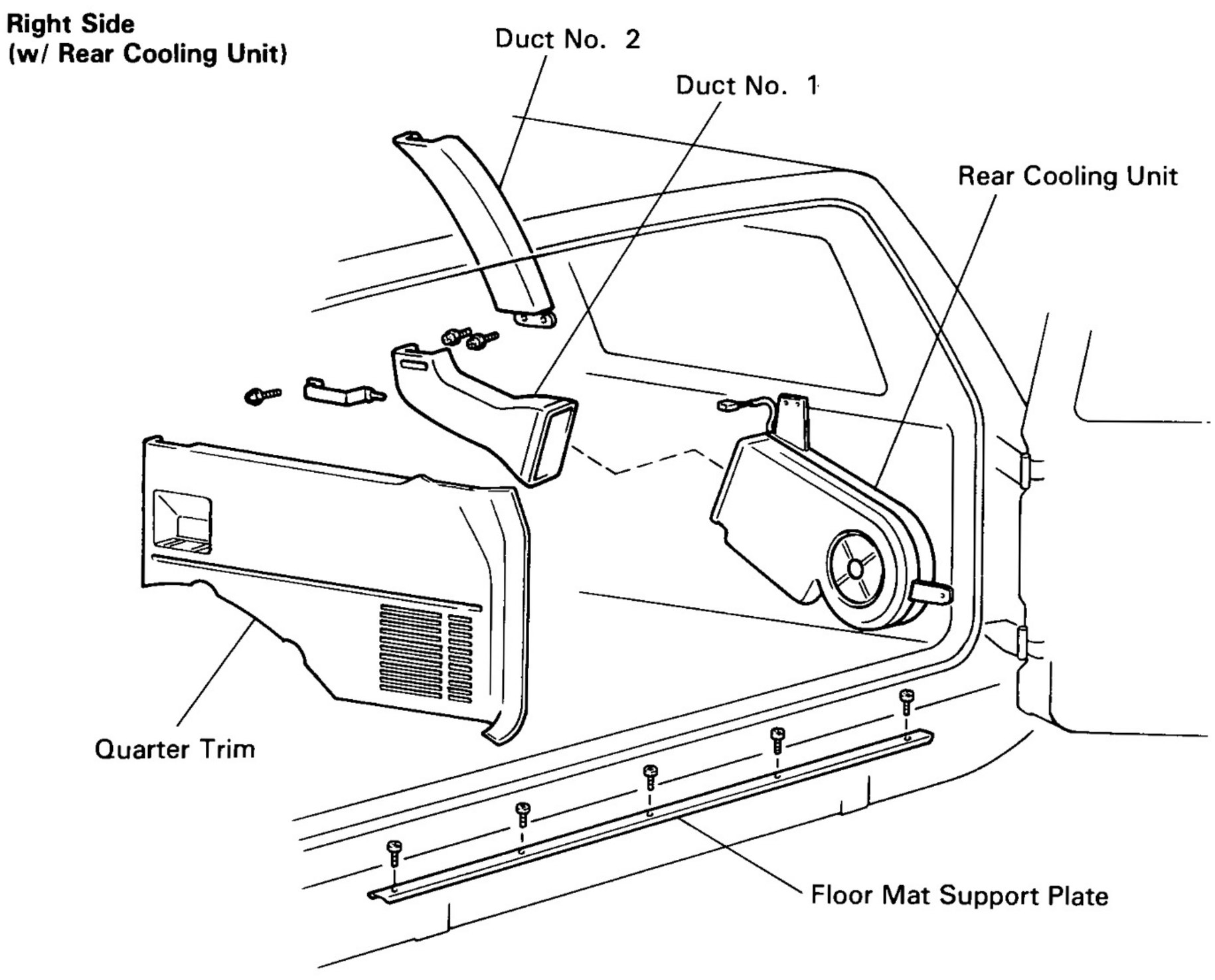

B05165
B05166

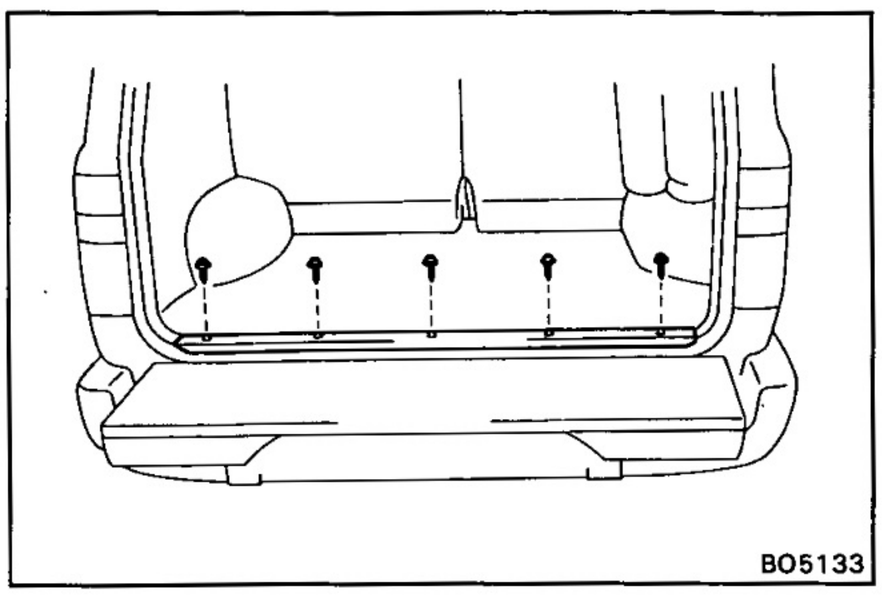

REMOVAL OF QUARTER WINDOW GLASS

(See page BO-62)

1. REMOVE FLOOR MAT SUPPORT PLATE

Remove five screws and the plate.

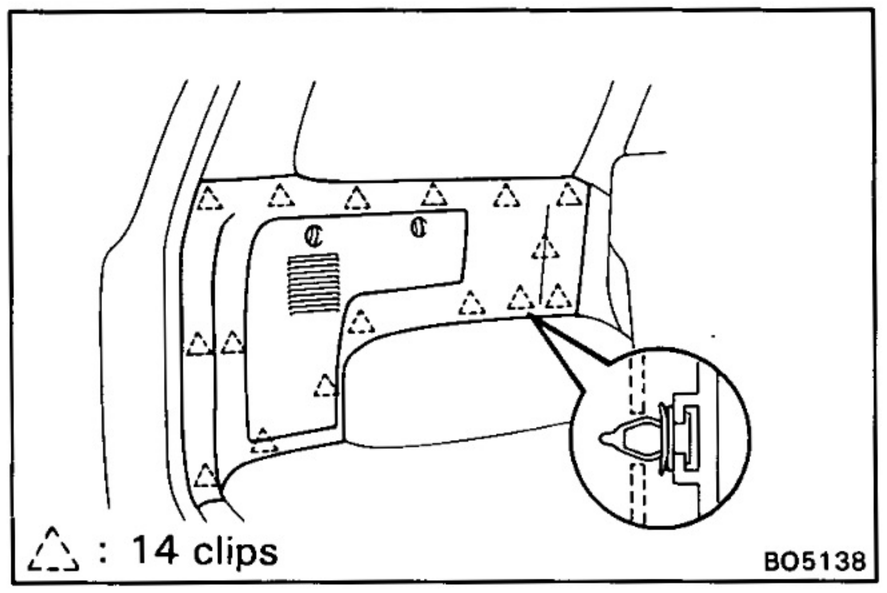

2. REMOVE QUARTER TRIM

(a) Insert a screwdriver between the retainers and quarter trim to pry it loose.

HINT: Tape the screwdriver tip before use.

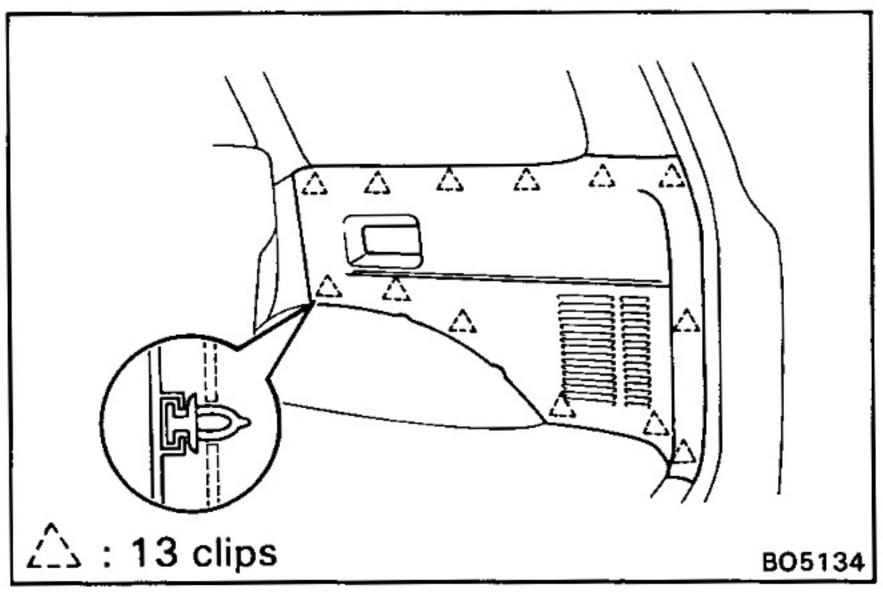

(b) (Right Side and w/ Rear Cooling Unit)

Insert a screwdriver between the retainers and quarter trim to pry it loose.

HINT: Tape the screwdriver tip before use.

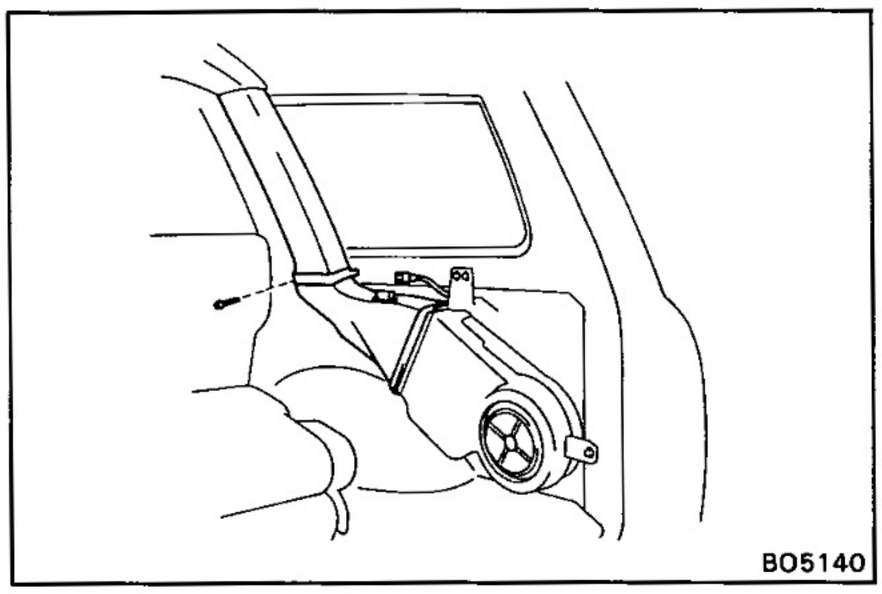

(c) Remove two screws and two ducts, then disconnect the connector.

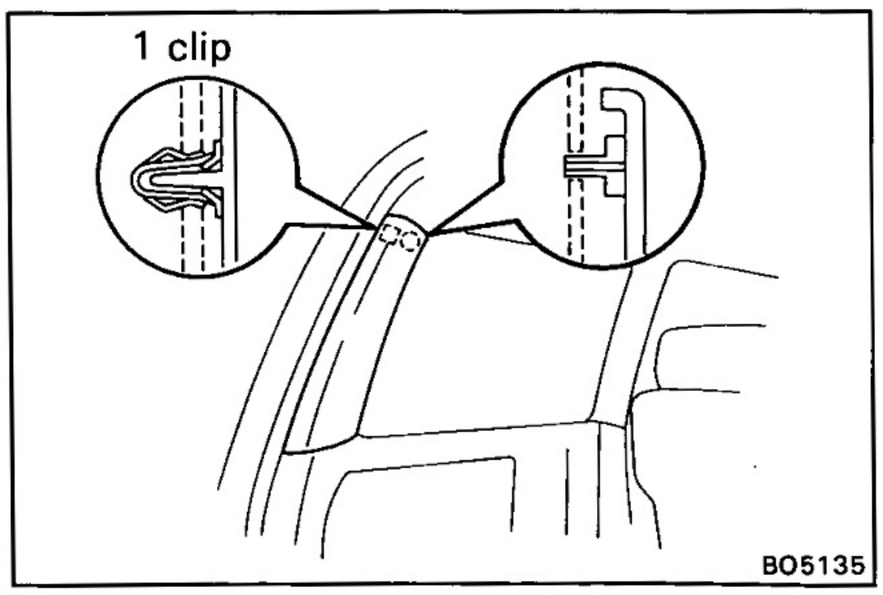

3. REMOVE REAR PILLAR GARNISH

Insert a screwdriver between the retainers and garnish to pry it loose.

HINT: Tape the screwdriver tip before use.

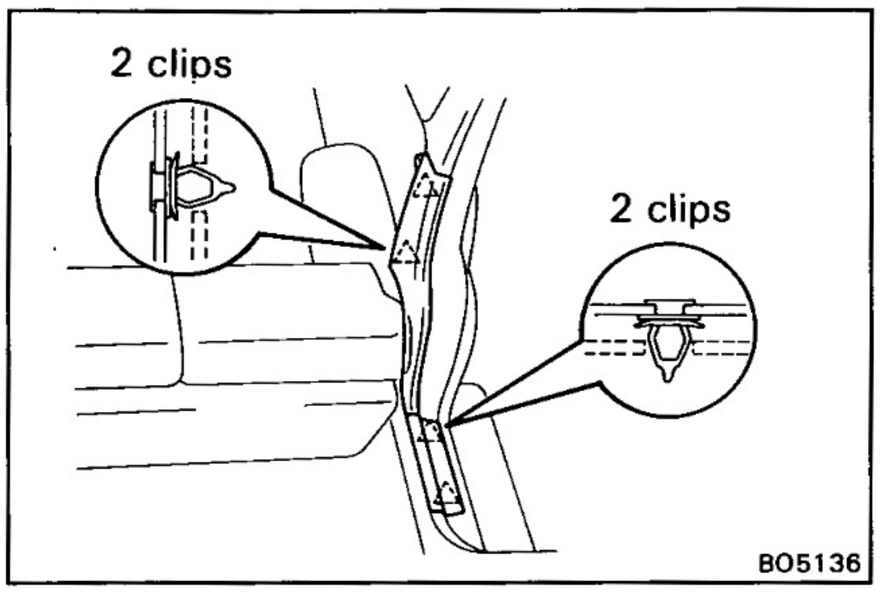

4. REMOVE REAR SEAT SIDE GARNISH AND SCFF PLATE

(a) Insert a screwdriver between the retainers and body to pry it loose.

HINT: Tape the screw driver tip before use.

(b) Pull out the side garnishe.

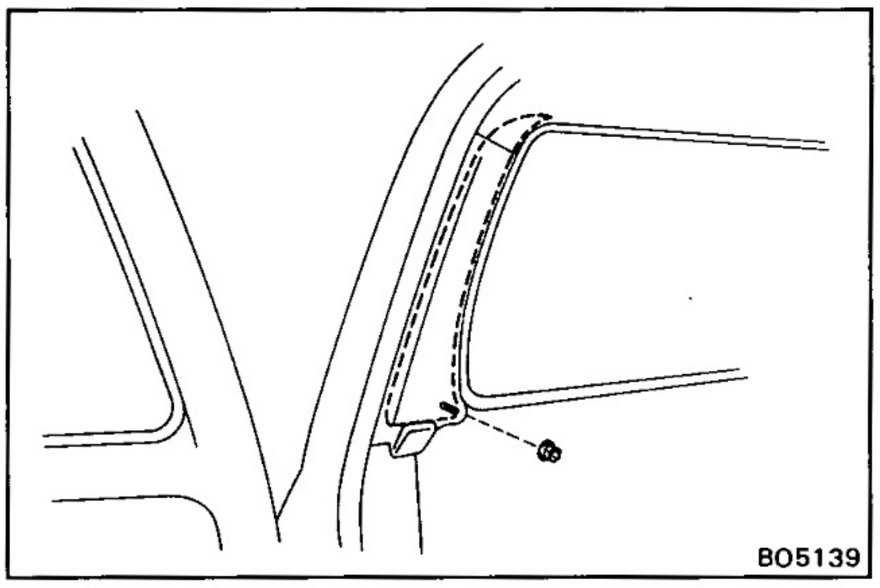

5. REMOVE VENT LOUVER AND QUARTER BELT MOULDING

(a) Remove the nut from the vent louver.

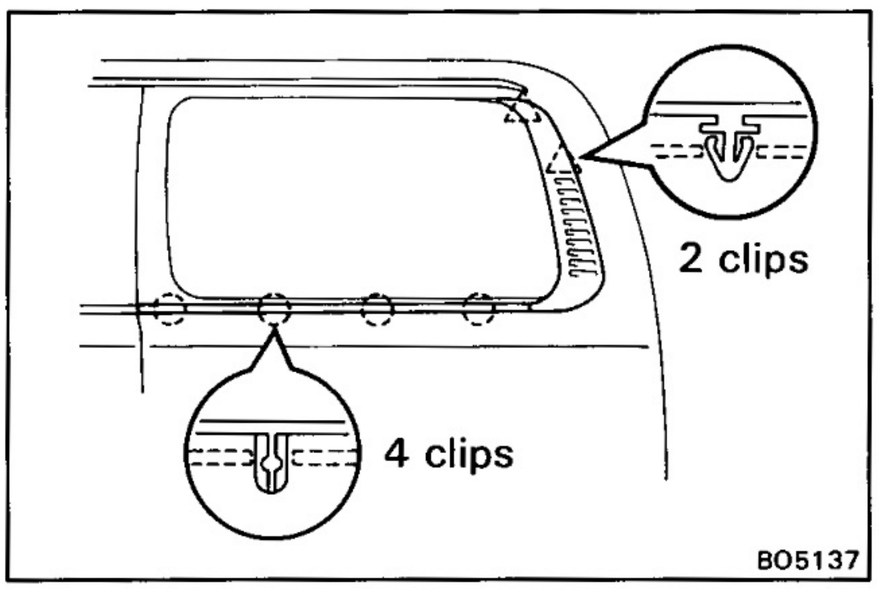

(b) Insert a screwdriver between the retainers of vent louver and body to pry it loose.

HINT: Tape the screwdriver tip before use.

(c) Remove the vent louver.

(d) Insert a screwdriver between the retainers of moulding and body.

HINT: Tape the screwdriver tip before use.

(e) Remove the moulding.

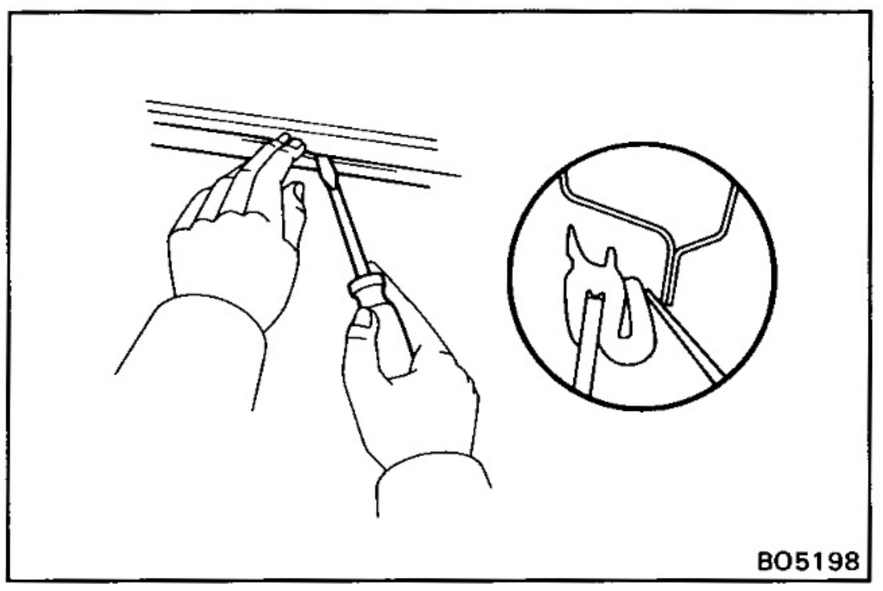

6. REMOVE QUARTER WINDOW GLASS

If reusing the weatherstrip:

(a) Using a screw driver, loosen the weatherstrip from the body.

NOTICE: Be careful not to damage the body.

(b) Pry the lip of the weatherstrip outward from the interior part of the body flange.

(c) Pull the glass outwards and remove it with the weatherstrip.

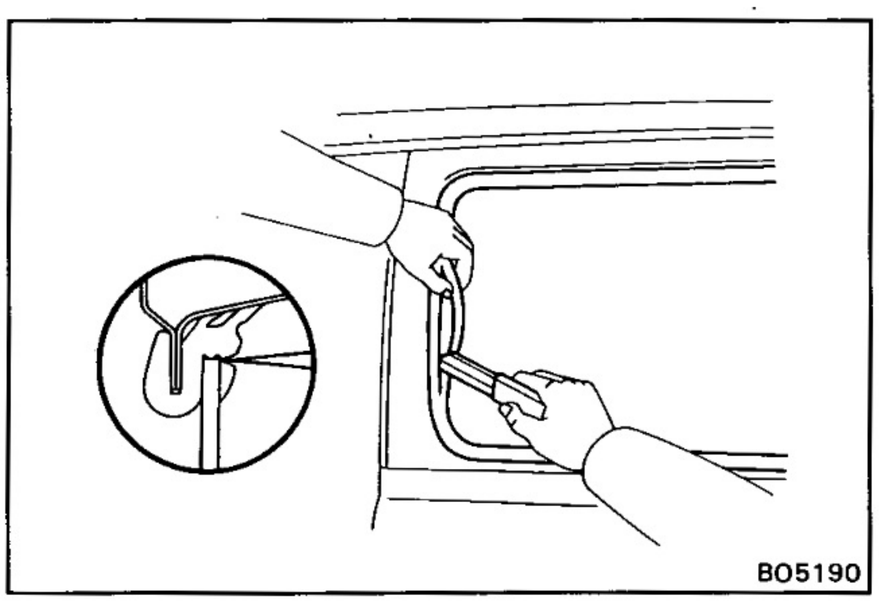

If using a new weatherstrip:

(a) From outside of the vehicle, cut off the weatherstrip lip with a knife.

(b) Push the back door glass outwards and remove the back door glass.

(c) Remove the remaining weatherstrip.

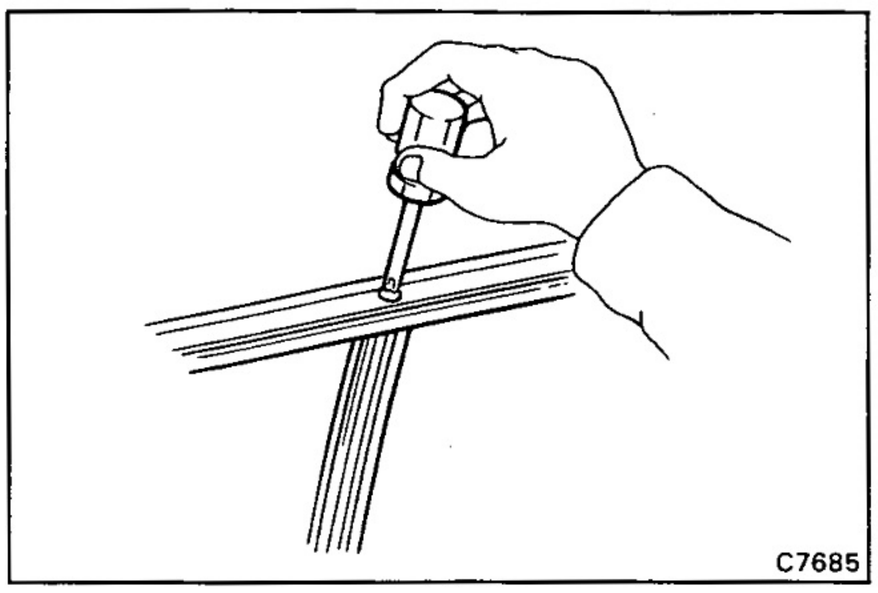

DISASSEMBLY OF QUARTER WINDOW GLASS

(See page BO-62)

(Slide Type)

1. **REMOVE CENTER WEATHERSTRIP**

   Remove the screw and the weatherstrip.

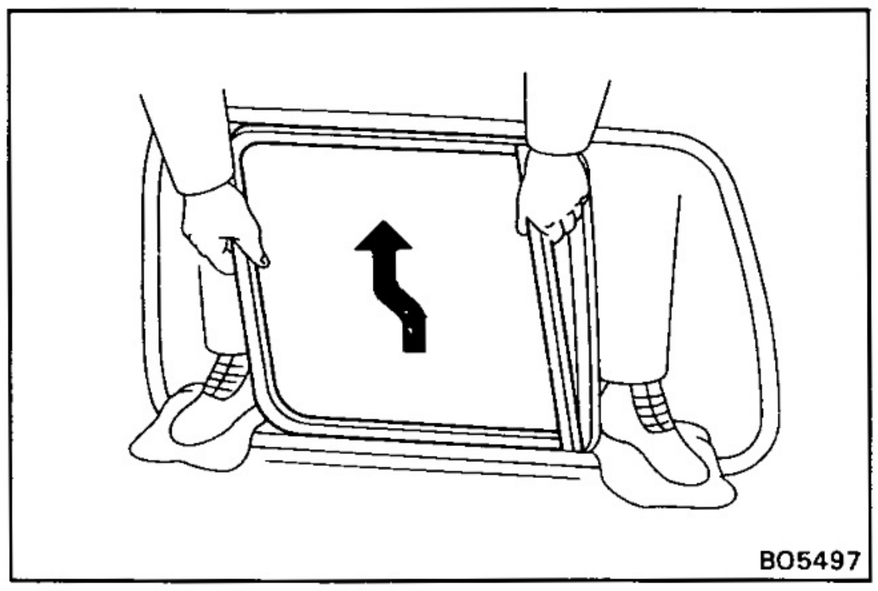

2. **REMOVE GLASS**

   Pull up on the sash and remove the two glasses.

3. **REMOVE QUARTER WINDOW RUN FROM SASH**

4. **REMOVE QUARTER WINDOW WEATHERSTRIP FROM SASH**

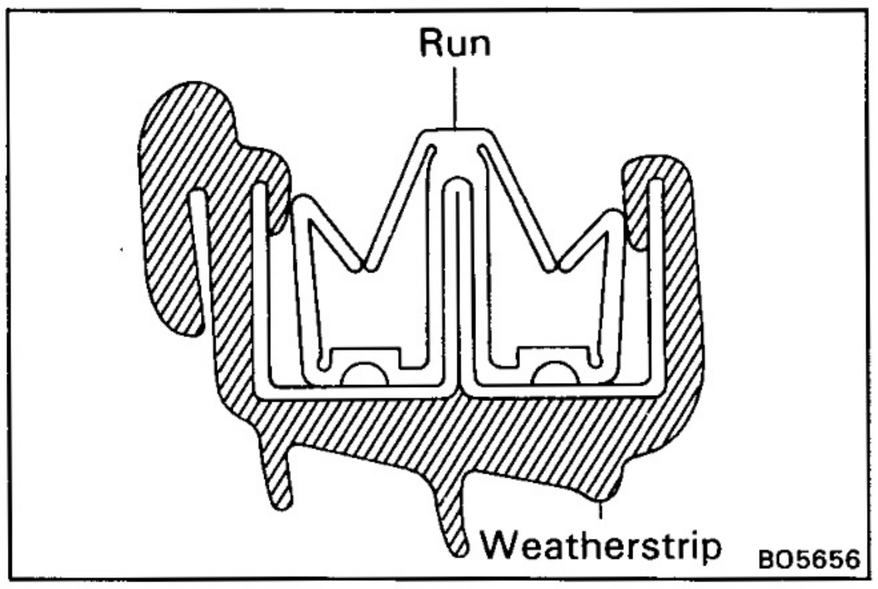

ASSEMBLY OF QUARTER WINDOW GLASS

(See page BO-62)

(Slide Type)

1. **INSTALL QUARTER WINDOW WEATHERSTRIP ON SASH AS SHOWN**

   NOTICE: If the weatherstrip has hardened, it may develop leaks. Use a new one if possible.

2. **INSTALL QUARTER WINDOW RUN AS SHOWN**

3. **INSTALL QUARTER WINDOW GLASS**

   Pull up on the sash and install the two glasses.

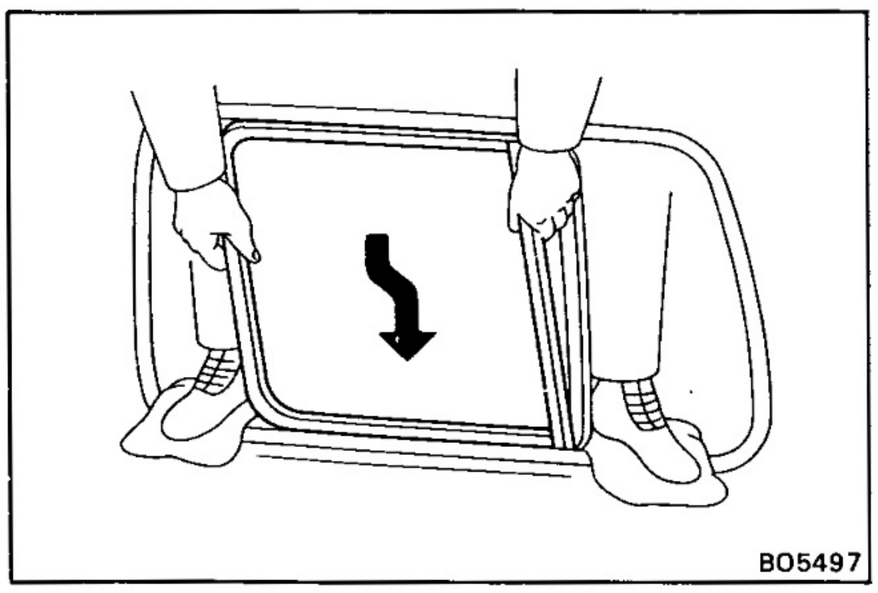

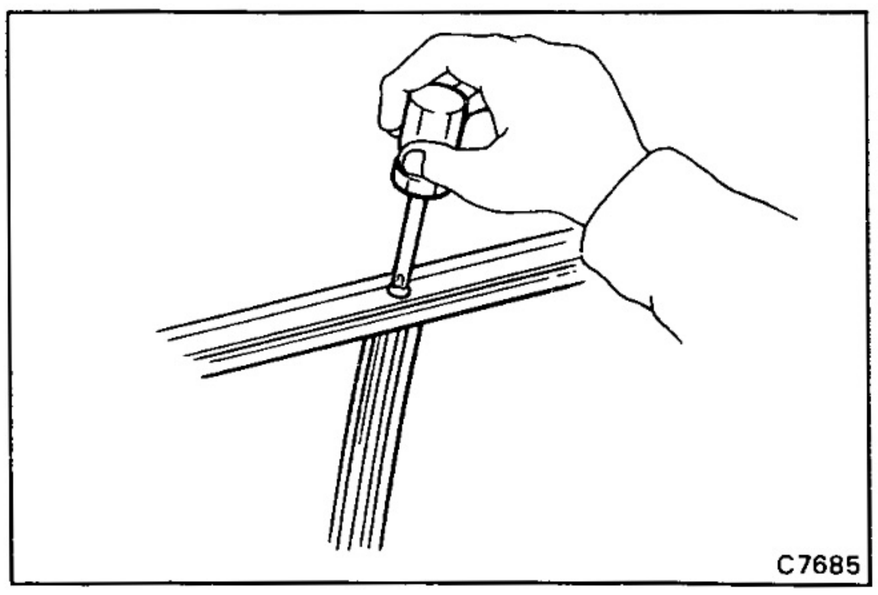

4. **INSTALL CENTER WEATHERSTRIP**

   Install the weatherstrip with the screw.

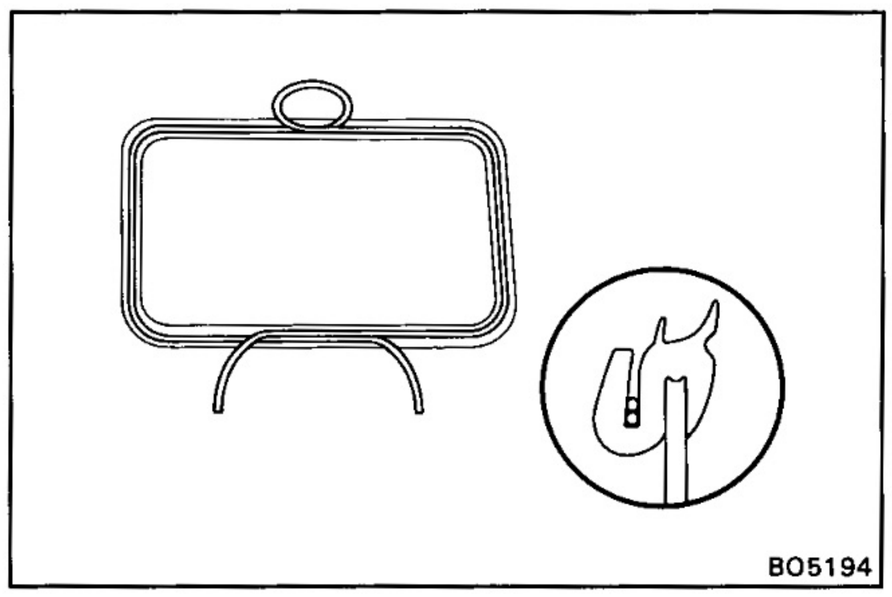

INSTALLATION OF QUARTER WINDOW GLASS

(See page BO-62)

1. INSTALL WEATHERSTRIP ON GLASS

(a) Attach the weatherstrip to the glass.

NOTICE: If the weatherstrip has hardened, it may develop leaks. Use a new one if possible.

(b) Insert a cord into the groove of the weatherstrip all the way around with the ends overlapping.

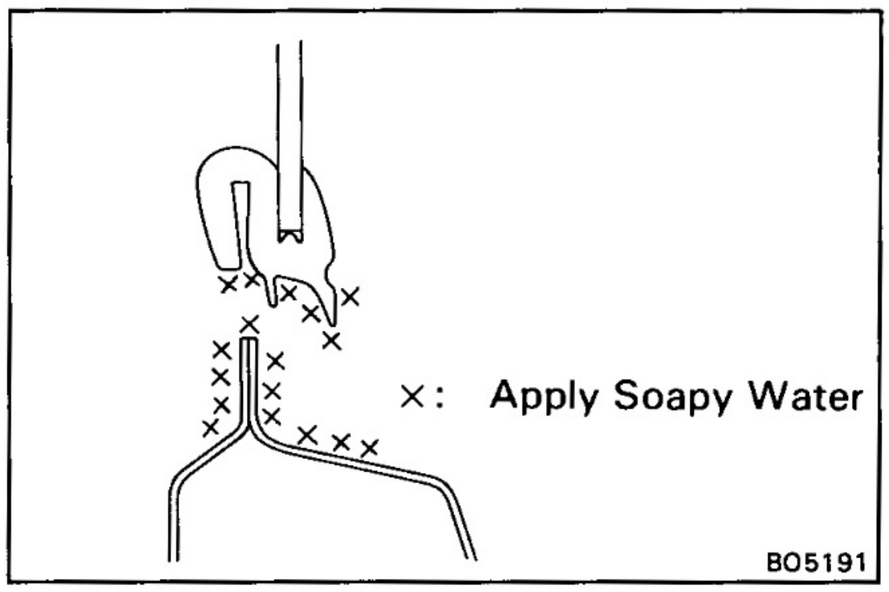

2. INSTALL QUARTER WINDOW GLASS

(a) Apply soapy water to the contact surface of the weatherstrip lip and to the body flange.

HINT: Begin installation in the middle of the lower part of the quarter window glass.

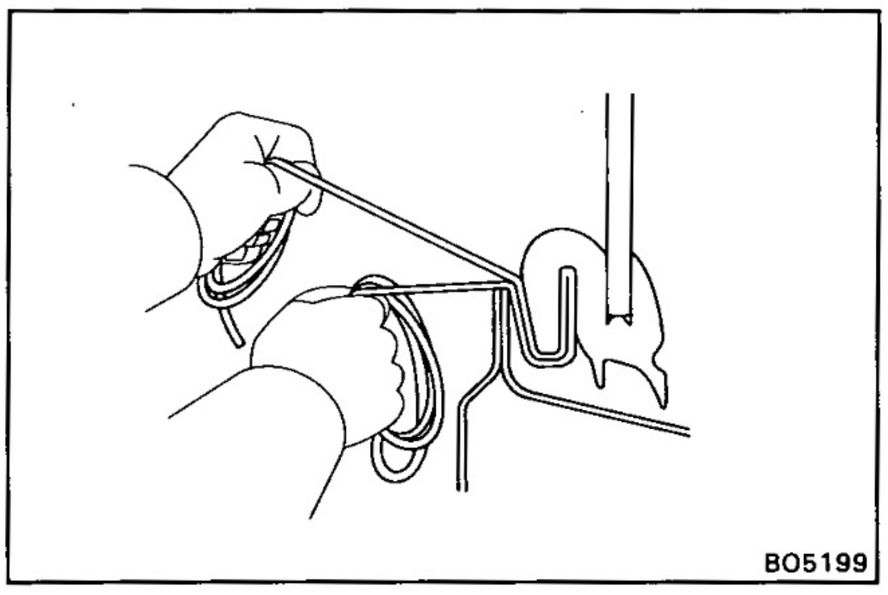

(b) Hold the glass in position on the body.

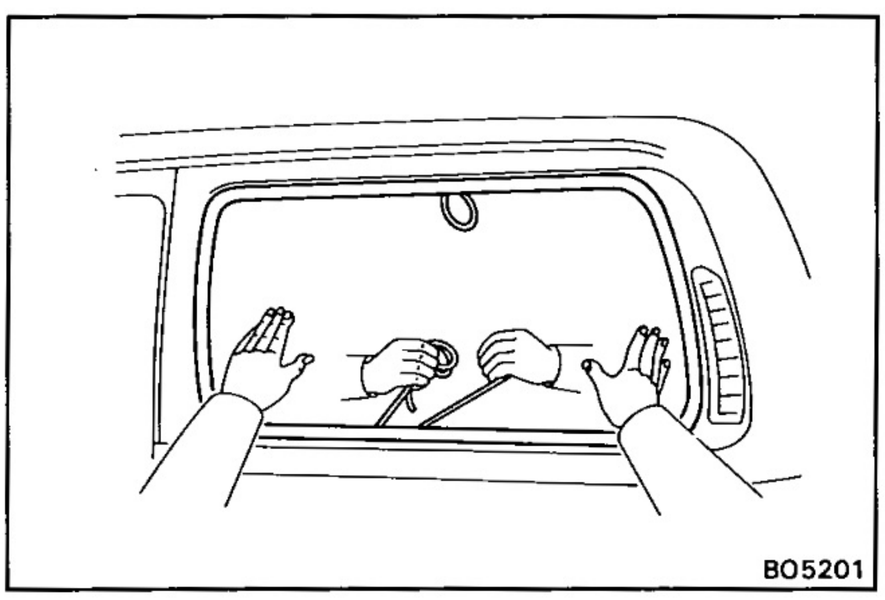

(c) From the inside, pull on one cord at an angle so it pulls the lip over the flange. From the outside, press the glass along the weatherstrip until the glass is installed.

3. SNUG DOWN GLASS

To snug down the glass, tap from the outside with your open hand.

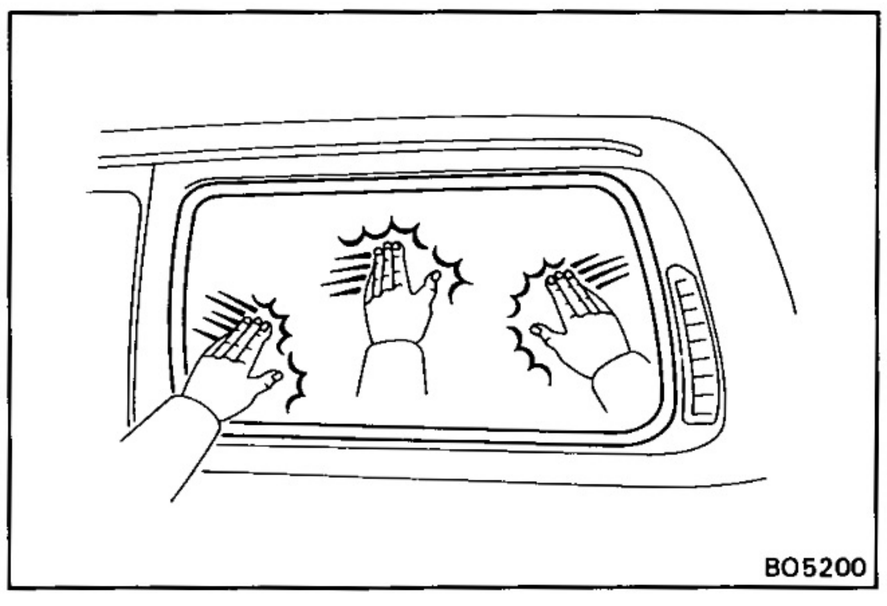

4. INSPECT FOR LEAKS AND REPAIR

(See step 7 on page BO-61)

5. INSTALL FOLLOWING PARTS:

- Pillar garnishes
- Quarter trim
- Floor mat support plate
- Air ducts
- Side garnishes and scuff plate

BACK DOOR GLASS

PREPARE ITEMS LISTED

(See page BO-57)

COMPONENTS

Lift-up Type

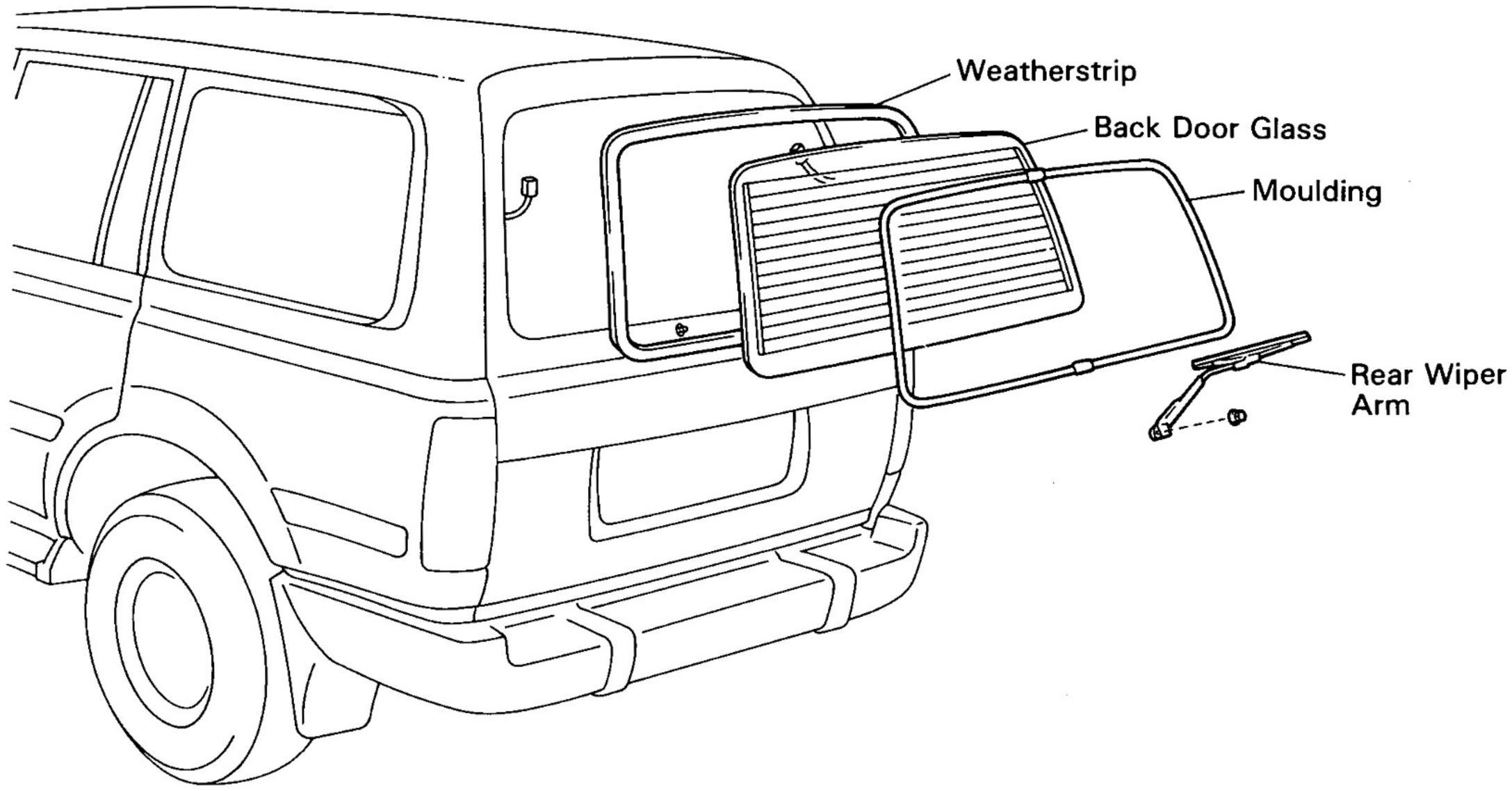

Swing Out Type

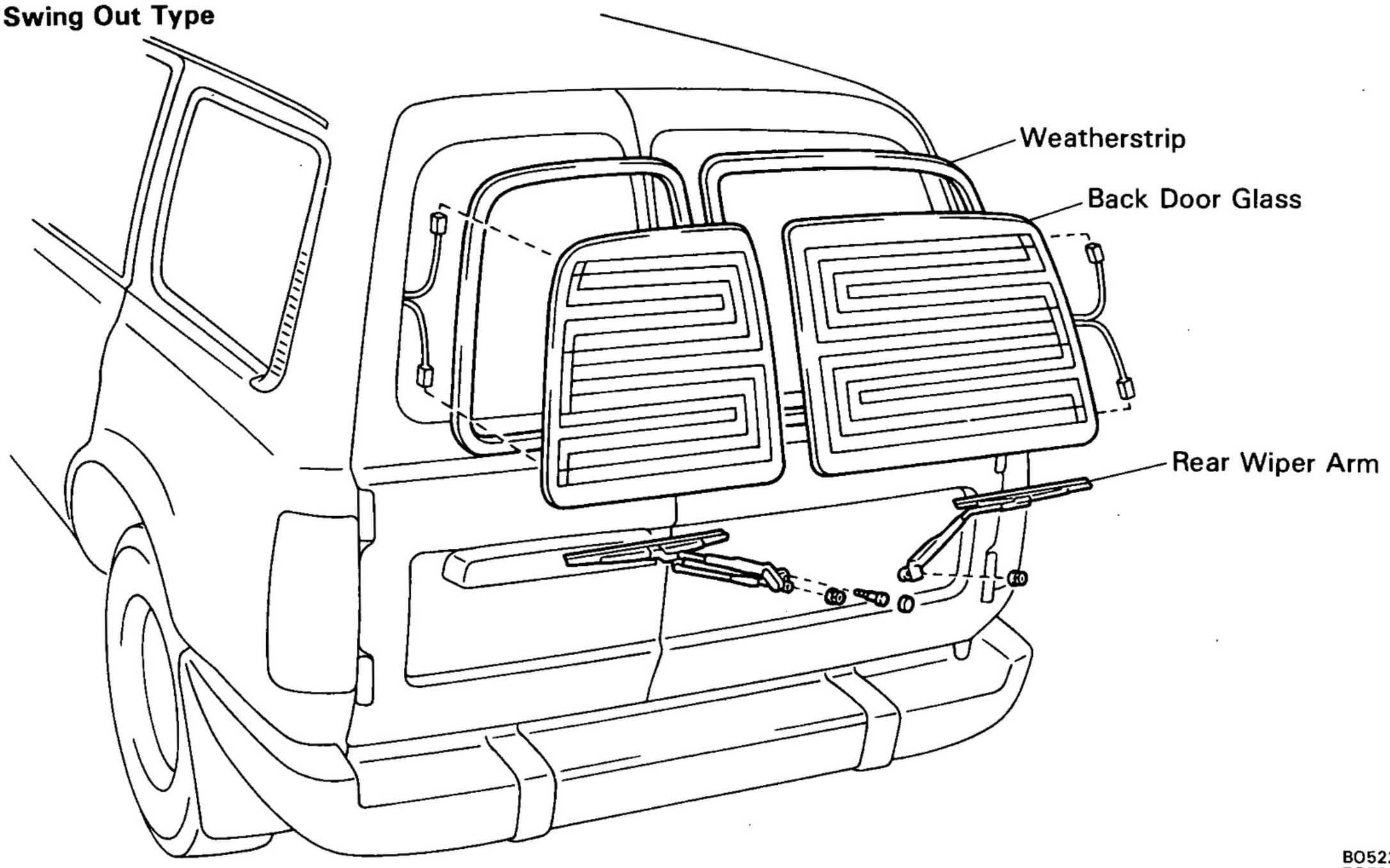

BO5227
BO5228

REMOVAL OF BACK DOOR GLASS

1. **REMOVE REAR WIPER ARM**

2. **(w/ Defogger)**
   REMOVE DEFOGGER CONNECTOR
   Disconnect the connector from the glass.

3. **(w/ Back Door Moulding) Lift-up Type**
   REMOVE BACK DOOR MOULDING
   (See page BO-48)

4. **REMOVE BACK DOOR GLASS**
   HINT: Remove the glass in the same manner as the windshield.
   (See step 6 on page BO-58)

INSTALLATION OF BACK DOOR GLASS

1. **CLEAN BODY AND GLASS**
   (See step 1 on page BO-59)

2. **INSTALL WEATHERSTRIP ON GLASS**
   (See step 2 on page BO-59)

3. **INSTALL BACK DOOR GLASS**
   HINT: Install the glass in the same manner as the windshield.
   (See step 3 on page BO-59)

4. **SNUG DOWN GLASS**
   (See step 4 on page BO-60)

5. **APPLY ADHESIVE**
   (See step 5 on page BO-60)

6. **CLEANING SEALER SURFACE**
   (See step 6 on page BO-60)

7. **INSPECT FOR LEAKS AND REPAIR**
   (See step 7 on page BO-61)

8. **(w/ Back Door Moulding)**
   INSTALL BACK DOOR MOULDING
   (See page BO-48)

9. **(w/ Defogger)**
   INSTALL DEFOGGER CONNECTOR
   Connect the connector to the glass.

10. **INSTALL REAR WIPER ARM**

MOON ROOF

COMPONENTS

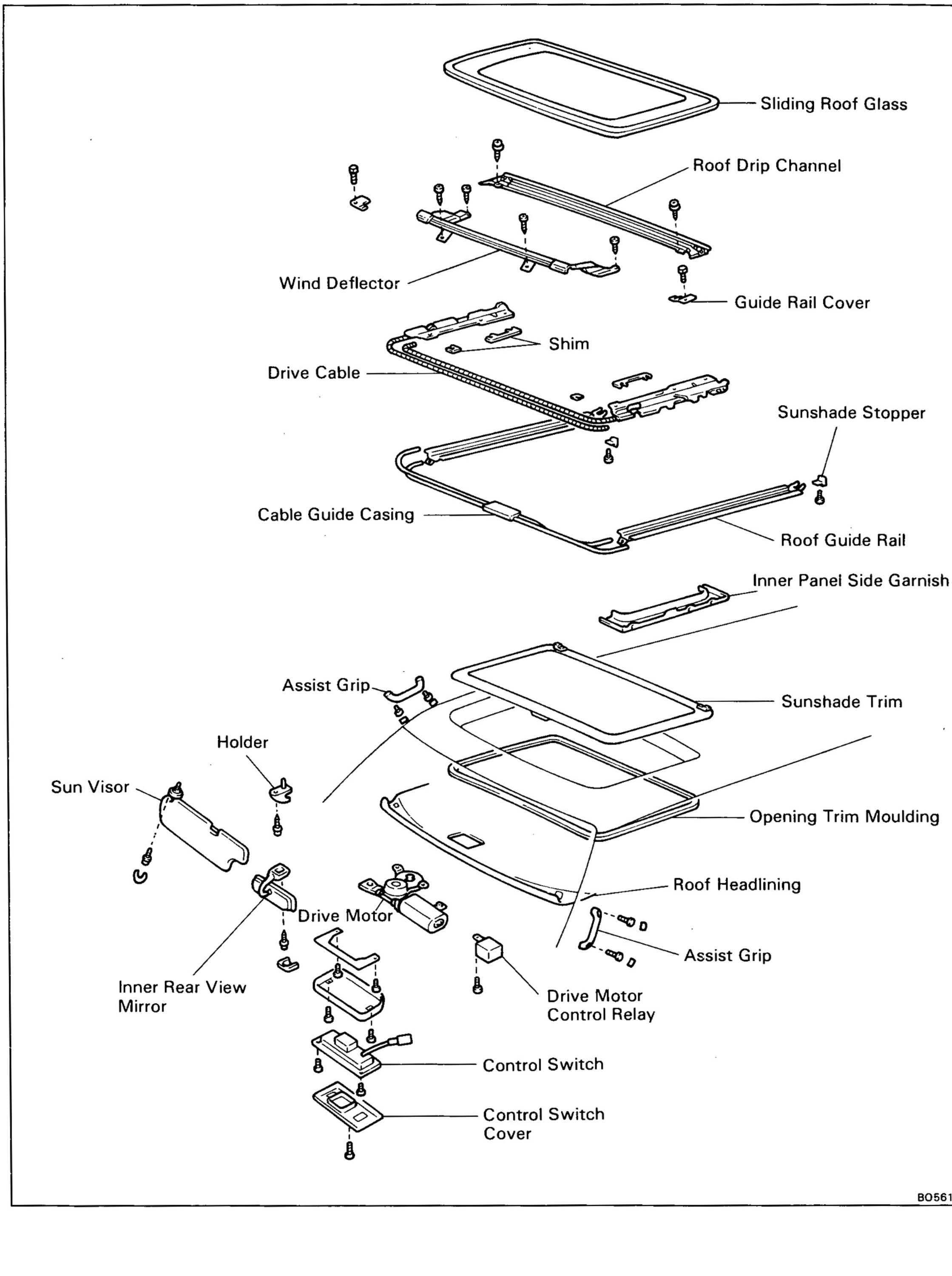

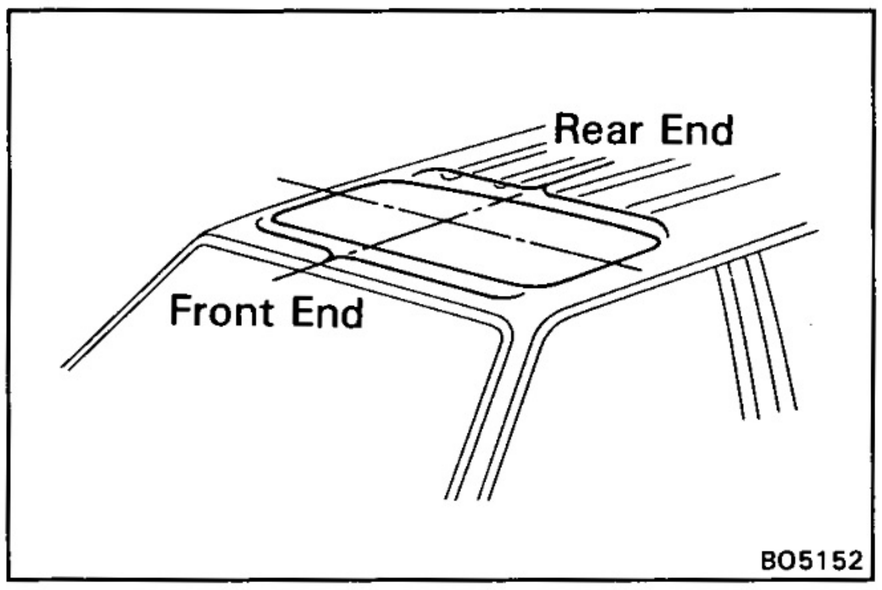

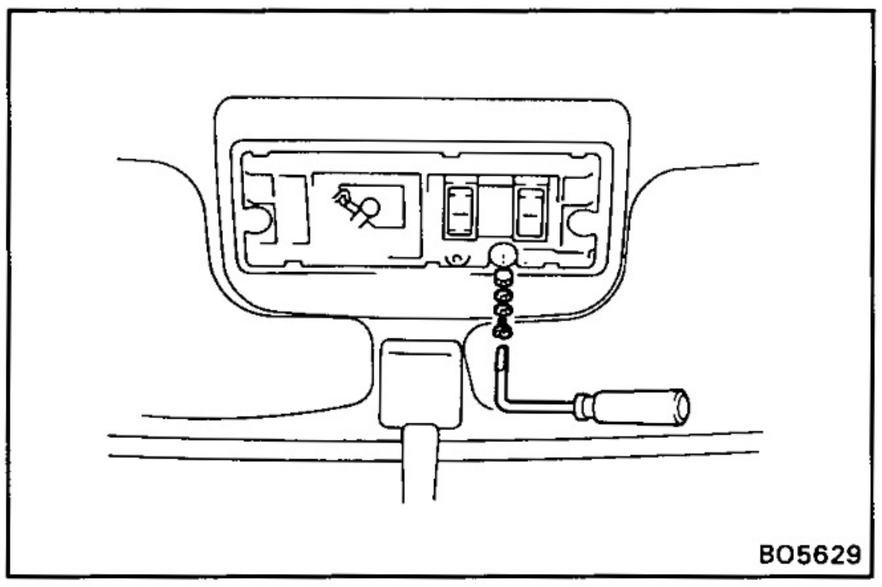

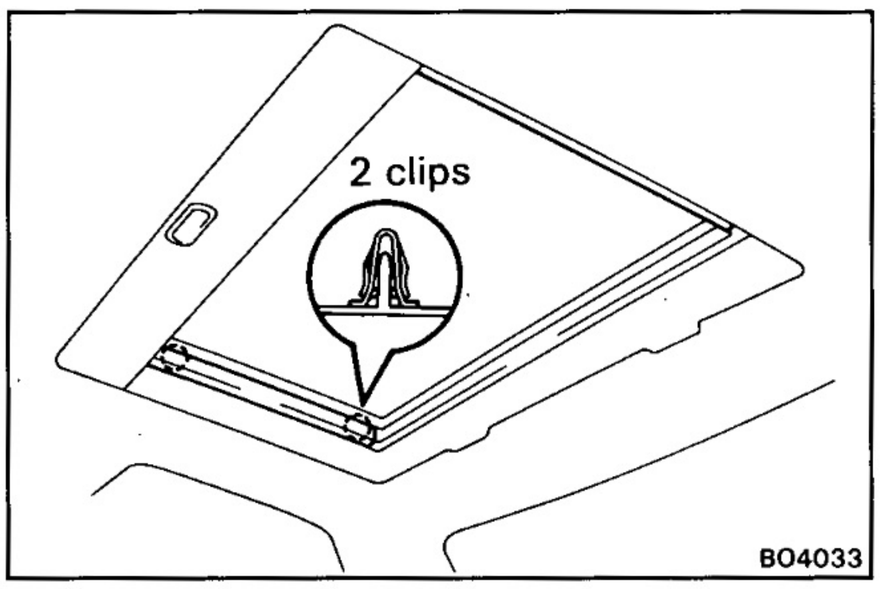

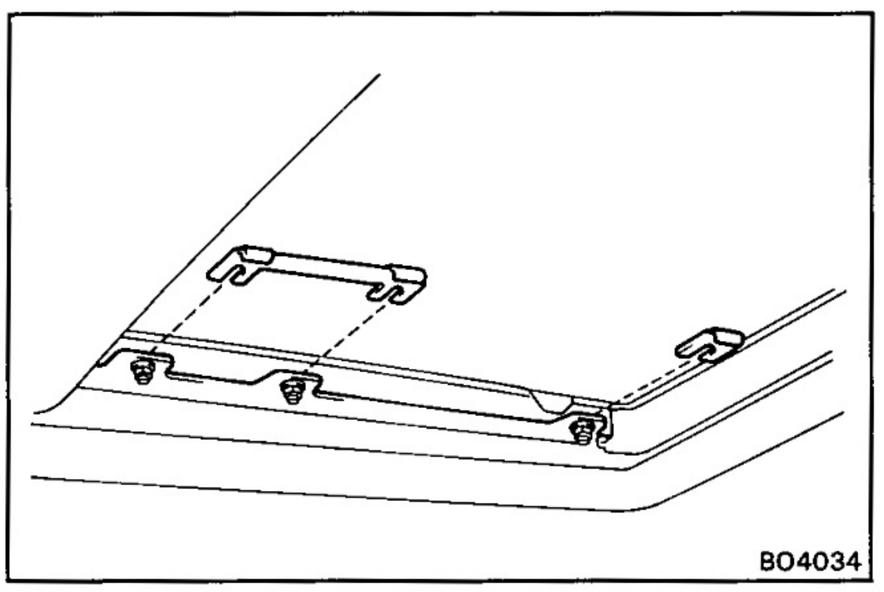

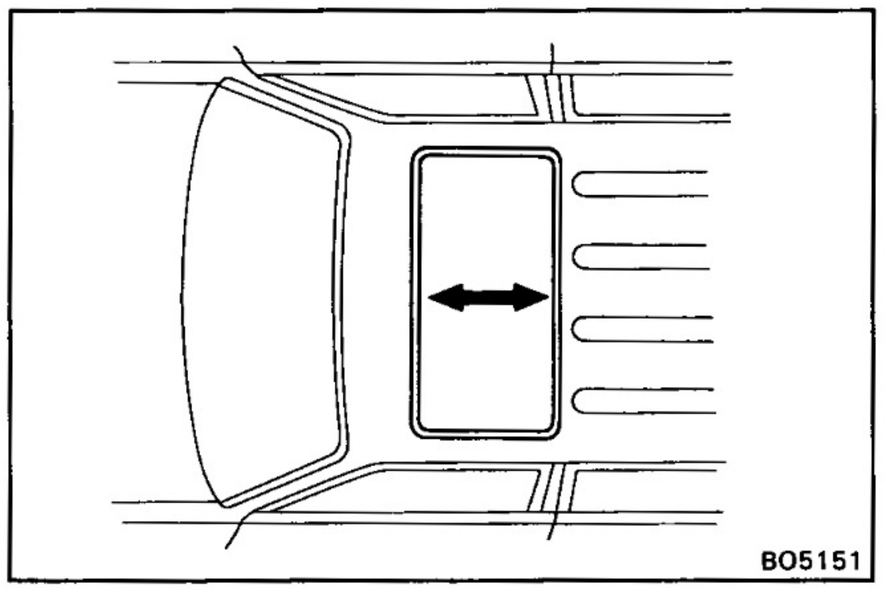

ON-VEHICLE INSPECTION

INSPECT SLIDING ROOF PANEL ALIGNMENT

(a) Start the engine and check the operation time of the sliding roof.

Operation time: Approx. 5 secs.

(b) Check for abnormal noise or binding during operation.

(c) With the sliding roof fully closed, check for water leakage.

(d) Check for a difference in level between the sliding root glass and roof panel.

Front side: $1.9^{+2.0}_{-1.0}$ mm ($0.075^{+0.079}_{-0.039}$ in.)

Rear side: $1.9^{+2.0}_{-1.0}$ mm ($0.075^{+0.079}_{-0.039}$ in.)

If the sliding roof does not operate:

(e) Remove the control switch cover.

(f) Remove the large screw inside.

NOTICE: Be careful not to lose the spring washer or shim.

(g) Manually operate the moon roof by inserting a special crank-shaped screwdriver into the hole and turning the drive shaft.

ADJUSTMENT OF SLIDING ROOF

1. REMOVE SLIDING ROOF GARNISHES

Before making adjustments, remove the left and right sliding roof garnishes.

HINT: After adjustment, reinstall the sliding roof garnishes.

2. TO ADJUST LEVEL DIFFERENCE

Adjust by increasing or decreasing the number of shims between the bracket and slinding roof.

3. TO ADJUST FORWARD OR REARWARD

(a) Adjust by loosening the sliding roof installation nuts, and move the sliding roof bracket forward and backward.

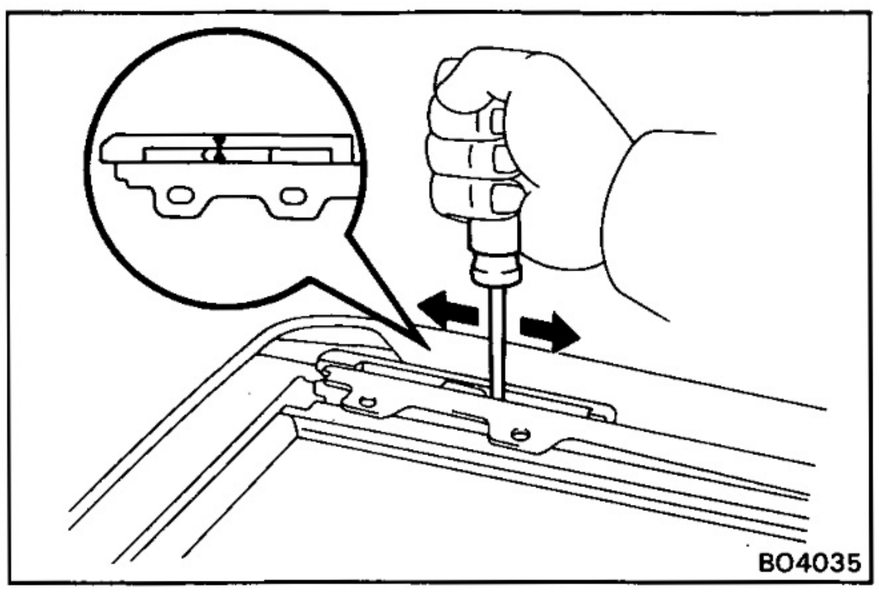

(b) When the front or rear alignment is not correct, remove the glass and adjust the drive rail.

(c) Using a screwdriver, slide the link forward or backward to align the two marks as shown.

(d) Slide the bracket to the forefront with yout hand.

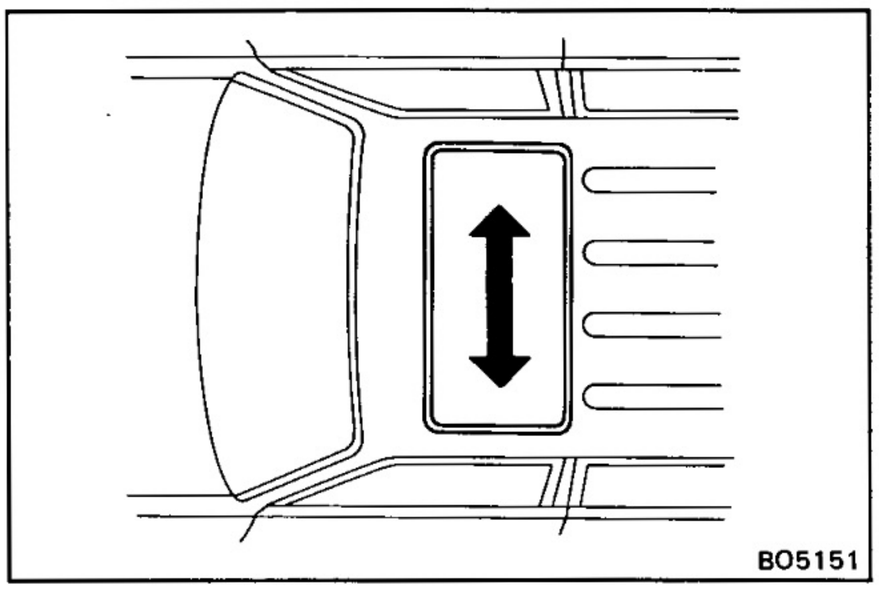

4. TO ADJUST RIGHT OR LEFT

Adjust by loosening the sliding roof rear shoe installation nuts, and move the sliding roof to the right and left.

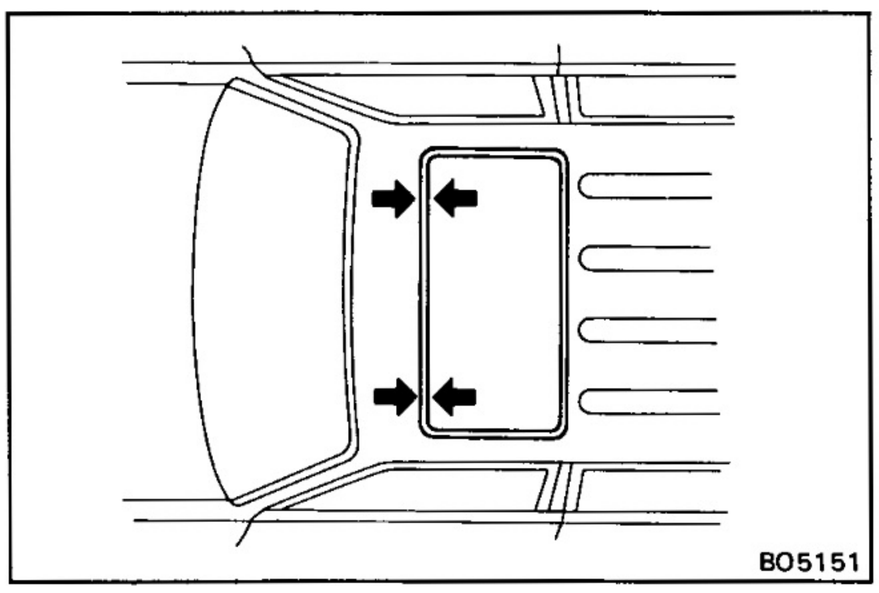

5. TO ADJUST CLEARANCE
(Difference in left and rigth clearance)

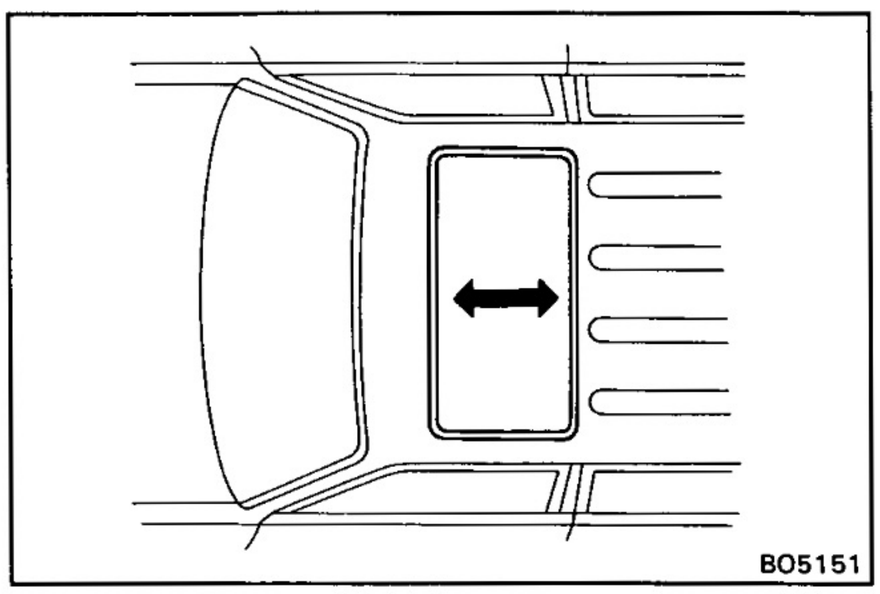

Adjust by loosening the sliding roof installation nuts and readjust the sliding roof to the proper position.

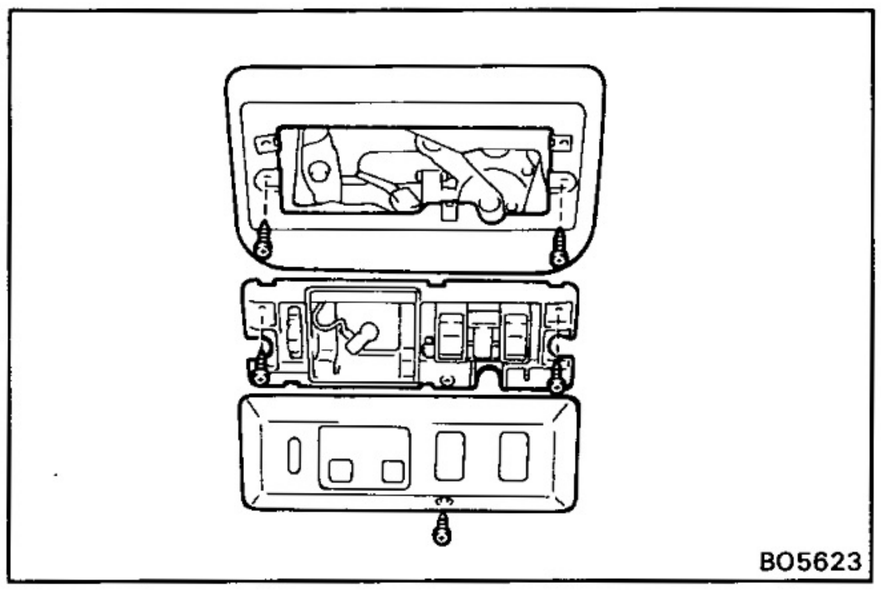

REMOVAL OF MOON ROOF

(See page BO-69)

1. DISCONNECT BATTERY CABLE FROM NEGATIVE TERMINAL

2. REMOVE CONTROL SWITCH

(a) Remove the screw and switch cover.

(b) Remove two screws and switch body, then disconnect the connector.

(c) Remove two screws and bracket.

3. REMOVE FOLLOWING PARTS:

- Assist grips
- Sun visors and holders
- Inner rear view mirror
- Opening trim moulding

4. PULL DOWN FRONT SLIDE OF ROOF HEADLINING

Pull down the headlining by hand.

NOTICE: Do not damage the roof headlining.

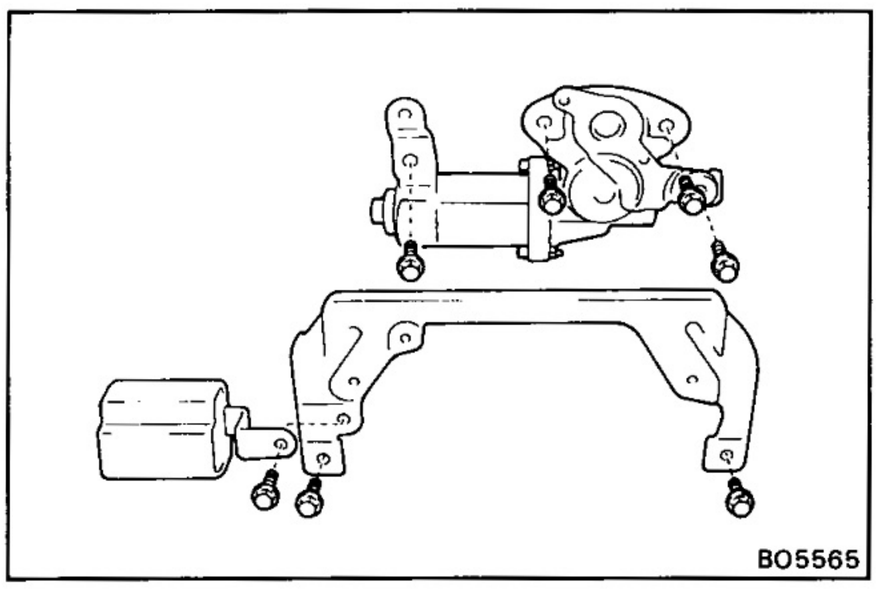

5. REMOVE DRIVE GEAR ASSEMBLY

(a) Remove the bolt and the moon roof control relay, then disconnect the connector.

(b) Remove two bolts and the braket.

(c) Remove four bolts and the gear assembly, then disconnect the connector.

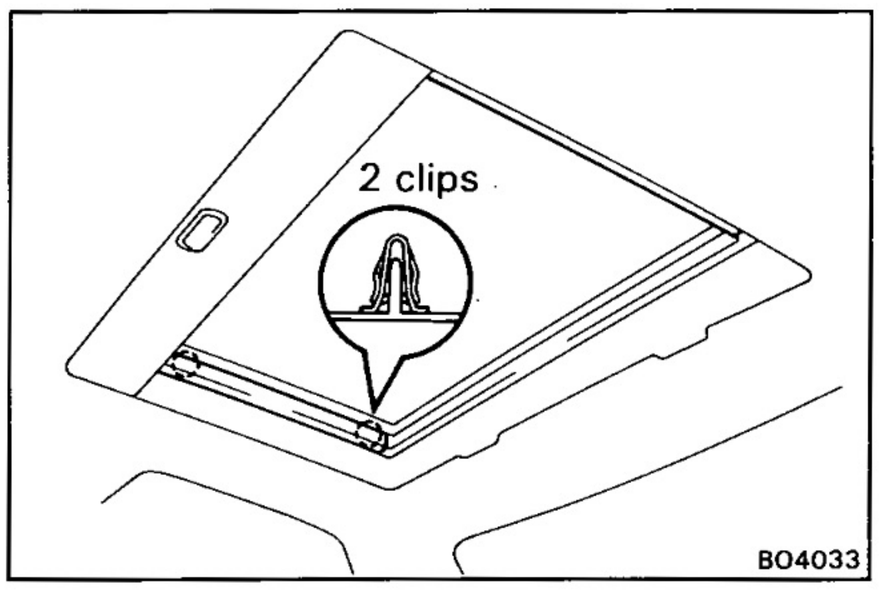

6. REMOVE SLIDING ROOF GARNISHES

Using a screwdriver, pry loose two clips and remove the inner panel side garnish.

HINT: Tape the screwdriver tip before use.

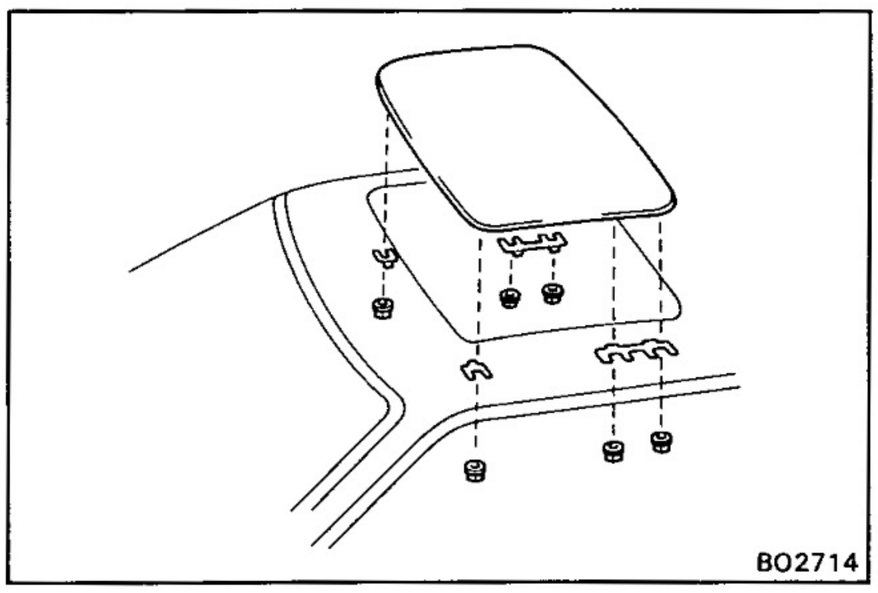

7. REMOVE SLIDING ROOF GLASS

(a) Remove six nuts and shims.

HINT: Make sure of the number of shims.

(b) Pull the glass upward to remove it.

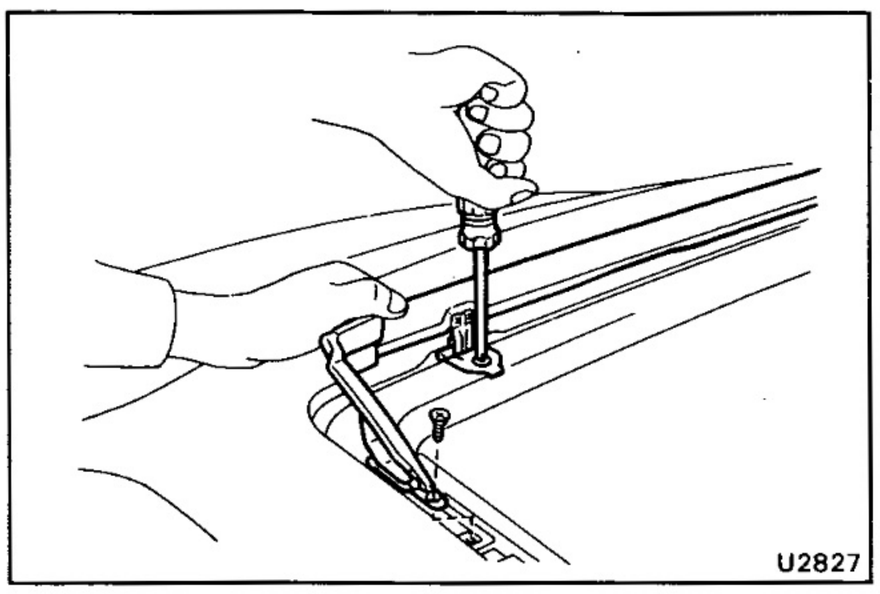

8. REMOVE WIND DEFLECTOR

Remove four screws and the wind deflector.

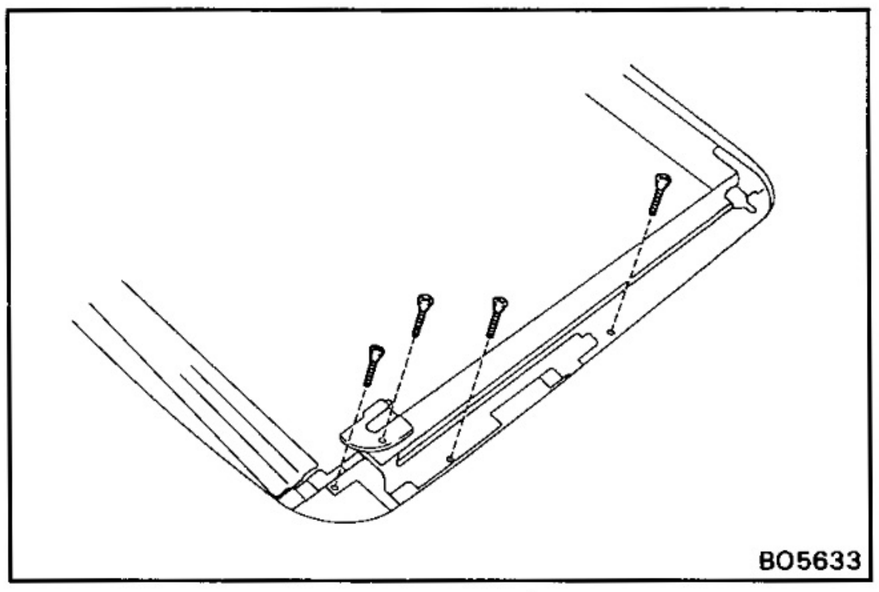

9. REMOVE CABLE GUIDE CASING

(a) Remove the screw and the guide rail cover.

(b) Remove three screws from the drive rail.

(c) Slide the drive cable forward.

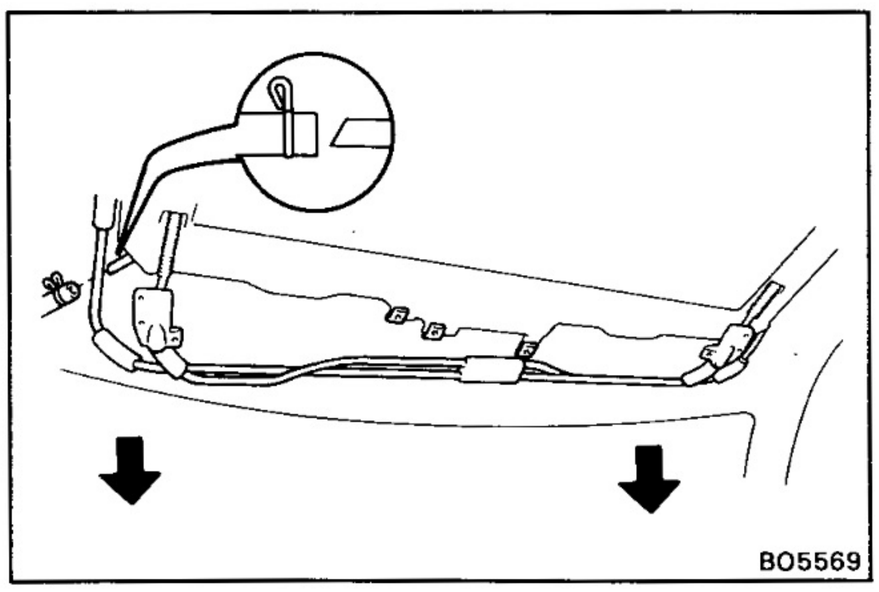

(d) Disconnect front side of the drain hose.

HINT: Disconnect the drain hose from the sliding roof housing side.

(e) Remove the cable guide casing gradually from both sides.

NOTICE: Be careful that the oily cable doesn't fall off.

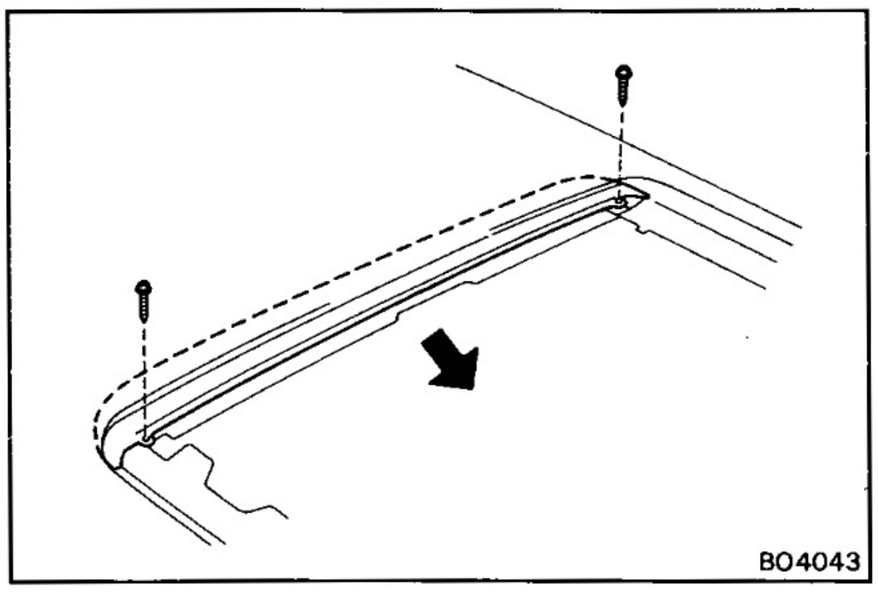

10. REMOVE ROOF DRIP CHANNEL

(a) Remove two screws.

(b) Pull the channel forward to remove it.

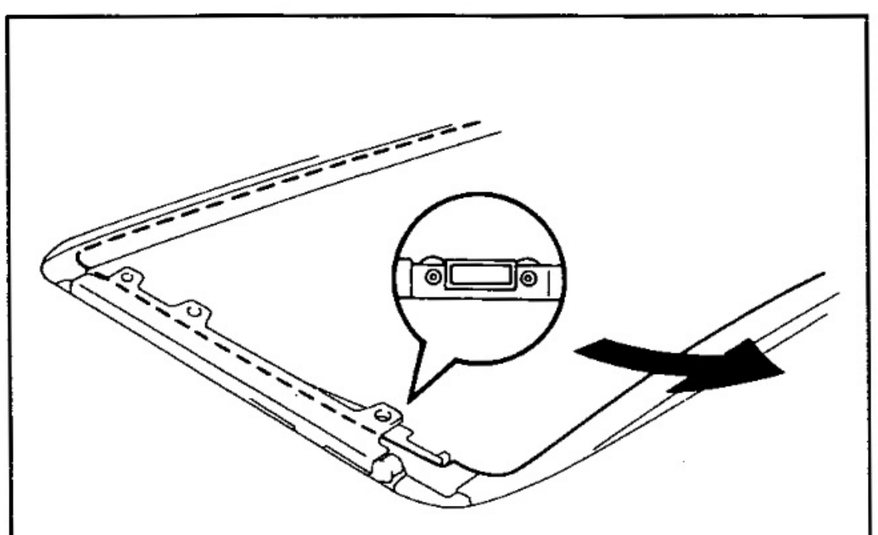

11. REMOVE SUNSHADE TRIM

While raising the drive rail, pull the trim forward to remove it.

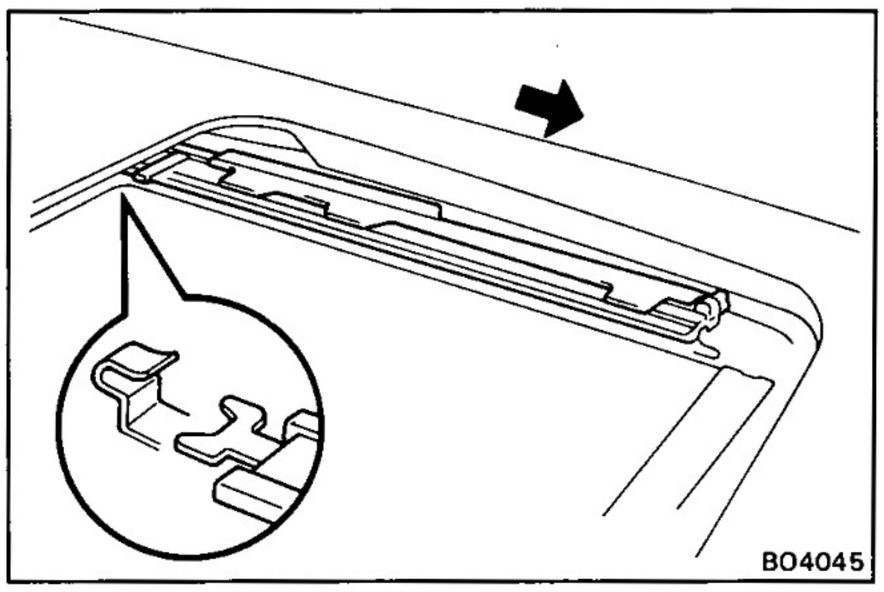

12. REMOVE DRIVE RAIL

(a) Slide the drive cable forward.

(b) Slide the rail forward and disconnect the clamp, then remove it.

INSTALLATION OF SLIDING ROOF

(See pages BO-69)

1. INSTALL FOLLOWING PARTS:

(a) Drive rail

(b) Sunshade trim

(c) Roof drip channel

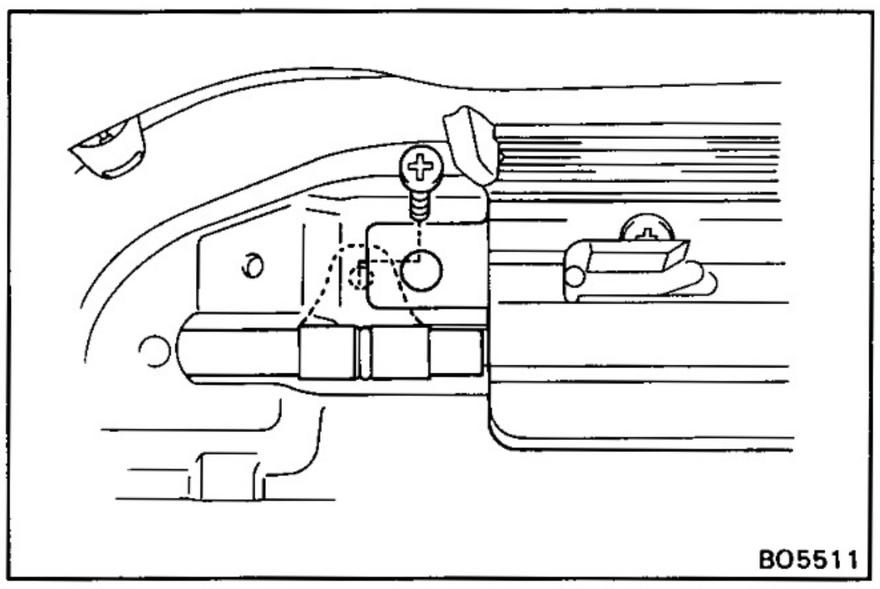

2. INSTALL CABLE GUIDE CASING

(a) Insert the cable to the casing and install the cable guide casing gradually to both sides.

(b) Insert the casing to the drive rail as shown.

(c) Connect the front side of drain hose.

HINT: Place the knobs of clips to upper side.

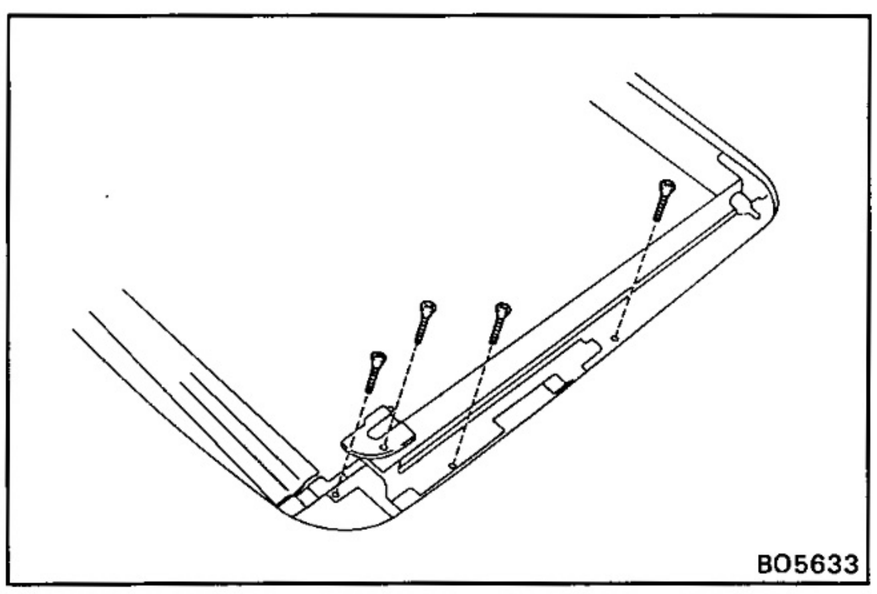

(d) Install three screws to the drive rail.

(e) Install the screw and the guide rail cover.

3. INSTALL WIND DEFLECTOR

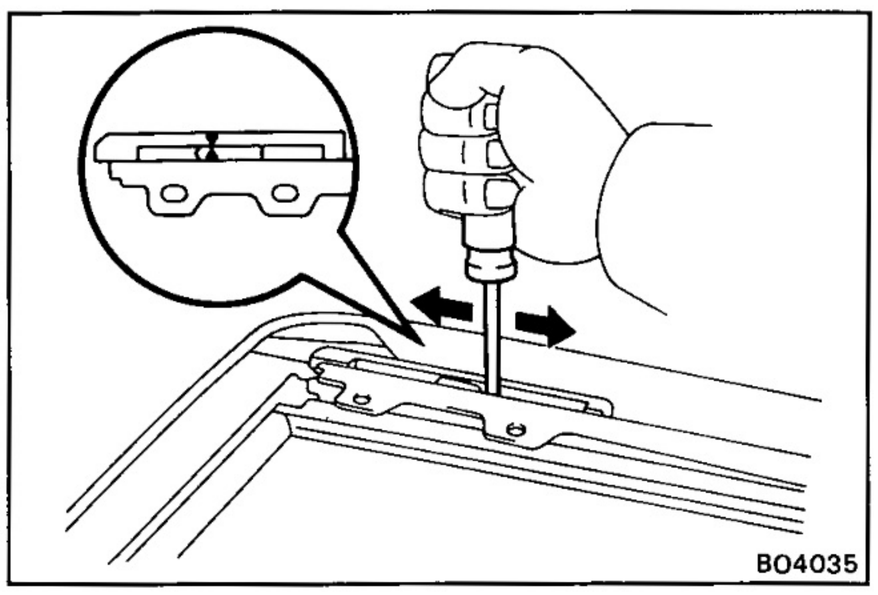

4. ADJUST DRIVE RAIL

HINT: Adjust the drive rail to a closed and tilted down position

(a) Using a screwdriver, slide the link forward or backward to align the two marks as shown.

(b) Slide the bracket to the forefront with your hand.

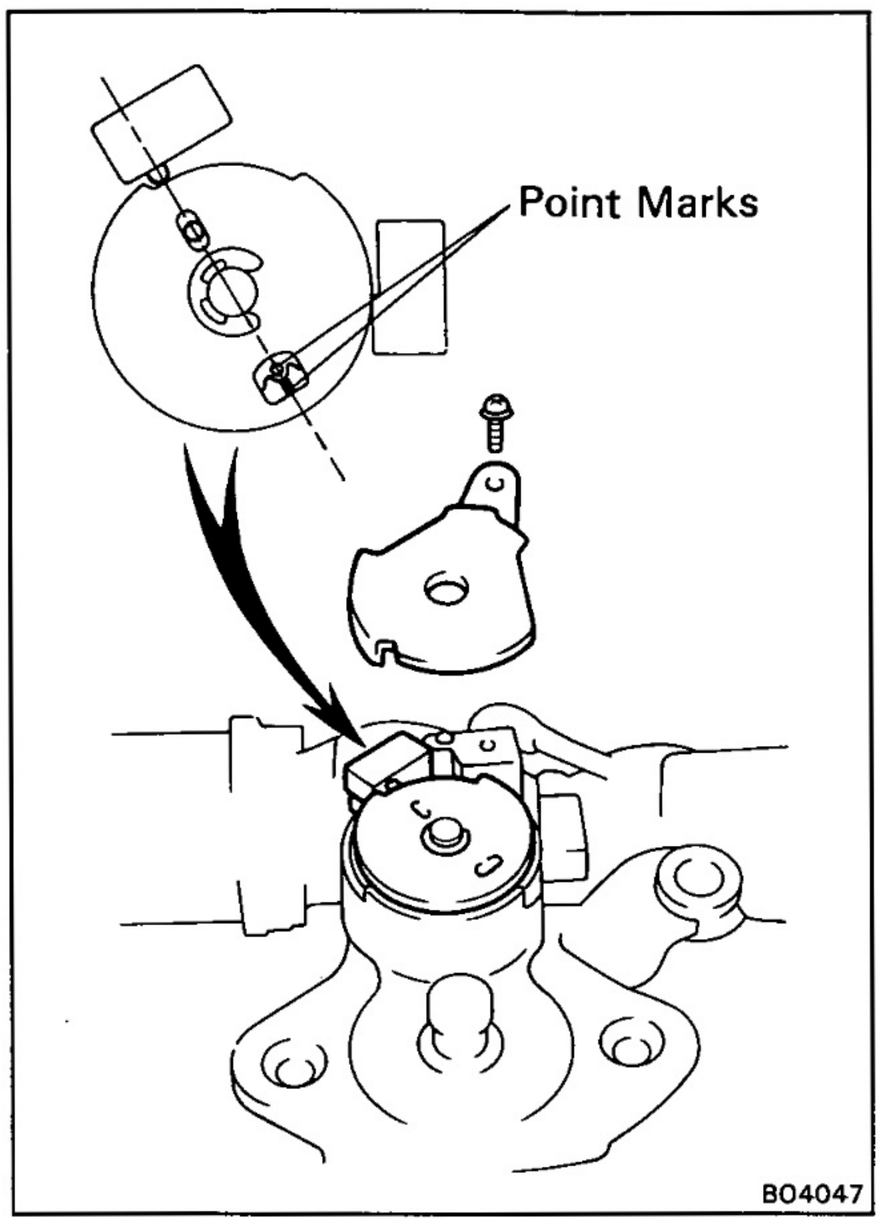

5. ADJUST AND INSTALL DRIVE GEAR ASSEMBLY

(a) Remove the screw and cam plate cover.

(b) Remove the large screw, washers and shims.

(c) Turn the drive shaft by screwdriver to align the housing and gear point mark as shown.

(d) Install cam plate cover with a screw.

(e) Install the drive gear assembly with four bolts.

(f) Connect the connectors.

6. INSTALL MOON ROOF CONTROL RELAY AND BRACKET

(a) Install the bracket with two bolts.

(b) Install the moon roof control relay with a bolt, then connect the connector.

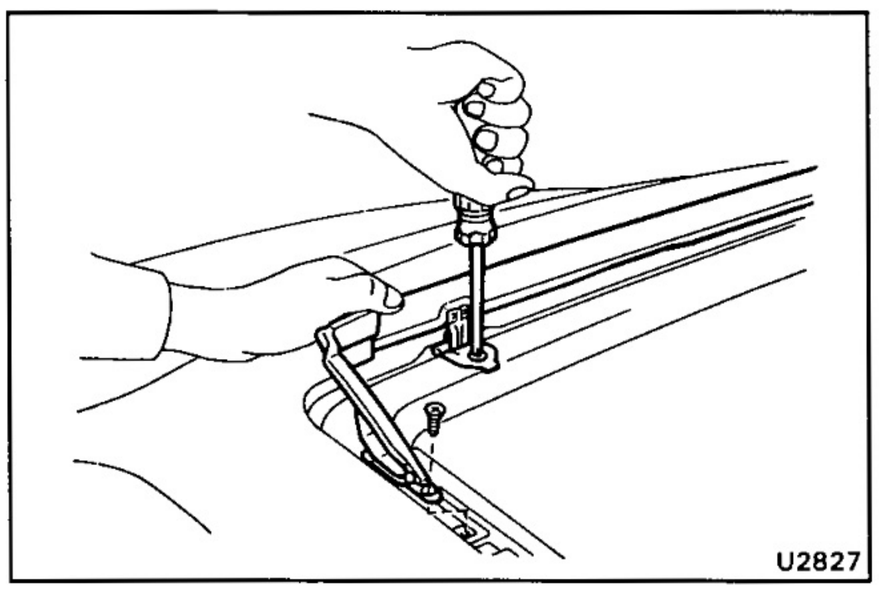

7. INSTALL WIND DEFLECTOR

Install the wind deflector with four screws.

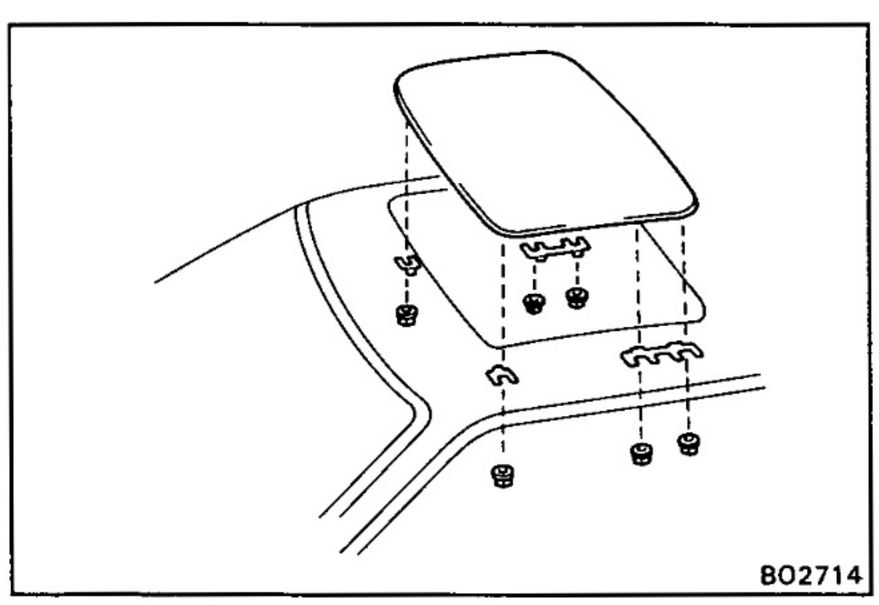

8. INSTALL SLIDING GLASS

HINT:

- Confirm that the lip part of the weatherstrip housing is not twisted.
- Confirm that the clearance between the left and right of the sliding roof glass and roof panel are equal.

Install six nuts and shims.

9. INSPECT SLIDING ROOF GLASS ALIGNMENT
(See page BO-70)

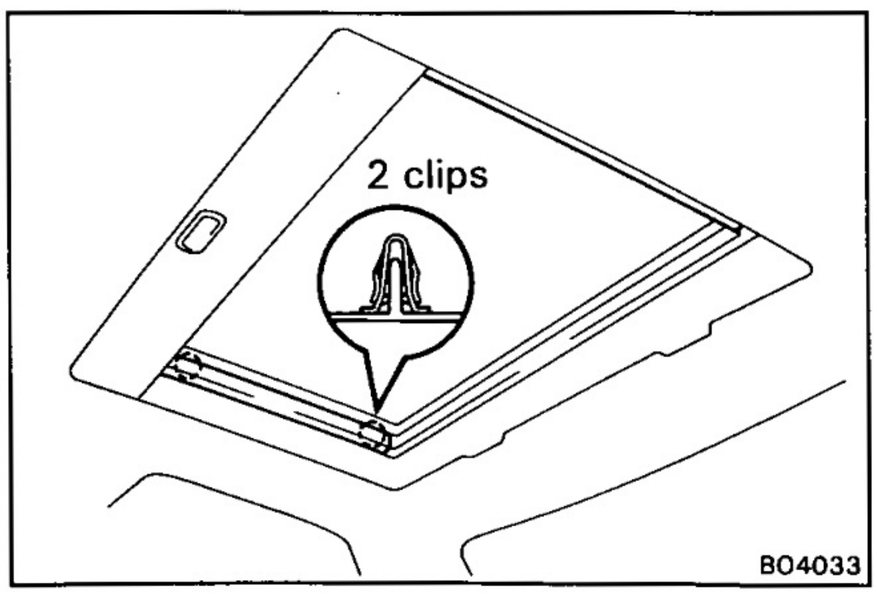

10. INSTALL SLIDING ROOF GARNISH

Install the inner panel side garnish with retainers to the sliding roof glass by tapping.

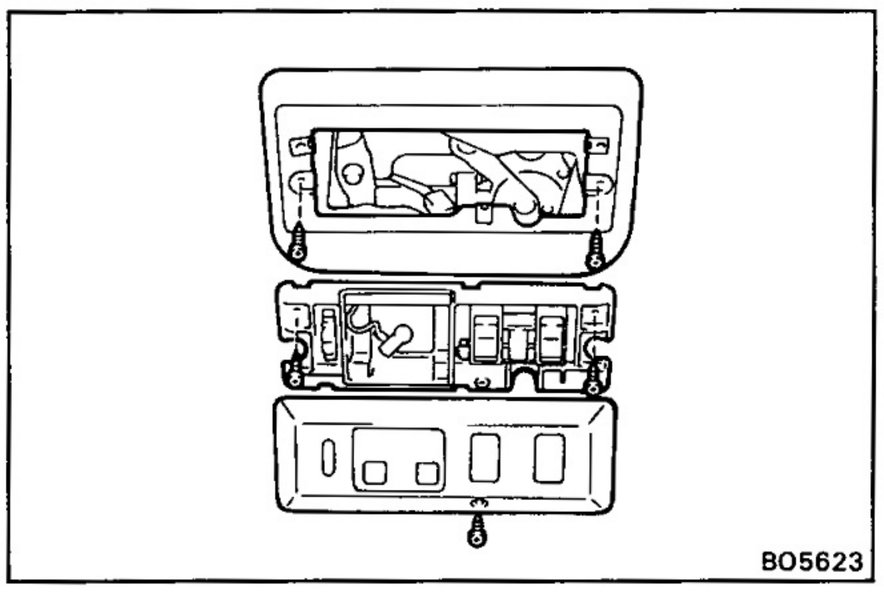

11. INSTALL CONTROL SWITCH

(a) Install the bracket with two screws.

(b) Install the switch body with two screws, then connect the connector.

(c) Install the switch cover with the screw.

12. INSTALL FOLLOWING PARTS:

- Assist grips
- Sun visors and holders
- Inner rear view mirror
- Opening trim moulding

13. CONNECT BATTERY CABLE TO NEGATIVE TERMINAL

14. CHECK OPERATION TO THE MOON ROOF

INSTRUMENT PANEL

COMPONENTS

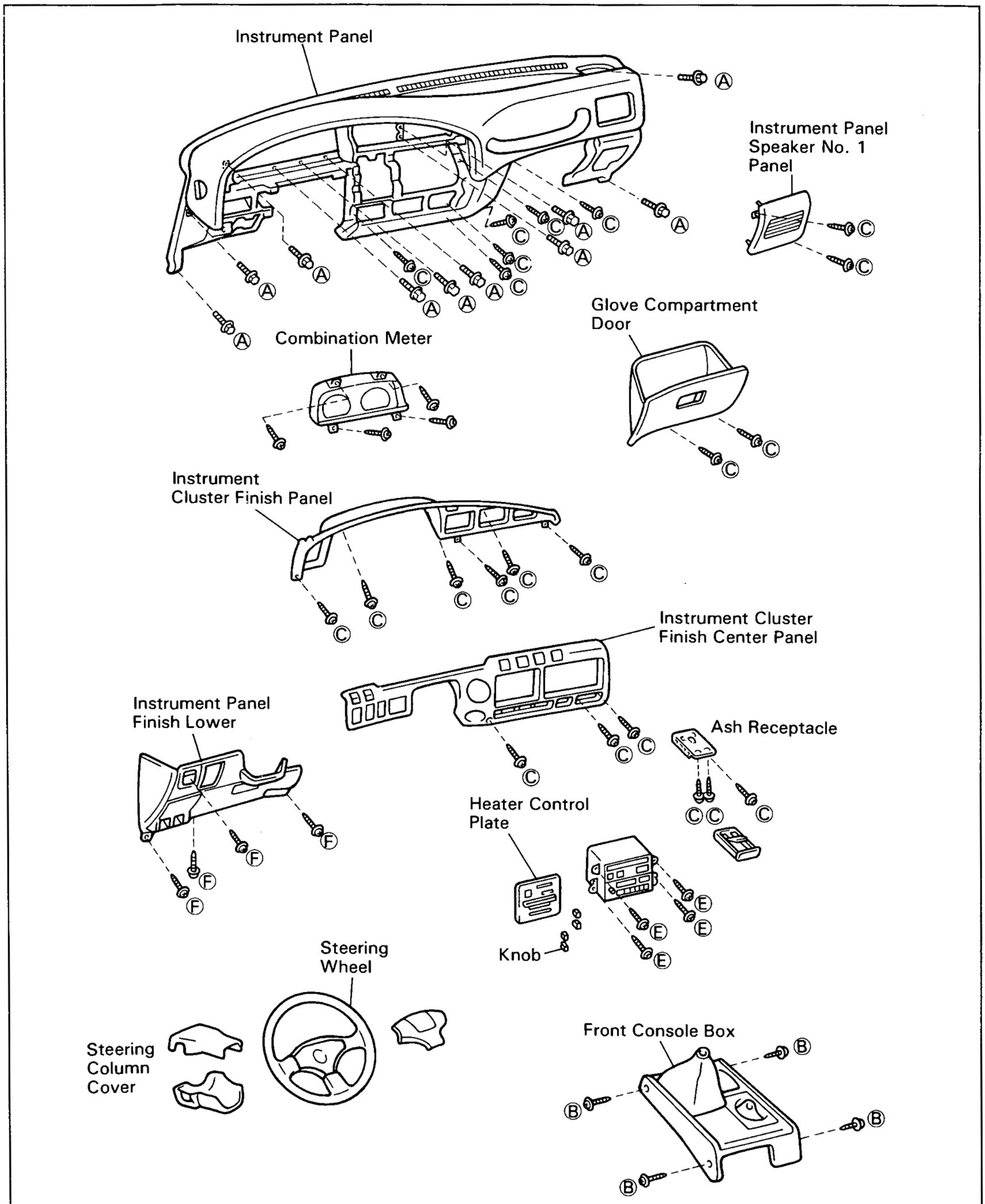

HINT: Screw sizes in the previous illustration are indicated according to the code below.

mm (in.)

Code	Shape	Size	Code	Shape	Size	Code	Shape	Size
Ⓐ		ϕ=6 (0.24) L=25 (0.98)	Ⓑ	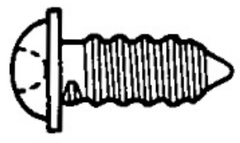	ϕ=5 (0.20) L=25 (0.98)	Ⓒ		ϕ=5.22 (0.2055) L=14 (0.55)
Ⓓ		ϕ=8 (0.31) L=30 (1.18)	Ⓔ	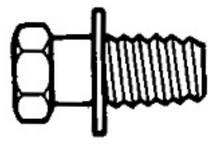	ϕ=5 (0.20) L=16 (0.62)	Ⓕ		ϕ=5.22 (0.2055) L=18 (0.70)

BO5168

REMOVAL OF INSTRUMENT PANEL

(See page BO-77)

1. **DISCONNECT BATTERY CABLE FROM NEGATIVE TERMINAL**

2. **REMOVE STEERING WHEEL**
(See page SR-4)

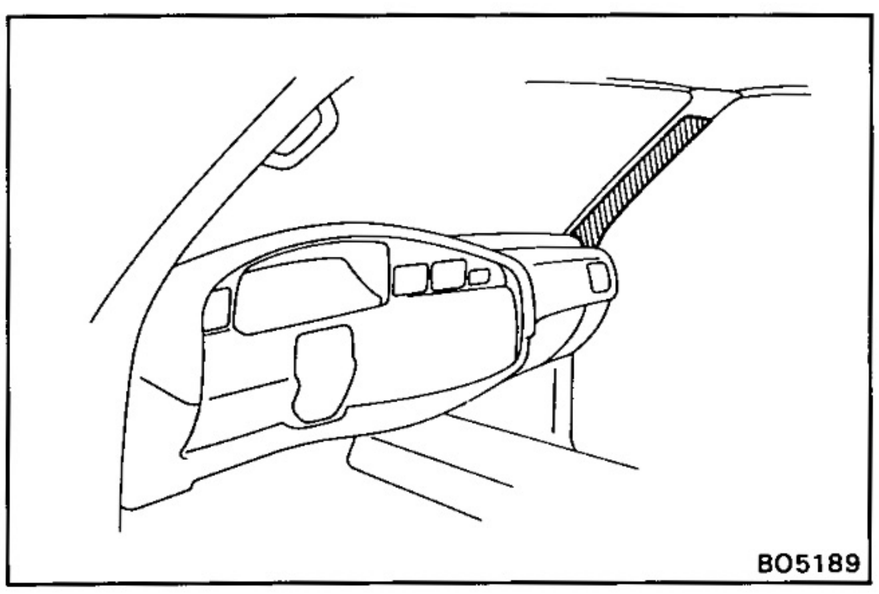

BO5189

3. **APPLY PROTECTION TAPE**

Before removing the instrument panel, apply protection tape to the pillars.

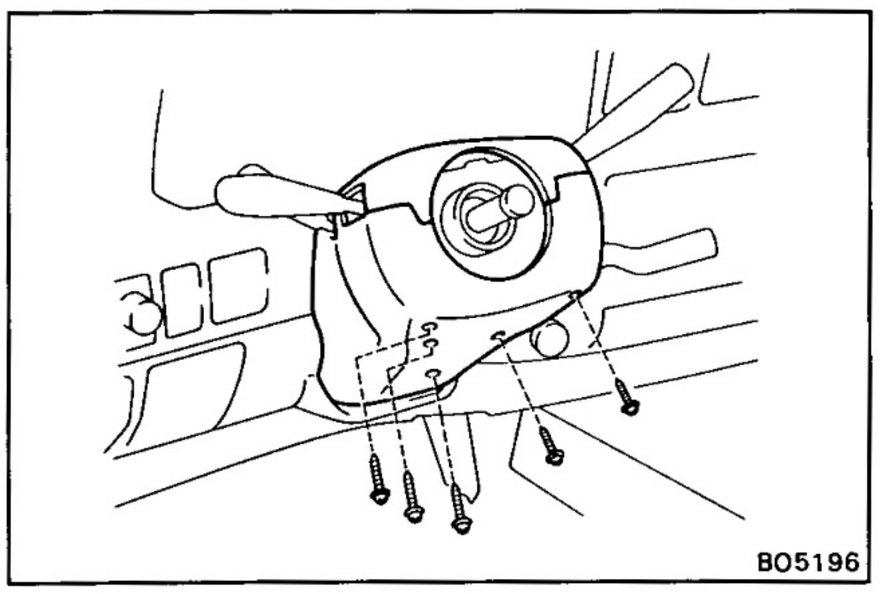

BO5196

4. **REMOVE STEERING COLUMN COVER**

Remove five screws and the column covers.

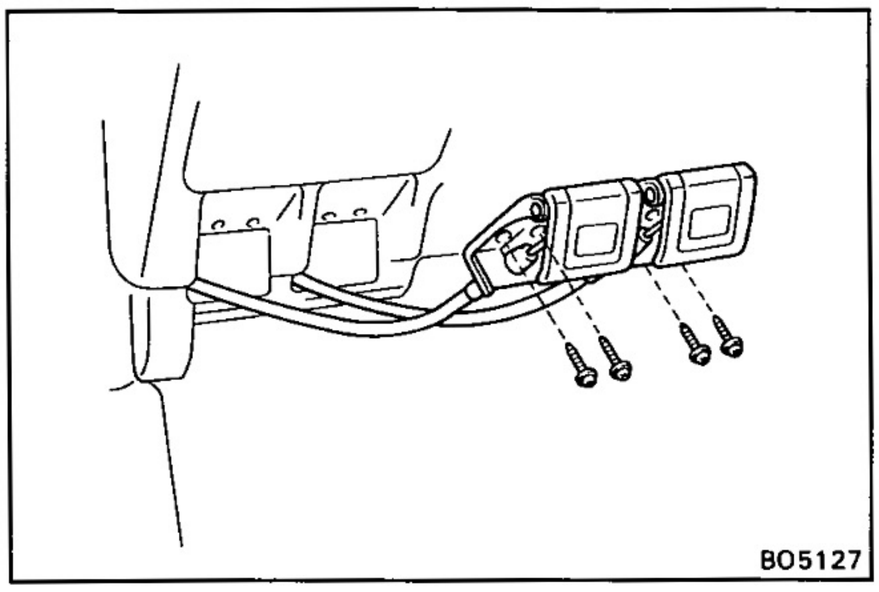

5. REMOVE ENGINE HOOD AND FUEL LID RELEASE LEVER

Remove four screws and the levers.

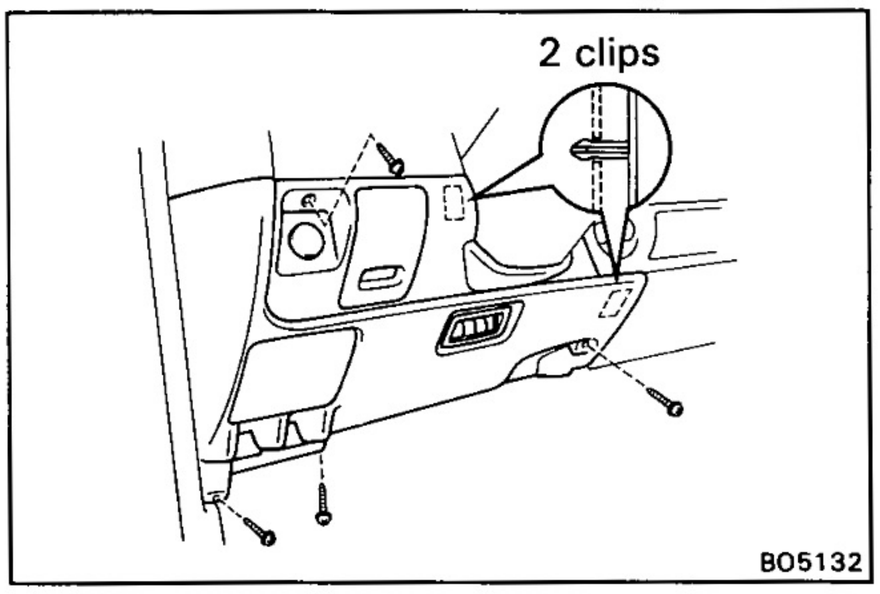

6. REMOVE LOWER FINISH PANEL

Remove four screws and the panel.

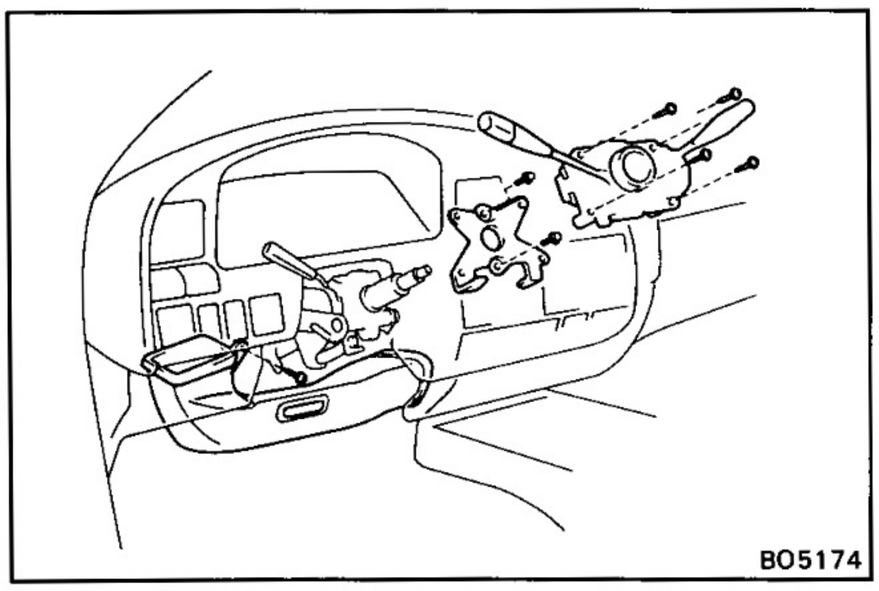

7. REMOVE DUCT HEATER TO REGISTER NO.2

Remove the screw and the duct.

8. REMOVE COMBINATION SWITCH

Remove four screws and the combination switch then disconnect the connectors.

9. REMOVE TURN SIGNAL BRACKET

Remove two bolts and the bracket.

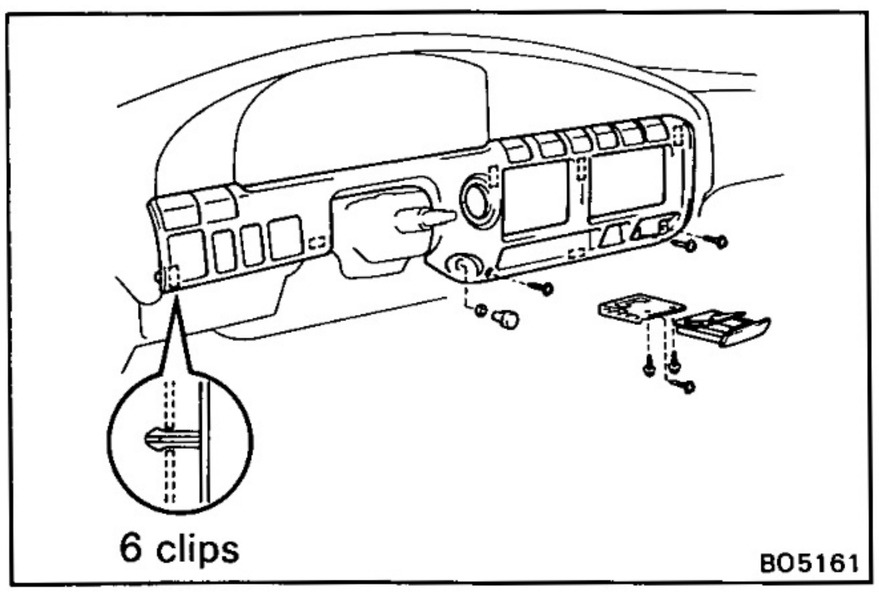

10. REMOVE INSTRUMENT CLUSTER FINISH CENTER PANEL

(a) (w/ Manual choke)
Remove the choke nobe by pulling.

(b) Remove the ashtry.

(c) Remove three screws and ash receptacle.

(d) Remove the instrument cluster finish center panel then disconnect the connectors.

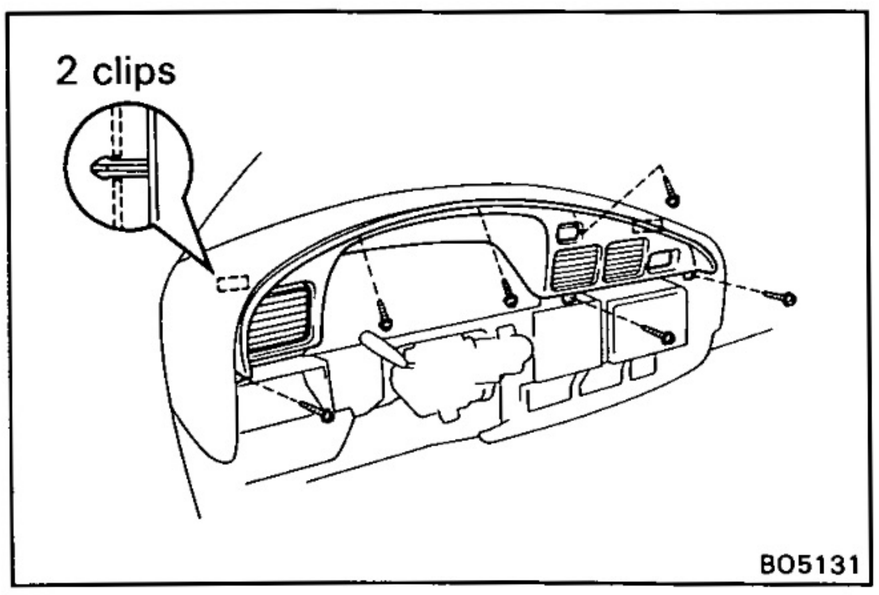

11. REMOVE INSTRUMENT CLUSTER FINISH PANEL

Remove six screws and the instrument cluster finish panel.

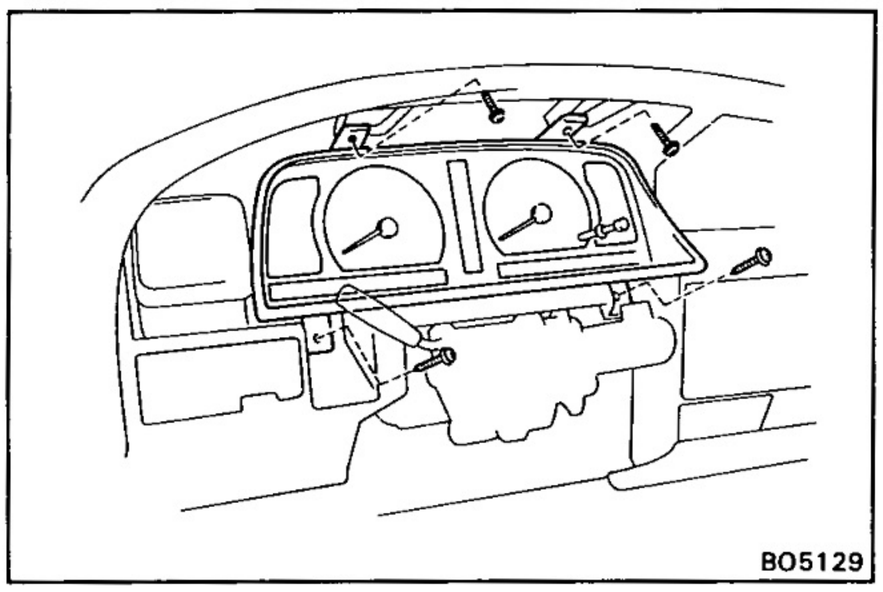

12. REMOVE COMBINATION METER

(a) Remove four screws.

(b) Disconnect the connectors and the speed meter cable, and remove the meter.

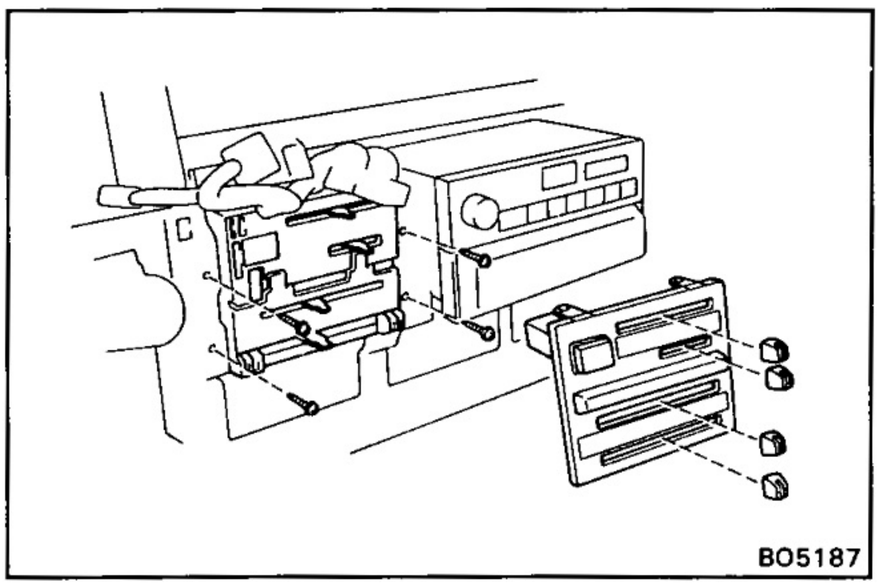

13. REMOVE HEATER CONTROL UNIT

(a) Remove four nobes and the name plate.

(b) Remove four screws and hang the heater control unit.

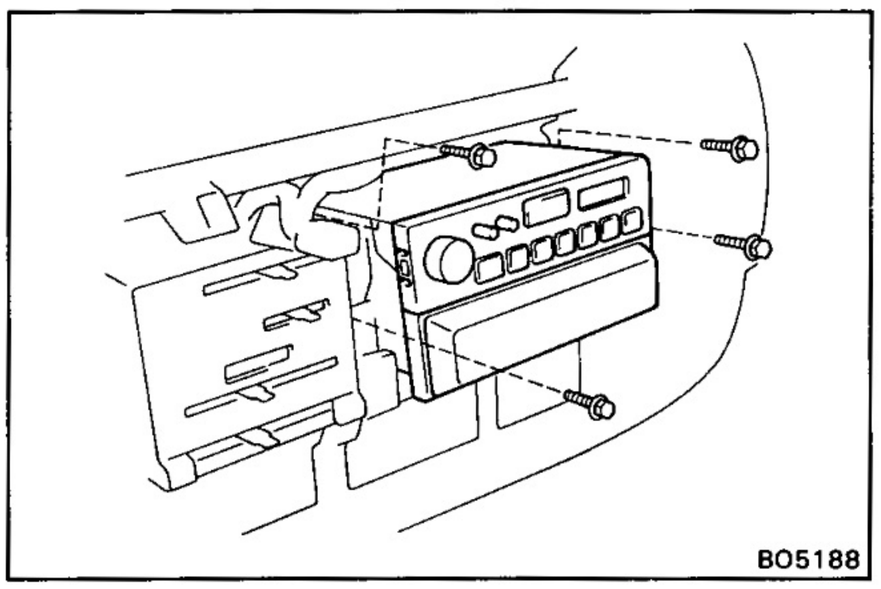

14. REMOVE RADIO

Remove four bolts and the radio then disconnect the connectors.

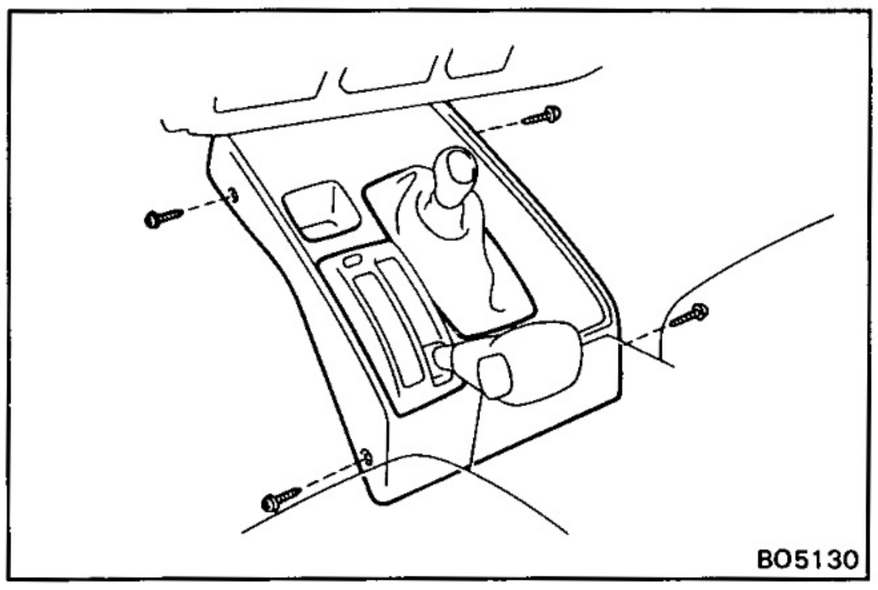

15. REMOVE FRONT CONSOL BOX

Remove four screws and the consol box.

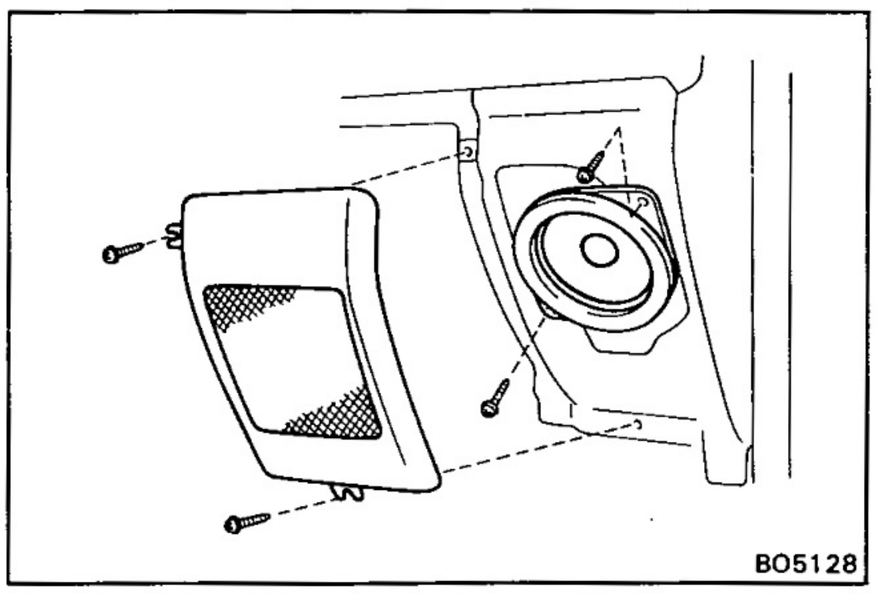

16. REMOVE INSTRUMENT PANEL SPEAKER

(a) Remove two screws and the speaker No.1 panel.

(b) Remove two screws and speaker, then disconnect the connector.

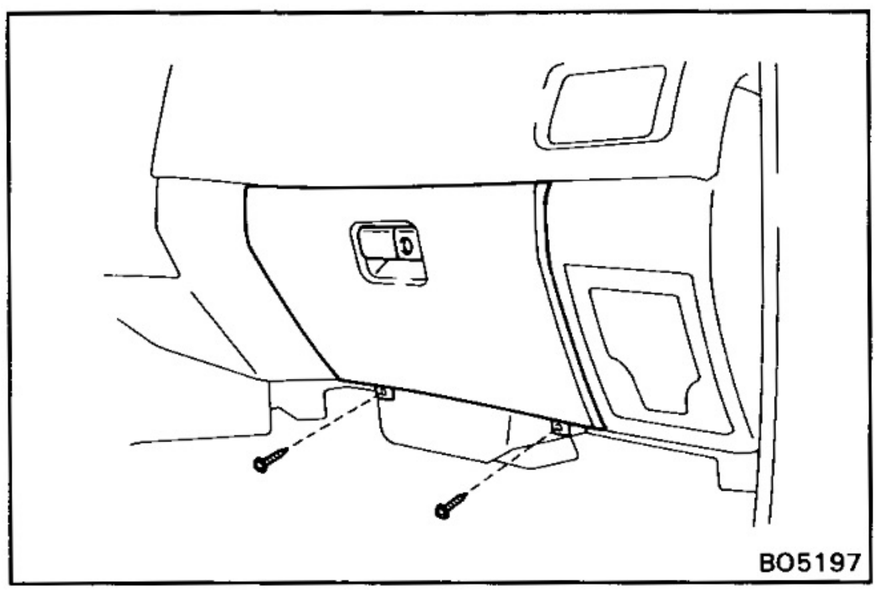

17. REMOVE GLOVE COMPARTMENT DOOR

Remove two screws and the compartment door.

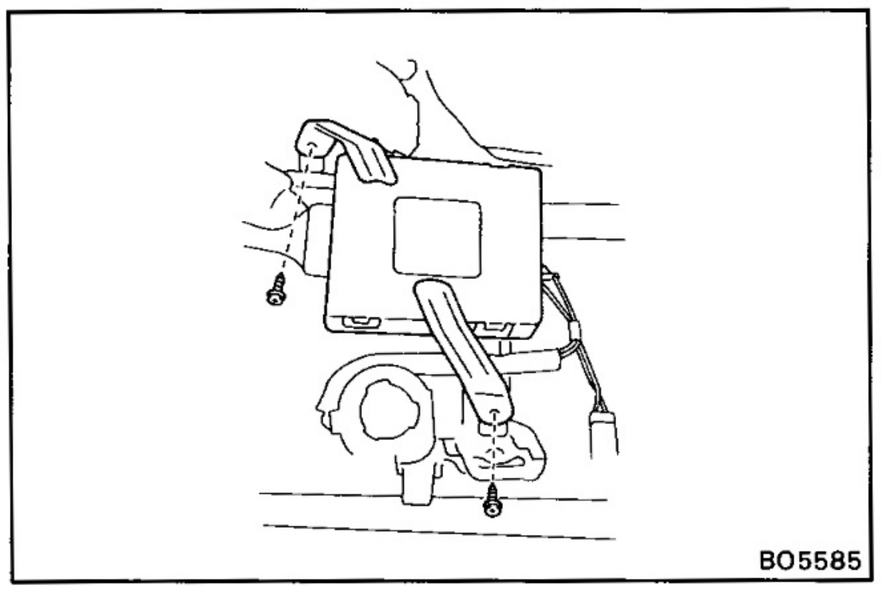

18. REMOVE ENGINE ECU

Remove two screws and the ECU, then disconnect the connecter.

19. REMOVE INSTRUMENT PANEL

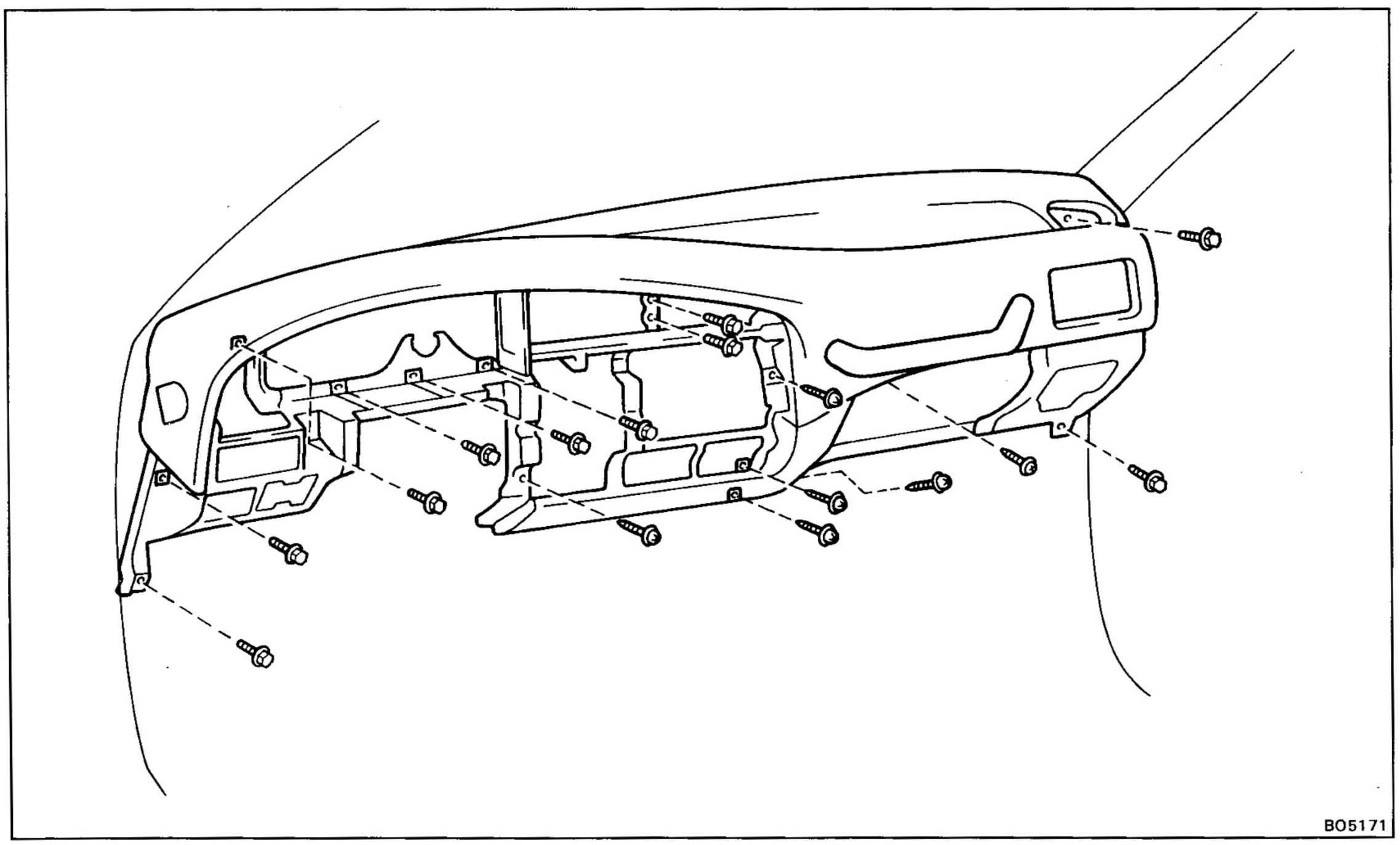

Remove ten bolts, six screws and the instrument panel.

20. REMOVE FOLLOWING PARTS FROM INSTRUMENT PANEL

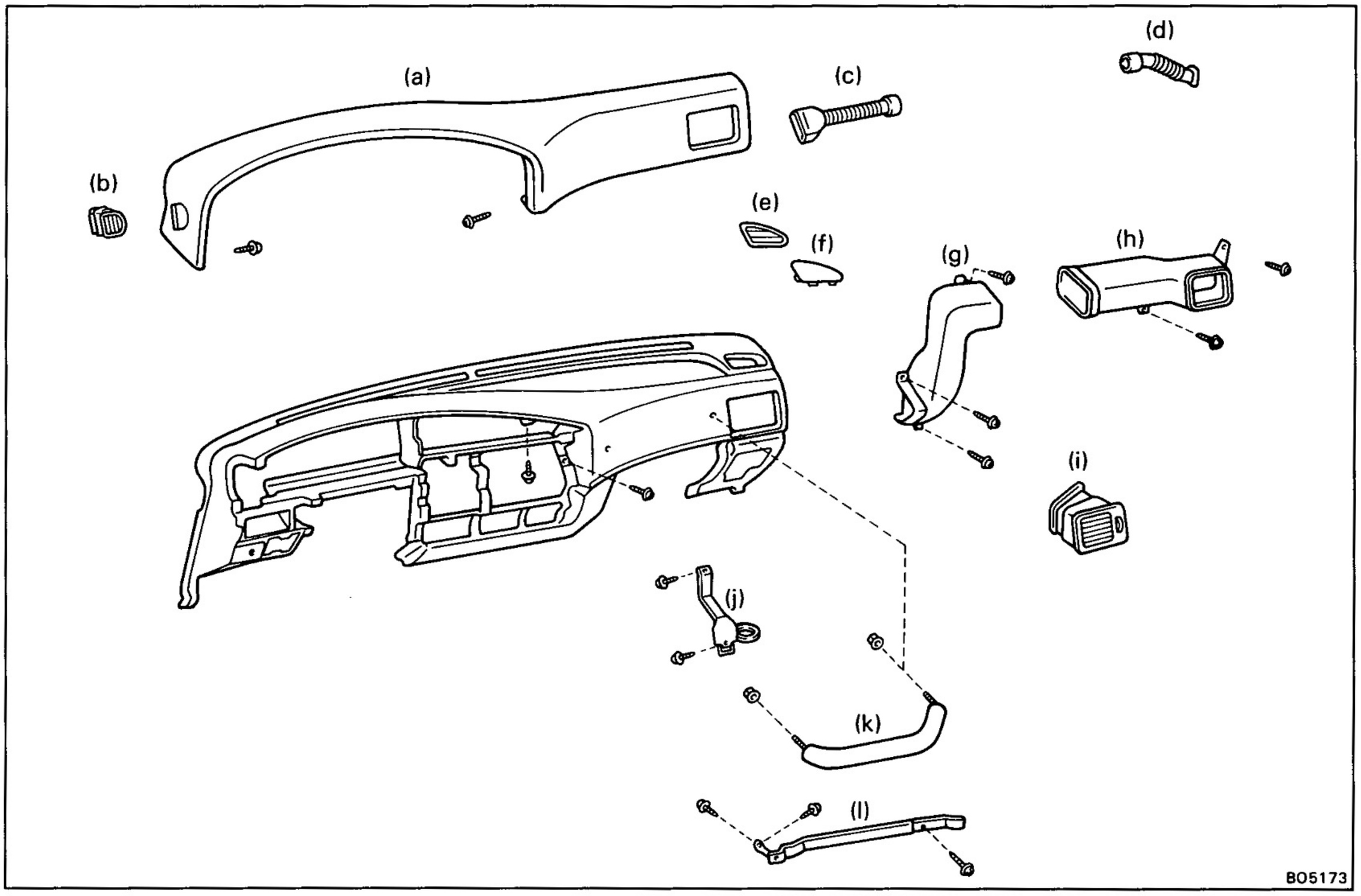

(a) Safety Pad
(b) Side Defroster No.1 Nozzle
(c) Side Defroster Nozzle No.1 Duct
(d) Side Defroster Nozzle No.2 Duct
(e) Side Defroster No.2 Nozzle
(f) Defroster Nozzle Plate
(g) No.4 Heater Register Duct
(h) No.5 Heater Register Duct
(i) Instrument Panel No.2 Register
(j) Glove Compartment Door Lock Striker Plate
(k) Assist Grip
(l) Glove Compartment Door Reinforcement

INSTALLATION OF INSTRUMENT PANEL

(See page BO-69)

INSTALL INSTRUMENT PANEL PARTS FOLLOWING REMOVAL SEQUENCE IN REVERSE

SEAT

Front Seat

COMPONENTS

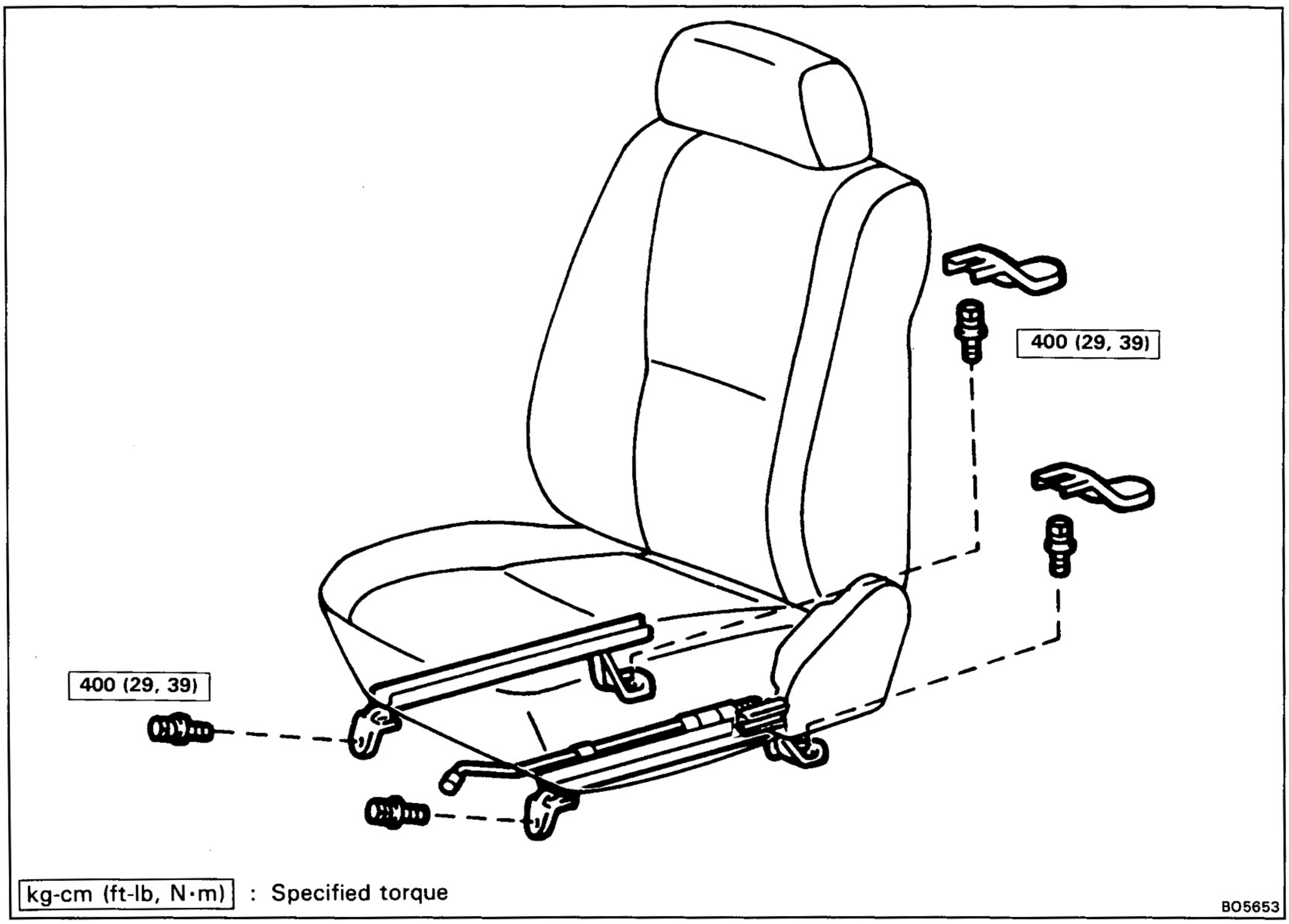

Second Seat

COMPONENTS

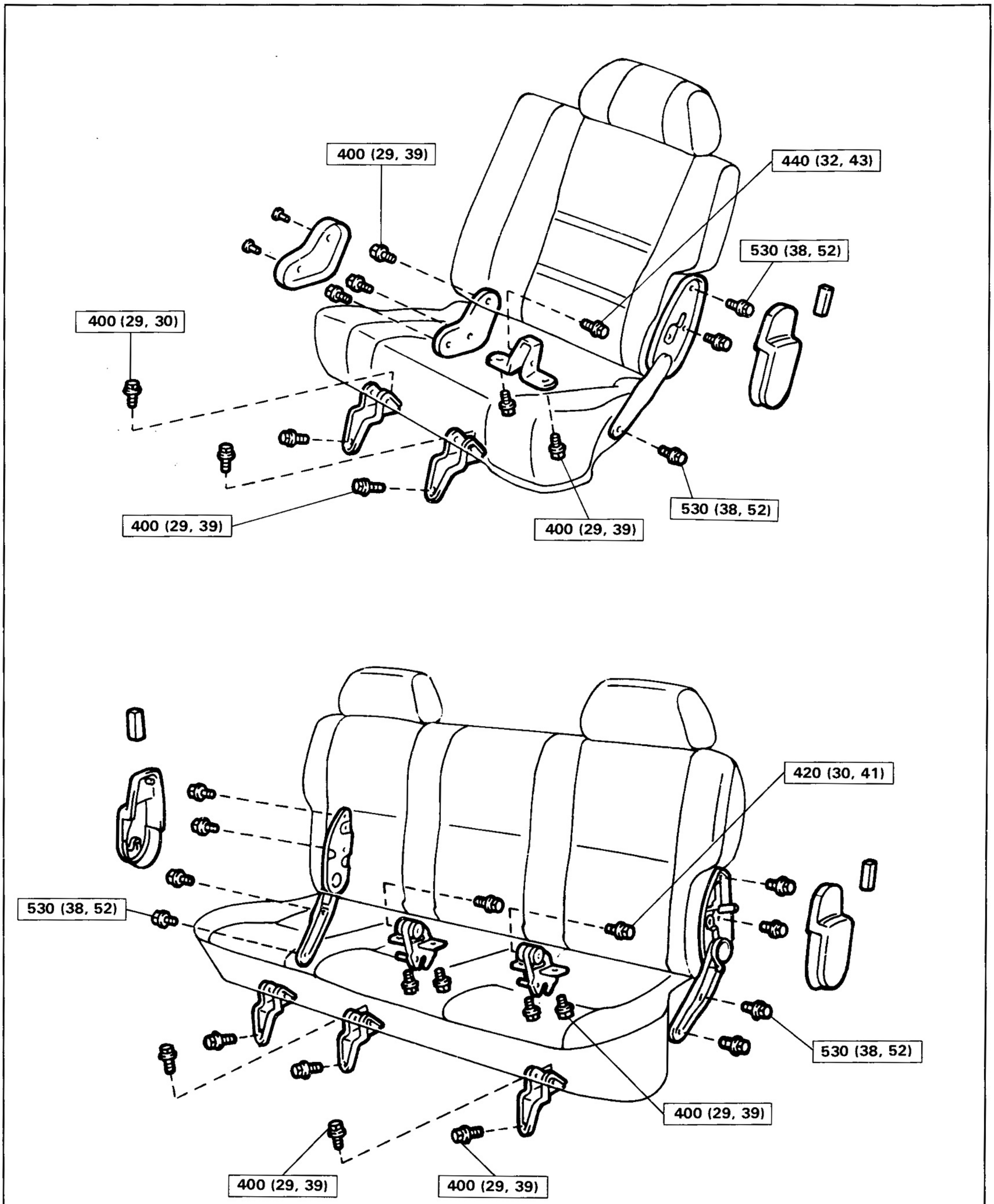

kg-cm (ft-lb, N·m) : Specified torque

BO5620
BO5597

Third Seat

COMPONENTS

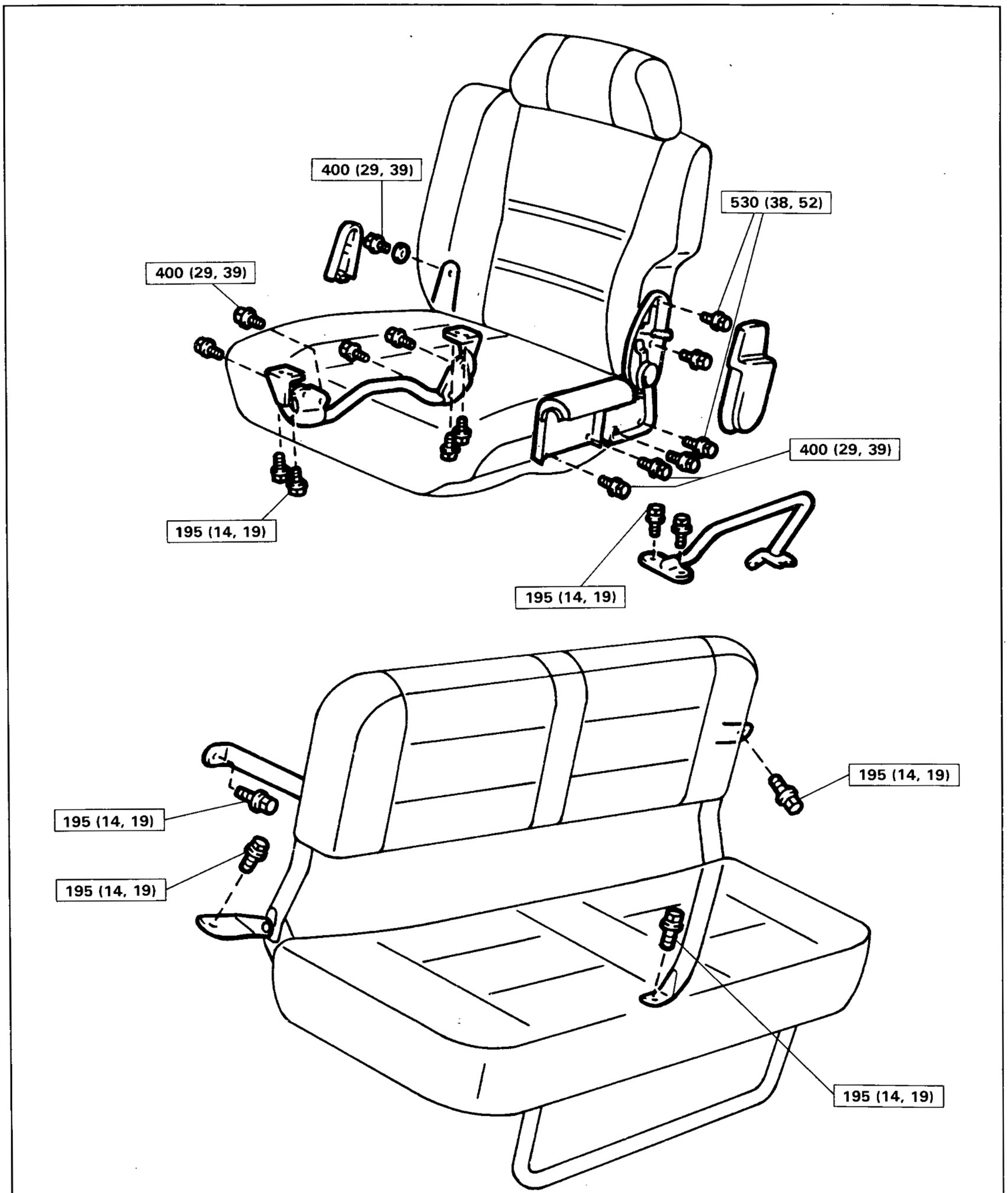

kg-cm (ft-lb, N·m) : Specified torque

BO5652
BO5622

SEAT BELTS

Front Seat Belts

COMPONENTS

ELR Type
Separate Seat

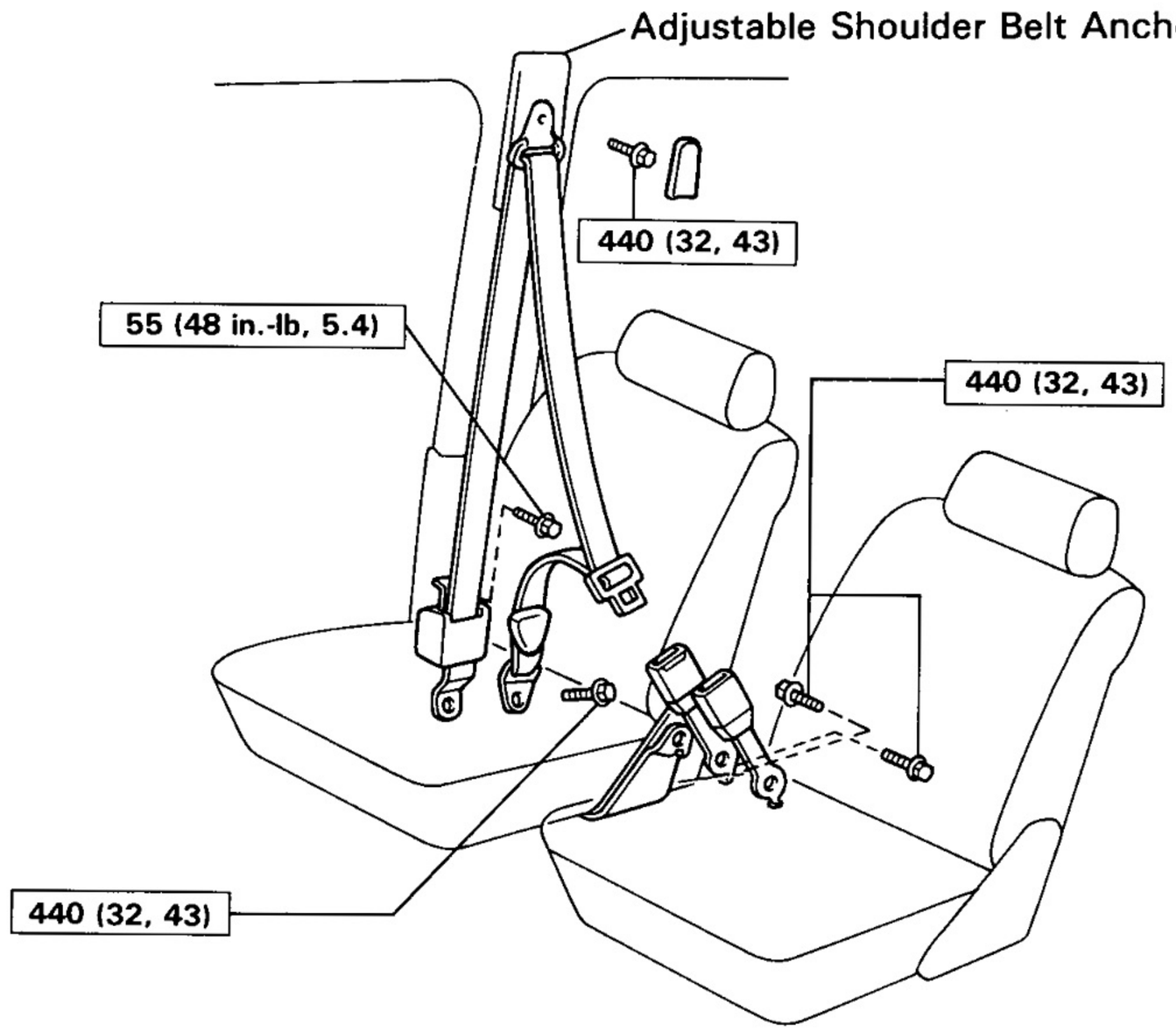

ELR Type
Separate Seat

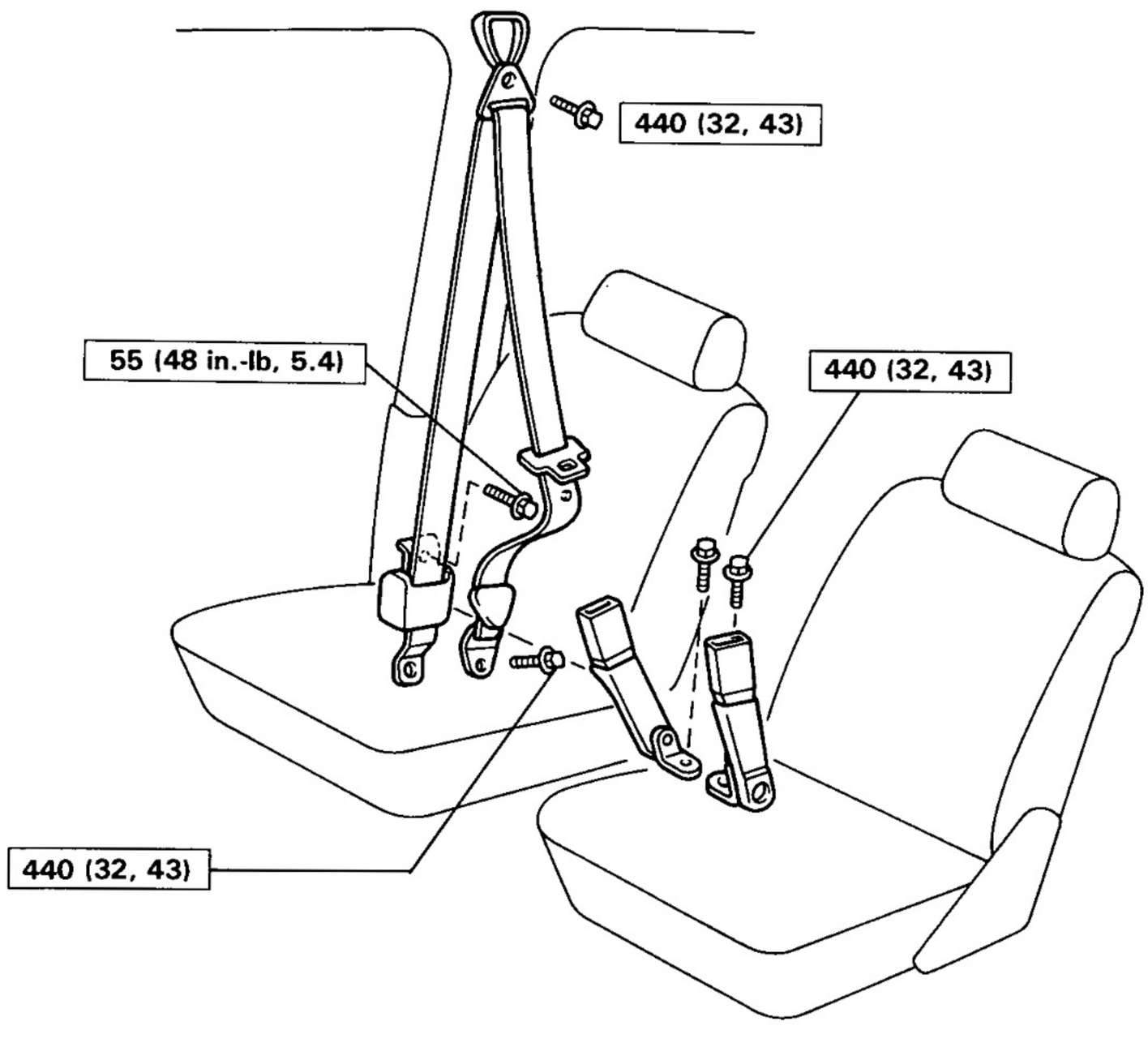

kg-cm (ft-lb, N·m) : Specified torque

BO5212
BO5645

COMPONENTS (Cont'd)

ELR and Manual Type
Separate and bench seat

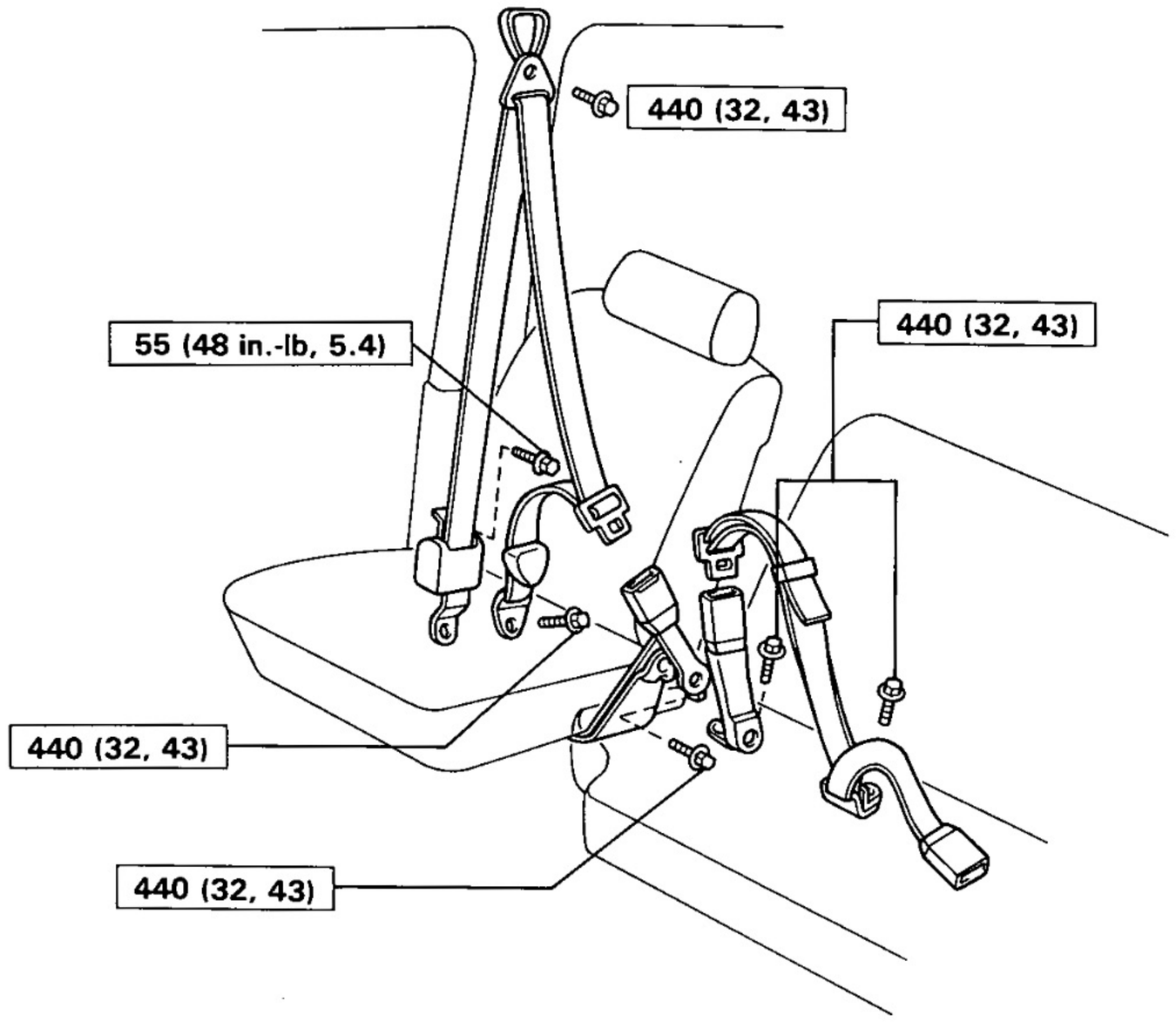

ELR and Manual Type
Separate and bench seat

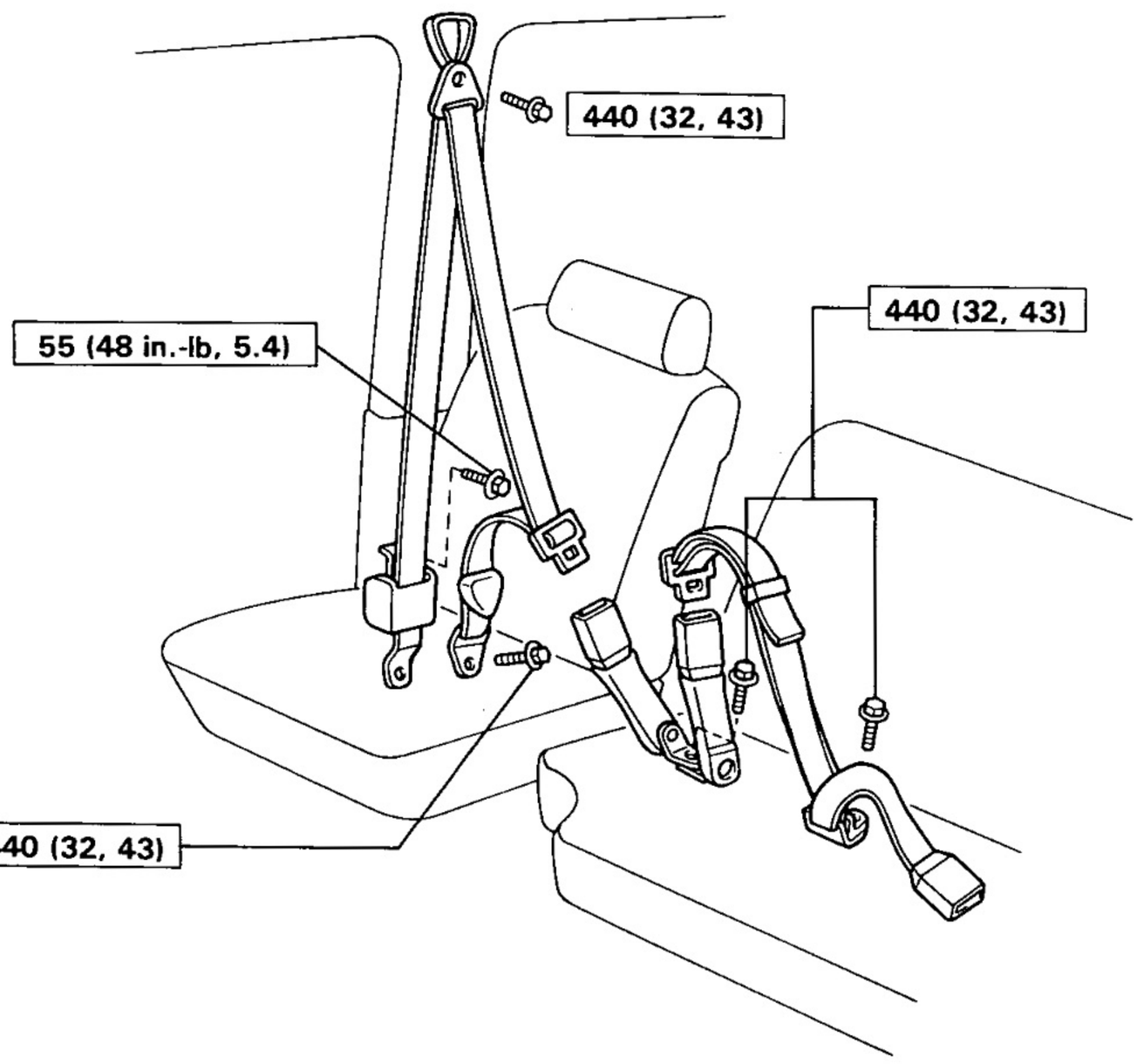

kg-cm (ft-lb, N·m) : Specified torque

BO5210
BO5214

COMPONENTS (Cont'd)

ELR Type
Separate and bench seat

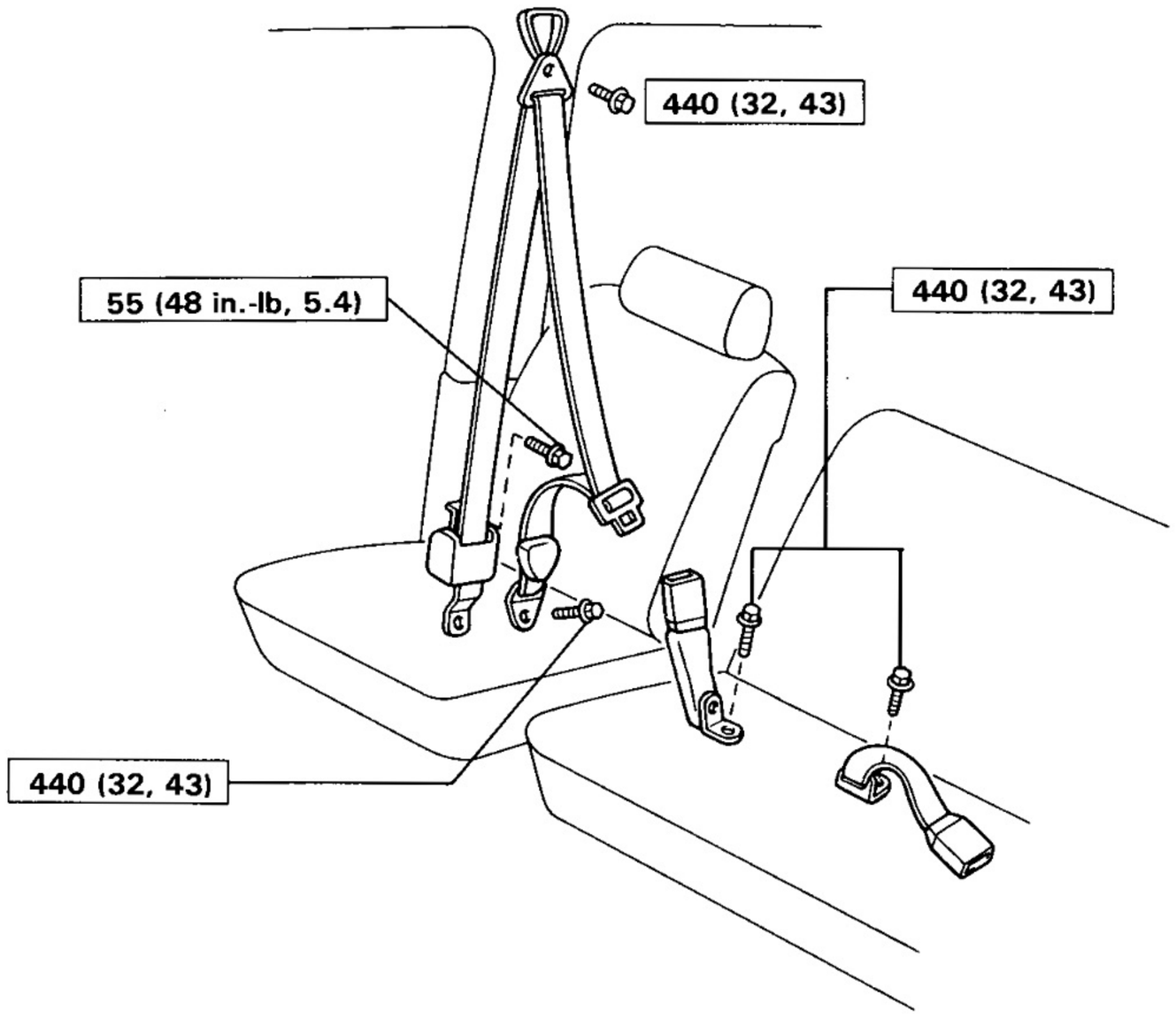

kg-cm (ft-lb, N·m) : Specified torque

BO5213

Second Seat Belts

COMPONENTS

ELR and Manual Type

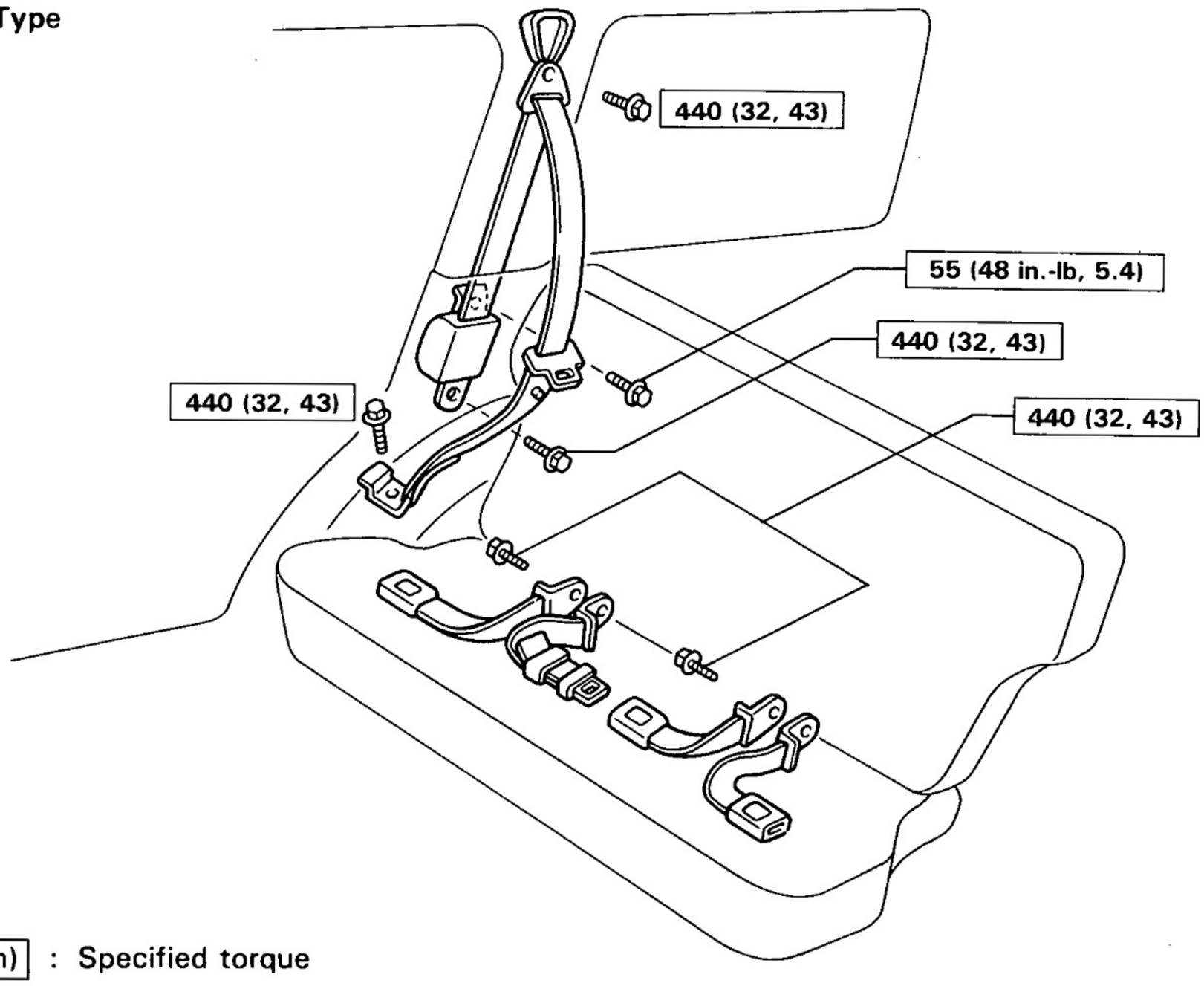

kg-cm (ft-lb, N·m) : Specified torque

BO5643

COMPONENTS (Cont'd)

Manual Type

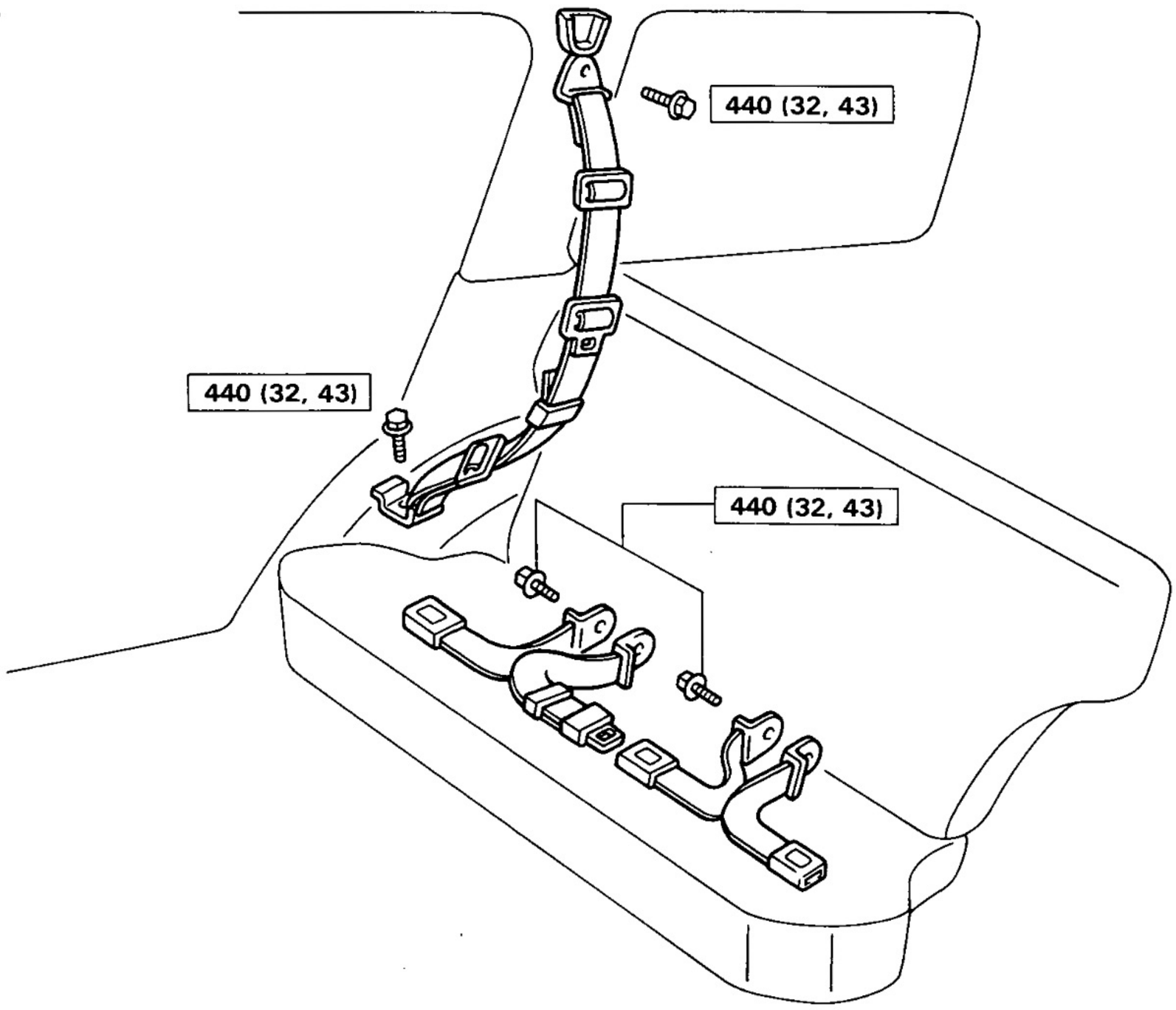

Manual Type

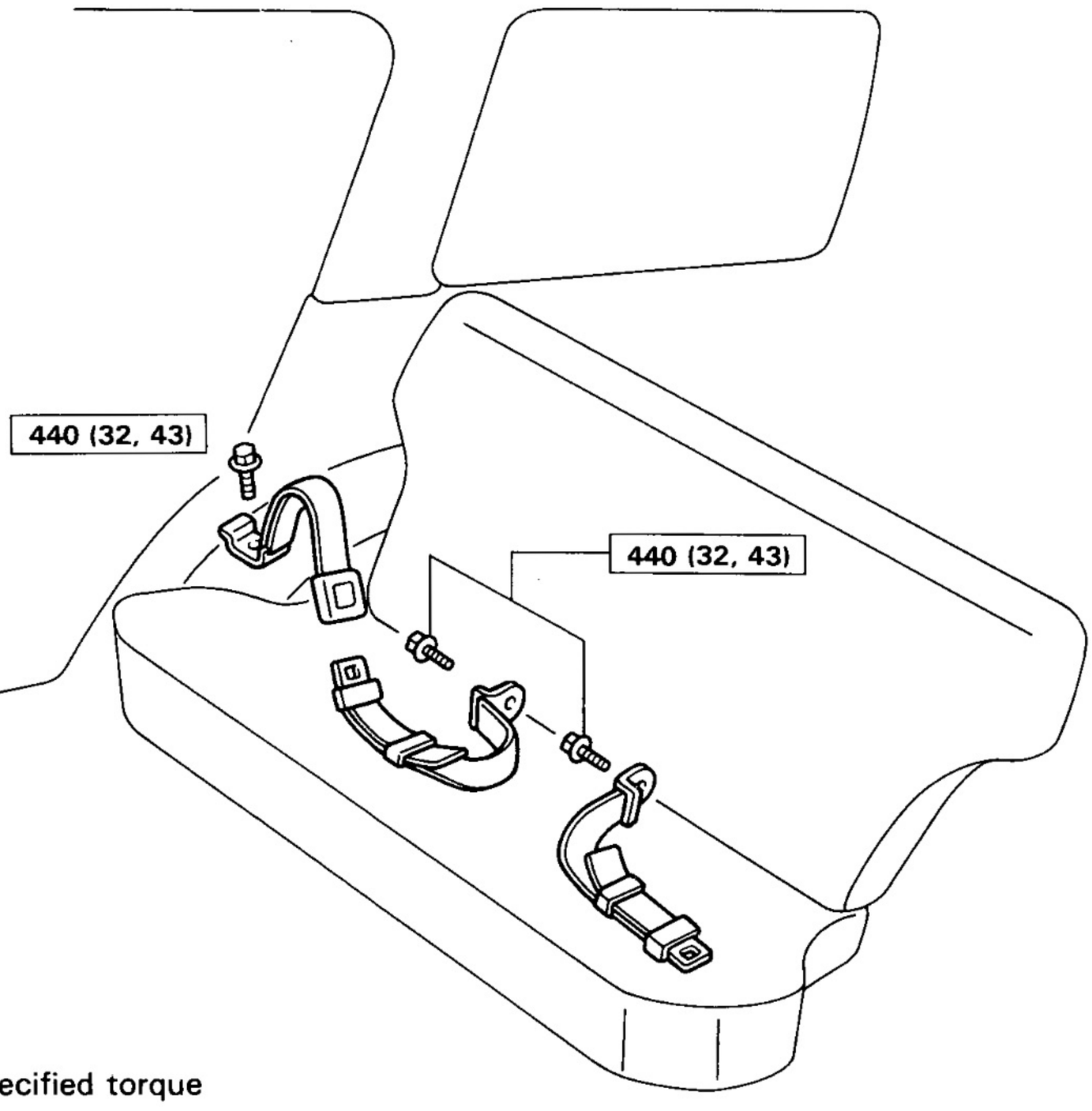

kg-cm (ft-lb, N·m) : Specified torque

BO5209
BO5207

Third Seat Belts

COMPONENTS

ELR and Manual Type

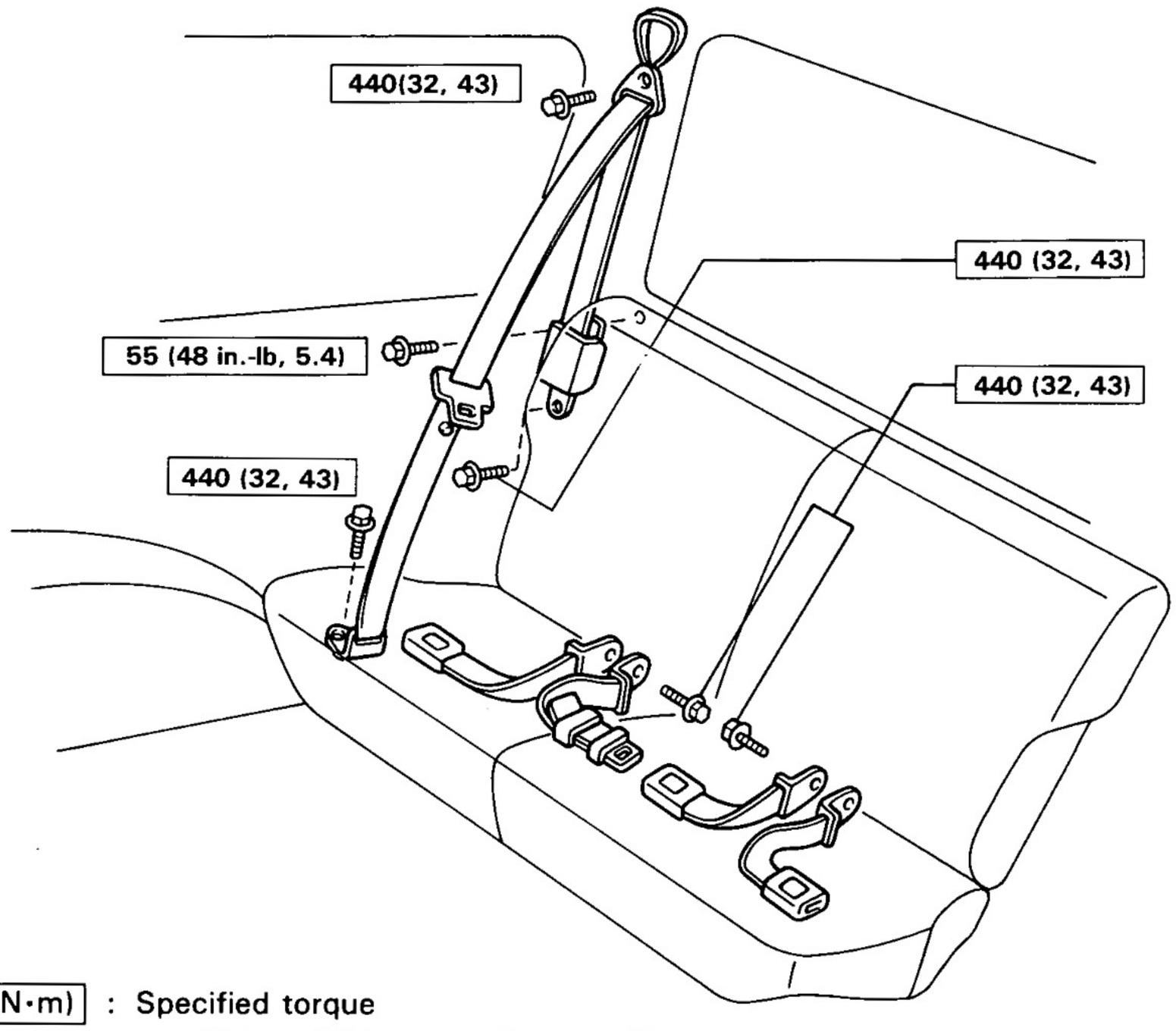

kg-cm (ft-lb, N·m) : Specified torque

BO5646

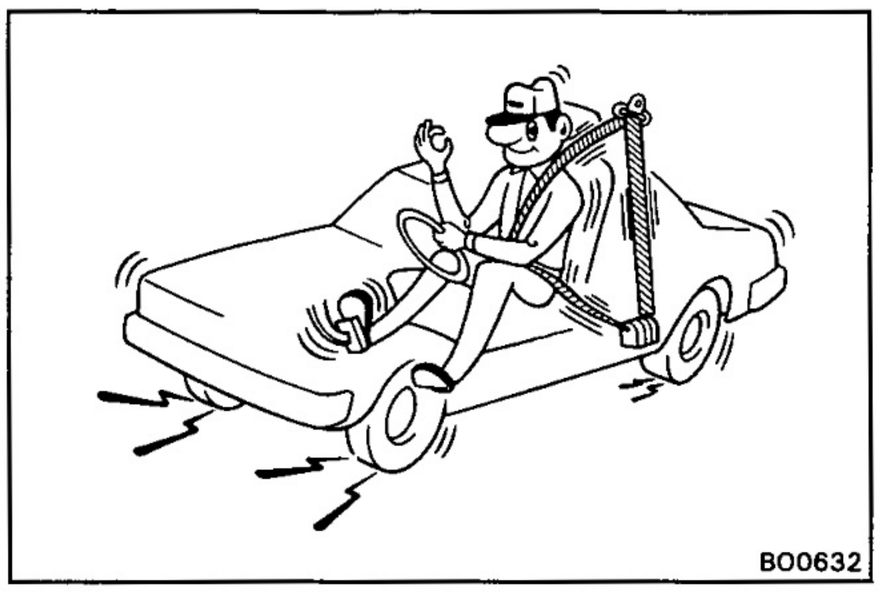

SEAT BELTS
[Emergency Locking Retractor (ELR) Type]

1. RUNNING TEST (IN SAFETY AREA)

(a) Fasten the seat belt.

(b) Drive the car at 10 mph (16 km/h) and make a very hard stop.

(c) Check that the seat belt is locked and cannot be extended at this time.

HINT: Conduct this test in safe area. If the belt does not lock, remove the belt mechanism assembly and conduct the following static check. Also, whenever installing a new belt assemly, verify the proper operation before installation.

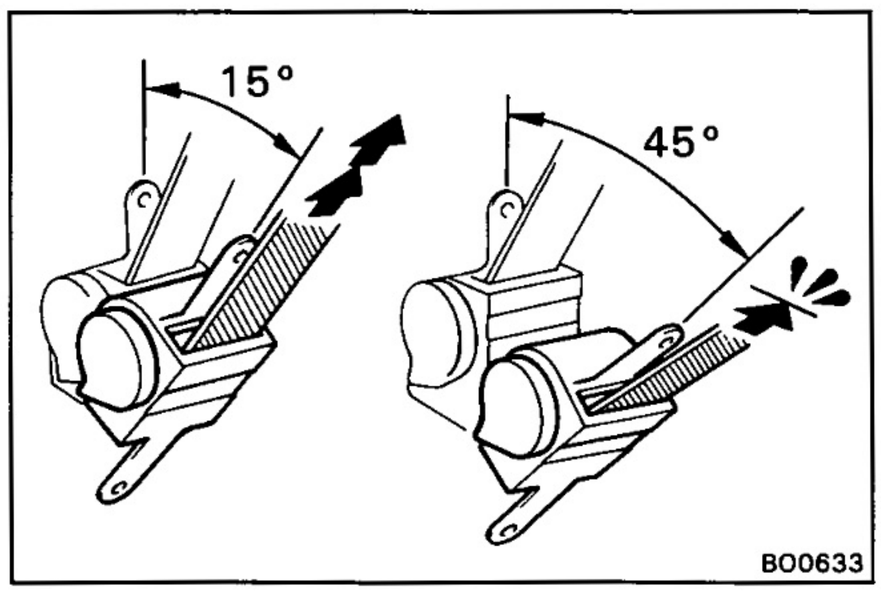

2. STATIC TEST

(a) Remove the locking retractor assembly.

(b) Tilt the retractor slowly.

(c) Verify that the belt can be pulled out at a tilt of 15 degrees or less, and cannot be pulled out at over 45 degrees of tilt.

If a problem is found, replace the assembly.

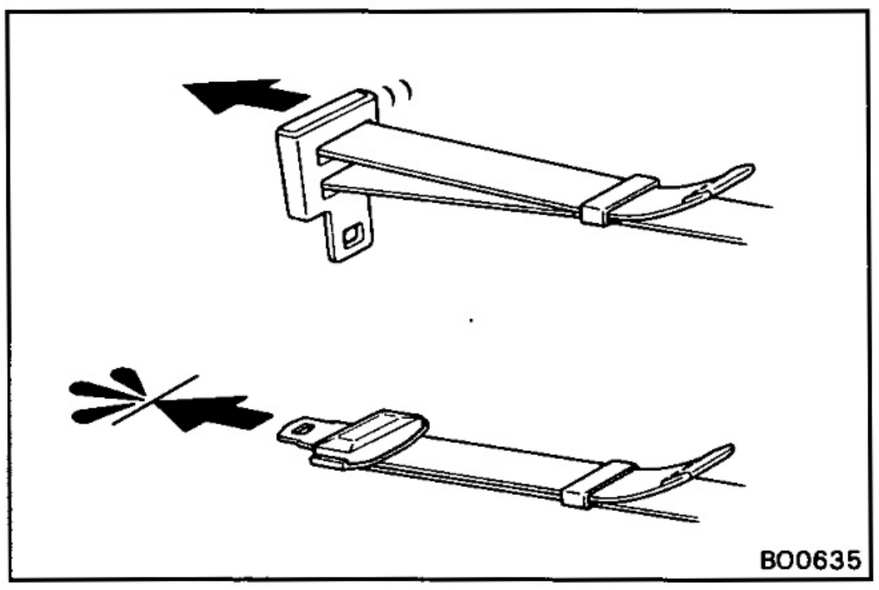

(Manual Type)

TESTING

(a) Adjust the belt to the proper length.

(b) Apply a firm load to the belt.

(c) Verify that the belt does not extend.

ROOF CARRIER AND ROOF RACK

COMPONENTS

Roof Rack

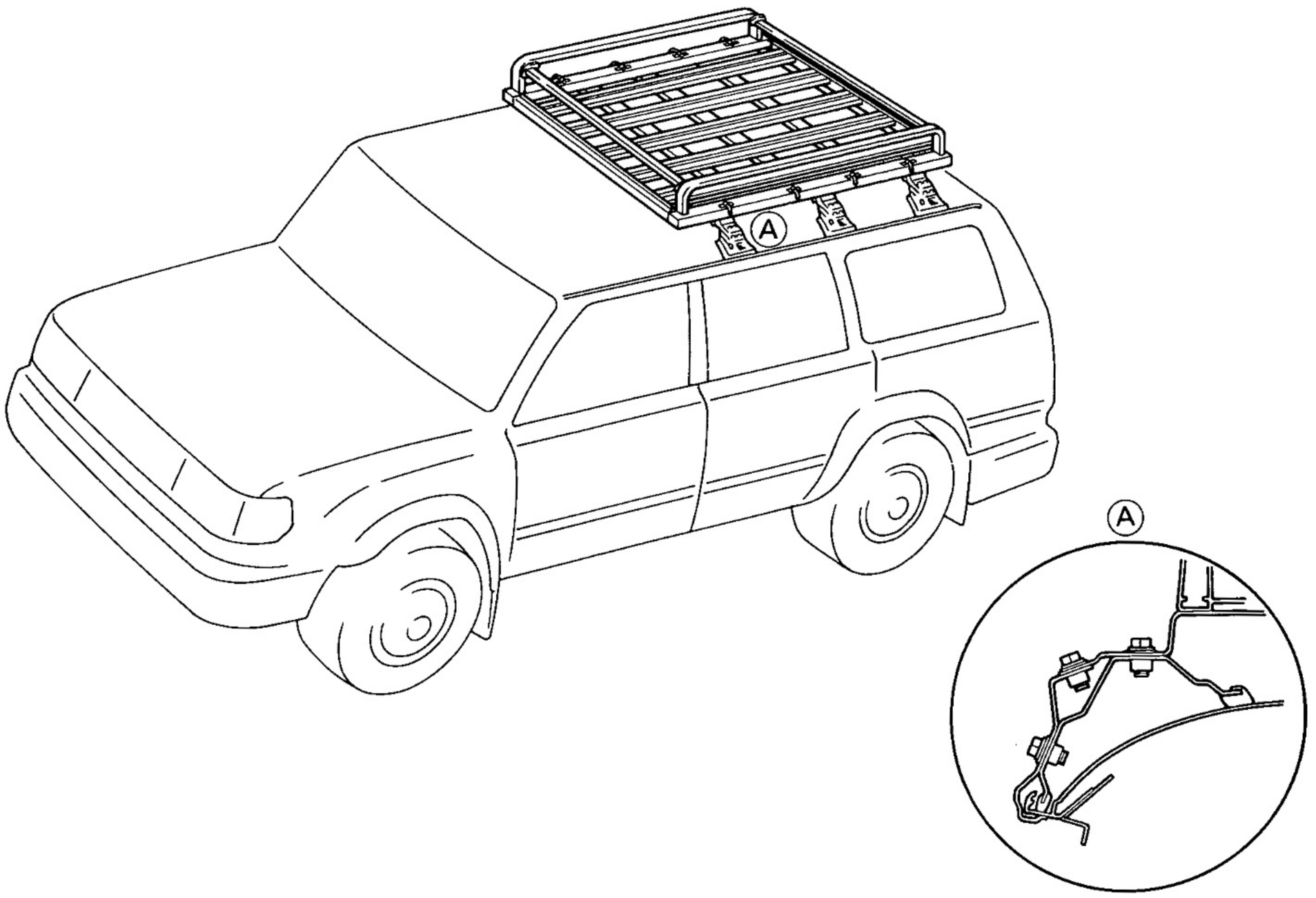

Roof Carrier

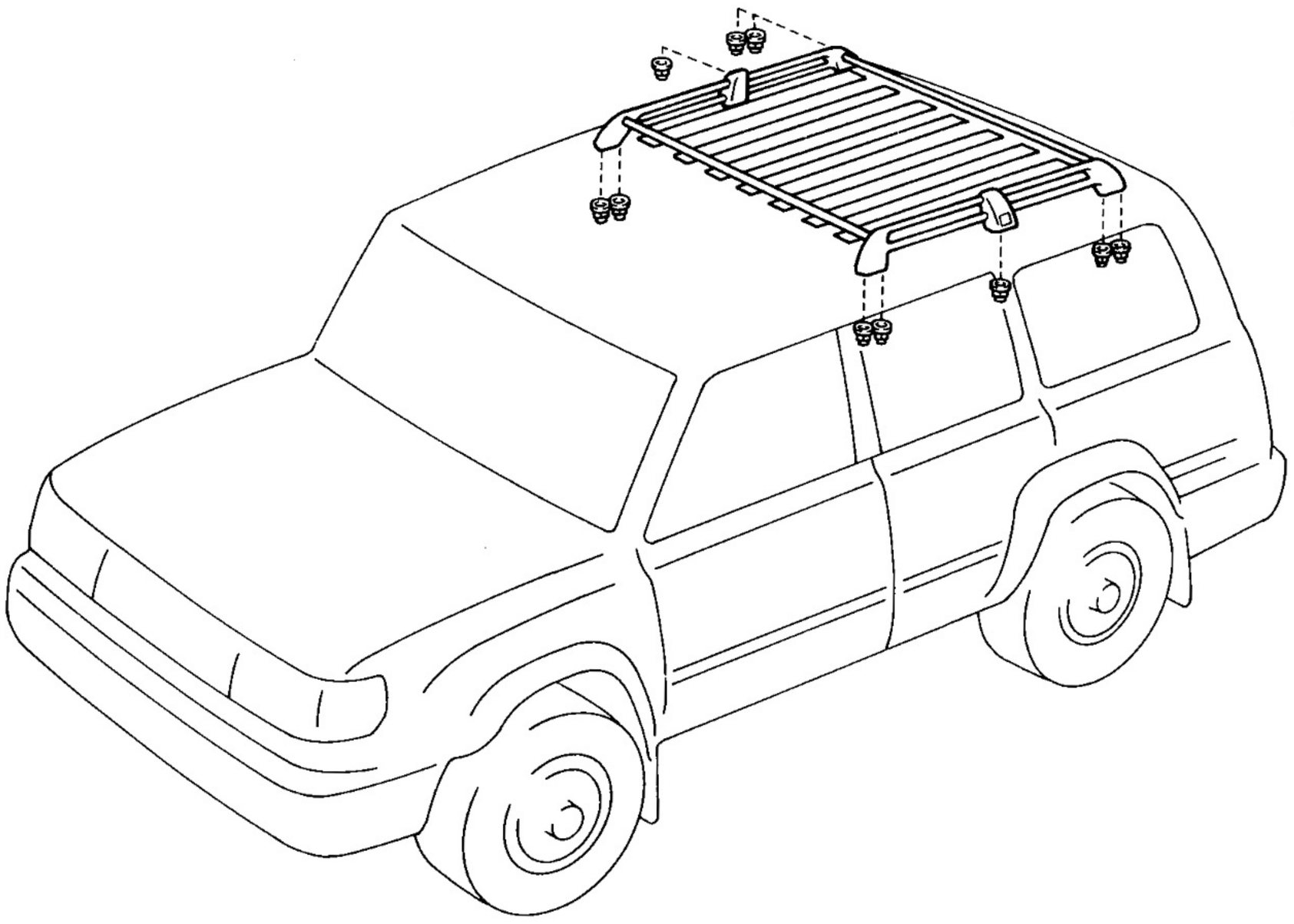

BO5205
BO5635

SIDE STEP

COMPONENTS

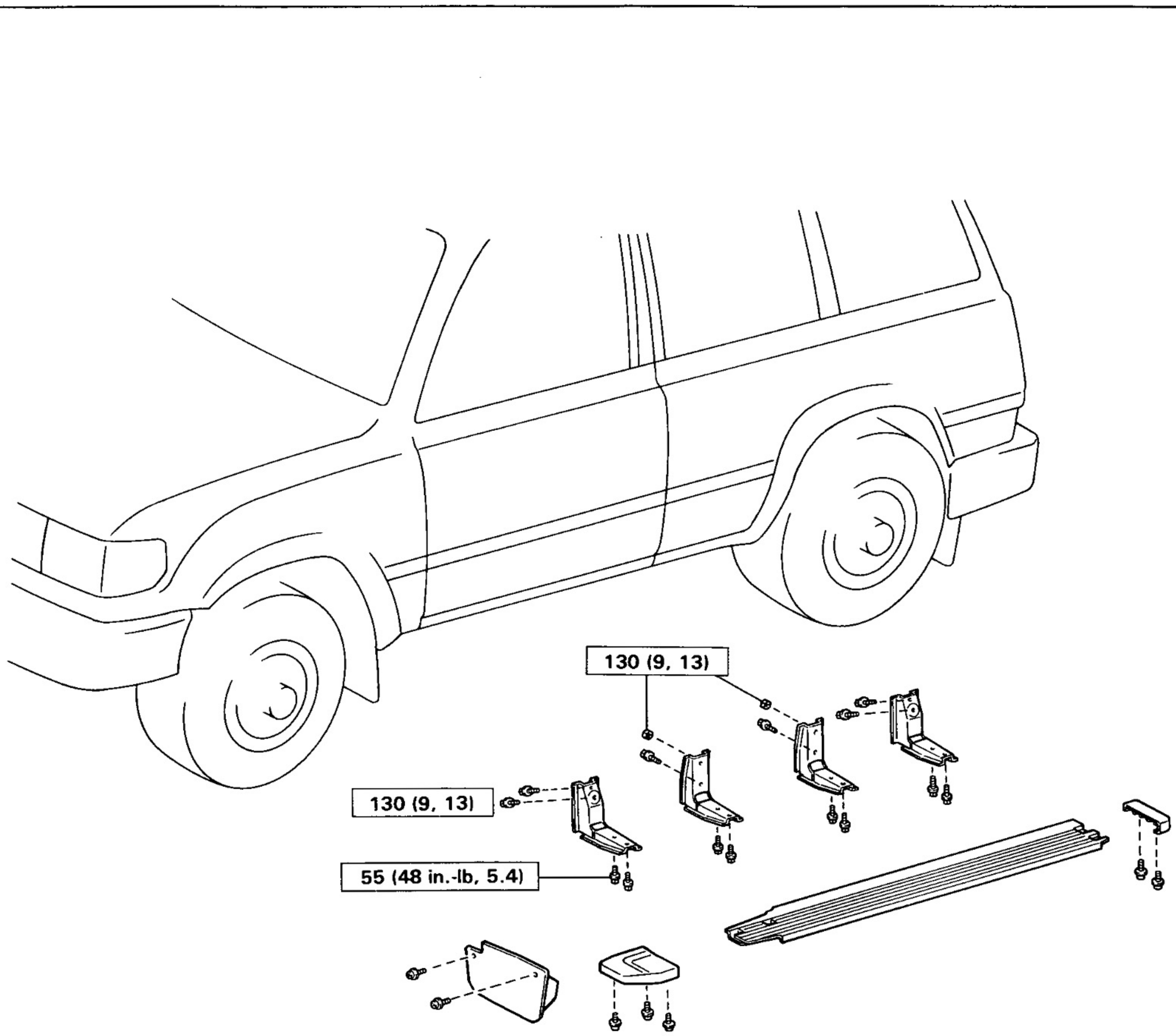

kg-cm (ft-lb, N·m) : Specified torque

BO5164

SPARE WHEEL CARRIER

COMPONENTS

Lif-up Door Type

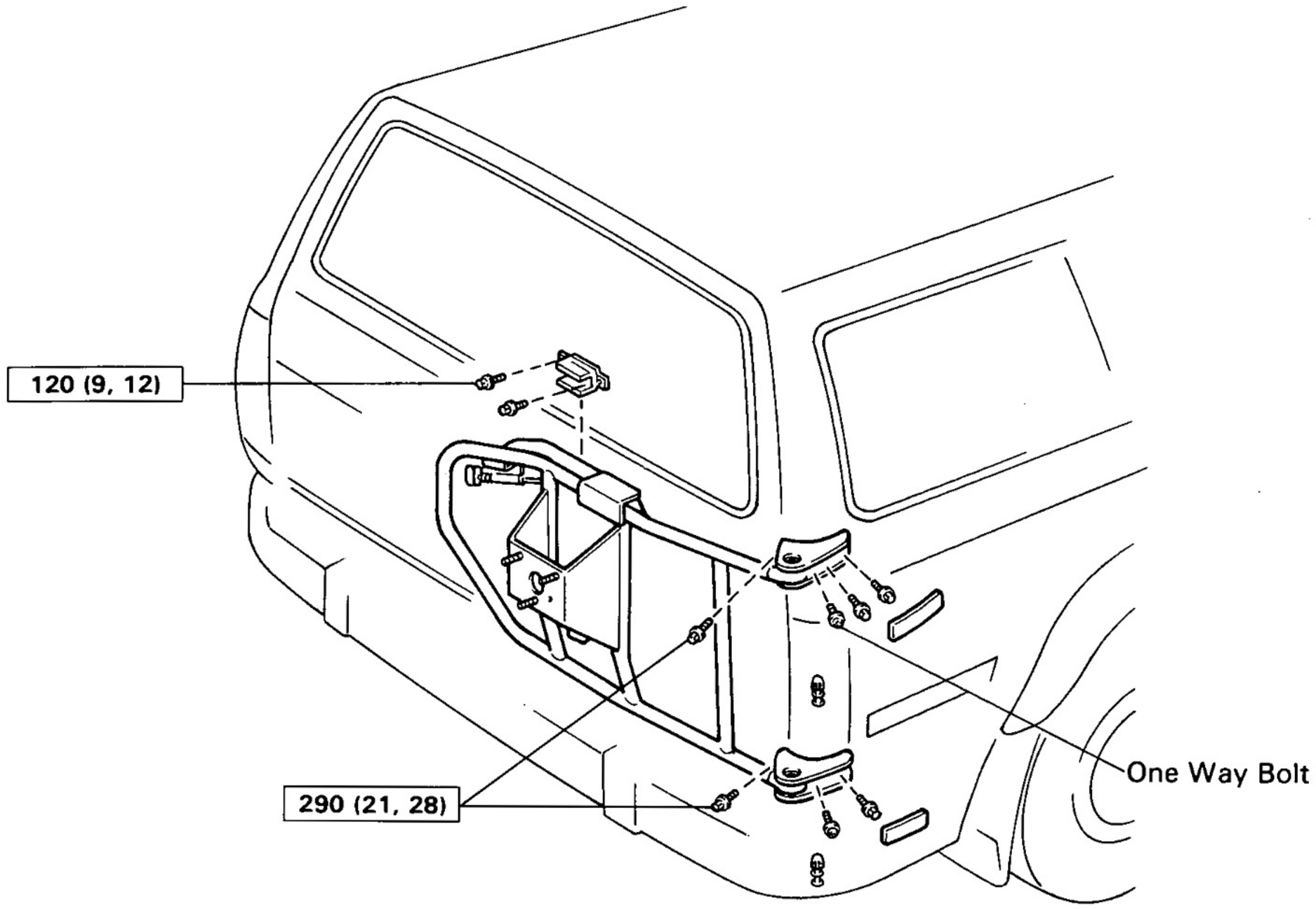

Swing Out Door Type

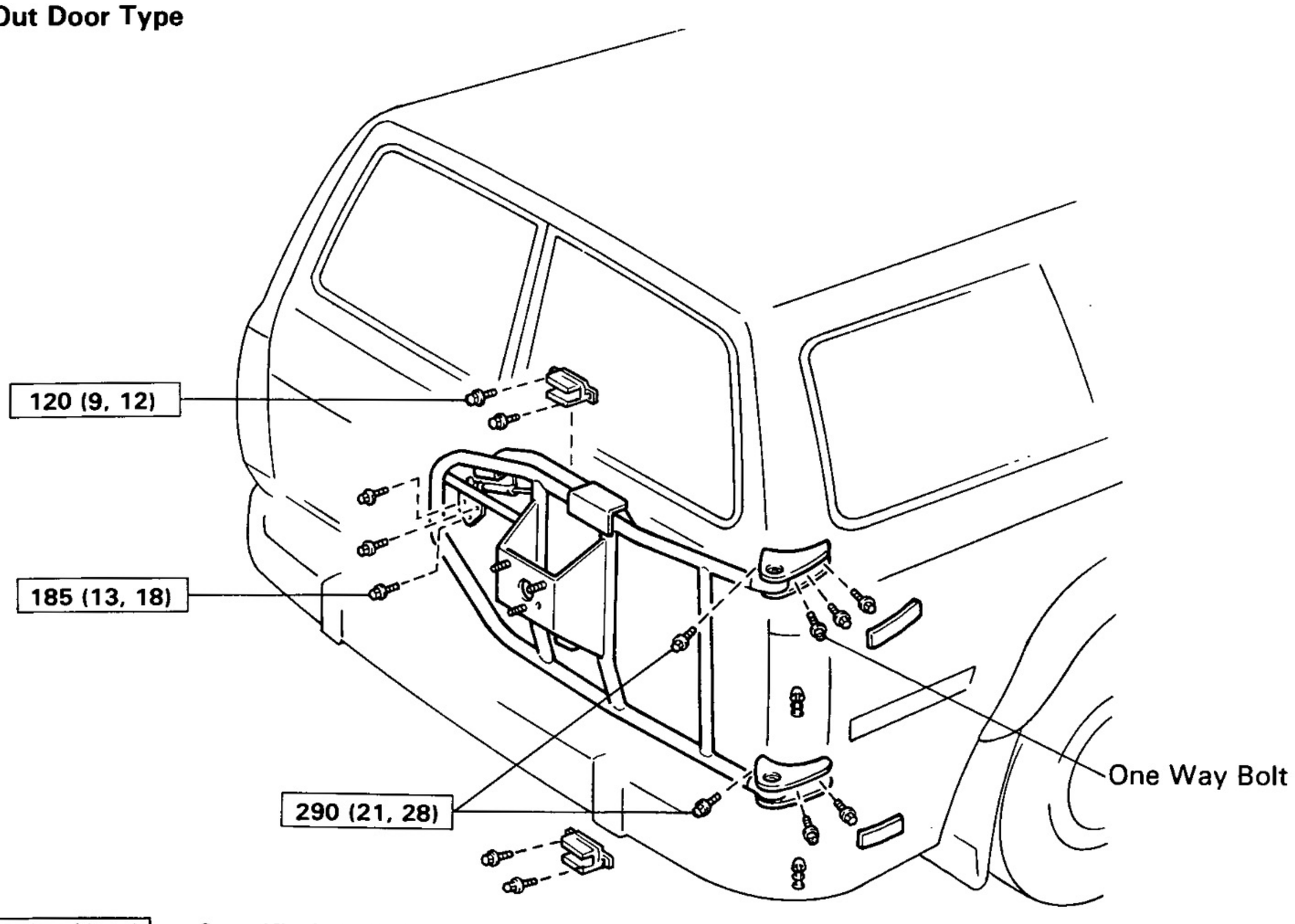

kg-cm (ft-lb, N·m) : Specified torque

BO5215

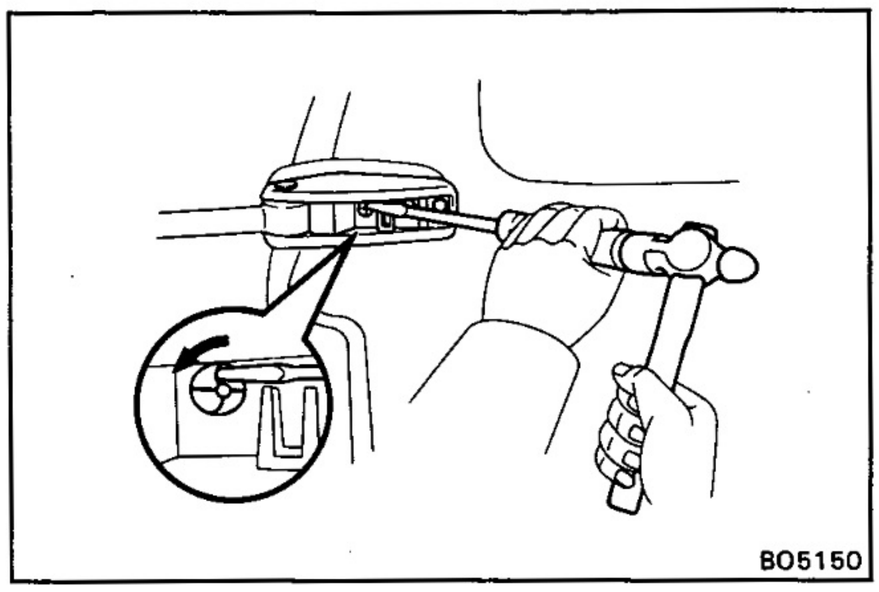

ONE WAY BOLT REMOVAL METHOD

Use a hammer to tap a screwdriver into the bolt grove at the perimeter, then turn the bolt anti-clockwise to remove it.

FUEL TANK AND LINE

COMPONENTS

(w/o Sub Fuel Tank)

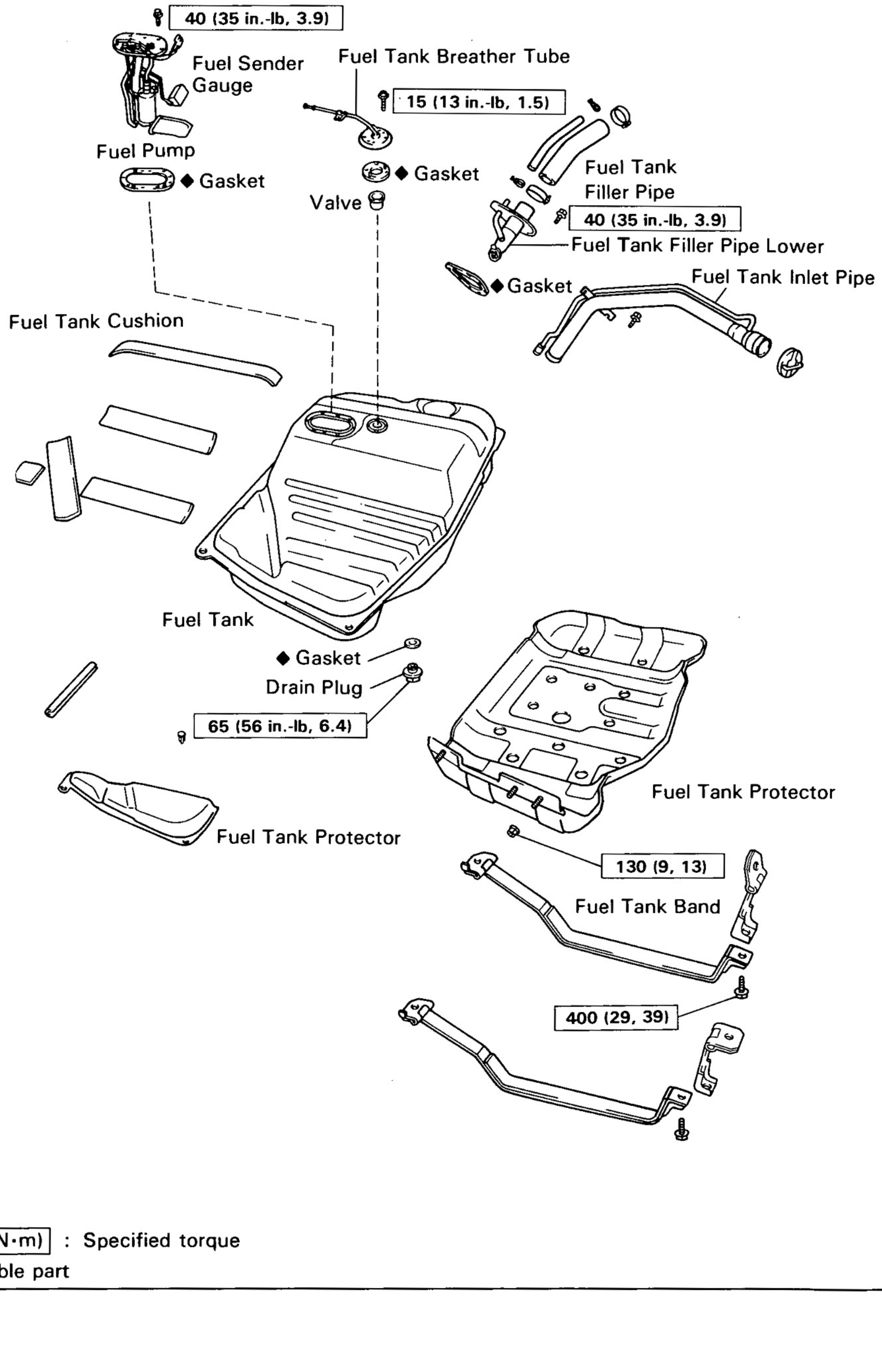

kg-cm (ft-lb, N·m) : Specified torque

◆ Non-reusable part

BO5650

COMPONETS (Cont'd)

(w/ Sub Fuel Tank)

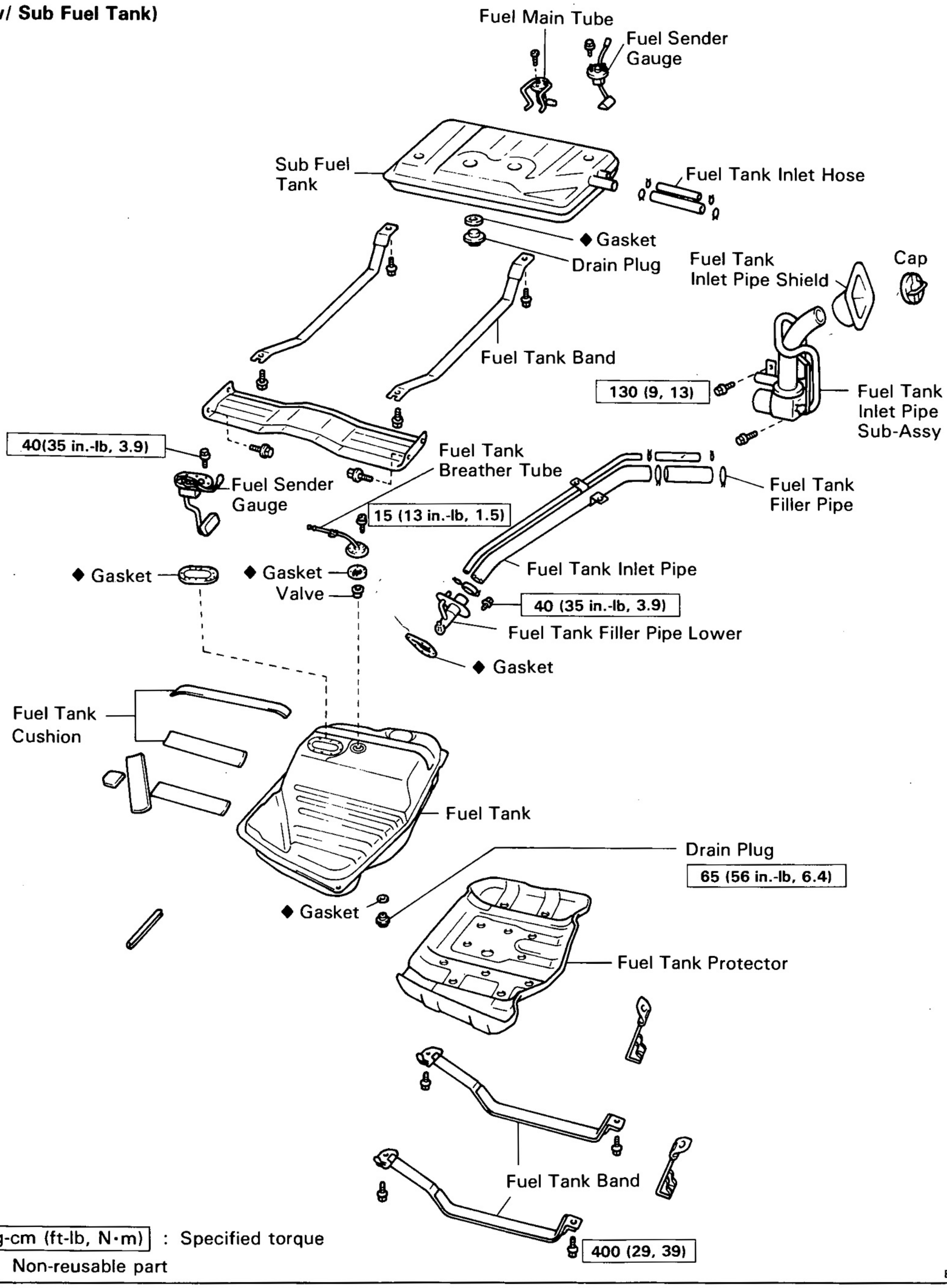

kg-cm (ft-lb, N·m) : Specified torque

◆ Non-reusable part

BO5598

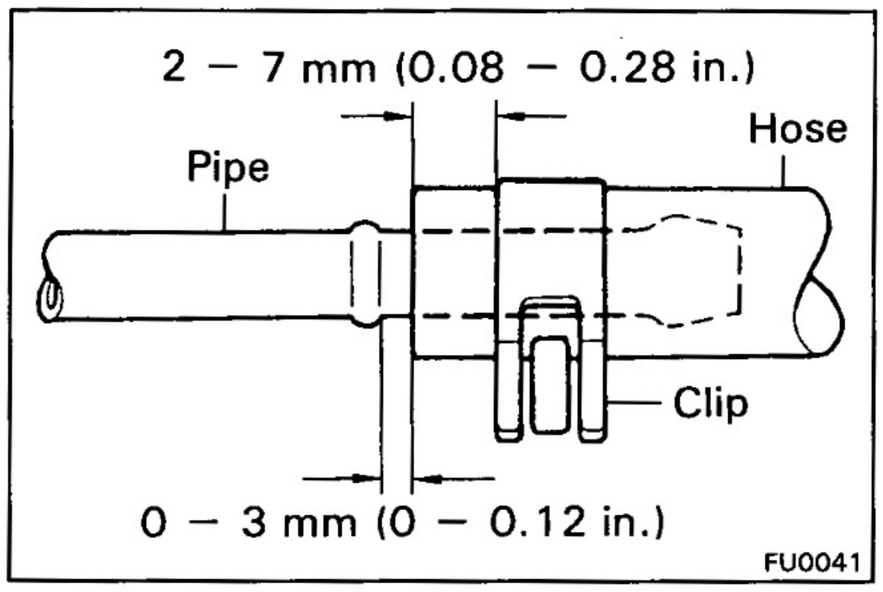

PRECAUTIONS

1. **Always use new gaskets when replacing the fuel tank or component parts.**

2. **Apply the proper torque to all tightening parts.**

INSPECT FUEL LINES AND CONNECTIONS

(a) Inspect the fuel lines and connections for cracks, leakage or deformation.

(b) Inspect the fuel tank vapor vent system hoses and connections for looseness, kinks or damage.

(c) Inspect the fuel tank for deformation, cracks, fuel leakage or tank mount bolts looseness.

(d) Inspect the filler neck for damage or fuel leakage.

(e) Hose and tube connections are as shown in the illustration.

If problem is found, repair or replace the parts as necessary.

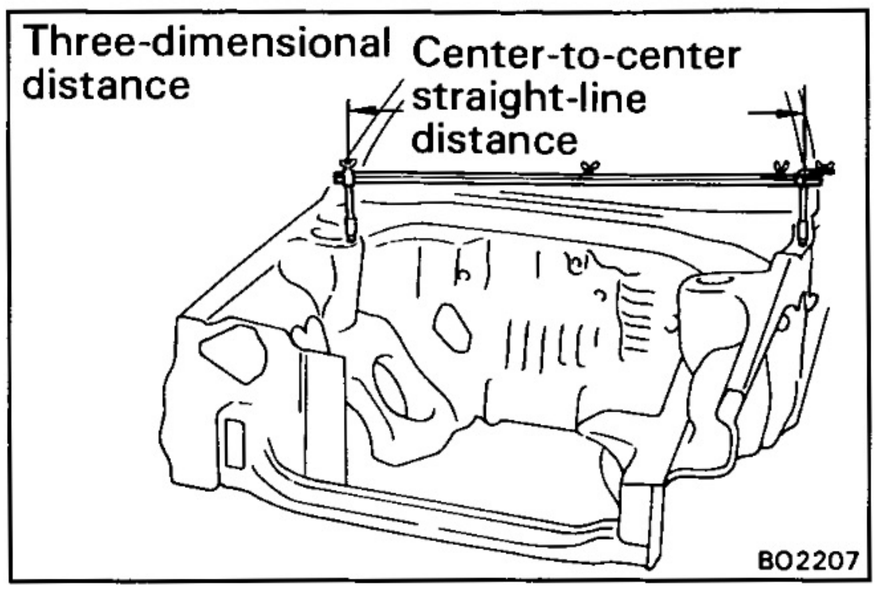

FRAME DIMENSIONS

General Information

1. BASIC DIMENSIONS

(a) There are two types of dimensions in the diagram.

(Three-dimensional distance)

- Straight-line distance between the centers of two measuring points.

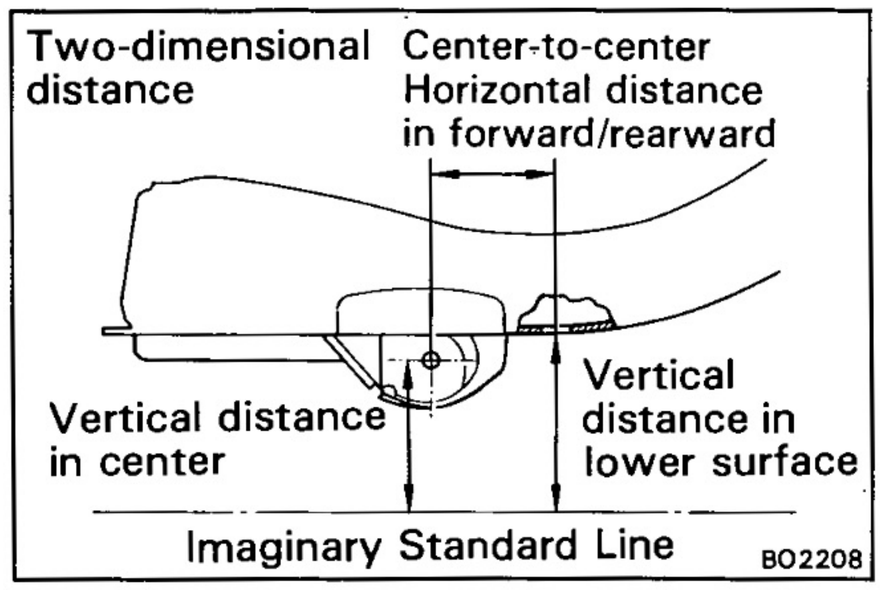

(Two-dimensional distance)

- Horizontal distance in forward/rearward between the centers of two measuring points.
- The height from an imaginary standard line.

(b) In cases in which only one dimension is given, left and right are symmetrical.

(c) The dimensions in the following drawing indicate actual distance. Therefore, please use the dimensions as a reference.

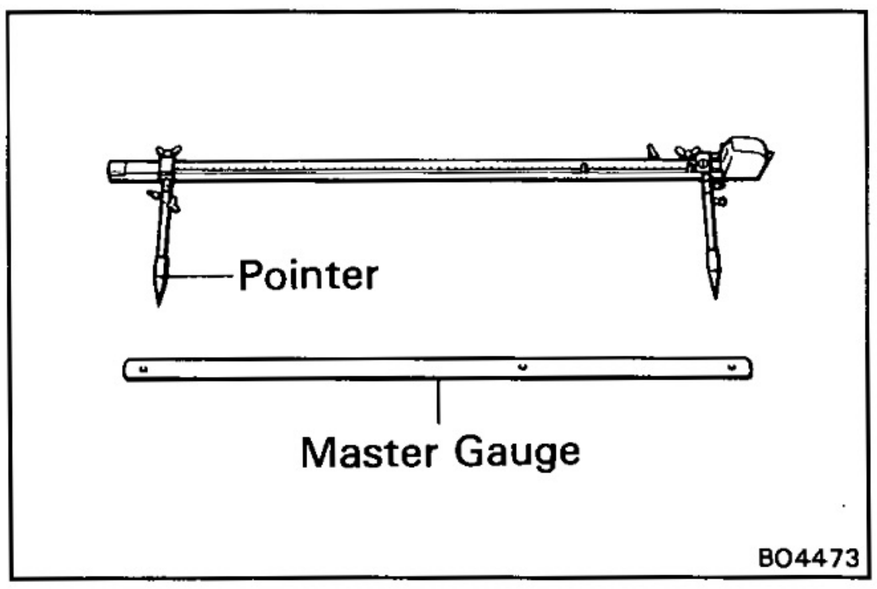

2. MEASURING

(a) Basically, all measurements are to be done with a tracking gauge. For portions where it is not possible to use a tracking gauge, a tape measure should be used.

(b) Use only a tracking gauge that has no looseness in the body, measuring plate, or pointers.

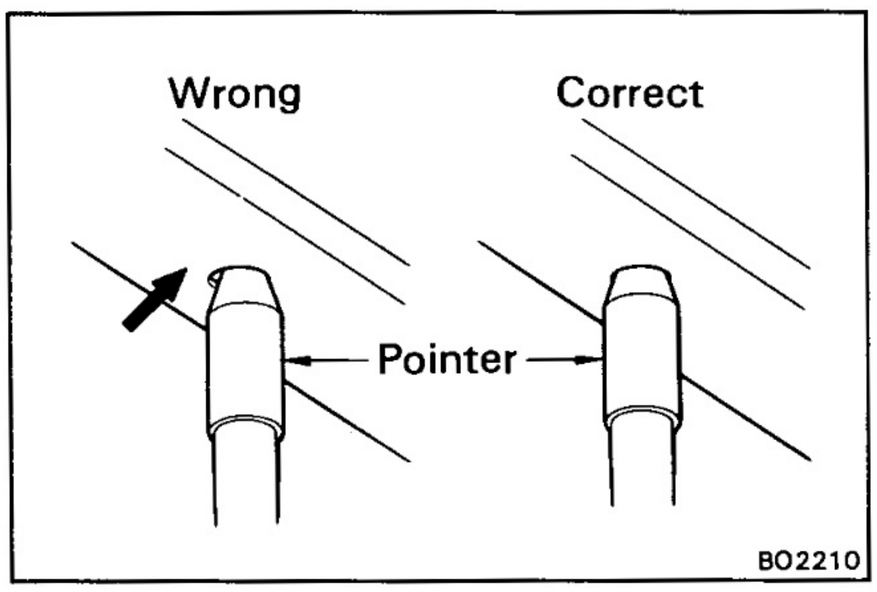

HINT:

1. The height of the left and right pointers must be equal.
2. Always calibrate the tracking gauge before measuring or after adjusting the pointer height.
3. Take care not to drop the tracking gauge or otherwise shock it.
4. Confirm that the pointers are securely in the holes.

Frame Dimensions

THREE-DIMENSIONAL DISTANCE

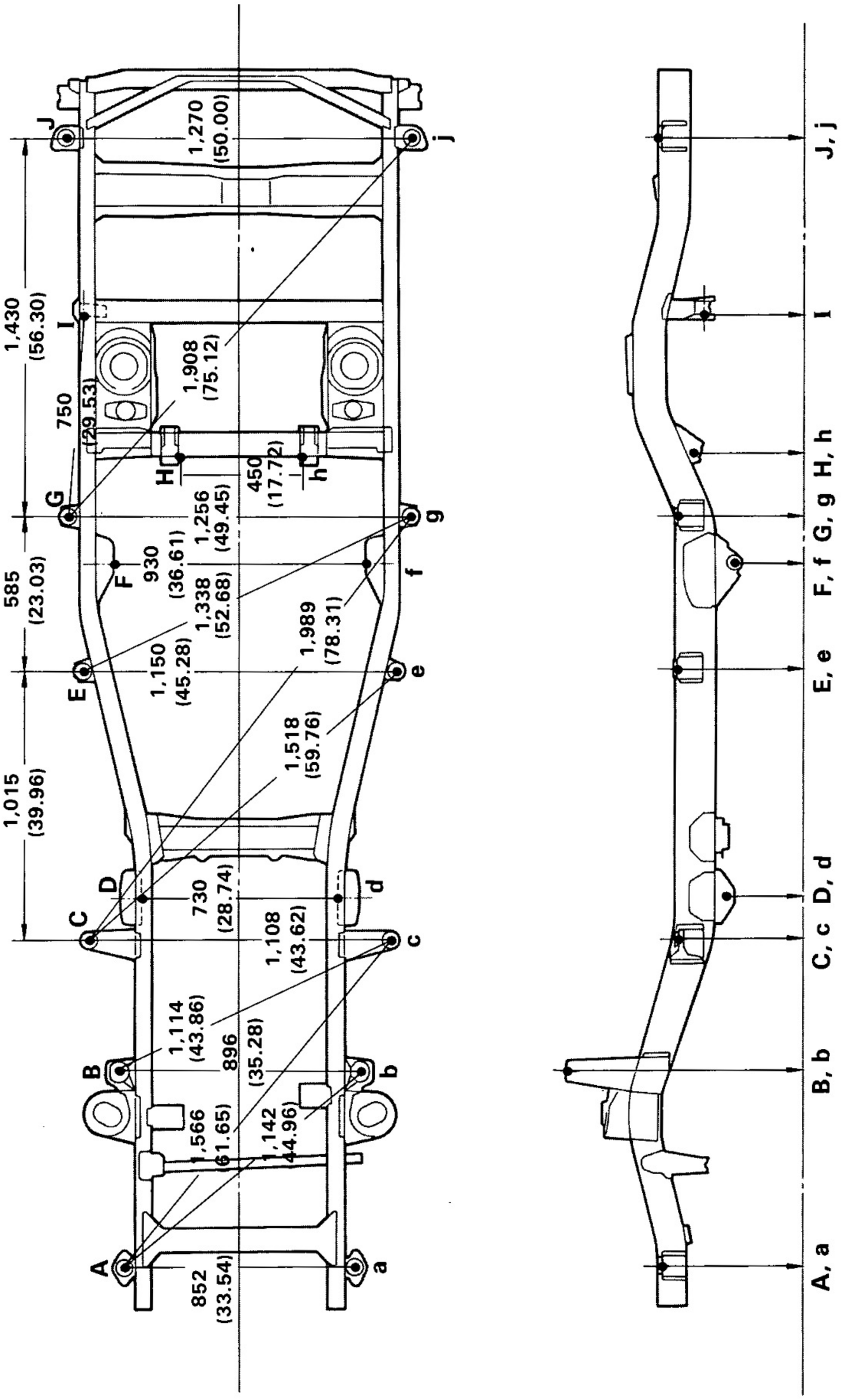

mm (in.)

Symbol	Name	Hole dia.
F, f	Lower control link installation hole	18.5 (0.73)
G, g	Body mounting hole	24 (0.94)
H, h	Upper control arm installation hole	18.5 (0.728)
I	Lateral control rod installation hole	18.5 (0.728)
J, j	Body mounting hole	60 (2.36)

Symbol	Name	Hole dia.
A, a	Body mounting hole	60 (2.36)
B, b	Shock absorber installation hole	24 (0.94)
C, c	Body mounting hole	28 (1.10)
D, d	Leading arm installation hole	18.5 (0.728)
E, e	Body mounting hole	24 (0.94)

BO5177

TWO-DIMENSIONAL DISTANCE

Wheel base	2,850 (112.20)

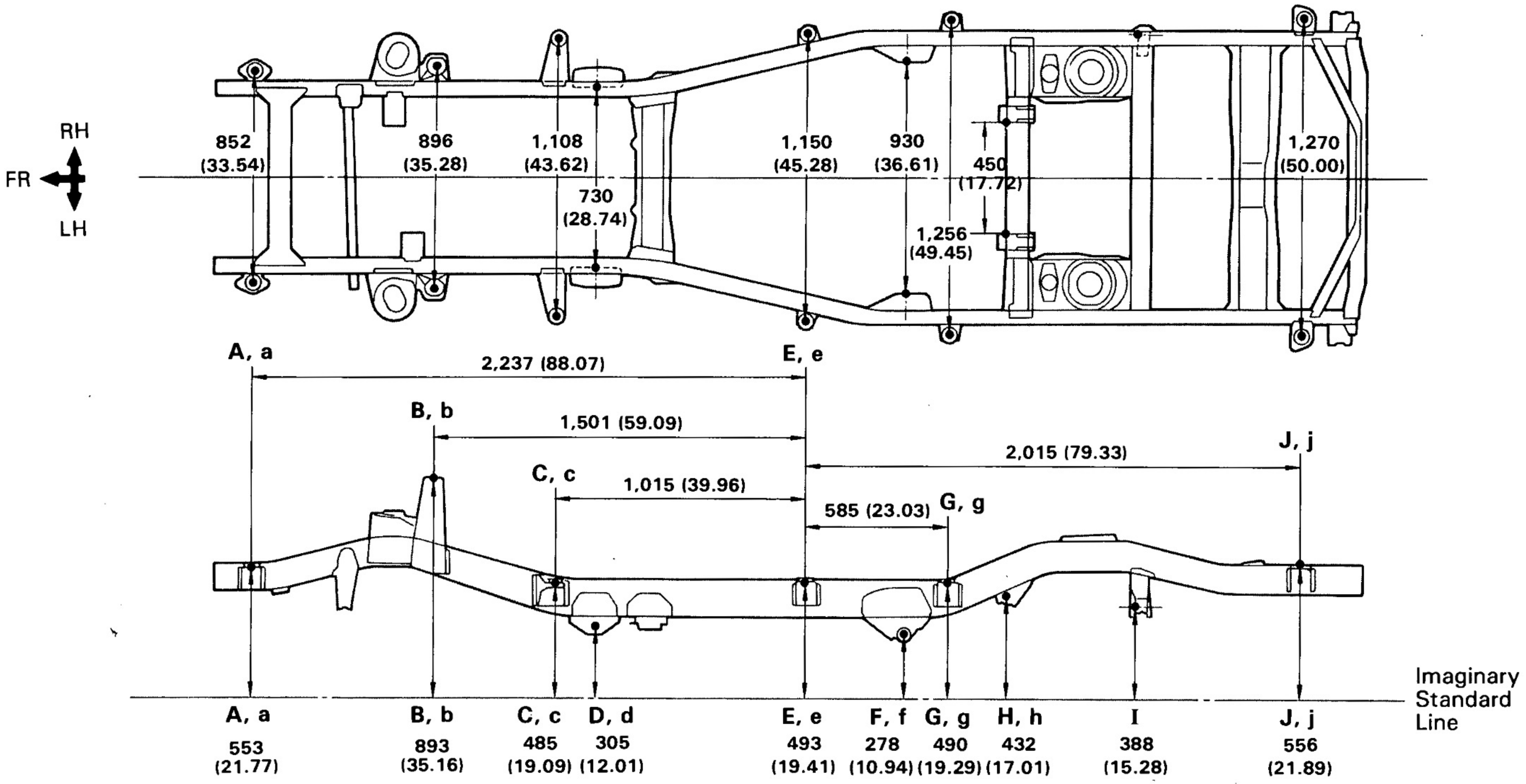

BO5177

mm (in.)

Symbol	Name	Hole dia.	Symbol	Name	Hole dia.
A, a	Body mounting hole	60 (2.36)	F, f	Lower control link installation hole	18.5 (0.73)
B, b	Shock absorber installation hole	24 (0.94)	G, g	Body mounting hole	24 (0.94)
C, c	Body mounting hole	28 (1.10)	H, h	Upper control arm installation hole	18.5 (0.728)
D, d	Leading arm installation hole	18.5 (0.728)	I	Lateral control rod installation hole	18.5 (0.728)
E, e	Body mounting hole	24 (0.94)	J, j	Body mounting hole	60 (2.36)

AIR CONDITIONING SYSTEM

	Page
GENERAL INFORMATION	AC-2
DESCRIPTION	AC-4
TROUBLESHOOTING	AC-16
PREPARATION	AC-20
REFRIGERATION SYSTEM	AC-21
DRIVE BELT	AC-25
REFRIGERATION LINES	AC-26
COMPRESSOR	AC-28
RECEIVER	AC-42
CONDENSOR	AC-43
COOLING UNIT	AC-44
COOL/ICE BOX	AC-51
EVAPORATORS	AC-52
EXPANSION VALVES	AC-53
THERMISTORS	AC-54
A/C CONTROL ASSEMBLY	AC-56
REAR COOLER CONTROL PANEL	AC-66
REAR HEATER SWITCH	AC-67
REAR COOLER SWITCH	AC-67
TRIPLE PRESSURE SWITCH	AC-68
WATER TEMPERATURE SWITCH	AC-68
SERVOMOTORS	AC-69
BLOWER MOTORS	AC-70
CONDENSER FAN MOTOR	AC-71
BLOWER RESISTORS	AC-71
POWER TRANSISTOR	AC-72
LOCATION OF RELAYS AND AMPLIFIERS	AC-72
HEATER RELAY	AC-72
BLOWER SPEED CONTROL RELAY	AC-73
REAR HEATER RELAY	AC-73
BLOWER HIGH RELAY	AC-73
MAGNETIC CLUTCH RELAY	AC-73
WATER TEMPERATURE CUT RELAY	AC-74
REAR COOLER RELAY	AC-74
CONDENSER FAN RELAY	AC-74
MAGNETIC VALVES	AC-74
SENSORS	AC-75
VACUUM SWITCHING VALVE (VSV)	AC-76
AMPLIFIERS	AC-77

GENERAL INFORMATION

ELECTRICAL PARTS

Before removing and inspecting the electrical parts, set the ignition switch to the LOCK position and disconnect the negative (—) terminal cable from the battery.

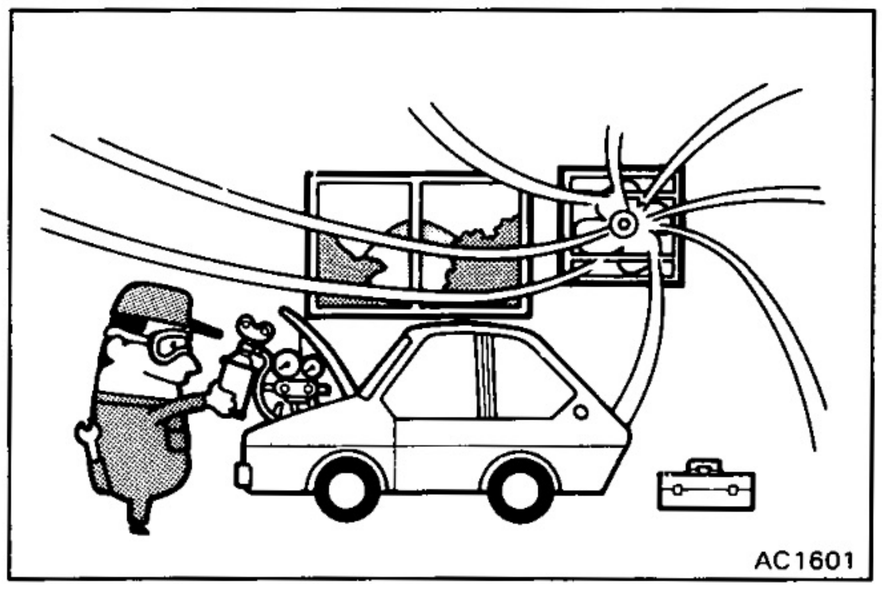
AC1601


AC1602

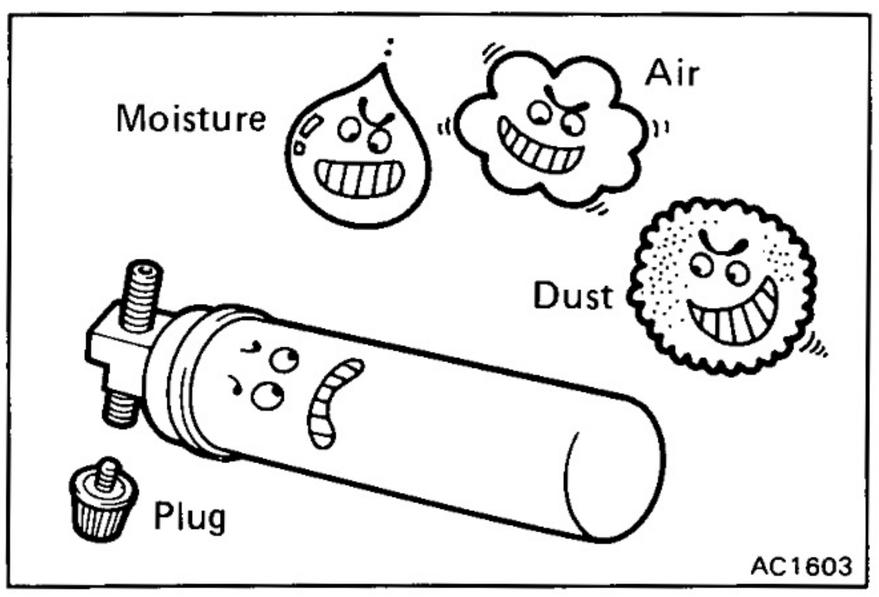

AC1603

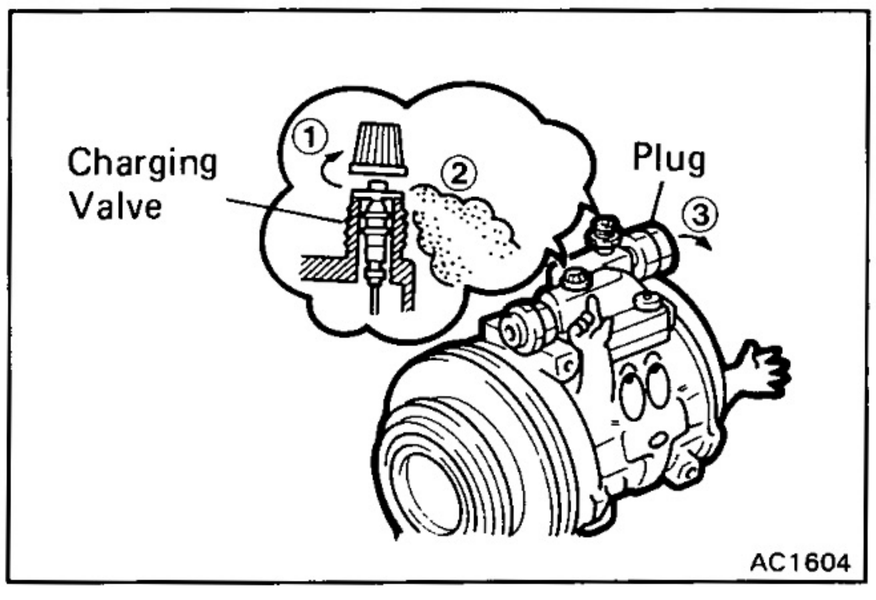

AC1604

REFRIGERATION SYSTEM

1. **WHEN HANDLING REFRIGERANT (R-12), FOLLOWING PRECAUTIONS MUST BE OBSERVED;**
   (a) Do not handle refrigerant in an enclosed area or near an open flame.
   (b) Always wear eye protection.
   (c) Be careful that liquid refrigerant does not get in your eyes or on your skin.

   If liquid refrigerant gets in your eyes or on your skin;
   - Do not rub.
   - Wash the area with lots of cool water.
   - Apply clean petroleum jelly to the skin.
   - Go immediately to a physician or hospital for professional treatment.
   - Do not attempt to treat yourself.

2. **WHEN REPLACING PARTS IN REFRIGERANT LINE;**
   (a) Discharge the refrigerant in the line slowly before replacement.
   (b) Insert a plug immediately in disconnected parts to prevent the entry of moisture and dust.
   (c) Do not leave a new condenser or receiver, etc., lying around with the plug removed.
   (d) Discharge the refrigerant from the charging valve before installing a new compressor.

   If the refrigerant is not discharged first, compressor oil will spray out with the refrigerant gas when the plug is removed.
   (e) Do not use a torch for tube bending or lengthening operations.

   If tubes are heated with a torch, a layer of oxidation forms inside the tube, causing the same kind of trouble as an accumulation of dust.

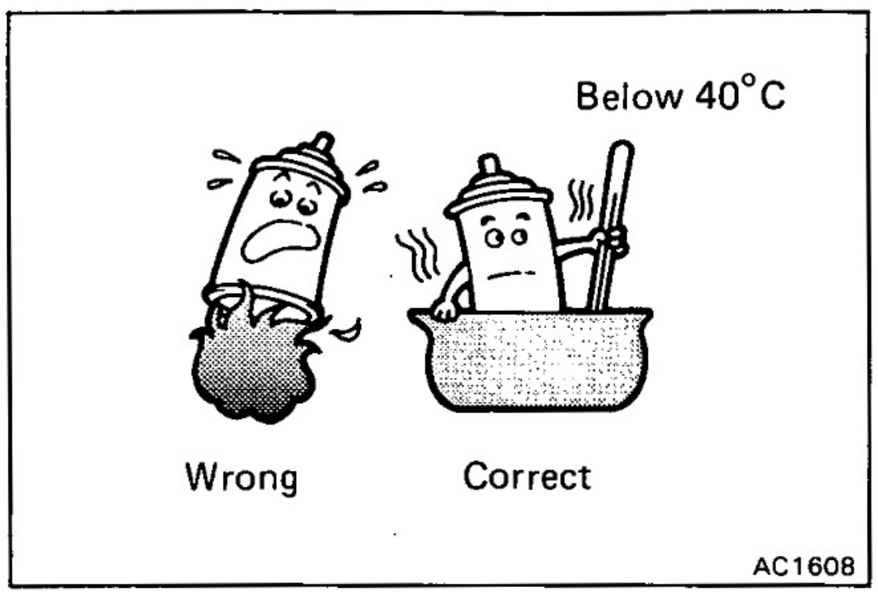

3. WHEN HANDLING REFRIGERANT CONTAINER (SERVICE CAN);

(a) The container must never be heated.

(b) Containers must be kept below 40°C (104°F)

(c) If warming a service can with hot water, be careful that the valve on top of the service can is never immersed in the water, as the water may permeate the refrigerant cycle.

(d) Empty service cans must never be re-used.

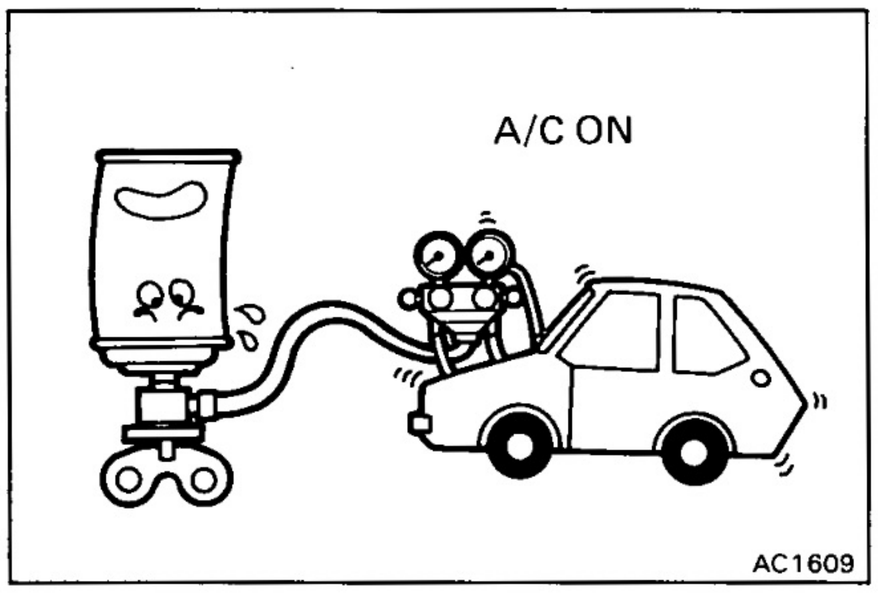

4. WHEN A/C IS ON AND REFRIGERANT GAS IS BEING REPLENISHED;

(a) If there is not enough refrigerant gas in the refrigerant cycle, oil lubrication will be insufficient and compressor burnout may occur, so take care to avoid this.

(b) If the valve on the high pressure side is opened, refrigerant flows in the reverse direction and could cause the service can to rupture, so open and close the valve on the low pressure side only.

(c) If the service can is inverted and refrigerant is loaded in a liquid state, the liquid is compressed and causes the compressor to break down, so the refrigerant must be in a gaseous state.

(d) Be careful not to load too much refrigerant gas, as this causes trouble such as inadequate cooling, poor fuel economy, engine overheating, etc.

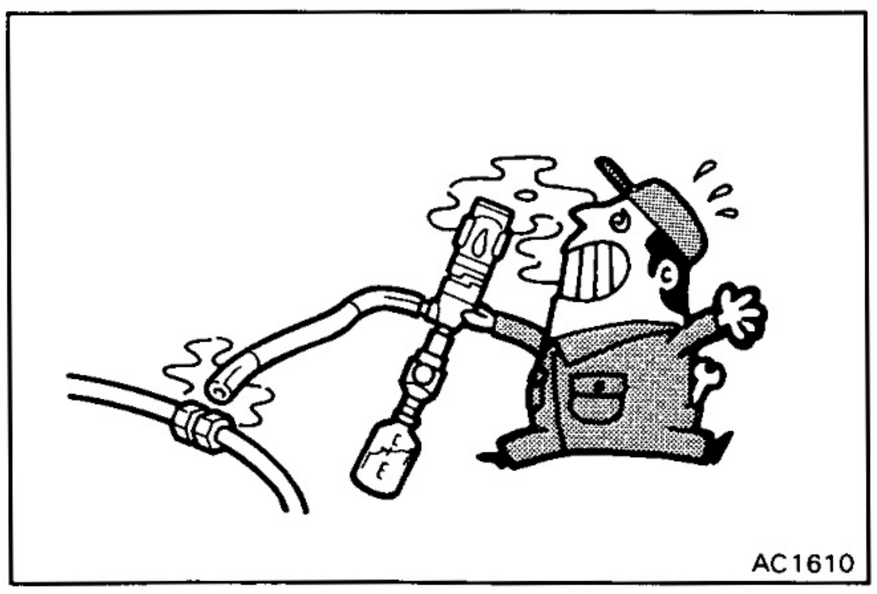

5. WHEN USING GAS-CYLINDER TYPE GAS LEAK TESTER;

(a) As a naked flame is used, first make sure that there are no flammable substances nearby before using it.

(b) Be careful, as a poisonous gas is produced when refrigerant gas comes in contact with heated parts.

DESCRIPTION

PARTS LOCATION

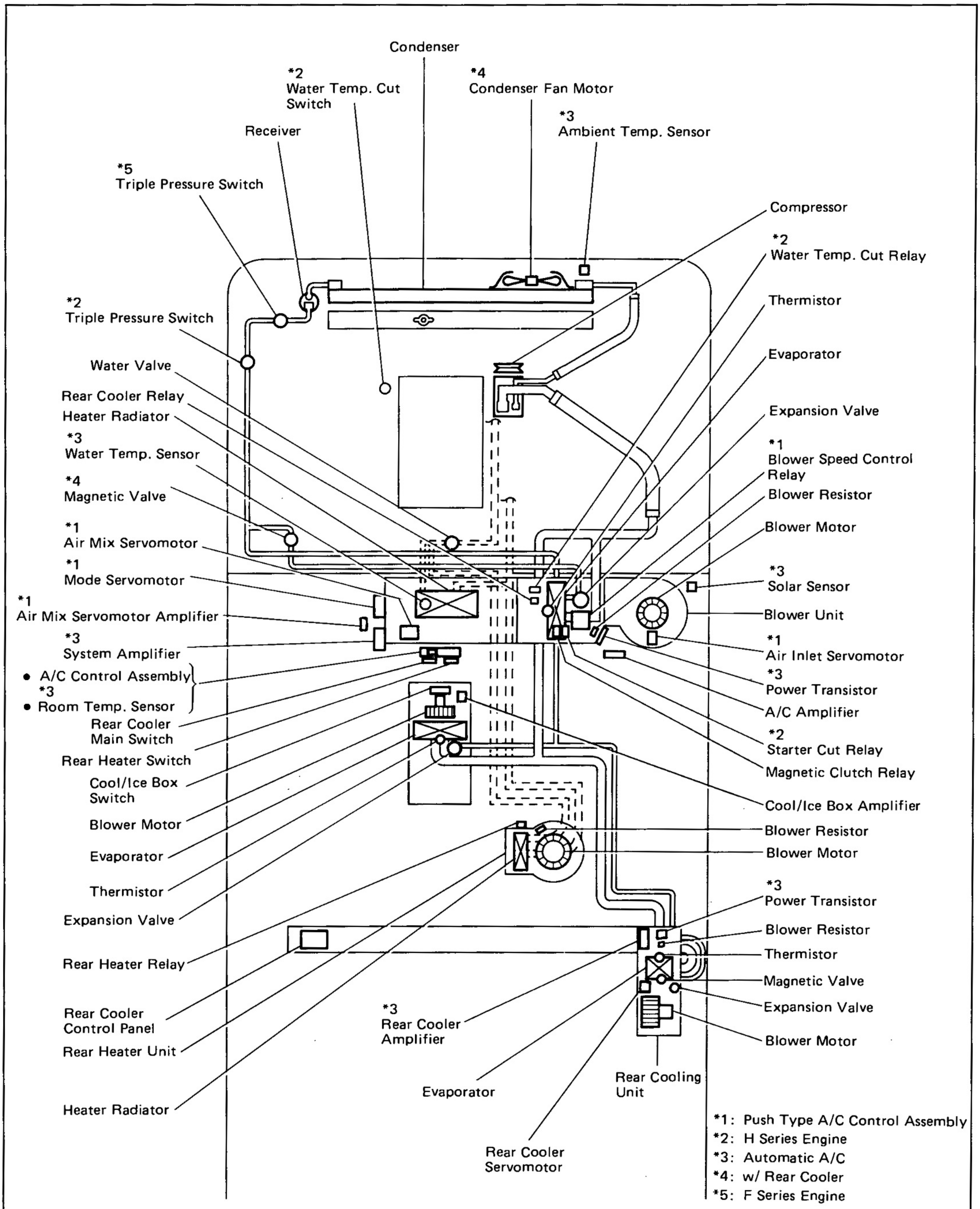

ELECTRICAL WIRING DIAGRAM

SINGLE A/C (Lever Type A/C Control Assembly)
3F-E Engine

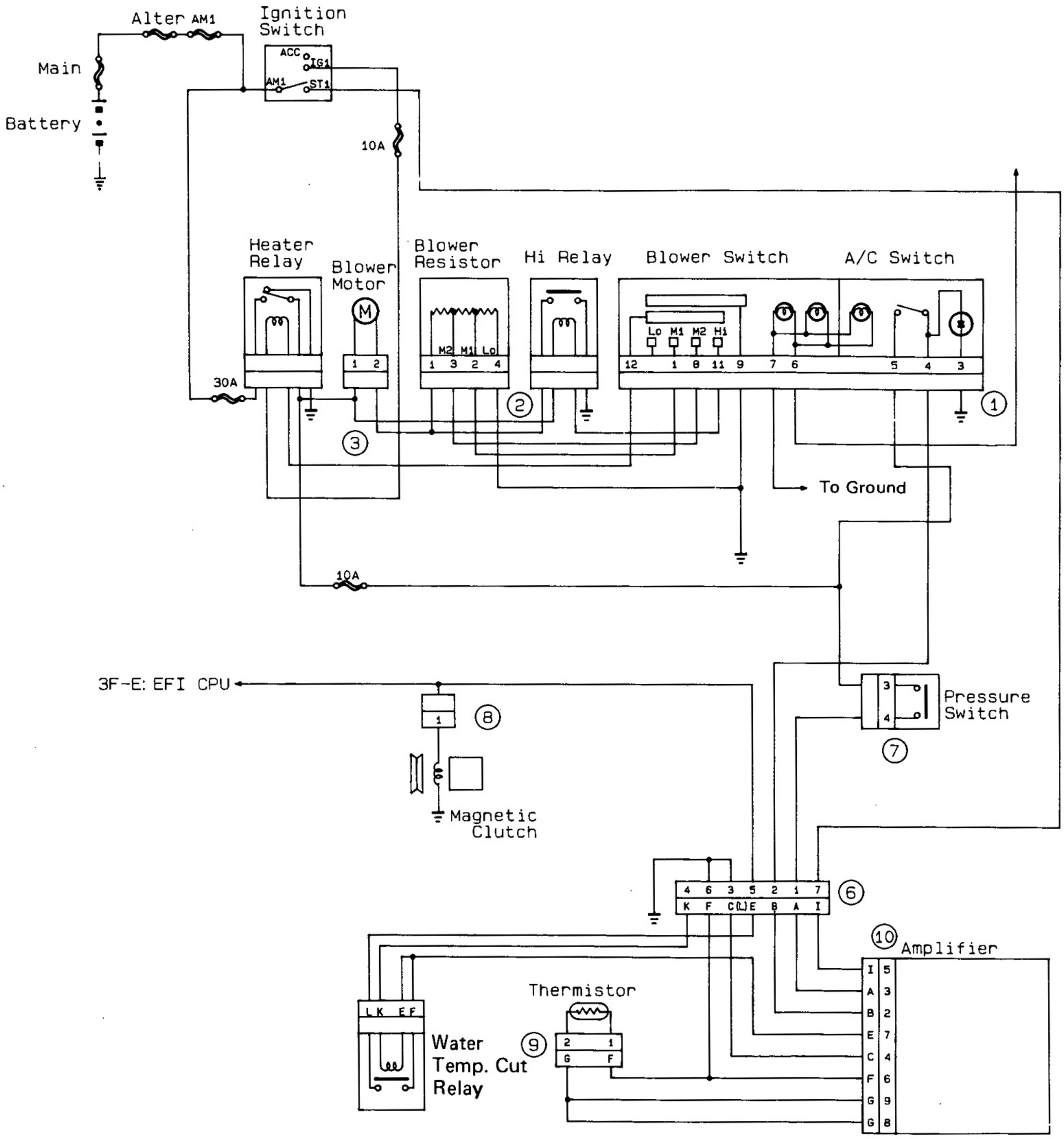

AC2711

SINGLE A/C (Lever Type A/C Control Assembly)
3F Engine

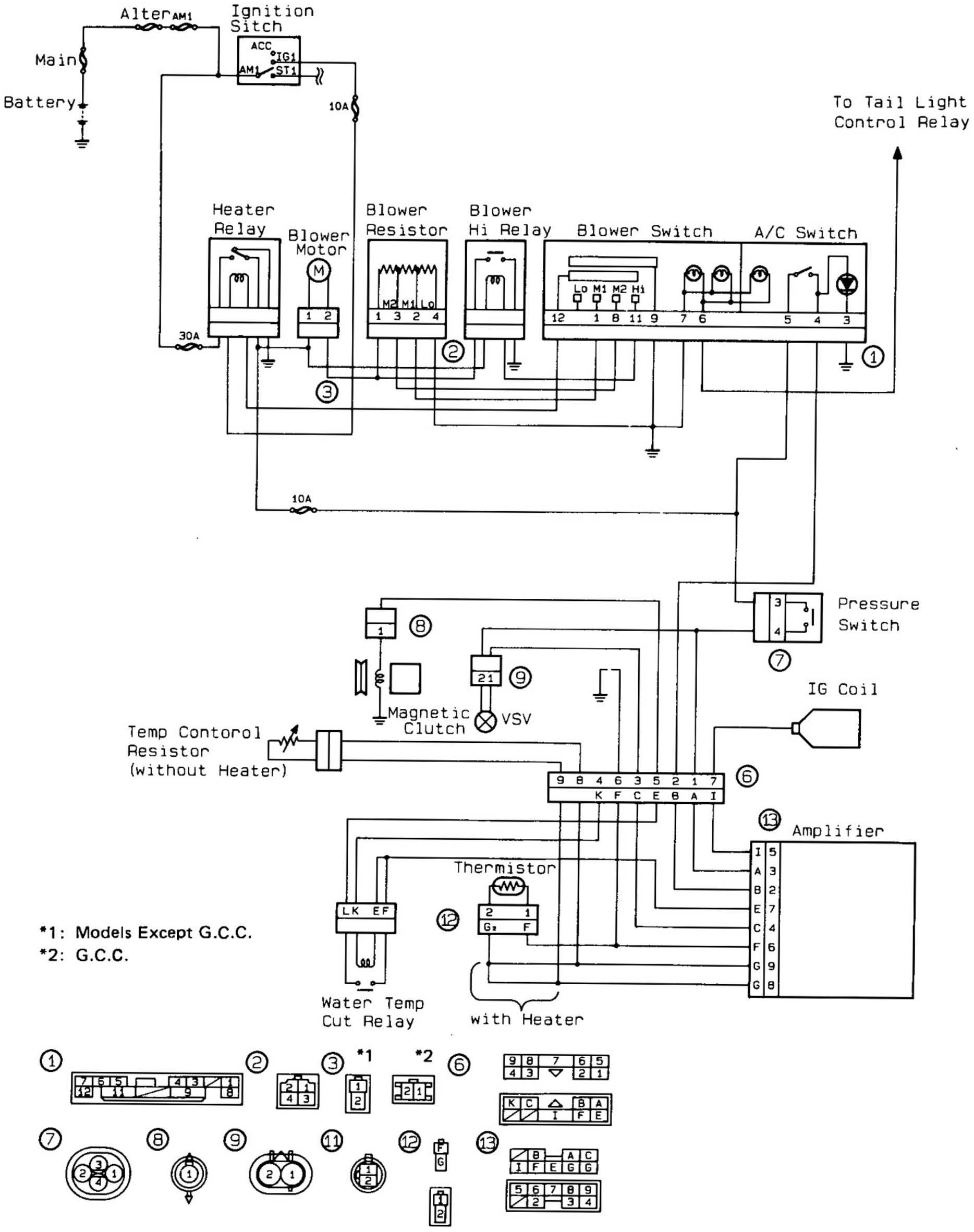

*1: Models Except G.C.C.
*2: G.C.C.

AC2712

SINGLE A/C (Lever Type A/C Control Assembly)
1HZ and 1HD-T Engine

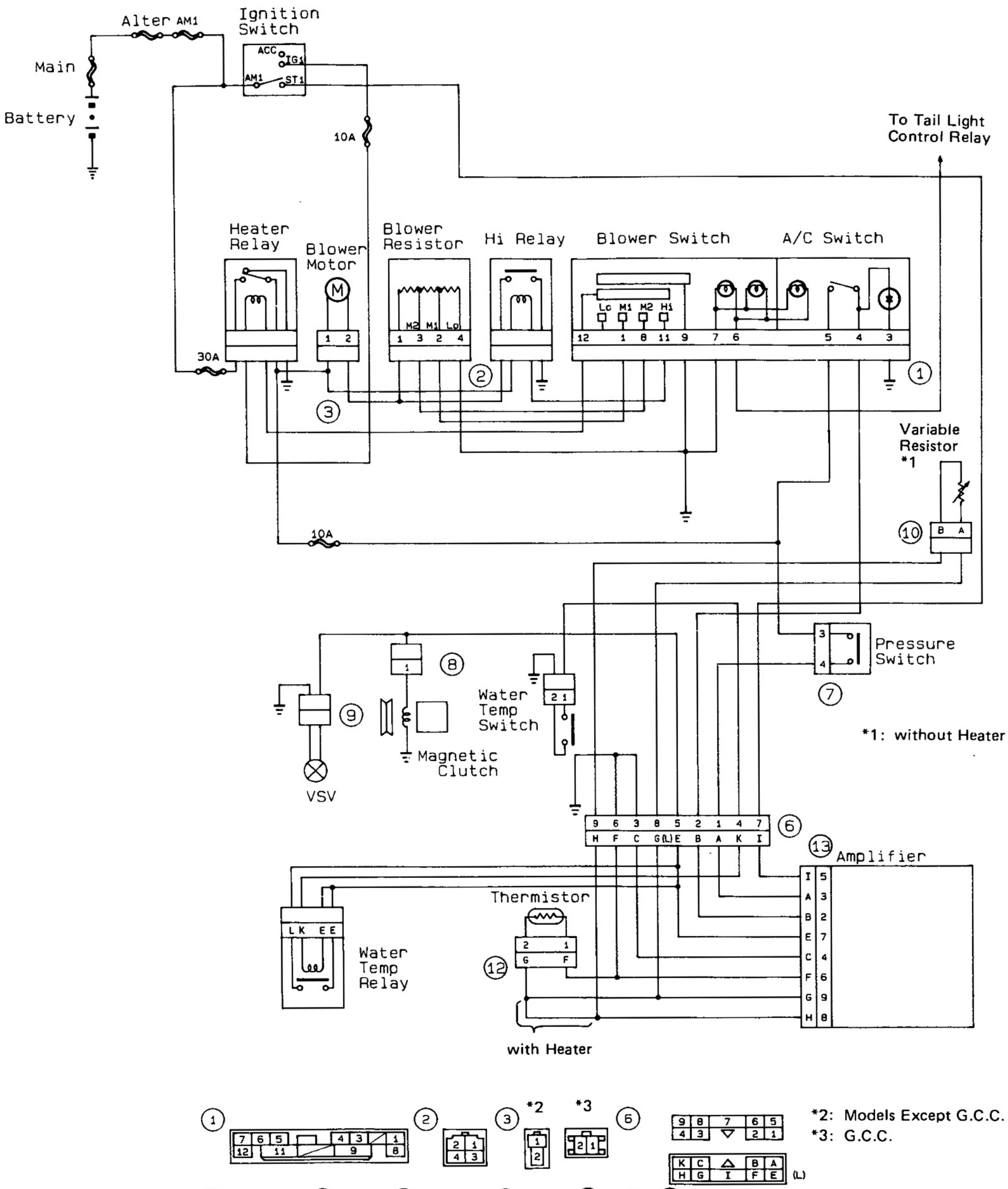

AC2713

DUAL A/C (Lever Type A/C Control Assembly)
3F Engine

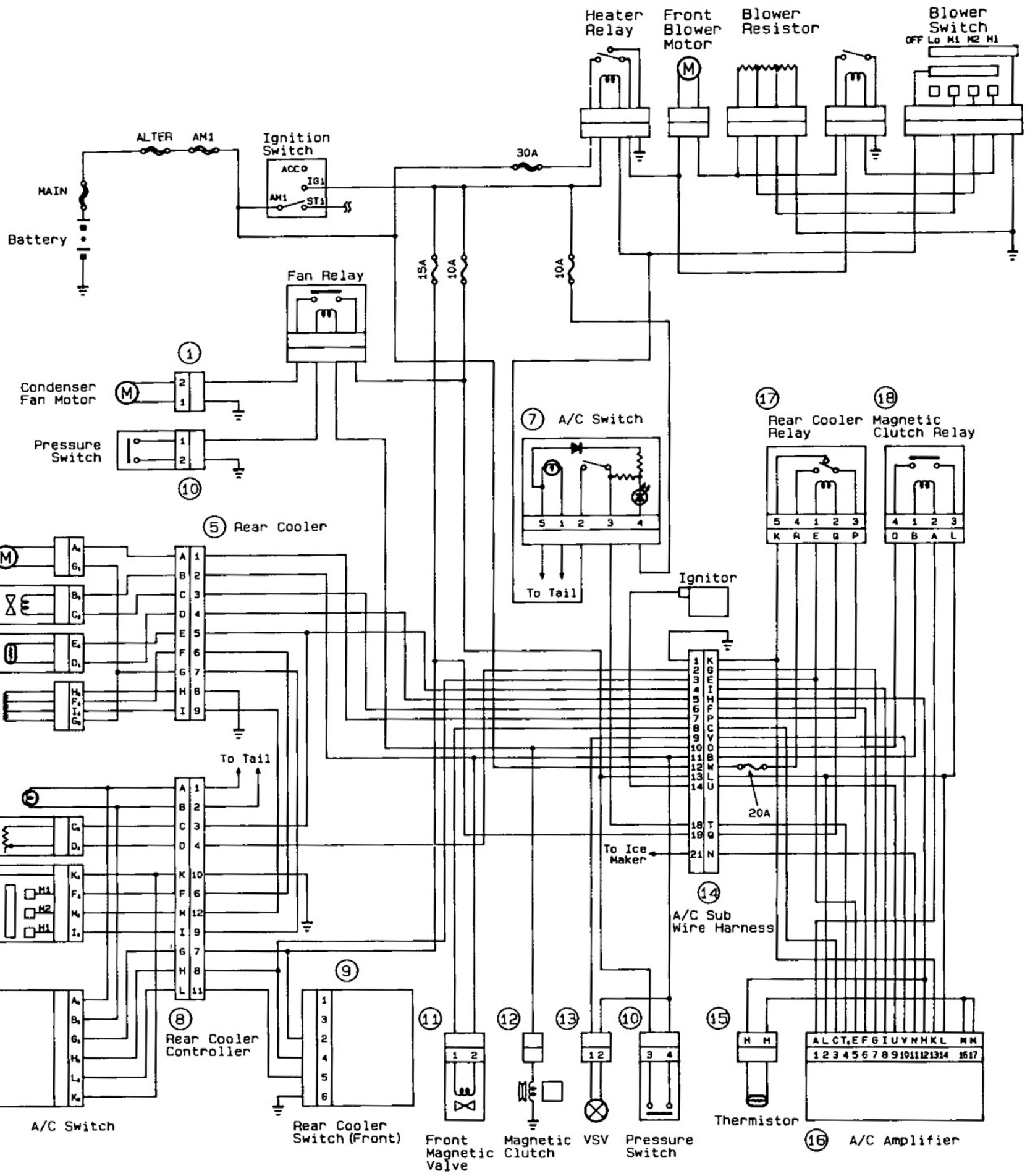

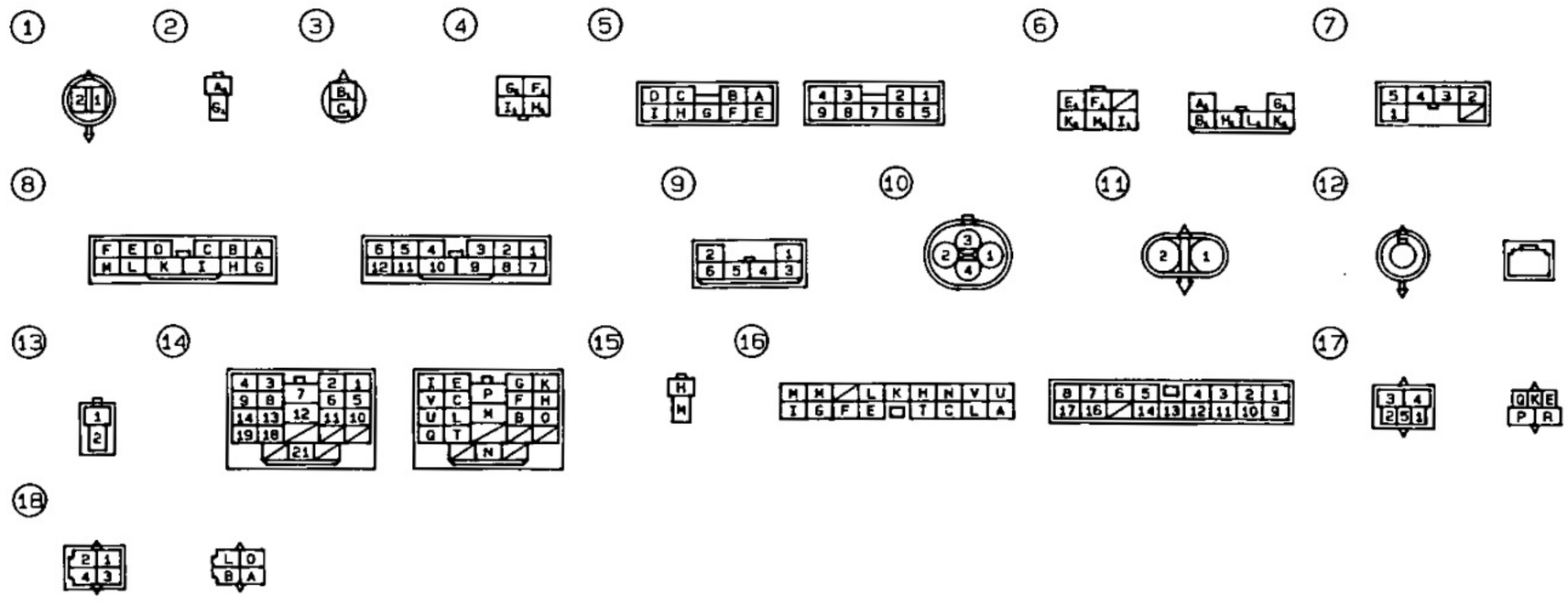

AC2714

DUAL A/C (Lever Type A/C Control Assembly)
3F-E, 1HZ and 1HD-T Engine

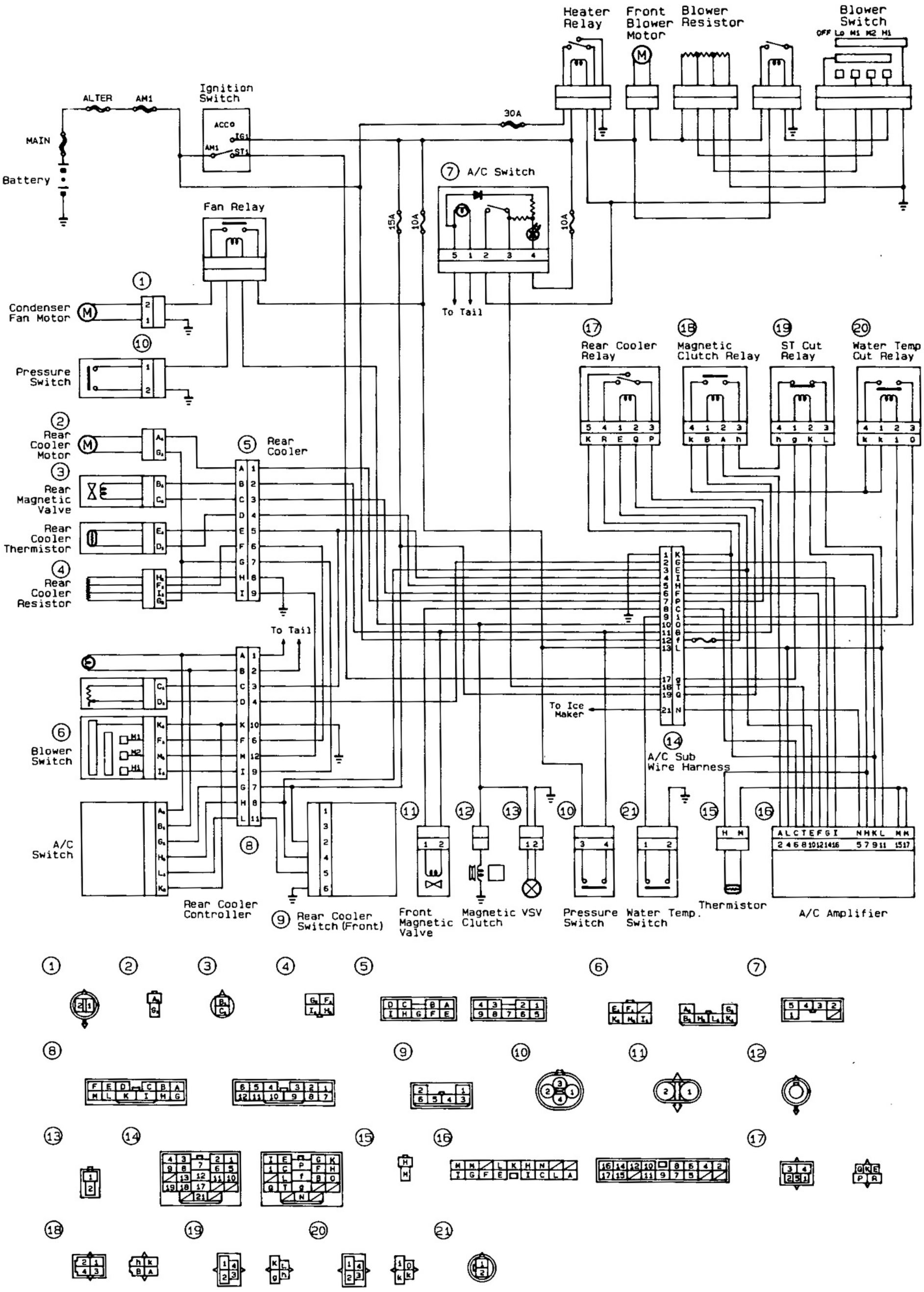

A2715

SINGLE A/C (Push Type A/C Control Assembly)

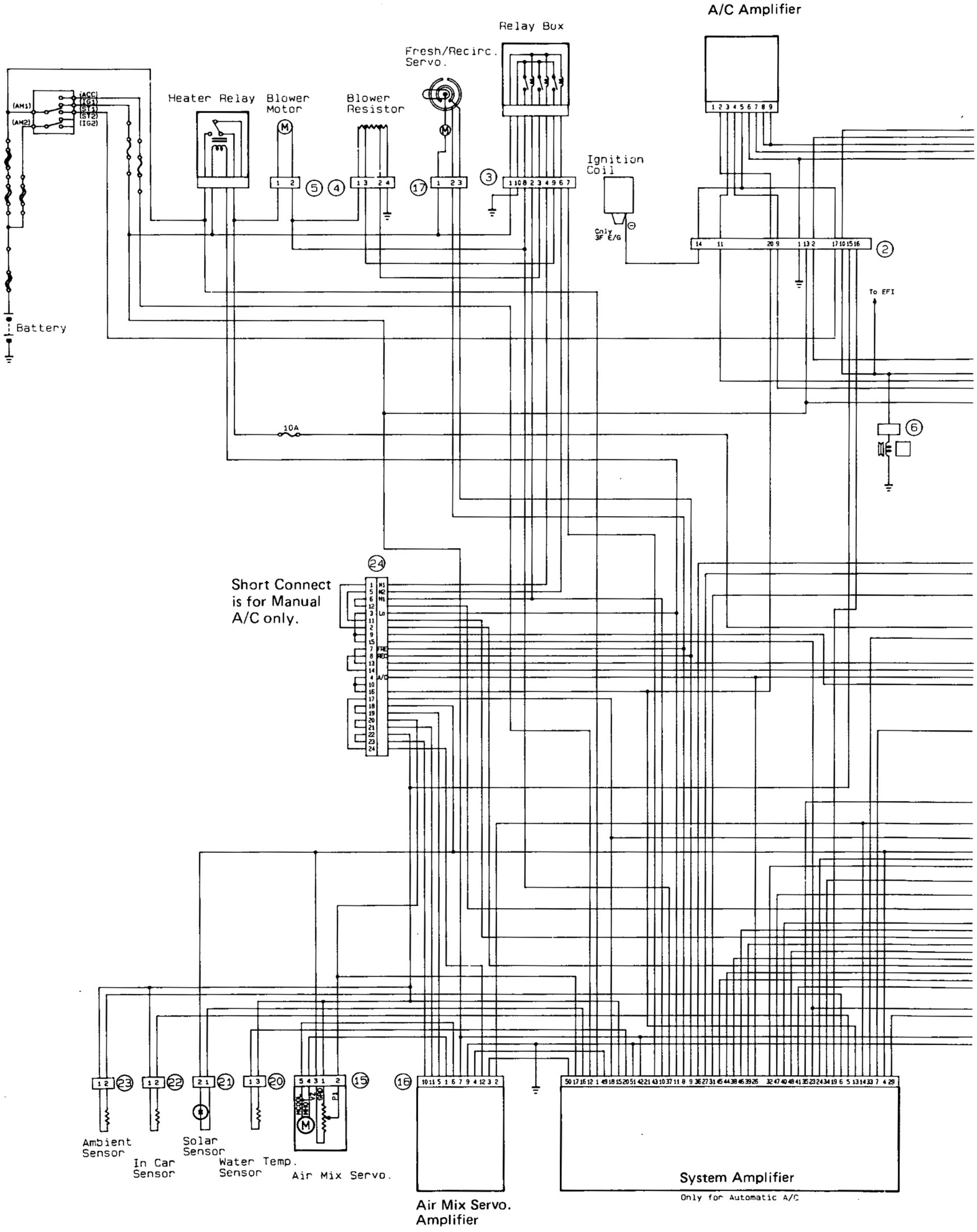

DUAL A/C (Push Type A/C Control Assembly)

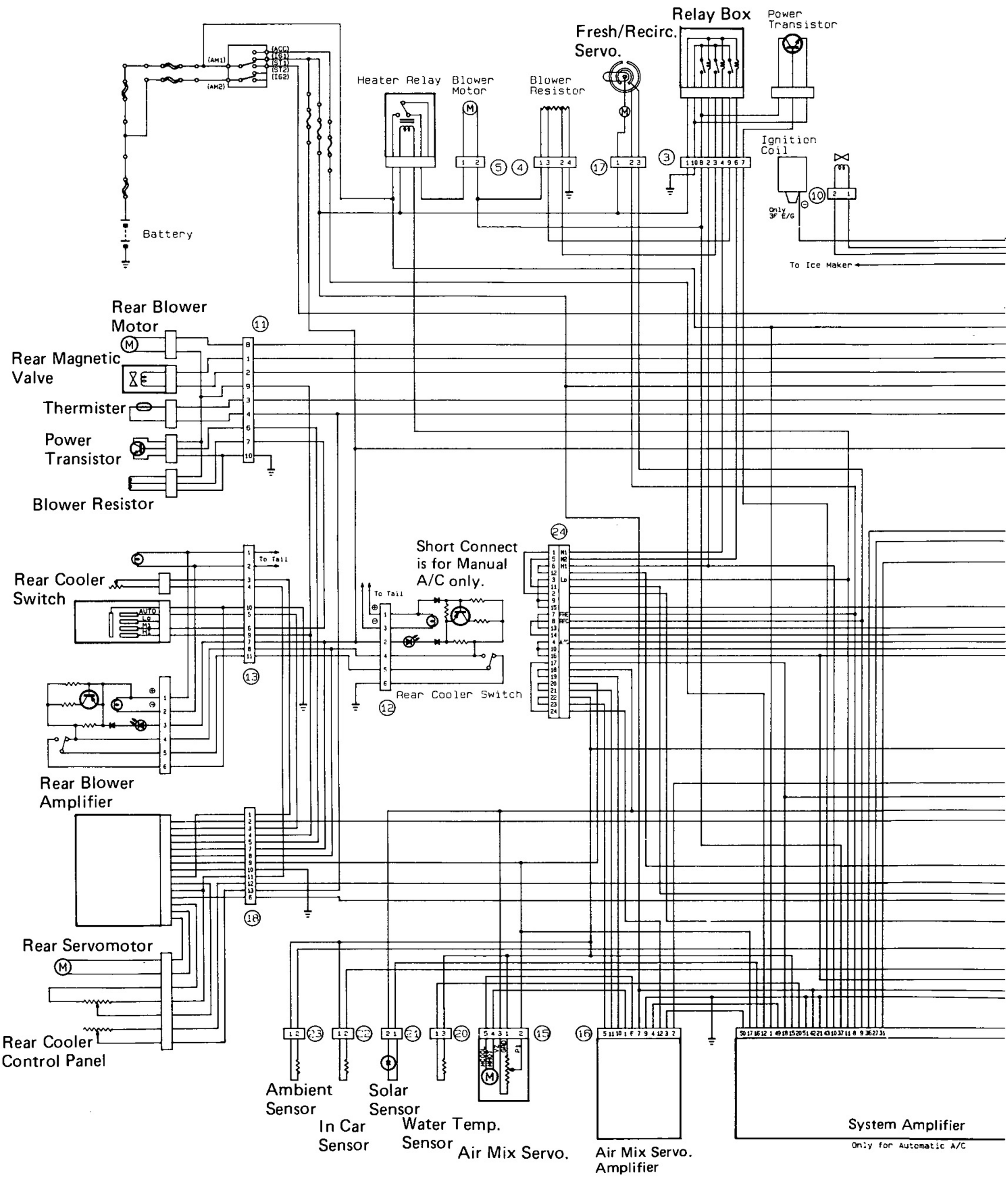

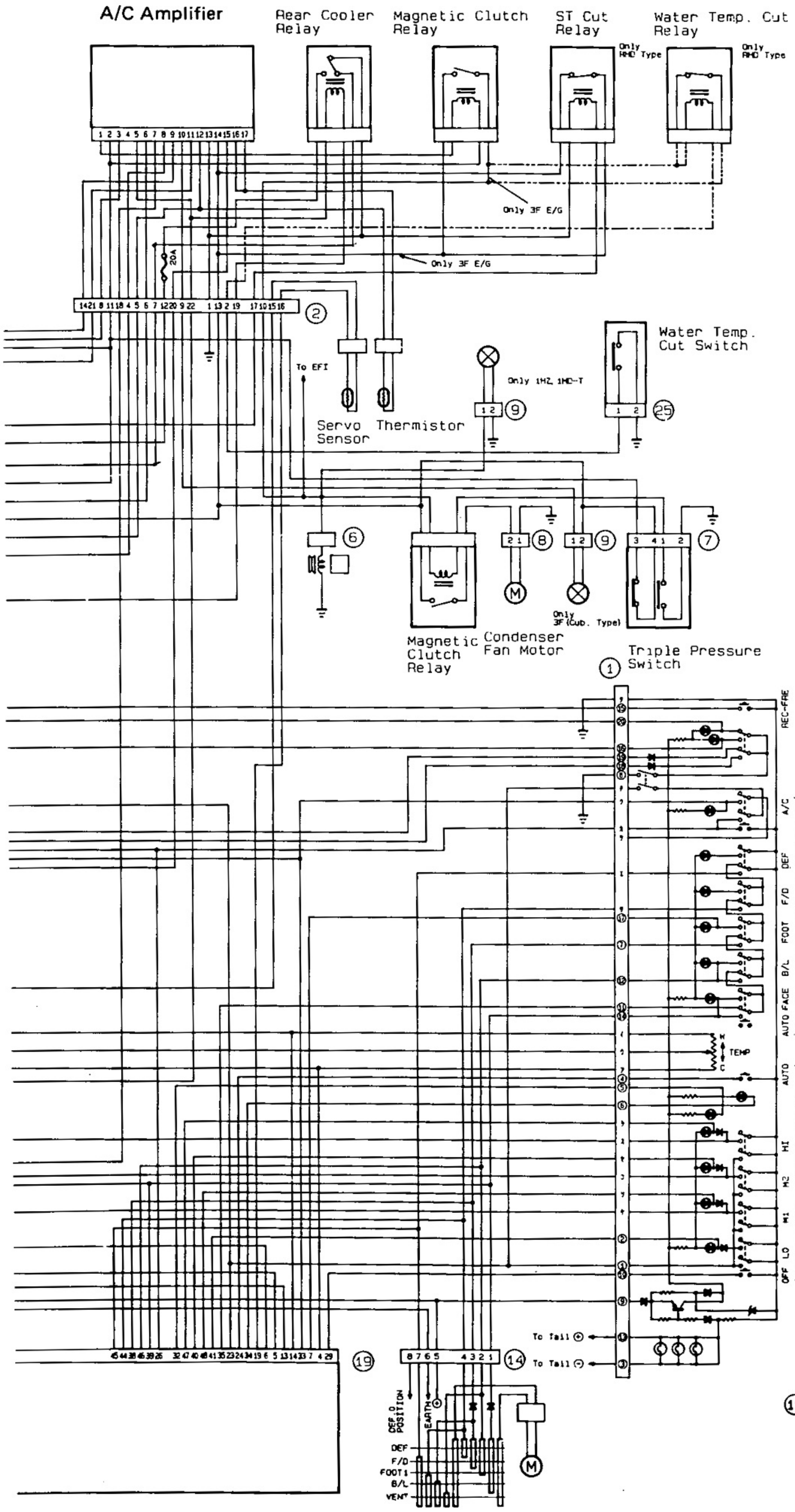
A/C Amplifier
Rear Cooler Relay
Magnetic Clutch Relay
ST Cut Relay
Water Temp. Cut Relay
Only RHD Type
Only RHD Type
Only 3F E/G
Only 3F E/G
20A
To EFI
Servo Thermistor Sensor
Only 1HZ, 1HD-T
Water Temp. Cut Switch
Magnetic Clutch Relay
Condenser Fan Motor
Only 3F (Cub. Type)
Triple Pressure Switch
REC-FRE
A/C
DEF
F/D
FOOT
B/L
AUTO FACE
MODE
AUTO
HI
M2
M1
LO
OFF
BLOWER
TEMP
H
C
To Tail
To Tail
DEF.D POSITION
EARTH
DEF
F/D
FOOT
B/L
VENT
Mode Control Servo.

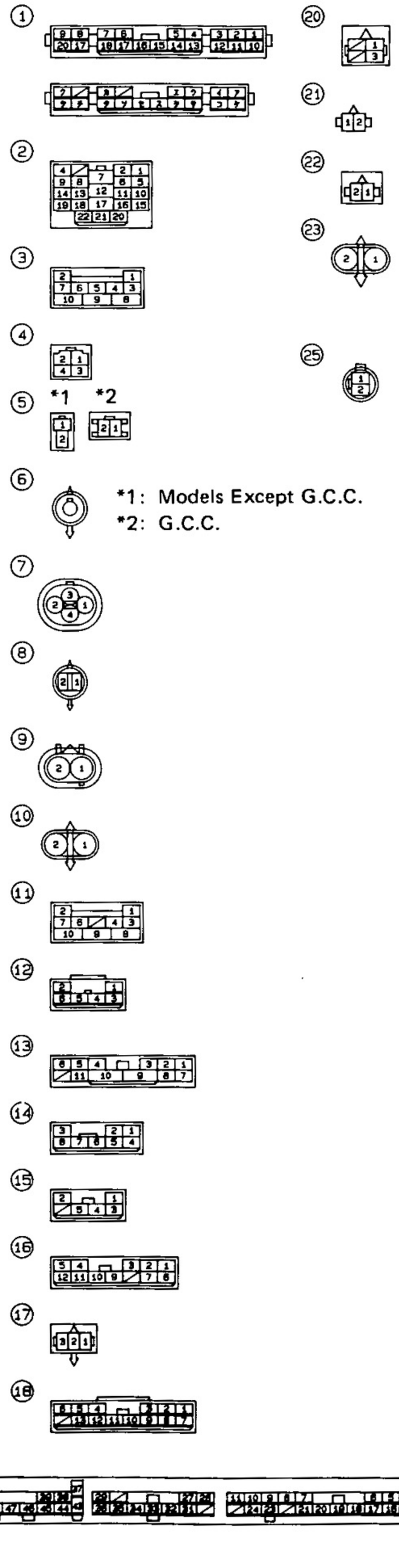
*1: Models Except G.C.C.
*2: G.C.C.

AC2659

COOL/ICE BOX

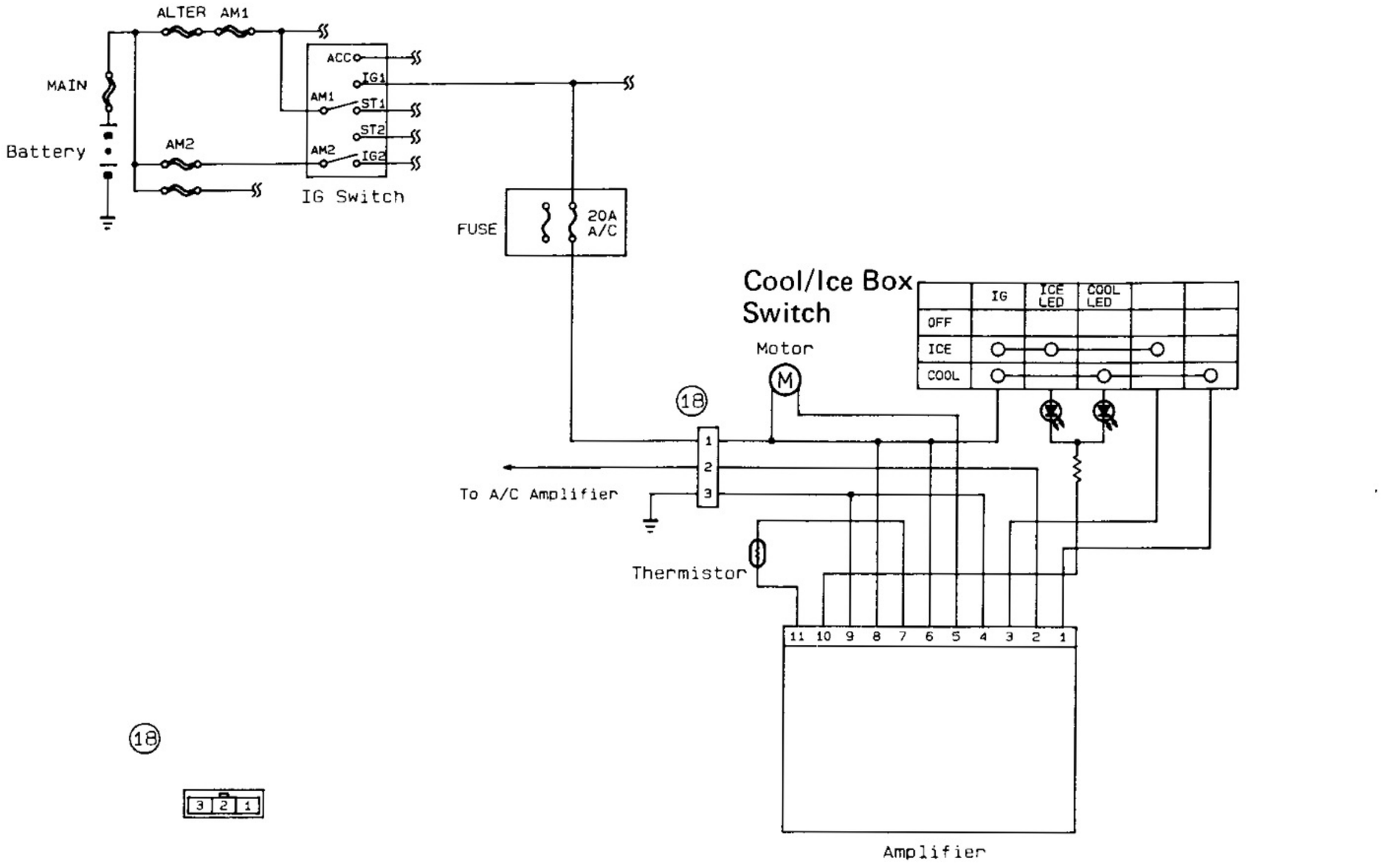

REAR HEATER

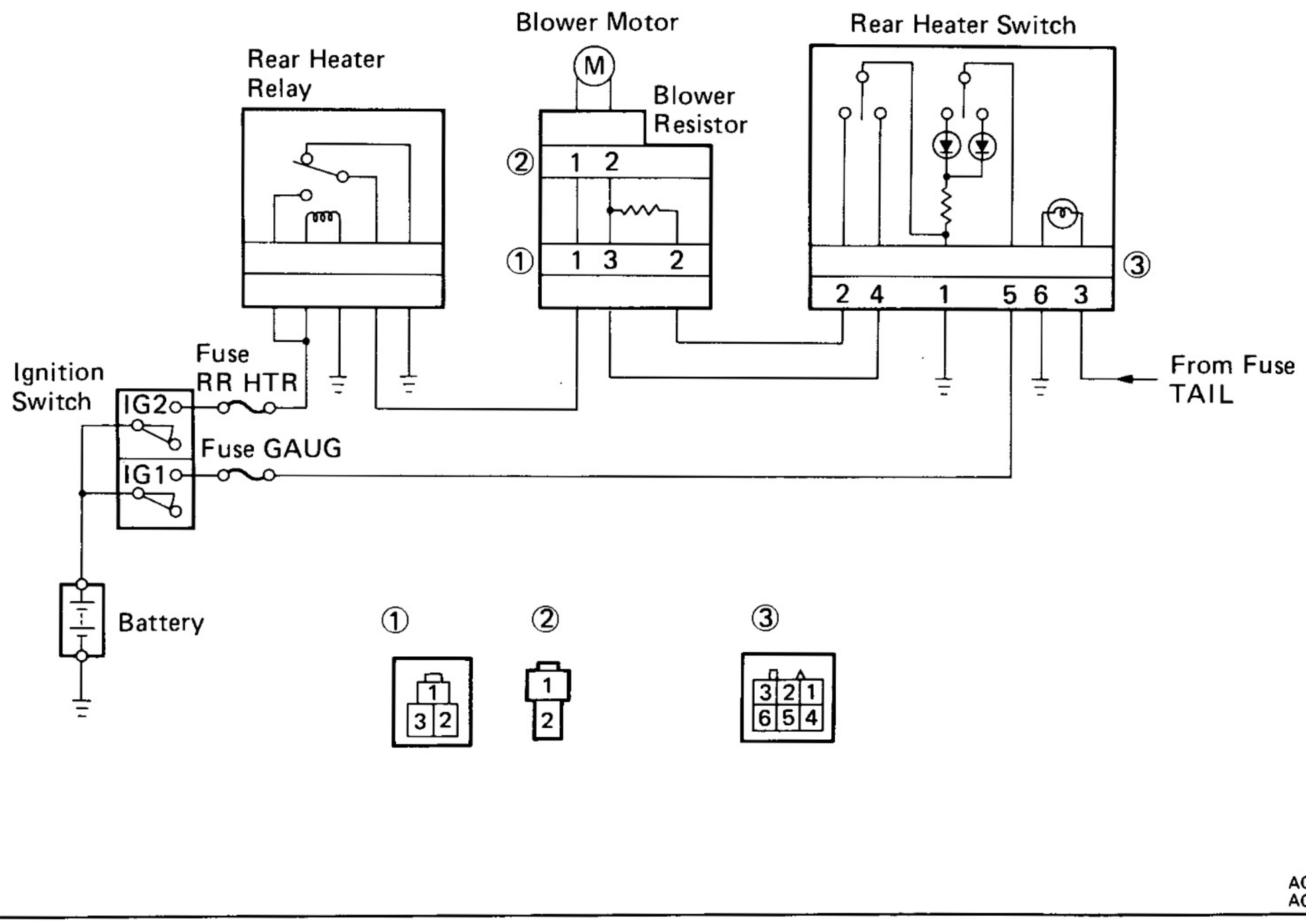

AC2660
AC2661

DAMPERS POSITION

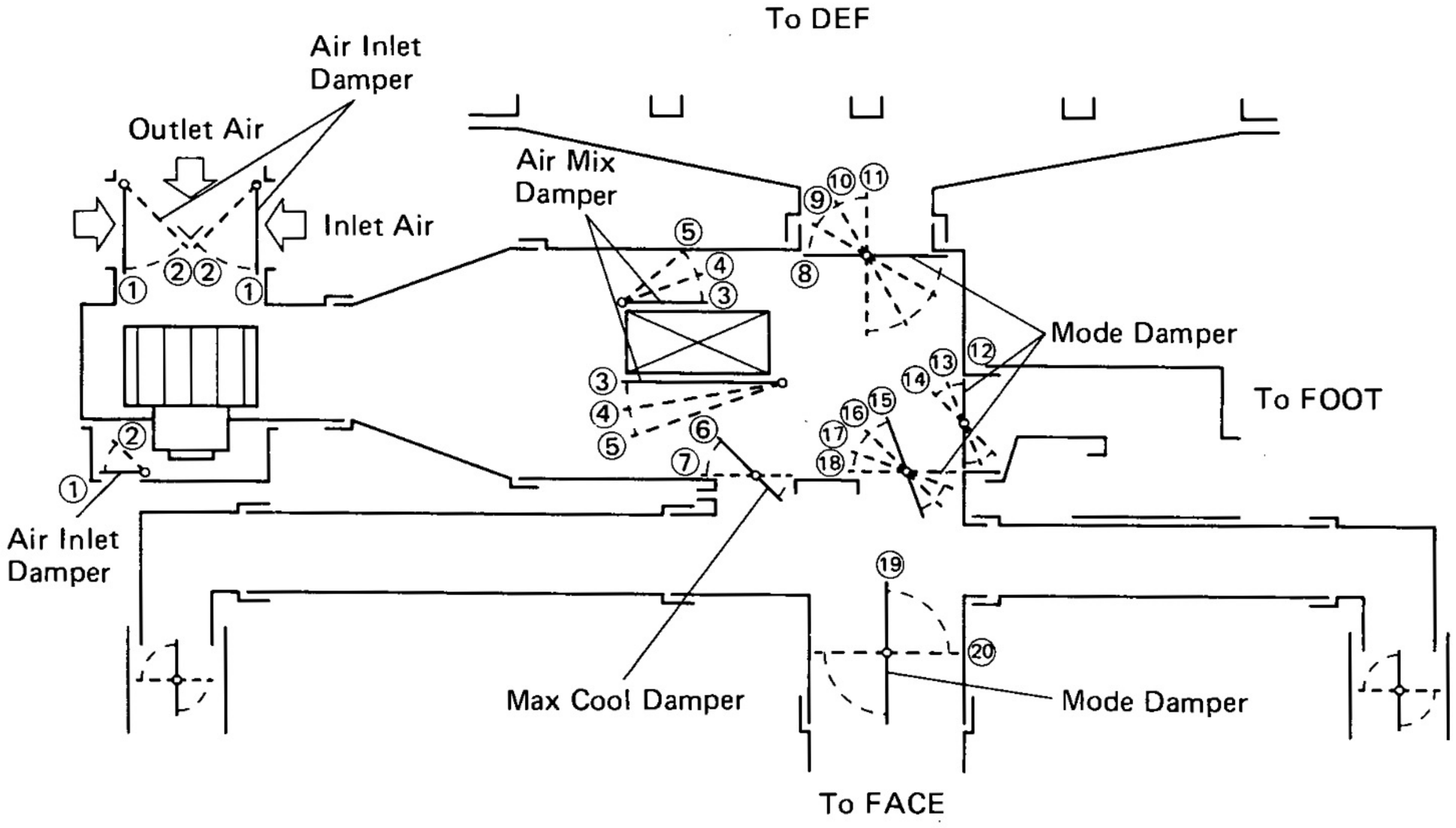

A/C control lever	A/C control lever position	Dampers position	Air flow vents			
			FACE		FOOT	DEF
			Center	Side		
Air Inlet Control Lever	Fresh	①				
	Recirc	②				
Temperature Control Lever	Warm ⇕ Cool	③ ⇕ ④ ⑦ ⇕ ⑤ ⑥				
Mode Control Lever	Def.	⑪ ⑫ ⑰ ⑳		○		◯
	Foot/Def.	⑩ ⑰ ⑳		○	○	○
	Foot	⑨ ⑬ ⑰ ⑳		○	◯	○
	Bi-Level	⑧ ⑬ ⑯ ⑲	○	○	○	
	Face	⑧ ⑭ ⑰	◯	◯		

The size of circle (○) indicates the proportion of the air flow volume.

AC2662
0001BE

TROUBLESHOOTING

You will find the cause of trouble more easily by properly using the table shown below. In this table, the numbers indicate the order of priority of the causes of trouble. Check each part in the order shown. If necessary, replace the part.

(without Automatic A/C)

See page / Parts Name / Trouble	AC-23	AC-21	AC-25	AC-5 to 14	AC-5 to 14	AC-5 to 14	AC-68	AC-54	AC-68	AC-73	AC-72	AC-73	AC-74	AC-71
	Inspect volume of refrigerant	Inspect refrigeration system with manifold gauge set	Inspect drive belt tension	Fusible link	Circuit breaker	Fuse	Triple pressure switch	Thermistor	Water temp. switch	Blower speed control relay	Heater relay	Magnetic clutch relay	CDS fan relay	Blower resistor
No blower operation				1	2					6	3			7
No blower control										2				3
No air flow mode control														
No air inlet control														
Insufficient flow of cool air											1			3
Insufficient flow of warm air											1			3
No cool air comes out	3	4	5			1	6	13				2		
Cool air comes out intermittently	1	2	3					5						
Cool air comes out only at high engine speed	2	3	1											
Insufficient cooling	1	2	3					14	7				6	
No warm air comes out														
Air temp. control not functioning														
*No engine idle up when A/C switch on														

*: Models Expect 3F-E Engine

									2				Air inlet servomotor (Push type A/C control assembly)	AC-69
	3	3	10			10							Air mix servomotor (Push type A/C control assembly)	AC-69
										2			Mode servomotor (Push type A/C control assembly)	AC-70
							2	2				5	Blower motor	AC-70
			8										Conder fan motor (Dual A/C)	CO-71
	2	2				11			1	1	1	4	A/C control assembly	AC-56
2			13		4	12							A/C amplifier	AC-77
			12	5		8							Compressor	AC-28
			4	4									Condenser	AC-43
			15					4					Evaporator	AC-52
			16		6								Expansion valve	AC-53
			11			7							Magnetic clutch	AC-28
			5										Receiver	AC-42
	1	1	9			9							Water valve	AC-58 or 65
		4					4						Heater radiator	—
1													A/C Idle up VSV (Models except 3F-E engine)	AC-76
3	3	5			7		5	5	3	3	4	7	Wiring or wiring connection	AC-5 to 14

TROUBLESHOOTING (Cont'd)

You will find the cause of trouble more easily by properly using the table shown below. In this table, the numbers indicate the order of priority of the causes of trouble. Check each part in the order shown. If necessary, replace the part.

(with Automatic A/C)

See page / Parts Name / Trouble	AC-23	AC-21	AC-25	AC-10 to 14	AC-10 to 14	AC-10 to 14	AC-68	AC-54	AC-68	AC-75	AC-76	AC-76	AC-72	AC-73	AC-72	AC-73
	Inspect volume of refrigerant	Inspect refrigeration system with manifold gauge set	Inspect drive belt tension	Fusible link	Circuit breaker	Fuse	Triple pressure switch	Thermistor	Water temp. switch	Room temp. sensor	Ambient temp. sensor	Solar sensor	Power transistor	Blower speed control relay	Heater relay	Magnetic clutch relay
No blower operation				1	2									7	3	
No blower control													3	2		
No air flow mode control																
No air inlet control																
Insufficient flow of cool air															1	
Insufficient flow of warm air															1	
No cool air comes out	3	4	5			1	6	14	15	16	17	18				2
Cool air comes out intermittently	1	2	3					5								
Cool air comes out only at high engine speed	2	3	1													
Insufficient cooling	1	2	3					15	7							
No warm air comes out																
Air temp. control not functioning																
No engine idle up when A/C switch on																

	CDS fan relay	Blower resistor	Air inlet servomotor	Air mix servomotor	Mode servomotor	Blower motor	Condenser fan motor	A/C control assembly	A/C amplifier	System amplifier	Compressor	Condenser	Evaporator	Expansion valve	Magnetic clutch	Receiver	Water valve	Heater radiator	A/C Idle up VSV	Wiring or wiring connector	
		6				5		4												8	AC-74
						4		1												5	AC-71
				2				1												3	AC-69
			2					1												3	AC-69
		3				2								4						5	AC-70
		3				2												4		5	AC-70
				10				11	12	13	8				7		9			19	AC-71
									4					6							AC-59
											5	4									AC-77
6			10			8		13	14	12	4	16	17	11	5	9					AC-80
			3				2									1	4			5	AC-28
			3				2									1				4	AC-43
								2										1		3	AC-52
																					AC-53
																					AC-28
																					AC-42
																					AC-65
																					—
																					AC-76
																					AC-10 to 14

PREPARATION

SPECIAL TOOLS AND EQUIPMENT

Tool	SST No.	Use
Ohmmeter	—	To diagnosis electrical system
Voltage meter	—	To diagnosis electrical system
Air conditioner service tool set	07110-58011	To evacuate and charge system
Hexagon wrench set	07110-61050	To remove service valve and front housing
Magnetic clutch remover	07112-66040	To remove pressure plate
Magnetic clutch stopper	07112-76060	To remove pressure plate
Felt remover	07112-15020	To remove felt
Lip seal protector	07112-85010	To install shaft seal
Lip seal pressure	07112-85020	To install shaft seal
Seal plate remover	07112-85030	To remove shaft seal
Snap ring pliers	07114-84010	To remove shaft seal
Snap ring pliers	07114-84020	To remove magnetic clutch

SSM (SPECIAL SERVICE MATERIALS)

Part Name	Part No.	Use etc.
DENSOOIL 6, SUNISO No.5GS or equivalent	07117-68040 —	Compressor

REFRIGERATION SYSTEM

INSPECTION OF REFRIGERATION SYSTEM WITH MANIFOLD GAUGE SET

This is a method in which the trouble is located by using a manifold gauge set. (See "Installation of Manifold Set" on page AC-24.) Read the manifold gauge pressure when the following conditions are established:

(a) Temperature at the air inlet with the switch set at RECIRC is 30 — 35°C (86 — 95°F)

(b) Engine running at 2,000 rpm

(c) Blower fan speed control switch set at high speed

(d) Temperature control switch set at max cool side

HINT: It should be noted that the gauge indications may vary slightly due to ambient temperature conditions.

No.	Gauge reading kg/cm^2 (psi, kPa)	Condition	Probable cause	Remedy
1	LO: 1.5—2.0 (21—28, 147—196) HI: 14.5—15.0 (206—213, 1,422—1,471) 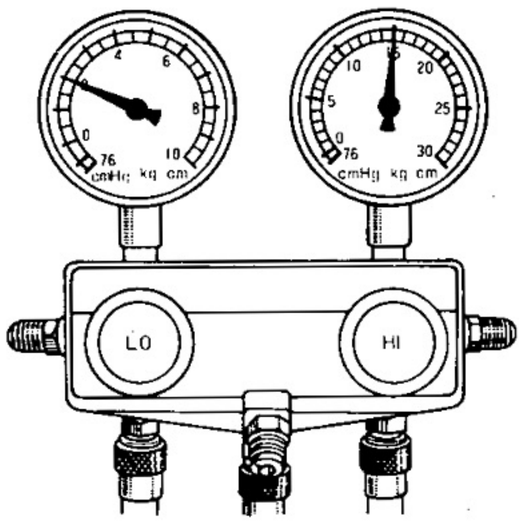 AC0067	Normal cooling	Normally functioning system	
2	During operation, pressure at low pressure side sometimes becomes a vacuum and sometimes normal 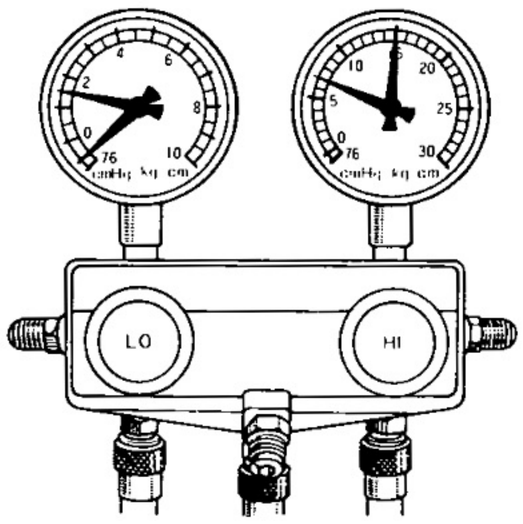 AC0068	Periodically cools and then fails to cool	Moisture present in refrigeration system	(1) Replace receiver (2) Remove moisture in system through repeatedly evacuating air (3) Charge with refrigerant to proper amount
3	Pressure low at both low and high pressure sides 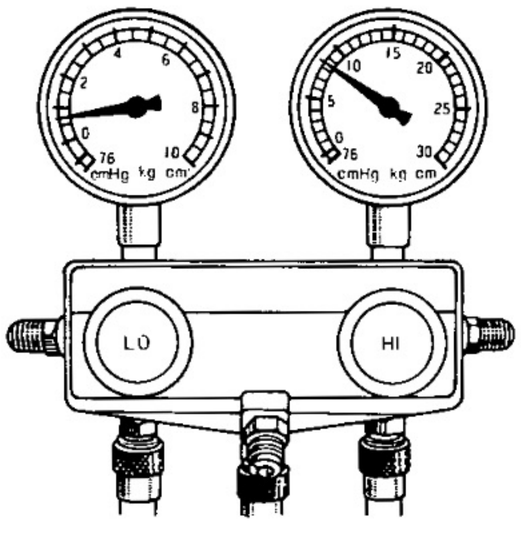 AC0069	• Insufficient cooling • Bubbles seen in sight glass	Insufficient refrigerant	(1) Using gas leak tester, check for leakage (2) Charge refrigerant to proper amount
		• Insufficient cooling • Frost on tubes from receiver to unit	Refrigerant flow obstructed by dirt in receiver	Replace receiver

No.	Gauge reading kg/cm² (psi, kPa)	Condition	Probable cause	Remedy
4	Pressure too high at both low and high pressure side	Insufficient cooling	Insufficient cooling of condenser	(1) Clean condenser (2) Check fan motor operation
5	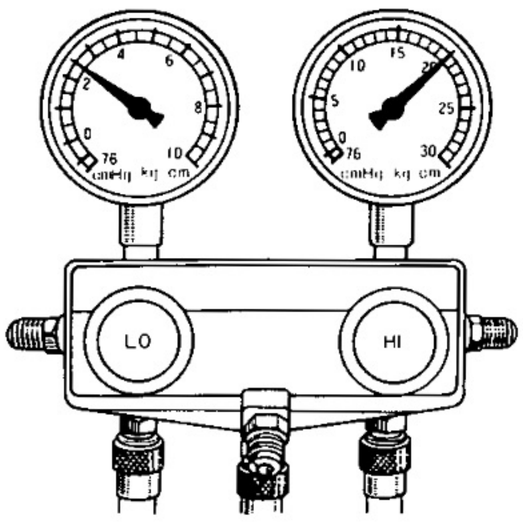 AC0070		Refrigerant over charged	Check amount of refrigerant HINT: Vent out refrigerant throuh gauge manifold low pressure side by gradually opening valve
6			Air present in system	(1) Replace receiver (2) Check compressor oil to see if dirty or insufficient (3) Evacuate air and charge with new refrigerant
7		• Insufficient cooling • Frost or large amount of dew on piping at low pressure side	Expansion valve improperly mounted, heat sensing tube defective (Opens too wide)	(1) Check heat sensing tube installation condition (2) If (1) is normal, check expansion valve (3) Replace if defective
8	Vacuum indicated at low pressure side, very low pressure indicated at high pressure. 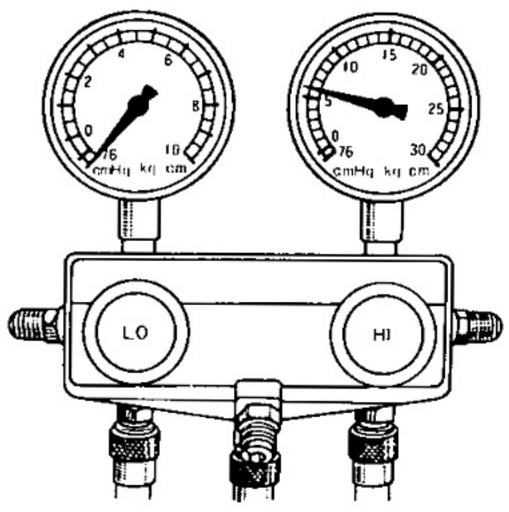 AC0156	• Does not cool (Cools from time to time in some cases) • Frost or dew seen on piping before and after receiver or expansion valve	Refrigerant does not circulate	Alow to stand for some time and then restart operation to determine if trouble is caused by moisture or dirt If caused by moisture refer to procedures step 2 on page AC-21 If caused by dirt, remove expansion valve and clean off dirt by blowing with air. If not able to remove dirt, replace valve Evacuate air and charge with new refrigerant to proper amount For gas leakage from heat sensing tube, replace expansion valve

HINT at No.6
These gauge indications are shown when the refrigeration system has been opened and the refrigerant charged without evacuating air.

No.	Gauge reading kg/cm² (psi, kPa)	Condition	Probable cause	Remedy
9	Pressure too high at low pressure side, pressure too low at high pressure side 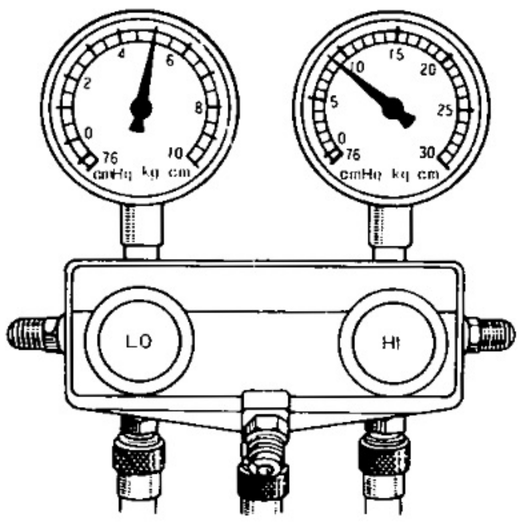 AC0157	Does not cool	Insufficient compression	Repair or replace compressor

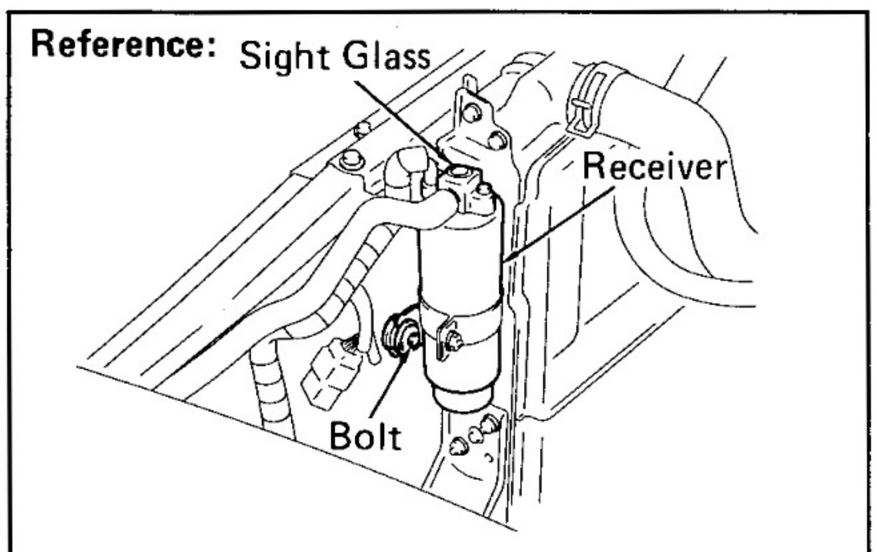

AC2663

INSPECTION OF REFRIGERANT VOLUME

1. **RUN ENGINE AT APPROX. 1,500 RPM**
2. **OPERATE A/C AT MAXIMUM COOLING FOR A FEW MINUTES**
3. **INSPECT AMOUNT OF REFRIGERANT**
   Observe the sight glass on the liquid tube.

Item	Symptom	Amount of refrigerant	Remedy
1	Bubbles present in sight glass	Insufficient*	Check for gas leakage with gas leak tester
2	No bubbles present in sight glass	None, sufficient or too much	Refer to items 3 and 4
3	No temperature difference between compressor inlet and outlet	Empty of nearly empty	Evacuate and charge system. Then check for gas leakage with gas leak tester
4	Temperature between compressor inlet and outlet is noticeably different	Proper or too much	Refer to items 5 and 6
5	Immediately after air conditioner is turned off, refrigerant in sight glass stays clear	Too much	Discharge excess refrigerant to specified amount
6	When air conditioner is turned off, refrigerant foams and then stays clear	Proper	Refer to items 3 and 4

*: Bubbles in the sight glass with ambient temperatures higher can be considered normal if cooling is sufficient.

DISCHARGING OF REFRIGERANT IN REFRIGERATION SYSTEM

(See Air Conditioning Fundamentals and Repairs Pub. No. 36950E)

EVACUATING OF AIR IN REFRIGERATION SYSTEM AND CHARGING WITH REFRIGERANT

(See Air Conditioning Fundamentals and Repairs Pub. No. 36950E)

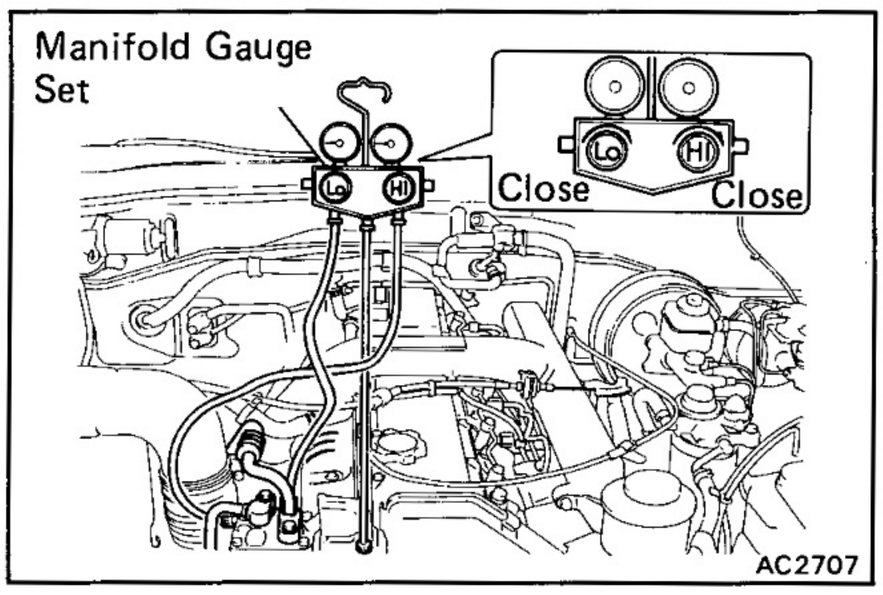

INSTALLATION OF MANIFOLD GAUGE SET

1. CLOSE BOTH HIGH AND LOW HAND VALVES
2. CONNECT CHARGING HOSES TO CHARGING VALVES
   (a) Connect the low pressure hose to the low pressure charging valve and the high pressure hose to the high pressure charging valve.
   (b) Tighten the hose nuts by hand.

NOTICE: Do not apply compressor oil to the seats of the connection.

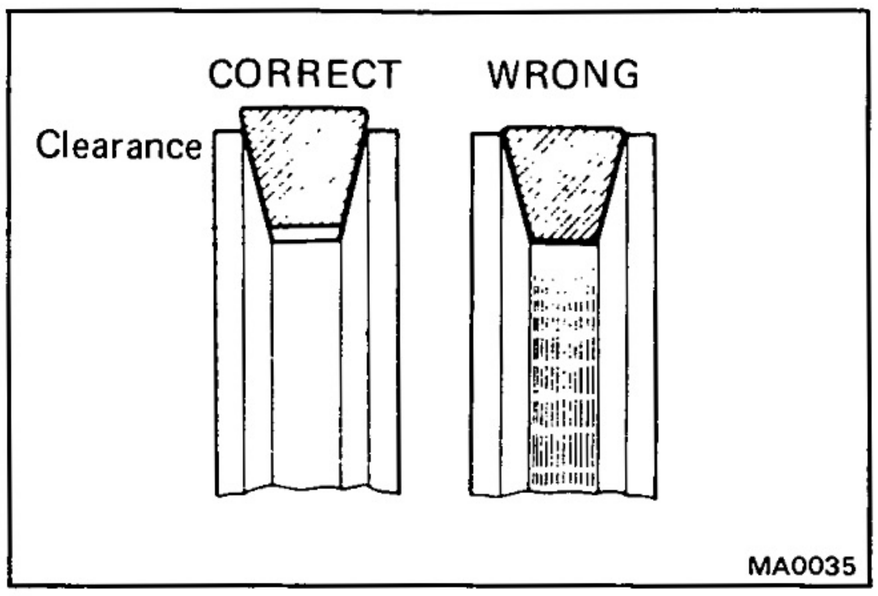

DRIVE BELT

ON-VEHICLE INSPECTION

1. **MAKE SURE THAT DRIVE BELT IS INSTALLED CORRECTLY**

   Visually check the belt for cracks, oiliness or wear. Check that the belt does not touch the bottom of the pulley groove.

2. **INSPECT DRIVE BELT TENSION**

   Drive belt tension at 10 kg (22.0 lb, 98N):

New belt	**H Series Engine**	**12 — 16 mm (0.47 — 0.63 in.)**
	F Series Engine	**11 — 15 mm (0.43 — 0.59 in.)**
Used belt	**H Series Engine**	**16 — 22 mm (0.63 — 0.87 in.)**
	F Series Engine	**15 — 21 mm (0.59 — 0.83 in.)**

HINT:

- "New belt" refers to a belt which has been used less than 5 minutes on a running engine.
- "Used belt" refers to a belt which has been used on a running engine for 5 minutes or more.
- After installing the drive belt, check that it fits properly in the ribbed grooves.

3F and 3F-E Engine

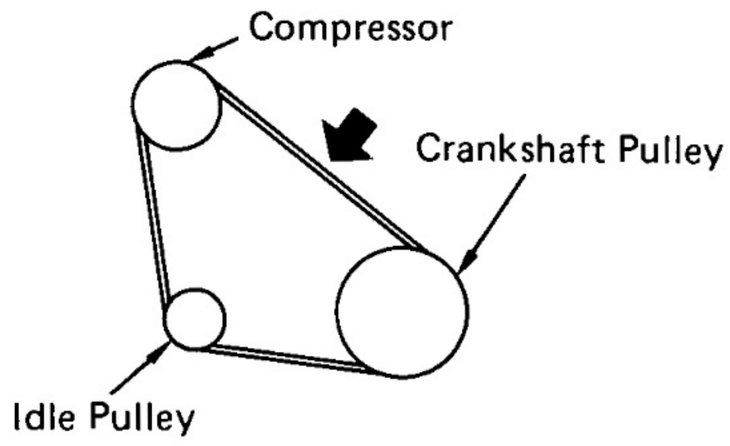

1HZ and 1HD-T Engine

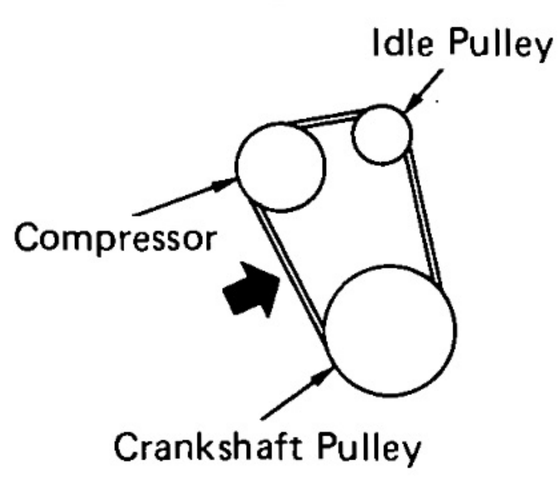

AC2664

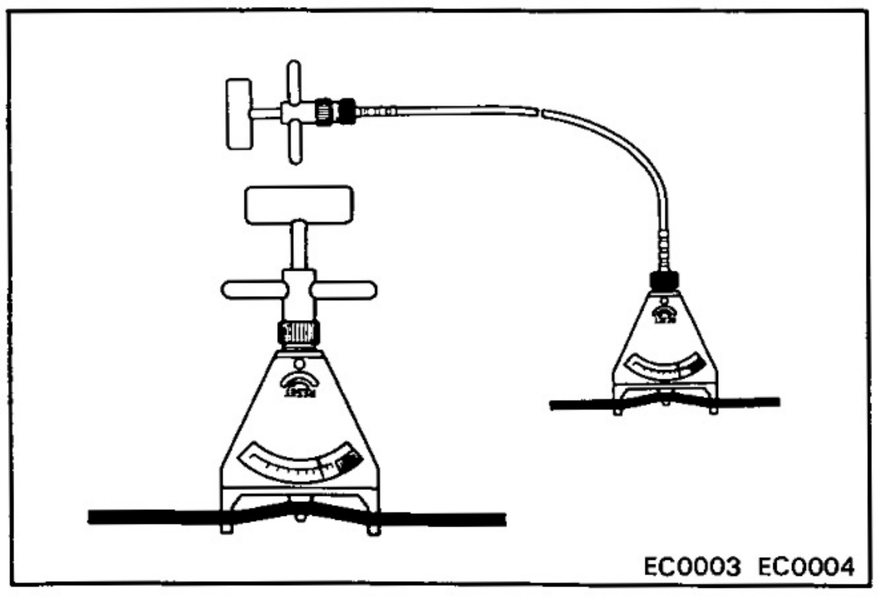

(Reference)

Using SST, check the drive belt tension.

SST 09216-00020 and 09216-00030

New belt	40 — 60 kg
Used belt	20 — 40 kg

REFRIGERATION LINES

TIGHTENING

SINGLE A/C

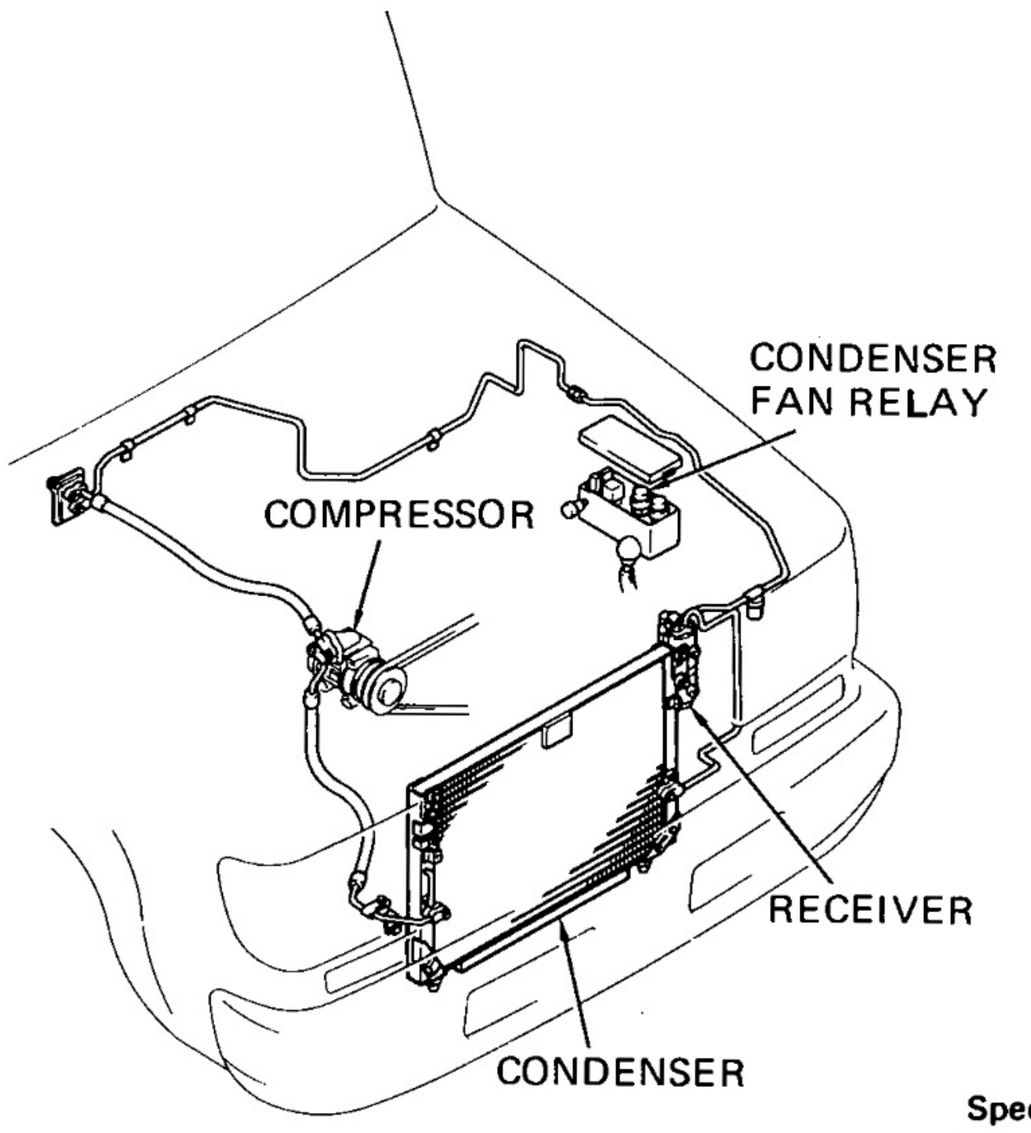

Specified Torque: kg-cm (ft-lb, N·m)

0.31 in. Tube		140 (10, 14)
0.50 in. Tube		230 (17, 23)
0.62 in. Tube		330 (24, 32)
Bolted Type	For Compressor	250 (18, 25)
	For Condenser	130 (9, 13)
	For Receiver	55 (4, 5)

DUAL A/C

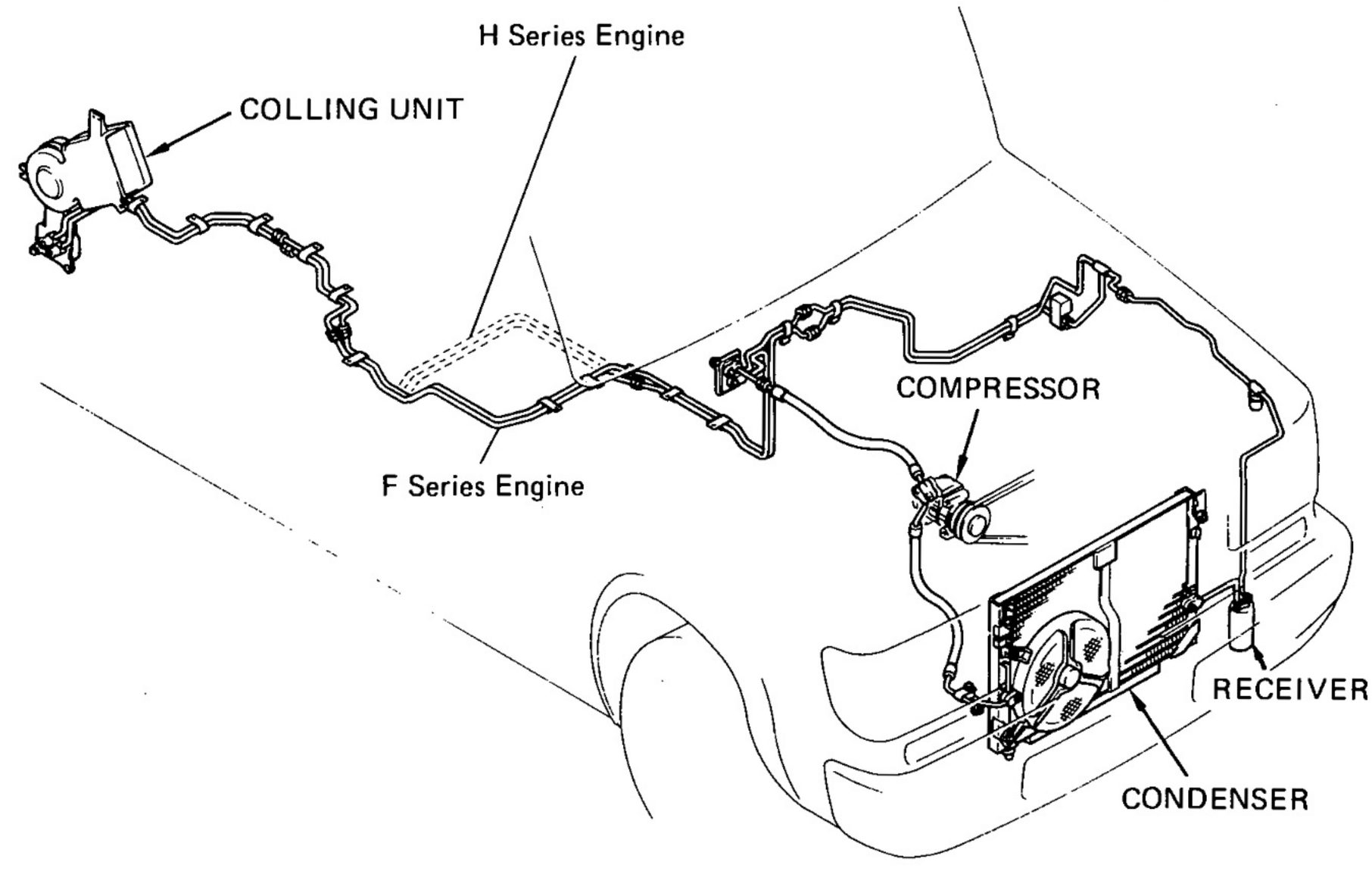

AC2665
AC2666

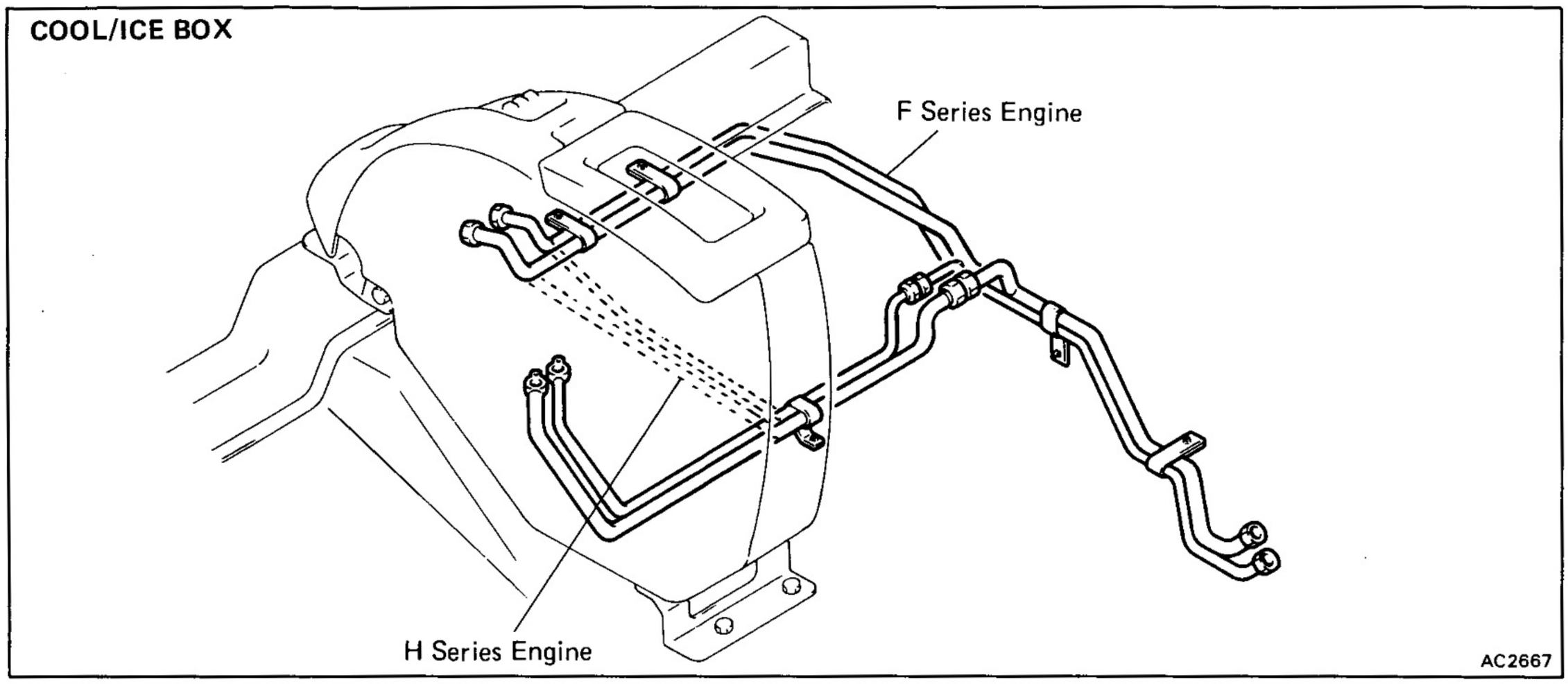

On-Vehicle Inspection

1. **INSPECT HOSE AND TUBE CONNECTIONS FOR LOOSENESS**

2. **INSPECT HOSES AND TUBES FOR LEAKAGE**

   Using a gas leak tester, check for leakage of refrigerant.

Replacement of Refrigerant Lines

1. **DISCHARGE REFRIGERANT IN REFRIGERATION SYSTEM**

   See page AC-10.

2. **REPLACE FAULTY TUBE OR HOSE**

   HINT: Cap the open fittings immediately to keep moisture or dirt out of the system.

3. **TORQUE CONNECTIONS TO SPECIFIED TORQUE**

   NOTICE: Connections should not be torqued tighter than the specified torque.

4. **EVACUATE AIR IN REFRIGERATION SYSTEM AND CHARGE WITH REFRIGERANT**

   Specified amount:

   Single A/C 900 ± 50 g (31.74 ± 1.76 oz)
   Dual A/C [G.C.C.]
   1,500 ± 50 g (52.91 ± 1.76 oz)
   [Models Except G.C.C.]
   1,350 ± 50 g (47.61 ± 1.76 oz)
   Dual A/C + Cool/Ice Box [G.C.C.]
   1,600 ± 50 g (56.43 ± 1.76 oz)
   [Models Except G.C.C.]
   1,500 ± 50 g (52.91 ± 1.76 oz)

5. **INSPECT FOR LEAKAGE OF REFRIGERANT**

   Using a gas leak tester, check for leakage of refrigerant.

6. **INSPECT AIR CONDITIONER OPERATION**

COMPRESSOR

ON-VEHICLE INSPECTION

(Magnetic Clutch)

INSPECT MAGNETIC CLUTCH FOR FOLLOWING

(a) Inspect the pressure plate and the rotor for signs of oil.

(b) Check the clutch bearings for noise and grease leakage.

(c) Connect the positive (+) lead from the battery to the terminal on the magnetic clutch connector and the negative (—) lead to the body ground.

(d) Check that the magnetic clutch is energized.

If the magnetic clutch is not energized, replace the magnetic clutch.

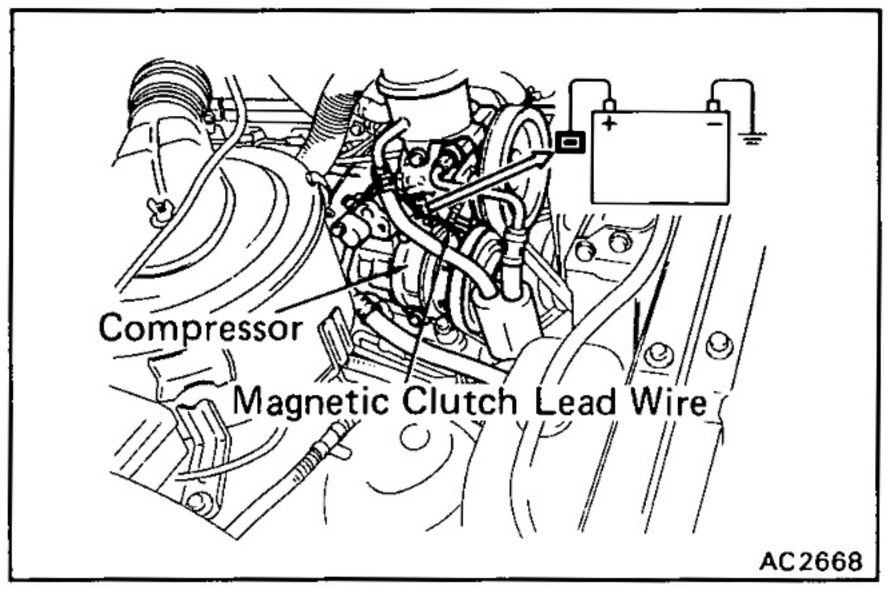

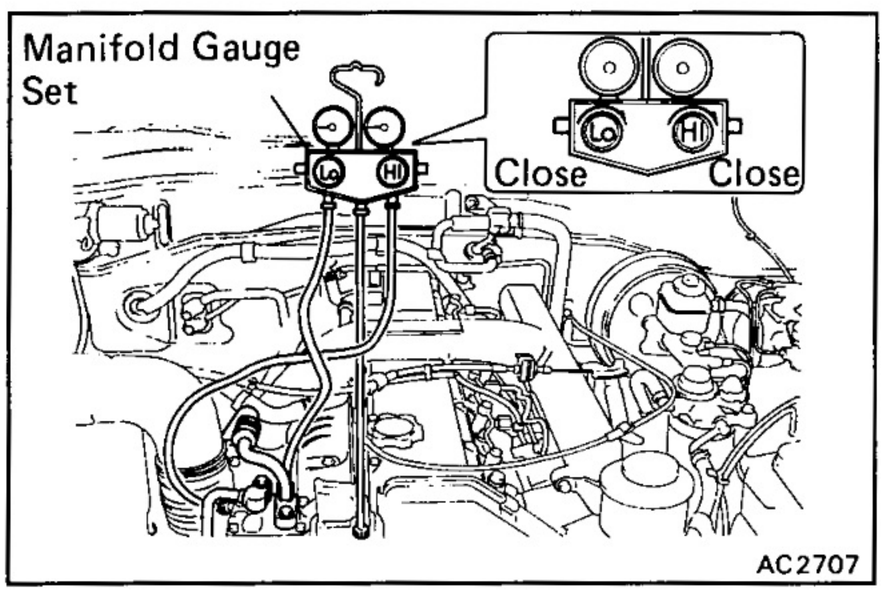

(Compressor)

1. **INSTALL MANIFOLD GAUGE SET**
   See page AC-24

2. **RUN ENGINE AT APPROX. 2,000 RPM**

3. **INSPECT COMPRESSOR FOR FOLLOWING**

   (a) High pressure gauge reading is not lower and low pressure gauge reading is not higher than normal.

   (b) Check that the metallic sound.

   (c) Check that the leakage from shaft seal.

   If defects are found, replace the compressor.

REMOVAL OF COMPRESSOR

3F and 3F-E ENGINE

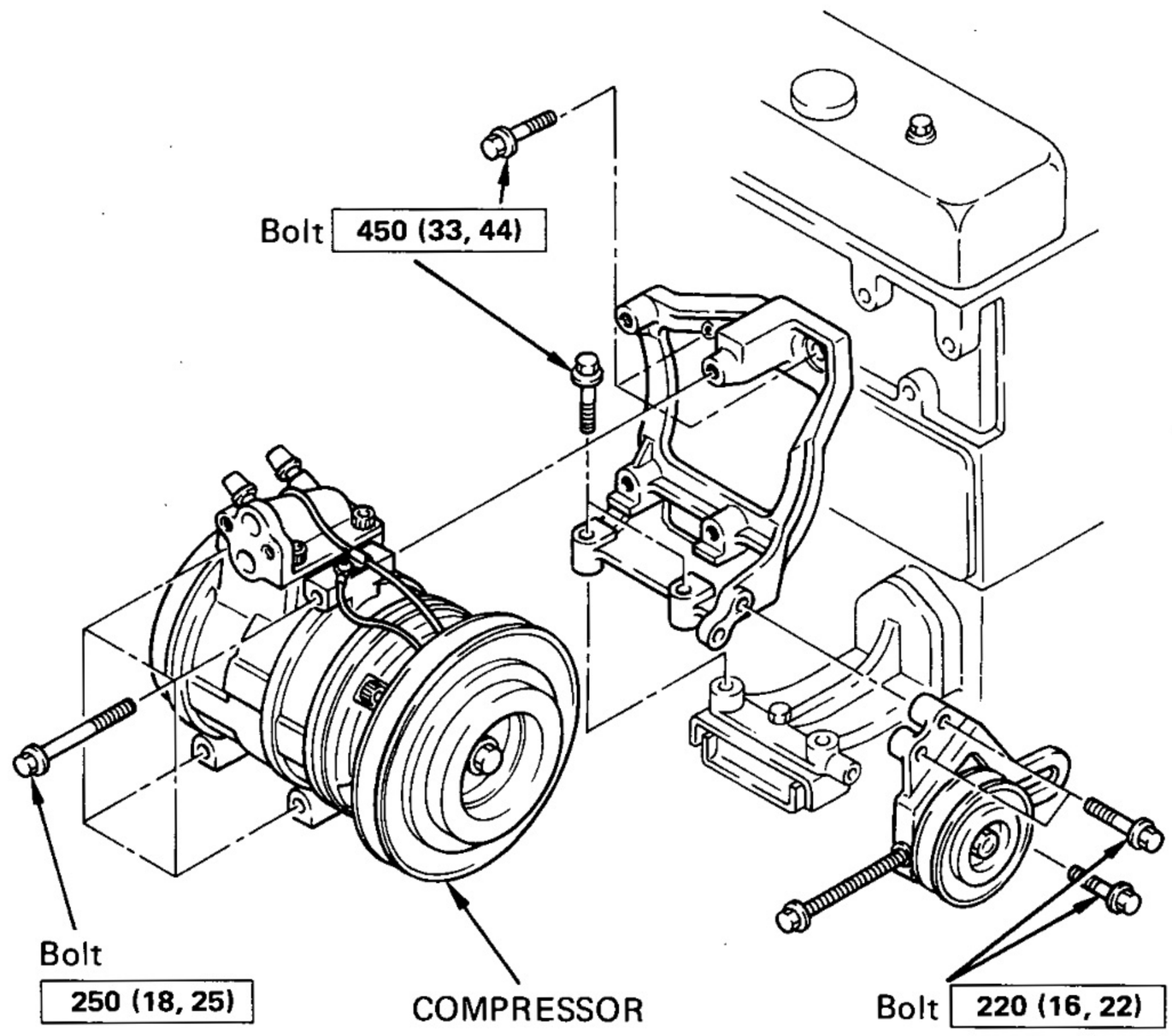

1HZ and 2HD-T ENGINE

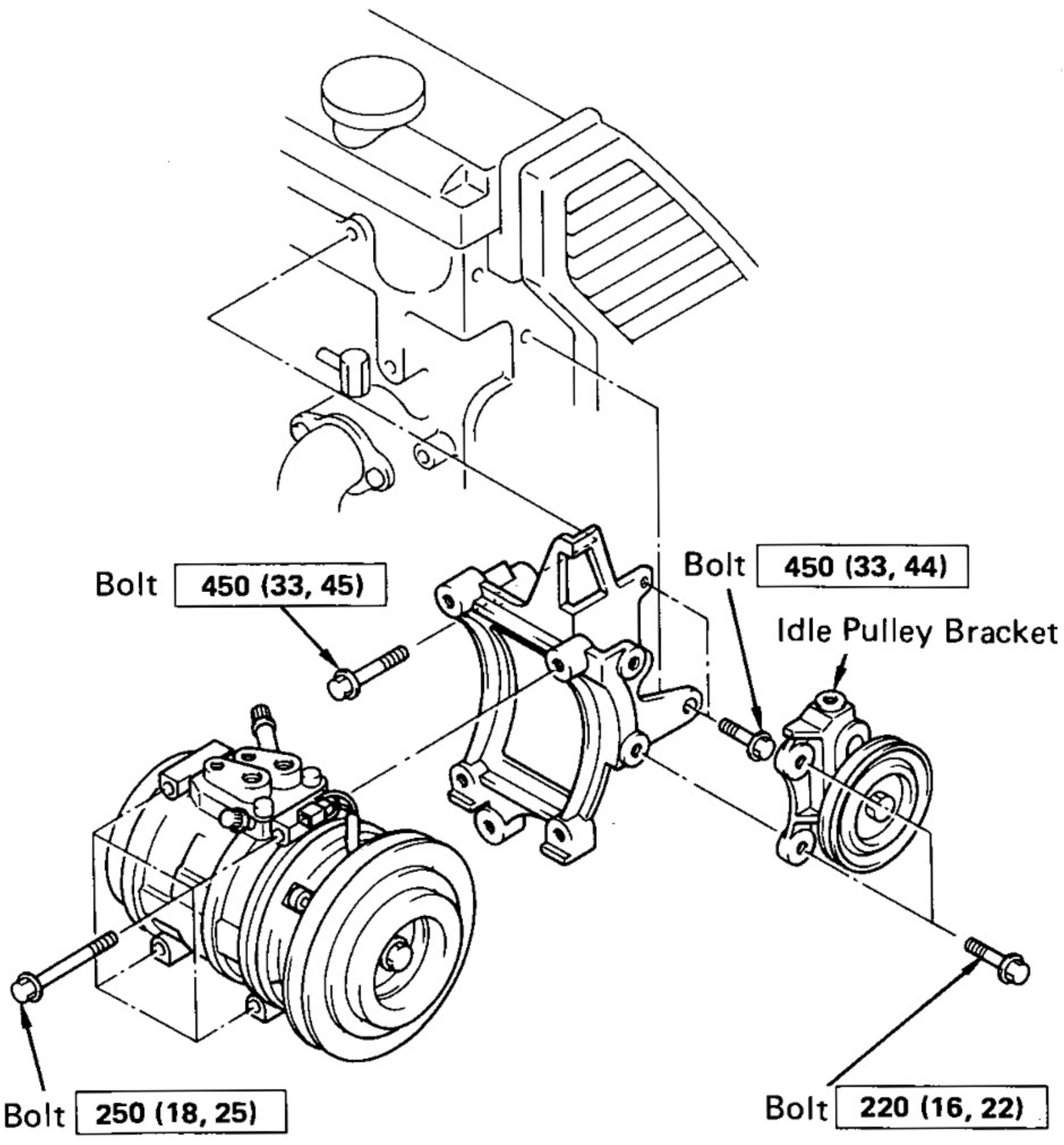

kg-cm (ft-lb, N·m) : Specified torque

AC2669
AC2670

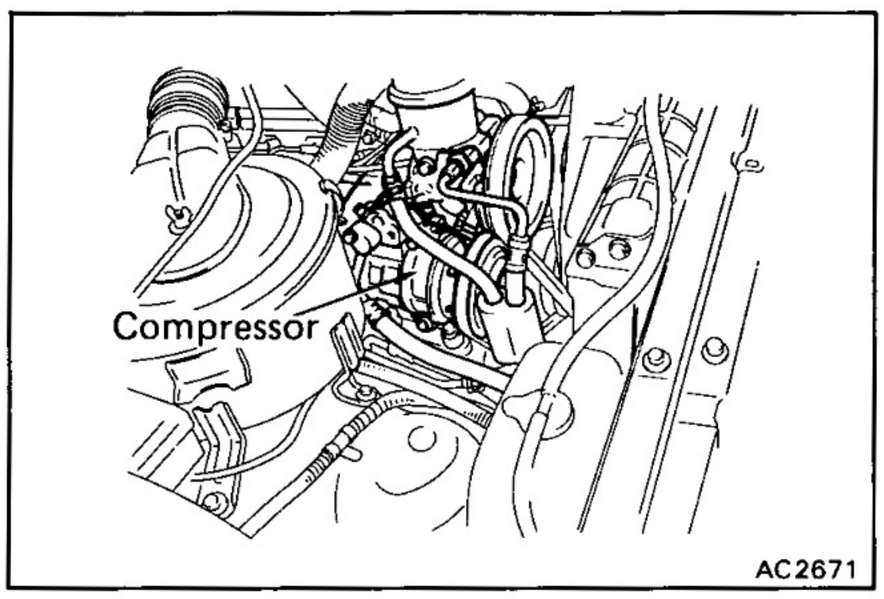

1. **RUN ENGINE AT IDLE SPEED WITH A/C ON FOR TEN MINUTES**
2. **STOP ENGINE**
3. **DISCONNECT NEGATIVE CABLE FROM BATTERY**
4. **REMOVE UNDER COVER**
5. **DISCONNECT CONNECTOR FROM MAGNETIC CLUTCH**
6. **DISCHARGE REFRIGERANT FROM REFRIGERATION SYSTEM**
7. **DISCONNECT TWO HOSES FROM COMPRESSOR SERVICE VALVES**

   Cap the open fitting immediately to keep moisture and dust out of the system.

DISASSEMBLY OF MAGNETIC CLUTCH

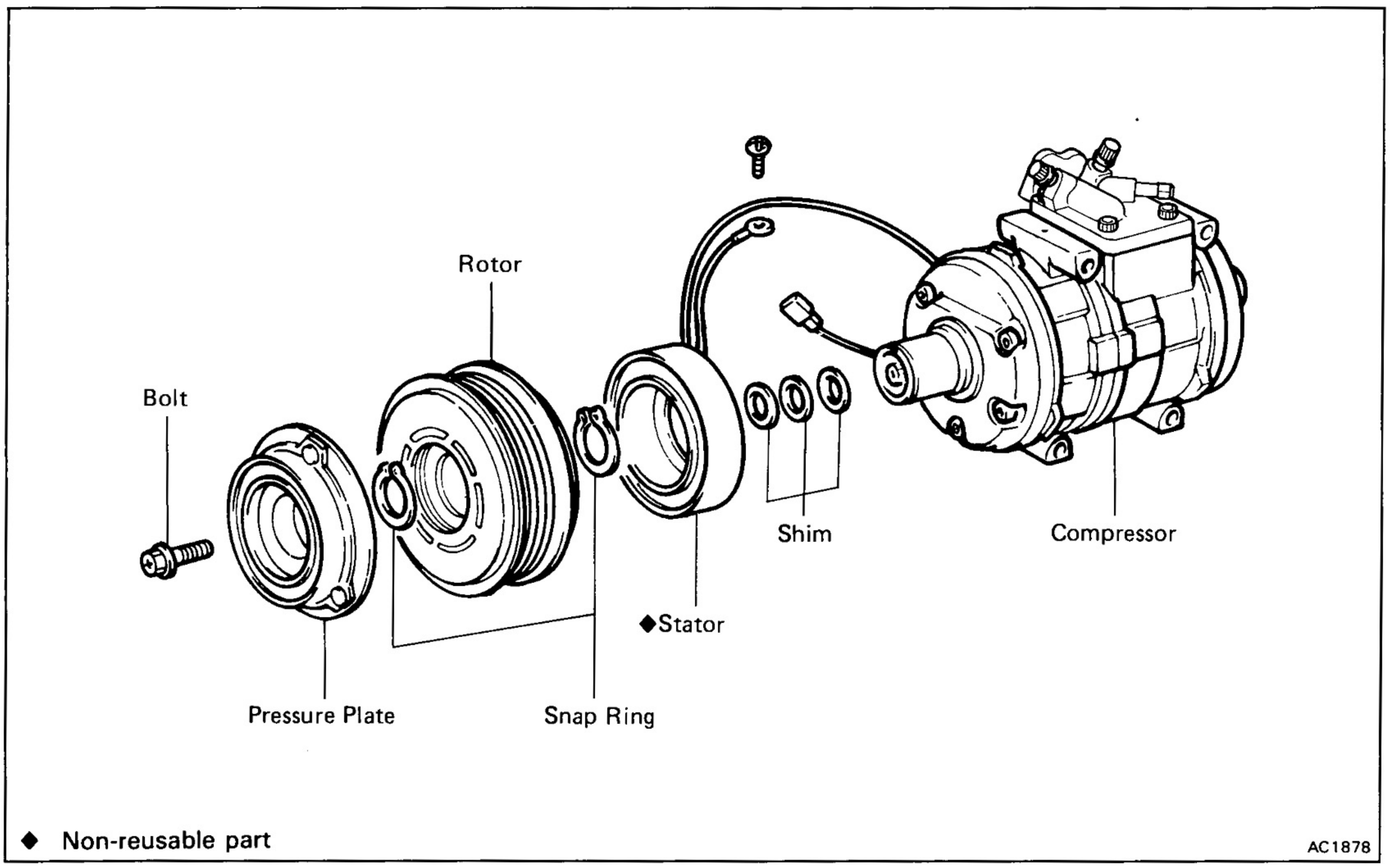

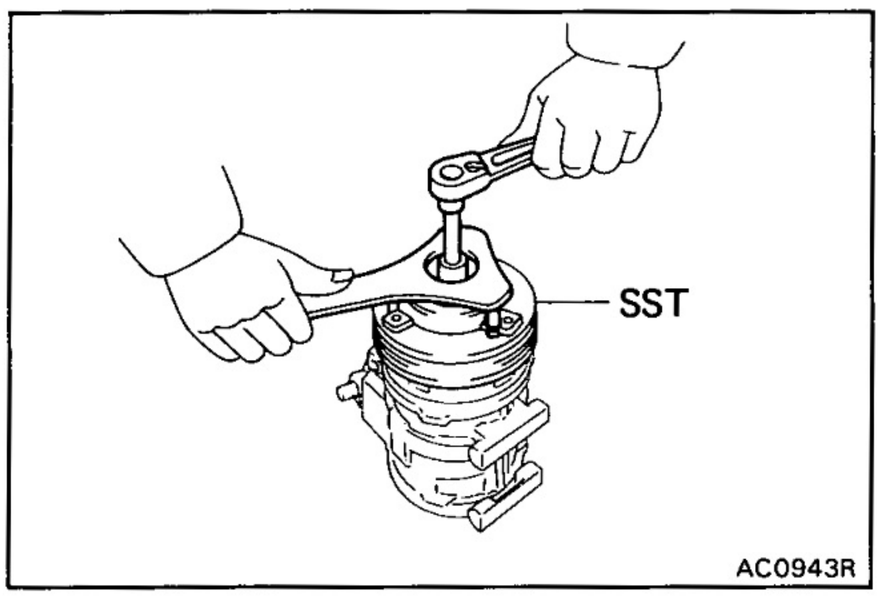

1. **REMOVE PRESSURE PLATE**

   (a) Using SST and a socket, remove the shaft bolt.

   SST 07112-76060

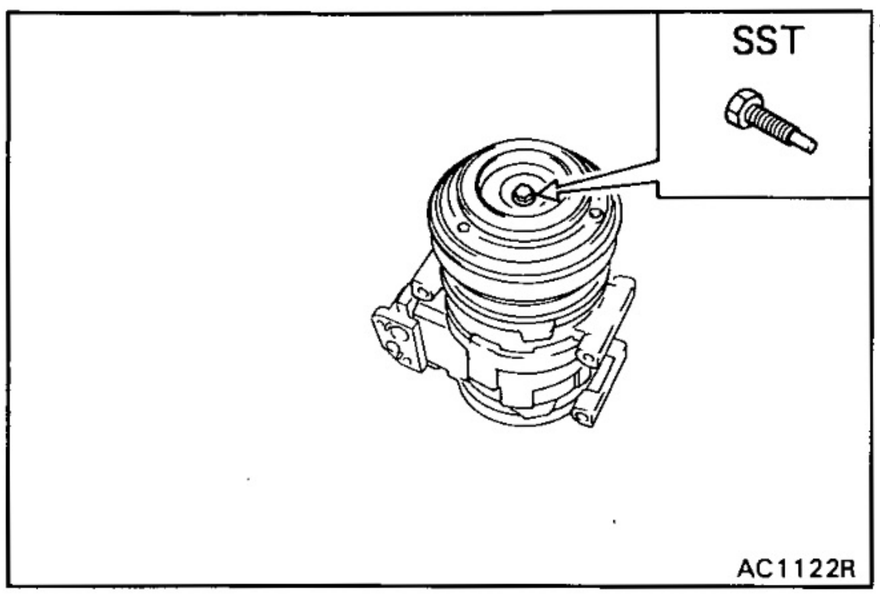

(b) Install SST to the pressure plate.

SST 07112-66040

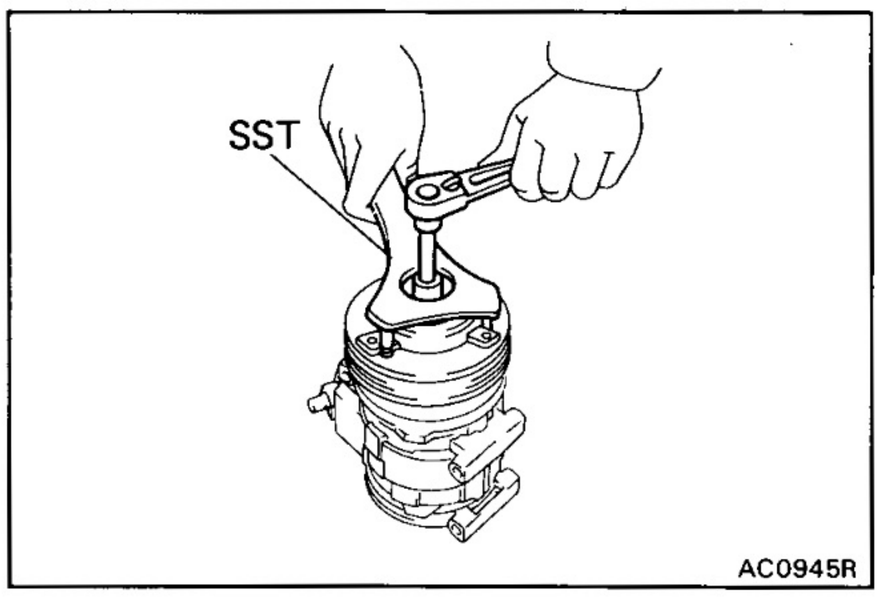

(c) Using SST and a socket, remove the pressure plate.

SST 07112-76060

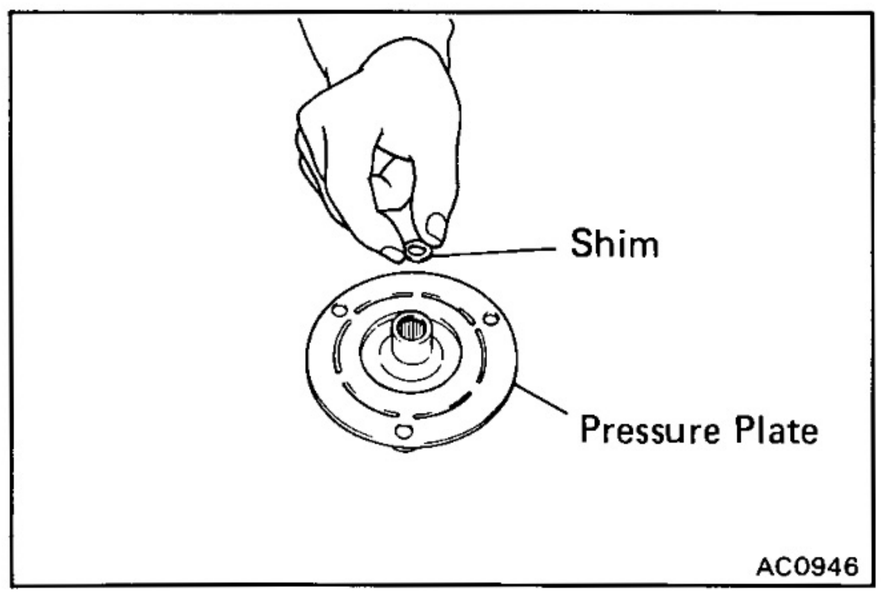

(d) Remove the shims from the pressure plate.

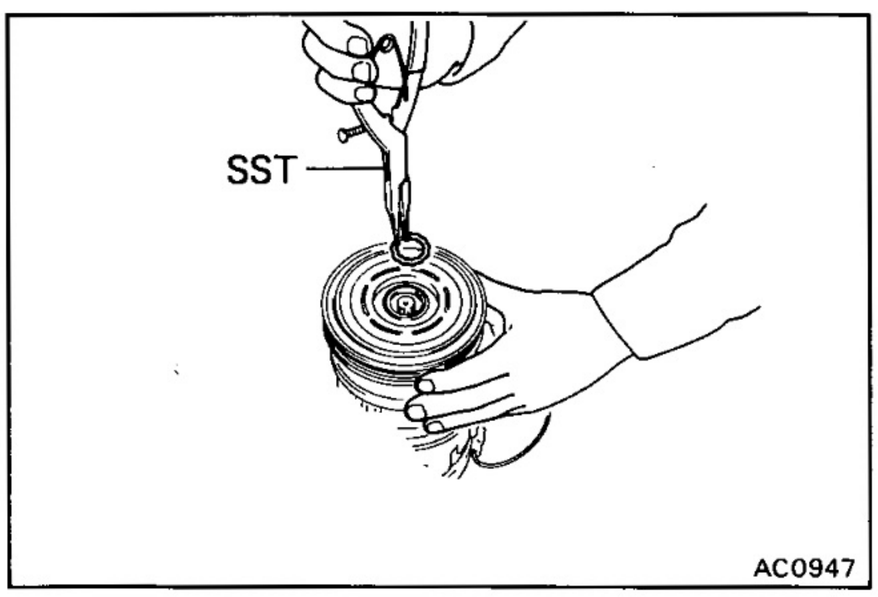

2. REMOVE ROTOR

(a) Using SST, remove the snap ring.

SST 07114-84020

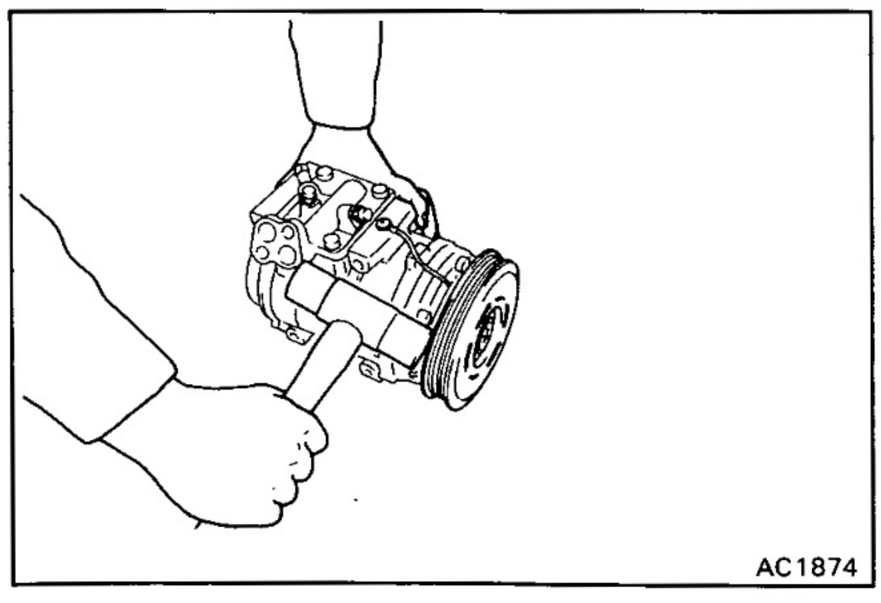

(b) Using a plastic hammer, tap the rotor off the shaft.

NOTICE: Be careful not to damage the pulley when tapping on the rotor.

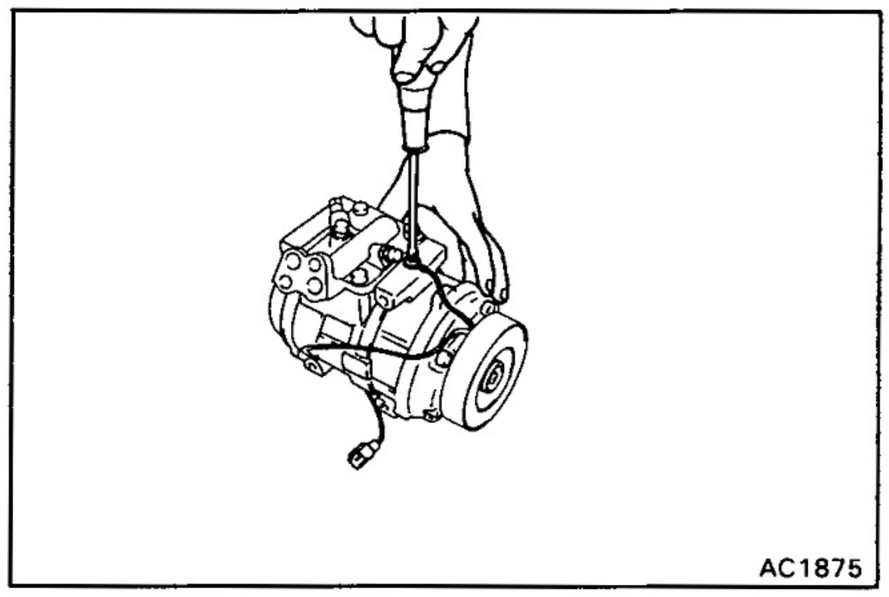
AC1875

3. REMOVE STATOR

(a) Disconnect the stator lead wire from the compressor housing.

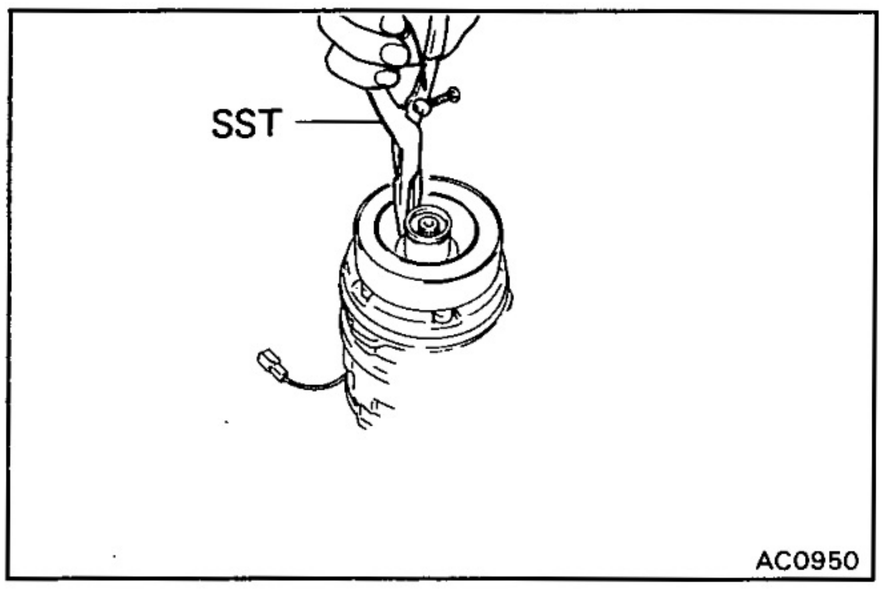

AC0950

(b) Using SST, remove the snap ring.

SST 07114-84020

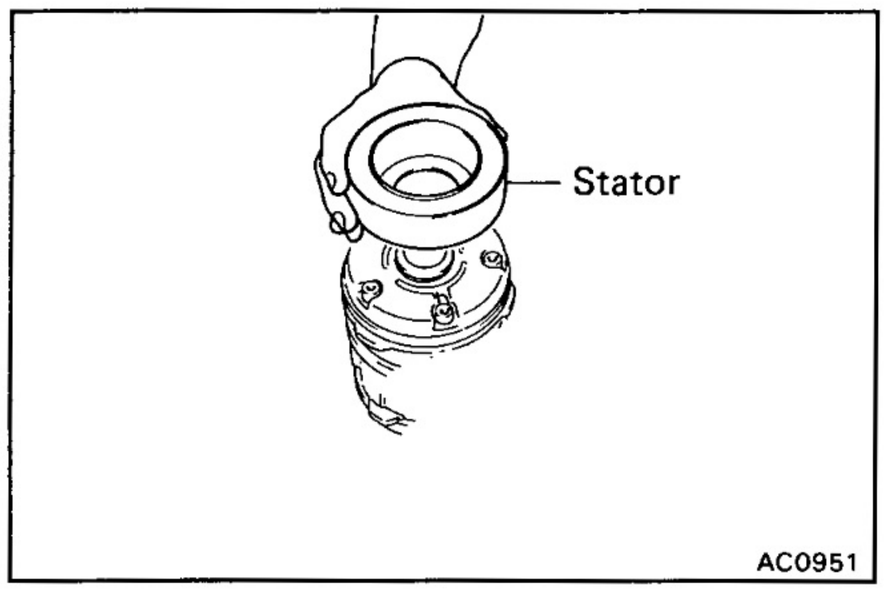

AC0951

(c) Remove the stator.

REPLACEMENT OF SHAFT SEAL

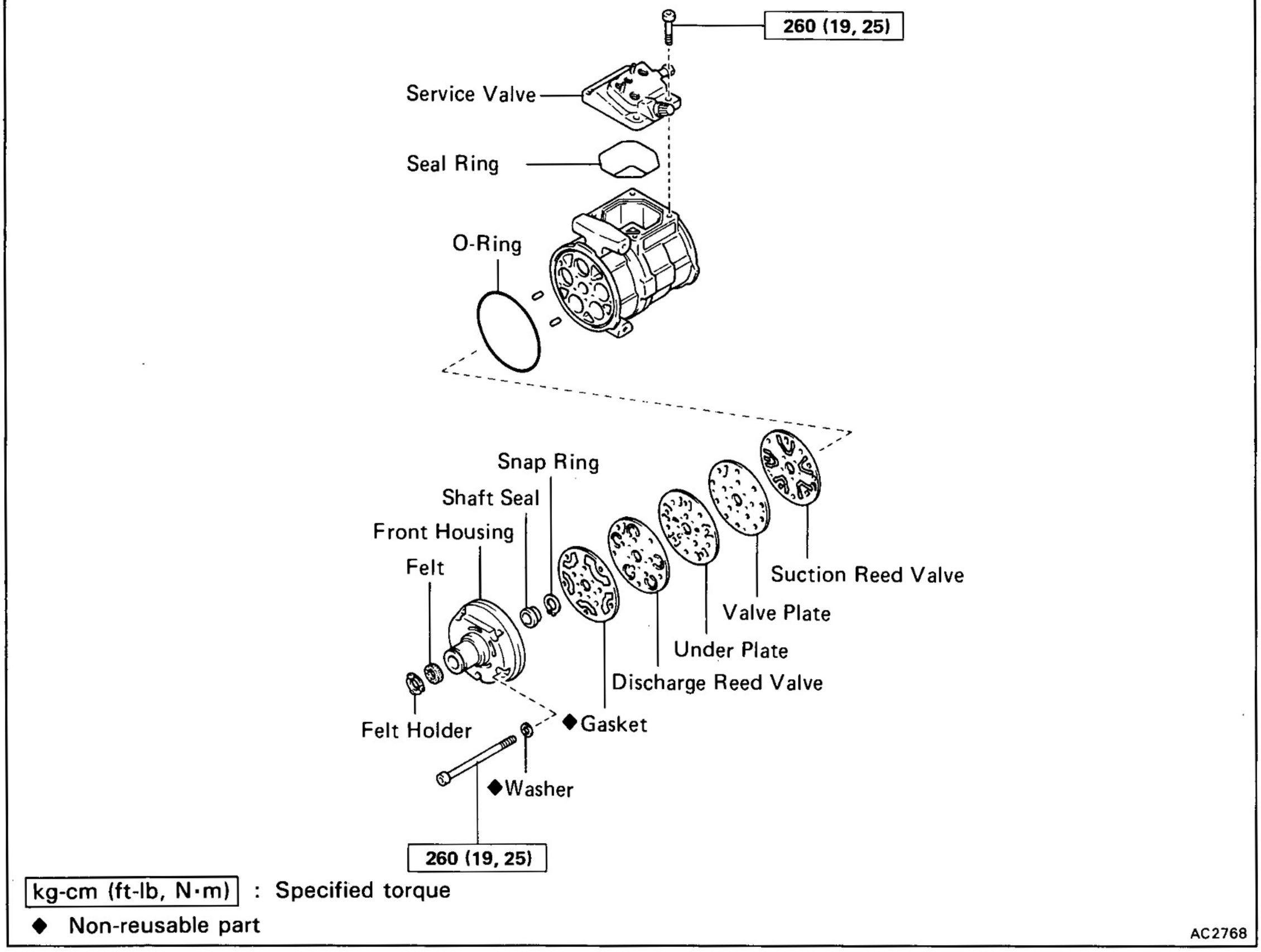

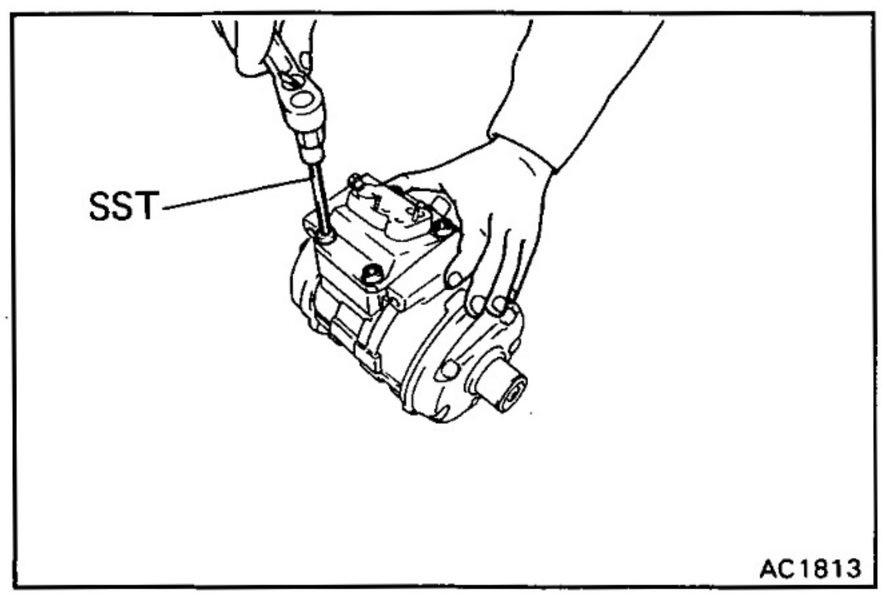

1. **REMOVE SERVICE VALVE**

(a) Using SST, remove four bolts holding the service valve.

SST 07110-61050

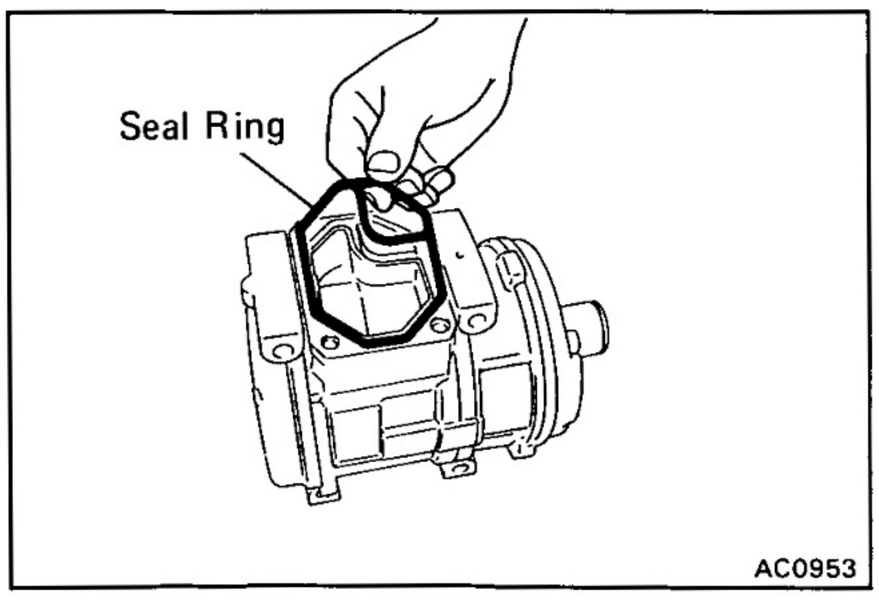

(b) Remove the seal ring from the cylinder block. Discard the seal ring.

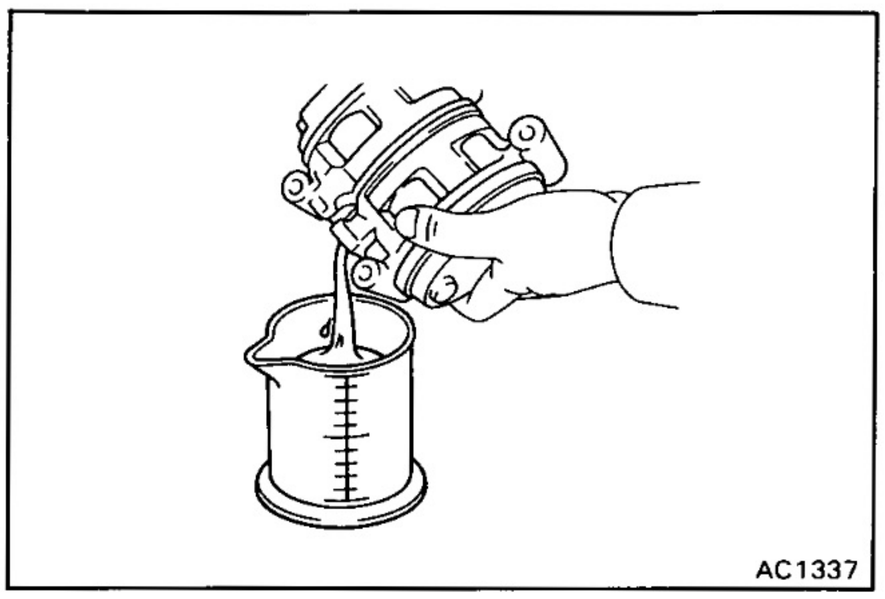

2. DRAIN COMPRESSOR OIL INTO MEASURING FLASK

Measure the quantity of drained oil because the same amount should be replaced later.

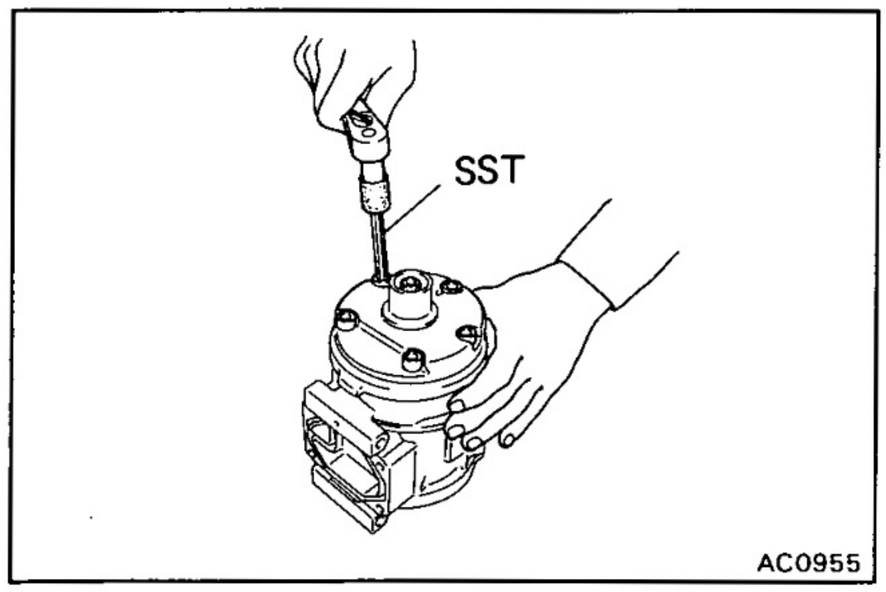

3. REMOVE FRONT HOUSING

(a) Using SST, remove five through bolts.

HINT: Do not reuse five washers.

SST 07110-61050

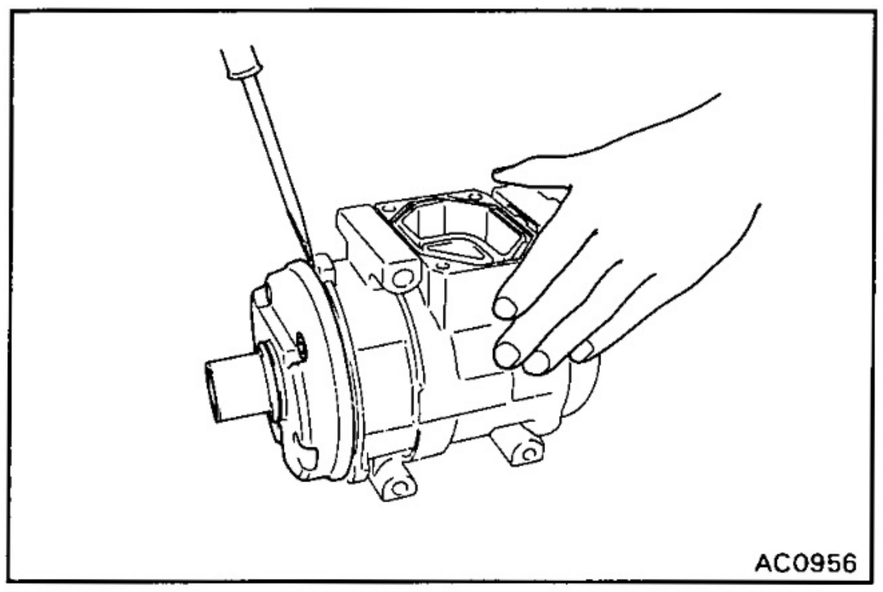

(b) Using a screwdriver, remove the front housing.

NOTICE: Be careful not to scratch the sealing surface of the front housing.

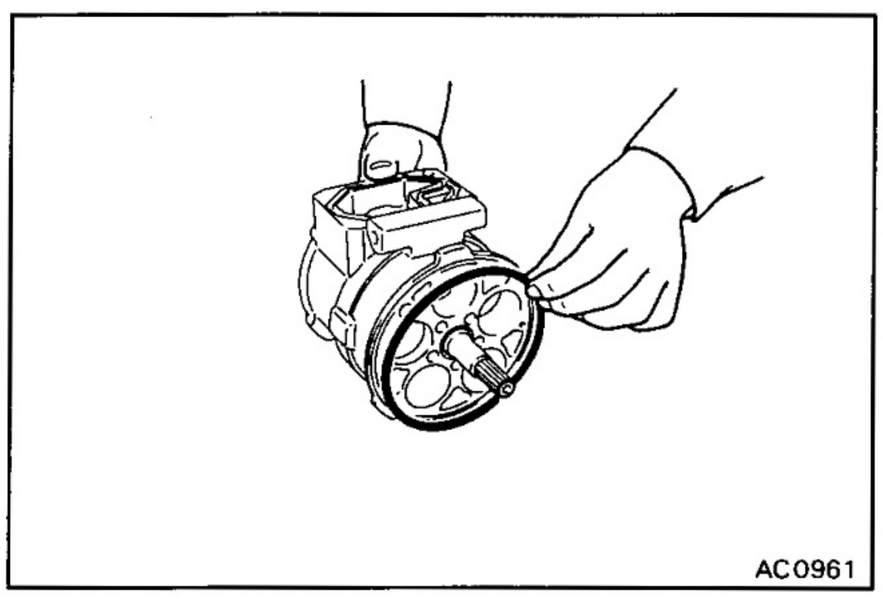

4. REMOVE O-RING

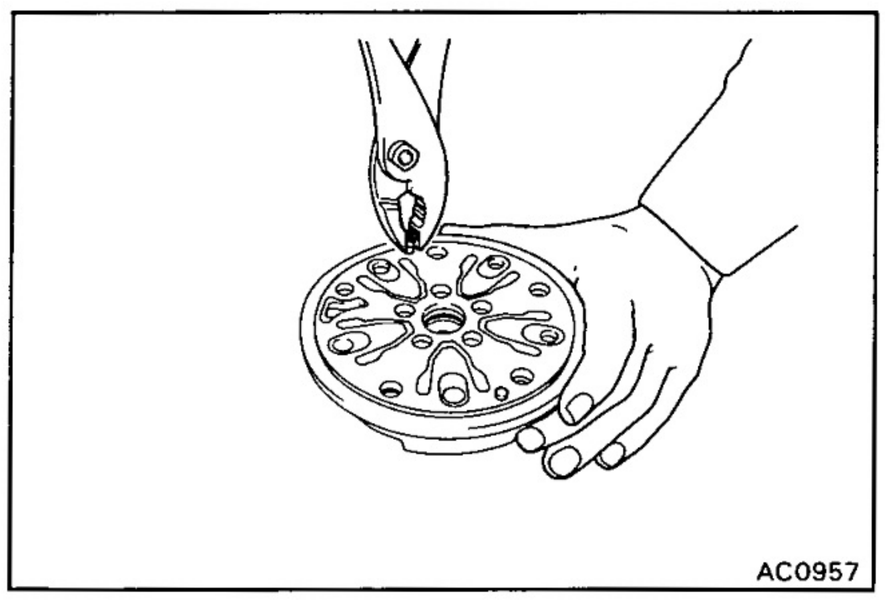

5. REMOVE FRONT VALVE PLATE

(a) Remove two pins from the front housing. Discard the pins.

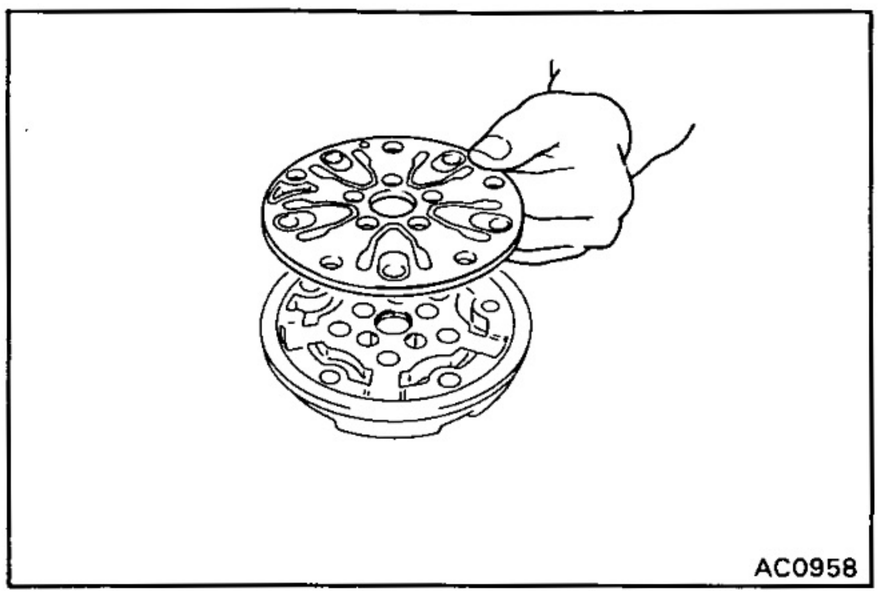
AC0958

(b) Remove the front valve plate with reed valves.

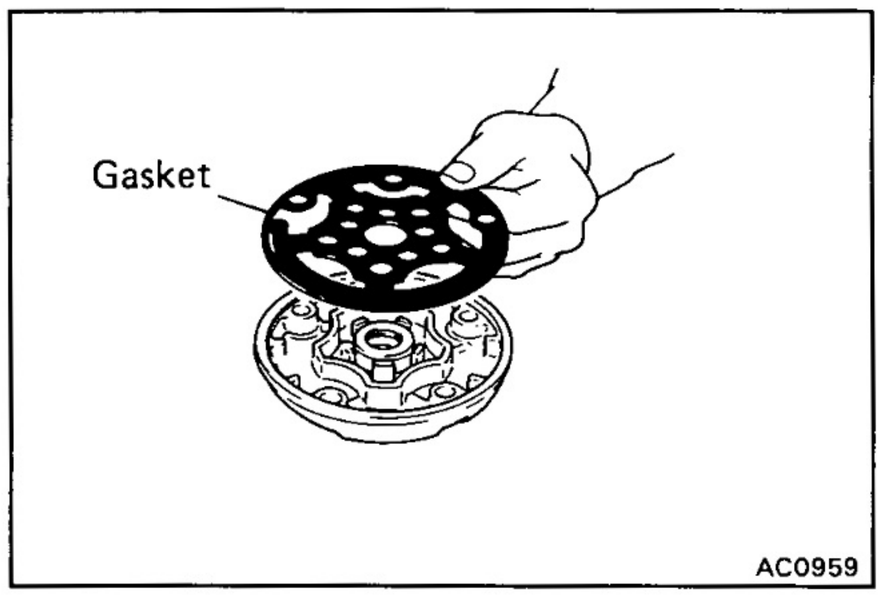

AC0959

6. REMOVE GASKET

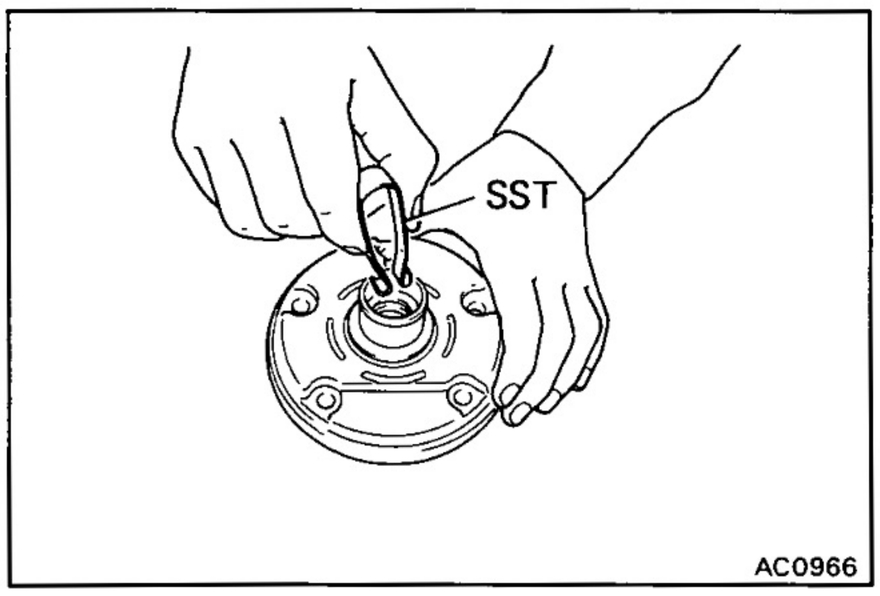

AC0966

7. REMOVE FELT

(a) Set SST on the felt.

SST 07112-15020

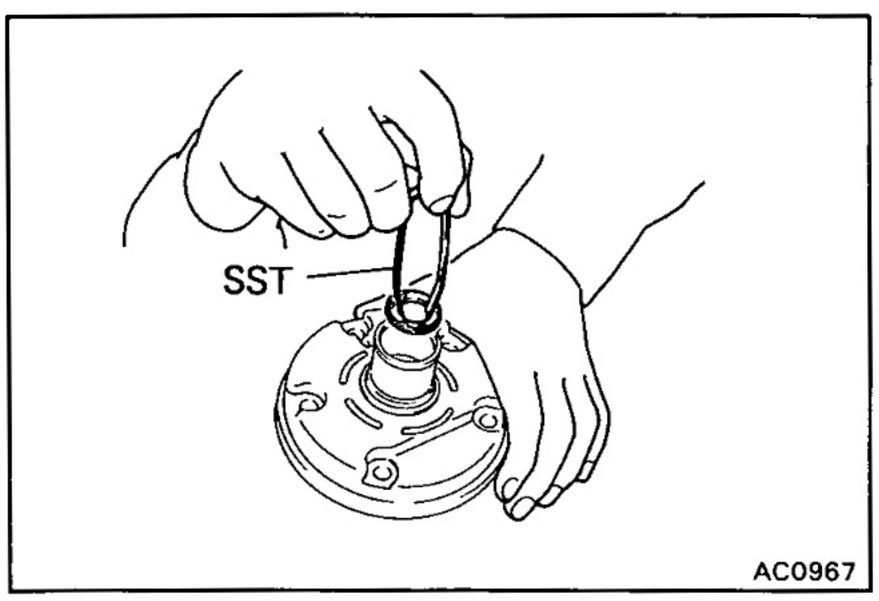

AC0967

(b) Pull the felt with felt holder out of front housing.

SST 07112-15020

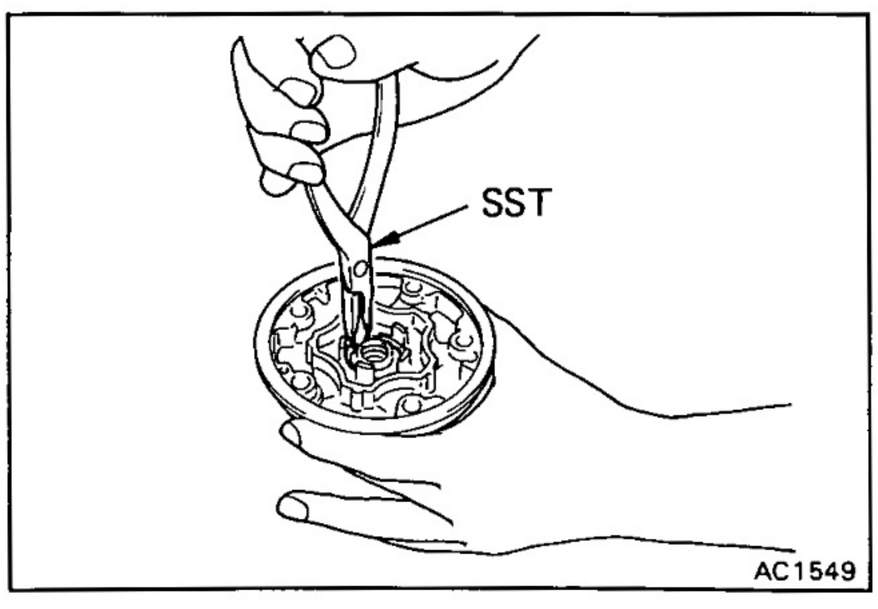

AC1549

8. REMOVE SHAFT SEAL

(a) Using SST, remove the snap ring from the front housing.

SST 07114-84010

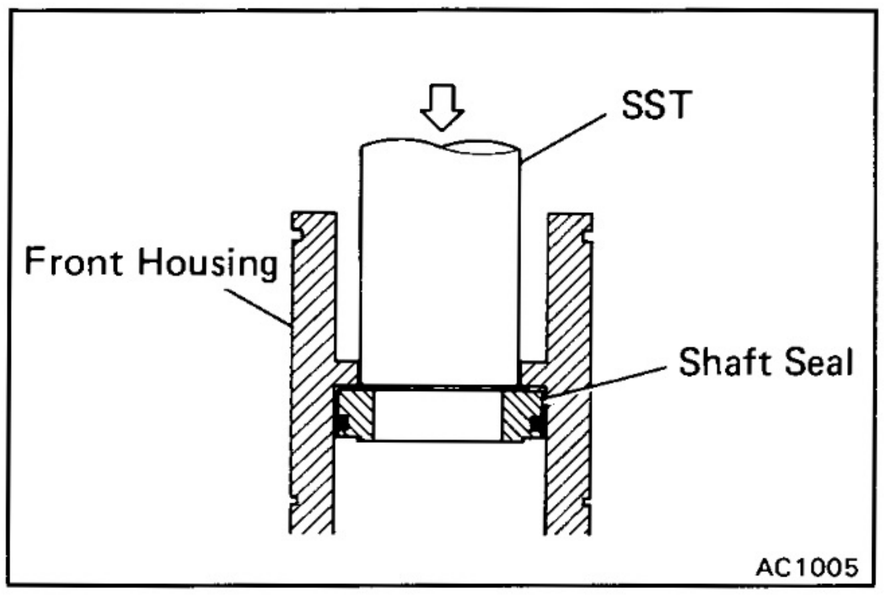

(b) Set SST on the shaft seal.

SST 07112-85030

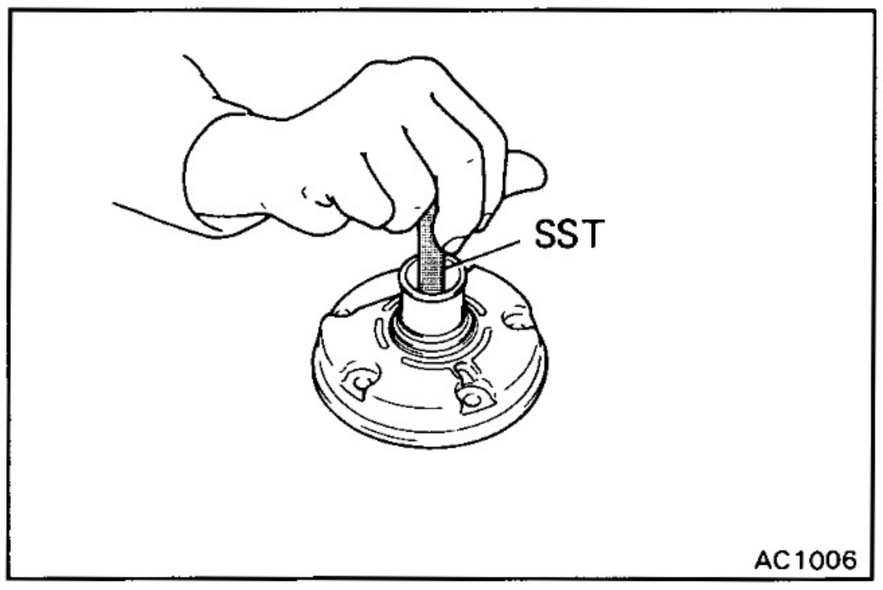

(c) Using SST, put the shaft seal out of the front housing.

SST 07112-85030

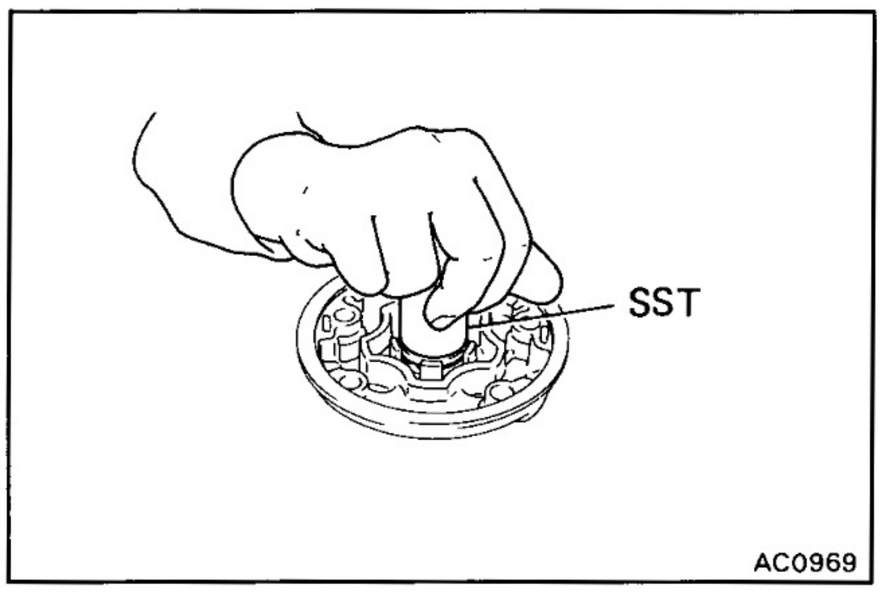

9. INSTALL SHAFT SEAL

(a) Fit shaft seal on SST, and install the shaft seal into the front housing.

SST 07112-85020

HINT: Clean up the surface of the shaft seal with compressor oil.

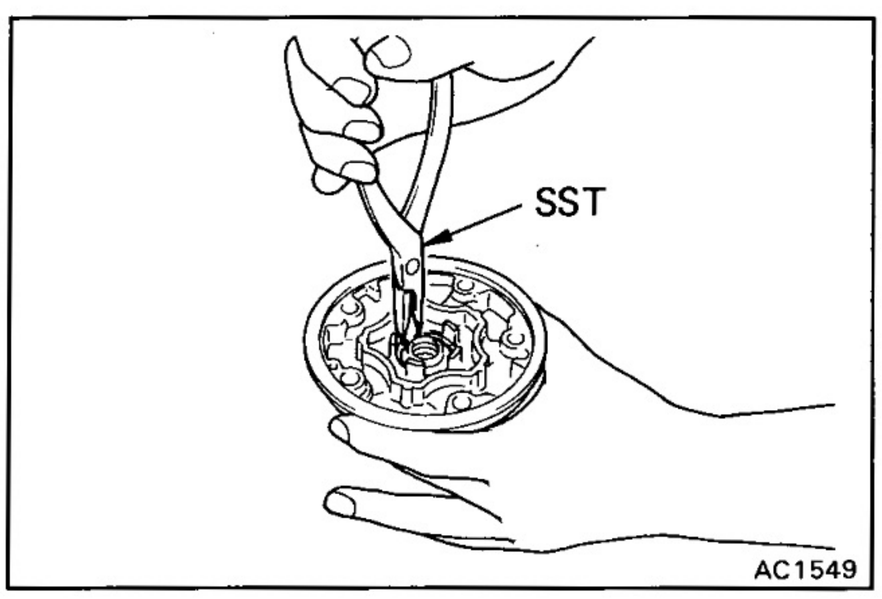

(b) Using SST, install the snap ring into the front housing.

SST 07114-84010

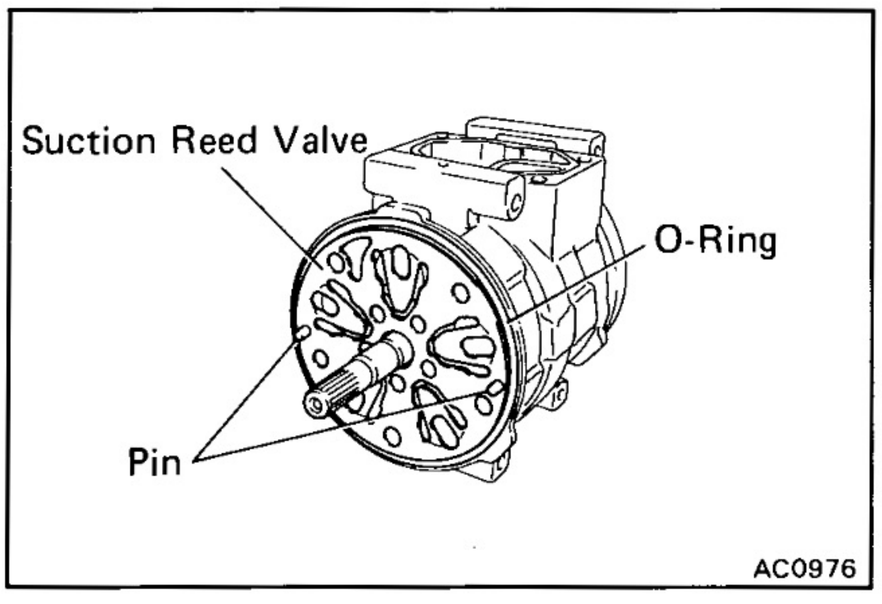

10. INSTALL FRONT VALVE PLATE ON FRONT CYLINDER

(a) Install two pins in the front cylinder.

(b) Lubricate a new O-ring with compressor oil and install it in the front housing.

(c) Install the front suction reed valve over the pins on the front cylinder.

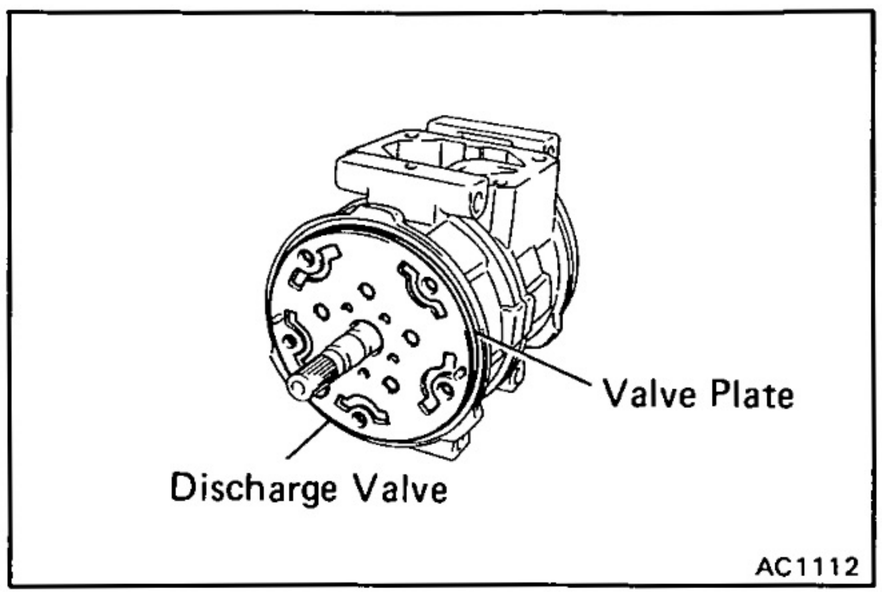

(d) Install the front valve plate with the discharge reed valve over the pins on the front cylinder.

HINT: The front valve plate is marked with an "F".

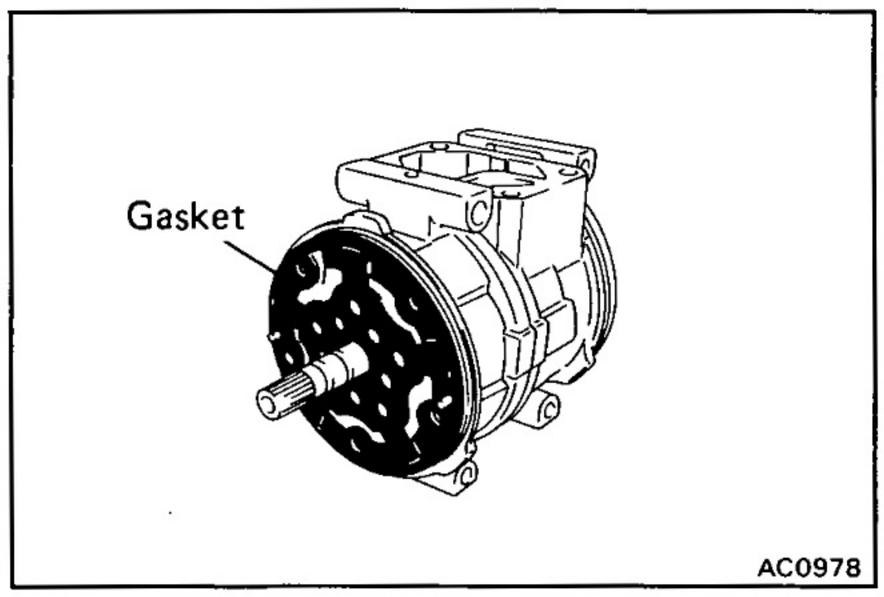

(e) Lubricate a new gasket with compressor oil and install the gasket on the valve plate.

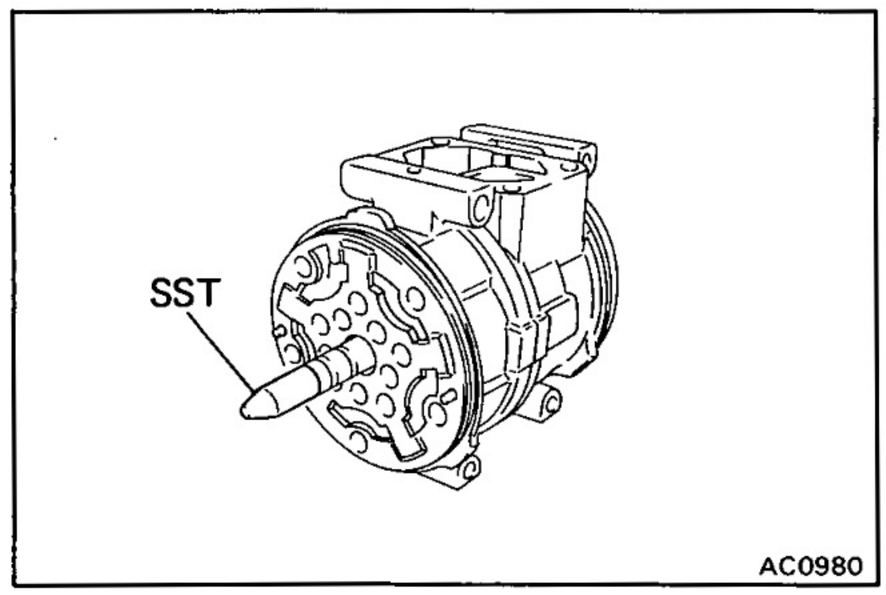

11. INSTALL FRONT HOUSING ON FRONT CYLINDER

(a) Set SST on the shaft to protect the lip seal.

SST 07112-85010

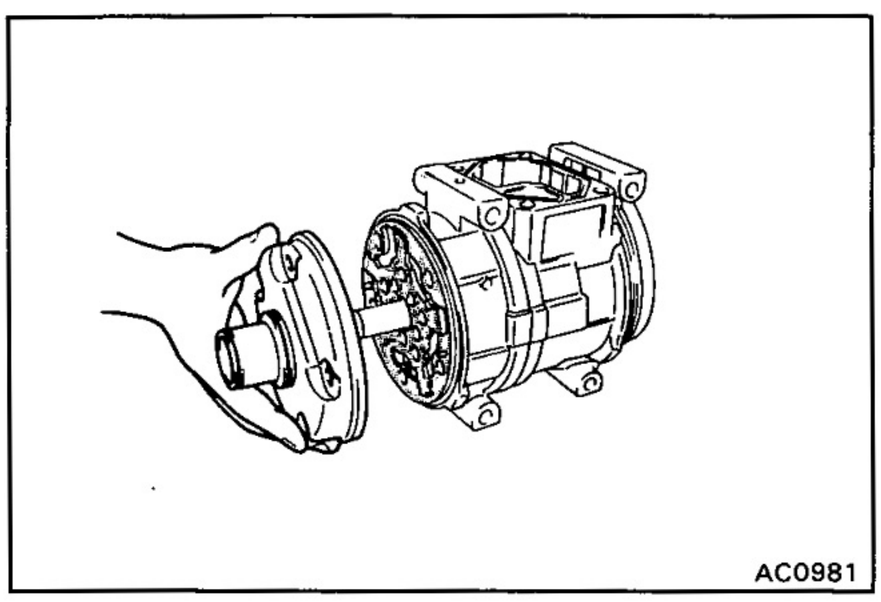

(b) Install the front housing on the front cylinder.

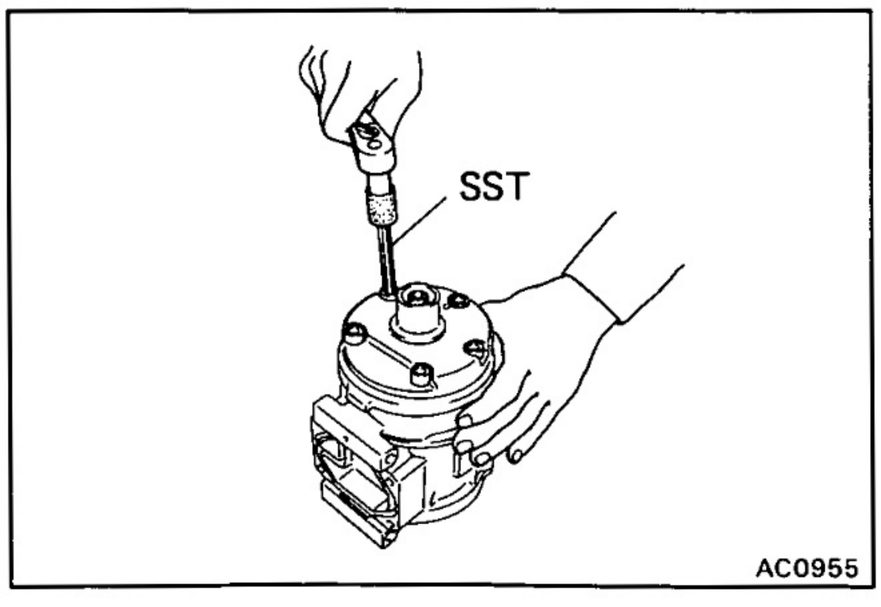

12. TIGHTEN FIVE THROUGH BOLTS

Using SST and torque wrench, gradually tighten the five through bolts in two or three passes.

SST 07110-61050

Torque: 260 kg-cm (19 ft-lb, 25 Nm)

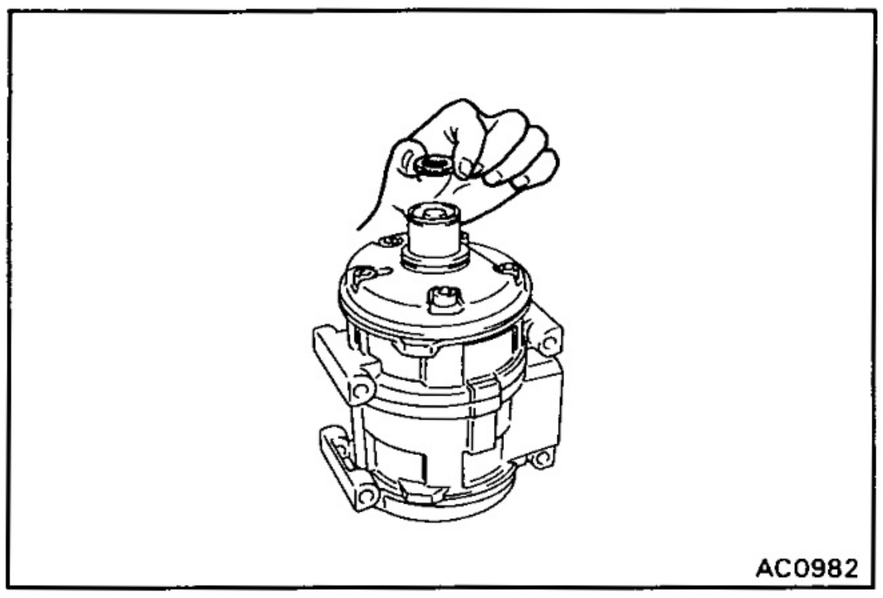
AC0982

13. INSTALL FELT

(a) Set the felt with felt holder to the front housing.

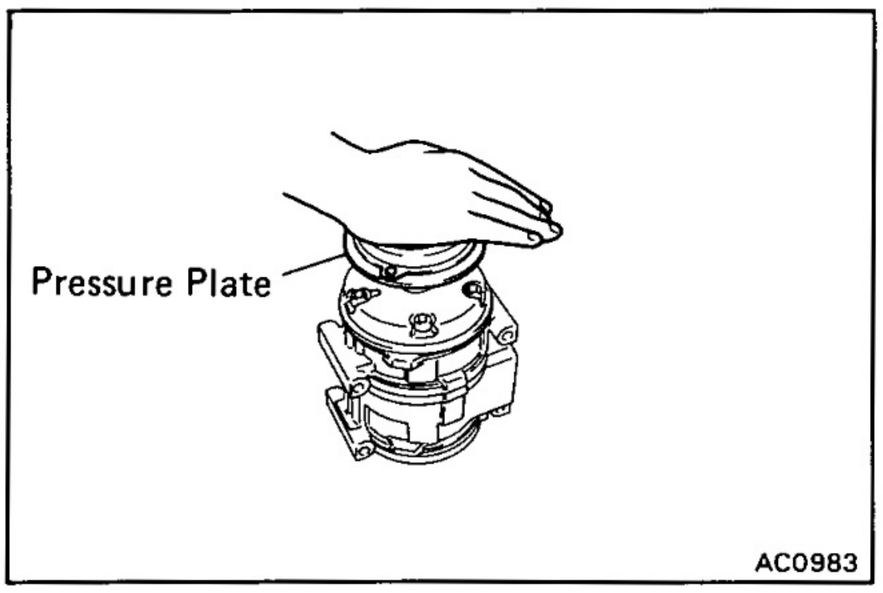

AC0983

(b) Using pressure plate of magnetic clutch, install the felt.

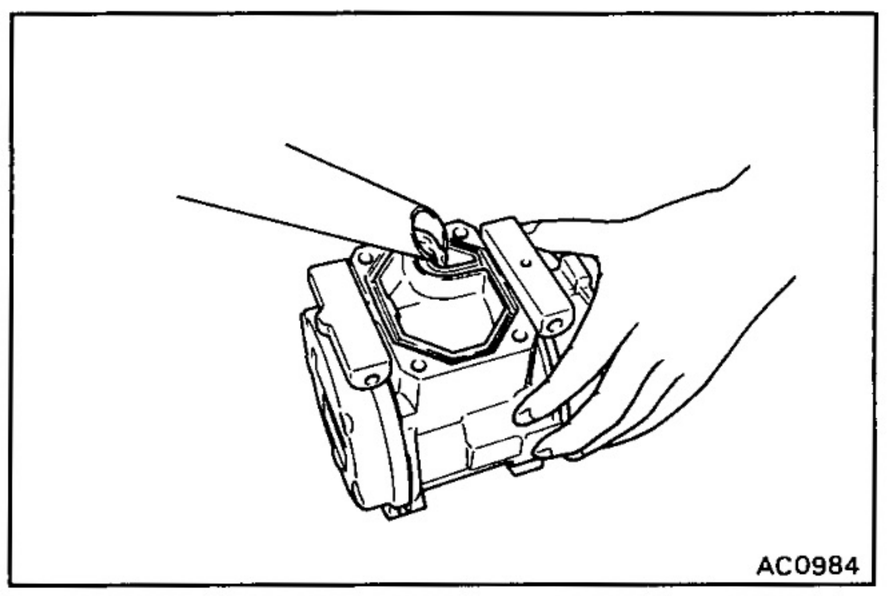
AC0984

14. POUR COMPRESSOR OIL INTO COMPRESSOR

Add the same quantity of oil as was removed, plus 20 cc (0.7 fl.oz), into the compressor.

Compressor oil: DENSOOIL 6, SUNISO No.5GS or equivalent

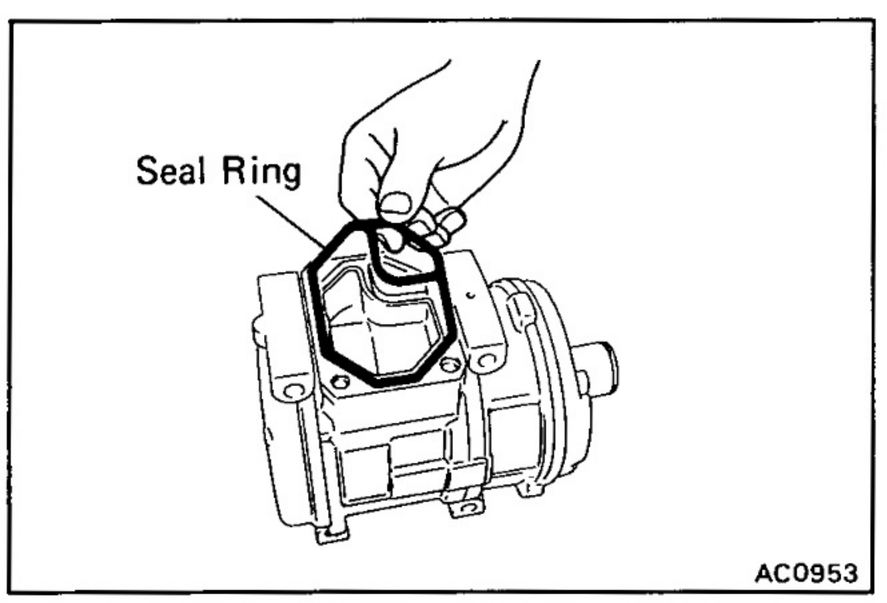

AC0953

15. INSTALL SERVICE VALVE

(a) Lubricate new seal ring with compressor oil.

Install the seal ring in the service valve.

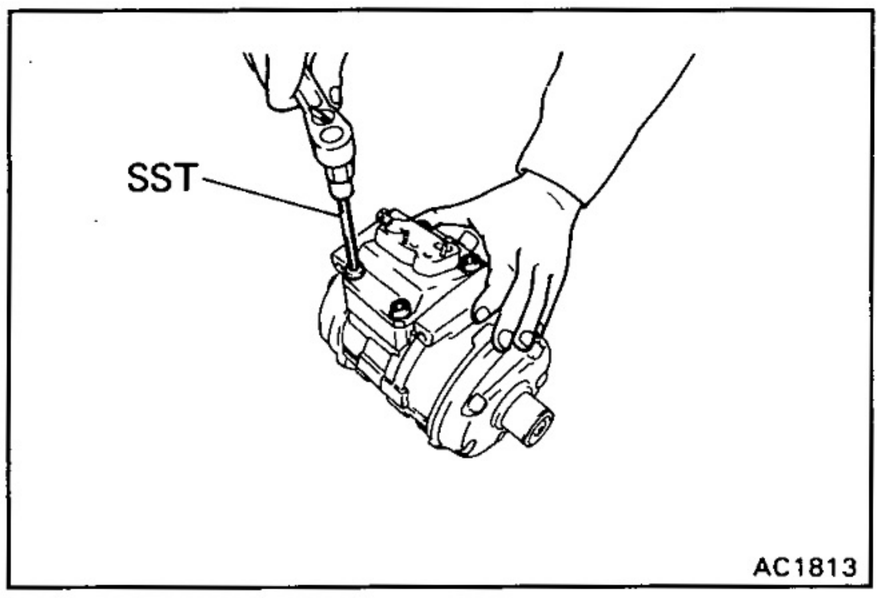

AC1813

(b) Install the service valve on the compressor.

Using SST and torque wrench, tighten the bolts.

SST 07110-61050

Torque: 260 kg-cm (19 ft-lb, 25 Nm)

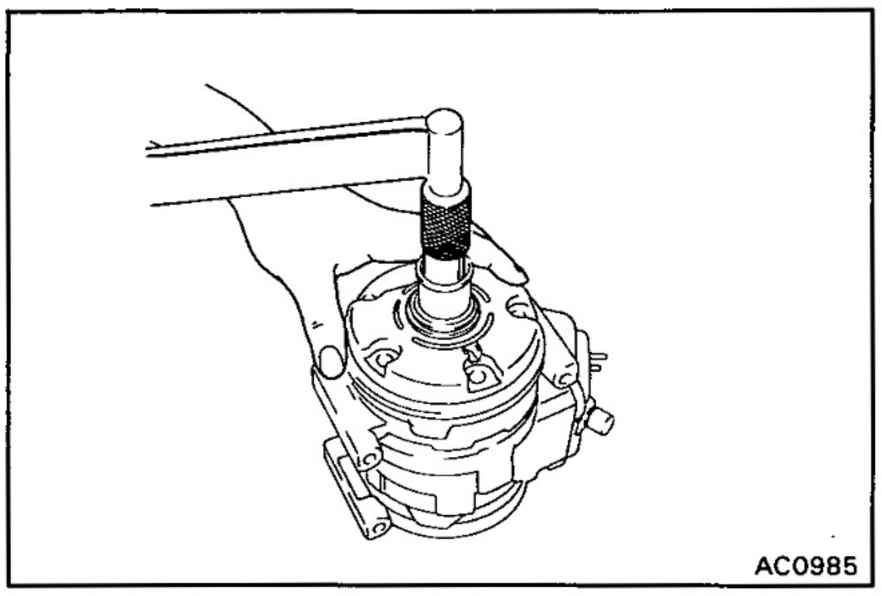
AC0985

16. CHECK SHAFT STARTING TORQUE

Torque: 30 kg-cm (26 in.-lb, 2.9 N·m) or less

ASSEMBLY OF MAGNETIC CLUTCH

1. INSTALL STATOR

(a) Install the stator on the compressor.

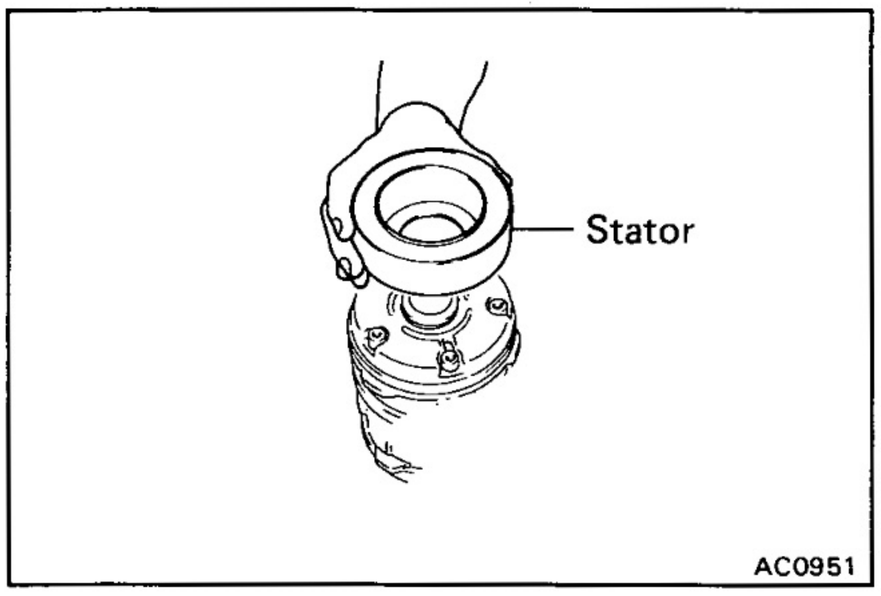

AC0951

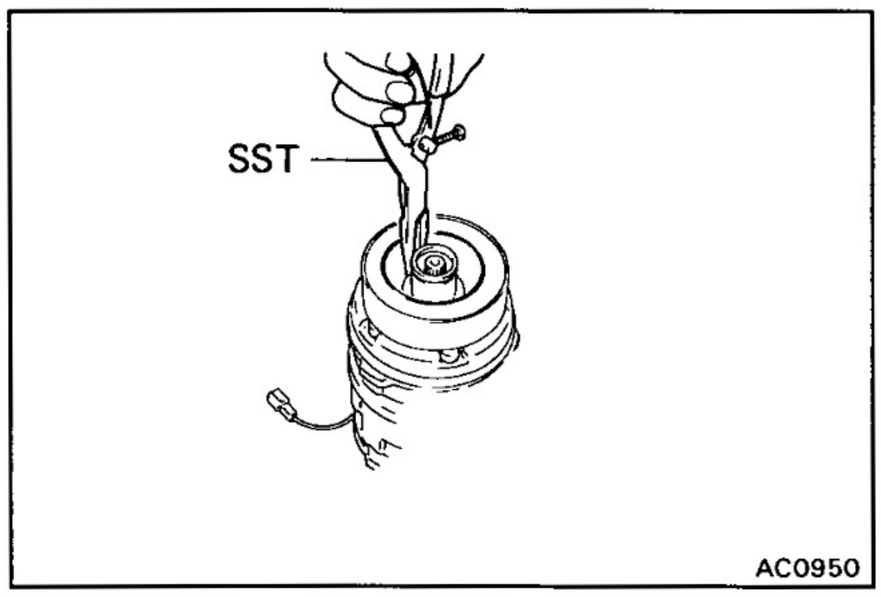

AC0950

(b) Using a SST, install the new snap ring.

SST 07114-84020

NOTICE: The snap ring should be installed so that its beveled side faces up.

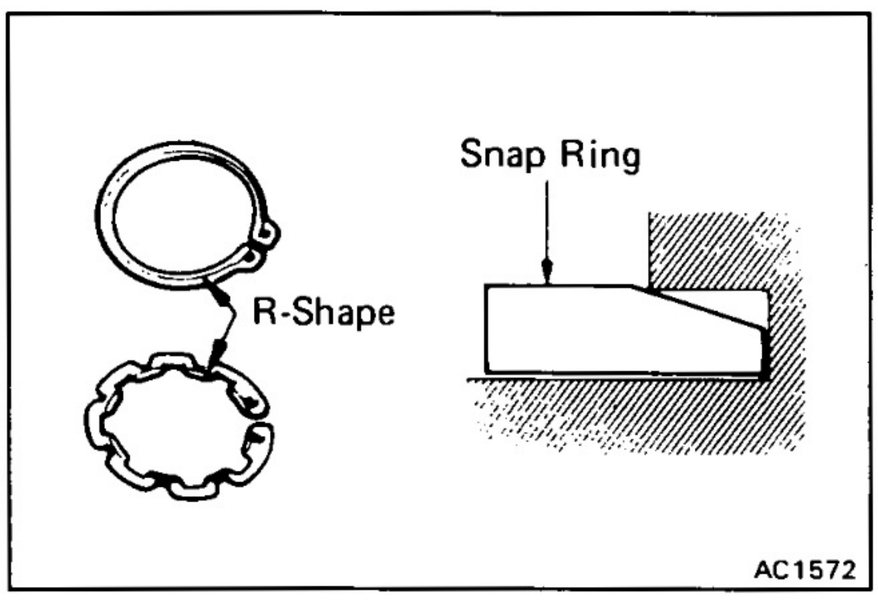

AC1572

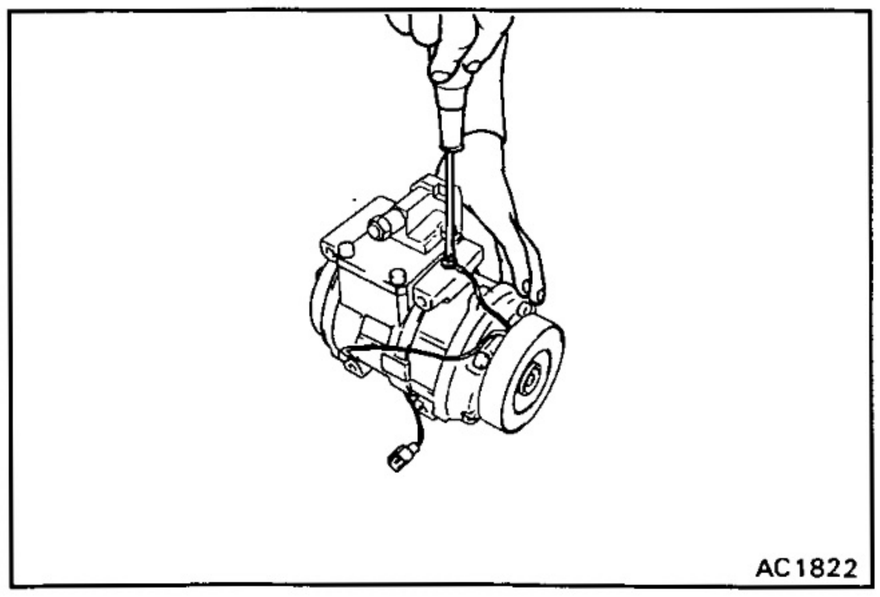
AC1822

(c) Using a SST and torque wrench, fasten the magnetic clutch lead wire to the cylinder block.

Torque: 35 kg-cm (30 in.-lb, 3.4 N·m)

SST 07110-61050

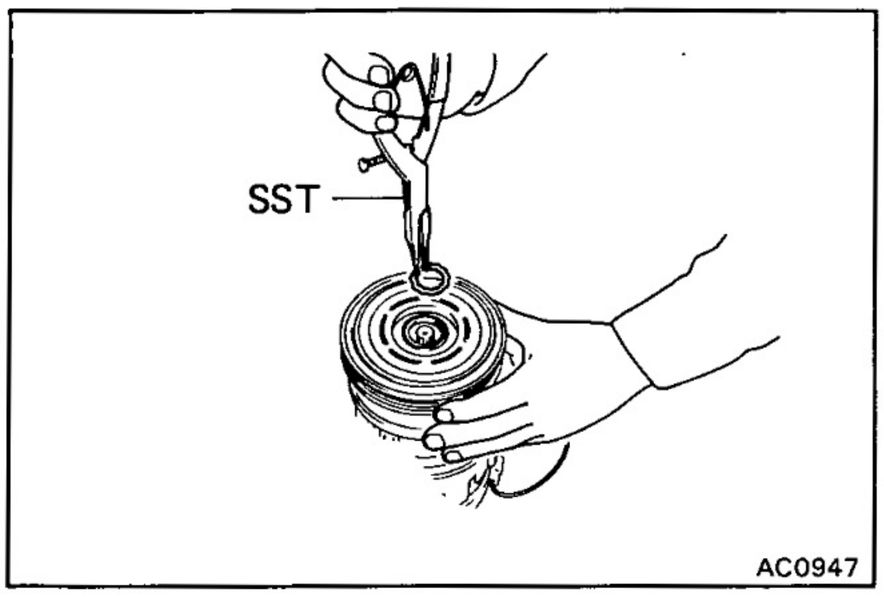

2. INSTALL ROTOR

(a) Install the rotor on the compressor shaft.

(b) Using a SST, install the new snap ring.

SST 07114-84020

NOTICE: The snap ring should be installed so that its beveled side faces up.

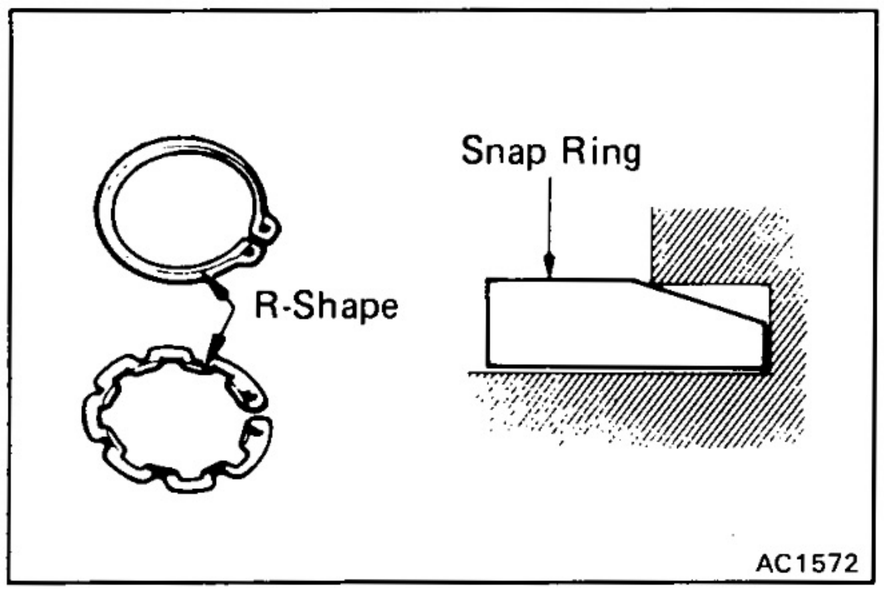

3. INSTALL PRESSURE PLATE

(a) Put the shims on the pressure plate.

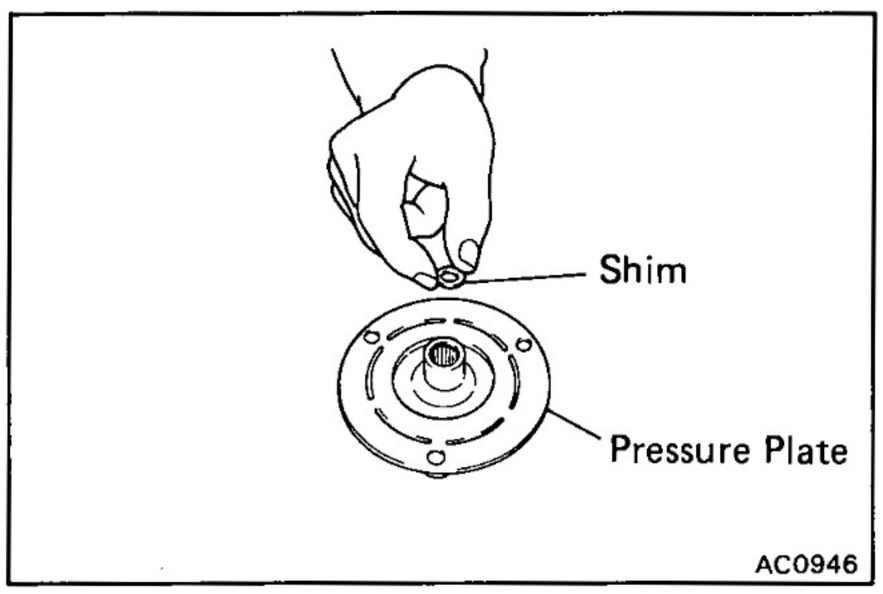

(b) Using a SST and torque wrench, install the shaft bolt.

SST 07112-76060

Torque: 135 kg-cm (9.8 ft-lb, 13 N·m)

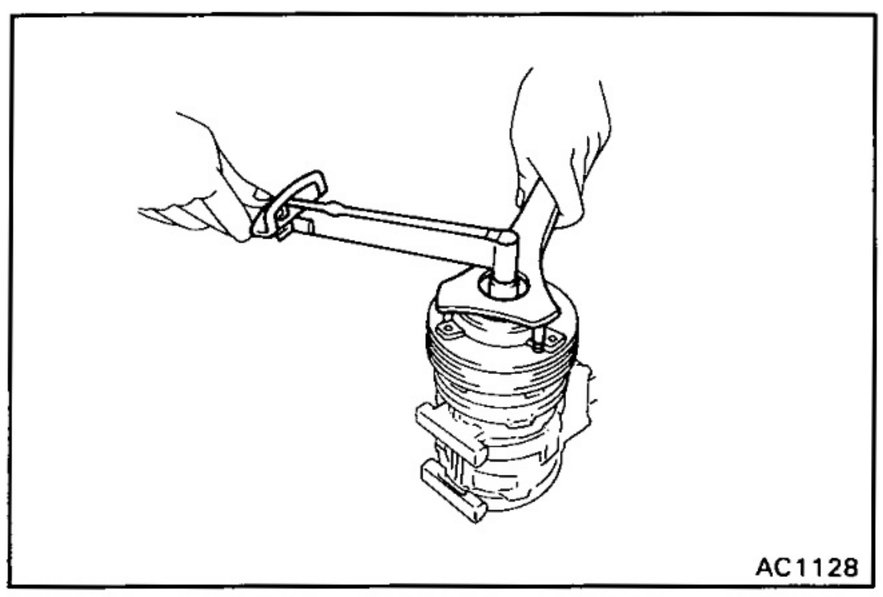

4. CHECK CLEARANCE OF MAGNETIC CLUTCH

Check the clearance between the pressure plate and rotor using thickness gauge.

Standard clearance: 0.5 ± 0.15 mm (0.020 ± 0.0059 in.)

If the clearance is not within tolerance, charge the number of shims to obtain the standard clearance.

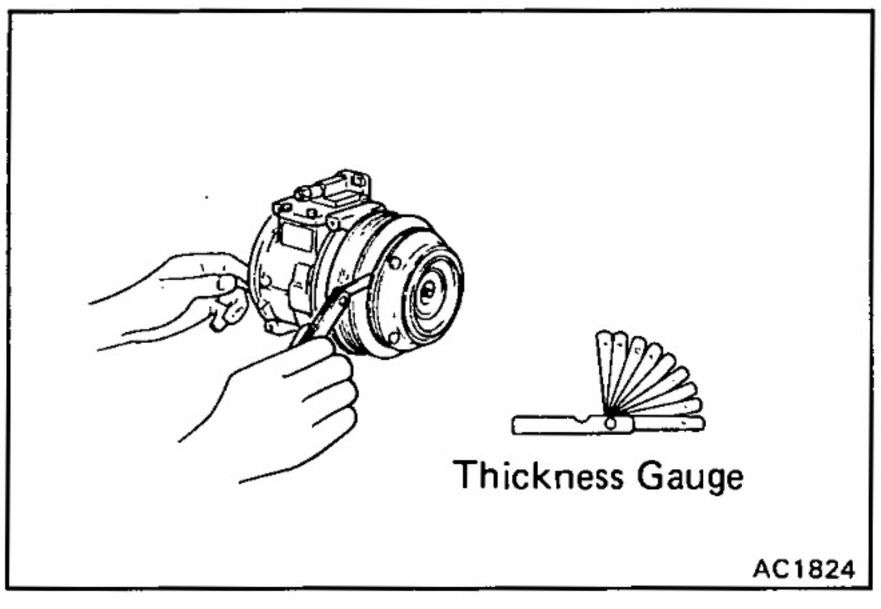

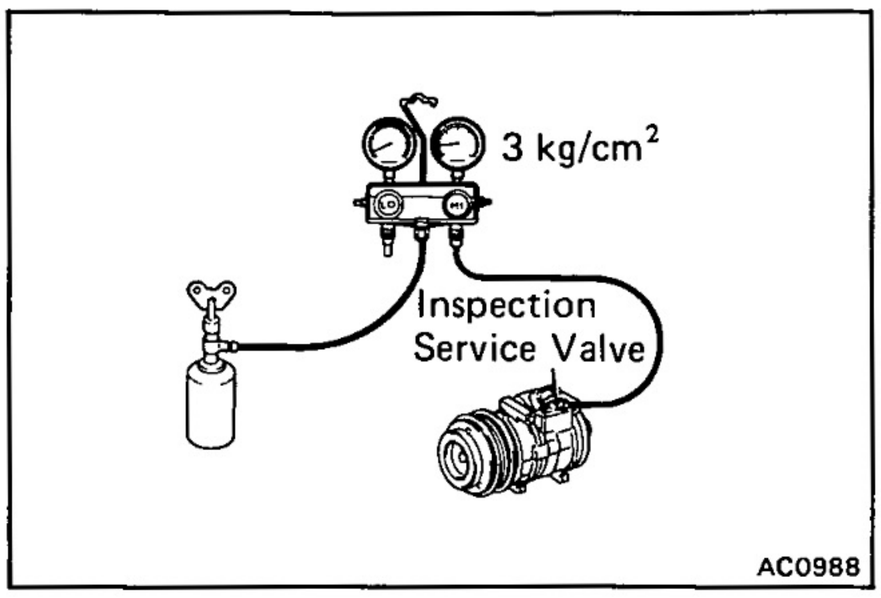

PERFORMANCE TEST OF COMPRESSOR

1. PERFORM GAS LEAKAGE TEST

(a) Install the inspection service valve on the service valve.

HINT: Use only a TOYOTA supplied inspection service valve to perform the gas leakage test.

Part No. Suction side 88376-17020
Discharge side 88376-22020

(b) Charge the compressor with refrigerant through the charge valve until the pressure is 3 kg/cm² (43 psi, 294 kPa).

(c) Using a gas leak tester, check the compressor for leaks.

If leaks are found, check and replace the compressor.

2. EVACUATE COMPRESSOR AND CHARGE WITH REFRIGERANT

Make sure the caps are tight and the compressor is free from moisture and contamination.

HINT: When storing a compressor for an extended period, charge the compressor with refrigerant or dry nitrogen gas to prevent corrosion.

INSTALLATION OF COMPRESSOR

(See page AC-29)

1. INSTALL COMPRESSOR WITH THREE MOUNTING BOLTS

Torque: 280 kg-cm (20 ft-lb, 27 N·m)

2. INSTALL DRIVE BELT
(See page AC-25)

3. CONNECT TWO HOSES TO COMPRESSOR SERVICE VALVES

Torque: Discharge line 250 kg-cm (18 ft-lb, 25 N·m)
Suction line 250 kg-cm (18 ft-lb, 25 N·m)

4. CONNECT CLUTCH LEAD WIRE TO WIRING HARNESS

5. CONNECT NEGATIVE CABLE TO BATTERY

6. EVACUATE AIR FROM AIR CONDITIONING SYSTEM

7. CHARGE AIR CONDITIONING SYSTEM WITH REFRIGERANT AND CHECK FOR GAS LEAKAGE

Specified amount:

Single A/C 900 ± 50 g (31.74 ± 1.76 oz)
Dual A/C [G.C.C.]
1,500 ± 50 g (52.91 ± 1.76 oz)
[Models Except G.C.C.]
1,350 ± 50 g (47.61 ± 1.76 oz)
Dual A/C + Cool/Ice Box [G.C.C.]
1,600 ± 50 g (56.43 ± 1.76 oz)
[Models Except G.C.C.]
1,500 ± 50 g (52.91 ± 1.76 oz)

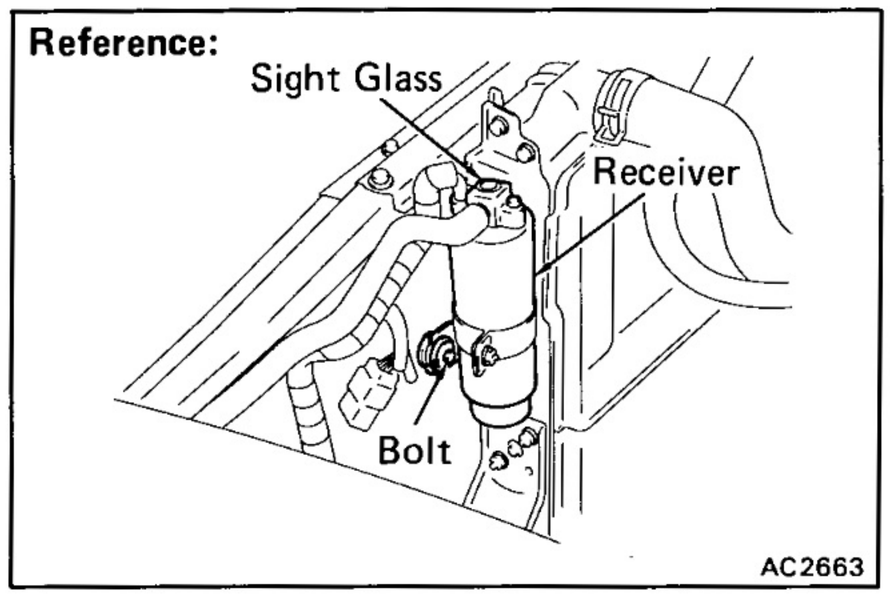

RECEIVER

ON-VEHICLE INSPECTION

INSPECT SIGHT GLASS, FUSIBLE PLUG AND FITTINGS FOR LEAKAGE

Use a gas leak tester. Repair as necessary.

REMOVAL OF RECEIVER

1. **DISCHARGE REFRIGERANT FROM REFRIGERATION SYSTEM**

2. **REMOVE BATTERY**

3. **DISCONNECT TWO LIQUID TUBES FROM RECEIVER**

   HINT: Cap the open fittings immediately to keep moisture out of the system

4. **REMOVE RECEIVER FROM RECEIVER HOLDER**

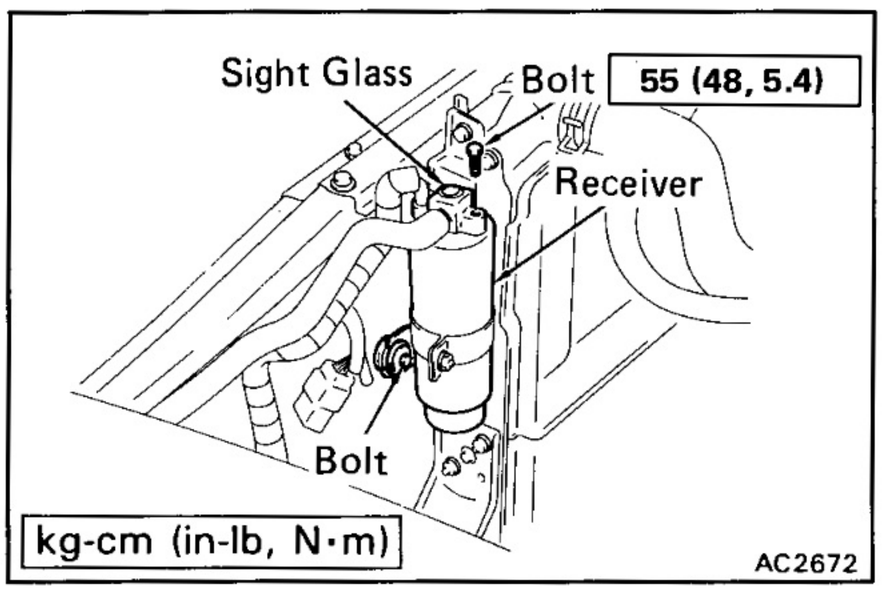

INSTALLATION OF RECEIVER

1. **INSTALL RECEIVER IN RECEIVER HOLDER**

   HINT: Do not remove the blind plugs until ready for connection.

2. **CONNECT TWO LIQUID TUBES TO RECEIVER**

   Torque: 55 kg-cm (48 in.-lb, 5.4 N·m)

3. **INSTALL BATTERY**

4. **IF RECEIVER WAS REPLACED, ADD COMPRESSOR OIL TO COMPRESSOR**

   Add 20 cc (0.7 fl.oz.)

   Compressor oil: DENSOOIL 6, SUNISO NO.5GS or equivalent

5. **EVACUATE AIR FROM REFRIGERATION SYSTEM**

6. **CHARGE SYSTEM WITH REFRIGERANT AND INSPECT FOR LEAKAGE OF REFRIGERANT**

   Specified amount:

   Single A/C 900 ± 50 g (31.74 ± 1.76 oz)
   Dual A/C [G.C.C]
   1,500 ± 50 g (52.91 ± 1.76 oz)
   [Models Except G.C.C]
   1,350 ± 50 g (47.61 ± 1.76 oz)
   Dual A/C + Cool/Ice Box [G.C.C]
   1,600 ± 50 g (56.43 ± 1.76 oz)
   [Models Except G.C.C]
   1,500 ± 50 g (52.91 ± 1.76 oz)

CONDENSER

ON-VEHICLE INSPECTION

1. **INSPECT CONDENSER FINS FOR BLOCKAGE OR DAMAGE**

   If the fins are clogged, wash them with water and dry with compressed air.

   NOTICE: Be careful not to damage the fins.

   If the fins are bent, straighten them with a screwdriver or pliers.

2. **INSPECT CONDENSER FITTINGS FOR LEAKAGE**

   Repair as necessary.

REMOVAL OF CONDENSER

1. **DISCHARGE REFRIGERANT FROM REFRIGERATION SYSTEM**

2. **DISCONNECT NEGATIVE CABLE FROM BATTERY**

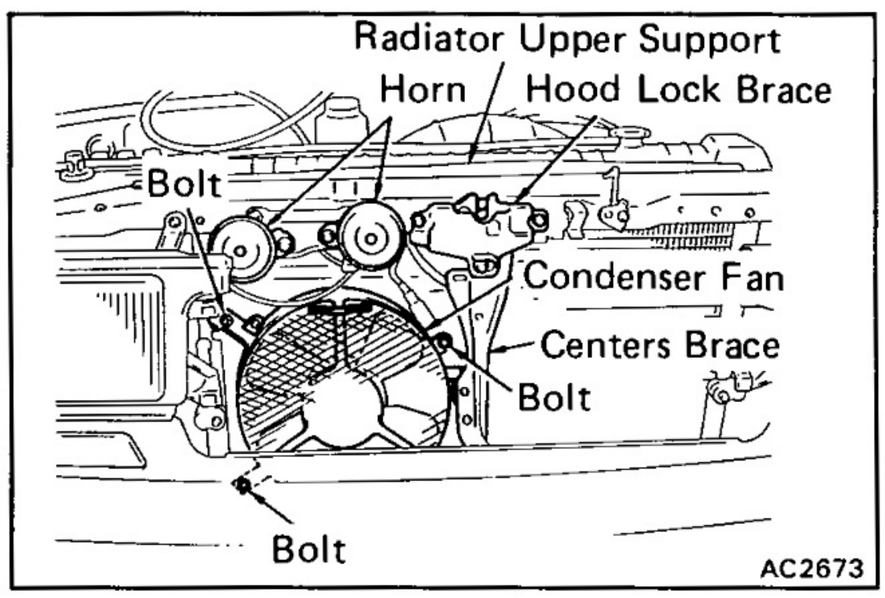

3. **REMOVE FOLLOWING COMPONENTS**
   (a) Hood lock brace
   (b) Center brace
   (c) Horns
   (d) Condenser fan (Dual A/C)
   (e) Radiator Upper Support (4 Lamp Headlight)

4. **DISCONNECT DISCHARGE HOSE AND LIQUID TUBE**

   HINT: Cap the open fittings immediately to keep moisture out of system.

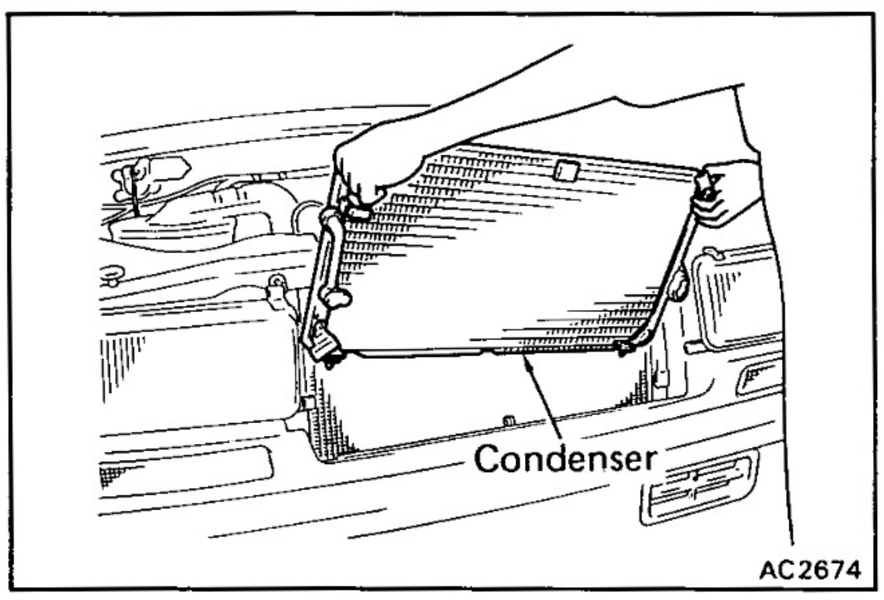

5. **REMOVE CONDENSER**
   (a) Remove two bolts.
   (b) Pull out the condenser between the radiator and the body.

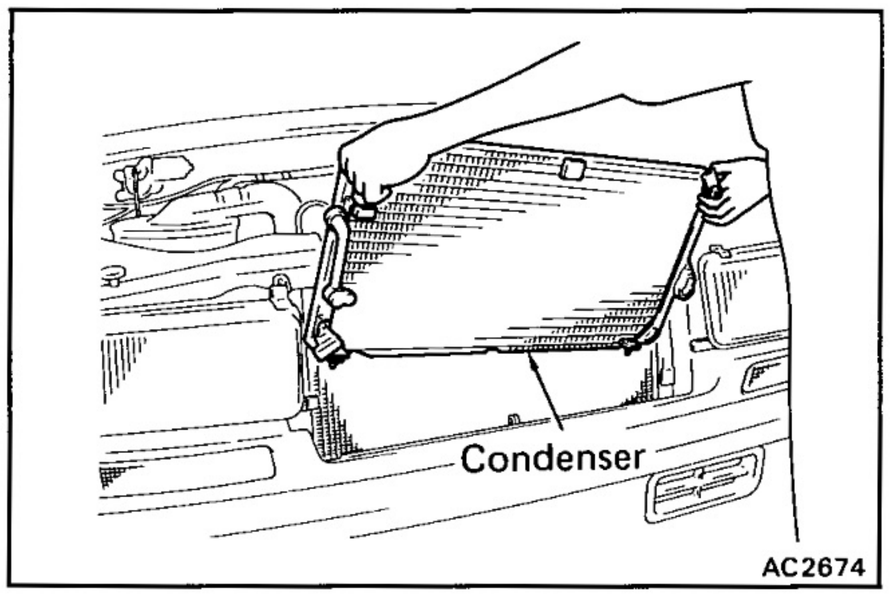

INSPECTION OF CONDENSER

1. **INSTALL CONDENSER**
   Put in the condenser between the radiator and the body. Then, tighten two bolts.

2. **CONNECT DISCHARGE HOSE AND LIQUID TUBE**
   Torque: 185 kg-cm (13 ft-lb, 18 N·m)

3. **INSTALL FOLLOWING COMPONENTS**
   (a) Radiator Upper Support (4 Lamp Headlight)
   (b) Condenser fan (Dual A/C)
   (c) Horns
   (d) Center brace
   (e) Hood lock brace

4. **IF CONDENSER WAS REPLACED, ADD COMPRESSOR OIL TO COMPRESSOR**
   Add 40 — 50 cc (1.4 — 1.7 fl.oz.)
   Compressor oil: DENSOOIL 6, SUNISO NO.5GS or equivalent

5. **EVACUATE AIR FROM AIR CONDITIONING SYSTEM**

6. **CHARGE SYSTEM WITH REFRIGERANT AND INSPECT FOR LEAKAGE OF REFRIGERANT**
   Specified amount:
   Single A/C 900 ± 50 g (31.74 ± 1.76 oz)
   Dual A/C [G.C.C.]
   1,500 ± 50 g (52.91 ± 1.76 oz)
   [Models Except G.C.C.]
   1,350 ± 50 g (47.61 ± 1.76 oz)
   Dual A/C + Cool/Ice Box [G.C.C.]
   1,600 ± 50 g (56.43 ± 1.76 oz)
   [Models Except G.C.C.]
   1,500 ± 50 g (52.91 ± 1.76 oz)

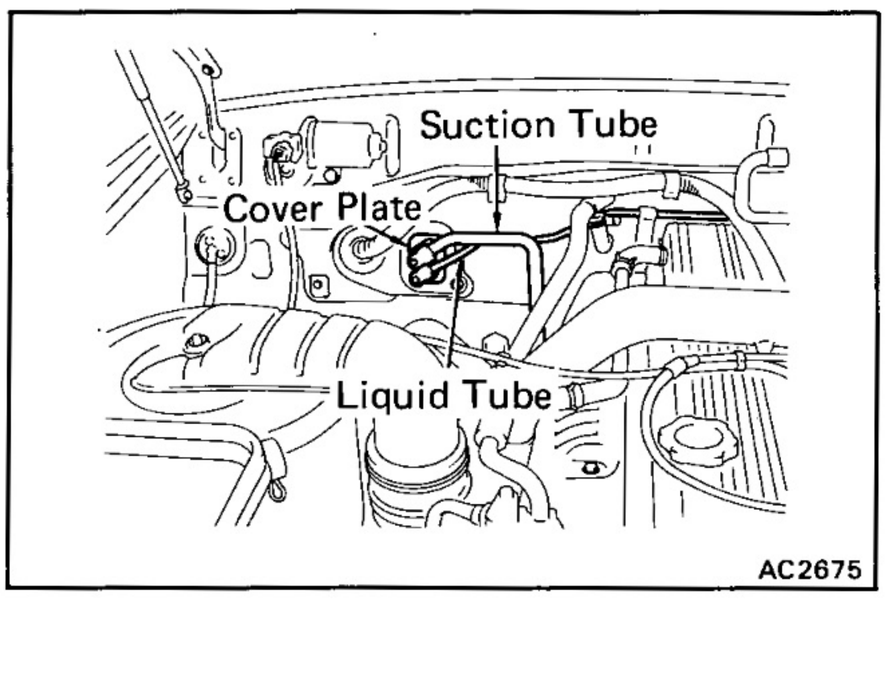

COOLING UNIT

Front Cooling Unit

Removal of Cooling Unit

1. **DISCONNECT NEGATIVE CABLE FROM BATTERY**

2. **DISCHARGE REFRIGERANT FROM REFRIGERATION SYSTEM**

3. **DISCONNECT SUCTION TUBE FROM COOLING UNIT OUTLET FITTING**

4. **DISCONNECT LIQUID TUBE FROM COOLING UNIT INLET FITTING**
   HINT: Cap the open fittings immediately to keep moisture out of the system.

5. **REMOVE COVER PLATE FROM INLET AND OUTLET FITTINGS**

6. **REMOVE GLOVE BOX**

7. **DISCONNECT CONNECTORS**

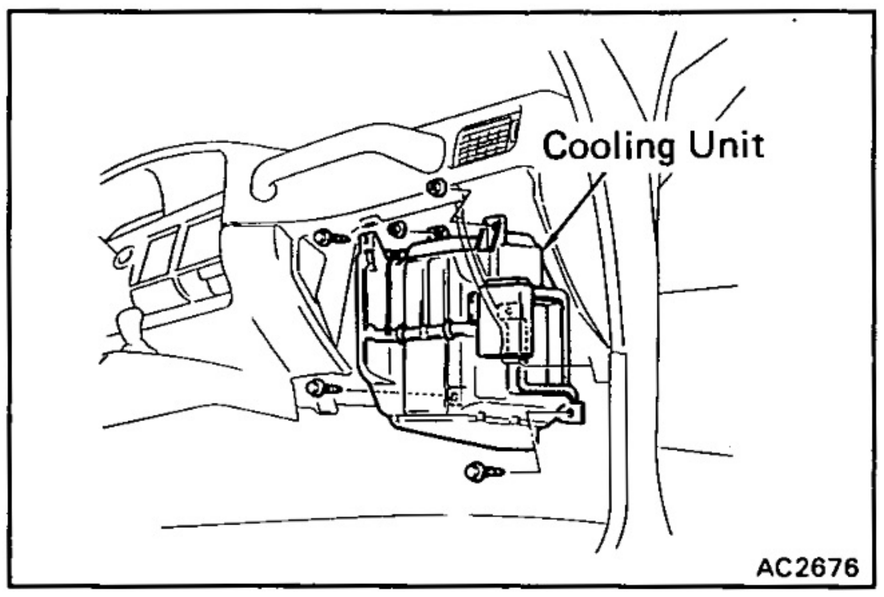

8. REMOVE COOLING UNIT

Remove the two nuts and three screws.

DISASSEMBLY OF COOLING UNIT

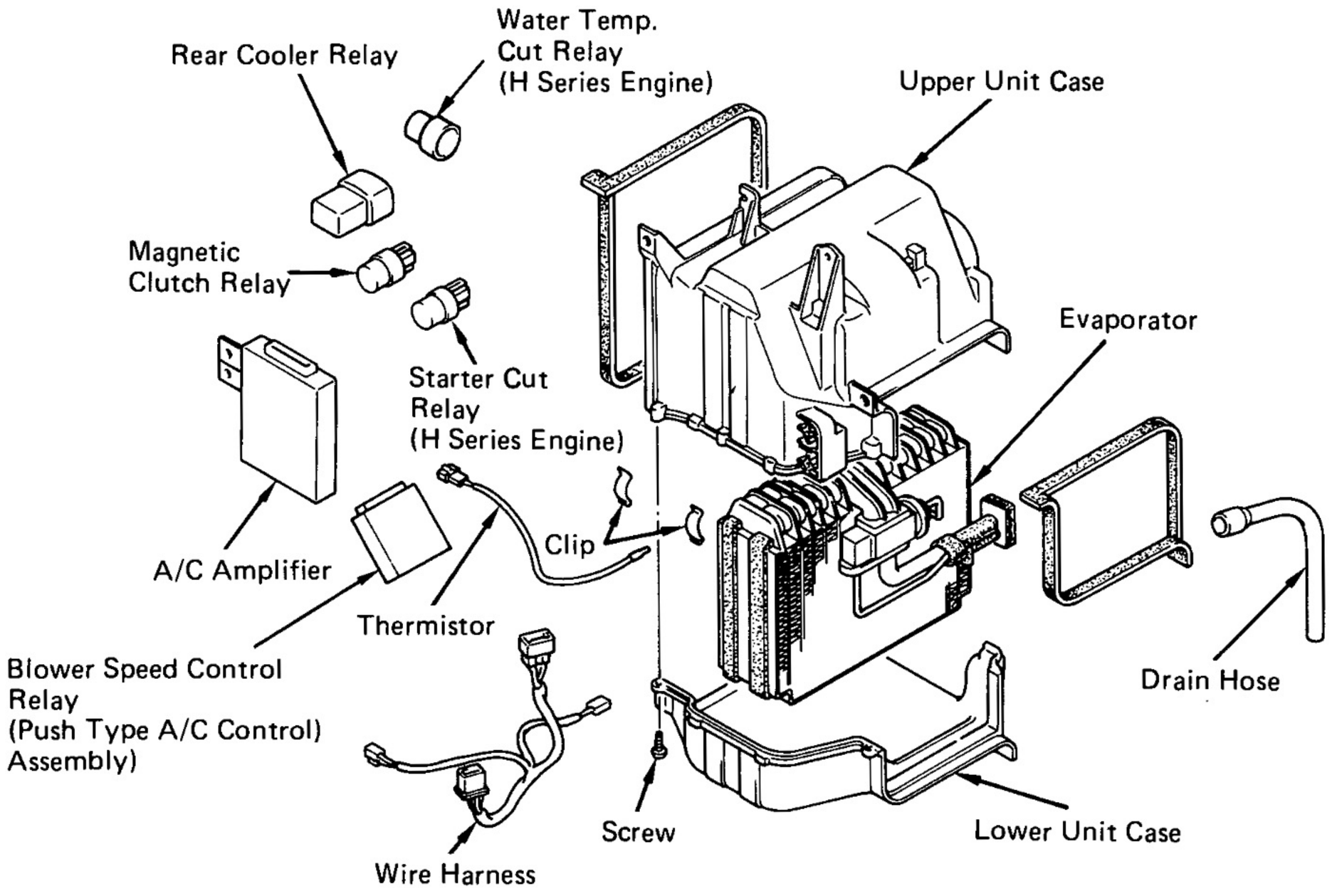

1. REMOVE MAGNETIC CLUTCH RELAY

2. REMOVE REAR COOLER RELAY

3. REMOVE A/C AMPLIFIER

4. REMOVE LOWER AND UPPER CASE

(a) Remove connector of thermistor from unit case.

(b) Remove three clips.

(c) Remove four screws.

(d) Remove upper unit case.

(e) Remove thermistor with thermistor holder.

(f) Remove lower unit case.

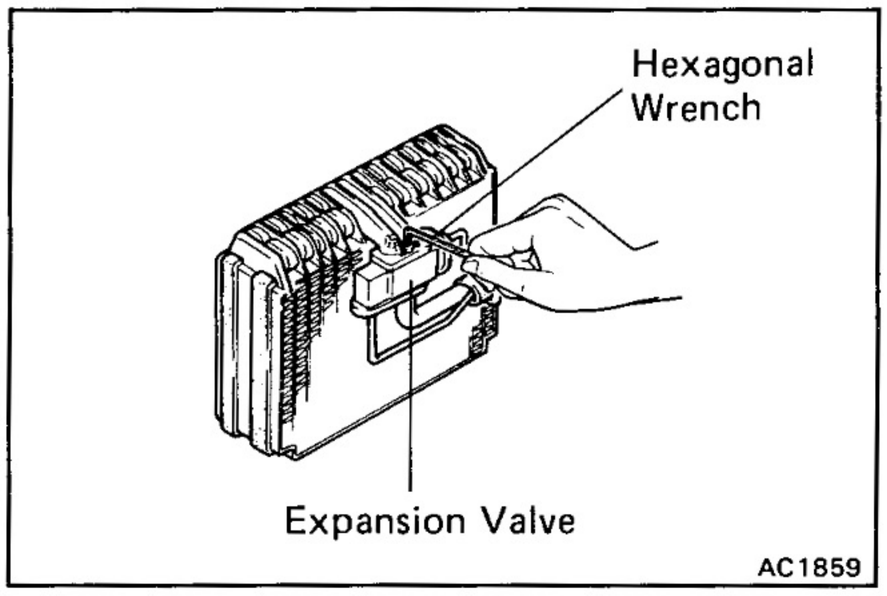

5. REMOVE EXPANSION VALVE

(a) Remove the packing and heat sensing tube from suction and liquid tubes.

(b) Remove the expansion valve from the evaporator.

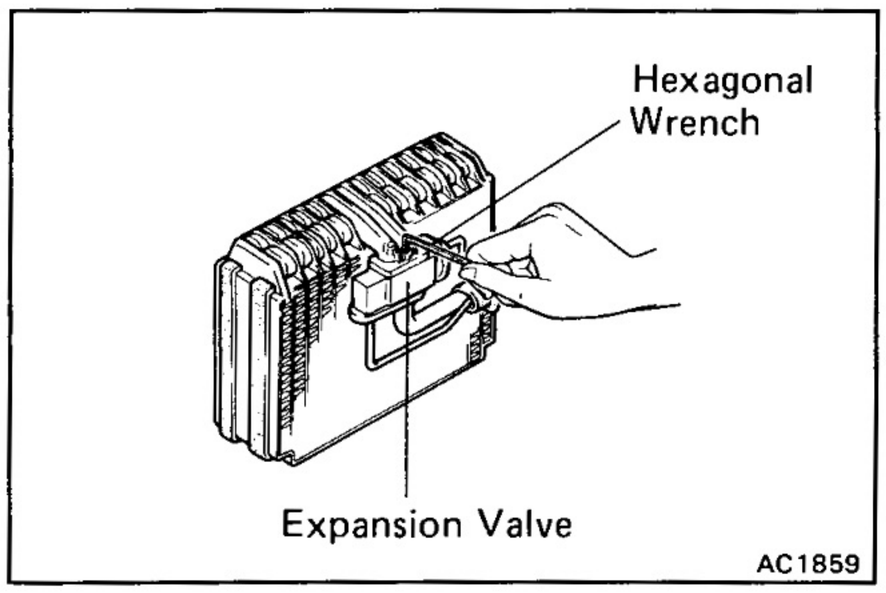

ASSEMBLY OF COOLING UNIT

INSTALL COMPONENTS ON EVAPORATOR

(a) Connect the expansion valve, suction and liquid tubes to the evaporator. Torque the bolt.

Torque: 55 kg-cm (48 in.-lb, 5.4 N·m)

HINT: Be sure that the O-rings are positioned on the tube fitting.

(b) Install the holder to the suction and liquid tubes with heat sensing tube.

(c) Install the lower unit case to the evaporator.

(d) Install the thermistor to the evaporator.

(e) Install the upper unit case.

(f) Install the four screws.

(g) Install three clips.

(h) Install the connector of thermistor.

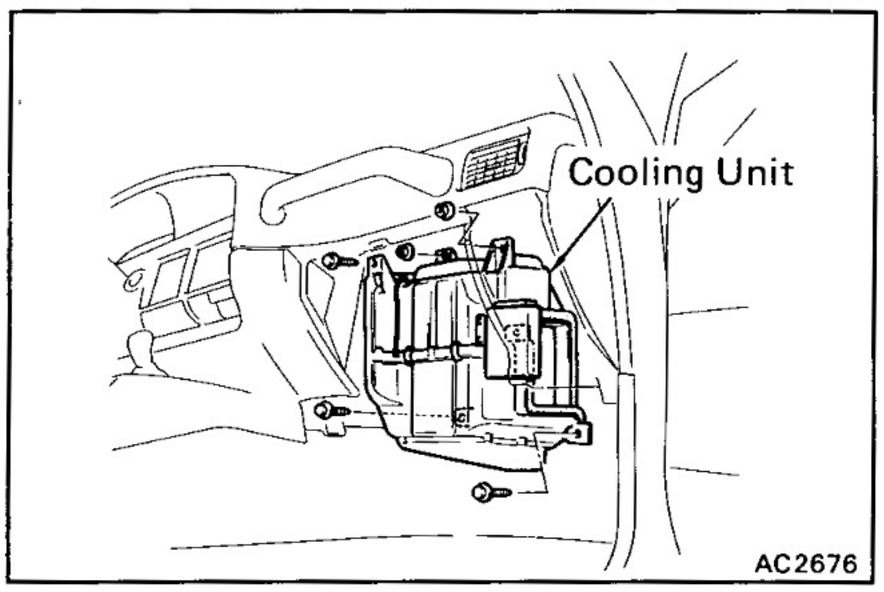

INSTALLATION OF COOLING UNIT

1. INSTALL COOLING UNIT

Install the cooling unit with three screws and two nuts.

2. CONNECT CONNECTOR OF THERMISTOR

3. INSTALL EFI AND A.B.S. COMPUTER

4. INSTALL GLOVE BOX COVER AND REINFORCEMENT

5. INSTALL GLOVE BOX AND UNDER COVER

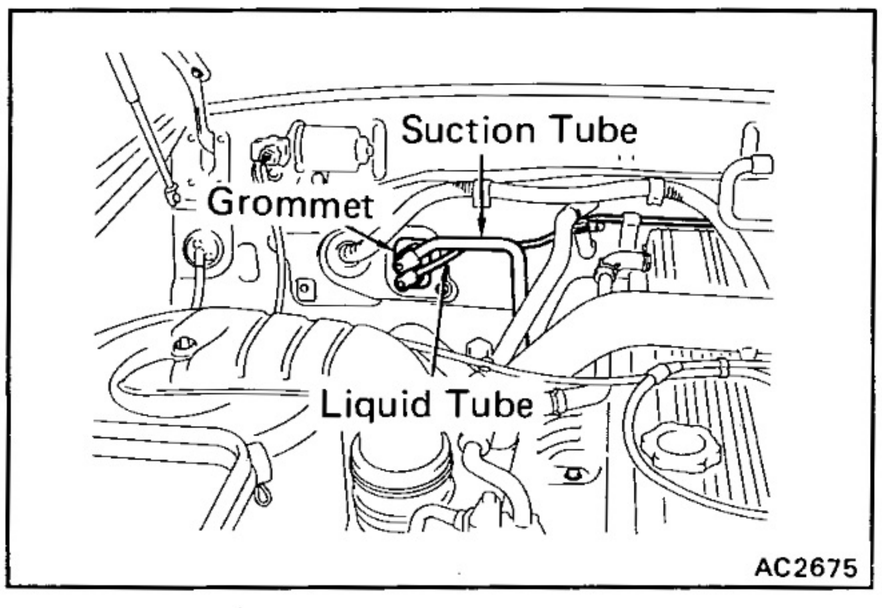

6. INSTALL GROMMETS ON INLET AND OUTLET FITTINGS

7. CONNECT LIQUID TUBE TO COOLING UNIT INLET FITTING

Torque the bolt.

Torque: 50 kg-cm (43 in.-lb, 4.9 N·m)

8. CONNECT SUCTION TUBE TO COOLING UNIT OUTLET FITTING

Torque the nut.

Torque: 50 kg-cm (43 in.-lb, 4.9 N·m)

9. **IF EVAPORATOR WAS REPLACED, ADD COMPRESSOR OIL TO COMPRESSOR**

   Add 40 — 50 cc (1.4 — 1.7 fl.oz.)

   Compressor oil: DENSOOIL 6, SUNISO No.5GS or equivalent

10. **INSTALL CHARCOAL CANISTER WITH BRACKET**

11. **CONNECT NEGATIVE CABLE TO BATTERY**

12. **EVACUATE AIR FROM AIR CONDITIONING SYSTEM**

13. **CHARGE AIR CONDITIONING SYSTEM WITH REFRIGERANT AND CHECK FOR GAS LEAKAGE**

    Specified amount:

    Single A/C 900 ± 50 g (31.74 ± 1.76 oz)

    Dual A/C [G.C.C.]

    1,500 ± 50 g (52.91 ± 1.76 oz)

    [Models Except G.C.C.]

    1,350 ± 50 g (47.61 ± 1.76 oz)

    Dual A/C + Cool/Ice Box [G.C.C.]

    1,600 ± 50 g (56.43 ± 1.76 oz)

    [Models Except G.C.C.]

    1,500 ± 50 g (52.91 ± 1.76 oz)

Rear Cooling Unit

REMOVAL OF COOLING UNIT

1. **DISCONNECT NEGATIVE CABLE FROM BATTERY**
2. **DISCHARGE REFRIGERATION SYSTEM**
3. **DISCONNECT CONNECTORS**
4. **DISCONNECT LIQUID TUBES**
5. **DISCONNECT SUCTION TUBE**
6. **REMOVE SPEAKER**

   Remove three bolts, one screw and the speaker.

7. **REMOVE COOLING UNIT**

   Remove seven bolts, one nut and the cooling unit.

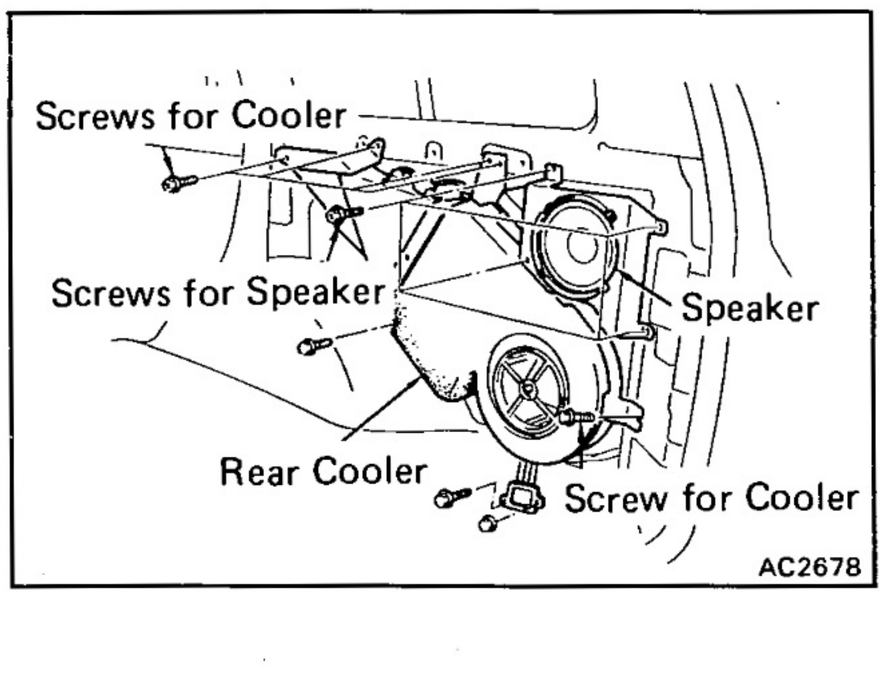

DISASSEMBLY OF COOLING UNIT

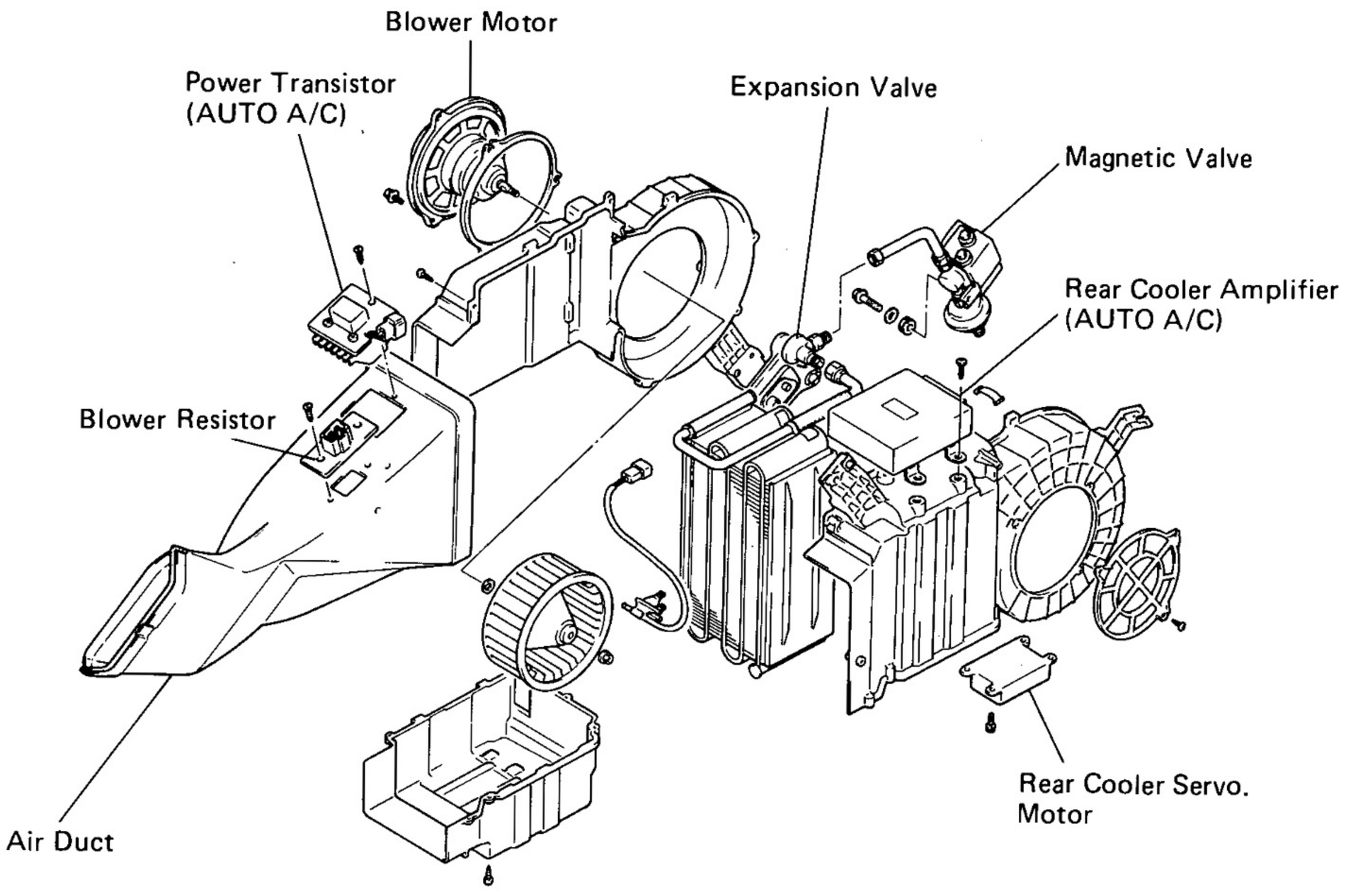

AC2766

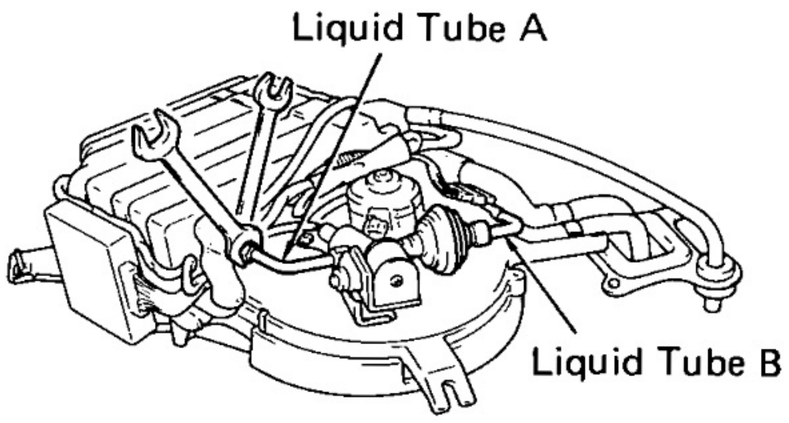

AC2679

1. **REMOVE REAR COOLING UNIT AIR DUCT**

2. **REMOVE LIQUID TUBE A AND B**

   (a) Remove the liquid tube A from the expansion valve, using two wrenches.

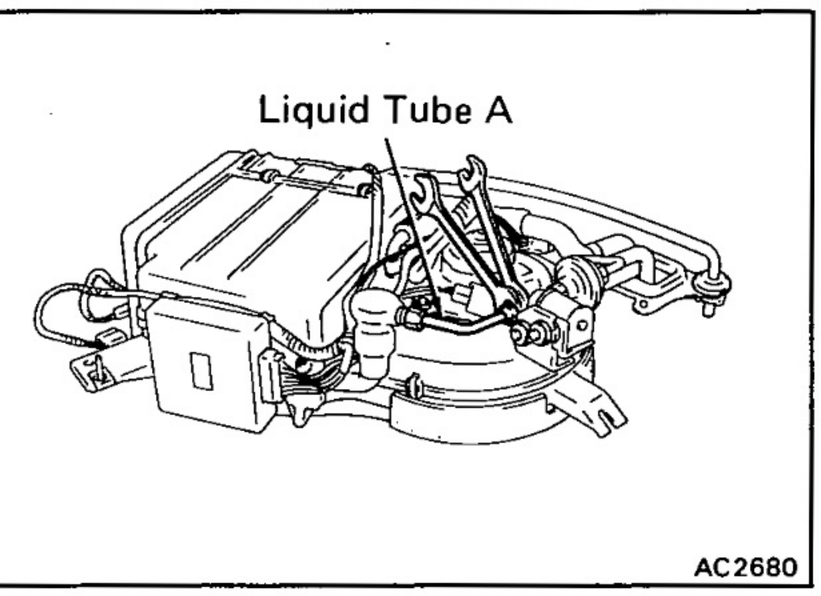

AC2680

   (b) Remove the liquid tube A from the magnetic valve, using two wrenches.

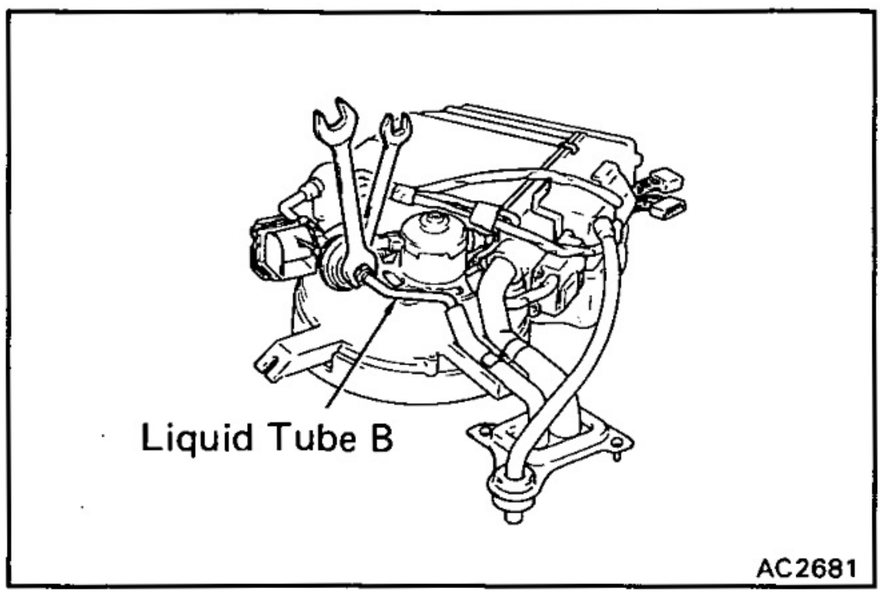

(c) Remove the liquid tube B from the magnetic valve, using two wrenches.

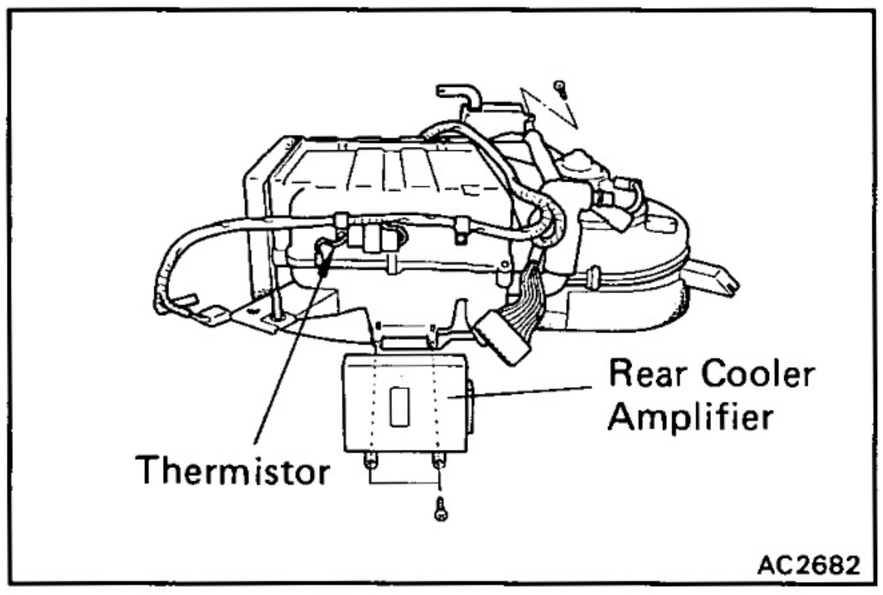

3. (AUTO A/C) REMOVE REAR COOLER AMPLIFIER AND SERVOMOTOR

(a) Disconnect the connector from amplifier and servomotor.

(b) Remove two screws and the amplifier and servomotor.

4. REMOVE THERMISTOR

5. REMOVE WIRE HARNESS

(a) Disconnect the connectors of the cooler wire harness from the blower motor and the magnetic valve.

(b) Remove the wire harness from the cooling unit case.

6. REMOVE MAGNETIC VALVE

Remove two screws and the magnetic valve.

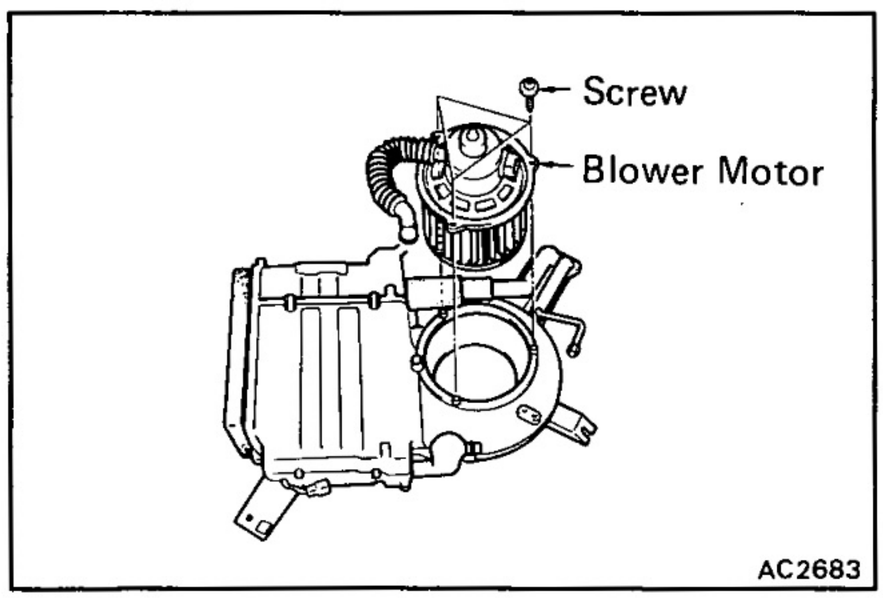

7. REMOVE BLOWER FAN AND MOTOR

Remove three screws and the blower fan and motor.

8. SEPARATE COOLING UNIT CASE

(a) Remove screws and clamps.

(b) Separate the upper case and lower case.

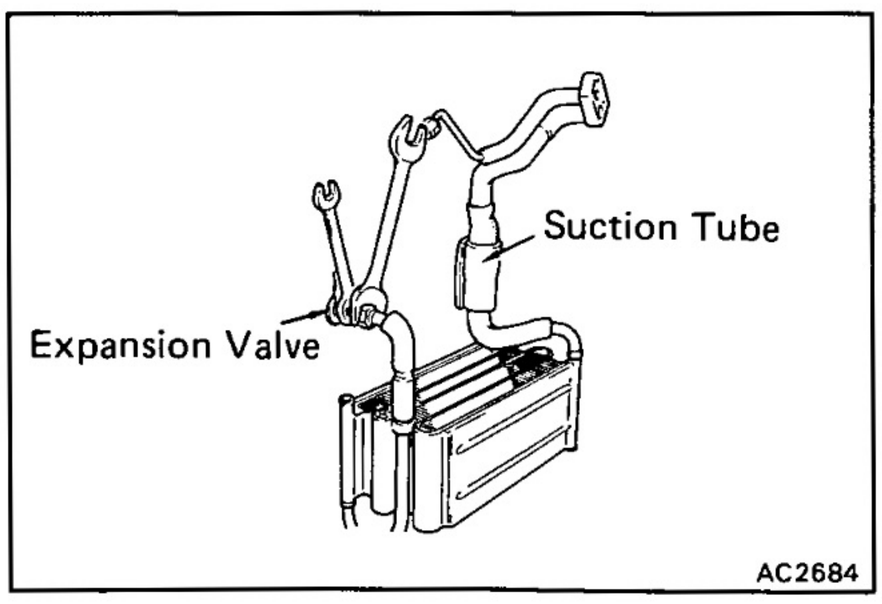

9. REMOVE EXPANSION VALVE AND SUCTION TUBE

Remove the expansion valve and the suction tube from the evaporator, using two wrenches.

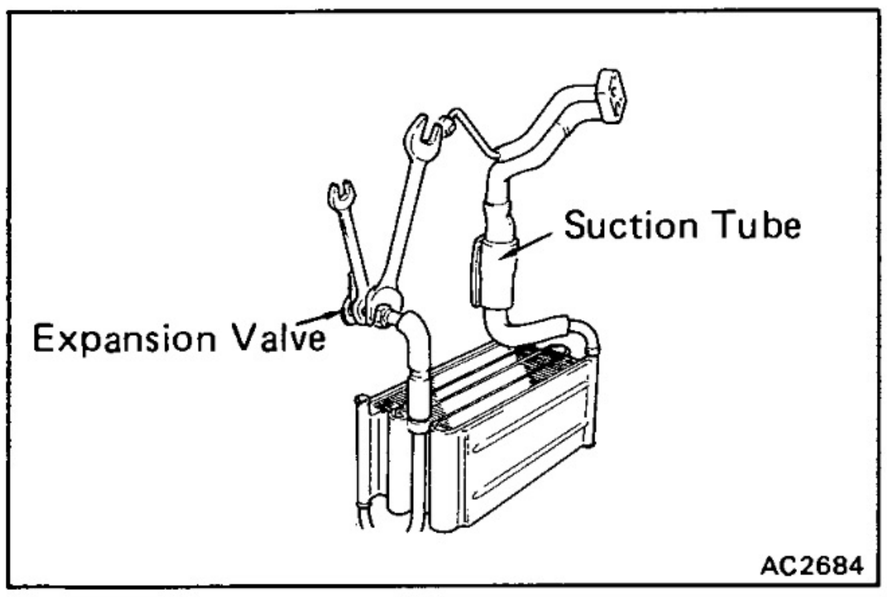

ASSEMBLY OF COOLING UNIT

1. INSTALL EXPANSION VALVE TO EVAPORATOR

Connect the expansion valve to the inlet fitting of the evaporator. Then, torque the nut.

Torque: 225 kg-cm (16 ft-lb, 22 N·m)

HINT: Be sure that the O-rings are positioned, on the tube fitting.

2. INSTALL SUCTION TUBE TO EVAPORATOR

Connect the suction tube to the outlet fitting of the evaporator. Then, torque the nut.

Torque: 330 kg-cm (24 ft-lb, 32 N·m)

HINT: Be sure that the O-rings are positioned, on the tube fitting.

3. INSTALL COOLING UNIT CASE

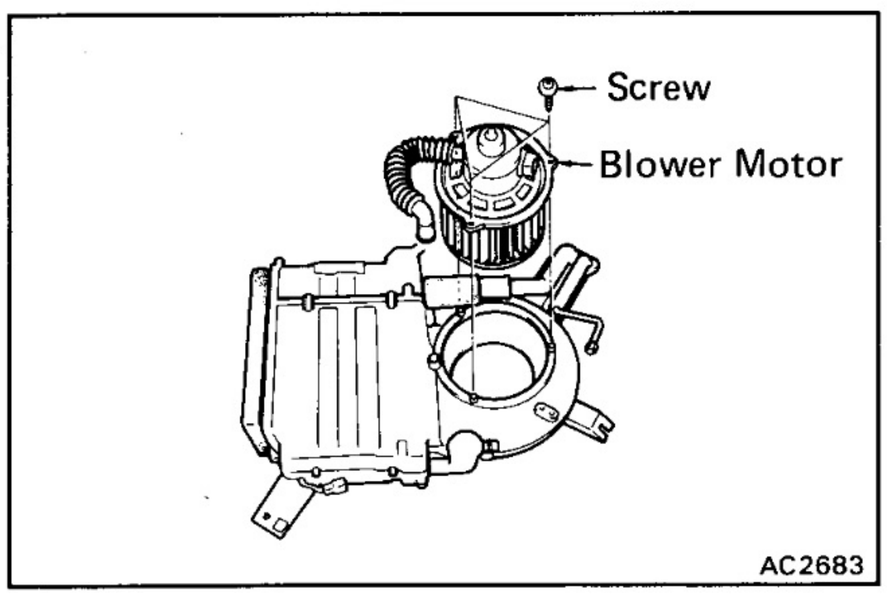

4. INSTALL BLOWER FAN AND MOTOR

5. INSTALL MAGNETIC VALVE

6. INSTALL WIRE HARNESS

Connect connectors and install the wire harness.

7. INSTALL THERMISTOR

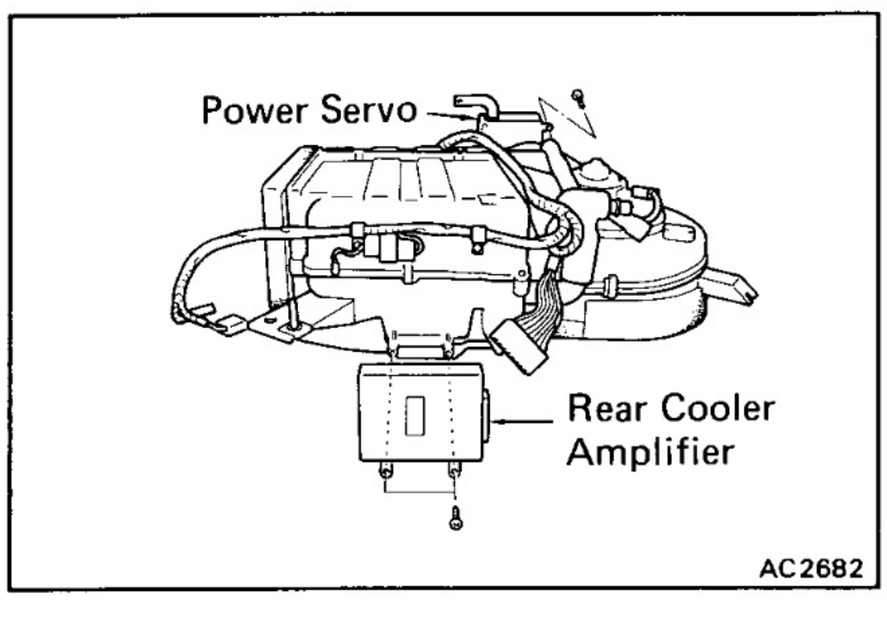

8. INSTALL REAR COOLER AMPLIFIER AND SERVOMOTOR

9. INSTALL LIQUID TUBE A AND B

Torque: 140 kg-cm (10 ft-lb, 14 N·m)

10. INSTALL REAR COOLING UNIT AIR DUCT

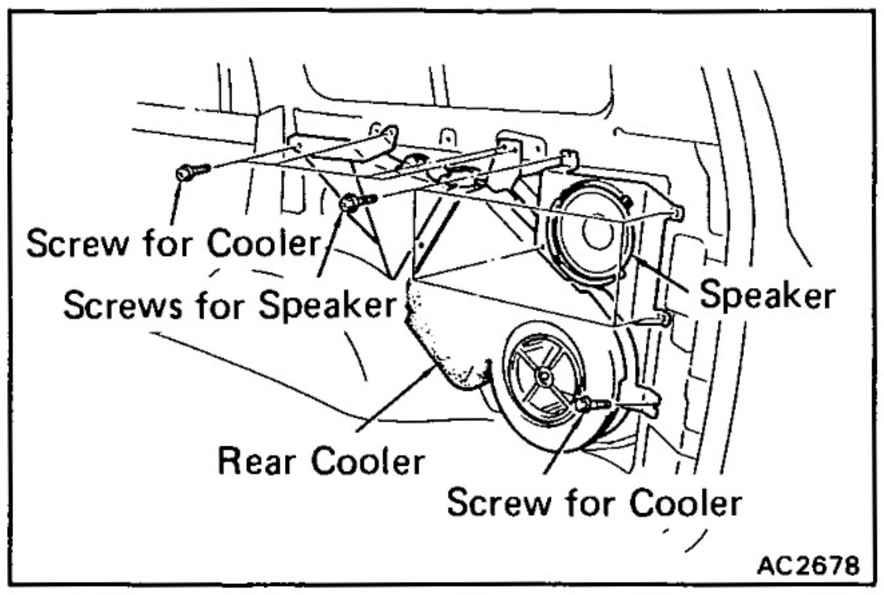

INSTALLATION OF COOLING UNIT

1. **INSTALL COOLING UNIT**
2. **INSTALL SPEAKER**
3. **CONNECT SUCTION TUBE AND LIQUID TUBE**
   Torque: 50 kg-cm (43 in.-lb, 4.9 N·m)
4. **CONNECT CONNECTORS**
5. **CONNECT NEGATIVE CABLE TO BATTERY**
6. **IF EVAPORATOR WAS REPLACED, ADD COMPRESSOR OIL TO COMPRESSOR**
   Add 40 — 50 cc (1.4 — 1.7 ft.oz.)
   Compressor oil: DENSOOIL 6,
   SUNISO No.5GS or equivalent
7. **EVACUATE AIR FROM AIR CONDITIONING SYSTEM**
8. **CHARGE AIR CONDITIONING SYSTEM WITH REFRIGERANT AND CHECK FOR GAS LEAKAGE**
   Specified amount:
   without Cool/Ice Box
   [G.C.C.]
   1,500 ± 50 g (52.91 ± 1.76 oz)
   [Models Except G.C.C.]
   1,350 ± 50 g (47.61 ± 1.76 oz)
   with Cool/Ice Box
   [G.C.C.]
   1,600 ± 50 g (56.43 ± 1.76 oz)
   [Models Except G.C.C.]
   1,500 ± 50 g (52.91 ± 1.76 oz)

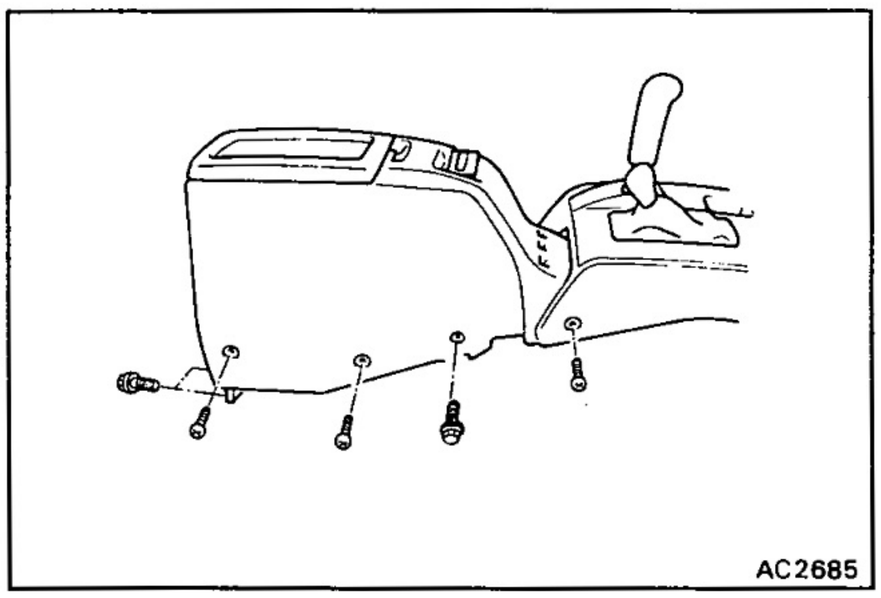

COOL/ICE BOX

REMOVAL OF COOL/ICE BOX

1. **DISCONNECT LIQUID AND SUCTION TUBE**
2. **REMOVE COOL/ICE BOX**
   Remove four bolts and the cool/ice box.
3. **REMOVE COOL/ICE BOX COVER**
   Remove six screws and the box cover.
4. **REMOVE SWITCH**
   Disconnect the connector from the switch and remove it.
5. **REMOVE CONNECTORS**
6. **REMOVE AMPLIFIER**

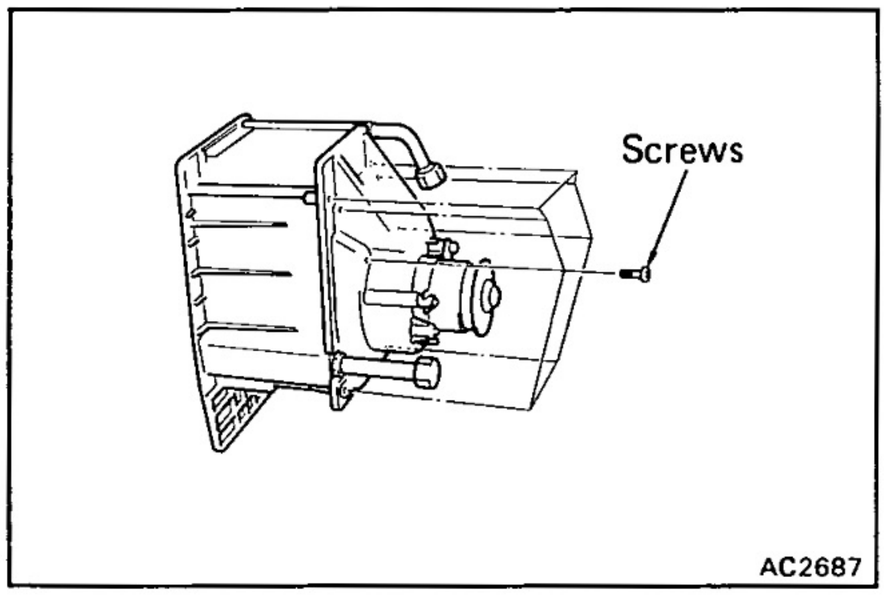

7. REMOVE BLOWER MOTOR

INSTALLATION OF COOL/ICE BOX

Install by following the removal procedure in reverse order.

EVAPORATORS

Front A/C Evaporator

REMOVAL OF EVAPORATOR

See Disassembly of Front Cooling Unit on page AC-45.

INSPECTION OF EVAPORATOR

1. INSPECT EVAPORATOR FINS FOR BLOCKAGE

If the fins are clogged, clean them with compressed air.

NOTICE: Never use water to clean the evaporator.

2. INSPECT FITTINGS FOR CRACKS OR SCRATCHES

Repair as necessary.

INSTALLATION OF EVAPORATOR

See Assembly of Front Cooling Unit on page AC-46.

Rear Cooler Evaporator

REMOVAL OF EVAPORATOR

See Disassembly of Rear Cooling Unit on page AC-48.

INSPECTION OF EVAPORATOR

Check the rear cooler evaporator the same way as for the front A/C evaporator on page AC-52.

INSTALLATION OF EVAPORATOR

See Assembly of Rear Cooling Unit on page AC-50.

Cool/Ice Box Evaporator

REMOVAL OF EVAPORATOR

See Removal of Cool/Ice Box on page AC-51.

INSPECTION OF EVAPORATOR

Check the cool/ice evaporator the same way as for the front A/C evaporator on page AC-52.

INSTALLATION OF EVAPORATOR

See Assembly of Cool/Ice Box on page AC-52.

EXPANSION VALVES

Front A/C Expansion Valve

ON-VEHICLE INSPECTION

1. **INSPECT REFRIGERANT VOLUME**

   See page AC-23.

2. **INSTALL MANIFOLD GAUGE SET**

   See page AC-24.

3. **TURN FRONT A/C SWITCH ON AND BLOWER SWITCH TO HI POSITION**

4. **RUN ENGINE AT APPROX. 2,000 RPM FOR AT LEAST FIVE MINUTES**

5. **INSPECT EXPANSION VALVE**

   If the expansion valve is clogged, the low pressure reading will drop to 0 kg-cm^2 (0 psi, 0 kPa), otherwise it is OK.

   HINT: If the low pressure reading is normal and only the front A/C is not cooling, check for the malfunction of the expansion valve.

REMOVAL OF EXPANSION VALVE

See Disassembly of Front Cooling Unit on page AC-45.

INSTALLATION OF EXPANSION VALVE

See Assembly of Front Cooling Unit on page AC-46.

Rear Cooler Expansion Valve

ON-VEHICLE INSPECTION

Turn the rear cooler switch ON and rear blower switch to HI position, then perform the same inspection as for the front A/C expansion valve.

HINT: If the low pressure reading is normal and cool air is only failing to come out of the rear cooler, check for a malfunction of the expansion valve.

REMOVAL OF EXPANSION VALVE

See Disassembly of Rear Cooling Unit on page AC-48.

INSTALLATION OF EXPANSION VALVE

See Assembly of Rear Cooling Unit on page AC-50.

Cool/Ice Box Expansion Valve

ON-VEHICLE INSPECTION

With the cool/ice box switch at COOL or ICE position, perform the same inspection as for the front A/C expansion valve.

HINT: First, turn the front A/C switch and rear cooler switch OFF.

REMOVAL OF EXPANSION VALVE

See Removal of Cool/Ice Box on page AC-51.

INSTALLATION OF EXPANSION VALVE

See Installation of Cool/Ice Box on page AC-52.

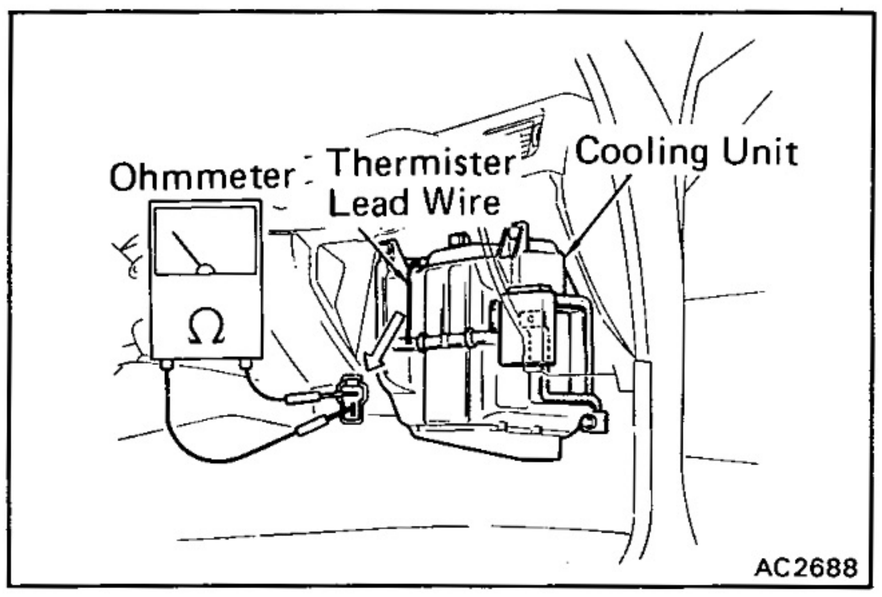

THERMISTORS

Front A/C Thermistor

ON-VEHICLE INSPECTION

1. **DISCONNECT NEGATIVE BATTERY CABLE**
2. **REMOVE GLOVE BOX**
3. **CHECK RESISTANCE OF THERMISTOR**

Measure the resistance between terminals.

Standard resistance: 1,500 Ω at 25°C (77°F)

If resistance value is not as specified, replace the thermistor.

REMOVAL OF THERMISTOR

See Disassembly of Front Cooling Unit on page AC-45.

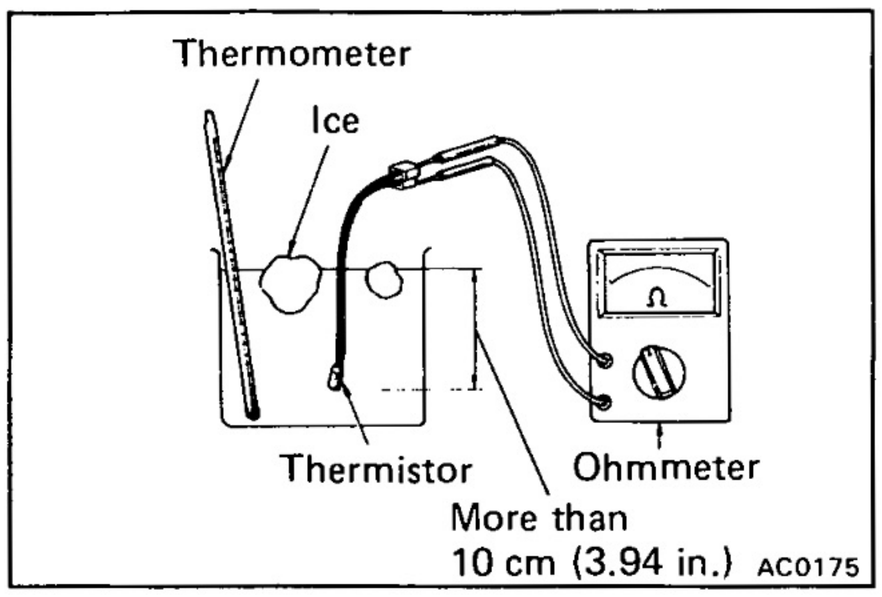

INSPECTION OF THERMISTOR

INSPECT THERMISTOR OPERATION

(a) Place the thermistor in cold water. While varying the temperature of the water, measure the resistance at the connector and at the same time, measure the temperature of the water with a thermometer.

(b) Compare the two readings on the chart.

If the intersection is not between the two lines, replace the thermistor.

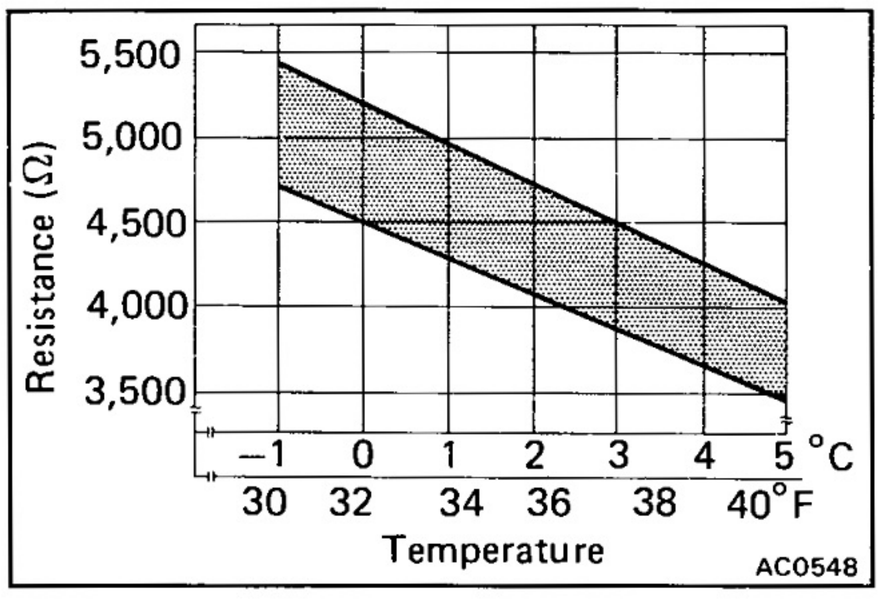

INSTALLATION OF THERMISTOR

See Assembly of Front Cooling Unit on page AC-46.

Rear Cooler Thermistor

REMOVAL OF THERMISTOR

See Disassembly of Rear Cooling Unit on page AC-48.

INSPECTION OF THERMISTOR

Check the thermistor the same way as for the front A/C thermistor on page AC-55.

INSTALLATION OF THERMISTOR

See Assembly of Rear Cooling Unit on page AC-50.

Cool/Ice Box Thermistor

REMOVAL OF THERMISTOR

See Removal of Cool/Ice Box on page AC-51.

INSPECTION OF THERMISTOR

Check the thermistor the same way as for the front A/C thermistor on page AC-55.

INSTALLATION OF THERMISTOR

See Installation of Cool/Ice Box on page AC-52.

A/C CONTROL ASSEMBLY (Lever Type)

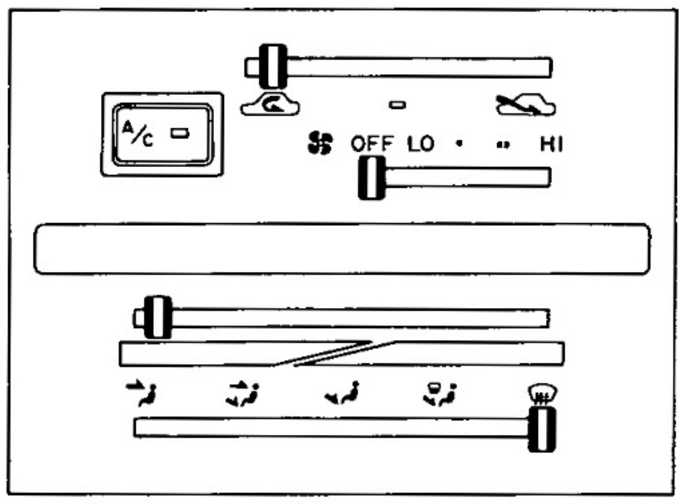

Blower Switch

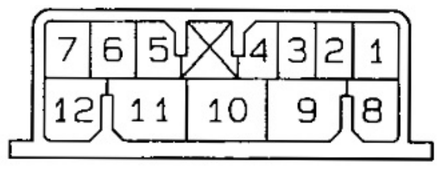

A/C Switch

Temperature Control Resistor



AC2716
S-6-2
AC2752 GA-2-2-6

Blower Switch

INSPECTION OF SWITCH

INSPECT SWITCH CONTINUITY

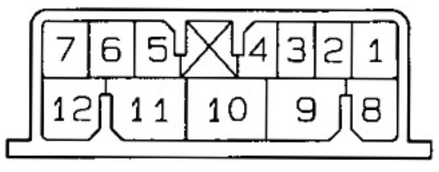

AC2716

Terminal / Switch position	1	8	9	11	12	Illustration 6	Illustration 7
OFF							
LO			○	—	○		
▪ (M1)	○	—	○	—	○	○	○
▪ (M2)		○	○	—	○		
HI			○	○	○		

If continuity is not as specified, replace the switch.

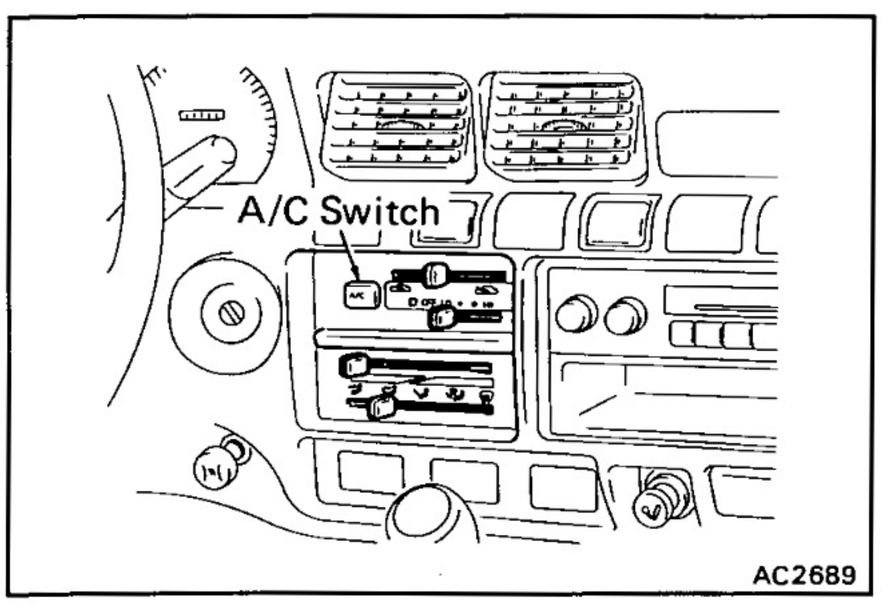

AC2689

A/C Switch

REMOVAL OF SWITCH

1. DISCONNECT NEGATIVE CABLE FROM BATTERY
2. REMOVE A/C SWITCH

INSPECTION OF SWITCH

INSPECT SWITCH CONTINUITY

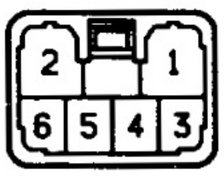

S-6-2

Terminal / Switch position	2	3
OFF		
ON	○——	——○

If continuity is not as specified, replace the switch.

INSTALLATION OF SWITCH

1. INSTALL A/C SWITCH
2. CONNECT NEGATIVE CABLE TO BATTERY

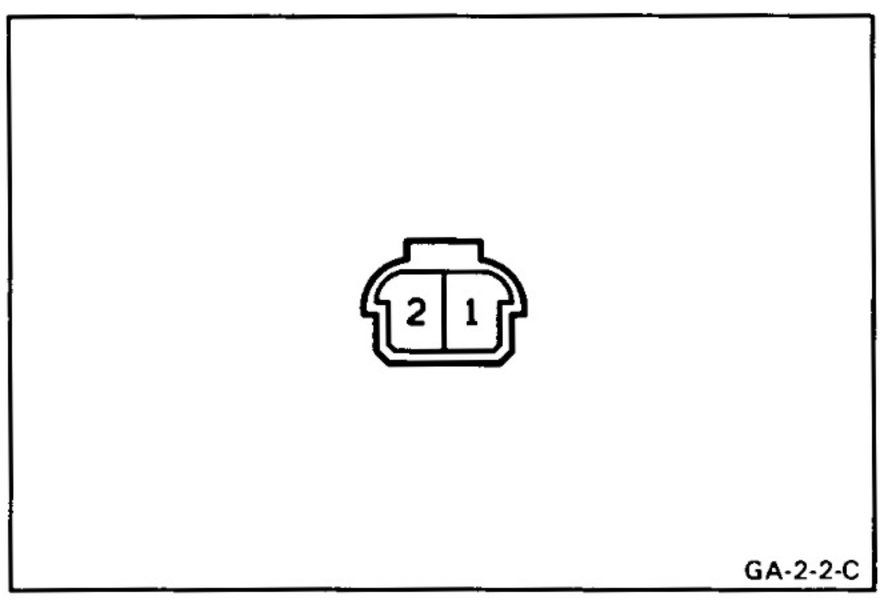

GA-2-2-C

Temperature Control Resistor

INSPECTION OF RESISTOR

INSPECT RESISTOR RESISTANCE

(a) Check that there is no continuity between terminals with the arm OFF position.

(b) Check that the resistance between terminals decreases from approx. 3 kΩ to 0 Ω, when the arm is moved from OFF to COOL position.

If resistance valve is not as specified, replace the resistor.

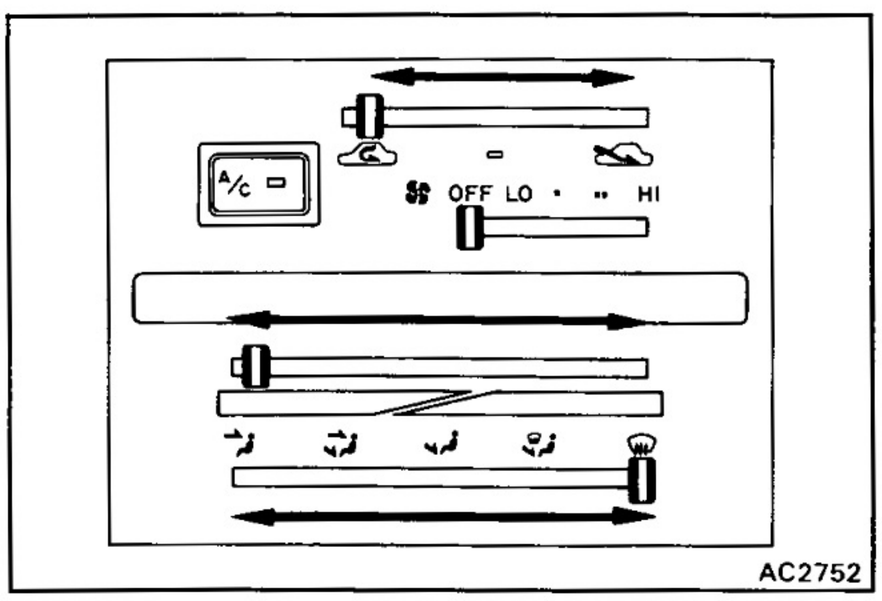

AC2752

A/C Control Levers

INSPECTION OF A/C CONTROL LEVERS

INSPECT A/C CONTROL LEVERS OPERATION

Move the control levers left and right, and check for stiffness and binding through the full range of the levers.

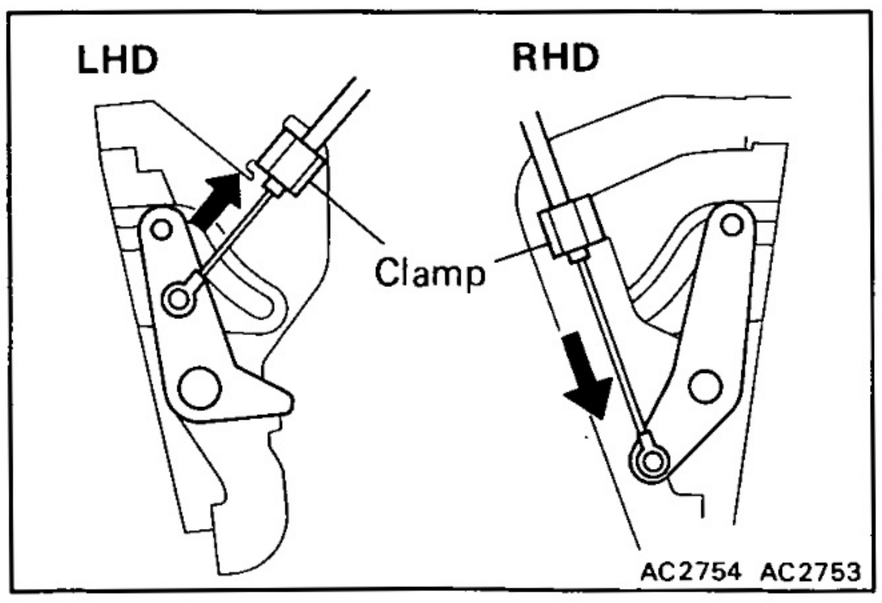

AC2754 AC2753

ADJUSTMENT OF A/C CONTROL CABLES

1. ADJUST AIR INLET DAMPER CONTROL CABLE

Set the air inlet damper and the control lever to "FRESH" position, install the control cable and lock the clamp.

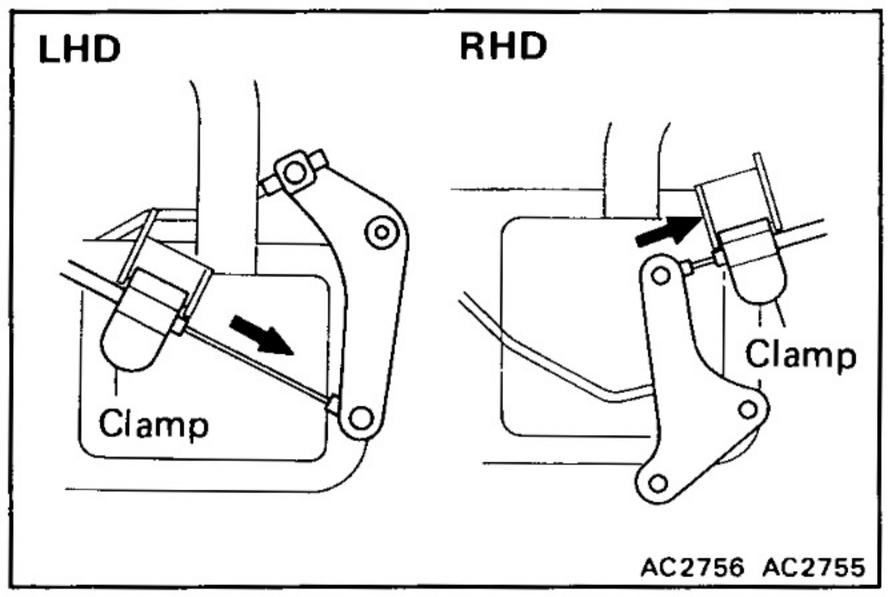

2. ADJUST AIR MIX DAMPER CONTROL CABLE

Set the air mix damper and the control lever to "COOL" position, install the control cable and lock the clamp.

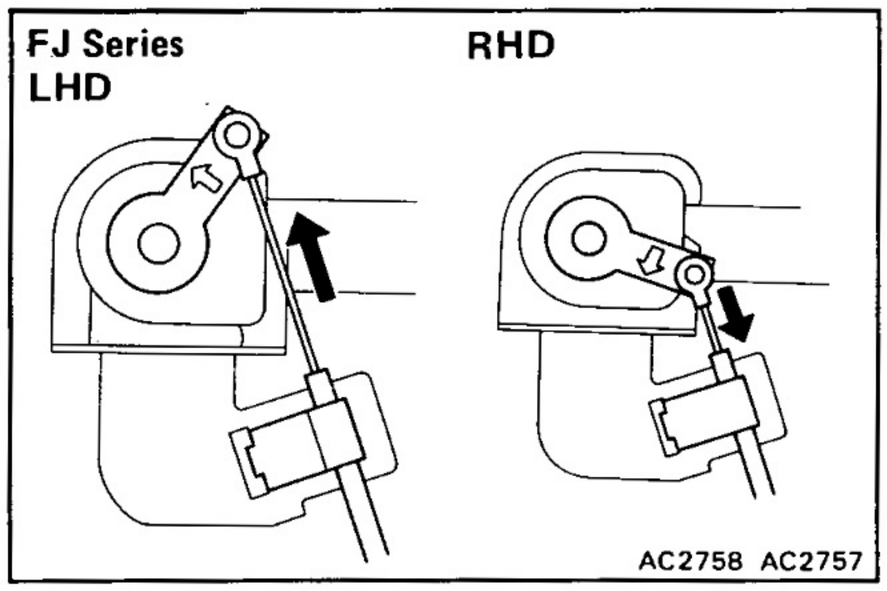

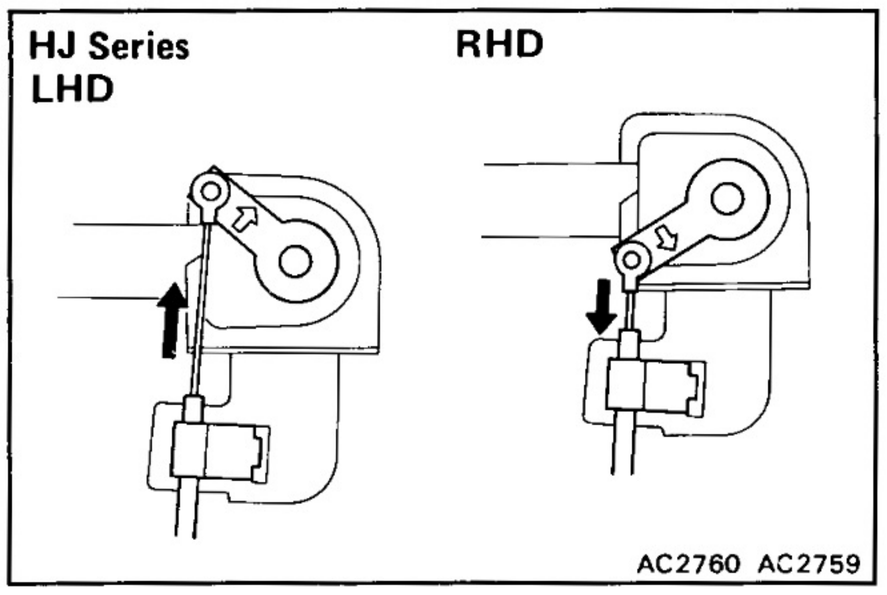

3. ADJUST WATER VALVE CONTROL CABLE

Set the water and the control lever to "COOL" position, install the control cable and lock the clamp.

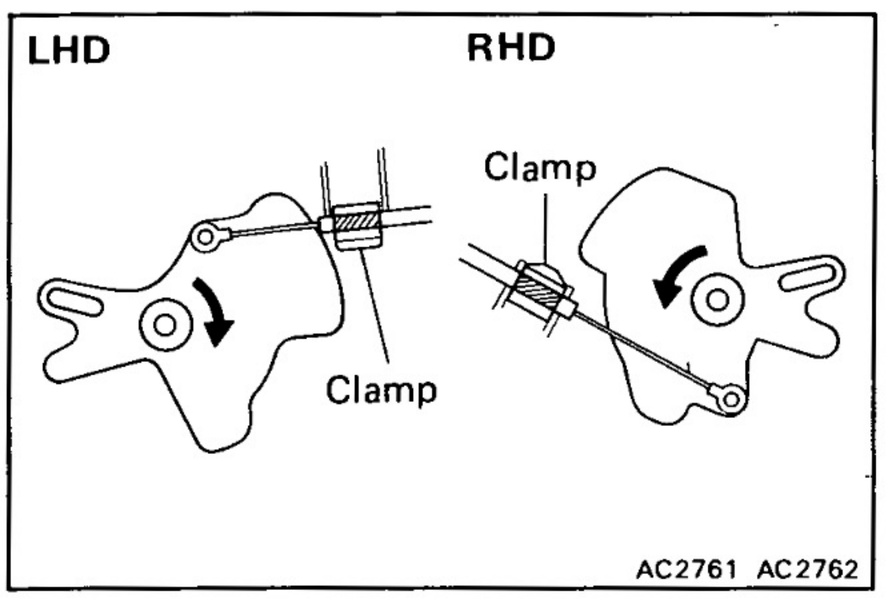

4. ADJUST MODE DAMPER CONTROL CABLE

(a) Set the mode damper and the control lever to "FACE" position.

(b) Clamp the white section of the control cable and install the cable to damper control lever.

(Push Type)

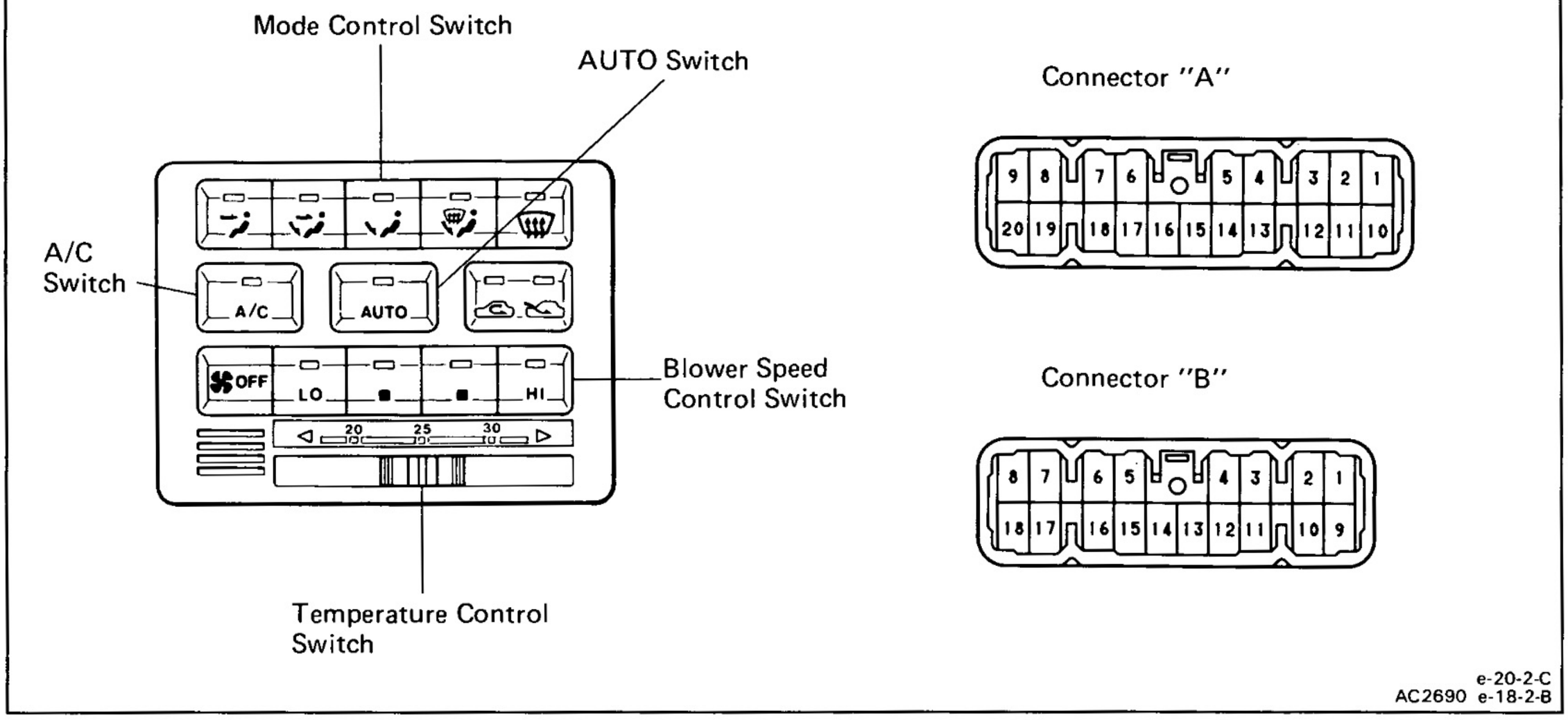

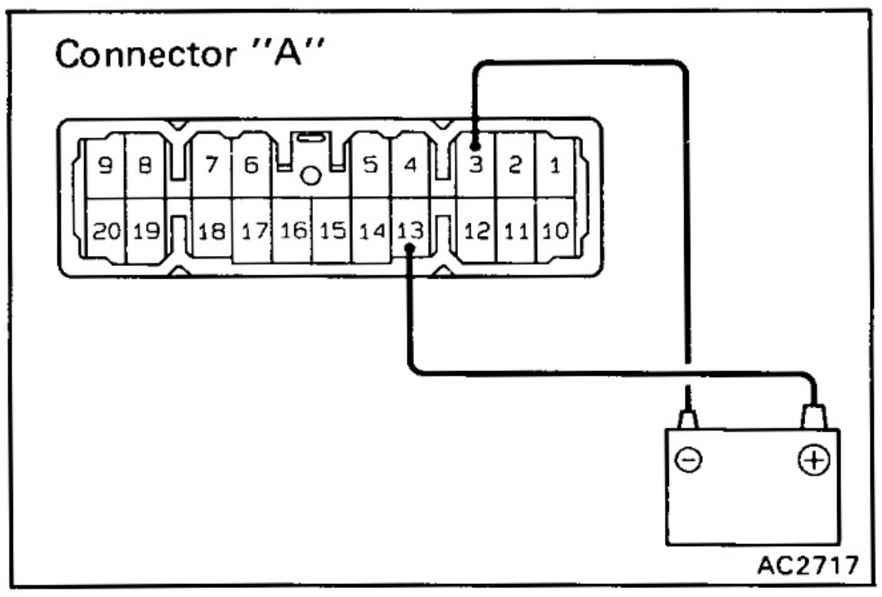

Illumination

INSPECTION OF ILLUMINATIONS

INSPECT ILLUMINATIONS

Connect the positive (+) lead from the battery to terminal A-13 and the negative (—) lead to terminal A-3, then check that the illuminations light up.

If illuminations do not light up, test the bulb.

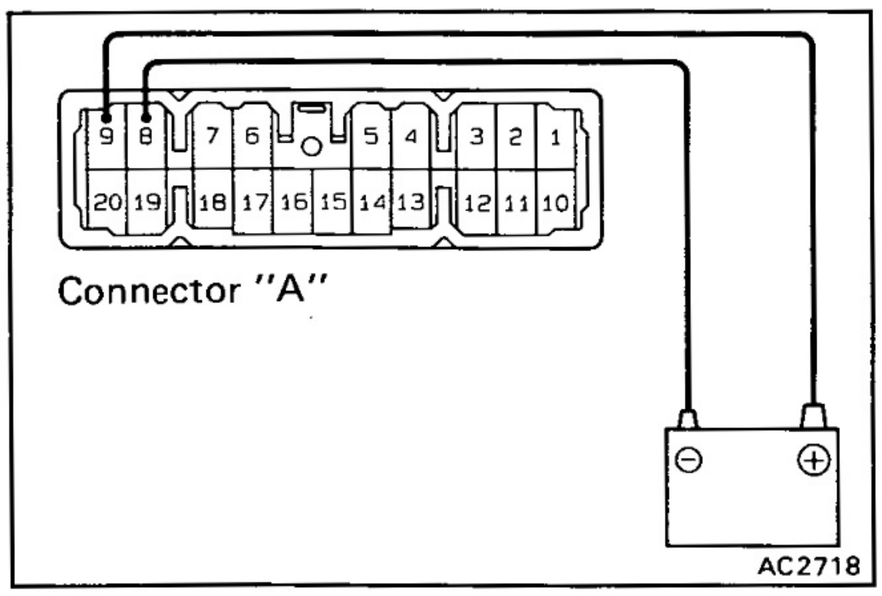

Air Inlet Control Switch

INSPECTION OF SWITCH (without Auto A/C)

1. INSPECT INDICATORS

(a) Connect the positive (+) lead from the battery to terminal A-9 and the negative (—) lead to terminal A-8.

(b) Check that the FRESH and RECIRC indicators light up alternately each time the air inlet control switch button is pressed.

(c) Then, connect the positive (+) lead from the battery to terminal A-13 and check that the indicator dims.

If indicators operation is not as specified, replace the A/C control assembly.

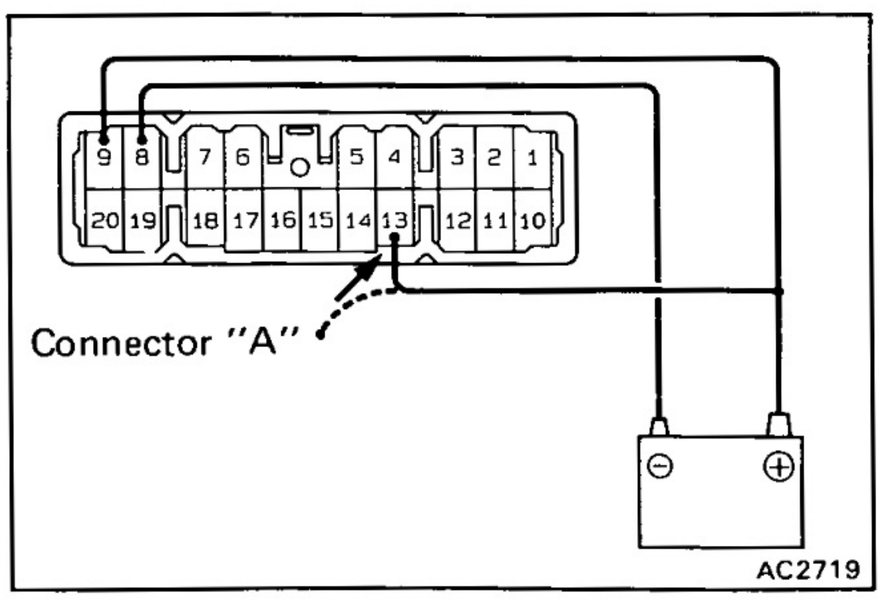

2. INSPECT SWITCH CONTINUITY

Connector "A"

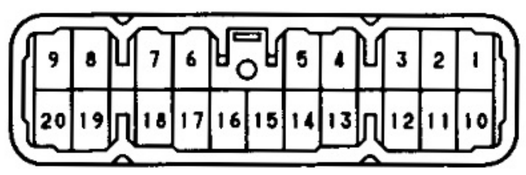

e-20-2-C

Terminal / Switch position	A-8	A-18	A-19
FRESH	○	◀	○
RECIRC	○	◀	○

If continuity is not as specified, replace the A/C control assembly.

(With Auto A/C)

1. INSPECT INDICATORS

(a) Connect the positive (+) lead from the battery to terminal A-9 and the negative (—) lead to each terminal, then check that the each indicator lights up.

Connected terminal	Indicator
A-16	RECIRC
A-20	FRESH

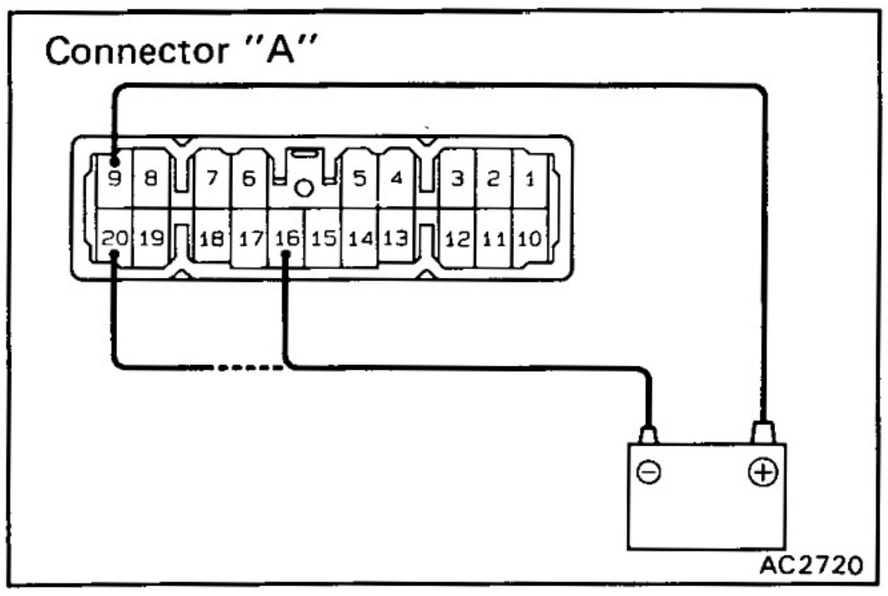

(b) Then, connect the positive (+) lead from the battery to terminal A-13 and check that the indicator dims.

If indicator operation is not as specified, replace the A/C control assembly.

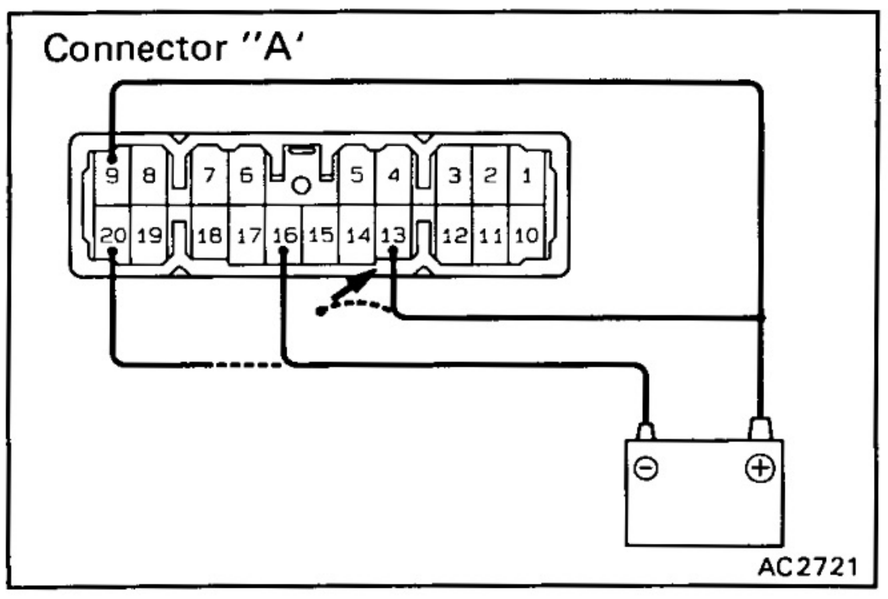

2. INSPECT SWITCH CONTINUITY

Connector "A"

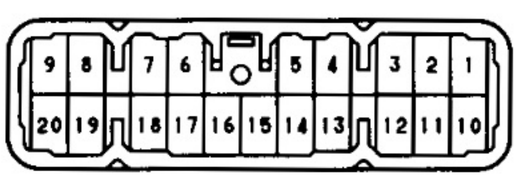

Connector "B"

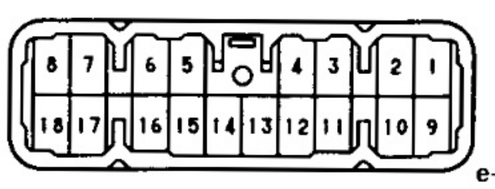

e-20-2-C
e-18-2-B

Terminal / Switch position	A-15	B-16
Free		
Pushed in	○	○

If continuity is not as specified, replace the A/C control assembly.

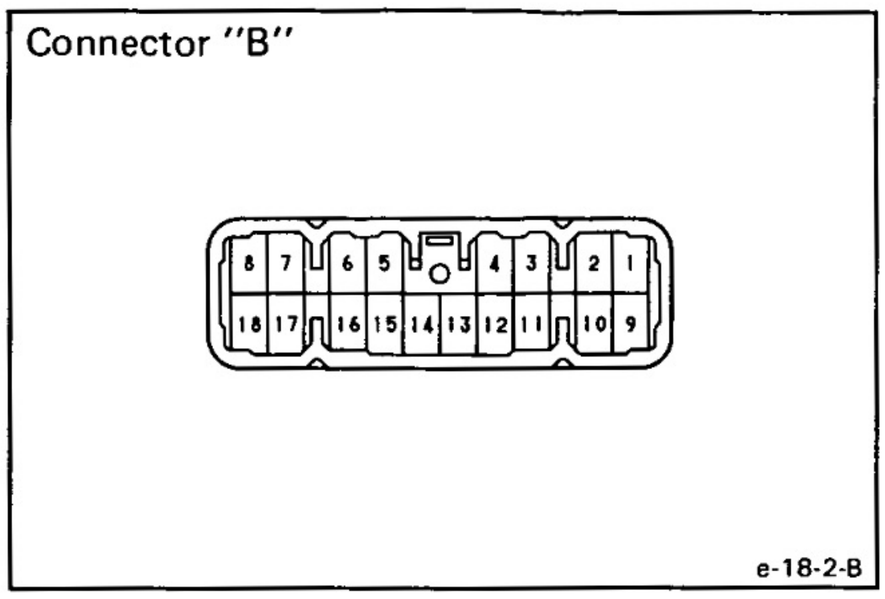

Temperature Control Switch

INSPECTION OF SWITCH

INSPECT SWITCH RESISTANCE

(a) Measure the resistance between terminals B-1 and B-2.

Resistance: Approx. 3 kΩ

(b) Check that the resistance between terminals B-1 and B-3 increases from 0 to approx. 3 kΩ when the switch knob is turned from COOL to HOT.

If operation is not as specified, replace the A/C control assembly.

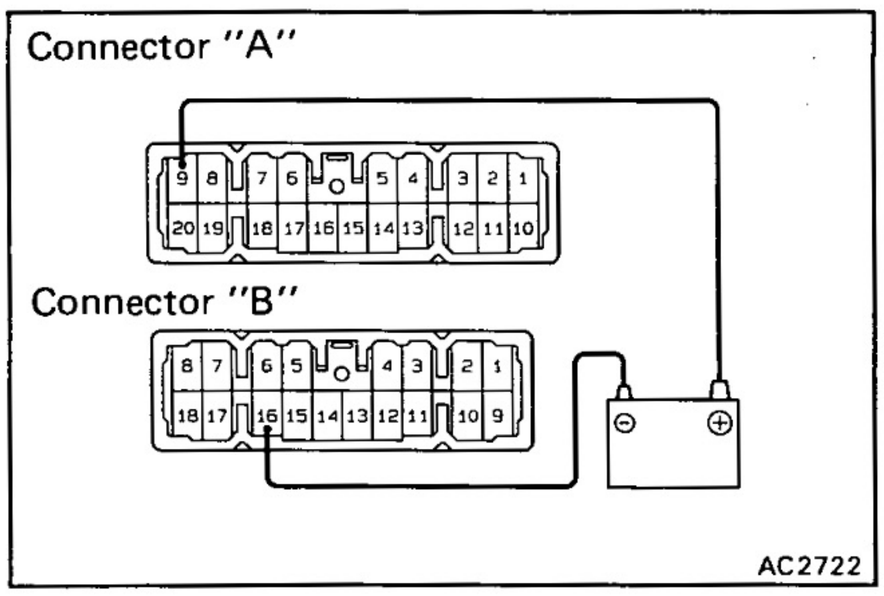

Mode Control Switch

INSPECTION OF SWITCH

1. INSPECT INDICATOR

(a) Connect the position (+) lead from the battery to terminal A-9 and the negative (−) lead to terminal B-16.

(b) Push each of the mode control switch buttons in and check that their indicators light up.

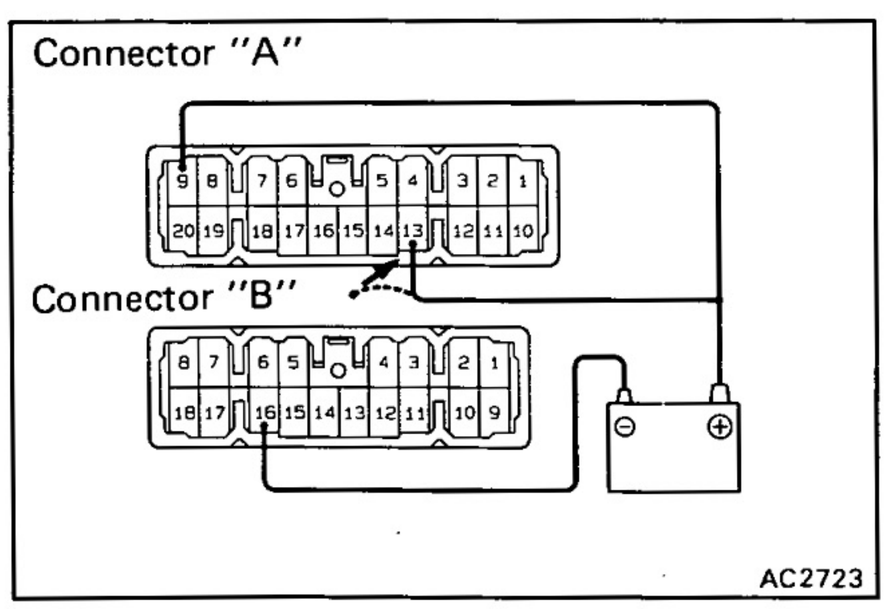

(c) Then, connect the positive (+) lead from the battery to terminal A-13 and check that indicator dims.

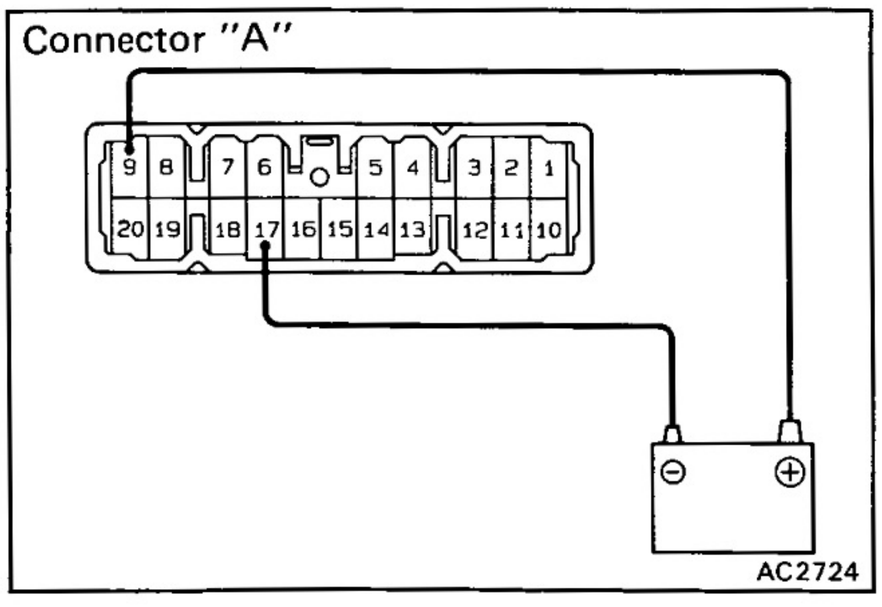

(d) (with Auto A/C)
Disconnect the positive (+) lead from terminal A-13 and the negative (−) lead from terminal B-16, then connect the negative (−) lead from the battery to terminal A-17 and check that the "FOOT" indicator lights up.

If indicator operation is not as specified, replace the A/C control assembly.

2. INSPECT SWITCH CONTINUITY

Connector "A"

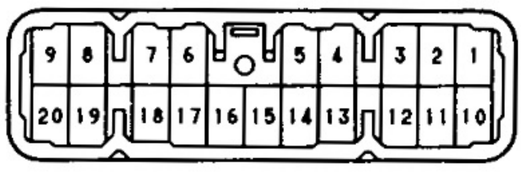

Connector "B"

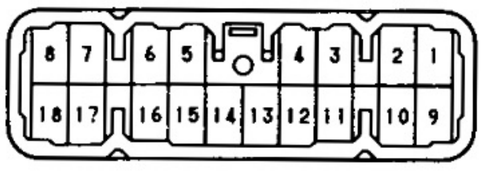

e-20-2-C
e-18-2-B

Terminal / Switch position	A-7	A-11	A-12	A-14	B-4	B-11	B-16
FACE				○	—	—	○
BI-LEVEL			○	—	—	—	○
FOOL	○	—	—	—	—	—	○
FOOT-DEF						○	○
DEF					○	—	○
*AUTO		○	—	—	—	—	○

*: with Auto A/C

If continuity is not as specified, replace the A/C control assembly.

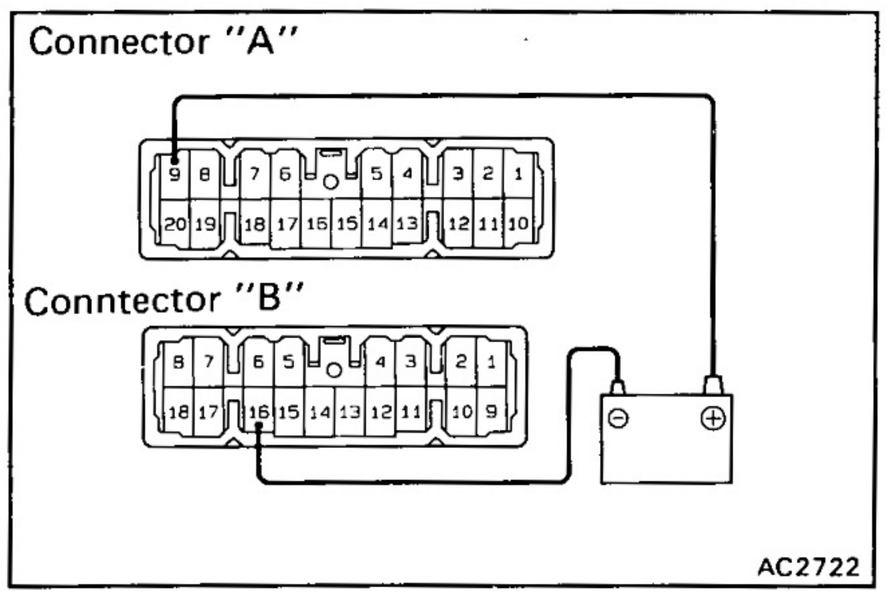

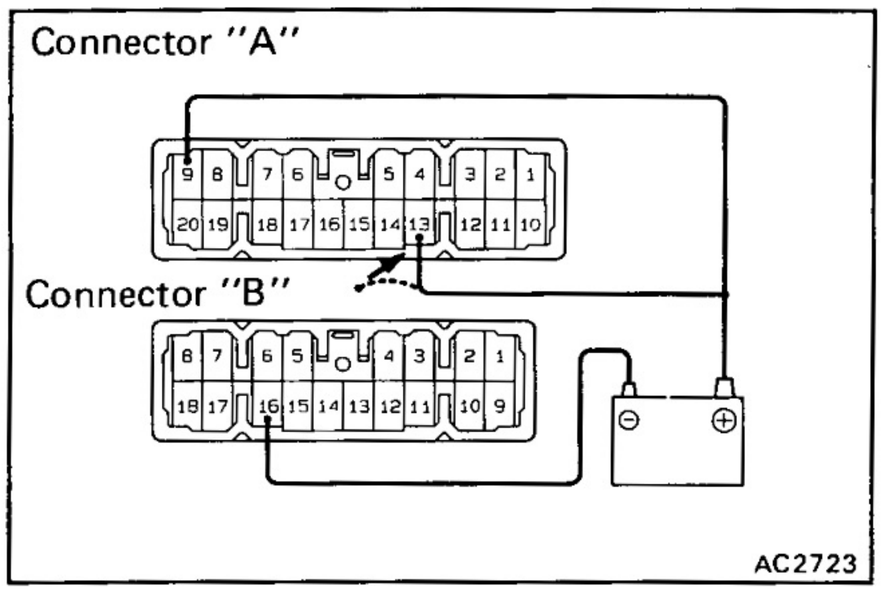

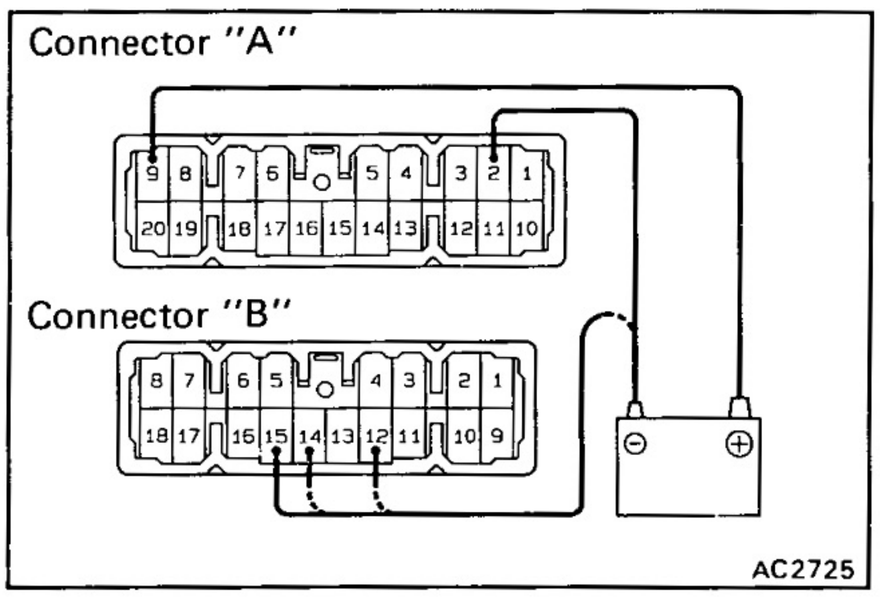

Blower Speed Control Switch

INSPECTION OF SWITCH

1. INSPECT INDICATOR

(a) Connect the positive (+) lead from the battery to terminal A-9 and the negative (—) lead to terminal B-16.

(b) Push each of the blower speed control switch buttons in and check that their indicators light up.

(c) Then, connect the positive (+) lead from the battery to terminal A-13 and check that indicator dims.

(d) (with Auto A/C)
Disconnect the positive (+) lead from terminal A-13 and the negative (—) lead from terminal B-16, and connect the negative (—) lead from the battery to each terminal, then check that the each indicator lights up.

Connected terminal	Indicator
A-2	LO
B-12	HI
B-14	▪(M2)
B-15	▪(M1)

If indicator operation is not as specified, replace the A/C control assembly.

2. INSPECT SWITCH CONTINUITY

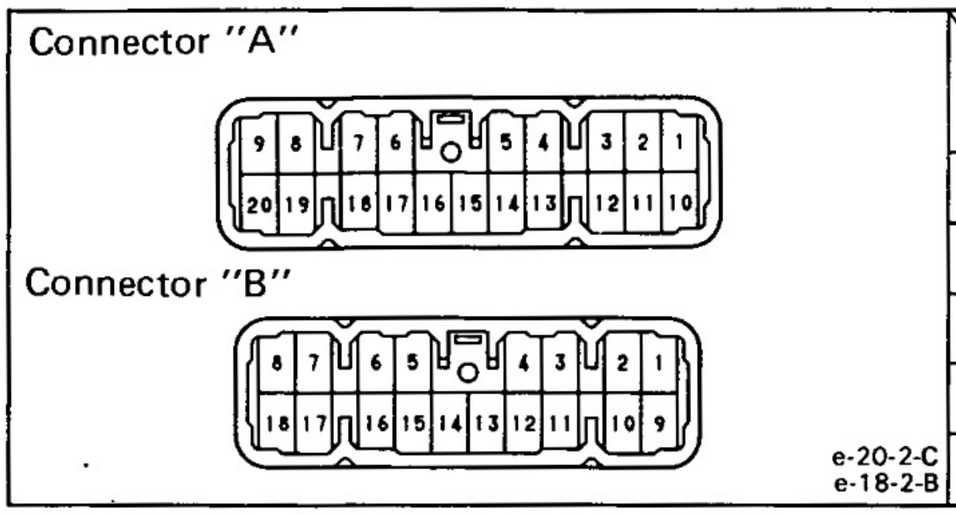

Terminal / Switch position	A-1	A-10	B-9	B-10	B-13	B-16
OFF		○	—	—	—	○
LO	○	—	—	—	—	○
▪ (M1)			○	—	—	○
▪ (M2)				○	—	○
HI					○	○

If continuity is not as specified, replace the A/C control assembly.

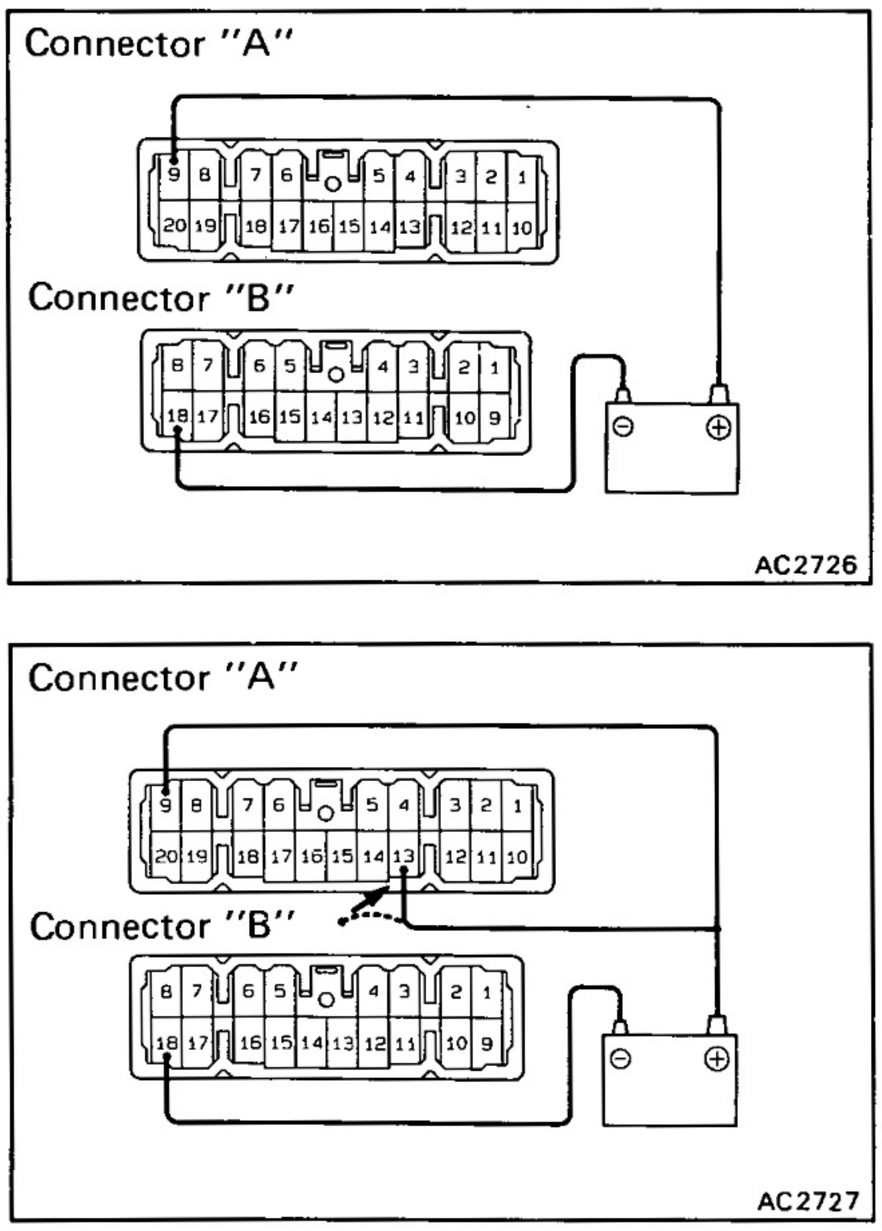

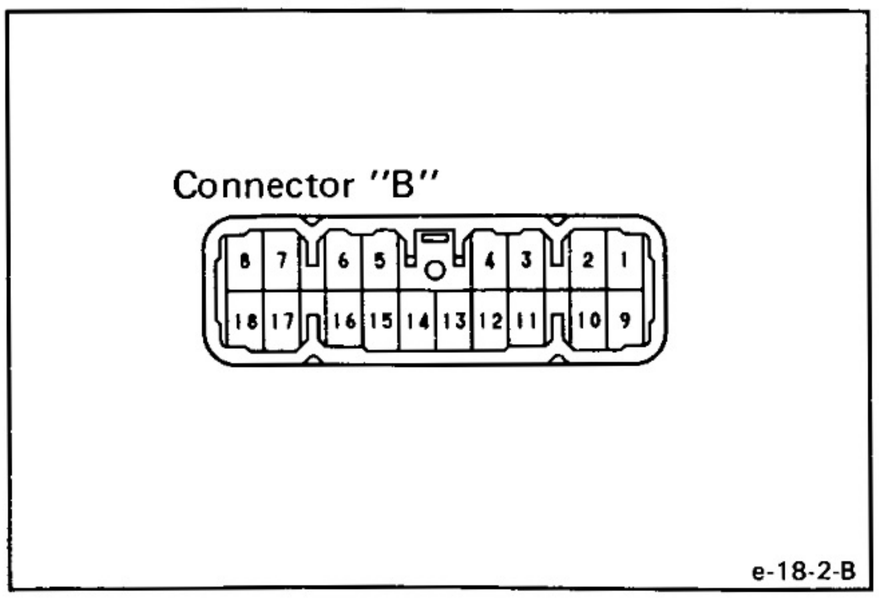

A/C Switch

INSPECTION OF SWITCH (without Auto A/C)

1. INSPECT INDICATOR

(a) Connect the positive (+) lead from the battery to terminal A-9 and the negative (−) lead to terminal B-18.

(b) Check that the A/C indicator lights up intermittently each time the A/C switch button is pressed.

(c) Then, connect the positive (+) lead from the battery to terminal A-13 and check that the indicator dims.

If indicator operation is not as specified, replace the A/C control assembly.

2. INSPECT SWITCH CONTINUITY

Check that there is continuity between terminals B-6 and B-17 intermittently each time the A/C switch button pressed.

If continuity is not as specified, replace the A/C control assembly.

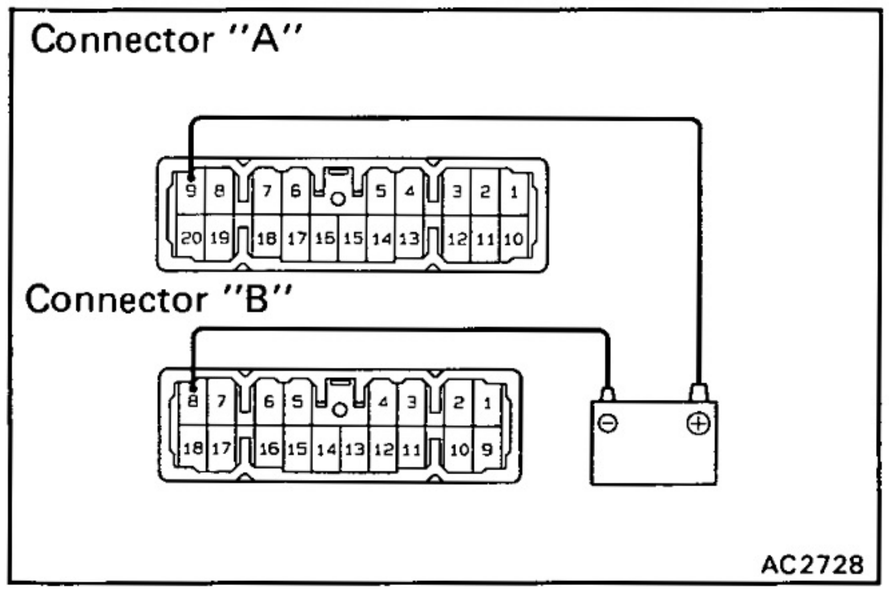

(with Auto A/C)

1. INSPECT INDICATOR

(a) Connect the positive (+) lead from the battery to terminal A-9 and the negative (—) lead to terminal B-8, and check that the A/C indicator lights up.

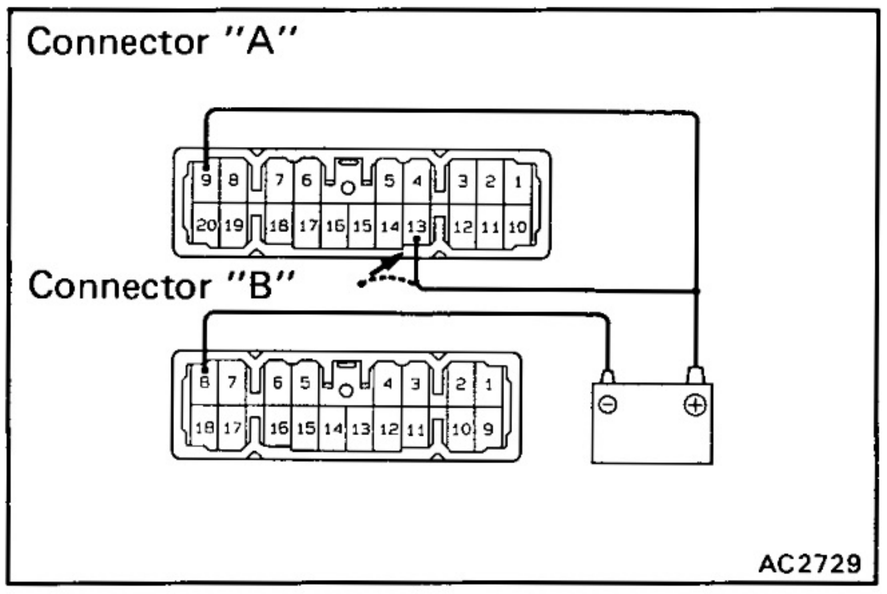

(b) Then, connect the positive (+) lead from the battery to terminal A-13 and check that the indicator dims.

If indicator operation is not as specified, replace the A/C control assembly.

2. INSPECT SWITCH CONTINUITY

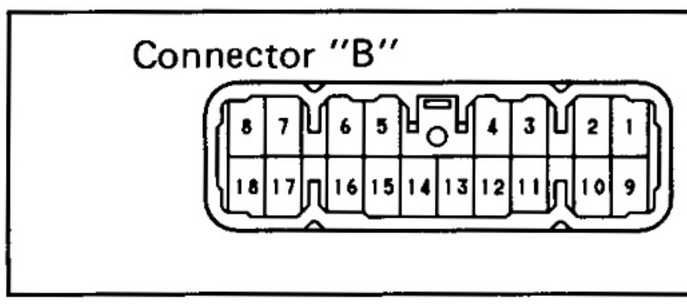

Terminal / Switch position	B-6	B-16
Free		
Pushed in	○——	——○

If continuity is not as specified, replace the A/C control assembly.

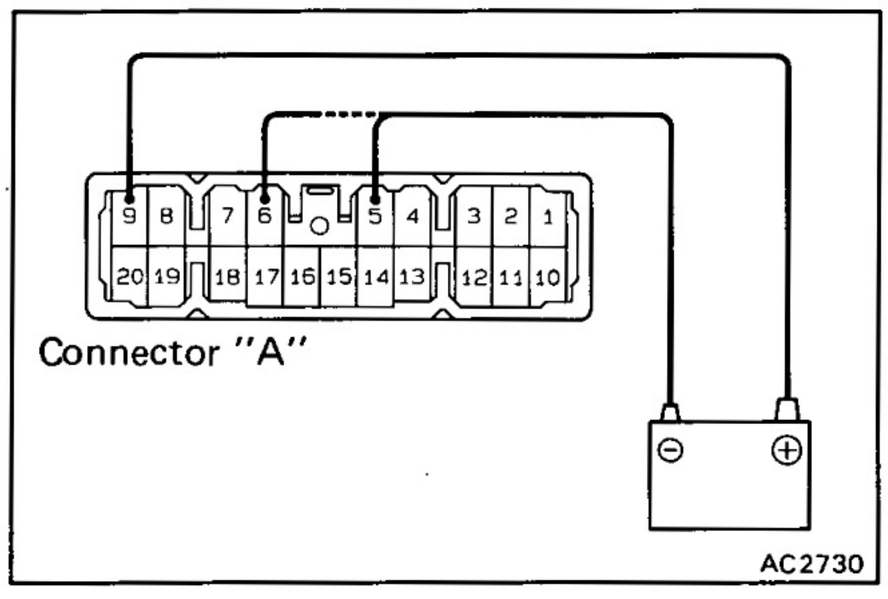

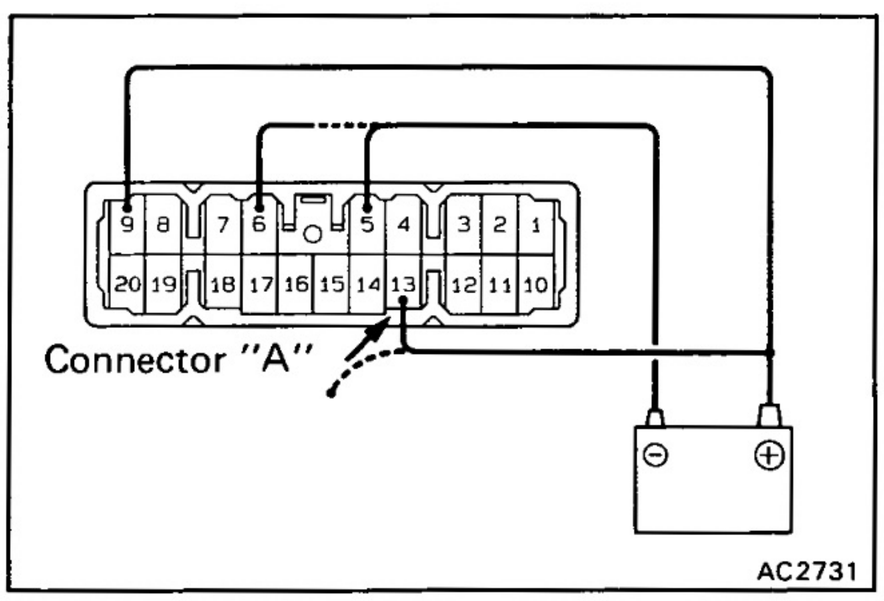

Auto Switch

INSPECTION OF SWITCH

1. INSPECT INDICATOR

(a) Connect the positive (+) lead from the battery to terminal A-9 and the negative (—) lead to each terminal, then check that the each color indicator lights up.

Connected terminal	Color of indicator
A-5	Green
A-6	Yellow

(b) Then, connect the positive (+) lead from the battery to terminal A-13 and check that the indicator dims.

If indicator operation is not as specified, replace the A/C control assembly.

2. INSPECT SWITCH CONTINUITY

Connector "A"

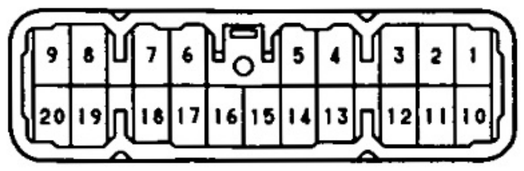

Connector "B"

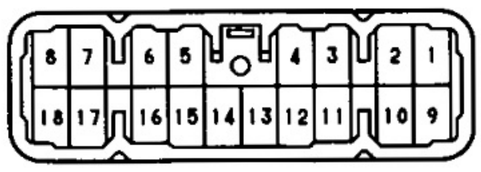

e-20-2-C
e-18-2-B

Terminal / Switch position	A-4	B-16
Free		
Pushed in	○——	——○

If continuity is not as specified, replace the A/C control assembly.

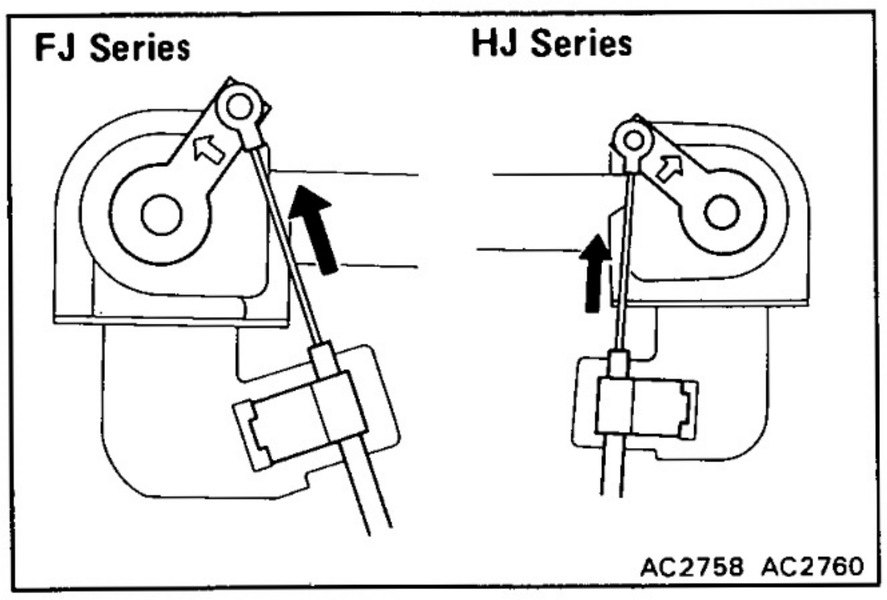

Water Valve Control Cable

ADJUSTMENT OF CONTROL CABLE

ADJUST CONTROL CABLE

(a) Set the vehicle in following condition.
- Ignition switch on.
- Blower speed control switch on.
- Temperature control switch to "COOL" position.

(b) Set the water valbe to "COOL" position, install the control cable and lock the clamp.

REAR COOLER CONTROL PANEL

Reference:

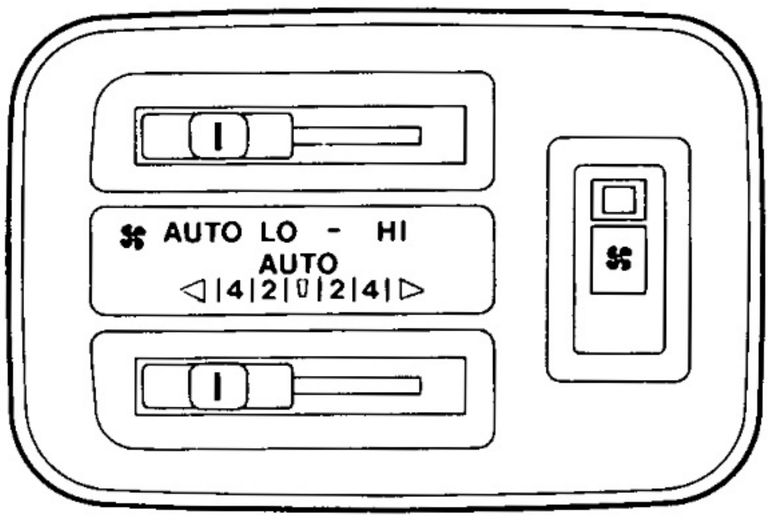

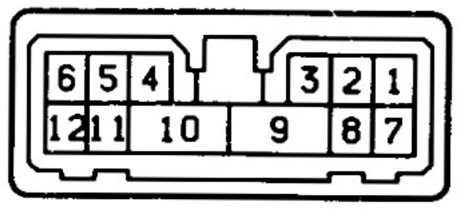

AC2763 SH-12-2

A/C Switch

INSPECTION OF SWITCH

INSPECT SWITCH CONTINUITY

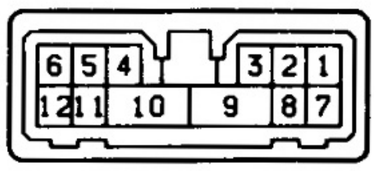

SH-12-2

Terminal / Switch position	2	8	11
OFF	○	○	
ON		○	○

If continuity is not as specified, replace the control panel.

Blower Switch

INSPECTION OF SWITCH

INSPECT SWITCH CONTINUITY

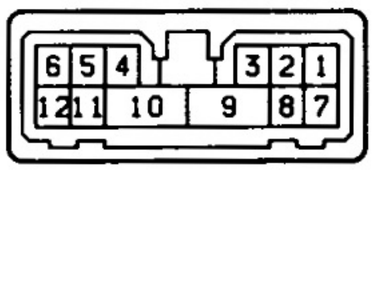

SH-12-2

Terminal / Switch position		6	9	10	12
Manual A/C	AUTO A/C				
LO	AUTO				
▪	LO	○		○	
▪	▪			○	○
HI	HI		○	○	

If continuity is not as specified, replace the control

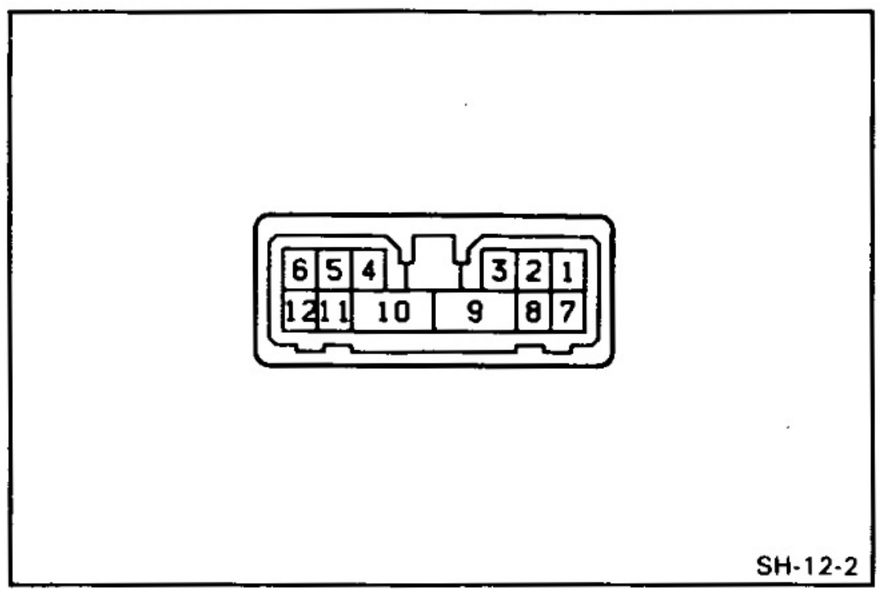

Temperature Control Resistor

INSPECTION OF RESISTOR

INSPECT RESISTOR RESISTANCE

(a) (Manual A/C)
Check that there is no continuity between terminals 3 and 4 with the arm OFF position.

(b) Check that the resistance between terminals 3 and 4 decreases from approx. 3 kΩ to 0 Ω, when the arm is moved from HOT to COOL position.

If resistance value is not as specified, replace the control panel.

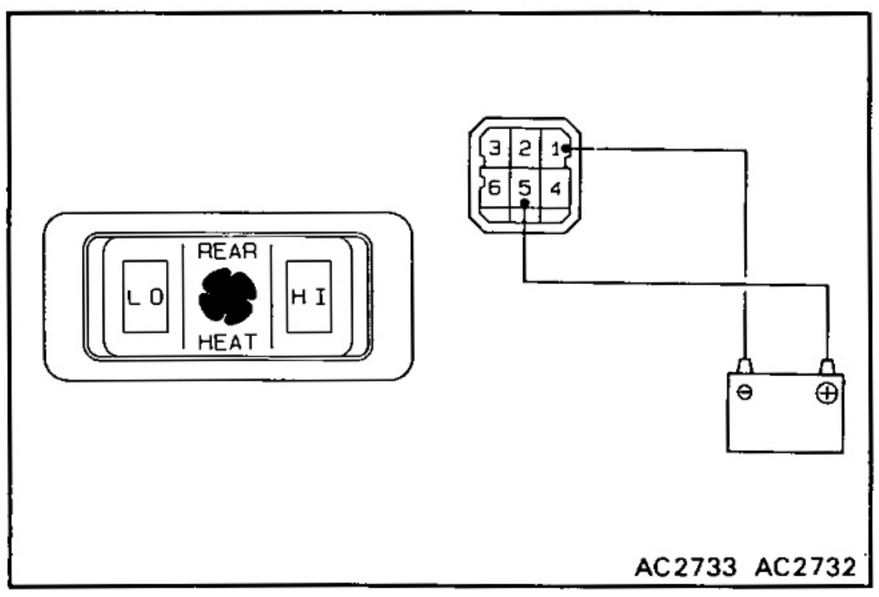

REAR HEATER SWITCH

INSPECTION OF SWITCH

1. INSPECT INDICATOR

(a) Connect the positive (+) lead from the battery to terminal 5 and the negative (−) lead to terminal 1.

(b) Push each of the rear heater switch knob in and check that their indicators light up.

If indicator operation is not as specified, replace the switch.

2. INSPECT SWITCH CONTINUITY

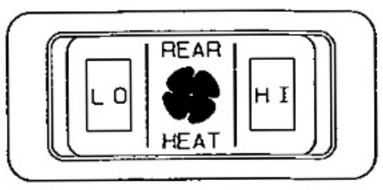



Terminal / Switch position	1	2	4	5	Illumination 3	Illumination 6
HI	○		○			
OFF					○	○
LO	○	○				

If continuity is not as specified, replace the switch.

REAR COOLER SWITCH

INSPECTION OF SWITCH

INSPECT SWITCH CONTINUITY

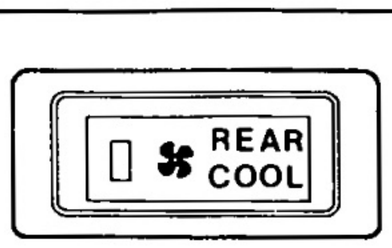

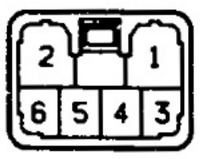

Terminal / Switch position	4	5	6
OFF		○	○
ON	○	○	

If continuity is not as specified, replace the switch.

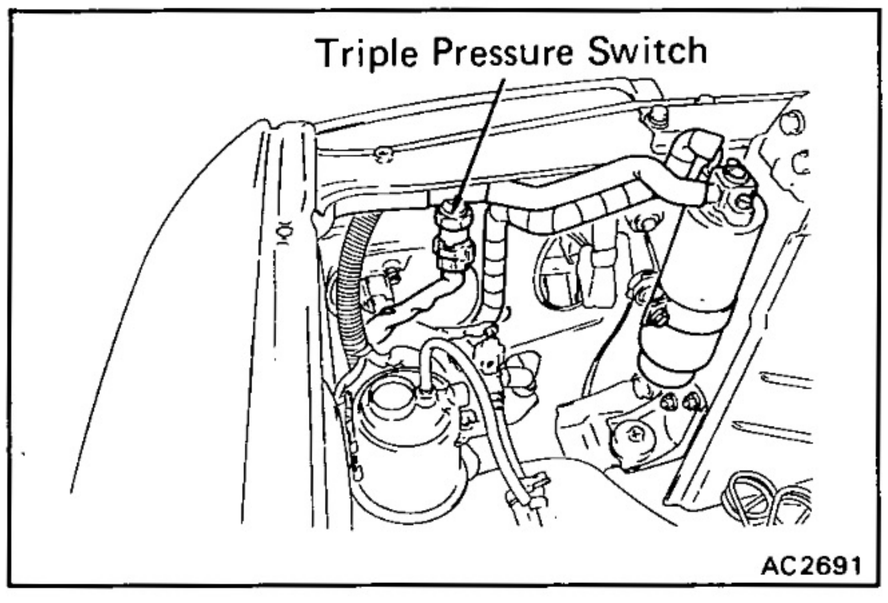

TRIPLE PRESSURE SWITCH

ON-VEHICLE INSPECTION

1. DISCONNECT CONNECTOR OF PRESSURE SWITCH

2. INSPECT PRESSURE SWITCH

(a) Install the manifold gauge set.

(b) Observe the gauge reading.

(c) Check the continuity between the two terminals of the pressure switch shown in the below.

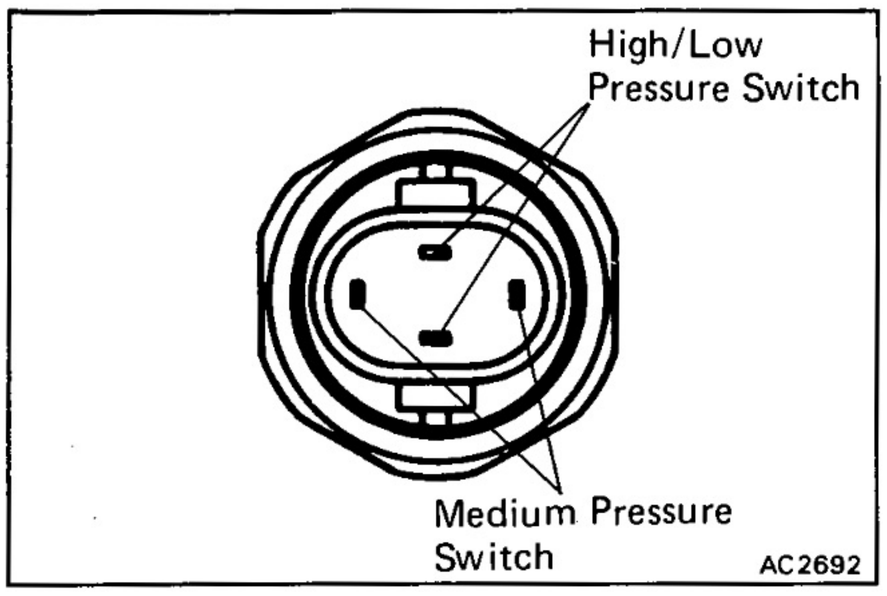

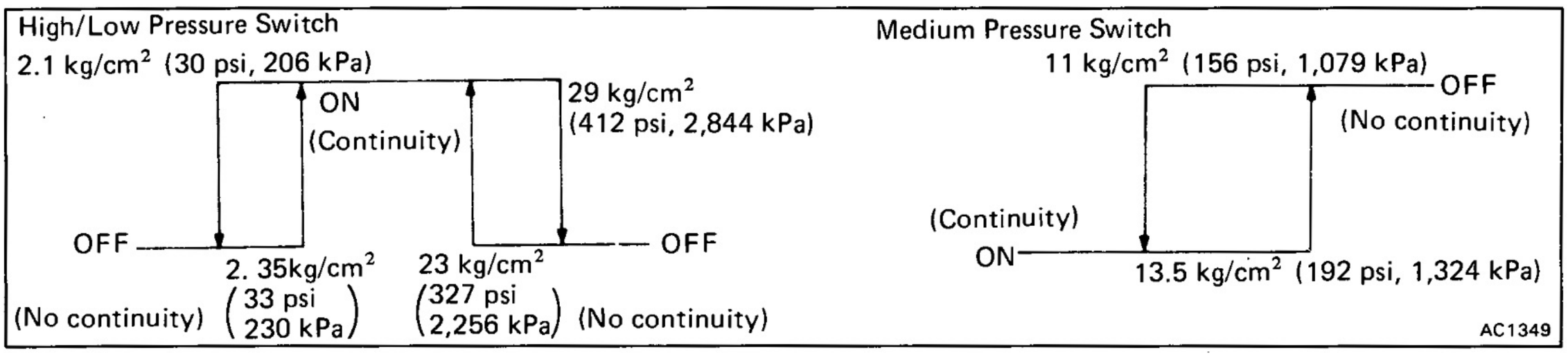

If defective, replace the pressure switch.

WATER TEMPERATURE CUT SWITCH

INSPECTION OF SWITCH

INSPECT SWITCH CONTINUITY

Check the continuity between terminals of the switch shown in the below.

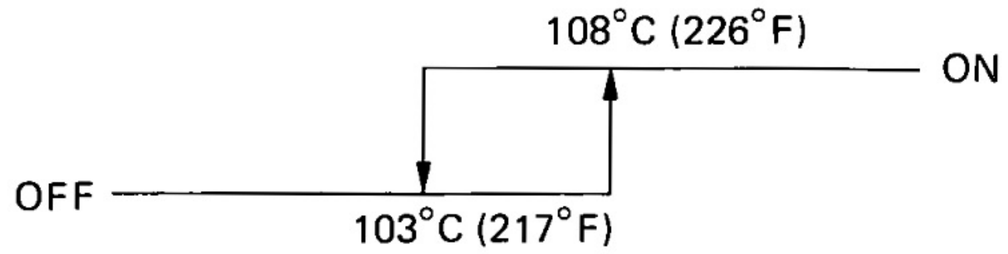

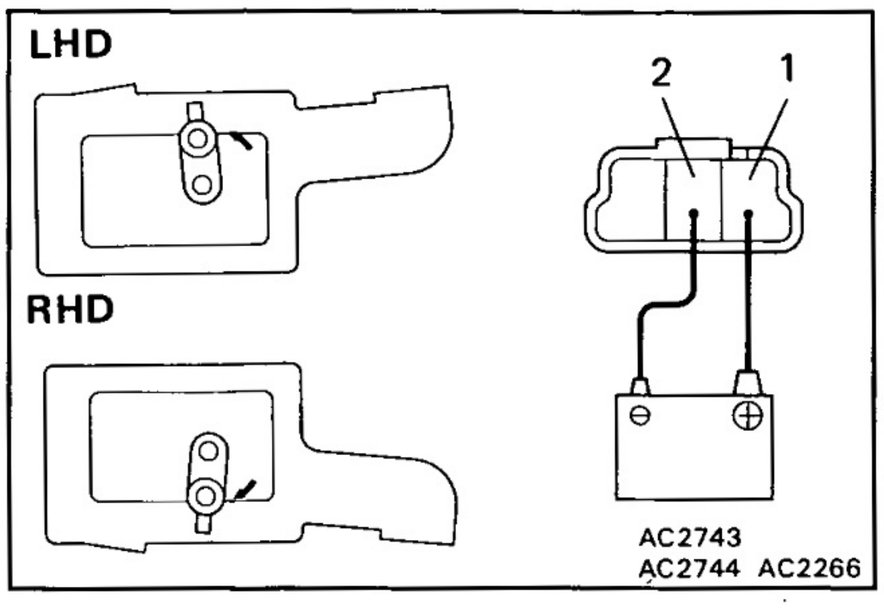

SERVOMOTORS

Air Inlet Servomotor

INSPECTION OF SERVOMOTOR

INSPECT SERVOMOTOR OPERATION

(a) Connect the positive (+) lead from the battery to terminal 1 and the negative (—) lead to terminal 2, then check that the arm rotates to the "FRESH" position.

(b) Connect the positive (+) lead from the battery to terminal 1 and the negative (—) lead to terminal 3, then check that the arm rotates to the "RECIRC" position.

If operation is not as specified, replace the servomotor.

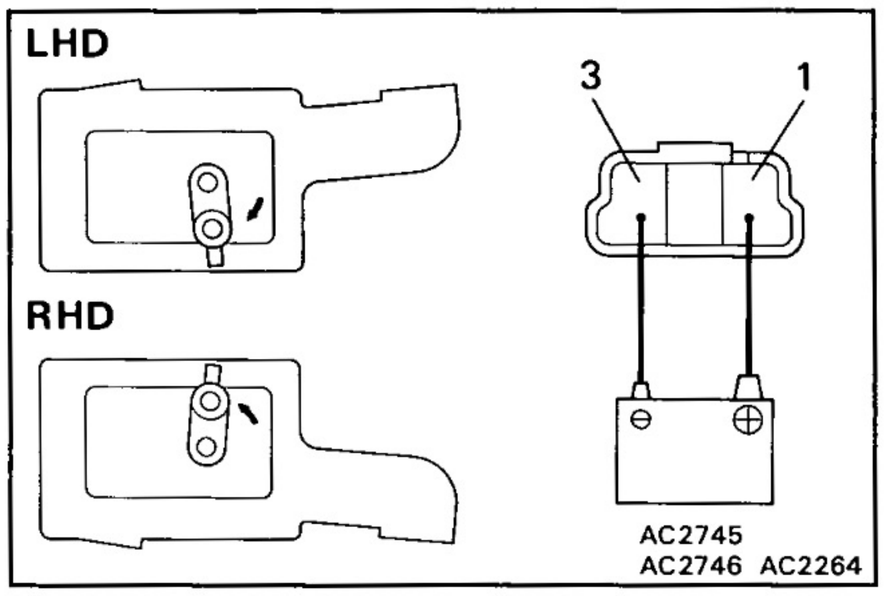

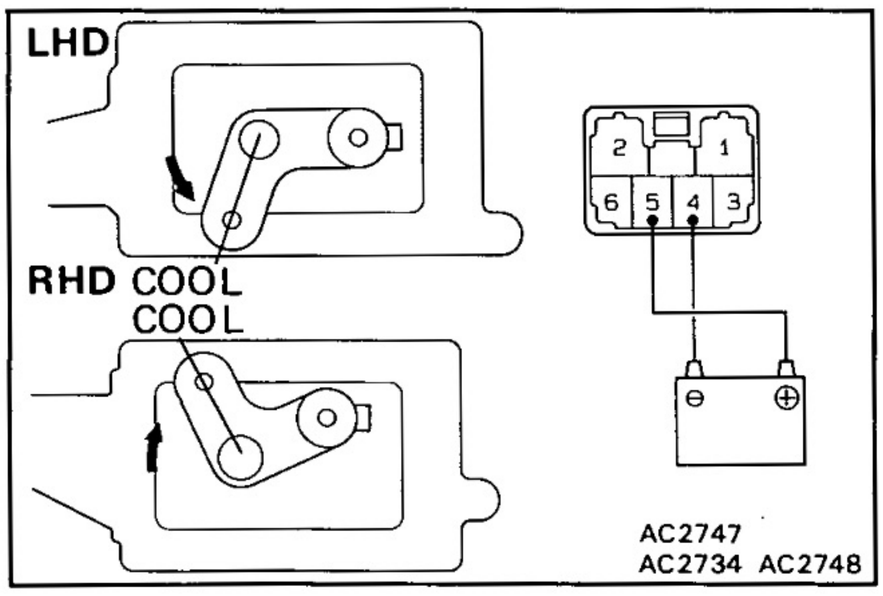

Air Mix Servomotor

INSPECTION OF SERVOMOTOR

1. INSPECT SERVOMOTOR OPERATION

(a) Connect the positive (+) lead from the battery to terminal 5 and the negative (—) lead to terminal 1, then check that the arm rotates to the "COOL" position.

(b) Reverse the polarity, check that the arm rotates to the "HOT" position.

If operation is not as specified, replace the servomotor.

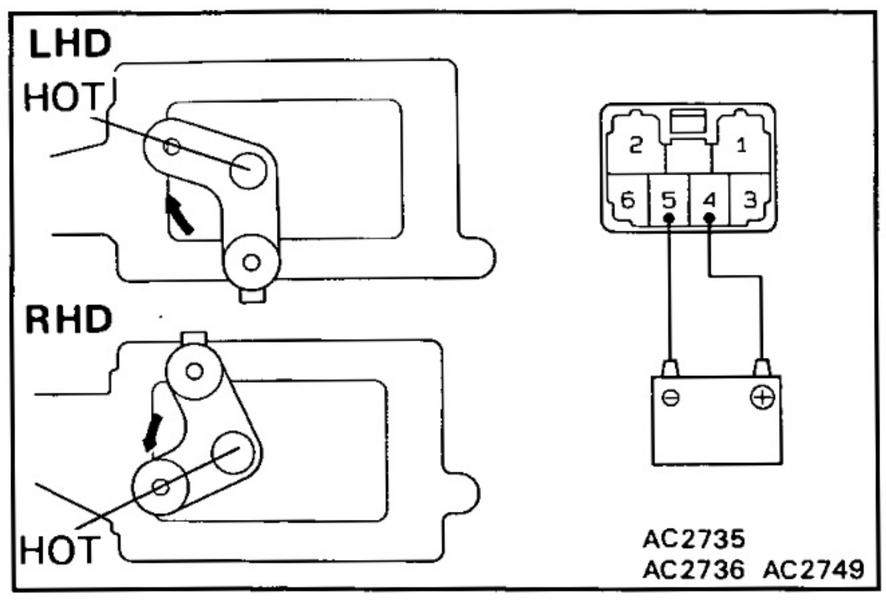

2. INSPECT POSITION SENSOR RESISTANCE

(a) Measure the resistance between terminals 1 and 3.

Resistance: Approx. 6 kΩ

(b) Set the arm to COOL position.

(c) Check that the resistance between terminals 2 and 3 decreases from approx. 4.8 kΩ to 1.2 kΩ, when the arm is rotated from COOL to HOT position.

If operation is not as specified, replace the motor.

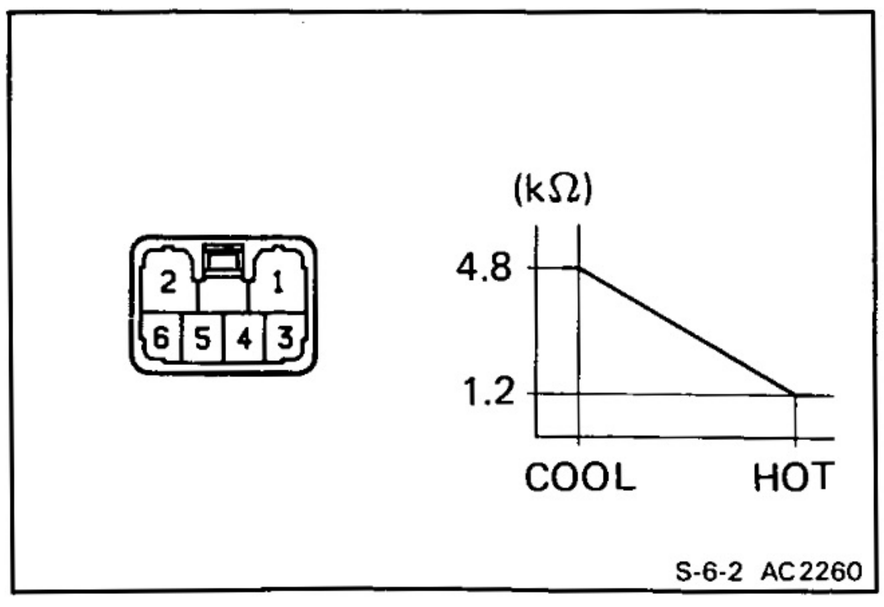

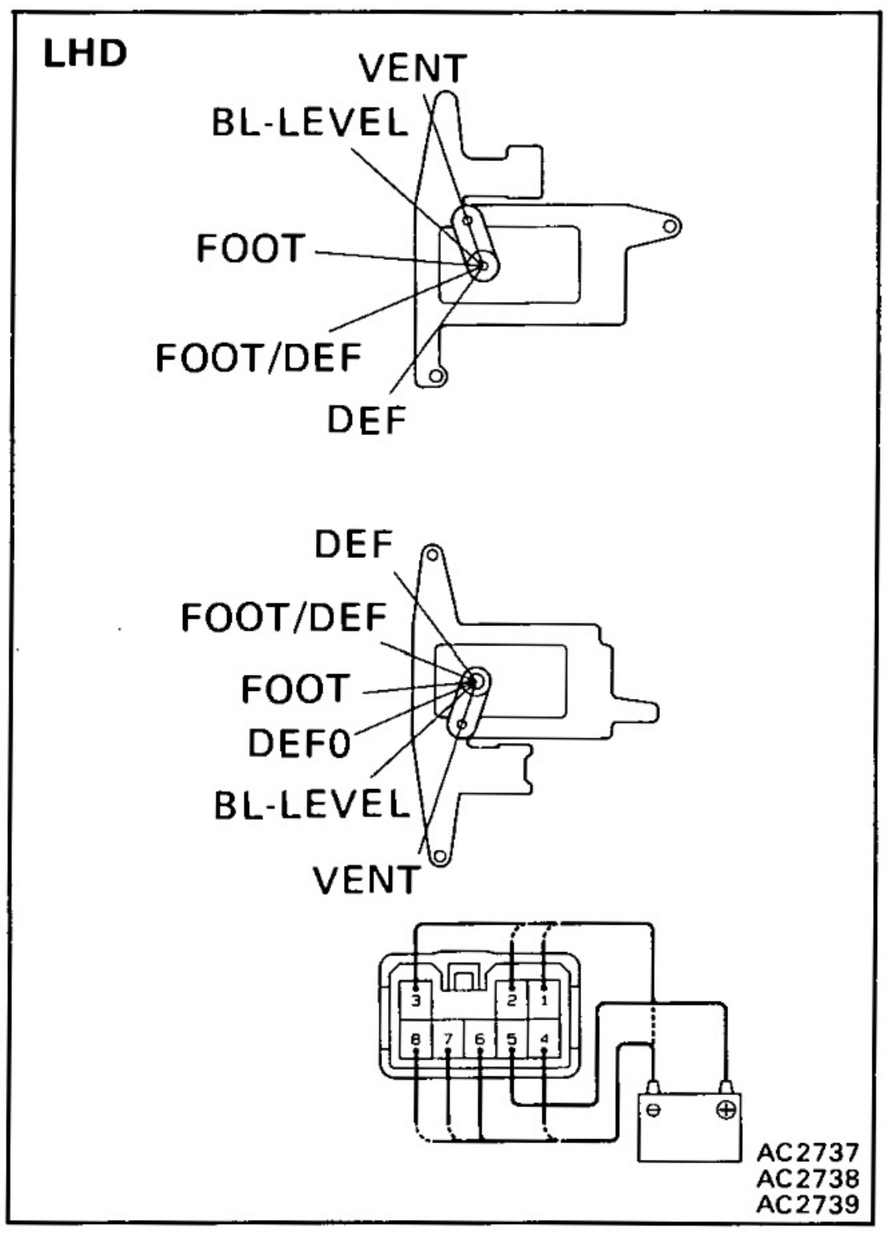

Mode Servomotor

INSPECTION OF SERVOMOTOR

INSPECT SERVOMOTOR OPERATION

(a) Connect the positive (+) lead from the battery to terminal 5 and the negative (−) lead to terminal 6.

(b) Connect the negative (−) lead from the battery to each terminal and check that the arm rotates to each position as shown.

Connected terminal	Position
1	VENT
2	B1-LEVEL
3	FOOT
4	FOOT/DEF
7	DEF
8 (RHD)	DEF 0

If operation is not as specified, replace the servomotor.

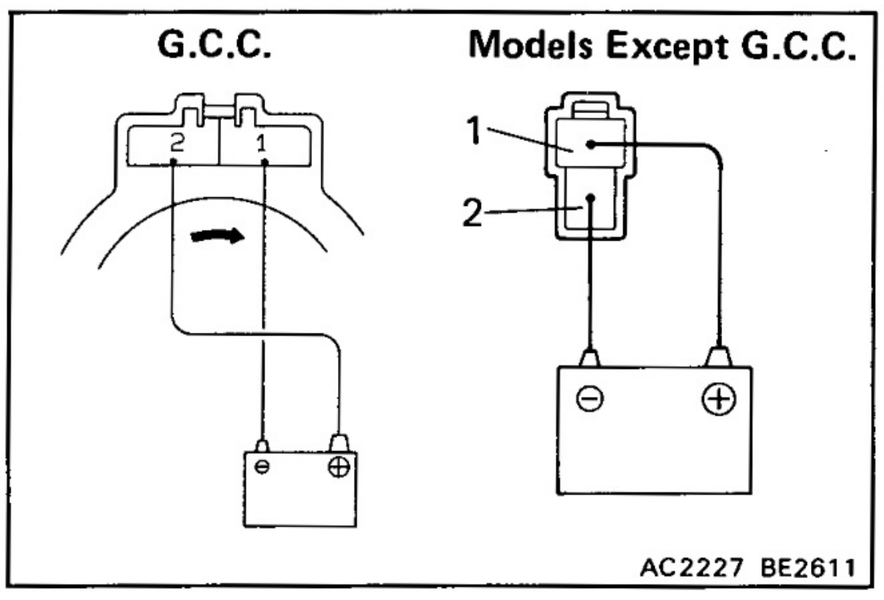

BLOWER MOTORS

Front A/C Blower Motor

INSPECTION OF BLOWER MOTOR

INSPECT BLOWER MOTOR OPERATION

(G.C.C.)

Connect the positive (+) lead from the battery to terminal 2 and the negative (−) lead to terminal 1, then check that the motor operation is smooth.

(Models Except G.C.C.)

Connect the positive (+) lead from the battery to terminal 1 and the negative (−) lead to terminal 2, then check that the motor operation is smooth.

Rear Heater Blower Motor

INSPECTION OF BLOWER MOTOR

Check the motor the same way as for the front A/C blower motor (RHD).

Rear Cooler Blower Motor

INSPECTION OF BLOWER MOTOR

Check the motor the same way as for the front A/C blower motor (RHD).

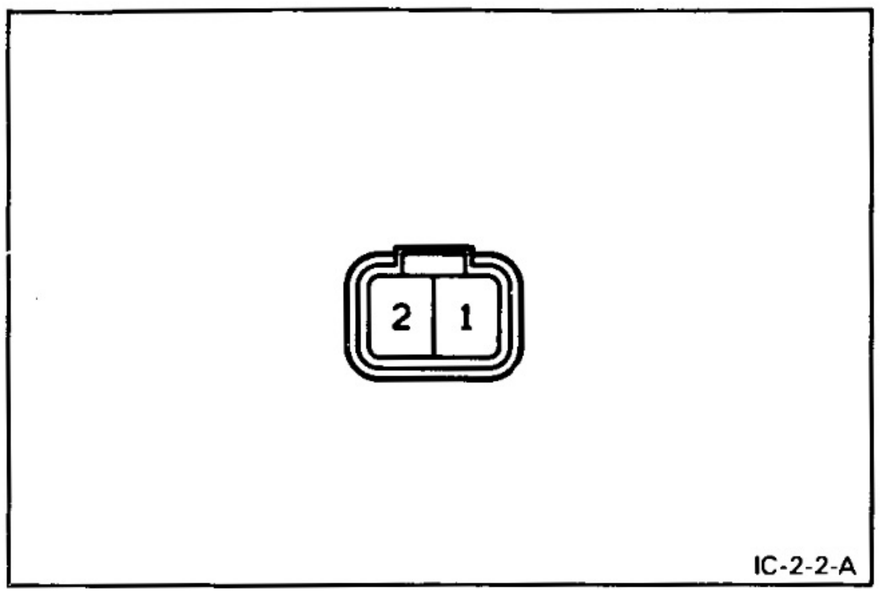

CONDENSER FAN MOTOR

INSPECTION OF CONDENSER FAN MOTOR

INSPECT FAN MOTOR OPERATION

Connect the positive (+) lead from the battery to terminal 1 and the negative (—) lead to terminal 2, check that the motor operation is smooth.

If operation is not as specified, replace the motor.

BLOWER RESISTORS

Front A/C Blower Resistor

INSPECTION OF BLOWER RESISTOR

INSPECT BLOWER RESISTOR CONTINUITY

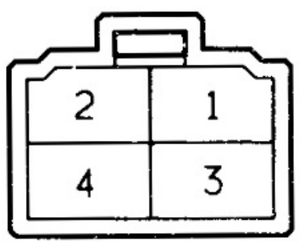

Terminal / Condition	1	3	2	4
Constant	○—/\/\—○—/\/\—○—/\/\—○			

If continuity is not as specified, replace the blower resistor.

Rear Heater Blower Resistor

INSPECTION OF BLOWER RESISTOR

INSPECT BLOWER RESISTOR CONTINUITY



Terminal / Condition	A-1	A-2	A-3	B-1	B-2
Constant	○——	○—/\/\—○		——○	——○

If continuity is not as specified, replace the blower resistor.

Rear Cooler Blower Resistor

INSPECTION OF BLOWER RESISTOR

INSPECT BLOWER RESISTOR CONTINUITY

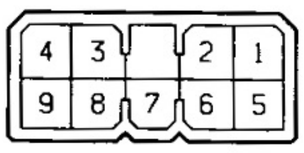

Terminal / Condition	8	6	9	7
Constant	○—/\/\—○—/\/\—○—/\/\—○			

If continuity is not as specified, replace the blower resistor.

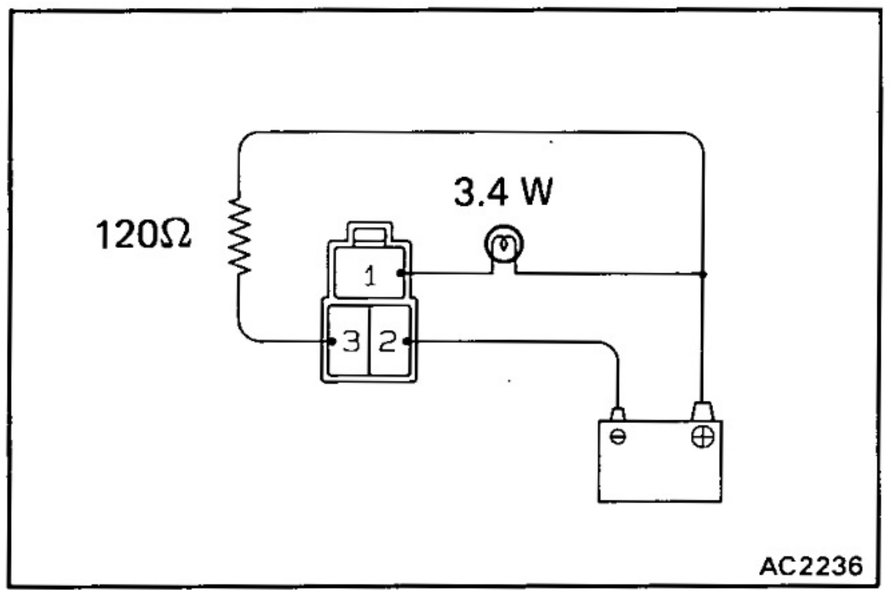

POWER TRANSISTOR

INSPECTION OF POWER TRANSISTOR

INSPECT POWER TRANSISTOR

(a) Connect the positive (+) leads from the battery to terminal 1 through a 3.4W test bulb and terminal 3 of a 120 Ω resistor.

(b) Connect the negative (—) lead from the battery to terminal 2, then check that the test bulb lights up.

If operation is not as specified, replace the power transistor.

LOCATION OF RELAYS AND AMPLIFIERS

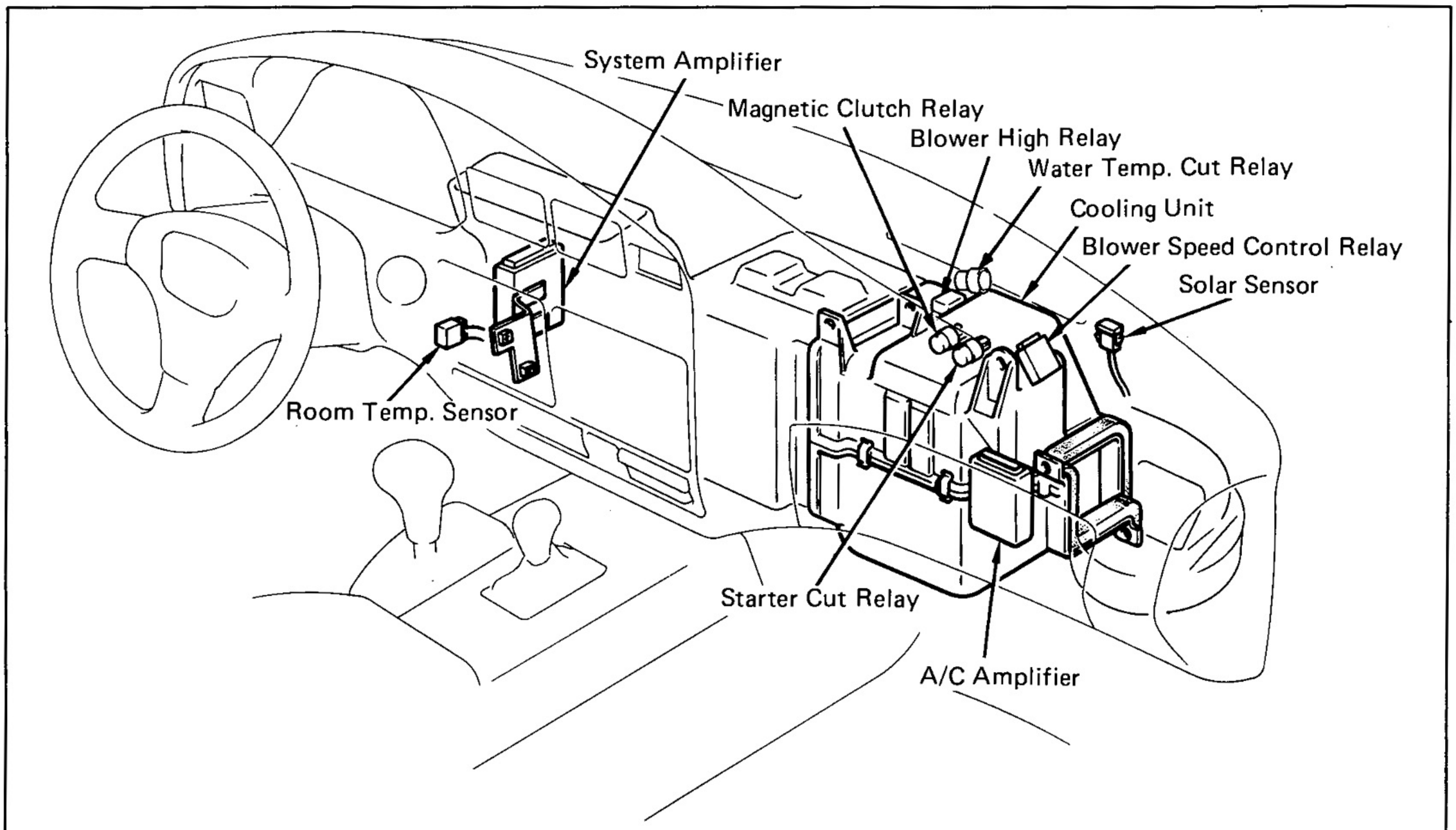

HEATER RELAY

INSPECTION OF RELAY

INSPECT RELAY CONTINUITY

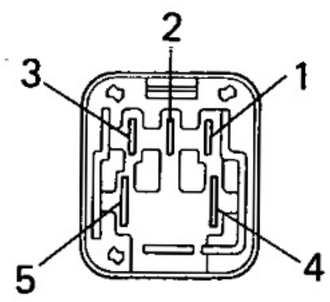

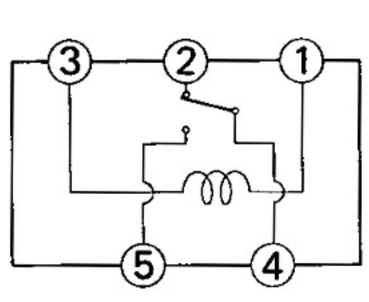

BE1850 BE1844

Teminal / Condition	1	2	3	4	5
Costant	○	○	○	○	
Apply battery voltage to terminals 1 and 3.				○	○

If continuity is not as specified, replace the relay.

BLOWER SPEED CONTROL RELAY

INSPECTION OF RELAY BOX

INSPECT RELAY BOX CONTINUITY

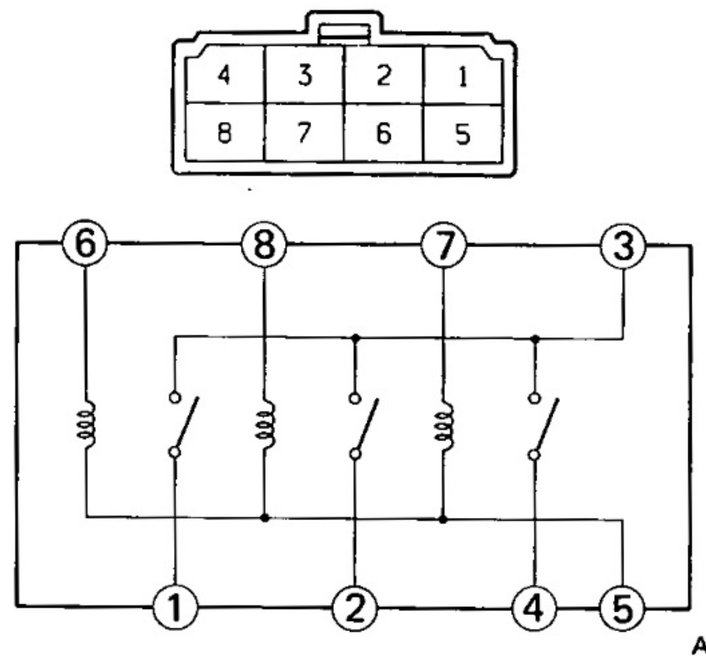

H-8-2
AC2145

Terminal / Condition	1	2	3	4	5	6	7	8
Constant					○	○	○	○
Apply battery voltage to terminals 5 and 6	○		○					
Apply battery voltage to terminals 5 and 7			○	○				
Apply battery voltage to terminals 5 and 8		○	○					

If the continuity is not as specified, replace the relay.

REAR HEATER RELAY

INSPECTION OF RELAY

INSPECT RELAY CONTINUITY

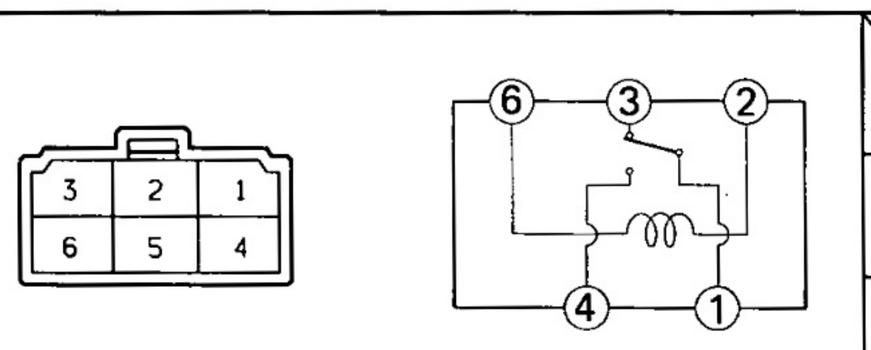

H-6-2 BE1844

Terminal / Condition	1	2	3	4	6
Constant	○	○	○	○	○
Apply battery voltage to terminals 2 and 6.	○			○	

If continuity is not as specified, replace the relay.

BLOWER HIGH RELAY

INSPECTION OF RELAY

INSPECT RELAY CONTINUITY

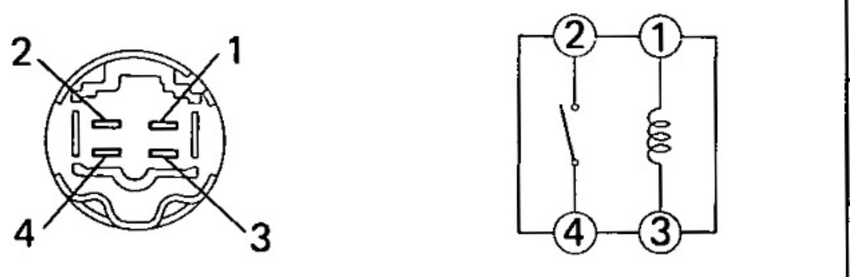

BE1647 BE1841

Terminal / Condition	1	2	3	4
Constant	○	○	○	
Apply battery voltage to terminals 1 and 3.		○		○

If continuity is not as specified, replace the relay.

MAGNETIC CLUTCH RELAY

INSPECTION OF RELAY

Check the relay the same way as for the blower high relay on page AC-73.

WATER TEMPERATURE CUT RELAY

INSPECTION OF RELAY

INSPECT RELAY CONTINUITY

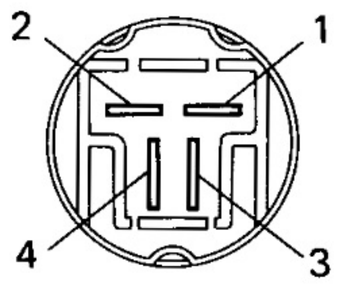

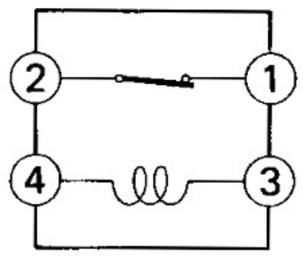

BE0006 BE4229

Terminal / Condition	1	2	3	4
Costant	○——	——○	○—∿∿∿—○	
Apply battery voltage to terminals 3 and 4.				

If continuity is not as specified, replace the relay.

REAR COOLER RELAY

INSPECTION OF RELAY

Check the relay the same way as for the heater relay on page AC-72.

CONDENSER FAN RELAY

INSPECTION OF RELAY

Check the relay the same way as for the blower high relay on page AC-73

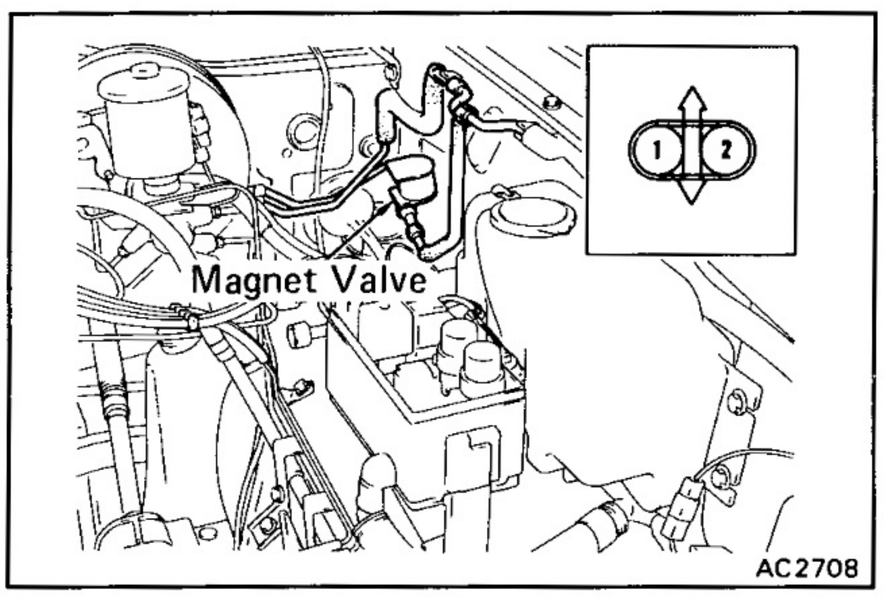

MAGNETIC VALVES

Front Magnetic Valve

INSPECTION OF MAGNETIC VALVE

1. **MEASURE MAGNETIC VALVE RESISTANCE**

   Measure the resistance between terminals 1 and 2.

   Resistance: 12.5 — 17.0 Ω/20°C

   If resistance value is not correct, replace the magnetic valve.

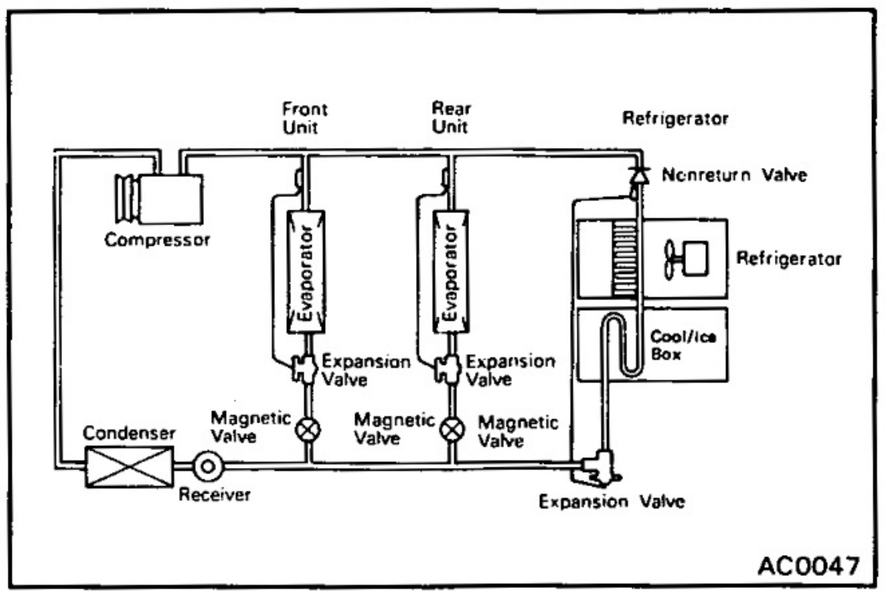

2. INSPECT MAGNETIC VALVE OPERATION

A/C ON-OFF, Refrigerator OFF

Condition / Device		1	2	3	4
A/C Switch	Front	ON	ON	OFF	OFF
	Rear	ON	OFF	ON	OFF
Magnetic Valve		Open (ON) / Shut (OFF); 3°C / 4°C; Air Temp. in Cooling Unit			
	Front	Open (ON)	Open (ON)	Shut (OFF)	Shut (OFF)
	Rear	Open (ON)	Shut (OFF)	Open (ON)	Shut (OFF)
Compressor Magnetic Clutch		ON	ON	ON	OFF

If operation is not as specified, replace the magnetic valve.

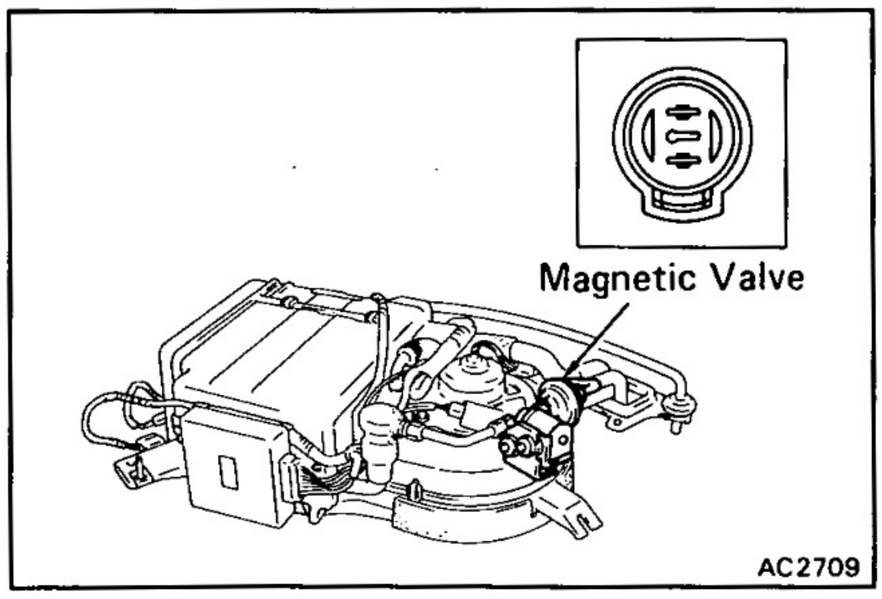

Rear Cooler Magnetic Valve

INSPECTION OF MAGNETIC VALVE

Check the magnetic valve the same way as for the front A/C magnetic valve on page AC-74.

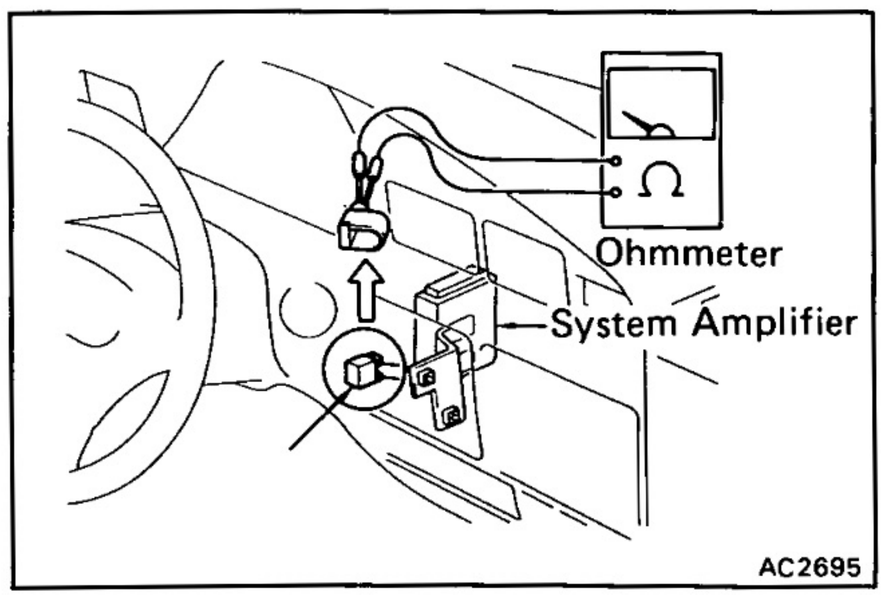

SENSORS

Room Temperature Sensor

INSPECTION OF SENSOR

MEASURE SENSOR RESISTANCE

Check the sensor resistance.

1.6 — 1.8 kΩ at 25°C (77°F)

If resistance value is not as specified, replace the sensor.

HINT: If there is an open circuit in the sensor, the system will operate at maximum heating.

Conversely, if there is a short in the system, it will operate at maximum cooling.

If resistance valve is not as specified, replace the sensor.

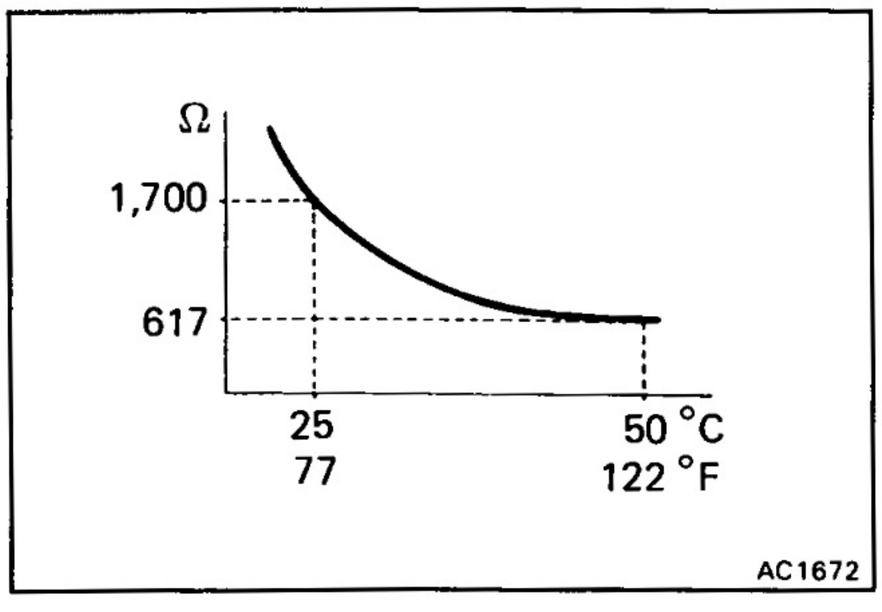

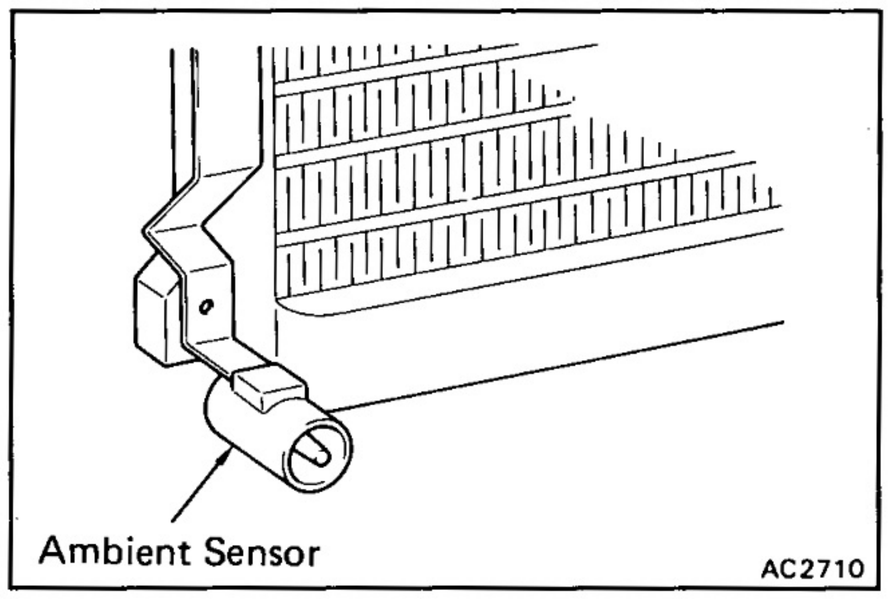

Ambient Temperature Sensor

INSPECTION OF SENSOR

MEASURE SENSOR RESISTANCE

Check the sensor resistance.

1.6 — 1.8 kΩ at 25°C (77°F)

If resistance value is not as specified, replace the sensor.

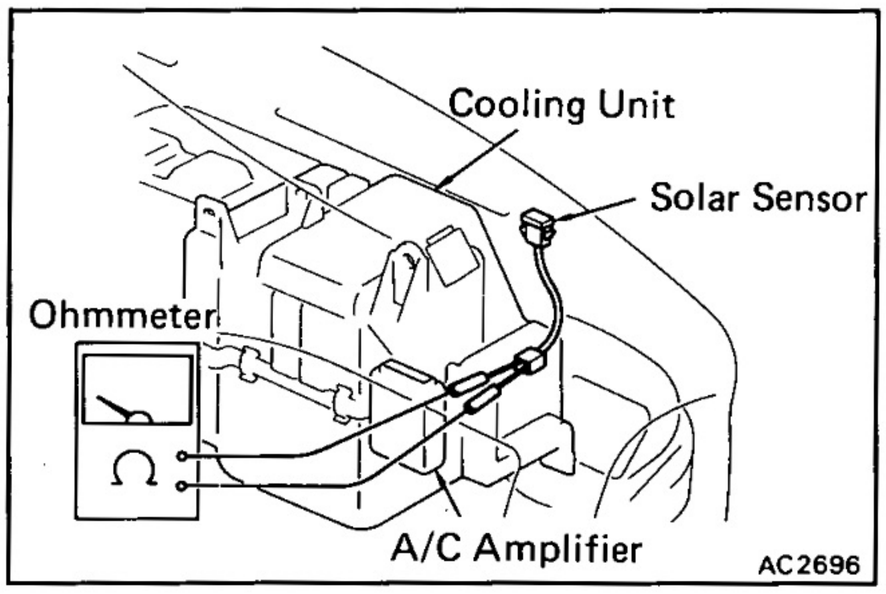

Solar Sensor

INSPECTION OF SENSOR

INSPECT SENSOR CONTINUITY

Check that there is continuity between terminals.

If resistance valve is not as specified, replace the sensor.

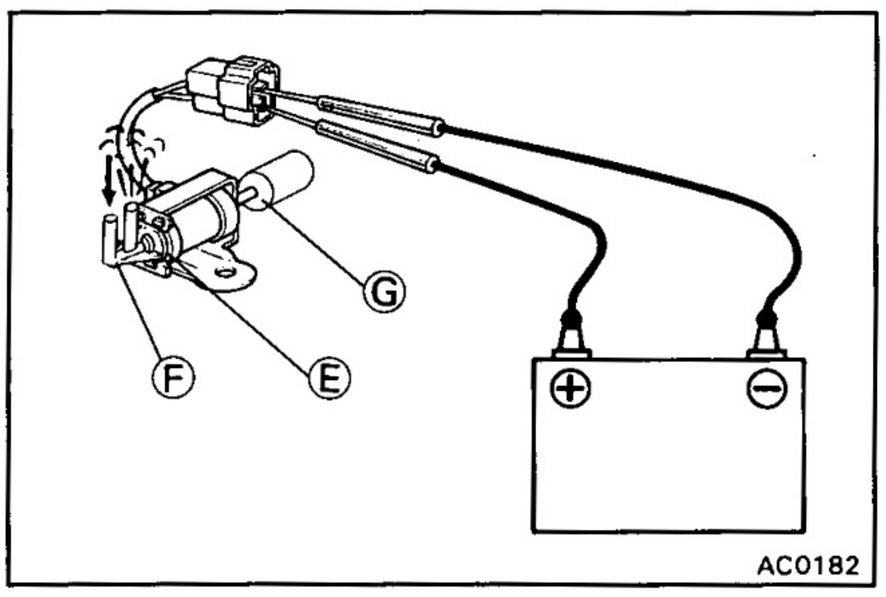

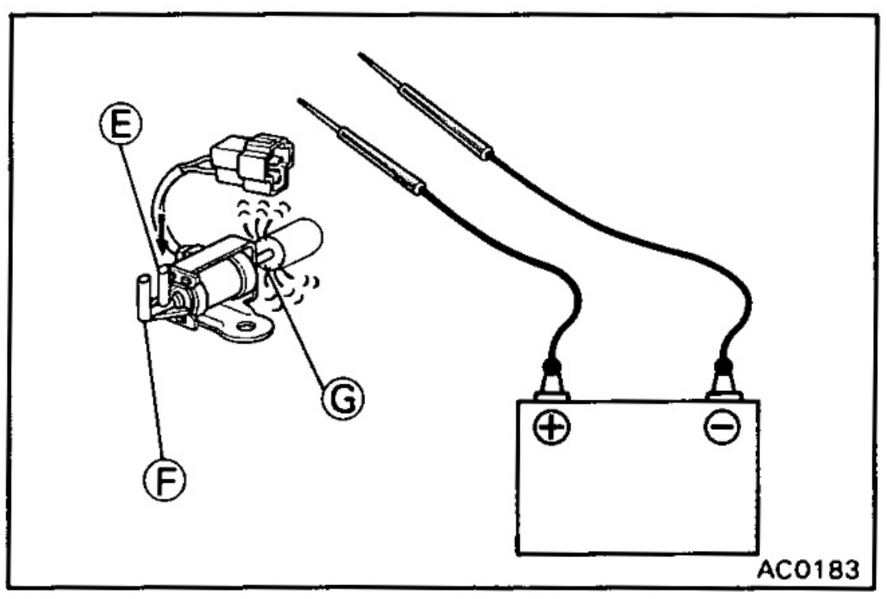

VACUUM SWITCHING VALVE (VSV)

(1HZ, 1HD-T and 3F Engine)

INSPECTION OF VSV

1. CHECK VACUUM CIRCUIT CONTINUITY IN VSV BY BLOWING AIR INTO PIPES

(a) Connect the VSV terminals to the battery terminals as illustrated.

(b) Blow into pipe "F" and check that air comes out of pipe "E" but does not come out of filter "G".

(c) Disconnect the battery.

(d) Blow into pipe "E" and check that air comes out of filter "G" but does not come out of pipe "F"

If a problem is found, repair or replace the VSV.

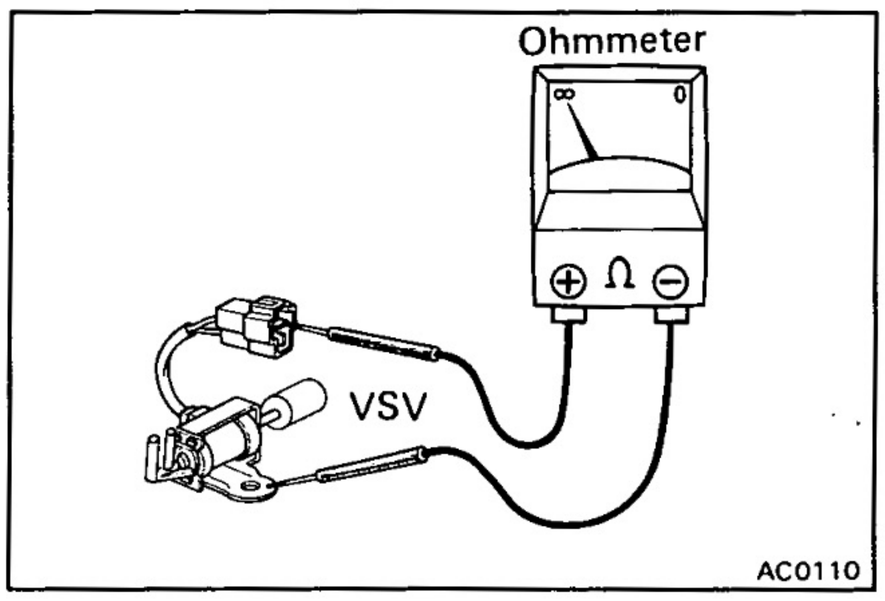

2. CHECK FOR SHORT CIRCUIT

Using an ohmmeter, check that there is no continuity between each terminal and the VSV body.

If there is continuity, replace the VSV.

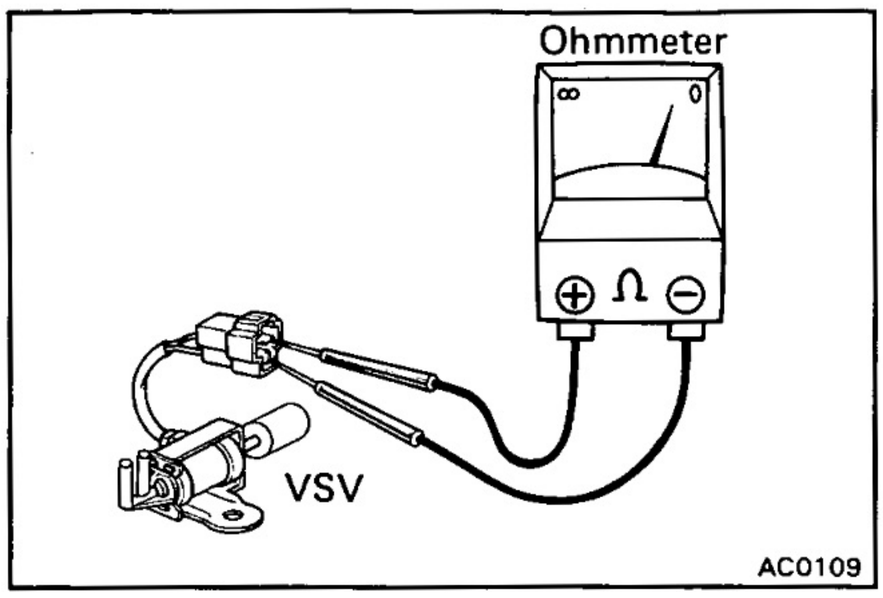

3. CHECK FOR OPEN CIRCUIT

Using an ohmmeter, measure the resistance between the two terminals.

Resistance: 38 — 44 Ω at 20°C (68°F)

If resistance value is not as specified, replace the VSV.

AMPLIFIERS

A/C Amplifier

INSPECTION OF AMPLIFIER

(Single A/C)

INSPECT AMPLIFIER CIRCUIT

Disconnect the amplifier and inspect the connector on the wire harness side as shown in the chart below.

Test conditions:

(1) Ignition switch: ON

(2) Temperature control lever: MAX COOL

(3) Blower switch: HI

ON-WIRE HARNESS SIDE

A/C Amplifier (Single A/C)

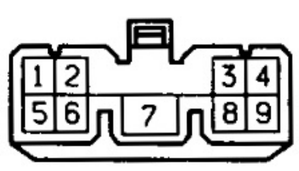

S-9-1

Check for	Tester connection	Condition	Specified value
Continuity	6 — Ground	Constant	Continuity
	8 — 9	Constant	Continuity
Voltage	2 — 6	Turn A/C switch on.	Battery voltage
		Turn A/C switch off.	No voltage
	3 — 6	Turn A/C switch on.	Battery voltage
		Turn A/C switch off.	No voltage
	5 — 6	Start the engine.	Approx. 10 to 14 V
		Stop the engine.	No voltage
Resistance	9 — 6	Constant	Approx. 1.5 kΩ at 25°C (77°F)
	7 — 6	Constant	Approx. 38 — 44 Ω at 20°C (68°F)

If circuit is as specified, replace the amplifier.

WIRE HARNESS

A/C Amplifier (Dual A/C)

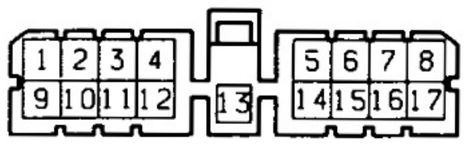

K-17-1

(Dual A/C : 3F Engine)

INSPECT AMPLIFIER CIRCUIT

Disconnect the amplifier and inspect the connector on the wire harness side as shown in the chart below.

Test conditions:

(1) Ignition switch: ON

(2) Temperature control lever: MAX COOL

(3) Blower switch: HI

Check for	Tester connection	Condition	Specified value
Continuity	5 — 13	Turn rear A/C switch on.	Continuity
		Turn rear A/C switch off.	No continuity
	13 — Ground	Constant	Continuity
	16 — 17	Constant	Continuity
Voltage	1 — 13	Turn ignition switch on.	Battery voltage
		Turn ignition switch off.	No voltage
	2 — 13	Turn ignition switch on.	Battery voltage
		Turn ignition switch off.	No voltage
	3 — 13	Turn ignition switch on.	Battery voltage
		Turn ignition switch off.	No voltage
	4 — 13	Turn A/C switch on.	Battery voltage
		Turn A/C switch off.	No voltage
	5 — 13	Turn ignition switch on.	Battery voltage
		Turn ignition switch off.	No voltage
	6 — 13	Turn ignition switch on.	Battery voltage
		Turn ignition switch off.	No voltage
	9 — 13	Start the engine.	Approx.10 to 14 V
		Stop the engine.	No voltage
	10 — 13	Turn ignition switch on.	Battery voltage
		Turn ignition switch off.	No voltage
	14 — 13	Turn ignition switch on.	Battery voltage
		Turn ignition switch off.	No voltage
Resistance	7 — 8	Variable	Approx.
	8 — 12	Constant (thermistor)	Approx.100 — 4,000 Ω
	16 — 12	Constant (thermistor)	Approx.100 — 4,000 Ω

If circuit is as specified, replace the amplifier.

WIRE HARNESS
A/C Amplifier (Dual A/C)

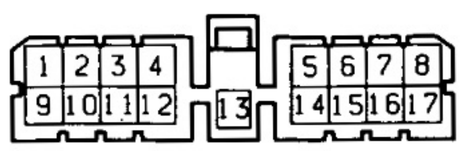

K-17-1

(Dual A/C : 3F-E, 1HZ and 1HD-T Engine)

INSPECT AMPLIFIER CIRCUIT

Disconnect the amplifier and inspect the connector on the wire harness side as shown in the chart below.

Test conditions:

(1) Ignition switch: ON
(2) Temperature control lever: MAX COOL
(3) Blower switch: HI

Check for	Tester connection	Condition	Specified value
Continuity	5 — 13	Turn rear A/C switch on.	Continuity
		Turn rear A/C switch off.	No continuity
	13 — Ground	Constant	Continuity
	16 — 17	Constant	Continuity
Voltage	1 — 13	Turn ignition switch on.	Battery voltage
		Turn ignition switch off.	No voltage
	2 — 13	Turn ignition switch on.	Battery voltage
		Turn ignition switch off.	No voltage
	3 — 13	Turn ignition switch on.	Battery voltage
		Turn ignition switch off.	No voltage
	4 — 13	Turn A/C switch on.	Battery voltage
		Turn A/C switch off.	No voltage
	5 — 13	Turn ignition switch on.	Battery voltage
		Turn ignition switch off.	No voltage
	6 — 13	Turn ignition switch on.	Battery voltage
		Turn ignition switch off.	No voltage
	14 — 13	Turn ignition switch on.	Battery voltage
		Turn ignition switch off.	No voltage
Resistance	7 — 8	Variable	Approx. 0 to 3 kΩ
	8 — 12	Constant (thermistor)	Approx.100 — 4,000 Ω
	16 — 12	Constant (thermistor)	Approx.100 — 4,000 Ω

If circuit is as specified, replace the amplifier.

System Amplifier

(Automatic A/C)

INSPECTION OF SYSTEM AMPLIFIER

1. False Signal Input to System Amplifier

False Signal	A	B
Condition	Interier room temperature is very low. 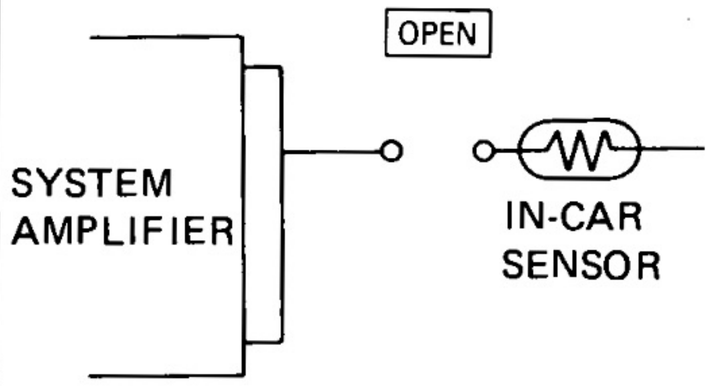 AC1370	Interior room temperature is very high. 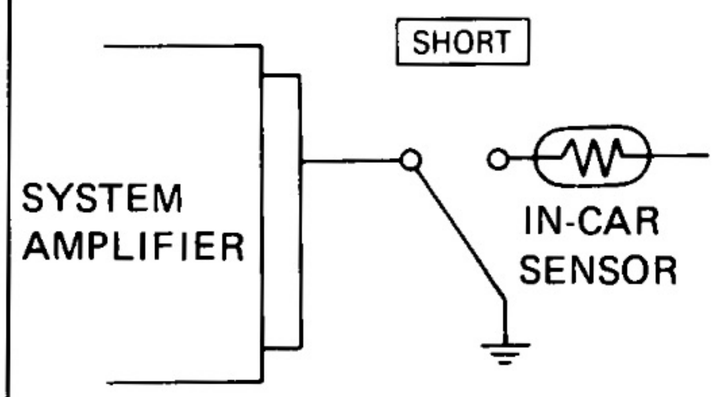 AC1371
Your Work	Remove in-car sensor connector.	Remove in-car sensor, and ground the number 1 pin of in-car sensor female connector.

2. System Operation When Input False Signal

Condition: Setting Temperature is at 25°C (77°F)

System Main Parts	False signal	Motion			
Air Mix Control Servo Motor	A	Air mix control servo motor shaft moves towards max-hot side.			
	B	Air mix control servo motor shaft moves towards max-cool side.			
Air Flow Mode Control Servo Motor		Air Flow Mode Damper			
		VENT	BI-LEVEL	HEAT	DEF
	A	Close	Close	Open	Close
	B	Open	Close	Close	Close

System Operation When Input False Signal (Cont'd)

System Main Parts	False signal	Motion
Blower Motor	A	Blower motor rotates at high speed
	B	
Water Valve	A	OPEN
	B	CLOSE
Air Inlet Control Servo Motor	FRE Switch ON	Fresh air is ventilated.
	REC Switch ON	Recirculation air is ventirated.

If necessary, replace the system amplifier.

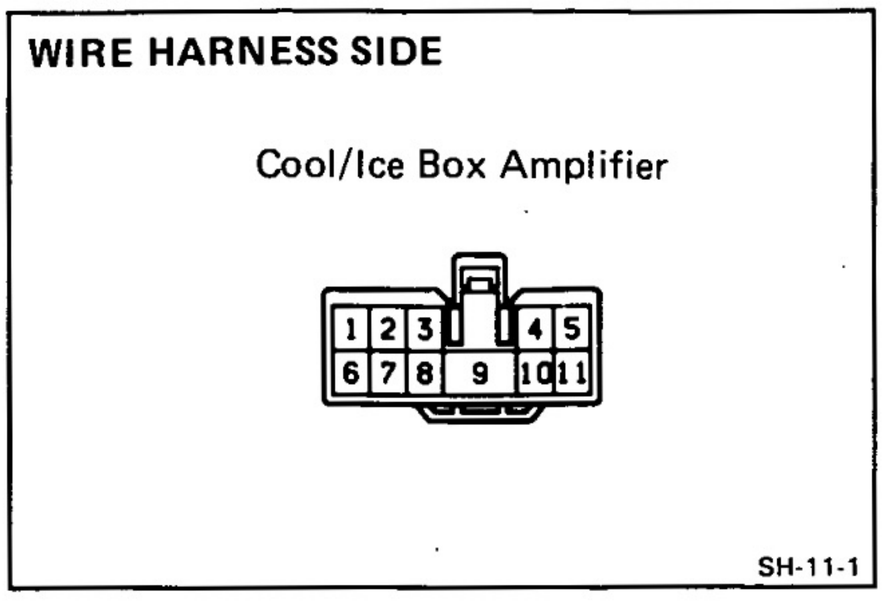

Cool/Ice Box Amplifier

INSPECTION OF AMPLIFIER

INSPECT AMPLIFIER CIRCUIT

Disconnect the amplifier and inspect the connector on the wire harness side as shown in the chart below.

Test conditions:

(1) Ignition switch: ON

(2) Temperature control lever: MAX COOL

(3) Blower switch: HI

Check for	Tester connection	Condition	Specified value
Continuity	4 — Ground	Constant	Continuity
	9 — Ground	Constant	Continuity
	8 — 5	Constant	Continuity
Voltage	1 — 4	Turn COOL switch on.	Battery voltage
		Turn COOL switch off.	No voltage
	3 — 4	Turn ICE switch on.	Battery voltage
		Turn ICE switch off.	No voltage
	6 — 4 8 — 4	Turn ignition switch on.	Battery voltage
		Turn ignition switch off.	No voltage
Resistance	7 — 11	Constant	Approx. 1.5 kΩ

If circuit is correct, replace the amplifier.

SERVICE SPECIFICATIONS

	Page
CLUTCH	A-2
MANUAL TRANSMISSION (H140F, H150F and H151F)	A-3
AUTOMATIC TRANSMISSION	A-5
TRANSFER (Full-Time 4WD Type)	A-9
TRANSFER (Part-Time 4WD Type)	A-11
PROPELLER SHAFT	A-13
SUSPENSION AND AXLE	A-14
BRAKE SYSTEM	A-19
STEERING	A-21
BODY	A-23
LUBRICANT	A-24

CLUTCH

Specifications

Pedal height (from asphalt sheet)			173 mm	6.81 in.
Pedal freeplay	w/o Clutch booster		13 – 23 mm	0.51 – 0.91 in.
	w/ Clutch booster		15 – 30 mm	0.59 – 1.18 in.
Push rod play at pedal top			1 – 5 mm	0.04 – 0.20 in.
Booster air valve stroke at pedal top			5 – 9 mm	0.20 – 0.35 in.
Booster push rod to piston clearance		w/ SST	0 mm	0 in.
Disc rivet head depth		Limit	0.3 mm	0.012 in.
Disc runout		Limit	0.8 mm	0.031 in.
Diaphragm spring tip alignment		Limit	1.0 mm	0.039 in.
Diaphragm spring finger wear	Depth	Limit	0.6 mm	0.024 in.
	Width	Limit	5.0 mm	0.197 in.
Flywheel runout		Limit	0.2 mm	0.008 in.

Torque Specifications

Part tightened	kg-cm	ft-lb	N·m
Master cylinder × Body	80	69 in.-lb	7.8
Clutch line union	155	11	15
Clevis lock nut	250	18	25
Master cylinder × Clutch booster	130	9	13
Clutch booster × Body	130	9	13
Accumulator bracket × Accumulator housing	55	48 in.-lb	5.4
Accumulator line union	155	11	15
Accumulator bleeder plug	110	8	11
Release cylinder set bolt	120	9	12
Release cylinder bleeder plug	110	8	11
Clutch cover × Flywheel			
H151F transmission	400	29	39
Others	195	14	19

MANUAL TRANSMISSION (H140F, H150F and H151F)

Specifications

Output shaft			
1st gear journal diameter	Limit	49.979 mm	1.9677 in.
2nd gear journal diameter	Limit	57.984 mm	2.2828 in.
3rd gear journal diameter	Limit	37.979 mm	1.4952 in.
5th gear journal diameter	Limit	45.984 mm	1.8104 in.
Frange thickness	Limit	4.725 mm	0.1860 in.
Runout	Limit	0.05 mm	0.0020 in.
Counter gear			
Roller bearing journal diameter	STD	35.957 – 35.970 mm	1.4156 – 1.4161 in.
	Limit	35.970 mm	1.4161 in.
Gear thrust clearance			
1st & 3rd gear	STD	0.1 – 0.45 mm	0.0039 – 0.0177 in.
	Limit	0.45 mm	0.0177 in.
2nd & 5th gear	STD	0.1 – 0.35 mm	0.0039 – 0.0138 in.
	Limit	0.35 mm	0.0138 in.
Reverse gear	STD	0.1 – 0.67 mm	0.0039 – 0.0264 in.
	Limit	0.67 mm	0.0264 in.
Gear oil clearance			
1st & 3rd gear	STD	0.020 – 0.073 mm	0.0008 – 0.0029 in.
	Limit	0.73 mm	0.0029 in.
2nd & 5th gear	STD	0.015 – 0.068 mm	0.0006 – 0.0027 in.
	Limit	0.068 mm	0.0027 in.
Shift fork to hub sleeve clearance	Limit	0.35 mm	0.0138 in.
Synchronizer ring to gear clearance			
1st & 2nd gear	STD	1.1 – 1.9 mm	0.0433 – 0.0748 in.
	Limit	1.1 mm	0.0433 in.
3rd & reverse gear	STD	0.8 – 1.6 mm	0.0315 – 0.0630 in.
	Limit	0.8 mm	0.0315 in.
Oil seal drive in depth			
Front bearing retainer		15.4 – 16.2 mm	0.6063 – 0.6378 in.
Input shaft to synchronizer ring	STD	0.8 – 1.6 mm	0.0315 – 0.0630 in.
	Limit	0.8 mm	0.0315 in.
Input shaft snap ring thickness	Mark		
	A	2.50 – 2.55 mm	0.0984 – 0.1004 in.
	B	2.55 – 2.60 mm	0.1004 – 0.1024 in.
	C	2.60 – 2.65 mm	0.1024 – 0.1043 in.
	D	2.65 – 2.70 mm	0.1043 – 0.1063 in.
	E	2.70 – 2.75 mm	0.1063 – 0.1083 in.
	F	2.75 – 2.80 mm	0.1083 – 0.1102 in.
Counter gear snap ring (Front bearing)	Mark		
	A	2.45 – 2.50 mm	0.0970 – 0.0984 in.
	B	2.50 – 2.55 mm	0.0984 – 0.1004 in.
	C	2.55 – 2.60 mm	0.1004 – 0.1024 in.
	D	2.60 – 2.65 mm	0.1024 – 0.1043 in.
	E	2.65 – 2.70 mm	0.1043 – 0.1063 in.
	F	2.70 – 2.75 mm	0.1063 – 0.1083 in.
Output shaft snap ring thickness			
Hub sleeve No.3	Mark		
	A	2.40 – 2.45 mm	0.0945 – 0.0965 in.
	B	2.45 – 2.50 mm	0.0965 – 0.0984 in.
	C	2.50 – 2.55 mm	0.0984 – 0.1004 in.
	D	2.55 – 2.60 mm	0.1004 – 0.1024 in.
	E	2.60 – 2.65 mm	0.1024 – 0.1044 in.
	F	2.65 – 2.70 mm	0.1044 – 0.1063 in.

Specifications (Cont'd)

Output shaft snap ring thickness (cont'd)			
Hub sleeve No.2	Mark		
	4	1.90 – 1.95 mm	0.0748 – 0.0768 in.
	5	1.95 – 2.00 mm	0.0768 – 0.0787 in.
	6	2.00 – 2.05 mm	0.0787 – 0.0807 in.
	7	2.05 – 2.10 mm	0.0807 – 0.0827 in.
	8	2.10 – 2.15 mm	0.0827 – 0.0847 in.
	9	2.15 – 2.20 mm	0.0847 – 0.0866 in.
Hub sleeve No.1	Mark		
	A	2.90 – 2.95 mm	0.1142 – 0.1162 in.
	B	2.95 – 3.00 mm	0.1162 – 0.1181 in.
	C	3.00 – 3.05 mm	0.1181 – 0.1201 in.
	D	3.05 – 3.10 mm	0.1201 – 0.1220 in.
	E	3.10 – 3.15 mm	0.1220 – 0.1240 in.
	F	3.15 – 3.25 mm	0.1240 – 0.1260 in.
Rear	Mark		
	A	2.40 – 2.45 mm	0.0945 – 0.0965 in.
	B	2.45 – 2.50 mm	0.0965 – 0.0984 in.
	C	2.50 – 2.55 mm	0.0984 – 0.1004 in.
	D	2.55 – 2.60 mm	0.1004 – 0.1024 in.
	E	2.60 – 2.65 mm	0.1024 – 0.1044 in.
	F	2.65 – 2.70 mm	0.1044 – 0.1063 in.
	G	2.70 – 2.75 mm	0.1063 – 0.1083 in.
	H	2.75 – 2.80 mm	0.1083 – 0.1102 in.
Oil pump			
Body clearance of driven rotor	STD	0.075 – 0.170 mm	0.0030 – 0.0067 in.
	Limit	0.17 mm	0.0067 in.
Tip clearance of both rotors	STD	0.10 – 0.22 mm	0.0039 – 0.0087 in.
	Limit	0.22 mm	0.0087 in.

Torque Specifications

Part tightened	kg-cm	ft-lb	N·m
Shift lever control retainer × Transmission case	170	12	17
Restrict pin	380	27	37
Oil receiver × Transmission case	120	7	12
Back-up light switch	450	33	44
Top switch	450	33	44
Drain plug	380	27	37
Front bearing retainer × Transmission case	170	12	16
Clutch housing × Transmission case	380	27	37
Oil strainer × Transfer adaptor	120	7	12
Oil receiver × Intermediate plate	185	13	18
Transmission case × Transfer adaptor	380	27	37
Rear bearing retainer × Intermediate plate	185	13	18
Shift fork No.1 set bolt	370	27	36
Shift fork No.2 set bolt	370	27	36
Shift fork No.3 set bolt	370	27	36
Reverse shift fork set bolt (4-Speed)	370	27	36
(5-Speed)	350	25	34
Screw plug	190	14	19
Oil pump cover × Transfer adaptor	170	12	17

AUTOMATIC TRANSMISSION

Specifications

Engine stall revolution		3F engine	1,850±150 rpm		
		1H engine	1,900±150 rpm		
Engine idle speed	N range	3F engine	750 rpm		
		3F-E engine	650 rpm		
		1HZ engine	710 rpm		
		1HD-T engine	800 rpm		
Time lag	N range→D range		Less than 0.7 seconds		
	N range→R range		Less than 1.2 seconds		
Line pressure (wheel locked)					
Engine idling	3F engine	D range	3.7 – 4.3 kg/cm²	53 – 61 psi	363 – 442 kPa
		R range	4.5 – 5.5 kg/cm²	64 – 78 psi	441 – 539 kPa
	1H engine	D range	4.4 – 5.2 kg/cm²	63 – 74 psi	431 – 510 kPa
		R range	6.5 – 8.6 kg/cm²	92 – 122 psi	637 – 843 kPa
At stall	3F engine	D range	11.1 – 13.6 kg/cm²	158 – 193 psi	1,089 – 1,344 kPa
		R range	14.0 – 17.0 kg/cm²	199 – 242 psi	1,373 – 1,677 kPa
	1H engine	D range	9.9 – 12.5 kg/cm²	141 – 178 psi	971 – 1,226 kPa
		R range	16.4 – 18.9 kg/cm²	233 – 269 psi	1,608 – 1,853 kPa
Governor pressure	Output shaft rpm				
	3F, 3F-E engine	1,000	0.8 – 1.2 kg/cm²	11 – 17 psi	78 – 118 kPa
		1,800	2.0 – 2.4 kg/cm²	28 – 34 psi	196 – 235 kPa
		3,500	5.7 – 6.3 kg/cm²	81 – 90 psi	559 – 618 kPa
	1HZ, 1HD-T engine	1,000	1.0 – 1.4 kg/cm²	14 – 20 psi	98 – 137 kPa
		1,800	2.3 – 2.9 kg/cm²	33 – 41 psi	226 – 284 kPa
		3,500	5.7 – 6.3 kg/cm²	81 – 90 psi	559 – 618 kPa
Throttle cable adjustment			Between boot end face and inner cable stopper		
Throttle valve fully closed			0.5 – 1.0 mm	0.020 – 0.059 in.	
Throttle valve fully opened			32 – 34 mm	1.26 – 1.34 in.	
Torque converter installation					
	3F, 3F-E engine		16.5 mm (0.650 in.) or more		
	1HZ, 1HD-T engine		41.2 mm (1.622 in.) or more		
Torque converter runout		Limit	0.30 mm	0.0118 in.	
Drive plate runout		Limit	0.20 mm	0.0079 in.	

Specifications (Cont'd)

Shift point schedule

(Australia)

km/h (mph)

		Throttle valve fully open						(fully closed)		2 range	1 range
Engine	Tire size	1→2	2→3	3→O/D	O/D→3	3→2	2→1	*1	*2	3→2	2→1
3F-E	7.50R-16-6	37–52 (23–32)	83–98 (52–61)	122–137 (76–85)	112–128 (70–80)	72–87 (45–54)	31–46 (19–29)	80–92 (50–57)	76–87 (47–54)	85–101 (53–63)	39–54 (24–34)
	265/75R-15	35–50 (22–31)	80–95 (50–59)	117–132 (73–82)	108–123 (67–76)	70–84 (43–52)	30–44 (19–27)	77–88 (48–55)	73–84 (48–52)	82–97 (51–60)	37–52 (23–32)
1HD-T	7.50R-16-6	27–42 (17–26)	73–88 (45–55)	124–139 (77–86)	114–129 (71–80)	60–75 (37–47)	19–35 (12–22)	73–85 (45–53)	69–80 (43–50)	78–93 (48–58)	35–49 (22–30)
	265/75R-15	25–40 (16–25)	69–84 (43–52)	117–132 (73–82)	108–123 (67–76)	57–72 (35–45)	18–33 (11–21)	69–81 (43–50)	65–76 (40–47)	74–88 (46–55)	33–46 (21–29)

*1 Lock-up ON *2 Lock-up OFF

(Europe)

km/h (mph)

		Throttle valve fully open						(fully closed)		2 range	1 range
Engine	Tire size	1→2	2→3	3→O/D	O/D→3	3→2	2→1	*1	*2	3→2	2→1
3F-E	265/75R-15	35–50 (22–31)	80–95 (50–59)	117–132 (73–82)	108–123 (67–76)	70–84 (43–52)	30–44 (19–27)	77–88 (48–55)	73–84 (45–52)	82–97 (51–60)	37–52 (23–32)
	215/80R-16	33–47 (21–29)	76–90 (47–56)	111–125 (69–78)	103–117 (64–73)	66–80 (41–50)	28–42 (17–26)	73–84 (45–52)	69–80 (43–50)	78–92 (48–57)	36–50 (22–31)
1HZ	265/75R-15	30–45 (19–28)	74–89 (46–55)	117–132 (73–82)	108–123 (67–76)	64–79 (40–49)	25–39 (16–24)	72–83 (45–52)	67–79 (42–49)	76–91 (47–57)	36–51 (22–32)
	215/80R-16	29–43 (18–27)	70–84 (43–52)	111–125 (69–78)	103–116 (64–72)	61–75 (38–47)	24–38 (15–24)	68–79 (42–49)	64–75 (40–47)	73–87 (45–54)	34–48 (21–30)
1HD-T	265/75R-15	25–40 (16–25)	69–84 (43–52)	117–132 (73–82)	108–123 (67–76)	57–72 (35–45)	18–33 (11–21)	69–81 (43–50)	67–76 (40–47)	74–88 (46–55)	33–46 (21–29)
	215/80R-16	24–38 (15–24)	66–80 (41–50)	111–125 (69–78)	103–117 (64–73)	54–68 (34–42)	17–31 (11–19)	66–77 (41–48)	62–73 (39–45)	70–84 (43–52)	32–44 (20–27)

*1 Lock-up ON *2 Lock-up OFF

(Middle East)

km/h (mph)

		Throttle valve fully open						(fully closed)		2 range	1 range
Engine	Tire size	1→2	2→3	3→O/D	O/D→3	3→2	2→1	*1	*2	3→2	2→1
3F	7.50-16-6	31–47 (19–29)	77–92 (48–57)	121–137 (75–85)	112–127 (70–79)	67–82 (42–51)	26–41 (16–25)	74–86 (46–53)	70–81 (43–50)	79–94 (49–58)	45–58 (28–36)
	9.00-15-6	33–49 (21–30)	81–97 (50–60)	128–143 (80–89)	118–133 (73–83)	70–86 (43–53)	27–43 (17–27)	78–90 (48–56)	73–86 (45–53)	83–79 (52–62)	45–61 (28–38)
	31×10.5R-15	30–45 (19–28)	75–89 (47–55)	118–133 (73–83)	109–123 (68–76)	65–80 (40–50)	25–40 (16–25)	72–83 (45–52)	68–79 (42–49)	77–92 (48–57)	41–56 (25–35)
	7.50R-16-8	32–47 (20–29)	78–94 (48–58)	124–139 (77–86)	114–129 (71–80)	68–83 (42–52)	27–42 (17–26)	75–87 (47–54)	71–83 (44–52)	81–96 (50–60)	43–59 (27–37)

*1 Lock-up ON *2 Lock-up OFF

Specifications (Cont'd)

Shift point schedule (cont'd)

(Others)

km/h (mph)

		Throttle valve fully open						(fully closed)		2 range	1 range
Engine	Tire size	1→2	2→3	3→O/D	O/D→3	3→2	2→1	*1	*2	3→2	2→1
3F	7.50-16-6 7.50-16-8	31–47 (19–29)	77–92 (48–57)	121–137 (75–85)	112–127 (70–79)	67–82 (42–51)	26–41 (16–25)	74–86 (46–53)	70–81 (43–50)	79–94 (49–58)	43–58 (28–36)
	9.00-15-6	33–49 (21–30)	81–97 (50–60)	128–143 (80–89)	118–133 (73–83)	70–86 (43–53)	27–43 (17–27)	78–90 (48–56)	73–86 (45–53)	83–99 (52–62)	45–61 (28–38)
	31×10.5R-15	30–45 (19–28)	75–89 (47–55)	118–133 (73–83)	109–123 (68–76)	65–80 (40–50)	25–40 (16–25)	72–83 (45–52)	68–79 (42–49)	77–92 (48–57)	41–56 (25–35)
	7.50R-16-8	32–47 (20–29)	78–94 (48–58)	124–139 (77–86)	114–129 (71–80)	68–83 (42–52)	27–42 (17–26)	75–87 (47–54)	71–83 (44–52)	81–96 (50–60)	43–59 (27–37)
	235/75R-15	28–42 (17–26)	69–83 (43–52)	110–123 (68–76)	101–115 (63–71)	60–74 (37–46)	23–37 (14–23)	67–78 (42–48)	63–74 (39–46)	71–85 (44–53)	39–52 (24–32)
1HZ	7.50-16-6 7.50-16-8	31–47 (19–29)	77–92 (48–57)	121–137 (75–85)	112–127 (70–79)	67–82 (42–51)	26–41 (16–25)	74–86 (46–53)	70–81 (43–50)	79–94 (49–58)	43–58 (28–36)
	7.50R-16-8	32–47 (20–29)	78–94 (48–58)	124–139 (77–86)	114–129 (71–80)	68–83 (42–52)	27–42 (17–26)	75–87 (47–54)	71–83 (44–52)	81–96 (50–60)	38–53 (24–33)
	9.00-15-6	33–49 (21–30)	81–97 (50–60)	128–143 (80–89)	118–133 (73–83)	70–86 (43–53)	28–43 (17–27)	78–90 (48–56)	73–86 (45–53)	83–99 (52–62)	39–55 (24–34)
	31×10.5R-15	30–45 (19–28)	75–89 (47–55)	118–133 (73–83)	109–123 (68–76)	65–80 (40–50)	25–40 (16–25)	72–83 (45–52)	68–79 (42–49)	77–92 (48–57)	36–51 (22–32)
1HD-T	7.50-16-6	26–41 (16–25)	72–87 (45–54)	121–137 (75–85)	112–127 (70–79)	59–74 (37–46)	19–34 (12–21)	72–83 (45–52)	67–79 (42–49)	76–92 (47–57)	35–48 (22–30)
	7.50-16-8	26–41 (16–25)	72–87 (45–54)	121–137 (75–85)	112–127 (70–79)	59–74 (37–46)	19–34 (12–21)	72–83 (45–52)	67–79 (42–49)	76–92 (47–57)	35–48 (22–30)
	7.50R-16-8	27–42 (17–26)	73–88 (45–55)	124–139 (77–86)	114–129 (71–80)	60–75 (37–47)	19–35 (12–22)	73–85 (45–53)	69–80 (43–50)	78–93 (48–58)	35–49 (22–30)
	9.00-15-6	27–43 (17–27)	75–91 (47–57)	128–143 (80–89)	118–133 (73–83)	62–78 (39–48)	20–36 (12–22)	76–88 (47–55)	71–83 (44–52)	62–78 (39–48)	20–36 (12–22)
	31×10.5R-15	25–40 (16–25)	70–84 (43–52)	118–133 (73–83)	109–123 (68–76)	57–72 (35–45)	18–33 (11–21)	70–81 (43–50)	65–77 (40–48)	74–89 (46–55)	34–47 (21–29)

*1 Lock-up ON *2 Lock-up OFF

Torque Specifications

Part tightened		kg-cm	ft-lb	N·m
Engine × Transmission	8 mm	185	13	18
	10 mm	380	27	37
	12 mm	730	53	72
Drive plate × Crankshaft	3F engine	1200 ~~900~~	87 ~~65~~	118 ~~88~~
	1H engine	1,300	94	127
Torque converter × Drive plate	3F engine	290	21	28
	1H engine	550	40	54
Valve body	6 mm	100	7	10
	5 mm	55	48 in.-lb	5.4
Oil pan		70	61 in.-lb	6.9
Oil pan drain plug		280	20	27
Cooler pipe union nut		350	25	34
Testing plug		75	65 in.-lb	7.4
Neutral start switch (bolt)		130	9	13
Neutral start switch (nut)		70	61 in.-lb	6.9
Frame crossmember set bolt		620	45	61
Frame crossmember set nut		750	54	74
PTO × Drive shaft		200	14	20

TRANSFER (Full-Time 4WD Type)

Specifications

Input shaft assembly	Input gear snap ring thickness and power take-off gear snap ring thickness	Mark		
		A	2.0 mm	0.0787 in.
		B	2.1 mm	0.0827 in.
		C	2.2 mm	0.0866 in.
		D	2.3 mm	0.0906 in.
		E	2.4 mm	0.0945 in.
		F	2.5 mm	0.0984 in.
		G	2.6 mm	0.1024 in.
		H	2.7 mm	0.1063 in.
		J	2.8 mm	0.1102 in.
	Input shaft rear ball bearing snap ring thickness	Mark		
		A	2.0 mm	0.0787 in.
		B	2.1 mm	0.0827 in.
		C	2.2 mm	0.0866 in.
		D	2.3 mm	0.0906 in.
		E	2.4 mm	0.0945 in.
Idler gear assembly	Idler low gear thrust clearance	STD	0.125 – 0.275 mm	0.0049 – 0.0108 in.
		Limit	0.275 mm	0.0108 in.
	Idler low gear oil clearance	STD	0.015 – 0.068 mm	0.0006 – 0.0027 in.
		Limit	0.068 mm	0.0027 in.
Center differential assembly	High speed output gear thrust clearance	STD	0.10 – 0.25 mm	0.0039 – 0.0098 in.
		Limit	0.25 mm	0.0098 in.
	High speed output gear oil clearance	STD	0.015 – 0.071 mm	0.0006 – 0.0028 in.
		Limit	0.071 mm	0.0028 in.
	Center differential backlash	Limit	0.05 mm	0.0020 in.
	Front drive gear piece snap ring thickness	Mark		
		A	2.00 mm	0.0787 in.
		B	2.10 mm	0.0827 in.
		C	2.20 mm	0.0866 in.
		D	2.30 mm	0.0906 in.
		E	2.40 mm	0.0945 in.
		F	2.50 mm	0.0984 in.
		G	2.60 mm	0.1024 in.
		H	2.70 mm	0.1063 in.
		J	2.80 mm	0.1102 in.
		K	1.80 mm	0.0709 in.
		L	1.90 mm	0.0748 in.
	Preload adjusting shim (Idler gear side)	Mark		
		A	0.15 mm	0.0059 in.
		B	0.30 mm	0.0118 in.
		C	0.45 mm	0.0177 in.
		D	2.40 mm	0.0945 in.
		E	2.60 mm	0.1024 in.
		F	2.80 mm	0.1102 in.
		G	3.00 mm	0.1181 in.
		H	3.20 mm	0.1260 in.
		J	3.40 mm	0.1339 in.
		K	3.60 mm	0.1417 in.
		L	3.80 mm	0.1496 in.
		M	4.00 mm	0.1575 in.

Specifications (Cont'd)

Center differential assembly (cont'd)	Preload adjusting shim (Output shaft side)	Mark		
		A	0.15 mm	0.0059 in.
		B	0.30 mm	0.0118 in.
		C	0.45 mm	0.0177 in.
		D	1.00 mm	0.0394 in.
		E	1.20 mm	0.0472 in.
		F	1.40 mm	0.0551 in.
		G	1.60 mm	0.0630 in.
		H	1.80 mm	0.0709 in.
		J	2.00 mm	0.0787 in.
		K	2.20 mm	0.0866 in.
		L	2.40 mm	0.0945 in.
		M	2.60 mm	0.1024 in.

Torque Specifications

Part tightened	kg-cm	ft-lb	N·m
Center differential rear case set bolt	1,000	72	98
(Tenporary tighten)	900	65	88
Oil pump plate set bolt	50	43 in.-lb	4.9
Screw plug (Rear extension housing)	190	14	19
Oil pump cover set screw	50	43 in.-lb	4.9
Oil receiver set bolt	55	48 in.-lb	5.4
Shift outer lever × Inner lever	120	9	12
Oil strainer set bolt	50	43 in.-lb	4.9
Front case × Rear case	380	27	37
Case cover × Rear case	380	27	37
Rear extension housing × Rear case	380	27	37
Front extension housing × Front case	380	27	37
Power take-off case × Front case	195	14	19
Power take-off cover × Front case	195	14	19
Screw plug (Front case)	190	14	19
4WD indicator switch	380	27	37
Motor actuator × Front case	195	14	19

TRANSFR (Part-Time 4WD Type)

Specifications

Input shaft	Input gear snap ring thickness and power take-off gear snap ring thickness	Mark		
		A	2.0 mm	0.0787 in.
		B	2.1 mm	0.0827 in.
		C	2.2 mm	0.0866 in.
		D	2.3 mm	0.0906 in.
		E	2.4 mm	0.0945 in.
		F	2.5 mm	0.0984 in.
		G	2.6 mm	0.1024 in.
		H	2.7 mm	0.1063 in.
		J	2.8 mm	0.1102 in.
	Input shaft rear ball bearing snap ring thickness	Mark		
		A	2.0 mm	0.0787 in.
		B	2.1 mm	0.0827 in.
		C	2.2 mm	0.0866 in.
		D	2.3 mm	0.0906 in.
		E	2.4 mm	0.0945 in.
Output shaft	High speed gear thrust clearance	STD	0.28 – 0.43 mm	0.0110 – 0.0169 in.
		Limit	0.43 mm	0.0169 in
	Low speed gear thrust clearance	STD	0.20 – 0.45 mm	0.0079 – 0.0177 in.
		Limit	0.45 mm	0.0177 in.
	High speed gear and low speed gear oil clearance	STD	0.0075 – 0.034 mm	0.0003 – 0.0013 in.
		Limit	0.34 mm	0.0013 in.
	Output shaft journal outer diameter (High speed gear)	Limit	41.984 mm	1.6529 in.
	Output shaft journal outer diameter (Low speed gear)	Limit	42.984 mm	1.6923 in.
	Output shaft synchronizer ring to gear clearance	STD	0.75 – 1.65 mm	0.0295 – 0.0650 in.
		Limit	0.75 mm	0.0295 in.
	Shift fork to hub sleeve clearance	STD	0.1 – 0.4 mm	0.0039 – 0.0157 in.
		Limit	0.4 mm	0.0157 in.
	Output shaft journal length (High speed gear)	Limit	46.55 mm	1.8327 in.
	Output shaft journal length (Low speed gear)	Limit	62.35 mm	2.4547 in.
	High and low hub sleeve snap ring thickness	Mark		
		A	2.60 mm	0.1024 in.
		B	2.65 mm	0.1043 in.
		C	2.70 mm	0.1063 in.
		D	2.75 mm	0.1083 in.
		E	2.80 mm	0.1102 in.
		F	2.85 mm	0.1122 in.
		G	2.90 mm	0.1142 in.
	Front drive gear piece snap ring thickness	Mark		
		A	2.0 mm	0.0787 in.
		B	2.1 mm	0.0827 in.
		C	2.2 mm	0.0866 in.
		D	2.3 mm	0.0906 in.
		E	2.4 mm	0.0945 in.

Specifications (Cont'd)

Front extension housing assembly	Bearing snap ring	Mark		
		A	1.7 mm	0.0669 in.
		B	1.8 mm	0.0709 in.
	Front output shaft	Mark		
		A	1.8 mm	0.0709 in.
		B	1.9 mm	0.0748 in.
		C	2.0 mm	0.0787 in.
		D	2.1 mm	0.0827 in.
		E	2.2 mm	0.0866 in.
	Preload adjusting shim (Idler gear side)	Mark		
		A	0.15 mm	0.0059 in.
		B	0.30 mm	0.0118 in.
		C	0.45 mm	0.0177 in.
		D	2.40 mm	0.0945 in.
		E	2.60 mm	0.1024 in.
		F	2.80 mm	0.1102 in.
		G	3.00 mm	0.1181 in.
		H	3.20 mm	0.1260 in.
		J	3.40 mm	0.1339 in.
		K	3.60 mm	0.1417 in.
		L	3.80 mm	0.1496 in.
		M	4.00 mm	0.1575 in.
	Preload adjusting shim (Output shaft side)	Mark		
		A	0.15 mm	0.0059 in.
		B	0.30 mm	0.0118 in.
		C	0.45 mm	0.0177 in.
		D	1.00 mm	0.0394 in.
		E	1.20 mm	0.0473 in.
		F	1.40 mm	0.0551 in.
		G	1.60 mm	0.0630 in.
		H	1.80 mm	0.0709 in.
		J	2.00 mm	0.0787 in.
		K	2.20 mm	0.0866 in.
		L	2.40 mm	0.0945 in.
		M	2.60 mm	0.1024 in.

Torque Specifications

Part tightened	kg-cm	ft-lb	N·m
Screw plug (Rear extension housing)	190	14	19
Oil pump cover	50	43 in.-lb	4.9
Oil receiver × Front case	55	48 in.-lb	5.4
Shift outer lever × Inner lever	120	9	12
Oil strainer × Rear case	50	43 in.-lb	4.9
Oil receiver × Rear case	130	9	13
Front case × Rear case	380	27	37
Case cover × Rear case	380	27	37
Rear extension housing × Rear case	380	27	37
Lock nut	1,300	94	128
Front extension housing × Front case	380	27	37
Power take-off case × Front case	195	14	19
Power take-off cover × Front case	195	14	19
4WD indicator switch	380	27	37
Screw plug (Front case)	190	14	19
Motor actuator × Front case	195	14	19

PROPELLER SHAFT

Specifications

Propeller shaft runout		Limit	0.8 mm	0.031 in.
Spider bearing axial play			Less than 0.05 mm (0.0020 in.)	
Snap ring thickness	Color	Mark		
Front propeller shaft	None	1	2.100 – 2.150 mm	0.0827 – 0.0846 in.
	None	2	2.150 – 2.200 mm	0.0846 – 0.0866 in.
	None	3	2.200 – 2.250 mm	0.0866 – 0.0886 in.
	Brown	None	2.250 – 2.300 mm	0.0886 – 0.0906 in.
	Blue	None	2.300 – 2.350 mm	0.0906 – 0.0925 in.
	None	6	2.350 – 2.400 mm	0.0925 – 0.0945 in.
	None	7	2.400 – 2.450 mm	0.0945 – 0.0965 in.
	None	8	2.450 – 2.500 mm	0.0965 – 0.0984 in.
Rear propeller shaft	None		2.00 mm	0.0787 in.
	Brown		2.03 mm	0.0799 in.
	Blue		2.06 mm	0.0811 in.
	None		2.09 mm	0.0823 in.

Torque Specifications

Part tightened	kg-cm	ft-lb	N·m
Front propeller shaft × Front differential	750	54	74
Front propeller shaft × Transfer	750	54	74
Rear propeller shaft × Rear differential	900	65	88
Rear propelier shaft × Transfer	900	65	88

SUSPENSION AND AXLE

Specifications

Cold tire inflation pressure	Destination	Grade	Tire size	Pressure kg/cm² (psi, kPa) Front	Rear
	Australia	STD	7.50R16-6PRLT	2.4 (34, 240)	3.0 (43, 300)
			7.50R16-8PRLT	2.4 (34, 240)	3.0 (43, 300)
		GX,VX	7.50R16-6PRLT	2.4 (34, 240)	3.2 (46, 320)
			265/75R15 112S	1.8 (27, 180)	1.8 (27, 180)
	Destination	Model	Tire size	Pressure kg/cm² (psi, kPa) Front	Rear
	Europe	FJ series	215/80R16 107S	2.1 (30, 210)	2.4 (35, 240)
			265/75R15 112S	1.8 (27, 180)	1.8 (27, 180)
		HZJ (STD) series	215/80R16 107S	2.1 (30, 210)	2.2 (32, 220)
		HZJ (GX) series	215/80R16 107S	2.2 (32, 220)	2.4 (35, 240)
			265/75R15 112S	1.8 (26, 180)	1.8 (26, 180)
		HDJ series	215/80R16 107S	2.3 (23, 230)	2.4 (33, 240)
			265/75R15 112S	1.8 (26, 180)	1.8 (26, 180)
	Others	All models	7.00-15-6PRLT	2.8 (40, 275)	3.25 (46, 318)
			7.50-16-6PRLT	2.0 (28, 196)	3.0 (43, 294)
			7.50-16-8PRLT	2.0 (28, 196)	3.0 (43, 294)
			7.50R16-8PRLT	2.5 (36, 245)	3.25 (46, 318)
			31 × 10.50R15-6PRLT	2.2 (31, 216)	3.0 (43, 294)
			7.50R16-8PRLT (Sahara tire)	2.7 (38, 265)	3.5 (50, 343)
			9.00-15-6PRLT (Sand tire)	2.45 (35, 240)	2.8 (40, 276)

Hollow spring and bumper stopper clearance	A: Hollow spring clearance (Front)	A	B
	B: Bumper stopper clearance (Rear)	25 mm (0.98 in.)	45 mm (1.77 in.)

Front wheel alignment	Camber		Inspection standard	1°00' ± 45'
			Left-right error	30' or less
	Caster	Tire size		
		31 × 10.50R15-6PRLT	Inspection standard	1°40' ± 60'
		265/75R15 112S	Left-right error	30' or less
		9.00-15-6PRLT		
		Others	Inspection standard	3°00' ± 60'
			Left-right error	30' or less
	Steering axis inclination		Inspection standard	13°00' ± 45'
			Left-right error	30' or less
	Toe-in	Tire size		
		7.00-15-6PRLT	Inspection standard	4 ± 2 mm (0.16 ± 0.08 in.)
		9.00-15-6PRLT	Adjustment standard	4 ± 1 mm (0.16 ± 0.04 in.)
		7.00-16-6PRLT		
		7.50-16-6PRLT		
		7.50-16-8PRLT		
		215/80R16 107S	Inspection standard	2 ± 2 mm (0.08 ± 0.08 in.)
		265/75R15 112S	Adjustment standard	2 ± 1 mm (0.08 ± 0.04 in.)
		31 × 10.50R15-6PRLT		
		7.50R16-6PRLT		
		7.50R16-8PRLT		

Specifications (Cont'd)

Front wheel alignment (cont'd)	Wheel angle	PS	MS
	Max. Inside wheel	35° +0° −3°	32° +0° −3°
	Outside wheel	31°	29°
	Side slip (Reference only)	3.0 mm/m (0.118 in./3.3 ft) or less	
Front differential	Drive pinion bearing preload (at starting)		
	New bearing	10 – 16 kg-cm	8.7 – 13.9 in.-lb 1.0 – 1.6 N·m
	Reused bearing	5 – 8 kg-cm	4.3 – 6.9 in.-lb 0.5 – 0.8 N·m
	Total preload (at starting)	Add drive pinion bearing preload	
		4 – 6 kg-cm	3.5 – 5.2 in.-lb 0.4 – 0.6 N·m
	Drive pinion to ring gear backlash	0.13 – 0.18 mm	0.0051 – 0.0071 in.
	Pinion gear to side gear backlash	0.05 – 0.20 mm	0.0020 – 0.0079 in.
	Ring gear runout Limit	0.10 mm	0.0039 in.
	Companion flange deviation Limit		
	Radial	0.10 mm	0.0039 in.
	Lateral	0.10 mm	0.0039 in.
	Side gear thrust washer thickness		
	2 pinion type	1.6 mm	0.063 in.
		1.7 mm	0.067 in.
		1.8 mm	0.071 in.
	w/ Differential lock	0.9 mm	0.035 in.
		1.0 mm	0.039 in.
		1.1 mm	0.043 in.
		1.2 mm	0.047 in.
		1.3 mm	0.051 in.
	Drive pinion adjusting plate washer thickness	1.70 mm	0.0669 in.
		1.73 mm	0.0681 in.
		1.76 mm	0.0693 in.
		1.79 mm	0.0705 in.
		1.82 mm	0.0717 in.
		1.85 mm	0.0728 in.
		1.88 mm	0.0740 in.
		1.91 mm	0.0752 in.
		1.94 mm	0.0764 in.
		1.97 mm	0.0776 in.
		2.00 mm	0.0787 in.
		2.03 mm	0.0799 in.
		2.06 mm	0.0811 in.
		2.09 mm	0.0823 in.
		2.12 mm	0.0835 in.
		2.15 mm	0.0846 in.
		2.18 mm	0.0858 in.
		2.21 mm	0.0870 in.
		2.24 mm	0.0882 in.
		2.27 mm	0.0894 in.
		2.30 mm	0.0906 in.
		2.33 mm	0.0917 in.
	Rear oil seal drive in depth	1.0 mm	0.039 in.

Specifications (Cont'd)

Rear differential	Drive pinion bearing preload (at starting)			
	New bearing		13 – 20 kg-cm	11.3 – 17.4 in.-lb 1.3 – 2.0 N·m
	Reused bearing		7 – 10 kg-cm	6.1 – 8.7 in.-lb 0.7 – 1.0 N·m
	Total preload (at starting)		Add drive pinion bearing preload	
	2 pinion and LSD types		4 – 6 kg-cm	3.5 – 5.2 in.-lb 0.4 – 0.6 N·m
	w/ Differential lock		3 – 7 kg-cm	2.6 – 6.1 in.-lb 0.3 – 0.7 N·m
	Drive pinion to ring gear backlash		0.15 – 0.20 mm	0.0059 – 0.0079 in.
	Pinion gear to side gear backlash			
	Ex. LSD type		0.02 – 0.20 mm	0.0008 – 0.0079 in.
	LSD type		0.02 – 0.24 mm	0.0008 – 0.0094 in.
	Ring gear runout	Limit	0.10 mm	0.0039 in.
	Companion flange deviation	Limit		
		Radial	0.10 mm	0.0039 in.
		Lateral	0.10 mm	0.0039 in.
	Side gear thrust washer thickness			
	Ex. LSD type		1.60 mm	0.0630 in.
			1.75 mm	0.0689 in.
			1.90 mm	0.0748 in.
			2.05 mm	0.0807 in.
	LSD type		0.20 mm	0.0079 in.
			0.25 mm	0.0098 in.
			0.30 mm	0.0118 in.
			0.35 mm	0.0138 in.
	Drive pinion adjusting plate washer thickness		1.05 mm	0.0413 in.
			1.10 mm	0.0433 in.
			1.15 mm	0.0453 in.
			1.20 mm	0.0472 in.
			1.25 mm	0.0492 in.
			1.30 mm	0.0512 in.
			1.35 mm	0.0531 in.
			1.40 mm	0.0551 in.
			1.45 mm	0.0571 in.
			1.50 mm	0.0591 in.
			1.55 mm	0.0610 in.
	Side bearing adjusting plate thickness (w/ Differential lock only)			
			2.67 mm	0.1051 in.
			2.70 mm	0.1063 in.
			2.73 mm	0.1075 in.
			2.76 mm	0.1087 in.
			2.79 mm	0.1098 in.
			2.82 mm	0.1110 in.
			2.85 mm	0.1122 in.
			2.88 mm	0.1134 in.
			2.91 mm	0.1146 in.
			2.94 mm	0.1157 in.
			2.97 mm	0.1169 in.
			3.00 mm	0.1181 in.
			3.03 mm	0.1193 in.
			3.06 mm	0.1205 in.
			3.09 mm	0.1217 in.
			3.12 mm	0.1228 in.
			3.15 mm	0.1240 in.
			3.18 mm	0.1252 in.
			3.21 mm	0.1264 in.
			3.24 mm	0.1276 in.
			3.27 mm	0.1287 in.
			3.30 mm	0.1299 in.
			3.33 mm	0.1311 in.
	Front oil seal drive in depth		1.0 mm	0.039 in.

Specifications (Cont'd)

Front			
Free wheeling hub ring oil clearance	0.3 mm		0.012 in.
Wheel bearing preload (starting) (rotating load at hub bolt)	2.8 — 5.7 kg	6.2 — 12.6 lb	27 — 56 N
Steering knuckle bearing preload (rotating load at knuckle arm end)	2.5 — 4.5 kg	5.6 — 12.3 lb	25 — 44 N
Rear			
Axle shaft lateral runout	0.8 mm		0.031 in.
Hub axial play (w/ Full-floating type)	Less than 0.1 mm (0.004 in.)		
Wheel bearing preload	0.6 — 1.4 kg	1.3 — 7.2 lb	6 — 32 N
Axle housing and lock nut distance	−0.2 — 0.9 mm		−0.008 — 0.035 in.

Torque Specifications

	Part tightened	kg-cm	ft-lb	N·m
Front axle and suspension	Knuckle stopper bolt	450	33	44
	Free wheeling hub body × Axle hub	360	26	59
	Free wheeling hub cover × Free wheeling hub body	100	7	10
	Axle carrier × Brake tube	155	11	15
	Axle carrier × Disc brake cylinder	1,250	90	123
	Axle hub × Flange	360	26	35
	Hub bearing adjusting nut	600	43	59
	Steering knuckle × Bearing cap	980	71	96
	Steering knuckle × Knuckle arm	980	71	96
	Steering knuckle × Oil seal retainer	55	48 in.-lb	5.4
	Knuckle arm × Tie rod end	925	67	91
	Shock absorber × Body	700	51	69
	Shock absorber × Axle housing	700	51	69
	Lateral control rod × Axle housing	1,750	127	171
	Lateral control rod × Frame	1,750	127	171
	Leading arm × Axle housing	1,750	127	171
	Leading arm × Frame	1,750	127	171
	Stabilizer bar × Axle housing	260	19	25
	Stabilizer bar bracket mounting bolt	185	13	18
	Stabilizer bar bracket × Frame	185	13	18
	Hub nut	1,500	108	147
Front differential	Propeller shaft × Companion flange	750	54	74
	Drive pinion × Companion flange	2,000 — 3,500	145 — 253	196 — 343
	Ring gear × Differential case	985	71	97
	Side bearing cap × Differential carrier	800	58	78
	Differential carrier × Axle housing	250	18	25
	Differential LH case × RH case	480	35	47
	Differential lock shaft retainer	240	17	24
	Differential lock screw plug	220	16	22
	Differential lock indicator switch	410	30	40
	Differential lock actuator	270	20	26

Specifications (Cont'd)

	Part tightened	kg-cm	ft-lb	N·m
Rear axle and suspension	Differential cover × Axle housing	130	9	13
	Differential cover × Parking brake cable clamp	130	9	13
	Differential cover × LSPV shackle bracket	195	14	19
	Differential pinion shaft pin	275	20	27
	Axle shaft × Axle hub	340	25	33
	Axle housing × Backing plate	1,250	90	123
	Bearing lock nut	600	43	59
	Shock absorber × Shock absorber bracket	700	51	69
	Shock absorber bracket × Frame	510	37	50
	Shock absorber × Axle housing	650	47	64
	Spring bumber × Frame	155	11	17
	Lateral control rod × Frame	1,800	130	177
	Lateral control rod × Axle housing	2,500	181	245
	Upper control arm × Axle housing	1,800	130	177
	Upper control arm × Frame	1,800	130	177
	Lower control arm × Axle housing	1,800	130	177
	Lower control arm × Frame	1,800	130	177
	Stabilizer bar × Axle housing	185	13	18
	Stabilizer bar × Stabilizer bar clamp	260	19	25
	Stabilizer bar clamp × Frame	150	11	15
	Hub nut	1,500	108	147
Rear differential	Propeller shaft × Companion flange	900	65	88
	Drive pinion × Companion flange	2,500 – 4,500	181 – 325	245 – 441
	Ring gear × Differential case	1,125	81	110
	Side bearing cap × Differential carrier (2 pinion and LSD types)	800	58	78
	Side bearing cap × Differential carrier (w/ Differential lock)	1,150	83	113
	Differential carrier × Axle housing	475	34	47
	Differential LH case × RH case	480	35	47
	Pinion shaft pin (2 pinion type)	275	18	25
	Differential case × Case cover	590	43	58
	Differential lock shift fork set bolt	200	14	20
	Differential lock actuator	240	17	24
	Differential lock cover	185	13	18
	Differential lock indicator switch	410	30	40

BRAKE SYSTEM

Specifications

Brake pedal	Pedal height (from asphalt sheet)		161 – 171 mm	6.34 – 6.73 in.
	Pedal freeplay		3 – 6 mm	0.12 – 0.24 in.
	Pedal reserve distance at 50 kg (110.2 lb, 490 N)		More than 59 mm (2.32 in.)	
Brake booster	Booster push rod to piston clearance			
	at ldling vacuum		0.1 – 0.5 mm	0.004 – 0.020 in.
	w/ SST		0 mm	0 in.
Vacuum pump	Blade	Height	13.80 mm	0.5433 in.
		Width	5.95 mm	0.2343 in.
		Length	39.98 mm	1.5740 in.
	Rotation play		1.0 mm	0.039 in.
Front brake	Pad thicnkess	STD	9.5 mm	0.374 in.
	(Ex. Australia)	Limit	1.0 mm	0.039 in.
	(Australia)	Limit	4.0 mm	0.157 in.
	Disc thickness	STD	25.0 mm	0.984 in.
		Limit	23.0 mm	0.906 in.
	Disc runout	Limit	0.15 mm	0.0059 in.
Rear brake (Drum)	Drum inside diameter	STD	295.0 mm	11.614 in.
		Limit	297.0 mm	11.693 in.
	Lining thickness	STD	6.5 mm	0.256 in.
		Limit	1.5 mm	0.059 in.
Rear brake (Disc)	Pad thickness	STD	9.0 mm	0.394 in.
		Limit	1.0 mm	0.039 in.
	Disc thickness	STD	18.0 mm	0.710 in.
		Limit	16.0 mm	0.630 in.
	Disc runout	Limit	0.09 mm	0.0035 in.
Parking brake	Rear disc inner diameter	STD	210 mm	8.27 in.
		Limit	211 mm	8.31 in.
	Lining thickness	STD	4.0 mm	0.157 in.
		Limit	1.0 mm	0.039 in.
	Lever travel at 20 kg (44.1 lb, 196 N)		7 – 9 clicks	
	Clearance between rear shoe and lever		Less than 0.35 mm (0.0138 in.)	
	Adjusting shim thickness		0.3 mm	0.012 in.
			0.6 mm	0.024 in.
			0.9 mm	0.035 in.

Torque Specifications

Part tightened	kg-cm	ft-lb	N·m
Bleeder plug	110	8	11
Piston stopper bolt × Master cylinder	100	7	10
Outlet plug × Master cylinder	450	33	44
Reservoir set bolt × Master cylinder	250	18	25
Master cylinder × Brake booster	130	9	13
Brake tube union nut	155	11	15
Brake booster × Pedal bracket	130	9	13
Brake booster clevis lock nut	375	27	37
Vacuum pump × Check valve	750	54	74
Vacuum pump × Engine	400	29	39
Vacuum pump end cover × Casing	80	69 in.-lb	7.8
Vacuum pump gear × Rotor shaft	1,125	81	110
Vacuum pump union bolt	140	10	14
Front brake wheel cylinder × Backing plate	185	13	18
Front brake tube clamp	80	69 in.-lb	7.8
Front disc × Front axle hub	475	34	47
Front disc brake cylinder × Steering knuckle	1,250	90	123
Drum brake backing plate × Rear axle housing	1,250	90	123
Parking brake bellcrank bracket × Racking plate	130	9	13
Rear brake wheel cylinder × Backing plate	100	7	10
Rear disc brake torque plate × Axle carrier	475	34	47
Rear disc brake cylinder installation bolt	255	18	25
LSP & BV bracket × Frame	195	14	19
LSP & BV × LSP & BV bracket	130	9	13
LSP & BV spring × LSP & BV bracket	185	13	18
LSP & BV spring × Shackle No.1	185	13	18
LSP & BV shackle lock nut	250	18	25
LSP & BV shackle × Shackle bracket	130	9	13
LSP & BV shackle bracket × Rear axie housing	195	14	19

STEERING

Specifications

Steering column	Steering wheel freeplay	Maximum	30 mm	1.18 in.
	Pawl stopper	Mark		
		1 or A	12.65 – 12.75 mm	0.4980 – 0.5020 in.
		2 or B	12.55 – 12.65 mm	0.4941 – 0.4980 in.
		3 or C	12.45 – 12.55 mm	0.4902 – 0.4941 in.
		4 or D	12.35 – 12.45 mm	0.4862 – 0.4902 in.
		5 or E	12.25 – 12.35 mm	0.4823 – 0.4862 in.
Manual gear housing	Sector shaft thrust washer thickness		1.95 mm	0.0768 in.
			2.00 mm	0.0787 in.
			2.05 mm	0.0807 in.
	Sector shaft end cover bushing inside diameter	No.1	36.055 – 36.065 mm	1.4195 – 1.4199 in.
		2	36.045 – 36.055 mm	1.4191 – 1.4195 in.
		3	36.035 – 36.045 mm	1.4187 – 1.4191 in.
		4	36.025 – 36.035 mm	1.4183 – 1.4187 in.
	Worm shaft preload	at Starting	3.5 – 5 kg-cm	3.0 – 4.3 in.-lb 0.34 – 0.49 N·m
	Total preload	at Starting	8 – 11 kg-cm	6.9 – 9.5 in.-lb 0.78 – 1.08 N·m
Power steering	Drive belt tension at 10 kg (22.0 lb, 98 N)			
		New belt	7 – 9.5 mm	0.28 – 0.35 in.
		Used belt	8 – 10 mm	0.32 – 0.39 in.
	Drive belt tension w/ SST	New belt	45 – 55 kg	
		Used belt	20 – 35 kg	
	Maximum rise of oil level		5 mm	0.20 in.
	Oil pressure at idle speed			
	FJ series	Minimum	80 kg/cm²	1,138 psi 7,845 kPa
	HZJ and HDJ series	Minimum	85 kg/cm²	1,209 psi 8,336 kPa
	Steering effort (w/o PPS)	Maximum	4 kg	8.8 lb 39 N
	(w/ PPS)	Maximum	3 kg	6.6 lb 29 N
	Rotor shaft bushing oil clearance	STD	0.01 – 0.03 mm	0.0004 – 0.0012 in.
		Maximum	0.07 mm	0.0028 in.
	Vane plate to rotor groove clearance			
		Maximum	0.028 mm	0.0011 in.
	Vane plate Minimum height		8.1 mm	0.319 in.
	Minimum thickness		1.797 mm	0.0707 in.
	Minimum length		14.988 mm	0.5901 in.
	Vane plate length			
	Rotor and cam ring mark			
		None	14.996 – 14.998 mm	0.5904 – 0.5905 in.
		1	14.994 – 14.996 mm	0.5903 – 0.5904 in.
		2	14.992 – 14.994 mm	0.5902 – 0.5903 in.
		3	14.990 – 14.992 mm	0.59016 – 0.59024 in.
		4	14.988 – 14.990 mm	0.5901 – 0.5902 in.
	Flow control valve spring length			
	FJ series		35 – 37 mm	1.38 – 1.46 in.
	HZJ and HDJ series		50 – 55 mm	1.97 – 2.17 in.
	Pump rotating torque		2.8 kg-cm (2.4 in.-lb, 0.3 N·m) or less	
	Steering rack runout	Maximum	0.15 mm	0.006 in.
	Cross shaft adjusting screw thrust clearance		0.03 – 0.05 mm	0.0012 – 0.0020 in.
	Worm gear preload	at Starting	3 – 5.5 kg-cm	2.6 – 4.8 in.-lb 0.3 – 0.5 N·m
	Total preload	at Starting	7.5 – 11 kg-cm	6.5 – 9.6 in.-lb 0.74 – 9.6 N·m

Torque Specifications

Steering column	Part tightened		kg-cm	ft-lb	N·m
	Steering wheel set nut		350	25	34
	Column tube × Body		250	18	25
	Breakaway bracket × Body		250	18	25
	Column hole cover × Body		80	69 in.-lb	7.8
	Main shaft × Intermediate shaft		350	25	34
	Intermediate shaft × Worm shaft		350	25	34
	Turn signal bracket × Upper column tube		50	43 in.-lb	4.9
	Tilt pawl set nut		60	52 in.-lb	5.9
	Compression spring set bolt		80	69 in.-lb	7.8
	Tilt lever retainer set nut		150	11	15
	Dust seal × Column hole cover		130	9	13
	Clamp × Column tube		195	14	19
Manual gear housing	Universal joint		350	25	34
	Gear housing × Body		1,450	105	142
	Pitman arm × Gear housing		1,800	130	177
	Sector shaft adjusting screw lock nut		450	33	44
	Sector shaft end cover		1,000	72	98
	Bleeder plug		200	14	20
	Worm shaft adjusting screw lock nut		1,110	80	109
Power steering (PS pump)	**FJ series**				
	Pressure tube		370	27	36
	PS pump × Bracket		450	33	44
	PS pump × Adjusting stay		400	29	39
	Adjusting stay × Bracket		400	29	39
	Pulley set nut		440	32	43
	Reservoir set bolt	12 mm bolt	130	9	13
		14 mm bolt	420	30	41
	Pressure port union		700	51	69
	HZJ and HDJ series				
	Union bolt		450	33	44
	PS pump × Engine		370	27	36
	Return tube		80	69 in.-lb	7.8
	Front housing × Rear housing		425	31	42
	Drive gear lock nut		750	54	74
	Valve lock screw		650	47	64
Power steering (Gear housing)	Pressure and return tube		450	33	44
	Universal joint		350	25	34
	Gear housing × Body		1,450	105	142
	Gear housing × Pitman arm		1,800	130	177
	Cross shaft adjusting screw set nut		470	34	46
	Cross shaft end cover lock bolt		620	45	61
	Worm gear valve body set bolt		620	45	61
	Plunger guide nut		205	15	20
	Solenoid valve × Gear housing		130	9	13
Steering linkage	Pitman arm × Relay rod		925	67	91
	Relay rod × Steering damper		750	54	74
	Steering damper × Damper hinge		750	54	74
	Damper hinge × Body		400	29	39
	Relay rod × Knuckle arm		925	67	91
	Tie rod × Knuckle arm		925	67	91
	Tie or relay rod clamp		375	27	38

BODY

Torque Specifications

Part tightened	kg-cm	ft-lb	N·m
SEAT			
Front Seat			
Set adjuster × Body	400	29	39
Second Seat			
Seat hinge × Body	400	29	39
Reclining seat adjuster × Seat cusion	530	38	52
Seat inner support × Seat cusion	420	30	41
Thrid Seat			
Inner leg × Seat cusion	185	13	18
Striker bar × Body	185	13	18
Outer lock × Seat cusion	400	29	39
Seat adjuster × Seat back (Parallel type)	530	38	52
Seat frame × Body	185	13	18
SEAT BELT			
Seat belt anchor × Body	440	32	43
SIDE STEP			
Step × Bracket	55	48 in.-lb	5.4
Bracket × Body	130	9	13
SPARE TIRE CARRIER			
Carrier × Body	290	21	28
Carrier × Body	185	13	18
Bracket × Body	120	7	12
FUEL TANK			
Fuel sender gauge set screw	40	35 in.-lb	3.9
Fuel tank breather set screw	15	13 in.-lb	1.5
Fuel tank filler pipe lower set screw	40	35 in.-lb	3.9
Fuel tank front braket × Body	400	29	39
Drain plag	65	56 in.-lb	6.4

LUBRICANT

Item			Capacity			Classification
			Liters	US qts	Imp.qts	
Manual transmission oil						API GL-4 or GL-5
H140F			2.7	2.8	2.4	SAE 75W-90
H150F, H151F			2.6	2.7	2.3	
Automatic transmission fluid						ATF DEXRON® II
Dry fill						
w/o Oil cooler			15.0	15.9	13.2	
w/ Oil cooler			15.4	16.3	13.6	
Drain and refill			6.0	6.3	5.3	
Transfer oil			1.3	1.4	1.1	API GL-4 or GL-5, SAE 75W-90
Differential oil	Front					API GL-5
2 pinion type			2.8	2.9	2.5	Above –18°C (0°F) SAE 90
w/ Differential lock			2.65	2.8	2.3	Below –18°C (0°F) SAE 80W or 80W-90
	Rear	w/o LSD	2.8	2.9	2.5	API GL-5 Above –18°C (0°F) SAE 90 Below –18°C (0°F) SAE 80W or 80W-90
		w/ LSD	2.8	2.9	2.5	API GL-5 for LSD Above –18°C (0°F) SAE 90 Below –18°C (0°F) SAE 80W or 80W-90
Power steering fluid						ATF DEXRON® II
Gear box			0.51	0.54	0.45	
Total			0.75	0.79	0.66	
Steering gear box oil			0.64	0.68	0.56	API GL-4, SAE 90
Brake fluid			–			SAE J1703 or FMVSS No.116 DOT3

STANDARD BOLT TORQUE SPECIFICATIONS

Page

STANDARD BOLT TORQUE SPECIFICATIONS B-2

STANDARD BOLT TORQUE SPECIFICATIONS

HOW TO DETERMINE BOLT STRENGTH

	Mark	Class
Hexagon head bolt		4T 5T 6T 7T 8T 9T 10T 11T
	 No mark	4T
Hexagon flange bolt w/ washer hexagon bolt	No mark	4T
Hexagon head bolt	 Two protruding lines	5T
Hexagon flange bolt w/ washer hexagon bolt	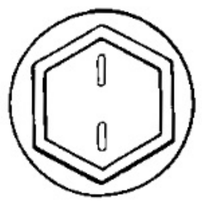 Two protruding lines	6T
Hexagon head bolt	 Three protruding lines	7T
Hexagon head bolt	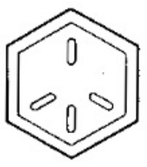 Four protruding lines	8T

	Mark	Class
Stud bolt	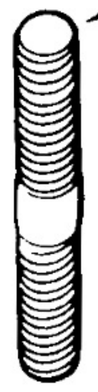 No mark	4T
	 Grooved	6T
Welded bolt	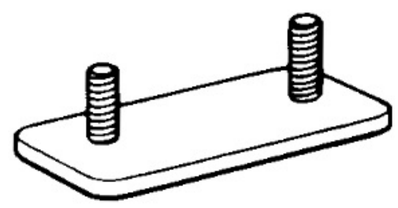	4T

SPECIFIED TORQUE FOR STANDARD BOLTS

Class	Diameter mm	Pitch mm	Specified torque					
			Hexagon head bolt			Hexagon flange bolt		
			kg-cm	ft-lb	N·m	kg-cm	ft-lb	N·m
4T	6	1	55	48 in.-lb	5	60	52 in.-lb	6
	8	1.25	130	9	12.5	145	10	14
	10	1.25	260	19	26	290	21	29
	12	1.25	480	35	47	540	39	53
	14	1.5	760	55	74	850	61	84
	16	1.5	1,150	83	115	—	—	—
5T	6	1	65	56 in.-lb	6.5	75	65 in.-lb	7.5
	8	1.25	160	12	15.5	175	13	17.5
	10	1.25	330	24	32	360	26	36
	12	1.25	600	43	59	670	48	65
	14	1.5	930	67	91	1,050	76	100
	16	1.5	1,400	101	140	—	—	—
6T	6	1	80	69 in.-lb	8	90	78 in.-lb	9
	8	1.25	195	14	19	210	15	21
	10	1.25	400	29	39	440	32	44
	12	1.25	730	53	71	810	59	80
	14	1.5	1,100	80	110	1,250	90	125
	16	1.5	1,750	127	170	—	—	—
7T	6	1	110	8	10.5	120	9	12
	8	1.25	260	19	25	290	21	28
	10	1.25	530	38	52	590	43	58
	12	1.25	970	70	95	1,050	76	105
	14	1.5	1,500	108	145	1,700	123	165
	16	1.5	2,300	166	230	—	—	—
8T	8	1.25	300	22	29	330	24	33
	10	1.25	620	45	61	690	50	68
	12	1.25	1,100	80	110	1,250	90	120
9T	8	1.25	340	25	34	380	27	37
	10	1.25	710	51	70	790	57	78
	12	1.25	1,300	94	125	1,450	105	140
10T	8	1.25	390	28	38	430	31	42
	10	1.25	800	58	78	890	64	88
	12	1.25	1,450	105	140	1,600	116	155
11T	8	1.25	430	31	42	480	35	47
	10	1.25	890	64	87	990	72	97
	12	1.25	1,600	116	155	1,800	130	175

SST AND SSM

	Page
SST (SPECIAL SERVICE TOOLS)	C-2
SSM (SPECIAL SERVICE MATERIALS)	C-11

SST (SPECIAL SERVICE TOOLS)

Section / Part Name / Part No. / Illustration			CL	MT	AT	TF	PR	SA Front	SA Rear	BR	SR	BE	BO	Note
	09032-00100	Oil Pan Seal Cutter			O									
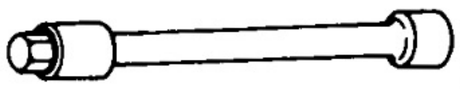	09043-38100	Hexagon 10 mm Wrench									O			
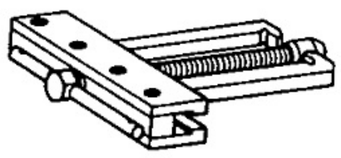	09213-27010	Gear Remover				O								
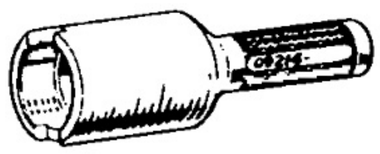	09214-76011	Crankshaft Pulley Replacer						* O	* O					* Drive pinion oil seal
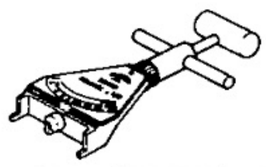	09216-00020	Belt Tension Gauge									O			
	09216-00030	Belt Tension Gauge Cable									O			
	09223-15020	Oil Seal & Bearing Replacer						O						Differential side bearing (w/ Differential lock only)
	09228-22020	Oil Filter Wrench						O						
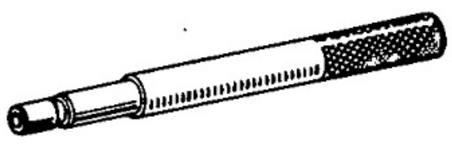	09301-55022	Clutch Guide Tool	O											
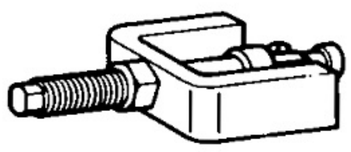	09303-35011	Input Shaft Front Bearing Puller	O											
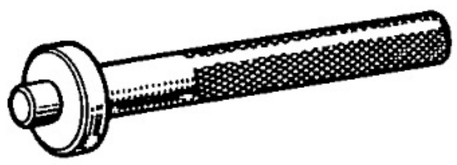	09304-30012	Input Shaft Front Bearing Replacer	O											
	09308-00010	Oil Seal Puller						*1 O	*2 O		*3 O			*1 Drive pinion bearing outer race and oil storage ring *2 Drive pinion bearing outer race *3 Manual steering
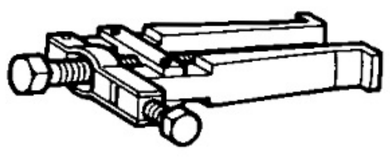	09308-10010	Oil Seal Puller						O	O					
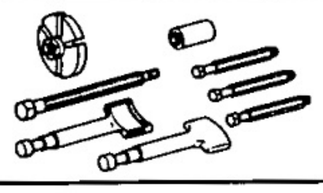	09310-17010	Transaxle Gear Remover & Replacer		O										

SST (SPECIAL SERVICE TOOLS) (Cont'd)

Section / Part Name / Part No. / Illustration			CL	MT	AT	TF	PR	SA Front	SA Rear	BR	SR	BE	BO	Note
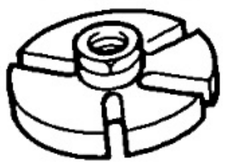	(09310-07010)	(Plate)		●										
	(09310-07020)	(Center Bolt)		●										
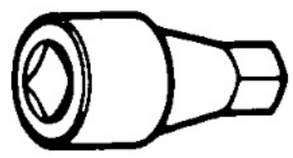	09313-30021	Detent Ball Plug Socket						●						Straight screw plug (w/ Differential lock only)
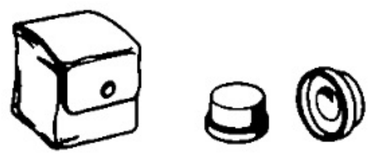	09315-00021	Clutch Release Bearing Remover & Replacer							●					Differential side bearing (2 pinion and LSD types)
	09316-20011	Transfer Bearing Replacer		●		●								
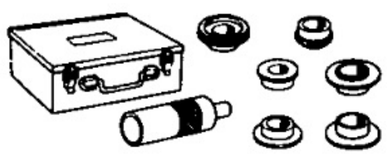	09316-60010	Transmission & Transfer Bearing Replacer		●		●		●	●					
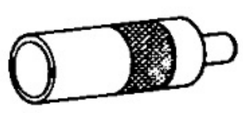	(09316-00010)	(Replacer Pipe)		●		●		*1 ●	*2 ●					*1 Drive pinion bearing outer race and oil storage ring *2 Drive pinion bearing outer race
	(09316-00020)	(Replacer "A")		●		●		*1 ●	*2 ●					*1 Drive pinion bearing outer race and oil storage ring *2 Drive pinion bearing outer race
	(09316-00030)	(Replacer "B")				●								
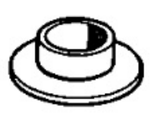	(09316-00040)	(Replacer "C")				●								
	(09316-00050)	(Replacer "D")				●		* ●						*Drive pinion bearing outer race
	(09316-00060)	(Replacer "E")				●								
	(09316-00070)	(Replacer "F")				●								
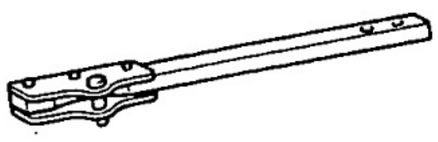	09330-00021	Companion Flange Holding Tool				●		●	●					

SST (SPECIAL SERVICE TOOLS) (Cont'd)

Section / Part Name / Part No. / Illustration			CL	MT	AT	TF	PR	SA Front	SA Rear	BR	SR	BE	BO	Note
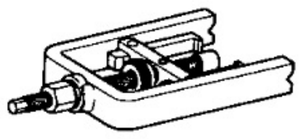	09332-25010	Universal Joint Bearing Remover & Replacer					●							
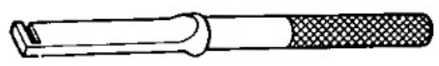	09333-00013	Clutch Diaphragm Spring Aligner	●											
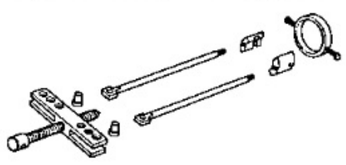	09336-60010	Transmission Gear Remover		●										
	09504-00011	Differential Side Bearing Adjusting Nut Wrench						●	●					
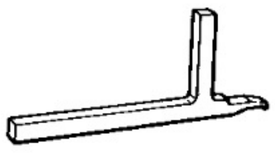	09504-22011	Differential Side Washer Remover & Replacer							●					w/ Differential lock only
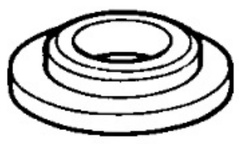	09506-30012	Differential Drive Pinion Bearing Cone Replacer						●						
	09506-35010	Differential Drive Pinion Rear Bearing Replacer							●					
	09509-25011	Rear Axle Bearing Lock Nut Wrench							●					
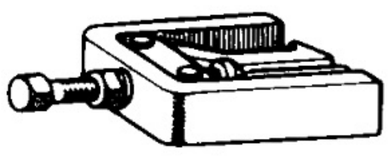	09514-35011	Rear Wheel Bearing Puller							●					
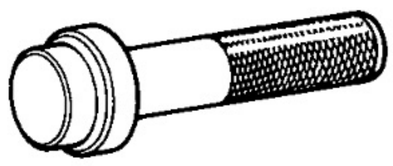	09517-36010	Rear Axle Shaft Oil Seal Replacer							●					
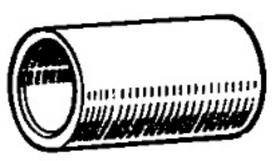	09523-36010	Rear Axle Hub Guide Tool		●										Output shaft rear ball bearing
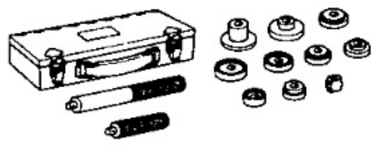	09550-10012	Replacer Set "B"							●		●			
	(09252-10010)	(No. 1 Replacer Handle)							●					Differential side bearing (w/ Differential lock only)
	(09552-10010)	(No. 2 Replacer Handle)									●			

SST (SPECIAL SERVICE TOOLS) (Cont'd)

Section / Part Name / Part No. / Illustration			CL	MT	AT	TF	PR	SA Front	SA Rear	BR	SR	BE	BO	Note
	(09557-10010)	(Differential Drive Pinion Front Bearing Replacer)							●					Differential side bearing (w/ Differential lock only)
	(09558-10010)	(Rear Axle Shaft Oil Seal Replacer)							* ●		●			* Differential side bearing
	(09559-10010)	(Knuckle Inner Bearing Replacer)									●			
	09550-60010	Differential Side Bearing Replacer							●					
	09555-55010	Differential Drive Pinion Bearing Replacer		●		●								
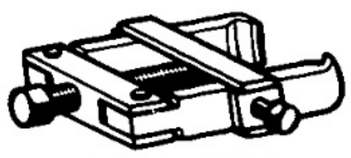	09556-22010	Drive Pinion Front Bearing Remover						●	●					
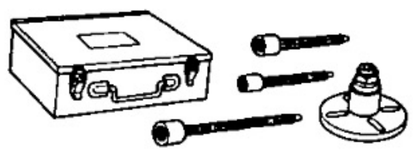	09557-22022	Companion Flange Remover & Replacer						●						
	(09557-22050)	(No. 3 Bolt)						●						
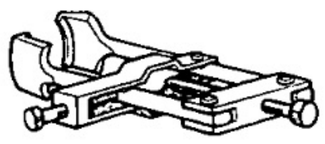	09602-35011	Front Axle Inner Bearing Puller		●										
	09605-60010	Steering Knuckle Bearing Cup Replacer						●						
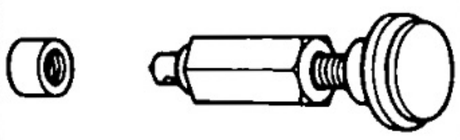	09606-60020	Steering Knuckle Bearing Cup Remover						●						
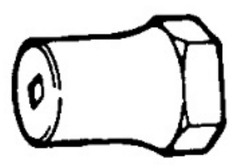	09607-60020	Front Wheel Adjusting Nut Wrench						●						
	09608-20012	Front Hub & Drive Pinion Bearing Tool Set		●		●			●					
	(09608-00040)	(Replacer)		●		●								

SST (SPECIAL SERVICE TOOLS) (Cont'd)

Section / Part Name / Part No. / Illustration			CL	MT	AT	TF	PR	SA Front	SA Rear	BR	SR	BE	BO	Note
	(09608-00080)	(Replacer)				●								
	(09608-03020)	(Handle)		●		●			●					
	(09608-03060)	(Replacer)							●					
	(09608-03090)	(Replacer)							●					
	09608-30012	Front Hub & Drive Pinion Bearing Tool Set						●		●				
	(09608-00060)	(Drive Pinion Front Bearing Cup Replacer)						●						
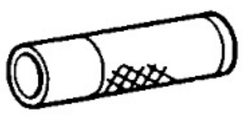	(09608-04030)	(Front Hub Inner Bearing Cone Replacer)								●				
	(09608-04060)	(Front Hub Outer Bearing Cup Replacer)												
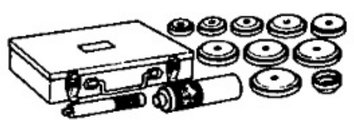	09608-35014	Axle Hub & Drive Pinion Bearing Tool Set						●	●					
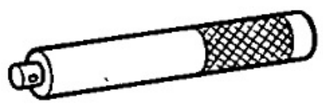	(09608-06020)	(Handle)						●	●					
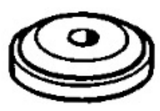	(09608-06110)	(Front Hub Inner & Drive Pinion Front Bearing Cup Replacer)							●					
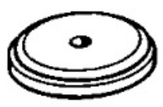	(09608-06150)	(Rear Hub Outer Bearing Cup Replacer)						●	●					
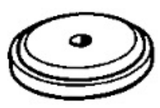	(09608-06180)	(Drive Pinion Rear Bearing Cup Replacer)							●					
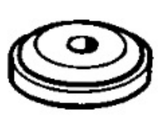	(09608-06200)	(Rear Axle Bearing Replacer)						●	●					

SST (SPECIAL SERVICE TOOLS) (Cont'd)

Section / Part Name / Part No. / Illustration			CL	MT	AT	TF	PR	SA Front	SA Rear	BR	SR	BE	BO	Note
	(09608-06210)	(Rear Axle Bearing Replacer)						○	○					
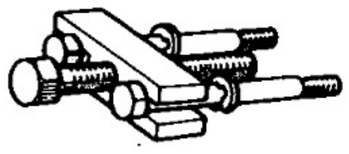	09609-20011	Steering Wheel Puller									●			
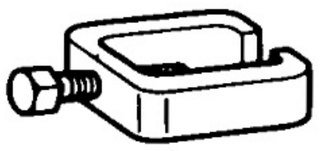	09610-55012	Pitman Arm Puller									●			
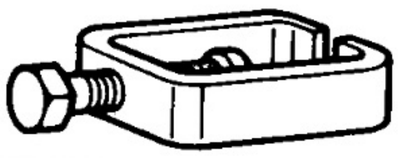	09611-22012	Tie Rod End Puller						●			●			
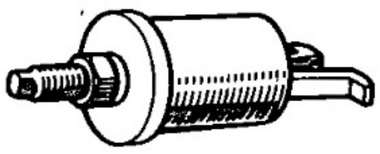	09612-30012	Steering Worm Bearing Puller	●											
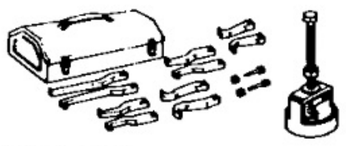	09612-65014	Steering Worm Bearing Puller						○			●			
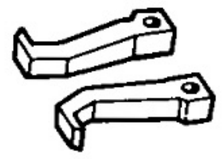	(09612-01010)	(Claw "A")						●						Knuckle spindle bushing
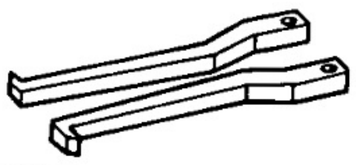	(09612-01030)	(Claw "C")									●			Manual steering
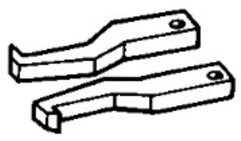	(09612-01040)	(Claw "D")									●			Manual steering
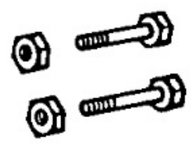	(09612-01050)	(Hanger Pin with Nut)						●						Knuckle spindle bushing
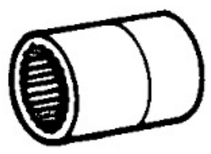	09616-00010	Steering Worm Bearing Adjusting Socket									●			
	09616-30020	Steering Worm Bearing Adjusting Screw Wrench						*1 ●			*2 ●			*1 Differential side bearing adjusting nut (w/ Differential lock only) *2 Manual steering
	09617-60010	Worm Bearing Adjusting Screw Lock Nut Wrench									●			Manual steering
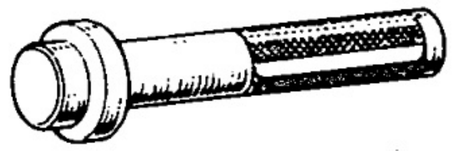	09618-60010	Front Axle & Drive Shaft Bearing Replacer						●						

SST (SPECIAL SERVICE TOOLS) (Cont'd)

Section / Part Name / Part No. / Illustration			CL	MT	AT	TF	PR	SA Front	SA Rear	BR	SR	BE	BO	Note
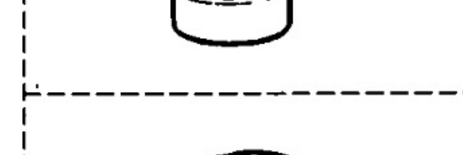	09628-62011	Ball Joint Puller									●			
	09630-00012	Power Steering Gear Housing Overhaul Tool Set	●								●			
	(09631-00020)	(Handle)									●			
	(09631-00050)	(No. 3 Wrench)									●			
	(09631-00060)	(Oil Seal Replacer)	●											
	(09631-00070)	(Bearing Remover & Replacer)									●			
	(09631-00090)	(Replacer)									●			
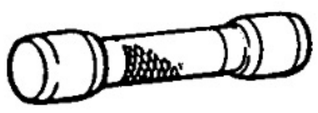	(09631-00120)	(Teflon Ring Former)									●			
	(09631-00140)	(Overhaul Stand)									●			
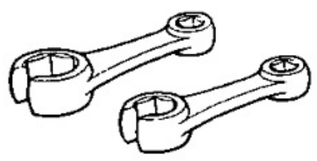	09631-22020	Power Steering Hose Nut 14 x 17 mm Wrench Set									●			
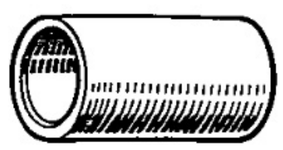	09632-36010	Steering Vane Pump Bearing Replacer									●			
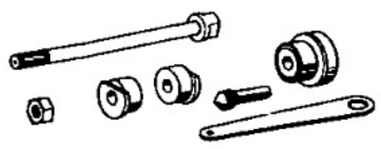	09634-60013	Steering Knuckle Centering Gauge						●						
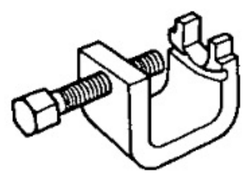	09650-17011	Hub Bolt Remover							●					
	09703-30010	Brake Shoe Return Spring Tool								●				

SST (SPECIAL SERVICE TOOLS) (Cont'd)

Section / Part Name / Part No. / Illustration			CL	MT	AT	TF	PR	SA Front	SA Rear	BR	SR	BE	BO	Note
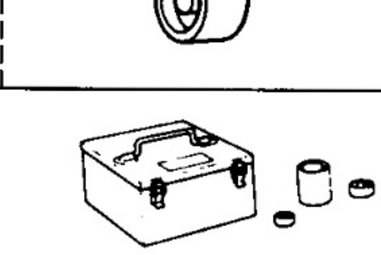	09709-29017	LSPV Gauge Set								●				
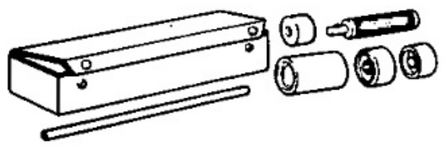	09710-22041	Rear Suspension Bushing Tool Set						●						
	(09710-02020)	(Handle)						●						
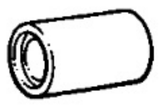	(09710-02050)	(Base)						●						
	(09710-02070)	(Bushing Remover & Replacer)						●						
	09710-30030	Rear Suspension Bushing Tool Set						●						
	(09710-03180)	(Replacer)						●						
	09717-20010	Brake Shoe Return Spring Remover								●				
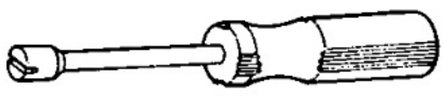	09718-00010	Shoe Hold Down Spring Driver								●				
	09718-20010	Brake Shoe Return Spring Replacer								●				
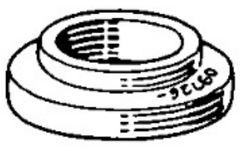	09726-40010	Lower Control Shaft Bearing Replacer						* ●	* ●					* Companion flange
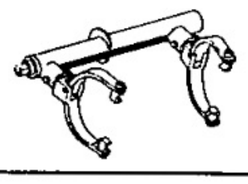	09727-30020	Coil Spring Compressor						●						
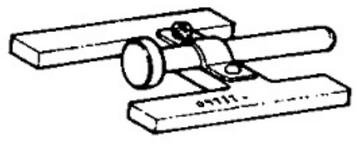	09737-00010	Brake Booster Push Rod Gauge	●							●				
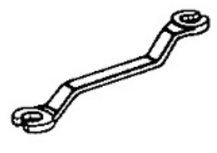	09751-36011	Brake Tube Union Nut 10 x 12 mm Wrench	●					●		●				

SST (SPECIAL SERVICE TOOLS) (Cont'd)

Section / Part Name / Part No. / Illustration			CL	MT	AT	TF	PR	SA Front	SA Rear	BR	SR	BE	BO	Note
	09753-00013	Brake Booster Overhaul Tool Set	●							●				
	09753-30020	Oil Seal Replacer	●											
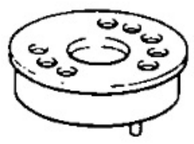	09753-40010	Base Plate								●				
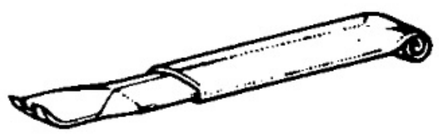	09806-30010	Windshield Moulding Remover											●	
	09812-00010	Door Hinge Set Bolt Wrench											●	
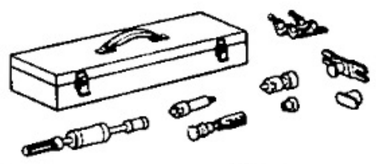	09910-00015	Puller Set									●			
	(09911-00011)	(Puller Clamp)									●			
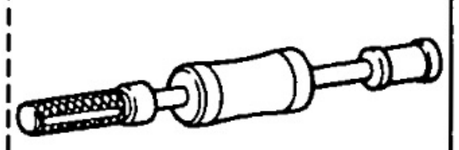	(09912-00010)	(Puller Slide Hammer)									●			
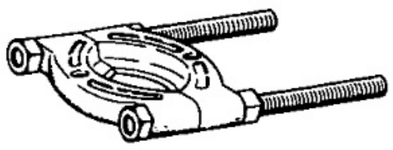	09950-00020	Bearing Remover		●		●		●	●					
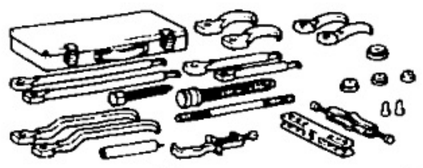	09950-20017	Universal Puller		●		●		●	●		●			
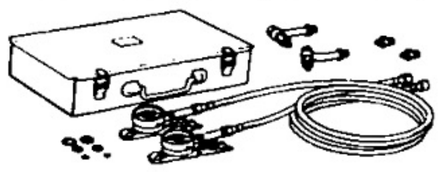	09992-00094	Automatic Transmission Oil Pressure Gauge Set			●									
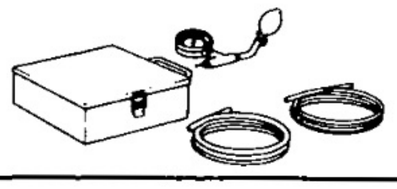	09992-00241	Turbocharger Pressure Gauge										●		Check for turbo indicator and warning system (1HD-T engine)

NOTE: For reference to SSTs for the Air Conditioning System see page AC-20.

SSM (SPECIAL SERVICE MATERIALS)

Part Name	Part No.	Sec.	Use etc.
Seal packing 1281, Three bond 1281 or equivalent	08826-00090	MT	Transmission case x Intermediate plate Transmission case x Front bearing retainer Transfer adaptor x Intermediate plate Transmission case x Shift lever control retainer
		AT	Oil pan x Transmission case
		TF	Front case x Rear case Rear case x Case cover Rear case x Rear extension housing Front case x Front extension housing Front case x Motor actuator
		SA	Differential lock shaft retainer Differential lock actuator Differential lock cover
Adhesive 1324, Three bond 1324 or equivalent	08833-00070	SA	Differential pinion a pins and bolts Differential cover lock set bolts Differential lock shift fork set bolt
Adhesive 1344, Three bond 1344, Loctite 242 or equivalent	08833-00080	MT	Front bearing retainer set bolts Oil pump body set bolts Shift lever control retainer set bolts
		TF	Straight screw plug Rear case set bolts (two bolts) Case cover set bolts
		SA	Differential lock shaft retainer set bolt Straight screw plug
		SR	Manual gear housing worm bearing adjusting screw and lock nut Sector shaft end cover
Dupont paste No. 4817	—	BE	Rear window defogger wire
Three cement black	08833-00030	BO	Windshield glass
Adhesive (Super special)	08850-00051	BO	Side protection moulding

NOTE: For reference to SSMs for the Air Conditioning System see page AC-20.

ELECTRICAL WIRING DIAGRAMS

ABBREVIATION

The following abbreviations are used in this wiring diagram.

A/C	=	Air Conditioner
A/T	=	Automatic Transmission
CB	=	Circuit Breaker
CD	=	Compact Disc
ECU	=	Electronic Control Unit
EFI	=	Electronic Fuel Injection
EGR	=	Exhaust Gas Recirculation
EUR	=	Europe
Ex.	=	Except
FL	=	Fusible Link
ISC	=	Idle Speed Control
J/B	=	Junction Block
LH	=	Left-Hand
M/T	=	Manual Transmission
PKB	=	Parking Brake
PPS	=	Progressive Power Steering
R/B	=	Relay Block
RH	=	Right-Hand
SC	=	Spark Control
SW	=	Switch
TP	=	Throttle Positioner
VSV	=	Vacuum Switching Valve
w/	=	With
w/o	=	Without
W/G	=	Wagon
2WD	=	Two Wheel Drive Vehicles (4 x 2)
4WD	=	Four Wheel Drive Vehicles (4 x 4)

HOW TO READ THIS SECTION

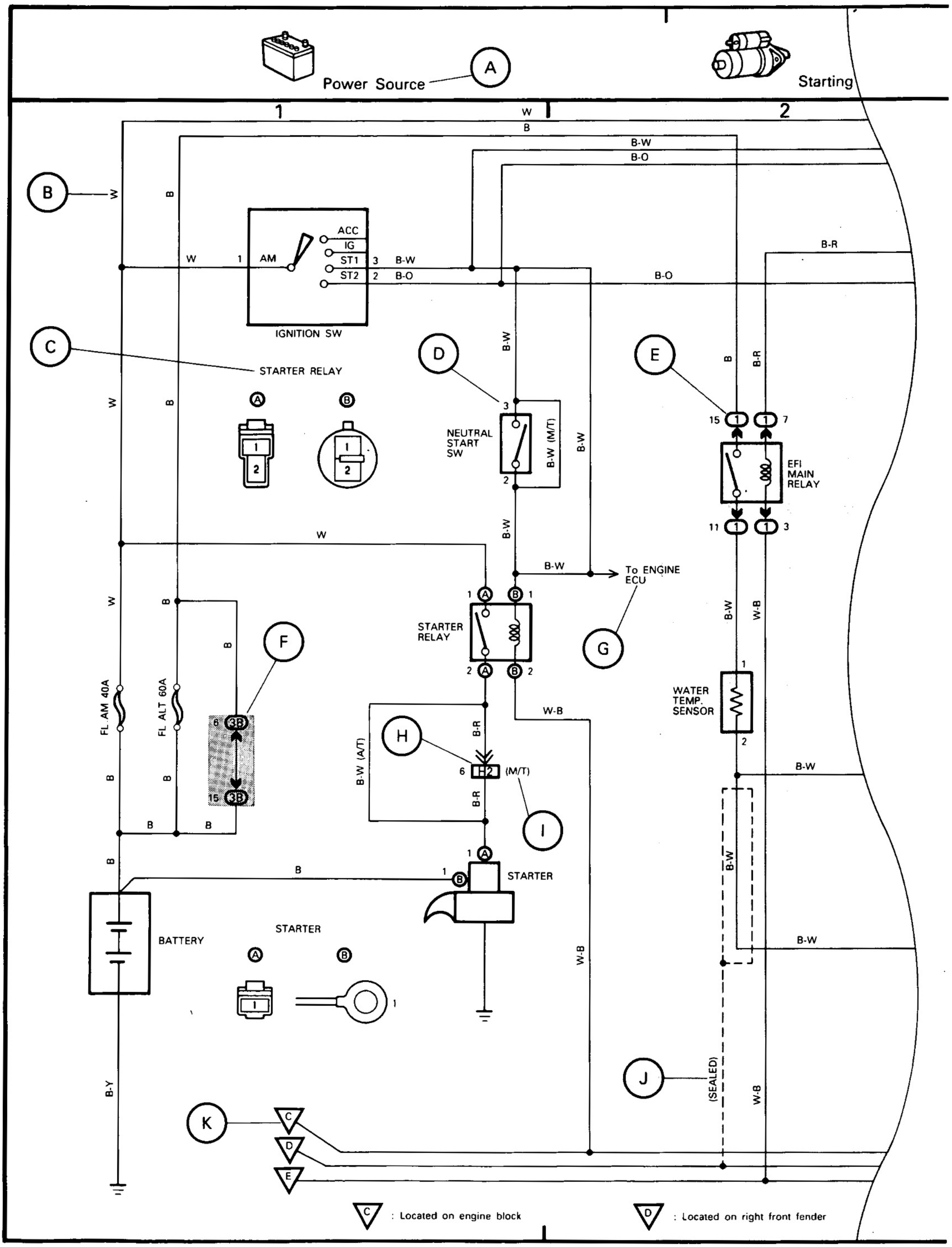

Ⓐ: System Title

Ⓑ: Indicates the wiring color.

Wire colors are indicated by an alphabetical code.

B	= Black	L	= Blue	R	= Red
BR	= Brown	LG	= Light Green	V	= Violet
G	= Green	O	= Orange	W	= White
GR	= Gray	P	= Pink	Y	= Yellow

The first letter indicates the basic wire color and the second letter indicates the color of the stripe.

Example: L—Y



Ⓒ: Indicates the connector to be connected to a part (the numeral indicates the pin No.)

Ⓓ: Indicates the pin number of the connector. The numbering system is different for female and male connectors.

Example: Numbered in order from upper left to lower right / Numbered in order from upper right to lower left

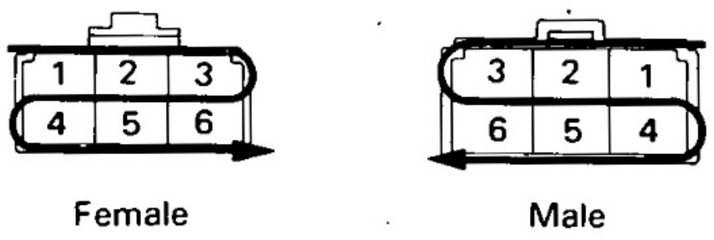

BE0B32

The numbering system for the overall wiring diagram is the same as above.

Ⓔ: Indicates a Relay Block. No shading is used and only the Relay Block No. is shown to distinguish it from the J/B.

Example: ① Indicates Relay Block No.1.

Ⓕ: Junction Block (The number in the circle is the J/B No. and the connector code is shown beside it). Junction Blocks are shaded to clearly separate them from other parts (different junction blocks are shaded differently for further clarification).

Example:

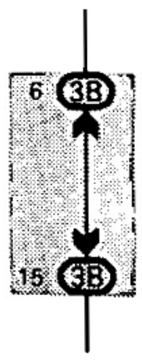

3B indicates that it is inside Junction Block No.3.

Ⓖ: Indicates related system.

Ⓗ: Indicates the wiring harness and wiring harness connector. The wiring harness with male terminal is shown with arrows (≫). Outside numerals are pin numbers.

- All connectors are shown from the open end, and the lock is on top.

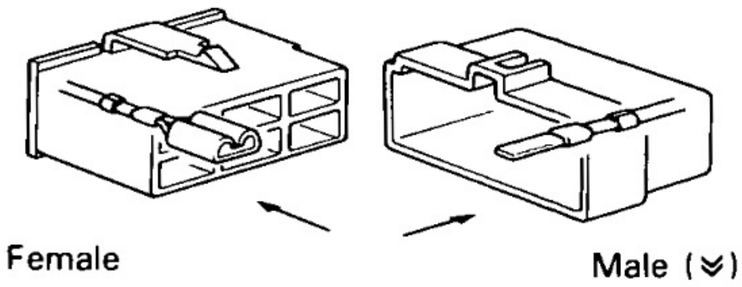

BE0B33

Ⓘ: ( ) are used to indicate different wiring and connector, etc. when the vehicle model, engine type, or specification is different.

Ⓙ: Indicates a sealed wiring harness.

Ⓚ: Indicates a ground point.

SYSTEM INDEX

LAND CRUISER (W/G) (Page 1 to Page 40)

SYSTEMS	LOCATION
Accessory Meter	20-3
Air Conditioner, Cooler and Heater	30-2 (Auto) 34-3 (Manual Dual Type) 36-2 (Manual Single Type)
Auto Antenna	13-3
Automatic Transmission Indicator	21-2
Back-Up Lights	21-3
Charging	2-2
Cigarette Lighter	24-3
Clock	24-2
Combination Meter	28-2
Condenser Fan	34-2
Cool and Hot Box	33-6
Cruise Control	23-2
Door Lock	16-2
Emission Control	3-2 (Ex. Middle East) 3-3 (Middle East)
Engine Control	27-2
Engine Compartment Cooling Fan	5-2
Front Wiper and Washer	17-2
Fuel Tank Changeover	29-6
Fuel Heater	19-4
Glow Plug	4-2
Headlight Beam Level Control	6-2
Headlight Cleaner	3-4
Headlight	7-2 (w/ Daytime Running Light) 8-2 (LHD in Europe w/o Daytime Running Light) 9-2 (U.K.) 10-2 (Ex. LHD in Europe)
Horn	12-4
Ignition	1-4
Interior Light	11-2
Light Reminder	24-3
Moon Roof	19-2
Power Seat	19-3
Power Source	1～28,-1 30-1, 34-1
Power Window	15-2
PPS (Progressive Power Steering)	5-3
Radio and Tape Player	26-3 (w/o CD Player) 26-5 (w/ CD Player)
Rear Air Conditioner	33-2 (Auto) 35-3 (Manual)
Rear Fog Light	14-2
Rear Window Defogger	2
Rear Wiper and Washer	17-3
Remote Control Mirror	20-2
Seat Belt Warning	21-4
Seat Heater	18-4
Starting	1-3
Stop Light	24-4
Taillight and Illumination	25-2
Turn Signal and Hazard	12-2
Winch	5-4
4WD	22-2
12/24 Volt Switchover System	1-2
Connector Joining Wire	37-2
Harness and Wire Harness	38-2 39-2 40-2
Junction Connector	40-2

Power Source

12-24 Volt Swichover System

Starting

Ignition

1 2 3 4

(Europe) (Ex. Europe)

I14 IGNITION SW

ACC IG1 ST1 IG2 ST2 AM1 AM2

F26 FUSE BLOCK

10A GAUGE

S6 GRAY S7 BLACK

STARTER RELAY

To A/C Amplifier (36-4)

To Bulb Check Relay (28-5)

To A/C Cut Relay (32-3)(34-4)

T8 GRAY T9

12-24 VOLT SWITCHOVER RELAY

50A AM1

POWER JUNCTION BOX

From "CHARGE" Fuse (2-3)

T12 12-24 VOLT SWITCHOVER TIMER RELAY

S6, S7 STARTER RELAY (Diesel)

14 IG1 (3F-E)
4 IG3 (3F)
19 IG1 (1HD-T, 1HZ)

N1 NEUTRAL START SW (A/T)

To Engine ECU (27-3)

To Bulb Check Relay (28-5)

To Circuit Opening Relay (27-2)

To A/C Cut Relay (32-3)(34-4)

To A/C Amplifier (36-4)

IGNITION COIL

I3 BLACK I4 I5

I3 A , I4 B , I5 C IGNITION COIL

T13 24 VOLT HOLD WARNING RELAY

FL 0.3P

T8 B , T9 A 12-24 VOLT SWITCHOVER RELAY

J4 JUNCTION CONNECTOR

B-W (M/T) B-R (A/T)

(Gasoline)

15 IG1 (3F-E)
5 IG3 (3F)

N3 NOISE FILTER (for Ignition)

C2 COLD START INJECTOR

To A/C Amplifier (32-5)(36-4)(34-5)

To Tachometer (28-3)

22 IG1

1 A (Gasoline) 1 B (Diesel)

S4 A B , S5 C STARTER

S4 A BLACK B BLACK

S5

J3 JUNCTION CONNECTOR

To Engine ECU (27-6)

S3 START INJECTOR TIME SW

D1 DISTRIBUTOR

F14 C , F15 , F19 B , F20 A FUSIBLE LINK

FL ST 0.5G FL MAIN 2.0L FL AM1 1.25B

① Europe, Australia 3F-E
② Ex. Europe, Australia 3F-E

BATTERY LH BATTERY RH

F14 GRAY F15, F19, F20

FUSIBLE LINK

Ground points
Point à terre
Erdschlußpunkt
Punto de conexión con tierra

ID = Located on right kick panel
= *Monté sur la tôle de pied de caisse droite*
= Angebracht am rechten Seitenblech des Vorderen Fußraums
= *Situado en el panel apoyapiés derecho*

IE = Located on left kick panel
= *Monté sur la tôle de pied de caisse gauche*
= Angebracht am linken Seitenblech des Vorderen Fußraums
= *Situado en el panel apoyapiés izquierdo*

Power Source

Charging

1 2 3 4

*1: w/ IC Regulator of 3F Engine, 80A IC Alternator of 3F-E Engine
*2: Except *1 and Diesel Engine
*3: Ex. w/o Tachometer in G.C.C
*4: w/o Tachometer in G.C.C

ACC
IG1
ST1
IG2
ST2
AM1
AM2
I14 IGNITION SW
(Ex. 3F-E)
50A AM1
POWER JUNCTION BOX
EA3 (LHD)
EA7 (RHD)
FL AM2 0.3P (3F-E)
FL AM1 1.25B
FL MAIN 2.0L
FL ST 0.5G
F14 C F15 B
F16 A F19 D F20 E
FUSIBLE LINK
F14 GRAY
F15, F19, F20
F16 GRAY
A13 BLACK
A14
① Europe, Australia 3F-E
② Ex. Europe, Australia 3F-E
ALTERNATOR (w/IC REGULATOR)
BATTERY RH
BATTERY LH
A13 B , A14 A
ALTERNATOR (w/ IC REGULATOR)
A13 B , A14 A
ALTERNATOR
V9 VOLTAGE REGULATOR
N2 NOISE FILTER (for Charging)
C11 B , C13 A
CHARGE WARNING LIGHT [COMB. METER]
To Daytime Running Light Relay (7-3)
To Pre-Heating Timer (4-3)
To 24 Volt Hold Warning Relay (1-1)
F26 FUSE BLOCK
7.5A CHARGE
CHARGE LIGHT RELAY
CHARGE WARNING LIGHT [COMB. METER]
C11 GRAY
C13 BLUE
(Gasoline, Ex. Europe Diesel)
(Ex. Europe Diesel)
(Europe Diesel)
(w/ IC Regulator)
(w/o IC Regulator)

Ground points
Point à terre
Erdschlußpunkt
Punto de conexión con tierra

EB = Located on left front fender
= *Monté dans le pare-chock AV gauche*
= Angebracht an der Innenseite des linken Vorderkotflügels
= *Situado en el parachoques*

Power Source | Emission Control (Ex. Middle East) | Emission Control (Middle East) | Headlight Cleaner

1 | 2 | 3 | 4

I14 IGNITION SW

ACC, IG1, ST1, AM1, IG2, ST2, AM2

B 9, B 3, 6 B-Y, 4 B-G

2 EA 3 (LHD), 7 EA 2 (RHD)

50A AM1

FUSIBLE LINK

F14 GRAY

POWER JUNCTION BOX

2 EA 7 (RHD), 3 EA 3 (LHD)

F15, F19

1 B (3F-E), 2 C (Diesel)

① Europe, Australia 3F-E
② Ex. Europe, Australia 3F-E

FL MAIN 2.0L, FL AM1 1.25B

F14 C , F15 B , F19 A
FUSIBLE LINK

BATTERY

F26 FUSE BLOCK

2 IG 3, 8 EA 1

F10 FUEL CUT SOLENOID (Australia)

F9 FUEL CUT SOLENOID (General)

V4 VSV (OVCV)

E3 EMISSION ECU

V8 VACUUM SW (for Emission Control)

To Tachometer (28-3)

To Speed Sensor (28-3)

V6 VSV (TP)

V5 VSV (SC)

F9 FUEL CUT SOLENOID

8 IG 3, 9 EB 1

T6 (5th), TRANSMISSION POSITION SW, T5 (4th)

W1 WATER TEMP. SW (for Emission Control)

J3 JUNCTION CONNECTOR

19 IG 5, 6 EB 1

F26 FUSE BLOCK

H3 HEADLIGHT CLEANER MOTOR

H4 HEADLIGHT CLEANER RELAY

H13 HEADLIGHT CLEANER SW

R-L (Europe)
R-W (Ex. Europe)

To Light Control SW (7-2)(8-2)(10-2)

(Europe)

(Ex. Europe)

J4 JUNCTION CONNECTOR

EB, ID, IE

Ground points
Point à terre
Erdschlußpunkt
Punto de conexión con tierra

EB = Located on left front fender
= *Monté dans le pare-chock AV gauche*
= Angebracht an der Innenseite des linken Vorderkotflügels
= *Situado en el parachoques*

ID = Located on right kick panel
= *Monté sur la tôle de pied de caisse droite*
= Angebracht am rechten Seitenblech des Vorderen Fußraums
= *Situado en el panel apoyaplés derecho*

IE = Located on left kick panel
= *Monté sur la tôle de pied de caisse gauche*
= Angebracht am linken Seitenblech des Vorderen Fußraums
= *Situado en el panel apoyapiés izquierdo*

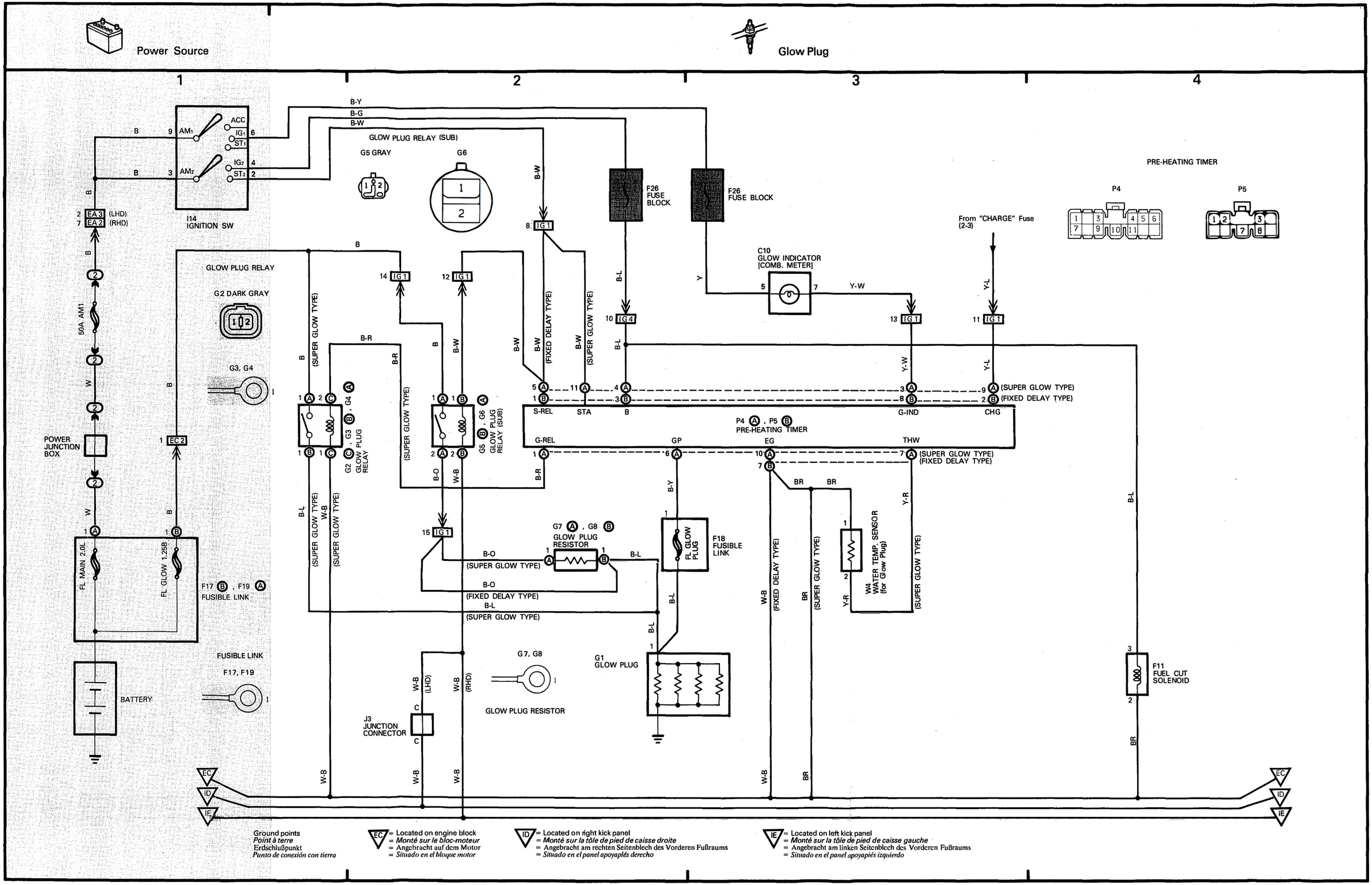
Power Source
Glow Plug
1
2
3
4
I14
IGNITION SW
ACC
AM1
AM2
IG1
ST1
IG2
ST2
EA3 (LHD)
EA2 (RHD)
50A AM1
POWER JUNCTION BOX
EC2
FL MAIN 2.0L
FL GLOW 1.25B
F17 B, F19 A
FUSIBLE LINK
BATTERY
FUSIBLE LINK
F17, F19
GLOW PLUG RELAY
G2 DARK GRAY
G3, G4
GLOW PLUG RELAY (SUB)
G5 GRAY
G6
G2 C, G3 B, G4 A
GLOW PLUG RELAY
G5 B, G6 A
GLOW PLUG RELAY (SUB)
G7 A, G8 B
GLOW PLUG RESISTOR
G7, G8
GLOW PLUG RESISTOR
J3
JUNCTION CONNECTOR
G1
GLOW PLUG
F26
FUSE BLOCK
F26
FUSE BLOCK
C10
GLOW INDICATOR
[COMB. METER]
From "CHARGE" Fuse
(2-3)
PRE-HEATING TIMER
P4
P5
P4 A, P5 B
PRE-HEATING TIMER
S-REL
STA
B
G-IND
CHG
G-REL
GP
EG
THW
FL GLOW PLUG
F18
FUSIBLE LINK
W4
WATER TEMP. SENSOR
(for Glow Plug)
F11
FUEL CUT
SOLENOID
(SUPER GLOW TYPE)
(FIXED DELAY TYPE)
(LHD)
(RHD)
EC
ID
IE
Ground points
Point à terre
Erdschlußpunkt
Punto de conexión con tierra
EC = Located on engine block
= Monté sur le bloc-moteur
= Angebracht auf dem Motor
= Situado en el bloque motor
ID = Located on right kick panel
= Monté sur la tôle de pied de caisse droite
= Angebracht am rechten Seitenblech des Vorderen Fußraums
= Situado en el panel apoyaplés derecho
IE = Located on left kick panel
= Monté sur la tôle de pied de caisse gauche
= Angebracht am linken Seitenblech des Vorderen Fußraums
= Situado en el panel apoyapiés izquierdo

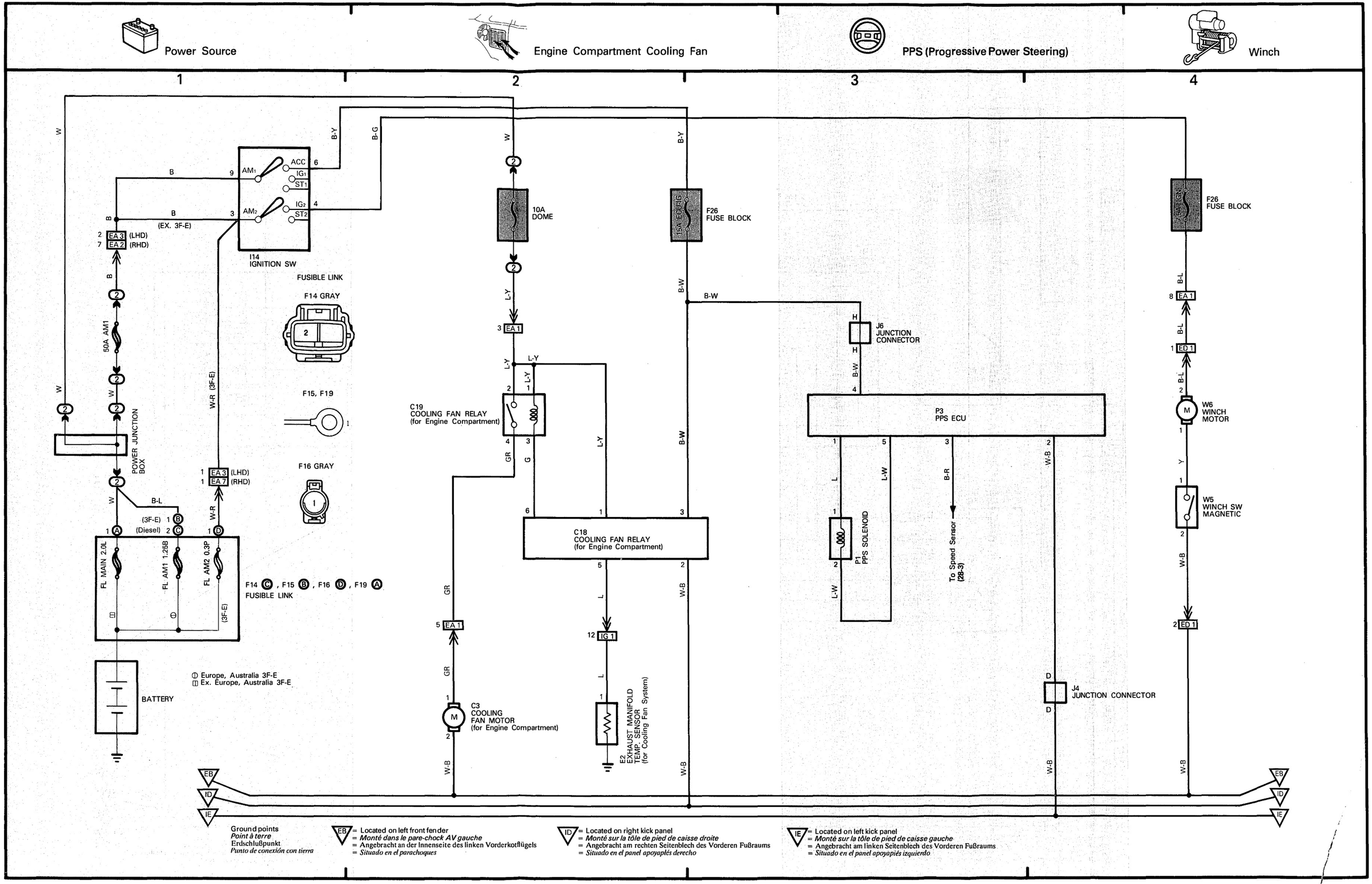
Power Source
Engine Compartment Cooling Fan
PPS (Progressive Power Steering)
Winch
1
2
3
4
I14
IGNITION SW
ACC
IG1
ST1
IG2
ST2
AM1
AM2
(EX. 3F-E)
EA 3 (LHD)
EA 2 (RHD)
50A AM1
POWER JUNCTION BOX
FUSIBLE LINK
F14 GRAY
F15, F19
F16 GRAY
EA 3 (LHD)
EA 7 (RHD)
(3F-E)
(Diesel)
FL MAIN 2.0L
FL AM1 1.25B
FL AM2 0.3P
F14 C, F15 B, F16 D, F19 A
FUSIBLE LINK
BATTERY
Europe, Australia 3F-E
Ex. Europe, Australia 3F-E
10A
DOME
C19
COOLING FAN RELAY
(for Engine Compartment)
C18
COOLING FAN RELAY
(for Engine Compartment)
C3
COOLING
FAN MOTOR
(for Engine Compartment)
E2
EXHAUST MANIFOLD
TEMP. SENSOR
(for Cooling Fan System)
F26
FUSE BLOCK
15A ECU-IG
J6
JUNCTION
CONNECTOR
P3
PPS ECU
P1
PPS SOLENOID
To Speed Sensor
(28-3)
J4
JUNCTION CONNECTOR
F26
FUSE BLOCK
W6
WINCH
MOTOR
W5
WINCH SW
MAGNETIC
EB
ID
IE
Ground points
Point à terre
Erdschlußpunkt
Punto de conexión con tierra
EB = Located on left front fender
= Monté dans le pare-chock AV gauche
= Angebracht an der Innenseite des linken Vorderkotflügels
= Situado en el parachoques
ID = Located on right kick panel
= Monté sur la tôle de pied de caisse droite
= Angebracht am rechten Seitenblech des Vorderen Fußraums
= Situado en el panel apoyaplés derecho
IE = Located on left kick panel
= Monté sur la tôle de pied de caisse gauche
= Angebracht am linken Seitenblech des Vorderen Fußraums
= Situado en el panel apoyapiés izquierdo

Power Source

Headlight Beam Level Control

1 2 3 4

W

TAILLIGHT RELAY

R

R (Ex. U.K.)

R (U.K.)

F26 FUSE BLOCK

G

G-R

1 EA 2 (LHD)
9 EA 1 (RHD)

G (Ex. U.K.)
G-R (U.K.)

G (Ex. U.K.)
G-R (U.K.)

G (Ex. U.K.)
G-R (U.K.)

H1
HEADLIGHT BEAM LEVEL CONTROL ACTUATOR LH

H2
HEADLIGHT BEAM LEVEL CONTROL ACTOATOR RH

UP

DOWN

M MOTOR

UP RELAY

DOWN RELAY

1 2 3 4 7 8 6 5

L L-B L-W L-G L-R L-O

W

3 EA 3

R-B

2 13

	T	EL	H
OFF			
TAIL	○		
HEAD	○	○	○

C15
LIGHT CONTROL SW [COMB. SW]

11

H12
HEADLIGHT BEAM LEVEL CONTROL SW

R-L

4

10 L 2 EA 5 L

9 L-B 1 EA 5 L-B

8 L-W 6 EA 5 L-W

7 L-G 5 EA 5 L-G

6 L-R 4 EA 5 L-R

5 L-O 3 EA 5 L-O

W

1

FL MAIN 2.0L

F19
FUSIBLE LINK

W-B

B

J2
JUNCTION CONNECTOR

B B

(RHD)

(LHD)

W-B W-B

BATTERY

W-B

W-B

EA EB ID IE

Ground points
Point à terre
Erdschlußpunkt
Punto de conexión con tierra

EA = Located on right front fender
= *Monté dans le pare-chock AV droite*
= Angebracht an der Innenseite des rechten Vorderkotflügels
= *Situado en el parachoques delantero derecho*

EB = Located on left front fender
= *Monté dans le pare-chock AV gauche*
= Angebracht an der Innenseite des linken Vorderkotflügels
= *Situado en el parachoques*

ID = Located on right kick panel
= *Monté sur la tôle de pied de caisse droite*
= Angebracht am rechten Seitenblech des Vorderen Fußraums
= *Situado en el panel apoyapiés derecho*

IE = Located on left kick panel
= *Monté sur la tôle de pied de caisse gauche*
= Angebracht am linken Seitenblech des Vorderen Fußraums
= *Situado en el panel apoyapiés izquierdo*

Power Source

Headlight (w/ Daytime Running Light)

1 2 3 4

I14 IGNITION SW

ACC, IG1, ST1, IG2, ST2, AM1, AM2

2 EA 3

50A AM1

FUSIBLE LINK F14 GRAY

POWER JUNCTION BOX

F15, F19

(3F-E) 1 A
(Diesel) 2 B

FL AM1 1.25B

FL MAIN 2.0L

F14 B , F15 A , F19 C FUSIBLE LINK

10A ECU-B

F26 FUSE BLOCK

10A GAUGE

HEADLIGHT RELAY

DIMMER RELAY

From Taillight Relay (14-1)(25-1)

D2 DAYTIME RUNNING LIGHT RELAY

15A HEAD LH-UPR

15A HEAD LH-LOW

15A HEAD RH-LOW

15A HEAD RH-UPR

H7 No. 2 LH

H5 No. 1 LH

H6 No. 1 RH

H8 No. 2 RH

HEADLIGHT

C11 HIGH BEAM INDICATOR [COMB. METER]

C15 LIGHT CONTROL SW [COMB. SW]

	T	EL	H
OFF			
TAIL	○		
HEAD	○	○	○

From Headlight Cleaner SW (3-4)

C15 DIMMER SW [COMB. SW]

	HF	HU	HL	ED
FLASH	○	○		○
LOW			○	○
HIGH		○	○	

From Rear Fog Light SW (14-2)

To Clock (24-2)

From "CHARGE" Fuse (2-3)

J2 JUNCTION CONNECTOR

J1 JUNCTION CONNECTOR

Ground points
Point à terre
Erdschlußpunkt
Punto de conexión con tierra

EA = Located on right front fender
= *Monté dans le pare-chock AV droite*
= Angebracht an der Innenseite des rechten Vorderkotflügels
= *Situado en el parachoques delantero derecho*

EB = Located on left front fender
= *Monté dans le pare-chock AV gauche*
= Angebracht an der Innenseite des linken Vorderkotflügels
= *Situado en el parachoques*

IE = Located on left kick panel
= *Monté sur la tôle de pied de caisse gauche*
= Angebracht am linken Seitenblech des Vorderen Fußraums
= *Situado en el panel apoyapiés izquierdo*

Power Source

Headlight (LHD in Europe w/o Daytime Running Light)

1 2 3 4

POWER JUNCTION BOX

FL AM1 1.25B

FL MAIN 2.0L

(3F-E) 1 A
(Diesel) 2 B

3 EA 3

F14 B , F15 A , F19 C
FUSIBLE LINK

BATTERY

SHORT CONNECTOR (FOR TAILLIGHT)

S9

S10

F26 FUSE BLOCK

TAILLIGHT RELAY

HEADLIGHT RELAY

DIMMER RELAY

From Taillight Relay (25-1)

From Rear Fog Light SW (14-2)

4 EA 1

2 EA 2

D2 A B
SHORT CONNECTOR (for Ex. Running Light)

To Clock (24-2)

S9 B , S10 A
SHORT CONNECTOR (for Taillight)

To Rear Fog Light Relay (14-2)

C15
LIGHT CONTROL SW [COMB. SW]

	T	EL	H
OFF			
TAIL	○	○	
HEAD	○	○	○

From Headlight Cleaner SW (3-4)

D6 DIODE

C15
DIMMER SW [COMB. SW]

	HF	HU	HL	ED
FLASH	○	○		○
LOW			○	○
HIGH		○	○	

15A HEAD LH-UPR

15A HEAD LH-LOW

15A HEAD RH-LOW

15A HEAD RH-UPR

H7 No. 2 LH

H5 No. 1 H6 No. 1

RH H8 No. 2

HEADLIGHT

3 EA 2

C11
HIGH BEAM INDICATOR LIGHT [COMB. METER]

J2 JUNCTION CONNECTOR

FUSIBLE LINK

F14 GRAY

F15, F19

D2

SHORT CONNECTOR (FOR EXCEPT RUNNING LIGHT)

EA
EB
IE

Ground points
Point à terre
Erdschlußpunkt
Punto de conexión con tierra

EA = Located on right front fender
= *Monté dans le pare-chock AV droite*
= Angebracht an der Innenseite des rechten Vorderkotflügels
= *Situado en el parachoques delantero derecho*

EB = Located on left front fender
= *Monté dans le pare-chock AV gauche*
= Angebracht an der Innenseite des linken Vorderkotflügels
= *Situado en el parachoques*

IE = Located on left kick panel
= *Monté sur la tôle de pied de caisse gauche*
= Angebracht am linken Seitenblech des Vorderen Fußraums
= *Situado en el panel apoyapiés izquierdo*

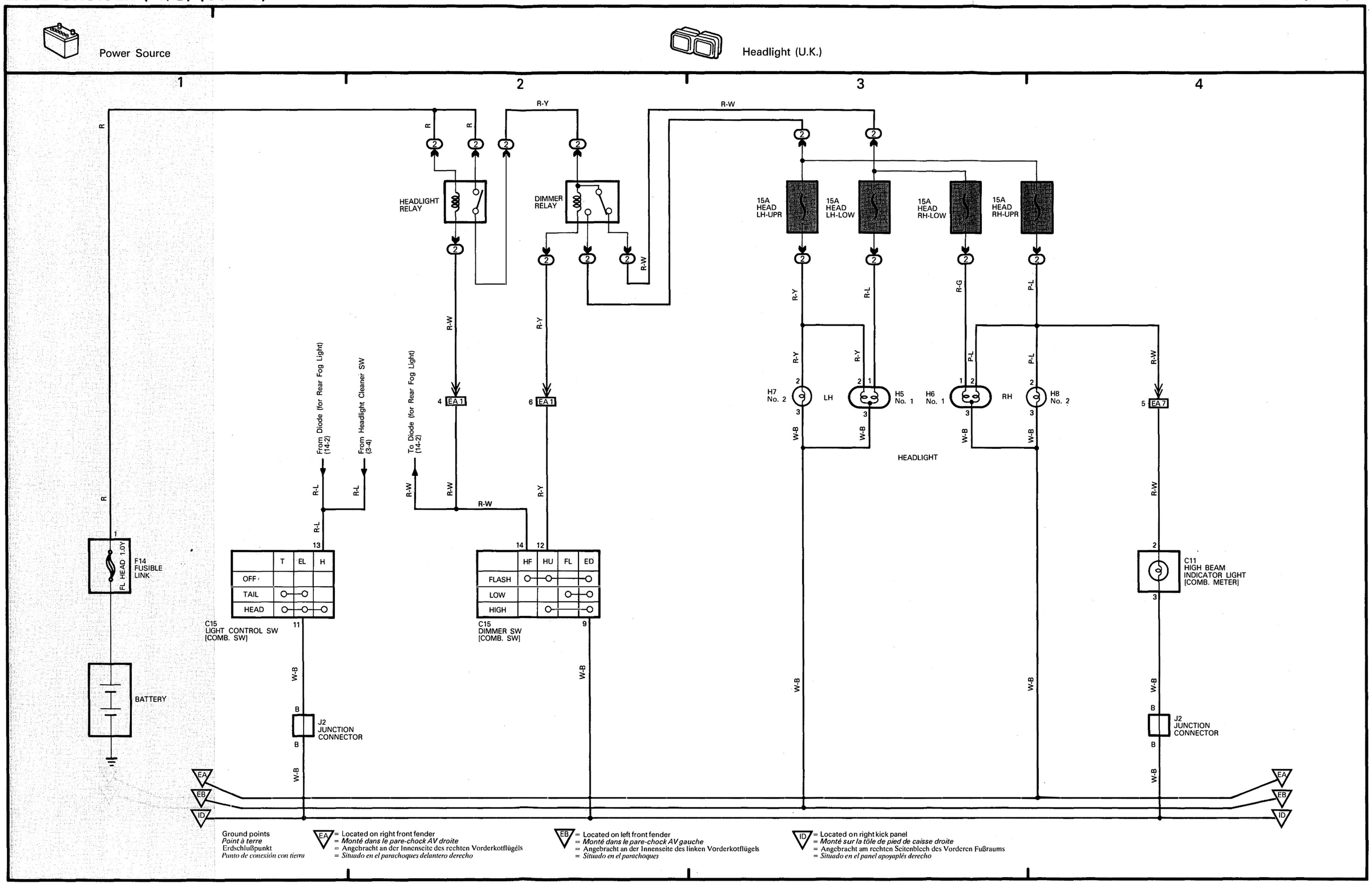
Power Source
Headlight (U.K.)
1
2
3
4
R
R-Y
R-W
HEADLIGHT RELAY
DIMMER RELAY
15A HEAD LH-UPR
15A HEAD LH-LOW
15A HEAD RH-LOW
15A HEAD RH-UPR
R-L
R-G
P-L
H7 No. 2
LH
H5 No. 1
H6 No. 1
RH
H8 No. 2
W-B
HEADLIGHT
EA 1
EA 7
From Diode (for Rear Fog Light) (14-2)
From Headlight Cleaner SW (3-4)
To Diode (for Rear Fog Light) (14-2)
F14 FUSIBLE LINK
FL HEAD 1.0Y
BATTERY
T
EL
H
OFF
TAIL
HEAD
C15 LIGHT CONTROL SW [COMB. SW]
HF
HU
FL
ED
FLASH
LOW
HIGH
C15 DIMMER SW [COMB. SW]
C11 HIGH BEAM INDICATOR LIGHT [COMB. METER]
J2 JUNCTION CONNECTOR
EA
EB
ID
Ground points
Point à terre
Erdschlußpunkt
Punto de conexión con tierra
EA = Located on right front fender
= Monté dans le pare-chock AV droite
= Angebracht an der Innenseite des rechten Vorderkotflügels
= Situado en el parachoques delantero derecho
EB = Located on left front fender
= Monté dans le pare-chock AV gauche
= Angebracht an der Innenseite des linken Vorderkotflügels
= Situado en el parachoques
ID = Located on right kick panel
= Monté sur la tôle de pied de caisse droite
= Angebracht am rechten Seitenblech des Vorderen Fußraums
= Situado en el panel apoyaplés derecho

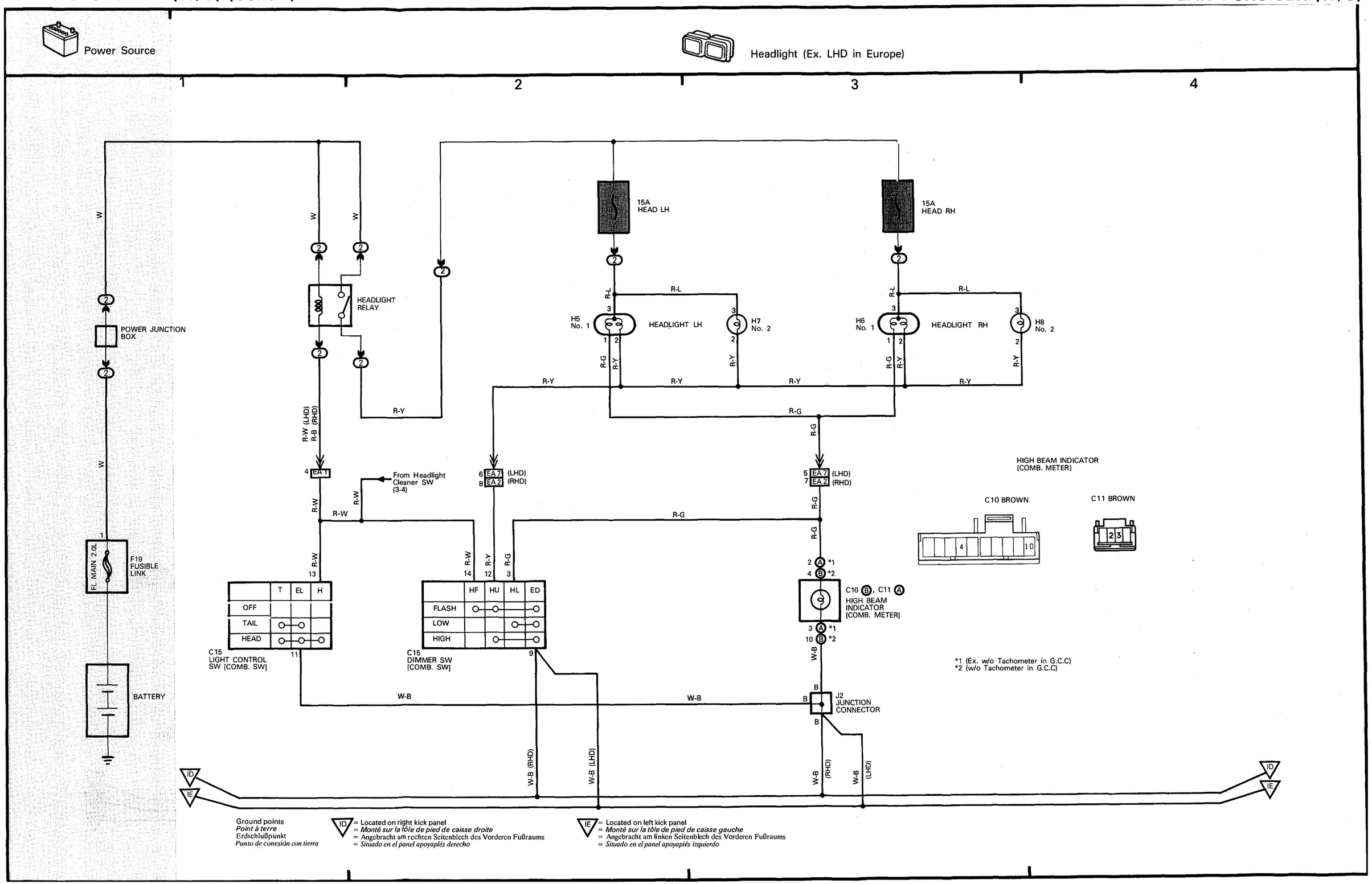
Power Source
Headlight (Ex. LHD in Europe)
1
2
3
4
15A HEAD LH
15A HEAD RH
HEADLIGHT RELAY
POWER JUNCTION BOX
H5 No. 1
HEADLIGHT LH
H7 No. 2
H6 No. 1
HEADLIGHT RH
H8 No. 2
R-L
R-G
R-Y
R-W (LHD)
R-B (RHD)
EA 1
EA 7 (LHD)
EA 2 (RHD)
From Headlight Cleaner SW (3-4)
HIGH BEAM INDICATOR [COMB. METER]
C10 BROWN
C11 BROWN
F19 FUSIBLE LINK
FL MAIN 2.0L
T
EL
H
OFF
TAIL
HEAD
C15 LIGHT CONTROL SW [COMB. SW]
HF
HU
HL
ED
FLASH
LOW
HIGH
C15 DIMMER SW [COMB. SW]
C10 B, C11 A
HIGH BEAM INDICATOR [COMB. METER]
*1 (Ex. w/o Tachometer in G.C.C)
*2 (w/o Tachometer in G.C.C)
BATTERY
W-B
J2 JUNCTION CONNECTOR
W-B (RHD)
W-B (LHD)
ID
IE
Ground points
Point à terre
Erdschlußpunkt
Punto de conexión con tierra
ID = Located on right kick panel
= Monté sur la tôle de pied de caisse droite
= Angebracht am rechten Seitenblech des Vorderen Fußraums
= Situado en el panel apoyaplés derecho
IE = Located on left kick panel
= Monté sur la tôle de pied de caisse gauche
= Angebracht am linken Seitenblech des Vorderen Fußraums
= Situado en el panel apoyapiés izquierdo

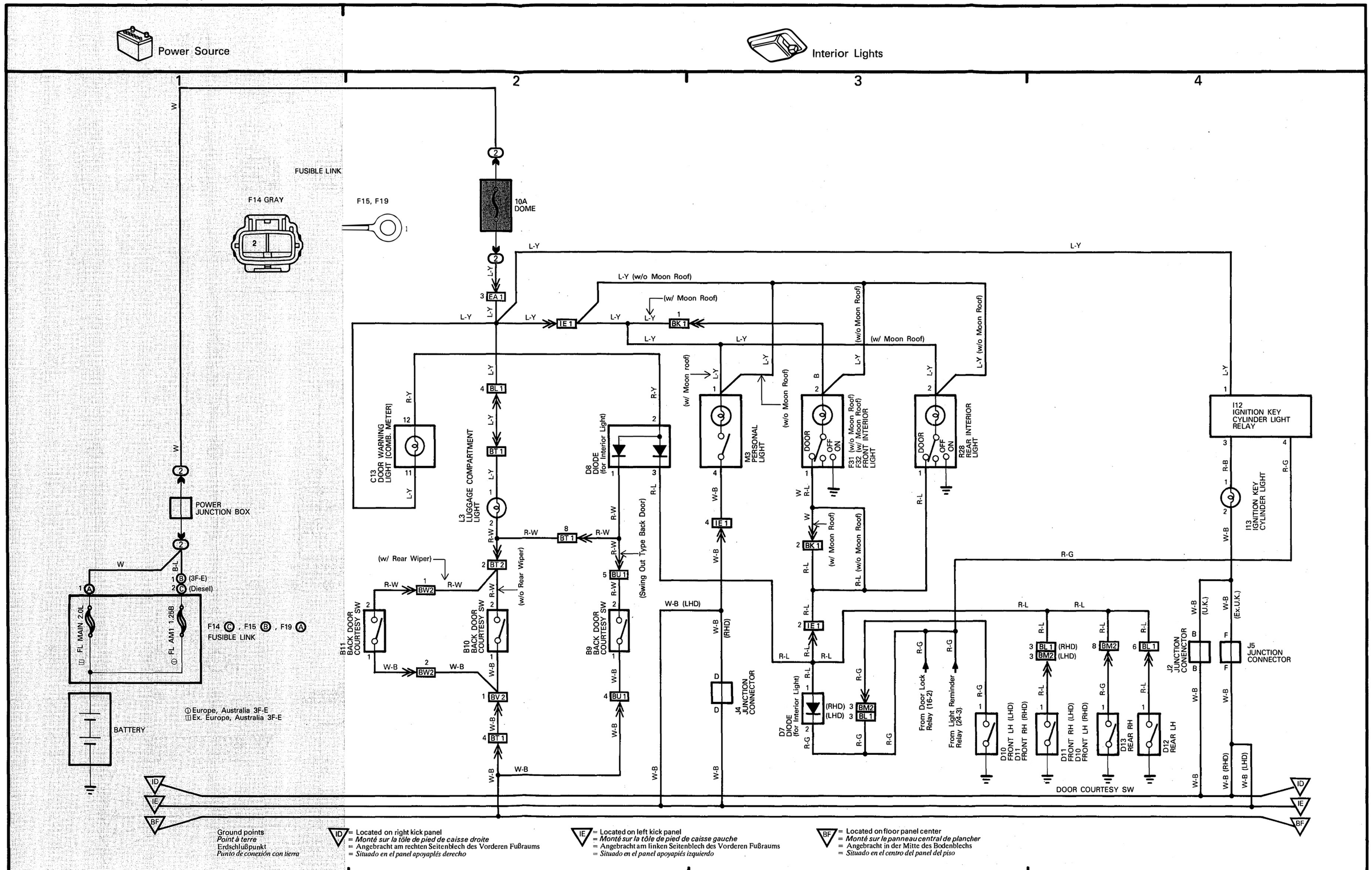
Power Source
Interior Lights
1
2
3
4
FUSIBLE LINK
F14 GRAY
F15, F19
10A DOME
POWER JUNCTION BOX
F14 Ⓒ, F15 Ⓑ, F19 Ⓐ
FUSIBLE LINK
FL MAIN 2.0L
FL AM1 1.25B
BATTERY
① Europe, Australia 3F-E
② Ex. Europe, Australia 3F-E
C13 DOOR WARNING LIGHT [COMB. METER]
L3 LUGGAGE COMPARTMENT LIGHT
D8 DIODE (for Interior Light)
M3 PERSONAL LIGHT
F31 (w/o Moon Roof) F32 (w/ Moon Roof) FRONT INTERIOR LIGHT
R28 REAR INTERIOR LIGHT
I12 IGNITION KEY CYLINDER LIGHT RELAY
I13 IGNITION KEY CYLINDER LIGHT
B11 BACK DOOR COURTESY SW
B10 BACK DOOR COURTESY SW
B9 BACK DOOR COURTESY SW
J4 JUNCTION CONNECTOR
D7 DIODE (for Interior Light)
From Door Lock Relay (16-2)
From Light Reminder Relay (24-3)
D10 FRONT LH (LHD) D11 FRONT RH (RHD)
D11 FRONT RH (LHD) D10 FRONT LH (RHD)
D13 REAR RH
D12 REAR LH
J2 JUNCTION CONENCTOR
J5 JUNCTION CONNECTOR
DOOR COURTESY SW
(w/ Rear Wiper)
(w/o Rear Wiper)
(Swing Out Type Back Door)
(w/ Moon Roof)
(w/o Moon Roof)
L-Y (w/o Moon Roof)
(w/ Moon roof)
(RHD)
(LHD)
(U.K.)
(Ex.U.K.)
Ground points
Point à terre
Erdschlußpunkt
Punto de conexión con tierra
ID = Located on right kick panel
= Monté sur la tôle de pied de caisse droite
= Angebracht am rechten Seitenblech des Vorderen Fußraums
= Situado en el panel apoyaplés derecho
IE = Located on left kick panel
= Monté sur la tôle de pied de caisse gauche
= Angebracht am linken Seitenblech des Vorderen Fußraums
= Situado en el panel apoyapiés izquierdo
BF = Located on floor panel center
= Monté sur le panneau central de plancher
= Angebracht in der Mitte des Bodenblechs
= Situado en el centro del panel del piso

Power Source

Turn Signal and Hazard

Horn

1 2 3 4

F14 GRAY

F15, F19

FUSIBLE LINK

B

9 AM1

ACC

IG1

ST1

6 B-Y

AM2

IG2

ST2

2 EA 3 (LHD)

7 EA 2 (RHD)

I14 IGNITION SW

B

2

50A AM1

W

W

POWER JUNCTION BOX

B-L

1 B (3F-E)

2 C (Diesel)

1 A

W

FL MAIN 2.0L

FL AM1 1.25B

A , F19

B , F15

C F14

FUSIBLE LINK

BATTERY

Ⓘ Europe, Australia 3F-E

Ⓘ Ex. Europe, Australia 3F-E

J1 JUNCTION CONNECTOR

W-B (LHD)

W-B (RHD)

FRONT TURN SIGNAL LIGHT LH

F5

Ⓐ GRAY

Ⓑ GRAY

W

15A HAZ-HORN

G-W

FRONT TURN SIGNAL LIGHT RH

F6

Ⓐ GRAY

Ⓑ GRAY

B-Y

F26 FUSE BLOCK

G-O

INDICATOR LIGHT [COMB. METER]

C10 BROWN

C11 BROWN

C12 GRAY

*1 (Ex. w/o Tachometer in G.C.C)

*2 (w/o Tachometer in G.C.C)

H11 HAZARD SW

		B1	F	B2	TL	TB	TR	T1
HAZARD	OFF	○	○					
	ON		○	○	○	○	○	

10 8 7 5 9 6 4

2 EA 1

G-O

TURN SIGNAL FLASHER

G-R

G

G-B

G-Y

HORN RELAY

9 EA 1 (Ex. U.K.)

10 EA 1 (U.K.)

19 BL 1

9 BQ1

T15 Ⓐ , T16 Ⓑ TRAILER SOCKET (for Turn Signal Light)

(w/o Trailer Socket)

C15 TURN SIGNAL SW [COMB. SW]

20 BL 1

10 BQ1

10 EA 1 (U.K.)

3 EA 7 (U.K.)

4 B 2 C 9 A *1

7 A 8 A *2

LH RH RED

*1 3 B INDICATOR LIGHT [COMB. METER]

*2 10 A C10 A , C11 B , C12 C

1 A (Europe)

1 B (Ex. Europe)

F5 A B FRONT LH

2 A (Europe)

2 B (Ex. Europe)

F3 FRONT SIDE LH

(Middle East)

J1 JUNCTION CONNECTOR

R17 REAR LH

R18 REAR RH

C15 BLACK

C16 BLACK

TRAILER SOCKET (FOR TURN SIGNAL LIGHT)

F6 A B FRONT RH

(Europe)

(Ex. Europe)

F4 FRONT SIDE RH

J4 JUNCTION CONNECTOR

J2 JUNCTION CONNECTOR

H9 H10 HORN

C15 HORN SW [COMB. SW]

BG = Located on back panel center
= Monté sous le panneau arrière
= Angebracht an der Innenseite der hinteren Wand des Kofferraums
= Situado en el centro del panel posterior

EA = Located on right front fender
= Monté dans le pare-chock AV droite
= Angebracht an der Innenseite des rechten Vorderkotflügels
= Situado en el parachoques delantero derecho

EB = Located on left front fender
= Monté dans le pare-chock AV gauche
= Angebracht an der Innenseite des linken Vorderkotflügels
= Situado en el parachoques

ID = Located on right kick panel
= Monté sur la tôle de pied de caisse droite
= Angebracht am rechten Seitenblech des Vorderen Fußraums
= Situado en el panel apoyapiés derecho

IE = Located on left kick panel
= Monté sur la tôle de pied de caisse gauche
= Angebracht am linken Seitenblech des Vorderen Fußraums
= Situado en el panel apoyapiés izquierdo

Ground points
Point à terre
Erdschlußpunkt
Punto de conexión con tierra

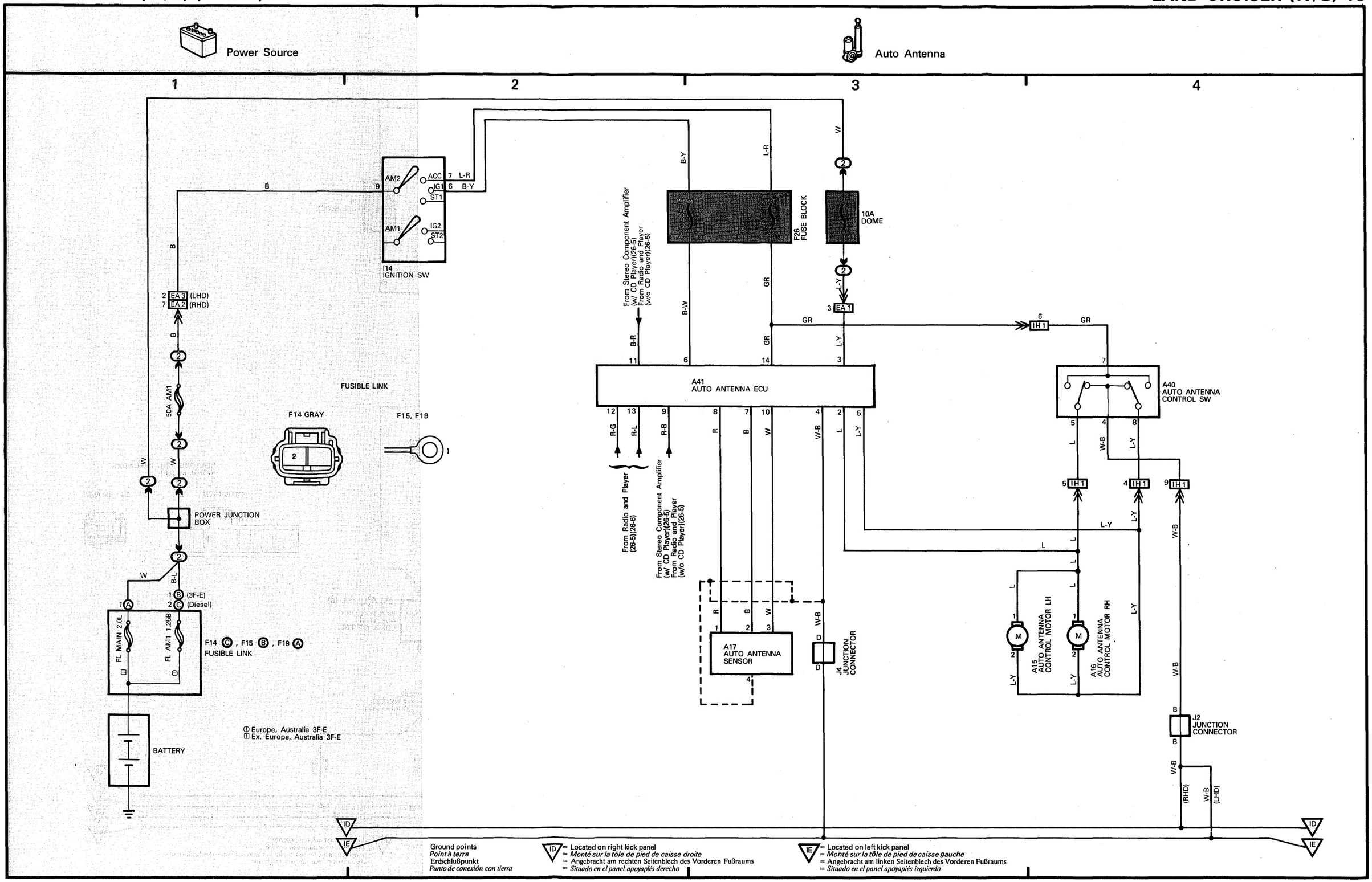
Power Source
Auto Antenna
1
2
3
4
AM2
AM1
ACC
IG1
ST1
IG2
ST2
I14
IGNITION SW
2 EA 3 (LHD)
7 EA 2 (RHD)
50A AM1
FUSIBLE LINK
F14 GRAY
F15, F19
POWER JUNCTION BOX
1 B (3F-E)
2 C (Diesel)
FL MAIN 2.0L
FL AM1 1.25B
F14 C, F15 B, F19 A
FUSIBLE LINK
BATTERY
Europe, Australia 3F-E
Ex. Europe, Australia 3F-E
From Stereo Component Amplifier (w/ CD Player)(26-5)
From Radio and Player (w/o CD Player)(26-5)
F26 FUSE BLOCK
10A DOME
3 EA 1
A41 AUTO ANTENNA ECU
From Radio and Player (26-5)(26-6)
From Stereo Component Amplifier (w/ CD Player)(26-5)
From Radio and Player (w/o CD Player)(26-5)
A17 AUTO ANTENNA SENSOR
J4 JUNCTION CONNECTOR
A40 AUTO ANTENNA CONTROL SW
A15 AUTO ANTENNA CONTROL MOTOR LH
A16 AUTO ANTENNA CONTROL MOTOR RH
J2 JUNCTION CONNECTOR
(RHD)
(LHD)
Ground points
Point à terre
Erdschlußpunkt
Punto de conexión con tierra
= Located on right kick panel
= Monté sur la tôle de pied de caisse droite
= Angebracht am rechten Seitenblech des Vorderen Fußraums
= Situado en el panel apoyaplés derecho
= Located on left kick panel
= Monté sur la tôle de pied de caisse gauche
= Angebracht am linken Seitenblech des Vorderen Fußraums
= Situado en el panel apoyapiés izquierdo

Power Source

Rear Fog Light

1 2 3 4

W

W

W

G (Ex. U.K.)

B-R

B-R (U.K.)

B-R

W

G ← (w/o Daytime Running Light)

TAILLIGHT RELAY

F26 FUSE BLOCK

From Dimmer SW "HF" (9-2)

R8 REAR FOG LIGHT RELAY

F26 FUSE BLOCK

R-W

R

G

From Short Connector (for Taillight)(8-1)

R-W (U.K.)

R (U.K.)

R-L (U.K.)

B-R

(w/ Daytime Running Light)

R-B

D9 DIODE (for Rear Fog Light)

(Ex. U.K.)

(Ex. U.K.)

To Light Control SW "H" (9-1)

R-L (U.K.)

R9 REAR FOG LIGHT SW

(U.K.)

To Daytime Running Light Relay (7-2)

To Short Connector (for Running Light) (w/o Daytime Running Light) (8-2)

R (Ex. U.K.)

R-W

R-W (Ex. U.K.)

(U.K.)

16 BL 2

R-W

To Daytime Running Light Relay (w/ Daytime Running Light)(7-1)

3 EA 3 (LHD)
2 EA 7 (RHD)

W

1

FL MAIN 2.0L

F19 FUSIBLE LINK

BATTERY

R-W R-W 2 BC 1 R-W R-W 15 BQ 1 R-W

(Swing Out Type Back Door)

(Swing Out Type Back Door)

3 BX 1

3 BU 1

R-W (Ex. U.K.)

R-W (U.K.)

REAR FOG LIGHT INDICATOR (COMB. METER)

C10 BROWN

C11 BROWN

8 (A)

C10 (A) , C11 (B)

R23 LH

REAR FOG LIGHT

R24 RH

R23 LH

REAR FOG LIGHT

R25 RH

REAR FOG LIGHT INDICATOR (COMB. METER)

3 (B)

W-B

J2 JUNCTION CONNECTOR

(Ex. Swing Out Type Back Door)

1 BC 1

4 BX 1

4 BU 1

W-B (RHD)

W-B (LHD)

ID IE BF BG

ID IE BF BG

Ground points
Point à terre
Erdschlußpunkt
Punto de conexión con tierra

ID = Located on right kick panel
= *Monté sur la tôle de pied de caisse droite*
= Angebracht am rechten Seitenblech des Vorderen Fußraums
= *Situado en el panel apoyaplés derecho*

IE = Located on left kick panel
= *Monté sur la tôle de pied de caisse gauche*
= Angebracht am linken Seitenblech des Vorderen Fußraums
= *Situado en el panel apoyapiés izquierdo*

BF = Located on floor panel center
= *Monté sur le panneau central de plancher*
= Angebracht in der Mitte des Bodenblechs
= *Situado en el centro del panel del piso*

BG = Located on back panel center
= *Monté sous le panneau arrière*
= Angebracht an der Innenseite der hinteren Wand des Kofferraums
= *Situado en el centro del panel posterior*

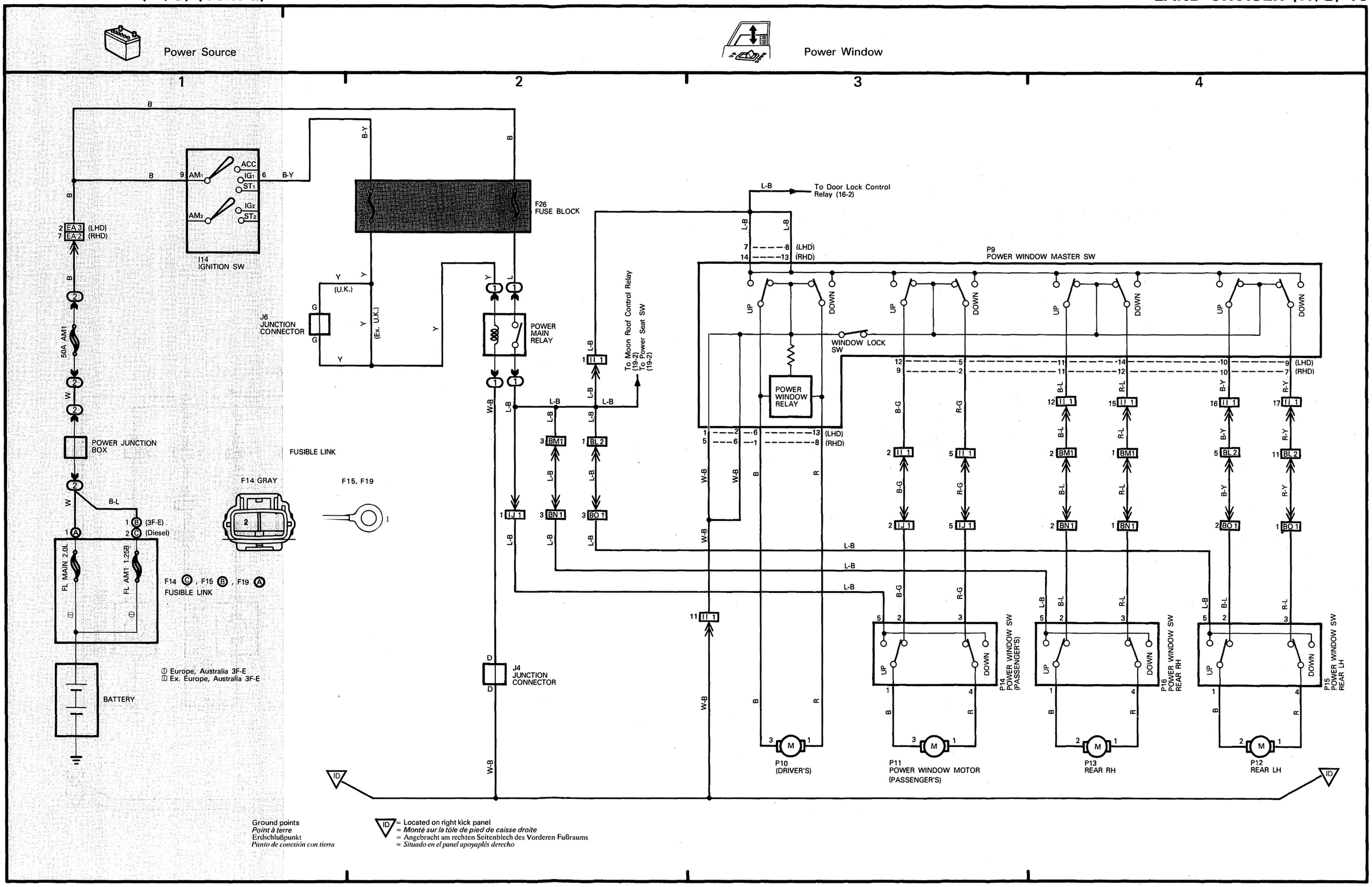
Power Source
Power Window
1
2
3
4
I14
IGNITION SW
ACC
IG1
ST1
IG2
ST2
AM1
AM2
F26
FUSE BLOCK
J6
JUNCTION
CONNECTOR
(U.K.)
(Ex. U.K.)
POWER
MAIN
RELAY
To Door Lock Control
Relay (16-2)
To Moon Roof Control Relay
(19-2)
To Power Seat SW
(19-2)
P9
POWER WINDOW MASTER SW
UP
DOWN
WINDOW LOCK
SW
POWER
WINDOW
RELAY
(LHD)
(RHD)
EA 3
EA 2
50A AM1
POWER JUNCTION
BOX
FUSIBLE LINK
F14 GRAY
F15, F19
(3F-E)
(Diesel)
FL MAIN 2.0L
FL AM1 1.25B
F14 C, F15 B, F19 A
FUSIBLE LINK
BATTERY
① Europe, Australia 3F-E
② Ex. Europe, Australia 3F-E
J4
JUNCTION
CONNECTOR
P10
(DRIVER'S)
P11
POWER WINDOW MOTOR
(PASSENGER'S)
P13
REAR RH
P12
REAR LH
P14
POWER WINDOW SW
(PASSENGER'S)
P16
POWER WINDOW SW
REAR RH
P15
POWER WINDOW SW
REAR LH
ID
Ground points
Point à terre
Erdschlußpunkt
Punto de conexión con tierra
= Located on right kick panel
= Monté sur la tôle de pied de caisse droite
= Angebracht am rechten Seitenblech des Vorderen Fußraums
= Situado en el panel apoyaplés derecho

Power Source

Door Lock

1 2 3 4

B

2 EA 3 (LHD)
7 EA 2 (RHD)

B

2

50A AM1

W

2

POWER JUNCTION BOX

2

W

B-L

1 B (3F-E)
2 C (Diesel)

1 A

FL MAIN 2.0L

FL AM1 1.25B

F14 C , F15 B , F19 A
FUSIBLE LINK

① Europe, Australia 3F-E
② Ex. Europe, Australia 3F-E

BATTERY

FUSIBLE LINK

F14 GRAY

F15, F19

L-B

From Power Main Relay (15-3)

F26
FUSE BLOCK

D19
DOOR LOCK CONTROL RELAY

To Door Courtesy SW Front RH (11-3)

P9
DOOR LOCK CONTROL SW (POWER WINDOW MASTER SW)

D14
DOOR KEY LOCK AND UNLOCK SW (DRIVER'S)

I14
UNLOCK WARNING SW (IGNITION SW)

D15
DOOR LOCK CONTROL MOTOR (DRIVER'S)

D16
DOOR LOCK CONTROL MOTOR (PASSENGER'S)

D18
DOOR LOCK CONTROL MOTOR REAR RH

D17
DOOR LOCK CONTROL MOTOR REAR LH

B13
BACK DOOR LOCK CONTROL MOTOR (Tail Gate)

B12
BACK DOOR LOCK CONTROL MOTOR (Swing Out)

(LHD)
(RHD)

LOCK
UNLOCK

M

ID
IE

Ground points
Point à terre
Erdschlußpunkt
Punto de conexión con tierra

ID = Located on right kick panel
= *Monté sur la tôle de pied de caisse droite*
= Angebracht am rechten Seitenblech des Vorderen Fußraums
= *Situado en el panel apoyaplés derecho*

IE = Located on left kick panel
= *Monté sur la tôle de pied de caisse gauche*
= Angebracht am linken Seitenblech des Vorderen Fußraums
= *Situado en el panel apoyapiés izquierdo*

Power Source

Front Wiper and Washer

Rear Wiper and Washer

1 2 3 4

ACC
IG1
ST1
IG2
ST2
AM1
AM2
I14
IGNITION SW
B
9
6
B-Y
2 EA 3 (LHD)
7 EA 2 (RHD)
50A AM1
W
FUSIBLE LINK
F14 GRAY
F15, F19
POWER JUNCTION BOX
B-L
1 B (3F-E)
2 C (Diesel)
FL MAIN 2.0L
RL AM1 1.25B
F14 C , F15 B , F19 A
FUSIBLE LINK
① Europe, Australia 3F-E
② Ex. Europe, Australia 3F-E
BATTERY
20A WIPER
F26
FUSE BLOCK
L
L-G
L-R
L-Y
L-W
L-B
L-O
W-B
B
C16
FRONT WIPER AND WASHER SW [COMB. SW]
+B S +1 +2 E W
OFF
INT
LOW
HIGH
WASHER
F7
FRONT WASHER MOTOR
REAR WIPER AND WASHER SW [COMB. SW]
L C E W
WASHER
OFF
INT
LOW
WASHER
R1
REAR WASHER MOTOR
F8
FRONT WIPER CONTROL MOTOR
J2
JUNCTION CONNECTOR
W-B (RHD)
W-B (LHD)
R38
REAR WIPER CONTROL RELAY (Tail Gate)
R35
REAR WIPER CONTROL MOTOR (Tail Gate)
R39
REAR WIPER CONTROL RELAY (Swing Out)
R36
REAR WIPER CONTROL MOTOR LH (Swing Out)
R37
REAR WIPER CONTROL MOTOR RH (Swing Out)
BL 2
BT 1
BT 2
BV 1
BW1
BW2
BX 1
BQ 1
BU 1
BU 2
BV 2
ID
IE
BF
BG

Ground points
Point à terre
Erdschlußpunkt
Punto de conexión con tierra

ID = Located on right kick panel
= *Monté sur la tôle de pied de caisse droite*
= Angebracht am rechten Seitenblech des Vorderen Fußraums
= *Situado en el panel apoyaplés derecho*

IE = Located on left kick panel
= *Monté sur la tôle de pied de caisse gauche*
= Angebracht am linken Seitenblech des Vorderen Fußraums
= *Situado en el panel apoyapiés izquierdo*

BF = Located on floor panel center
= *Monté sur le panneau central de plancher*
= Angebracht in der Mitte des Bodenblechs
= *Situado en el centro del panel del piso*

BG = Located on back panel center
= *Monté sous le panneau arrière*
= Angebracht an der Innenseite der hinteren Wand des Kofferraums
= *Situado en el centro del panel posterior*

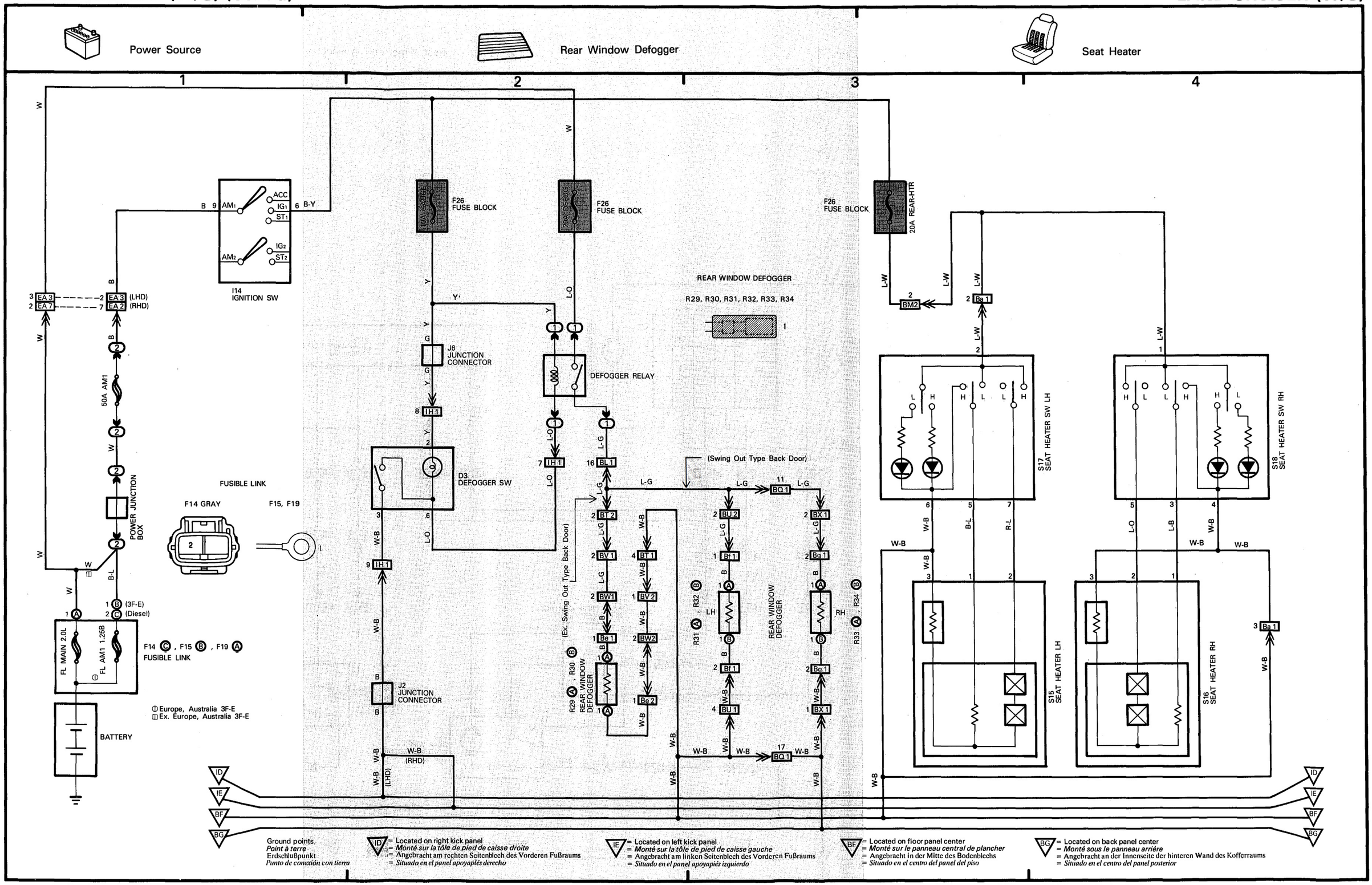
Power Source
Rear Window Defogger
Seat Heater
1
2
3
4
I14
IGNITION SW
ACC
IG1
ST1
IG2
ST2
AM1
AM2
F26
FUSE BLOCK
20A REAR-HTR
REAR WINDOW DEFOGGER
R29, R30, R31, R32, R33, R34
J6
JUNCTION
CONNECTOR
DEFOGGER RELAY
D3
DEFOGGER SW
(Swing Out Type Back Door)
(Ex. Swing Out Type Back Door)
REAR WINDOW
DEFOGGER
R29 A, R30 B
R31 A, R32 B
R33 A, R34 B
J2
JUNCTION
CONNECTOR
50A AM1
POWER JUNCTION
BOX
FUSIBLE LINK
F14 GRAY
F15, F19
(3F-E)
(Diesel)
FL MAIN 2.0L
FL AM1 1.25B
F14 C, F15 B, F19 A
FUSIBLE LINK
BATTERY
Europe, Australia 3F-E
Ex. Europe, Australia 3F-E
S17
SEAT HEATER SW LH
S18
SEAT HEATER SW RH
S15
SEAT HEATER LH
S16
SEAT HEATER RH
Ground points
Point à terre
Erdschlußpunkt
Punto de conexión con tierra
ID = Located on right kick panel
= Monté sur la tôle de pied de caisse droite
= Angebracht am rechten Seitenblech des Vorderen Fußraums
= Situado en el panel apoyaplés derecho
IE = Located on left kick panel
= Monté sur la tôle de pied de caisse gauche
= Angebracht am linken Seitenblech des Vorderen Fußraums
= Situado en el panel apoyapiés izquierdo
BF = Located on floor panel center
= Monté sur le panneau central de plancher
= Angebracht in der Mitte des Bodenblechs
= Situado en el centro del panel del piso
BG = Located on back panel center
= Monté sous le panneau arrière
= Angebracht an der Innenseite der hinteren Wand des Kofferraums
= Situado en el centro del panel posterior

Power Source

Moon Roof

Power Seat

Fuel Heater

1 2 3 4

W

AM1 ACC IG1 ST1 AM2 IG2 ST2

I14 IGNITION SW

B 3 W-R

4 B-G

2 EA 3 (LHD)
7 EA 2 (RHD)

B

50A AM1

(Ex. 3F-E)

W

W-R

FUSIBLE LINK

F14 GRAY

2

F15, F19

1

F16 GRAY

1

1 EA 3 (LHD)
1 EA 7 (RHD)

POWER JUNCTION BOX

W

B-L

1 B (3F-E)
2 C (Diesel)

1 A 1 D

FL MAIN 2.0L

FL AM1 1.25B ⓘ

FL AM2 0.3P

(3F-E)

F14 C , F15 B , F16 D , F19 A
FUSIBLE LINK

BATTERY

ⓘ Europe, Australia 3F-E
◫ Ex. Europe, Australia 3F-E

W

10A DOME

L-Y

3 EA 1

1 IE 1

12

M2
MOON ROOF CONTROL RELAY

1 2 3 7

P G-Y R-Y R-W

3 6 5 2

OPEN CLOSE UP DOWN

M3
MOON ROOF CONTROL SW

8 9 4 5 11

G-W R-L R G W-B

1 4 3 6

M4
MOON ROOF LIMIT SW AND MOTOR

5 2

W-B

4 IE 1

W-B

(LHD, Australia)

(Ex. LHD, Australia)

D

J4
JUNCTION CONNECTOR

D

From Power Main Relay (15-2)

L-B

3 IE 1

6

L-B

1 BL 2

3 BZ 1

3 BM1

3 BY 1

P8
POWER SEAT SW (LHD)

P8
POWER SEAT SW (RHD)

1 4 2 5

W-B L-R

L-W

2

M

1

P7
POWER SEAT MOTOR (LHD)

P7
POWER SEAT MOTOR (RHD)

1 BZ 1

1 BY 1

3 Ba 1

W

B-G

20A FUEL HTR

F26 FUSE BLOCK

B-L 8 EA 1 B-L

W-L

FUEL HEATER RELAY

W-R

W-B

1 EA 3 (LHD)
4 EA 2 (RHD)

1

F12
FUEL HEATER

2

EB
ID
IE
BF

Ground points
Point à terre
Erdschlußpunkt
Punto de conexión con tierra

EB = Located on left front fender
= *Monté dans le pare-chock AV gauche*
= Angebracht an der Innenseite des linken Vorderkotflügels
= *Situado en el parachoques*

ID = Located on right kick panel
= *Monté sur la tôle de pied de caisse droite*
= Angebracht am rechten Seitenblech des Vorderen Fußraums
= *Situado en el panel apoyapiés derecho*

IE = Located on left kick panel
= *Monté sur la tôle de pied de caisse gauche*
= Angebracht am linken Seitenblech des Vorderen Fußraums
= *Situado en el panel apoyapiés izquierdo*

BF = Located on floor panel center
= *Monté sur le panneau central de plancher*
= Angebracht in der Mitte des Bodenblechs
= *Situado en el centro del panel del piso*

Power Source

Remote Control Mirror

Accessory Meter

1 2 3 4

W

B

9 AM1

ACC 7

IG1 6

ST1

AM2

IG2

L-R

B-Y

I14
IGNITION SW

3 EA 3 ---- 2 EA 3 (LHD)
2 EA 7 ---- 7 EA 2 (RHD)

B

2

50A AM1

FUSIBLE LINK

F14 GRAY

2

F15, F19

1

W

2

W

2

POWER JUNCTION BOX

2

W

B-L

1 B (3F-E)
2 C (Diesel)

1 A

FL MAIN 2.0L

FL AM1 1.25B

F14 C , F15 B, F19 A
FUSIBLE LINK

BATTERY

Ⓘ Europe, Australia 3F-E
◫ Ex. Europe, Australia 3F-E

L-R

F26
FUSE BLOCK

GR

1

R11
REMOTE CONTROL MIRROR SW

		B	E	H1	V1	C	V2	H2
RH	UP							
	DOWN							
	RIGHT							
	LEFT							
LH	UP							
	DOWN							
	RIGHT							
	LEFT							

4 9 10 3 6 2

W-B

G-R

Y-R

W

W

Y

G

(RHD)

(LHD)

W-B

W-B

9 II-1 6 II-1 10 II-1 ---- 10 II-1 6 IJ-1 9 IJ-1 (LHD)
9 IJ-1 6 IJ-1 10 IJ-1 ---- 10 IJ-1 6 II-1 9 II-1 (RHD)

G Y W W Y G

1 2 3 3 2 1

M M R40 LH

M M R41 RH

REMOTE CONTROL MIRROR

B-Y

F26
FUSE BLOCK

From Sub Fuel Warning Light (28-3)

GR

Y

Y-L

1 IE 2

2 IE 2

5 IE 2

GR

Y

Y-G

1 A

2 A

6 A

A43 A , A44 B
ACCESSORY METER

1 B 2 B 3 B 4 B 5 B 6 B 7 B 8 B 9 B 10 B 5 A

B GR R W G L Y O V LG W-B

1 2 3 4 5 6 7 8 9 10 3 IE 2

M1 MAGNET RELD SENSOR

B-Y L-R W

2 3 1

IG ACC +B

E 4

P2
POWER OUTLET

W-B

ACCESSORY METER

A43

1 2 5 6

A44

1 2 3 4
5 6 7 8 9 10

W-B W-B

ID IE

ID IE

Ground points
Point à terre
Erdschlußpunkt
Punto de conexión con tierra

ID = Located on right kick panel
= *Monté sur la tôle de pied de caisse droite*
= Angebracht am rechten Seitenblech des Vorderen Fußraums
= *Situado en el panel apoyapiés derecho*

IE = Located on left kick panel
= *Monté sur la tôle de pied de caisse gauche*
= Angebracht am linken Seitenblech des Vorderen Fußraums
= *Situado en el panel apoyapiés izquierdo*

Power Source | Automatic Transmission Indicator | Back-Up Light | Seat Belt Warning

1 | 2 | 3 | 4

C10 BROWN

C13 BLUE

SEAT BELT WARNING LIGHT (COMB. METER)

*1 (Ex. w/o Tachometer in G.C.C)
*2 (w/o Tachometer in G.C.C)

I14 IGNITION SW

FUSIBLE LINK

50A AM1

F14 GRAY

F15, F19

POWER JUNCTION BOX

FL MAIN 2.0L

FL AM1.25B

F14 C , F15 B , F19 A FUSIBLE LINK

BATTERY

① Europe, Australia 3F-E
② Ex. Europe, Australia 3F-E

10A GAUGE

F26 FUSE BLOCK

J6 JUNCTION CONNECTOR

B2 BACK-UP LIGHT AND A/T INDICATOR SW

B1 BACK-UP LIGHT SW (M/T)

C10 A/T FLUID TEMP. INDICATOR [COMB. METER]

A9 A/T FLUID TEMP. SENSOR

C14 A/T INDICATOR [COMB. METER]

C13 TRANSFER NEUTRAL POSITION INDICATOR [COMB. METER]

T4 TRANSFER NEUTRAL POSITION SW

TRAILER SOCKET

T14

Ⓐ BLACK

Ⓑ BLACK

T14 Ⓐ Ⓑ TRAILER SOCKET (for Ex. Turn Signal Light)

C10 Ⓑ, C13 Ⓑ SEAT BELT WARNING LIGHT [COMB. METER]

S8 SEAT BELT WARNING RELAY

B14 BUCKLE SW

R17 LH

R18 RH

BACK-UP LIGHT [REAR COMB. LIGHT]

J2 JUNCTION CONNECTOR

J3 JUNCTION CONNECTOR

J1 JUNCTION CONNECTOR

EC = Located on engine block
= *Monté sur le bloc-moteur*
= Angebracht auf dem Motor
= *Situado en el bloque motor*

Ground points
Point à terre
Erdschlußpunkt
Punto de conexión con tierra

ID = Located on right kick panel
= *Monté sur la tôle de pied de caisse droite*
= Angebracht am rechten Seitenblech des Vorderen Fußraums
= *Situado en el panel apoyapiés derecho*

IE = Located on left kick panel
= *Monté sur la tôle de pied de caisse gauche*
= Angebracht am linken Seitenblech des Vorderen Fußraums
= *Situado en el panel apoyapiés izquierdo*

BF = Located on floor panel center
= *Monté sur le panneau central de plancher*
= Angebracht in der Mitte des Bodenblechs
= *Situado en el centro del panel del piso*

BG = Located on back panel center
= *Monté sous le panneau arrière*
= Angebracht an der Innenseite der hinteren Wand des Kofferraums
= *Situado en el centro del panel posterior*

Power Source

4WD

1 2 3 4

4WD INDICATOR LIGHT
DIFF. LOCK INDICATOR LIGHT
(COMB. METER)

C10 BROWN

C13 BLUE

*1 (Ex. w/o Tachometer in G.C.C)
*2 (w/o Tachometer in G.C.C)

I14 IGNITION SW

ACC, IG1, ST1, IG2, ST2, AM1, AM2

2 EA 3 (LHD)
7 EA 2 (RHD)

FUSIBLE LINK

50A AM1

F14 GRAY

F15, F19

POWER JUNCTION BOX

B-L
1 (B) (3F-E)
2 (C) (Diesel)

FL MAIN 2.0L

FL AM1 1.25B

F14 (C), F15 (B), F19 (A)
FUSIBLE LINK

BATTERY

Ⓘ Europe, Australia 3F-E
Ⓘ Ex. Europe, Australia 3F-E

F26 FUSE BLOCK
50A DIFF
10A GAUGE

J6 JUNCTION CONNECTOR

T10 TRANSFER CONTROL RELAY

T3 TRANSFER L4 POSITION SW

T11 TRANSFER CONTROL SW
2WD
4WD

T2 TRANSFER 2,4 CONTROL MOTOR ACTUATOR

J1 JUNCTION CONNECTOR

To Engine ECU (27-6)

F21 4WD INDICATOR SW

4WD INDICATOR LIGHT

DIFF. LOCK INDICATOR LIGHT

C10 (A), C13 (B) (COMB. METER)

F28 FRONT DIFF. LOCK POSITION SW

R20 REAR DIFF. LOCK POSITION SW

F27 FRONT DIFF. LOCK CONTROL MOTOR ACTUATOR

R19 REAR DIFF. LOCK CONTROL MOTOR ACTUATOR

D5 DIFF. LOCK CONTROL SW
FRONT
REAR

To Speed Sensor (28-3)

D4 DIFF. LOCK ECU
RLP, FLP, 4WD, IG, FR, R, SPD
M3, REL3, REL4, M4, M1, REL2, REL1, M2, E

J4 JUNCTION CONNECTOR
(RHD)
(LHD)

EC, ID, IE, BG

Ground points
Point à terre
Erdschlußpunkt
Punto de conexión con tierra

EC = Located on engine block
= *Monté sur le bloc-moteur*
= Angebracht auf dem Motor
= *Situado en el bloque motor*

ID = Located on right kick panel
= *Monté sur la tôle de pied de caisse droite*
= Angebracht am rechten Seitenblech des Vorderen Fußraums
= *Situado en el panel apoyaplés derecho*

IE = Located on left kick panel
= *Monté sur la tôle de pied de caisse gauche*
= Angebracht am linken Seitenblech des Vorderen Fußraums
= *Situado en el panel apoyapiés izquierdo*

BG = Located on back panel center
= *Monté sous le panneau arriére*
= Angebracht an der Innenseite der hinteren Wand des Kofferraums
= *Situado en el centro del panel posterior*

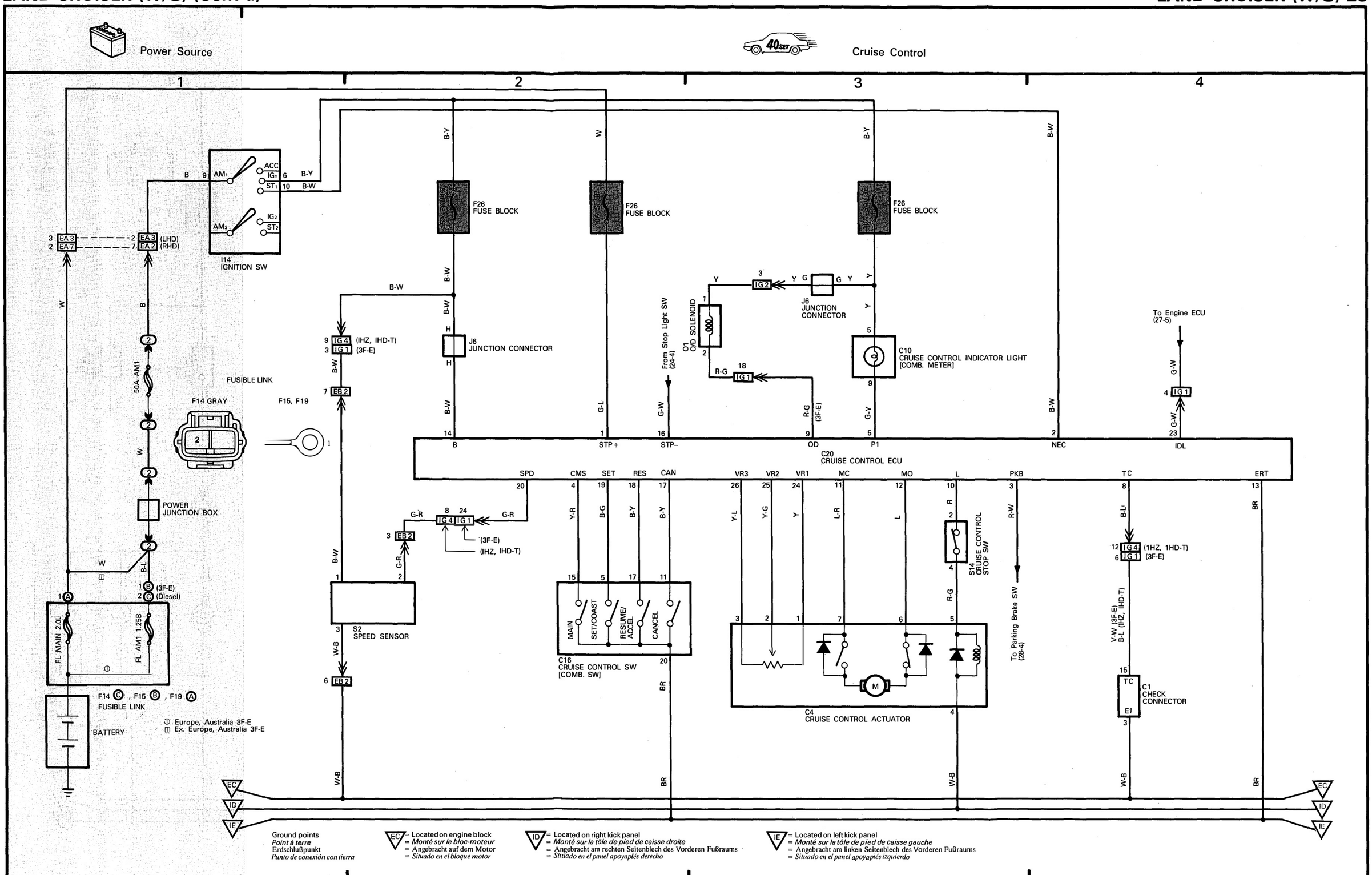
Power Source
Cruise Control
1
2
3
4
I14
IGNITION SW
AM1
AM2
ACC
IG1
ST1
IG2
ST2
B-Y
B-W
EA3 (LHD)
EA7 (RHD)
EA2
50A AM1
FUSIBLE LINK
F14 GRAY
F15, F19
POWER
JUNCTION BOX
(3F-E)
(Diesel)
FL MAIN 2.0L
FL AM1 1.25B
F14 Ⓒ, F15 Ⓑ, F19 Ⓐ
FUSIBLE LINK
BATTERY
① Europe, Australia 3F-E
② Ex. Europe, Australia 3F-E
F26
FUSE BLOCK
J6
JUNCTION CONNECTOR
IG4 (IHZ, IHD-T)
IG1 (3F-E)
EB2
S2
SPEED SENSOR
From Stop Light SW
(24-4)
O1
O/D SOLENOID
IG2
C10
CRUISE CONTROL INDICATOR LIGHT
[COMB. METER]
To Engine ECU
(27-5)
B
STP+
STP–
OD
P1
NEC
IDL
C20
CRUISE CONTROL ECU
SPD
CMS
SET
RES
CAN
VR3
VR2
VR1
MC
MO
L
PKB
TC
ERT
(3F-E)
(IHZ, IHD-T)
MAIN
SET/COAST
RESUME/
ACCEL
CANCEL
C16
CRUISE CONTROL SW
[COMB. SW]
S14
CRUISE CONTROL
STOP SW
To Parking Brake SW
(28-4)
C4
CRUISE CONTROL ACTUATOR
(1HZ, 1HD-T)
(3F-E)
V-W (3F-E)
B-L (IHZ, IHD-T)
C1
CHECK
CONNECTOR
EC
ID
IE
Ground points
Point à terre
Erdschlußpunkt
Punto de conexión con tierra
EC = Located on engine block
= Monté sur le bloc-moteur
= Angebracht auf dem Motor
= Situado en el bloque motor
ID = Located on right kick panel
= Monté sur la tôle de pied de caisse droite
= Angebracht am rechten Seitenblech des Vorderen Fußraums
= Situado en el panel apoyaplés derecho
IE = Located on left kick panel
= Monté sur la tôle de pied de caisse gauche
= Angebracht am linken Seitenblech des Vorderen Fußraums
= Situado en el panel apoyapiés izquierdo

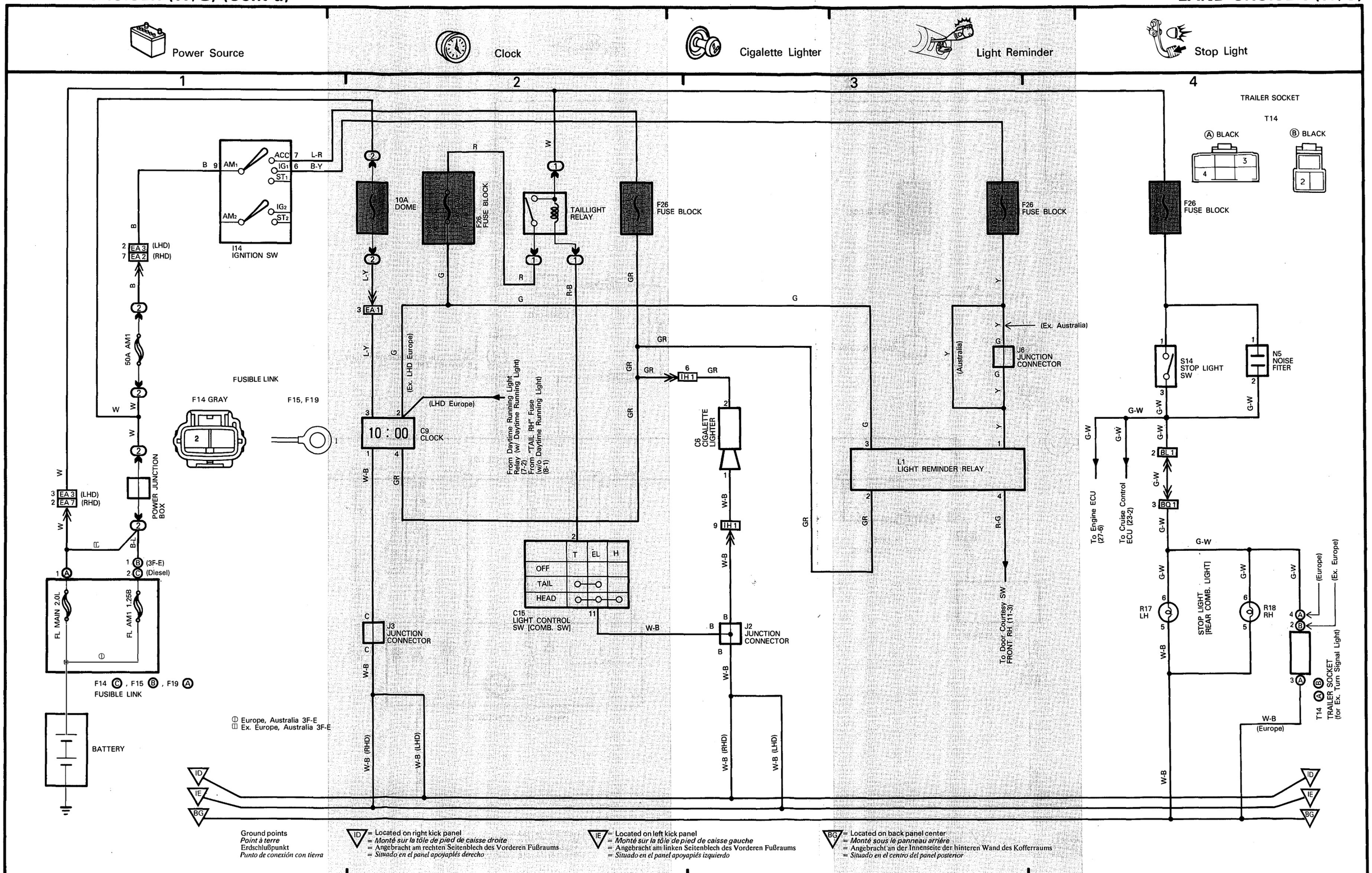
Power Source
Clock
Cigalette Lighter
Light Reminder
Stop Light
1
2
3
4
TRAILER SOCKET
T14
Ⓐ BLACK
Ⓑ BLACK
I14
IGNITION SW
AM1
AM2
ACC
IG1
ST1
IG2
ST2
L-R
B-Y
10A
DOME
F26
FUSE BLOCK
TAILLIGHT
RELAY
F26
FUSE BLOCK
F26
FUSE BLOCK
F26
FUSE BLOCK
EA 3 (LHD)
EA 2 (RHD)
50A AM1
FUSIBLE LINK
F14 GRAY
F15, F19
POWER JUNCTION
BOX
EA 3 (LHD)
EA 7 (RHD)
(3F-E)
(Diesel)
FL MAIN 2.0L
FL AM1 1.25B
F14 Ⓒ, F15 Ⓑ, F19 Ⓐ
FUSIBLE LINK
BATTERY
EA 1
(Ex. LHD Europe)
(LHD Europe)
10 : 00
C9
CLOCK
From Daytime Running Light Relay (w/ Daytime Running Light) (7-2)
From "TAIL RH" Fuse (w/o Daytime Running Light) (8-1)
IH 1
C6
CIGALETTE
LIGHTER
IH 1
J6
JUNCTION
CONNECTOR
(Ex. Australia)
(Australia)
L1
LIGHT REMINDER RELAY
To Door Courtesy SW
FRONT RH (11-3)
S14
STOP LIGHT
SW
N5
NOISE
FITER
BL 1
BQ 1
To Engine ECU (27-6)
To Cruise Control ECU (23-2)
T
EL
H
OFF
TAIL
HEAD
C15
LIGHT CONTROL
SW [COMB. SW]
J3
JUNCTION
CONNECTOR
J2
JUNCTION
CONNECTOR
R17
LH
STOP LIGHT
[REAR COMB. LIGHT]
R18
RH
(Europe)
(Ex. Europe)
T14 Ⓐ Ⓑ
TRAILER SOCKET
(for Ex. Turn Signal Light)
W-B (Europe)
Ⓘ Europe, Australia 3F-E
Ⓘ Ex. Europe, Australia 3F-E
W-B (RHD)
W-B (LHD)
ID
IE
BG
Ground points
Point à terre
Erdschlußpunkt
Punto de conexión con tierra
ID = Located on right kick panel
= Monté sur la tôle de pied de caisse droite
= Angebracht am rechten Seitenblech des Vorderen Fußraums
= Situado en el panel apoyaplés derecho
IE = Located on left kick panel
= Monté sur la tôle de pied de caisse gauche
= Angebracht am linken Seitenblech des Vorderen Fußraums
= Situado en el panel apoyapiés izquierdo
BG = Located on back panel center
= Monté sous le panneau arrière
= Angebracht an der Innenseite der hinteren Wand des Kofferraums
= Situado en el centro del panel posterior

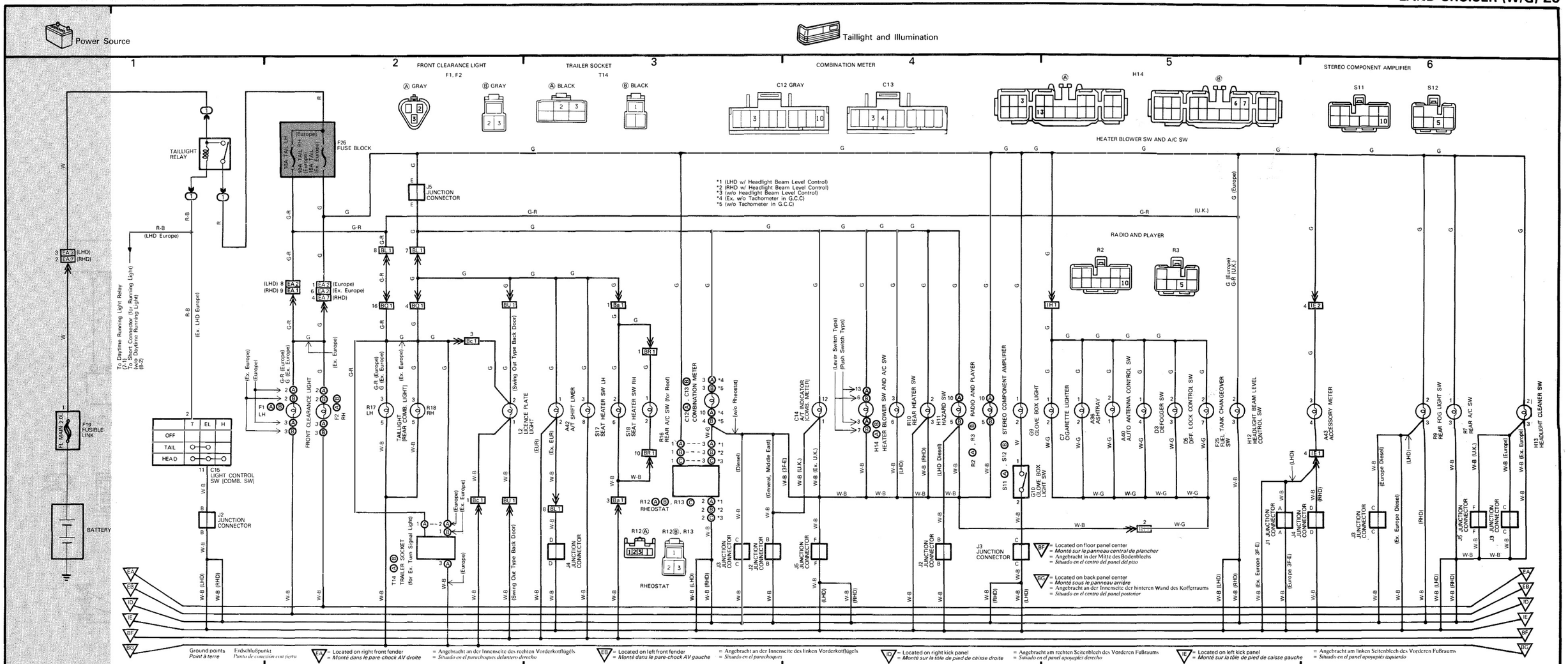
Power Source
Taillight and Illumination
FRONT CLEARANCE LIGHT
F1, F2
TRAILER SOCKET
T14
COMBINATION METER
C12 GRAY
C13
H14
HEATER BLOWER SW AND A/C SW
STEREO COMPONENT AMPLIFIER
S11
S12
TAILLIGHT RELAY
F26 FUSE BLOCK
J5 JUNCTION CONNECTOR
*1 (LHD w/ Headlight Beam Level Control)
*2 (RHD w/ Headlight Beam Level Control)
*3 (w/o Headlight Beam Level Control)
*4 (Ex. w/o Tachometer in G.C.C)
*5 (w/o Tachometer in G.C.C)
RADIO AND PLAYER
R2
R3
F19 FUSIBLE LINK
BATTERY
C15 LIGHT CONTROL SW [COMB. SW]
J2 JUNCTION CONNECTOR
T14 TRAILER SOCKET (for Ex. Turn Signal Light)
L2 LICENCE PLATE LIGHT
A42 A/T SHIFT LIVER
S17 SEAT HEATER SW LH
S18 SEAT HEATER SW RH
R16 REAR A/C SW (for Roof)
C12, C13 COMBINATION METER
R12 RHEOSTAT
R13 RHEOSTAT
C14 A/T INDICATOR [COMB. METER]
H14 HEATER BLOWER SW AND A/C SW
H10 REAR HEATER SW
H11 HAZARD SW
R2, R3 RADIO AND PLAYER
S11, S12 STEREO COMPONENT AMPLIFIER
G9 GLOVE BOX LIGHT
C7 CIGARETTE LIGHTER
A36 ASHTRAY
A40 AUTO ANTENNA CONTROL SW
D3 DEFOGGER SW
D5 DIFF. LOCK CONTROL SW
F25 FUEL TANK CHANGEOVER SW
H12 HEADLIGHT BEAM LEVEL CONTROL SW
A43 ACCESSORY METER
R9 REAR FOG LIGHT SW
R7 REAR A/C SW
H13 HEADLIGHT CLEANER SW
J1 JUNCTION CONNECTOR
J4 JUNCTION CONNECTOR
J3 JUNCTION CONNECTOR
J5 JUNCTION CONNECTOR
BF = Located on floor panel center
= Monté sur le panneau central de plancher
= Angebracht in der Mitte des Bodenblechs
= Situado en el centro del panel del piso
BG = Located on back panel center
= Monté sous le panneau arrière
= Angebracht an der Innenseite der hinteren Wand des Kofferraums
= Situado en el centro del panel posterior
Ground points
Point à terre
Erdschlußpunkt
Punto de conexión con tierra
EA = Located on right front fender
= Monté dans le pare-chock AV droite
= Angebracht an der Innenseite des rechten Vorderkotflügels
= Situado en el parachoques delantero derecho
EB = Located on left front fender
= Monté dans le pare-chock AV gauche
= Angebracht an der Innenseite des linken Vorderkotflügels
= Situado en el parachoques
ID = Located on right kick panel
= Monté sur la tôle de pied de caisse droite
= Angebracht am rechten Seitenblech des Vorderen Fußraums
= Situado en el panel apoyapiés derecho
IE = Located on left kick panel
= Monté sur la tôle de pied de caisse gauche
= Angebracht am linken Seitenblech des Vorderen Fußraums
= Situado en el panel apoyapiés izquierdo

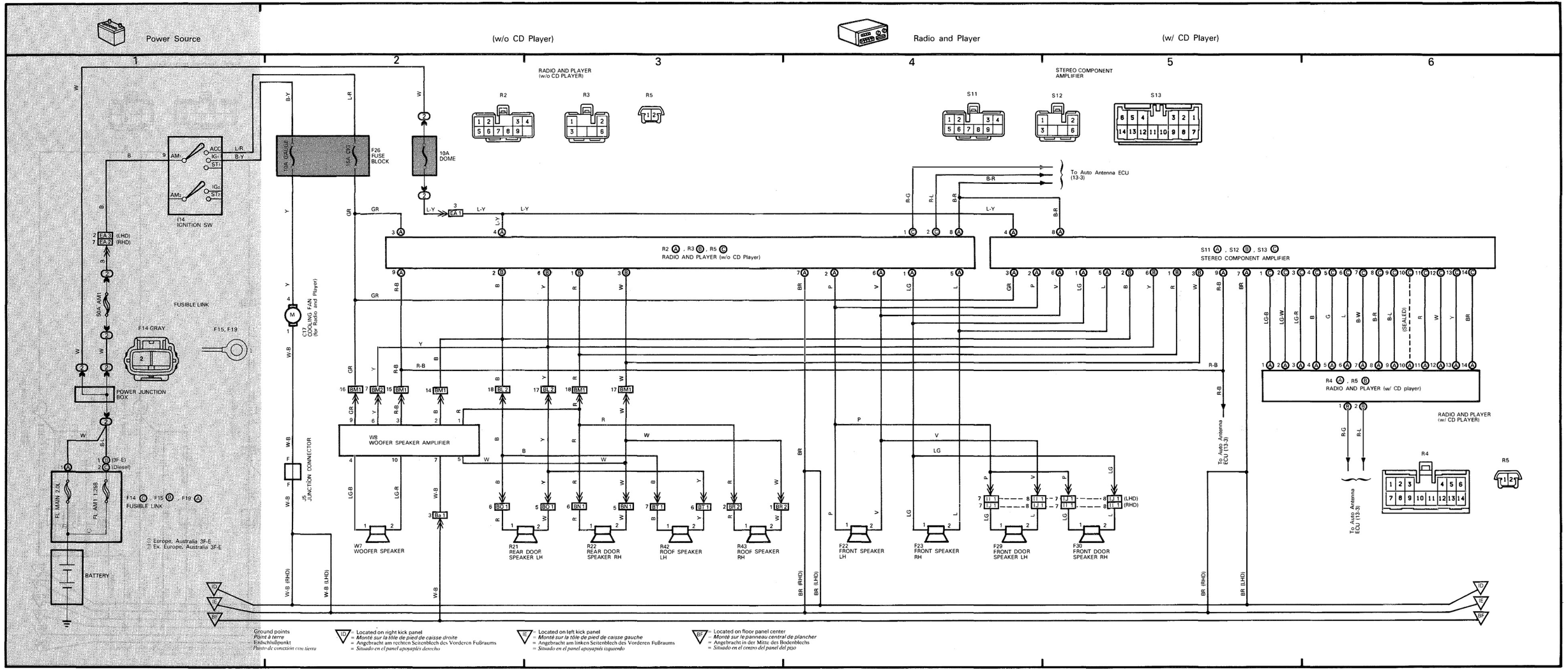

Power Source
(w/o CD Player)
Radio and Player
(w/ CD Player)
RADIO AND PLAYER (w/o CD PLAYER)
STEREO COMPONENT AMPLIFIER
R2
R3
R5
S11
S12
S13
10A DOME
F26 FUSE BLOCK
I14 IGNITION SW
FUSIBLE LINK
F14 GRAY
F15, F19
POWER JUNCTION BOX
F14 C, F15 B, F19 A FUSIBLE LINK
BATTERY
C17 COOLING FAN (for Radio and Player)
J5 JUNCTION CONNECTOR
W8 WOOFER SPEAKER AMPLIFIER
W7 WOOFER SPEAKER
R21 REAR DOOR SPEAKER LH
R22 REAR DOOR SPEAKER RH
R42 ROOF SPEAKER LH
R43 ROOF SPEAKER RH
F22 FRONT SPEAKER LH
F23 FRONT SPEAKER RH
F29 FRONT DOOR SPEAKER LH
F30 FRONT DOOR SPEAKER RH
R2 A, R3 B, R5 C RADIO AND PLAYER (w/o CD Player)
S11 A, S12 B, S13 C STEREO COMPONENT AMPLIFIER
R4 A, R5 B RADIO AND PLAYER (w/ CD player)
RADIO AND PLAYER (w/ CD PLAYER)
To Auto Antenna ECU (13-3)
Ground points
Point à terre
Erdschlußpunkt
Punto de conexión con tierra
ID = Located on right kick panel
= Monté sur la tôle de pied de caisse droite
= Angebracht am rechten Seitenblech des Vorderen Fußraums
= Situado en el panel apoyapiés derecho
IE = Located on left kick panel
= Monté sur la tôle de pied de caisse gauche
= Angebracht am linken Seitenblech des Vorderen Fußraums
= Situado en el panel apoyapiés izquierdo
BF = Located on floor panel center
= Monté sur le panneau central de plancher
= Angebracht in der Mitte des Bodenblechs
= Situado en el centro del panel del piso

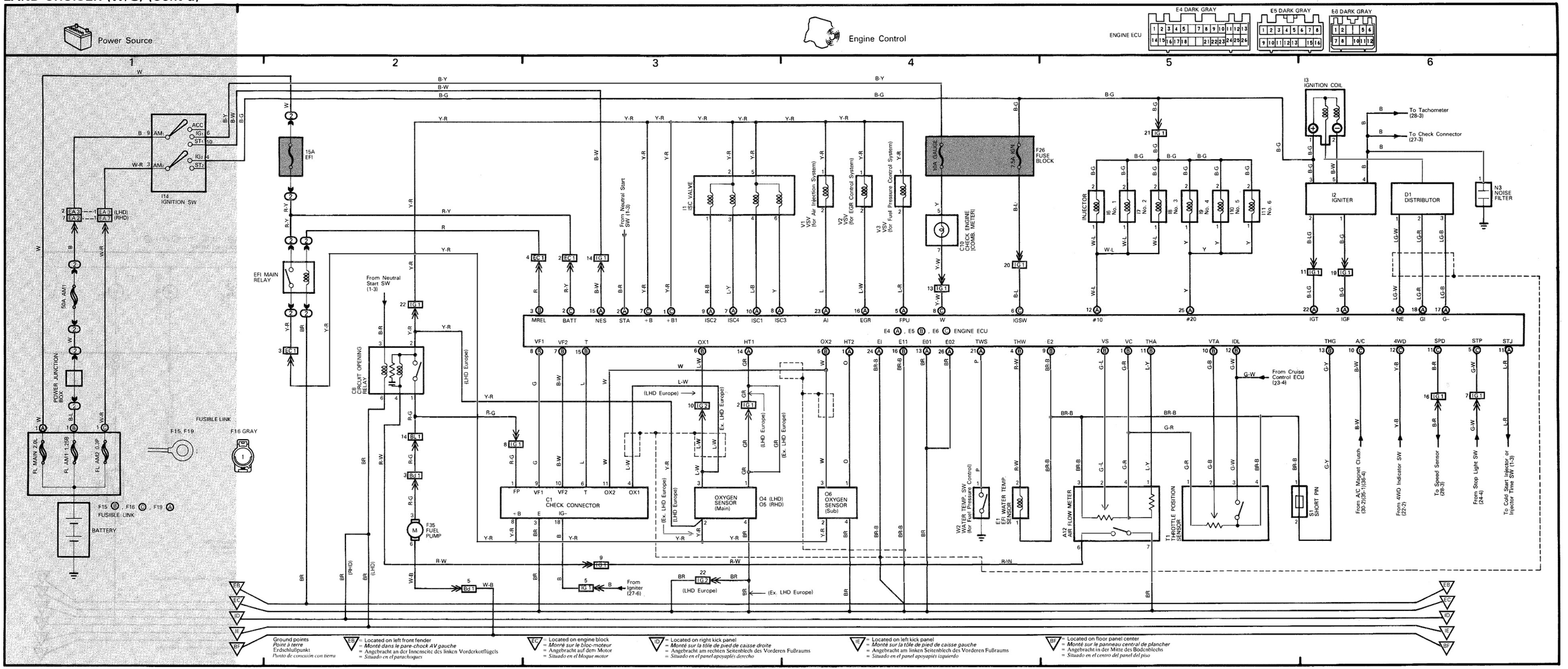
Power Source
Engine Control
E4 DARK GRAY
E5 DARK GRAY
E6 DARK GRAY
ENGINE ECU
1
2
3
4
5
6
W
B-Y
B-W
B-G
Y-R
R-Y
R
Y-R
R-G
B-R
B-L
W-R
W-B
L-W
L-Y
G
B-W
L
W
BR
R-W
O
P
R-B
G-R
BR-B
G-L
L-Y
G-B
G-W
G-Y
B-R
G-W
L-R
LG-W
LG-R
LG-B
B-LG
B-G
W-L
Y
Y-W
B-L
G-R
I4 IGNITION SW
15A EFI
EFI MAIN RELAY
50A AM1
POWER JUNCTION BOX
FL MAIN 20L
FL AM1 1.25B
FL AM2 0.3P
FUSIBLE LINK
F15, F19
F16 GRAY
F15 B, F16 C, F19 A FUSIBLE LINK
BATTERY
From Neutral Start SW (1-3)
C9 CIRCUIT OPENING RELAY
(LHD Europe)
F35 FUEL PUMP
C1 CHECK CONNECTOR
FP VF1 VF2 T OX2 OX1
+B E IG-
OXYGEN SENSOR (Main)
O4 (LHD) O5 (RHD)
O6 OXYGEN SENSOR (Sub)
From Igniter (27-6)
(Ex. LHD Europe)
ISC VALVE
V1 VSV (for Air Injection System)
V2 VSV (for EGR Control System)
V3 VSV (for Fuel Pressure Control System)
10A GAUGE
7.5A IGN
F26 FUSE BLOCK
C10 CHECK ENGINE (COMB. METER)
MREL BATT NES STA +B +B1 ISC2 ISC4 ISC1 ISC3 AI EGR FPU W IGSW
E4 A, E5 B, E6 C ENGINE ECU
VF1 VF2 T OX1 HT1 OX2 HT2 EI E11 E01 E02 TWS THW E2 VS VC THA VTA IDL THG A/C 4WD SPD STP STJ
W2 WATER TEMP. SW (for Fuel Pressure Control)
E1 WATER TEMP. SENSOR
A12 AIR FLOW METER
T1 THROTTLE POSITION SENSOR
S1 SHORT PIN
From Cruise Control ECU (23-4)
To Tachometer (28-3)
To Check Connector (27-3)
I3 IGNITION COIL
I2 IGNITER
D1 DISTRIBUTOR
N3 NOISE FILTER
INJECTOR
#10 #20 IGT IGF NE GI G-
From A/C Magnet Clutch (30-2)(35-1)(38-4)
From 4WD Indicator SW (27-2)
To Speed Sensor (28-3)
From Stop Light SW (24-4)
To Cold Start Injector or Injector Time SW (1-5)
Ground points
Point à terre
Erdschlußpunkt
Punto de conexión con tierra
EB = Located on left front fender
= Monté dans le pare-chock AV gauche
= Angebracht an der Innenseite des linken Vorderkotflügels
= Situado en el parachoques
EC = Located on engine block
= Monté sur le bloc-moteur
= Angebracht auf dem Motor
= Situado en el bloque motor
ID = Located on right kick panel
= Monté sur la tôle de pied de caisse droite
= Angebracht am rechten Seitenblech des Vorderen Fußraums
= Situado en el panel apoyapiés derecho
IE = Located on left kick panel
= Monté sur la tôle de pied de caisse gauche
= Angebracht am linken Seitenblech des Vorderen Fußraums
= Situado en el panel apoyapiés izquierdo
BF = Located on floor panel center
= Monté sur le panneau central de plancher
= Angebracht in der Mitte des Bodenblechs
= Situado en el centro del panel del piso

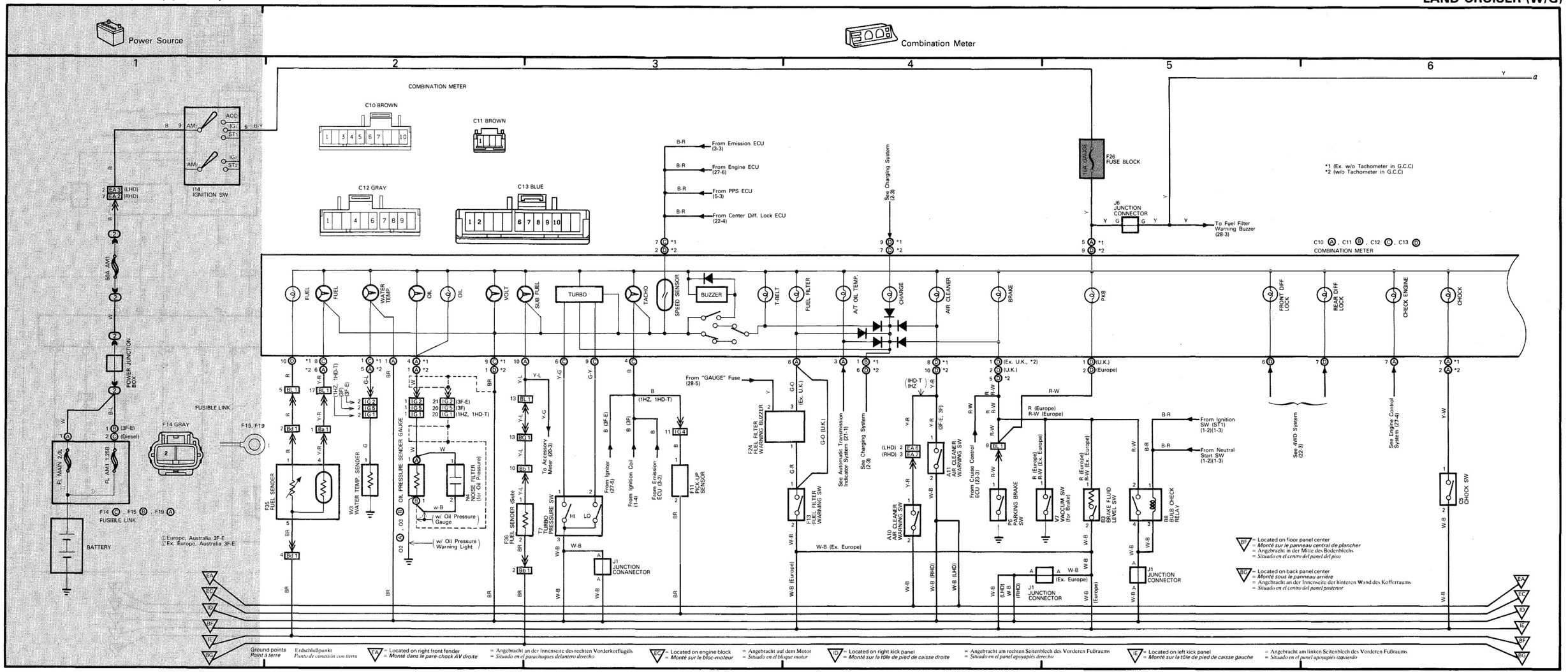
Power Source
Combination Meter
COMBINATION METER
C10 BROWN
C11 BROWN
C12 GRAY
C13 BLUE
I14 IGNITION SW
From Emission ECU (3-3)
From Engine ECU (27-6)
From PPS ECU (5-3)
From Center Diff. Lock ECU (22-4)
See Charging System (2-3)
F26 FUSE BLOCK
J6 JUNCTION CONNECTOR
To Fuel Filter Warning Buzzer (28-3)
*1 (Ex. w/o Tachometer in G.C.C)
*2 (w/o Tachometer in G.C.C)
C10 A, C11 B, C12 C, C13 D
COMBINATION METER
FUEL
WATER TEMP.
OIL
VOLT
SUB FUEL
TURBO
TACHO
SPEED SENSOR
BUZZER
T-BELT
FUEL FILTER
A/T OIL TEMP.
CHARGE
AIR CLEANER
BRAKE
PKB
FRONT DIFF LOCK
REAR DIFF LOCK
CHECK ENGINE
CHOCK
POWER JUNCTION BOX
FUSIBLE LINK
F14 GRAY
F15, F19
BATTERY
F14 C, F15 B, F19 A
① Europe, Australia 3F-E
② Ex. Europe, Australia 3F-E
F35 FUEL SENDER
W3 WATER TEMP. SENDER
OIL PRESSURE SENDER GAUGE
O2 A, O3 B
w/ Oil Pressure Gauge
w/ Oil Pressure Warning Light
N4 NOISE FILTER (for Oil Pressure)
F36 FUEL SENDER (Sub)
To Accessory Meter (20-3)
T7 TURBO PRESSURE SW
From Igniter (27-6)
From Ignition Coil (1-4)
From Emission ECU (3-2)
F11 PICK-UP SENSOR
J1 JUNCTION CONANECTOR
From "GAUGE" Fuse (28-5)
F24 FUEL FILTER WARNING BUZZER
F13 FUEL FILTER WARNING SW
See Automatic Transmission Indicator System (21-1)
See Charging System (2-3)
A10 AIR CLEANER WARNING SW
A11 AIR CLEANER WARNING SW
From Cruise Control ECU (23-3)
P6 PARKING BRAKE SW
V7 VACCUM SW (for Brake)
B3 BRAKE FLUID LEVEL SW
B8 BULB CHECK RELAY
From Ignition SW (ST1) (1-2)(1-3)
From Neutral Start SW (1-2)(1-3)
See 4WD System (22-3)
See Engine Control System (27-4)
C5 CHOCK SW
J1 JUNCTION CONNECTOR
BF = Located on floor panel center
= Monté sur le panneau central de plancher
= Angebracht in der Mitte des Bodenblechs
= Situado en el centro del panel del piso
BG = Located on back panel center
= Monté sous le panneau arrière
= Angebracht an der Innenseite der hinteren Wand des Kofferraums
= Situado en el centro del panel posterior
Ground points
Point à terre
Erdschlußpunkt
Punto de conexión con tierra
EA = Located on right front fender
= Monté dans le pare-chock AV droite
= Angebracht an der Innenseite des rechten Vorderkotflügels
= Situado en el parachoques delantero derecho
EC = Located on engine block
= Monté sur le bloc-moteur
= Angebracht auf dem Motor
= Situado en el bloque motor
ID = Located on right kick panel
= Monté sur la tôle de pied de caisse droite
= Angebracht am rechten Seitenblech des Vorderen Fußraums
= Situado en el panel apoyapiés derecho
IE = Located on left kick panel
= Monté sur la tôle de pied de caisse gauche
= Angebracht am linken Seitenblech des Vorderen Fußraums
= Situado en el panel apoyapiés izquierdo

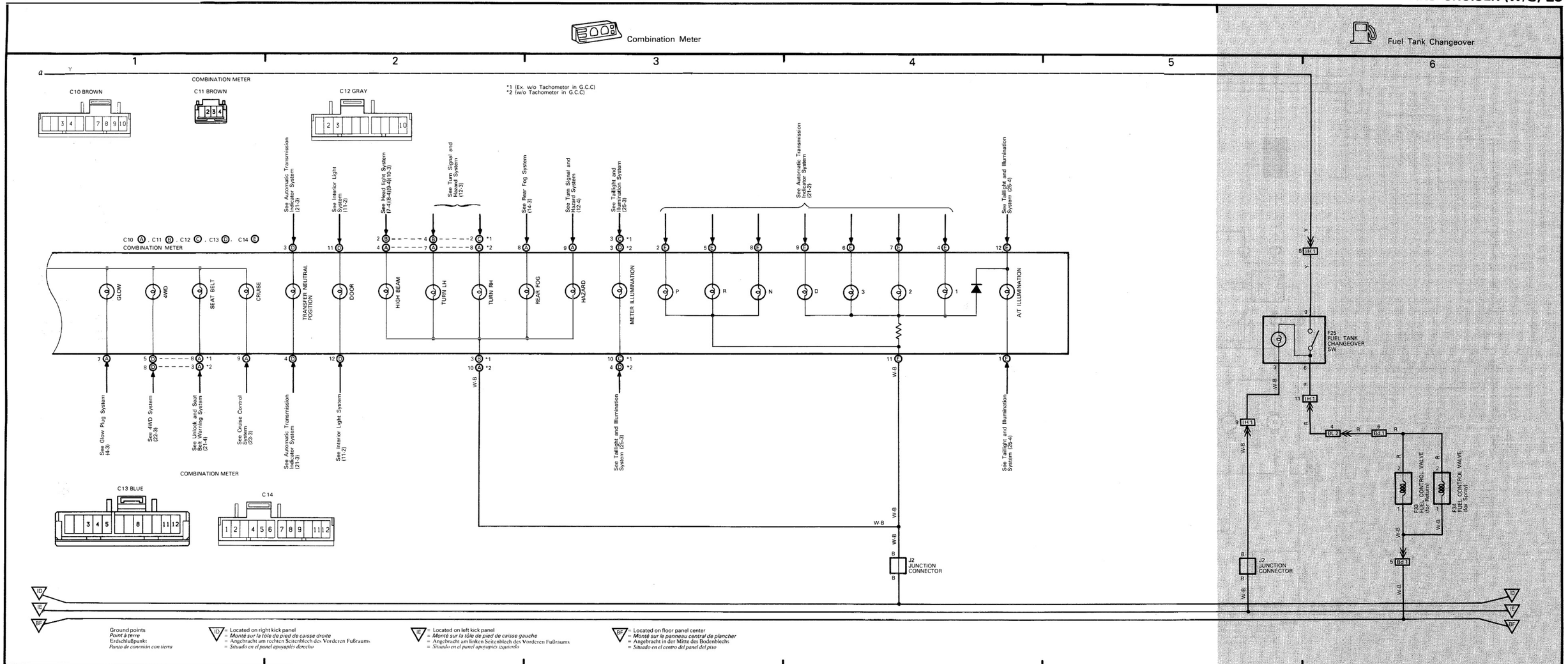
Combination Meter
Fuel Tank Changeover
1
2
3
4
5
6
COMBINATION METER
C10 BROWN
C11 BROWN
C12 GRAY
*1 (Ex. w/o Tachometer in G.C.C)
*2 (w/o Tachometer in G.C.C)
C10 A, C11 B, C12 C, C13 D, C14 E
COMBINATION METER
GLOW
4WD
SEAT BELT
CRUISE
TRANSFER NEUTRAL POSITION
DOOR
HIGH BEAM
TURN LH
TURN RH
REAR FOG
HAZARD
METER ILLUMINATION
A/T ILLUMINATION
See Automatic Transmission Indicator System (21-3)
See Interior Light System (11-2)
See Head light System (7-4)(8-4)(9-4)(10-3)
See Turn Signal and Hazard System (12-3)
See Rear Fog System (14-3)
See Turn Signal and Hazard System (12-4)
See Taillight and Illumination System (25-3)
See Automatic Transmission Indicator System (21-2)
See Taillight and Illumination System (25-4)
See Glow Plug System (4-3)
See 4WD System (22-3)
See Unlock and Seat Belt Warning System (21-4)
See Cruise Control System (23-3)
See Automatic Transmission Indicator System (21-3)
See Interior Light System (11-2)
See Taillight and Illumination System (25-3)
See Taillight and Illumination System (25-4)
COMBINATION METER
C13 BLUE
C14
J2 JUNCTION CONNECTOR
F25 FUEL TANK CHANGEOVER SW
F33 FUEL CONTROL VALVE (for Return)
F34 FUEL CONTROL VALVE (for Spray)
J2 JUNCTION CONNECTOR
Ground points
Point à terre
Erdschlußpunkt
Punto de conexión con tierra
ID = Located on right kick panel
= Monté sur la tôle de pied de caisse droite
= Angebracht am rechten Seitenblech des Vorderen Fußraums
= Situado en el panel apoyapiés derecho
IE = Located on left kick panel
= Monté sur la tôle de pied de caisse gauche
= Angebracht am linken Seitenblech des Vorderen Fußraums
= Situado en el panel apoyapiés izquierdo
BF = Located on floor panel center
= Monté sur le panneau central de plancher
= Angebracht in der Mitte des Bodenblechs
= Situado en el centro del panel del piso

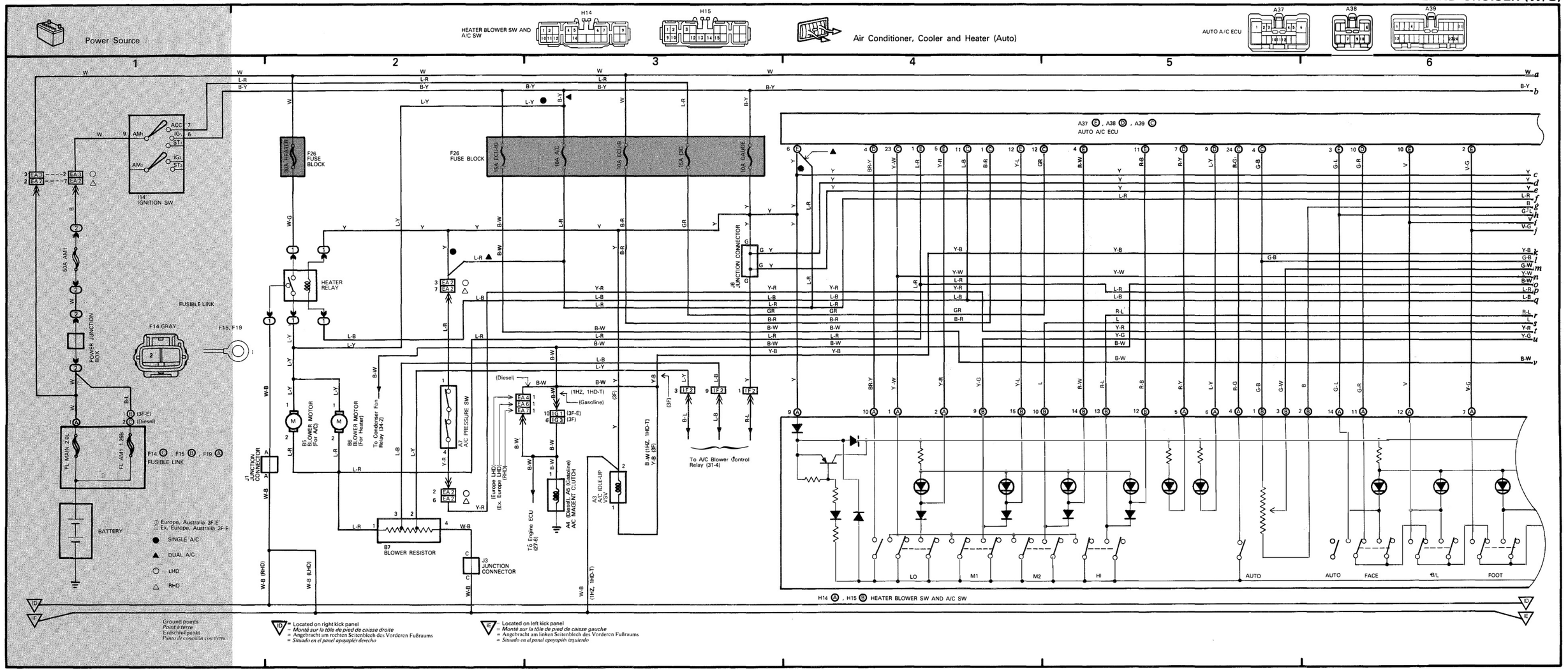
Power Source
HEATER BLOWER SW AND A/C SW
H14
H15
Air Conditioner, Cooler and Heater (Auto)
AUTO A/C ECU
A37
A38
A39
1
2
3
4
5
6
I14 IGNITION SW
F26 FUSE BLOCK
30A HEATER
15A ECU-IG
10A A/C
10A ECU-B
15A DIG
10A GAUGE
HEATER RELAY
J6 JUNCTION CONNECTOR
A37 E, A38 D, A39 C
AUTO A/C ECU
50A AM1
FUSIBLE LINK
F14 GRAY
F15, F19
POWER JUNCTION BOX
FL MAIN 2.0L
FL AM1 1.25B
F14 C, F15 B, F19 A
FUSIBLE LINK
BATTERY
B5 BLOWER MOTOR (For A/C)
B6 BLOWER MOTOR (For Heater)
To Condenser Fan Relay (34-2)
A7 A/C PRESSURE SW
J1 JUNCTION CONNECTOR
B7 BLOWER RESISTOR
J3 JUNCTION CONNECTOR
To Engine ECU (27-6)
A4 (Diesel), A5 (Gasoline) A/C MAGENT CLUTCH
A3 A/C IDLE-UP VSV
To A/C Blower Control Relay (31-4)
LO
M1
M2
HI
AUTO
AUTO
FACE
B/L
FOOT
H14 A, H15 B HEATER BLOWER SW AND A/C SW
Europe, Australia 3F-E
Ex. Europe, Australia 3F-E
SINGLE A/C
DUAL A/C
LHD
RHD
Ground points
Point à terre
Erdschlußpunkt
Punto de conexión con tierra
= Located on right kick panel
= Monté sur la tôle de pied de caisse droite
= Angebracht am rechten Seitenblech des Vorderen Fußraums
= Situado en el panel apoyapiés derecho
= Located on left kick panel
= Monté sur la tôle de pied de caisse gauche
= Angebracht am linken Seitenblech des Vorderen Fußraums
= Situado en el panel apoyapiés izquierdo

HEATER BLOWER SW AND A/C SW

H14

H15

Air Conditioner, Cooler and Heater (Auto)

AUTO A/C ECU

A37

A38

A39

1 2 3 4 5 6

a W

b

c Y

d Y

e Y

f L-R

g B

h G-L

i V

j V-G

k Y-B

l G-B

m G-W

n Y-W

o B-W

p L-R

q L-B

r R-L

s L

t Y-R

u Y-G

v B-W

A37 E , A38 D , A39 C
AUTO A/C ECU

From Blower Resistor (30-3)

From "GAUGE" Fuse (30-3)

DEF

F/D

FOOT

B/L

VENT

IC

M

A35
AIR VENT MODE CONTROL SERVO MOTOR

A22
A/C POWER TRANSISTOR

A23
A/C RELAY BOX

A33
AIR INLET SERVO MOTOR

A25
A/C SHORT CONNECTOR

● SINGLE A/C
▲ DUAL A/C
○ LHD
△ RHD

H14 A , H15 B HEATER BLOWER SW AND A/C SW

A/C POWER TRANSISTOR
A22

Ground points
Point à terre
Erdschlußpunkt
Punto de conexión con tierra

ID = Located on right kick panel
= *Monté sur la tôle de pied de caisse droite*
= Angebracht am rechten Seitenblech des Vorderen Fußraums
= *Situado en el panel apoyapiés derecho*

IE = Located on left kick panel
= *Monté sur la tôle de pied de caisse gauche*
= Angebracht am linken Seitenblech des Vorderen Fußraums
= *Situado en el panel apoyapiés izquierdo*

AUTO A/C ECU

Air Conditioner, Cooler and Heater (Auto)

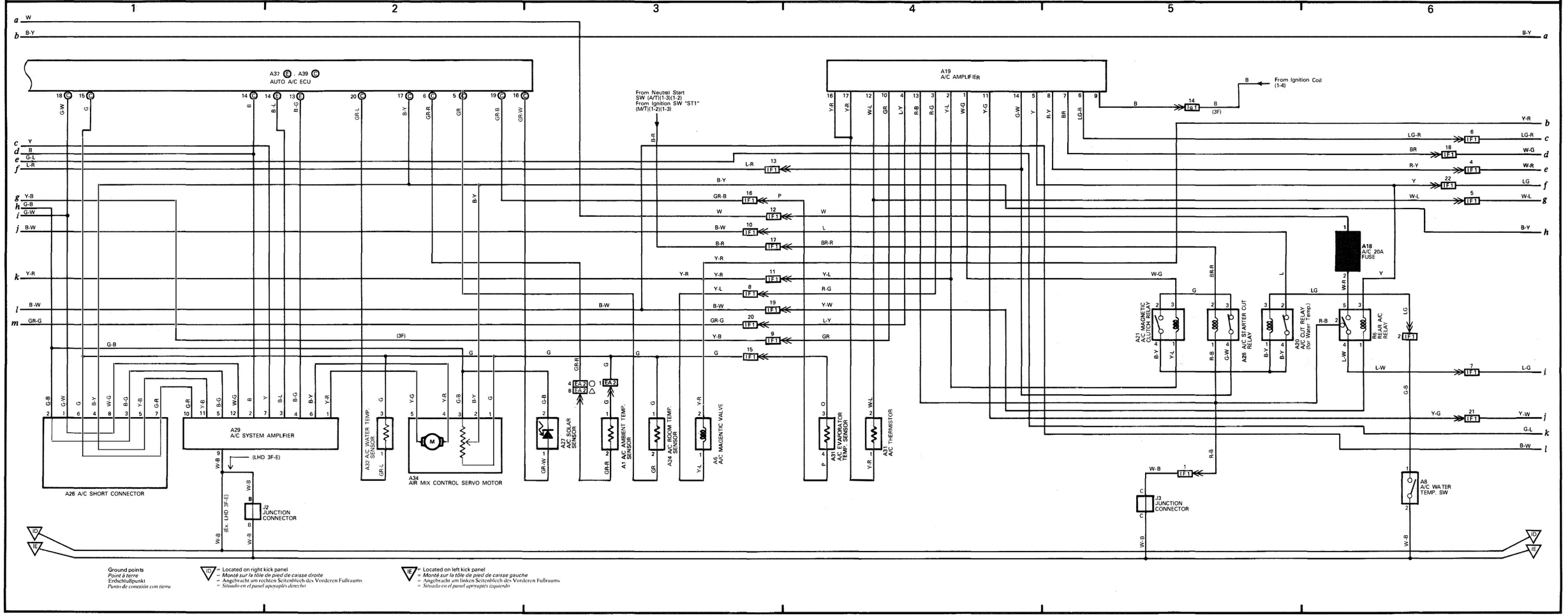

Rear Air Conditioner (Auto)

Cool/Ice Box

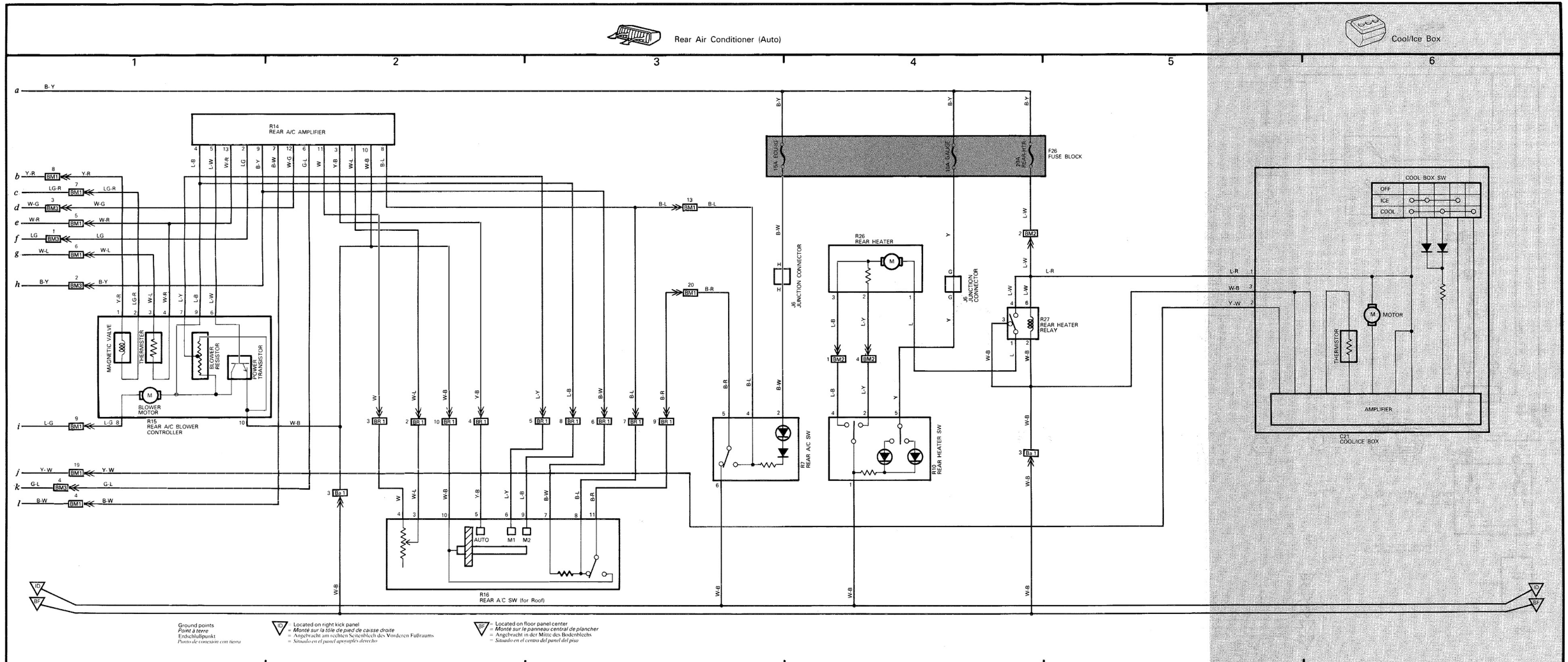

Ground points
Point à terre
Erdschlußpunkt
Punto de conexión con tierra

ID = Located on right kick panel
= Monté sur la tôle de pied de caisse droite
= Angebracht am rechten Seitenblech des Vorderen Fußraums
= *Situado en el panel apoyapiés derecho*

BF = Located on floor panel center
= Monté sur le panneau central de plancher
= Angebracht in der Mitte des Bodenblechs
= *Situado en el centro del panel del piso*

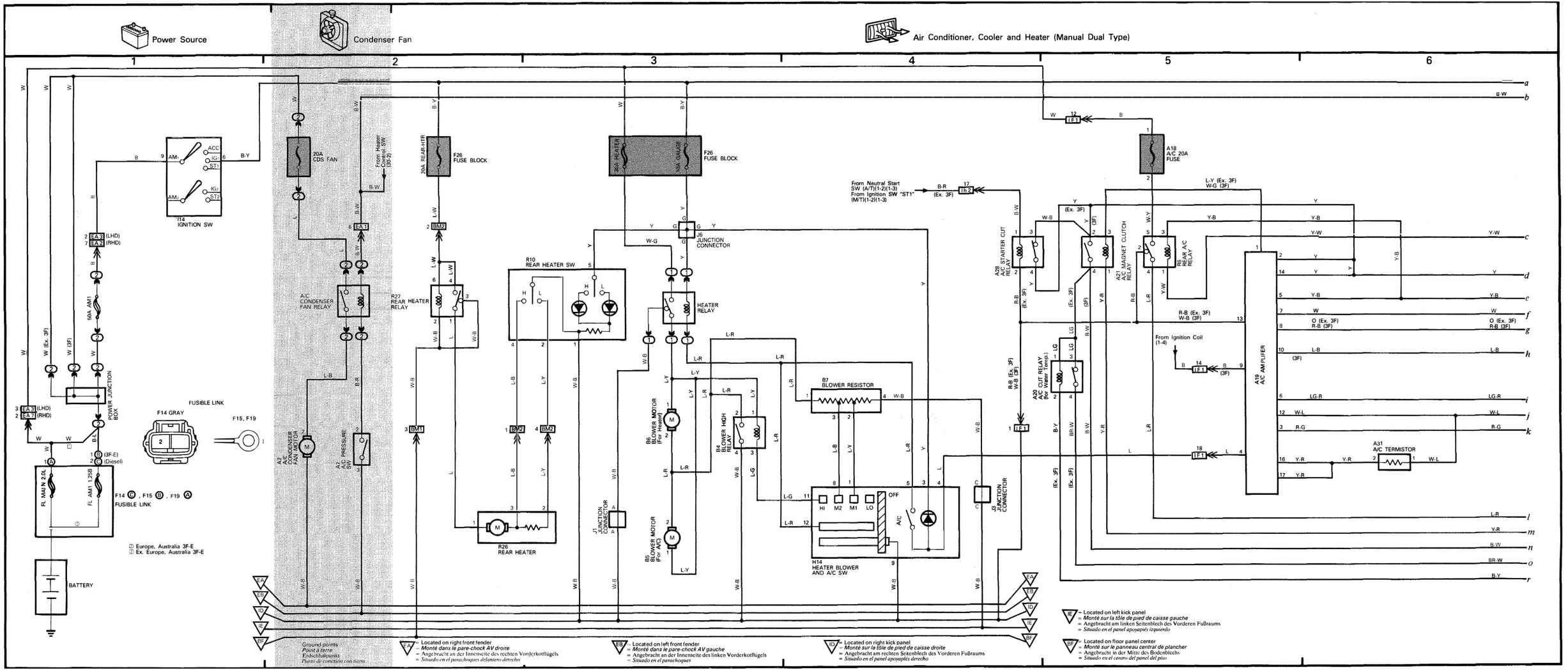
Power Source
Condenser Fan
Air Conditioner, Cooler and Heater (Manual Dual Type)
1
2
3
4
5
6
I14 IGNITION SW
20A CDS FAN
20A REAR-HTR
F26 FUSE BLOCK
30A HEATER
10A GAUGE
F26 FUSE BLOCK
A18 A/C 20A FUSE
From Neutral Start SW (A/T)(1-2)(1-3)
From Ignition SW "ST1" (M/T)(1-2)(1-3)
J6 JUNCTION CONNECTOR
R10 REAR HEATER SW
A/C CONDENSER FAN RELAY
R27 REAR HEATER RELAY
HEATER RELAY
A28 A/C STARTER CUT RELAY
A21 A/C MAGNET CLUTCH RELAY
R6 REAR A/C RELAY
A19 A/C AMPLIFER
From Ignition Coil (1-4)
A20 A/C CUT RELAY (for Water Temp.)
A31 A/C TERMISTOR
B7 BLOWER RESISTOR
B6 BLOWER MOTOR (For Heater)
B4 BLOWER HIGH RELAY
B5 BLOWER MOTOR (For A/C)
J1 JUNCTION CONNECTOR
J3 JUNCTION CONNECTOR
H14 HEATER BLOWER AND A/C SW
R26 REAR HEATER
A2 A/C CONDENSER FAN MOTOR
A2 A/C PRESSURE SW
50A AM1
POWER JUNCTION BOX
FUSIBLE LINK
F14 GRAY
F15, F19
FL MAIN 2.0L
FL AM1 1.25B
F14 Ⓒ, F15 Ⓑ, F19 Ⓐ
FUSIBLE LINK
BATTERY
Ⓘ Europe, Australia 3F-E
Ⓘ Ex. Europe, Australia 3F-E
Ground points
Point à terre
Erdschlußpunkt
Punto de conexión con tierra
EA = Located on right front fender
= Monté dans le pare-chock AV droite
= Angebracht an der Innenseite des rechten Vorderkotflügels
= Situado en el parachoques delantero derecho
EB = Located on left front fender
= Monté dans le pare-chock AV gauche
= Angebracht an der Innenseite des linken Vorderkotflügels
= Situado en el parachoques
ID = Located on right kick panel
= Monté sur la tôle de pied de caisse droite
= Angebracht am rechten Seitenblech des Vorderen Fußraums
= Situado en el panel apoyapiés derecho
IE = Located on left kick panel
= Monté sur la tôle de pied de caisse gauche
= Angebracht am linken Seitenblech des Vorderen Fußraums
= Situado en el panel apoyapiés izquierdo
BF = Located on floor panel center
= Monté sur le panneau central de plancher
= Angebracht in der Mitte des Bodenblechs
= Situado en el centro del panel del piso

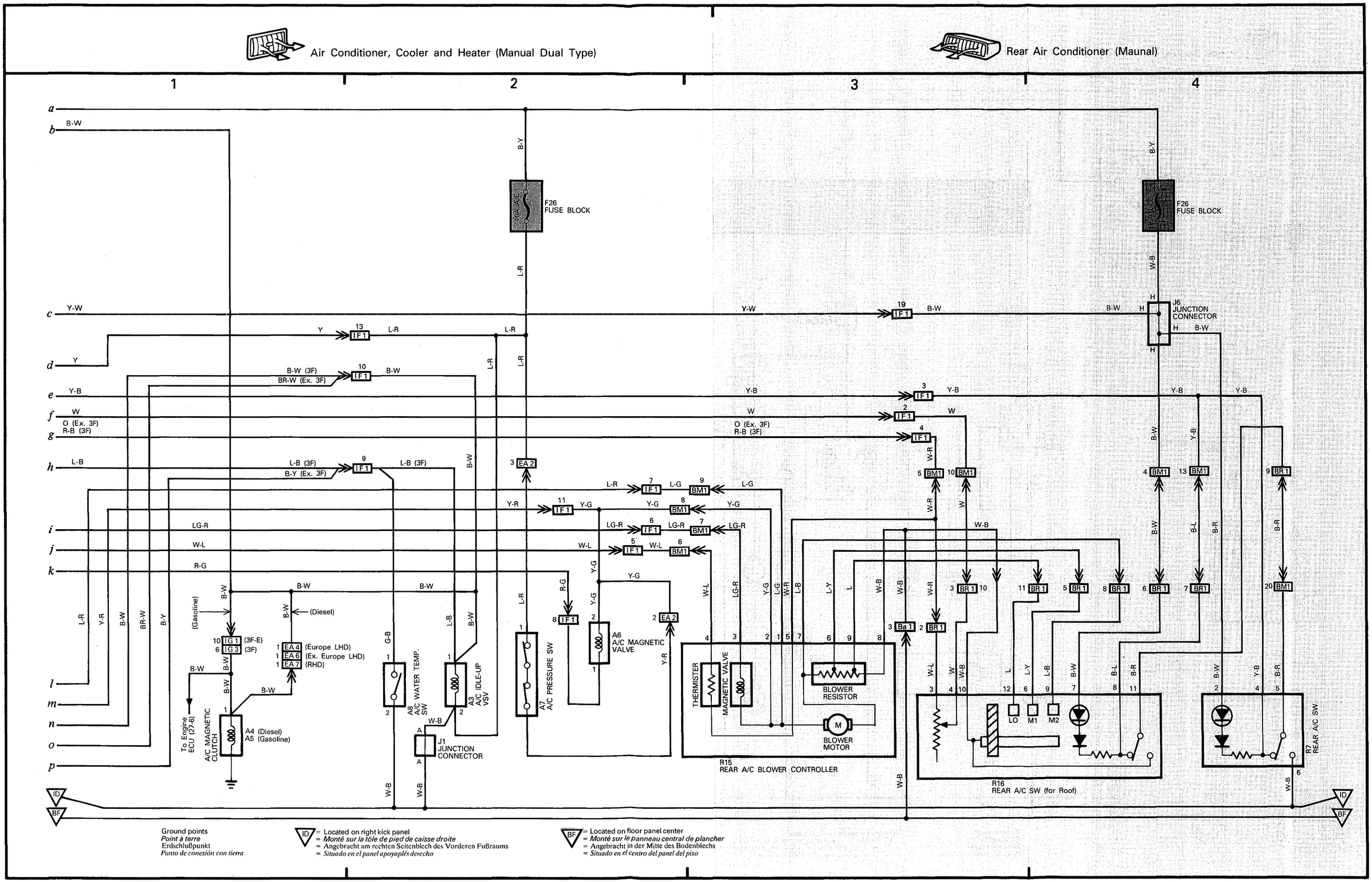
Air Conditioner, Cooler and Heater (Manual Dual Type)
Rear Air Conditioner (Maunal)
1
2
3
4
F26 FUSE BLOCK
J6 JUNCTION CONNECTOR
A4 (Diesel)
A5 (Gasoline)
A/C MAGNETIC CLUTCH
To Engine ECU (27-6)
A8 A/C WATER TEMP. SW
A3 A/C IDLE-UP VSV
J1 JUNCTION CONNECTOR
A7 A/C PRESSURE SW
A6 A/C MAGNETIC VALVE
THERMISTER
MAGNETIC VALVE
BLOWER RESISTOR
BLOWER MOTOR
R15 REAR A/C BLOWER CONTROLLER
R16 REAR A/C SW (for Roof)
R7 REAR A/C SW
Ground points
Point à terre
Erdschlußpunkt
Punto de conexión con tierra
ID = Located on right kick panel
= Monté sur la tôle de pied de caisse droite
= Angebracht am rechten Seitenblech des Vorderen Fußraums
= Situado en el panel apoyaplés derecho
BF = Located on floor panel center
= Monté sur le panneau central de plancher
= Angebracht in der Mitte des Bodenblechs
= Situado en el centro del panel del piso

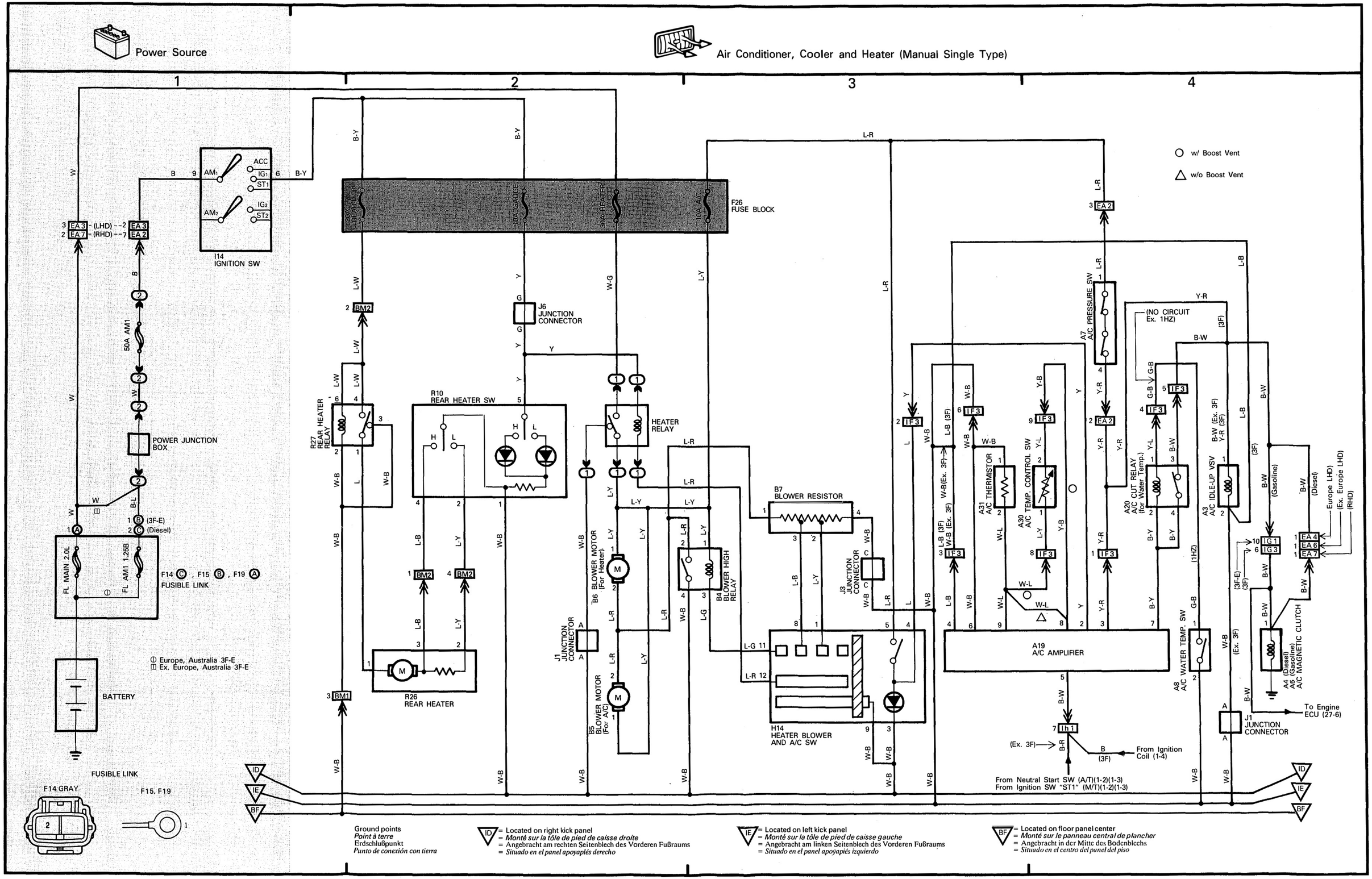
Power Source
Air Conditioner, Cooler and Heater (Manual Single Type)
1
2
3
4
w/ Boost Vent
w/o Boost Vent
I14 IGNITION SW
ACC
IG1
ST1
IG2
ST2
AM1
AM2
EA 3 - (LHD)
EA 7 - (RHD)
EA 2
50A AM1
POWER JUNCTION BOX
FL MAIN 2.0L
FL AM1 1.25B
F14 Ⓒ, F15 Ⓑ, F19 Ⓐ
FUSIBLE LINK
Ⓘ Europe, Australia 3F-E
Ⓘ Ex. Europe, Australia 3F-E
BATTERY
FUSIBLE LINK
F14 GRAY
F15, F19
F26 FUSE BLOCK
20A REAR HTR
10A GAUGE
30A HEATER
10A A/C
J6 JUNCTION CONNECTOR
R27 REAR HEATER RELAY
R10 REAR HEATER SW
HEATER RELAY
R26 REAR HEATER
B6 BLOWER MOTOR (For Heater)
B5 BLOWER MOTOR (For A/C)
J1 JUNCTION CONNECTOR
B4 BLOWER HIGH RELAY
B7 BLOWER RESISTOR
J3 JUNCTION CONNECTOR
H14 HEATER BLOWER AND A/C SW
A7 A/C PRESSURE SW
(NO CIRCUIT Ex. 1HZ)
A31 A/C THERMISTOR
A30 A/C TEMP. CONTROL SW
A20 A/C CUT RELAY (for Water Temp.)
A3 A/C IDLE-UP VSV
A19 A/C AMPLIFIER
A8 A/C WATER TEMP. SW
A4 (Diesel) A5 (Gasoline) A/C MAGNETIC CLUTCH
J1 JUNCTION CONNECTOR
To Engine ECU (27-6)
From Ignition Coil (1-4)
From Neutral Start SW (A/T)(1-2)(1-3)
From Ignition SW "ST1" (M/T)(1-2)(1-3)
Ground points
Point à terre
Erdschlußpunkt
Punto de conexión con tierra
ID = Located on right kick panel
= Monté sur la tôle de pied de caisse droite
= Angebracht am rechten Seitenblech des Vorderen Fußraums
= Situado en el panel apoyaplés derecho
IE = Located on left kick panel
= Monté sur la tôle de pied de caisse gauche
= Angebracht am linken Seitenblech des Vorderen Fußraums
= Situado en el panel apoyapiés izquierdo
BF = Located on floor panel center
= Monté sur le panneau central de plancher
= Angebracht in der Mitte des Bodenblechs
= Situado en el centro del panel del piso

1 2 3 4

Connector Joining Wire Harness and Wire Harness (E Group : Engine Compartment area)

EA1 GRAY

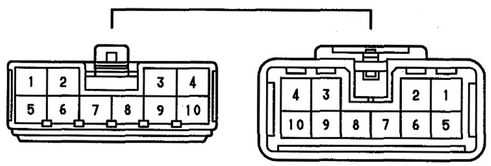

COWL WIRE — ENGINE ROOM MAIN WIRE

EA2 GRAY

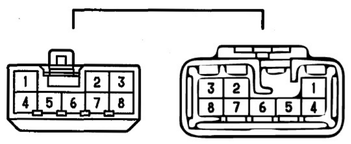

COWL WIRE — ENGINE ROOM MAIN WIRE

EA3

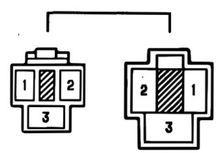

COWL WIRE — ENGINE ROOM MAIN WIRE

EA4 GRAY

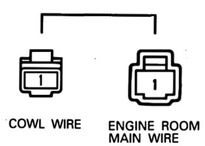

COWL WIRE — ENGINE ROOM MAIN WIRE

EA5 GRAY

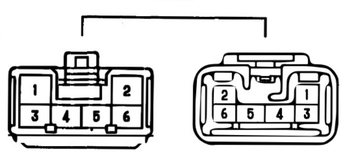

COWL WIRE — ENGINE ROOM MAIN WIRE

EA6 GRAY

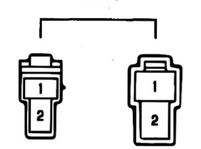

COWL WIRE — ENGINE ROOM MAIN WIRE

EA7 GRAY

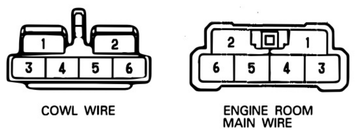

COWL WIRE — ENGINE ROOM MAIN WIRE

EB2 GRAY

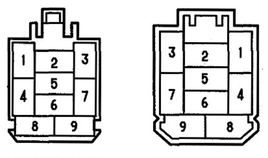

ENGINE WIRE — TRANSMISSION WIRE

EC1 GRAY



ENGINE ROOM MAIN WIRE — ENGINE WIRE

EC2 GRAY



ENGINE WIRE — ENGINE ROOM MAIN WIRE

ED1 GRAY



ENGINE ROOM MAIN WIRE — MAGNET SWITCH TO WINCH WIRE

EB1 GRAY

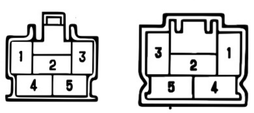

ENGINE WIRE — TRANSMISSION WIRE

1 2 3 4

Connector Joining Wire Harness and Wire Harness (I Group : Instrument Panel and Surrounding Area)

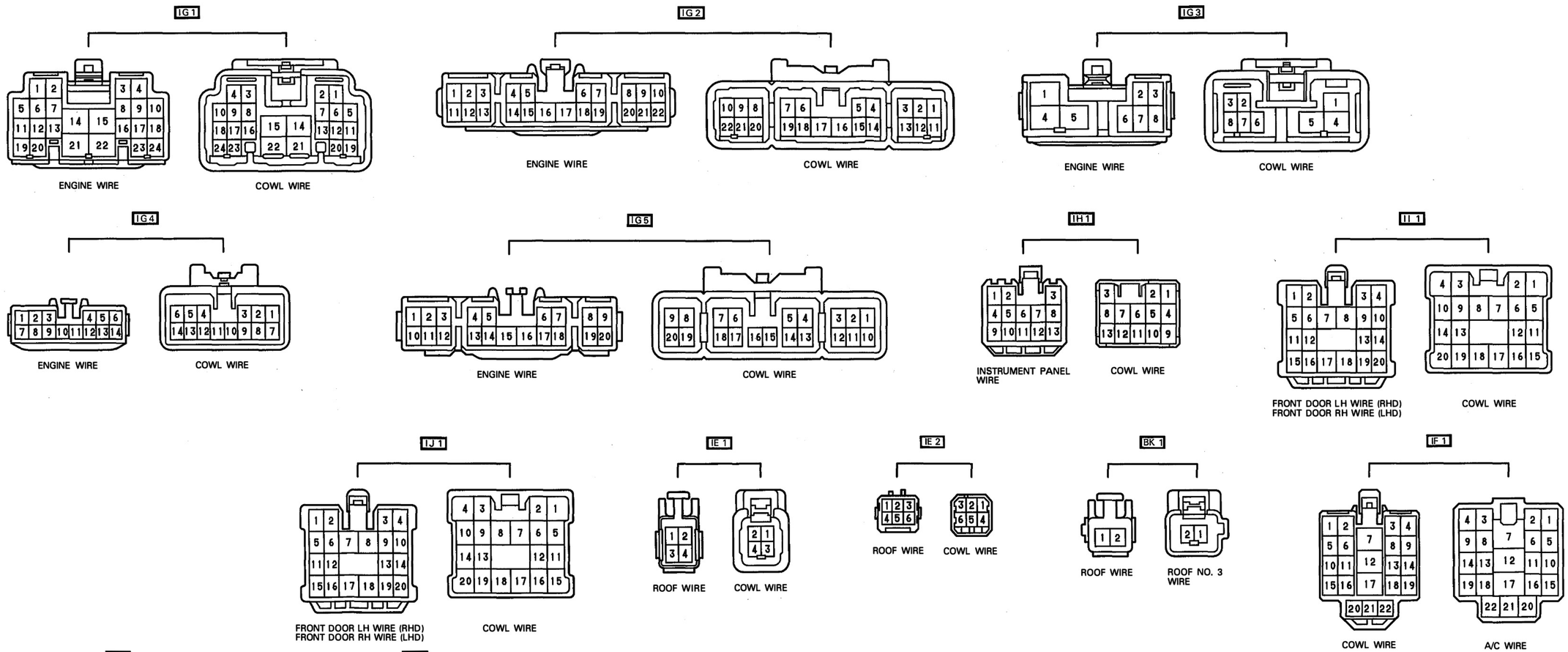

1 2 3 4

Connector Joining Wire Harness and Wire Harness (B Group : Body and Surrounding area)

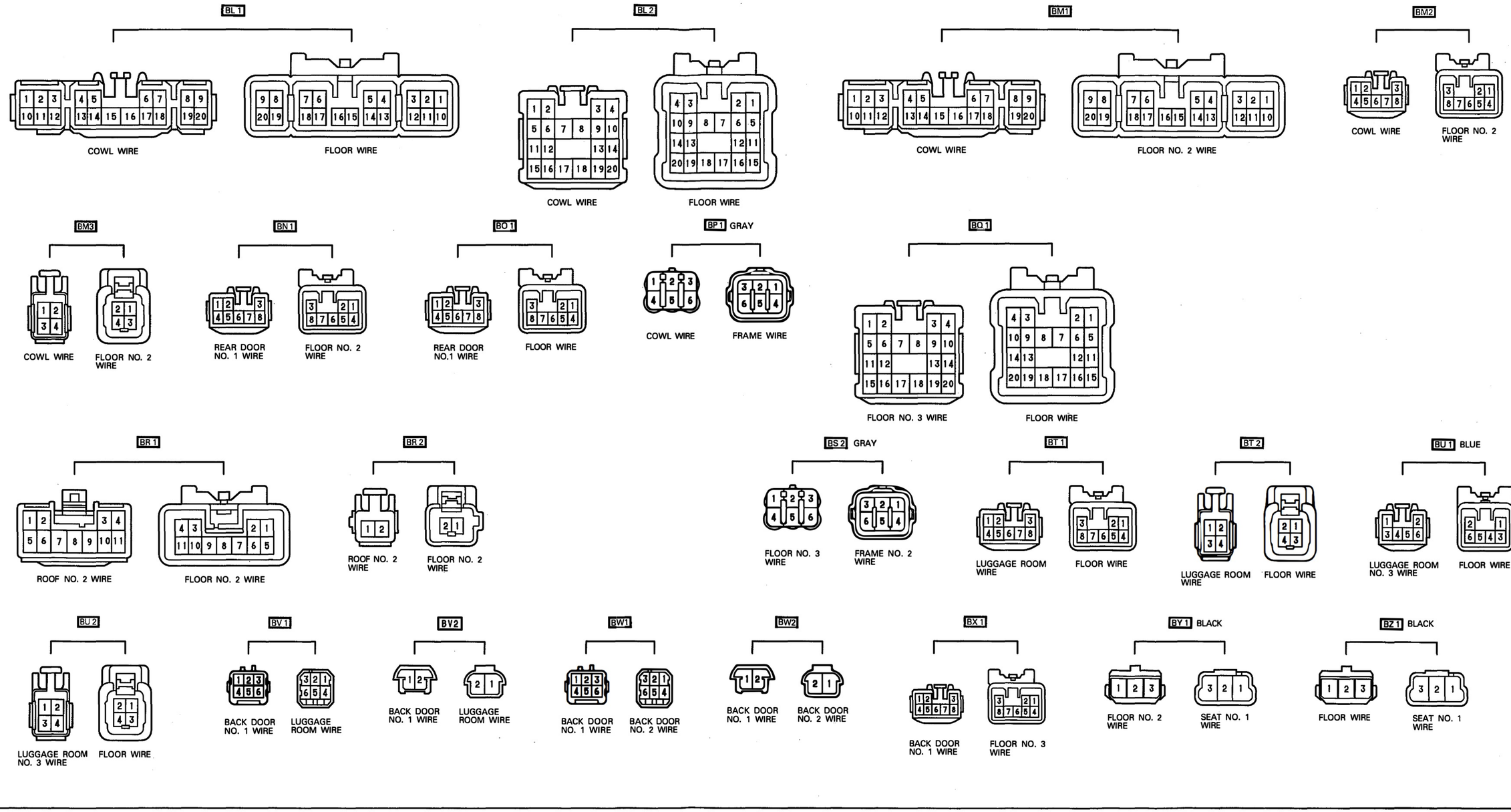

1 2 3 4

Connector Joining Wire Harness and Wire Harness (B Group : Body and Surrounding area)

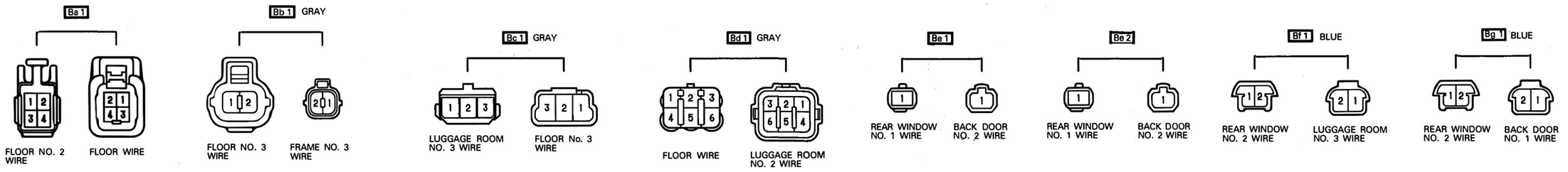

JUNCTION CONNECTOR

