TOYOTA

2H, 12H-T ENGINE

REPAIR MANUAL

Nov., 1985

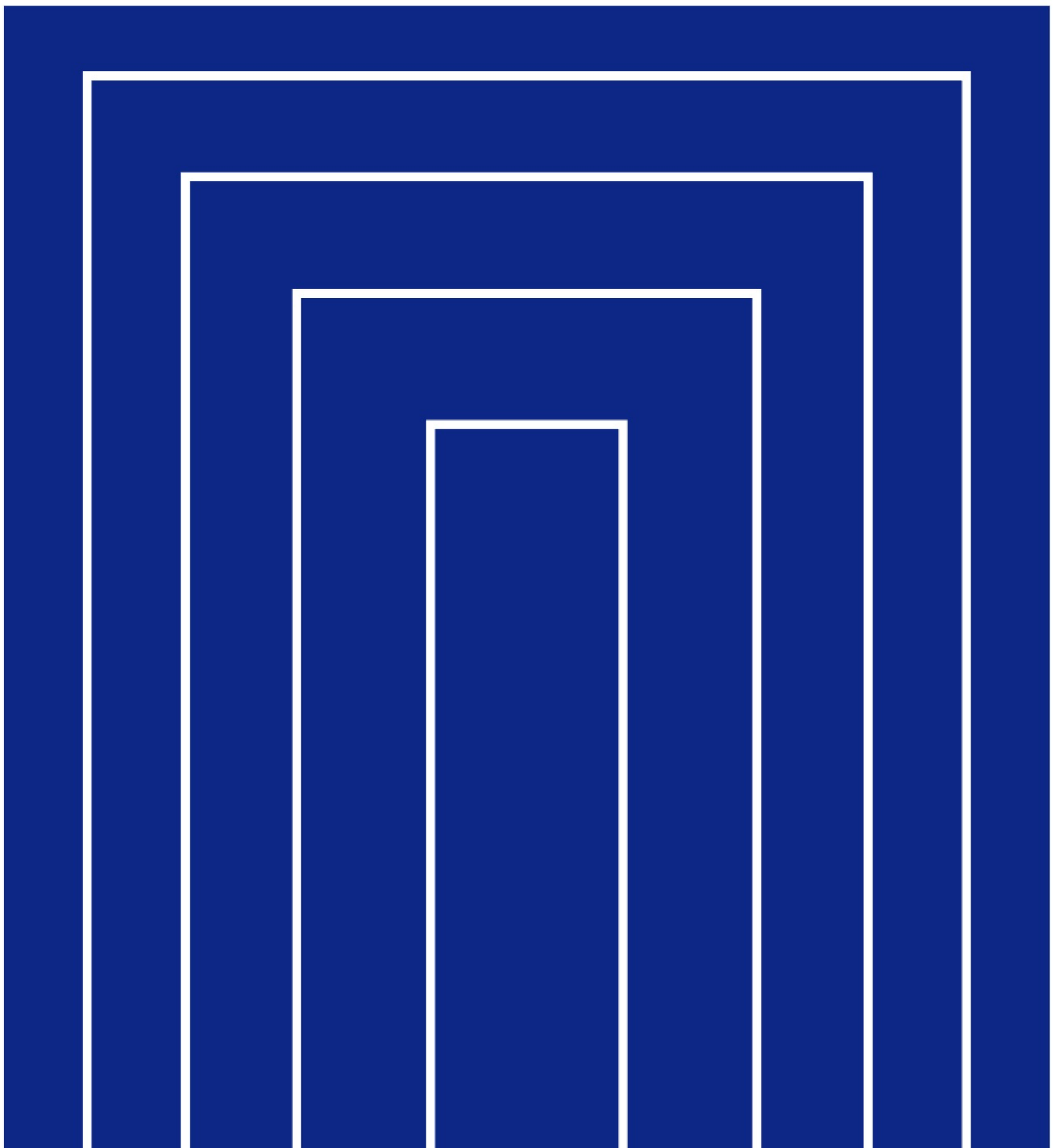

Pub. No. RM012E

FOREWORD

This repair manual has been prepared to provide information covering general service repairs for the 2H and 12H-T engines mounted on the TOYOTA LAND CRUISER (Heavy-Duty).

Applicable models:
HJ60, 61, 75 series

All information contained in this manual is the most up-to-date at the time of publication. However, specifications and procedures are subject to change without notice.

TOYOTA MOTOR CORPORATION

TOYOTA 2H, 12H-T ENGINE REPAIR MANUAL

INTRODUCTION IN
ENGINE MECHANICAL EM
FUEL SYSTEM FU
COOLING SYSTEM CO
LUBRICATION SYSTEM LU
STARTING SYSTEM ST
CHARGING SYSTEM CH
SERVICE SPECIFICATIONS A
STANDARD BOLT TORQUE SPECIFICATIONS B
SST AND SSM C

© 1985 TOYOTA MOTOR CORPORATION
All rights reserved. This book may not be reproduced or copied, in whole or in part, without the written permission of Toyota Motor Corporation.

INTRODUCTION

	Page
HOW TO USE THIS MANUAL	IN-2
IDENTIFICATION INFORMATION	IN-4
GENERAL REPAIR INSTRUCTIONS	IN-4
ABBREVIATIONS USED IN THIS MANUAL	IN-7

HOW TO USE THIS MANUAL

To assist in finding your way through this manual, the Section Title and major heading are given at the top of every page.

An **INDEX** is provided on the 1st page of each section to guide you to the item to be repaired.

At the beginning of each section, **PRECAUTIONS** are given that pertain to *all* repair operations contained in that section. *Read these precautions before starting any repair task.*

TROUBLESHOOTING tables are included for each system to help you diagnose the system problem and find the cause. The repair for each possible cause is referenced in the remedy column to quickly lead you to the solution.

REPAIR PROCEDURES

Most repair operations begin with an overview illustration. It identifies the components and shows how the parts fit together.

Example:

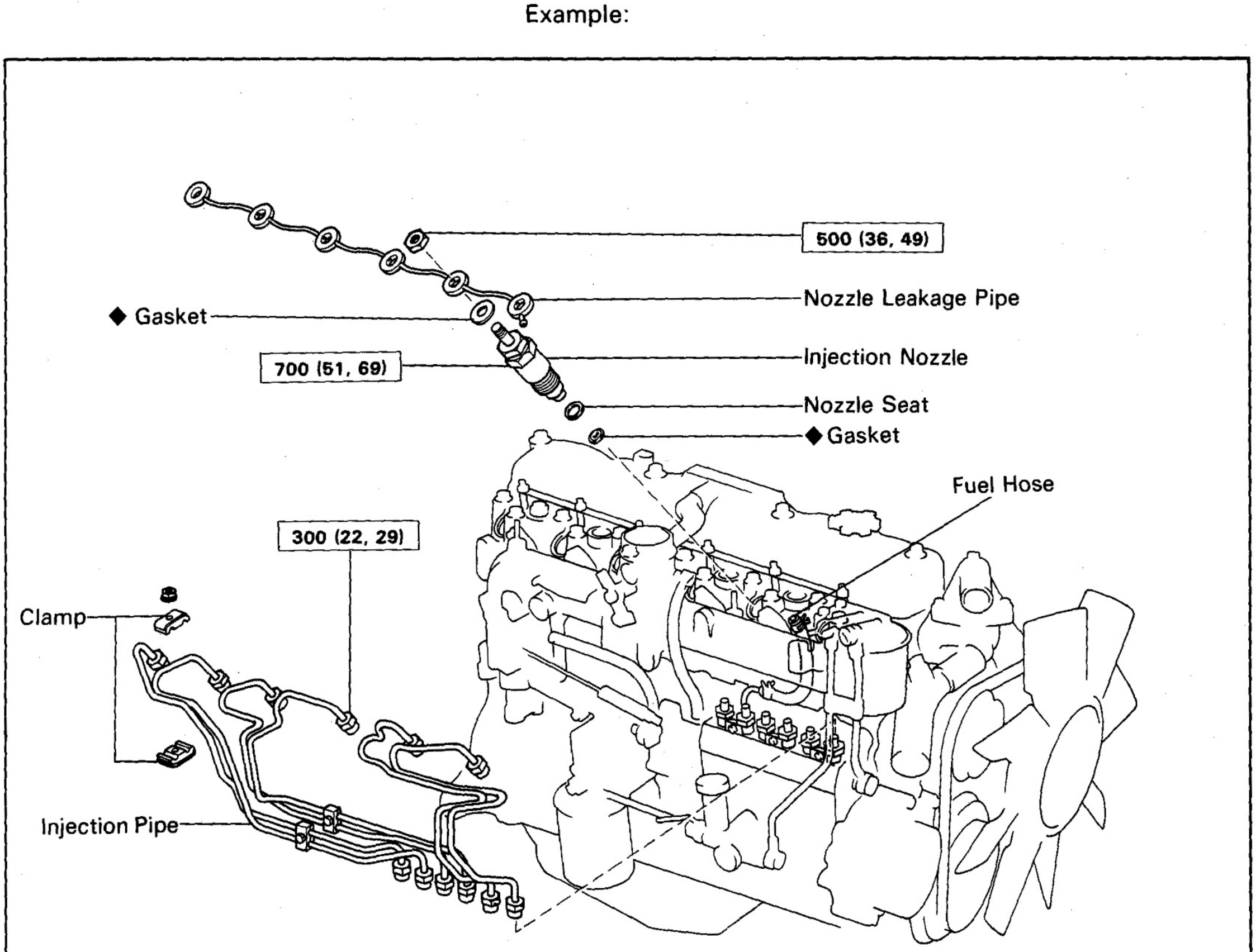

kg-cm (ft-lb, N·m) : Specified torque
◆ Non-reusable part

FU1366

The procedures are presented in a step-by-step format:

- The illustration shows *what* to do and *where* to do it.
- The task heading tells *what* to do.
- The detailed text tells *how* to perform the task and gives other information such as specifications and warnings.

Example:

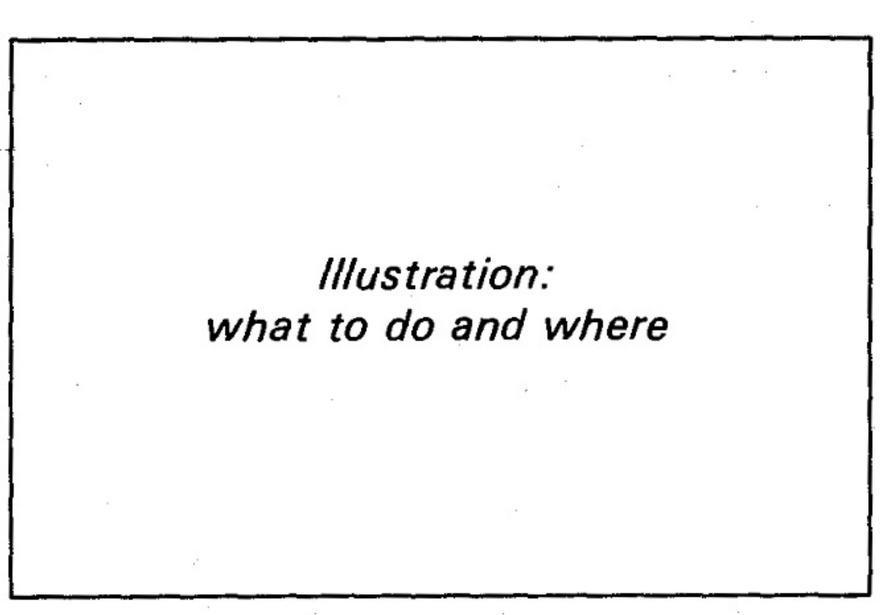

Task heading: what to do

REMOVE INJECTION NOZZLES

Using SST, remove the timer.

SST 09260-47010 (09267-76020)

Set part No. *Components part NO.*

Install and torque the round nut.

Detailed text: how to do task

Torque: 750 kg-cm (54 ft-lb, 74 N·m)

Torque Specification

This format enables the experienced technician with a FAST TRACK to the information needed. The upper case heading can be read at a glance and only when necessary, the test below it provides detailed information. Important specifications and warnings always stand out in bold type.

REFERENCES

References have been kept to a minimum. However, when they are required you are given the *page* to go to.

SPECIFICATIONS

Specifications are presented in bold type throughout the text in the applicable step. You never have to leave the procedure to look up your specs. All specifications are also found in Appendix A, specifications, for quick reference.

WARNINGS, CAUTIONS, NOTES:

- WARNINGS are presented in bold type, and indicate there is a possibility of injury to you or other people.
- CAUTIONS are also presented in bold type and indicate there is a possibility of damage to the components being repaired.
- NOTES are separated from the text but do not appear in bold. They provide additional information to help you efficiently perform the repair.

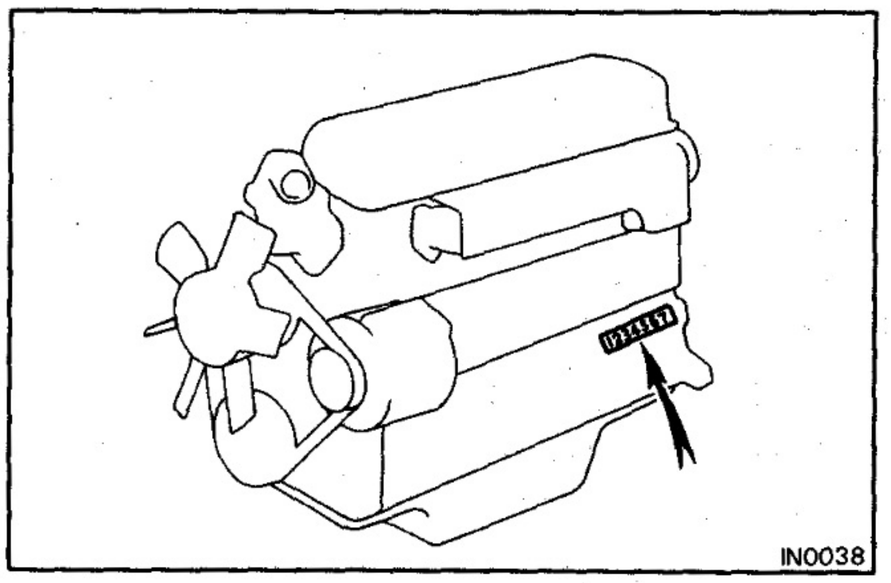

IDENTIFICATION INFORMATION

ENGINE SERIAL NUMBER

The engine serial number is stamped on the left side of the cylinder block.

GENERAL REPAIR INSTRUCTIONS

1. Use fender, seat and floor covers to keep the vehicle clean and prevent damage.
2. During disassembly, keep parts in order to facilitate reassembly.
3. Observe the following:
   (a) Before performing electrical work, disconnect the negative cable from the battery terminal.
   (b) If it is necessary to disconnect the battery for inspection or repair, always disconnect the cable from the negative (–) terminal which is grounded to the vehicle body.
   (c) To prevent damage to the battery terminal post, loosen the terminal nut and raise the cable straight up without twisting it or prying it.
   (d) Clean the battery terminal posts and cable terminal with a shop rag. Do not scrape them with a file or other abrasive object.
   (e) Install the cable terminal to the battery post with the nut loose and tighten the nut after installation. Do not use a hammer to tap the terminal onto the post.
   (f) Be sure the cover for the positive (+) terminal is properly in place.
4. Check hose and wiring connectors to make sure they are securely and correctly connected.
5. Non-reusable parts
   (a) Always replace cotter pins, gaskets, O-rings, oil seals etc. with new ones.
   (b) Non-reusable parts are indicated in the component illustrations by the "◆" symbol.

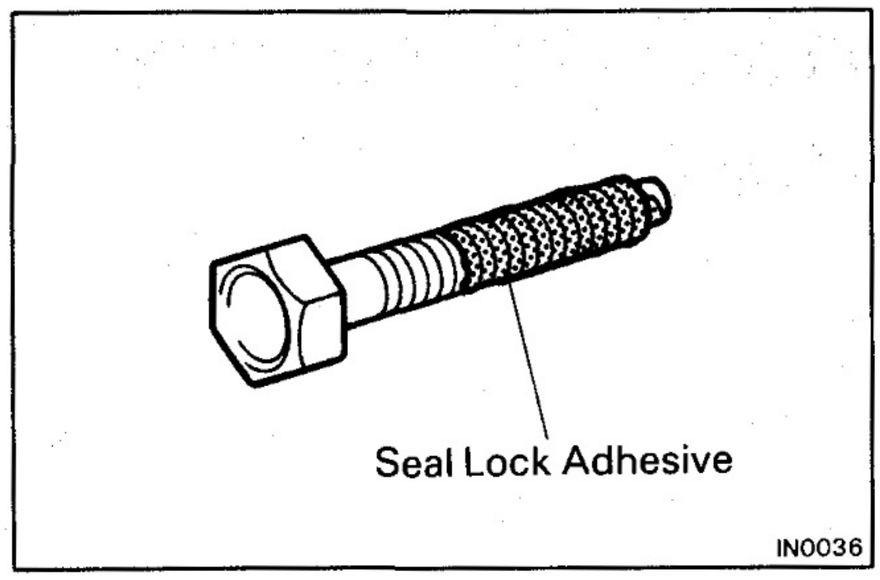

6. Precoated Parts

   Precoated parts are the bolts, nuts, etc. Which are coated with a seal lock adhesive at the factory.

   (a) If a precoated part is tightened, loosened or caused to move in any way, it must be precoated with the specified adhesive.

   (b) Recoating of Precoating Parts

      (1) Clean off the old adhesive from the bolts, nut or installation part threads.

      (2) Dry with compressed air.

      (3) Apply the specified seal lock adhesive to the bolt or nut threads.

   (c) Precoated parts are indicated in the component illustrations by the "★" symbol.

7. When necessary, use a sealer on gaskets to prevent leaks.

8. Carefully observe all specifications for bolt tightening torques. Always use a torque wrench.

9. Use of special service tools (SST) and special service materials (SSM) may be required depending on the nature of the repair. Be sure to use SST and SSM where specified and follow the proper work procedure. A list of SST and SSM can be found at the back of this manual.

10. When replacing fuses, be sure the new fuse is the correct amperage rating. DO NOT exceed the fuse amp rating or use one of a lower rating.

11. Care must be taken when jacking up and supporting the vehicle. Be sure to lift and support the vehicle at the proper locations.

   (a) If the vehicle is to be jacked up only at the front or rear end, be sure to block the wheels in order to ensure safety.

   (b) After the vehicle is jacked up, be sure to support it on stands. It is extremely dangerous to do any work on the vehicle raised on one jack alone, even for a small job that can be finished quickly.

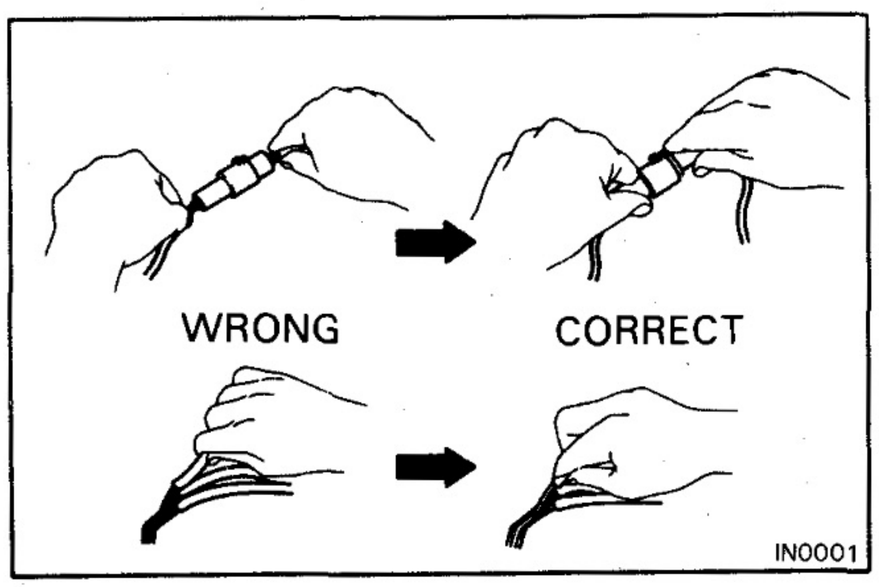

12. Observe the following precautions to avoid damage the parts:

   (a) To disconnect vacuum hoses, pull on the end, not the middle of the hose.

   (b) To pull apart electrical connectors, pull on the connector itself, not the wires.

   (c) Be careful not to drop electrical components, such as sensors or relays. If they are dropped on a hard floor, they should be replaced and not reused.

(d) When steam cleaning an engine, protect the air filter and injection pump from water.

(e) Never use an impact wrench to remove or install thermo switches or thermo sensors.

(f) When checking continuity at the wire connector, insert the tester probe carefully to prevent terminals from bending.

(g) When using a vacuum gauge, never force the hose onto a connector that is too large. Use a step-down adapter instead. Once the hose has been stretched, it may leak.

13. After removing and reinstalling the injection pump and fuel hoses, clean off the fuel on engine components. In particular, be sure to check the radiator hose and by-pass hose, because they deteriorate easily if they come into contact with fuel.

ABBREVIATIONS USED IN THIS MANUAL

A/C	Air Conditioner
A/T	Automatic Transmission
ATDC	After Top Dead Center
BDC	Bottom Dead Center
BTDC	Before Top Dead Center
EDIC	Electrical Diesel Injection Control
EX	Exhaust
HAC	High Altitude Compensator
IN	Intake
LH	Left-hand
M/T	Manual Transmission
MP	Multipurpose
O/S	Oversize
PCV	Positive Crankcase Ventilation
PS	Power Steering
RH	Right-hand
SSM	Special Service Materials
SST	Special Service Tools
STD	Standard
TDC	Top Dead Center
U/S	Undersize
VSV	Vacuum Switching Valve
w/	With
w/o	Without

ENGINE MECHANICAL

	Page
DIESEL ENGINE DIAGNOSIS	EM-2
DIESEL ELECTRICAL SYSTEM DIAGNOSIS [2H]	EM-11
DIESEL ELECTRICAL SYSTEM DIAGNOSIS [12H-T]	EM-13
TURBOCHARGER DIAGNOSIS [12H-T]	EM-17
TURBOCHARGER ELECTRICAL SYSTEM DIAGNOSIS [12H-T]	EM-19
ENGINE TUNE-UP	EM-20
COMPRESSION CHECK [2H]	EM-35
COMPRESSION CHECK [12H-T]	EM-36
TURBOCHARGER [12H-T]	EM-37
CYLINDER HEAD	EM-47
TIMING GEARS AND CAMSHAFT	EM-77
CYLINDER BLOCK	EM-94

DIESEL ENGINE DIAGNOSIS

1. GENERAL

Diesel engine problems are usually caused by the engine or fuel system. The injection pump is very rarely the cause of fuel system problems.

Before beginning fuel system tests, first check that the engine compression, valve timing and other major systems are within specifications.

2. PRELIMINARY CHECKS

(a) Before performing fuel system checks, insure that the engine is in good running condition. If necessary, first check the compression, timing and major components or systems.

(b) Check the air filter and clean or replace as necessary.

(c) Check for sufficient fuel in the tank.

(d) Check if the fuel is contaminated with gasoline or other foreign elements. Only high-quality diesel fuel should be used.

(e) Bleed air from the system by pumping the priming pump.

(f) Check for water in the sedimenter and fuel tank, and drain as necessary.

(g) If the engine will not crank or if it cranks slowly, troubleshoot the electrical system.

PRECAUTION

1. The basic troubleshooting procedures for the diesel engine (valve clearance, compression, bearings, valves, pistons, etc.) are the same checks you would make for a gasoline engine.
2. The repair of the injection pump requires considerable skill and use of a special test bench.

ENGINE WILL NOT CRANK

(Possible Cause)	(Check Procedure and Correction Method)
1. LOOSE OR CORRODED BATTERY CABLES	Check cables from battery to starter and make necessary repairs.
2. DISCHARGED BATTERY	Check the alternator output and the drive belt. Repair as necessary. (See page CH-6)
3. INOPERATIVE STARTER	Check for battery voltage at starter terminals 30 and 50. If Okay, see STARTING SYSTEM page (ST-11) for repair procedure.

ENGINE CRANKS SLOWLY-WILL NOT START

NOTE: Minimum cranking speed: 100rpm Cold
150rpm Hot

(Possible Cause)	(Check Procedure and Correction Method)
1. LOOSE OR CORRODED BATTERY CABLES	Refer to items 1 and 2 of ENGINE WILL NOT CRANK.
2. DISCHARGED BATTERY	
3. IMPROPER ENGINE OIL	Check engine oil. If improper viscosity, drain and refill with oil of viscosity recommended by manufacturer. (See page LU-4)

ENGINE CRANKS NORMALLY BUT WILL NOT START

(Possible Cause)	(Check Procedure and Correction Method)
1. NO FUEL TO INJECTION NOZZLE	Loosen any one injection pipe union nut from its nozzle. Crank the engine for about 5 seconds while confirming that fuel is being discharged from the pipe. If fuel is coming out, begin diagnosis from item 4. If not, begin from item 2.
2. NO FUEL INTO INJECTION PUMP	Disconnect inlet hoses to the feed pump and feed clean fuel from separate container directly into feed pump. If engine starts, either the sedimenter or fuel line between the fuel tank and feed pump is clogged and should be repaired. If the engine still does not start, check the fuel filter or line between feed pump and injection pump. If normal, the feed pump or injection pump is faulty and should be repaired. **NOTE: When feeding fuel directly into pump, keep container at same level as vehicle fuel tank.**
3. FUEL LEAKAGE FROM INJECTION PIPE	Check for loose unions or cracks. If leaking, tighten to specified torque or, if necessary, replace pipe(s).
4. [2H] INOPERATIVE PRE-HEATING OPERATION	With the starter switch turned ON and the glow plug indicator light illuminated, check that there is voltage applied to the glow plug. If not, refer to ELECTRICAL DIAGNOSIS and repair as necessary. (See page EM-11)
5. [12H-T] INOPERATIVE PRE-HEATING OPERATION	With the ignition switch turned ON and the intake heater indicator light illuminated, check that there is voltage applied to the intake heater. If not, refer to ELECTRICAL DIAGNOSIS and repair as necessary. (See page EM-13)
6. [2H] FAULTY GLOW PLUG OPERATION	Check the glow plug for continuity. (See page ST-5) If no continuity, a broken wire is indicated and the glow plug should be replaced.
7. [12H-T] FAULTY INTAKE HEATER OPERATION	Check the intake heater continuity. (See page ST-9) If no continuity, a broken wire is indicated and intake heater should be replaced.

8. IMPROPER INJECTION TIMING

Check the injection timing. (See page EM-23)

Injection timing: **2H 18° BTDC**
12H-T 11° BTDC

If not as specified, injection timing must be readjusted.

9. FAULTY INJECTION NOZZLE

Check the injection pressure with nozzle tester. (See page FU-4 or 10)

Opening pressure:

2H	**105 – 125 kg/cm² (1,493 – 1,778 psi) (10,296 – 12,258 kPa)**
12H-T	**180 – 210 kg/cm² (2,560 – 2,987 psi) (17,652 – 20,594 kPa)**

If not within specification, nozzle adjustment is improper and pressure should be readjusted.

If pressure cannot be adjusted to specification, replace nozzle.

ROUGH IDLE WITH WARM ENGINE

(Possible Cause) **(Check Procedure and Correction Method)**

1. IMPROPER ADJUSTMENT OF ACCELERATOR CABLE

With the accelerator pedal released, check that the adjusting lever is in contact with the idle adjusting screw. Also, check if the accelerator cable is catching on something.

If necessary, adjust so lever is in contact with the screw, or make other required repairs.

2. IDLE SPEED TOO LOW

Check the idle speed as specified below. (See page EM-26 or 28)

Idle speed: **MT 650 rpm**
AT (2H) 750 rpm
AT (12H-T) 770 rpm

If not, adjust with the idle speed adjusting screw.

NOTE: If less than specified, idling would normally be rough.

3. FUEL LEAKAGE

Check for leaks in the injection pump connections, feed pump, nozzle holder and delivery valve. Tighten any loose connections to specified torque or replace parts as necessary.

4. IMPROPER INJECTION TIMING	Refer to item 6 of ENGINE CRANKS NORMALLY BUT WILL NOT START, above.
5. IMPROPER OPERATION OF INJECTION NOZZLE OR DELIVERY VALVE	With the engine idling, loosen the injection pipe to each cylinder in order, and check if the idle speed changes. If no change, a faulty cylinder is indicated. Check according to the following procedure. ● Faulty Nozzle Check the nozzle with nozzle tester. (See page FU-4 or 10) **Opening pressure:** **2H 105 – 125 kg/cm² (1,493 – 1,778 psi) (10,296 – 12,258 kPa)** **12H-T 180 – 210 kg/cm² (2,560 – 2,987 psi) (17,652 – 20,594 kPa)** If not within specification, the nozzle is faulty and injection pressure should be readjusted. ● Faulty Delivery Valve If injection pressure is within specification, the delivery valve is defective and should be replaced.

ENGINE SUDDENLY STOPS

(Possible Cause)	(Check Procedure and Correction Method)
1. ENGINE WILL NOT RE-START	Check to see if engine re-starts according to prescribed procedure. If not, refer to ENGINE CRANKS NORMALLY BUT WILL NOT START, above, and repair as necessary.
2. ROUGH IDLE	If idle is not stable, refer to ROUGH IDLE WITH WARM ENGINE and repair accordingly.
3. NO FUEL INTO INJECTION PUMP	Refer to item 2 of ENGINE CRANKS NORMALLY BUT WILL NOT START, above.

LACK OF POWER

NOTE:
1. First check that the air cleaner is not clogged or the engine overheating.
2. Not applicable if the customer desires an output power higher than specified for that vehicle. For accuracy, adjust with a chassis dynamo.

(Possible Cause)	(Check Procedure and Correction Method)
1. IMPROPER ACCELERATOR CABLE ADJUSTMENT	With accelerator fully depressed, check that the adjusting lever is in contact with the maximum speed adjusting screw. (See page EM-26 or 28) If not, adjust accordingly.
2. INSUFFICIENT MAXIMUM SPEED	Start engine, depress the accelerator pedal to the floor and check that maximum speed is as specified below. (See page EM-26 or 28) **Maximum speed:** **w/ Fluid coupling 4,170 rpm** **w/o Fluid coupling 4,100 rpm** If not, adjust with the maximum speed adjusting screw.
3. FUEL LEAKAGE	Refer to item 3 of ROUGH IDLE WITH WARM ENGINE.
4. CLOGGED FUEL FILTER	Disconnect the injection pump inlet hose and outlet pipe of the feed pump, and connect directly with a suitable pipe. Then pour clean fuel into the inlet side of the feed pump. If the engine condition improves, the fuel filter is clogged and should be replaced. (See page FU-2) **NOTE: When feeding fuel directly into the pump, keep container at same level as vehicle fuel tank.** If no increase in engine condition after replacing the fuel filter, check the feed pump or perform other necessary repairs.
5. IMPROPER INJECTION TIMING	Refer to item 8 of ENGINE CRANKS NORMALLY BUT WILL NOT START.
6. FAULTY INJECTION NOZZLE	Refer to item 9 of ENGINE CRANKS NORMALLY BUT WILL NOT START.

EXCESSIVE EXHAUST SMOKE

NOTE:
1. Check that the air cleaner is not clogged.
2. Check with the customer whether or not oil consumption has been excessive.

(Possible Cause)	(Check Procedure and Correction Method)
1. IMPROPER INJECTION TIMING	Refer to item 8 of ENGINE CRANKS NORMALLY BUT WILL NOT START. **NOTE: Black smoke indicates advanced timing while white smoke indicates retarded timing. Adjustments should be made accordingly.**
2. CLOGGED FUEL FILTER	Refer to item 5 of LACK OF POWER. **NOTE: At high speed (2,000 — 3,000 rpm), a clogged filter tends to make the exhaust smoke white.**
3. FAULTY INJECTION NOZZLE	Refer to item 9 of ENGINE CRANKS NORMALLY BUT WILL NOT START. **NOTE: Excessive exhaust smoke is often caused by nozzle pressure being too low.**

EXCESSIVE FUEL CONSUMPTION

NOTE: Check whether the clutch slips, brakes grab, whether the tires are the wrong size or the air filter is clogged.

(Possible Cause)	(Check Procedure and Correction Method)
1. FUEL LEAKAGE	Refer to item 3 of ROUGH IDLE WITH WARM ENGINE.
2. IDLE SPEED TOO HIGH	After sufficiently warming up engine, check that idle speed is as specified below. (See page EM-26 or 28) **Idle speed: M/T 650 rpm** **A/T (2H) 750 rpm** **A/T (12H-T) 770 rpm** If not, adjust with the idle speed adjusting screw.
3. MAXIMUM SPEED TOO HIGH	Start engine, depress the accelerator pedal to the floor and check that maximum speed is as specified below. (See page EM-26 or 28) **Maximum speed:** **w/ Fluid coupling 4,170 rpm** **w/o Fluid coupling 4,100 rpm** If not, adjust with the maximum speed adjusting screw.

4. IMPROPER INJECTION TIMING	Refer to item 8 of ENGINE CRANKS NORMALLY BUT WILL NOT START.
5. FAULTY INJECTION NOZZLE	Refer to item 9 of ENGINE CRANKS NORMALLY BUT WILL NOT START.

ENGINE NOISE WHEN WARM

(Cranking Noise with Excessive Vibration)

(Possible Cause)	(Check Procedure and Correction Method)
1. COOLANT TEMPERATURE TOO LOW	Check coolant temperature with coolant temperature gauge. If not sufficiently warm, thermostat is faulty and should be replaced.
2. IMPROPER INJECTION TIMING	Refer to item 8 of ENGINE CRANKS NORMALLY BUT WILL NOT START.
3. FAULTY INJECTION NOZZLE	Refer to item 9 of ENGINE CRANKS NORMALLY BUT WILL NOT START.

ENGINE WILL NOT RETURN TO IDLE

(Possible Cause)	(Check Procedure and Correction Method)
BINDING ACCELERATOR CABLE	Operate adjusting lever on side of injection pump and check if engine returns to idle. If so, the accelerator cable is binding or improperly adjusted and should be repaired accordingly. If engine does not return to idle, the injection pump is faulty and should be repaired.

ENGINE WILL NOT SHUT OFF WITH STOP BUTTON OR KEY

(Possible Cause)	(Check Procedure and Correction Method)
1. [2H M/T (w/o EDIC SYSTEM)] BINDING STOP CABLE	Operate stop lever (adjusting lever) on side of injection pump and check if engine stops. If so, stop cable is binding or maladjusted and should be repaired accordingly. If engine does not stop, injection pump is faulty and should be replaced. (See page FU-29)
2. [2H M/T (w/ EDIC SYSTEM)] IMPROPER EDIC SYSTEM	Operate stop lever (adjusting lever) on side of injection pump and check if engine stops. If so, EDIC system is faulty and should be repaired. (See page ST-21) If engine does not stop, injection pump is faulty and should be repaired. (See page FU-29)
3. [2H A/T AND 12H-T] IMPROPER INTAKE SHUTTER OPERATION	Close the intake shutter and check if engine stops. If it does, the intake shutter system is faulty and should be repaired. (See page EM-33 or 34)

DIESEL ELECTRICAL SYSTEM DIAGNOSIS [2H]

ENGINE DOES NOT START COLD

NOTE: 1. Battery voltage at least 12 volts (or 24 volts) — ignition switch OFF.
2. Engine cranks normally.
3. Fusible link okay.
4. Check the voltage marked with an asterisk (*) just as the ignition switch is placed at ON because the voltage will change with elapse of time.

Pre-heating System (Super Glow Type)

Check if indicator light lights up with ignition switch ON.
Coolant temp. Approx. 20°C (68°F) : Approx. 2 seconds

No → Check ENGINE fuse (HJ60 Europe, HJ75) or GLOW Fuse (Others).

Fuse Blown → Check for short circuit and repair if necessary.

Fuse OK → Check indicator light bulb.

Bulb No Good → Replace bulb.

Bulb OK → Check for battery voltage to terminal 3 of pre-heating timer connector (on wire harness side). If okay, pre-heating timer is faulty and should be replaced.

Yes → Ignition switch OFF.

→ * Check for battery voltage to terminal 1 of pre-heating timer with ignition switch ON.

No Voltage → Check that is 1V between terminals 9 and 12. If faulty, repair glow plug current sensor. If okay, timer is faulty and should be replaced.

Voltage → Check if voltage to terminal 1 of pre-heating timer is terminated after engine is started.

No → Start the engine and check/if there is a voltage at terminal 9 of pre-heating timer. If faulty, repair charging system as necessary. If okay, timer is faulty and should be replaced.

Yes → Ignition switch OFF.

CONTINUED ON PAGE EM-12

Pre-heating Timer

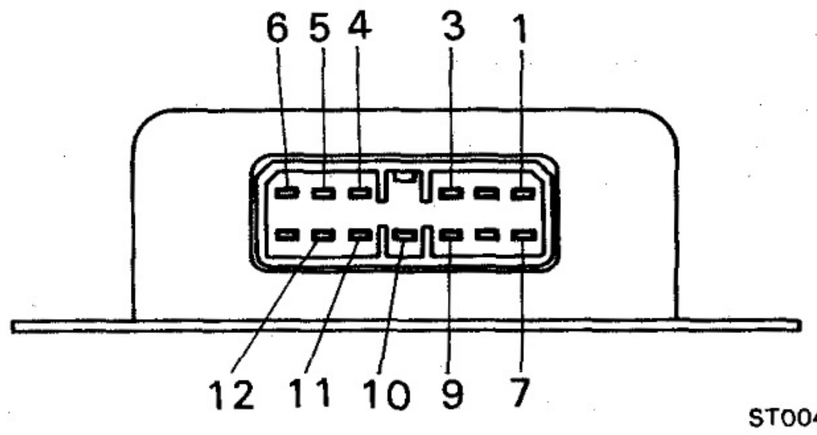

CONTINUED FROM PAGE EM-11

Place ignition switch at ON and check if current flow to terminal 5 of timer is in accordance with coolant temperature (See Timer characteristics Diagram on page ST-3).

Pre-heating Duration is Quite Different Than That Specification

OK

No Voltage

Timer is faulty and should be replaced.

After completion of pre-heating, check for voltage at terminal 5 again when starter switch is placed at ST.

No Voltage

Voltage

Ignition switch OFF.

Place ignition switch at ON and check for voltage to glow plug a few seconds later. Thereafter, voltage should drop about 1/2.

No Voltage at All

Check for battery voltage at plus side of glow plug current sensor (Resister side).

If okay, replace sensor.

If no voltage, No. 1 glow plug relay is faulty and should be replaced.

OK

No 1/2 Voltage Thereafter

Check for battery voltage to plus side of resistor (Intake manifold side).

If okay, replace resistor.

If no voltage, No. 2 glow plug relay is faulty and should be replaced.

Measure glow plug resistance.

Infinity

Glow plug is faulty and should be replaced.

Approx. 0 Ω

Glow plug okay

DIESEL ELECTRICAL SYSTEM DIAGNOSIS [12H-T]

ENGINE DOES NOT START WHEN COLD

NOTE: 1. Battery voltage at least 12 volts (or 24 volts) — ignition switch OFF.
2. Engine cranks normally.
3. Water temperature sensor okay. (See page ST-9)

Pre-heating System

1. INSPECT POWER SUPPLY SECTION

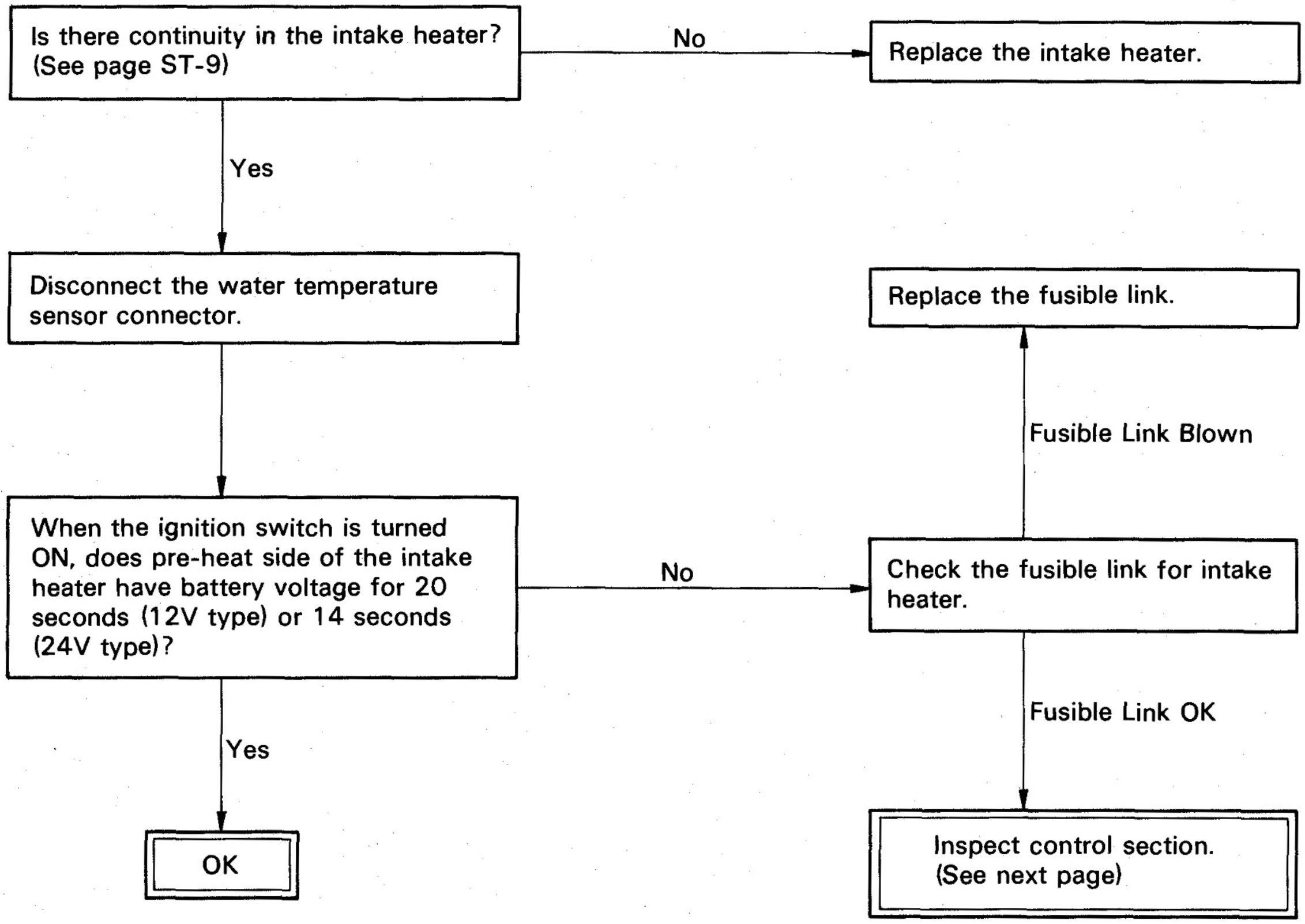

2. INSPECT CONTROL SECTION

NOTE: Perform this inspection with the intake heater connector fully connected.

Disconnect the water temperature sensor connector.

When the ignition switch is turned ON, does the indicator light light? (Measure the time lighted)

No → Is the ENGINE fuse (Europe) or GLOW fuse (Australia) Okay?

No → Replace the fuse.

Yes

Is the indicator light bulb Okay?

No → Replace the bulb.

Yes

Is terminal 10 of the pre-heating timer grounded?

No → Open circuit or ground faulty in wire harness between terminal 10 of the timer and body ground.

Yes

Is there battery voltage to terminal 3 of the timer (on wire harness side)?

Yes → Replace the timer.

No → Open circuit in wire harness between terminal 3 of the timer and indicator light.

Yes

Is the lighting time correct?
12V type: 20 seconds
24V type: 14 seconds

No → Replace the timer.

Yes

CONTINUED ON PAGE EM-15

Pre-heating Timer

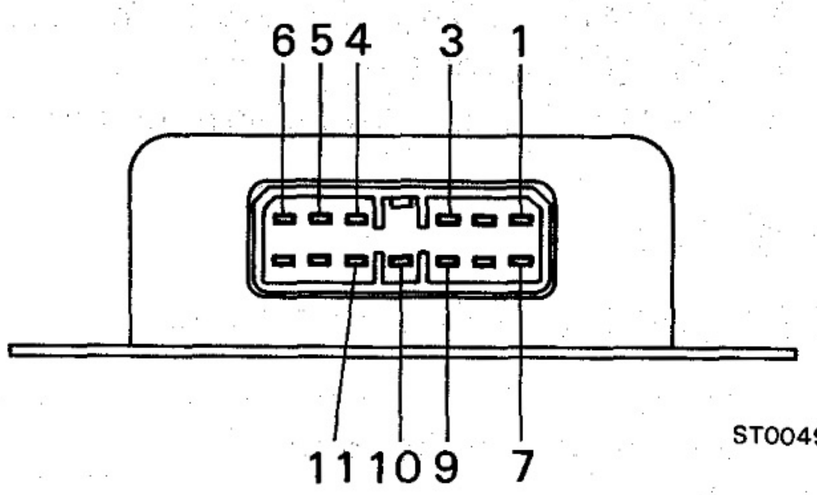

Yes CONTINUED FROM PAGE EM-14

When the ignition switch is turned ON, is voltage between terminals B and G of the No. 1 intake heater relay 0 V for 20 seconds (12V type) or 14 seconds (24V type)?

No → Did No. 1 intake heater relay check out okay? (See page ST-9)

No → Replace the No. 1 intake heater relay.

Yes

Yes

When the ignition switch is turned ON, does terminal 1 of the intake heater timer have battery voltage for 20 seconds (12V type) or 14 seconds (24V type)?

No → Replace the timer.

Yes

- Open circuit in wire harness between terminal 1 of the timer and terminal g of the No. 1 intake heater relay
- Open circuit or ground faulty in wire harness between terminal E of the No. 1 intake heater relay and body ground.

With the engine started, is there 0 voltage between terminals B and G of the No. 2 intake heater relay? (Measure the time too)

No → Did No. 2 intake heater relay check out okay? (See page ST-9)

No → Replace the No.2 intake heater relay.

Yes

Yes

CONTINUED ON PAGE EM-16

No. 1 and No. 2 Intake Heater Relays

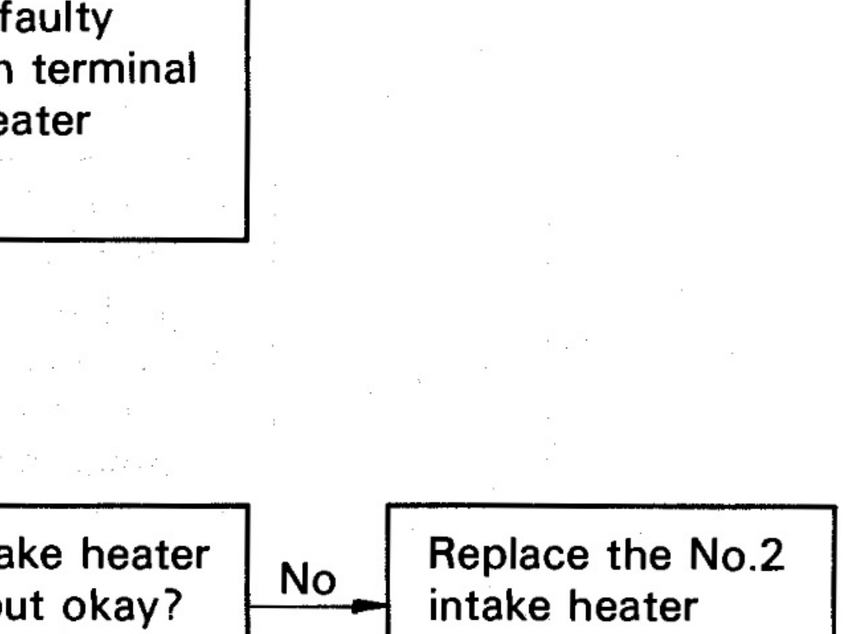

Yes

CONTINUED FROM PAGE EM-15

Yes

With the engine started, does terminal 5 of the Pre-heating have battery voltage for 70 seconds?

Yes

No

Is terminal 9 of the timer grounded?

No

When the ignition switch is turned ON, does the charge warning light light?

Yes

No

Yes

Replace the timer.

Open circuit in wire harness between terminal 9 of the timer and charge warning light.

- Inspect CHARGE fuse.
- Inspect alternater regulator.

- Open circuit in wire harness between terminal 5 of the timer and terminal g of the No. 2 intake heater relay.
- Open circuit or ground faulty in wire harness between terminal E of the No. 2 intake heater and body ground.

Is time normal?
After heat time:
Approx. 70 seconds

No

Replace the timer.

Yes

Inspect power supply section.
(See page EM-13)

TURBOCHARGER DIAGNOSIS [12H-T]

INSUFFICIENT ACCELERATION, LACK OF POWER OR EXCESSIVE FUEL CONSUMPTION

NOTE: Before troubleshooting the turbocharger, first check the valve clearance, injection timing, etc.

(Possible Cause)	(Check Procedure and Correction Method)
1. INSUFFICIENT TURBOCHARGING PRESSURE	Check turbocharging pressure. (See page EM-38) **Turbocharging pressure:** **0.39 – 0.53 kg/cm²** **(5.5 – 7.3 psi, 38 – 52 kPa)** If not within specification, begin diagnosis from Item 2.
2. RESTRICTED INTAKE AIR SYSTEM	Check intake air system, and repair or replace parts as necessary. (See page EM-40)
3. LEAK IN INTAKE AIR SYSTEM	Check intake air system, and repair or replace parts as necessary. (See page EM-40)
4. RESTRICTED EXHAUST SYSTEM	Check exhaust system, and repair or replace parts as necessary. (see page EM-40)
5. LEAK IN EXHAUST SYSTEM	Check exhaust system, and repair or replace parts as necessary. (See page EM-40)
6. ERRATIC TURBOCHARGER OPERATION	Check rotation of impeller wheel. If it does not turn or turns with heavy drag, replace the turbocharger assembly. Check axial play of impeller wheel. (See page EM-43) **Axial play: 0.13 mm (0.0051 in.) or less** If not within specification, replace the turbocharger assembly.

ABNORMAL NOISE

(Possible Cause)	(Check Procedure and Correction Method)
1. TURBOCHARGER HEAT INSULATOR RESONNANCE	Check for loose, improperly installed or deformed insulator mount bolts, and repair or replace as necessary.
2. EXHAUST PIPE LEAKING OR VIBRATING	Check for deformed exhaust pipe, loose mount bolts or damaged gasket, and repair or replace as necessary.
3. ERRATIC TURBOCHARGER OPERATION	Refer to Item 7 of INSUFFICIENT ACCELERATION, LACK OF POWER OR EXCESSIVE FUEL CONSUMPTION.

EXCESSIVE OIL CONSUMPTION OR WHITE EXHAUST

(Possible Cause)	(Check Procedure and Correction Method)
FAULTY TURBOCHARGER SEAL	Check for oil leakage in exhaust system. ● Remove the turbine elbow from the turbocharger and check for excessive carbon deposits on the turbine wheel. Excessive carbon deposits would indicate a faulty turbocharger. Check for oil leakage in intake air system. ● Check for axial play in impeller wheel, and replace the turbocharger if necessary. (See page EM-43) **Axial play: 0.13 mm (0.0051 in.) or less** **CAUTION: There is some oil mist from the PCV in the blowby gas so care must be taken not to diagnosis this as an oil leakage from the turbocharger.**

TURBOCHARGER ELECTRICAL SYSTEM DIAGNOSIS [12H-T]

Troubleshooting of Turbocharger Indicator Light and Warning Light Operation

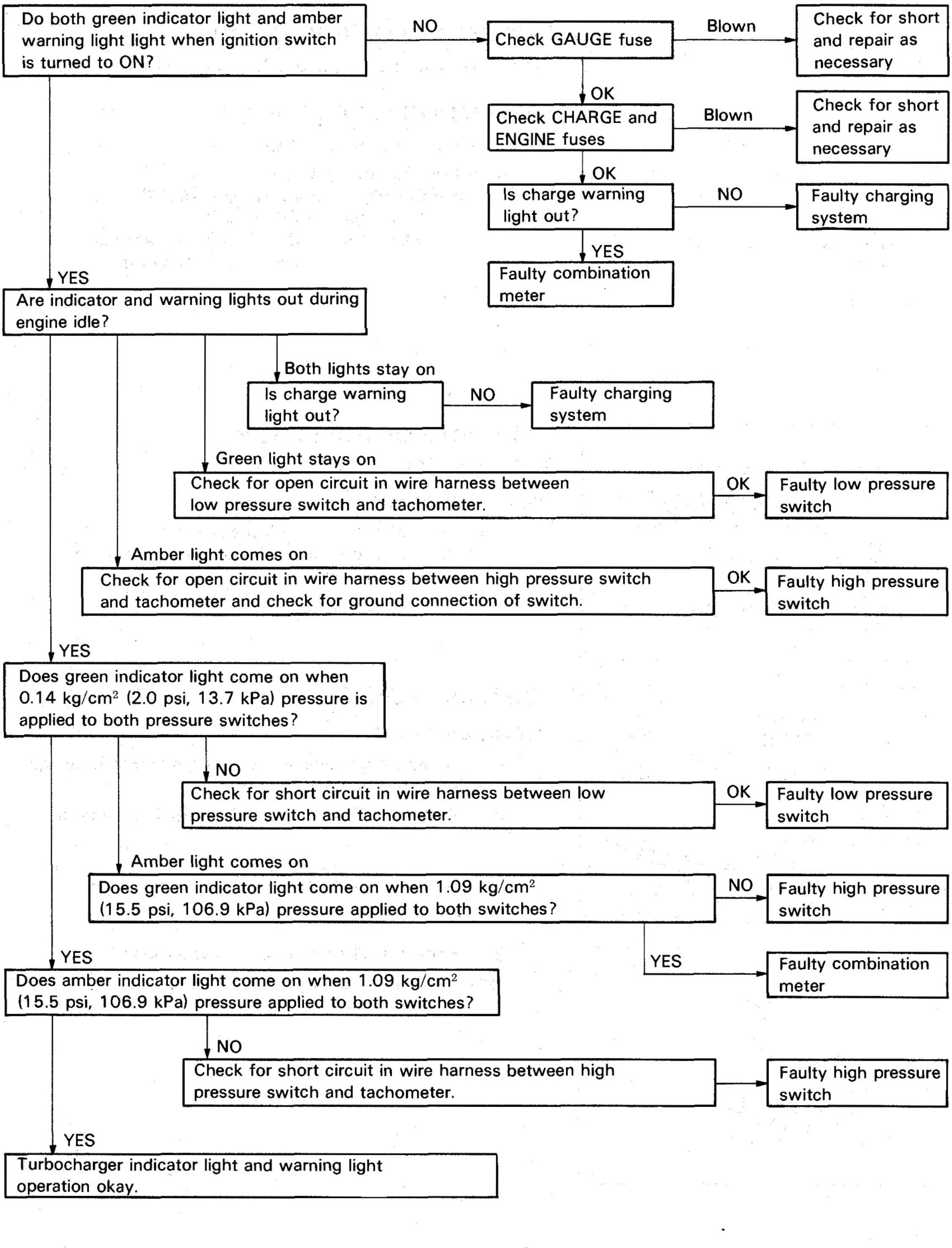

ENGINE TUNE-UP

INSPECTION OF ENGINE COOLANT

(See steps 1 and 2 on page CO-3)

INSPECTION OF ENGINE OIL

(See steps 1 and 2 on page LU-3)

INSPECTION OF BATTERY

(See steps 1 and 2 page CH-6)

Standard specific gravity:

When fully charged at 20°C (68°F)

12V type 1.25 – 1.27

24V type 1.27 – 1.29 (NX series)

1.25 – 1.27 (Others)

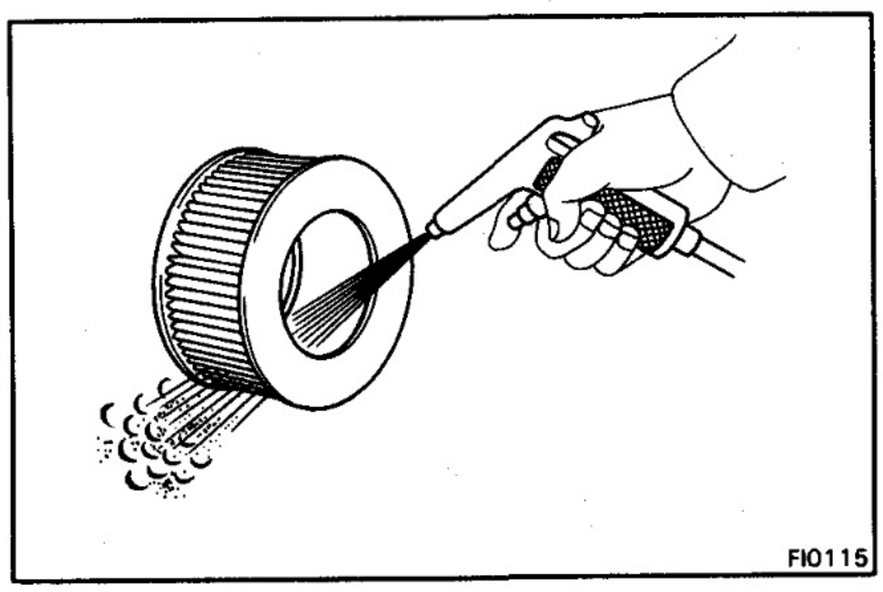

FI0115

CLEANING OF AIR FILTER
[Paper Filter Type]

CLEAN AIR FILTER

Clean the element with compressed air.
First blow from the inside thoroughly. Then blow off the outside of the element.

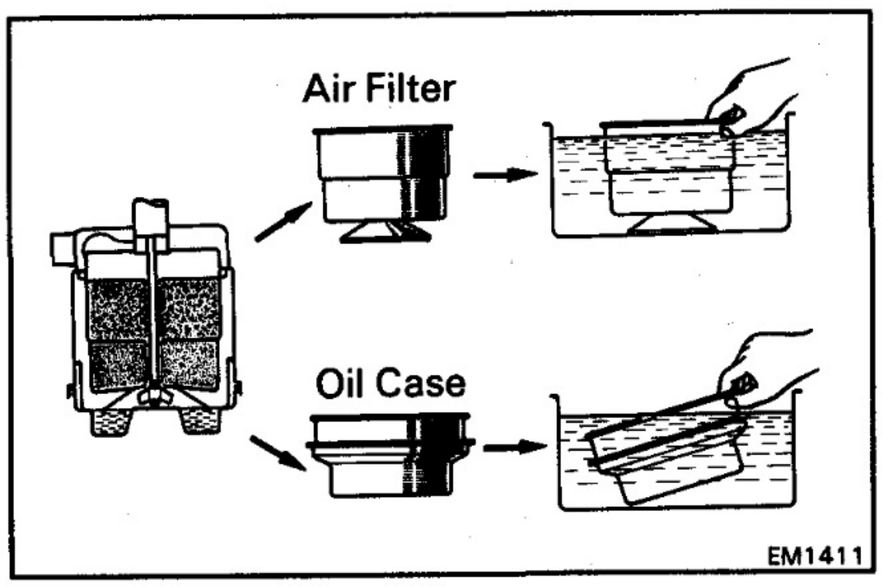

EM1411

[Oil Bath Type]

CLEAN AIR FILTER

(a) Wash the oil case and air filter in kerosine by agitating and rubbing.

(b) Wipe the oil case and air filter with a clean rag.

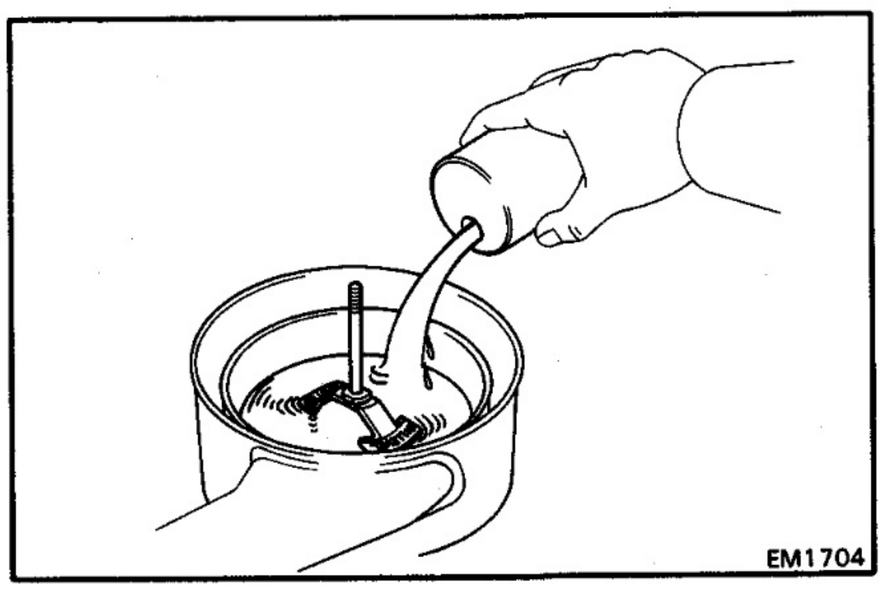

EM1704

(c) Place the oil case on a level work stand.

(d) Pour in clean engine oil until it reaches the "OIL LEVEL" mark.

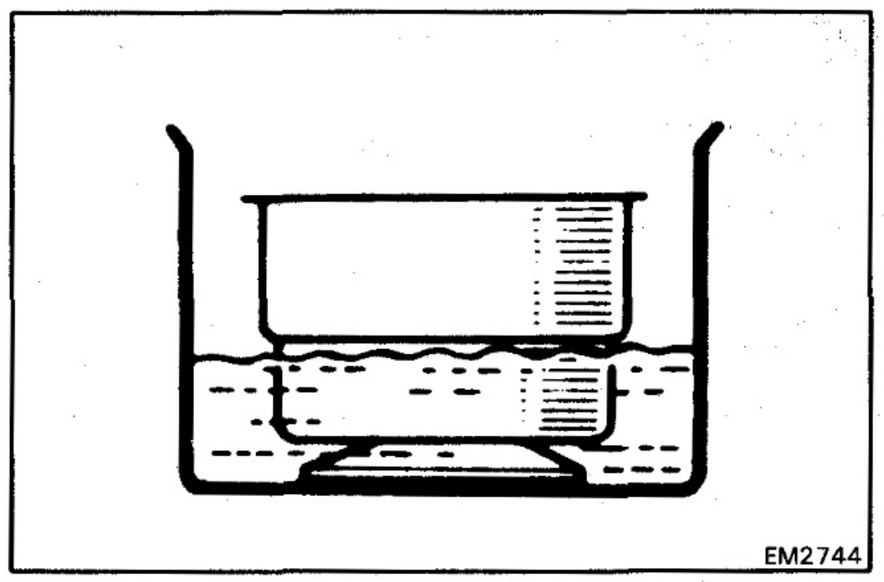

(e) Place the air filter on the tray.

(f) Saturate the air filter with clean engine oil.

INSPECTION OF ALTERNATER DRIVE BELT

(See page CH-6)

Drive belt tension (Canada):

Used belt	80 ± 20 lb
New belt	125 ± 5 lb

Drive belt deflection (Others):

Used belt	10 – 13 mm (0.39 – 0.51 in.)
New belt	8 – 9 mm (0.31 – 0.35 in.)

INSPECTION OF GLOW PLUG [2H]

(See page ST-5)

INSPECTION OF INTAKE HEATER [12H-T]

(See page ST-9)

INSPECTION OF INJECTION NOZZLES

(See steps 4 to 6 on pages FU-4 and 5) 2H
(See steps 6 to 8 on pages FU-10 and 11) 12H-T

Opening pressure (2H):

Reused nozzle	105 – 125 kg/cm^2 (1,493 – 1,778 psi) (10,296 – 12,258 kPa)
New nozzle	115 – 125 kg/cm^2 (1,636 – 1,778 psi) (11,278 – 12,258 kPa)

Opening pressure (12H-T):

Reused nozzle	180 – 210 kg/cm^2 (2,560 – 2,987 psi) (17,652 – 20,594 kPa)
New nozzle	200 – 210 kg/cm^2 (2,845 – 2,987 psi) (19,613 – 20,594 kPa)

ADJUSTMENT OF VALVE CLEARANCES

1. WARM UP ENGINE

Allow the engine to reach normal operating temperature.

2. [12H-T]
REMOVE INTAKE AIR CONNECTOR AND INTAKE PIPE
(See step 2 to 5 on page EM-40)

3. REMOVE CYLINDER HEAD COVER

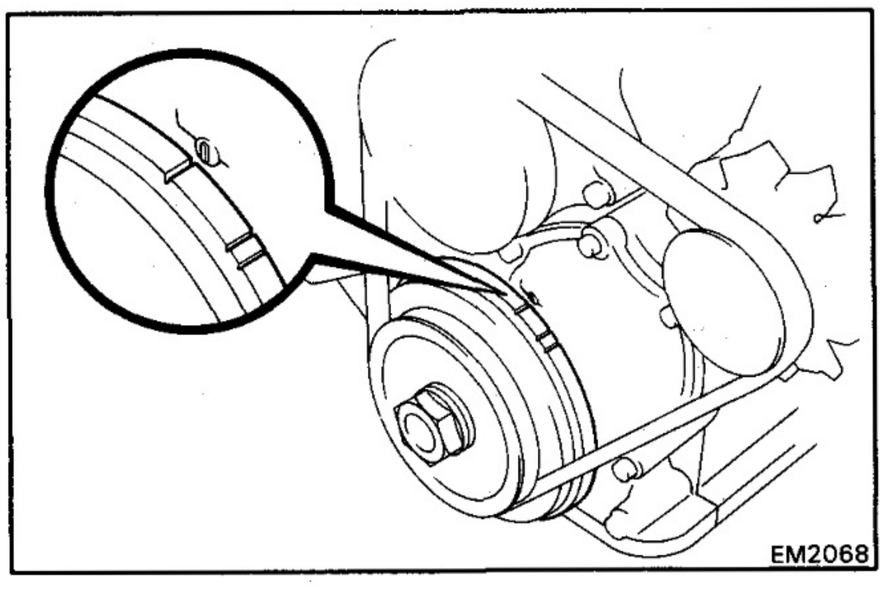

4. SET NO. 1 CYLINDER TO TDC/COMPRESSION

(a) Align the groove on the pulley with the timing pointer by turning the crankshaft clockwise with a wrench.

(b) Check that the rocker arms on the No. 1 cylinder are loose and rocker arms on the No. 6 cylinder are tight.

If not, turn the crankshaft one revolution (360°) and align the mark as above.

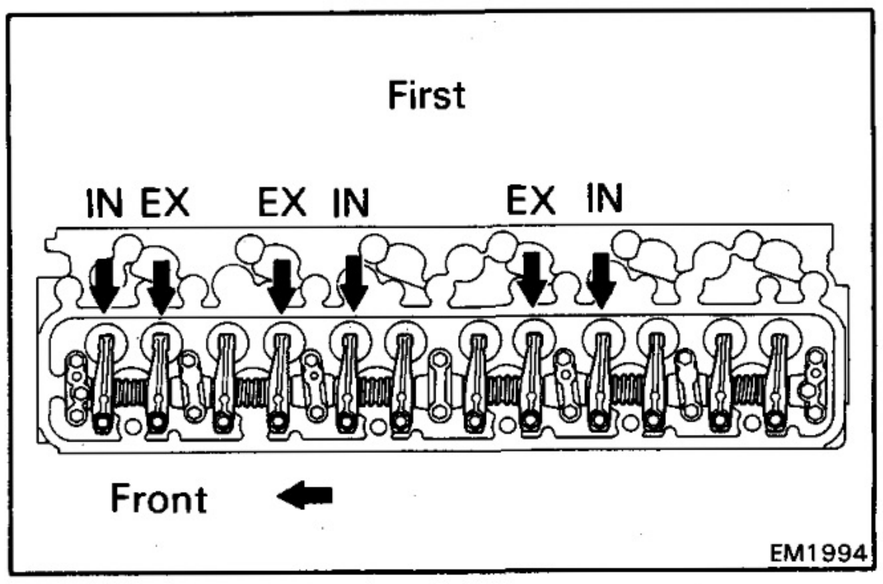

5. ADJUST VALVE CLEARANCES

(a) Measure only those valves indicated by arrows.

Valve clearance (Hot):

Intake	**0.20 mm (0.008 in.)**
Exhaust	**0.36 mm (0.014 in.)**

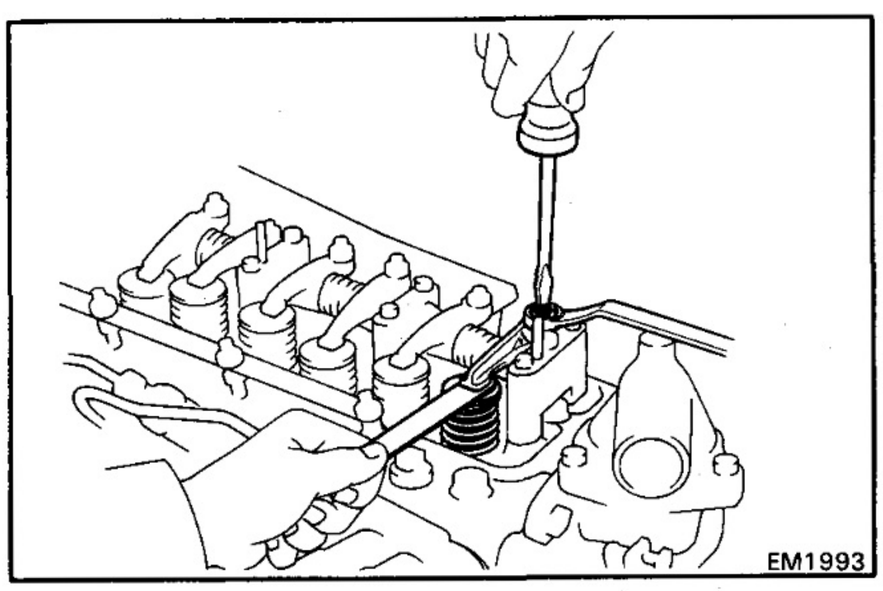

- Using a feeler gauge, measure the valve clearance between the valve stem and rocker arm. Loosen the lock nut and turn the adjusting screw to set the proper clearance. Hold the adjusting screw in position and tighten the lock nut.
- Recheck the valve clearance. The feeler gauge should slide with a very slight drag.

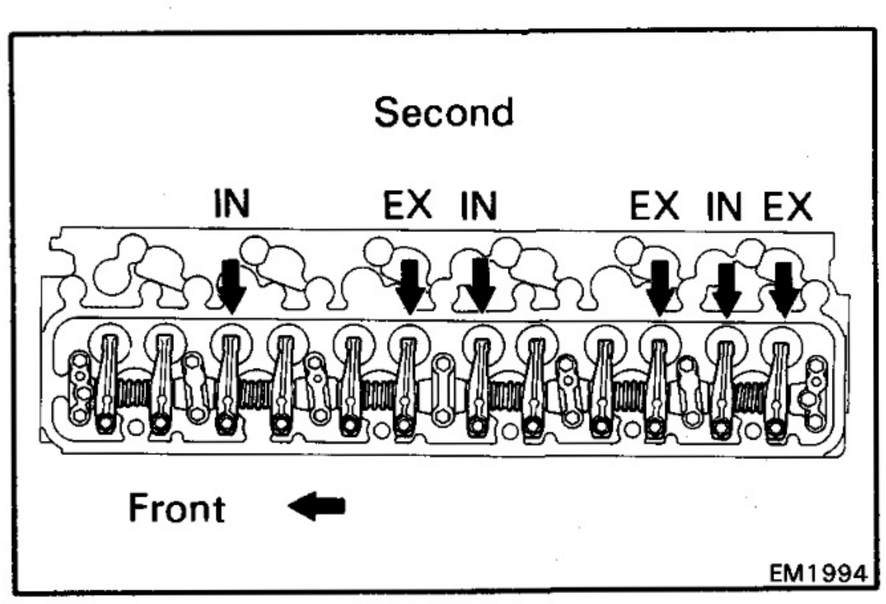

(b) Turn the crankshaft one revolution (360°) and align the mark as above.
Adjust only the valves indicated by arrows.

6. INSTALL CYLINDER HEAD COVER

7. [12H-T]
INSTALL INTAKE PIPE AND INTAKE AIR CONNECTOR
(See steps 9 to 12 on page EM-45 and 46)

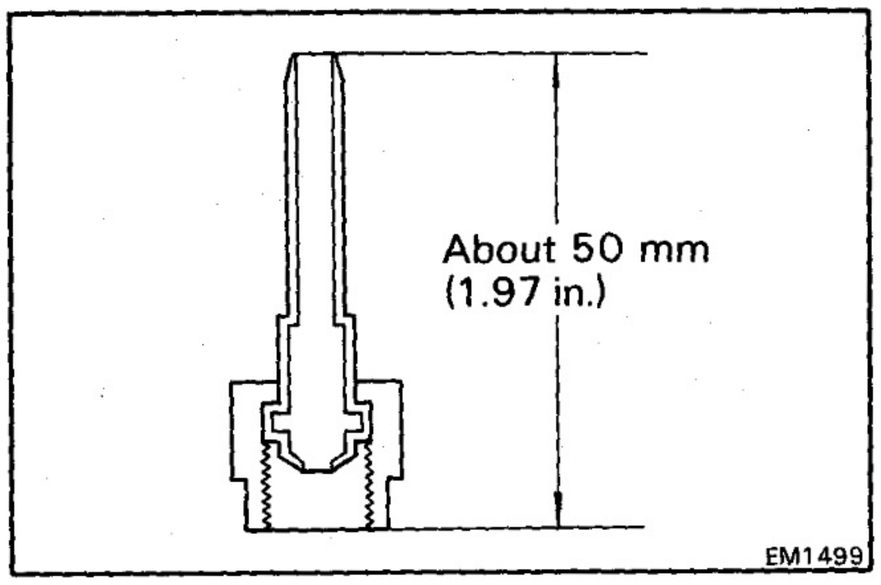

ADJUSTMENT OF INJECTION TIMING

1. PREPARE INSPECTION PIPE

Make an inspection pipe with a injection pipe as shown.

2. [12H-T]
REMOVE INTAKE AIR CONNECTOR AND INTAKE PIPE (See steps 2 to 5 on page EM-40)

3. REMOVE CYLINDER HEAD COVER

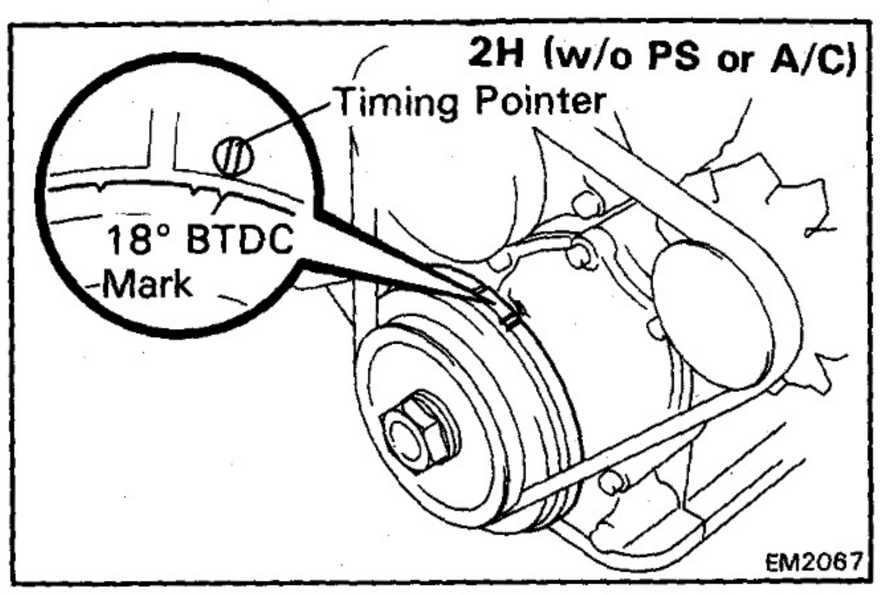

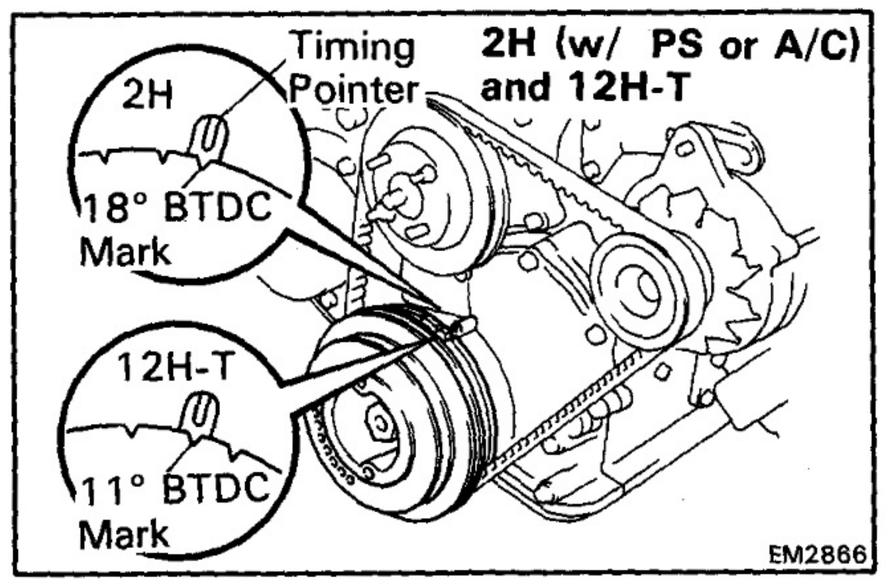

4. SET NO. 1 CYLINDER TO 18° (2H) or 11° (12H-T) BTDC/COMPRESSION

(a) Align the groove on the pulley with the timing pointer by turning the crankshaft clockwise with a wrench.

(b) Check that the rocker arms on the No. 1 cylinder are loose and rocker arms on the No. 6 cylinder are tight.

If not, turn the crankshaft one revolution (360°) and align the mark as above.

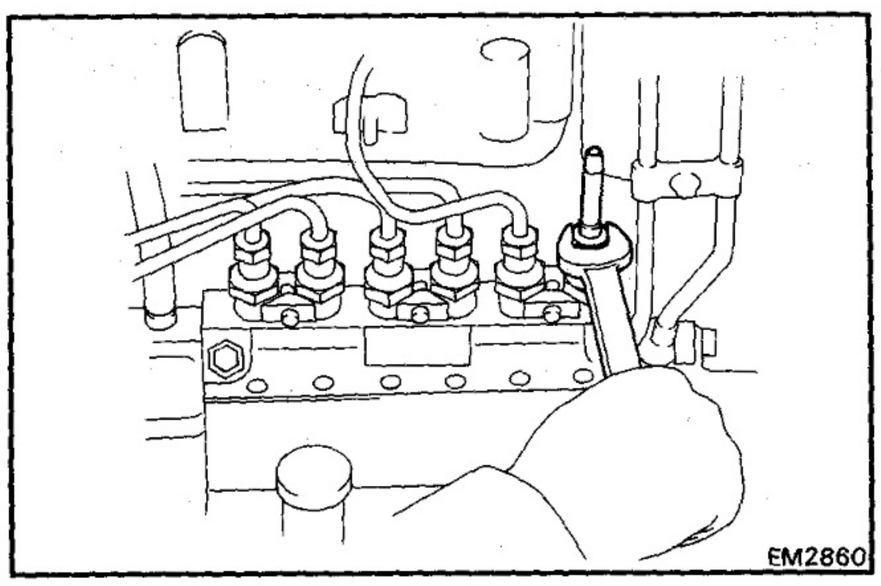

5. ADJUST INJECTION TIMING

(a) Remove the No. 1 injection pipe and install the inspection pipe on the No. 1 delivery valve holder.

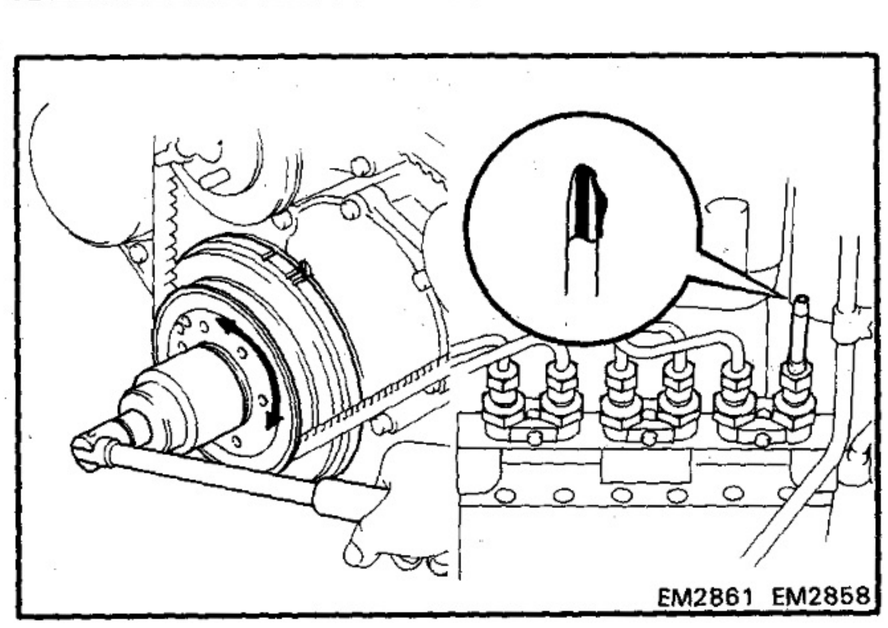

(b) Turn the crankshaft slightly to left and right until fuel surfaces from the inspection pipe.

(c) Turn the crankshaft counterclockwise, set the No. 1 cylinder just before the 18° (2H) or 11° (12H-T) BTDC/compression.

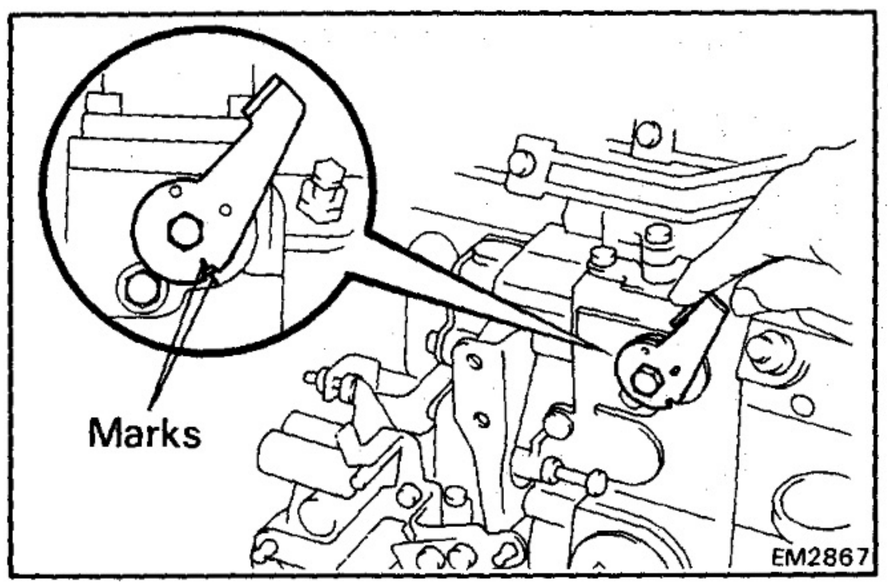

(d) [2H A/T and 12H-T]
Align the marks of the stop lever and injection pump governor housing.

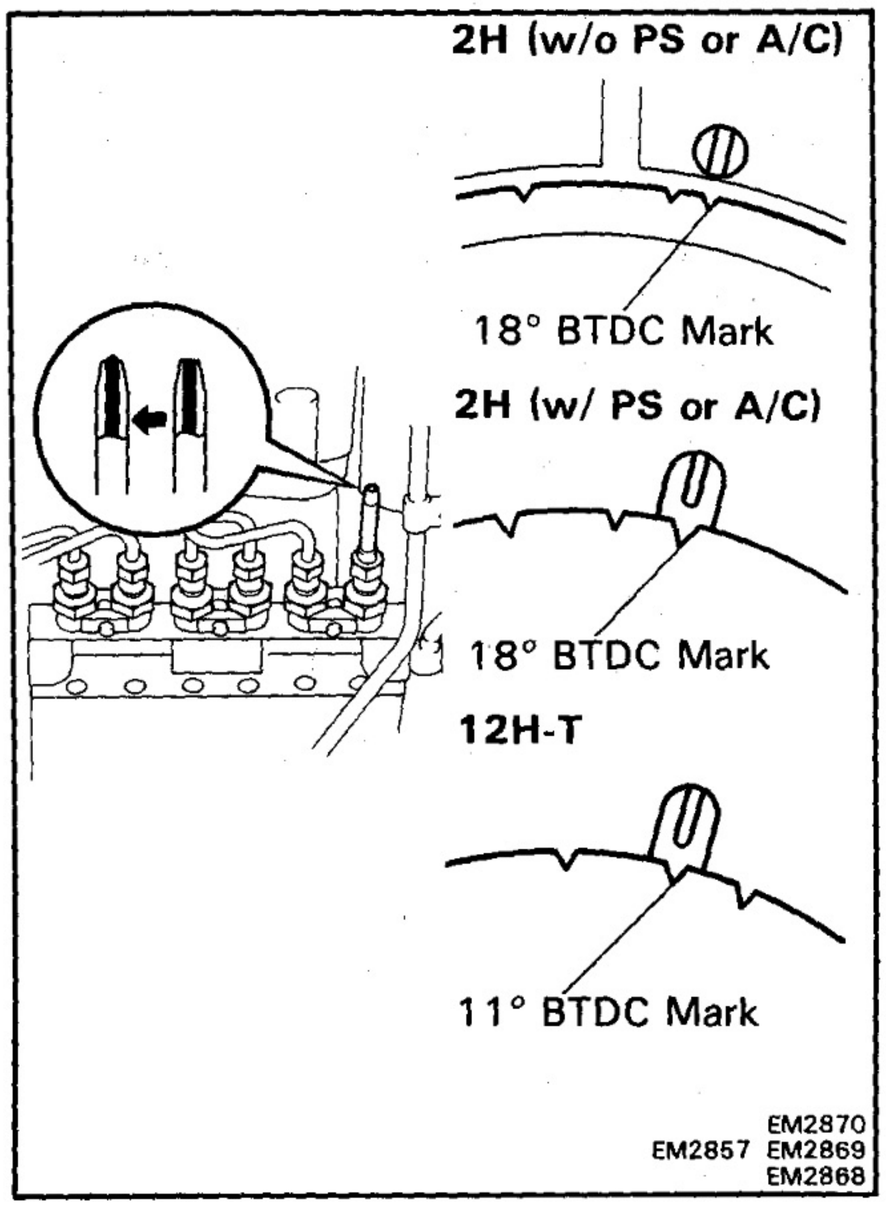

(e) Slowly turn the crankshaft clockwise.

(f) Check the crankshaft pulley position (injection timing position) when the fuel level in the inspection pipe rises.

Injection timing:

2H	**18° BTDC**
12H-T	**11° BTDC**

NOTE: This operation should be repeated at least two or three times.

(g) Loosen the other injection pipe union nuts, fuel pipe and oil pipe union bolt at the injection pump side.

(h) Loosen the bolt holding the injection pump stay to the stay.

(i) Loosen the four nuts holding the injection pump to the retainer.

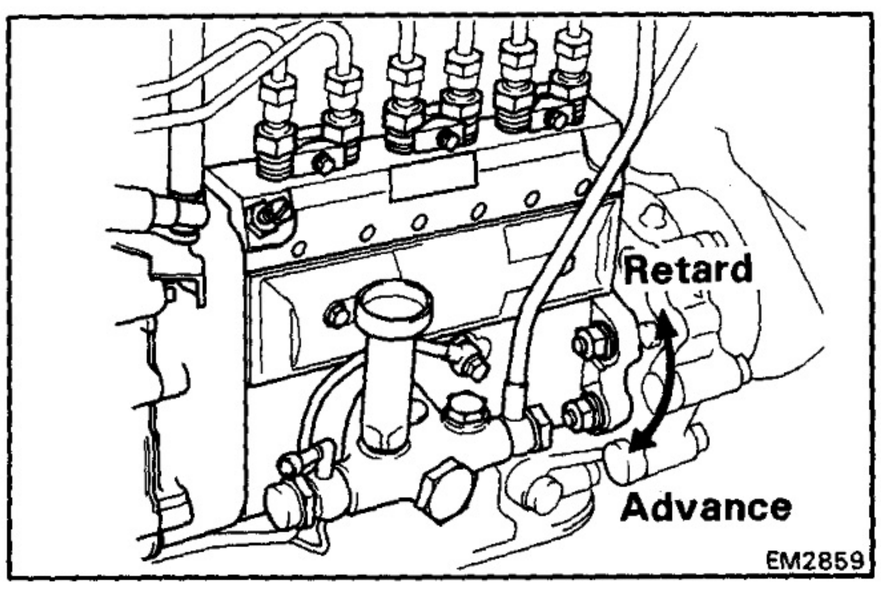

(j) Adjust the injection timing by slightly tilting the injection pump body.

If the injection timing is retarded, advance it by tilting the pump a way from the engine.

If the injection timing is advanced, retard it by tilting the pump toward the engine.

(k) Tighten the four nuts holding the injection pump to the retainer.

Torque: 375 kg-cm (27 ft-lb, 37 N·m)

(l) Tighten the bolt holding the injection pump stay to stay.

Torque:

2H	**185 kg-cm (13 ft-lb, 18 N·m)**
12H-T	**360 kg-cm (26 ft-lb, 35 N·m)**

(m) Recheck the injection timing.

(n) Remove the inspection pipe and install the No. 1 injection pipe.

(o) Tighten the injection pipe union nuts, oil pipe union bolt and fuel pipe union bolt.

Torque:

Injection pipe	**300 kg-cm (22 ft-lb, 29 N·m)**
Oil pipe	**185 kg-cm (13 ft-lb, 18 N·m)**
Fuel pipe	**280 kg-cm (20 ft-lb, 27 N·m)**

6. INSTALL CYLINDER HEAD COVER

7. [12H-T]
INSTALL INTAKE PIPE AND INTAKE AIR CONNECTOR
(See steps 9 to 12 on pages EM-45 and 46)

8. START ENGINE AND CHECK FOR LEAKS

ADJUSTMENT OF IDLE SPEED AND MAXIMUM SPEED [2H M/T]

1. INITIAL CONDITIONS

(a) Air cleaner installed

(b) Normal operating coolant temperature

(c) All accessories switched off

(d) All vacuum lines connected

(e) Valve clearances set correctly

(f) Injection timing set correctly

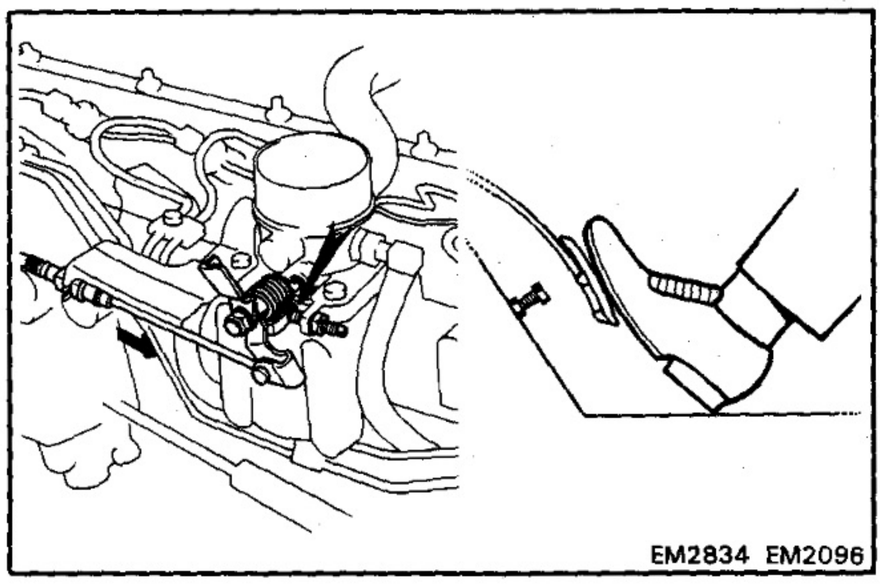

EM2834 EM2096

2. CONNECT TACHOMETER

3. ADJUST IDLE SPEED

(a) Check that the adjusting lever touches the idle speed (throttle valve) adjusting screw when the accelerator pedal is released.

If not, adjust the accelerator linkage.

(b) Start the engine.

(c) Check the idle speed.

Idle speed: 650 rpm

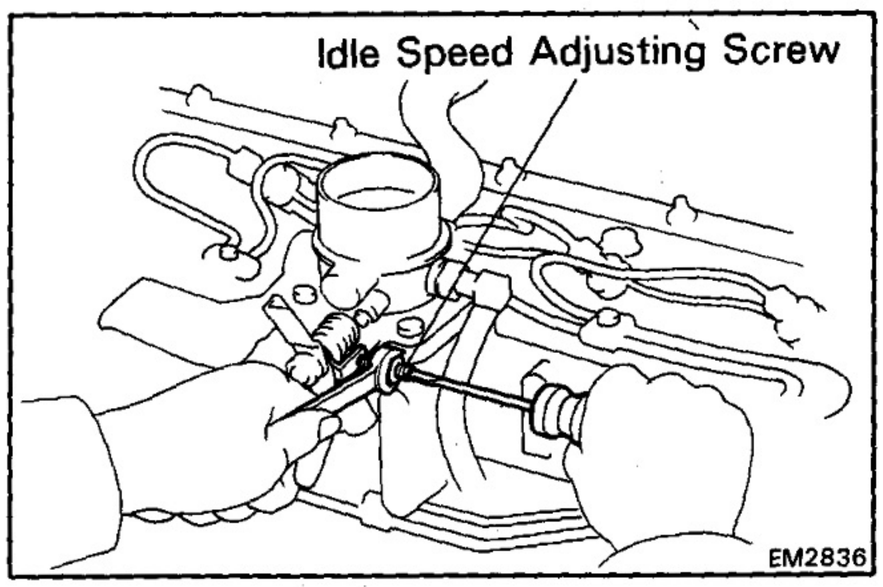

EM2836

(d) Adjust the idle speed.

- Disconnect the accelerator linkage.
- Loosen the lock nut of the idle speed (throttle valve) adjusting screw.
- Adjust the idle speed by turning the IDLE SPEED ADJUSTING SCREW.
- Securely tighten the lock nut and recheck the idle speed.
- Connect the accelerator linkage.
- After adjustment, adjust the accelerator linkage.

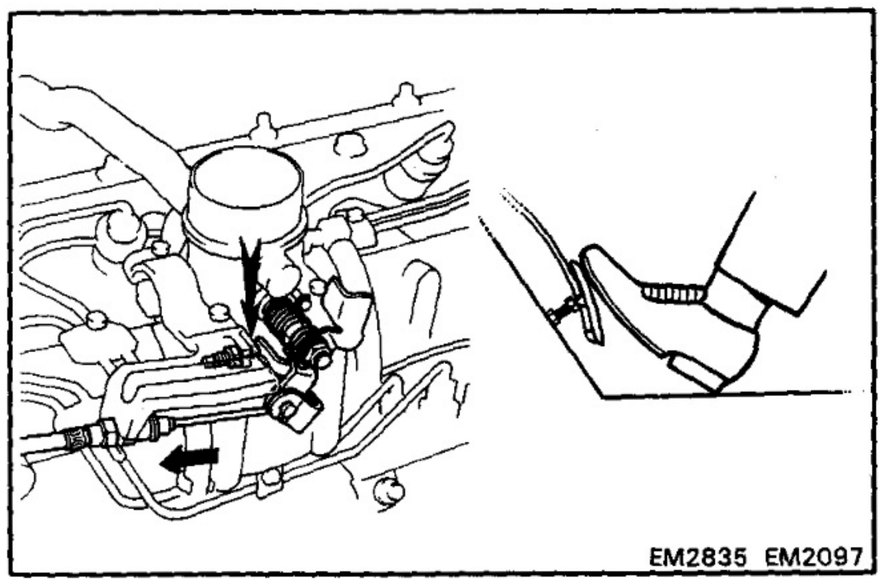

EM2835 EM2097

4. ADJUST MAXIMUM SPEED

(a) Check that the adjusting lever touches the throttle valve adjusting screw when the accelerator pedal is depressed all the way.

If not, adjust the accelerator linkage.

(b) Start the engine.

(c) Depress the accelerator pedal all the way.

(d) Check the maximum speed.

Maximum speed:

w/ Fluid coupling	**4,170 rpm**
w/o Fluid coupling	**4,100 rpm**

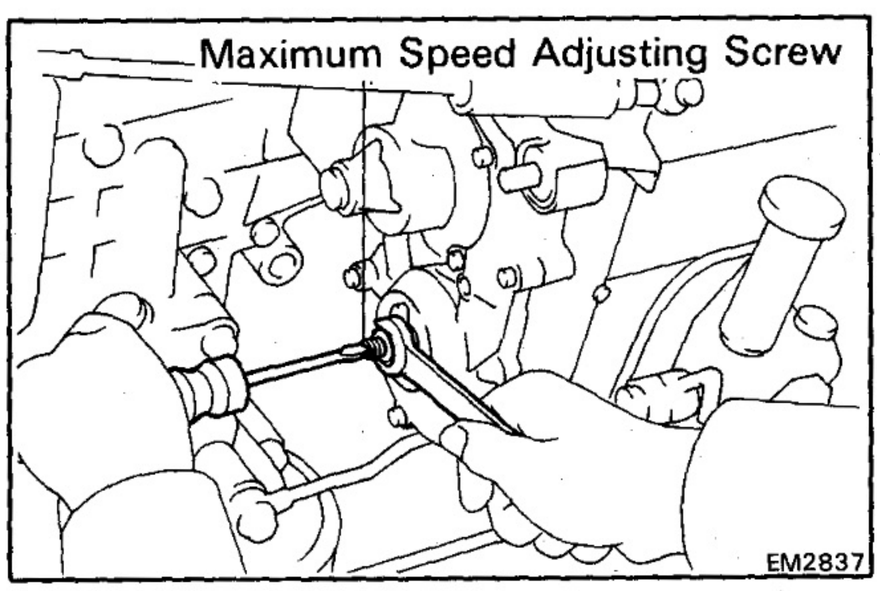

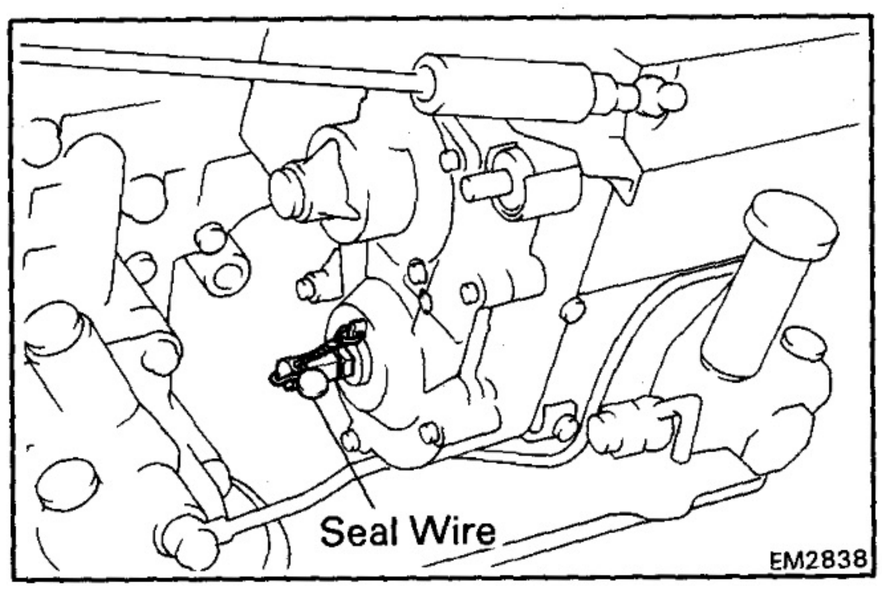

(e) Adjust the maximum speed.

- Disconnect the accelerator linkage.
- Cut out the maximum speed adjusting (speed control) screw seal wire.
- Loosen the lock nut of the maximum speed adjusting screw.
- Adjust the maximum speed by turning the MAXIMUM SPEED ADJUSTING SCREW.

NOTE: Adjust at idle speed. Then, raise engine speed and recheck the maximum speed.

- Securely tighten the lock nut and recheck the maximum speed.
- Seal the maximum speed adjusting screw with a new seal wire.

ADJUSTMENT OF IDLE SPEED AND MAXIMUM SPEED [2H A/T and 12H-T]

1. INITIAL CONDITIONS

(a) Air cleaner installed

(b) Normal operating coolant temperature

(c) All accessories switched off

(d) All vacuum lines connected

(e) Valve clearances set correctly

(f) Injection timing set correctly

(g) Transmission in N range

2. CONNECT TACHOMETER

3. ADJUST IDLE SPEED

(a) Check that the adjusting lever touches the idle speed adjusting bolt when the accelerator pedal is released.

If not, adjust the accelerator linkage.

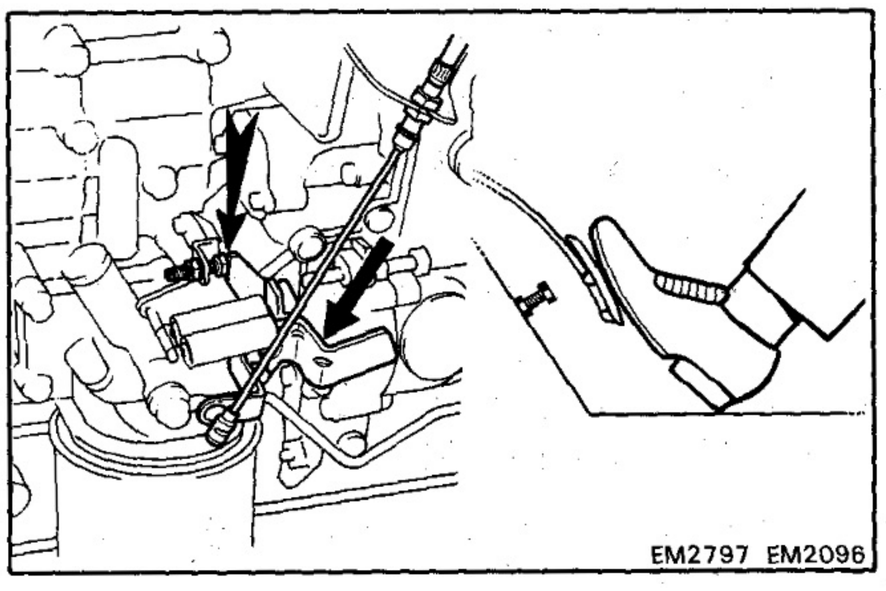

(b) Start the engine.

(c) Check the idle speed.

Idle speed:

M/T	**650 rpm**
A/T (2H)	**750 rpm**
A/T (12H-T)	**770 rpm**

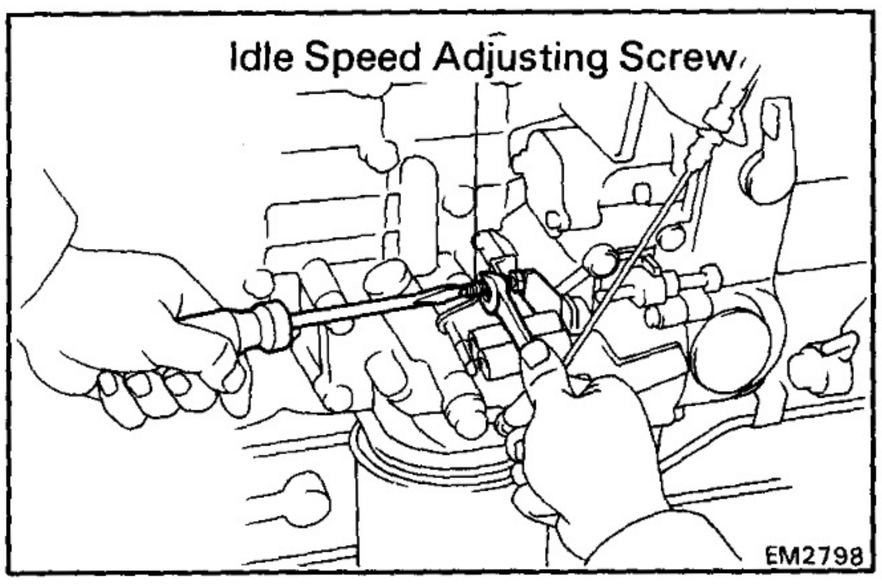

(d) Adjust the idle speed.

- Disconnect the accelerator linkage.
- Loosen the lock nut of the idle speed adjusting bolt.
- Adjust the idle speed by turning the IDLE SPEED ADJUSTING BOLT.
- Securely tighten the lock nut and recheck the idle speed.
- Connect the accelerator linkage.
- After adjustment, adjust the accelerator linkage.

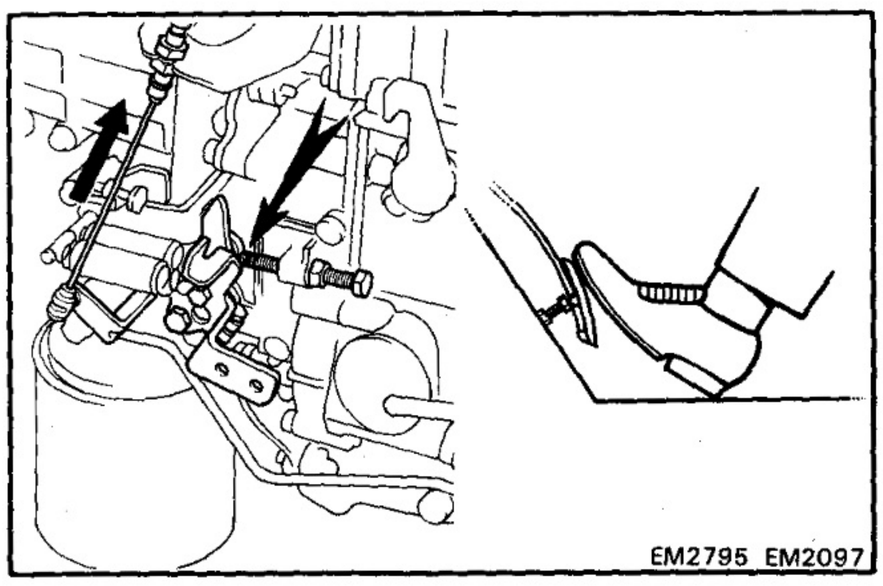

4. ADJUST MAXIMUM SPEED

(a) Check that the adjusting lever touches the maximum speed adjusting bolt when the accelerator pedal is depressed all the way.

If not, adjust the accelerator linkage.

(b) Start the engine.

(c) Depress the accelerator pedal all the way.

(d) Check the maximum speed.

Maximum speed: 4,170 rpm

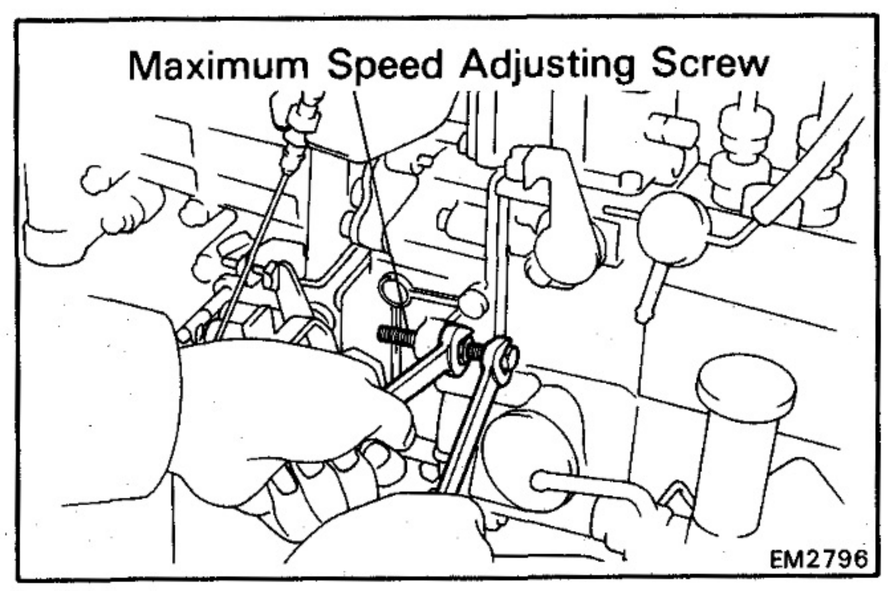

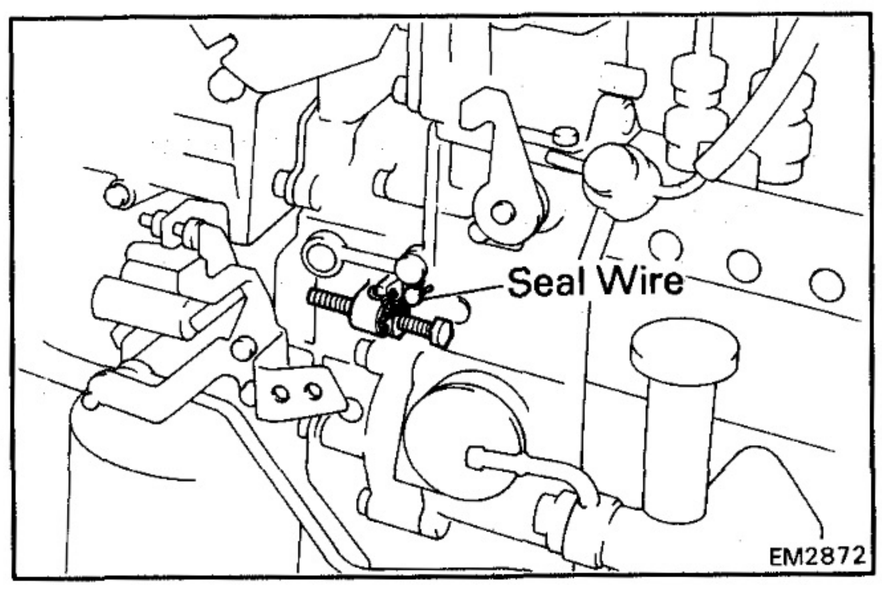

(e) Adjusting the maximum speed.

- Disconnect the accelerator linkage.
- Cut out the seal wire of the maximum speed adjusting bolt.
- Loosen the lock nut of the maximum speed adjusting bolt.
- Adjust the maximum speed by turning the MAXIMUM SPEED ADJUSTING BOLT.

NOTE: Adjust at idle speed. Then, raise engine speed and recheck the maximum speed.

- Securely tighten the lock nut and recheck the maximum speed.
- Seal the maximum speed adjusting bolt with a new seal wire.

ADJUSTMENT OF POWER STEERING IDLE-UP SETTING SPEED [12H-T A/T]

1. INITIAL CONDITIONS

(a) Air cleaner installed
(b) Normal operating coolant temperature
(c) All accessories switched off
(d) All vacuum lines connected
(e) Valve clearances set correctly
(f) Injection timing set correctly
(g) Idle speed set correctly
(h) Transmission in N range

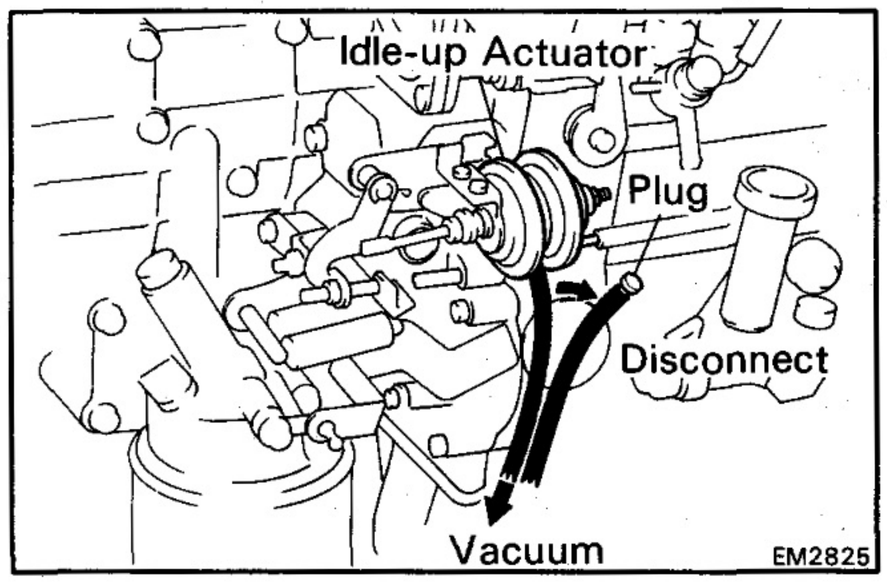

2. CONNECT TACHOMETER

3. ADJUST POWER STEERING (PS) IDLE-UP SETTING SPEED

(a) Start the engine.
(b) Disconnect the vacuum hose from the idle-up actuator and plug the hose end.
(c) Apply vacuum to the idle-up actuator.
(d) Race the engine to 2,500 rpm a few seconds, release the throttle and check the PS idle-up setting speed.

PS idle-up setting speed: 820 rpm

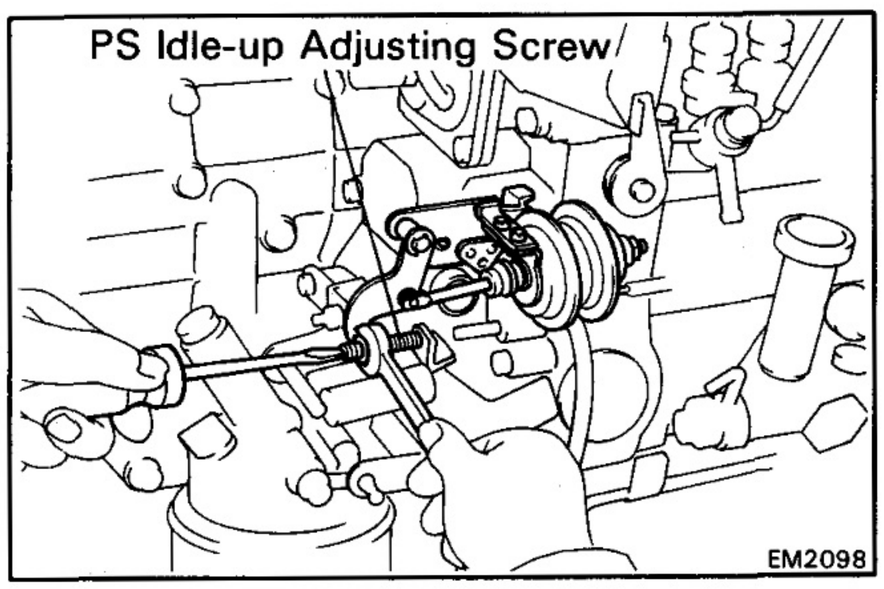

(e) Adjust the PS idle-up setting speed by turning the PS IDLE-UP ADJUSTING SCREW.

(f) Race the engine to 2,500 rpm a few seconds, release the throttle and recheck the PS idle-up setting speed.
(g) Reconnect the vacuum hose to the PS idle-up actuator.

ADJUSTMENT OF AIR CONDITIONER IDLE-UP SETTING SPEED [2H M/T]

1. INITIAL CONDITIONS

(a) Air cleaner installed
(b) Normal operating coolant temperature
(c) All accessories switched off
(d) All vacuum lines connected
(e) Valve clearances set correctly
(f) Injection timing set correctly
(g) Idle speed set correctly

2. CONNECT TACHOMETER

3. ADJUST AIR CONDITIONER (A/C) IDLE-UP SETTING SPEED

(a) Start the engine.
(b) Disconnect the vacuum hose from the idle-up actuator and plug the hose end.
(c) Apply vacuum to the idle-up actuator.
(d) Race the engine to 2,500 rpm a few seconds, release throttle and check the A/C idle-up setting speed.

A/C idle-up setting speed: 950 rpm

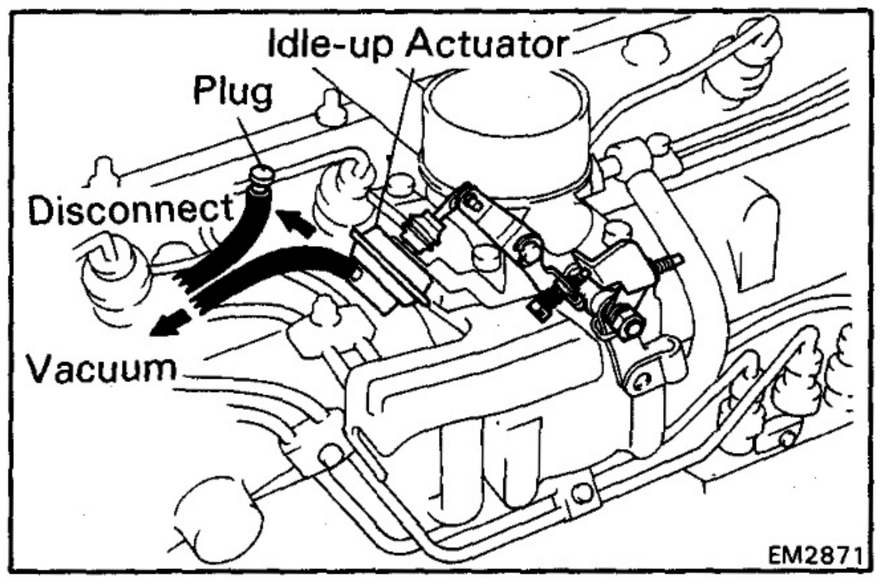

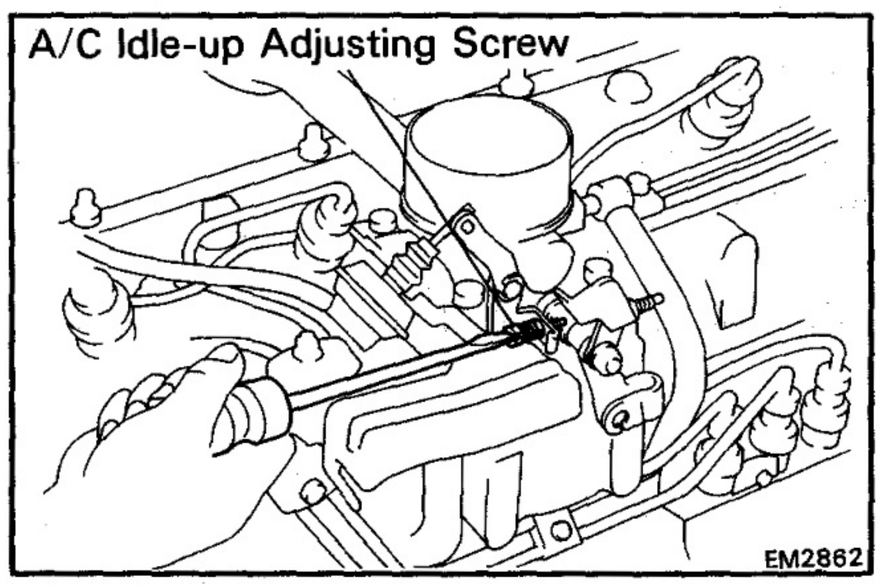

(e) Adjust the A/C idle-up setting speed by turning the A/C IDLE-UP ADJUSTING SCREW.

(f) Race the engine to 2,500 rpm a few seconds, release the throttle and recheck the A/C idle-up setting speed.
(g) Reconnect the vacuum hose to the idle-up actuator.

ADJUSTMENT OF AIR CONDITIONER IDLE-UP SETTING SPEED [2H A/T and 12H-T]

1. INITIAL CONDITIONS

(a) Air cleaner installed

(b) Normal operating coolant temperature

(c) All accessories switched off

(e) Valve clearances set correctly

(f) Injection timing set correctly

(g) Idle speed set correctly

(h) [w/ PS]
PS idle-up setting speed set correctly

(i) Transmission in N range

2. CONNECT TACHOMETER

3. ADJUST AIR CONDITIONER (A/C) IDLE-UP SETTING SPEED

(a) Start the engine.

(b) Disconnect the vacuum hose(s) from the idle-up actuator and plug the hose end(s).

(c) Apply vacuum to the idle-up actuator.

(d) Race the engine to 2,500 rpm a few seconds, release the throttle and check the A/C idle-up setting speed.

A/C idle-up setting speed:
M/T 950 rpm (Transmission in neutral)
A/T 800 rpm (Transmission in D range)

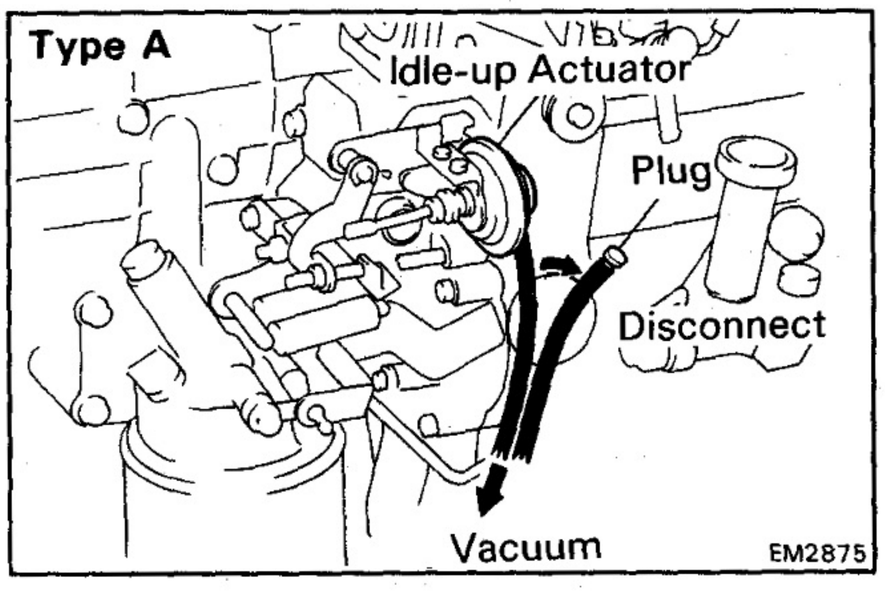

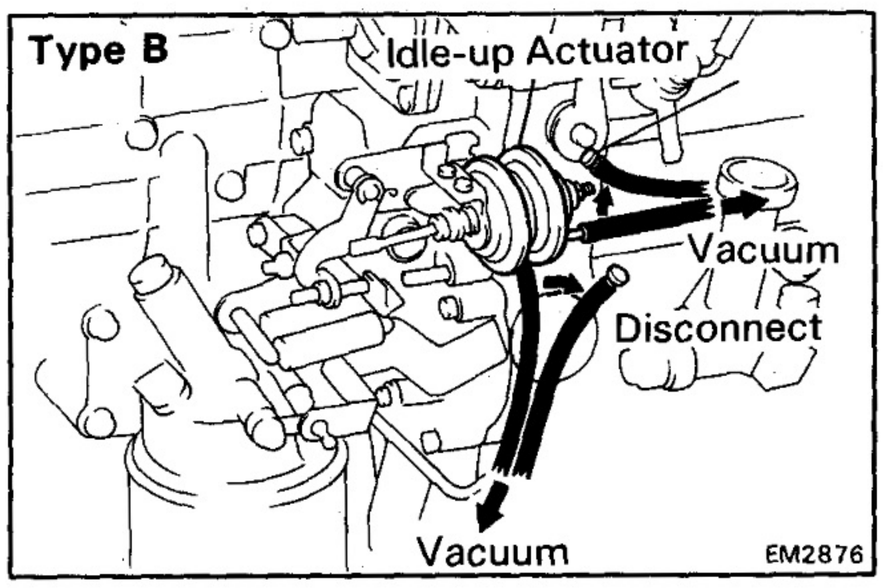

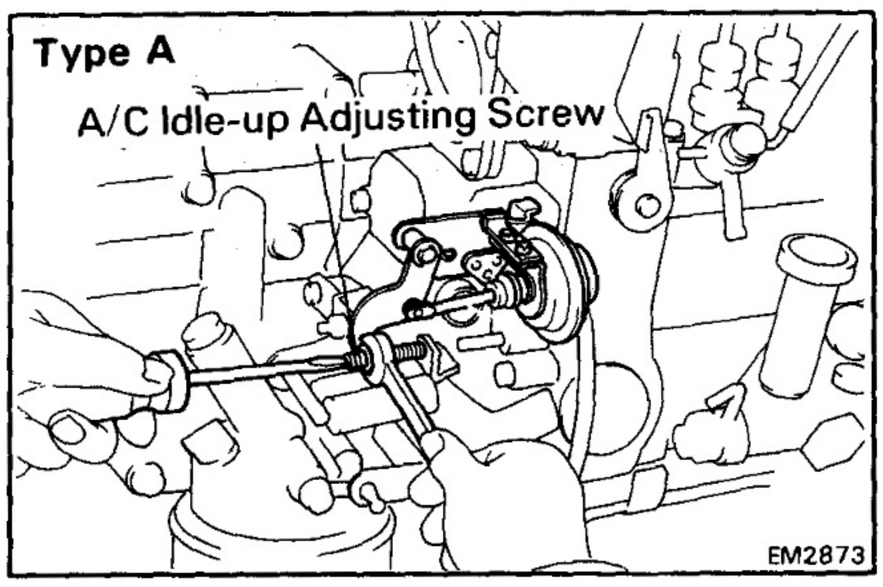

(e) Adjust the A/C idle-up setting speed by turning the A/C IDLE-UP ADJUSTING SCREW.

(f) Race the engine to 2,500 rpm a few seconds, release the throttle and recheck the A/C idle-up setting speed.

(g) Reconnect the vacuum hose(s) to the idle-up actuator.

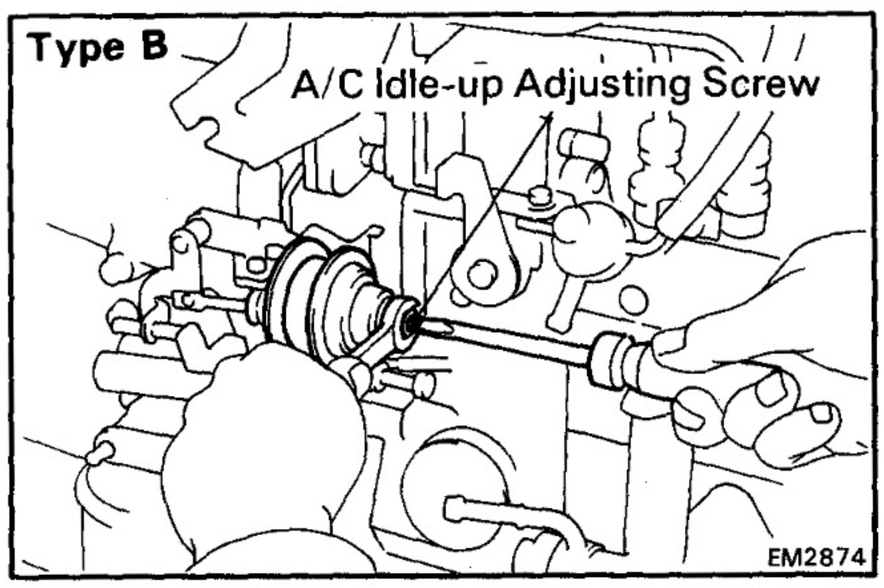

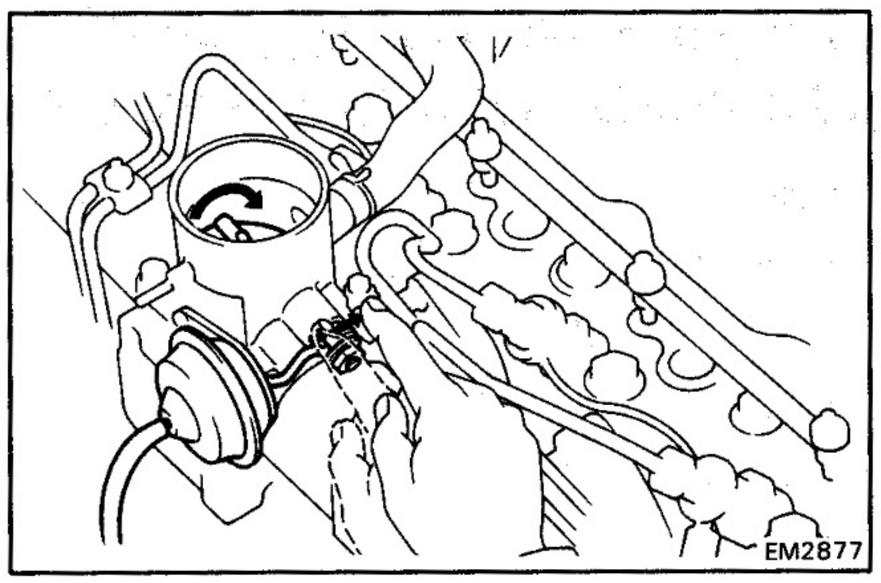

INSPECTION OF INTAKE SHUTTER [2H A/T]

1. INSPECT INTAKE SHUTTER AND ACTUATOR

(a) Fully close the throttle valve, and check that it return smoothly.

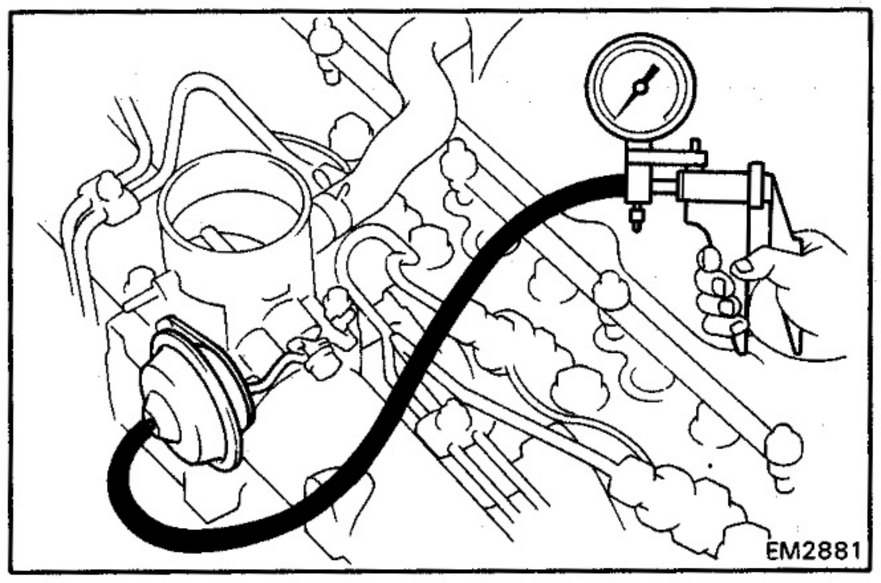

(b) Apply vacuum to the actuator.

(c) Check that the vacuum does not drop immediately.

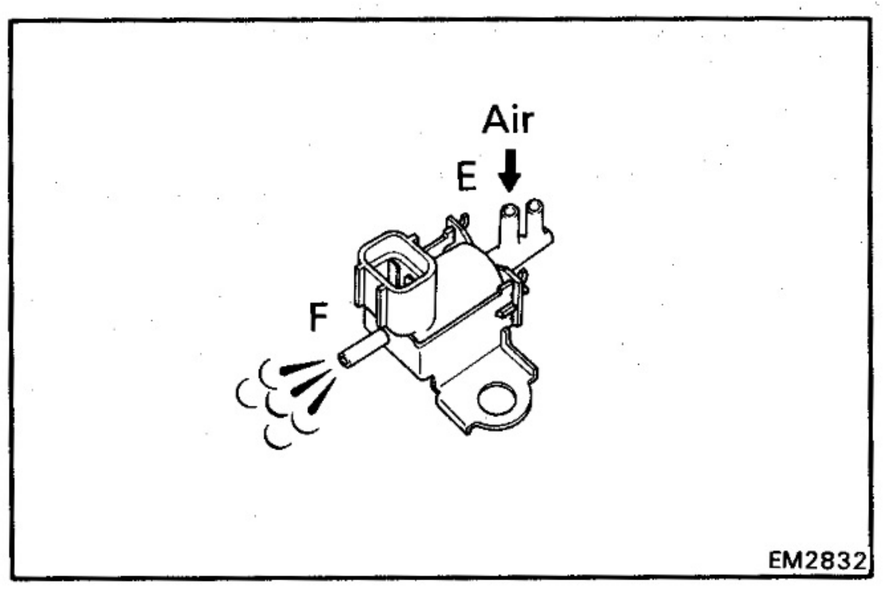

2. INSPECT VACUUM SWITCHING VALVE (VSV)

(a) Remove the VSV.

(b) Check that air flow from pipe E to pipe F.

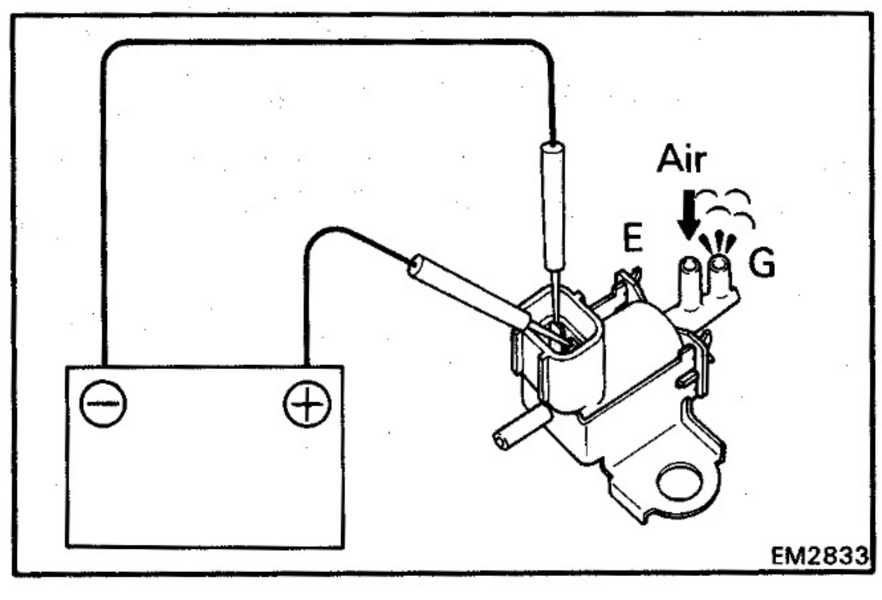

(c) Connect the VSV terminals to the battery terminals.

(d) Check that air flows from pipe E to pipe G.

If operation is not as specified, replace the VSV.

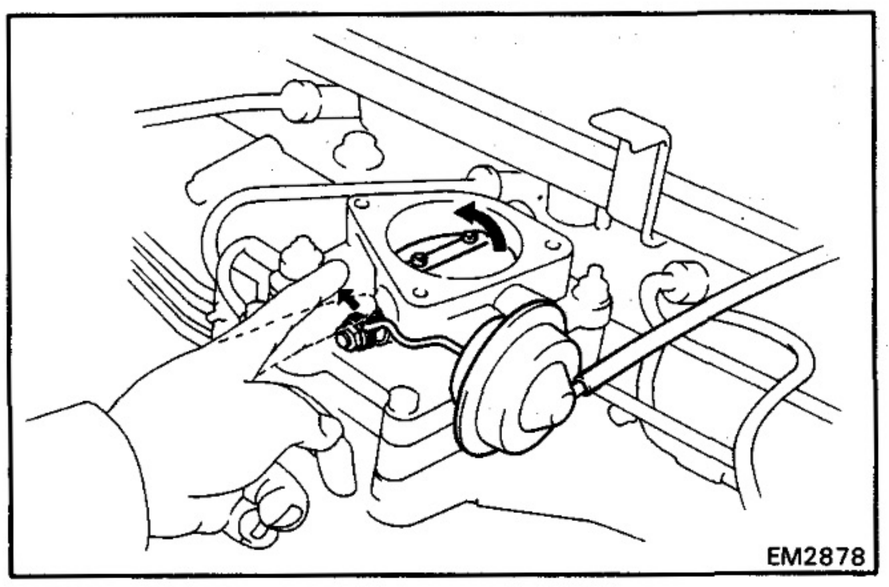

INSPECTION OF INTAKE SHUTTER [12H-T]

1. INSPECT INTAKE SHUTTER AND ACTUATOR

(a) Fully close the throttle valve, and check that it return smoothly.

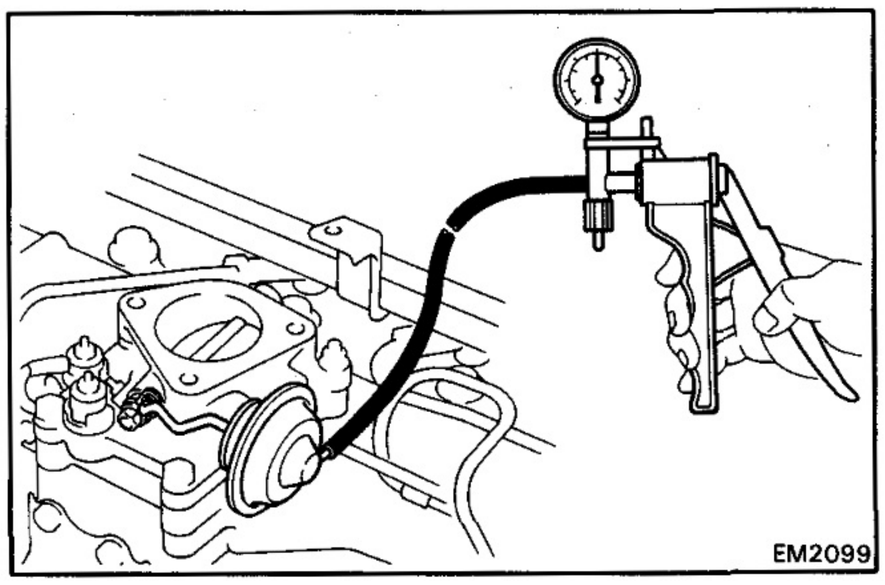

(b) Apply vacuum to the actuator.

(c) Check that the vacuum does not drop immediately.

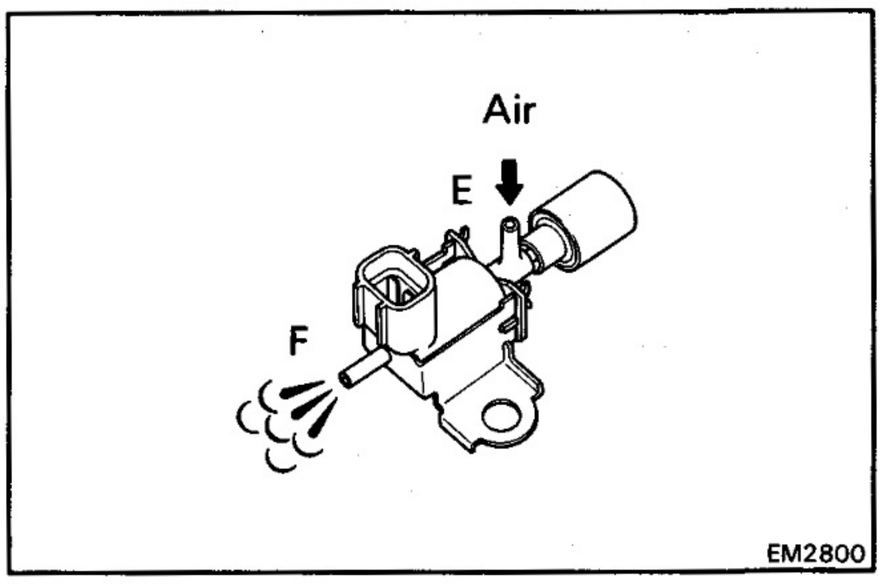

2. INSPECT VACUUM SWITCH VALVE (VSV)

(a) Remove the VSV.

(b) Check that air flow from pipe E to pipe F.

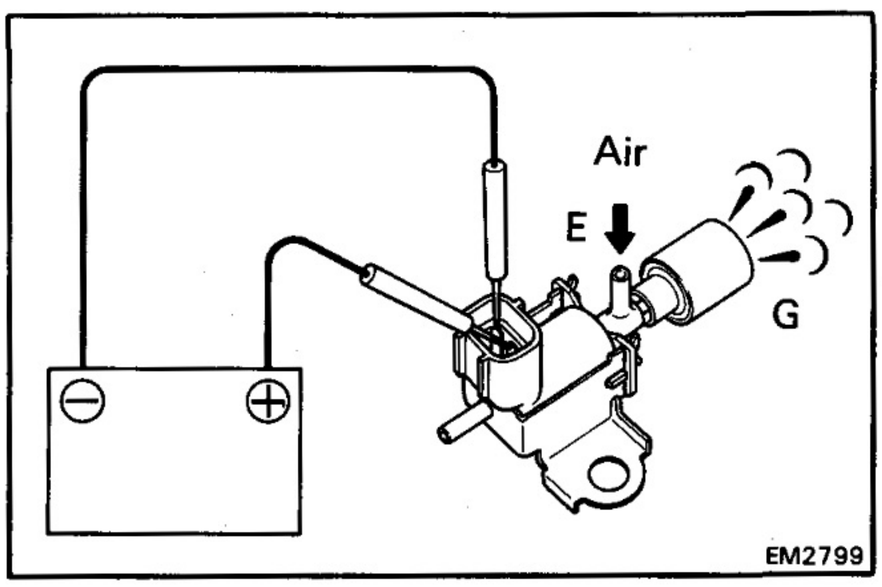

(c) Connect the VSV terminals to the battery terminals.

(d) Check that air flows from pipe E to pipe G.

If operation is not as specified, replace the VSV.

COMPRESSION CHECK [2H]

NOTE: If there is lack of power, excessive oil consumption or poor fuel economy, measure the cylinder compression pressure.

1. **WARM UP AND STOP ENGINE**

2. **REMOVE GLOW PLUGS (See page EM-49)**

   CAUTION: Make sure the load wire is not grounded.

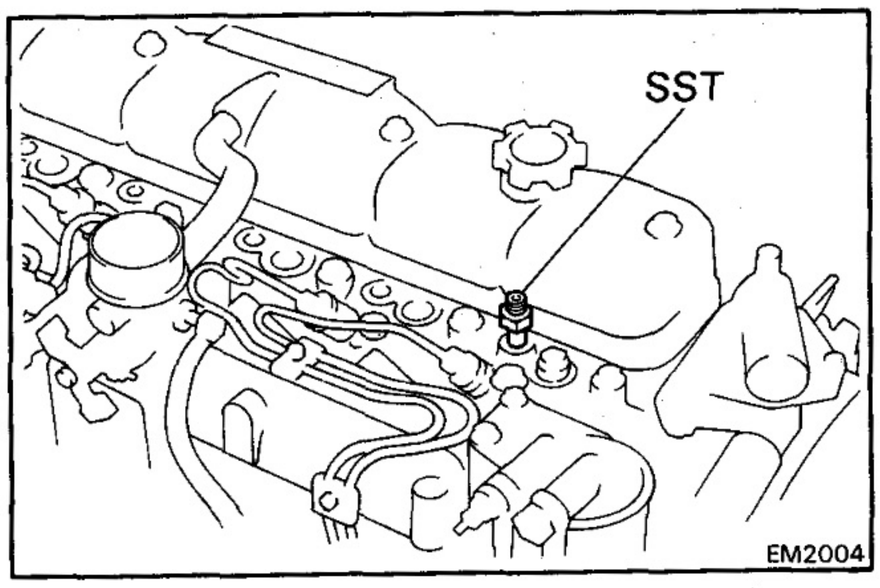

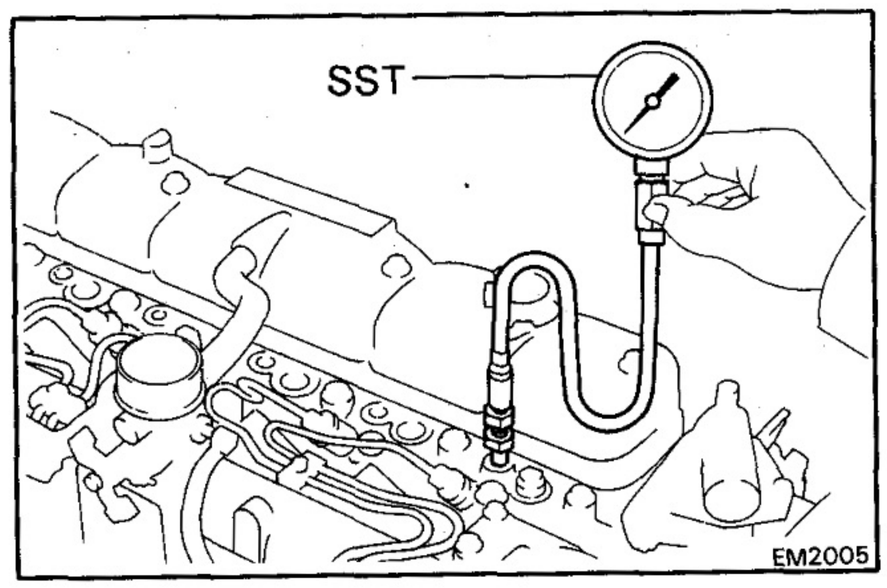

3. **CHECK CYLINDER COMPRESSION PRESSURE**

   (a) Install SST (gauge adapter) to the glow plug hole.

   SST 09992-00023

   (b) Connect SST (compression gauge) to SST (gauge adapter).

   SST 09992-00023

   (c) Fully open the throttle valve.

   (d) While cranking the engine with the starter, measure the compression pressure.

   NOTE: Always use a fully charged battery to obtain engine revolutions of more than 250 rpm.

   (e) Repeat steps (a) through (d) for each cylinder.

   Compression pressure:
   28.0 kg/cm² (398 psi, 2,746 kPa) or more
   Minimum pressure:
   20.0 kg/cm² (284 psi, 1,961 kPa)
   Difference between each cylinder:
   2.0 kg/cm² (~~28~~ 18 psi, 196 kPa) or less

   (f) If the cylinder compression in one or more cylinders is low, pour a small amount of engine oil into the cylinder through the glow plug hole and repeat steps (a) through (d) for the cylinder with low compression.

   - If adding oil helps the compression, chances are that the piston rings and/or cylinder bore are worn or damaged.
   - If pressure stays low, a valve may be sticking or seating improperly, or there may be leakage past the gasket.

4. **INSTALL GLOW PLUGS**
   (See steps 1 to 4 on page FU-8)

COMPRESSION CHECK [12H-T]

NOTE: If there is lack of power, excessive oil consumption or poor fuel economy, measure the cylinder compression pressure.

1. **WARM UP AND STOP ENGINE**

2. **REMOVE INJECTION NOZZLES (See page FU-9)**

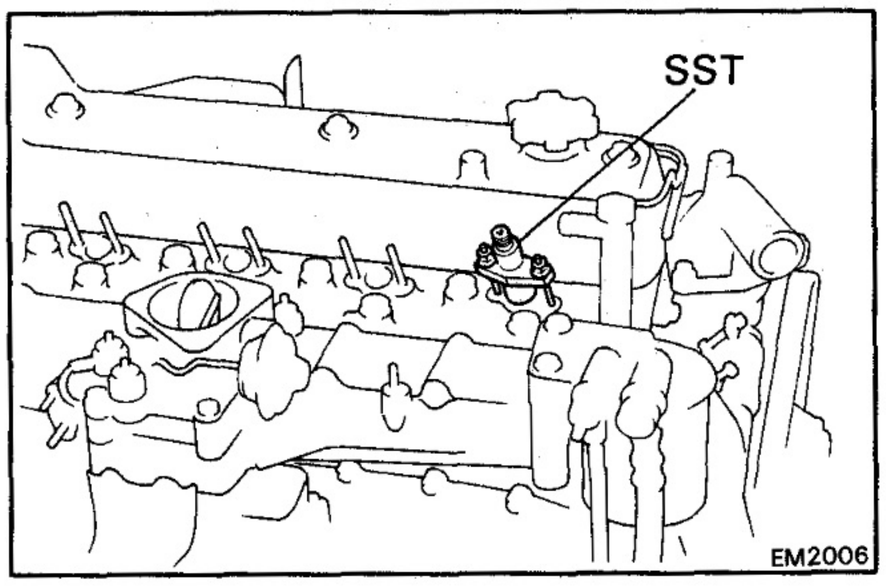

3. **CHECK CYLINDER COMPRESSION PRESSURE**

(a) Install SST (gauge adapter) to the injection nozzle hole.

SST 09992-00023

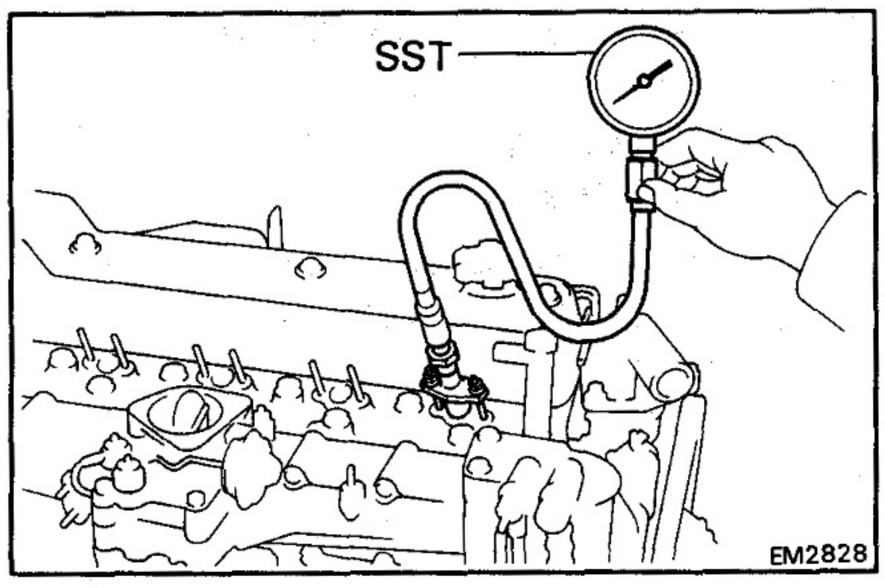

(b) Connect SST (compression gauge) to SST (gauge adapter).

SST 09992-00023

(c) Fully open the throttle valve.

(d) While cranking the engine with the starter, measure the compression pressure.

NOTE: Always use a fully charged battery to obtain engine revolutions of more than 250 rpm.

(e) Repeat steps (a) through (d) for each cylinder.

Compression pressure:
30.0 kg/cm² (427 psi, 2,942 kPa) or more
Minimum pressure:
20.0 kg/cm² (284 psi, 1,961 kPa)
Difference between each cylinder:
2.0 kg/cm² (28 psi, 196 kPa) or less

(f) If the cylinder compression in one or more cylinders is low, pour a small amount of engine oil into the cylinder through the injection nozzle hole and repeat steps (a) through (d) for the cylinder with low compression.

- If adding oil helps the compression, chances are that the piston rings and/or cylinder bore are worn or damaged.
- If pressure stays low, a valve may be sticking or seating improperly, or there may be leakage past the gasket.

4. **INSTALL INJECTION NOZZLES**
(See steps 1 to 6 on pages FU-14 and 15)

TURBOCHARGER [12H-T]

CAUTION:

- **Do not stop the engine immediately after pulling a trailer or high speed or uphill driving. Idle the engine 20 – 120 seconds, depending on the severity of the driving condition.**
- **Avoid sudden racing or acceleration immediately after starting a cold engine.**
- **If the turbocharger is defective and must be replaced, first check for the cause of the defect in reference to the following items and replace parts if necessary:**

  Engine oil level and quality

  Conditions under which turbocharger was used

  Oil lines leading to turbocharger

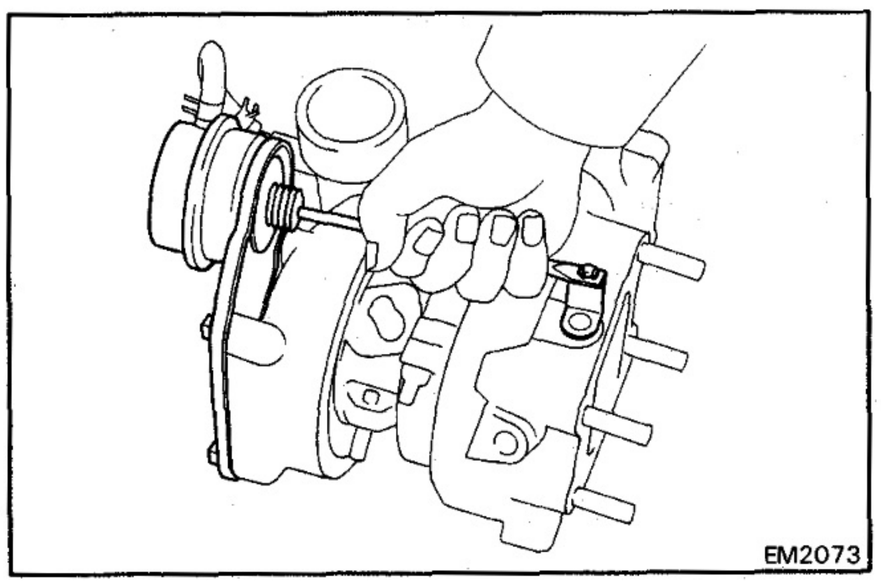

EM2073

- **Use caution when removing and reinstalling the turbocharger assembly. Do not drop it or bang it against anything or grasp it by easily-deformed parts, such as the actuator or rod, when moving.**
- **Before removing the turbocharger, plug the intake and exhaust pots and oil inlet to prevent entry of dirt or other foreign material.**

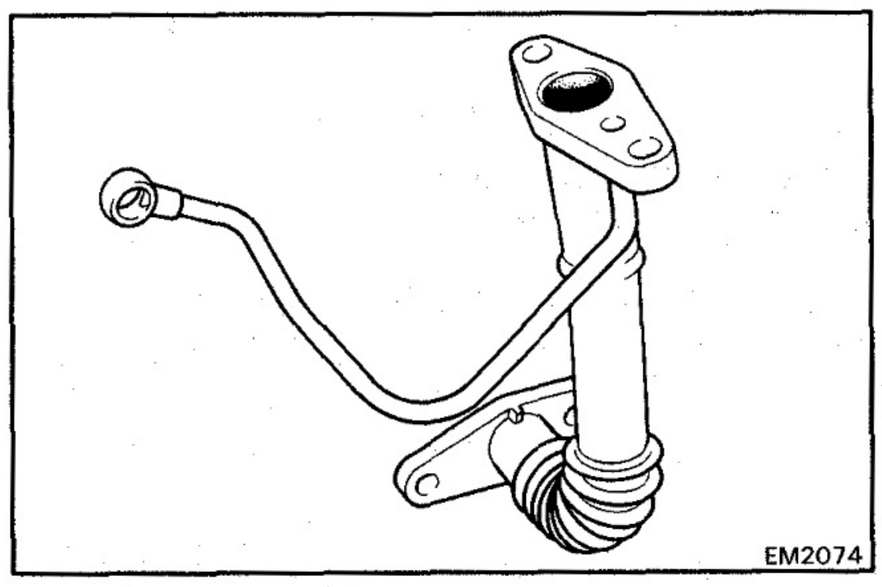

EM2074

- **If replacing the turbocharger, check for accumulation of sludge particles in the oil pipes and, if necessary, replace the oil pipes.**
- **Completely remove the gaskets adhered to the lubrication oil pipe flanged and turbocharger oil flange.**
- **If replacing bolts or nuts, do so only with the specified new ones to guard against breakage or deformation.**

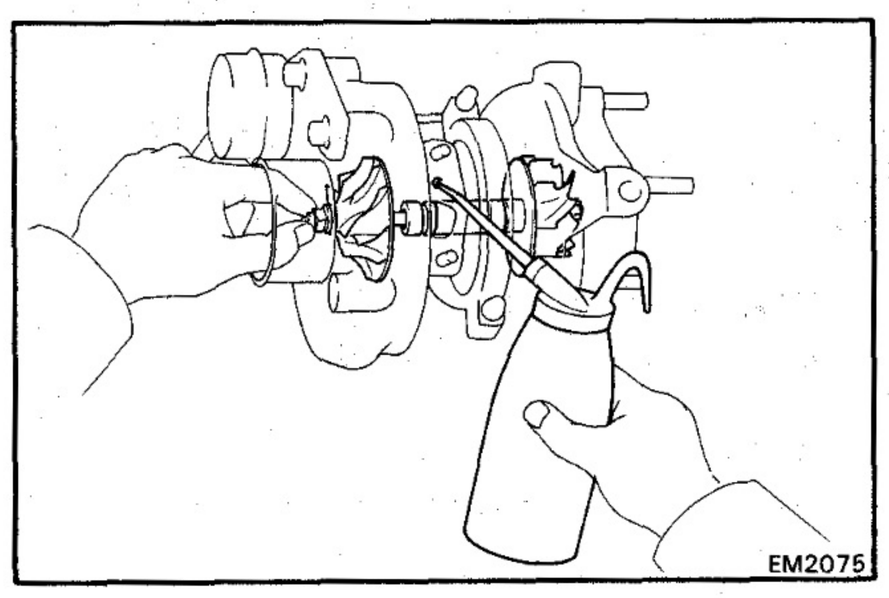

EM2075

- **If replacing the turbocharger, put 20 cc (1.2 cu in.) of oil into the turbocharger oil inlet and turn the impeller wheel by hand to spread oil to the bearing.**
- **If overhauling or replacing the engine, cut the fuel supply and ignition function after reassembly and crank the engine for 30 seconds to distribute oil throughout the engine. Then allow the engine to idle for 60 seconds.**

ON-VEHICLE INSPECTION OF TURBOCHARGER

1. INSPECT INTAKE AIR SYSTEM

Check for leakage or clogging between the air cleaner and turbocharger inlet and between the turbocharger outlet and cylinder head.

- Clogged air cleaner .... Clean or replace the element
- Hoses collapsed or deformed .... Repair or replace
- Leakage from connections .... Check each connection and repair
- Cracks in components .... Check and replace

2. INSPECT EXHAUST SYSTEM

Check for leakage or clogging between the cylinder head and turbocharger inlet and between the turbocharger outlet and exhaust pipe.

- Deformed components .... Repair or replace
- Foreign material in passages .... Remove
- Leakage from components .... Repair or replace
- Cracks in components .... Check and replace

3. INSPECT OPERATION OF ACTUATOR AND WASTE GATE VALVE

(a) Disconnect the actuator hose.

(b) Using SST (turbocharger pressure gauge), apply about 0.68 kg/cm² (9.7 psi, 67 kPa) of pressure to the actuator and check that the rod moves.

SST 09992-00240

CAUTION: Never apply more than 0.8 kg/cm² (11.4 psi, 78 kPa) of pressure to the actuator.

If the rod does not move, replace the turbocharger assembly.

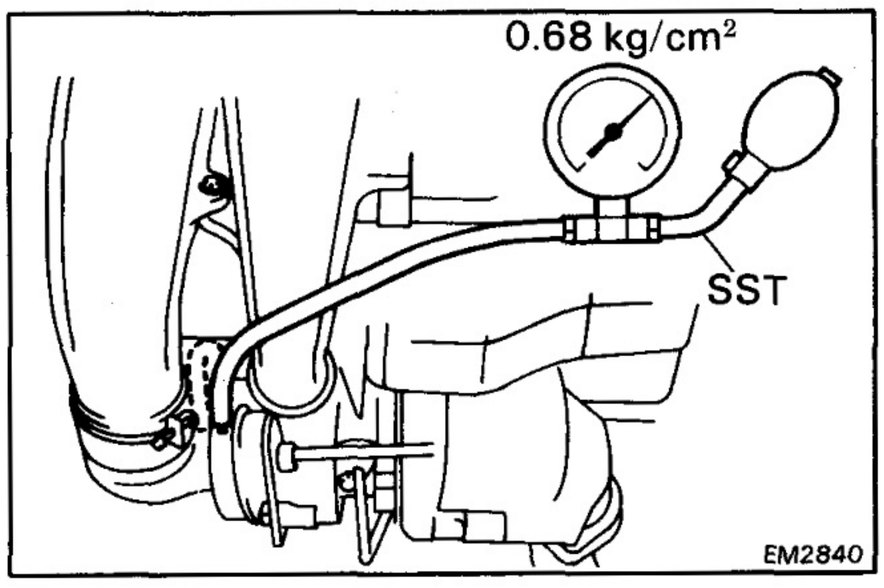

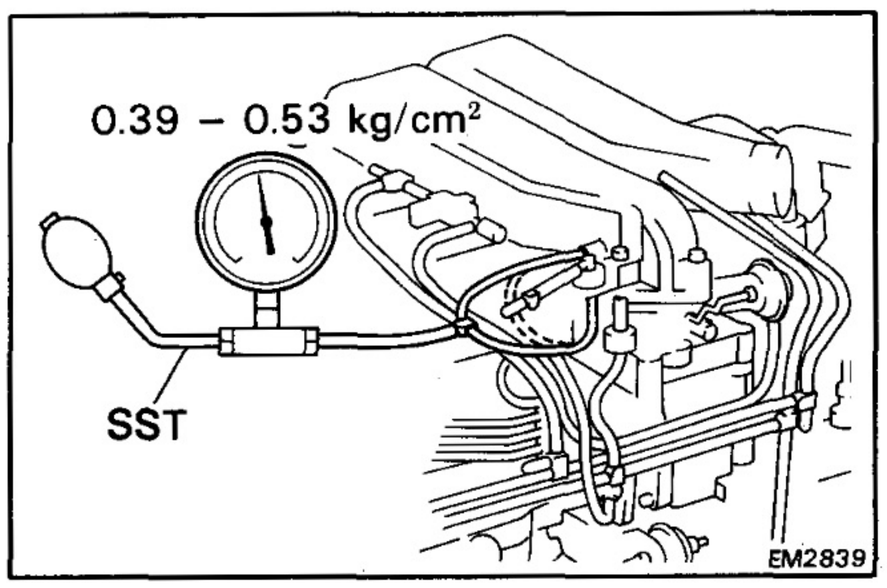

4. INSPECT TURBOCHARGING PRESSURE

(a) Warm up the engine.

(b) Connect a 3-way union to the intake pipe pressure hose and install SST (turbocharger pressure gauge) to it.

SST 09992-00240

(c) Press in the clutch pedal, then press the accelerator pedal down as far as it will go. Measure the turbocharging pressure at maximum speed (4,050 – 4,200 rpm).

Turbocharging pressure: 0.39 – 0.53 kg/cm² (5.5 – 7.3 psi, 38 – 52 kPa)

If the pressure is less than specification, check the intake air and exhaust systems for leakage. If there is no leakage, replace the turbocharger assembly.

If the pressure is above specification, check if the actuator hose is disconnected or cracked. If not replace the tubocharger assembly.

COMPONENTS

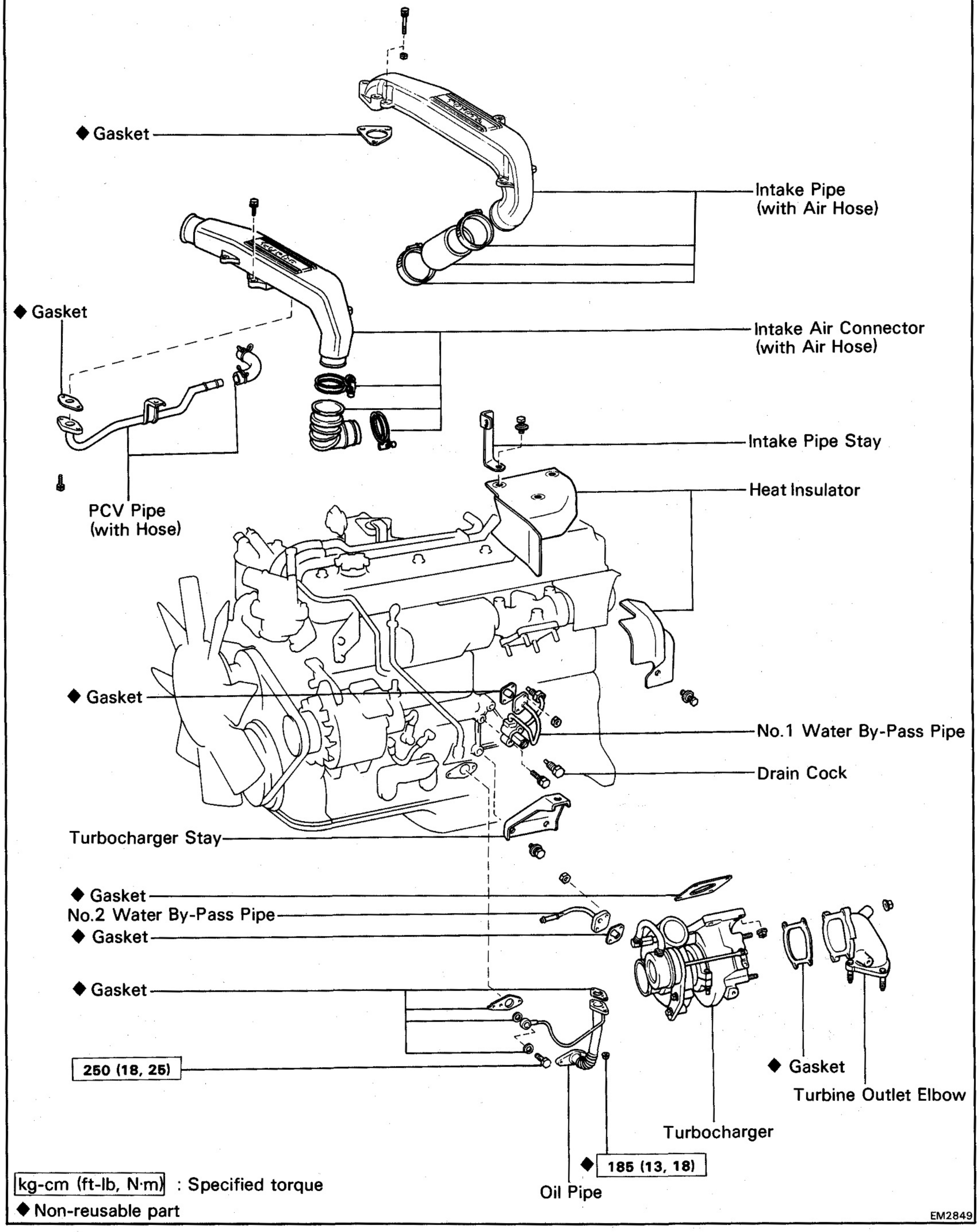

kg-cm (ft-lb, N·m) : Specified torque

◆ Non-reusable part

EM2849

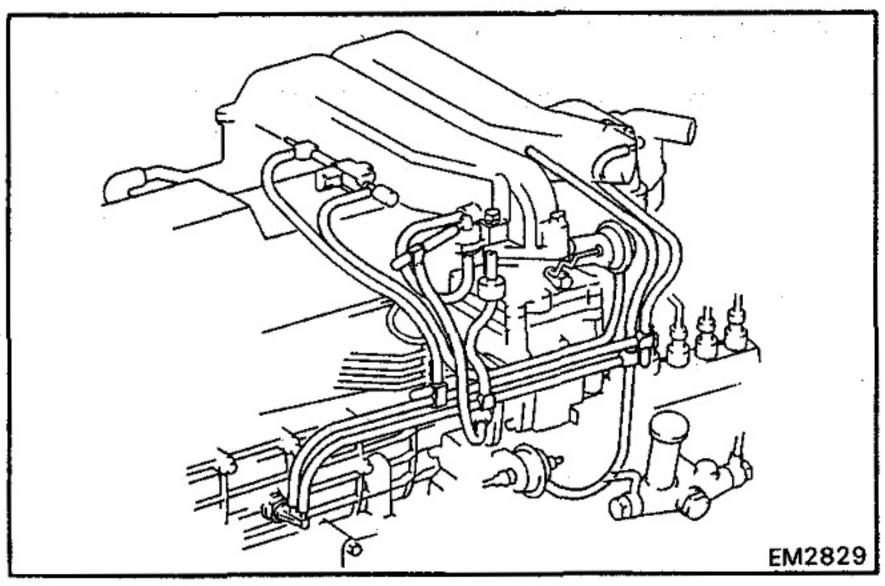

REMOVAL OF TURBOCHARGER

(See page EM-39)

1. DRAIN ENGINE COOLANT (See page CO-3)

2. REMOVE VACUUM HOSES, VSV AND GAS FILTER

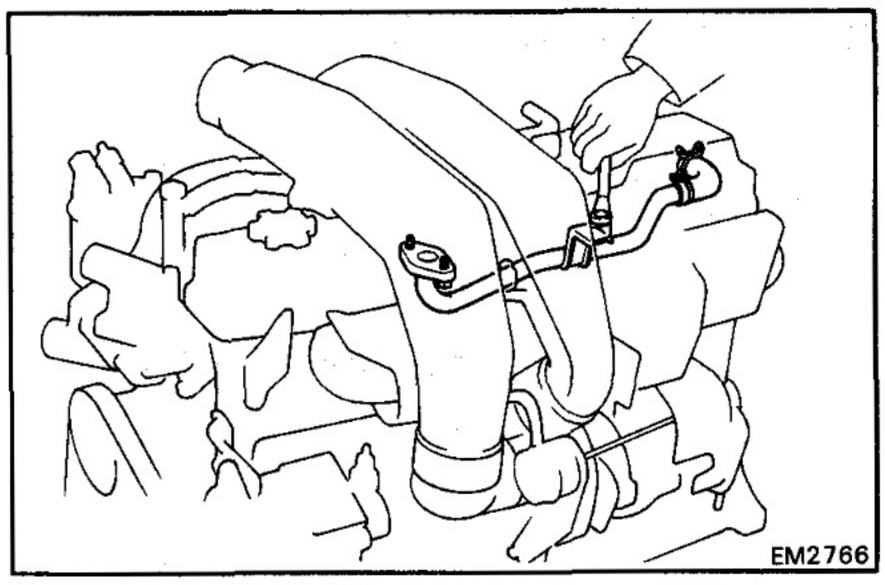

3. REMOVE PCV PIPE
   (a) Remove the three bolts.
   (b) Disconnect the PCV hose, and remove the PCV pipe and gasket together with the PCV hose.

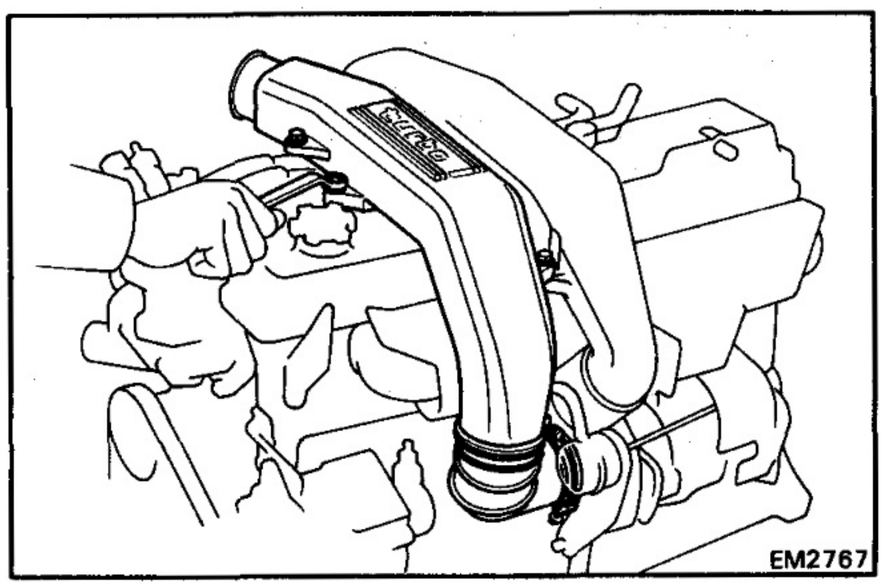

4. REMOVE INTAKE AIR CONNECTOR
   (a) Remove the three bolts.
   (b) Disconnect the air hose, and remove the intake air connector together with the air hose.

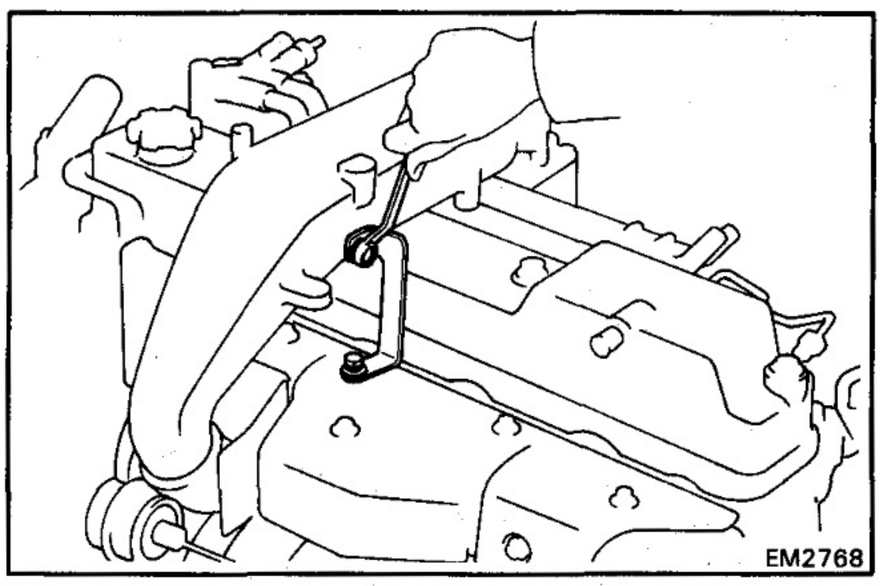

5. REMOVE INTAKE PIPE
   (a) Remove the two bolts and intake pipe stay.

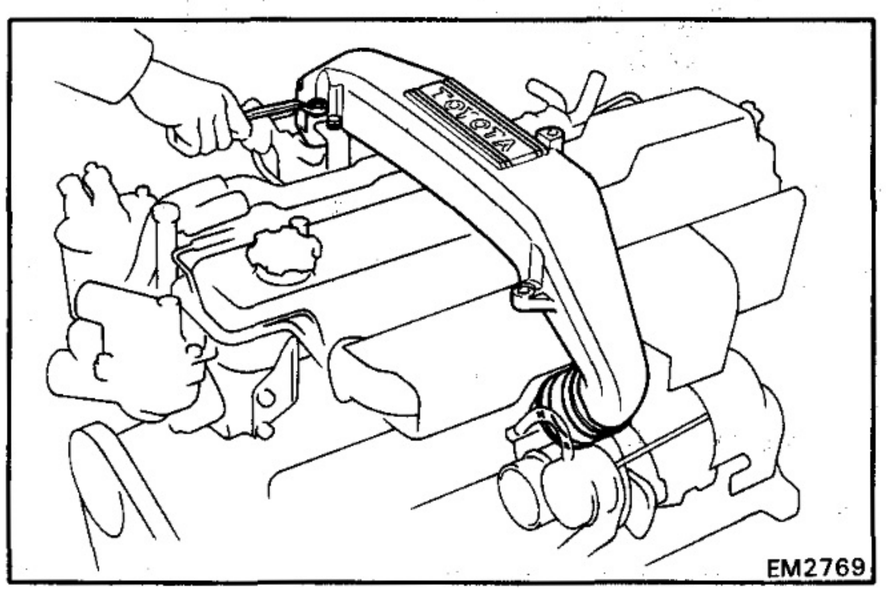

   (b) Remove the four bolts and nut.
   (c) Disconnect the air hose, and remove the intake pipe and gasket together with the air hose.

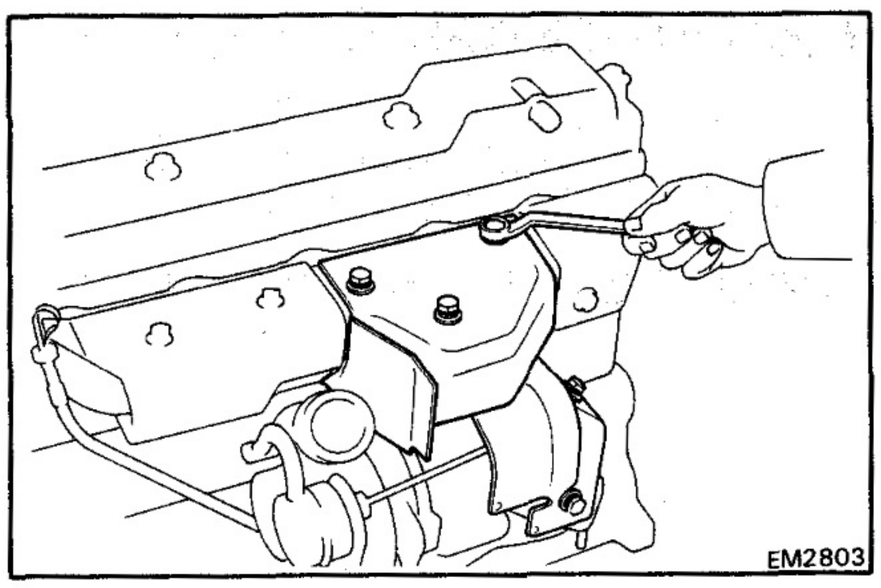

6. REMOVE HEAT INSULATORS

Remove the five bolts and two heat insulators.

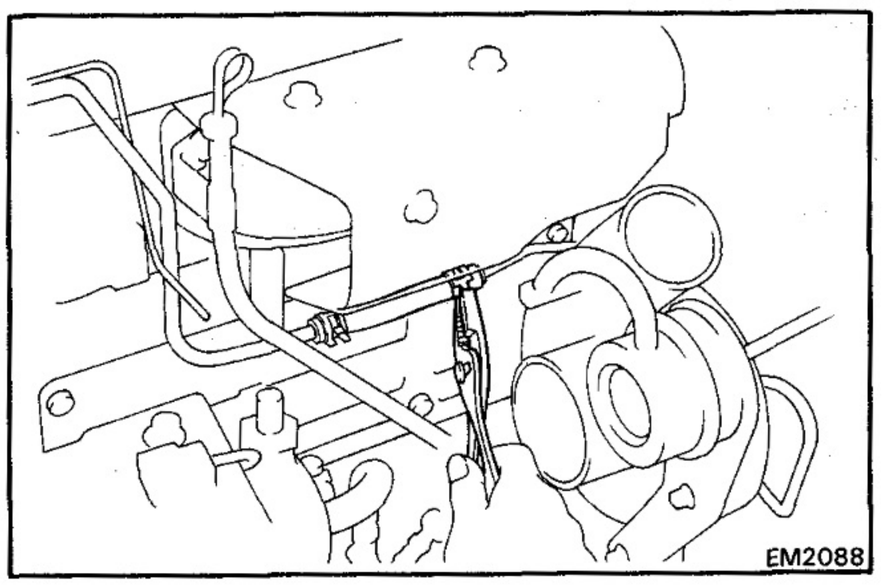

7. DISCONNECT HOSE FROM NO.2 WATER BY-PASS PIPE

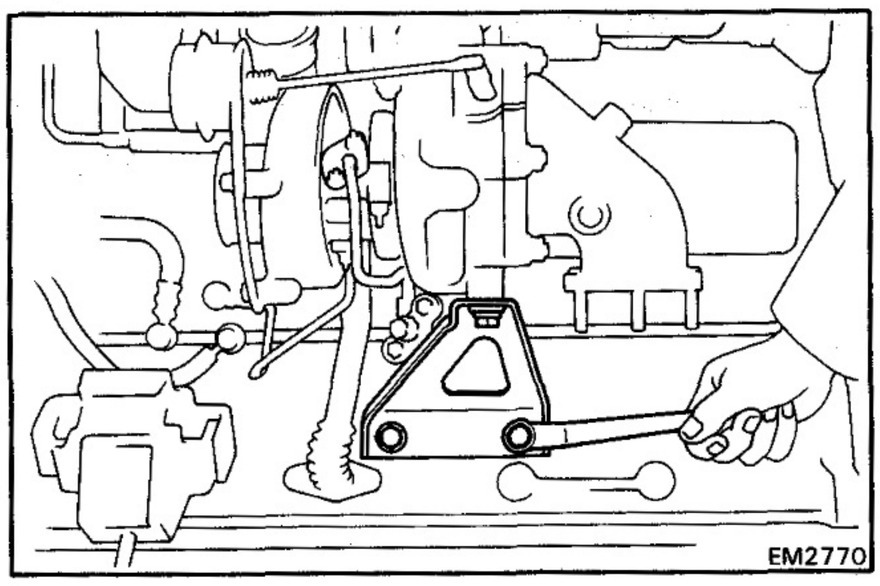

8. REMOVE TURBOCHARGER STAY

Remove the three bolts and stay.

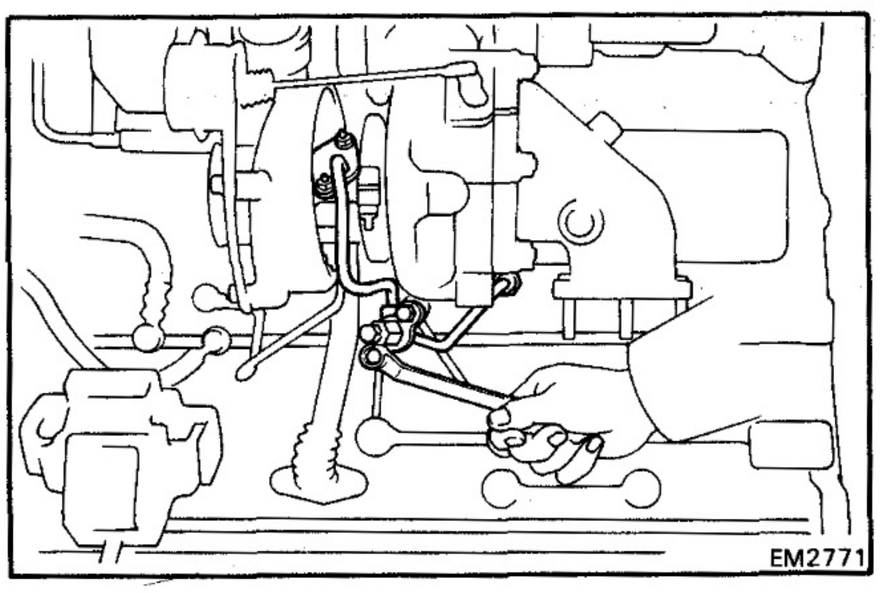

9. REMOVE NO.1 WATER BY-PASS PIPE

(a) Loosen the union nut.

(b) Remove the two nuts, two bolts, by-pass pipes and two gaskets.

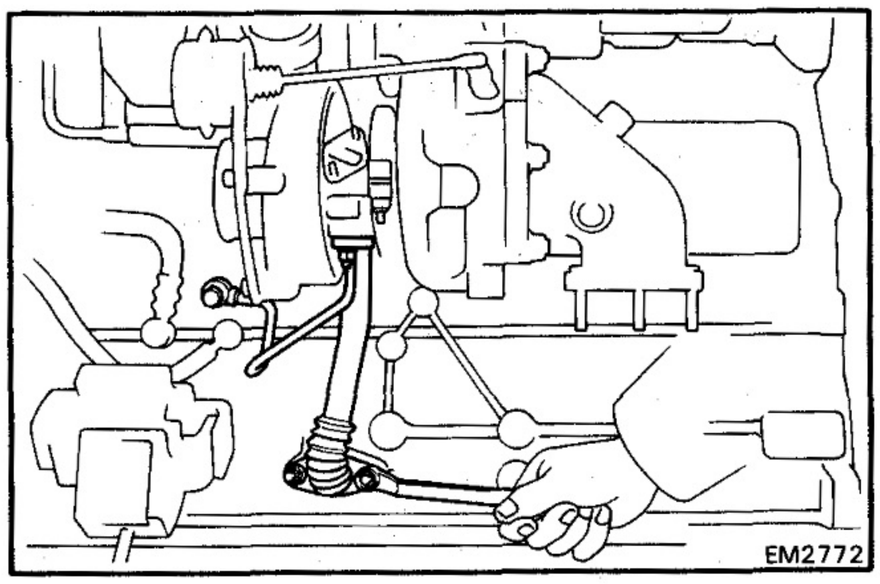

10. REMOVE TURBOCHARGER

(a) Remove the union bolt and two gaskets of the oil pipe.

(b) Remove the two nuts holding the oil pipe to the cylinder block.

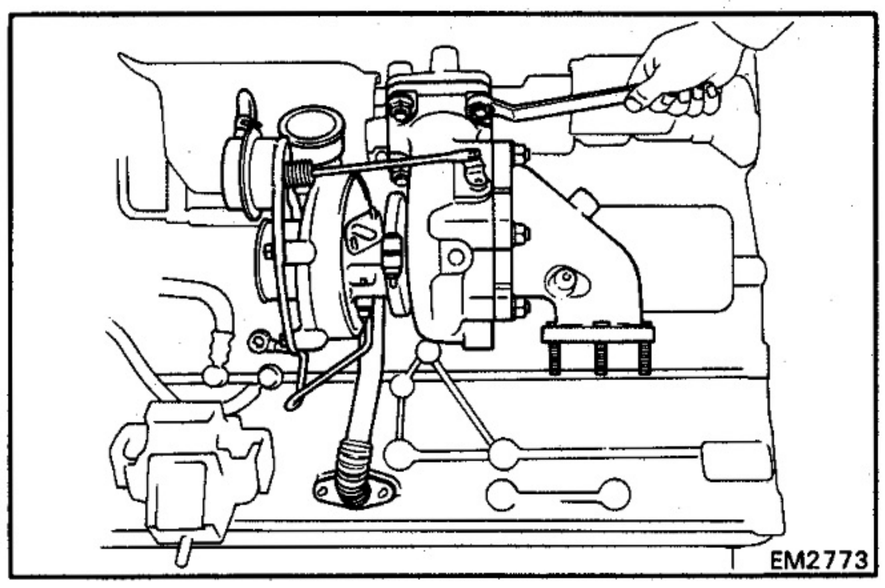

(c) Remove the four nuts holding the turbocharger to the exhaust manifold.

(d) Remove the turbocharger and gasket together with the oil pipe.

(e) Remove the gasket of the oil pipe from the cylinder block.

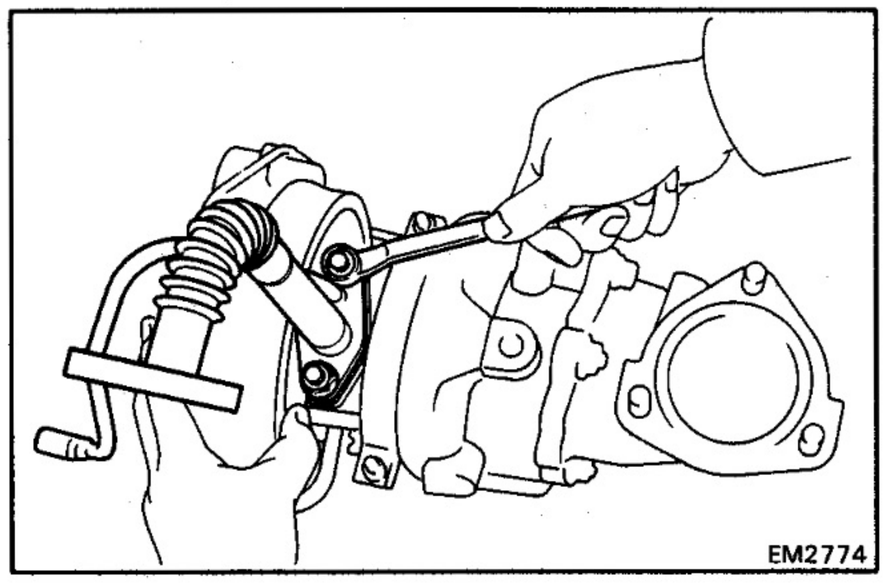

11. REMOVE OIL PIPE

Remove the two nuts, oil pipe and gasket.

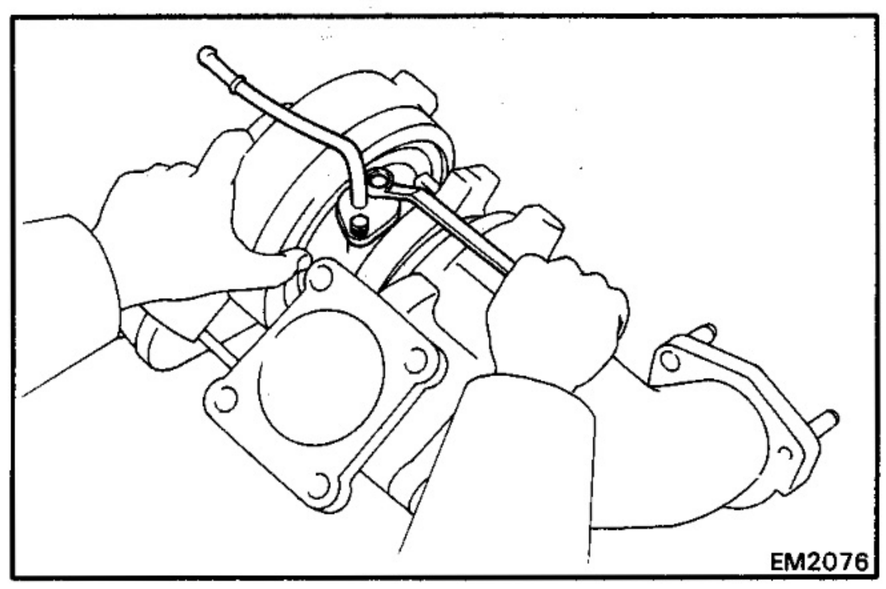

12. REMOVE NO.2 WATER BY-PASS PIPE

Remove the two nuts, by-pass pipe and gasket.

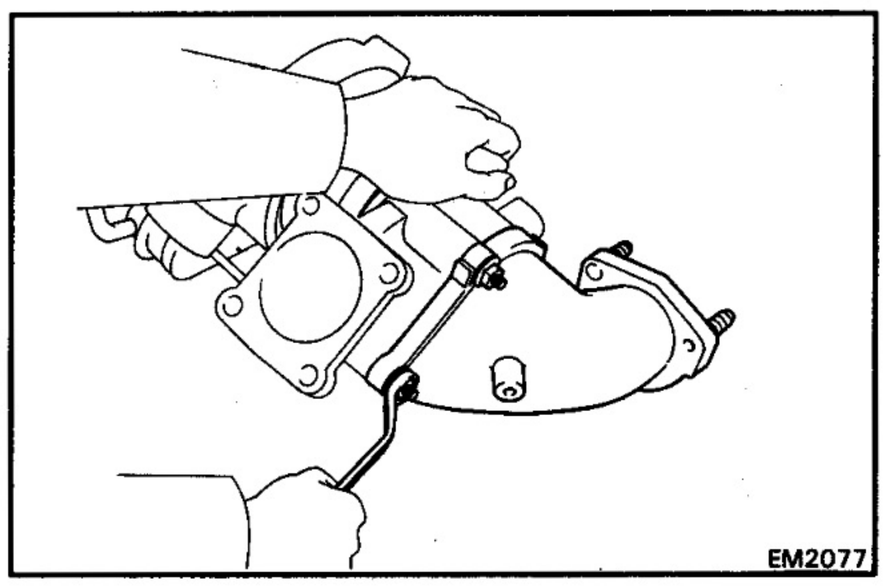

13. REMOVE TURBINE OUTLET ELBOW

Remove the four nuts, turbine outlet elbow and gasket.

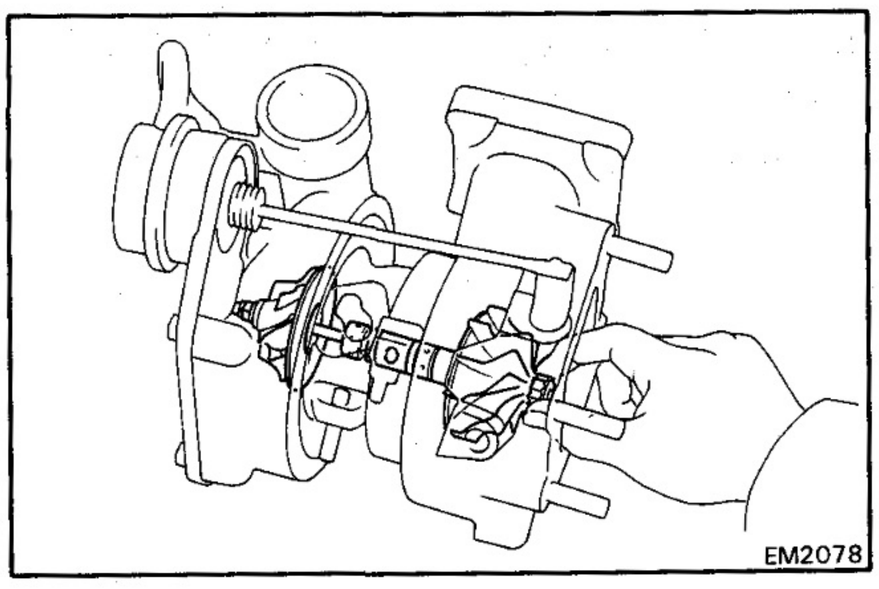

INSPECTION OF TURBOCHARGER

1. INSPECT IMPELLER WHEEL ROTATION

Grasp the edge of the turbine wheel and tune it. Check that the impeller wheel turns smoothly.

If the impeller wheel does not turn or if it turns with a drag, replace the turbocharger assembly.

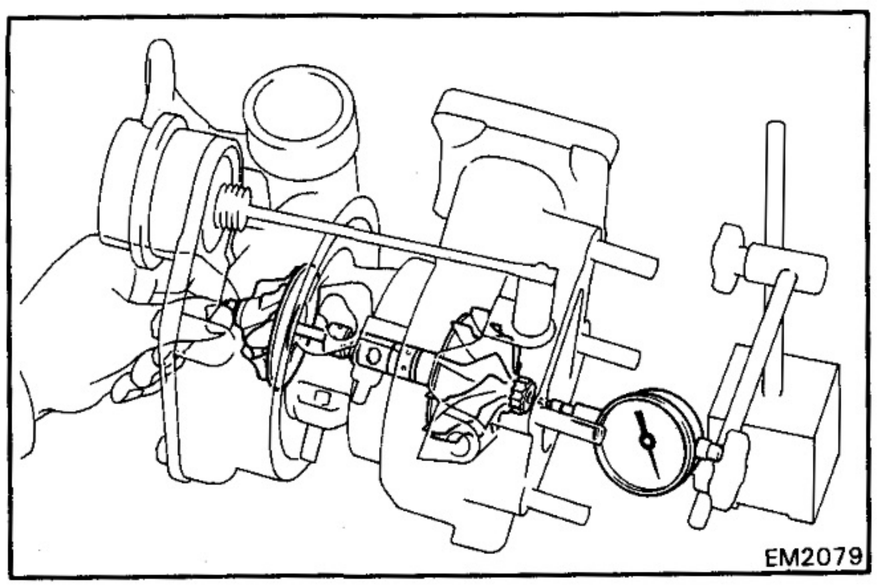

2. INSPECT AXIAL PLAY OF IMPELLER WHEEL

Insert a dial indicator into the exhaust side, hold the turbine wheel edge by hand and check the axial play.

Axial play: 0.13 mm (0.0051 in.) or less

If the axial play is not within specification, replace the turbocharger assembly.

INSTALLATION OF TURBOCHARGER

(See page EM-39)

CAUTION: After replacing a turbocharger assembly, pour about 20 cc (1.2 cu in.) of new oil into the oil inlet and then turn the impeller wheel by hand to splash oil on the bearing.

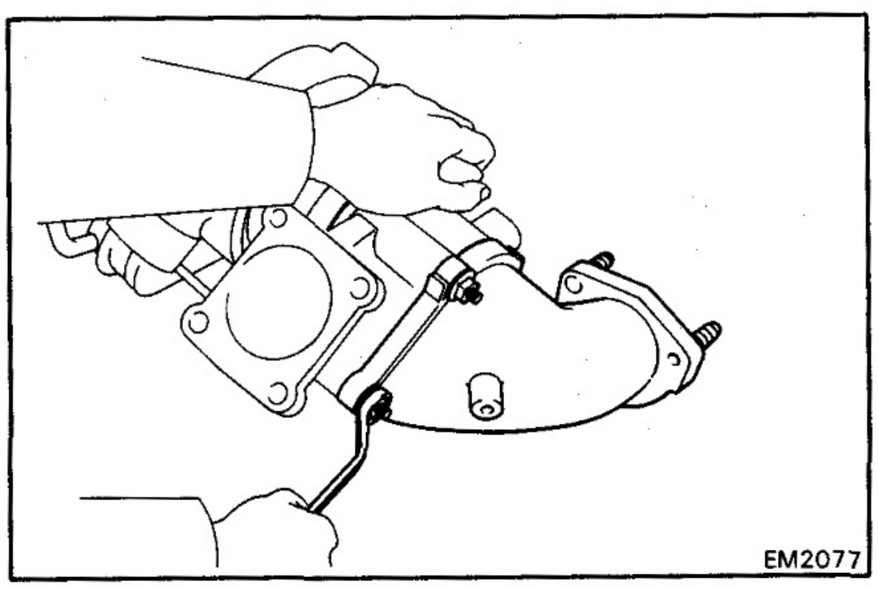

1. INSTALL TURBINE OUTLET ELBOW

Install a new gasket and the turbine outlet elbow with the four nuts.

Torque: 530 kg-cm (38 ft-lb, 52 N·m)

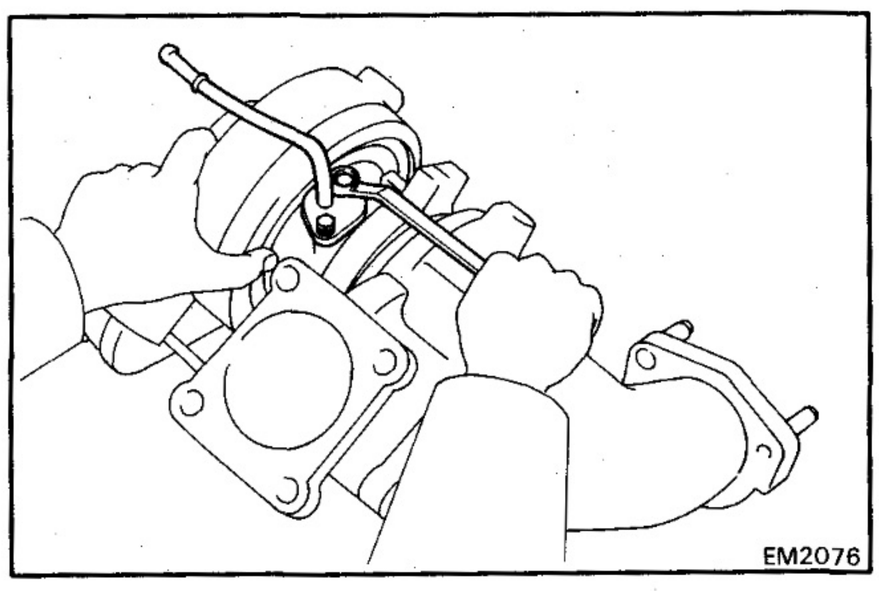

2. INSTALL NO.2 WATER BY-PASS PIPE

Install a new gasket and the by-pass pipe with the two nuts.

Torque: 75 kg-cm (65 in.-lb, 7.1 N·m)

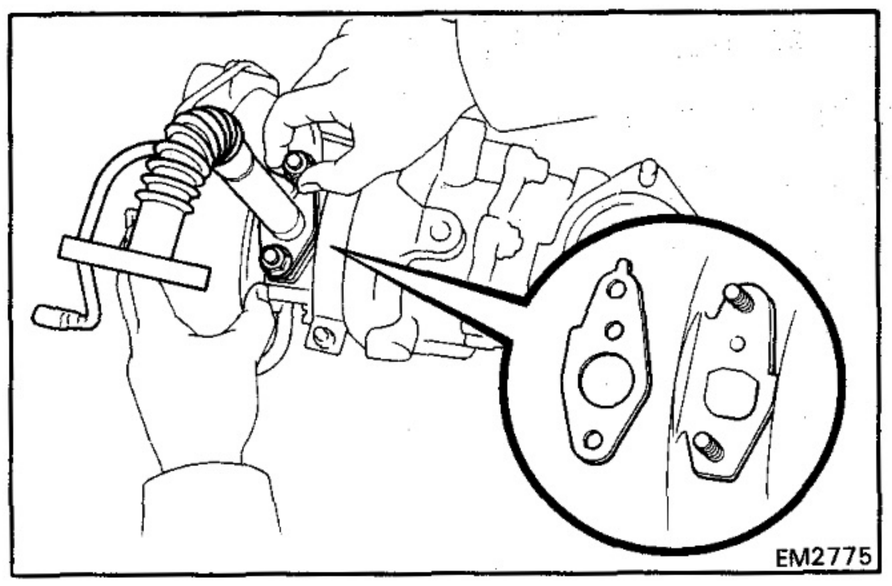

3. INSTALL OIL PIPE

Install a new gasket and the oil pipe with new two nuts. Do not torque the nuts yet.

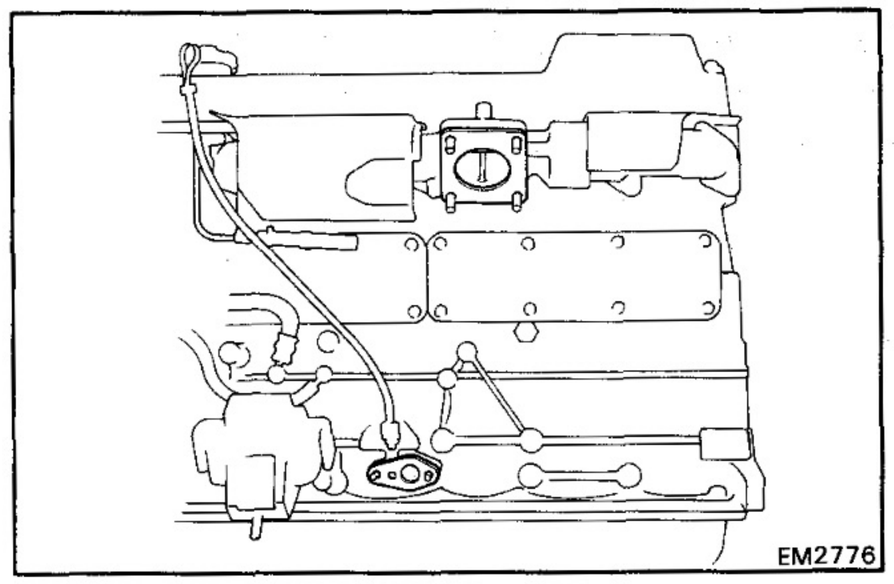

4. INSTALL TURBOCHARGER

(a) Install new two gaskets to the cylinder block and exhaust manifold.

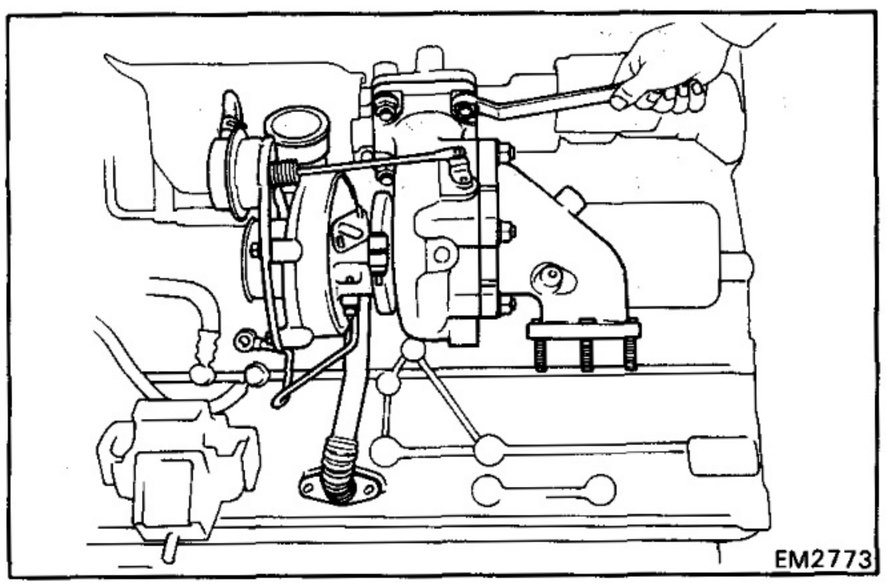

(b) Install the turbocharger and oil pipe together.

(c) Install the four nuts holding the turbocharger to the exhaust manifold.

Torque: 530 kg-cm (38 ft-lb, 52 N·m)

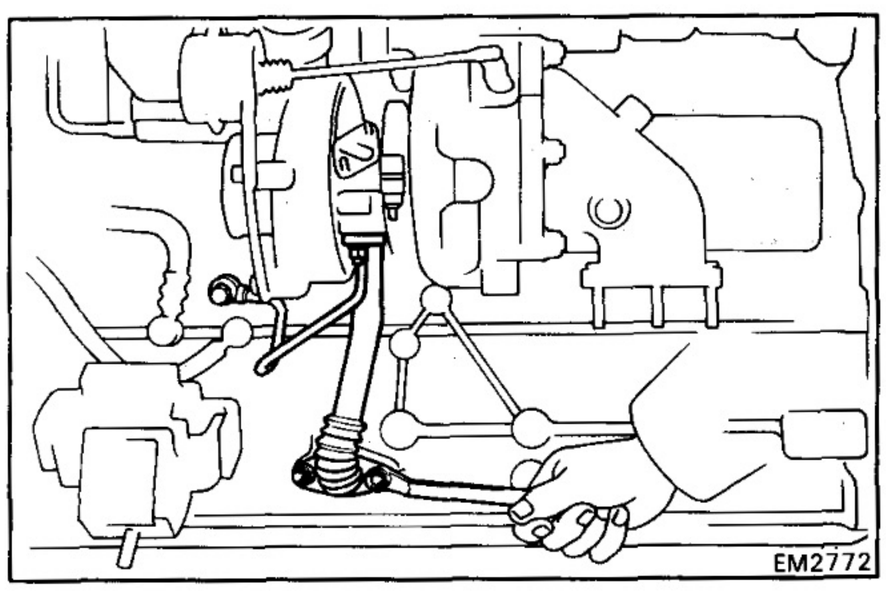

(d) Install new two nuts holding the oil pipe to the cylinder block. Torque the four oil pipe nuts.

Torque: 185 kg-cm (13 ft-lb, 18 N·m)

(e) Install new two gaskets and the union bolt of the oil pipe. Torque the union bolt.

Torque: 250 kg-cm (18 ft-lb, 25 N·m)

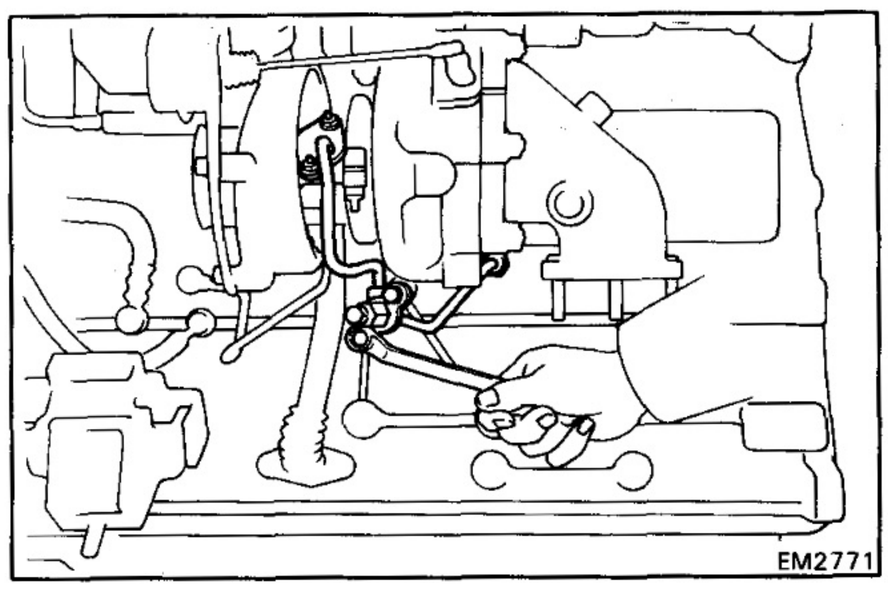

5. INSTALL NO.1 WATER BY-PASS PIPE

(a) Install a new gasket and the by-pass pipe with the two nuts and two bolts.

Torque:

Nut 75 kg-cm (65 in.-lb, 7.1 N·m)
Bolt 175 kg-cm (13 ft-lb, 17 N·m)

(b) Install the union nut.

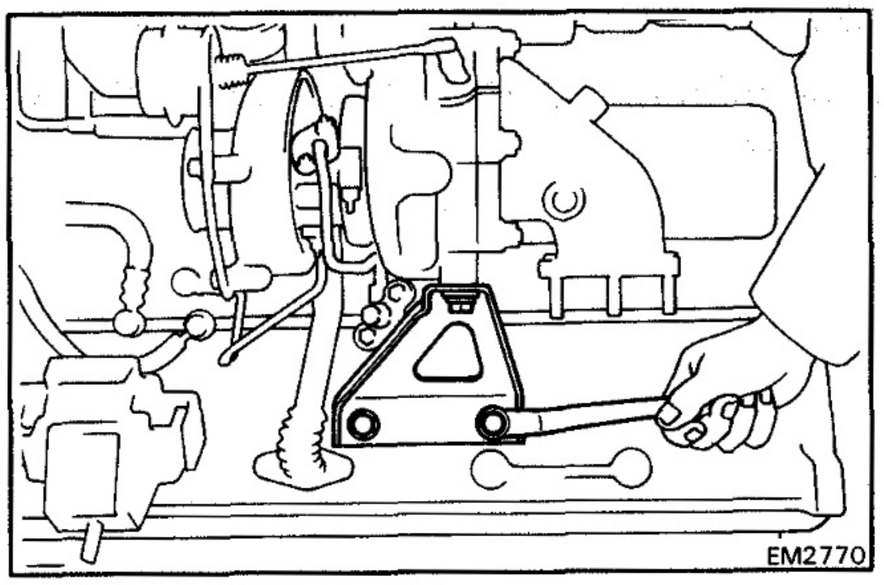

6. INSTALL TURBOCHARGER STAY

Install the stay with the three bolts.

Torque: 700 kg-cm (51 ft-lb, 69 N·m)

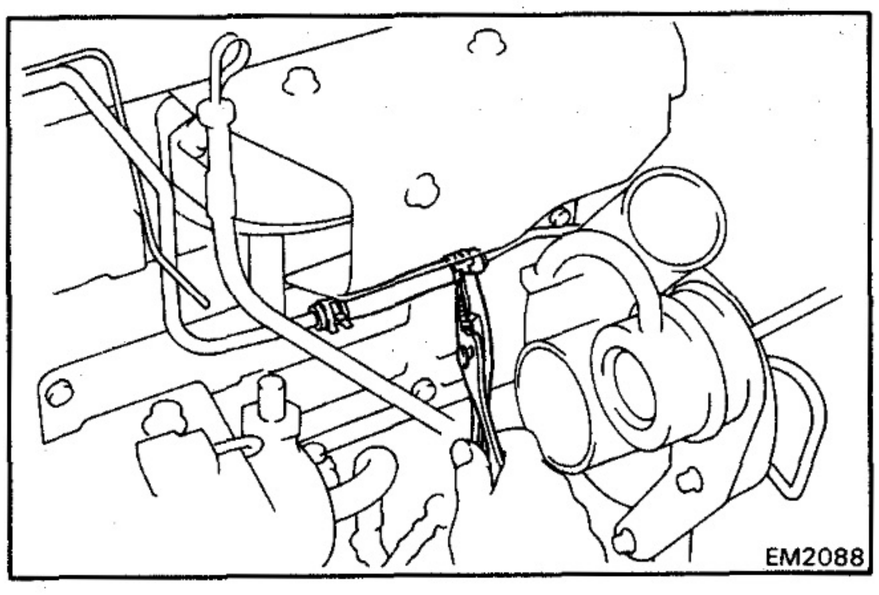

7. CONNECT HOSE TO NO.2 WATER BY-PASS PIPE

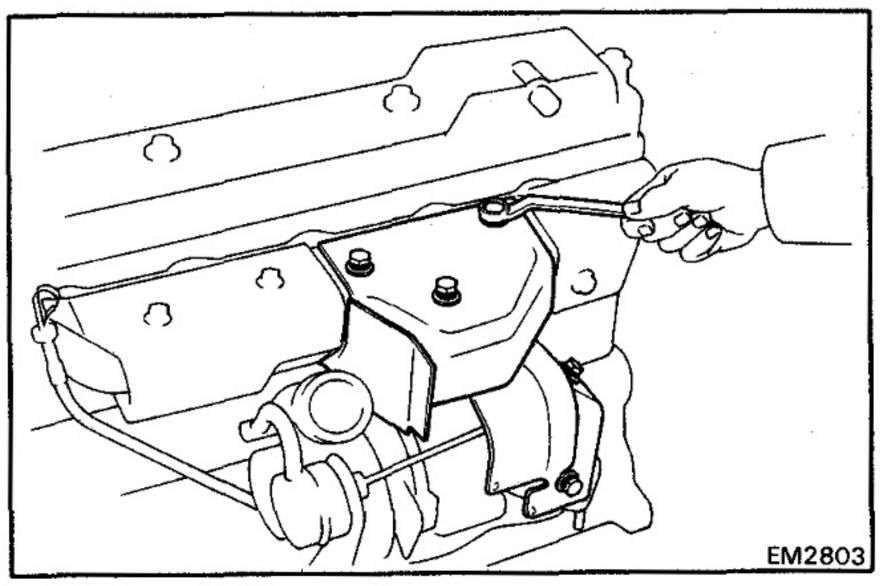

8. INSTALL HEAT INSULATORS

Install the two heat insulators with the five bolts.

Torque: 185 kg-cm (13 ft-lb, 18 N·m)

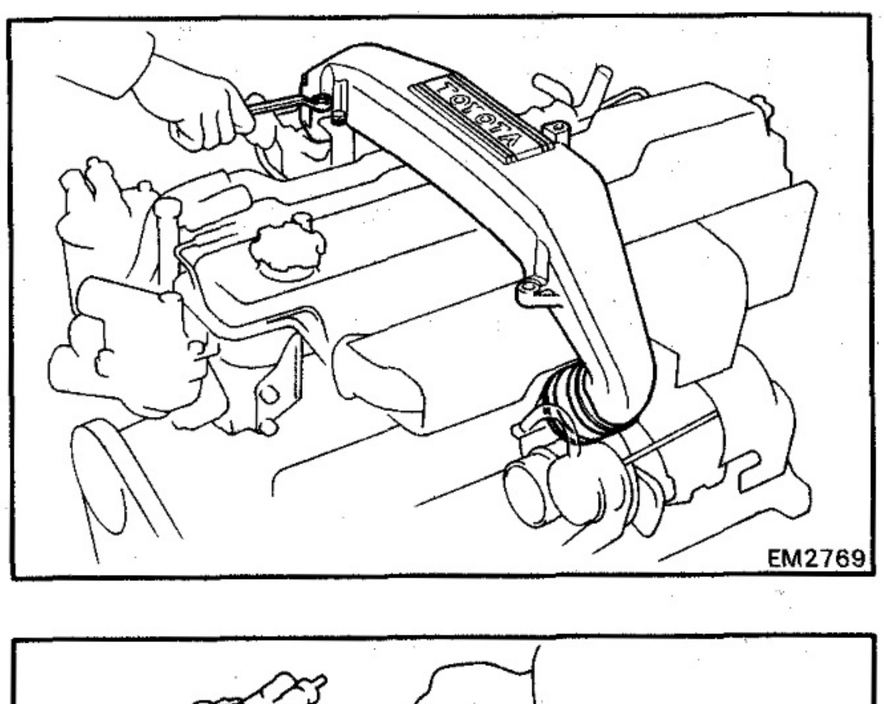

9. INSTALL INTAKE PIPE

(a) Connect the air hose, and install a new gasket and the intake pipe with the four bolts and nut.

Torque: 185 kg-cm (13 ft-lb, 18 N·m)

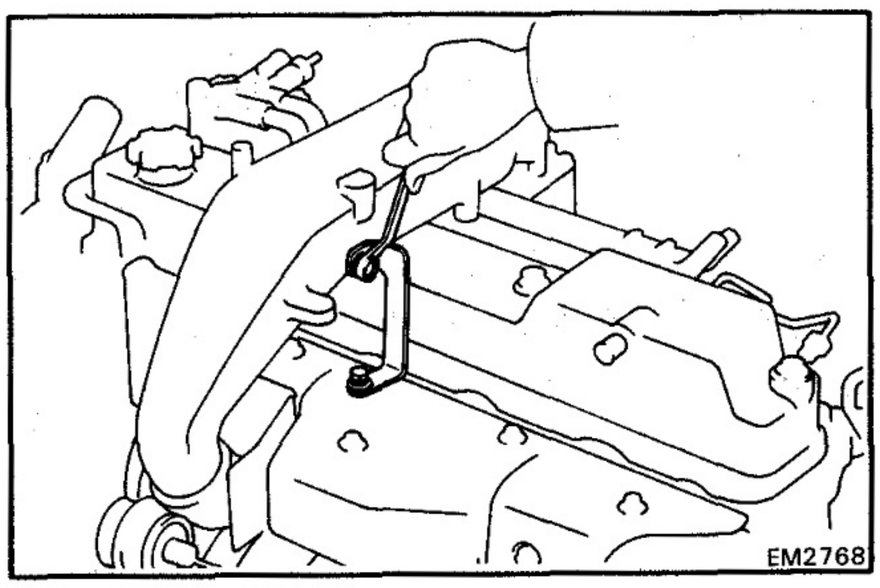

(b) Install the intake pipe stay with the two bolts.

Torque: 185 kg-cm (13 ft-lb, 18 N·m)

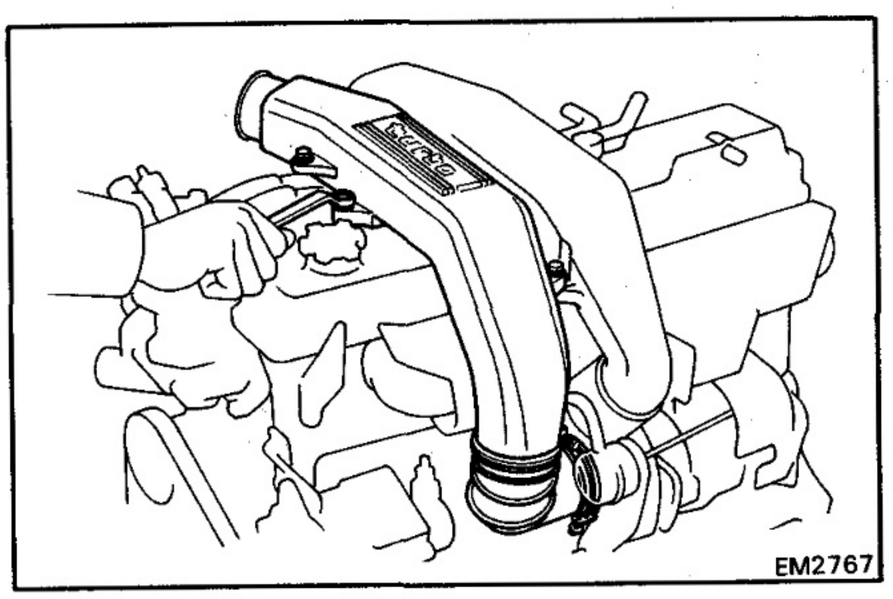

10. INSTALL INTAKE AIR CONNECTOR

Connect the air hose, and install the intake air connector with the three bolts.

Torque: 185 kg-cm (13 ft-lb, 18 N·m)

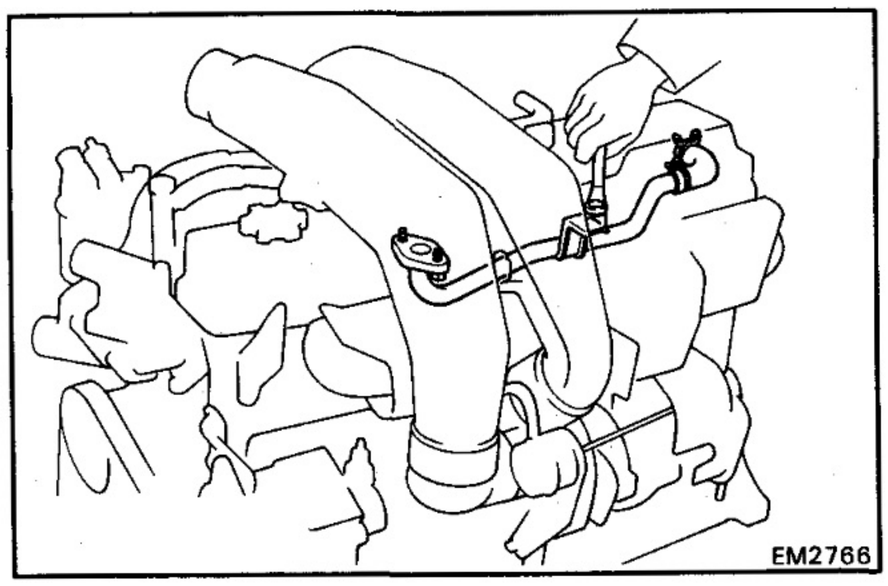

11. INSTALL PCV PIPE

Connect the PCV hose, and install a new gasket and PCV pipe with three bolts.

Torque: 185 kg-cm (13 ft-lb, 18 N·m)

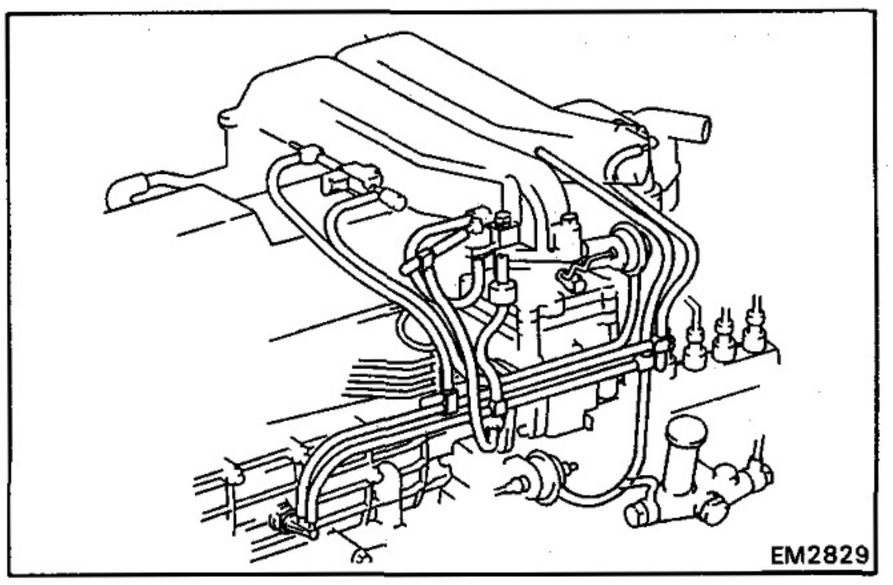

12. INSTALL VACUUM HOSES, VSV AND GAS FILTER

13. FILL WITH ENGINE COOLANT
(See page CO-3)

14. START ENGINE AND CHECK FOR LEAKS

15. CHECK ENGINE OIL LEVEL (See page LU-3)

CYLINDER HEAD

COMPONENTS

2H

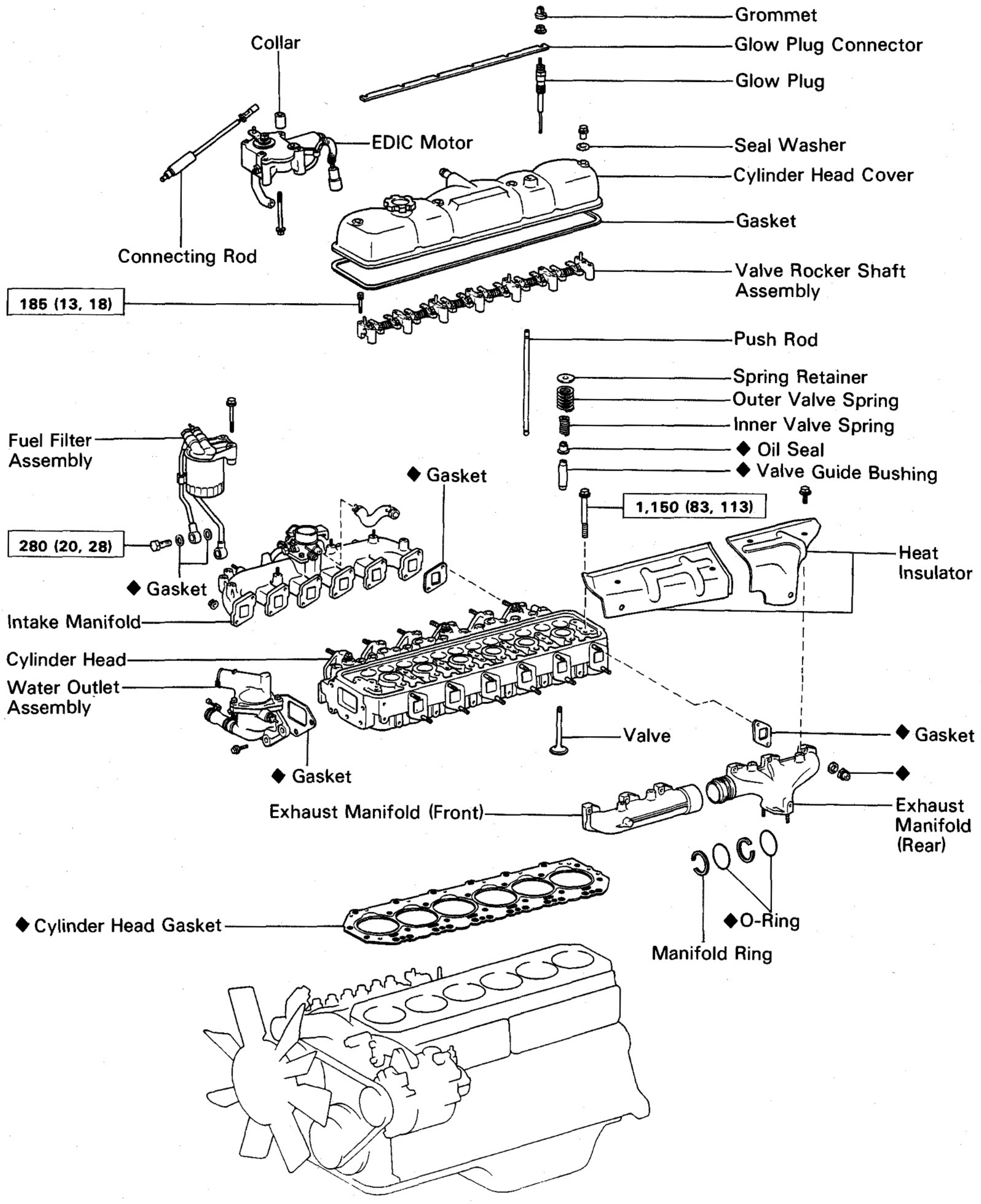

kg-cm (ft-lb, N·m) : Specified torque

◆ Non-reusable part

EM2853

COMPONENTS (Cont'd)

12H-T

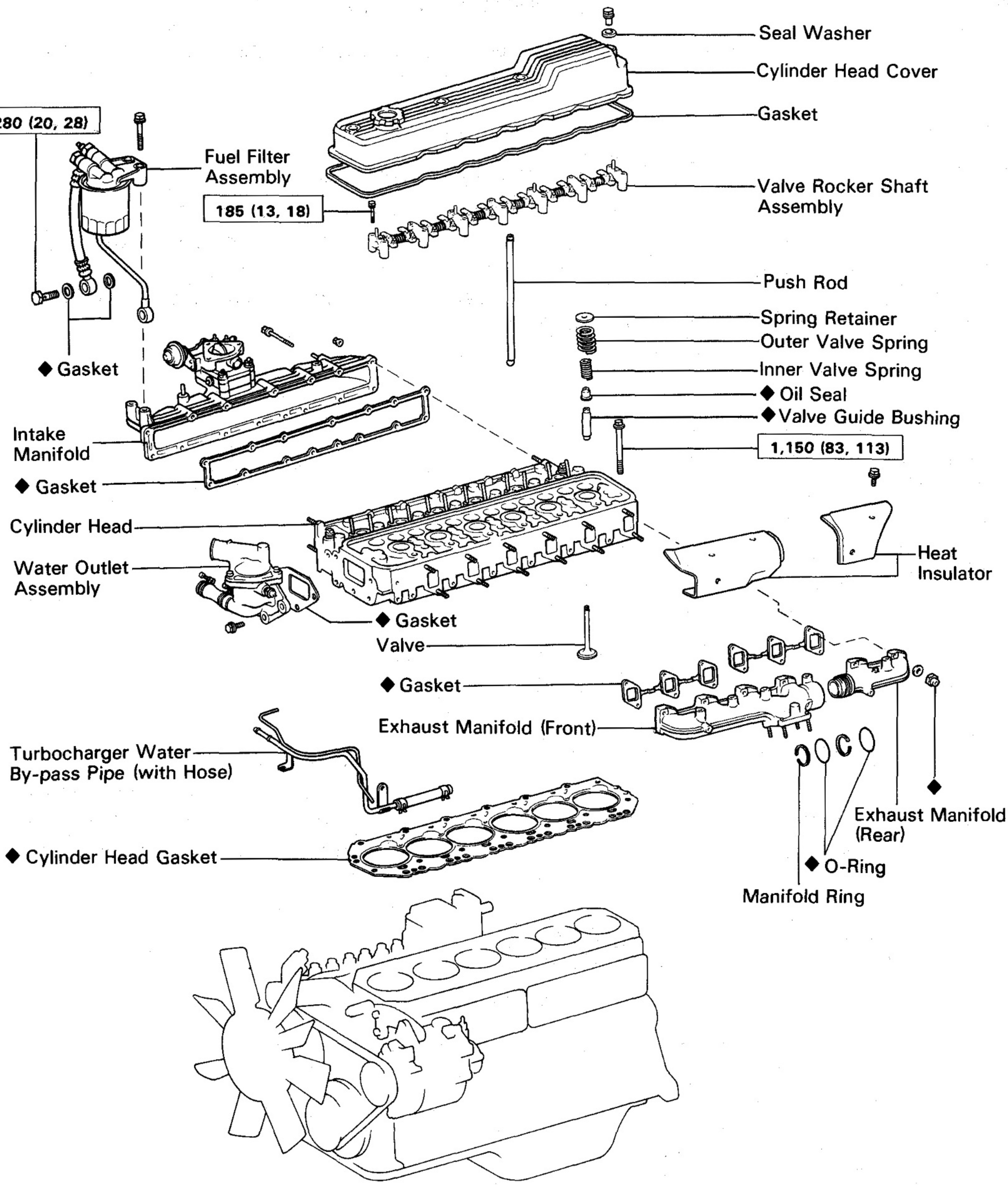

kg-cm (ft-lb, N·m) : Specified torque

◆ Non-reusable part

EM2850

REMOVAL OF CYLINDER HEAD [2H]

(See page EM-47)

1. DRAIN ENGINE COOLANT (See page CO-3)
2. REMOVE PCV HOSE
3. REMOVE INJECTION NOZZLES (See page FU-3)

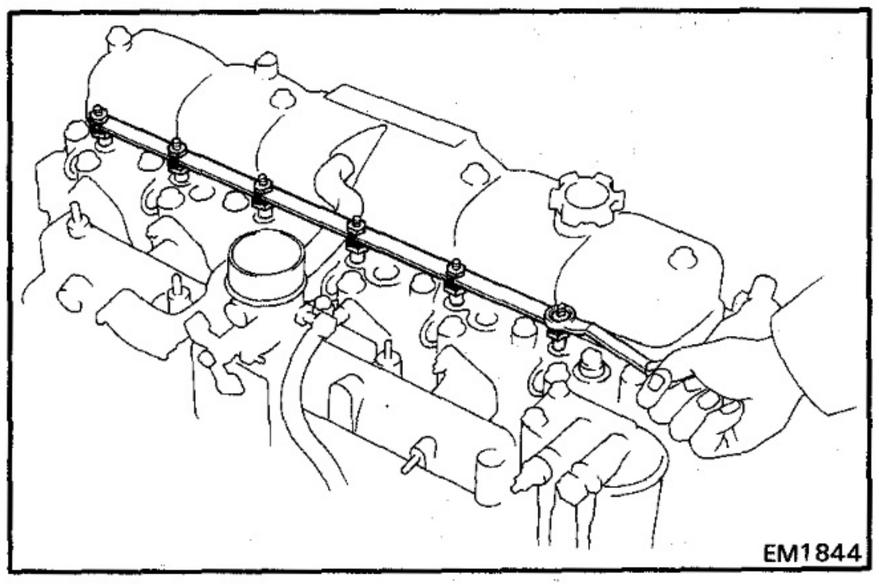
EM1844

4. REMOVE GLOW PLUGS
   (a) Remove the six screw grommets.
   (b) [Pre-heating System (Super Glow Type)]
   Remove the current sensor plate.
   (c) Remove the six nuts and glow plug connector.

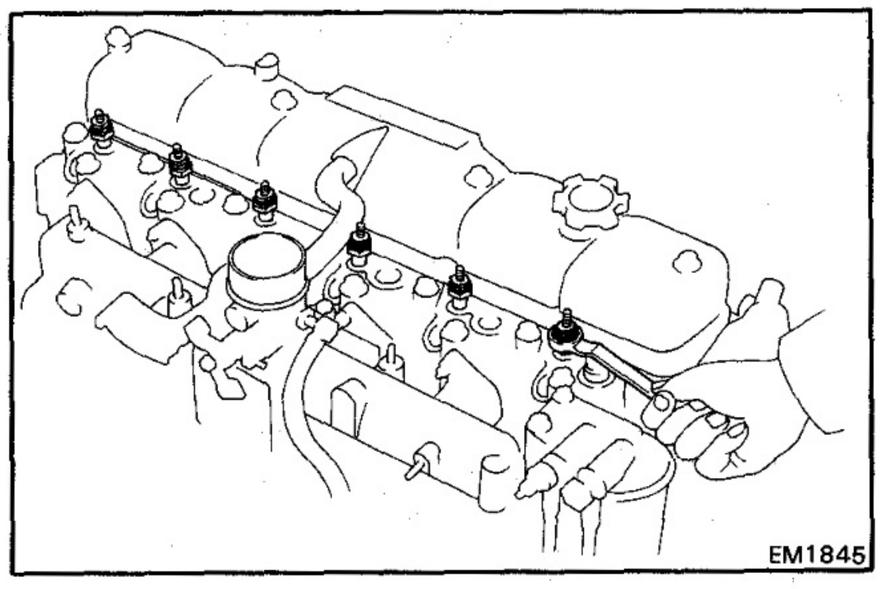
EM1845

   (d) Remove the six glow plugs

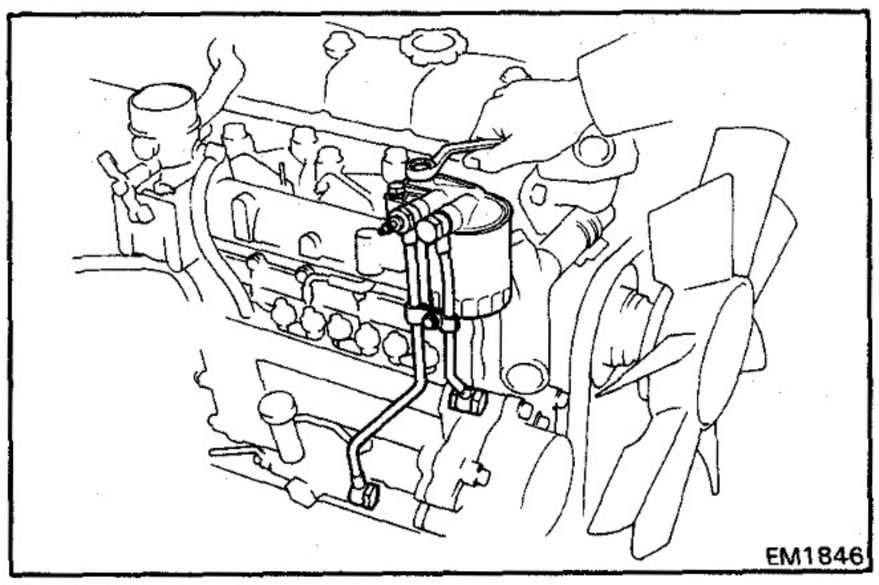
EM1846

5. REMOVE FUEL FILTER ASSEMBLY
   (a) Remove the two union bolts and four gaskets, and disconnect the fuel pipes from the injection pump.
   (b) Remove the two bolts and the fuel filter together with the fuel pipes.

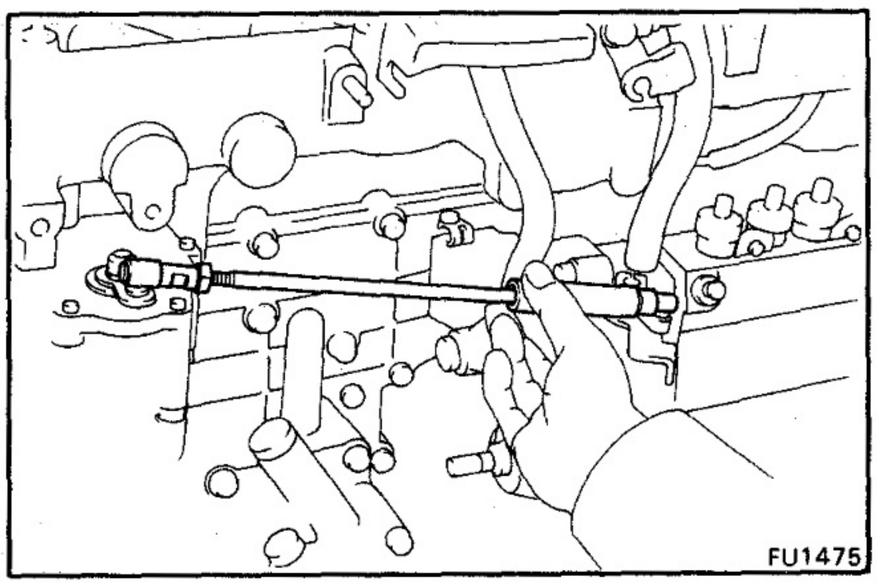
FU1475

6. [M/T (w/ EDIC SYSTEM)]
   REMOVE EDIC MOTOR
   (a) Remove the connecting rod.

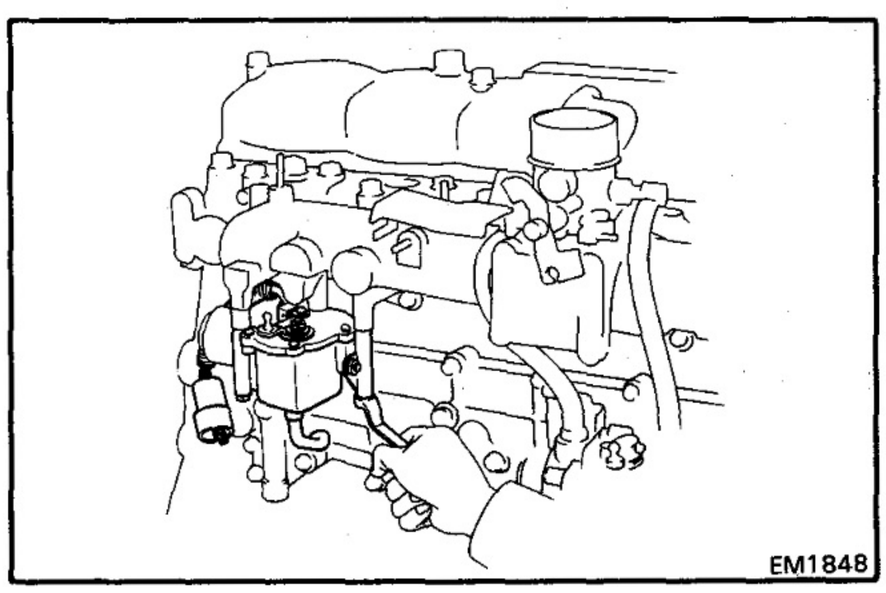

(b) Remove the three bolts, collar and EDIC motor.

7. [M/T (w/o EDIC SYSTEM)]
REMOVE OVERINJECTION MAGNET

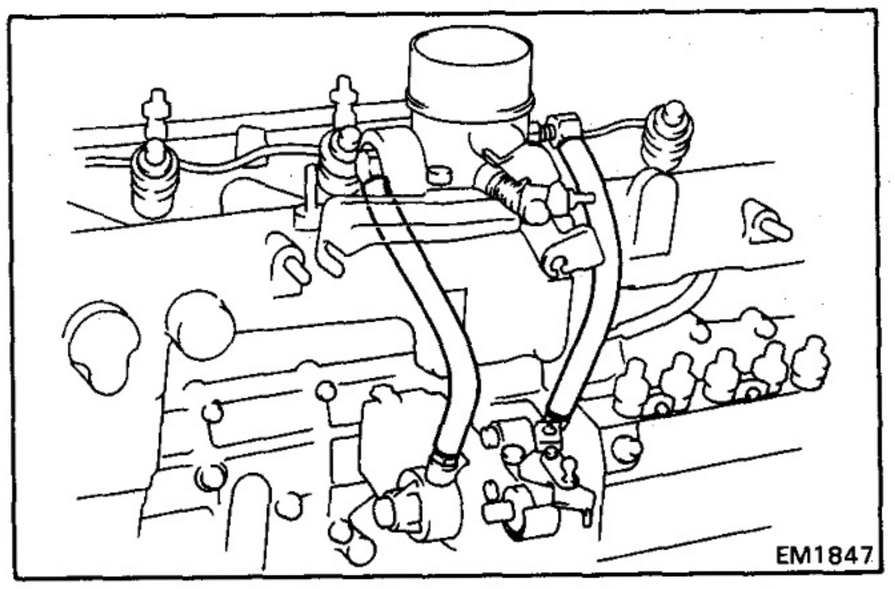

8. REMOVE INTAKE MANIFOLD

(a) [M/T]
Remove the two vacuum hoses.

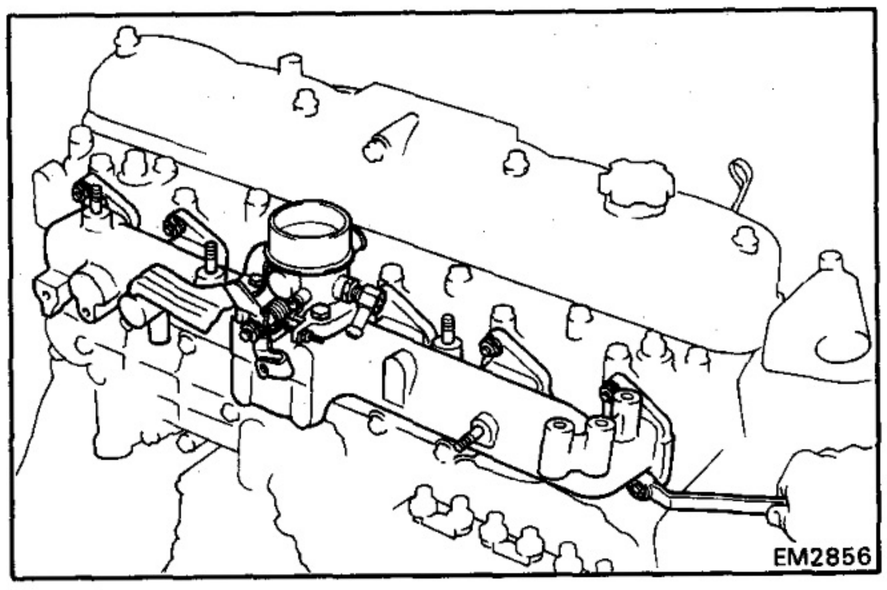

(b) Remove the twelve nuts, intake manifold and six gaskets.

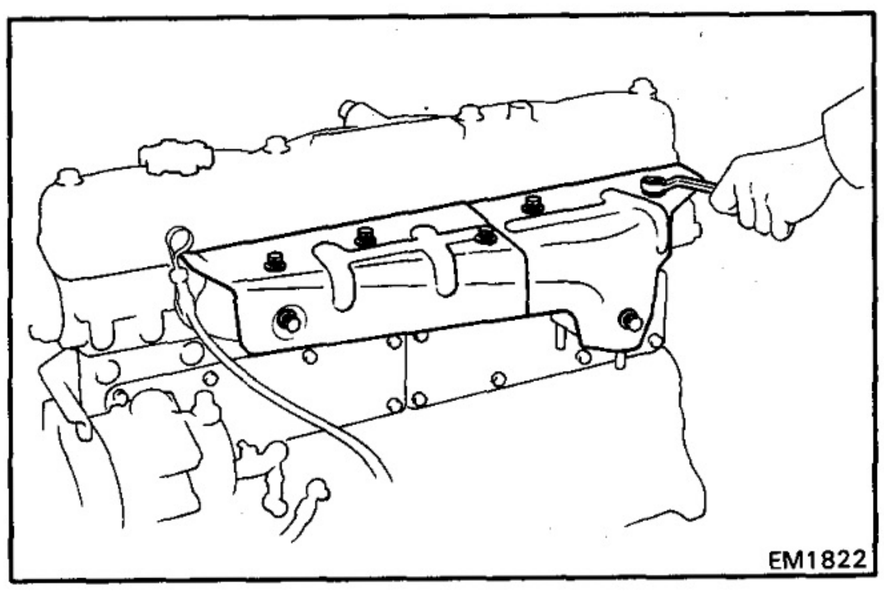

9. REMOVE EXHAUST MANIFOLDS

(a) Remove the seven bolts and two heat insulators.

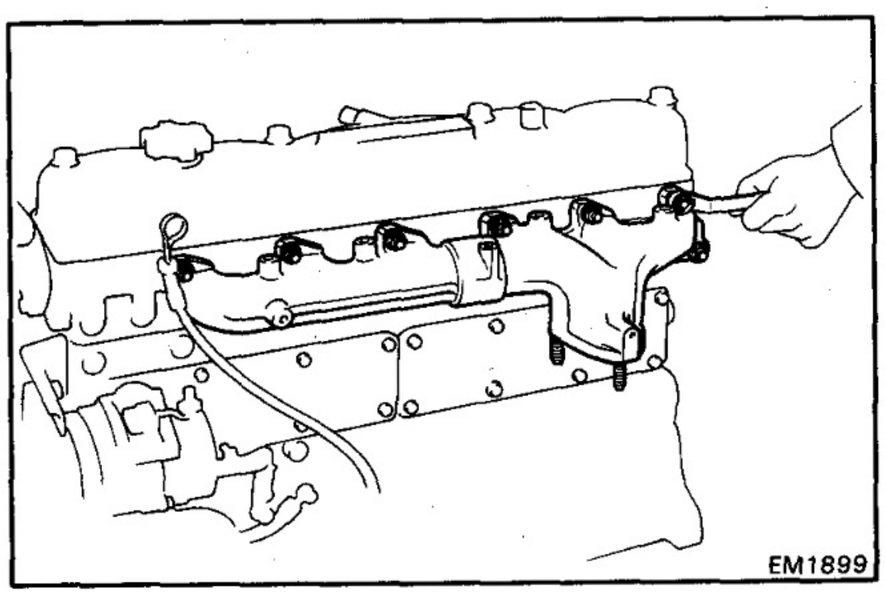

(b) Remove the twelve nuts, plate washers, exhaust manifolds and six gaskets.

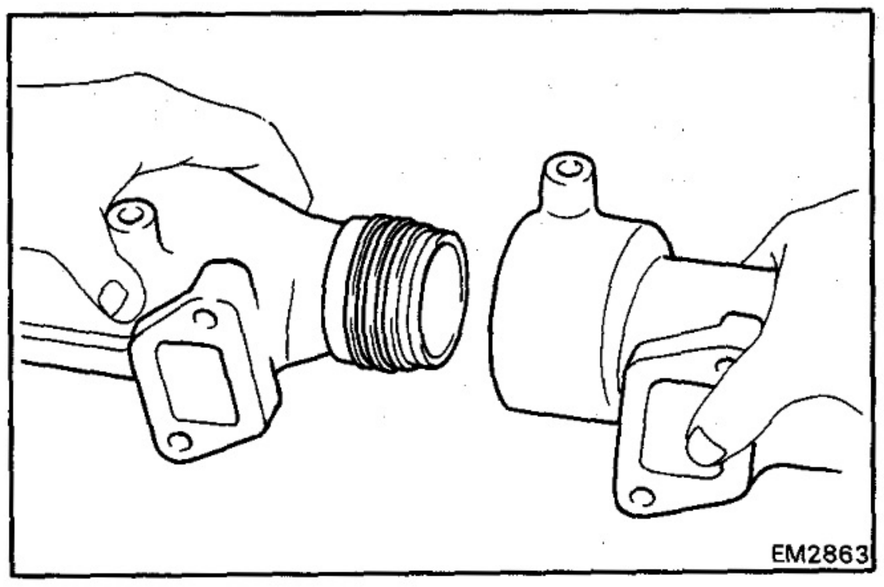

10. SEPARATE EXHAUST MANIFOLDS

(a) Separate the front and rear exhaust manifolds.

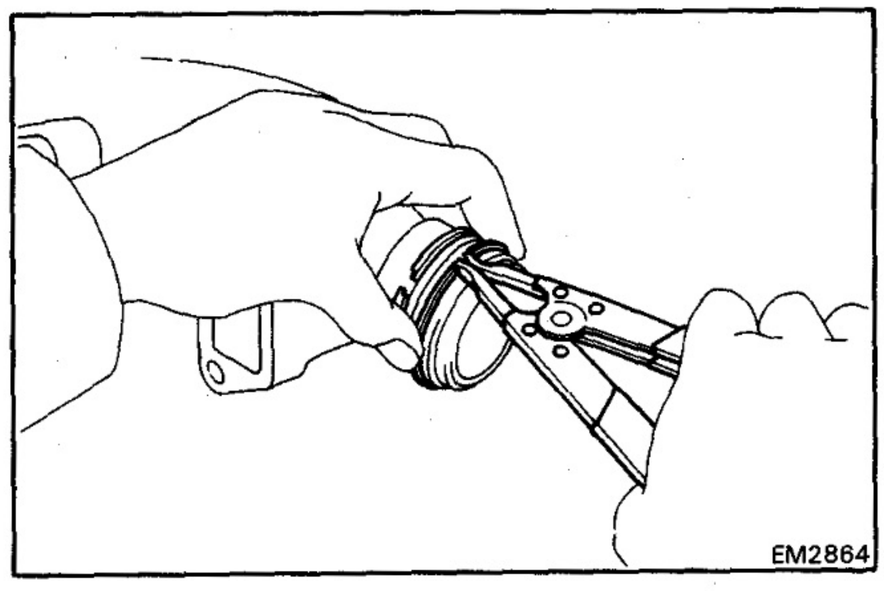

(b) Using snap ring pliers, remove the two manifold rings.

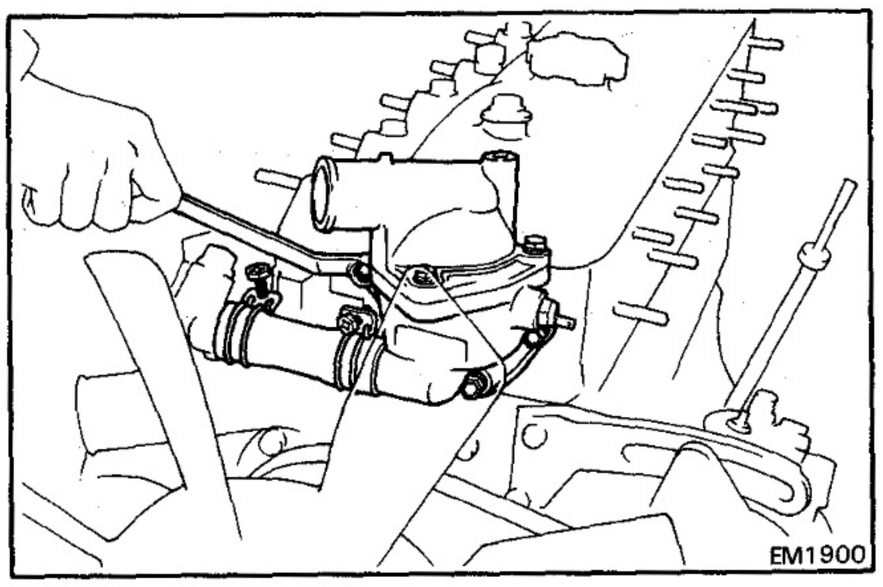

11. REMOVE WATER OUTLET ASSEMBLY

(a) Remove the three bolts holding the water outlet housing to the cylinder head.

(b) Disconnect the water by-pass hose from the water pump, and remove the water outlet assembly and gasket together with the by-pass hose.

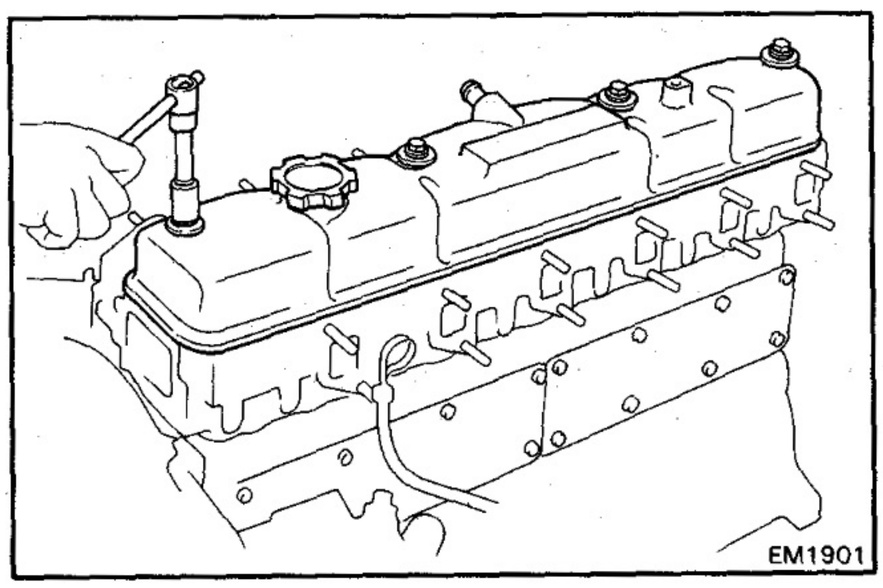

12. REMOVE CYLINDER HEAD COVER

Remove the four cap nuts, seal washers, cylinder head cover and gasket.

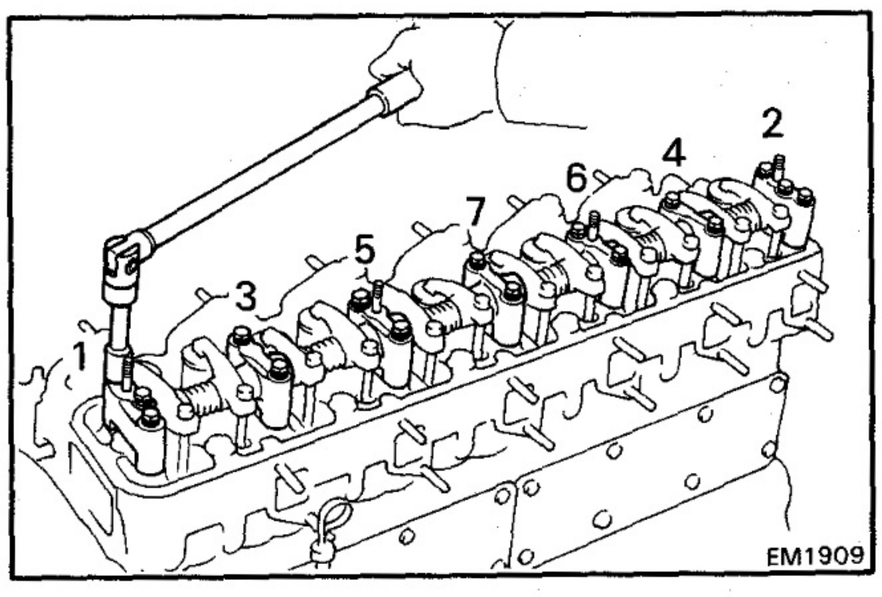

13. REMOVE VALVE ROCKER SHAFT ASSEMBLY

(a) Uniformly loosen and remove the fourteen bolts in several passes, in the sequence shown.

(b) Remove the rocker shaft assembly.

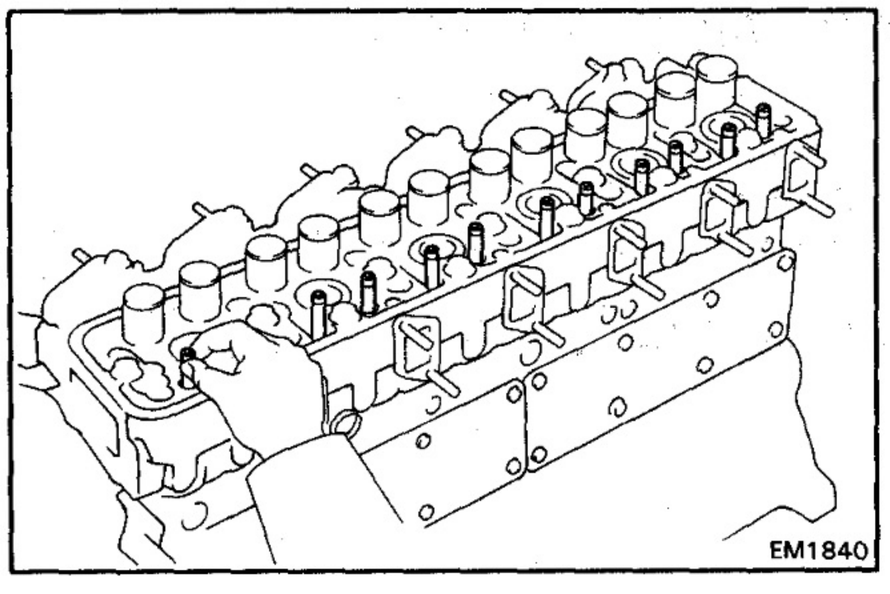

14. REMOVE PUSH RODS

Remove the twelve push rods in order, beginning from the No. 1 push rod.

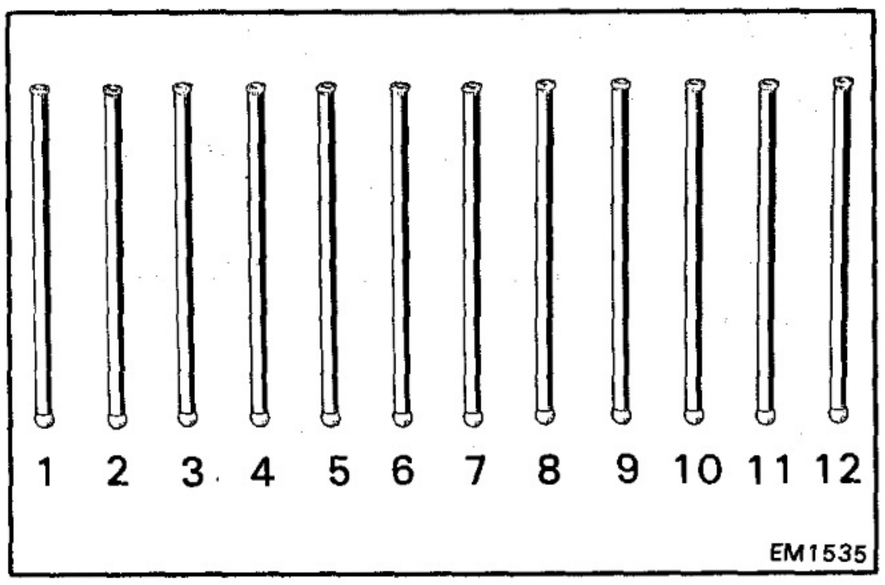

NOTE: Arrange the push rods in correct order.

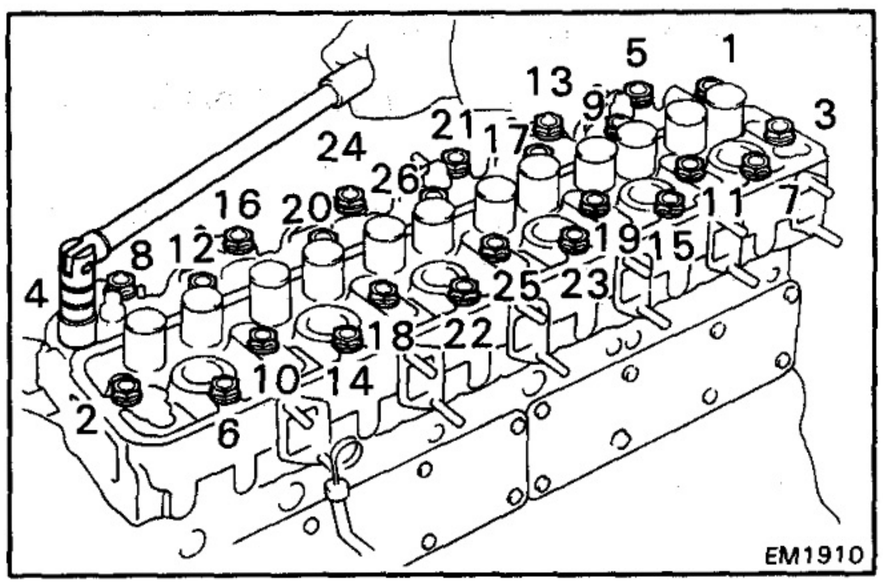

15. REMOVE CYLINDER HEAD

(a) Uniformly loosen and remove the twenty-six head bolts in several passes, in the sequence shown.

CAUTION: Head warpage or cracking could result from removing bolts in incorrect order.

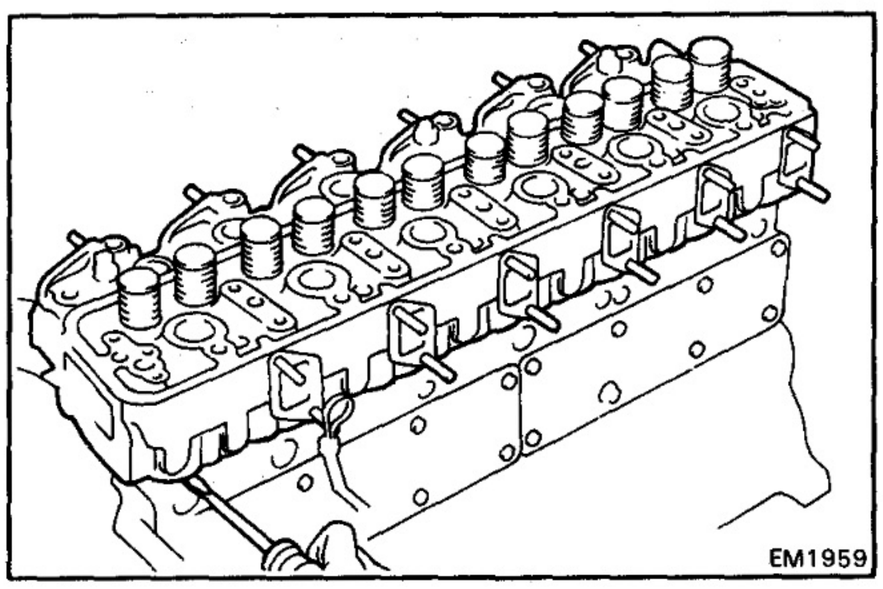

(b) Lift the cylinder head from the dowels on the cylinder block and place the head on wooden blocks on a bench.

NOTE: If the cylinder head is difficult to lift off, pry with a screwdriver between the cylinder head and block saliences.

CAUTION: Be careful not to damage the cylinder head and block surface on the cylinder and head gasket sides.

REMOVAL OF CYLINDER HEAD [12H-T]

(See page EM-48)

1. REMOVE TURBOCHARGER
(See steps 1 to 10 on pages EM-40 to 42)

2. REMOVE INJECTION NOZZLES (See page FU-9)

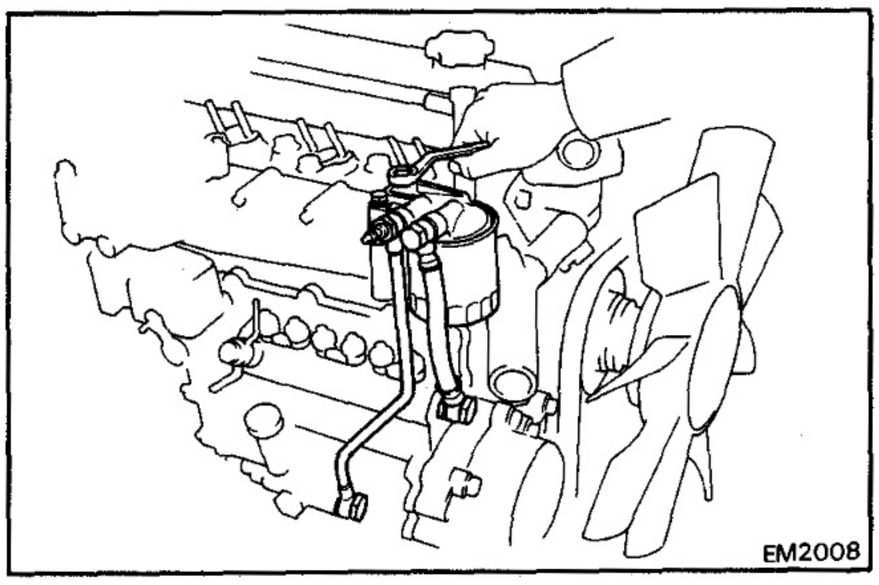

3. REMOVE FUEL FILTER ASSEMBLY

(a) Remove the two union bolts and four gaskets, and disconnect the fuel hose and pipe from the injection pump.

(b) Remove the two bolts and the fuel filter together with the hose and pipe.

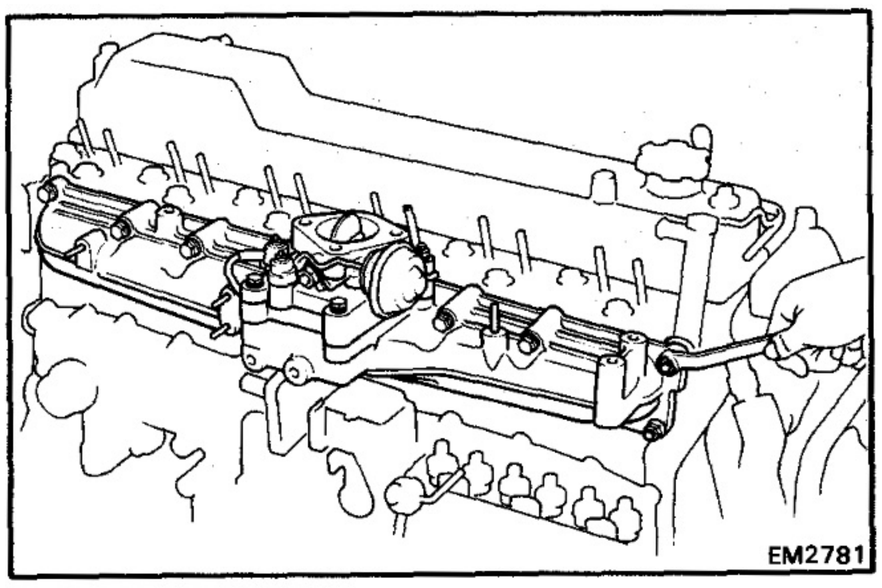

4. REMOVE INTAKE MANIFOLD

Remove the five bolts, eleven nuts, intake manifold and gasket.

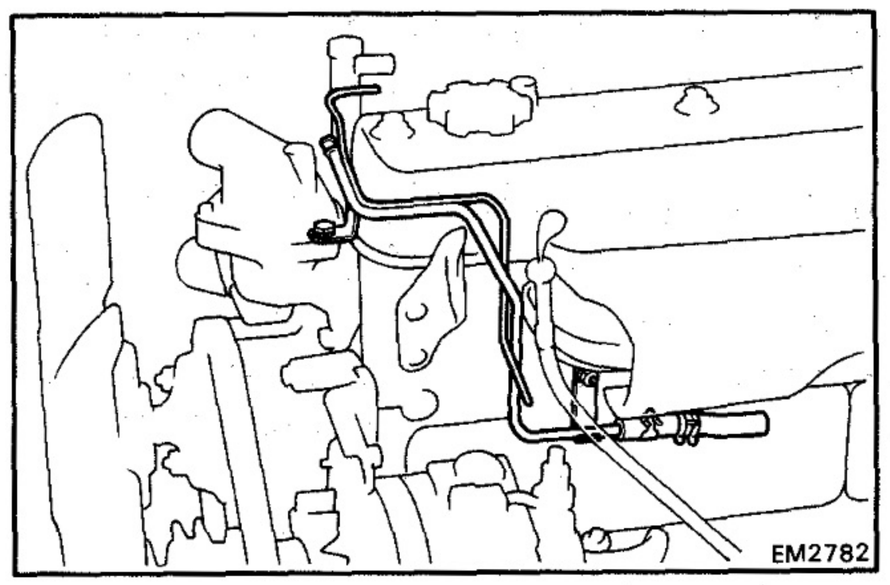

5. REMOVE WATER BY-PASS PIPE OF TURBOCHARGER

Remove the bolt, nut, water by-pass pipe and two hose.

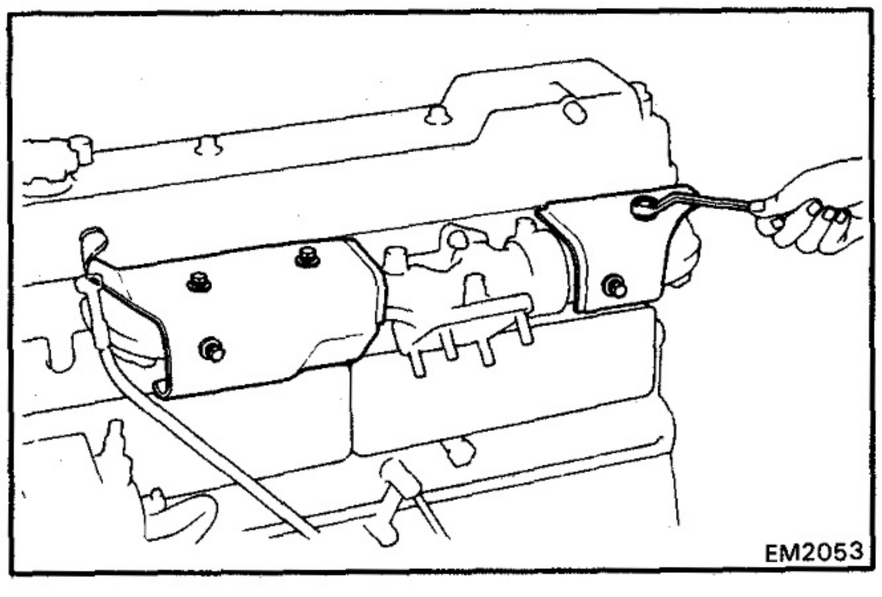

6. REMOVE EXHAUST MANIFOLDS

(a) Remove the five bolts and two heat insulators.

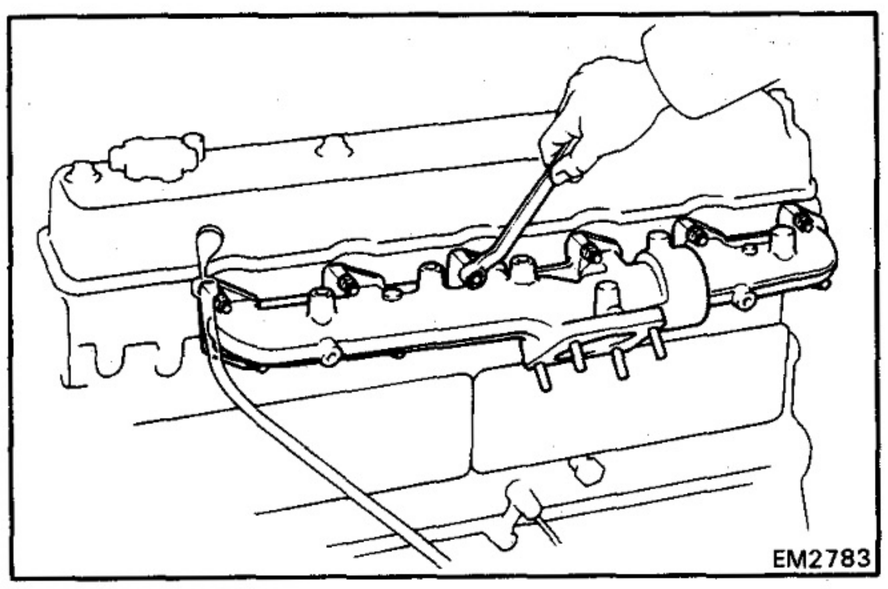

(b) Remove the twelve nuts, plate washers, exhaust manifold and two gaskets.

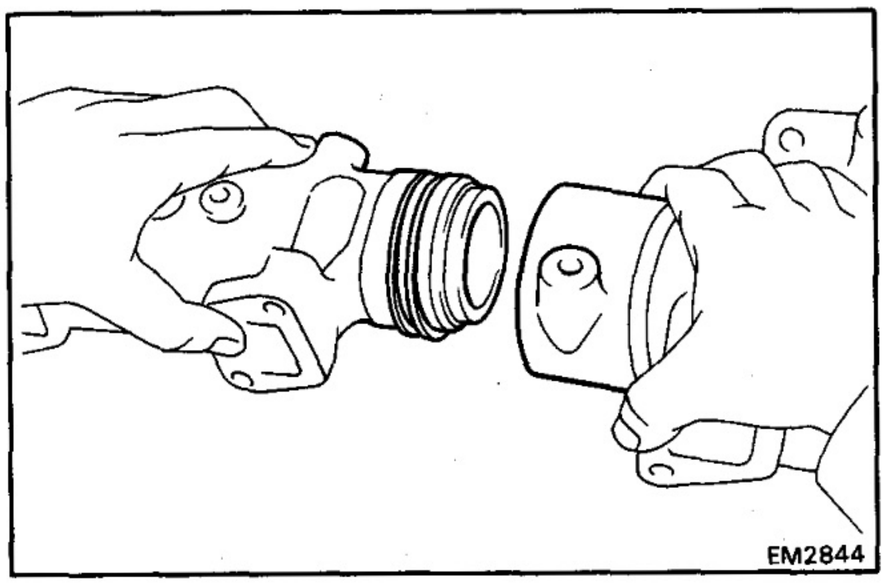

7. SEPARATE EXHAUST MANIFOLDS

(a) Separate the front and rear exhaust manifolds.

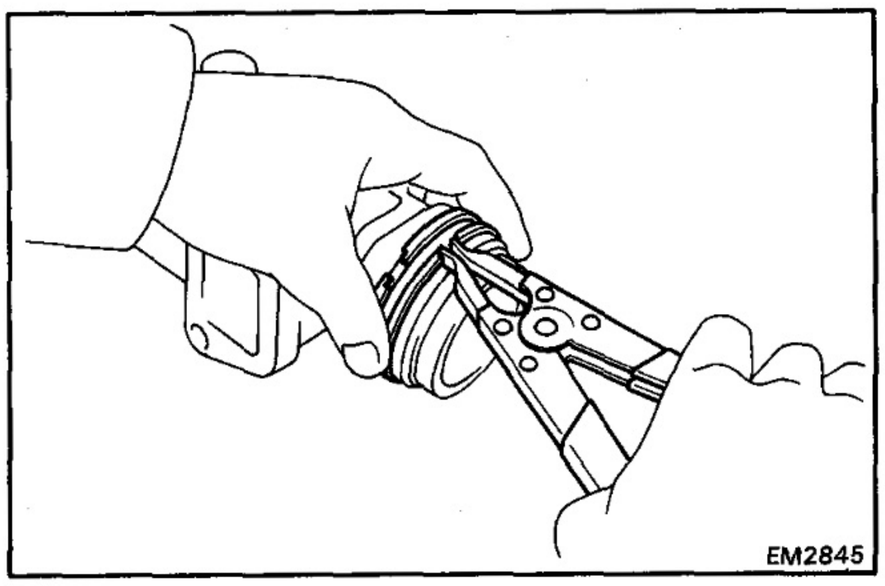

(b) Using snap ring pliers, remove the two manifold rings.

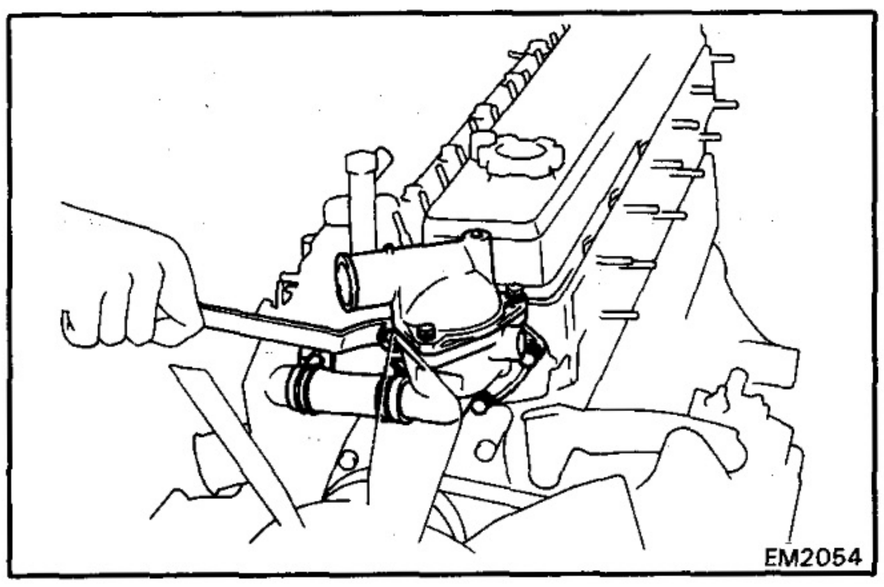

8. REMOVE WATER OUTLET ASSEMBLY

(a) Remove the three bolts holding the water outlet housing to the cylinder head.

(b) Disconnect the water by-pass hose from the water pump, and remove the water outlet and gasket together with the by-pass hose.

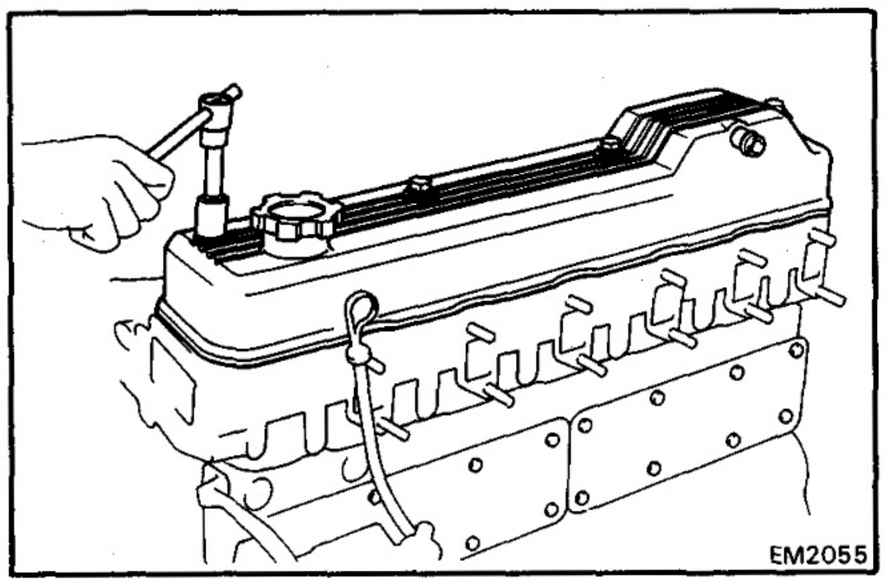

9. REMOVE CYLINDER HEAD COVER

Remove the four cap nuts, seal washers cylinder head cover and gasket.

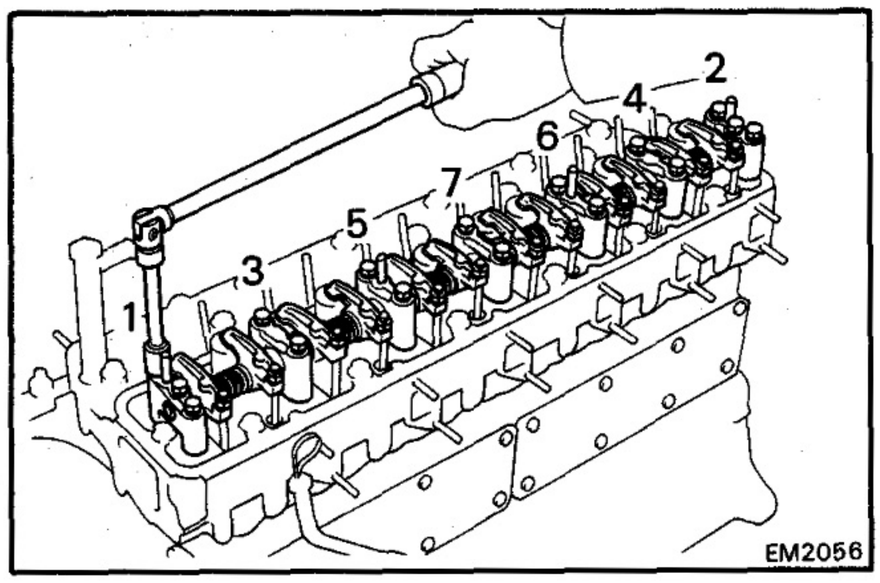

10. REMOVE VALVE ROCKER SHAFT ASSEMBLY

(a) Uniformly loosen and remove the fourteen bolts in several pass, in the sequence shown.

(b) Remove the rocker shaft assembly.

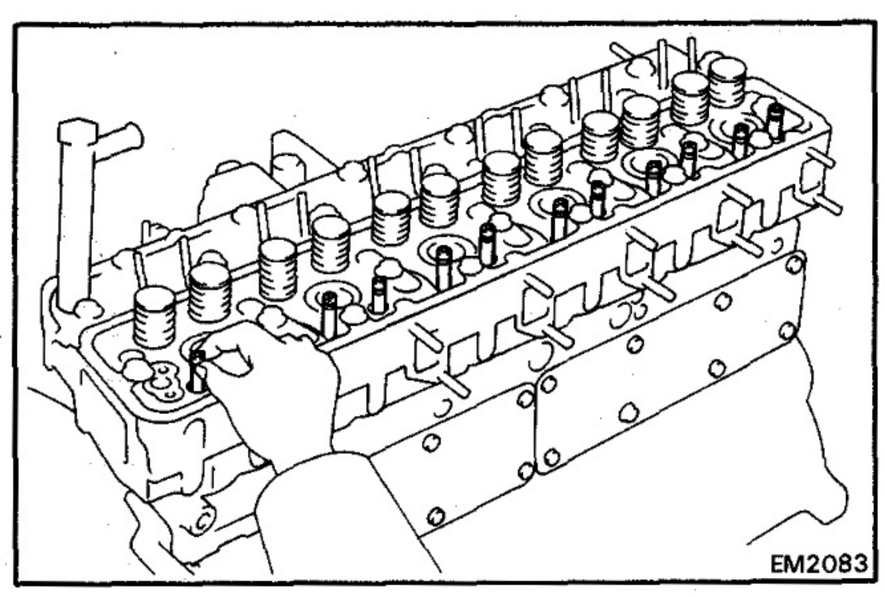

11. REMOVE PUSH RODS

Remove the twelve push rods in order, begining from the No. 1 push rod.

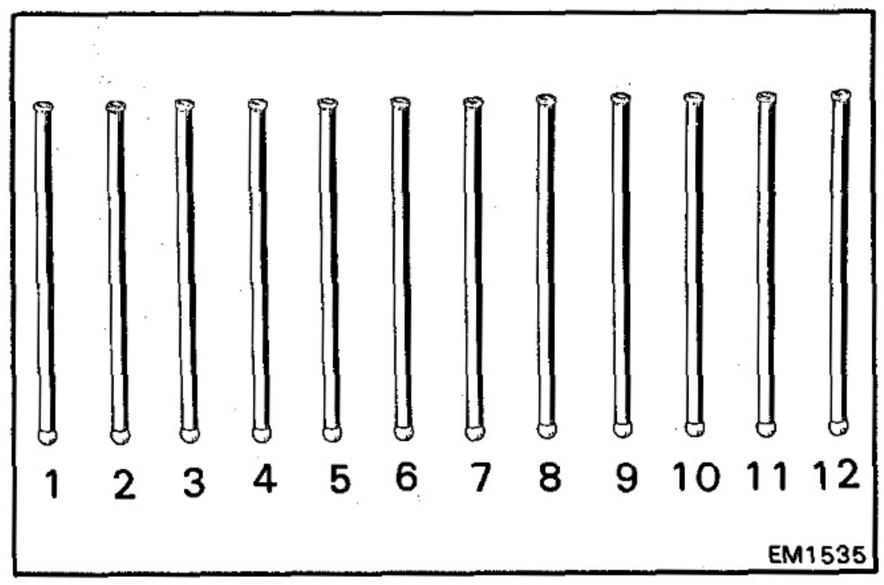

NOTE: Arrange the push rods in correct order.

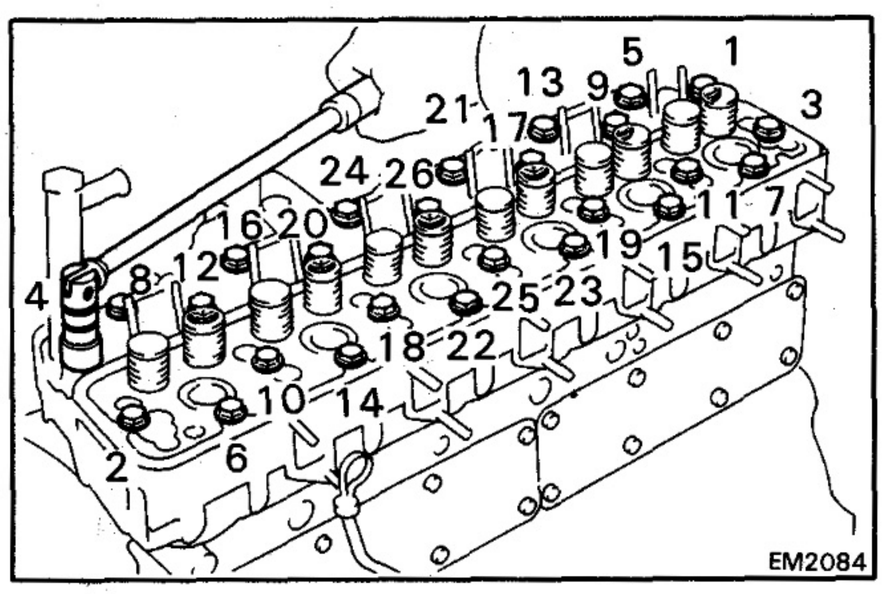

12. REMOVE CYLINDER HEAD

(a) Uniformly loosen and remove the twenty-six head bolts in several passes, in the sequence shown.

CAUTION: Head warpage or cracking could result from removing bolts in incorrect order.

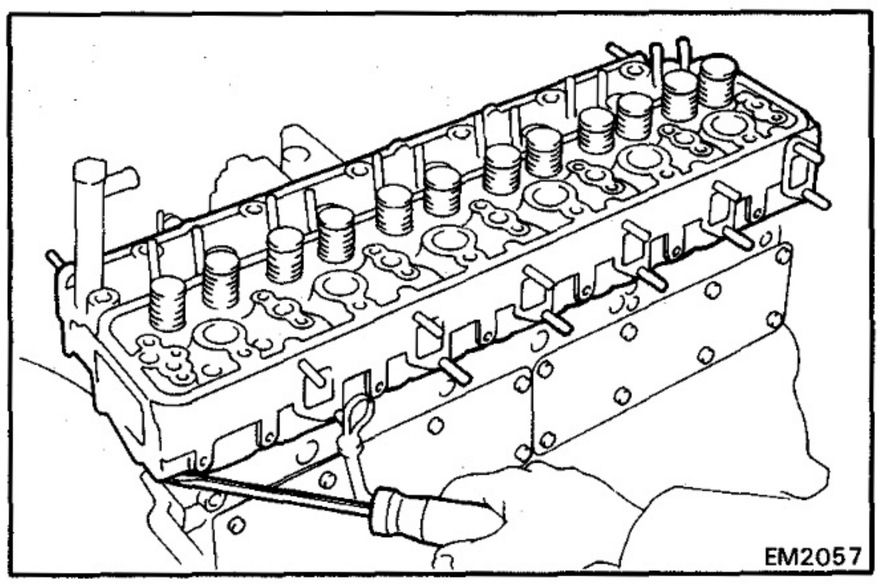

(b) Lift the cylinder head from the dowels on the cylinder block and place the head on wooden blocks on a bench.

NOTE: If the cylinder head is difficult to lift off, pry with a screwdriver between the cylinder head and block saliences.

CAUTION: Be careful not to damage the cylinder head and block surface on the cylinder and head gasket sides.

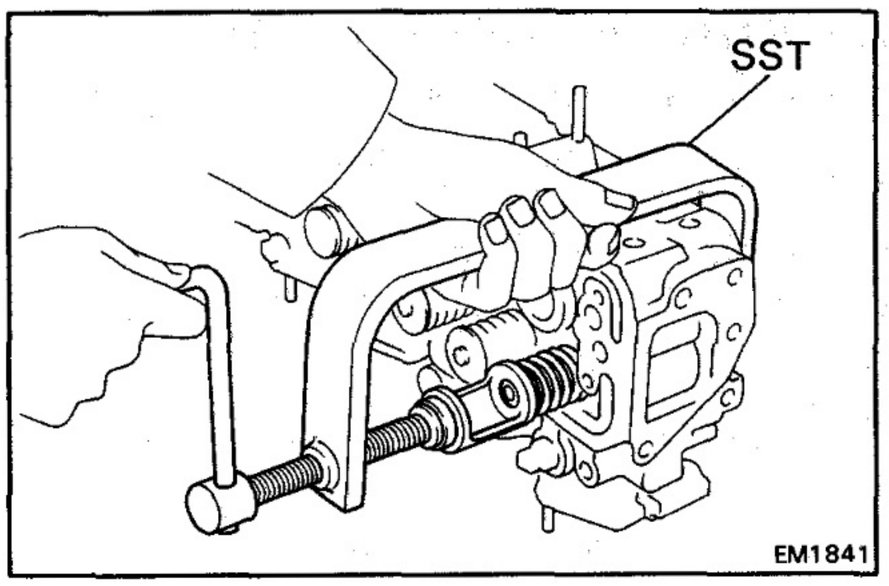

DISASSEMBLY OF CYLINDER HEAD

(See page EM-47) 2H
(See page EM-48) 12H-T

1. REMOVE VALVES

(a) Using SST, compress the valve spring and remove the two keepers.

SST 09202-43013

(b) Remove the spring retainer, valve springs, valve and oil seal.

NOTE: Arrange the valves, valve springs and spring retainers in the correct order.

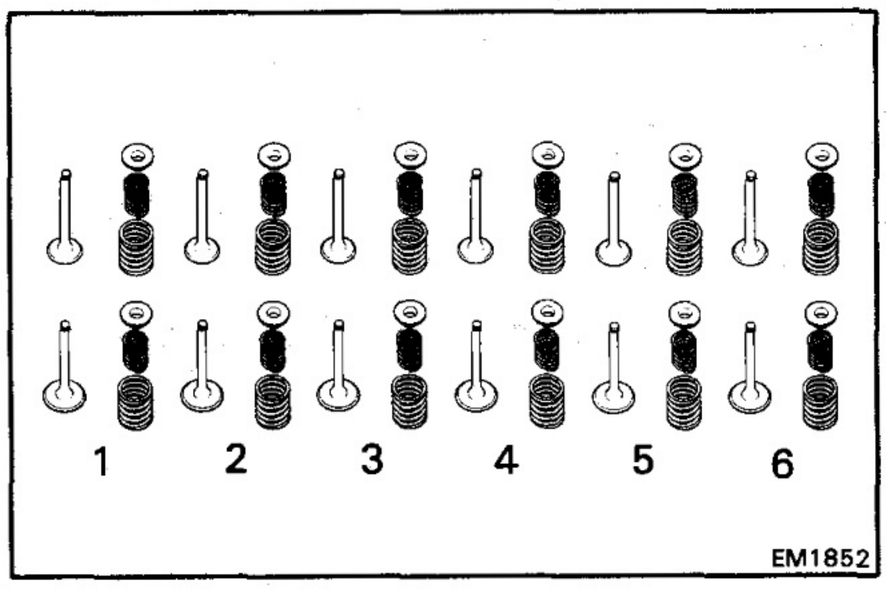

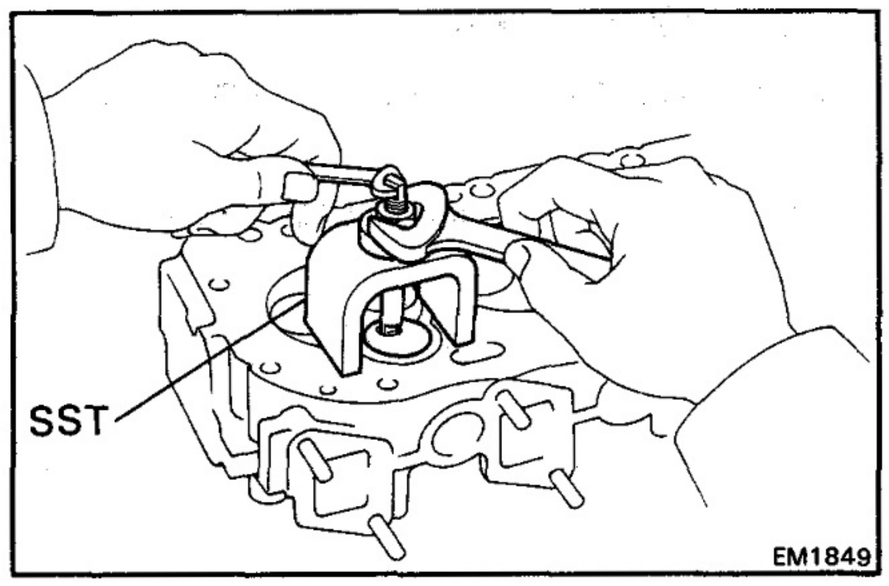

2. [2H] REMOVE COMBUSTION CHAMBERS

Using SST, remove the six combustion chambers.

SST 09208-48010

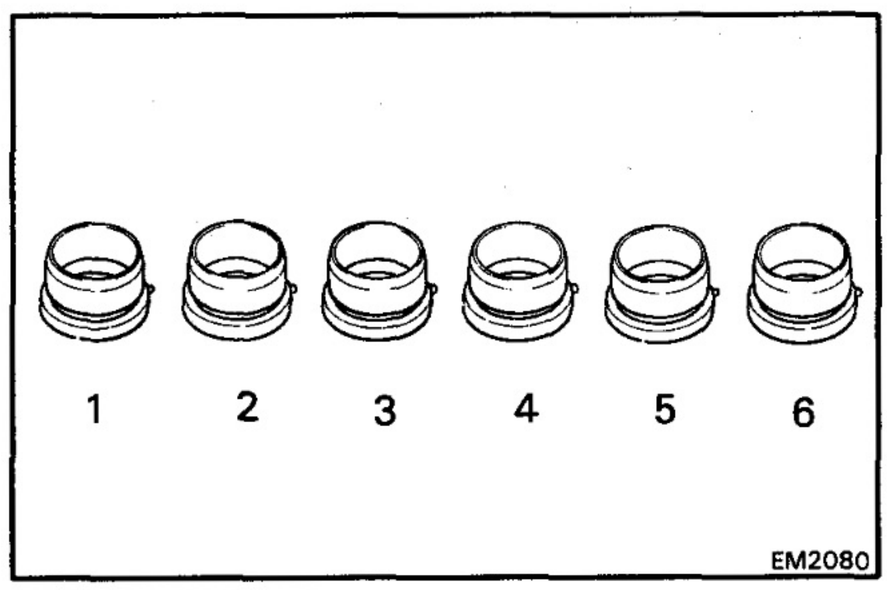

NOTE: Arrange the combustion chambers in correct order.

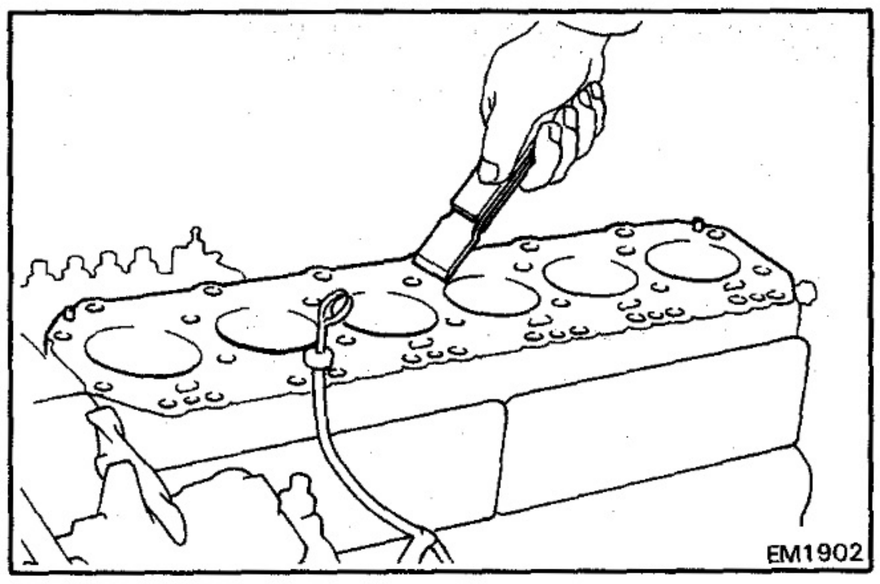

INSPECTION, CLEANING AND REPAIR OF CYLINDER HEAD COMPONENTS

1. CLEAN TOP OF PISTONS AND TOP OF BLOCK

(a) Turn the crankshaft and bring each piston to top dead center. Using a gasket scraper, remove all the carbon from the piston top.

(b) Remove all the gasket material from the top of the block.

(c) Blow carbon and oil from the bolt holes.

WARNING: Protect your eyes when using high pressure air.

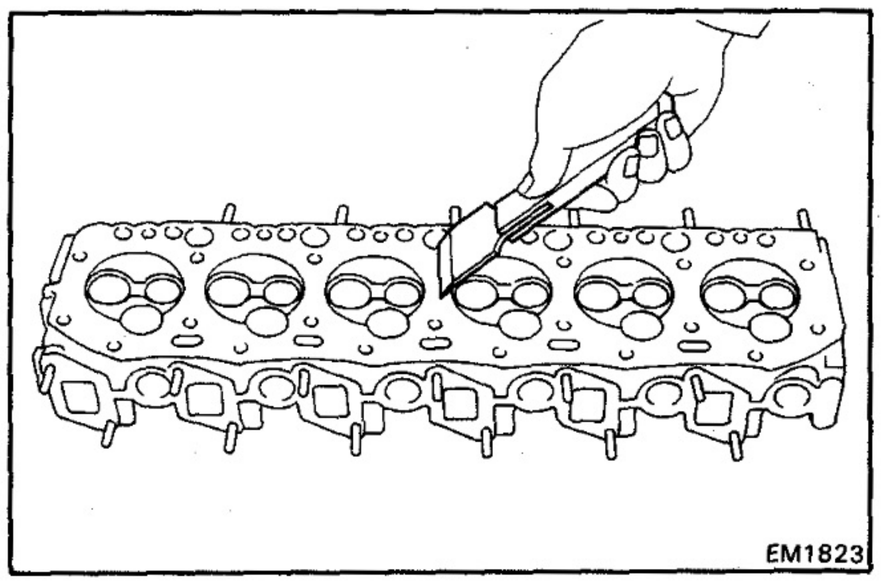

2. REMOVE GASKET MATERIAL

Using a gasket scraper, remove all the gasket material from the manifold and head surface.

CAUTION: Be careful not to scratch the surfaces.

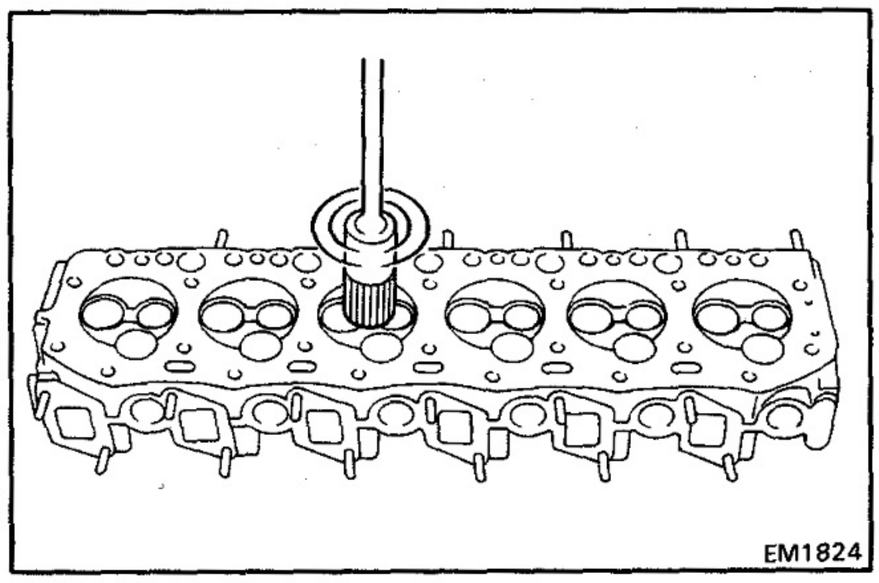

3. CLEAN COMBUSTION CHAMBERS

Using a wire brush, remove all the carbon from the combustion chambers.

CAUTION: Be careful not to scratch the head gasket contact surface.

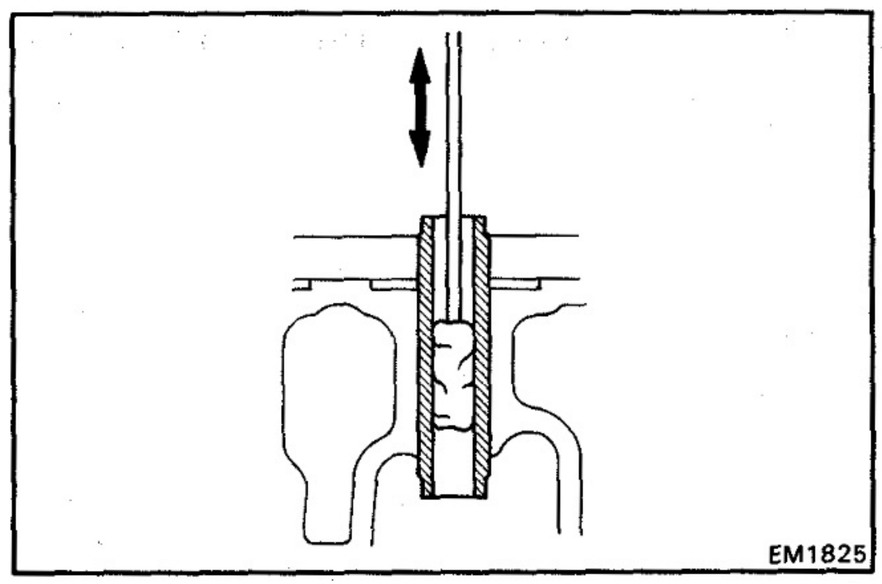

4. CLEAN VALVE GUIDE BUSHINGS

Using a valve guide bushing brush and solvent, clean all the guide bushings.

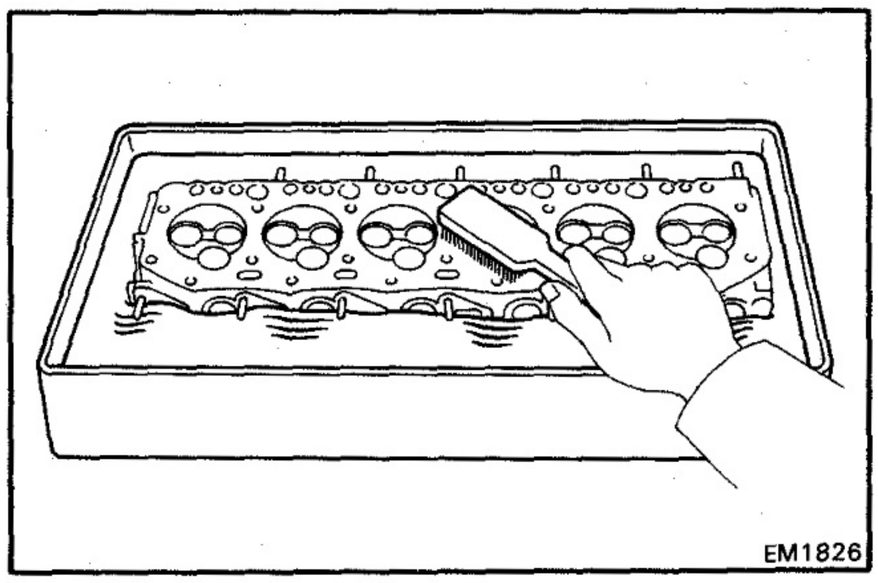

5. CLEAN CYLINDER HEAD

Using a soft brush and solvent, thoroughly clean the head.

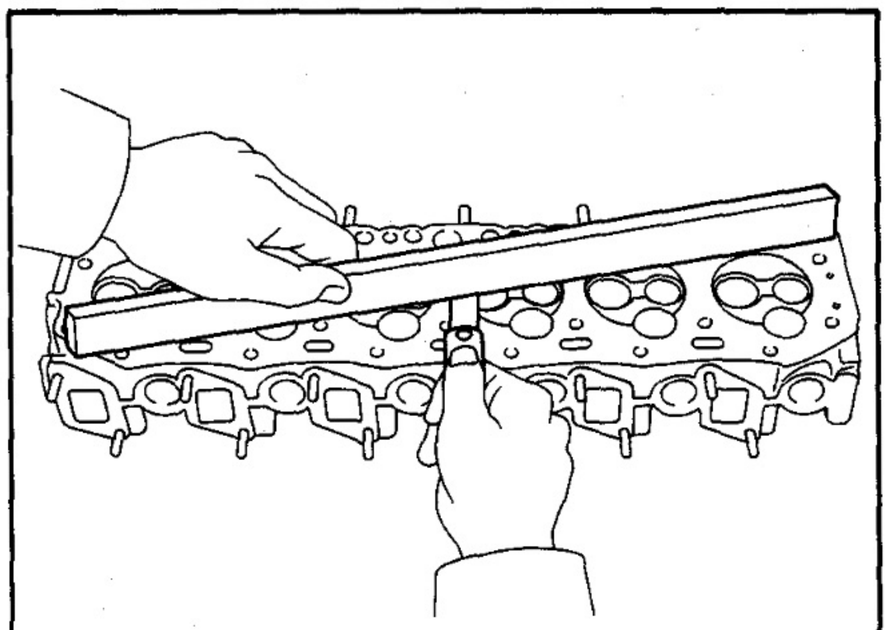

Cylinder block side

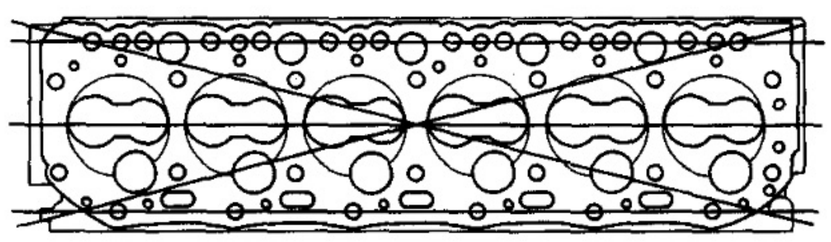

Intake Manifold side [2H]

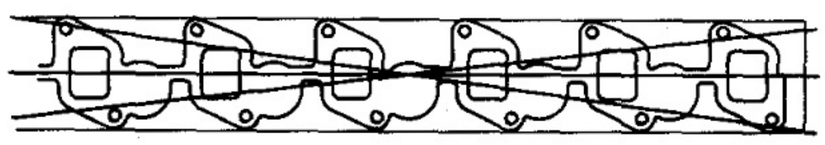

Intake Manifold side [12H-T]

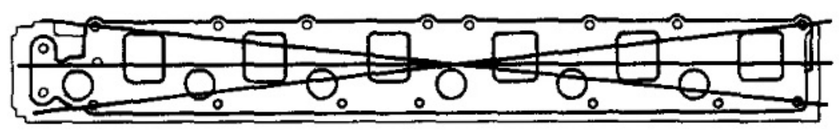

Exhaust Manifold side

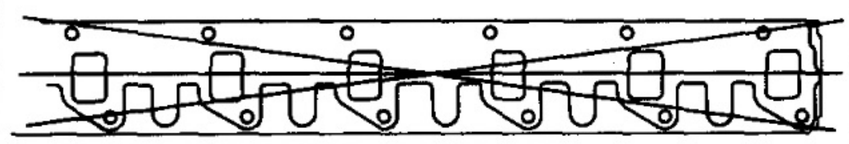

EM1843
EM1990
EM1991
EM2069
EM1992

6. INSPECT CYLINDER HEAD FOR FLATNESS

Using a precision straight edge and feeler gauge, measure the surfaces contacting the cylinder block and manifolds for warpage.

Maximum warpage:

Cylinder block side	**0.20 mm (0.0079 in.)**
Manifold side	**0.20 mm (0.0079 in.)**

If warpage is greater than maximum, replace the head.

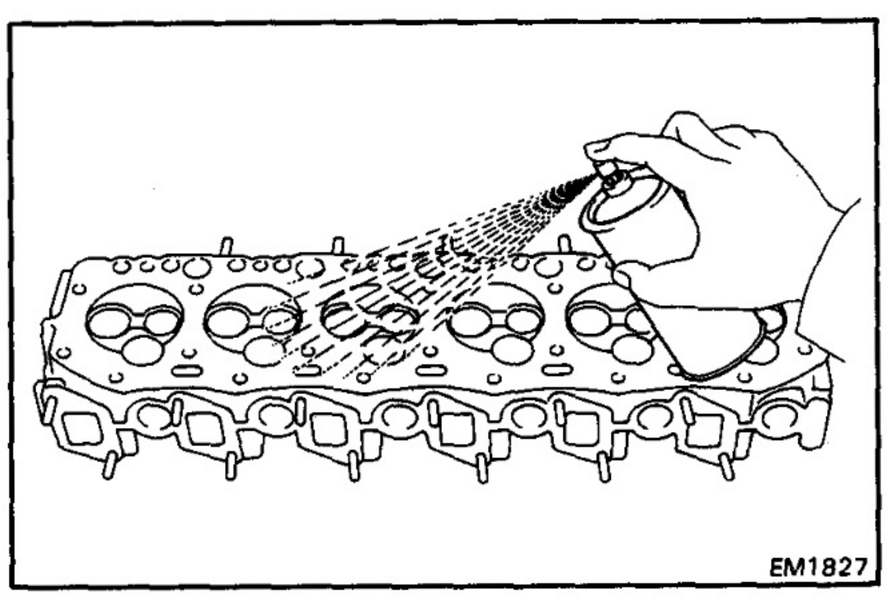

EM1827

7. INSPECT CYLINDER HEAD FOR CRACKS

Using a dye penetrant, check the combustion chamber, intake and exhaust ports, head surface and the top of the head for cracks.

If cracked, replace the head.

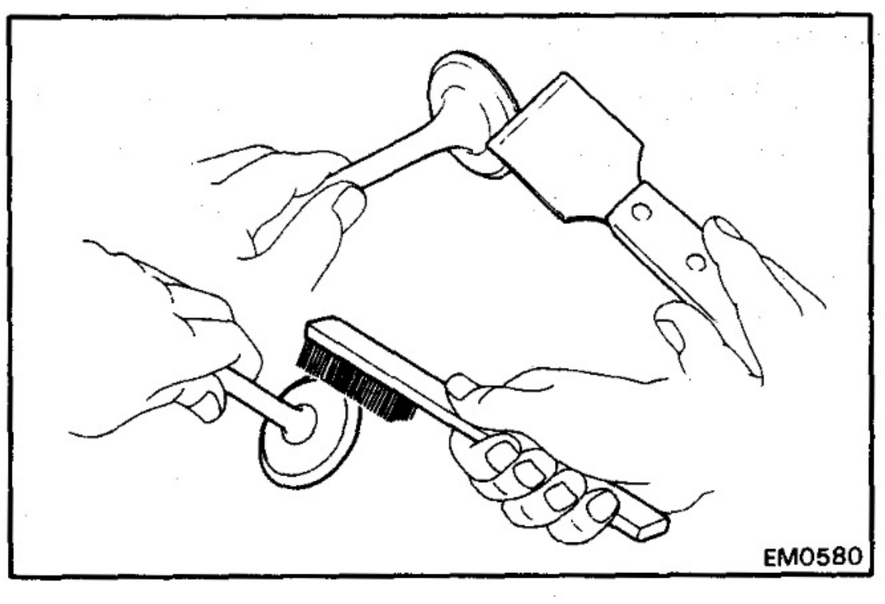

8. CLEAN VALVES

(a) Use a gasket scraper, chip any carbon from the valve head.

(b) Using a wire brush, thoroughly clean the valve.

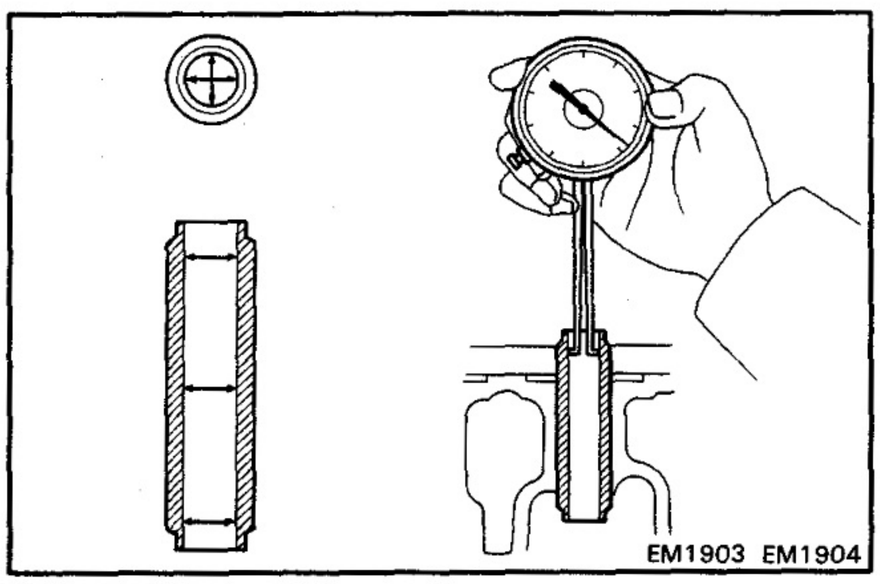

9. INSPECT VALVE STEM AND VALVE GUIDE BUSHING

(a) Using a caliper gauge or telescoping gauge, measure the inside diameter of the valve guide bushing.

Bushing inside diameter:
9.010 – 9.030 mm (0.3547 – 0.3555 in.)

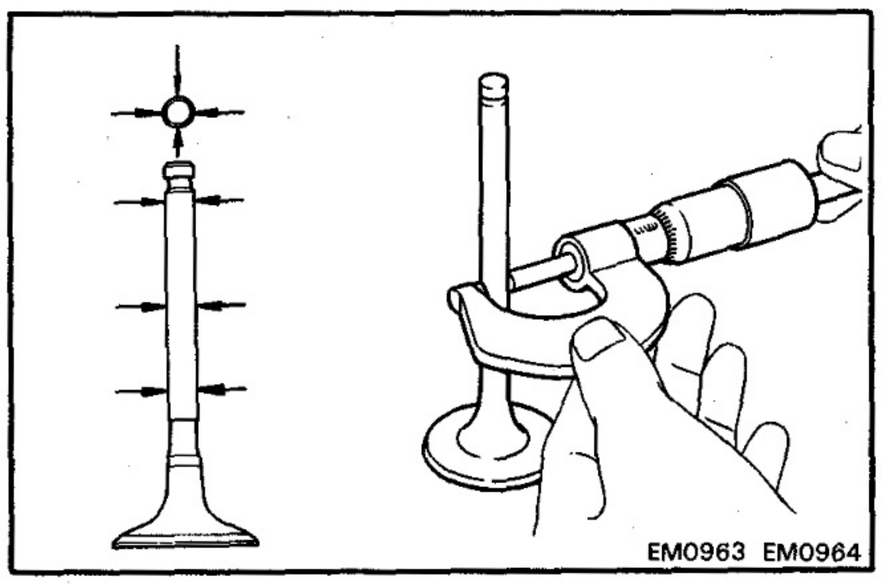

(b) Using a micrometer, measure the diameter of the valve stem.

Valve stem diameter:

Intake	**8.973 – 8.989 mm (0.3533 – 0.3539 in.)**
Exhaust	**8.954 – 8.970 mm (0.3525 – 0.3531 in.)**

(c) Subtract the valve stem diameter measurement from the bushing inside diameter measurement.

Standard stem oil clearance:

Intake	**0.021 – 0.057 mm (0.0008 – 0.0022 in.)**
Exhaust	**0.040 – 0.076 mm (0.0016 – 0.0030 in.)**

Maximum stem oil clearance:

Intake	**0.10 mm (0.0039 in.)**
Exhaust	**0.12 mm (0.0047 in.)**

If the clearance is greater than maximum, replace the valve and valve guide bushing.

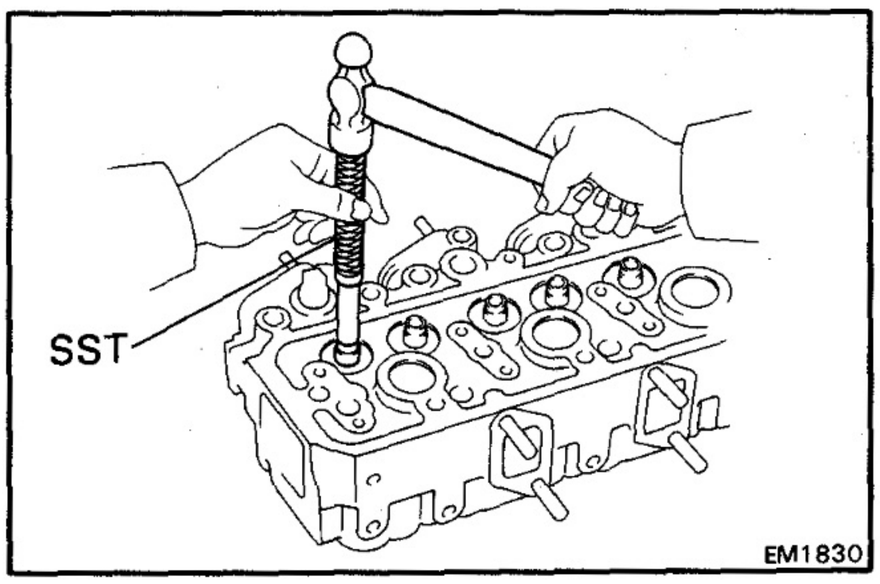

10. IF NECESSARY, REPLACE VALVE GUIDE BUSHING

(a) Using SST and a hammer, tap out the valve guide bushing.

SST 09201-60011

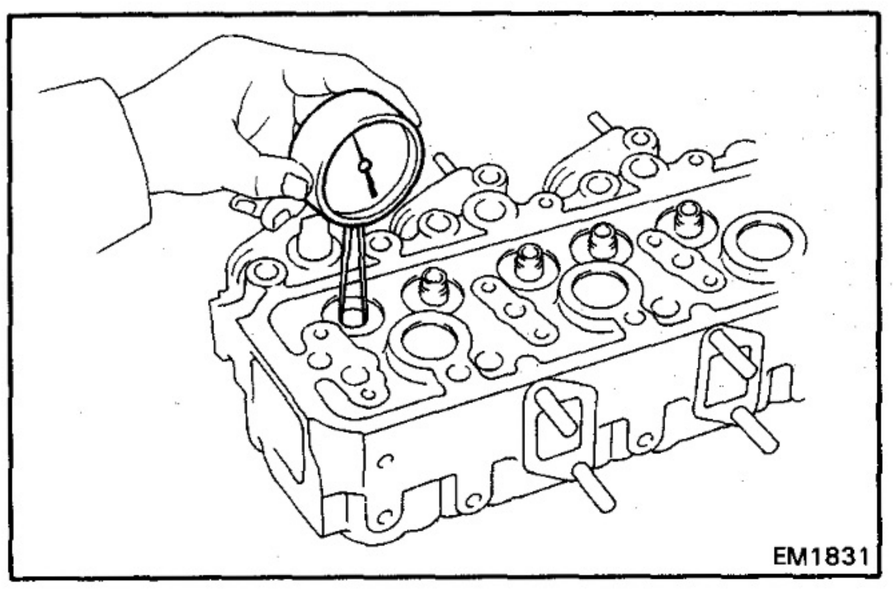

(b) Using a caliper gauge, measure the bushing bore diameter of the cylinder head.

If the bushing bore diameter of the cylinder head is more than 14.018 mm (0.5519 in.), replace the cylinder head.

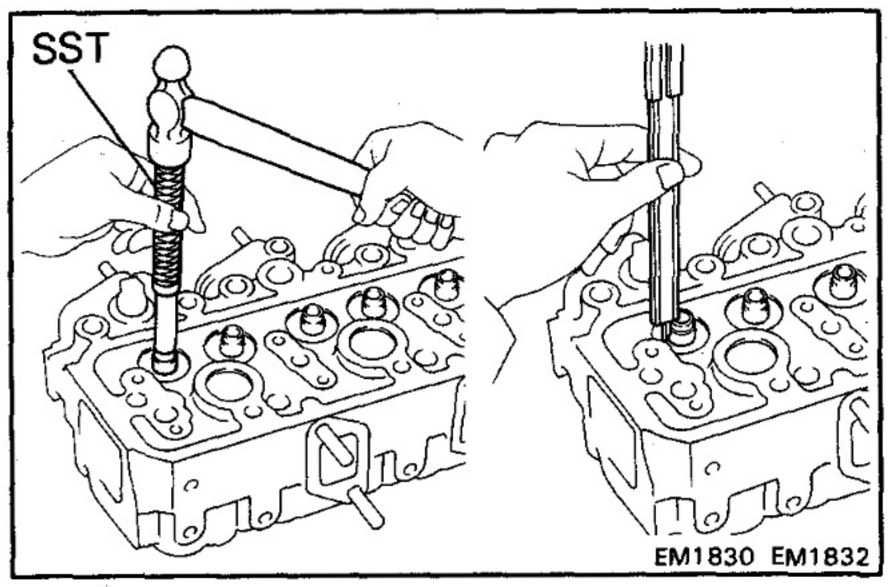

(c) Using SST and a hammer, tap in a new valve guide bushing to where there is 14.8 – 15.2 mm (0.583 – 0.598 in.) protruding from the cylinder head.

SST 09201-60011

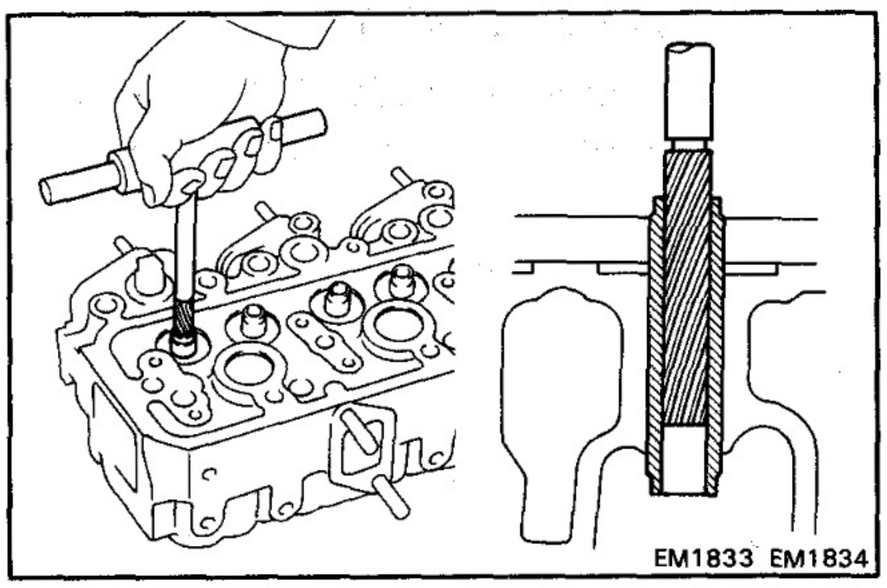

(d) Using a sharp 9.0 mm reamer, ream the valve guide bushing to obtain the standard specified clearance (See page EM-59) between the valve guide bushing and new valve stem.

11. INSPECT AND GRIND VALVES

(a) Grind the valve only enough to remove pits and carbon.

(b) Check that the valve is ground to the correct valve face angle.

Valve face angle: 44.5°

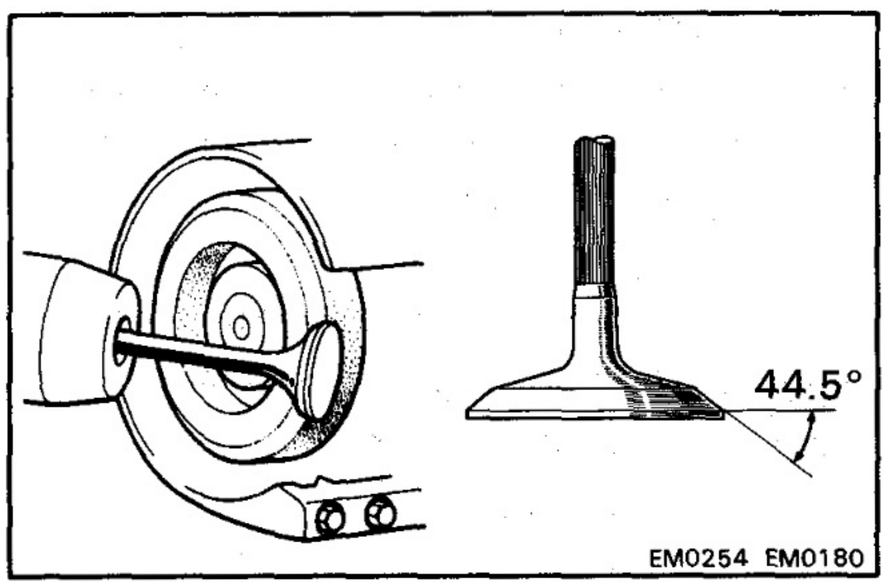

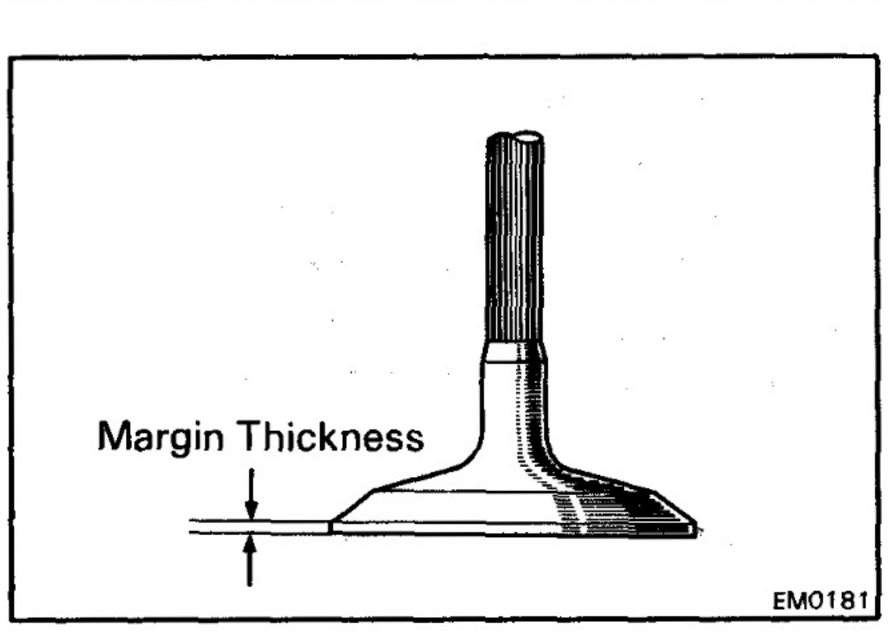

(c) Check the valve head margin thickness.

Standard margin thickness

Intake	**1.4 mm (0.055 in.)**
Exhaust	**1.8 mm (0.071 in.)**

Minimum margin thickness:

Intake	**0.9 mm (0.035 in.)**
Exhaust	**1.3 mm (0.051 in.)**

If the valve head margin thickness is less than minimum, replace the valve.

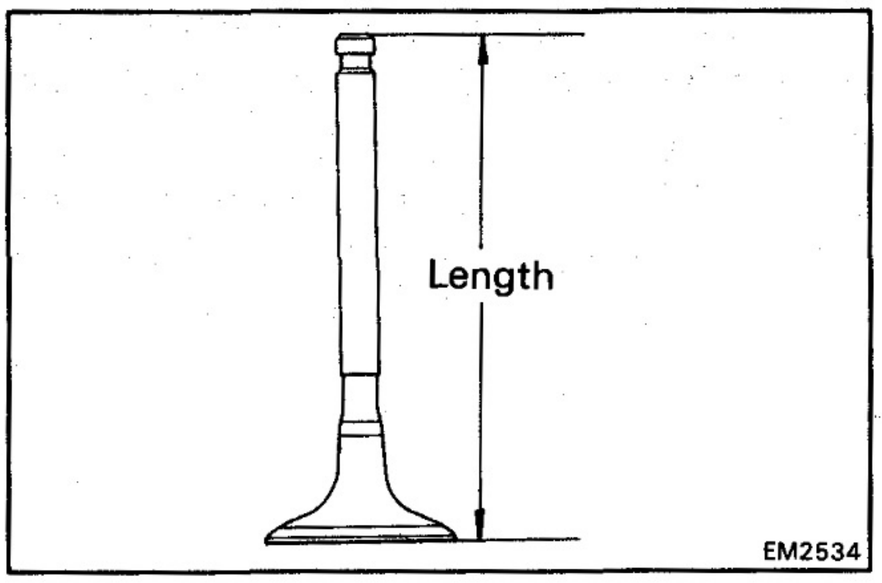

(d) Check the valve overall length.

Standard overall length:

Intake	**120.7 mm (4.752 in.)**
Exhaust	**120.6 mm (4.748 in.)**

Minimum overall length:

Intake	**120.2 mm (4.732 in.)**
Exhaust	**120.1 mm (4.728 in.)**

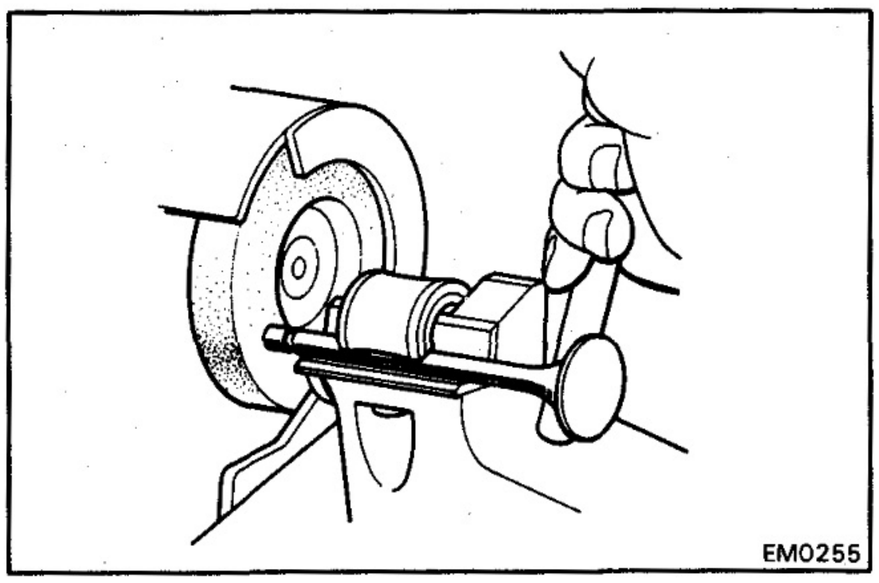

(e) If the valve stem tip is worn, resurface the tip with a grinder or replace the valve.

CAUTION: Do not grind off more than the minimum amount.

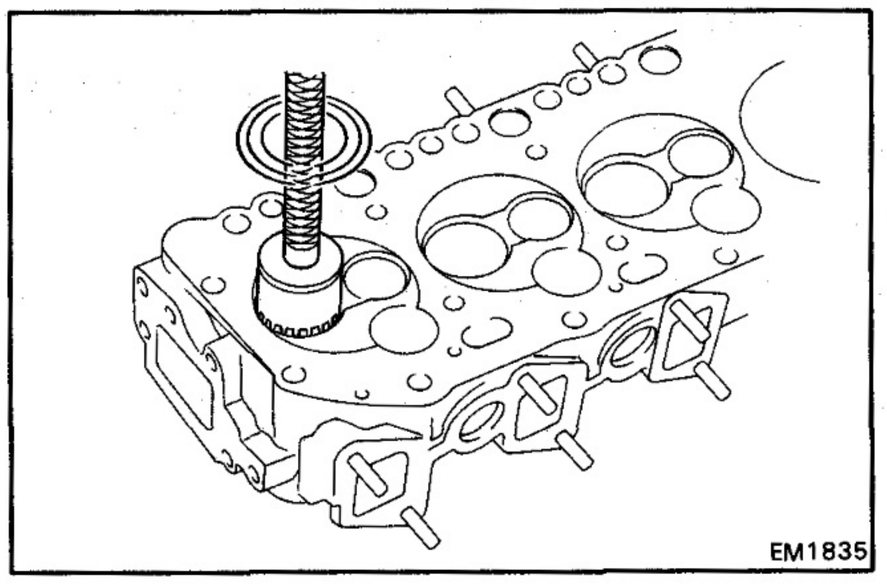

12. INSPECT AND CLEAN VALVE SEATS

(a) Using a 45° carbide cutter, resurface the valve seats. Remove only enough metal to clean the seats.

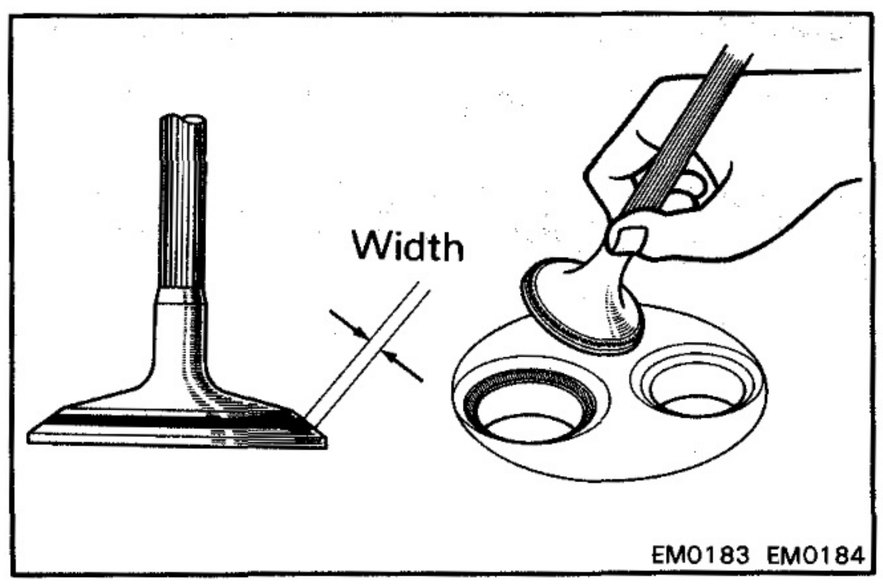

(b) Check the valve seating position.

Apply a thin coat of prussian blue (or white lead) to the valve face. Install the valve. While applying light pressure to the valve, rotate the valve against the seat.

(c) Check the valve face and seat for the following:

- If blue appears 360° around the face, the valve is concentric. If not, replace the valve.
- If blue appears 360° around the valve seat, the guide and seat are concentric. If not, resurface the seat.
- Check that the seat contact is on the middle of the valve face with the following width:
  1.4 – 2.0 mm (0.055 – 0.079 in.)

If not, correct the valve seat as follows:

(1) If the seating is too high on the valve face, use 30° and 45° cutters to correct the seat.

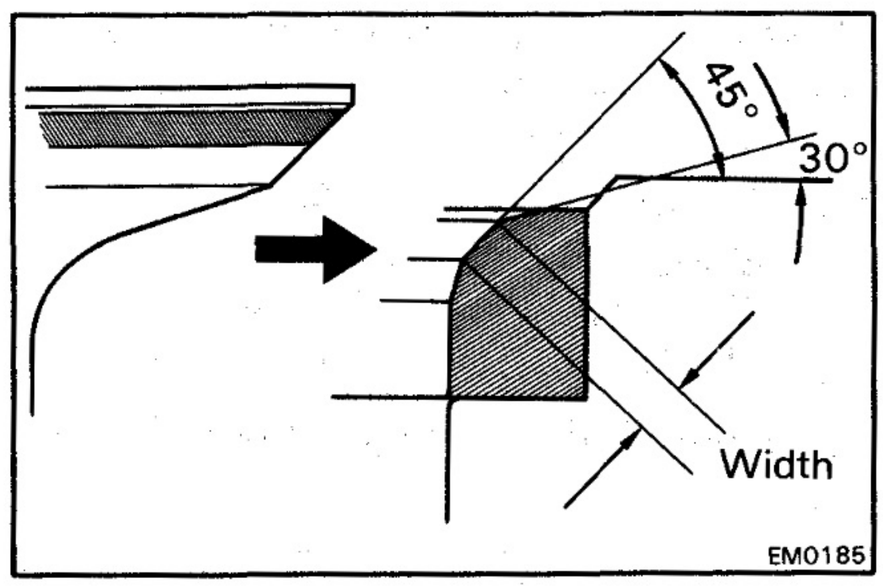

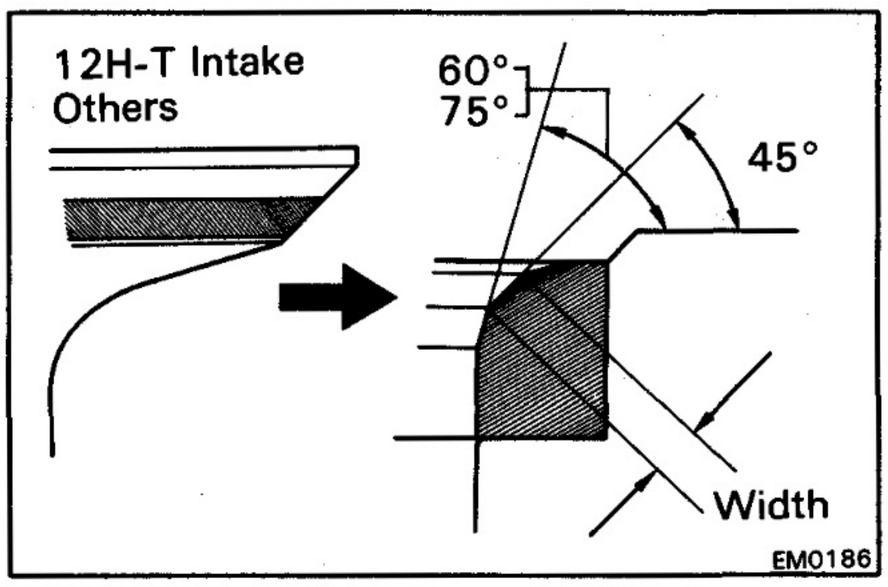

(2) [12H-T Intake]
If the seating is too low on the valve face, use 60° and 45° cutters to correct the seat.

(3) [Others]
If the seating is too low on the valve face, use 75° and 45° cutters to correct the seat.

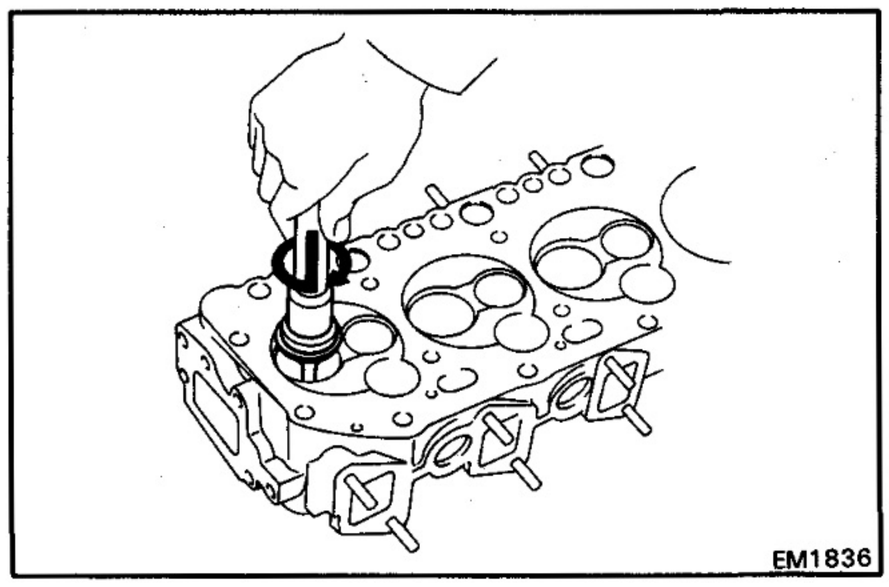

(d) Hand-lap the valve and valve seat with an abrasive compound.

(e) After hand-lapping, clean the valve and valve seat.

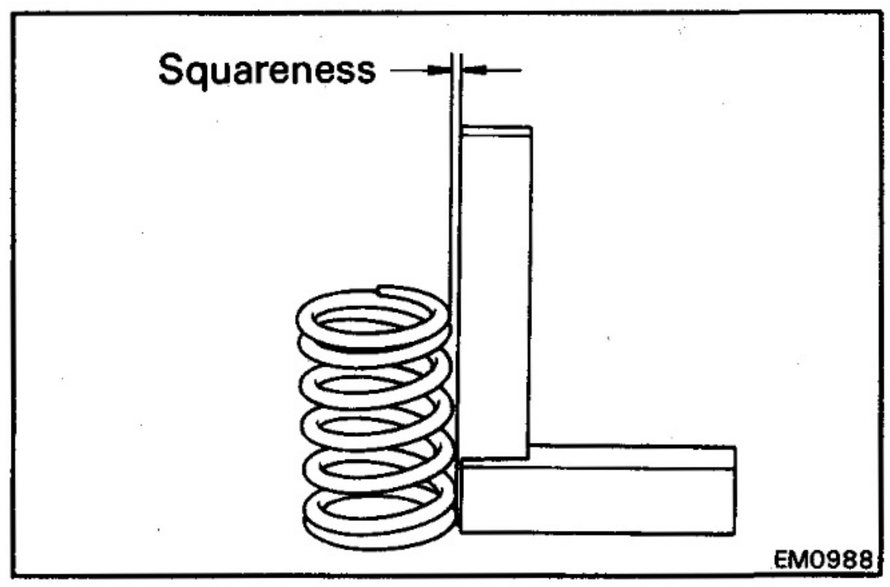

13. INSPECT VALVE SPRINGS

(a) Using a steel square, check the squareness of the valve spring.

Maximum squareness: 2.0 mm (0.079 in.)

If squareness is greater than maximum, replace the valve spring.

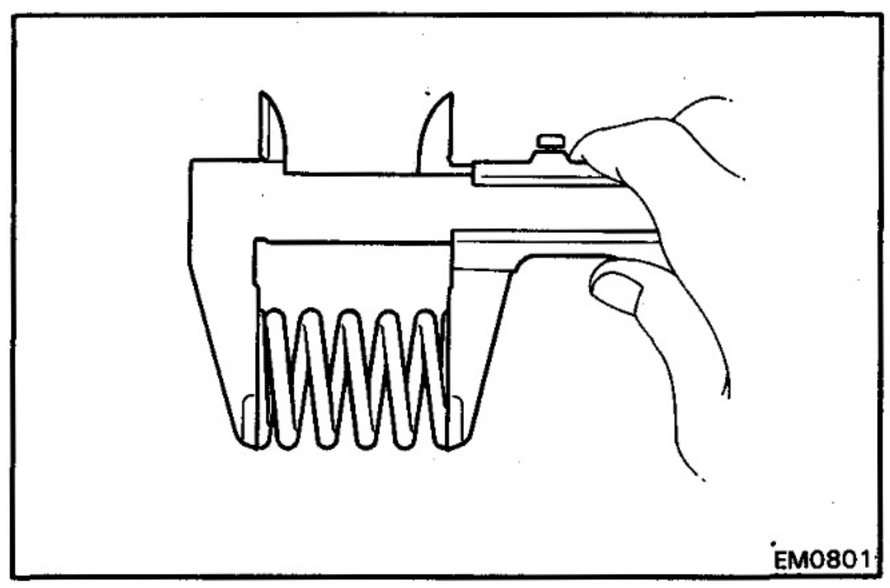

(b) Using calipers, measure the free length of the valve spring.

Free length:
Inner spring 44.3 mm (1.744 in.)
Outer spring 48.1 mm (1.894 in.)

If the free length is not as specified, replace the valve spring.

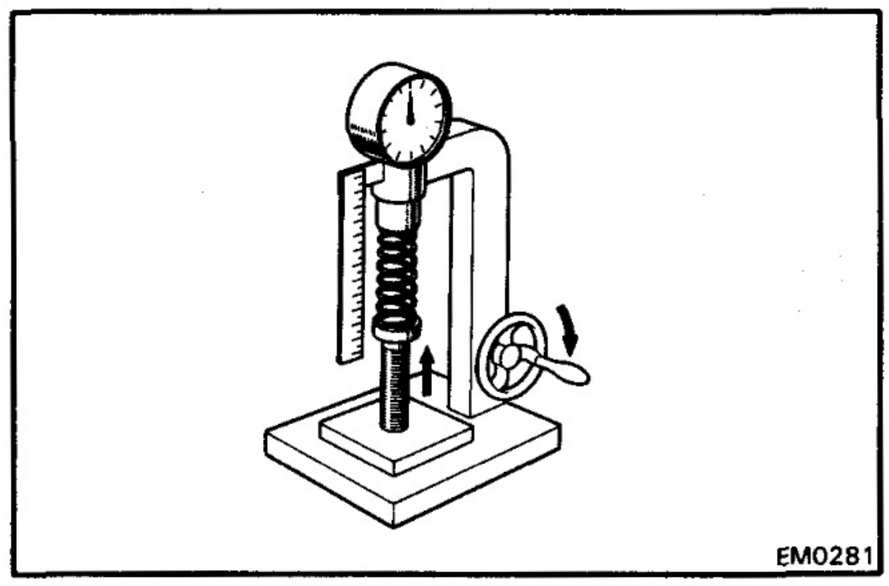

(c) Using a spring tester, measure the tension of the valve spring at the specified installed length.

Installed tension:
Inner spring 7.6 kg (16.8 lb, 75 N) at 36.0 mm (1.417 in.)
Outer spring 22.5 kg (49.6 lb, 221 N) at 40.0 mm (1.575 in.)

If the installed tension is not as specified, replace the valve spring.

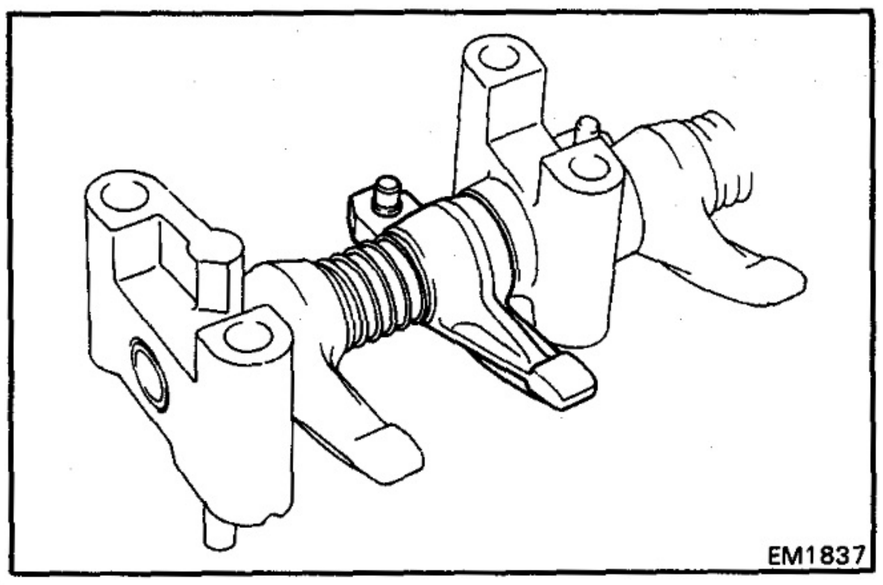

14. INSPECT ROCKER ARM AND SHAFT

(a) Check the valve contacting surface of the rocker arm for wear.

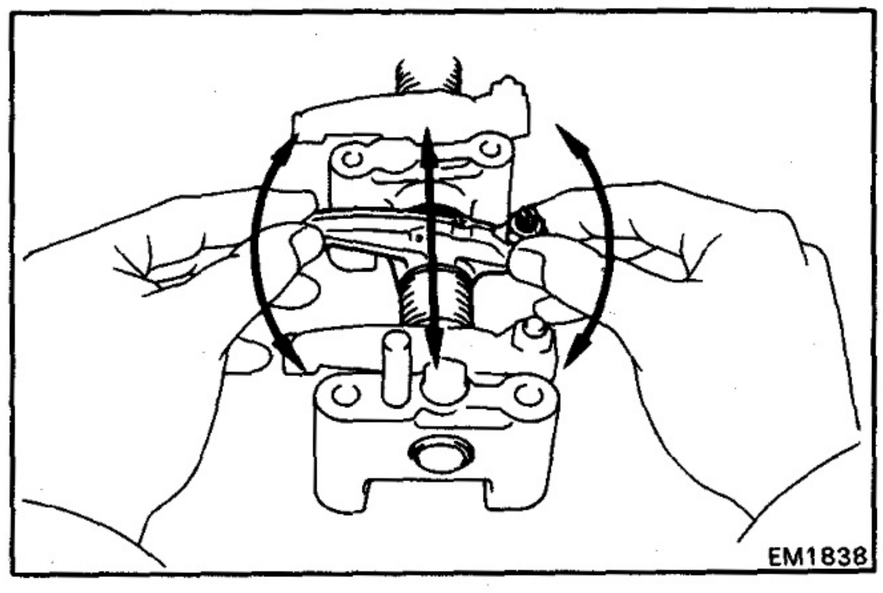

(b) Check the rocker arm-to-shaft clearance by moving each rocker arm as shown in the figure.

If movement is felt, disassemble and inspect.

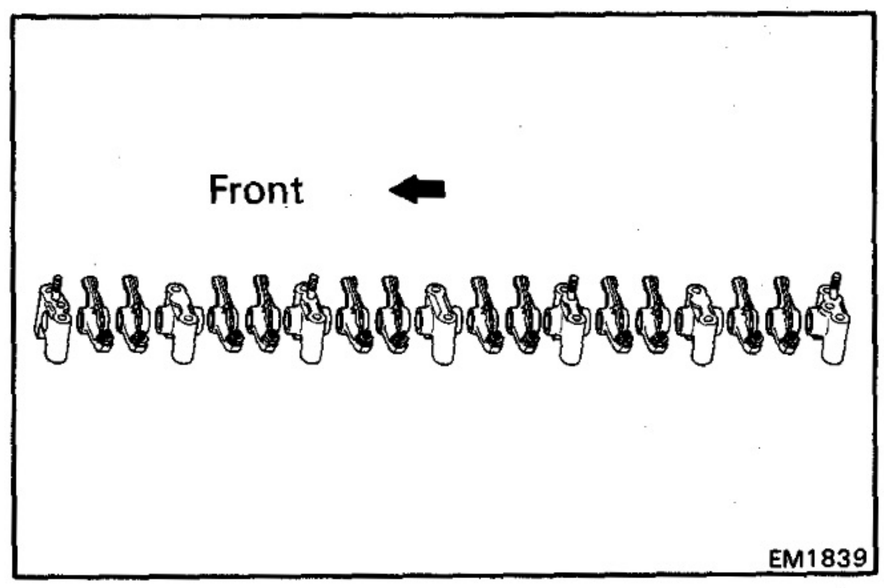

(c) Disassemble the valve rocker shaft assembly.

NOTE: Arrange the rocker arms and rocker supports in correct order.

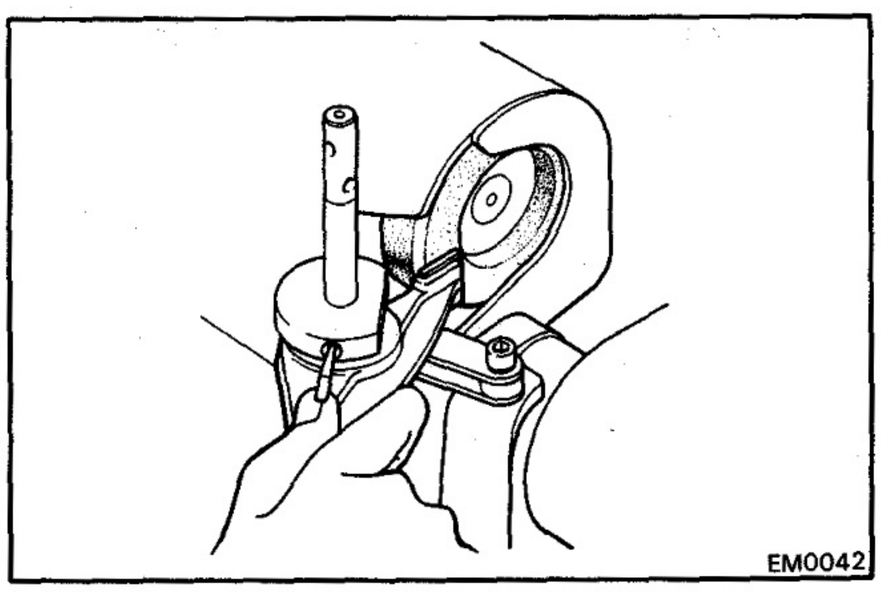

If the contacting surface of the rocker arm is worn, resurface it with a valve refacer and oil stone, or replace the rocker arm.

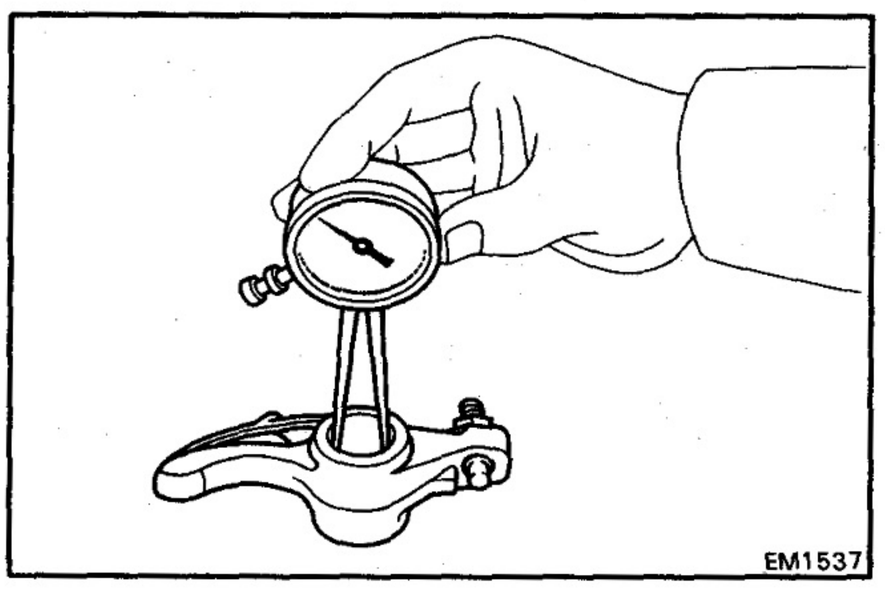

(d) Check the oil clearance between the rocker arm and shaft.

- Using a caliper gauge, measure the inside diameter of the rocker arm.

Rocker arm inside diameter:
18.500 — 18.521 mm (0.7283 — 0.7292 in.)

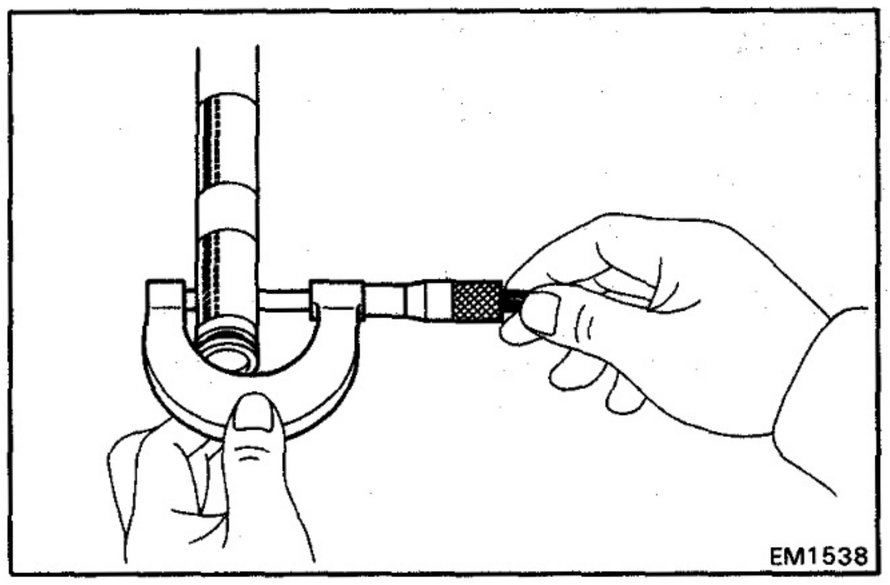

- Using a micrometer, measure the diameter of the rocker shaft.

Rocker shaft diameter:
18.472 – 18.493 mm (0.7272 – 0.7281 in.)

- Subtract the rocker shaft diameter measurement from the inside diameter measurement of the rocker arm.

Standard oil clearance: **0.007 – 0.049 mm (0.0003 – 0.0019 in.)**
Maximum oil clearance: **0.10 mm (0.0039 in.)**

If the clearance is greater than maximum, replace the rocker arm and shaft.

(e) Assemble the valve rocker shaft assembly as shown.

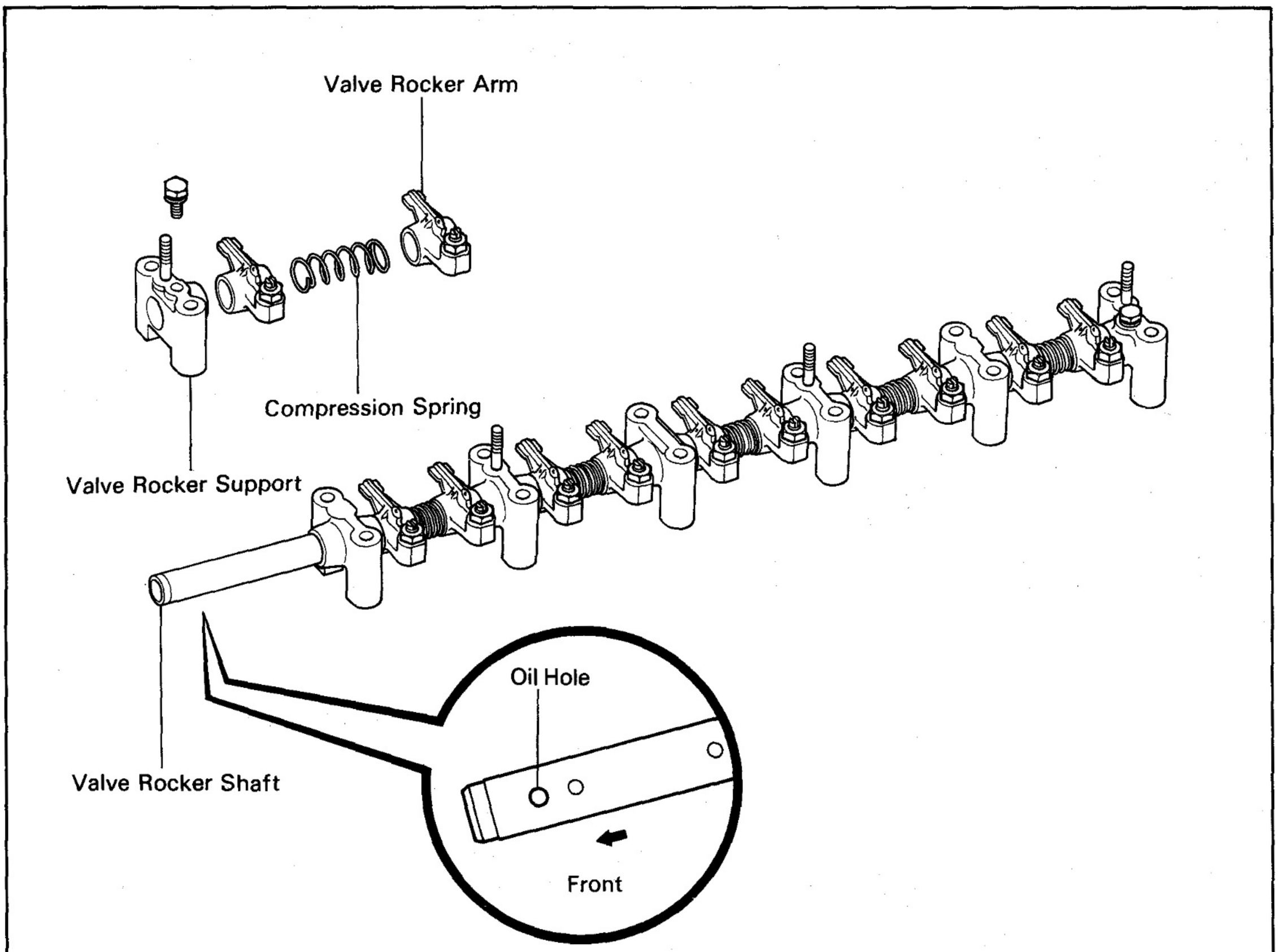

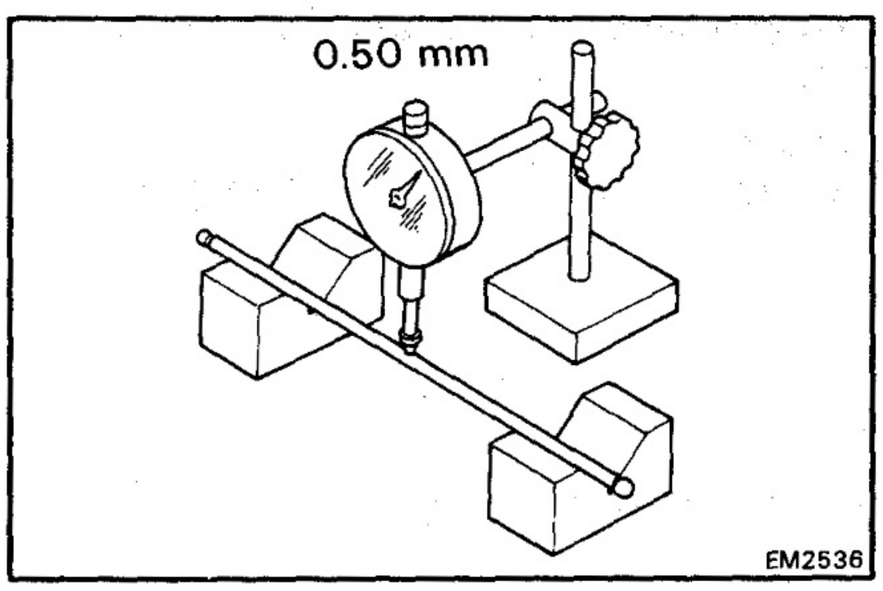

15. INSPECT PUSH RODS

(a) Place the push rod on V-blocks.

(b) Using a dial indicator, measure the circle runout at the center of the push rod.

Maximum circle runout: 0.50 mm (0.0197 in.)

If the circle runout is greater than maximum, replace the push rod.

16. INSPECT INTAKE AND EXHAUST MANIFOLDS

Using a precision straight edge and feeler gauge, measure the surface contacting the cylinder head for warpage.

Maximum warpage:

Intake	**0.50 mm (0.0197 in.)**
Exhaust	
2H (Front and rear)	**0.30 mm (0.0118 in.)**
12H-T (Front)	**0.30 mm (0.0118 in.)**
12H-T (Rear)	**0.20 mm (0.0079 in.)**

If warapage is greater than maximum, replace the manifold.

Intake Manifold [2H]

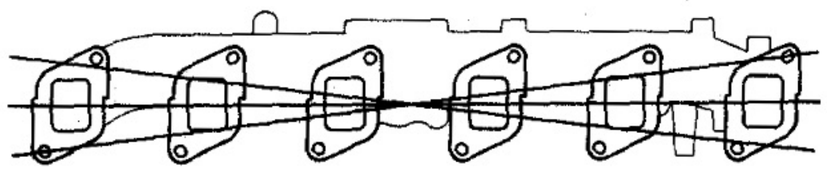

Intake Manifold [12H-T]

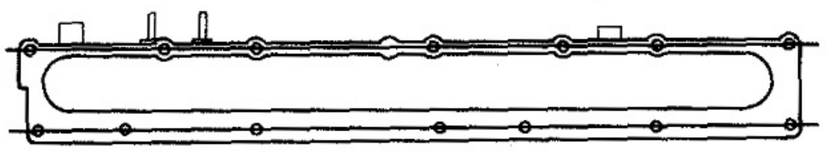

Exhaust Manifold [2H]

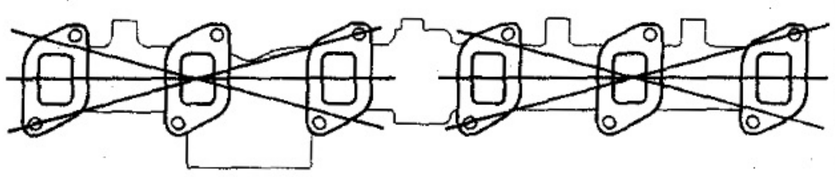

Exhaust Manifold [12H-T]

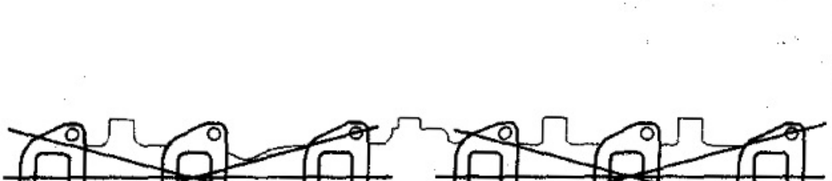

EM2070
EM2071
EM2841
EM2072

ASSEMBLY OF CYLINDER HEAD

(See page EM-47) 2H
(See page EM-48) 12H-T

NOTE:
- Thoroughly clean all parts to be assembled.
- Before installing the parts, apply new engine oil to all sliding and rotating surfaces.
- Replace all gaskets and oil seals with new ones.

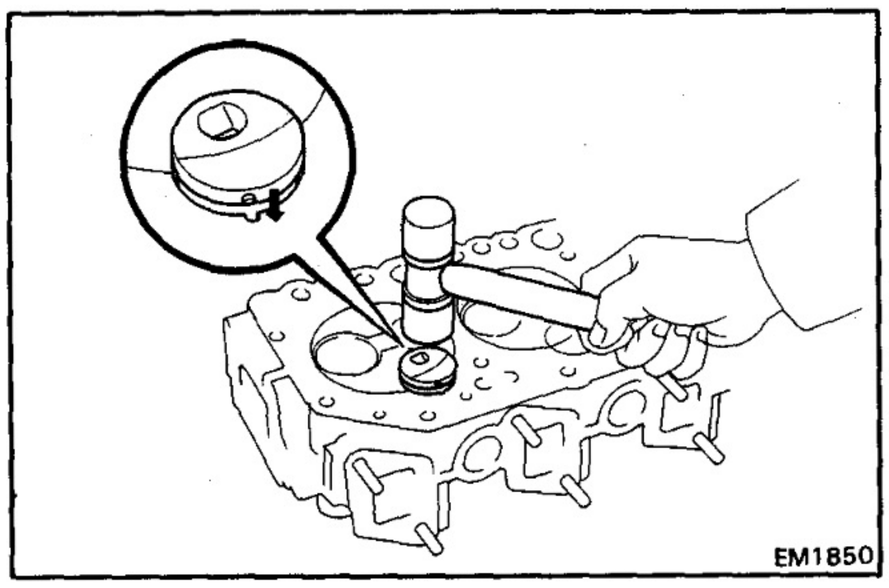

1. [2H]
INSTALL COMBUSTION CHAMBERS

(a) Align the combustion chamber knock pin with the cylinder head notch.

(b) Using a plastic-faced hammer, tap in the combustion chamber with the shim.

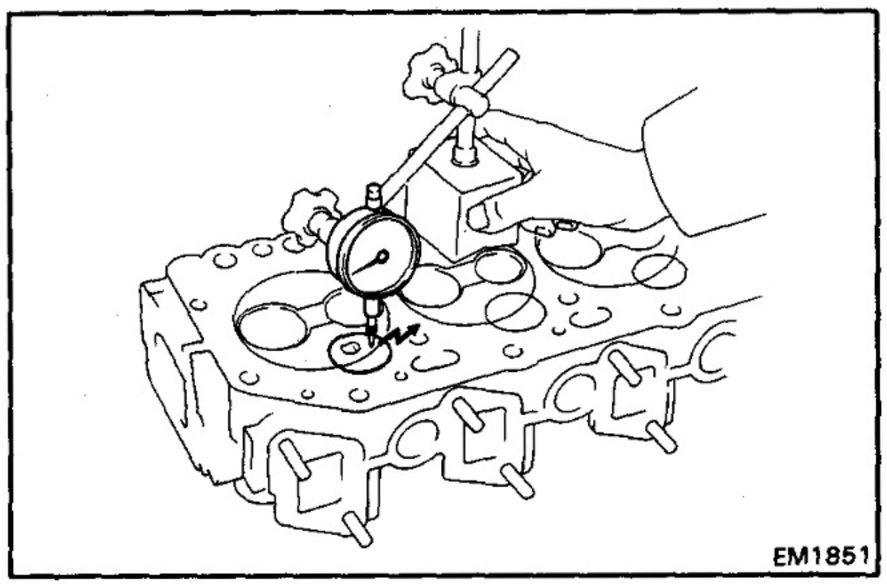

(c) Using a dial indicator, check the combustion chamber protrusion.

Combustion chamber protrusion:
0 – 0.10 mm (0 – 0.0039 in.)

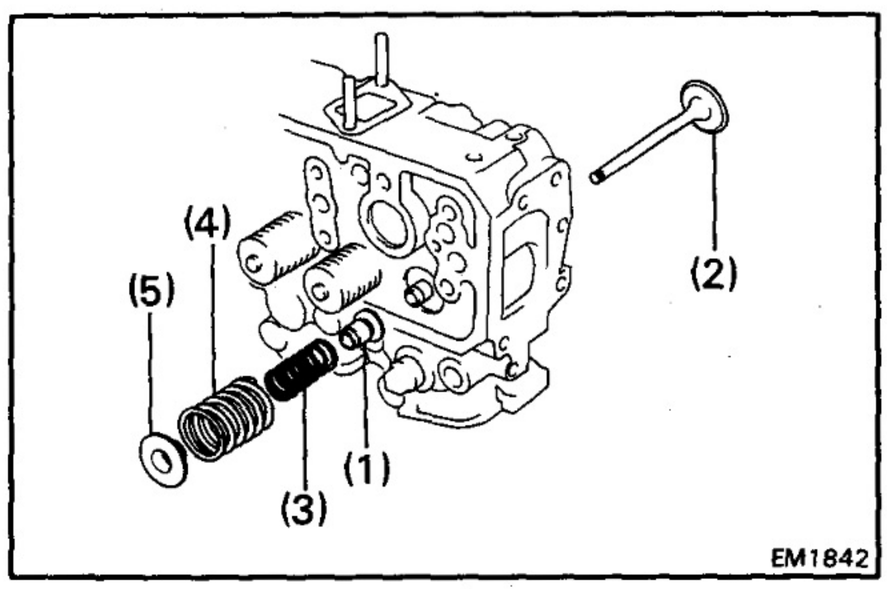

2. INSTALL VALVES

(a) Install the following parts:
(1) New oil seal
(2) Valve
(3) Inner spring
(4) Outer spring
(5) Spring retainer

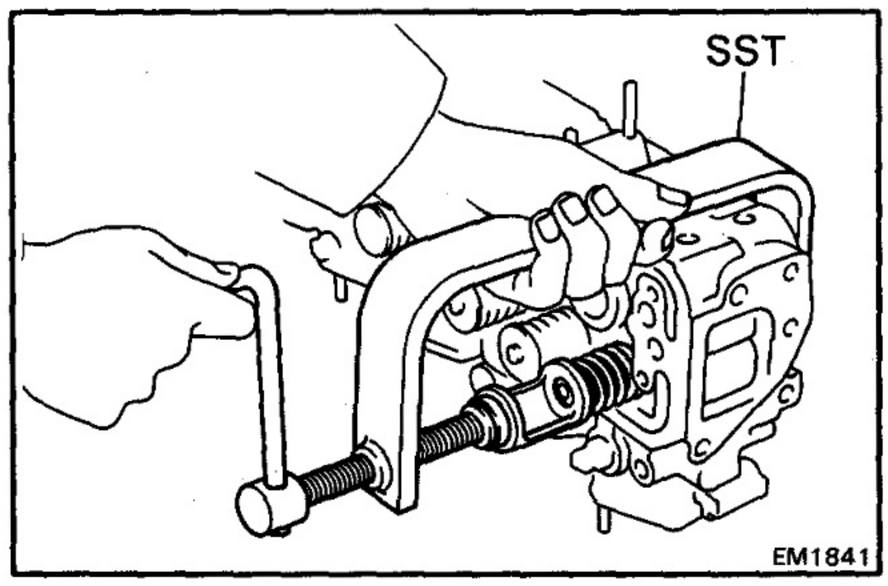

(b) Using SST, compress the valve spring and place the two keepers around the valve stem.

SST 09202-43013

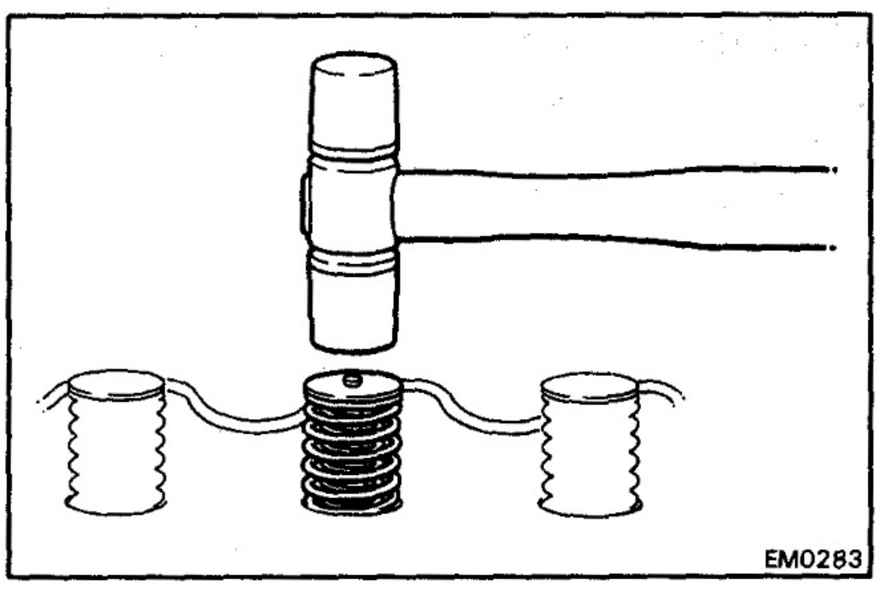

(c) Using a plastic-faced hammer, lightly tap the valve stem to assure proper fit.

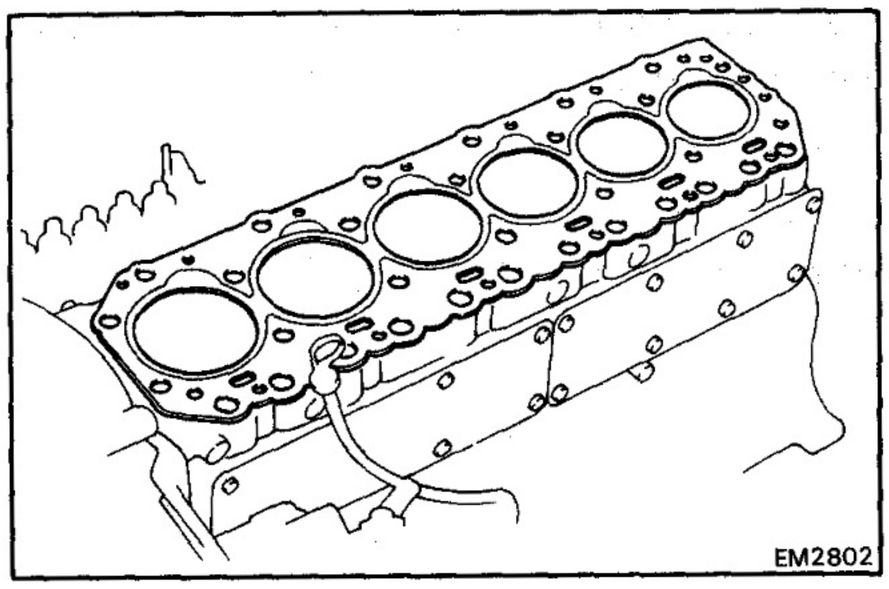

INSTALLATION OF CYLINDER HEAD [2H]

(See page EM-47)

1. INSTALL CYLINDER HEAD

(a) Place a new cylinder head gasket on the cylinder block.

CAUTION: Be careful of the installation direction.

(b) Place the cylinder head on the cylinder head gasket.

(c) Apply a light coat of engine oil on the threads and under the cylinder head bolts.

(d) Install and uniformly tighten the twenty-six cylinder head bolts in several passes, in the sequence shown.

Torque: 1,150 kg-cm (83 ft-lb, 113 N·m)

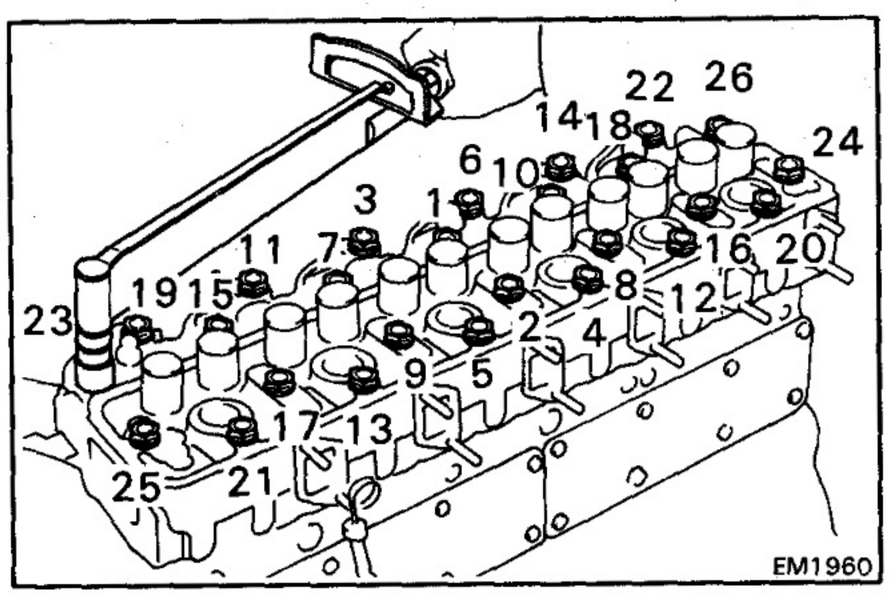

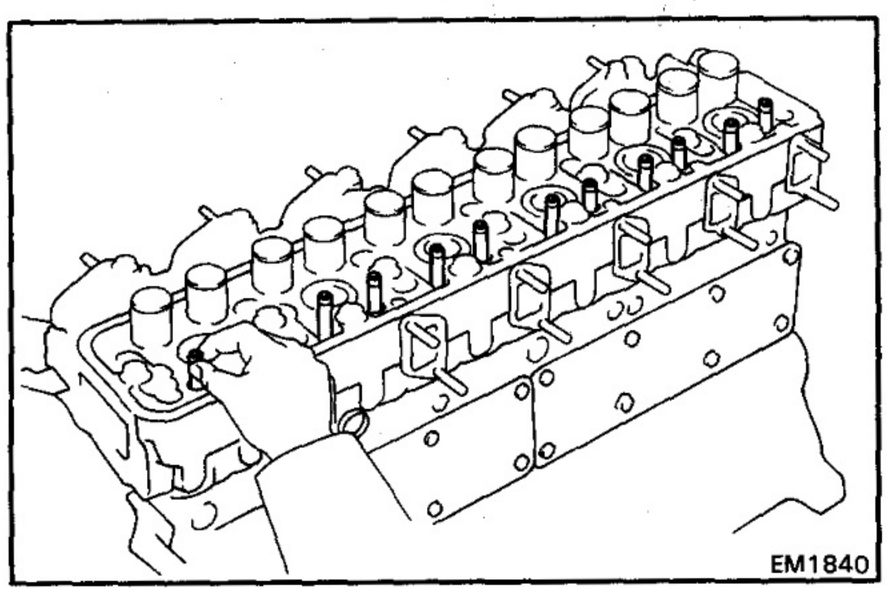

2. INSTALL PUSH RODS

Install the twelve push rods.

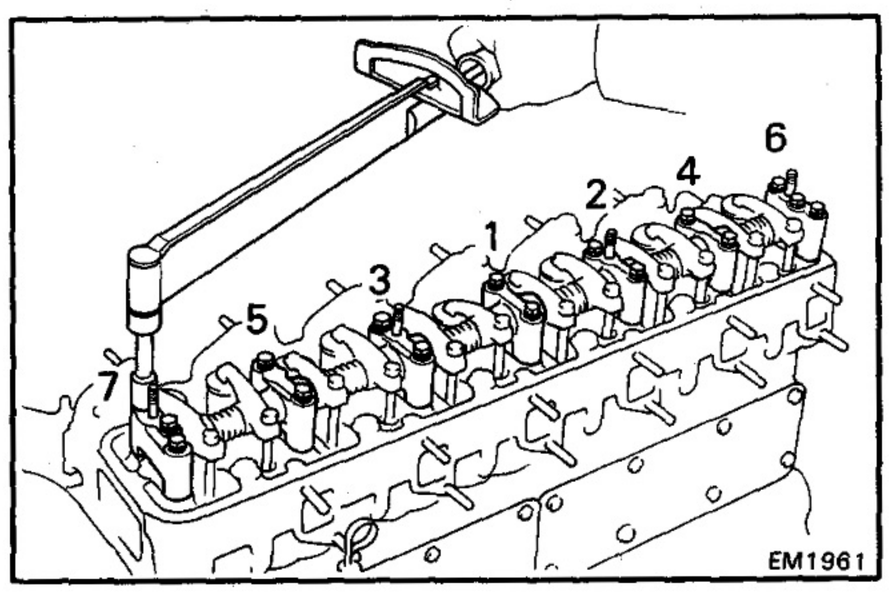

3. INSTALL VALVE ROCKER SHAFT ASSEMBLY

(a) Place the rocker shaft assembly on the cylinder head.

(b) Install and uniformly tighten the fourteen bolts in several passes, in the sequence shown.

Torque: 185 kg-cm (13 ft-lb, 18 N·m)

4. ADJUST VALVE CLEARANCES

(See steps 4 and 5 on page EM-22)

Valve clearance (Reference):

Intake	**0.20 mm (0.008 in.)**
Exhaust	**0.36 mm (0.014 in.)**

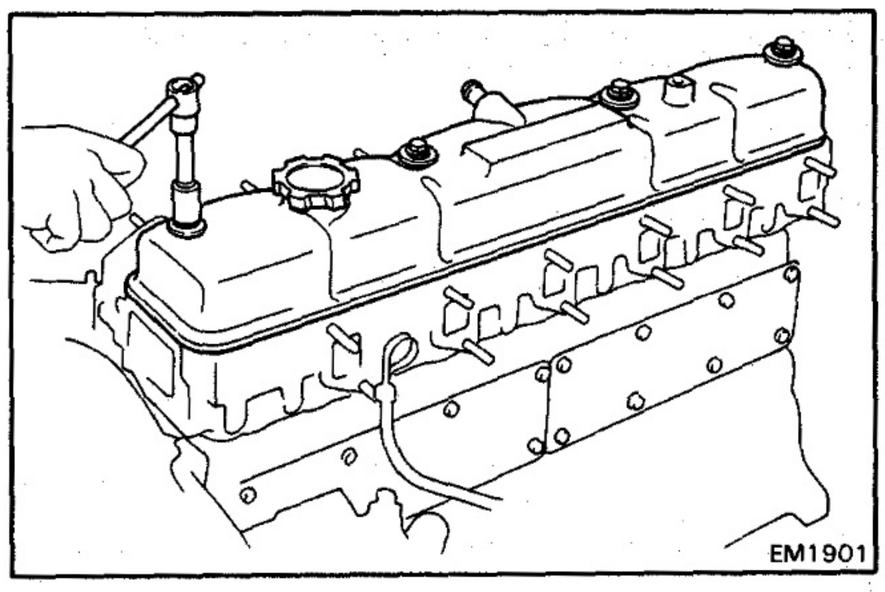

5. INSTALL CYLINDER HEAD COVER

(a) Install a new gasket to the cylinder head cover.

(b) Install the cylinder head cover with the four seal washers and cap nuts.

Torque: 70 kg-cm (61 in.-lb, 6.9 N·m)

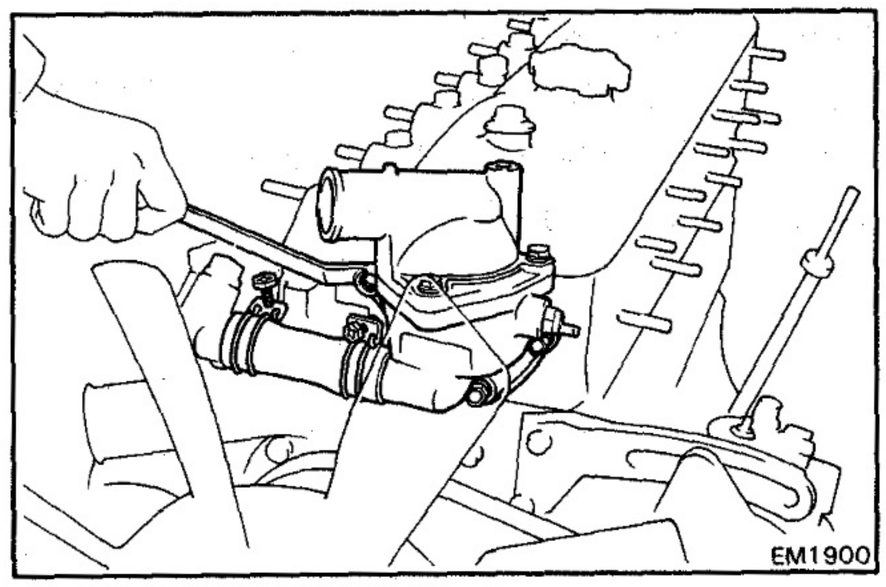

6. INSTALL WATER OUTLET ASSEMBLY

Connect the water by-pass hose to the water pump, and install a new gasket and the water outlet assembly with the three bolts.

Torque: 375 kg-cm (27 ft-lb, 37 N·m)

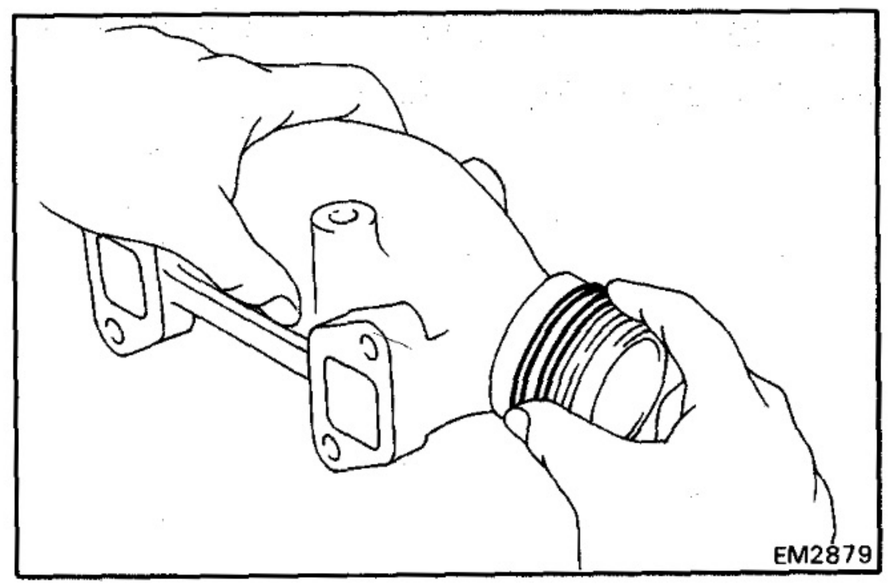

7. ASSEMBLE EXHAUST MANIFOLDS

(a) Remove all the O-ring material from the manifold grooves.

(b) Install new two O-rings.

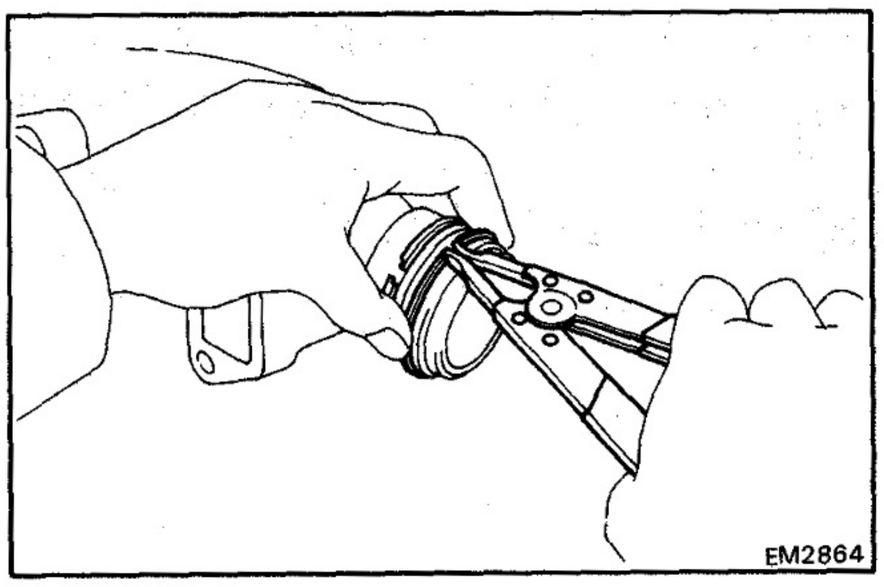

(c) Using snap ring pliers, install the two manifold rings.

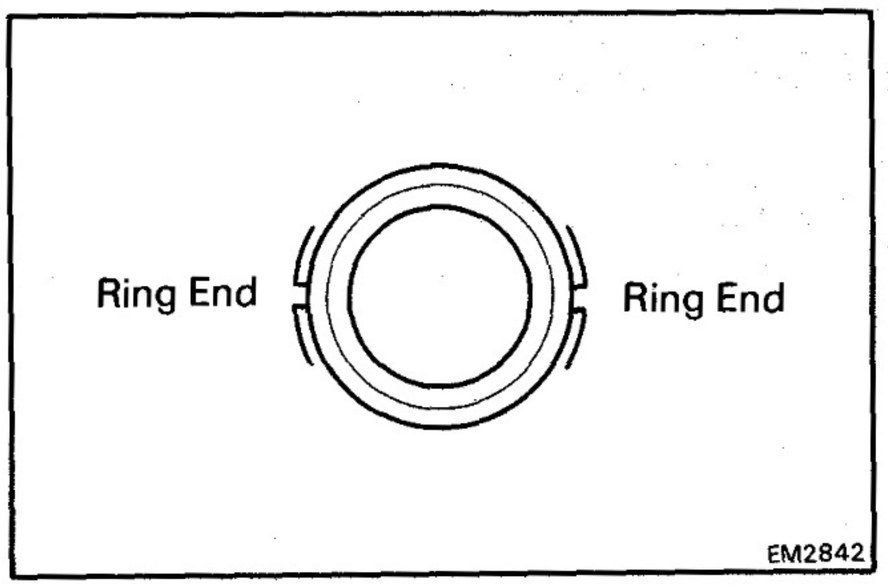

(d) Position the manifold rings so that the ring ends are as shown.

CAUTION: Do not align the ends.

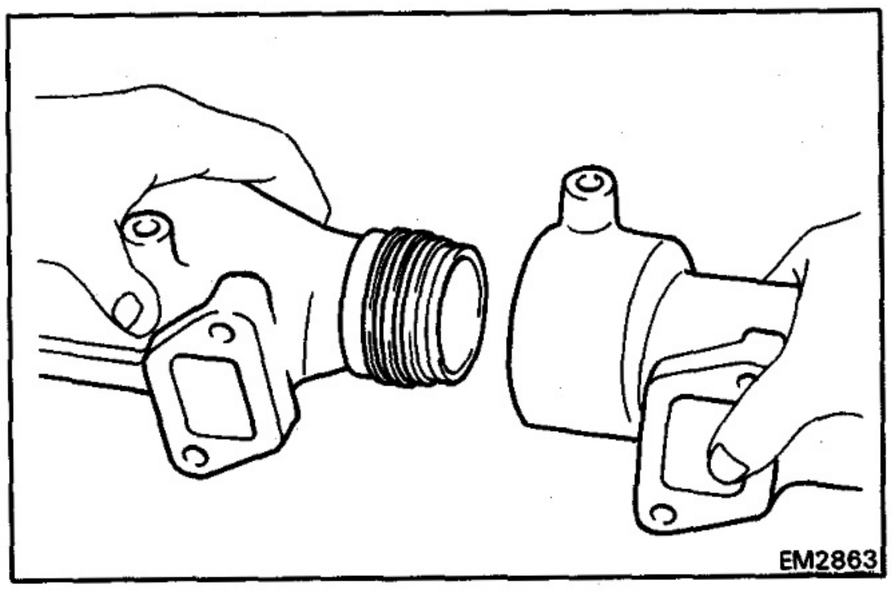

(e) Assemble the front and rear manifolds.

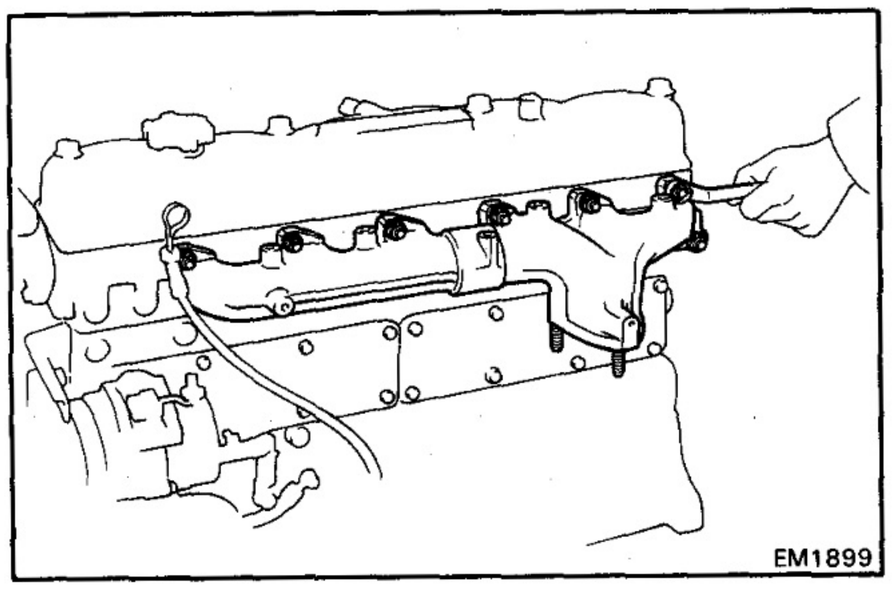

8. INSTALL EXHAUST MANIFOLDS

(a) Install new six gaskets and the exhaust manifolds with the twelve plate washers and new nuts.

Torque: 210 kg-cm (15 ft-lb, 21 N·m)

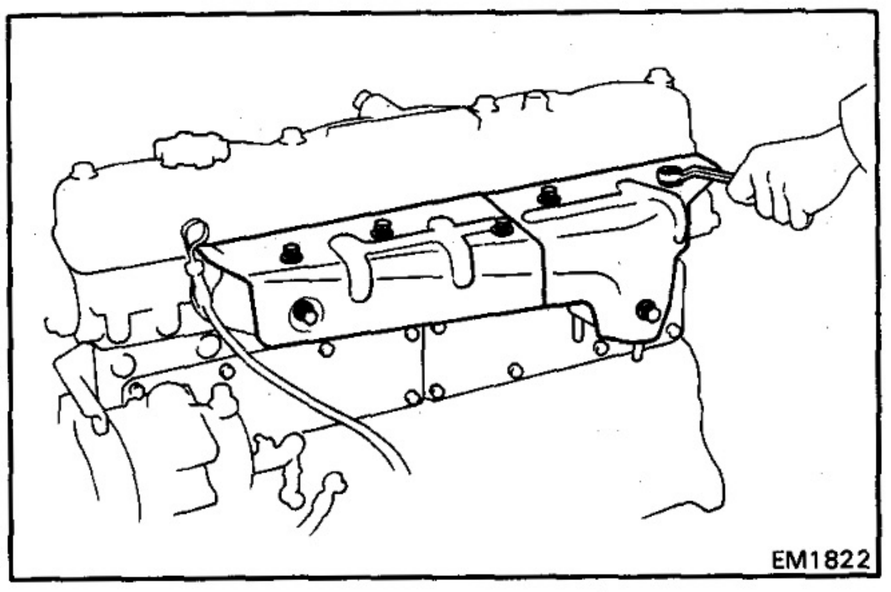

(b) Install the two heat insulators with the seven bolts.

Torque: 185 kg-cm (13 ft-lb, 18 N·m)

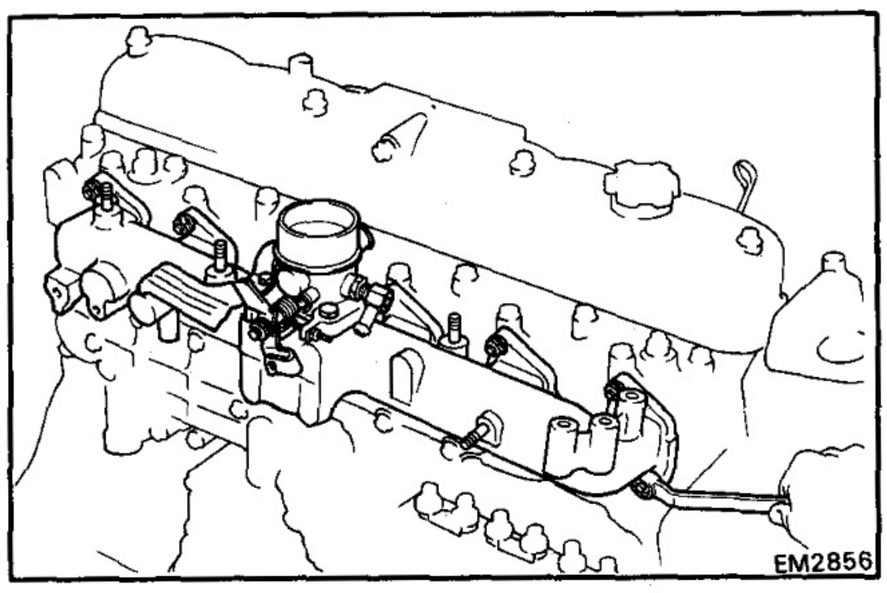

9. INSTALL INTAKE MANIFOLD

(a) Install new six gaskets and the intake manifold with the twelve nuts.

Torque: 185 kg-cm (13 ft-lb, 18 N·m)

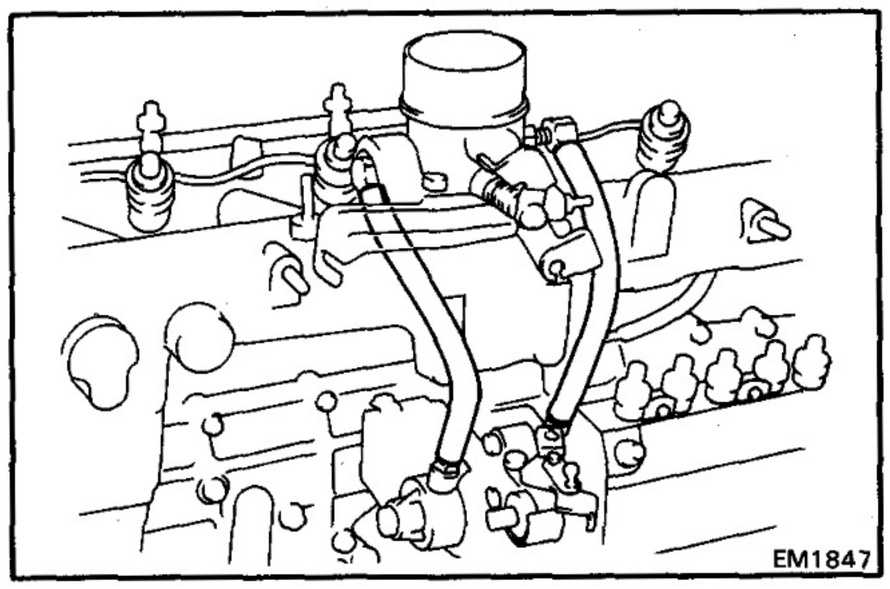

(b) [M/T]
Install the two vacuum hoses.

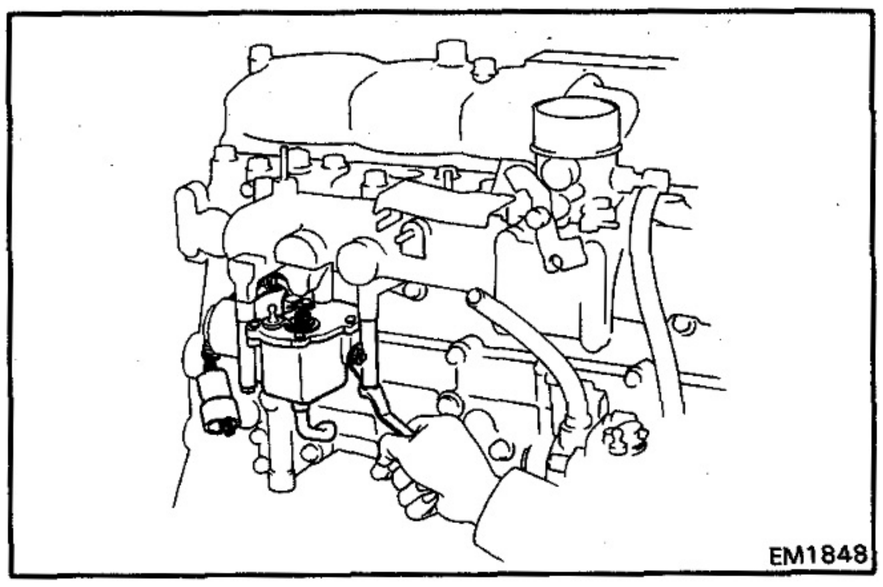

10. [M/T (w/ EDIC SYSTEM)]
INSTALL EDIC MOTOR

(a) Install the EDIC motor with the collar and three bolts.

(b) Install the connecting rod.

11. [M/T (w/o EDIC SYSTEM)]
INSTALL OVERINJECTION MAGNET

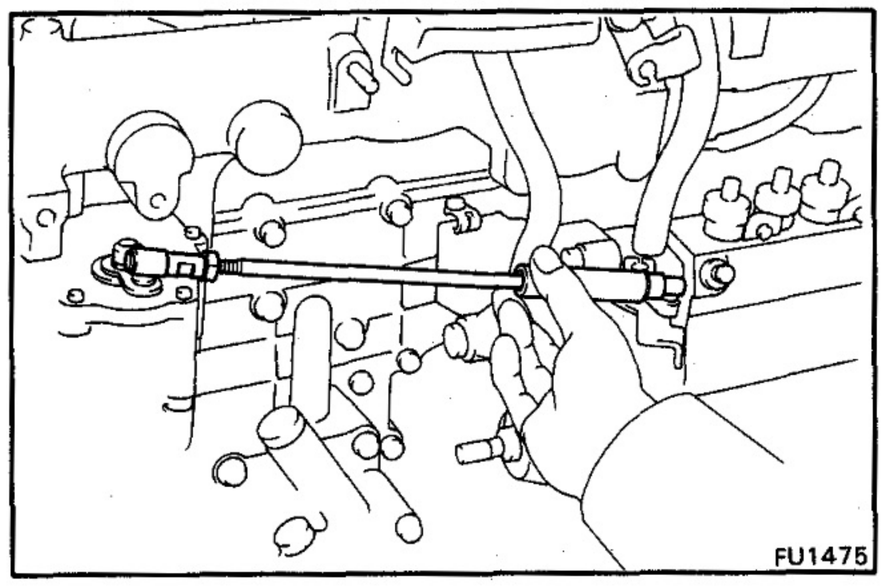

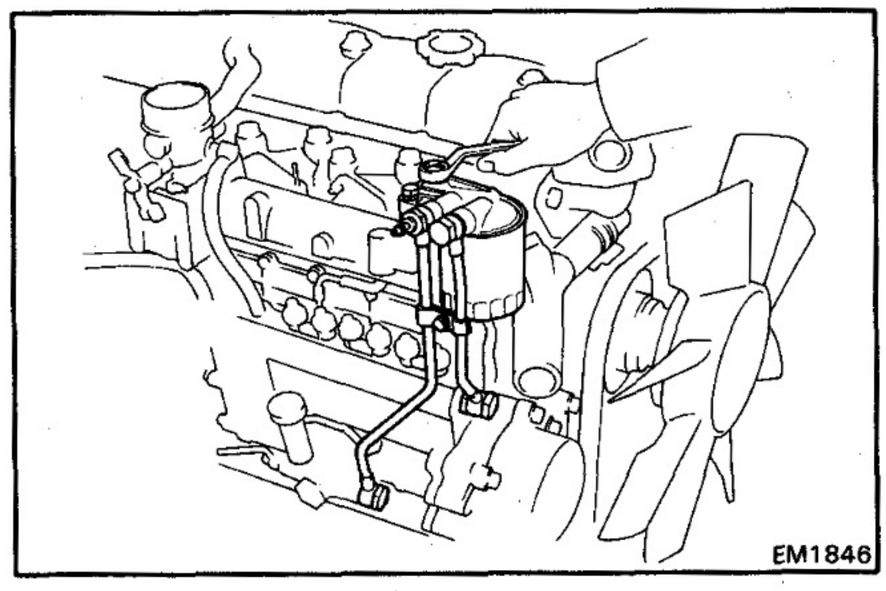

12. INSTALL FUEL FILTER ASSEMBLY

(a) Install the fuel filter assembly with the two bolts.

Torque: 375 kg-cm (27 ft-lb, 37 N·m)

(b) Connect the two fuel pipes to the injection pump with new four gaskets and the two union bolts. Torque the union bolts.

Torque: 280 kg-cm (20 ft-lb, 28 N·m)

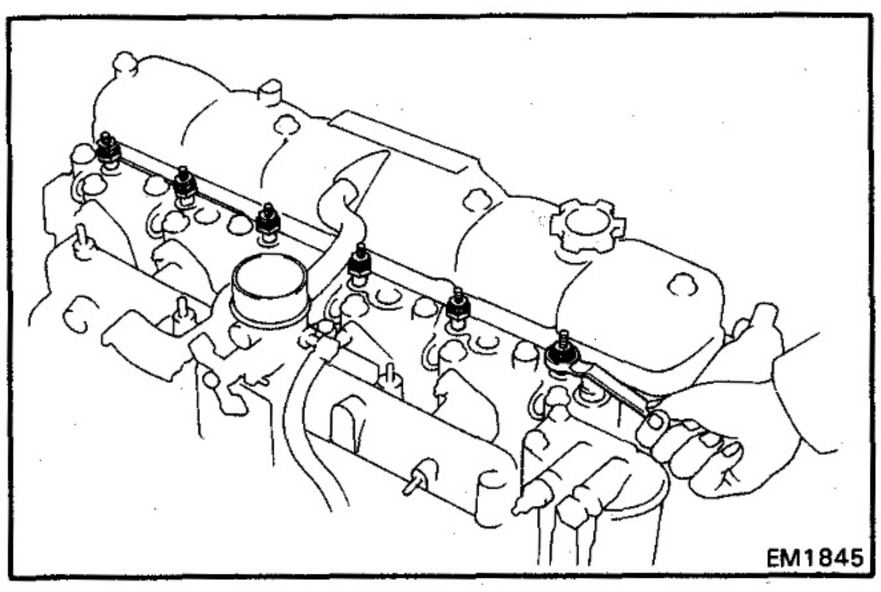

13. INSTALL GLOW PLUGS

(a) Install the six glow plugs.

Torque: 125 kg-cm (9 ft-lb, 12 N·m)

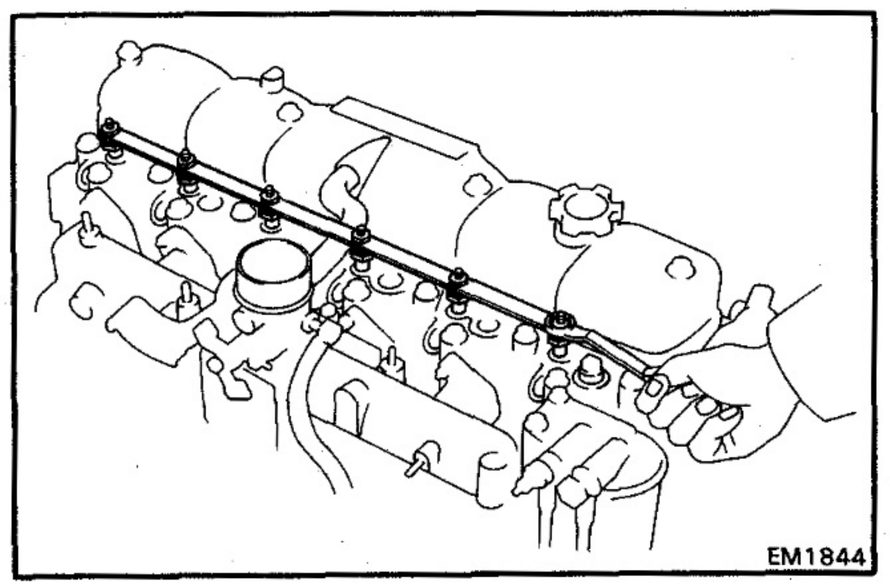

(b) Install the glow plug connector with the six nuts.

(c) [Pre-heating System (Supper Glow Type)]
Install the current sensor plate.

(d) Install the six screw grommets.

14. **INSTALL INJECTION NOZZLES**
    (See steps 1 to 3 on page EM-8)

15. **INSTALL PCV HOSE**

16. **FILL WITH ENGINE COOLANT (See page CO-3)**

17. **START ENGINE AND CHECK FOR LEAKS**

18. **CHECK ENGINE OIL LEVEL (See page LU-3)**

19. **READJUST VALVE CLEARANCES**
    (See steps 1, 3 to 6 on page EM-22)

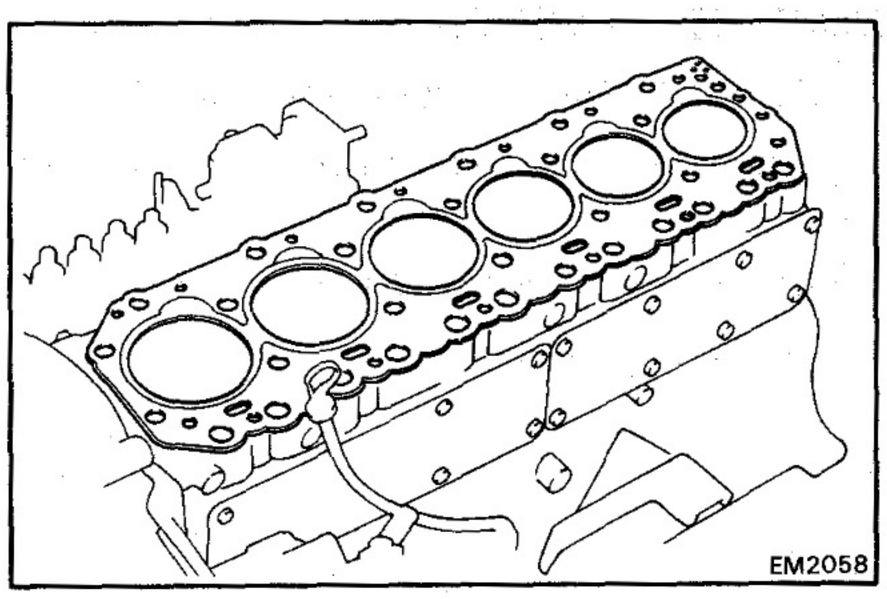

INSTALLATION OF CYLINDER HEAD [12H-T]

(See page EM-48)

1. INSTALL CYLINDER HEAD

(a) Place a new cylinder head gasket on the cylinder block.

CAUTION: Be careful of the installation direction.

(b) Place the cylinder head on the cylinder head gasket.

(c) Apply a light coat of engine oil on the threads and under the cylinder head bolts.

(d) Install and uniformly tighten the twenty-six cylinder head bolts in several passes, in the sequence shown.

Torque: 1,150 kg-cm (83 ft-lb, 113 N·m)

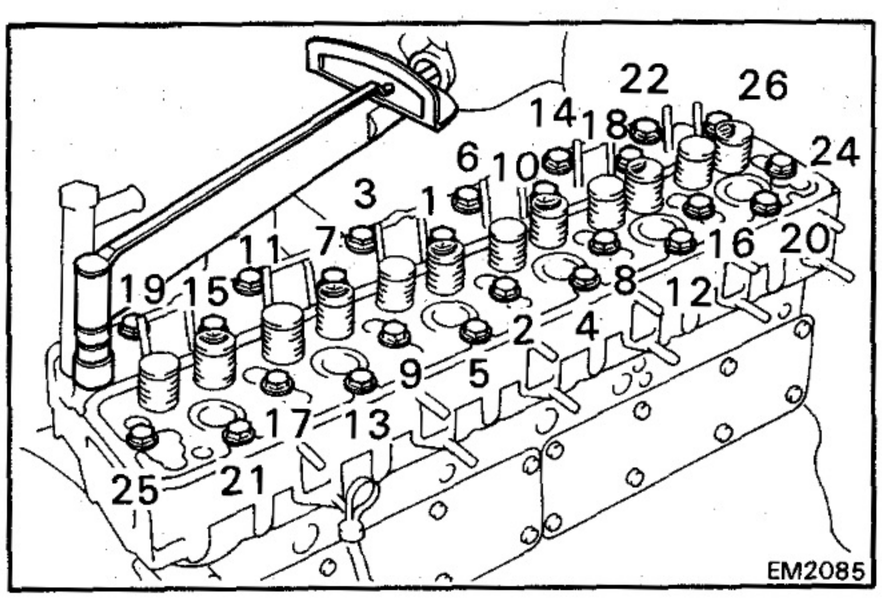

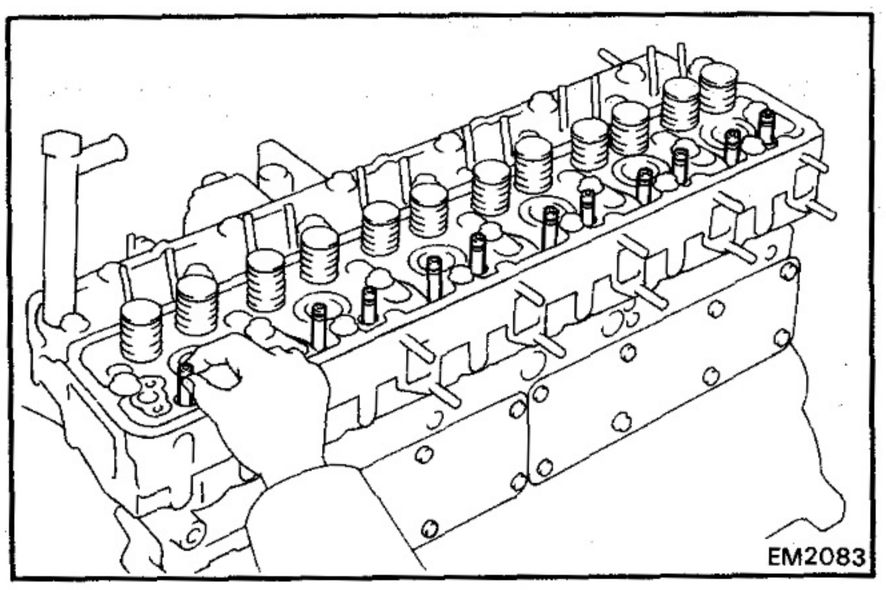

2. INSTALL PUSH RODS

Install the twelve push rods.

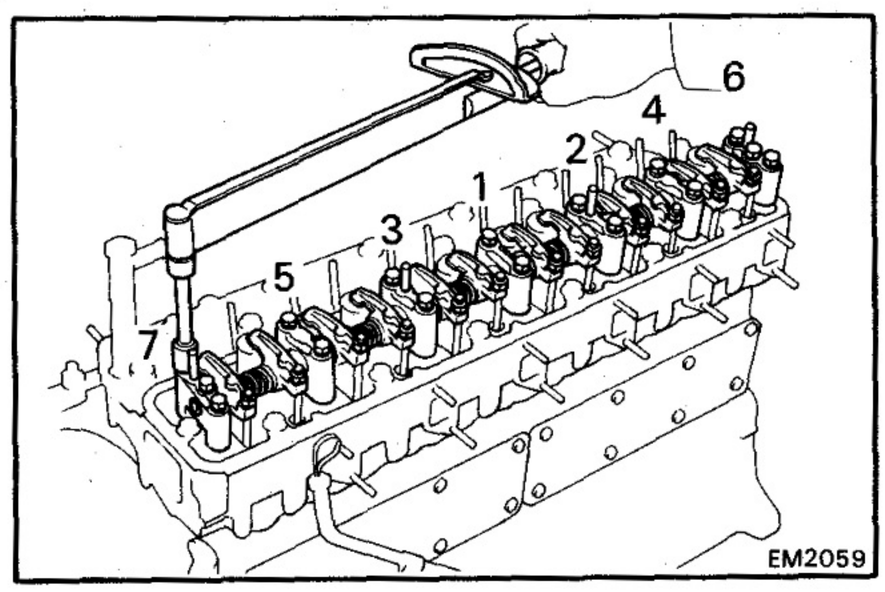

3. INSTALL VALVE ROCKER SHAFT ASSEMBLY

(a) Place the rocker shaft assembly on the cylinder head.

(b) Instal and uniformly tighten the fourteen bolts in several passes, in the sequence shown.

Torque: 185 kg-cm (13 ft-lb, 18 N·m)

4. ADJUST VALVE CLEARANCE

(See steps 4 and 5 on page EM-22)

Valve clearance (Reference):

Intake	0.20 mm (0.008 in.)
Exhaust	0.36 mm (0.014 in.)

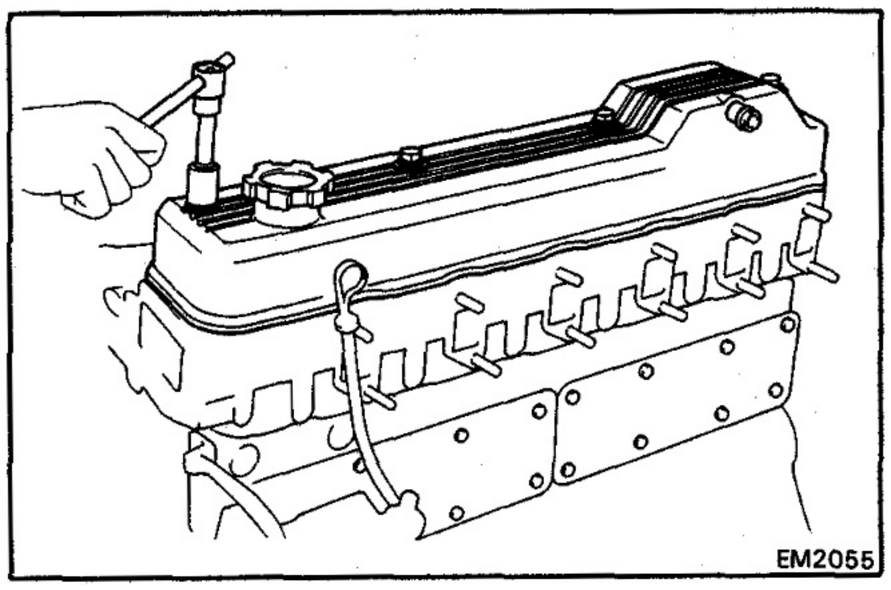

5. INSTALL CYLINDER HEAD COVER

(a) Install a new gasket to the cylinder head cover.

(b) Install the cylinder head cover with the four seal washers and cap nuts.

Torque: 70 kg-cm (61 in-lb, 6.9 N·m)

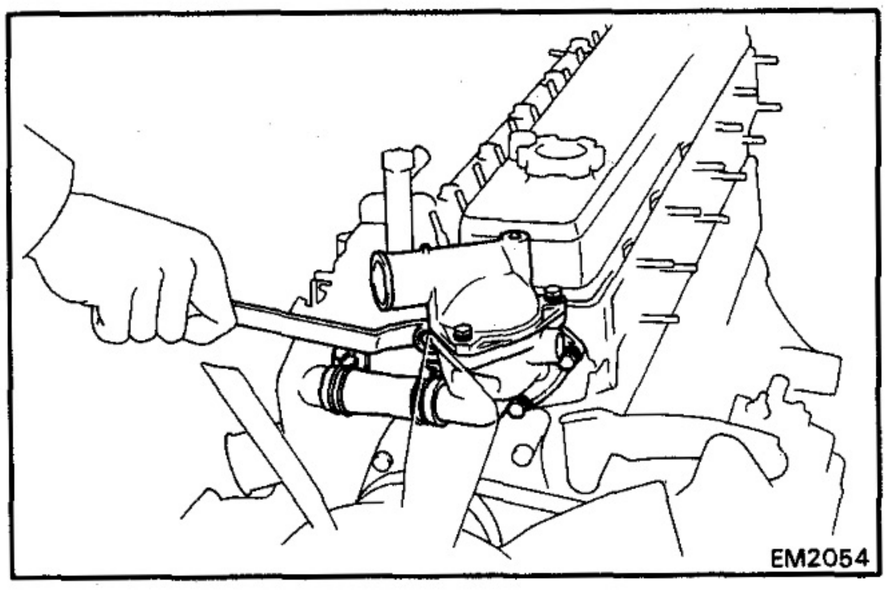

6. INSTALL WATER OUTLET ASSEMBLY

Connect the water by-pass hose to the water pump, and install a new gasket and the water outlet assembly with the three bolts.

Torque: 375 kg-cm (27 ft-lb, 37 N·m)

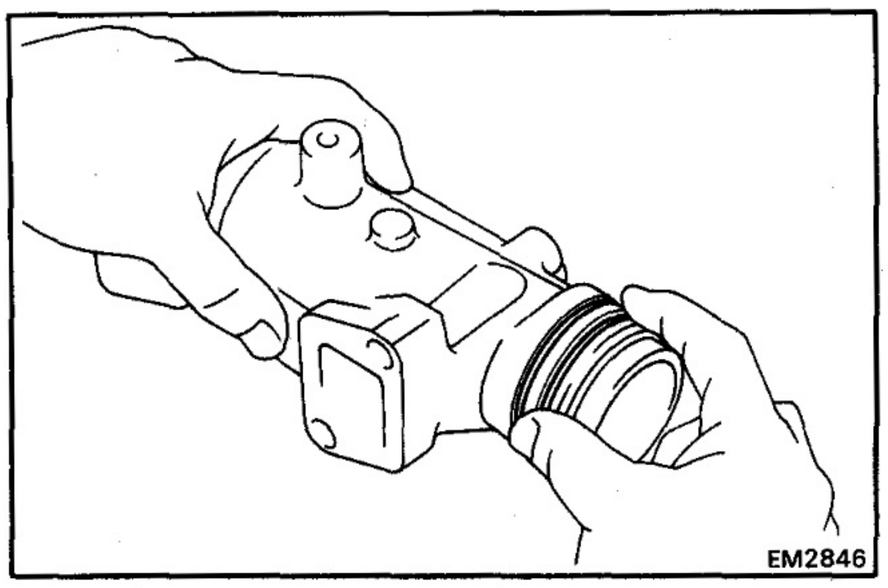

7. ASSEMBLE EXHAUST MANIFOLDS

(a) Remove all the O-ring material from the manifold grooves.

(b) Install new two O-rings.

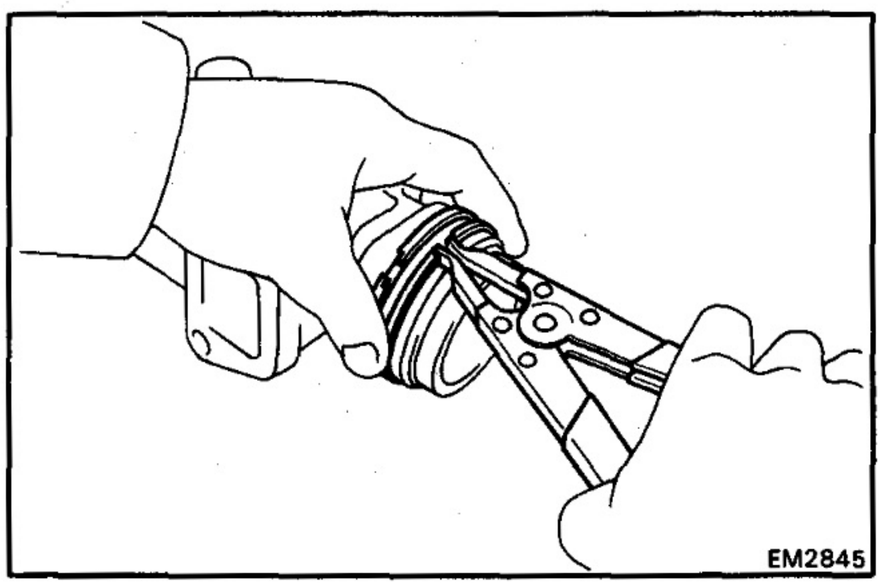

(c) Using snap ring pliers, install the two manifold rings.

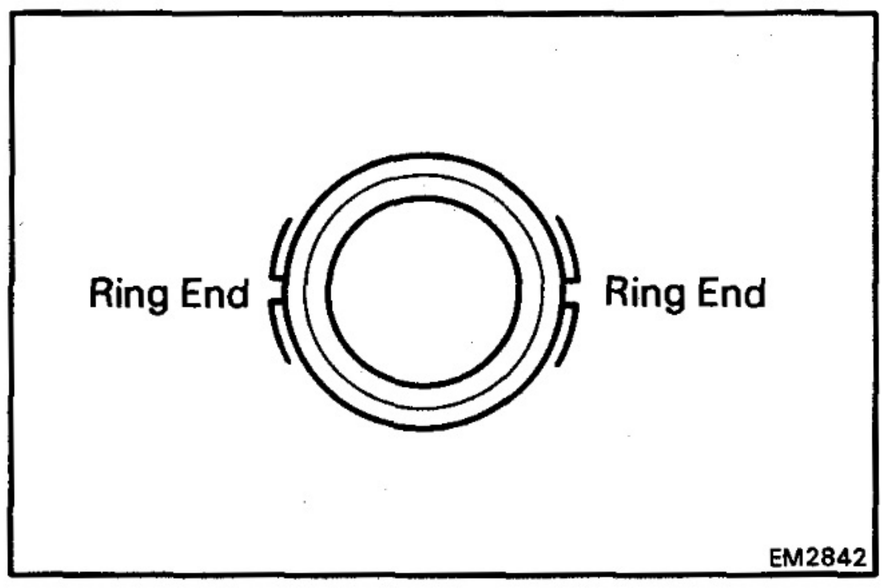

(d) Position the manifold rings so that the ring ends are as shown.

CAUTION: Do not align the ends.

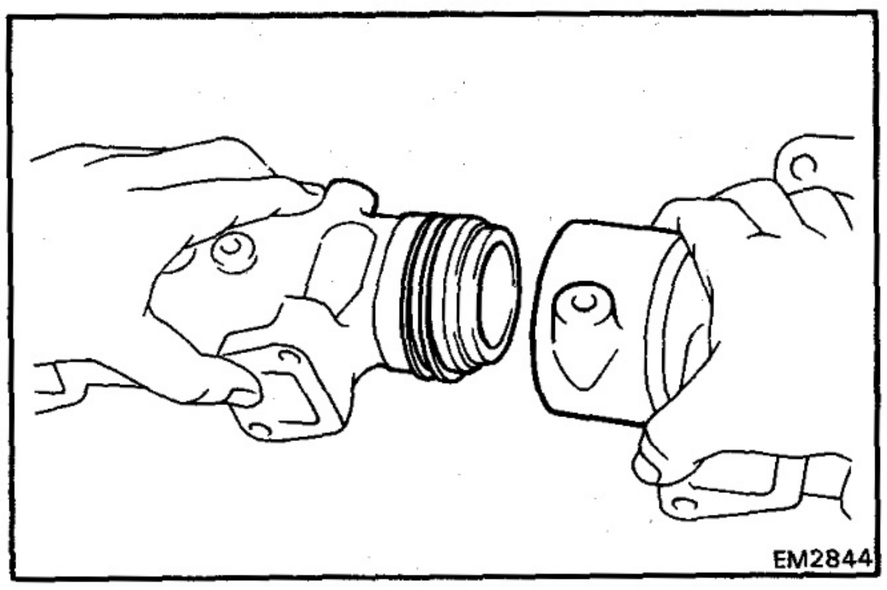

(e) Assembly the front and rear manifolds.

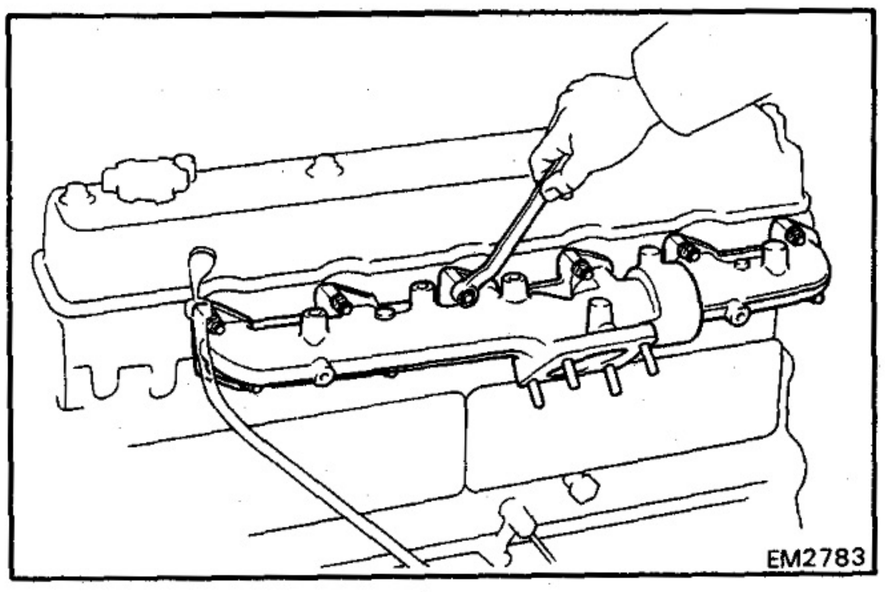

8. INSTALL EXHAUST MANIFOLDS

(a) Install new two gaskets and the exhaust manifolds with the twelve plate washers and new nuts.

Torque: 210 kg-cm (15 ft-lb, 21 N·m)

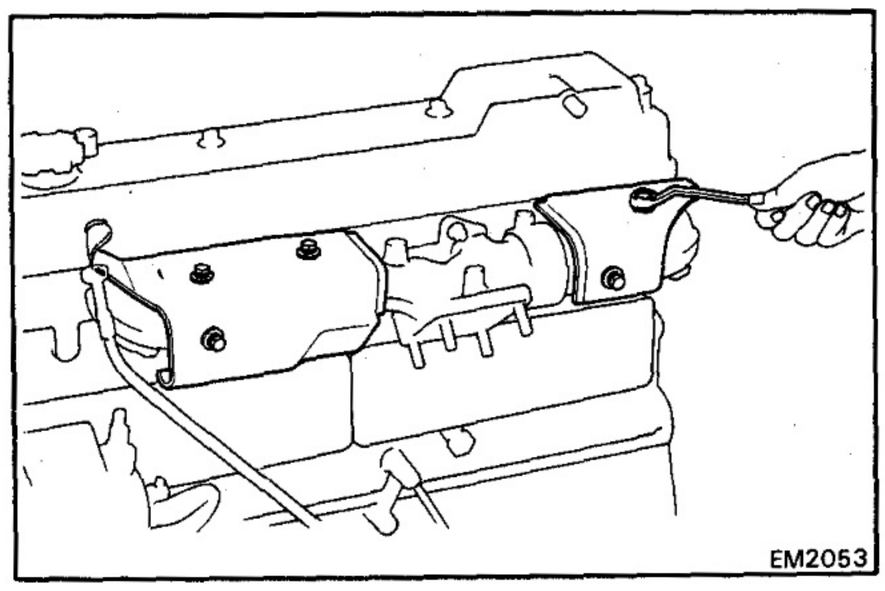

(b) Install the two heat insulators with the five bolts.

Torque: 185 kg-cm (13 ft-lb, 18 N·m)

9. INSTALL WATER BY-PASS HOSE OF TURBOCHARGER

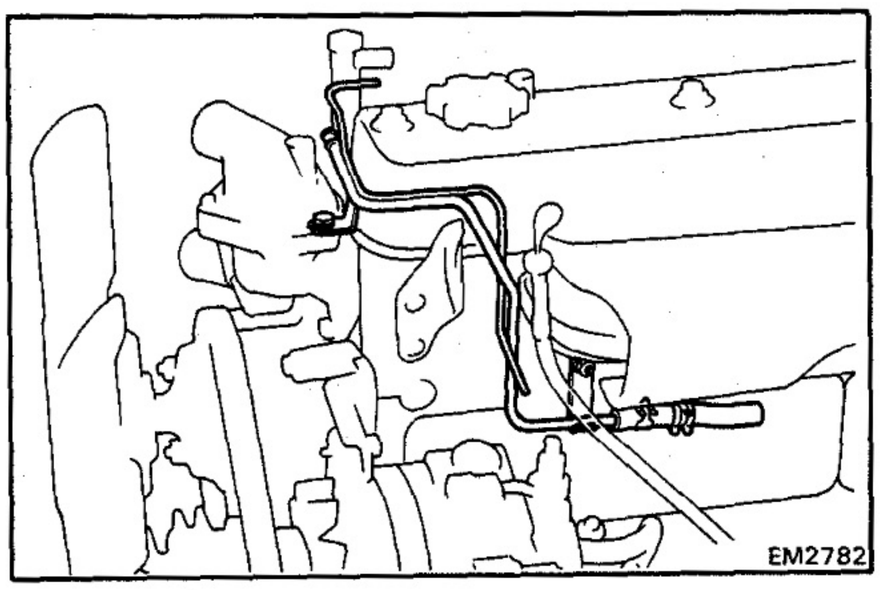

10. INSTALL INTAKE MANIFOLD

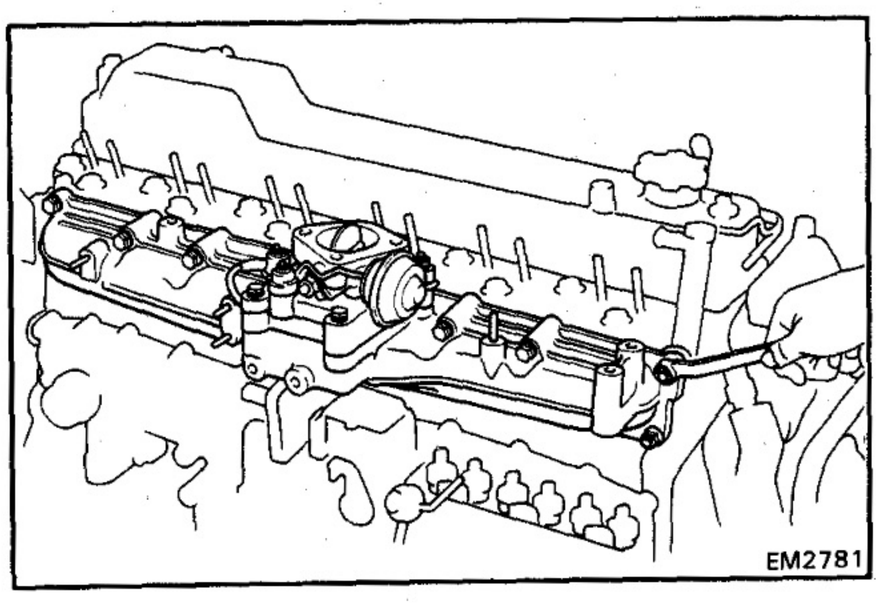

(a) Install a new gasket to the intake manifold.

(b) Install the intake manifold with the five bolts and eleven nuts.

Torque: 185 kg-cm (13 ft-lb, 18 N·m)

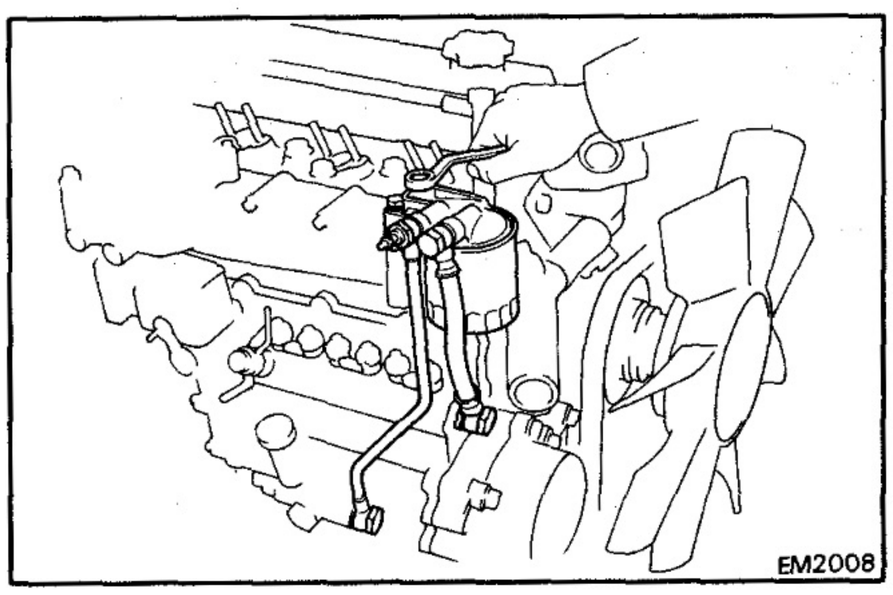

11. INSTALL FUEL FILTER ASSEMBLY

(a) Install the fuel filter assembly with the two bolts.

Torque: 375 kg-cm (27 ft-lb, 37 N·m)

(b) Connect the fuel pipe and hose to the injection pump with new four gaskets and the two union bolts. Torque the union bolts.

Torque: 280 kg-cm (20 ft-lb, 28 N·m)

12. INSTALL INJECTION NOZZLES
(See steps 1 to 4 on pages FU-14 and 15)

13. INSTALL TURBOCHARGER
(See steps 3 to 12 on pages EM-44 and 46)

14. FILL WITH ENGINE COOLANT (See page CO-3)

15. START ENGINE AND CHECK FOR LEAKS

16. CHECK ENGINE OIL LEVEL (See page LU-3)

17. READJUST VALVE CLEARANCES
(See steps 1 to 7 on page EM-22)

TIMING GEARS AND CAMSHAFT

COMPONENTS

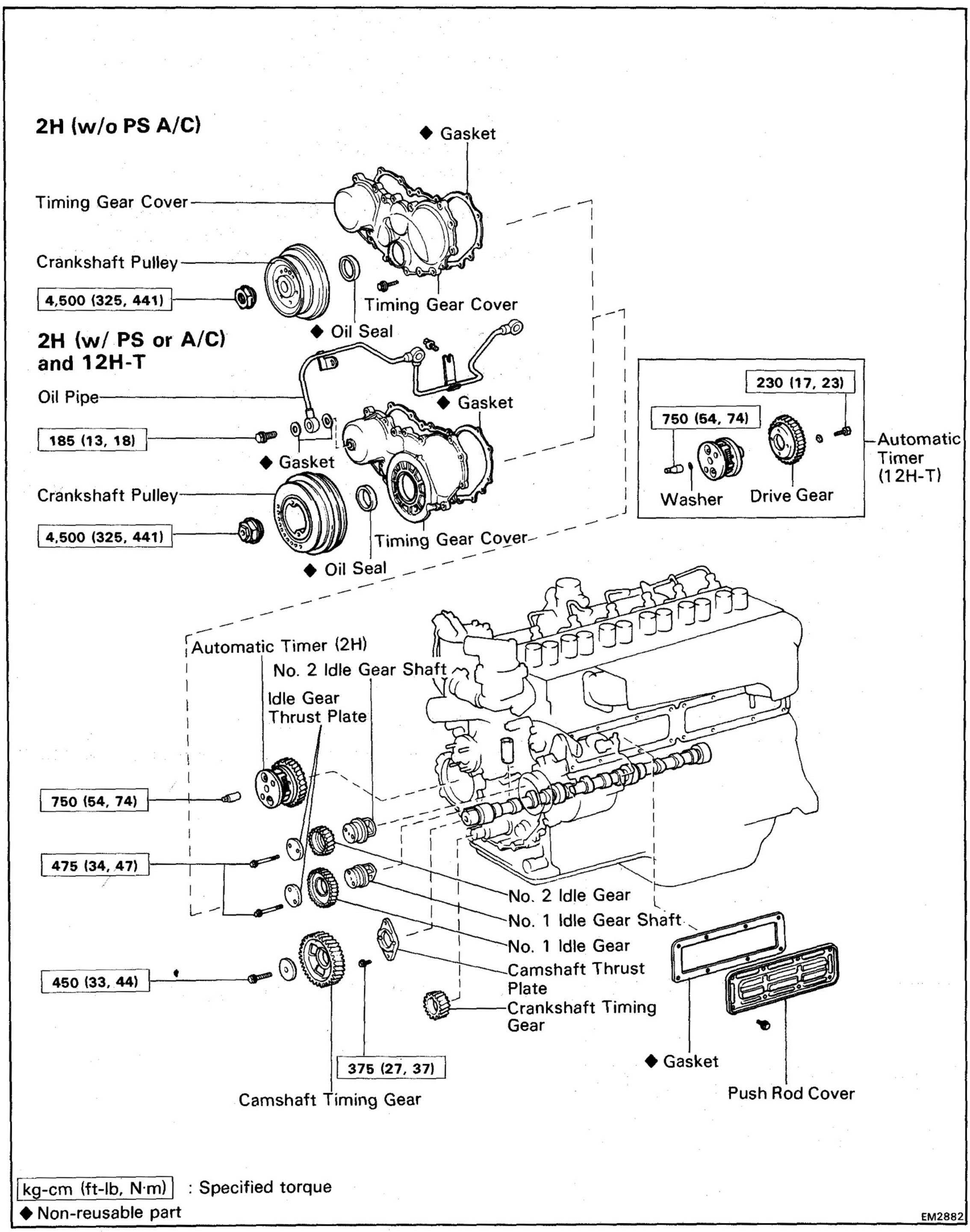

kg-cm (ft-lb, N·m) : Specified torque

◆ Non-reusable part

EM2882

REMOVAL OF TIMING GEARS AND CAMSHAFT

(See page EM-77)

1. REMOVE DRIVE BELT

2. REMOVE FAN AND WATER PUMP PULLEY
(See page CO-5)

3. [12H-T]
REMOVE TURBOCHARGER
(See steps 1 to 10 on page EM-40 to 42)

4. REMOVE VALVE ROCKER SHAFT ASSEMBLY
(See steps 12 to 14 on page EM-51 and 52) 2H
(See steps 9 to 11 on page EM-54 and 55) 12H-T

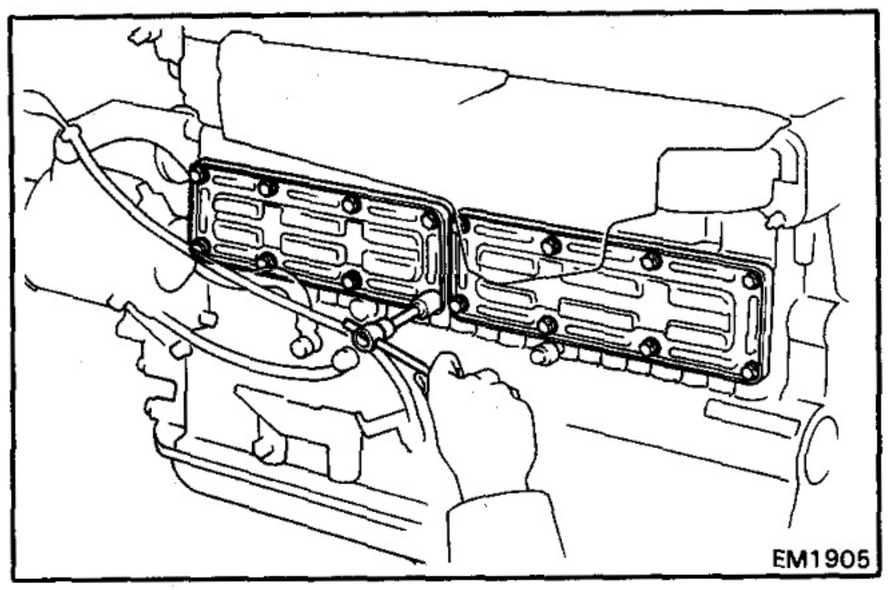
EM1905

5. REMOVE PUSH ROD COVERS

Remove the eight bolts, push rod cover and gasket.
Remove the two push rod covers.

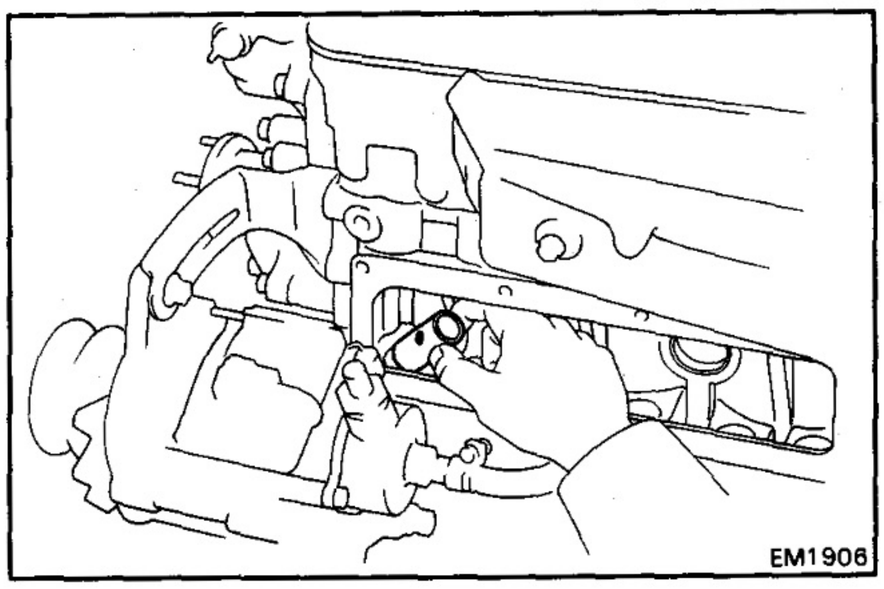
EM1906

6. REMOVE VALVE LIFTERS

Remove the twelve valve lifters in order, begining from the No. 1 valve lifter.

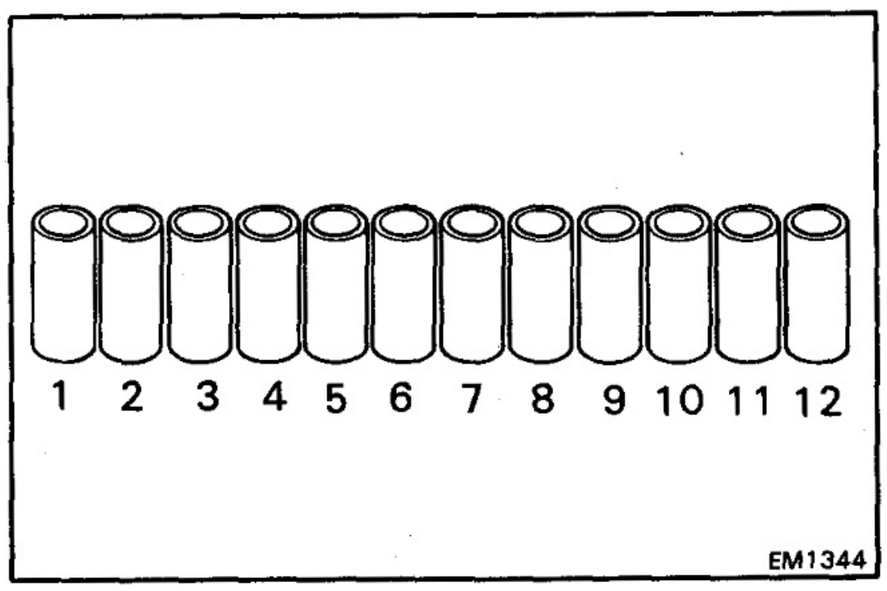

EM1344

NOTE: Arrange the valve lifters in correct order.

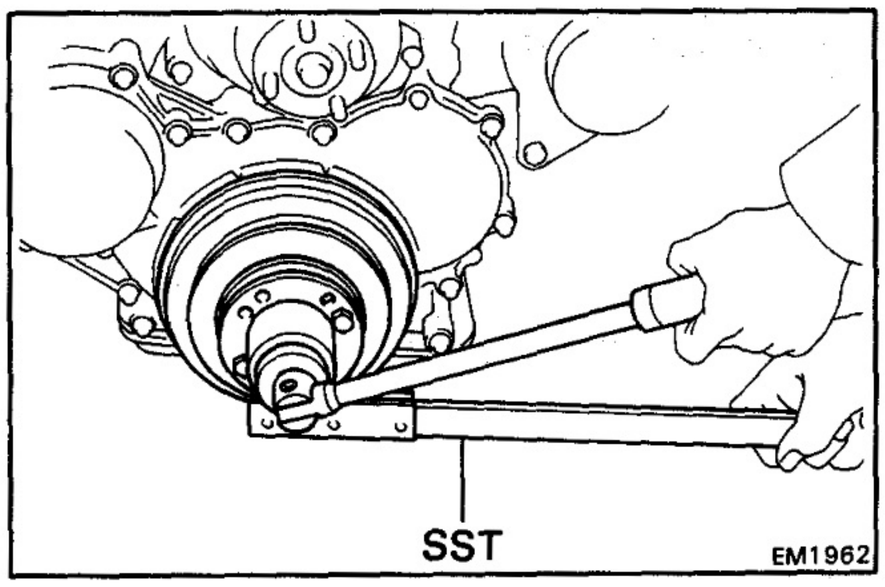

7. REMOVE CRANKSHAFT PULLEY

(a) Using SST and a 46 mm socket wrench, remove the pulley mount nut.

SST 09213-58011 and 09330-00021

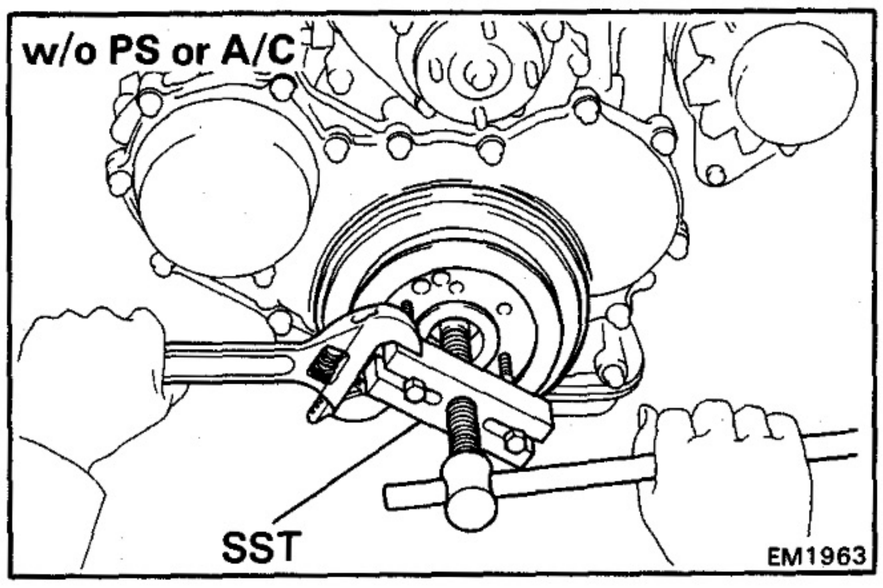

(b) Using SST, remove the pulley.

SST 09213-60017 [w/o PS or A/C]

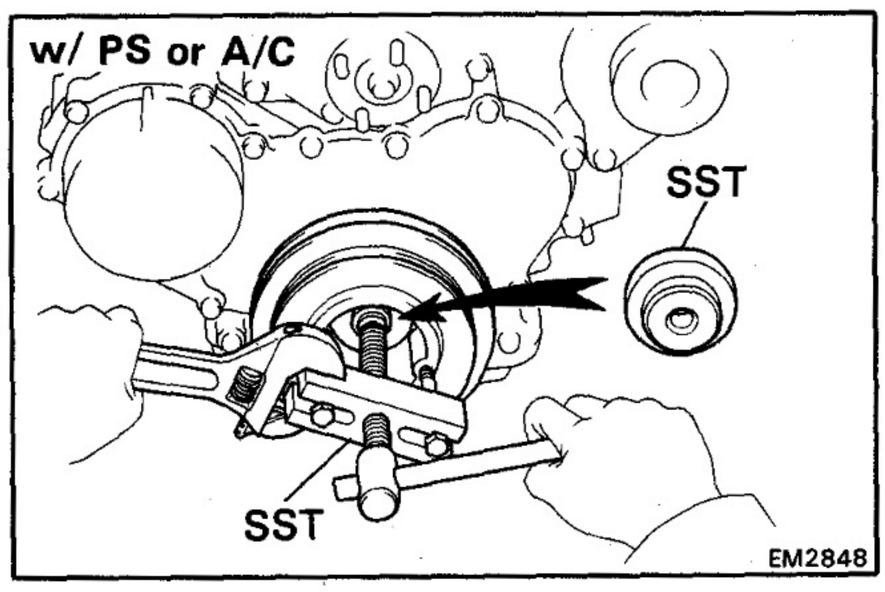

SST 09213-60017 and 09950-20017 [w/ PS or A/C]

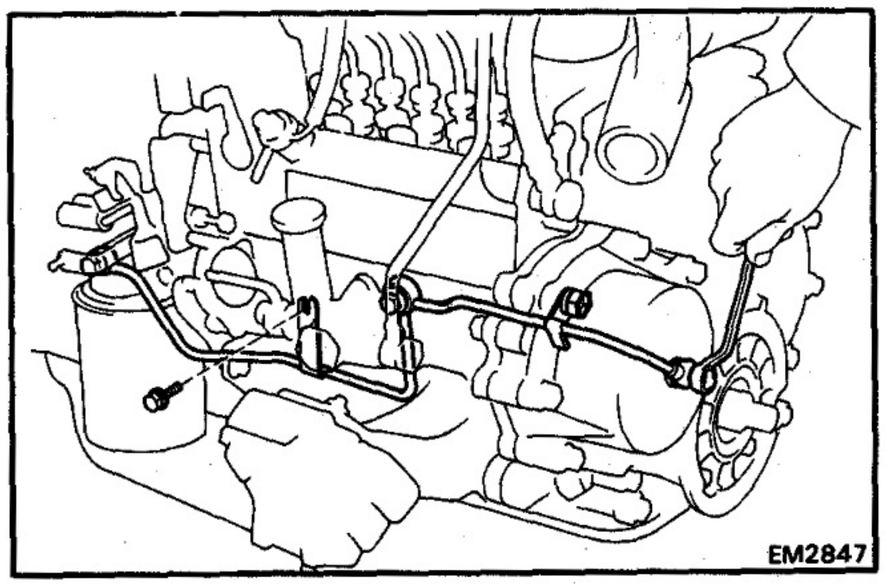

8. [12H-T]
REMOVE OIL PIPE

(a) Remove three union bolts and six gaskets.

(b) Remove the two bolts and oil pipe.

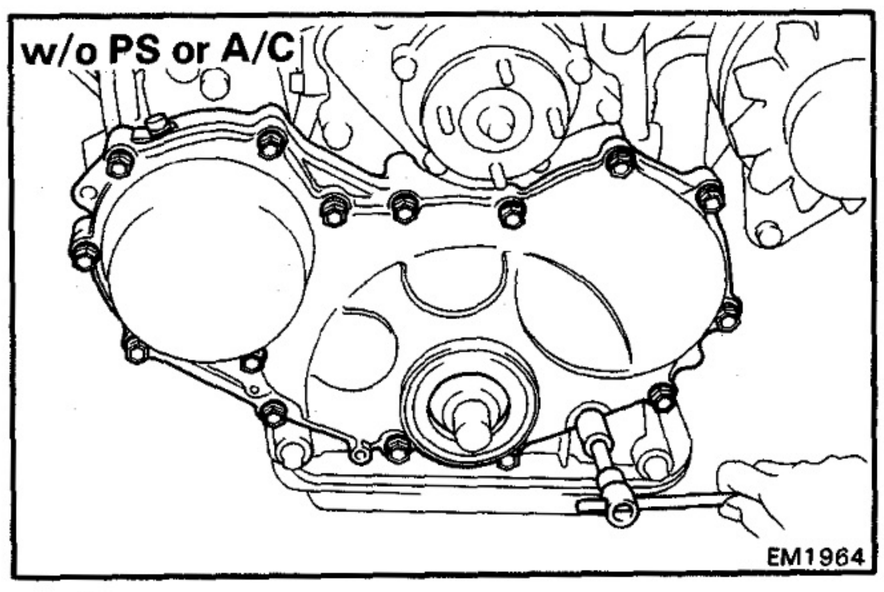

9. REMOVE TIMING GEAR COVER

Remove the sixteen bolts, gear cover and gasket.

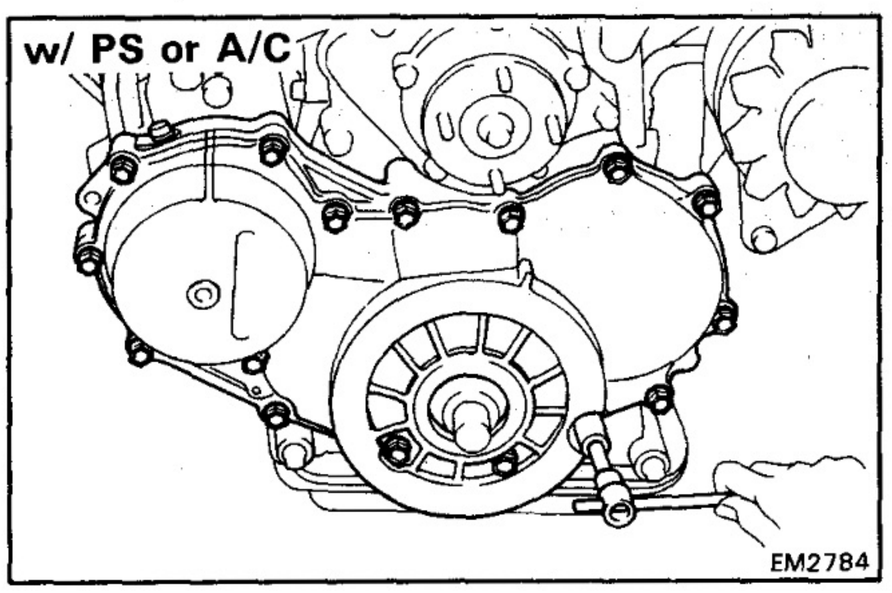

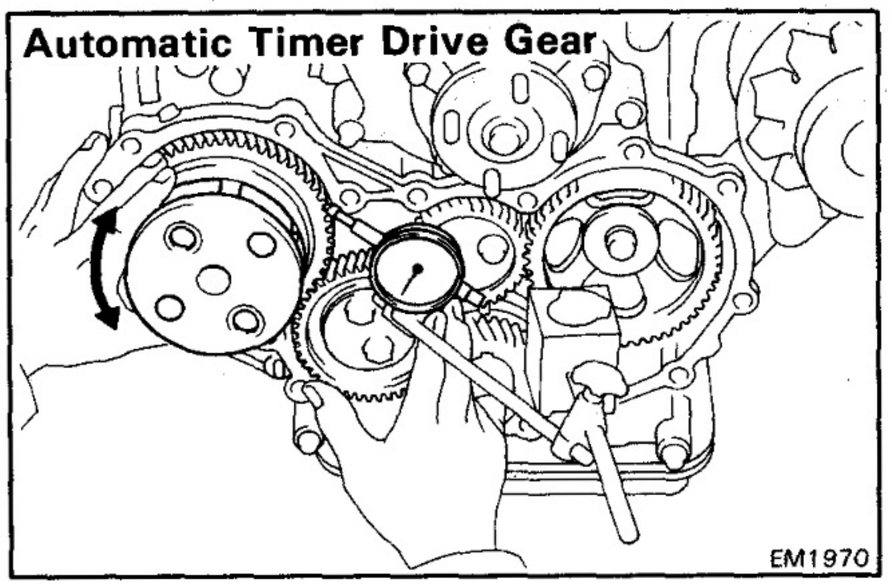

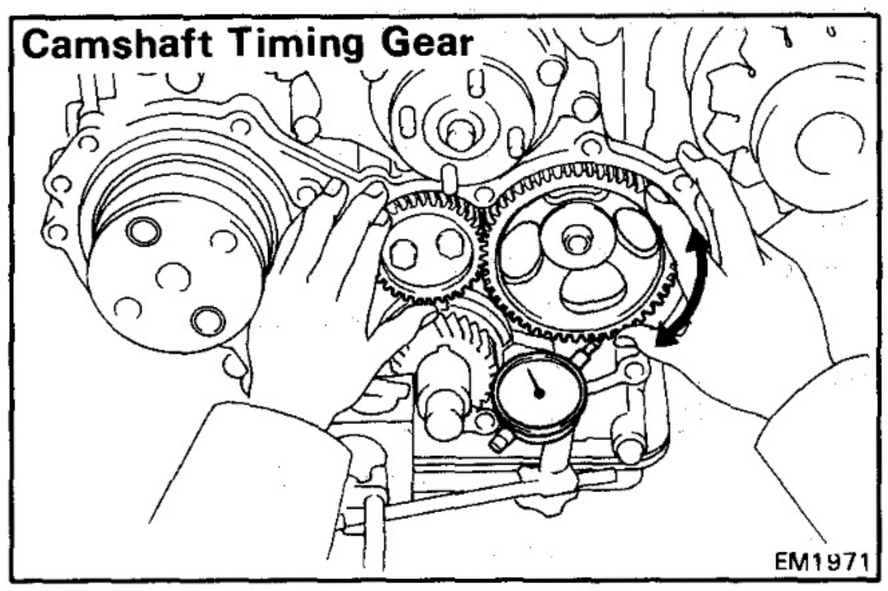

10. CHECK BACKLASH OF AUTOMATIC TIMER DRIVE GEAR AND CAMSHAFT TIMING GEAR

Using a dial indicator, measure the blacklash.

Standard backlash:

Automatic timer drive gear	**0.050 – 0.111 mm (0.0019 – 0.0043 in.)**
Camshaft timing gear	**0.050 – 0.113 mm (0.0019 – 0.0044 in.)**
Maximum backlash:	**0.30 mm (0.0118 in.)**

If the backlash is greater than maximum, replace the gears as set.

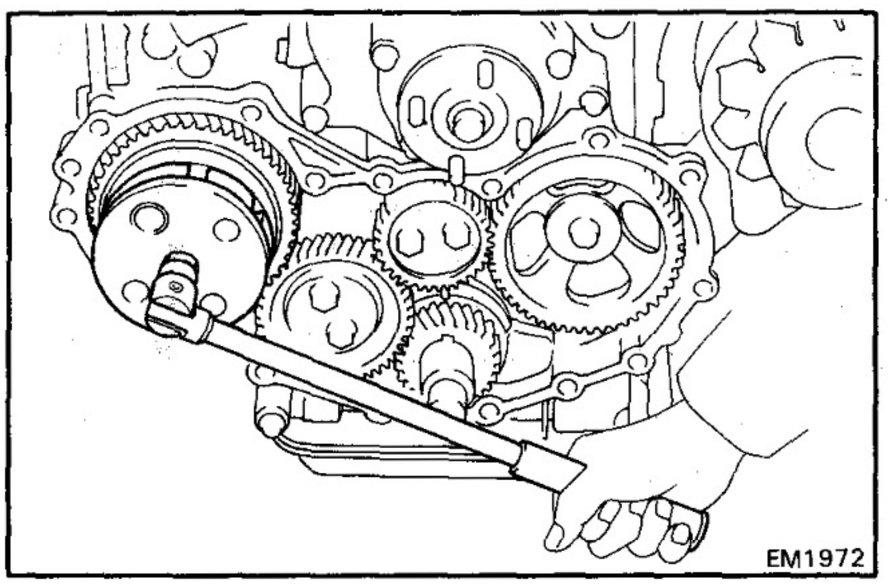

11. REMOVE AUTOMATIC TIMER

(a) Remove the round nut and washer (12H-T).

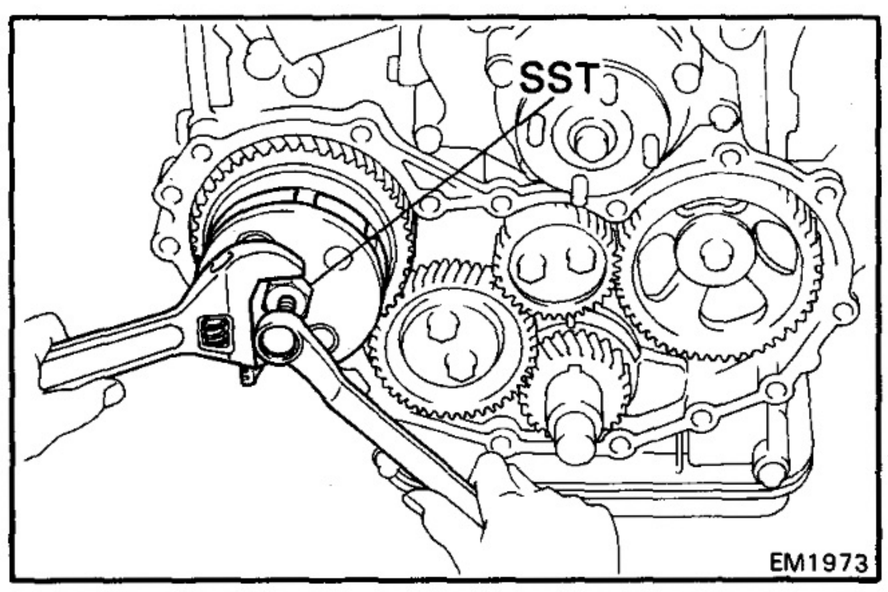

(b) Using SST, remove the timer.

SST 09260-47010 (09267-76020)

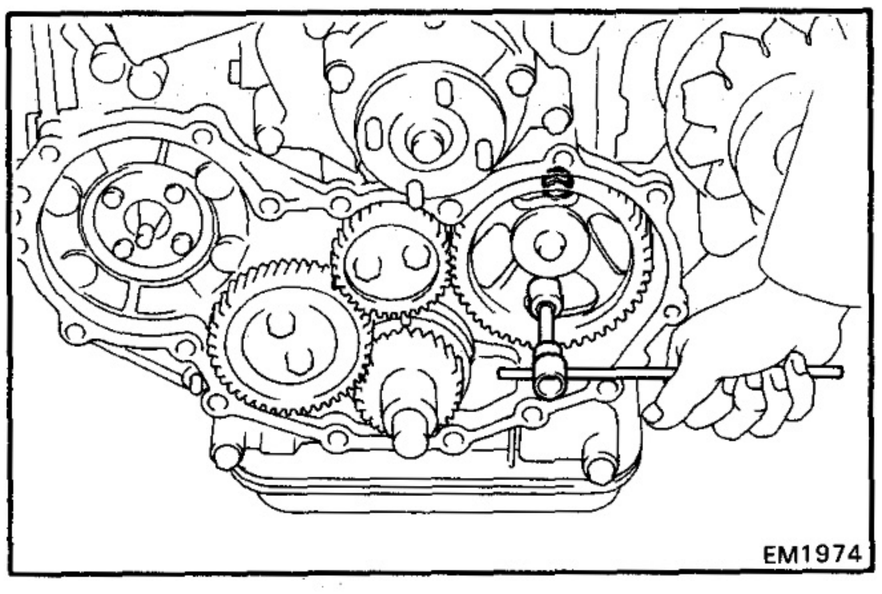

12. REMOVE CAMSHAFT TIMING GEAR AND CAMSHAFT ASSEMBLY

(a) Remove the two bolts holding the thrust plate to the cylinder block.

(b) Carefully pull out the timing gear and camshaft assembly.

CAUTION: Be careful not to damage the camshaft bearings.

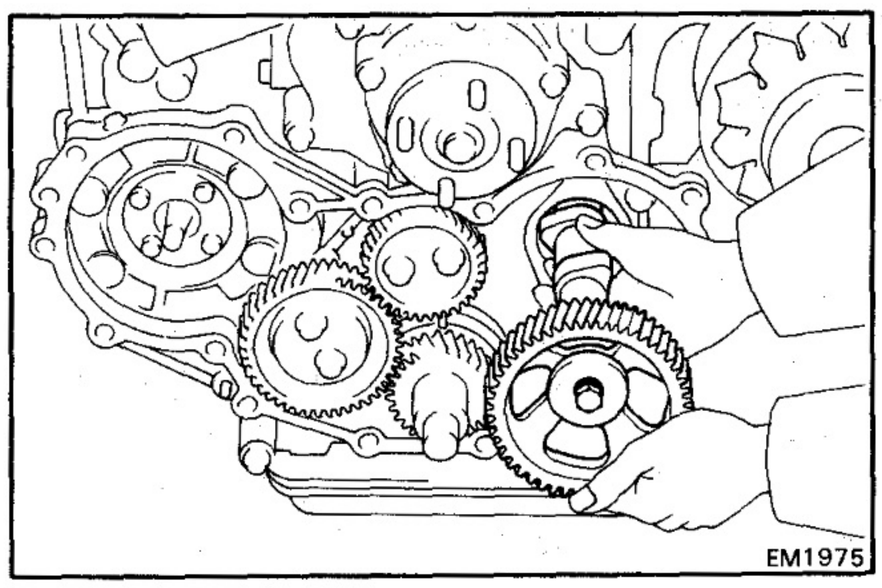

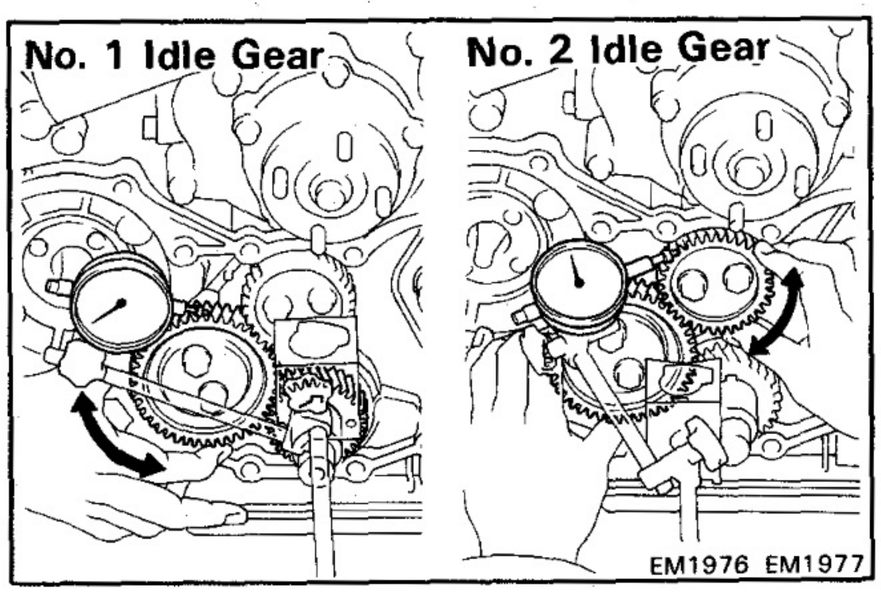

13. CHECK BACKLASH OF NO. 1 AND NO. 2 IDLE GEARS

Using a dial indicator, measure the backlash.

Standard backlash:

No. 1 idle gear	**0.050 – 0.116 mm (0.0019 – 0.0045 in.)**
No. 2 idle gear	**0.050 – 0.113 mm (0.0019 – 0.0044 in.)**
Maximum backlash:	**0.30 mm (0.0118 in.)**

If the backlash is greater than maximum, replace the gears as a set.

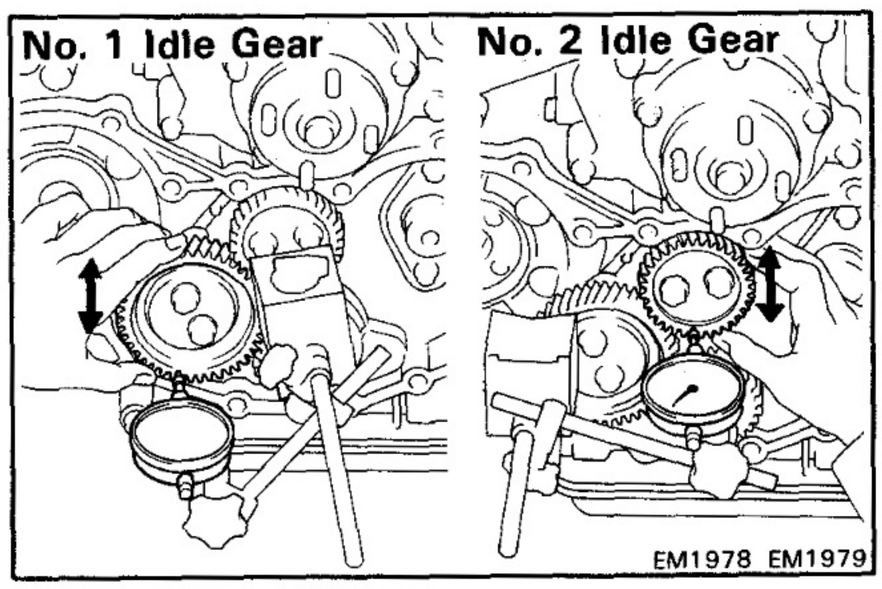

14. CHECK THRUST CLEARANCE OF NO. 1 AND NO. 2 IDLE GEARS

Using a dial indicator, measure the thrust clearance.

Standard thrust clearance:	**0.050 – 0.150 mm (0.0019 – 0.0059 in.)**
Maximum thrust clearance:	**0.30 mm (0.0118 in.)**

If the backlash is greater than maximum, replace the gears thrust plate. If necessary, replace the gear.

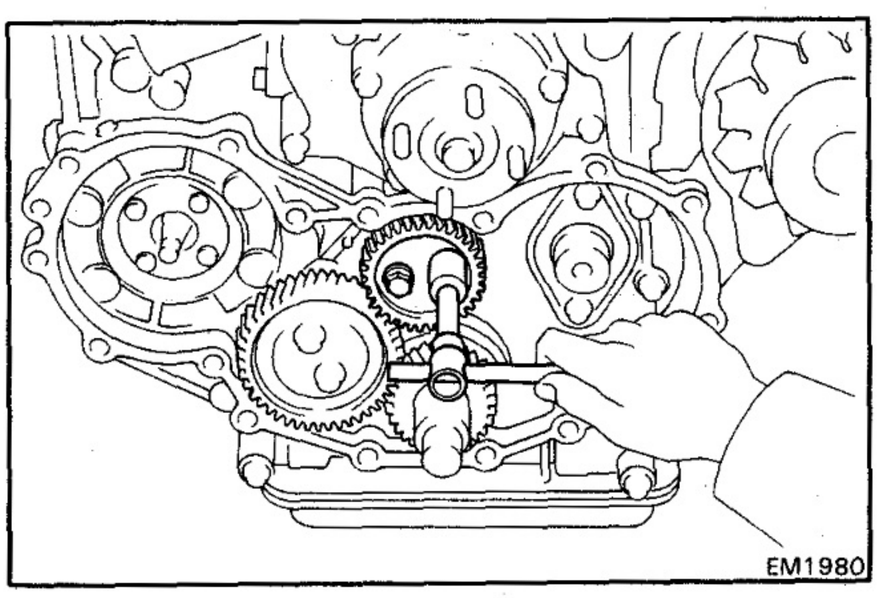

15. REMOVE NO. 2 IDLE GEAR

Remove the two bolts, thrust plate, idle gear and idle gear shaft.

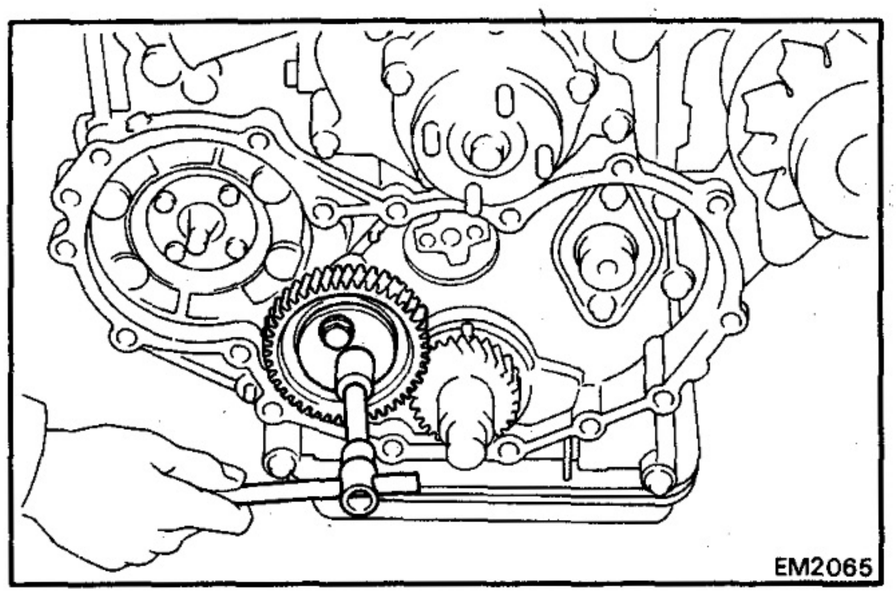

16. REMOVE NO. 1 IDLE GEAR

Remove the two bolts, thrust plate, idle gear and idle gear shaft.

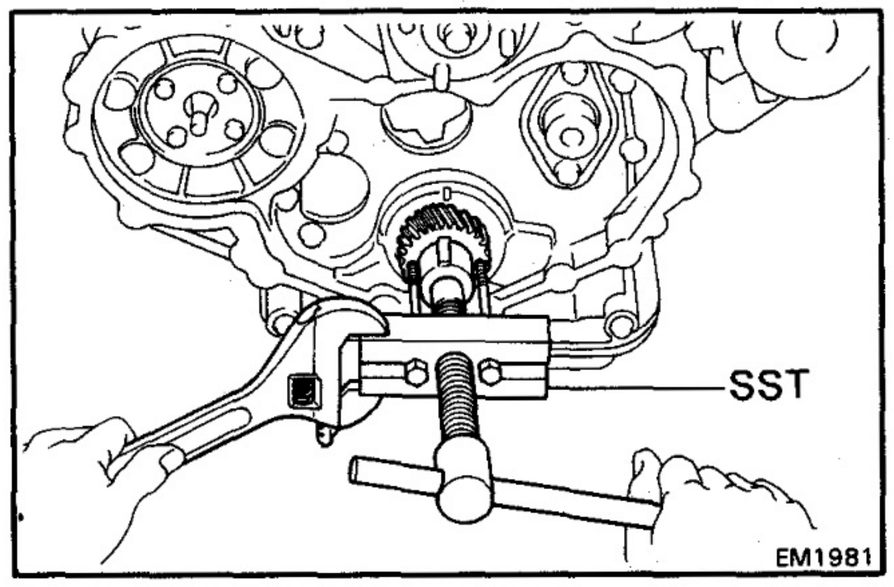

17. REMOVE CRANKSHAFT TIMING GEAR

Using SST, remove the timing gear.

SST 09213-60017

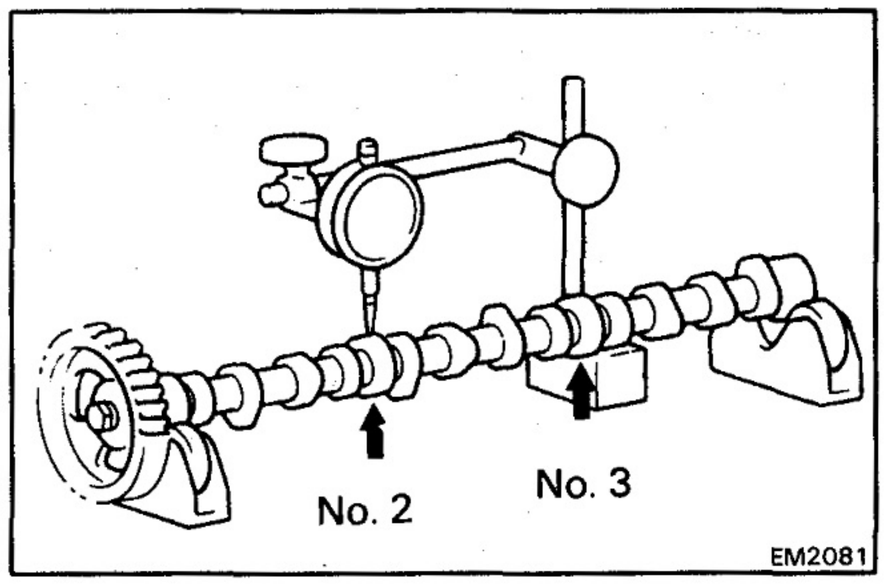

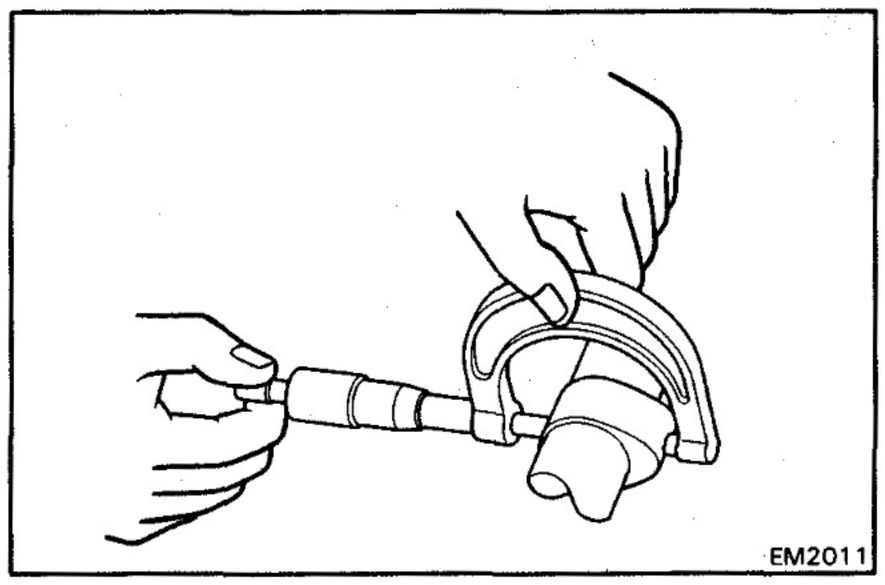

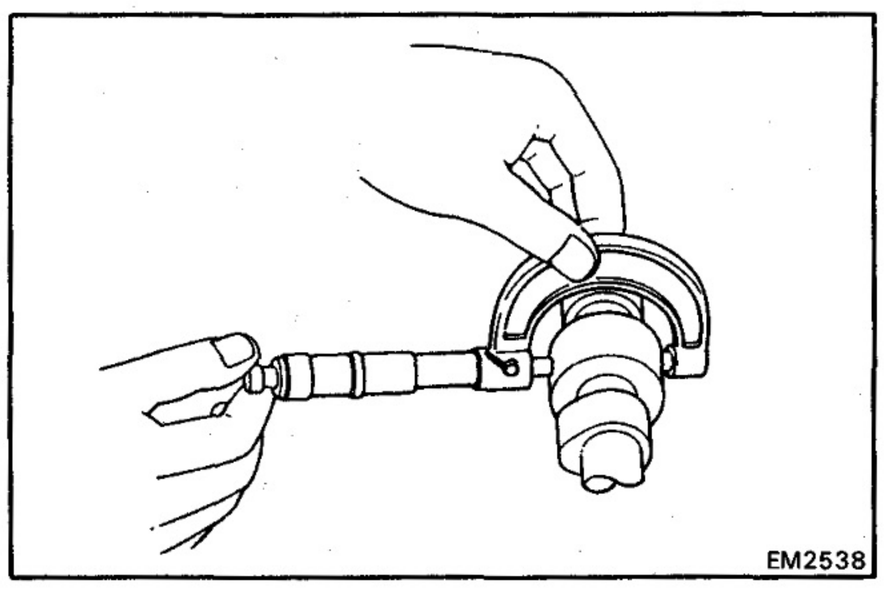

INSPECTION OF TIMING GEARS AND CAMSHAFT

1. INSPECT CAMSHAFT

(a) Place the camshaft on V-blocks and, using a dial indicator, measure the circle runout at the No. 2 and No. 3 journals.

Maximum circle runout: 0.30 mm (0.0118 in.)

If the circle runout is greater than maximum, replace the camshaft.

(b) Using a micrometer, measure the cam lobe height.

Standard cam lobe height:

Intake	**2H**	**41.900 mm (1.6496 in.)**
	12H-T	**41.713 mm (1.6422 in.)**
Exhaust	**2H**	**42.298 mm (1.6653 in.)**
	12H-T	**42.758 mm (1.6834 in.)**

Minimum cam lobe height:

Intake	**2H**	**41.4 mm**
	12H-T	**41.2 mm**
Exhaust	**2H**	**41.8 mm**
	12H-T	**42.3 mm**

If the lobe height is less than minimum, replace the camshaft.

(c) Using a micrometer, measure the journal diameter.

Journal diameter (from front side):

STD size	**No. 1**	**51.151 – 51.170 mm (2.0138 – 2.0146 in.)**
	No. 2	**50.951 – 50.970 mm (2.0059 – 2.0067 in.)**
	No. 3	**50.751 – 50.770 mm (1.9981 – 1.9988 in.)**
	No. 4	**50.551 – 50.570 mm (1.9902 – 1.9909 in.)**
U/S 0.125	**No. 1**	**51.025 – 51.035 mm (2.0089 – 2.0092 in.)**
	No. 2	**50.825 – 50.835 mm (2.0010 – 2.0014 in.)**
	No. 3	**50.625 – 50.635 mm (1.9931 – 1.9935 in.)**
	No. 4	**50.425 – 50.435 mm (1.9852 – 1.9856 in.)**
U/S 0.25	**No. 1**	**50.900 – 50.910 mm (2.0039 – 2.0043 in.)**
	No. 2	**50.700 – 50.710 mm (1.9961 – 1.9965 in.)**
	No. 3	**50.500 – 50.510 mm (1.9882 – 1.9886 in.)**
	No. 4	**50.300 – 50.310 mm (1.9803 – 1.9807 in.)**

If the journal diameter is not within specification, check the oil clearance. (See page EM-109)

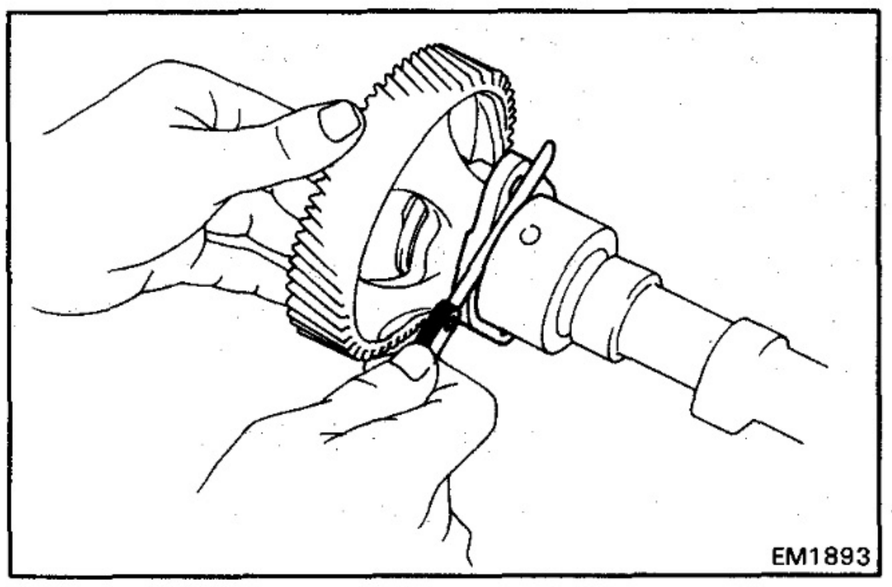

(d) Using a feeler gauge, measure the thrust clearance between the thrust plate and camshaft.

Standard thrust clearance: 0.060 – 0.130 mm (0.0024 – 0.0051 in.)
Maximum thrust clearance: 0.30 mm (0.0118 in.)

If the clearance is greater than maximum, replace the thrust plate. If necessary, replace the camshaft.

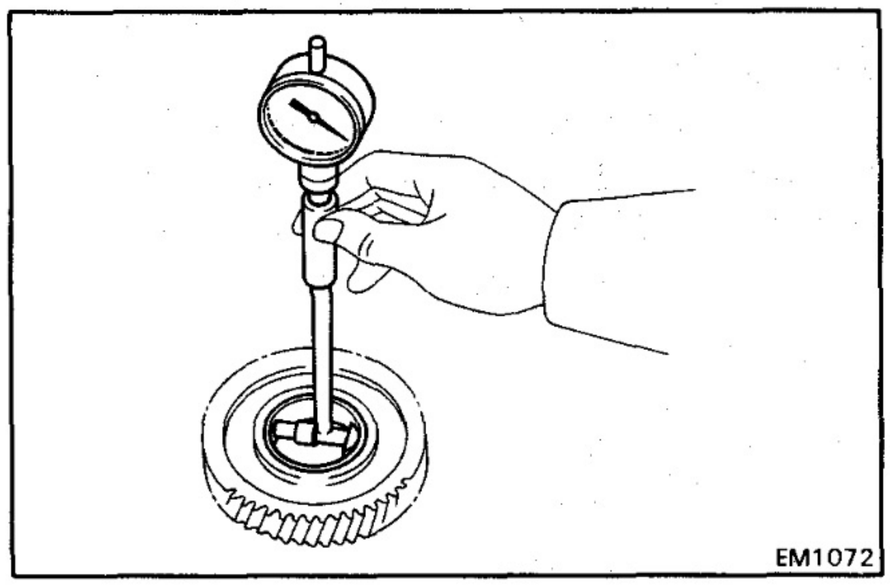

2. INSPECT IDLE GEARS

(a) Using a cylinder gauge, measure the inside diameter of the idle gear.

Idle gear inside diameter: 45.000 – 45.250 mm (1.7717 – 1.7726 in.)

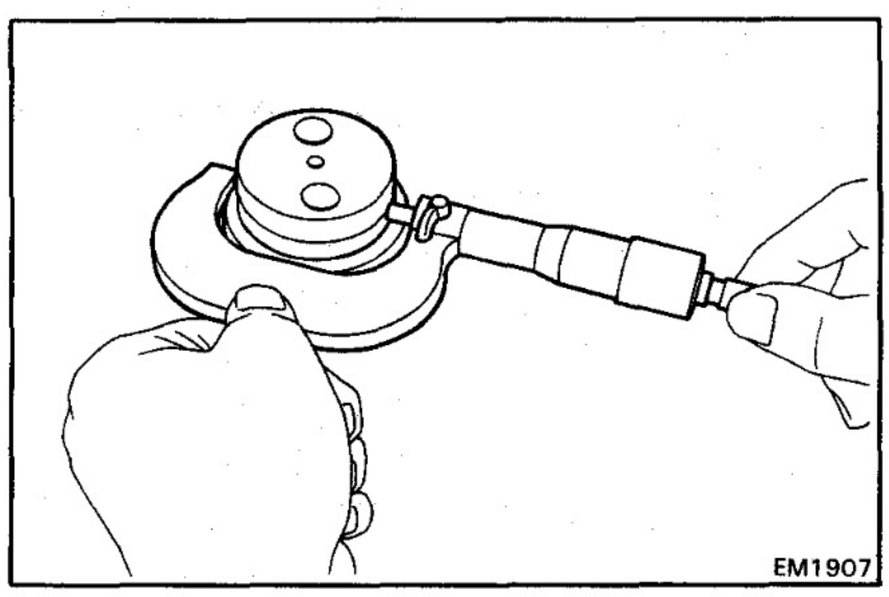

(b) Using a micrometer, measure the diameter of the idle gear shaft.

Idle gear shaft diameter: 44.950 – 44.975 mm (1.7697 – 1.7707 in.)

(c) Subtract the idle gear shaft diameter measurement from the idle gear inside diameter measurement.

Standard oil clearance: 0.025 – 0.075 mm (0.0010 – 0.0030 in.)
Maximum oil clearance: 0.20 mm (0.0079 in.)

If the clearance is greater than maximum, replace the gear and shaft.

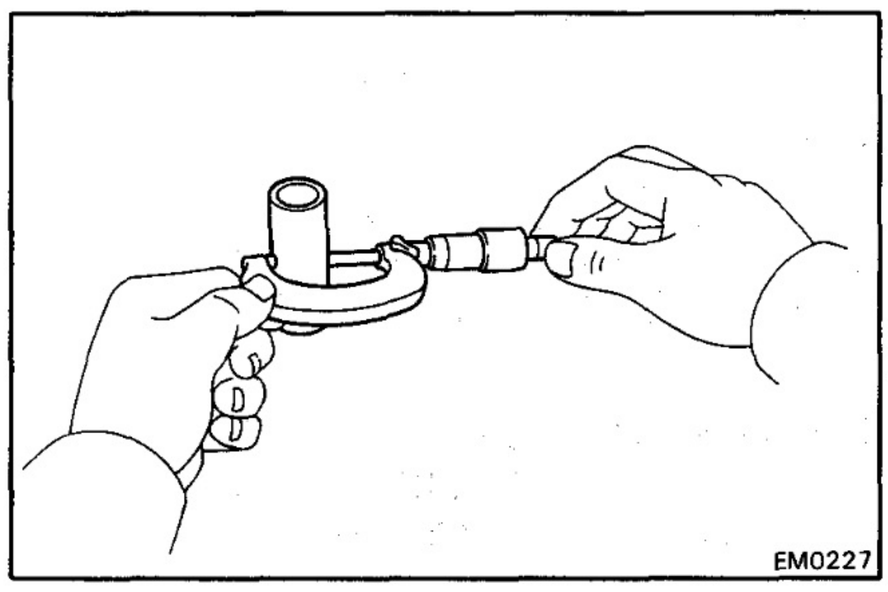

3. INSPECT VALVE LIFTERS

Using a micrometer, measure the valve lifter diameter.

Lifter diameter:

STD size	**22.17 – 22.19 mm (0.8728 – 0.8736 in.)**
O/S 0.05	**22.22 – 22.24 mm (0.8748 – 0.8756 in.)**

If the diameter is not within specification, check the oil clearance. (See page EM-111)

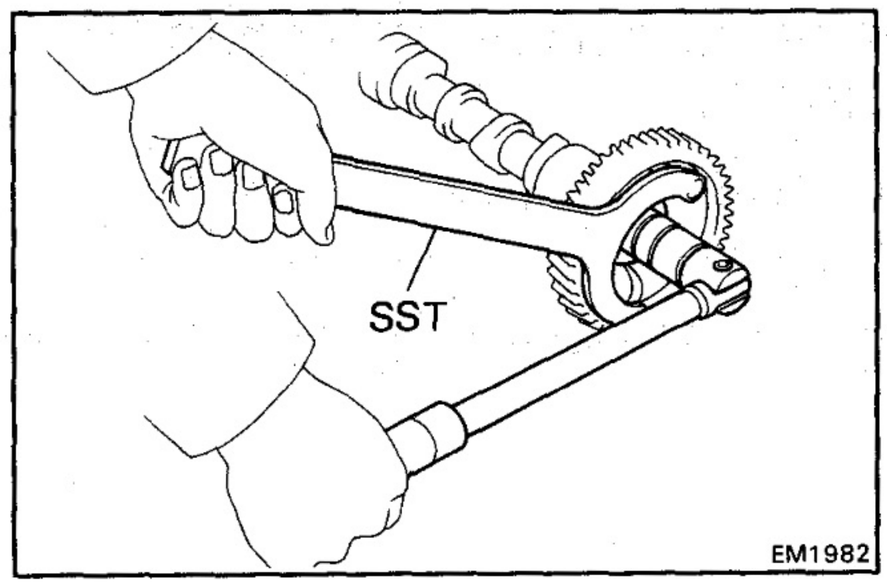

REPLACEMENT OF CAMSHAFT (OR CAMSHAFT TIMING GEAR)

1. REMOVE CAMSHAFT

(a) Using SST, remove the bolt and plate washer.

SST 09278-54012

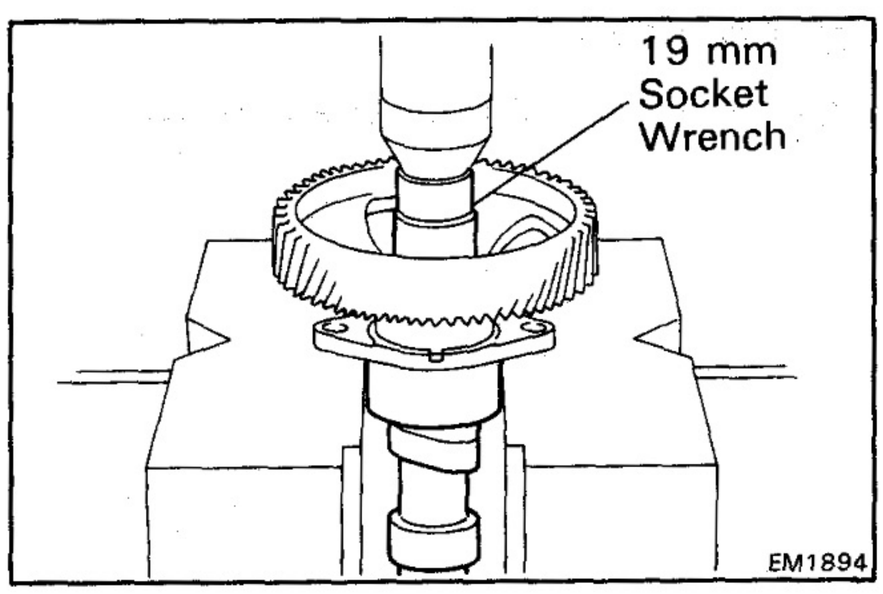

(b) Using a 19 mm socket wrench and press, press out the camshaft.

2. INSTALL NEW CAMSHAFT

(a) Install the timing gear set key to the camshaft.

(b) Assembly the camshaft, thrust plate and timing gear as shown.

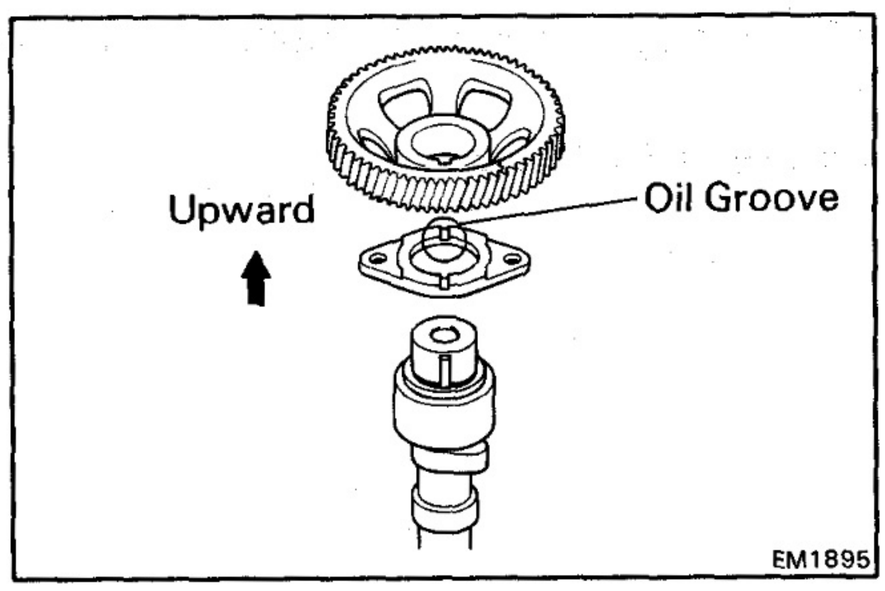

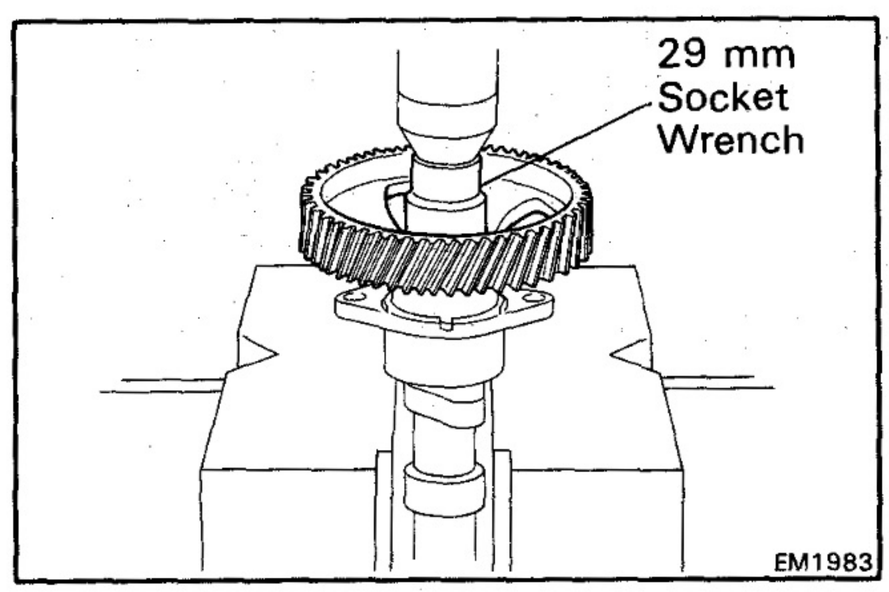

(c) Using a 29 mm socket wrench and press, align the timing gear set key with the key groove of the timing gear, and press in the camshaft timing gear.

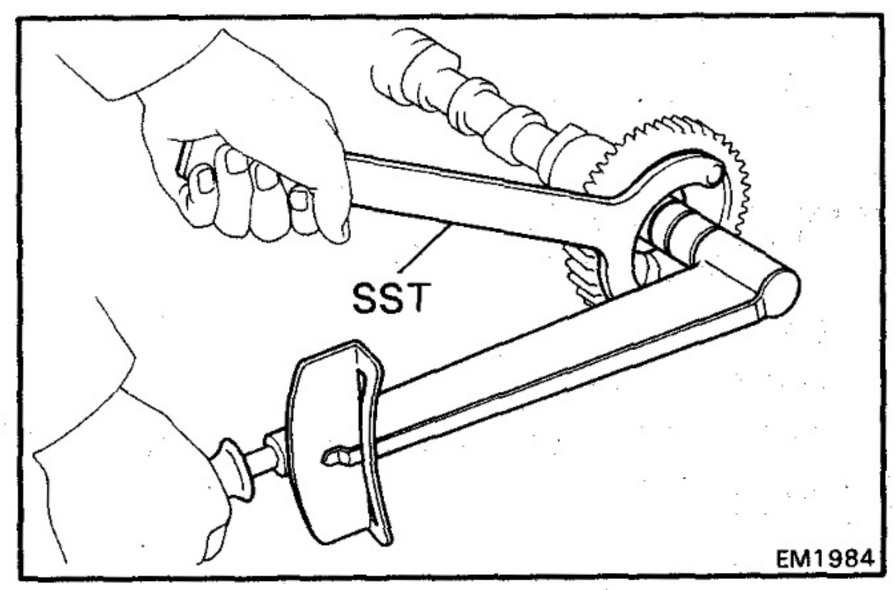

(d) Using SST, install the plate washer and bolt. Torque the bolt.

SST 09278-54012

Torque: 450 kg-cm (33 ft-lb, 44 N·m)

3. CHECK CAMSHAFT THRUST CLEARANCE

(See page EM-84)

Standard thrust clearance: 0.060 – 0.130 mm (0.0024 – 0.0051 in.)

Maximum thrust clearance: 0.30 mm (0.0118 in.)

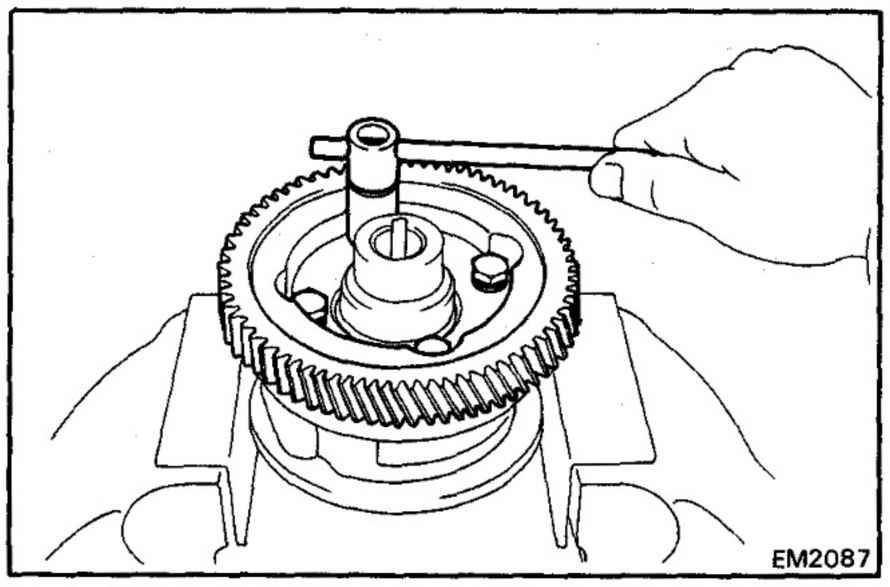

REPLACEMENT OF AUTOMATIC TIMER DRIVE GEAR [12H-T]

1. REMOVE DRIVE GEAR

(a) Mount the timer hub in a soft jaw vise.

(b) Remove the four bolts, spring washers and drive gears.

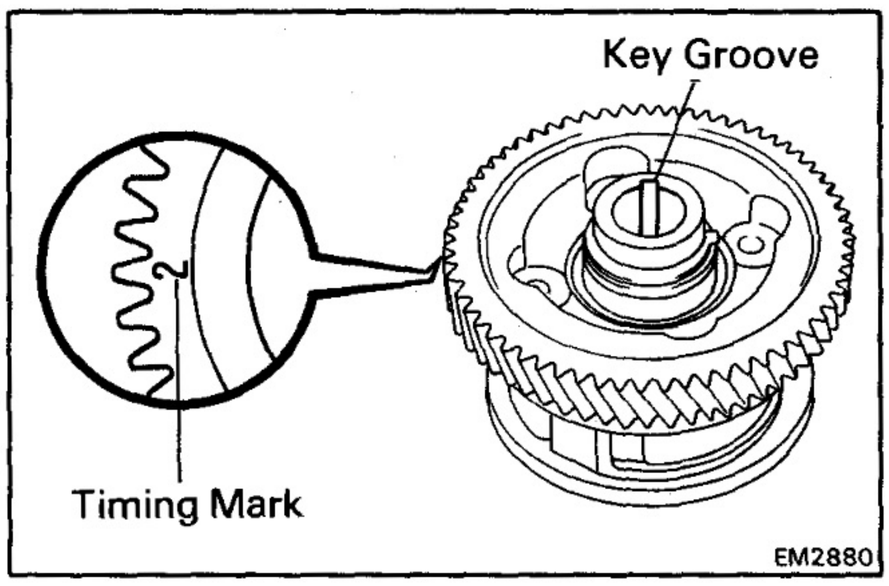

2. INSTALL NEW DRIVE GEAR

(a) Install the drive gear onto the timer as shown.

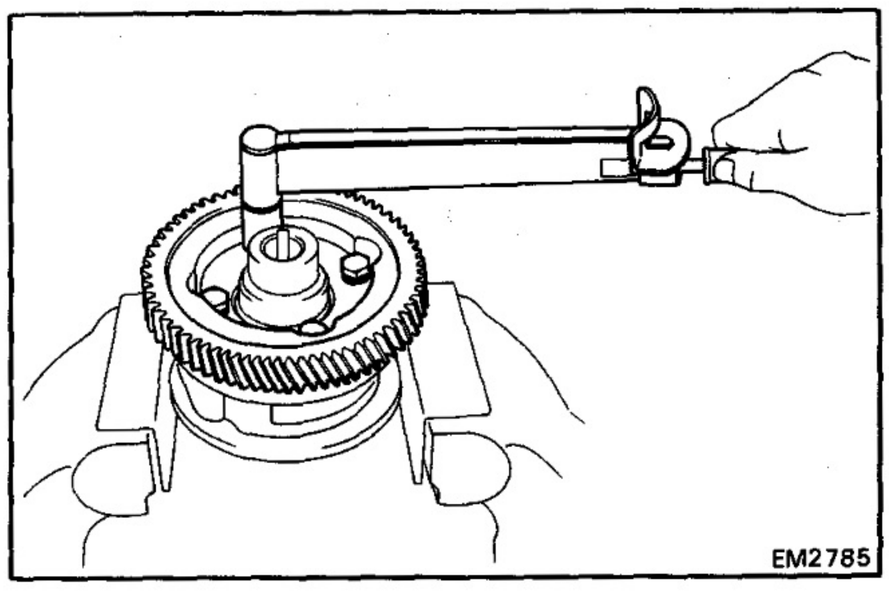

(b) Install the four spring washers and bolt. Torque the bolts.

Torque: 230 kg-cm (17 ft-lb, 23 N·m)

REPLACEMENT OF CRANKSHAFT FRONT OIL SEAL

REPLACE CRANKSHAFT FRONT OIL SEAL

NOTE: There are two methods (A and B) to replace the oil seal as follows.

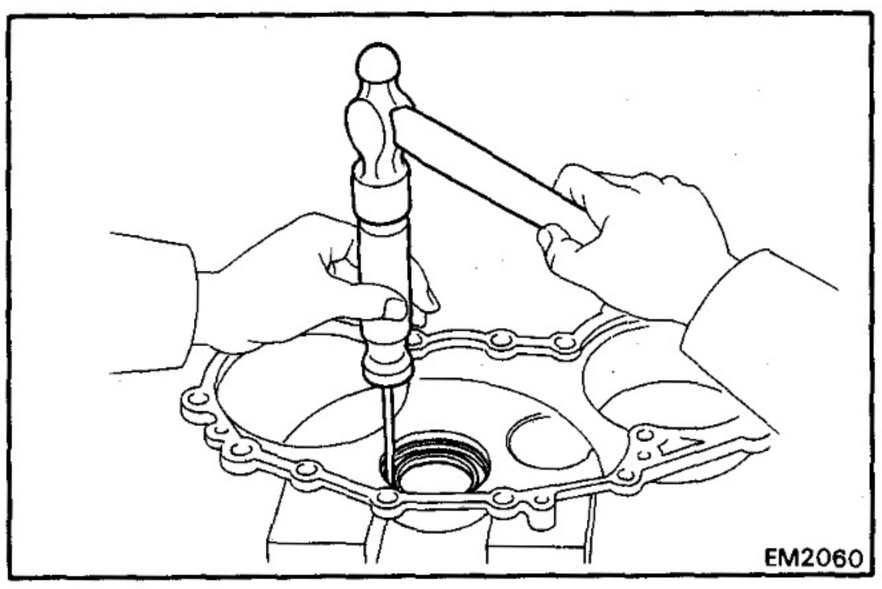

A. If timing gear cover is removed from cylinder block:

(a) Using a screwdriver and hammer, tap out the oil seal.

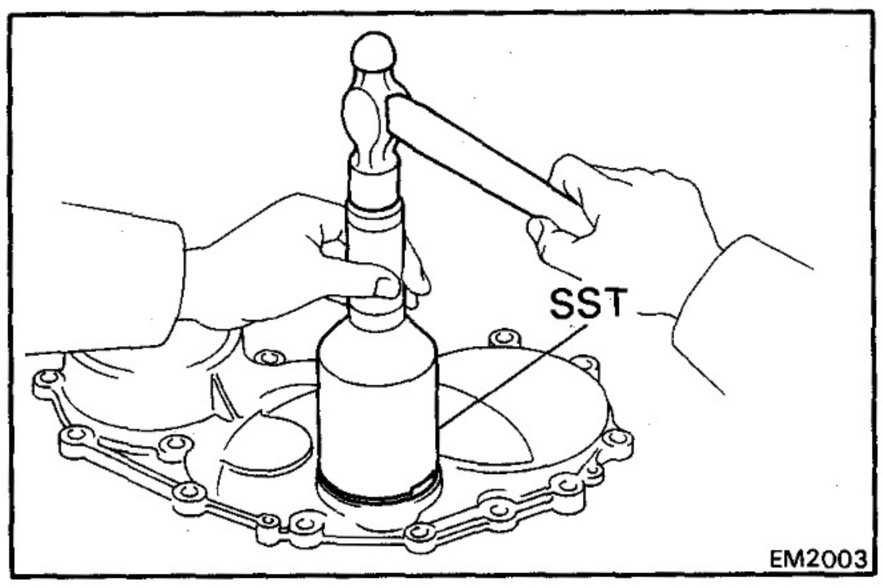

(b) Using SST and a hammer, tap in a new oil seal until its surface is flush with the timing gear cover edge.

SST 09214-76011

(c) Apply MP grease to the oil seal lip.

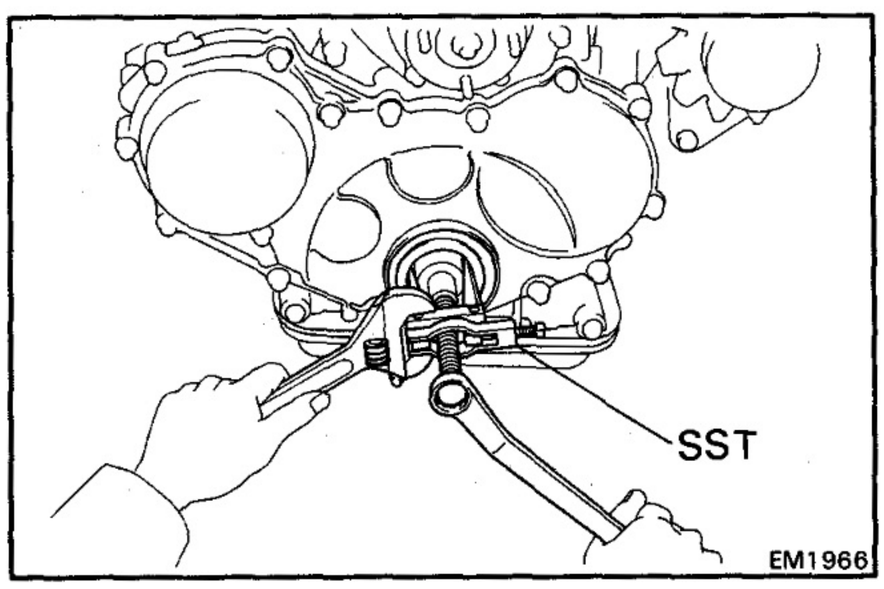

B. If timing gear cover is installed to cylinder block:

(a) Using SST, remove the oil seal.

SST 09308-10010

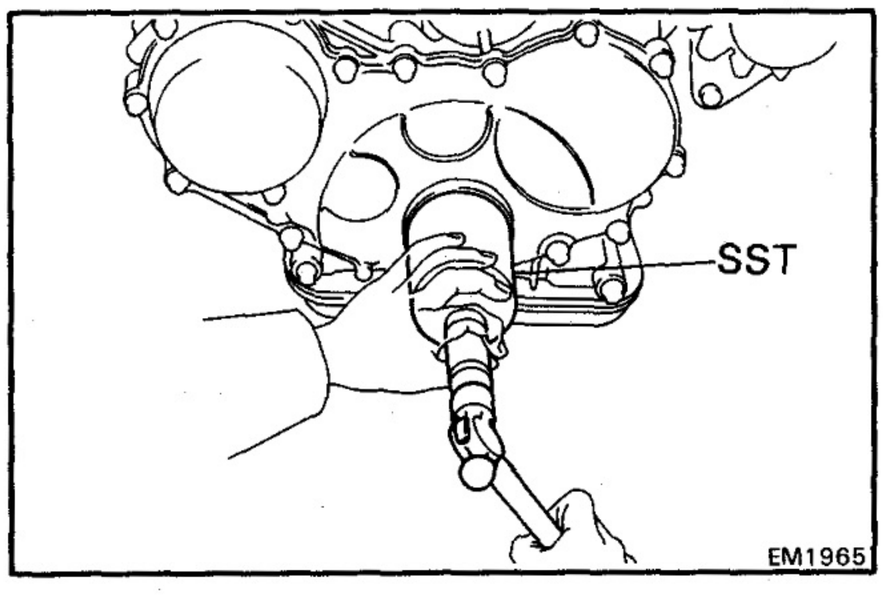

(b) Apply MP grease to a new oil seal lip.

(c) Using SST and a hammer, tap in the oil seal until its surface is flush with the timing gear cover edge.

SST 09214-76011

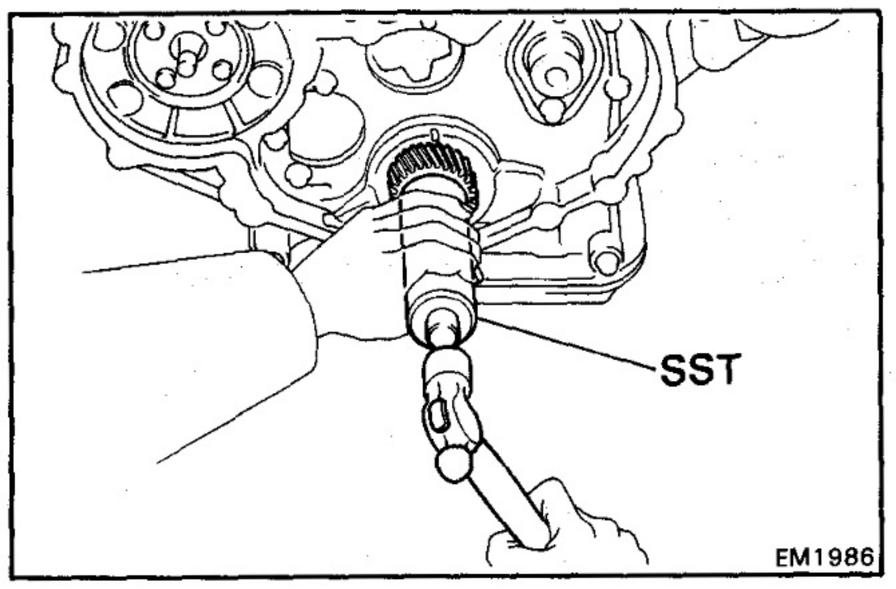

INSTALLATION OF TIMING GEARS AND CAMSHAFT

(See page EM-77)

1. INSTALL CRANKSHAFT TIMING GEAR

(a) Put the timing gear on the crankshaft with the timing mark facing frontward.

(b) Align the timing gear set key with the key groove of the timing gear.

(c) Using SST and a hammer, tap in the timing gear.

SST 09608-35014 (09608-06040)

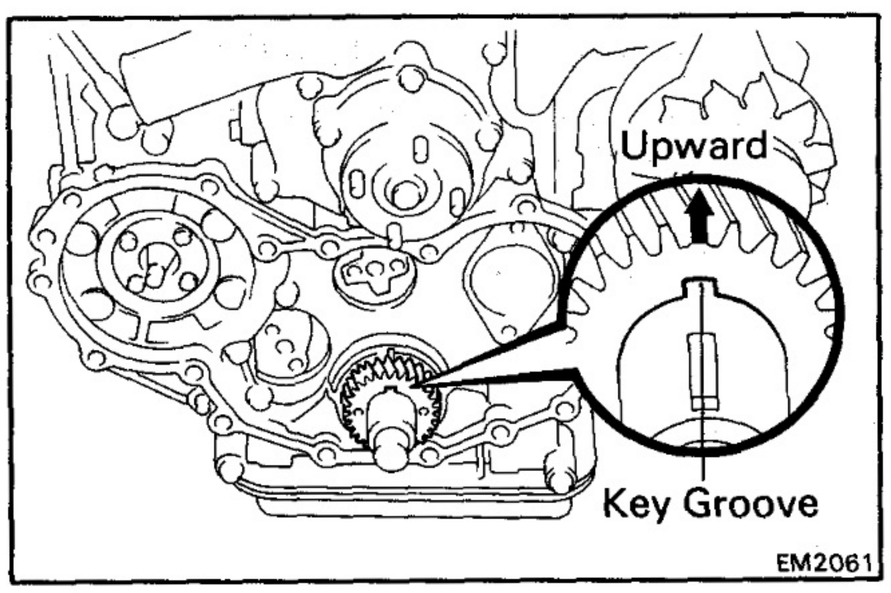

2. INSTALL NO. 1 IDLE GEAR

(a) Set the crankshaft timing gear with the key groove facing upward by turning the crankshaft clockwise.

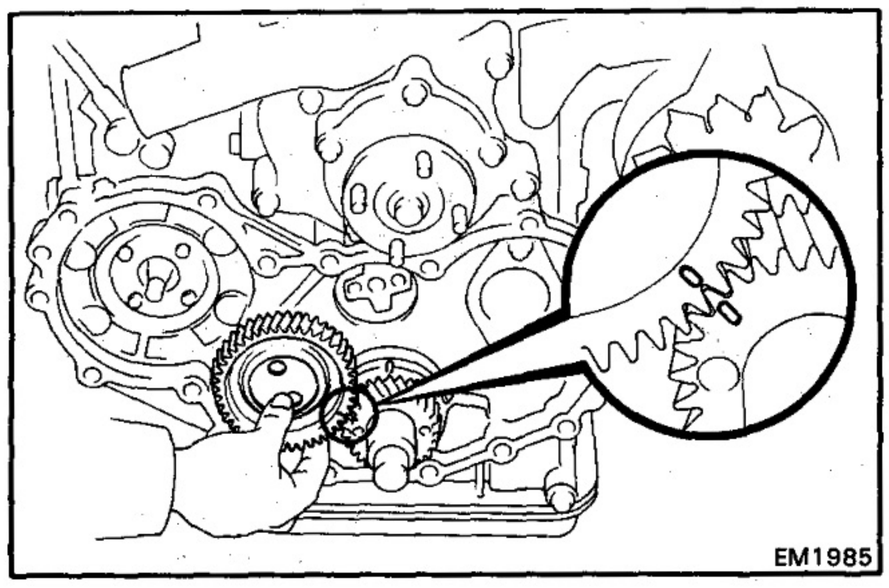

(b) Assemble the idle gear gear and gear shaft.

(c) Align the "0" timing marks of the crankshaft timing and idle gears, and mesh the gears.

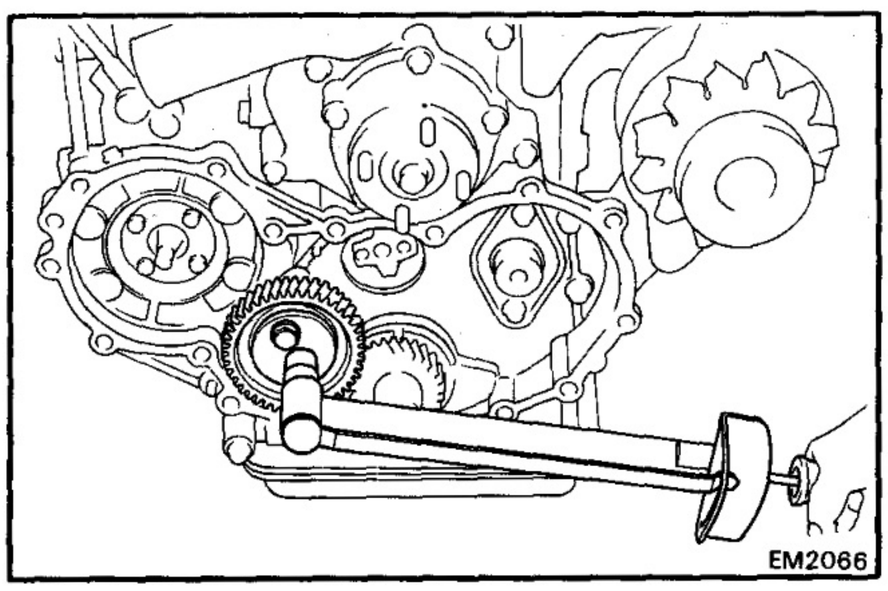

(d) Apply a light coat of the engine oil on the threads and under the bolt heads.

(e) Install the thrust plate with the two bolts. Torque the bolts.

Torque: 475 kg-cm (34 ft-lb, 47 N·m)

3. CHECK BACKLASH OF NO. 1 IDLE GEAR

(See page EM-81)

Stardard backlash: 0.050 – 0.116 mm (0.0019 – 0.0045 in.)
Maximum backlash: 0.30 mm (0.0118 in.)

4. CHECK THRUST CLEARANCE OF NO. 1 IDLE GEAR

(See page EM-81)

Standard thrust clearance: 0.050 – 0.150 mm (0.0019 – 0.0059 in.)
Maximum thrust clearance: 0.30 mm (0.0118 in.)

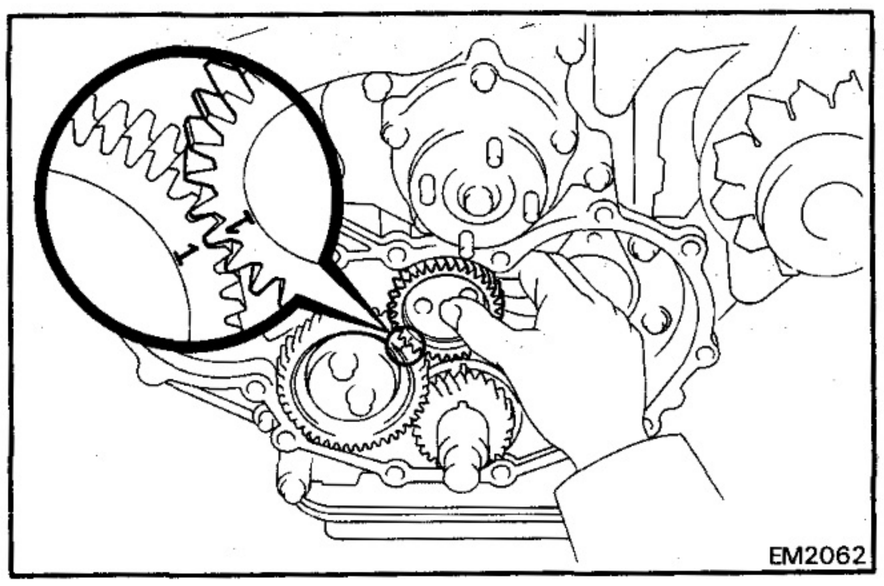

5. INSTALL NO. 2 IDLE GEAR

(a) Assemble the idle gear and gear shaft.

(b) Align the "1" timing marks of the idle gears, and mesh the gears.

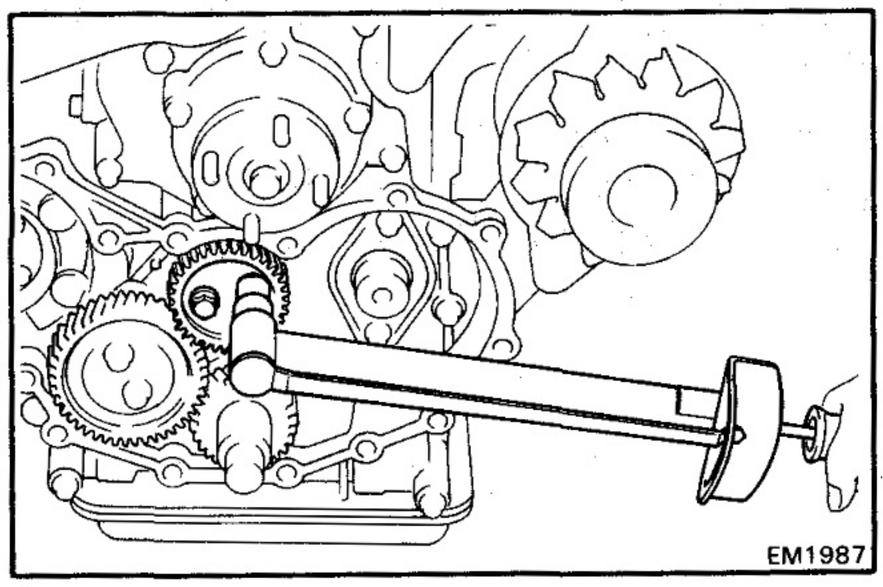

(c) Apply a light coat of engine oil on the threads and under the bolt heads.

(d) Install the thrush plate with the two bolts. Torque the bolts.

Torque: 475 kg-cm (34 ft-lb, 47 N·m)

6. CHECK BACKLASH OF NO. 2 IDLE GEAR
(See page EM-81)

Standard backlash: 0.050 — 0.113 mm (0.0019 — 0.0044 in.)
Maximum backlash: 0.30 mm (0.0118 in.)

7. CHECK THRUST CLEARANCE OF NO. 2 IDLE GEAR
(See page EM-81)

Standard thrust clearance: 0.050 — 0.150 mm (0.0019 — 0.0059 in.)
Maximum thrust clearance: 0.30 mm (0.0118 in.)

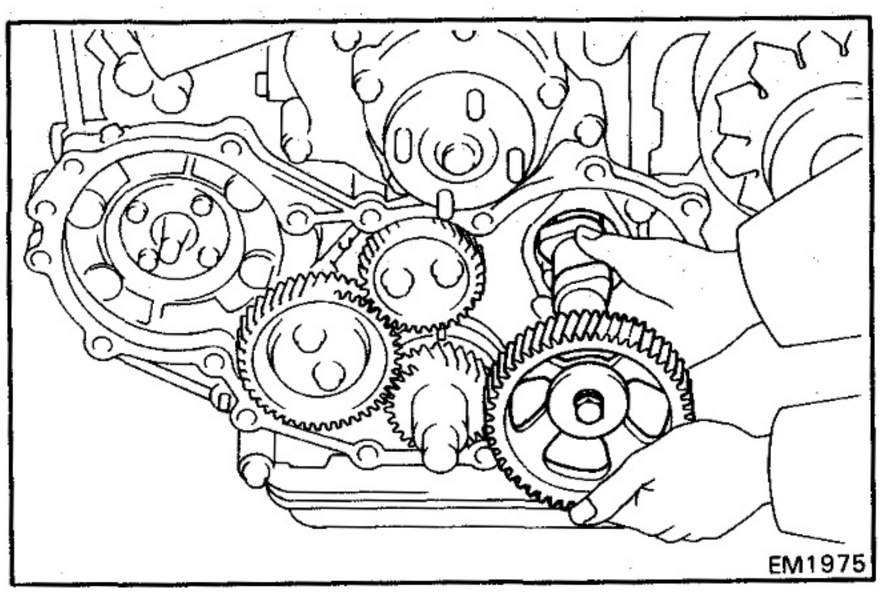

8. INSTALL CAMSHAFT TIMING GEAR AND CAMSHAFT ASSEMBLY

(a) Insert the camshaft into the cylinder block.

CAUTION: Be careful not to damage the camshaft bearings.

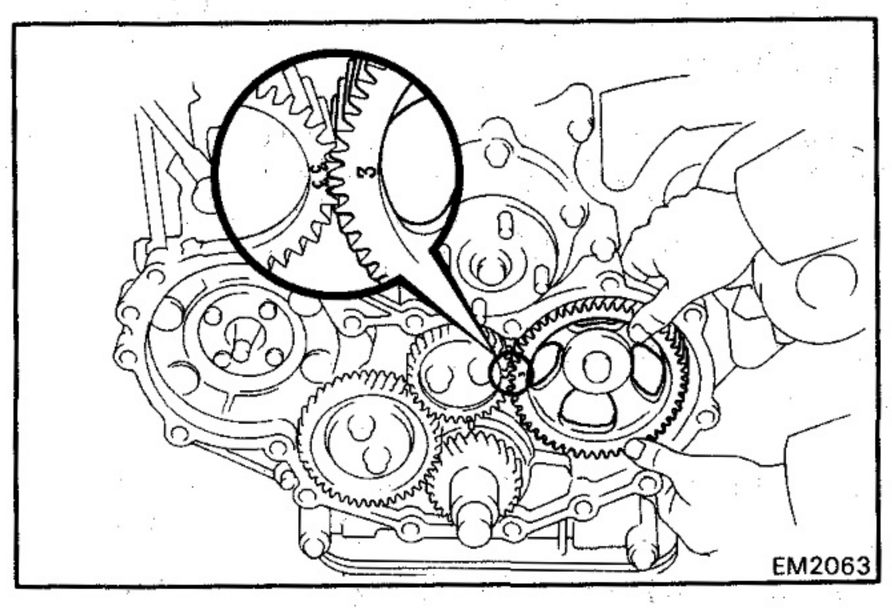

(b) Align the "3" timing marks of the No. 2 idle and camshaft timing gears, and mesh the gears.

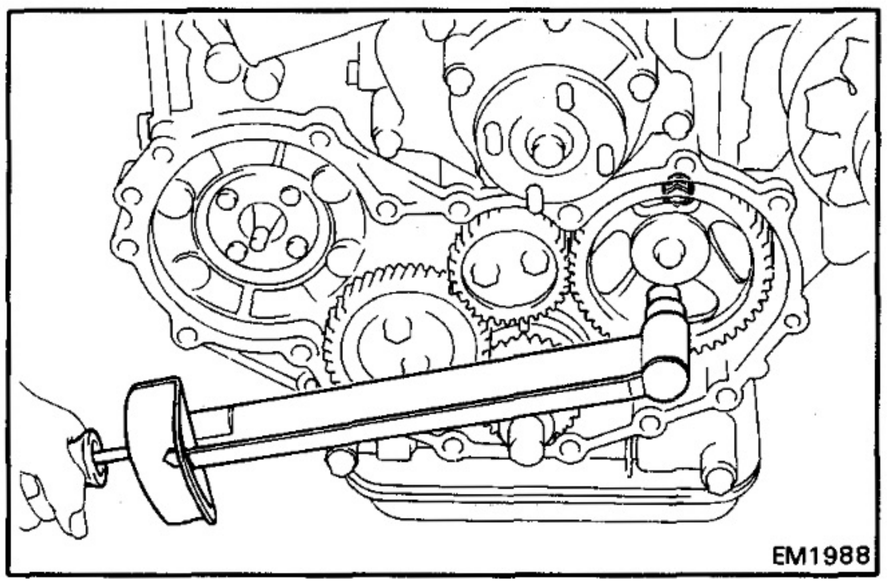
EM1988

(c) Install and torque the two bolts.

Torque: 375 kg-cm (27 ft-lb, 37 N·m)

9. CHECK BACKLASH OF CAMSHAFT TIMING GEAR (See page EM-80)

Standard backlash: 0.050 – 0.113 mm (0.0019 – 0.044 in.)
Maximum backlash: 0.30 mm (0.0118 in.)

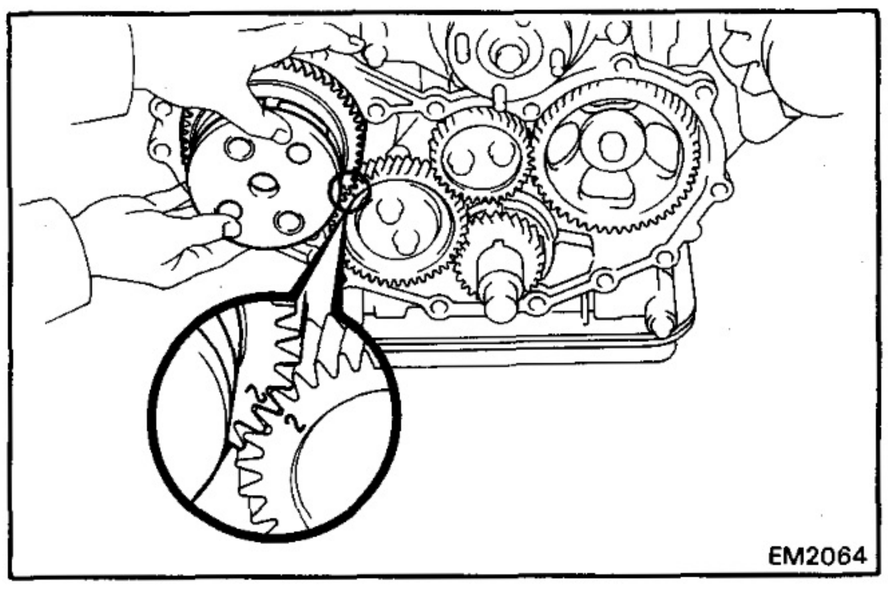
EM2064

10. INSTALL AUTOMATIC TIMER

(a) Align the automatic timer set key with the key groove of the automatic timer.

(b) Align the "2" timing marks of the No. 1 idle and automatic timer drive gear, and mesh the gears.

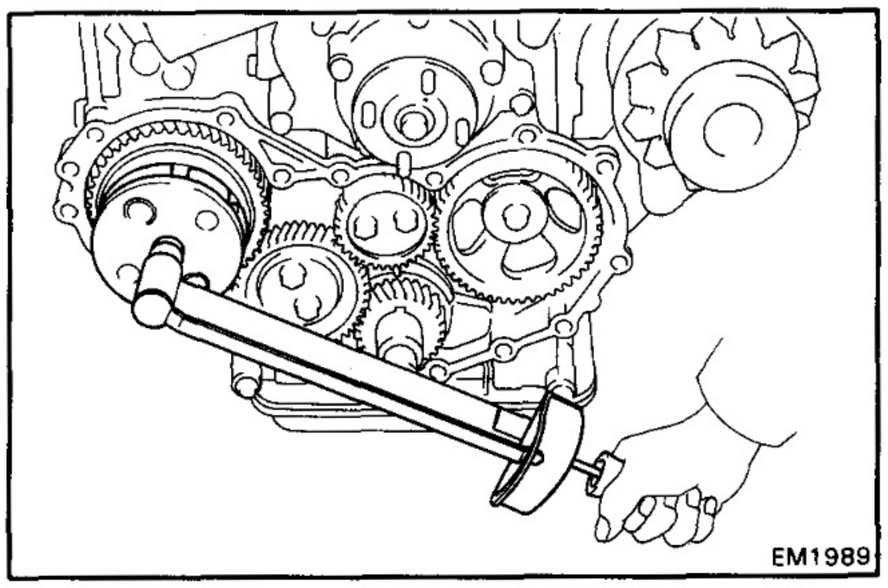
EM1989

(c) Apply a light coat of engine oil on the threads and under the round nut.

(d) Install the washer (12H-T) and round nut. Torque the round nut.

Torque: 750 kg-cm (54 ft-lb, 74 N·m)

11. CHECK BACKLASH OF AUTOMATIC TIMER DRIVE GEAR (See page EM-80)

Standard backlash: 0.050 – 0.111 mm (0.0019 – 0.0043 in.)
Maximum backlash: 0.30 mm (0.118 in.)

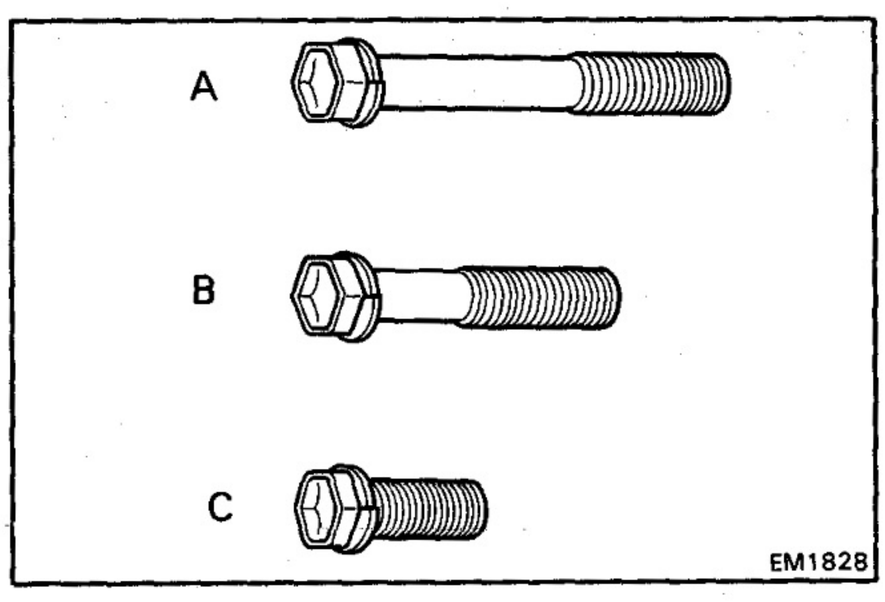

12. INSTALL TIMING GEAR COVER

[w/o PS or A/C]

NOTE: Use the bolts indicated "A," "B" and "C."

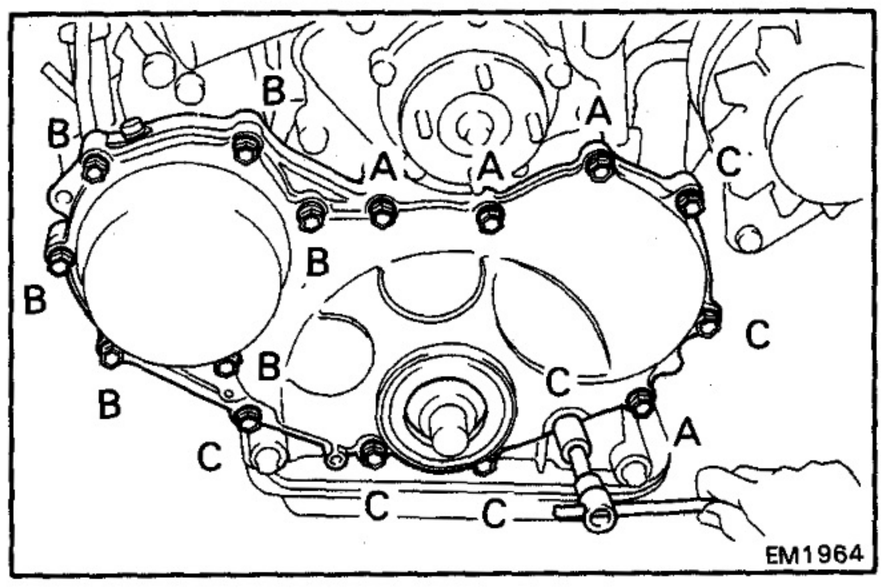

Install a new gasket and the gear cover with the sixteen bolts.

Torque: 250 kg-cm (18 ft-lb, 25 N·m)

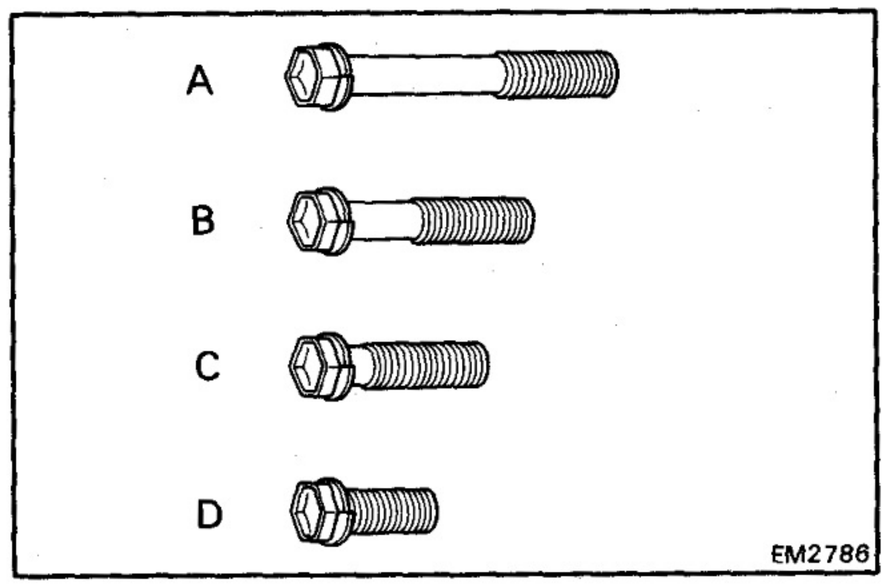

[w/ PS or A/C]

NOTE: Use the bolts indicated "A," "B," "C" and "D."

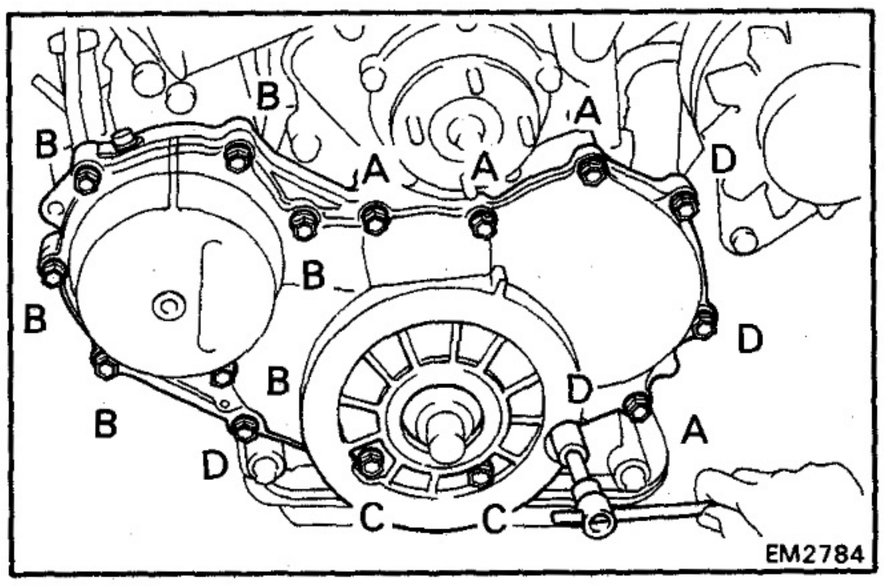

Install a new gasket and the gear cover with the sixteen bolts.

Torque: 250 kg-cm (18 ft-lb, 25 N·m)

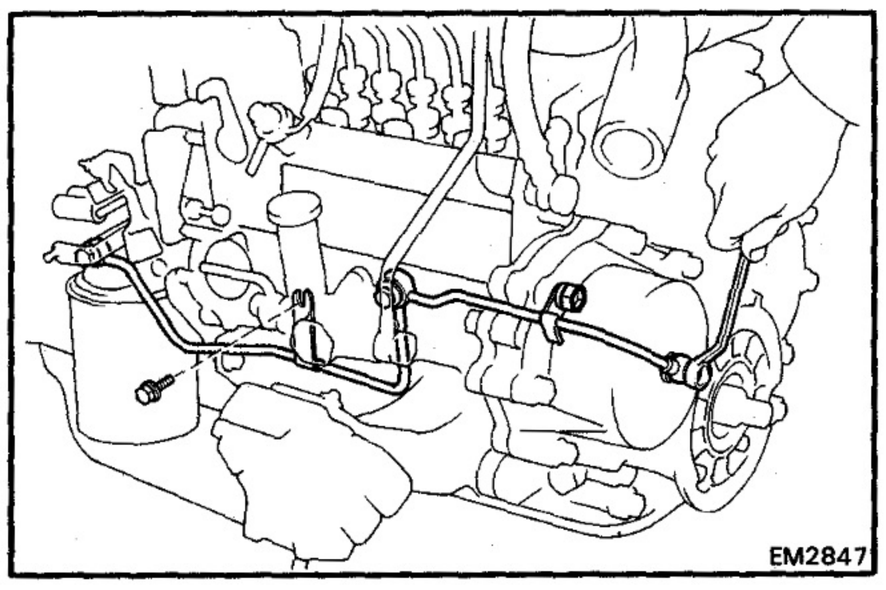

13. [12H-T]
INSTALL OIL PIPE

Torque the union bolts.

Torque: 185 kg-cm (13 ft-lb, 18 N·m)

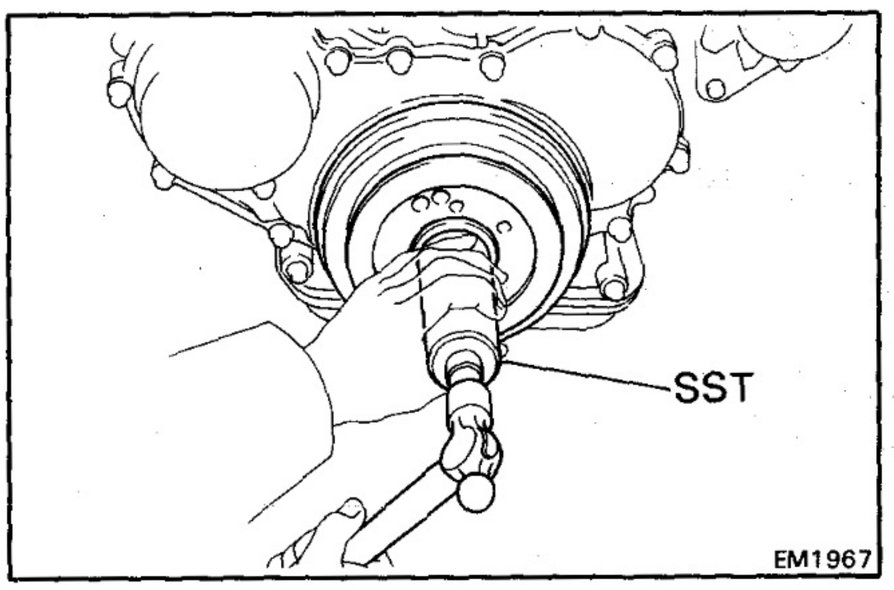

14. INSTALL CRANKSHAFT PULLEY

(a) Align the pulley set key with the key groove of the pulley.

(b) Using SST and a hammer, tap in the pulley.

SST 09608-35014 (09608-06040)

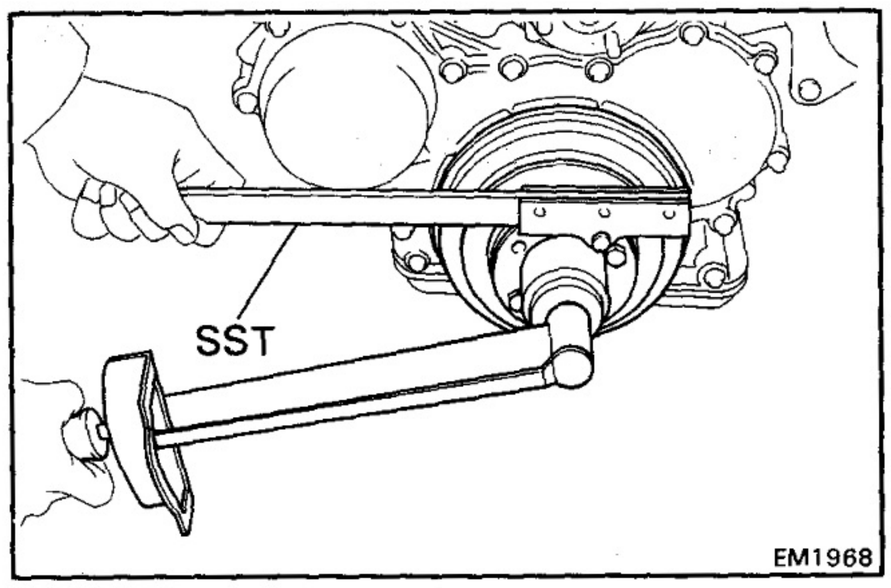

(c) Apply a light coat of engine oil on the thread and under the pulley mount bolt.

(d) Using SST and a 46 mm socket wrench, install and torque the pulley mount bolt.

SST 09213-58011 and 09330-00021

Torque: 4,500 kg-cm (325 ft-lb, 441 N·m)

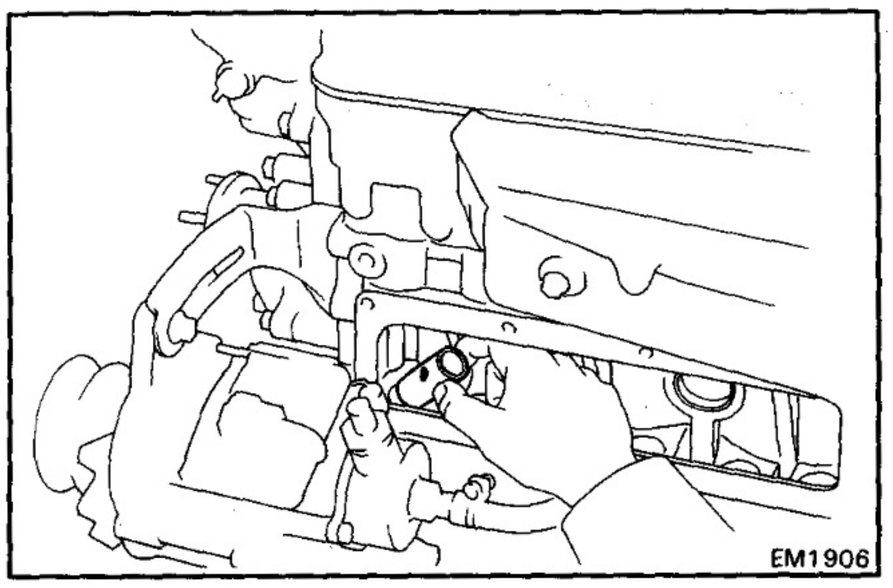

15. INSTALL VALVE LIFTER

Carefully insert the twelve lifters into the lifter bores.

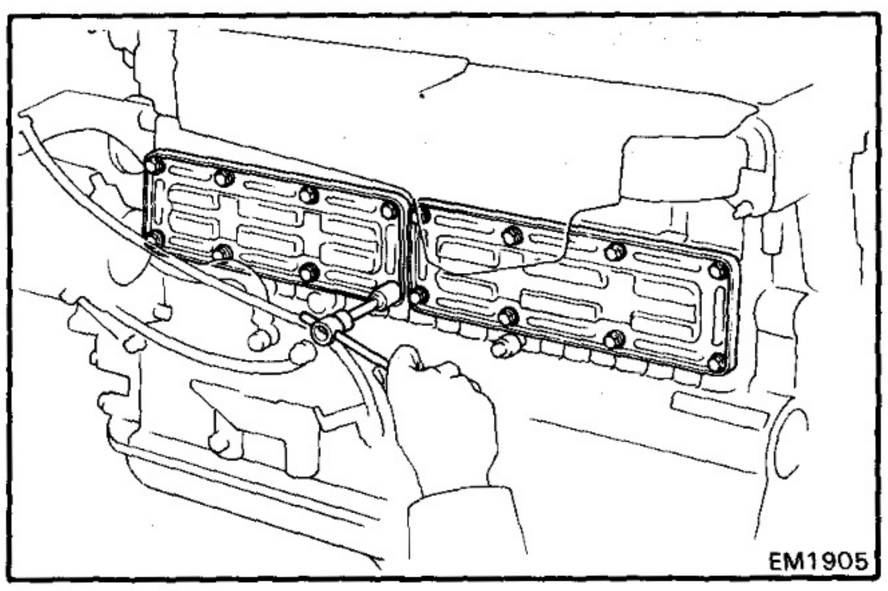

16. INSTALL PUSH ROD COVER

Install a new gasket and the push rod cover with the eight bolts. Install the two push rod covers.

Torque: 130 kg-cm (9 ft-lb, 13 N·m)

17. INSTALL VALVE ROCKER SHAFT ASSEMBLY
(See steps 2 to 5 on pages EM-68 and 69) 2H
(See steps 2 to 5 on pages EM-73 an 74) 12H-T

18. [12H-T]
INSTALL TURBOCHARGER
(See steps 3 to 12 on pages EM-44 to 46)

19. INSTALL WATER PUMP PULLEY AND FAN
(See page CO-10)

20. **INSTALL AND ADJUST DRIVE BELT**
    (See page CH-6)

21. **START ENGINE AND CHECK FOR LEAKS**

22. **CHECK ENGINE OIL LEVEL**

23. **READJUST VALVE CLEARANCES**
    (See steps 1 to 7 on page EM-22)

CYLINDER BLOCK

COMPONENTS

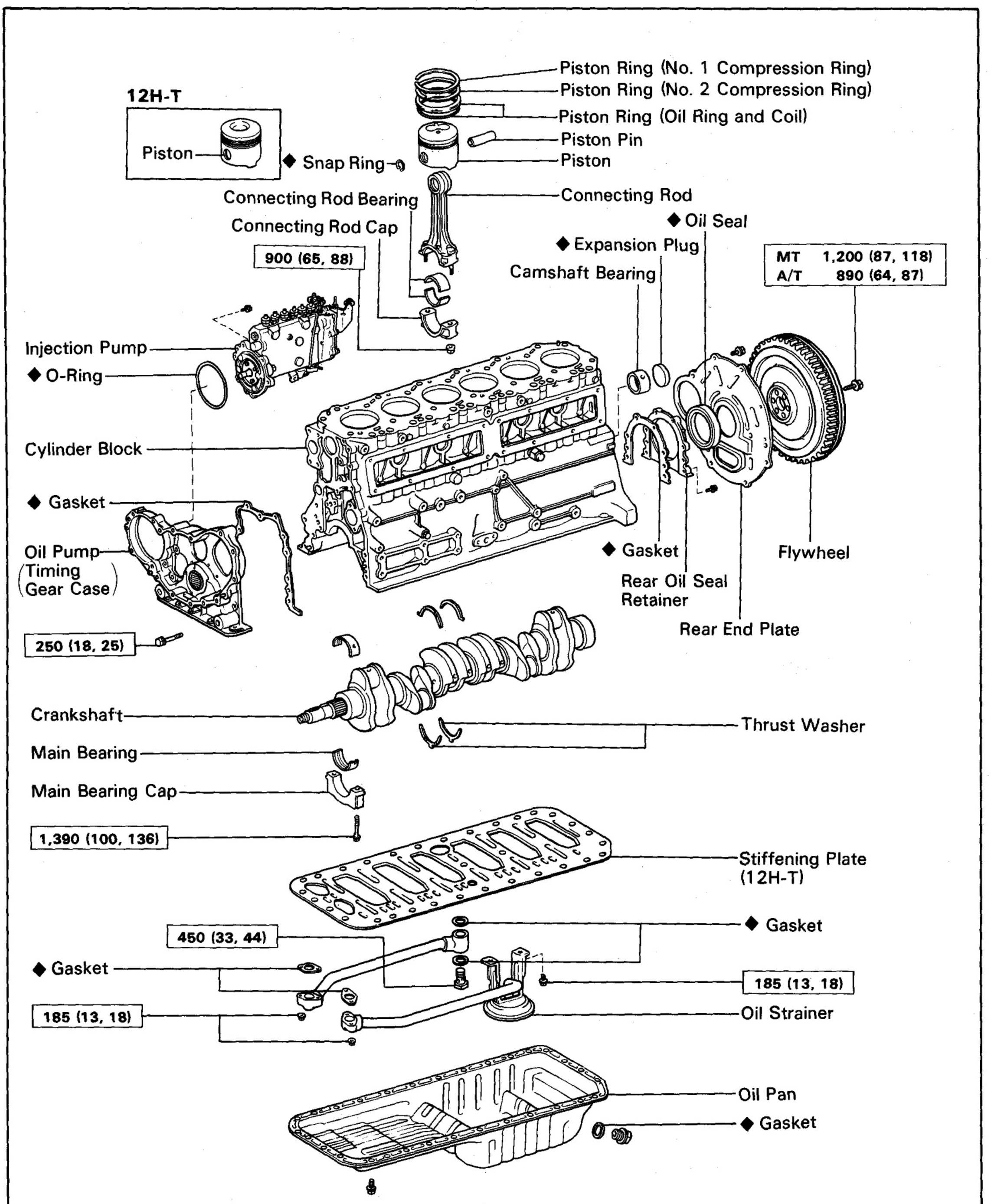

kg-cm (ft-lb, N·m) : Specified torque

◆ Non-reusable part

EM2843

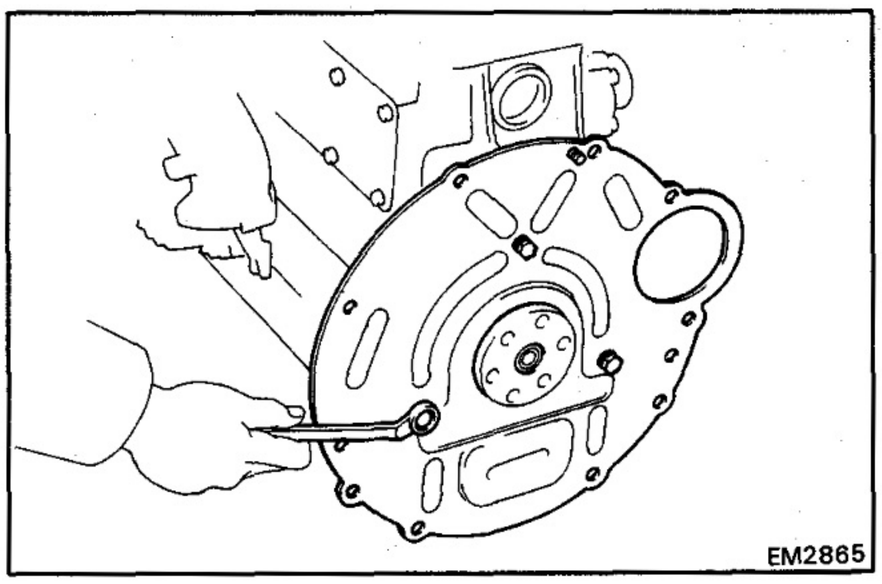

DISASSEMBLY OF CYLINDER BLOCK

(See page EM-94)

1. [M/T]
   REMOVE FLYWHEEL

2. [A/T]
   REMOVE DRIVE PLATE

3. REMOVE REAR END PLATE
   Remove the three bolts and rear end plate.

4. INSTALL ENGINE TO ENGINE STAND FOR DISASSEMBLY

5. [12H-T]
   REMOVE TURBOCHARGER
   (See pages EM-40 to 42)

6. REMOVE INJECTION PIPES
   (See page FU-3) 2H
   (See page FU-9 and 10) 12H-T

7. REMOVE CYLINDER HEAD
   (See pages EM-49 to 52) 2H
   (See pages EM-53 to 55) 12H-T

8. REMOVE TIMING GEARS AND CAMSHAFT
   (See pages EM-78 to 82)

9. REMOVE INJECTION PUMP
   (See pages FU-30 and 31)

10. REMOVE OIL PAN AND OIL PUMP
    (See page LU-6 and 7)

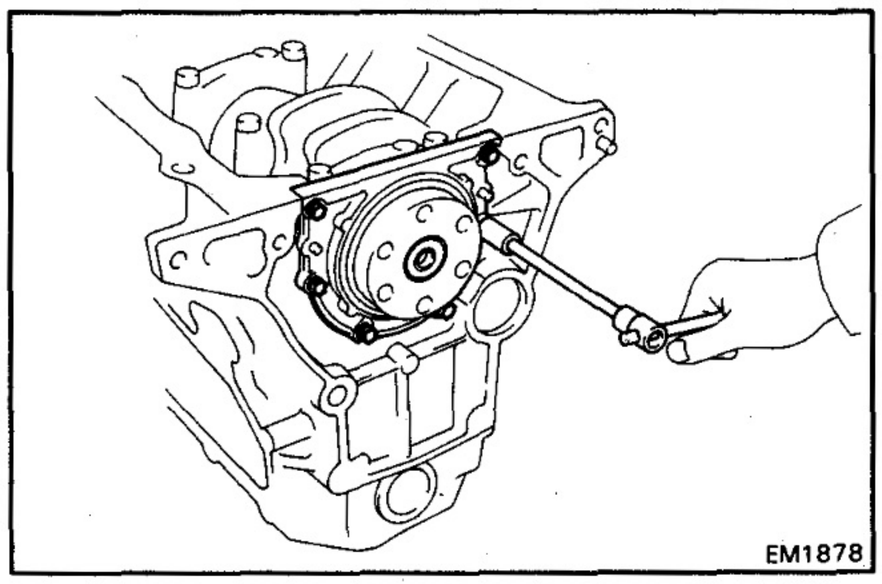

11. REMOVE REAR OIL SEAL RETAINER
    Remove the six bolts, retainer and gasket.

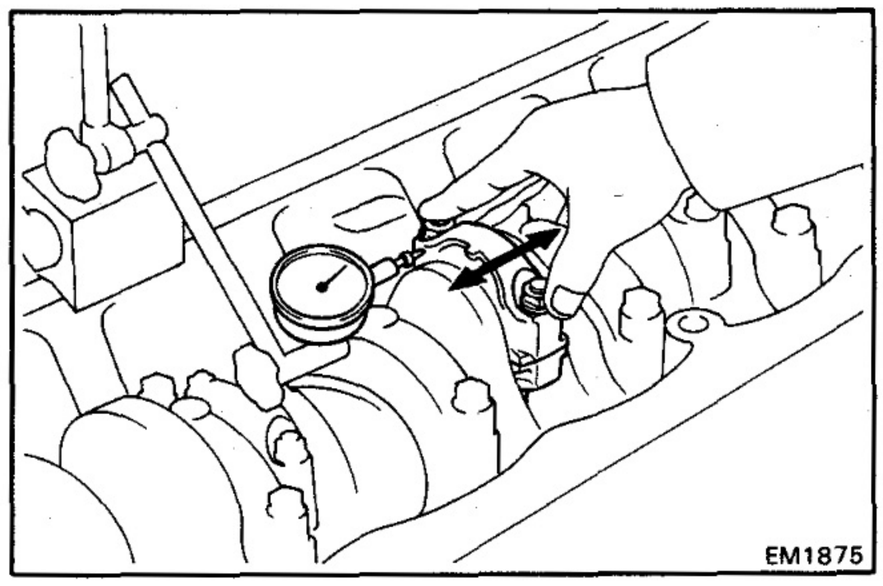

12 CHECK CONNECTING ROD THRUST CLEARANCE

Using a dial indicator, measure the thrust clearance while moving the rod back and forth.

Standard thrust clearance: **0.200 — 0.340 mm (0.0079 — 0.0134 in.)**

Maximum thrust clearance: **0.40 mm (0.0157 in.)**

If the clearance is greater than maximum, replace the connecting rod assembly. If necessary, replace the crankshaft.

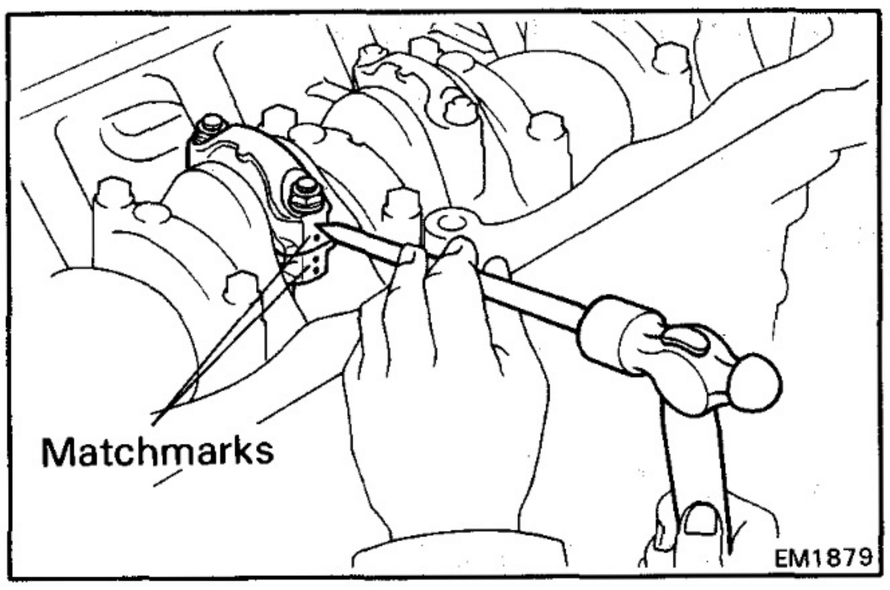

13. REMOVE CONNECTING ROD CAPS AND CHECK OIL CLEARANCE

(a) Using a punch or numbering stamp, place matchmarks on the connecting rod and cap to ensure correct reassembly.

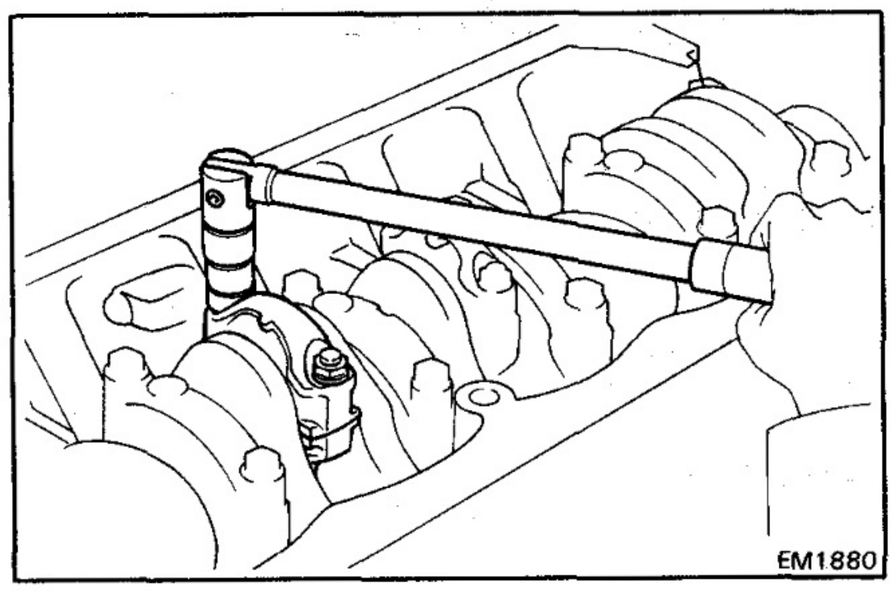

(b) Remove the connecting rod cap nuts.

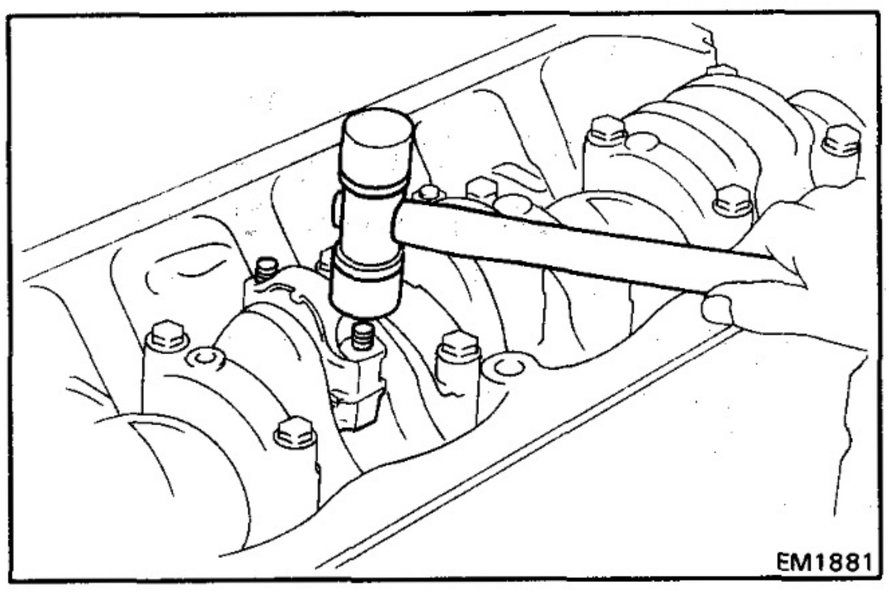

(c) Using a plastic-faced hammer, lightly tap the connecting rod bolts and lift off the connecting rod cap.

NOTE: Keep the lower bearing inserted with the connecting rod cap.

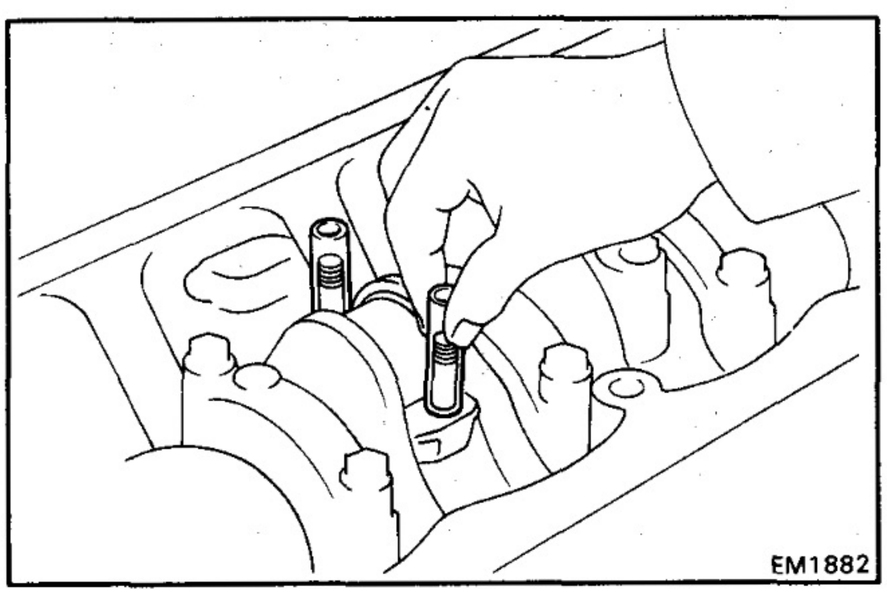

(d) Cover the connecting rod bolts with a short piece of hose to protect the crankshaft from damage.

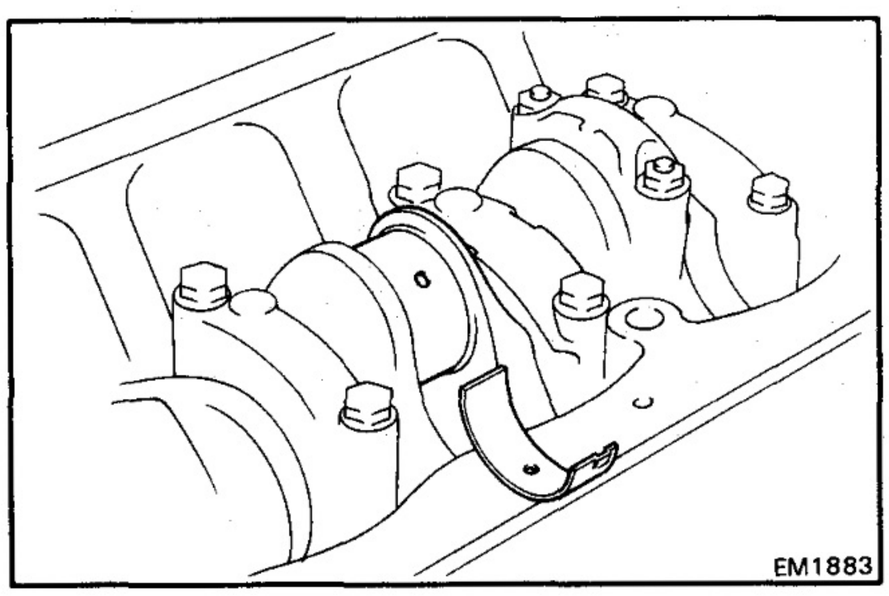

(e) Clean the crank pin and bearing.

(f) Check the crank pin and bearing for pitting and scratches.

If the crank pin or bearing are damaged, replace the bearings. If necessary, grind or replace the crankshaft.

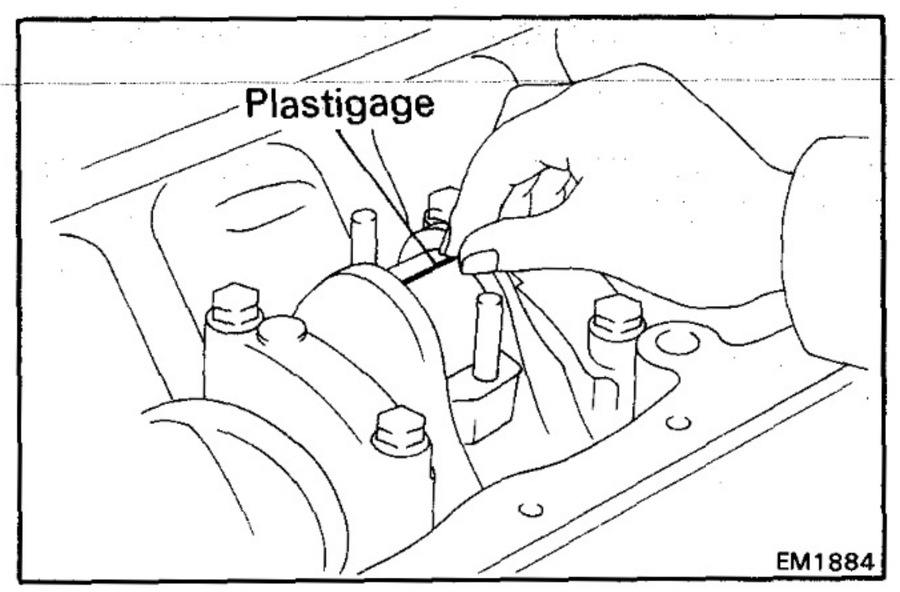

(g) Lay a strip of Plastigage across the crank pin.

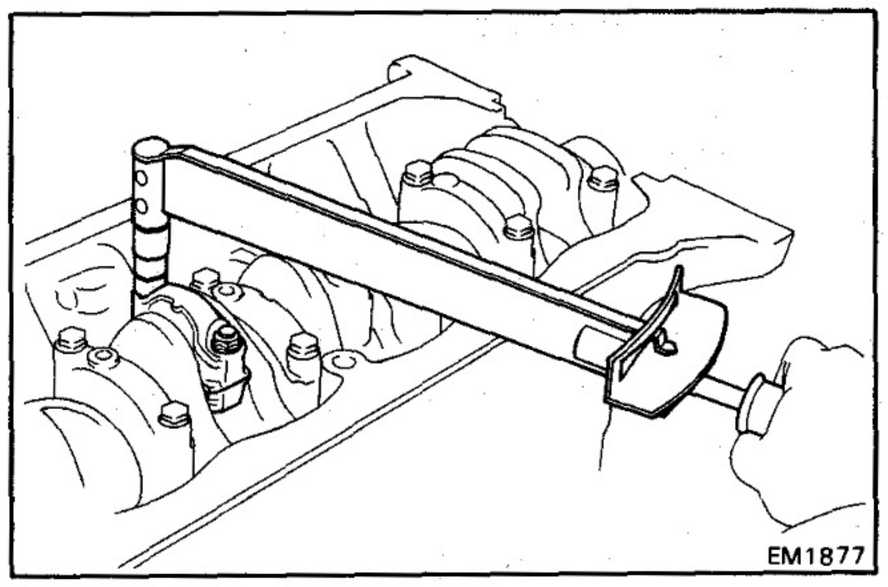

(h) Install the connecting rod cap. (See page EM-116)

Torque: 900 kg-cm (65 ft-lb, 88 N·m)

NOTE: Do not turn the crankshaft.

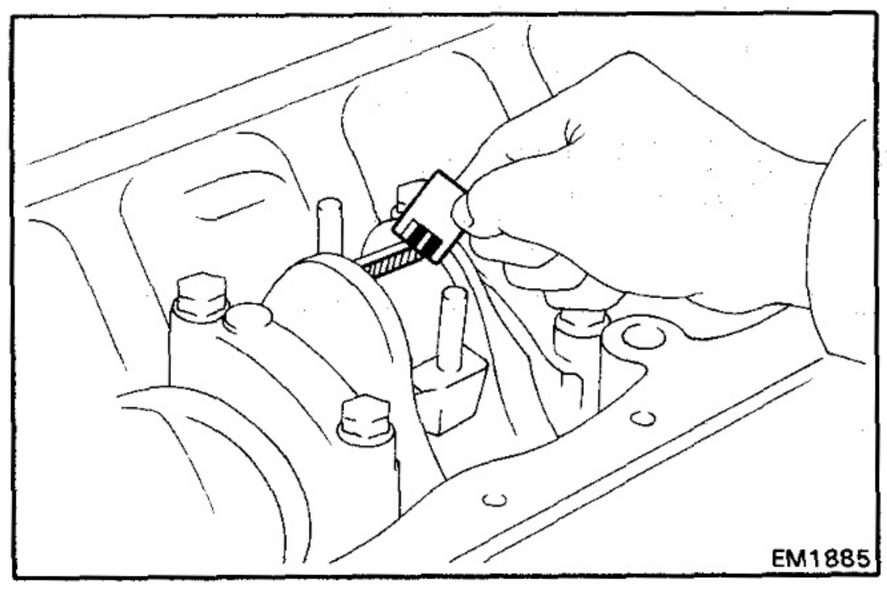

(i) Remove the connecting rod cap.

(j) Measure the Plastigage at its widest point.

Standard oil clearance: 0.030 — 0.070 mm (0.0012 — 0.0028 in.)

Maximum oil clearance: 0.10 mm (0.0039 in.)

If the clearance is greater than maximum, replace the bearing. If necessary, grind or replace the crankshaft.

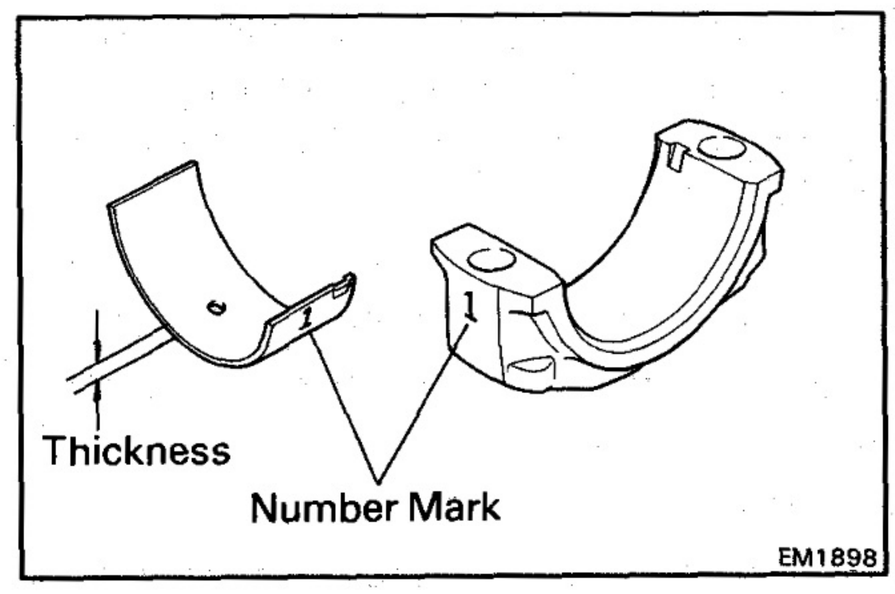

NOTE: If using a standard bearing, replace with one having the same number marked on the connecting rod cap. There are two sizes of standard bearings, marked "1" and "2" accordingly.

Standard bearing thickness (at center wall):

STD size 1 1.480 — 1.485 mm (0.0583 — 0.0585 in.)

STD size 2 1.485 — 1.490 mm (0.0585 — 0.0587 in.)

(k) Completely remove the Plastigage.

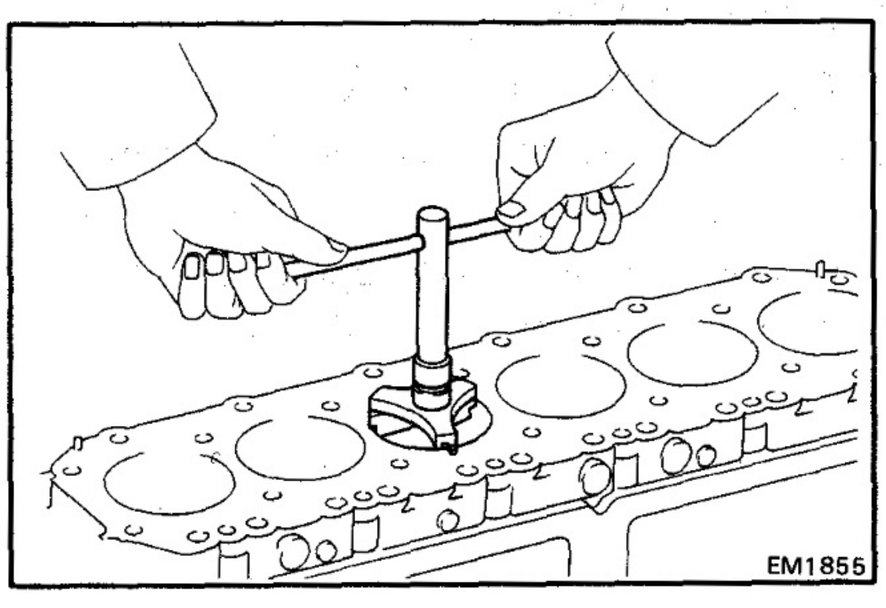

14. REMOVE PISTON AND CONNECTING ROD ASSEMBLIES

(a) Remove all the carbon from the piston ring ridge.

(b) Cover the connecting rod bolts. (See page EM-96)

(c) Push the piston, connecting rod assembly and upper bearing out through the tap of the cylinder.

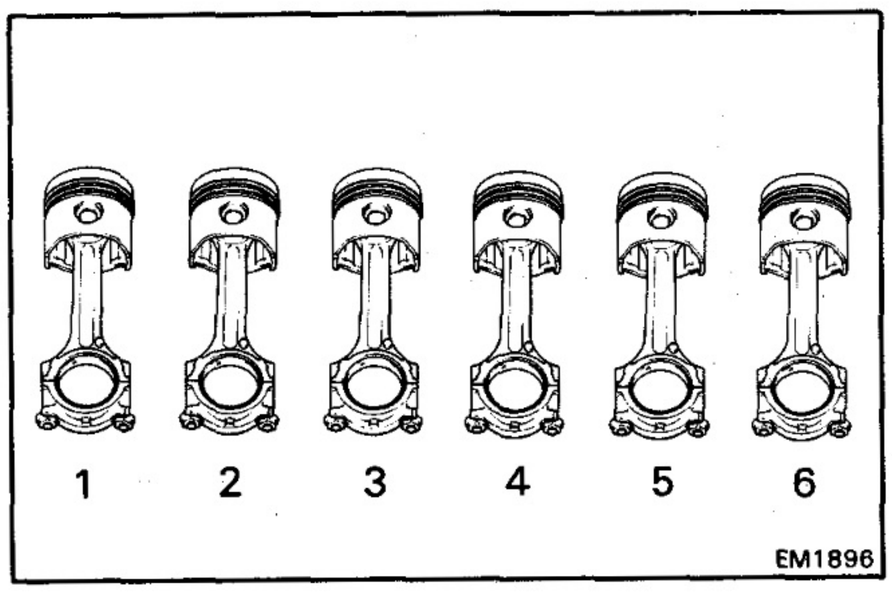

NOTE:
- Keep the bearings, connecting rod and cap together.
- Arrange the piston and connecting rod assemblies in correct order.

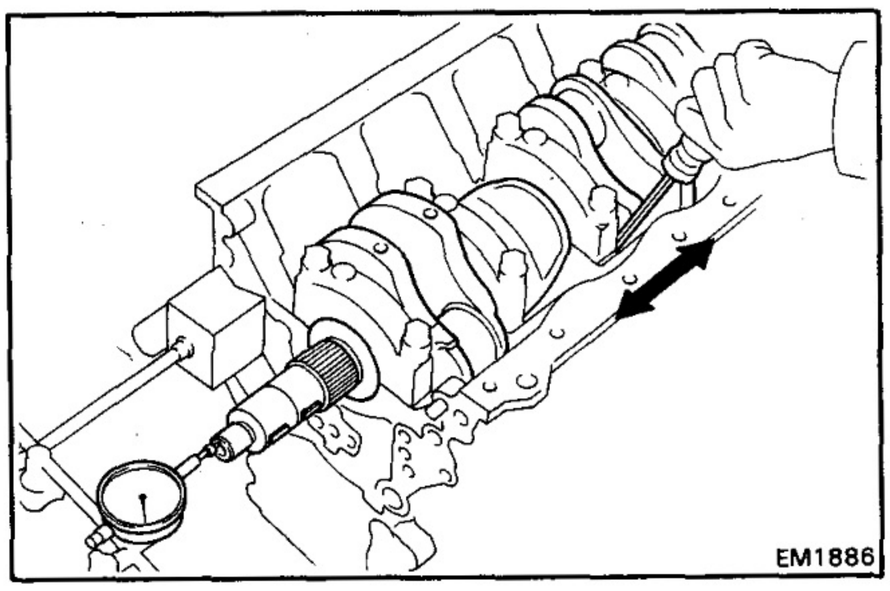

15. CHECK CRANKSHAFT THRUST CLEARANCE

Using a dial indicator, measure the thrust clearance while prying the crankshaft back and forth with a screwdriver.

Standard thrust clearance: 0.040 — 0.240 mm (0.0016 — 0.0094 in.)
Maximum thrust clearance: 0.30 mm (0.0118 in.)

If the clearance is greater than maximum, replace the thrust washers as a set.

Thrust washer thickness:

STD size	**2.930 — 2.980 mm (0.1154 — 0.1173 in.)**
O/S 0.125	**(2.993 — 3.043 mm (0.1178 — 0.1198 in.)**
O/S 0.250	**3.055 — 3.105 mm (0.1203 — 0.1222 in.)**

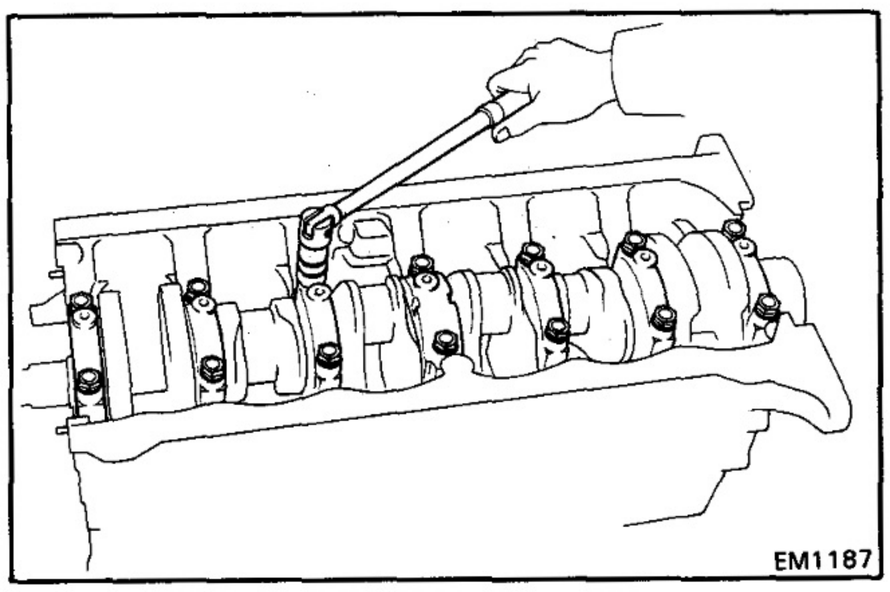

16. REMOVE MAIN BEARING CAPS AND CHECK OIL CLEARANCE

(a) Remove the main bearing cap bolts.

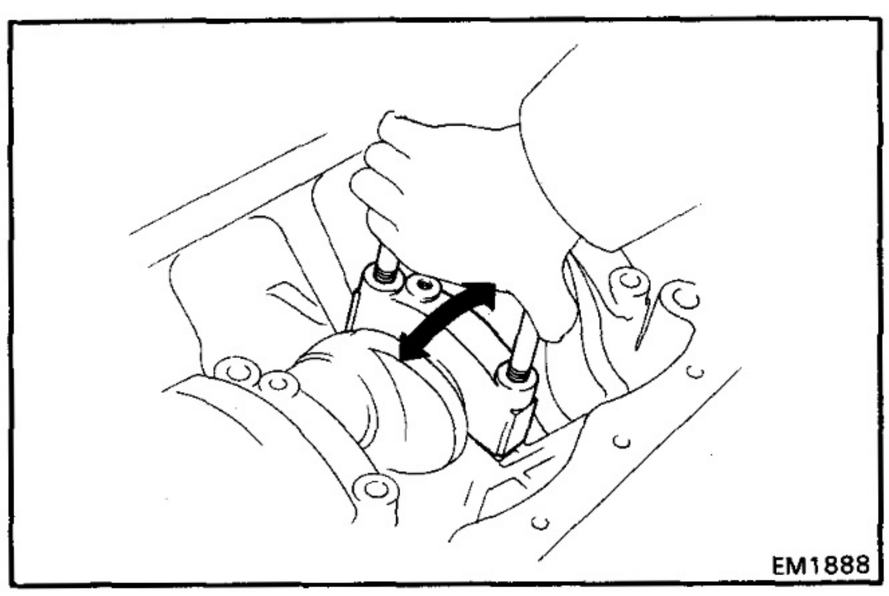

(b) Using the removed main bearing cap bolts, pry the cap back and forth, and remove the main bearing caps, lower bearings and lower thrust washers (No. 4 main bearing cap only).

NOTE:
- Keep the lower bearing and main bearing cap together.
- Arrange the main bearing cap and lower thrust washers in correct order.

(c) Lift out the crankshaft.

NOTE: Keep the upper bearing and upper thrust washers together with the cylinder block.

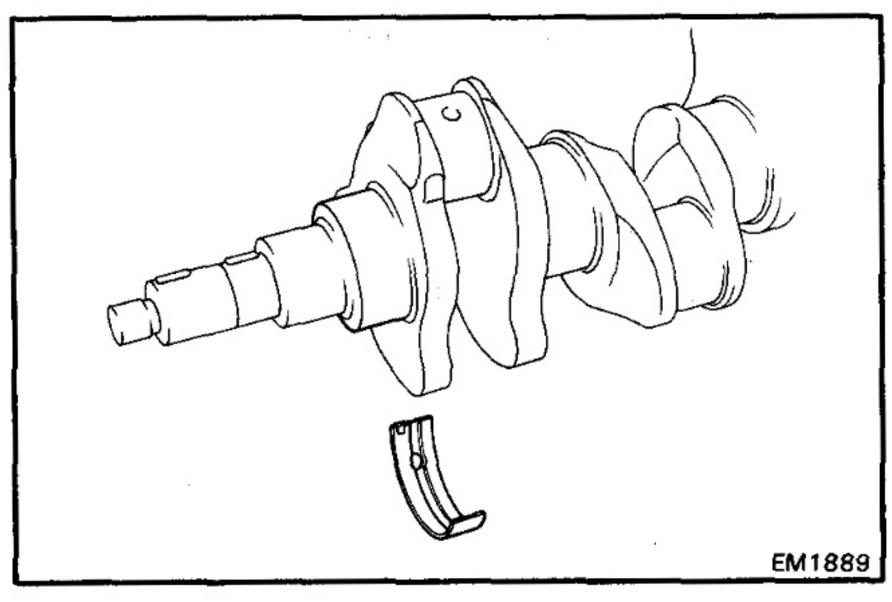

(d) Clean each main journal and bearing.

(e) Check each main journal and bearing for pitting and scratches.

If the journal or bearing are damaged, replace the bearing.
If necessary, grind or replace the crankshaft.

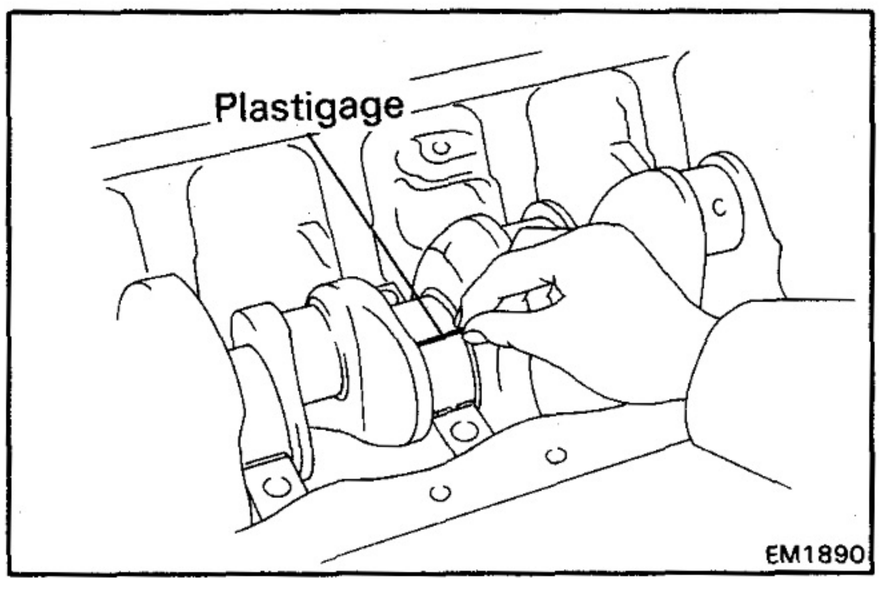

(f) Place the crankshaft on the cylinder block.

(g) Lay a strip of Plastigage across each of the main journal.

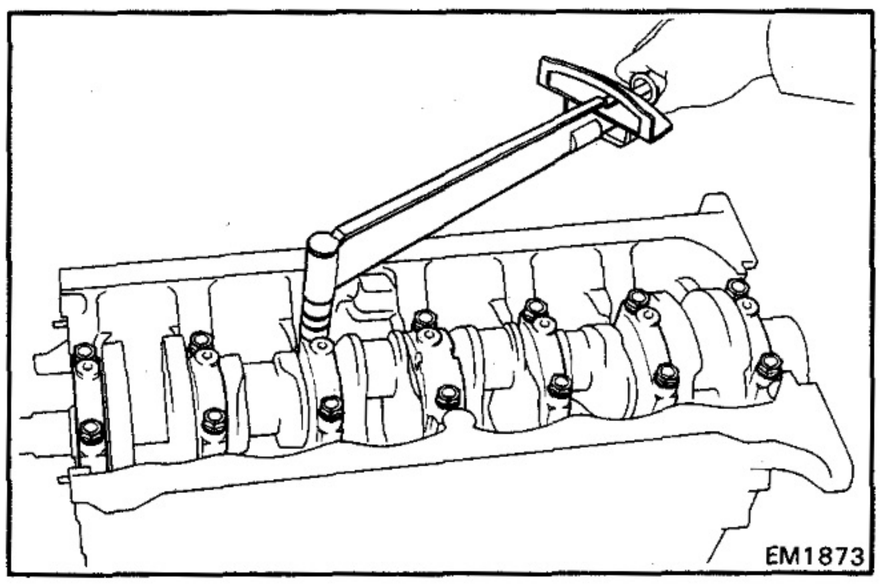

(h) Install the main bearing caps. (See page EM-115)

Torque: 1,390 kg-cm (100 ft-lb, 136 N·m)

NOTE: Do not turn the crankshaft.

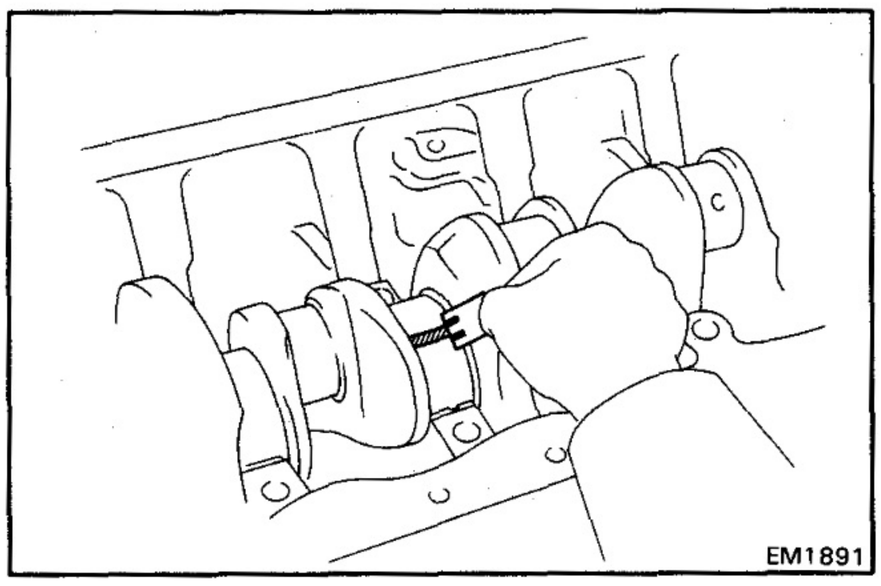

(i) Remove the main bearing caps.

(j) Measure the Plastigage at its widest point.

Standard oil clearance: 0.032 — 0.068 mm (0.0013 — 0.0027 in.)

Maximum oil clearance: 0.10 mm (0.0039 in.)

If the clearance is greater than maximum, replace the main bearing. If necessary, grind or replace the crankshaft.

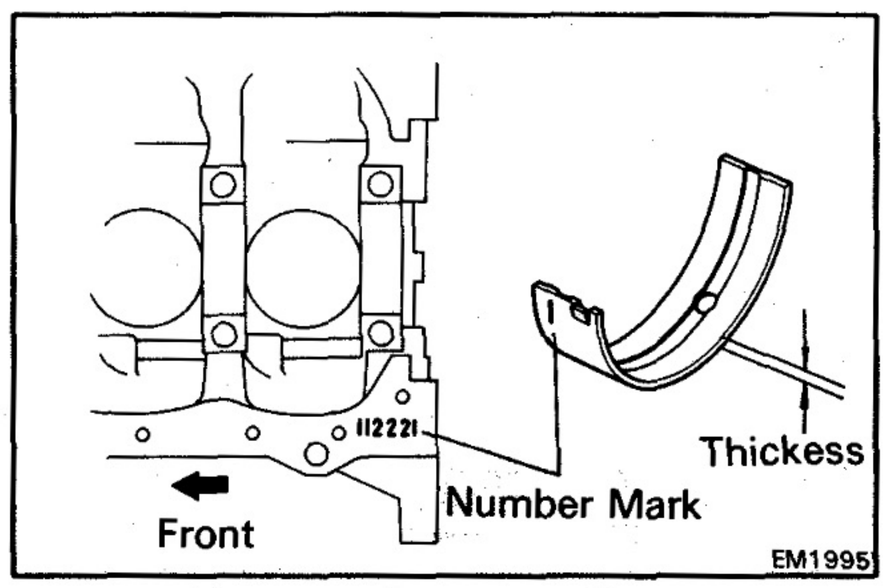

NOTE: If using a standard bearing, replace with one having the same number marked on the cylinder block. There are three sizes of standard bearings, marked "1," "2" and "3" accordingly.

Standard bearing thickness (at center wall):

STD size 1	**1.981 — 1.985 mm (0.0780 — 0.0781 in.)**
STD size 2	**1.985 — 1.989 mm (0.0781 — 0.0783 in.)**
STD size 3	**1.989 — 1.993 mm (0.0783 — 0.0785 in.)**

(k) Completely remove the Plastigage.

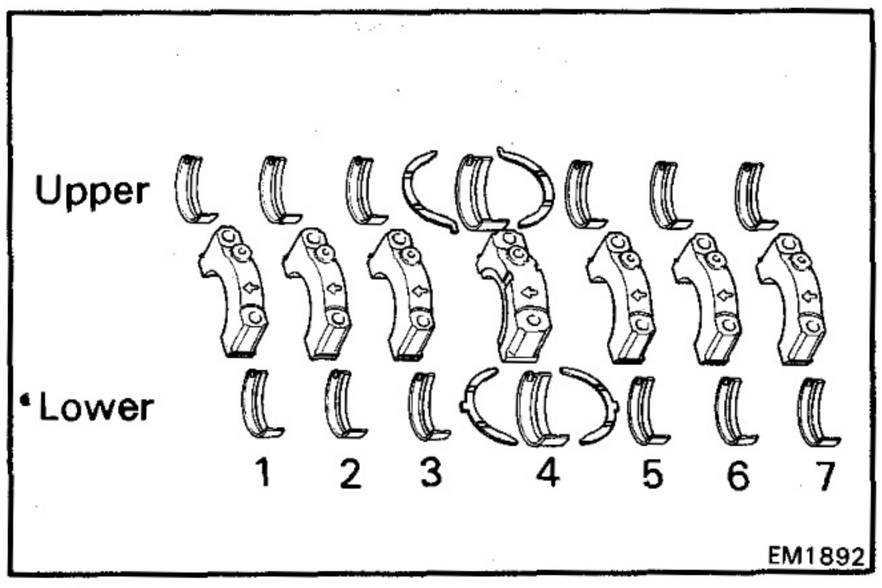

17. REMOVE CRANKSHAFT

(a) Lift out the crankshaft.

(b) Remove the upper bearings and upper thrust washers from the cylinder block.

NOTE: Arrange the main bearing caps, bearings and thrust washers in correct order.

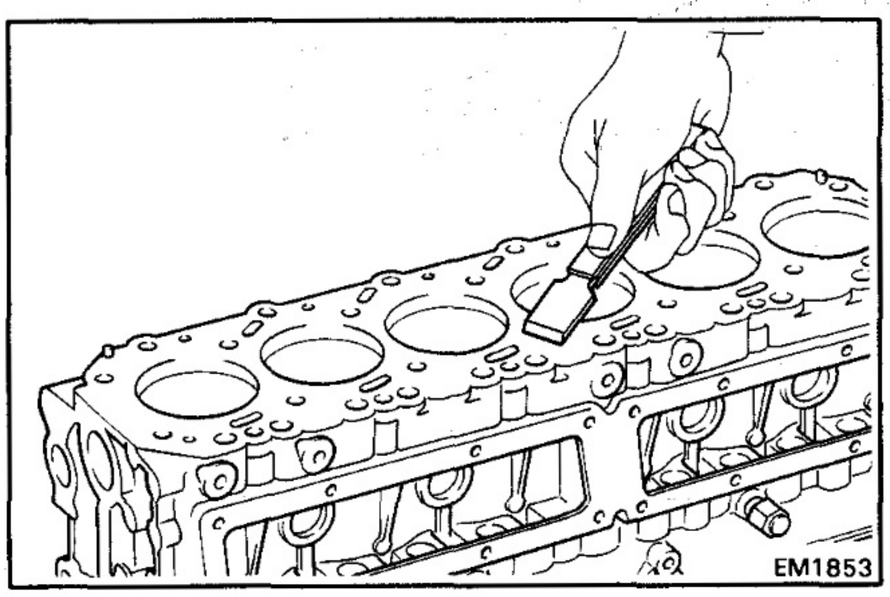

INSPECTION OF CYLINDER BLOCK

1. REMOVE GASKET MATERIAL

Using a gasket scraper, remove all the gasket material from the cylinder block surface.

2. CLEAN CYLINDER BLOCK

Using a soft brush and solvent, clean the block.

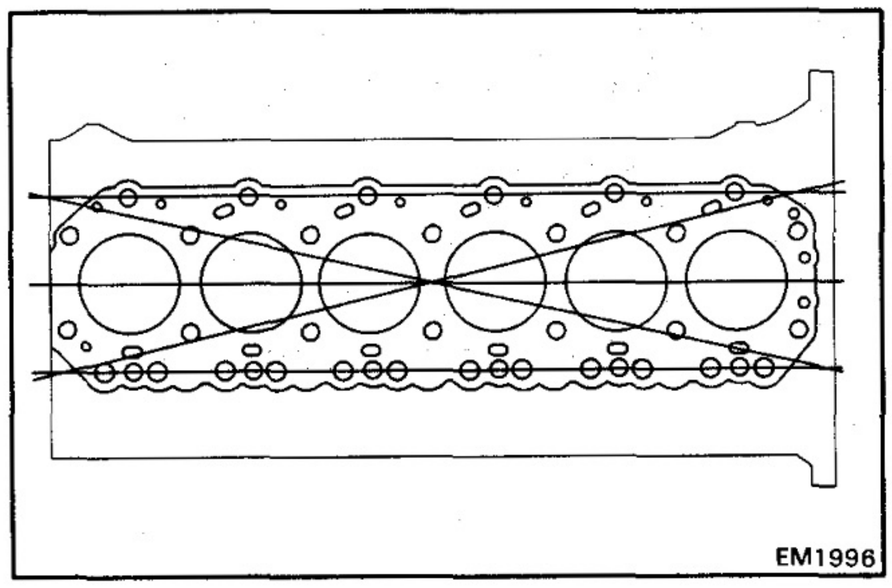

3. INSPECT TOP OF CYLINDER BLOCK FOR FLATNESS

Using a precision straight edge and feeler gauge, measure the surfaces contacting the cylinder head gasket for warpage.

Maximum warpage: 0.20 mm (0.0079 in.)

If warpage is greater than maximum, replace the cylinder block.

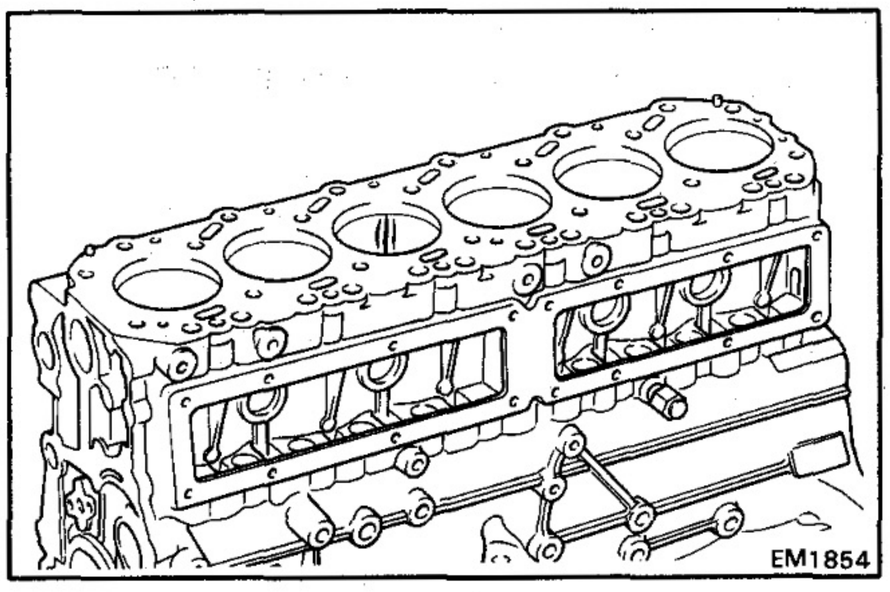

4. INSPECT CYLINDER FOR VERTICAL SCRATCHES

Visually check the cylinder for vertical scratches.

If deep scratches are present, rebore all six cylinders.

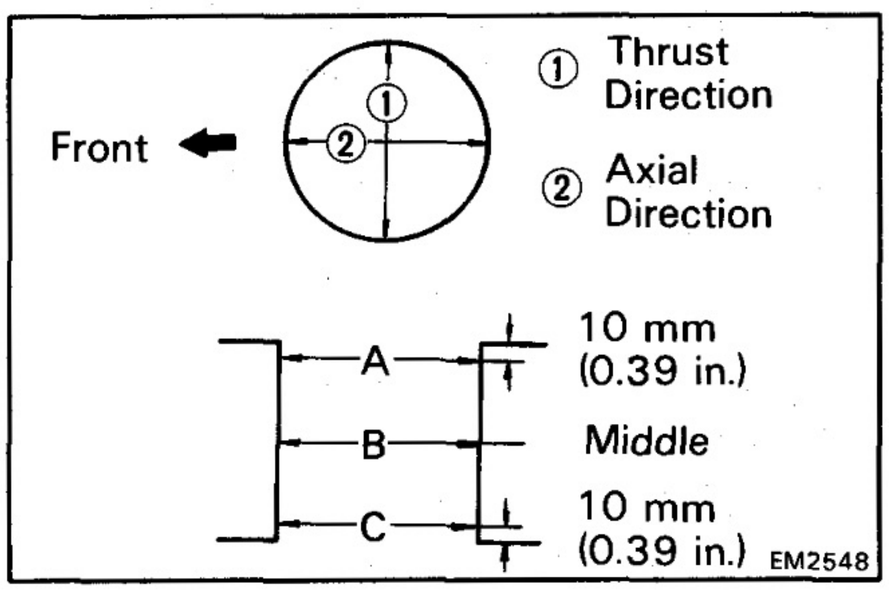

5. INSPECT CYLINDER BORE DIAMETER

Using a cylinder gauge, measure the cylinder bore diameter at positions A, B and C in the thrust and axial directions.

Standard diameter:

STD size 91.000 – 91.030 mm (3.7008 – 3.7020 in.)

Maximum diameter:

STD size 91.23 mm (6.5686 in.)

O/S 0.50 91.73 mm (6.6046 in.)

If the diameter is greater than maximum, rebore all six cylinders.

If necessary, replace the cylinder block.

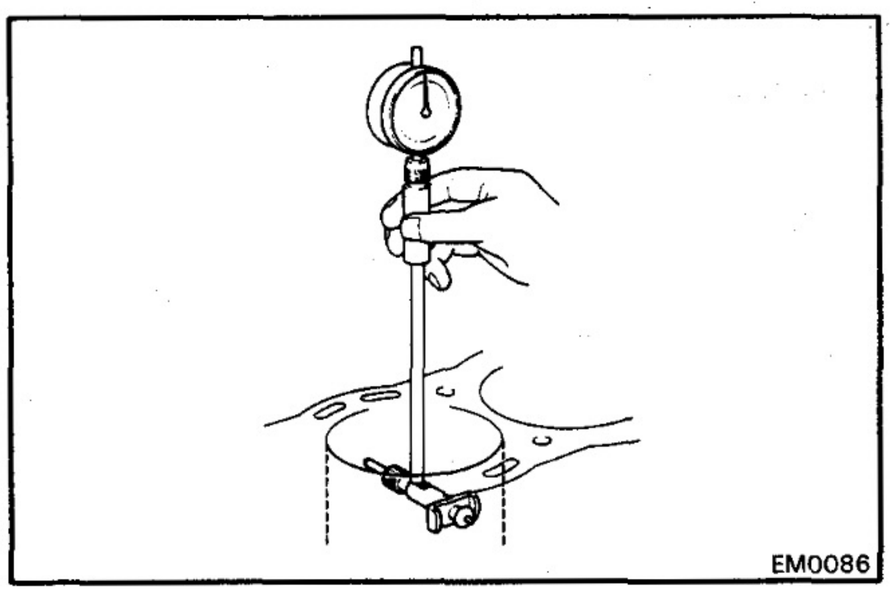

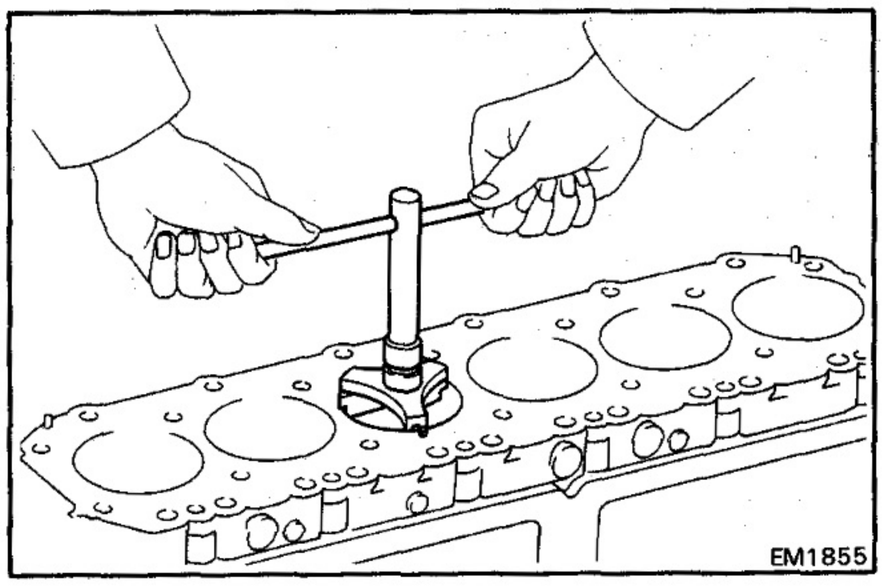

6. REMOVE CYLINDER RIDGE

If the wear is less than 0.2 mm (0.008 in.), use a ridge reamer to machine the piston ring ridge at the top of the cylinder.

DISASSEMBLY OF PISTON AND CONNECTING ROD ASSEMBLIES

(See page EM-94)

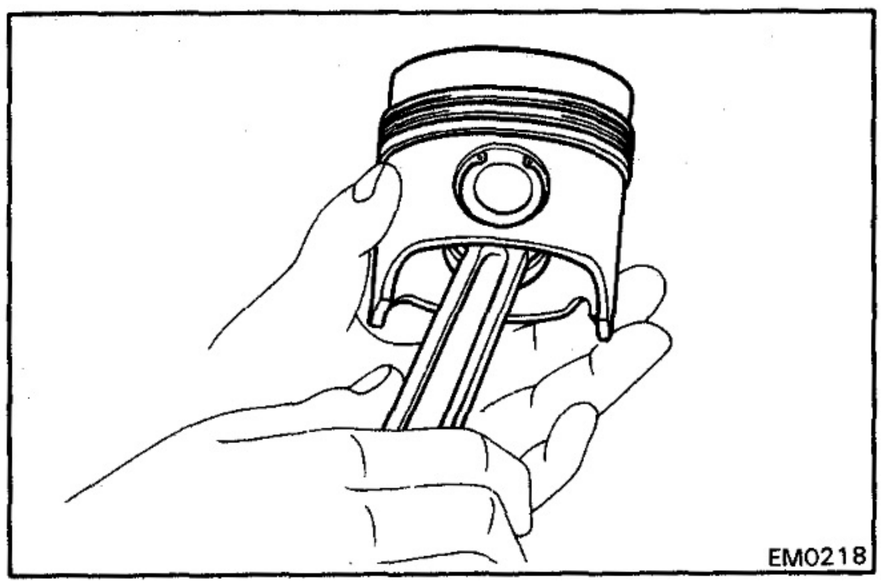

1. CHECK FIT BETWEEN PISTON AND PIN

Try to move the piston back and forth on the piston pin.

If any movement is felt, replace the piston and pin as a set.

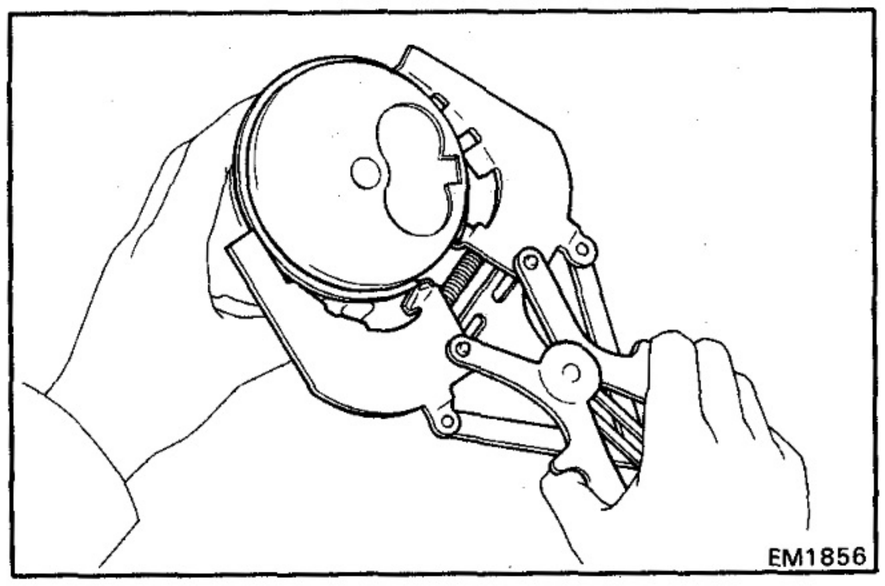

2. REMOVE PISTON RINGS

(a) Using a piston ring expander, remove the piston rings.

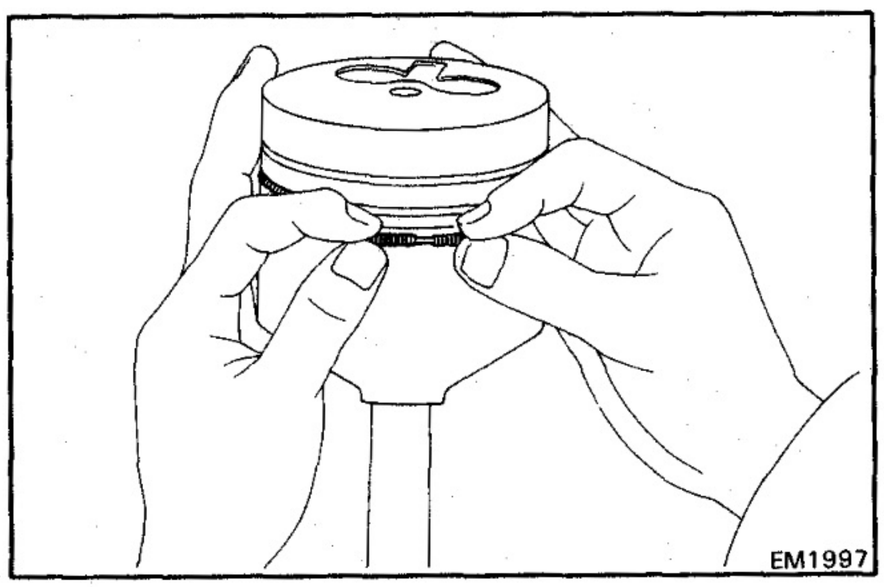

(b) Remove the oil ring and coil by hand.

NOTE: Arrange the rings in correct order only.

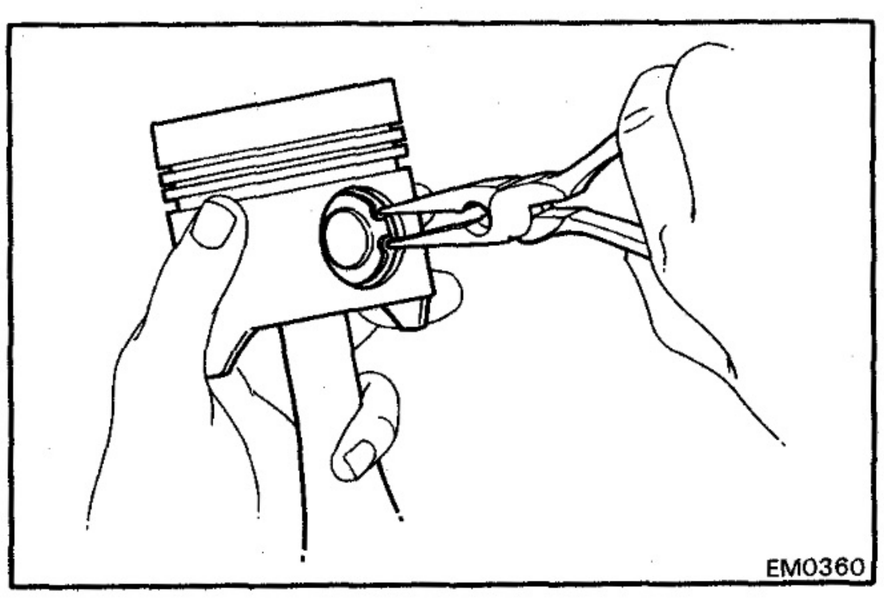

3. DISCONNECT CONNECTING ROD FROM PISTON

(a) Using needle-nose pliers, remove the snap rings.

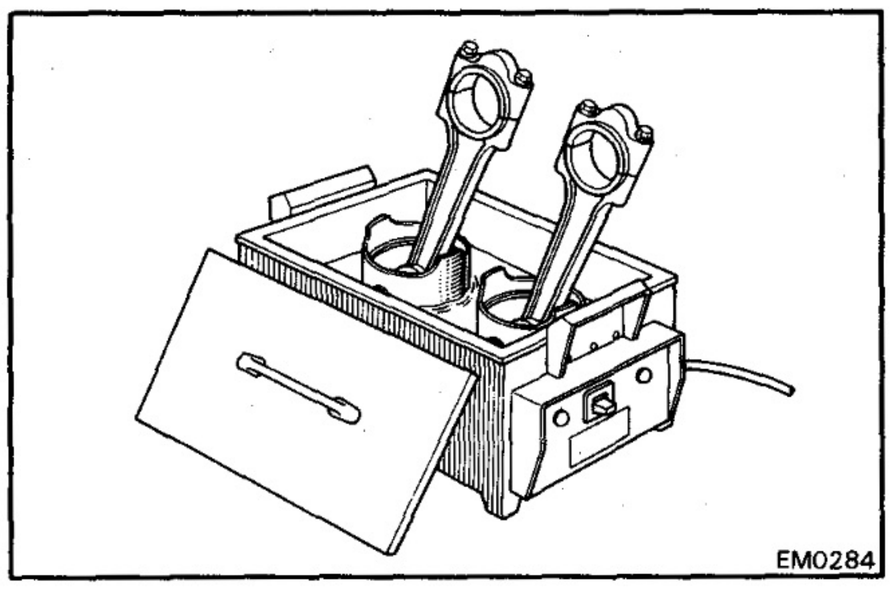
EM0284

(b) Gradually heat the piston to approx. 60°C (140°F).

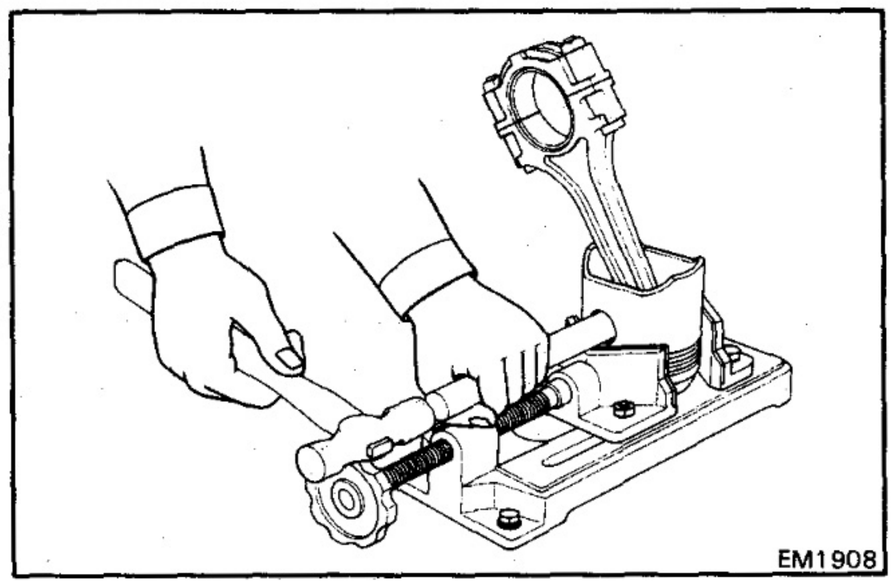
EM1908

(c) Using a plastic-faced hammer and driver, lightly tap out the piston pin and remove the connecting rod.

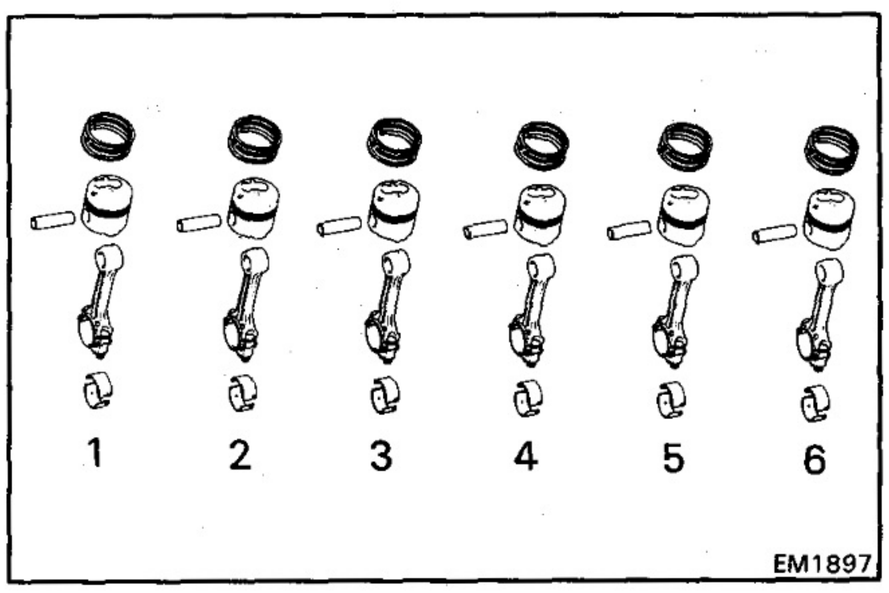

EM1897

NOTE:
- The piston and pin are a matched set.
- Arrange the pistons, pins, rings, connecting rods and bearings in correct order.

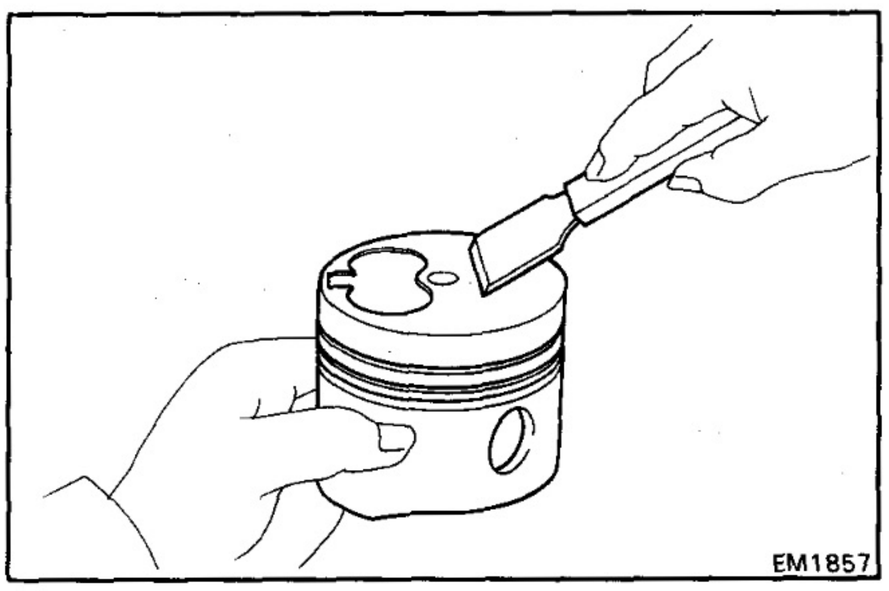
EM1857

INSPECTION OF PISTON AND CONNECTING ROD ASSEMBLIES

1. CLEAN PISTON

(a) Using a gasket scraper, remove the carbon from the piston top.

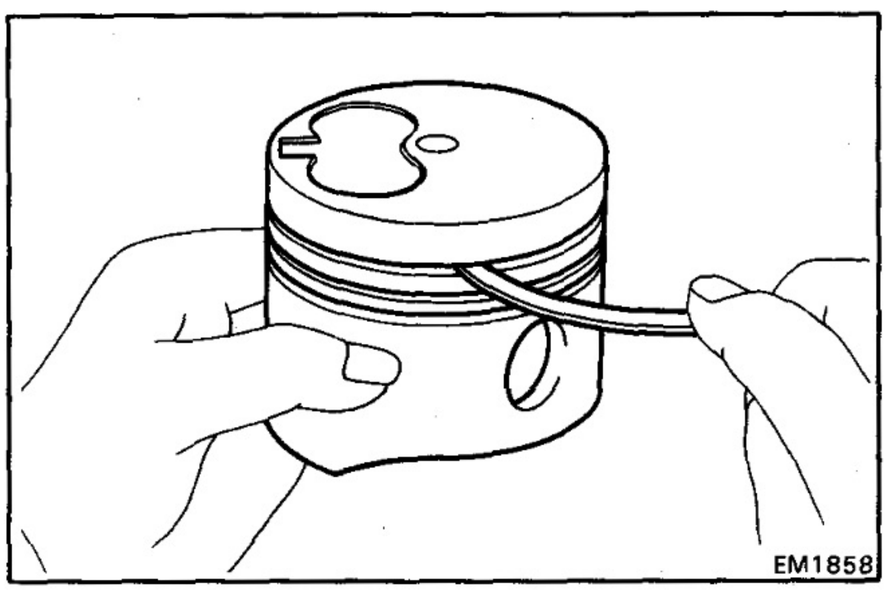
EM1858

(b) Using a groove cleaning tool or broken ring, clean the ring grooves.

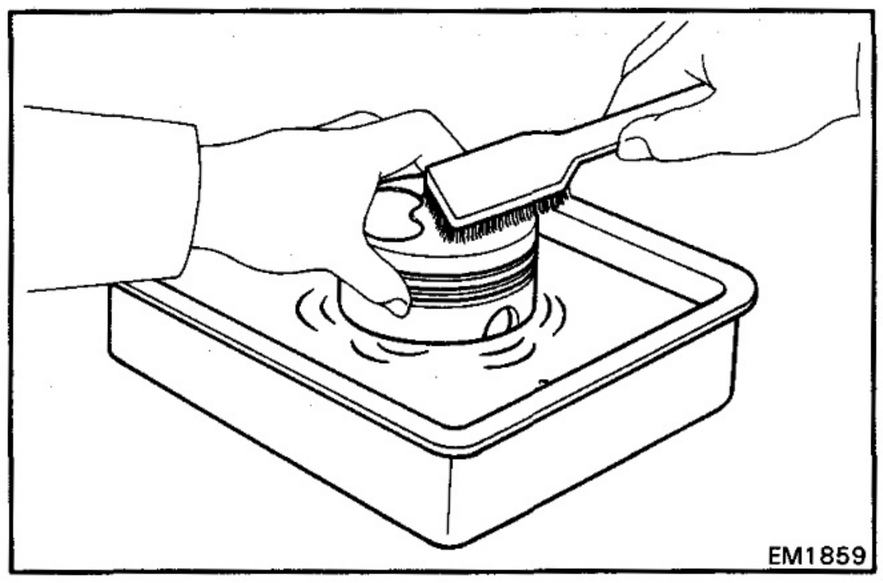
EM1859

(c) Using solvent and a brush, thoroughly clean the piston.

CAUTION: Do not use a wire brush.

2. INSPECT PISTON DIAMETER AND OIL CLEARANCE

(a) Using a micrometer, measure the piston diameter at a right angle to the piston pin hole center line, 25mm (0.94 in.) or 9mm (0.35 in.) from the skirt bottom edge.

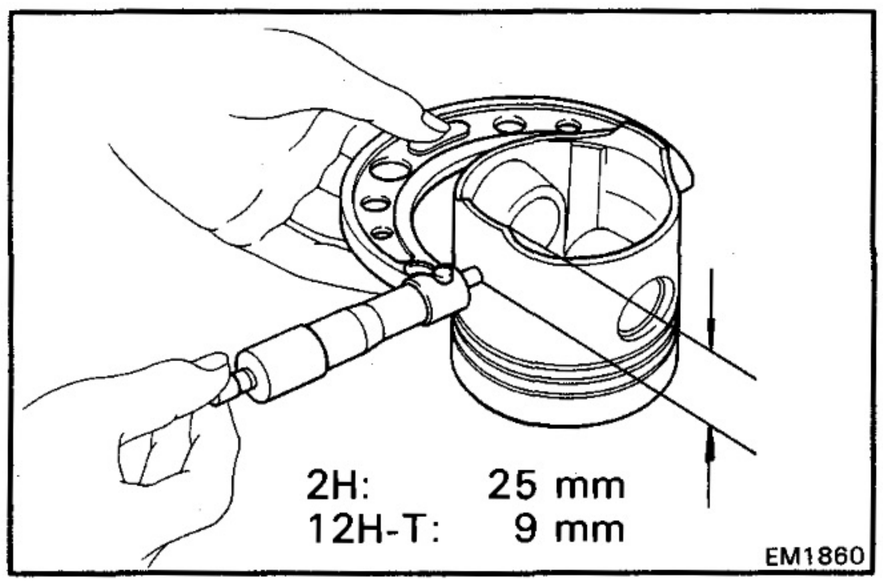

Standard diameter:

2H	**STD size**	**90.930 – 90.960 mm (3.5799 – 3.5811 in.)**
	O/S 0.50	**91.430 – 91.460 mm (3.5996 – 3.6008 in.)**
12H-T	**STD size**	**90.940 – 90.970 mm (3.5803 – 3.5815 in.)**
	O/S 0.50	**91.440 – 91.470 mm (3.6000 – 3.6012 in.)**

(b) Measure the cylinder bore diameter in the thrust directions (See page EM-100) and subtract the piston diameter measurement from the cylinder bore diameter.

Oil clearance:

2H	**0.060 – 0.080 mm (0.0024 – 0.0032 in.)**
12H-T	**0.050 – 0.070 mm (0.0020 – 0.0028 in.)**

If the clearance is not within specification, replace all six pistons. If necessary, rebore all six cylinders or replace the cylinder block.

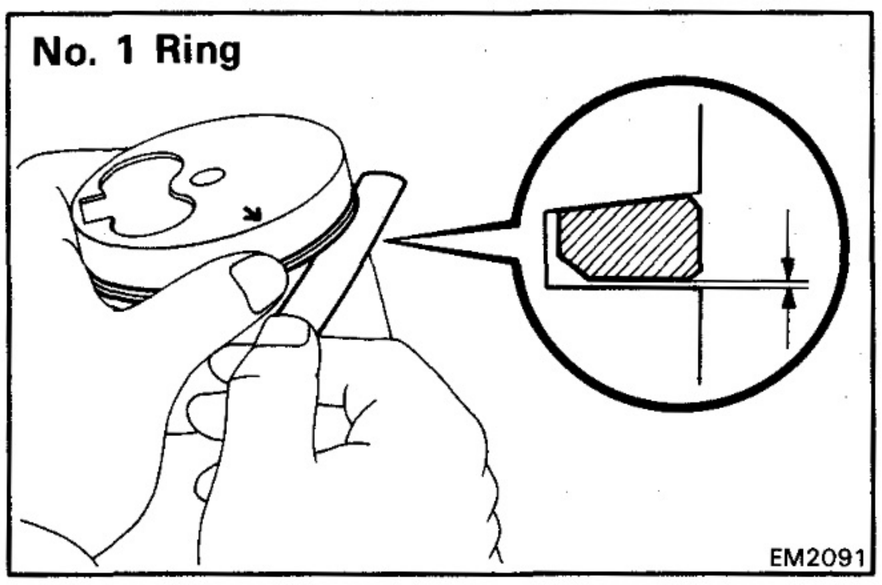

3. INSPECT CLEARANCE BETWEEN WALL OF PISTON RING GROOVE AND NEW PISTON RING

[No. 1 Ring]

Install a new No. 1 piston ring to the piston. Using a feeler gauge, measure the clearance between the piston ring and wall of the piston ring groove.

Ring groove clearance:

2H	**0.097 – 0.137 mm (0.0038 – 0.0054 in.)**
12H-T	**0.139 – 0.204 mm (0.0055 – 0.0080 in.)**

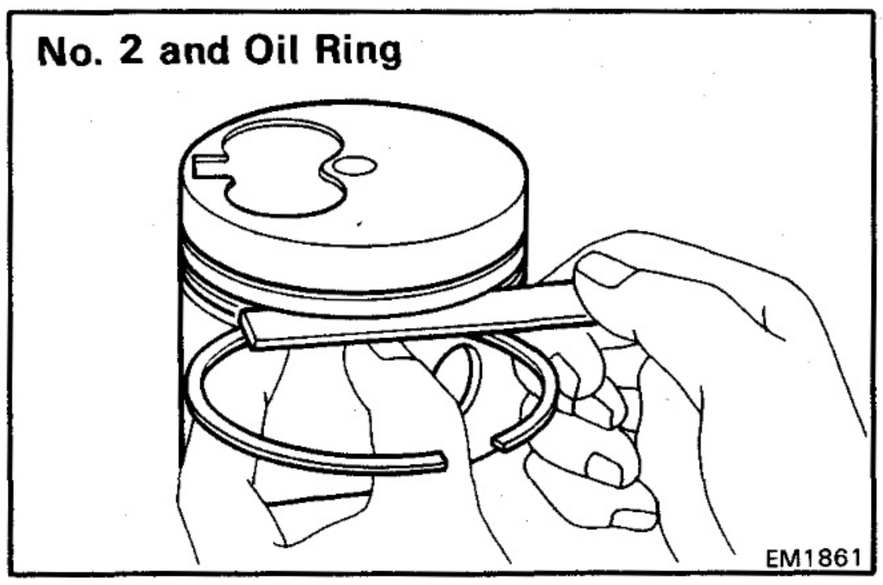

[No. 2 and Oil Ring]

Using a feeler gauge, measure the clearance between new piston ring and the wall of the piston ring groove.

Ring groove clearance:

No. 2	**0.060 –0.100 mm (0.0024 – 0.0039 in.)**
Oil	**0.820 – 0.060 mm (0.0008 – 0.0024 in.)**

If the clearance is not within specification, replace the piston.

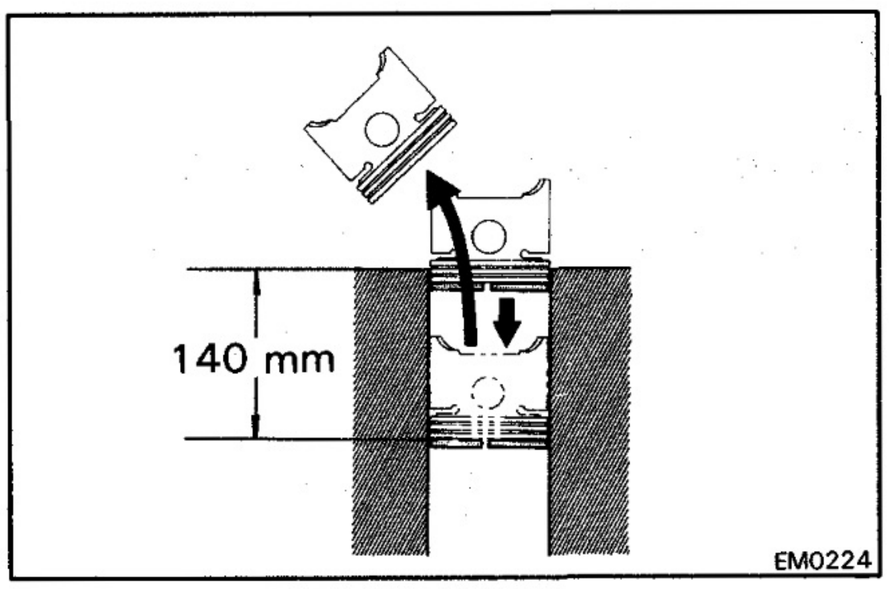

4. INSPECT PISTON RING END GAP

(a) Insert the piston ring into the cylinder bore.

(b) Using a piston, push the piston ring a little beyond the bottom of the ring travel, 140 mm (5.51 in.) from the top of the cylinder block.

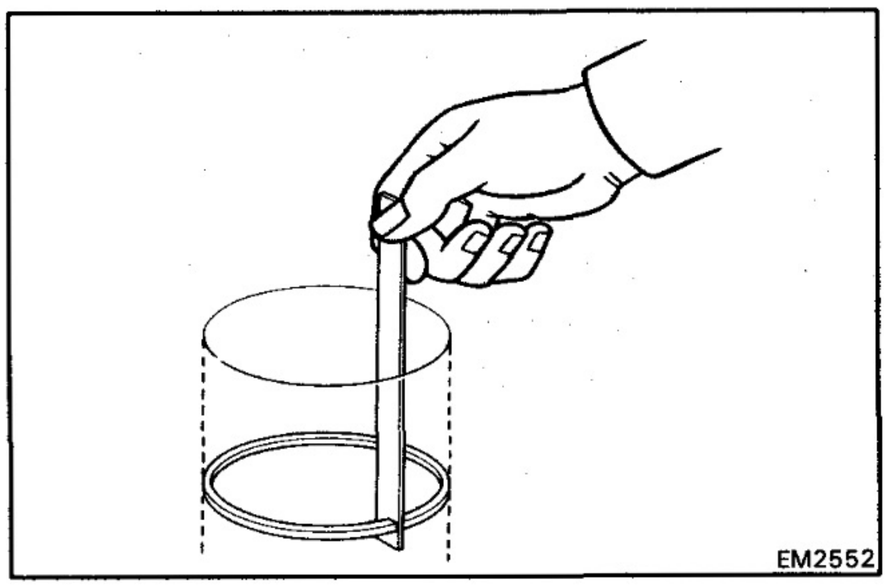

(c) Using a feeler gauge, measure the end gap.

Standard end gap:

No. 1	**2H**	**0.200 – 0.440 mm (0.0079 – 0.0173 in.)**
	12H-T	**0.200 – 0.470 mm (0.0079 – 0.0185 in.)**
No. 2		**0.200 – 0.440 mm (0.0079 – 0.0173 in.)**
Oil		**0.150 – 0.490 mm (0.0059 – 0.0193 in.)**

Maximum end gap:

No. 1	**2H**	**1.24 mm (0.0488 in.)**
	12H-T	**1.27 mm (0.0500 in.)**
No. 2		**1.24 mm (0.0488 in.)**
Oil		**1.29 mm (0.0508 in.)**

If the gap is greater than maximum, replace the piston ring.

If the gap is greater than maximum, even with a new piston ring, rebore the cylinder and use an oversized piston ring.

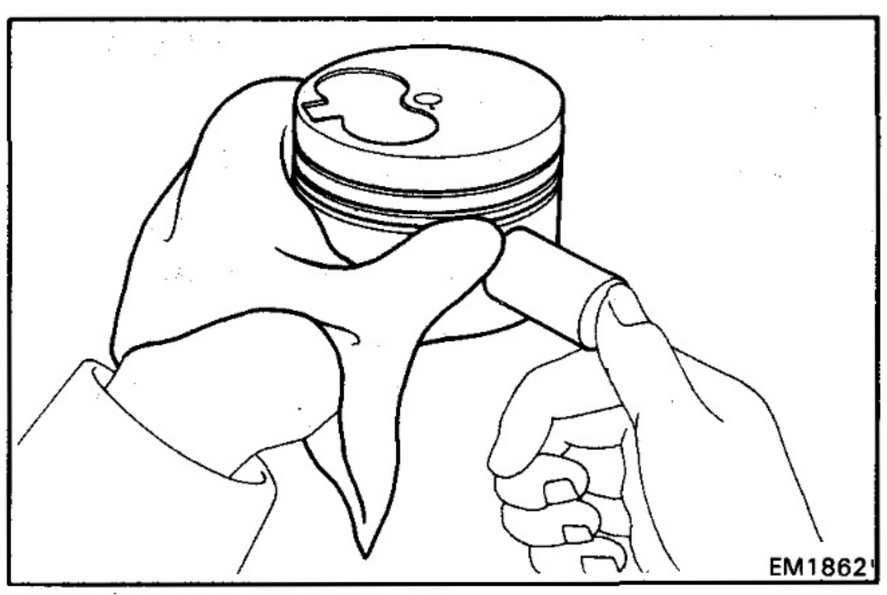

5. CHECK PISTON PIN FIT

At 60°C (140°F) you should be able to push the pin into the piston with your thumb.

If the pin can be installed at a lower temperature, replace the piston and pin as a set.

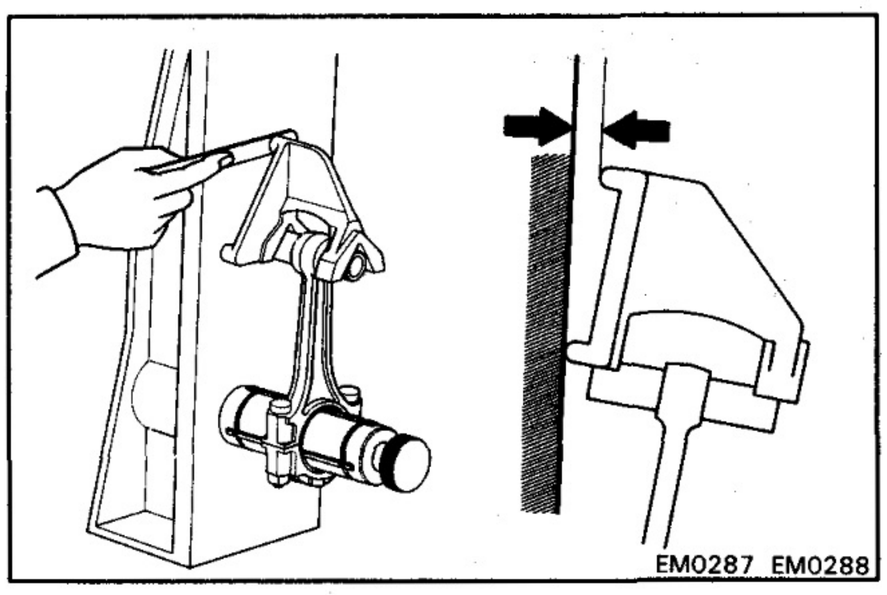

6. INSPECT CONNECTING RODS

(a) Using a rod aligner, check the connecting rod alignment.

- Check for bend.

Maximum bend:

0.05 mm (0.0020 in.) per 100 mm (3.94 in.)

If bend is greater than maximum, replace the connecting rod assembly.

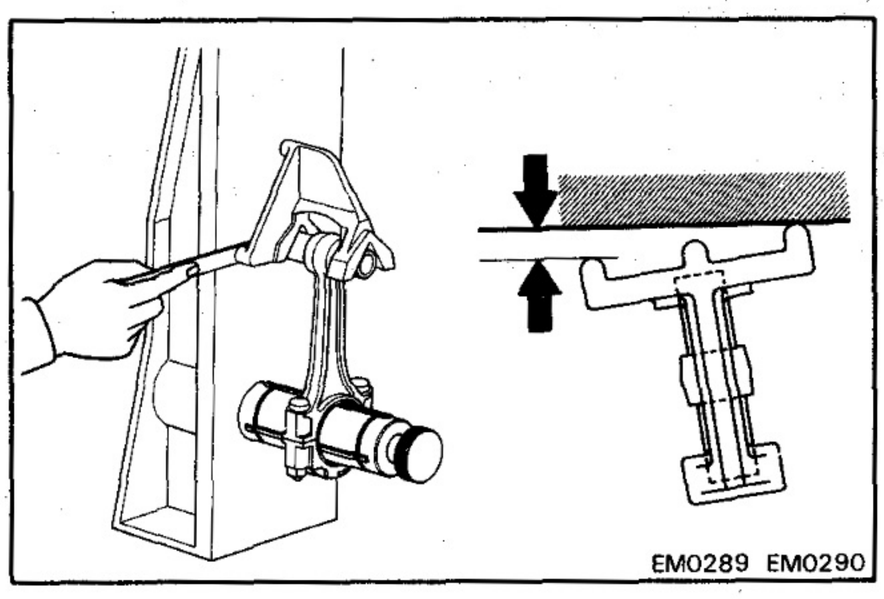
EM0289 EM0290

- Check for twist.

Maximum twist:
0.05 mm (0.0020 in.) per 100 mm (3.94 in.)

If twist is greater than maximum, replace the connecting rod assembly.

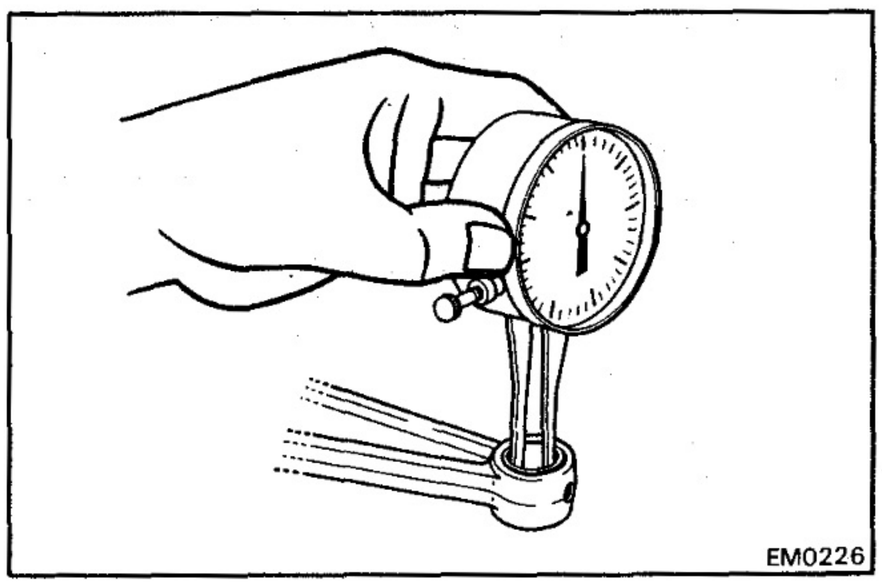
EM0226

(b) Using a caliper gauge, measure the inside diameter of the connecting rod bushing.

Bushing inside diameter:

2H	**29.008 – 29.020 mm (1.1420 – 1.1425 in.)**
12H-T	**32.008 – 32.020 mm (1.2602 –1.2606 in.)**

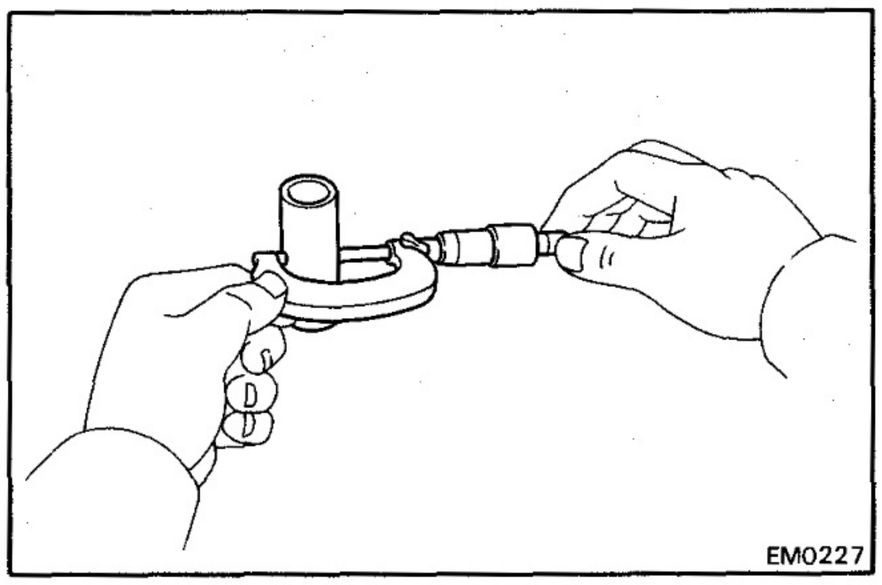
EM0227

(c) Using a micrometer, measure the diameter of the piston pin.

Piston pin diameter:

2H	**29.000 – 29.012 mm (1.1417 – 1.1422 in.)**
12H-T	**32.000 – 32.012 mm (1.2598 – 1.2603 in.)**

(d) Subtract the piston pin diameter measurement from the bushing inside diameter measurement.

Standard oil clearance: 0.004 – 0.012 mm (0.0002 – 0.0005 in.)
Maximum oil clearance: 0.03 mm (0.0012 in.)

If the clearance is greater than maximum, replace the connecting rod bushing. If necessary, replace the piston and piston pin assembly.

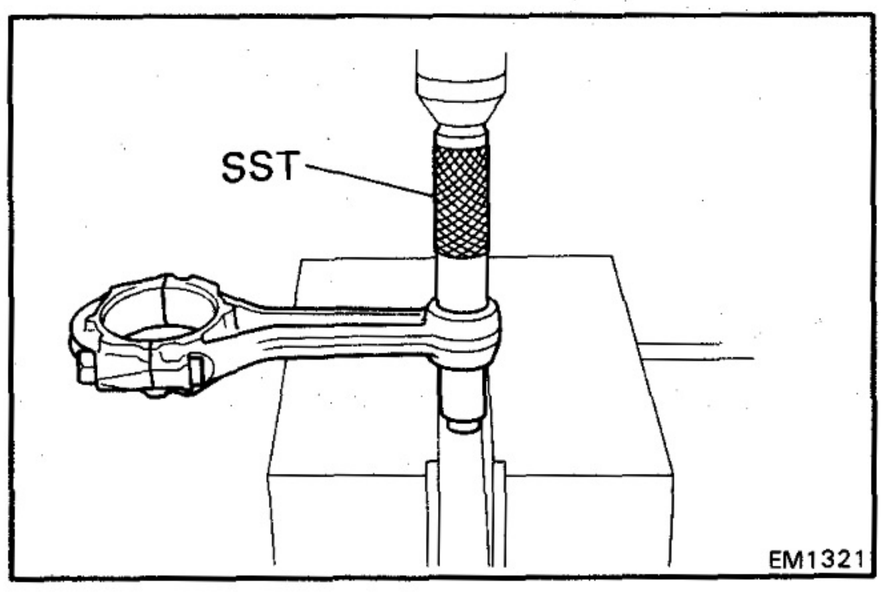

EM1321

REPLACEMENT OF CONNECTING ROD BUSHINGS

1. REMOVE CONNECTING ROD BUSHING

Using SST and a press, press out the bushing.
SST 09222-66010

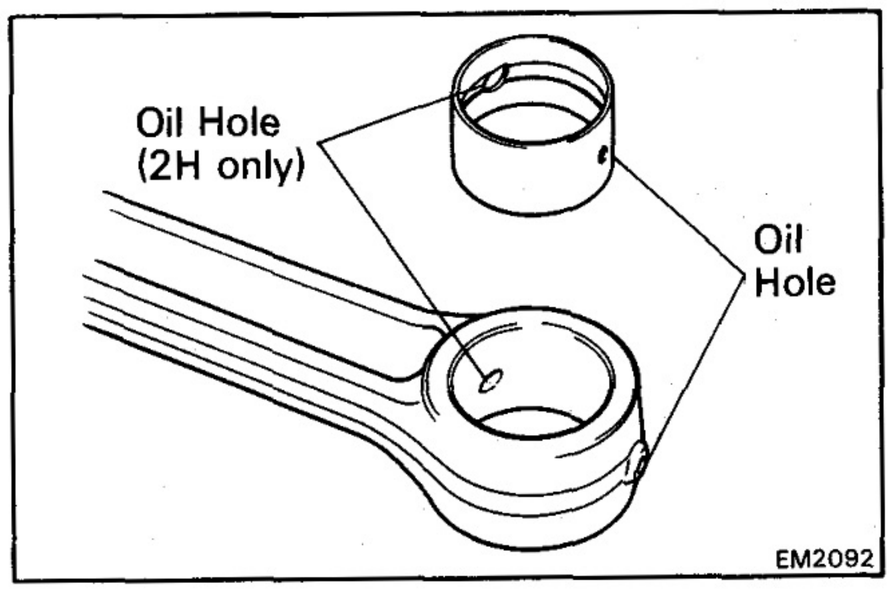

2. INSTALL NEW CONNECTING ROD BUSHING

(a) Align the oil holes of the bushing and connecting rod.

(b) Using SST and a press, press in the bushing.

SST 09222-66010

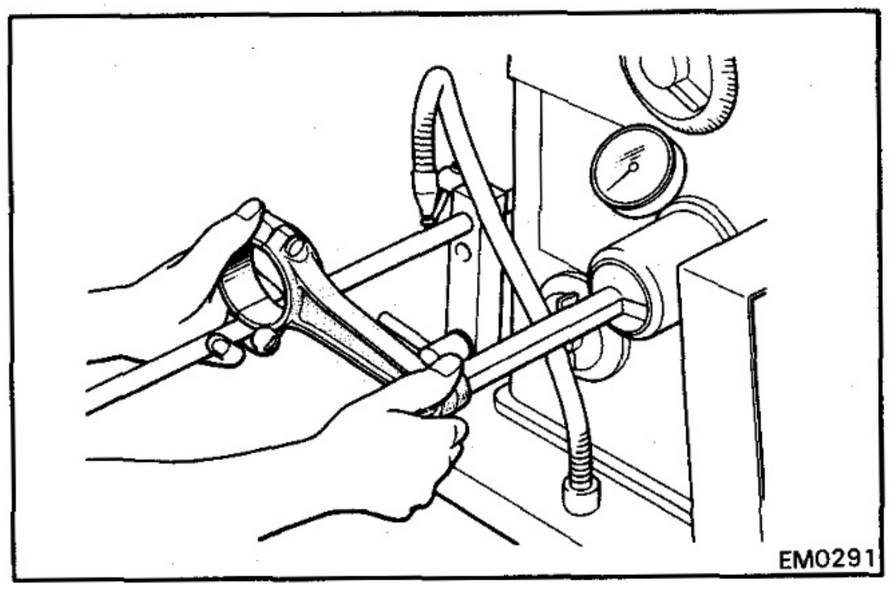

3. HONE CONNECTING ROD BUSHING AND CHECK PISTON PIN FIT IN CONNECTING ROD

(a) Using a pin hole grinder, hone the bushing to obtain the standard specified clearance (See page EM-105) between the bushing and piston pin.

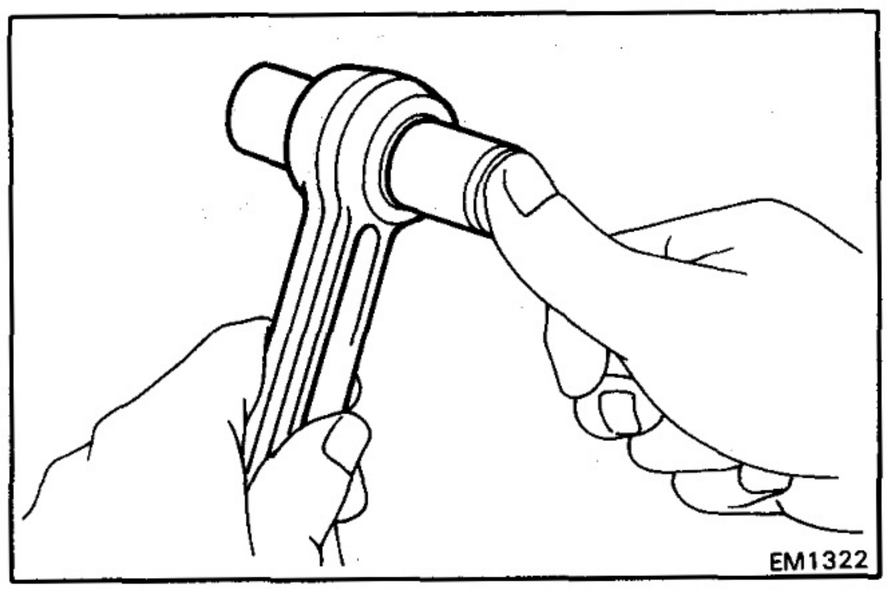

(b) Check the piston pin fit at normal room temperature. Coat the piston pin with engine oil and push it into the rod with your thumb.

BORING OF CYLINDERS

NOTE:
- Bore all six cylinders for the oversized piston's outside diameter.
- Replace the piston rings with ones to match the oversized pistons.

1. KEEP OVERSIZED PISTON

Oversized piston diameter:

O/S 0.50	**2H**	**91.430 – 91.460 mm (3.5996 –3.6008 in.)**
	12H-T	**91.440 – 91.470 mm (3.6000 – 3.6012 in.)**

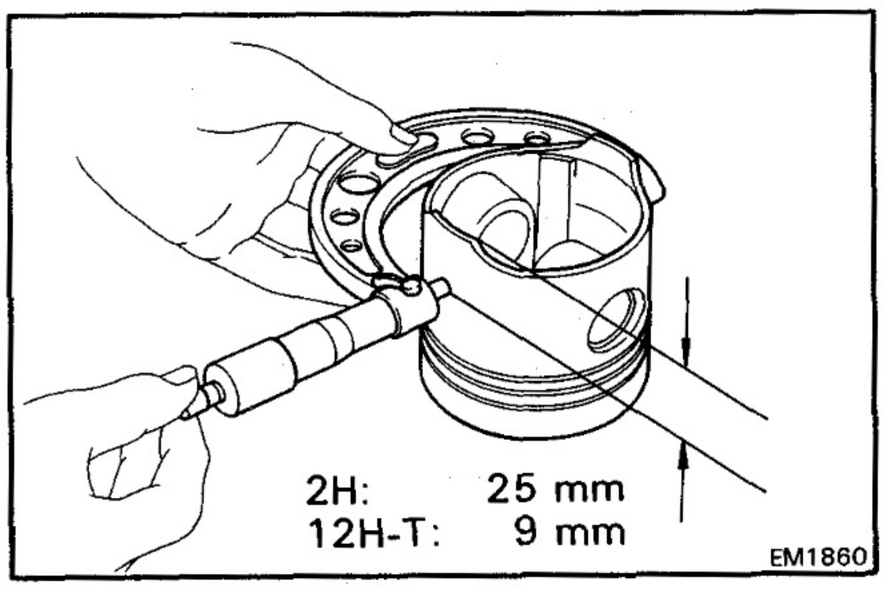

2. CALCULATE AMOUNT TO BORE CYLINDER

(a) Using a micrometer, measure the piston diameter at a right angle to the piston pin hole center line, 25 mm (0.941 in.) or 9 mm (0.35 in.) from the skirt bottom edge.

(b) Calculate the amount each cylinder is to be rebored as follows:

Size to be rebored = P + C – H

P = Piston diameter

C = Piston clearance

2H	**0.060 – 0.080 mm (0.0024 – 0.0032 in.)**
12H-T	**0.050 – 0.070 mm (0.0020 – 0.0028 in.)**

H = Allowance for honing

0.02 mm (0.0008 in.) or less

3. BORE AND HONE CYLINDERS TO CALCULATED DIMENSIONS

Maximum honing: 0.02 mm (0.0008 in.)

CAUTION: Excess honing will destroy the finished roundness.

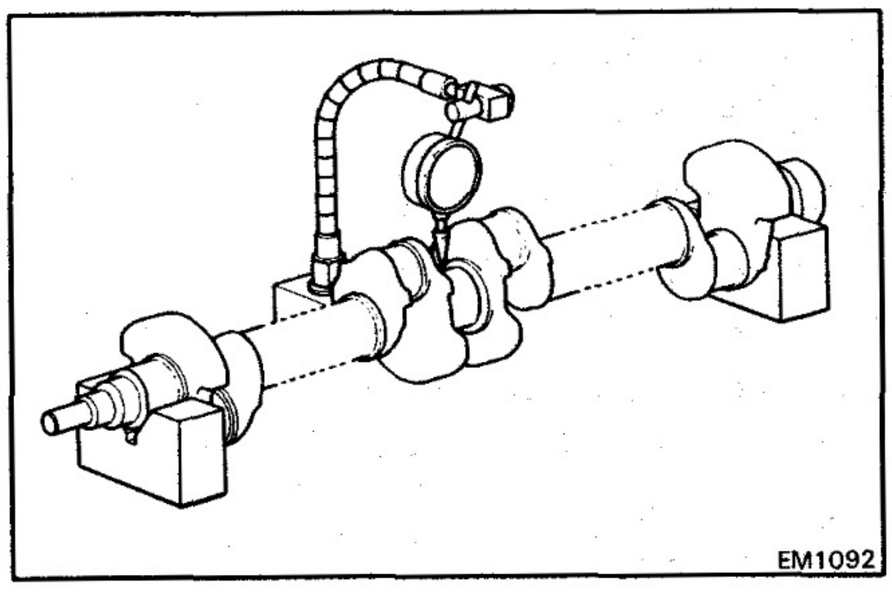

INSPECTION AND REPAIR OF CRANKSHAFT

1. INSPECT CRANKSHAFT FOR RUNOUT

(a) Place the crankshaft on V-blocks.

(b) Using a dial indicator, measure the circle runout at the center journal.

Maximum circle runout: 0.06 mm (0.0024 in.)

If the circle runout is greater than maximum, replace the crankshaft.

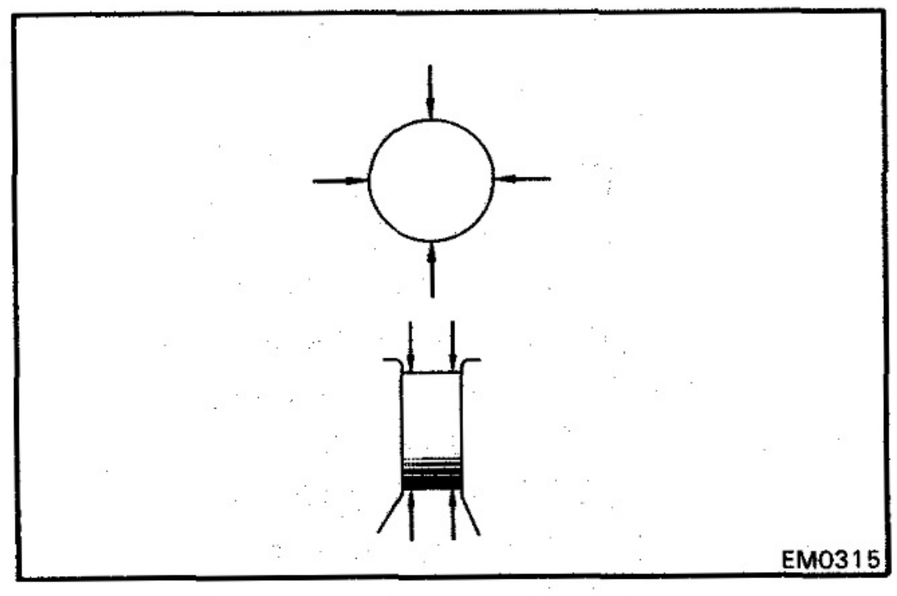

2. INSPECT MAIN JOURNALS AND CRANK PINS

(a) Using a micrometer, measure the diameter of each main journal and crank pin.

Main journal diameter:

STD size	**69.980 – 70.000 mm (2.7551 –2.7559 in.)**
U/S 0.25	**69.730 – 69.740 mm (2.7453 – 2.7457 in.)**
U/S 0.50	**69.480 – 69.490 mm (2.7354 – 2.7358 in.)**
U/S 0.75	**69.230 – 69.240 mm (2.7256 – 2.7260 in.)**
U/S 1.00	**68.980 – 69.990 mm (2.7157 –2.7161 in.)**

Crank pin diameter:

STD size	**54.980 – 55.000 mm (2.1646 – 2.1654 in.)**
U/S 0.25	**54.730 – 54.740 mm (2.1547 – 2.1551 in.)**
U/S 0.50	**54.480 – 54.490 mm (2.1449 – 2.1453 in.)**
U/S 0.75	**54.230 – 54.240 mm (2.1350 – 2.1354 in.)**
U/S 1.00	**53.980 – 53.990 mm (2.1252 – 2.1259 in.)**

If the diameter is not within specification, check the oil clearance. If necessary, grind or replace the crankshaft.

(b) Check each main journal and crank pin for taper and out-of-round as shown.

Maximum taper and out-of-round: 0.02 mm (0.0008 in.)

If taper and out-of-round is greater than maximum, replace the crankshaft.

3. IF NECESSARY, GRIND AND HONE MAIN JOURNALS AND/OR CRANK PINS

Grind and hone the main journals and/or crank pins to the undersized finished diameter. (See procedure step 2)

Install new main journal and/or crank pin undersize bearings.

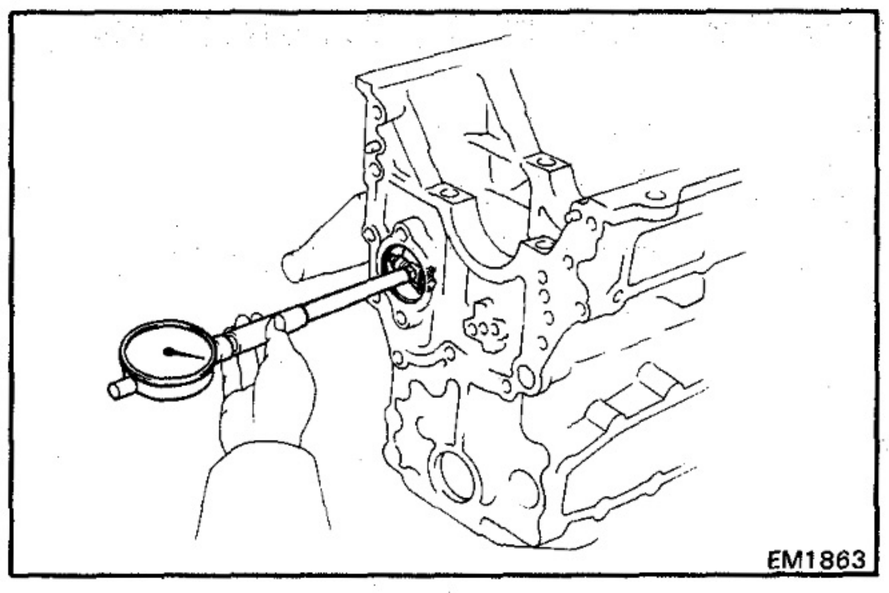

INSPECTION AND REPAIR OF CAMSHAFT BEARINGS AND CAMSHAFT

1. INSPECT CAMSHAFT OIL CLEARANCE

(a) Using a cylinder gauge, measure the inside diameter of the camshaft bearing.

Bearing inside diameter (from front side):

STD size	**No. 1**	**51.200 – 51.265 mm (2.0157 – 2.0183 in.)**
	No. 2	**51.000 – 51.065 mm (2.0079 – 2.0104 in.)**
	No. 3	**50.800 – 50.865 mm (2.0000 – 2.0026 in.)**
	No. 4	**50.600 – 50.665 mm (1.9921 – 1.9947 in.)**
U/S 0.125	**No. 1**	**51.074 – 51.139 mm (2.0108 – 2.0133 in.)**
	No. 2	**50.874 – 50.939 mm (2.0029 – 2.0055 in.)**
	No. 3	**50.674 – 50.739 mm (1.9950 – 1.9976 in.)**
	No. 4	**50.474 – 50.539 mm (1.9872 – 1.9897 in.)**
U/S 0.25	**No. 1**	**50.950 – 51.015 mm (2.0059 – 2.0085 in.)**
	No. 2	**50.750 – 50.815 mm (1.9980 – 2.0006 in.)**
	No. 3	**50.550 – 50.615 mm (1.9902 – 1.9927 in.)**
	No. 4	**50.350 – 50.415 mm (1.9823 – 1.9848 in.)**

(b) Subtract the journal diameter measurement (See page EM-83) from the bearing inside diameter measurement.

Standard oil clearance: **0.030 – 0.115 mm (0.0012 – 0.0045 in)**

Maximum oil clearance: **0.15 mm (0.0059 in.)**

If the clearance is greater than maximum, replace the camshaft bearings. If necessary, grind or replace the camshaft.

2. IF NECESSARY, GRIND AND HONE CAMSHAFT JOURNALS

Grind and hone the journals to the undersized finished diameter (See page EM-83)

Install new camshaft undersized bearings.

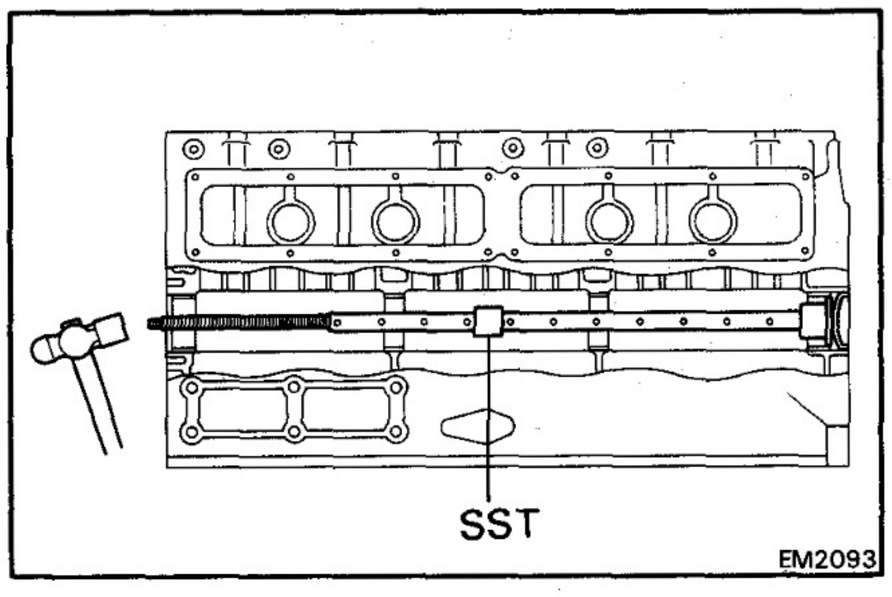

3. IF NECESSARY, REPLACE CAMSHAFT BEARINGS

A. Remove expansion plug

Using SST and a hammer, tap out the expansion plug.

SST 09215-00100 (09215-00130, 09215-00150, 09215-00210)

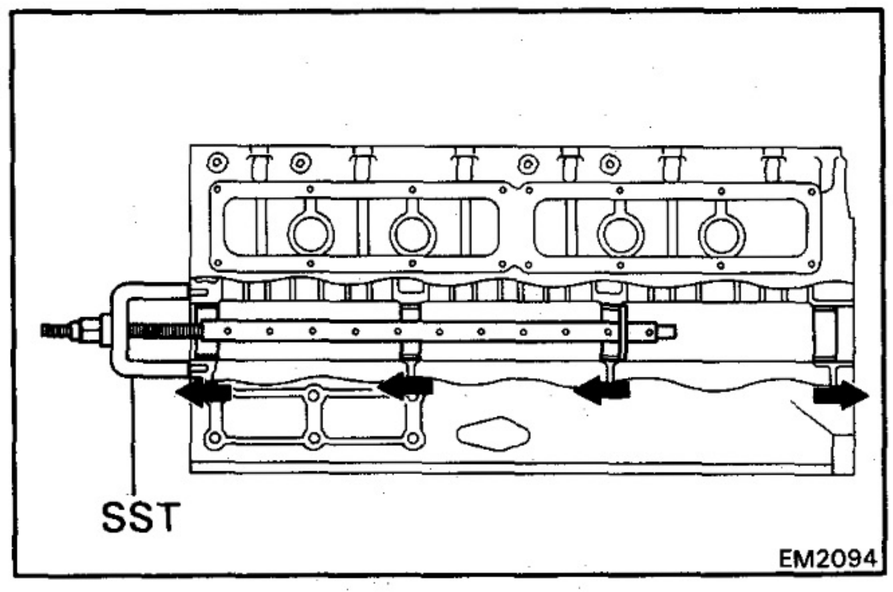

B. Remove camshaft bearings

Using SST, remove the bearings.

SST 09215-00100 (09215-00120, 09215-00130, 09215-00140, 09215-00150, 09215-00160, 09215-00280)

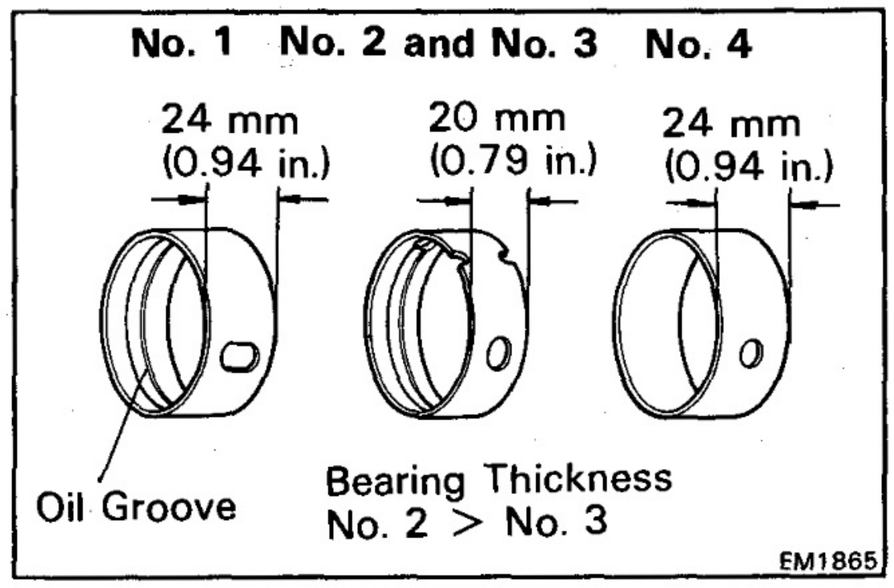

C. Install new camshaft bearings

(a) Install new bearings in their proper location.

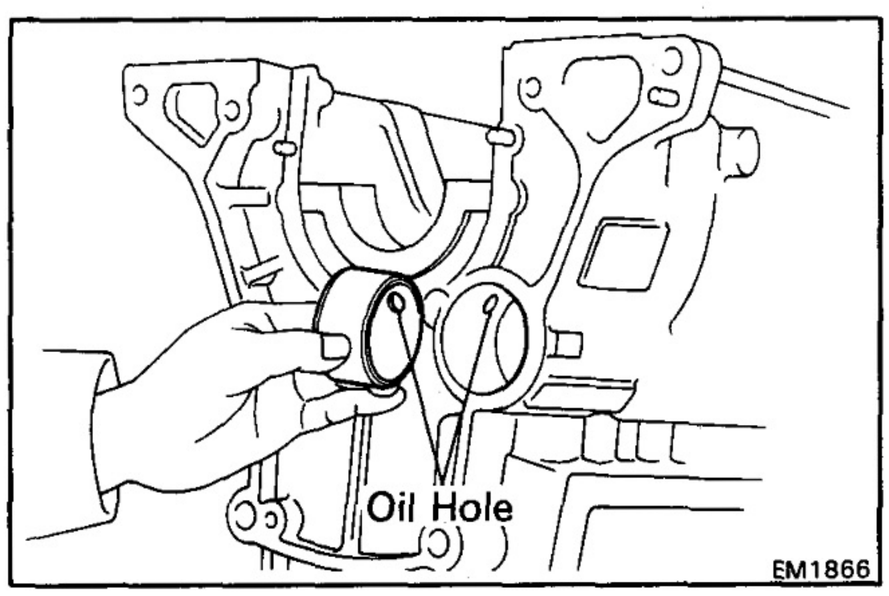

(b) Align the oil holes of the bearing and cylinder block.

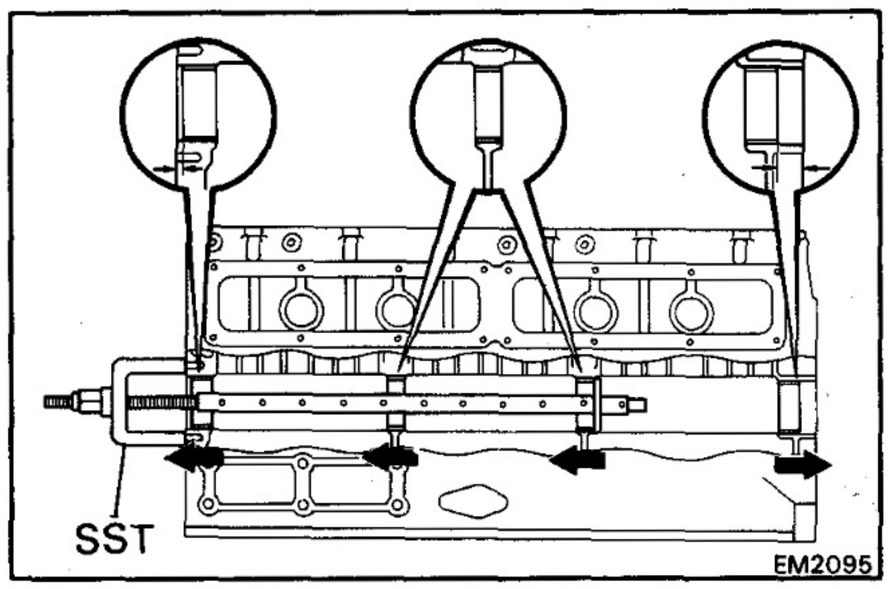

(c) Using SST, install the bearings.

SST 09215-00100 (09215-00120, 09215-00130, 09215-00140, 09215-00150, 09215-00160, 09215-00280)

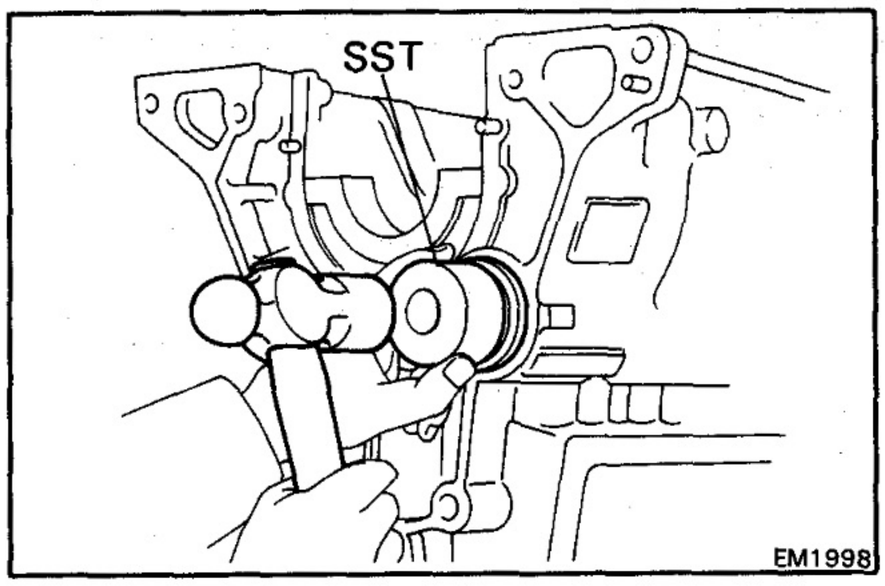

D. Check camshaft oil clearance (See page EM-109)

E. Install expansion plug

(a) Apply liquid sealer to the expansion plug surface of the cylinder block.

(b) Using a hammer, tap in a new expansion plug until its surface is flush with the cylinder block edge.

SST 09215-00100 (09215-00280)

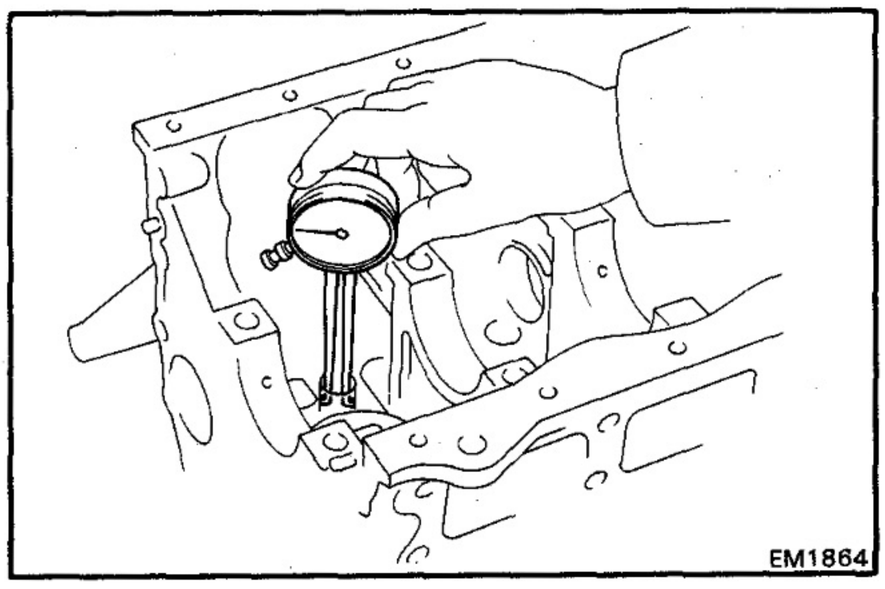

INSPECTION OF VALVE LIFTER BORES

INSPECT VALVE LIFTER OIL CLEARANCE

(a) Using calipers, measure the valve lifter bore diameter.

Bore diameter: 22.200 – 22.221 mm (0.8740 – 0.8748 in.)

(b) Subtract the valve lifter diameter measurement (See page EM-84) from the vale lifter bore diameter measurement.

Standard oil clearance: 0.010 – 0.051 mm (0.0004 – 0.0020 in.)

Maximum oil clearance: 0.10 mm (0.0039 in.)

If the clearance is greater than maximum, replace the valve lifters.

REPLACEMENT OF CRANKSHAFT REAR OIL SEAL

NOTE: There are two methods (A and B) to replace the oil seal as follows.

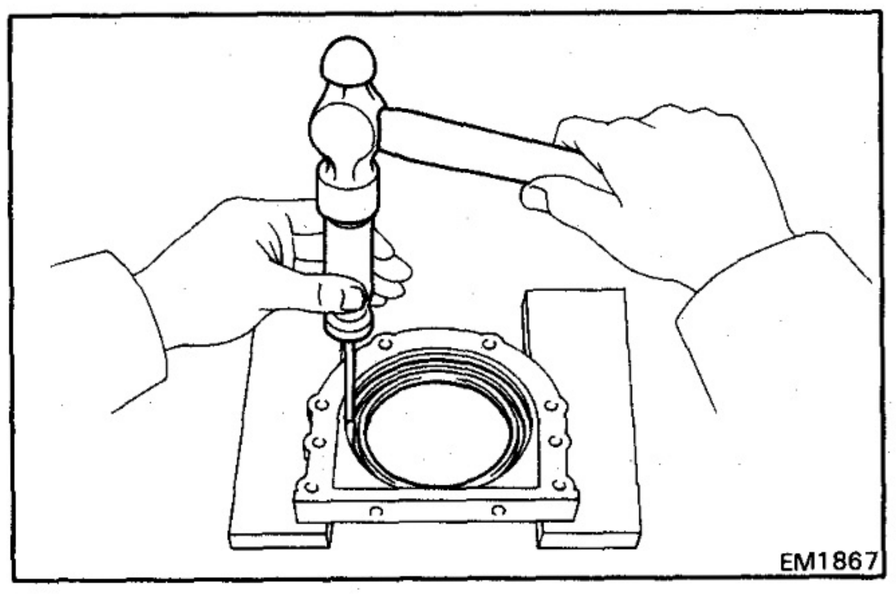

REPLACE CRANKSHAFT REAR OIL SEAL

A. If rear oil seal retainer is removed from cylinder block:

(a) Using a screwdriver and hammer, tap out the oil seal.

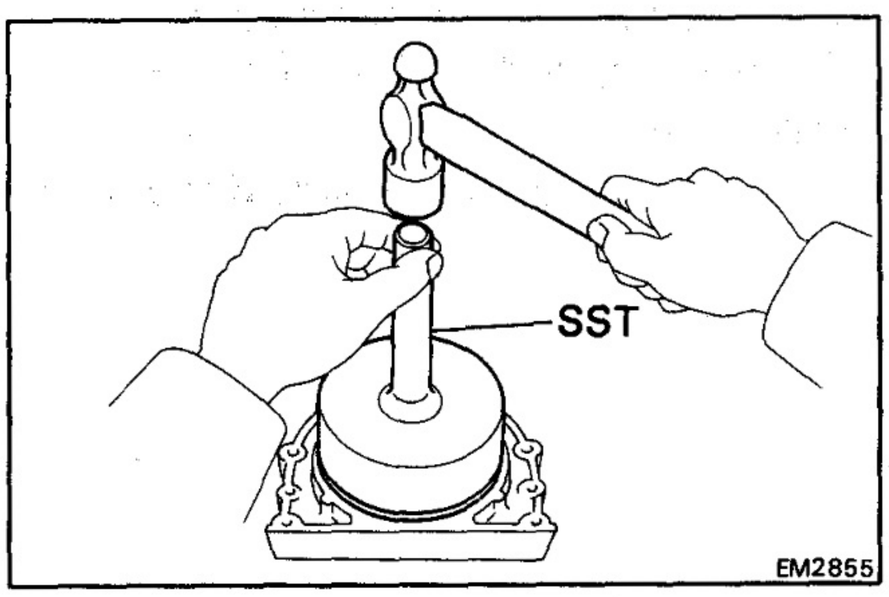

(b) Using SST and a hammer, tap in the oil seal until its surface is flush with the rear oil seal retainer edge.

SST 09223-56010

(c) Apply MP grease to the oil seal lip.

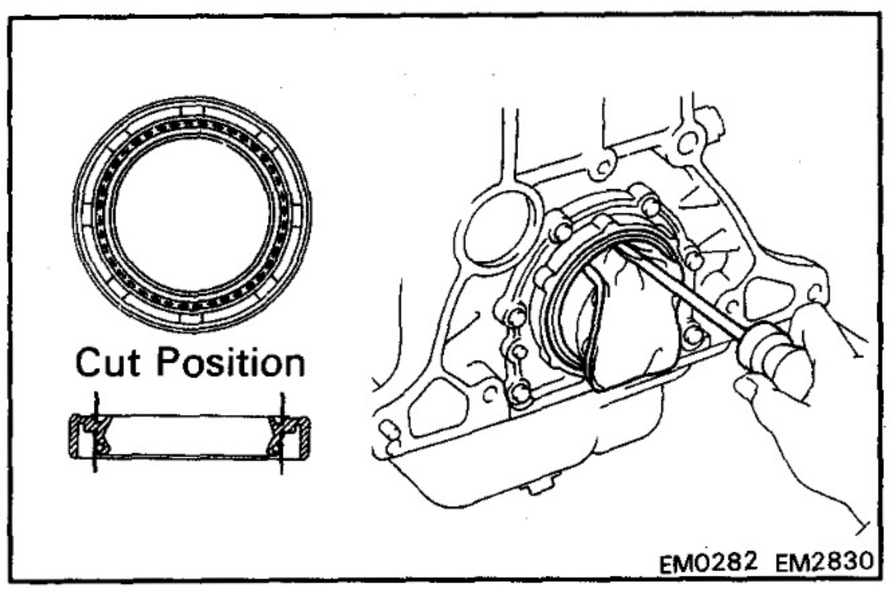

B. If rear oil seal retainer is installed to cylinder block:

(a) Using a knife, cut off the oil seal lip.

(b) Using a screwdriver, Pry out the oil seal.

CAUTION: Be careful not to damage the crankshaft. Tape the screwdriver.

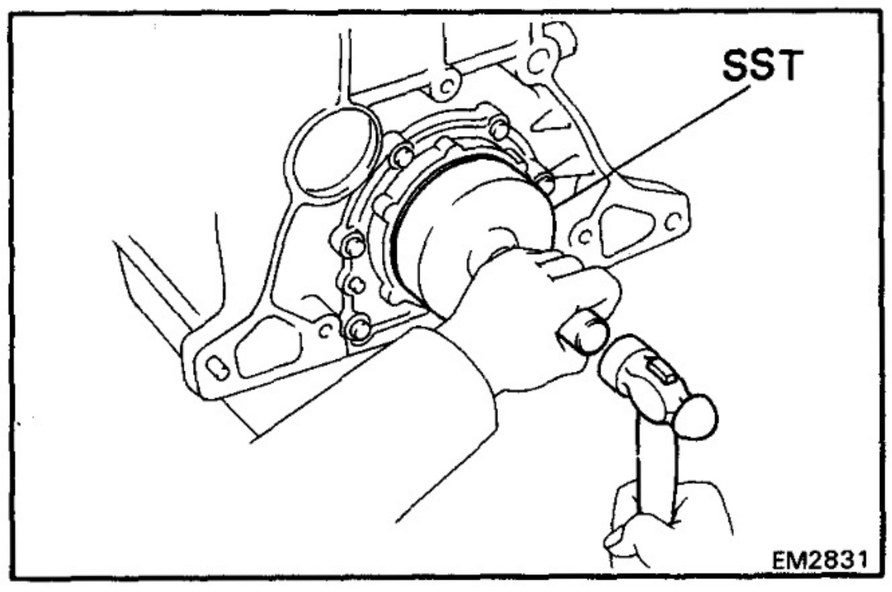

(c) Apply MP grease to a new oil seal.

(d) Using SST and a hammer, tap in the oil seal until its surface is flush with the rear oil seal retainer edge.

SST 09223-56010

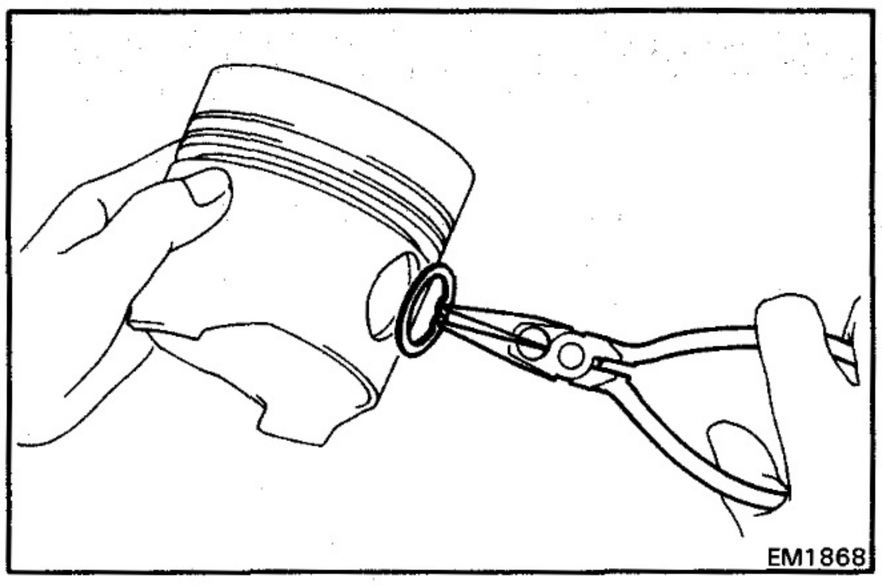
EM1868

ASSEMBLY OF PISTON AND CONNECTING ROD ASSEMBLIES

1. ASSEMBLE PISTON AND CONNECTING ROD

(a) Install a new snap ring on one side of the piston pin hole.

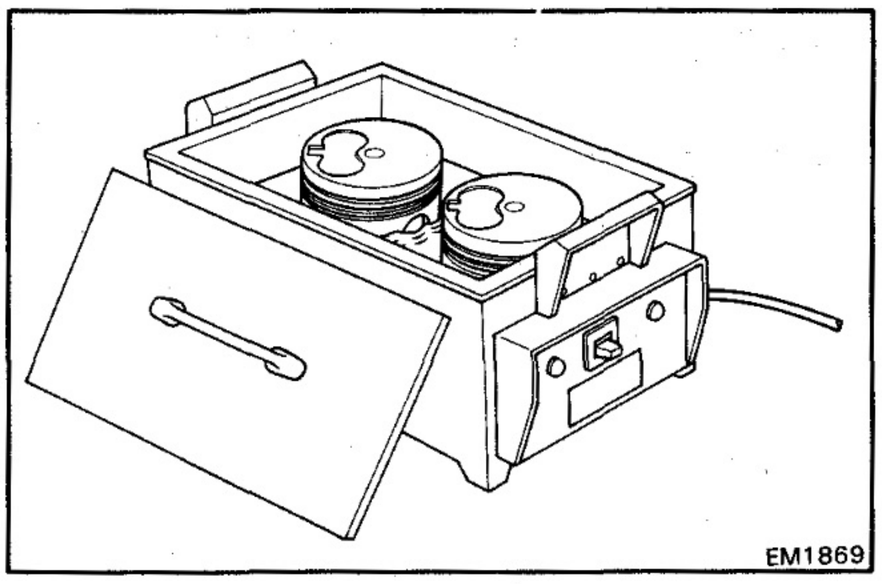
EM1869

(b) Gradually heat the piston to approx. 60°C (140°F).

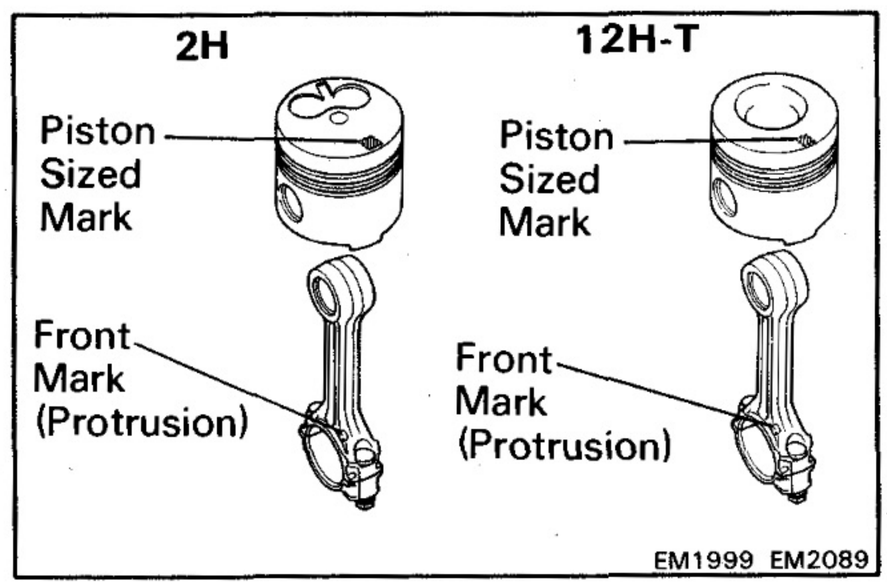

EM1999 EM2089

(c) Position the piston sized mark of the piston with the front mark of connecting rod, and push in the piston pin with your thrumb.

(d) Install a new snap ring on the other side if the piston pin hole.

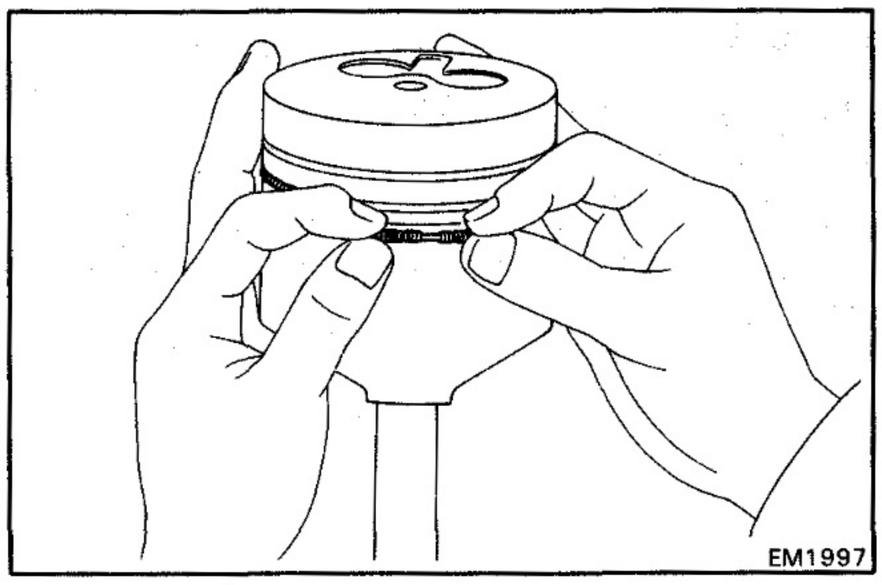
EM1997

2. INSTALL PISTON RINGS

(a) Install the coil and oil ring by hand.

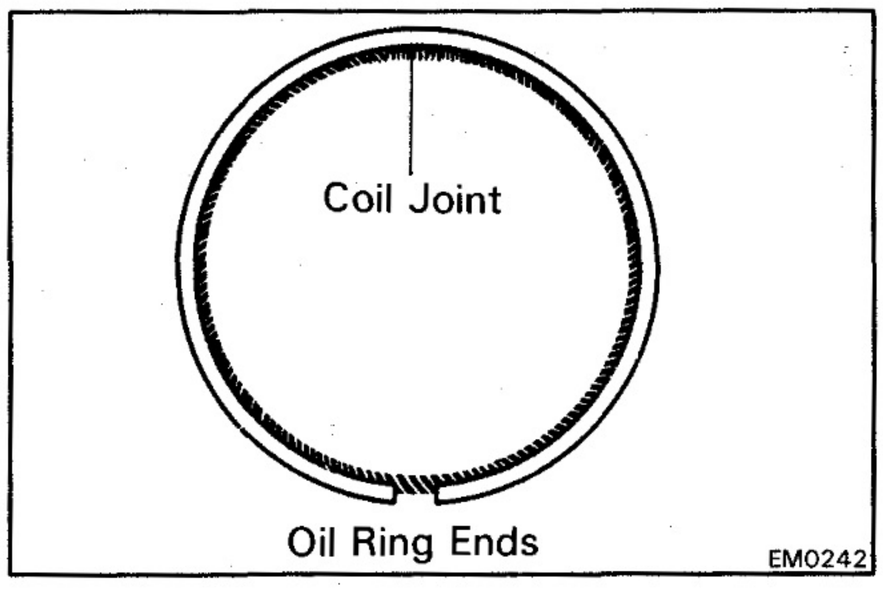

EM0242

NOTE: Face the end gap of the oil ring in the opposite direction of the coil joint.

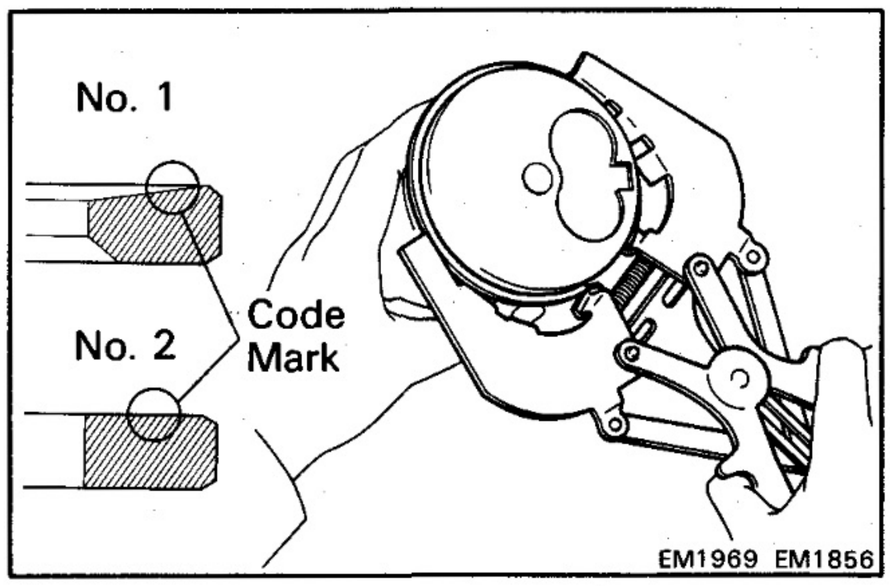

(b) Using a piston ring expander, install the two compression rings with the code mark facing upward.

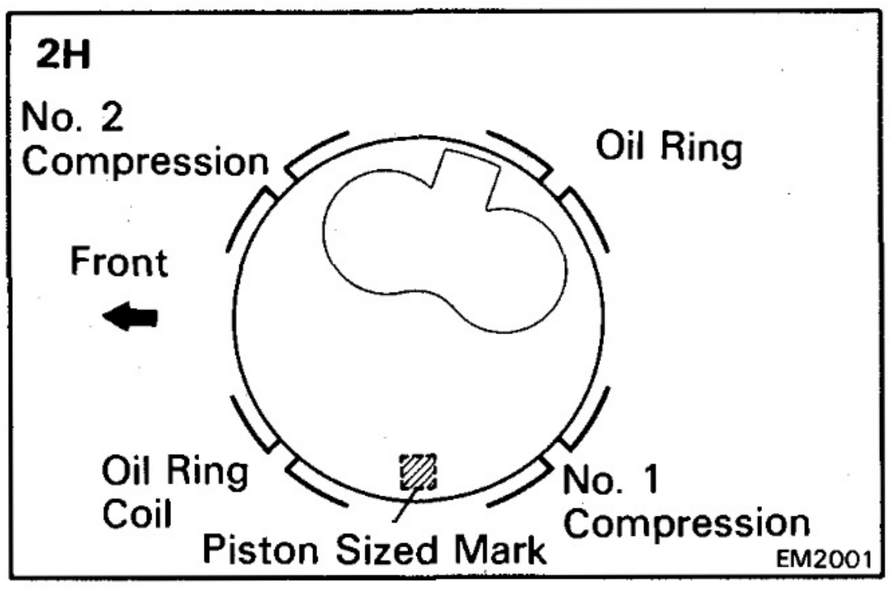

(c) Position the piston rings so that the ring end gaps are as shown.

CAUTION: Do not align the end gaps.

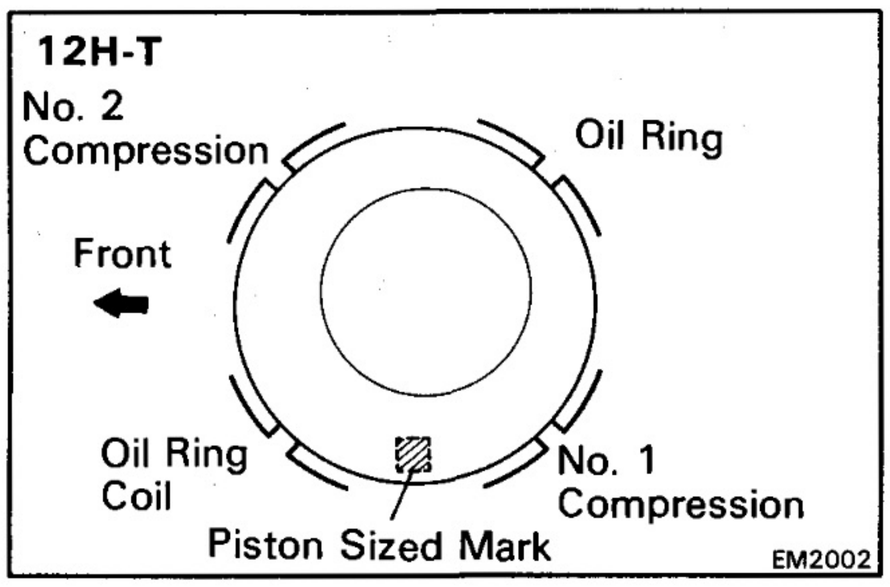

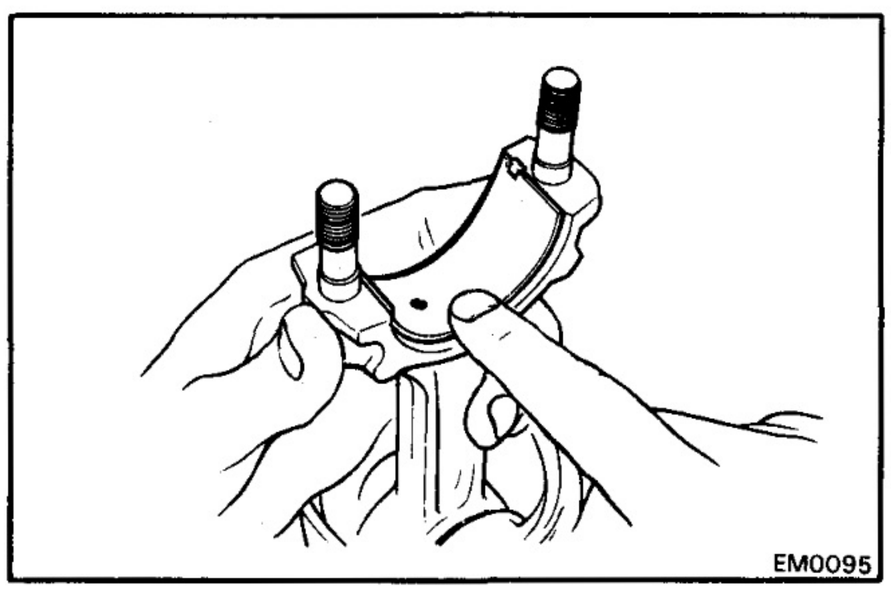

3. INSTALL BEARINGS

(a) Align the bearing claw with the claw groove of the connecting rod or connecting rod cap.

(b) Install the bearings in the connecting rod and connecting rod cap.

ASSEMBLY OF CYLINDER BLOCK

(See page EM-94)

NOTE:

- Thoroughly clean all parts to be assembled.
- Before installing the parts, apply new engine oil to all sliding and rotaing surfaces.
- Replace all gaskets, and oil seals with new parts.

1. INSTALL MAIN BEARINGS

(a) Align the bearing claw with the claw groove of the main bearing cap or cylinder block.

(b) Install the bearing in the cylinder block and main bearing caps in the proper location.

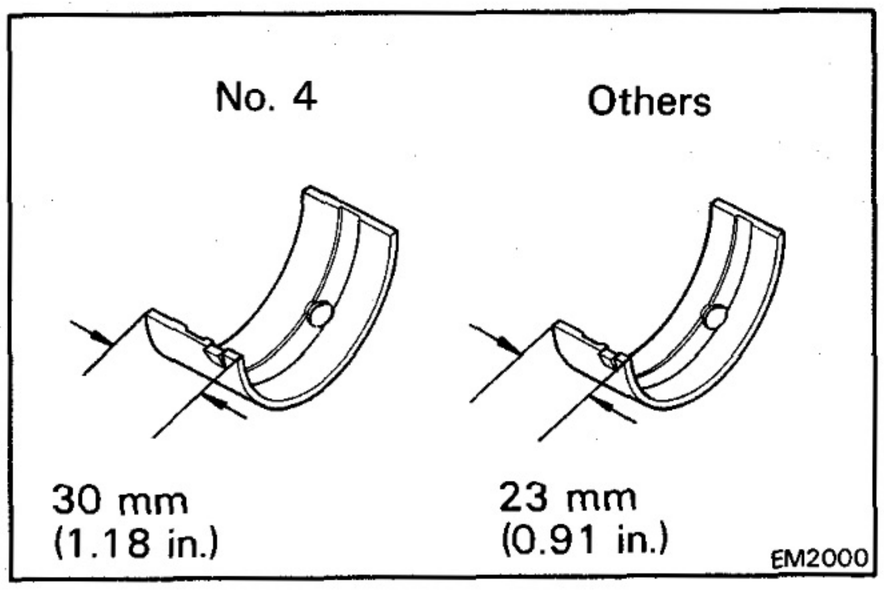

2. INSTALL UPPER THRUST WASHERS

Install the thrust washers under the No. 4 main bearing cap position of the block with the oil grooves facing outward.

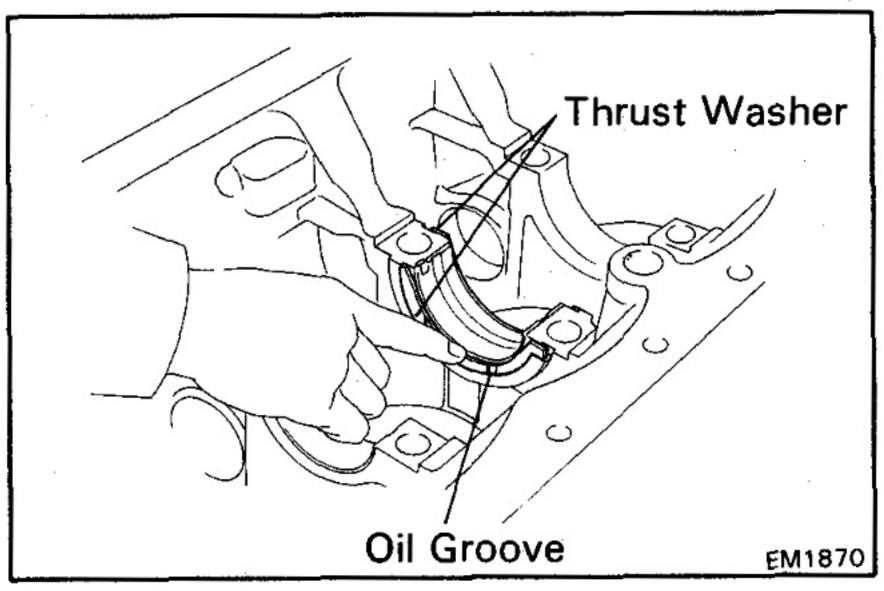

3. PLACE CRANKSHAFT ON CYLINDER BLOCK

4. INSTALL MAIN BEARING CAPS AND LOWER THRUST WASHERS

(a) Install the lower thrust washers on the No. 4 main bearing cap with the oil grooves facing outward.

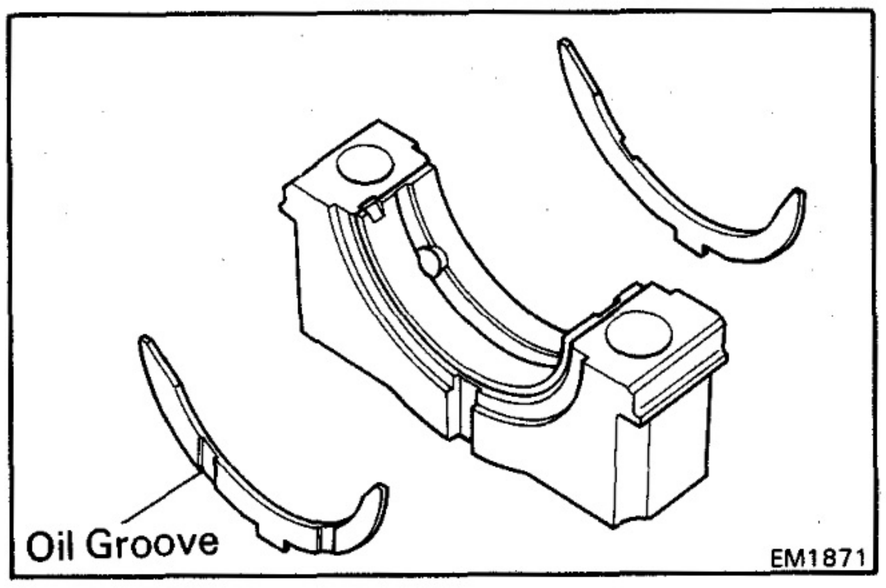

(b) Install the main bearing caps in their proper locations.

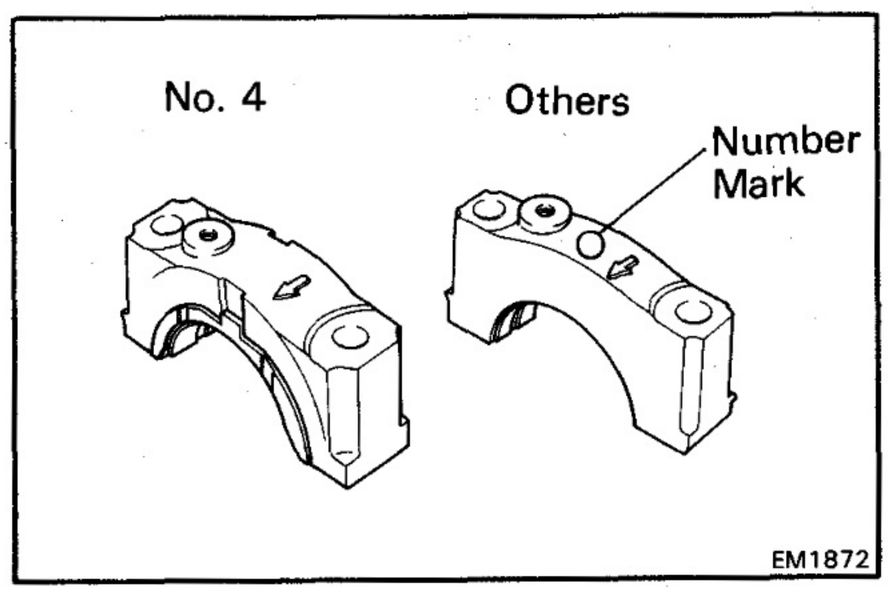

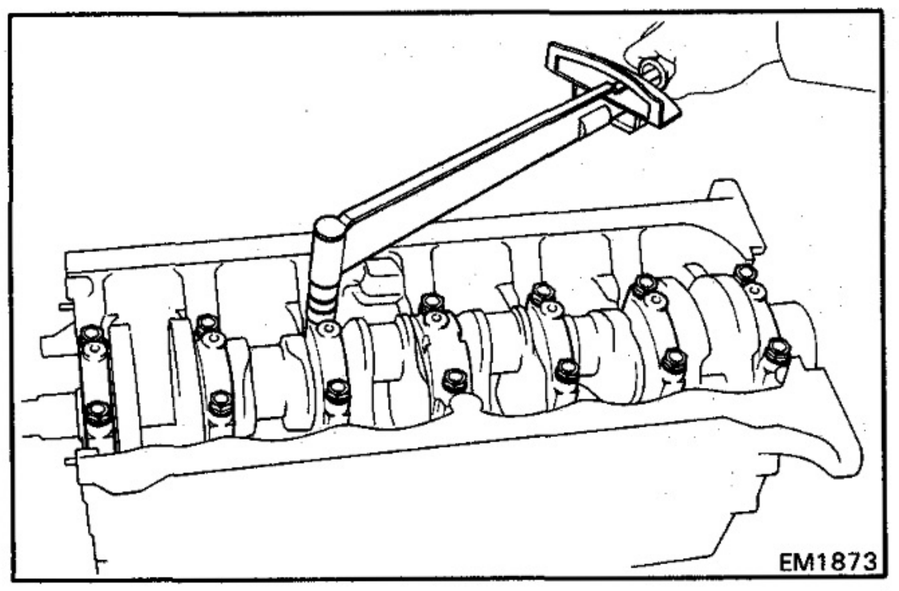

(c) Apply a light coat of the engine oil on the threads and under the bolt heads of the main bearing caps.

(d) Install and uniformly tighten the fourteen bolts of the main bearing caps in several passes, in the sequence shown.

Torque: 1,390 kg-cm (100 ft-lb, 136 N·m)

(e) Check that the crankshaft turns smoothly.

(f) Check the crankshaft thrust clearance.
(See page EM-98)

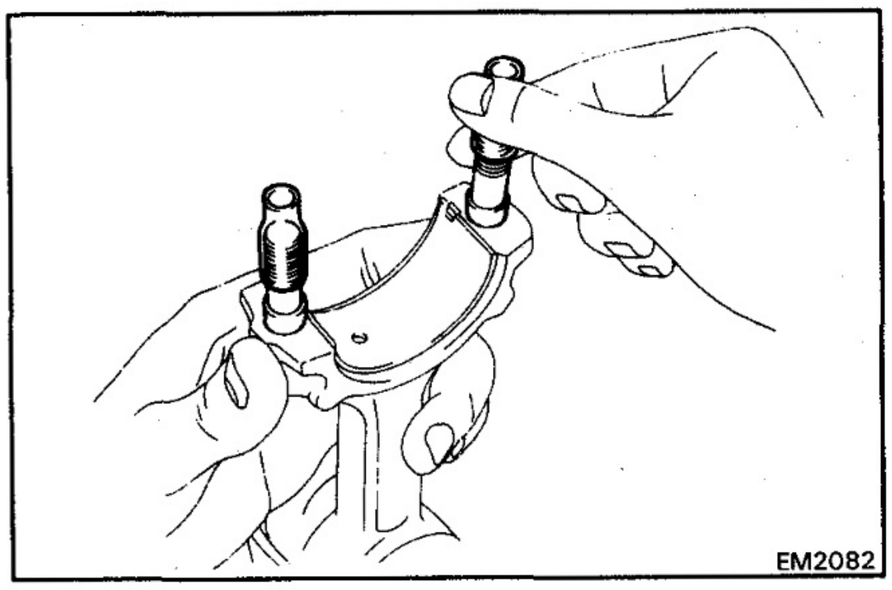

5. INSTALL PISTON AND CONNECTING ROD ASSEMBLIES

(a) Cover the connecting rod bolts with a short piece of hose to protect the crankshaft and cylinder bore from damage.

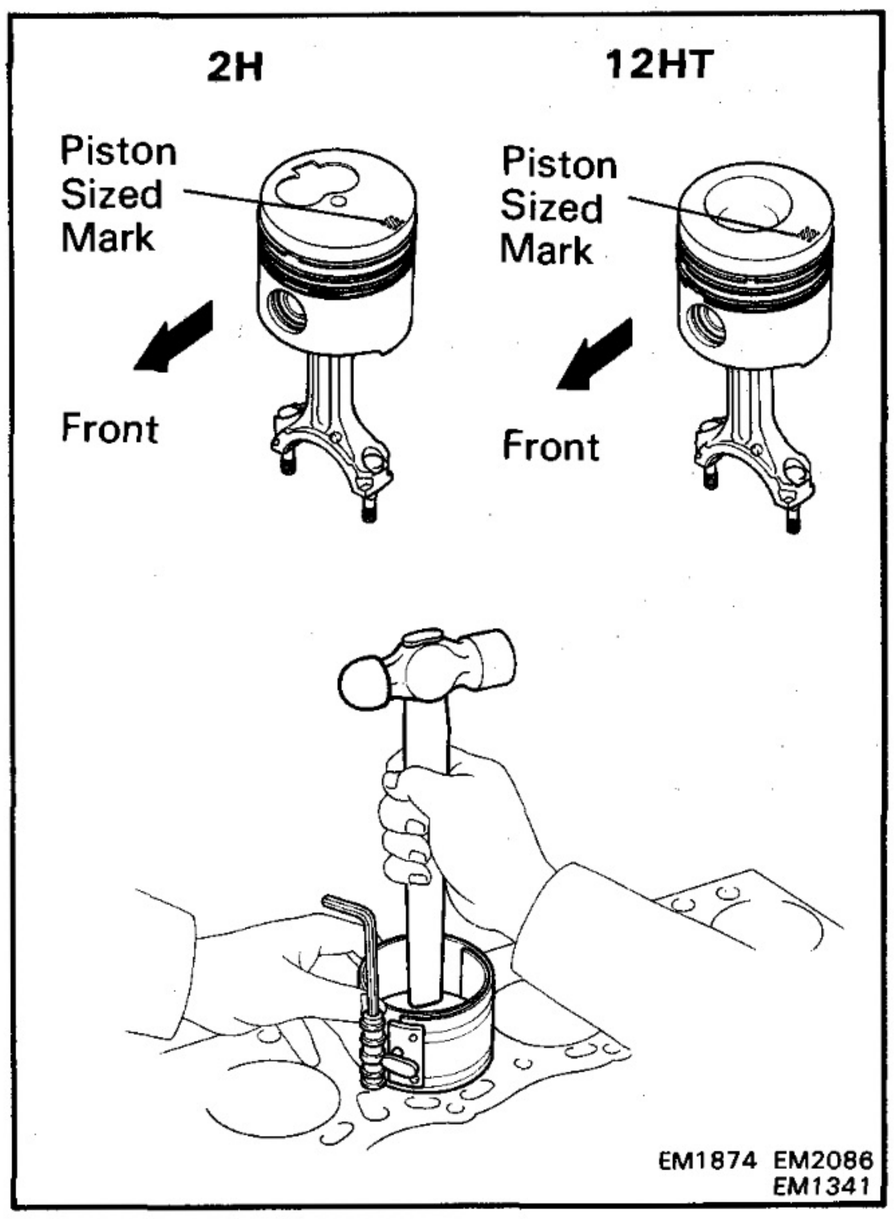

(b) Position the piston sized mark of the piston.

(c) Using a piston ring compressor, push the correctly numbered piston and connecting rod assembly into the cylinder.

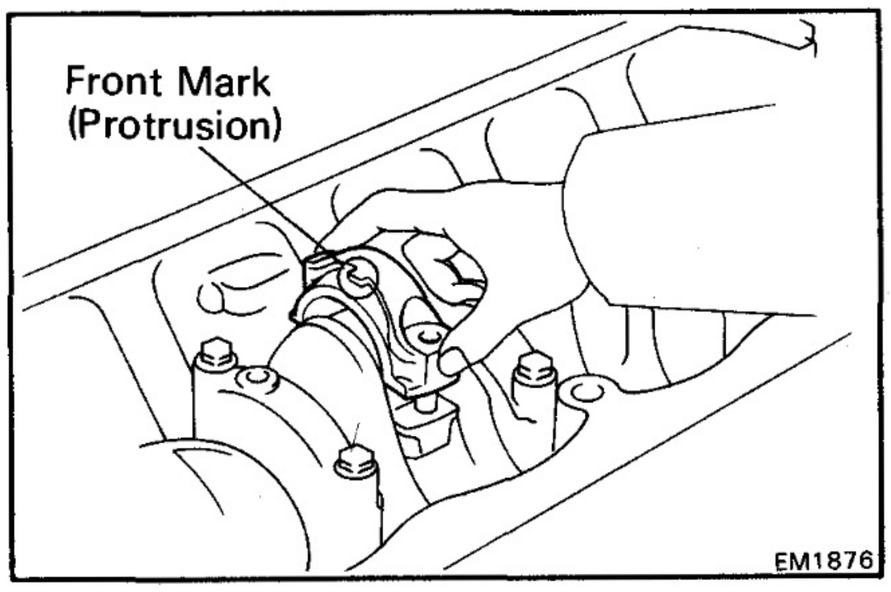

6. INSTALL CONNECTING ROD CAPS

(a) Match the numbered cap with the numbered connecting rod.

(b) Install the connecting rod cap with the front mark facing forward.

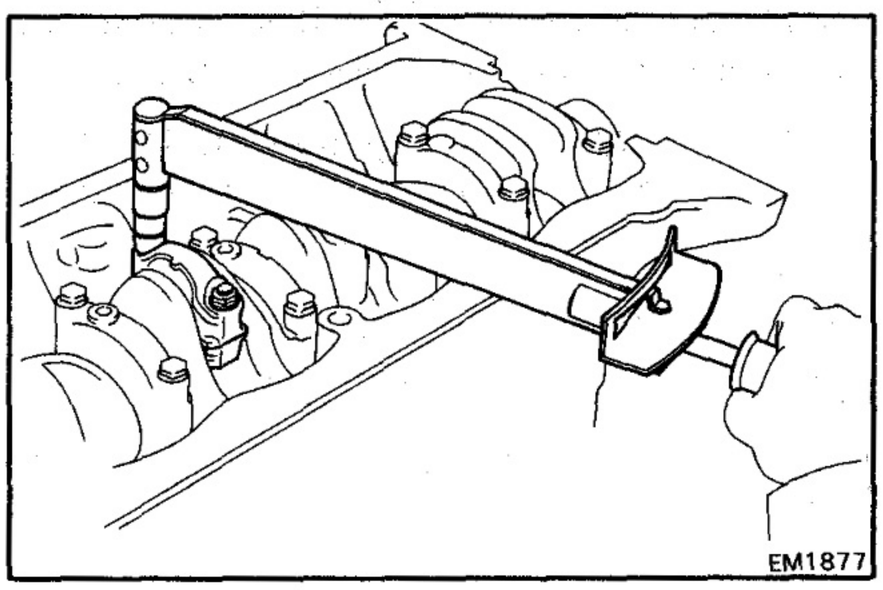

(c) Apply a light coat of engine oil on the threads and under the nuts of the connecting rod cap.

(d) Install and alternately tighten the nuts of the connecting rod cap in several passes.

Torque: 900 kg-cm (65 ft-lb, 88 N·m)

(e) Check that the crankshaft turns smoothly.

(f) Check the connecting rod thrust clearance.
(See page EM-95)

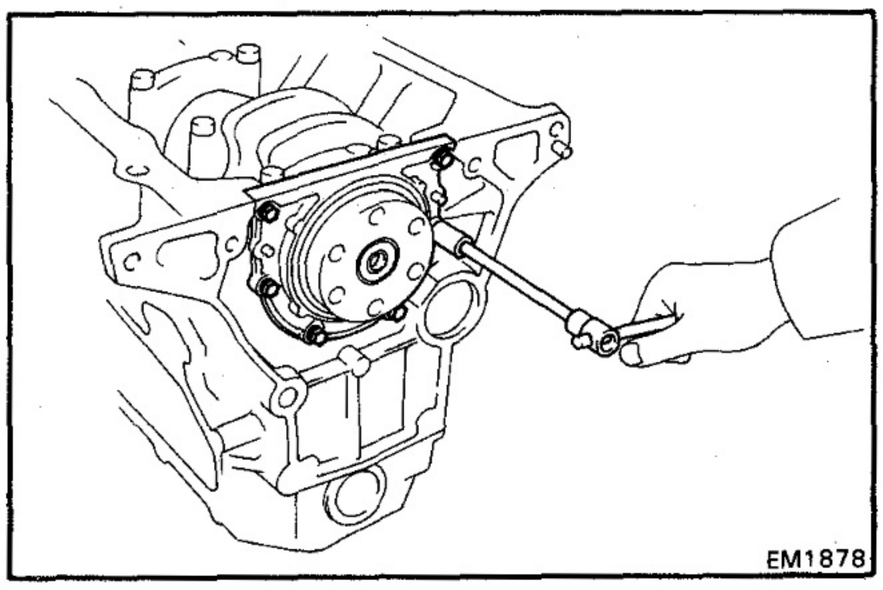

7. INSTALL REAR OIL SEAL RETAINER

Install a new gasket and the retainer with the six bolts.

Torque: 185kg-cm (13 ft-lb, 18 N·m)

8. INSTALL OIL PUMP AND OIL PAN
(See pages LU-11 to 13)

9. INSTALL INJECTION PUMP
(See pages FU-98 and 99)

10. INSTALL TIMING GEARS AND CAMSHAFT
(See pages EM-88 to 92)

11. INSTALL CYLINDER HEAD
(See pages EM-68 to 71) 2H
(See pages EM-73 to 76) 12H

12. INSTALL INJECTION PIPES
(See page FU-8) 2H
(See page FU-14 and 15) 12H-T

13. [12H-T]
INSTALL TURBOCHARGER
(See pages EM-44 to 46)

14. REMOVE ENGINE STAND

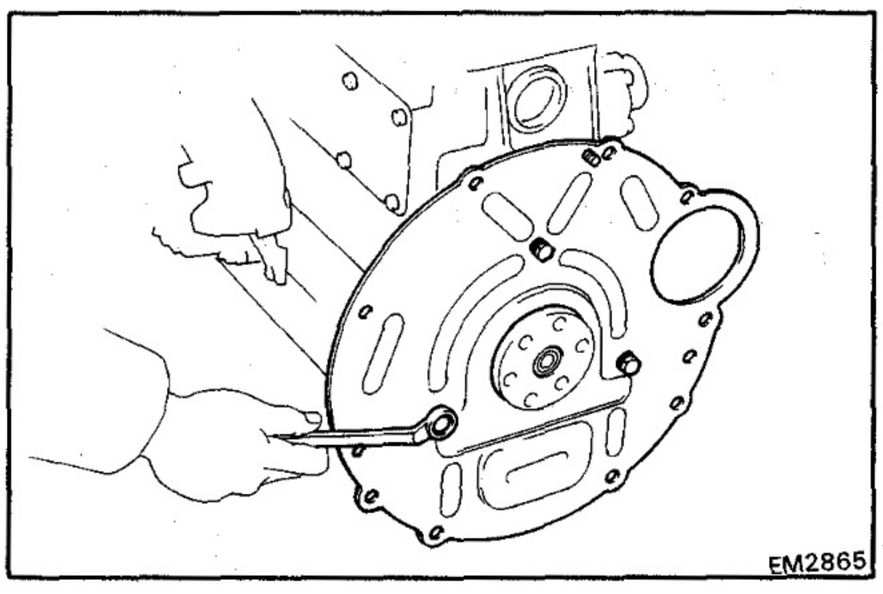

15. INSTALL REAR END PLATE

Install the rear end plate with the three bolts.

Torque:

12 mm bolt head 185 kg-cm (13 ft-lb, 18 N·m)
17 mm bolt head 650 kg-cm (47 ft-lb, 64 N·m)

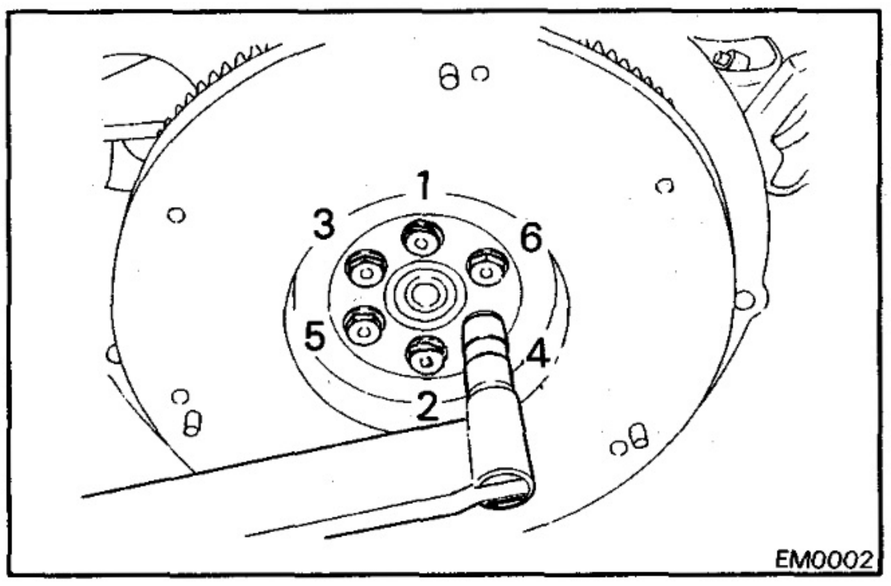

16. [M/T]
INSTALL FLYWHEEL

(a) Apply a light coat of engine oil on the threads and under the bolt heads.

(b) Install the flywheel on the crankshaft.

(c) Install and uniformly tighten the six bolts in several passes, in the sequence shown.

Torque: 1,200 kg-cm (87 ft-lb, 118 N·m)

17. [A/T]
INSTALL DRIVE PLATE
(See procedure step 16)

Torque: 1,000 kg-cm (72 ft-lb, 98 N·m)

FUEL SYSTEM

NOTE: For troubleshooting procedures, refer to DIESEL ENGINE DIAGNOSIS (EM Section).

	Page
REPLACEMENT OF FUEL FILTER	FU-2
INJECTION NOZZLES [2H]	FU-3
INJECTION NOZZLES [12H-T]	FU-9
FUEL FEED PUMP	FU-16
AUTOMATIC TIMER	FU-21
INJECTION PUMP	FU-29

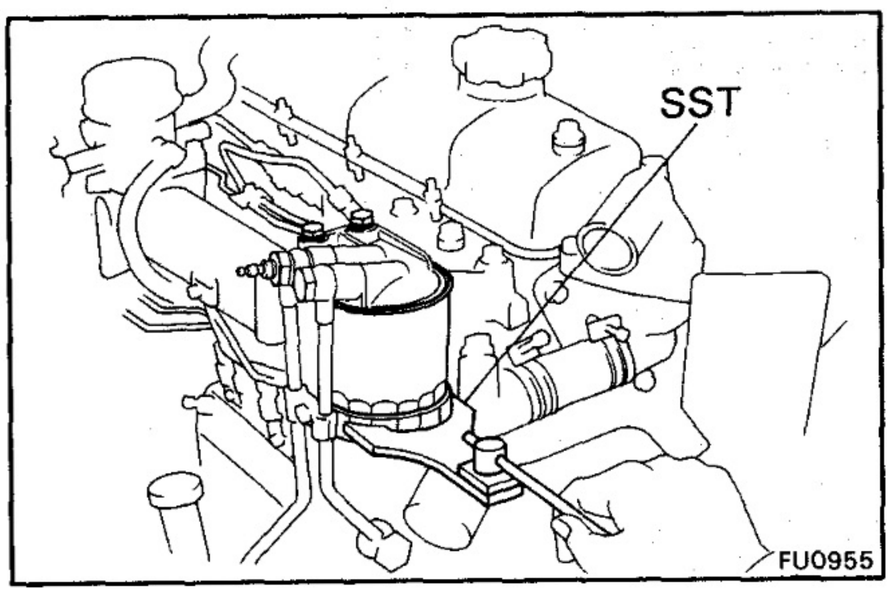

REPLACEMENT OF FUEL FILTER

1. REPLACE FUEL FILTER

(a) Using SST, remove the fuel filter and O-ring.

SST 09228-34010

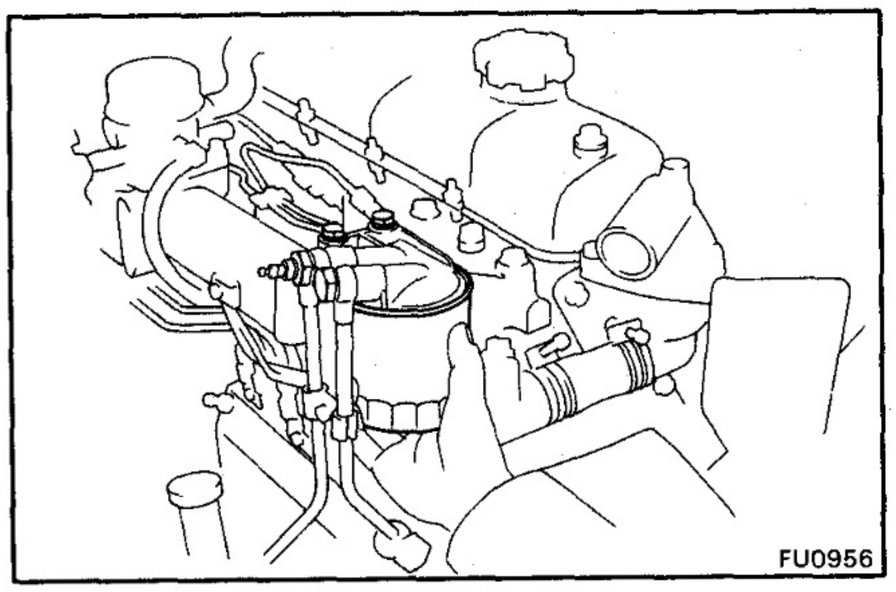

(b) Install a new fuel filter with a new O-ring.

- Apply a light coat of fuel on the O-ring.
- Hand tighten ONLY. DO NOT use SST to tighten the filter.

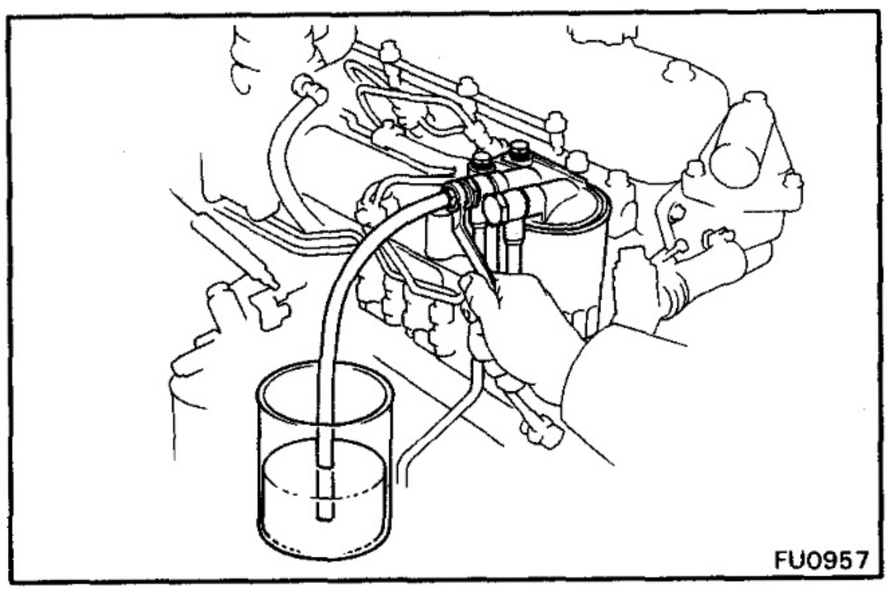

2. BLEED FUEL FILTER

(a) Connect a vinyl tube to the fuel filter bleeder plug.

(b) Insert other end of the tube in a container of fuel.

(c) Loosen the fuel filter bleeder plug.

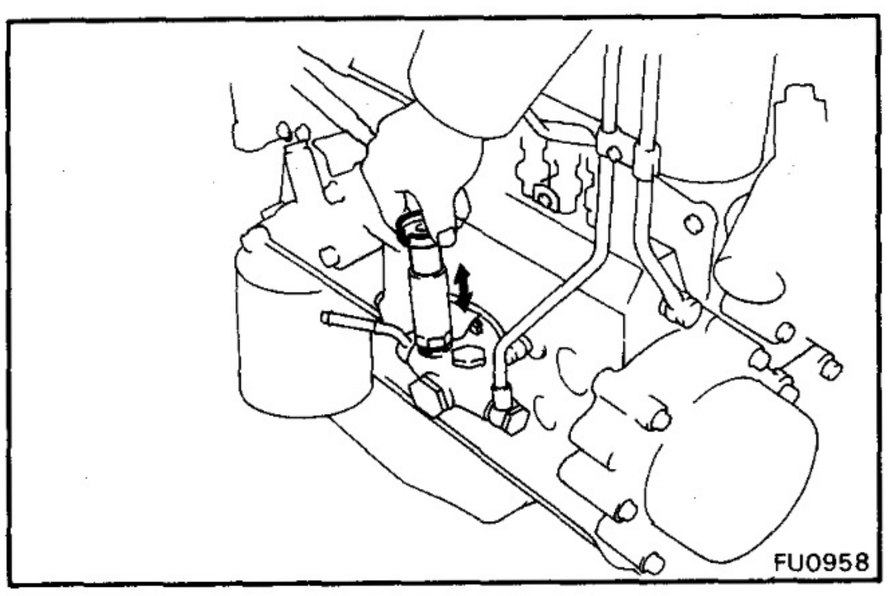

(d) Turn the priming pump handle counterclockwise to free it.

(e) Operate the priming pump handle until there are no air bubbles emitted from the fuel filter bleeder plug.

(f) Turn the priming pump handle clockwise and tighten it.

(g) Tighten the fuel filter bleeder plug.

3. START ENGINE AND CHECK FOR FUEL LEAKS

INJECTION NOZZLES [2H]

REMOVAL AND TEST OF INJECTION NOZZLES

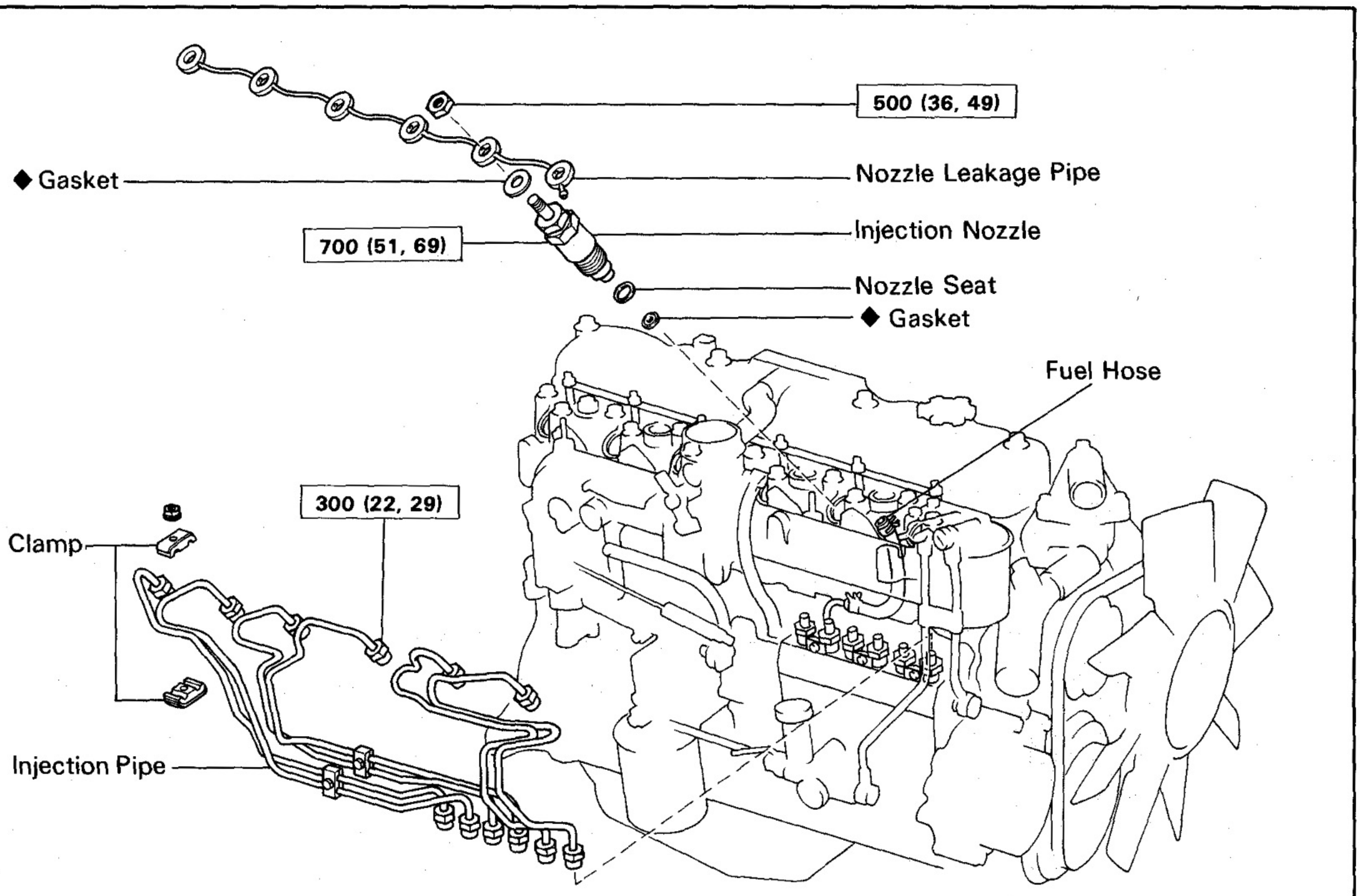

kg-cm (ft-lb, N·m) : Specified torque
◆ Non-reusable part

FU1366

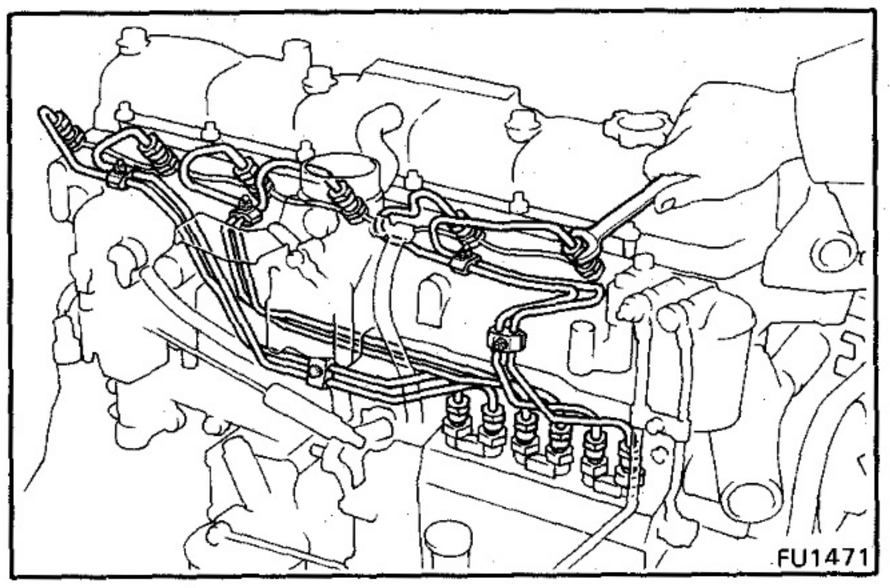

FU1471

1. REMOVE INJECTION PIPES

(a) Loosen the union nuts of the six injection pipes.

(b) Remove the five nuts, six injection pipes and clamps.

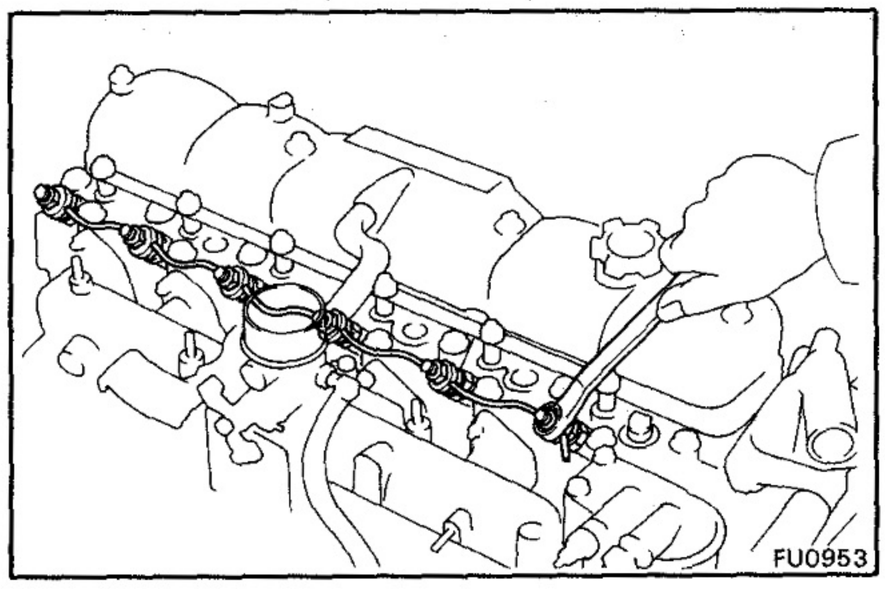

FU0953

2. REMOVE NOZZLE LEAKAGE PIPE

(a) Disconnect the fuel hose from the leakage pipe.

(b) Remove the six nuts, leakage pipe and six gaskets.

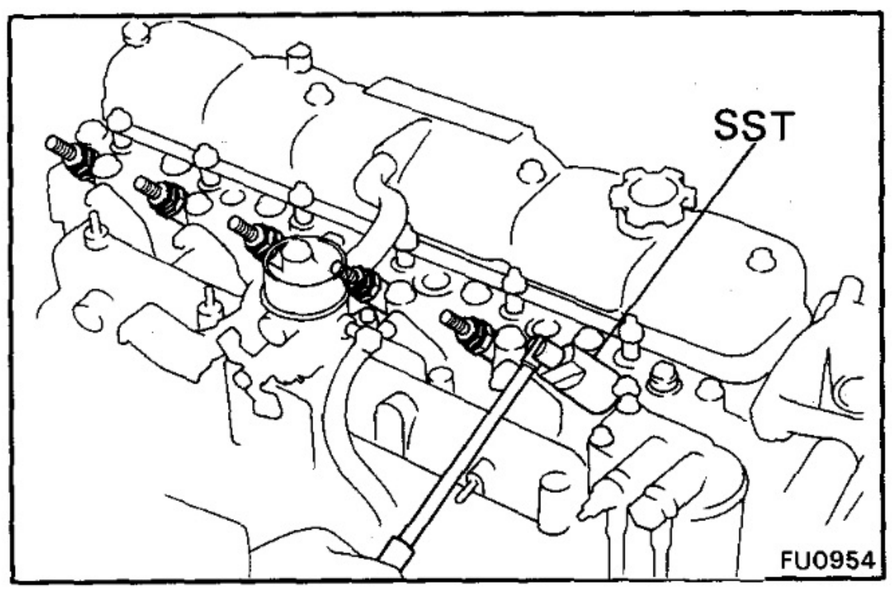

3. REMOVE INJECTION NOZZLES

Using SST, remove the six nozzles, seats and gaskets.
SST 09268-64010

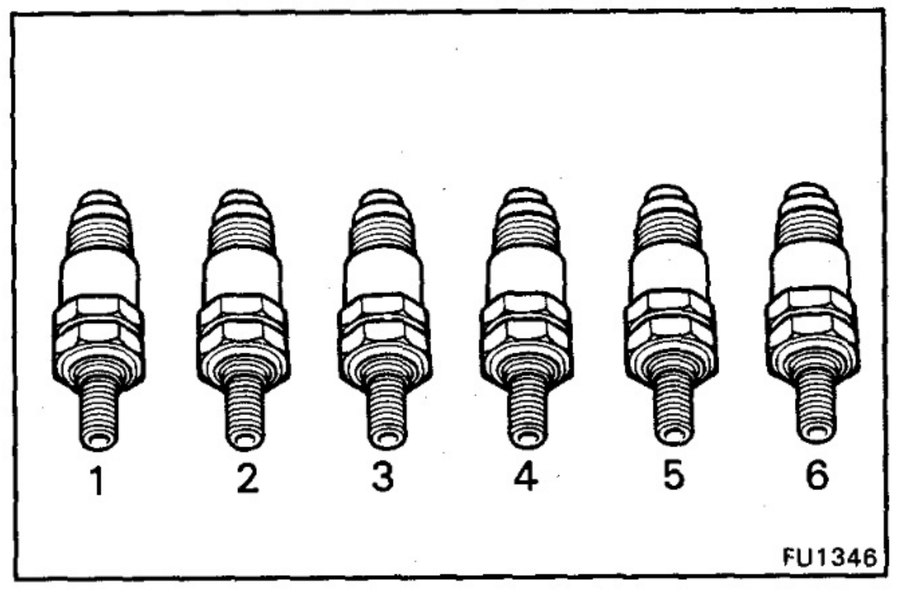

NOTE: Arrange the nozzles in correct order.

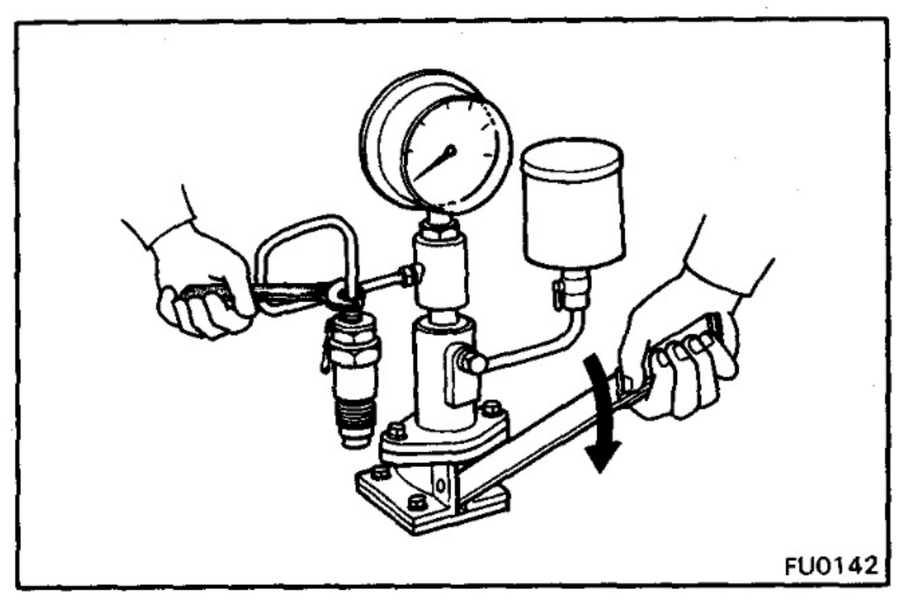

4. INJECTION PRESSURE TEST

(a) Install the nozzle to an injection nozzle hand tester and bleed the air from the union nut.

WARNING: Do not place your finger over the nozzle injection hole.

(b) Pump the tester handle a few times as fast as possible by hand to discharge the carbon from the injection hole.

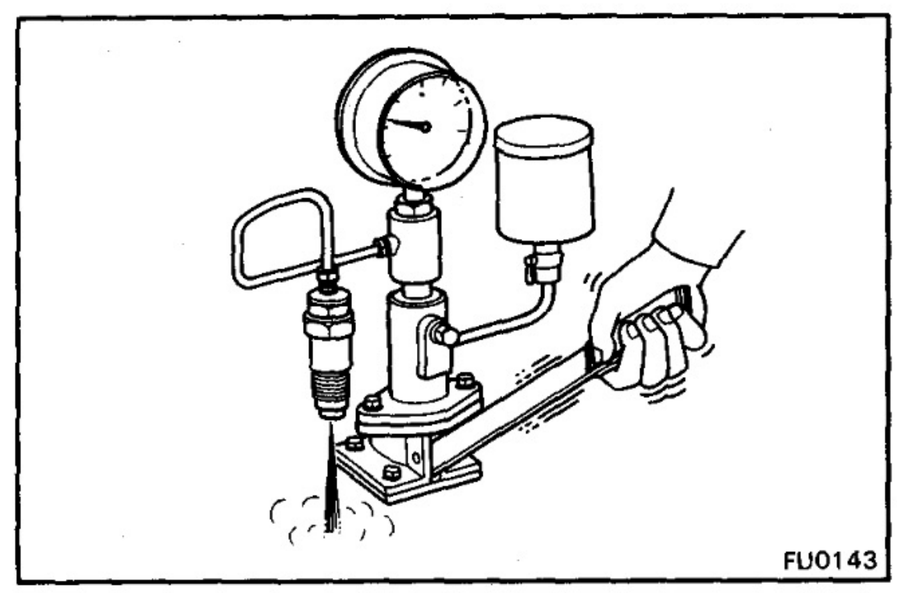

(c) Pump the tester handle slowly and observe the pressure gauge.

(d) Read the pressure gauge when the injection pressure just begins to drop.

Opening pressure:

Reused nozzle	**105 – 125 kg/cm² (1,493 – 1,778 psi) (10,296 – 12,258 kPa)**
New nozzle	**115 – 125 kg/cm² (1,636 – 1,778 psi) (11,278 – 12,258 kPa)**

NOTE: Proper nozzle operation can be determined by a swishing sound.

If the opening pressure is not within specification, disassemble the nozzle and change the adjusting shim on the top of the pressure spring.

Adjusted opening pressure: 105 – 125 kg/cm² (1,493 – 1,778 psi) (10,296 – 12,258 kPa)

Adjusting shim thickness mm (in.)			
1.00	(0.0394)	1.50	(0.0591)
1.05	(0.0413)	1.55	(0.0610)
1.10	(0.0433)	1.60	(0.0630)
1.15	(0.0453)	1.65	(0.0650)
1.20	(0.0472)	1.70	(0.0669)
1.25	(0.0492)	1.75	(0.0689)
1.30	(0.0512)	1.80	(0.0709)
1.35	(0.0531)	1.85	(0.0728)
1.40	(0.0551)	1.90	(0.0748)
1.45	(0.0571)	1.95	(0.0768)

NOTE:

- Varying the adjusting shim thickness by 0.05 mm (0.0020 in.) changes the injection pressure by about 6.4 kg/cm² (91 psi, 628 kPa).
- Only one adjusting shim should be used.

(e) There should be no dripping after injection.

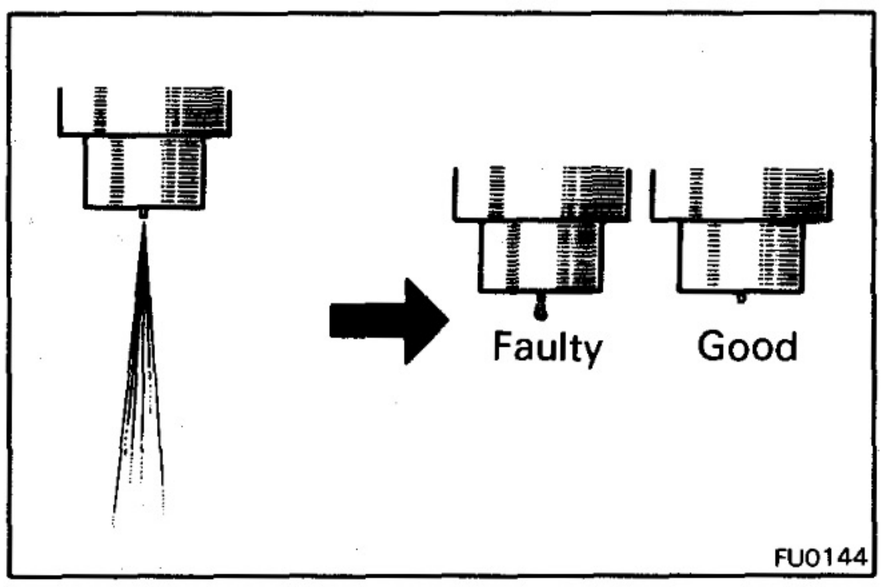

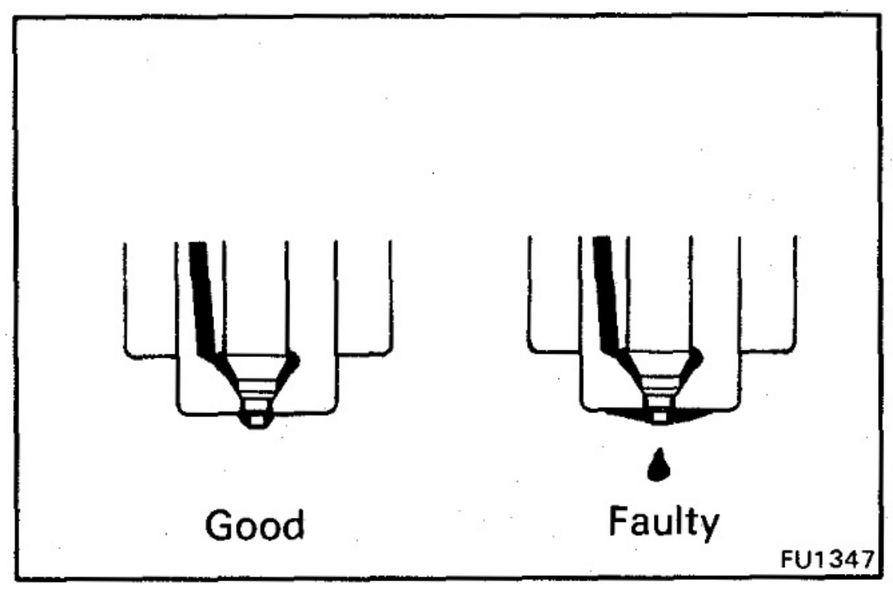

5. LEAKAGE TEST

While maintaining pressure at about 10.0 – 20.0 kg/cm² (142 – 284 psi, 981 – 1,961 kPa) below opening pressure (adjust by tester handle), check that there is no dripping for 10 seconds from the injection hole or around the retaining nut.

If the nozzle drips within 10 seconds, replace it or clean and overhaul the nozzle assembly.

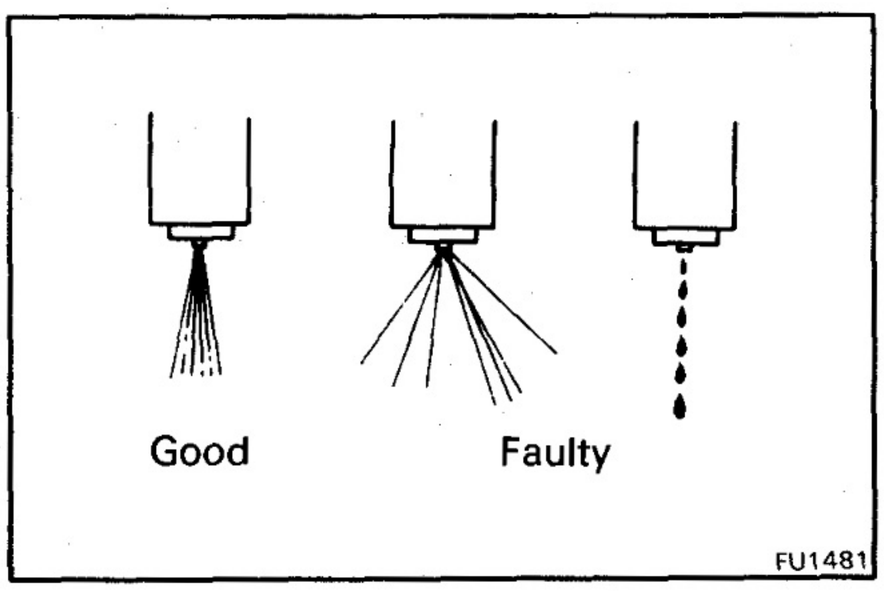

6. SPRAY PATTERN TEST

(a) The injection nozzle should shudder at a pumping speed between 15 – 60 times (old nozzle) or 30 – 60 times (new nozzle) per minute.

(b) Check the spray pattern during shuddering.

If the spray pattern is not correct during shuddering, the nozzle must be replaced or cleaned.

COMPONENTS

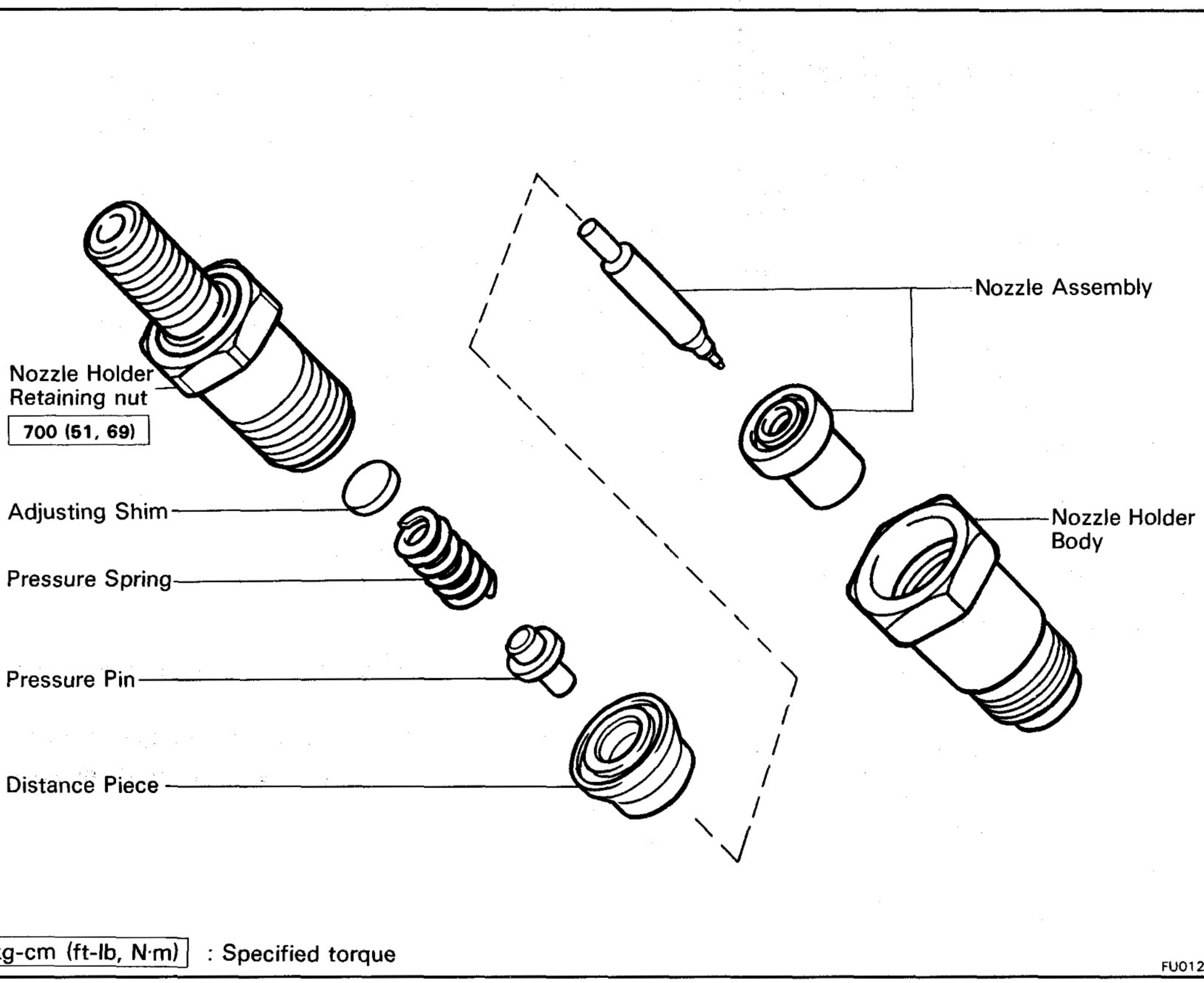

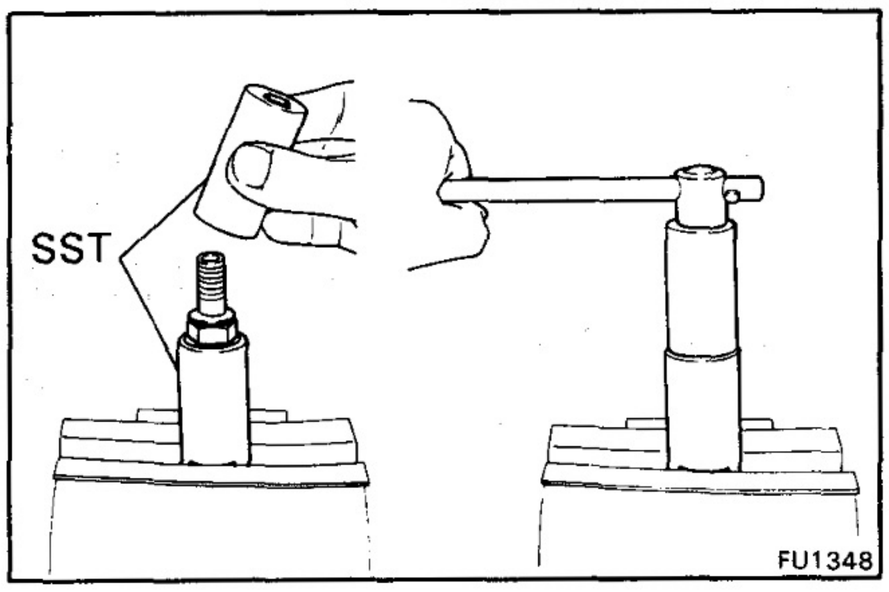

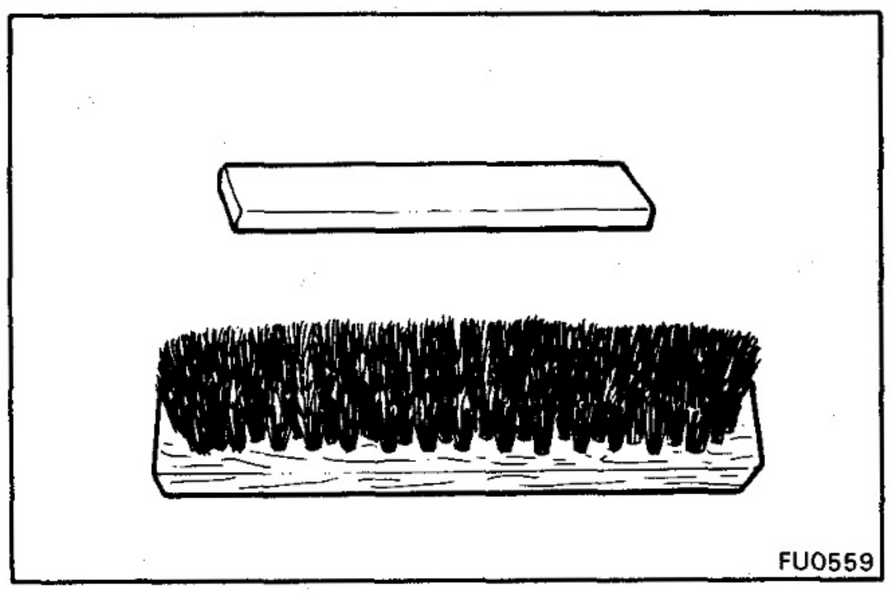

DISASSEMBLY, CLEANING AND TEST OF INJECTION NOZZLE

1. DISASSEMBLE INJECTION NOZZLE

(a) Using SST, unscrew the nozzle holder retaining nut.

SST 09268-64010

CAUTION: When disassembling the nozzle, be careful not to drop the inner parts.

(b) Remove the adjusting shim, pressure spring, pressure pin, distance piece and the nozzle assembly.

2. NOZZLE CLEANING

(a) To wash the nozzles, use a wooden stick and brass brush. Wash in clean diesel fuel.

NOTE: Do not touch the nozzle mating surfaces with your fingers.

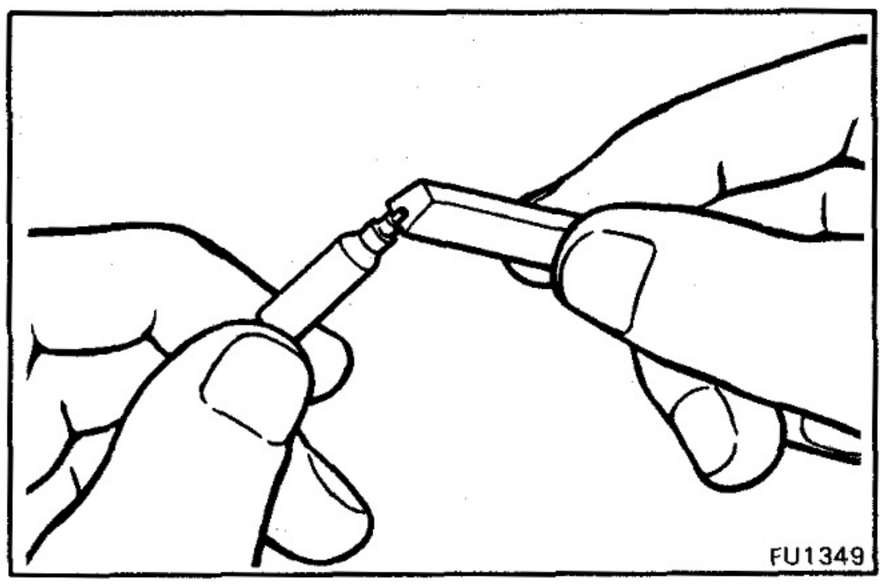

(b) Using a wooden stick, remove the carbon adhering to the nozzle needle tip.

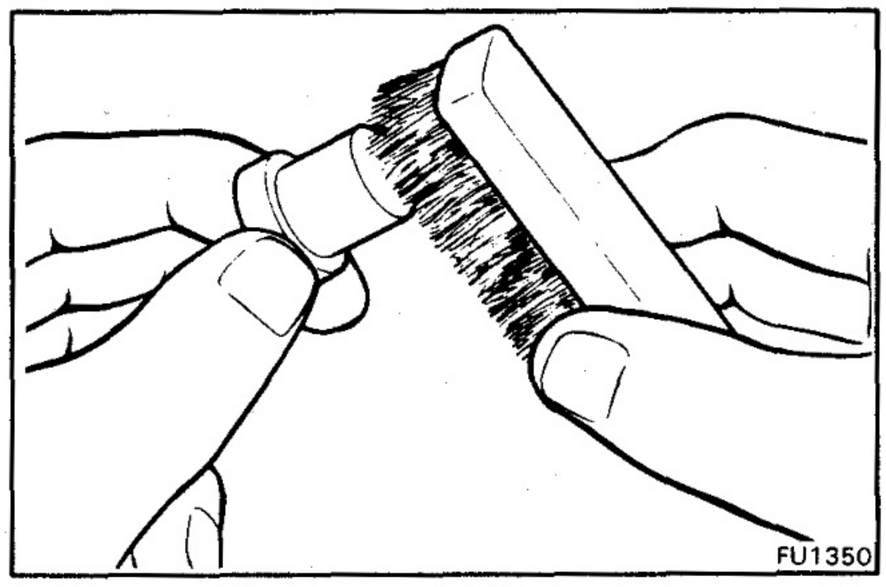

(c) Using a brass brush, remove the carbon from the exterior of the nozzle body.

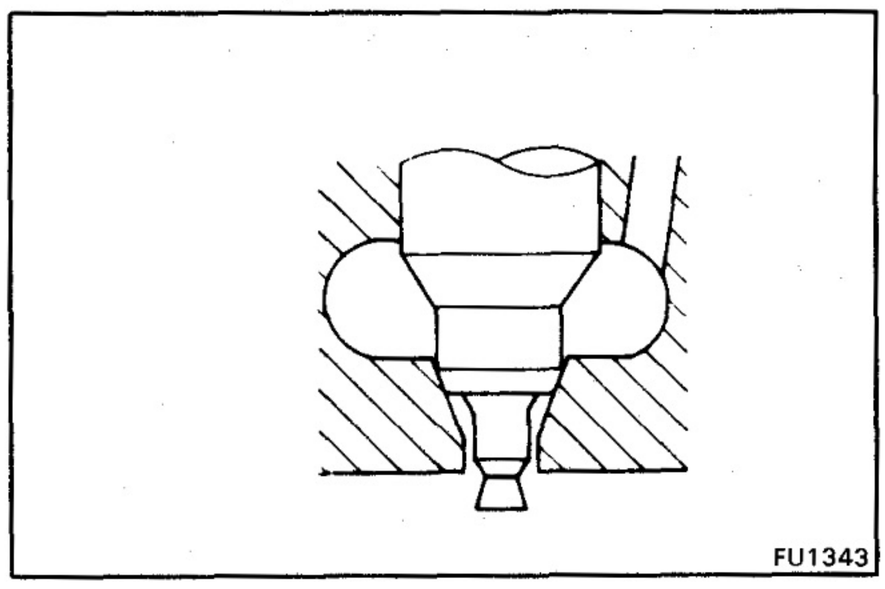

(d) Check the seat of the nozzle body for burns or corrosion.

(e) Check the nozzle needle tip for damage or corrosion.

If any of these conditions are presented, replace the nozzle assembly.

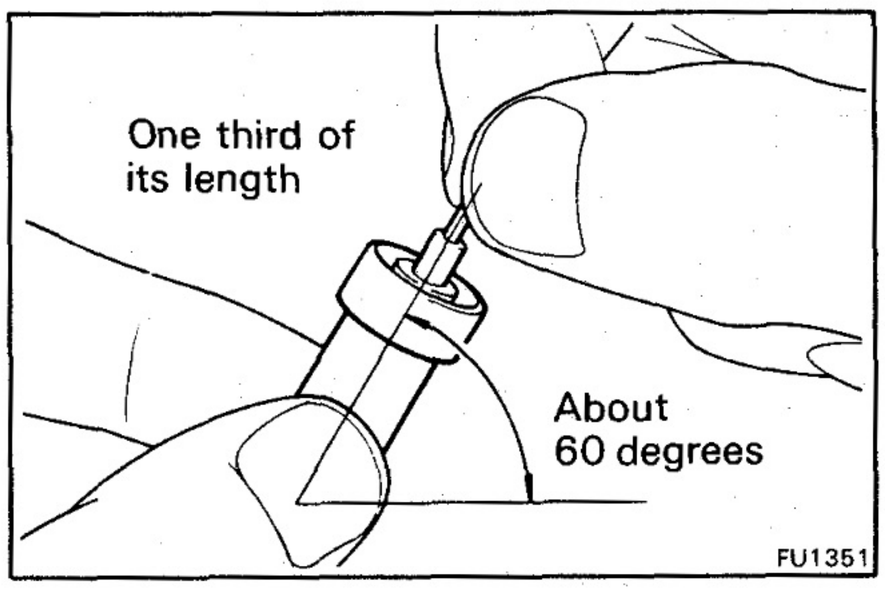

3. SINKING TEST

(a) Wash the nozzle in clean diesel fuel.

NOTE: Do not touch the nozzle mating surfaces with your fingers.

(b) Tilt the nozzle body about 60 degrees and pull the needle out about one third of its length.

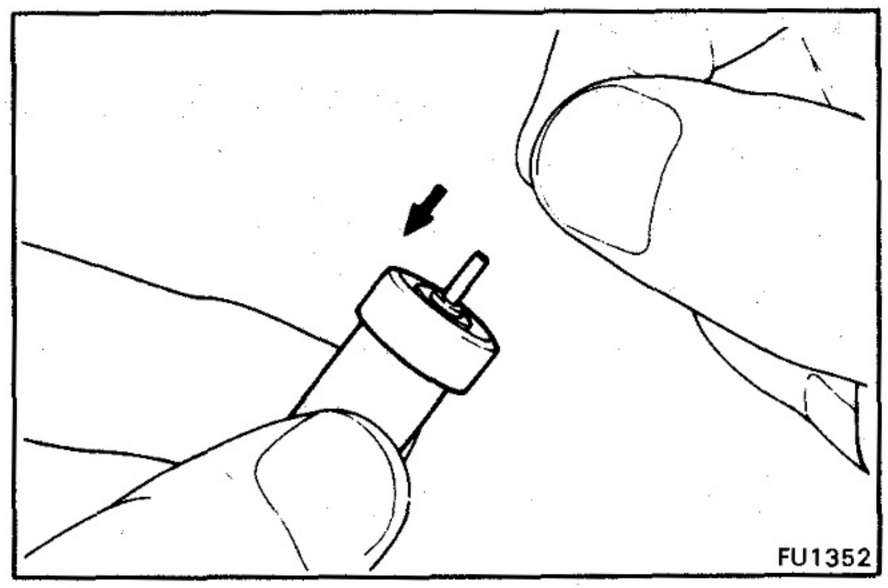

(c) When released, the needle should sink down into the body vent smoothly by its own weight.

(d) Repeat this test, rotating the needle slightly each time.

If the needle does not sink freely, replace the nozzle assembly.

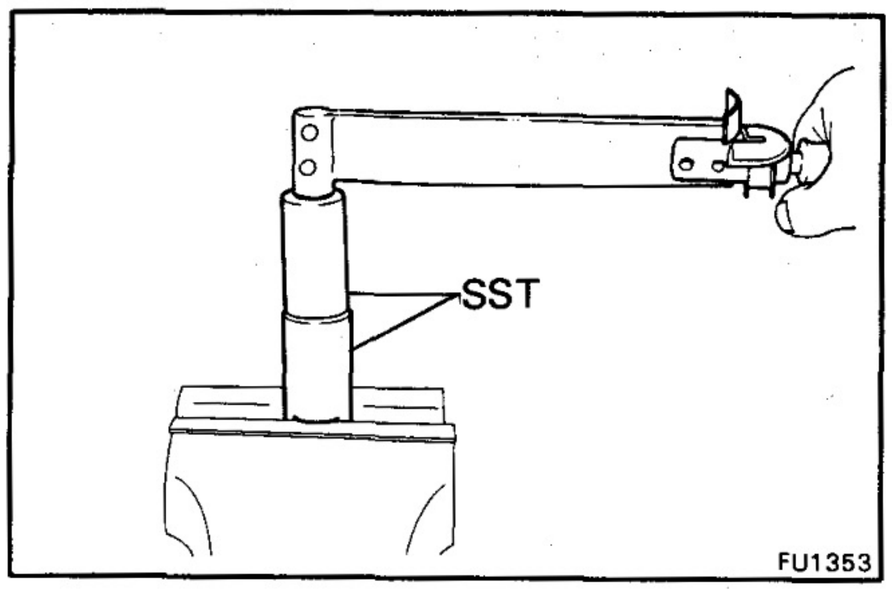

ASSEMBLY OF INJECTION NOZZLES

(See page FU-6)

1. ASSEMBLE INJECTION NOZZLES

(a) Assemble the nozzle holder body, the nozzle assembly, distance piece, pressure pin, pressure spring, adjusting shim and nozzle holder retaining nut, and finger tighten the nut.

(b) Using SST, torque the retaining nut.

SST 09268-64010

Torque: 700 kg-cm (51 ft-lb, 69 N·m)

2. PERFORM PRESSURE AND SPRAY PATTERN TEST

(See steps 4 to 6 on pages FU-4 and 5)

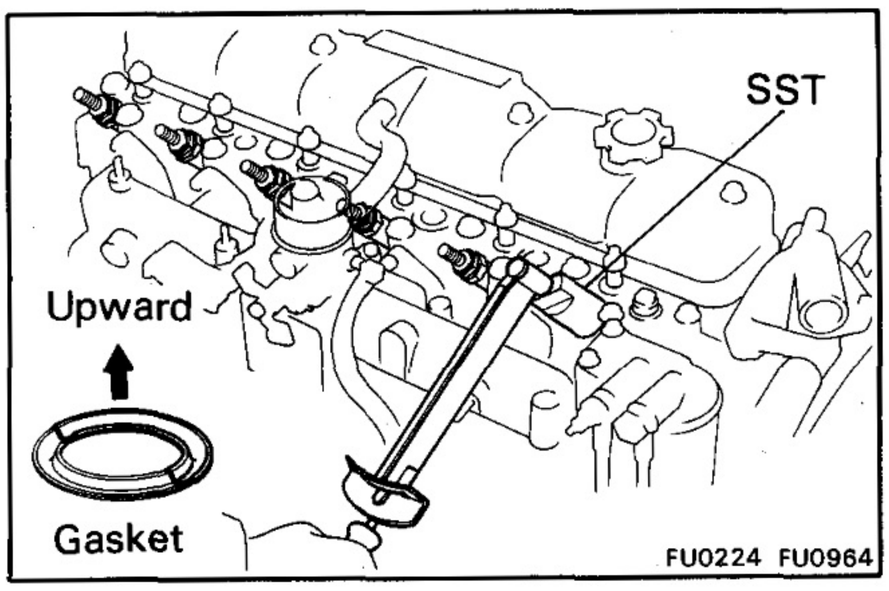

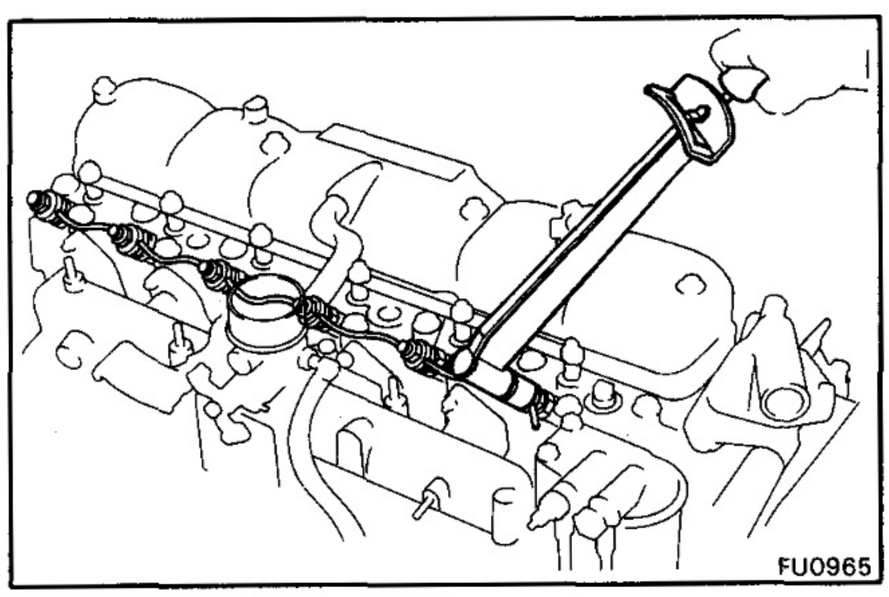

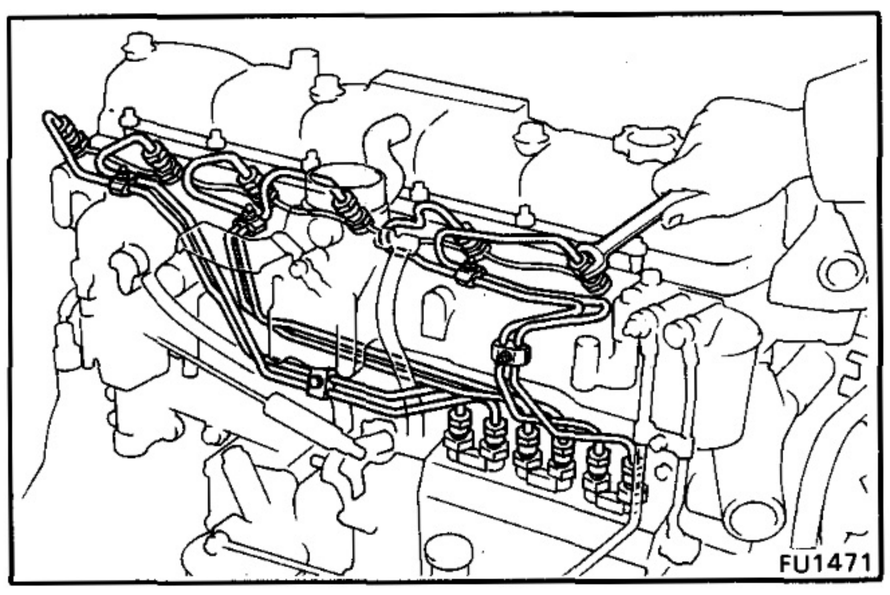

INSTALLATION OF INJECTION NOZZLES

(See page FU-3)

1. INSTALL INJECTION NOZZLES

(a) Place new six gaskets and the sixnozzle seats in the cylinder head.

(b) Using SST, install and torque the six nozzles.

SST 09268-64010

Torque: 700 kg-cm (51 ft-lb, 69 N·m)

2. INSTALL NOZZLE LEAKAGE PIPE

(a) Install new six gaskets and the leakage pipe with the six nuts. Torque the nuts.

Torque: 500 kg-cm (36 ft-lb, 49 N·m)

(b) Connect the fuel hose to the leakage pipe.

3. INSTALL INJECTION PIPES

(a) Place the five lower clamps in position on the intake manifold.

(b) Install the six injection pipes. Torque the union nuts.

Torque: 300 kg-cm (22 ft-lb, 29 N·m)

(c) Secure the injection pipes with the five upper clamps and nuts.

4. START ENGINE AND CHECK FOR LEAKS

INJECTION NOZZLES [12H-T]

REMOVAL AND TEST OF INJECTION NOZZLES

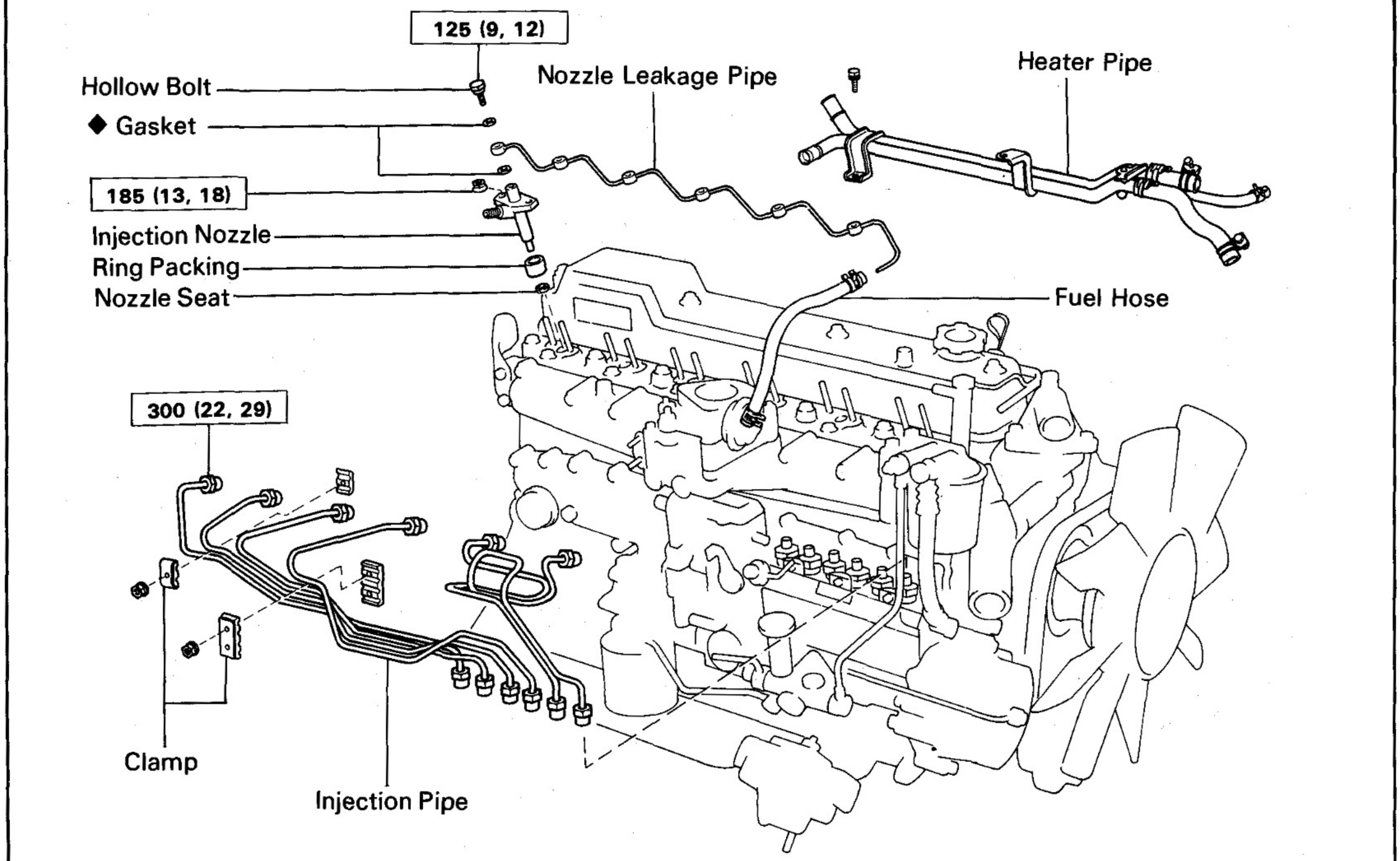

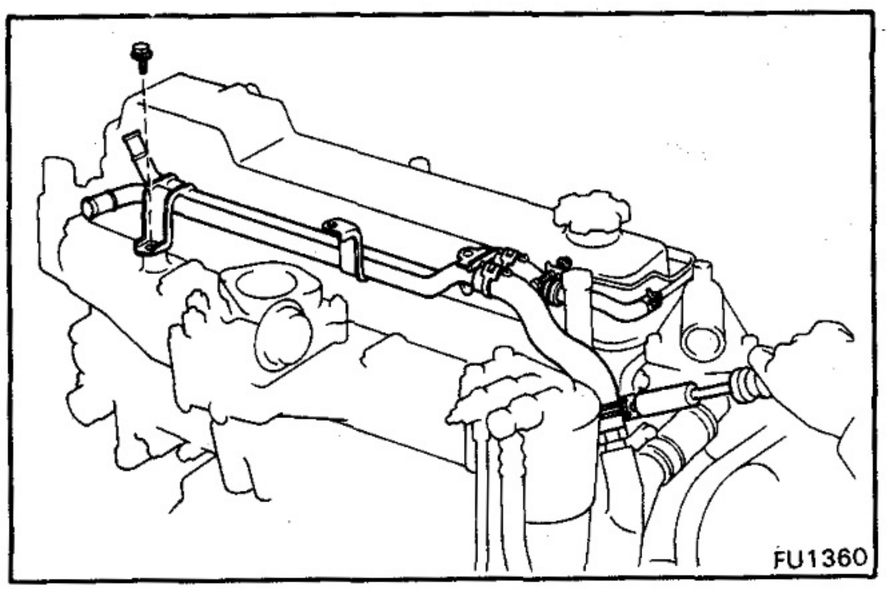

1. REMOVE INTAKE AIR CONNECTOR AND INTAKE PIPE (See steps 1 to 5 on page EM-40)

2. REMOVE HEATER PIPES

(a) Remove the bolt.

(b) Disconnect the three hoses, and remove the heater pipes together with the three hoses.

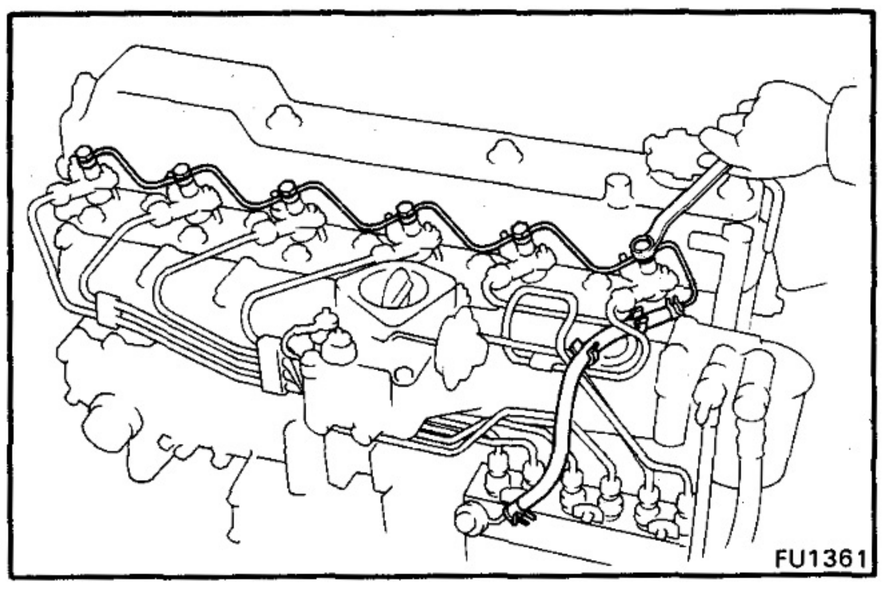

3. REMOVE NOZZLE LEAKAGE PIPE

(a) Remove the fuel hose.

(b) Remove the six hollow bolts, leakage pipe and twelve gaskets together with the fuel hose.

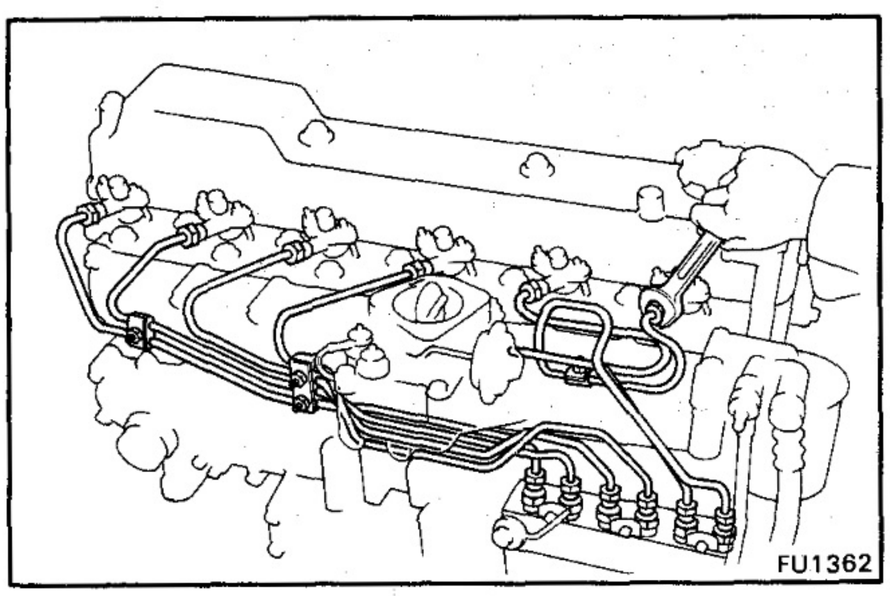

4. REMOVE INJECTION PIPES

(a) Loosen the union nuts of the six injection pipes.

(b) Remove the four nuts, six injection pipes and clamps.

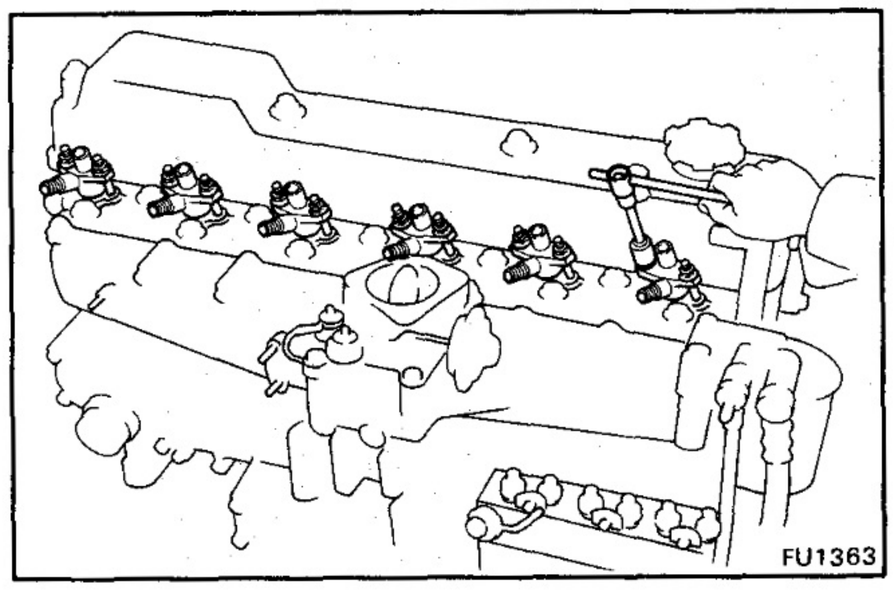

5. REMOVE INJECTION NOZZLES

Remove the two bolts, nozzle, ring packing and seat. Remove the six nozzles.

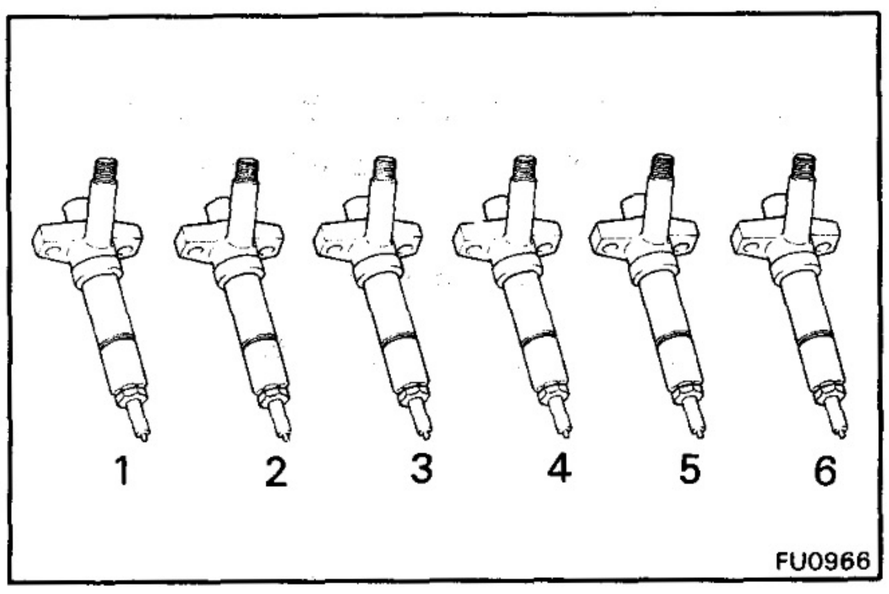

NOTE: Arrange the nozzles in correct order.

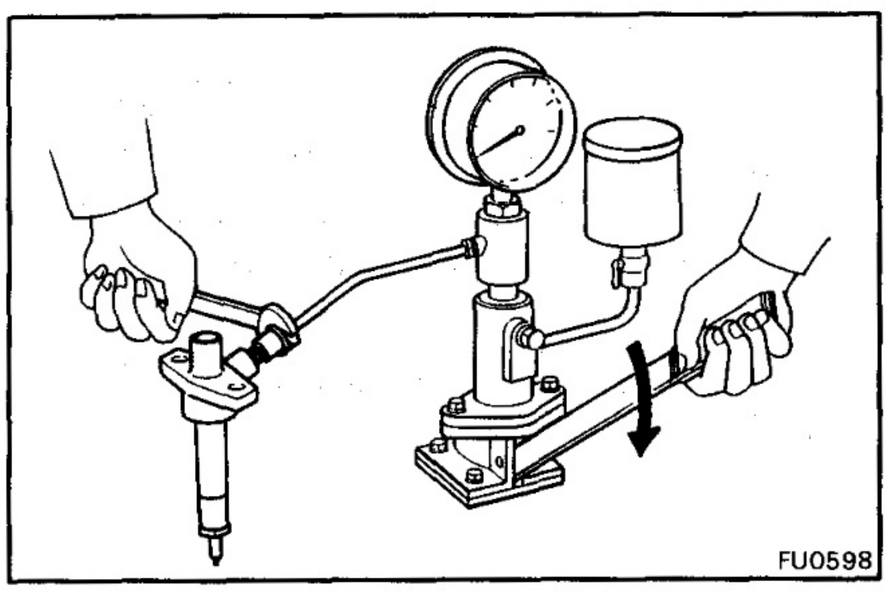

6. INJECTION PRESSURE TEST

(a) Install the nozzle to an injection nozzle hand tester and bleed the air from the union nut.

WARNING: Do not place your finger over the nozzle injection hole.

(b) Pump the tester handle a few times as fast as possible by hand to discharge the carbon from the injection hole.

(c) Pump the tester handle slowly and observe the pressure gauge.

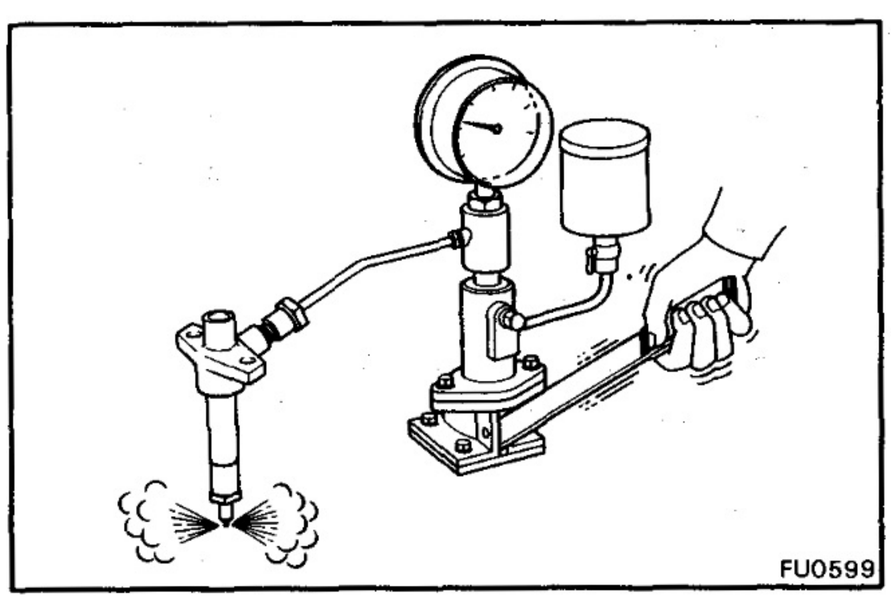

(d) Read the pressure gauge when the injection pressure just begins to drop.

Opening pressure:

Reused nozzle	**180 – 210 kg/cm² (2,560 – 2,987 psi) (17,652 – 20,594 kPa)**
New nozzle	**200 – 210 kg/cm² (2,845 – 2,987 psi) (19,613 – 20,594 kPa)**

NOTE: Proper nozzle operation can be determined by a swishing sound.

If the opening pressure is not within specification, disassemble the nozzle and change the adjusting shim on the top of the pressure spring.

Adjusted opening pressure: 180 – 210 kg/cm² (2,560 – 2,987 psi) (17,652 – 20,594 kPa)

Adjusting shim thickness mm (in.)			
0.700	(0.0276)	1.250	(0.0492)
0.750	(0.0295)	1.275	(0.0502)
0.800	(0.0315)	1.300	(0.0512)
0.850	(0.0335)	1.325	(0.0522)
0.900	(0.0354)	1.350	(0.0531)
0.950	(0.0374)	1.375	(0.0541)
0.975	(0.0384)	1.400	(0.0551)
1.000	(0.0394)	1.425	(0.0561)
1.025	(0.0404)	1.450	(0.0571)
1.050	(0.0413)	1.475	(0.0581)
1.075	(0.0423)	1.500	(0.0591)
1.100	(0.0433)	1.550	(0.0610)
1.125	(0.0443)	1.600	(0.0630)
1.150	(0.0453)	1.650	(0.0650)
1.175	(0.0463)	1.700	(0.0669)
1.200	(0.0472)	1.750	(0.0689)
1.225	(0.0482)	1.800	(0.0709)

NOTE:

- Varying the adjusting shim thickness by 0.025 mm (0.0010 in.) changes the injection pressure by about 3.8 kg/cm² (54 psi, 373 kPa).
- Only one adjusting shim should be used.

(e) There should be no dripping after injection.

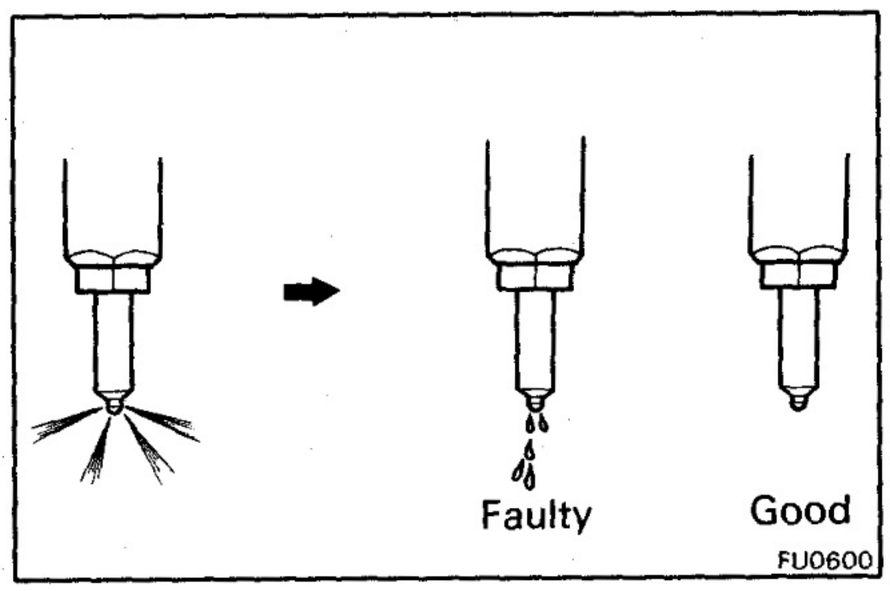

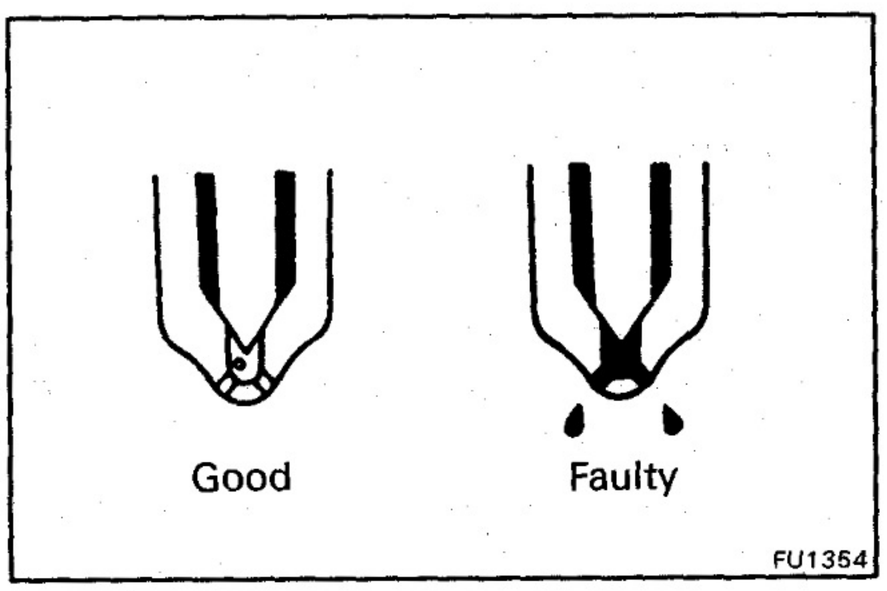

7. LEAKAGE TEST

While maintaining pressure at about 10.0 – 20.0 kg/cm² (142 – 284 psi, 981 – 1,961 kPa) below opening pressure (adjust by tester handle), check that there is no dripping for 10 seconds from the injection hole or around the retaining nut.

If the nozzle drips within 10 seconds, replace it or clean and overhaul the nozzle assembly.

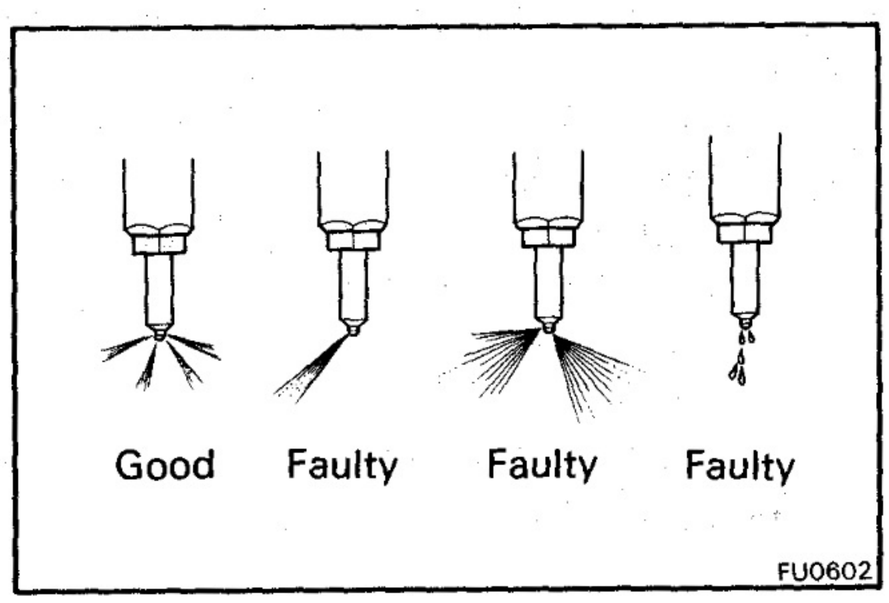

8. SPRAY PATTERN TEST

(a) The injection nozzle should shudder at a pumping speed between 15 – 60 times (old nozzle) or 30 – 60 times (new nozzle) per minute.

(b) Check the spray pattern during shuddering.

If the spray pattern is not correct during shuddering, the nozzle must be cleaned or replaced.

COMPONENTS

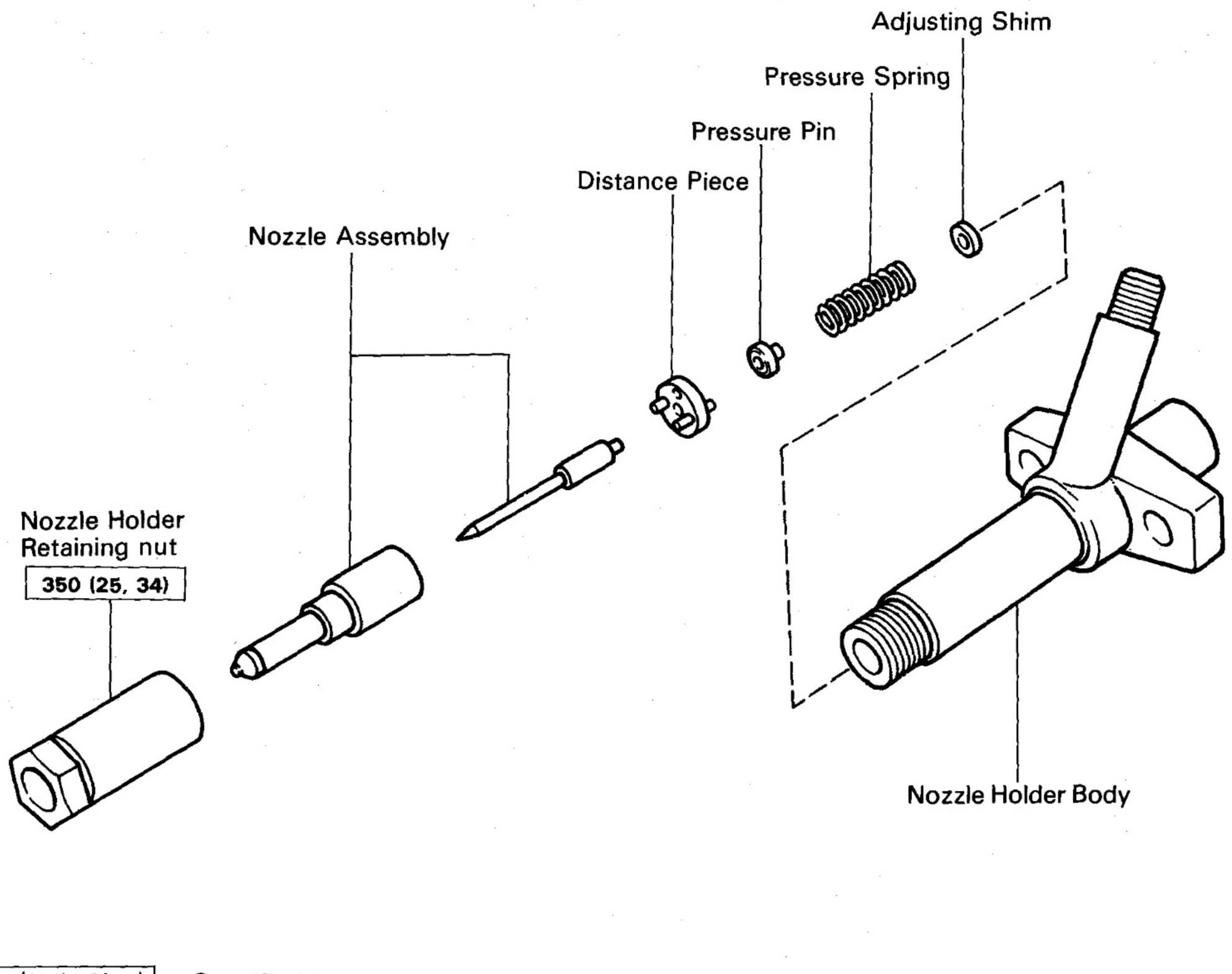

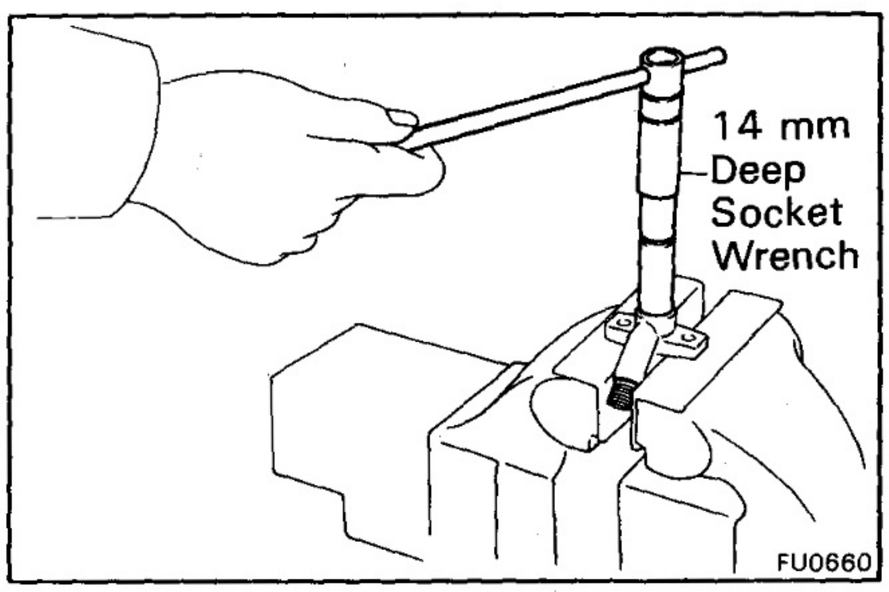

DISASSEMBLY, CLEANING AND TEST OF INJECTION NOZZLE

1. DISASSEMBLE INJECTION NOZZLE

(a) Using a 14 mm deep socket wrench, unscrew the nozzle holder retaining nut.

CAUTION: When disassembling the nozzle, be careful not to drop the inner parts.

(b) Remove the nozzle assembly, distance piece, pressure pin, pressure spring and adjusting shim.

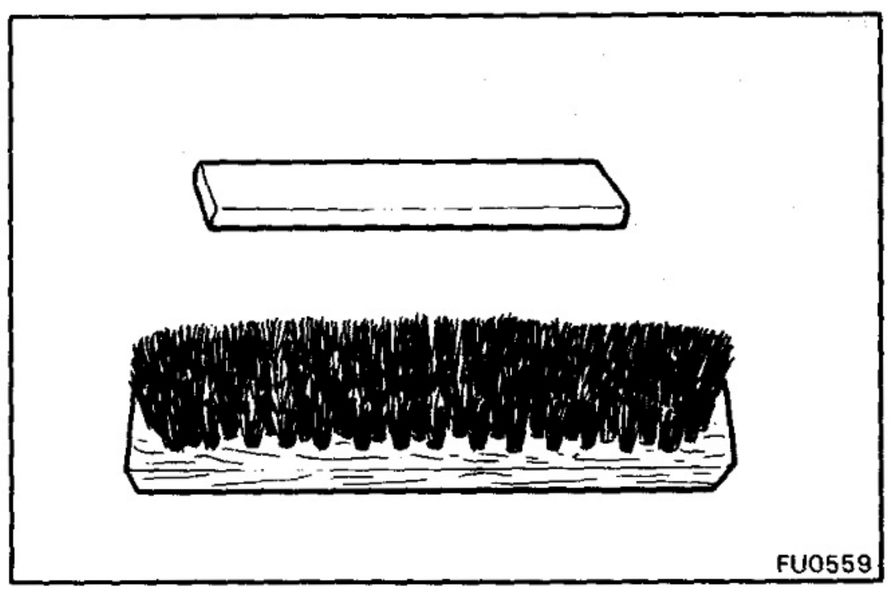

2. NOZZLE CLEANING

(a) To wash the nozzles, use a wooden stick and brass brush. Wash in clean diesel fuel.

NOTE: Do not touch the nozzle mating surfaces with your fingers.

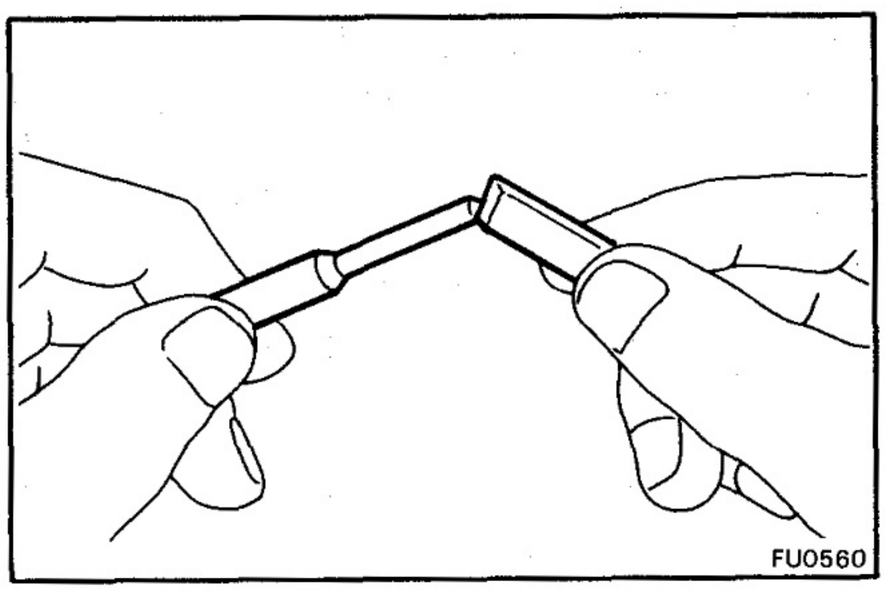

(b) Using a wooden stick, remove the carbon adhering to the nozzle needle tip.

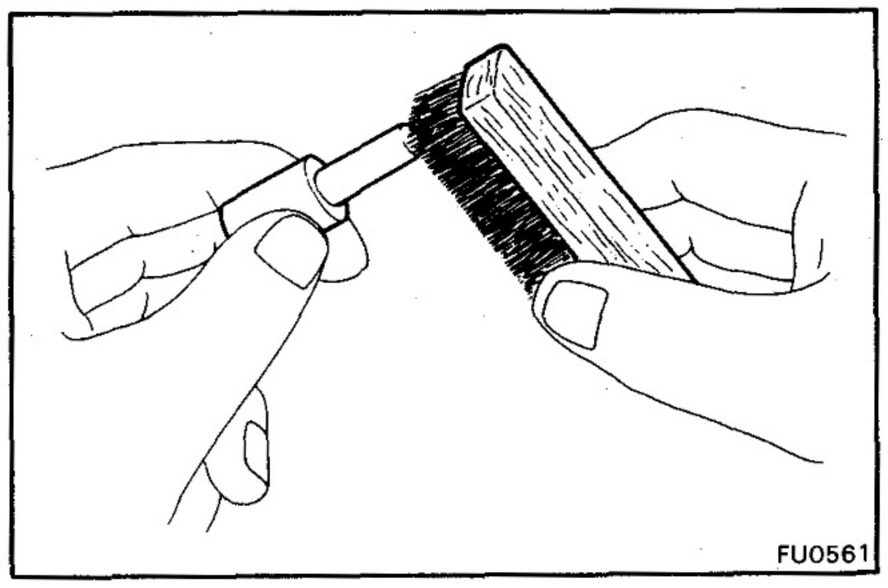

(c) Using a brass brush, remove the carbon from the exterior of the nozzle body.

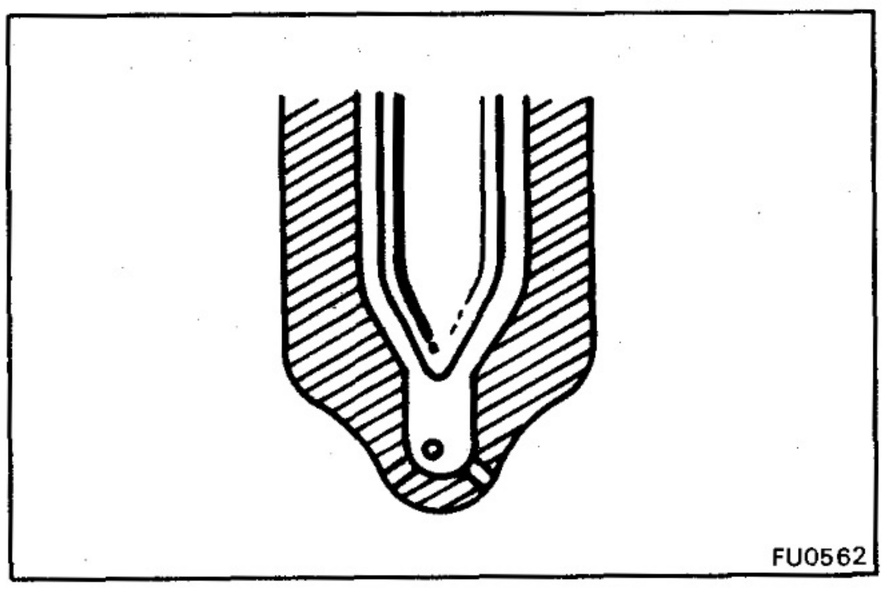

(d) Check the nozzle body for burns or corrosion.

(e) Check the nozzle needle tip for damage or corrosion.

If any of these conditions are present, replace the nozzle assembly.

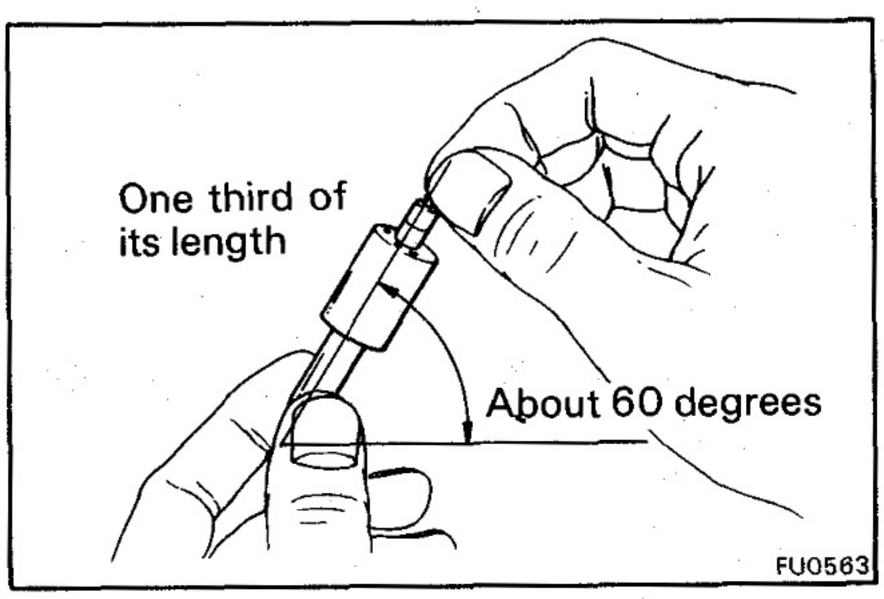

3. SINKING TEST

(a) Wash the nozzle in clean diesel fuel.

NOTE: Do not touch the nozzle mating surfaces with your fingers.

(b) Tilt the nozzle body about 60 degrees and pull the needle out about one third of its length.

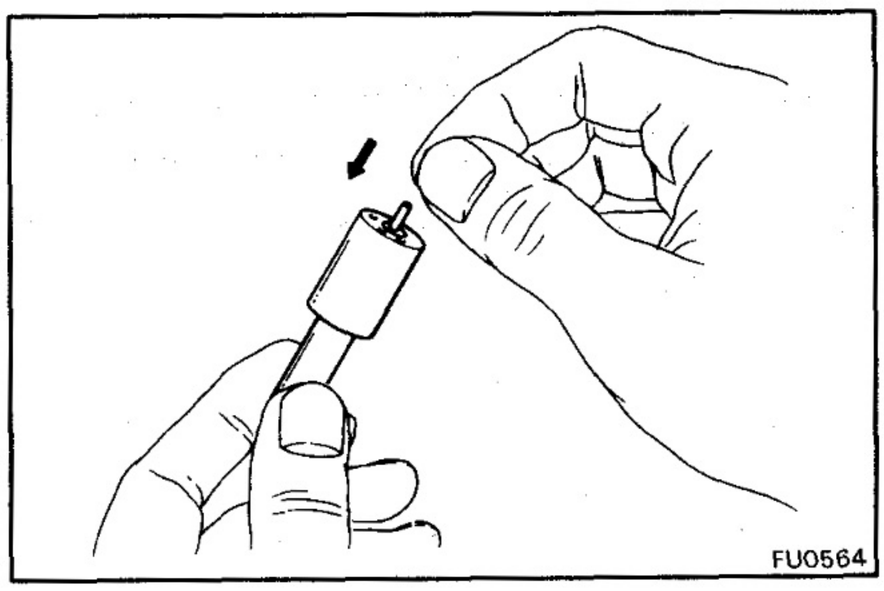

(c) When released, the needle should sink down into the body vent smoothly by its own weight.

(d) Repeat this test, rotating the needle slightly each time.

If the needle does not sink freely, replace the nozzle assembly.

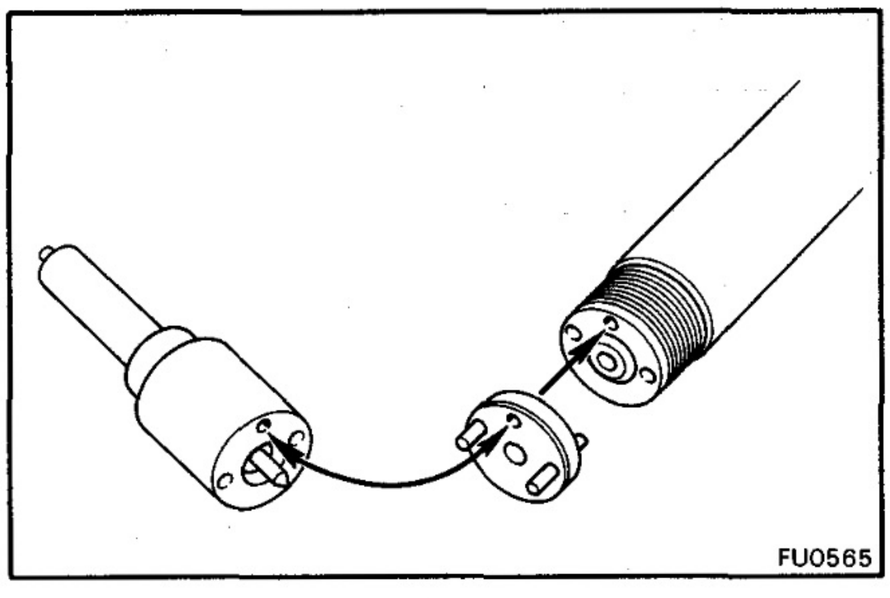

ASSEMBLY OF INJECTION NOZZLES

(See page FU-12)

1. ASSEMBLE INJECTION NOZZLES

(a) Assemble the nozzle holder body, adjusting shim, pressure spring, pressure pin, distance piece, the nozzle assembly and nozzle holder retaining nut, and finger tighten the nut.

NOTE: Align the holes of the nozzle body, distance piece and nozzle holder body.

(b) Using a 14 mm deep socket wrench, torque the retaining nut.

Torque: 350 kg-cm (25 ft-lb, 34 N·m)

2. PERFORM PRESSURE AND SPRAY PATTERN TEST

(See steps 6 to 8 on pages FU-10 and 11)

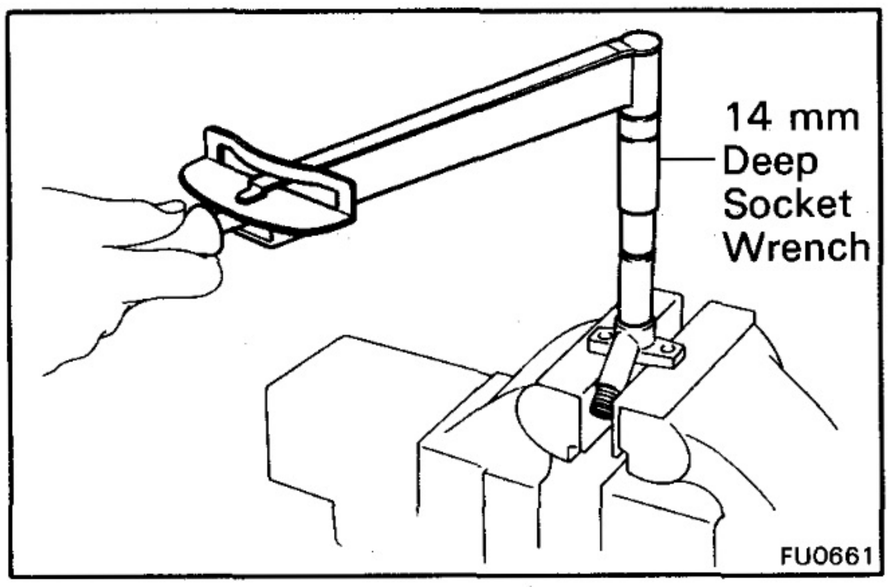

INSTALLATION OF INJECTION NOZZLES

(See page FU-9)

1. INSTALL INJECTION NOZZLES

Install the nozzle seat, ring packing and injection nozzle with the two nuts. Install the six injection nozzles. Torque the nuts.

Torque: 185 kg-cm (13 ft-lb, 18 N·m)

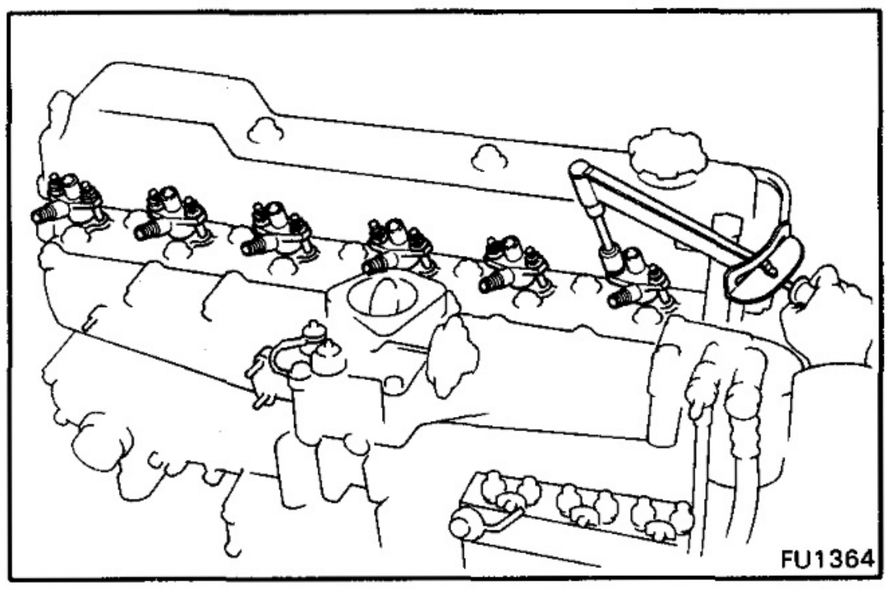

2. INSTALL INJECTION PIPES

(a) Place the three lower clamps in position on the intake manifold.

(b) Install the six injection pipes. Torque the union nuts.

Torque: 300 kg-cm (22 ft-lb, 29 N·m)

(c) Secure the injection pipes with the three upper clamps and nuts.

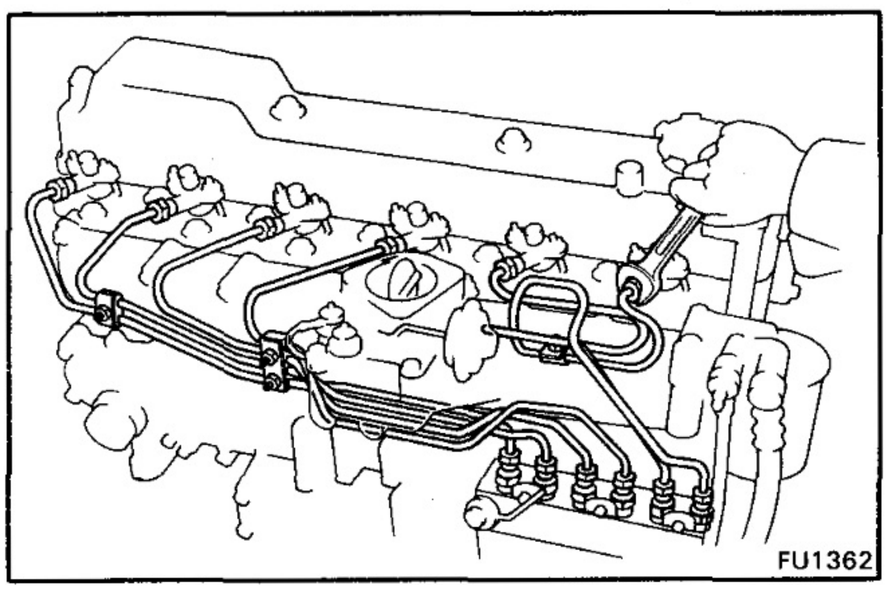

3. INSTALL NOZZLE LEAKAGE PIPE

(a) Install new twelve gaskets and the leakage pipe with the six hollow bolts. Torque the hollow bolts.

Torque: 125 kg-cm (9 ft-lb, 12 N·m)

(b) Install the fuel hose.

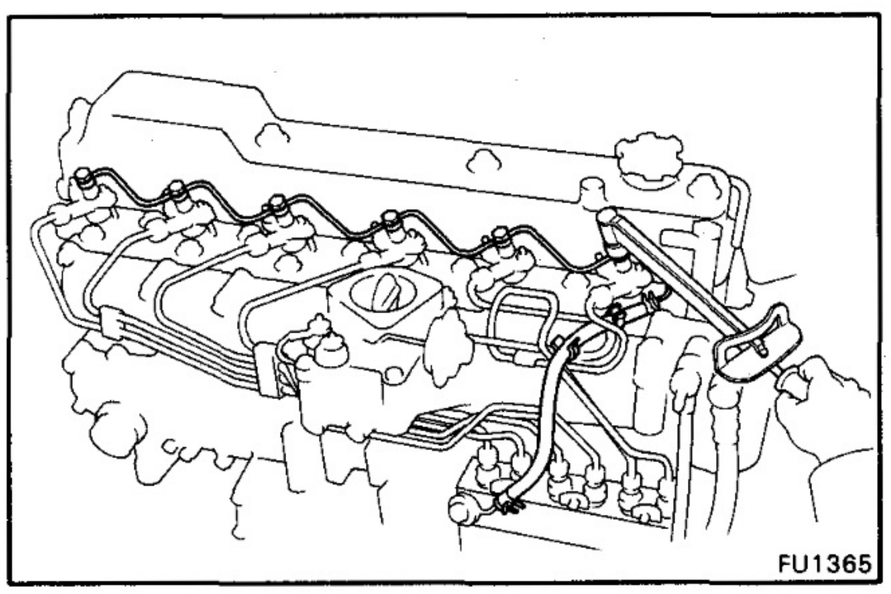

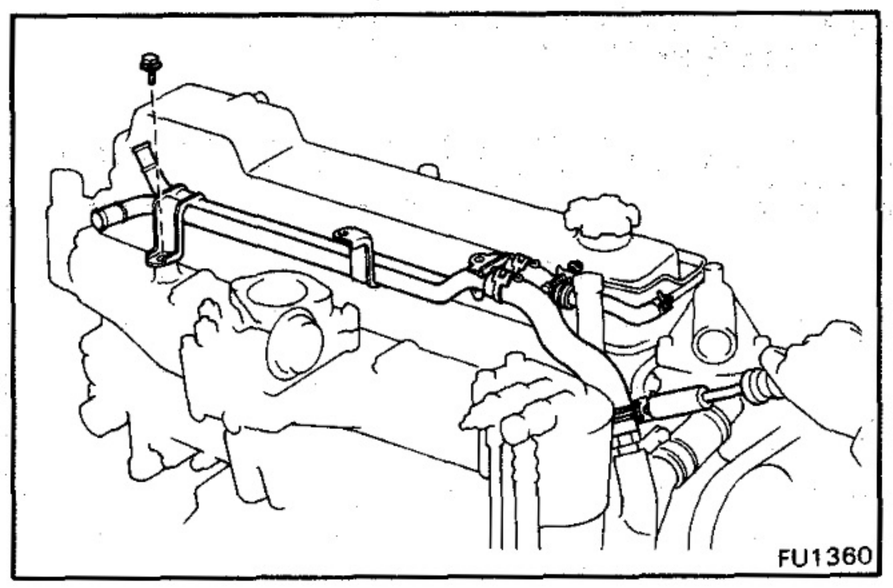

4. INSTALL HEATER PIPES

Connect the three hoses, and install the heater pipes with the bolt.

Torque: 185 kg-cm (13 ft-lb, 18 N·m)

5. INSTALL INTAKE PIPE AND INTAKE AIR CONNECTOR
(See steps 9 to 13 on pages EM-46 and 46)

6. START ENGINE AND CHECK FOR LEAKS

FUEL FEED PUMP

REMOVAL AND TEST OF FUEL FEED PUMP

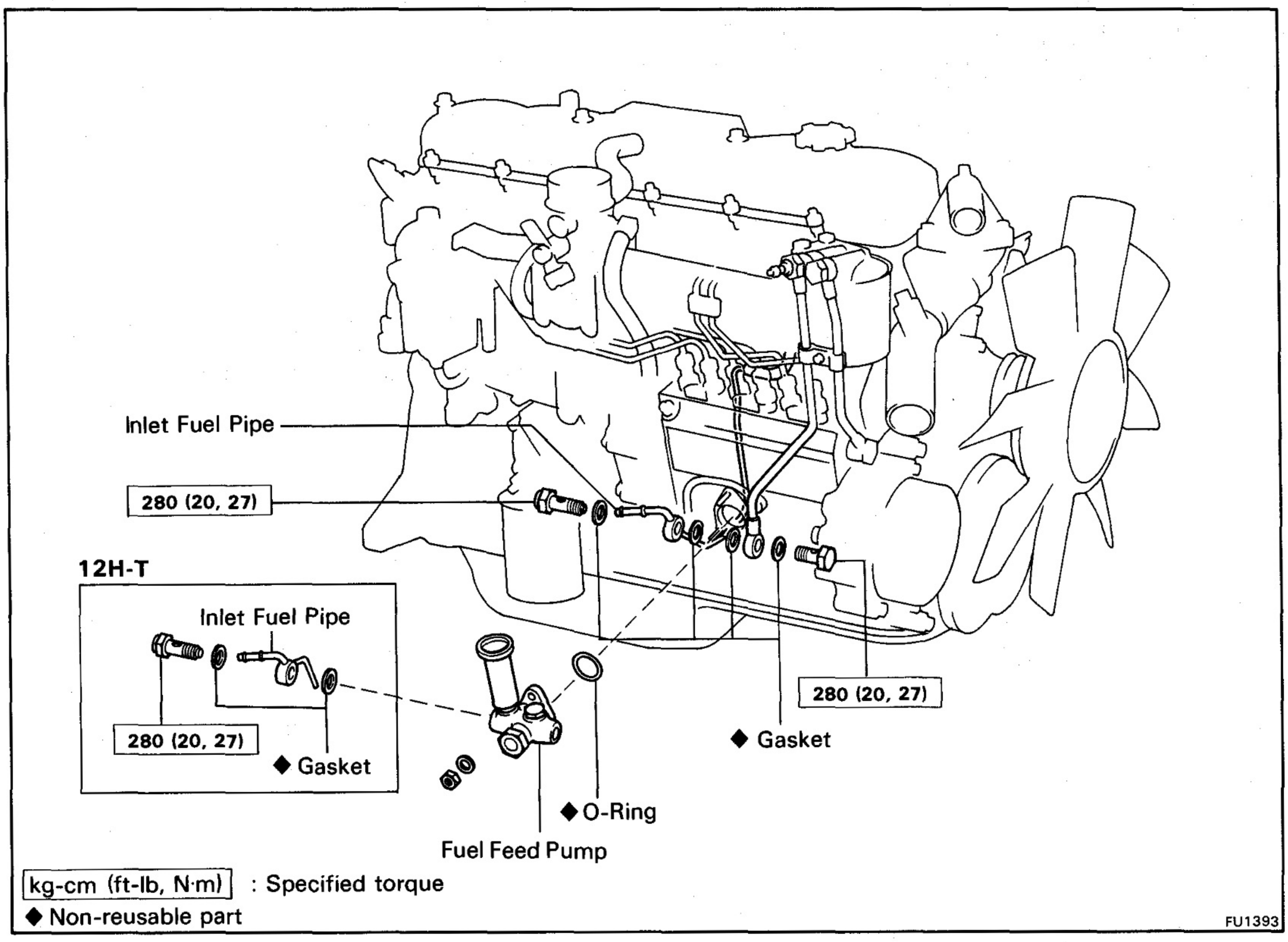

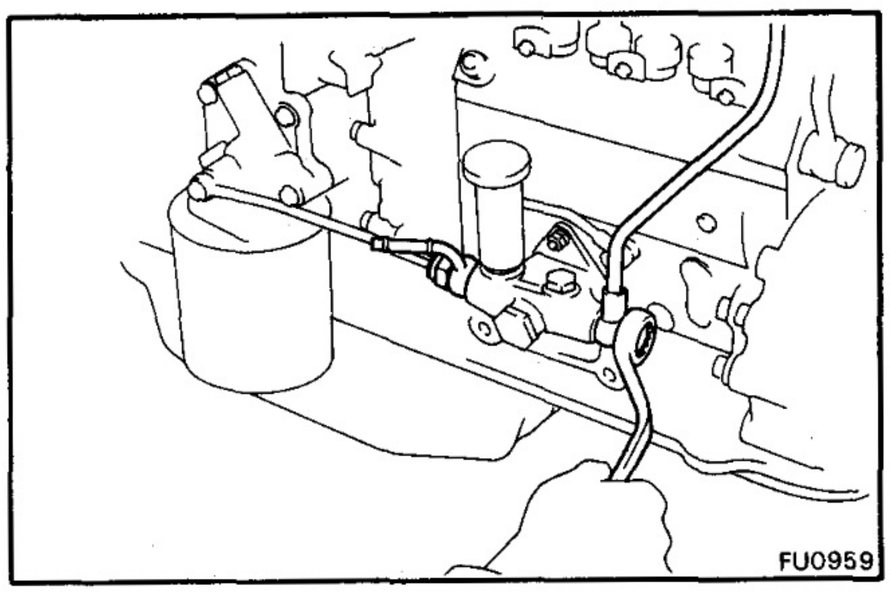

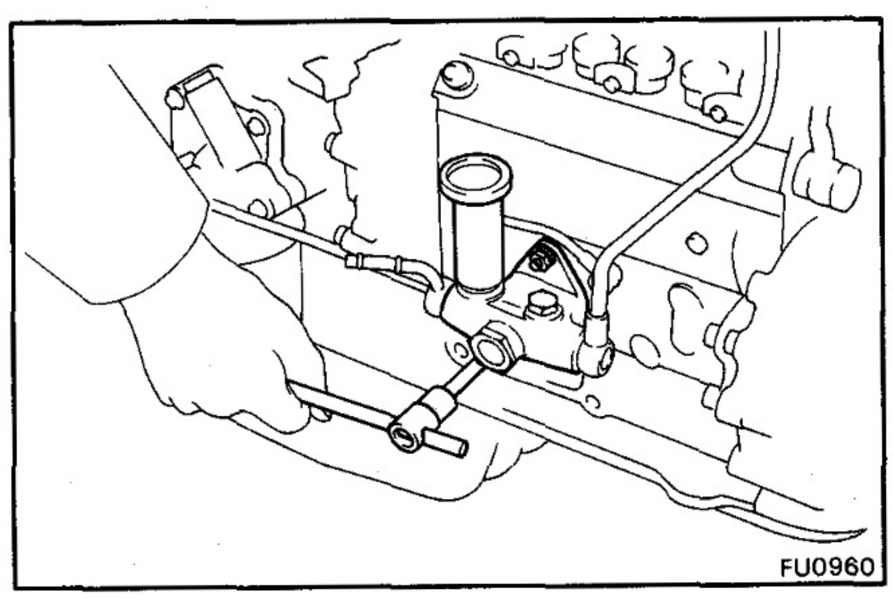

1. DISCONNECT INLET AND OUTLET PIPES FROM FEED PUMP

[2H]

Remove the two union bolt and four gasket, and disconnect the fuel pipes.

[12H-T]

(a) Remove the union bolt, two gaskets and inlet fuel pipe.

(b) Remove the union bolt and two gasket, and disconnect the outlet fuel pipe.

2. REMOVE FEED PUMP FROM INJECTION PUMP

Remove the three nuts, spring washers and feed pump.

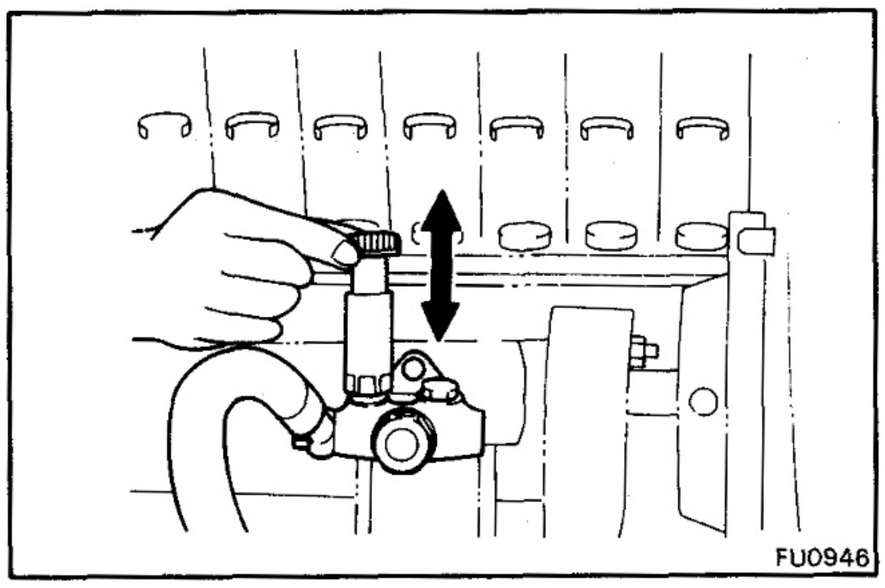
FU0946

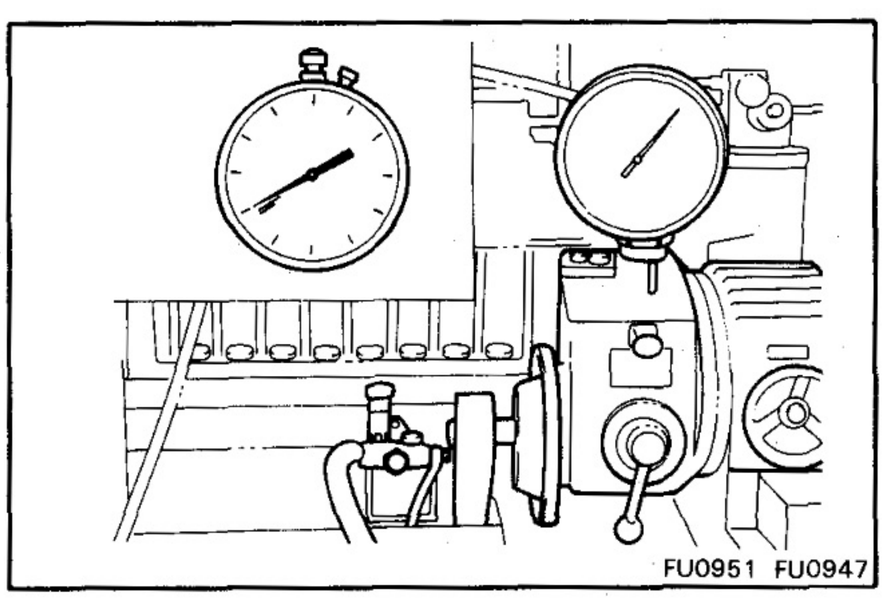
FU0951 FU0947

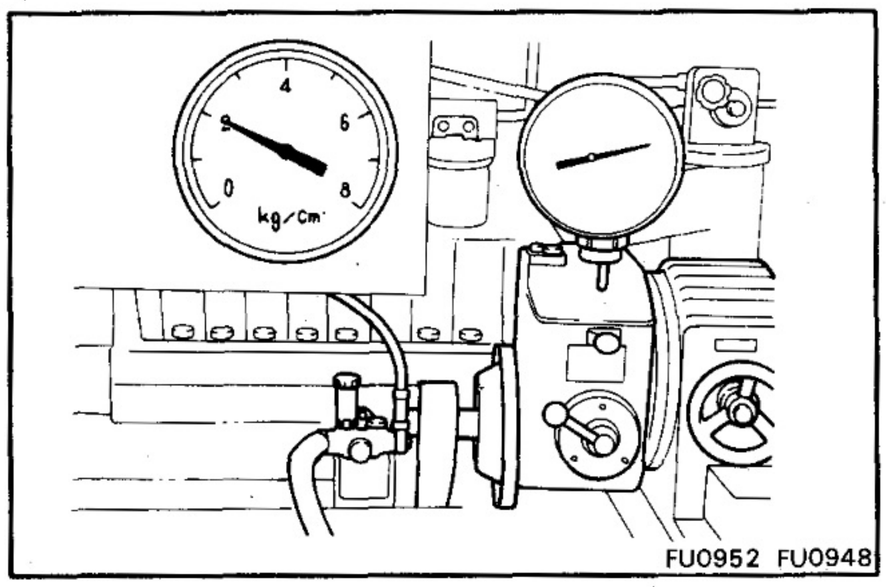

FU0952 FU0948

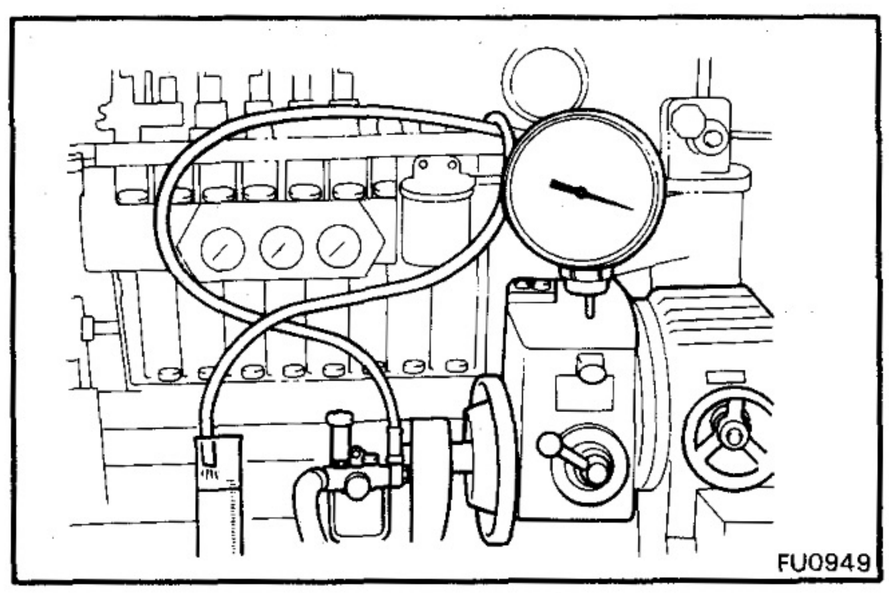
FU0949

3. SUCTION TEST

(a) Mount the feed pump on the pump tester.

(b) Connect a suction pipe with the following specifications:

Pipe inner diameter: 8 mm (0.31 in.)
Pipe length: 2 m (78.7 in.)
Suction height: 1 m (39.4 in.)

(c) Operate the priming pump 60 strokes per minute and count the number of strokes before fuel is discharged.

Fuel must discharge within 25 strokes

(d) Drain any fuel from the feed pump.

(e) Operate the feed pump at 150 rpm and check the amount of time until fuel is discharged.

Fuel must discharge within 40 seconds

4. DISCHARGE TEST

(a) Install the pressure gauge to the feed pump discharge side.

(b) Operate the feed pump at 600 rpm and check the discharge pressure.

Discharge pressure:
1.8 – 2.2 kg/cm² (26 – 31 psi, 177 – 216 kPa)

(c) Install a 1.54 mm (0.0606 in.) nozzle to the feed pump discharge side.

(d) Operate the feed pump at 1,000 rpm, and measure discharge volume.

Discharge volume:
900 cc/min (54.9 cu in./min.) or more

COMPONENTS

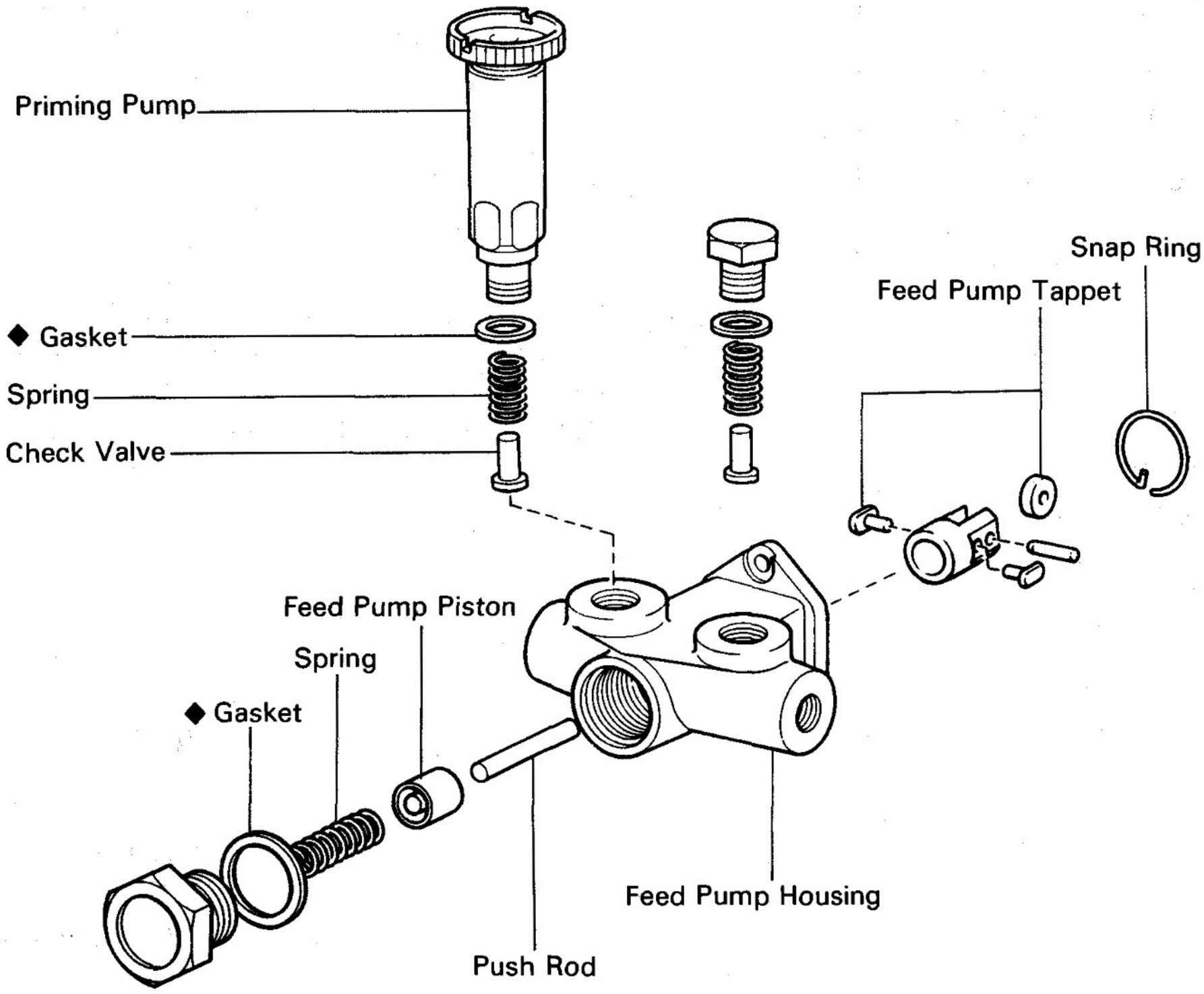

◆ Non-reusable part

FU0945

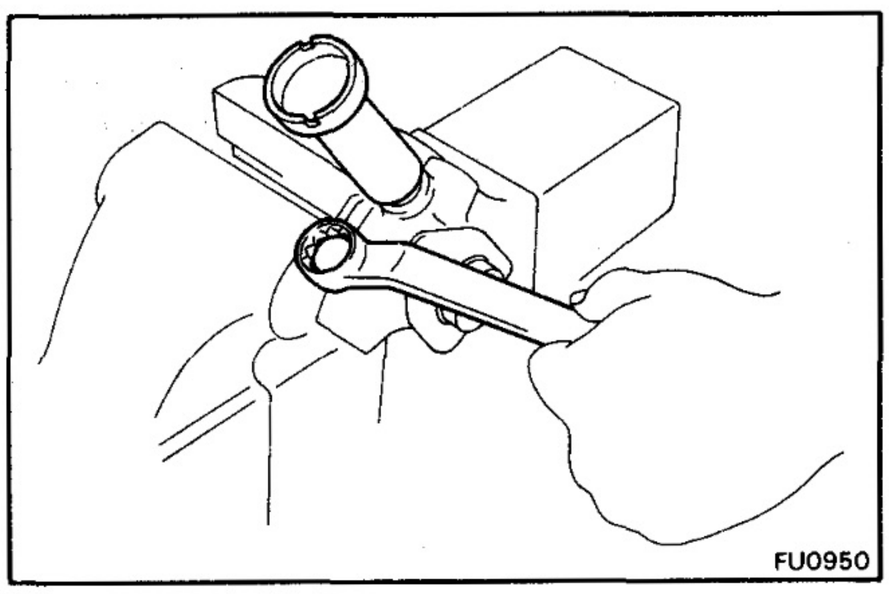

FU0950

DISASSEMBLY OF FUEL FEED PUMP

1. REMOVE PRIMING PUMP AND CHECK VALVES

(a) Remove the chamber plug, gasket, spring and check valve.

(b) Remove the priming pump, gasket, spring and check valve.

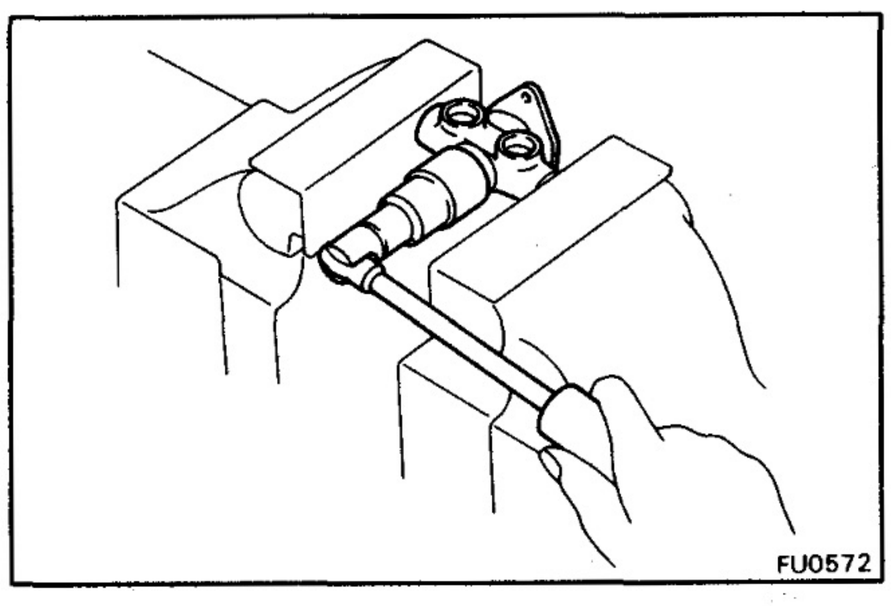

FU0572

2. REMOVE FEED PUMP PISTON

Remove the chamber plug, gasket, spring and piston.

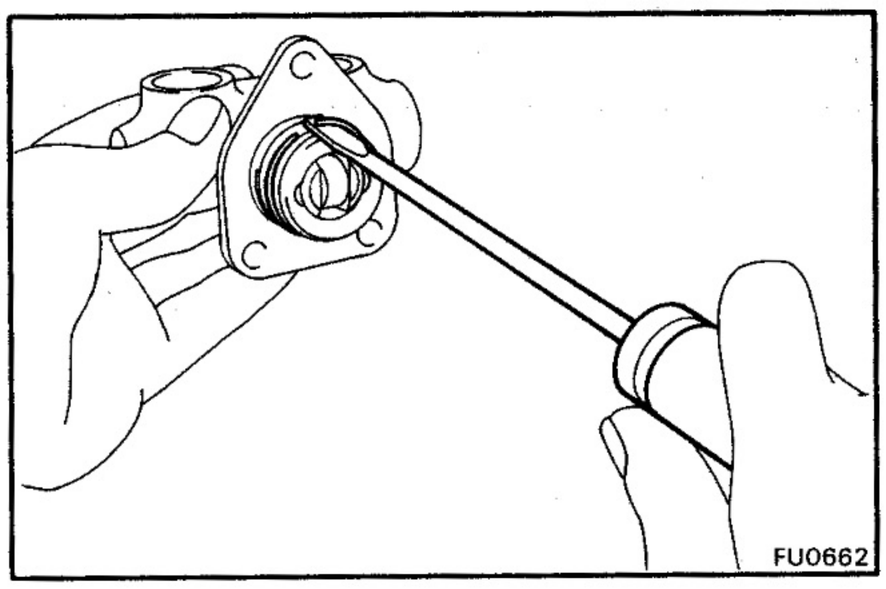

3. REMOVE FEED PUMP TAPPET

Remove the snap ring, and pull out the tappet.

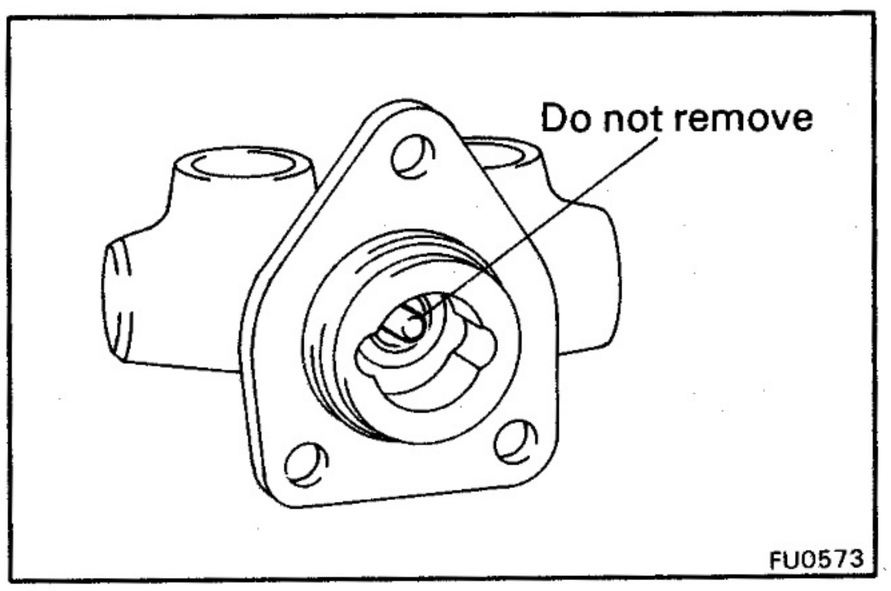

NOTE: Since the push rod is precisely fitted into the feed pump housing, do not remove the push rod unless necessary.

If removed, be sure to confirm assembly direction.

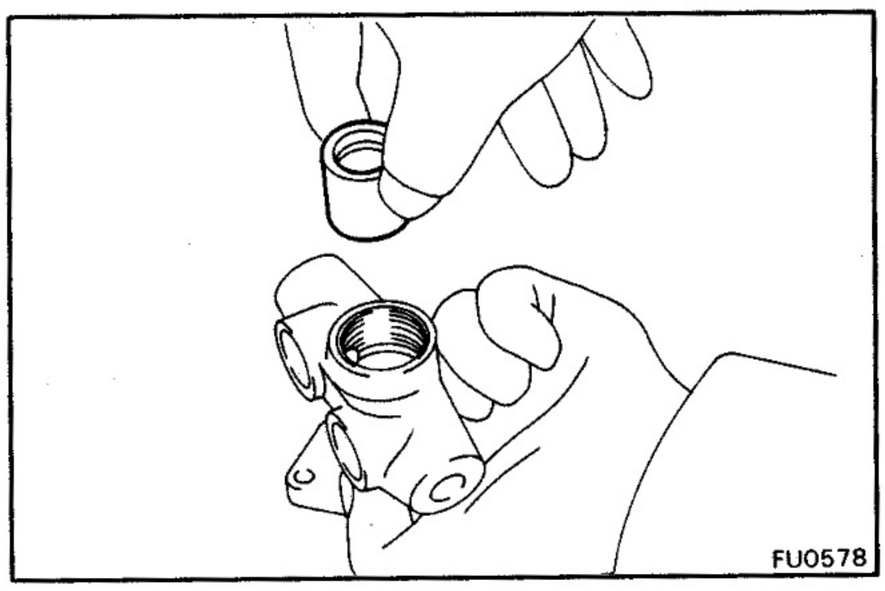

INSPECTION OF FUEL FEED PUMP

1. INSPECT FEED PUMP PISTON

Check that the piston smoothly falls into the piston hole by its own weight.

If abnormal, replace the piston. If necessary, replace the feed pump assembly.

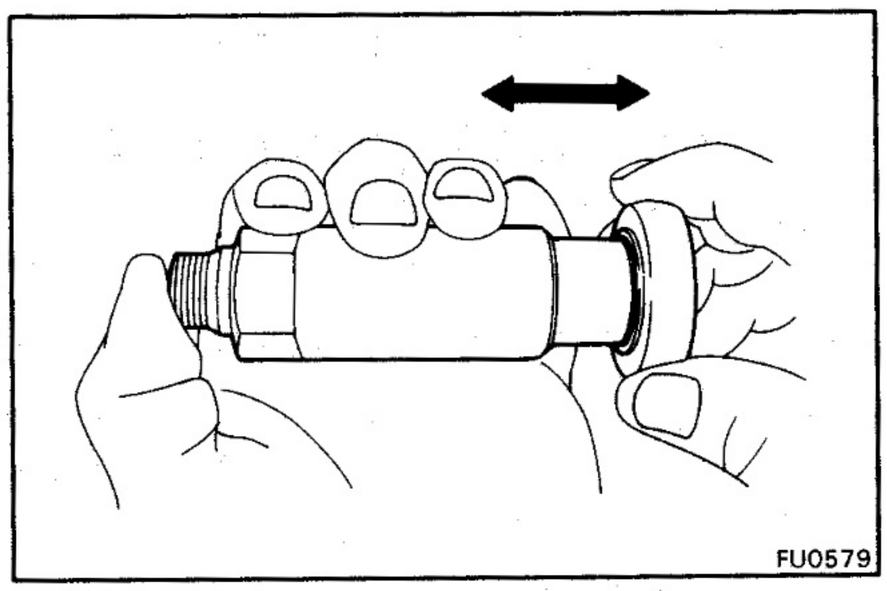

2. INSPECT PRIMING PUMP

Firmly block the priming pump inlet port with your finger and check that pressure and vacuum are created when the pump is operated.

If abnormal, replace the priming pump.

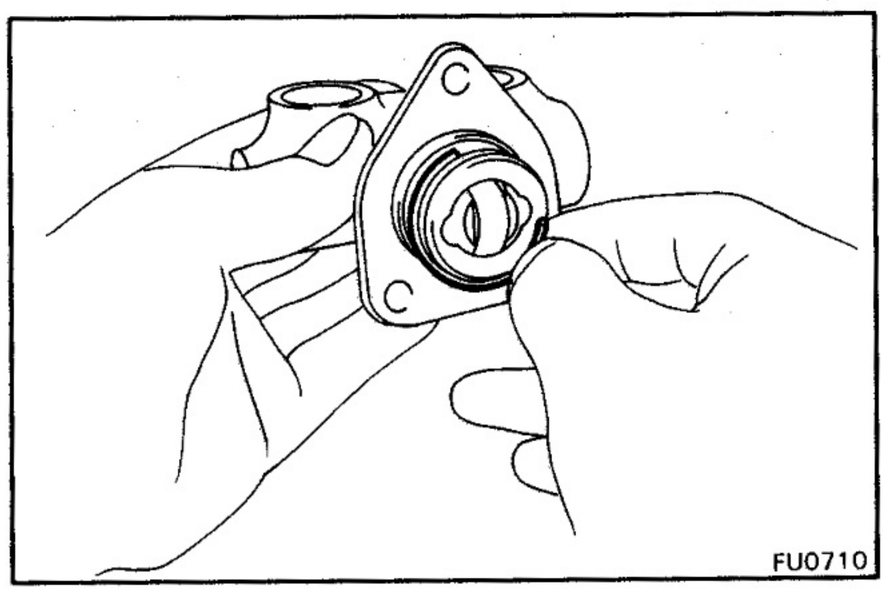

ASSEMBLY OF FUEL FEED PUMP

(See page FU-18)

1. INSTALL FEED PUMP TAPPET

Insert the tappet into the housing, and secure it with the snap ring.

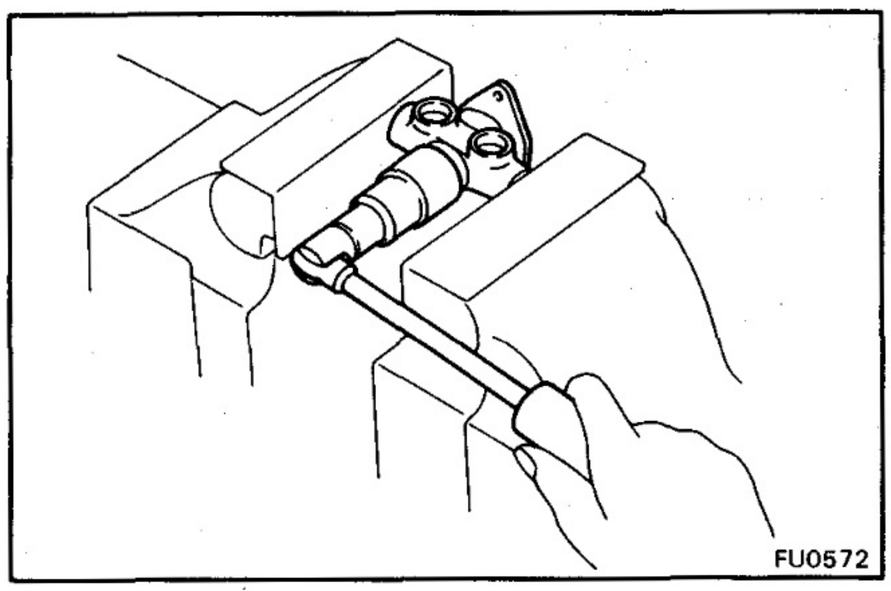

2. INSTALL FEED PUMP PISTON

Install the piston, spring, a new gasket and the chamber plug.

Torque: 1,500 kg-cm (109 ft-lb, 147 N·m)

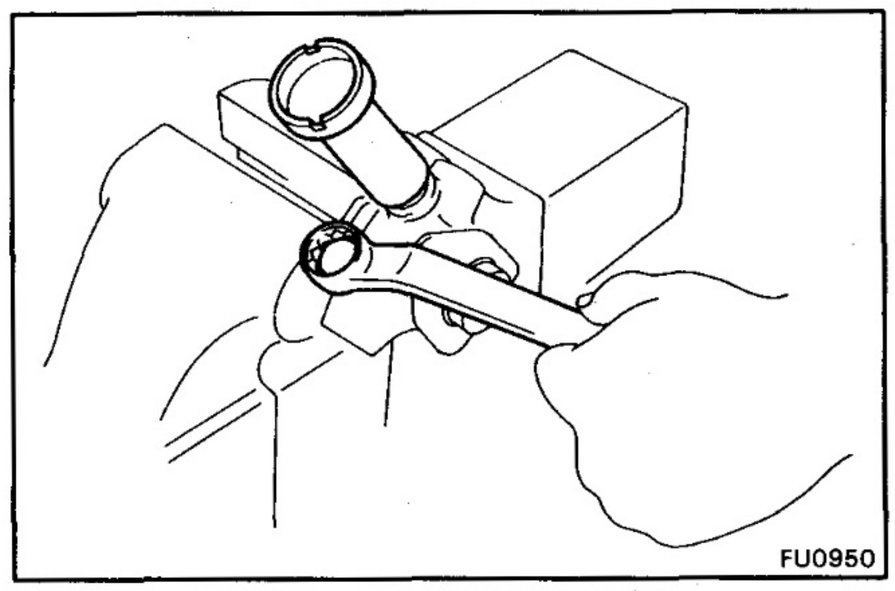

3. INSTALL PRIMING PUMP AND CHECK VALVES

(a) Install the check valve, spring, a new gasket and the priming pump.

Torque: 500 kg-cm (36 ft-lb, 49 N·m)

(b) Install the check valve, spring, a new gasket and the plug.

Torque: 500 kg-cm (36 ft-lb, 49 N·m)

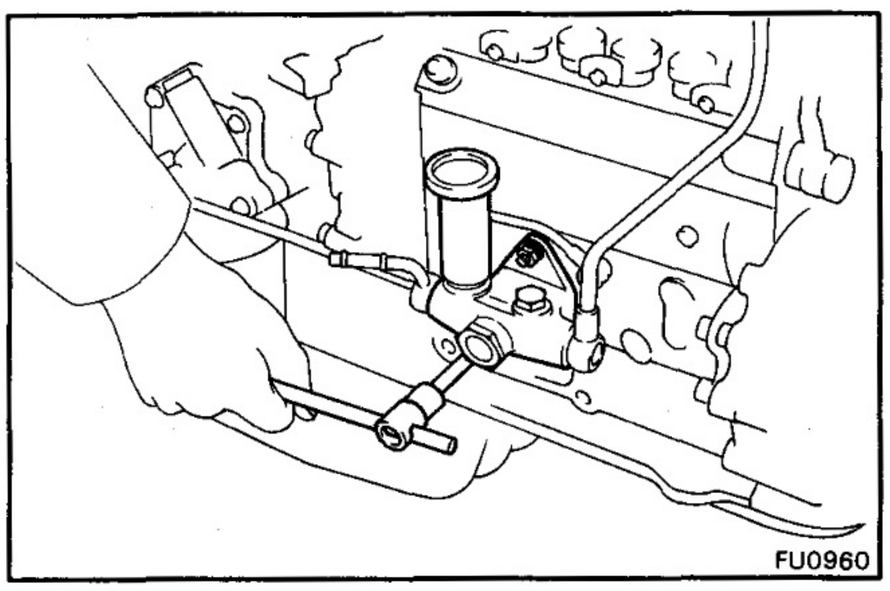

INSTALLATION OF FUEL FEED PUMP

(See page FU-16)

1. INSTALL FEED PUMP

(a) Place a new O-ring in position on the injection pump housing.

(b) Install the feed pump with the three spring washers and nuts.

Torque: 95 kg-cm (82 in.-lb, 9.3 N·m)

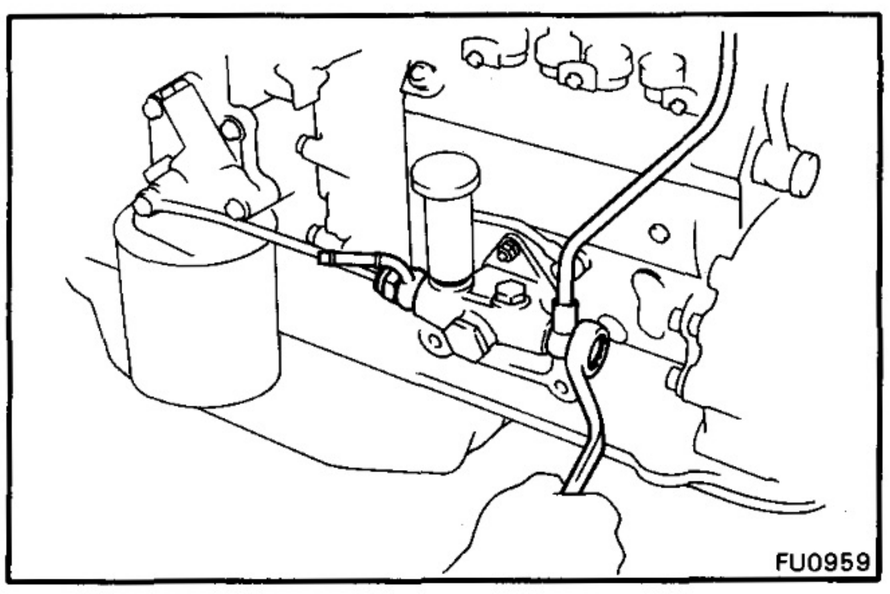

2. INSTALL INLET AND OUTLET FUEL PIPES

[2H]

Connect the fuel pipe with new two gaskets and the union bolt. Connect the two fuel pipes. Torque the union bolts.

Torque: 280 kg-cm (20 ft-lb, 27 N·m)

[12H-T]

Install the inlet fuel pipe with new two gaskets and the union bolt. Connect the outlet fuel pipe with new two gaskets and the union bolt. Torque the union bolts.

Torque: 280 kg-cm (20 ft-lb, 27 N·m)

3. BLEED FUEL FEED PUMP (See step 2 on page FU-2)

4. START ENGINE AND CHECK FOR FUEL LEAKS

AUTOMATIC TIMER

REMOVAL OF AUTOMATIC TIMER

2H

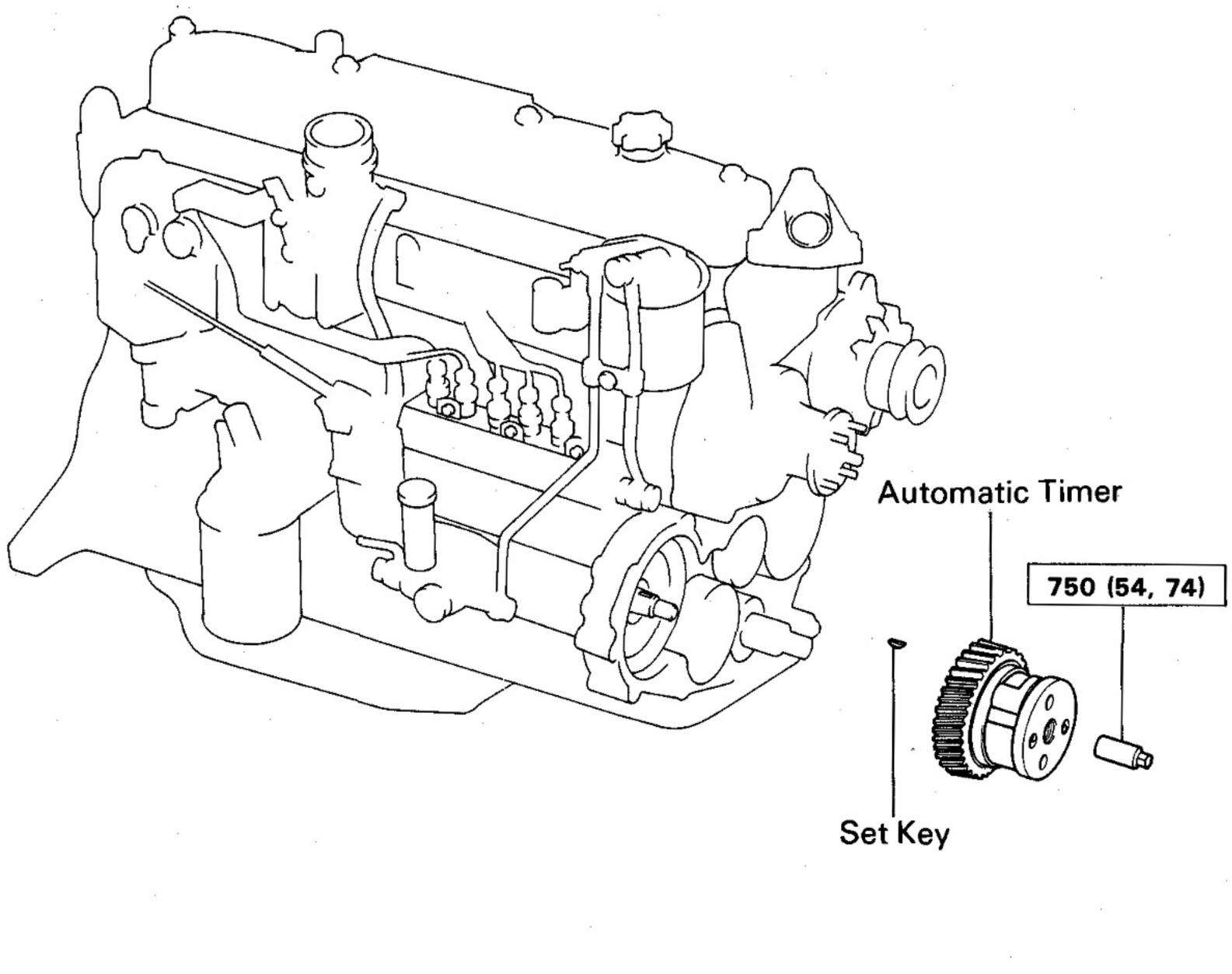

12H-T

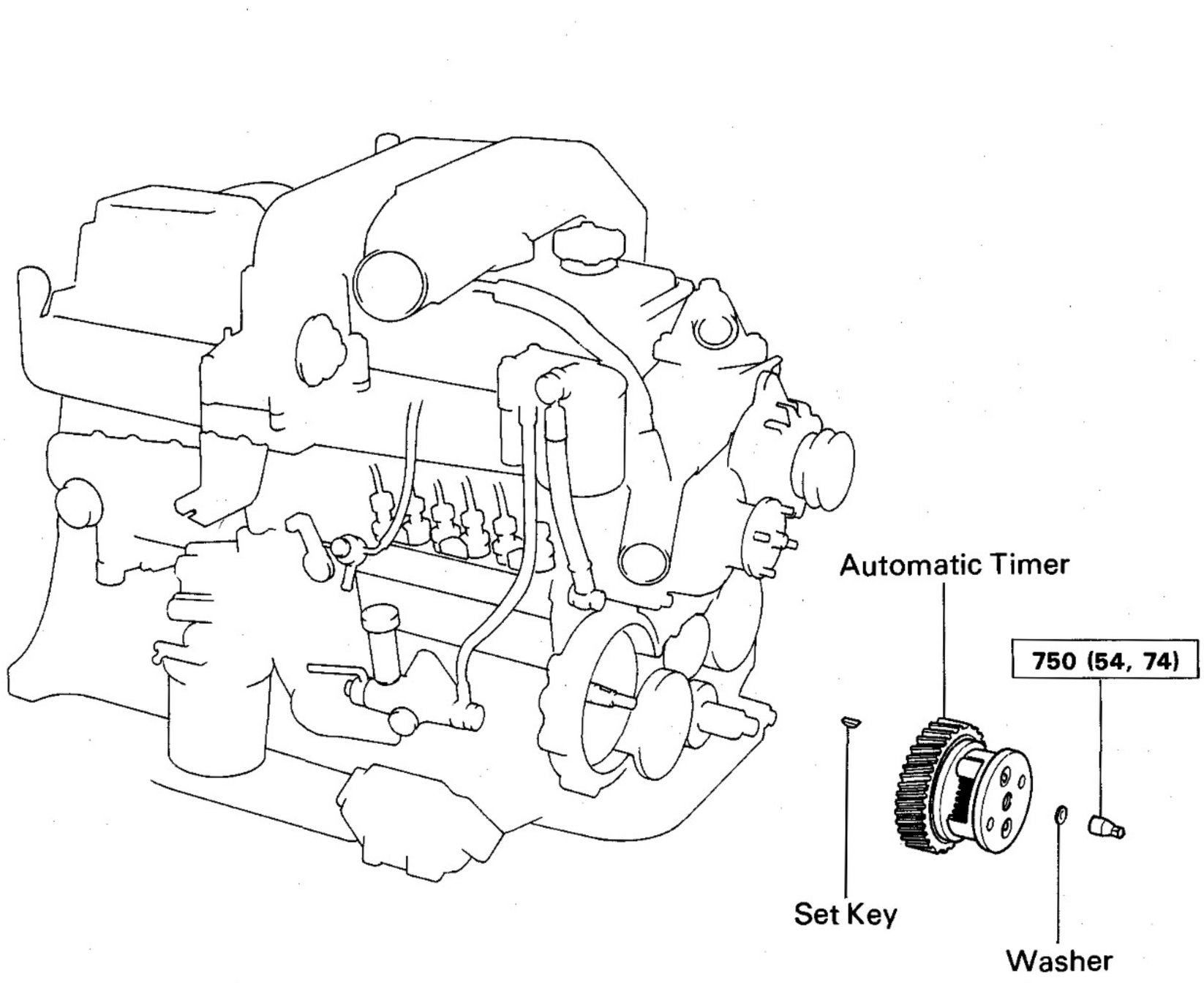

kg-cm (ft-lb, N·m) : Specified torque

FU1484
FU1490

1. **REMOVE DRIVE BELT**

2. **REMOVE FAN AND WATER PUMP PULLEY**
   (See page CO-5)

3. **REMOVE CRANKSHAFT PULLEY AND TIMING GEAR COVER**
   (See steps 7 to 9 on pages EM-79 to 80)

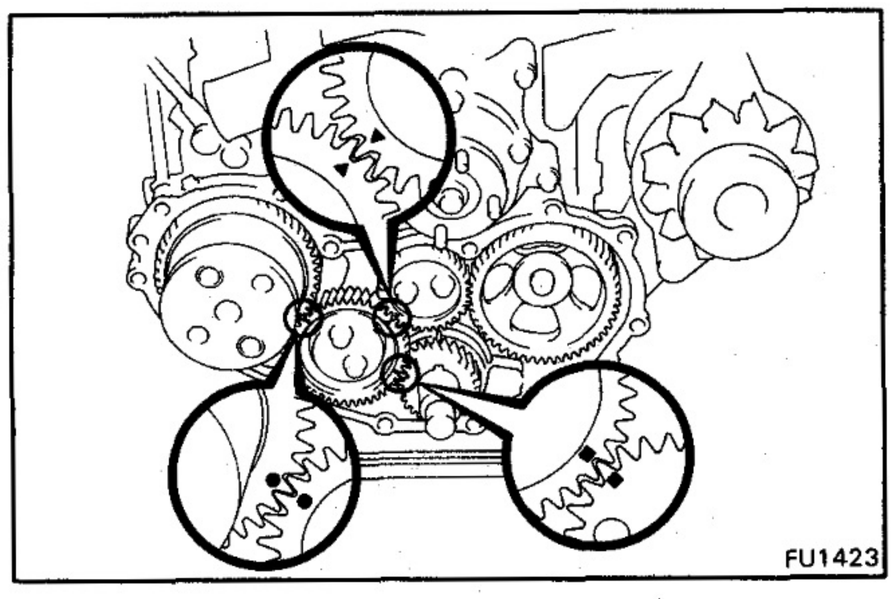

4. **REMOVE AUTOMATIC TIMER**

(a) Place the matchmarks on each gear to ensure correct assembly.

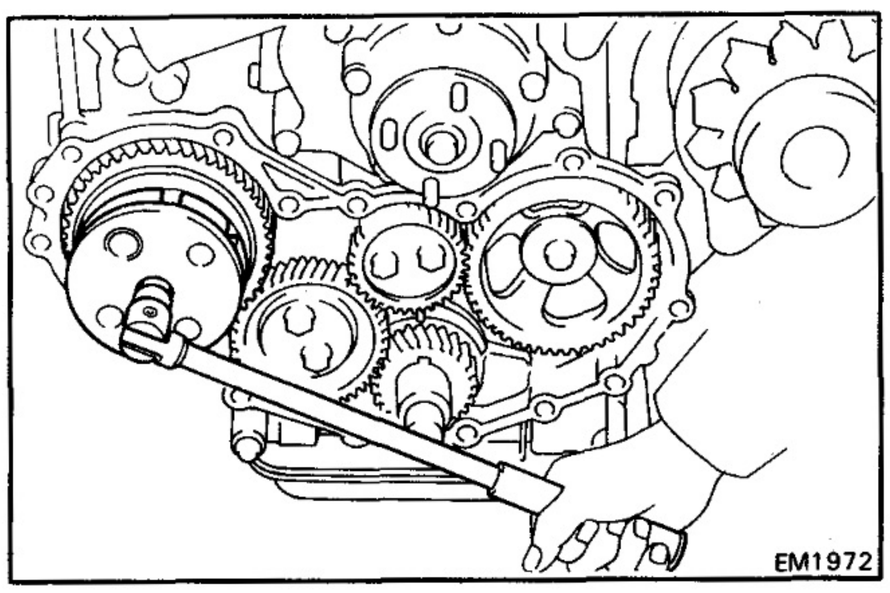

(b) Remove the round nut and washer (12H-T).

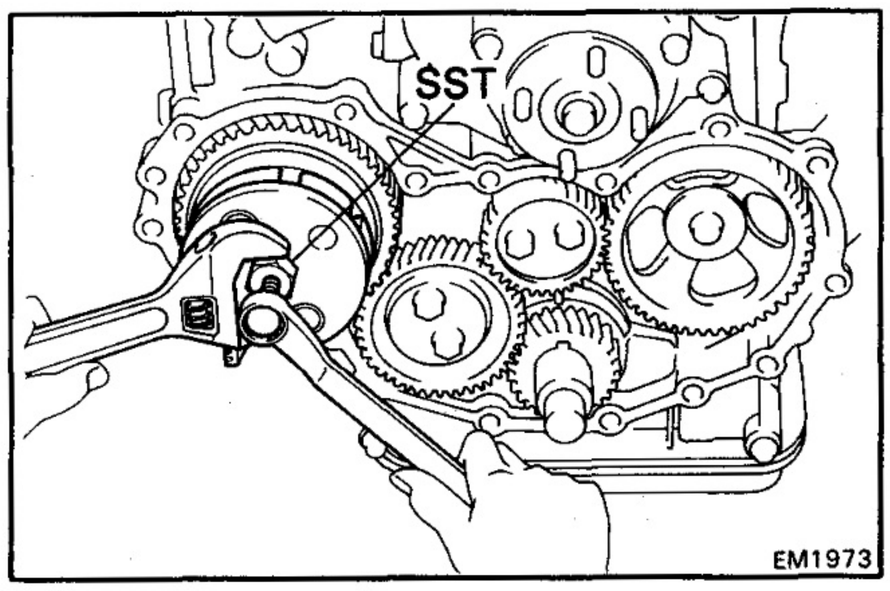

(c) Using SST, remove the timer.

SST 09260-47010 (09267-76020)

COMPONENTS

2H

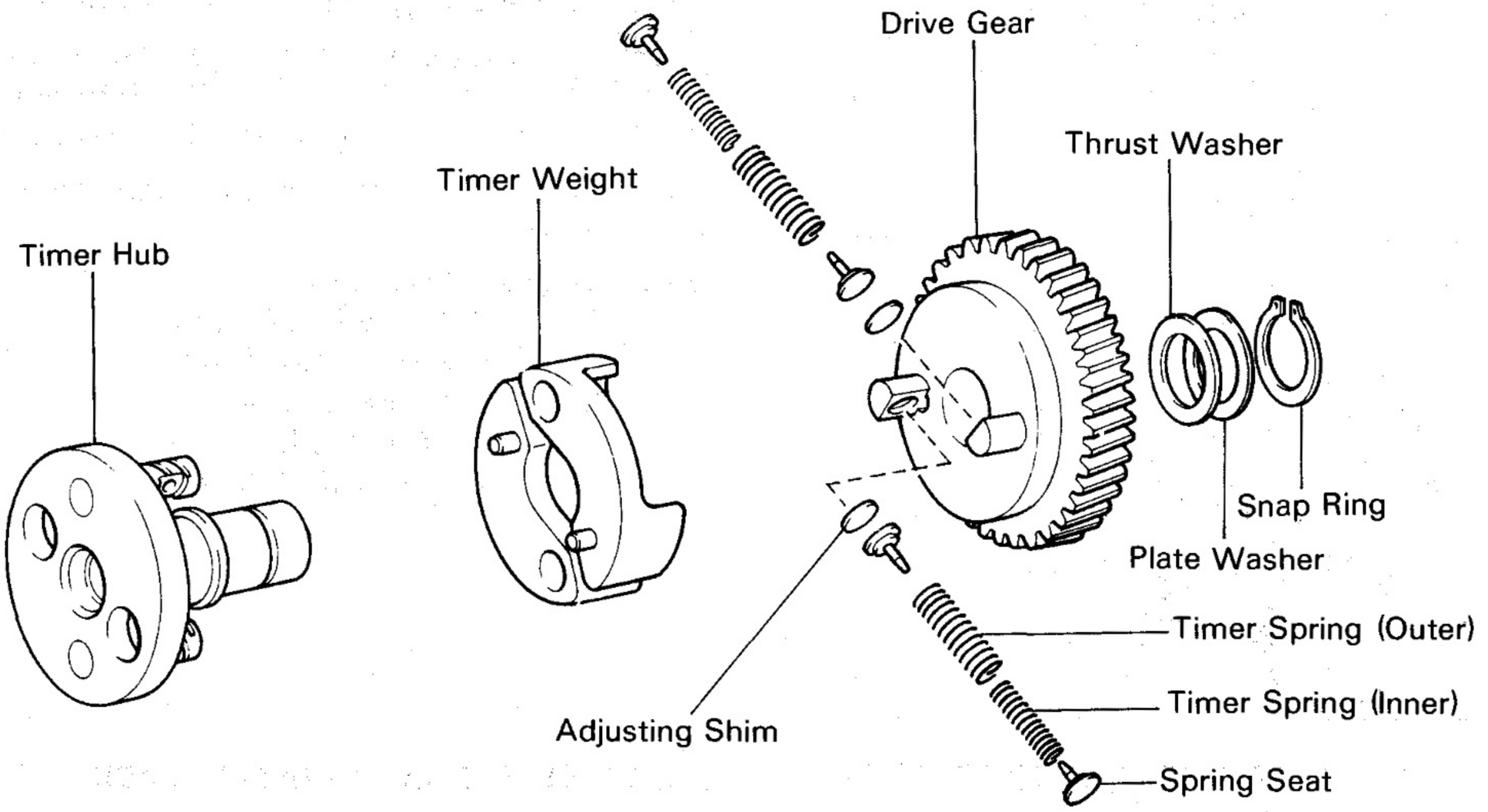

12H-T

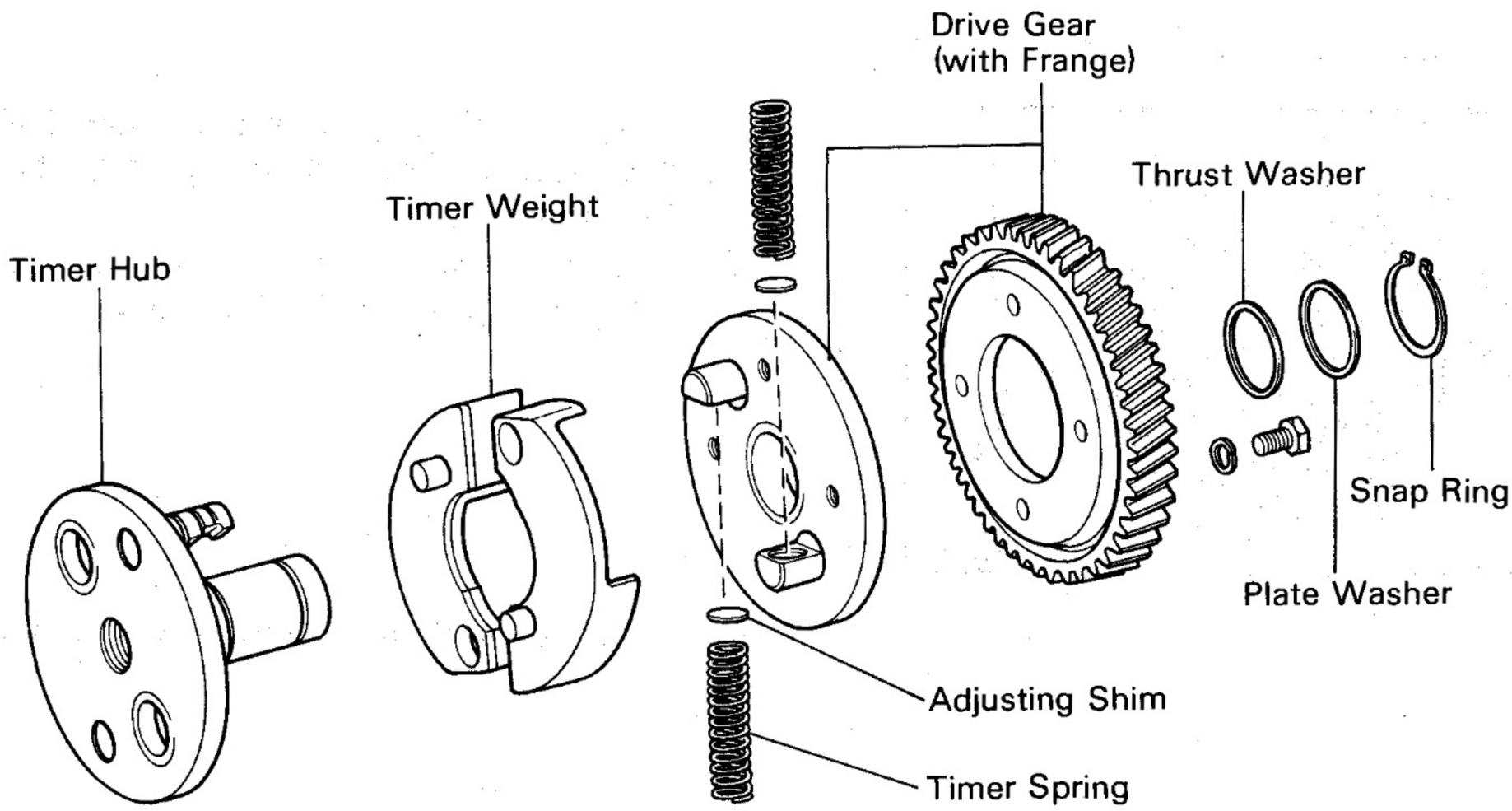

FU1413
FU1412

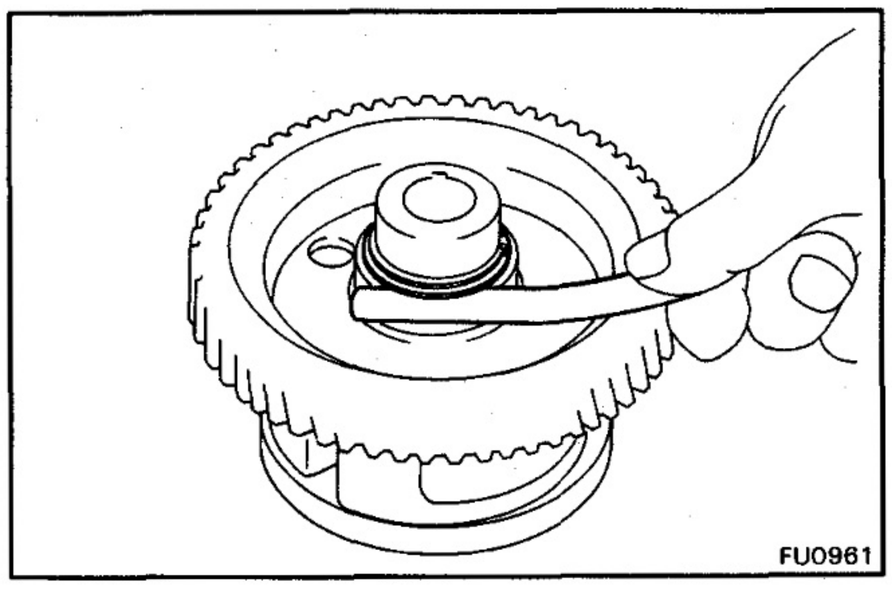

DISASSEMBLY OF AUTOMATIC TIMER

(See page FU-23)

1. CHECK THRUSH CLEARANCE OF DRIVE GEAR

Using a feeler gauge, measure the thrust clearance.

Standard thrust clearance: 0.010 – 0.200 mm (0.0004 – 0.0079 in.)

Maximum thrust clearance: 0.30 mm (0.0118 in.)

If the clearance is greater than maximum, replace the thrust washer.

Thrust washer thickness:

2H	**0.1 mm (0.004 in.)**
	0.2 mm (0.008 in.)
12H-T	**0.1 mm (0.004 in.)**
	0.35 mm (0.014 in.)
	0.5 mm (0.020 in.)

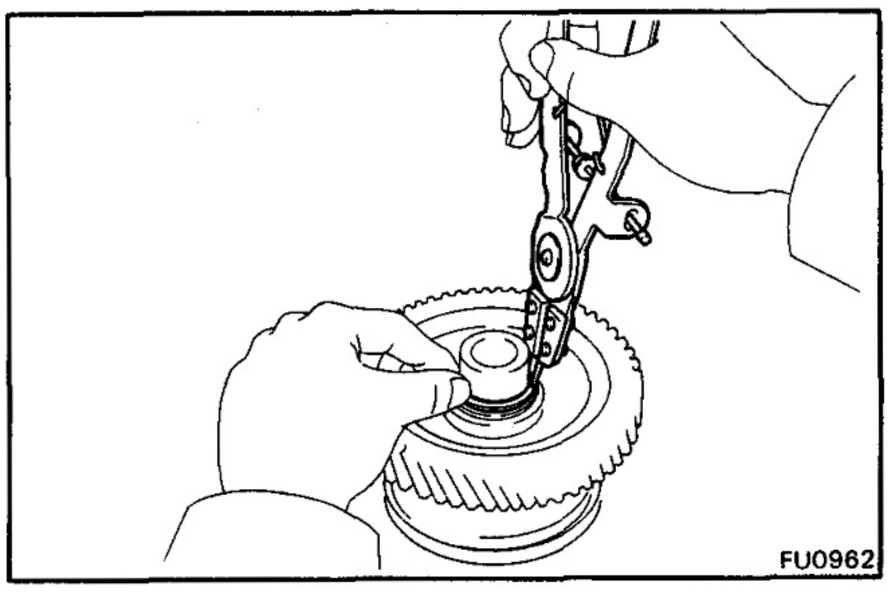

2. DISASSEMBLE AUTOMATIC TIMER

(a) Using snap ring pliers, remove the snap ring, plate washer and thrust washer.

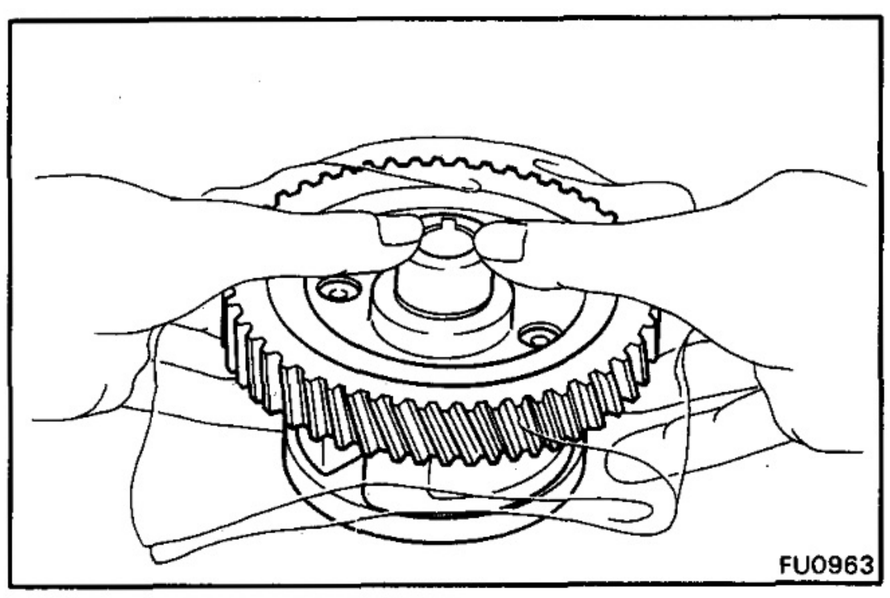

(b) Cover the timer with a shop towel to prevent the spring seats (2H), springs and adjusting shims from flying out.

(c) Pull up the drive gear, and remove the spring seats (2H), springs and adjusting shims.

(d) Remove the timer weights from the timer hub.

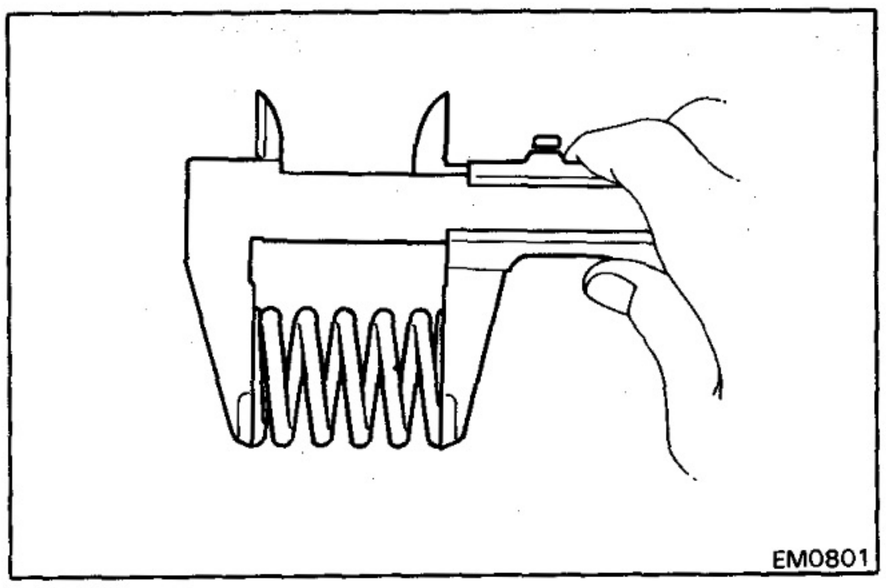

INSPECTION OF AUTOMATIC TIMER

INSPECT TIMER SPRINGS

Using calipers, measure the free length of the spring.

Free length:

2H	**Inner**	**37.8 mm (1.488 in.)**
	Outer	**41.2 mm (1.622 in.)**
12H-T		**58.8 mm (2.315 in.)**

If the free length is not as specified, replace the spring.

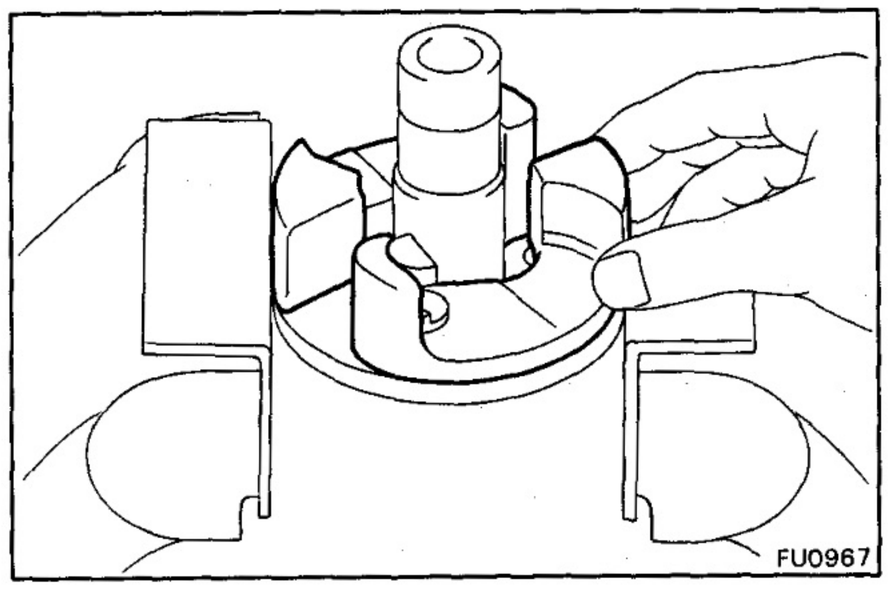

ASSEMBLY OF AUTOMATIC TIMER

(See page FU-23)

1. ASSEMBLE AUTOMATIC TIMER

(a) Mount the timer hub in a soft jaw vise.

(b) Install the timer weights to the timer hub.

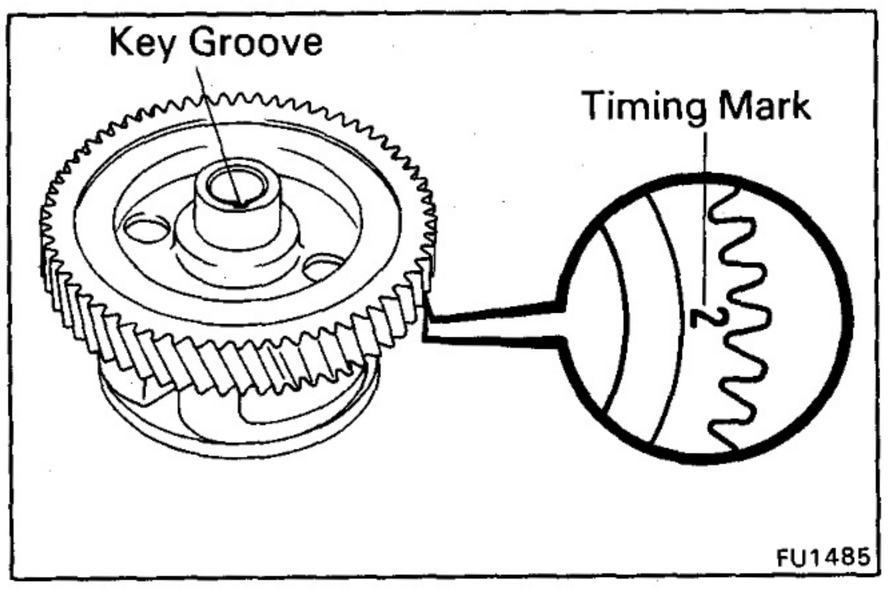

(c) Assemble the timer hub and drive gear as shown.

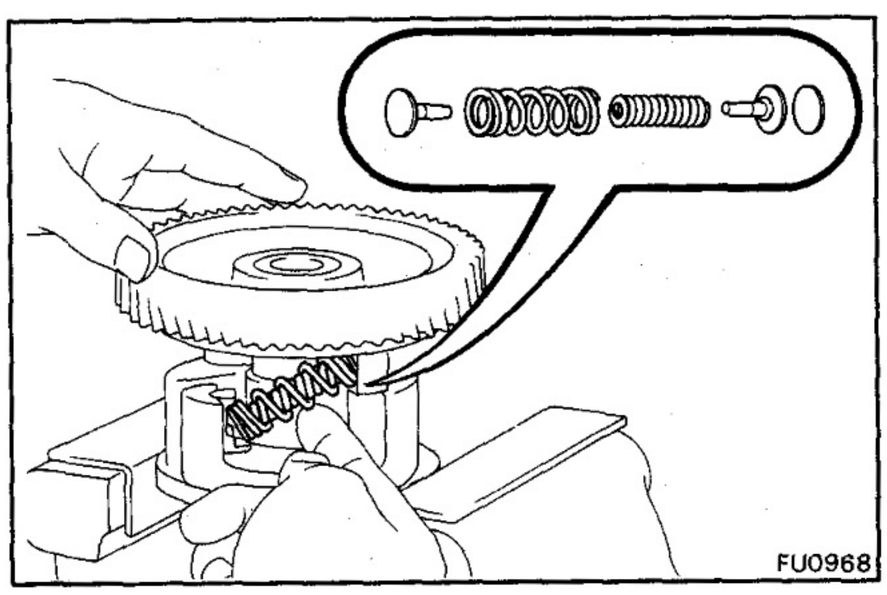

(d) [2H]
Install the spring seats, timer springs and adjusting shims.

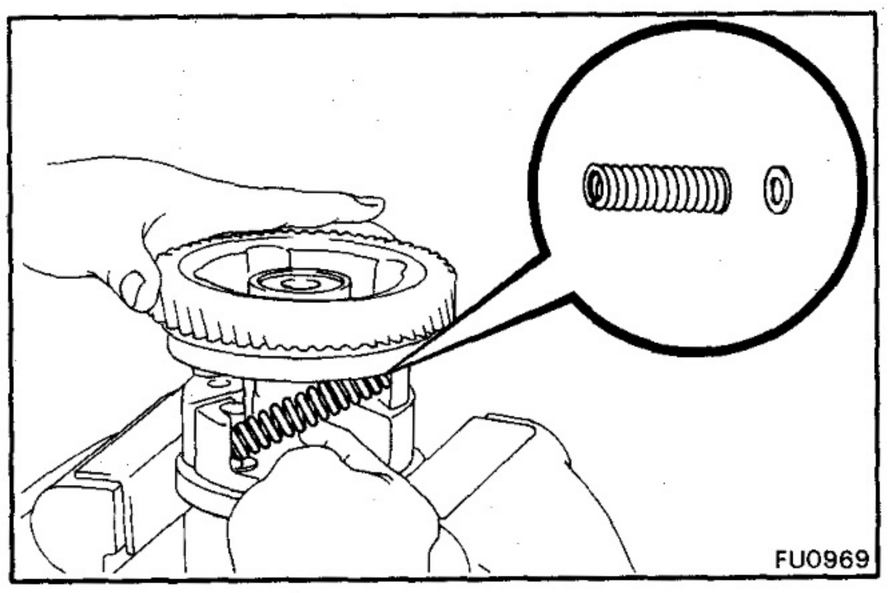

(e) [12H-T]
Install the timer springs and adjusting shims.

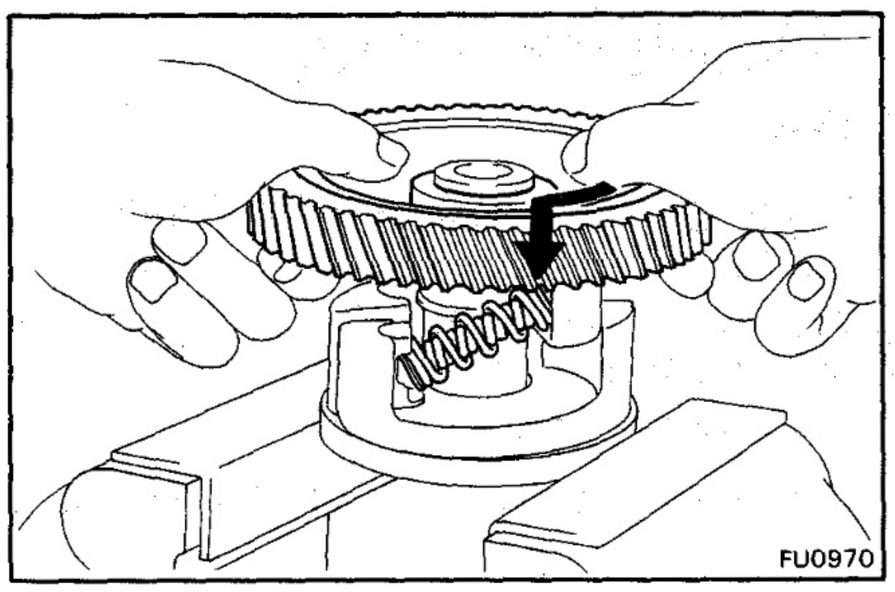

(f) Turn and push the drive gear onto the timer hub.

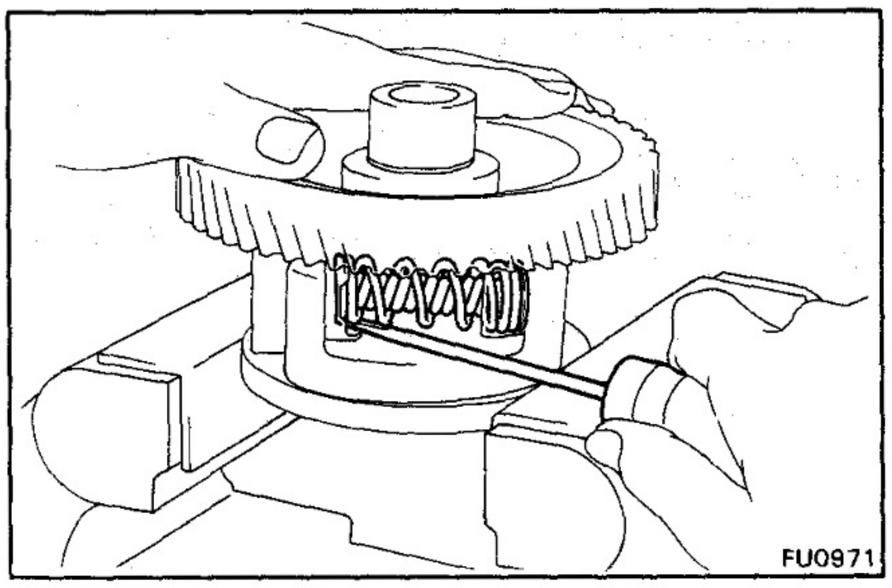

(g) Using a screwdriver, snugly seat the spring seats (2H), springs and adjusting shims.

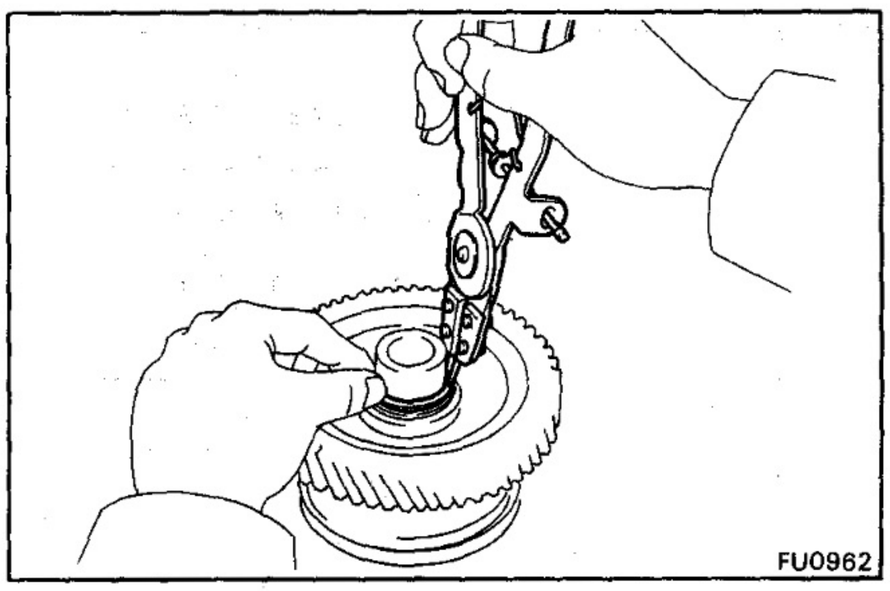

(h) Slide the thrust washer and plate washer onto the shaft of the timer hub.

(i) Using snap ring pliers, install the snap ring.

2. CHECK THRUST CLEARANCE OF DRIVE GEAR
(See page FU-24)

Standard thrust clearance: 0.010 — 0.200 mm (0.0004 — 0.0079 in.)
Maximum thrust clearance: 0.30 mm (0.0118 in.)

ADJUSTMENT OF AUTOMATIC TIMER

1. PREPARATION

(a) Remove the injection pump without disconnecting the feed pump. (See page FU-29)

(b) Install the automatic timer to the injection pump.

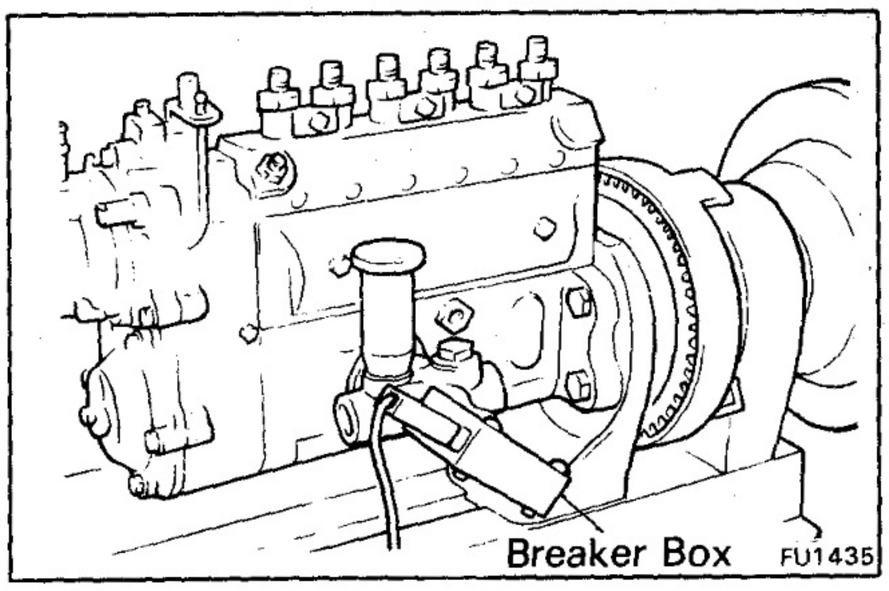

(c) Mount the injection pump on the pump tester.

(d) Fill the camshaft chamer of the injection pump with engine oil.

(e) Install the timer breaker box to the piston bore of the feed pump.

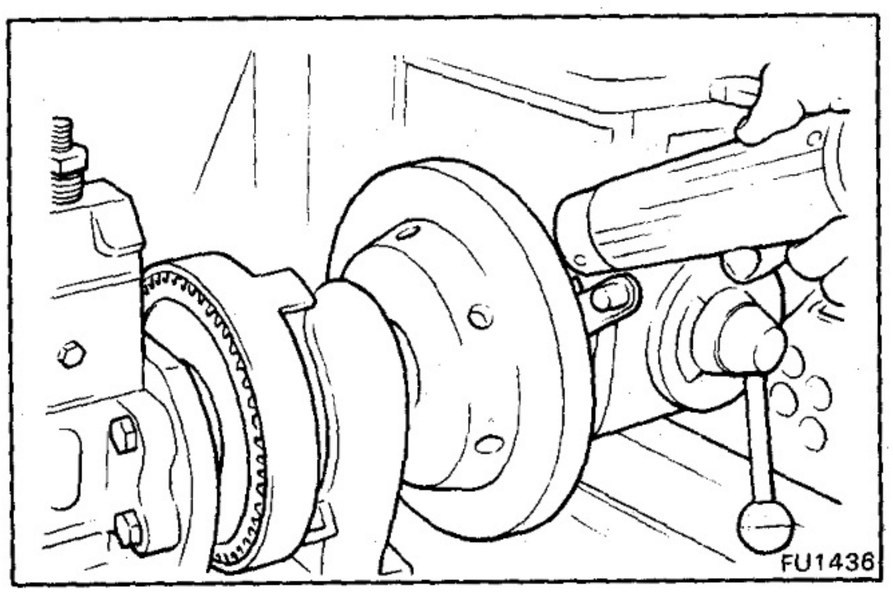

2. ADJUST ADVANCE ANGLE

(a) Using a timing light, measure the advance angle.

Item	Pump rpm	Advance angle
2H	640	0.5° or less
	800	0.2 – 1.2°
	1,100	1.5 – 2.5°
	1,400	2.7 – 3.7°
	1,680	4.0 – 5.0°
12H-T	1,450	0.5° or less
	1,700	5.5 – 6.5°

(b) Disassemble the automatic timer, and adjusting by changing the adjusting shim.

Adjusting shim thickness:

2H
0.1 mm (0.004 in.)
0.2 mm (0.008 in.)
0.3 mm (0.012 in.)
0.5 mm (0.020 in.)
1.0 mm (0.039 in.)

12H-T
0.5 mm (0.020 in.)
0.6 mm (0.024 in.)
0.7 mm (0.028 in.)
0.8 mm (0.031 in.)
0.9 mm (0.035 in.)
1.0 mm (0.039 in.)

NOTE: The advance angle will advance with a reduction in shim thickness and retard with an increase.

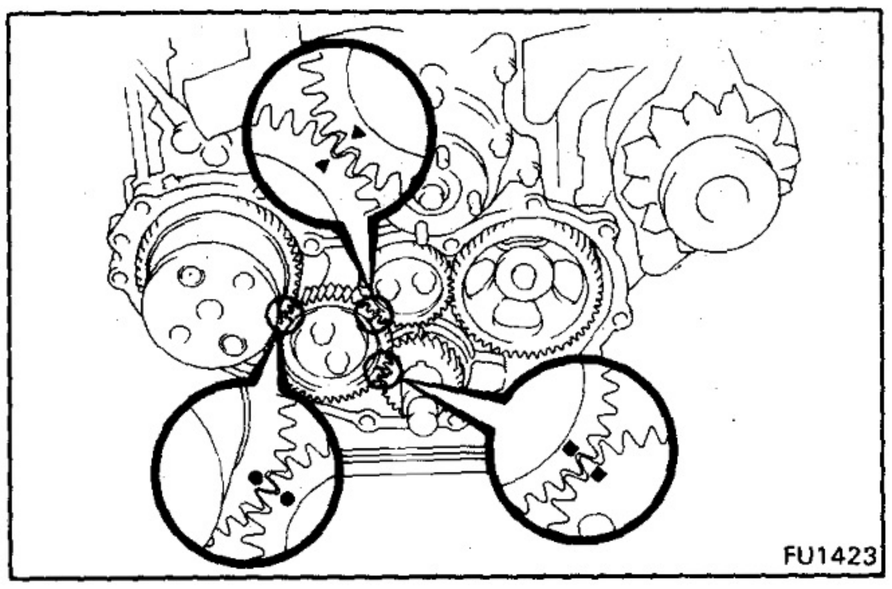

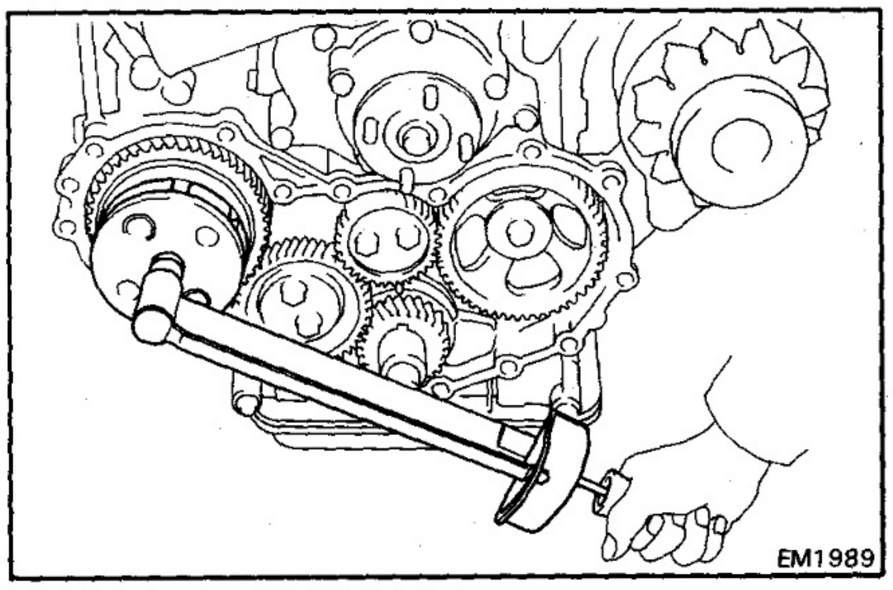

INSTALLATION OF AUTOMATIC TIMER

(See page FU-21)

1. INSTALL AUTOMATIC TIMER

(a) Align the automatic timer set key with the key groove of the automatic timer.

(b) Align the matchmacks of each gear, and mesh the gears.

(c) Apply a light coat of engine oil on the threads and under the round nut.

(d) Install the washer (12H-T) and round nut. Torque the round nut.

Torque: 750 kg-cm (54 ft-lb, 74 N·m)

2. INSTALL TIMING GEAR COVER AND CRANKSHAFT PULLEY
(See steps 12 to 14 on pages EM-91 and 92)

3. INSTALL WATER PUMP PULLEY AND FAN
(See page CO-10)

4. INSTALL AND ADJUST DRIVE BELT
(See page CH-6)

5. START ENGINE AND CHECK FOR LEAKS

6. CHECK ENGINE OIL LEVEL (See page LU-3)

INJECTION PUMP

REMOVAL OF INJECTION PUMP

2H

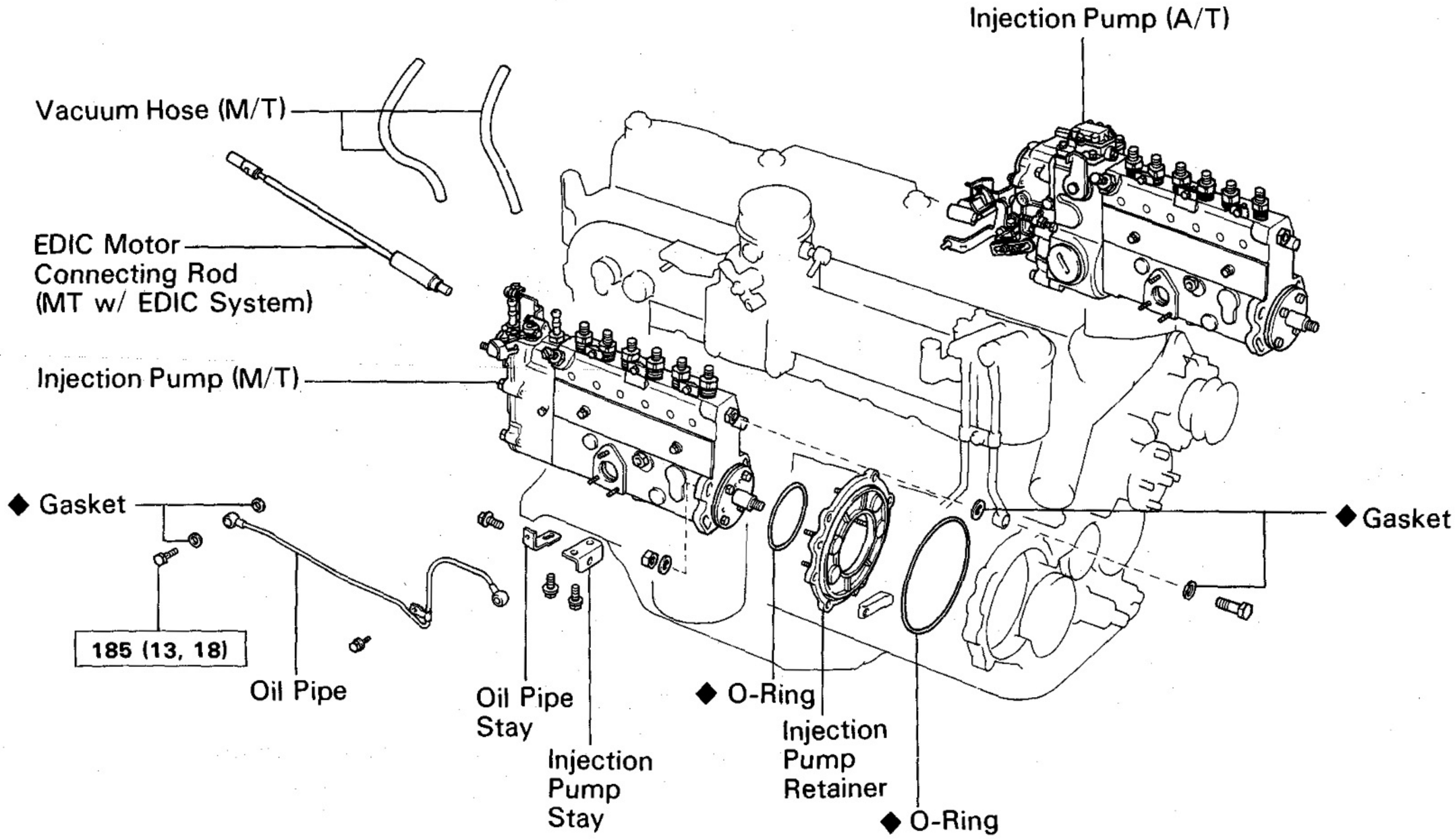

12H-T

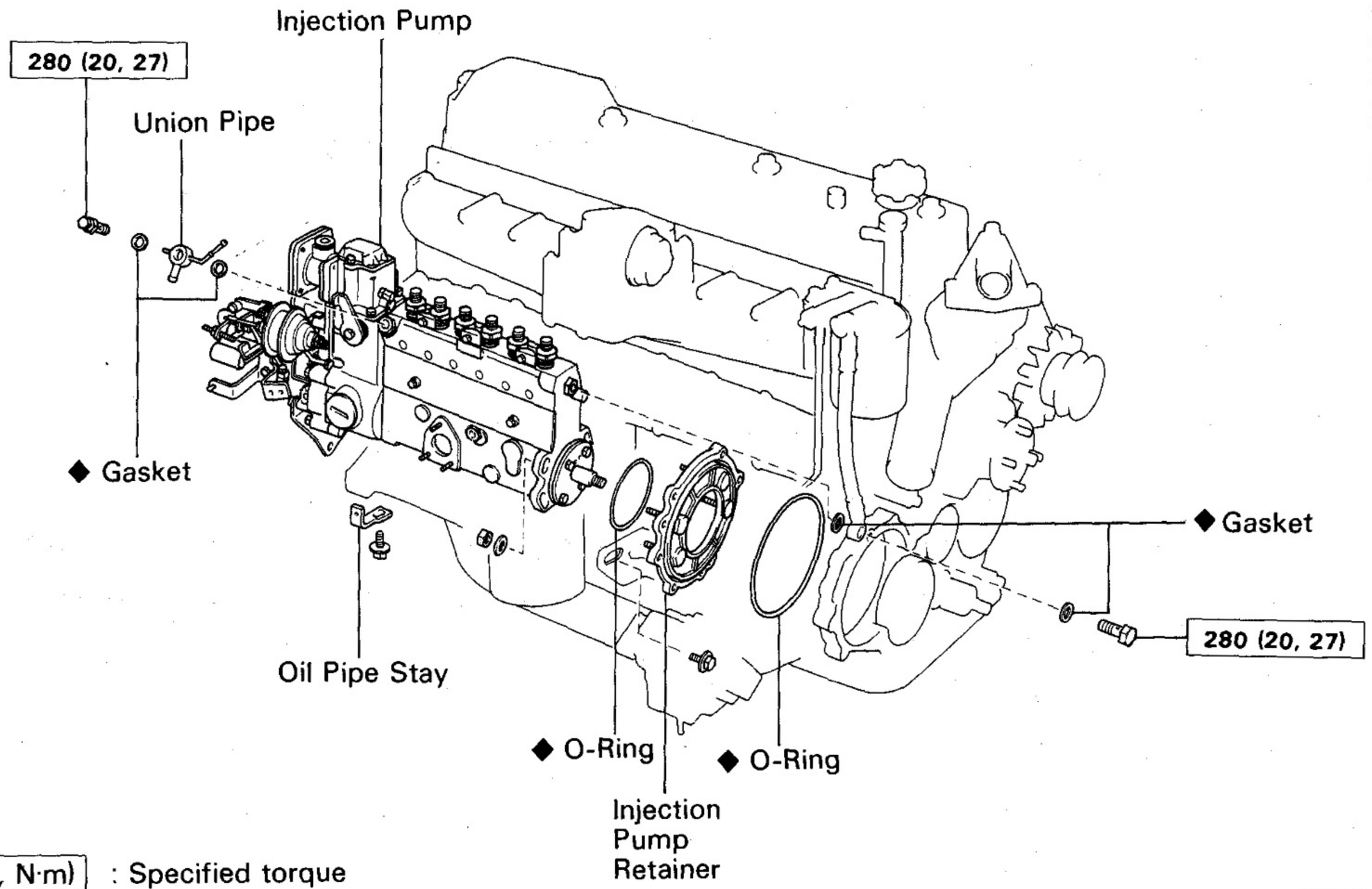

kg-cm (ft-lb, N·m) : Specified torque

◆ Non-reusable part

FU1491
FU1492

1. **REMOVE INJECTION PIPES**
   (See step 1 on page FU-3) 2H
   (See steps 1, 2 and 4 on pages FU-9 and 10) 12H-T

2. **REMOVE FUEL FEED PUMP**
   (See steps 1 and 2 on page FU-16)

3. **REMOVE AUTOMATIC TIMER**
   (See steps 1 to 4 on page FU-22)

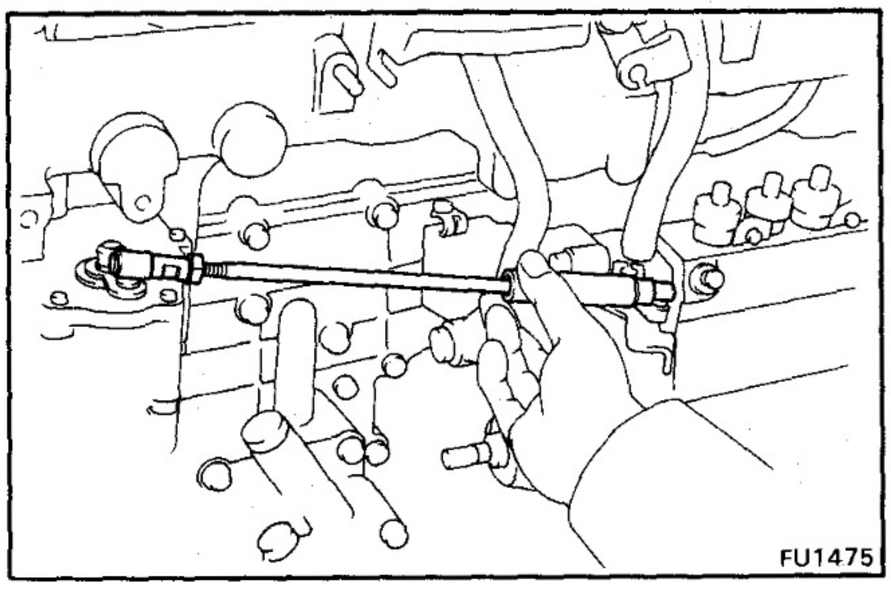

4. **[2H M/T (w/ EDIC SYSTEM)]**
   REMOVE CONNECTING ROD OF EDIC MOTOR

5. **[2H M/T (w/o EDIC SYSTEM)]**
   REMOVE CONNECTING WIRE OF OVERINJECTION MAGNET

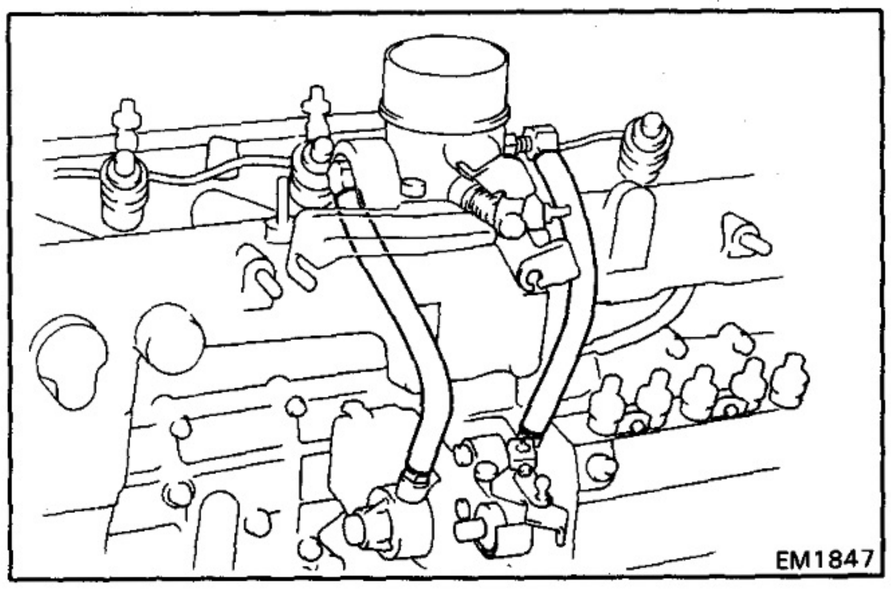

6. **[2H M/T]**
   REMOVE VACUUM HOSES

   Remove the two vacuum hoses connecting the venturi to the governor of the injection pump.

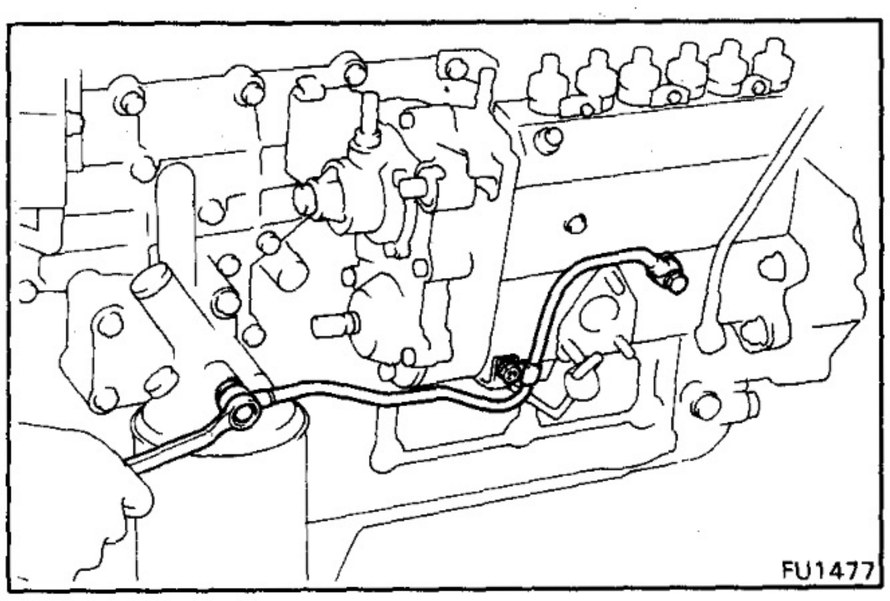

7. **[2H]**
   REMOVE OIL PIPES

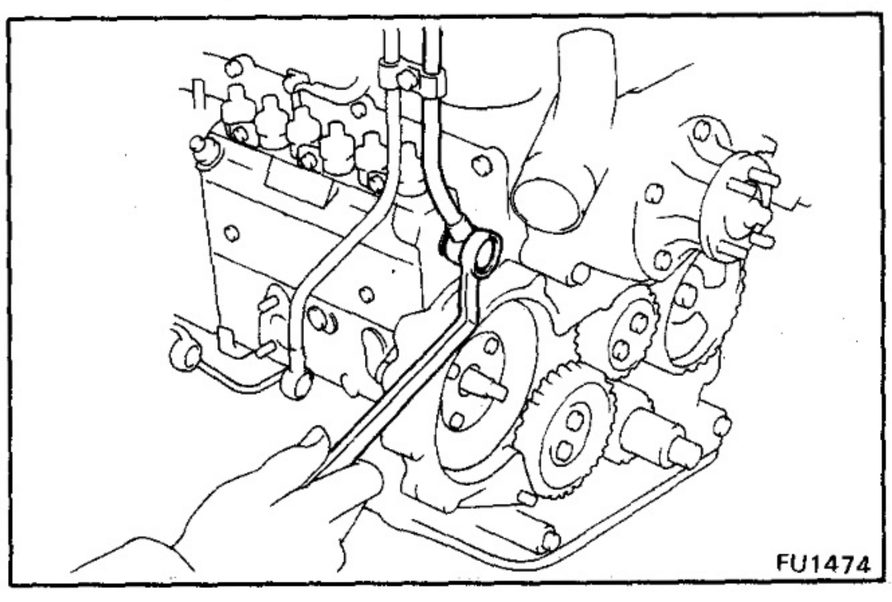

8. **DISCONNECT FUEL PIPE (2H) OR HOSE (12H-T)**

   Remove the union bolt and two gaskets.

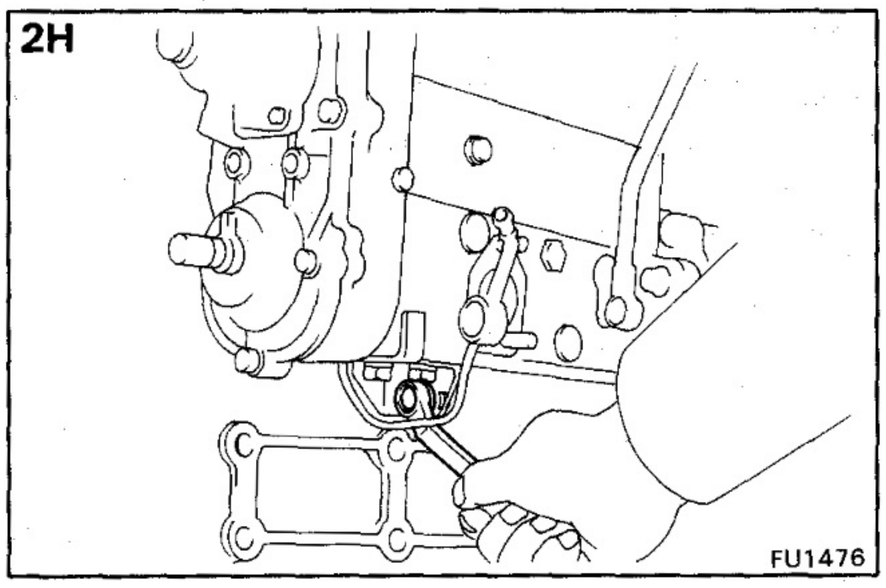

9. REMOVE INJECTION PUMP

(a) Remove the bolt holding the injection pump stay to the stay.

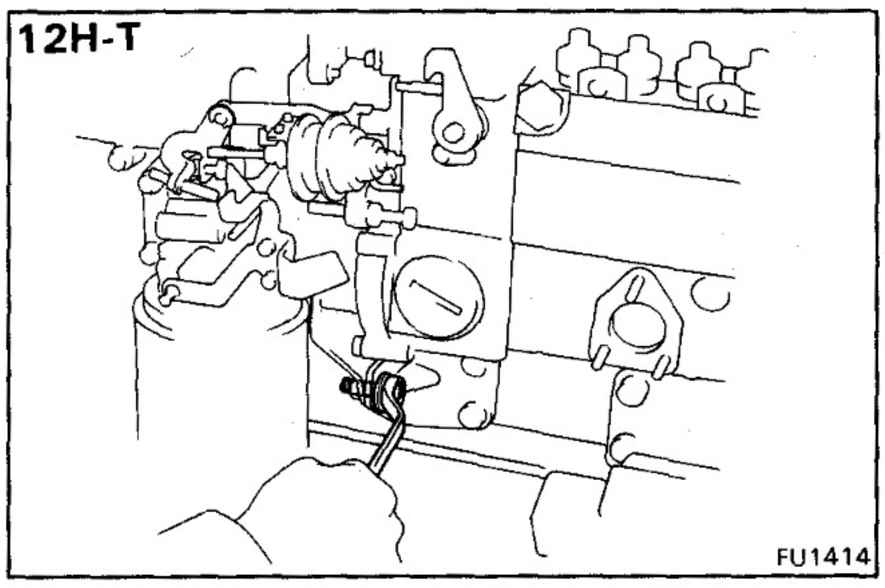

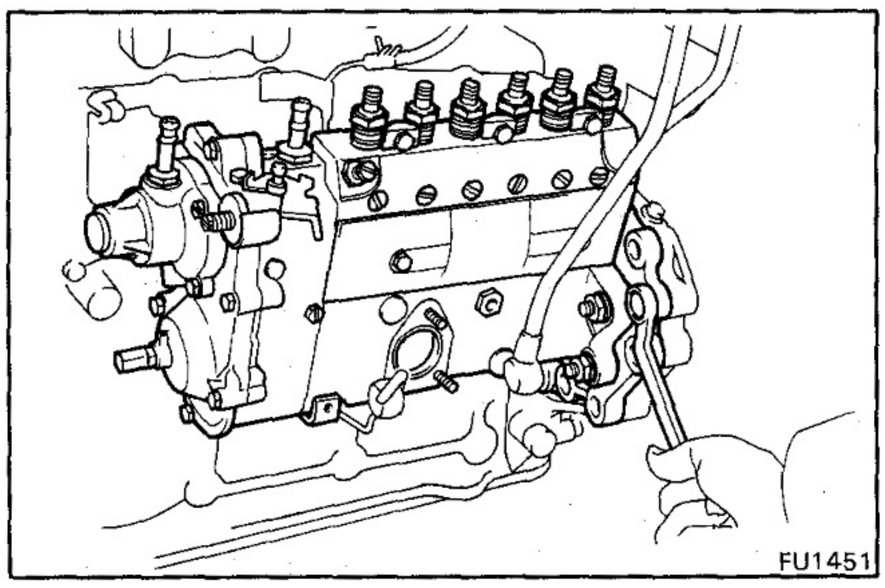

(b) Remove the bolt holding the injection pump retainer to the timing gear case.

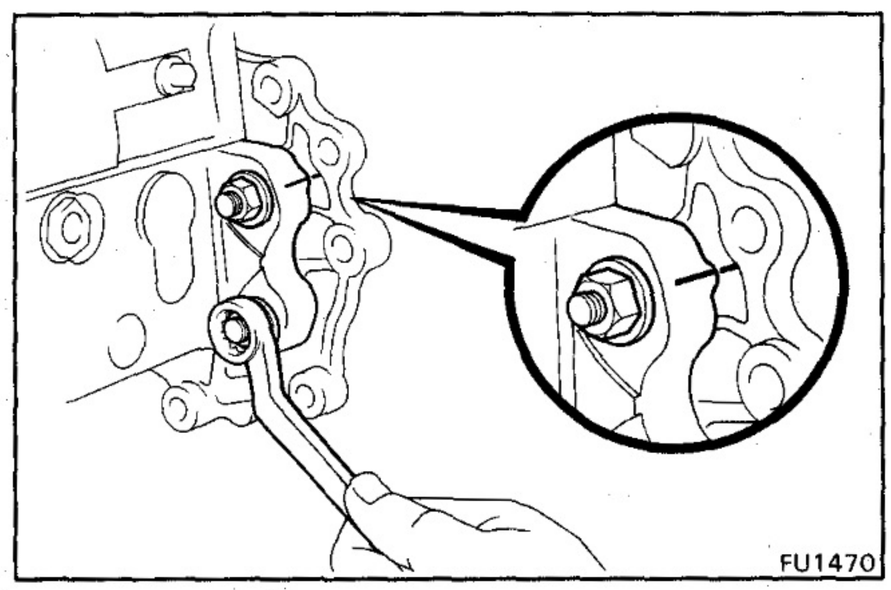

10. REMOVE INJECTION PUMP RETAINER

(a) Before removing the injection pump, check if the matchmarks are aligned. If not, place new matchmarks for reinstallation.

(b) Remove the four nuts, plate washer and retainer.

(c) Remove the O-ring.

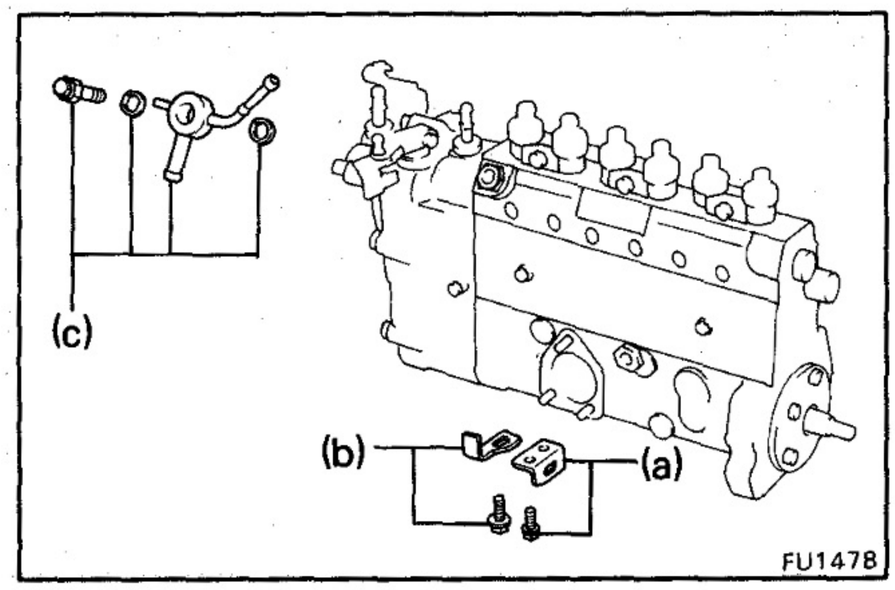

11. REMOVE PARTS

(a) [2H]
Remove the two bolts and injection pump stay.

(b) Remove the bolt and oil pipe stay.

(c) [12H-T]
Remove the union bolt (with relief valve) and return pipe.

COMPONENTS

Governor (2H M/T)

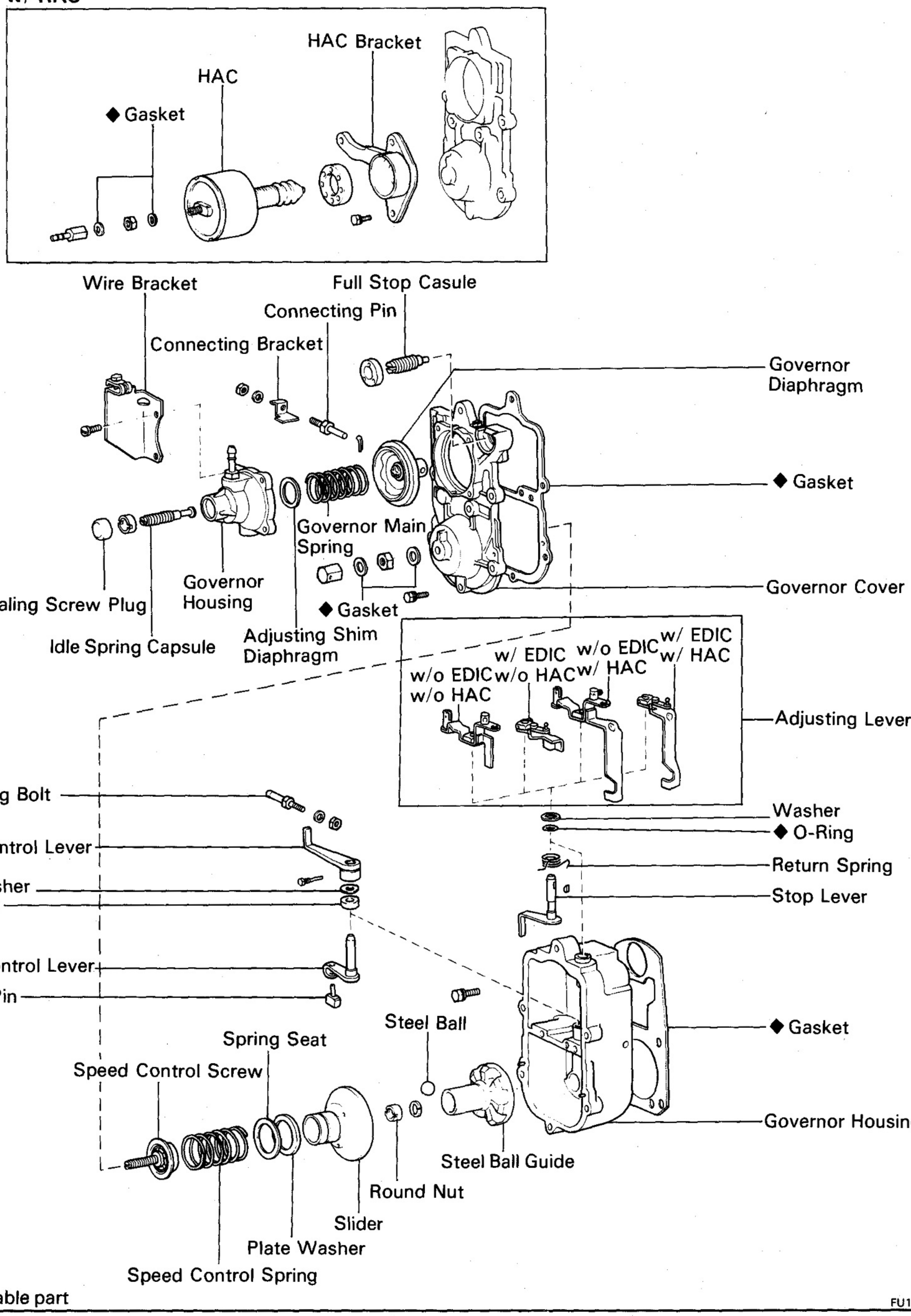

COMPONENTS (Cont'd)

Governor (2H A/T and 12H-T)

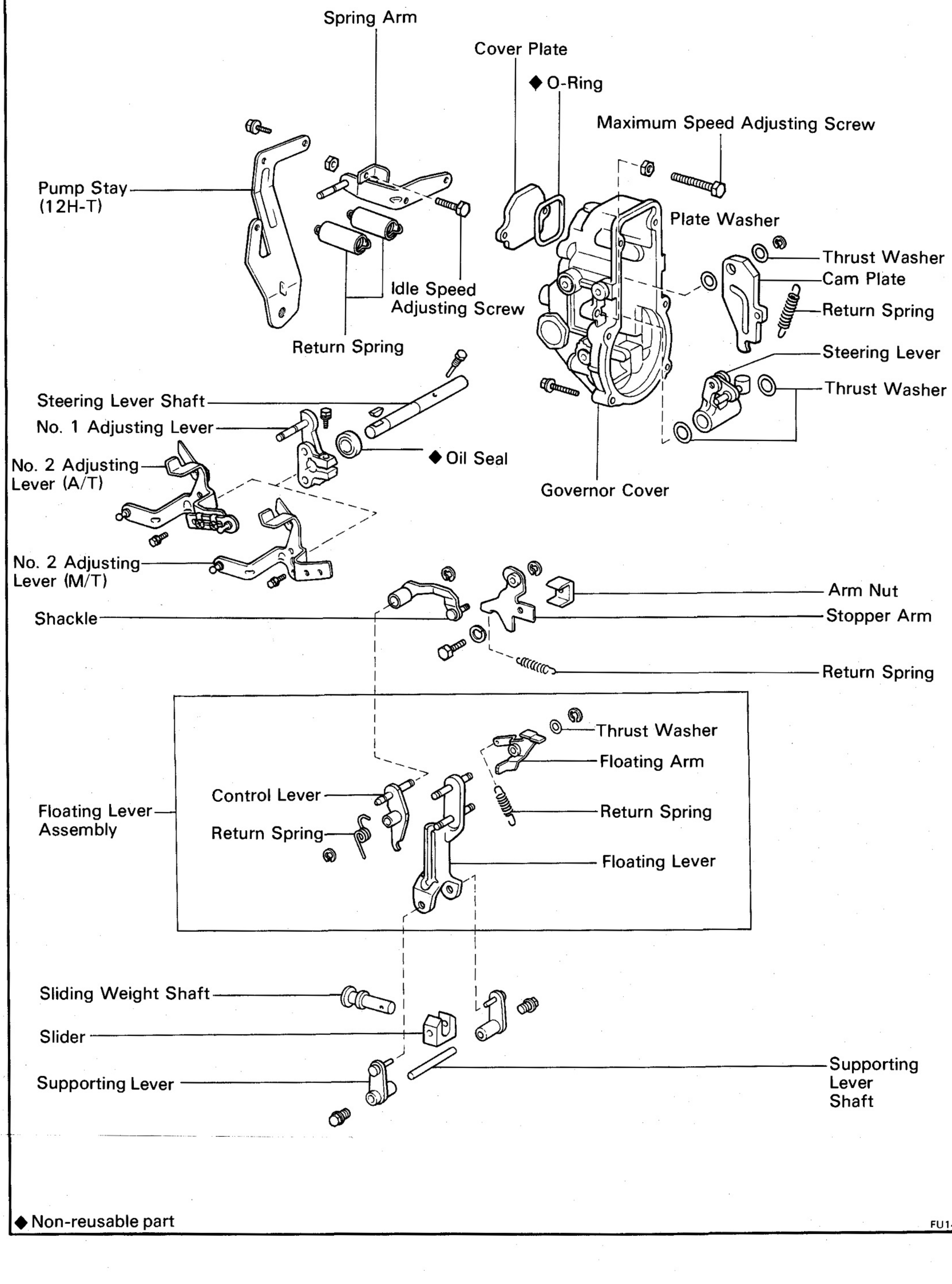

◆ Non-reusable part

FU1465

COMPONENTS (Cont'd)

Governor (2H A/T)

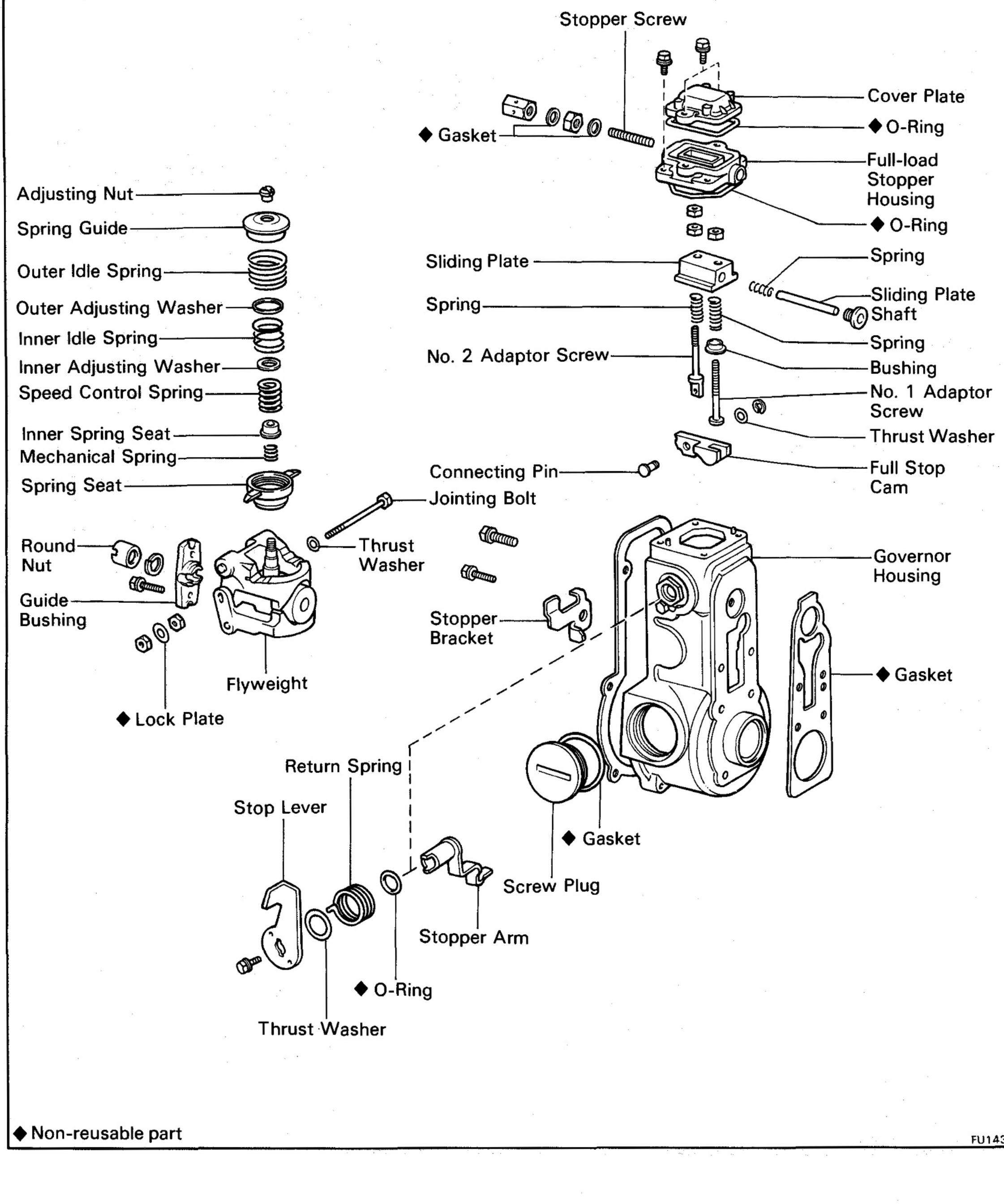

◆ Non-reusable part

FU1438

COMPONENTS (Cont'd)

Governor (12H-T)

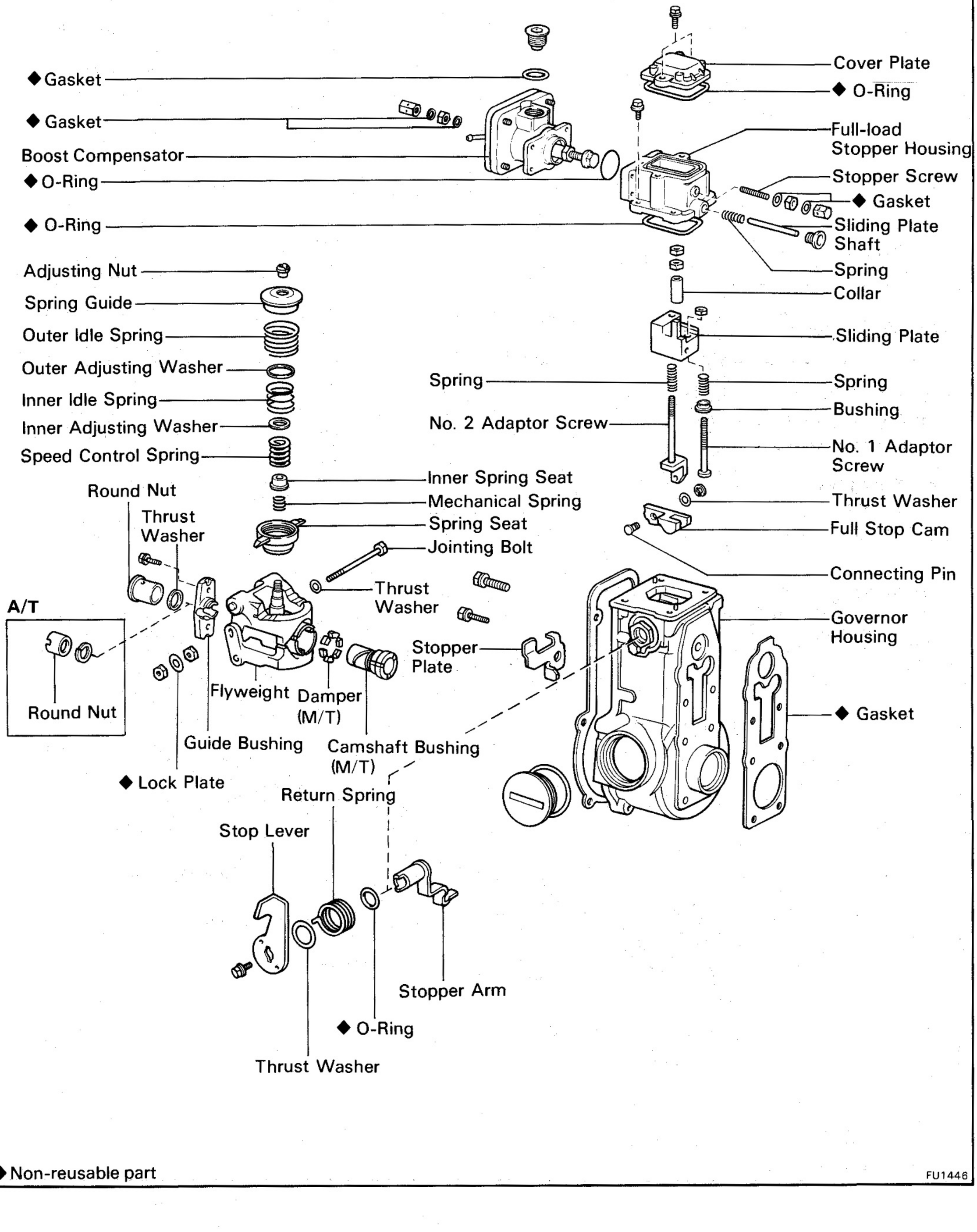

◆ Non-reusable part

FU1446

COMPONENTS (Cont'd)

Pump Body

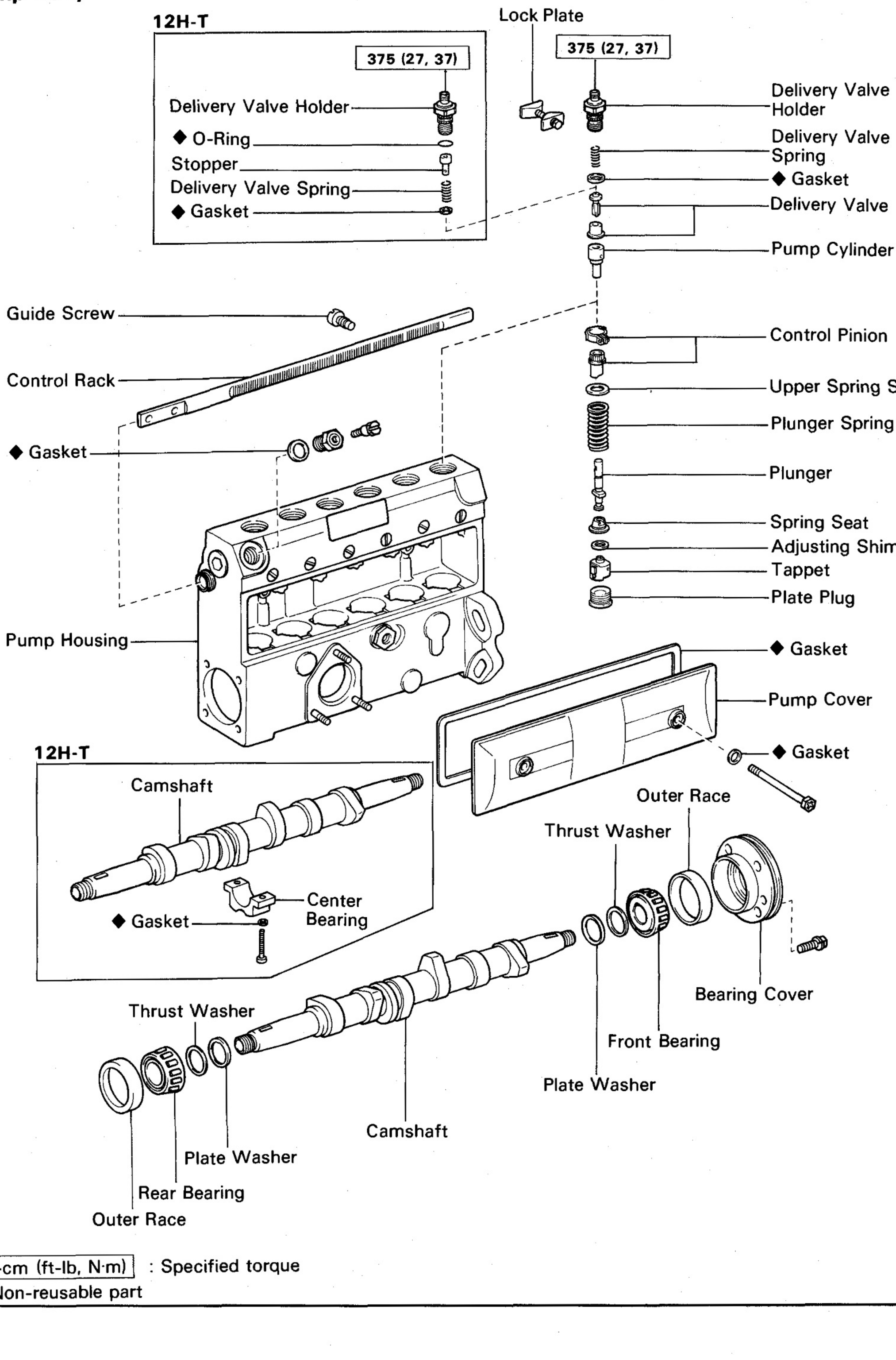

kg-cm (ft-lb, N·m) : Specified torque

◆ Non-reusable part

FU1448

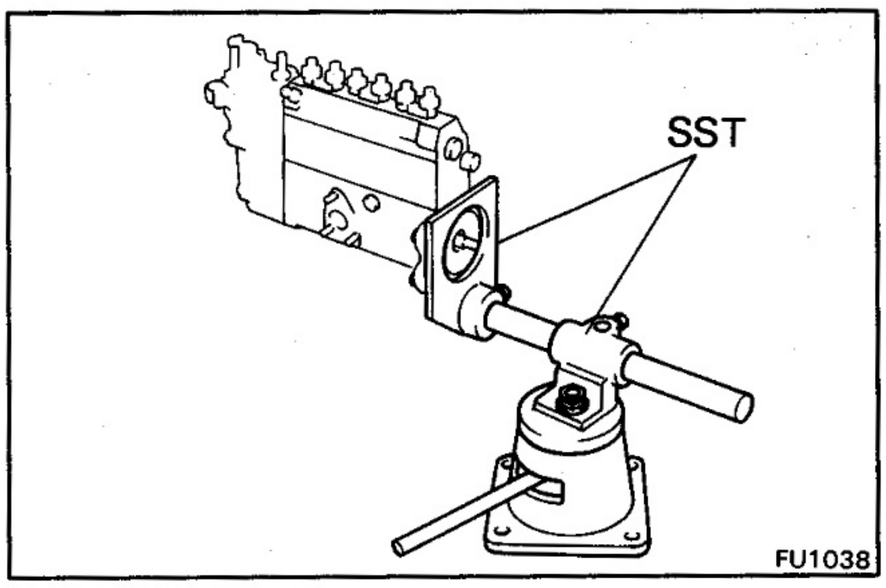

DISASSEMBLY OF INJECTION PUMP

Disassembly of Governor [2H M/T]

(See page FU-32)

1. MOUNT PUMP ASSEMBLY TO SST (STAND)

SST 09241-76022 and 09245-78010

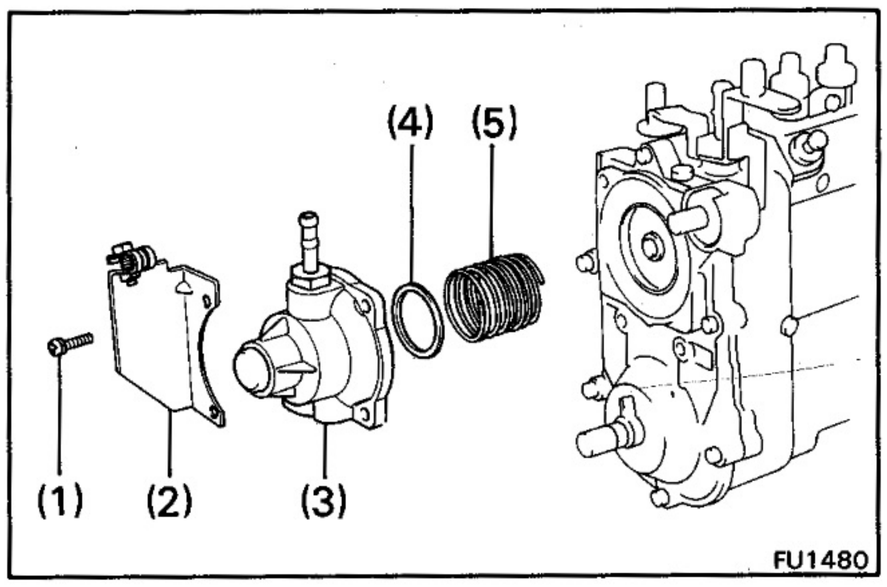

2. REMOVE GOVERNOR DIAPHRAGM HOUSING AND MAIN SPRING

Remove the following parts:

(1) Four screws
(2) [w/o EDIC]
Wire bracket
(3) Governor diaphragm housing
(4) Adjusting shim (s)
(5) Governor main spring

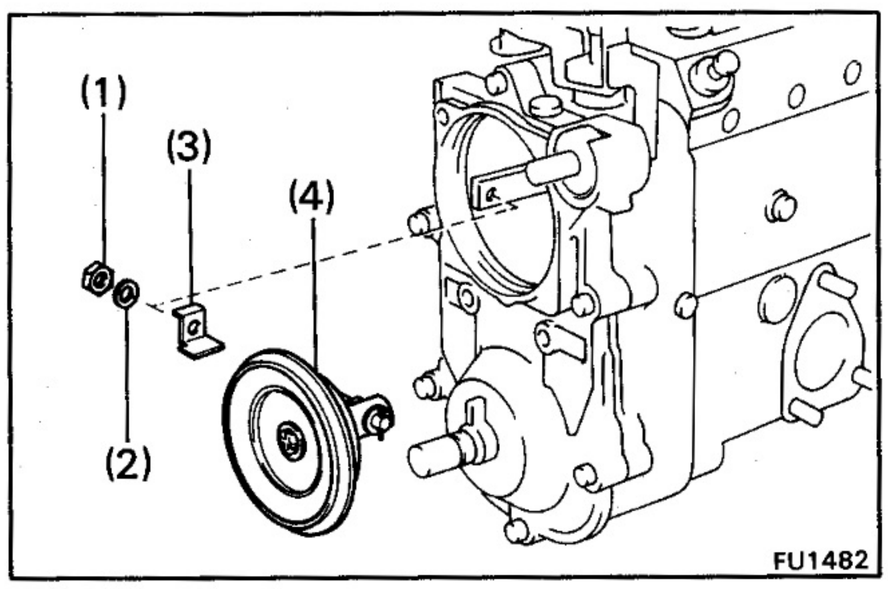

3. REMOVE GOVERNOR DIAPHRAGM

Remove the following parts:

(1) Nut
(2) Spring washer
(3) Connecting bracket
(4) Governor diaphragm

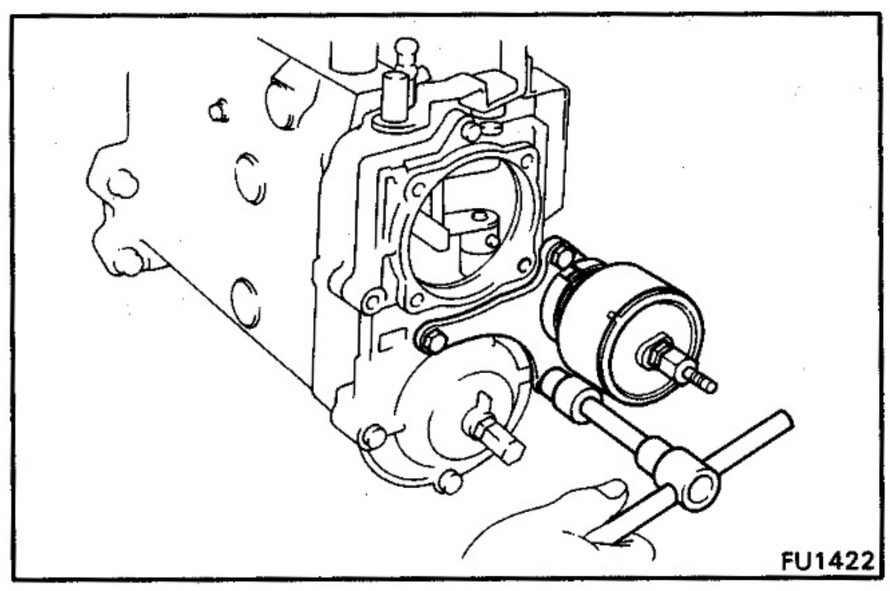

4. [w/ HAC]
REMOVE HIGH ALTITUDE COMPENSATOR (HAC)

Remove the three bolts and HAC.

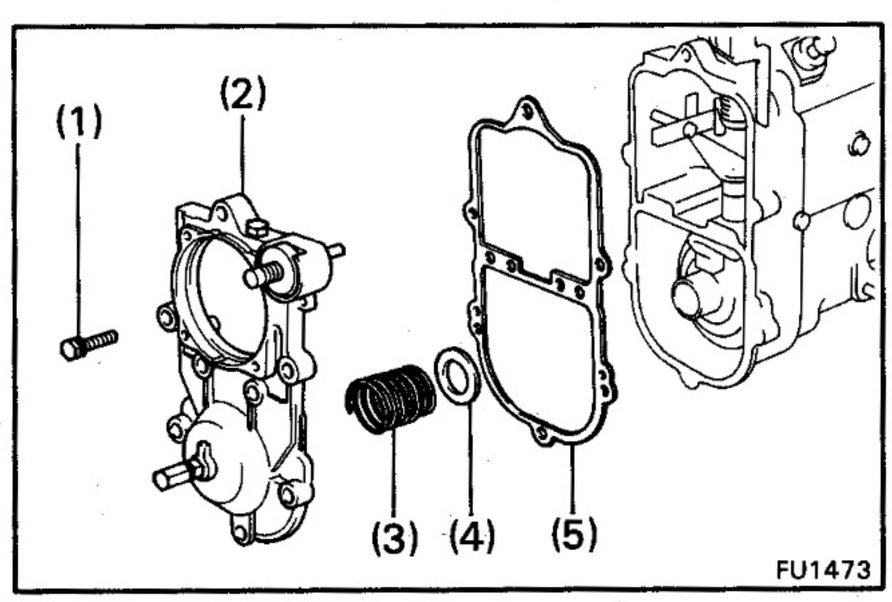

5. REMOVE GOVERNOR COVER AND SPEED CONTROL SPRING

Remove the following parts:

(1) Six bolts
(2) Governor cover
(3) Speed control spring
(4) Spring seat
(5) Gasket

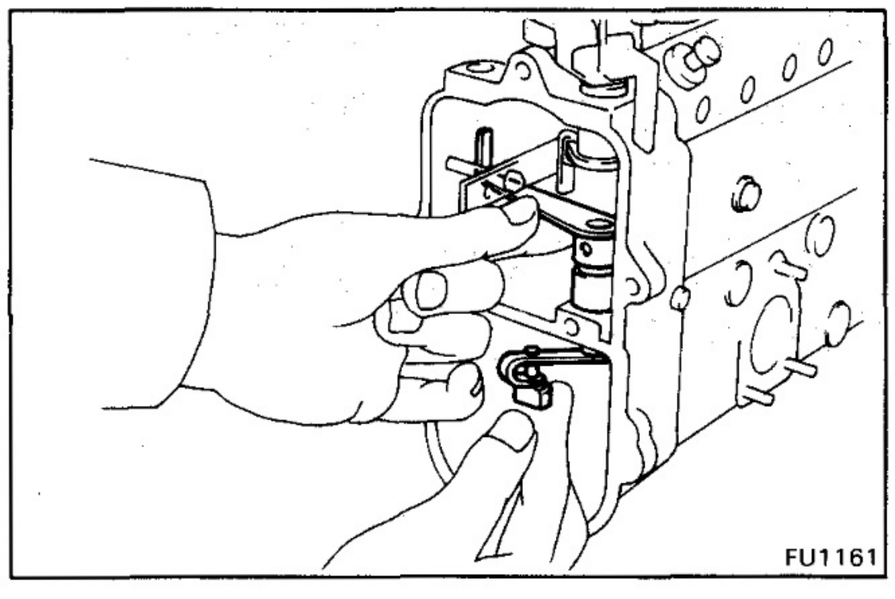

6. REMOVE CONTROL RACK LEVERS

Remove bolt, shifting pin, lower control lever, upper control lever and plate washer.

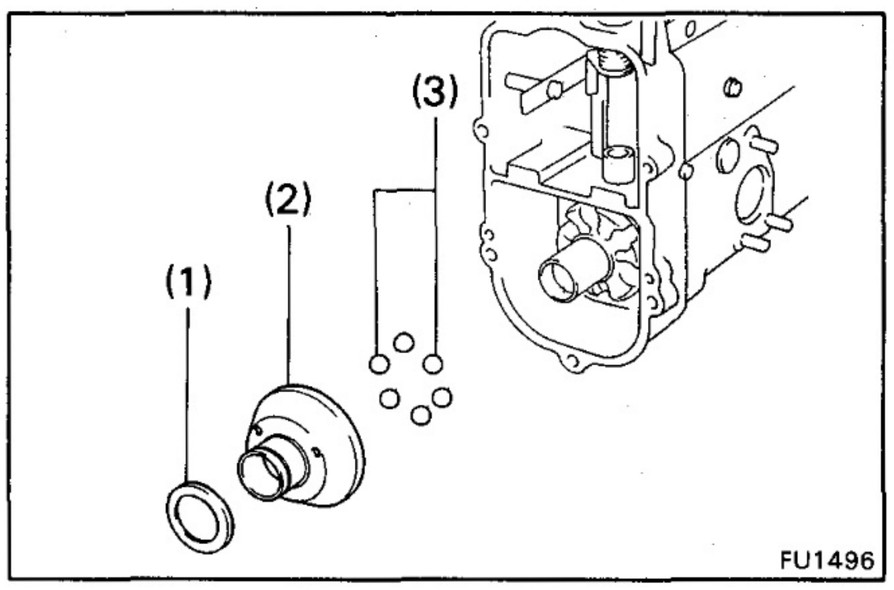

7. REMOVE SLIDER AND STEEL BALLS

Remove the following parts:

(1) Plate washer
(2) Slider
(3) Six steel balls

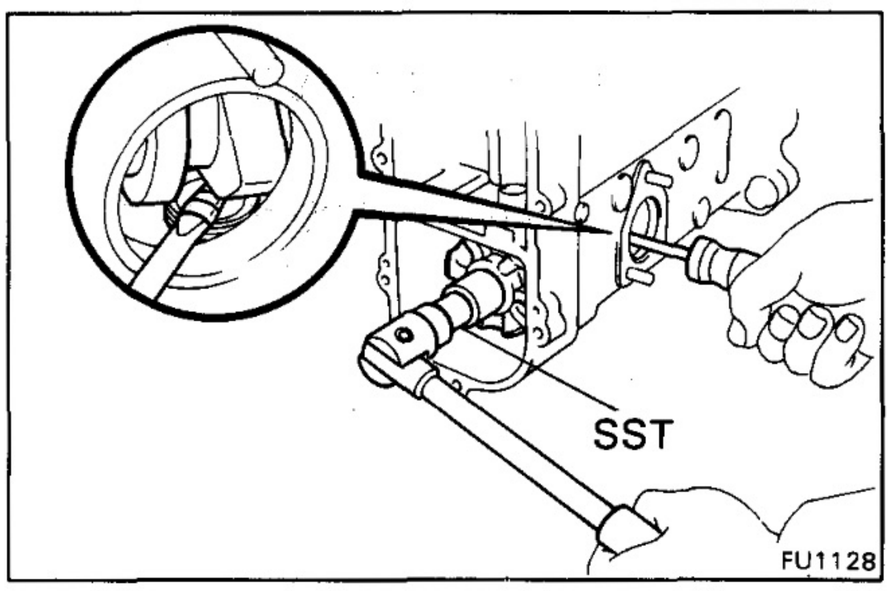

8. REMOVE STEEL BALL GUIDE

(a) Using SST, remove the round nut and spring washer.

SST 09260-47010 (09260-78010)

CAUTION: Be careful not to damage the camshaft. Tape the screwdriver tip.

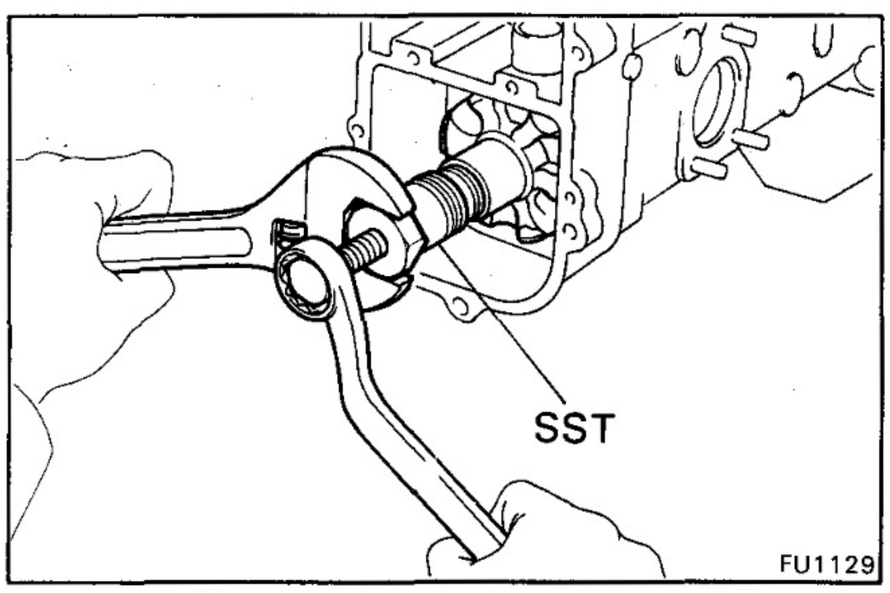

(b) Using SST, remove the ball guide.

SST 09260-47010 (09267-76011)

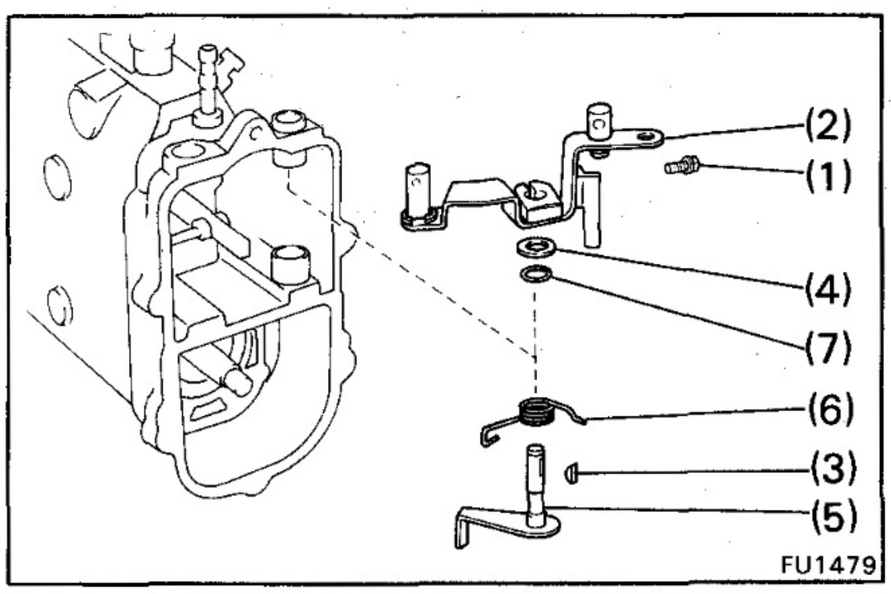

9. REMOVE ADJUSTING AND STOP LEVERS

Remove the following parts:

(1) Bolt
(2) Adjusting lever
(3) Set key
(4) Washer
(5) Stop lever
(6) Return spring
(7) O-ring

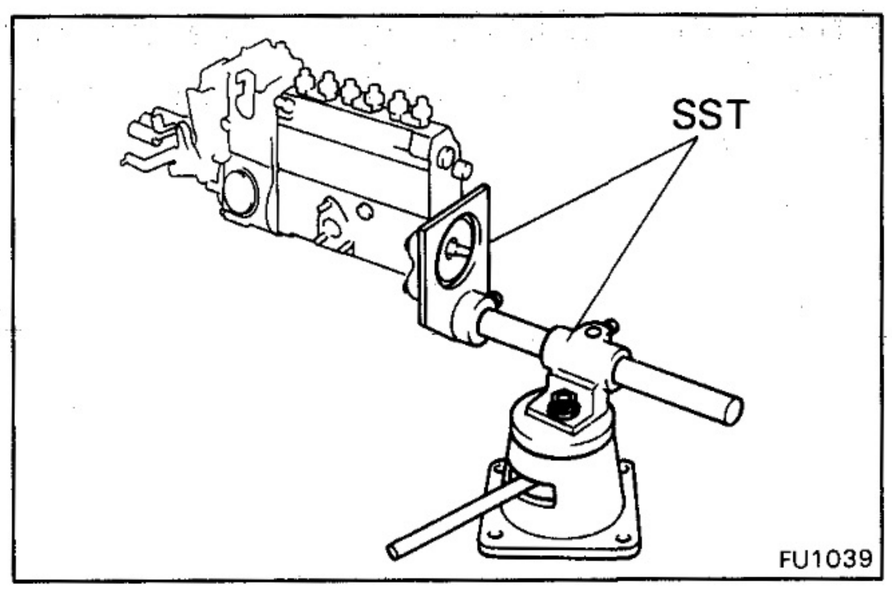

Disassembly of Governor [2H A/T and 12H-T]

(See page FU-33 and 34) 2H A/T
(See page FU-33 and 35) 12H-T

1. MOUNT PUMP ASSEMBLY TO SST (STAND)

SST 09241-76022 and 09245-78010

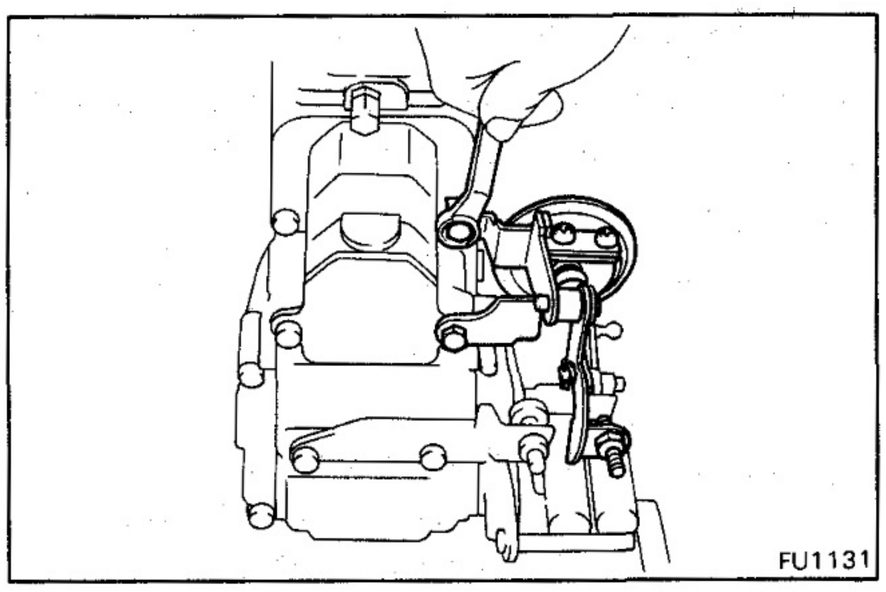

2. [w/ PS OR A/C]
REMOVE IDLE-UP ACTUATOR

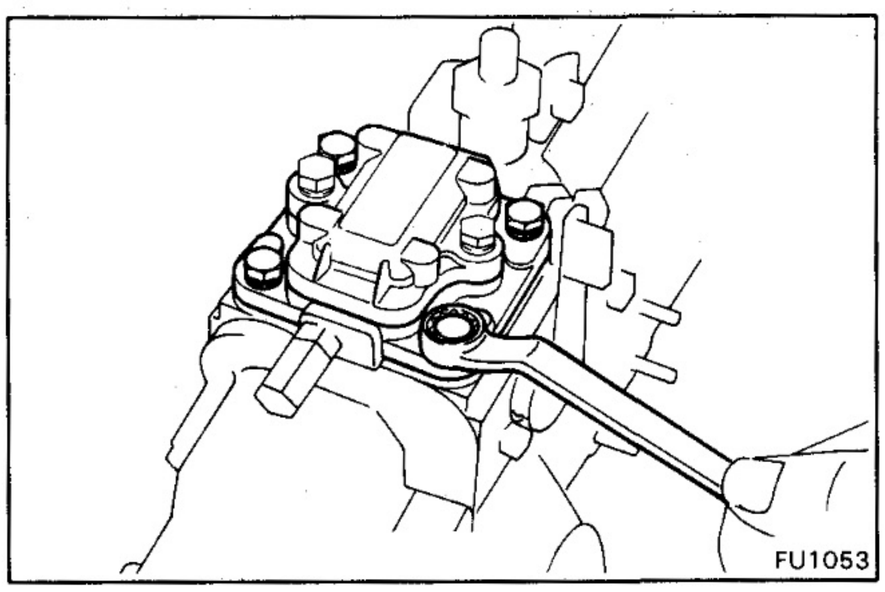

3. [2H A/T]
REMOVE FULL-LOAD STOPPER HOUSING ASSEMBLY

Remove the four bolts, the stopper housing assembly and O-ring.

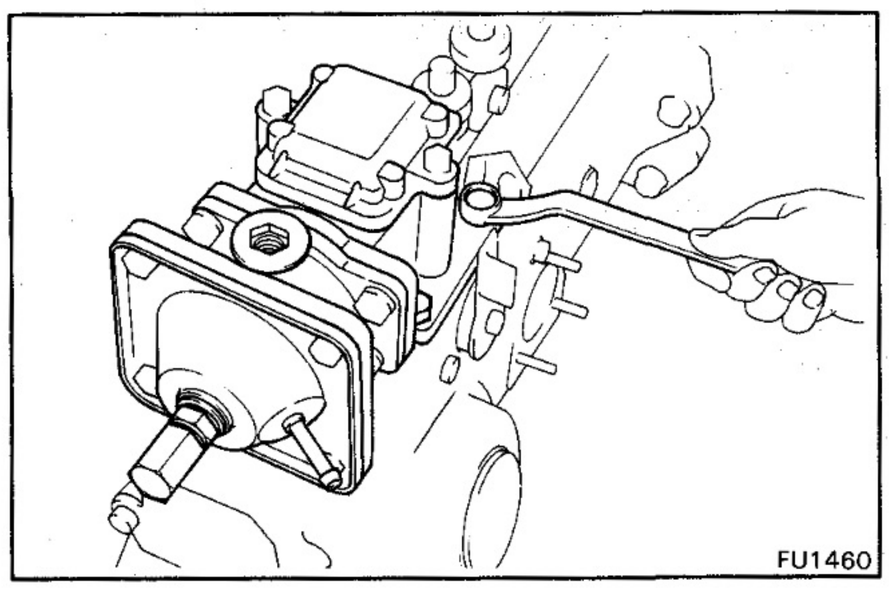

4. [12H-T]
REMOVE FULL-LOAD STOPPER HOUSING ASSEMBLY AND BOOST COMPENSATOR

Remove the four bolts, the stopper housing assembly and O-ring together with the boost compensator.

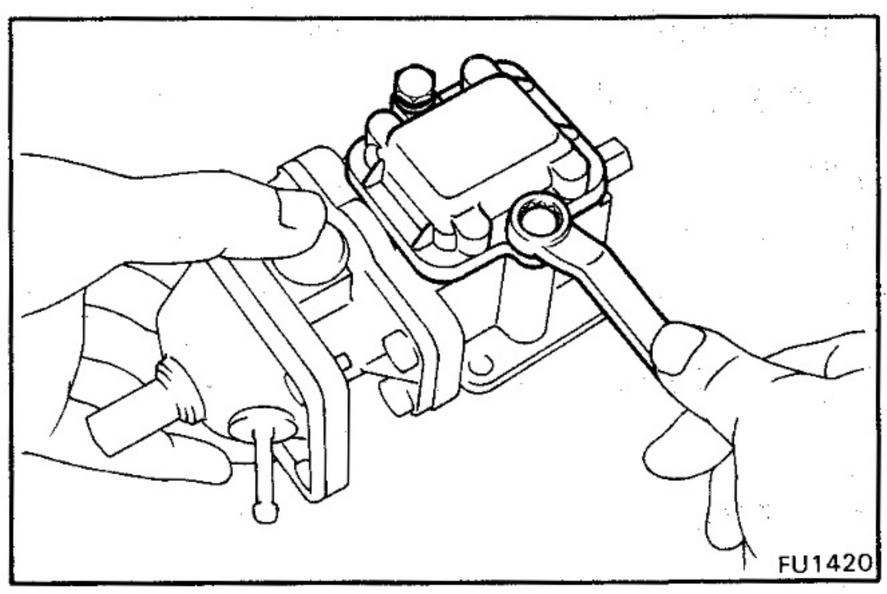

5. [12H-T]
SEPARATE FULL-LOAD STOPPER HOUSING ASSEMBLY AND BOOST COMPENSATOR

(a) Remove the two bolts, cover plate and O-ring.

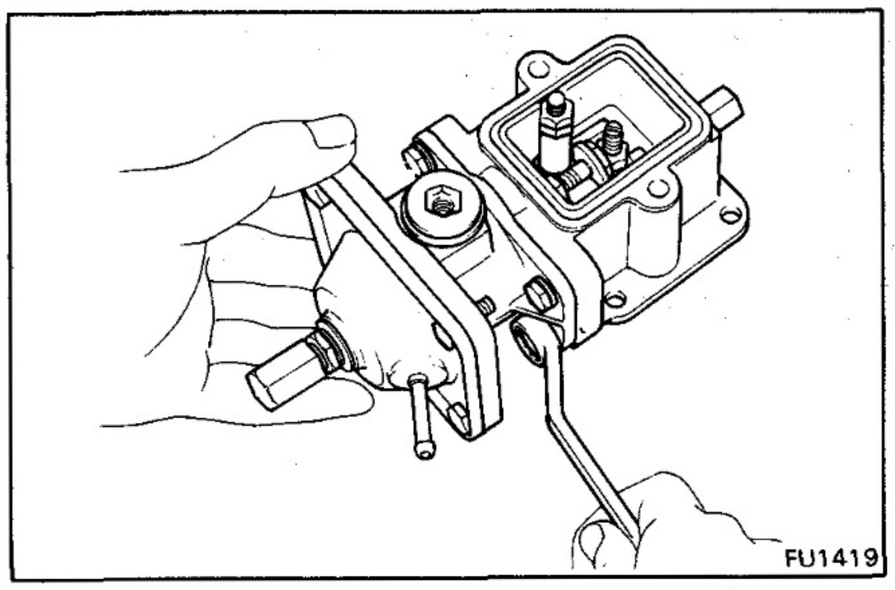

(b) Remove the four bolts, and separate the stopper housing and boost compensator. Remove the O-ring.

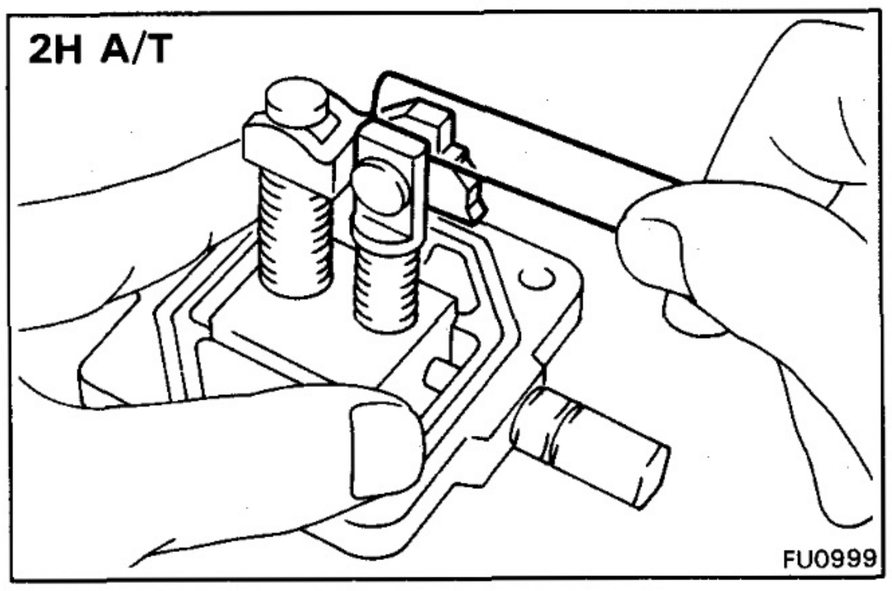

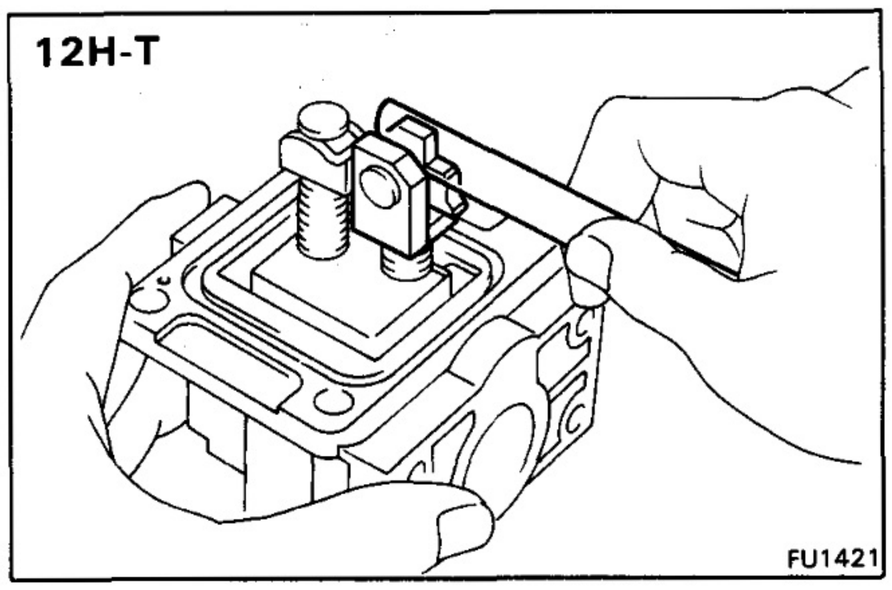

6. CHECK THRUST CLEARANCE OF FULL STOP CAM

Using a feeler gauge, measure the thrust clearance between the full stop cam and No. 2 adapter screw.

Thrust clearance: 0.03 — 0.08 mm (0.0012 — 0.0032 in.)

If the clearance is not within specification, replace the thrust washer.

Thrust washer thickness: 0.05 mm (0.0020 in.)
0.10 mm (0.0039 in.)
0.20 mm (0.0079 in.)

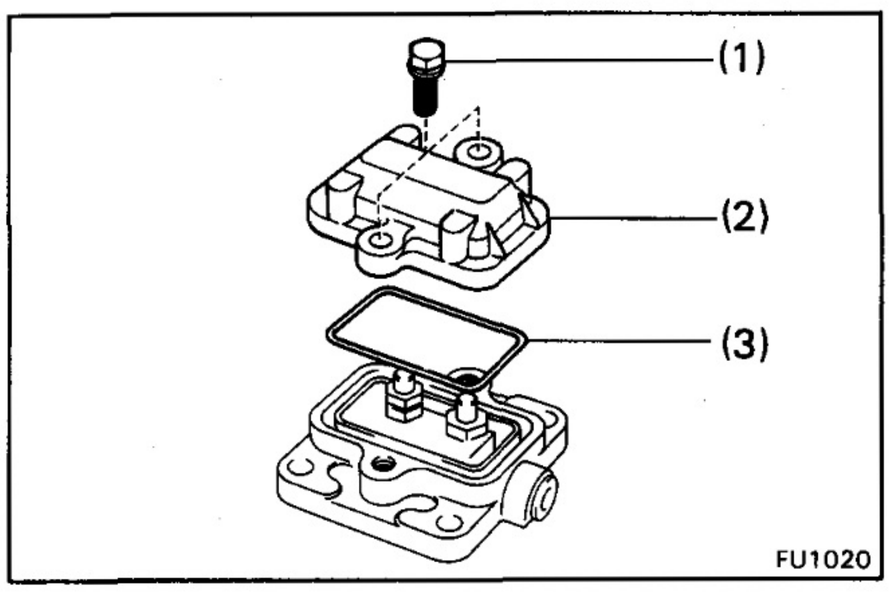

7. DISASSEMBLE FULL-LOAD STOPPER HOUSING ASSEMBLY

[2H A/T]

Disassemble the following parts:

(1) Two bolts
(2) Cover plate
(3) O-ring

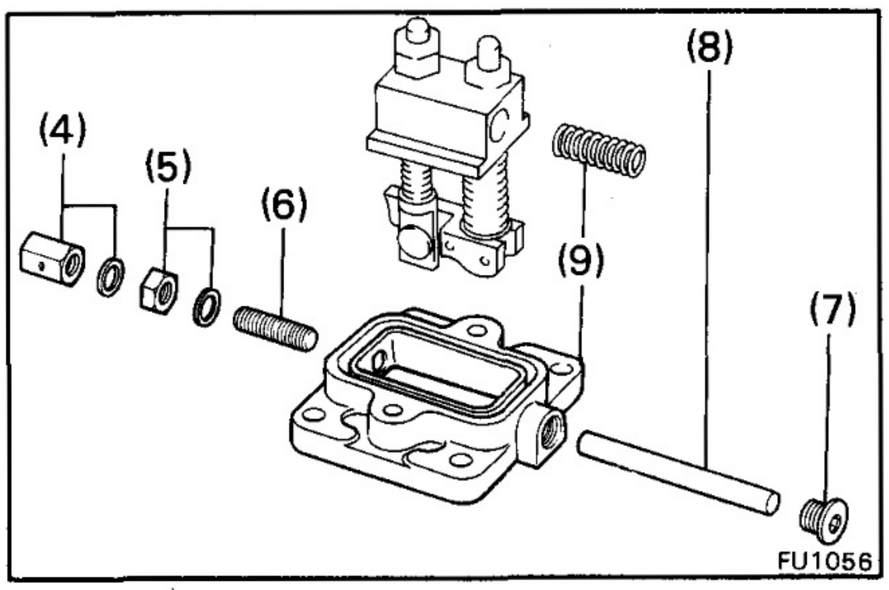

(4) Cap nut and gasket
(5) Lock nut and gasket
(6) Stopper screw
(7) Screw plug
(8) Sliding plate shaft
(9) Full-load stopper housing and spring

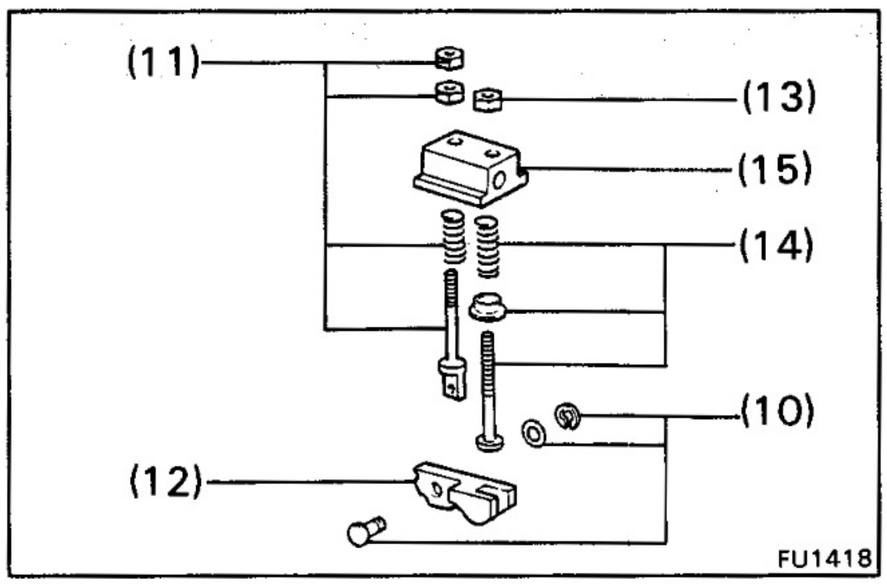

(10) E-ring, thrust washer and connecting pin
(11) Two lock nuts, No. 2 adaptor screw and spring
(12) Full stop cam
(13) Lock nut
(14) No. 1 adaptor screw, bushing and spring
(15) Sliding plate

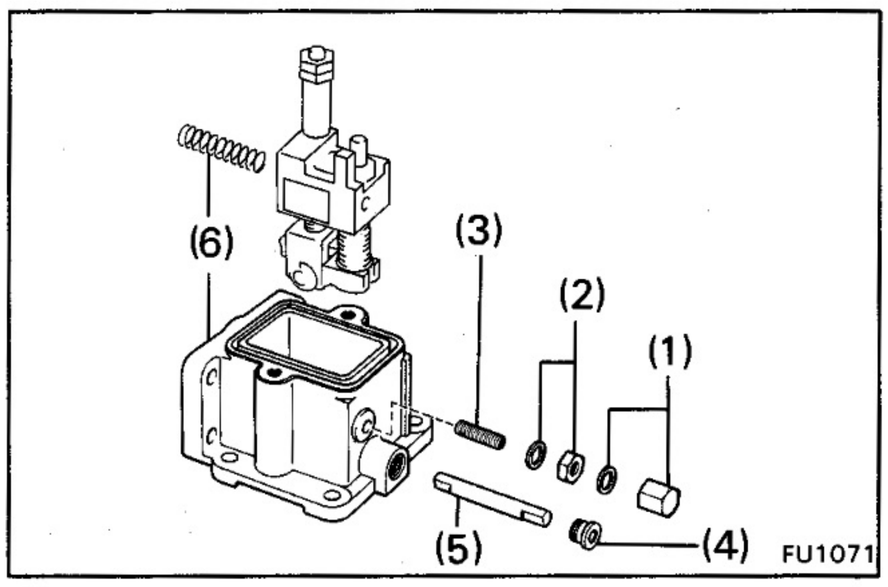

[12H-T]

Disassemble the following parts:

(1) Cap nut and gasket
(2) Lock nut and gasket
(3) Stopper screw
(4) Screw plug
(5) Sliding plate shaft
(6) Full-load stopper housing and spring

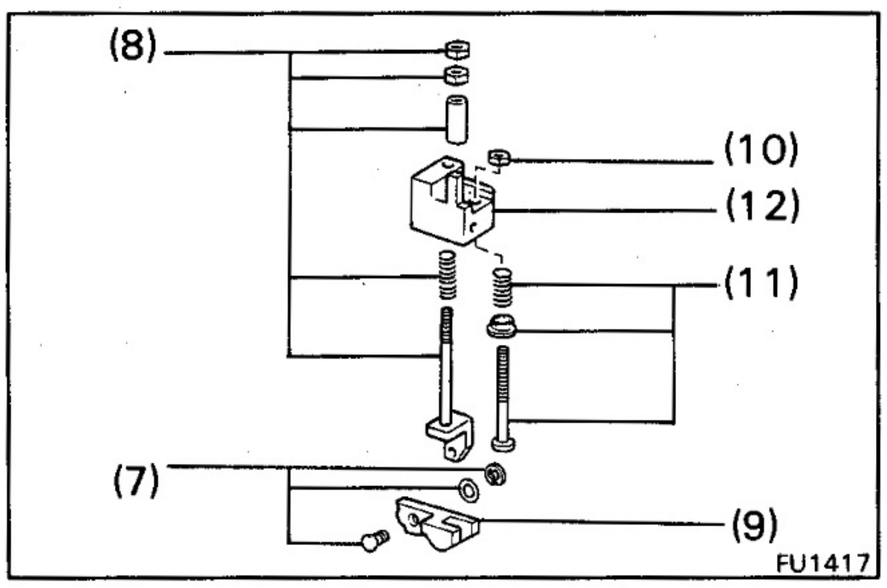

(7) E-ring, thrust washer and connecting pin
(8) Two lock nuts, collar, No. 2 adaptor screw and spring
(9) Full stop cam
(10) Lock nut
(11) No. 1 adaptor screw, spring and bushing
(12) Sliding plate

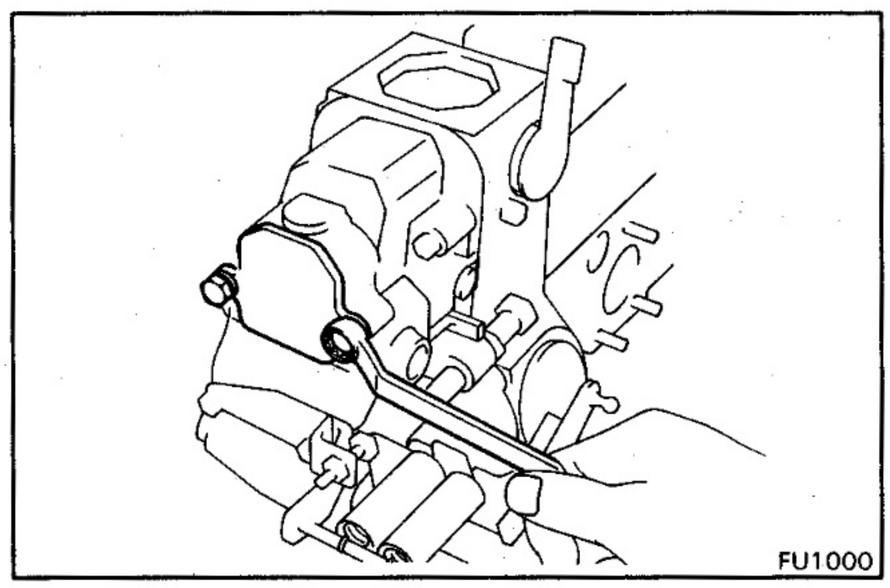

8. REMOVE GOVERNOR COVER ASSEMBLY

(a) Remove the two nuts, cover plate and O-ring.

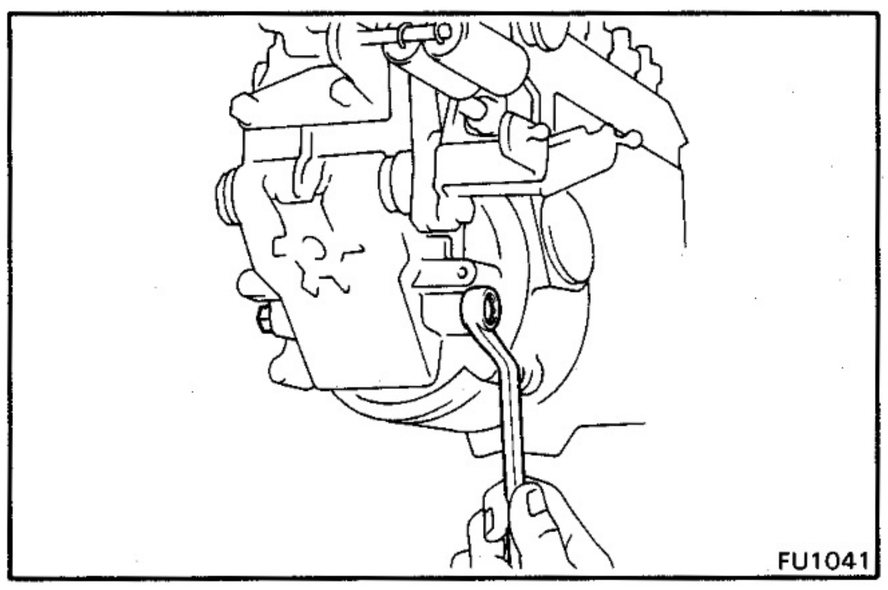

(b) Remove the two screw plugs.

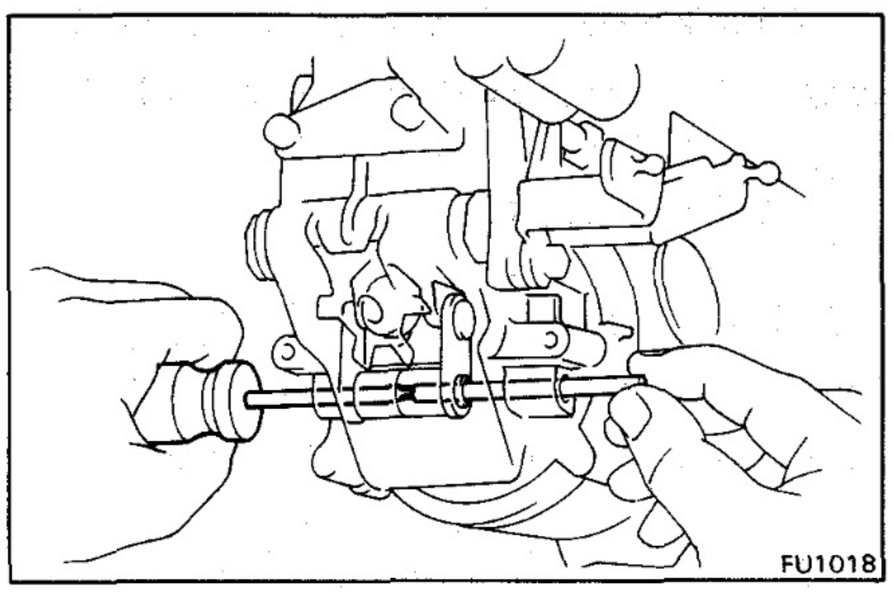

(c) Using a small screwdriver, push out the supporting lever shaft.

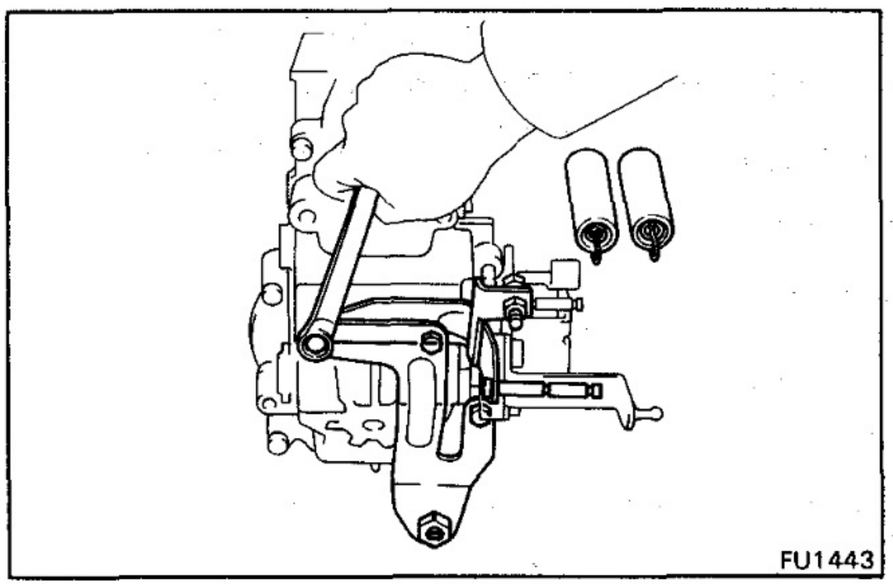

(d) [12H-T]
Remove the two return springs.

(e) [12H-T]
Remove the three bolts, pump stay and spring arm.

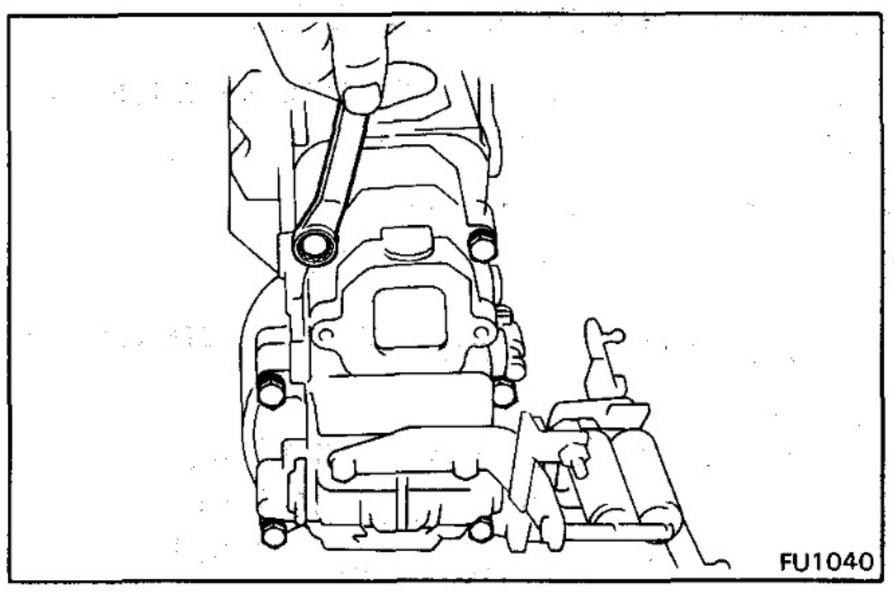

(f) Remove the six bolts.

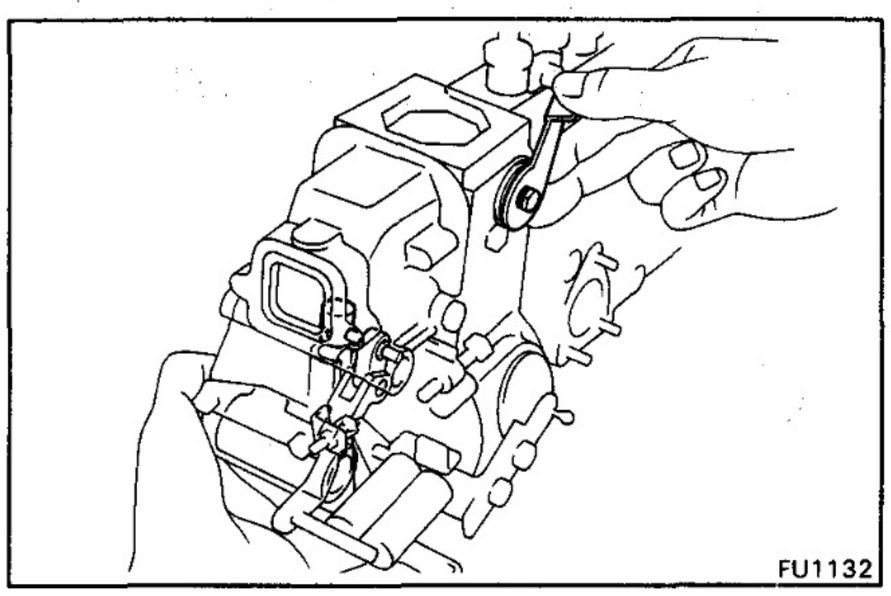

(g) Turn the stop lever, and disconnect the sliding block of the steering lever from the floating lever hole. Remove the governor cover assembly and gasket.

CAUTION: Be careful not drop the supporting levers and slider.

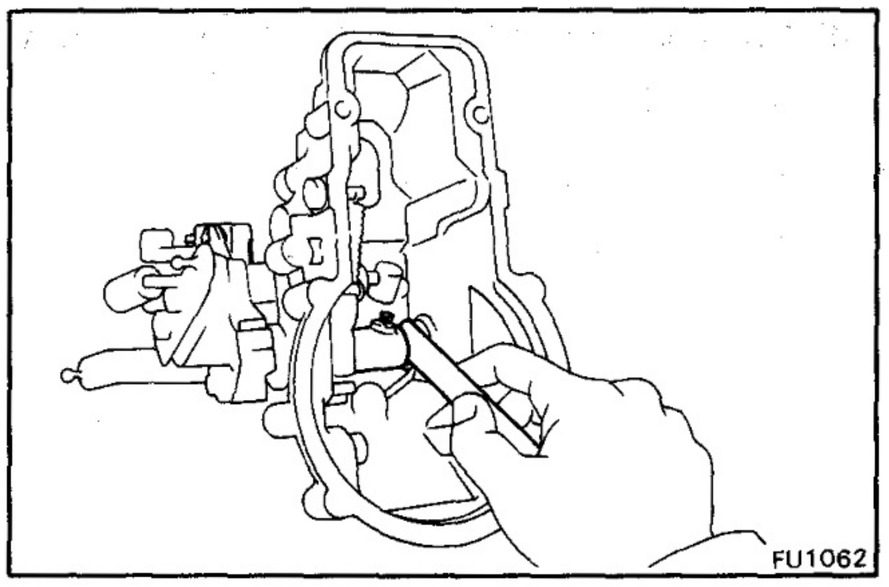

9. CHECK THRUST CLEARANCE OF STEERING LEVER

Using a feeler gauge, measure the thrust clearance between the steering lever and governor cover.

Thrust clearance: 0.05 – 0.20 mm (0.0020 – 0.0079 in.)

If the clearance is not within specification, replace the thrust washer.

Thrust washer thickness:
0.50 mm (0.0197 in.)
0.55 mm (0.0217 in.)
0.60 mm (0.0236 in.)
0.65 mm (0.0256 in.)
0.70 mm (0.0276 in.)
0.75 mm (0.0295 in.)
0.80 mm (0.0315 in.)

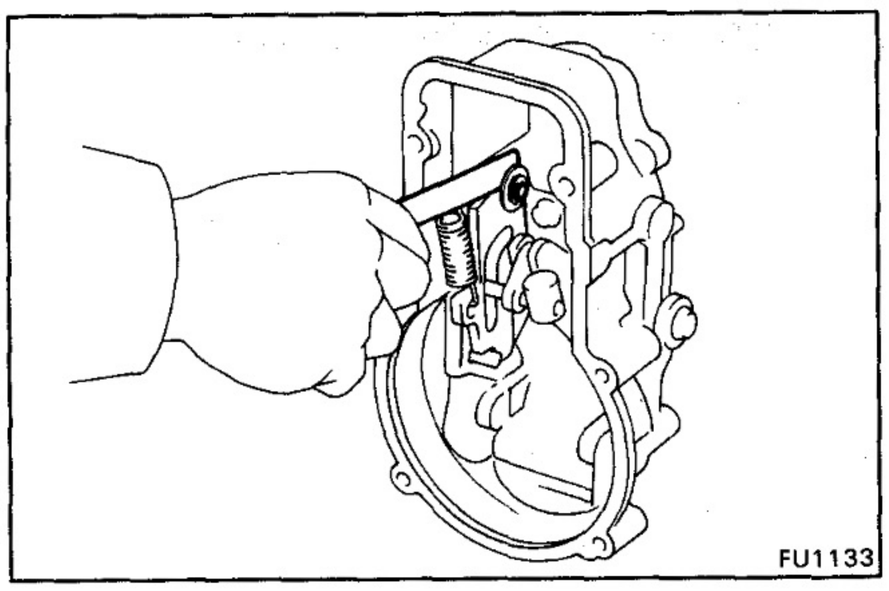

10. CHECK THRUST CLEARANCE OF CAM PLATE

Using a feeler gauge, measure the thrust clearance between the cam plate and governor cover.

Thrust clearance: 0.08 – 0.12 mm (0.0031 – 0.0047 in.)

If the clearance is not within specification, replace the thrust washer.

Thrust washer thickness:
0.2 mm (0.008 in.)
0.3 mm (0.012 in.)
0.4 mm (0.016 in.)
0.5 mm (0.020 in.)

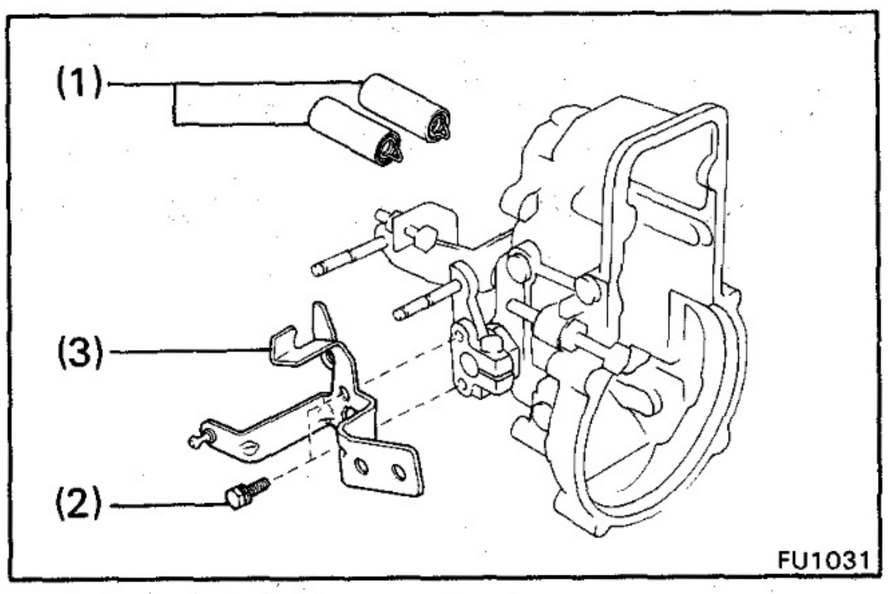

11. DISASSEMBLE GOVERNOR COVER ASSEMBLY

Remove the following parts:

(1) [2H A/T]
Two return springs
(2) Two bolts
(3) No. 2 adjusting lever

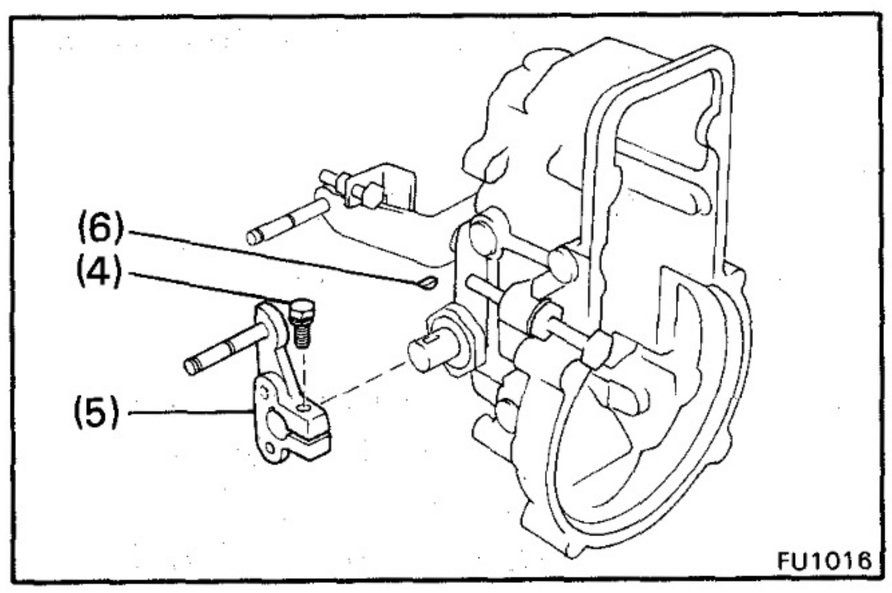

(4) Bolt
(5) No. 1 adjusting lever
(6) Set key

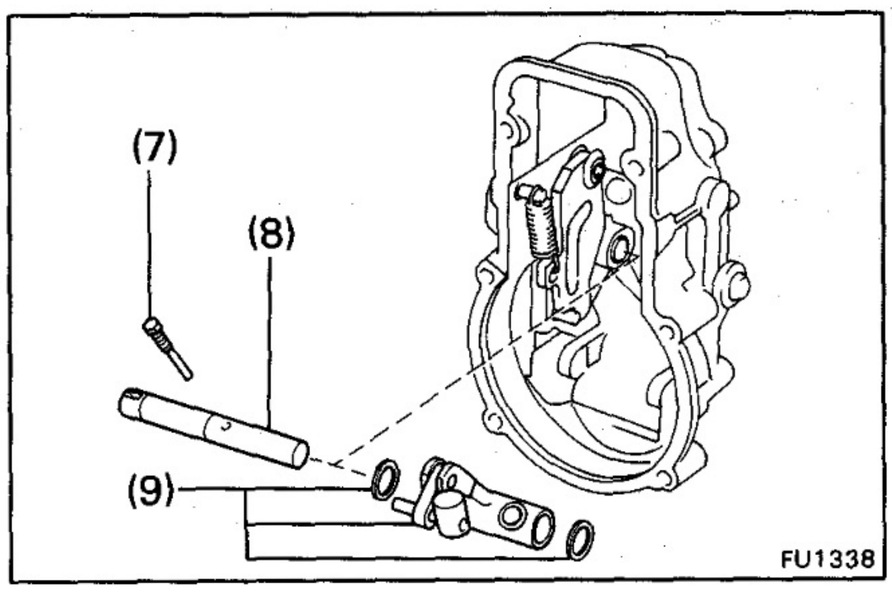

(7) Bolt
(8) Steering lever shaft
(9) Steering lever and thrust washers

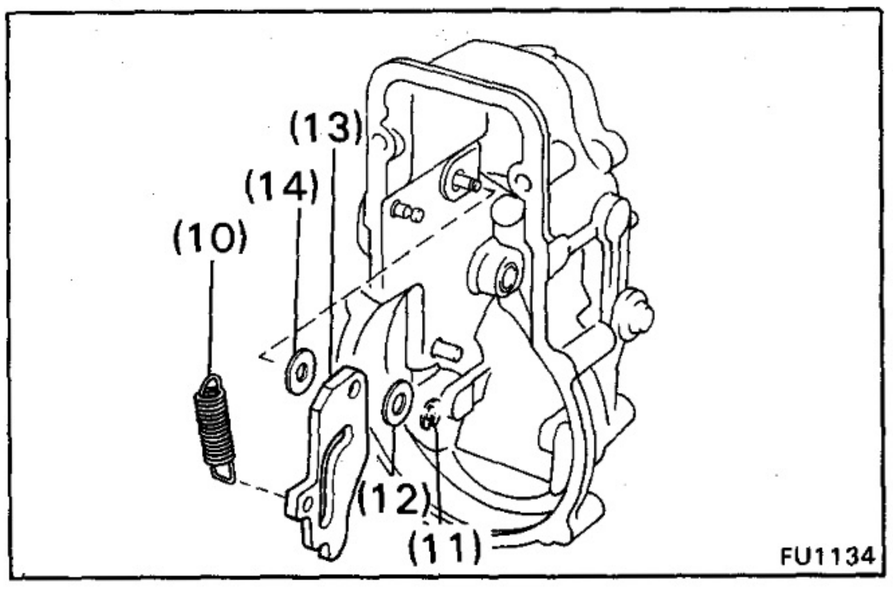

(10) Return spring
(11) E-ring
(12) Thrust washer
(13) Cam plate
(14) Plate washer

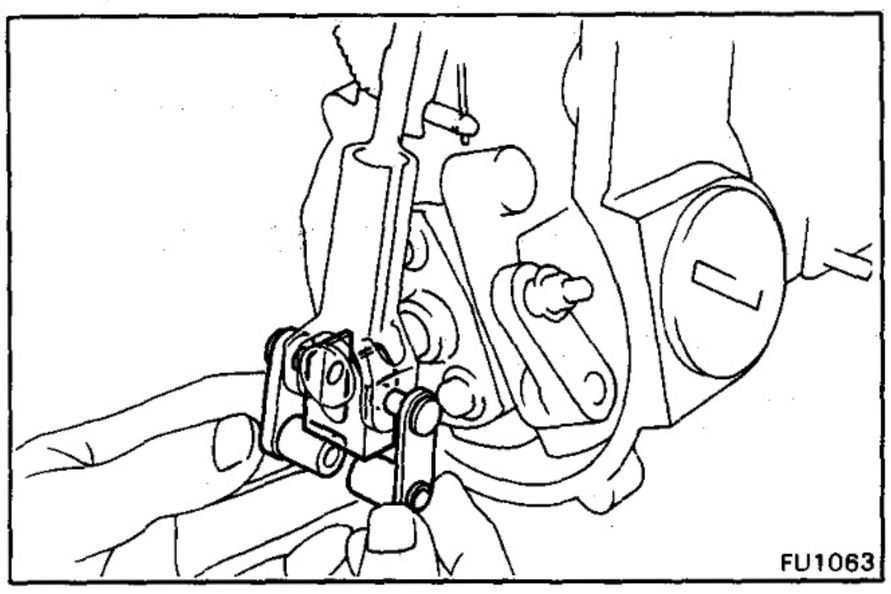

12. REMOVE SUPPORTING LEVERS AND SLIDER

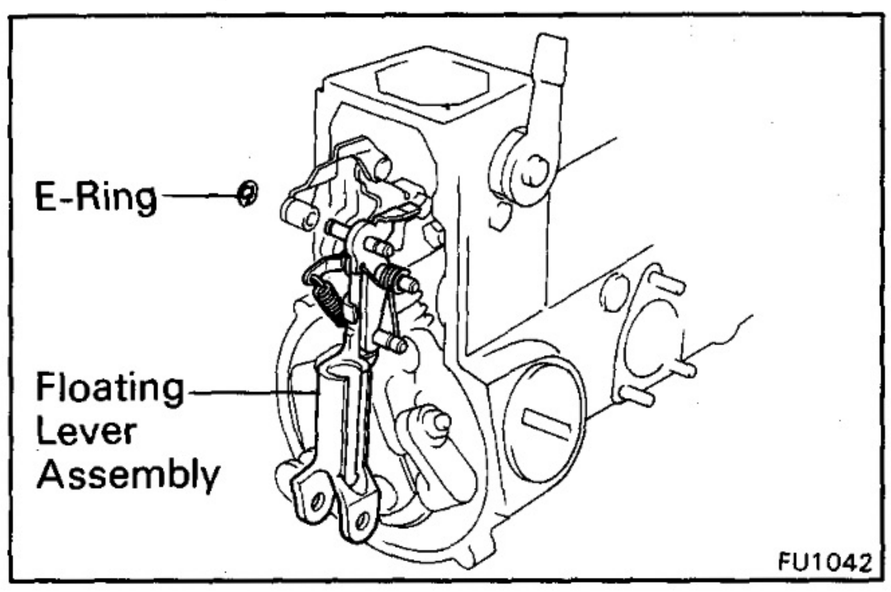

13. REMOVE FLOATING LEVER ASSEMBLY

Remove the E-ring and the floating lever assembly.

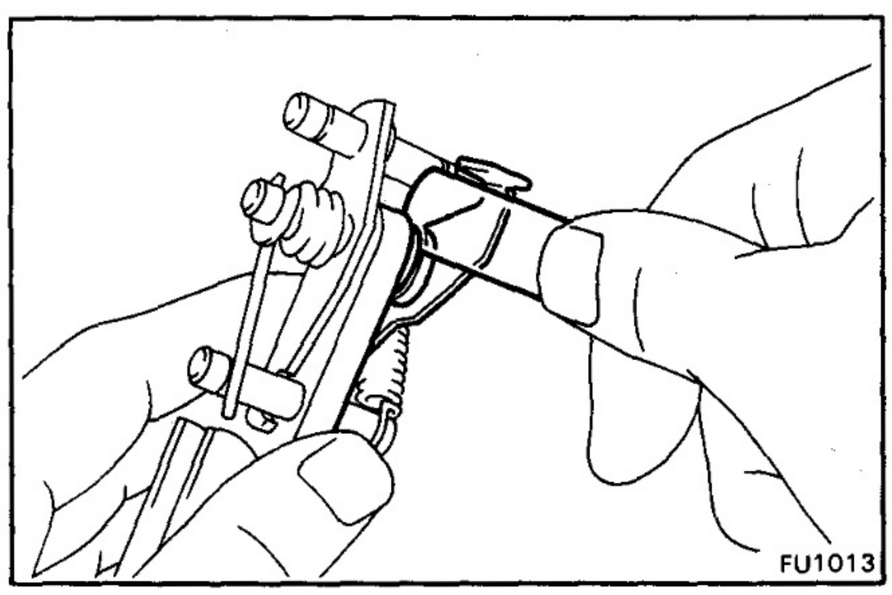

14. CHECK THRUST CLEARANCE OF FLOATING ARM

Using a feer gauge, measure the thrust clearance between the floating arm and floating lever.

Thrust clearance: 0.05 – 0.12 mm (0.0020 – 0.0047 in.)

If the clearance is not within specification, replace the thrust washer.

Thrust washer thickness: 0.05 mm (0.0020 in.)
0.10 mm (0.0039 in.)
0.20 mm (0.0079 in.)
0.40 mm (0.0157 in.)

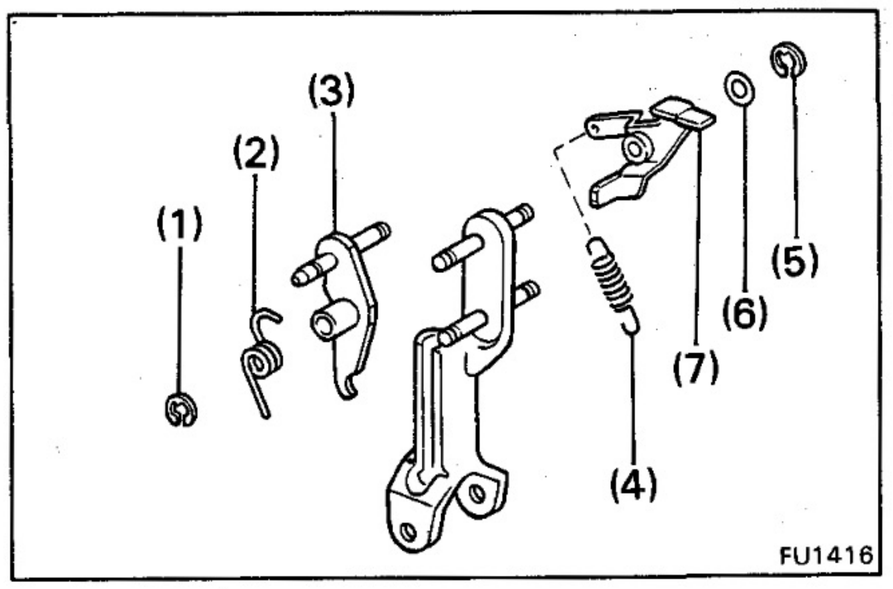

15. DISASSEMBLE FLOATING LEVER ASSEMBLY

Remove the following parts:

(1) E-ring
(2) Return spring
(3) Control lever
(4) Return spring
(5) E-ring
(6) Thrust washer
(7) Floating arm

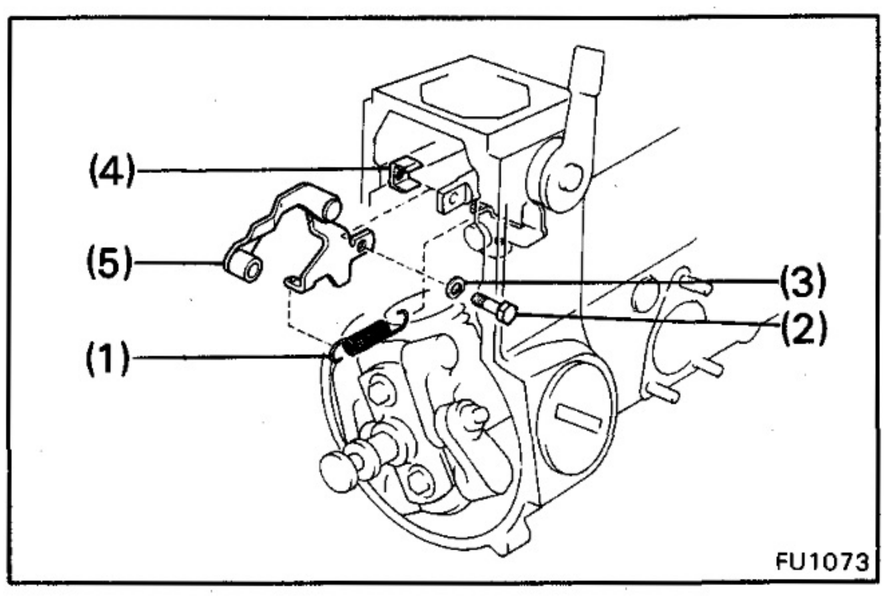

16. REMOVE SHACKLE AND STOPPER ARM ASSEMBLY

Remove the following parts:

(1) Return spring
(2) Bolt
(3) Spring washer
(4) Arm nut
(5) Shackle and stopper arm assembly

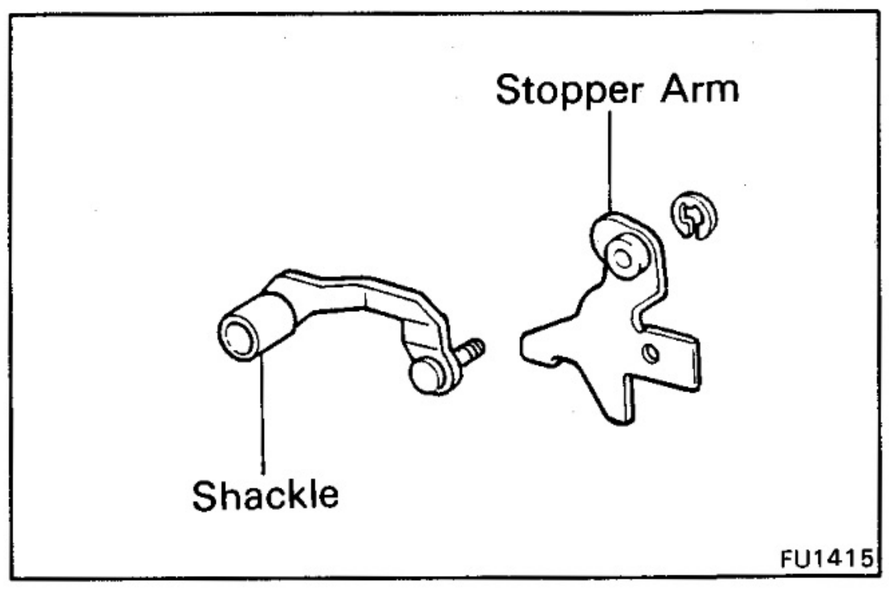

17. SEPARATE SHACKLE AND STOPPER ARM

Remove the E-ring, and separate the shackle and stopper arm.

18. CHECK THRUST CLEARANCE OF JOINTING BOLT (See page FU-81)

Thrust clearance: 1.5 — 2.0 mm (0.059 — 0.079 in.)

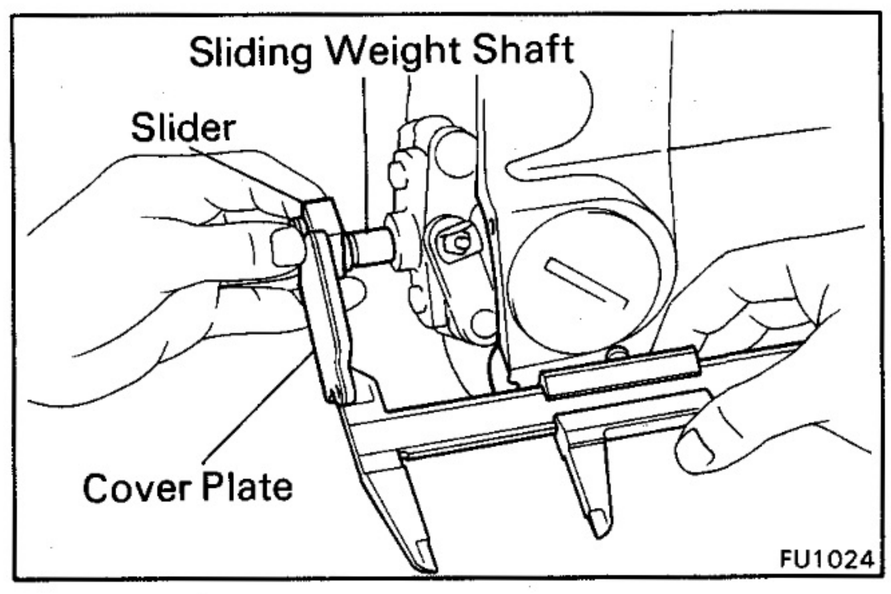

19. CHECK FITTING DIMENSIONS OF SLIDING WEIGHT SHAFT

While pulling on the sliding weight shaft, measure the fitting dimensions with calipers as shown.

Fitting dimensions: 49.7 — 50.1 mm (1.957 — 1.972 in.)

If the dimensions are not within specification, replace the sliding weight shaft.

Sliding weight shaft length:
30.7 mm (1.209 in.)
30.9 mm (1.217 in.)
31.1 mm (1.224 in.)
31.3 mm (1.232 in.)
31.5 mm (1.240 in.)
31.7 mm (1.248 in.)
31.9 mm (1.256 in.)

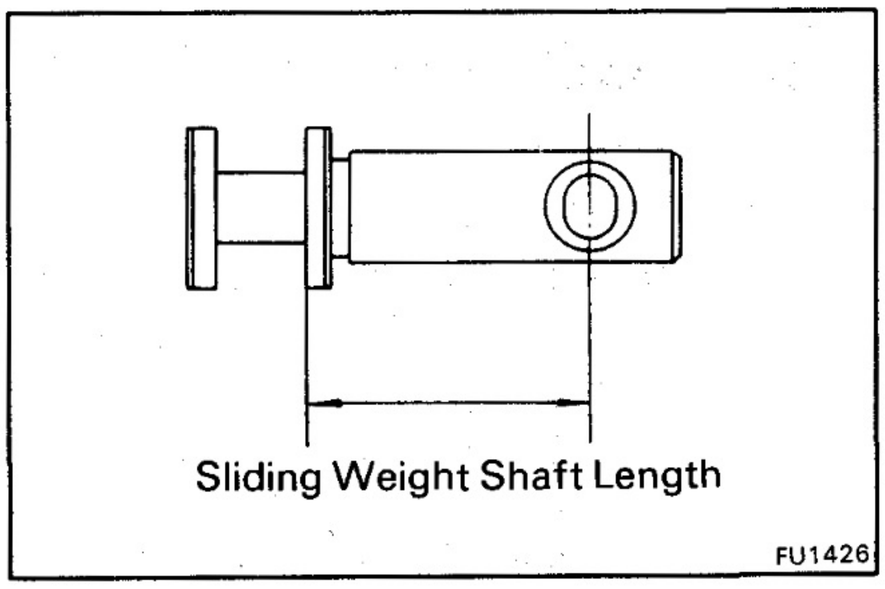

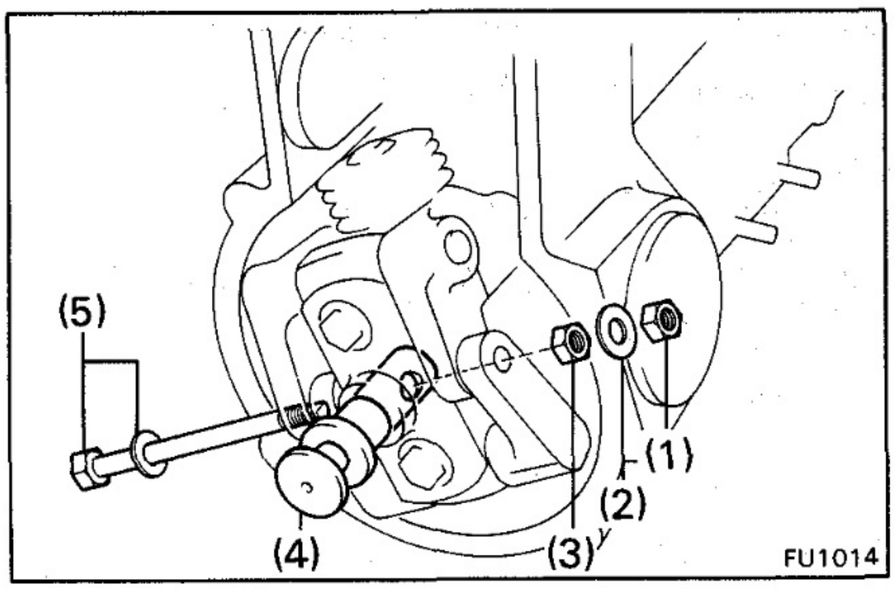

20. REMOVE SLIDING WEIGHT SHAFT

(a) Unstake the lock washer.

(b) Remove the following parts:

(1) Lock nut
(2) Lock washer
(3) Lock nut
(4) Jointing bolt with thrust washer
(5) Sliding weight shaft

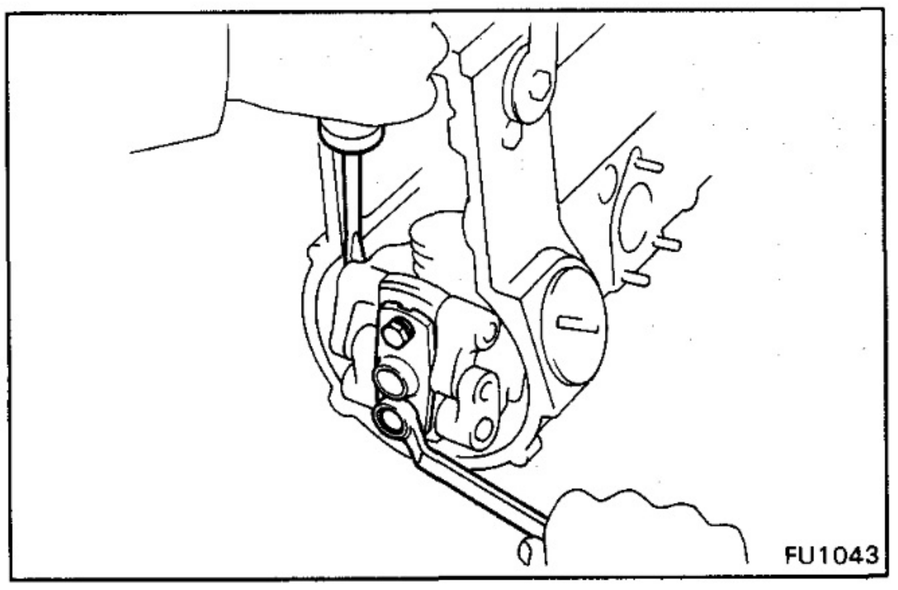

21. REMOVE GUIDE BUSHING

Remove the two bolts and guide bushing.

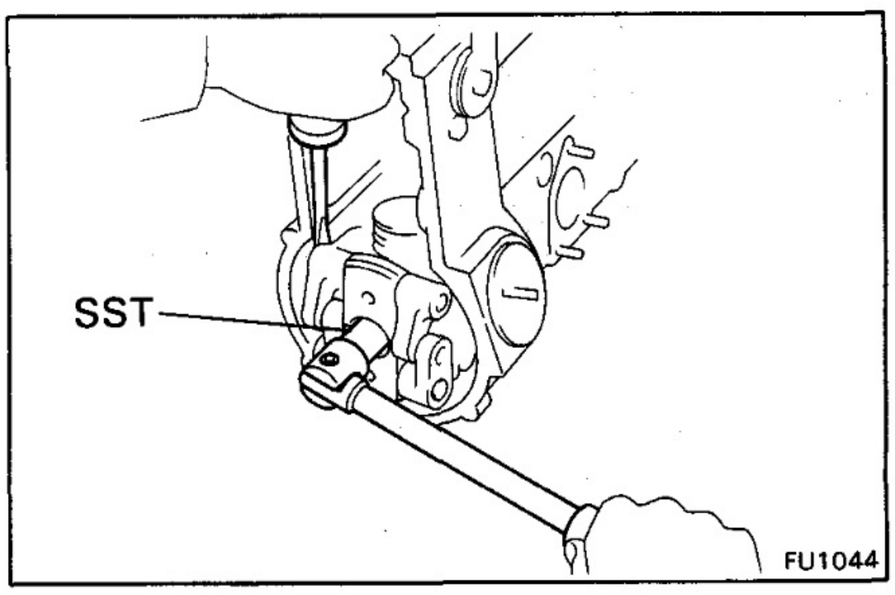

22. REMOVE FLYWEIGHT ASSEMBLY

(a) Using SST, remove the round nut.

SST 09260-47010 (09260-78010)

(b) [2H A/T and 12H-T A/T]
Remove the spring washer.

(c) [12H M/T]
Remove the thrust washer and the flyweight assembly.

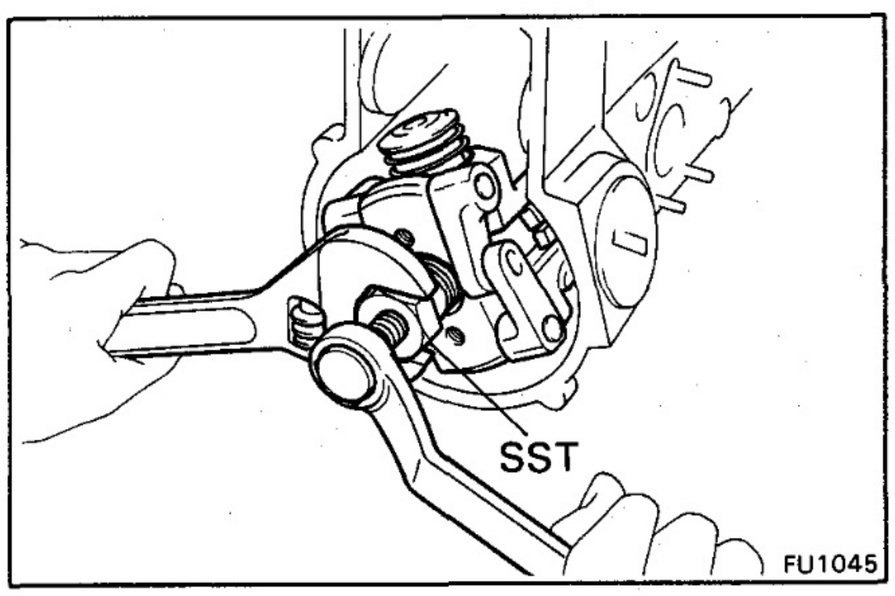

(d) [2H]
Using SST, remove the flyweight assembly.

SST 09260-47010 (09267-76011)

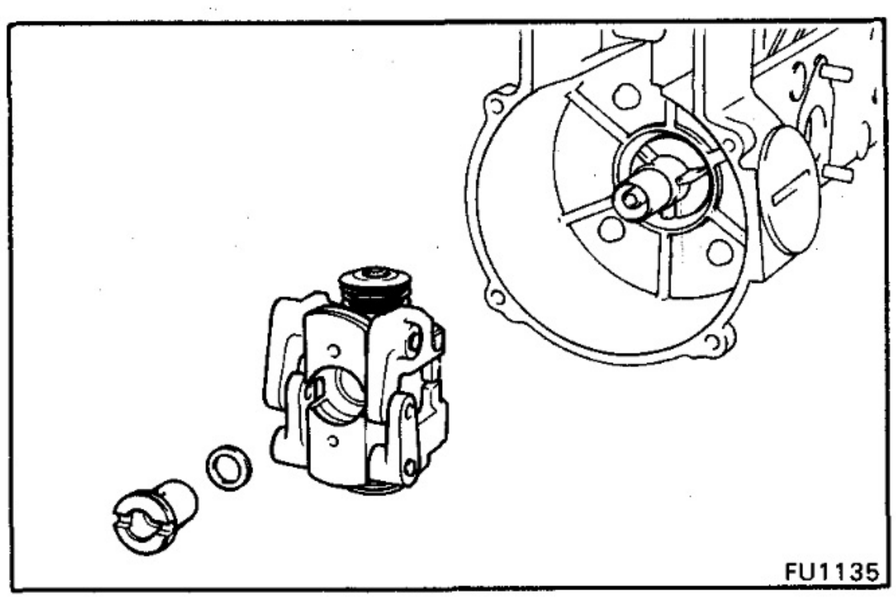

23. [12H-T M/T]
CHECK THRUST CLEARANCE OF FLYWEIGHT

(a) Install the flyweight without the dampers.

(b) Install the thrust washer and round nut.

Torque: 550 kg-cm (40 ft-lb, 54 N·m)

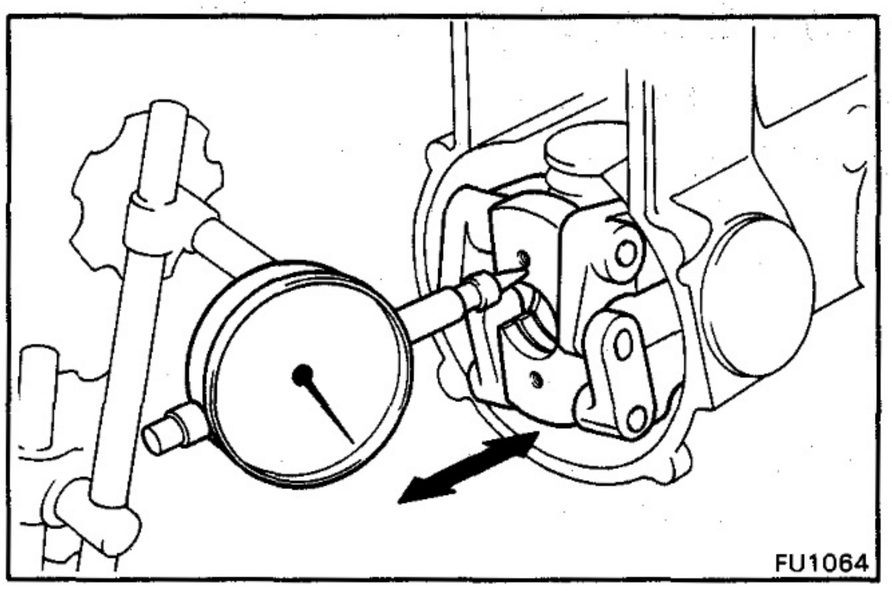

(c) Using a dial indicator, measure the thrust clearance between the flyweight and camshaft bushing.

Thrust clearance: 0.02 — 0.10 mm (0.0008 — 0.0039 in.)

If the clearance is not within specification, replace the thrust washer.

Thrust washer thickness:
1.60 mm (0.0630 in.)
1.65 mm (0.0650 in.)
1.70 mm (0.0670 in.)
1.75 mm (0.0689 in.)
1.80 mm (0.0709 in.)
1.85 mm (0.0728 in.)
1.90 mm (0.0748 in.)
1.95 mm (0.0768 in.)
2.00 mm (0.0787 in.)
2.10 mm (0.0827 in.)
2.20 mm (0.0866 in.)
2.30 mm (0.0906 in.)

(d) Remove the flyweight assembly.

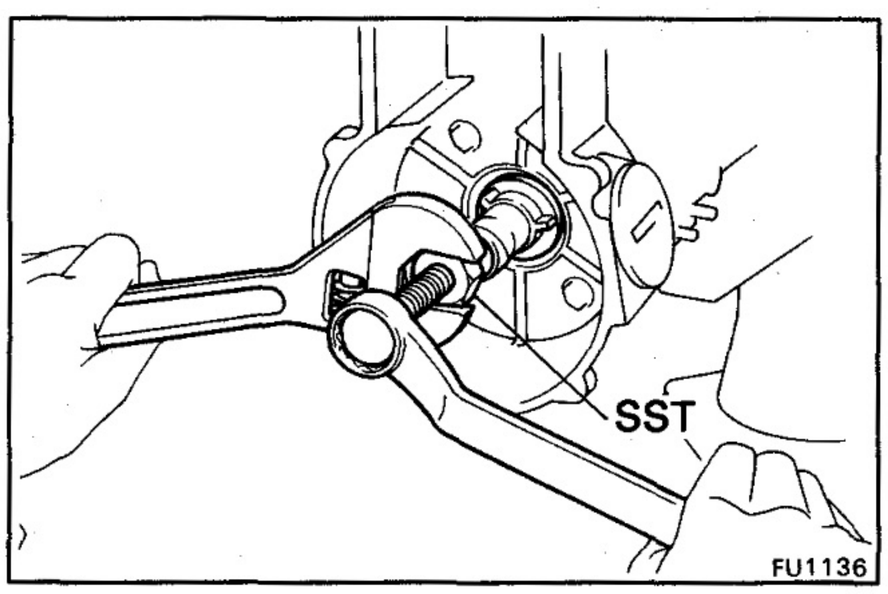

24. [12H-T M/T]
REMOVE CAMSHAFT BUSHING

Using SST, remove the camshaft bushing.
SST 09260-58010 (09267-76030)

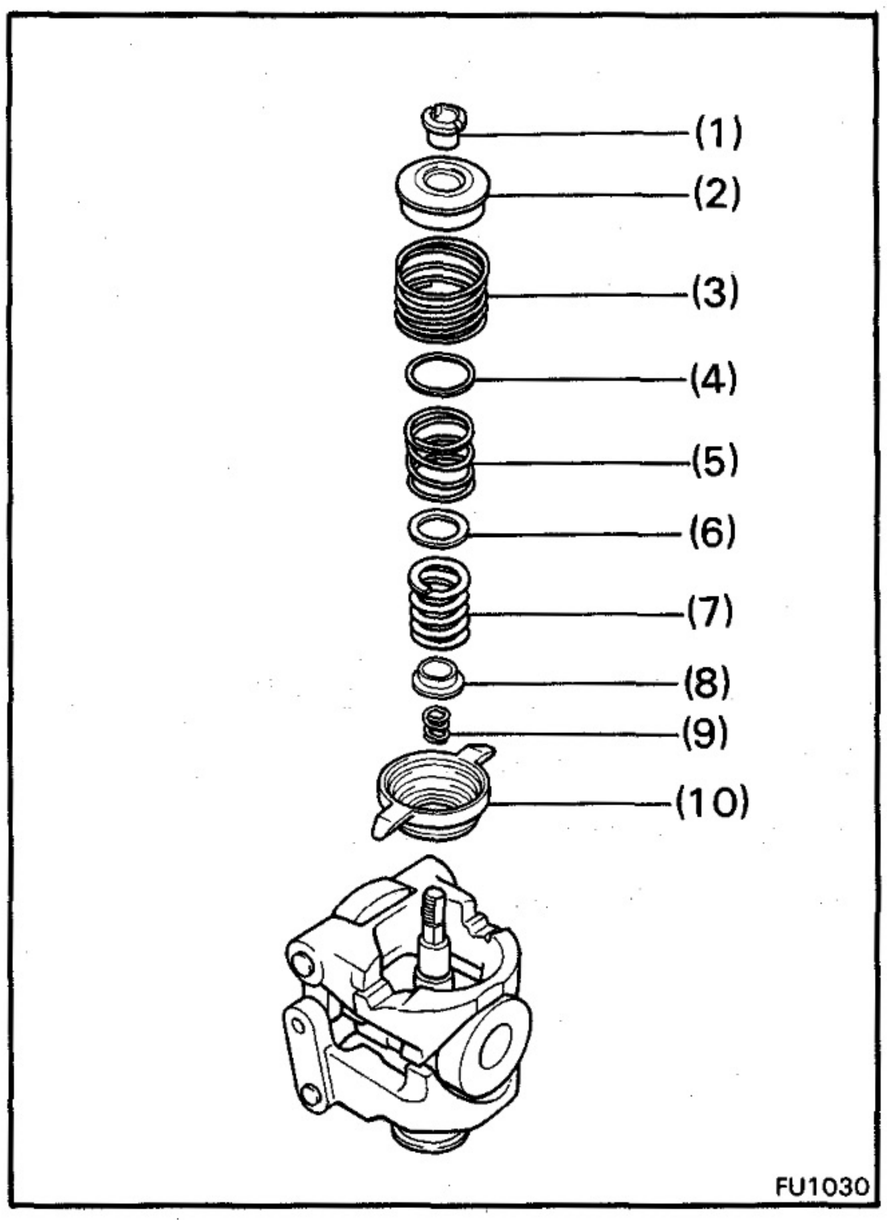

25. DISASSEMBLE FLYWEIGHT ASSEMBLY

Remove the following parts:
(1) Adjusting nut
(2) Spring guide
(3) Outer idle spring
(4) Outer adjusting washer
(5) Inner idle spring
(6) Inner adjusting washer
(7) Speed control spring
(8) Inner spring seat
(9) Mechanical spring
(10) Spring seat

CAUTION: Be careful not to get these parts mixed up.

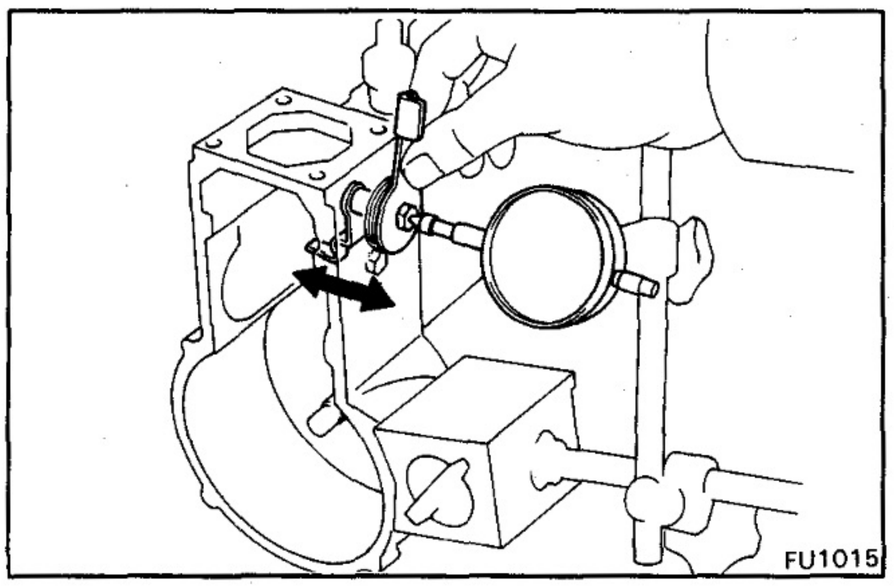

26. CHECK THRUST CLEARANCE OF STOPPER ARM

Using a dial indicator, measure the thrust clearance between the stopper arm and governor housing.

Thrust clearance: 0.05 – 0.20 mm (0.0020 – 0.0079 in.)

If the clearance is not within specification, replace the thrust washer.

Thrust washer thickness: 0.1 mm (0.004 in.)
0.2 mm (0.008 in.)
0.5 mm (0.020 in.)

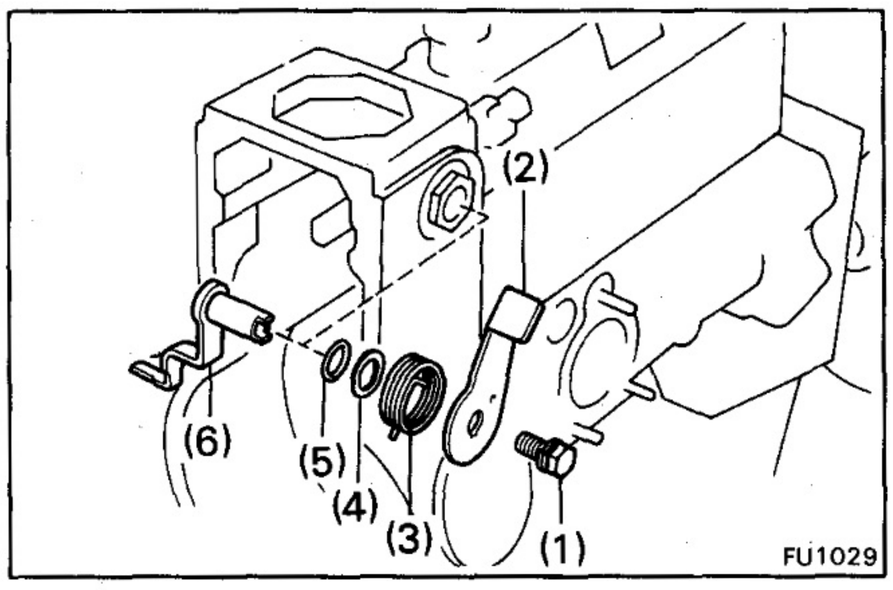

27. REMOVE STOP LEVER AND STOPPER ARM

Remove the following parts:

(1) Bolt
(2) Stop lever
(3) Return spring
(4) Thrust washer(s)
(5) O-ring
(6) Stopper arm

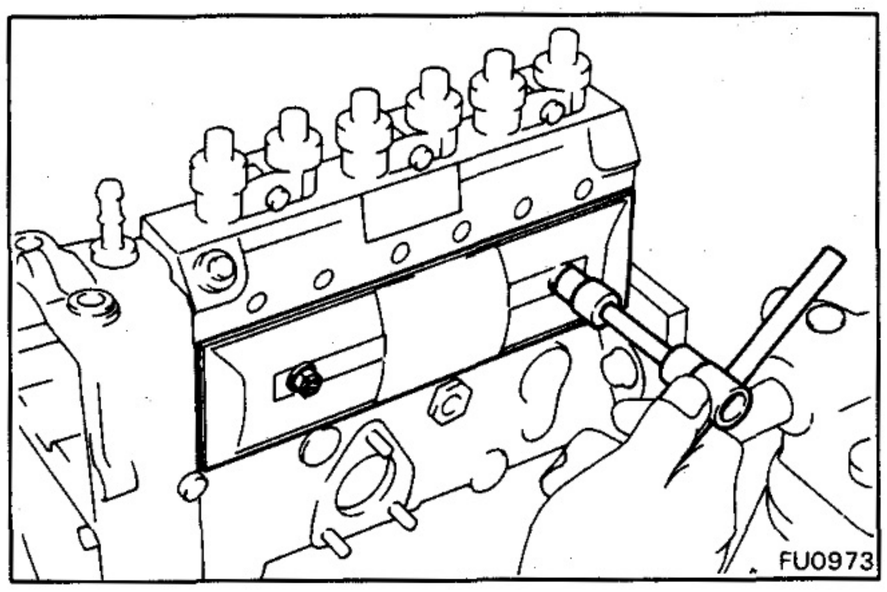

Disassembly of Pump Body

(See page FU-32 and 36) 2H M/T
(See page FU-33, 34 and 36) 2H A/T
(See page FU-33, 35 and 36) 12H-T

1. REMOVE PUMP COVER

Remove the two bolts, pump cover and gaskets.

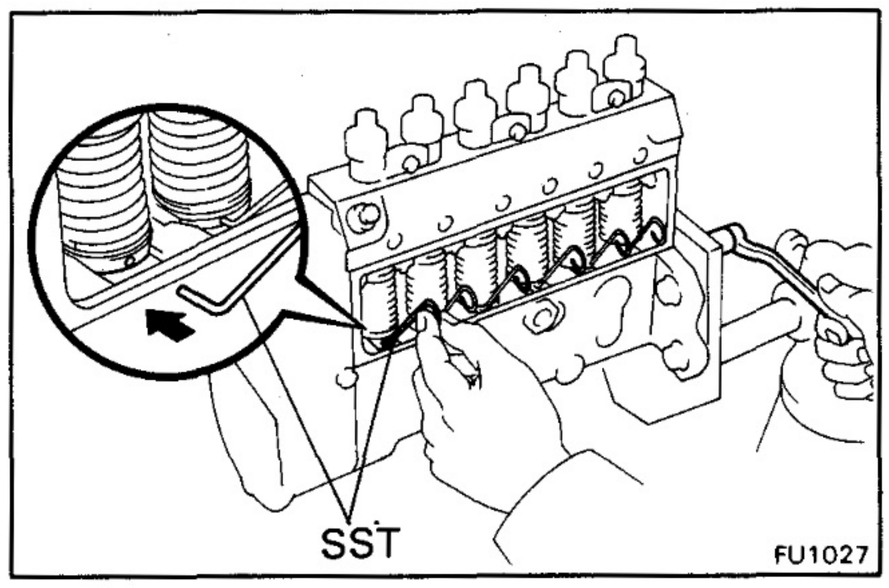

2. INSTALL SST TO TAPPET SERVICE HOLES

Turn the camshaft, and insert SST into each tappet service hole when the tappets are at their hightest positions.

SST 09260-47010 (09274-46011)

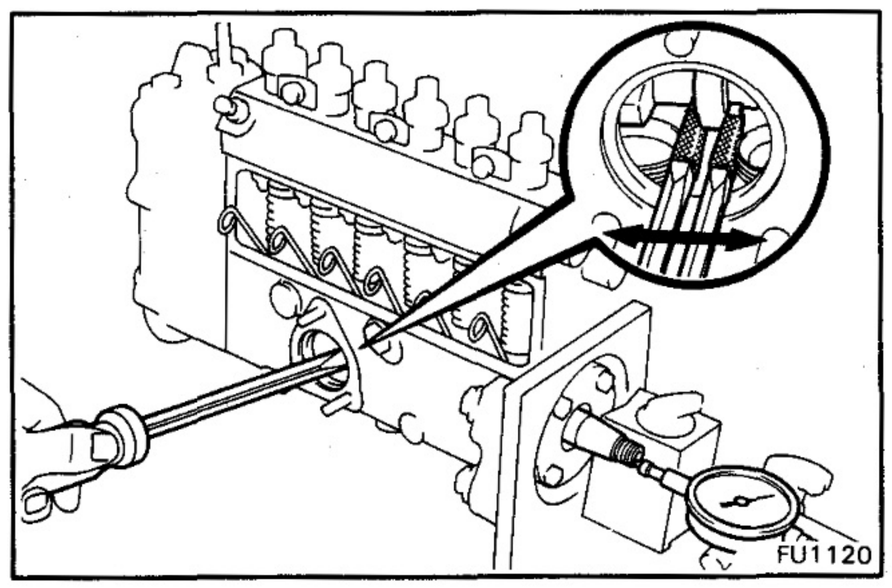

3. CHECK THRUST CLEARANCE OF CAMSHAFT

Using a dial indicator, measure the thrust clearance while prying the camshaft back and forth with a screwdriver.

Standard clearance: 0.03 – 0.05 mm (0.0012 – 0.0020 in.)
Maximum clearance: 0.1 mm (0.004 in.)

CAUTION: Be careful not to damage the camshaft. Tape the screwdriver tip.

If the clearance is greater than maximum, replace the thrust washer.

Thrust washer thickness:

2H (Front and rear) and 12H-T (Rear)
0.10 mm (0.0039 in.)
0.12 mm (0.0047 in.)
0.14 mm (0.0055 in.)
0.16 mm (0.0063 in.)
0.18 mm (0.0071 in.)
0.50 mm (0.0197 in.)

12H-T (Front)
0.10 mm (0.0039 in.)
0.15 mm (0.0059 in.)
0.30 mm (0.0118 in.)
0.50 mm (0.0197 in.)
1.00 mm (0.0394 in.)
1.50 mm (0.0591 in.)

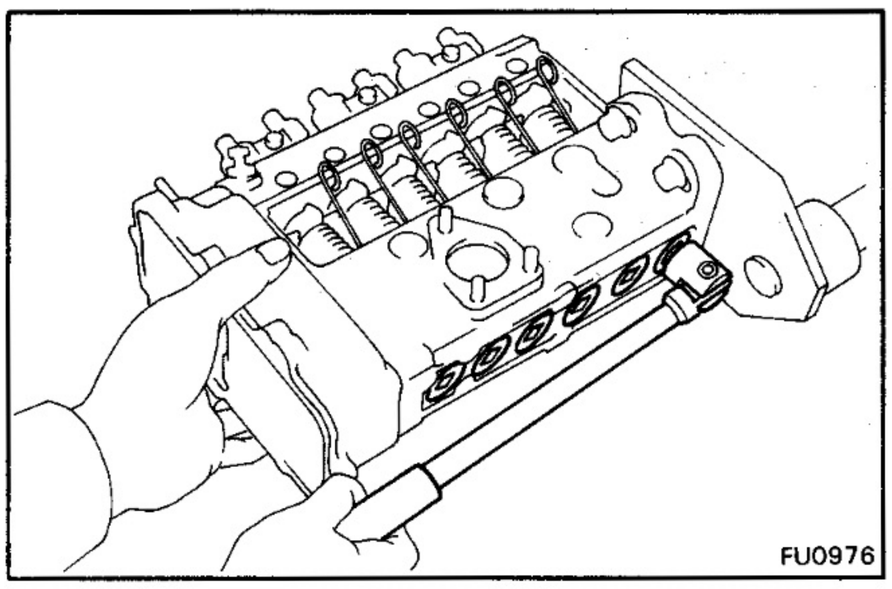

4. REMOVE PLATE PLUGS

Remove the six plate plugs.

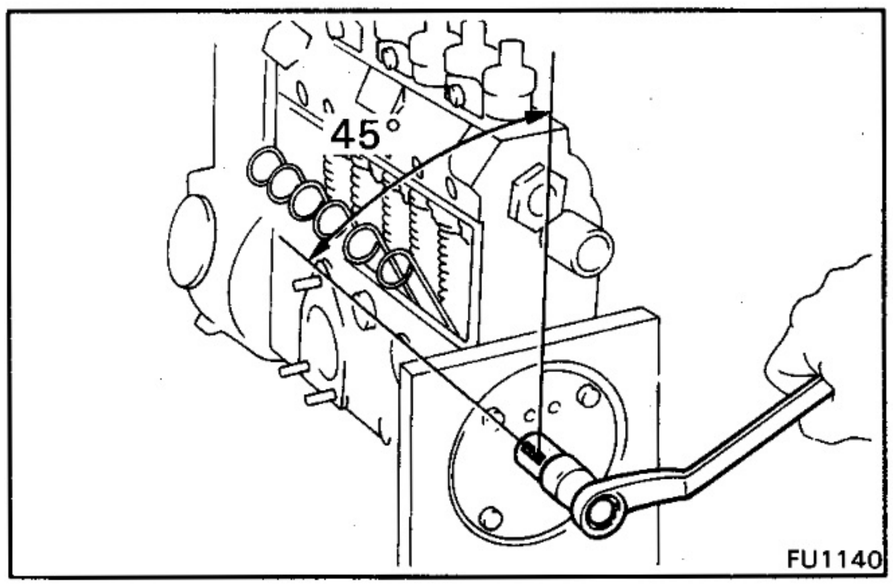

5. REMOVE CAMSHAFT AND GOVERNOR HOUSING

(a) [12H-T]
Turn the camshaft, and position the key groove of it as shown.

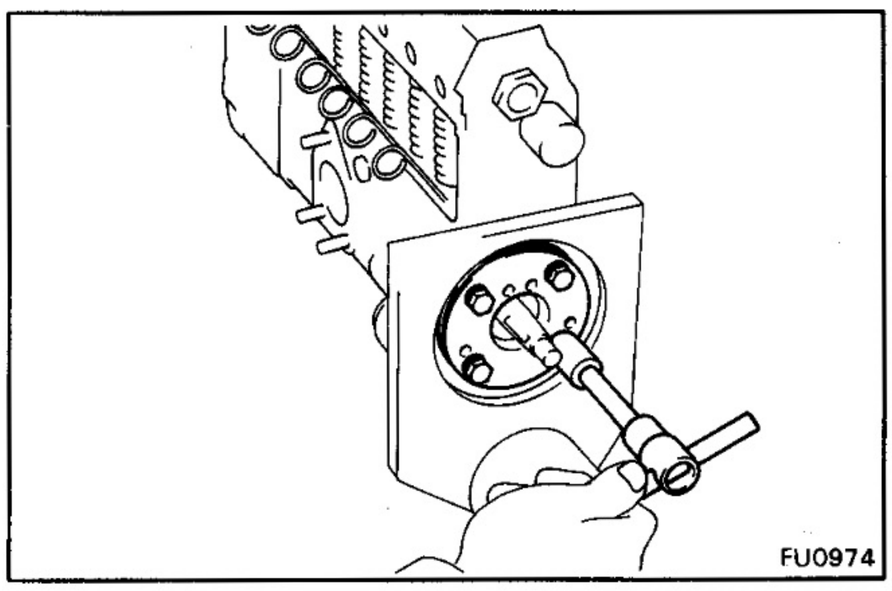

(b) Remove the four bolts of the bearing cover.

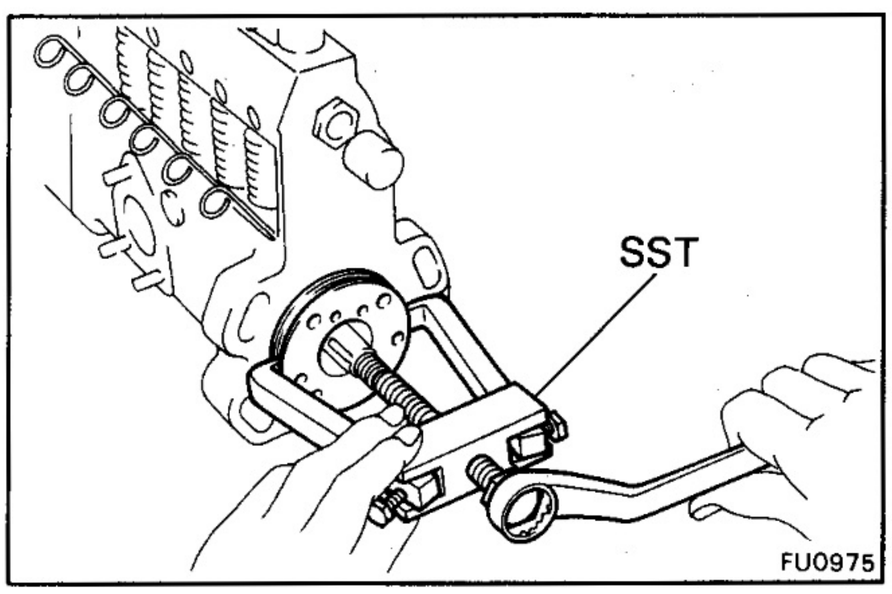

(c) Using SST, remove the bearing cover.
SST 09260-47010 (09287-58010)

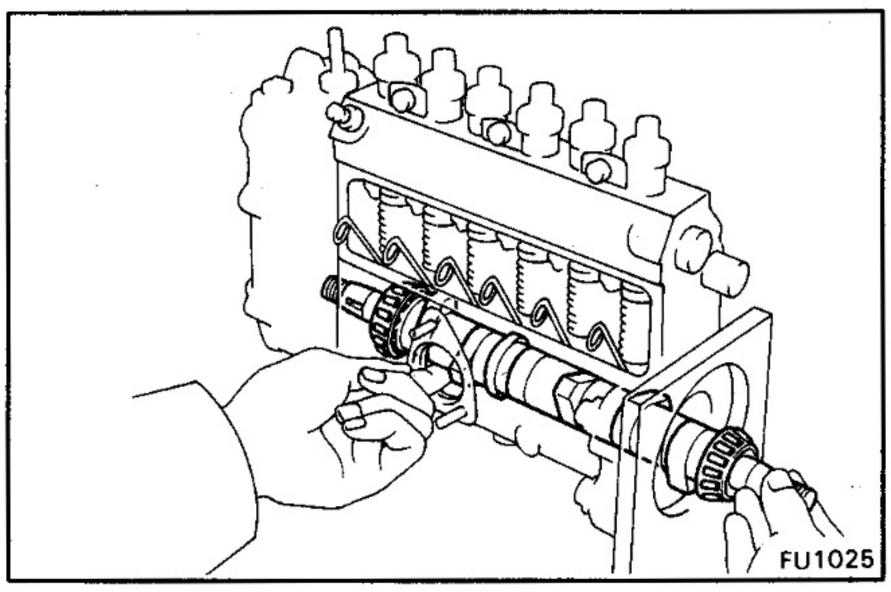

(d) [2H]
Remove the camshaft.

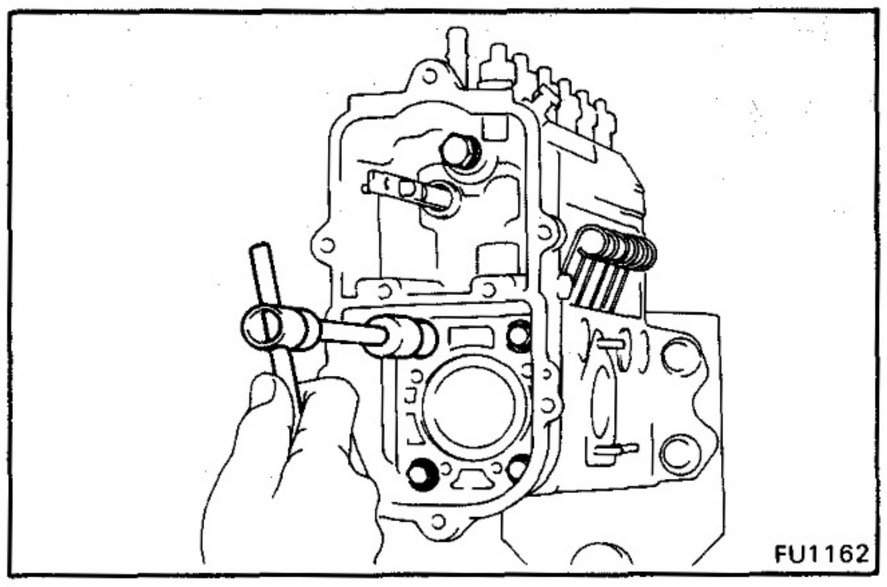

(e) [2H M/T]
Remove the five bolts, governor housing and gasket.

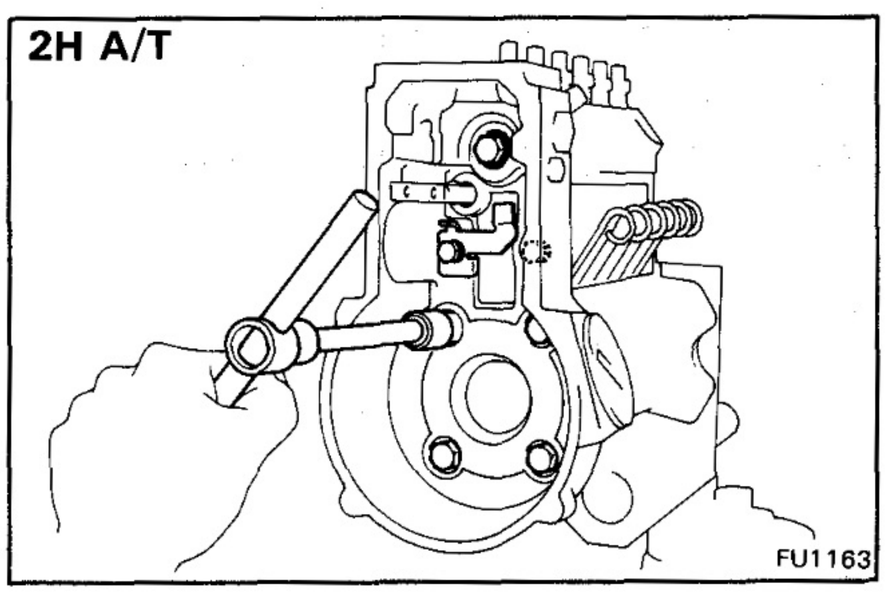

(f) [2H A/T and 12H-T]
Remove the seven bolts, stopper bracket, governor housing and gasket.

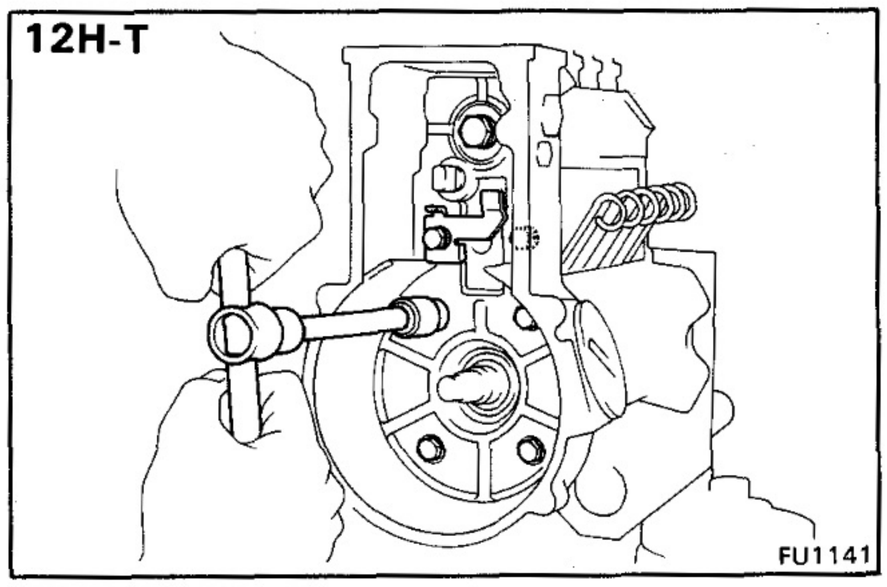

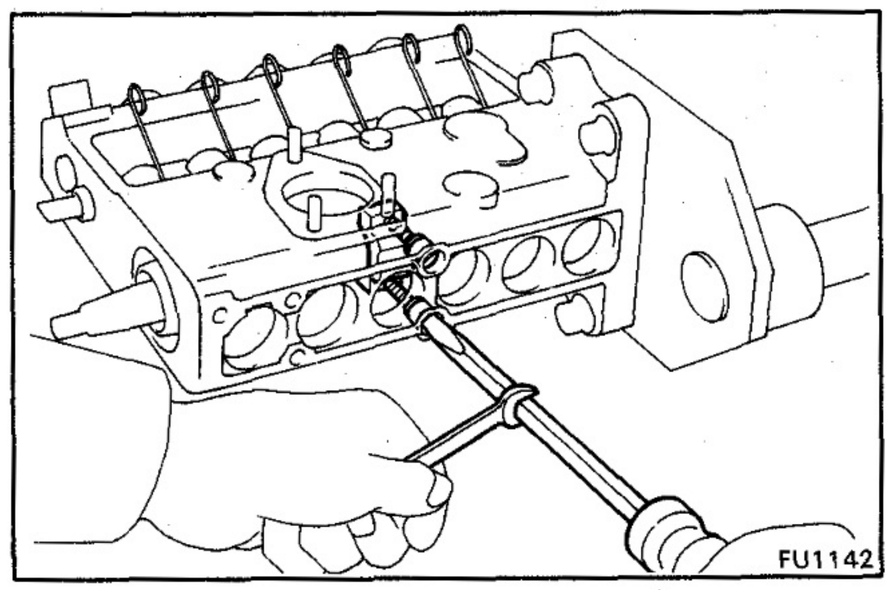

(g) [12H-T]
Remove the two screws and gaskets of the camshaft center bearing.

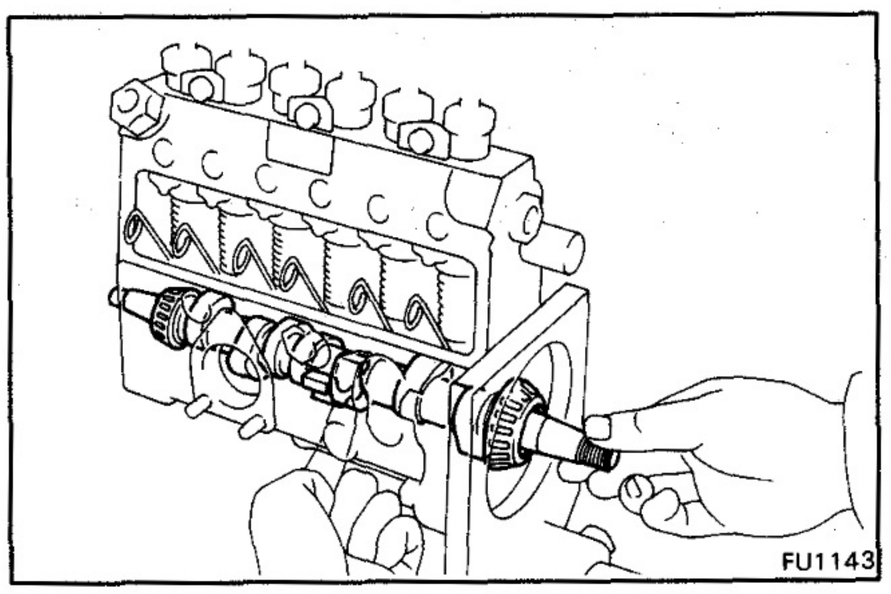

(h) [12H-T]
Remove the camshaft together with the camshaft center bearing.

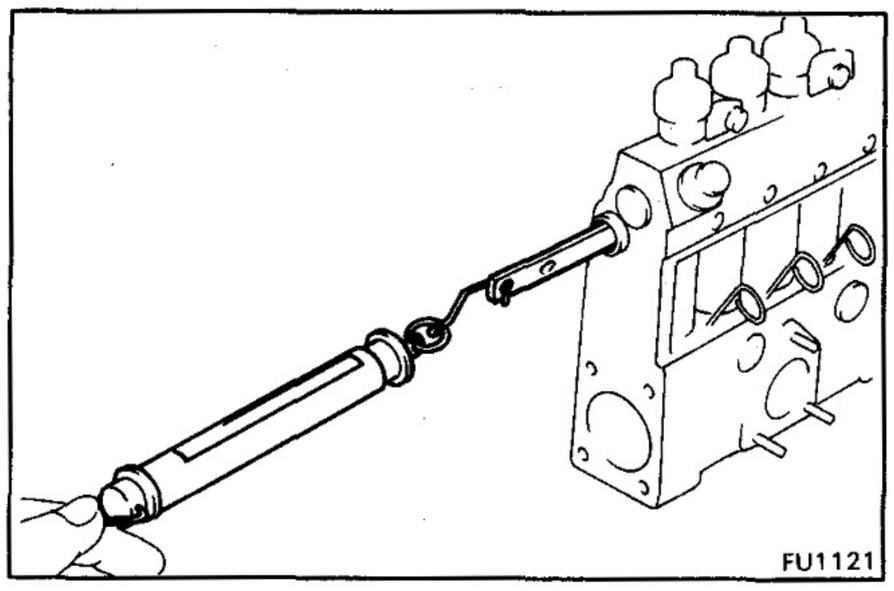

6. CHECK SLIDING RESISTANCE OF CONTROL RACK

Using a spring tension gauge, measure the sliding resistance. The rack should move smoothly.

Sliding resistance: 120 g (4.2 oz) or less

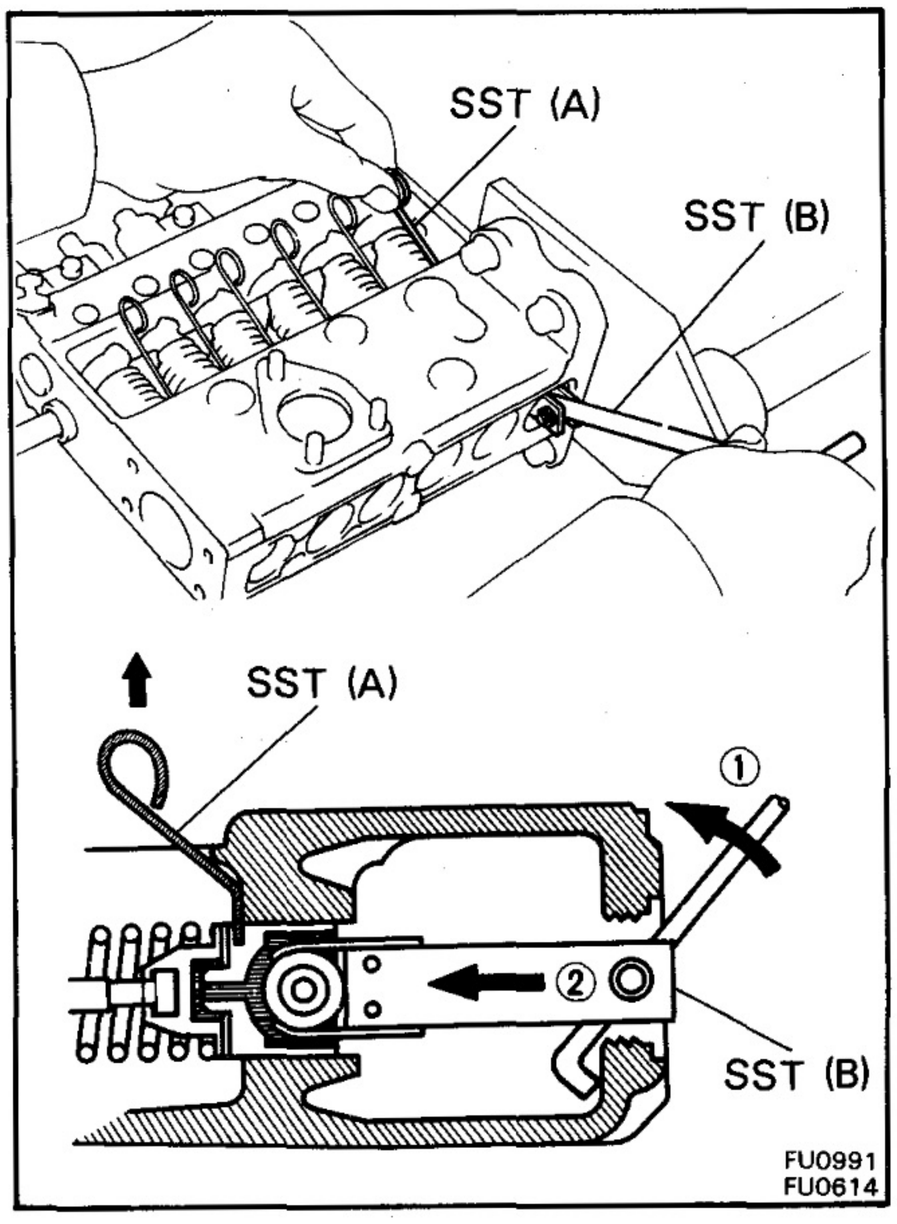

7. REMOVE TAPPETS, PLUNGERS AND PINIONS

(a) Using SST (B), push the tappet to remove SST (A).

SST 09260-47010 (09272-76011, 09274-46011)

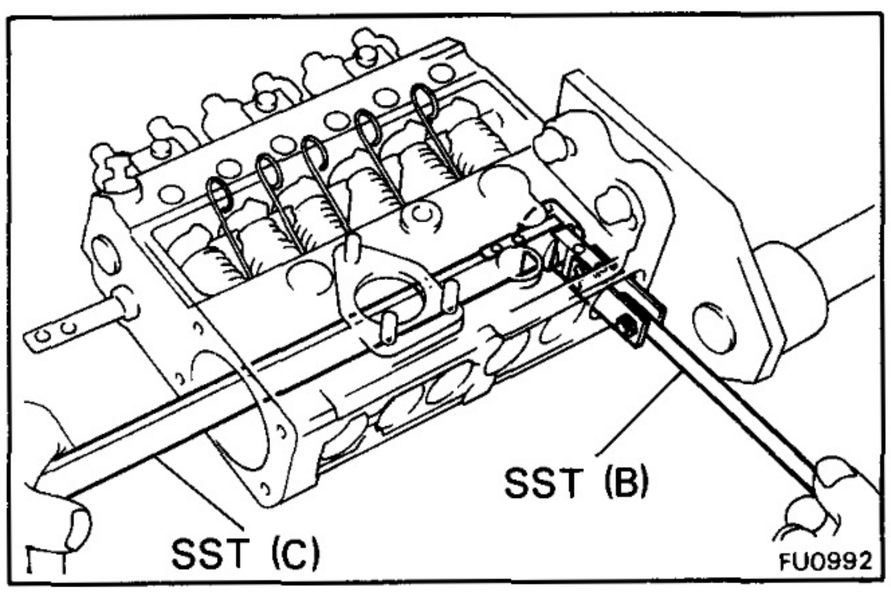

(b) Using SST (B), hold the tappet in the camshaft chamber and take out the tappet through the camshaft bearing hole with SST (C).

SST 09260-47010 (09272-76011, 09273-76011)

(c) Remove the adjusting shim(s).

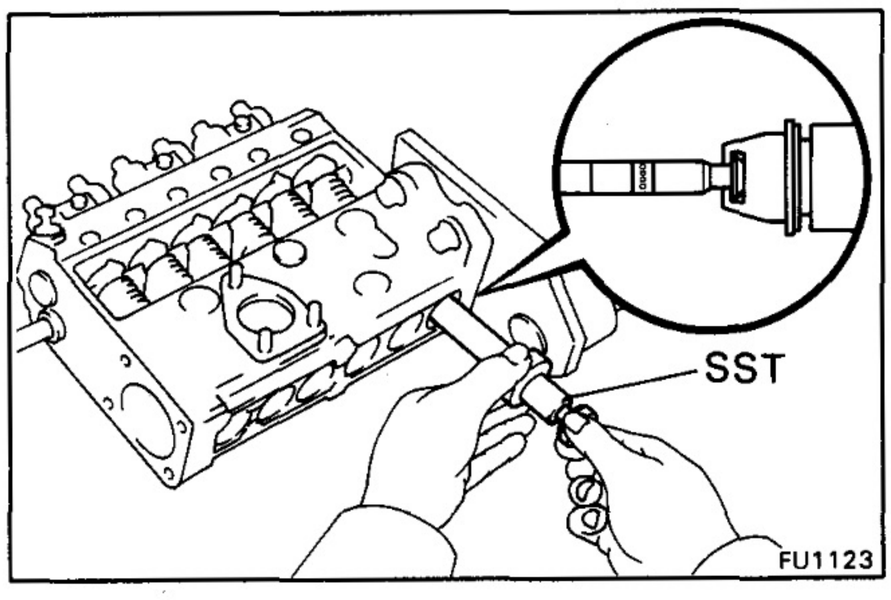

(d) Using SST, hold the lower spring seat and take it out together with the plunger.

SST 09260-47010 (09275-46010)

(e) Remove the spring, upper spring seat and pinion.

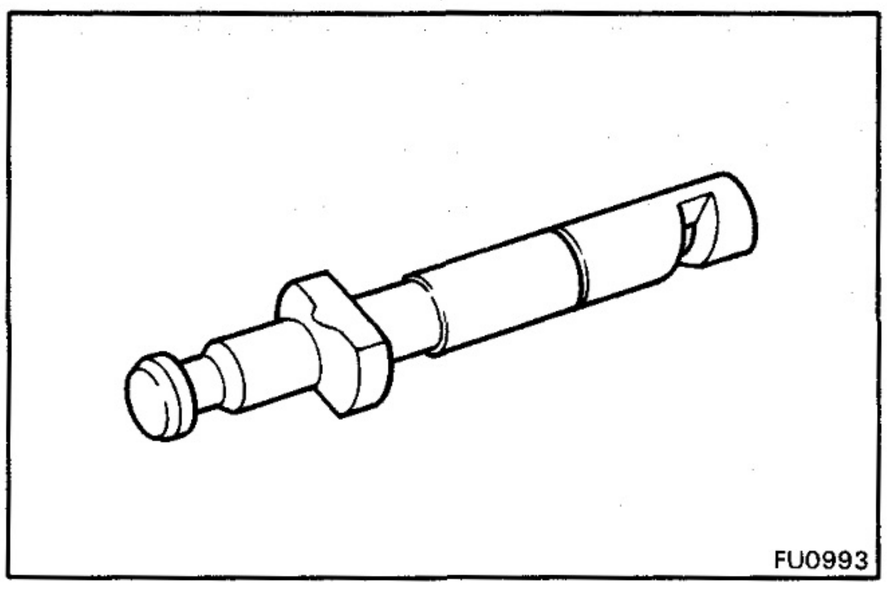
FU0993

NOTE:
- Do not touch the sliding surfaces of the plunger with your hand.

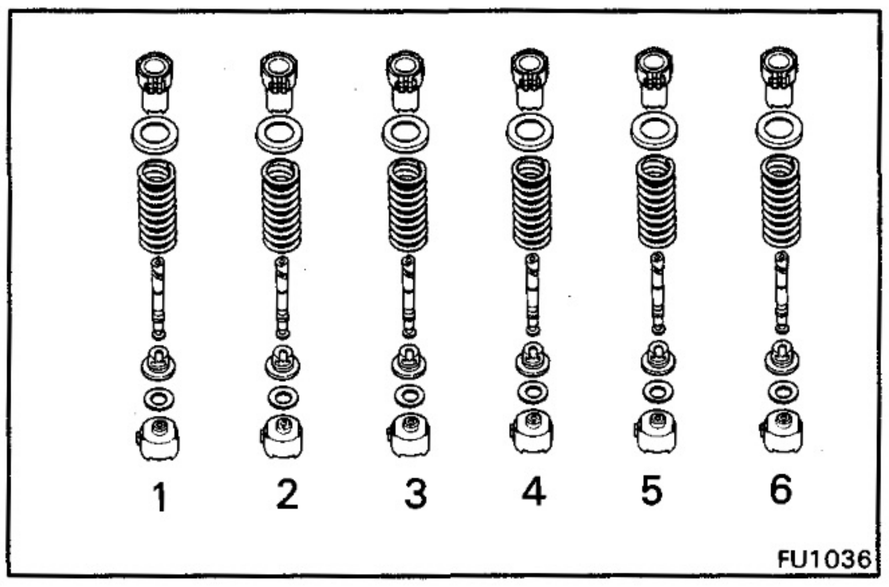

FU1036

- Arrange all parts in correct order.

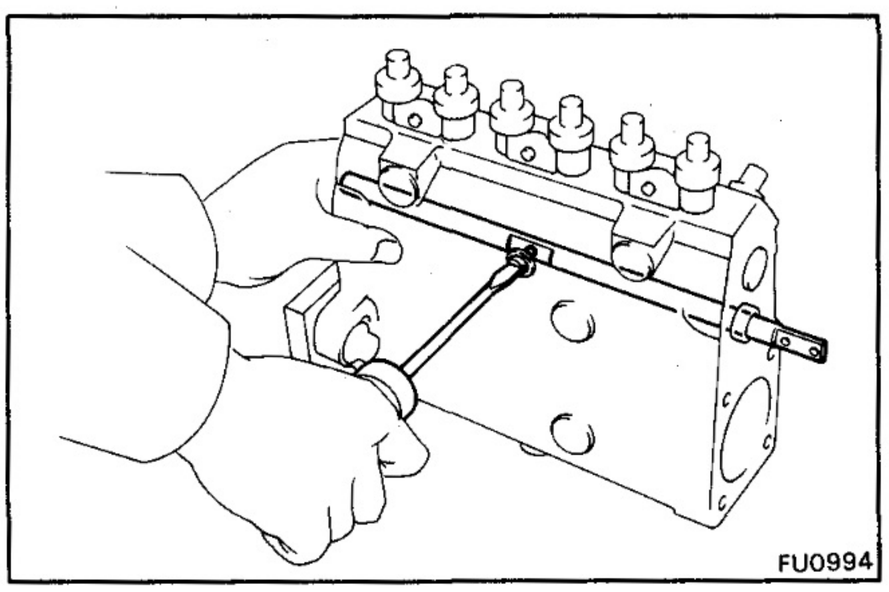
FU0994

8. REMOVE CONTROL RACK

Remove the guide screw and pull out the control rack.

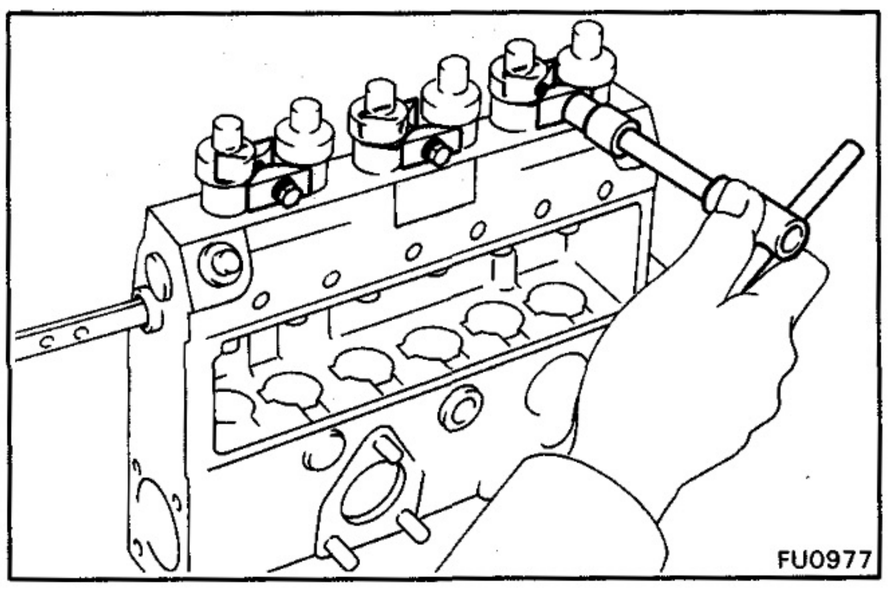
FU0977

9. REMOVE DELIVERY VALVES AND PUMP CYLINDERS

(a) Remove the three lock plates.

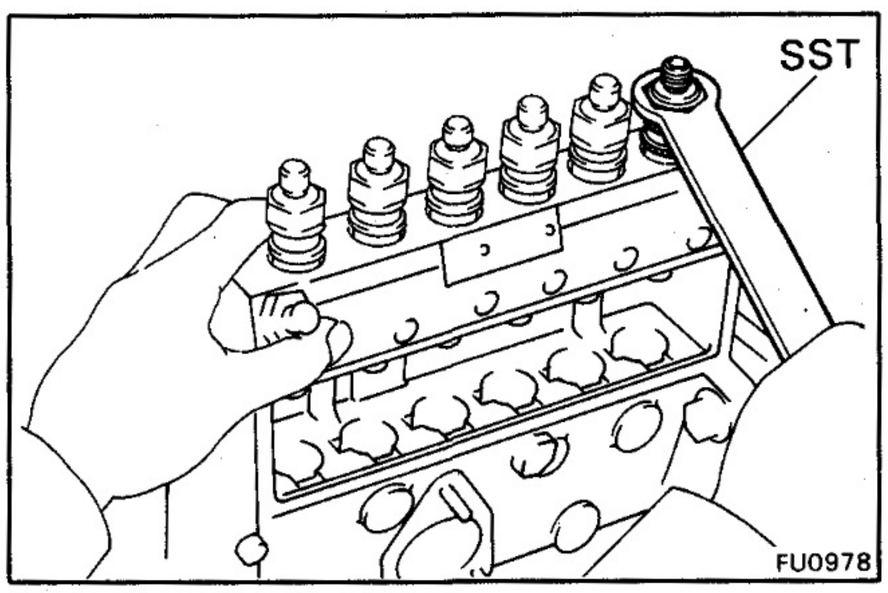

FU0978

(b) Using SST, remove the delivery valve holder, O-ring (12H-T), stopper (12H-T), spring and gasket (12H-T).

SST 09260-47010 (09270-76010)

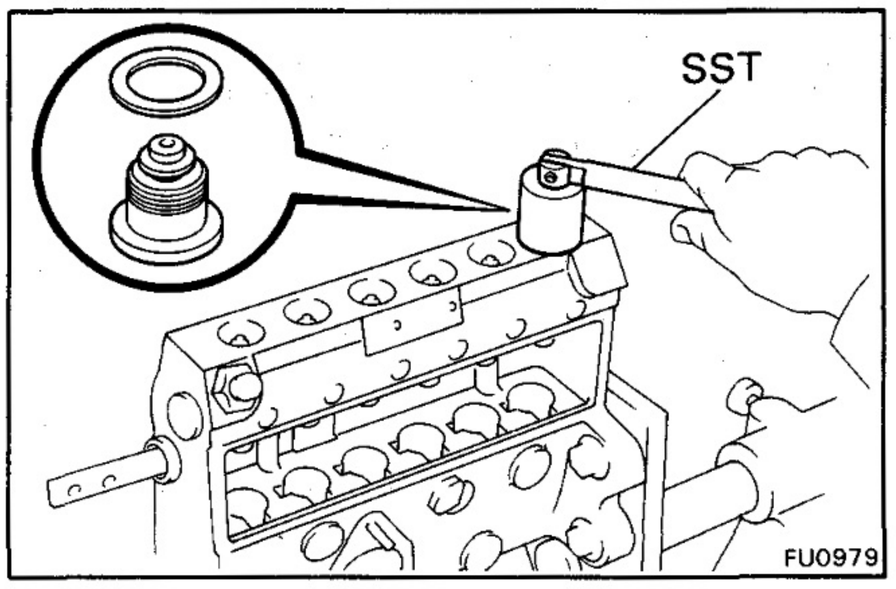

(c) Using SST, remove the delivery valve and gasket (2H).

SST 09260-47010 (09271-76011)

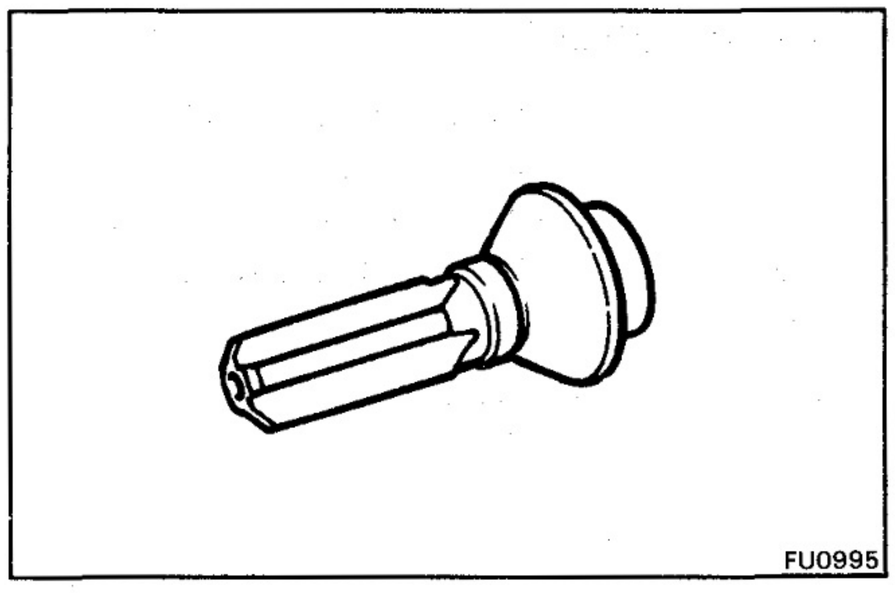

NOTE: Do not touch the sliding surfaces of the delivery valve with your hand.

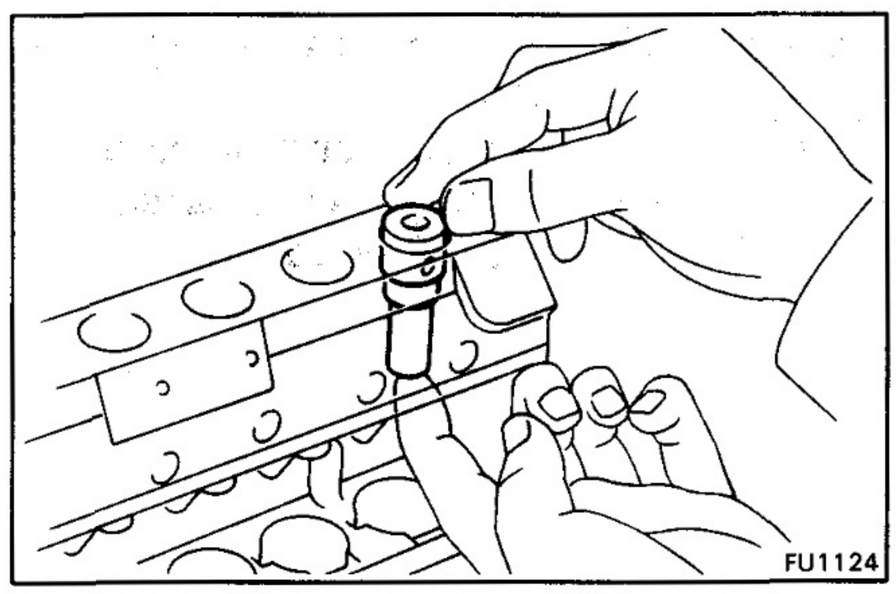

(d) Raise the pump cylinder with your forefinger, and remove it.

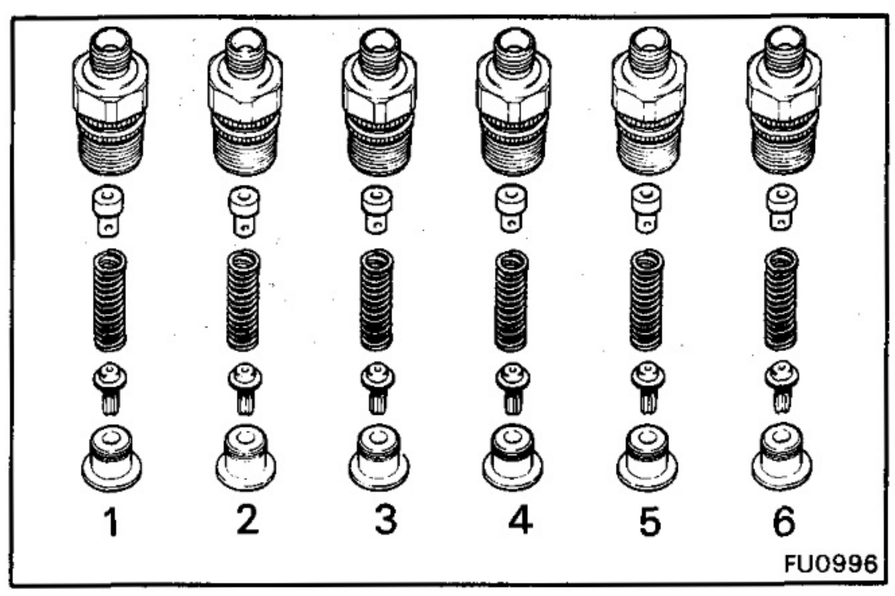

NOTE: Arrange all parts in correct order.

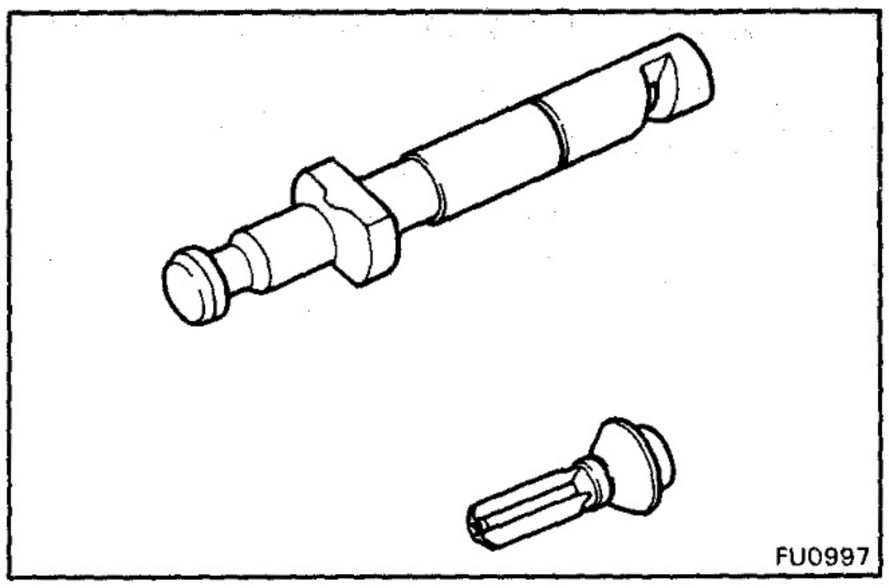

INSPECTION INJECTION PUMP

NOTE: Do not touch the sliding surfaces of the pump plunger and delivery valves.

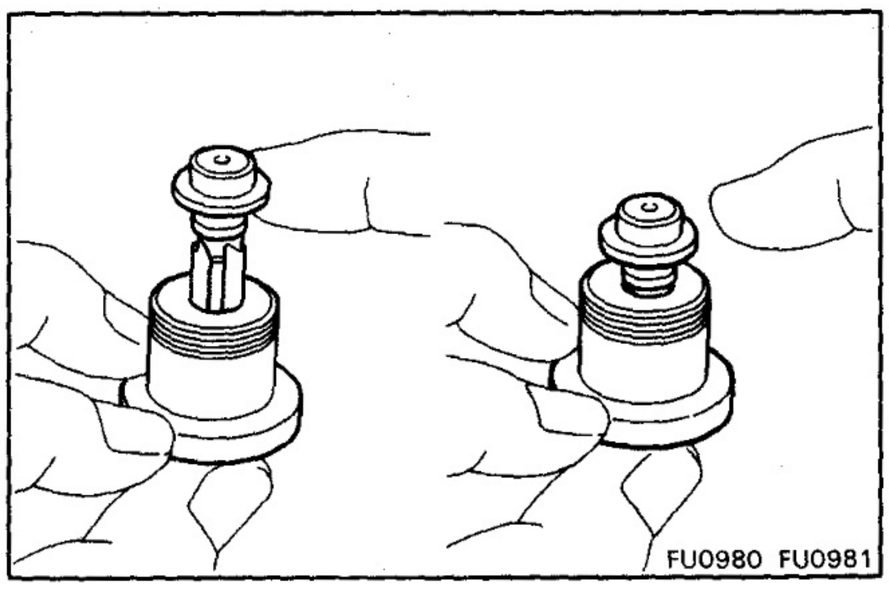

1. INSPECT DELIVERY VALVES

(a) Pull up the valve and close the hole at the valve seat bottom end with your thumb.
When the valve is released, it should sink down quickly and stop at the position where the relief ring closes the valve seat hole.

If defective, replace the valve as a set.

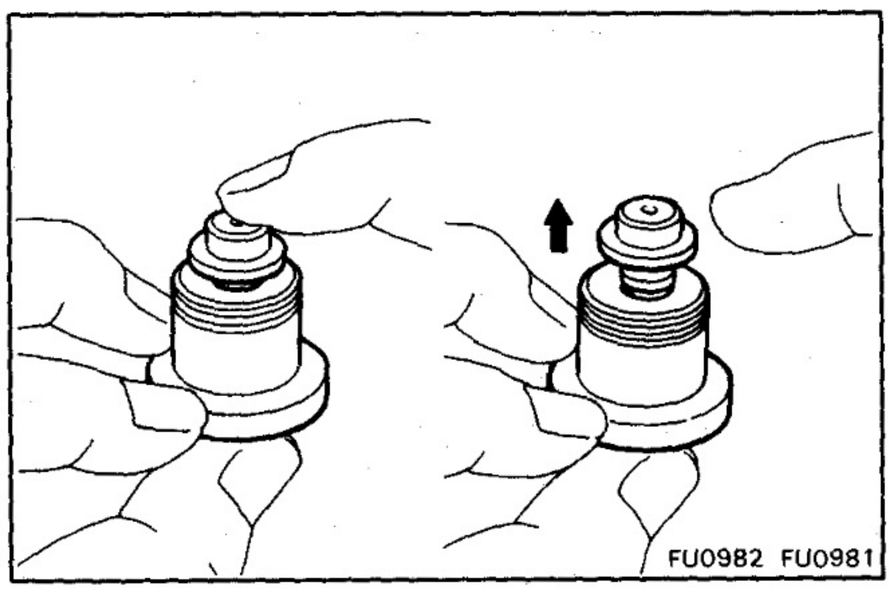

(b) Close the hole at the valve seat bottom end with your thumb.
Insert the valve into the valve seat and press down with your finger. When your finger is released, the valve should rise back to its original position.

Replace if defective.

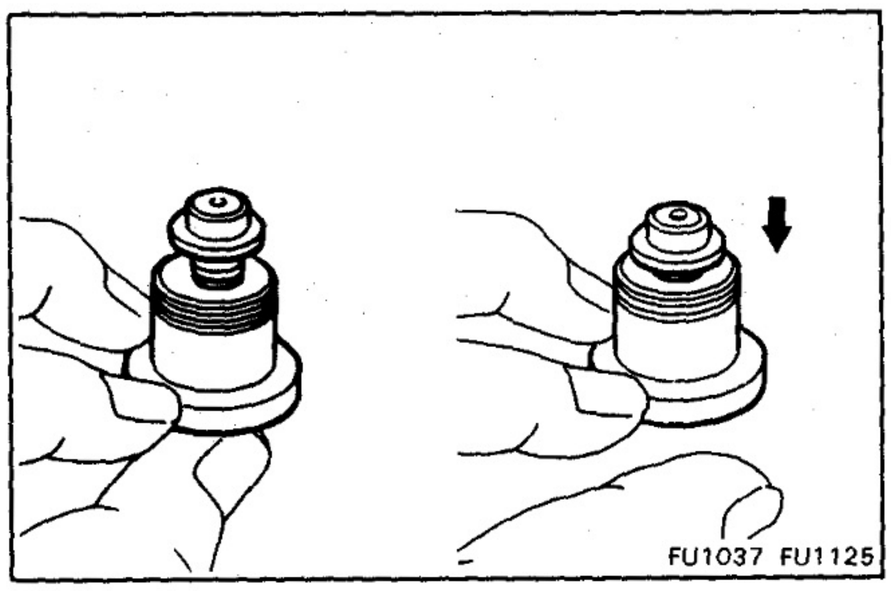

(c) Remove your thumb from the valve seat hole.
The valve should close completely by its own weight.

Replace if defective.

NOTE: Before using a new valve set, wash off the rust prevention compound with light oil or gasoline.
Then re-wash with diesel fuel and perform the above tests.

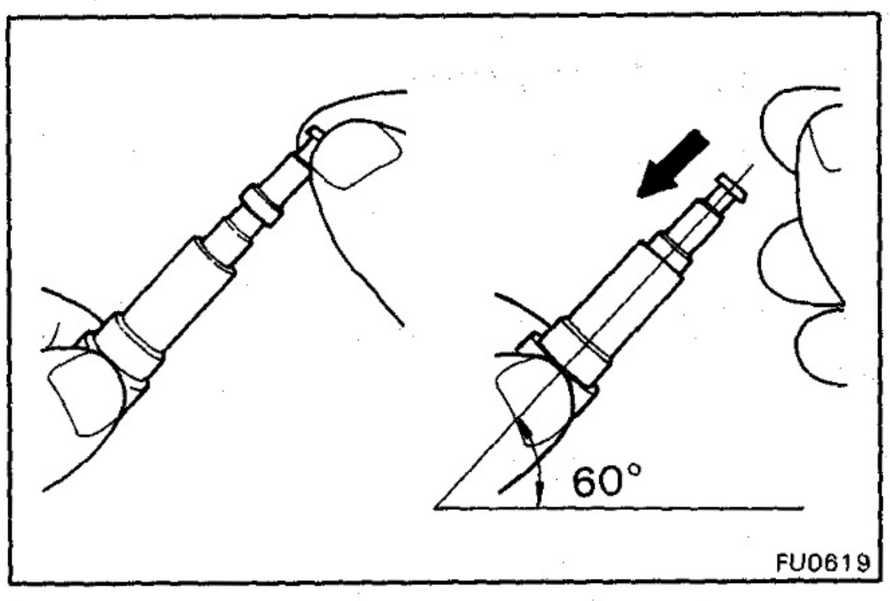

2. INSPECT PUMP PLUNGERS

(a) Tilt the cylinder slightly and pull out the plunger.

(b) When released, the plunger should sink down smoothly into the cylinder by its own weight.

(c) Rotate the plunger and repeat the test at various positions.

If the plunger sticks at any position, replace it as a set.

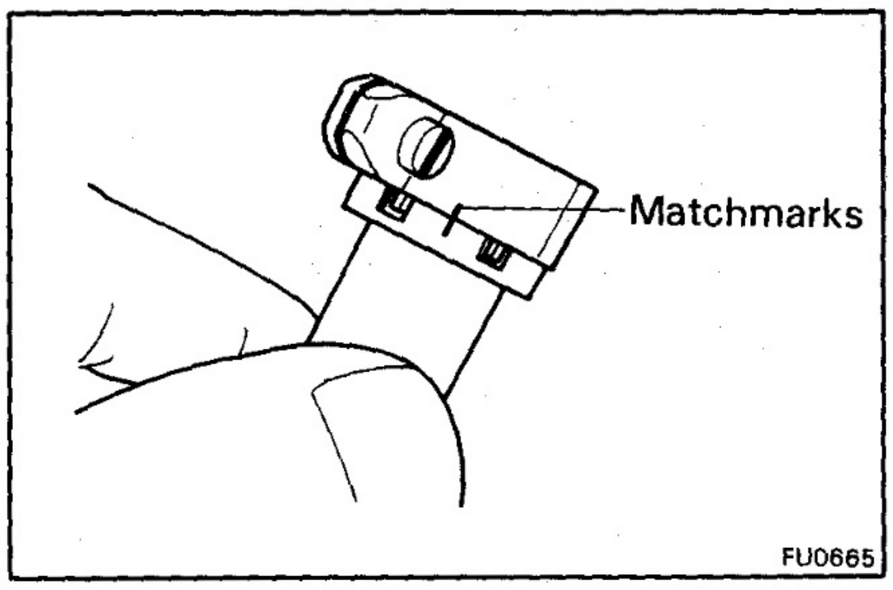

3. INSPECT CONTROL RACK AND PINION

Check the tooth surfaces of the control rack and pinion for wear or damage.

NOTE: Before disassembling the pinion, check that the matchmarks of the pinion and sleeve are aligned.

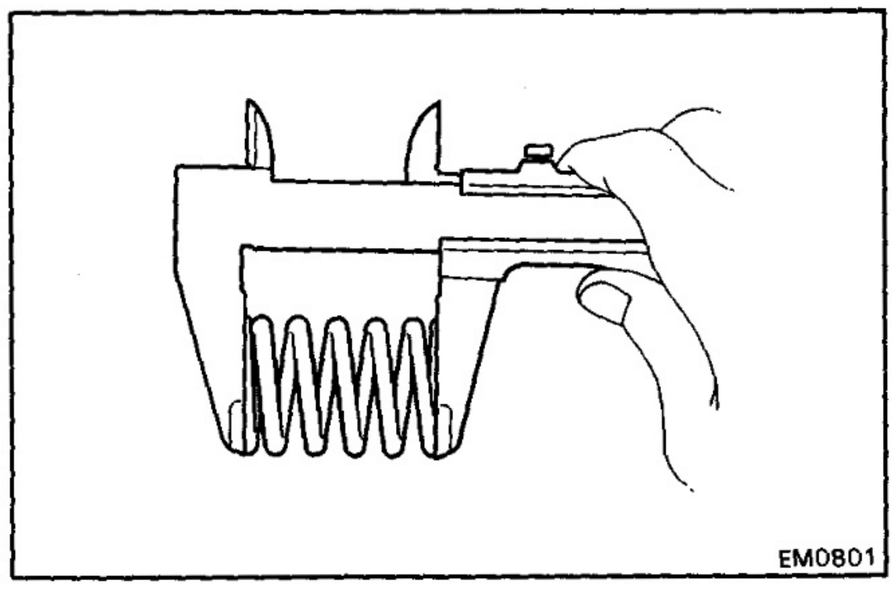

4. INSPECT SPRINGS

Using calipers, measure the free length of the spring.

Item	Free length (Approx.) mm (in.)						
	Delivery valve spring	Plunger spring	Governor main spring	Mechanical governor spring	Speed control spring	Inner idling spring	Outer idling spring
2H M/T	36.8 (1.449)	49.4 (1.945)	43.5 (1.713)		38.0 (1.496)		
2H A/T	36.8 (1.449)	49.4 (1.945)		10.2 (0.402)	24.0 (0.945)	25.7 (1.012)	23.8 (0.937)
12H-T	19.8 (0.780)	49.4 (1.945)		10.2 (0.402)	24.0 (0.945)	25.7 (1.012)	23.8 (0.937)

If the free length is not as specified, replace the spring.

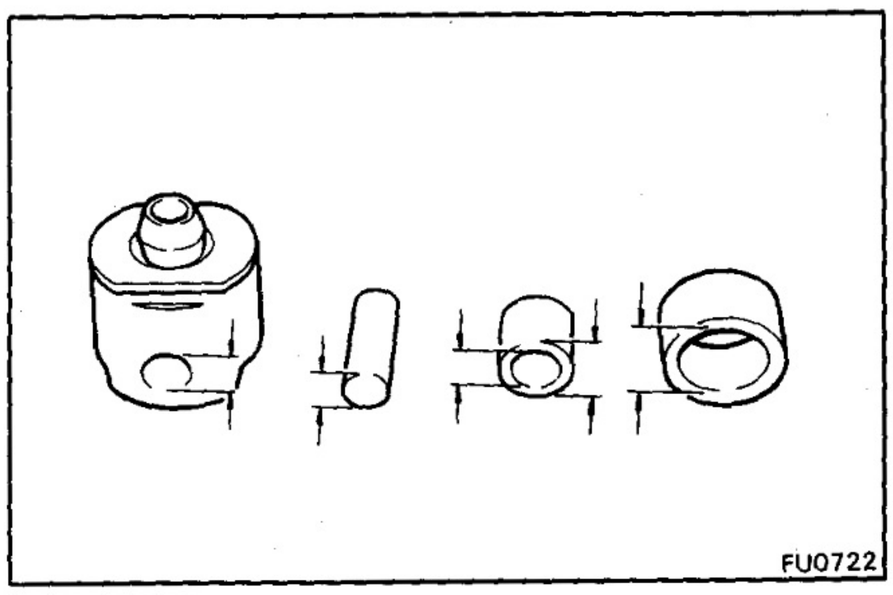

5. INSPECT TAPPETS

Measure the combined looseness with the tappet roller in the assembled state.

Maximum combined looseness: 0.3 mm (0.012 in.)

If the combined looseness is greater than maximum, replace the tappet assembly.

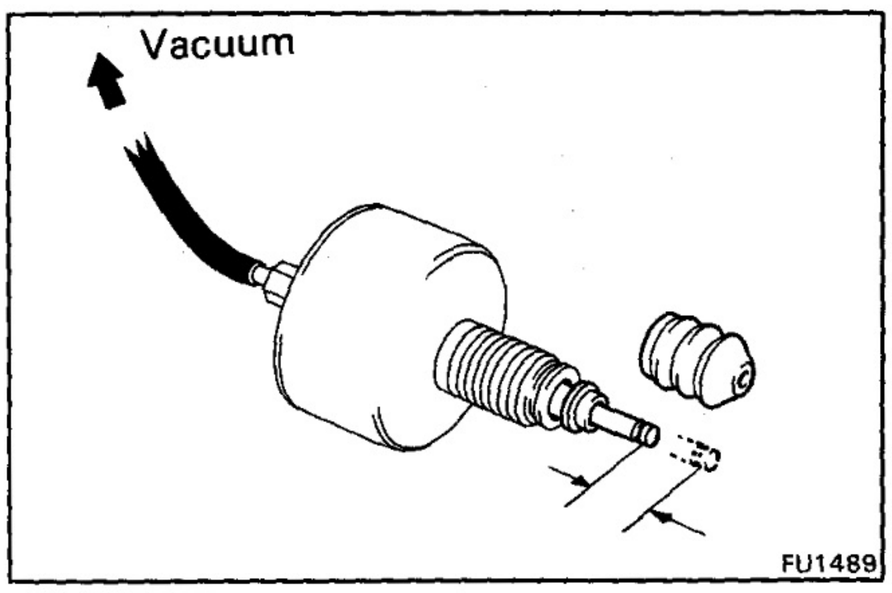

6. [2H M/T (w/ HAC)] INSPECT HIGH ALTITUDE COMPENSATOR (HAC)

(a) Apply 370 – 700 mmHg (14.57 – 27.56 in. Hg, 49.3 – 93.3 kPa) of vacuum to the HAC.

Stroke (at sea level):
3.1 – 3.6 mm (0.122 – 0.142 in.)
at 1.0 kg (2.2 lb, 9 N)

If the stroke is not within specification, replace the HAC.

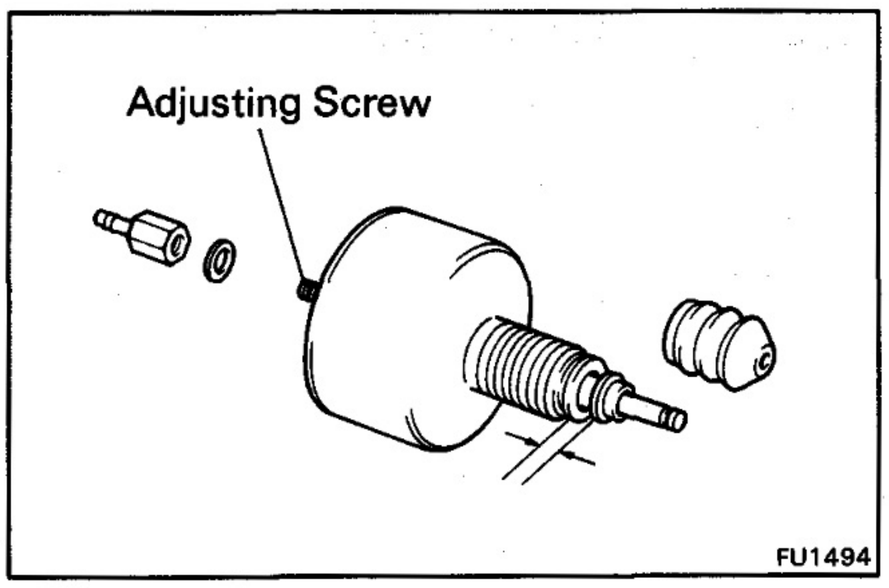

(b) Measure the clearance between the push rod flange and HAC body.

Clearance:
0.1 – 0.3 mm (0.004 – 0.012 in.) at sea level

If the clearance is not within specification, adjust with the adjusting screw.

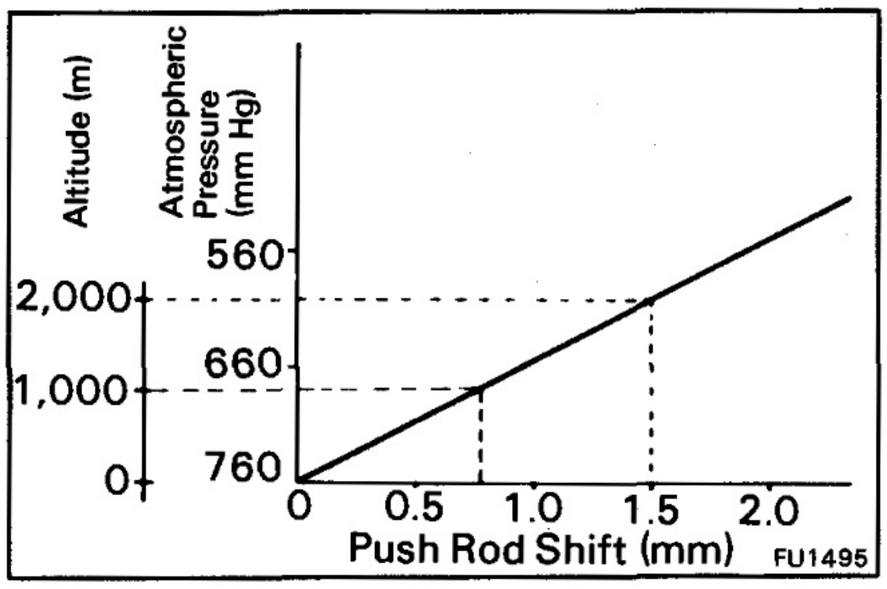

NOTE: Since the position of the push rod depends on altitude, the clearance mentioned above must be 0.1 – 0.3 mm (0.004 – 0.012 in.) plus the amount of push rod shift as shown in the figure.

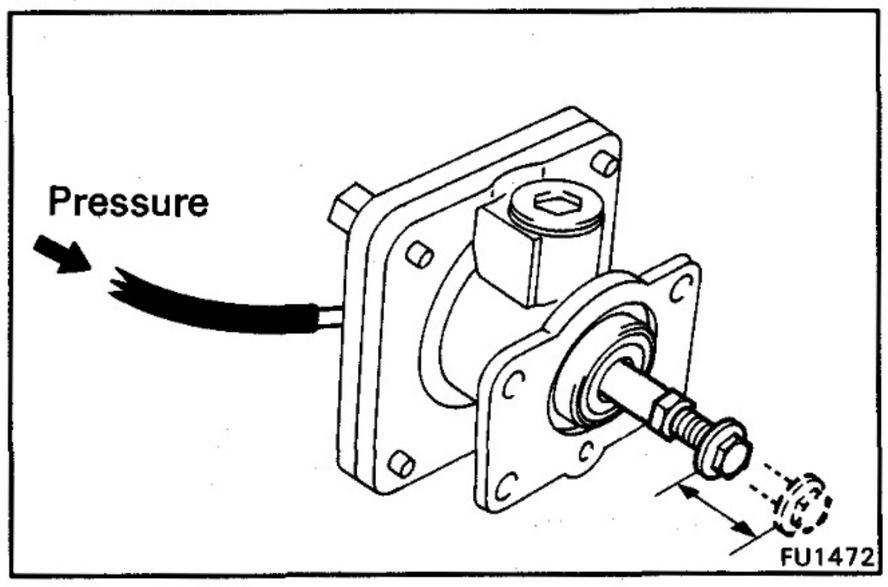

7. [12H-T]
INSPECT BOOST COMPENSATOR

(a) Apply 1.36 kg/cm² (19.3 psi, 133 kPa) of pressure to the boost compensator.

(b) Measure the push rod stroke.

Push rod stroke: 4.0 – 5.0 mm (0.158 – 0.197 in.)

If the stroke is not within specification, replace the boost compensator.

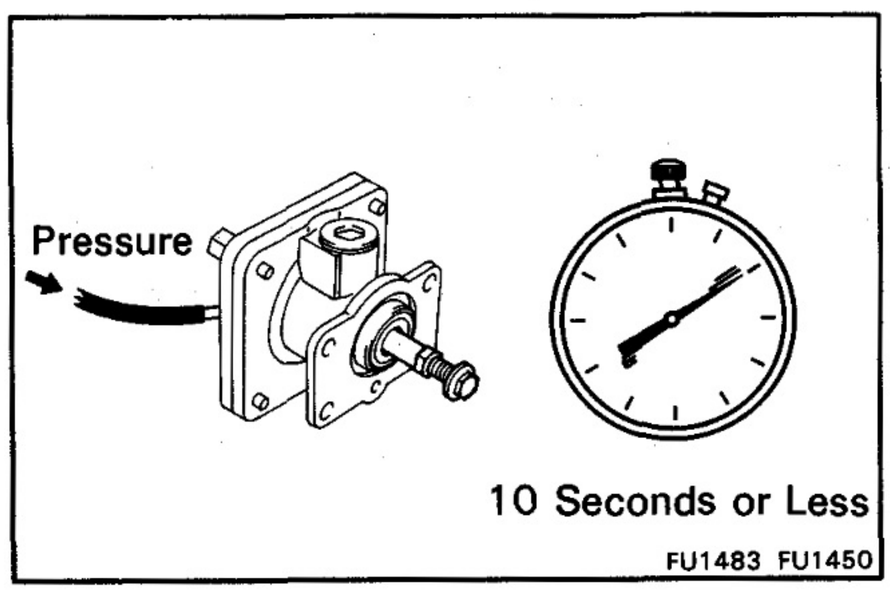

(c) Apply 1.36 kg/cm² (19.3 psi, 133 kPa) of pressure to the boost compensator.

(d) Measure the time it takes for the pressure to drop to 1.33 kg/cm² (18.9 psi, 130 kPa).

Pressure drop: 10 seconds or more

If the pressure drops in less time than specified, replace the boost compensator.

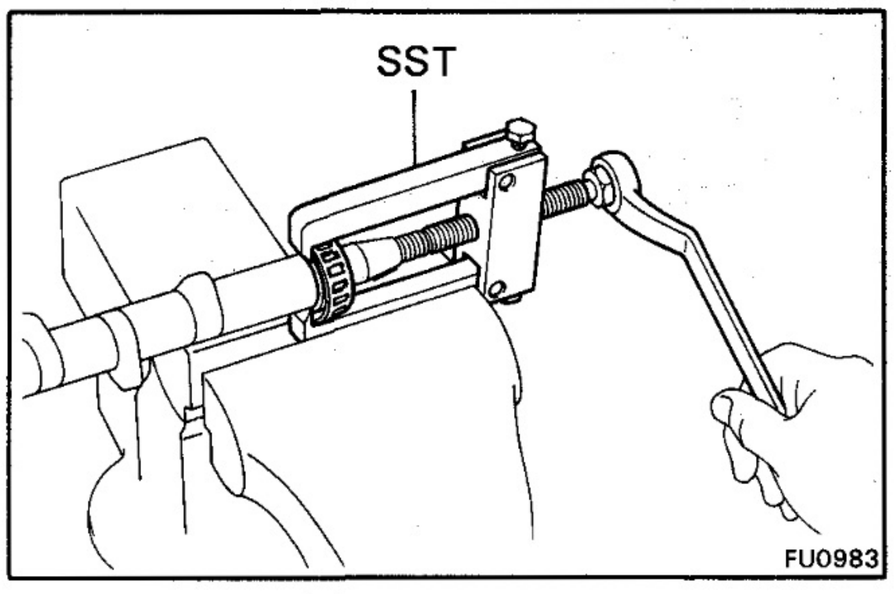

REPLACEMENT OF BEARINGS AND OIL SEALS

1. REPLACE CAMSHAFT BEARINGS

[Front and Rear Bearings]

(a) Using SST, remove the bearing.

SST 09260-47010 (09287-58010)

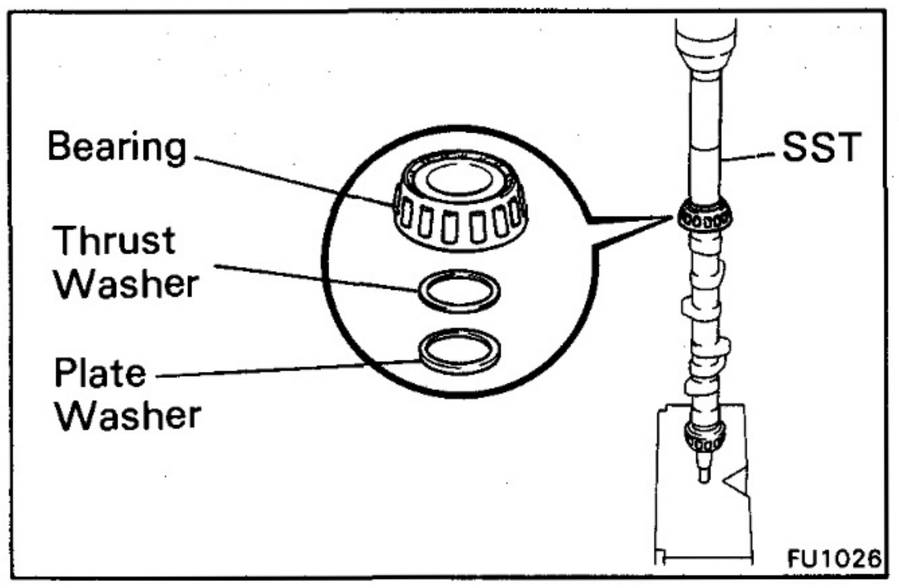

(b) Using SST and a press, press in a new bearing together with the plate washer and thrust washer(s).

SST 09260-47010 (09285-76020)

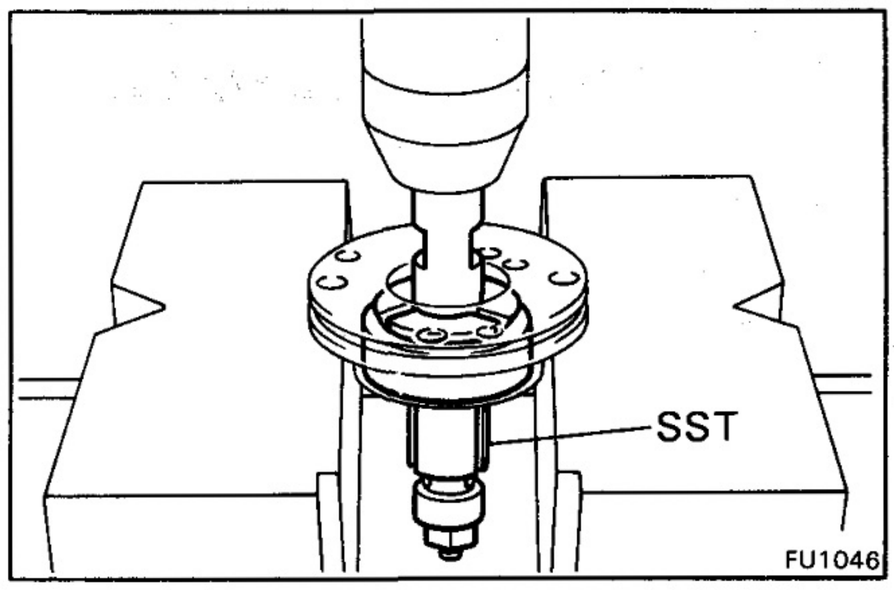

[Outer Race of Front Bearing]

(a) Using SST and a press, press out the outer race.

SST 09260-47010 (09286-76011) 2H
09286-78010 12H-T

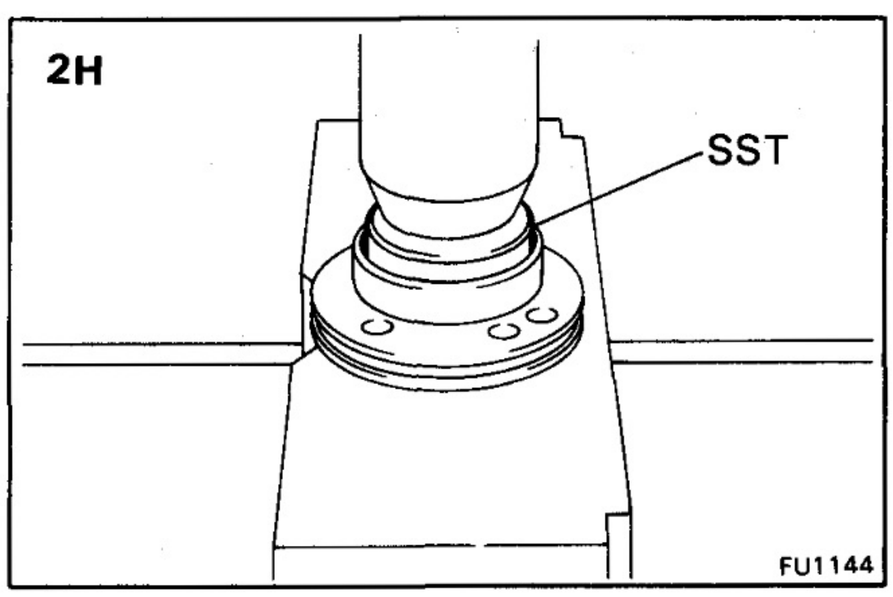

(b) Using SST and a press, press in a new outer race.

SST 09608-12010 (09608-00040) 2H
09260-47010 (09289-00010) 12H-T

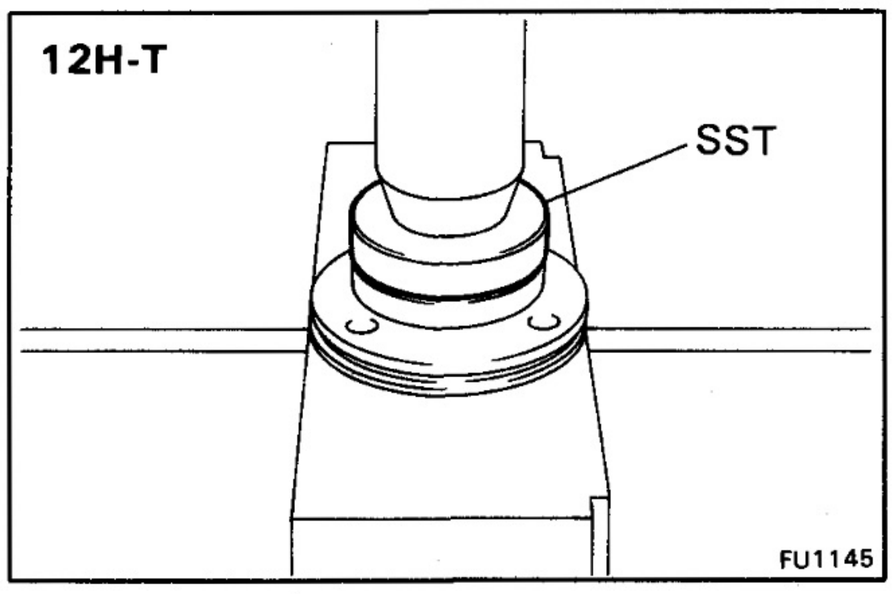

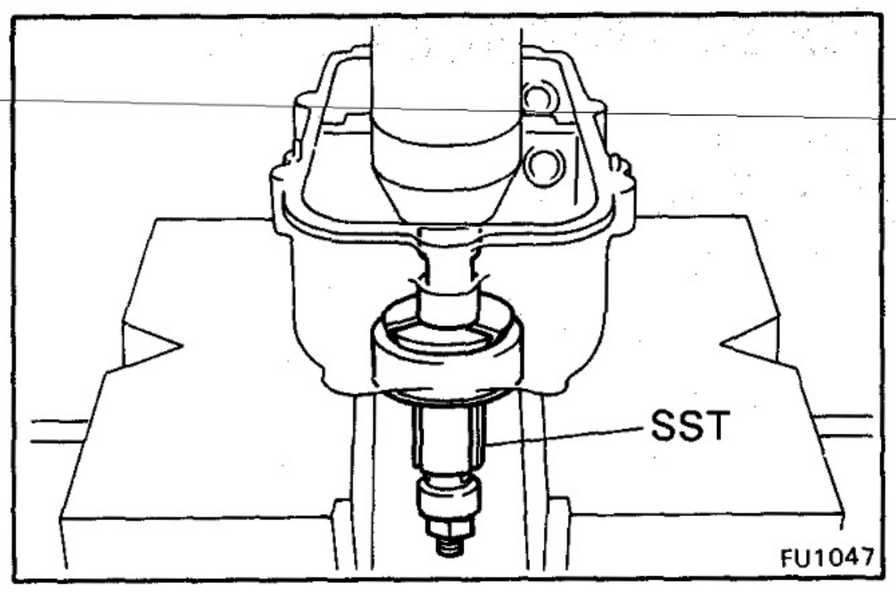

[Outer Race of Rear Bearing]

(a) Using SST and a press, press out the outer race.

SST 09260-47010 (09286-76011)

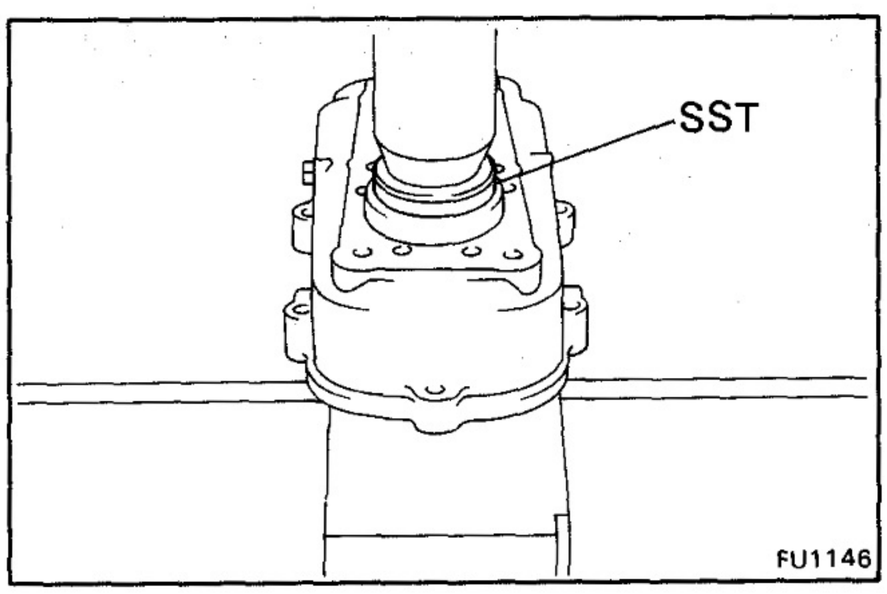

(b) Using SST and a press, press in a new outer race.

SST 09608-12010 (09608-00040)

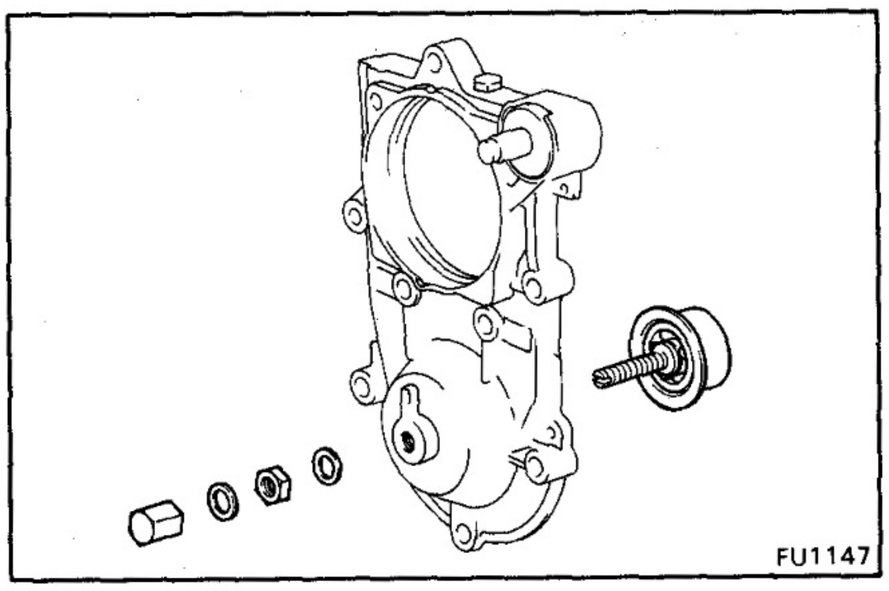

2. **[2H M/T]**
REPLACE BEARING OF SPEED CONTROL SCREW

Install new gaskets.

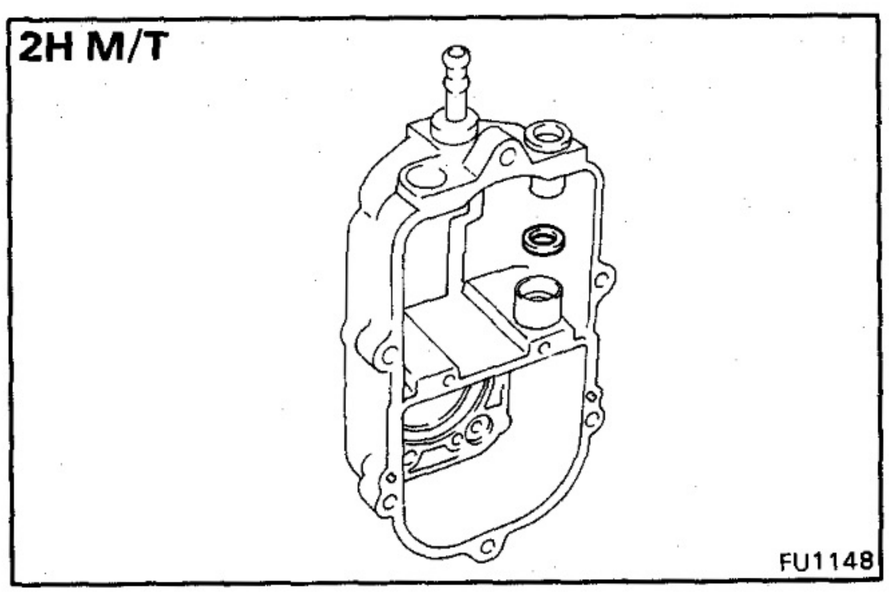

3. **REPLACE OIL SEAL OF LEVER SHAFT**

Apply MP grease to a new oil seal lip.

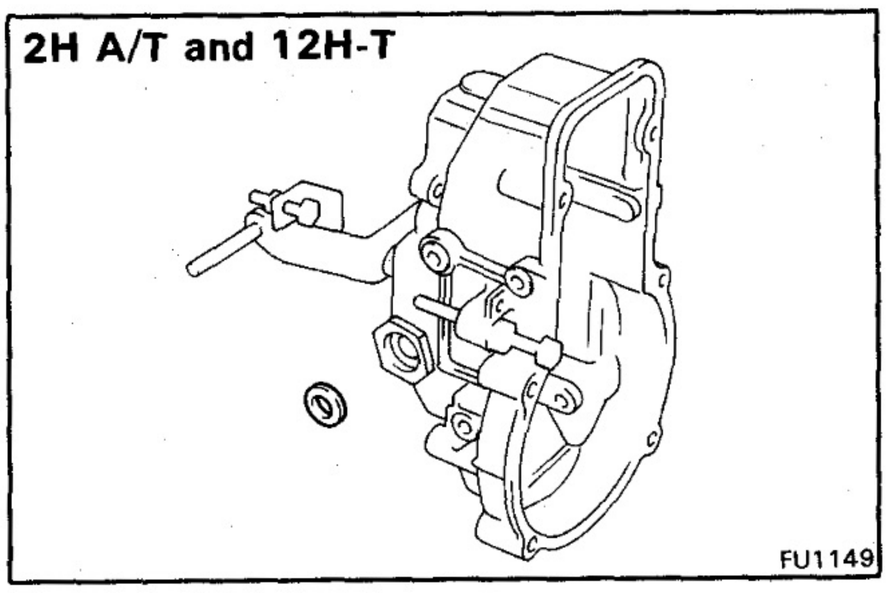

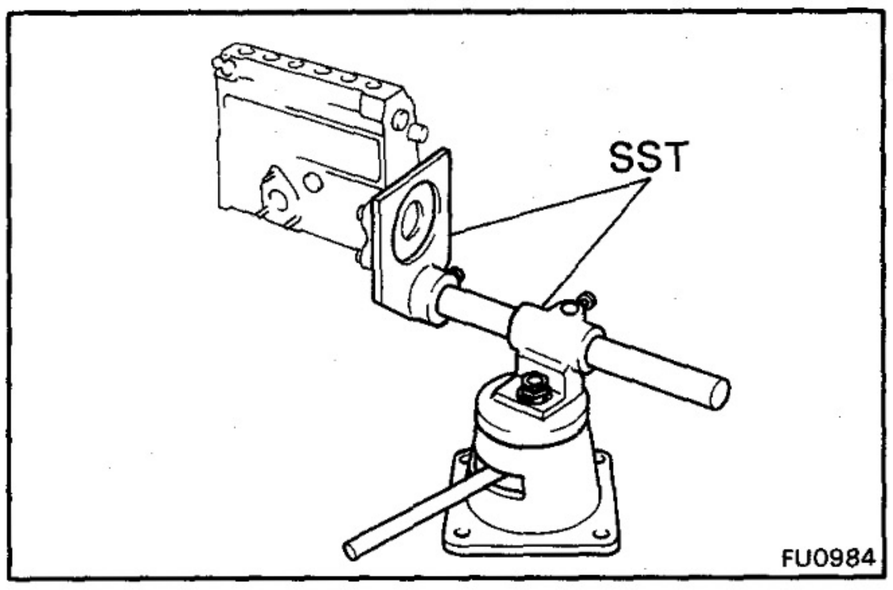

ASSEMBLY OF INJECTION PUMP

Assembly of Pump Body

(See pages FU-32 and 36) 2H M/T
(See pages FU-33, 34 and 36) 2H A/T
(See pages FU-33, 35 and 36) 12H-T

1. MOUNT PUMP BODY TO SST (STAND)

SST 09241-76022 and 09245-78010

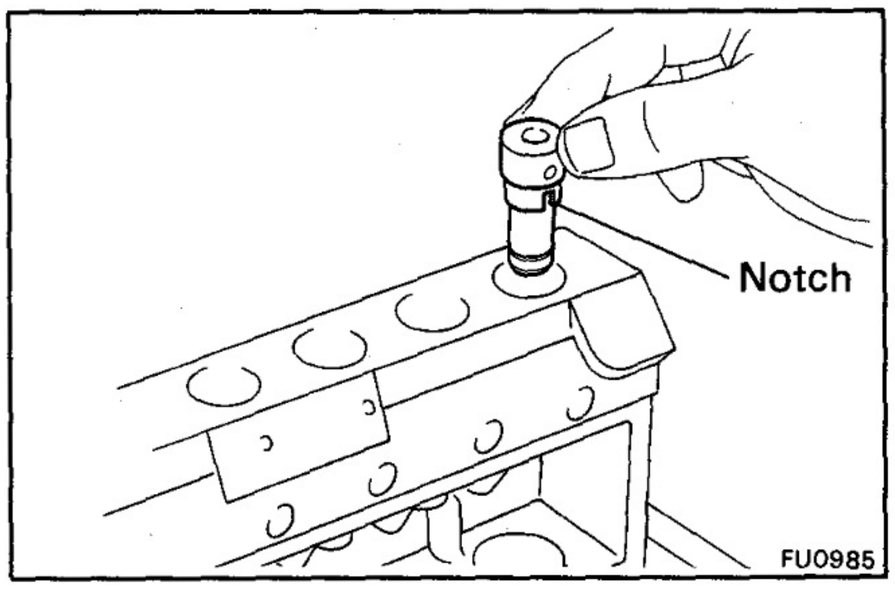

2. INSTALL PUMP CYLINDERS AND DELIVERY VALVES

(a) Align the notch of the pump cylinder with the knock pin of the pump housing.

(b) Install the pump cylinder.

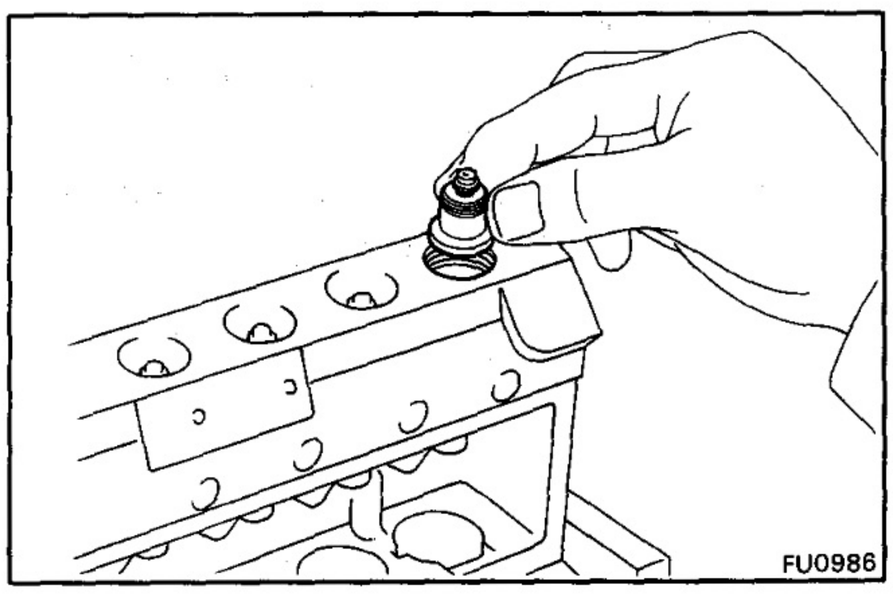

(c) Install the delivery valve.

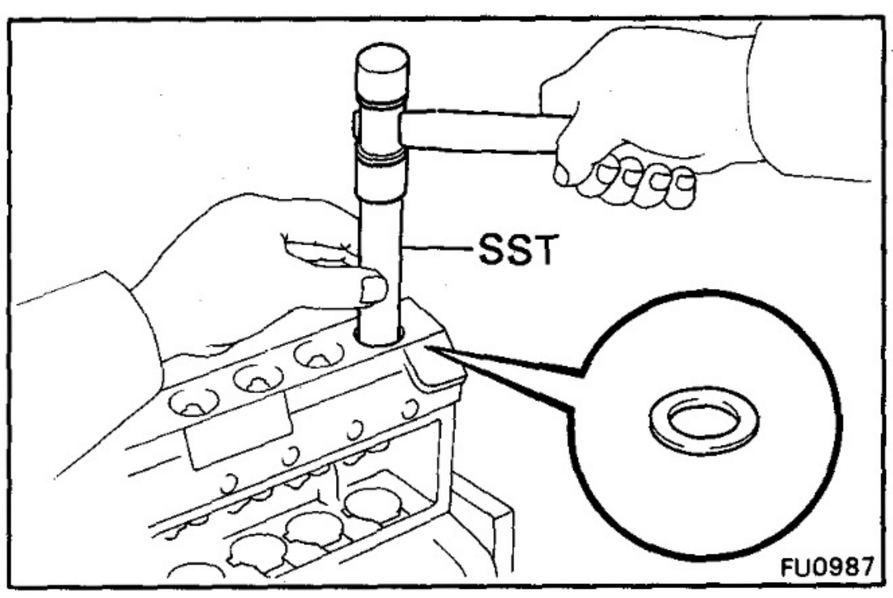

(d) [2H]
Using SST and a plastic-faced hammer, lightly tap in a new gasket.

SST 09260-47010 (09262-76010)

(e) [12H-T]
Install a new gasket.

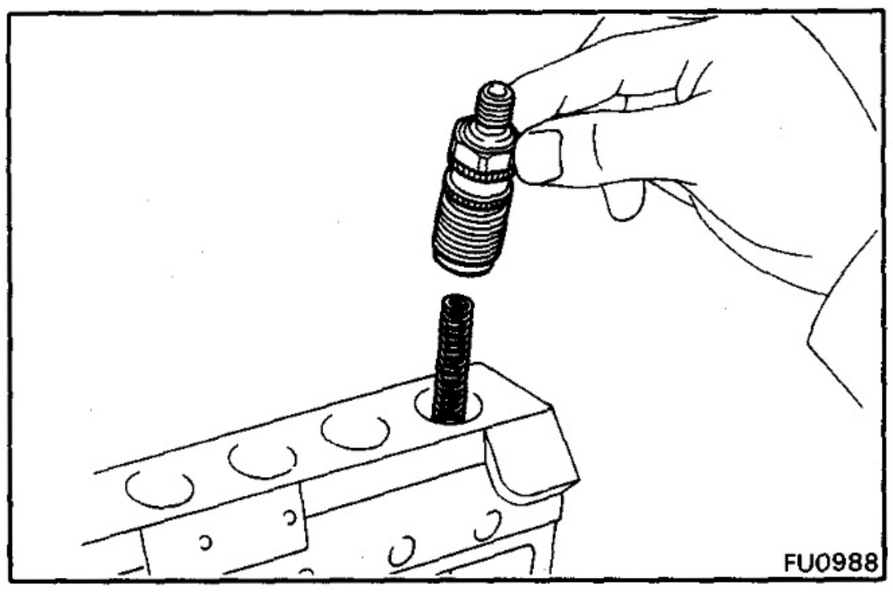

(f) [2H]
Install the delivery valve spring and holder. Do not torque the delivery valve holder yet.

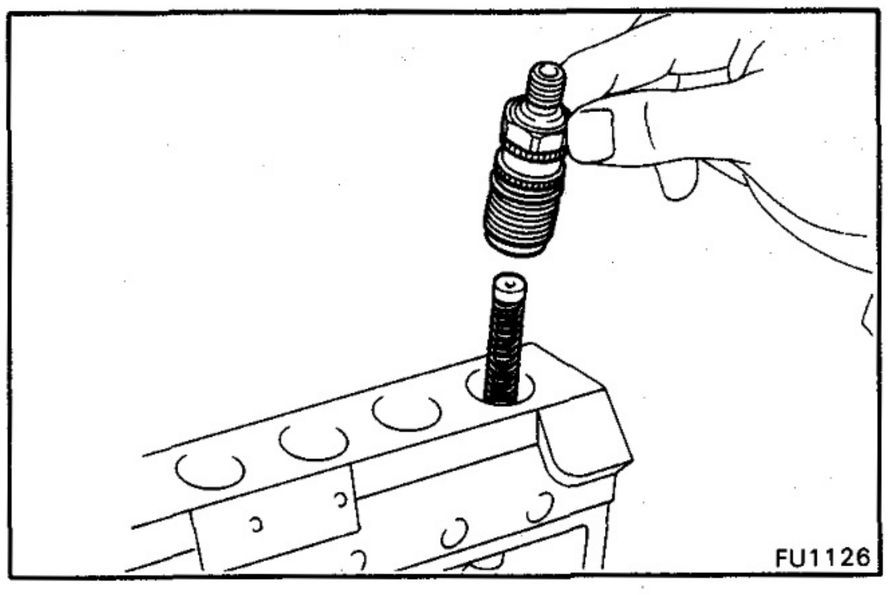

(g) [12H-T]
Install a new O-ring to the delivery valve holder. Install the delivery valve spring, stopper and valve.

Do not torque the delivery valve holder yet.

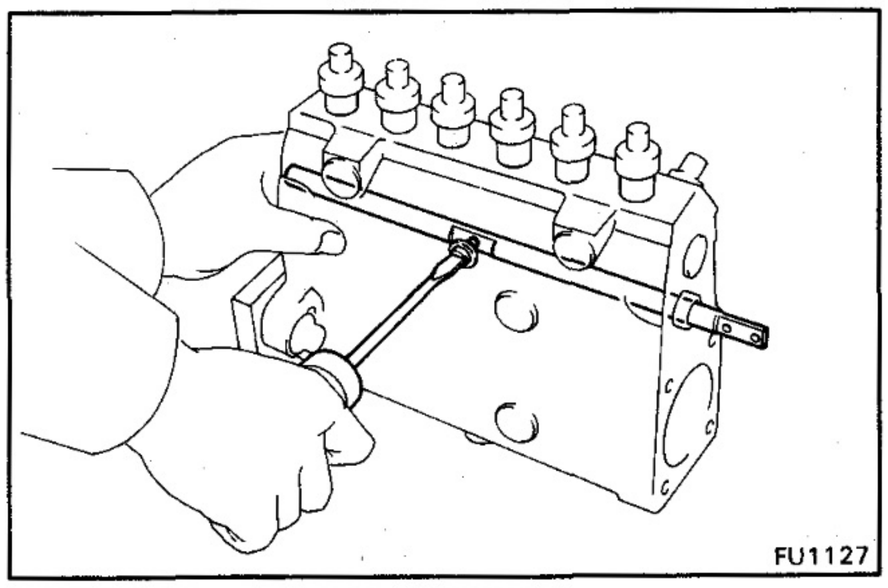

3. INSTALL CONTROL RACK AND PINIONS

(a) Install the control rack with the guide screw.

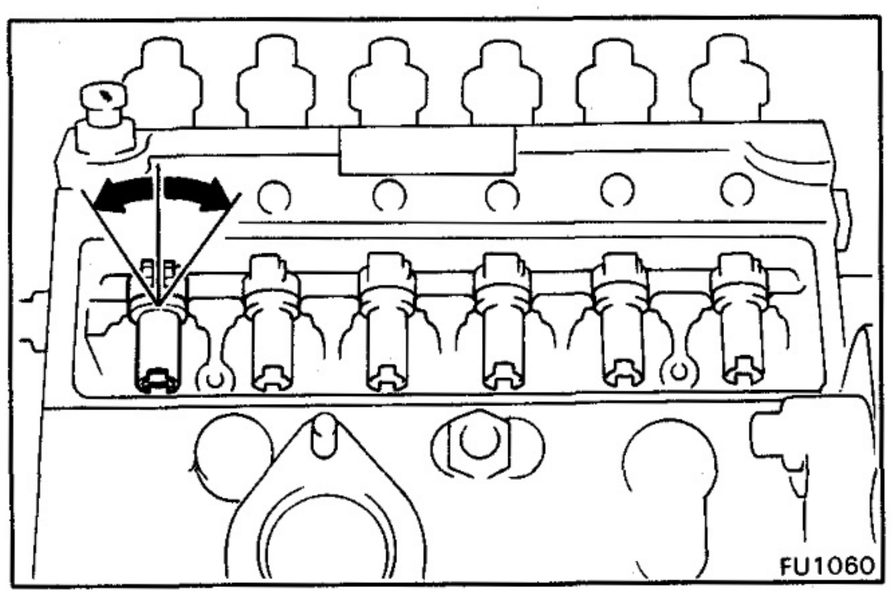

(b) Assemble so that the pinion with the sleeve swings evenly left and right when the rack is moved to the right and left.

(c) When installing the pinion to each pump cylinder, check the control rack for smooth and effortless movement.

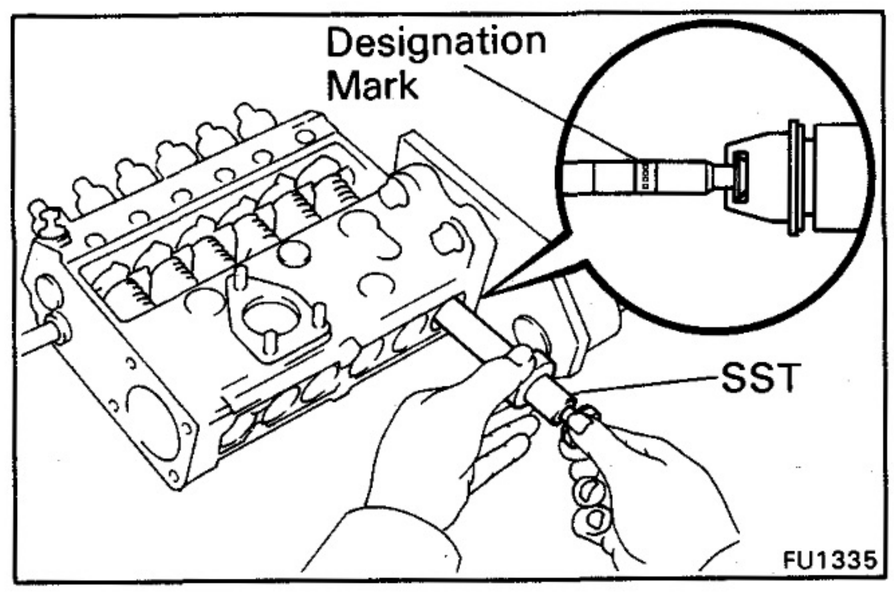

4. INSTALL PLUNGERS AND TAPPETS

(a) Install the upper spring seat and plunger spring.

(b) Assemble the plunger and lower spring seat.

(c) Using SST, insert the plunger and lower seat assembly with the designation mark of the plunger driving face facing pump cover side.

SST 09260-47010 (09275-46010)

Designation mark (Example): 5,799

NOTE: After inserting the plunger, turn the lower spring seat a half turn to position the notch facing downward so the plunger will not slip out.

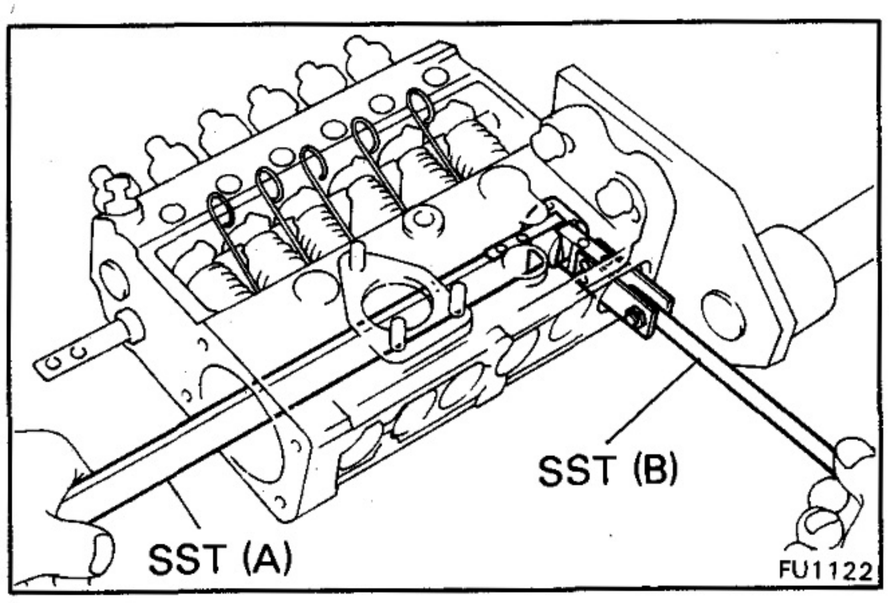

(d) Using SST (A), insert the tappet together with the adjusting shim through the camshaft bearing hole and hold the tappet to SST (B).

SST 09260-47010 (09272-76011, 09273-76011)

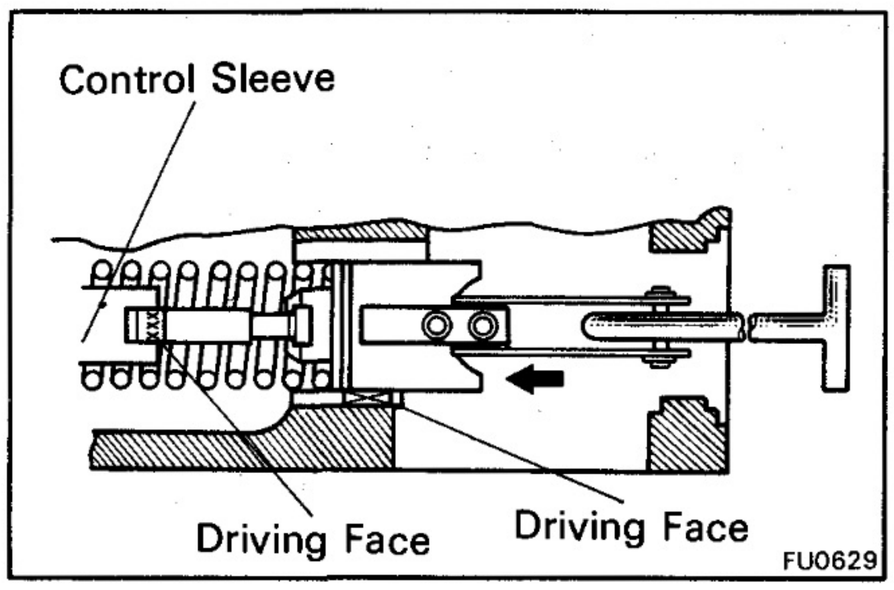

(e) Align the driving face of the tappet with the groove of the pump housing.

(f) Align the driving face of the plunger with the groove the control sleeve.

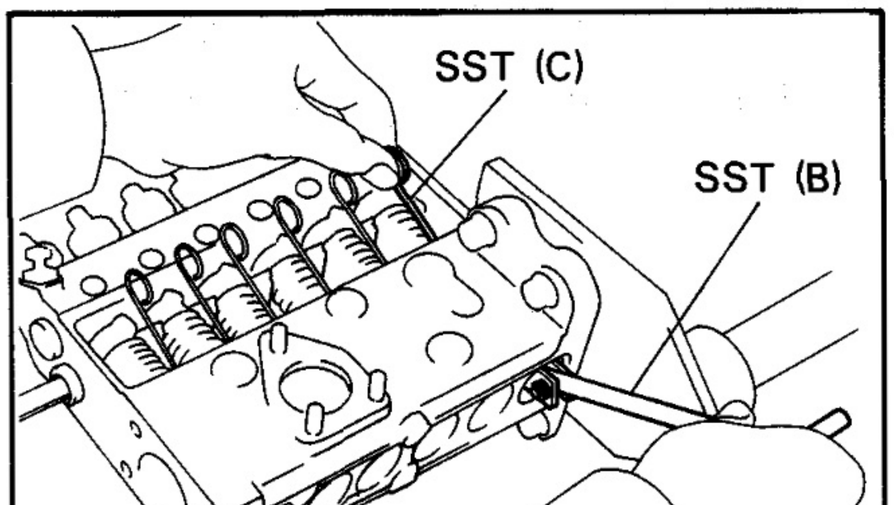

(g) Using SST (B), press in the tappet and insert SST (C) into the tappet service hole.

SST 09260-47010 (09272-76011, 09274-46011)

(h) When installing each plunger and tappet, check the control rack for smooth and effortless movement.

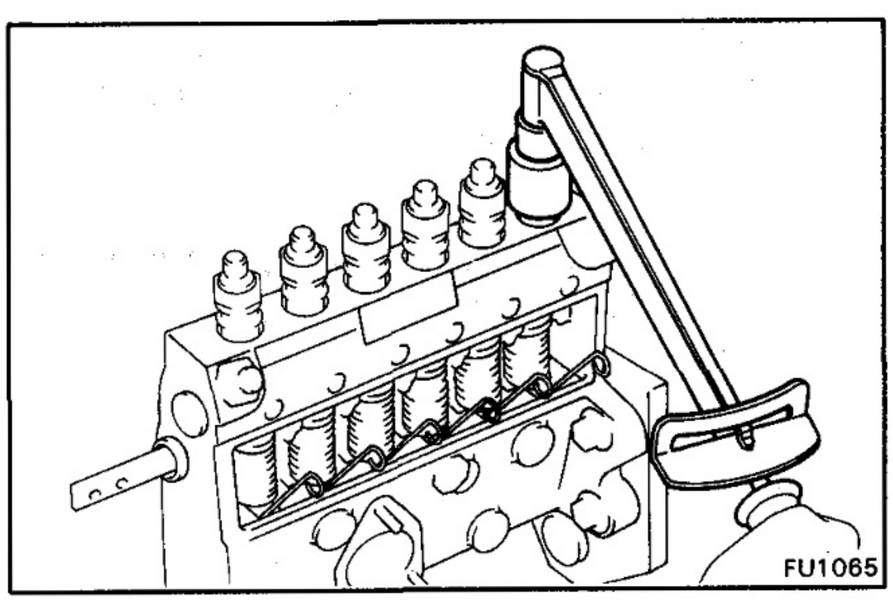

5. TORQUE DELIVERY VALVE HOLDERS

(a) Torque the six delivery valve holders.

Torque: 375 kg-cm (27 ft-lb, 37 N·m)

NOTE: When one delivery valve holder is tightened, move the control rack to the right and left and check the tightness of the rack.

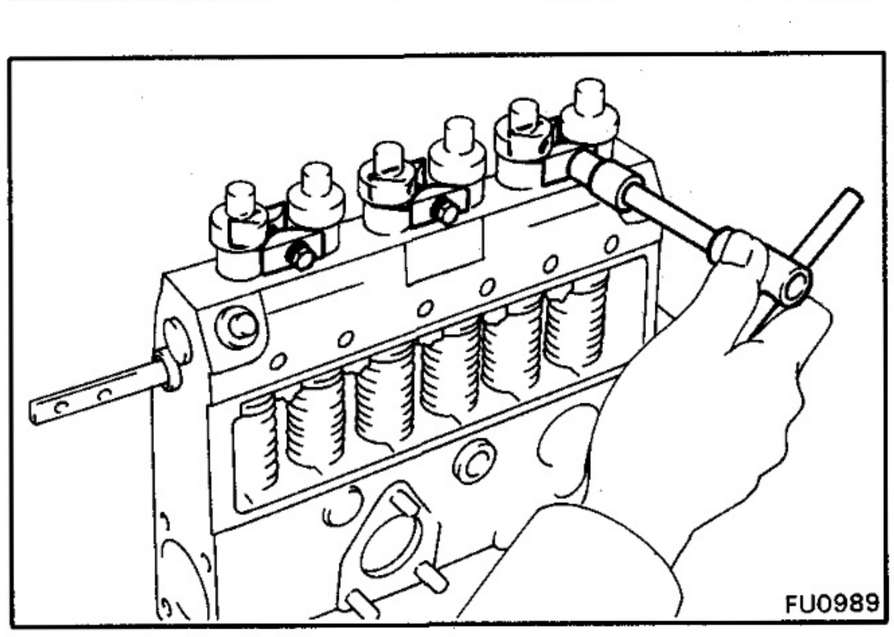

(b) Install the three lock plates.

6. CHECK SLIDING RESISTANCE OF CONTROL RACK

(See page FU-52)

Sliding resistance: 120 g (4.2 oz) or less

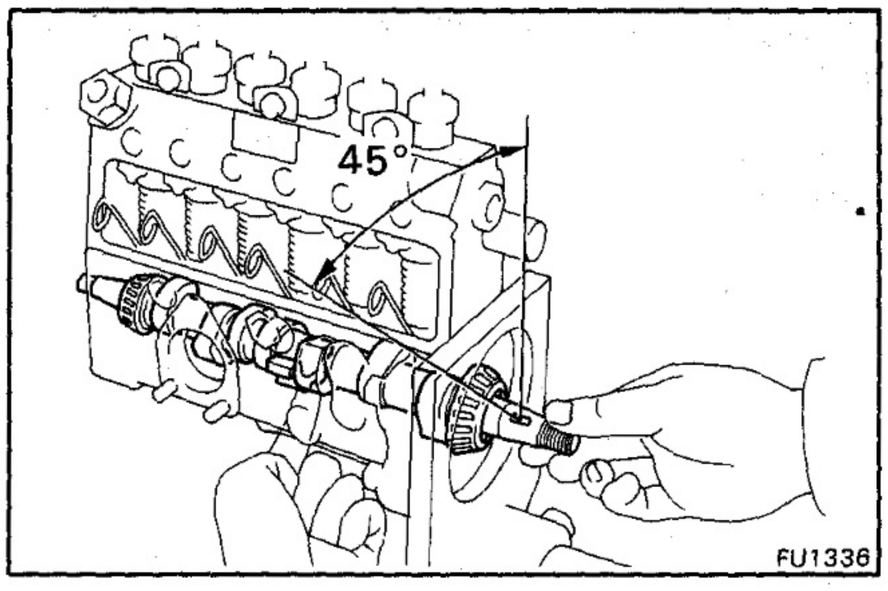

7. INSTALL GOVERNOR HOUSING AND CAMSHAFT

(a) [12H-T]
Insert the camshaft together with the center bearing as shown.

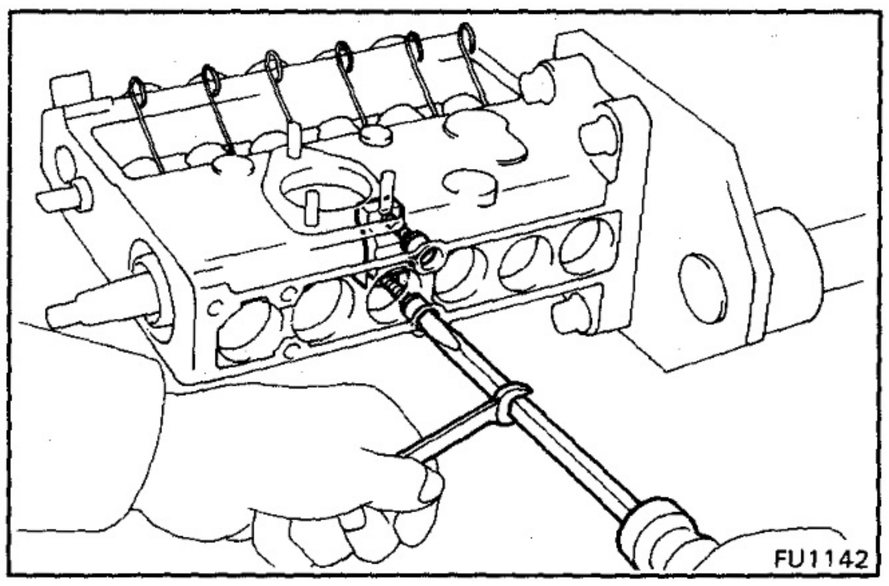

(b) [12H-T]
Install the center bearing with new two gaskets and the two screws.

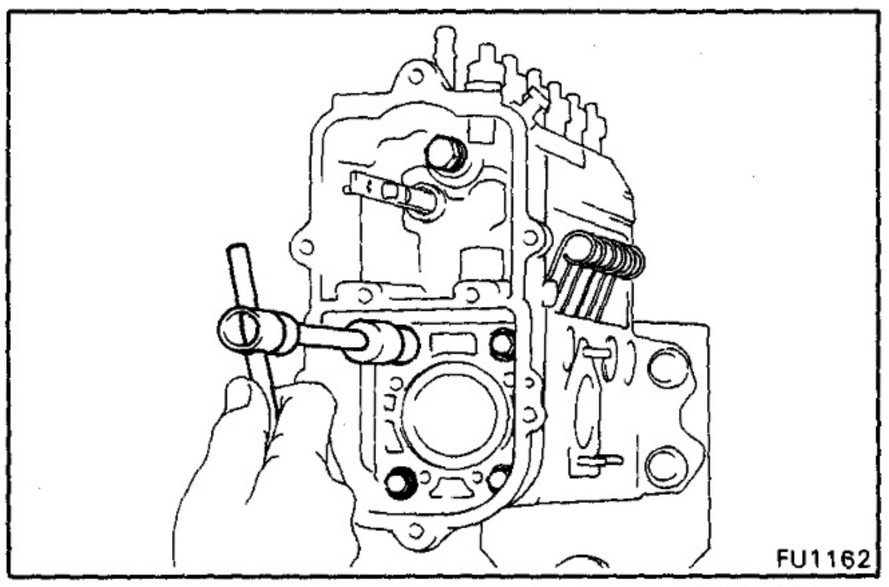

(c) [2H M/T]
Install a new gasket and the governor housing with the five screws.

Torque:
10 mm bolt head 85 kg-cm (74 in.-lb, 8.3 N·m)
12 mm bolt head 190 kg-cm (14 ft-lb, 19 N·m)

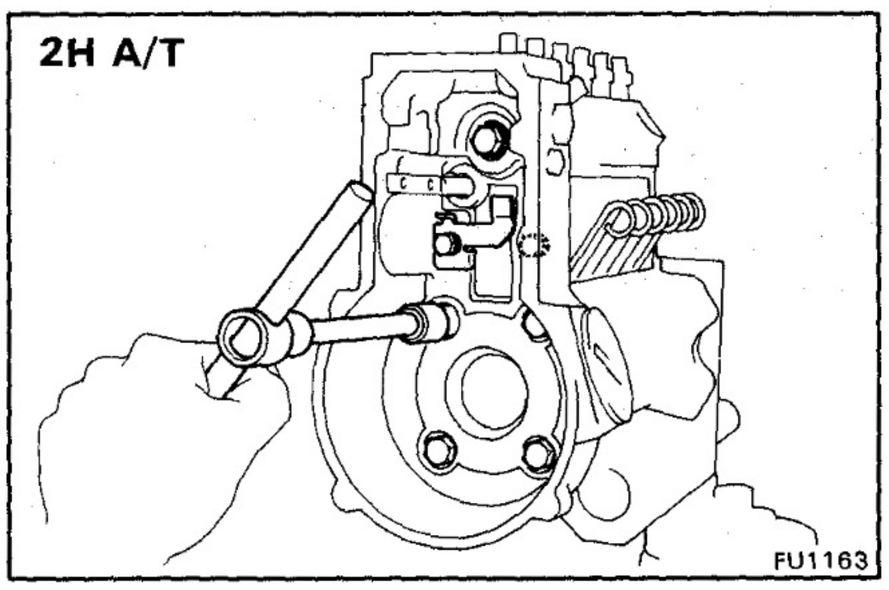

(d) [2H A/T and 12H-T]
Install a new gasket, the governor housing and stopper bracket with the seven screws.

Torque:
10 mm bolt head 85 kg-cm (74 in.-lb, 8.3 N·m)
12 mm bolt head 190 kg-cm (14 ft-lb, 19 N·m)

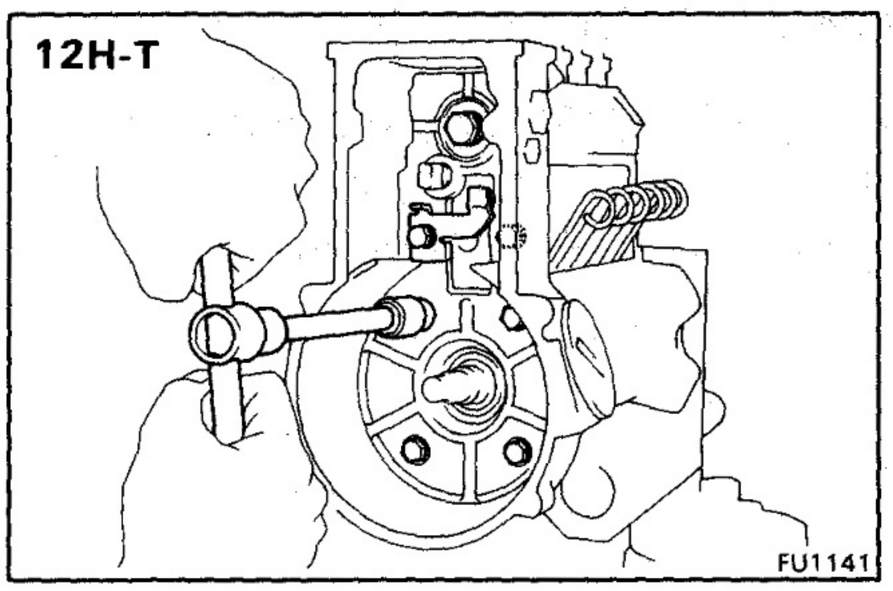

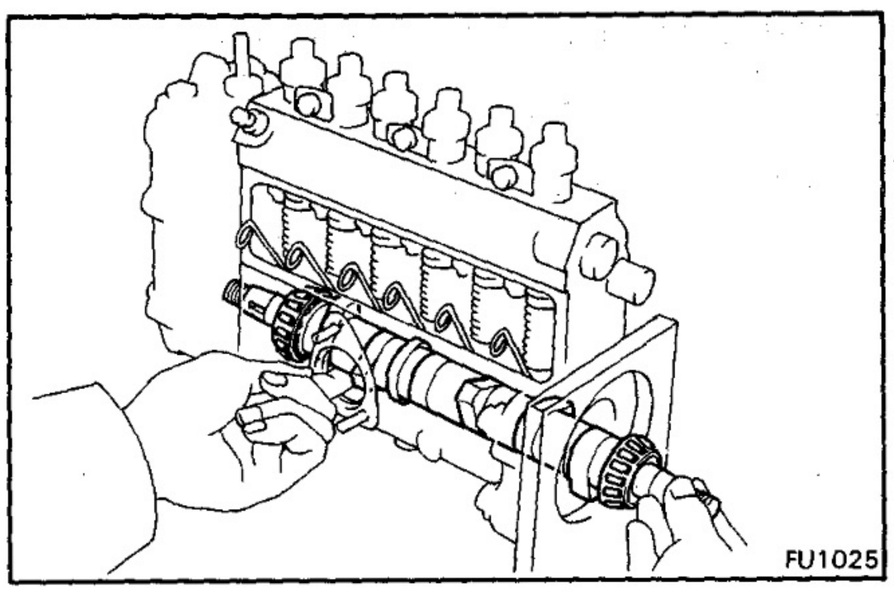

(e) [2H]
Insert the camshaft.

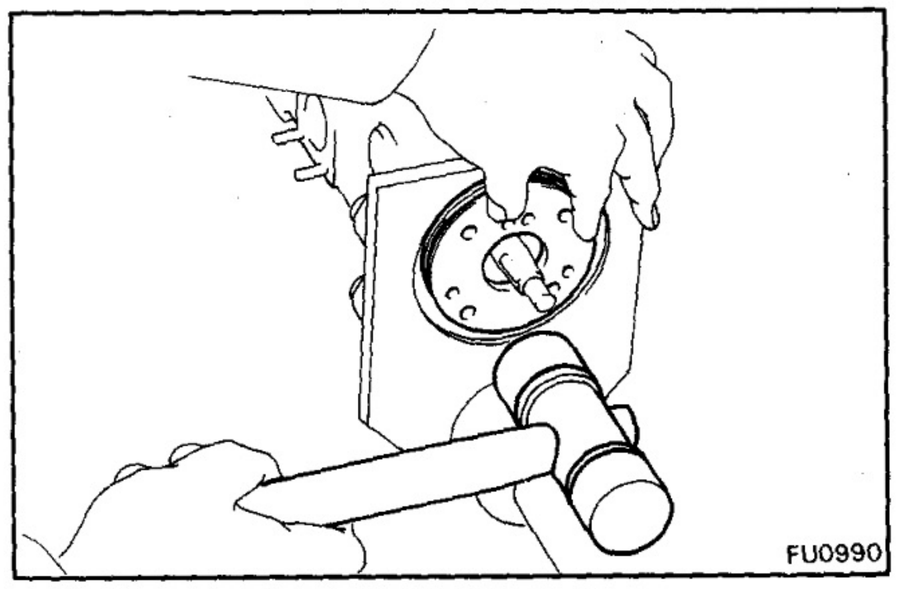

(f) Using a plastic-faced hammer, tap in the bearing cover.

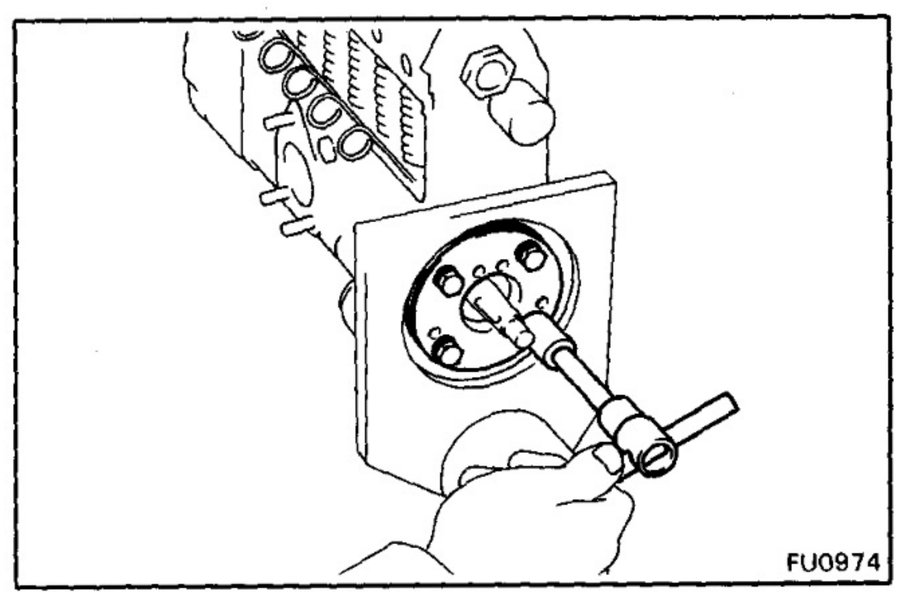

(g) Install the four bolts of the bearing cover.

Torque: 85 kg-cm (74 in.-lb, 8.3 N·m)

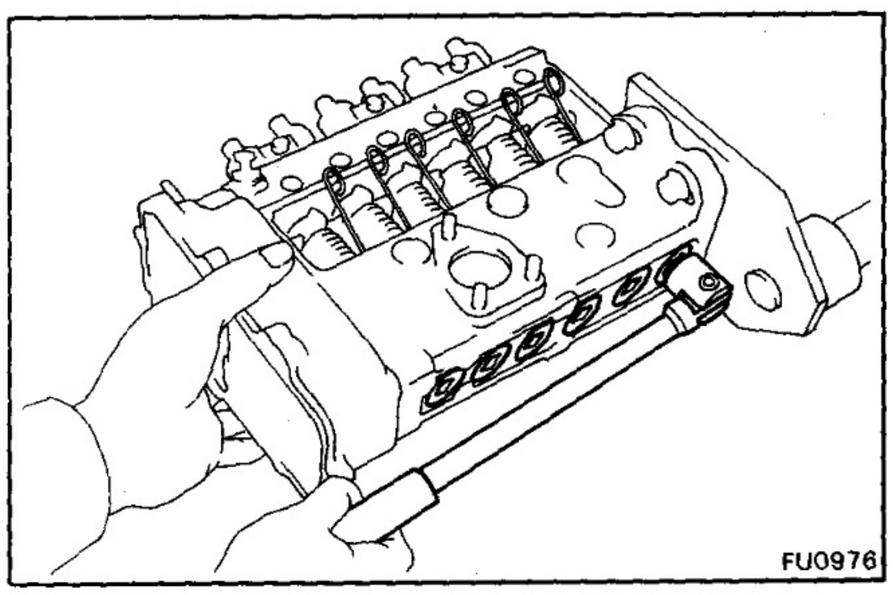

8. INSTALL PLATE PLUGS

(a) Apply liquid sealer on the threads and under the plate plug heads.

(b) Install the six plate plugs.

Torque: 650 kg-cm (47 ft-lb, 64 N·m)

9. CHECK THRUST CLEARANCE OF CAMSHAFT
(See page FU-49)

Standard clearance:	**0.03 – 0.05 mm (0.0012 – 0.0020 in.)**
Maximum clearance:	**0.1 mm (0.004 in.)**

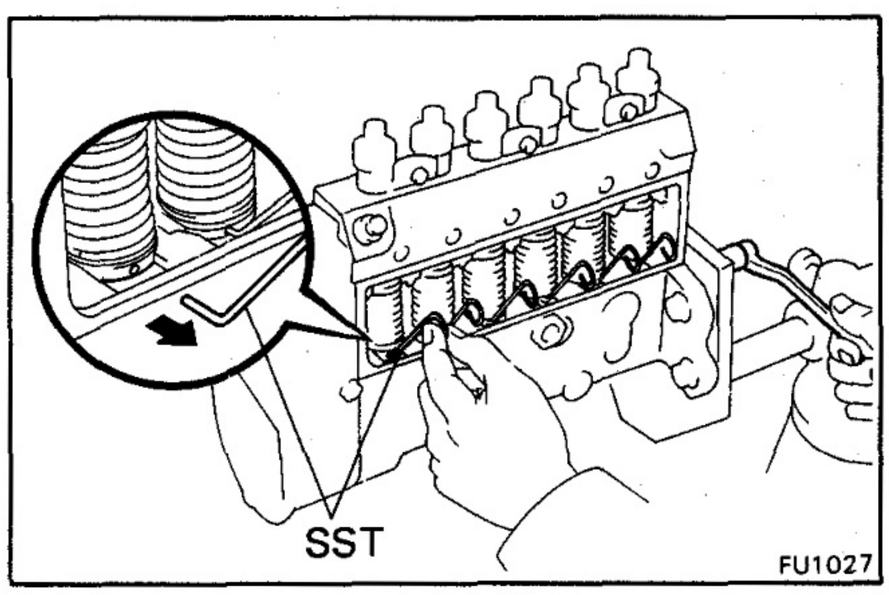

10. REMOVE SST FROM TAPPET SERVICE HOLES

Turn the camshaft, and remove SST.

SST 09260-47010 (09274-46011)

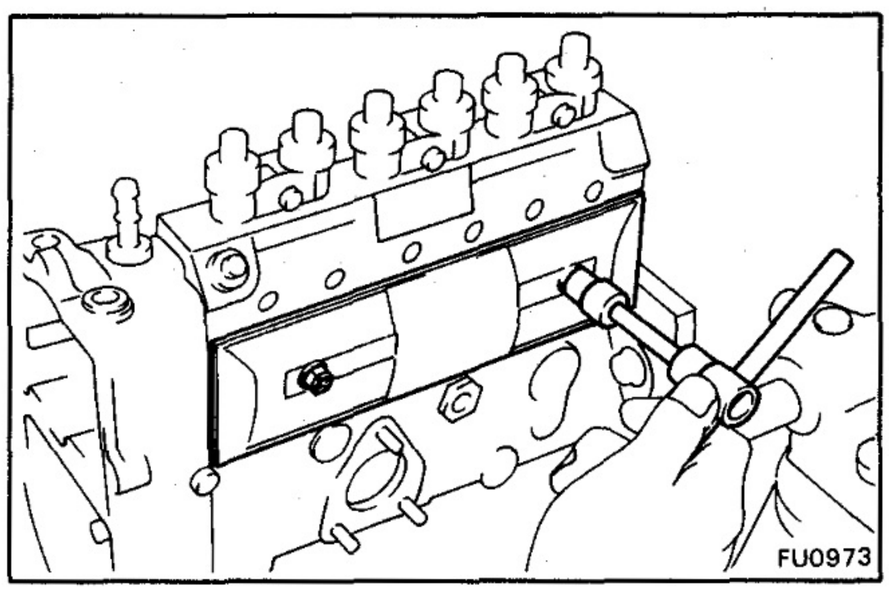

11. INSTALL PUMP COVER

Install the gasket and pump cover with the two gaskets and bolts.

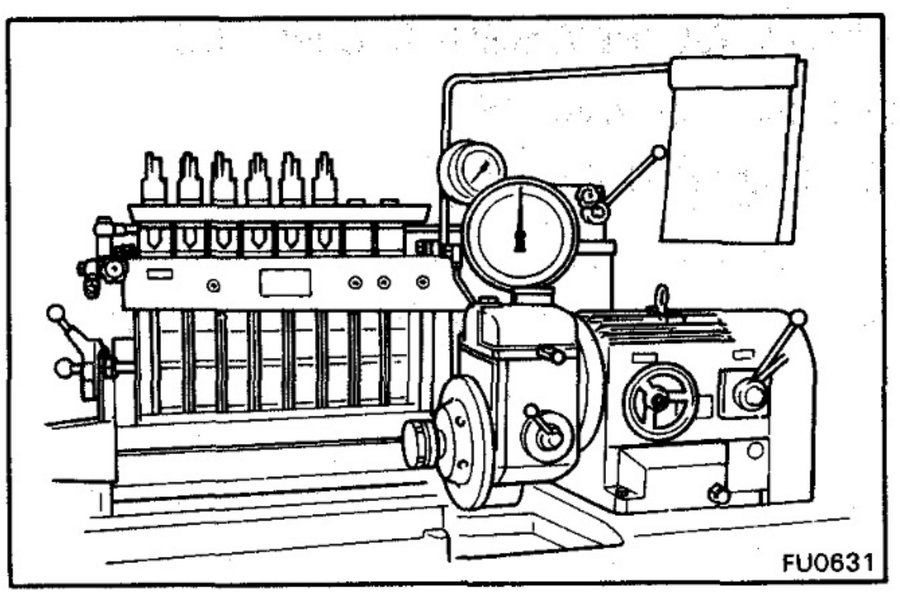

Adjustment of Pump Body

1. PRE-TEST CHECK AND PREPARATION

(a) The specifications for test nozzles and nozzle holders are as follows.

Test nozzle: 2H DN 4 SD 24A
12H-T DN 12 SD 12A

Test nozzle holder valve opening pressure:
2H 115 – 125 kg/cm² (1,636 – 1,778 psi, 11,278 – 12,258 kPa)
12H-T 170 – 180 kg/cm² (2,418 – 2,560 psi, 16,671 – 17,651 kPa)

(b) Check the accuracy of the tachometer.

Allowable error: ± 40 rpm at 2,000 rpm

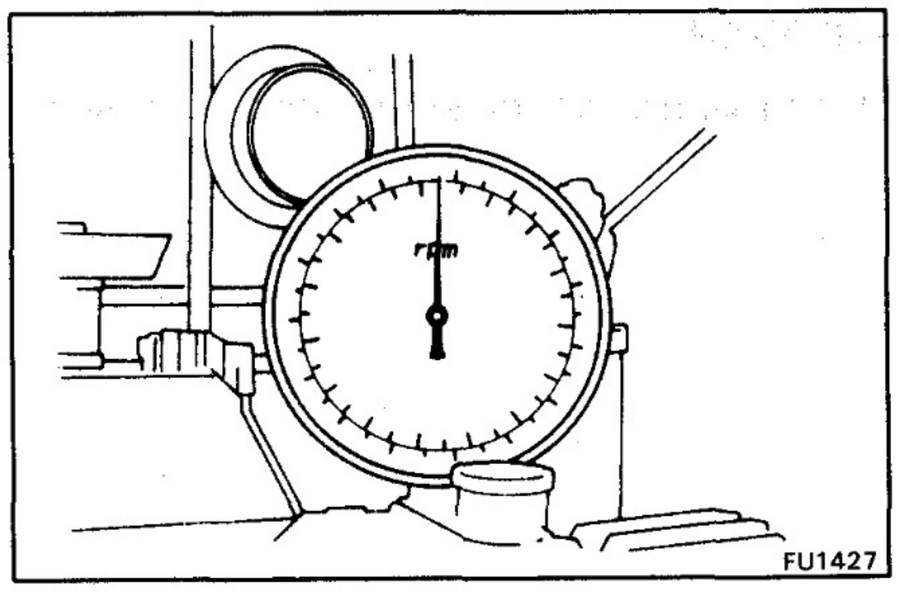

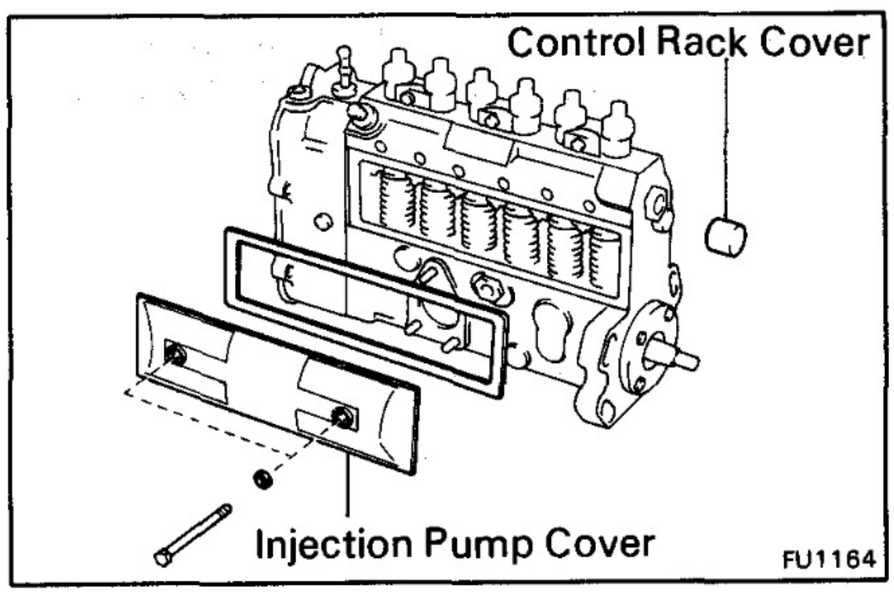

(c) Remove the injection pump and control rack covers.

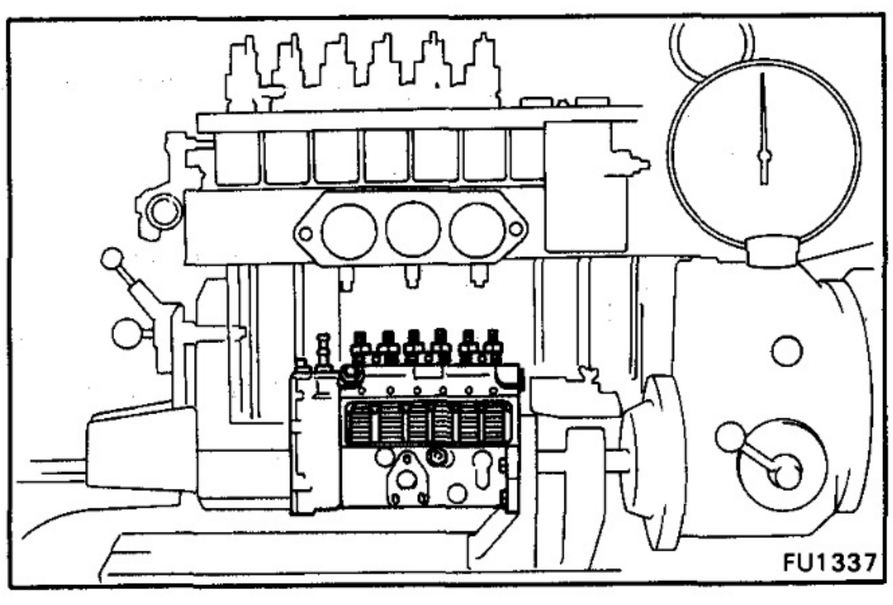

(d) Mount the injection pump body on the pump tester.

(e) Rotate the pump by hand and check that it turns smoothly.

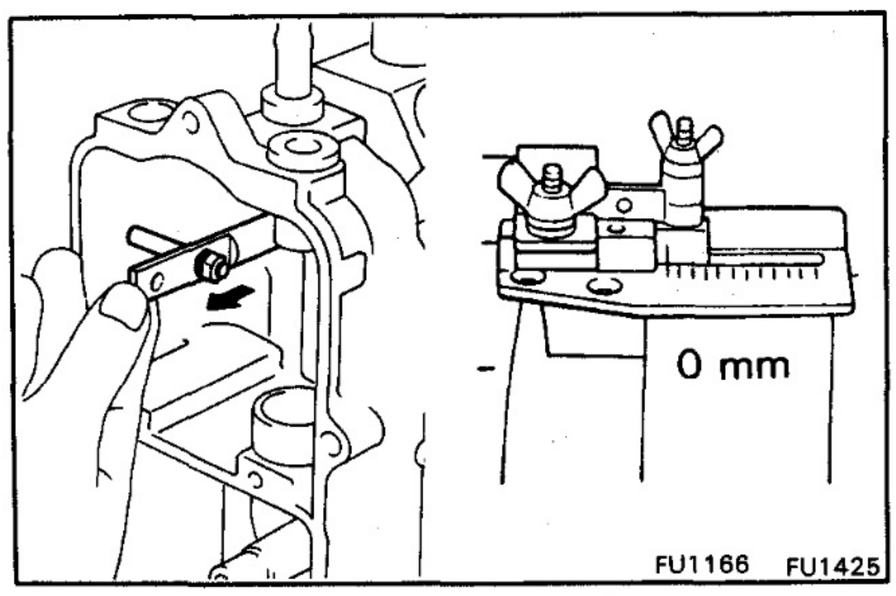

(f) Install the rack scale so that its zero point is at the position where the control rack is pulled fully toward the governor side, and set it to allow easy reading of the scale graduations.

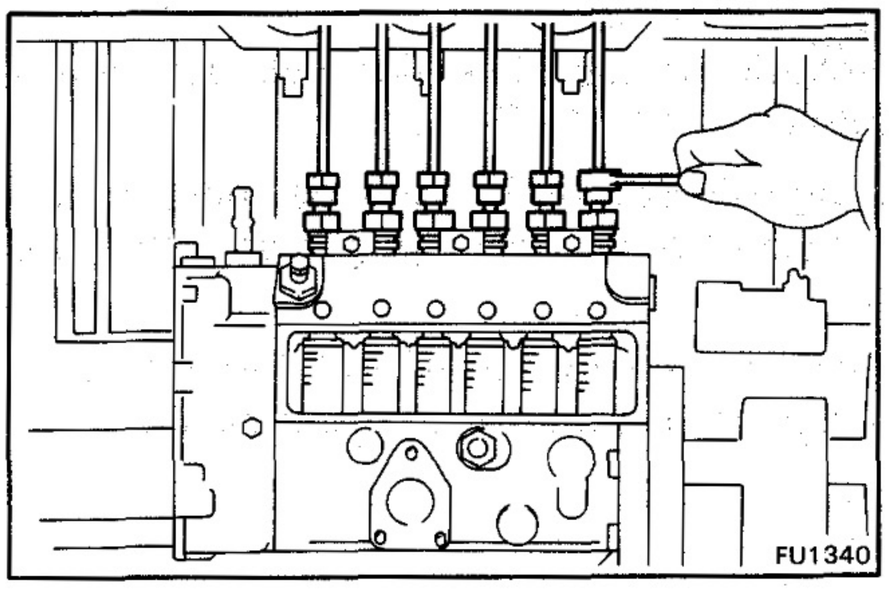

(g) Install an injection pipe with the following specifications.

Outer diameter: 6.0 mm (0.236 in.)
Inner diameter: 2.0 mm (0.079 in.)
Length: 600 mm (23.62 in.)
Minimum bending radius: 25 mm (0.98 in.) or more

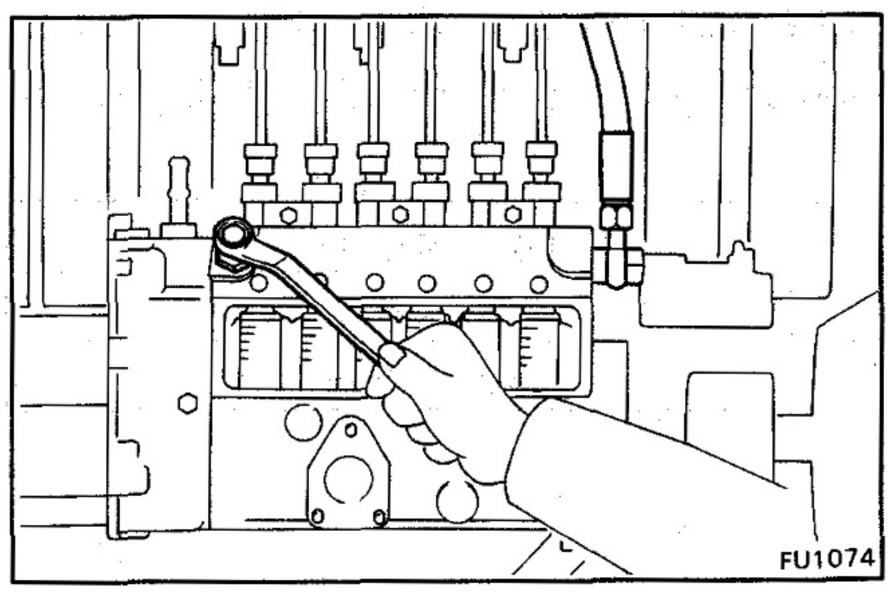

(h) Connect the fuel inlet pipe.

(i) Install the blind plug to the bleeder hole.

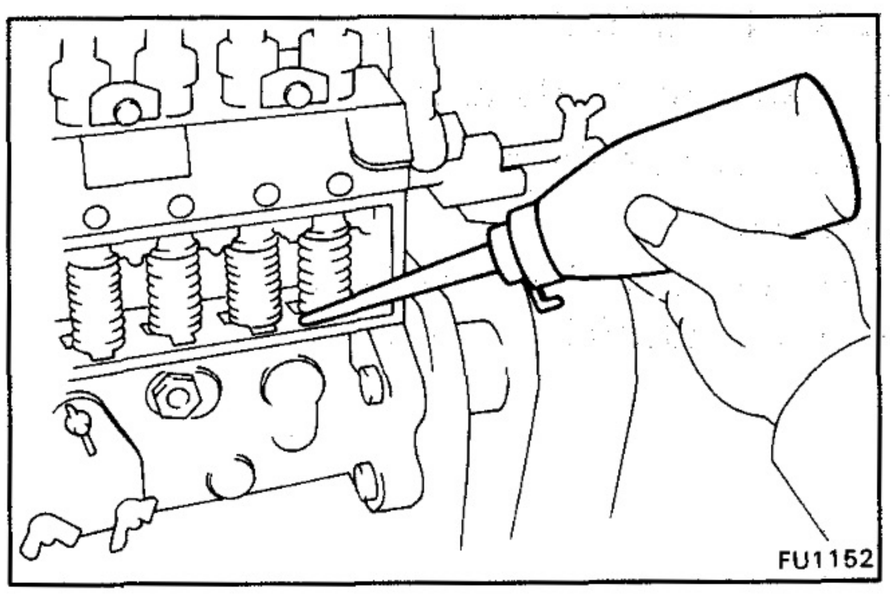

(j) Install the cover to the feed pump installation surface, and fill the pump camshaft chamber with engine oil.

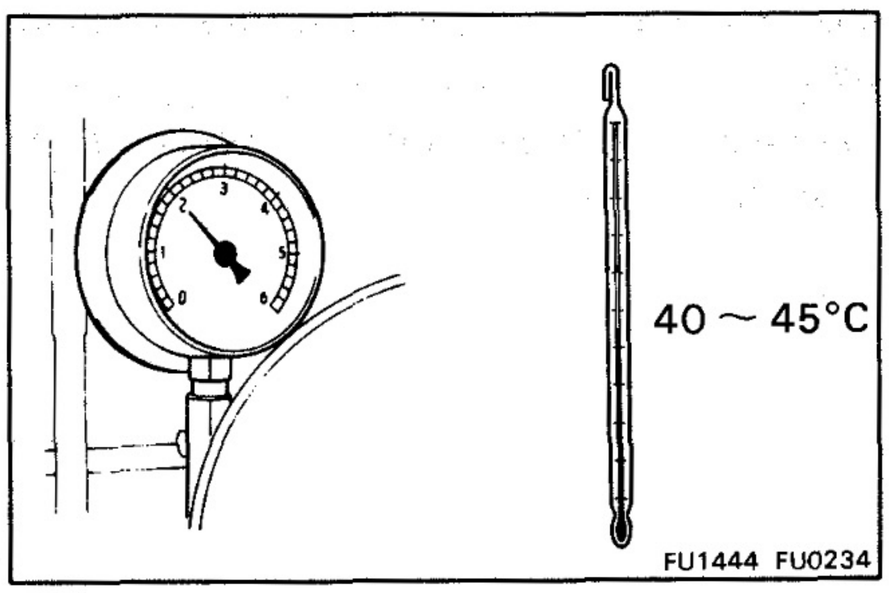

(k) [2H]
Fuel feeding pressure to injection pump should be 0.5 kg/cm² (7.1 psi, 49 kPa).

(l) [12H-T]
Fuel feeding pressure to injection pump should be 2.0 kg/cm² (28 psi, 196 kPa).

(m) Fuel temperature for pump testing should be 40 – 45°C (104 – 113°F).

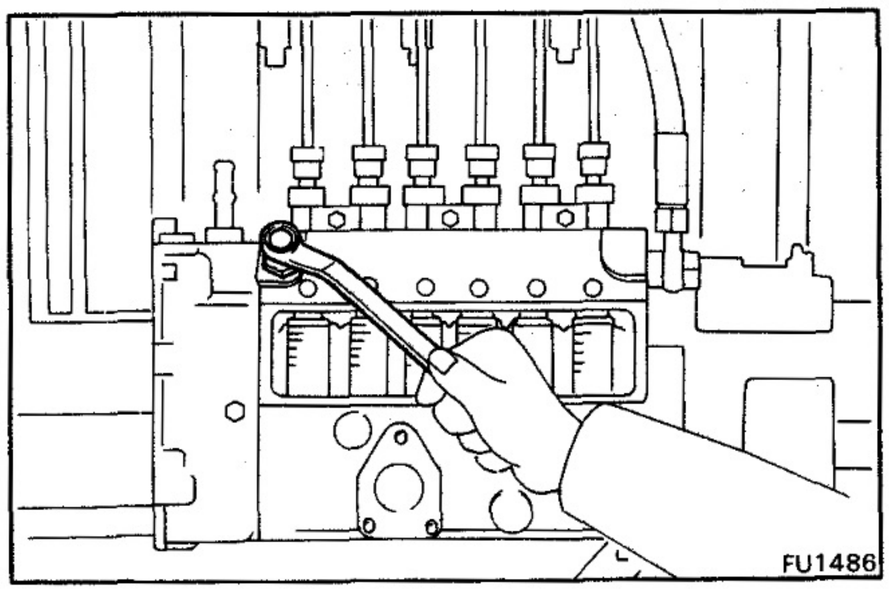

(n) Bleed the air from the pump housing.

NOTE: Be careful that fuel does not enter the pump housing during bleeding.

(o) Race the injection pump to 1,000 rpm for 5 minutes.

CAUTION: Check that there is no fuel leakage or abnormal noise.

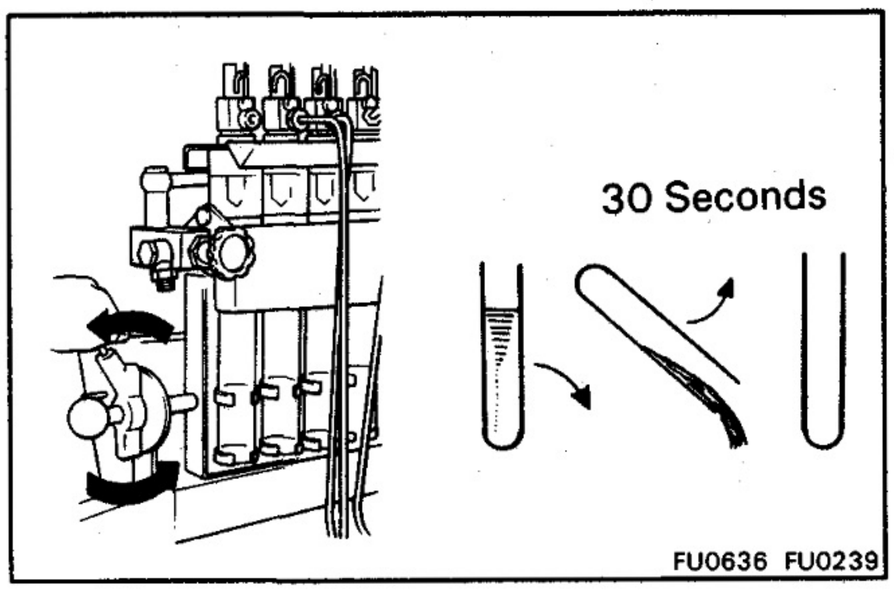

NOTE:
- Measure the volume of each injection cylinder with a measuring cylinder.
- Tilt the measuring cylinder for 30 seconds and pour out the fuel. Then, raise the cylinder upright and measure the next one.
- To obtain an accurate reading, wait until the bubbles in the graduated cylinder disappear before measuring.

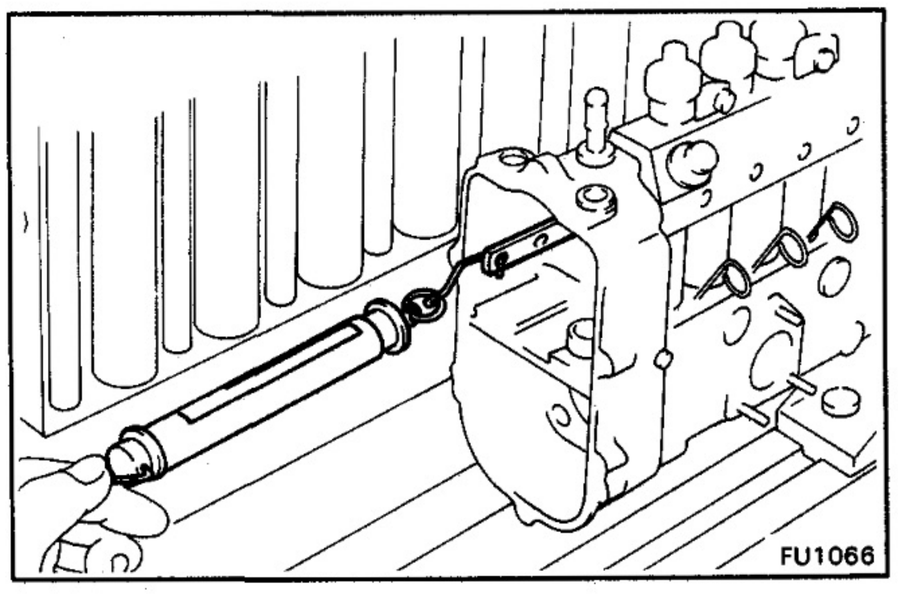

2. CHECK SLIDING RESISTANCE OF CONTROL RACK

Using a spring tension gauge, measure the sliding resistance.

Pump rpm	Sliding resistance g (oz)
0	120 (4.2) or less
1,000	50 (1.8) or less

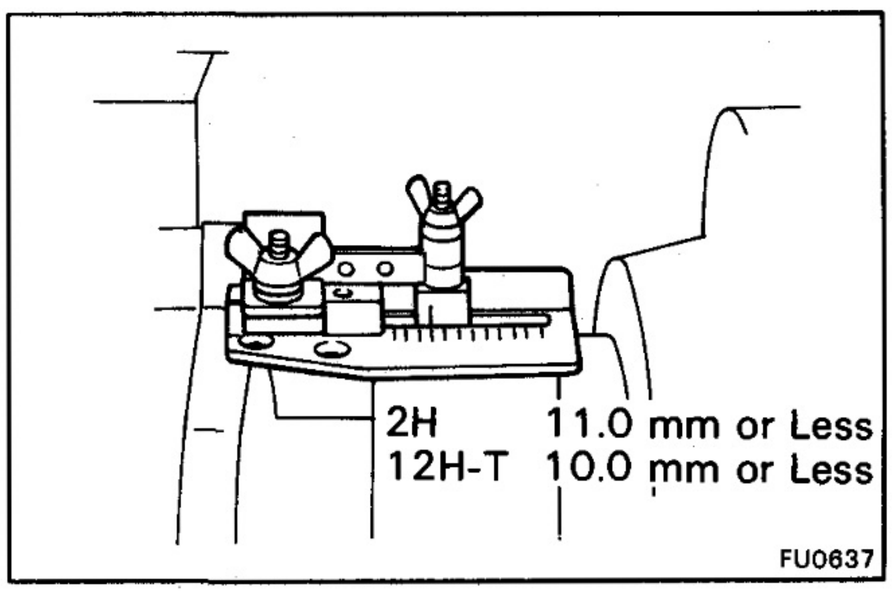

3. ADJUST INJECTION TIMING

A. Adjust pre-stroke for No. 1 Plunger

(a) Set the control rack position.

Control rack position:

2H 11.0 mm (0.433 in.) or less
12H-T 10.0 mm (0.394 in.) or less

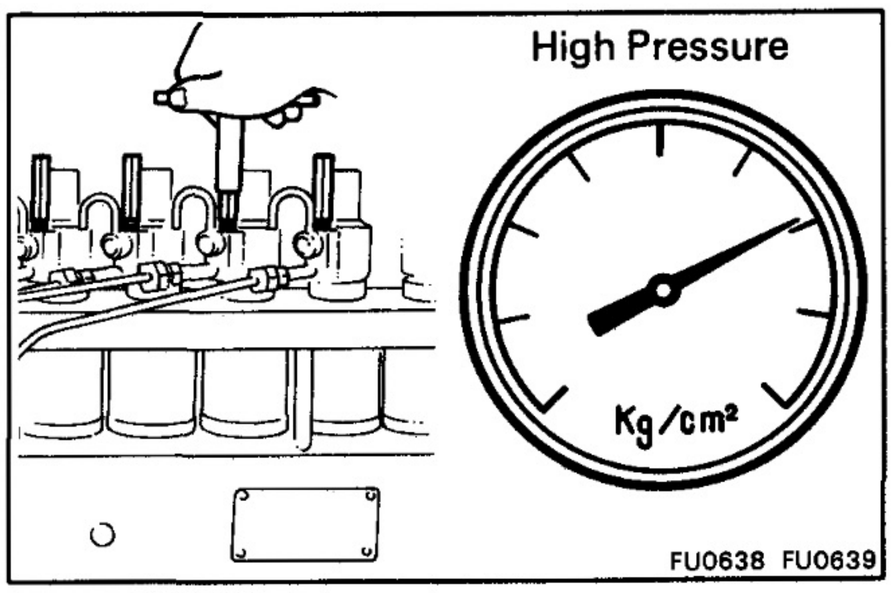

(b) Loosen the overflow cock of the pump tester bench nozzle holder.

(c) Fuel feeding pressure to the injection pump should be on the high side.

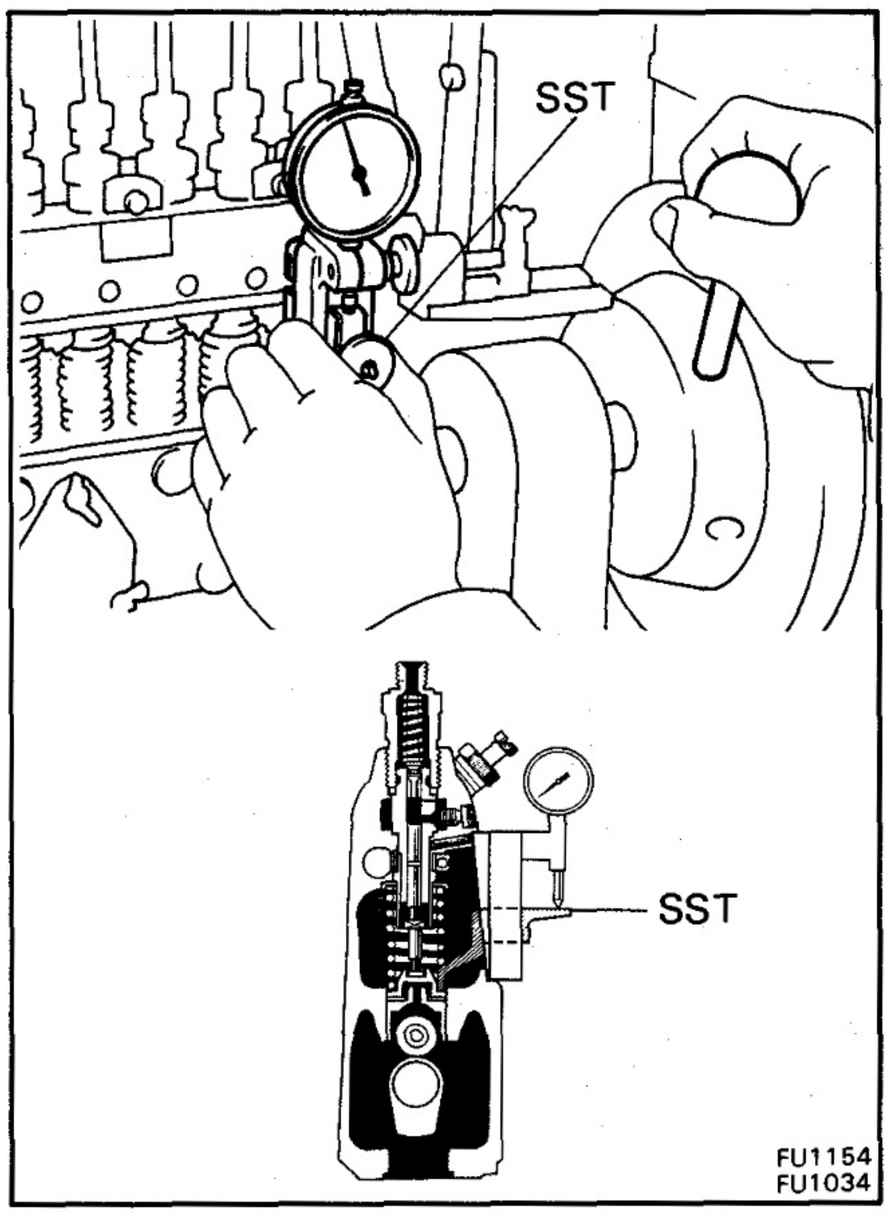

(d) Using SST, set the No. 1 tappet to BDC position, and then set the dial gauge on the No. 1 tappet.

SST 09260-47010 (09283-46010)

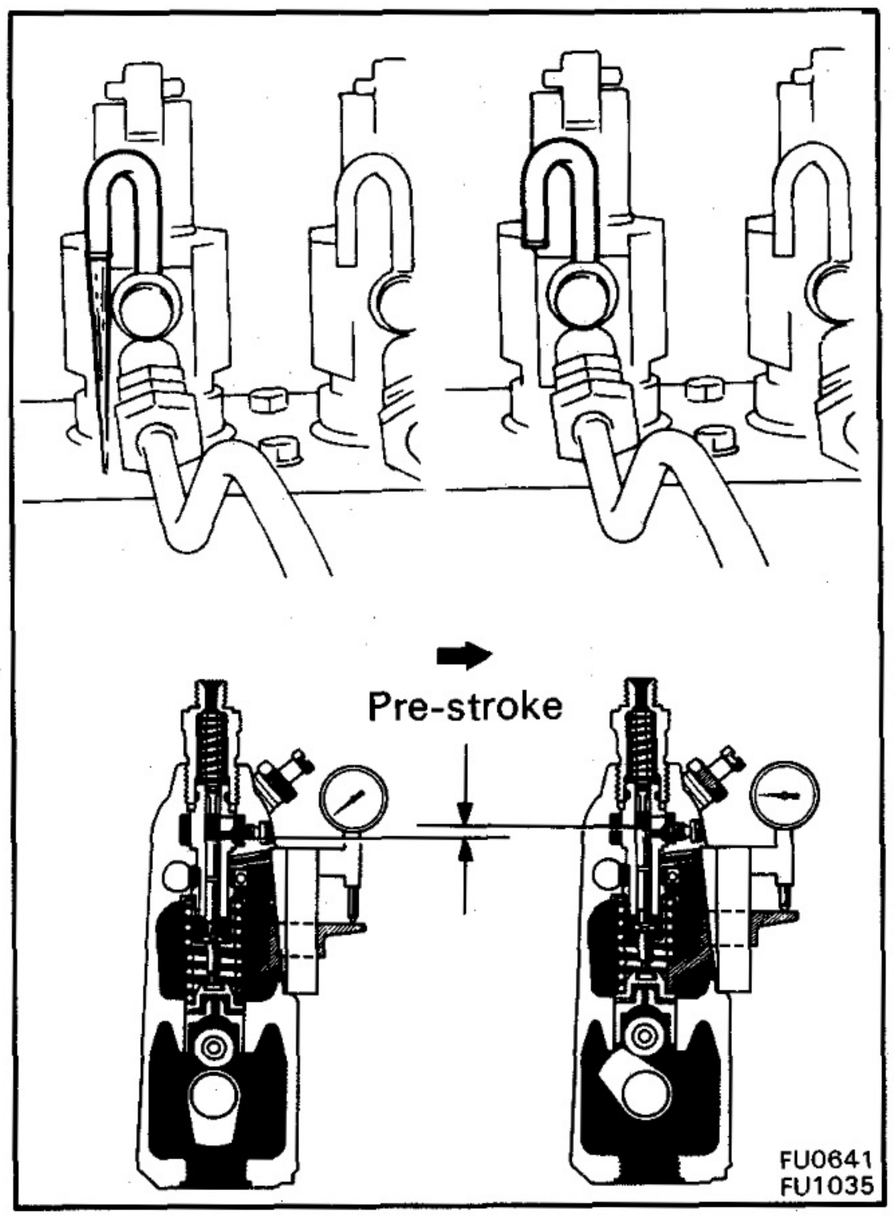

(e) Rotate the camshaft clockwise, and measure the lift of the No. 1 plunger when it moves from BDC to the injection starting position (the point where fuel flowing from the overflow pipe stops).

Pre-stroke:

2H	**1.90 – 2.00 mm (0.0748 – 0.0787 in.)**
12H-T	**3.55 – 3.65 mm (0.1398 – 0.1437 in.)**

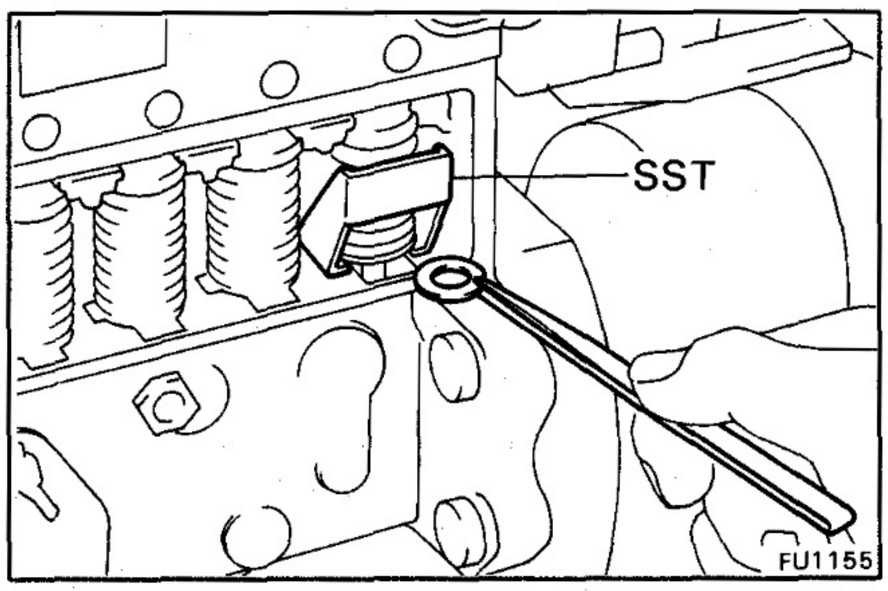

(f) Using SST, adjust by changing the adjusting shim.

SST 09260-47010 (09280-46010)

Adjusting shim thickness:

0.10 mm (0.0039 in.)
0.15 mm (0.0059 in.)
0.20 mm (0.0079 in.)
0.30 mm (0.0118 in.)
0.40 mm (0.0158 in.)
0.50 mm (0.0197 in.)

Adjusting shim thickness (cont'd):
0.60 mm (0.0236 in.)
0.70 mm (0.0276 in.)
0.80 mm (0.0315 in.)
0.90 mm (0.0354 in.)
1.00 mm (0.0394 in.)
1.10 mm (0.0433 in.)
1.20 mm (0.0472 in.)
1.30 mm (0.0519 in.)
1.40 mm (0.0551 in.)

NOTE:
- The pre-stroke will increase with a decrease in shim thickness and decrease with an increase.
- When adjusting the pre-stroke, the matchmarks placed on the pump and pump retainer during disassembly may not align. Therefore, make a note of the pre-stroke value for installation of the pump retainer.

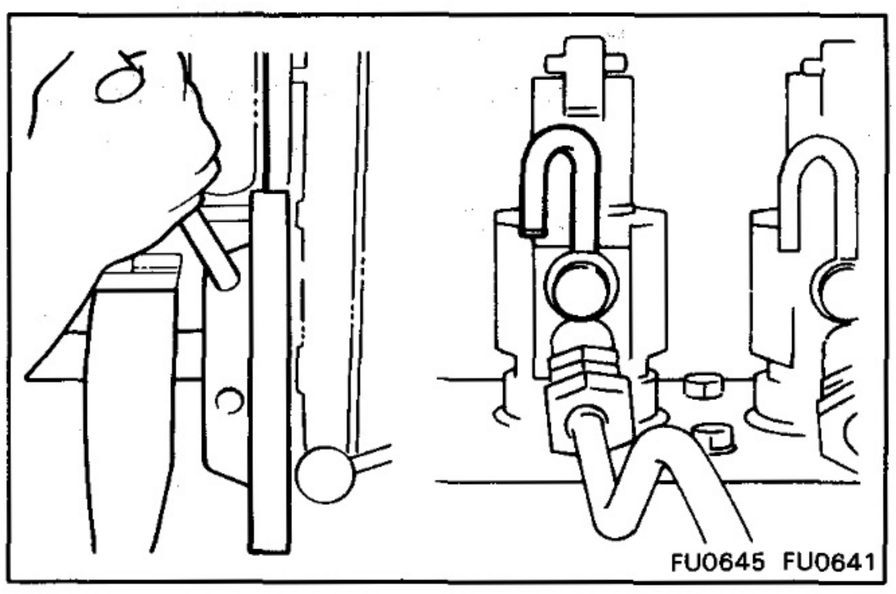

B. Adjust Injection Interval

(a) Using the No. 1 cylinder injection starting time position as a base, measure the injection starting angles in the order of injection.

Cylinder No.	Injection starting angle
1	0
4	59°30′ – 60°30′
2	119°30′ – 120°30′
6	179°30′ – 180°30′
3	239°30′ – 240°30′
5	299°30′ – 300°30′

(b) Adjust by using the same procedure as pre-stroke adjustment.

NOTE: The injection starting angle will change about 30′ with 0.1 mm (0.004 in.) change is shim thickness.

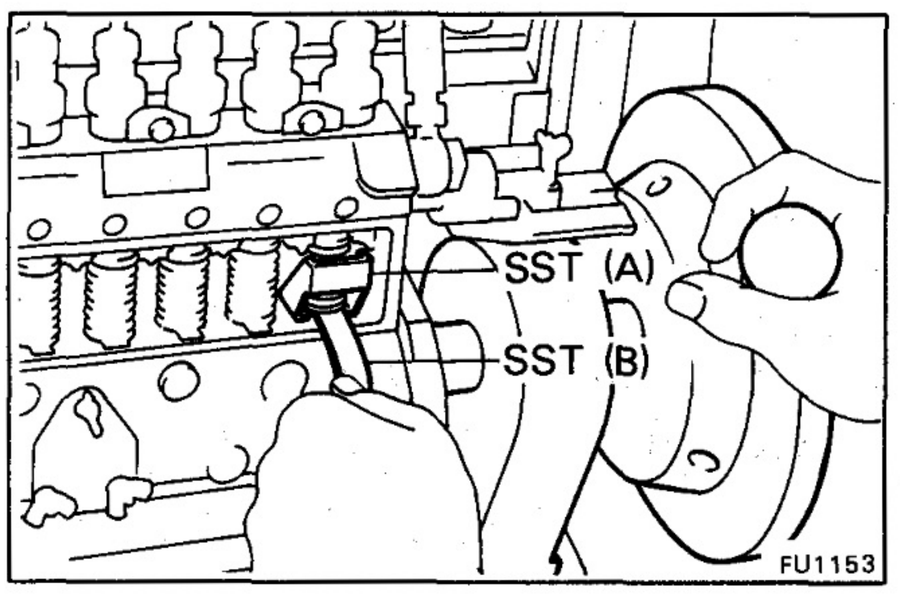

C. Adjust Tappet Clearance

(a) Using SST (A), insert the 0.2 mm (0.008 in.) gauge of SST (B) between the spring lower seat and adjusting shim, and rotate the camshaft slowly.

SST 09260-47010 (09280-46010, 09288-46011)

Tappet clearance: 0.2 mm (0.008 in.) or more

CAUTION: If there is interference between the plunger driving face and lower portion of the cylinder, or if resistance is felt while rotating the camshaft, it indicates that there is less than 0.2 mm (0.008 in.) clearance so, do not rotate it any further.

(b) If the tappet clearance is less than specification, recheck the pre-stroke.

Pre-stroke:

2H	**1.95 – 2.00 mm (0.0748 – 0.0787 in.)**
12H-T	**3.55 – 3.65 mm (0.1398 – 0.1437 in.)**

(c) Recheck the injection interval.

Cylinder No.	Injection starting angle
1	0
4	59°30′ – 60°30′
2	119°30′ – 120°30′
6	179°30′ – 180°30′
3	239°30′ – 240°30′
5	299°30′ – 300°30′

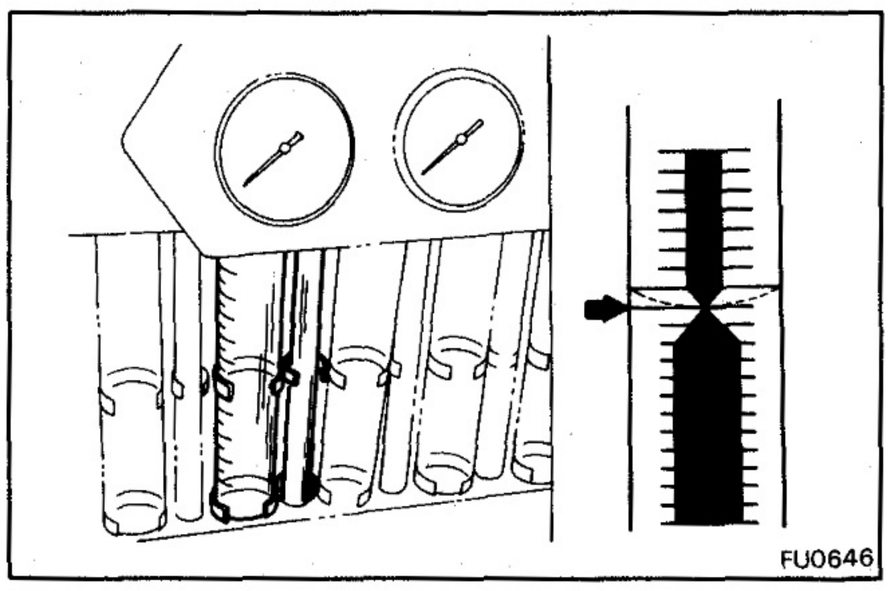
FU0646

4. ADJUST INJECTION VOLUME

(a) Remove the blind plug from the bleeder hole, and install an overflow valve.

(b) Measure each injection volume.

Item	Control rack position mm (in.)	Pump rpm	Measuring stroke	Injection volume of each cylinder cc (cu in.)	Variation limit cc (cu in.)
2H M/T (Cold weather spec. and Canada)	16.0 (0.630)	100	200	12.8 – 15.0 (0.78 – 0.92)	1.8 (0.11)
	8.0 (0.315)	1,000	200	4.1 – 5.3 (0.25 – 0.32)	0.6 (0.04)
	10.6 (0.417)	1,100	200	8.2 – 9.2 (0.50 – 0.56)	0.6 (0.04)
	10.6 (0.417)	1,700	200	8.5 – 10.1 (0.52 – 0.62)	0.9 (0.05)
	6.5 (0.256)	325	500	2.0 – 5.0 (0.12 – 0.31)	1.5 (0.09)
2H M/T (Others)	16.0 (0.630)	100	200	9.8 – 12.0 (0.60 – 0.73)	1.8 (0.11)
	8.0 (0.315)	1,000	200	4.1 – 5.3 (0.25 – 0.32)	0.6 (0.04)
	10.6 (0.417)	1,100	200	8.2 – 9.2 (0.50 – 0.56)	0.6 (0.04)
	10.6 (0.417)	1,700	200	8.5 – 10.1 (0.52 – 0.62)	0.9 (0.05)
	6.5 (0.256)	325	500	2.0 – 5.0 (0.12 – 0.31)	1.5 (0.09)
2H A/T (Cold weather spec. and Canada)	16.0 (0.630)	100	200	14.9 – 17.1 (0.91 – 1.04)	1.8 (0.11)
	11.3 (0.445)	1,100	200	8.8 – 9.8 (0.53 – 0.60)	0.6 (0.04)
	11.3 (0.445)	1,750	200	9.2 – 10.8 (0.56 – 0.66)	0.9 (0.05)
	7.9 (0.311)	390	500	2.5 – 5.5 (0.15 – 0.34)	1.5 (0.09)

Cont'd

Item	Control rack position mm (in.)	Pump rpm	Measuring stroke	Injection volume of each cylinder cc (cu in.)	Variation limit cc (cu in.)
2H A/T (Others)	16.0 (0.630)	100	200	8.6 – 10.8 (0.52 – 0.66)	1.8 (0.11)
	11.3 (0.445)	1,100	200	8.8 – 9.8 (0.53 – 0.60)	0.6 (0.04)
	11.3 (0.445)	1,750	200	9.2 – 10.8 (0.56 – 0.66)	0.9 (0.05)
	7.9 (0.311)	390	500	2.5 – 5.5 (0.15 – 0.34)	1.5 (0.09)
12H-T M/T (Cold weather spec.)	16.0 (0.630)	100	200	14.0 – 18.0 (0.85 – 1.10)	1.6 (0.10)
	10.7 (0.421)	1,100	200	11.3 – 12.3 (0.69 – 0.75)	0.9 (0.05)
	10.7 (0.421)	1,750	200	11.3 – 12.5 (0.69 – 0.76)	1.2 (0.07)
	8.9 (0.350)	340	500	3.0 – 6.5 (0.18 – 0.40)	1.5 (0.09)
12H-T M/T (Others)	16.0 (0.630)	100	200	9.0 – 13.0 (0.55 – 0.79)	1.6 (0.10)
	10.7 (0.421)	1,100	200	11.3 – 12.3 (0.69 – 0.75)	0.9 (0.05)
	10.7 (0.421)	1,750	200	11.3 – 12.5 (0.69 – 0.76)	1.2 (0.07)
	8.9 (0.350)	340	500	3.0 – 6.5 (0.18 – 0.40)	1.5 (0.09)
12H-T A/T	16.0 (0.630)	100	200	9.0 – 13.0 (0.55 – 0.79)	1.6 (0.10)
	10.7 (0.421)	1,100	200	11.3 – 12.3 (0.69 – 0.75)	0.9 (0.05)
	10.7 (0.421)	1,750	200	11.3 – 12.5 (0.69 – 0.76)	1.2 (0.07)
	8.9 (0.350)	390	500	0.75 – 4.75 (0.05 – 0.29)	1.5 (0.09)

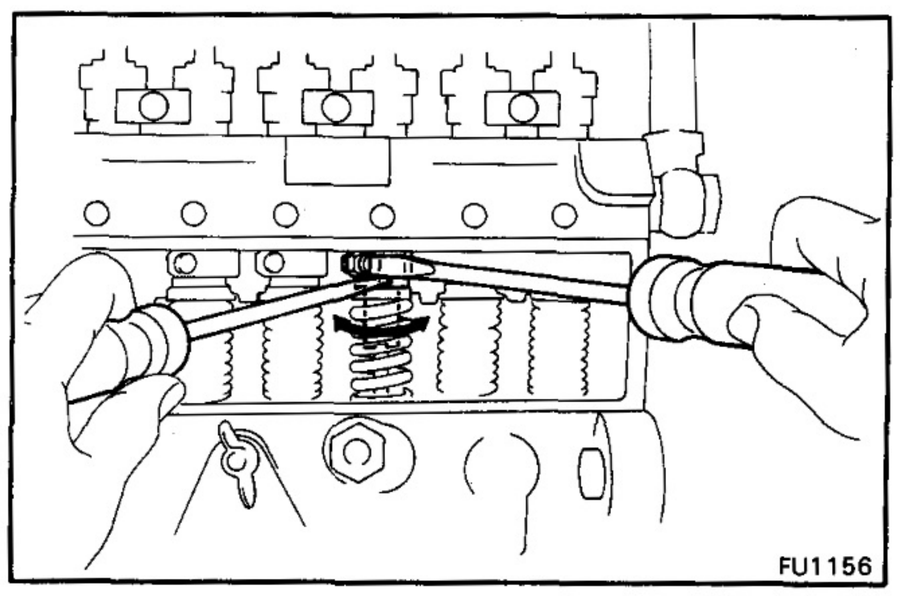

(c) Loosen the clamp screw of the control pinion, and adjust by rotating the control sleeve.

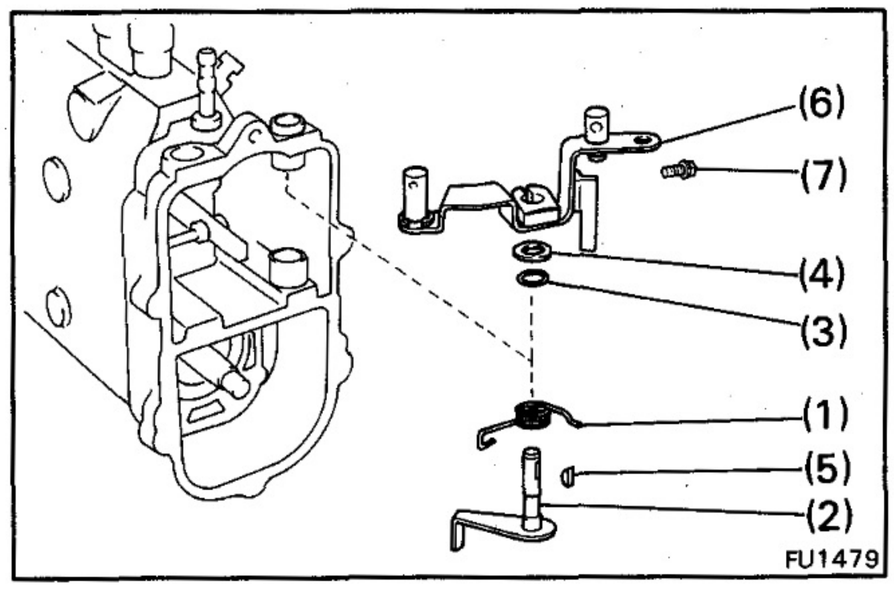

Assembly of Governor [2H M/T]

(See page FU-32)

1. INSTALL STOP AND ADJUSTING LEVERS

(a) Install the following parts:

(1) Return spring
(2) Stop lever
(3) O-ring
(4) Washer
(5) Set key
(6) Adjusting lever
(7) Bolt

Torque: 85 kg-cm (74 in.-lb, 8.3 N·m)

(b) Hook the return spring to the stop lever.

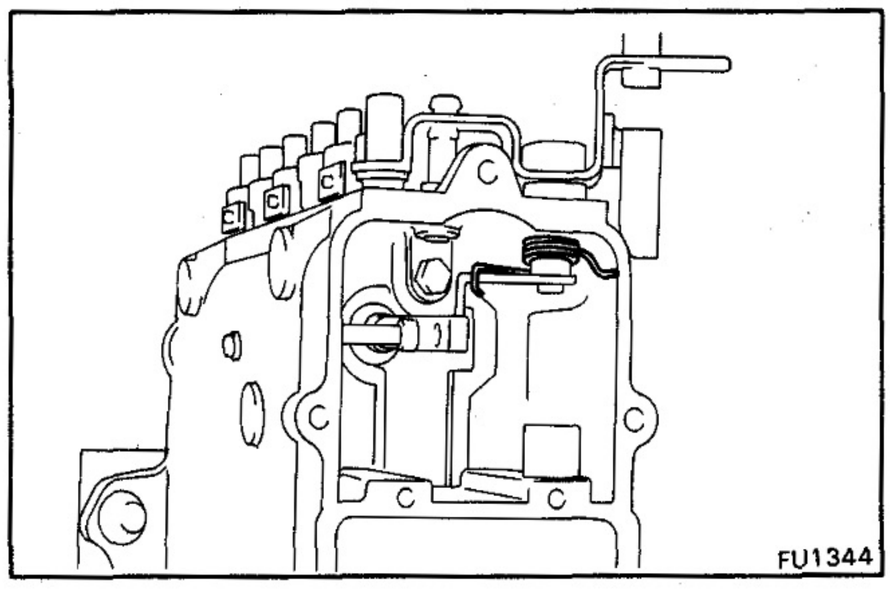

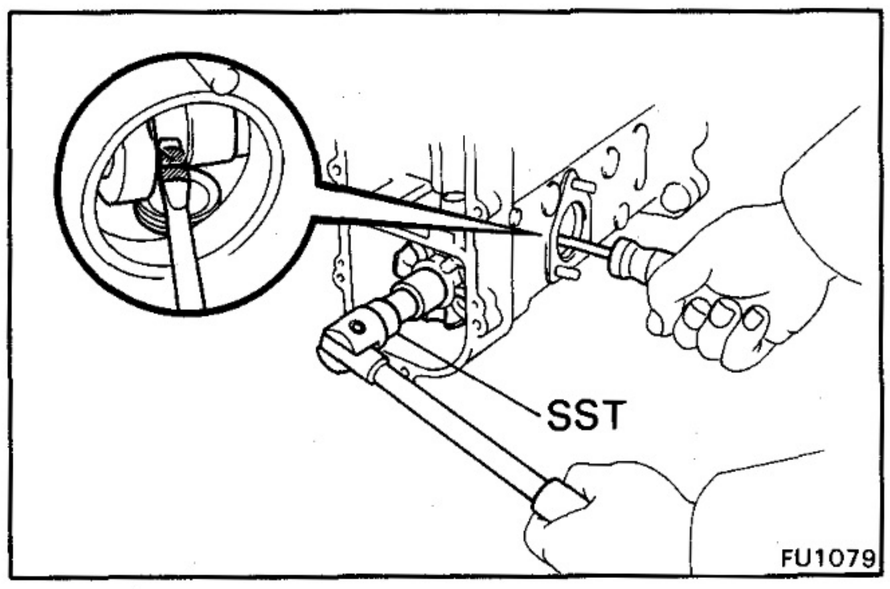

2. INSTALL STEEL BALL GUIDE

Using SST, install the ball guide with the spring washer and round nut.

SST 09260-47010 (09260-78010)

Torque: 550 kg-cm (40 ft-lb, 54 N·m)

CAUTION: Be careful not to damage the camshaft. Tape the screwdriver tip.

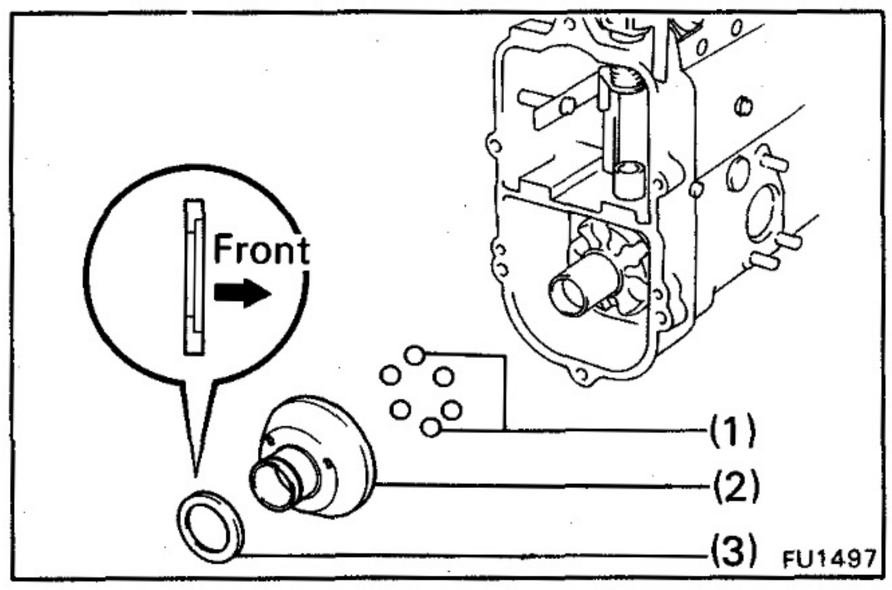

3. INSTALL STEEL BALLS AND SLIDER

Install the following parts:

(1) Six steel balls
Apply MP grease to the steel balls.
(2) Slider
(3) Plate washer (thick)

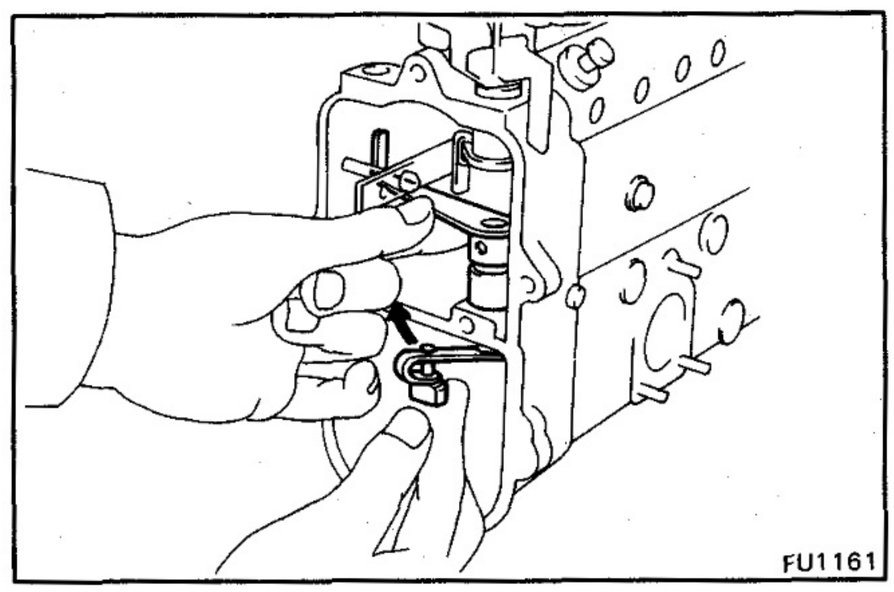

4. INSTALL CONTROL RACK LEVERS

(a) Install the upper control lever, plate washer and lower control lever.

(b) Install the shifting pin.

(c) Install the bolt.

Torque: 55 kg-cm (48 in.-lb, 5.4 N·m)

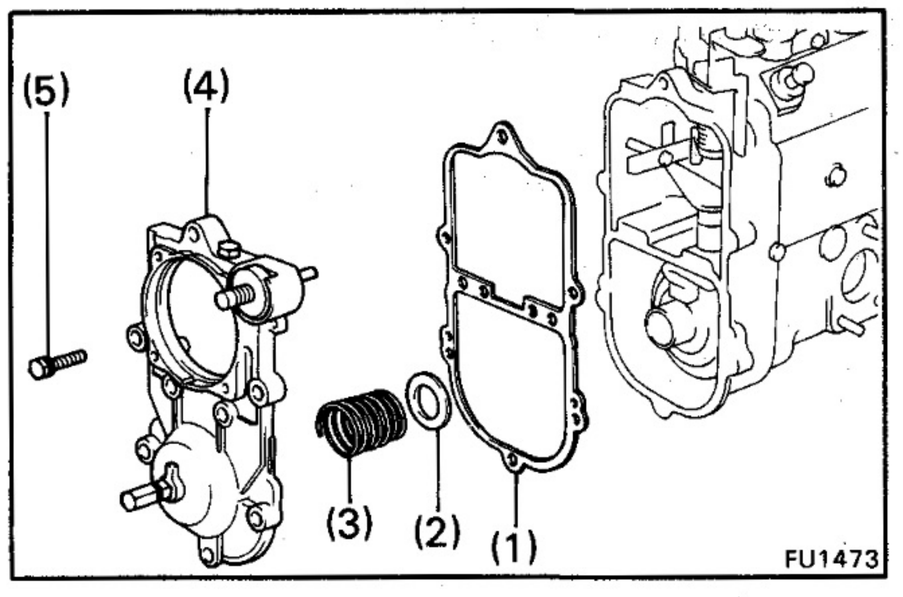

5. INSTALL SPEED CONTROL SPRING AND GOVERNOR COVER

Install the following parts:

(1) New gasket
(2) Spring seat (thin)
(3) Speed control spring
(4) Governor cover
(5) Six bolts

Torque: 85 kg-cm (74 in.-lb, 8.3 N·m)

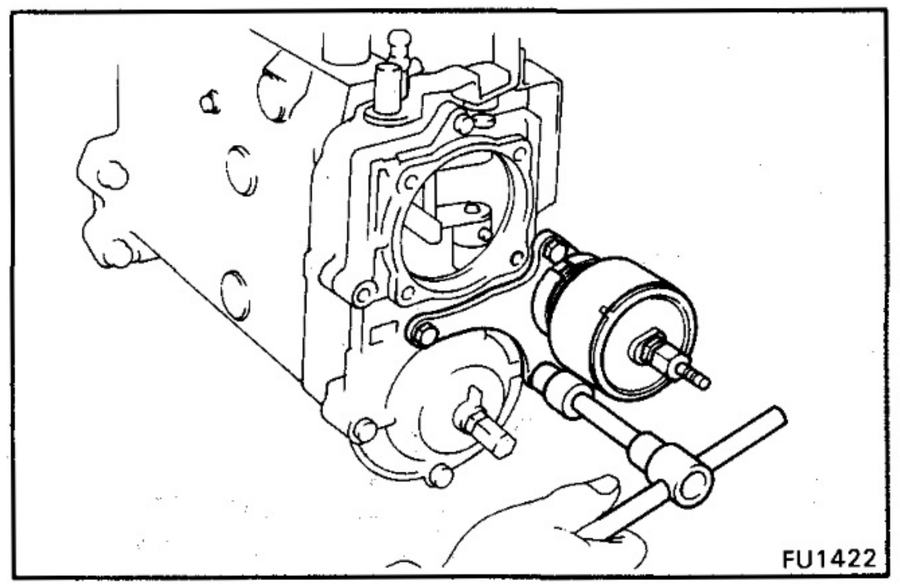

6. [w/ HAC]
INSTALL HIGH ALTITUDE COMPENSATOR (HAC)

Install the HAC with the three bolts.

Torque: 85 kg-cm (74 in.-lb, 8.3 N·m)

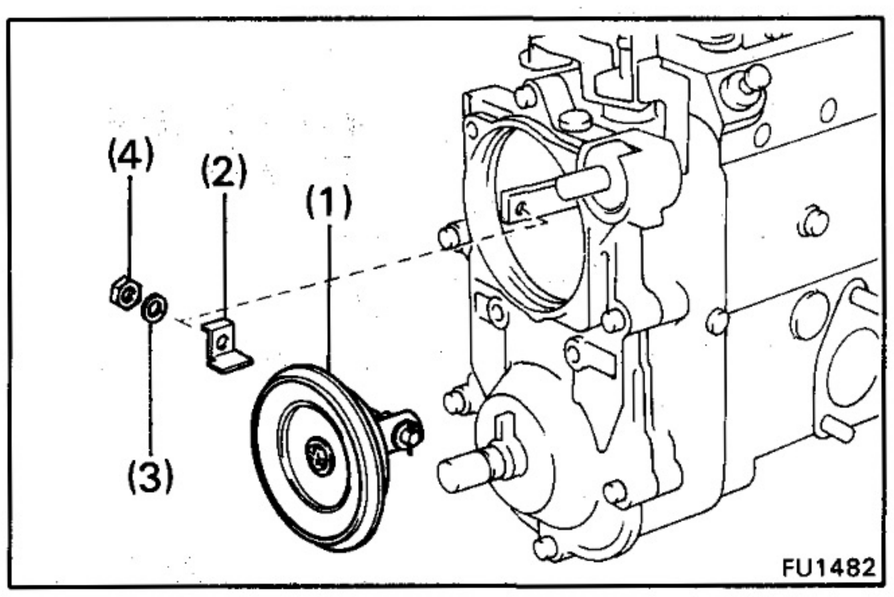

7. INSTALL GOVERNOR DIAPHRAGM

(a) Install the following parts:
(1) Governor diaphragm
(2) Connecting bracket
(3) Spring washer
(4) Nut

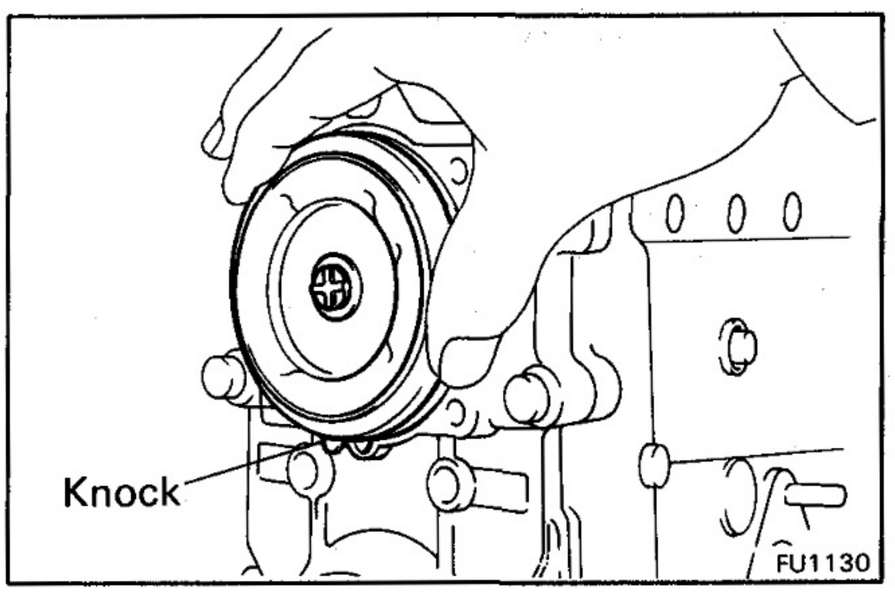

(b) Align the knock of the governor diaphragm with the knock groove of the governor cover.

(c) Insert the governor diaphragm into the governor cover.

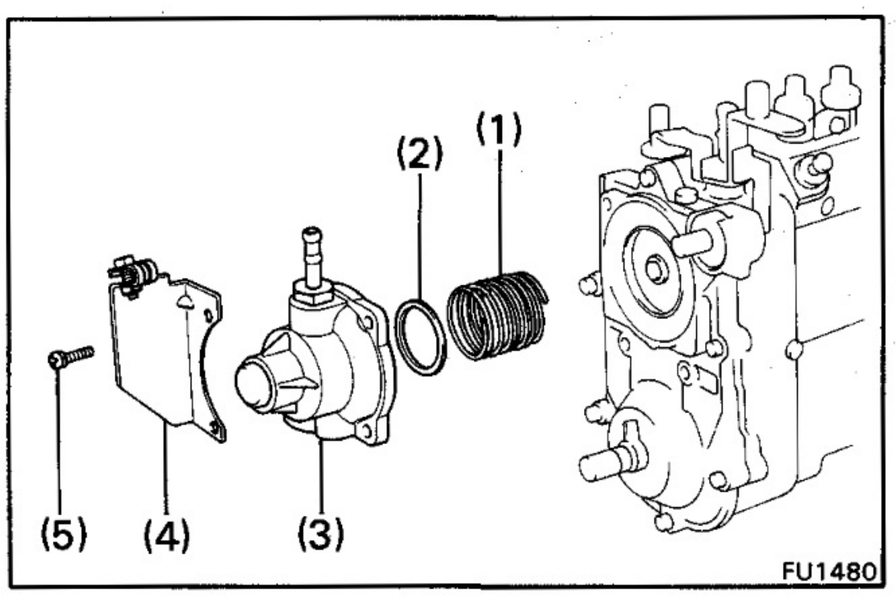

8. INSTALL GOVERNOR MAIN SPRING AND GOVERNOR DIAPHRAGM HOUSING

Install the following parts:

(1) Governor main spring
(2) Adjusting shim(s)
(3) Governor diaphragm housing
(4) [w/o EDIC]
Wire bracket
(5) Four screws

Adjustment of Governor [2H M/T]

Governor Charactecristic Diagram

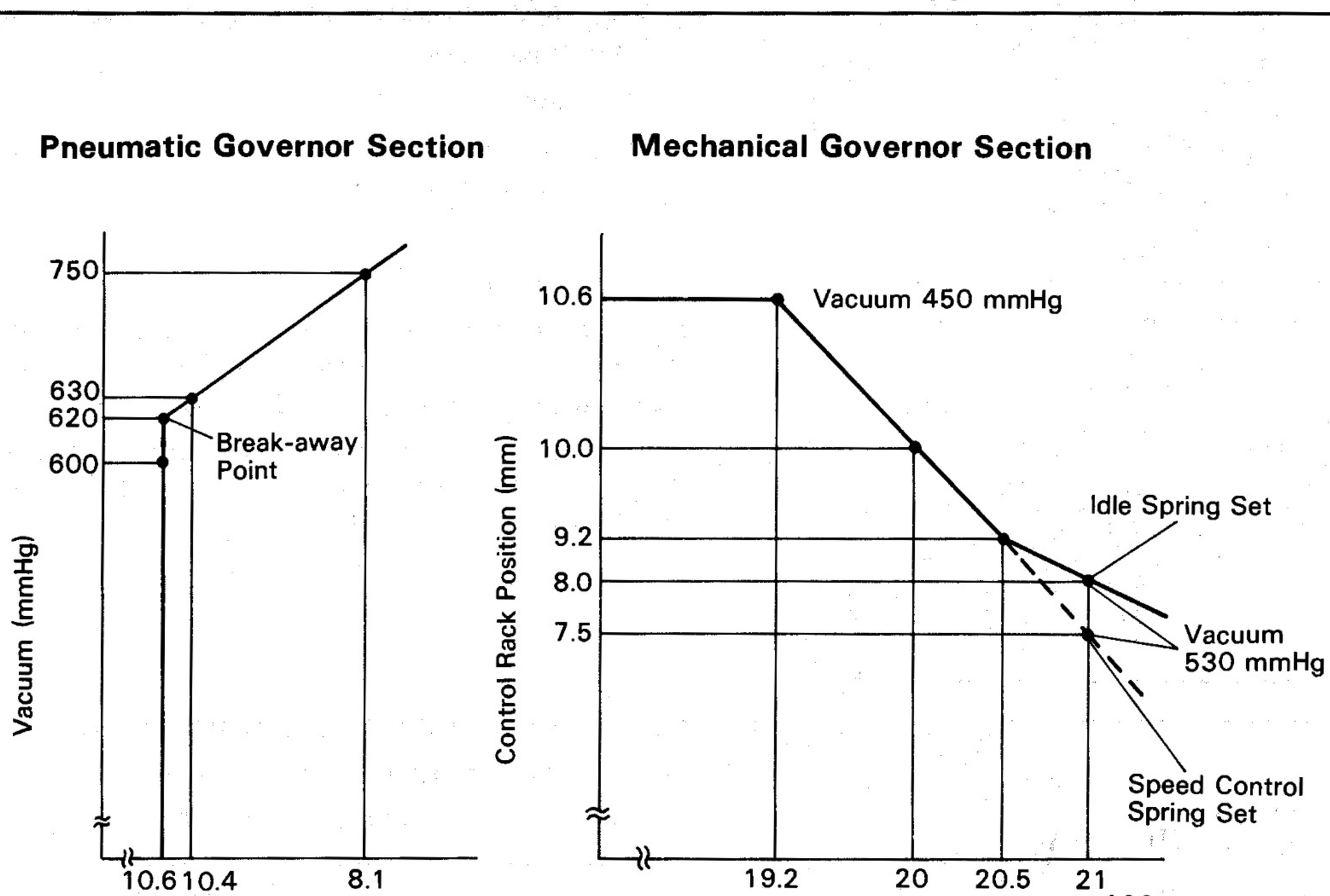

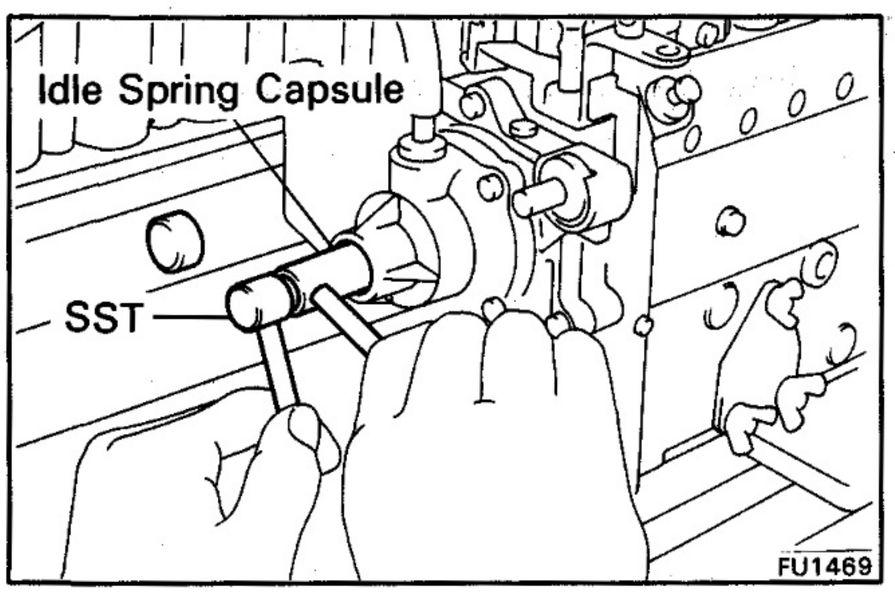

1. PRE-TEST CHECK AND PREPARATION
(See page FU-66)

2. PREPATATION

(a) Remove the sealing screw plug.

(b) Using SST, loosen the idle spring capsule to keep it inoperative.

SST 09260-47010 (09282-76010)

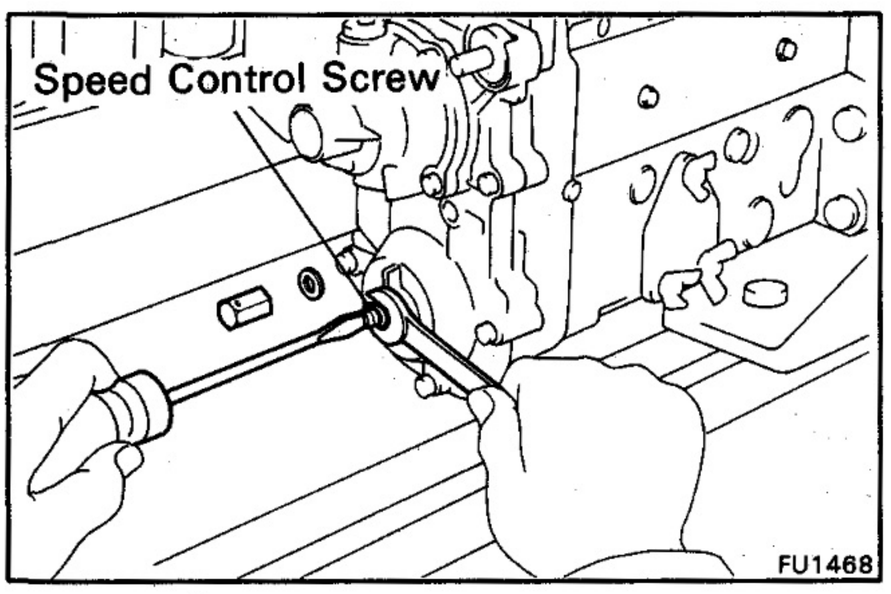

(c) Remove the cap nut and gasket.

(d) Fully tighten the speed control screw.

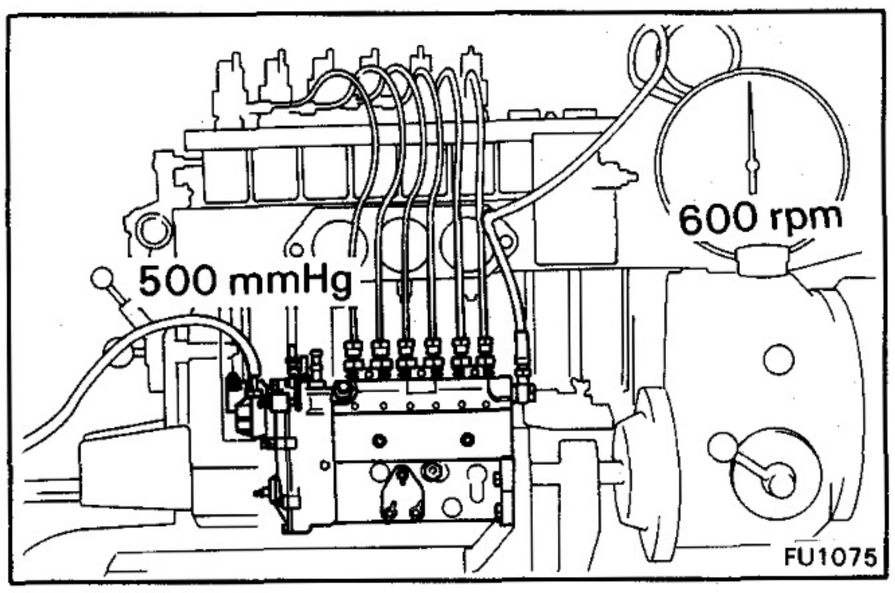

3. CHECK AIR-TIGHT OF VACUUM CHAMBER

(a) Set the pump speed at 600 rpm.

(b) Apply 500 mmHg (19.69 in.Hg, 66.7 kPa) of vacuum to vacuum chamber.

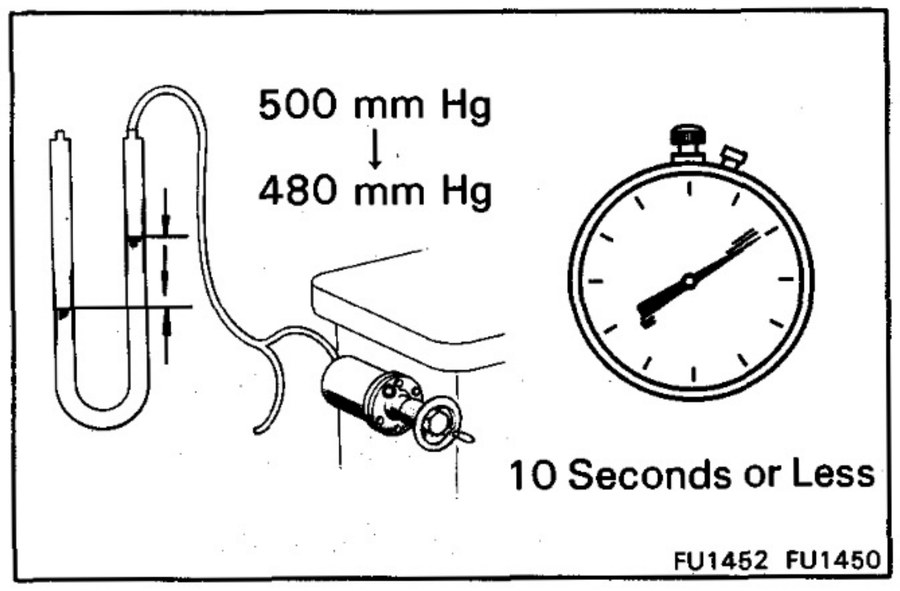

(c) Measure the time it takes for the vacuum to drop to 480 mmHg (18.9 in.Hg, 64.0 kPa).

Pressure drop: 10 seconds or more

If the pressure is less than specification, retighten the screws of the governor diaphragm housing. If necessary, replace the governor diaphragm.

4. ADJUST PNEUMATIC GOVERNOR SECTION

A. Adjust Initial Position of Control Rack

(a) Measure the control rack position.

Pump rpm	Vacuum mmHg (in.Hg, kPa)	Control rack position mm (in.)
600	600 (23.62, 80.0)	10.3 – 10.9 (0.406 – 0.429)

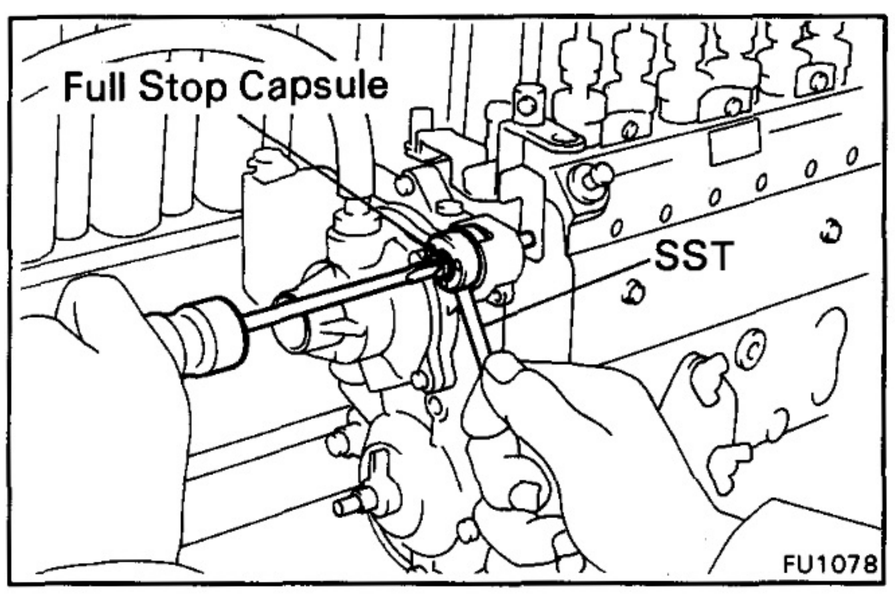

(b) [w/o HAC]
Using SST, adjust by turning the full stop capsule.

SST 09260-47010 (09283-76010)

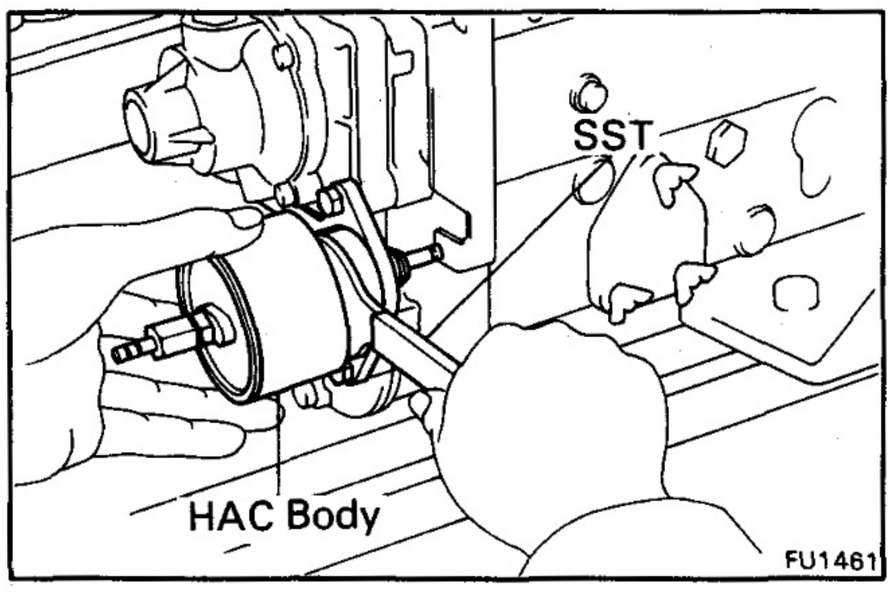

(c) [w/ HAC]
Using SST, adjust by turning the HAC body.

SST 09283-76020

B. Adjust Governor Main Spring

(a) Measure the control rack position.

Pump rpm	Vacuum mmHg (in.Hg, kPa)	Control rack position mm (in.)
600	600 (23.62, 80.0)	10.3 – 10.9 (0.406 – 0.429)
600	630 (24.80, 84.0)	10.1 – 10.7 (0.398 – 0.421)
600	750 (29.53, 100.0)	7.3 – 8.9 (0.287 – 0.350)

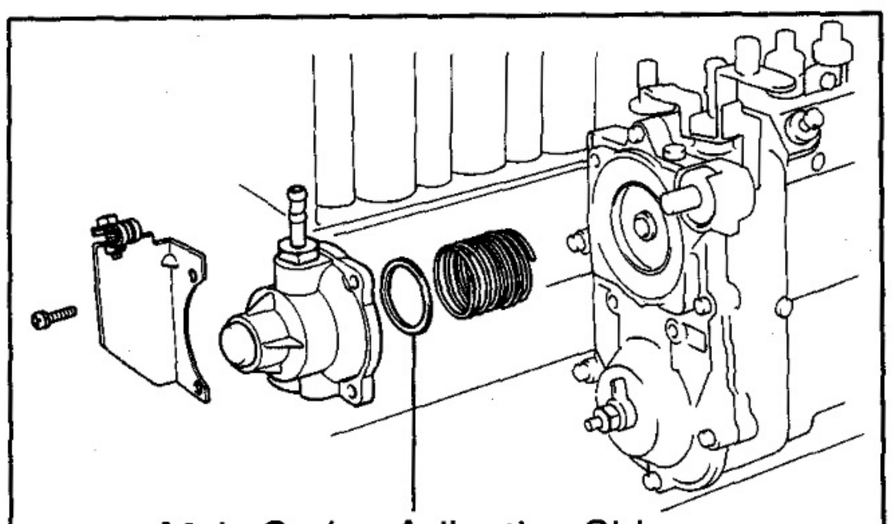
Main Spring Adjusting Shim
FU1493

(b) Remove the governor diaphragm housing, and adjust by changing the main spring adjusting shim.

Adjusting shim thickness: 0.5 mm (0.020 in.)
1.0 mm (0.039 in.)
2.0 mm (0.079 in.)
3.0 mm (0.118 in.)

NOTE: The control rack position will increase with a decrease in shim thickness and decrease with an increase.

(c) Recheck the initial position of the control rack.

5. ADJUST MECHANICAL GOVERNOR SECTION

A. Adjust Speed Control Spring

(a) Measure the control rack position.

Pump rpm	Vacuum mmHg (in.Hg, kPa)	Control rack position mm (in.)
1,920	450 (17.72, 60.0)	10.4 – 10.8 (0.409 – 0.425)
2,000	450 (17.72, 60.0)	9.6 – 10.4 (0.378 – 0.409)
2,050	450 (17.72, 60.0)	8.6 – 9.8 (0.339 – 0.386)
2,100	530 (20.87, 70.6)	7.5 (0.295) or less

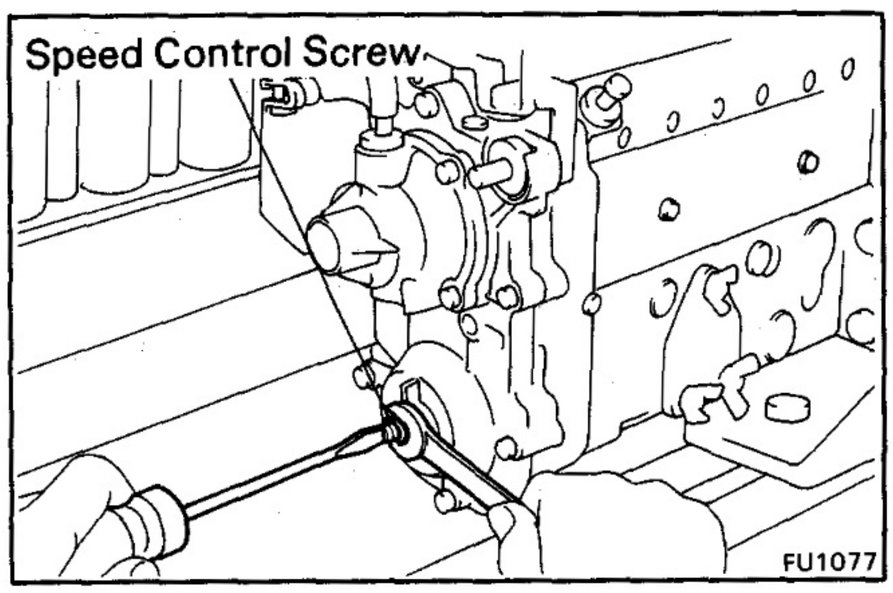

FU1077

(b) Adjust by turning the speed control screw.

B. Adjust Idling Spring

(a) Measure the control rack position.

Pump rpm	Vacuum mmHg (in.Hg, kPa)	Control rack position mm (in.)
2,100	530 (20.87, 70.6)	8.0 (0.315)

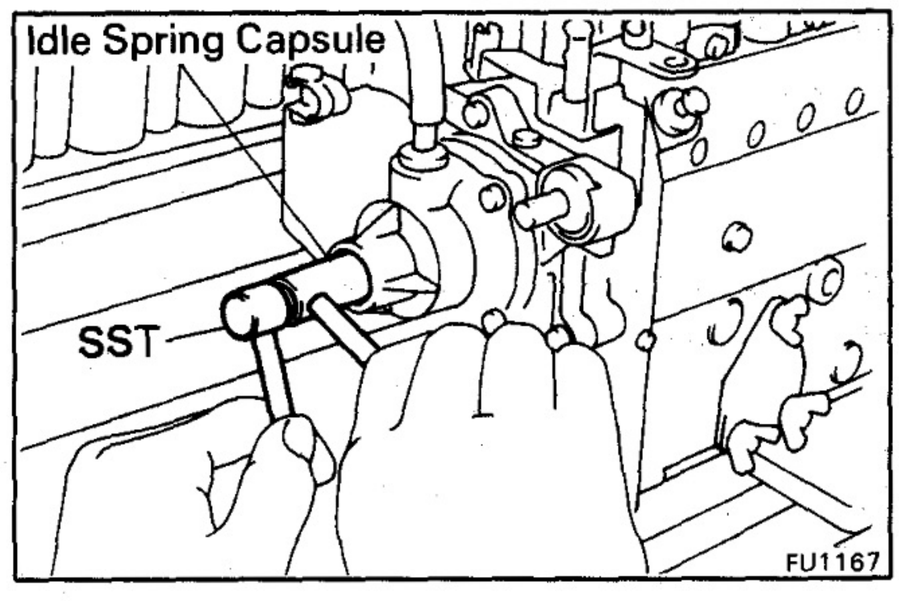

(b) Using SST, adjust by turning the idling spring capsule.

SST 09260-47010 (09282-76010)

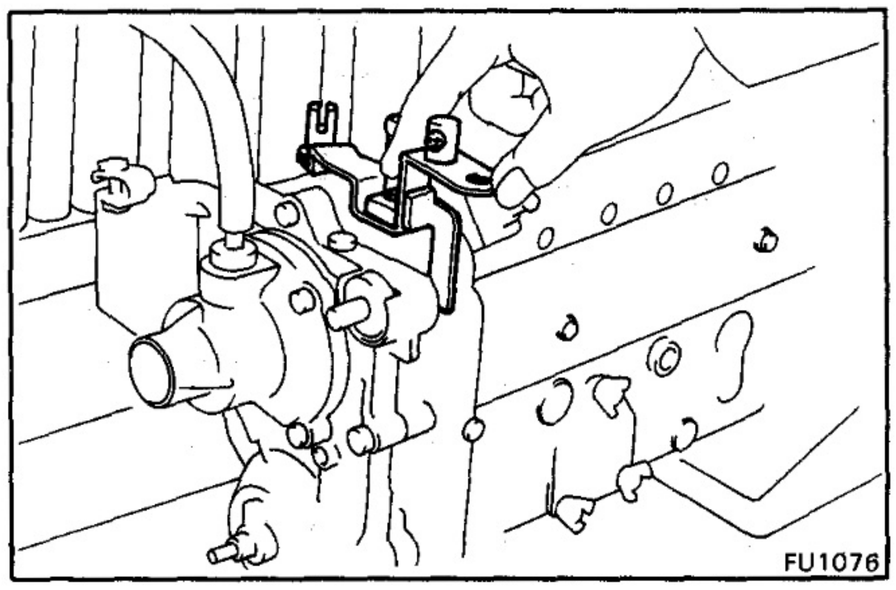

6. ADJUST TOTAL INJECTION VOLUME

(a) Operate the adjusting lever in several times in order to stabilize the injection pump.

(b) Measure the total injection volume.

Item	Pump rpm	Vacuum mmHg (in.Hg, kPa)	Measuring stroke	Total injection of each cylinder volume cc (cu in.)
w/o HAC	700	60 (2.36, 8.0)	1,000	237 – 261 (14.5 – 15.9)
	1,100	150 (5.91, 20.0)	1,000	255 – 267 (15.6 – 16.3)
	1,700	400 (15.75, 53.3)	1,000	267 – 291 (16.3 – 17.8)
w/ HAC	700	60 (2.36, 8.0)	1,000	237 – 261 (14.5 – 15.9)
	1,100	150 (5.91, 20.0)	1,000	255 – 267 (15.6 – 16.3)
	1,700	400 (15.75, 53.3)	1,000	258 – 282 (15.7 – 17.2)

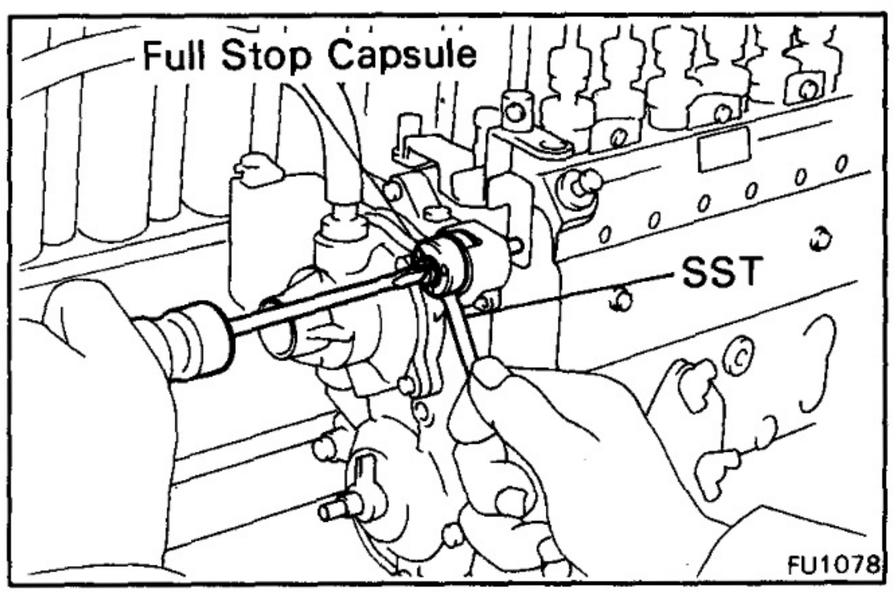

(c) [w/o HAC]
Using SST, adjust by turning the full stop capsule.

SST 09260-47010 (09283-76010)

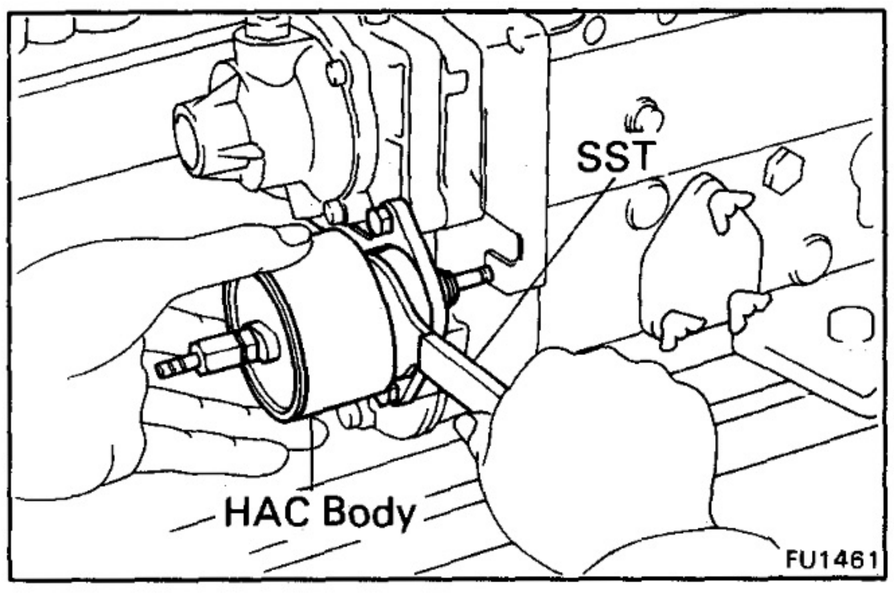

(d) [w/ HAC]
Using SST, adjust by turning the HAC body.

SST 09283-76020

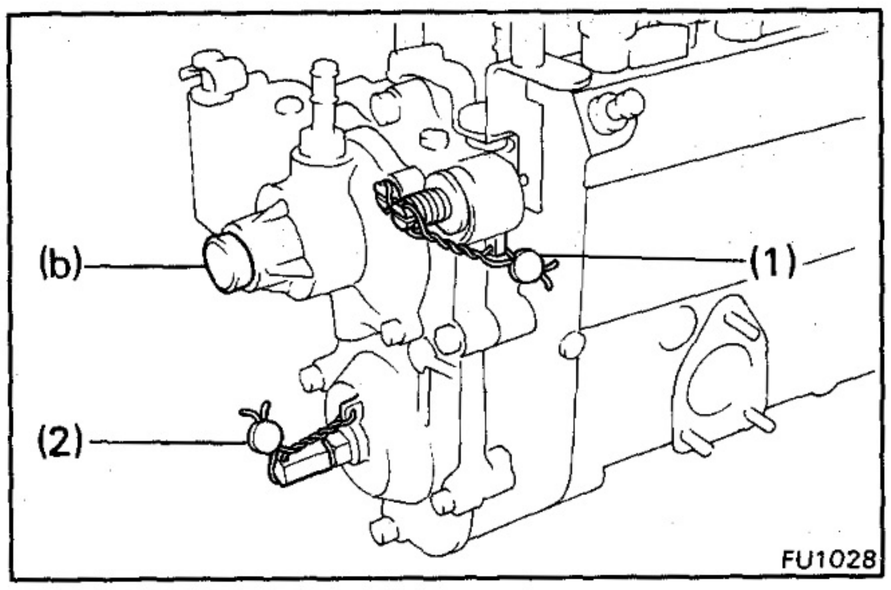

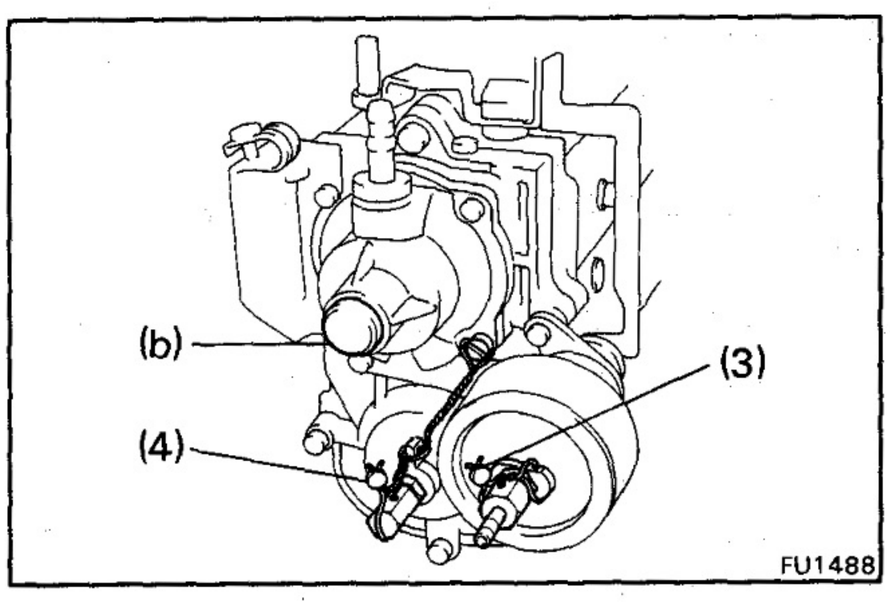

7. INSTALL AND SEAL PARTS

(a) Seal the following parts with new seal wire and lead seal:

(1) [w/o HAC]
Full stop capsule with screw of governor diaphragm housing

(2) [w/o HAC]
Cap nut of speed control screw

(3) [w/ HAC]
Nipple of HAC

(4) [w/ HAC]
Cap nut of speed control screw with screw of governor diaphragm housing

(b) Using a plastic-faced hammer, carefully tap in a new sealing screw plug.

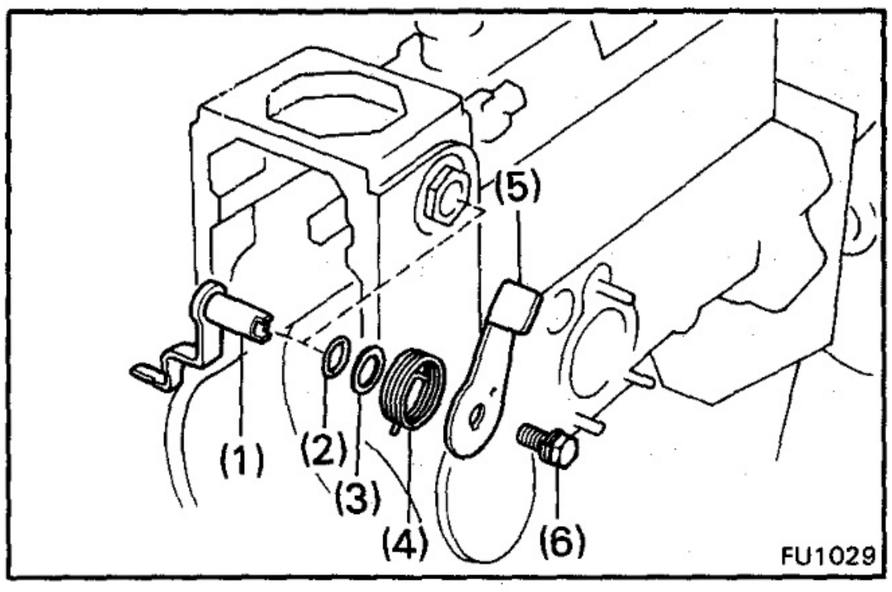

Assembly of Governor [2H A/T and 12H-T]

(See pages FU-33 and 34) 2H A/T
(See pages FU-33 and 35) 12H-T

1. INSTALL STOPPER ARM AND STOP LEVER

Install the following parts:

(1) Stopper arm
(2) O-ring
(3) Thrust washer(s)
(4) Return spring
(5) Stop lever
(6) Bolt

2. CHECK THRUST CLEARANCE OF STOPPER ARM

(See page FU-48)

Thrust clearance: 0.05 – 0.20 mm (0.0020 – 0.0079 in.)

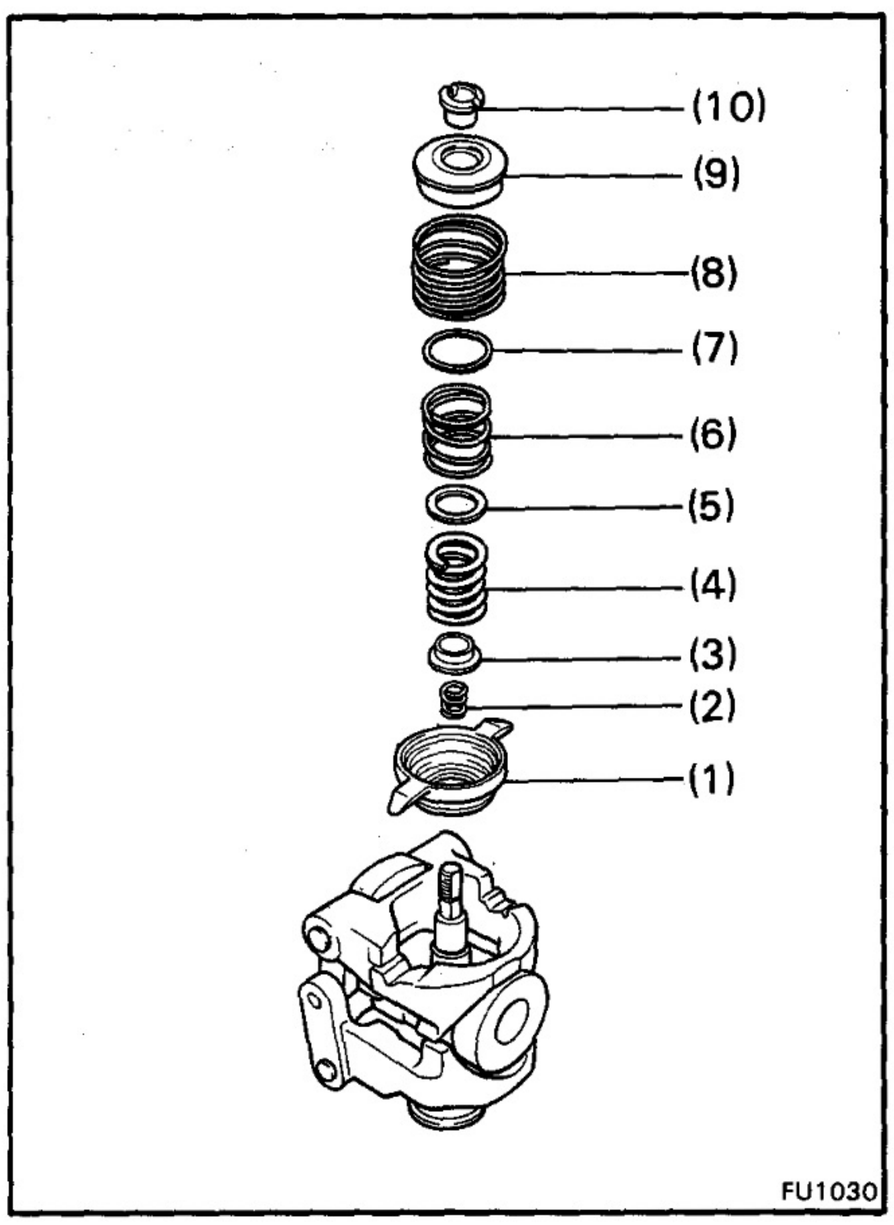

3. ASSEMBLY FLYWEIGHT

(a) Install the following parts:

(1) Spring seat
(2) Mechanical spring
(3) Inner spring seat
(4) Speed control spring
(5) Inner adjusting washer
(6) Inner idle spring
(7) Outer adjusting washer
(8) Outer idle spring
(9) Spring guide
(10) Adjusting nut

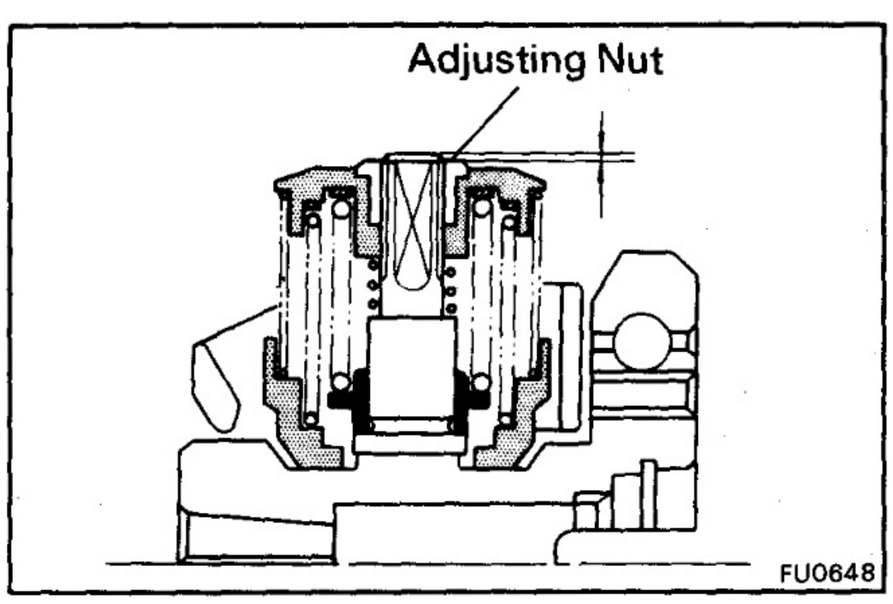

(b) Preset the protrusion of the adjusting nut.

Protrusion: Minus 0.4 – Plus 0.2 mm (Minus 0.016 – Plus 0.008 in.)

CAUTION: If the protrusion is to large, the adjusting nut will contact the governor housing.

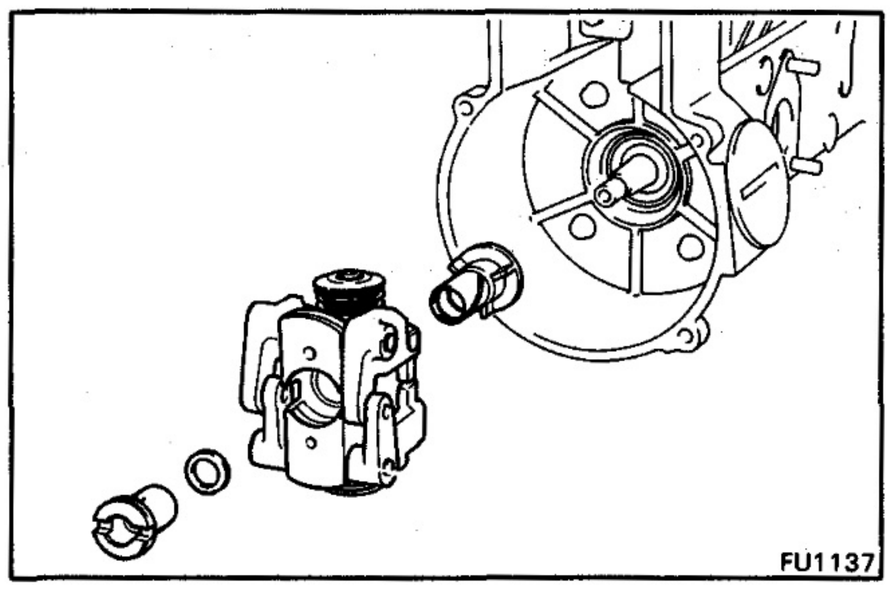
FU1137

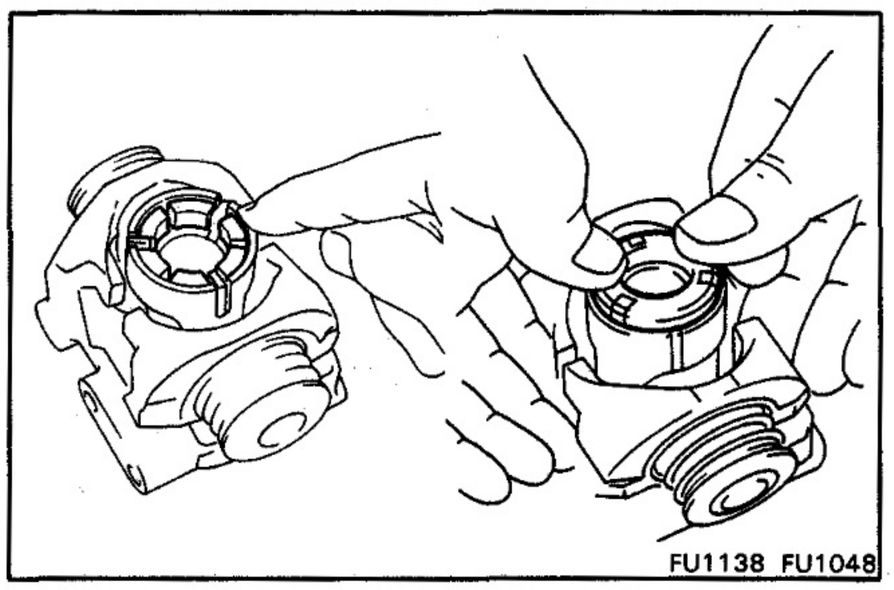
FU1138 FU1048

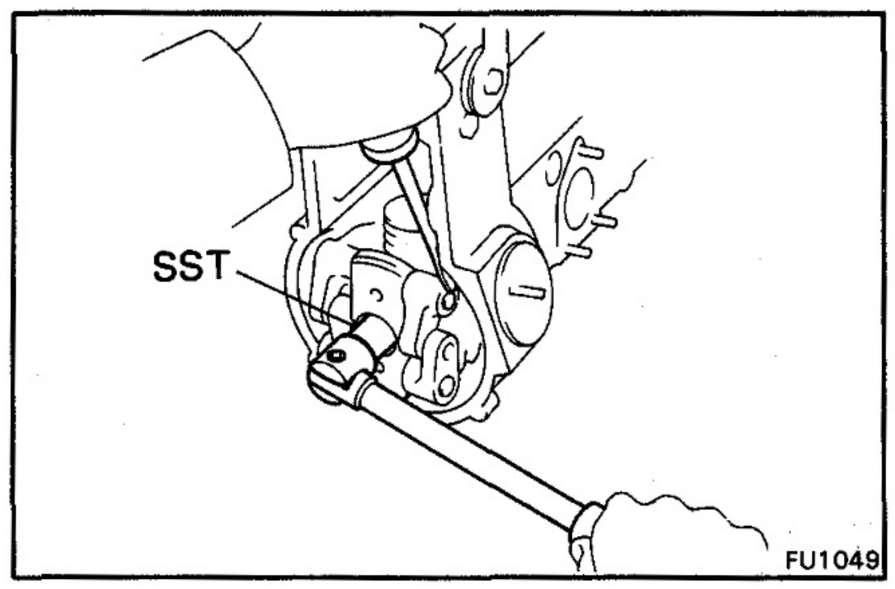

FU1049

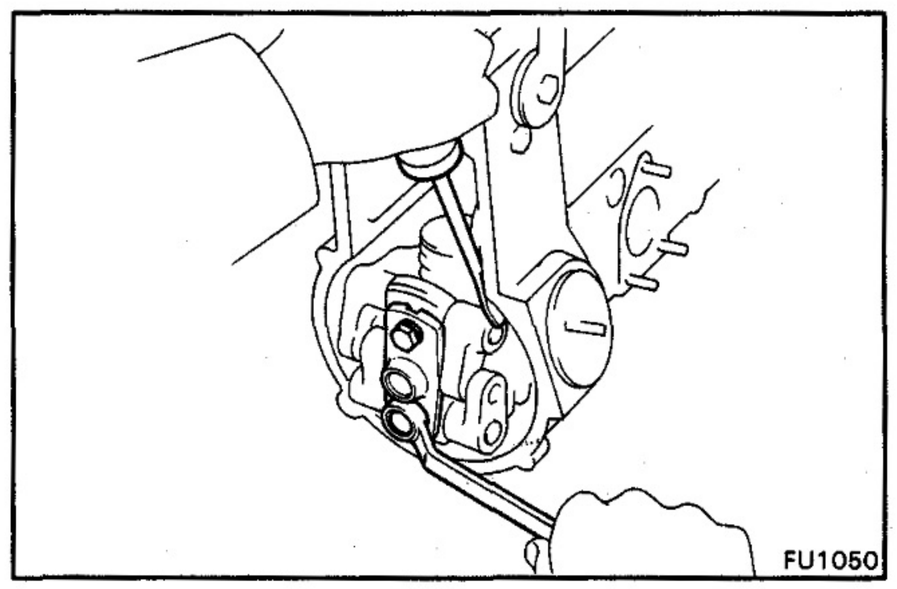
FU1050

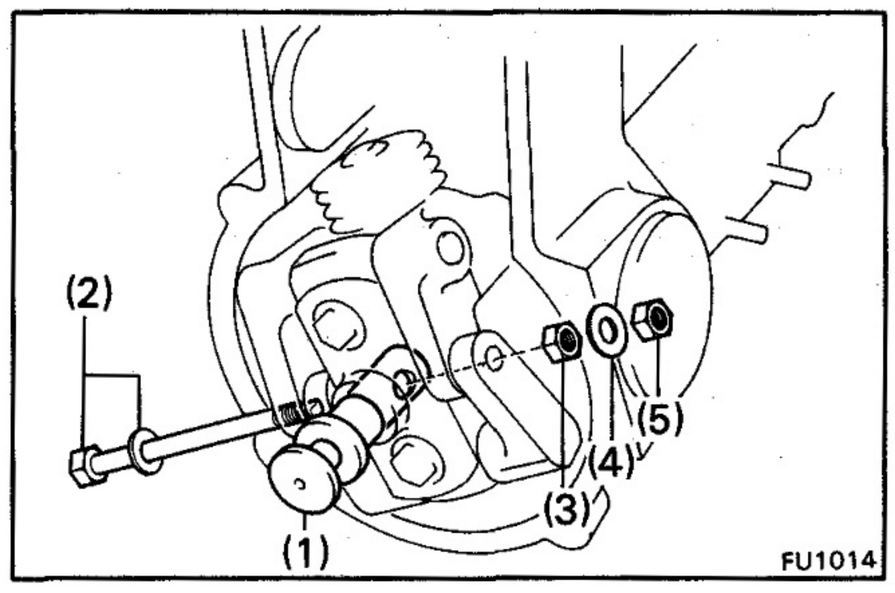

FU1014

4. [12H-T M/T]
CHECK THRUST CLEARANCE OF DAMPER

(a) Install the camshaft bushing and flyweight without the dampers.

(b) Install the thrust washer and round nut.

Torque: 550 kg-cm (40 ft-lb, 54 N·m)

(c) Measure the thrust clearance. (See page FU-47)

Thrust clearance: 0.02 – 0.10 mm (0.0008 – 0.0039 in.)

(d) Remove the flyweight assembly and camshaft bushing. (See page FU-46)

5. [12H-T M/T]
INSTALL DAMPERS AND CAMSHAFT BUSHING

(a) Place the six dampers in position into the flyweight holder.

(b) Push in the camshaft bushing.

6. INSTALL FLYWEIGHT ASSEMBLY

(a) [2H A/T and 12H-T A/T]
Install the set key to the camshaft.

(b) [2H A/T and 12H-T A/T]
Align the set key with the flyweight key groove.

(c) Slide the flyweight assembly onto the camshaft.

(d) [2H A/T and 12H-T A/T]
Install the spring washer.

(e) [12H-T M/T]
Install the thrust washer.

(f) Using SST, install the round nut.

SST 09260-47010 (09260-78010)

Torque: 550 kg-cm (40 ft-lb, 54 N·m)

7. INSTALL GUIDE BUSHING

Install the guide bushing with the two bolts.

Torque: 80 kg-cm (69 in.-lb, 7.8 N·m)

8. INSTALL SLIDING WEIGHT SHAFT

(a) Install the following parts:

(1) Sliding weight shaft
Check that the sliding weight shaft slides lightly

(2) Jointing bolt with thrust washer

(3) Lock nut

(4) Lock washer

(5) Lock nut

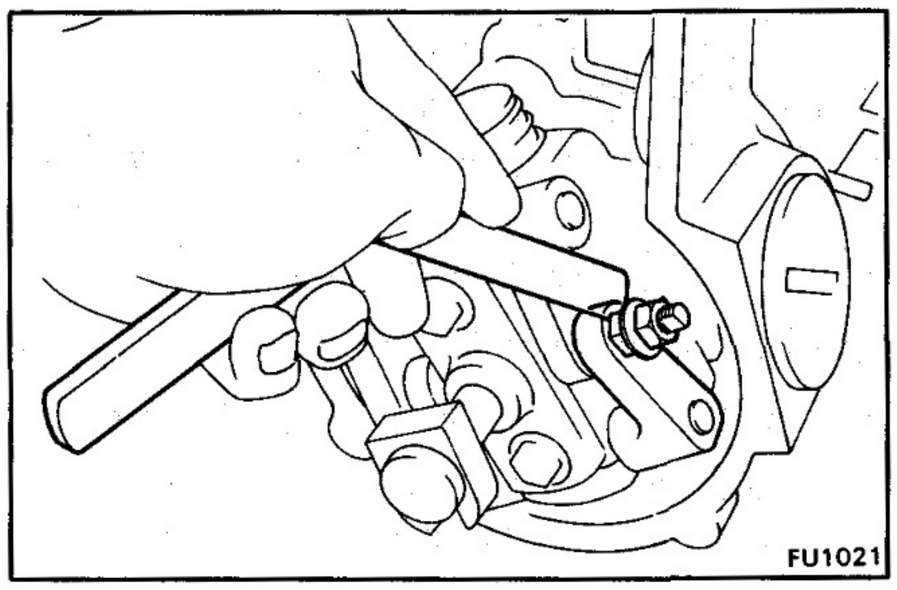

(b) Adjust the thrust clearance of the jointing bolt.
Using a feeler gauge, measure the thrust clearance between the jointing bolt and flyweight.

Thrust clearance: 1.5 — 2.0 mm (0.059 — 0.079 in.)

If the thrust clearance is not specification, adjust with the two lock nuts. If necessary, adjust by increasing the thrust washer.

(c) Check the fitting dimensions of the sliding weight shaft. (See page FU-45)

Fitting dimensions: 49.7 — 50.1 mm (1.957 — 1.972 in.)

(d) Stake the lock washer.

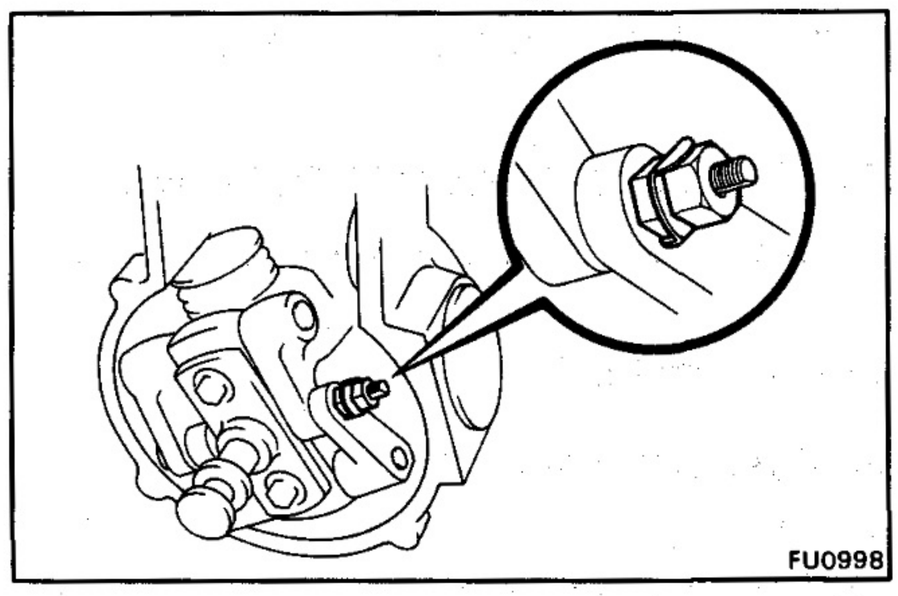

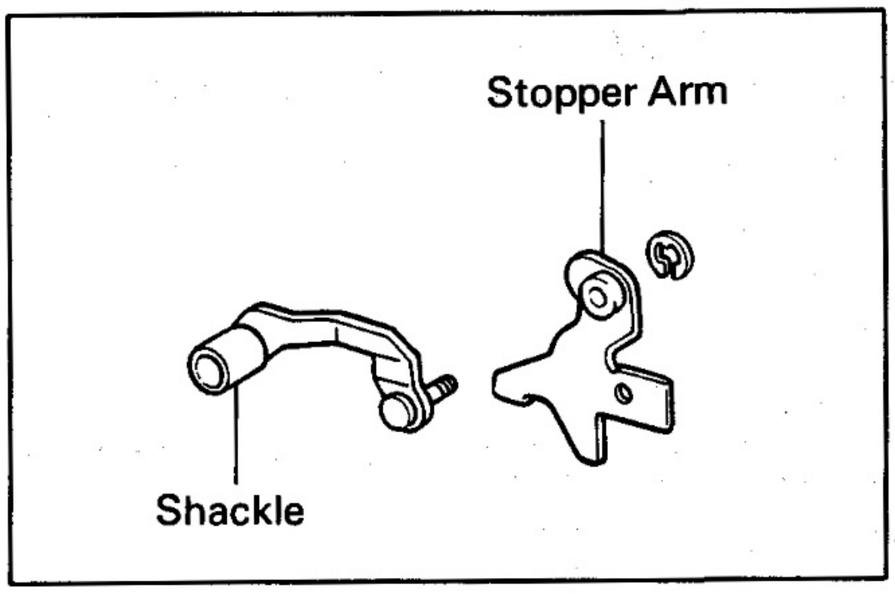

9. ASSEMBLE SHACKLE AND STOPPER ARM

Assemble the shackle and stopper arm with the E-ring.

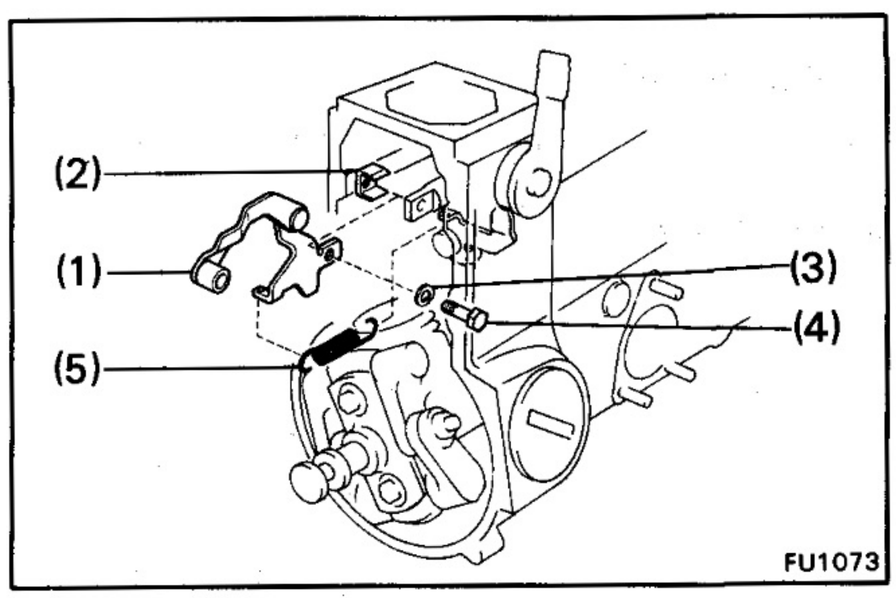

10. INSTALL SHACKLE AND STOPPER ARM ASSEMBLY

Install the following parts:

(1) Shackle and stopper arm assembly
(2) Arm nut
(3) Spring washer
(4) Bolt
(5) Return Spring

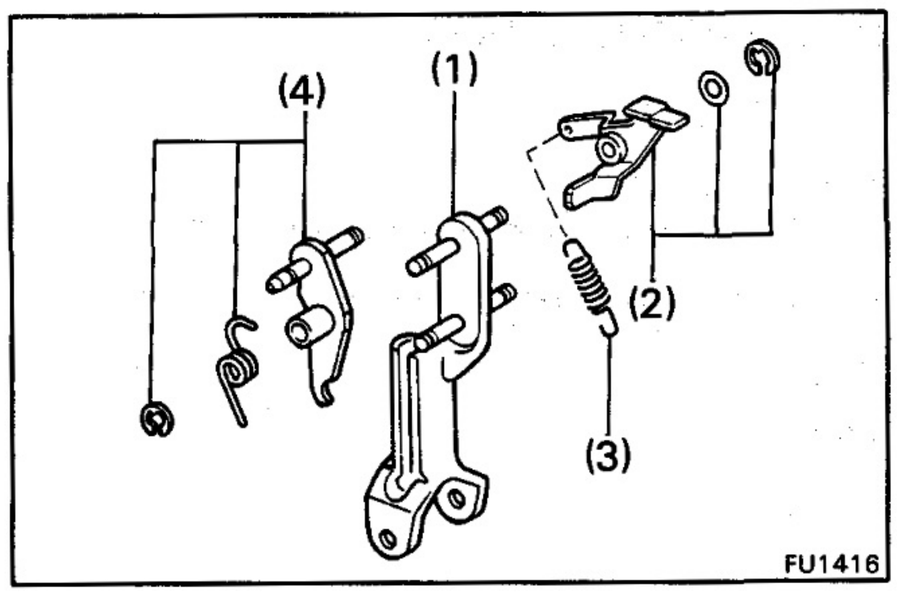

11. ASSEMBLE FLOATING LEVER

(a) Assemble the following parts:

(1) Floating lever
(2) Floating arm, thrust washer and E-ring
Check the thrust clearance of the floating lever arm (See page FU-44)

Thrust clearance: 0.05 — 0.20 mm (0.0020 — 0.0079 in.)

(3) Return spring
(4) Control lever, return spring and E-ring

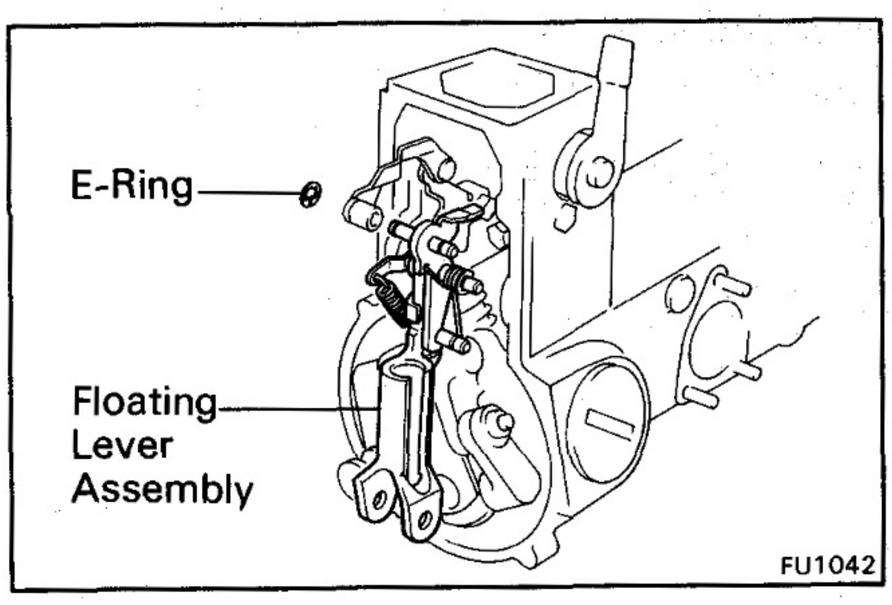

12. INSTALL FLOATING LEVER ASSEMBLY

Install the floating lever assembly with the E-ring.

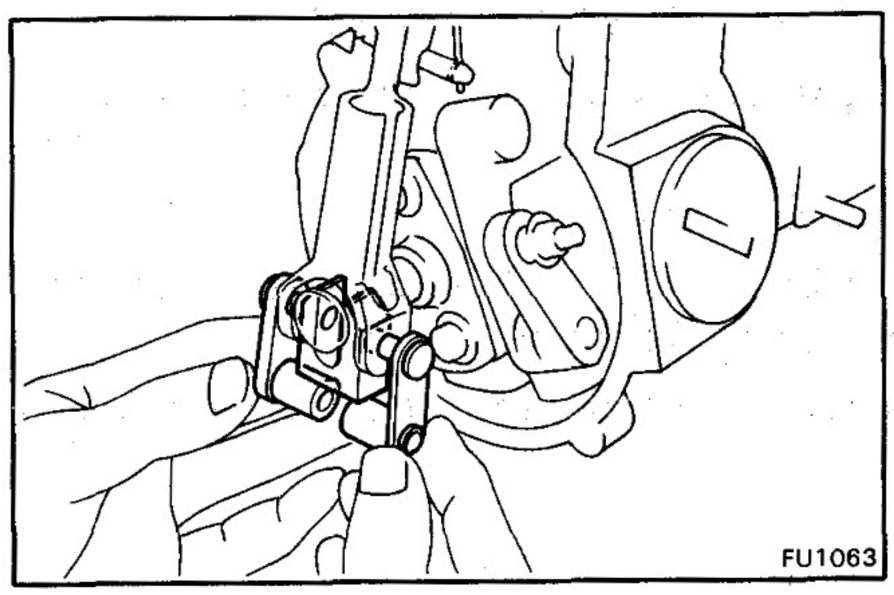

13. INSTALL SLIDER AND SUPPORTING LEVERS

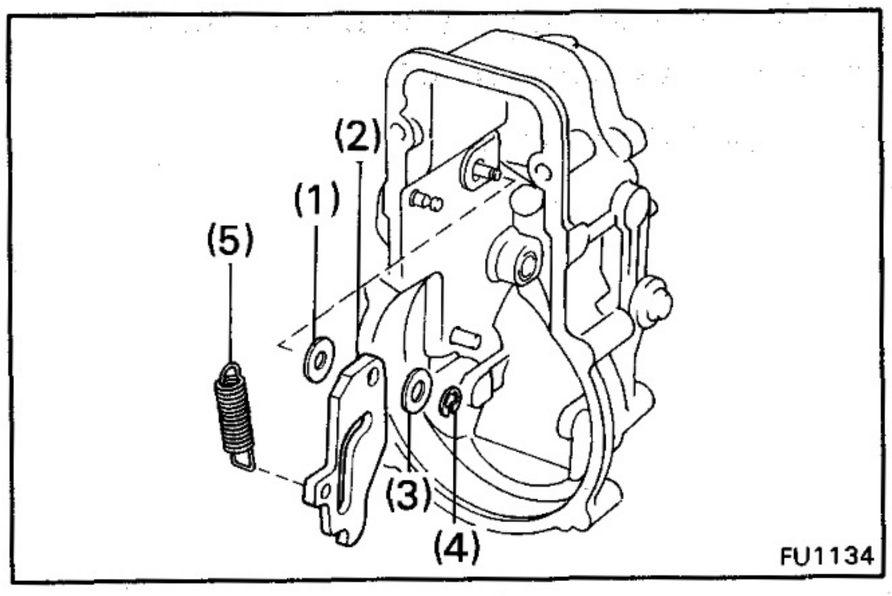

14. ASSEMBLE GOVERNOR COVER

Install the following parts.

(1) Plate washer

(2) Cam plate

(3) Thrust washer

(4) E-ring
Check the thrust clearance of the cam plate (See page FU-43)

Thrust clearance: 0.08 — 0.12 mm (0.0031 — 0.0047 in.)

(5) Return spring

(6) Steering lever and thrust washers

(7) Steering lever shaft
Check the thrust clearance of the steering lever. (See page FU-43)

Thrust clearance: 0.05 — 0.20 mm (0.0020 — 0.0079 in.)

(8) Tapered bolt
Position the key groove of the steering lever upward, and install the tappred bolt.

Torque: 55 kg-cm (48 in.-lb, 5.4 N·m)

(9) Set key

(10) No. 1 adjusting lever

(11) Bolt

Torque: 85 kg-cm (74 in.-lb, 8.3 N·m)

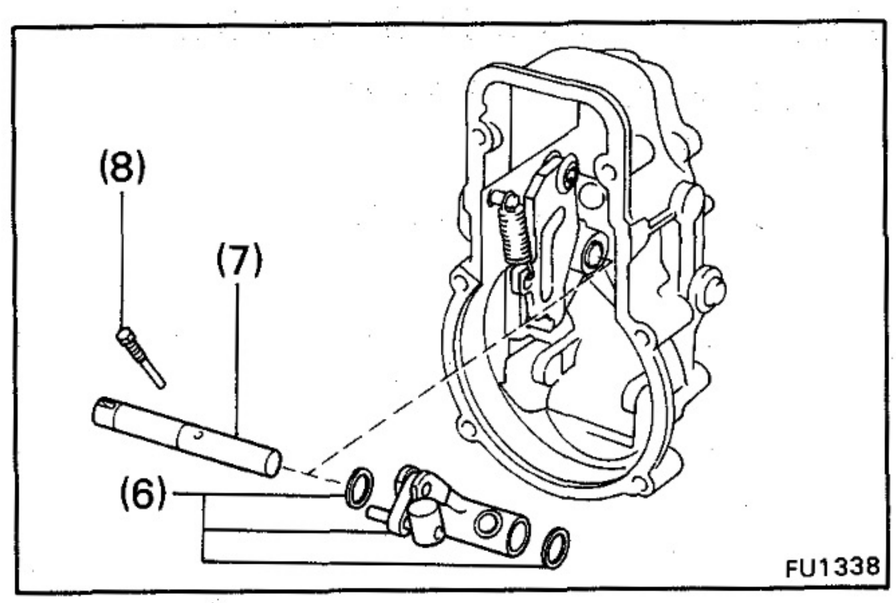

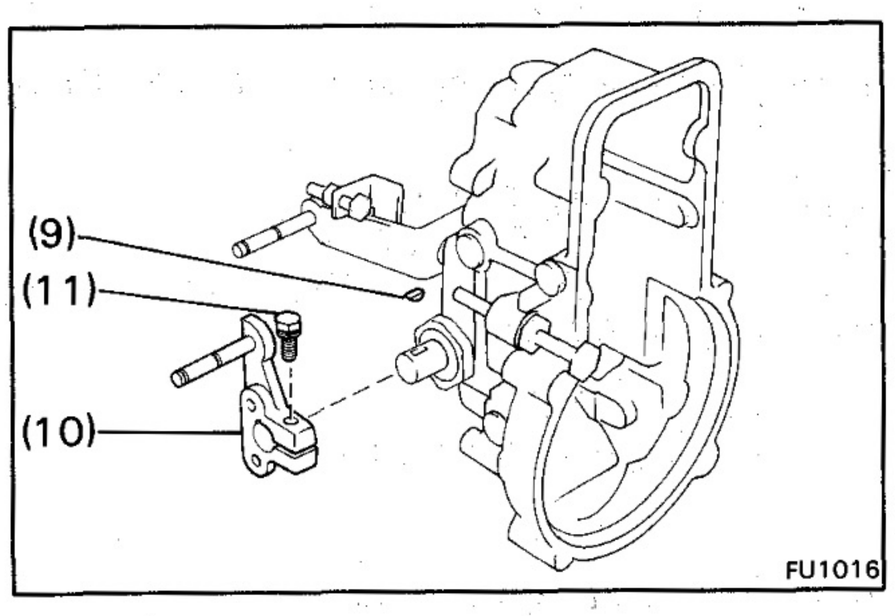

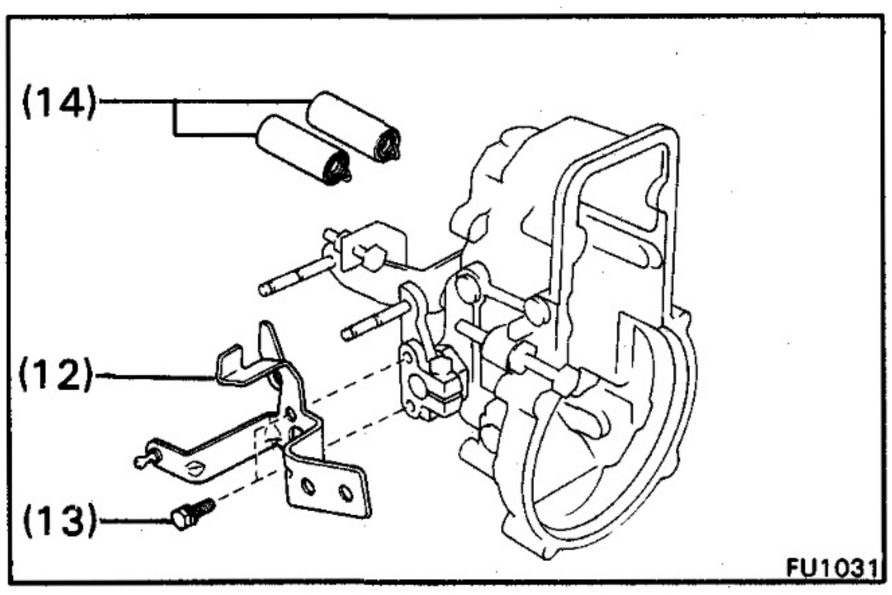

(12) No. 2 adjusting lever

(13) Two bolts

Torque: 85 kg-cm (74 in.-lb, 8.3 N·m)

(14) [2H A/T]
Two return springs

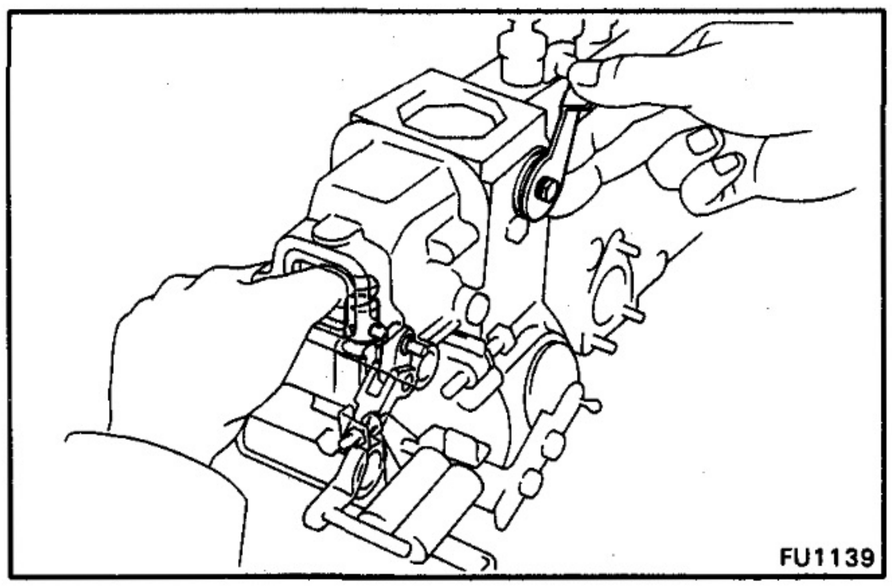

15. INSTALL GOVERNOR COVER ASSEMBLY

(a) Place a new gasket in position on the governor housing.

(b) Turn the stop lever clockwise.

(c) Support the sliding block with your finger, and insert it into the floating lever hole.

CAUTION: Position the long end of the sliding block upward.

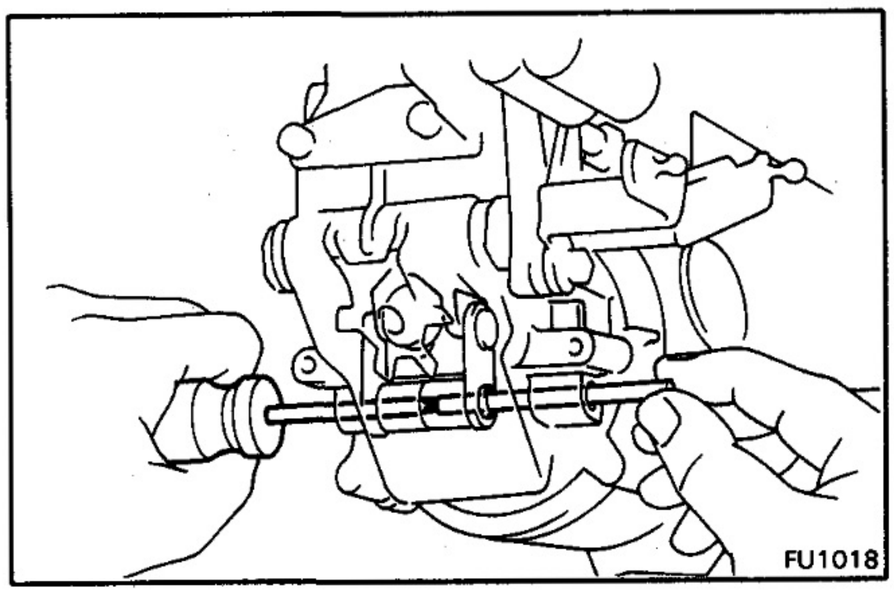

(d) Using a small screwdriver, align the shaft holes of the supporting levers and governor cover.

(e) Push in the supporting lever shaft.

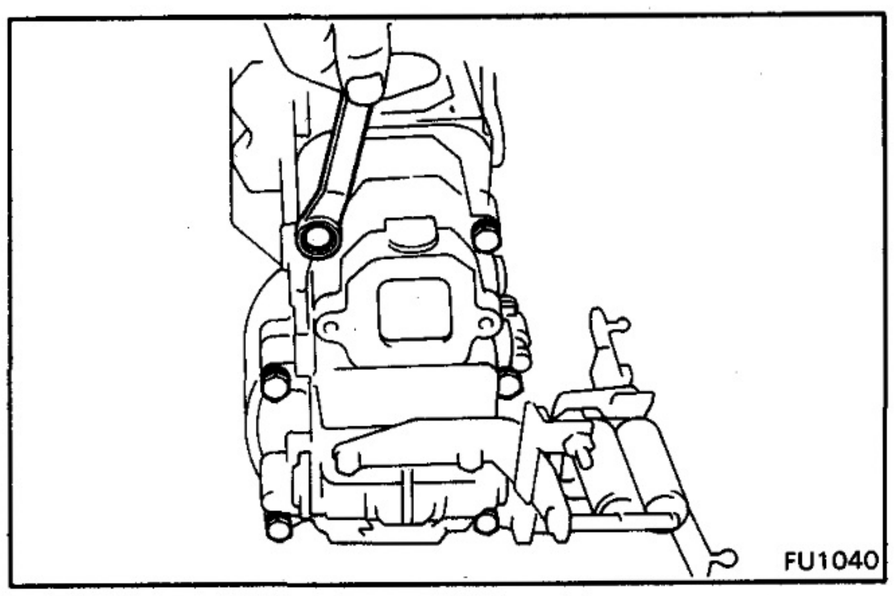

(f) Install the governor cover with the six bolts.

Torque: 85 kg-cm (74 in.-lb, 8.3 N·m)

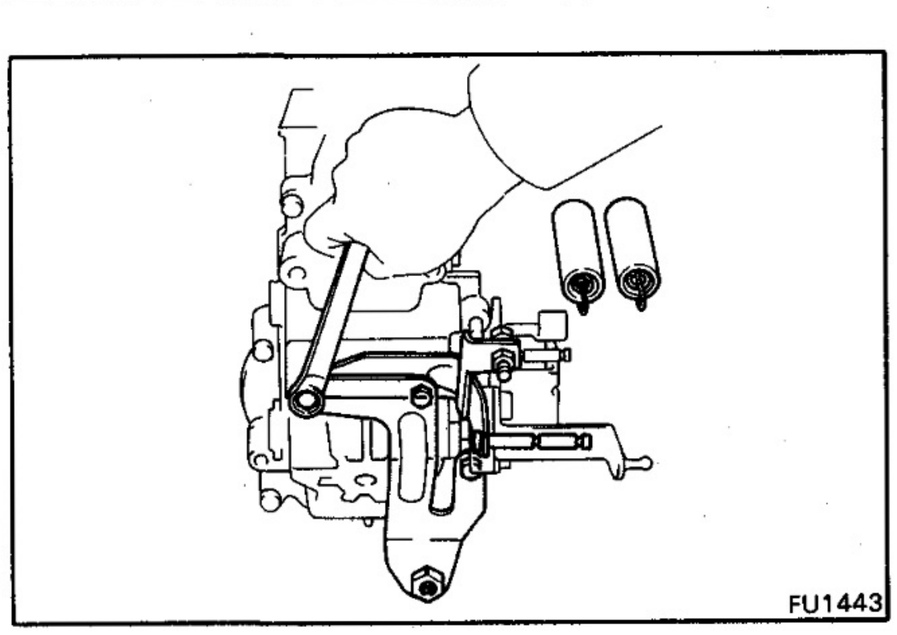

(g) [12H-T]
Install the spring arm and pump stay with the three bolts.

Torque: 85 kg-cm (74 in.-lb, 8.3 N·m)

(h) [12H-T]
Install the two return springs.

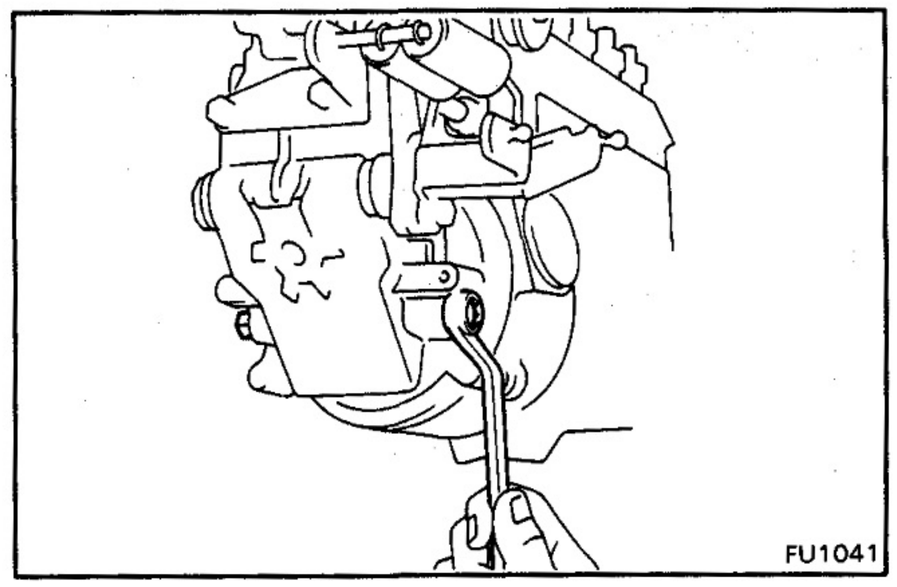

(i) Apply liquid sealer on the threads and under the screw plug heads.

(j) Install the two screw plugs.

Torque: 120 kg-cm (9 ft-lb, 12 N·m)

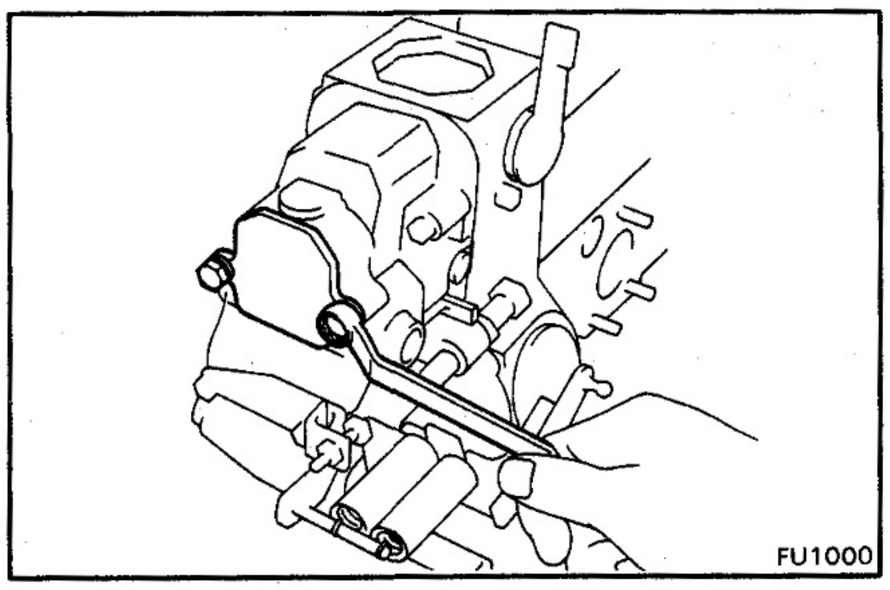

(k) Install a new O-ring and the cover plate with the two bolts.

Torque: 85 kg-cm (74 in.-lb, 8.3 N·m)

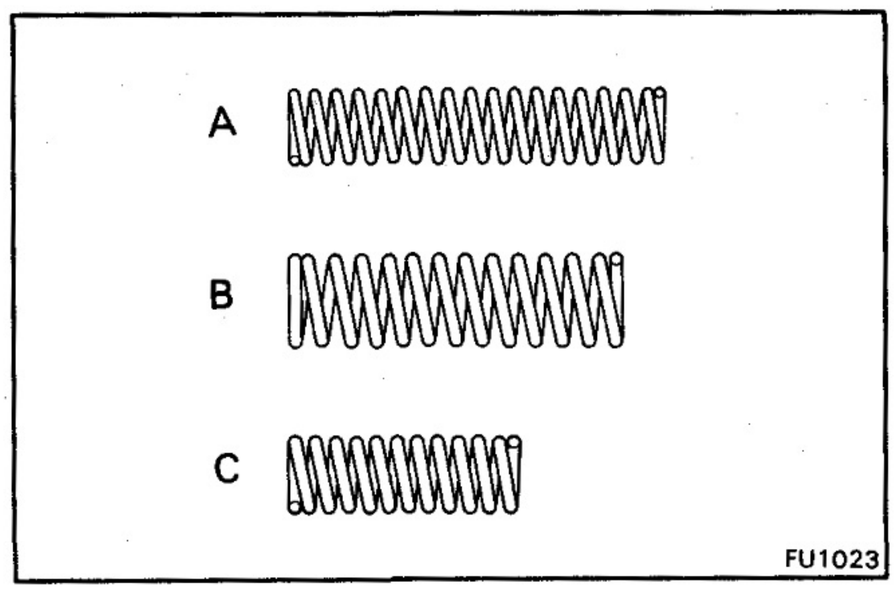

16. ASSEMBLE FULL-LOAD STOPPER HOUSING [2H]

NOTE: Use the springs indicated "A", "B", and "C."

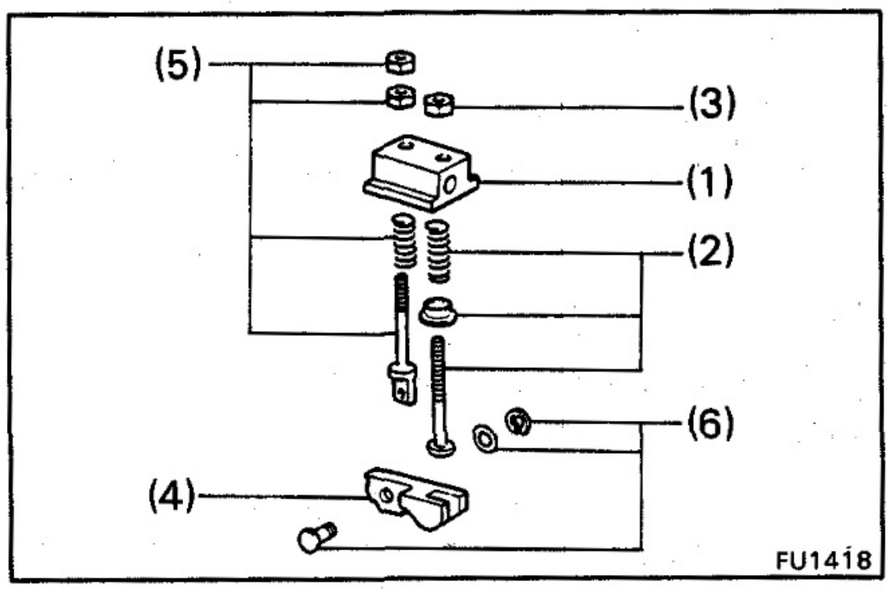

Assemble the following parts:

(1) Sliding plate

(2) No. 1 adapter screw, bushing and "B" spring

(3) Lock nut

(4) Full stop cam

(5) No. 2 adaptor screw, "A" spring and two lock nuts

(6) Connecting pin, thrust washer and E-ring
Check the thrust clearance of the full stop cam.
(See page FU-40)

Thrust clearance: 0.03 — 0.08 mm (0.0012 — 0.0032 in.)

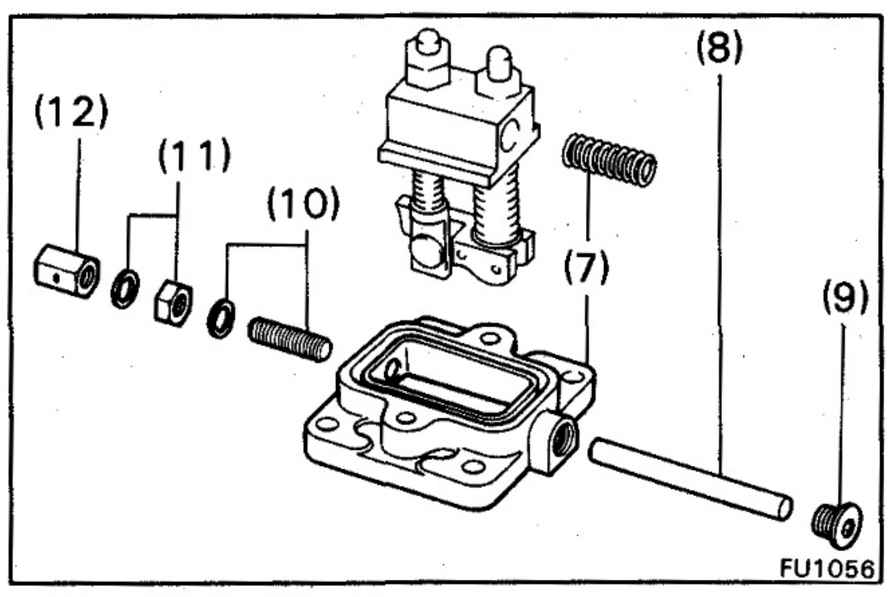

(7) "C" spring and full-load stopper housing

(8) Sliding plate shaft

(9) Screw plug
Apply liquid sealer on the threads and under the screw plug head

(10) Stopper screw

(11) New gasket and nut

(12) New gasket and cap nut

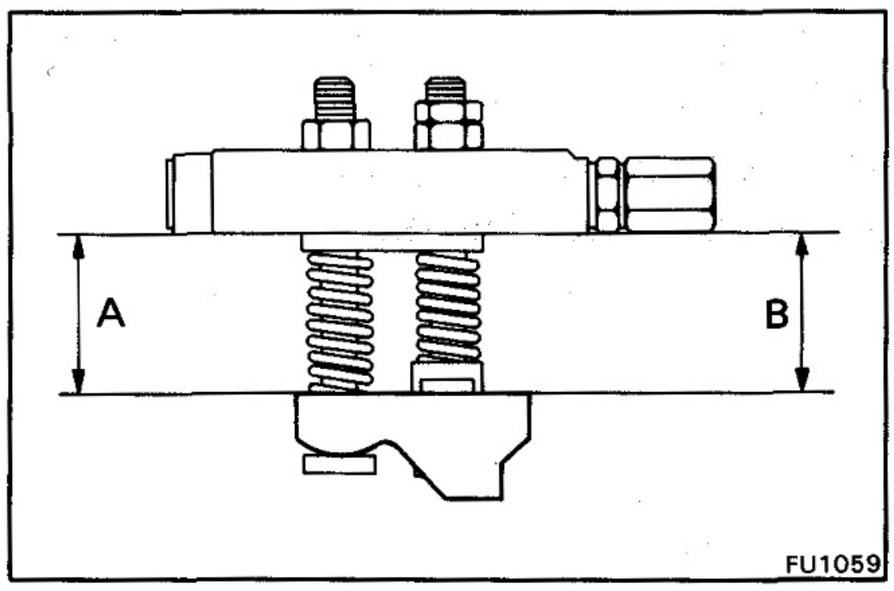

Preset the full stop cam position with the No. 1 and No. 2 adaptor screws.

Distance: A Approx. 30.5 mm (1.201 in.)
B Approx. 30.5 mm (1.201 in.)

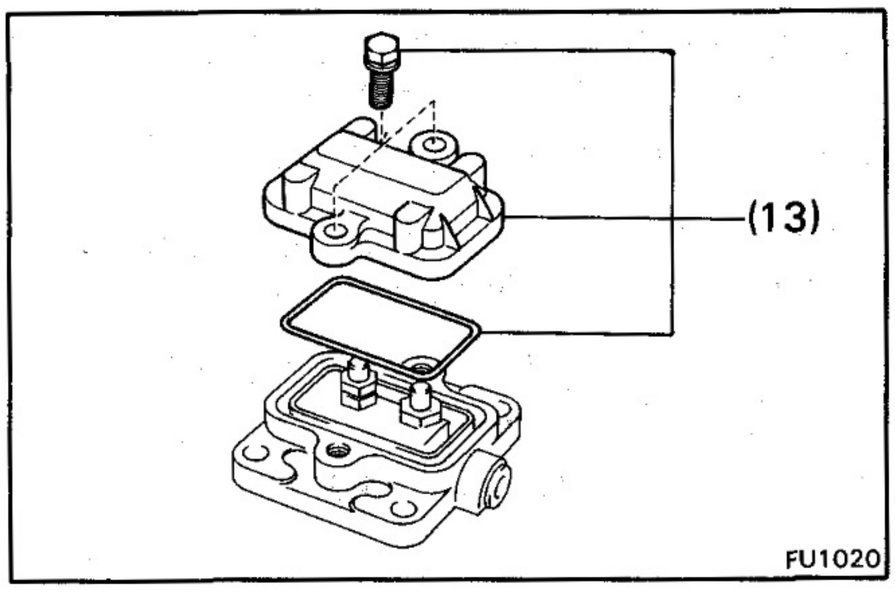

(13) New O-ring, cover plate and two bolts

Torque: 85 kg-cm (74 in.-lb, 8.3 N·m)

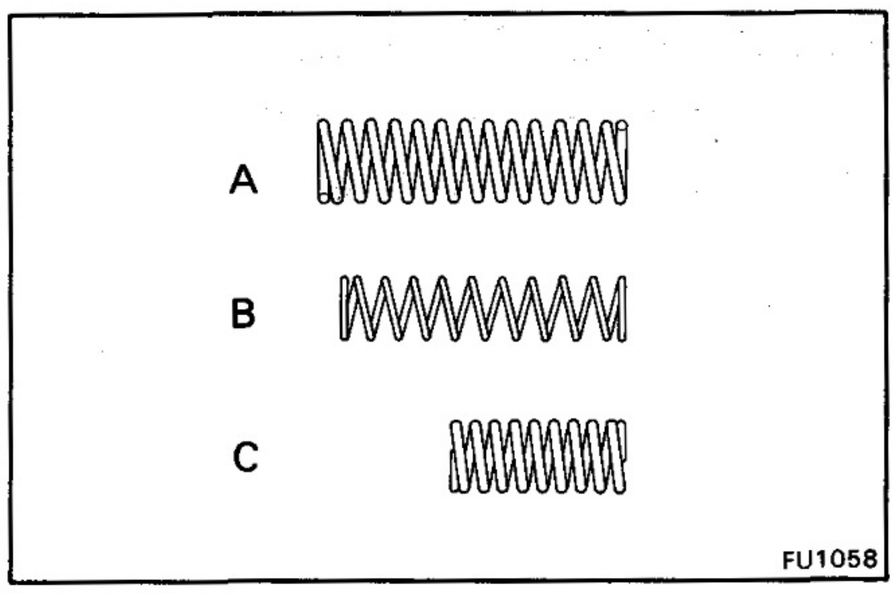

[12H-T]

NOTE: Use the springs indicated "A", "B" and "C."

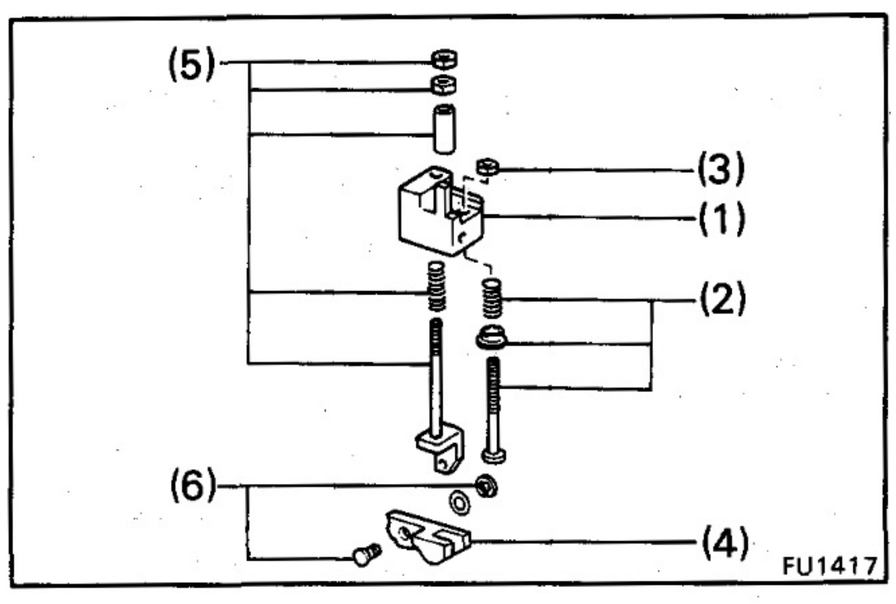

Assemble the following parts:

(1) Sliding plate
(2) No. 1 adaptor screw, bushing and "A" spring
(3) Lock nut
(4) Full stop cam
(5) No. 2 adaptor screw, "B" spring, collar and two lock nuts
(6) Connecting pin, thrust washer and E-ring
Check the thrust clearance of the full stop cam. (See page FU-40)

Thrust clearance: 0.03 — 0.008 mm (0.0012 — 0.0032 in.)

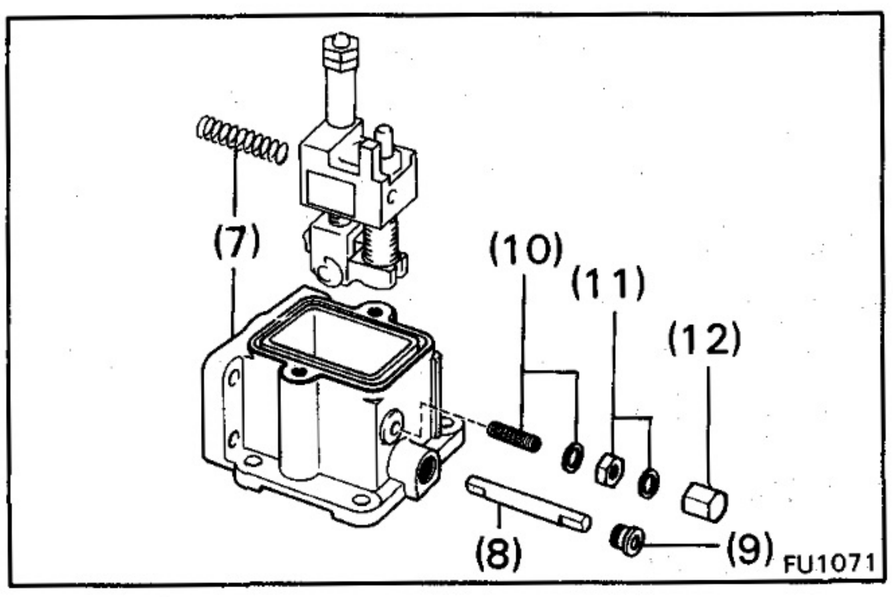

(7) "C" spring and full-load stopper housing
(8) Sliding plate shaft
(9) Screw plug
Apply liquid sealer on the threads and under the screw plug head
(10) Stopper screw
(11) New gasket and nut
(12) New gasket and cap nut

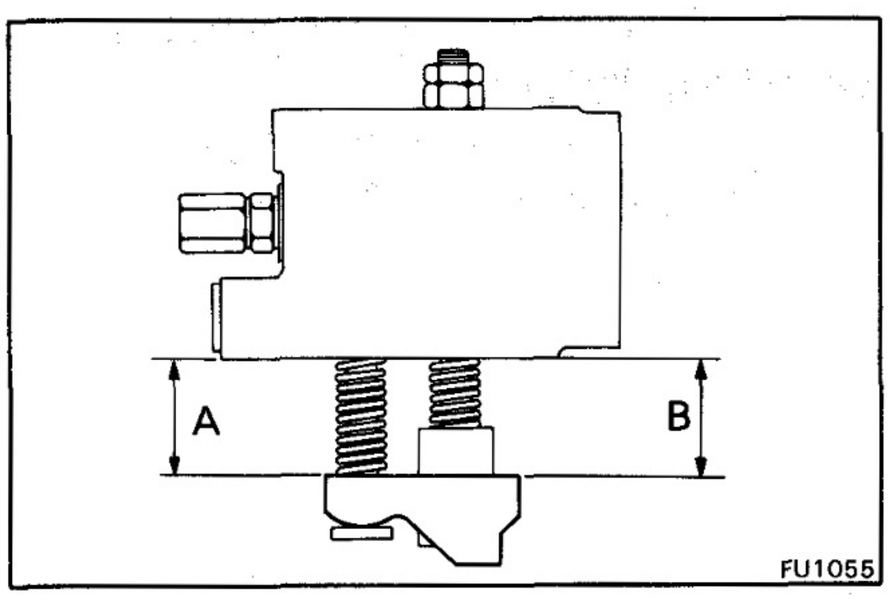

Preset the full stop cam position with the No. 1 and No. 2 adaptor screws.

Distance: A Approx. 23.5 mm (0.925 in.)
B Approx. 23.5 mm (0.925 in.)

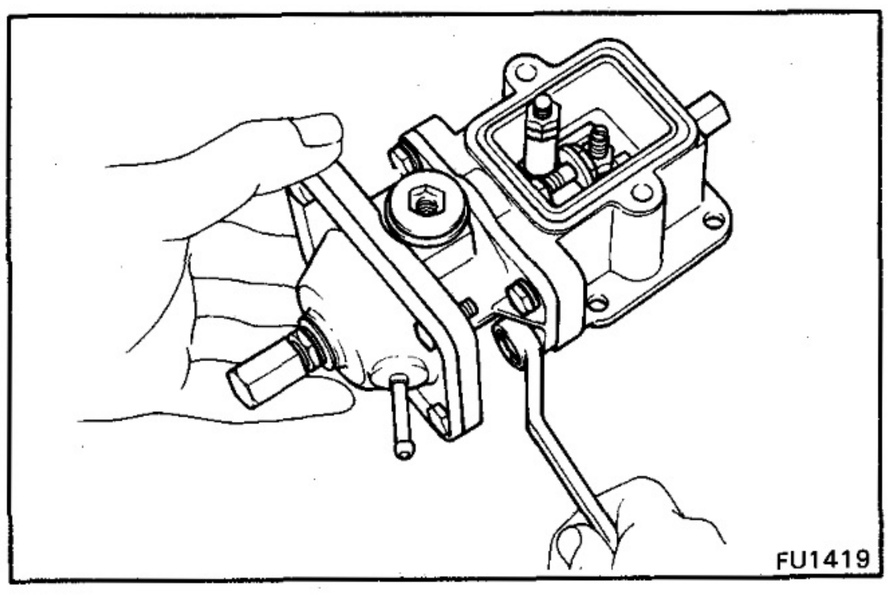

17. ASSEMBLE FULL-LOAD STOPPER HOUSING ASSEMBLY AND BOOST COMPENSATOR

(a) Install a new O-ring to the boost compensator.

(b) Hook the push rod bolt of the boost compensator to the sliding plate of the full-load stopper.

(c) Assemble the fuel-load stopper housing and boost compensator with the four bolts.

Torque: 85 kg-cm (74 in.-lb, 8.3 N·m)

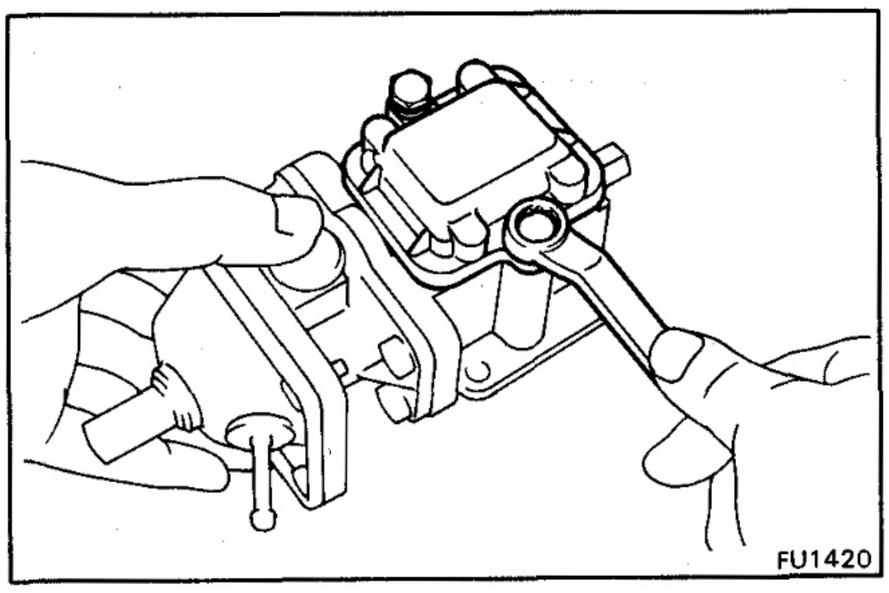

(d) Install a new O-ring to the cover plate.

(e) Install the cover plate with the two bolts.

Torque: 85 kg-cm (74 in.-lb, 8.3 N·m)

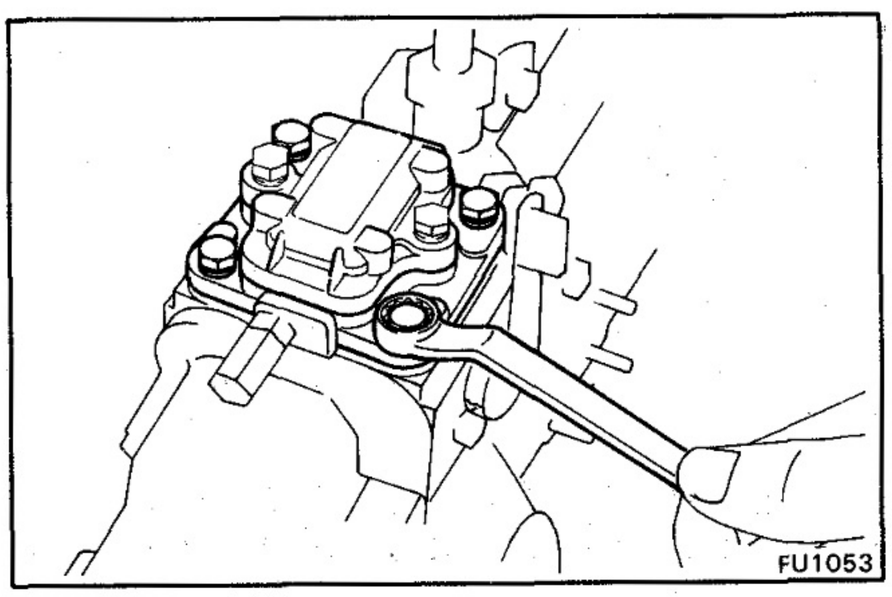

18. [2H A/T]
INSTALL FULL-LOAD STOPPER HOUSING ASSEMBLY

(a) Install a new O-ring to the stopper housing.

(b) Install the stopper housing assembly with the four bolts.

Torque: 85 kg-cm (74 in.-lb, 8.3 N·m)

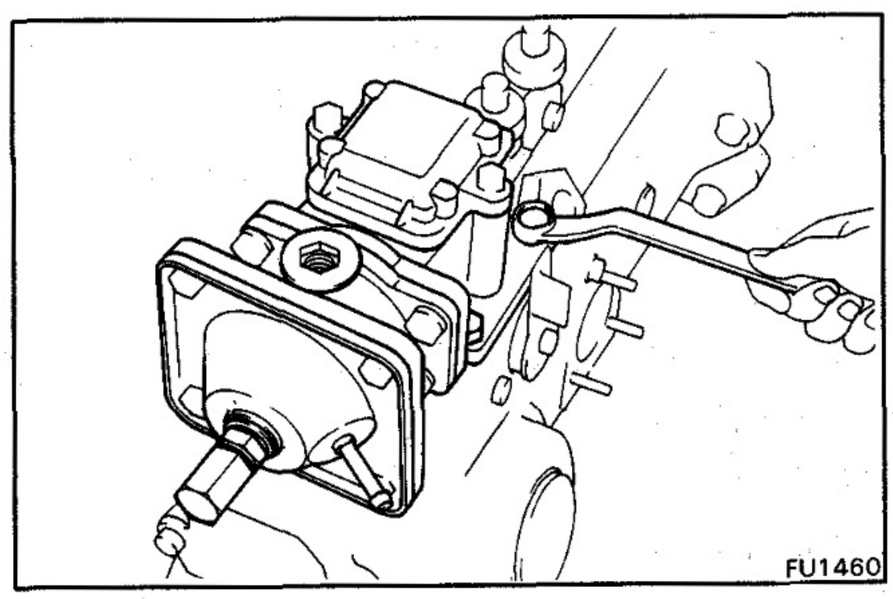

19. [12H-T]
INSTALL FULL-LOAD STOPPER HOUSING ASSEMBLY AND BOOST COMPENSATOR

(a) Install a new O-ring to the stopper housing.

(b) Install the stopper housing assembly and boost compensator with the four bolts.

Torque: 85 kg-cm (74 in.-lb, 8.3 N·m)

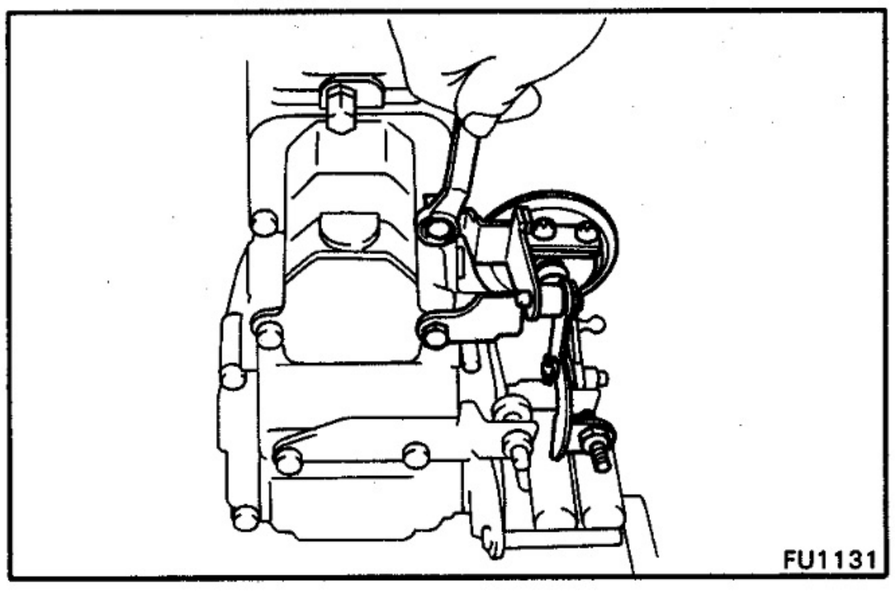

20. [w/ PS OR A/C]
INSTALL IDLE-UP ACTUATOR

Adjustment of Governor [2H A/T and 12H-T]

Governor Characteristic Diagram

2H A/T

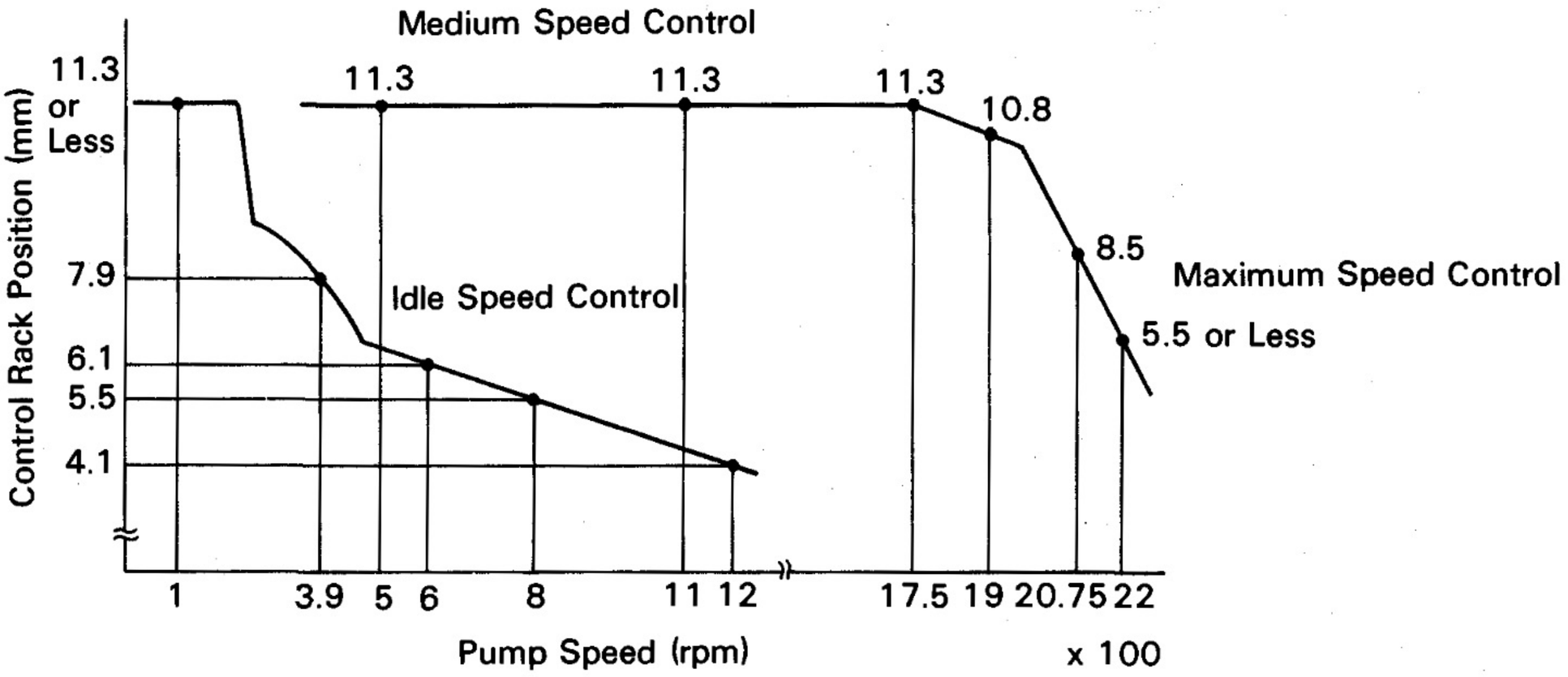

12H-T M/T

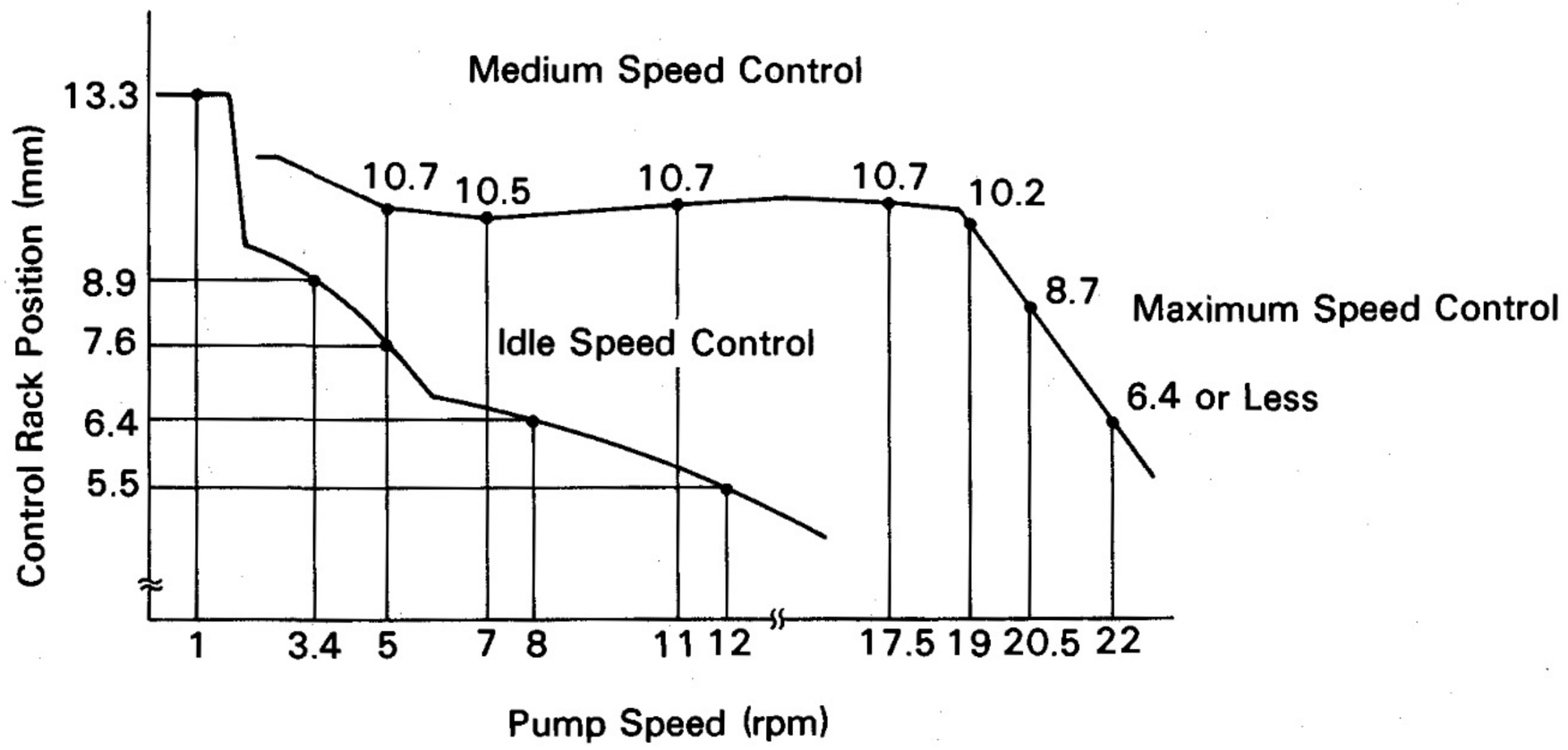

12H-T A/T

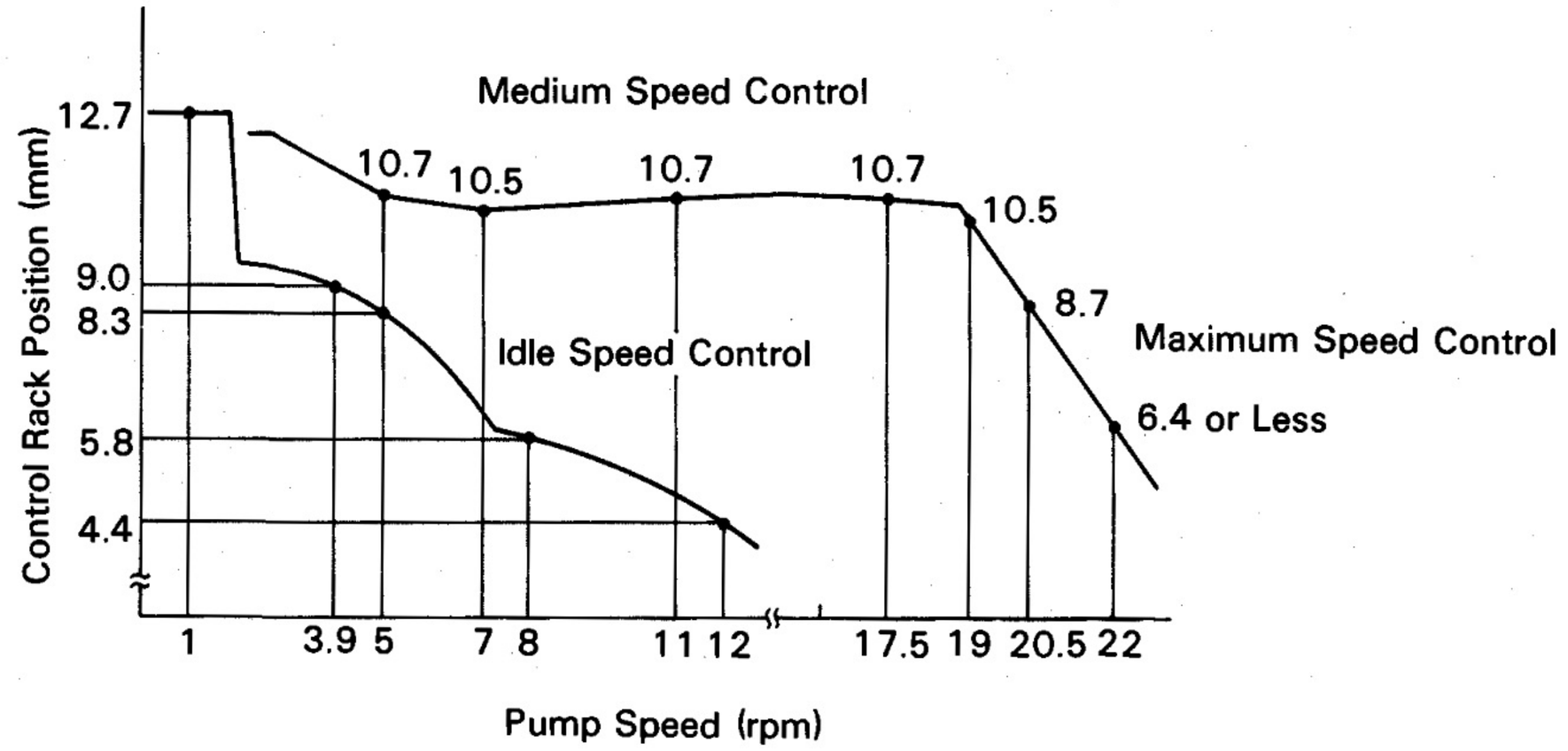

FU1457
FU1456
FU1455

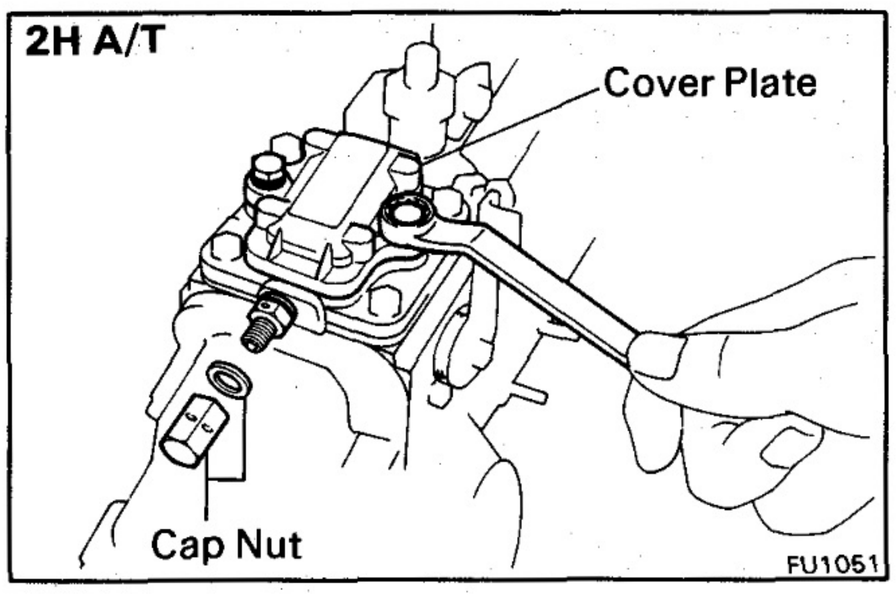

1. PRE-TEST CHECK AND PREPARATION
(See page FU-66)

2. REMOVE CAP NUP AND COVER PLATE

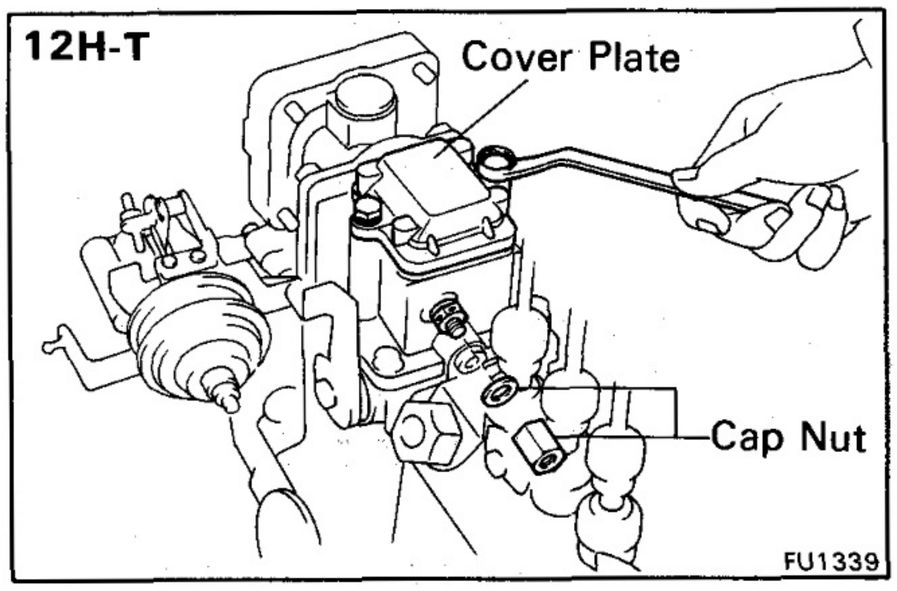

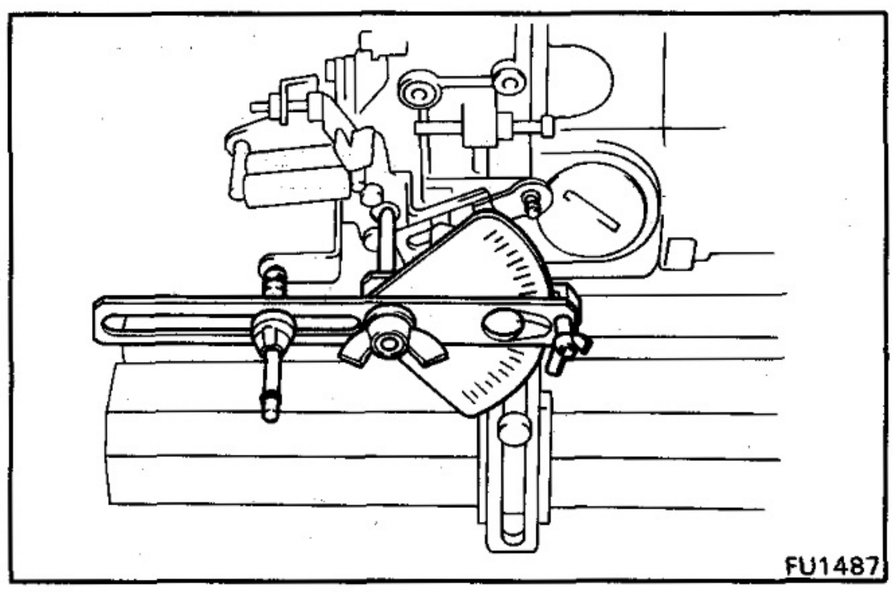

3. INSTALL ANGLE GAUGE TO ADJUSTING LEVER

4. PRESET IDLE SPEED CONTROL

(a) Measure the control rack position.

Item	Adjusting lever position	Adjusting lever angle	Pump rpm	Control rack position mm (in.)
2H	Idle	Approx. 3°	390	7.7 – 8.1 (0.303 – 0.319)
12H-T M/T	Idle	Approx. 3°	340	8.6 – 9.2 (0.339 – 0.362)
12H-T A/T	Idle	Approx. 3°	390	8.7 – 9.3 (0.343 – 0.366)

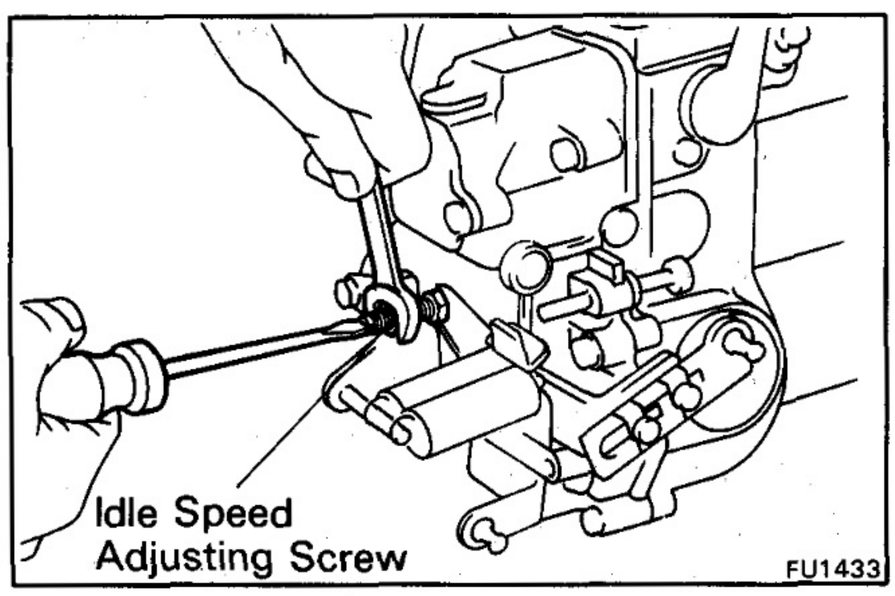

(b) Adjust by turning the idle speed adjusting screw.

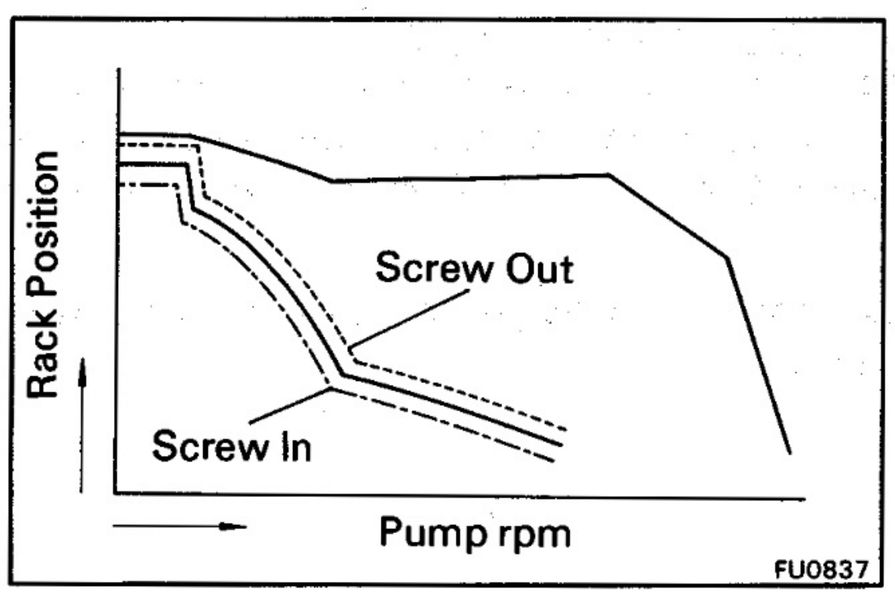

NOTE: The idle adjusting screw will change the governor characteristic as shown in the illustration.

5. ADJUST IDLE SPEED CONTROL

(a) Measure the control rack position.

Item	Adjusting lever position	Pump rpm	Control rack position mm (in.)	Adjusting point
2H A/T	Idle	100	11.3 (0.445) or more	
		390	7.7 – 7.9 (0.303 – 0.311)	Idle adjusting screw
		600	5.6 – 6.6 (0.220 – 0.260)	
		800	5.1 – 5.9 (0.201 – 0.232)	Adjusting nut or washers
		1,200	3.4 – 4.8 (0.134 – 0.189)	
12H-T M/T	Idle	100	12.9 – 13.7 (0.508 – 0.539)	
		340	8.6 – 9.2 (0.339 – 0.362)	Idle adjusting screw
		500	6.9 – 8.3 (0.272 – 0.327)	
		800	6.0 – 6.8 (0.236 – 0.268)	Adjusting nut or washers
		1,200	4.3 – 5.7 (0.169 – 0.224)	
12H-T A/T	Idle	100	12.4 – 13.0 (0.488 – 0.512)	
		390	8.7 – 9.3 (0.343 – 0.366)	Idle adjusting screw
		500	7.6 – 9.0 (0.299 – 0.354)	
		800	5.4 – 6.2 (0.213 – 0.244)	Adjusting nut or washers
		1,200	3.7 – 5.1 (0.146 – 0.201)	

(b) Adjust by turning the idle speed adjusting screw.
(See page FU-90)

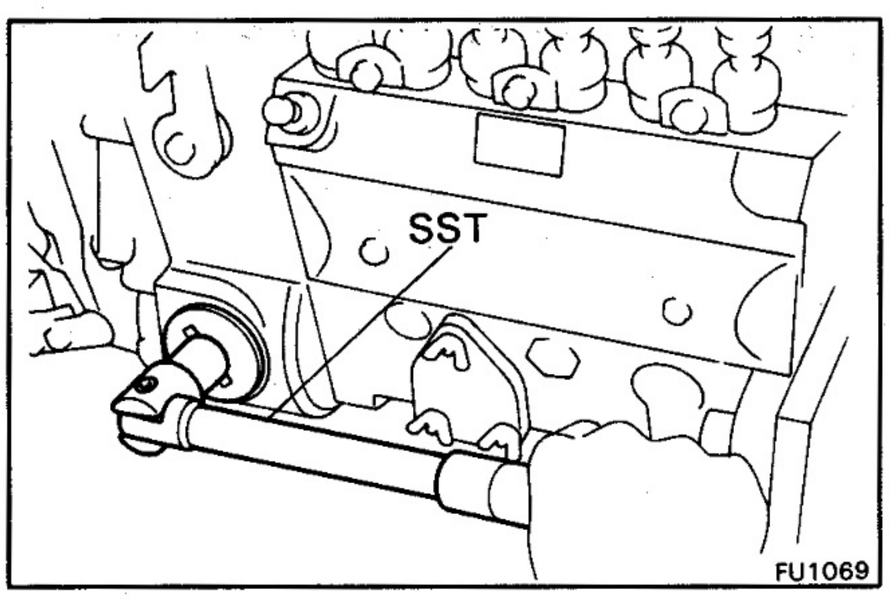

(c) Using SST, remove the screw plug and adjust by turning the adjusting nut or changing the adjusting washers (inner or outer).

SST 09260-47010 (09260-78020)

Adjusting washer thickness:

0.2 mm (0.008 in.)	**Outer**
0.4 mm (0.016 in.)	**Inner and outer**
0.5 mm (0.020 in.)	**Outer**
0.55 mm (0.022 in.)	**Inner**
0.6 mm (0.024 in.)	**Inner and outer**

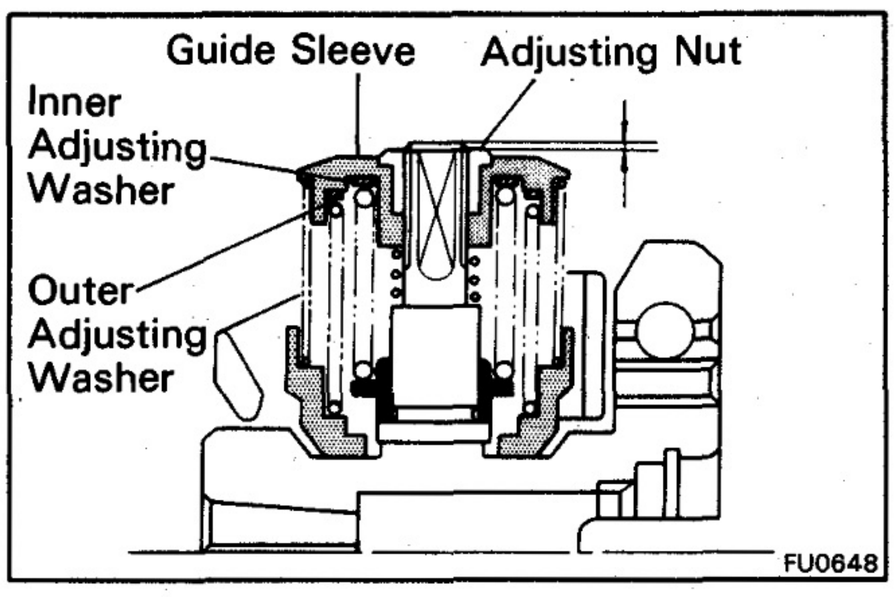

CAUTION:

- **To insure that there is no interference between the adjusting nut and housing, set the amount of protrusion within minus 0.4 mm (0.016 in.) to plus 0.2 mm (0.08 in.)**
- **Be sure to assemble the adjusting washers on the guide sleeve side.**

NOTE:

- By adding a thicker adjusting washer, the governor characteristic will change as shown in the illustration.

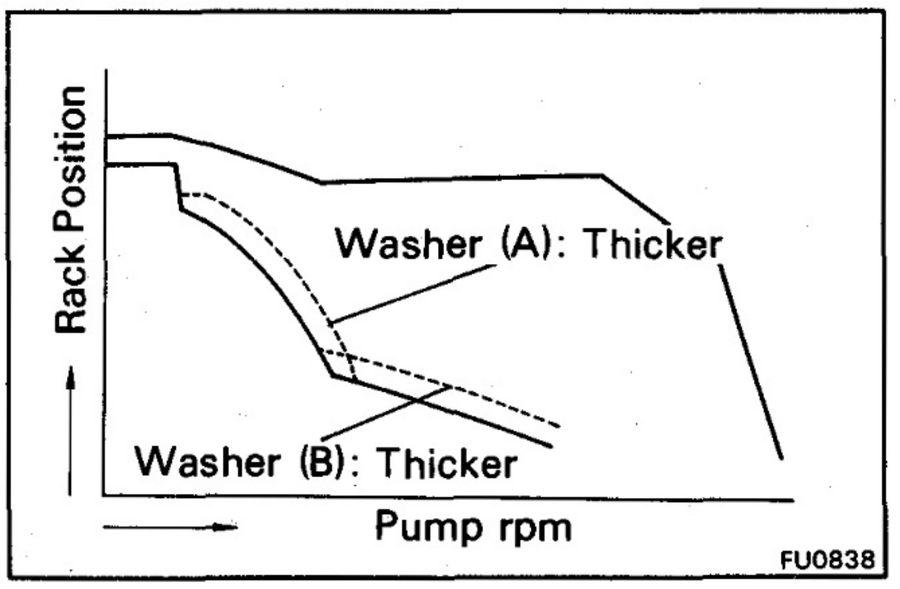

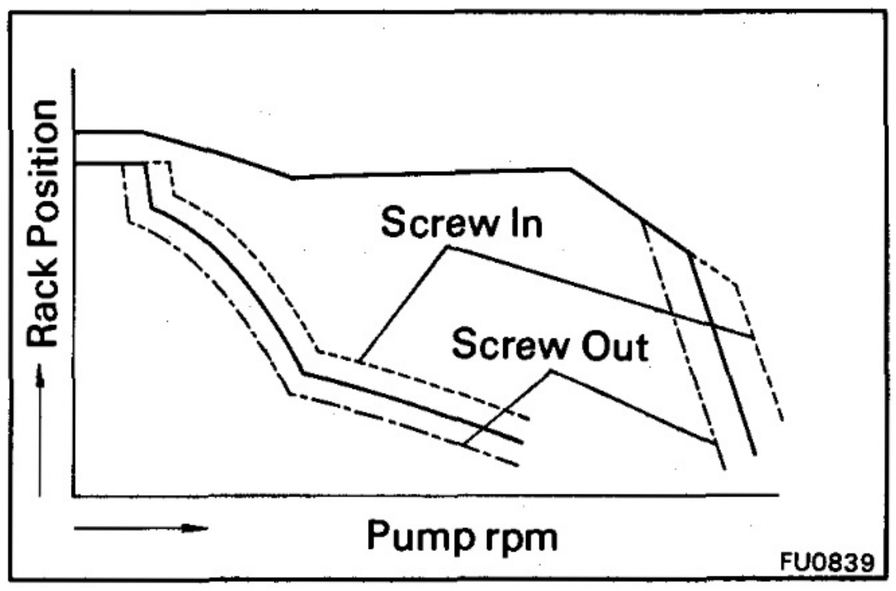

- The adjusting nut will change the governor characteristic as shown in the illustration.

6. PRESET MAXIMUM SPEED CONTROL

(a) [12H-T]
Apply 0.27 kg-cm^2 (3.9 psi, 26 kPa) of pressure to the boost compensator.

(b) Measure the control rack position.

Item	Adjusting lever position	Adjusting lever angle	Pump rpm	Control rack position mm (in.)
2H A/T	Maximum	Approx. 43°	2,075	8.2 – 8.8 (0.323 – 0.346)
12H-T	Maximum	Approx. 38°	2,050	8.0 – 9.4 (0.315 – 0.370)

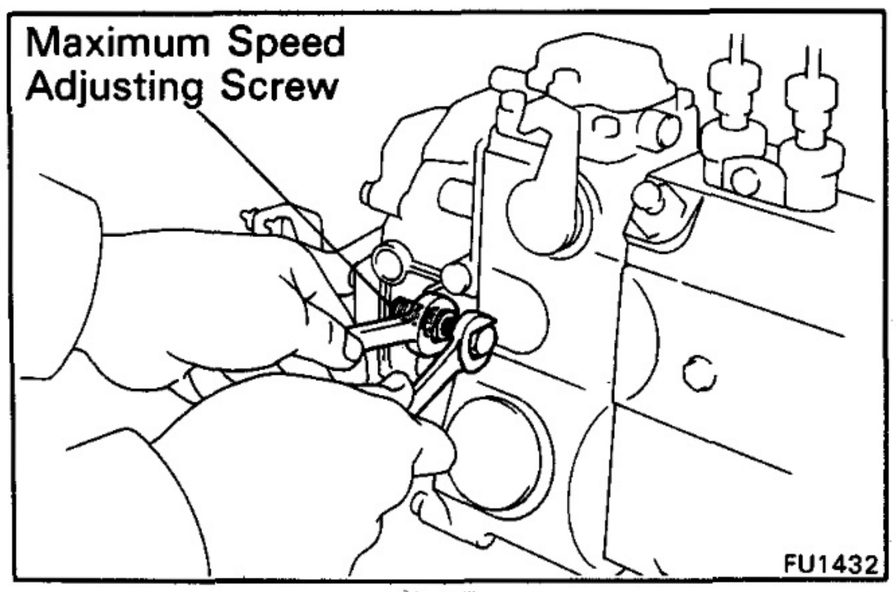

(c) Adjust by turning the maximum speed adjusting screw.

7. ADJUST MEDIUM SPEED CONTROL

(a) [12H-T]
Apply 0.27 kg-cm² (3.9 psi, 26 kPa) of pressure to the boost compensator.

(b) Raise the pump speed above 600 rpm.

(c) Move the adjusting lever to idle speed side, and then set it to maximum speed side.

(d) Measure the control rack position.

Item	Adjusting lever position	Pump rpm	Control rack position mm (in.)	Adjusting point
2H A/T	Maximum	500	11.0 – 11.6 (0.433 – 0.457)	No. 1 adapter screw
		1,100	11.1 – 11.5 (0.437 – 0.453)	Full-load stopper screw
		1,750	11.0 – 11.6 (0.433 – 0.457)	No.1 and No. 2 adapter screws
		1,900	10.4 – 11.2 (0.409 – 0.441)	—
12H-T M/T	Maximum	500	10.3 – 11.1 (0.406 – 0.437)	No. 1 adapter screw
		700	10.1 – 10.9 (0.398 – 0.429)	—
		1,100	10.4 – 11.0 (0.409 – 0.433)	Full-load stopper screw
		1,750	10.3 – 11.1 (0.406 – 0.437)	No. 1 and No. 2 adapter screws
		1,900	9.8 – 10.6 (0.386 – 0.417)	—
12H-T A/T	Maximum	500	10.3 – 11.1 (0.406 – 0.437)	No. 1 adapter screw
		700	10.1 – 10.9 (0.398 – 0.429)	—
		1,100	10.4 – 11.0 (0.409 – 0.433)	Full-load stopper screw
		1,750	10.3 – 11.1 (0.406 – 0.437)	No. 1 and No. 2 adapter screws
		1,900	10.1 – 10.9 (0.398 – 0.429)	—

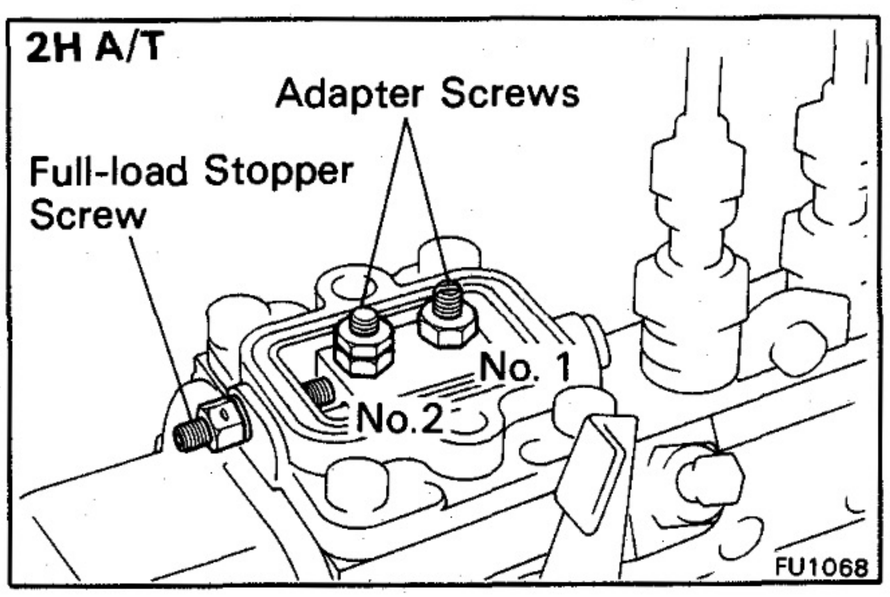

(e) Adjust by turning the full-load stopper and adapter screws.

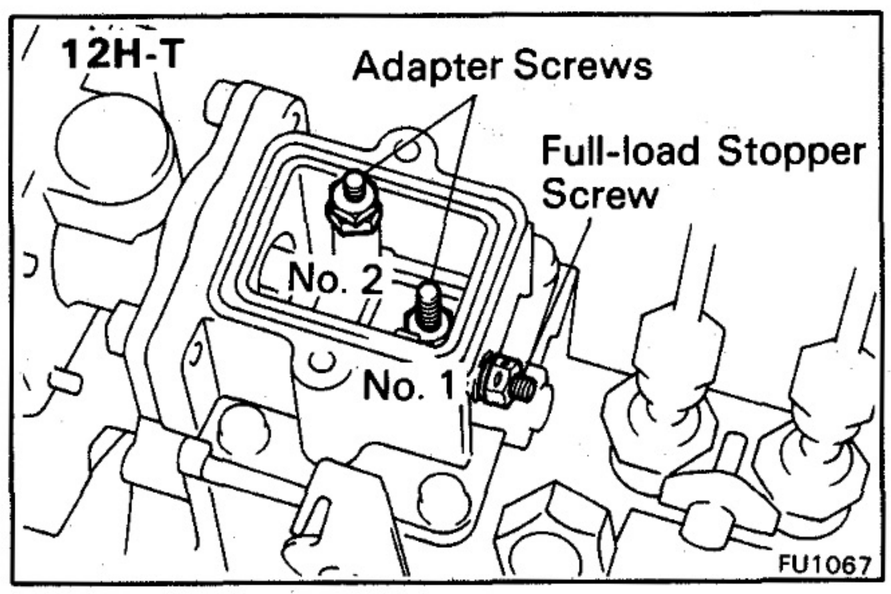

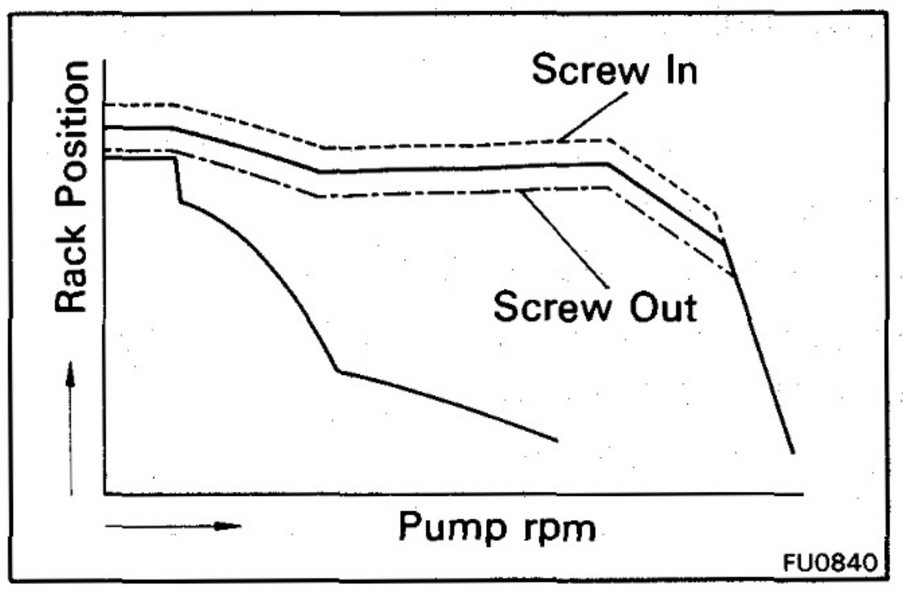

NOTE:

- The full-load stopper will change the governor characteristic as shown in the illustration.

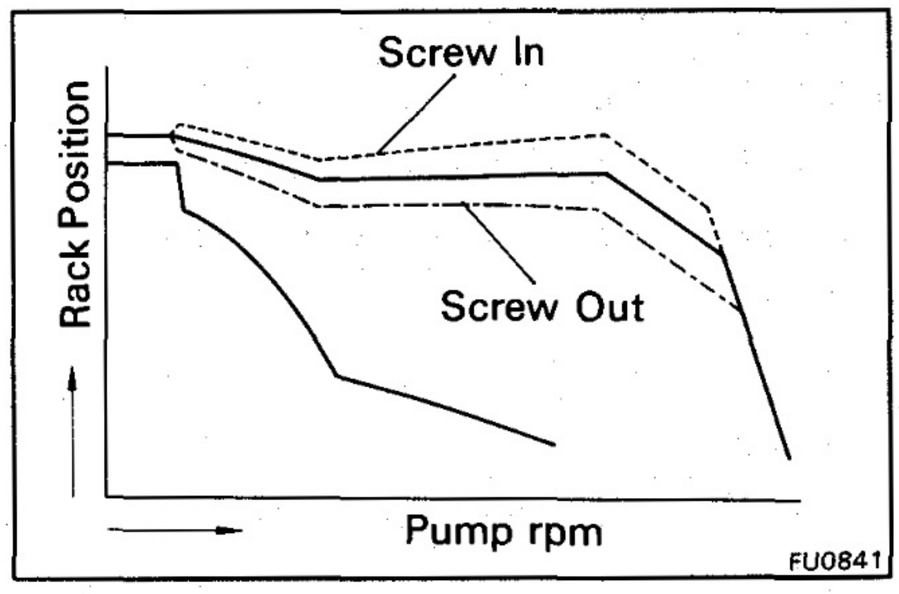

- The No. 1 adaptor screw will change the governor characteristic as shown in the illustration.

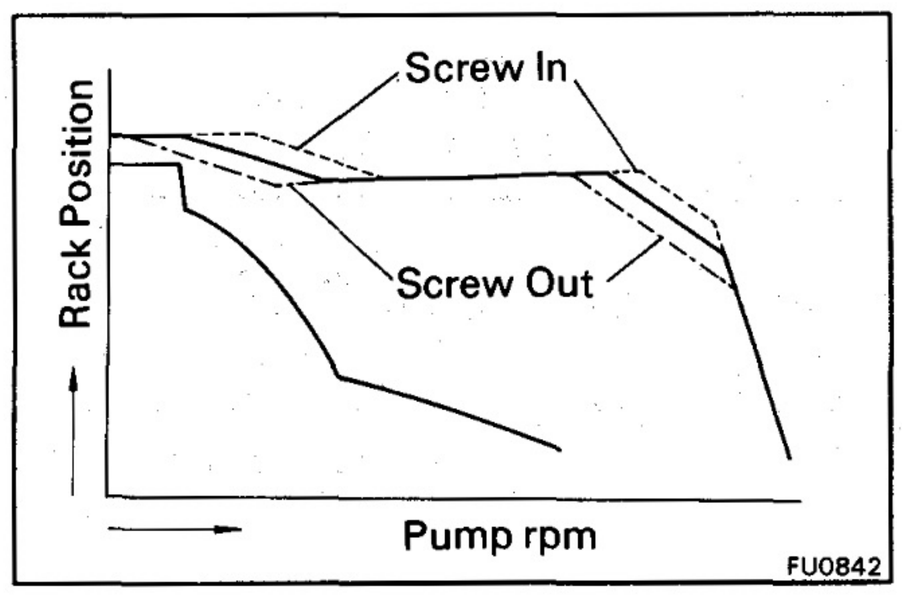

- By turning adaptor screws No. 1 and No. 2 together, the governor characteristic will change as shown in the illustration.

8. ADJUST MAXIMUM SPEED CONTROL

(a) [12H-T]
Apply 0.27 kg-cm² (3.9 psi, 26 kPa) of pressure to the boost compensator.

(b) Measure the control rack position.

Item	Adjusting lever position	Pump rpm	Control rack position mm (in.)	Adjusting point
2H A/T	Maximum	2,075	8.2 – 8.8 (0.323 – 0.346)	Maximum adjusting screw
		2,200	5.5 (0.217) or less	—
	Idle → Maximum	0	16.0 (0.630) or more	*
12H-T	Maximum	2,050	8.0 – 9.4 (0.315 – 0.370)	Maximum adjusting screw
		2,200	6.4 (0.252) or less	—
	Idle → Maximum	0	15.8 – 17.2 (0.622 – 0.677)	*

* With the pump not moving (0 rpm), move the stop lever and return it, change the adjusting lever position from idle to maximum position.

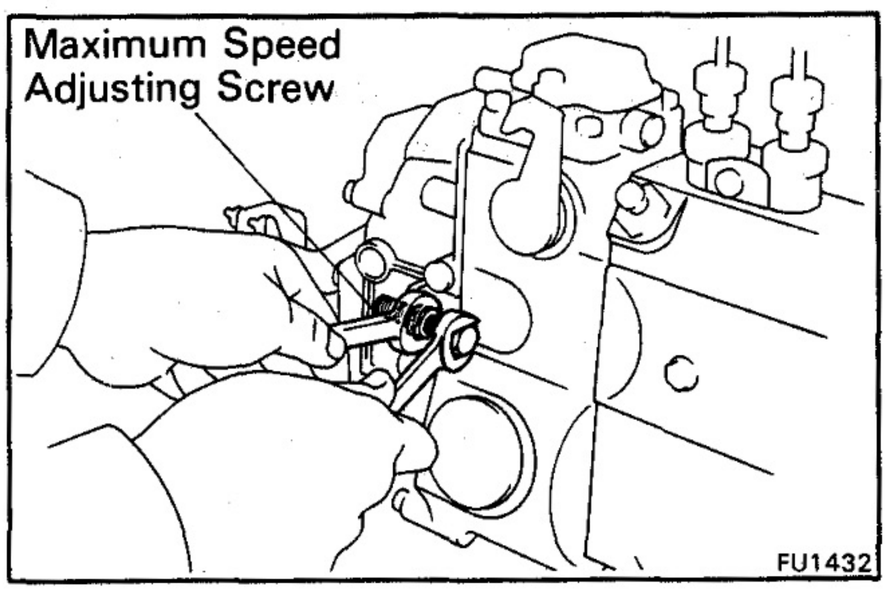

(c) Adjust by turning the maximum speed adjusting screw.

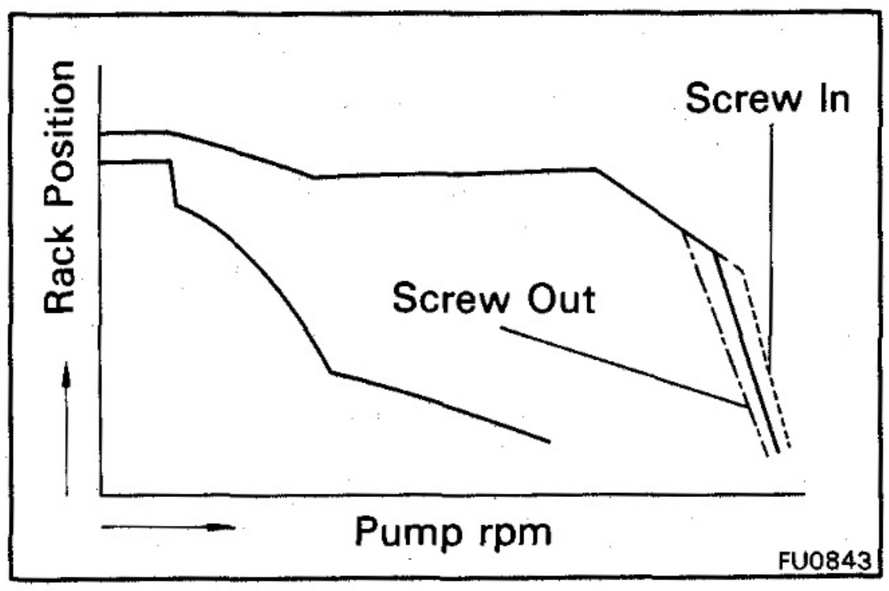

NOTE: The maximum speed adjusting screw will change the governor characteristic as shown in the illustration.

9. [12H-T]
ADJUST BOOST COMPENSATOR

(a) Measure the control rack position.

Adjusting lever position	Pump rpm	Boost compensator pressure kg/cm² (psi, kPa)	Control rack position mm (in.)	Adjusting point
Maximum	500	0	9.8 – 10.4 (0.386 – 0.409)	Stop screw
		0.12 (1.7, 12)	10.3 – 11.1 (0.406 – 0.437)	Guide bushing

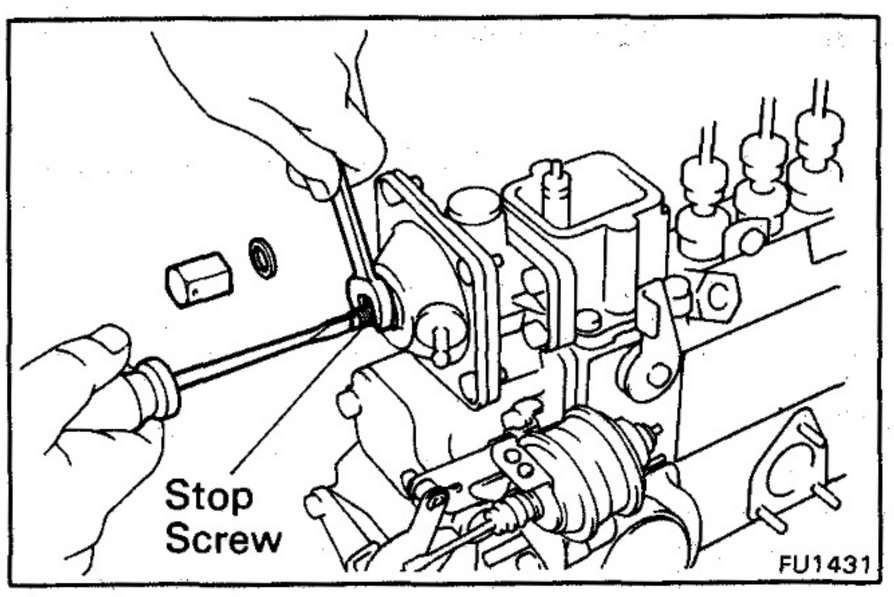

(b) Adjust the stop screw.
Remove the cap nut, adjust by turning the stop screw.

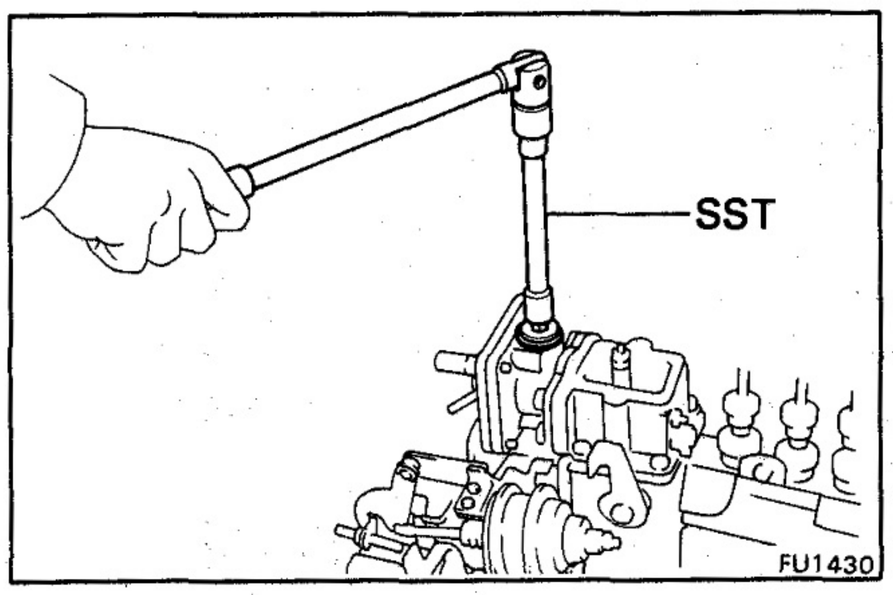

(c) Adjust the guide bushing.

(1) Using SST, remove the screw plug.

SST 09043-38100

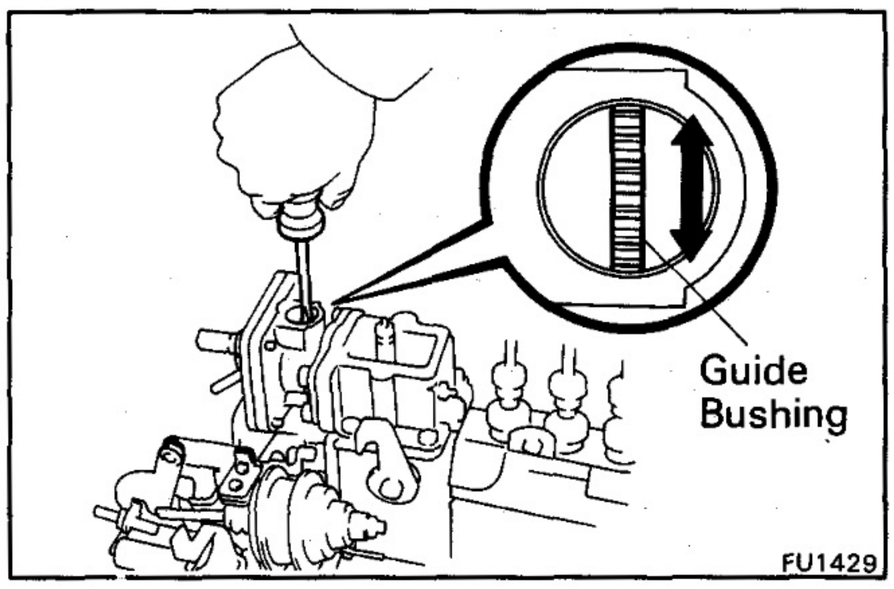

(2) Adjust by turning the guide bushing.

10. ADJUST TOTAL INJECTION VOLUME

(a) Measure the total injection volume.

Item	Adjusting lever position	Boost compensator pressure kg/cm² (psi, kPa)	Pump rpm	Measuring stroke	Total injection volume of each cylinder cc (cu in.)
2H A/T	Maximum	—	500	1,000	210.0 – 264.0 (12.82 – 16.11)
			1,100	1,000	270.0 – 282.0 (16.48 – 17.21)
			1,750	1,000	288.0 – 318.0 (17.57 – 19.41)
12H-T	Maximum	0.27 (3.9, 26)	500	1,000	198.0 – 234.0 (12.08 – 14.28)
		0.27 (3.9, 26)	1,100	1,000	345.0 – 363.0 (21.05 – 22.15)
		0.27 (3.9, 26)	1,750	1,000	339.0 – 375.0 (20.69 – 22.88)
		0	500	1,000	156.0 – 174.0 (9.52 – 10.62)

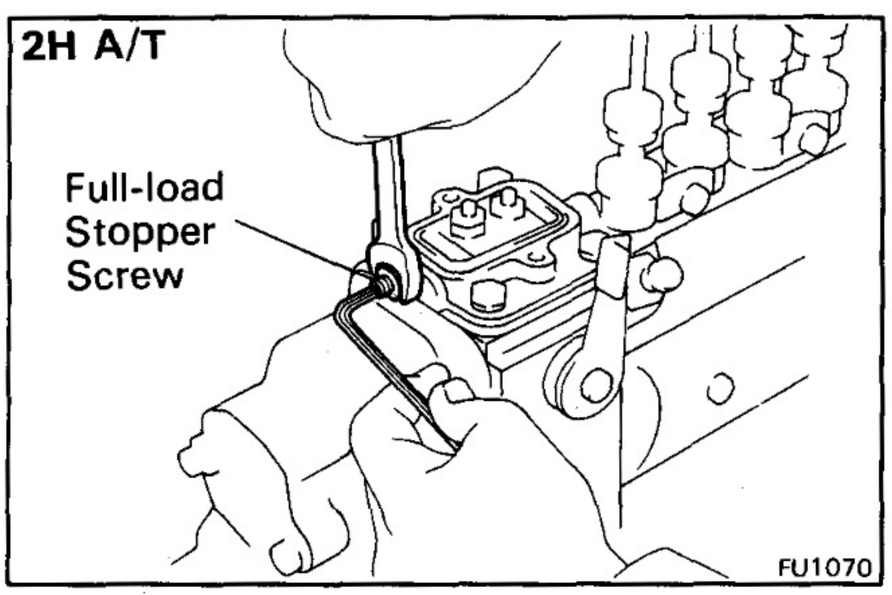

(b) Adjust by turning full-load stopper screw.

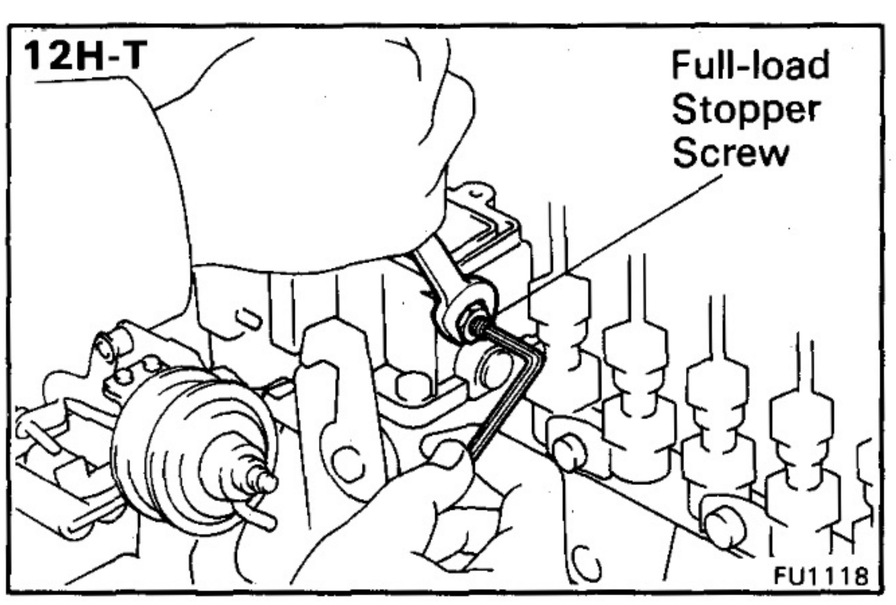

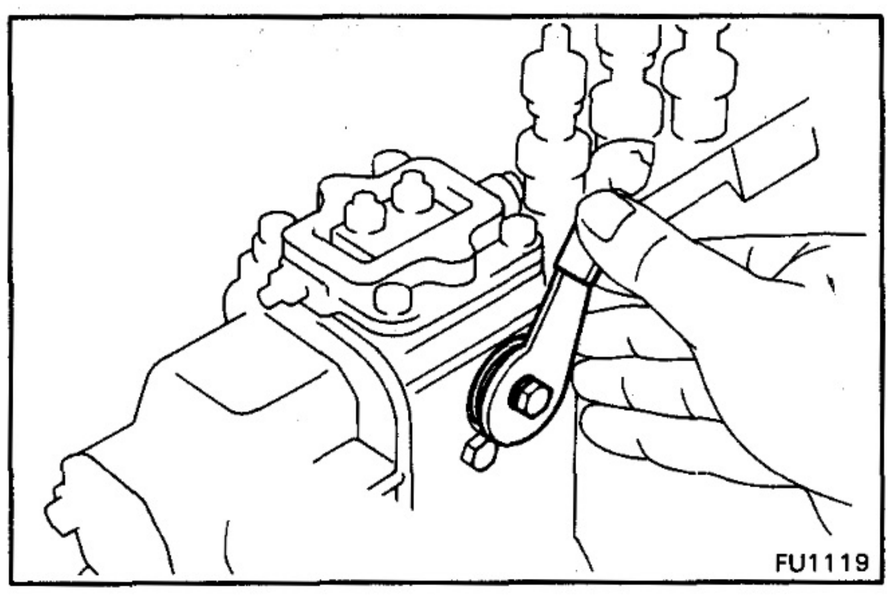

11. CHECK STOP LEVER OPERATION

Measure the control rack position when the stop lever operates.

Item	Adjusting lever position	Pump rpm	Control rack position mm (in.)
2H	Idle	0	2.0 (0.079) or less
12H-T	Idle	0	7.5 (0.295) or less

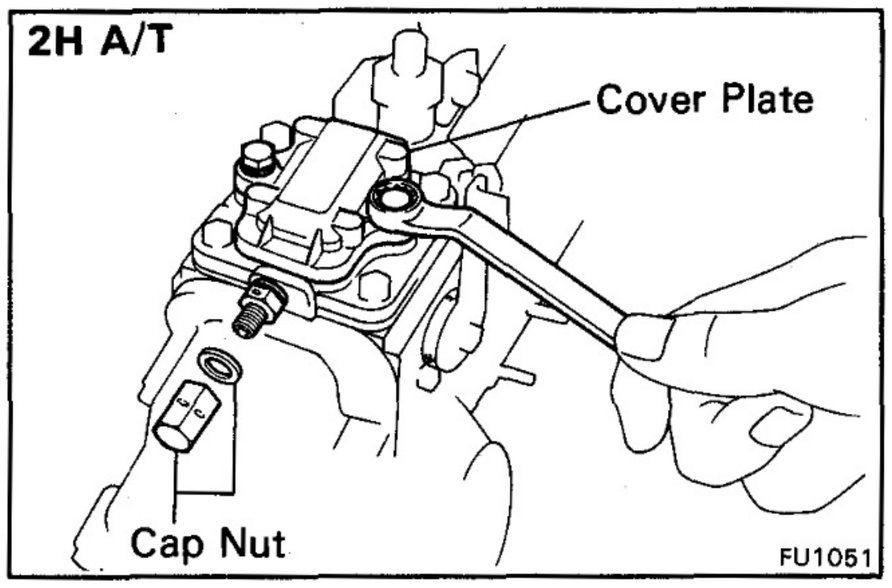

12. INSTALL CAP NUT AND COVER PLATE OF FULL-LOAD STOPPER HOUSING

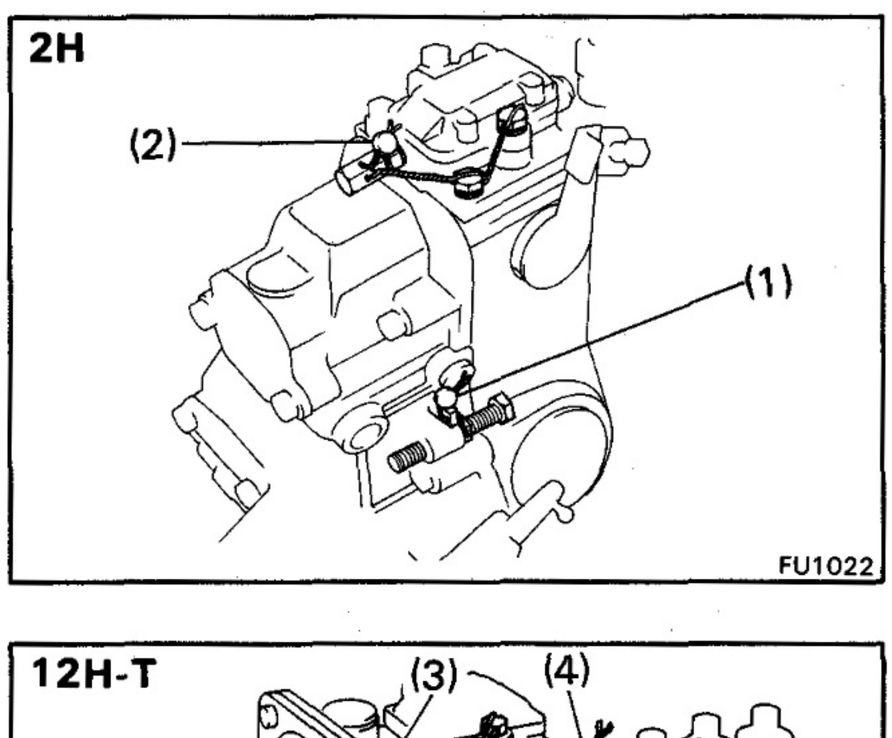

13. SEAL PARTS

Seal the following parts with new seal wire and lead seal:

(1) Maximum adjusting screw

(2) [2H]
Bolt of cover plate with cap nut of full-load stopper screw

(3) [12H-T]
Bolt of cover plate

(4) [12H-T]
Cap nut of full-load stopper screw

(5) [12H-T]
Cap nut of boost compensator stopper screw

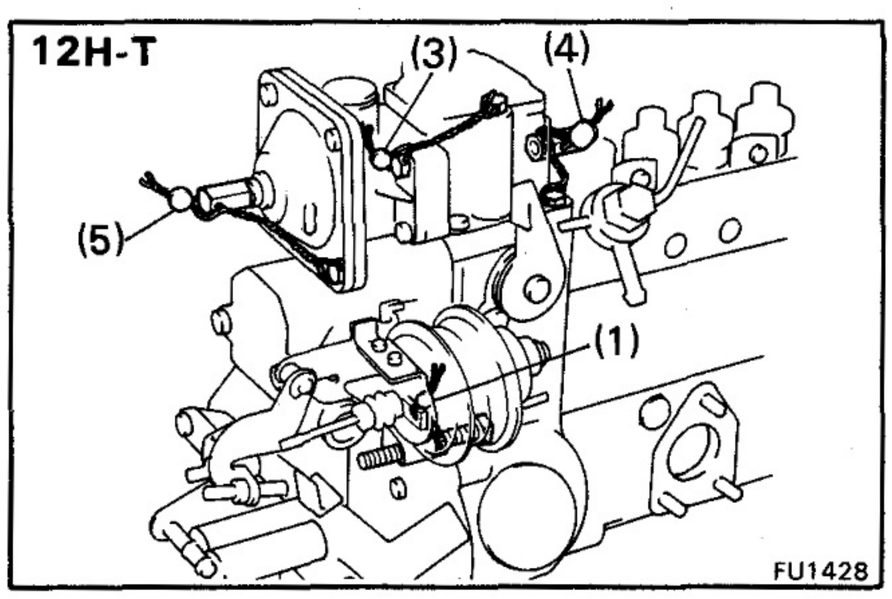

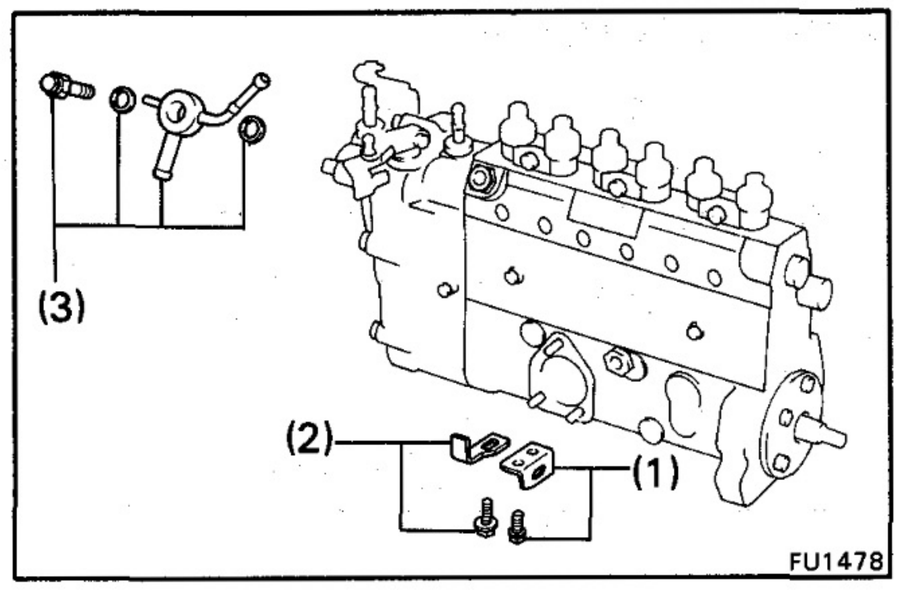

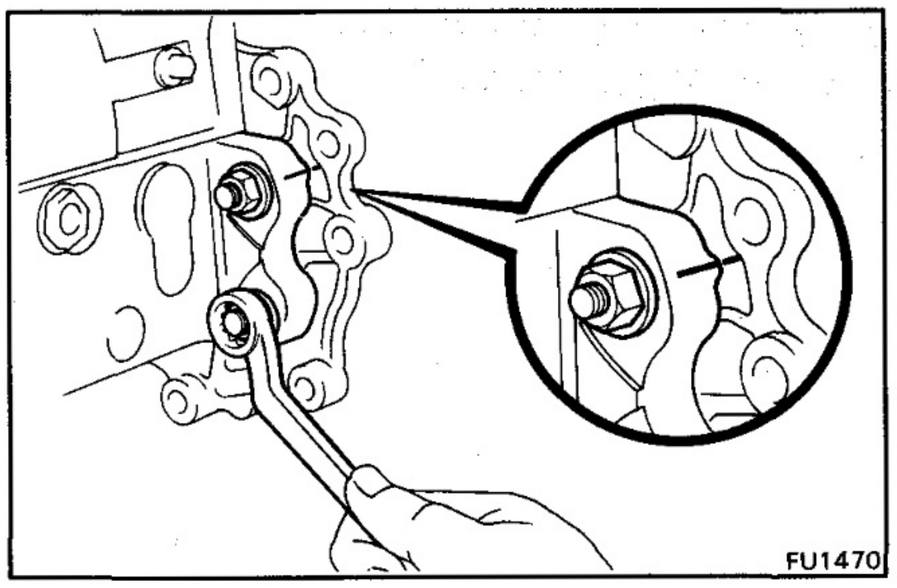

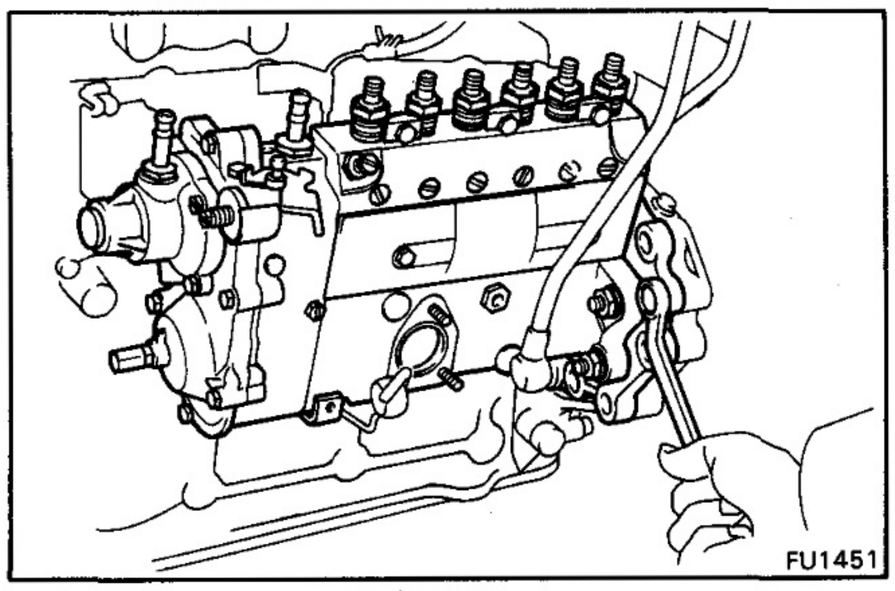

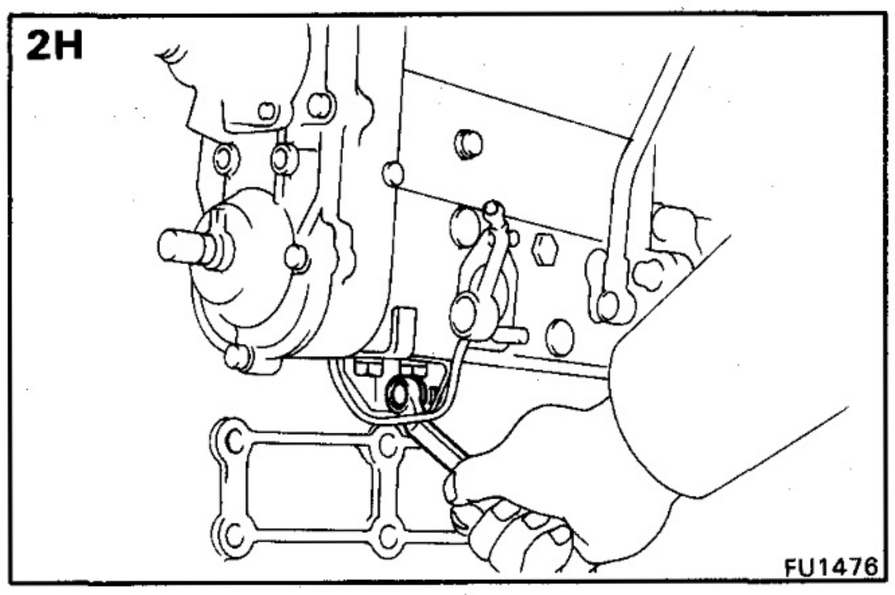

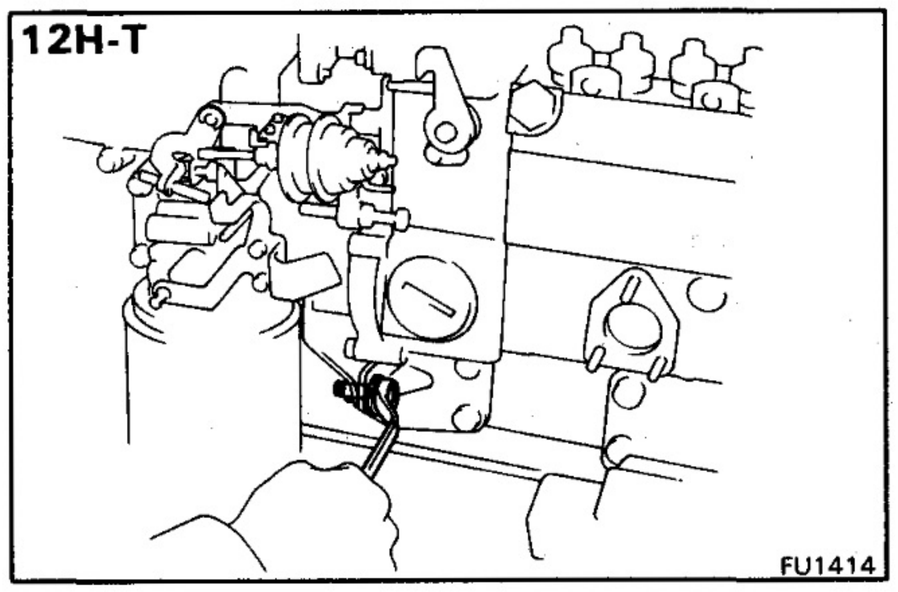

INSTALLATION OF INJECTION PUMP

(See page FU-29)

1. INSTALL PARTS

(a) [2H]
Install the injection pump stay with the two bolts.

Torque: 185 kg-cm (13 ft-lb, 18 N·m)

(b) Install the oil pipe stay with the bolt.

Torque: 185 kg-cm (13 ft-lb, 18 N·m)

(c) [12H-T]
Install the union pipe with the union bolt (with the relief valve). Torque the union bolt.

Torque: 280 kg-cm (20 ft-lb, 27 N·m)

2. INSTALL INJECTION PUMP RETAINER

(a) Install a new O-ring to the bearing cover groove of the injection pump.

(b) Align the matchmark of the injection pump body and retainer.

(c) Install the retainer with the four plate washers and nuts.

Torque: 375 kg-cm (27 ft-lb, 37 N·m)

3. INSTALL INJECTION PUMP

(a) Install a new O-ring retainer groove of the injection pump.

(b) Install the injection pump with the bolt.

Torque: 250 kg-cm (18 ft-lb, 25 N·m)

(c) Install the bolt holding the injection pump stay to the stay.

Torque:

2H	**185 kg-cm (13 ft-lb, 18 N·m)**
12H-T	**360 kg-cm (26 ft-lb, 35 N·m)**

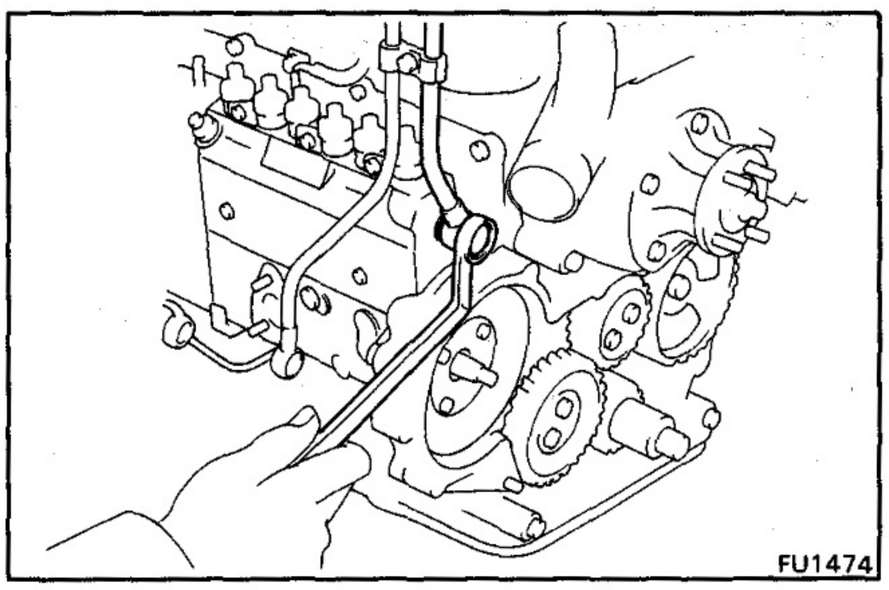

4. CONNECT FUEL PIPE (2H) OR HOSE (12H-T)

Install new two gaskets and union bolt. Torque the union bolt.

Torque: 280 kg-cm (20 ft-lb, 27 N·m)

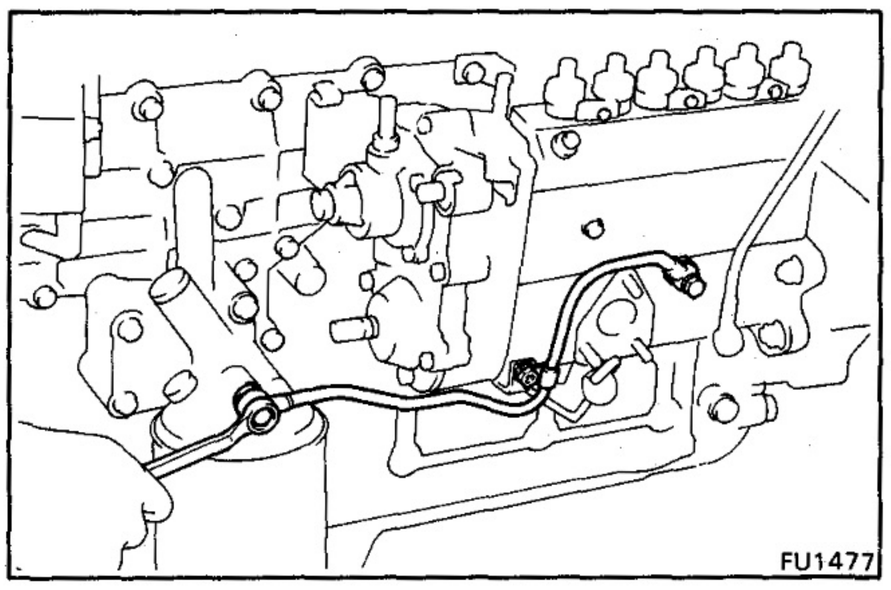

5. [2H]
INSTALL OIL PIPE

(a) Install the oil pipe with new four gaskets and the two union bolt. Torque the union bolts.

Torque: 185 kg-cm (13 ft-lb, 18 N·m)

(b) Secure the oil pipe with the bolt.

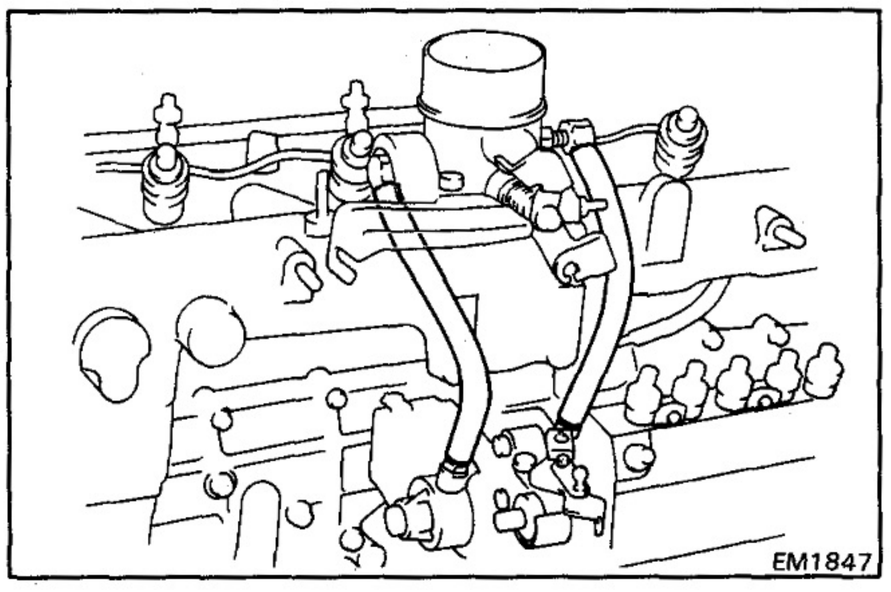

6. [2H M/T]
INSTALL VACUUM HOSES

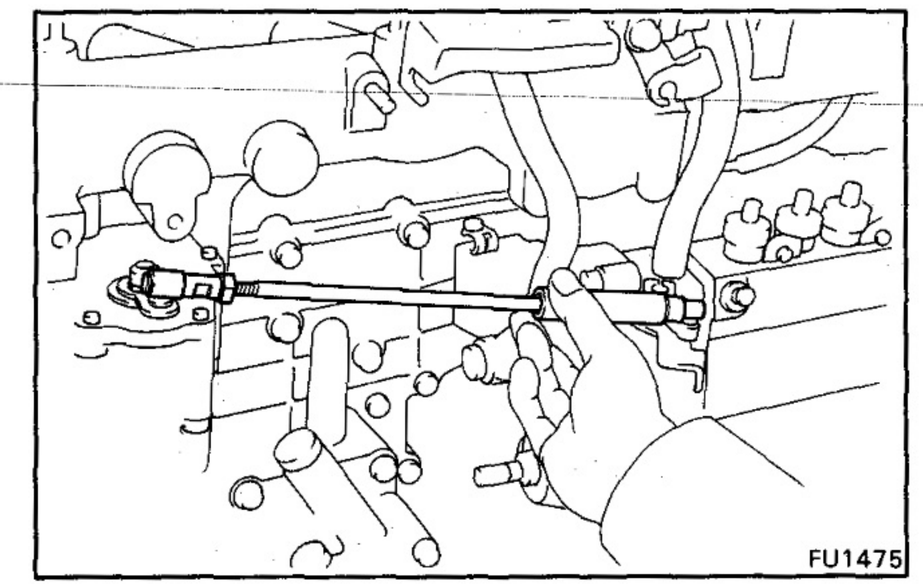

7. [2H M/T (w/ EDIC SYSTEM)]
INSTALL CONNECTING ROD OF EDIC MOTOR

8. [2H M/T (w/o EDIC SYSTEM)]
INSTALL CONNECTIONG WIRE OF OVERINJECTION MAGNET

9. INSTALL AUTOMATIC TIMER
(See steps 1 to 4 on page FU-20)

10. INSTALL FUEL FEED PUMP
(See step 1 and 2 on page FU-20)

11. INSTALL INJECTION PIPES
(See step 3 on page FU-8) 2H
(See steps 2, 4 and 5 on pages FU-14 and 15) 12H-T

12. BLEED FUEL LINE (See step 2 on page FU-3)

13. START ENGINE AND CHECK FOR LEAKS

14. CHECK ENGINE OIL LEVEL (See page LU-3)

COOLING SYSTEM

	Page
TROUBLESHOOTING	CO-2
CHECK AND REPLACEMENT OF ENGINE COOLANT	CO-3
WATER PUMP	CO-4
THERMOSTAT	CO-11
RADIATOR	CO-12

TROUBLESHOOTING

Problem	Possible cause	Remedy	Page
Engine overheats	Fan belt loose or missing	Adjust or replace belt	CH-6
	Dirt, leaves or insects on radiator or condenser	Clean radiator or condenser	CO-12
	Hoses, water pump, thermostat housing, radiator, heater, core plugs or head gasket leakage	Repair as necessary	
	Thermostat faulty	Check thermostat	CO-11
	Injection timing retarded	Adjust timing	EM-23
	Fluid coupling faulty	Replace fluid coupling	CO-5
	Radiator hose plugged or rotted	Replace hose	
	Water pump faulty	Replace water pump	CO-5
	Radiator plugged or cap faulty	Check radiator	CO-12
	Cylinder head or block cracked or plugged	Repair as necessary	

NOTE: If the engine tends to overheat, removal of the thermostat will adversely effect, cooling efficiency.

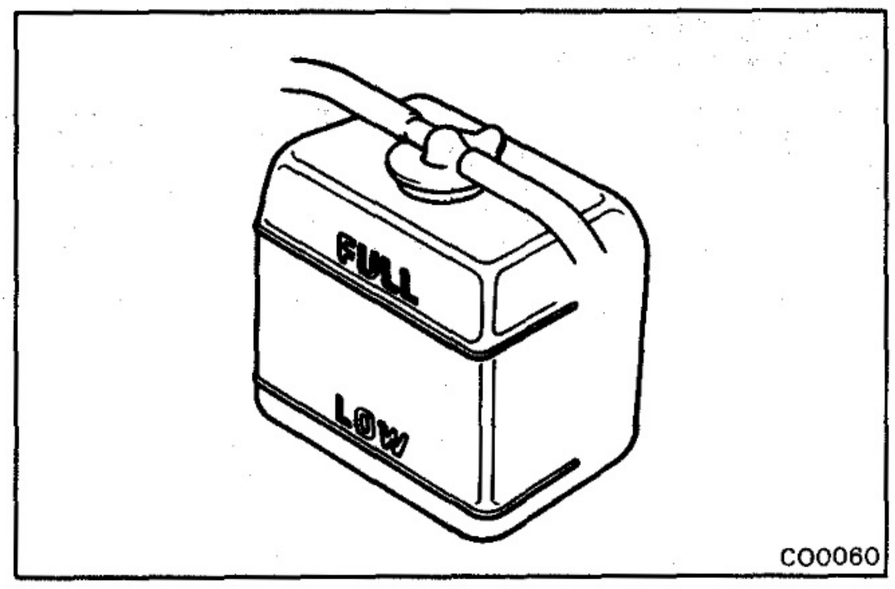

CHECK AND REPLACEMENT OF ENGINE COOLANT

1. CHECK ENGINE COOLANT LEVEL AT RESERVE TANK

The coolant level should be between the "LOW" and "FULL" lines.

If low, check for leaks and add coolant up to the "FULL" line.

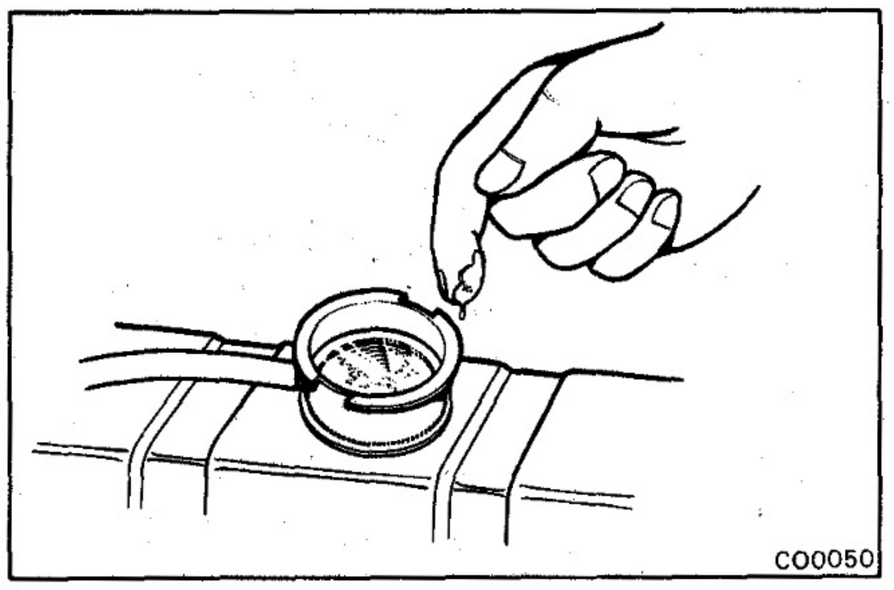

2. CHECK ENGINE COOLANT QUALITY

There should not be any excessive deposits of rust or scales around the radiator cap or radiator filler hole, and the coolant should be free from oil.

If excessively dirty, replace the coolant.

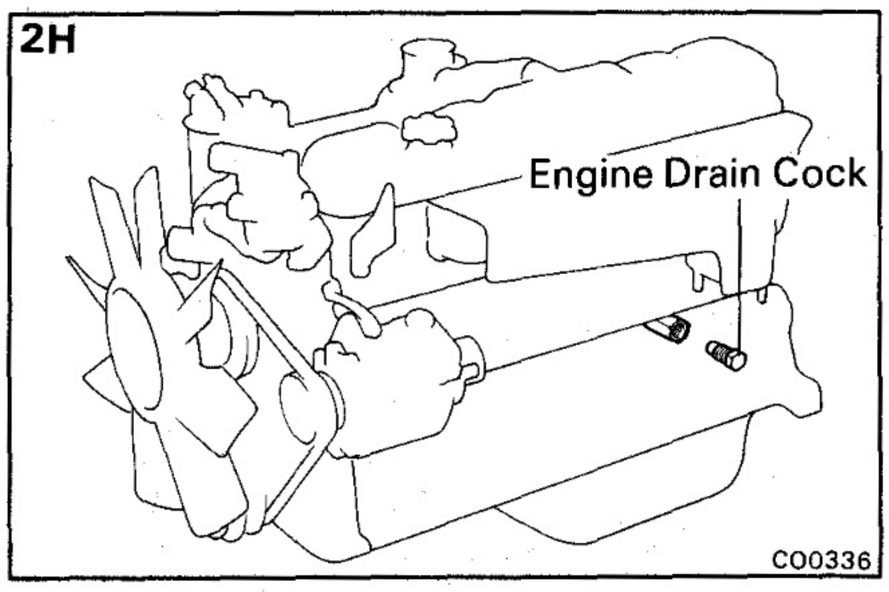

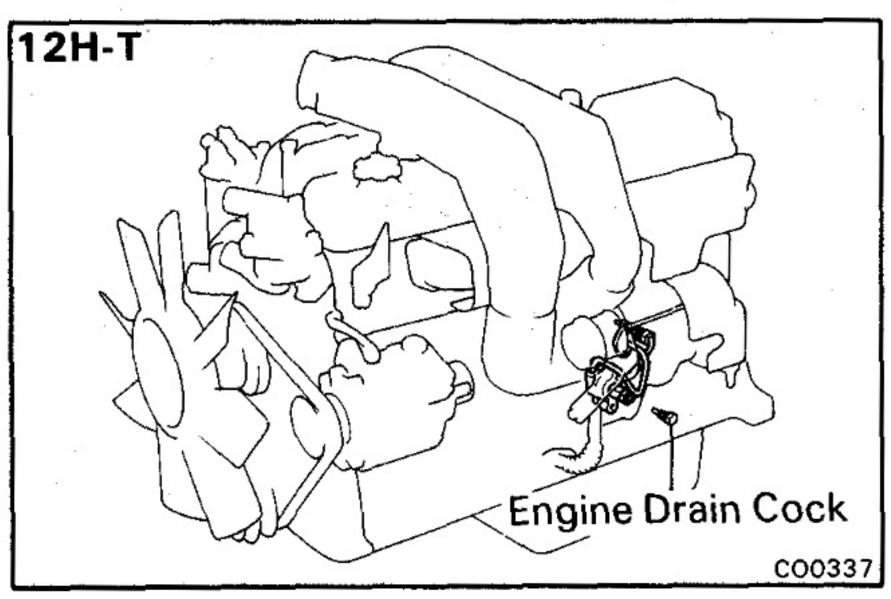

3. REPLACE ENGINE COOLANT

(a) Remove the radiator cap.

(b) Drain the coolant from the radiator and engine drain cocks. (Engine drain cock is at left front of engine block.)

(c) Close the drain cocks.

(d) Fill the system with coolant.

Use a good brand of ethylene-glycol base coolant, mixed according to the manufacturer's directions.

Capacity (w/ Front heater):

HJ60, 61 series

15.4 liters (16.3 US qts, 13.6 Imp. qts)

HJ75 series

14.2 liters (15.0 US qts, 12.5 Imp. qts)

(e) Install the radiator cap.

(f) Start the engine and check for leaks.

(g) Recheck the coolant level and refill as necessary.

WATER PUMP

REMOVAL OF WATER PUMP

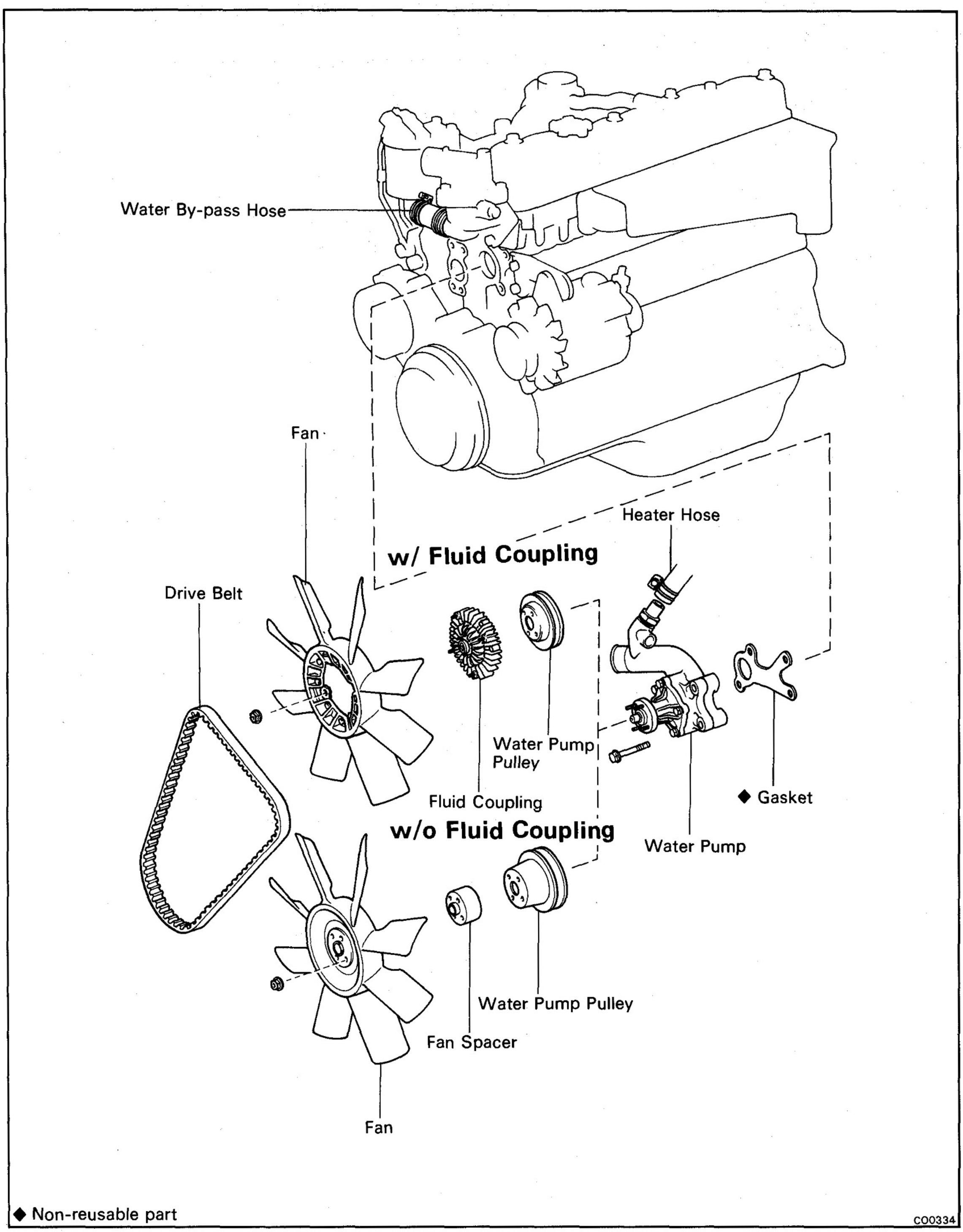

◆ Non-reusable part

CO0334

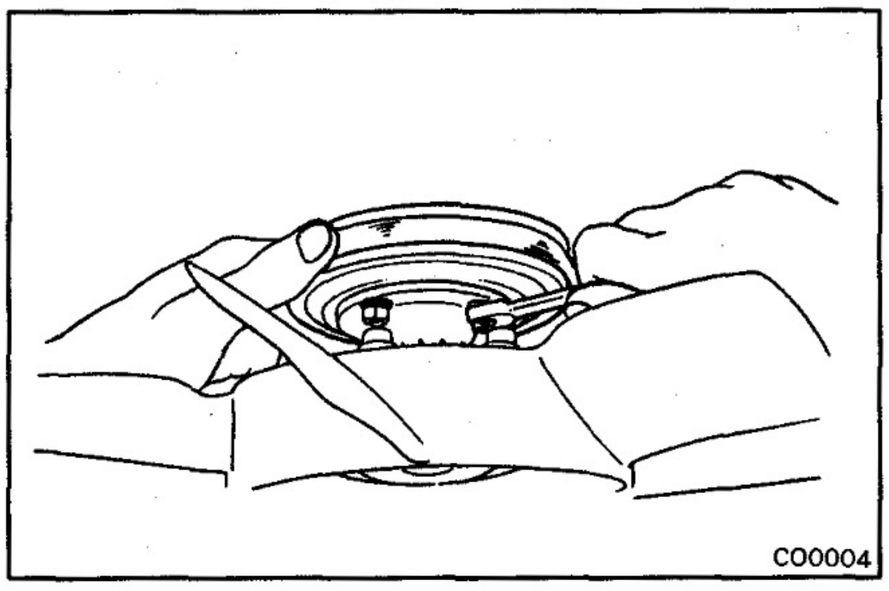

1. **DRAIN ENGINE COOLANT (See page CO-3)**

2. **REMOVE DRIVE BELT**

3. **REMOVE FAN AND WATER PUMP PULLEY**

   [w/ Fluid Coupling]
   Remove the four nuts holding the fluid coupling to the pulley seat, and remove the fan and fluid coupling assembly and the pump pulley.

   [w/o Fluid Coupling]
   Remove the four bolts holding the fan to the pulley seat, and remove the fan, fan spacer and pump pulley.

4. **DISCONNECT HOSES FROM WATER PUMP**

   (a) Radiator inlet hose

   (b) [w/ Heater]
   Heater hose

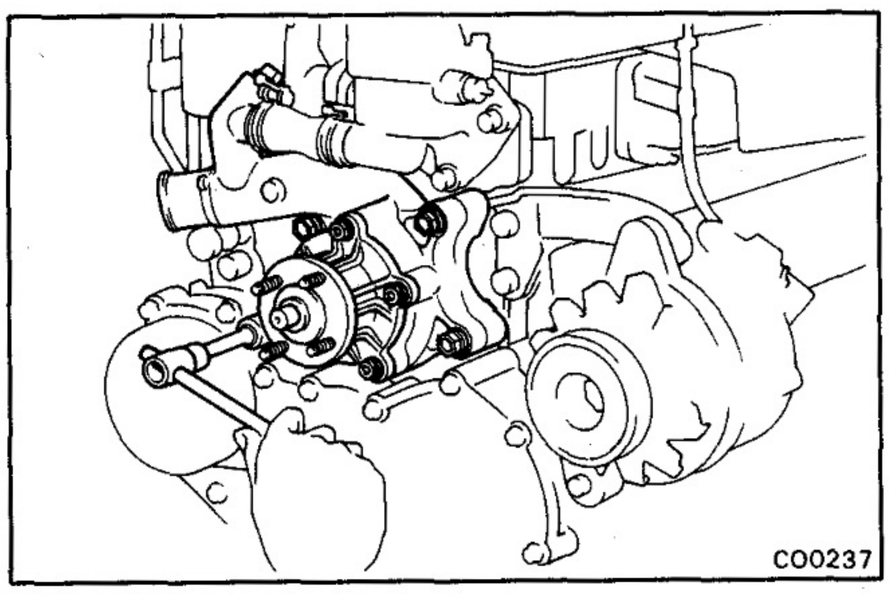

5. **REMOVE WATER PUMP**

   (a) Remove the four bolts.

   (b) Disconnect the water by-pass hose, and remove the water pump and gasket.

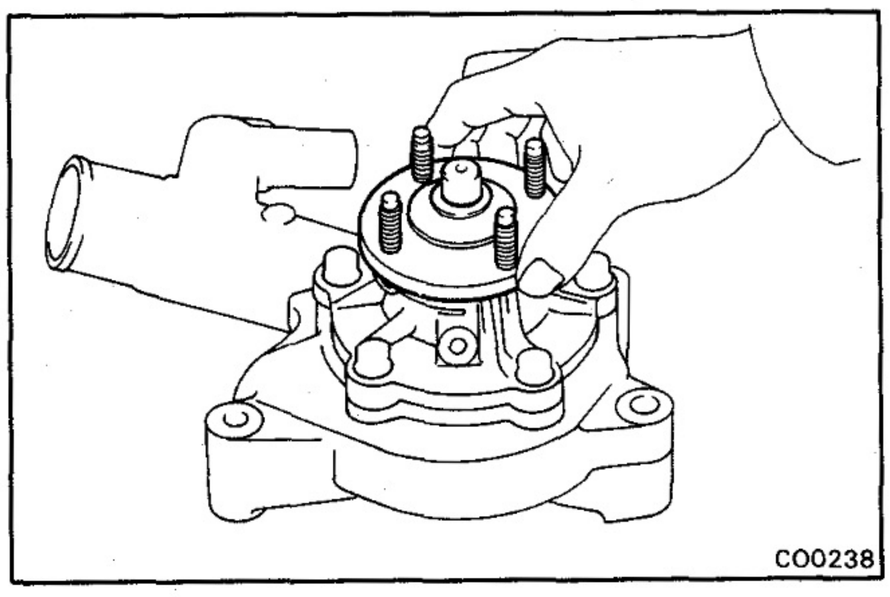

INSPECTION OF WATER PUMP COMPONENTS

1. **INSPECT WATER PUMP**

   Turn the pulley seat and check that the water pump bearing moves smoothly and quietly.

   If necessary, replace the water pump bearing.

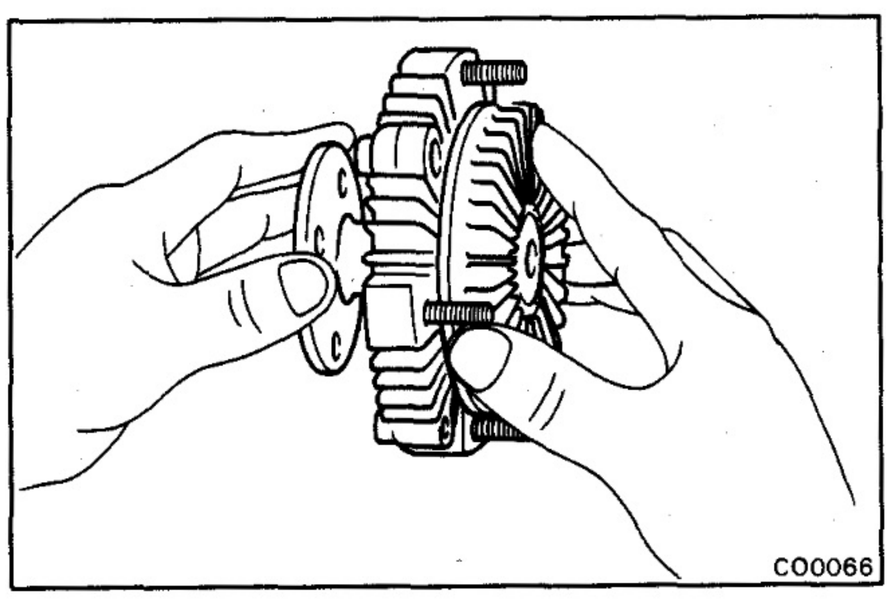

2. **INSPECT FLUID COUPLING**

   Check the fluid coupling for damage and silicon oil leakage.

   If necessary, replace the fluid coupling.

COMPONENTS

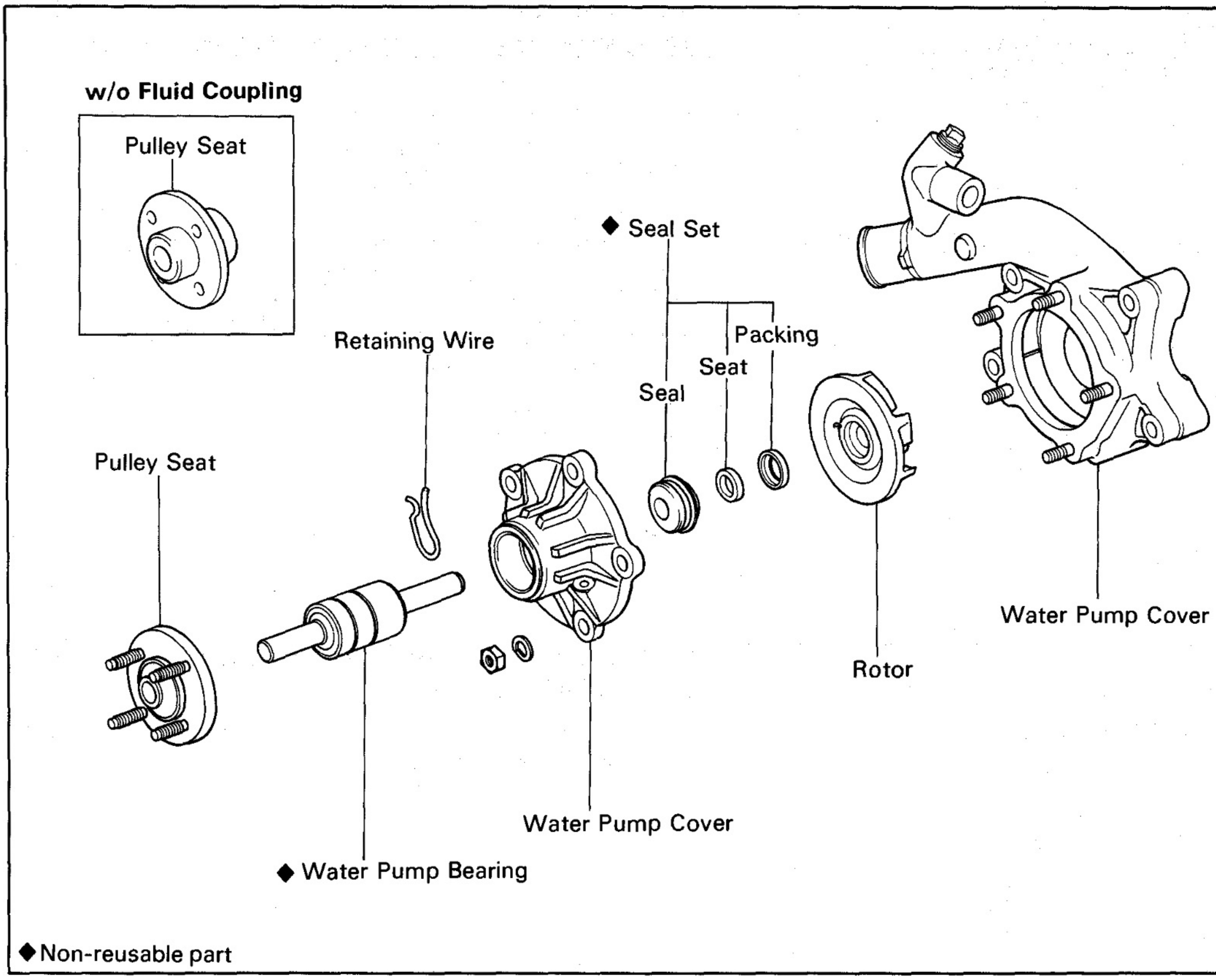

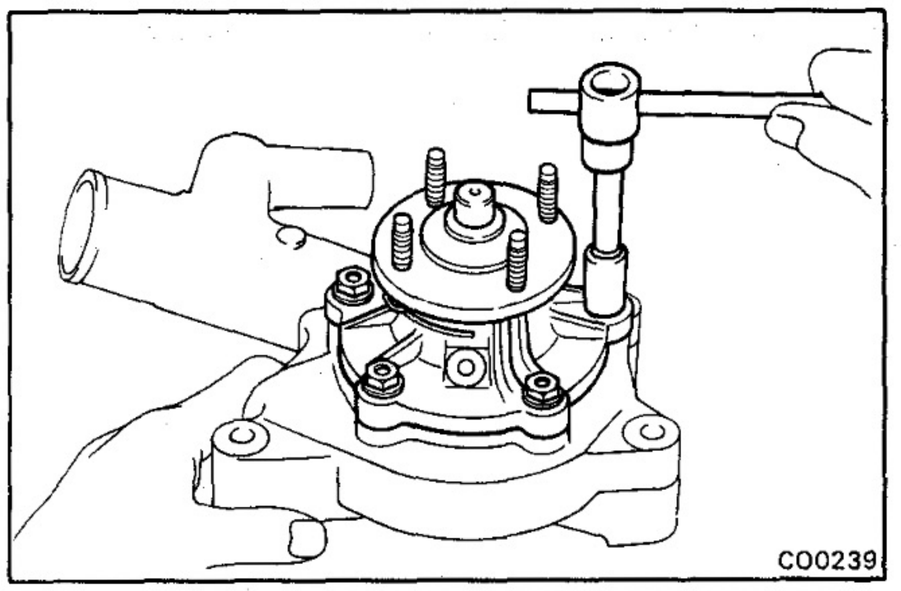

DISASSEMBLY OF WATER PUMP

1. REMOVE WATER PUMP BODY

Remove the five nuts, spring washers, water pump body and gasket.

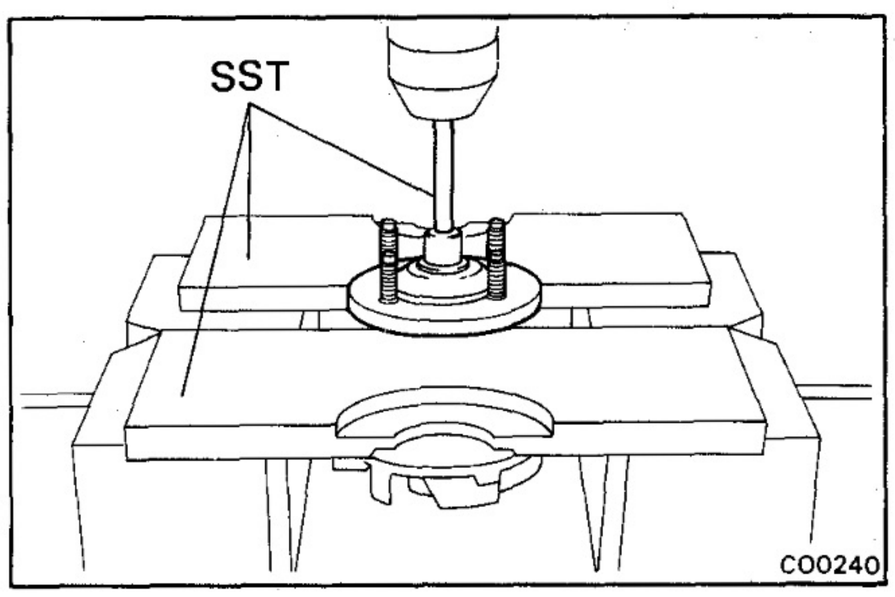

2. REMOVE PULLEY SEAT

Using SST and a press, press the shaft of the bearing and remove the pulley seat.

SST 09236-00101 (09237-00010, 09237-00040)

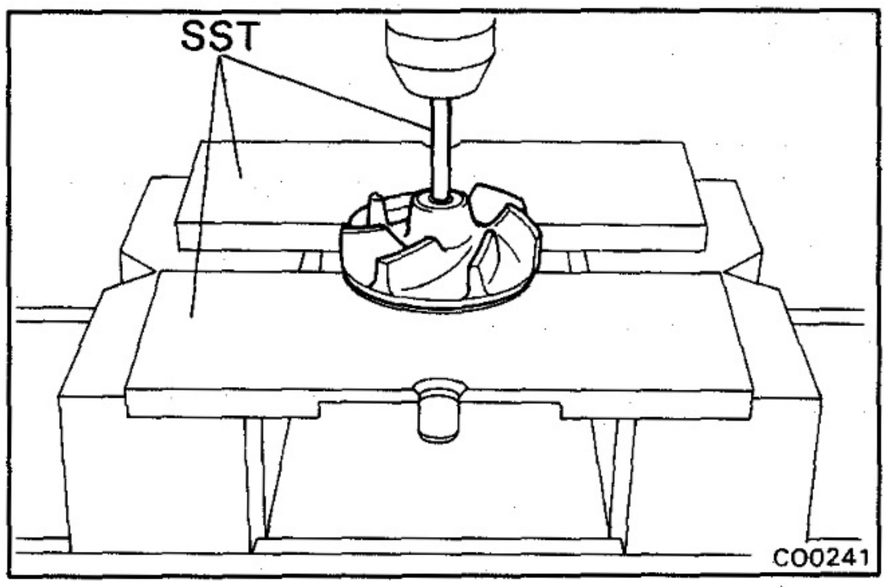

3. REMOVE ROTOR

Using SST and a press, press the shaft of the bearing and remove the rotor.

SST 09236-00101 (09237-00010, 09237-00040)

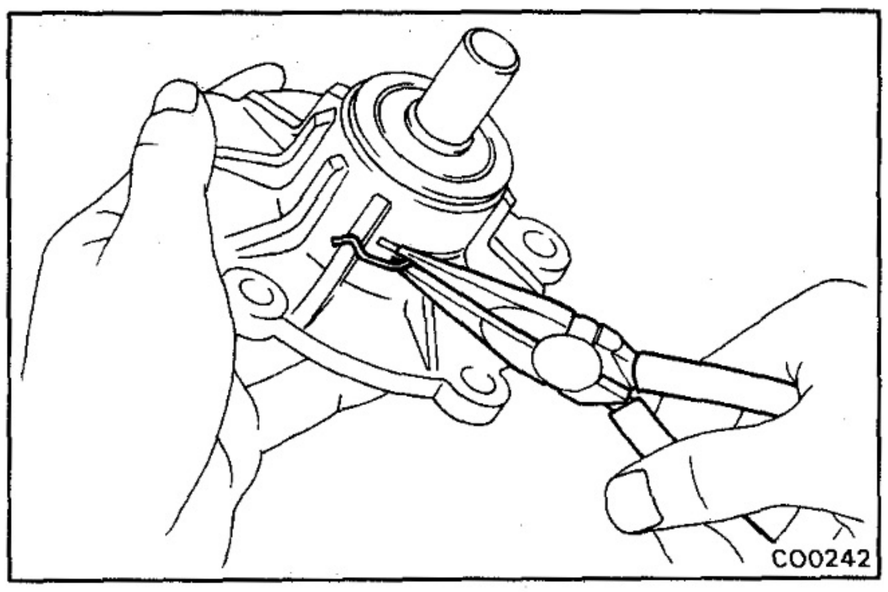

4. REMOVE WATER PUMP BEARING

(a) Remove the retaining wire.

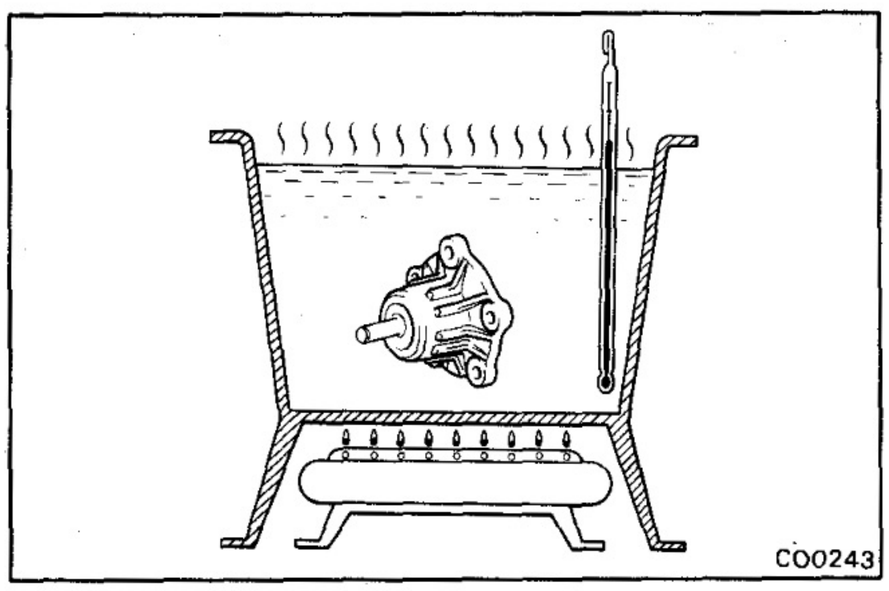

(b) Gradually heat the water pump body to approx. 85°C (185°F).

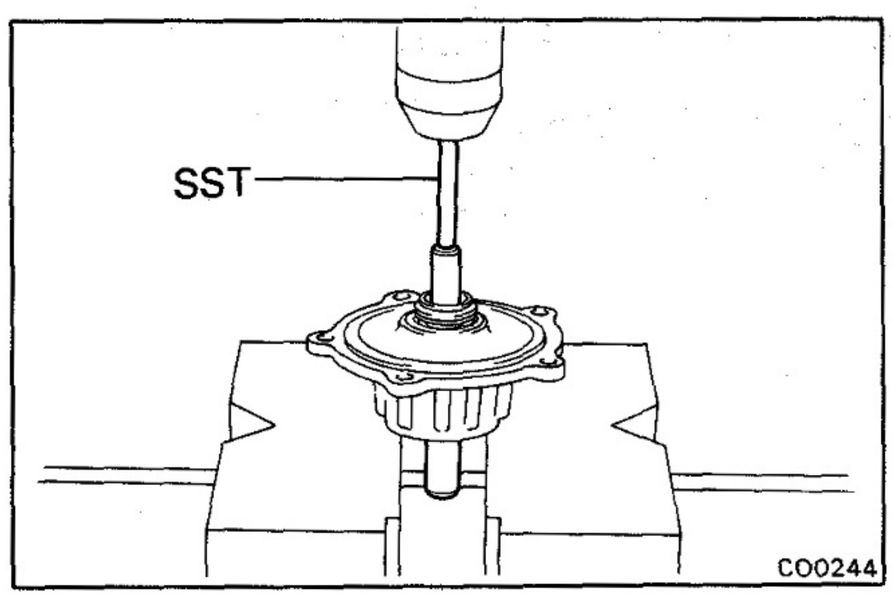

(c) Using SST and a press, press the outer race of the bearing and remove the bearing.

SST 09236-00101 (09237-00040)

5. REMOVE SEAL, SEAT AND PACKING

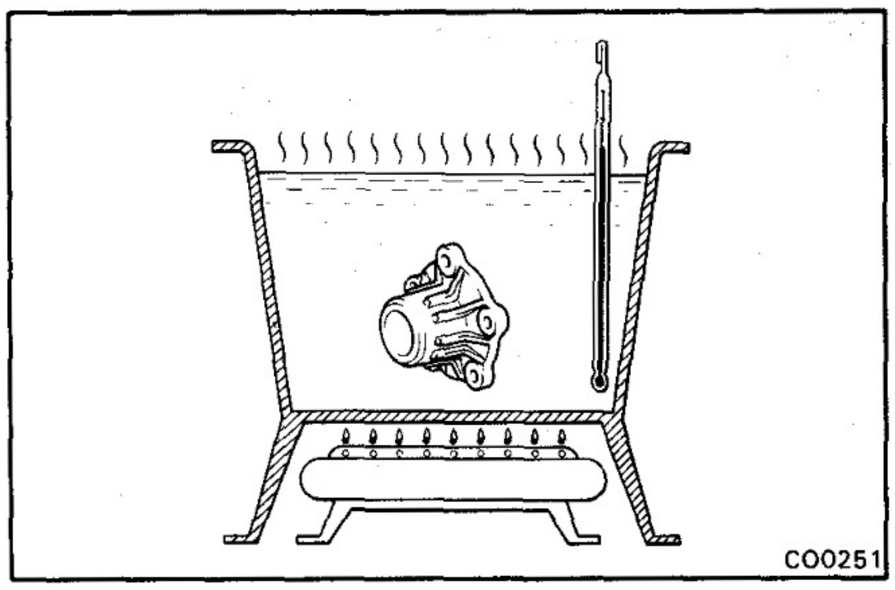

ASSEMBLY OF WATER PUMP

(See page CO-6)

NOTE: Always assemble the water pump with new seal set and water bearing.

1. INSTALL WATER PUMP BEARING

(a) Gradually heat the water pump body to approx. 85°C (185°F).

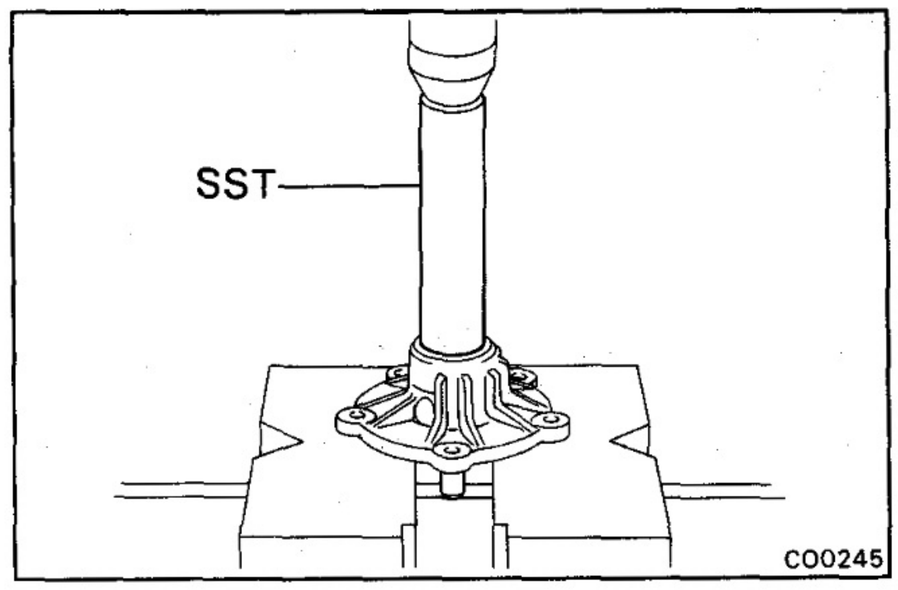

(b) Using SST and a press, press in the outer race of the bearing.

SST 09236-00101 (09237-00020)

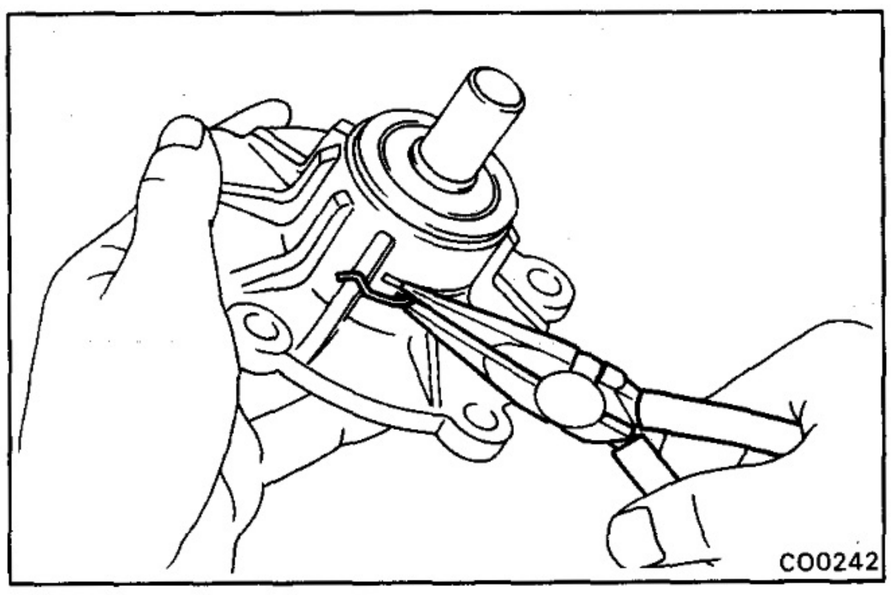

(c) Install the retaining wire.

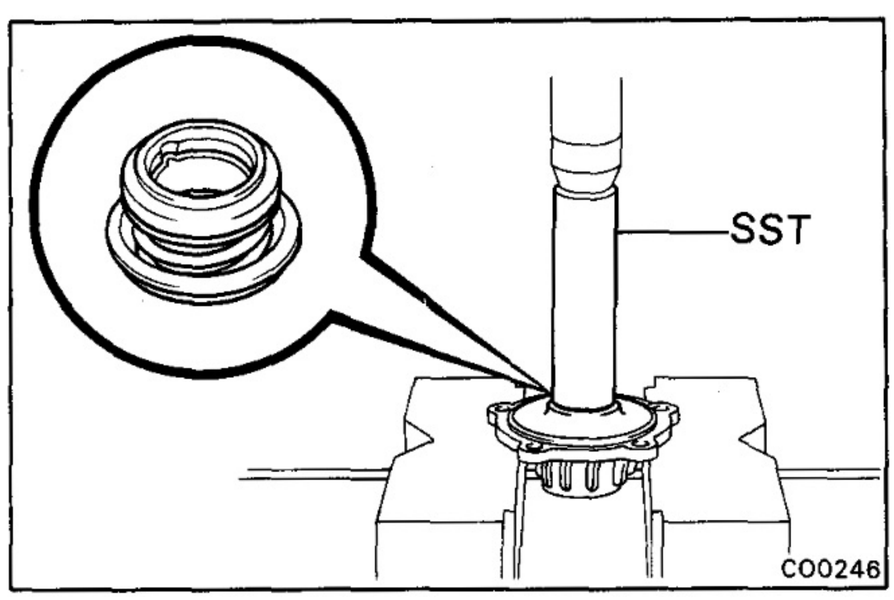

2. INSTALL SEAL

Using SST and a press, press in a new seal.

SST 09236-00101 (09237-00020)

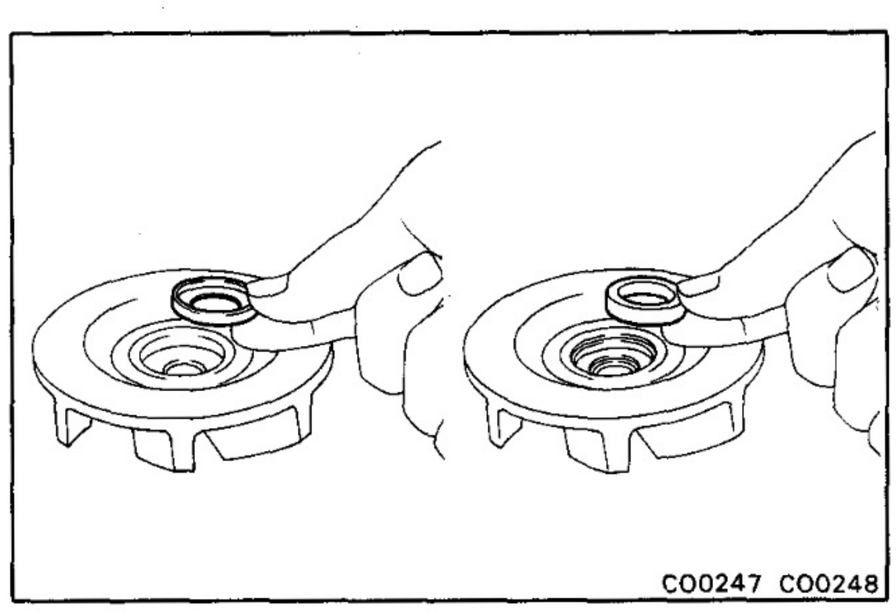

3. INSTALL ROTOR

(a) Place new packing and seat into the rotor.

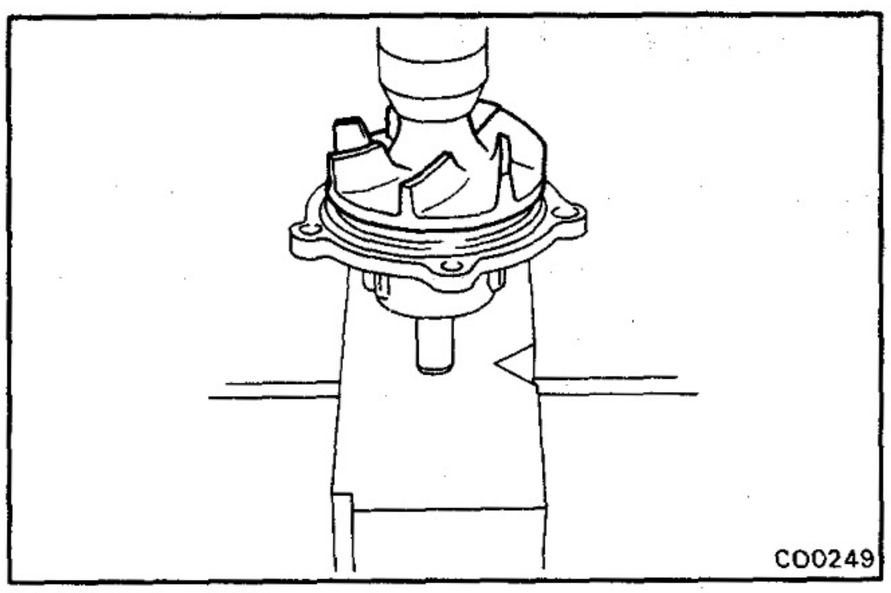

(b) Using a press, press in the rotor.

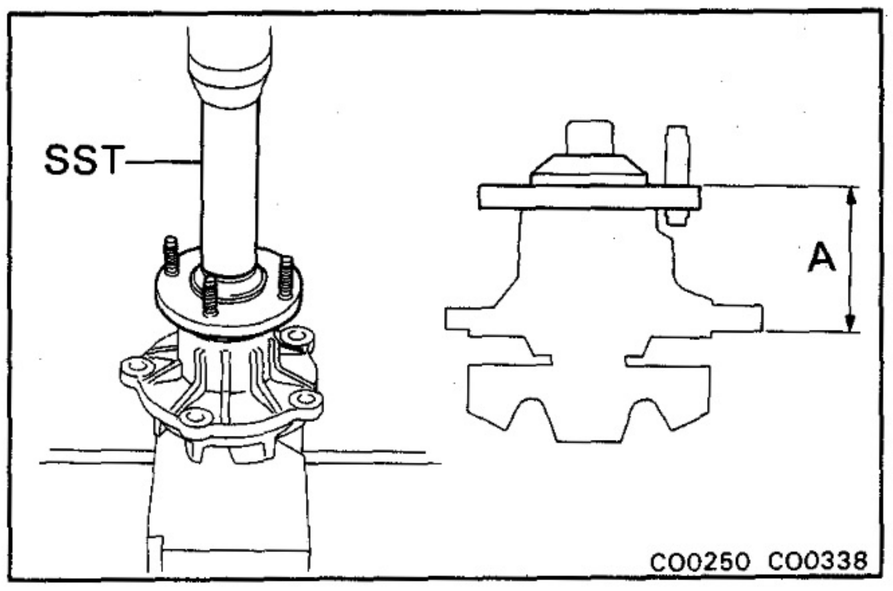

4. INSTALL PULLEY SEAT

Using SST and a press, press in the pulley seat to a distance of A from the shaft edge of the water pump bearing.

SST 09236-00101 (09237-00030)

Distance (A):

w/ Fluid coupling	**49.5 – 50.9 mm (1.949 – 2.004 in.)**
w/o Fluid coupling	**84.5 – 85.9 mm (3.327 – 3.382 in.)**

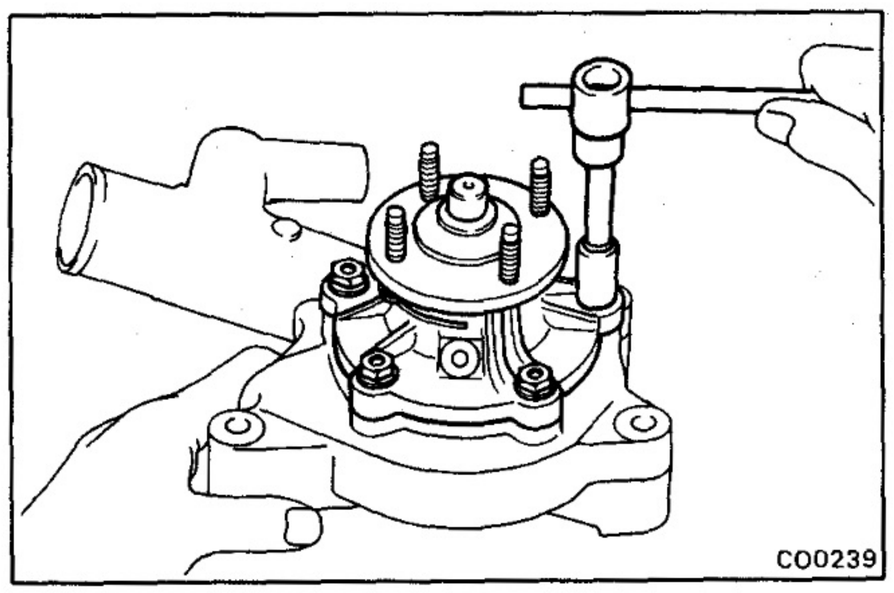

5. INSTALL WATER PUMP BODY

Install a new gasket and the water pump body with the five spring washers and nuts.

Torque: 185 kg-cm (13 ft-lb, 18 N·m)

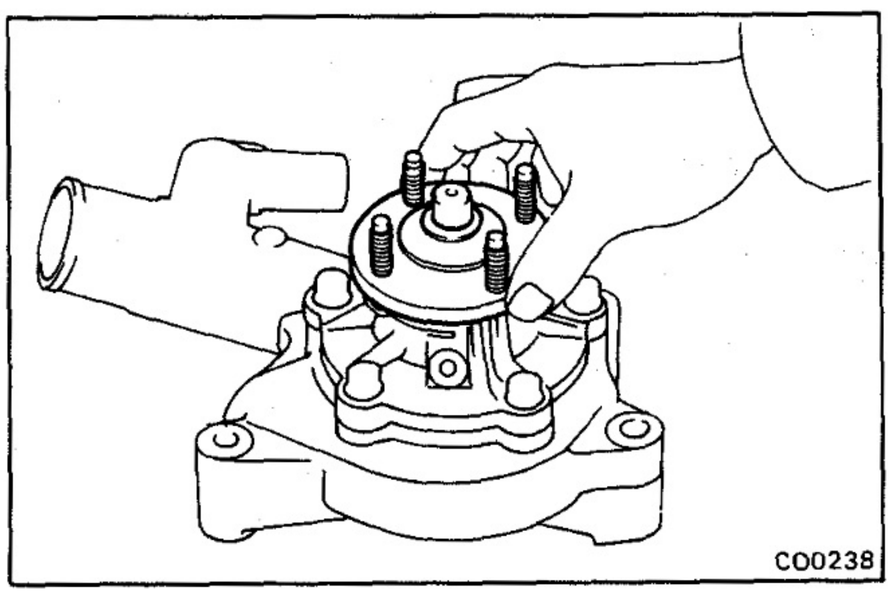

6. CHECK WATER PUMP BEARING ROTATES SMOOTHLY

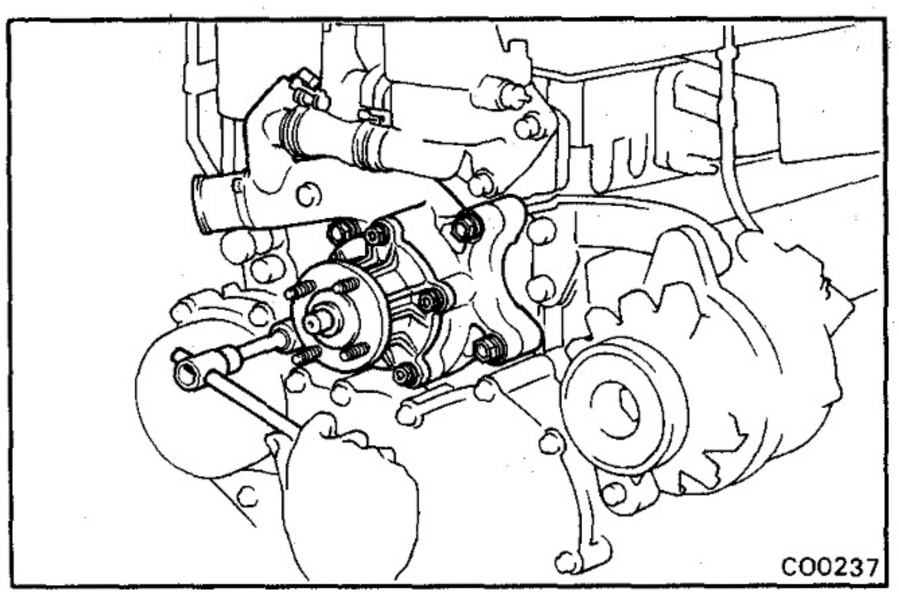

INSTALLATION OF WATER PUMP

(See page CO-4)

1. INSTALL WATER PUMP

Connect the water by-pass hose, install a new gasket and the water pump with the four bolts.

Torque: 375 kg-cm (27 ft-lb, 37 N·m)

2. CONNECT HOSES

(a) Radiator inlet hose

(b) [w/ Heater]
Heater hose

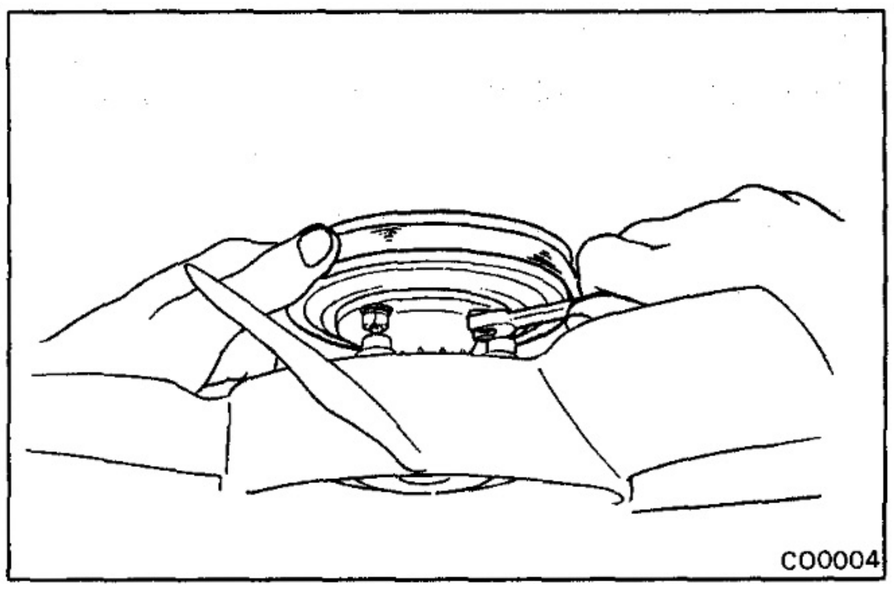

3. INSTALL WATER PUMP PULLEY AND FAN

[w/ Fluid Coupling]
Install the pump pulley and the fluid coupling and fan assembly with the four nuts.

[w/o Fluid Coupling]
Install the pump pulley and the drive shaft and fan assembly with the four nuts.

4. INSTALL AND ADJUST DRIVE BELT
(See page CH-6)

5. REFILL WITH COOLANT **(See page CO-3)**

6. START ENGINE AND CHECK FOR LEAKS

THERMOSTAT

REMOVAL OF THERMOSTAT

1. **DRAIN ENGINE COOLANT (See page CO-3)**

2. **DISCONNECT RADIATOR INLET HOSE FROM WATER OUTLET**

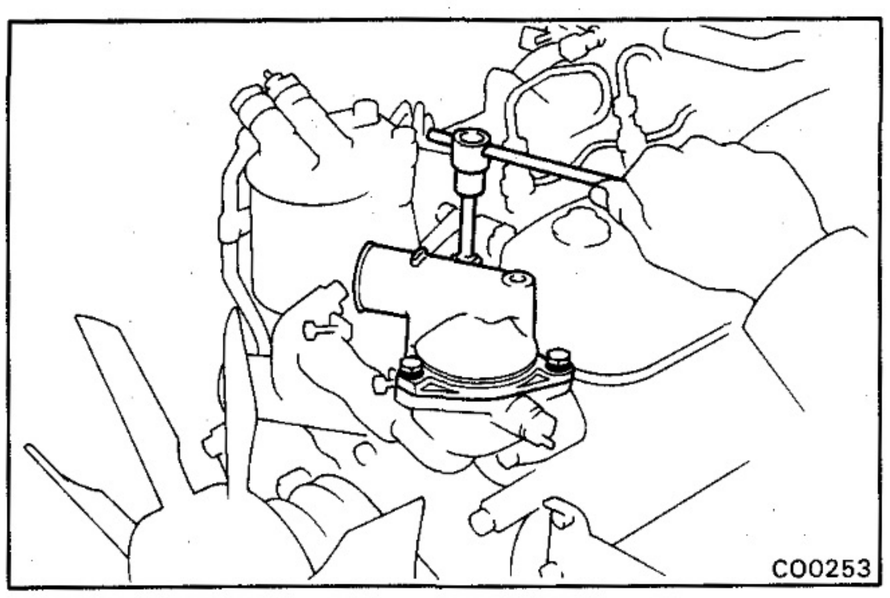

3. **REMOVE WATER OUTLET**

   Remove the three bolts, water outlet and gasket.

4. **REMOVE THERMOSTAT**

INSPECTION OF THERMOSTAT

NOTE: The thermostat is numbered with the valve opening temperature.

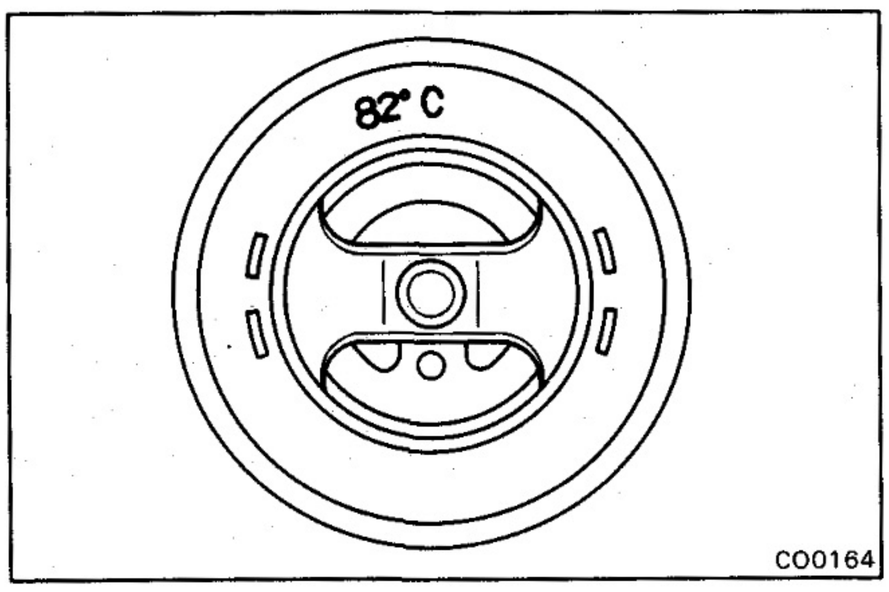

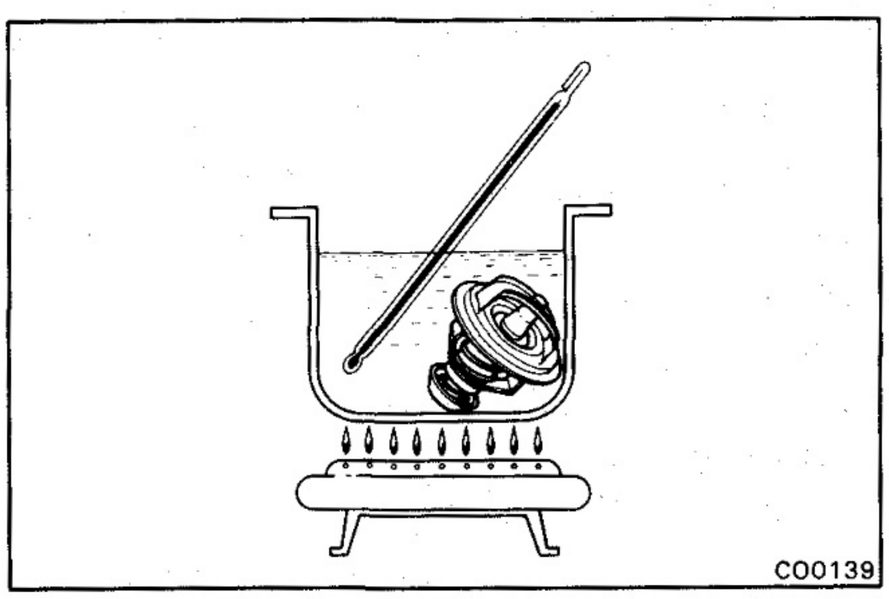

(a) Immerse the thermostat in water and gradually heat the water.

(b) Check the valve opening temperature.

Valve opening temperature:

82°C type 80 — 84°C (176 — 183°F)
88°C type 86 — 90°C (187 — 194°F)

If the valve opening temperature is within specification, replace the thermostat.

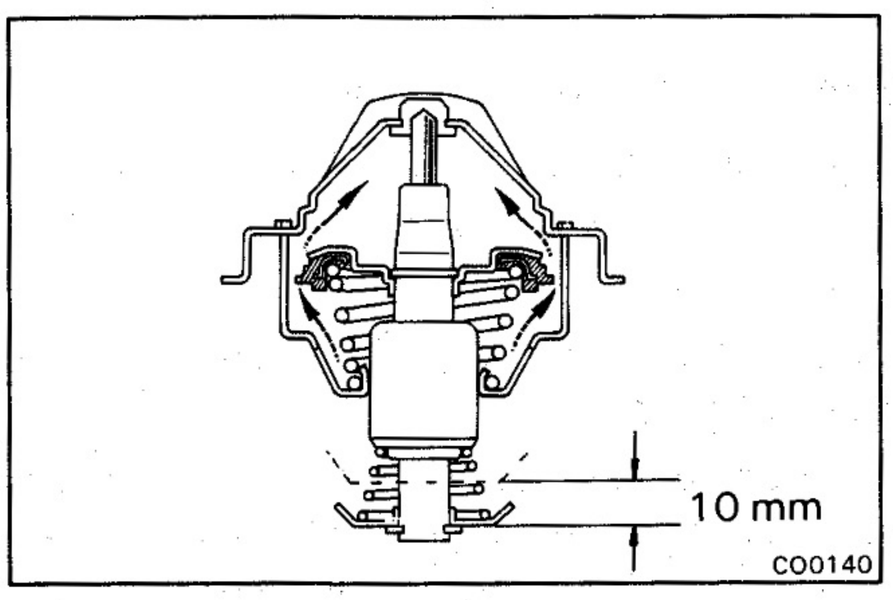

(c) Check the valve lift.

Valve lift:

82°C type
10 mm (0.39 in.) or more at 95°C (203°F)
88°C type
10 mm (0.39 in.) or more at 100°C (212°F)

If the valve lift is less than specification, replace the thermostat.

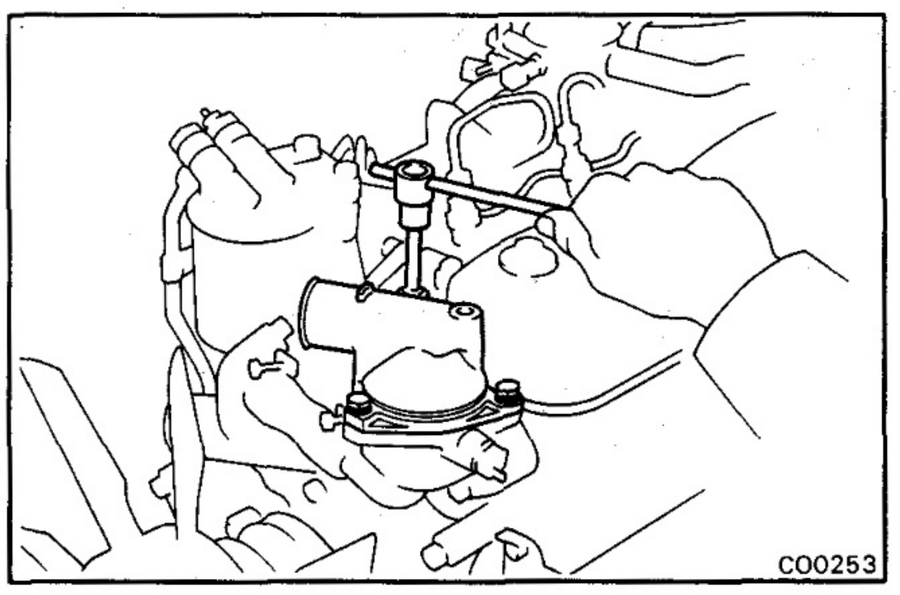

INSTALLATION OF THERMOSTAT

1. **PLACE THERMOSTAT IN WATER INLET**

2. **INSTALL WATER OUTLET**

   (a) Install a new gasket and the water outlet with the three bolts.

   Torque: 185 kg-cm (13 ft-lb, 18 N·m)

   (b) Secure the water by-pass pipe of turbocharger with the bolt.(See page EM-75)

3. **CONNECT RADIATOR INLET HOSE**

4. **FILL WITH ENGINE COOLANT (See page CO-3)**

5. **START ENGINE AND CHECK FOR LEAKS**

RADIATOR

CLEANING OF RADIATOR

Using water or a steam cleaner, remove any mud and dirt from the radiator core.

CAUTION: If using a high pressure type cleaner, be careful not to deform the fins of the radiator core. If the cleaner nozzle pressure is 30 – 35 kg/cm² (427 – 498 psi, 2,942-3,432 kPa), keep a distance of at least 40 – 50 cm (15.75 – 19.69 in.) between the radiator core and cleaner nozzle.

INSPECTION OF RADIATOR

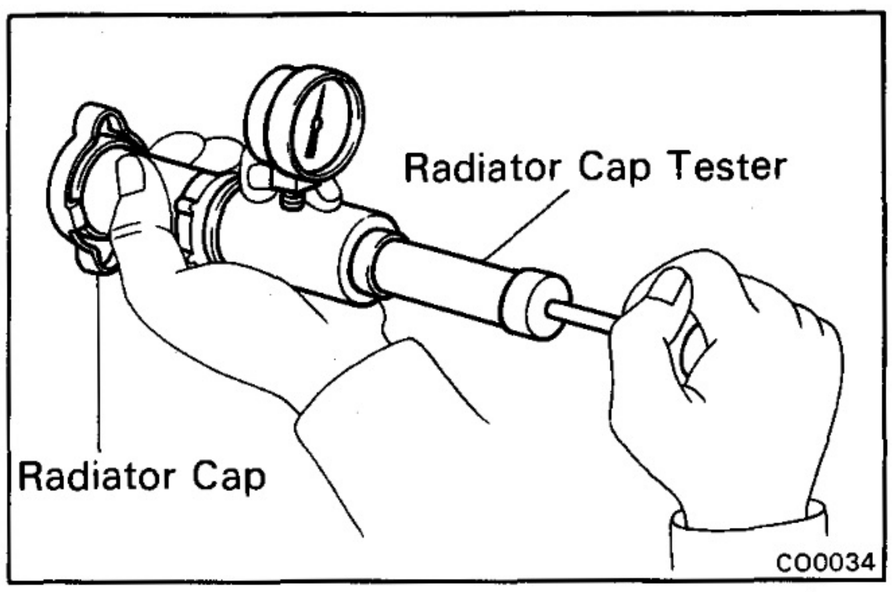

1. **INSPECT RADIATOR CAP**

   Using a radiator cap tester, pump the tester and measure the relief valve opening pressure.

   Standard opening pressure:
   0.75 – 1.05 kg/cm²
   (10.7 – 14.9 psi, 74 – 103 kPa)
   Minimum opening pressure:
   0.6 kg/cm² (8.5 psi, 59 kPa)

   If the opening pressure is less than minimum, replace the radiator cap.

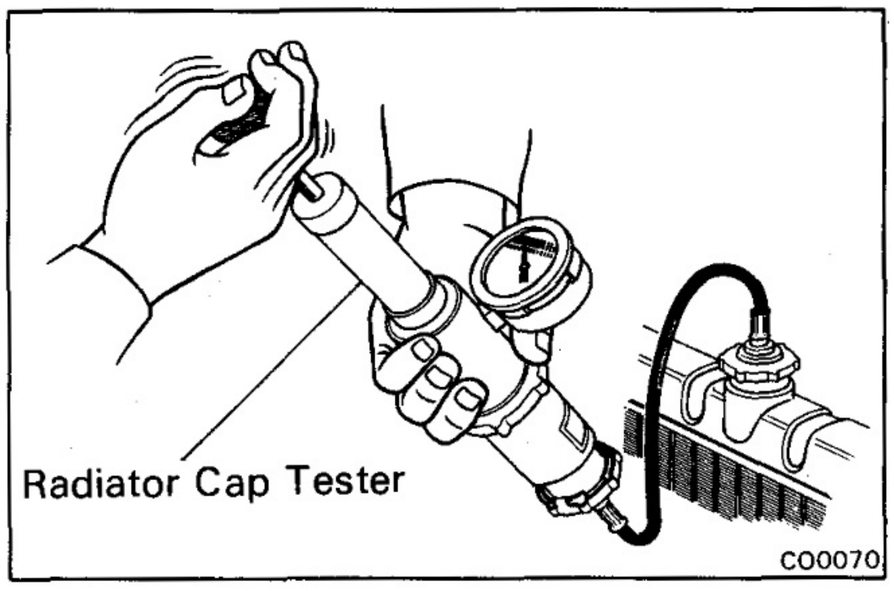

2. **INSPECT COOLING SYSTEM FOR LEAKS**

   (a) Fill the radiator with coolant and attach a pressure tester.

   (b) Warm up the engine.

   (c) Pump it to 1.2 kg/cm² (17.1 psi, 118 kPa), check that presure does not drop.

   If the pressure drops, check for leaks from the hoses, radiator or water pump. If no external leaks are found, check the heater core, cylinder block and head.

LUBRICATION SYSTEM

	Page
TROUBLESHOOTING	LU-2
OIL PRESSURE CHECK	LU-3
REPLACEMENT OF ENGINE OIL AND OIL FILTER	LU-4
OIL PUMP	LU-5
OIL COOLER AND RELIEF VALVE	LU-15
OIL NOZZLES AND CHECK VALVES [12H-T]	LU-20

TROUBLESHOOTING

Problem	Possible cause	Remedy	Page
Oil leakage	Cylinder head, cylinder block or oil pump body damaged or cracked	Repair as necessary	
	Oil seal faulty	Replace oil seal	EM-87, 112
	Gasket faulty	Replace gasket	
Low oil pressure	Oil leakage	Repair as necessary	
	Relief valve faulty	Repair relief valve	LU-5
	Oil pump faulty	Repair oil pump	LU-5
	Engine oil poor quality	Replace engine oil	LU-4
	Crankshaft bearing faulty	Replace bearing	EM-95
	Connecting rod bearing faulty	Replace bearing	EM-95
	Oil filter clogged	Replace oil filter	LU-4
High oil pressure	Relief valve faulty	Repair relief valve	LU-5

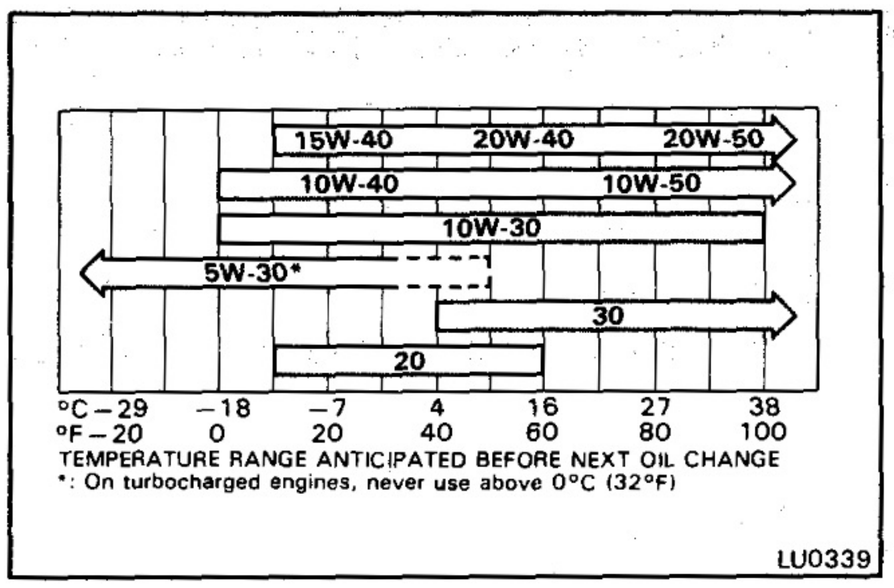

OIL PRESSURE CHECK

1. CHECK ENGINE OIL QUALITY

Check the oil for deterioration, entry of water, discoloring or thinning.

If the quality is poor, replace the oil.

Use API grade CC, CD, or better and recommended viscosity oil.

NOTE: Be sure to use CD type or better for the vehicle with turbocharger.

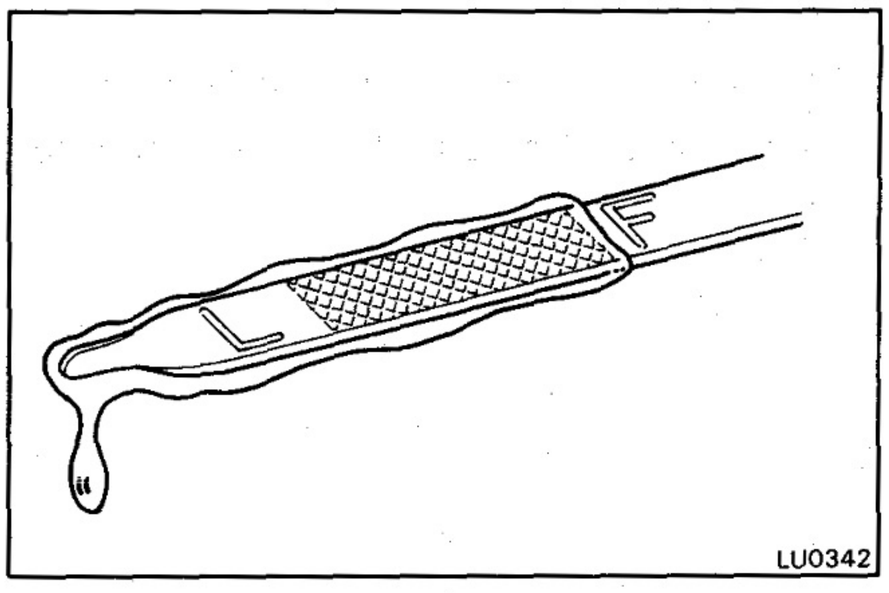

2. CHECK ENGINE OIL LEVEL

The oil level should be between the "L" and "F" marks on the level gauge.

If low, check for leakage and add oil up to the "F" mark.

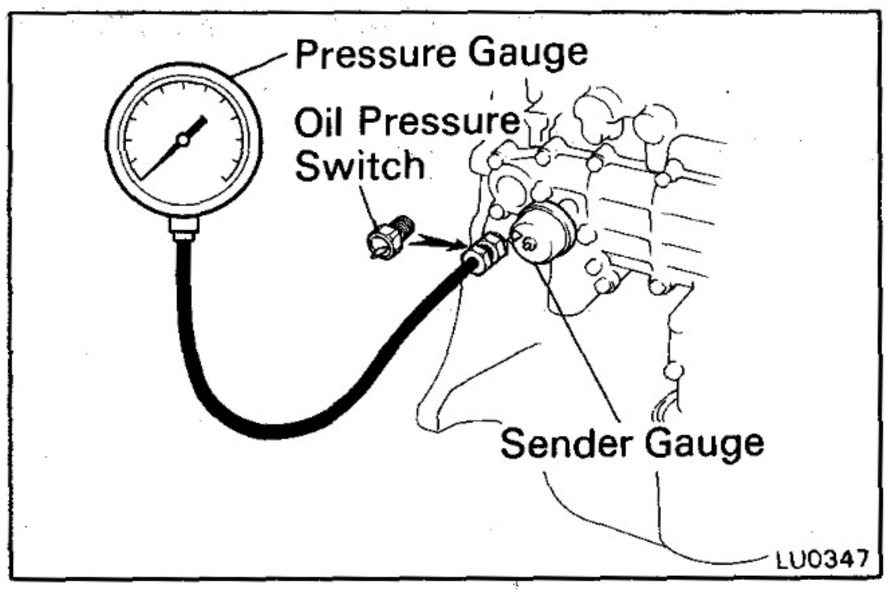

3. REMOVE OIL PRESSURE SWITCH OR SENDER GAUGE

4. INSTALL OIL PRESSURE GAUGE

5. START ENGINE

Start engine and warm it up to normal operating temperature.

6. CHECK OIL PRESSURE

Oil pressure:

At idle	**0.3 kg/cm² (4.3 psi, 29 kPa) or more**
At 3,000 rpm	**2.5 — 6.0 kg/cm² (36 — 85 psi, 245 — 588 kPa)**

NOTE: Check for oil leakage after reinstalling the oil pressure switch or sender gauge.

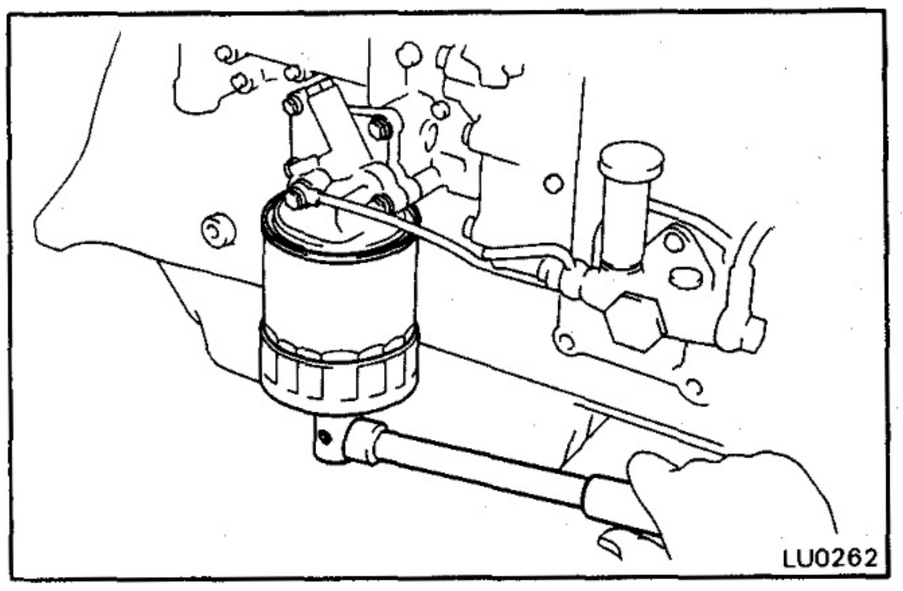

REPLACEMENT OF ENGINE OIL AND OIL FILTER

1. DRAIN ENGINE OIL

(a) Remove the oil filler cap.

(b) Remove the oil drain plug and drain the engine oil into a container.

2. REPLACE OIL FILTER

(a) Using SST, remove the oil filter.

SST 09228-60010

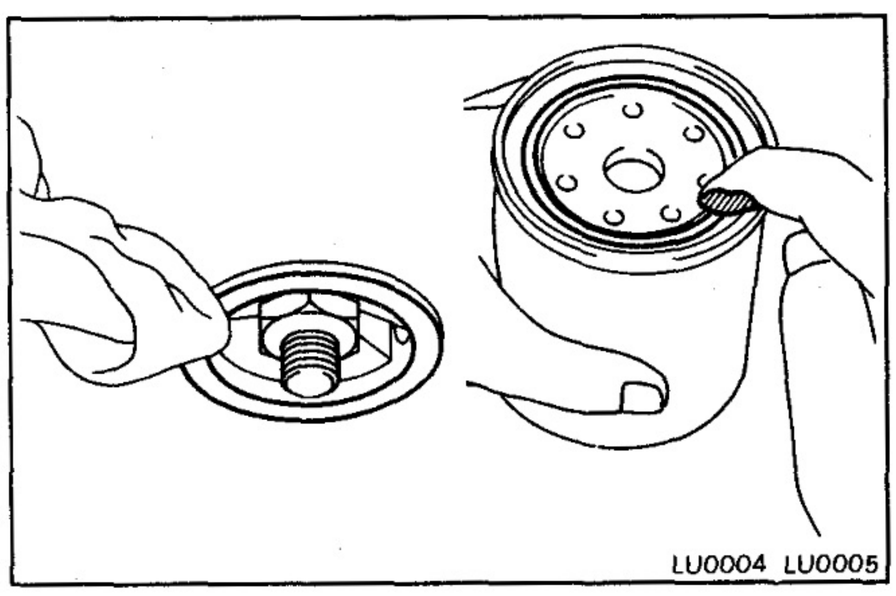

(b) Check and clean the oil filter installation surface.

(c) Apply clean engine oil to the gasket of a new oil filter.

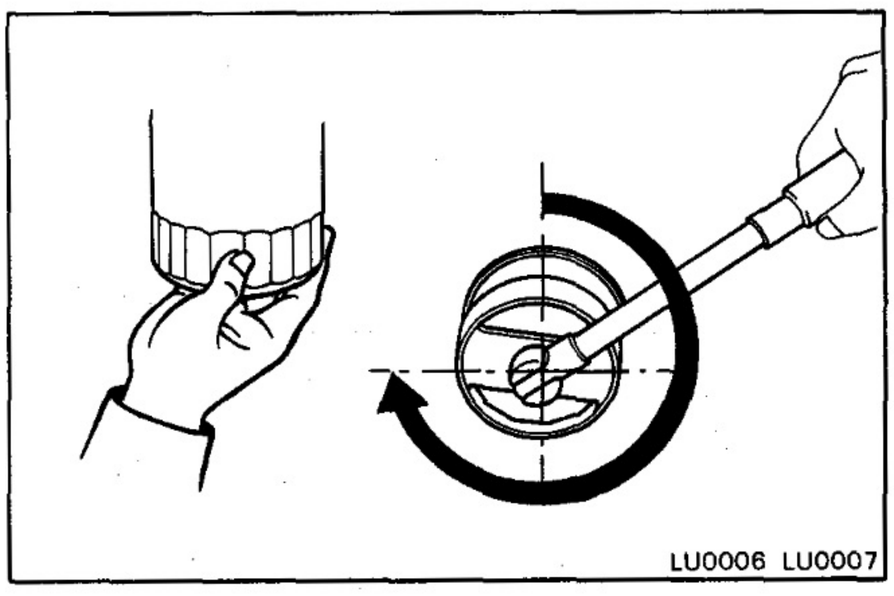

(d) Lightly screw in the oil filter by hand to where you feel resistance.

(e) Using SST, tighten it another 1 turn.

SST 09228-60010

3. FILL WITH ENGINE OIL

(a) Clean and install the oil drain plug with a new gasket. Torque the drain plug.

Torque: 400 kg-cm (29 ft-lb, 39 N·m)

(b) Fill the engine with new oil, API grade CC, CD or better.

NOTE: Be sure to use CD type or better for the vehicle with turbocharger.

Capacity:

Drain and refill—

w/o Oil filter change

8.1 liters (8.6 US qts, 7.1 Imp.qts)

w/ Oil filter change

9.7 liters (10.3 US qts, 8.5 Imp.qts)

Dry fill— 10.3 liters (10.9 US qts, 9.1 Imp.qts)

(c) Install the oil filler cap together with the gasket.

4. START ENGINE AND CHECK FOR LEAKS

5. RECHECK ENGINE OIL LEVEL (See page LU-3)

OIL PUMP

REMOVAL OF OIL PUMP

NOTE: When repairing the oil pump, the oil pan and strainer should be removed and cleaned.

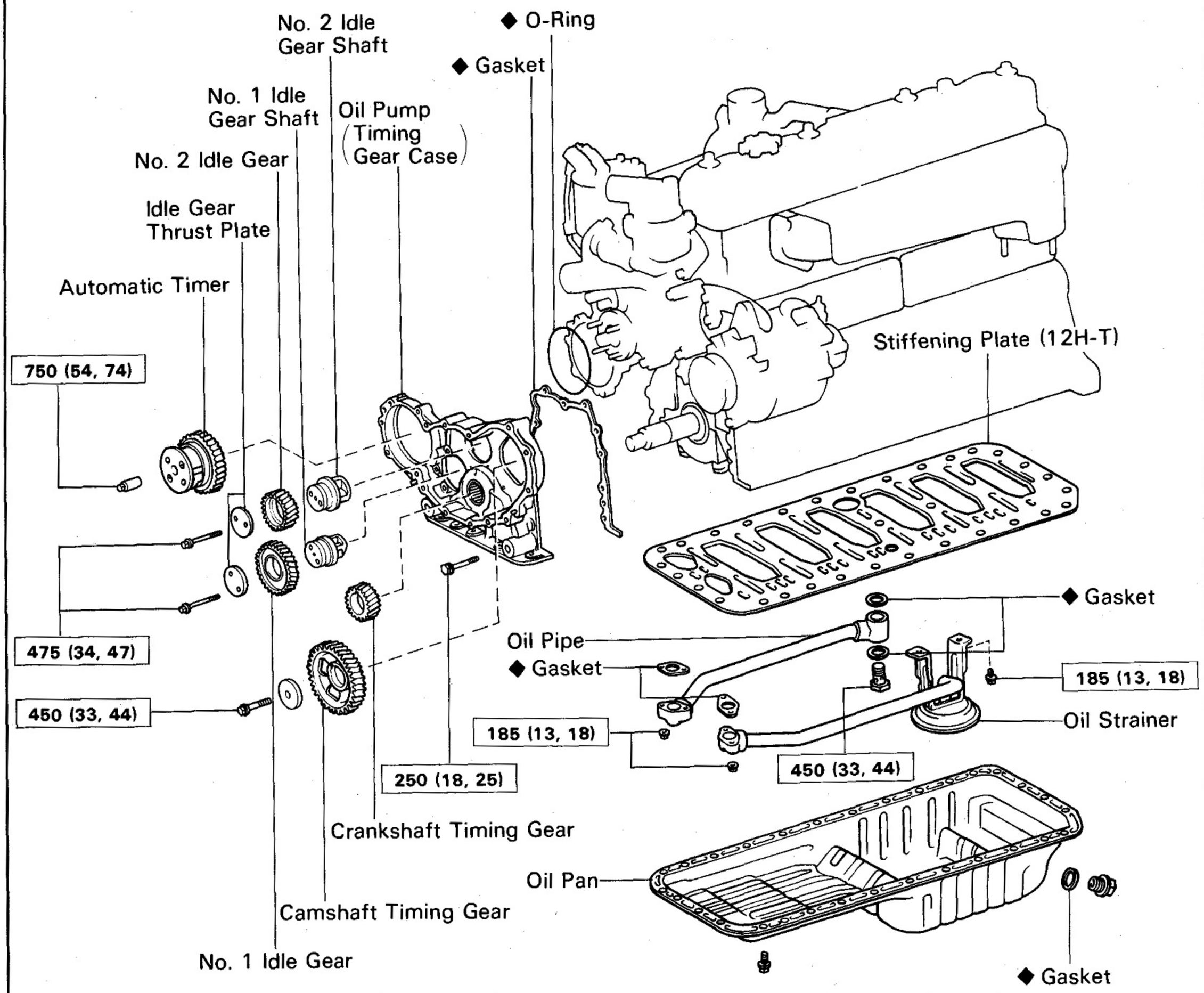

kg-cm (ft-lb, N·m) : Specified torque

◆ Non-reusable part

LU0343

1. **DRAIN ENGINE OIL (See page LU-4)**

2. **REMOVE DRIVE BELT**

3. **REMOVE FAN AND WATER PUMP PULLEY**
   (See page CO-5)

4. **REMOVE CRANKSHAFT PULLEY AND TIMING GEAR COVER**
   (See steps 7 to 9 on pages EM-79 and 80)

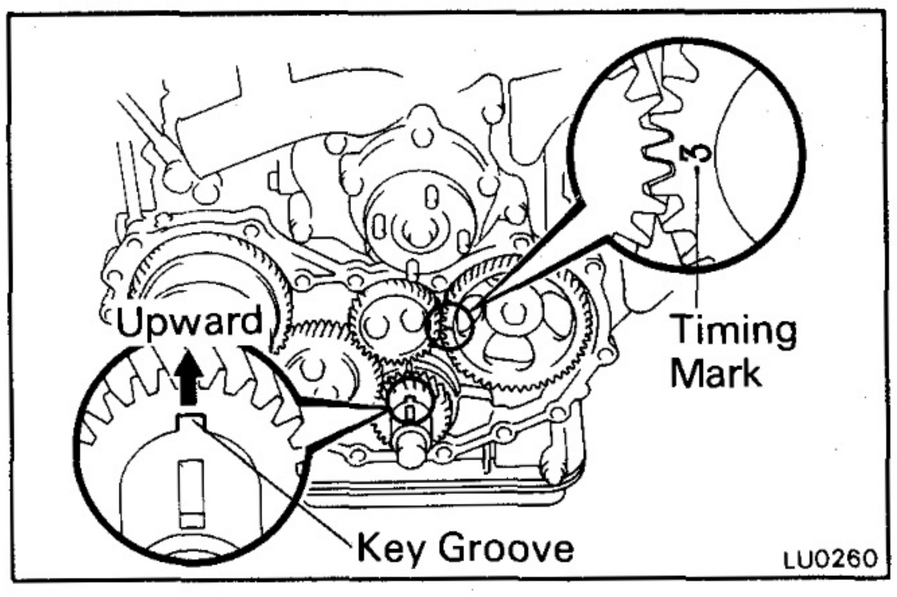

5. **SET NO. 1 CYLINDER TO TDC/COMPRESSION**

   Turn the crankshaft clockwise, and set the "3" timing mark of the camshaft timing gear and the key groove of the crankshaft timing gear as shown.

6. **REMOVE AUTOMATIC TIMER, NO. 2, NO. 1 IDLE GEAR AND CRANKSHAFT TIMING GEAR**
   (See steps 11, 15 to 17 on pages EM-80 to 82)

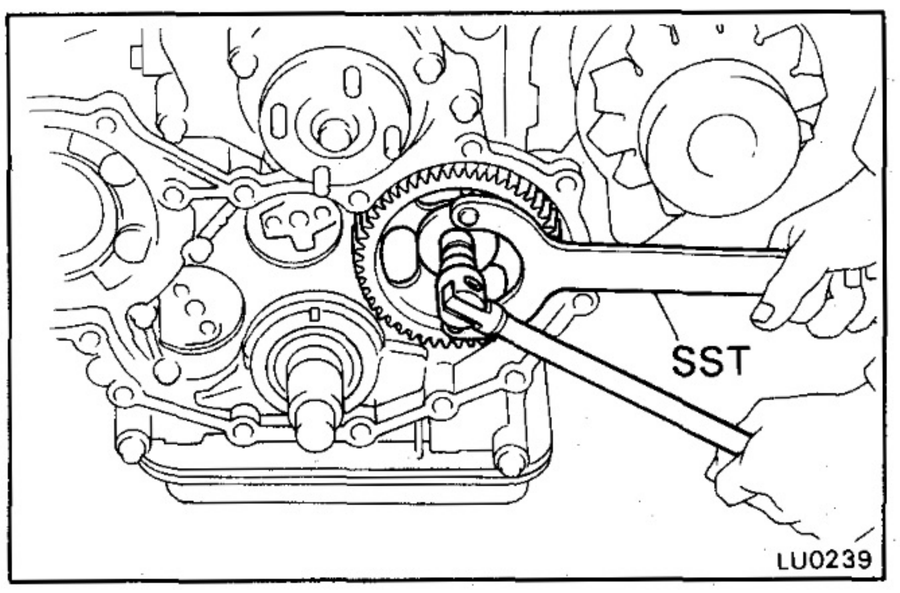

7. **REMOVE CAMSHAFT TIMING GEAR**

   (a) Using SST, remove the bolt and plate washer holding the camshaft to the timing gear.

   SST 09278-54012

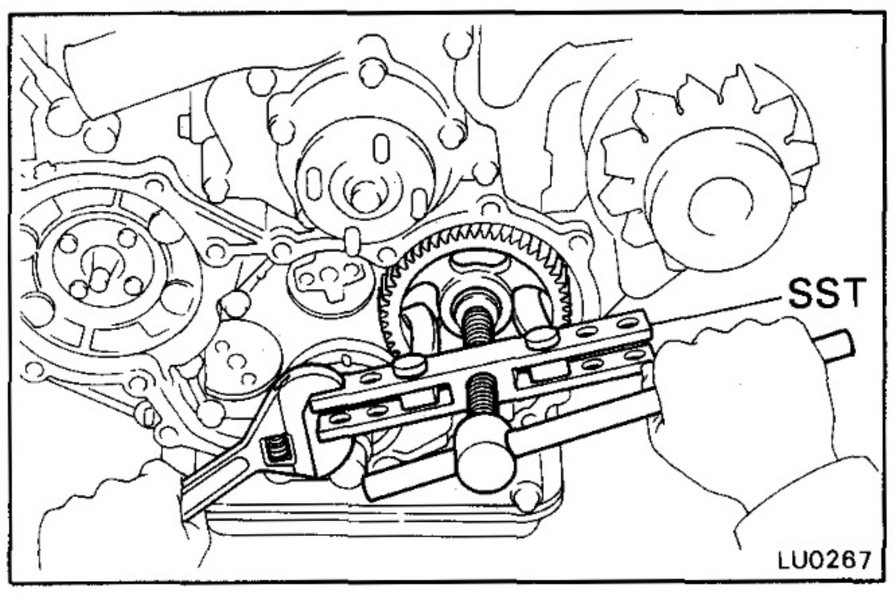

   (b) Using SST, remove the timing gear.

   SST 09950-20017

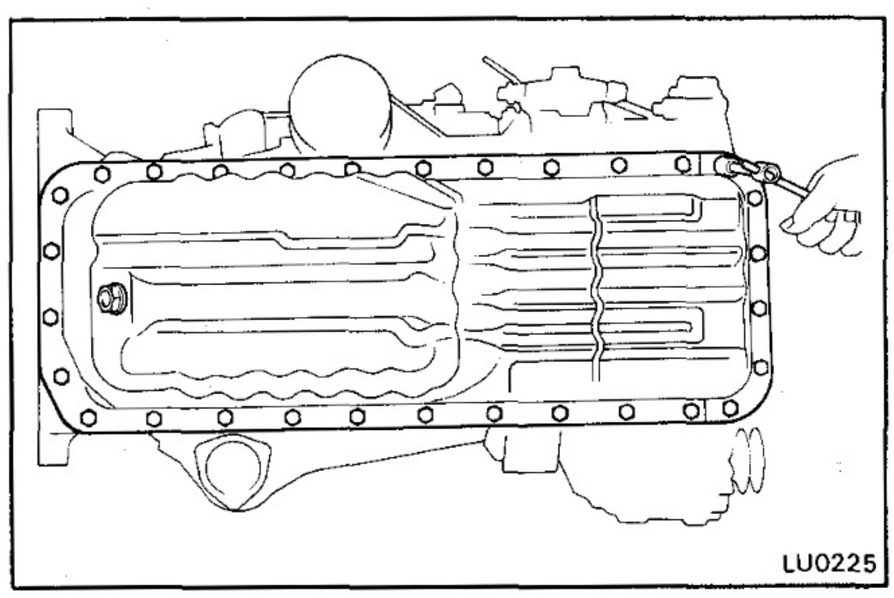

8. **REMOVE OIL PAN**

   (a) Remove the twenty-eight bolts, two nuts, oil pan and gasket.

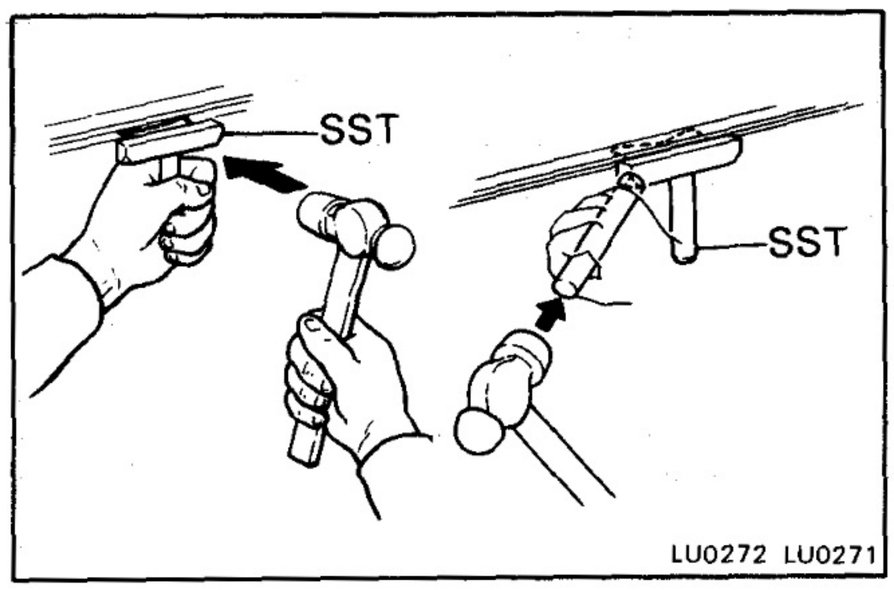

(b) Insert the SST blade between the oil pan and cylinder block (2H) or stiffening plate (12H-T), cut off applied sealer and remove the oil pan.

SST 09032-00100

CAUTION:

- **Do not use SST for the timing gear case side and rear oil seal retainer side. (2H)**
- **Be careful not to damage the oil pan flange.**

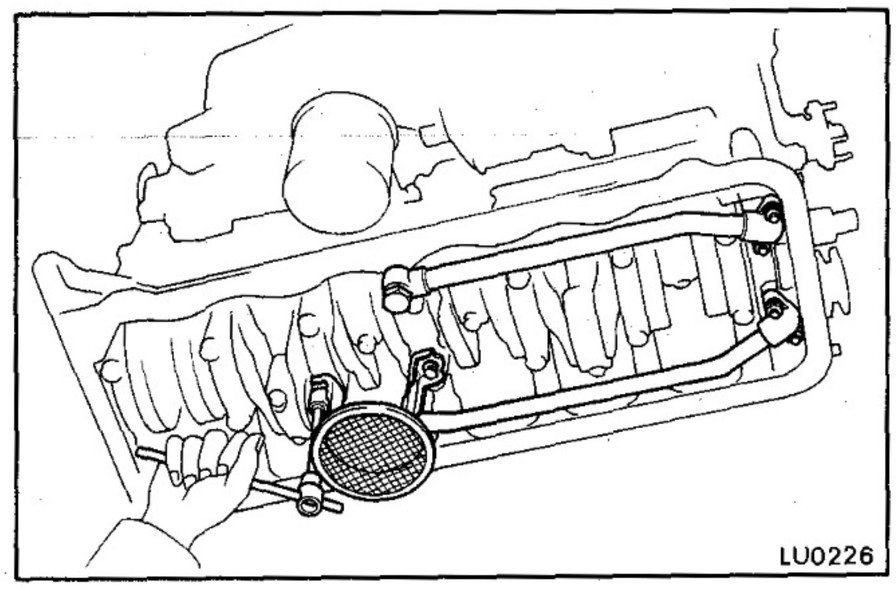

9. REMOVE OIL STRAINER AND OIL PIPE

(a) Remove the two bolts, two nuts, oil strainer and gasket.

(b) Remove the union bolt, two nuts, oil pipe and gaskets.

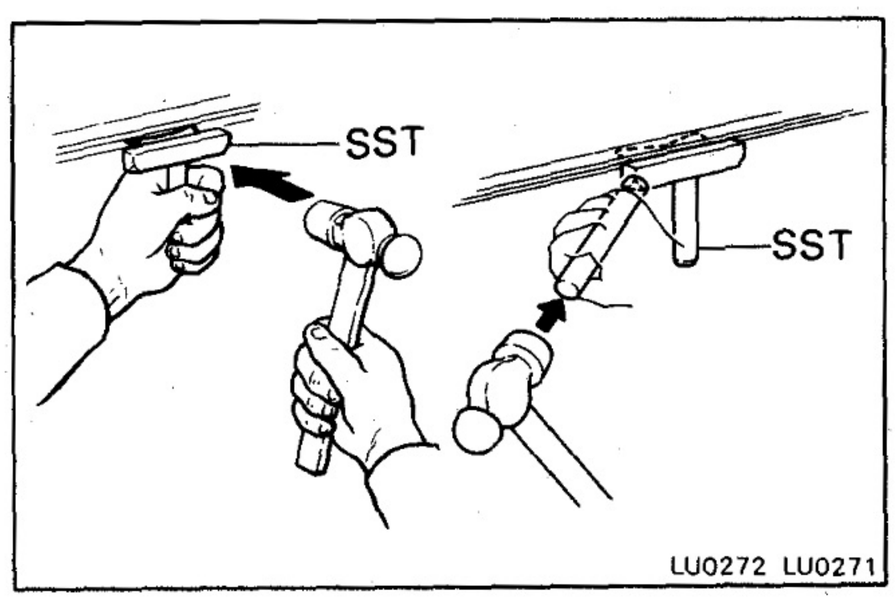

10. [12H-T]
REMOVE STIFFENING PLATE

Insert the SST blade between the stiffening plate and cylinder block, cut off applied sealer and remove the stiffening plate.

SST 09032-00100

CAUTION:

- **Do not use SST for the timing gear case side and rear oil seal retainer side.**
- **Be careful not to damage the stiffening plate.**

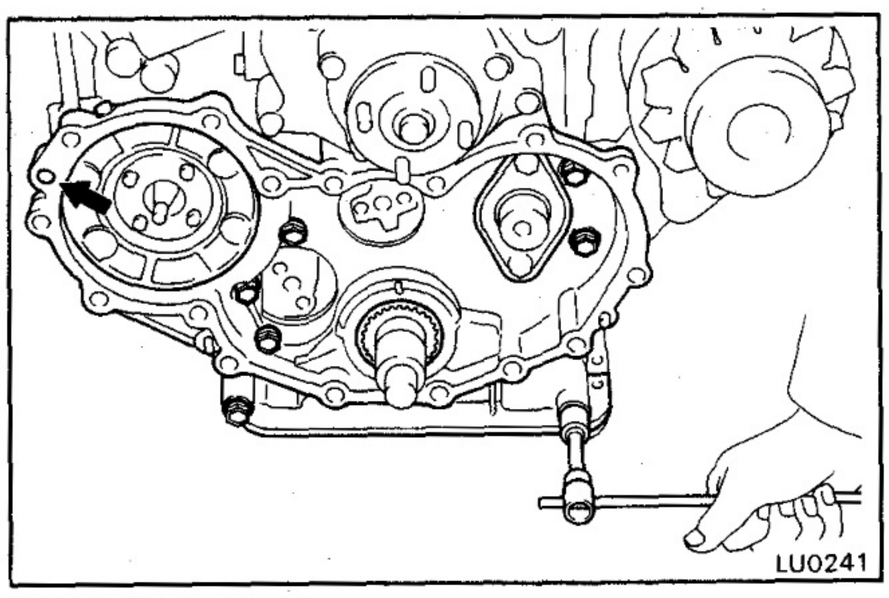

11. REMOVE OIL PUMP

Remove the eight bolts, oil pump, gasket and O-ring.

COMPONENTS

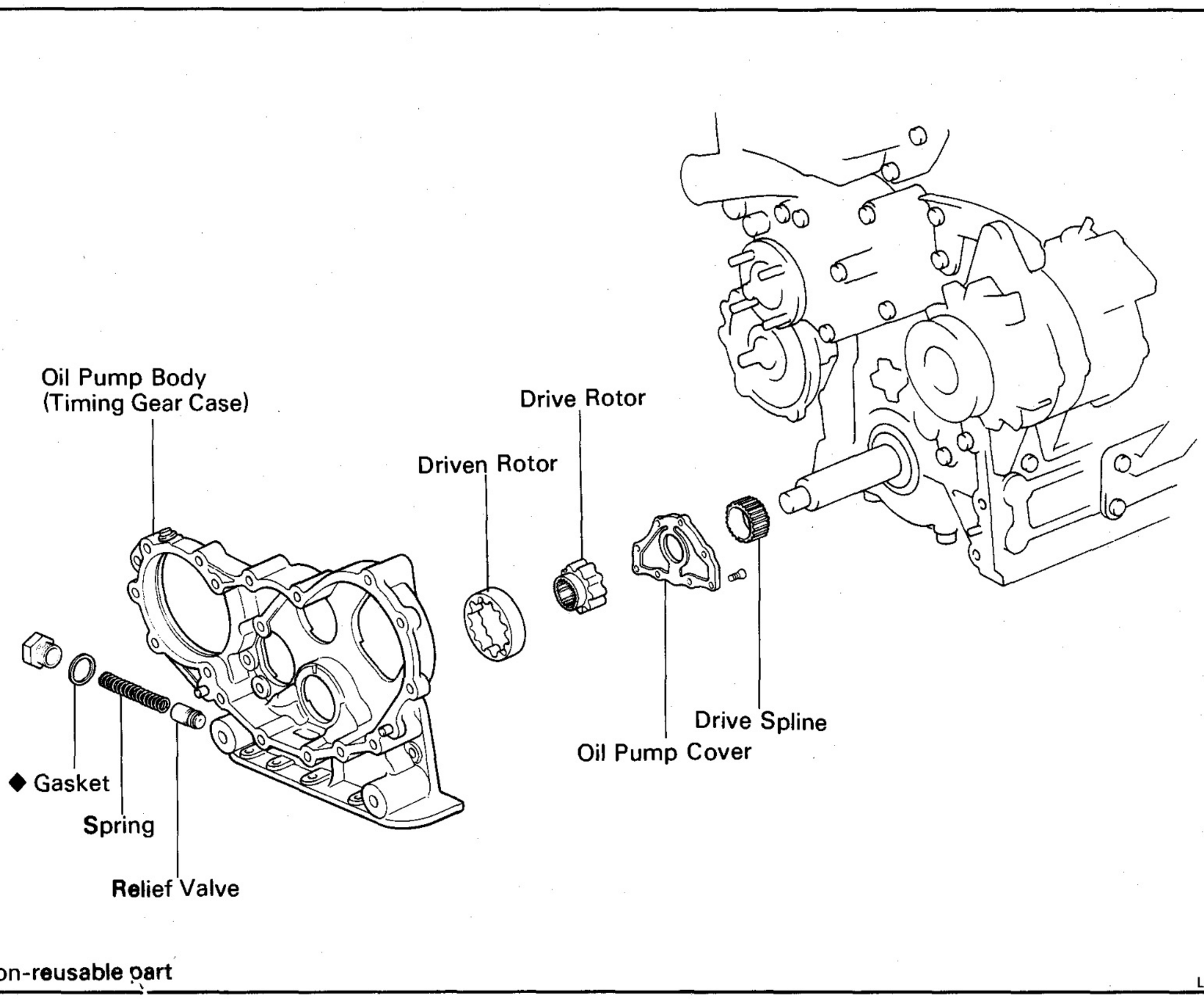

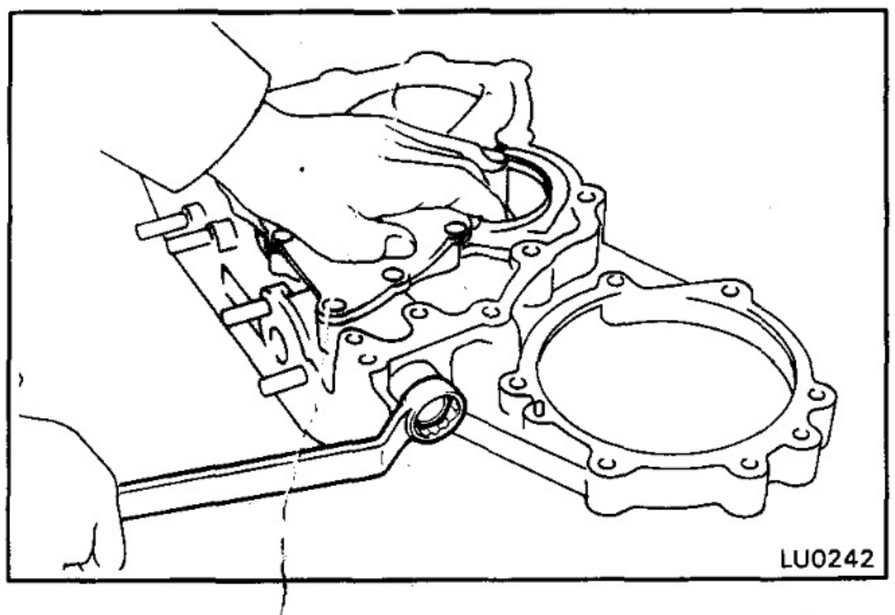

DISASSEMBLY OF OIL PUMP

1. REMOVE RELIEF VALVE

Remove the plug, gasket, spring and relief valve.

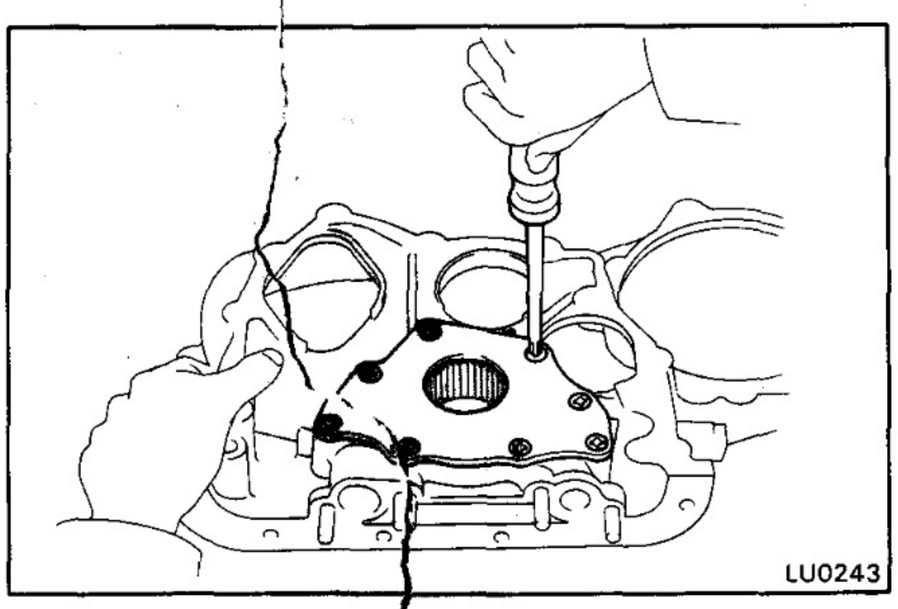

2. REMOVE DRIVE AND DRIVEN ROTORS

(a) Remove the eight screws and oil pump cover.

(b) Remove the drive and driven rotors.

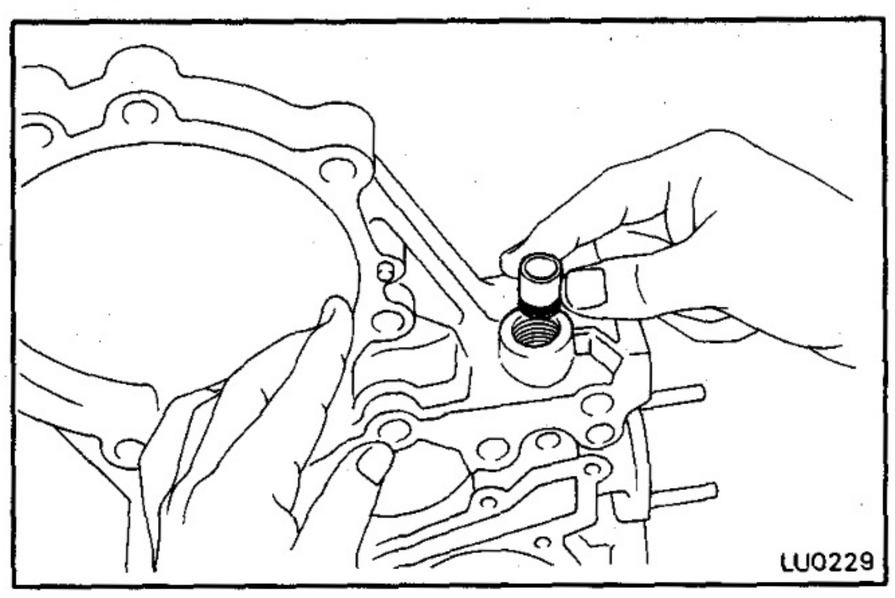

INSPECTION OF OIL PUMP

1. INSPECT RELIEF VALVE

Coat the valve with engine oil and check that it falls smoothly into the valve hole by its own weight.

If operation is not as specified, replace the relief valve. If necessary, replace the oil pump body.

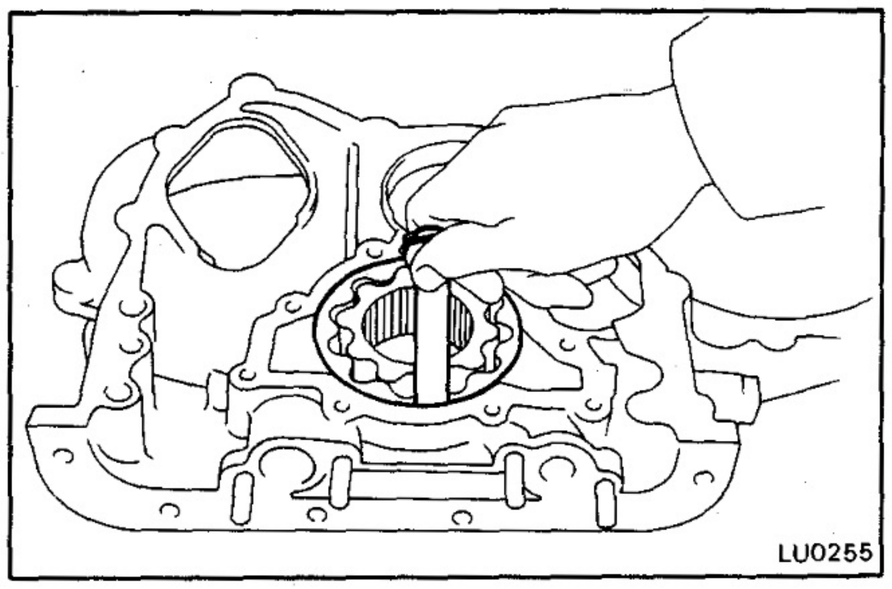

2. INSPECT DRIVE AND DRIVEN ROTORS

A. Inspect Rotor Body Clearance

Using a feeler gauge, measure the clearance between the driver rotor and body.

Standard body clearance: **0.144 – 0.219 mm (0.0057 – 0.0086 in.)**
Maximum body clearance: **0.40 mm (0.0157 in.)**

If the clearance is greater than maximum, replace rotors. If necessary, replace the oil pump body.

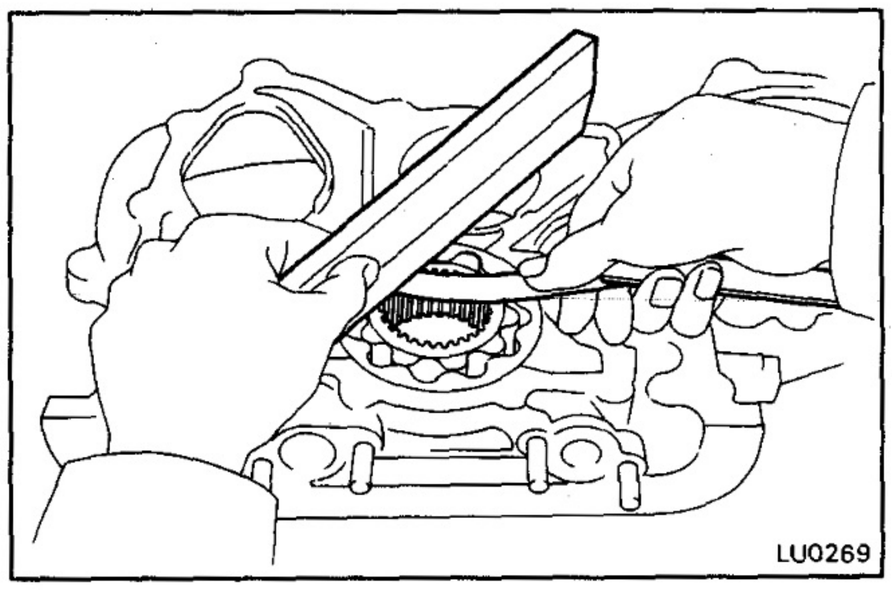

B. Inspect Rotor Side Clearance

Using a feeler gauge and precision straight edge, measure the clearance between the rotor and precision straight edge.

Standard side clearance: **0.035 – 0.090 mm (0.0014 – 0.0035 in.)**
Maximum side clearance: **0.15 mm (0.0059 in.)**

If the clearance is greater than maximum, replace the rotors. If necessary, replace the oil pump body.

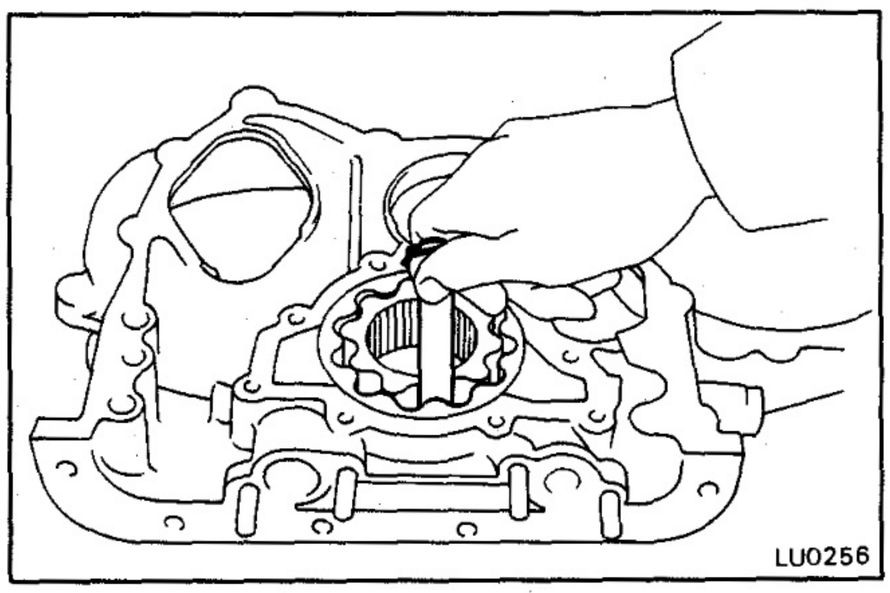

C. Inspect Rotor Tip Clearance

Using a feeler gauge, measure the clearance between the drive and driven rotors.

Standard tip clearance: **0.110 – 0.240 mm (0.0043 – 0.0094 in.)**
Maximum tip clearance: **0.30 mm (0.0118 in.)**

If the clearance is greater than maximum, replace the rotors.

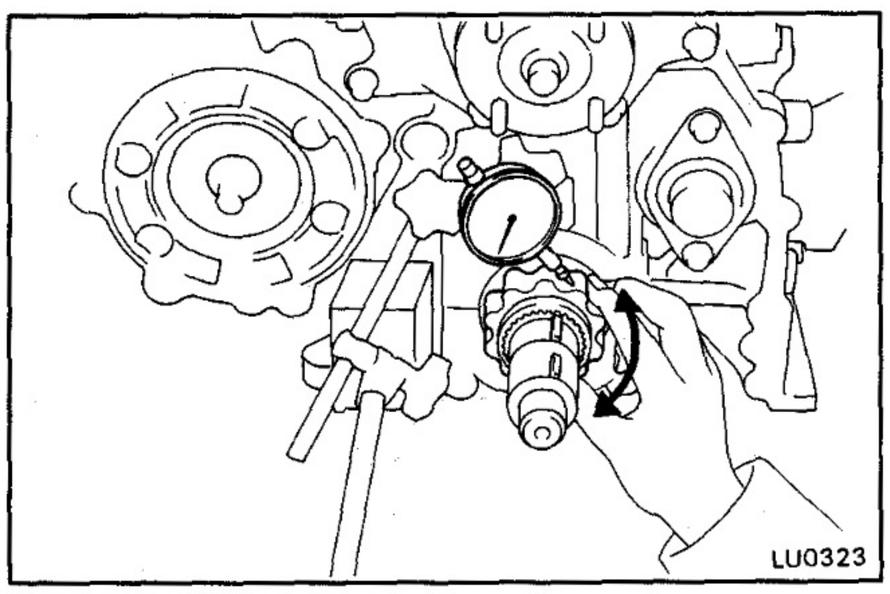

3. INSPECT DRIVE SPLINE

Using a dial indicator, measure the backlash while turning the driven rotor clockwise and counterclockwise in several places.

Standard backlash: **0.541 – 0.790 mm (0.0213 – 0.0311 in.)**
Maximum backlash: **1.00 mm (0.0394 in.)**

If the backlash is greater than maximum, replace the rotors and spline.

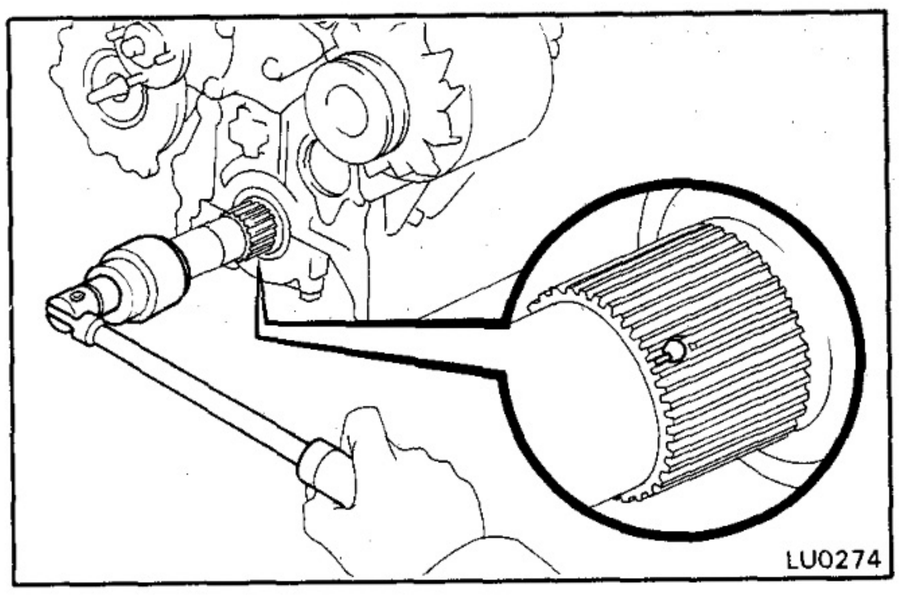

REPLACEMENT OF DRIVE SPLINE

1. REMOVE DRIVE SPLINE

(a) Remove the two set keys.

(b) Set the drive spline with the hole facing downward by turning the crankshaft.

CAUTION: Do not turn the crankshaft more than 1/4 revolution.

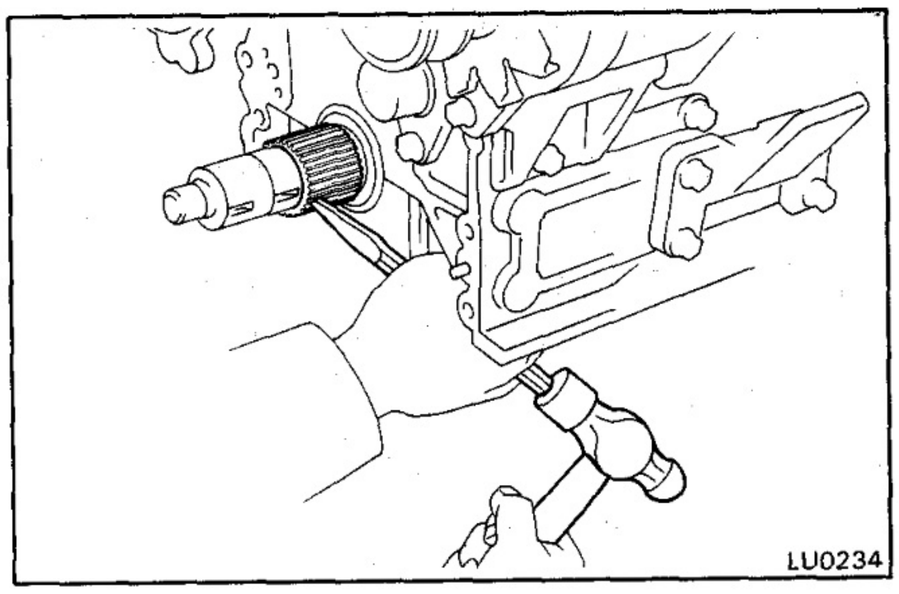

(c) Using a chisel and hammer, tap the drive spline out of the hole until SST can be hooked to spline's end.

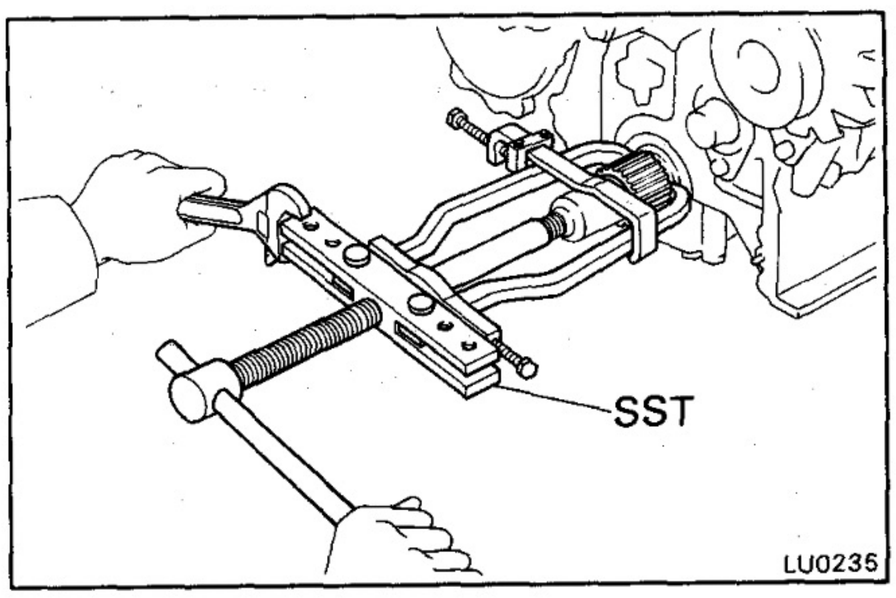

(d) Using SST, remove the drive spline.

SST 09950-20017

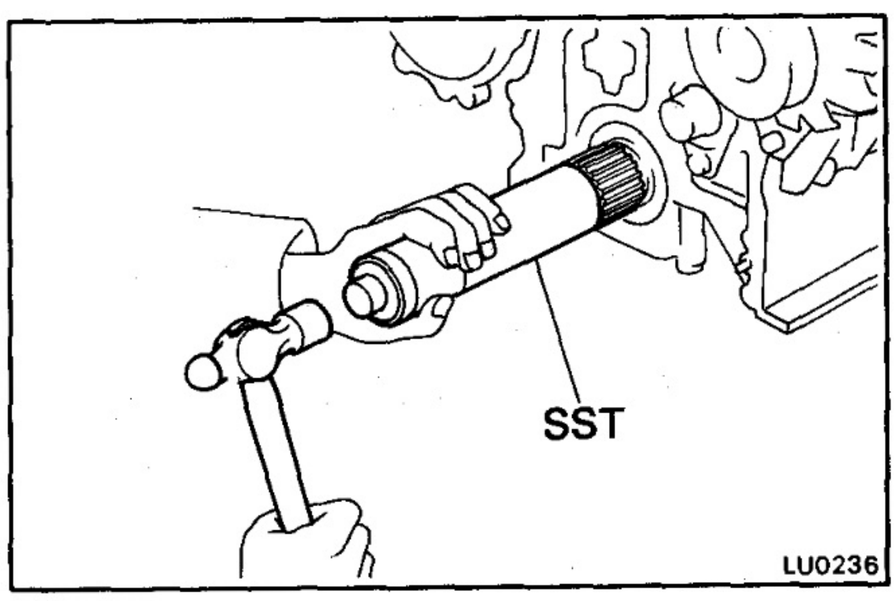

2. INSTALL NEW DRIVE SPLINE

(a) Using SST and a hammer, tap in the drive spline.

SST 09608-35014 (09608-06040)

(b) Install the two set keys.

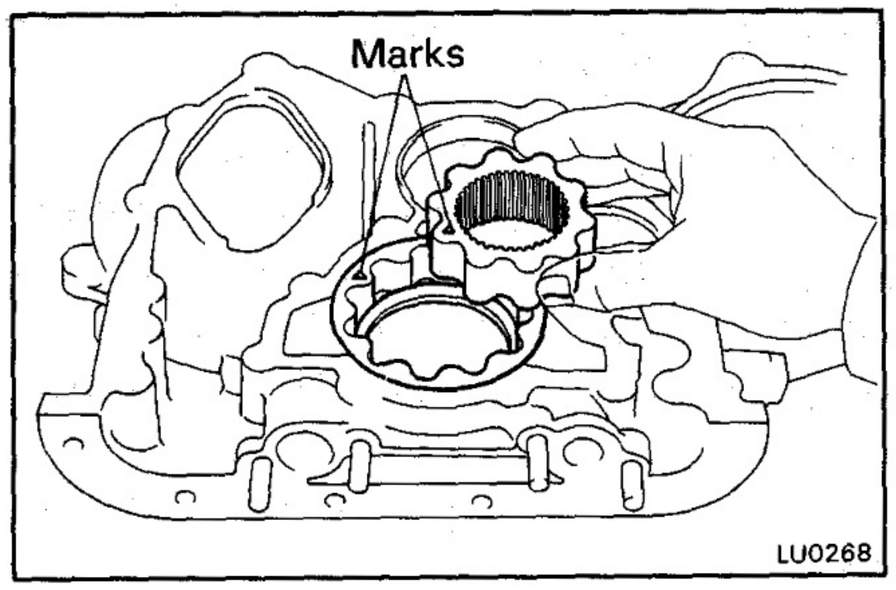

ASSEMBLY OF OIL PUMP

(See page LU-8)

1. INSTALL DRIVE AND DRIVEN ROTORS

(a) Insert the drive and driven rotors into the oil pump body with the marks facing the oil pump cover side.

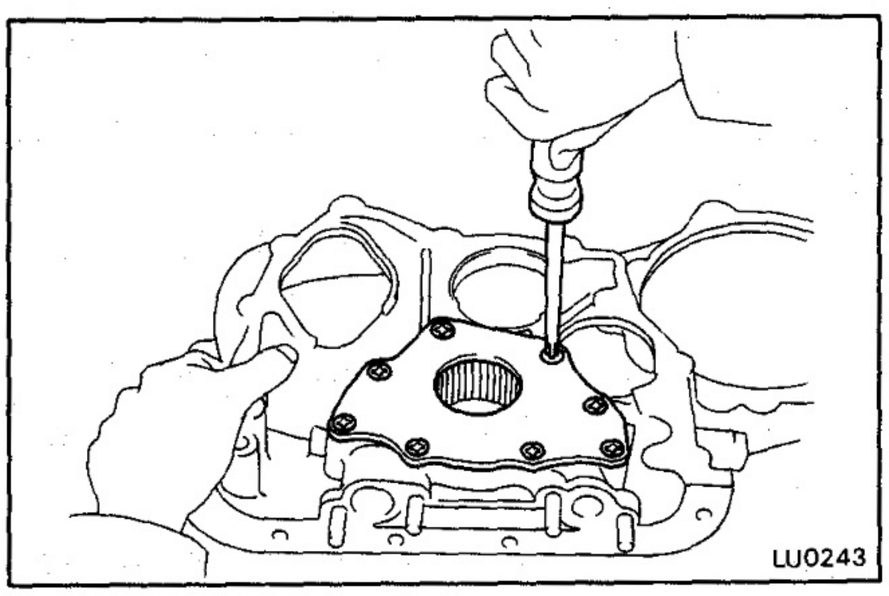

(b) Install the oil pump cover with the eight screws.

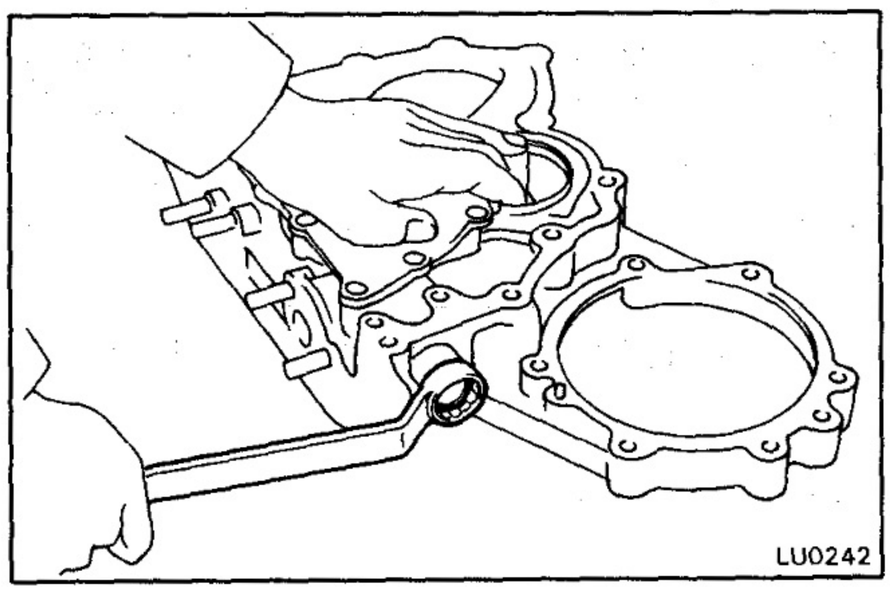

2. INSTALL RELIEF VALVE

Install the relief valve and spring with a new gasket and the plug.

Torque: 500 kg-cm (36 ft-lb, 49 N·m)

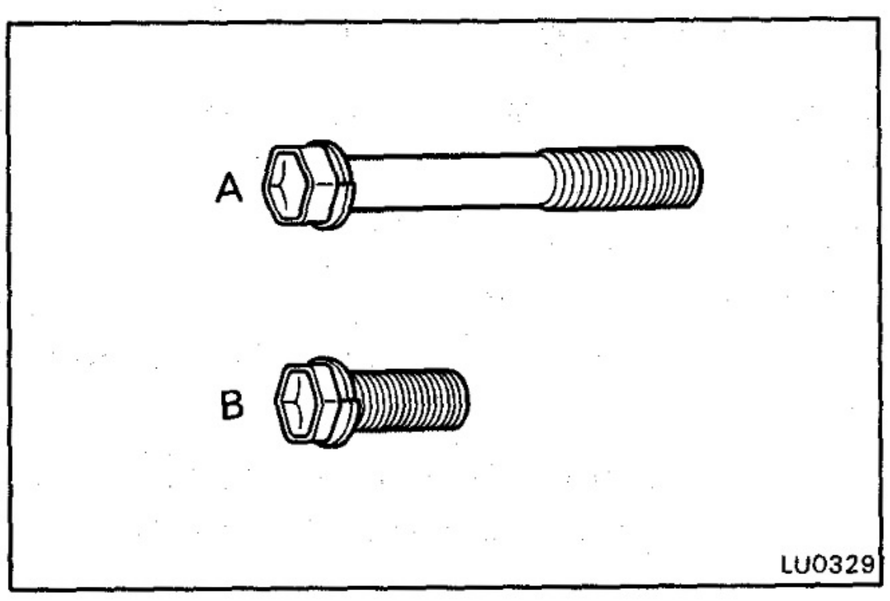

INSTALLATION OF OIL PUMP

(See page LU-5)

1. INSTALL OIL PUMP

NOTE: Use the bolts indicated "A" and "B".

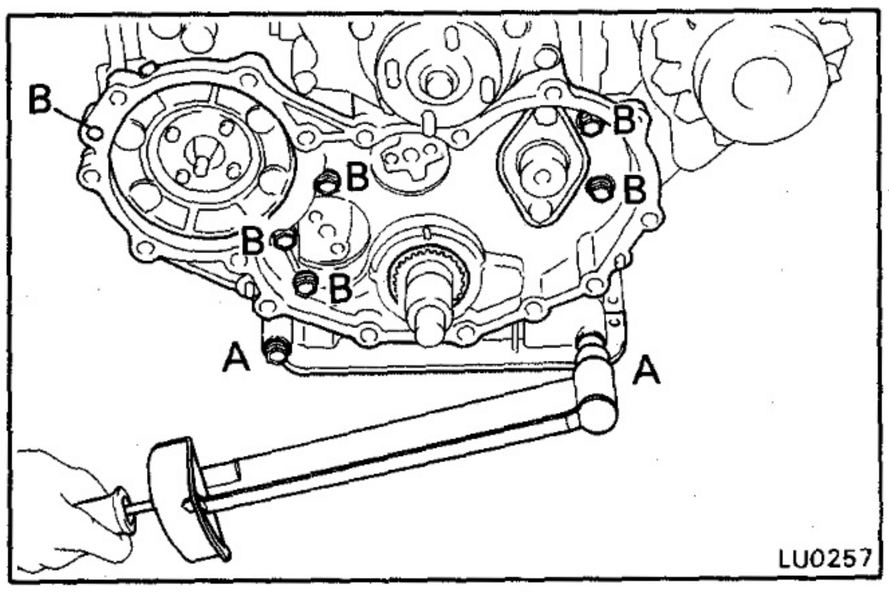

(a) Apply a light coat of engine oil to a new O-ring, and place the O-ring in position on the injection pump retainer.

(b) Place a new gasket in position on the cylinder block.

(c) Install the oil pump with the eight bolts. Torque the bolts.

Torque: 250 kg-cm (18 ft-lb, 25 N·m)

2. [12H-T]
INSTALL STIFFENING PLATE

(a) Remove any oil packing material and be careful not to drop any oil on the contacting surfaces of the stiffening plate and cylinder block.

- Using a razor blade and gasket scraper, remove all the old packing (FIPG) material from the gasket surfaces and sealing groove.
- Thoroughly clean all components to remove all the loose material.
- Clean both sealing surfaces with a non-residue solvent.

CAUTION: Do not use a solvent which will affect the painted surfaces.

(b) Apply seal packing to the oil pan as shown in the figure.

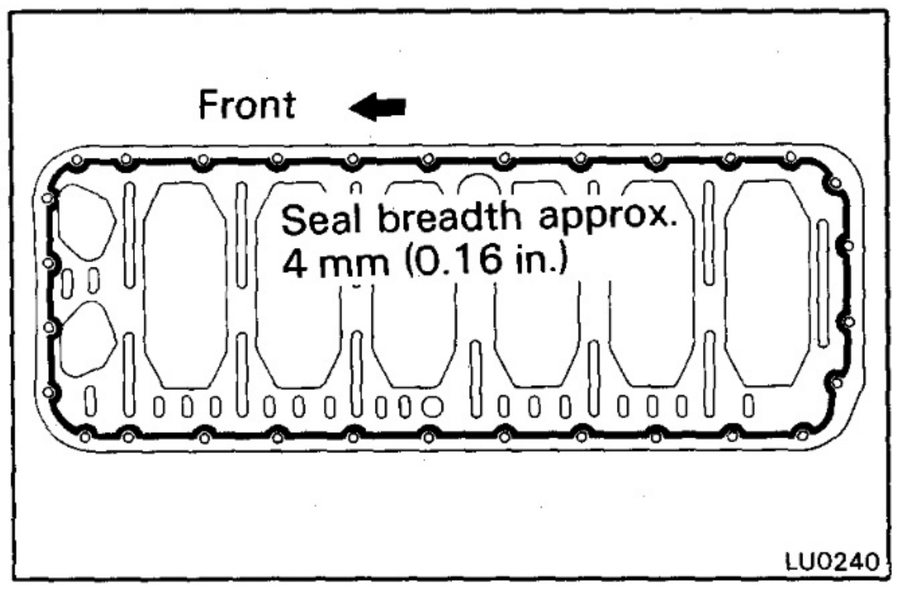

Seal packing: Part No.08826-00080 or equivant

- Install a nozzle that has been cut to the 3 mm (0.12 in.) opening.

NOTE: Avoid applying an excess amount to the surface. Be especially careful near oil passages.

- Parts must be assembled within 15 minutes of application. Otherwise, the material must be removed and reapplied.
- Immediately remove nozzle from tube and reinstall cap.

(c) Attach the stiffening plate to the cylinder block.

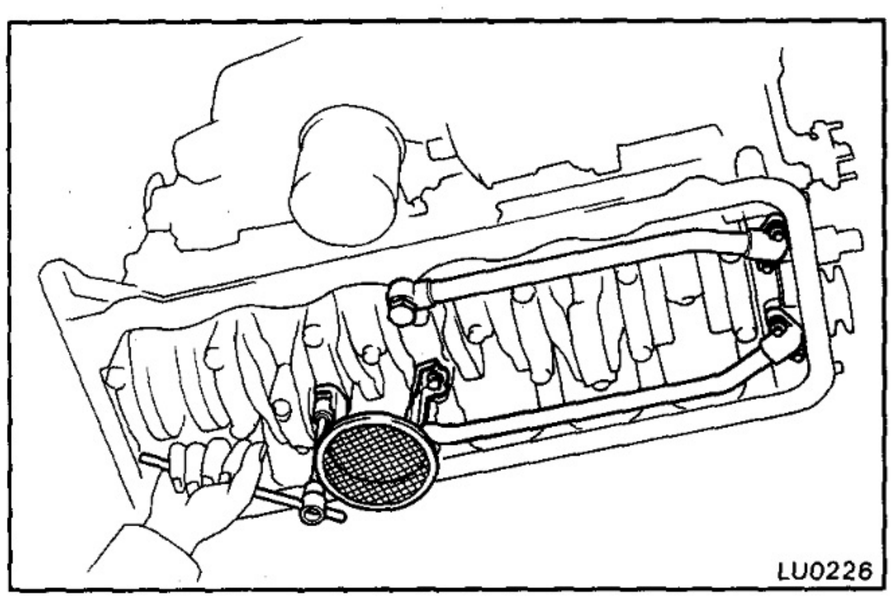

3. INSTALL OIL STRAINER AND OIL PIPE

(a) Install a new gasket and oil strainer with the two bolts and two nuts. Torque the bolts and nuts.

Torque: 185 kg-cm (13 ft-lb, 18 N·m)

(b) Install new three gaskets and oil pipe with the union bolt and two nuts. Torque the union bolt and nuts.

Torque:

Union bolt	**450 kg-cm (33 ft-lb, 44 N·m)**
Nut	**185 kg-cm (13 ft-lb, 18 N·m)**

4. INSTALL OIL PAN

(a) Remove any oil packing material and be careful not to drop any oil on the contacting surfaces of the oil pan (2H) or stiffening plate (12H-T) and cylinder block.

- Using a razor blade and gasket scraper, remove all the old packing (FIPG) material from the gasket surfaces and sealing groove.
- Thoroughly clean all components to remove all the loose material.
- Clean both sealing surfaces with a non-residue solvent.

CAUTION: Do not use a solvent which will affect the painted surfaces.

(b) Apply seal packing to the oil pan as shown in the figure.

Seal packing: Part No.08826-00080 or equivant

- Install a nozzle that has been cut to the 3 mm (0.12 in.) opening.

NOTE: Avoid applying an excess amount to the surface. Be especially careful near oil passages.

- Parts must be assembled within 15 minutes of application. Otherwise, the material must be removed and reapplied.
- Immediately remove nozzle from tube and reinstall cap.

(c) Install the oil pan with the twenty-eight and two nuts.

Torque: 130 kg-cm (9 ft-lb, 13 N·m)

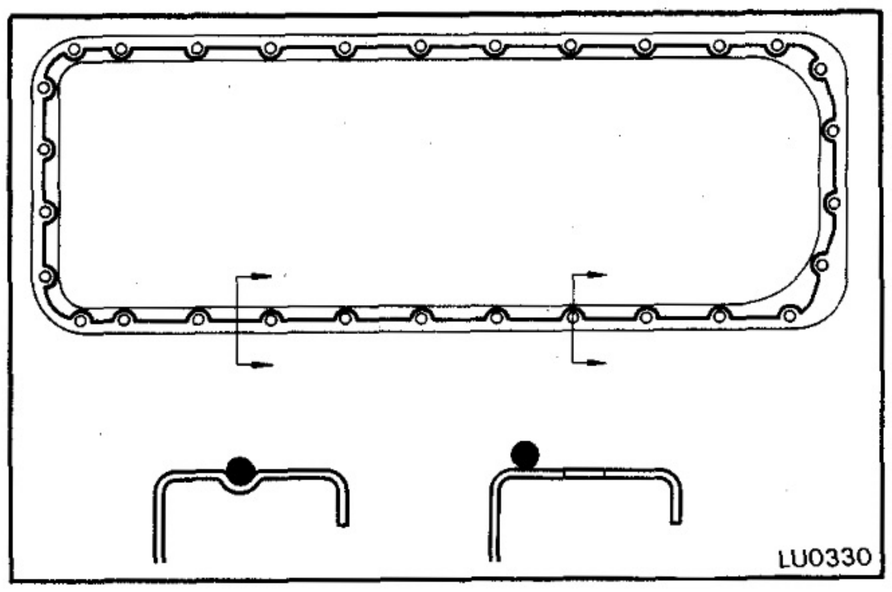

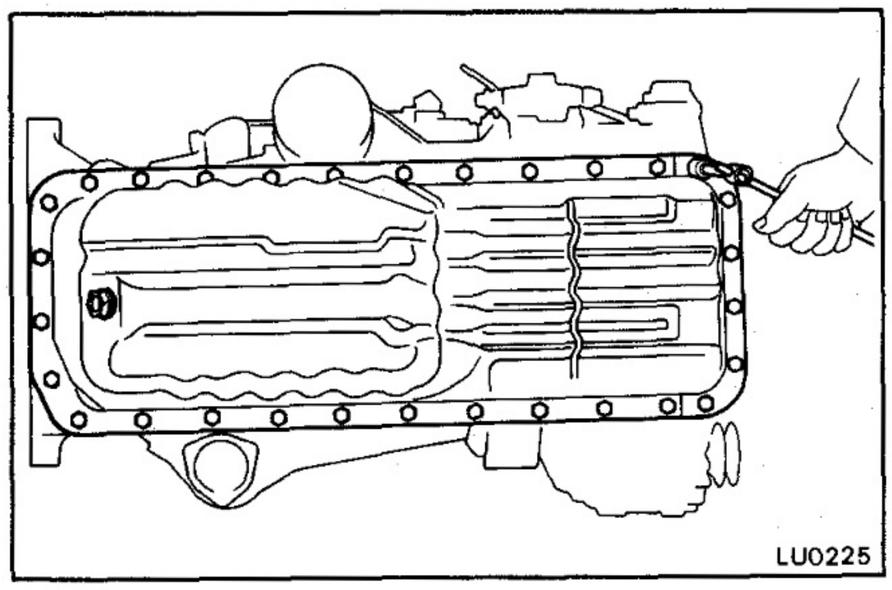

5. INSTALL CAMSHAFT TIMING GEAR

(a) Align the set key with the key groove of the timing gear.

(b) Using a plastic-faced hammer, tap in the timing gear.

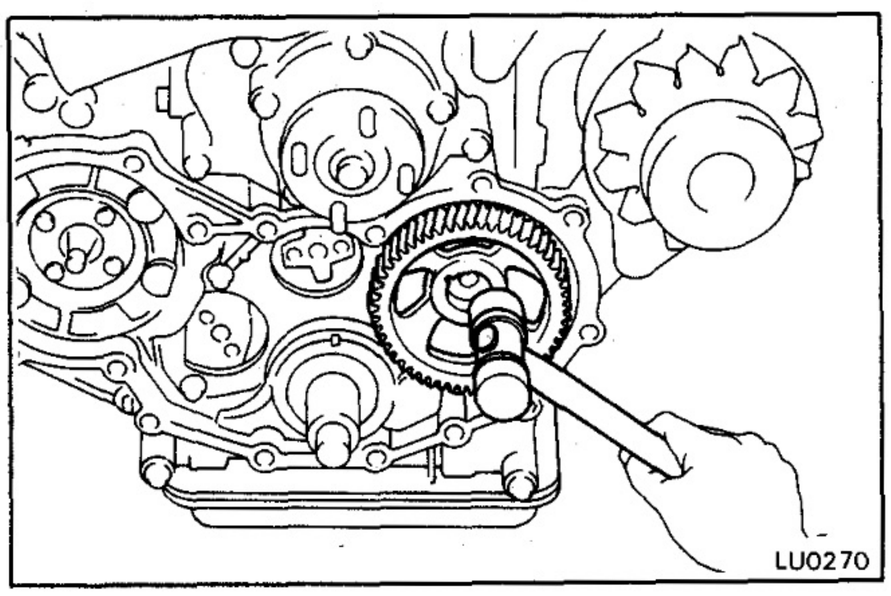

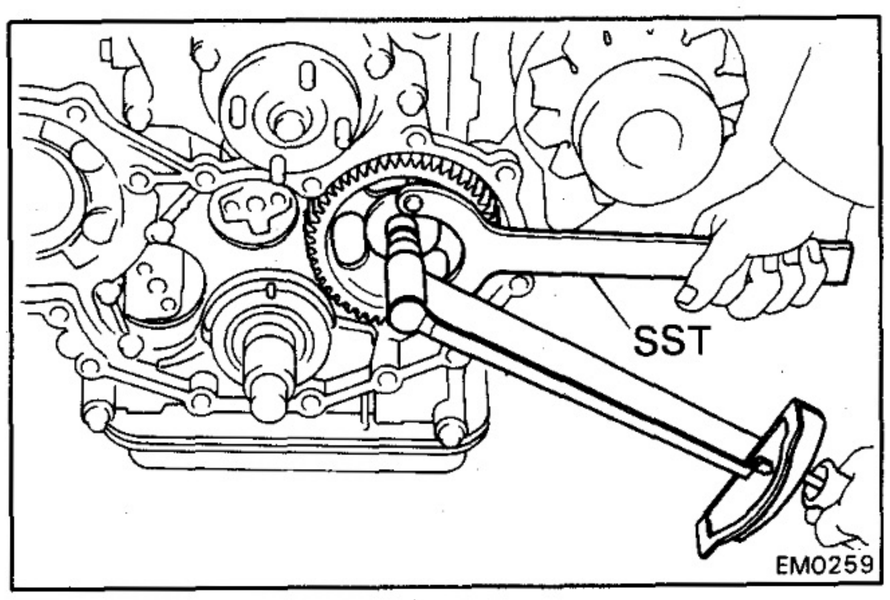

(c) Apply a light coat of engine oil on the threads and under the bolt head.

(d) Using SST, install the plate washer and mount bolt. Torque the bolt.

SST 09278-54012

Torque: 450 kg-cm (33 ft-lb, 44 N·m)

6. INSTALL CRANKSHAFT TIMING GEAR, NO. 1 IDLE GEAR AND AUTOMATIC TIMER

(See steps 1, 2 and 10 on pages EM-88 and 90)

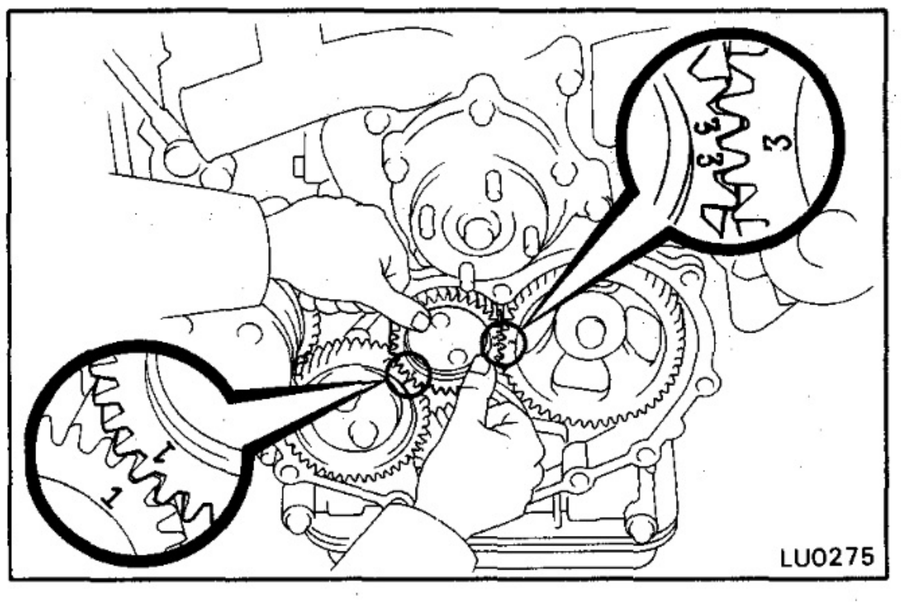

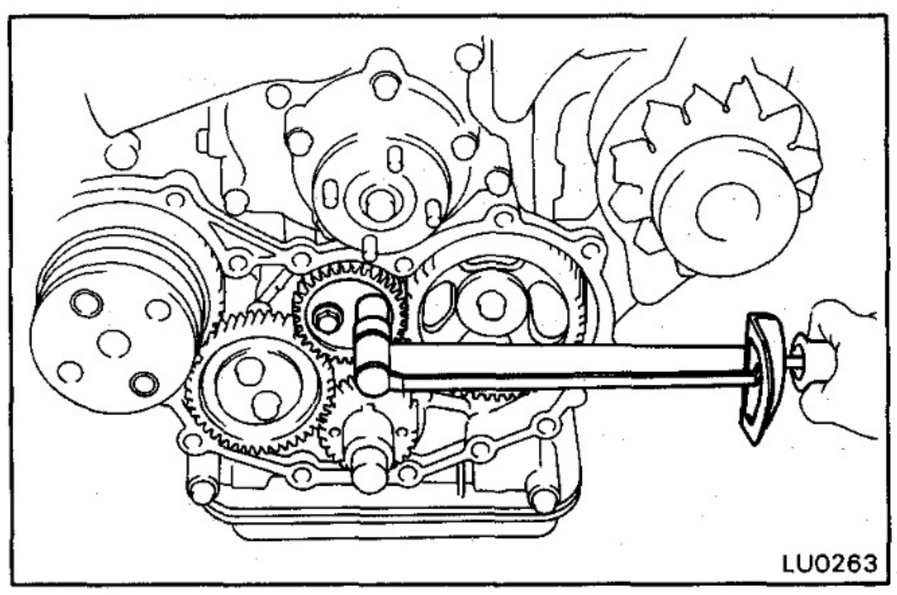

7. INSTALL NO. 2 IDLER GEAR

(a) Align the "1" and "3" timing marks of the No. 2 idle gear with the "1" timing mark of the No. 1 idle gear and "3" timing mark of the camshaft timing gear respectively, and mesh the gears.

(b) Apply a light coat of engine oil on the threads and under the bolt heads.

(c) Install the thrust plate with the two bolts. Torque the bolts.

Torque: 475 kg-cm (34 ft-lb, 47 N·m)

8. INSTALL TIMING GEAR COVER AND CRANKSHAFT PULLEY
(See steps 12 to 14 on pages EM-91 and 92)

9. INSTALL WATER PUMP PULLEY AND FAN
(See page CO-10)

10. INSTALL AND ADJUST DRIVE BELT
(See page CH-6)

11. FILL WITH ENGINE OIL (See page LU-4)

12. START ENGINE AND CHECK FOR LEAKS

13. RECHECK ENGINE OIL LEVEL (See page LU-3)

OIL COOLER AND RELIEF VALVE

COMPONENTS

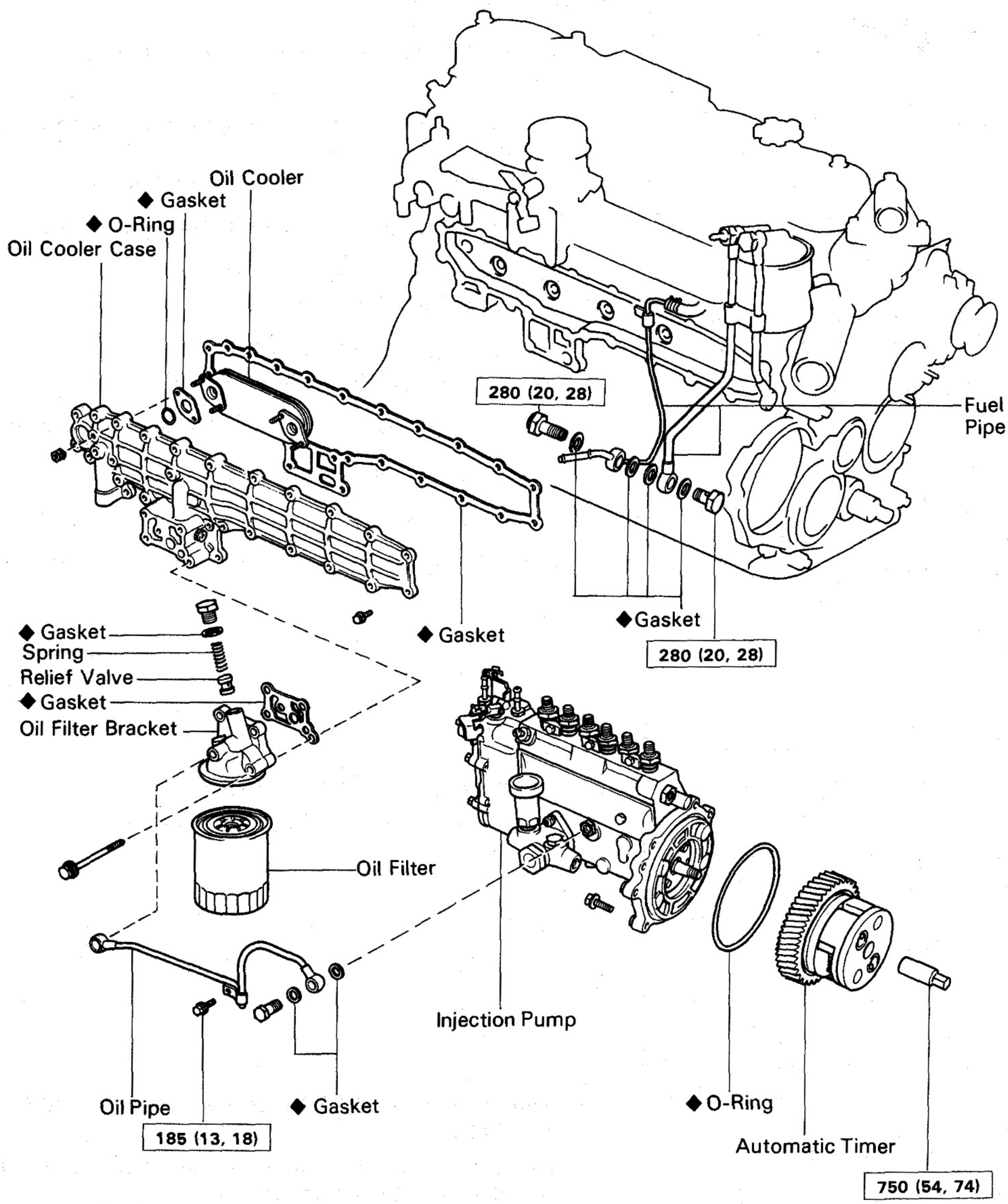

kg-cm (ft-lb, N·m) : Specified torque

◆ Non-reusable part

LU0336

REMOVAL OF OIL COOLER AND RELIEF VALVE

(See page LU-15)

1. DRAIN ENGINE COOLANT (See page CO-3)
2. REMOVE DRIVE BELT
3. REMOVE FAN AND WATER PUMP PULLEY (See page CO-5)
4. REMOVE CRANKSHAFT PULLEY AND TIMING GEAR COVER (See steps 7 to 9 on pages EM-79 and 80)
5. REMOVE AUTOMATIC TIMER (See page FU-22)
6. [2H M/T (w/ EDIC SYSTEM)]
   REMOVE EDIC MOTOR
7. [2H M/T (w/o EDIC SYSTEM)]
   REMOVE OVERINJECTION MAGNET
8. REMOVE INJECTION PUMP (See page FU-30 and 31)
9. REMOVE OIL FILTER (See page LU-4)
10. REMOVE RELIEF VALVE

    Remove the plug, gasket, spring and relief valve.

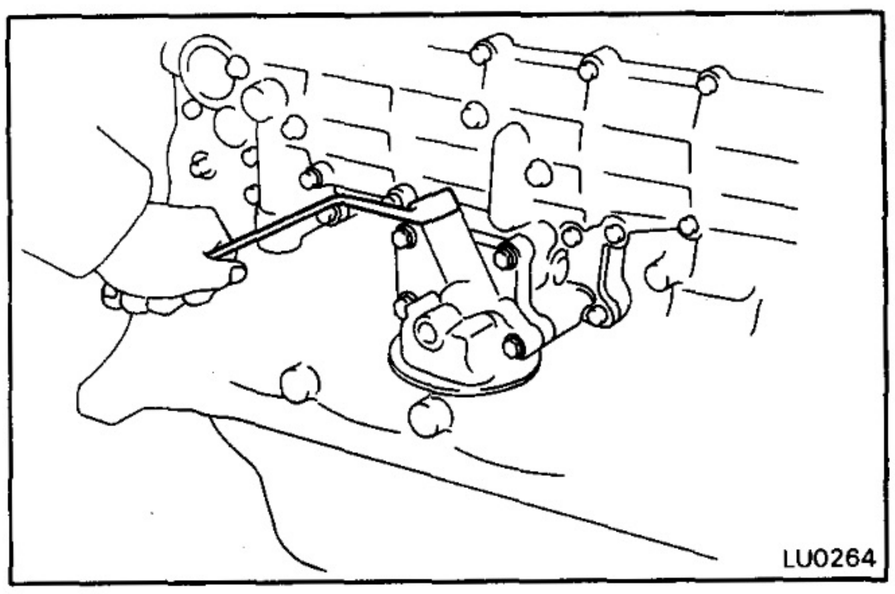

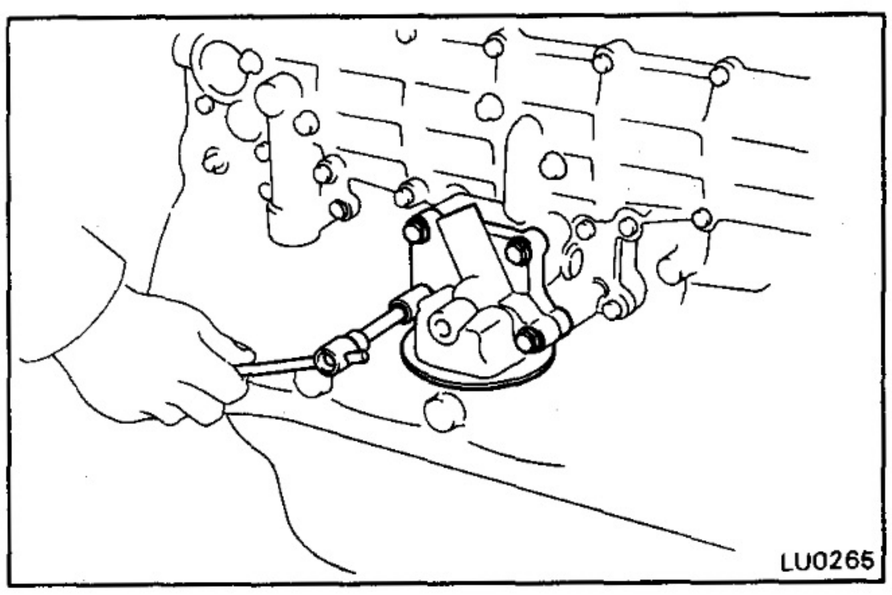

11. REMOVE OIL FILTER BRACKET

    Remove the four bolts, bracket and gasket.

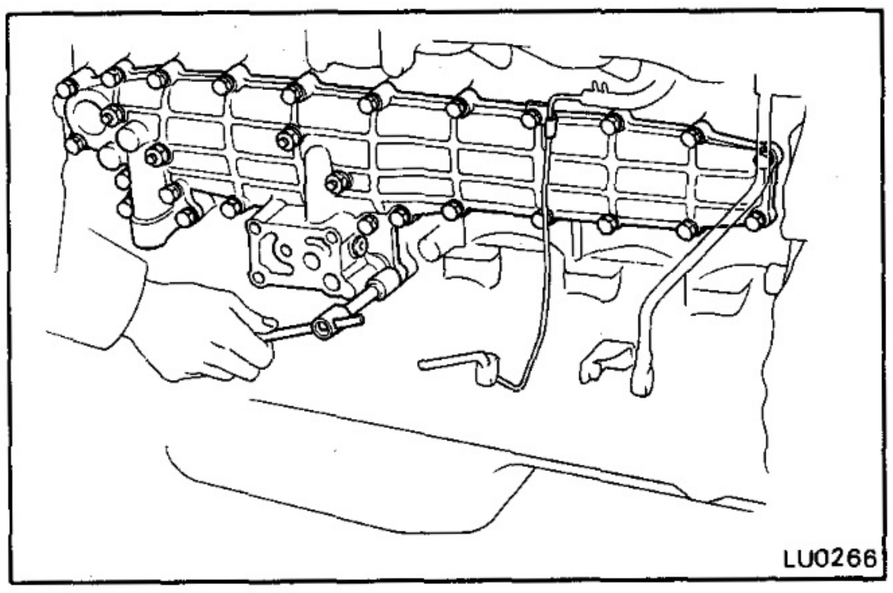

12. REMOVE OIL COOLER AND OIL COOLER CASE ASSEMBLY

    Remove the twenty-four bolts, the oil cooler and gasket together with the oil cooler case.

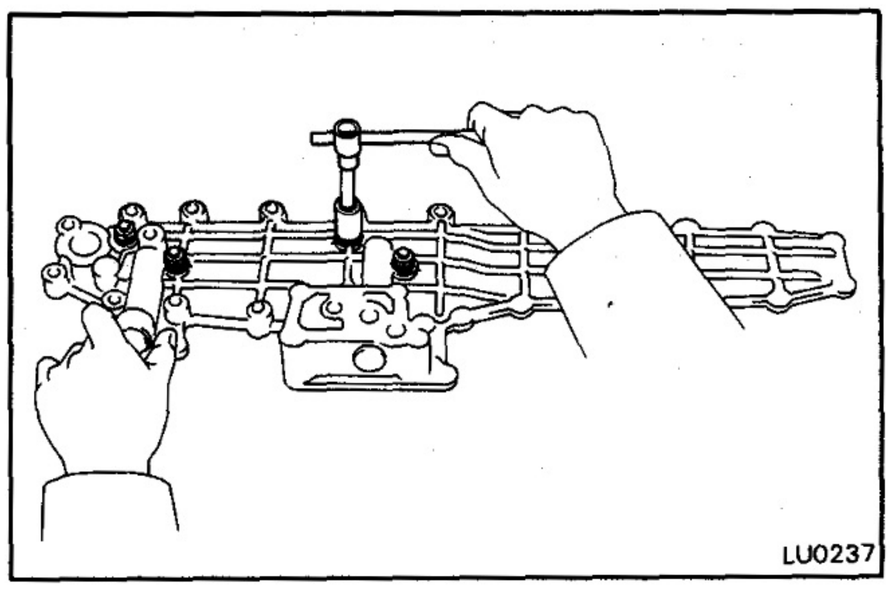

13. SEPARATE OIL COOLER AND OIL COOLER CASE

Remove the four nuts, oil cooler, two O-rings and gaskets.

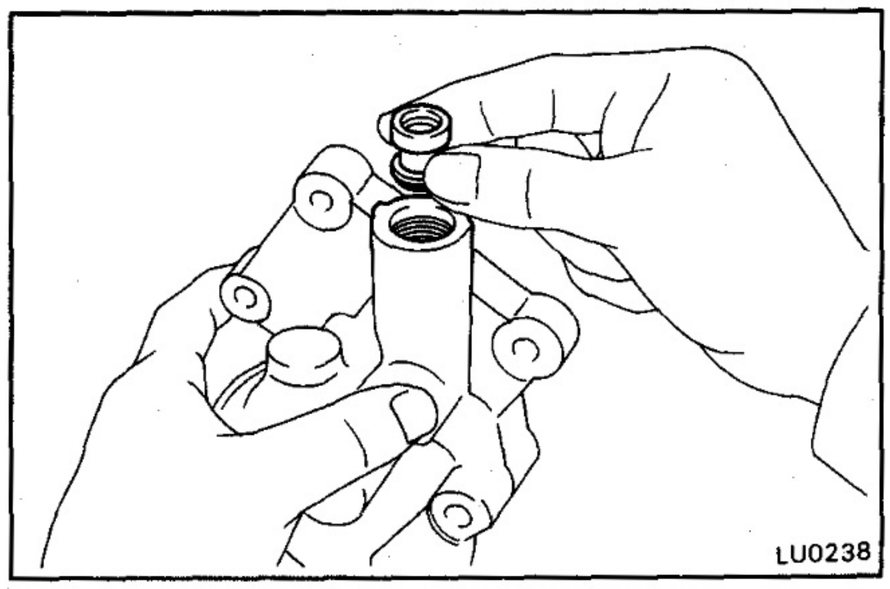

INSPECTION OF OIL COOLER AND RELIEF VALVE

1. INSPECT RELIEF VALVE

Coat the valve with engine oil and check that it falls smoothly into the valve hole by its own weight.

If operation is not as specified, replace the relief valve. If necessary, replace the oil filter bracket.

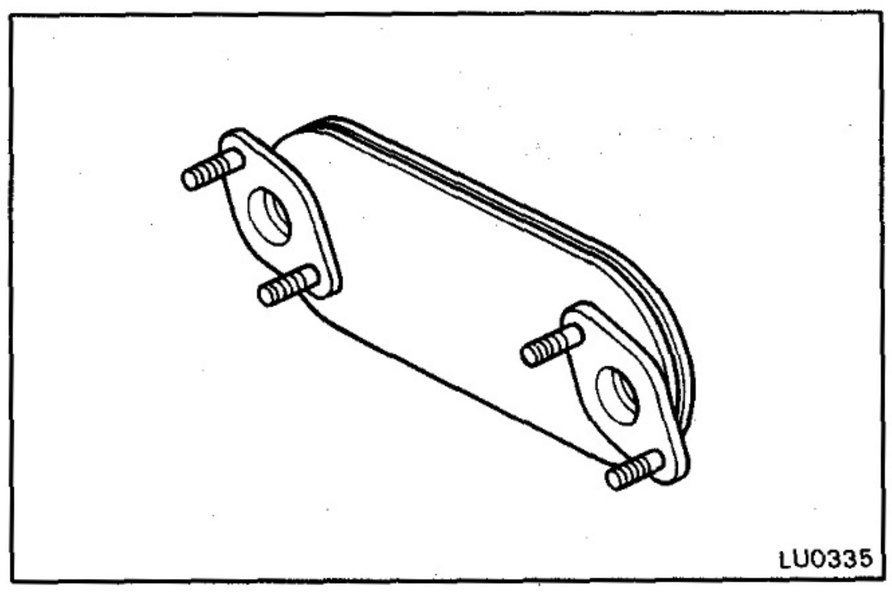

2. INSPECT OIL COOLER

Check the oil cooler for damage or clogging.

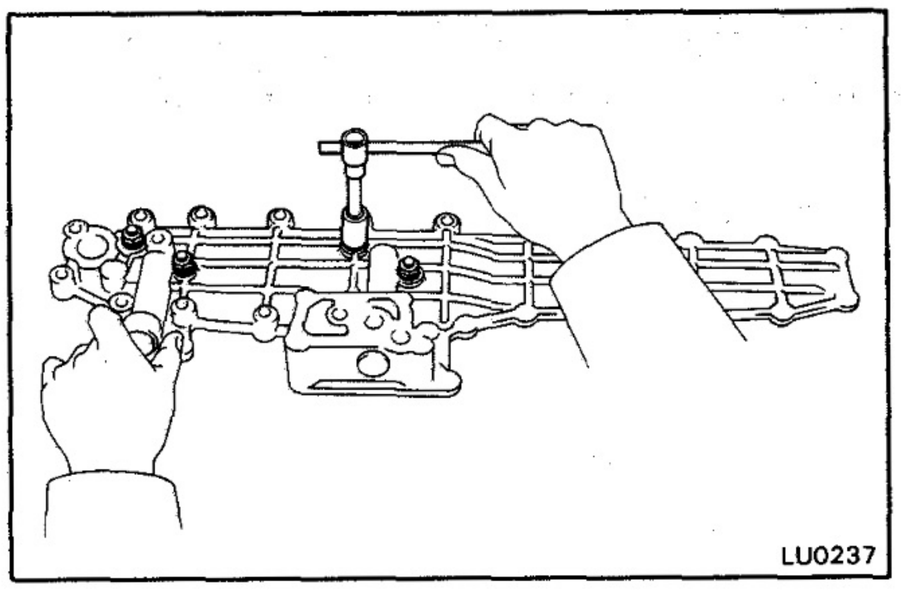

INSTALLATION OF OIL COOLER AND RELIEF VALVE

(See page LU-15)

1. ASSEMBLE OIL COOLER AND OIL COOLER CASE

Assemble the oil cooler and oil cooler case together with new two gaskets and O-rings. Install the four nuts.

Torque: 250 kg-cm (18 ft-lb, 25 N·m)

2. INSTALL OIL COOLER AND OIL COOLER CASE ASSEMBLY

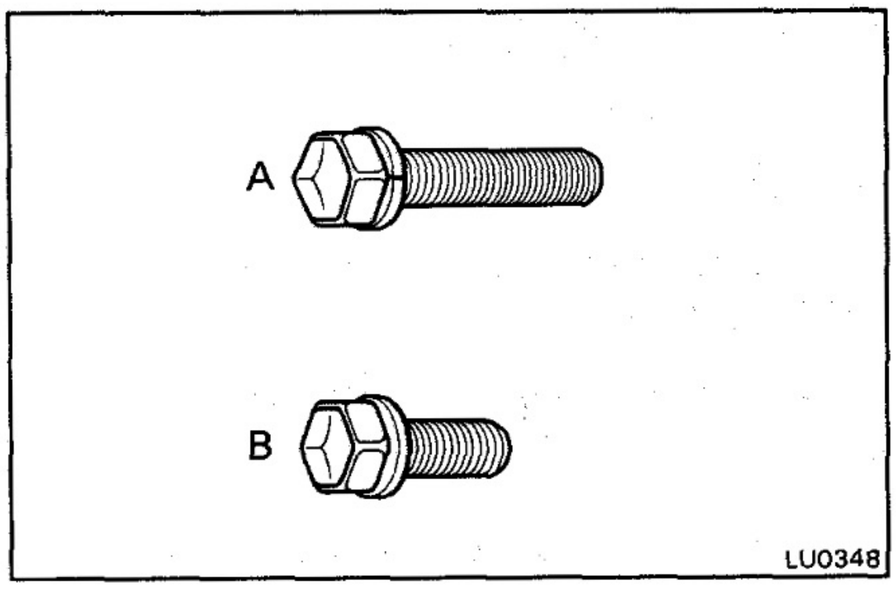

NOTE: Use the bolts indicated "A" and "B."

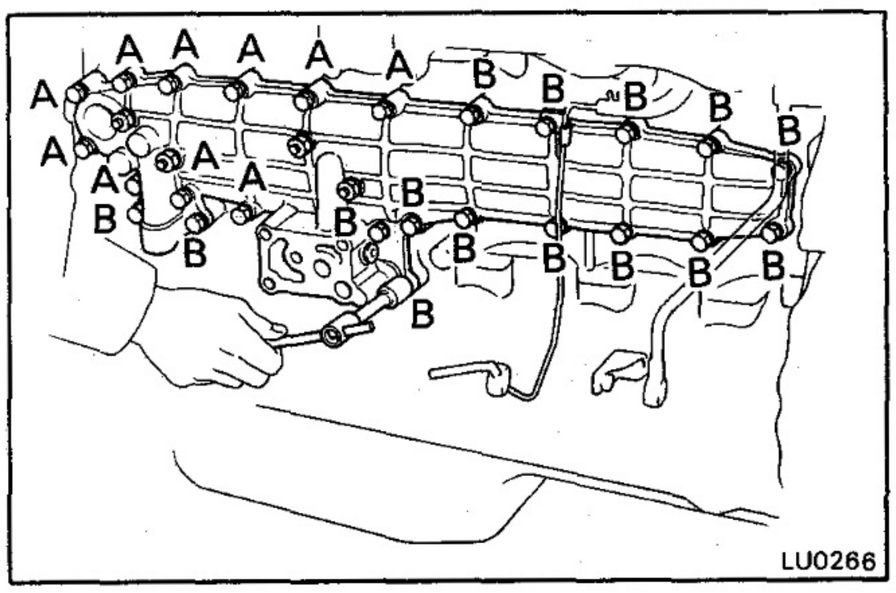

Install a new gasket, the oil cooler and oil cooler case assembly with the twenty-four bolts.

Torque: 185 kg-cm (13 ft-lb, 18 N·m)

3. INSTALL OIL FILTER BRACKET

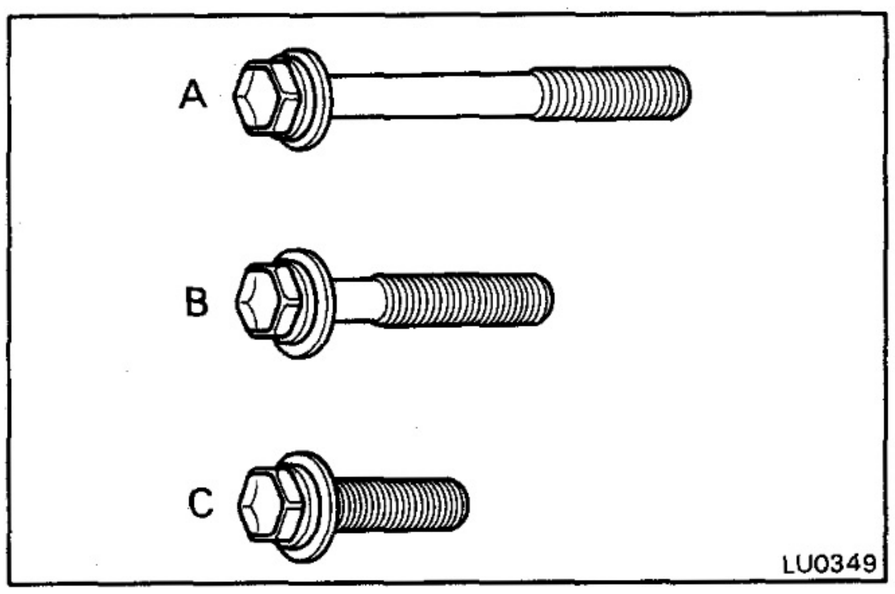

NOTE: Use the bolts indicated "A," "B" and "C."

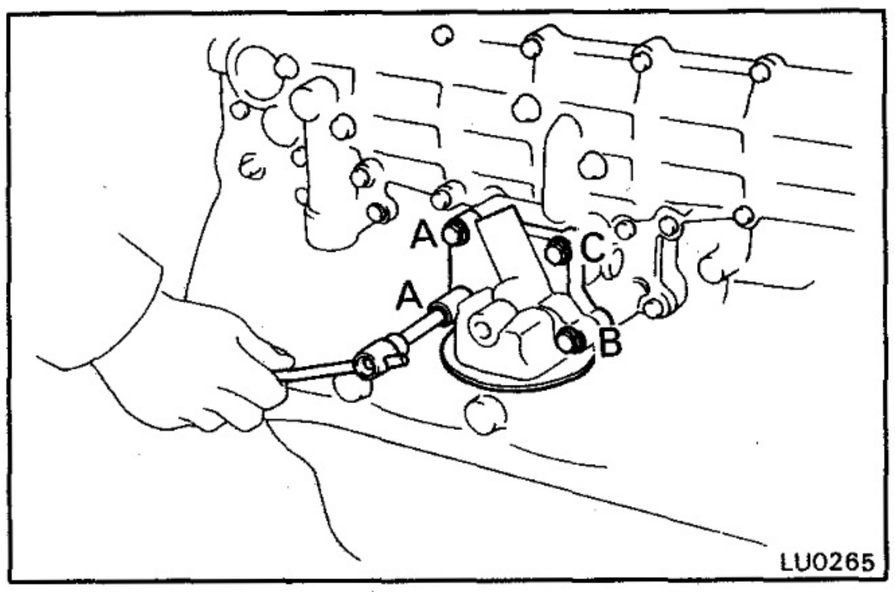

Install a new gasket and the oil filter bracket with the four bolts.

Torque: 185 kg-cm (13 ft-lb, 18 N·m)

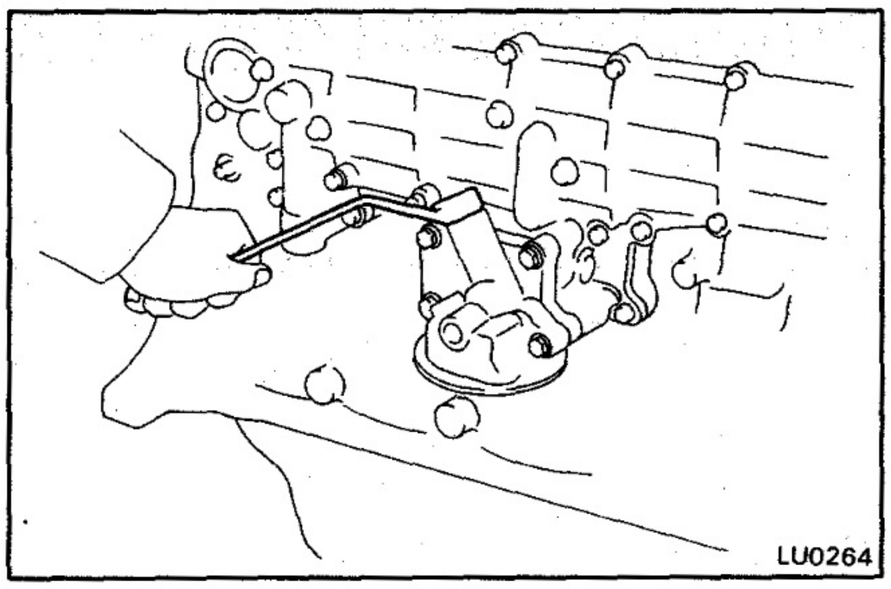

4. INSTALL RELIEF VALVE

Install the relief valve and spring with a new gasket and the plug.

Torque: 500 kg-cm (36 ft-lb, 49 N·m)

5. INSTALL OIL FILTER (See page LU-4)

6. INSTALL INJECTION PUMP
(See pages FU-98 and 99)

7. [2H M/T (w/ EDIC SYSTEM)]
INSTALL EDIC MOTOR

8. [2H M/T (w/o EDIC SYSTEM)]
INSTALL OVERINJECTION MAGNET

9. INSTALL AUTOMATIC TIMER (See page FU-28)

10. INSTALL TIMING GEAR COVER AND CRANKSHAFT PULLEY
(See steps 12 to 14 on pages EM-91 and 92)

11. INSTALL WATER PUMP PULLEY AND FAN
(See page CO-10)

12. INSTALL AND ADJUST DRIVE BELT
(See page CH-6)

13. FILL WITH ENGINE COOLANT (See page CO-3)

14. START ENGINE AND CHECK FOR LEAKS

15. CHECK ENGINE OIL LEVEL (See page LU-3)

OIL NOZZLES AND CHECK VALVES [12H-T]

COMPONENTS

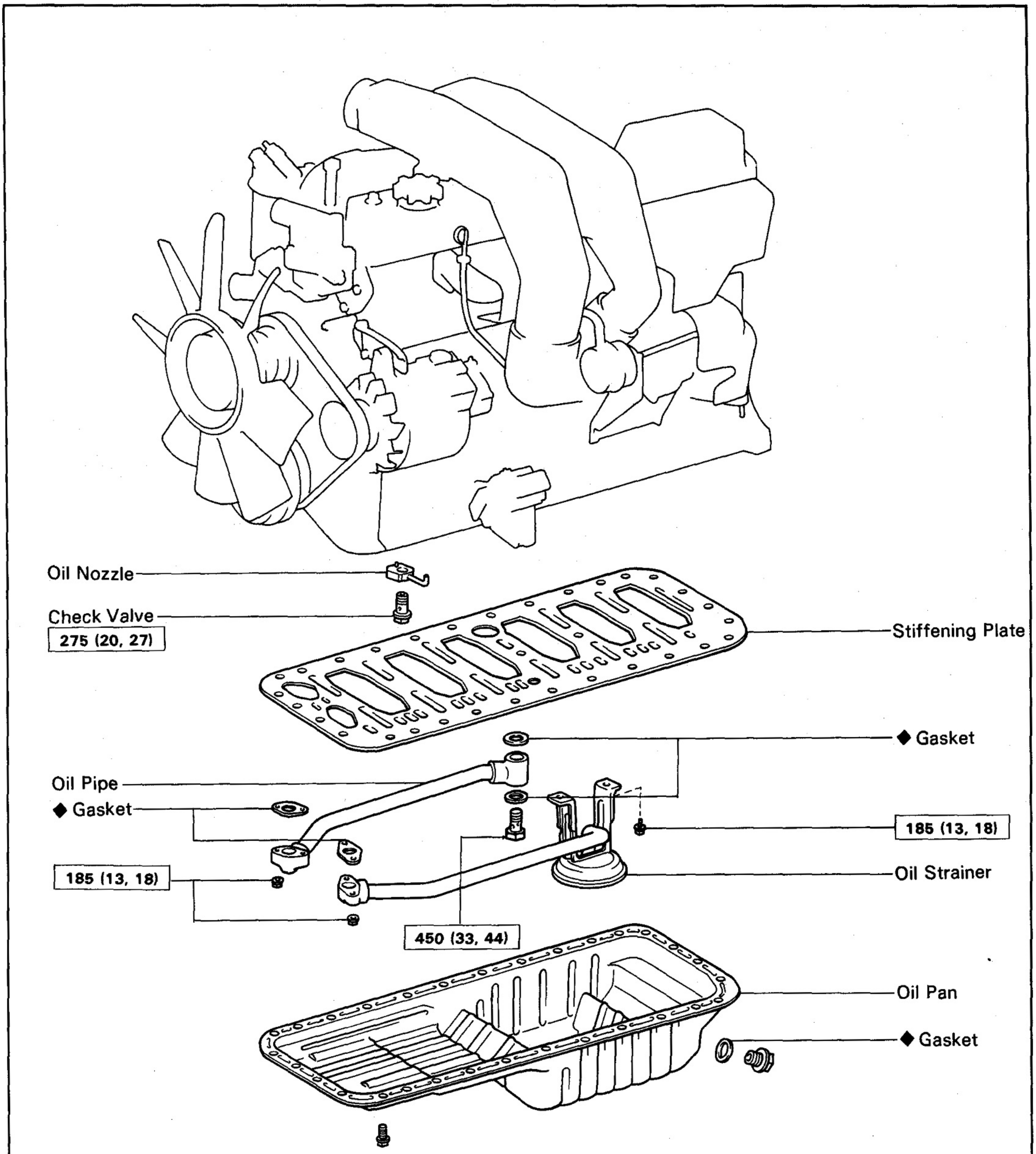

kg-cm (ft-lb, N·m) : Specified torque

◆ Non-reusable part

LU0337

REMOVAL OF OIL NOZZLES AND CHECK VALVES

(See page LU-20)

1. DRAIN ENGINE OIL (See page LU-4)

2. REMOVE OIL PAN AND STIFFENING PLATE
(See steps 8 to 12 on pages LU-6 and 7)

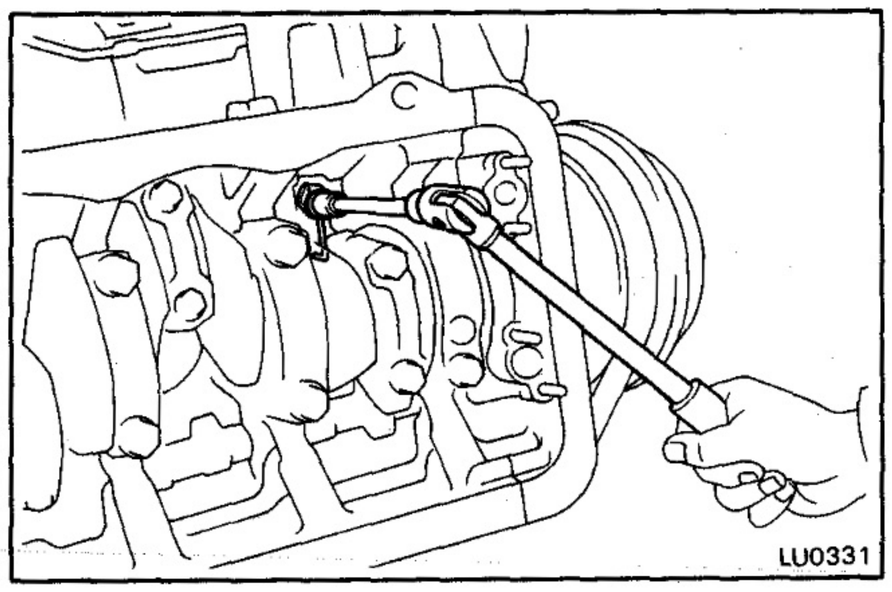

3. REMOVE OIL NOZZLES AND CHECK VALVES

INSPECTION OF OIL NOZZLE AND CHECK VALVES

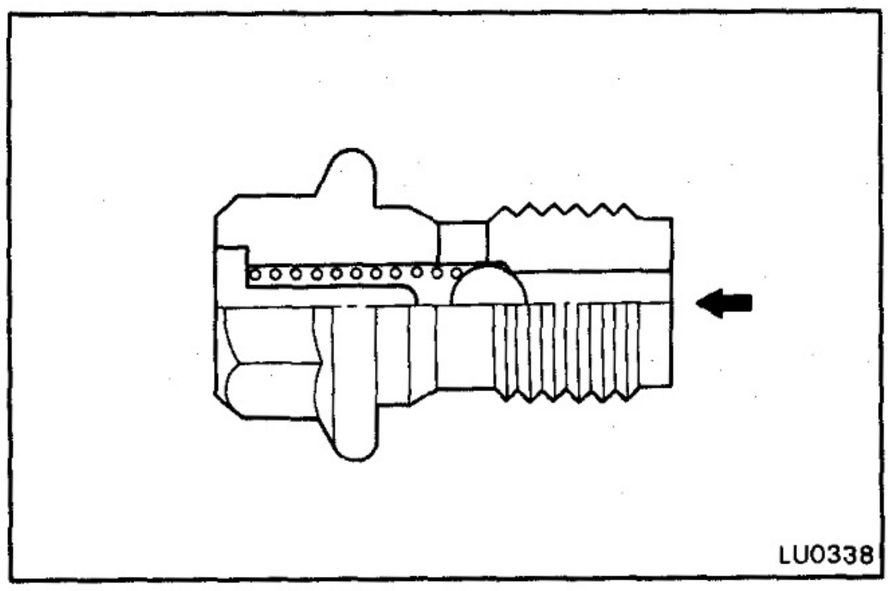

1. INSPECT CHECK VALVE

Push the valve with a wooden stick to check to check if it is stuck.

If operating is not as specified, replace the check valve.

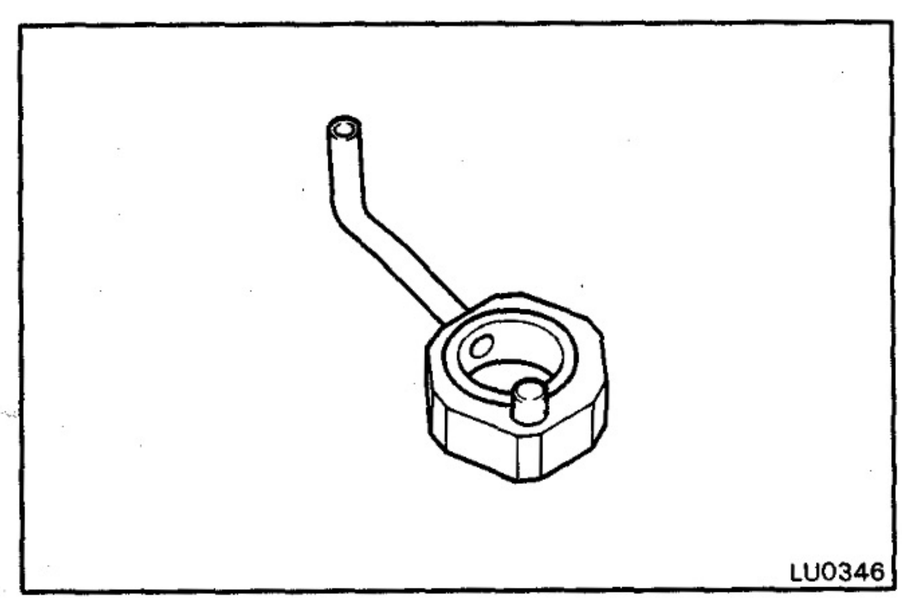

2. INSPECT OIL NOZZLES

Check the oil nozzle for damage or clogging.

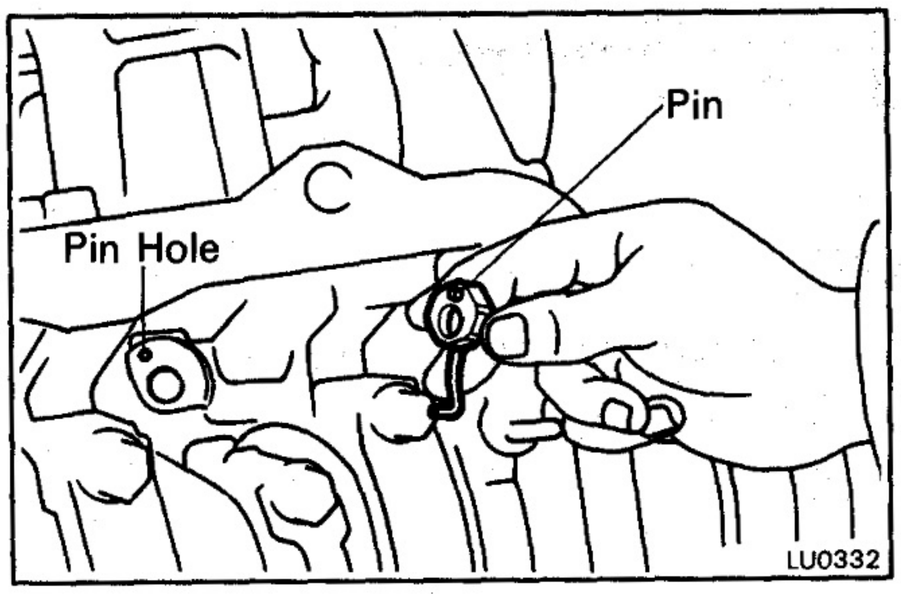

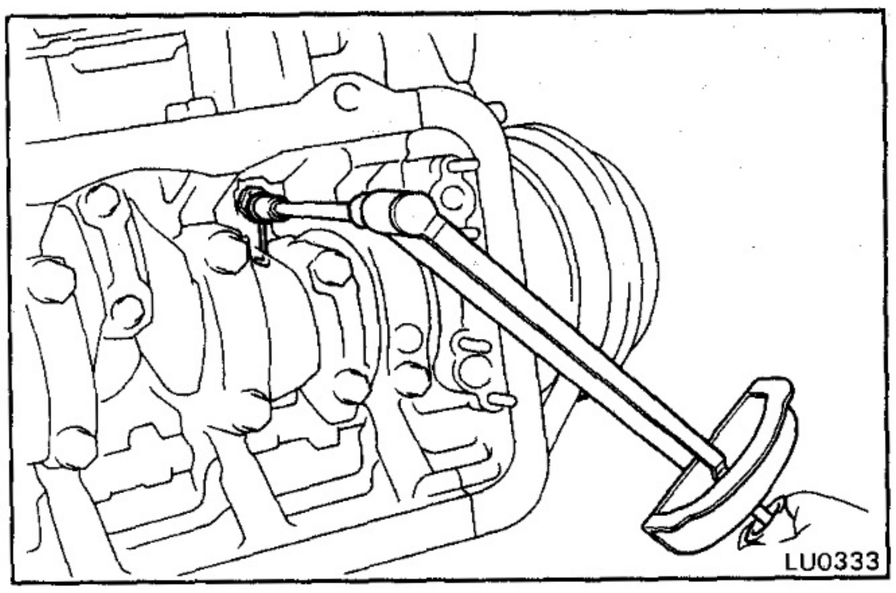

INSTALLATION OF OIL NOZZLES AND CHECK VALVES

(See page LU-20)

1. INSTALL OIL NOZZLES AND CHECK VALVES

(a) Align the pin of the oil nozzle with the pin hole of the cylinder block.

(b) Install the oil nozzles and check valves. Torque the check valve.

Torque: 275 kg-cm (20 ft-lb, 27 N·m)

2. INSTALL STIFFENING PLATE AND OIL PAN
(See steps 2 to 4 on pages LU-12 and 13)

3. FILL WITH ENGINE OIL (See page LU-4)

4. START ENGINE CHECK FOR LEAKS

5. RECHECK ENGINE OIL LEVEL (See page LU-3)

STARTING SYSTEM

	Page
PRE-HEATING SYSTEM [2H]	ST-2
PRE-HEATING SYSTEM [12H-T]	ST-8
TROUBLESHOOTING	ST-10
STARTING SYSTEM CIRCUIT	ST-10
STARTER	ST-11
STARTER RELAY	ST-20
ELECTRICAL DIESEL INJECTION CONTROL (EDIC) SYSTEM [2H M/T (w/ EDIC System)]	ST-21
OVERINJECTION MAGNET [2H M/T (w/o EDIC System)]	ST-23

PRE-HEATING SYSTEM [2H]
Super Glow Type
[Europe, Australia and Canada]

INFORMATION ON PRE-HEATING SYSTEM FROM 8210-8411 IS IN 1984 COMM. VEHICLE WIRING DIAGRAM

SYSTEM CIRCUIT

HJ60 Series

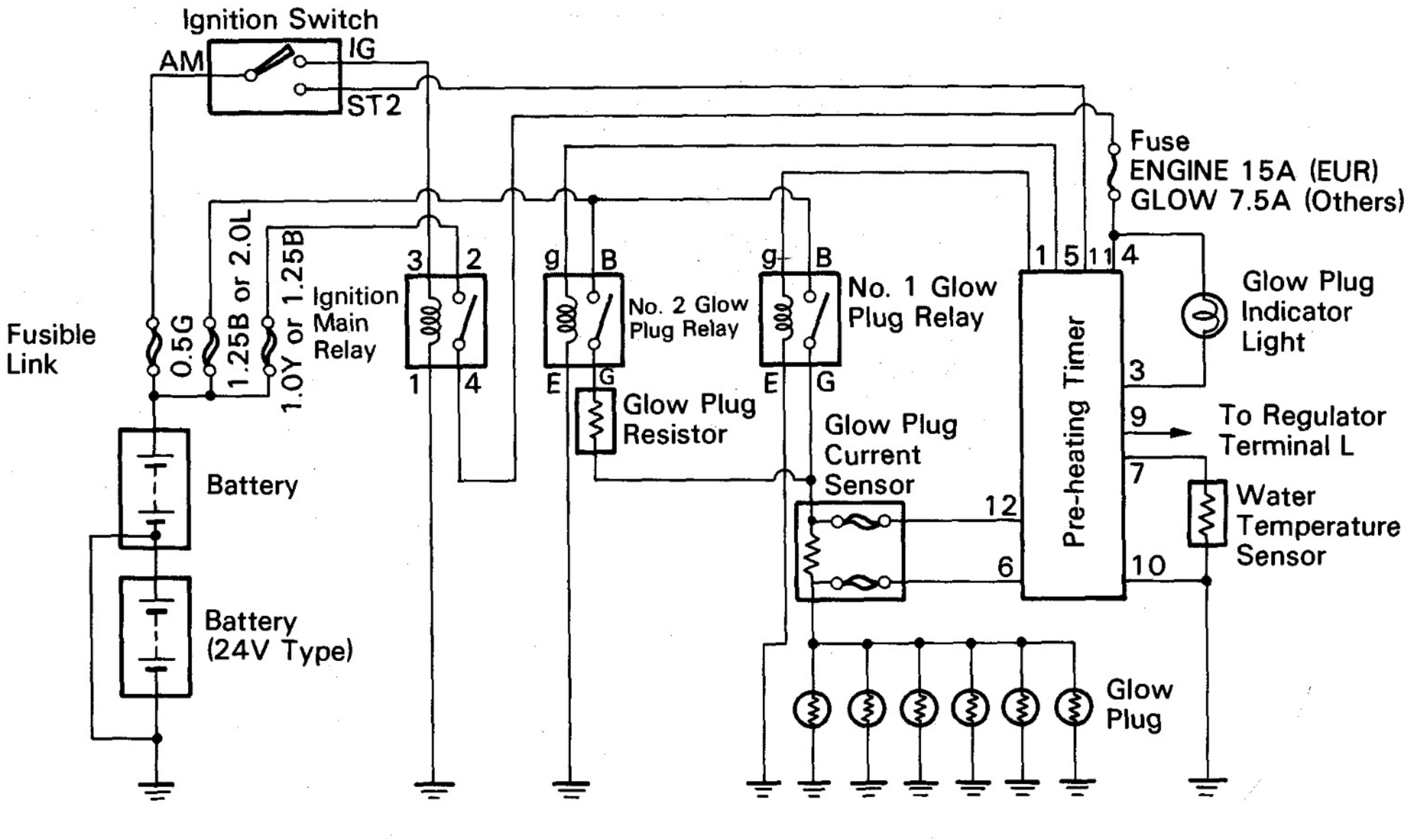

HJ75 Series

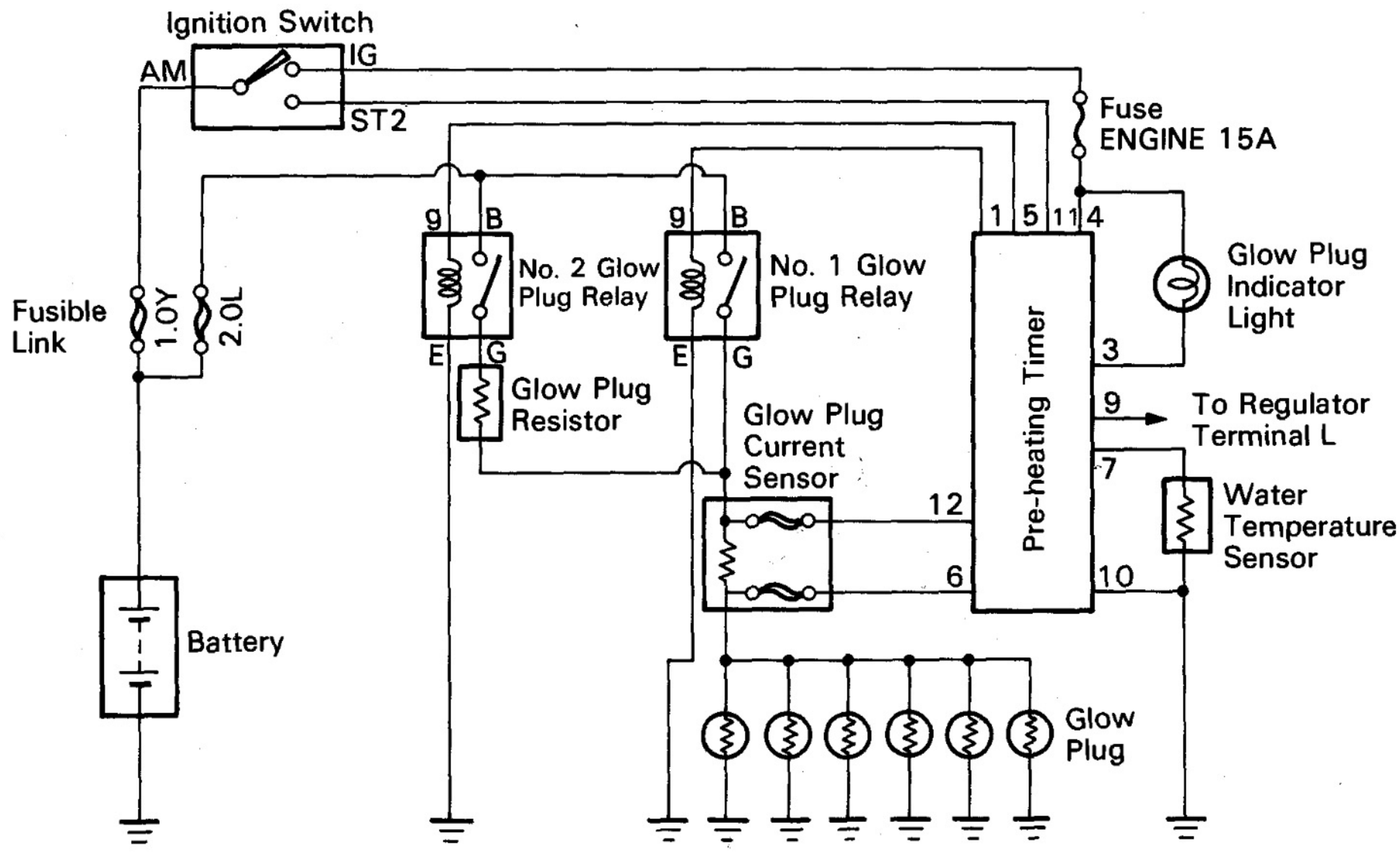

ST0294
ST0293

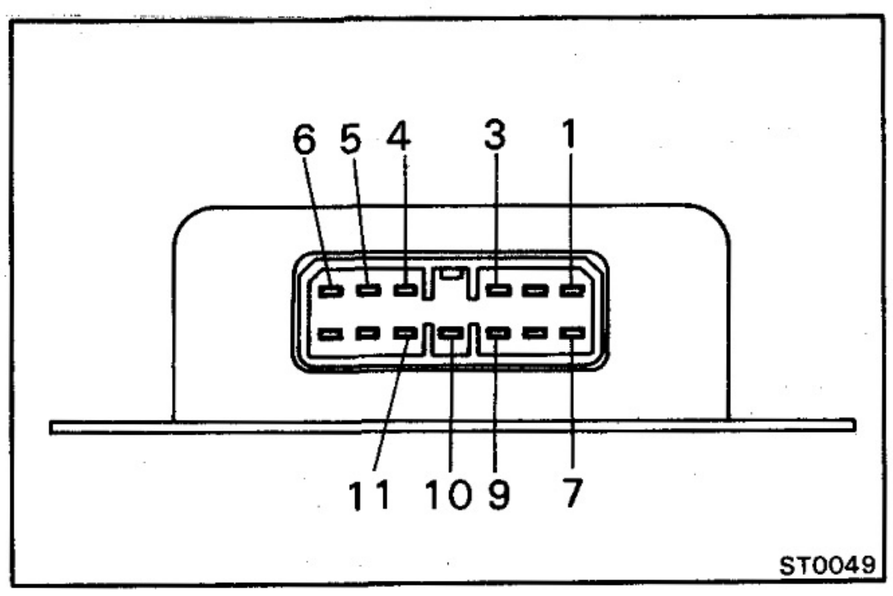

INSPECTION OF COMPONENTS

Pre-heating Timer

LOCATION:

HJ60 In the cowl on the passenger side.

HJ75 Under the instrument panel on the passenger side.

Refer to Diesel Electrical System Diagnosis for inspection procedures. (See page EM-11)

TIMER CHARACTERISTIC DIAGRAM

Australia [12V Type]

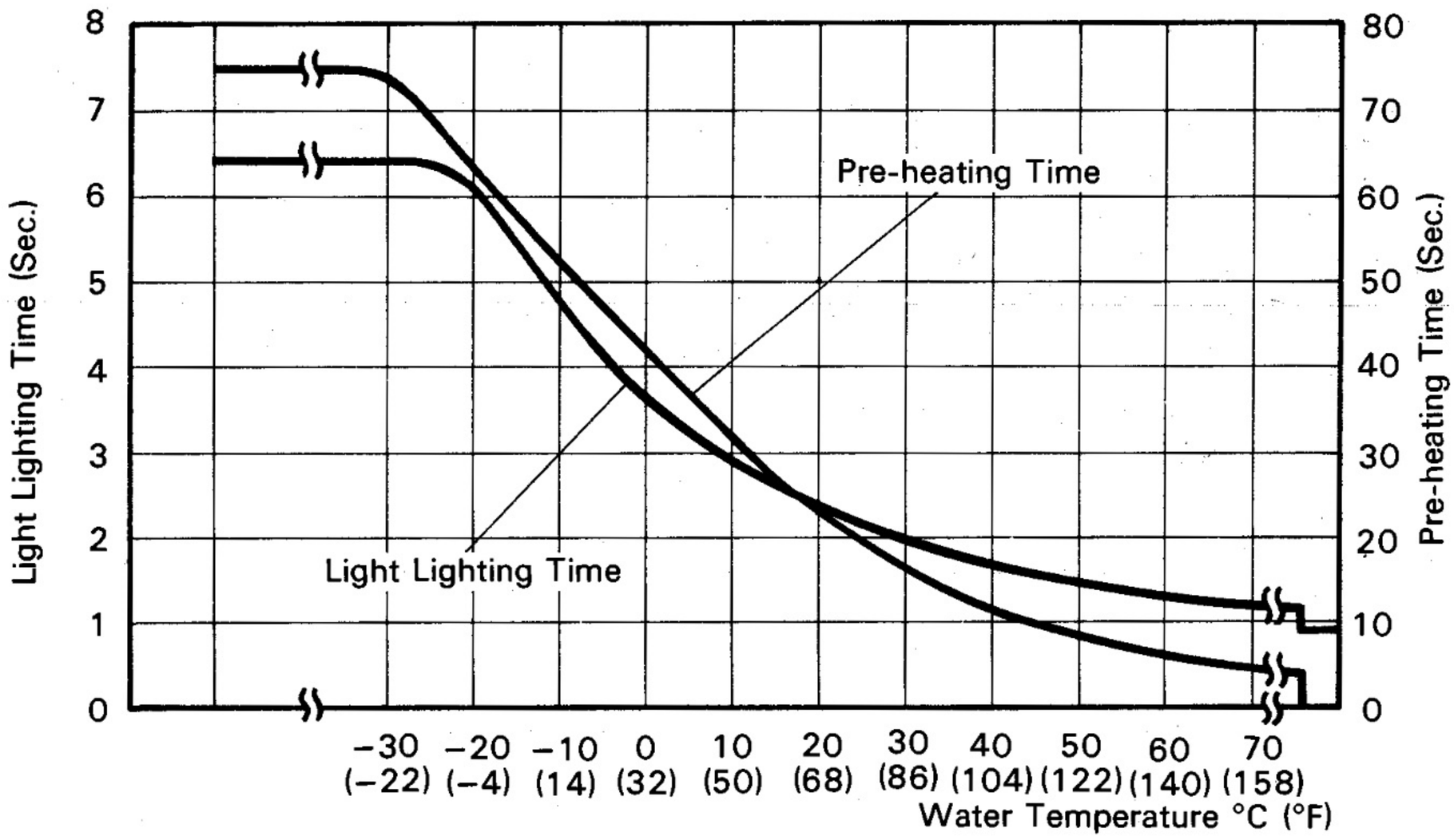

Europe and Canada [24V Type]

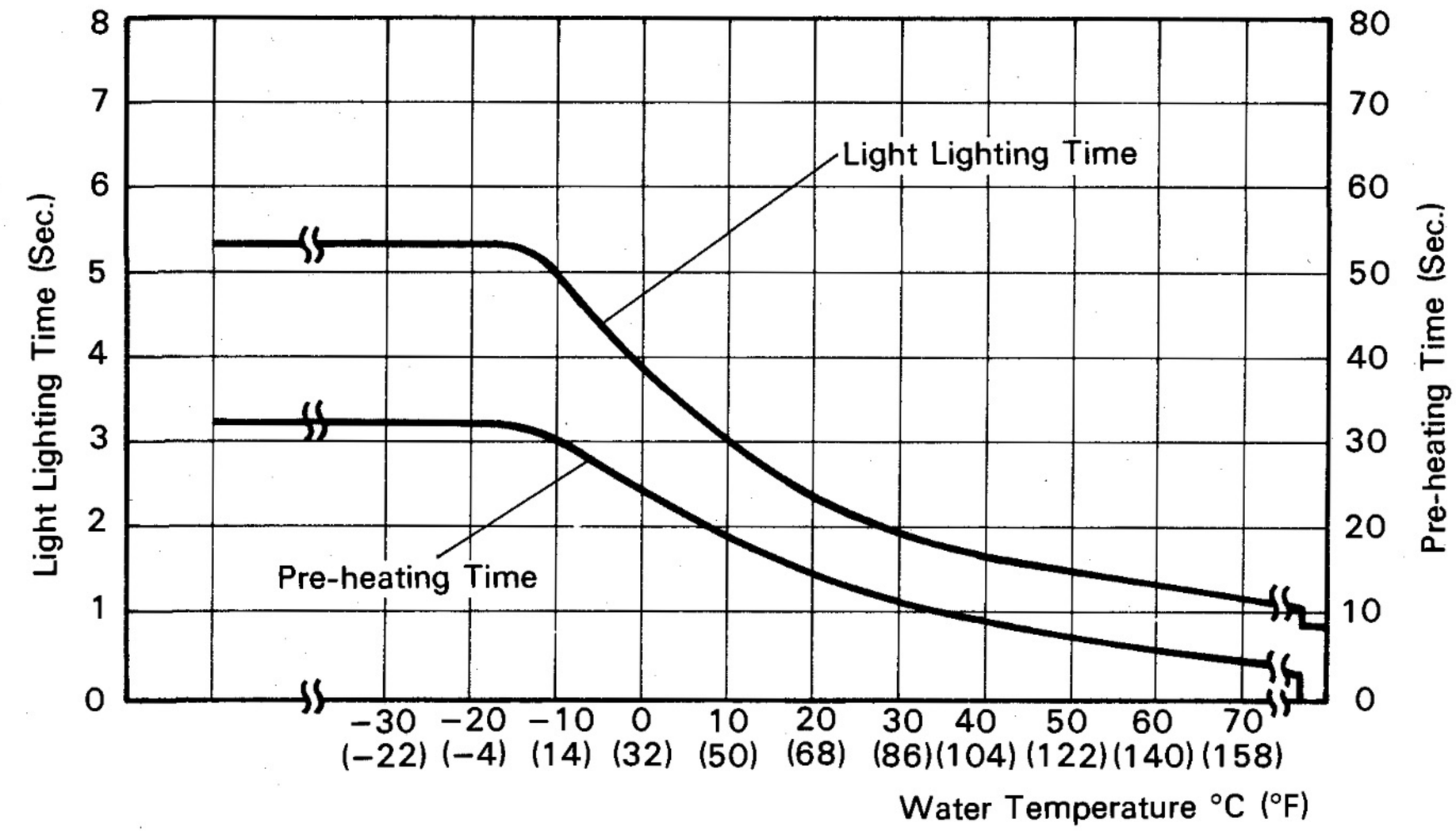

ST0296
ST0295

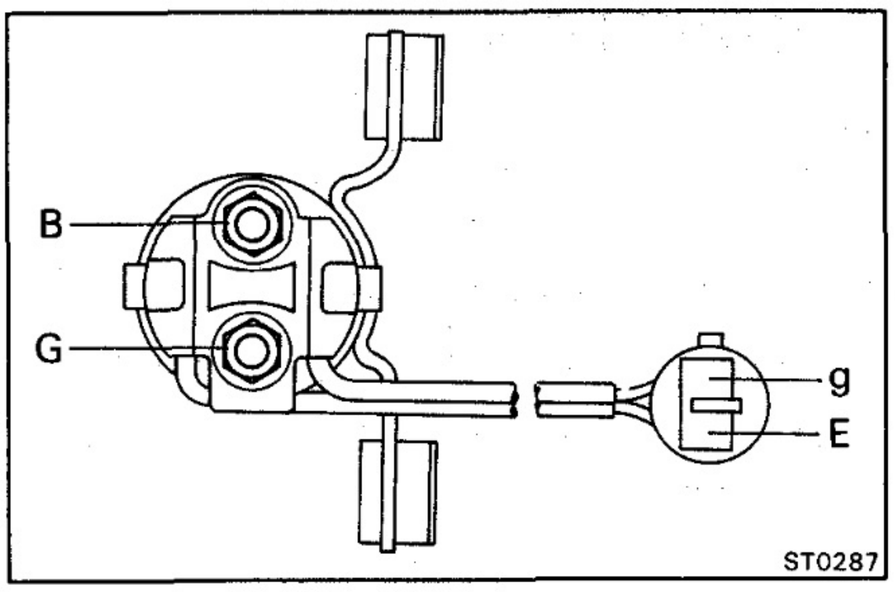

No. 1 Glow Plug Relay

LOCATION: On the fender apron in the engine compartment.

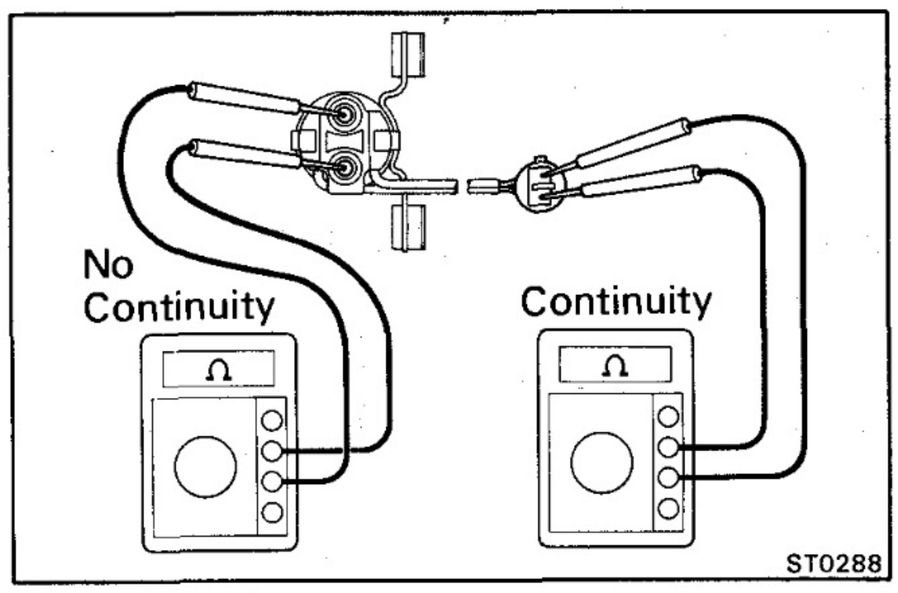

1. INSPECT RELAY CONTINUITY

(a) Check that there is continuity between terminals E and g.

(b) Check that there is no continuity between terminals B and G.

If continuity is not as specified, replace the relay.

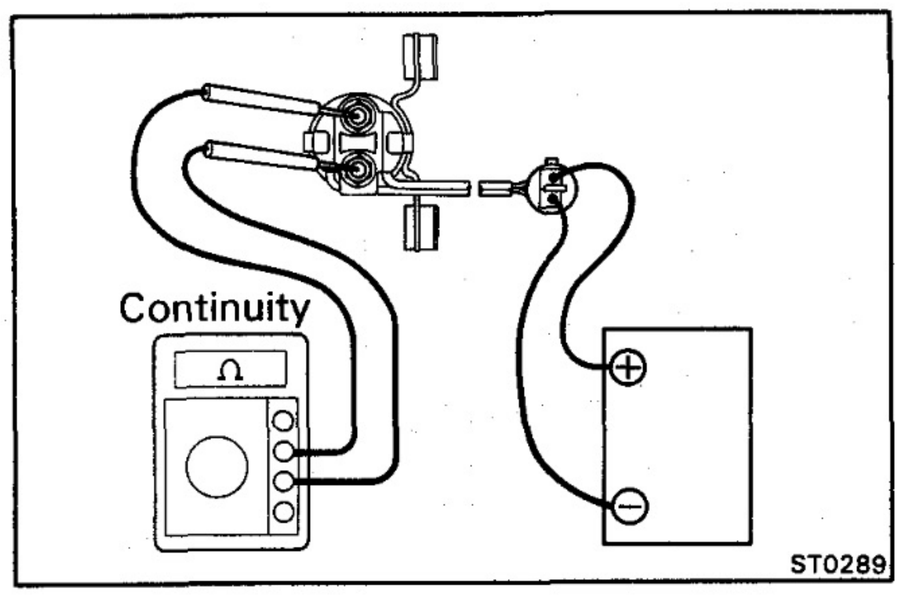

2. INSPECT RELAY OPERATION

(a) Apply battery voltage across terminals E and g.

(b) Check that there is continuity between terminals B and G.

If operation is not as specified, replace the relay.

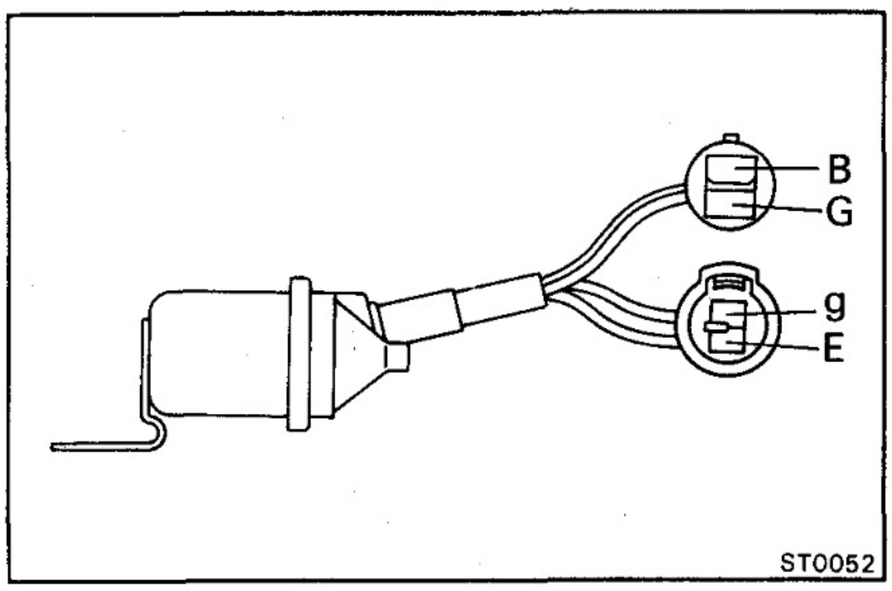

No. 2 Glow Plug Relay

LOCATION: On the fender apron in the engine compartment.

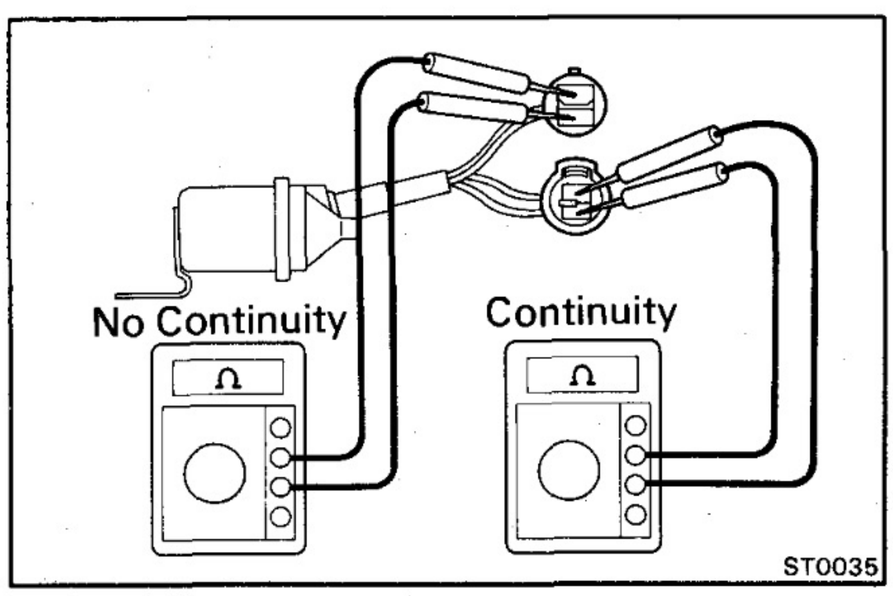

1. INSPECT RELAY CONTINUITY

(a) Check that there is continuity between terminals E and g.

(b) Check that there is no continuity between terminals B and G.

If continuity is not as specified, replace the relay.

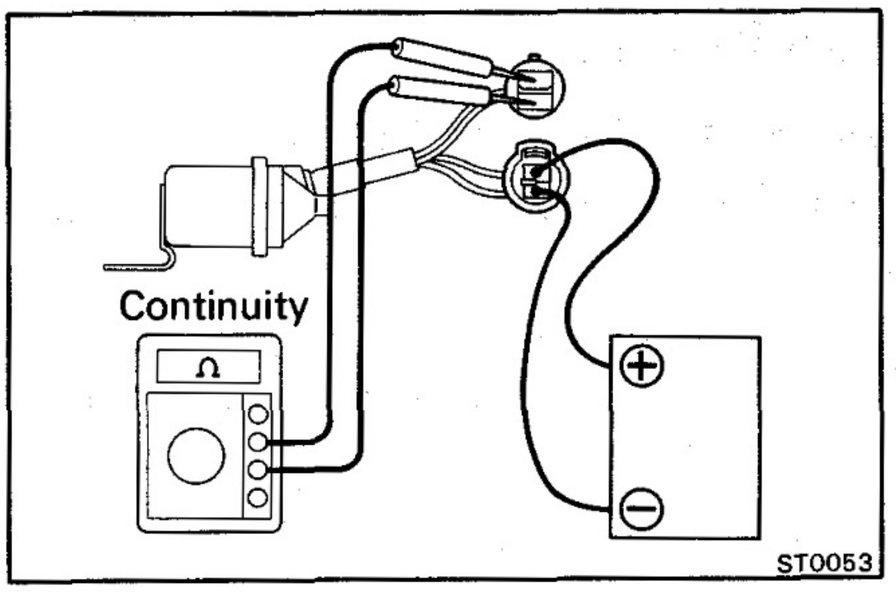

2. INSPECT RELAY OPERATION

(a) Apply battery voltage across terminals E and g.

(b) Check that there is continuity between terminals B and G.

If operation is not as specified, replace the relay.

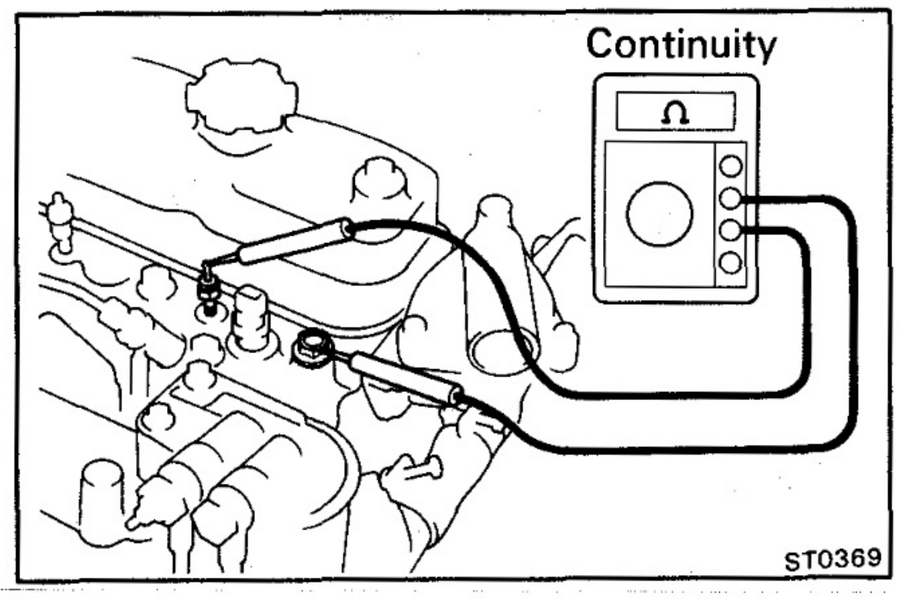

Glow Plug

INSPECT GLOW PLUG

Using an ohmmeter, check that there is continuity between the glow plug terminal and ground.

If there is no continuity, replace the glow plug.

NOTE:

- Be careful not to damage the glow plug pipes as it could cause an open circuit or shorten the life of the plugs.
- Avoid getting oil and gasoline on the glow plugs when cleaning.
- During inspection, use a cloth be sure to wipe any oil off the glow plug terminals and bakelite washer.
- Be careful not to apply more than 7 volts to the glow plug as it could cause an open circuit.

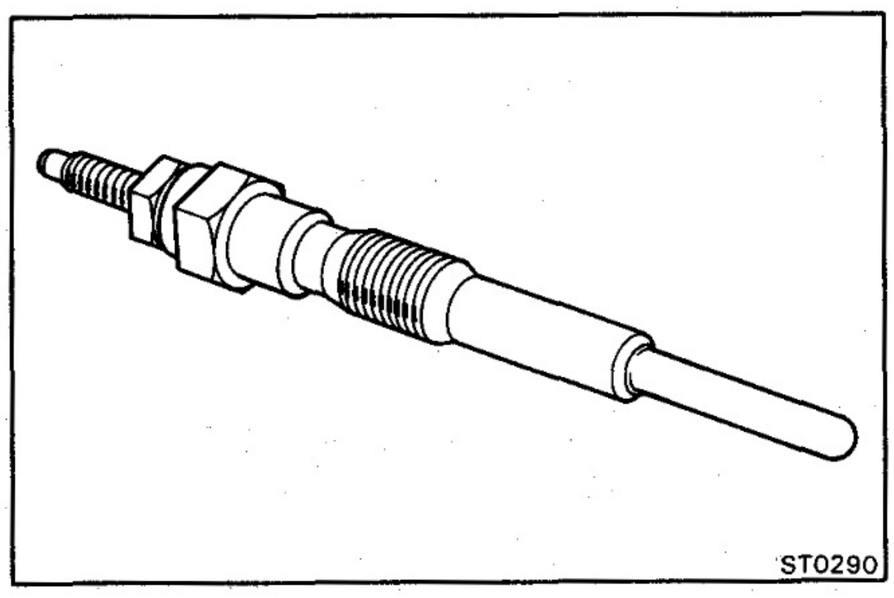

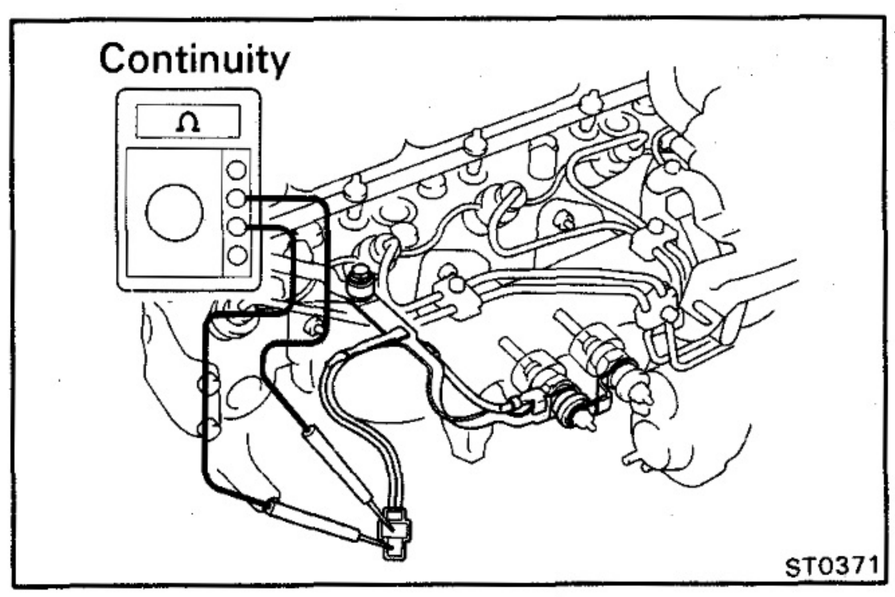

Glow Plug Current Sensor

INSPECT GLOW PLUG CURRENT SENSOR

Using an ohmmeter, check that there is continuity between the current sensor terminals.

If there is no continuity, replace the current sensor.

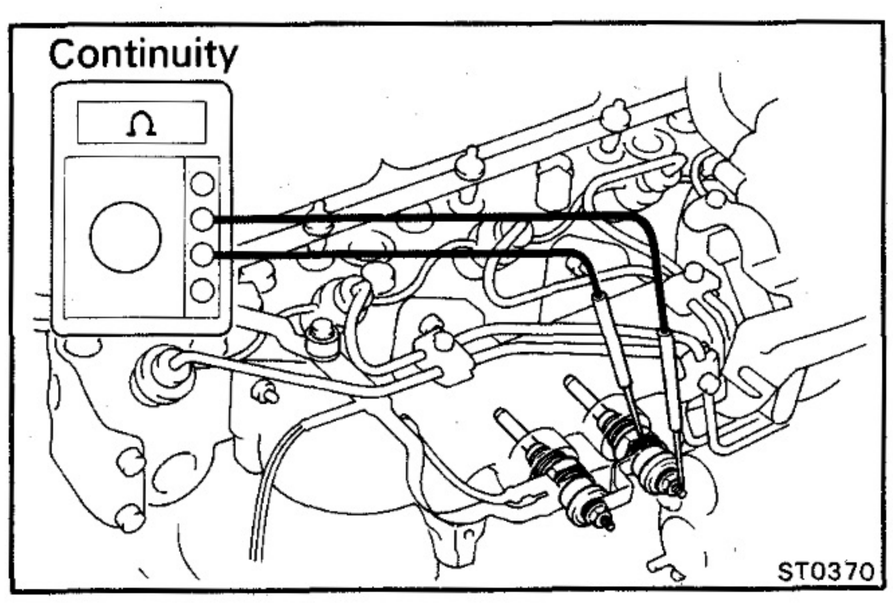

Glow Plug Resistor

INSPECT GLOW PLUG RESISTOR

Using an ohmmeter, check that there is continuity between the resistor terminals.

If there is no continuity, replace the resistor.

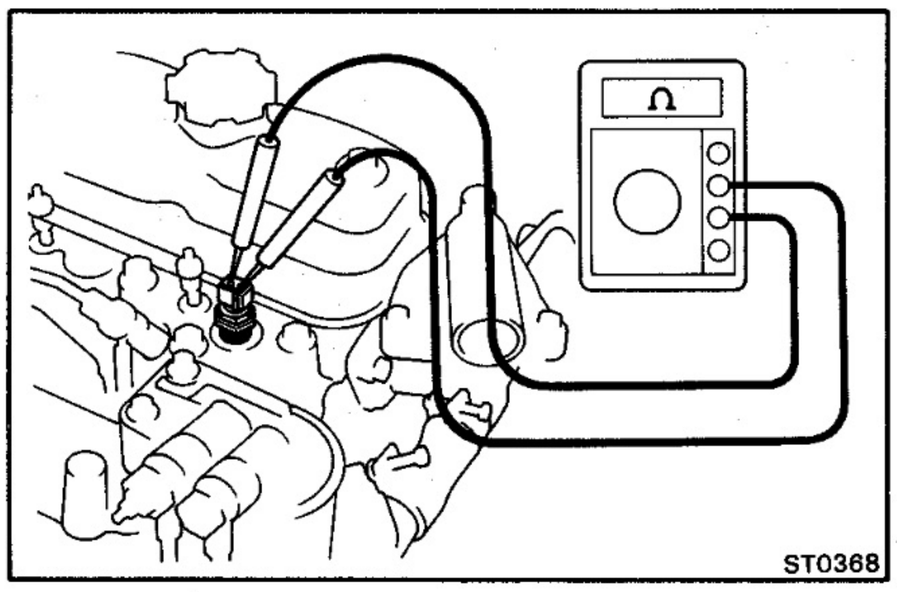

Water Temperature Sensor

INSPECT WATER TEMPERATURE SENSOR

Using an ohmmeter, check the resistance between the water temperature sensor terminals.

Resistance: Refer to the chart.

If the resistance is not as specified, replace the water temperature sensor.

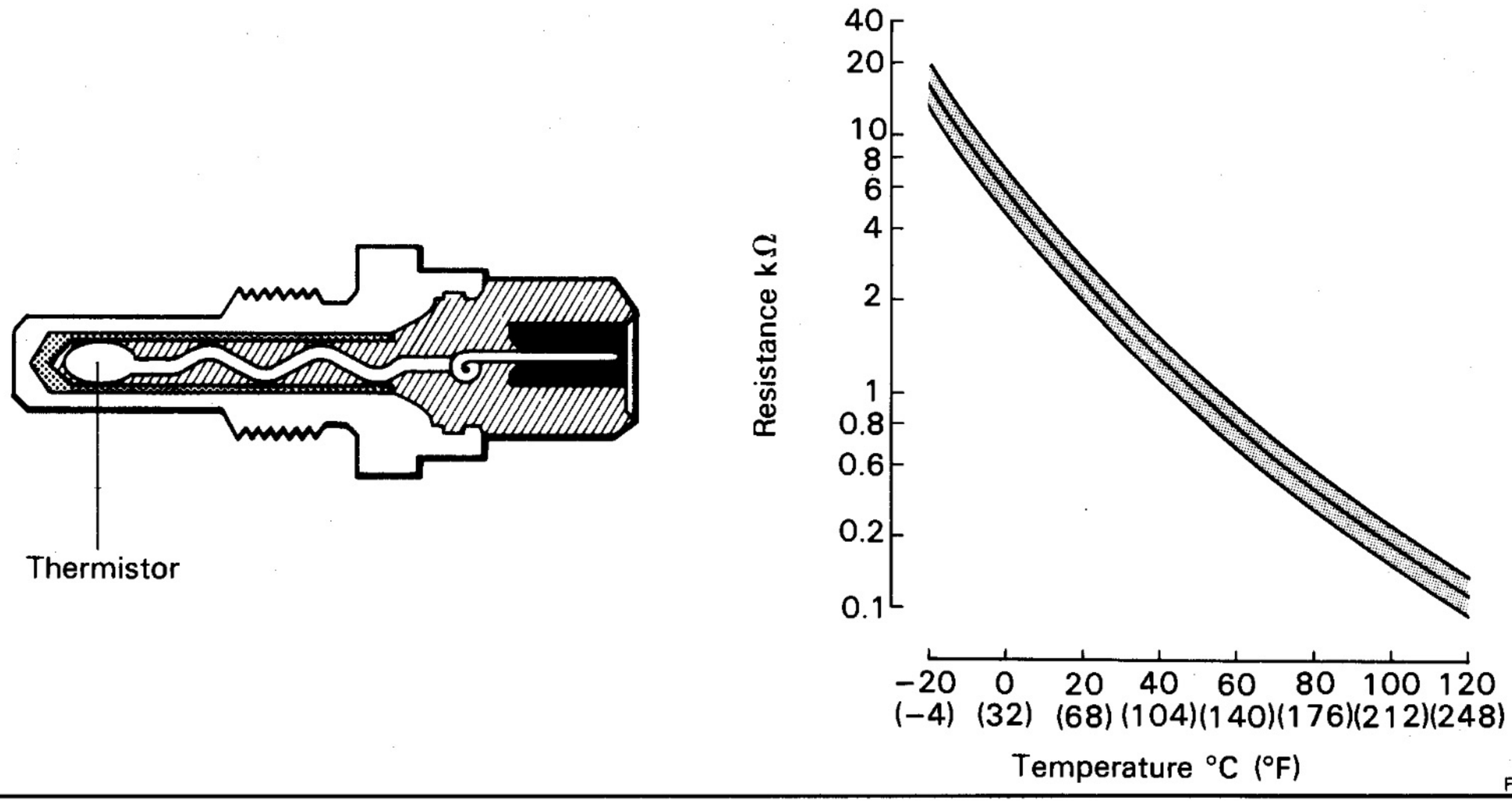

Ignition Main Relay

(See page CH-25)

Fixed Delay Type [General Destinations]

SYSTEM CIRCUIT

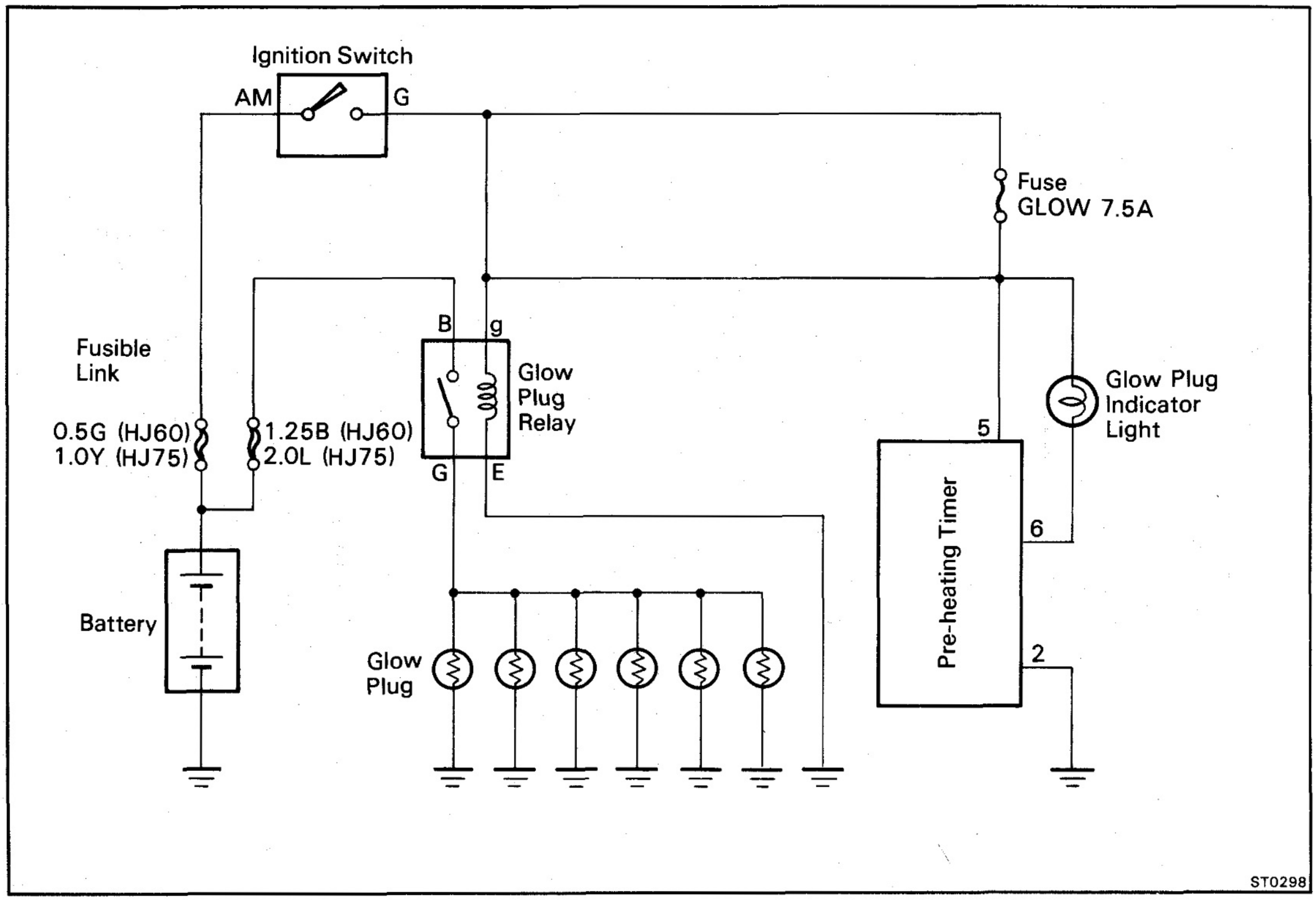

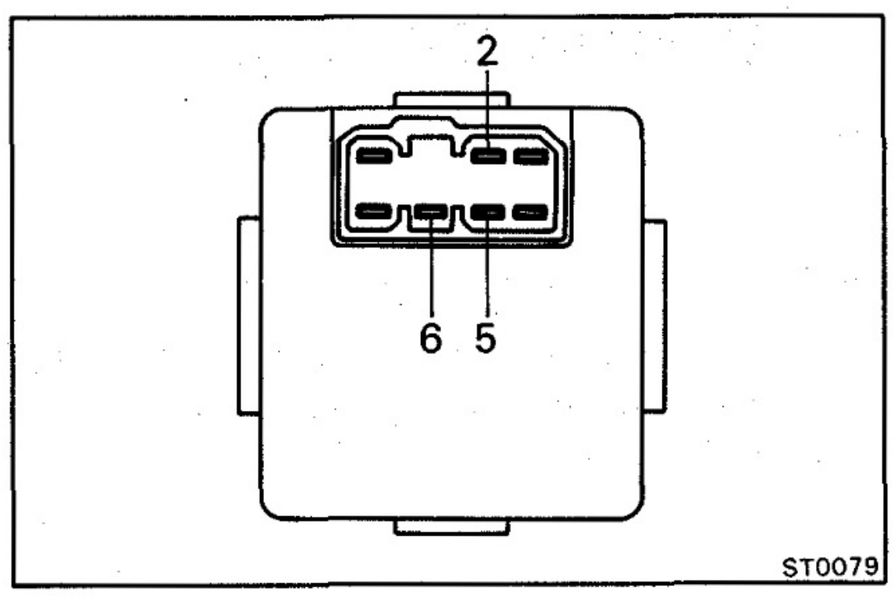

INSPECTION OF COMPONENTS

Pre-Heating Timer

LOCATION: Under the instrument panel on the

HJ60: In the cowl on the passenger side.

HJ75: Under the instrument panel on the passenger side.

INSPECT PRE-HEATING TIMER

(a) Turn the ignition switch to G and measure the lighting time of the glow indicator light.

Light lighting time: 15 — 19.5 seconds

(b) Check that there is voltage at terminal 5 of the pre-heating timer when the starter switch is turned to G.

Glow Plug Relay

(See No. 2 Glow Plug Relay on page ST-4)

Glow Plug

(See page ST-5)

PRE-HEATING SYSTEM [12H-T]

SYSTEM CIRCUIT

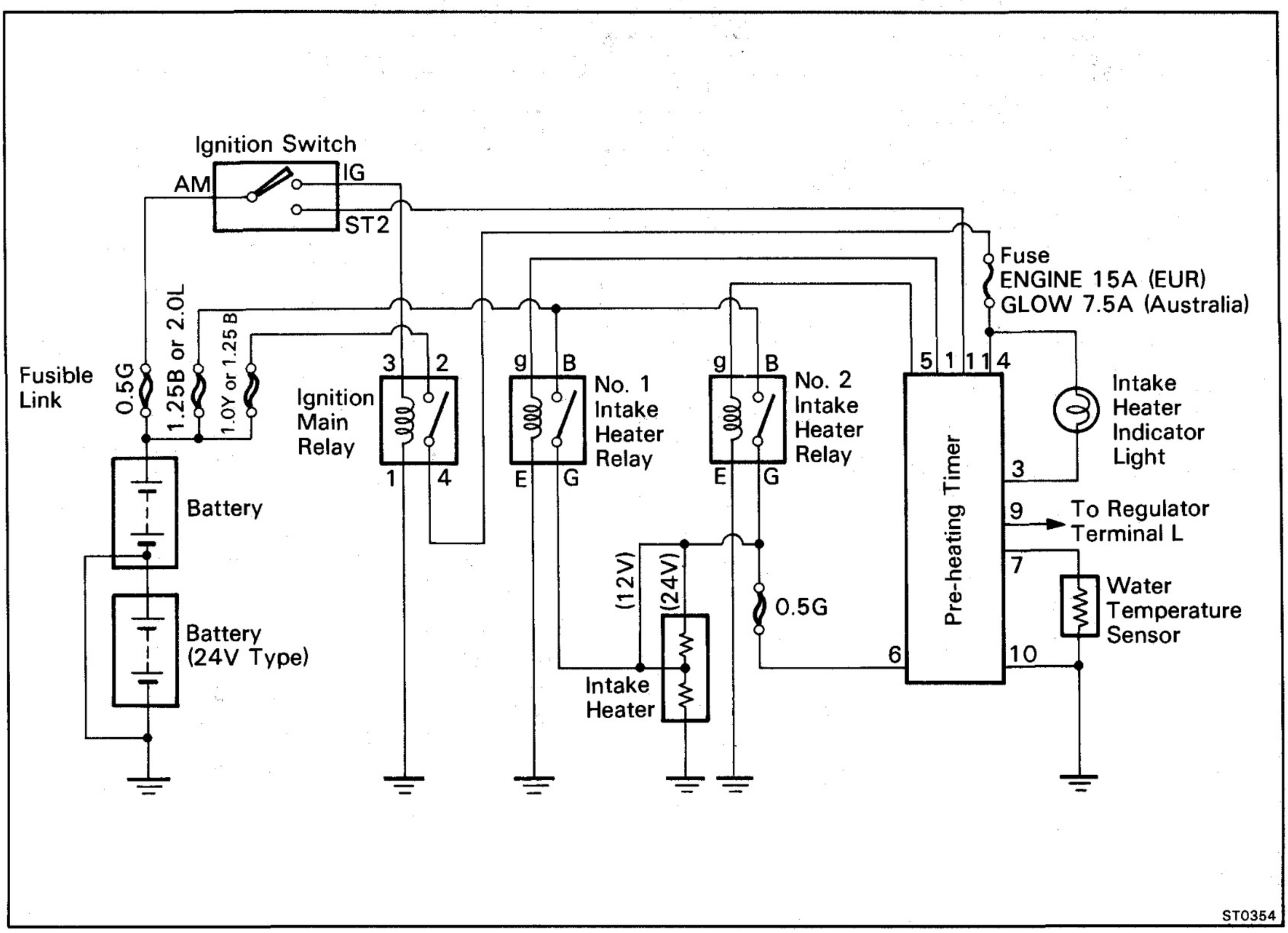

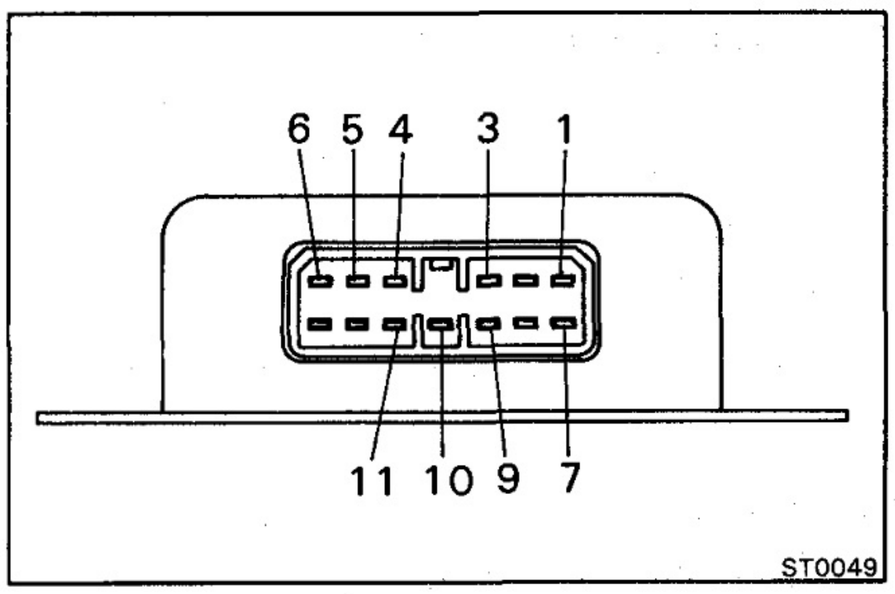

INSPECTION OF COMPONENTS

Pre-heating Timer

LOCATION

HJ60: In the cowl on the passenger side.

HJ75: Under the instrument panel on the passenger side.

Refer to Diesel Electrical System Diagnosis for inspection procedures. (See page EM-13)

TIMER CHARACTERISTIC DIAGRAM

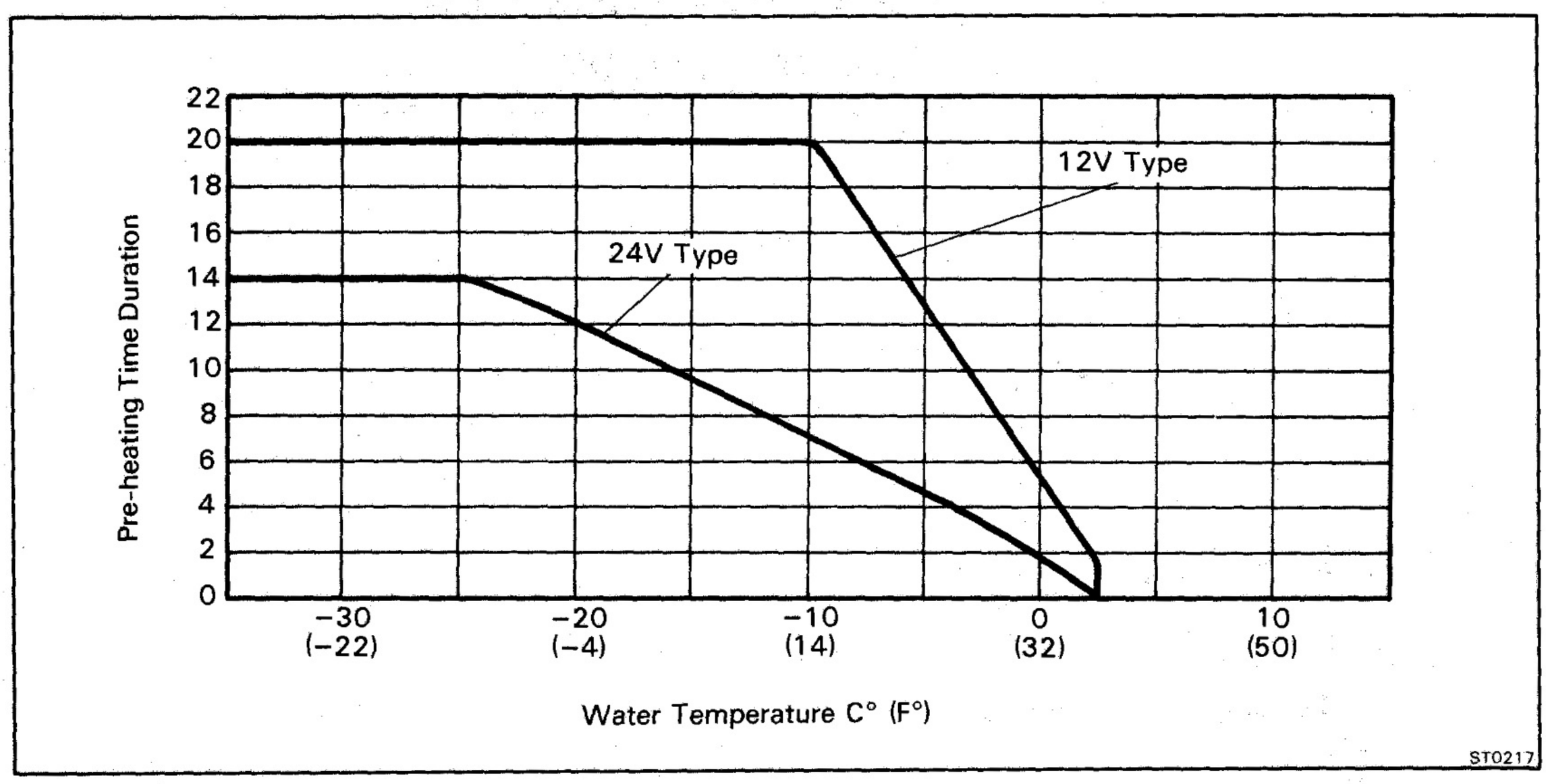

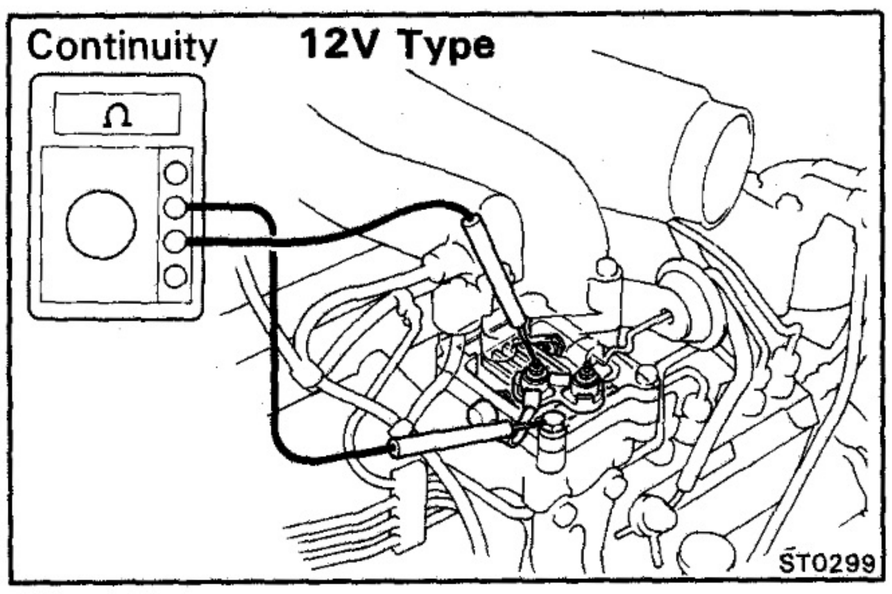

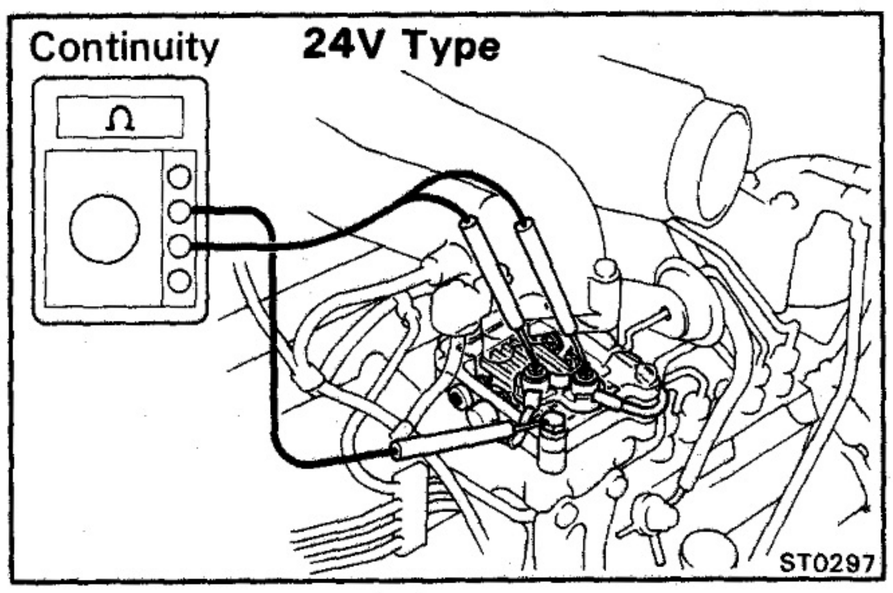

Intake Heater

INSPECT INTAKE HEATER

Using an ohmmeter, check that there is continuity between terminal(s) of the intake heater and ground.

If continuity is not as specified, replace the relay

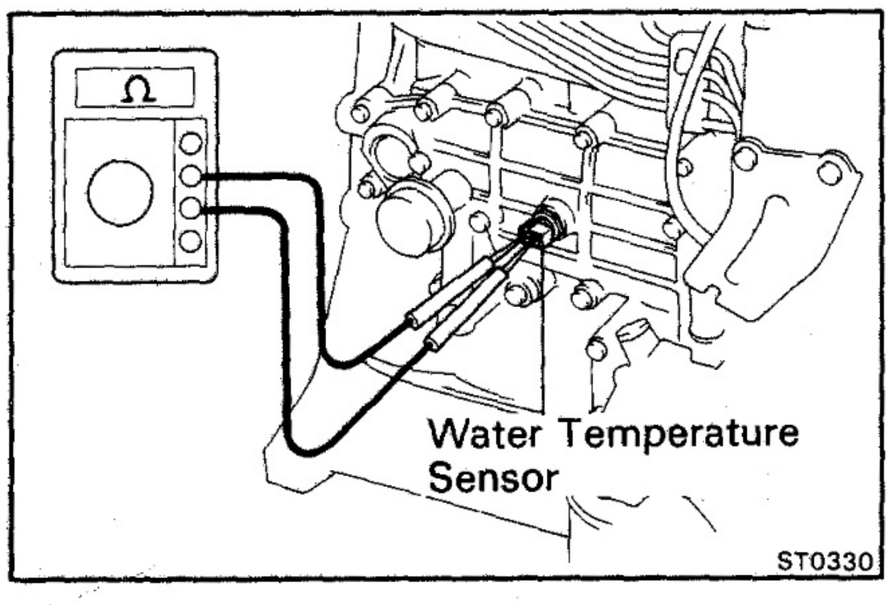

No. 1 and No. 2 Intake Heater Relays

(See No. 1 Glow Plug Relay on page ST-4)

Water Temperature Sensor

(See page ST-6)

Ignition Main Relay

(See page CH-25)

TROUBLESHOOTING

Problem	Possible cause	Remedy	Page
Engine will not crank	Battery charge low	Check battery specific gravity Charge or replace battery	CH-6
	Battery cables loose, corroded or worn	Repair or replace cables	
	Neutral start switch faulty (A/T only)	Replace switch	
	Fusible link blown	Replace fusible link	
	Starter faulty	Repair starter	ST-11
	Ignition switch faulty	Replace ignition switch	
Engine cranks slowly	Battery charge low	Check battery specific gravity Charge or replace battery	CH-6
	Battery cables loose, corroded or worn	Repair or replace cables	
	Starter faulty	Repair starter	ST-11
Starter keeps running	Starter faulty	Repair starter	ST-11
	Ignition switch faulty	Replace ignition switch	
	Short in wiring	Repair wiring	
Starter spins but engine will not crank	Pinion gear teeth broken or faulty starter	Repair starter	ST-11
	Flywheel teeth broken	Replace flywheel	

STARTING SYSTEM CIRCUIT

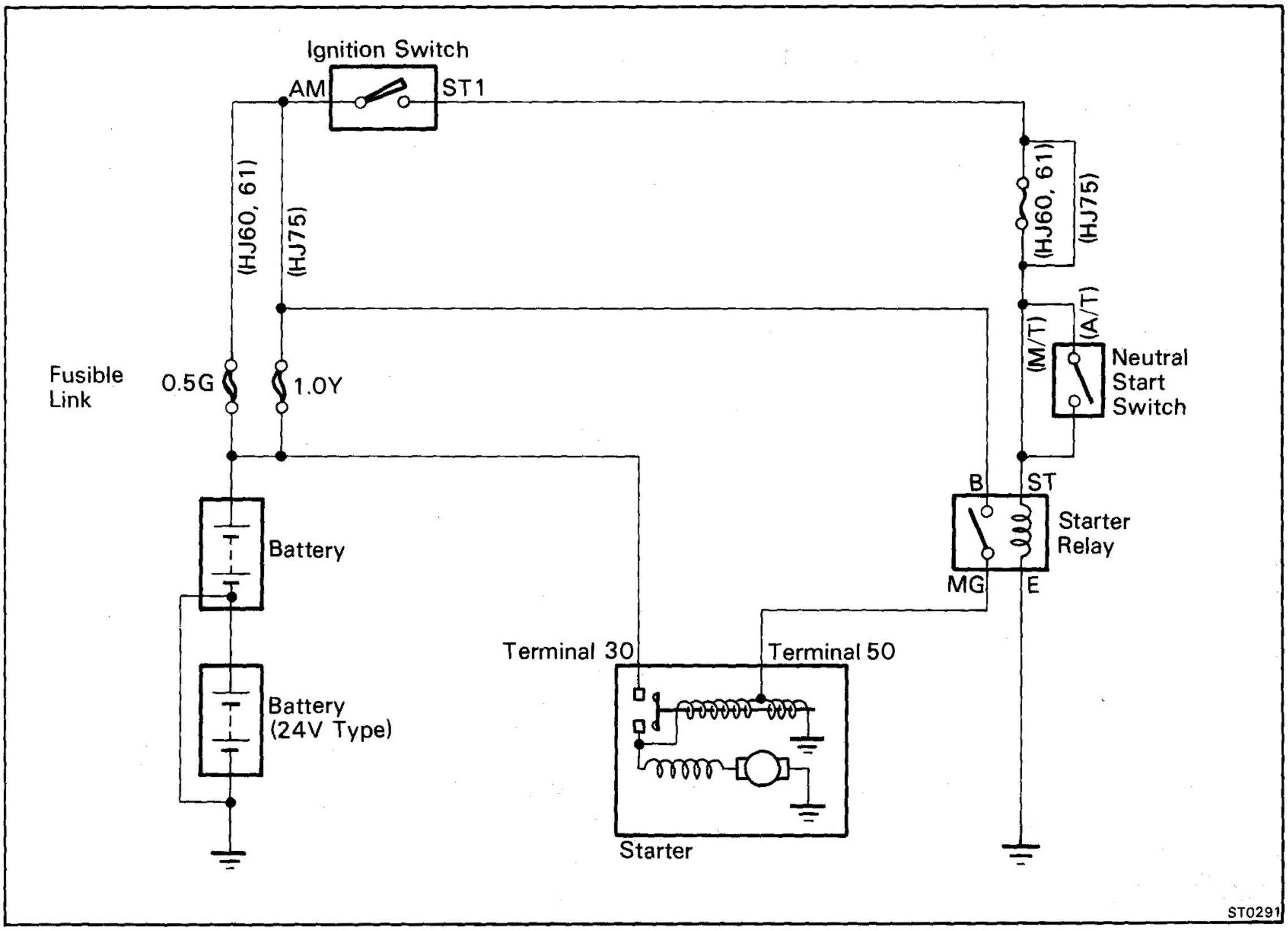

STARTER

COMPONENTS

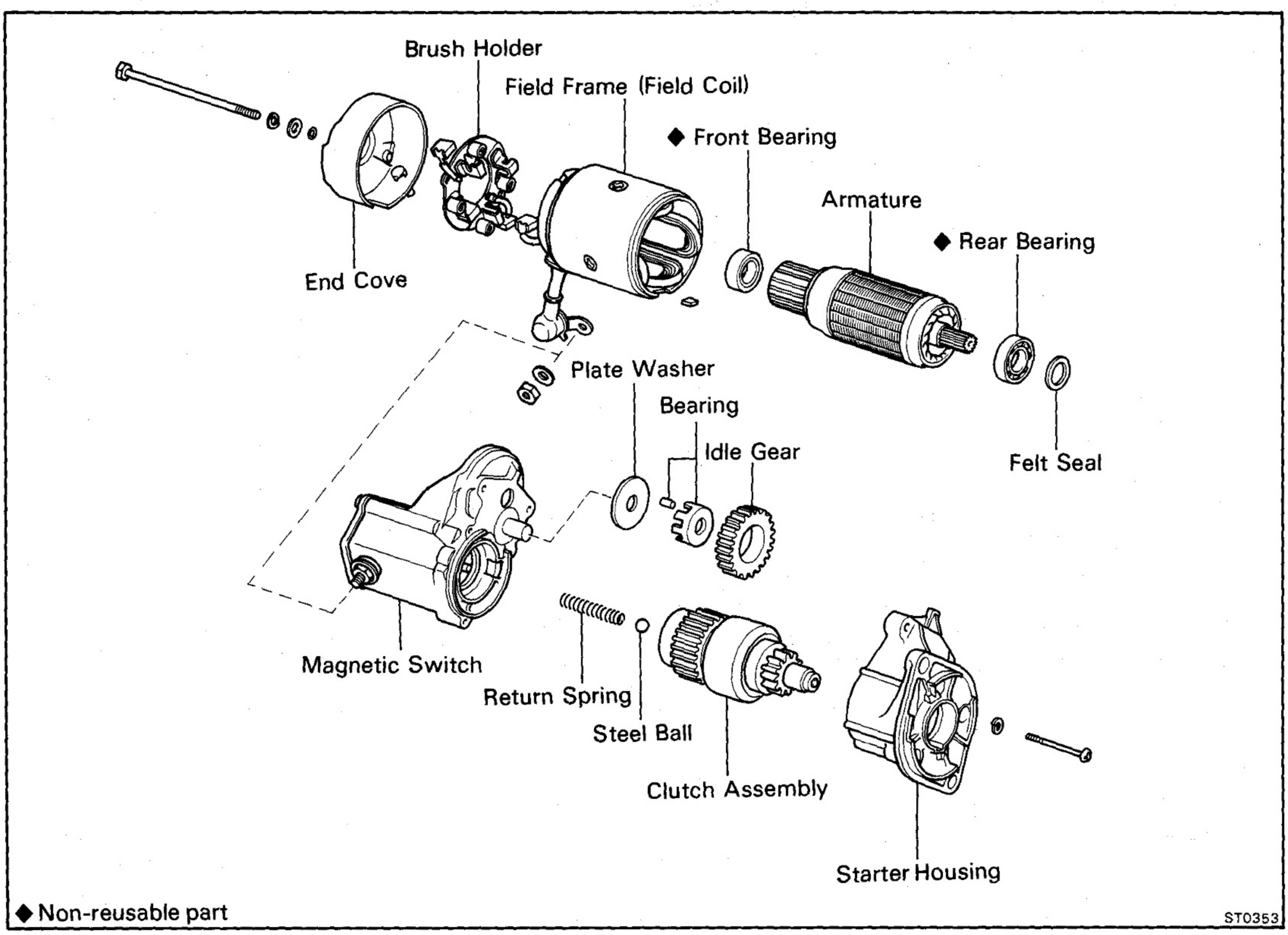

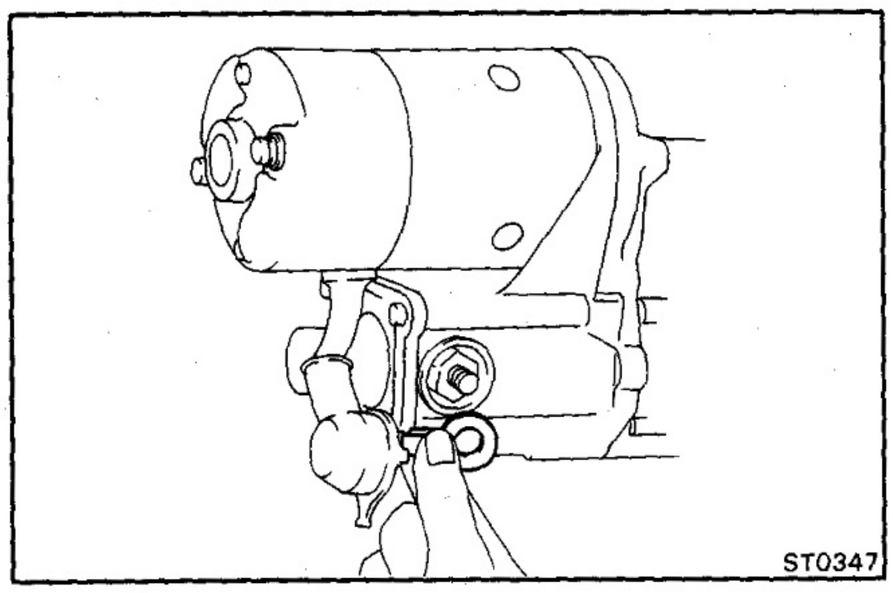

DISASSEMBLY OF STARTER

1. REMOVE FIELD FRAME AND ARMATURE ASSEMBLY

(a) Remove the nut and disconnect the lead wire from the magnetic switch terminal.

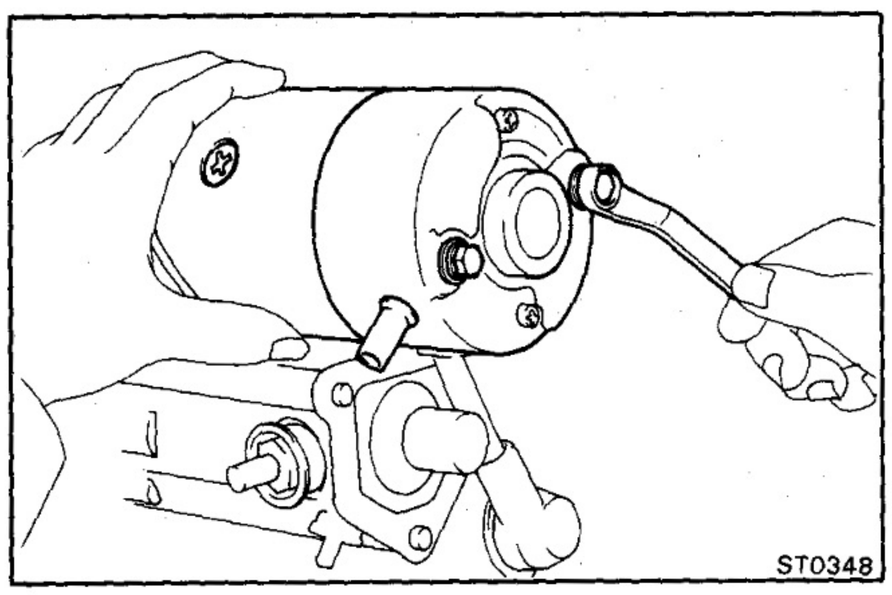

(b) Remove the two through bolts.

(c) Pull out the field frame together with the armature.

(d) Remove the felt seal and lock plate.

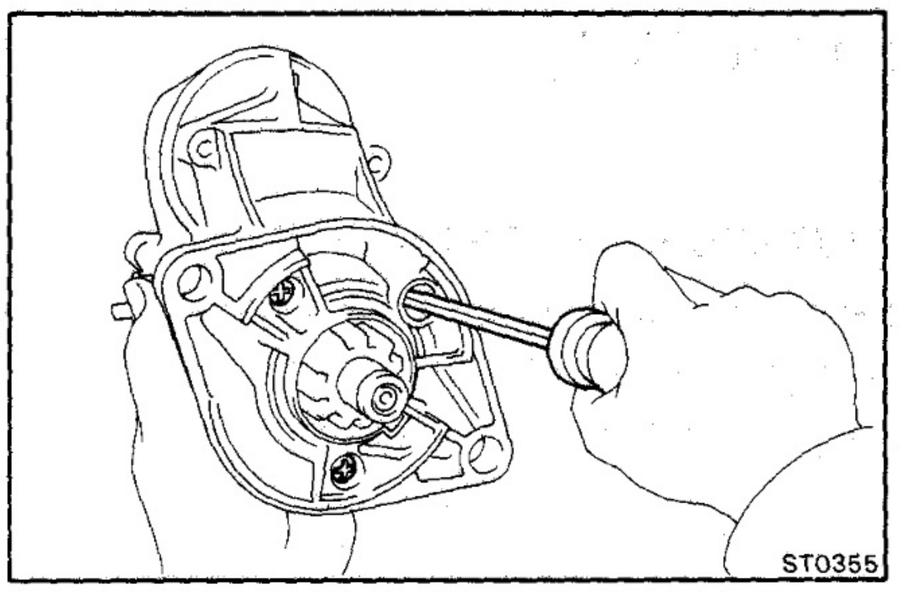

2. REMOVE STARTER HOUSING, CLUTCH ASSEMBLY AND GEAR

(a) Remove the three screws.

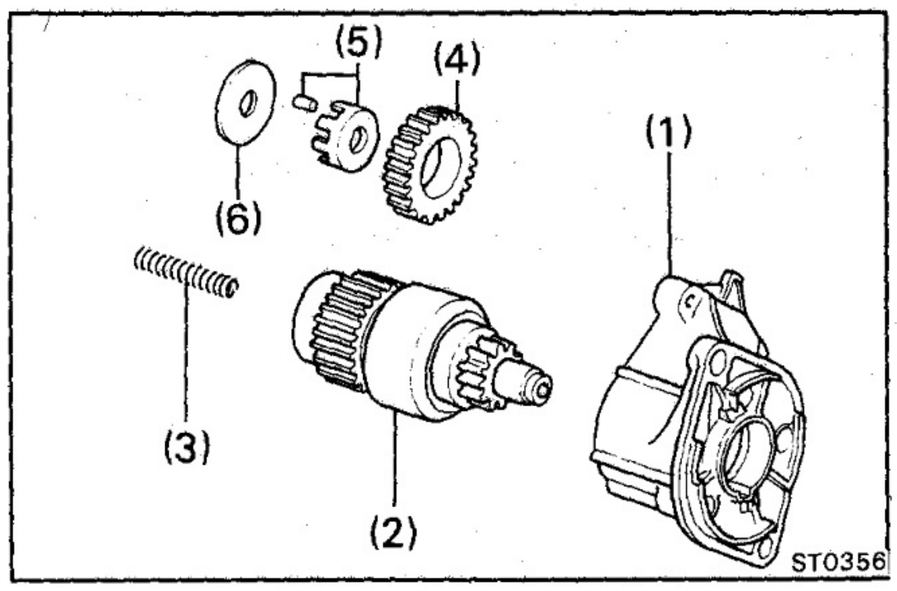

(b) Remove the following parts from the magnetic switch:

(1) Starter housing
(2) Clutch assembly
(3) Return spring
(4) Idle gear
(5) Bearing
(6) Plate washer

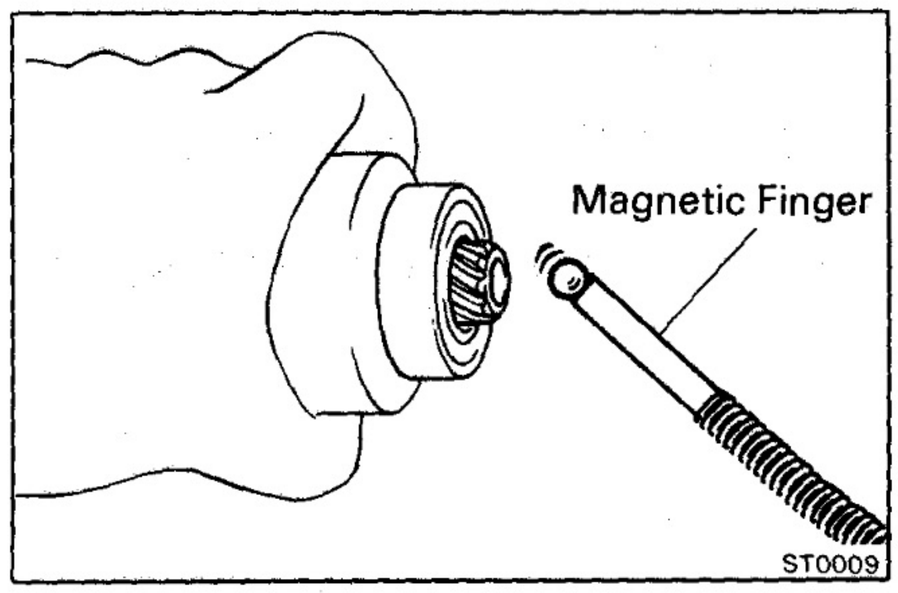

3. REMOVE STEEL BALL

Using a magnetic finger, remove the steel ball from the clutch shaft hole.

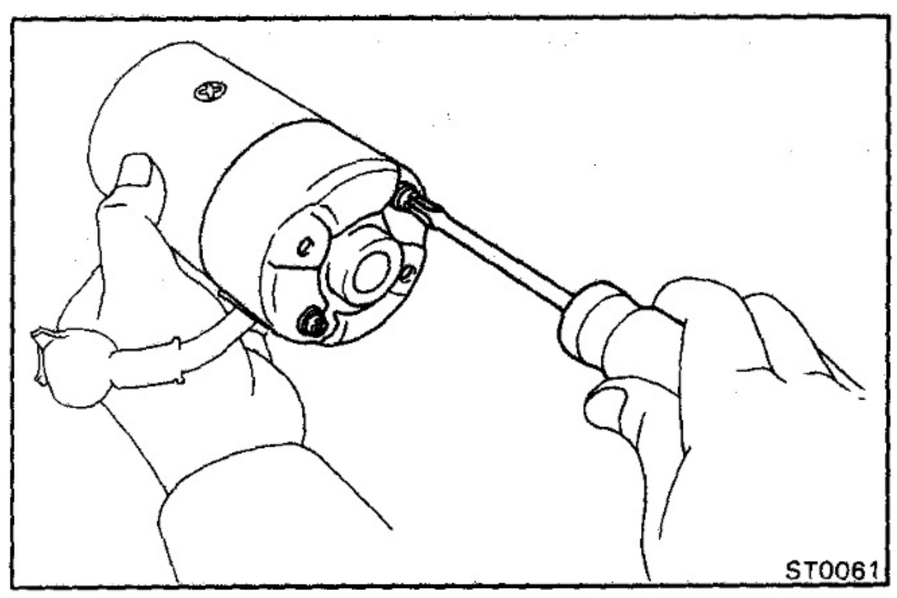

4. REMOVE BRUSH HOLDER

(a) Remove the two screws and end cover from the field frame.

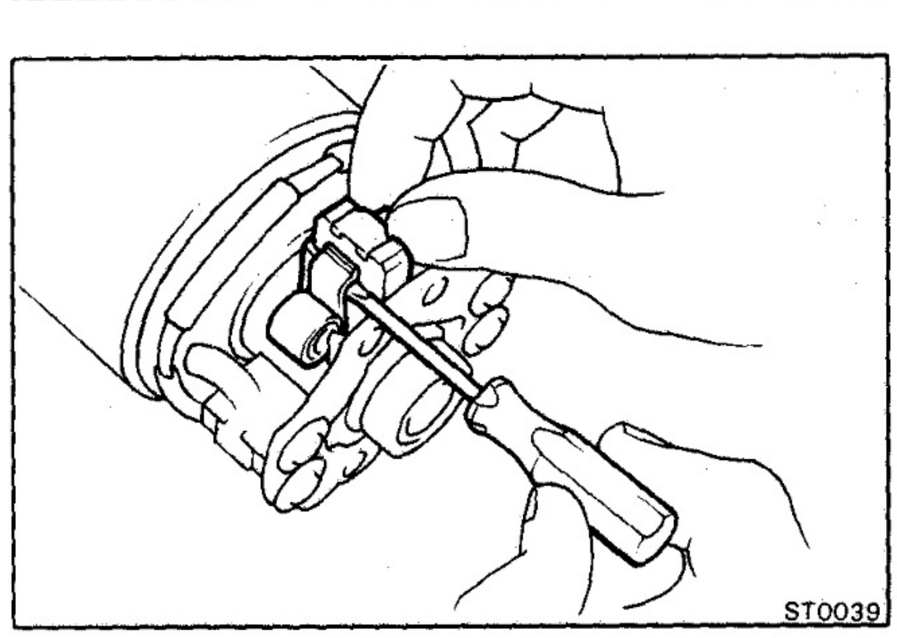

(b) Using a screwdriver, hold the spring back and disconnect the brush from the brush holder. Disconnect the four brushes and remove the brush holder.

5. REMOVE ARMATURE FROM FIELD FRAME

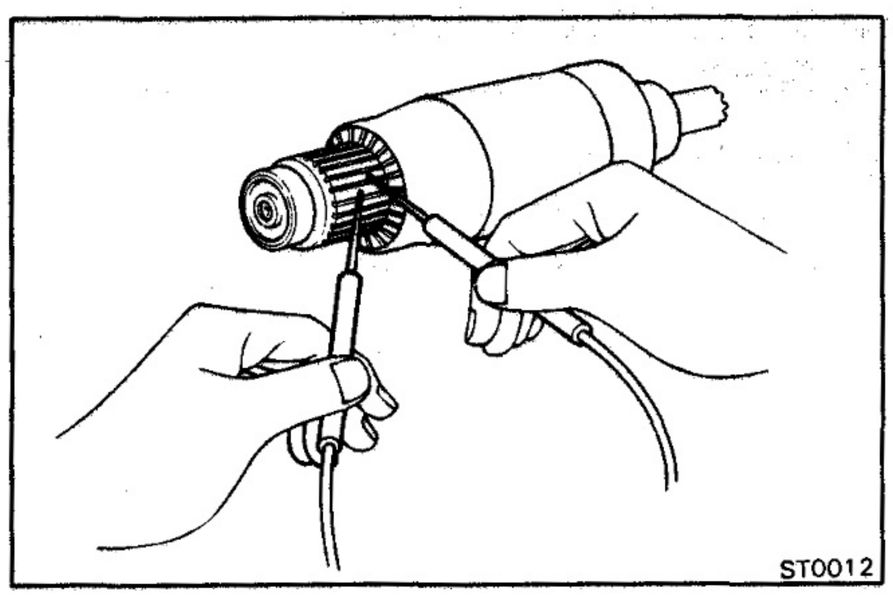

INSPECTION OF STARTER

Armature Coil

1. INSPECT COMMUTATOR FOR OPEN CIRCUIT

Using an ohmmeter, check that there is continuity between the segments of the commutator.

If there is no continuity, replace the armature.

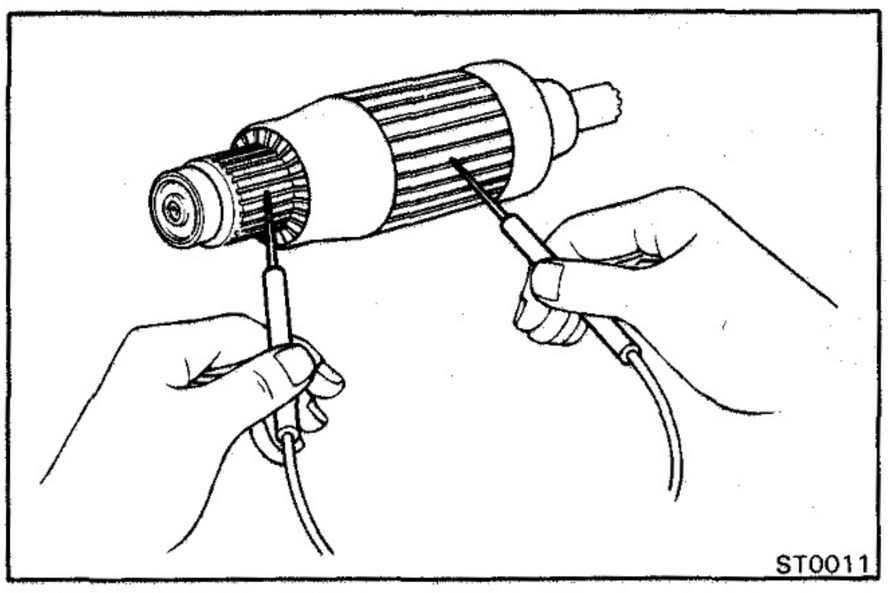

2. INSPECT COMMUTATOR FOR GROUND

Using an ohmmeter, check that there is no continuity between the commutator and armature coil core.

If there is continuity, replace the armature.

Commutator

1. INSPECT COMMUTATOR FOR DIRTY AND BURNT SURFACE

If the surface is dirty or burnt, correct with sandpaper (No. 400) or a lathe.

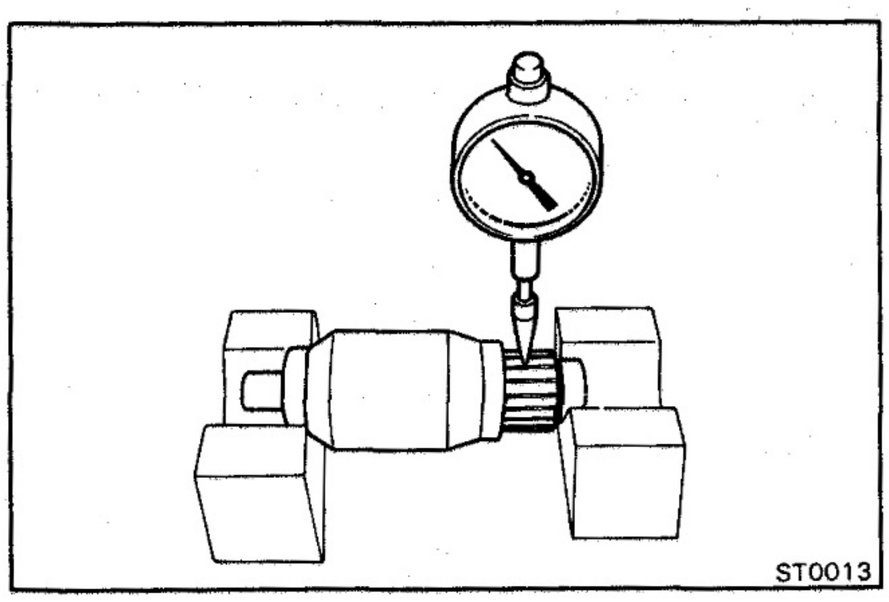

2. INSPECT COMMUTATOR CIRCLE RUNOUT

Maximum circle runout: 0.05 mm (0.0020 in.)

If the circle runout is greater than maximum, correct with a lathe.

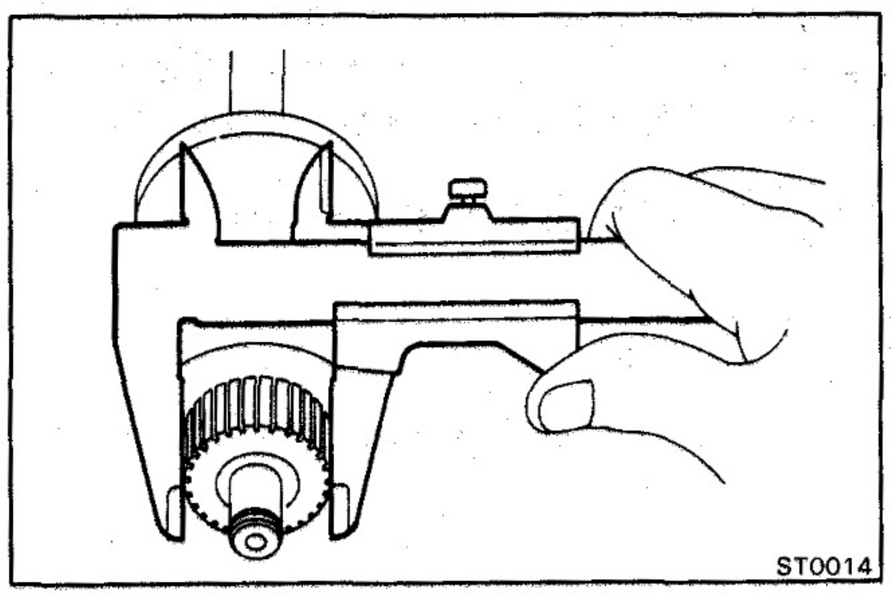

3. INSPECT DIAMETER OF COMMUTATOR

Standard diameter: 36 mm (1.42 in.)
Minimum diameter: 35 mm (1.38 in.)

If the diameter is less than minimum, replace the armature.

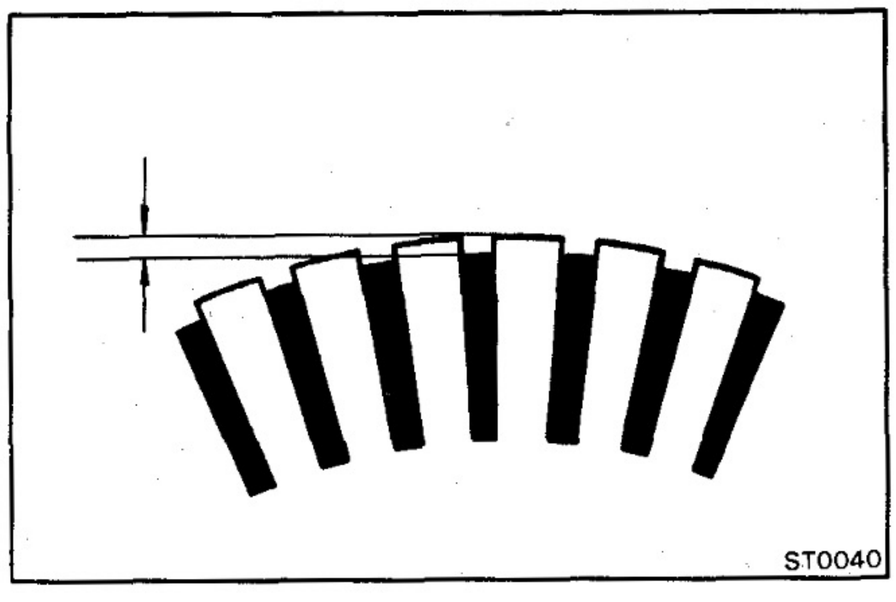

4. INSPECT UNDERCUT DEPTH

Check that the undercut depth is clean and free of foreign materials. Smooth out the edge.

Standard undercut depth: 0.7 mm (0.028 in.)
Minimum undercut depth: 0.2 mm (0.008 in.)

If the undercut depth is less than minimum, correct it with a hacksaw blade.

Field Coil (Field Frame)

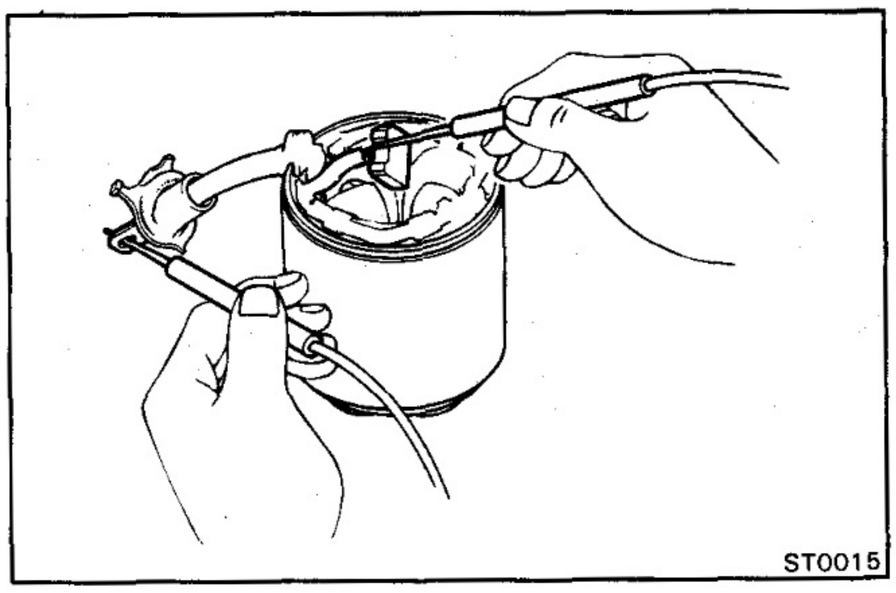

1. INSPECT FIELD COIL FOR OPEN CIRCUIT

Using an ohmmeter, check that there is continuity between the lead wire and field coil brush lead.

If there is no continuity, replace the field frame.

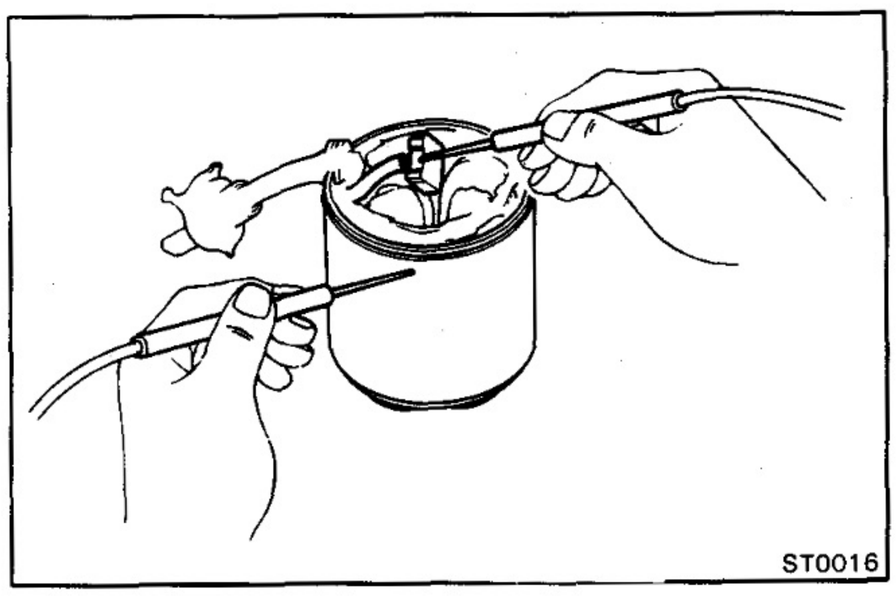

2. INSPECT FIELD COIL FOR GROUND

Using an ohmmeter, check that there is no continuity between the field coil end and field frame.

If there is continuity, repair or replace the field frame.

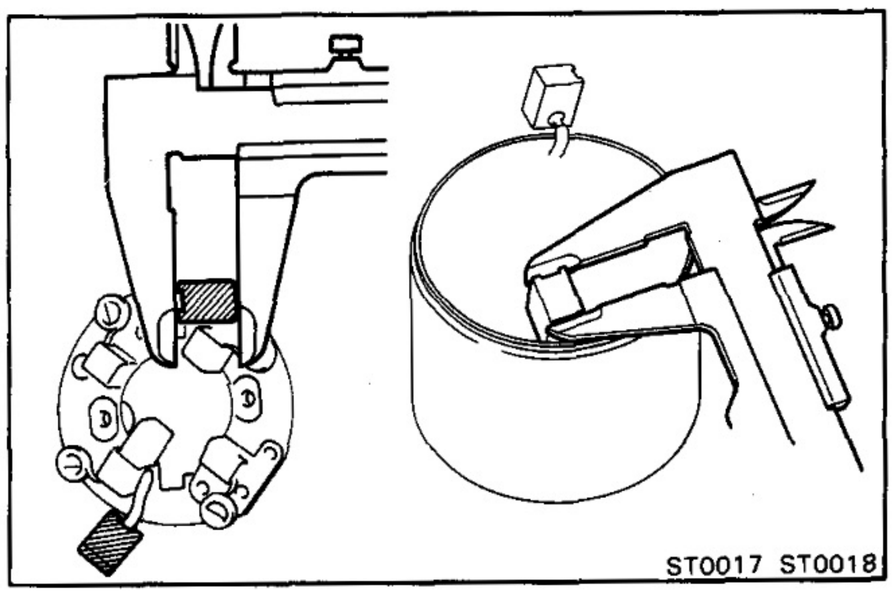

Brushes

INSPECT BRUSH LENGTH

Using calipers, measure the brush length.

Standard length: 20.5 mm (0.807 in.)
Minimum length: 13.0 mm (0.512 in.)

If the length is less than minimum, replace the brush holder and field frame.

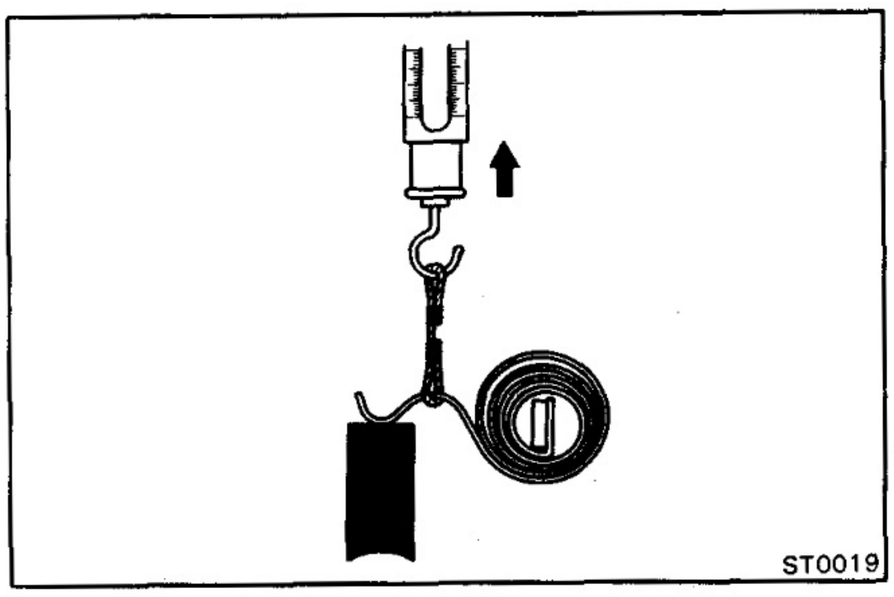

Brush Springs

INSPECT BRUSH SPRING LOAD

Take the pull scale reading the instant the brush spring separates from the brush.

Spring installed load:
3.2 – 4.0 kg (7.1 – 8.8 lb, 31 – 39 N)

If the reading is not within specification, replace the brush springs.

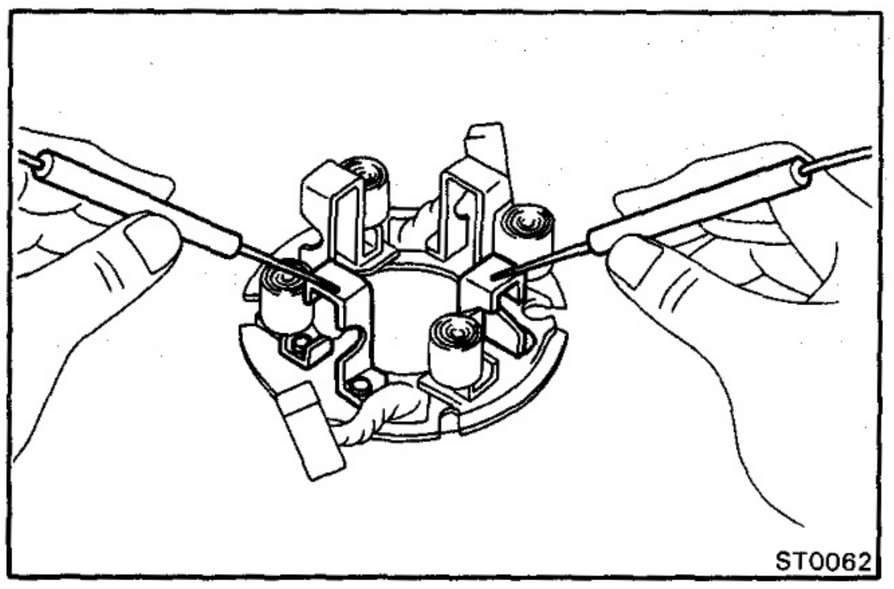

Brush Holder

INSPECT INSULATION OF BRUSH HOLDER

Using an ohmmeter, check that there is no continuity between the positive (+) and negative (–) brush holders.

If there is continuity, repair or replace the brush holder.

Clutch and Gears

1. INSPECT GEAR TEETH

Check the gear teeth on the pinion gear, idler gear and clutch assembly for wear or damage. Replace if damaged.

If damaged, also check the flywheel ring gear for wear or damage.

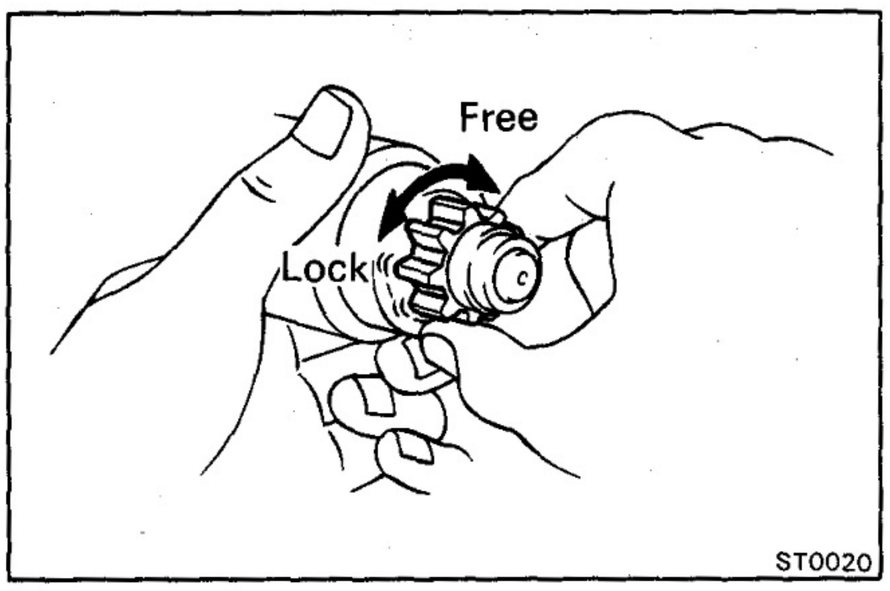

2. INSPECT CLUTCH PINION GEAR

Rotate the pinion gear clockwise and check that it turns freely. Try to rotate the pinion gear counterclockwise and check that it locks.

If necessary, replace the clutch assembly.

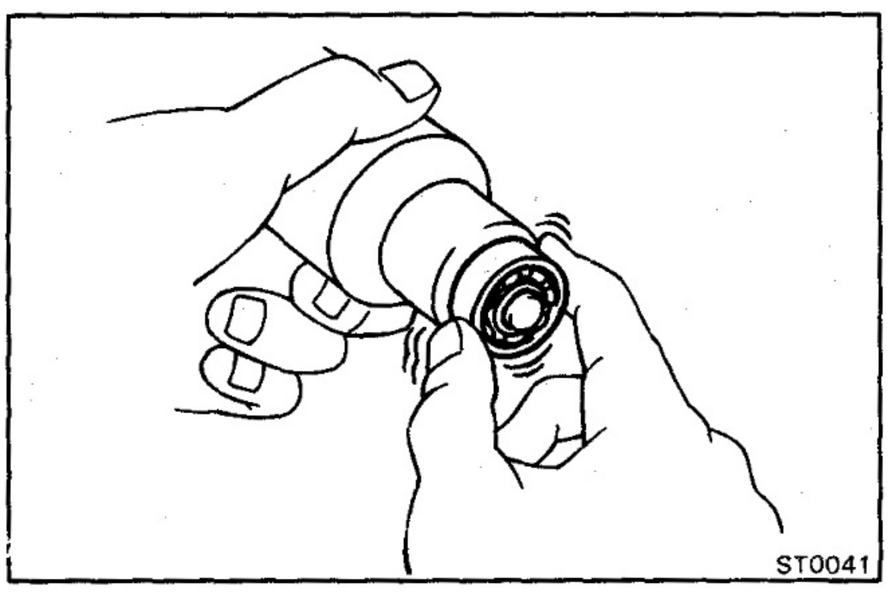

Bearings

1. INSPECT BEARINGS

Turn each bearing by hand while applying inward force.

If resistance is felt or if the bearing sticks, replace the bearing.

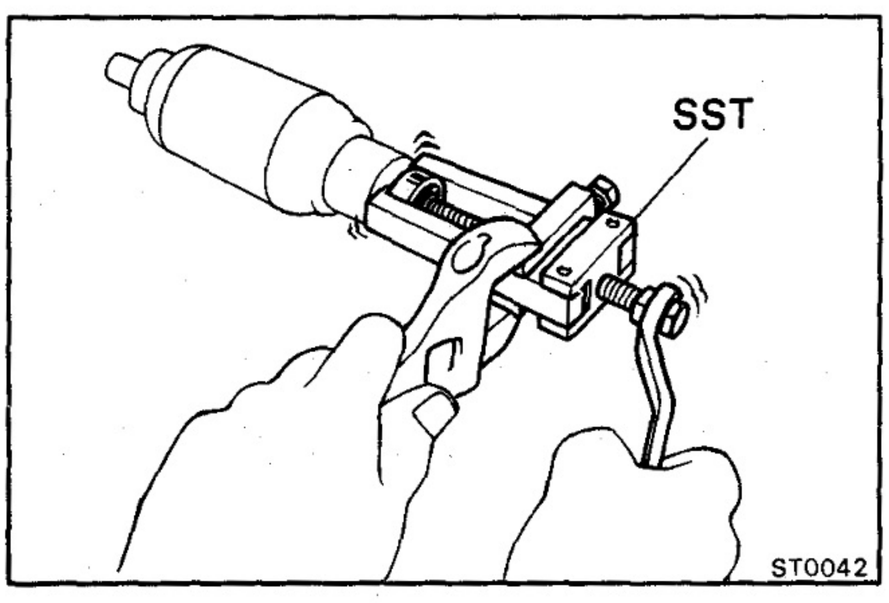

2. IF NECESSARY, REPLACE BEARINGS

(a) Using SST, remove the bearing.

SST 09286-46011

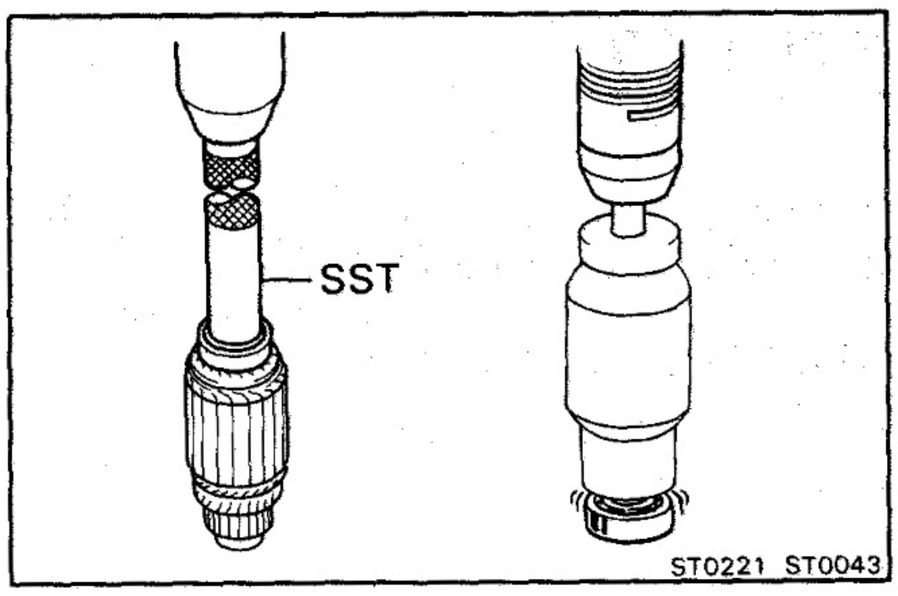

(b) Using SST and a press, press in a new front bearing.

SST 09285-76010

(c) Using a press, press in a new rear bearing.

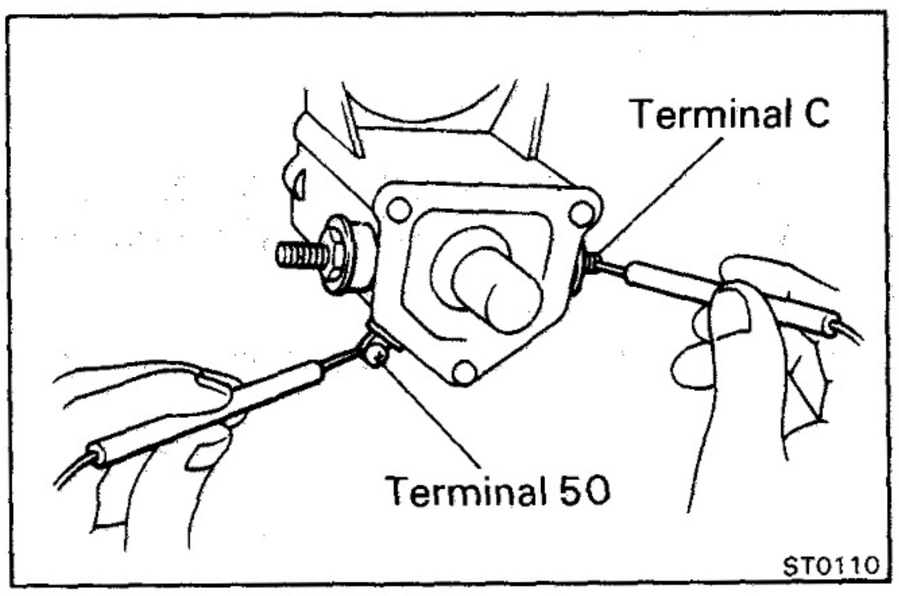

Magnetic Switch

1. PERFORM PULL-IN COIL OPEN CIRCUIT TEST

Using an ohmmeter, check that there is continuity between terminals 50 and C.

If there is no continuity, replace the magnetic switch.

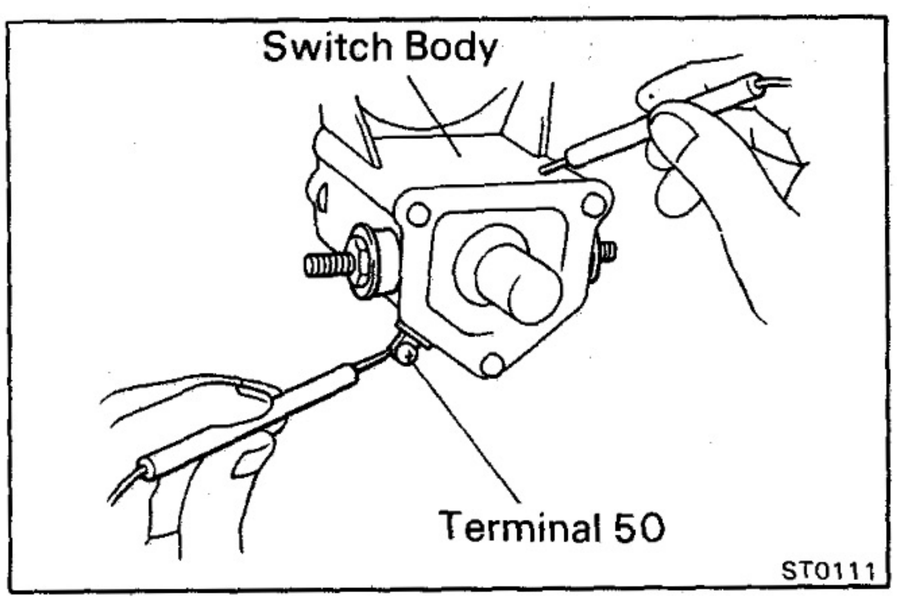

2. PERFORM HOLD-IN COIL OPEN CIRCUIT TEST

Using an ohmmeter, check that there is continuity between terminal 50 and the switch body.

If there is no continuity, replace the magnetic switch.

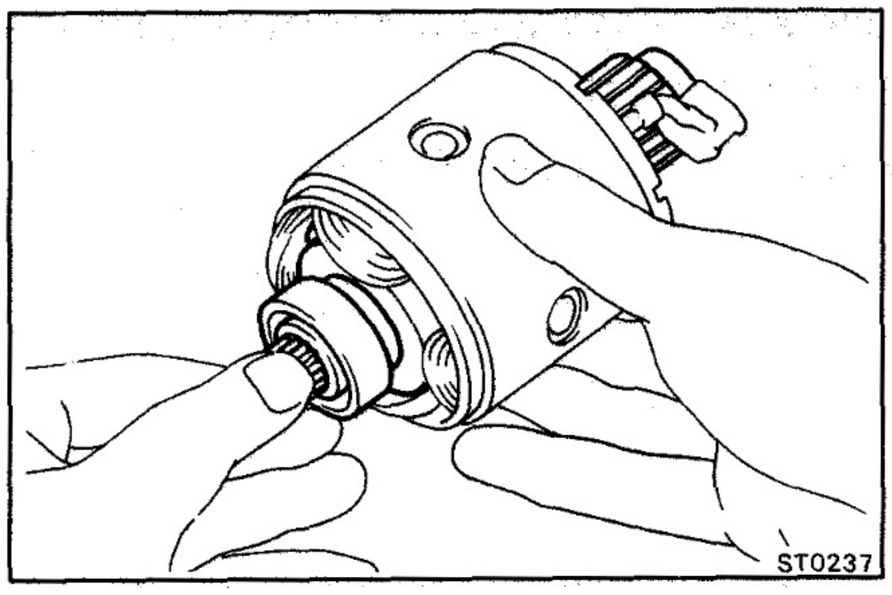

ASSEMBLY OF STARTER

(See page ST-11)

NOTE: Use high-temperature grease to lubricate the bearings and gears when assembling the starter.

1. PLACE ARMATURE INTO FIELD FRAME

Apply grease to the armature bearings and insert the armature into the field frame.

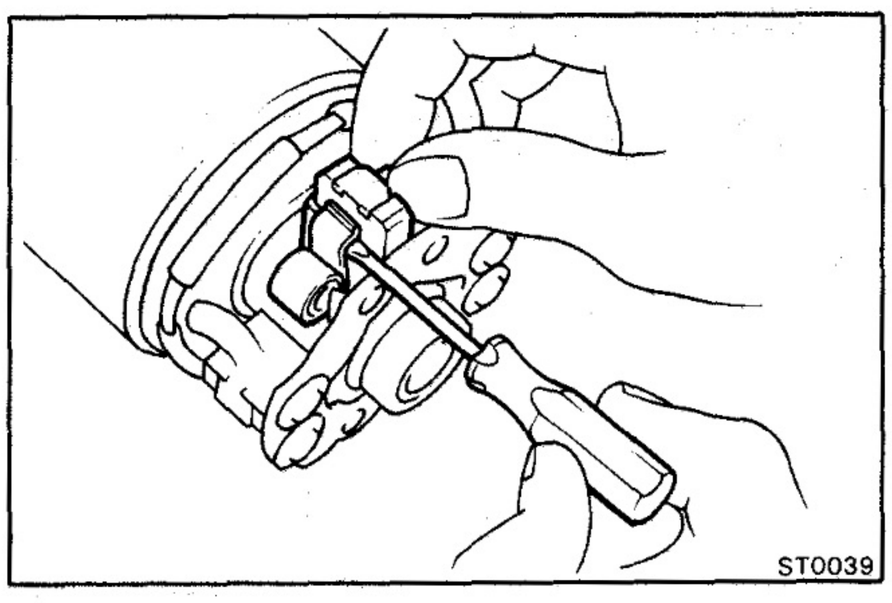

2. INSTALL BRUSH HOLDER

(a) Place the brush holder on the armature.

(b) Using a screwdriver, hold the brush spring back, and connect the brush into the brush holder. Connect the four brushes.

NOTE: Check that the positive (+) lead wires are not grounded.

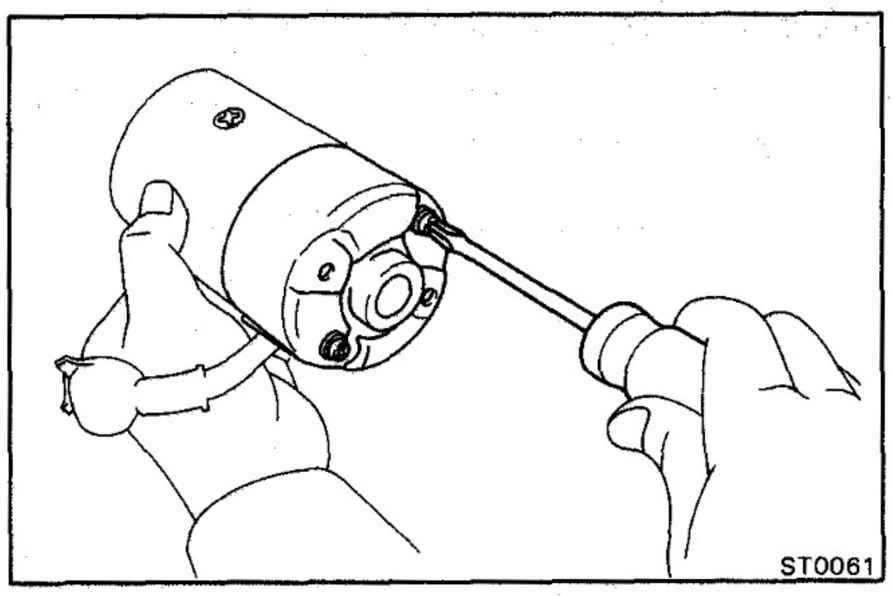

(c) Install the end cover with the two screws.

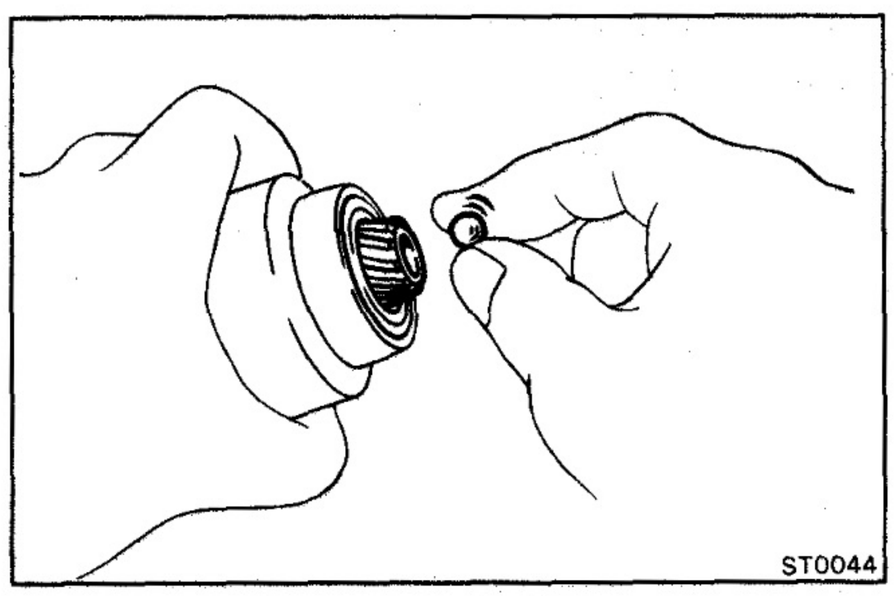

3. INSERT STEEL BALL INTO CLUTCH SHAFT HOLE

(a) Apply grease to the steel ball.

(b) Insert the steel ball into the clutch shaft hole.

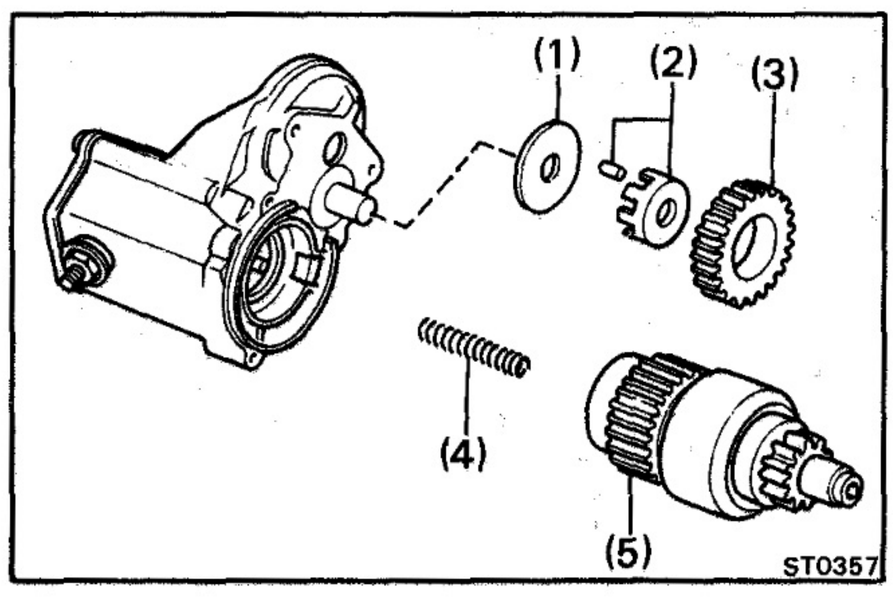

4. INSTALL CLUTCH ASSEMBLY AND GEAR

(a) Place the following parts in position on the magnetic switch:

(1) Plate washer

(2) Bearing

(3) Idle gear

(4) Return spring

(5) Clutch assembly

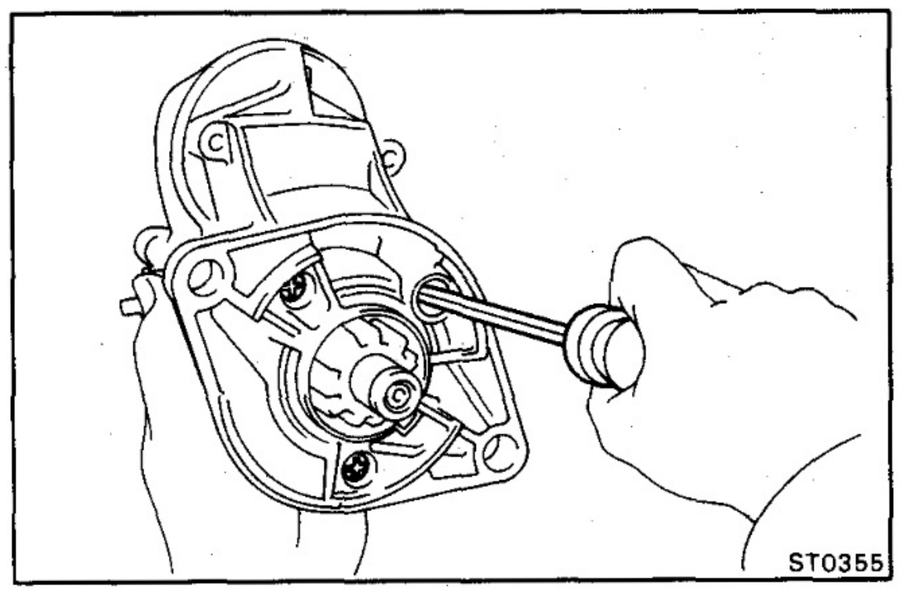

(b) Assemble the starter housing and magnetic switch with the two screws.

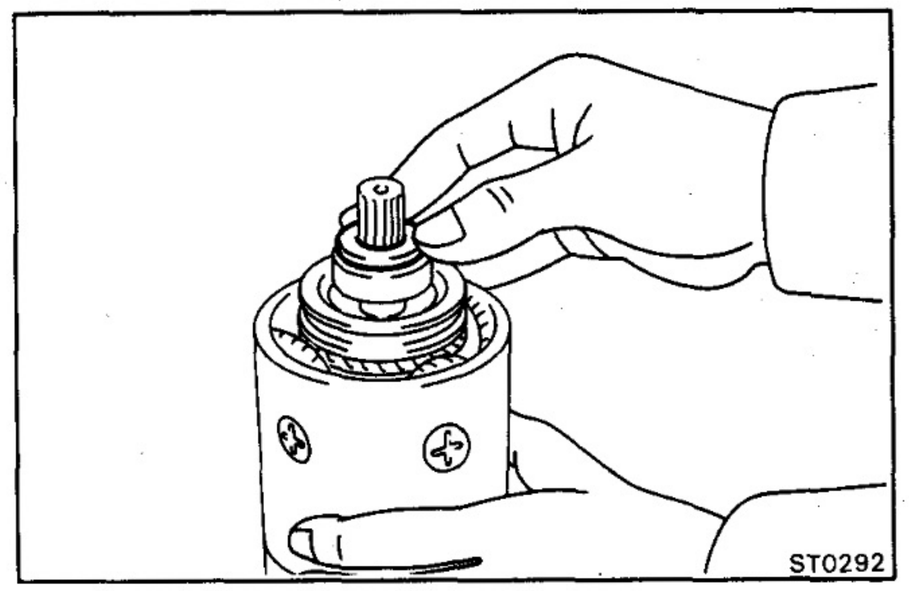

5. INSTALL FIELD FRAME AND ARMATURE ASSEMBLY

(a) Place the felt seal in position on the armature shaft.

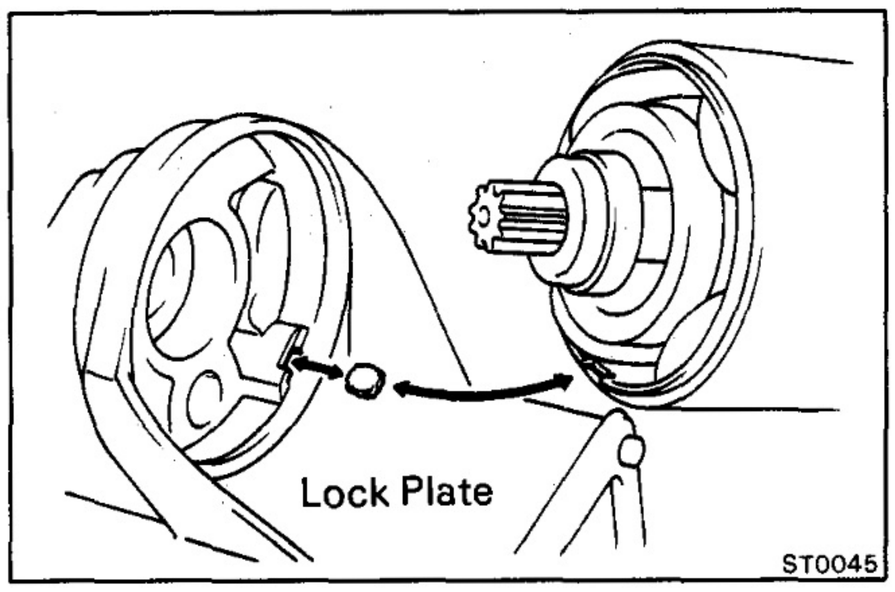

(b) Align the lock plate with the notch on the field frame.

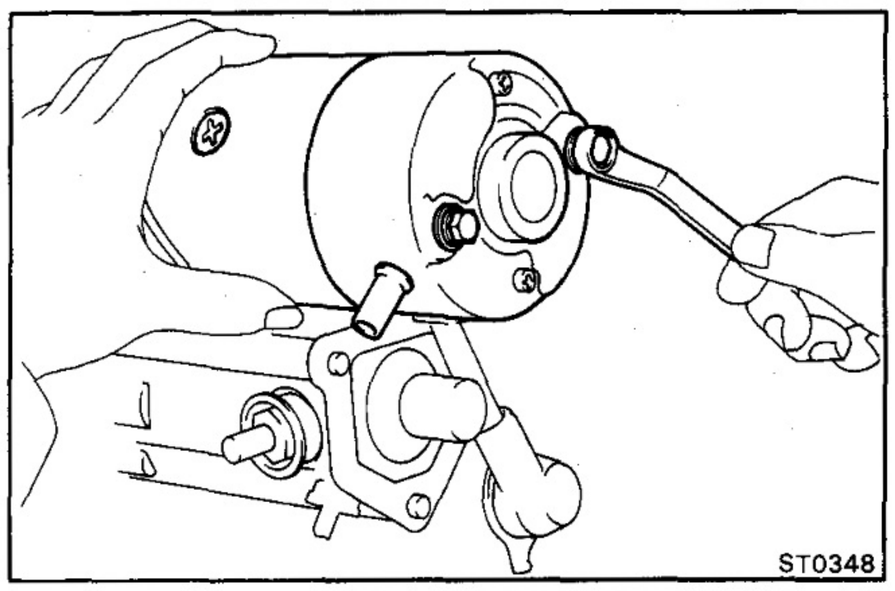

(c) Install the field frame and armature assembly with the two throught bolts.

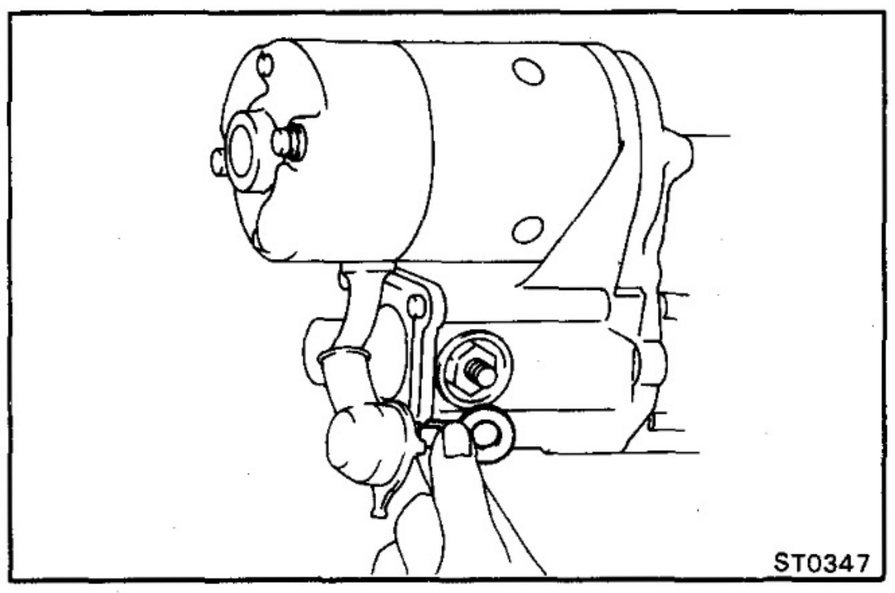

(d) Connect the lead wire to the magnetic switch terminal, and install the nut.

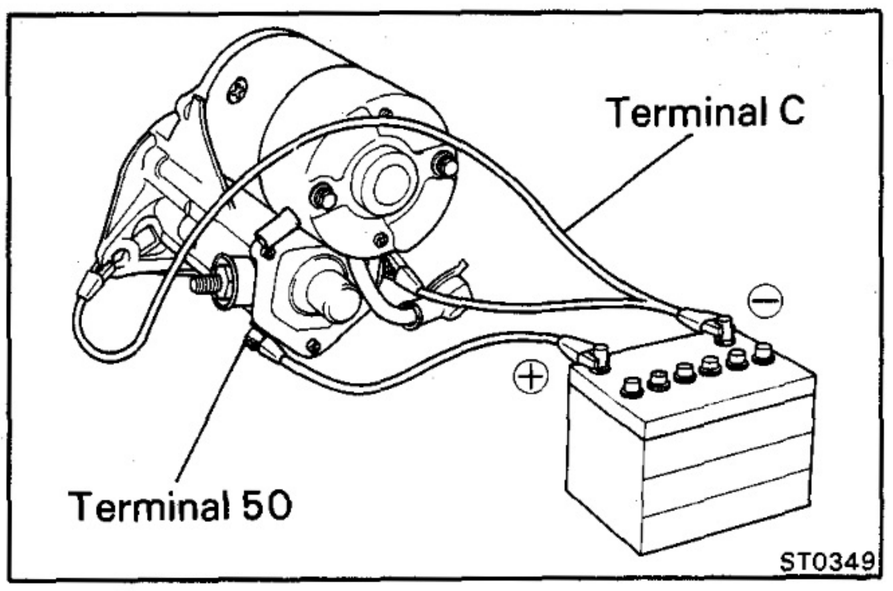

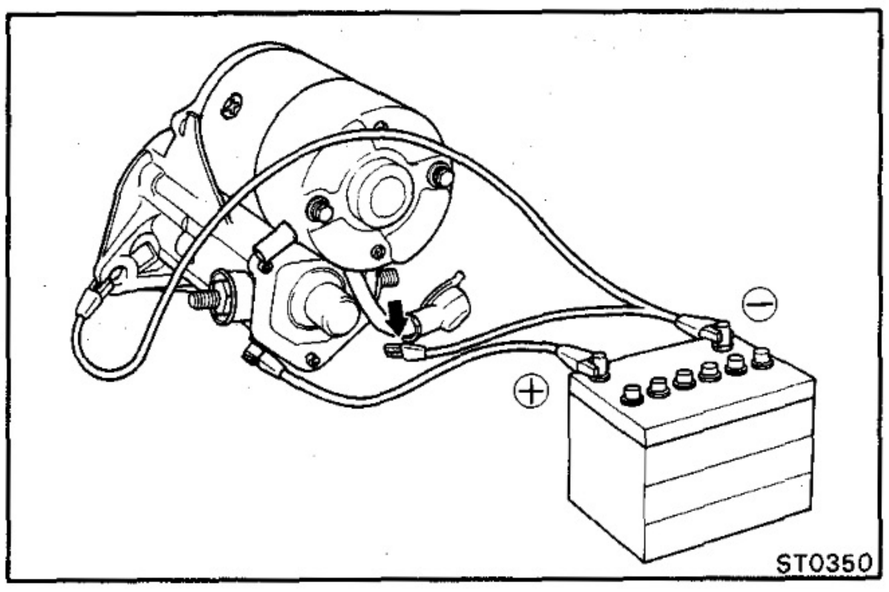

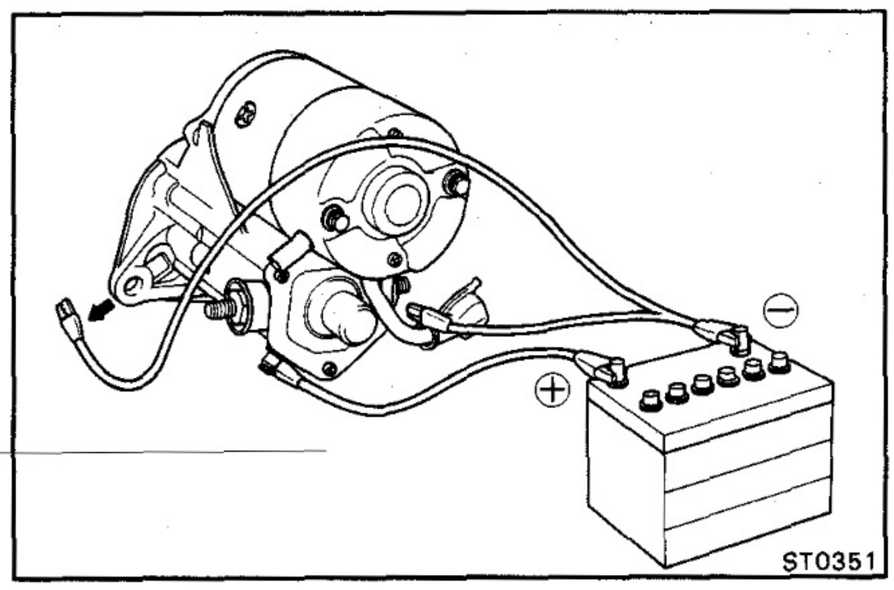

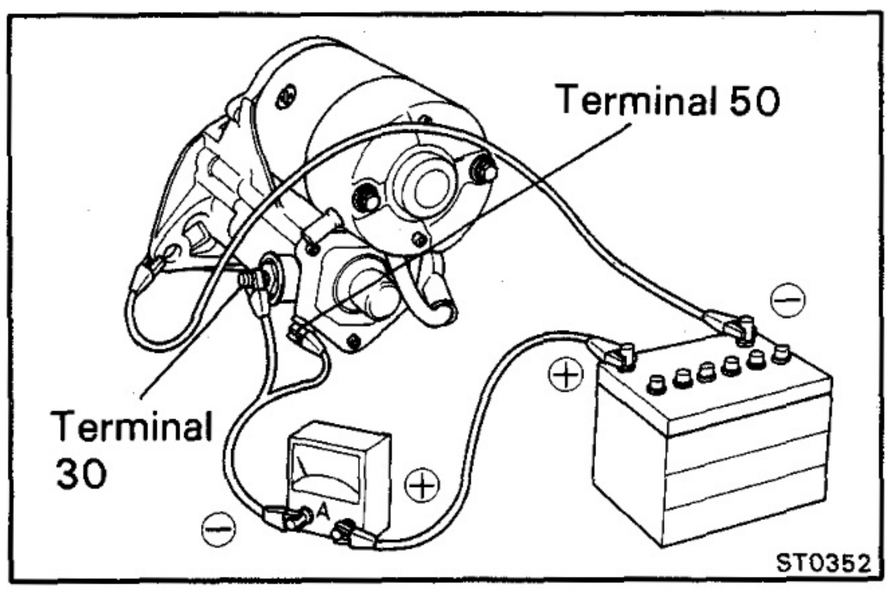

PERFORMANCE TEST OF STARTER

CAUTION: These tests must be performed within 3 to 5 seconds to avoid burning out the coil.

1. PERFORM PULL-IN TEST

(a) Disconnect the field coil lead from terminal C.

(b) Connect the battery to the magnetic switch as shown. Check that the pinion gear moves outward.

If the pinion gear does not move, replace the magnetic switch assembly.

2. PERFORM HOLD-IN TEST

While connected as above with the pinion gear out, disconnect the negative (–) lead from terminal C. Check that the pinion gear remains out.

If the pinion gear returns inward, replace the magnetic switch assembly.

3. INSPECT PLUNGER RETURN

Disconnect the negative (–) lead from the switch body. Check that the pinion gear returns inward.

If the pinion gear does not return, replace the magnetic switch assembly.

4. PERFORM NO-LOAD PERFORMANCE TEST

(a) Connect the battery and ammeter to the starter as shown.

(b) Check that the starter rotates smoothly and steadily with the pinion gear moving out. Check that the ammeter reads the specified current.

Specified current:

12V Type 180 A or less at 11 V
24V Type 90 A or less at 23 V

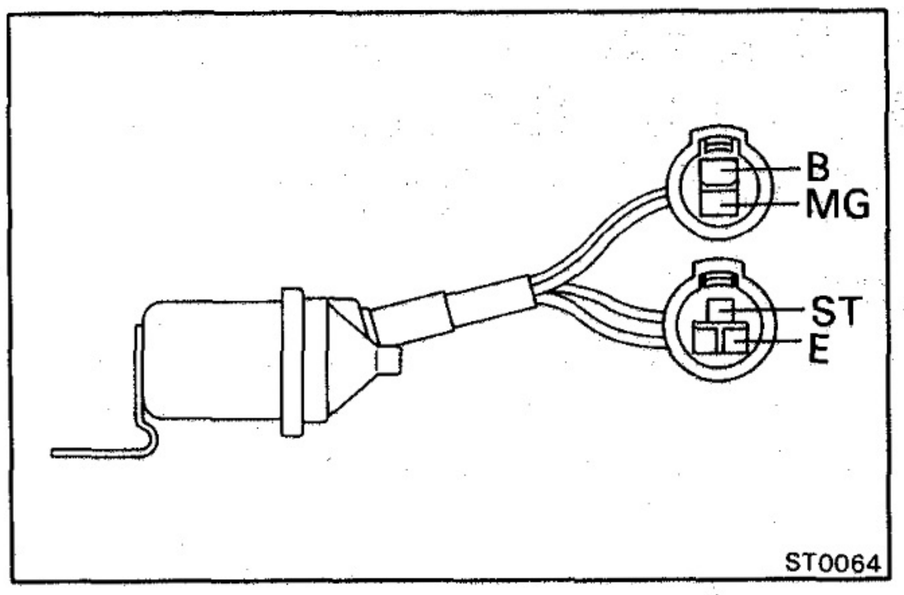

STARTER RELAY

LOCATION: On the fender apron in the engine compartment.

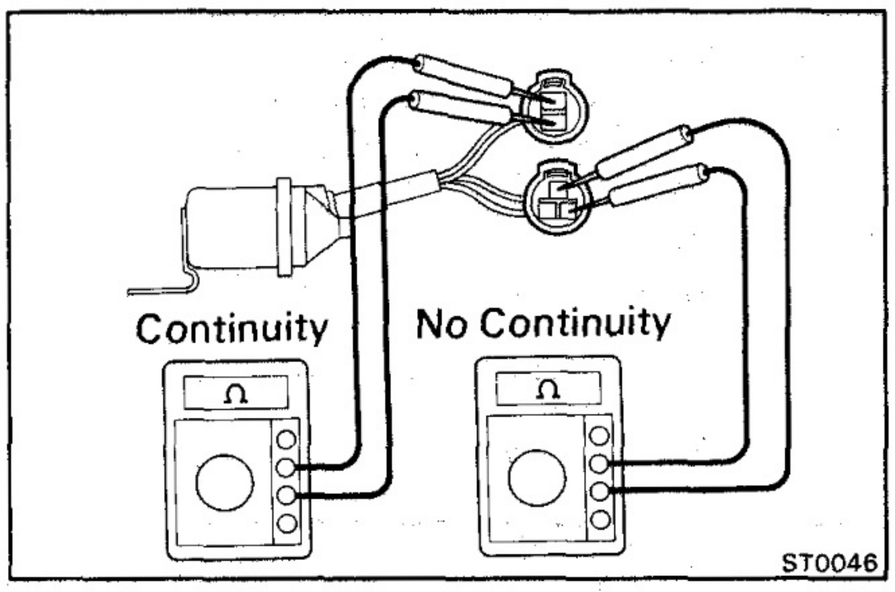

INSPECTION OF STARTER RELAY

1. INSPECT RELAY CONTINUITY

(a) Check that there is continuity between terminals E and ST.

(b) Check that there is no continuity between terminal B and MG.

If continuity is not as specified, replace the relay.

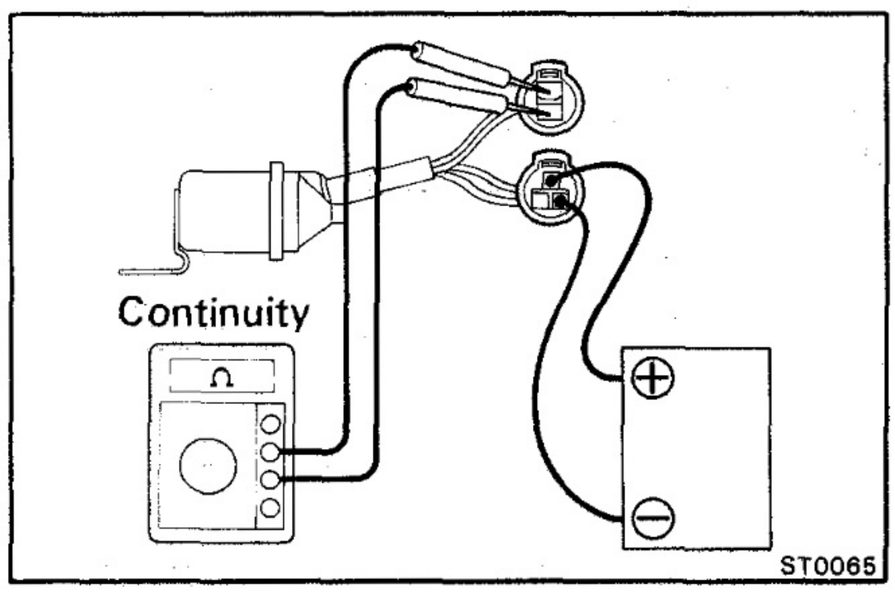

2. INSPECT RELAY OPERATION

(a) Apply battery voltage across terminals E and ST.

(b) Check that there is continuity between terminals B and MG.

If operation is not as specified, replace the relay.

ELECTRICAL DIESEL INJECTION CONTROL (EDIC) SYSTEM [2H M/T (w/ EDIC System)]

SYSTEM CIRCUIT

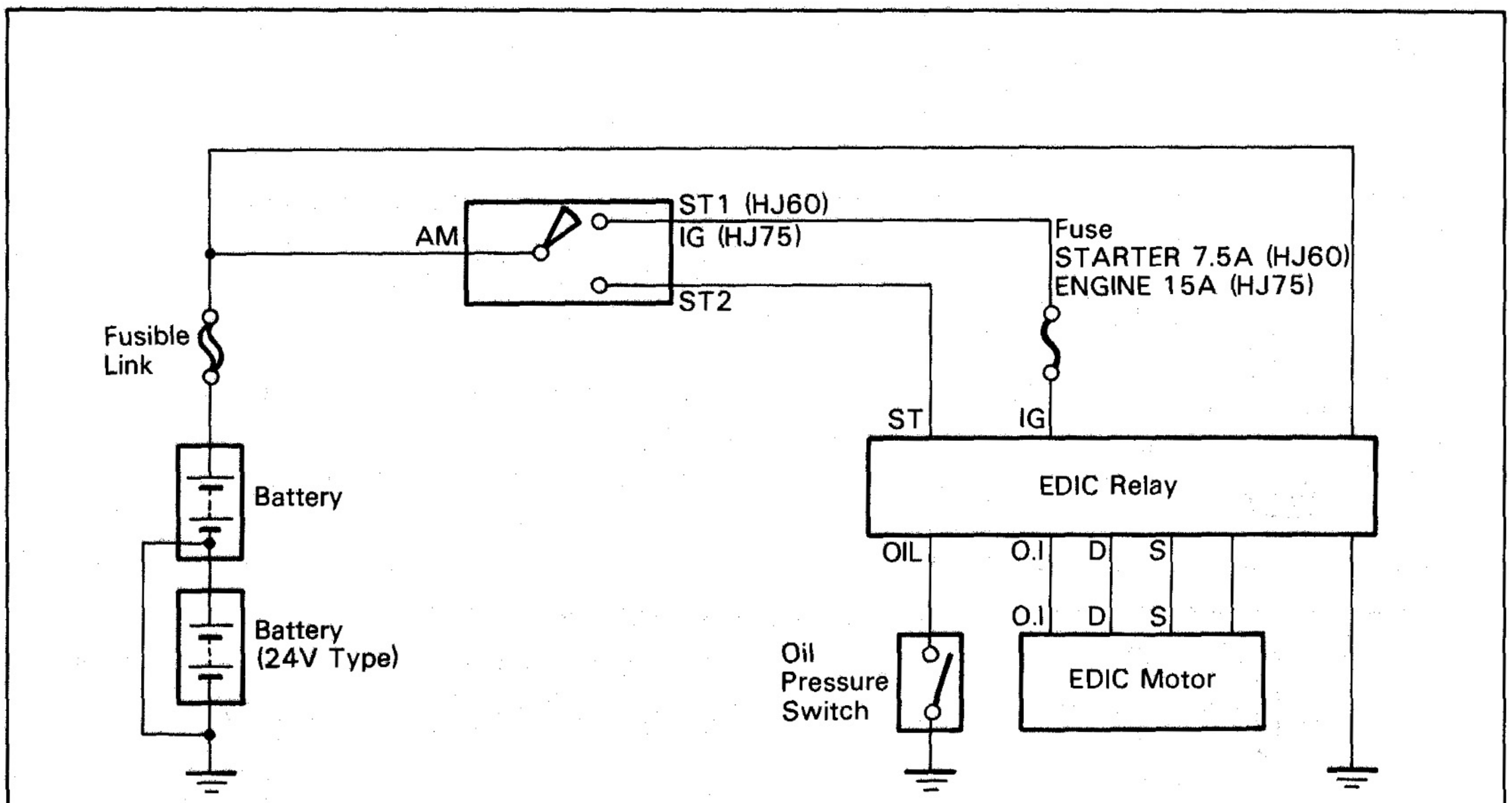

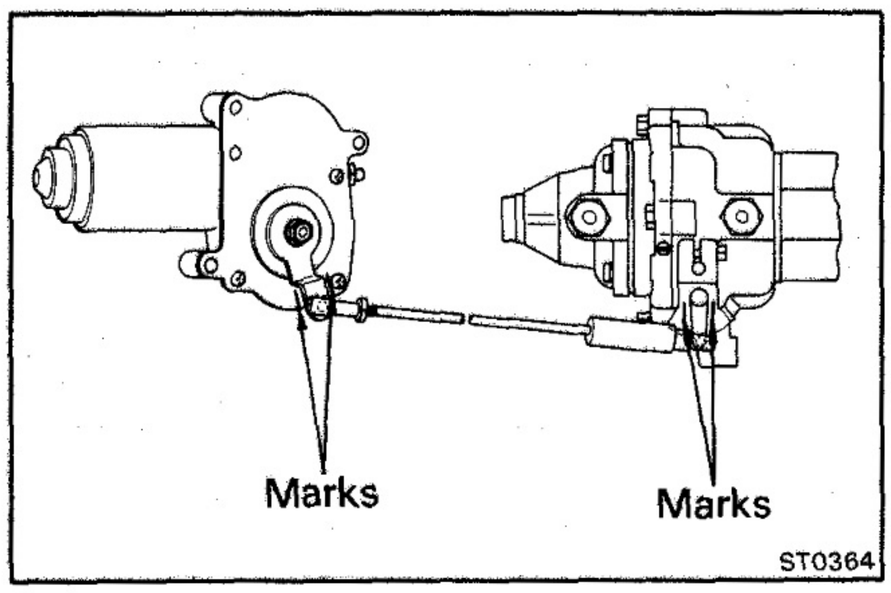

ON-VEHICLE INSPECTION

1. INSPECT CONNECTING ROD LENGTH

(a) Disconnect the connector from the oil pressure switch.

(b) When the ignition switch is turned to "ON," the fuel control motor lever and pump adjusting lever should be positioned between the marks.

If necessary, adjust with the connecting rod.

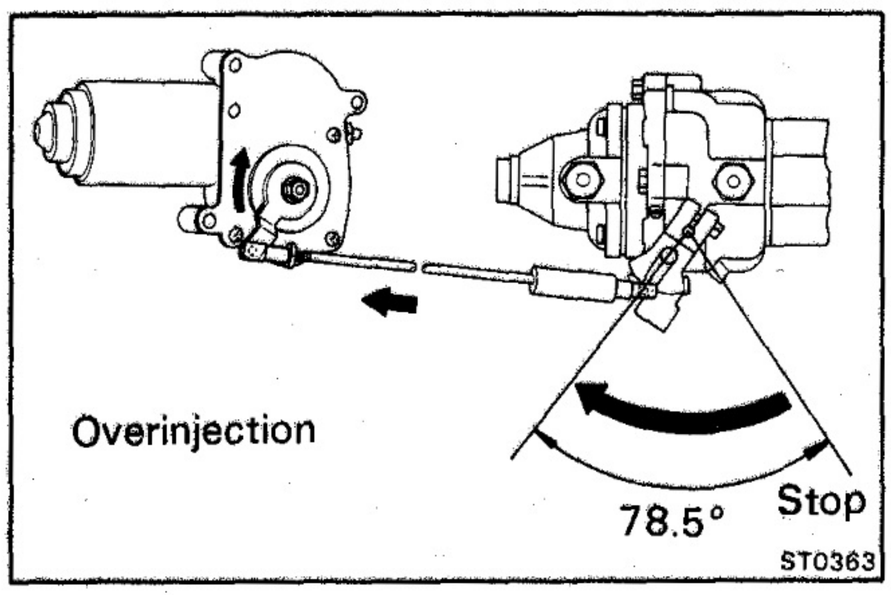

2. INSPECT LEVER OPERATION

A. Starting Overinjection (Overinjection Position)

When the ignition switch is turned to "START," the pump adjusting lever should move to the overinjection position.

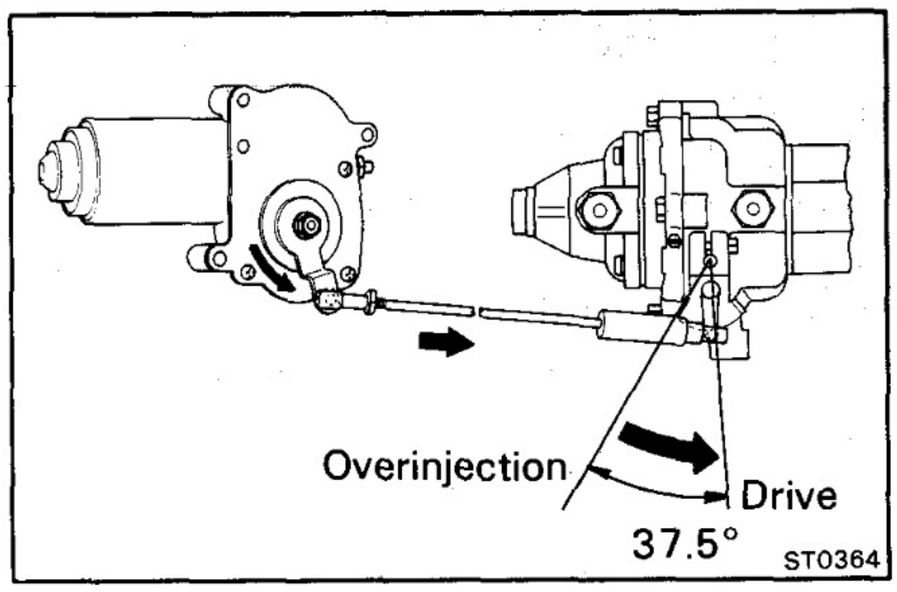

B. After Starting (Drive Position)

After starting the engine, the pump adjusting lever should be positioned to the drive position.

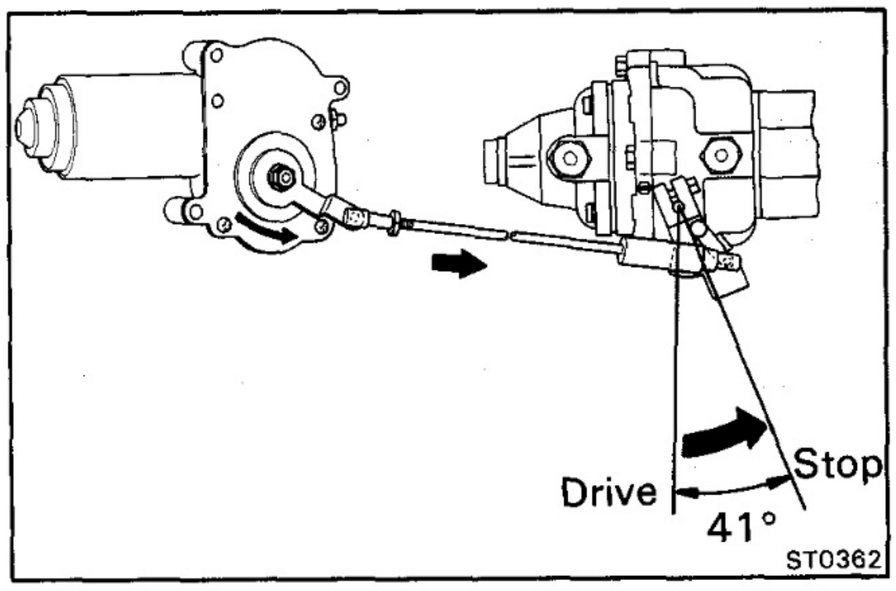

C. Engine Stopping Action (Stop Position)

When the ignition switch is turned to "OFF," the pump adjusting lever should move to the stop position and the engine should stop.

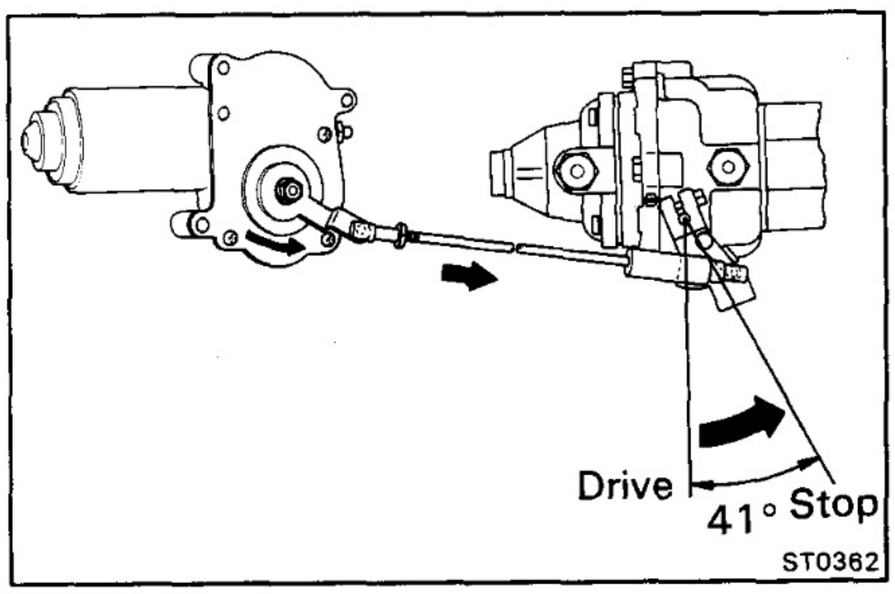

D. Reverse Rotation Prevention

Start the engine, and ground the oil pressure switch connector. Then the pump adjusting lever should move to the stop position and the engine should stop.

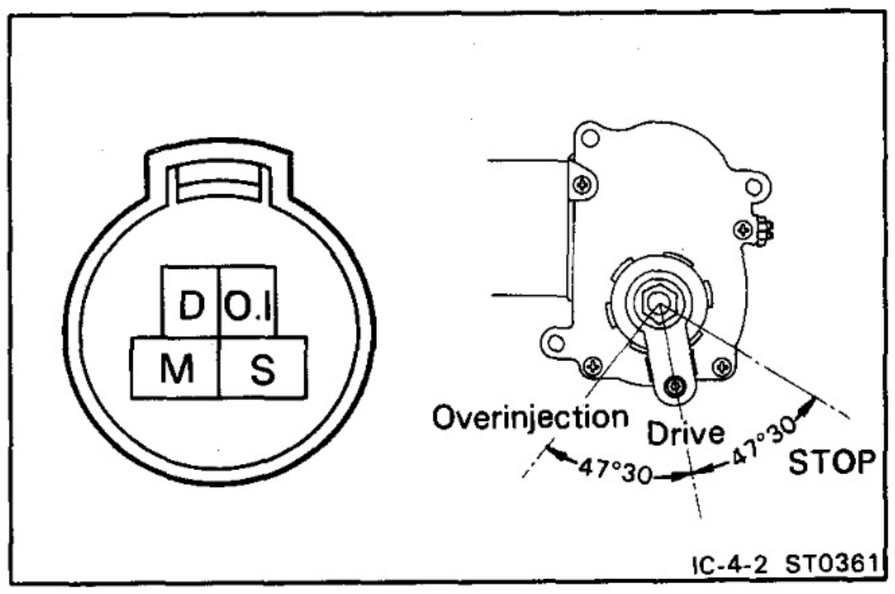

INSPECTION OF COMPONENTS

EDIC Motor

INSPECT EDIC MOTOR

Check the continuity between the terminals and body ground.

Lever Position \ Terminal	S	D	O.I	Body
Overinjection position	○	○		○
Drive position	○		○	○
Stop position		○	○	○

If continuity is not as specified, replace the motor.

Oil Pressure Switch

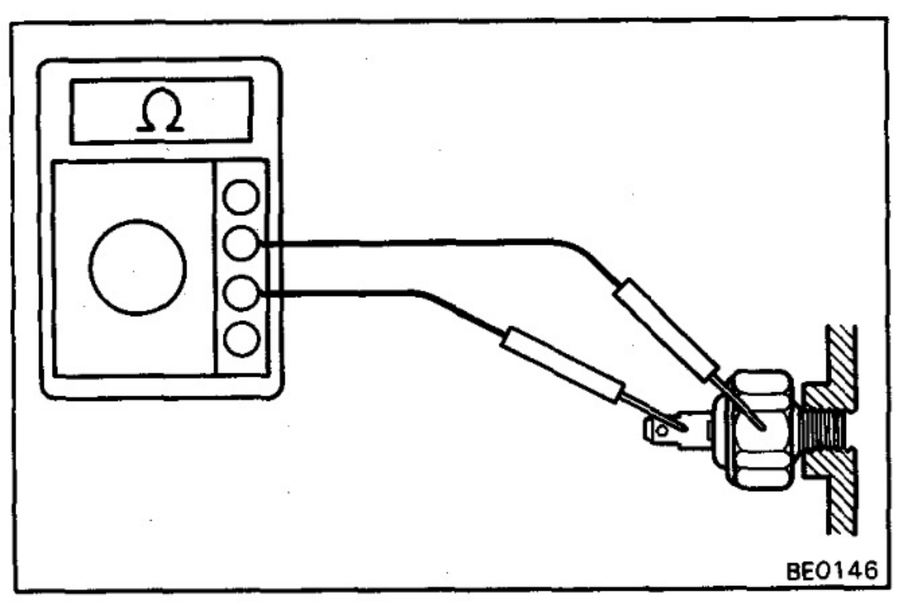

INSPECT OIL PRESSURE SWITCH

Check the continuity between the terminal and body ground.

(a) Check that there is continuity with the engine stopped.

(b) Check that there is no continuity with the engine running.

NOTE: After the engine has started, oil pressure should rise over 0.2 kg/cm² (2.8 psi, 20 kPa).

If operation is not correct, replace the switch.

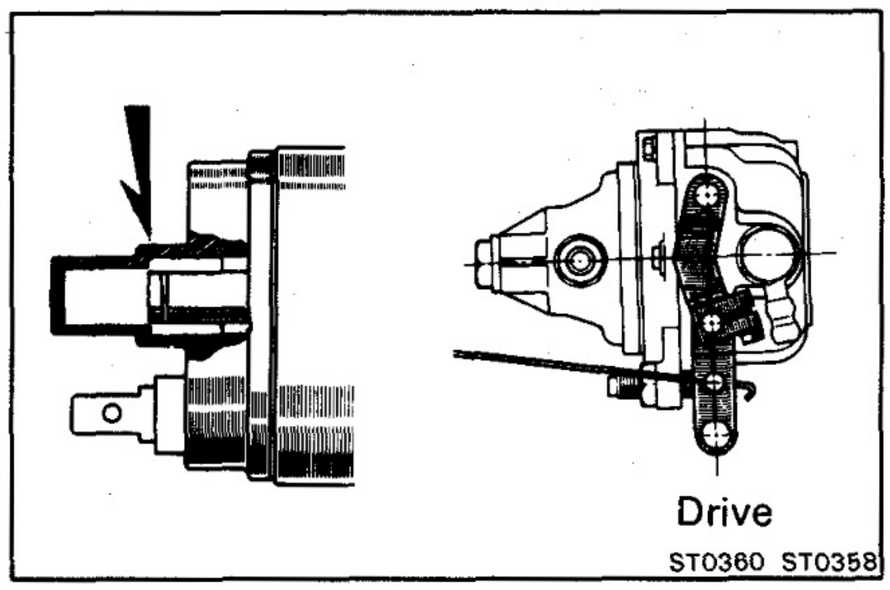

OVERINJECTION MAGNET [2H M/T (w/o EDIC System)]

ON-VEHICLE INSPECTION

1. INSPECT CONNECTING WIRE LENGTH

When the ignition switch is turned to "ON," the pump adjusting lever should be positioned as shown.

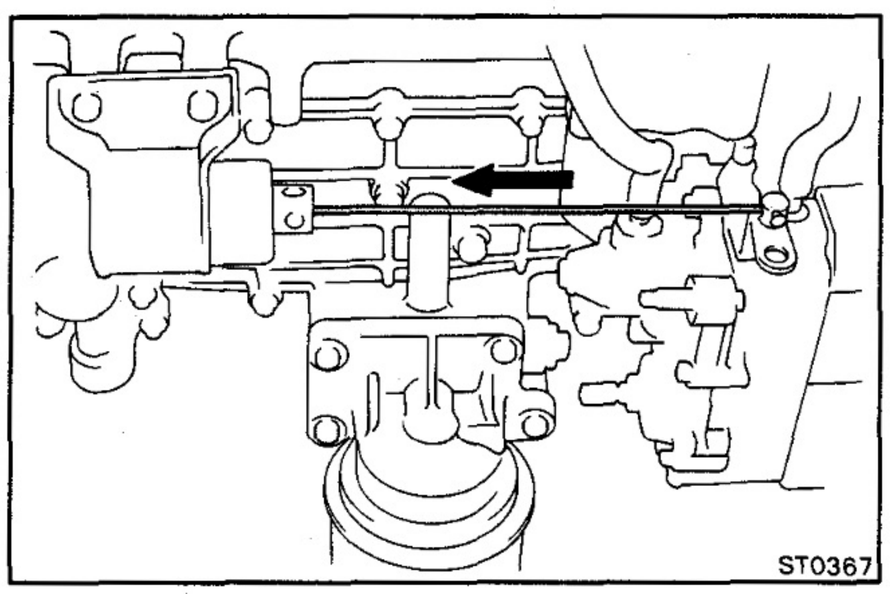

2. INSPECT LEVER OPERATION

When the ignition switch is turned to "START," the pump adjusting lever should move to the overjection position.

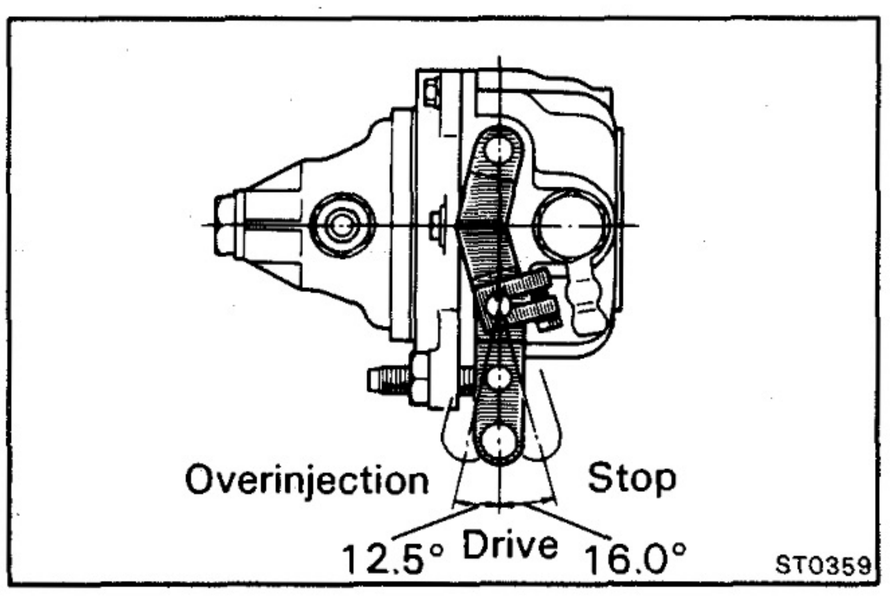

CHARGING SYSTEM

	Page
PRECAUTIONS	CH-2
TROUBLESHOOTING	CH-2
CHARGING SYSTEM CIRCUIT	CH-3
ON-VEHICLE INSPECTION	CH-6
ALTERNATOR	CH-10
ALTERNATOR REGULATOR	CH-21
CHARGE LIGHT RELAY [w/ IC Regulator (12V Type)]	CH-23
CHARGE LIGHT RELAY [w/ IC Regulator (24V Type)]	CH-24
IGNITION MAIN RELAY [HJ60, 61 Series]	CH-25

PRECAUTIONS

1. **Check that the battery cables are connected to the correct terminals.**
2. **Disconnect the battery cables when the battery is given a quick charge.**
3. **Do not perform tests with a high voltage insulation resistance tester.**
4. **Never disconnect the battery while the engine is running.**

TROUBLESHOOTING

Problem	Possible cause	Remedy	Page
Charge light does not light with ignition "ON" and engine off	Fuse blown	Check "CHARGE" and "ENGINE" fuses	
	Light burned out	Replace light	
	Wiring connection loose	Tighten loose connections	
	Alternator regulator faulty	Check regulator	CH-21
	Charge light relay	Check relay	CH-23 or 24
	IC regulater faulty	Replace regulater	CH-11
Charge light does not go out with engine running (battery requires frequent recharging)	Drive belt loose or worn	Adjust or replace drive belt	CH-6
	Battery cables loose, corroded or worn	Repair or replace cables	
	Fuse blown	Check "ENGINE" fuse	
	Ignition main relay faulty	Check relay	CH-25
	Fusible link blown	Replace fusible link	
	Alternator regulator IC regulater, charge light relay or alternator faulty	Check charging system faulty	CH-6
	Wiring faulty	Repair wiring	

CHARGING SYSTEM CIRCUIT

HJ60, 61 Series [w/o IC Regulator]

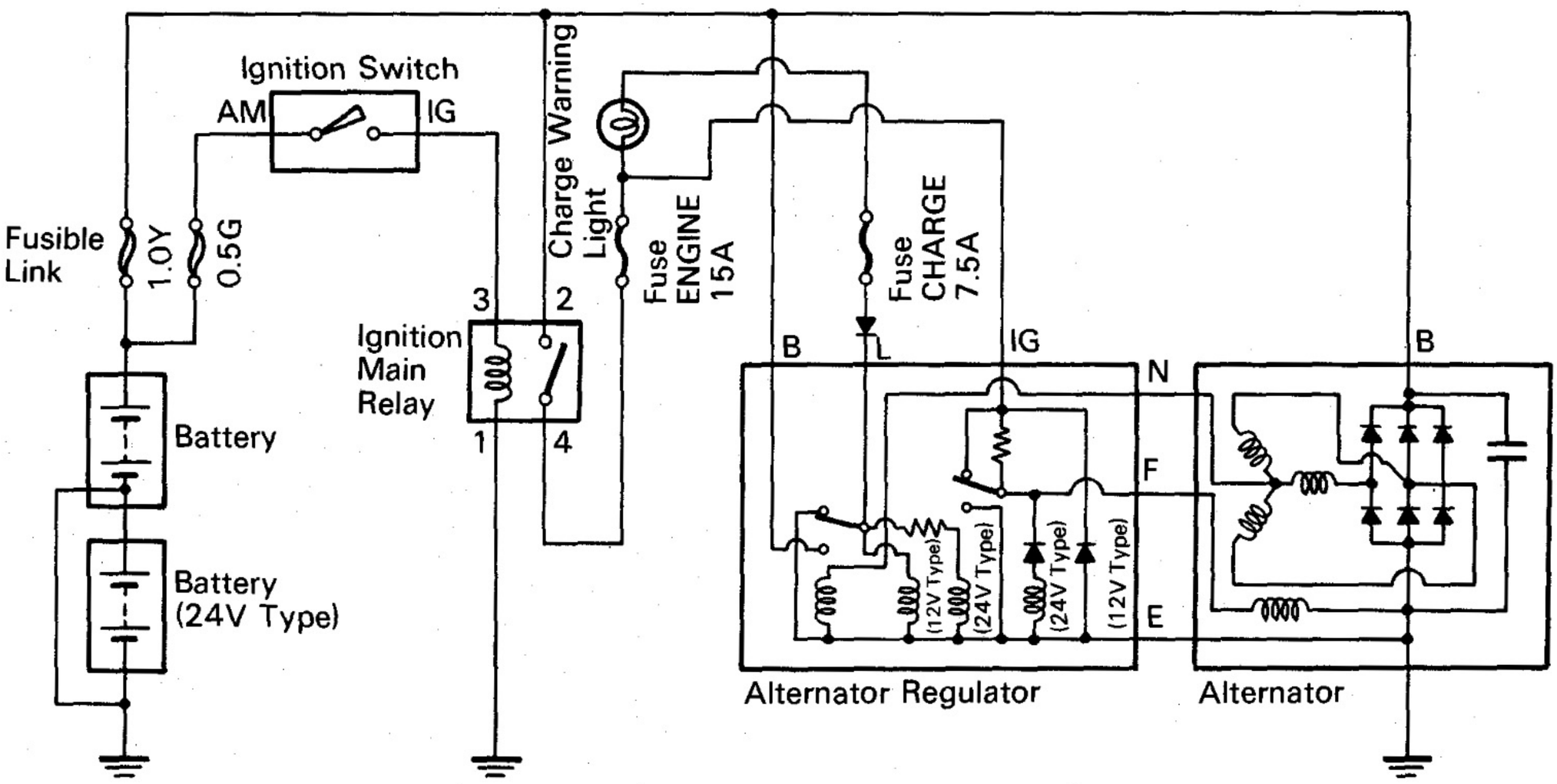

HJ60, 61 Series [w/ IC Regulator (12V Type)]

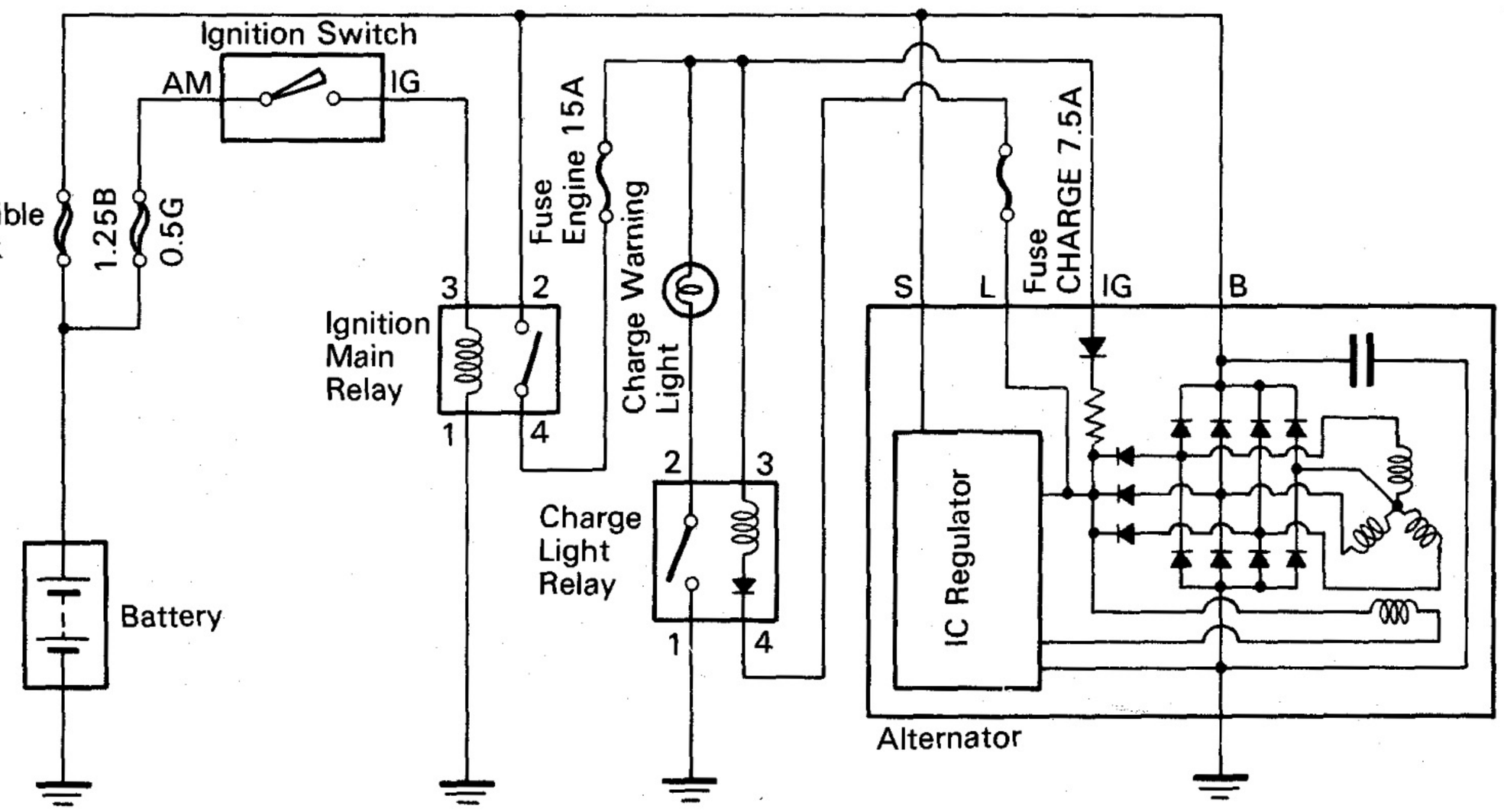

CH0428
CH0438

CHARGING SYSTEM CIRCUIT (Cont'd)

HJ60, 61 Series [w/ IC Regulator (24V Type)]

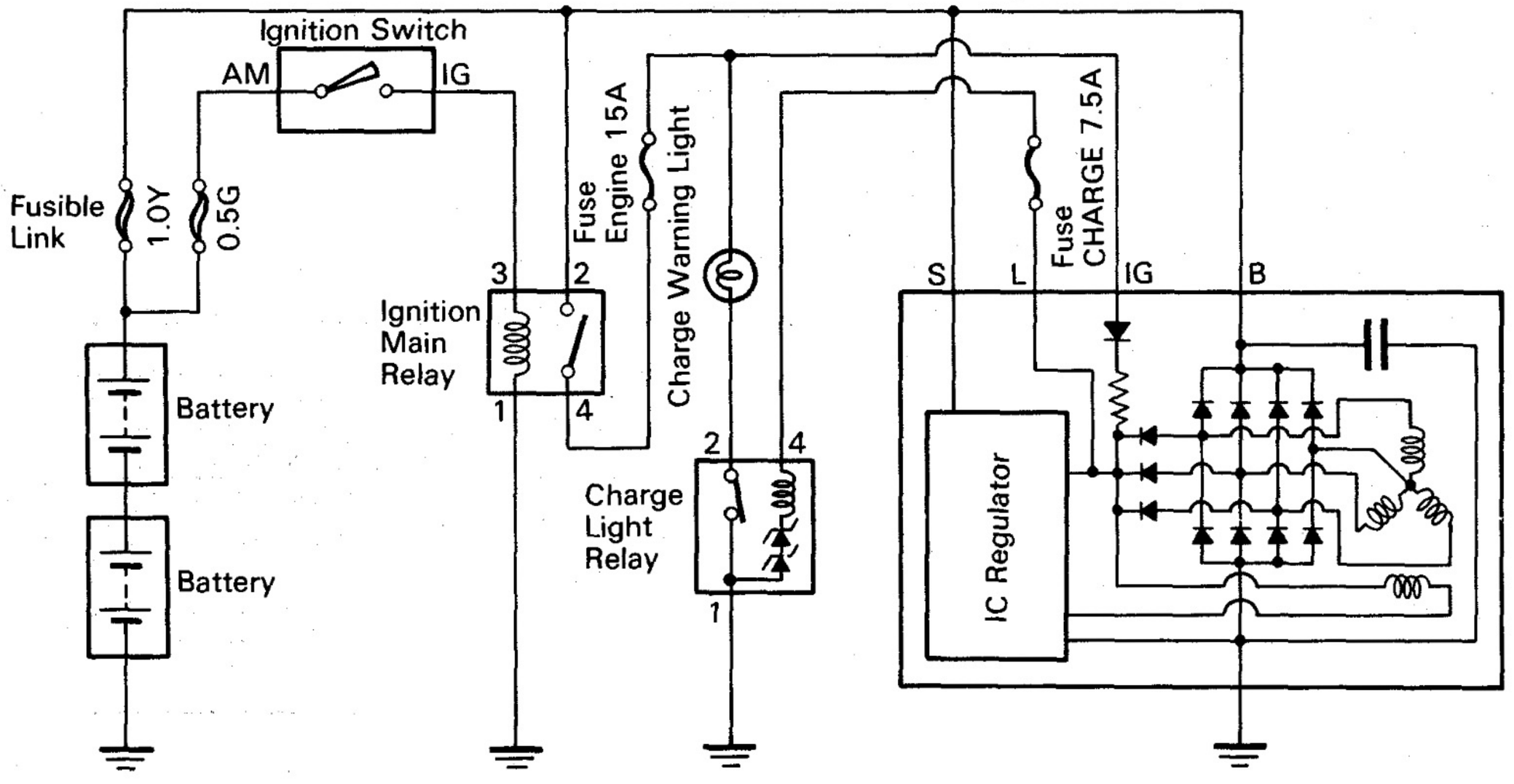

HJ75 Series [w/o IC Regulator]

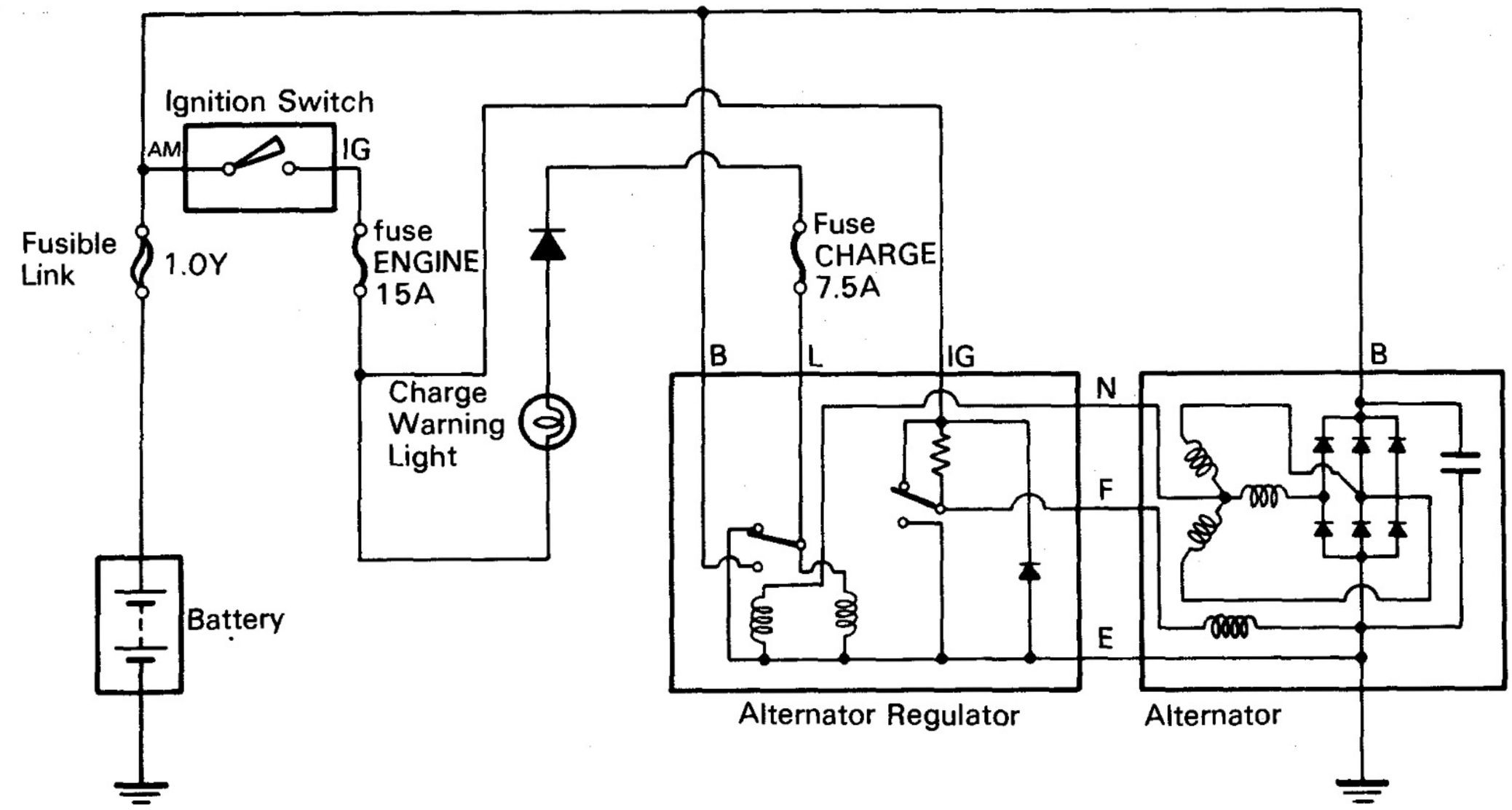

CH0437
CH0429

CHARGING SYSTEM CIRCUIT (Cont'd)

HJ75 Series [w/ IC Regulator]

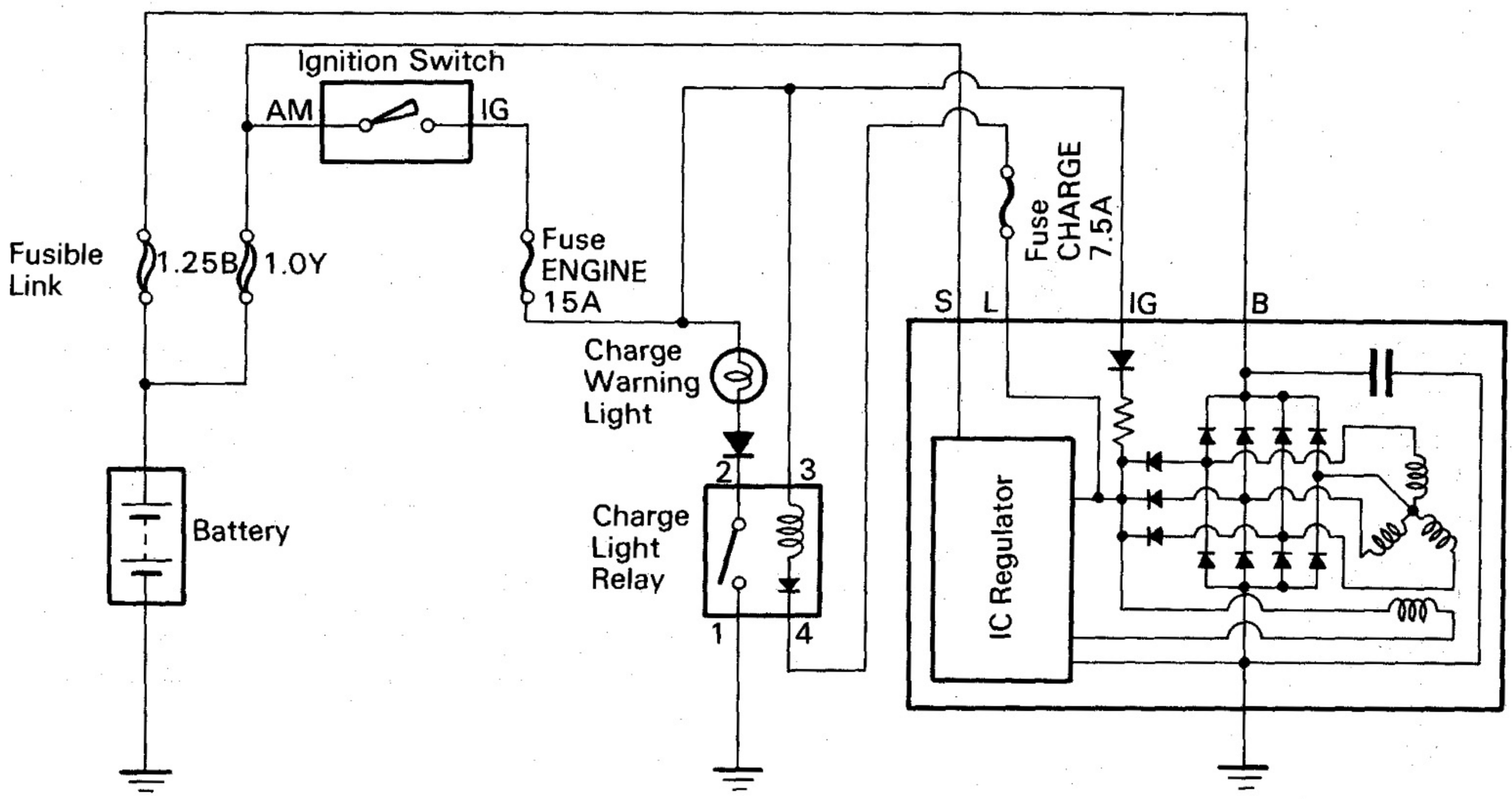

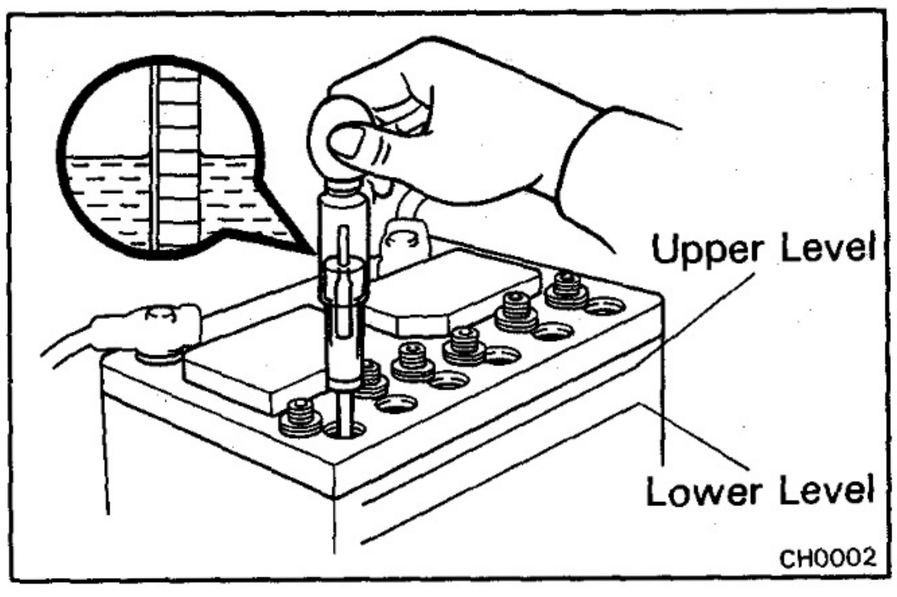

ON-VEHICLE INSPECTION

1. CHECK BATTERY SPECIFIC GRAVITY

(a) Check the specific gravity of each cell.

Standard specific gravity:
When fully charged at 20°C (68°F)
12V type 1.25 – 1.27
24V type 1.27 – 1.29 (NX series)
1.25 – 1.27 (Others)

(b) Check the electrolyte quantily of each cell.
If insufficient, refill with distilled (or purified) water.

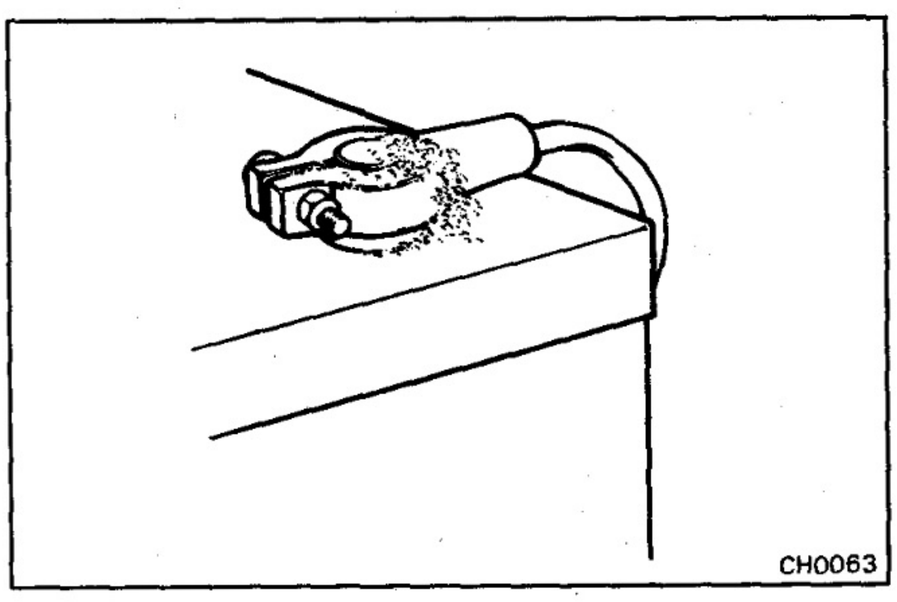

2. CHECK BATTERY TERMINALS, FUSIBLE LINKS AND FUSES

(a) Check that the battery terminals are not loose or corroded.

(b) Check the fusible link and fuses for continuity.

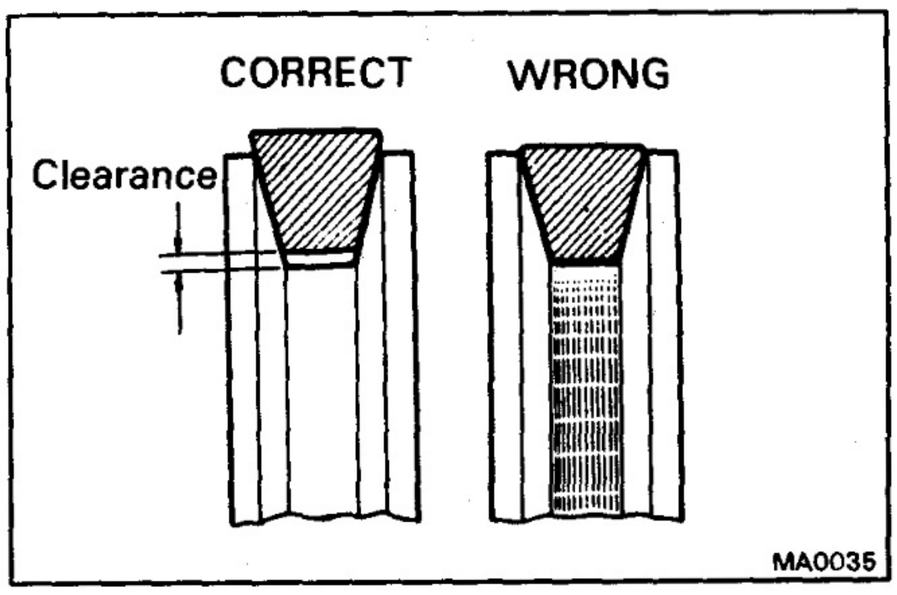

3. INSPECT DRIVE BELT

(a) Visually check the drive belt for cracks, oiliness or wear. Check that the belt does not touch the bottom of the pulley groove.

If necessary, replace the drive belt.

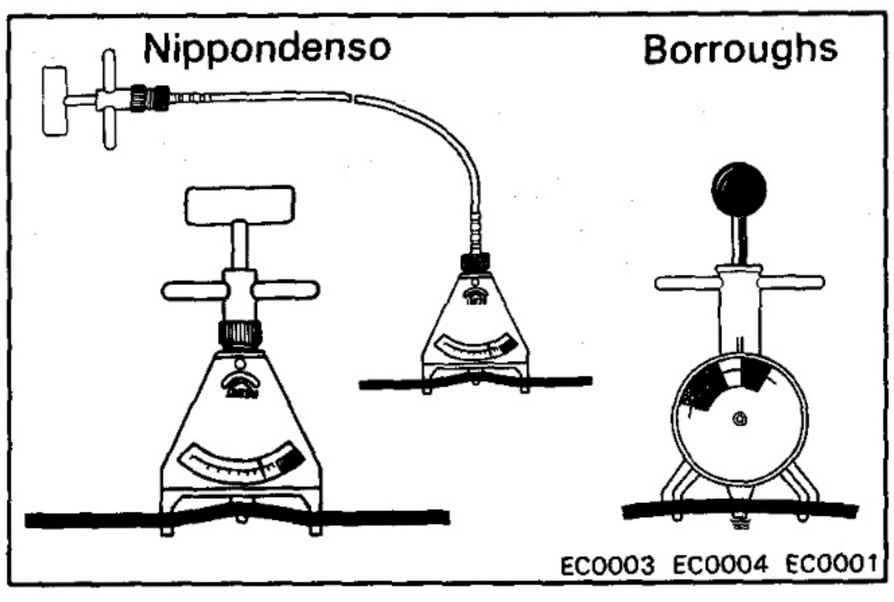

(b) [Canada]

Using a belt tension gauge, check the drive belt tension.

Belt tension gauge:
Nippondenso BTG-20 (95506-00020) or
Borroughs No. BT-33-73F

Drive belt tension: New belt 125 ± 25 lb
Used belt 115 ± 15 lb

If the belt tension is not within specification, adjust it.

NOTE:

- When checking the tension, be sure the gauge is on the belt protrusion.
- "New belt" refers to a new belt which has been used less than 5 minutes on a running engine.
- "Used belt" refers to a belt which has been used on a running engine for 5 minutes or more.
- After installing a new belt, run the engine for about 5 minutes and recheck the tension.

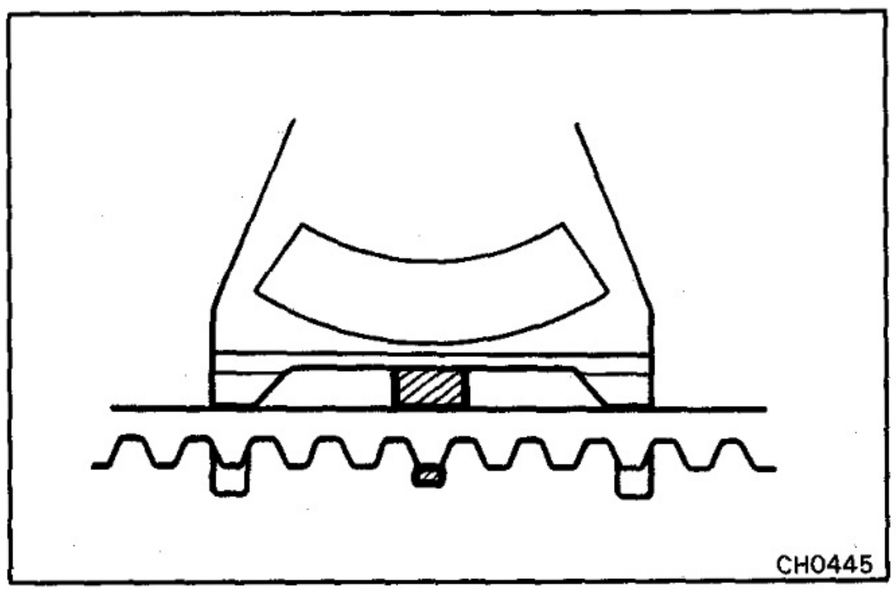

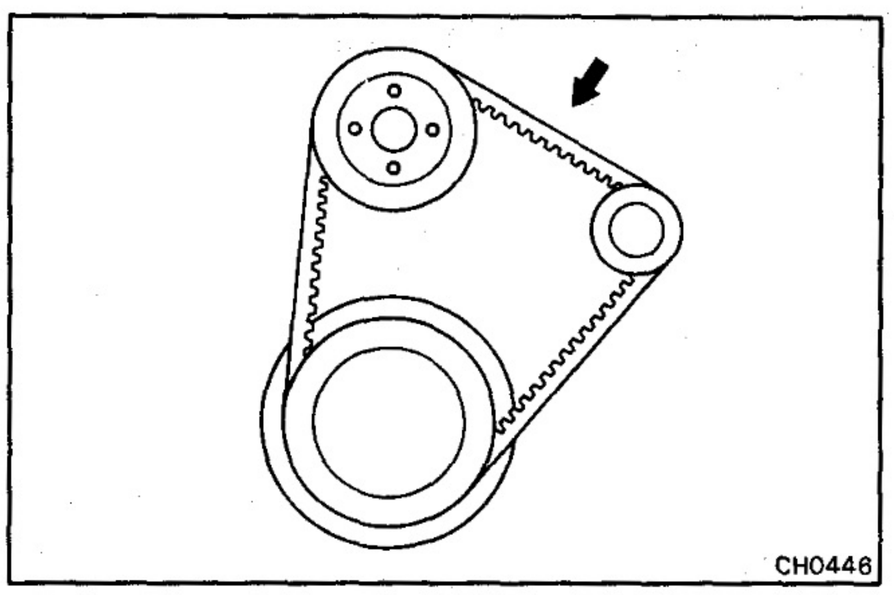

(c) [Others]

Check the drive belt deflection by pressing on the belt at the points indicated in the figure with 10 kg (22.0 lb, 98 N) of pressure.

Drive belt deflection:

New belt 8 – 9 mm (0.31 – 0.35 in.)
Used belt 10 – 13 mm (0.39 – 0.51 in.)

If the belt deflection is not within specification, adjust it.

NOTE:

- "New belt" refers to a new belt which has been used less than 5 minutes on a running engine.
- "Used belt" refers to a belt which has been used on a running engine for 5 minutes or more.
- After installing a new belt, run the engine for about 5 minutes and recheck the deflection.

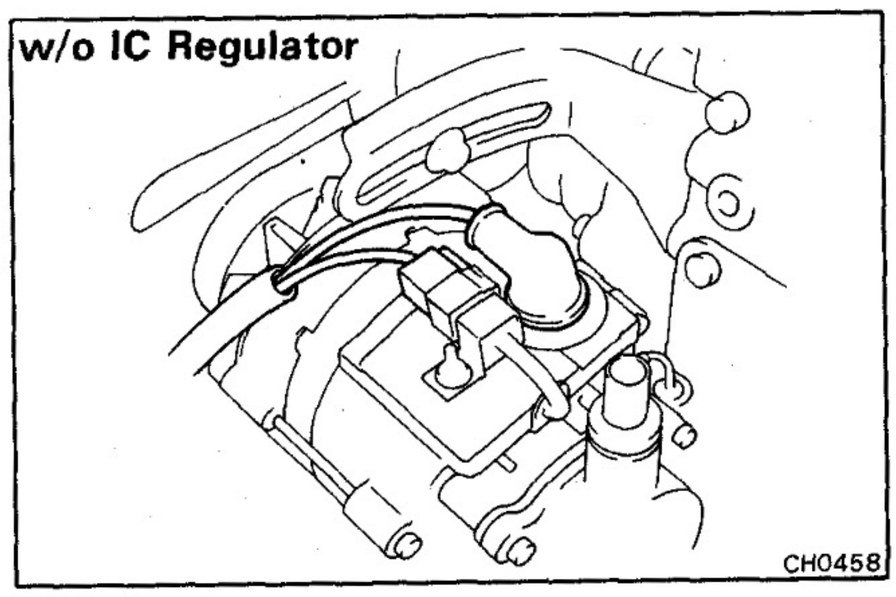

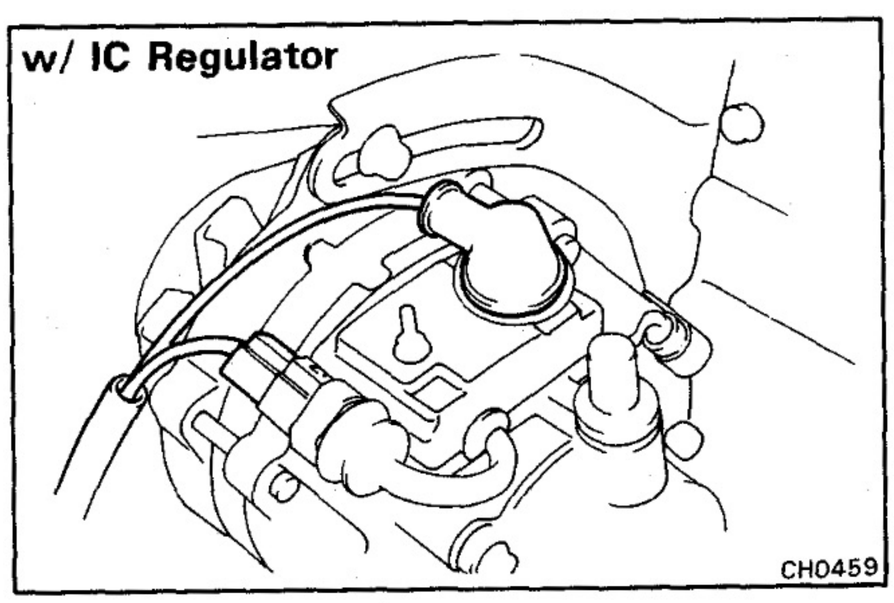

4. VISUALLY CHECK ALTERNATOR WIRING AND LISTEN FOR ABNORMAL NOISES

(a) Check that the wiring is in good condition.

(b) Check that there are no abnormal noises from the alternator while the engine is running.

5. INSPECT CHARGE WARNING LIGHT CIRCUIT

(a) Warm up the engine and then turn it off.

(b) Turn off all accessories.

(c) Turn the starter switch to "ON." Check that the charge warning light is lit.

(d) Start the engine. Check that the light goes out.

If the light does not operate as specified, troubleshoot the warning light circuit.

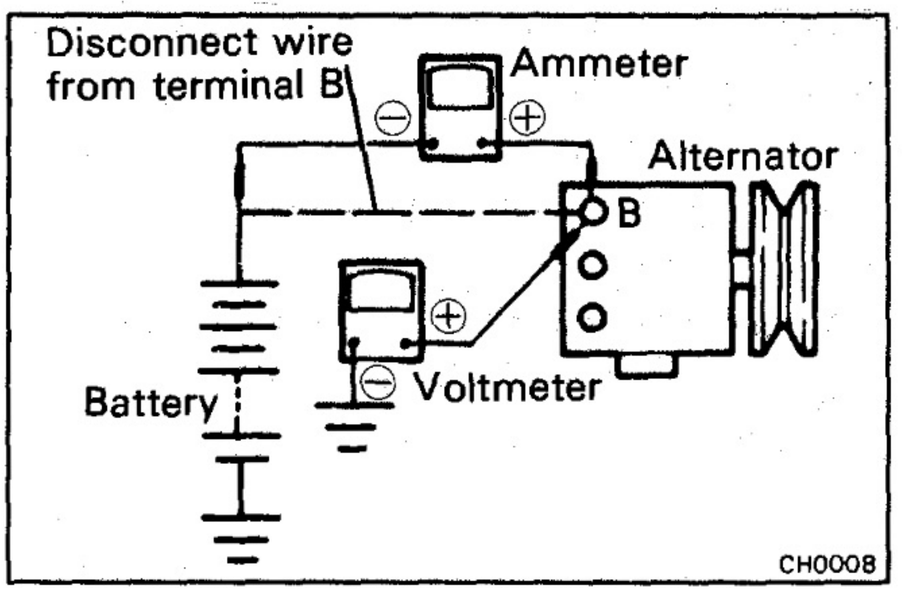

6. CHECK CHARGING CIRCUIT WITHOUT LOAD

NOTE: If a battery/alternator tester is available, connect the tester to the charging circuit as per the manufacturer's instructions.

(a) If a tester is not available, connect a voltmeter and ammeter to the charging circuit as follows:

- Disconnect the wire from terminal B of the alternator and connect it to the negative (–) probe of the ammeter.
- Connect the test probe from the positive (+) terminal of the ammeter to terminal B of the alternator.
- Connect the positive (+) probe of the voltmeter to terminal B of the alternator.
- Ground the negative (–) probe of the voltmeter.

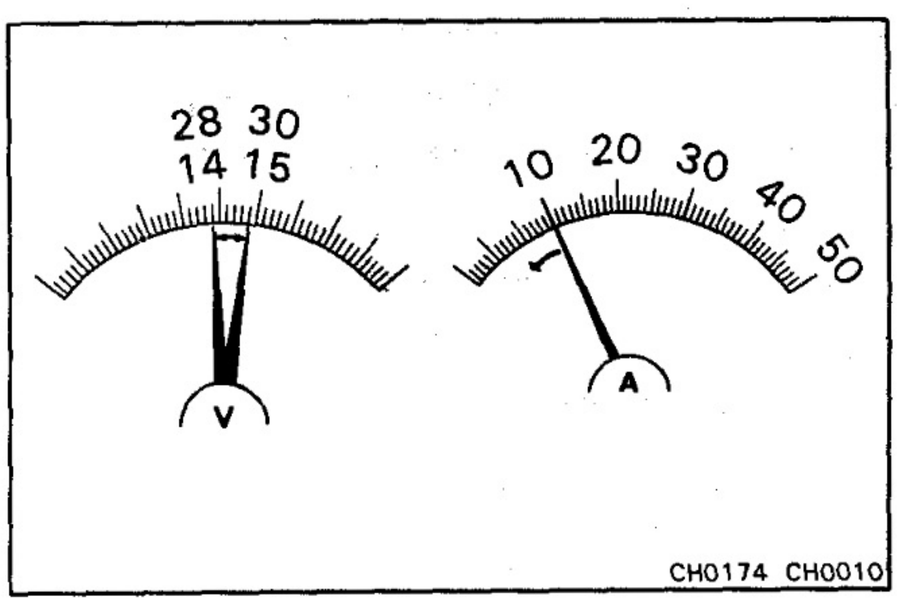

(b) Check the charging circuit as follows:

With the engine running from idle to 2,000 rpm, check the reading on the ammeter and voltmeter.

[w/o IC Regulator]

Standard amperage: 10 A or less
Standard voltage:
12V type 13.8 – 14.8 V at 25°C (77°F)
24V type 27.0 – 29.0 V at 25°C (77°F)

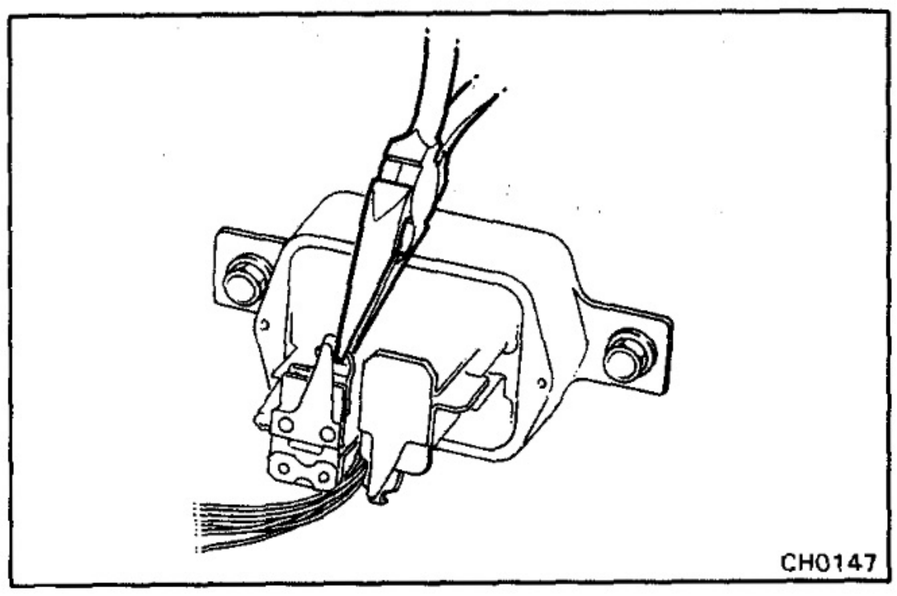

If the reading is not within standard voltage, adjust the regulator or replace it.

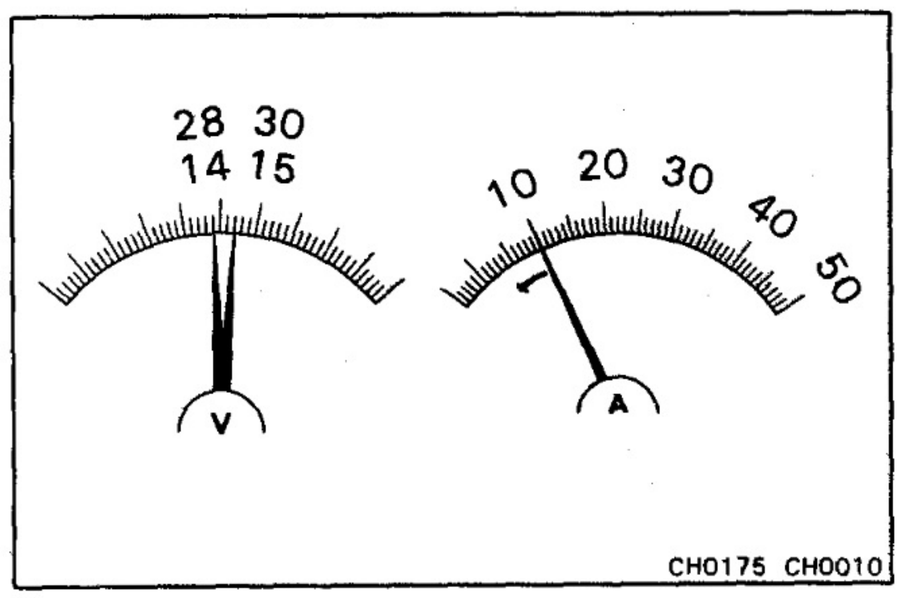

[w/ IC Regulator]

Standard amperage: 10 A or less
Standard voltage:
12V type 13.8 – 14.4 V at 25°C (77°F)
24V type 27.9 – 28.5 V at 25°C (77°F)

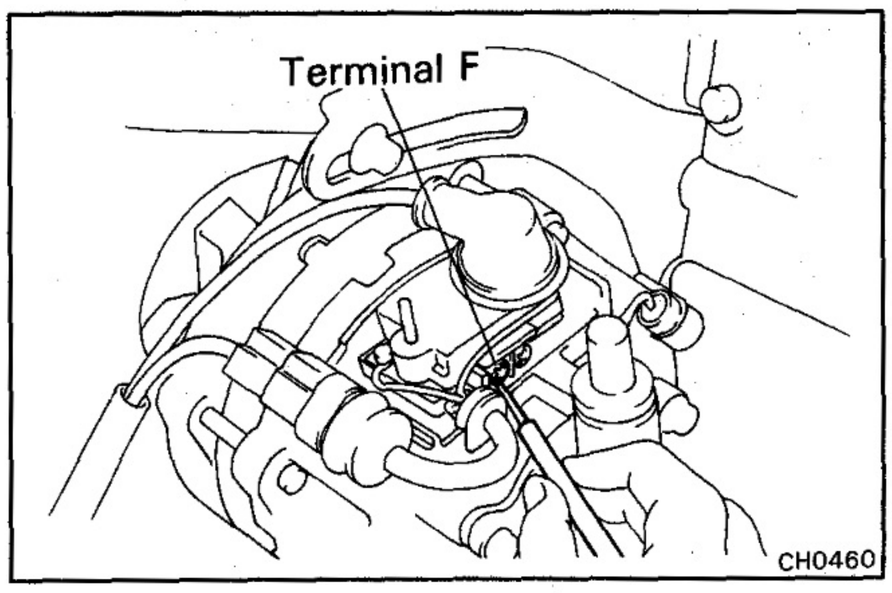

If the voltage reading is less than standard voltage, check the IC regulator and alternator as follows:

- Remove the brush holder cover and connect the terminal B wire to the original position.

CAUTION: Battery voltage is applied to terminal B, so disconnect the battery before beginning work.

- With terminal F grounded, start the engine and check the reading on the voltmeter.

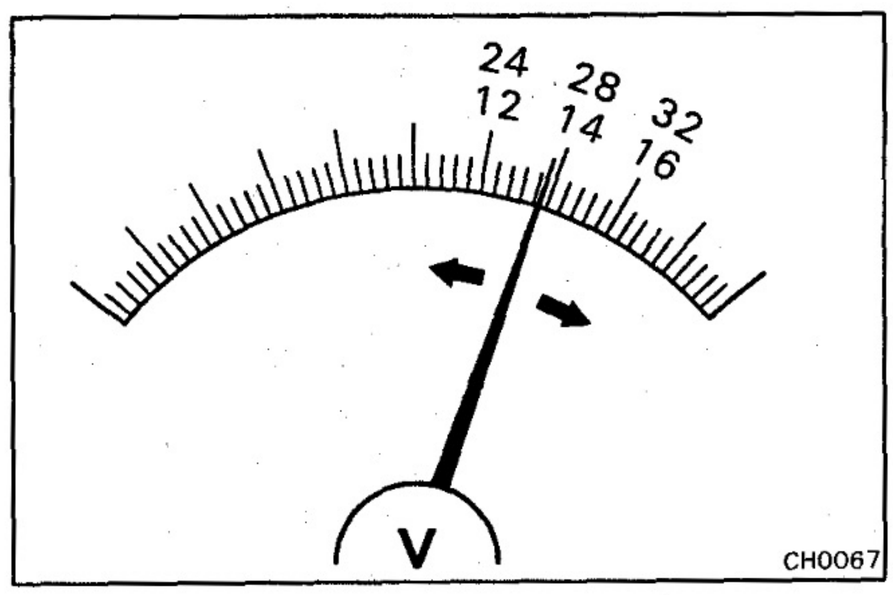

If the voltage reading is more than standard voltage, replace the IC regulator.

If the voltage reading is less than standard voltage, check the alternator.

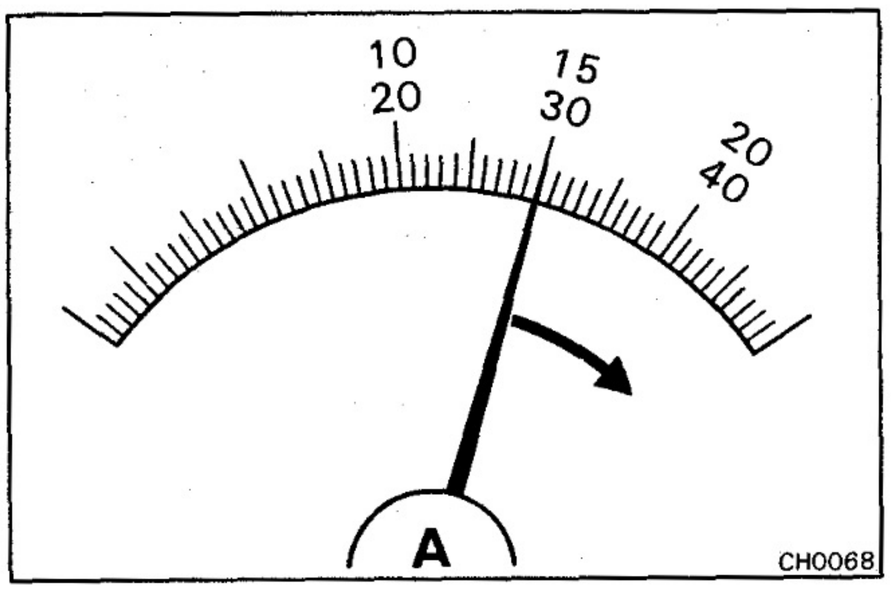

7. CHECK CHARGING CIRCUIT WITH LOAD

(a) With the engine running at 2,000 rpm, turn on the high beam headlights and place the heater fan control switch at "HI."

(b) Check the reading on the ammeter.

Standard amperage:

12V type	**30 A or more**
24V type	**15 A or more**

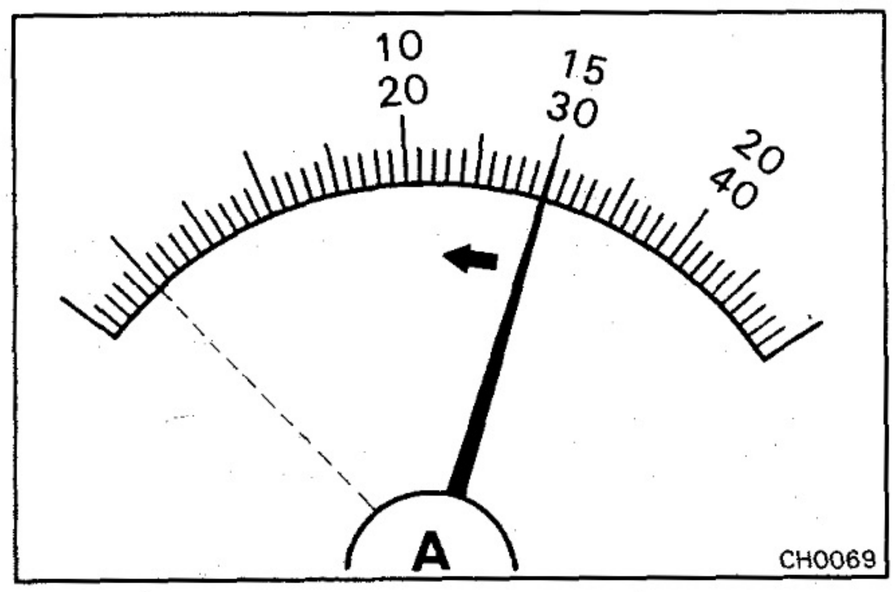

If the ammeter reading is less than standard amperage, repair the alternator. (See page CH-11)

NOTE: If the battery is fully charged, the indication will sometimes be less than standard amperage.

ALTERNATOR

COMPONENTS

w/o IC Regulator

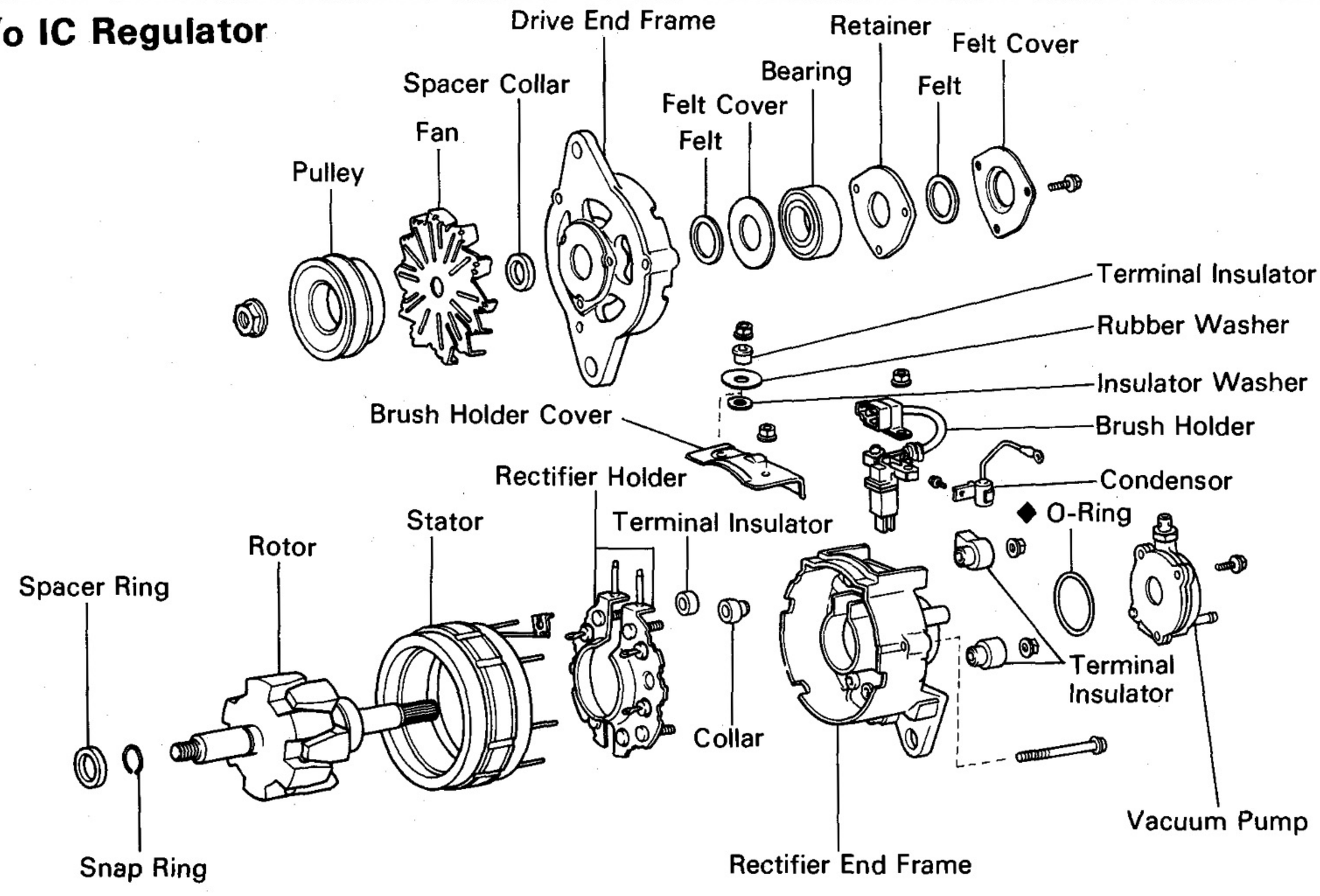

w/ IC Regulator

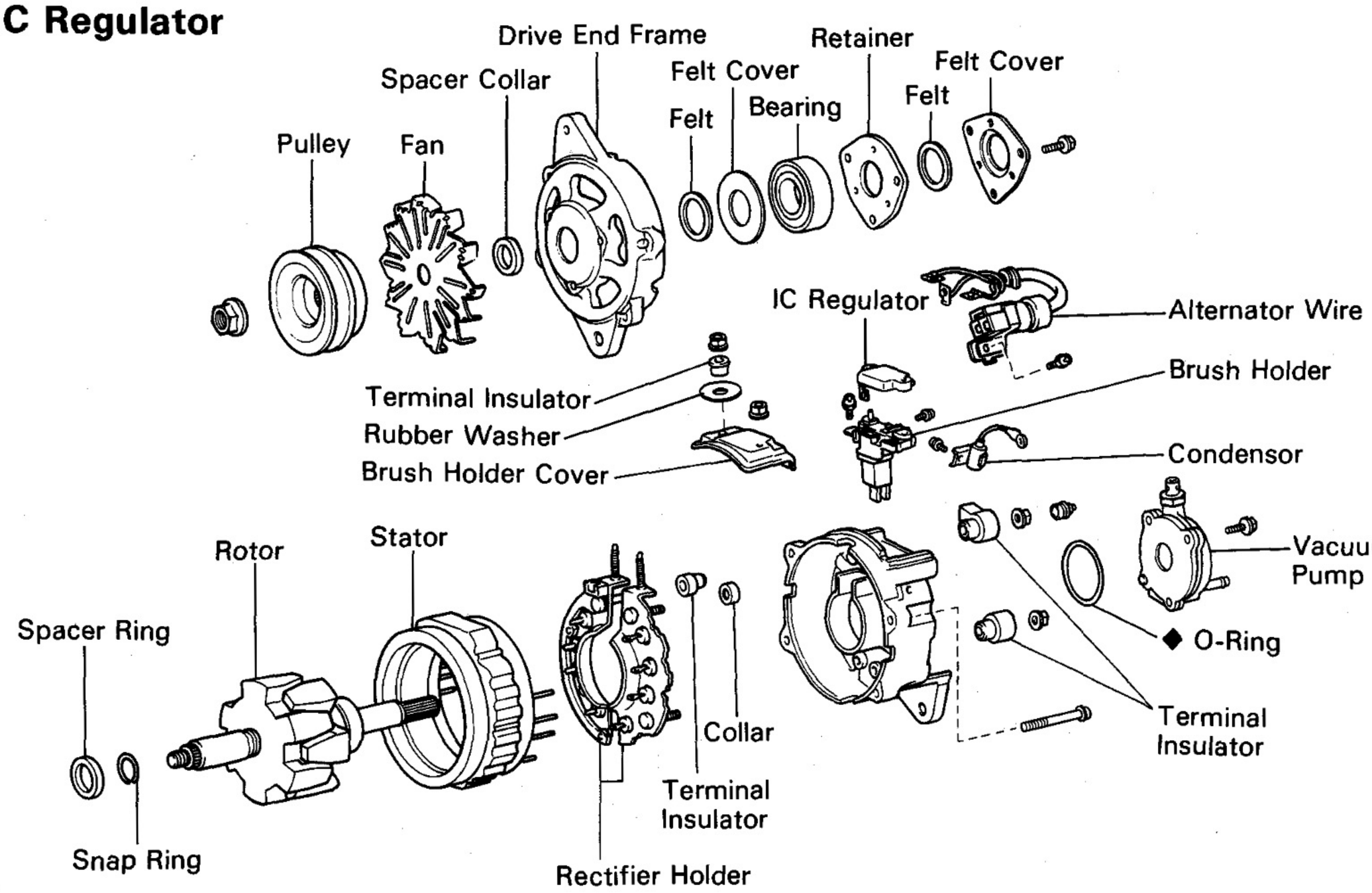

◆ Non-reusable part

CH0444
CH0443

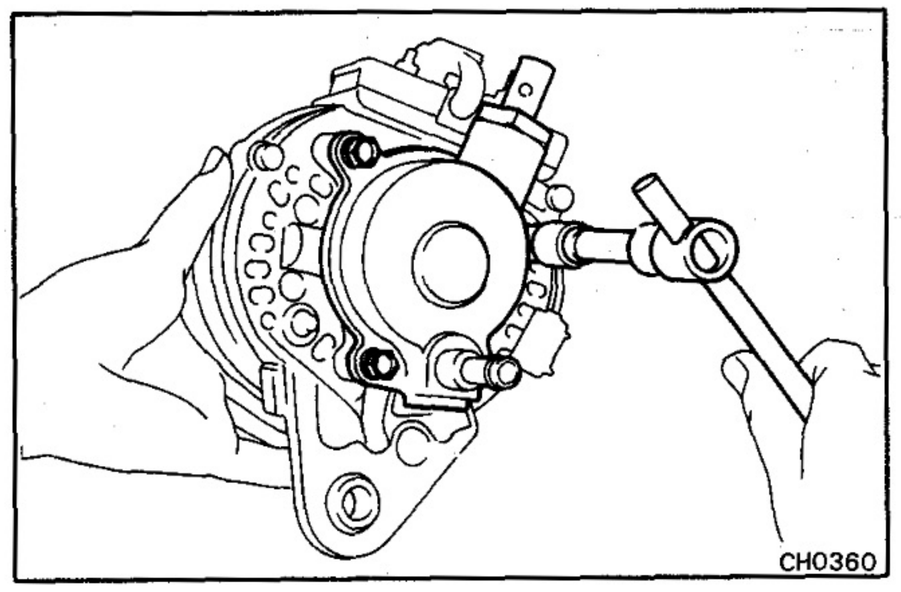

DISASSEMBLY OF ALTERNATOR

(See page CH-10)

1. REMOVE VACUUM PUMP

Remove the three bolts, vacuum pump and O-ring.

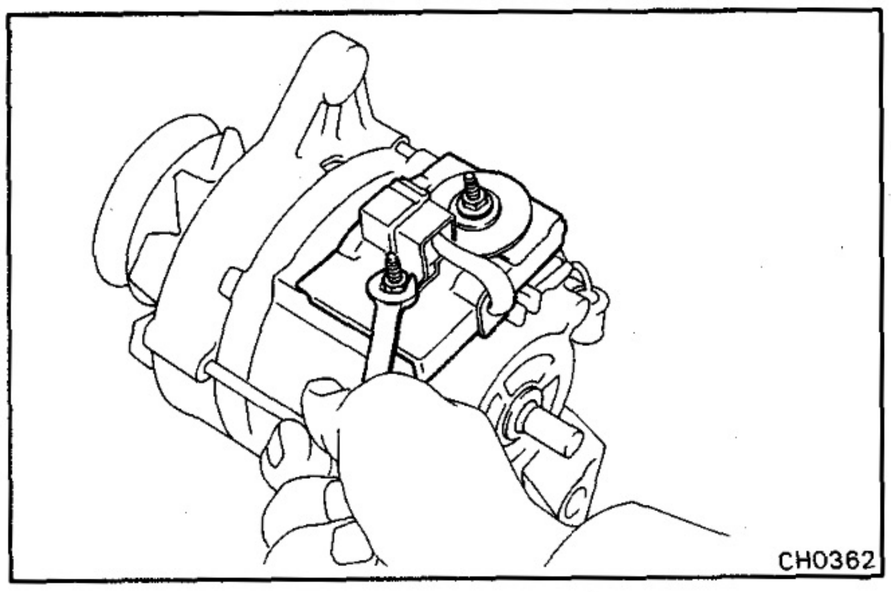

2. REMOVE BRUSH HOLDER COVER

[w/o IC Regulator]

Remove the two nuts, terminal insulator, rubber washer, brush holder cover and insulator washer.

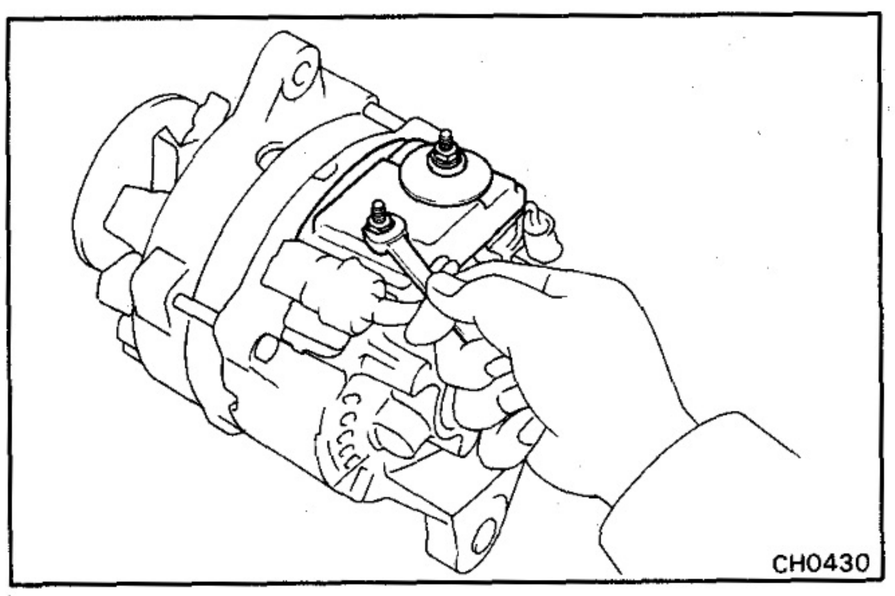

[w/ IC Regulator]

Remove the two nuts, terminal insulator, rubber washer and brush holder cover.

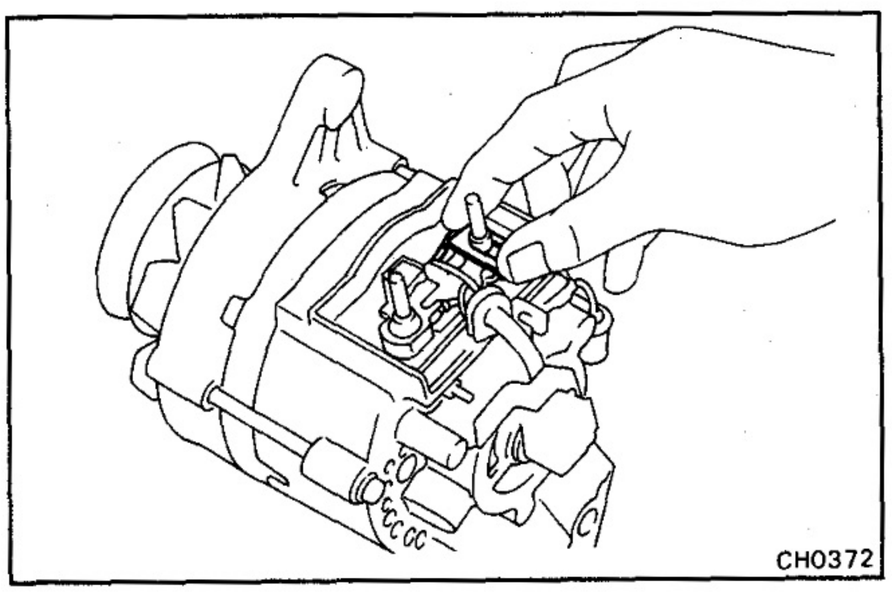

3. [w/o IC REGULATOR] REMOVE BRUSH HOLDER

(a) Disconnect the lead wire.

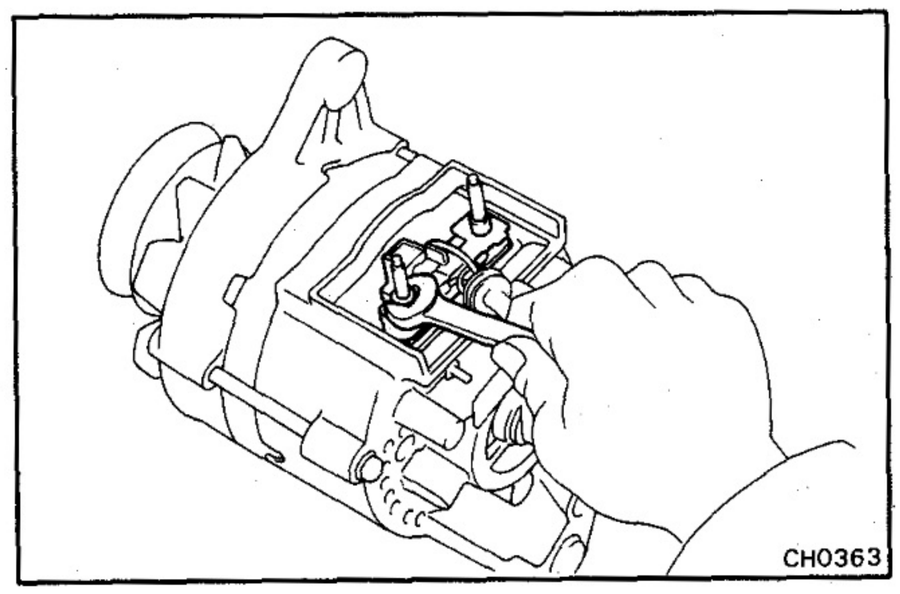

(b) Remove the nut and brush holder.

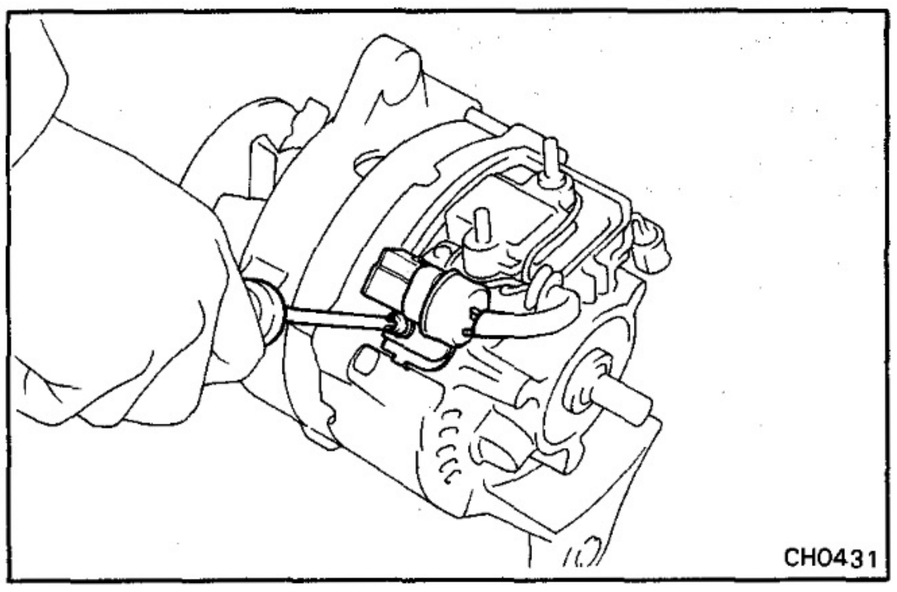

4. [w/ IC REGULATOR]
REMOVE BRUSH HOLDER AND IC REGULATOR

(a) Remove the screw, disconnect the alternator connector.

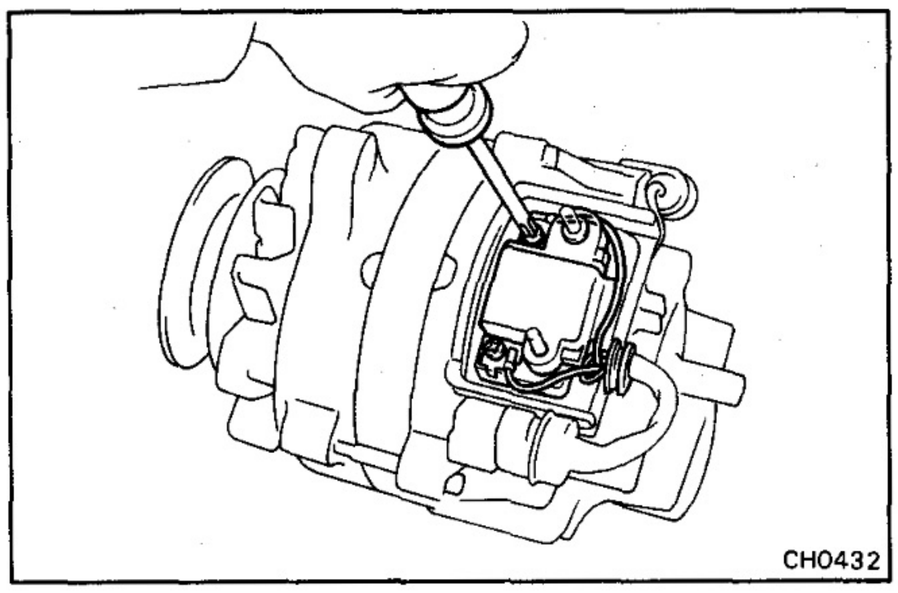

(b) Remove the screw, the brush holder and IC Regulator assembly.

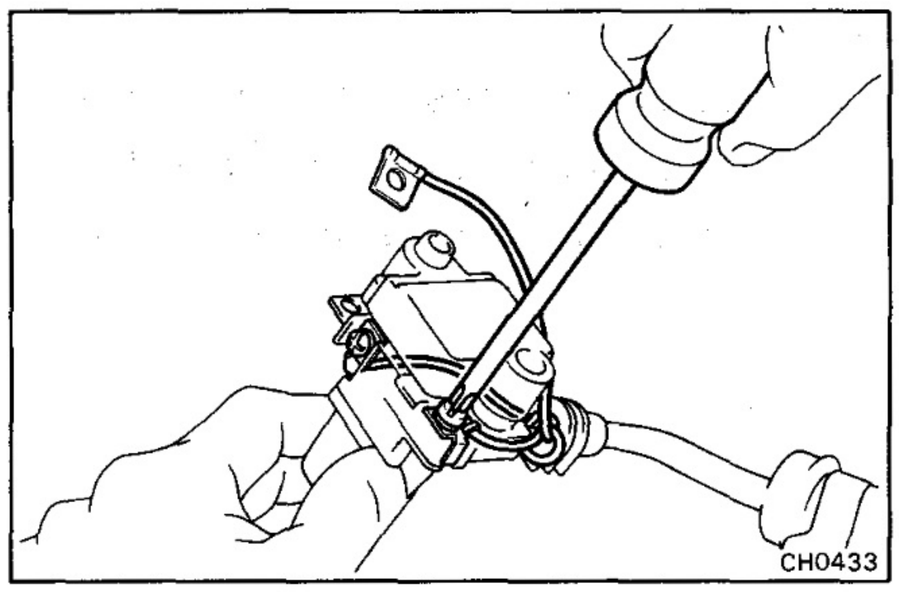

5. [w/ IC REGULATOR]
SEPARATE BRUSH HOLDER AND IC REGULATOR

(a) Remove the two screws and alternator wire.

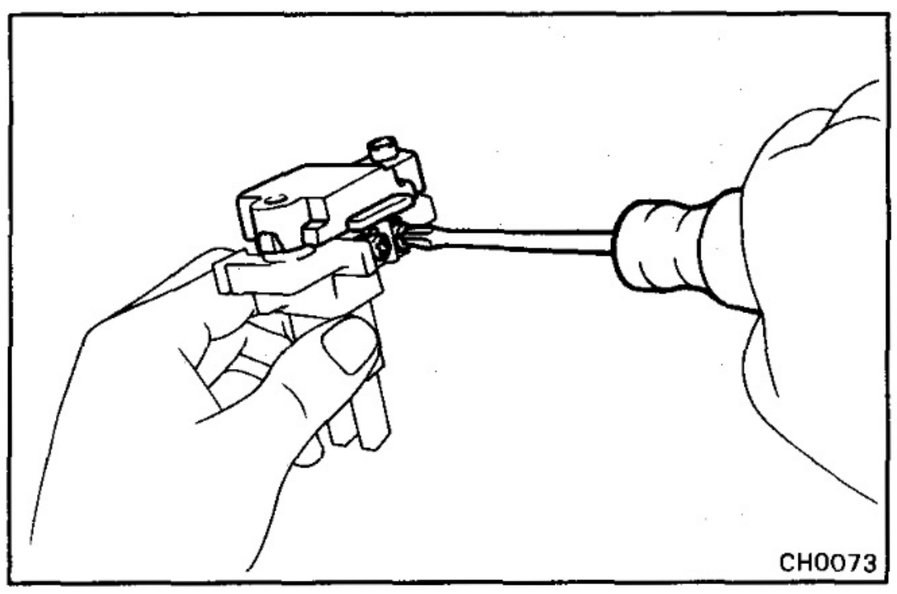

(b) Remove the two screws, and separate the brush holder and IC regulator.

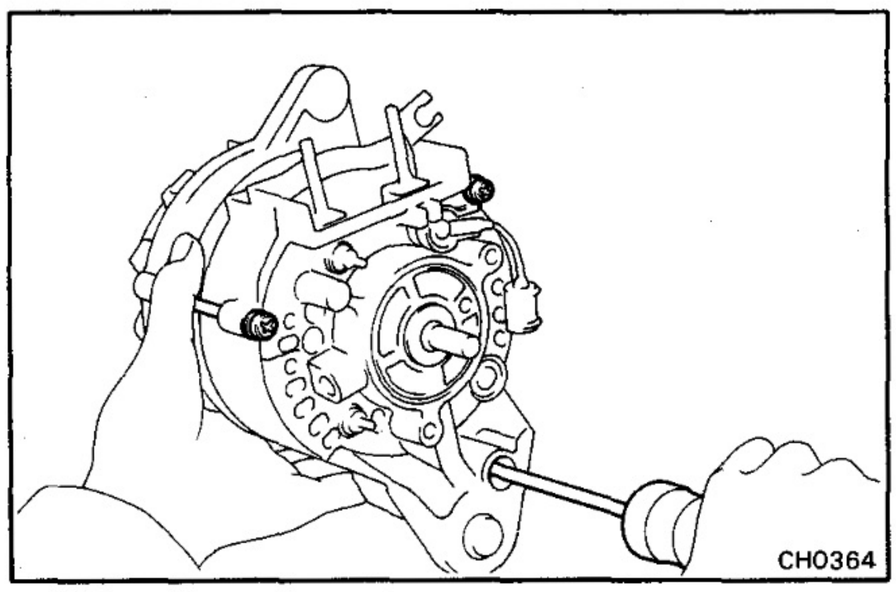

6. REMOVE DRIVE END FRAME AND ROTOR ASSEMBLY FROM STATOR

(a) [w/o IC Regulator]
Remove the three through screws.

(b) [w/ IC Regulator]
Remove the four through screws.

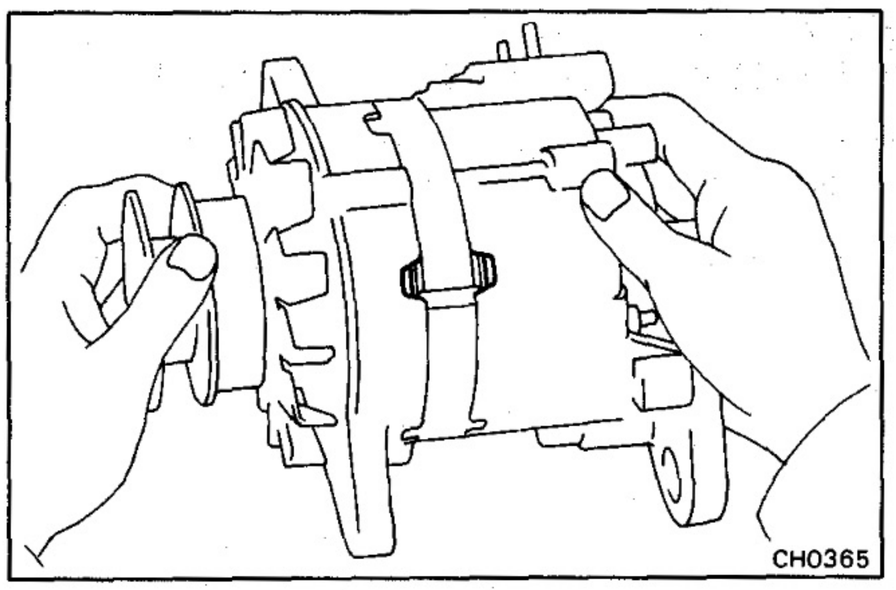

(c) Remove the drive end frame together with the rotor.

NOTE: If necessary, lightly tap the rotor shaft with a plastic-faced hammer.

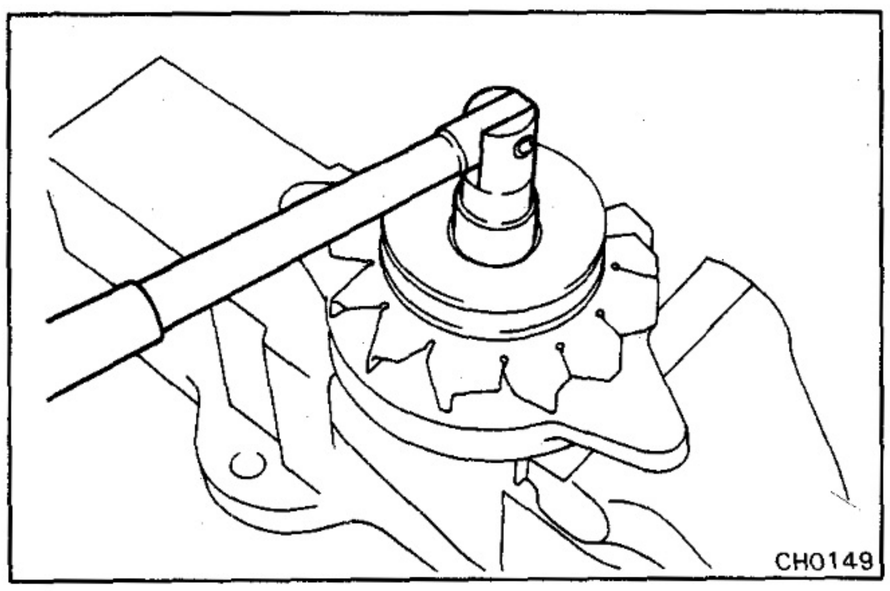

7. REMOVE PULLEY AND FAN

(a) Mount the rotor in a soft jaw vise.

(b) Remove the nut, pulley and fan.

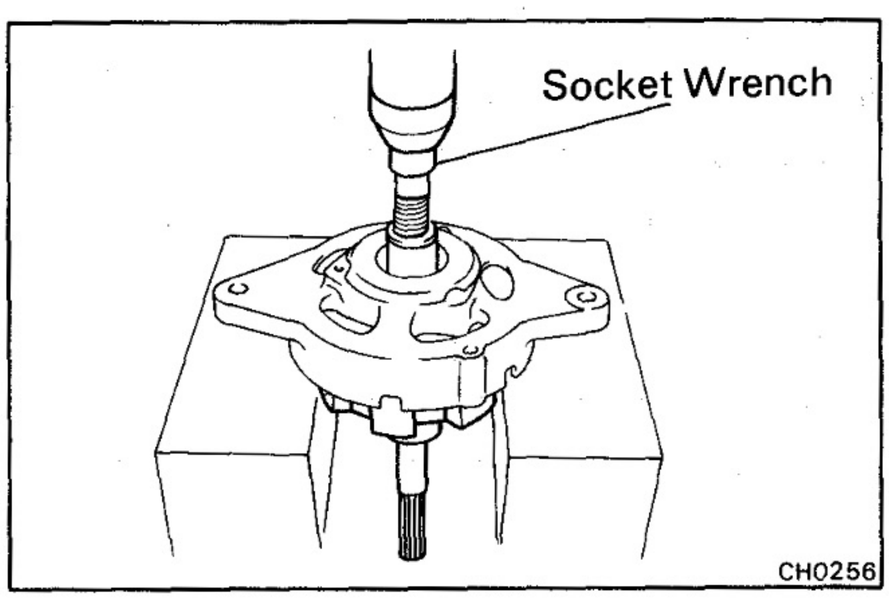

8. REMOVE ROTOR

(a) Using a socket wrench and press, press out the rotor.

(b) Remove the spacer collar from the drive end frame.

(c) Remove the spacer ring and snap ring from the rotor shaft.

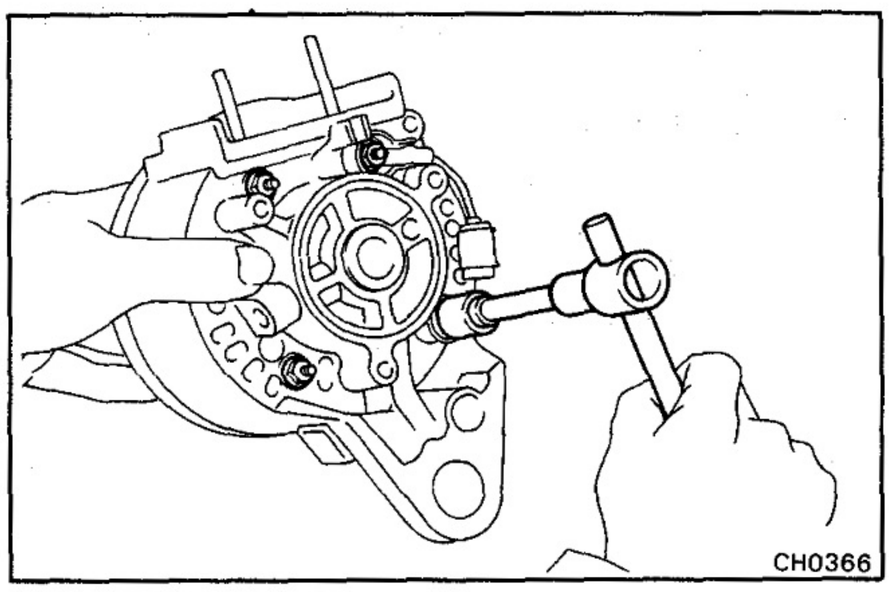

9. REMOVE RECTIFIER END FRAME

(a) [w/ IC Regulator]
Remove the two rubber caps.

(b) Remove the four nuts and two terminal insulators.

(c) Remove the rectifier end frame.

(d) Remove the two terminal bushings and collars from the rectifier holder studs.

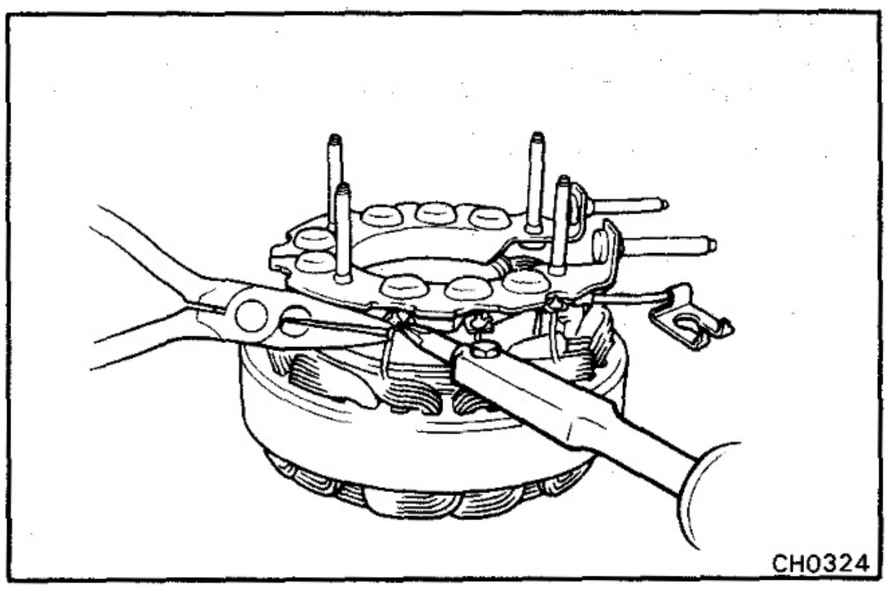

10. REMOVE RECTIFIER HOLDER

Hold the rectifier terminal with needle-nose pliers and unsolder the leads.

CAUTION: Protect the rectifiers from heat.

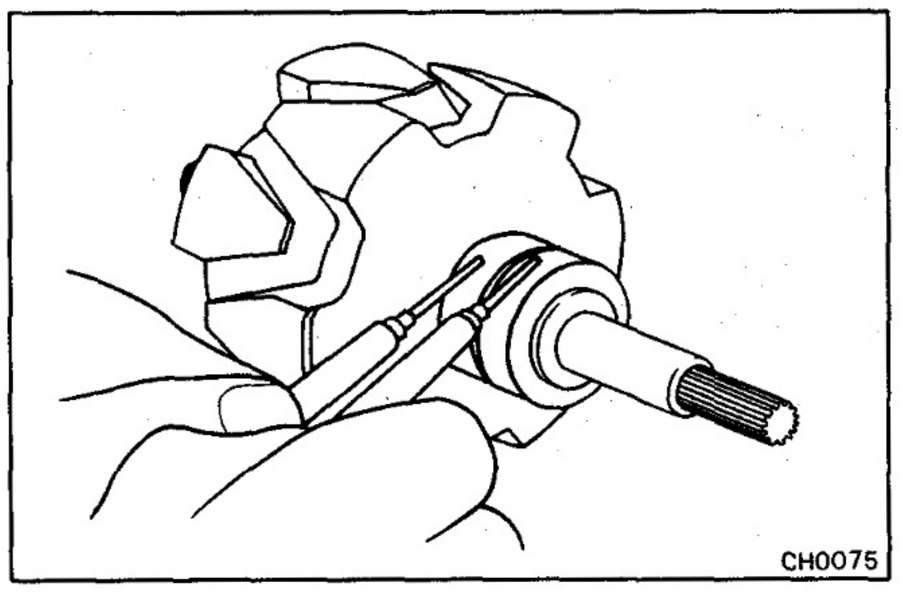

INSPECTION OF ALTERNATOR

Rotor

1. INSPECT ROTOR FOR OPEN CIRCUIT

Using an ohmmeter, check that there is continuity between the slip rings.

Standard resistance:

w/o IC regulator	**12V type**	**3.9–4.1 Ω**
	24V type	**18.8–19.2 Ω**
w/ IC regulator	**12V type**	**2.8–3.0 Ω**
	24V type	**8.8–9.2 Ω**

If there is no continuity, replace the rotor.

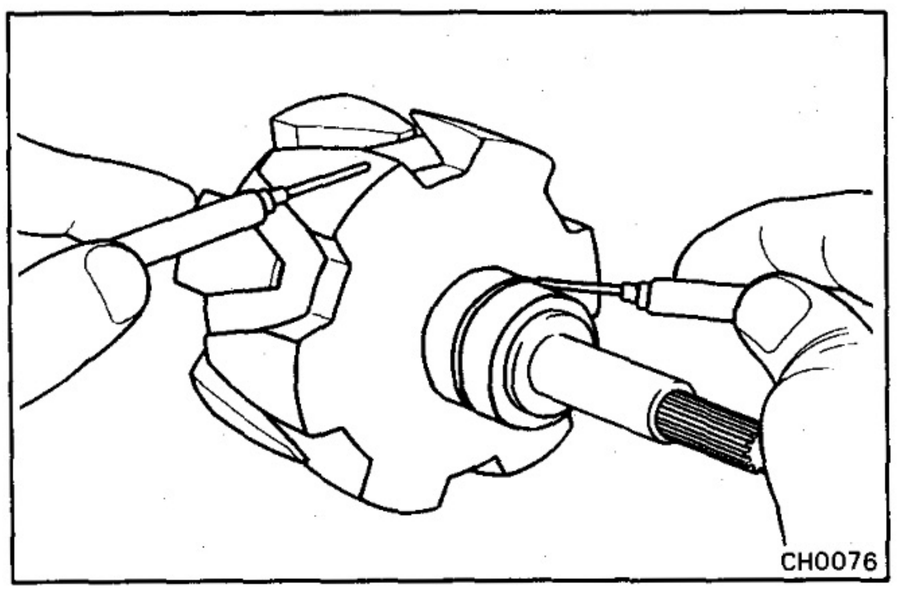

2. INSPECT ROTOR FOR GROUND

Using an ohmmeter, check that there is no continuity between the slip ring and the rotor.

If there is continuity, replace the rotor.

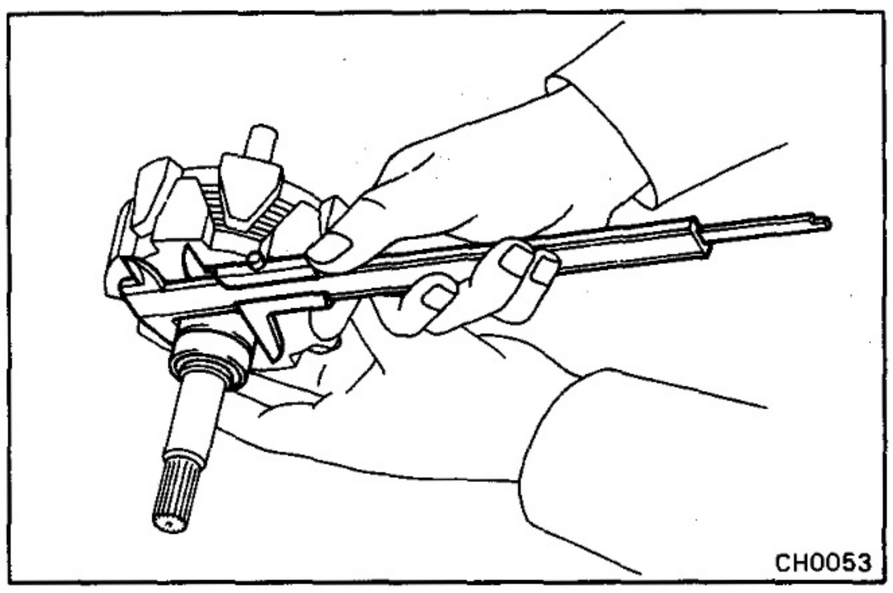

3. INSPECT SLIP RINGS

(a) Check that the slip rings are not rough or scored. If rough or scored, replace the rotor.

(b) Using calipers, measure the slip ring diameter.

Standard diameter: 32.3 – 32.5 mm (1.272 – 1.280 in.)

Minimum diameter: 32.1 mm (1.264 in.)

If the diameter is less than minimum, replace the rotor.

Stator

1. INSPECT STATOR FOR OPEN CIRCUIT

Using an ohmmeter, check that there is continuity between the coil leads.

If there is no continuity, replace the stator.

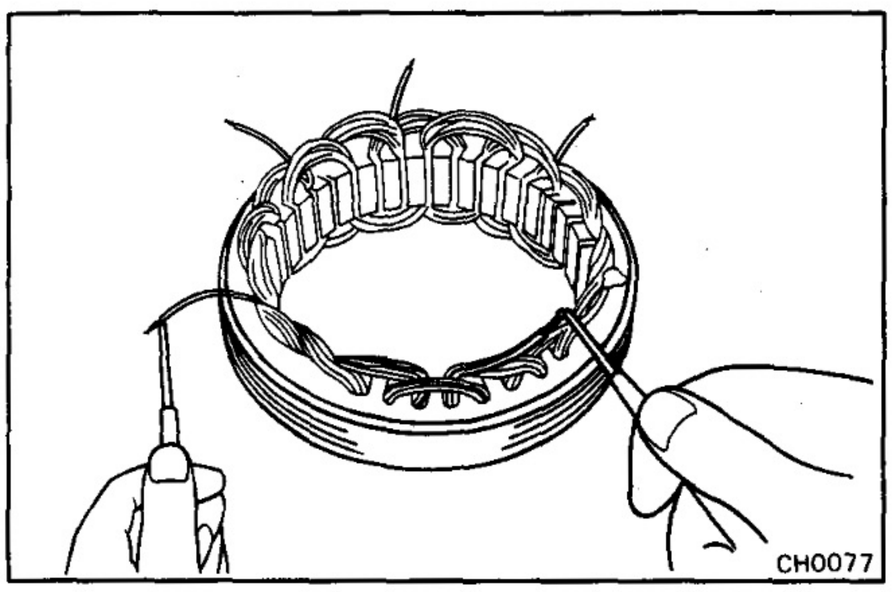

2. INSPECT STATOR FOR GROUND

Using an ohmmeter, check that there is no continuity between the coil leads and stator core.

If there is continuity, replace the stator.

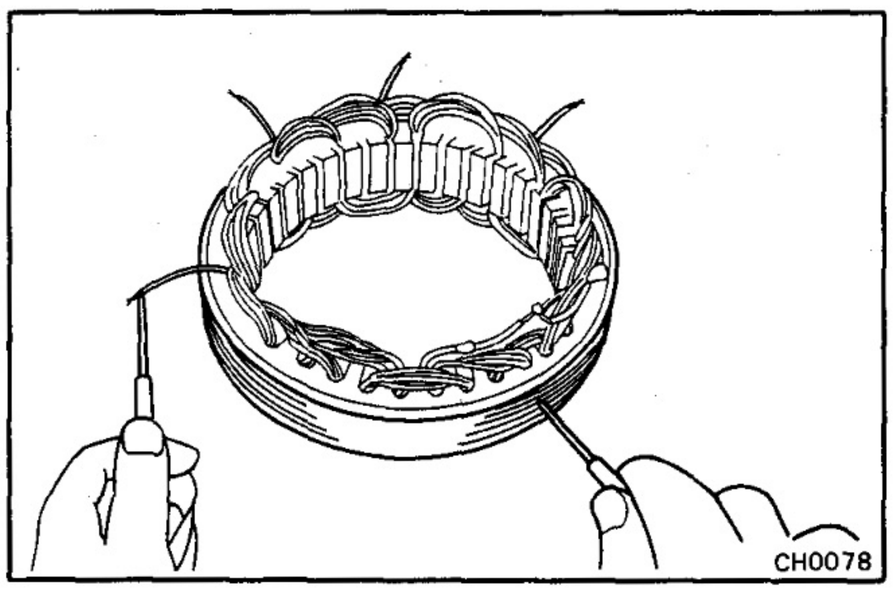

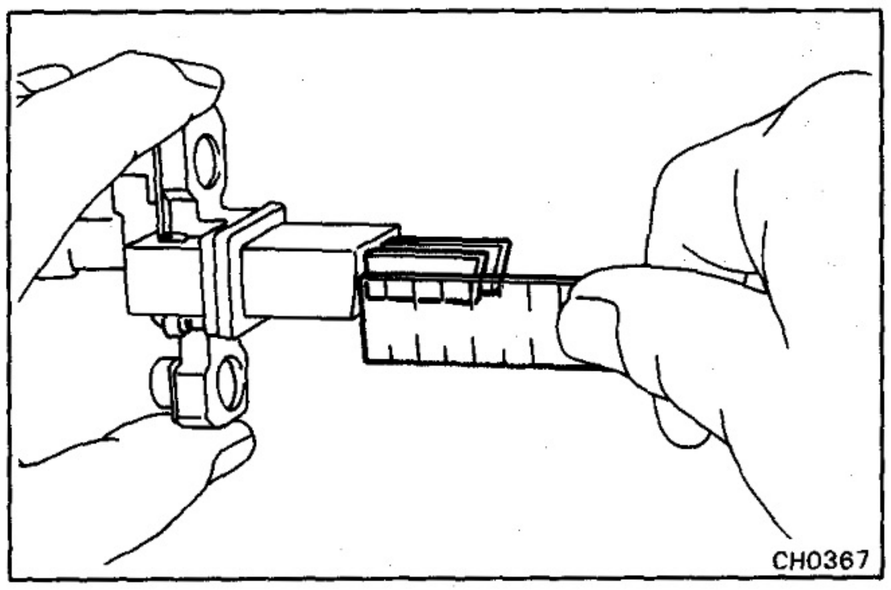

Brushes

1. INSPECT EXPOSED BRUSH LENGTH

Using a scale, measure the exposed brush length.

Standard exposed length: 20.0 mm (0.787 in.)
Minimum exposed length: 5.5 mm (0.217 in.)

If the length is less than minimum, replace the brushes.

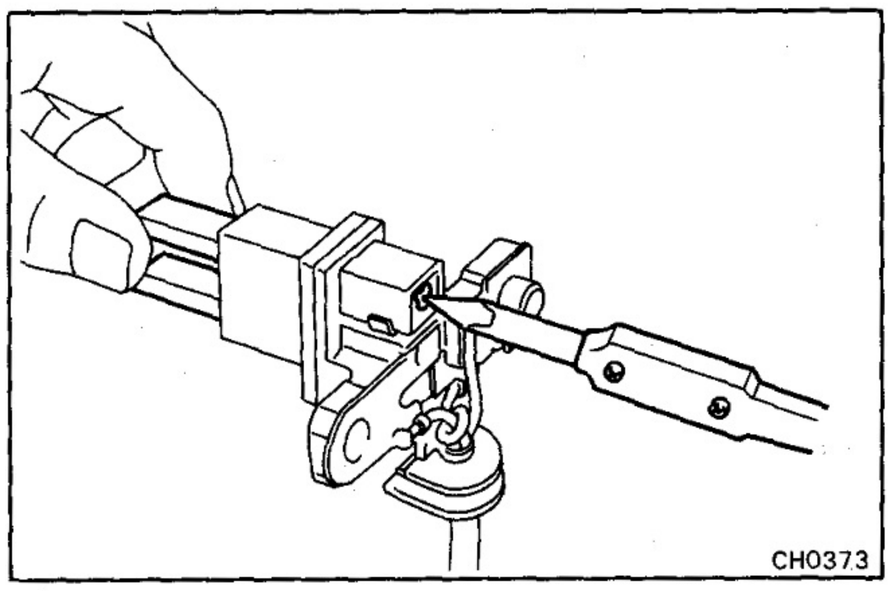

2. IF NECESSARY, REPLACE BRUSHES

(a) Unsolder and remove the brush and spring.

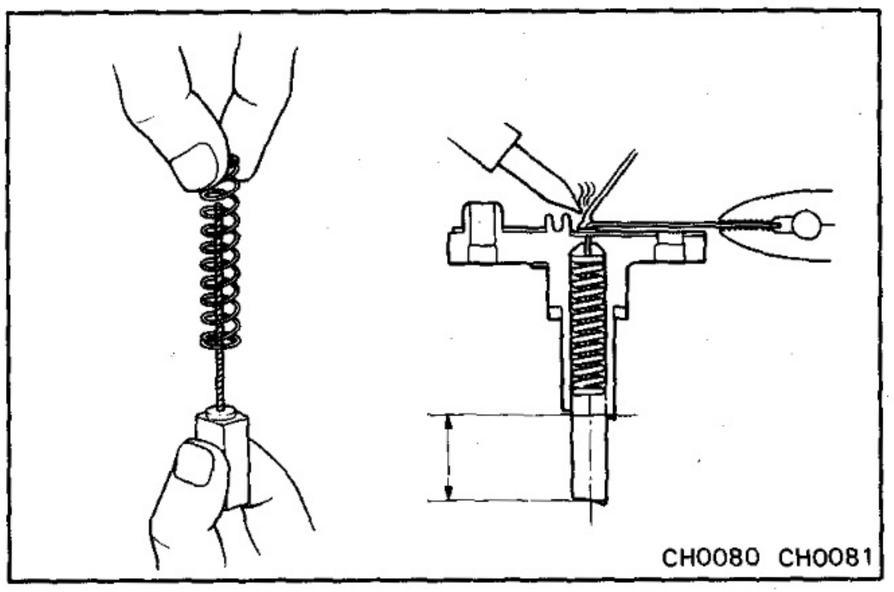

(b) Insert the brush wire through the spring.
(c) Install the brush in the brush holder.
(d) Solder the wire to the brush holder at specifield exposed length.

Exposed length: 20.0 mm (0.787 in.)

(e) Check that the brush moves smoothly in the brush holder.
(f) Cut off any excess wire.

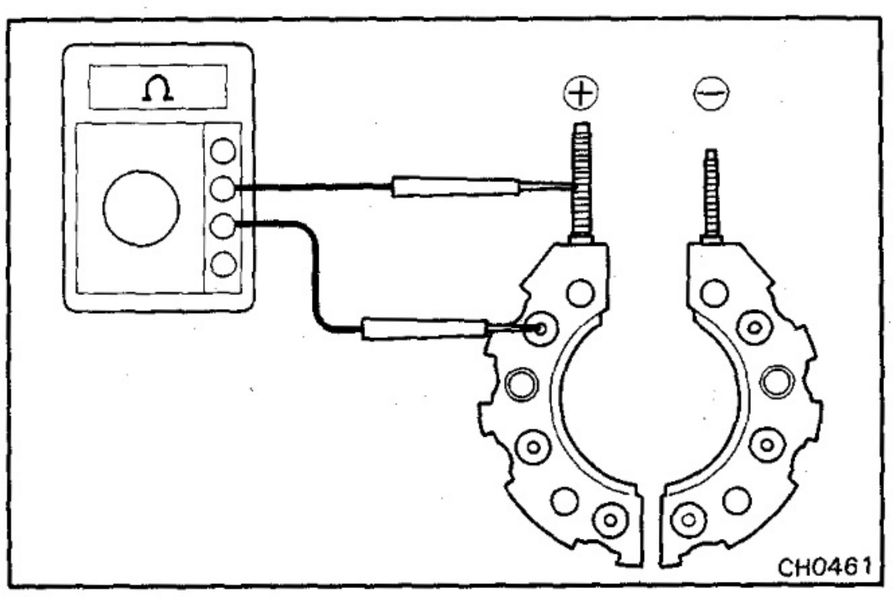

Rectifiers

1. INSPECT POSITIVE RECTIFIER

(a) Connect the ohmmeter positive (+) probe to the rectifier terminal and the nagtive (–) probe to the rectifier holder, and check that there is no continuity.
(b) Reverse the ohmmeter probes, and check that there is continuity.

If continuity is not as specified, replace the rectifier.

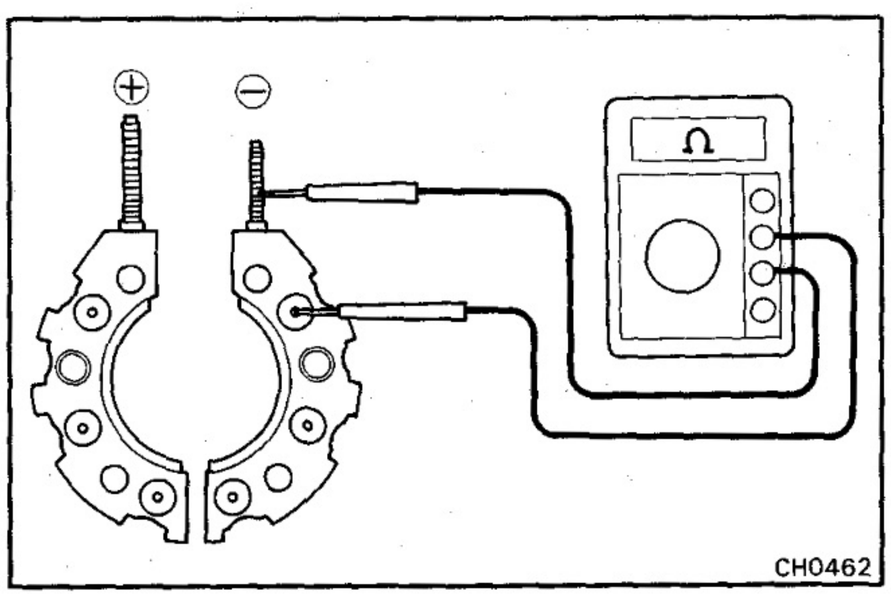

2. INSPECT NEGATIVE RECTIFIER

(a) Connect the ohmmeter positive (+) probe to the rectifier terminal and the nagative (–) probe to the rectifier holder, and check that there is continuity.
(b) Reverse the ohmmeter probes, and check that there is no continuity.

If continuity is not as specified, replace the rectifier.

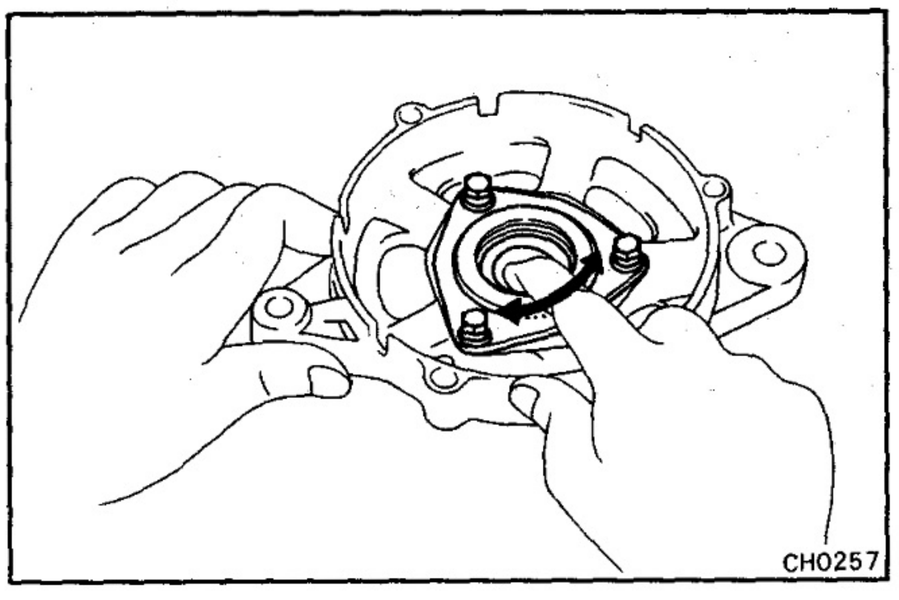

Bearings

1. INSPECT FRONT BEARING

Check that the bearing is not rough or worn.

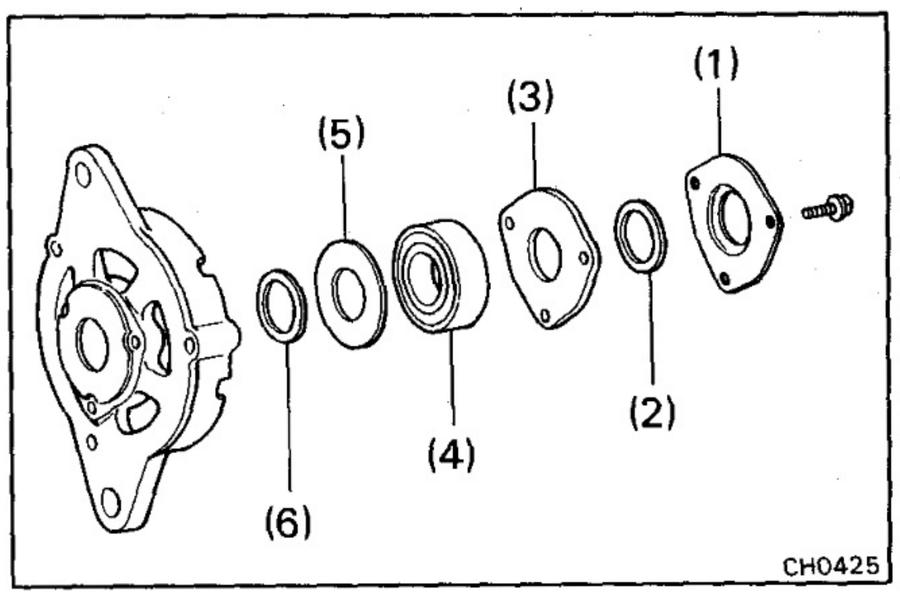

2. IF NECESSARY, REPLACE FRONT BEARING

(a) Remove the three bolts and following parts:

(1) Felt cover
(2) Felt
(3) Retainer
(4) Bearing
(5) Felt cover
(6) Felt

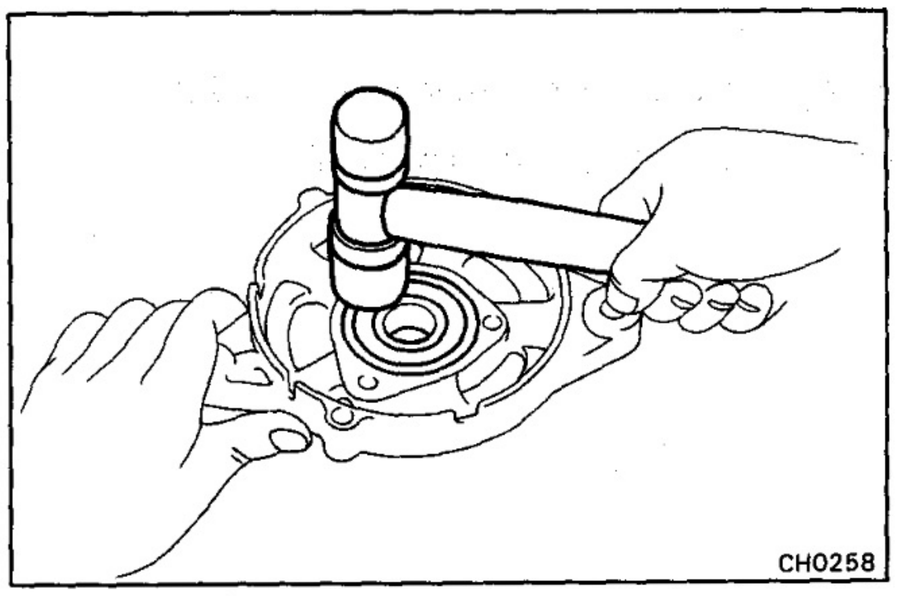

(b) Install the following parts with the three bolts:

(1) Felt
(2) Felt cover
(3) Bearing
If necessary, lightly tap the bearing with a plastic-faced hammer.
(4) Retainer
(5) Felt
(6) Felt cover

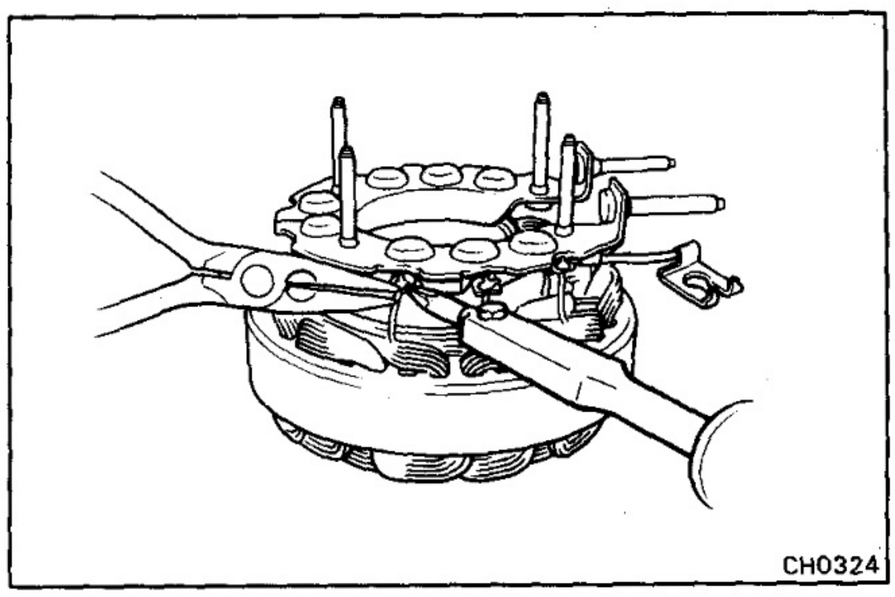

ASSEMBLY OF ALTERNATOR

(See page CH-10)

1. INSTALL RECTIFIER HOLDER TO STATOR

Hold the rectifier terminal with needle-nose pliers while soldering the leads.

CAUTION: Protect the rectifiers from heat.

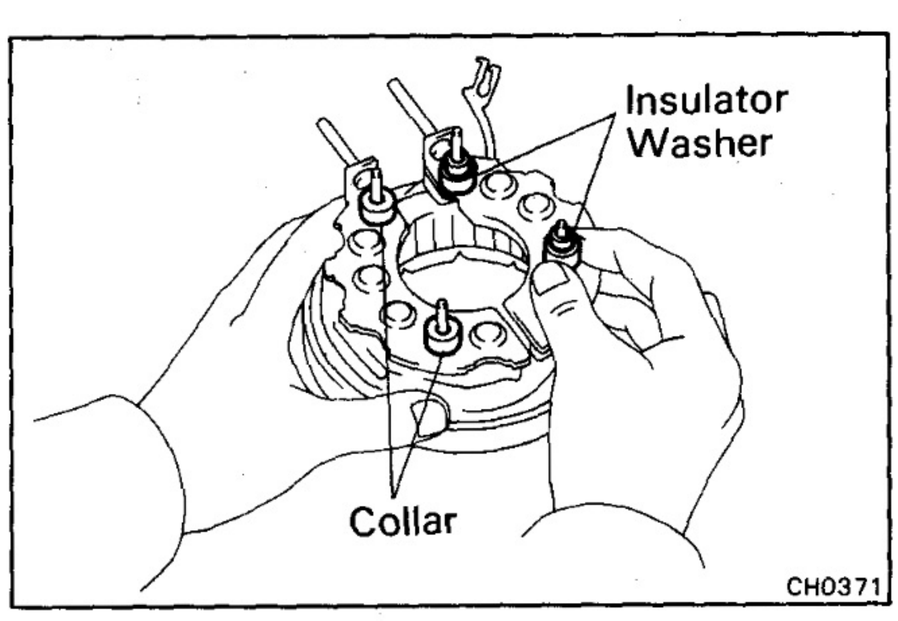

2. INSTALL RECTIFIER END FRAME TO RECTIFIER HOLDER

(a) Place the two insulator washers on the positive (+) studs of the rectifier holder.

(b) Place the two collars on the negative (–) studs of the rectifier holder.

(c) Place the rectifier end frame on the rectifier holder.

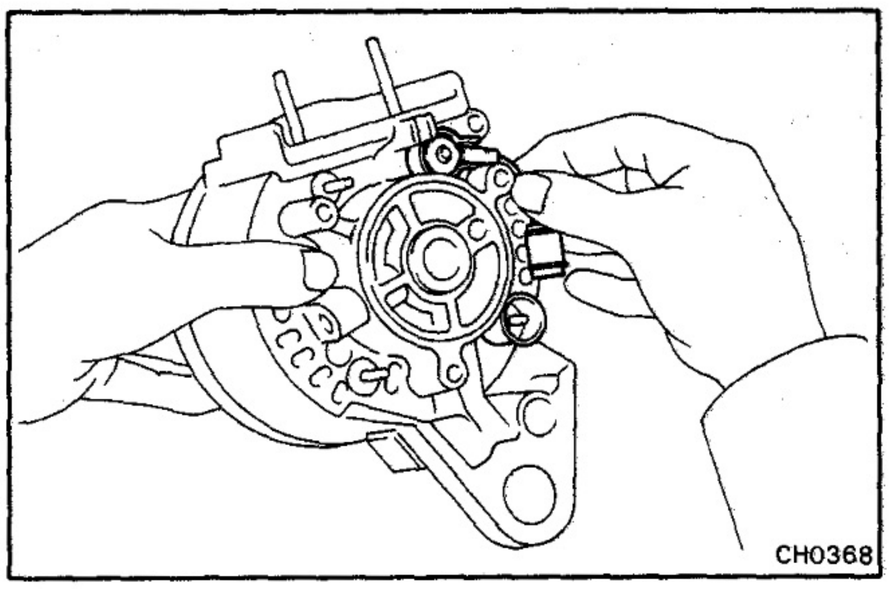

(d) Place the two terminal insulators on the positive (+) studs of the rectifier holder.

(e) Connect the lead wire of the condenser on the positive (+) stud of the rectifier holder.

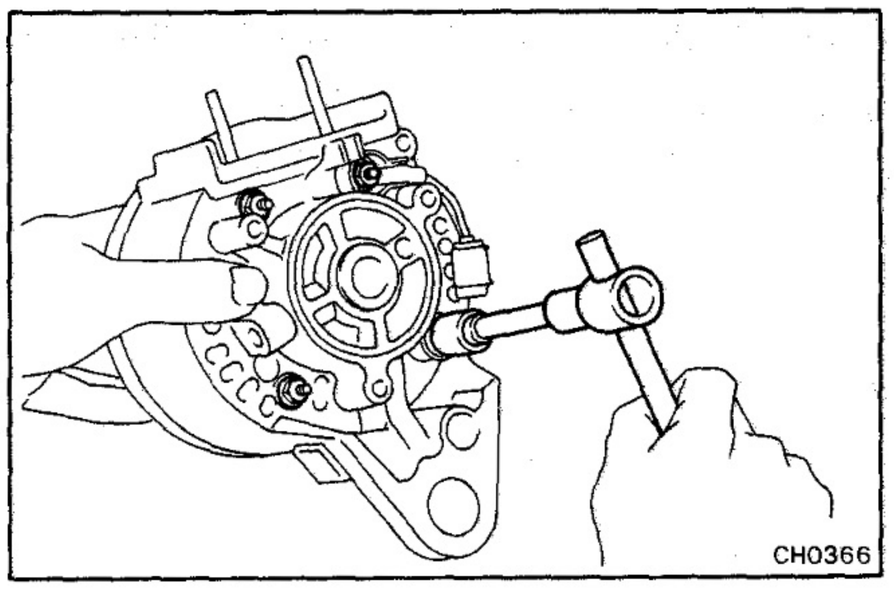

(f) Install the four nuts.

(g) Check that the wires are not touching the frame.

(h) [w/ IC Regulator]
Install the two rubber caps to the positive (+) studs of the rectifier holder.

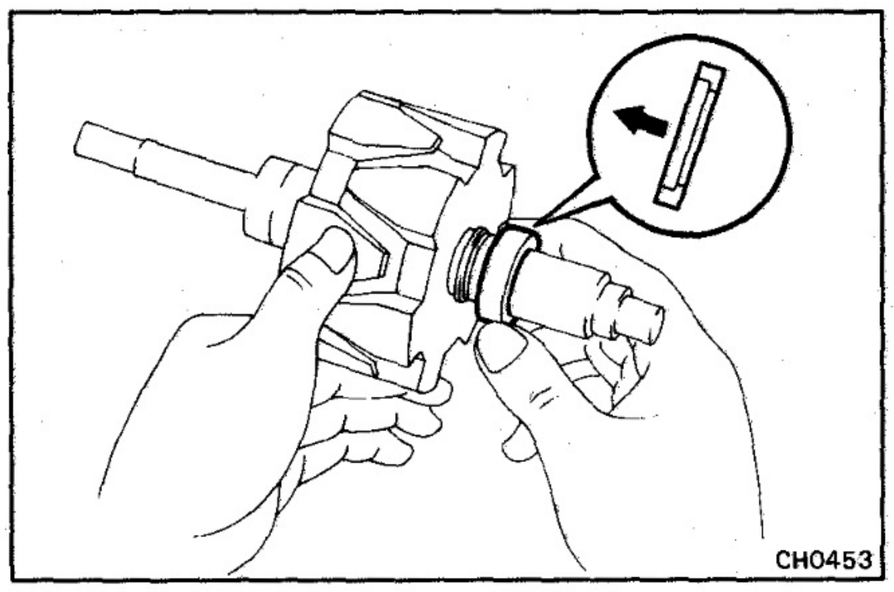

3. INSTALL ROTOR

(a) Install the snap ring on the rotor shaft groove.

(b) Slide the spacer ring onto the rotor shaft.

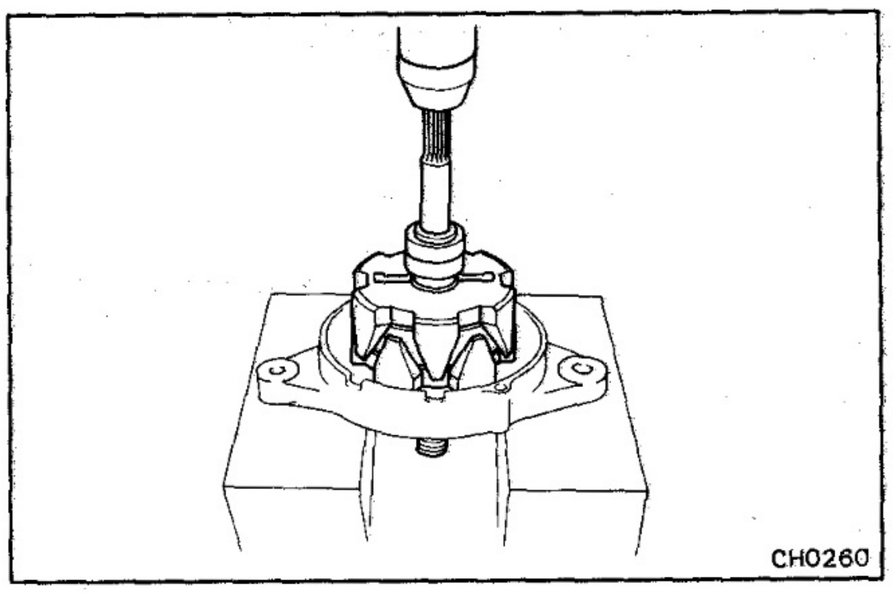

(c) Using a press, press in the rotor.

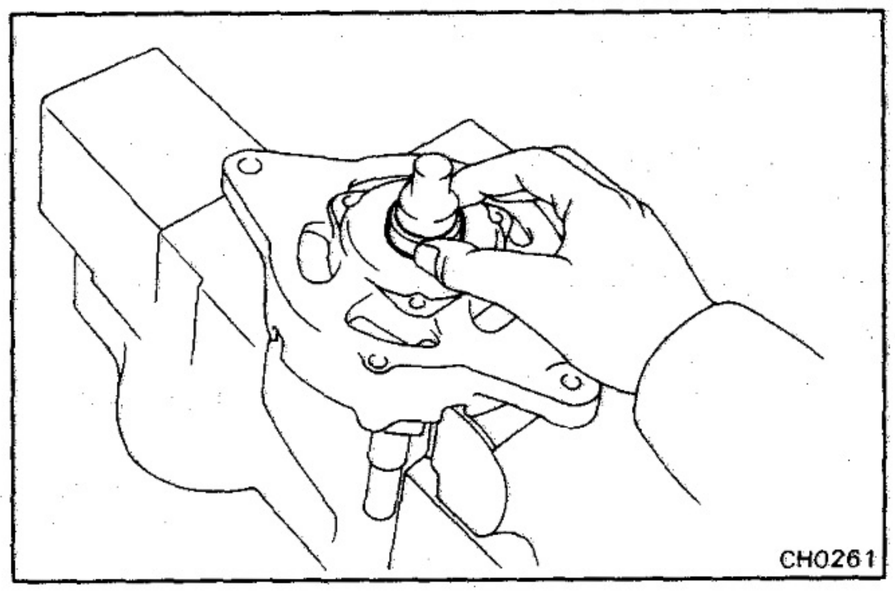

4. INSTALL FAN AND PULLEY

(a) Mount the rotor in soft jaw vise.

(b) Slide the spacer collar onto the rotor shaft.

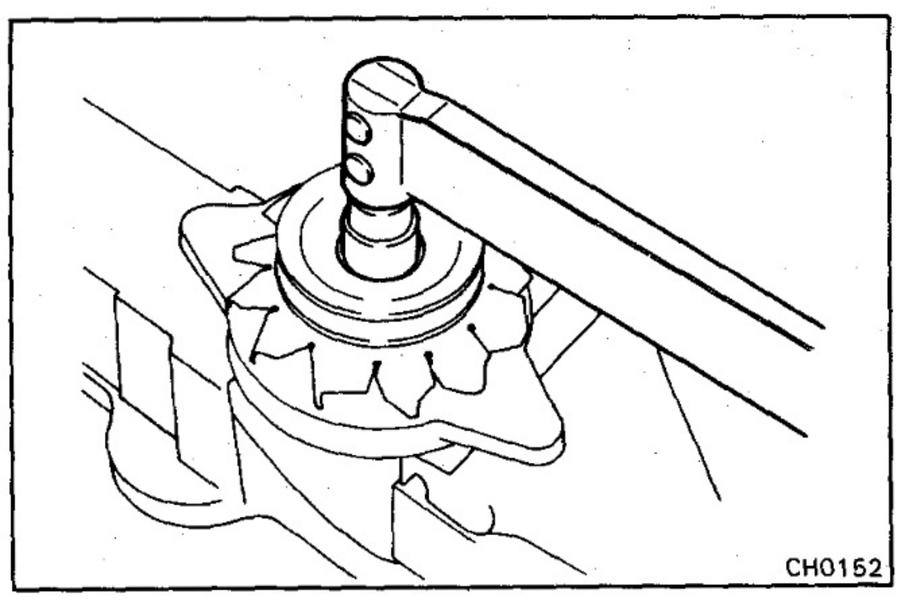

(c) Slide the fan, pulley and spring washer onto the rotor shaft.

(d) Install the nut.

Torque: 900 kg-cm (65 ft-lb, 88 N·m)

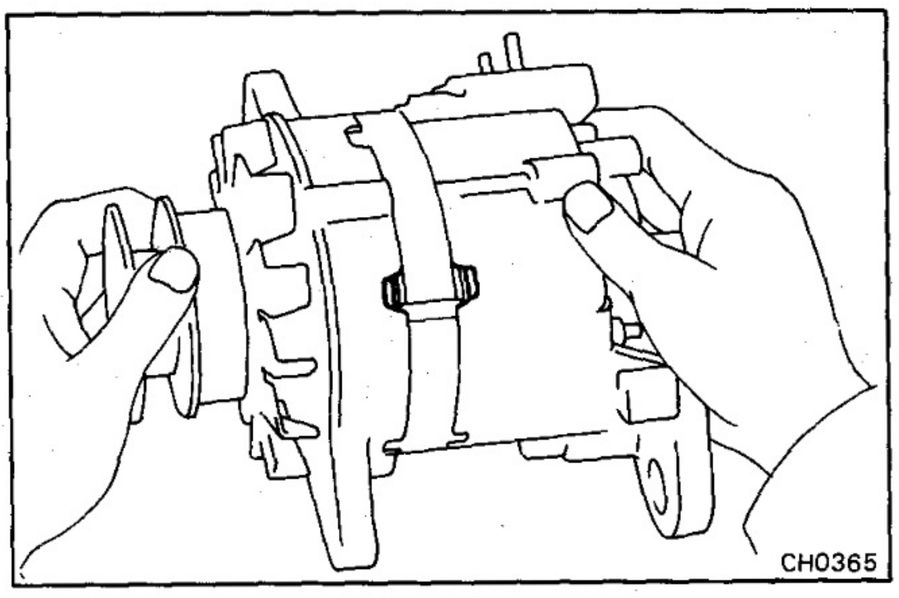

5. ASSEMBLE DRIVE END FRAME AND RECTIFIER END FRAME

(a) Assemble the drive end frame and rectifier end frame.

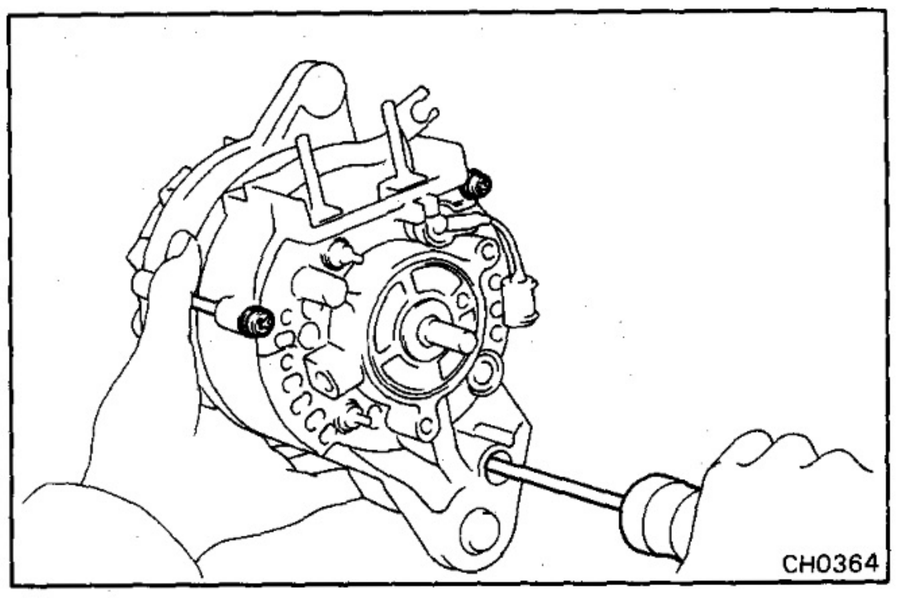

(b) [w/o IC Regulator]
Install the three through screws.

(c) [w/ IC Regulator]
Install the four through screws.

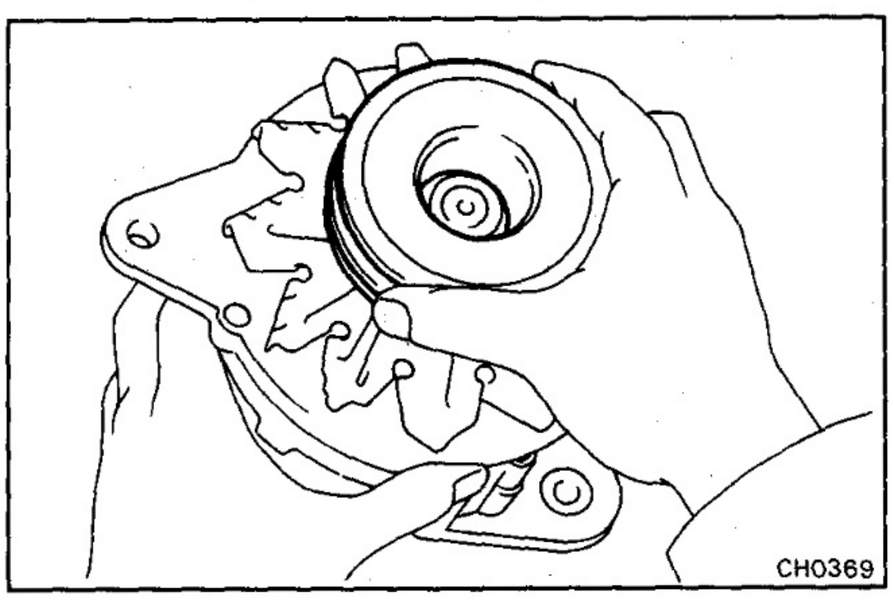

(d) Make sure the rotor rotates smoothly.

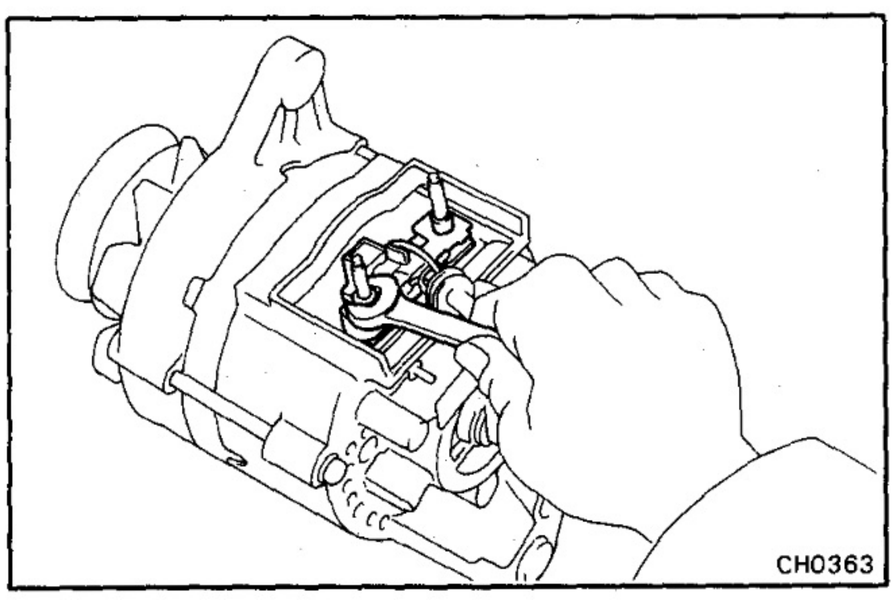

6. [w/o IC REGULATOR] INSTALL BRUSH HOLDER

(a) Install the brush holder with the nut.

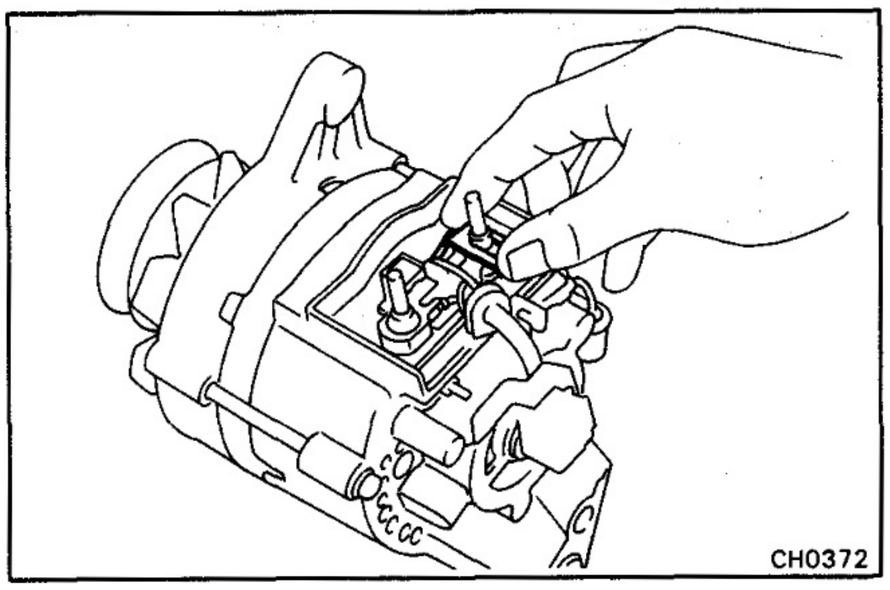

(b) Connect the lead wire to terminal B.

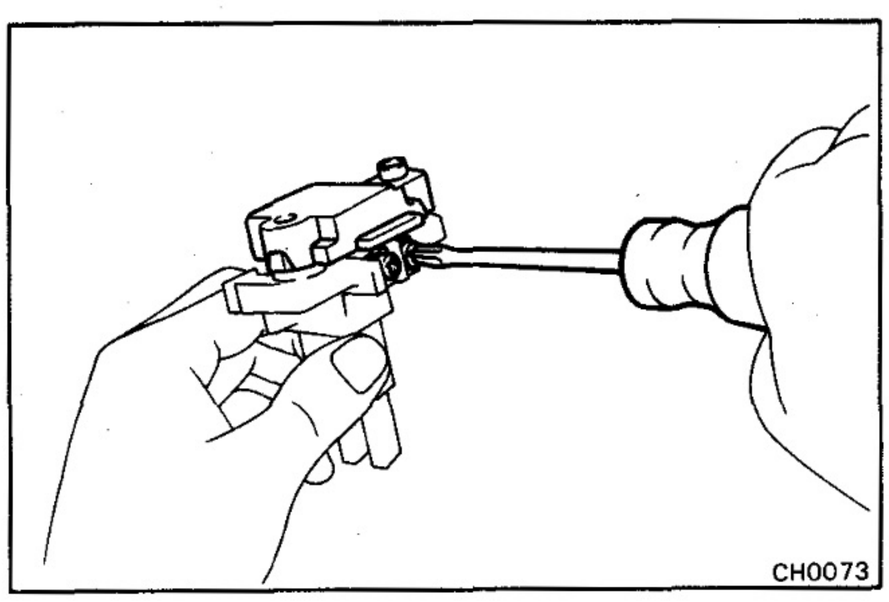

7. [w/ IC REGULATOR]
ASSEMBLE BRUSH HOLDER AND IC REGULATOR

(a) Assemble the brush holder and IC regulator with the two screws.

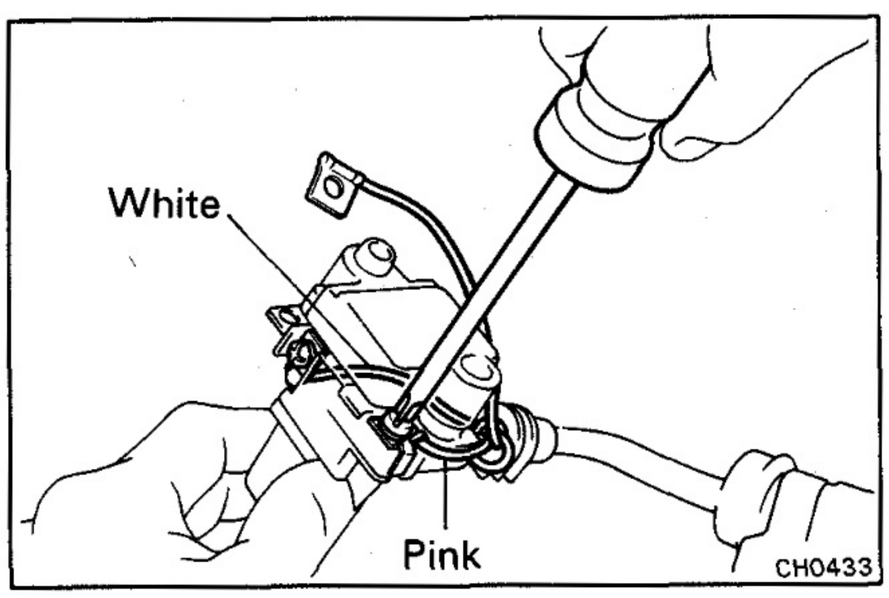

(b) Connect the two alternator wires to the terminal of the IC regulator with the two screws as shown.

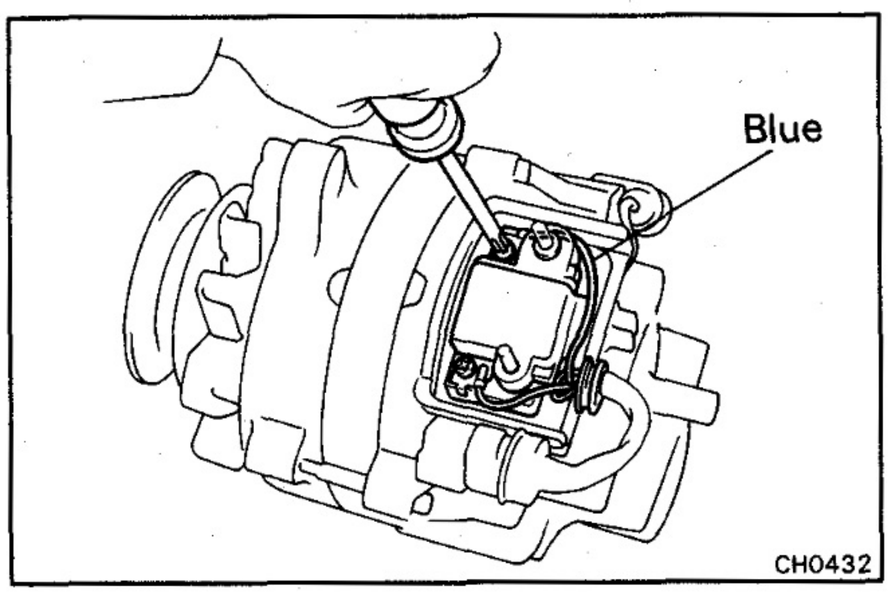

8. [w/ IC REGULATOR]
INSTALL BRUSH HOLDER AND IC REGULATOR ASSEMBLY

(a) Install the brush holder and IC regulator assembly with the screw. Connect the alternater wire to the terminal of the IC regulator as shown.

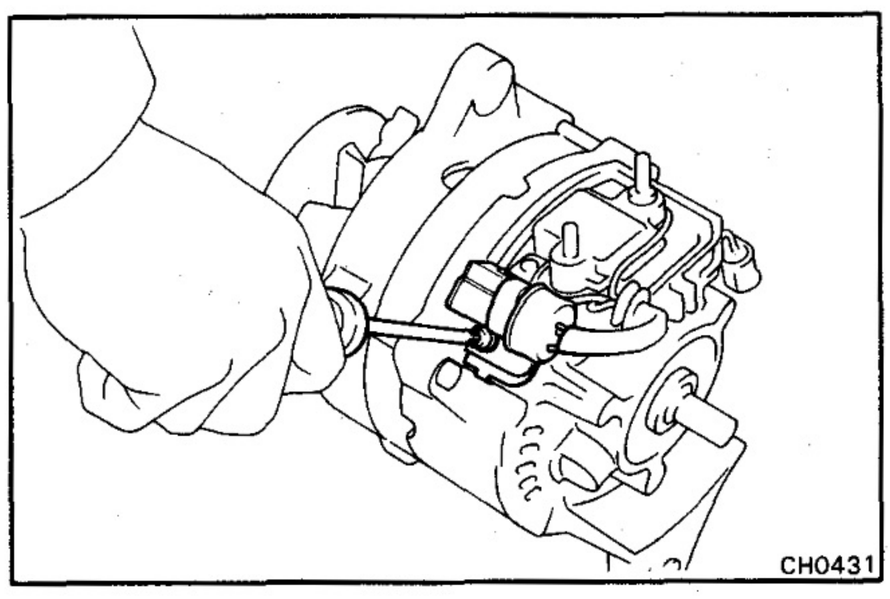

(b) Install the alternator connector with the clamp and screw.

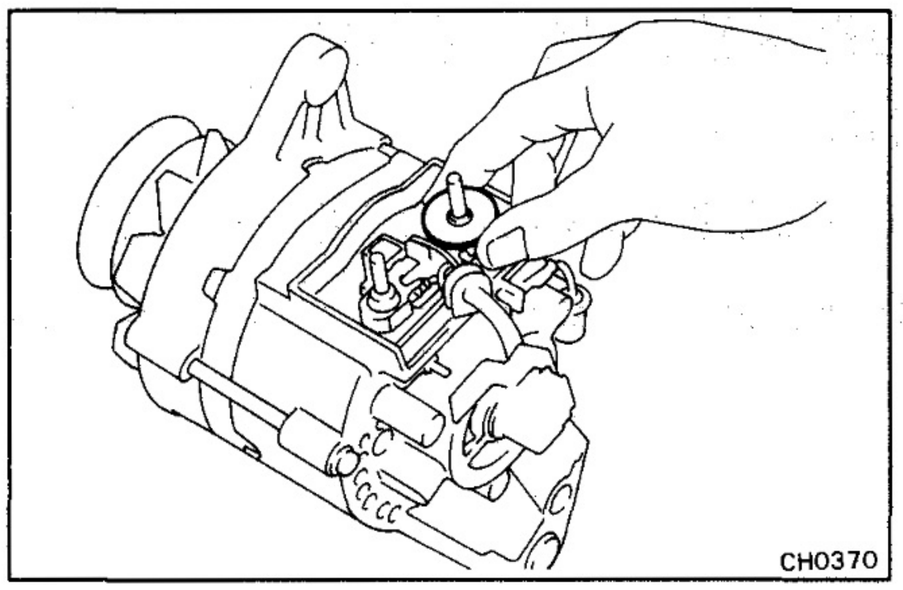

9. INSTALL BRUSH HOLDER COVER
[w/o IC Regulator]

(a) Place the insulator washer on terminal B.

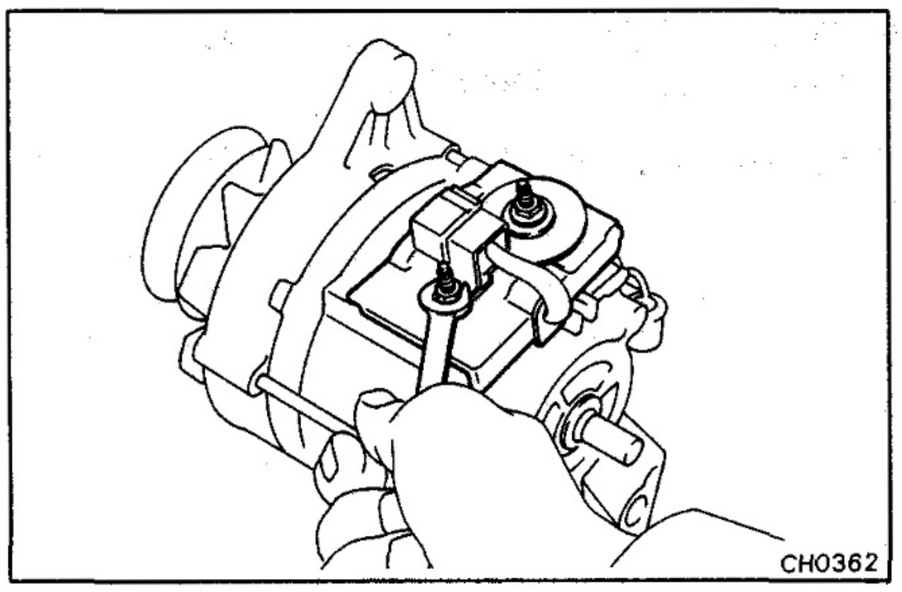

(b) Place the brush holder cover on the rectifier end frame.

(c) Place the terminal insulator and rubber washer on terminal B.

(d) Install the two nuts together with the alternator connector.

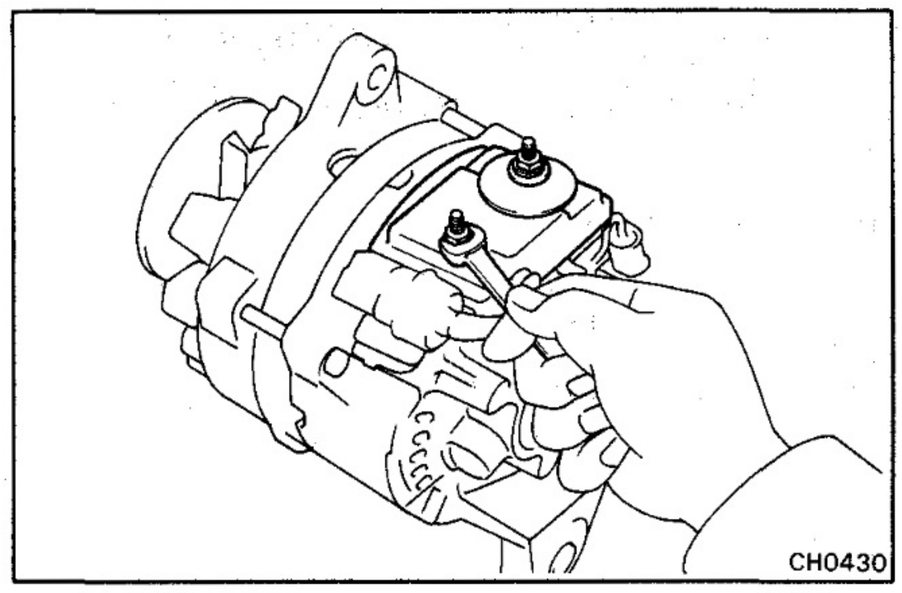

[w/ IC Regulator]

(a) Place the brush holder cover on the rectifier end frame.

(b) Place the terminal insulator and rubber washer on terminal B.

(c) Install the two nuts.

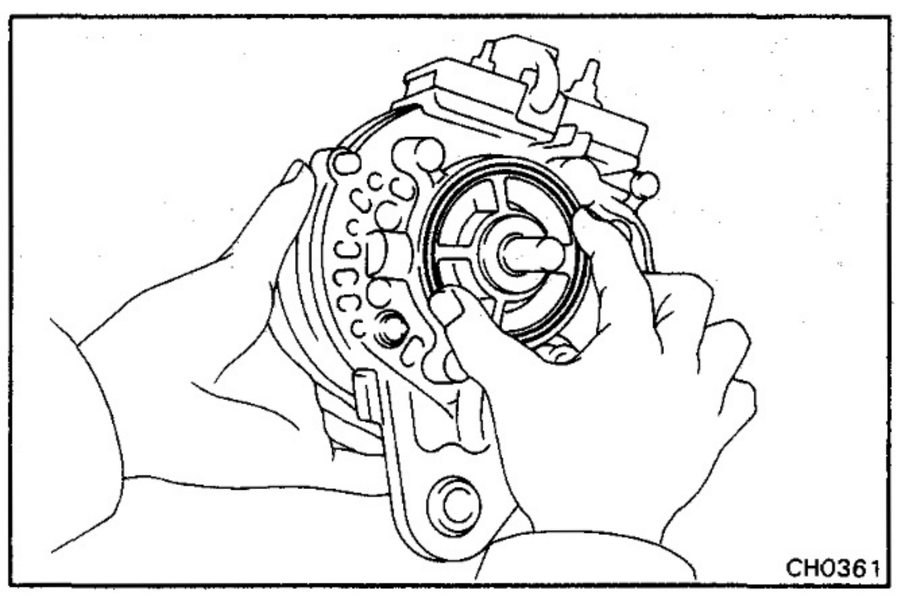

10. INSTALL VACUUM PUMP

(a) Install a new O-ring on the rectifier end frame.

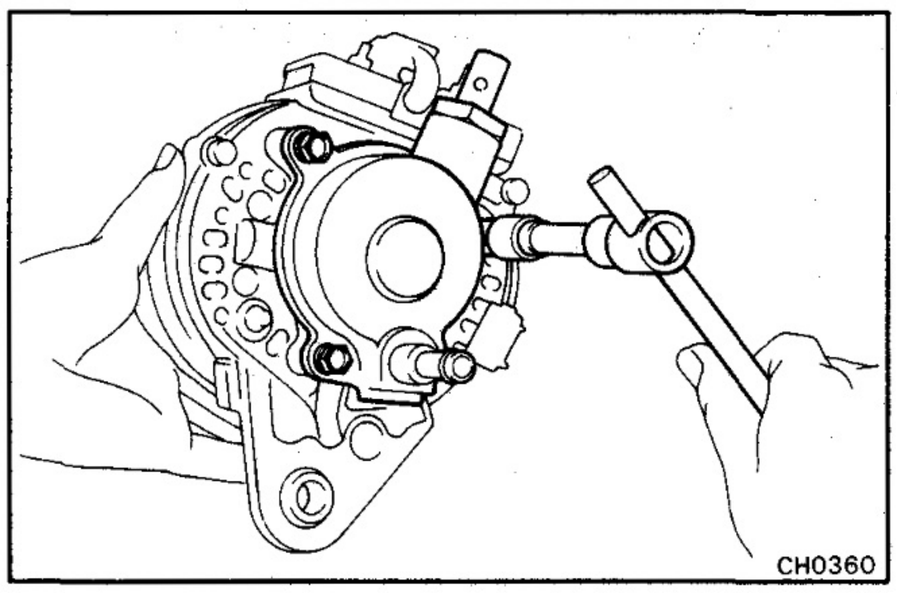

(b) Install the vacuum pump with the three bolts.

Torque: 80 kg-cm (69 in.-lb, 7.8 N·m)

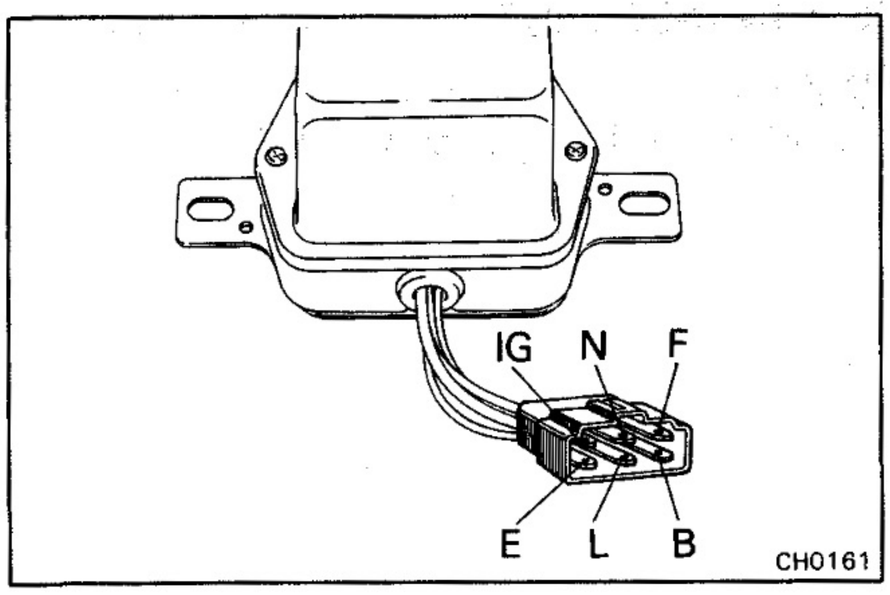

ALTERNATOR REGULATOR [w/o IC Regulator]

INSPECTION OF ALTERNATOR REGULATOR

LOCATION: On the left fender apron in the engine compartment.

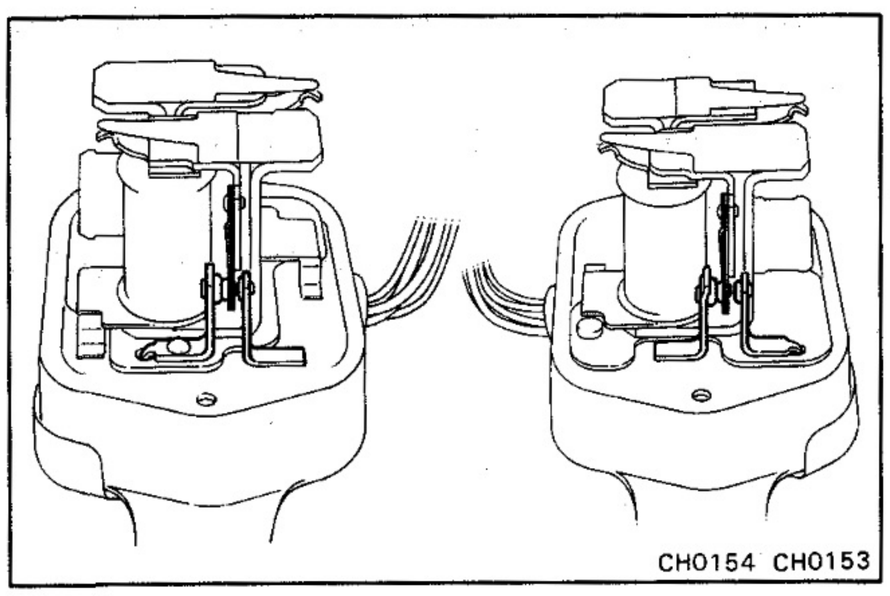

1. INSPECT POINT SURFACES FOR SEIZURE AND DAMAGE

If defective, replace the regulator.

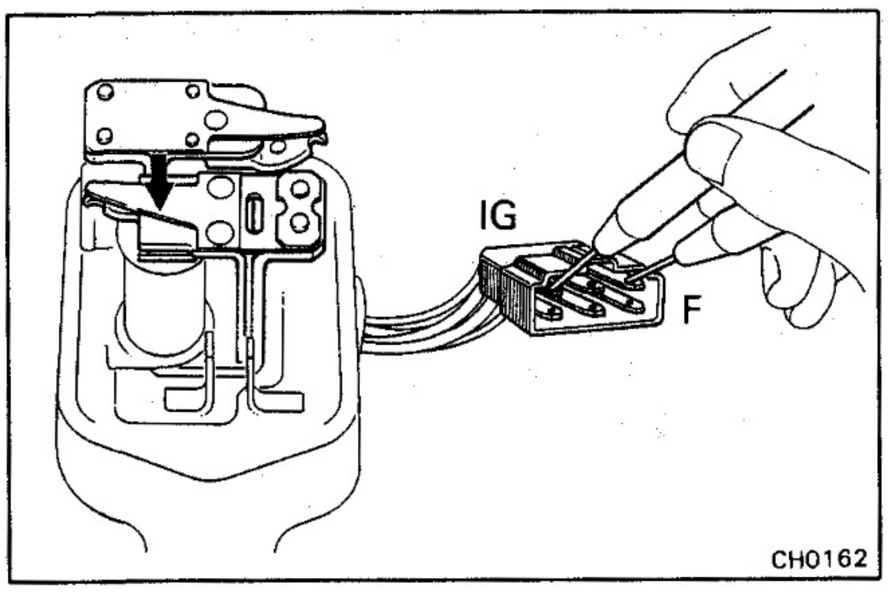

2. INSPECT RESISTANCE BETWEEN TERMINALS

(a) Using an ohmmeter, measure the resistance between terminals IG and F.

Resistance (Voltage regulator):

At rest		**0 Ω**
Pulled in	**12V type**	**10.5 Ω**
	24V type	**200 Ω**

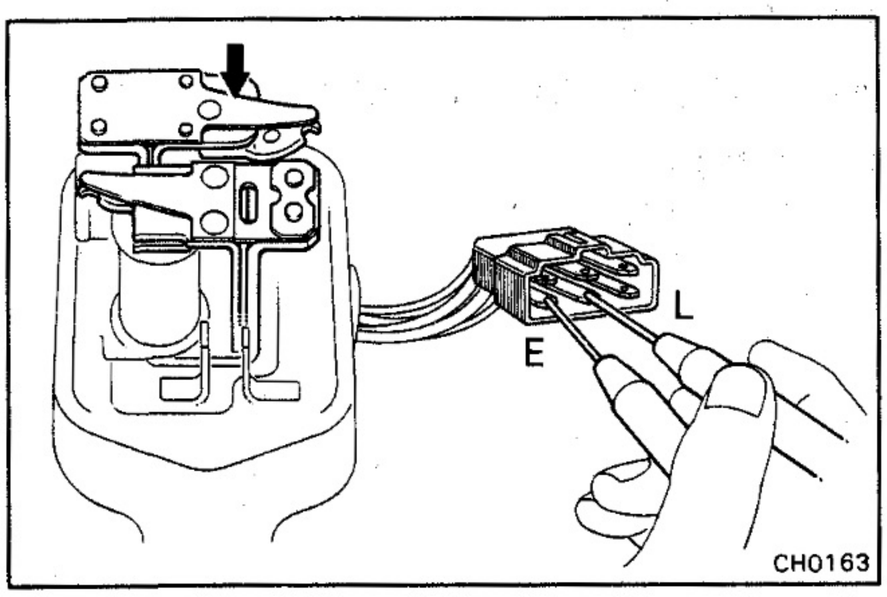

(b) Measure the resistance between terminals E and L.

Resistance (Voltage relay):

At rest		**0 Ω**
Pulled in	**12V type**	**102 Ω**
	24V type	**199 Ω**

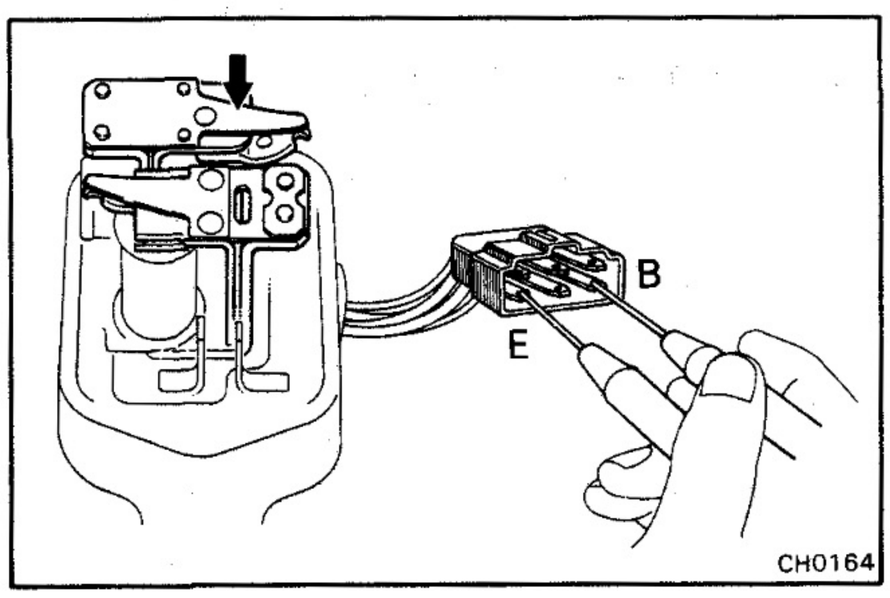

(c) Measure the resistance between terminals B and E.

Resistance (Voltage relay):

At rest		**Infinity**
Pulled in	**12V type**	**102 Ω**
	24V type	**199 Ω**

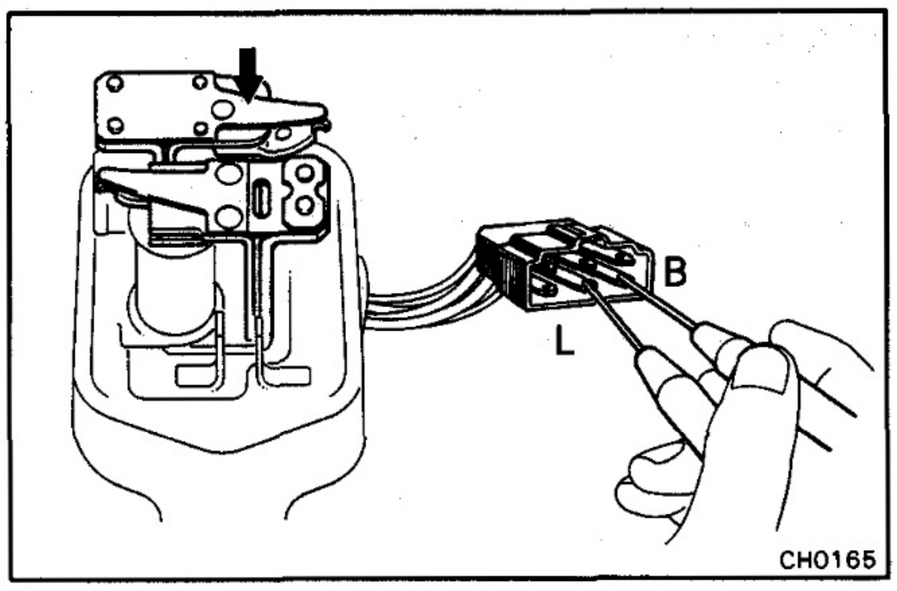

(d) Measure the resistance between terminals B and L.

Resistance (Voltage relay): At rest Infinity
Pulled in 0 Ω

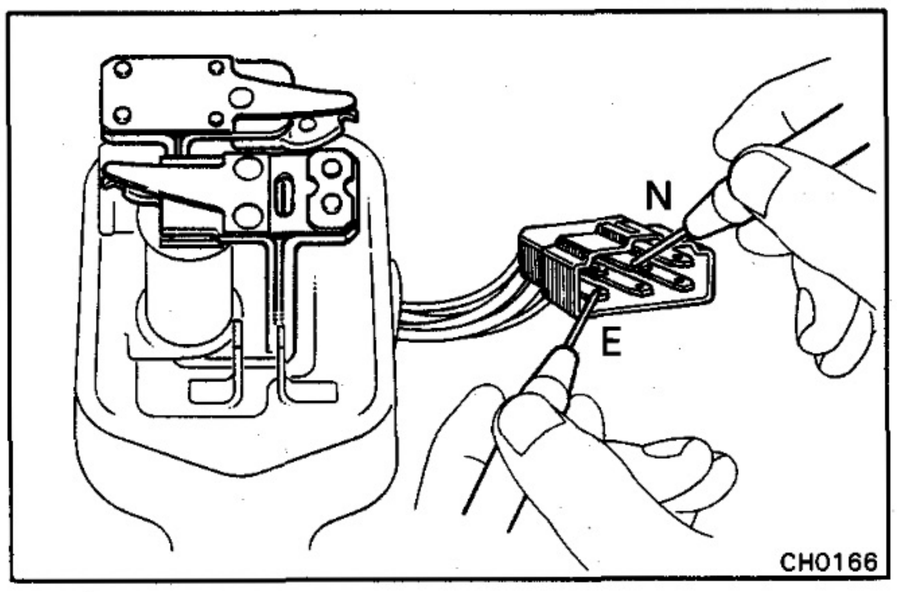

(e) Measure the resistance between terminals N and E.

Resistance:
12V type Approx. 24 Ω
24V type Approx. 102 Ω

If any of the above checks are not positive, replace the alternator regulator.

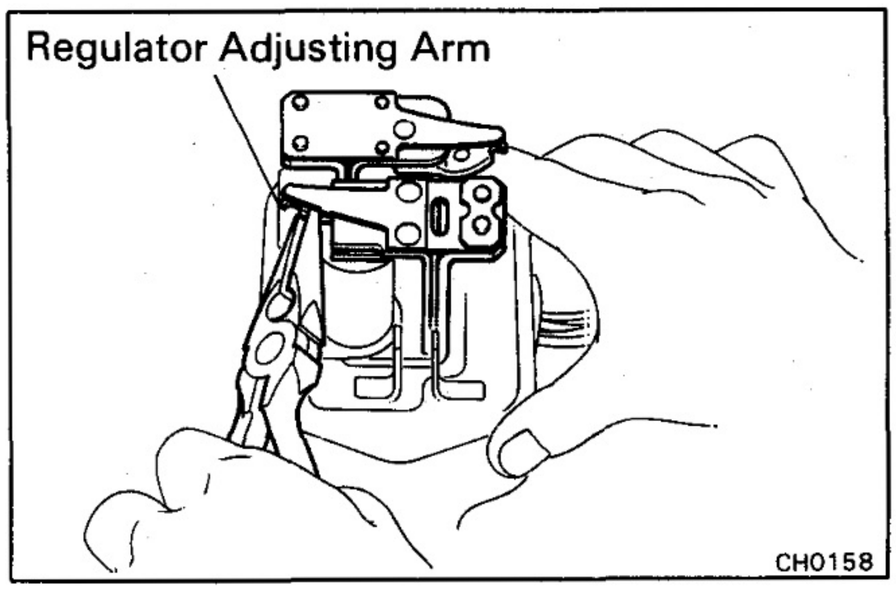

VOLTAGE ADJUSTMENT OF ALTERNATOR REGULATOR

1. ADJUST VOLTAGE REGULATOR

Bend the regulator adjusting arm to adjust.

Regulating voltage:
12V type 13.8 – 14.8 V
24V type 27.0 – 29.0 V

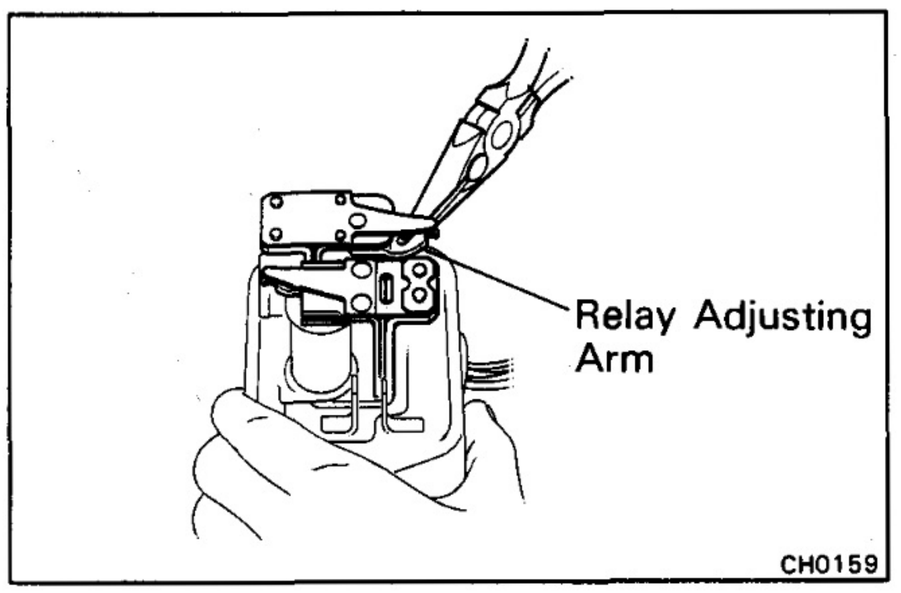

2. ADJUST VOLTAGE RELAY

Bend the relay adjusting arm to adjust.

Relay actuating voltage:
12V type 4.0 – 5.8 V
24V type 8.0 – 11.6 V

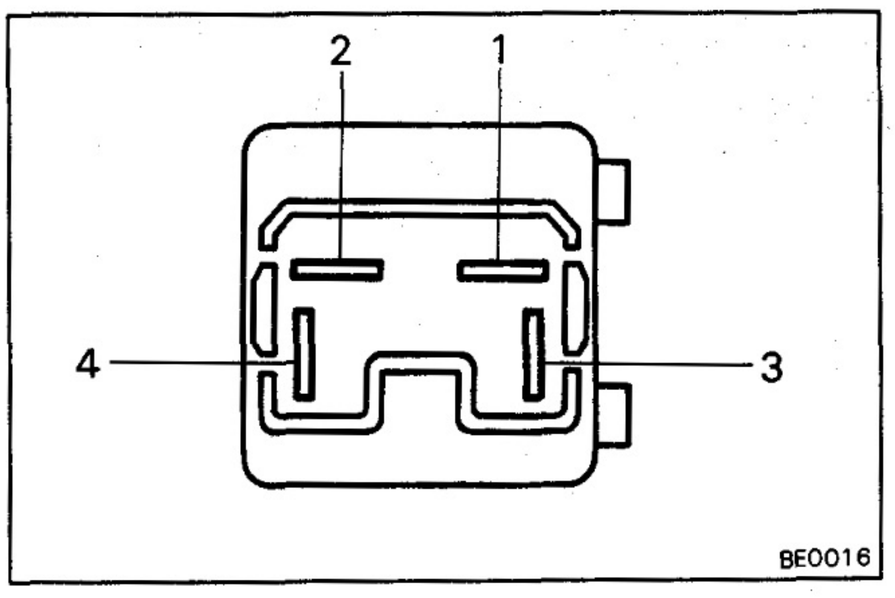

CHARGE LIGHT RELAY [w/ IC Regulator (12V Type)]

INSPECTION OF CHARGE LIGHT RELAY

LOCATION: In the cowl on the driver side.

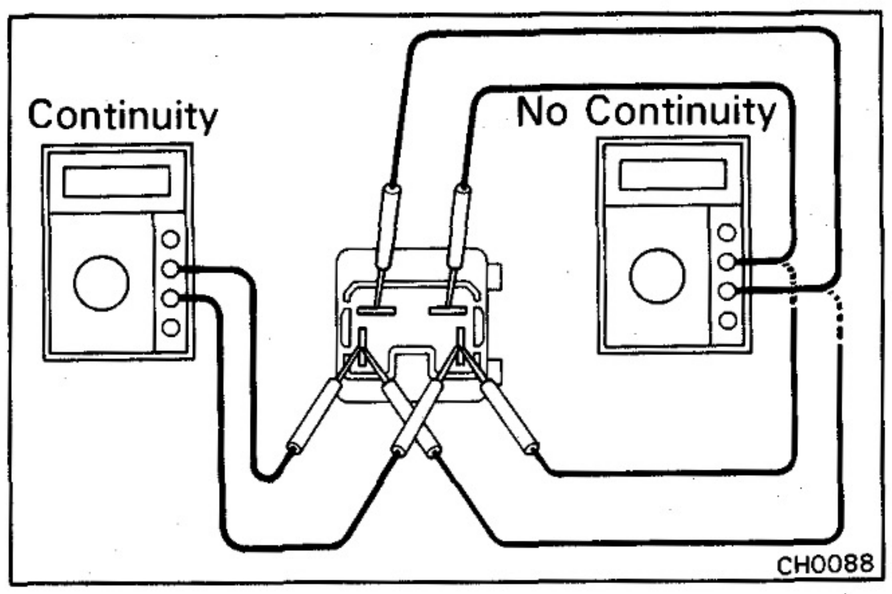

1. INSPECT RELAY CONTINUITY

(a) Connect the ohmmeter positive (+) probe to terminal 3 and the negative (−) probe to terminal 4, and check that there is continuity.

(b) Connect the ohmmeter positive (+) probe to terminal 4 and the negative (−) probe to terminal 3, and check that there is no continuity.

(c) Check that there is no continuity between terminals 1 and 2.

If continuity is not as specified, replace the relay.

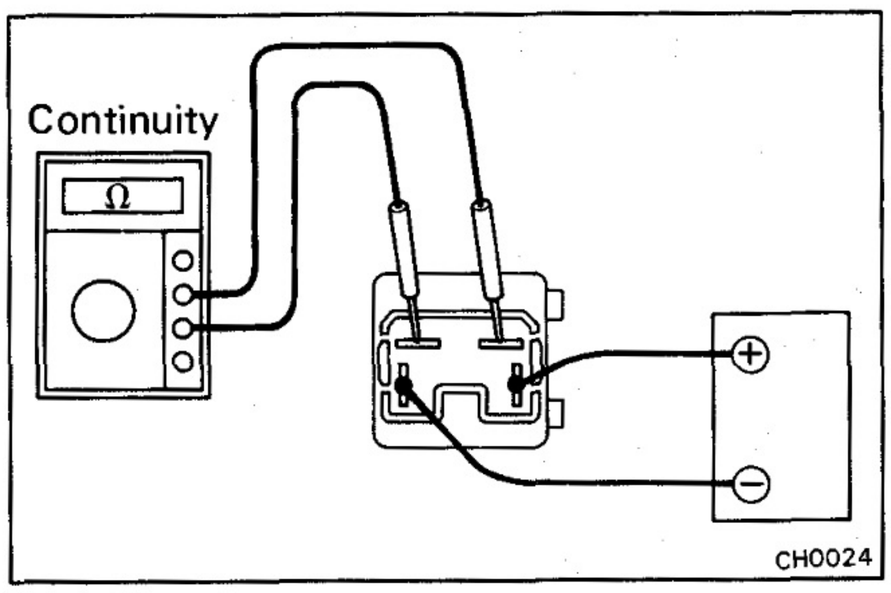

2. INSPECT RELAY OPERATION

(a) Connect the positive (+) lead from the battery to terminal 3. Connect the negative (−) lead to terminal to terminal 4.

(b) Check that there is continuity between terminals 1 and 2.

If operation is not as specified, replace the relay.

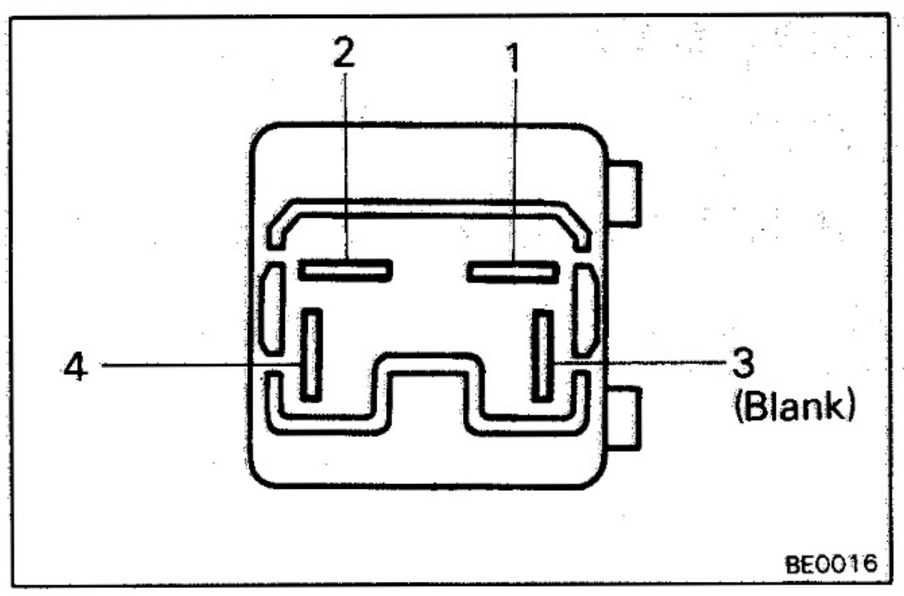

CHARGE LIGHT RELAY [w/ IC Regulator (24V Type)]

INSPECTION OF CHARGE LIGHT RELAY

LOCATION: In the cowl on the driver side.

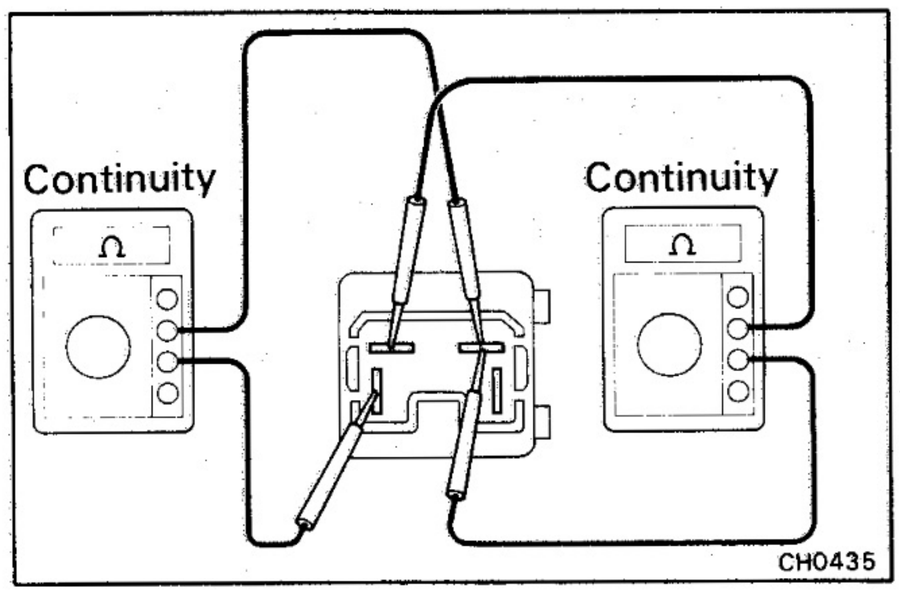

1. INSPECT RELAY CONTINUITY

(a) Check that there is continuity between terminals 1 and 2.

(b) Check that there is continuity between terminals 1 and 4.

If continuity is not as specified, replace the relay.

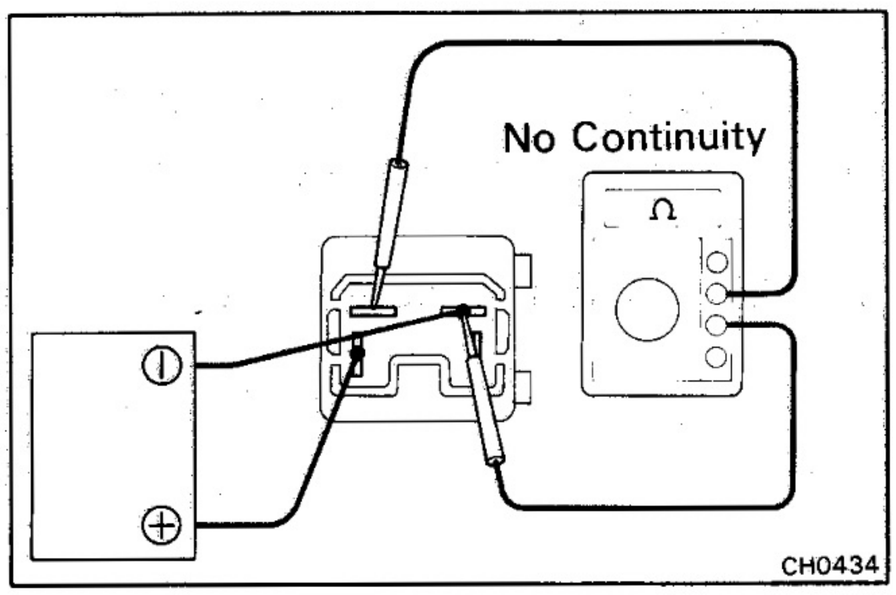

2. INSPECT RELAY OPERATION

(a) Connect the positive (+) lead from the battery to terminal 4. Connect the negative (−) lead to terminal to terminal 1.

(b) Check that there is no continuity between terminals 1 and 2.

If operation is not as specified, replace the relay.

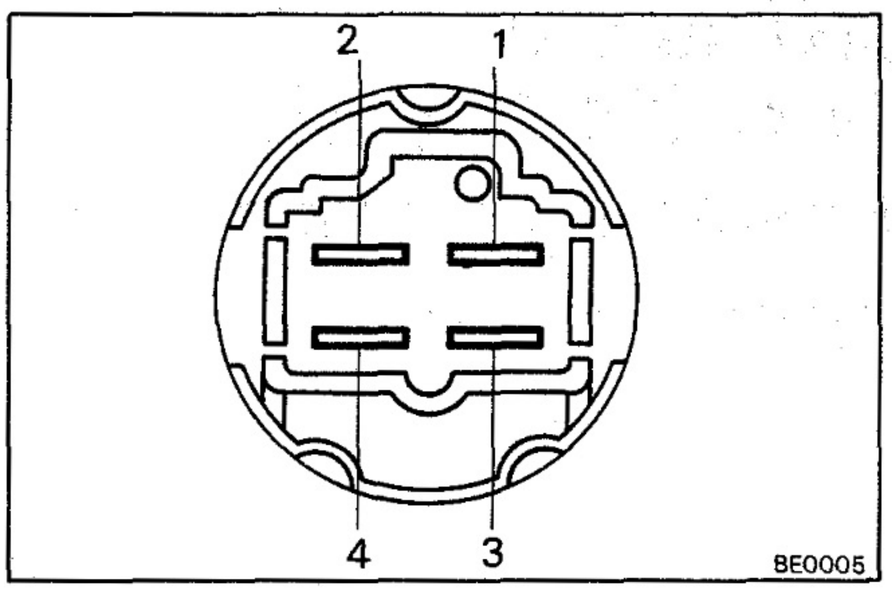

IGNITION MAIN RELAY [HJ60, 61 Series]

INSPECTION OF IGNITION MAIN RELAY

LOCATION: Under the instrument panel on the front drive side in the relay box.

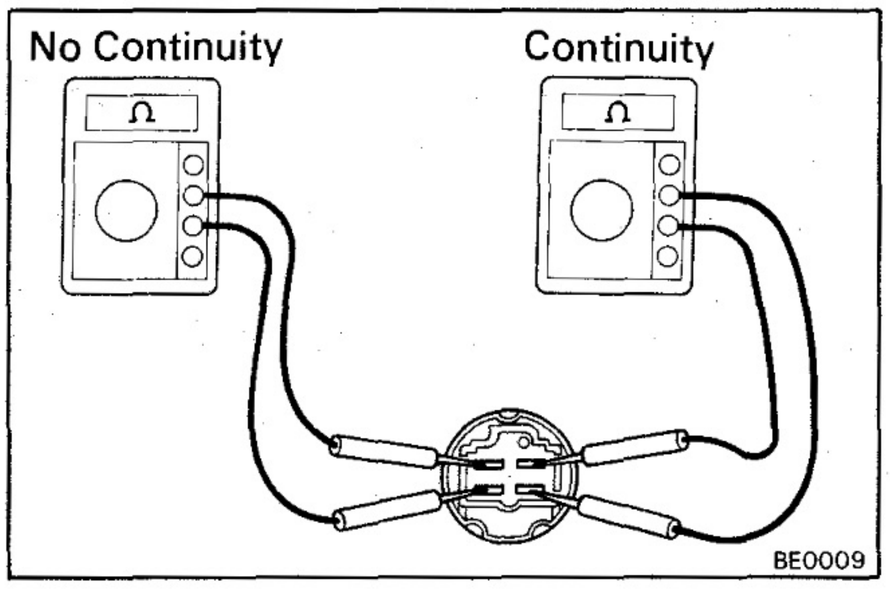

1. INSPECT RELAY CONTINUITY

(a) Check that there is continuity between terminals 1 and 3.

(b) Check that there is no continuity between terminals 2 and 4.

If continuity is not as specified, replace the relay.

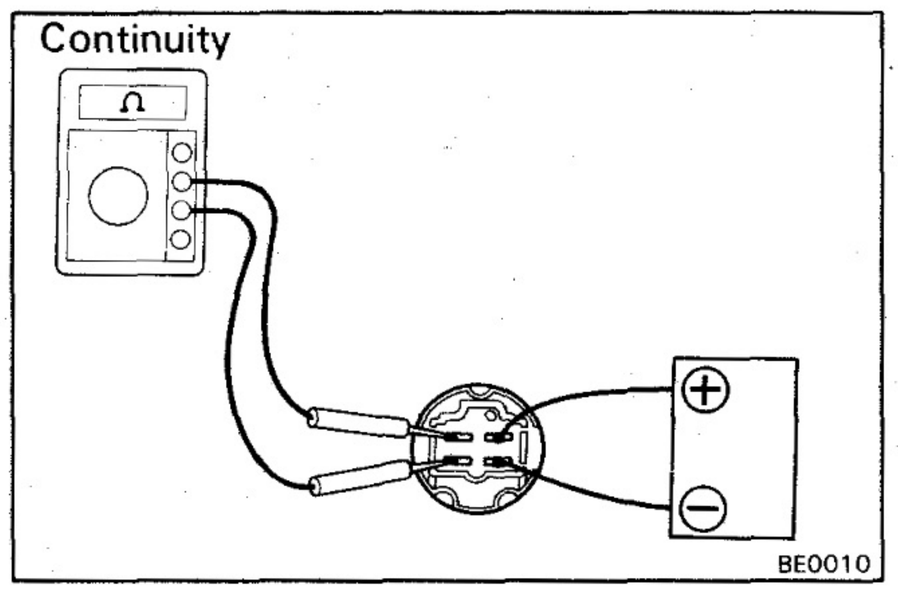

2. INSPECT RELAY OPERATION

(a) Apply battery voltage across terminals 1 and 3.

(b) Check that there is continuity between terminals 2 and 4.

If operation is not as specified, replace the relay.

SERVICE SPECIFICATIONS

	Page
ENGINE MECHANICAL	A-2
FUEL SYSTEM	A-8
COOLING SYSTEM	A-17
LUBRICATION SYSTEM	A-18
STARTING SYSTEM	A-19
CHARGING SYSTEM	A-19

ENGINE MECHANICAL

Specifications

Engine tune-up	Engine coolant capacity (w/ Heater)			
	HJ60, 61 series	15.4 liters	16.3 US qts	13.6 Imp. qts
	HJ75 series	14.2 liters	15.0 US qts	12.5 Imp. qts
	Engine oil capacity			
	Drain and refill			
	w/o Oil filter change	8.1 liters	8.6 US qts	7.1 Imp. qts
	w/ Oil filter change	9.7 liters	10.3 US qts	8.5 Imp. qts
	Dry fill	10.3 liters	10.9 US qts	9.1 Imp. qts
	Battery specific gravity			
	12V type	1.25 – 1.27 when fully charged at 20°C (68°F)		
	24V type NX series	1.27 – 1.29 when fully charged at 20°C (68°F)		
	Others	1.25 – 1.27 when fully charged at 20°C (68°F)		
	Drive belt			
	Tension (Canada) Used belt	115 ± 15 lb		
	New belt	125 ± 25 lb		
	Deflection (Others) Used belt	10 – 13 mm	0.39 – 0.51 in.	
	New belt	8 – 9 mm	0.31 – 0.35 in.	
	Injection nozzle opening pressure			
	2H Reused nozzle	105 – 125 kg/cm² (1,493 – 1,778 psi, 10,296 – 12,258 kPa)		
	New nozzle	115 – 125 kg/cm² (1,636 – 1,778 psi, 11,278 – 12,258 kPa)		
	12-H Reused nozzle	180 – 210 kg/cm² (2,560 – 2,987 psi, 17,652 – 20,594 kPa)		
	New nozzle	200 – 210 kg/cm² (2,845 – 2,987 psi, 19,613 – 20,594 kPa)		
	Valve clearance (Hot) IN	0.20 mm	0.008 in.	
	EX	0.36 mm	0.014 in.	
	Injection timing			
	2H	18° BTDC		
	12H-T	11° BTDC		
	Injection order	1-4-2-6-3-5		
	Idle speed			
	2H M/T	650 rpm		
	A/T	750 rpm		
	12H-T M/T	650 rpm		
	A/T	770 rpm		
	Maximum speed			
	2H w/ Fluid coupling	4,170 rpm		
	w/o Fluid coupling	4,100 rpm		
	12H-T	4,170 rpm		
	PS idle-up setting speed (12H-T A/T)	820 rpm		
	A/C idle-up setting speed M/T	950 rpm (Transmission in neutral)		
	A/T	800 rpm (Transmission in D range)		

Specifications (Cont'd)

Compression pressure	Engine revolution at 250 rpm				
		STD	2H	28.0 kg/cm² (398 psi, 2,746 kPa) or more	
			12H-T	30.0 kg/cm² (427 psi, 2,942 kPa) or more	
		Limit		20.0 kg/cm²	284 psi 1,961 kPa
	Difference of pressure between each cylinder			2.0 kg/cm² (28 psi, 196 kPa) or less	
Turbocharger	Turbocharging pressure			0.39 – 0.53 kg/cm² (5.5 – 7.3 psi, 38 – 52 kPa)	
	Impeller wheel axial play			0.13 mm (0.0051 in.) or less	
Cylinder head	Cylinder block side warpage	Limit		0.20 mm	0.0079 in.
	Manifold side warpage	Limit		0.20 mm	0.0079 in.
	Valve seat				
	Refacing angle	12H-T	IN	30°, 45°, 60°	
		Others		30°, 45°, 75°	
	Contacting angle			45°	
	Contacting width			1.4 – 2.0 mm	0.055 – 0.079 in.
Valve guide busing	Inner diameter			9.010 – 9.030 mm	0.3547 – 0.3555 in.
	Outer diameter			14.023 – 14.041 mm	0.5521 – 0.5528 in.
Valve	Valve overall length	STD	IN	120.7 mm	4.752 in.
			EX	120.6 mm	4.748 in.
		Limit	IN	120.2 mm	4.732 in.
			EX	120.1 mm	4.728 in.
	Valve face angle		IN & EX	44.5°	
	Stem diameter		IN	8.973 – 8.989 mm	0.3533 – 0.3539 in.
			EX	8.954 – 8.970 mm	0.3525 – 0.3531 in.
	Stem oil clearance	STD	IN	0.021 – 0.057 mm	0.0008 – 0.0022 in.
			EX	0.040 – 0.076 mm	0.0016 – 0.0030 in.
		Limit	IN	0.10 mm	0.0039 in.
			EX	0.12 mm	0.0047 in.
	Margin thickness	STD	IN	1.4 mm	0.055 in.
			EX	1.8 mm	0.071 in.
		Limit	IN	0.9 mm	0.035 in.
			EX	1.3 mm	0.051 in.
Valve spring	Free length	Inner		44.3 mm	1.744 in.
		Outer		48.1 mm	1.894 in.
	Installed tension at 40.6 mm (1.598 in.)				
	Inner at 36.0 mm (1.417 in.)			7.6 kg	16.9 lb 75 N
	Outer at 40.0 mm (1.575 in.)			22.5 kg	49.6 lb 221 N
	Squareness			2.0 mm	0.079 in.
Rocker arm and shaft	Rocker arm inside diameter			18.500 – 18.521 mm	0.7283 – 0.7292 in.
	Rocker shaft diameter			18.472 – 18.493 mm	0.7272 – 0.7281 in.
	Rocker arm to shaft oil clearance				
		STD		0.007 – 0.049 mm	0.0003 – 0.0019 in.
		Limit		0.10 mm	0.0039 in.
Push rod	Circle runout			0.50 mm	0.0197 in.

Specifications (Cont'd)

Intake and exhaust manifold	Manifold surface warpage				
	2H	Limit	IN	0.50 mm	0.0197 in.
			EX (Front)	0.30 mm	0.0118 in.
			EX (Rear)	0.30 mm	0.0118 in.
	12H-T	Limit	IN	0.50 mm	0.0197 in.
			EX (Front)	0.30 mm	0.0118 in.
			EX (Rear)	0.20 mm	0.0079 in.
Combustion chamber (2H)	Protrusion			0 – 0.10 mm	0 – 0.0039 in.
Camshaft	Circle runout			0.30 mm	0.0118 in.
	Cam lobe height				
	2H	STD	IN	41.900 mm	1.6496 in.
			EX	42.298 mm	1.6653 in.
		Limit	IN	41.713 mm	1.6422 in.
			EX	42.758 mm	1.6834 in.
	12H-T	STD	IN	41.4 mm	1.630 in.
			EX	41.8 mm	1.646 in.
		Limit	IN	41.2 mm	1.622 in.
			EX	42.3 mm	1.665 in.
	Journal diameter	STD size	No. 1	51.151 – 51.170 mm	2.0138 – 2.0146 in.
			No. 2	50.951 – 50.970 mm	2.0059 – 2.0067 in.
			No. 3	50.751 – 50.770 mm	1.9981 – 1.9988 in.
			No. 4	50.551 – 50.570 mm	1.9902 – 1.9901 in.
		U/S 0.125	No. 1	51.025 – 51.035 mm	2.0089 – 2.0092 in.
			No. 2	50.825 – 50.835 mm	2.0010 – 2.0014 in.
			No. 3	50.625 – 50.635 mm	1.9931 – 1.9935 in.
			No. 4	50.425 – 50.435 mm	1.9852 – 1.9856 in.
		U/S 0.25	No. 1	50.900 – 50.910 mm	2.0039 – 2.0043 in.
			No. 2	50.700 – 50.710 mm	1.9961 – 1.9965 in.
			No. 3	50.500 – 50.510 mm	1.9882 – 1.9886 in.
			No. 4	50.300 – 50.310 mm	1.9803 – 1.9807 in.
	Bearing inside diameter	STD size	No. 1	51.200 – 51.265 mm	2.0157 – 2.0183 in.
			No. 2	51.000 – 51.065 mm	2.0079 – 2.0104 in.
			No. 3	50.800 – 50.865 mm	2.0000 – 2.0026 in.
			No. 4	50.600 – 50.665 mm	1.9921 – 1.9947 in.
		U/S 0.125	No. 1	51.074 – 51.139 in.	2.0108 – 2.0133 in.
			No. 2	50.874 – 50.939 mm	2.0029 – 2.0055 in.
			No. 3	50.674 – 50.739 mm	1.9950 – 1.9976 in.
			No. 4	50.474 – 50.539 mm	1.9872 – 1.9897 in.
		U/S 0.25	No. 1	50.950 – 51.015 mm	2.0059 – 2.0085 in.
			No. 2	50.750 – 50.815 mm	1.9980 – 2.0006 in.
			No. 3	50.550 – 50.615 mm	1.9902 – 1.9927 in.
			No. 4	50.350 – 50.415 mm	1.9823 – 1.9848 in.
	Journal oil clearance	STD		0.030 – 0.115 mm	0.0012 – 0.0045 in.
		Limit		0.15 mm	0.0059 in.
	Thrust clearance	STD		0.060 – 0.130 mm	0.0024 – 0.0051 in.
		Limit		0.30 mm	0.0118 in.

Specifications (Cont'd)

Timing Gear	Gear backlash				
	Automatic timer drive gear				
		STD		0.050 – 0.111 mm	0.0019 – 0.0043 in.
		Limit		0.30 mm	0.0118 in.
	Camshaft timing gear	STD		0.050 – 0.113 mm	0.0019 – 0.0044 in.
		Limit		0.30 mm	0.0118 in.
	No. 1 idle gear	STD		0.050 – 0.116 mm	0.0019 – 0.0045 in.
		Limit		0.30 mm	0.0118 in.
	No. 2 idle gear	STD		0.050 – 0.113 mm	0.0019 – 0.0044 in.
		Limit		0.30 mm	0.0118 in.
	Idle gear thrust clearance (No. 1 and No. 2)				
		STD		0.050 – 0.150 mm	0.0019 – 0.0059 in.
		Limit		0.30 mm	0.0118 in.
	Idle gear inside diameter (No. 1 and No. 2)			45.000 – 45.025 mm	1.7717 – 1.7726 in.
	Idle gear shaft diameter (No. 1 and No. 2)			44.950 – 44.975 mm	1.7697 – 1.7707 in.
	Idle gear oil clearance (No. 1 and No. 2)				
		STD		0.025 – 0.075 mm	0.0010 – 0.0030 in.
		Limit		0.20 mm	0.0079 in.
Valve lifter	Cylinder block lifter bore diameter			22.200 – 22.221 mm	0.8746 – 0.8748 in.
	Lifter diameter		STD size	22.17 – 22.19 mm	0.8728 – 0.8736 in.
			O/S 0.05	22.22 – 22.24 mm	0.8748 – 0.8756 in.
Cylinder block	Warpage	Limit		0.20 mm	0.0079 in.
	Cylinder bore diameter	STD	STD size	91.000 – 91.030 mm	3.7008 – 3.7020 in.
		Limit	STD size	91.23 mm	6.5686 in.
			O/S 0.50	91.73 mm	6.6046 in.
Piston and piston ring	Piston diameter				
	2H		STD size	90.930 – 90.960 mm	3.5799 – 3.5811 in.
			O/S 0.50	91.430 – 91.460 mm	3.5996 – 3.6008 in.
	12H-T		STD size	90.940 – 90.970 mm	3.5803 – 3.5815 in.
			O/S 0.50	91.440 – 91.470 mm	3.6000 – 3.6012 in.
	Piston oil clearance				
	2H			0.060 – 0.080 mm	0.0024 – 0.0032 in.
	12H-T			0.050 – 0.070 mm	0.0020 – 0.0028 in.
	Piston ring groove clearance				
	2H		No. 1	0.097 – 0.137 mm	0.0038 – 0.0054 in.
			No. 2	0.060 – 0.100 mm	0.0024 – 0.0039 in.
			Oil	0.020 – 0.060 mm	0.0008 – 0.0024 in.
	12H-T		No. 1	0.139 – 0.204 mm	0.0055 – 0.0080 in.
			No. 2	0.060 – 0.100 mm	0.0024 – 0.0039 in.
			Oil	0.020 – 0.060 mm	0.0008 – 0.0024 in.
	Piston ring end gap				
	2H	STD	No. 1	0.200 – 0.440 mm	0.0079 – 0.0173 in.
			No. 2	0.200 – 0.440 mm	0.0079 – 0.0173 in.
			Oil	0.150 – 0.490 mm	0.0059 – 0.0193 in.
		Limit	No. 1	1.24 mm	0.0488 in.
			No. 2	1.24 mm	0.0488 in.
			Oil	1.29 mm	0.0508 in.

Specifications (Cont'd)

Piston and piston ring (Cont'd)	Piston ring end gap (Cont'd) 12H-T	STD	No. 1	0.200 – 0.470 mm	0.0079 – 0.0185 in.
			No. 2	0.200 – 0.440 mm	0.0079 – 0.0173 in.
			Oil	0.150 – 0.490 mm	0.0059 – 0.0193 in.
		Limit	No. 1	1.27 mm	0.0500 in.
			No. 2	1.24 mm	0.0488 in.
			Oil	1.29 mm	0.0508 in.
Connecting rod	Thrust clearance	STD		0.200 – 0.340 mm	0.0079 – 0.0134 in.
		Limit		0.40 mm	0.0157 in.
	Bushing inside diameter				
	2H			29.008 – 29.020 mm	1.1420 – 1.1425 in.
	12H-T			32.008 – 32.020 mm	1.2602 – 1.2606 in.
	Piston pin diameter				
	2H			29.000 – 29.012 mm	1.1417 – 1.1422 in.
	12H-T			32.000 – 32.012 mm	1.2598 – 1.2603 in.
	Piston pin oil clearance	STD		0.004 – 0.012 mm	0.0002 – 0.0005 in.
		Limit		0.03 mm	0.0012 in.
	Bend	Limit	per 100 mm (3.94 in.)	0.05 mm	0.0020 in.
	Twist	Limit	per 100 mm (3.94 in.)	0.05 mm	0.0020 in.
Crankshaft	Thrust clearance	STD		0.040 –0.240 mm	0.0016 – 0.0094 in.
		Limit		0.30 mm	0.0118 in.
	Thrust washer thickness	STD size		2.930 – 2.980 mm	0.1154 – 0.1173 in.
		O/S 0.125		2.993 – 3.043 mm	0.1178 – 0.1198 in.
		O/S 0.250		3.055 – 3.105 mm	0.1203 – 0.1222 in.
	Main journal diameter	STD size		69.980 – 70.000 mm	2.7551 – 2.7559 in.
		U/S 0.25		69.730 – 69.740 mm	2.7453 – 2.7457 in.
		U/S 0.50		69.480 – 69.490 mm	2.7354 – 2.7358 in.
		U/S 0.75		69.230 – 69.240 mm	2.7256 – 2.7260 in.
		U/S 1.00		68.980 – 68.990 mm	2.7157 – 2.7161 in.
	Main journal oil clearance	STD		0.032 – 0.068 mm	0.0013 – 0.0027 in.
		Limit		0.10 mm	0.0039 in.
	Main bearing thickness at center wall				
		STD size 1		1.981 – 1.985 mm	0.0780 – 0.0781 in.
		STD size 2		1.985 – 1.989 mm	0.0781 – 0.0783 in.
		STD size 3		1.989 – 1.993 mm	0.0783 – 0.0785 in.
	Crank pin diameter	STD size		54.980 – 55.000 mm	2.1646 – 2.1654 in.
		U/S 0.25		54.730 – 54.740 mm	2.1547 – 2.1551 in.
		U/S 0.50		54.480 – 54.490 mm	2.1449 – 2.1453 in.
		U/S 0.75		54.230 – 54.240 mm	2.1350 – 2.1354 in.
		U/S 1.00		53.980 – 53.990 mm	2.1252 – 2.1259 in.
	Crank pin oil clearance	STD		0.030 – 0.070 mm	0.0012 – 0.0028 in.
		Limit		0.10 mm	0.0039 in.
	Crank pin (connecting rod) bearing thickness at center wall				
		STD size 1		1.480 – 1.485 mm	0.0583 – 0.0585 in.
		STD size 2		1.485 – 1.490 mm	0.0585 – 0.0587 in.
	Circle runout	Limit		0.06 mm	0.0024 in.
	Taper and out-of round				
	Main journal and crank pin	Limit		0.02 mm	0.0008 in.

Torque Specifications

Part tightened	kg-cm	ft-lb	N·m
Turbine outlet elbow x Turbocharger (12H-T)	530	38	52
No. 2 water by-pass pipe x Turbocharger (12H-T)	75	65 in.-lb	7.1
Turbocharger x Exhaust manifold (12H-T)	530	38	52
Turbocharger oil pipe x Cylinder block (12H-T)	185	13	18
Turbocharger oil pipe x Turbocharger (12H-T)	185	13	18
Turbocharger oil pipe union bolt (12H-T)	250	18	25
No. 1 water by-pass pipe x Cylinder block (12H-T)	175	13	17
No. 1 water by-pass pipe x Turbocharger (12H-T)	75	65 in.-lb	7.1
Turbocharger stay x Cylinder block (12H-T)	700	51	69
Turbocharger stay x Turbocharger (12H-T)	700	51	69
PCV pipe x Intake air connector (12H-T)	185	13	18
Cylinder head x Cylinder block	1,150	83	113
Valve rocker support x Cylinder head	185	13	18
Cylinder head cover x Cylinder head	70	69 in.-lb	6.9
Water outlet housing x Cylinder head	375	27	37
Exhaust manifold x Cylinder head	210	15	21
Intake manifold x Cylinder head	185	13	18
Fuel filter bracket x Cylinder head	375	27	37
Fuel pipe x Injection pump	280	20	28
Fuel hose x Injection pump (12H-T)	280	20	28
Glow plug x Cylinder head (2H)	125	9	12
Camshaft timing gear x Camshaft	450	33	44
Automatic timer drive gear x Automatic timer (12H-T)	230	17	23
No. 1 idle gear x Cylinder block	475	34	47
No. 2 idle gear x Cylinder block	475	34	47
Camshaft thrust plate x Cylinder block	375	27	37
Automatic timer x injection pump	750	54	74
Timing gear cover x Timing gear case	250	18	25
Timing gear cover x Cylinder block	250	18	25
Injection pump retainer x Timing gear case	250	18	25
Oil pipe union bolt	185	13	25
Crankshaft pulley x Crankshaft	4,500	325	441
Push rod cover x Cylinder block	130	9	13
Connecting rod cap x Connecting rod	900	65	88
Main bearing cap x Cylinder block	1,390	100	136
Rear oil seal retainer x Cylinder block	185	13	18
Rear end plate x Cylinder block 12 mm head bolt	185	13	18
17 mm head bolt	650	47	64
Flywheel x Crankshaft (M/T)	1,200	87	118
Drive plate x Crankshaft (A/T)	1,000	72	98

FUEL SYSTEM

Specifications

Injection nozzle (2H)	Nozzle type	DN-NDOSDND 177	
	Nozzle opening pressure	See page A-2	
	Pressure adjusting shim thickness	1.00 mm	0.0394 in.
		1.05 mm	0.0413 in.
		1.10 mm	0.0433 in.
		1.15 mm	0.0453 in.
		1.20 mm	0.0472 in.
		1.25 mm	0.0492 in.
		1.30 mm	0.0512 in.
		1.35 mm	0.0531 in.
		1.40 mm	0.0551 in.
		1.45 mm	0.0571 in.
		1.50 mm	0.0591 in.
		1.55 mm	0.0610 in.
		1.60 mm	0.0630 in.
		1.65 mm	0.0650 in.
		1.70 mm	0.0669 in.
		1.75 mm	0.0689 in.
		1.80 mm	0.0709 in.
		1.85 mm	0.0728 in.
		1.90 mm	0.0748 in.
		1.95 mm	0.0768 in.
Injection Nozzle (12H-T)	Nozzle type	DN-DLLA 150P 24	
	Nozzle opening pressure	See page A-2	
	Pressure adjusting shim thickness	0.700 mm	0.0276 in.
		0.750 mm	0.0295 in.
		0.800 mm	0.0315 in.
		0.850 mm	0.0335 in.
		0.900 mm	0.0354 in.
		0.950 mm	0.0374 in.
		0.975 mm	0.0384 in.
		1.000 mm	0.0394 in.
		1.025 mm	0.0404 in.
		1.050 mm	0.0413 in.
		1.075 mm	0.0423 in.
		1.100 mm	0.0433 in.
		1.125 mm	0.0443 in.
		1.150 mm	0.0453 in.
		1.175 mm	0.0463 in.
		1.200 mm	0.0472 in.
		1.225 mm	0.0482 in.
		1.250 mm	0.0492 in.
		1.275 mm	0.0502 in.
		1.300 mm	0.0512 in.
		1.325 mm	0.0522 in.
		1.350 mm	0.0531 in.
		1.375 mm	0.0541 in.
		1.400 mm	0.0551 in.

Specifications (Cont'd)

Injection nozzle (12H-T) (Cont'd)	Pressure adjusting shim thickness		1.425 mm	0.0561 in.
			1.450 mm	0.0571 in.
			1.475 mm	0.0581 in.
			1.500 mm	0.0591 in.
			1.550 mm	0.0610 in.
			1.600 mm	0.0630 in.
			1.650 mm	0.0650 in.
			1.700 mm	0.0669 in.
			1.750 mm	0.0689 in.
			1.800 mm	0.0709 in.
Feed pump	Suction test			
	Suction pipe	Inner diameter	8 mm	0.31 in.
		length	2 m	78.7 in.
		Suction height	1 m	39.4 in.
	Priming pump	at 60 stroke/ min.	Fuel must discharge within 25 strokes	
	Feed pump	at 150 rpm	Fuel must discharge within 40 seconds	
	Discharge test			
	Pressure	at 600 rpm	1.8 – 2.2 kg/cm² (26 – 31 psi, 177 – 216 kPa)	
	Discharge nozzle diameter		1.54 mm	0.0606 in.
	Volume	at 1,000 rpm	900 cc/min. (54.9 cu in./min.) or more	
Automatic timer (2H)	Drive gear thrust clearance			
		STD	0.010 – 0.200 mm	0.0004 – 0.0079 in.
		Limit	0.30 mm	0.0118 in.
	Drive gear thrust washer thickness		0.1 mm	0.0004 in.
			0.2 mm	0.0008 in.
	Timer spring free length			
		Inner	37.8 mm	1.488 in.
		Outer	41.2 mm	1.622 in.
	Timer advance angle	at 640 rpm	0.5° or less	
		at 800 rpm	0.2 – 1.2°	
		at 1,100 rpm	1.5 – 2.5°	
		at 1,400 rpm	2.7 – 3.7°	
		at 1,680 rpm	4.0 – 5.0°	
	Timer adjusting shim thickness		0.1 mm	0.004 in.
			0.2 mm	0.008 in.
			0.3 mm	0.012 in.
			0.5 mm	0.020 in.
			1.0 mm	0.039 in.

Specifications (Cont'd)

Automatic timer (12H-T)	Drive gear thrust clearance		
	STD	0.010 – 0.200 mm	0.0004 – 0.0079 in.
	Limit	0.30 mm	0.0118 in.
	Drive gear thrust washer thickness	0.1 mm	0.004 in.
		0.35 mm	0.014 in.
		0.5 mm	0.020 in.
	Timer spring free length	58.8 mm	2.315 in.
	Timer advance angle at 1,450 rpm	0.5° or less	
	at 1,700 rpm	5.5 – 6.5°	
	Timer adjusting shim thickness	0.5 mm	0.020 in.
		0.6 mm	0.024 in.
		0.7 mm	0.028 in.
		0.8 mm	0.031 in.
		0.9 mm	0.035 in.
		1.0 mm	0.039 in.
Injection pump (2H M/T)	Direction of rotation	Clockwise as seen drive side	
	Camshaft thrust clearance		
	STD	0.03 – 0.05 mm	0.0012 – 0.0020 in.
	Limit	0.1 mm	0.004 in.
	Camshaft thrust washer thickness	0.10 mm	0.0039 in.
		0.12 mm	0.0047 in.
		0.14 mm	0.0055 in.
		0.16 mm	0.0063 in.
		0.18 mm	0.0071 in.
		0.50 mm	0.0197 in.
	Control rack sliding resistance	120 g (4.2 oz) or less	
	Delivery valve spring free length	36.8 mm	1.449 in.
	Plunger spring free length	49.4 mm	1.945 in.
	Governor main spring free length	43.5 mm	1.713 in.
	Speed control spring free length	38.0 mm	1.496 in.
	HAC push rod stroke (w/ HAC)	3.1 – 3.6 mm	0.122 – 0.142 in.
Injection pump (2H A/T and 12H-T)	Direction of rotation	Clockwise as seen drive side	
	Full stop cam thrust clearance	0.03 – 0.08 mm	0.0012 – 0.0032 in.
	Full stop cam thrust washer thickness	0.05 mm	0.0020 in.
		0.10 mm	0.0039 in.
		0.20 mm	0.0079 in.
	Steering lever thrust clearance	0.05 – 0.20 mm	0.0020 – 0.0079 in.
	Steering lever thrust washer thickness	0.50 mm	0.0197 in.
		0.55 mm	0.0217 in.
		0.60 mm	0.0236 in.
		0.65 mm	0.0256 in.
		0.70 mm	0.0276 in.
		0.75 mm	0.0295 in.
		0.80 mm	0.0315 in.
	Cam plate thrust clearance	0.08 – 0.12 mm	0.0031 – 0.0047 in.
	Cam plate thrust washer thickness	0.2 mm	0.008 in.
		0.3 mm	0.012 in.
		0.4 mm	0.016 in.
		0.5 mm	0.020 in.
	Floating arm thrust clearance	0.05 – 0.12 mm	0.0020 – 0.0047 in.
	Floating arm thrust washer thickness	0.05 mm	0.0020 in.
		0.10 mm	0.0039 in.
		0.20 mm	0.0079 in.
		0.40 mm	0.0157 in.

Specifications (Cont'd)

Injection pump 2H A/T and 12H-T (Cont'd)	Jointing bolt thrust clearance	1.5 – 2.0 mm	0.059 – 0.079 in.
	Sliding weight shaft fitting dimension	49.7 – 50.1 mm	1.957 – 1.972 in.
	Sliding weight shaft length	30.7 mm	1.209 in.
		30.9 mm	1.217 in.
		31.1 mm	1.224 in.
		31.3 mm	1.232 in.
		31.5 mm	1.240 in.
		31.7 mm	1.248 in.
		31.9 mm	1.256 in.
	Flyweight thrust clearance (12H-T M/T)	0.02 – 0.10 mm	0.0008 – 0.0039 in.
	Flyweight thrust washer thickness (12H-T M/T)	1.60 mm	0.0630 in.
		1.65 mm	0.0650 in.
		1.70 mm	0.0670 in.
		1.75 mm	0.0689 in.
		1.80 mm	0.0709 in.
		1.85 mm	0.0728 in.
		1.90 mm	0.0748 in.
		1.95 mm	0.0768 in.
		2.00 mm	0.0787 in.
		2.10 mm	0.0827 in.
		2.20 mm	0.0866 in.
		2.30 mm	0.0906 in.
	Stopper arm thrust clearance	0.05 – 0.20 mm	0.0020 – 0.0079 in.
	Stopper arm thrust washer thickness	0.1 mm	0.004 in.
		0.2 mm	0.008 in.
		0.5 mm	0.020 in.
	Camshaft thrust clearance STD	0.03 – 0.05 mm	0.0012 – 0.0020 in.
	Limit	0.1 mm	0.004 in.
	Camshaft thrust washer thickness		
	2H (Front and rear) and 12H-T (Rear)	0.10 mm	0.0039 in.
		0.12 mm	0.0047 in.
		0.14 mm	0.0055 in.
		0.16 mm	0.0063 in.
		0.18 mm	0.0071 in.
		0.50 mm	0.0197 in.
	12H-T (Front)	0.10 mm	0.0039 in.
		0.15 mm	0.0059 in.
		0.30 mm	0.0118 in.
		0.50 mm	0.0197 in.
		1.00 mm	0.0394 in.
		1.50 mm	0.0591 in.
	Control rack sliding resistance	120 g (4.2 oz.) or less	
	Delivery valve spring free length		
	2H	36.8 mm	1.449 in.
	12H-T	19.8 mm	0.780 in.
	Plunger spring free length	49.4 mm	1.945 in.
	Mechanical governor spring free length	10.2 mm	0.402 in.
	Speed control spring free length	24.0 mm	0.945 in.
	Inner idle spring free length	25.7 mm	1.012 in.
	Outer idle spring free length	23.8 mm	0.937 in.

Specifications (Cont'd)

Injection pump (2H A/T and 12H-T) (Cont'd)	HAC push rod clearance (w/HAC) at sea level	0.1 – 0.3 mm 0.004 – 0.012 in.
	Boost compensator push rod stroke (12H-T)	4.0 – 5.0 mm 0.158 – 0.197 in.
	Boost compensator pressure drop (12H-T)	10 seconds or more
	Full-load stopper pre-setting	
	Stop cam to stopper housing distance	
	2H	Approx. 30.5 mm (1.201 in.)
	12H-T	Approx. 23.5 mm (0.925 in.)

Injection Pump Adjustment (Pump Body)

Preparations of pump tester	Test nozzle type		
	2H		DN 4 SD 24 A
	12H-T		DN 12 SD 12 A
	Test nozzle opening pressure		
	2H		115 – 125 kg/cm² (1,636 – 1,778 psi, 11,278 – 12,258 kPa)
	12H-T		170 – 180 kg/cm² (2,418 – 2,560 psi, 16,671 – 17,651 kPa)
	Injection pipe	Outer diameter	6.0 mm 0.236 in.
		Inner diameter	2.0 mm 0.079 in.
		Length	600 mm 23.6 in.
		Minimum bending radius	25 mm (0.98 in.) or more
	Fuel temperature		40 – 45°C 104 – 113°F
	Fuel feeding pressure		
	2H		0.5 kg/cm² 7.1 psi 49 kPa
	12H-T		2.0 kg/cm² 28.4 psi 196 kPa
Control Rack	Sliding resistance	Pump at 0 rpm	120 g (4.2 oz) or less
		Pump at 1,000 rpm	50 g (1.8 oz) or less
Injecting timing	Pre-stroke		
	2H		1.90 – 2.00 mm 0.0748 – 0.0787 in.
	12H-T		3.55 – 3.65 mm 0.1398 – 0.1437 in.
	Injection interval		59°30′ – 60°30′
	Tappet clearance		0.2 mm (0.008 in.) or more
	Adjusting shim thickness		0.10 mm 0.0039 in.
			0.15 mm 0.0059 in.
			0.20 mm 0.0079 in.
			0.30 mm 0.0118 in.
			0.40 mm 0.0158 in.
			0.50 mm 0.0197 in.
			0.60 mm 0.0236 in.
			0.70 mm 0.0276 in.
			0.80 mm 0.0315 in.
			0.90 mm 0.0354 in.
			1.00 mm 0.0394 in.

Injection Pump Adjustment (Pump Body) (Cont'd)

Injection timing (Cont'd)	Adjusting shim thickness (Cont'd)			1.10 mm 1.20 mm 1.30 mm 1.40 mm	0.0433 in. 0.0472 in. 0.0519 in. 0.0551 in.	
Injection volume	Item	Rack position mm (in.)	Pump rpm	Measuring strokes	Injection volume cc (cu in.)	Variation limit cc (cu in.)
	2H M/T (Cold weather spec. and Canada)	16.0 (0.630)	100	200	12.8 – 15.0 (0.78 – 0.92)	1.8 (0.11)
		8.0 (0.315)	1,000	200	4.1 – 5.3 (0.25 – 0.32)	0.6 (0.04)
		10.6 (0.417)	1,100	200	8.2 – 9.2 (0.50 – 0.56)	0.6 (0.04)
		10.6 (0.417)	1,700	200	8.5 – 10.1 (0.52 – 0.62)	0.9 (0.05)
		6.5 (0.256)	325	500	2.0 – 5.0 (0.12 – 0.31)	1.5 (0.09)
	2H M/T (Others)	16.0 (0.630)	100	200	9.8 – 12.0 (0.60 – 0.73)	1.8 (0.11)
		8.0 (0.315)	1,000	200	4.1 – 5.3 (0.25 – 0.32)	0.6 (0.04)
		10.6 (0.417)	1,100	200	8.2 – 9.2 (0.50 – 0.56)	0.6 (0.04)
		10.6 (0.417)	1,700	200	8.5 – 10.1 (0.52 – 0.62)	0.9 (0.05)
		6.5 (0.256)	325	500	2.0 – 5.0 (0.12 – 0.31)	1.5 (0.09)
	2H A/T (Cold weather spec. and Canada)	16.0 (0.630)	100	200	14.9 – 17.1 (0.91 – 1.04)	1.8 (0.11)
		11.3 (0.445)	1,100	200	8.8 – 9.8 (0.53 – 0.60)	0.6 (0.04)
		11.3 (0.445)	1,750	200	9.2 – 10.8 (0.56 – 0.66)	0.9 (0.05)
		7.9 (0.311)	390	500	2.5 – 5.5 (0.15 – 0.34)	1.5 (0.09)
	2H A/T (Others)	16.0 (0.630)	100	200	8.6 – 10.8 (0.52 – 0.60)	1.8 (0.11)
		11.3 (0.445)	1,100	200	8.8 – 9.8 (0.53 – 0.60)	0.6 (0.04)
		11.3 (0.445)	1,750	200	9.2 – 10.8 (0.56 – 0.66)	0.9 (0.05)
		7.9 (0.311)	390	500	2.5 – 5.5 (0.15 – 0.34)	1.5 (0.09)
	12H-T M/T (Cold weather spec.)	16.0 (0.630)	100	200	14.0 – 18.0 (0.85 – 1.10)	1.6 (0.10)
		10.7 (0.421)	1,100	200	11.3 – 12.3 (0.69 – 0.75)	0.9 (0.05)
		10.7 (0.421)	1,750	200	11.3 – 12.5 (0.69 – 0.76)	1.2 (0.07)
		8.9 (0.350)	340	500	3.0 – 6.5 (0.18 – 0.40)	1.5 (0.09)

Injection Pump Adjustment (Pump Body) (Cont'd)

Injection volume (Cont'd)	Item	Rack position mm (in.)	Pump rpm	Measuring strokes	Injection volume cc (cu in.)	Variation limit cc (cu in.)
	12H-T M/T (Others)	16.0 (0.630)	100	200	9.0 – 13.0 (0.55 – 0.79)	1.6 (0.10)
		10.7 (0.421)	1,100	200	11.3 – 12.3 (0.69 – 0.75)	0.9 (0.05)
		10.7 (0.421)	1,750	200	11.3 – 12.5 (0.69 – 0.76)	1.2 (0.07)
		8.9 (0.350)	340	500	3.0 – 6.5 (0.18 – 0.40)	1.5 (0.09)
	12H-T A/T	16.0 (0.630)	100	200	9.0 – 13.0 (0.55 – 0.79)	1.6 (0.10)
		10.7 (0.421)	1,100	200	11.3 – 12.3 (0.69 – 0.75)	0.9 (0.05)
		10.7 (0.421)	1,750	200	11.3 – 12.5 (0.69 – 0.76)	1.2 (0.07)
		8.9 (0.350)	390	500	0.75 – 4.75 (0.05 – 0.29)	1.5 (0.09)

Injection Pump Adjustment (Governor 2H M/T)

Vacuum chamber	Pressure drop		10 seconds or more	
Main spring	Pump rpm	Vacuum mmHg (in.Hg, kPa)	Rack position mm (in.)	
	600	600 (23.62, 80.0)	10.3 – 10.9 (0.406 – 0.429)	
	600	630 (24.80, 84.0)	10.1 – 10.7 (0.398 – 0.421)	
	600	750 (29.53, 100.0)	7.3 – 8.9 (0.287 – 0.350)	
	Adjusting shim thickness		0.5 mm 1.0 mm 2.0 mm 3.0 mm	0.020 in. 0.039 in. 0.079 in. 0.118 in.
Speed control spring	Pump rpm	Vacuum mmHg (in.Hg, kPa)	Rack position mm (in.)	
	1,920	450 (17.72, 60.0)	10.4 – 10.8 (0.409 – 0.425)	
	2,000	450 (17.72, 60.0)	9.6 – 10.4 (0.378 – 0.409)	
	2,050	450 (17.72, 60.0)	8.6 – 9.8 (0.339 – 0.386)	
	2,100	530 (20.87, 70.6)	7.5 (0.295) or less	
Idle spring	2,100	530 (20.87, 70.6)	8.0 (0.315)	

Injection Pump Adjustment (Governor 2H M/T) (Cont'd)

Total injection volume	Item	Pump rpm	Vacuum mmHg (in.Hg, kPa)	Measuring stroke	Total injection of each cylinder volume cc(cu in.)
	w/o HAC	700	60 (2.36, 8.0)	1,000	237 – 261 (14.5 – 15.9)
		1,100	150 (5.91, 20.0)	1,000	255 – 267 (15.6 – 16.3)
		1,700	400 (15.75, 23.3)	1,000	267 – 291 (16.3 – 17.8)
	w/ HAC	700	60 (2.36, 8.0)	1,000	237 – 261 (14.5 – 15.9)
		1,100	150 (5.91, 20.0)	1,000	255 – 267 (15.6 – 16.3)
		1,700	400 (15.75, 23.3)	1,000	258 – 282 (15.7 – 17.2)

Injection Pump Adjustment (Governor 2H A/T and 12H-T)

Idle speed control	Item	Adjusting lever position	Pump rpm	Rack position mm (in.)
	2H A/T	Idle	100	11.3 (0.445) or more
			390	7.7 – 7.9 (0.303 – 0.311)
			600	5.6 – 6.6 (0.220 – 0.260)
			800	5.1 – 5.9 (0.201 – 0.232)
			1,200	3.4 – 4.8 (0.134 – 0.189)
	12H-T M/T	Idle	100	12.9 – 13.7 (0.508 – 0.539)
			340	8.6 – 9.2 (0.339 – 0.362)
			500	6.9 – 8.3 (0.272 – 0.327)
			800	6.0 – 6.8 (0.236 – 0.268)
			1,200	4.3 – 5.7 (0.169 – 0.224)
	12H-T A/T	Idle	100	12.4 – 13.0 (0.488 – 0.512)
			390	8.7 – 9.3 (0.343 – 0.366)
			500	7.6 – 9.0 (0.299 – 0.354)
			800	5.4 – 6.2 (0.213 – 0.244)
			1,200	3.7 – 5.1 (0.146 – 0.201)
	Adjusting washer thickness	Inner	0.4 mm	0.016 in.
			0.55 mm	0.022 in.
			0.6 mm	0.024 in.
		Outer	0.2 mm	0.008 in.
			0.4 mm	0.016 in.
			0.5 mm	0.020 in.
			0.6 mm	0.024 in.

Medium speed control	Item	Adjusting lever position	Pump rpm	Rack position mm (in.)
	2H A/T	Maximum	500	11.0 – 11.6 (0.433 – 0.457)
			1,100	11.1 – 11.5 (0.437 – 0.453)
			1,750	11.0 – 11.6 (0.433 – 0.457)
			1,900	11.4 – 11.2 (0.409 – 0.441)

Injection Pump Adjustment (Governor 2H A/T and 12H-T) (Cont'd)

Medium speed control (Cont'd)	Item	Adjusting lever position	Pump rpm	Rack position mm (in.)
	12H-T M/T	Maximum	500	10.3 – 11.1 (0.406 – 0.437)
			700	10.1 – 10.9 (0.398 – 0.429)
			1,100	10.4 – 11.0 (0.409 – 0.433)
			1,750	10.3 – 11.1 (0.406 – 0.437)
			1,900	9.8 – 10.6 (0.386 – 0.417)
	12H-T A/T	Maximum	500	10.3 – 11.1 (0.406 – 0.437)
			700	10.1 – 10.9 (0.398 – 0.429)
			1,100	10.4 – 11.0 (0.409 – 0.433)
			1,750	10.3 – 11.1 (0.406 – 0.437)
			1,900	10.1 – 10.9 (0.398 – 0.429)
Maximum speed control	2H A/T	Maximum	2,075	8.2 – 8.8 (0.323 – 0.346)
			2,200	5.5 (0.217) or less
	12H-T	Maximum	2,050	8.0 – 9.4 (0.315 – 0.370)
			2,200	6.4 (0.252) or less

Boost compensator (12H-T)	Adjusting lever position	Pump rpm	Boost compensator pressure kg/cm² (psi, kPa)	Rack position mm (in.)
	Maximum	500	0	9.8 – 10.4 (0.386 – 0.409)
			0.12 (1.7, 12)	10.3 – 11.1 (0.406 – 0.437)

Total injection volume	Item	Adjusting lever position	Boot compensator Pressure kg/cm² (psi, kPa)	Pump rpm	Measuring strokes	Total injection volume of each cylinder cc (cu in.)
	2H A/T	Maximum	—	500	1,000	210.0 – 264.0 (12.82 – 16.11)
				1,100	1,000	270.0 – 282.0 (16.48 – 17.21)
				1,750	1,000	288.0 – 318.0 (17.57 – 19.41)
	12H-T	Maximum	0.27 (3.9, 26)	500	1,000	198.0 – 234.0 (12.08 – 14.28)
			0.27 (3.9, 26)	1,100	1,000	345.0 – 363.0 (21.05 – 22.15)
			0.27 (3.9, 26)	1,750	1,000	339.0 – 375.0 (20.69 – 22.88)
			0	500	1,000	156.0 – 174.0 (9.52 – 10.62)

Stop lever	Item	Adjusting lever position	Pump rpm	Rack position mm (in.)
	2H A/T	Idle	0	2.0 (0.079) or less
	12H-T	Idle	0	7.5 (0.295) or less

Torque Specifications

Part tightened			kg-cm	ft-lb	N·m
Nozzle holder retaining nut x Nozzle holder body		2H	700	51	69
		12H-T	350	25	34
Injection nozzle x Cylinder head		2H	700	51	69
		12H-T	185	13	18
Nozzle leakage pipe x Injection nozzle		2H	500	36	49
		12H-T	125	9	12
Injection pipe x Injection nozzle			300	22	29
Chamber plug x Feed pump housing	19 mm bolt head		500	36	49
	32 mm bolt head		1,500	109	147
Priming pump x Feed pump housing			500	36	49
Feed pump x Injection pump			95	82 in.-lb	9.3
Fuel pipe x Feed pump			280	20	27
Automatic timer x Injection pump			750	54	74
Steel ball guide x Camshaft (2H M/T)			550	40	54
Flyweight x Camshaft (2H A/T and 12H-T)			550	40	54
Injection pump retainer x Injection pump			375	27	37
Injection pump x Timing gear case			250	18	25
Fuel pipe x Injection pump			280	20	27
Fuel hose x Injection pump (12H-T)			280	20	27
Oil pipe union bolt			185	13	18

COOLING SYSTEM

Specifications

Engine coolant capacity			See page A-2
Thermostat	Valve opening temperature		
	82°C type		80 – 84°C 176 – 183°F
	88°C type		86 – 90°C 187 – 194°F
	Valve opening travel		
	82°C type	at 95°C (203°F)	10 mm (0.39 in.) or more
	88°C type	at 100°C (212°F)	10 mm (0.39 in.) or more
Radiator	Relief valve opening pressure		
		STD	0.75 – 1.05 kg/cm² (10.7 – 14.9 psi, 74 – 103 kPa)
		Limit	0.6 kg/cm² 8.5 psi 59 kPa

Torque Specifications

Part tightened	kg-cm	ft-lb	N·m
Water pump cover x Water pump body	185	13	18
Water pump x Cylinder block	375	27	37
Water outlet x Water outlet housing	185	13	18

LUBRICATION SYSTEM

Specifications

Engine oil capacity			See page A-2	
Oil pressure		at idle	0.3 kg/cm² (4.3 psi, 29 kPa) or more	
		at 3,000 rpm	2.5 – 6.0 kg/cm² (36 – 85 psi, 245 – 588 kPa)	
Oil Pump	Rotor body clearance	STD	0.144 – 0.219 mm	0.0057 – 0.0086 in.
		Limit	0.40 mm	0.0157 in.
	Rotor side clearance	STD	0.035 – 0.090 mm	0.0014 – 0.0035 in.
		Limit	0.15 mm	0.0059 in.
	Rotor tip clearance	STD	0.110 – 0.240 mm	0.0043 – 0.0094 in.
		Limit	0.30 mm	0.0118 in.
	Drive spline to rotor backlash			
		STD	0.541 – 0.790 mm	0.0213 – 0.0311 in.
		limit	1.00 mm	0.0394 in.

Torque Specifications

Part tightened	kg-cm	ft-lb	N·m
Engine drain plug	400	29	39
Plug of oil pump relief valve	500	36	49
Timing gear case x Cylinder block	250	18	25
Timing gear case x Injection pump retainer	250	18	25
Oil strainer x Main bearing cap	185	13	18
Oil strainer x Timing gear case	185	13	18
Oil pipe x Cylinder block	450	33	44
Oil pipe x Timing gear case	185	13	18
Oil pan x Cylinder block	130	9	13
Oil pan x Timing gear case	130	9	13
Oil pan x Rear oil seal retainer	130	9	13
Oil cooler x Oil cooler case	250	18	25
Oil cooler case x Cylinder block	185	13	18
Oil filter bracket x Oil cooler case	185	13	18
Plug of oil cooler relief valve	500	36	49
Oil nozzle x Cylinder block	275	20	27

STARTING SYSTEM

Pre-heating system	Light lighting time			
	2H (Super glow type)		at 20°C (68°F)	Approx. 2 seconds
	2H (Fixed delay type)			15 – 19.5 seconds
	12H-T w/ Water temp. sensor disconnected			
			12V type	20 seconds
			24V type	14 seconds
Starter	Rated voltage and output power		12 V 2.5 kw	24 V 4.5 kw
	No-load characteristic	Ampere	180 A or less at 11 V	90 A or less at 23 V
		rpm	3,500 rpm or more	←
	Brush length	STD	20.5 mm 0.807 in.	←
		Limit	13.0 mm 0.512 in.	←
	Spring installed load	STD	3.2 – 4.0 kg (7.1 – 8.8 lb, 31 – 39 N)	←
	Commutator			
	Outer diameter	STD	36 mm 1.42 in.	←
		Limit	35 mm 1.38 in.	←
	Undercut depth	STD	0.7 mm 0.028 in.	←
		Limit	0.2 mm 0.008 in.	←
	Circle runout	Limit	0.05 mm 0.0020 in.	←

CHARGING SYSTEM

Battery specific gravity			See page A-2
Drive belt tension or deflection			See page A-2
Alternator	Rated output		12 V 40 A
			12 V 55 A
			12 V 80 A
			24 V 25 A
			24 V 30 A
			24 V 40 A
	Rotor coil resistance		
	w/o IC regulator	12V type	3.9 – 4.1 Ω
		24V type	18.8 – 19.2 Ω
	w/ IC regulator	12V type	2.8 – 3.0 Ω
		24V type	8.8 – 9.2 Ω
	Slip ring diameter	STD	32.3 – 32.5 mm 1.272 – 1.280 in.
		Limit	32.1 mm 1.264 in.
	Brush exposed length	STD	20.0 mm 0.787 in.
		Limit	5.5 mm 0.217 in.
Alternator regulator	Regulating voltage at 25°C (77°F)		
	w/o IC regulator	12V type	13.8 – 14.8 V
		24V type	27.0 – 29.0 V
	w/ IC regulator	12V type	13.8 – 14.4 V
		24V type	27.9 – 28.5 V

STANDARD BOLT TORQUE SPECIFICATIONS

Page

STANDARD BOLT TORQUE SPECIFICATIONS B-2

STANDARD BOLT TORQUE SPECIFICATIONS

HOW TO DETERMINE BOLT STRENGTH

	Mark	Class		Mark	Class
Hexagon head bolt	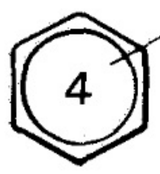 Bolt head No. 4– 5– 6– 7–	4T 5T 6T 7T	Stud bolt	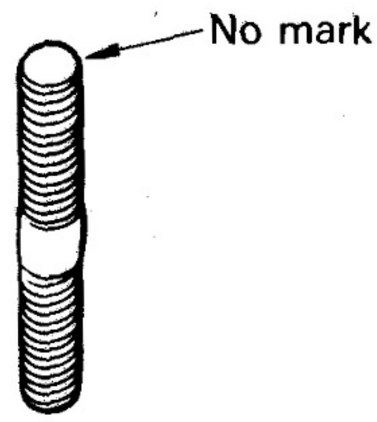 No mark	4T
	 No mark	4T			
Hexagon flange bolt w/washer hexagon bolt	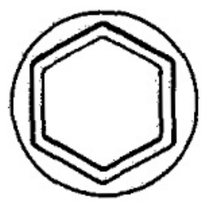 No mark	4T		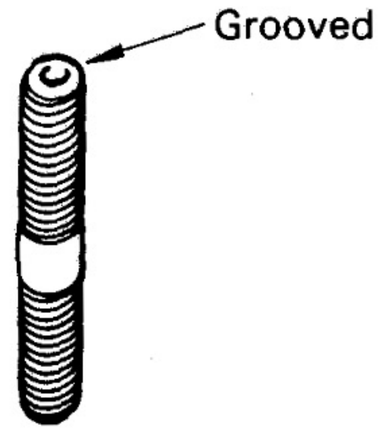 Grooved	6T
Hexagon head bolt	 Two protruding lines	5T			
Hexagon flange bolt w/washer hexagon bolt	 Two protruding lines	6T	Welded bolt	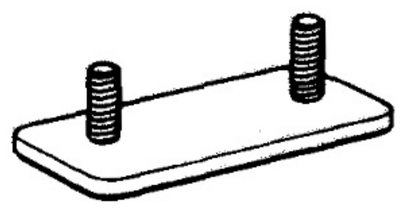	4T
Hexagon head bolt	 Three protruding lines	7T			

SPECIFIED TORQUE FOR STANDARD BOLTS

Class	Diameter mm	Pitch mm	Torque specifications					
			Hexagon head bolt			Hexagon flange bolt		
			kg-cm	ft-lb	N·m	kg-cm	ft-lb	N·m
4T	6	1	55	48 in.-lb	5.4	60	52 in.-lb	5.9
	8	1.25	130	9	13	145	10	14
	10	1.25	260	19	25	290	21	28
	12	1.25	480	35	47	540	39	53
	14	1.5	760	55	75	850	61	83
	16	1.5	1,150	83	113		–	
5T	6	1	65	56 in.-lb	6.4		–	
	8	1.25	160	12	16		–	
	10	1.25	330	24	32		–	
	12	1.25	600	43	59		–	
	14	1.5	930	67	91		–	
	16	1.5	1,400	101	137		–	
6T	6	1	80	69 in.-lb	7.8	90	78 in.-lb	8.8
	8	1.25	195	14	19	215	16	21
	10	1.25	400	29	39	440	32	43
	12	1.25	730	53	72	810	59	79
	14	1.5		–		1,250	90	123
7T	6	1	110	8	11	120	9	12
	8	1.25	260	19	25	290	21	28
	10	1.25	530	38	52	590	43	58
	12	1.25	970	70	95	1,050	76	103
	14	1.5	1,500	108	147	1,700	123	167
	16	1.5	2,300	166	226		–	

SST AND SSM

	Page
SST (SPECIAL SERVICE TOOLS)	C-2
SSM (SPECIAL SERVICE MATERIALS)	C-7

SST (SPECIAL SERVICE TOOLS)

NOTE: Classification
A = SST required for vehicle inspections and minor repairs and multipurpose SST.
B = SST required for major repairs involving disassembly of components.
C = SST required for rather special, less frequent work not of classifiable as either A or B.

Section / Classification / Part Name / Part No. / Illustration				EM	FU	CO	LU	ST
	09032-00100	(Oil Pan Seal Cutter)	A				●	
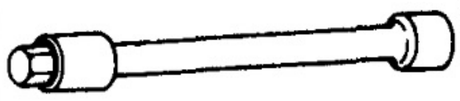	09043-38100	(Hexagon 10 mm Wrench)	A		●			
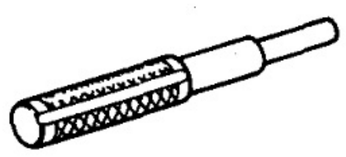	09201-60011	(Valve Guide Bushing Remover & Replacer)	A	●				
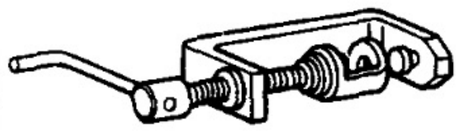	09202-43013	(Valve Spring Compressor)	A	●				
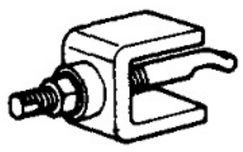	09208-48010	(Combustion Chamber Remover)	B	●				
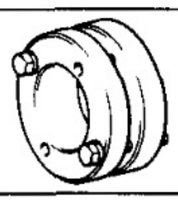	09213-58011	(Crankshaft Pulley Holding Tool	A	●				
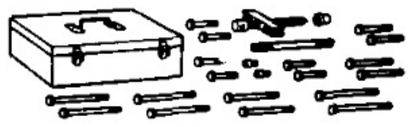	09213-60017	(Crankshaft Pulley Puller	A	●				
	09214-76011	(Crankshaft Pulley Replacer	B	●				
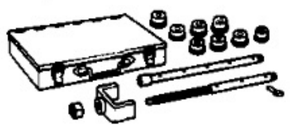	09215-00100	(Camshaft Bearing Remover & Replacer)	C	●				
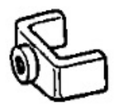	(09215-00120)	(Gate "A")		●				
	(09215-00130)	(Bolt)		●				

SST (SPECIAL SERVICE TOOLS) (Cont'd)

Section / Classification / Part Name / Part No. / Illustration			EM	FU	CO	LU	ST
	(09215-00140)	(Nut)	●				
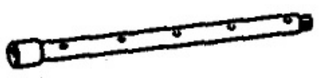	(09215-00150)	(Shaft "A")	●				
	(09215-00160)	(Pin)	●				
	(09215-00210)	(Remover & Replacer)	●				
	(09215-00280)	(Remover & Replacer)	●				
	09222-66010	(Connecting Rod Bushing Remover & Replacer)	B	●			
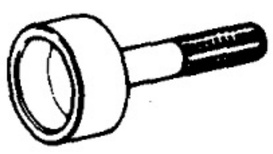	09223-56010	(Crankshaft Rear Oil Seal Replacer)	B	●			
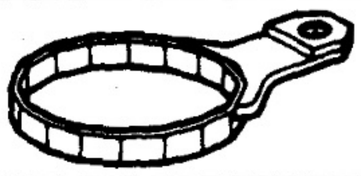	09228-34010	(Oil Filter Wrench)	A		●		
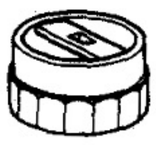	09228-60010	(Oil Filter Wrench)	A			●	
	09236-00101	(Water Pump Overhaul Tool Set)	B			●	
	(09237-00010)	(Water Pump Bearing Remover & Replacer)				●	
	(09237-00020)	(Bearing Stay)				●	
	(09237-00030)	(Bearing Stay)				●	
	(09237-00040)	(Shaft "A")				●	

SST (SPECIAL SERVICE TOOLS) (Cont'd)

Section / Classification / Part Name / Part No. / Illustration				EM	FU	CO	LU	ST
	09241-76022	(Injection Pump Stand Set	C		●			
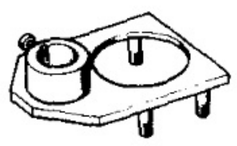	09245-78010	(Injection Pump Stand Arm	C		●			
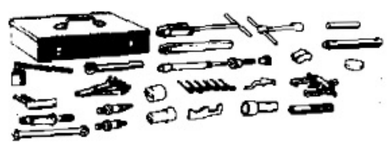	09260-47010	(Injection Pump Tool Set	C	●	●			
	(09260-78010)	(Round Nut Wrench)			●			
	(09260-78020)	(Screw Plug Wrench)			●			
	(09262-76010)	(Delivery Valve Gasket Replacer			●			
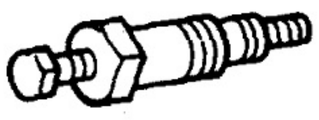	(09267-76011)	(Automatic Timer Extractor			●			
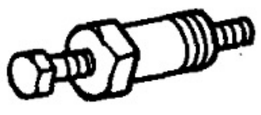	(09267-76020)	(Automatic Timer Remover		●	●			
	(09270-76010)	(Delivery Valve Holder Wrench			●			
	(09271-76011)	(Delivery Valve Extractor			●			
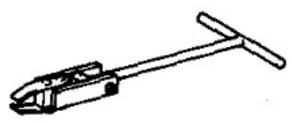	(09272-76011)	(Tappet Roller Clamp)			●			
	(09273-76011)	(Tappet Clamp)			●			
	(09274-46011)	(Tappet Insert)			●			
	(09275-46010)	(Plunger Clamp)			●			

SST (SPECIAL SERVICE TOOLS) (Cont'd)

Section / Classification / Part Name / Part No. / Illustration				EM	FU	CO	LU	ST
	(09280-46010)	(Plunger Spring Holder)			●			
	(09282-76010)	(Idle Adjusting Wrench)			●			
	(09283-46010)	(Tappet Gauge Holder Attachment)			●			
	(09283-76010)	(Fuel Stop Capsule Lock Nut Wrench)			●			
	(09285-76010)	(Injection Pump Camshaft Bearing Cone Replacer)			●			
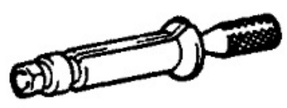	(09286-76011)	(Injection Pump Camshaft Bearing Cup Puller)			●			
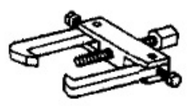	(09287-58010)	(Injection Pump Camshaft Bearing Puller)			●			
	(09288-46011)	(Tappet Adjusting Gauge)			●			
	(09289-00010)	(Injection Pump Camshaft Bearing Cup Replacer)			●			
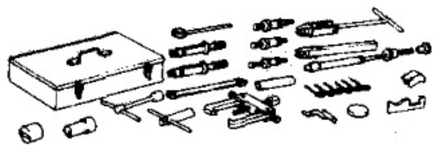	09260-58010	(Injection Pump Tool Set)	C		●			
	(09267-76030)	(Camshaft Bushing Remover)			●			
	09268-64010	(Injection Nozzle Wrench Set)	B		●			
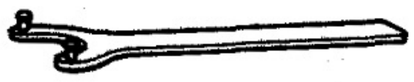	09278-54012	(Drive Shaft Holding Tool)	B	●			●	
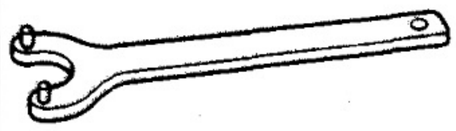	09283-76020	(DHAC Bellows Lock Nut Wrench)	A		●			

SST (SPECIAL SERVICE TOOLS) (Cont'd)

Section / Classification / Part Name / Part No. / Illustration				EM	FU	CO	LU	ST
	09285-76010	(Injection Camshaft Bearing Cone Replacer)	C					●
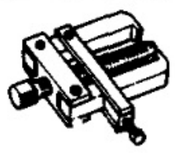	09286-46011	(Injection Pump Spline Shaft Puller)	C					●
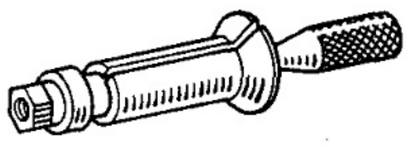	09286-78010	(Bearing Cup Remover)	C		●			
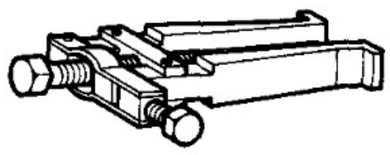	09308-10010	(Oil Seal Puller)	A	●				
	09330-00021	(Companion Flange Holding Tool)	A	●				
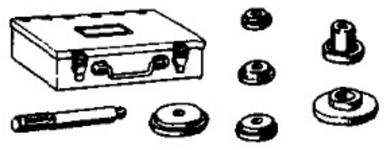	09608-12010	(Front Hub & Drive Pinion Bearing Replacer Set)	B		●			
	(09608-00040)	(Front Hub Outer Bearing Cup Replacer)			●			
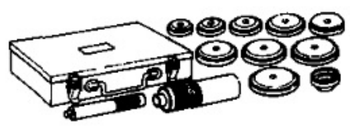	09608-35014	(Axle Hub & Drive Pinion Bearing Tool Set)	B	●			●	
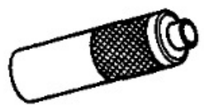	(09608-06040)	(Front Hub Inner Bearing Cone Replacer)		●			●	
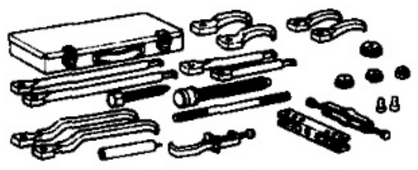	09950-20017	(Universal Puller)	A	●			●	
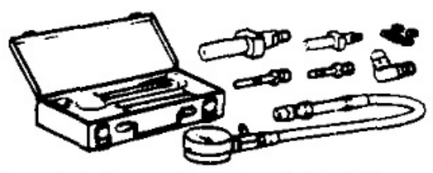	09992-00023	(Cylinder Compression Check Gauge Set)	A	●				
	09992-00240	(Turbocharger Pressure Gauge)	C	●				

SSM (SPECIAL SERVICE MATERIALS)

Part Name	Part No.	Sec.	Use etc.
Seal packing black	08826-00080	LU	Engine oil pan and stiffening plate