TOYOTA

REPAIR MANUAL FOR CHASSIS & BODY

LAND CRUISER
(Heavy Duty)

FJ6_, 7_ series
BJ6_, 7_ series
HJ6_, 7_ series

Oct., 1984

Pub. No. 36262E

FOREWORD

This repair manual has been prepared to provide information covering general service repairs for the chassis and body of the TOYOTA LAND CRUISER (Heavy-Duty).

Applicable models:
FJ 62, 70, 73, 75 series
BJ 60, 70, 73, 75 series
HJ 60, 75 series

For service of the TOYOTA LAND CRUISER (Heavy-Duty), refer to the following repair manuals.

3F Engine Repair Manual	(Pub. No. 36253E)
B series Engine Repair Manual	(Pub. No. RM035E)
2H Engine Repair Manual	(Pub. No. 36048E)
A440L, A440F Automatic Transmission Repair Manual	(Pub. No. 36264E)

For instructions on how to use this manual, please refer to page IN-2. All information contained in this manual is up-to-date at the time of publication. However, specifications and procedures are subject to change without prior notice.

TOYOTA MOTOR CORPORATION

93-10

TOYOTA LAND CRUISER (Heavy-Duty) REPAIR MANUAL FOR CHASSIS & BODY

INTRODUCTION IN
CLUTCH CL
MANUAL TRANSMISSION MT
AUTOMATIC TRANSMISSION AT
TRANSFER TF
PROPELLER SHAFT PR
FRONT AXLE AND SUSPENSION FA
REAR AXLE AND SUSPENSION RA
BRAKE SYSTEM BR
STEERING SR
BODY ELECTRICAL SYSTEM BE
BODY BO
WINCH WI
AIR CONDITIONING SYSTEM AC
SERVICE SPECIFICATIONS A
STANDARD BOLT TORQUE SPECIFICATIONS B
SST AND SSM C
ELECTRICAL WIRING DIAGRAMS D

©1990 TOYOTA MOTOR CORPORATION
All rights reserved. This book may not be reproduced or copied, in whole or in part, without the written permission of Toyota Motor Corporation.

INTRODUCTION

	Page
HOW TO USE THIS MANUAL	IN-2
IDENTIFICATION INFORMATION	IN-4
GENERAL REPAIR INSTRUCTIONS	IN-4
VEHICLE LIFT AND SUPPORT LOCATION	IN-6
ABBREVIATIONS USED IN THIS MANUAL	IN-8

HOW TO USE THIS MANUAL

To assist in finding your way through the manual, the section title and major heading are given at the top of every page.

An **INDEX** is provided on the first page of each section to guide you to the item to be repaired.

At the beginning of each section, **PRECAUTIONS** are given that pertain or *all* repair operations contained in that section. *Read these precautions before starting any repair task.*

TROUBLESHOOTING tables are included for each system to help you diagnose the system problem and find the cause. The repair for each possible cause is referenced in the remedy column to quickly lead you to the solution.

REPAIR PROCEDURES

Most repair operations begin with an overview illustration which identifies the components and shows how the parts fit together.

Example:

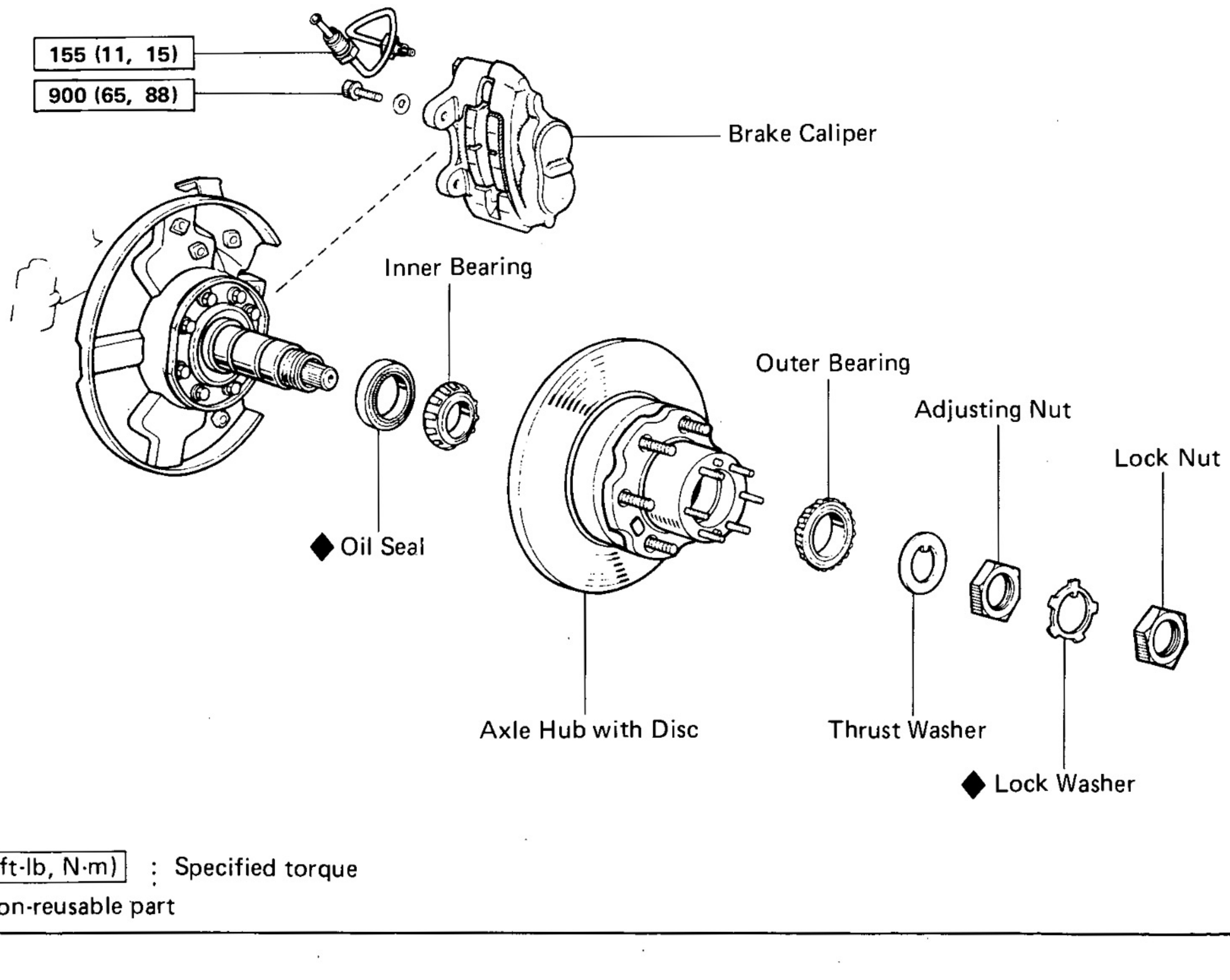

kg-cm (ft-lb, N·m) : Specified torque

◆ : Non-reusable part

FA0503

The procedures are presented in a step-by-step format:

- The illustration shows *what* to do and *where* to do it.
- The task heading tells *what* to do.
- The detailed text tells *how* to perform the task and gives other information, such as specifications and warnings.

Illustration:
what to do and where

Example:

Task heading: what to do

CONNECT PROPELLER SHAFT FLANGE TO COMPANION FLANGE

(a) Align the marks on the flanges and connect the flanges with four bolts and nuts.

(b) Torque four bolts and nuts.

Detail text: how to do it

Torque: 600 – 750 kg-cm (44 – 54 ft-lb, 59 – 73 N·m)

Specification

This format enables the experienced technician to have a FAST TRACK. He can read the task headings and refer to the detailed text only when he needs it. Important specifications and warnings always stand out in bold type.

REFERENCES

References have been kept to a minimum. However, when they are required you are given the *page* to go to.

SPECIFICATIONS

Specifications are presented in bold type throughout the text in the applicable step. You never have to leave the procedure to look up your specs. All specifications are also found in Appendix A, specifications for quick reference.

WARNINGS, CAUTIONS, NOTES:

- WARNINGS are presented in bold type, and indicate there is a possibility of injury to you or other people.
- CAUTIONS are also presented in bold type, and indicate the possibility of damage to the components being repaired.
- NOTES are separated from the text but do not appear in bold. They provide additional information to help you efficiently perform the repair.

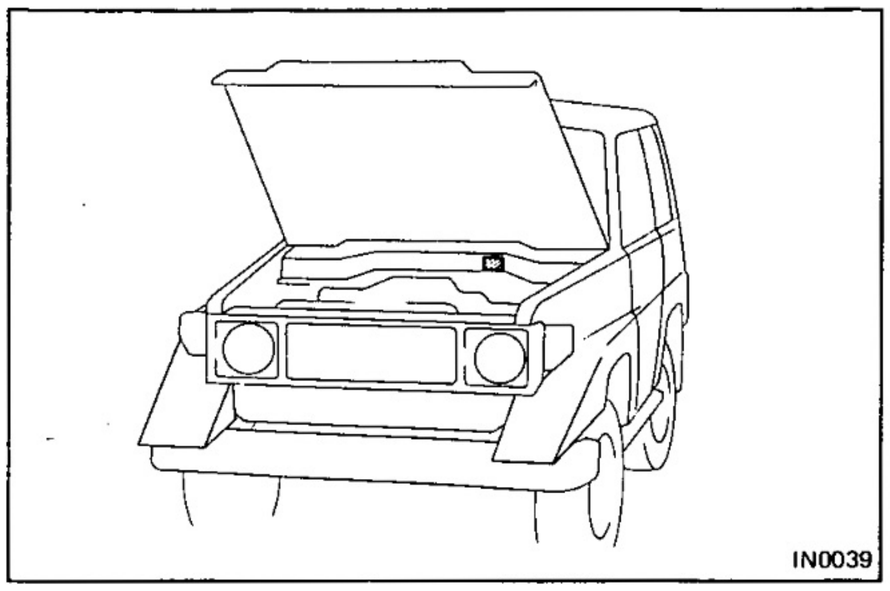

IDENTIFICATION INFORMATION

VEHICLE IDENTIFICATION NUMBER

The vehicle identification number is stamped on the cowl panel of the engine compartment.

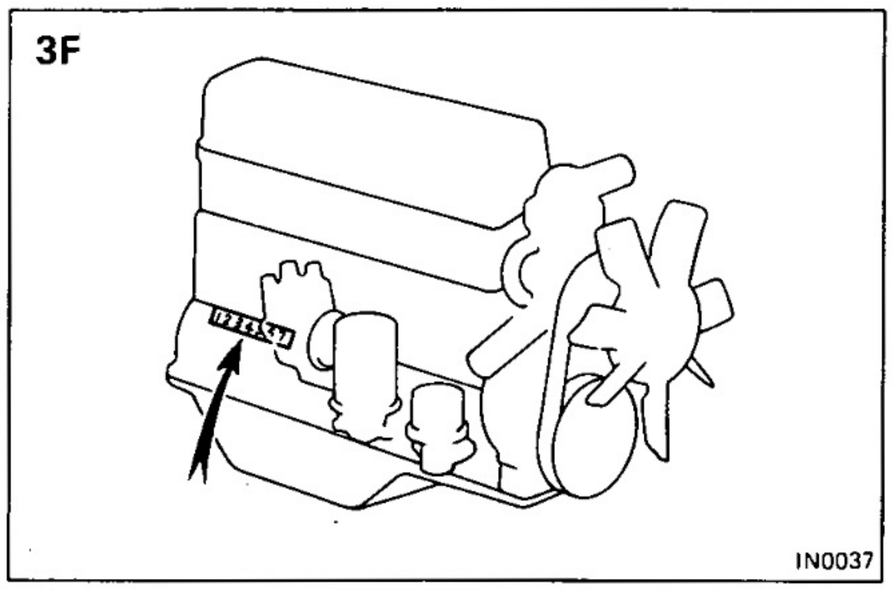

ENGINE SERIAL NUMBER

The engine serial number is stamped on the cylinder block, as shown.

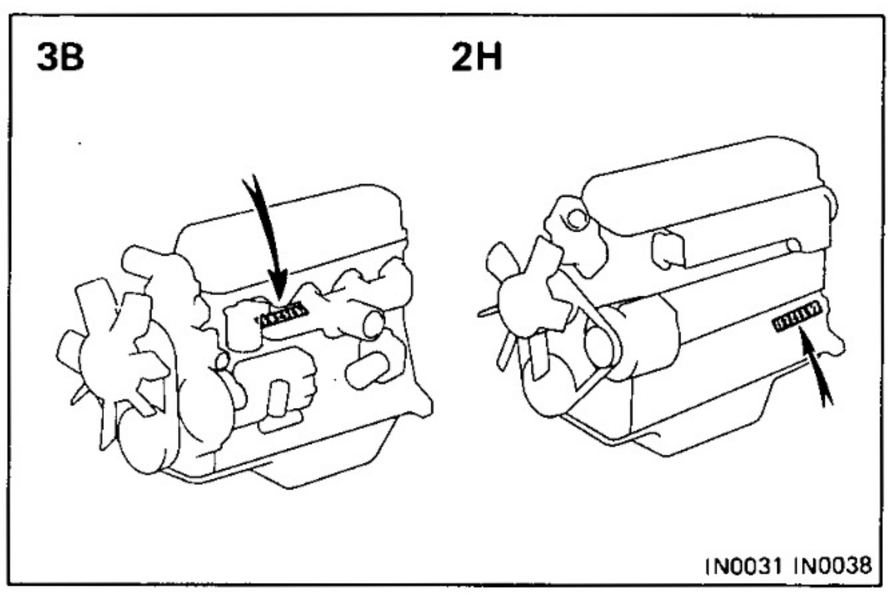

GENERAL REPAIR INSTRUCTIONS

1. Use fender, seat and floor covers to keep the vehicle clean and prevent damage.
2. During disassembly, keep parts in order to facilitate re-assembly.
3. Observe the following:
   (a) Before performing electrical work, disconnect the cable from the battery terminal.
   (b) If it is necessary to disconnect the battery for inspection or repair, always disconnect the cable from the negative (—) terminal which is grounded to the vehicle body.
   (c) To prevent damage to the battery terminal post, loosen the terminal nut and raise the cable straight up without twisting or prying it.
   (d) Clean the battery terminal posts and cable terminals with a shop rag. Do not scrape them with a file or such.

(e) Install the cable terminal to the battery post with the nut loose and tighten the nut after installation. Do not use a hammer, or such, to tap the terminal onto the post.

(f) Be sure the cover for the positive (+) terminal is properly in place.

4. Check hose and wiring connectors to make sure that they are secure and correct.

5. Non-reusable Parts:

(a) Always replace cotter pins, gaskets, O-rings and oil seals, etc. with new ones.

(b) Non-reusable parts are indicated in the component illustrations by the "◇" symbol.

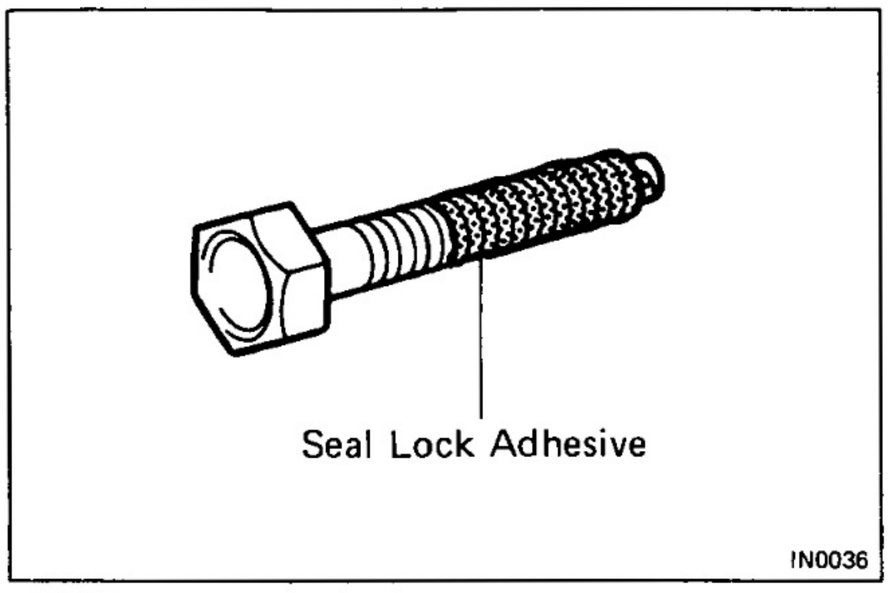

6. Precoated Parts:

Precoated parts are the bolts, nuts, etc. which are coated with a seal lock adhesive at the factory.

(a) If a precoated part is retightened, loosened or caused to move in any way, it must be recoated with the specified adhesive.

(b) Recoating of Precoated Parts

(1) Clean off the old adhesive from the bolt, nut or installation part threads.

(2) Dry with compressed air.

(3) Apply the specified seal lock adhesive to the bolt or nut threads.

(c) Precoated parts are indicated in the component illustrations by the "★" symbol.

7. When necessary, use a sealer on gaskets to prevent leaks.

8. Carefully observe all specifications for bolt tightening torques. Always use a torque wrench.

9. Use of special service tools (SST) and special service materials (SSM) may be required, depending on the nature of the repair. Be sure to use SST and SSM where specified and follow the proper work procedure. A list of SST and SSM can be found at the back of this manual.

10. When replacing fuses, be sure the new fuse is the correct amperage rating. DO NOT exceed the fuse amp rating or use one of a lower rating.

11. Care must be taken when jacking up and supporting the vehicle. Be sure to lift and support the vehicle at the proper locations (See page IN-6).

(a) If the vehicle is to be jacked up only at the front or rear end, be sure to block the wheels to ensure safety.

(b) After the vehicle is jacked up, be sure to support it on stands. It is extremely dangerous to do any work on the vehicle raised on jack alone, even for a small job that can be finished quickly.

VEHICLE LIFT AND SUPPORT LOCATIONS

60 series

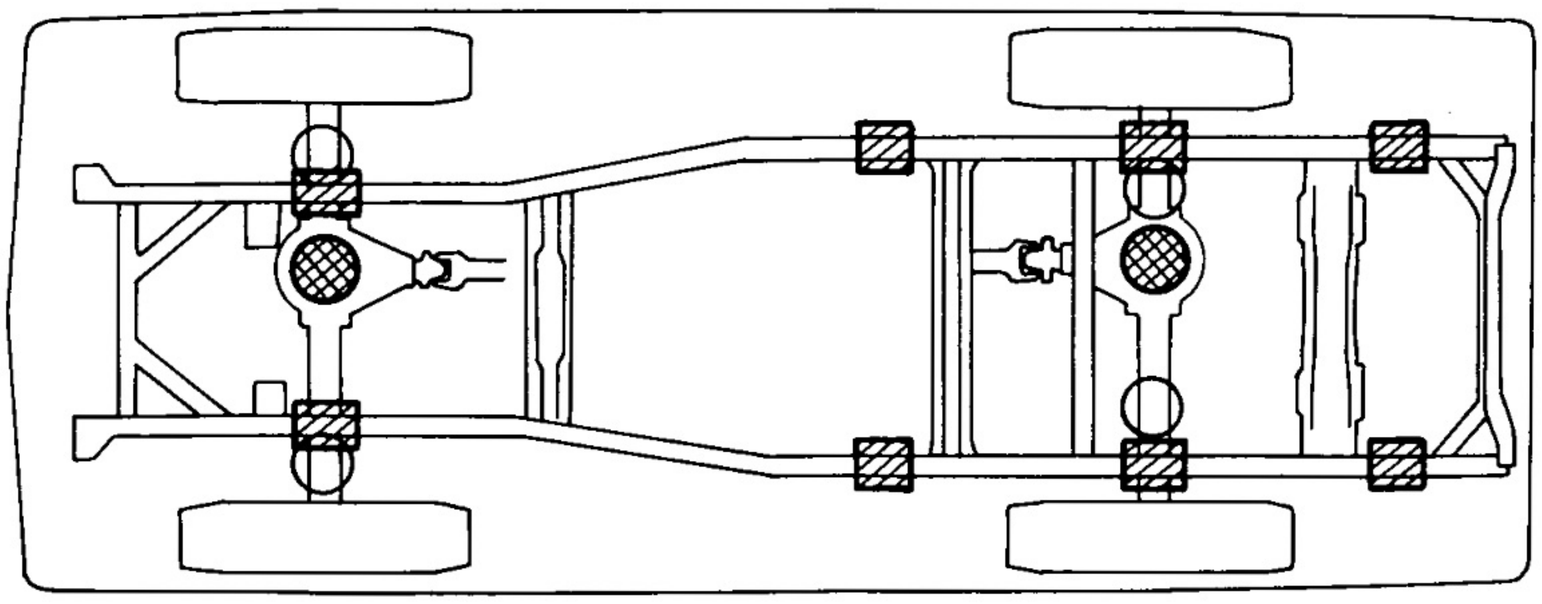

70 series (short)

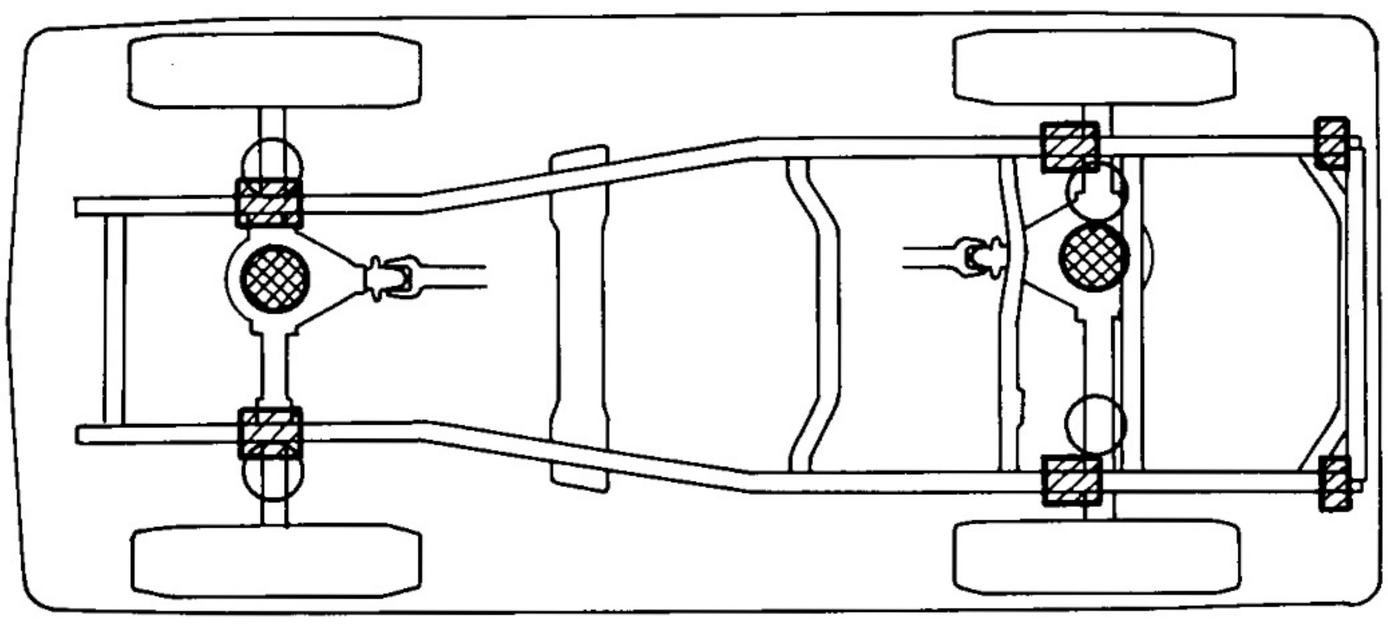

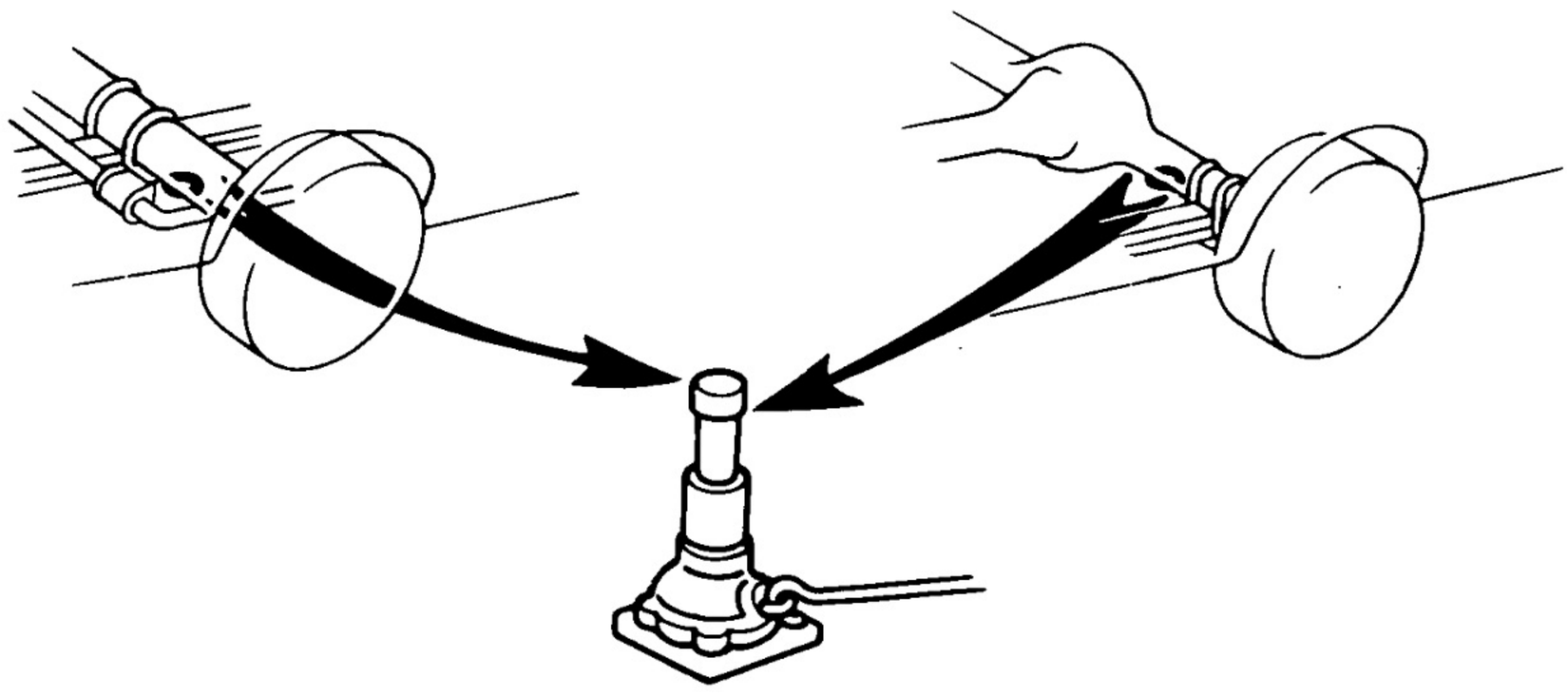

JACK POSITION

Front . . . . . Under the front differential
Rear . . . . . Under the rear differential

SUPPORT POSITION

Safety stand . . . . . ▨

SCREW TYPE JACK POSITION . . . . . ○

IN0041
IN0042

VEHICLE LIFT AND SUPPORT LOCATIONS (Cont'd)

73 series (middle)

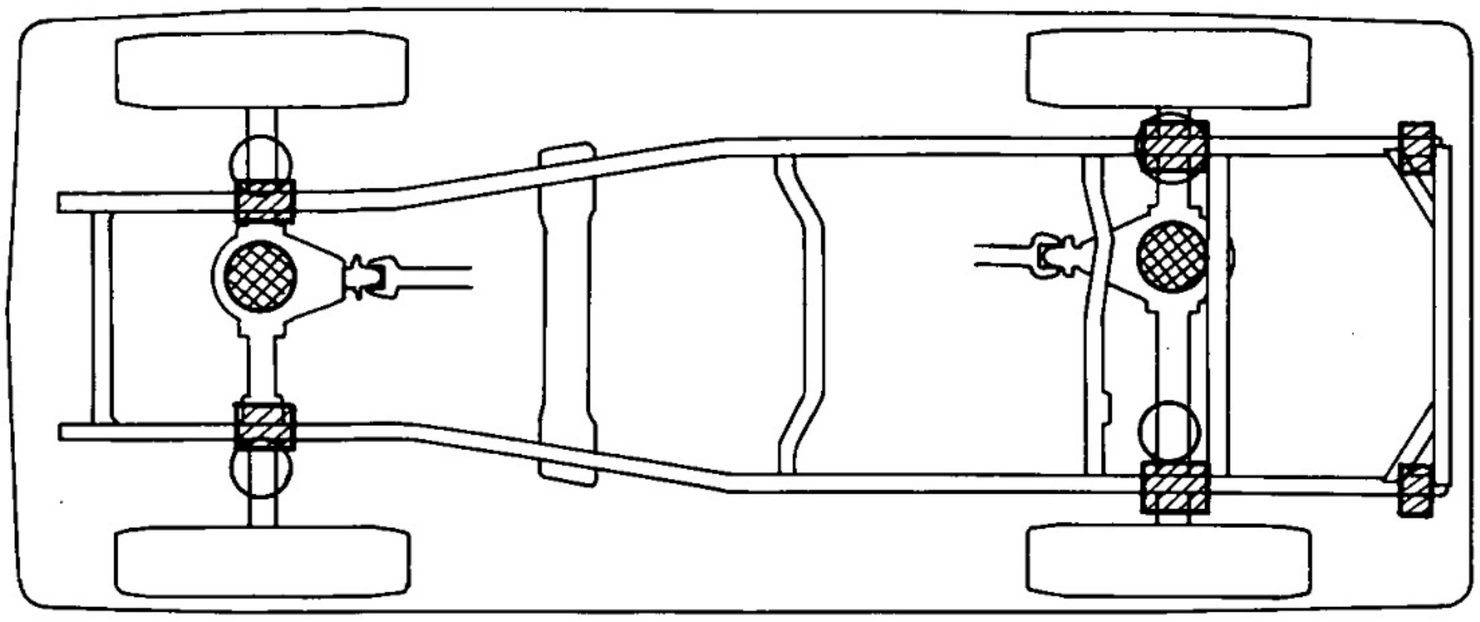

75 series (long)

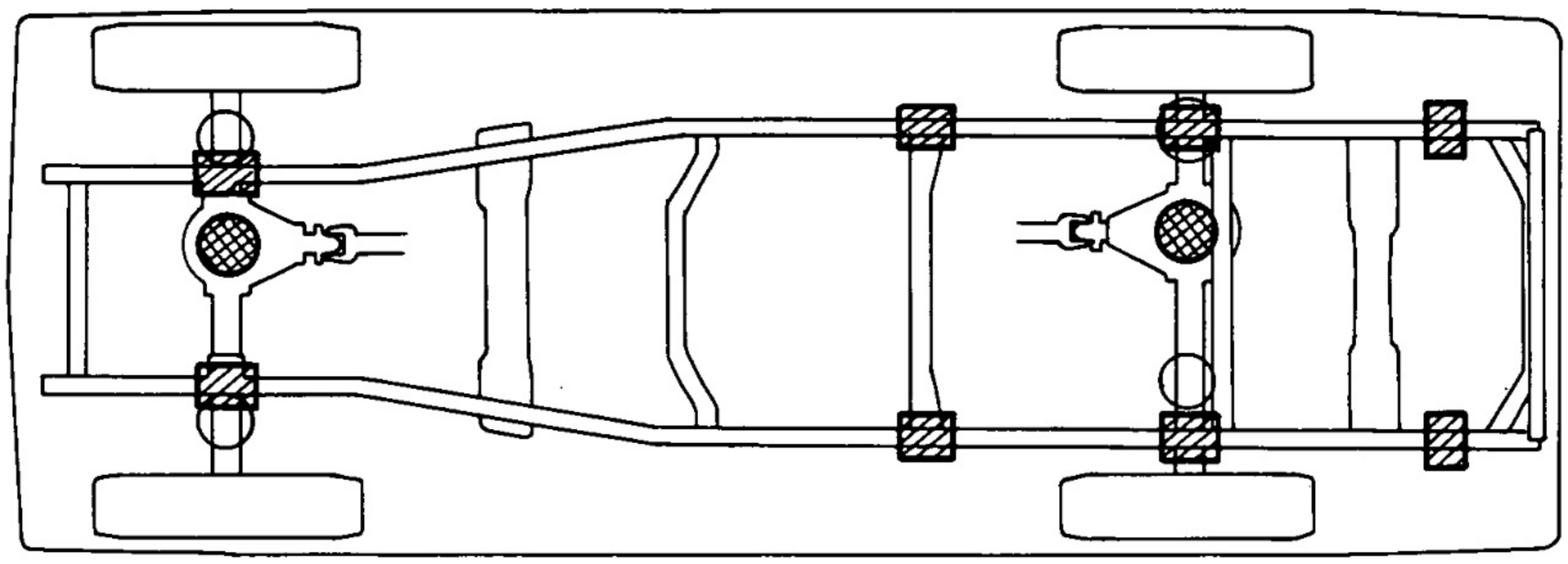

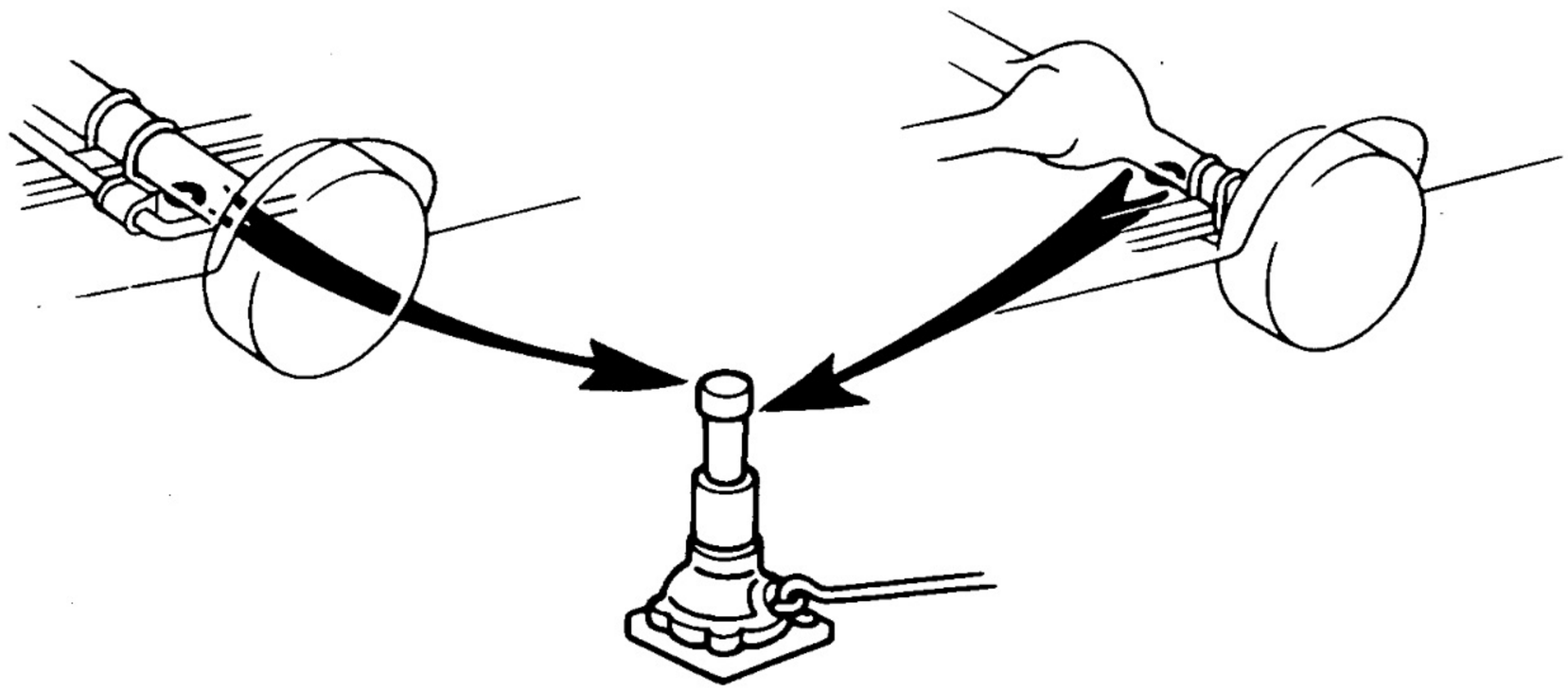

JACK POSITION ——————————

Front . . . . . Under the front differential
Rear . . . . . Under the rear differential

SUPPORT POSITION

Safety stand . . . . . .

SCREW TYPE JACK POSITION . . . . . .

IN0043
IN0044

ABBREVIATIONS USED IN THIS MANUAL

A/C	Air Conditioner
A/T, ATM	Automatic Transmission
Approx.	Approximate
ATF	Automatic Transmission Fluid
CB	Circuit Breaker
Ex.	Except
Fr	Front
FRP	Fiber Reinforced Plastics
in.	Inch
IG	Ignition
LH	Left-hand
LHD	Left-hand Drive
LSPV	Load Sensing Proportioning Valve
Max.	Maximum
Min.	Minimum
MP	Multipurpose
M/T, MTM	Manual Transmission
OD	Overdrive
OPT	Option
PS	Power Steering
P.T.O.	Power Take-off
RH	Right-hand
RHD	Right-hand Drive
Rr	Rear
SSM	Special Service Materials
SST	Special Service Tool
STD	Standard
S/W	Switch
Temp.	Temperature
VSV	Vacuum Switching Valve
w/	With
w/o	Without

CLUTCH

	Page
TROUBLESHOOTING	CL-2
CHECK AND ADJUSTMENT OF CLUTCH PEDAL	CL-3
OPERATIONAL TEST OF CLUTCH BOOSTER	CL-4
BLEEDING OF CLUTCH SYSTEM	CL-4
CLUTCH MASTER CYLINDER	CL-5
CLUTCH BOOSTER	CL-9
CLUTCH RELEASE CYLINDER	CL-16
CLUTCH UNIT	CL-18

TROUBLESHOOTING

Problem	Possible cause	Remedy	Page
Hard to shift or will not shift	Clutch pedal freeplay excessive	Adjust pedal freeplay	CL-3
	Clutch booster faulty	Inspect clutch booster	CL-9
	Clutch release cylinder faulty	Repair release cylinder	CL-16
	Clutch master cylinder faulty	Repair master cylinder	CL-5, 7
	Clutch disc out of true, lining greasy or broken	Inspect clutch disc	CL-18
	Splines on input shaft or clutch disc dirty or burred	Repair as necessary	CL-18
	Clutch pressure plate faulty	Replace pressure plate	CL-18
Transmission jumps out of gear	Pilot bearing worn	Replace pilot bearing	CL-18
Clutch slips	Clutch pedal freeplay insufficient	Adjust pedal freeplay	CL-3
	Clutch booster faulty	Inspect clutch booster	CL-9
	Clutch disc lining oily or worn out	Inspect clutch disc	CL-18
	Pressure plate faulty	Replace pressure plate	CL-18
	Release fork binds	Inspect release fork	CL-18
Clutch grabs/chatters	Clutch booster faulty	Inspect clutch booster	CL-9
	Clutch disc lining oily or worn out	Inspect clutch disc	CL-18
	Pressure plate faulty	Replace pressure plate	CL-18
	Clutch diaphragm spring bending	Align clutch diaphragm	CL-18
	Engine mounts loose	Repair as necessary	
Clutch pedal spongy	Air in clutch lines	Bleed clutch system	CL-4
	Clutch release cylinder faulty	Repair release cylinder	CL-16
	Clutch master cylinder faulty	Repair master cylinder	CL-5, 7
Clutch noisy	Loose part inside housing	Repair as necessary	
	Release bearing worn or dirty	Replace release bearing	CL-18
	Pilot bearing worn	Replace pilot bearing	CL-18
	Release fork or linkage sticks	Repair as necessary	

w/o Clutch Booster

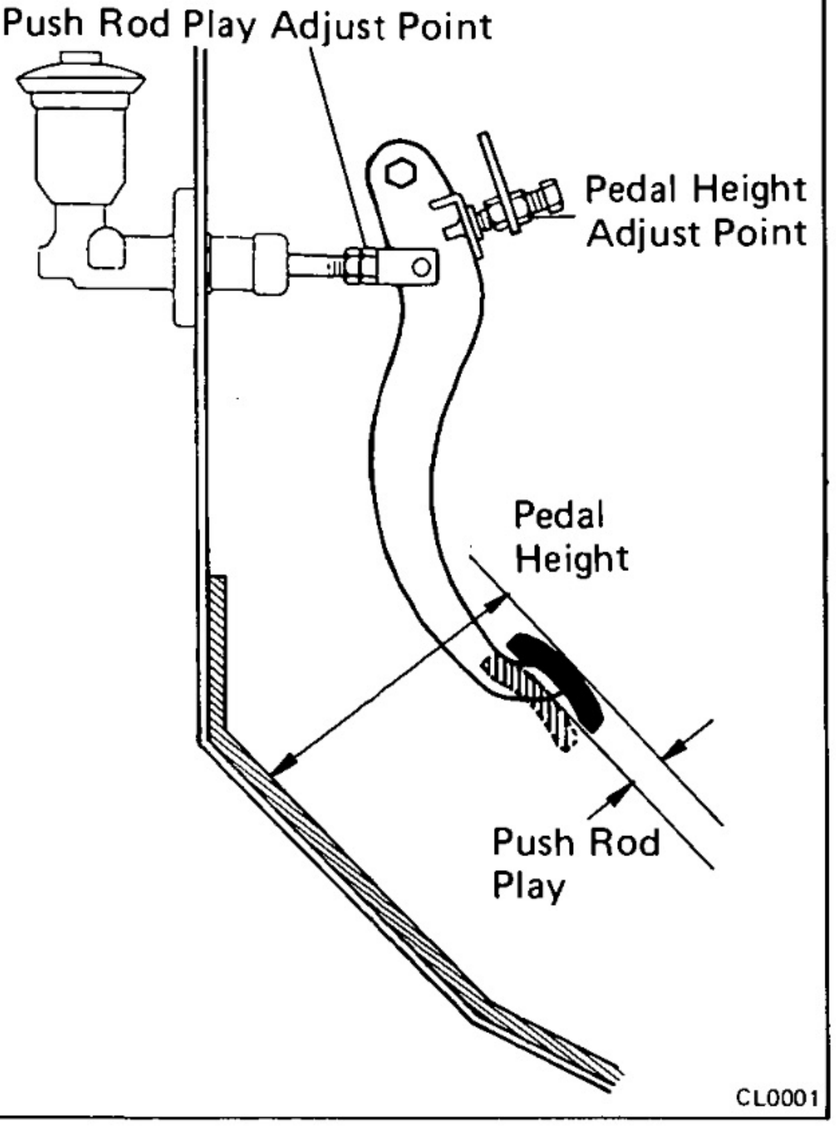

w/ Clutch Booster

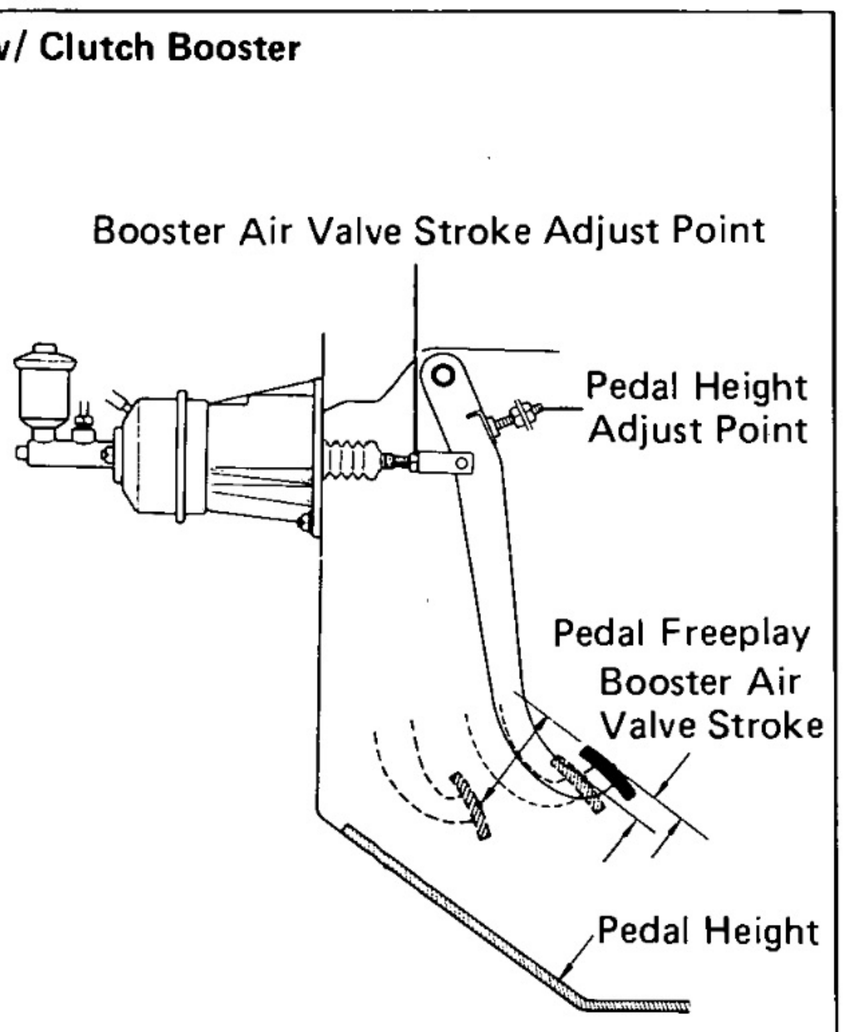

CHECK AND ADJUSTMENT OF CLUTCH PEDAL

1. CHECK THAT PEDAL HEIGHT IS CORRECT

Pedal height:

FJ·HJ·BJ 60 series	**181 mm (7.13 in.)**
FJ·HJ 70 series	**186 mm (7.32 in.)**
BJ 70 series	**190 mm (7.48 in.)**

2. IF NECESSARY, ADJUST PEDAL HEIGHT

Loosen the lock nut and turn the stopper bolt or clutch switch until the height is correct. Tighten the lock nut.

NOTE: After adjusting the pedal height, check and adjust the pedal free play and push rod play or booster air valve stroke.

3.-1 (w/o Clutch Booster) CHECK THAT PEDAL FREEPLAY AND PUSH ROD PLAY ARE CORRECT

(Pedal Freeplay)
Push in on the pedal until the clutch begins to resist.

Pedal freeplay: 13 – 23 mm (0.51 – 0.91 in.)

(Push Rod Play)
Push in on the pedal with a finger softly until the resistance begins to increase a little.

Push rod play at pedal top: 1 – 5 mm (0.04 – 0.20 in.)

3.-2 (w/ Clutch Booster) CHECK PEDAL FREEPLAY AND BOOSTER AIR VALVE STROKE

(Pedal Freeplay)
Push in on the pedal until the clutch begins to resist.

Pedal freeplay: 15 – 30 mm (0.59 – 1.18 in.)

(Booster Air Valve Stroke)

(a) Stop the engine and depress the clutch pedal several times until there is no vacuum left in the clutch booster.

(b) Push in on the pedal with a finger softly until the resistance begins to increase a little.

Booster air valve stroke at pedal top: 5 – 9 mm (0.20 – 0.35 in.)

NOTE: The booster air valve stroke is the amount of the stroke until the booster piston is moved by the booster air valve.

4. IF NECESSARY, ADJUST PEDAL FREEPLAY AND PUSH ROD PLAY OR BOOSTER AIR VALVE STROKE

(a) Loosen the lock nut and turn the push rod until the freeplay and push rod play or booster air valve stroke are correct.

(b) Tighten the lock nut.

(c) After adjusting the pedal freeplay, check the pedal height.

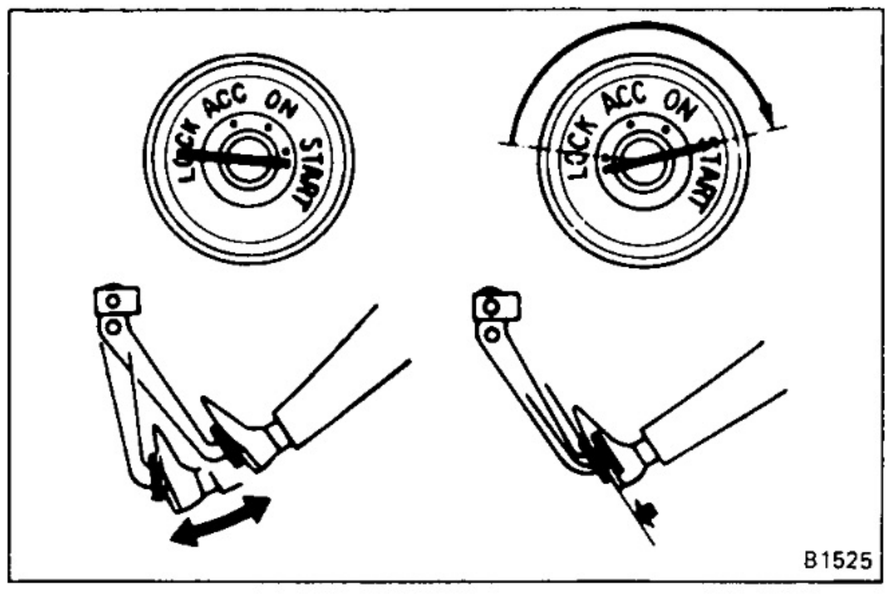

OPERATIONAL TEST OF CLUTCH BOOSTER

NOTE: If there is leakage or lack of vacuum, repair before testing.

1. OPERATING CHECK

With the engine stopped, depress the clutch pedal several times. Then, with the pedal at the mid point, start the engine and confirm that the pedal sinks down slightly.

2. AIR-TIGHTNESS CHECK

(a) Depress the clutch pedal several times with the engine stopped. Then, start the engine and depress the clutch pedal and check that there is a slight difference in pedal effort.

(b) Start the engine and turn it off after there is sufficient vacuum in the booster. Depress the clutch pedal and confirm that the effort required for at least one time is equal to that with the engine running.

NOTE: If (a) and (b) are not as stipulated, inspect the vacuum check valve and, if necessary, the clutch booster also.

BLEEDING OF CLUTCH SYSTEM

NOTE: If any work is done on the clutch system, or if air is suspected in the clutch lines, bleed the system of air.

CAUTION: Do not let brake fluid remain on a painted surface. Wash it off immediately.

1. FILL CLUTCH RESERVOIRS WITH BRAKE FLUID

Check the reservoir after bleeding. Add fluid if necessary.

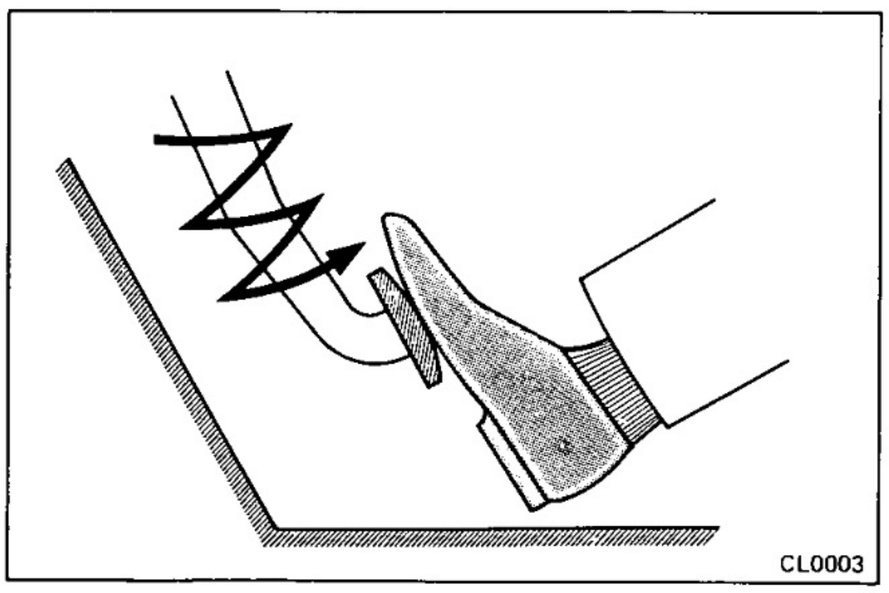

2. CONNECT VINYL TUBE TO RELEASE CYLINDER BLEEDER PLUG

Insert the other end of the tube in a half-filled container of brake fluid.

3. BLEED CLUTCH LINE

(a) Slowly pump the clutch pedal several times.

(b) While having an assistant press on the pedal, loosen the bleeder plug until fluid starts to runout. Then close the bleeder plug.

(c) Repeat this procedure until there are no more air bubbles in the fluid..

(d) Torque the bleeder plug.

Torque: 110 kg-cm (8 ft-lb, 11 N·m)

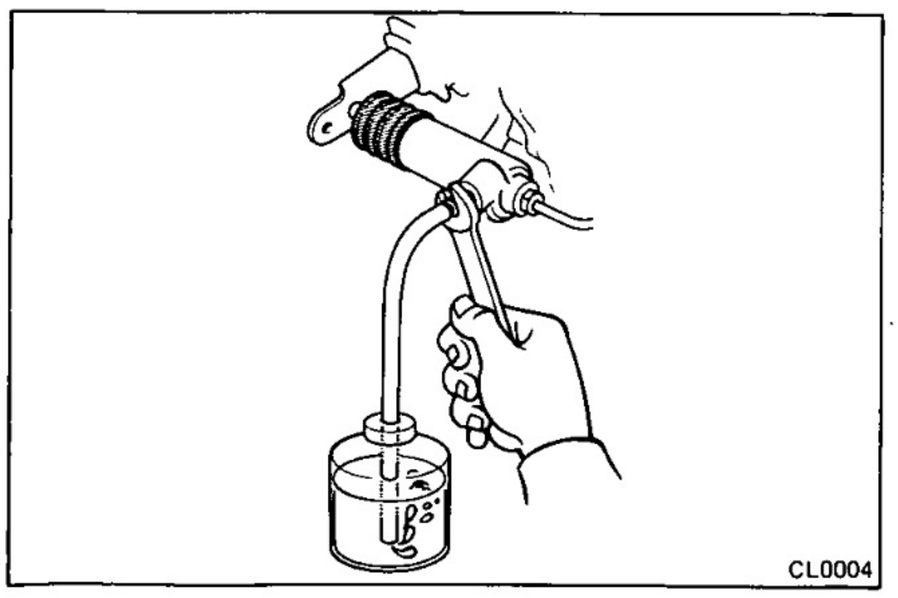

CLUTCH MASTER CYLINDER (w/o Clutch Booster)

COMPONENTS

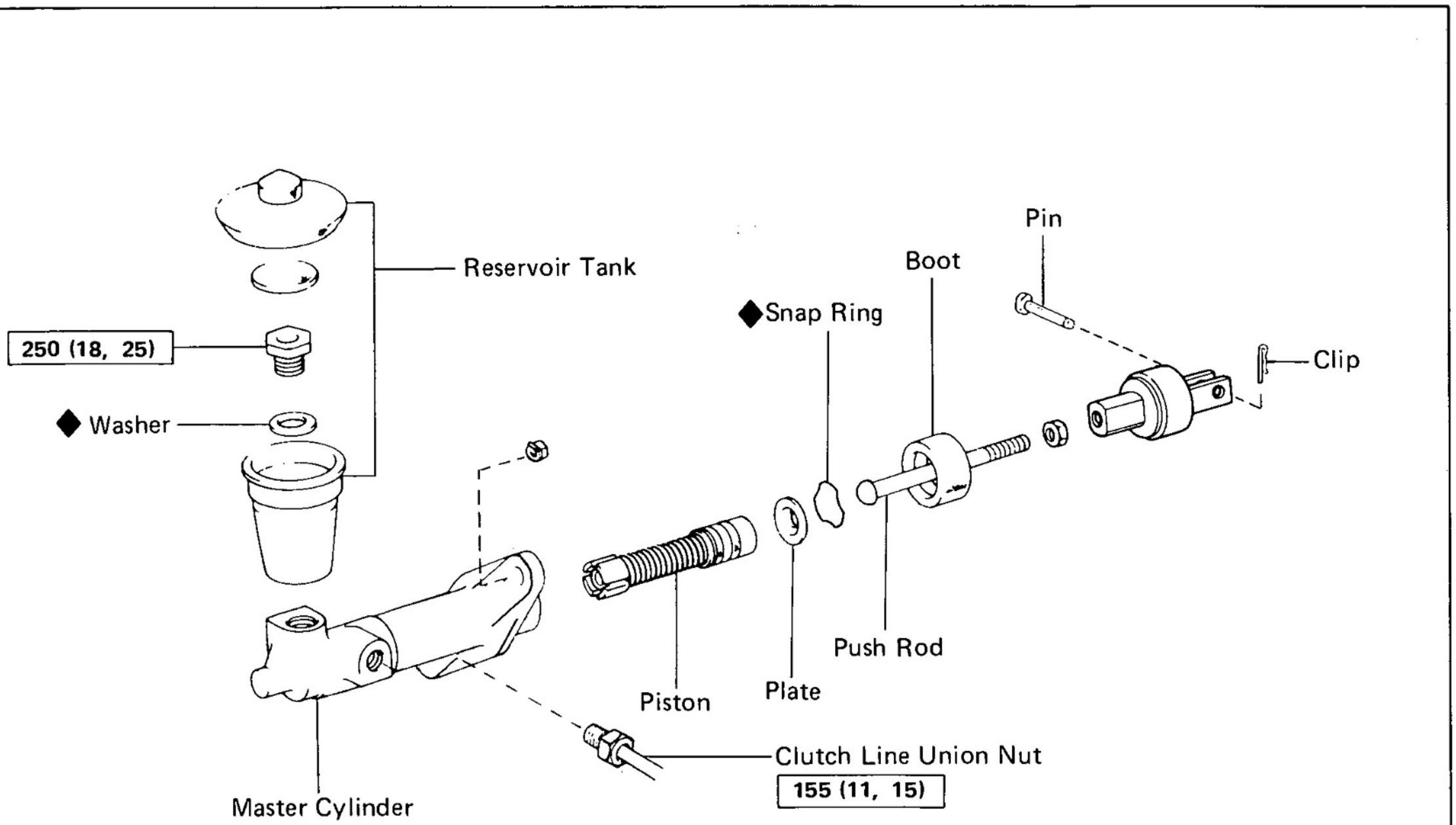

kg-cm (ft-lb, N·m) : Specified torque

◆ : Non-reusable part

CL0006

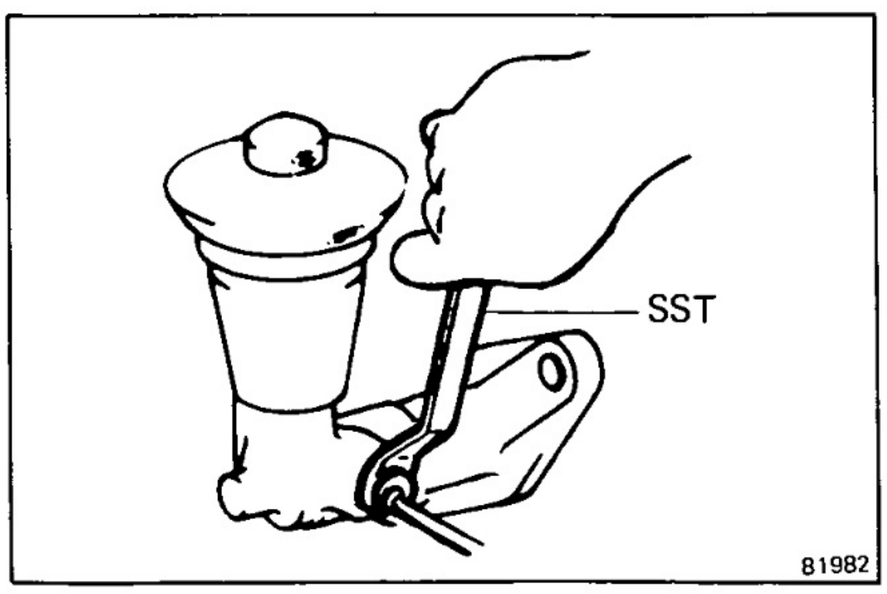

REMOVAL OF MASTER CYLINDER

1. DRAW OUT FLUID WITH SYRINGE
2. DISCONNECT CLUTCH LINE UNION
   Using SST, disconnect the union.
   SST 09751-36011
3. DISCONNECT CLEVIS FROM CLUTCH PEDAL
   Remove the clip and clevis pin, disconnect the clevis from the clutch pedal.
4. REMOVE MASTER CYLINDER
   Remove the two mounting nuts, and pull off the master cylinder.

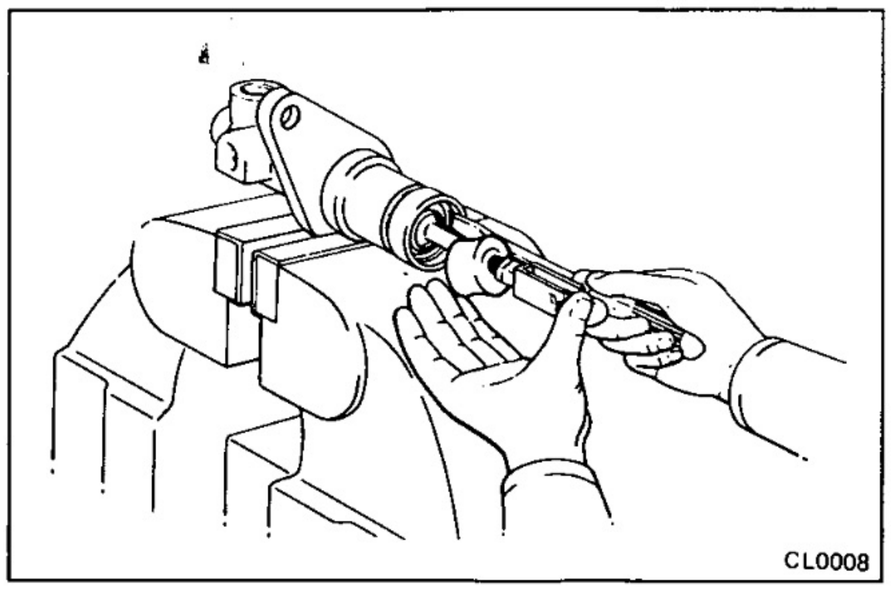
CL0008

DISASSEMBLY OF MASTER CYLINDER

1. REMOVE PUSH ROD AND SNAP RING
   (a) Pull back the boot and remove the snap ring with a screwdriver.
   (b) Pull off the push rod and washer.

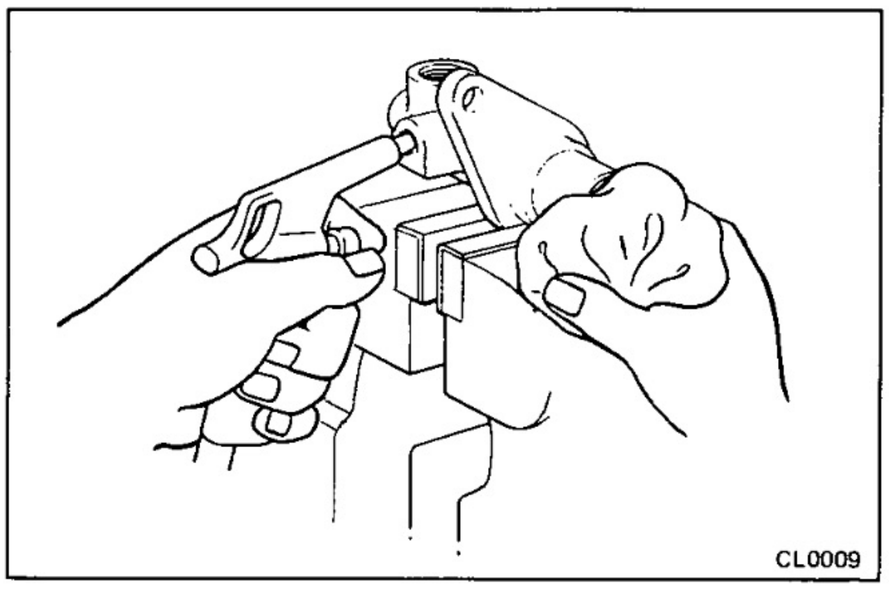
CL0009

2. REMOVE RESERVOIR TANK

3. REMOVE PISTON
   Using compressed air, remove the piston from the cylinder.

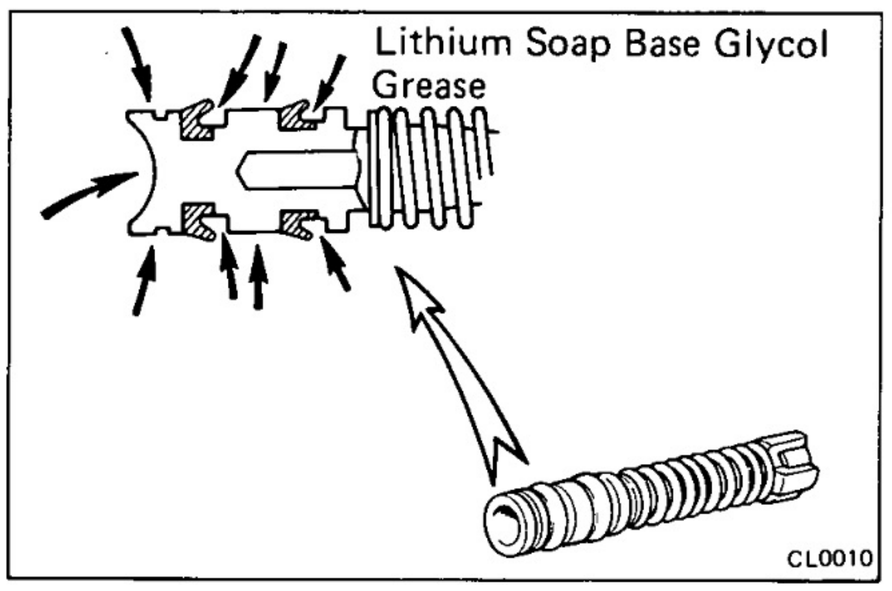

CL0010

INSPECTION OF MASTER CYLINDER

INSPECT MASTER CYLINDER
Inspect the disassembled parts for wear, rust or damage.

ASSEMBLY OF MASTER CYLINDER
(See page CL-5)

1. COAT PARTS WITH LITHIUM SOAP BASE GLYCOL GREASE

2. INSTALL PISTON INTO CYLINDER

3. INSTALL PUSH ROD ASSEMBLY WITH SNAP RING

4. INSTALL RESERVOIR TANK
   Torque: 250 kg-cm (18 ft-lb, 25 N·m)

INSTALLATION OF MASTER CYLINDER

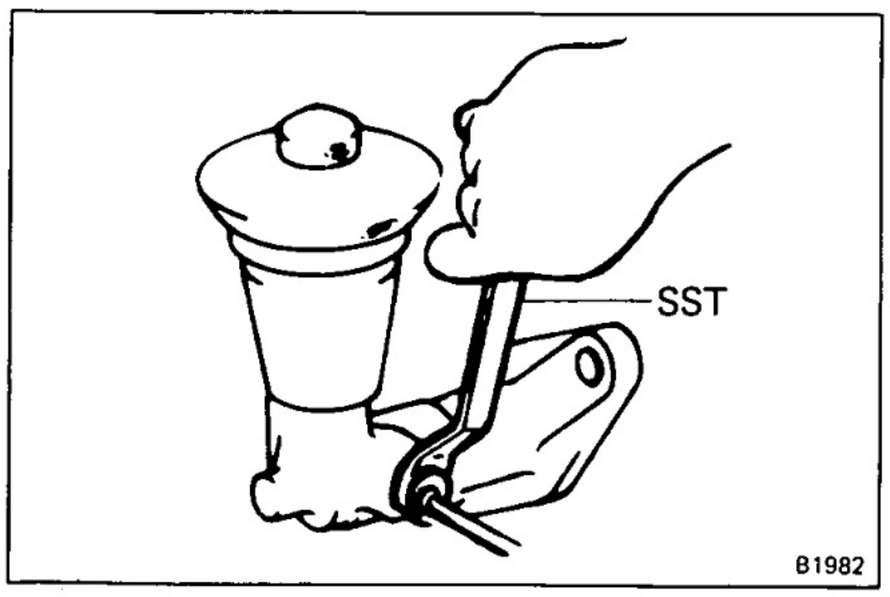

B1982

1. INSTALL MASTER CYLINDER

2. CONNECT CLEVIS AND CLUTCH PEDAL
   Connect the clevis and clutch pedal with clevis pin and clip.

3. CONNECT CLUTCH LINE UNION
   Using SST, connect the union.
   SST 09751-36011

4. ADJUST CLUTCH PEDAL AND BLEED SYSTEM
(See pages CL-3, 4)

(w/ Clutch Booster)

COMPONENTS

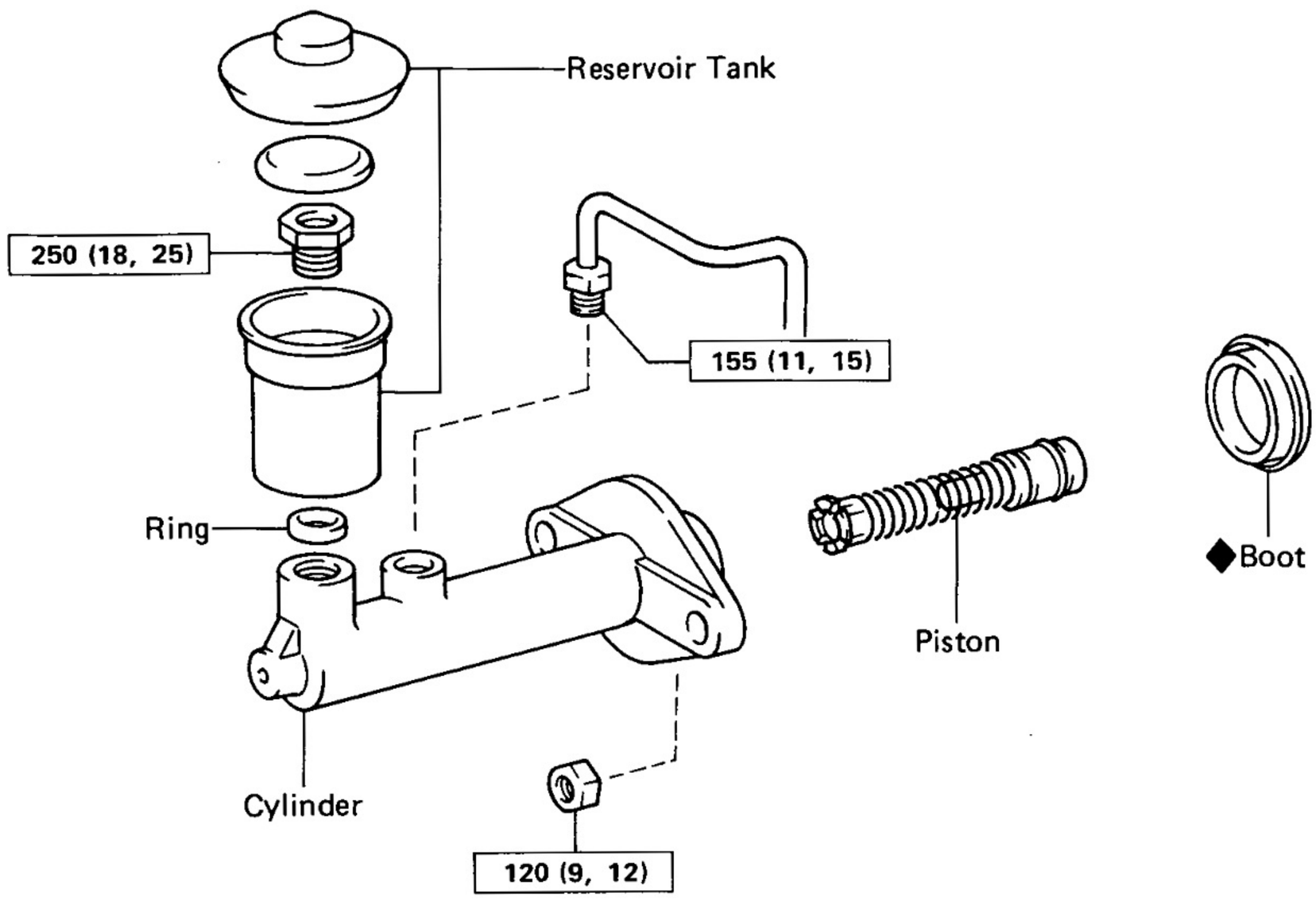

kg-cm (ft-lb, N·m) : Specified torque

◆ : Non-reusable part

D3859

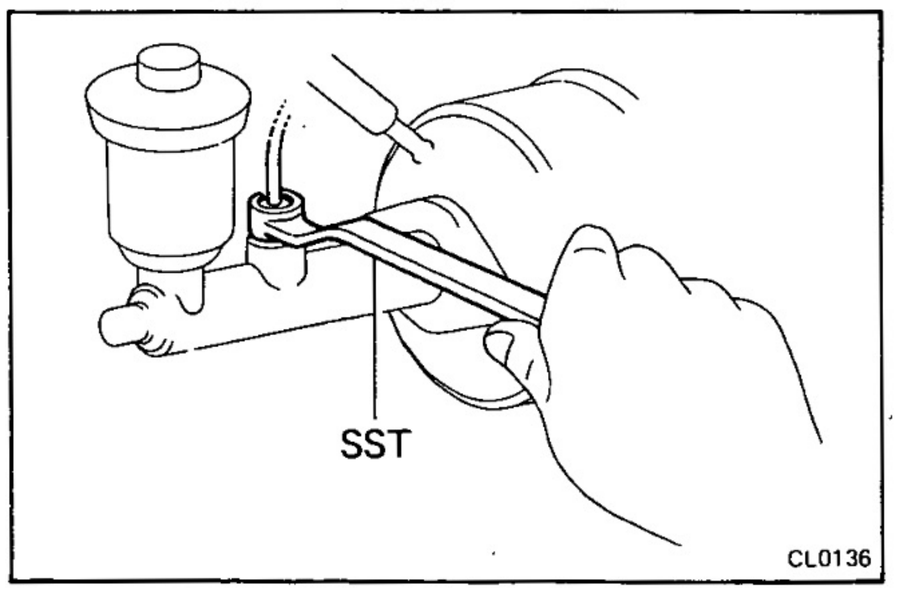

REMOVAL OF MASTER CYLINDER

1. DRAW OUT FLUID WITH SYRINGE

2. DISCONNECT CLUTCH LINE UNION

   Using SST, disconnect the union.

   SST 09751-36011

3. REMOVE MASTER CYLINDER

   Remove the two mounting nuts and pull off the master cylinder.

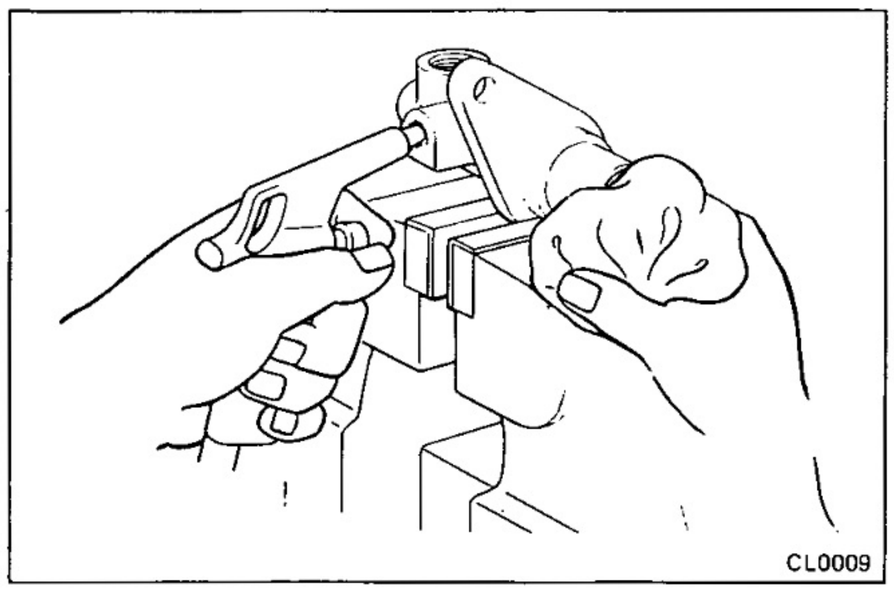

DISASSEMBLY OF MASTER CYLINDER

1. REMOVE PISTON

   Using compressed air, remove the piston from the cylinder.

2. REMOVE RESERVOIR TANK

INSPECTION OF MASTER CYLINDER

INSPECT MASTER CYLINDER

Inspect the disassembled parts for wear, rust or damage.

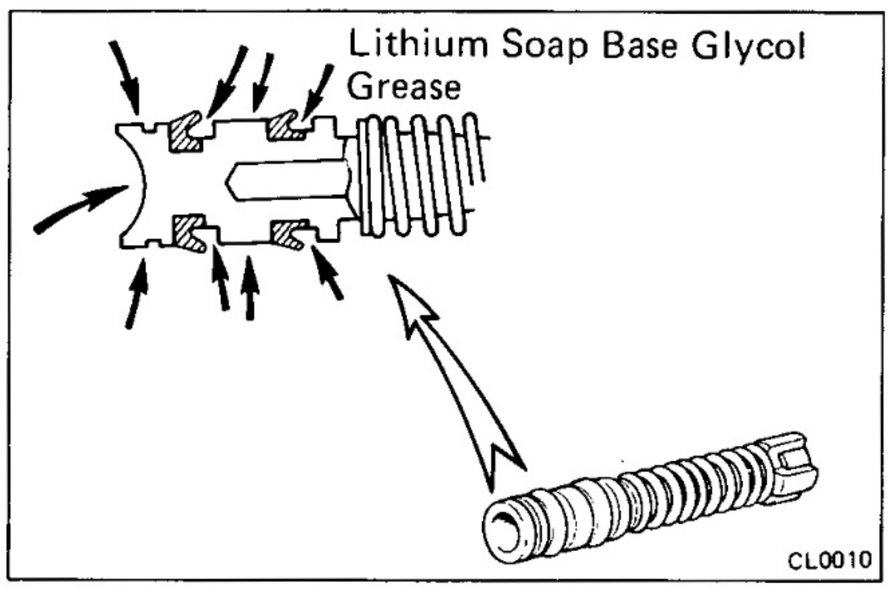

ASSEMBLY OF MASTER CYLINDER

(See page CL-7)

1. COAT PARTS WITH LITHIUM SOAP BASE GLYCOL GREASE

2. INSTALL PISTON INTO CYLINDER

3. INSTALL RESERVOIR TANK

   Torque: 250 kg-cm (18 ft-lb, 25 N·m)

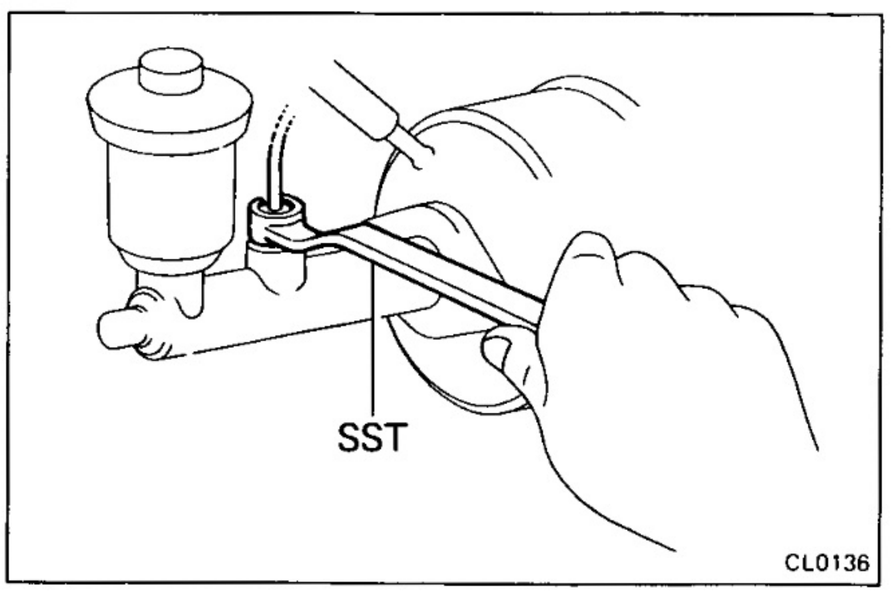

INSTALLATION OF MASTER CYLINDER

1. ADJUST LENGTH OF CLUTCH BOOSTER PUSH ROD
   (See step 1 on page CL-15)

2. INSTALL MASTER CYLINDER WITH MOUNTING NUTS

3. CONNECT CLUTCH LINE UNION

   Using SST, connect the union.

   SST 09751-36011

4. ADJUST CLUTCH PEDAL AND BLEED SYSTEM
   (See pages CL-3, 4)

CLUTCH BOOSTER

REMOVAL OF CLUTCH BOOSTER

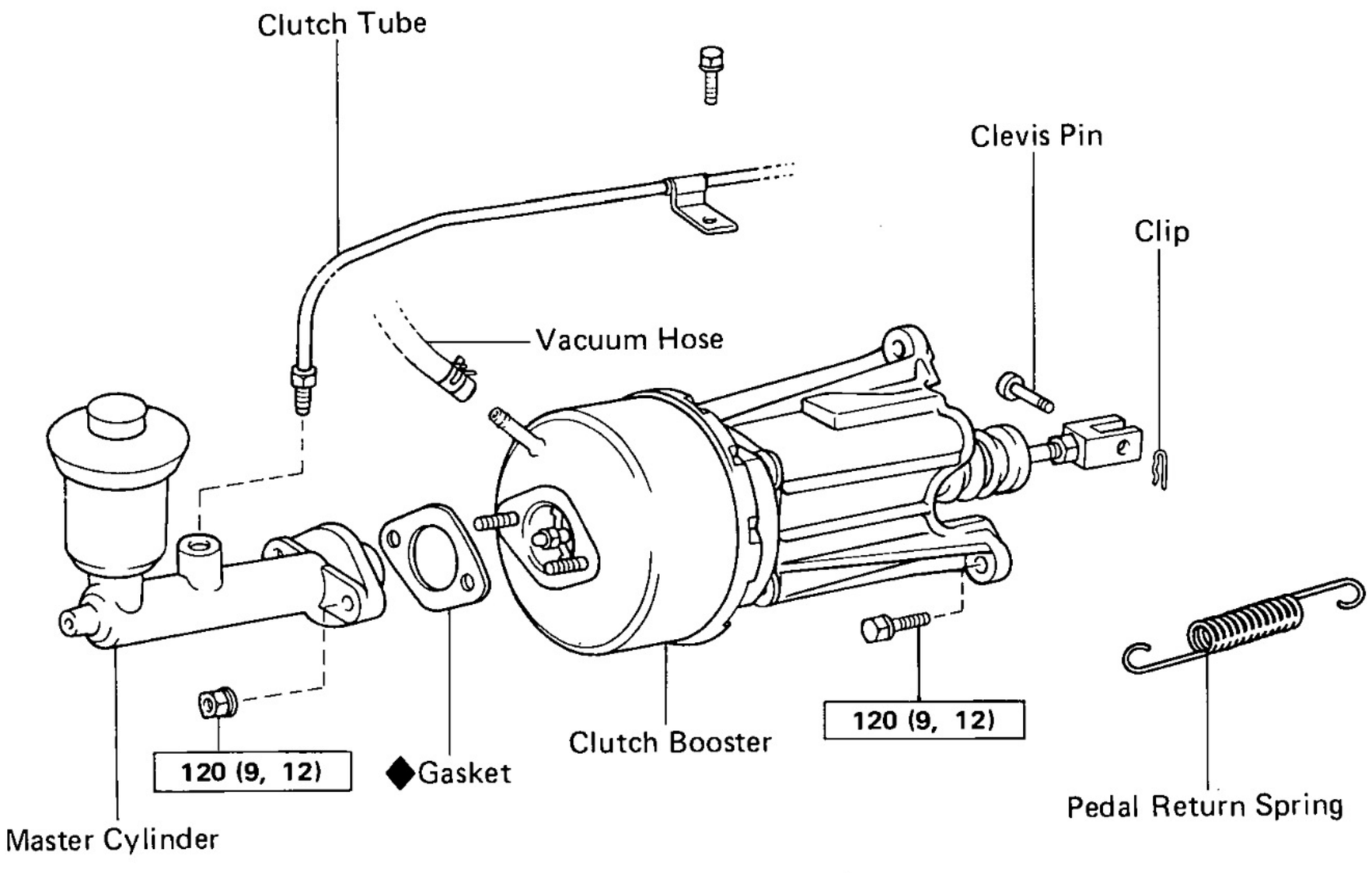

kg-cm (ft-lb, N·m) : Specified torque

◆ : Non-reusable part

CL0137

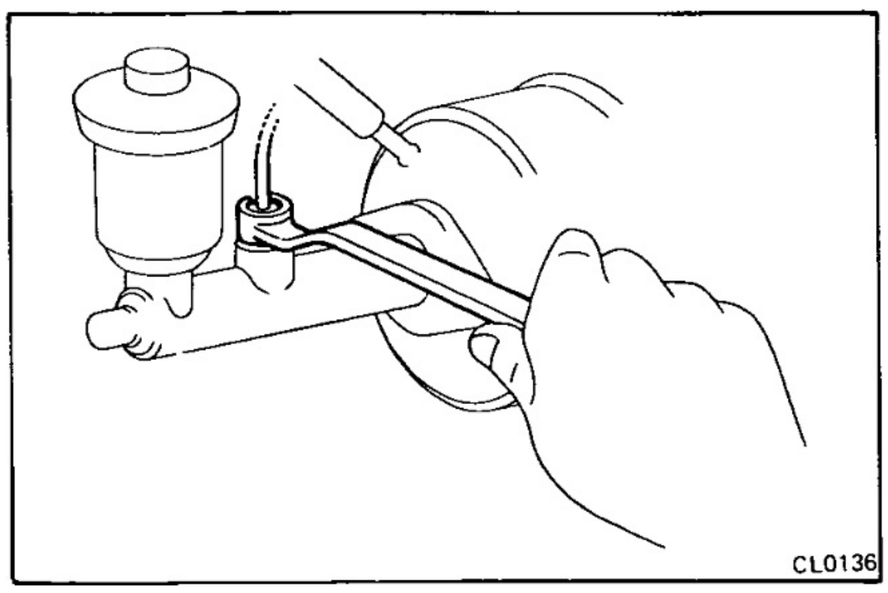

CL0136

1. REMOVE MASTER CYLINDER (See page CL-7)
2. DISCONNECT VACUUM HOSE FROM CLUTCH BOOSTER
3. REMOVE CLUTCH PIPE AND VACUUM PIPE CLAMP BOLTS

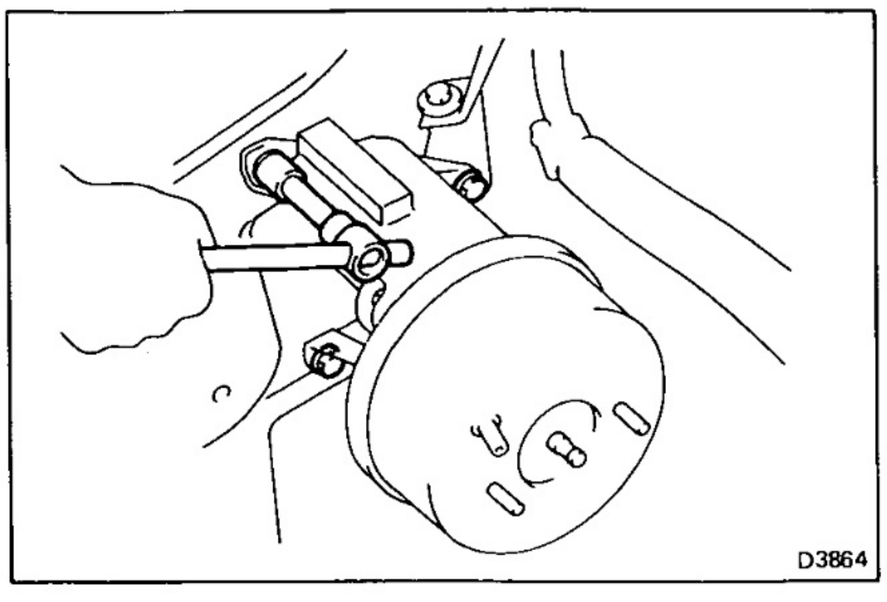

D3864

4. DISCONNECT CLEVIS FROM CLUTCH PEDAL

   Remove the clip and clevis pin.

5. REMOVE CLUTCH BOOSTER WITH BOOSTER CYLINDER BRACKET

   Remove the three bolts and pull off the clutch booster with bracket.

COMPONENTS

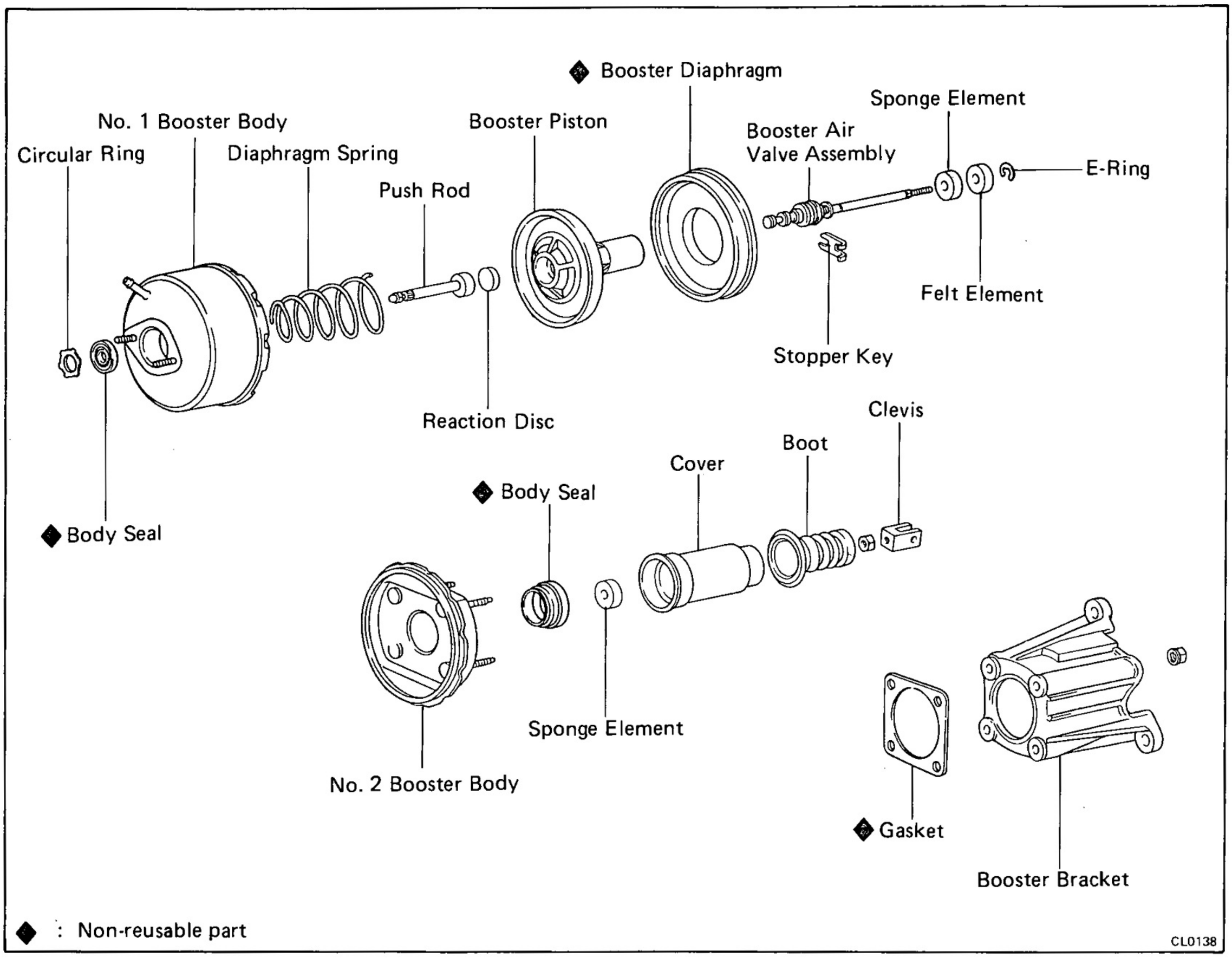

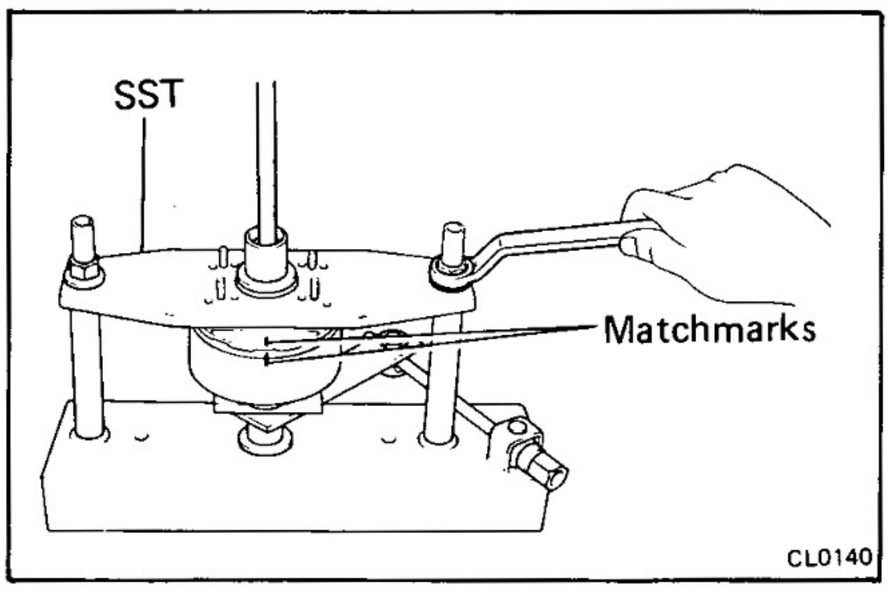

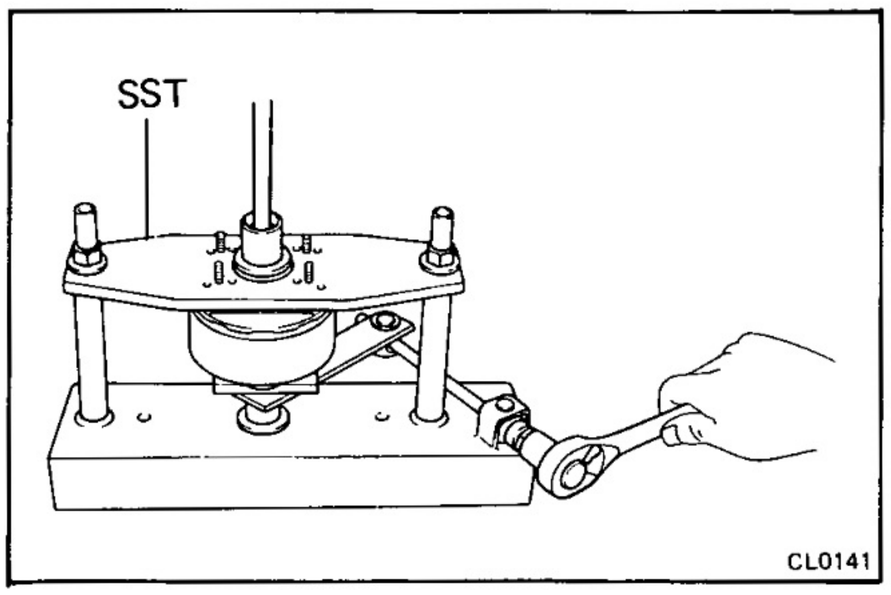

DISASSEMBLY OF CLUTCH BOOSTER

1. REMOVE CLEVIS

2. REMOVE PISTON COVER AND BOOT

(a) Remove the booster bracket.

(b) Remove the piston cover and boot.

(c) Remove the sponge element from the boot.

3. REMOVE SPONGE AND FELT ELEMENT

Using screwdriver, remove the E-ring and sponge and felt element.

4. SEPARATE NO.1 AND NO.2 BOOSTER BODIES

(a) Put matchmarks on the No.1 and No.2 booster bodies.

(b) Set the booster in SST.

SST 09753-00012

CAUTION: Be careful not to tighten the two nuts of the SST too tightly.

(c) Turn the No.1 booster body clockwise, until the No.1 and No.2 booster bodies separate.

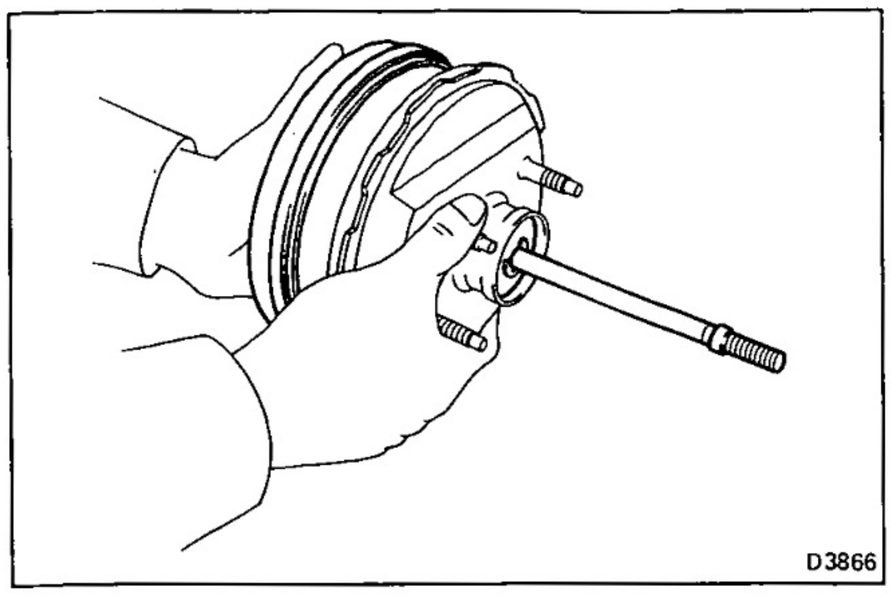

5. REMOVE BOOSTER PISTON ASSEMBLY FROM NO.2 BOOSTER BODY

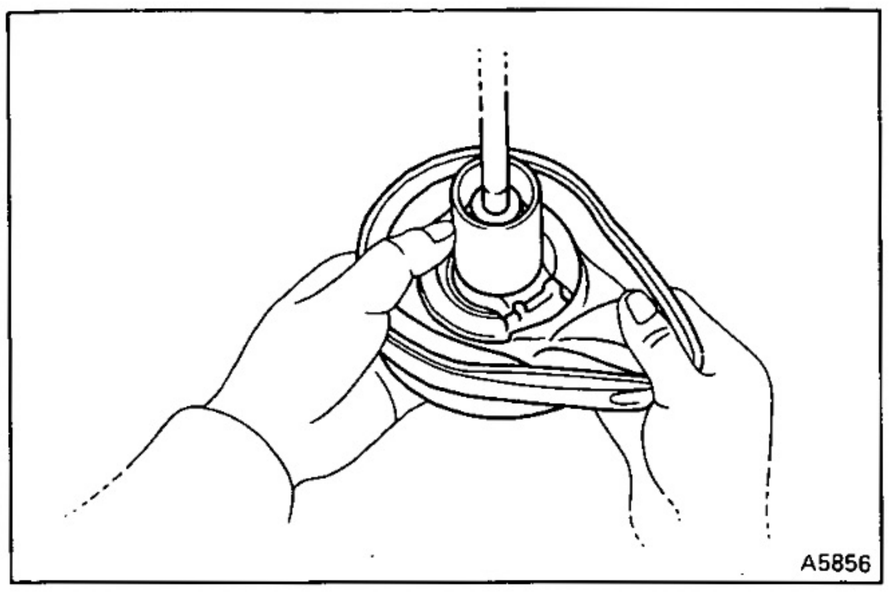

6. REMOVE BOOSTER DIAPHRAGM FROM BOOSTER PISTON

Pull off the diaphragm.

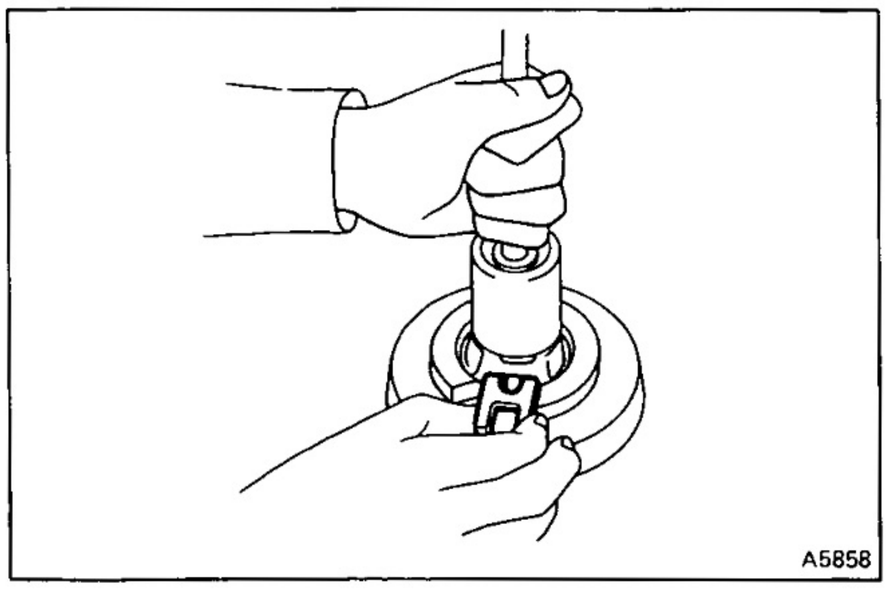

7. REMOVE BOOSTER AIR VALVE ASSEMBLY FROM BOOSTER PISTON

(a) Push down the booster air valve in the booster piston and remove the stopper key.

(b) Pull off the booster air valve assembly.

8. REMOVE REACTION DISC FROM BOOSTER PISTON

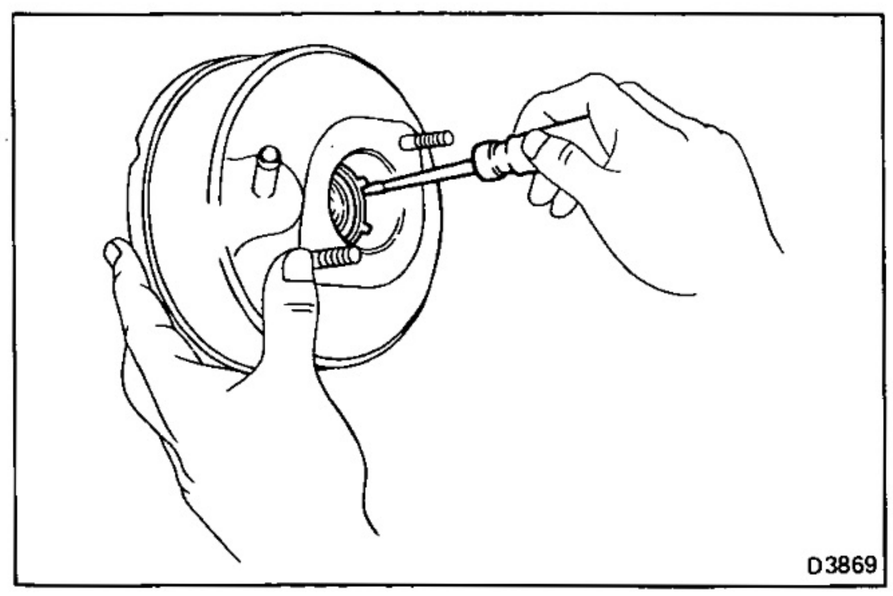

9. REMOVE BODY SEAL FROM NO.1 BOOSTER BODY

Using a screwdriver, pry out the circular ring and remove the body seal.

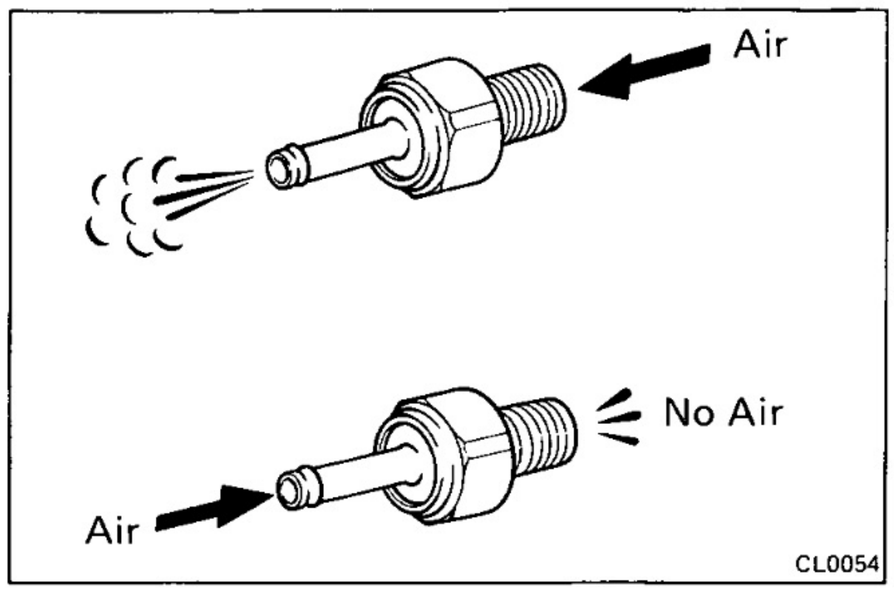

INSPECTION AND REPLACEMENT OF CLUTCH BOOSTER

1. INSPECT CHECK VALVE OPERATION

(a) Check that air flows from the vacuum tank side to the vacuum hose side.

(b) Check that air does not flow from the vacuum hose side to the vacuum tank side.

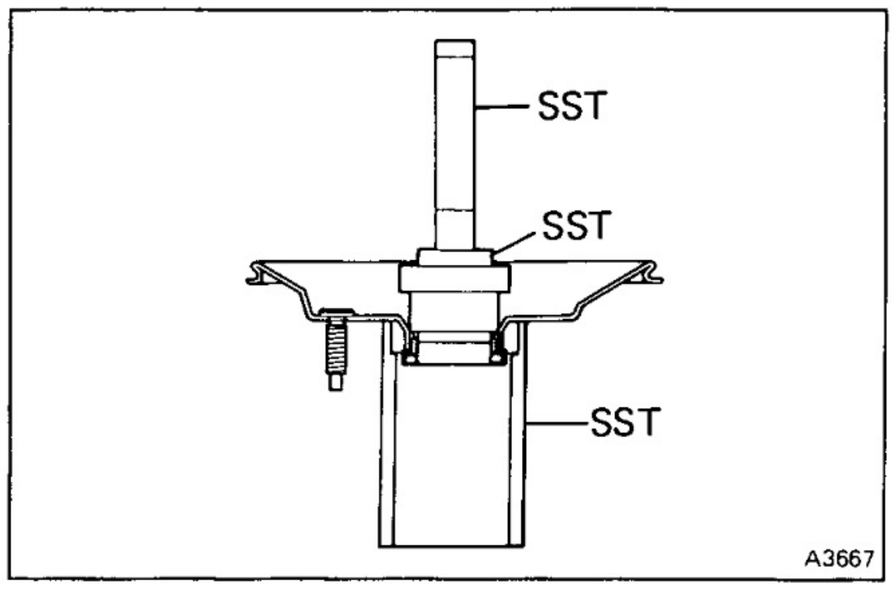

2. IF NECESSARY, REPLACE BODY SEAL FOR NO. 2 BOOSTER BODY

(a) Using SST, remove the body sealer.

SST 09630-00011, 09753-30020 and 09612-30012

NOTE: Support the No. 2 booster body using SST cylinder base only.

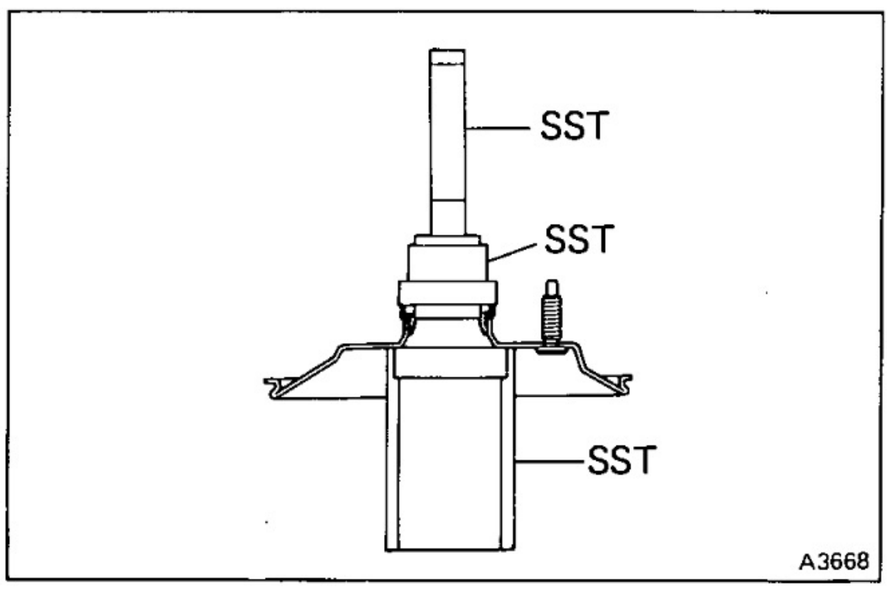

(b) Using SST, drive in the body sealer.

SST 09630-00011, 09753-30020 and 09612-30012

NOTE: Support the No. 2 booster body using SST cylinder base only.

ASSEMBLY OF CLUTCH BOOSTER

(See page CL-9)

1. APPLY SILICONE GREASE TO PARTS SHOWN BELOW

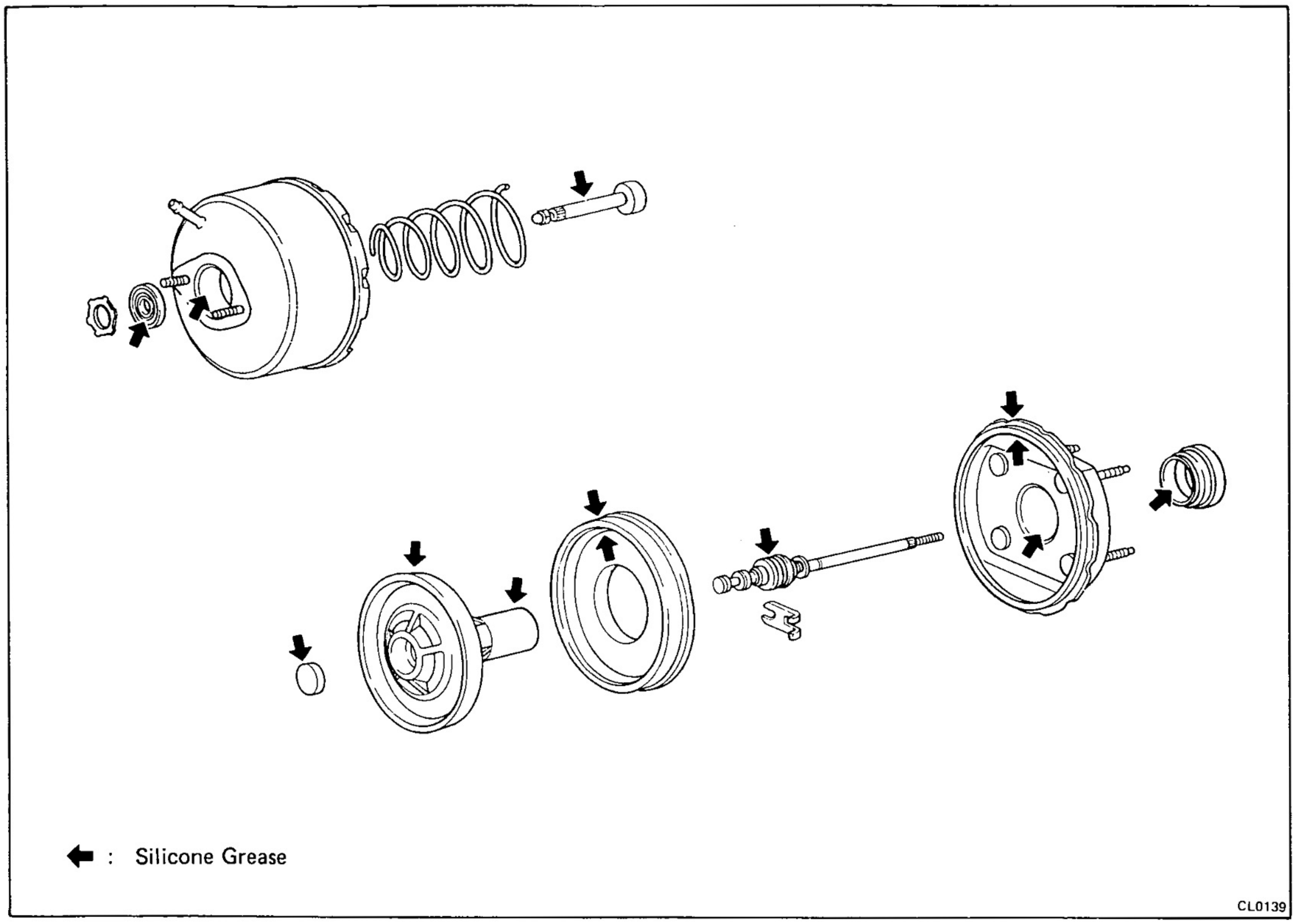

⬅ : Silicone Grease

CL0139

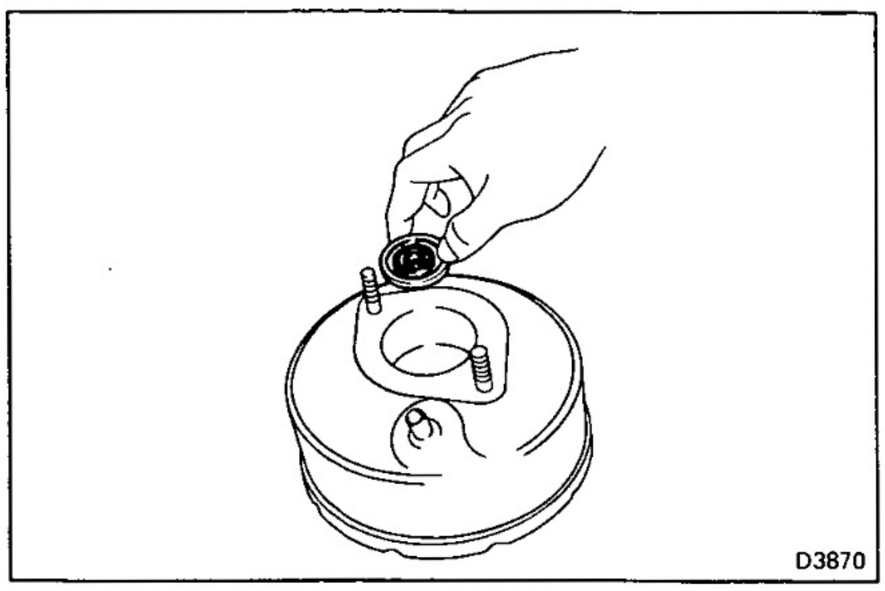

D3870

2. INSTALL BODY SEAL TO NO.1 BOOSTER BODY

(a) Place the body seal in position.

(b) Secure the body seal with the circular ring.

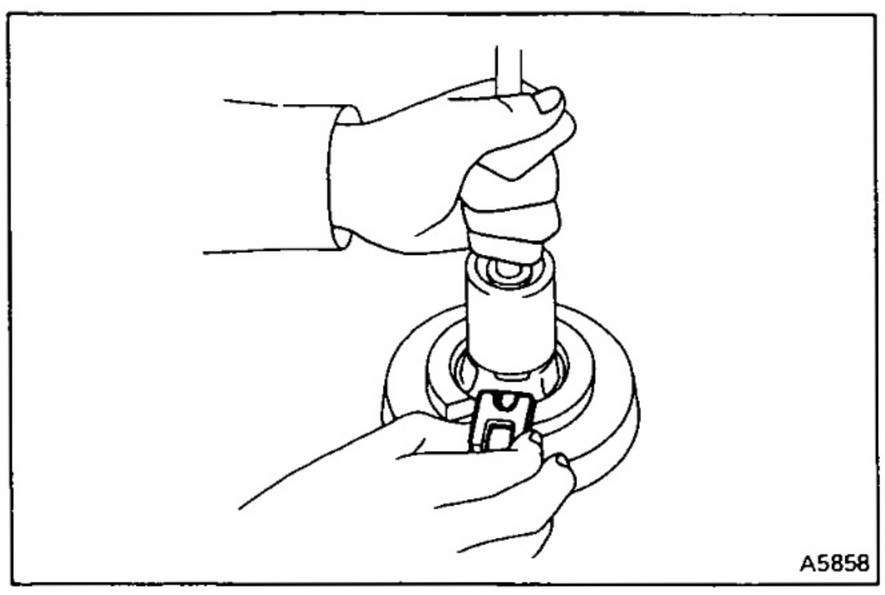

A5858

3. INSTALL BOOSTER AIR VALVE ASSEMBLY TO BOOSTER PISTON

(a) Insert the booster air valve in the booster piston.

(b) Push the booster air valve in the booster piston and install the stopper key.

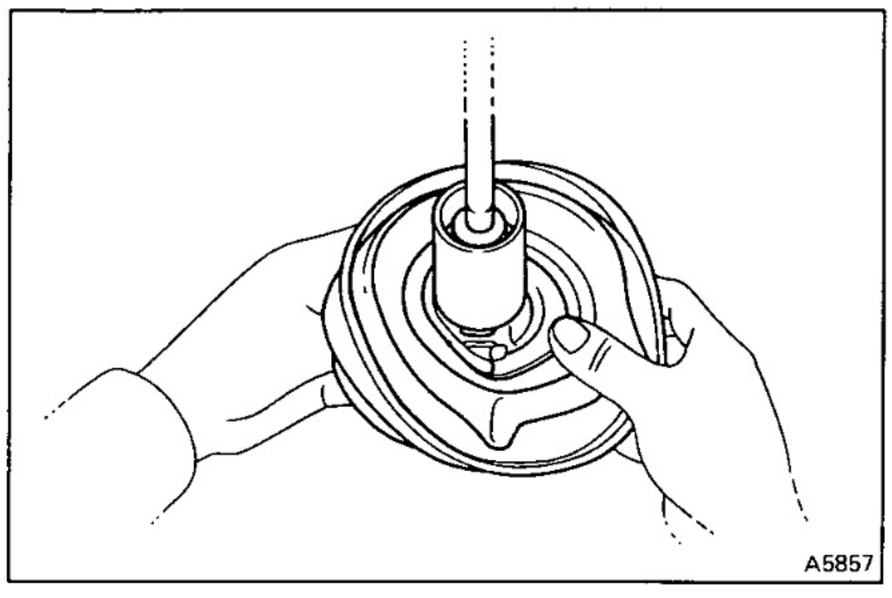

4. INSTALL DIAPHRAGM TO BOOSTER PISTON

Push in the head of the diaphragm.

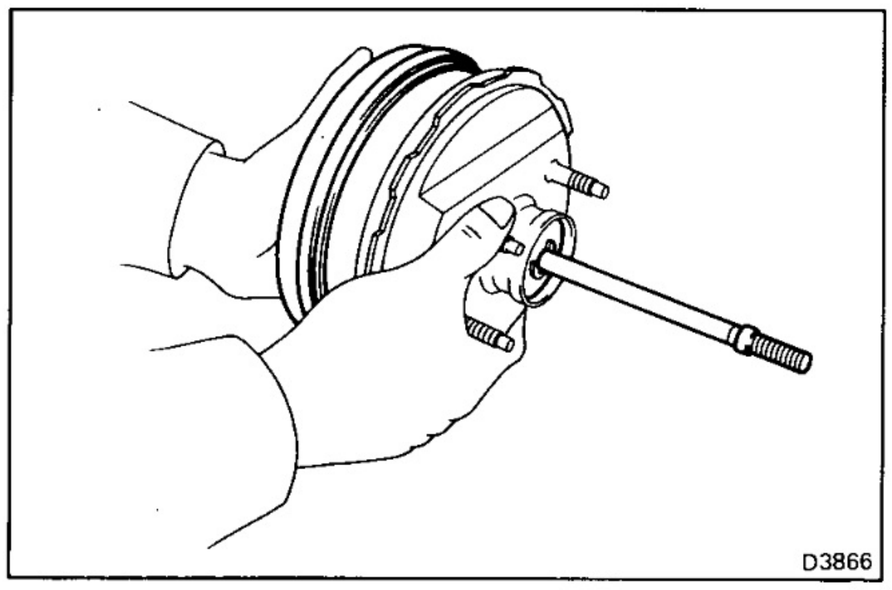

5. INSTALL BOOSTER PISTON ASSEMBLY TO NO. 2 BOOSTER BODY

6. INSTALL REACTION DISC TO BOOSTER PISTON

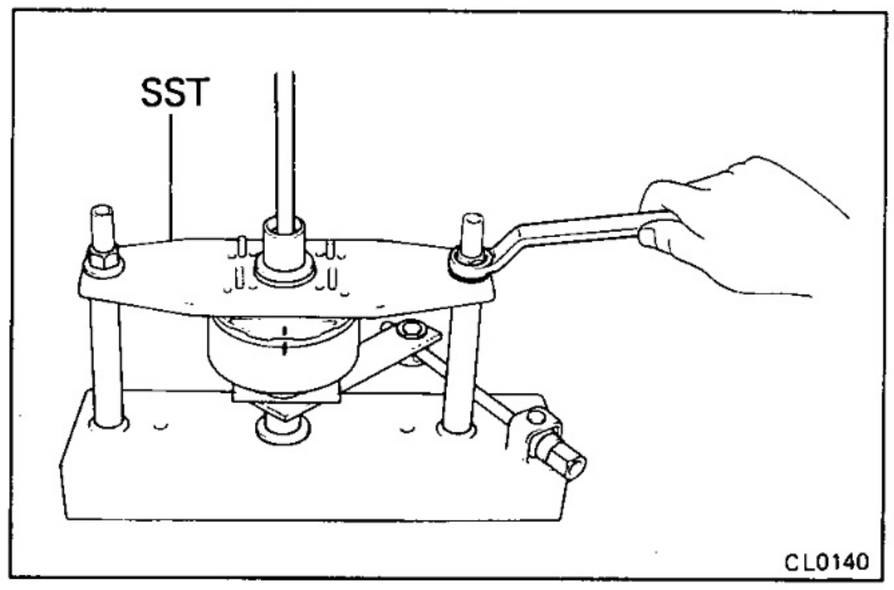

7. ASSEMBLE NO. 1 AND NO. 2 BOOSTER BODIES

(a) Place the No. 1 booster body on SST.

SST 09753-00012

(b) Place the push rod, diaphragm spring and No. 2 booster body in the No. 1 booster body.

(c) Compress the diaphragm spring between the No. 1 and No. 2 booster bodies.

CAUTION: Be careful not to tighten the two nuts of the SST too tightly.

(d) Turn the No. 1 booster body counterclockwise, until the matchmarks match.

NOTE: If the No. 1 booster body is too tight to be turned, apply more silicone grease on the diaphragm edge that contacts the No. 1 and No. 2 booster bodies.

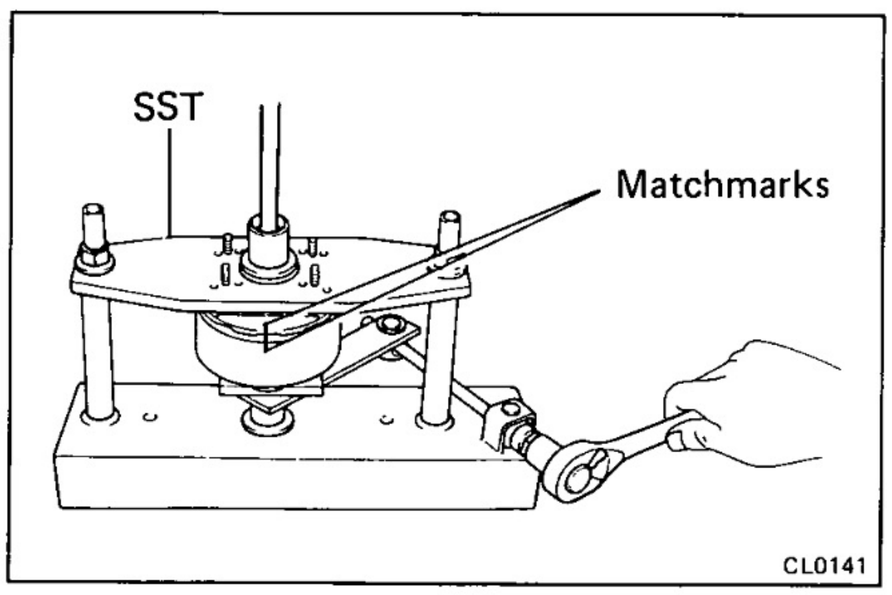

8. INSTALL SPONGE AND FELT ELEMENT

(a) Install the sponge and felt elements into the booster.

(b) Install E-ring onto the booster air valve assembly.

9. INSTALL PISTON COVER WITH BOOT

(a) Install the sponge element into the boot.

(b) Install the boot to the piston cover.

(c) Install a new gasket onto the booster and the piston cover with the boot.

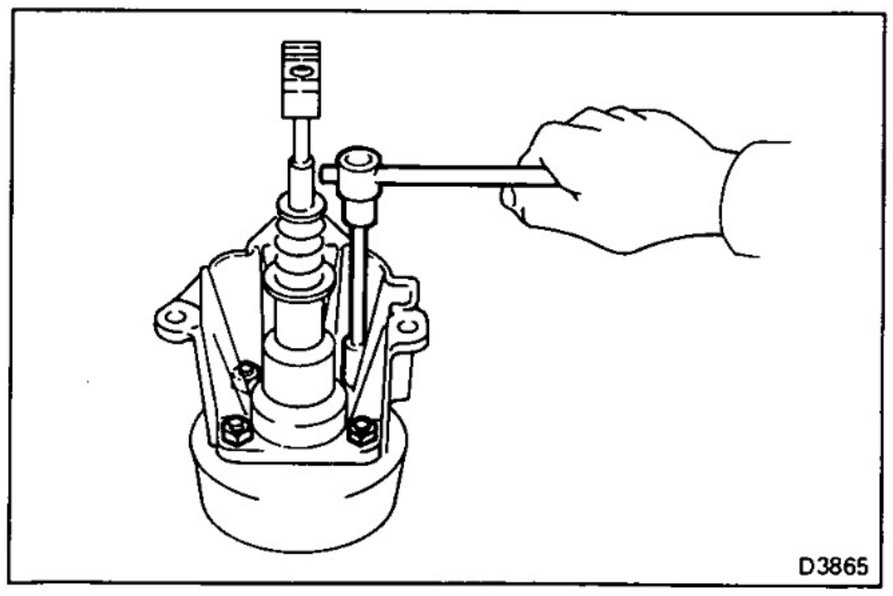

10. INSTALL BOOSTER TO BOOSTER BRACKET WITH FOUR NUTS

11. INSTALL CLEVIS

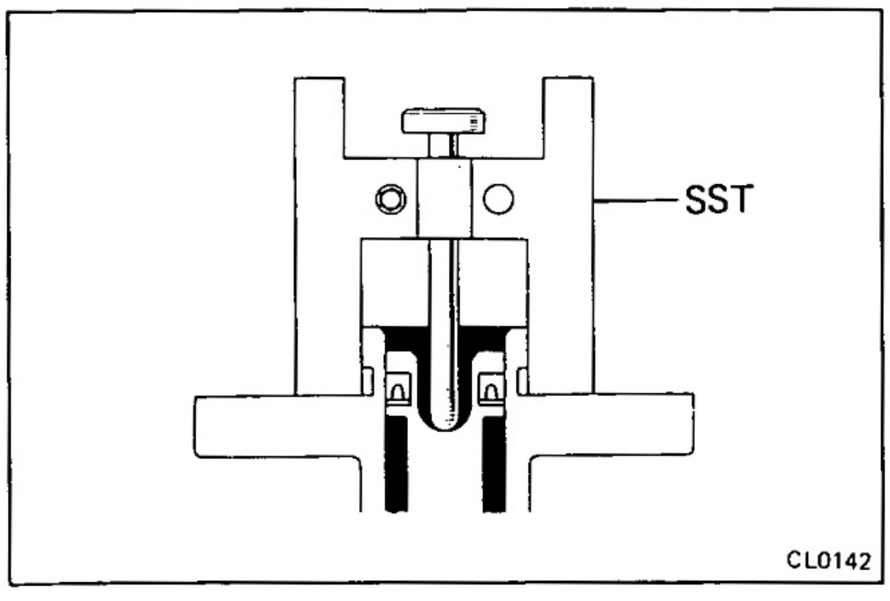

INSTALLATION OF CLUTCH BOOSTER

(See page CL-10)

1. ADJUST LENGTH OF BOOSTER PUSH ROD

(a) Set SST on the master cylinder, and lower the pin until its tip slightly touches the piston.

SST 09737-00010

NOTE: Always adjust the piston after pressing it with a screwdriver and allowing it to return slowly.

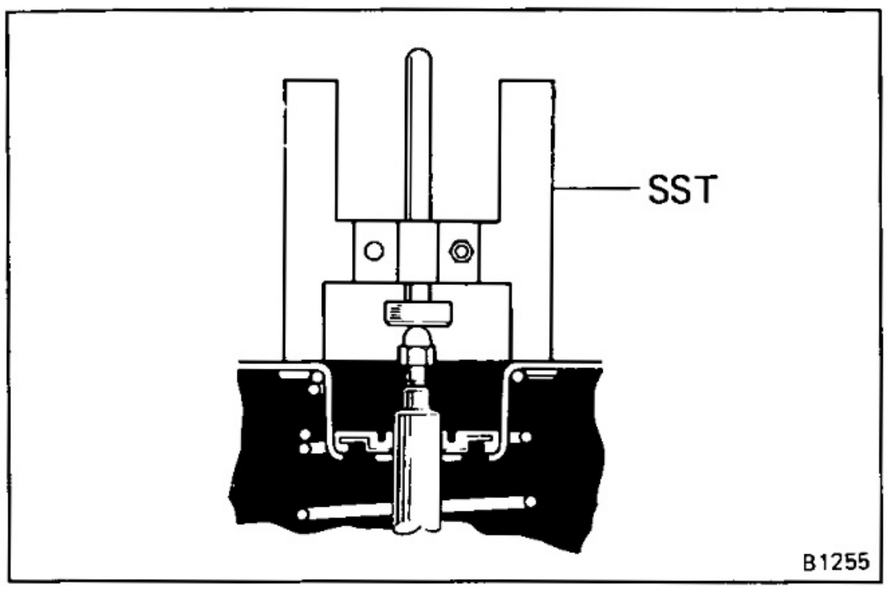

(b) Turn SST upside down, and set it on the booster.

SST 09737-00010

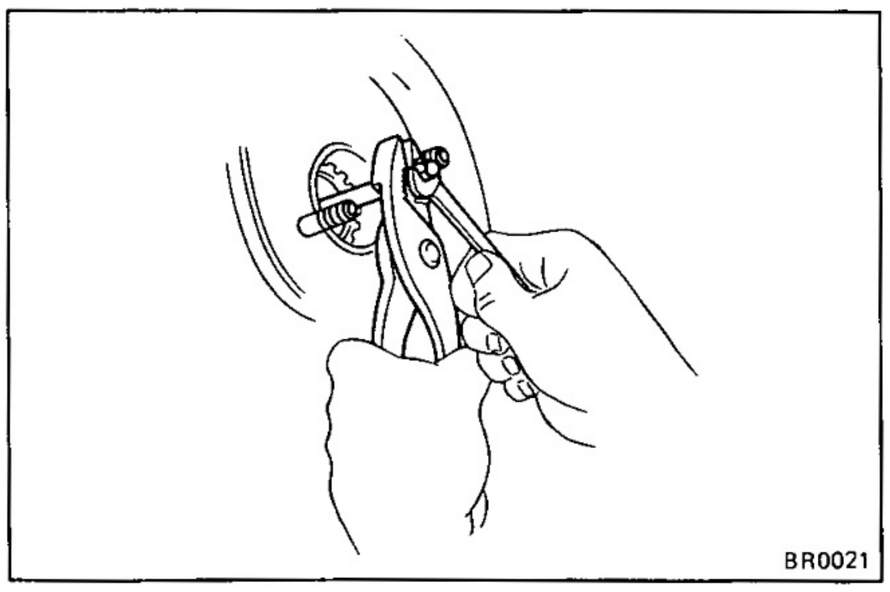

(c) Adjust the booster push rod length until the push rod lightly touches the pin head.

Clearance: 0 mm (0 in.)

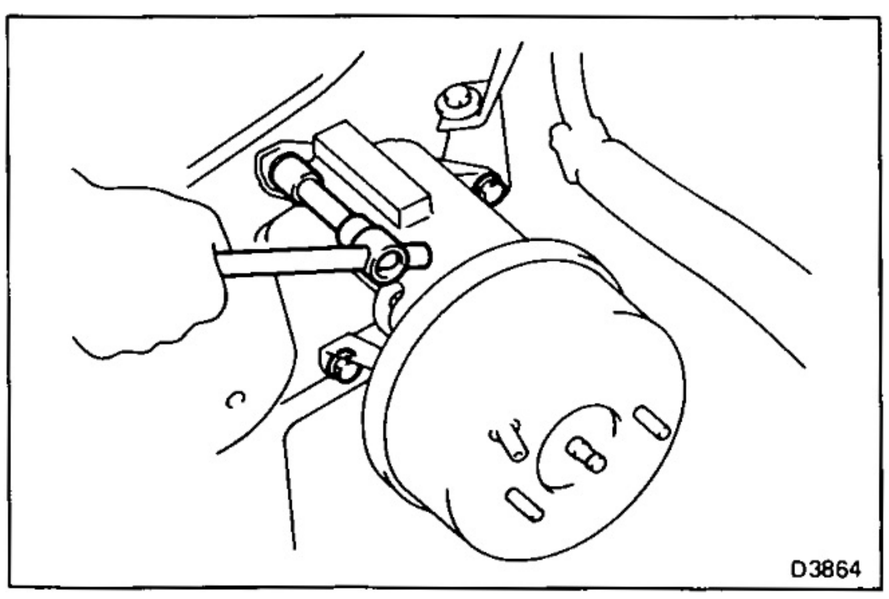

2. INSTALL CLUTCH BOOSTER WITH MASTER CYLINDER BRACKET TO BODY

3. CONNECT CLEVIS TO CLUTCH PEDAL

Connect the clevis to the clutch pedal with the clevis pin and clip.

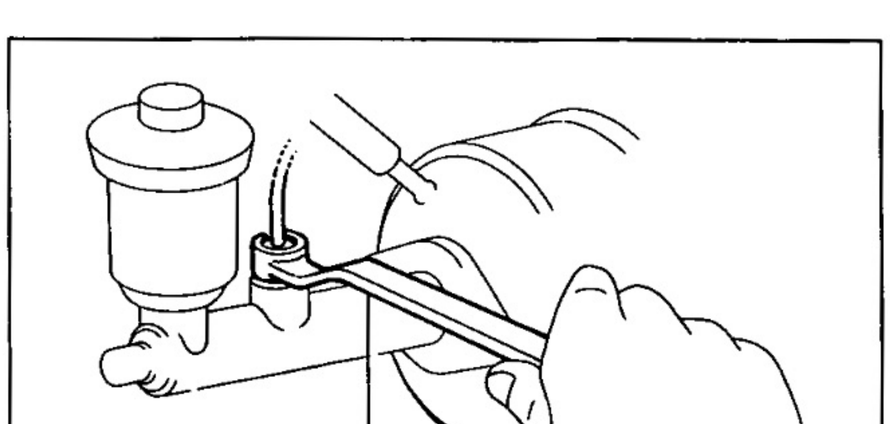

4. INSTALL MASTER CYLINDER TO CLUTCH BOOSTER

(See page CL-8)

Torque: 120 kg-cm (9 ft-lb, 12 N·m)

5. CONNECT CLUTCH LINE UNION

Using SST, connect the union.

SST 09751-36011

6. CONNECT VACUUM HOSE TO CLUTCH BOOSTER

7. ADJUST CLUTCH PEDAL AND BLEED SYSTEM

(See pages CL-3, 4)

CLUTCH RELEASE CYLINDER

COMPONENTS

60 series

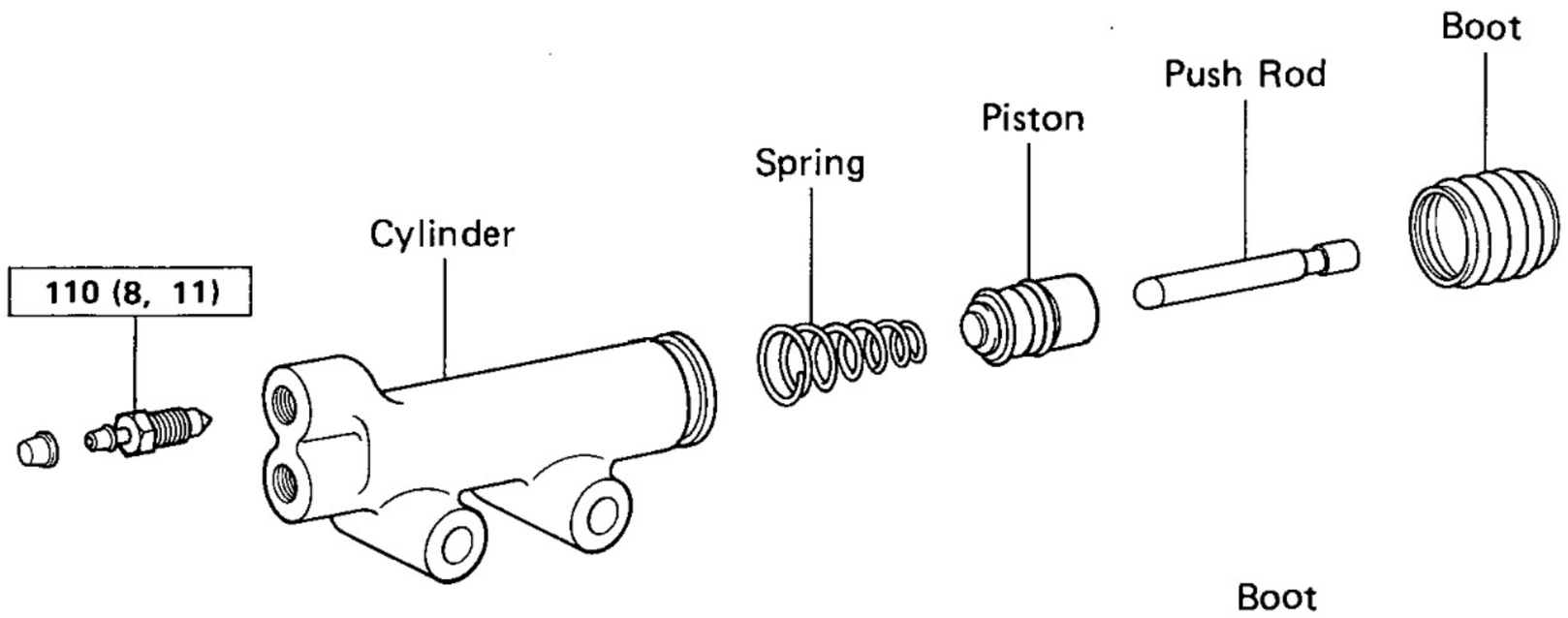

70 series

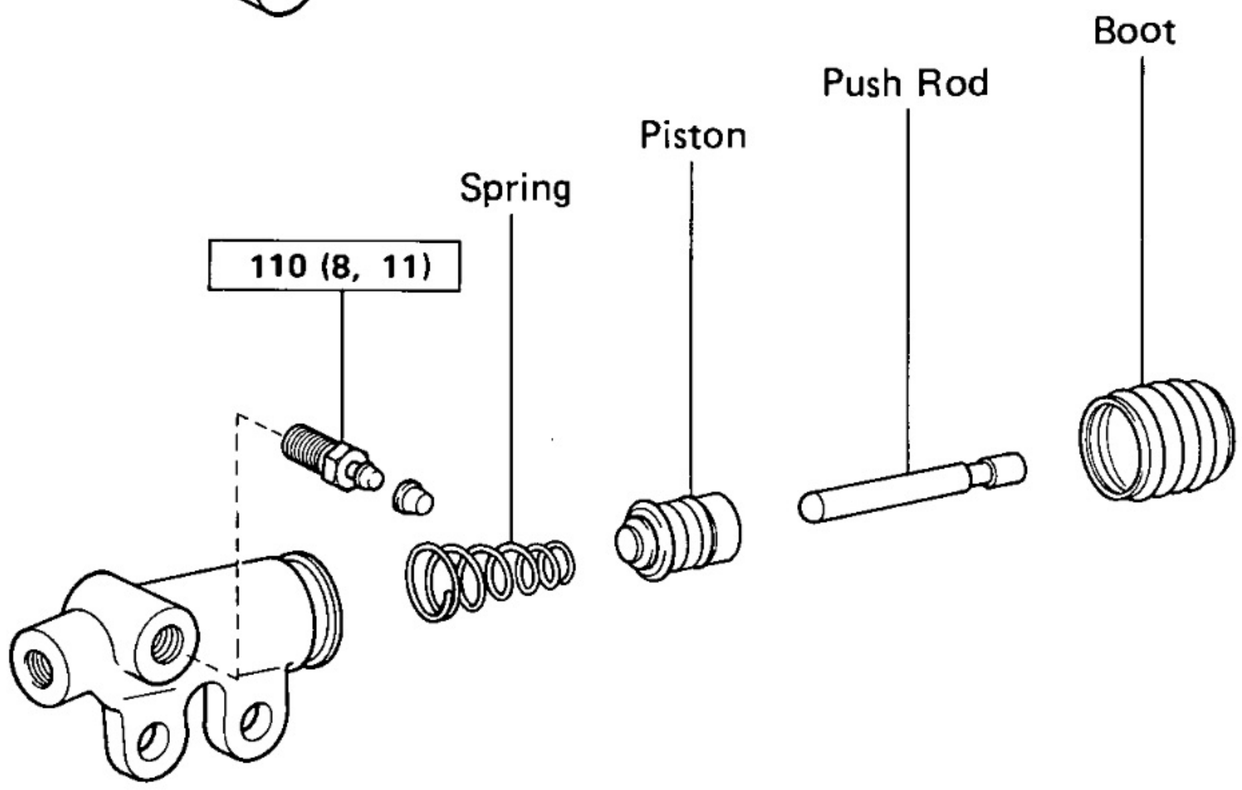

kg-cm (ft-lb, N·m) : Specified torque

CL0150
CL0151

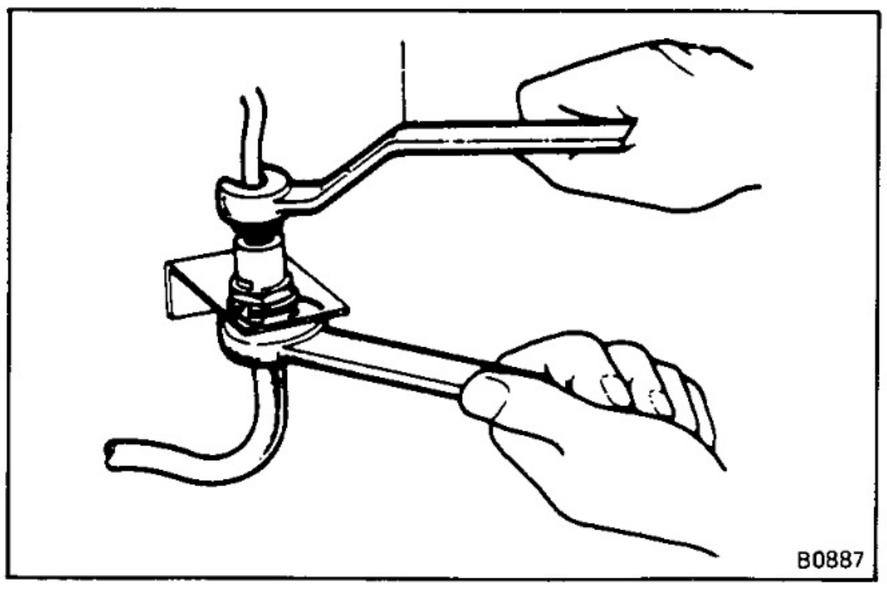

REMOVAL OF RELEASE CYLINDER

1. REMOVE FLEXIBLE HOSE

   (a) Using SST, disconnect the union.

   SST 09751-36011

   (b) Remove the clip from flexible hose.

   (c) Loosen and remove the flexible hose from the release cylinder.

2. REMOVE RELEASE CYLINDER

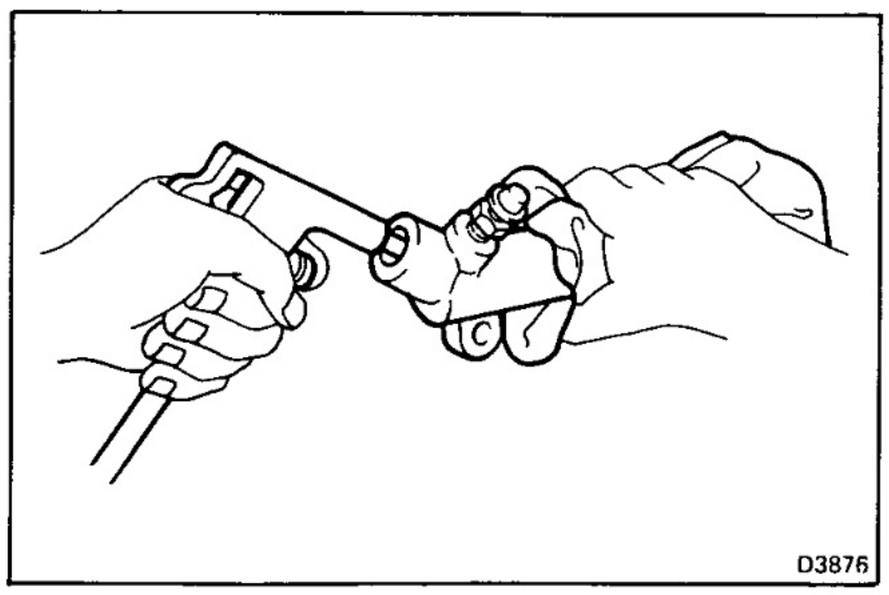

DISASSEMBLY OF RELEASE CYLINDER

1. PULL OFF PUSH ROD
2. REMOVE BOOT
3. REMOVE PISTON

   Using compressed air, remove the piston from the cylinder.

INSPECTION OF RELEASE CYLINDER

INSPECT RELEASE CYLINDER

Inspect the disassembled parts for wear, rust or damage.

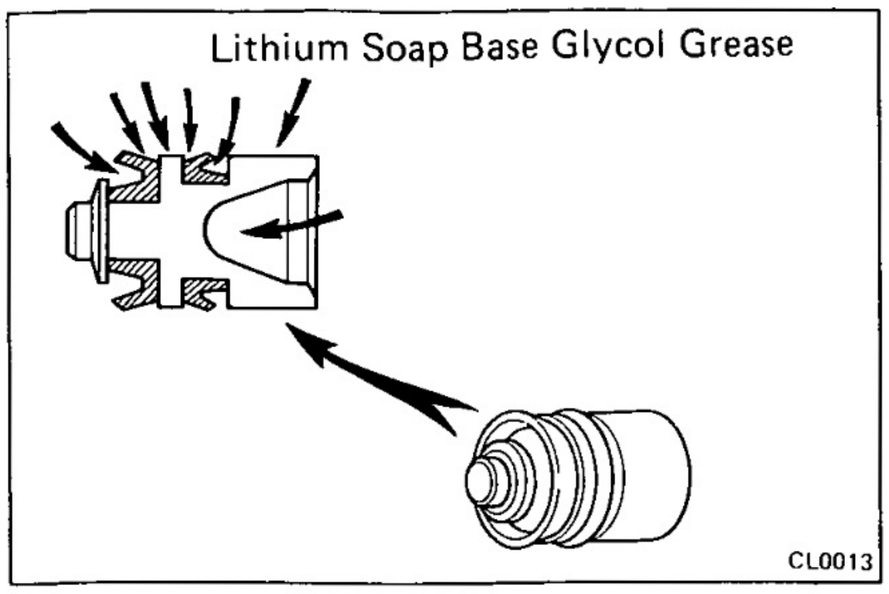

ASSEMBLY OF RELEASE CYLINDER

(See page CL-16)

1. COAT PISTON WITH LITHIUM SOAP BASE GLYCOL GREASE, AS SHOWN
2. INSTALL PISTON
3. INSTALL BOOT AND INSERT PUSH ROD

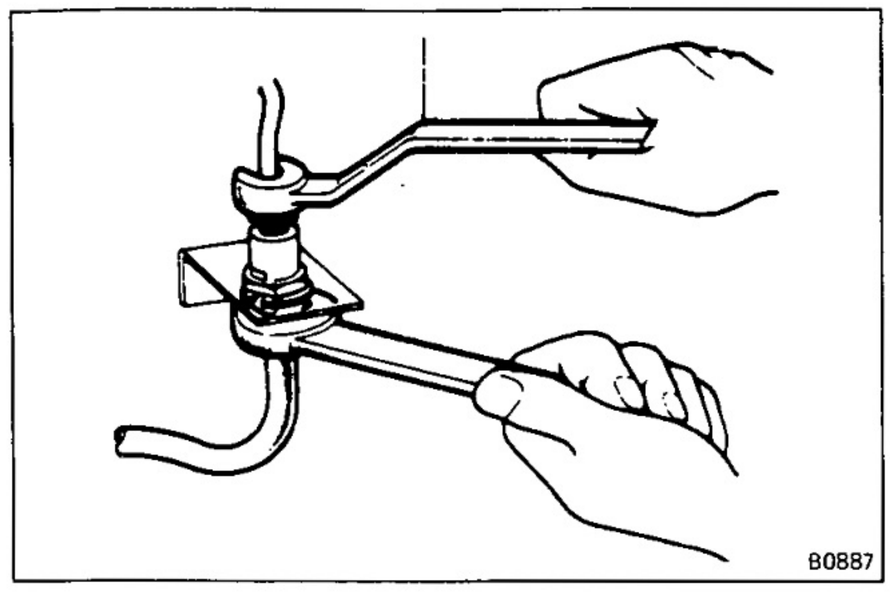

INSTALLATION OF RELEASE CYLINDER

(See page CL-16)

1. INSTALL RELEASE CYLINDER WITH TWO BOLTS

   Torque: 120 kg-cm (9 ft-lb, 12 N·m)

2. INSTALL FLEXIBLE HOSE

   (a) Install the flexible hose to the release cylinder.

   Torque: 155 kg-cm (11 ft-lb, 15 N·m)

   (b) Using SST, connect the union.

   SST 09751-36011

   (c) Install the clip.

3. BLEED CLUTCH SYSTEM

   (See page CL-4)

CLUTCH UNIT

COMPONENTS

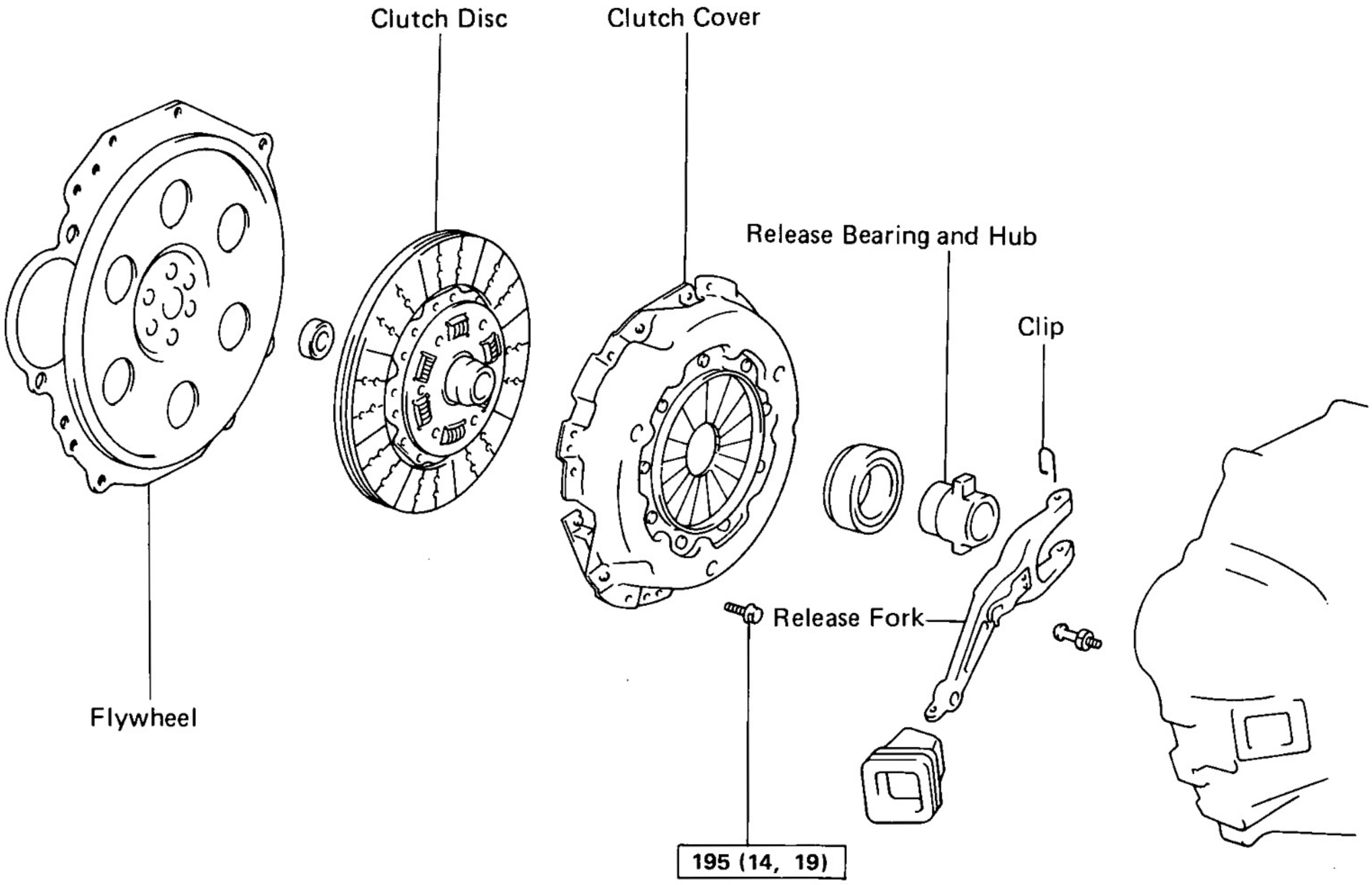

kg-cm (ft-lb, N·m) : Specified torque

D2238

REMOVAL OF CLUTCH UNIT

1. REMOVE TRANSMISSION
   (See page MT-3)

   NOTE: Do not drain the transmission oil.

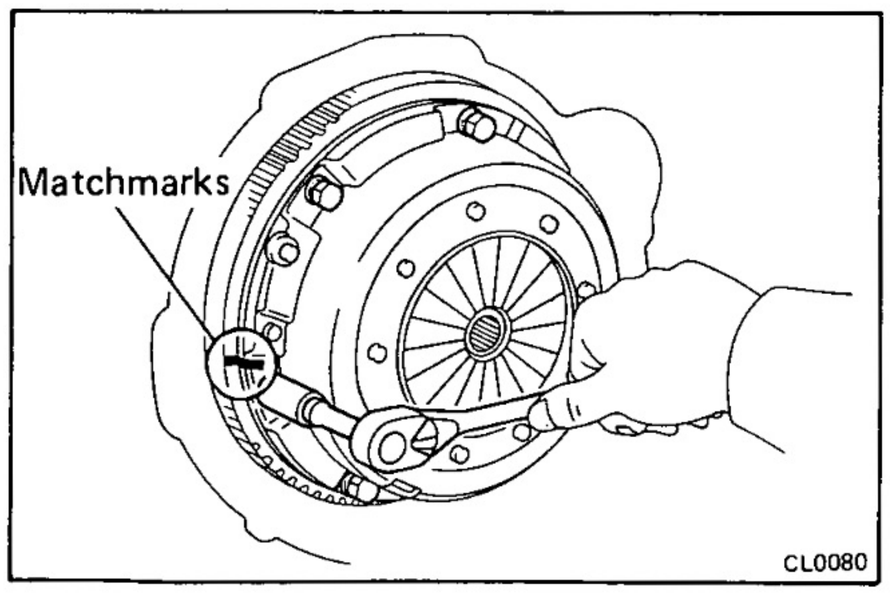

2. REMOVE CLUTCH COVER AND DISC

   (a) Place matchmarks on the clutch cover and flywheel.

   (b) Loosen the set bolts one turn at a time until the spring tension is released.

   (c) Remove the set bolts and pull off the clutch cover and disc.

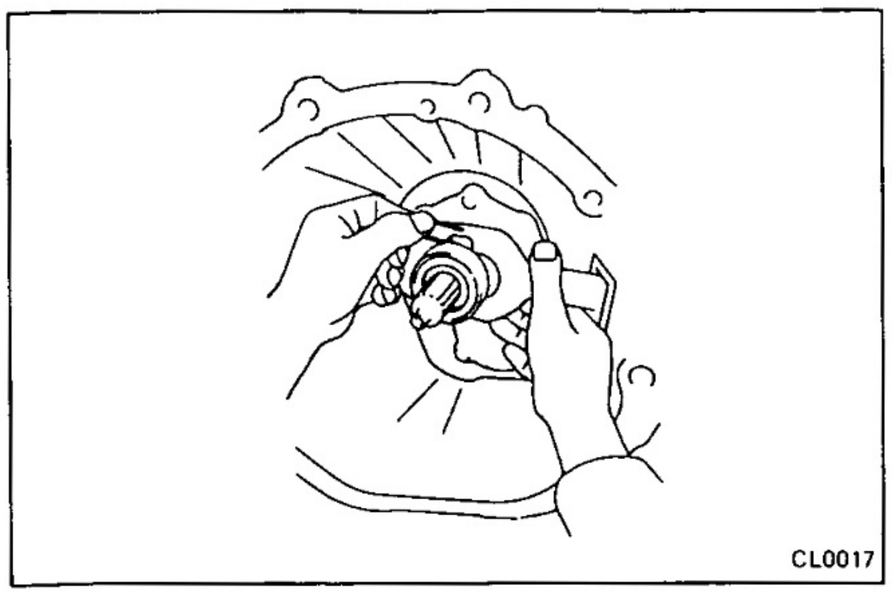

3. **REMOVE BEARING, HUB AND FORK FROM TRANSMISSION**

(a) Remove the retaining clip and pull off the bearing with hub.

(b) Remove the fork and boot.

INSPECTION OF CLUTCH PARTS

1. **INSPECT CLUTCH DISC FOR WEAR OR DAMAGE**

Using calipers, measure the rivet head depth.

Minimum rivet depth: 0.3 mm (0.012 in.)

If a problem is found, replace the clutch disc.

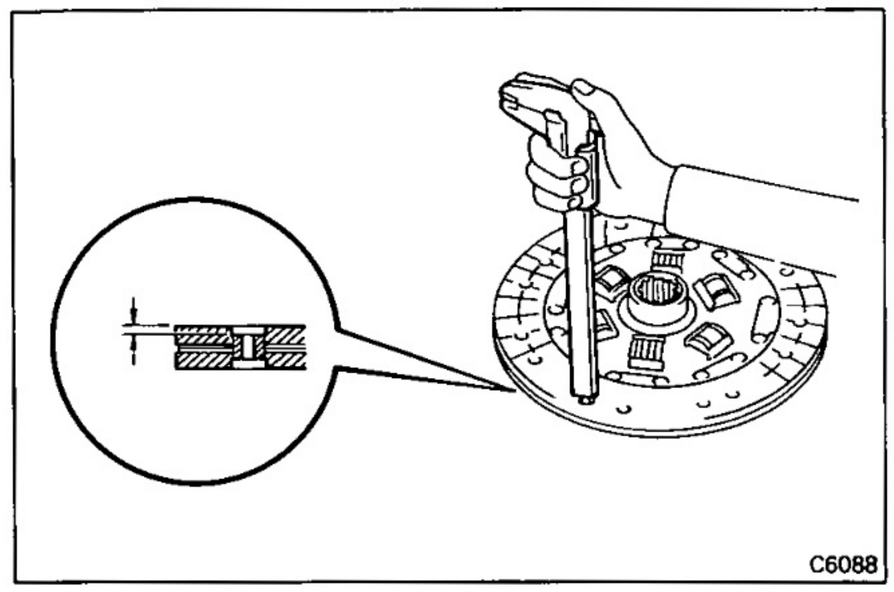

2. **INSPECT CLUTCH DISC RUNOUT**

Using a dial indicator, check the disc runout.

Maximum runout: 0.8 mm (0.031 in.)

If runout is excessive, replace the disc.

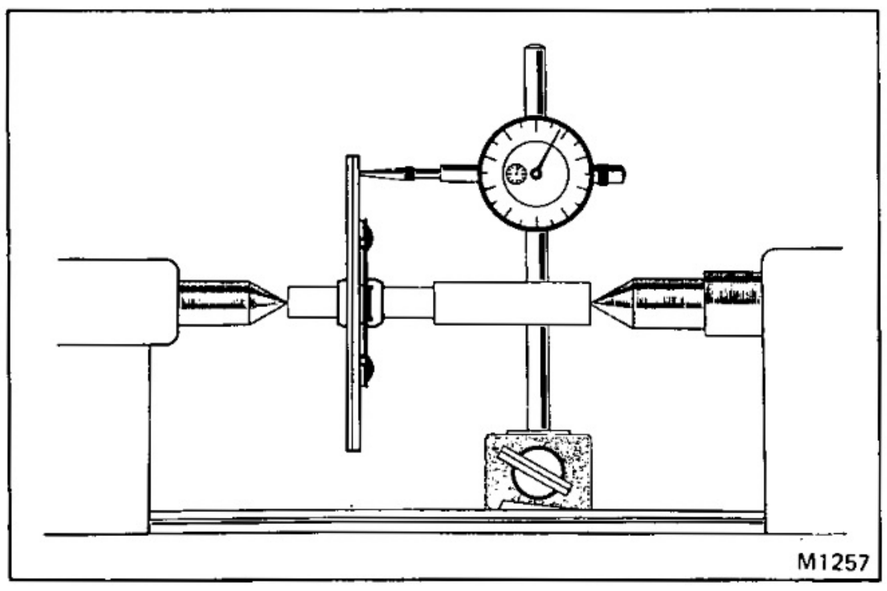

3. **INSPECT FLYWHEEL RUNOUT**

Using a dial indicator, check the flywheel runout.

Maximum runout: 0.2 mm (0.008 in.)

If runout is excessive, repair or replace the flywheel.

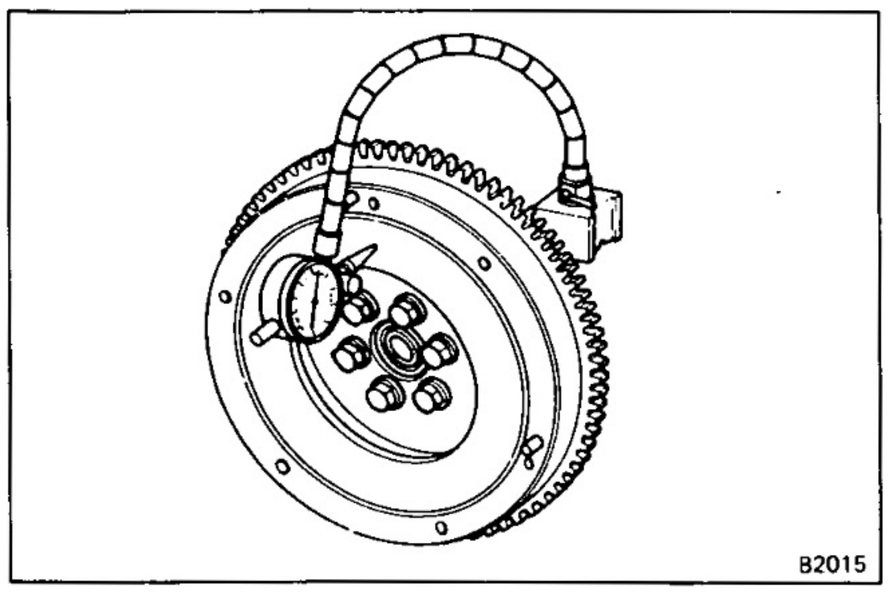

4. **INSPECT PILOT BEARING**

Turn the bearing by hand while applying force in the axial direction.

If the bearing sticks or has much resistance, replace the pilot bearing.

NOTE: The bearing is permanently lubricated and requires no cleaning or lubrication.

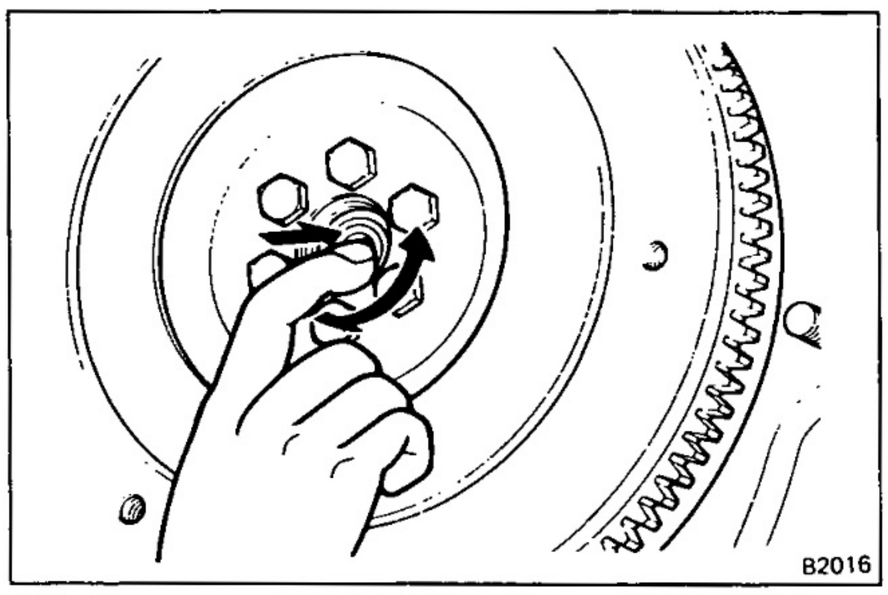

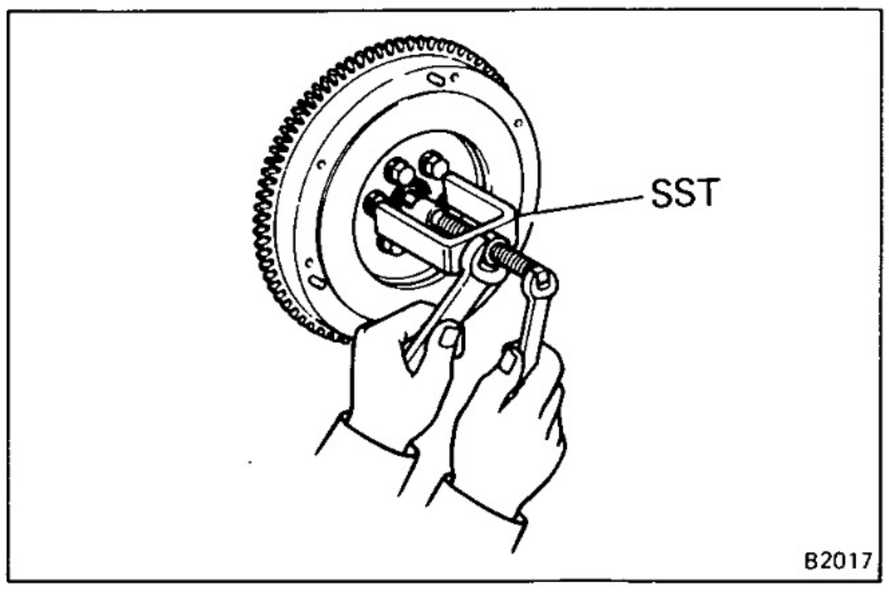

5. **IF NECESSARY, REPLACE PILOT BEARING**

(a) Using SST, remove the pilot bearing.

SST 09303-35011

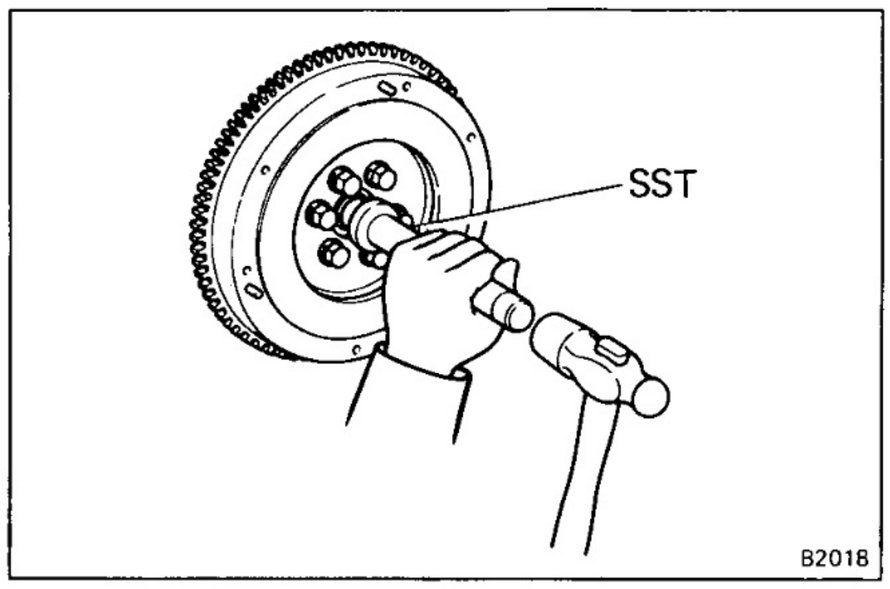

(b) Using SST, install the pilot bearing.

SST 09304-30012

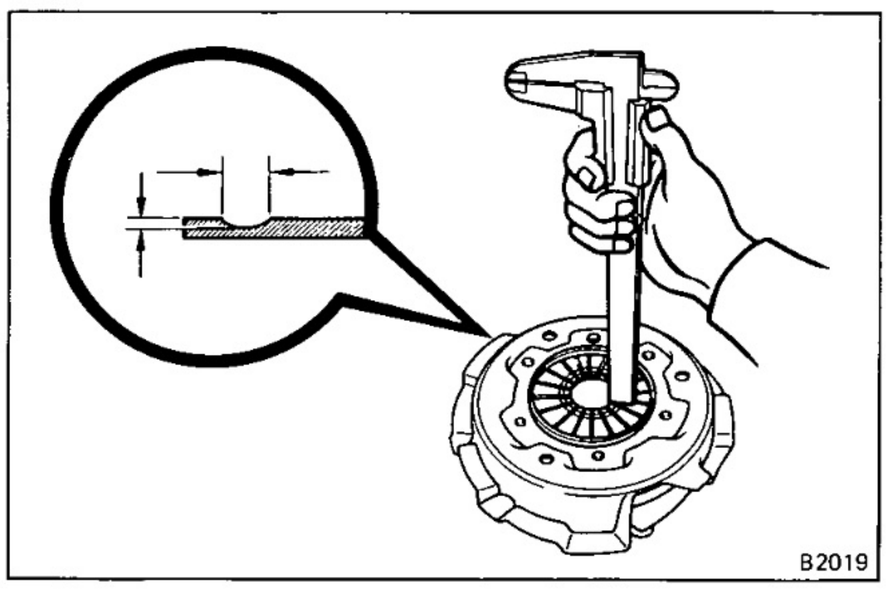

6. **INSPECT DIAPHRAGM SPRING FOR WEAR**

Using calipers, measure the diaphragm spring for depth and width of wear.

Limit: Depth 0.6 mm (0.024 in.)
Width 5.0 mm (0.197 in.)

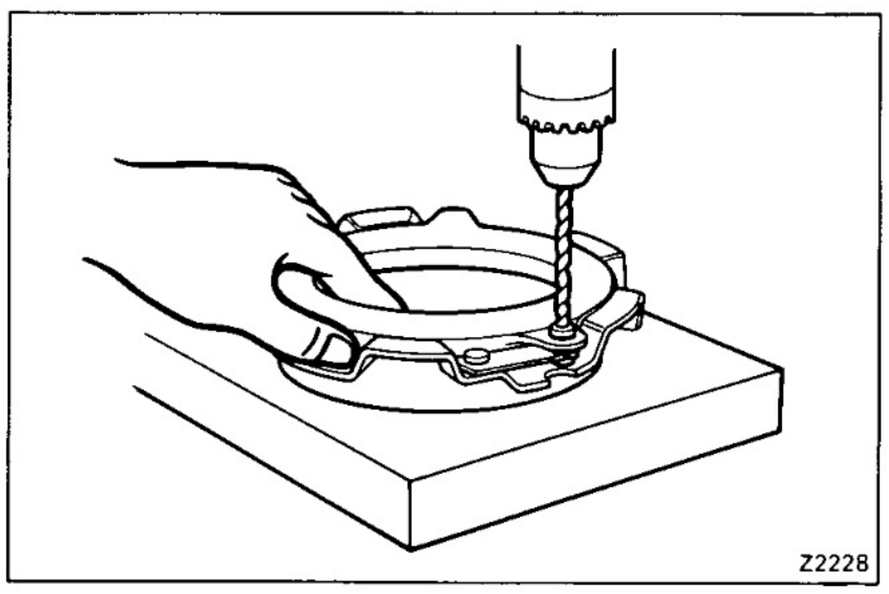

7. **IF NECESSARY, REPLACE PRESSURE PLATE**

(a) Drill out the rivet heads.

(b) Disconnect the retracting springs from the pressure plate.

(c) Using a punch, drive out the rivets.

(d) Apply molybdenum disulphide lithium base grease (NLGI No.2) to the contact surface of the pressure plate and cover.

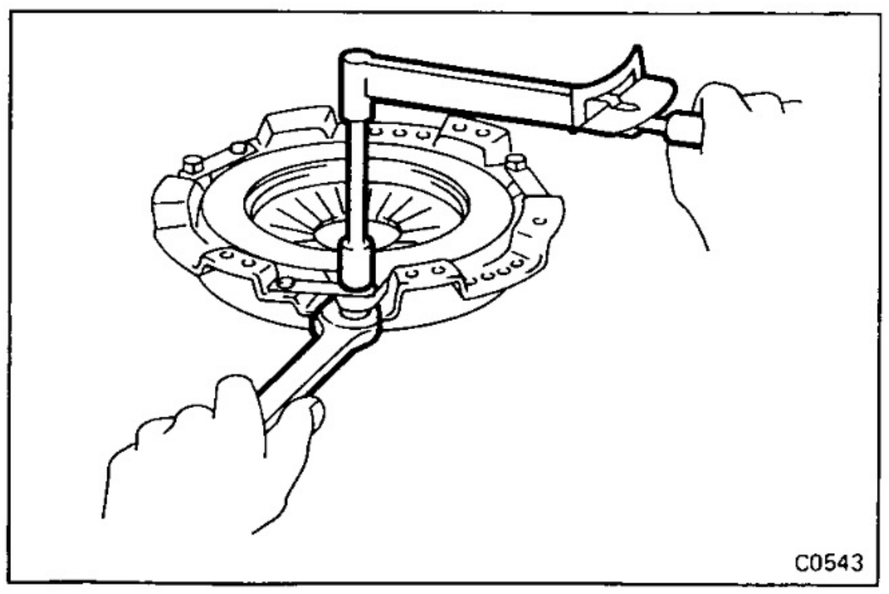

(e) Connect a new pressure plate and the retracting springs with the special pressure plate bolts and nuts. Torque the nuts.

Torque: 195 kg-cm (14 ft-lb, 19 N·m)

(f) Using a punch, stake the nuts.

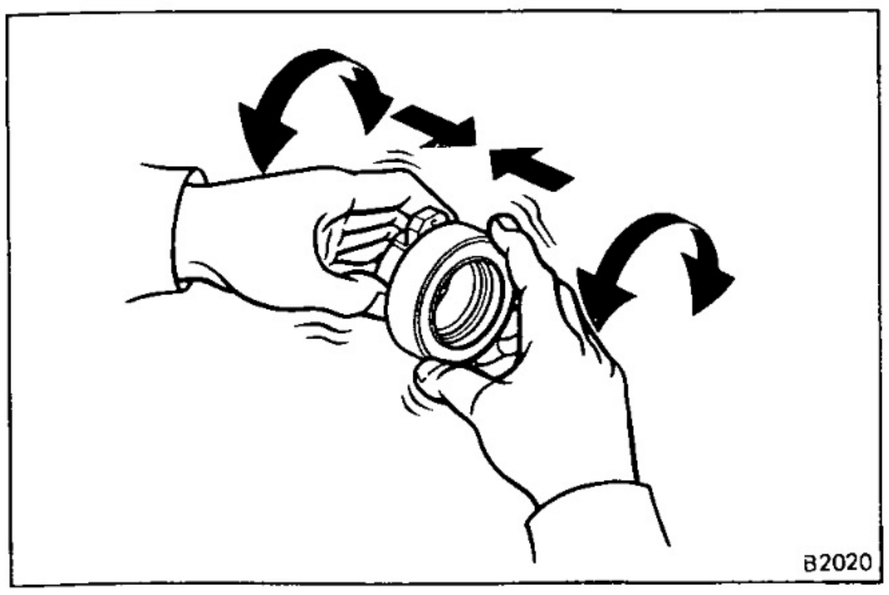

8. INSPECT RELEASE BEARING

Turn the bearing by hand while applying force in the axial direction.

NOTE: The bearing is permanently lubricated and requires no cleaning or lubrication.

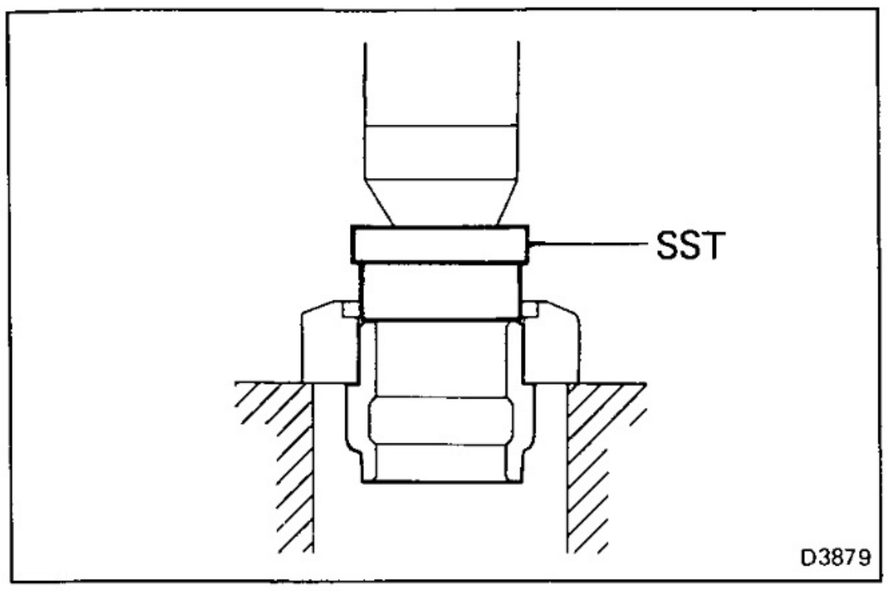

9. IF NECESSARY REPLACE RELEASE BEARING

(a) Using a press and SST, press the release bearing from the hub.

SST 09315-00021

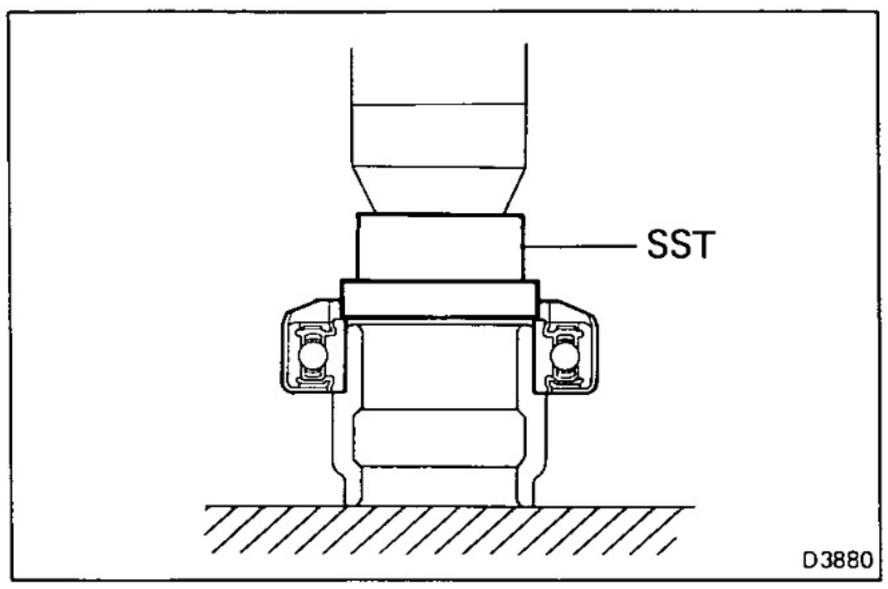

(b) Using a press and SST, press a new release bearing into the hub.

SST 09315-00021

(c) After installing the bearing, check that there is no drag on the bearing when it is turned under pressure.

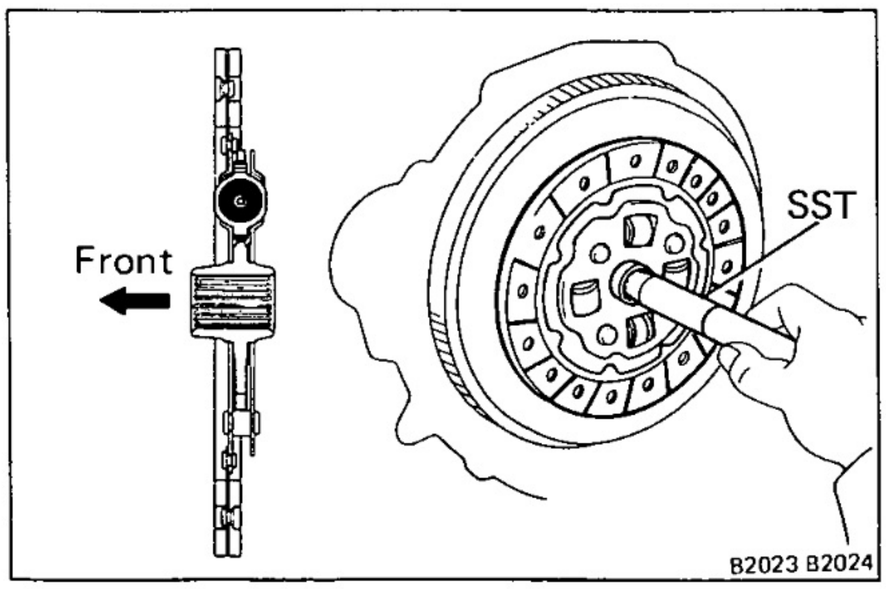

INSTALLATION OF CLUTCH UNIT

(See page CL-18)

1. INSTALL DISC ON FLYWHEEL

Using SST, install the disc on the flywheel.

SST FJ and HJ Series 09301-55022
BJ Series 09301-20020

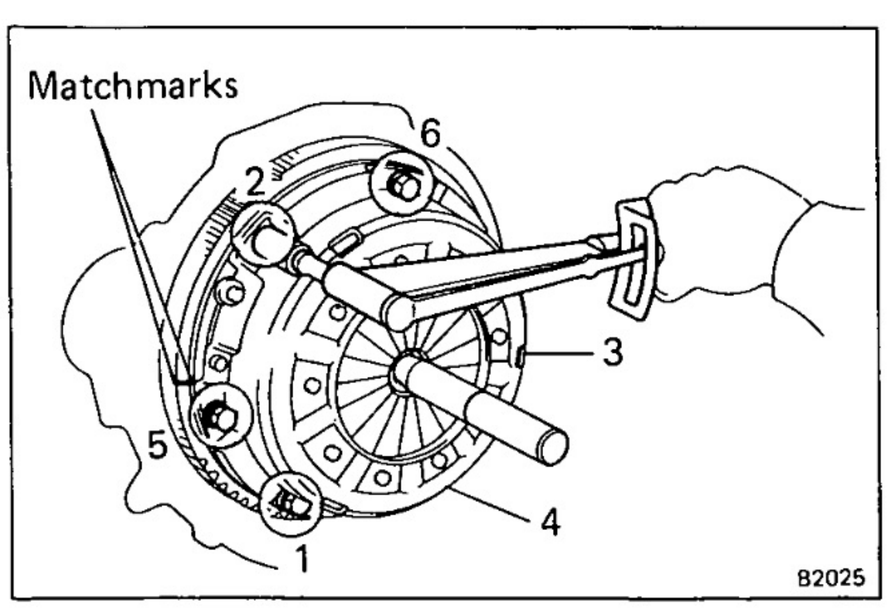

2. INSTALL CLUTCH COVER

(a) Align the matchmarks on the clutch cover and flywheel.

(b) Tighten the bolts evenly. Make several passes around the cover until it is snug. Torque the bolts.

Torque: 195 kg-cm (14 ft-lb, 19 N·m)

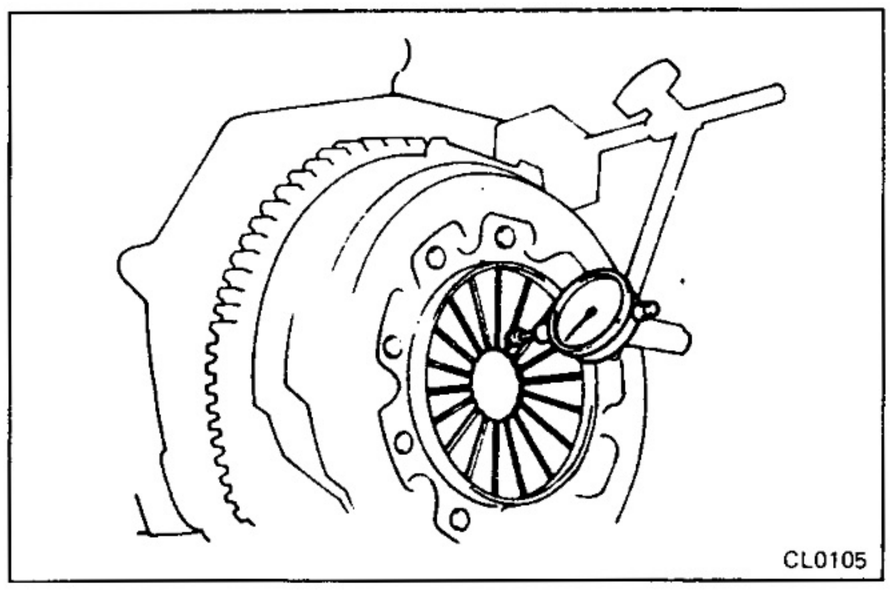

3. CHECK DIAPHRAGM SPRING TIP ALIGNMENT

Using a dial indicator and measuring point, check the diaphragm spring tip alignment.

Maximum non-alignment: 1.0 mm (0.039 in.)

If alignment is excessive, adjust as follows.

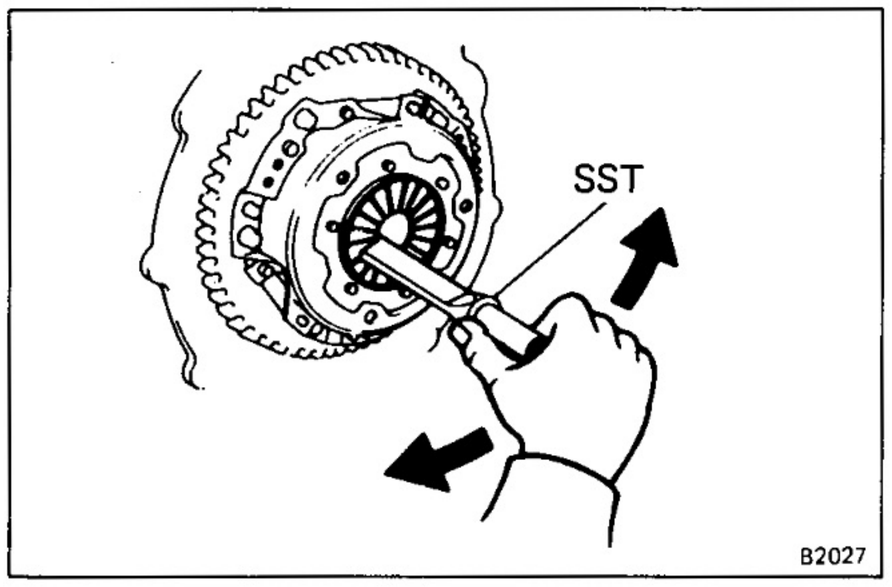

4. IF NECESSARY, ADJUST SPRINGS

Using SST, bend the springs until alignment is correct.

SST 09333-00012

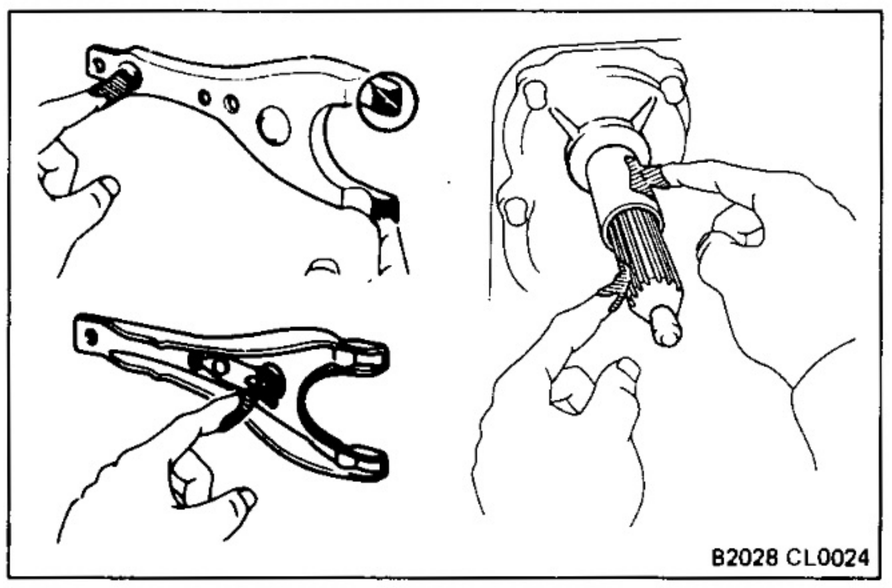

5. APPLY MOLYBDENUM DISULPHIDE LITHIUM BASE GREASE (NLGI NO.2) OR MP GREASE

(a) Apply molybdenum disulphide lithium base grease to the following parts:

- Release fork and hub contact point
- Release fork and push rod contact point
- Release fork pivot point
- Clutch disc spline
- Release bearing hub inside groove

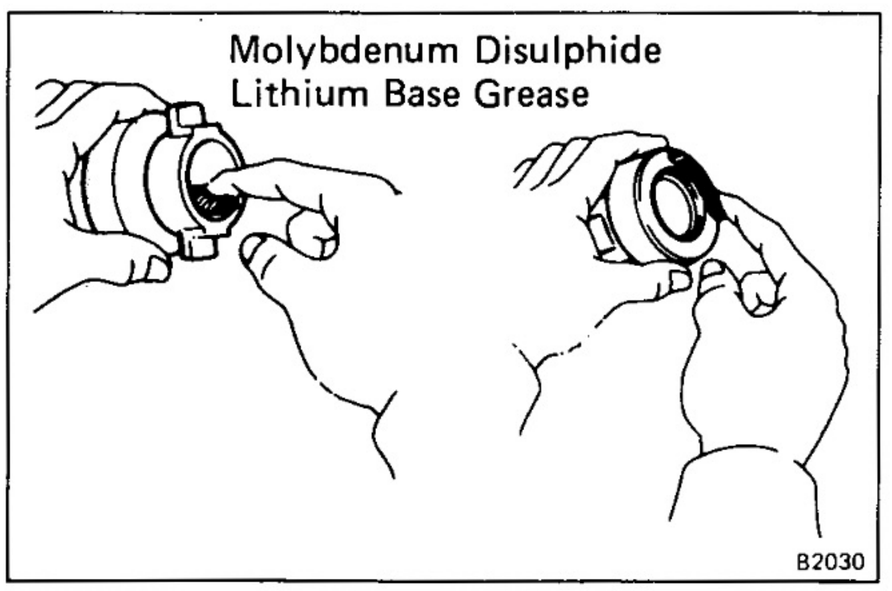

(b) Apply molybdenum disulphide lithium base grease to release bearing front.

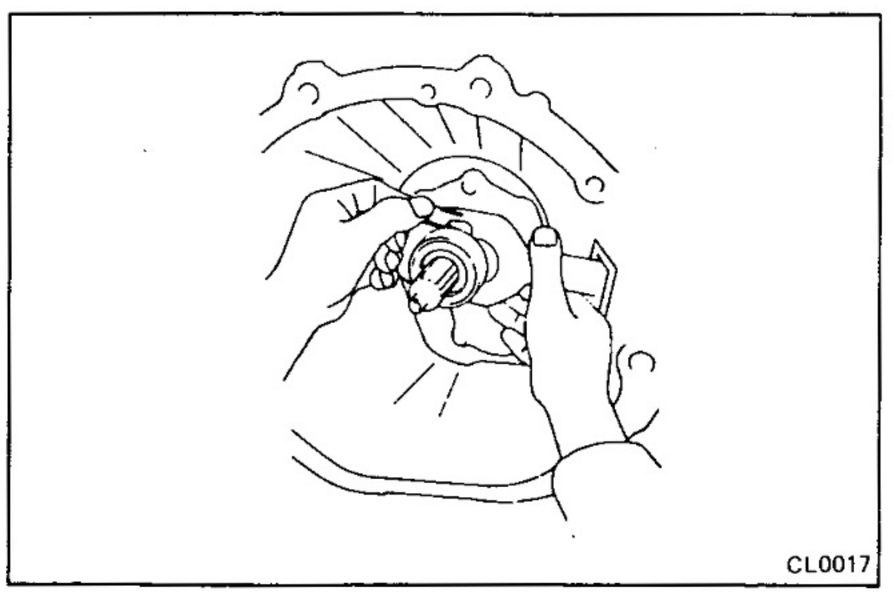

6. INSTALL BOOT, FORK AND HUB WITH BEARING ON TRANSMISSION

7. INSTALL TRANSMISSION

(See page MT-40)

MANUAL TRANSMISSION

	Page
TROUBLESHOOTING	MT-2
H41 AND H55F TRANSMISSIONS	MT-3
Removal of Transmission with Transfer	MT-3
Components	MT-5
Disassembly of Transmission	MT-9
Disassembly of Case Cover Assembly (H41)	MT-16
Disassembly of Case Cover Assembly (H55F)	MT-18
Inspection of Transmission Components	MT-21
Assembly of Case Cover Assembly (H41)	MT-25
Assembly of Case Cover Assembly (H55F)	MT-27
Assembly of Transmission	MT-30
Installation of Transmission with Transfer	MT-40

TROUBLESHOOTING

Problem	Possible cause	Remedy	Page
Hard to shift or will not shift	Splines on input shaft dirty or burred Transmission faulty	Repair as necessary Disassemble and inspect transmission	
Transmission jumps out of gear	Transmission faulty	Disassemble and inspect transmission	

H41 AND H55F TRANSMISSIONS

REMOVAL OF TRANSMISSION WITH TRANSFER

1. DISCONNECT BATTERY CABLE FROM NEGATIVE TERMINAL

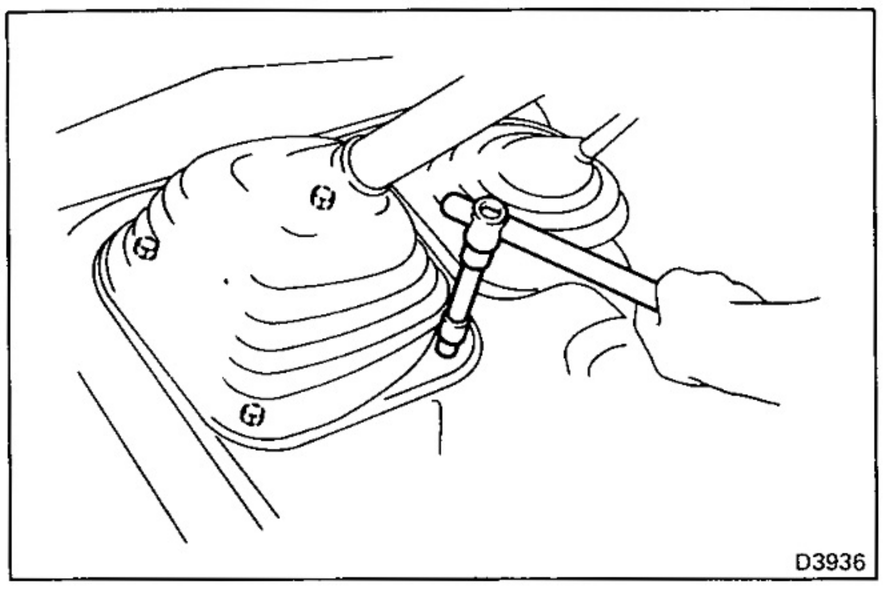
D3936

2. REMOVE TRANSMISSION SHIFT LEVER
   (a) Remove the shift lever boot.

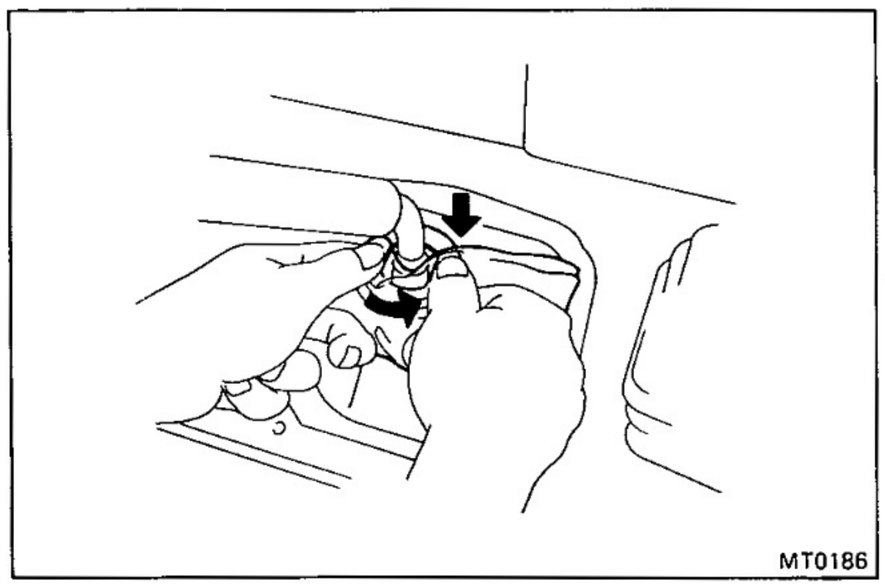
MT0186

   (b) Cover the shift lever cap with a cloth.
   (c) Then, pressing down on the shift lever cap, rotate it counterclockwise to remove.
   (d) Remove the shift lever.

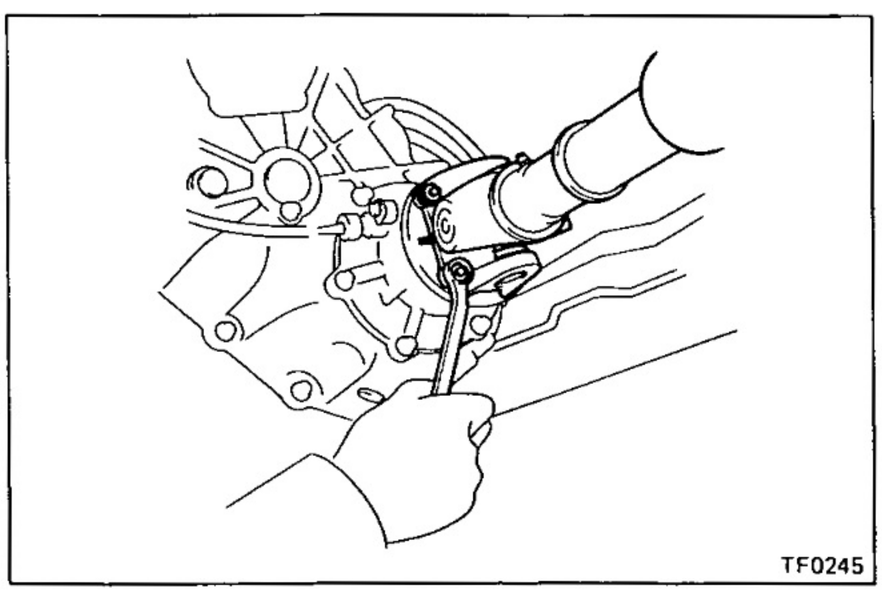
TF0245

3. RAISE VEHICLE AND DRAIN OUT TRANSMISSION AND TRANSFER

4. REMOVE TRANSMISSION UNDERCOVER

5. REMOVE FRONT AND REAR PROPELLER SHAFTS
(See page PR-3)

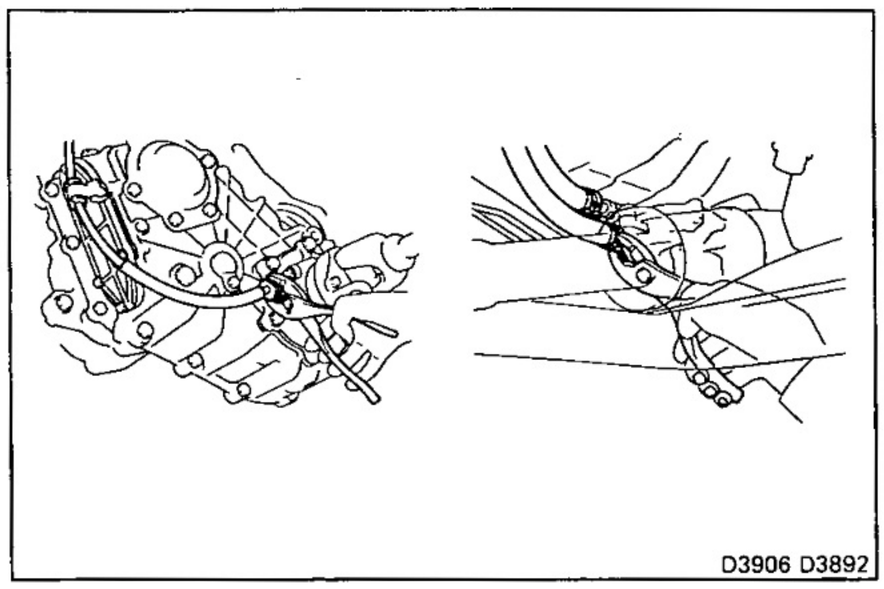
D3906 D3892

6. REMOVE SPEEDOMETER CABLE

7. REMOVE DIAPHRAGM CYLINDER VACUUM HOSE (ELECTRICAL SHIFT TYPE)

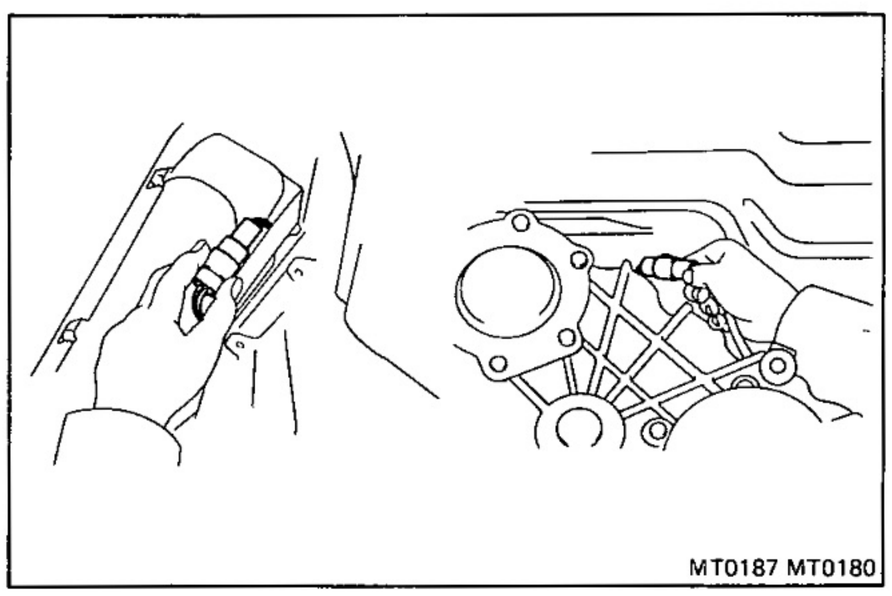
MT0187 MT0180

8. REMOVE 4WD AND BACK-UP LIGHT SWITCH CONNECTOR

9. REMOVE L4 SWITCH CONNECTOR (ELECTRICAL SHIFT TYPE)

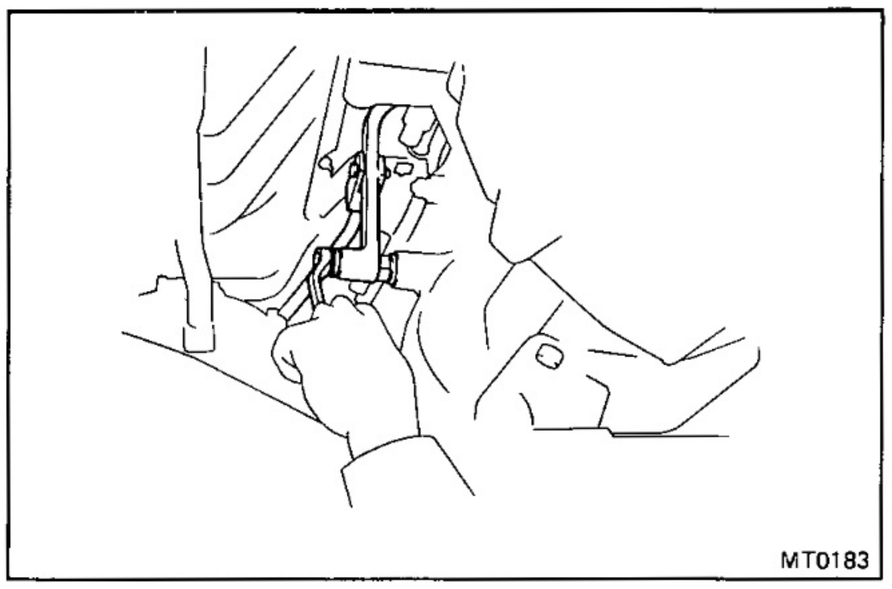
MT0183

10. REMOVE TRANSFER SHIFT LEVER FROM TRANSFER

11. REMOVE CLUTCH RELEASE CYLINDER (BJ, HJ)

12. REMOVE STARTER (BJ, HJ)
    (a) Disconnect the cable and connector.
    (b) Remove the starter.

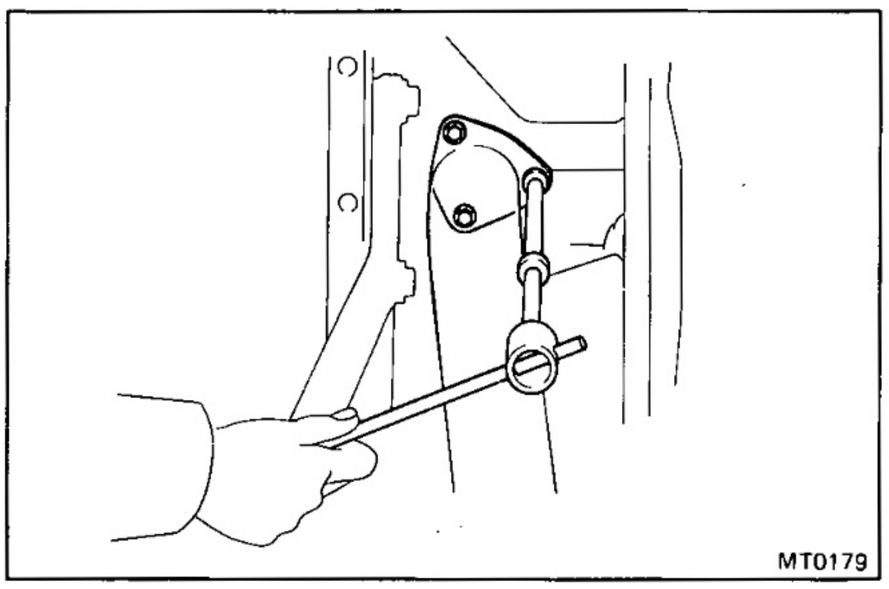
MT0179

13. REMOVE EXHAUST PIPE

14. JACK UP TRANSMISSION SLIGHTLY
    Raise the transmission enough to remove the weight from the engine rear support member.

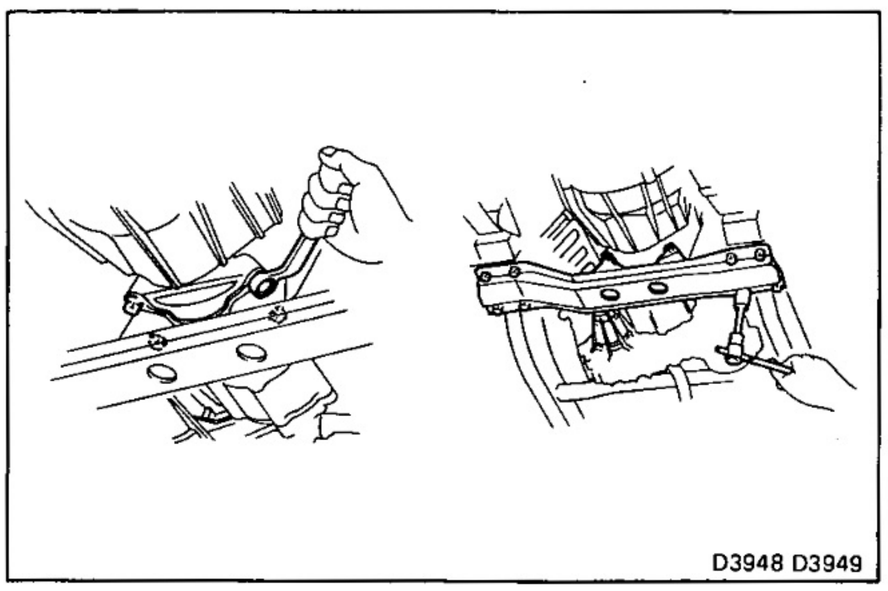
D3948 D3949

15. REMOVE ENGINE REAR SUPPORT MEMBER
    (a) Remove the four bolts from the support member.
    (b) Remove the bolts from both sides of the member.
    (c) Pry off the member.

16. LOWER TRANSMISSION

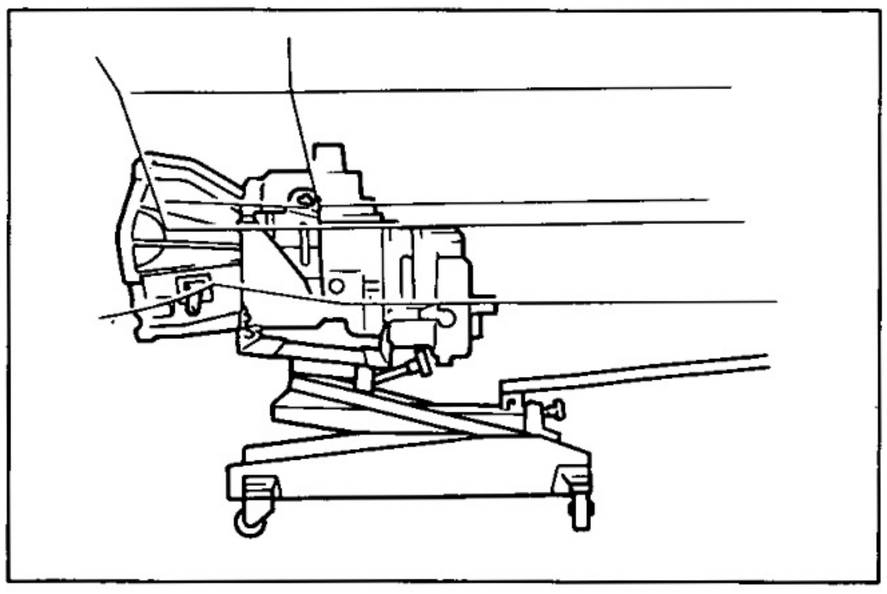

17. REMOVE TRANSMISSION WITH TRANSFER
    (a) Remove the transmission mounting bolts from the clutch housing (FJ) or engine (BJ, HJ).
    (b) Remove the transmission with the transfer.

COMPONENTS

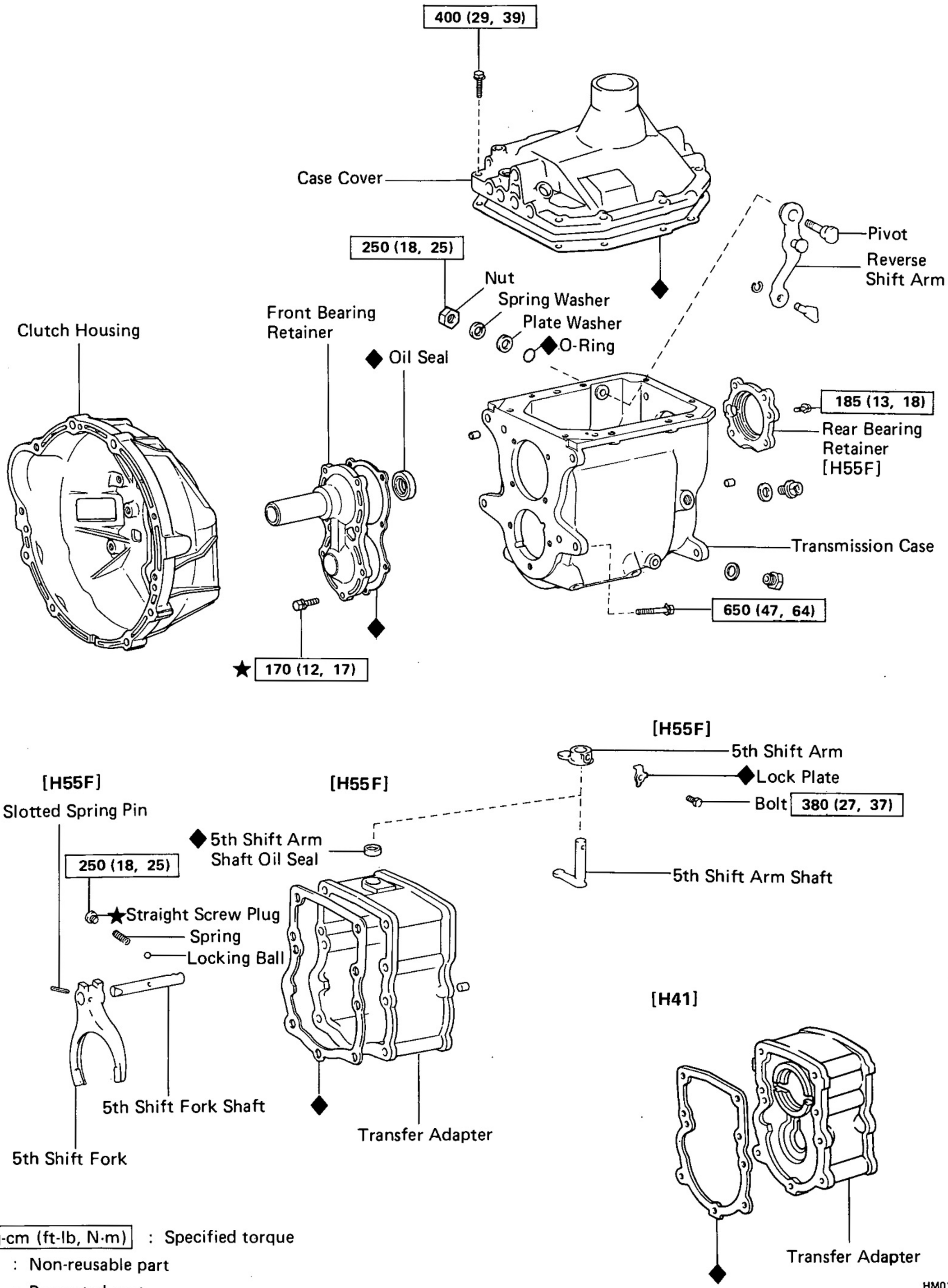

kg-cm (ft-lb, N·m) : Specified torque

◆ : Non-reusable part

★ : Precoated part

HM0166
HM0167
HM0265

COMPONENTS(Cont'd)

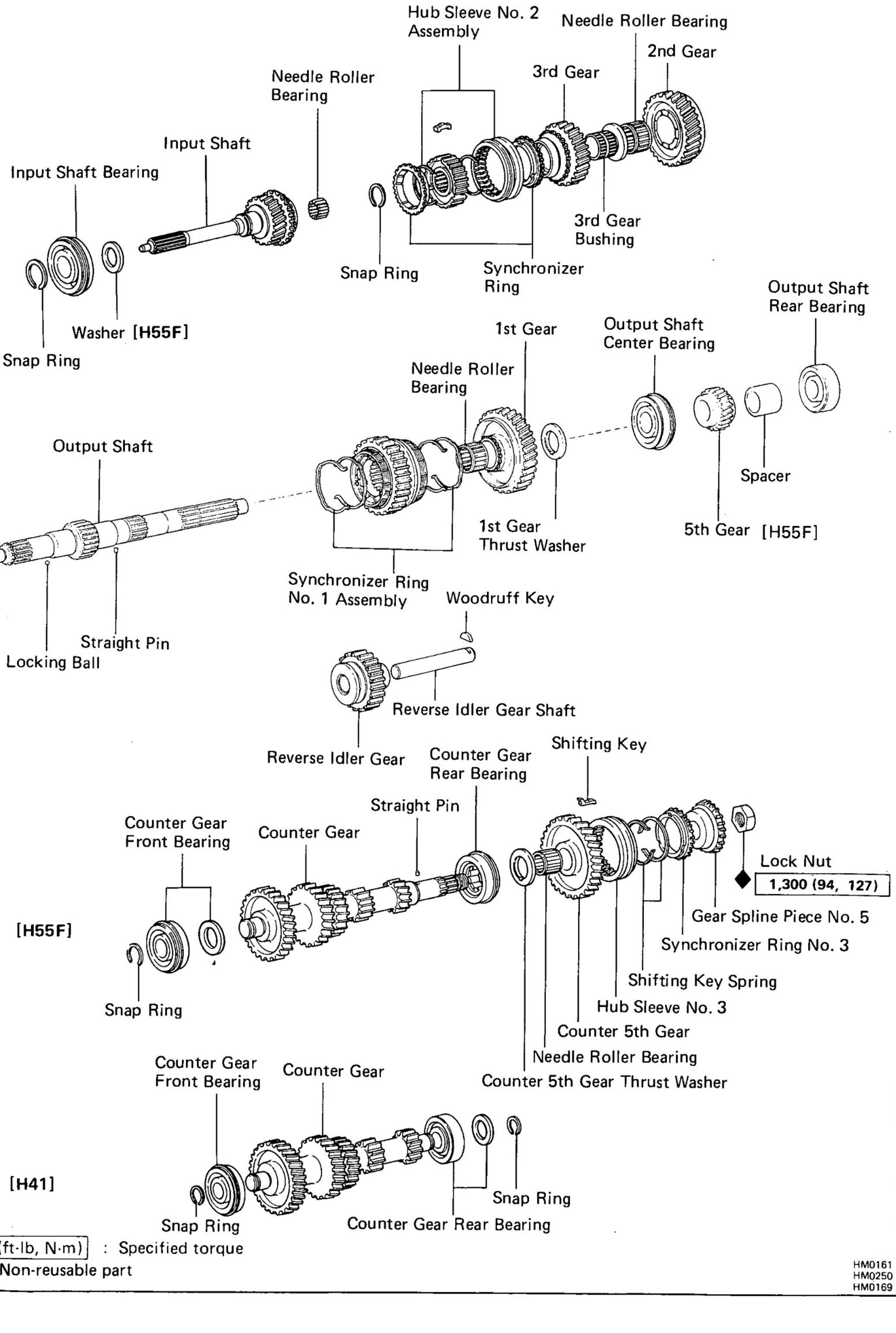

COMPONENTS(Cont'd)

4-Speed

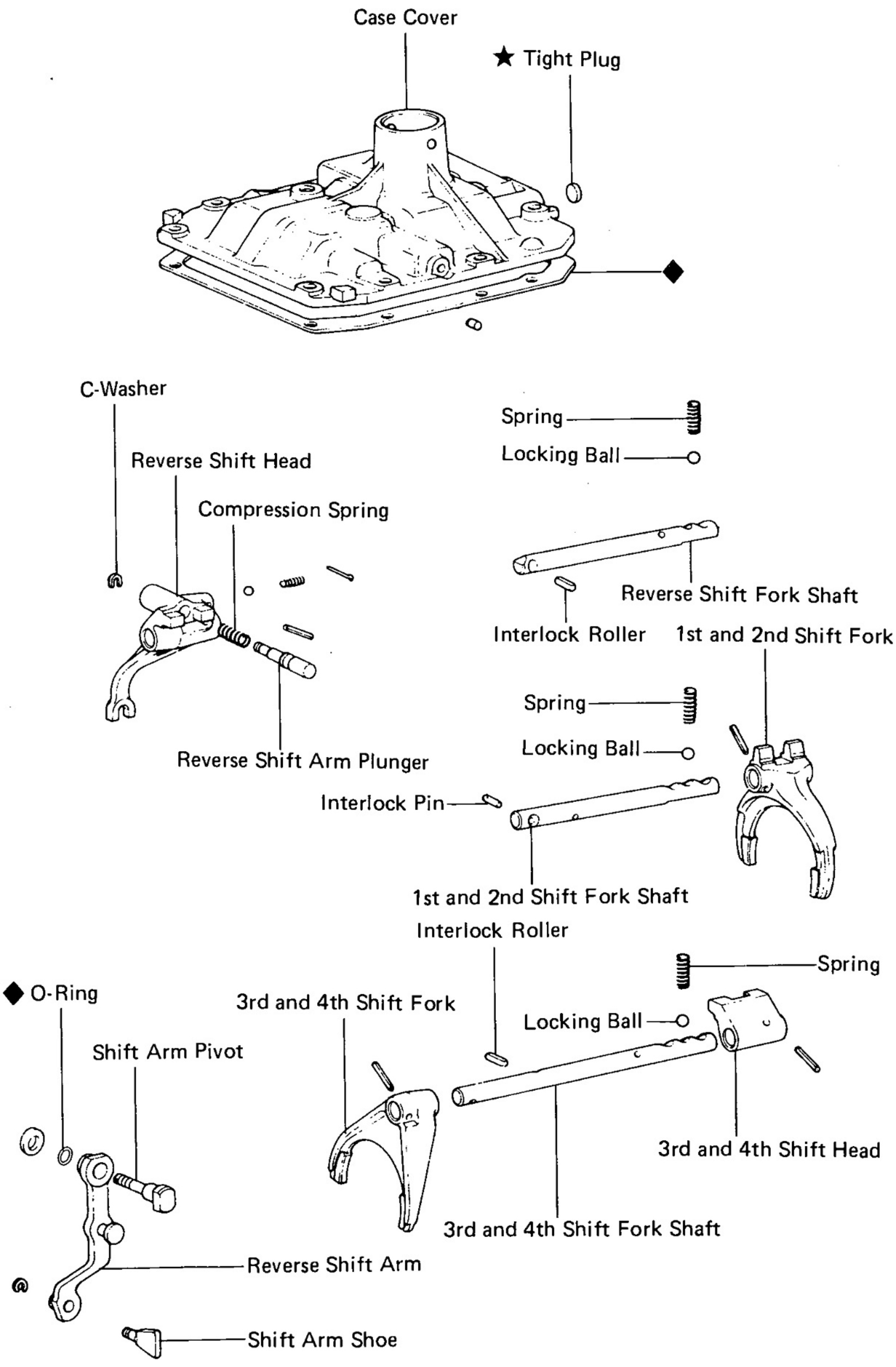

◆ : Non-reusable part

★ : Precoated part

HM0211

COMPONENTS(Cont'd)

5-Speed

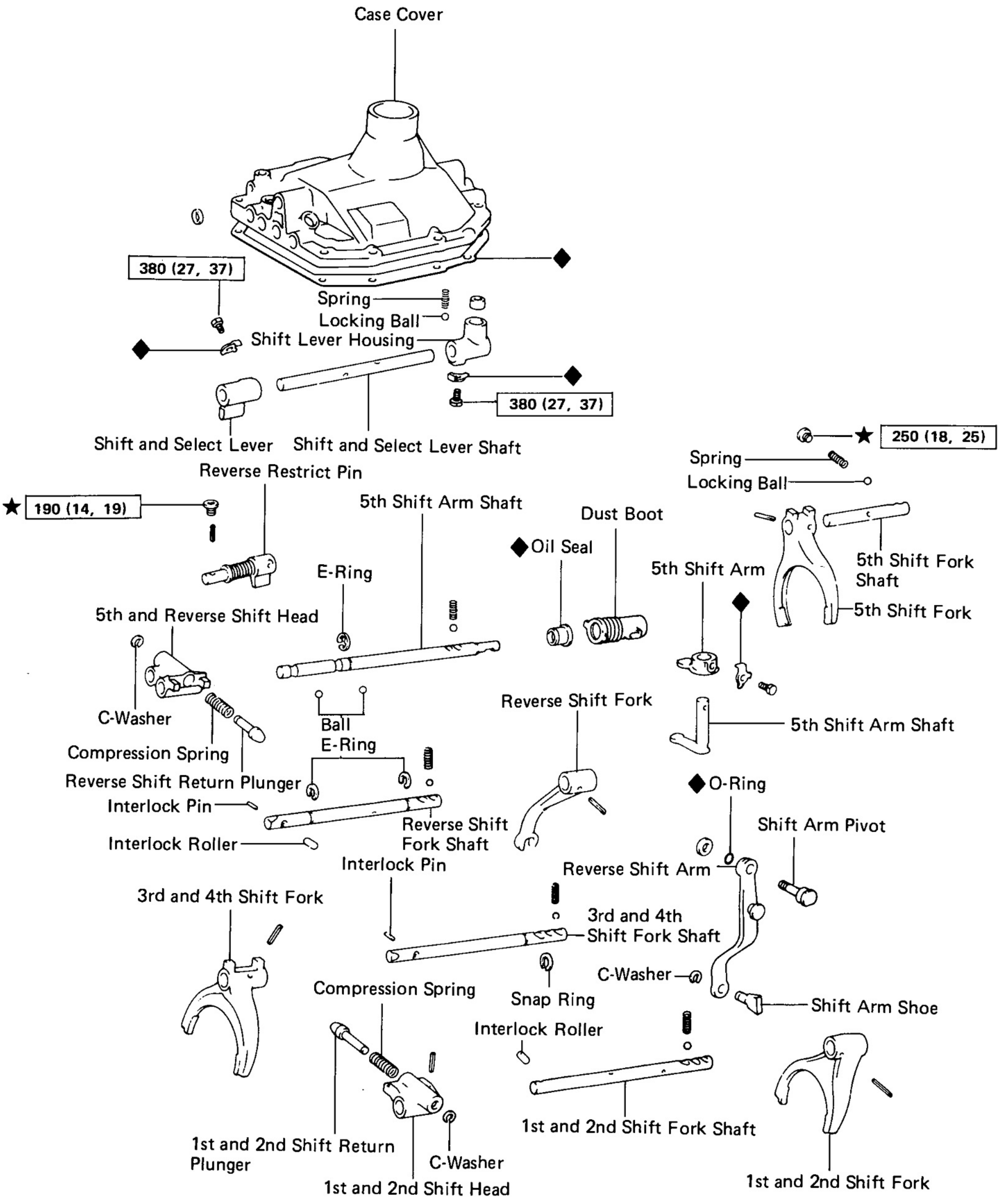

kg-cm (ft-lb, N·m) : Specified torque

◆ : Non-reusable part

★ : Precoated part

HM0261

DISASSEMBLY OF TRANSMISSION

(See pages MT-5, 6)

1. REMOVE CLUTCH HOUSING (HJ, BJ)

2. REMOVE TRANSFER
(See page TF-8)

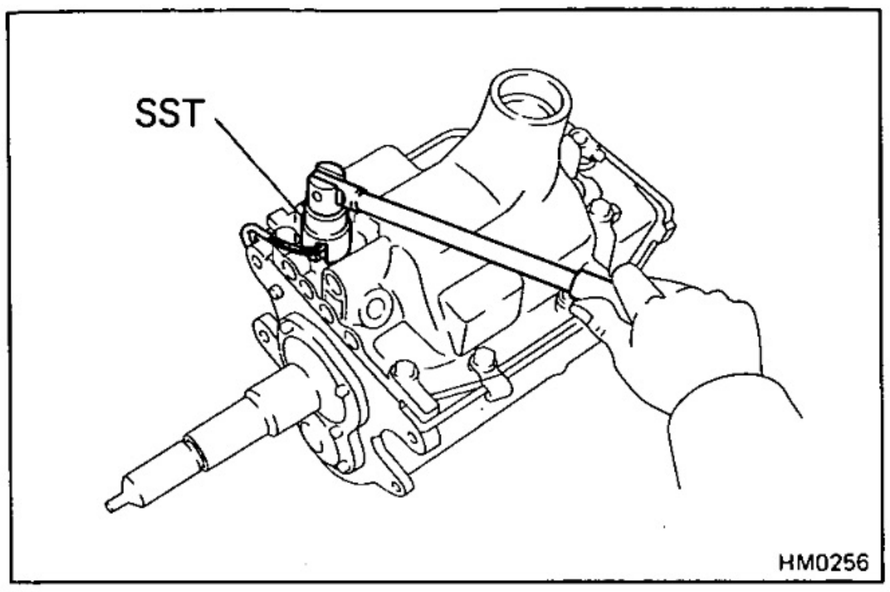

3. REMOVE BACK-UP LIGHT SWITCH

Using SST, remove the back-up light switch.

SST 09817-16011

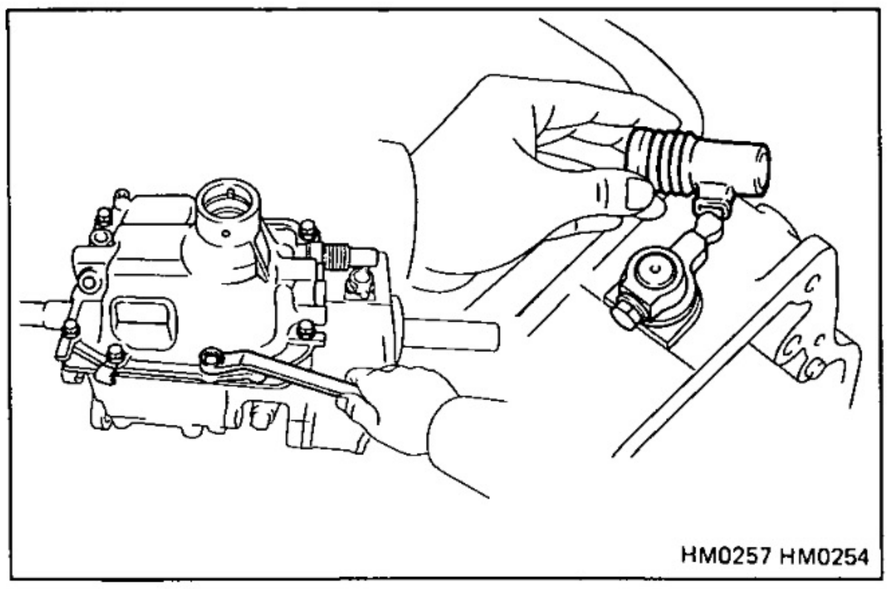

4. REMOVE CASE COVER

(a) Remove the case cover and gasket.

(b) Remove the dust boot. (H55F)

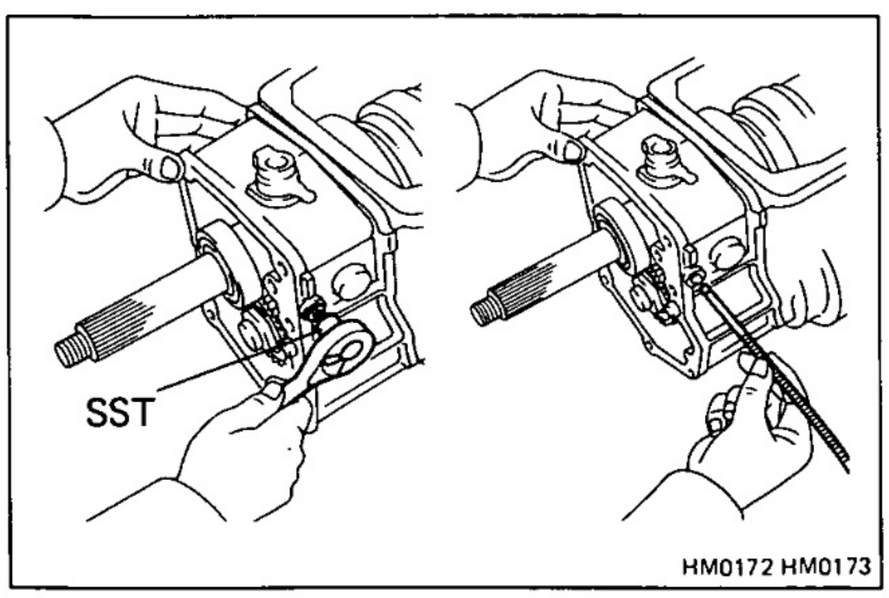

5. REMOVE FIFTH LOCKING BALL AND SPRING (H55F)

(a) Using SST, remove the screw plug.

SST 09313-30021

(b) Using a magnetic finger, remove the locking ball and spring.

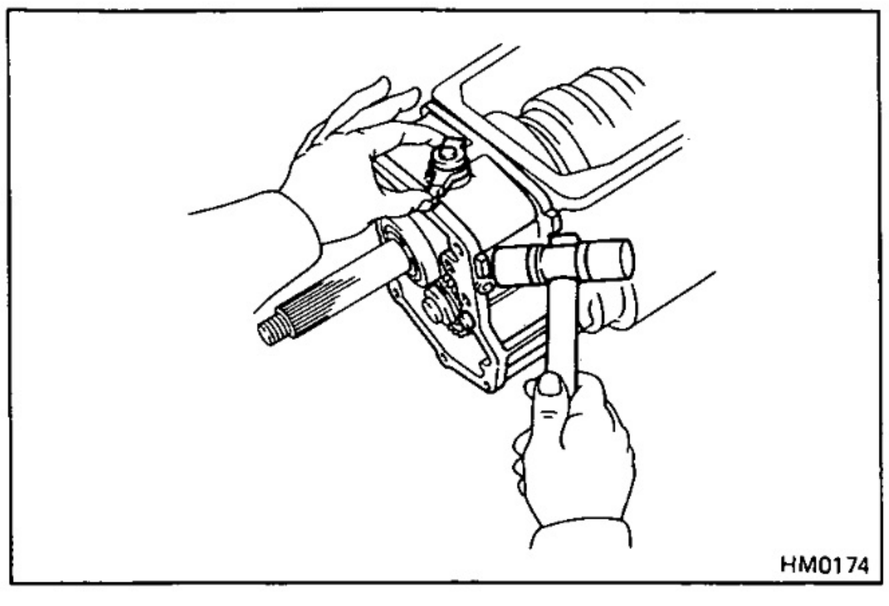

6. REMOVE TRANSFER ADAPTER

(a) Using a plastic hammer, carefully tap the transfer adapter.

(b) Pull up 5th shift arm and pull the transfer adapter from the transmission case.

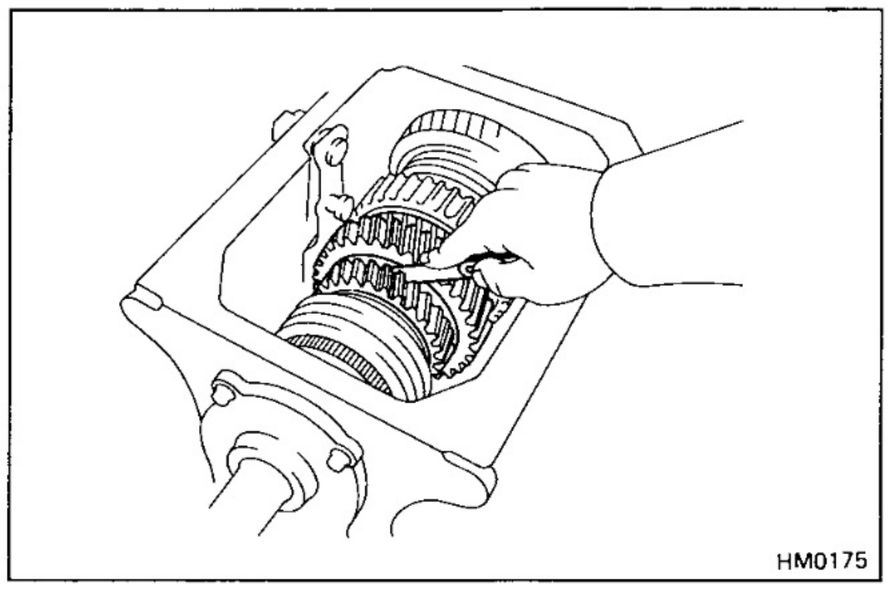
HM0175

7. MEASURE EACH GEAR THRUST CLEARANCE

Using a feeler gauge, measure the thrust clearance of each gear.

NOTE: For later reference, write down the thrust clearance.

Standard clearance:

1st and 2nd gears	**0.175 – 0.325 mm (0.0069 – 0.0128 in.)**
3rd gear	**0.125 – 0.275 mm (0.0049 – 0.0108 in.)**
Counter 5th gear	**0.10 – 0.30 mm (0.0039 – 0.0118 in.)**

Maximum clearance:

1st and 2nd gears	**0.35 mm (0.0138 in.)**
3rd and counter 5th gears	**0.30 mm (0.0118 in.)**

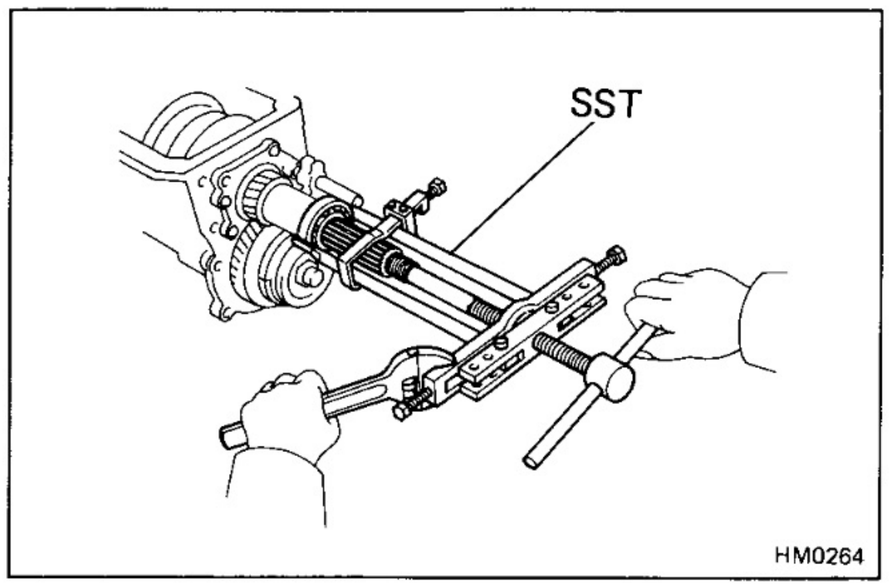

HM0264

8. REMOVE OUTPUT SHAFT REAR BEARING

Using SST, remove the rear bearing.

SST 09950-20016

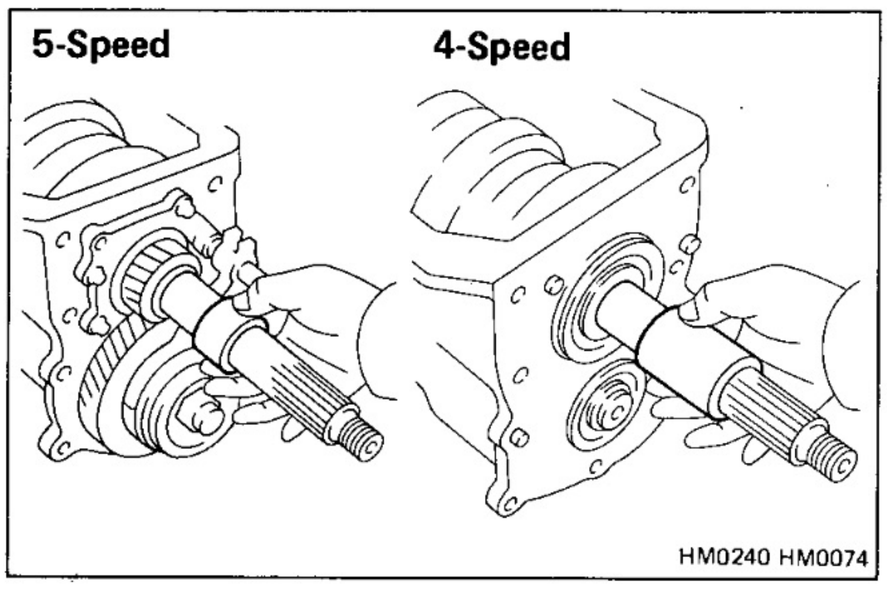

HM0240 HM0074

9. REMOVE SPACER

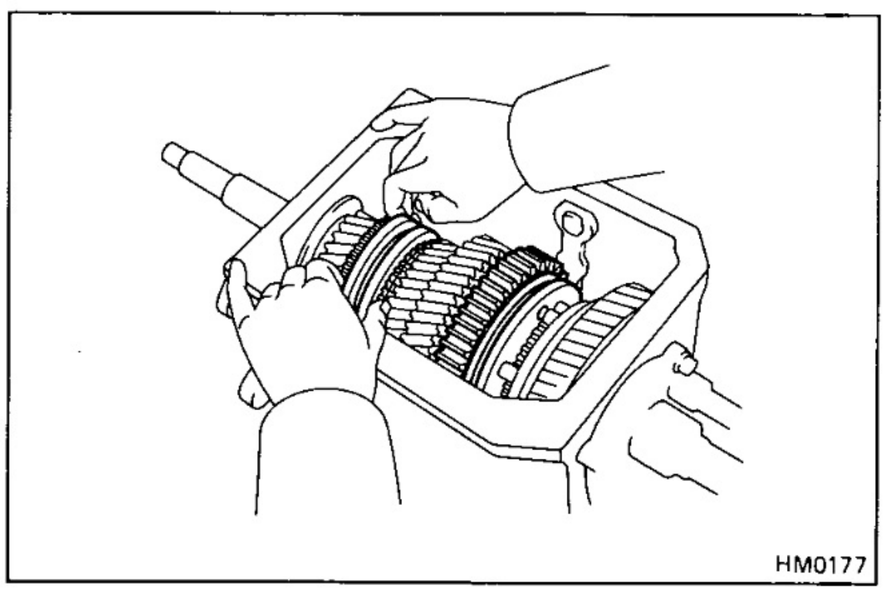
HM0177

10. REMOVE COUNTER GEAR REAR LOCK NUT (H55F)

(a) Engage the gear double meshing.

(b) Unstake the lock nut.

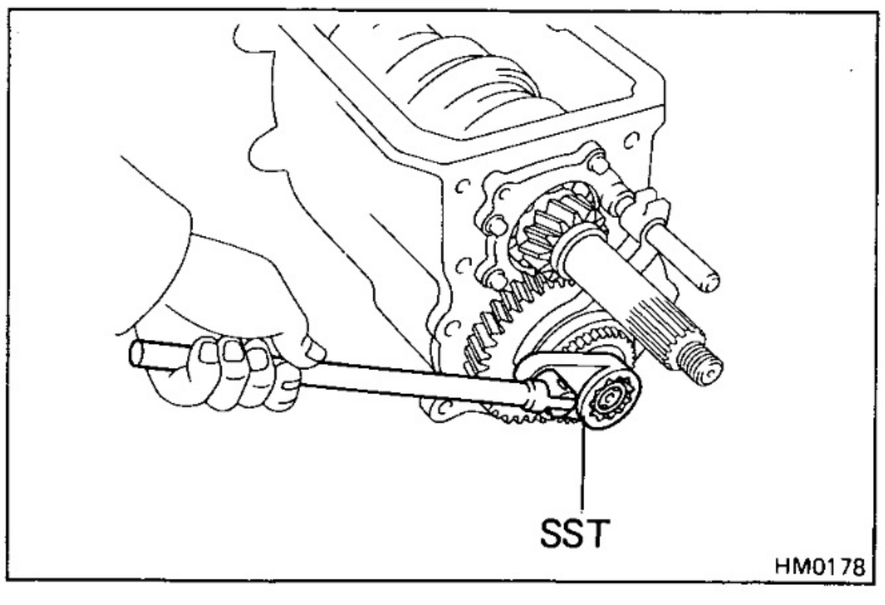

HM0178

(c) Using SST, remove the lock nut.

SST 09326-20011

(d) Disengage the gear double meshing.

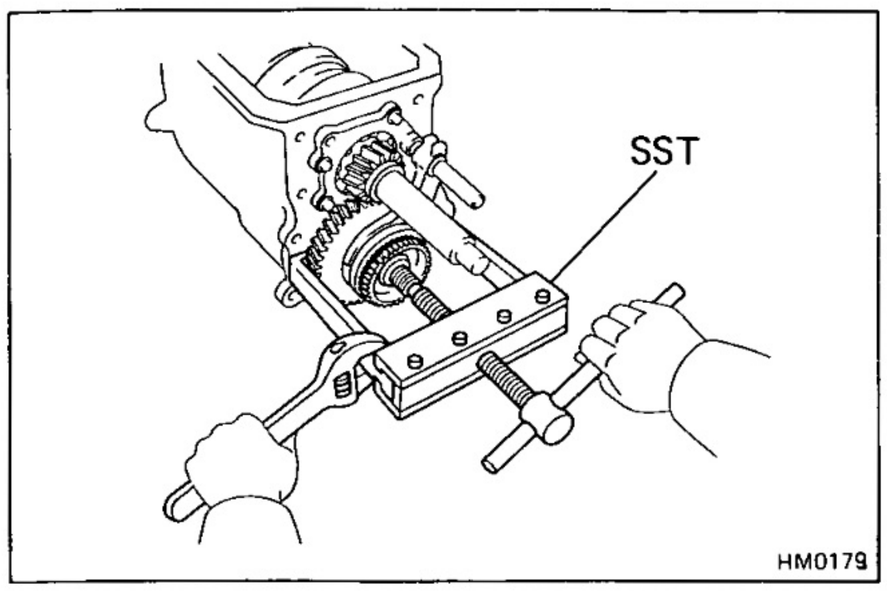

11. REMOVE GEAR SPLINE PIECE NO. 5, COUNTER FIFTH GEAR ASSEMBLY AND FIFTH SHIFT FORK (H55F)

Using SST, pull the counter 5th gear out of the counter gear rear end with gear spline piece No. 5 and the 5th shift fork.

SST 09213-27010

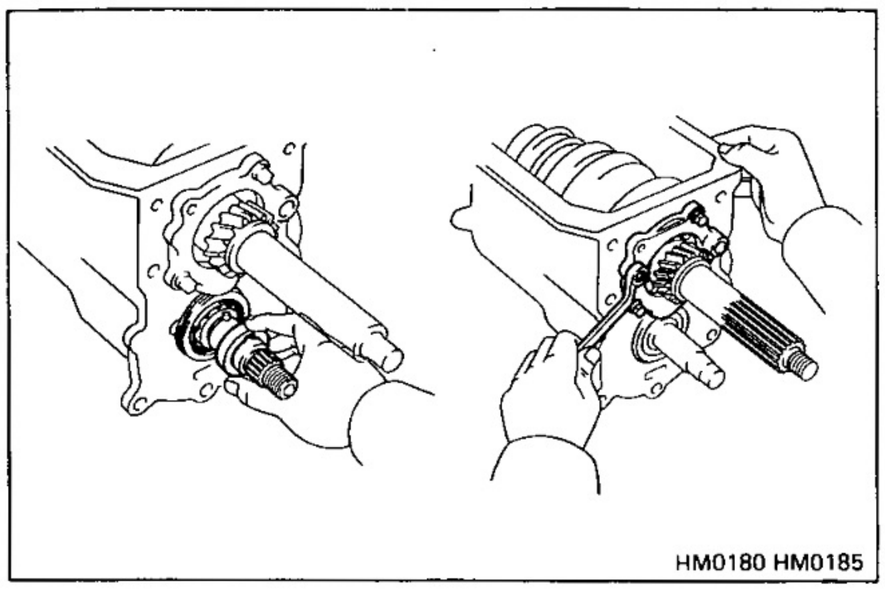

12. REMOVE STRAIGHT PIN AND COUNTER FIFTH GEAR THRUST WASHER (H55F)

13. REMOVE REAR BEARING RETAINER (H55F)

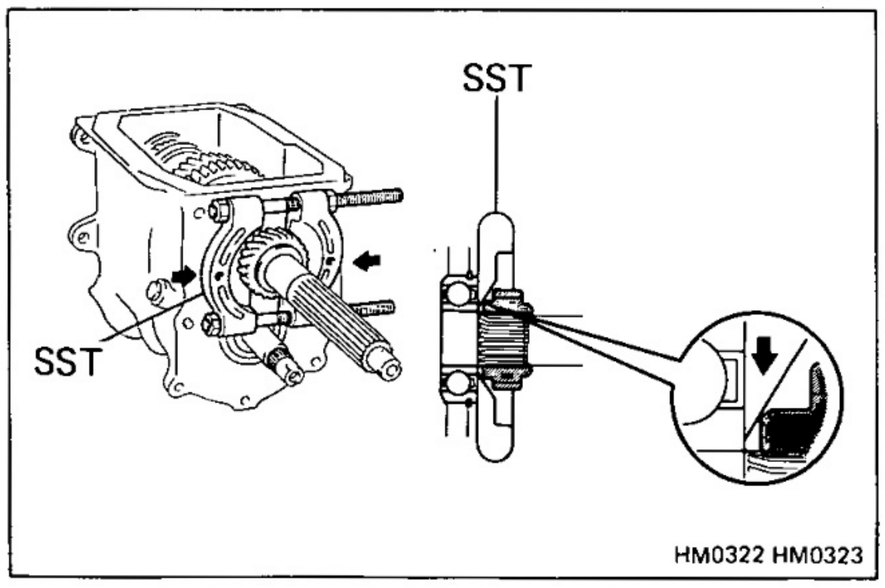

14. REMOVE FIFTH GEAR FROM OUTPUT SHAFT (H55F)

(a) Apply the SST between 5th gear and the bearing.

SST 09950-00020

NOTE:

- Check that the teeth of the SST are not damaged.

(b) Apply the SST, make a gap between 5th gear and the bearing, then raise the gear.

NOTE:

- Make sure the SST is always between 5th gear and the bearing.
- Tighten the SST so that the leading edge of the SST does not touch the output shaft.

(c) Install two bolts in the SST, tighten the bolts and slide 5th gear above the output shaft to remove it.

NOTE:

- Use steel plates etc. (approx. 2 mm thick) as a backplate to prevent the case from being damaged by the bolts.
- Tighten the two bolts evenly.
- Use bolts with a 12 mm nominal diameter, 1.5 pitch, and approx. 80 mm thread length.
(Reference: Part No. 90101-12034)

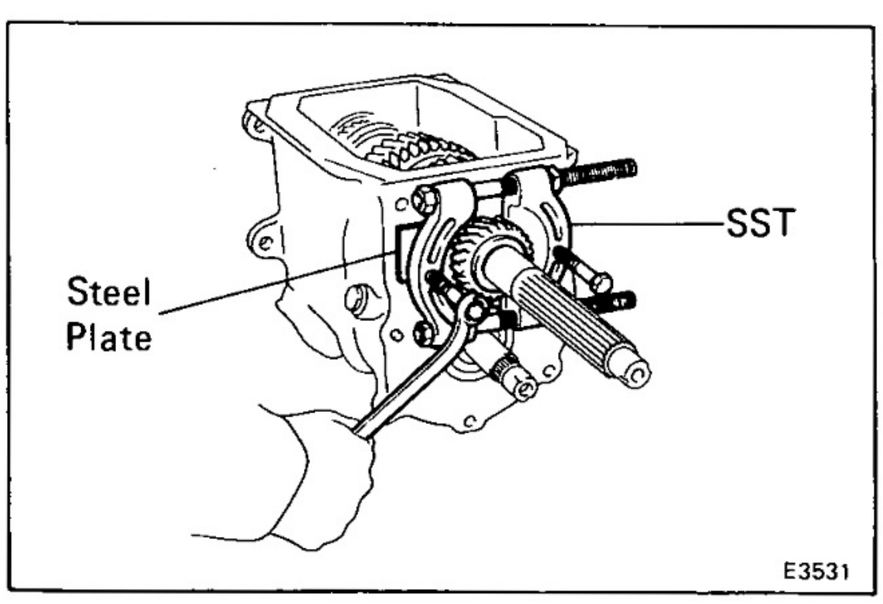

15. REMOVE COUNTER GEAR SHAFT REAR BEARING

(a) Using snap ring pliers, remove the snap ring.

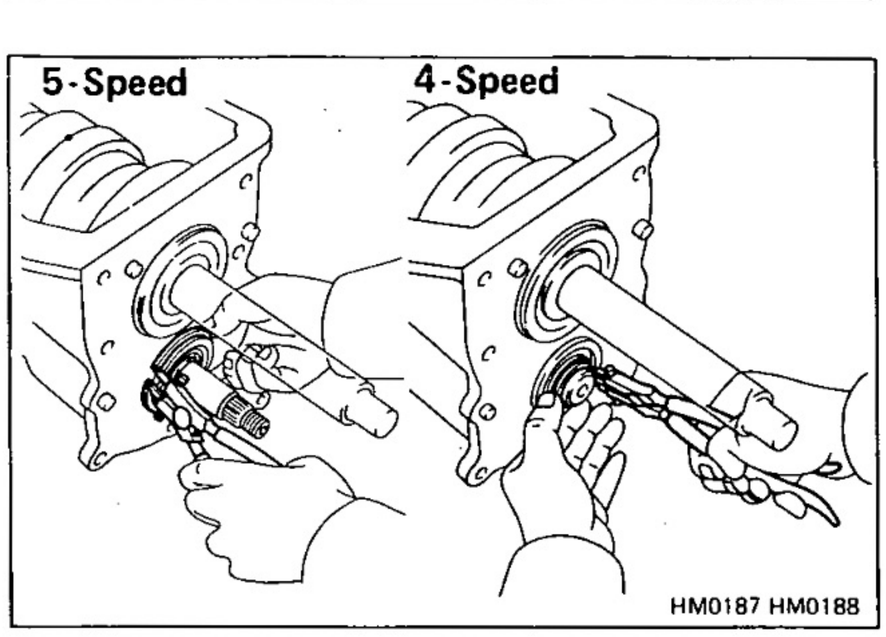

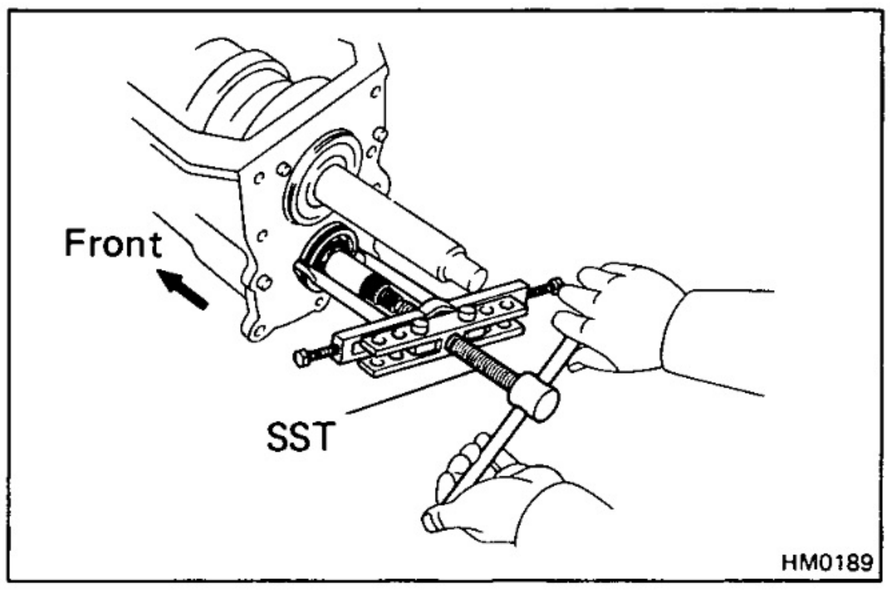

(b) Using SST, remove the counter gear rear bearing.

SST 09950-20016

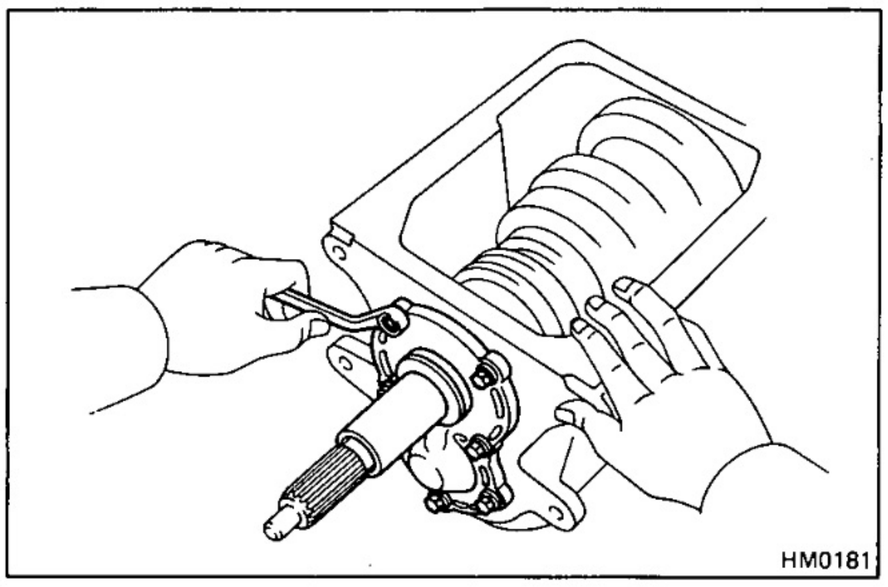

16. REMOVE FRONT BEARING RETAINER

NOTE: Be careful not to damage the oil seal.

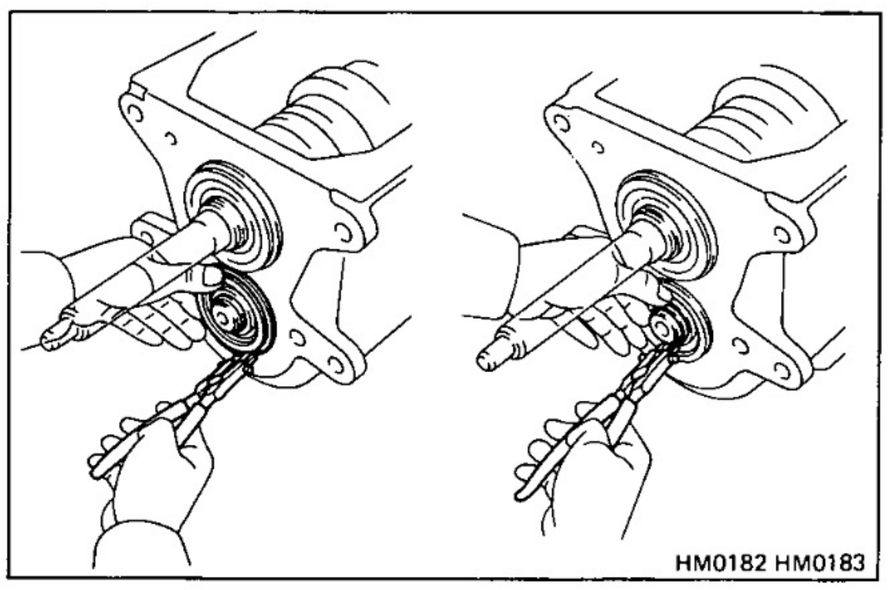

17. REMOVE COUNTER GEAR FRONT BEARING

(a) Using snap ring pliers, remove the snap rings.

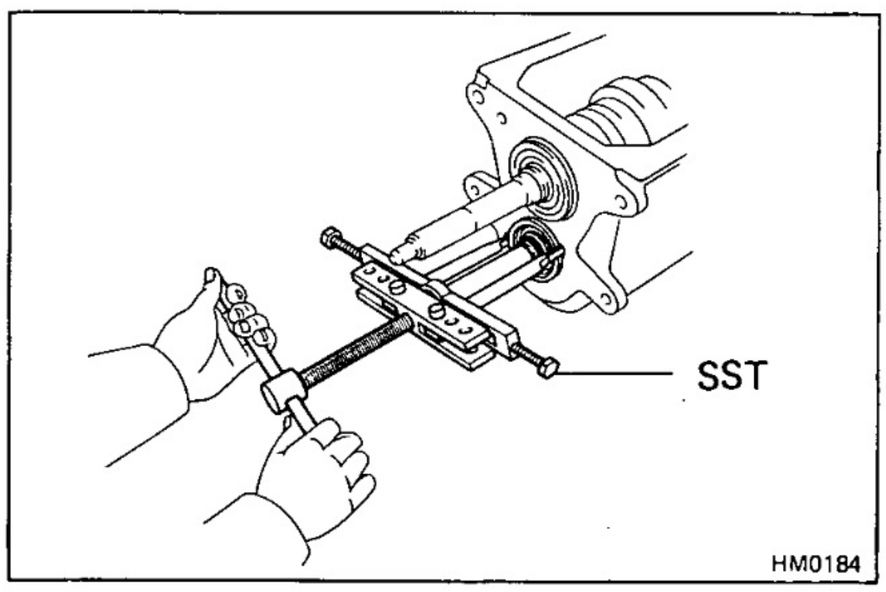

(b) Using SST, remove the counter gear front bearing.

SST 09950-20016

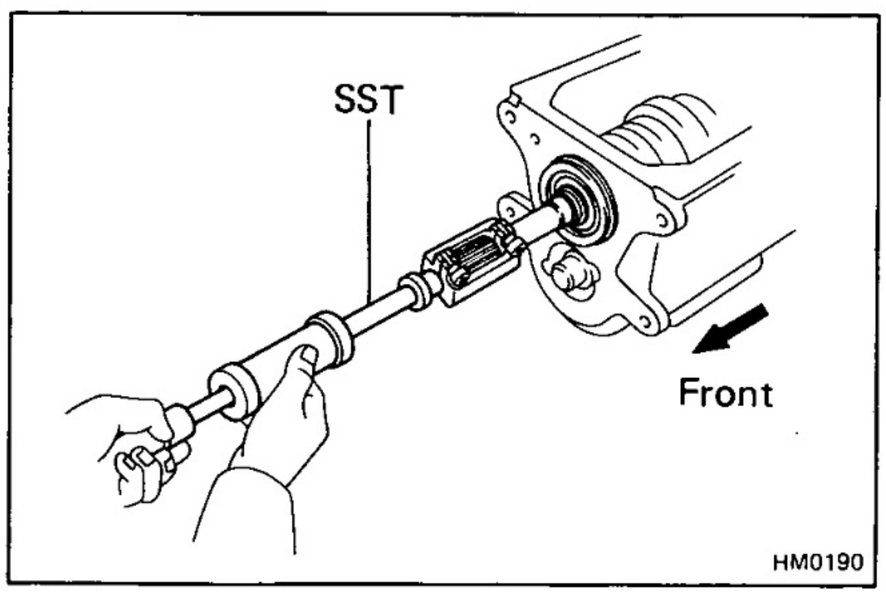

18. (FJ, HJ series)
REMOVE INPUT SHAFT AND BEARING

(a) Using SST, remove the input shaft and bearing.

SST 09910-00015

NOTE: Insure that the input shaft and counter gear do not strike against each other.
Be careful not to loose the 17 needle roller bearings.

(b) Remove the synchronizer ring.

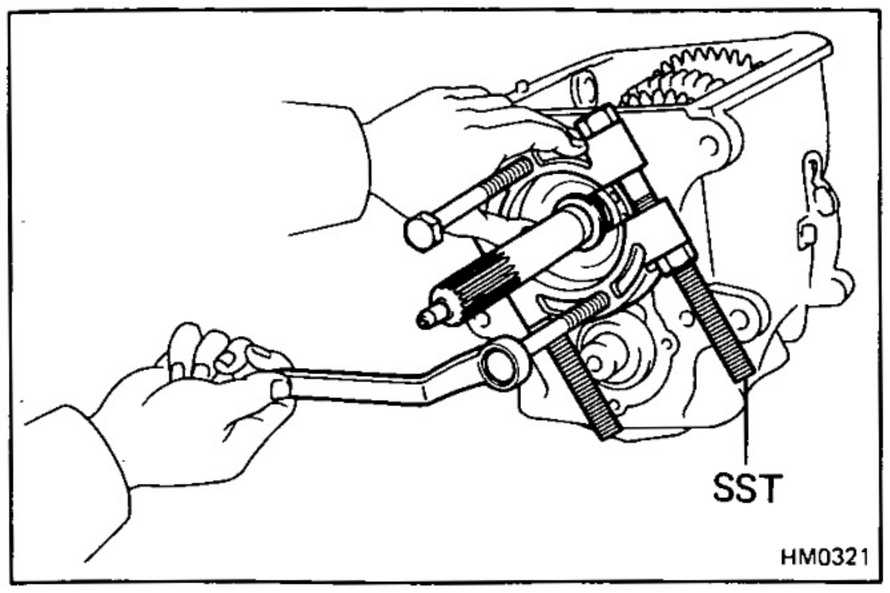

(BJ series)

REMOVE INPUT SHAFT AND BEARING

(a) Using snap ring pliers, remove the snap ring of bearing inner.

(b) Set the SST to the snap ring groove, and using two bolts, remove the input shaft and bearing.

SST 09950-00020

NOTE:

- Use steel plates etc. (approx. 2 mm thick) as a backplate to prevent the case from being damaged by the bolts.
- Tighten the two bolts evenly.
- Use bolts with a 12 mm nominal diameter, 1.5 pitch, and approx. 60 mm thread length.
  (Reference: Part No. 90101-12034)

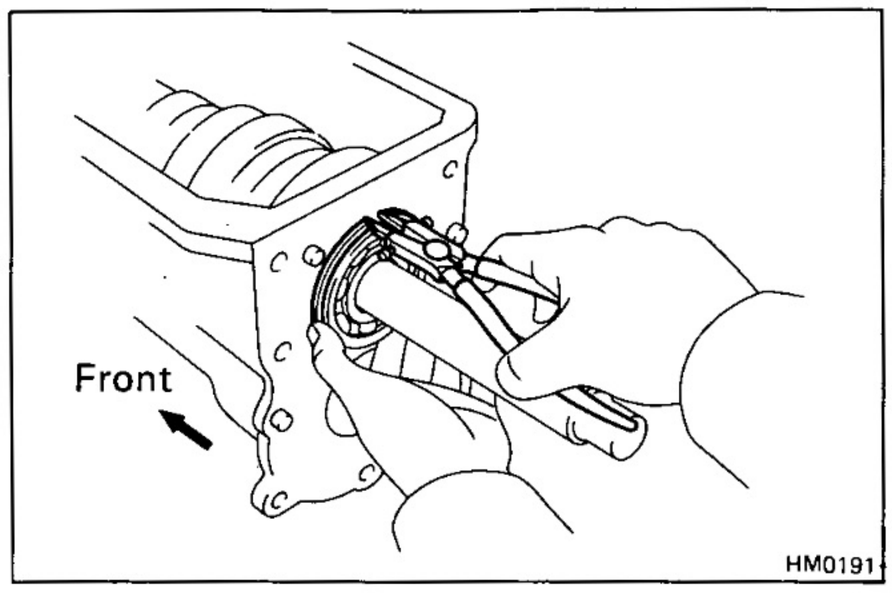

19. REMOVE OUTPUT SHAFT CENTER BEARING

(a) Using snap ring pliers, remove the snap ring.

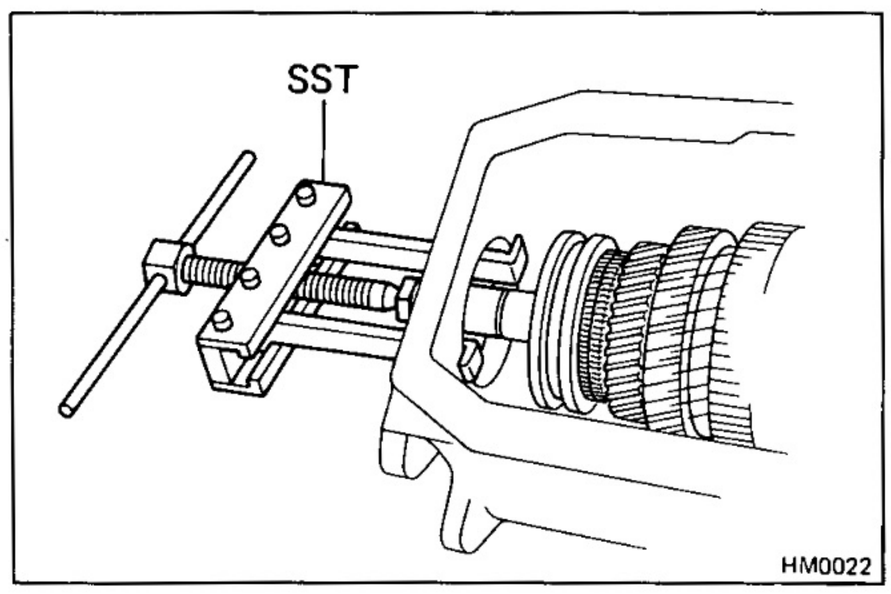

(b) Using SST, support the output shaft front end.

SST 09213-27010

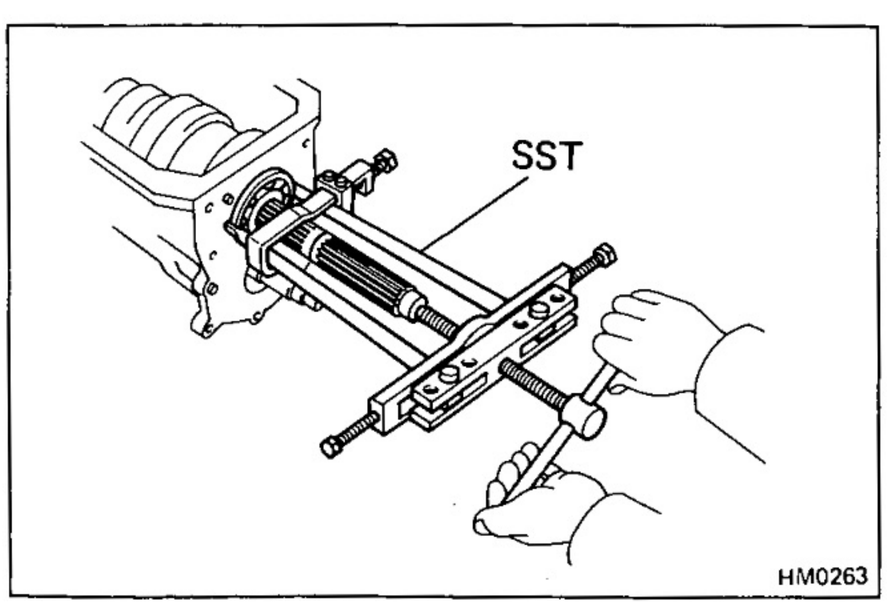

(c) Using SST, remove the center bearing.

SST 09950-20016

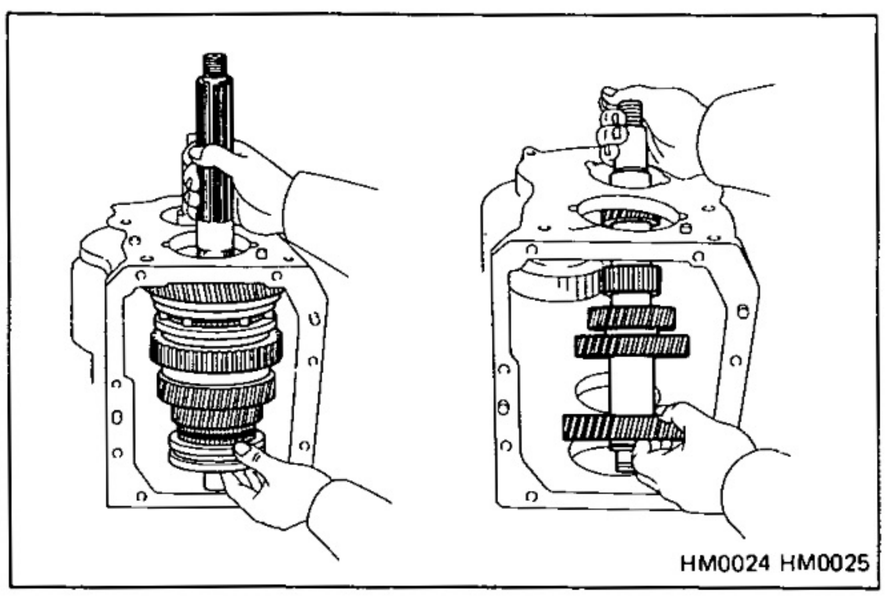

20. REMOVE OUTPUT SHAFT AND COUNTER GEAR

(a) Stand the transmission case on its front end.

(b) Remove the output shaft.

(c) Remove the counter gear.

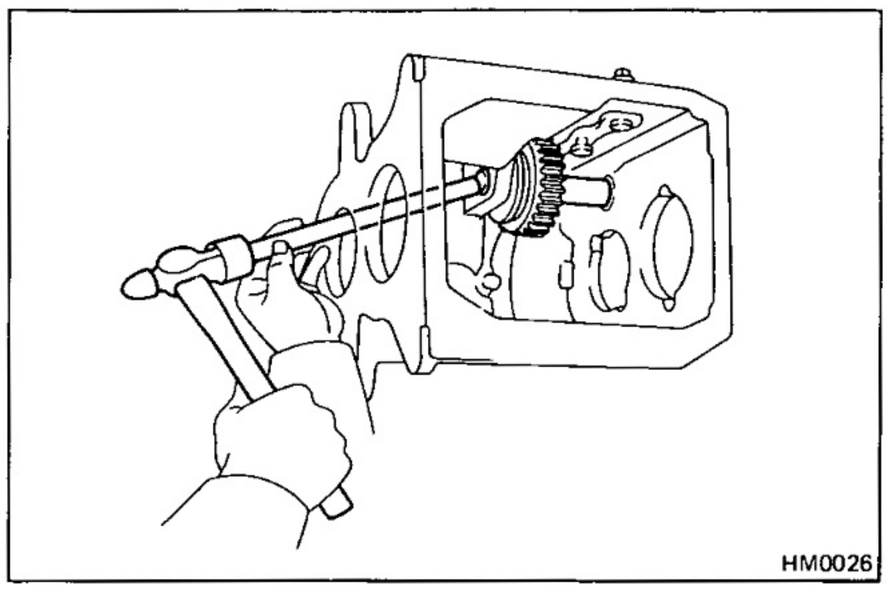
HM0026

21. REMOVE REVERSE IDLER GEAR AND SHAFT

(a) Tap out the reverse idler gear shaft toward the rear.

(b) Remove the gear and the woodruff key.

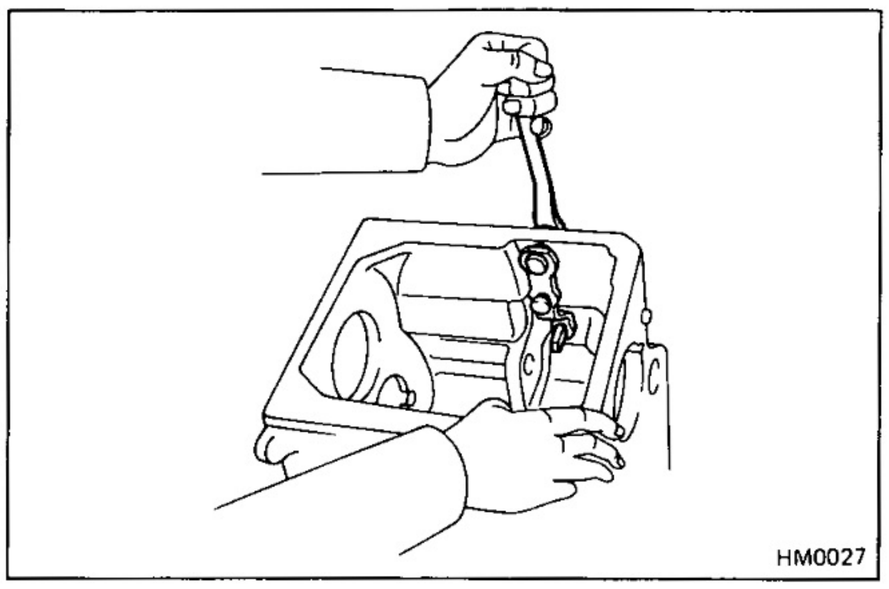
HM0027

22. REMOVE REVERSE SHIFT ARM FROM TRANSMISSION CASE

Remove the nut, washers, O-ring, pivot arm, and reverse shift arm.

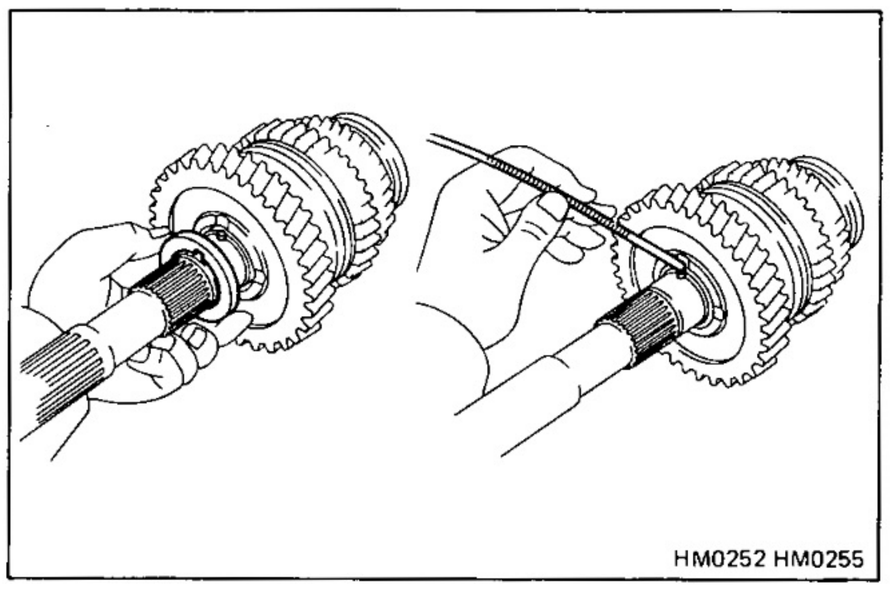
HM0252 HM0255

23. REMOVE FIRST GEAR THRUST WASHER AND STRAIGHT PIN

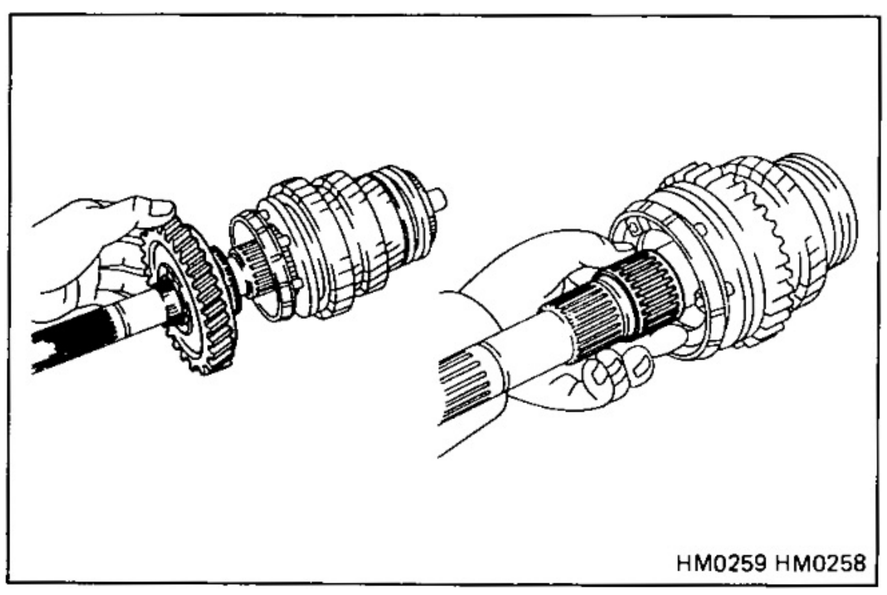
HM0259 HM0258

24. REMOVE FIRST GEAR AND NEEDLE ROLLER BEARING

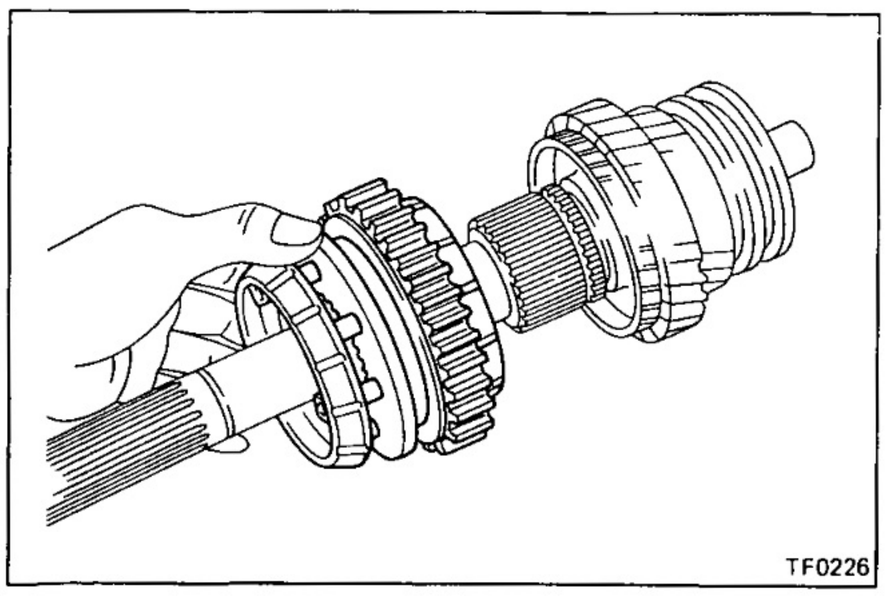
TF0226

25. REMOVE SYNCHRONIZER RING NO.1 ASSEMBLY

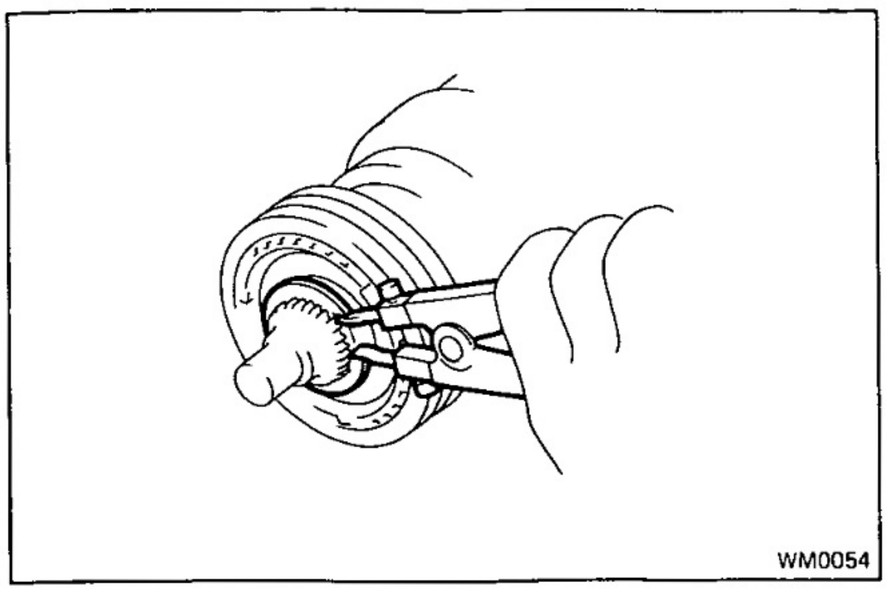

26. **REMOVE HUB SLEEVE NO. 2 ASSEMBLY, SYNCHRONIZER RING, THIRD GEAR, THIRD GEAR BUSHING, NEEDLE ROLLER BEARING AND SECOND GEAR FROM OUTPUT SHAFT**

(a) Using snap ring pliers, remove the snap ring.

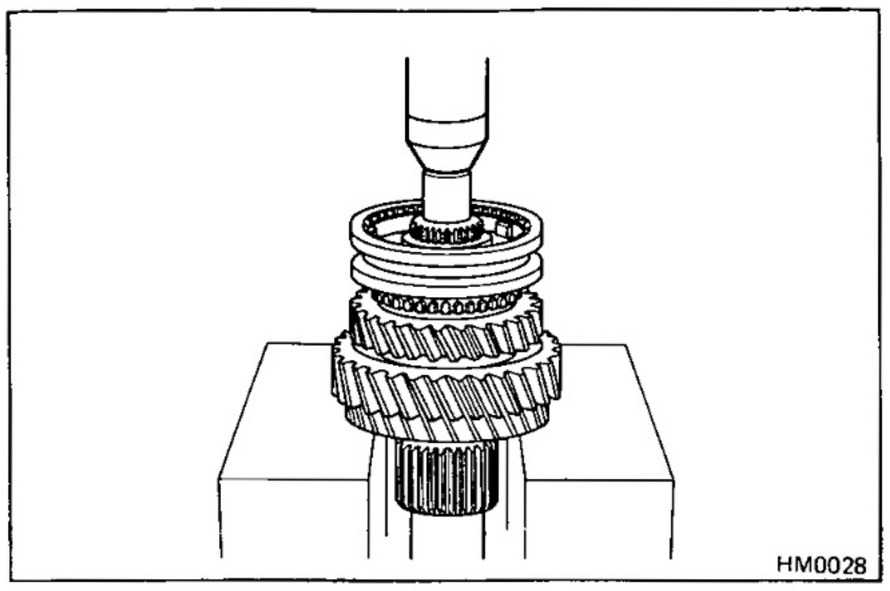

(b) Using a press, remove the hub sleeve No. 2 assembly, synchronizer ring, 3rd gear, 3rd gear bushing, needle roller bearing and 2nd gear.

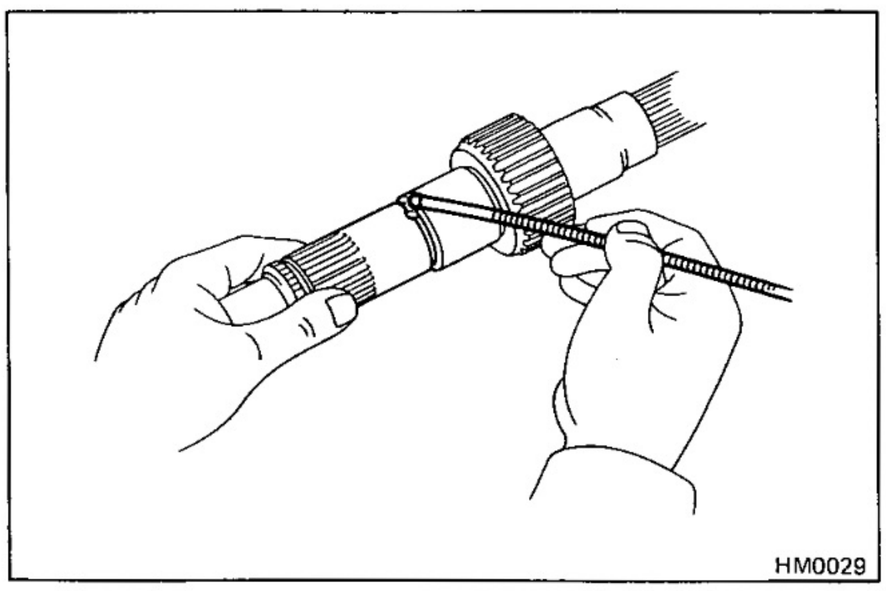

27. **REMOVE LOCKING BALL**

Using a magnetic finger, remove the locking ball.

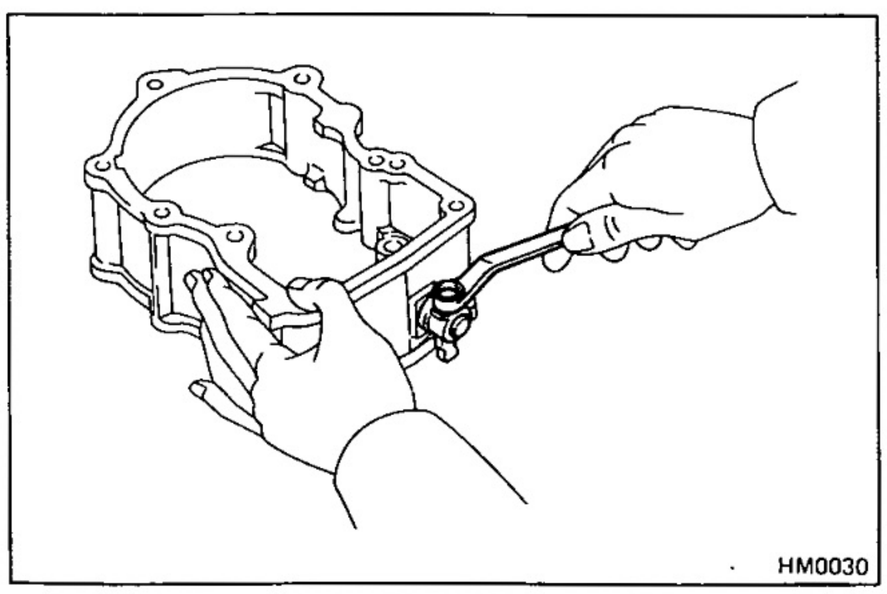

28. **REMOVE FIFTH SHIFT ARM AND SHAFT FROM TRANSFER ADAPTER (H55F)**

(a) Remove the bolt and lock plate.

(b) Remove the 5th shift arm and shaft.

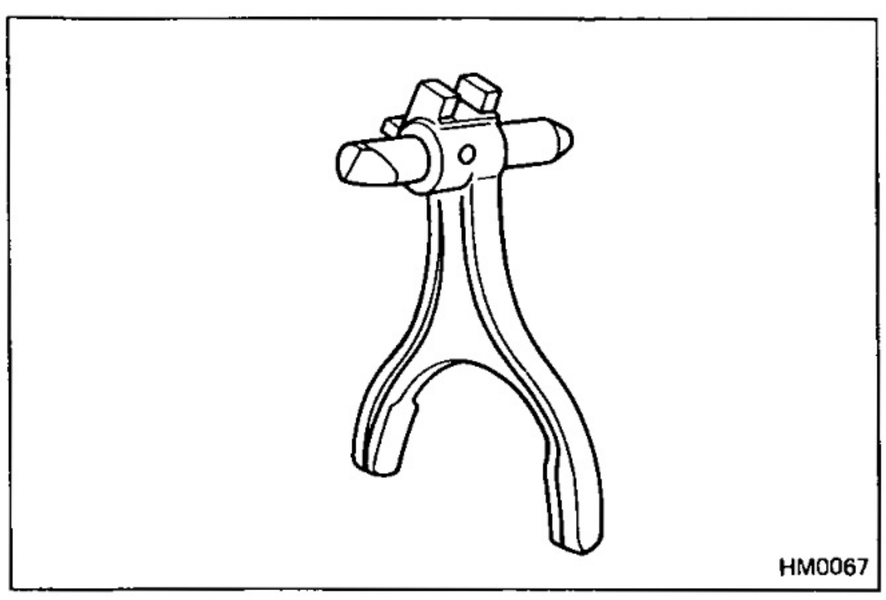

29. **DISASSEMBLE FIFTH SHIFT FORK**

(a) Using a pin punch and hammer, drive out the slotted pin.

(b) Remove the 5th shift fork from the shaft.

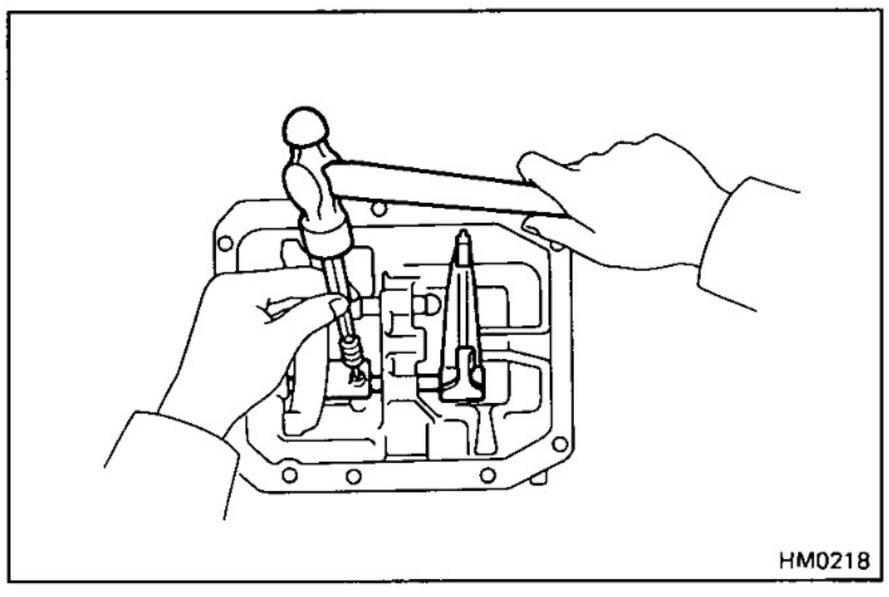
HM0218

DISASSEMBLY OF CASE COVER ASSEMBLY (H41)

(See page MT-7)

1. REMOVE THIRD AND FOURTH SHIFT HEAD, THIRD AND FOURTH SHIFT FORK AND SHAFT

(a) Using a pin punch and hammer, drive out the slotted spring pins from the shift head and the shift fork.

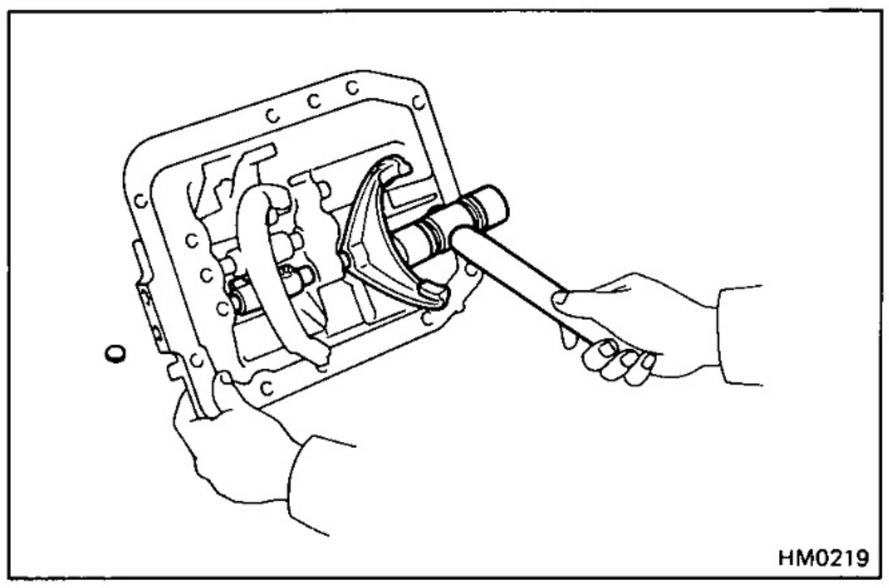
HM0219

(b) Using a hammer, drive out the shift fork shaft together with the tight plug.

NOTE: Cover the service hole with your hand to prevent the locking ball from flying out.

(c) Remove the fork shaft, shift head, interlock roller, locking ball and spring.

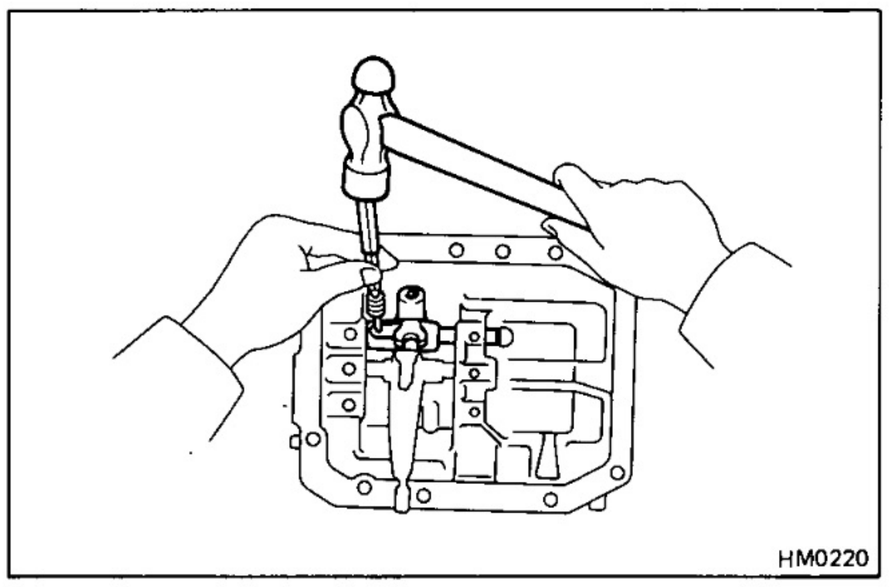
HM0220

2. REMOVE REVERSE SHIFT HEAD

(a) Using a pin punch and hammer, drive out the slotted spring pin from the reverse shift head.

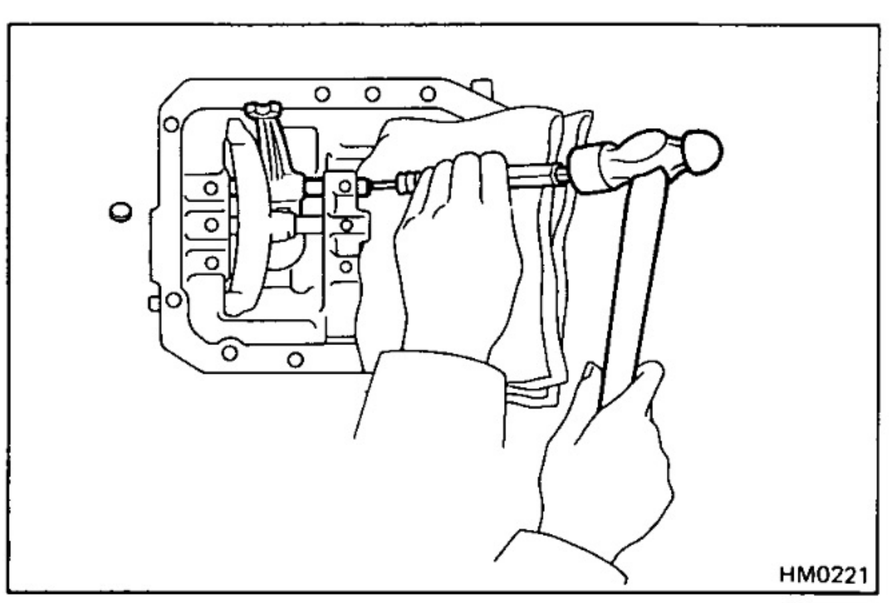
HM0221

(b) Using a pin punch and hammer, drive out the shift fork shaft together with the tight plug.

NOTE: Cover the service hole with your hand to prevent the locking ball from flying out.

(c) Remove the fork shaft, shift head, interlock roller, locking ball and spring.

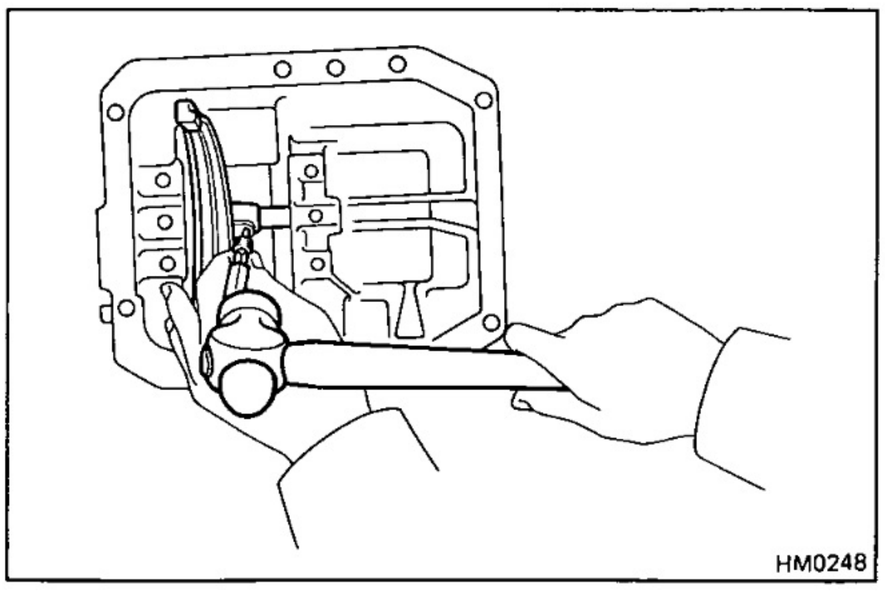
HM0248

3. REMOVE FIRST AND SECOND SHIFT FORK AND SHAFT

(a) Using a pin punch and hammer, remove the slotted spring pin from the shift fork.

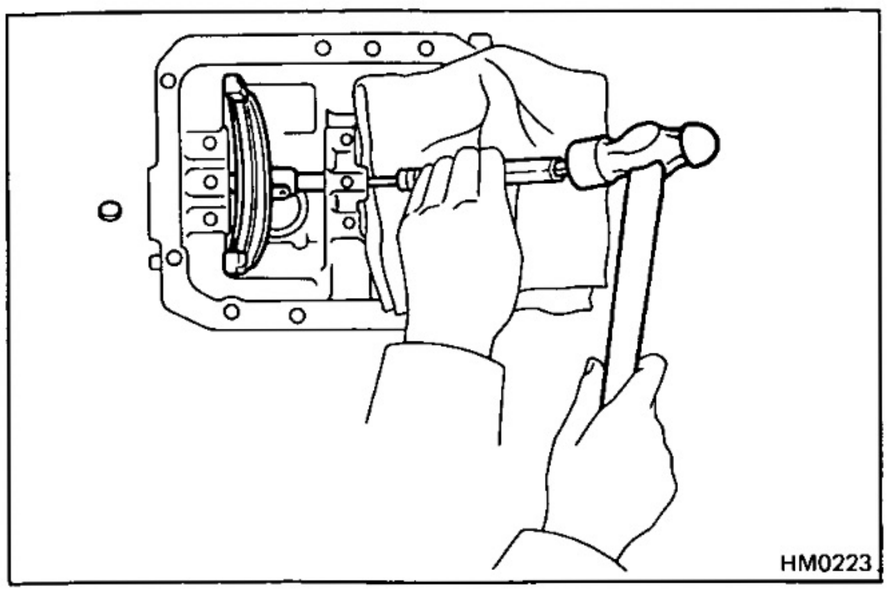

(b) Using a pin punch and hammer, drive out the shift fork shaft together with the tight plug.

NOTE: Cover the service hole with your hand to prevent the locking ball from flying out.

(c) Remove the fork shaft, shift fork, interlock pin, locking ball and spring.

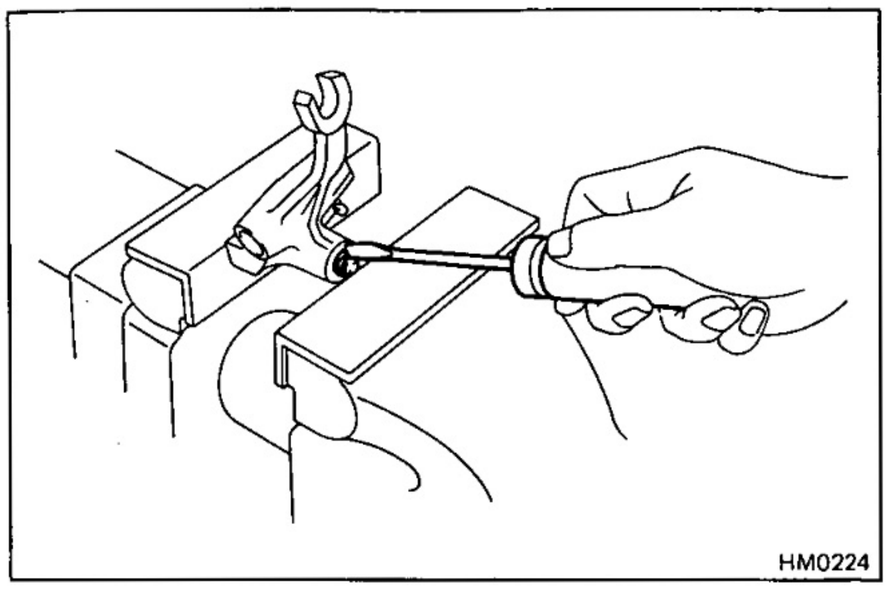

4. DISASSEMBLE SHIFT HEAD

(a) Compress the spring, and remove the C-washer.

CAUTION: Be careful as the plunger will spring out.

(b) Remove the plunger and compression spring.

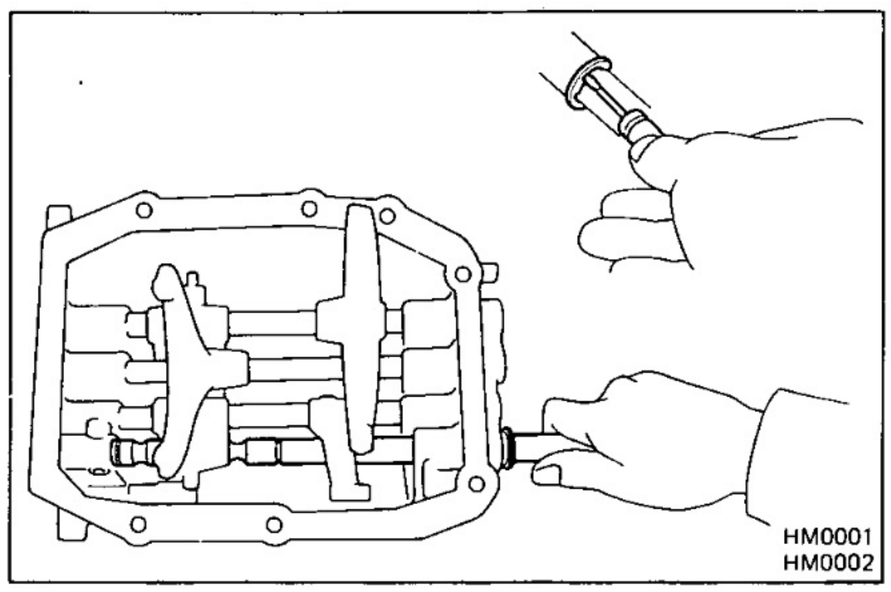

DISASSEMBLY OF CASE COVER ASSEMBLY (H55F)

(See page MT-8)

1. REMOVE FIFTH SHIFT ARM SHAFT

(a) Using a screwdriver, pry out the E-ring.

(b) Remove the shaft, two interlock balls, locking ball and spring.

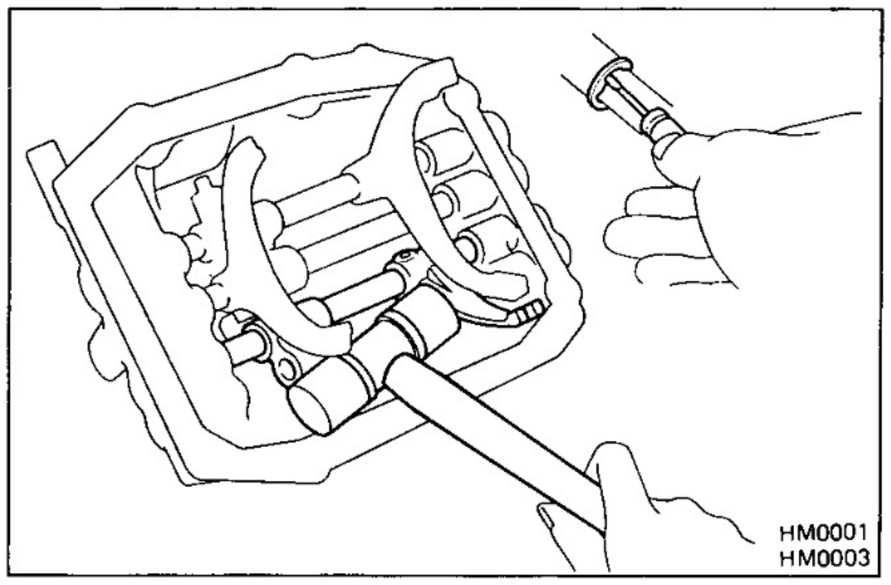

2. REMOVE FIFTH AND REVERSE SHIFT HEAD, REVERSE SHIFT FORK AND FORK SHAFT

(a) Using a screwdriver, pry out the E-rings.

(b) Using a plastic hammer, tap on the shift fork and remove the tight plug from the case cover.

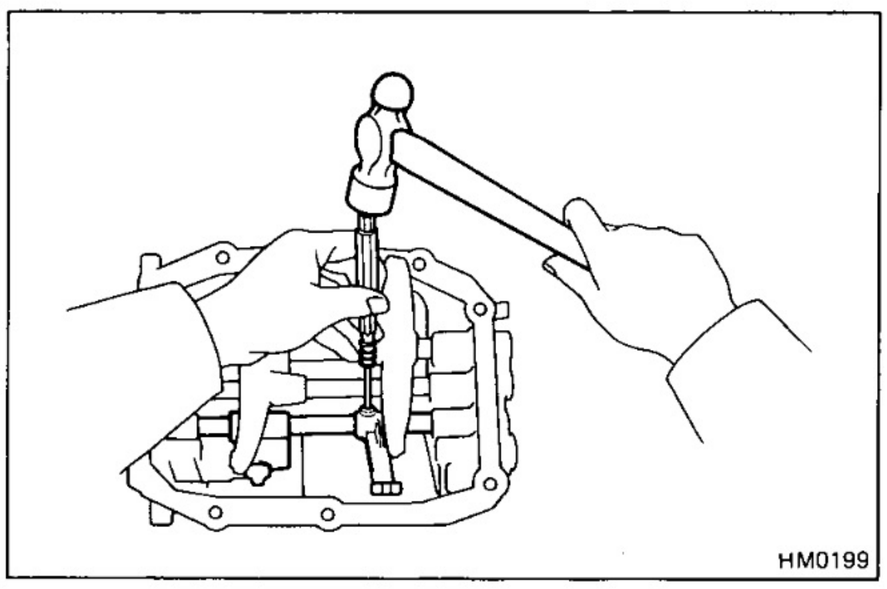

(c) Using a pin punch, drive out the slotted spring pin from the shift fork.

(d) Remove the fork shaft, shift fork, shift head, interlock roller, interlock pin, locking ball and spring.

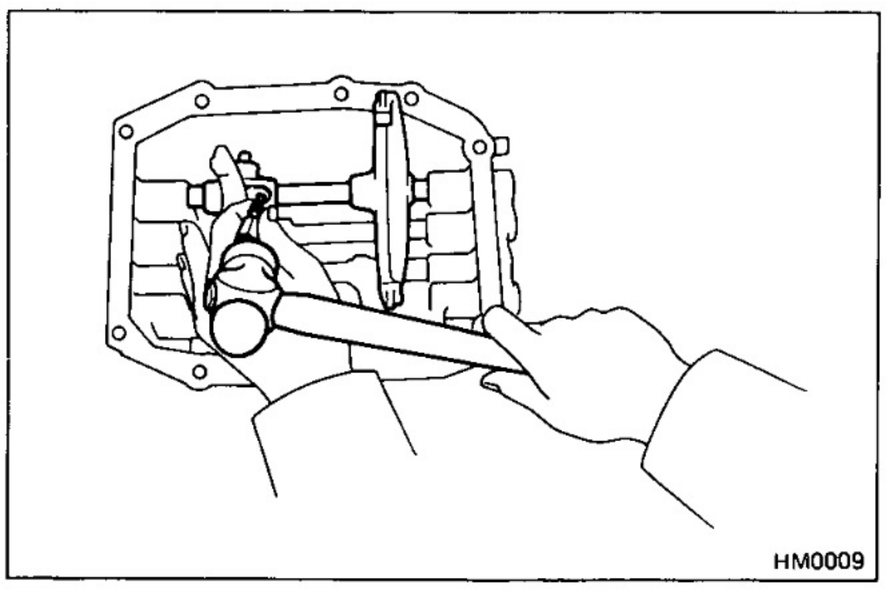

3. REMOVE FIRST AND SECOND SHIFT HEAD, SHIFT FORK AND FORK SHAFT

(a) Using a pin punch and hammer, drive out the slotted spring pin from the shift head.

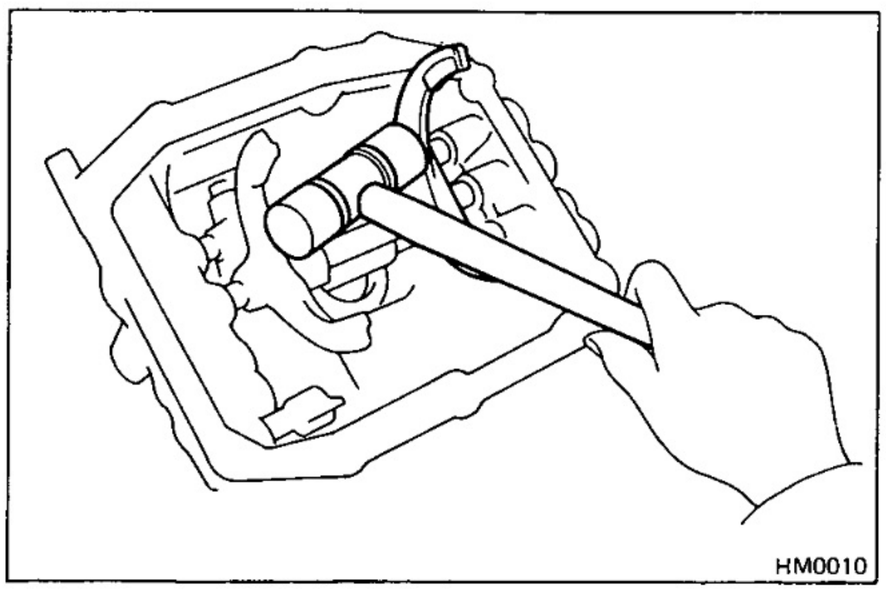

(b) Using a plastic hammer, tap the shift fork and remove the tight plug from the case cover.

(c) Using a pin punch and hammer, drive out the slotted spring pin from the shift fork.

(d) Remove the fork shaft, shift head, shift fork, locking ball and spring.

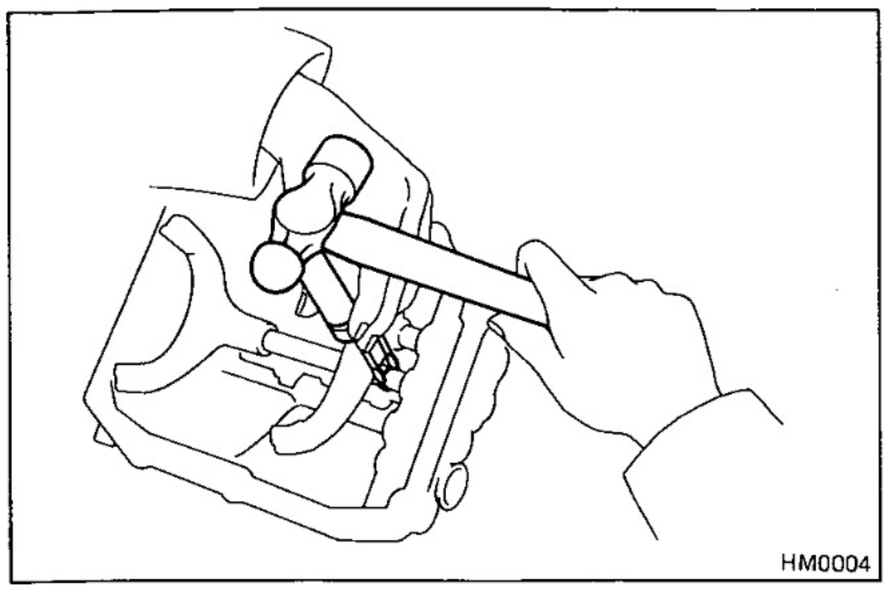

4. REMOVE THIRD AND FOURTH SHIFT FORK AND FORK SHAFT

(a) Using two screwdrivers and a hammer, tap out the snap ring.

(b) Using a plastic hammer, tap the shift fork and remove the tight plug from the case cover.

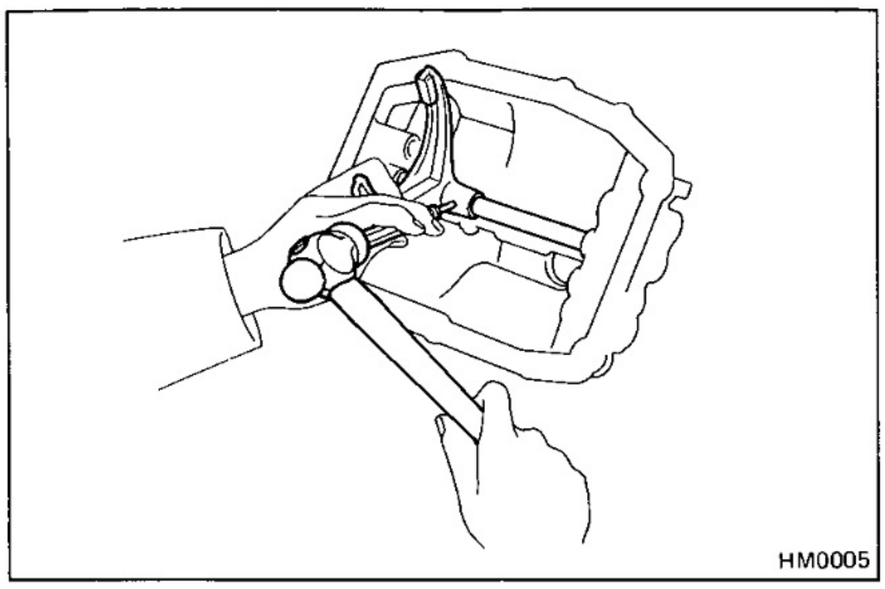

(c) Using a pin punch, drive out the slotted spring pin from the shift fork.

(d) Remove the fork shaft, shift fork, interlock roller, interlock pin, locking ball and spring.

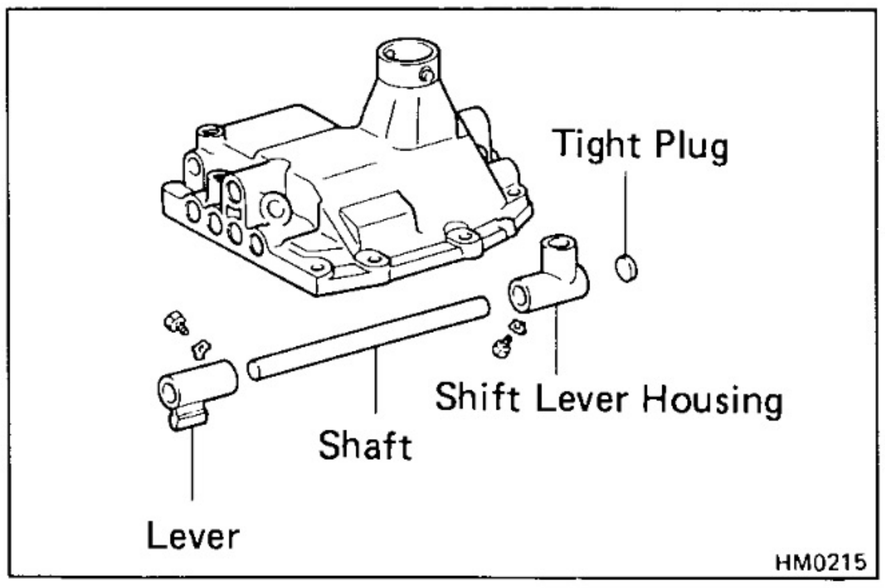

5. REMOVE SELECT LEVER, SHAFT AND SHIFT LEVER HOUSING

(a) Unstake the lock plate and remove the lock bolt from the shift lever housing.

(b) Using a plastic hammer, tap the select lever and remove the tight plug from the case cover.

(c) Unstake the lock plate and remove the lock bolt from the lever.

(d) Remove the shaft, select lever and shift lever housing.

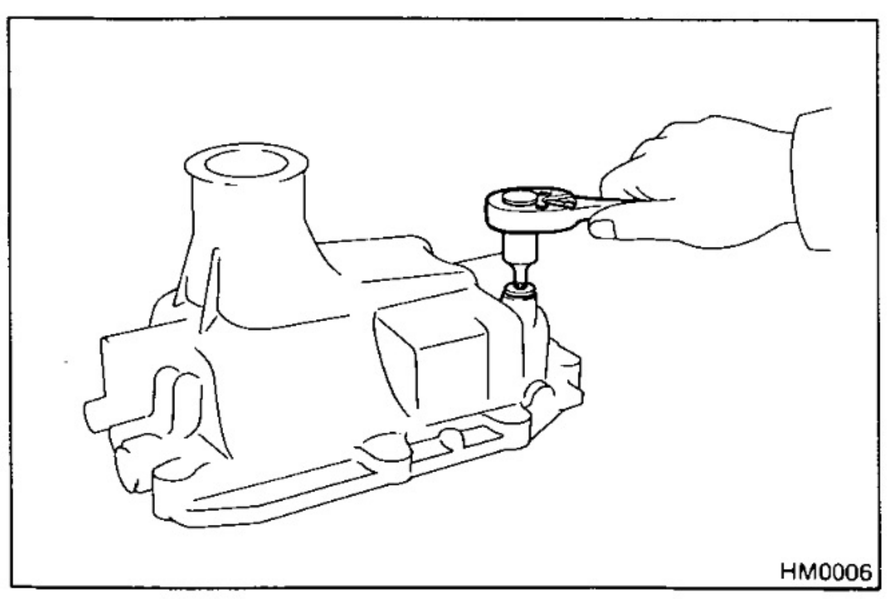

6. REMOVE REVERSE RESTRICT PIN

(a) Using a torx wrench, remove the straight screw plug.

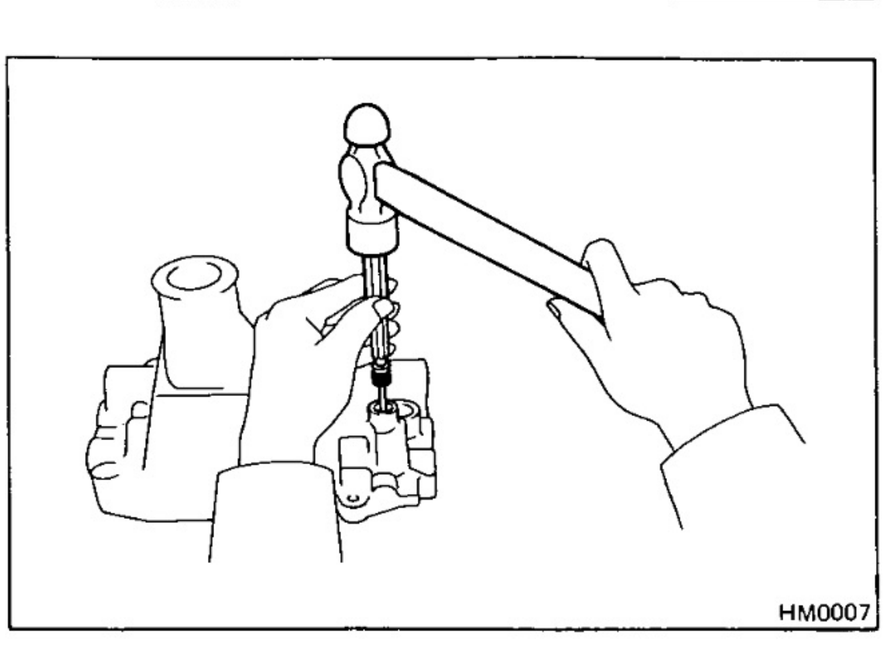

(b) Using a pin punch and hammer, drive out the slotted spring pin.

(c) Remove the restrict pin.

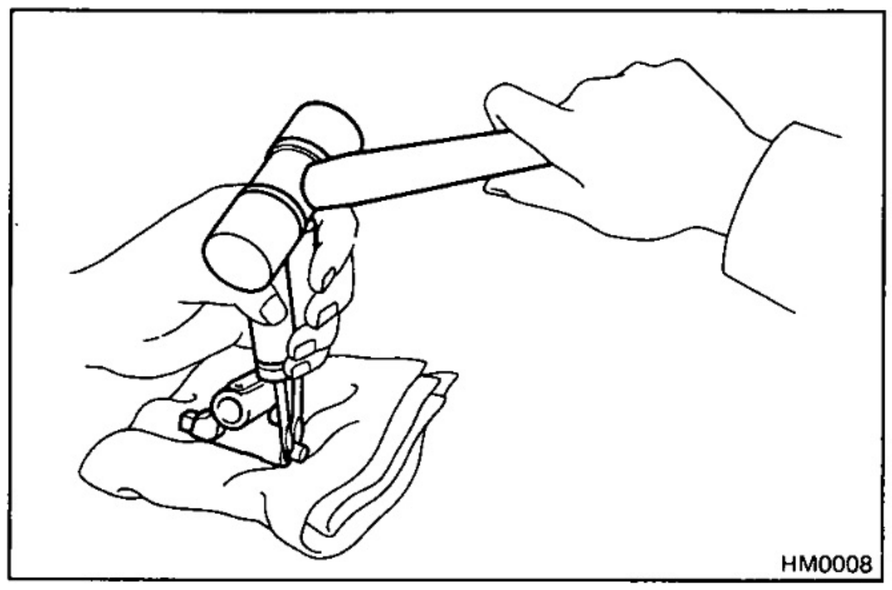

7. DISASSEMBLE SHIFT HEADS

(a) Using two screwdrivers and a hammer, remove the C-washer.

CAUTION: Be careful as the plunger will spring out.

(b) Remove the plunger and compression spring.

NOTE: Be careful not to mix up the springs and plungers.

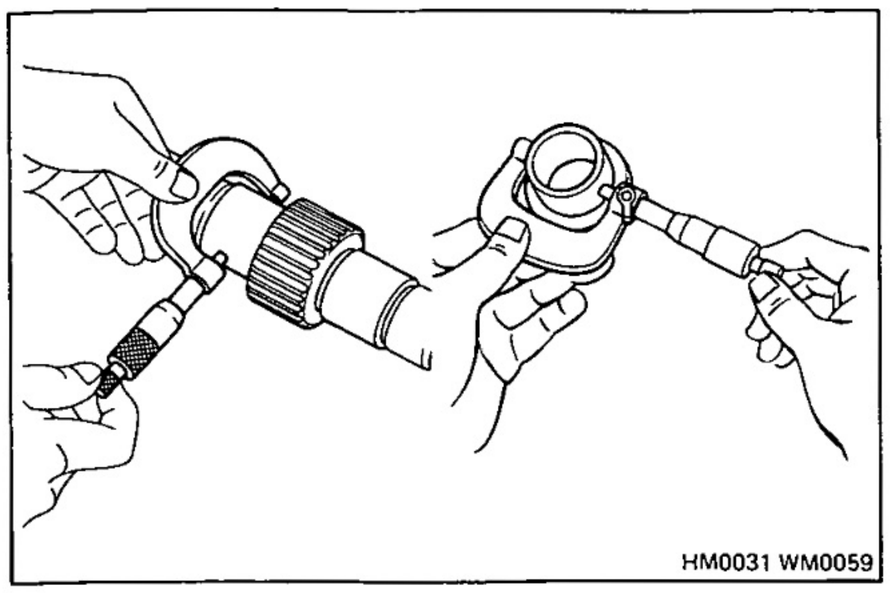
HM0031 WM0059

INSPECTION OF TRANSMISSION COMPONENTS

1. INSPECT OUTPUT SHAFT AND BUSHING

(a) Check the output shaft and bushing for wear or damage.

(b) Using a micrometer, measure the outer diameter of the output shaft journal and bushing.

Minimum diameter

1st and 2nd gear journal	**43.984 mm (1.7317 in.)**
Bushing	**47.910 mm (1.8862 in.)**

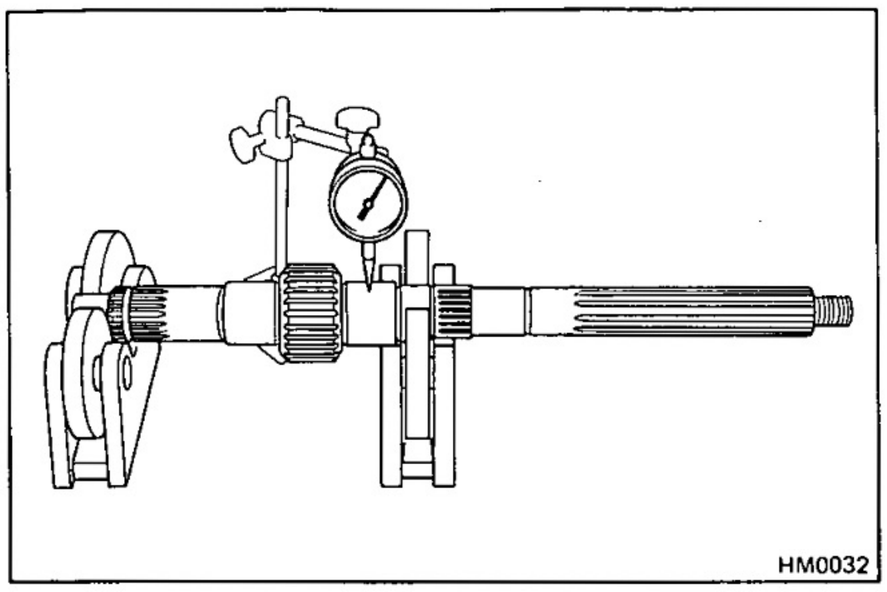
HM0032

(c) Using a dial indicator, measure the shaft runout.

Maximum runout: 0.03 mm (0.0012 in.)

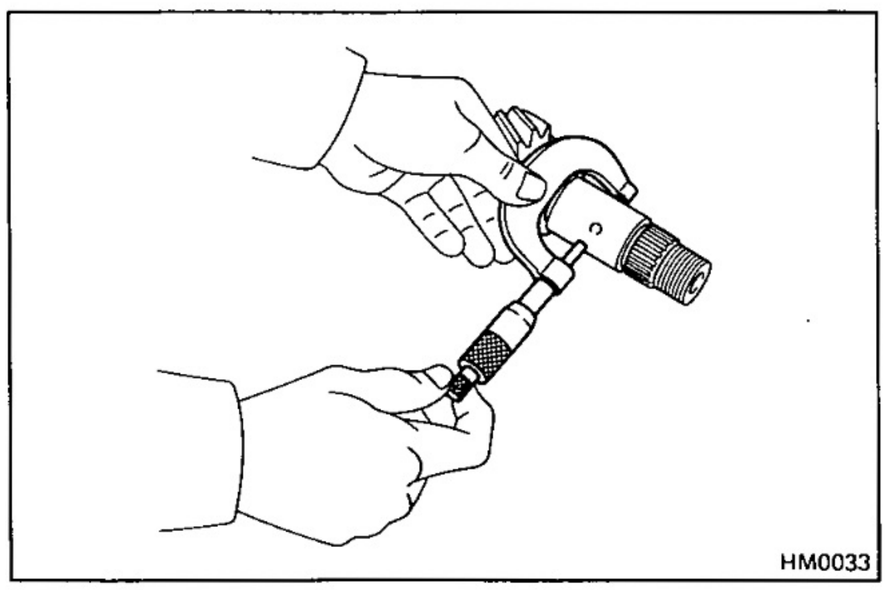
HM0033

2. INSPECT COUNTER GEAR AND BEARINGS

(a) Check the gear teeth for wear or damage.

(b) Check the bearings for wear or damage.

(c) Using a micrometer, measure the outer diameter of the counter gear journal. (H55F)

Minimum diameter:

Counter 5th gear journal	**31.984 mm (1.2592 in.)**
Rear bearing journal	**39.957 mm (1.5731 in.)**

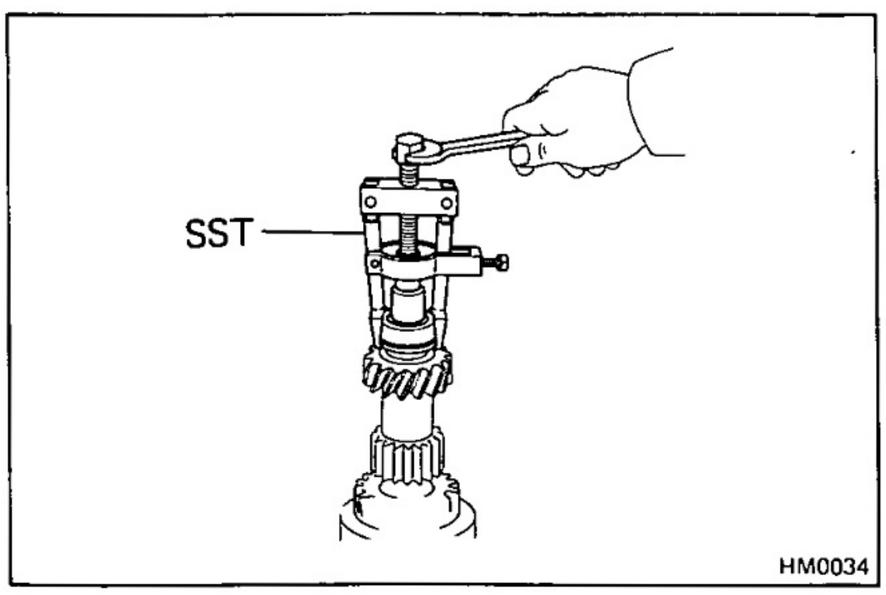

HM0034

3. IF NECESSARY, REPLACE COUNTER REAR BEARING INNER RACE (H41)

(a) Using SST, remove the bearing inner race.

SST 09602-10010

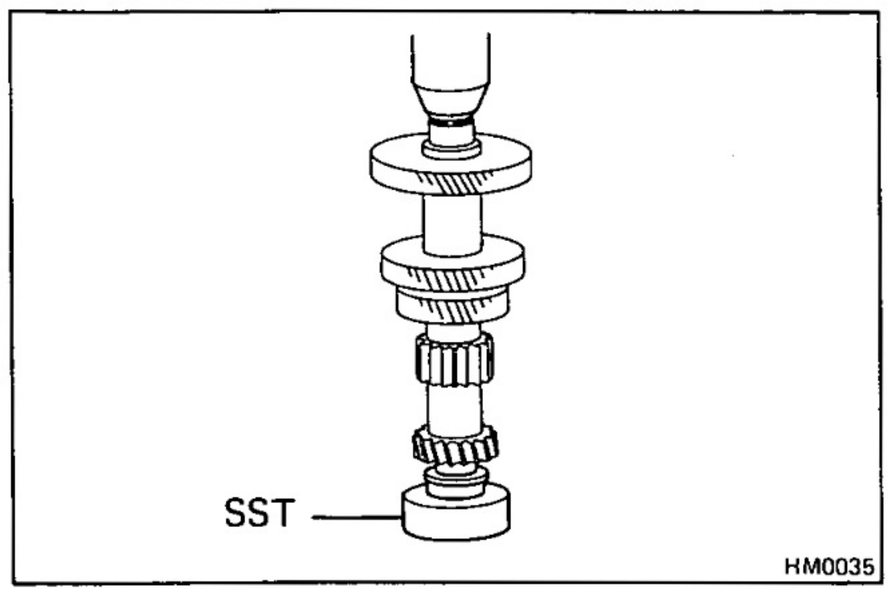

HM0035

(b) Using SST and a press, install the bearing inner race.

SST 09515-21010

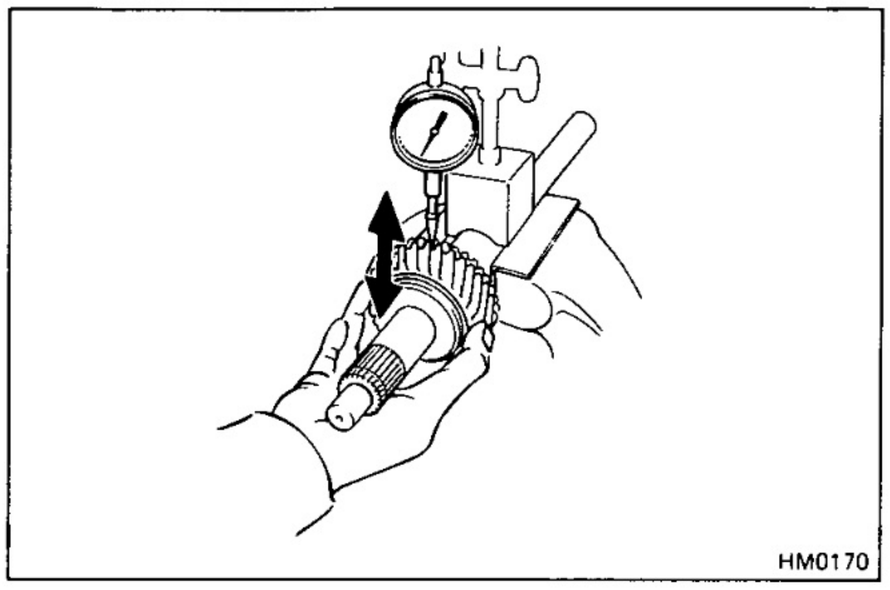
HM0170

4. INSPECT OIL CLEARANCE OF FIRST, SECOND AND COUNTER FIFTH GEARS

Using a dial indicator, measure the oil clearance between the gear and shaft with the needle roller bearing installed.

Standard clearance:

1st and 2nd gears	**0.020 – 0.073 mm (0.0008 – 0.0029 in.)**
Counter 5th gear	**0.015 – 0.068 mm (0.0006 – 0.0027 in.)**

Maximum clearance:

1st and 2nd gears	**0.08 mm (0.0031 in.)**
Counter 5th gear	**0.07 mm (0.0028 in.)**

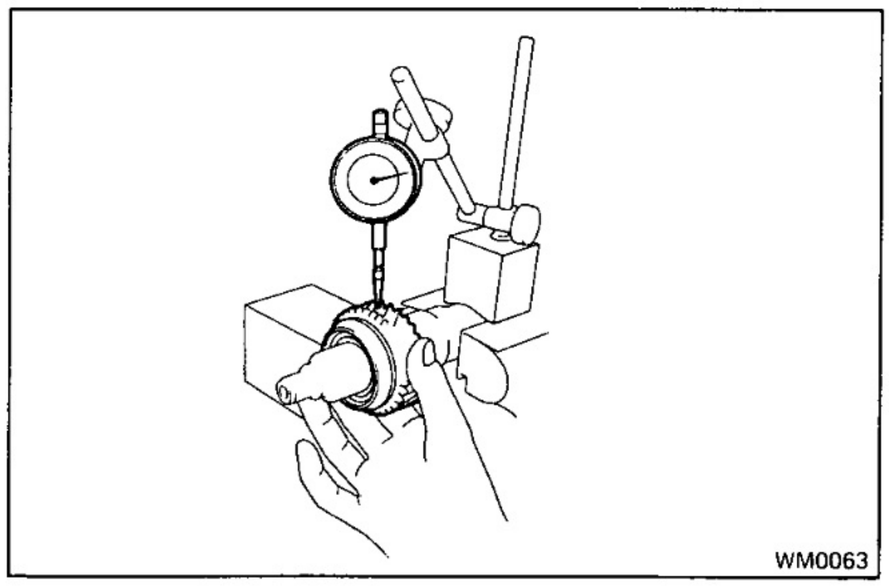
WM0063

5. INSPECT OIL CLEARANCE OF THIRD GEAR

Using a dial indicator, measure the oil clearance between the gear and bushing.

Standard clearance: **0.065 – 0.115 mm (0.0026 – 0.0045 in.)**

Maximum clearance: **0.12 mm (0.0047 in.)**

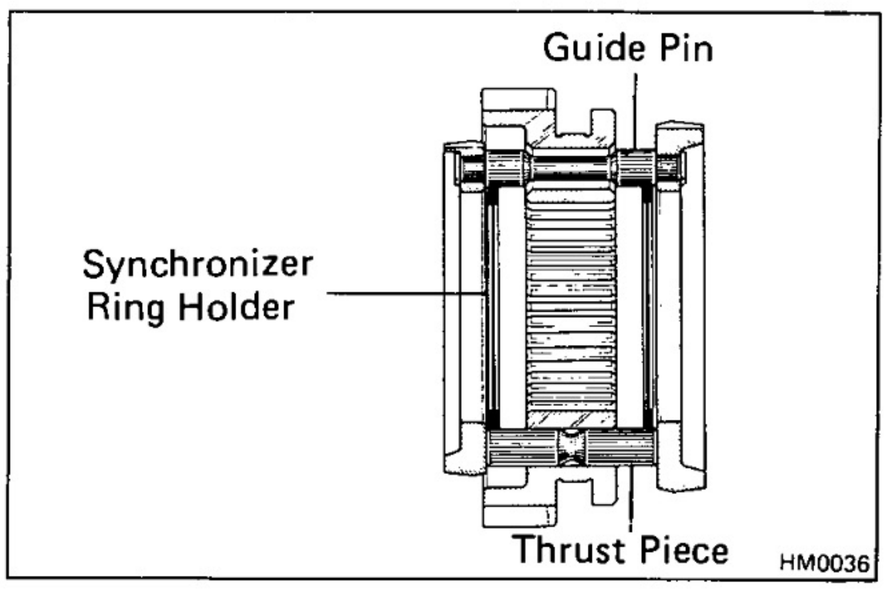

HM0036

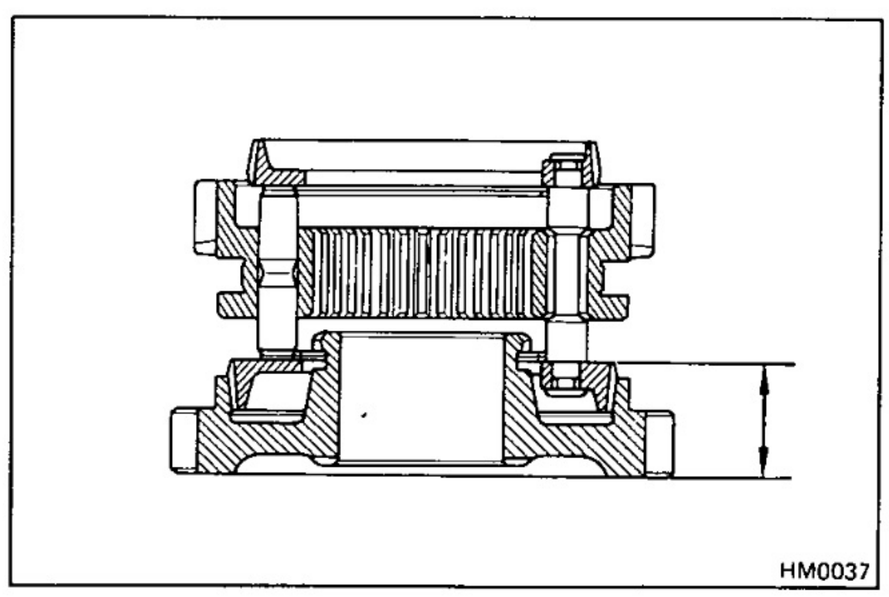
HM0037

6. INSPECT SYNCHRONIZER RINGS OF FIRST AND SECOND GEARS

(a) Check the inner spline for wear or damage.

(b) Check the raised position of the guide pins for wear or damage.

(c) Check the thrust pieces and gear moving parts for wear or damage.

(d) Check the guide pin rivet staked parts for play or damage.

(e) Check the synchronizer ring holders for deterioration or wear.

(f) With the synchronizer ring pressed into the gear, measure the distance as shown.

Minimum distance:

1st gear	**32.5 mm (1.280 in.)**
2nd gear	**38.0 mm (1.496 in.)**

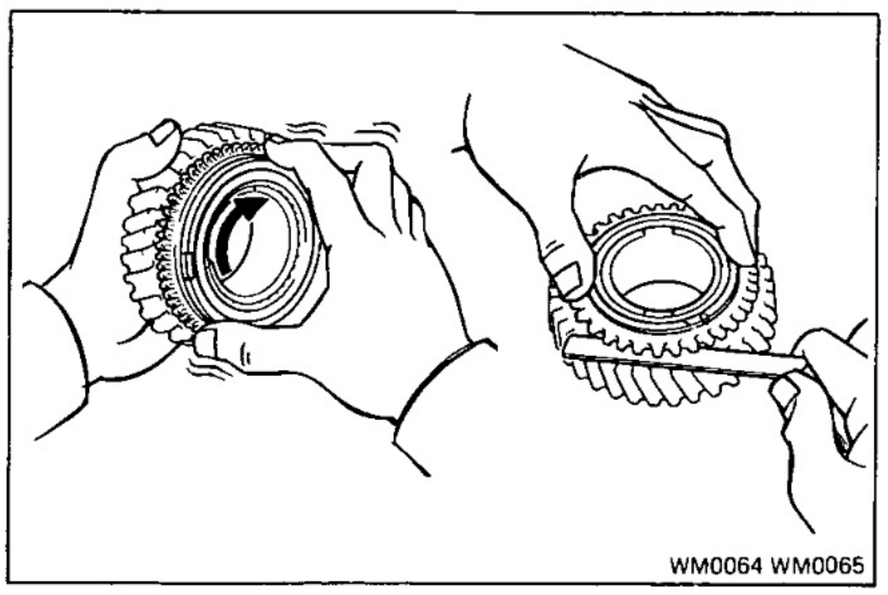
WM0064 WM0065

7. INSPECT SYNCHRONIZER RINGS OF THIRD GEAR, INPUT SHAFT AND GEAR SPLINE PIECE NO. 5 (H55F)

(a) Check the synchronizer rings for wear or damage.

(b) Turn the ring and push it in to check the braking action.

(c) Measure the clearance between the synchronizer ring back and gear spline end.

Minimum clearance: **0.8 mm (0.031 in.)**

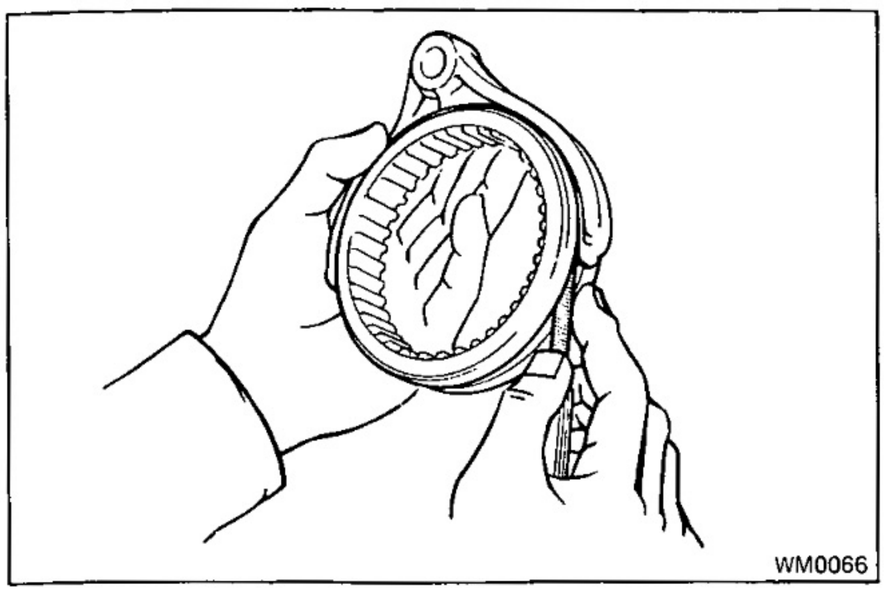

8. **INSPECT SHIFT FORKS AND HUB SLEEVES**

(a) Check the contact surfaces for wear or damage.

(b) Measure the clearance between the hub sleeve and shift fork.

Maximum clearance: 0.8 mm (0.031 in.)

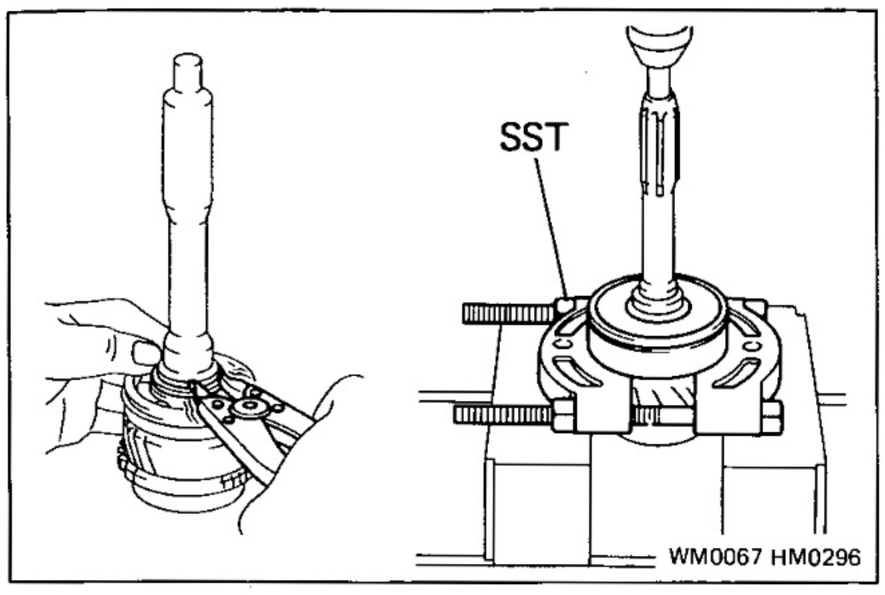

9. **INSPECT INPUT SHAFT AND BEARING**

Check for wear or damage.

10. **IF NECESSARY, REPLACE INPUT SHAFT BEARING**

(a) Using snap ring pliers, remove the snap ring.

(b) Using SST and a press, remove the bearing.

SST 09950-00020

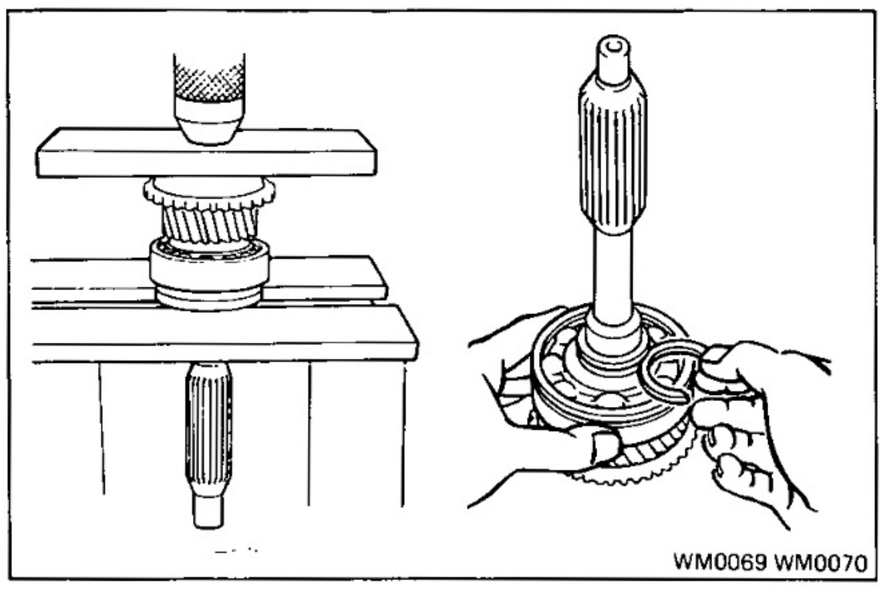

(c) Using a press, install a new bearing.

CAUTION: Do not press in the bearing outer race.

(d) Select a snap ring that will allow minimum axial play and install it on the shaft.

Standard play: 0 – 0.10 mm (0 – 0.0039 in.)

Thickness	mm (in.)
3.20 – 3.31	(0.1260 – 0.1303)
3.31 – 3.42	(0.1303 – 0.1346)

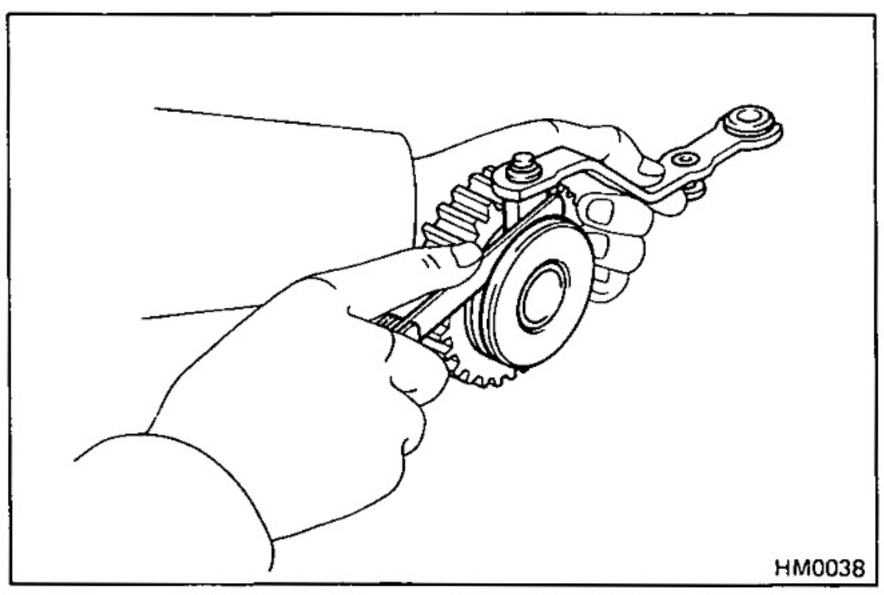

11. **INSPECT REVERSE SHIFT ARM AND REVERSE IDLER GEAR**

(a) Check for wear or damage.

(b) Measure the clearance between the shift arm shoe and idler gear groove.

Maximum clearance: 0.7 mm (0.028 in.)

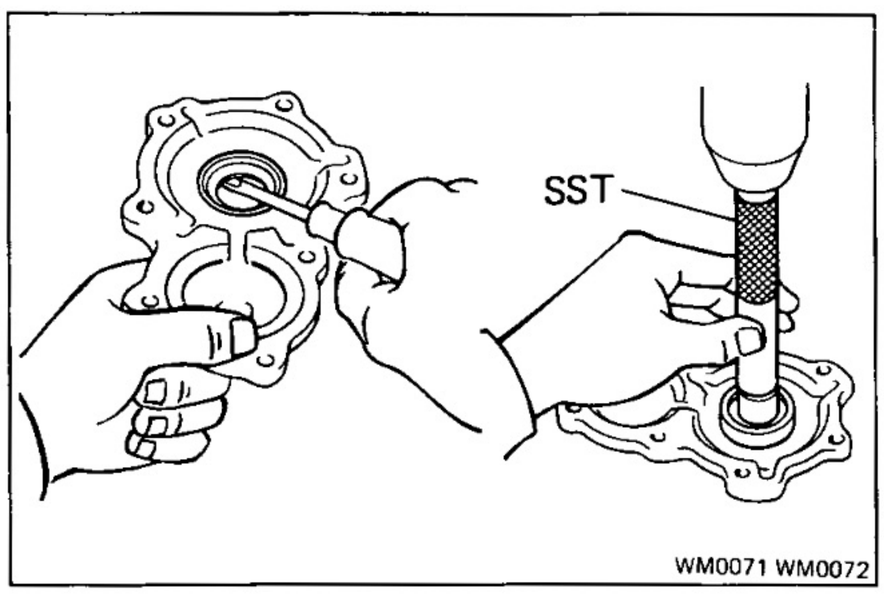

12. **INSPECT FRONT BEARING RETAINER**

(a) Check for wear or damage.

(b) Check the oil seal for wear or damage.

13. **IF NECESSARY, REPLACE FRONT BEARING RETAINER OIL SEAL**

(a) Using a screwdriver, pry out the oil seal.

(b) Using SST, press in a new oil seal.

SST 09608-20011

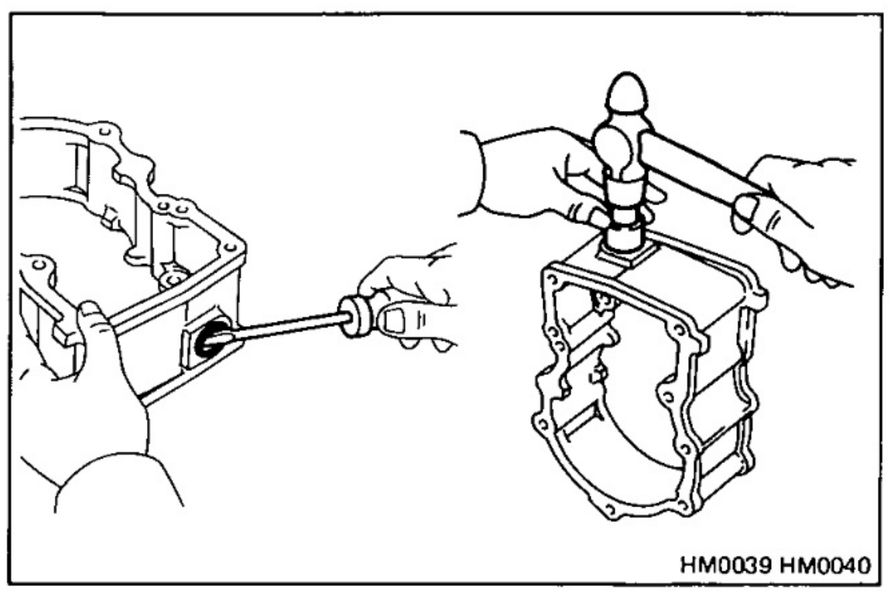
HM0039 HM0040

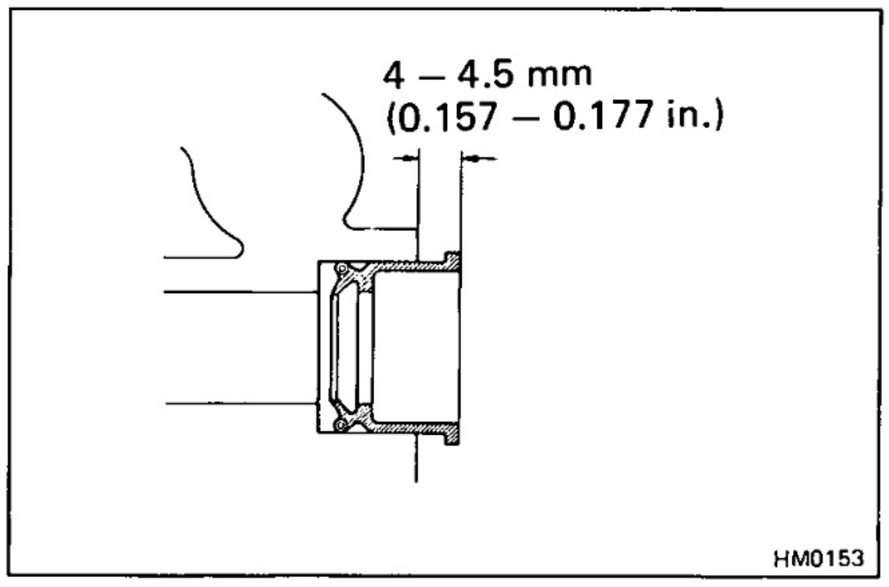

HM0153

14. **INSPECT TRANSFER ADAPTER**
    (a) Check for damage.
    (b) Check the oil seal for wear or damage. (H55F)

15. **IF NECESSARY, REPLACE FIFTH SHIFT ARM OIL SEAL ON TRANSFER ADAPTER (H55F)**
    (a) Using a screwdriver, pry out the oil seal.
    (b) Using a socket wrench and hammer, drive in a new oil seal.

    Drive in depth: 1.0 mm (0.039 in.)

16. **IF NECESSARY, REPLACE FIFTH FORK SHAFT OIL SEAL ON CASE COVER (H55F)**
    (a) Using a screwdriver, pry out the oil seal.
    (b) Using SST, drive in a new oil seal.

    SST 09304-47010

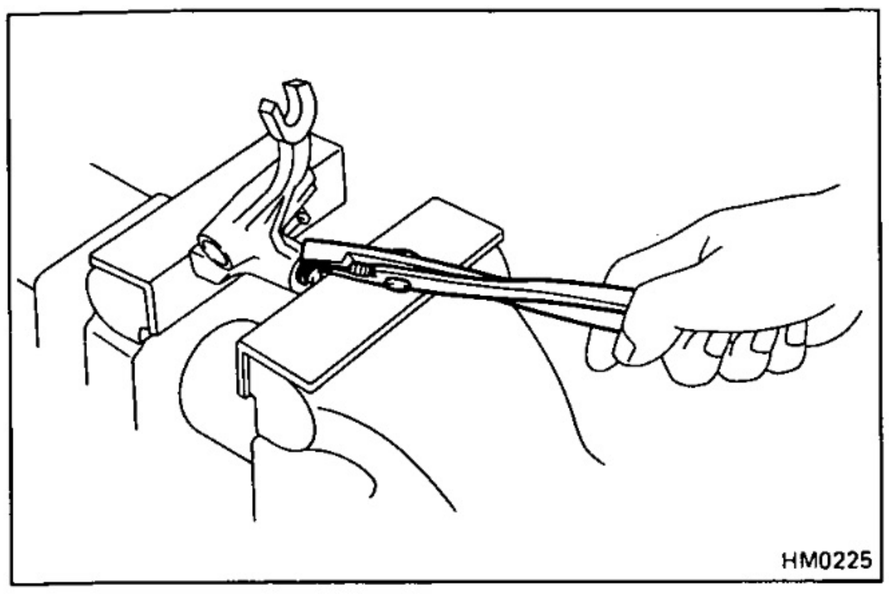
HM0225

ASSEMBLY OF CASE COVER ASSEMBLY (H41)

(See page MT-7)

1. ASSEMBLE REVERSE SHIFT HEAD

(a) Install the compression spring and plunger into the shift head.

(b) Press the end of the plunger, and install a new C-washer.

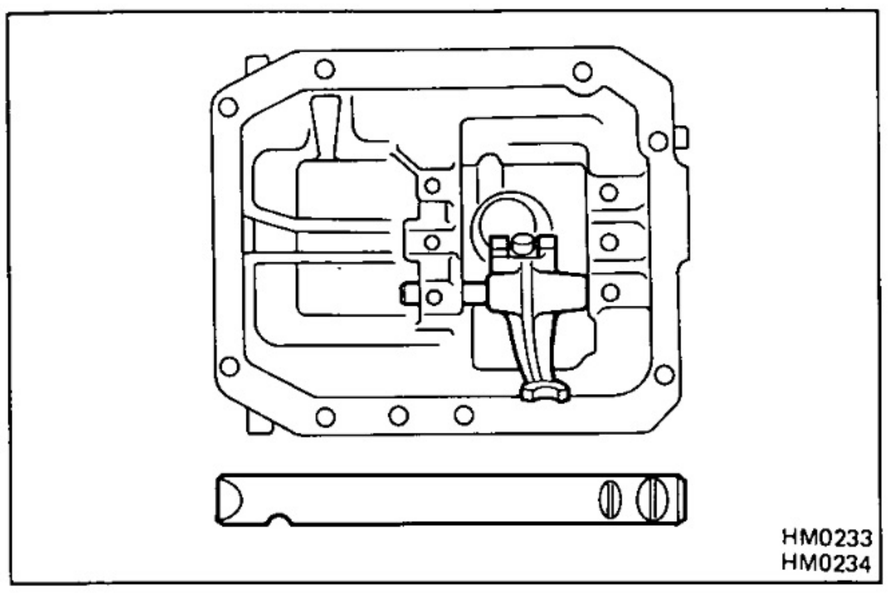
HM0233
HM0234

2. INSTALL REVERSE SHIFT HEAD AND SHAFT

(a) Install the spring and locking ball.

(b) Insert the fork shaft through the reverse shift head.

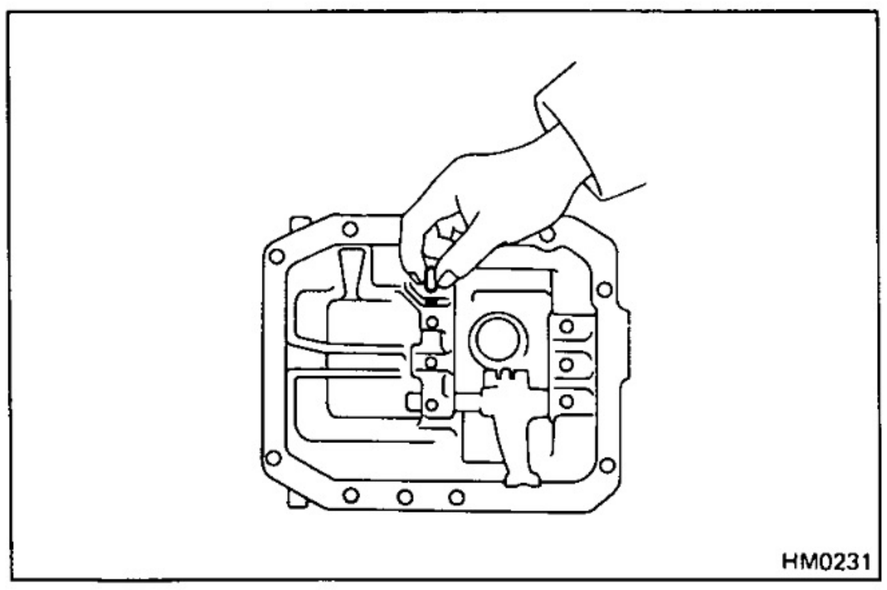
HM0231

3. INSTALL FIRST AND SECOND SHIFT FORK AND SHAFT

(a) Install the spring and locking ball.

(b) Coat the interlock roller with MP grease and install it in the case cover.

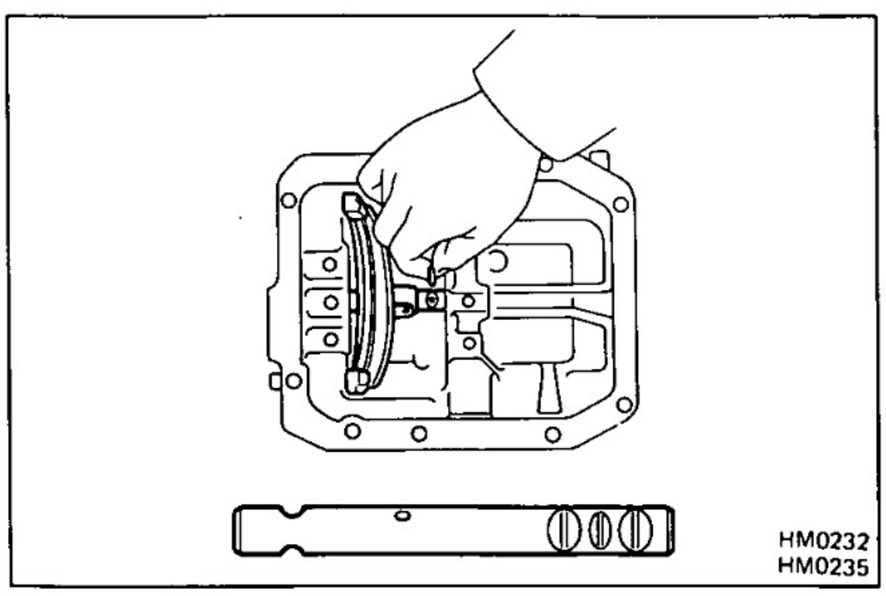
HM0232
HM0235

(c) Coat the interlock pin with MP grease and install it in the shaft.

(d) Insert the fork shaft through the shift fork.

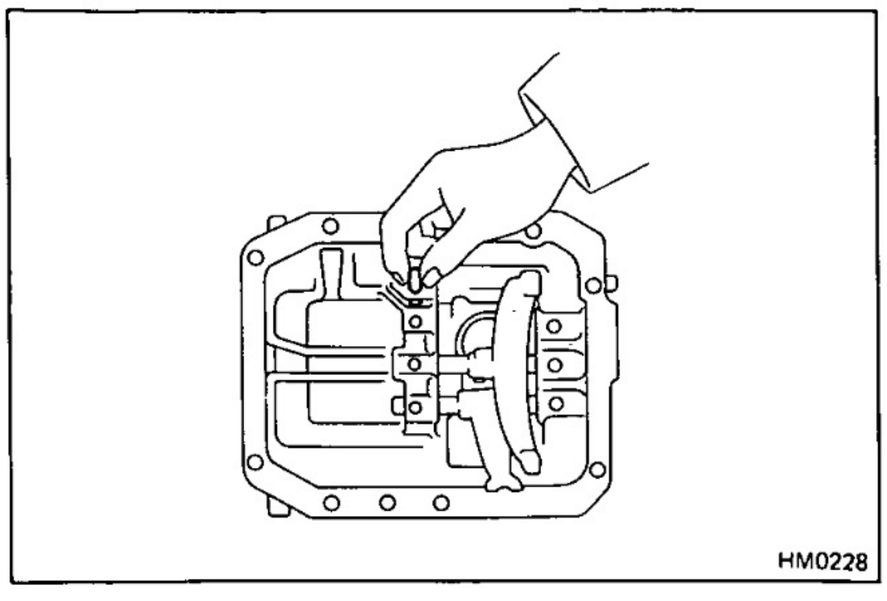
HM0228

4. INSTALL THIRD AND FOURTH SHIFT FORK AND SHAFT

(a) Install the spring and locking ball.

(b) Coat the interlock roller with MP grease and install it in the case cover.

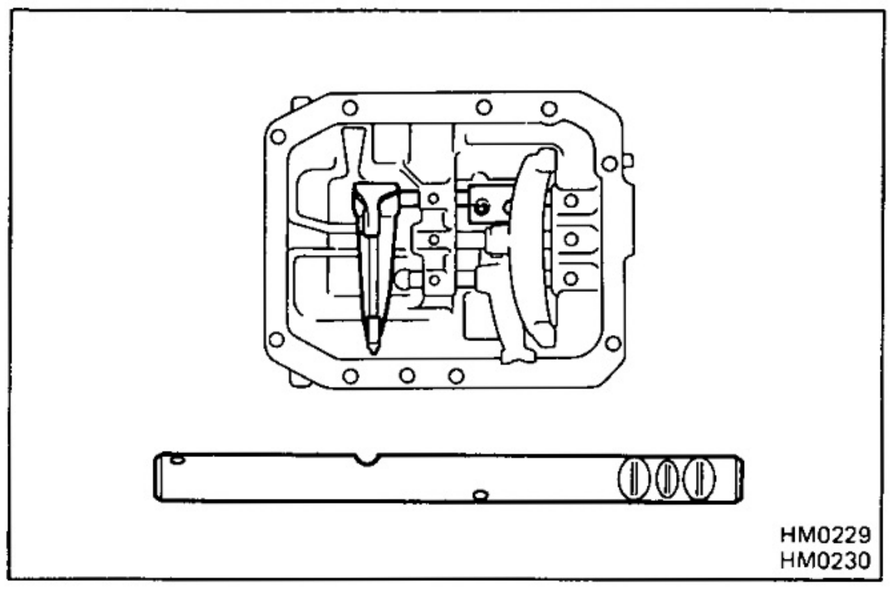
HM0229
HM0230

(c) Insert the fork shaft through the 3rd and 4th shift fork.

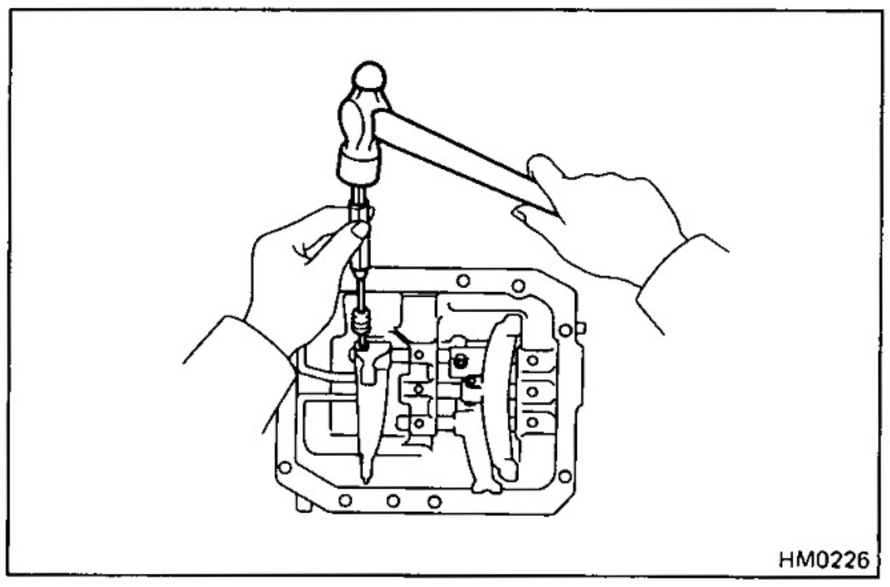
HM0226

5. INSTALL SLOTTED SPRING PINS

(a) Align the pin hole of each shaft with the fork, head and the other fork respectively.

(b) Using a pin punch and hammer, drive in the slotted spring pins until they are flush with the fork.

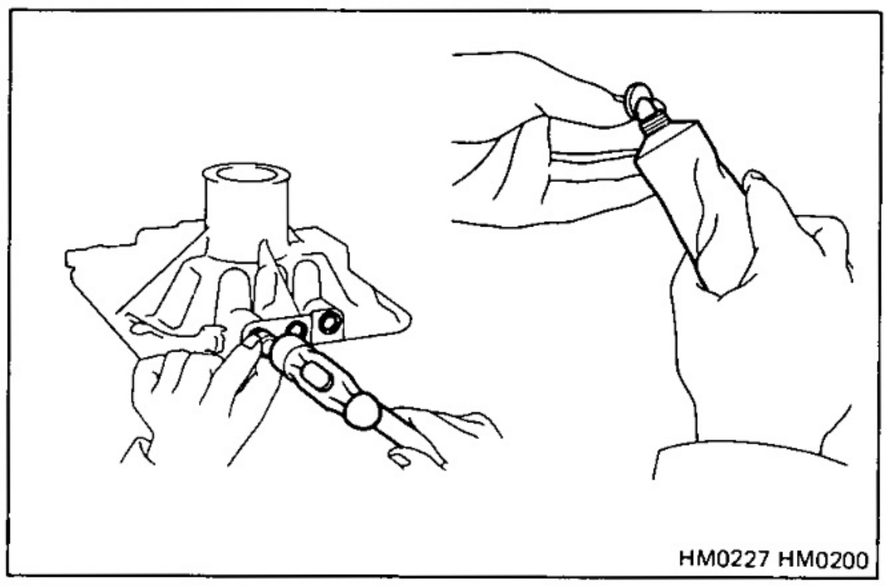
HM0227 HM0200

6. INSTALL TIGHT PLUGS

Apply liquid sealer to the tight plugs and drive them into the case cover as shown.

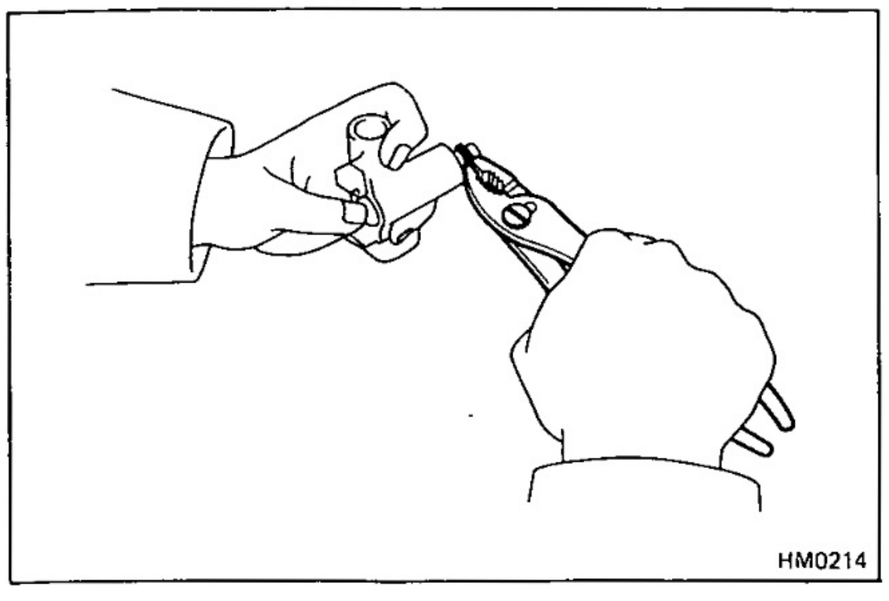
HM0214

ASSEMBLY OF CASE COVER ASSEMBLY (H55F)

(See page MT-8)

1. ASSEMBLE SHIFT HEADS

(a) Install the compression spring and plunger into the shift head.

(b) Press the end of the plunger, and install a new C-washer.

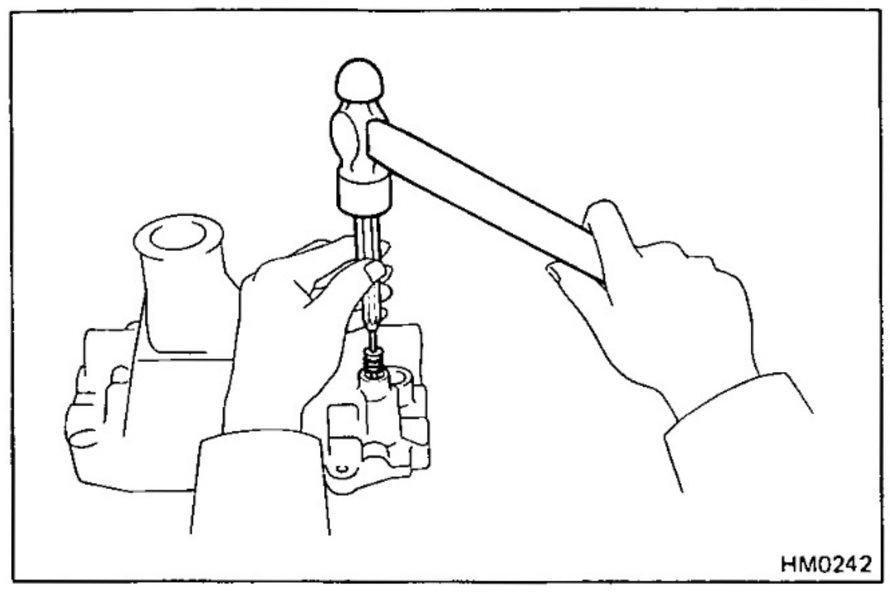
HM0242

2. INSTALL REVERSE RESTRICT PIN

(a) Insert the reverse restrict pin into the case cover.

(b) Align the pin holes of the case cover and reverse restrict pin, and drive in the slotted spring pin.

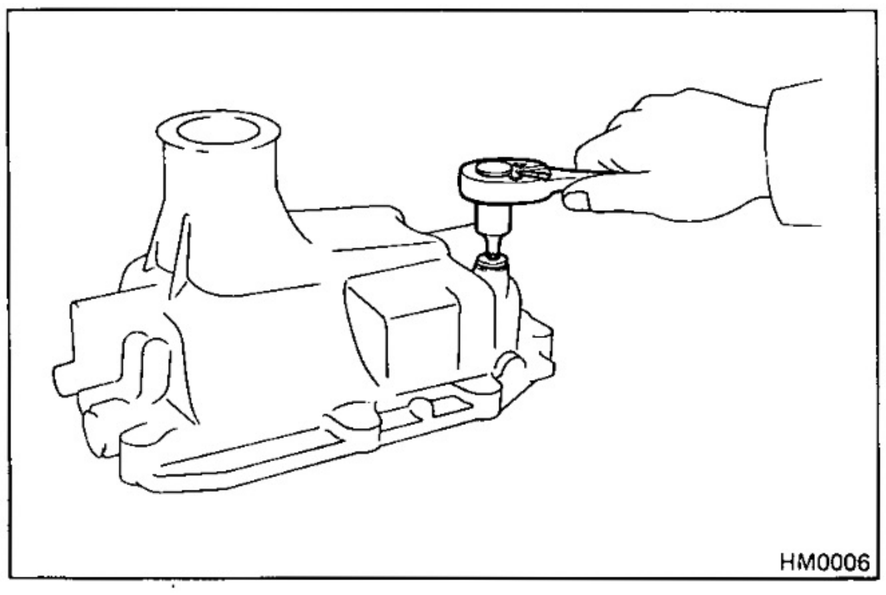
HM0006

(c) Apply liquid sealer to the plug and torque the plug.

Torque: 190 kg-cm (14 ft-lb, 19 N·m)

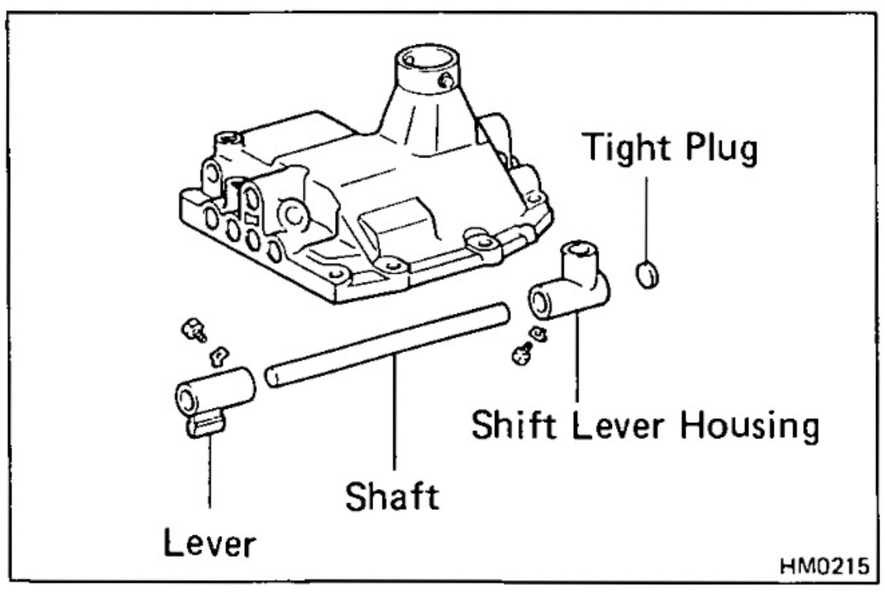

HM0215

3. INSTALL SELECT LEVER, SHAFT AND SHIFT LEVER HOUSING

(a) Insert the shaft through the select lever and shift lever housing.

(b) Align the holes of the shaft and select lever, and install the lock bolt with a new lock plate.

Torque: 380 kg-cm (27 ft-lb, 37 N·m)

(c) Align the holes of the shaft and shift lever housing, and install the lock bolt with a new lock plate.

Torque: 380 kg-cm (27 ft-lb, 37 N·m)

(d) Stake the lock plates.

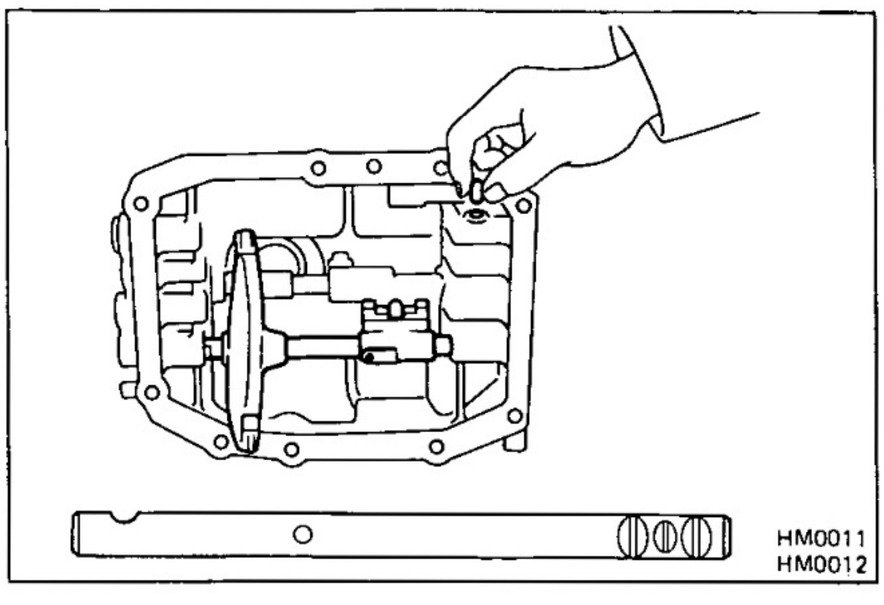
HM0011
HM0012

4. INSTALL FIRST AND SECOND SHIFT HEAD, FORK SHAFT AND SHIFT FORK

(a) Install the spring and locking ball.

(b) Insert the fork shaft through the shift fork and shift head.

(c) Install the interlock roller to the case cover.

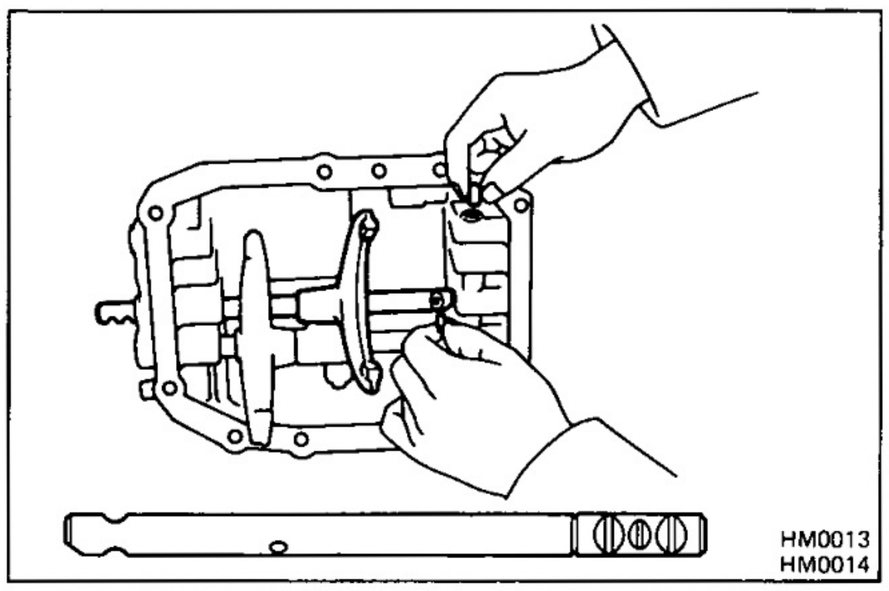

5. **INSTALL THIRD AND FOURTH SHIFT FORK AND FORK SHAFT**

(a) Install the spring and locking ball.

(b) Coat the interlock pin with MP grease and install it in the shaft.

(c) Insert the fork shaft through the shift fork.

(d) Install the interlock roller to the case cover.

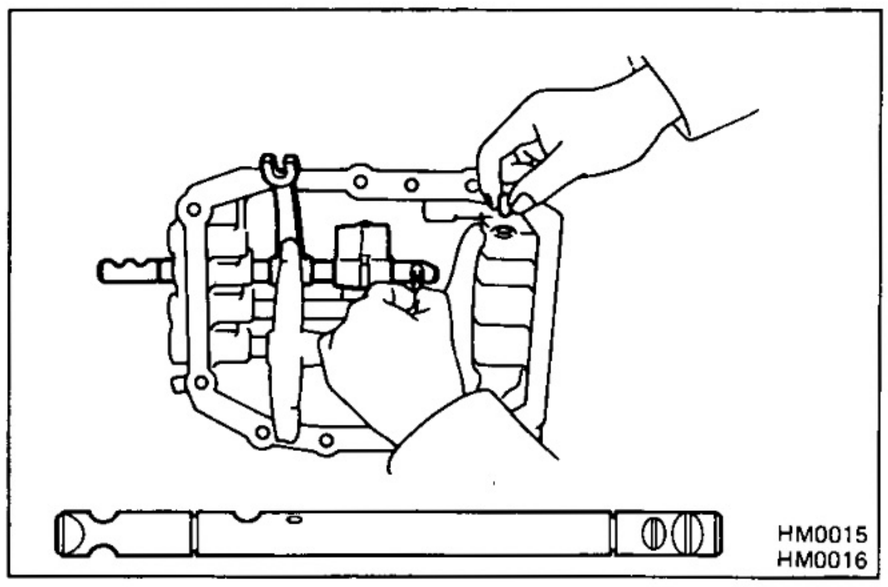

6. **INSTALL REVERSE AND FIFTH SHIFT HEAD, REVERSE SHIFT FORK AND FORK SHAFT**

(a) Install the spring and locking ball.

(b) Coat the interlock pin with MP grease and install it in the shaft.

(c) Insert the fork shaft through the shift fork and the shift head.

(d) Install the two interlock balls to the case cover and shift head.

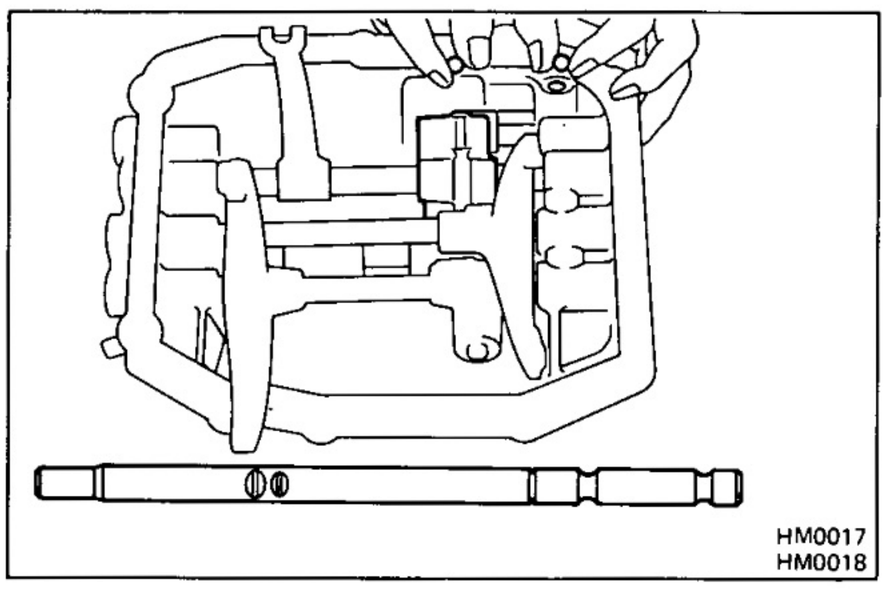

7. **INSTALL FIFTH SHIFT ARM SHAFT**

(a) Install the spring and locking ball.

(b) Insert the shaft through the shift head.

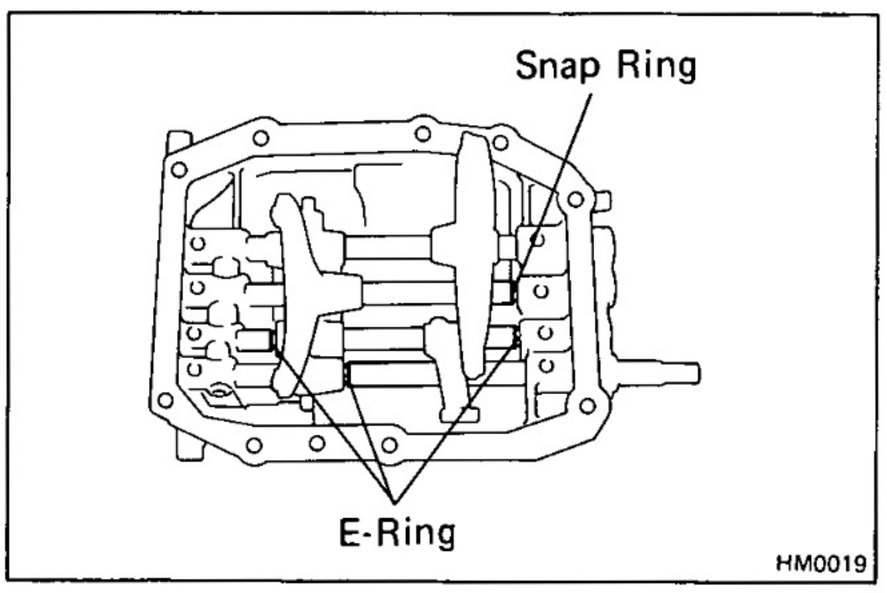

8. **INSTALL THREE E-RINGS AND SNAP RING**

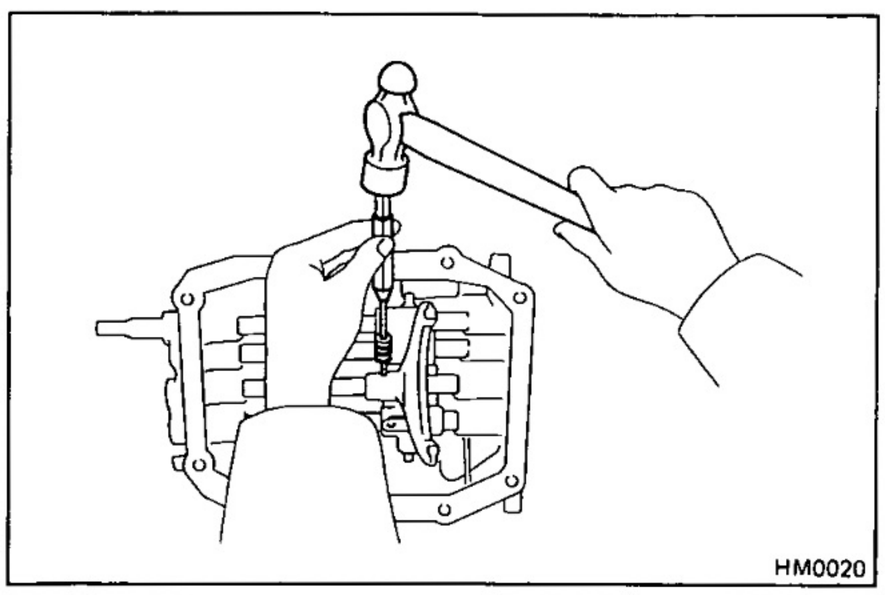

9. **INSTALL SLOTTED SPRING PINS**

(a) Align the pin hole of each shaft with either the fork, head and other fork or arm respectively.

(b) Using a pin punch and hammer, drive in the slotted spring pins until they are flush with the fork.

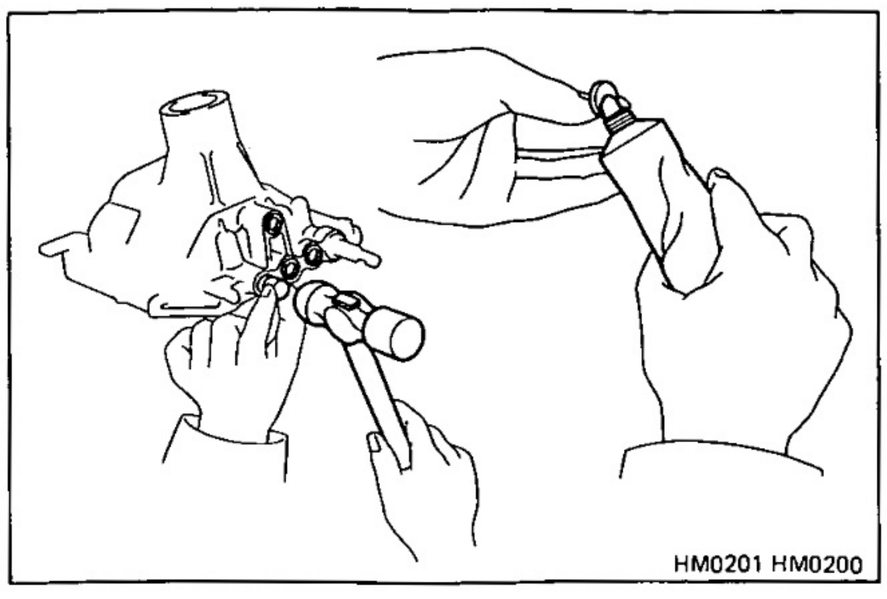

10. INSTALL TIGHT PLUGS

Apply liquid sealer to the tight plugs and drive them into the case cover as shown.

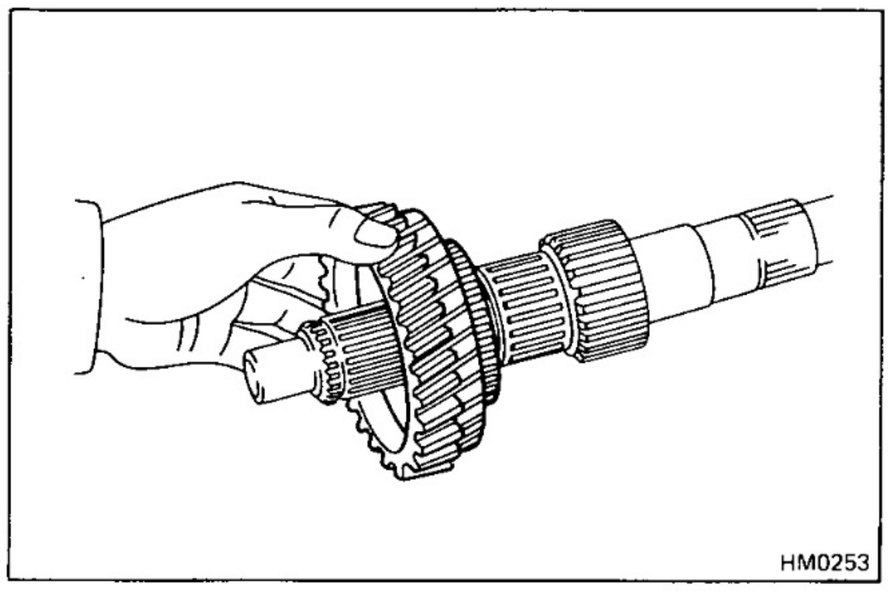
HM0253

ASSEMBLY OF TRANSMISSION

(See pages MT-5, 6)

1. INSTALL SECOND GEAR AND NEEDLE ROLLER BEARING
   (a) Apply gear oil to the output shaft.
   (b) Install the needle roller bearing and 2nd gear.

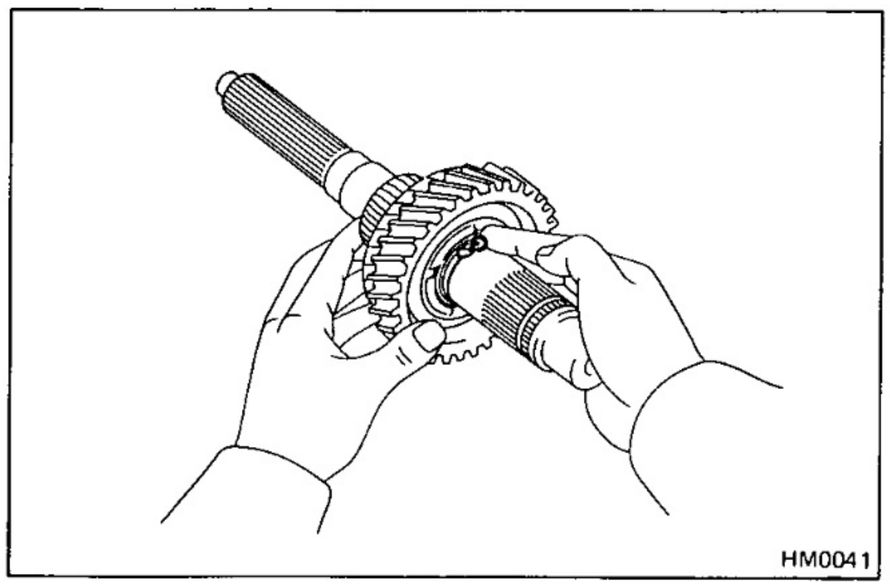
HM0041

2. INSTALL LOCKING BALL, BUSHING AND THIRD GEAR
   (a) Install the locking ball in the shaft.

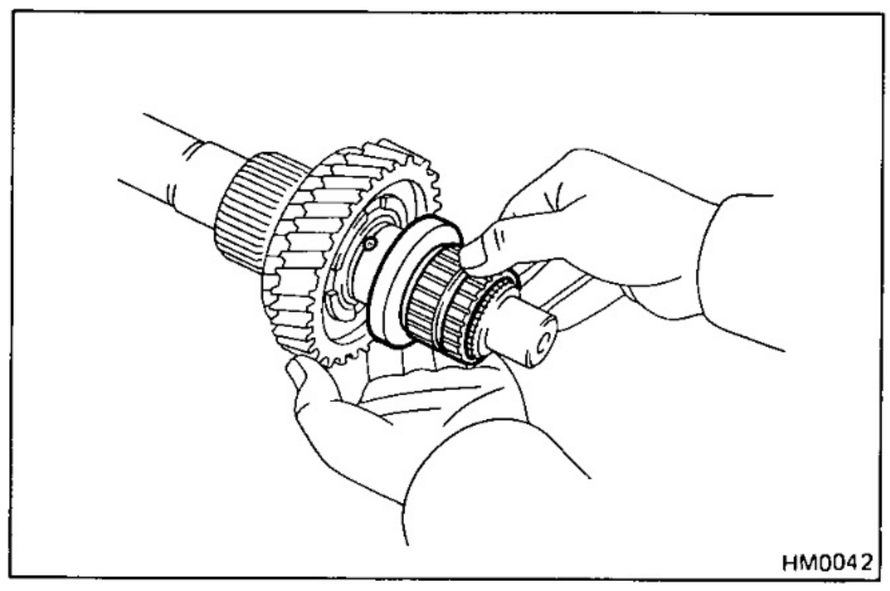
HM0042

   (b) Install the bushing on the output shaft and align the bushing notch and locking ball.
   (c) Apply gear oil to the bushing.
   (d) Install the 3rd gear on the bushing.

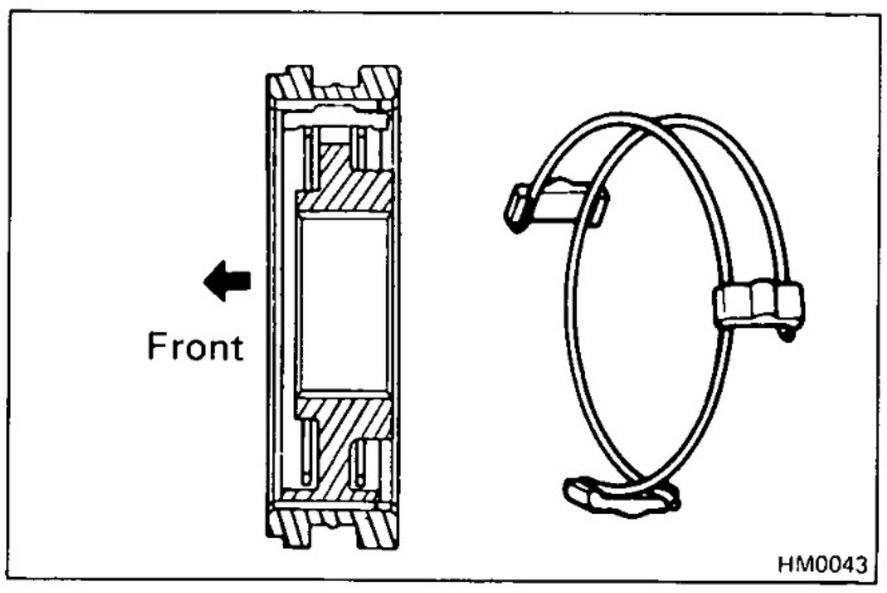

HM0043

3. INSERT CLUTCH HUB NO. 2 INTO HUB SLEEVE
   (a) Install the clutch hub and shifting keys to the hub sleeve.
   (b) Install the shifting key springs under the shifting keys.

CAUTION: Install the key springs positioned so that their ends are not in line.

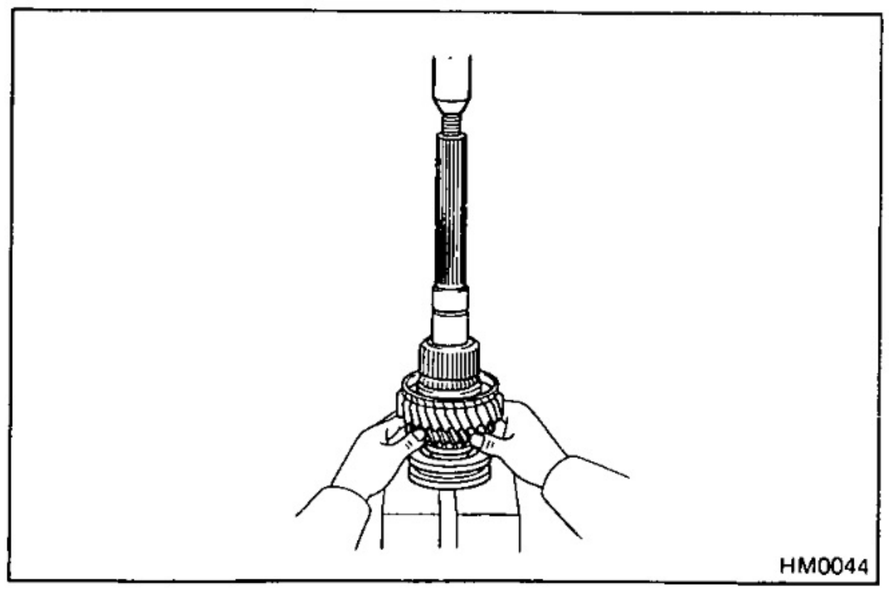
HM0044

4. INSTALL HUB SLEEVE NO. 2 ASSEMBLY

   Using a press, install the hub sleeve No. 2 assembly.

CAUTION: Hold the 3rd gear to prevent the bushing from falling. Be sure that the shifting keys align with the synchronizer ring slots.

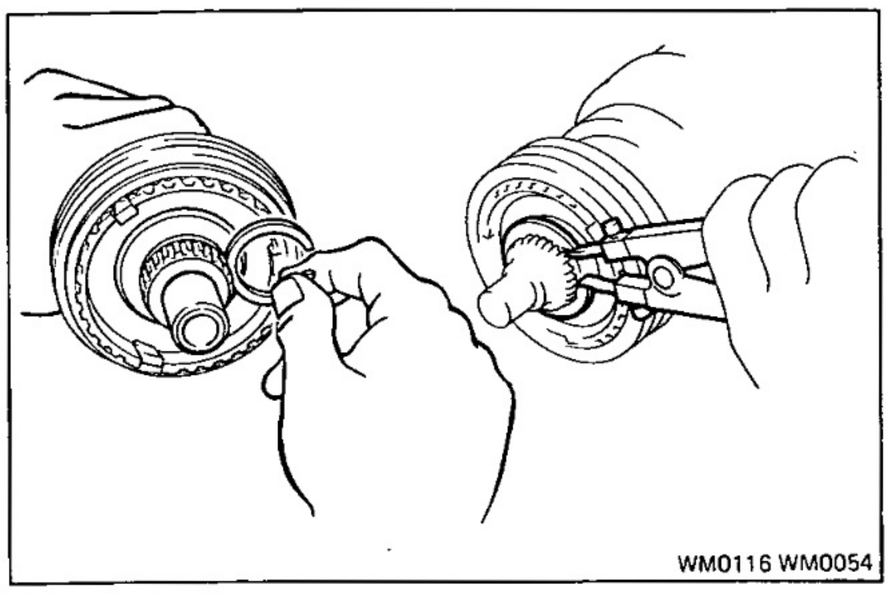
WM0116 WM0054

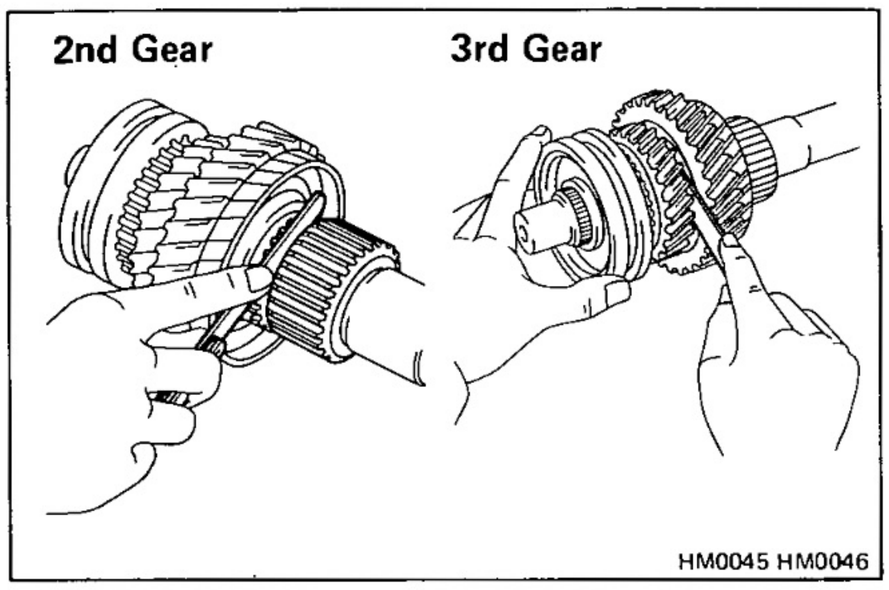

HM0045 HM0046

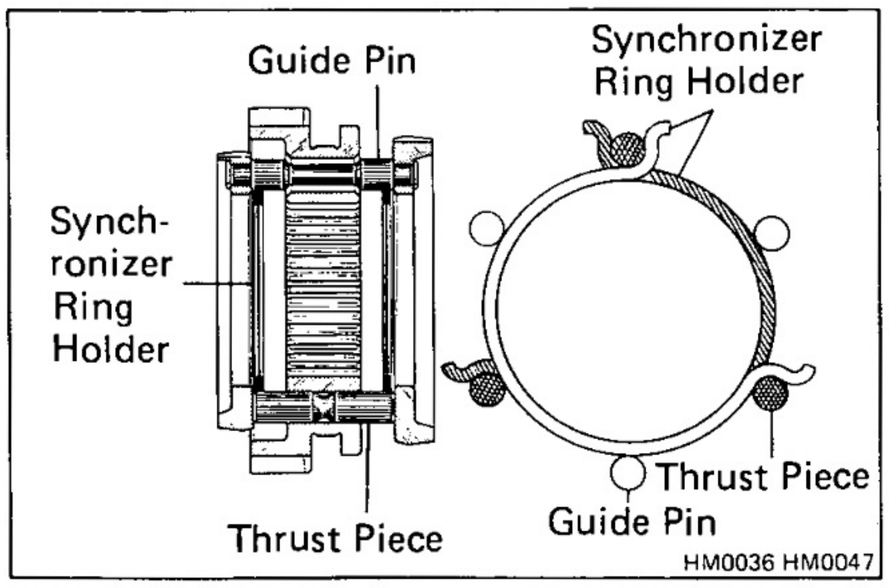

HM0036 HM0047

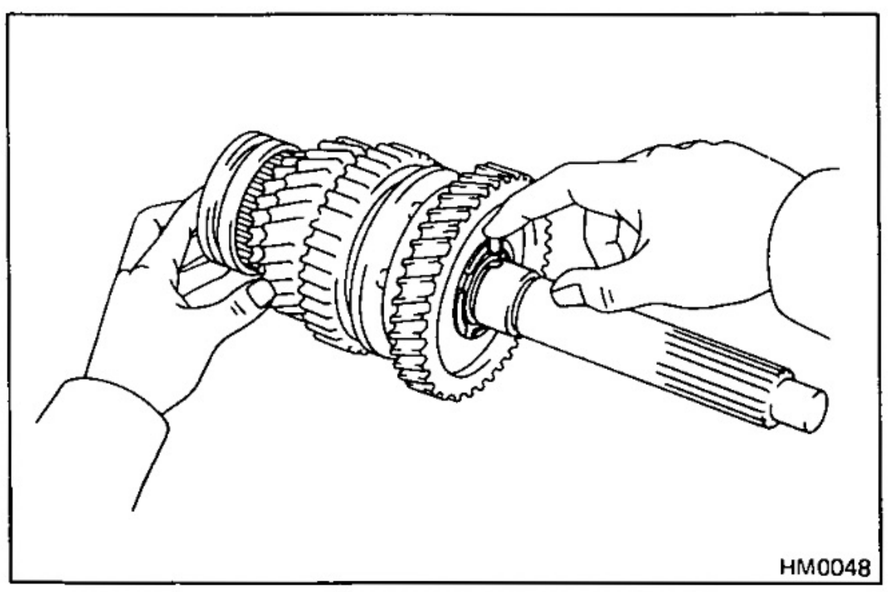
HM0048

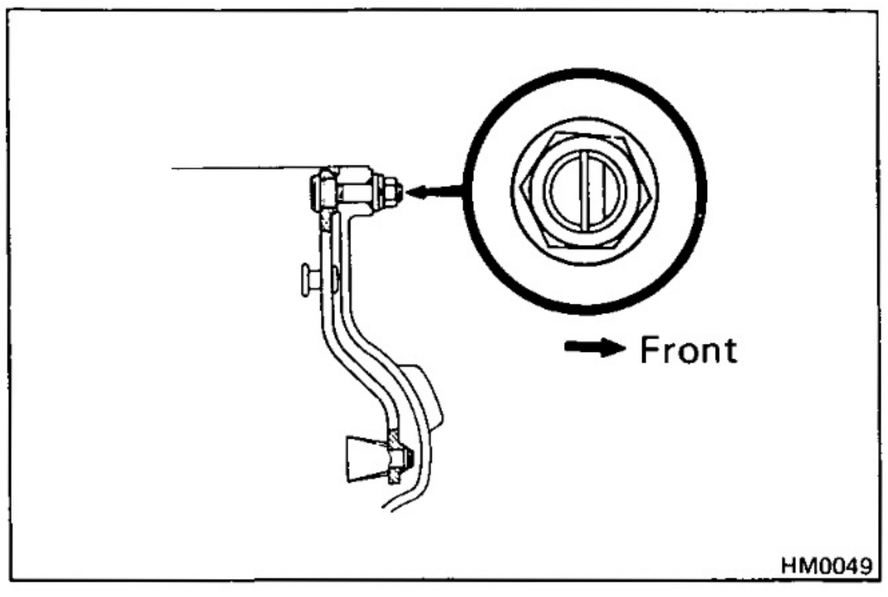

HM0049

5. INSTALL SNAP RING

Select a snap ring that will allow minimum axial play and install it on the shaft.

Mark	Thickness mm (in.)
0	2.40 – 2.45 (0.0945 – 0.0965)
1	2.45 – 2.50 (0.0965 – 0.0984)
2	2.50 – 2.55 (0.0984 – 0.1004)
3	2.55 – 2.60 (0.1004 – 0.1024)
4	2.60 – 2.65 (0.1024 – 0.1043)
5	2.65 – 2.70 (0.1043 – 0.1063)

6. MEASURE THRUST CLEARANCE OF SECOND AND THIRD GEAR

Using a feeler gauge, measure the 2nd and 3rd gear thrust clearances.

Standard clearance:

2nd gear 0.175 – 0.325 mm (0.0069 – 0.0128 in.)
3rd gear 0.125 – 0.275 mm (0.0049 – 0.0108 in.)

Maximum clearance:

2nd gear 0.35 mm (0.0138 in.)
3rd gear 0.30 mm (0.0118 in.)

7. ASSEMBLE SYNCHRONIZER RING HOLDER

Hook the synchronizer ring holder ends to the thrust piece.

NOTE:

- Align the synchronizer ring holder ends so they are not both facing in the same direction.
- Be sure the synchronizer ring holders are parallel and not intersecting.

8. INSTALL SYNCHRONIZER RING NO. 1 AND FIRST GEAR

(a) Install synchronizer ring No. 1.

(b) Apply gear oil to the needle roller bearing.

(c) Install the needle roller bearing and the 1st gear.

(d) Apply MP grease to the straight pin and 1st gear thrust washer.

(e) Install the 1st gear thrust washer onto the output shaft with the straight pin aligned with the 1st gear thrust washer.

9. INSTALL REVERSE SHIFT ARM

(a) Install the reverse shift arm so its pivot is positioned as shown.

(b) Install the O-ring, plate washer, spring washer and nut.

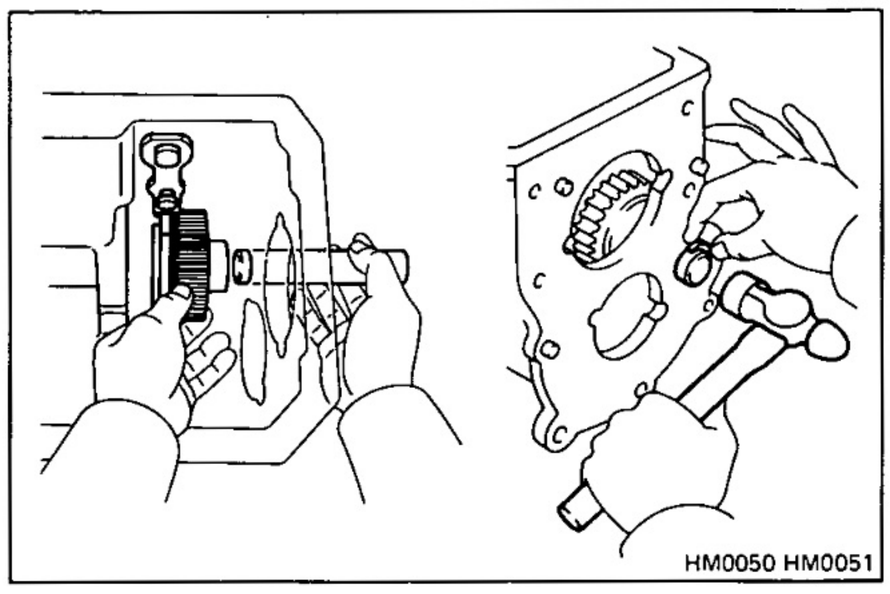

10. INSTALL REVERSE IDLER GEAR AND SHAFT

(a) Align the reverse idler gear groove with the reverse shift arm shoe.

(b) Install the reverse idler gear shaft with the woodruff key through the gear.

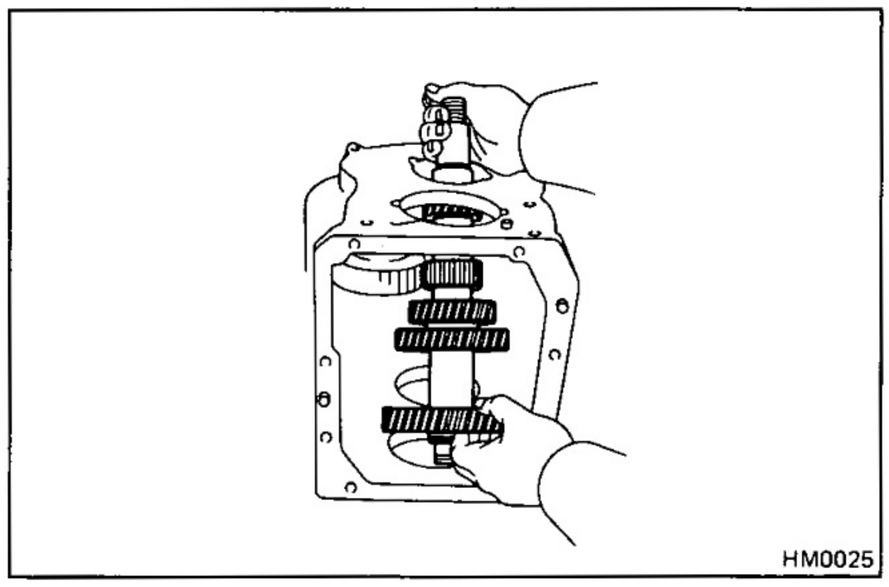

11. PUT COUNTER GEAR INTO TRANSMISSION CASE

(a) Stand the transmission case on its front end.

(b) Put the counter gear into the case.

CAUTION: Be careful not to damage either end.

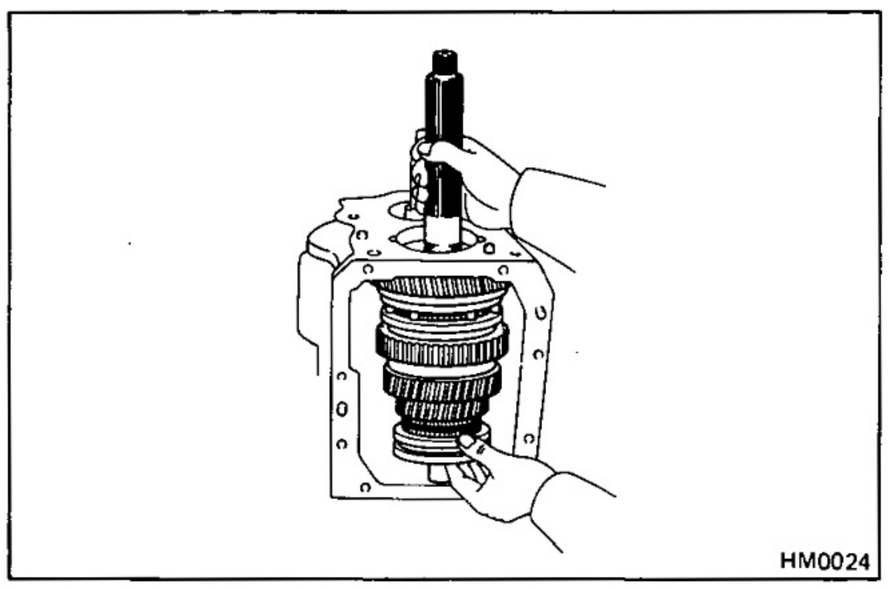

12. PUT OUTPUT SHAFT ASSEMBLY INTO TRANSMISSION CASE

CAUTION: Be careful not to damage the front end of the shaft.

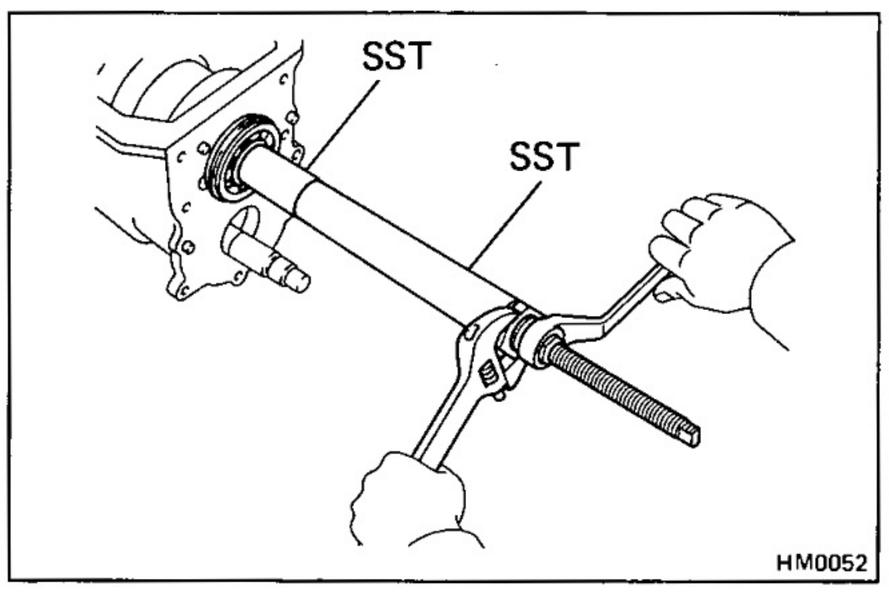

13. INSTALL OUTPUT SHAFT CENTER BEARING

(a) Using snap ring pliers, install the snap ring onto the bearing.

(b) Confirm that the groove of the 1st gear thrust washer and the straight pin are aligned.

(c) Using SST, install the bearing until it comes into contact with the 1st gear thrust washer.

SST 09309-36033 and 09309-60010

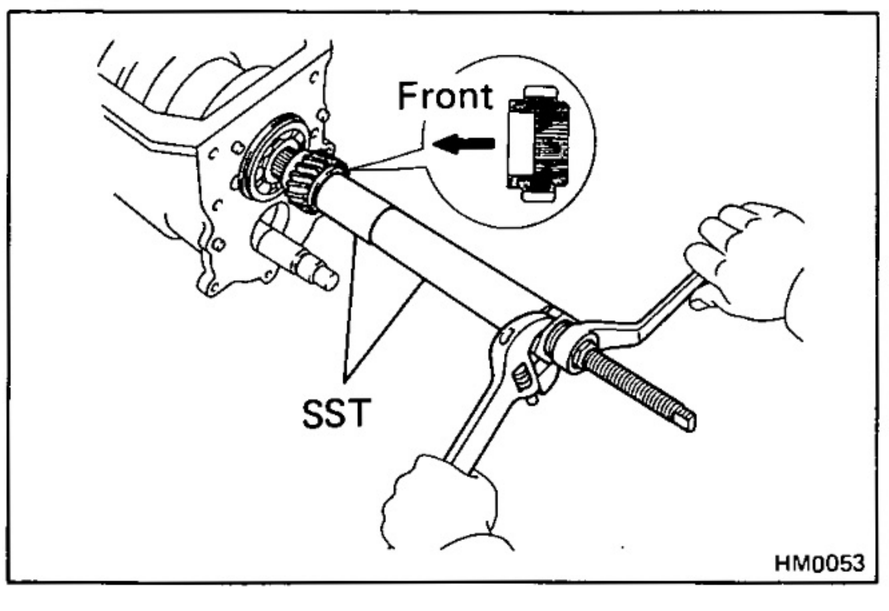

14. INSTALL FIFTH GEAR TO OUTPUT SHAFT (H55F)

(a) Apply MP grease to the inside surface of the 5th gear.

(b) Using SST, install the 5th gear to the output shaft.

SST 09309-36033 and 09309-60010

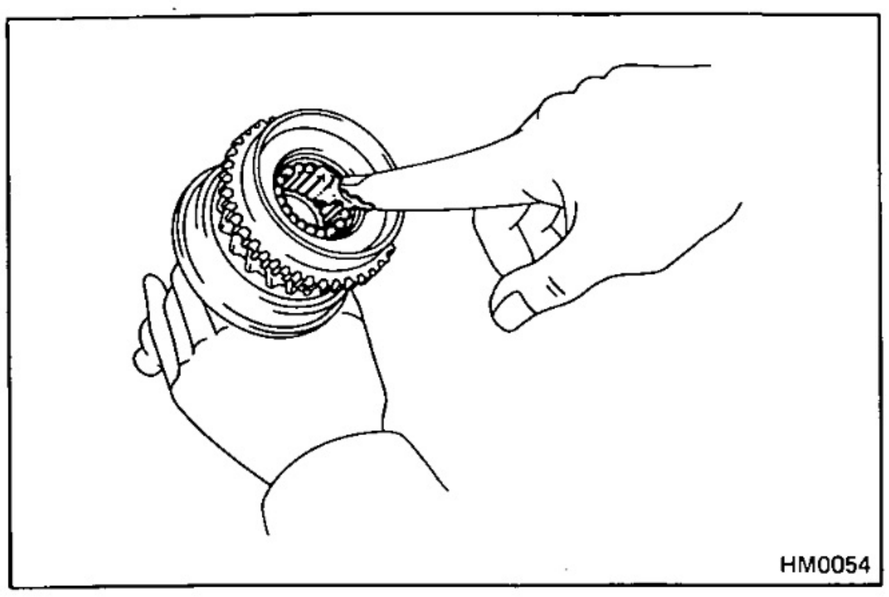
HM0054

15. INSTALL INPUT SHAFT

(a) Using a snap ring pliers, install the snap ring onto the bearing.

(b) Install the 17 needle roller bearings into the input shaft.

(c) Apply MP grease to the needle roller bearings.

(d) Align the synchronizer ring slots with the shifting keys.

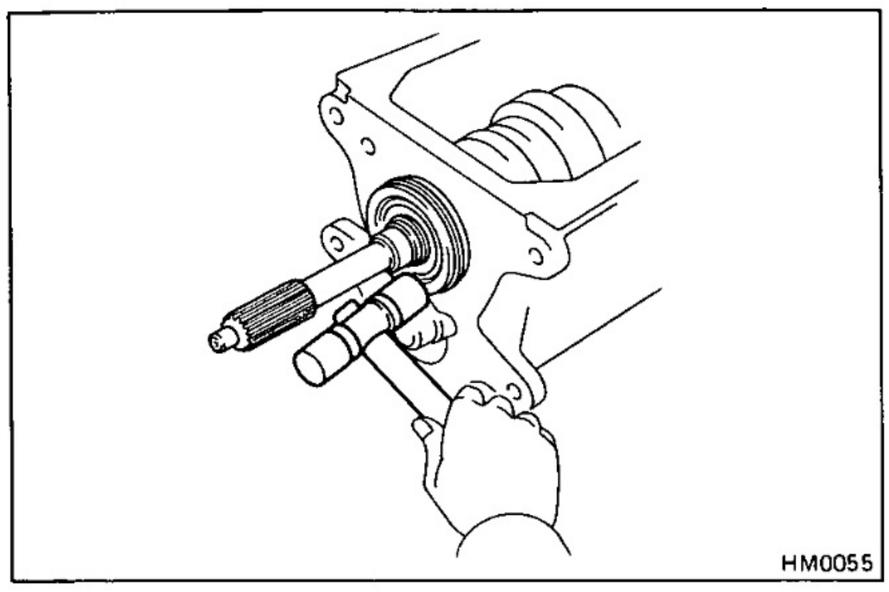
HM0055

(e) Using a plastic hammer, drive in the input shaft.

NOTE: Be sure that the counter gear is low enough so as not to interfere with the input shaft.

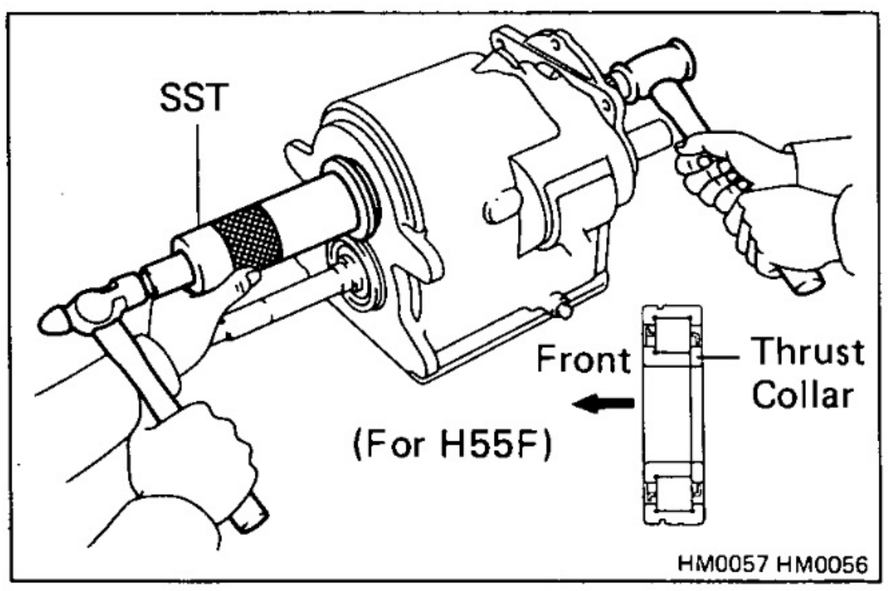

HM0057 HM0056

16. INSTALL COUNTER GEAR FRONT BEARING

(a) Turn the transmission over and align the counter gear center.

(b) Install the thrust collar for the front bearing onto the counter gear. (H55F)

(c) Using SST, drive in the bearing.

SST 09316-60010

NOTE: When driving in the bearing, support the counter gear in rear with a 3-5 lb hammer or equivalent.

(d) Install the snap ring onto the bearing outer race.

(e) Select a snap ring that will allow minimum axial play and install it on the counter gear front end.

Mark	Thickness mm (in.)
0	2.05 – 2.10 (0.0807 – 0.0827)
2	2.15 – 2.20 (0.0846 – 0.0866)
4	2.25 – 2.30 (0.0886 – 0.0906)

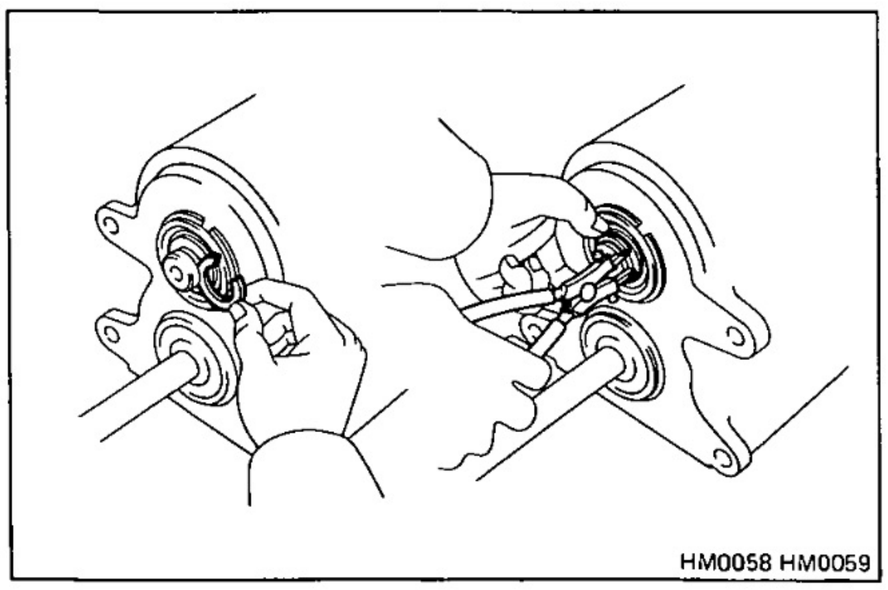
HM0058 HM0059

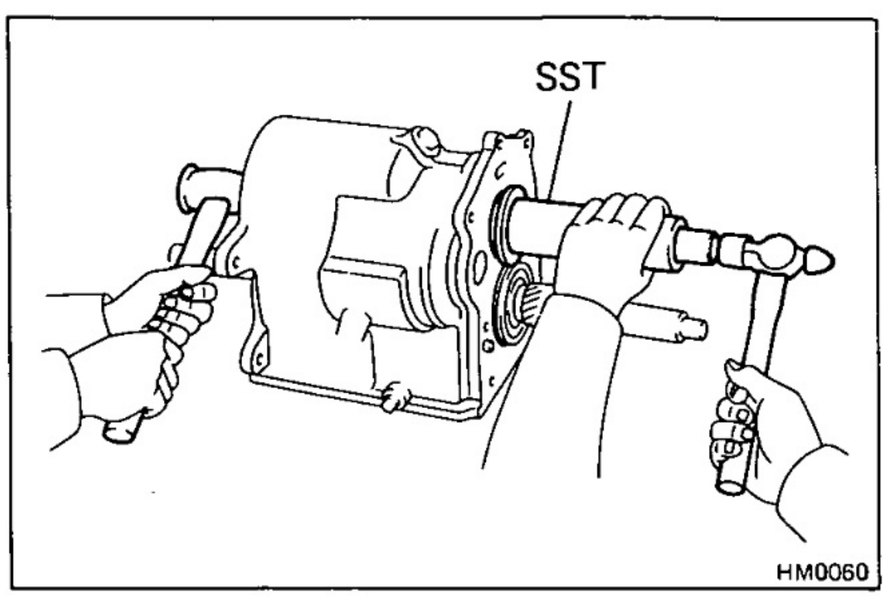

HM0060

17. INSTALL COUNTER GEAR REAR BEARING

(a) Install the snap ring to the counter gear rear bearing outer race. (H55F)

(b) Using SST, drive in the rear bearing.

SST 09316-60010

NOTE: When driving in the bearing, support the counter gear in front with a 3-5 lb hammer or equivalent.

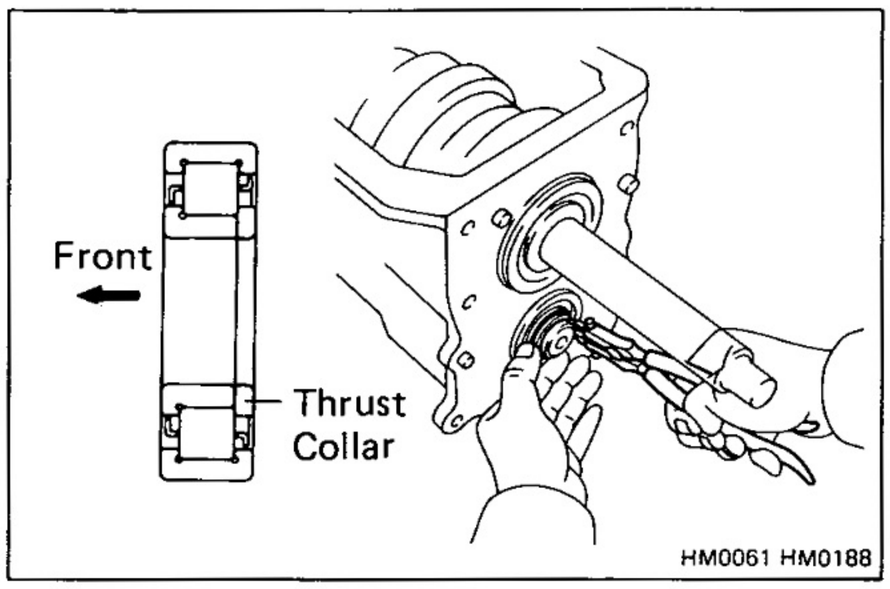

(c) Install the thrust collar for the rear bearing onto the counter gear rear end. (H41)

(d) Using snap ring pliers, install the snap ring onto the counter gear rear end. (H41)

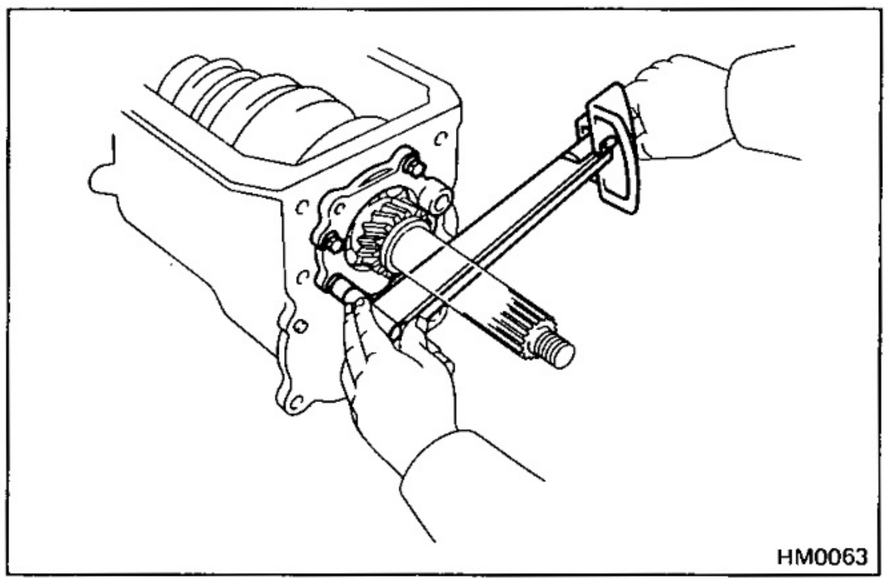

18. INSTALL REAR BEARING RETAINER (H55F)

Install the rear bearing retainer to the transmission case. Torque the bolts.

Torque: 185 kg-cm (13 ft-lb, 18 N·m)

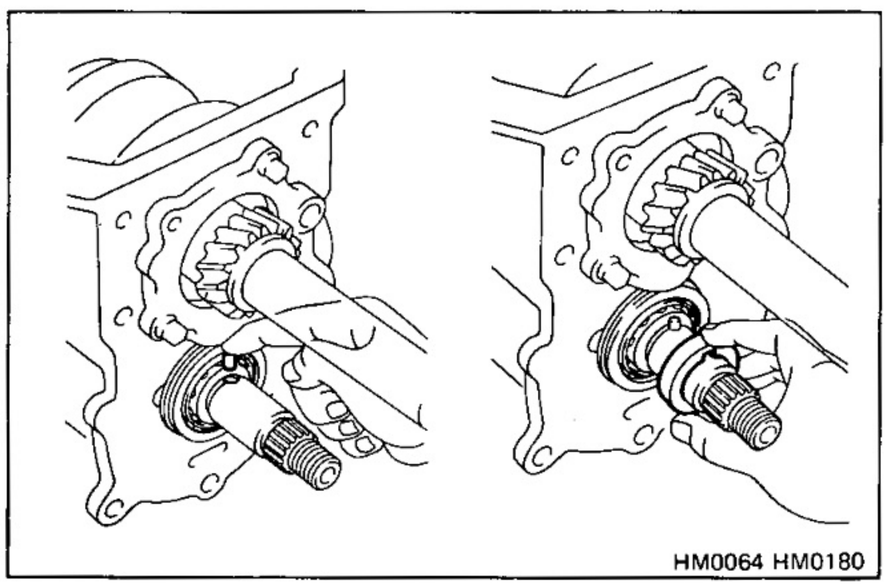

19. INSTALL STRAIGHT PIN AND COUNTER FIFTH GEAR THRUST WASHER (H55F)

(a) Install the straight pin onto the counter shaft.

(b) Align the thrust washer slot with the straight pin, and install the thrust washer.

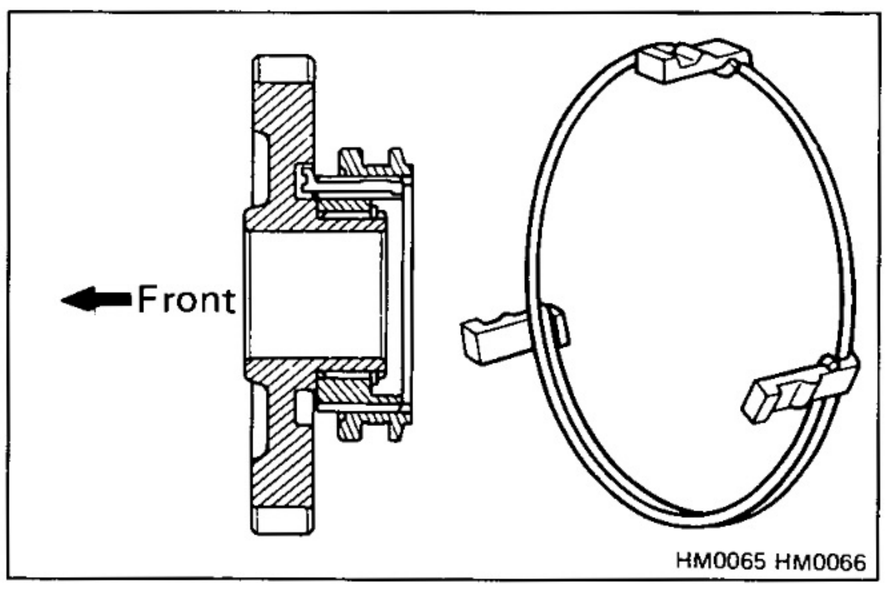

20. ASSEMBLE COUNTER FIFTH GEAR (H55F)

(a) Install the No. 3 hub sleeve and shifting keys to the counter 5th gear.

(b) Install the shifting key springs under the shifting keys so that the spring ends are not in line, as shown in the figure.

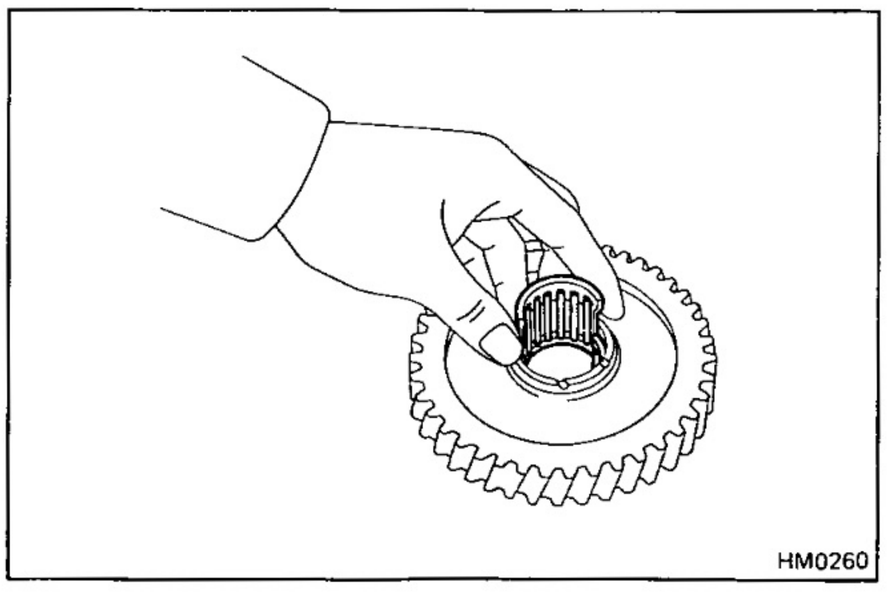

21. INSTALL NEEDLE ROLLER BEARING (H55F)

(a) Apply MP grease to the needle roller bearing.

(b) Install the needle roller bearing into the counter 5th gear.

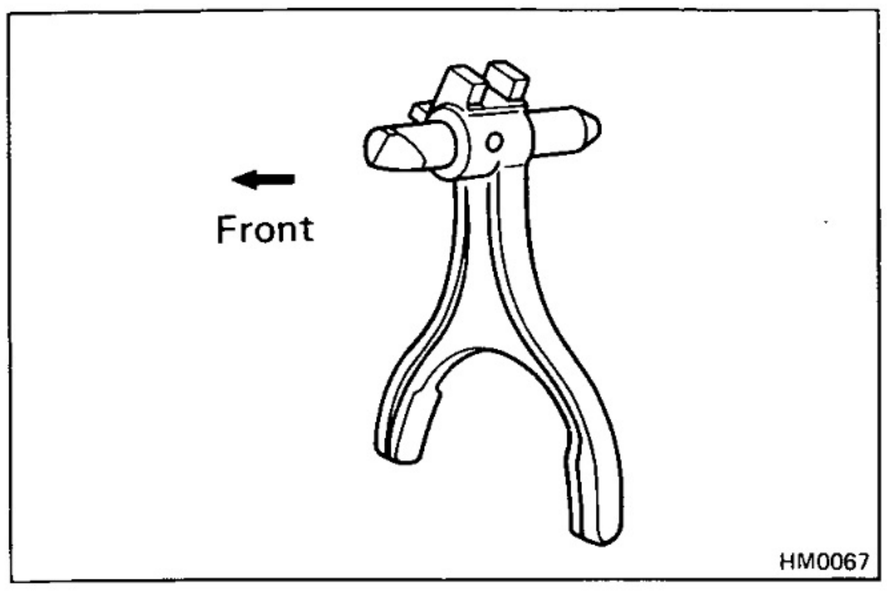

22. **ASSEMBLE FIFTH SHIFT FORK (H55F)**

(a) Install the 5th shift fork to the shaft.

(b) Align the pin holes of the 5th shift fork and shaft.

(c) Using a pin punch and hammer, drive in the slotted spring pin.

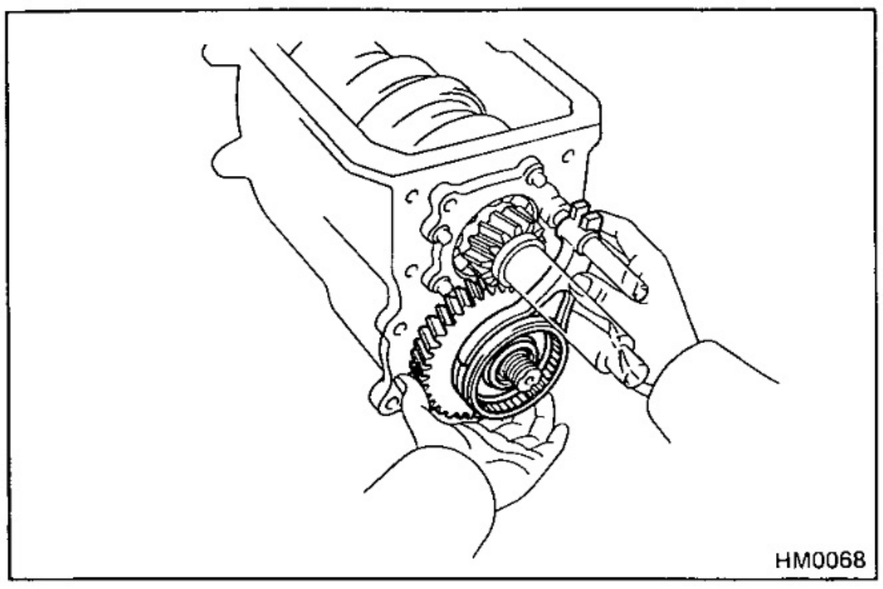

23. **INSTALL COUNTER FIFTH GEAR ASSEMBLY WITH FIFTH SHIFT FORK (H55F)**

(a) Install the 5th shift fork and fork shaft onto hub sleeve No. 3.

(b) Install the counter 5th gear assembly with the 5th shift fork.

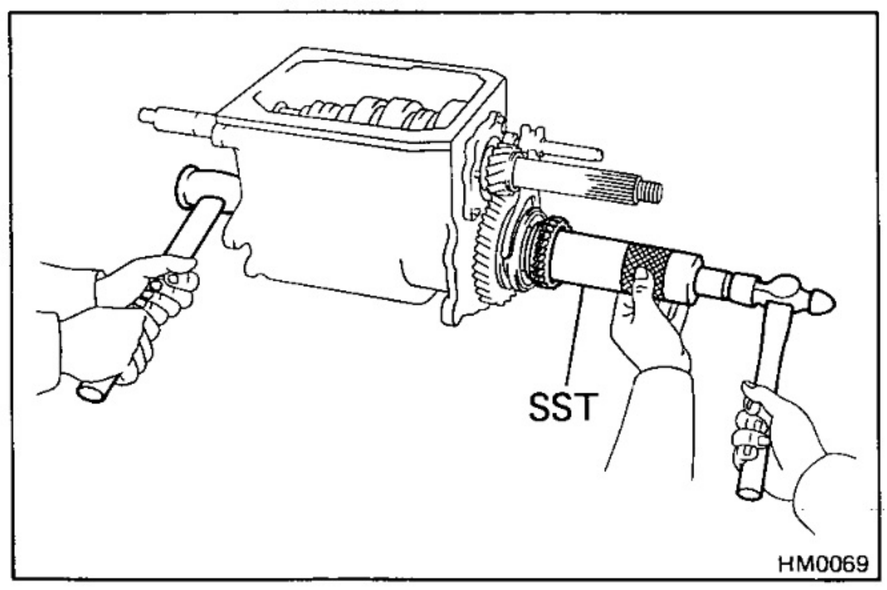

24. **INSTALL SYNCHRONIZER RING AND GEAR SPLINE PIECE NO. 5 (H55F)**

(a) Align the synchronizer ring slots with the shifting keys, and place the synchronizer ring on the rear end of the counter 5th gear.

(b) Using SST, drive gear spline piece No. 5 into the counter gear to where the lock nut can be installed.

SST 09316-60010

NOTE: When driving in gear spline piece No. 5, support the counter gear in front with a 3-5 lb hammer or equivalent.

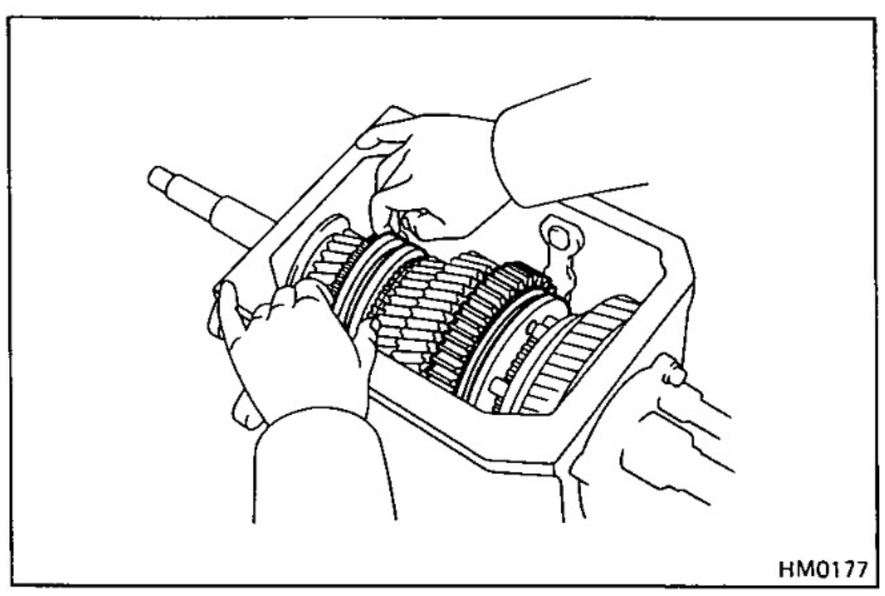

25. **INSTALL LOCK NUT TO COUNTER GEAR REAR END (H55F)**

(a) Engage the gear double meshing.

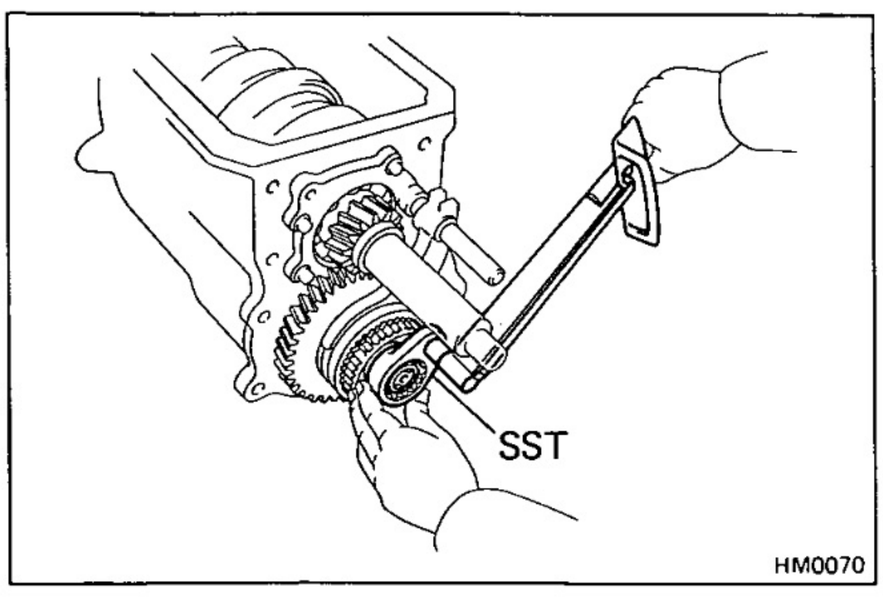

(b) Using SST, install a new lock nut.
Torque the nut.

SST 09326-20011

Torque: 1,300 kg-cm (94 ft-lb, 127 N·m)

(c) Disengage the gear double meshing.

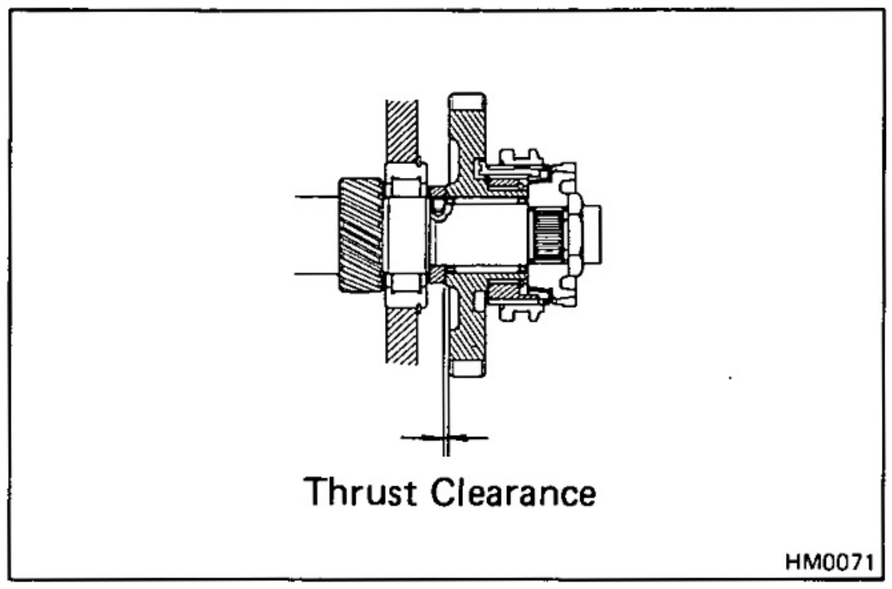
Thrust Clearance
HM0071

(d) Using a feeler gauge, measure the counter 5th gear thrust clearance.

Standard clearance : 0.10 – 0.30 mm (0.0039 – 0.0118 in.)
Maximum clearance: 0.30 mm (0.0118 in.)

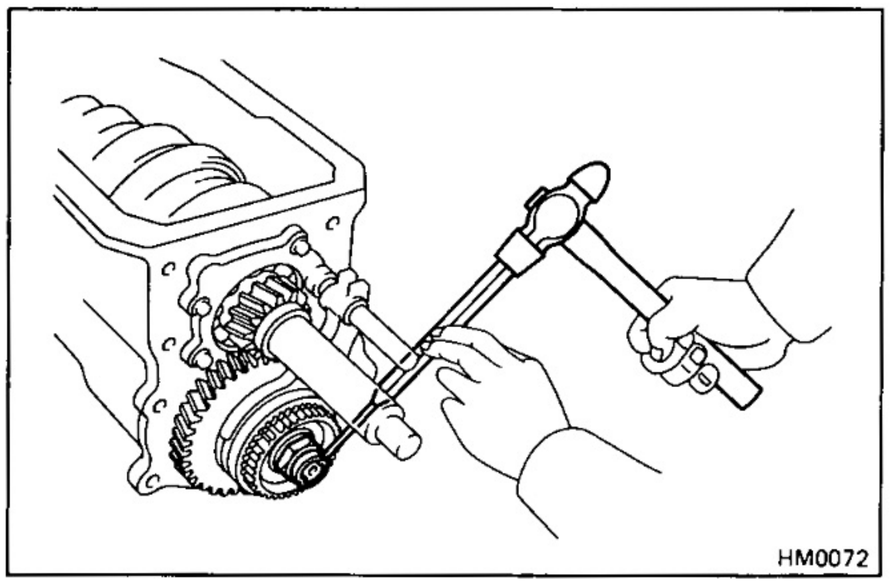
HM0072

(e) Using a punch, stake the lock nut.

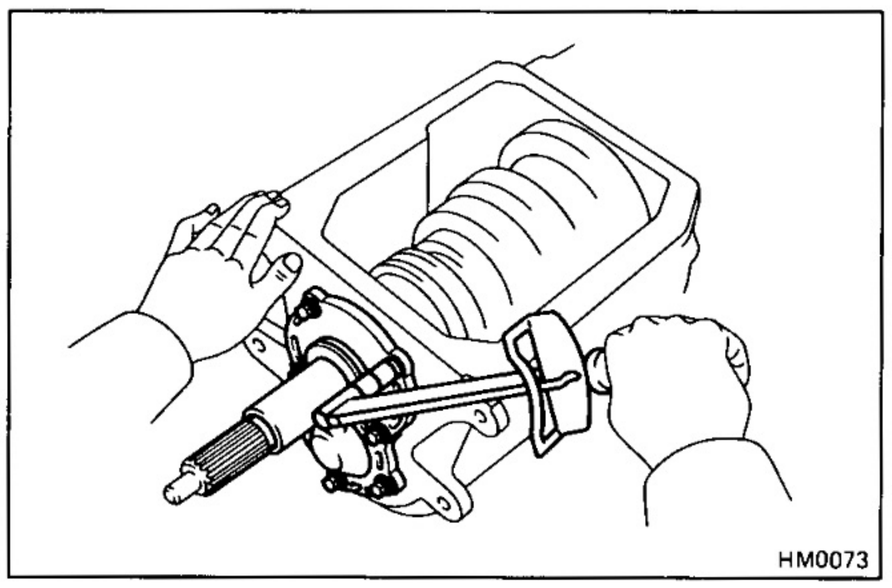
HM0073

26. INSTALL FRONT BEARING RETAINER WITH A GASKET

(a) Install the front bearing retainer with a gasket.
(b) Apply liquid sealer to the bolts.
(c) Install and torque the bolts.

Torque: 170 kg-cm (12 ft-lb, 17 N·m)

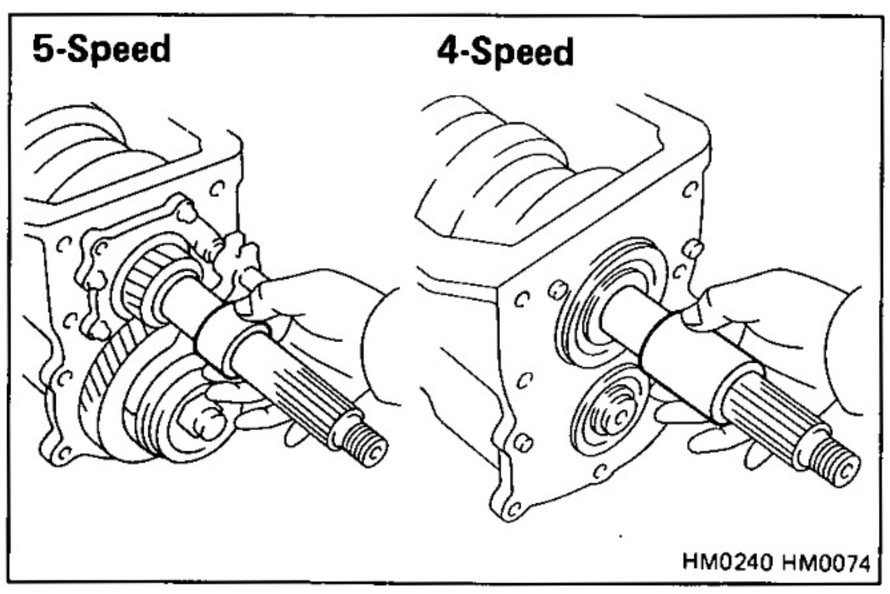

HM0240 HM0074

27. INSTALL SPACER

Install the spacer on the output shaft.

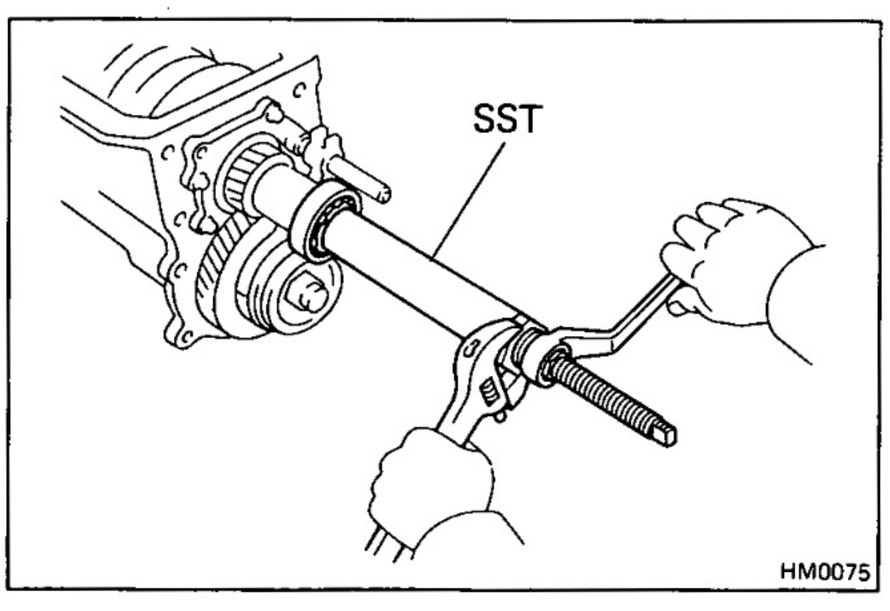

HM0075

28. INSTALL OUTPUT SHAFT REAR BEARING

Using SST, install the rear bearing.
SST 09309-36033

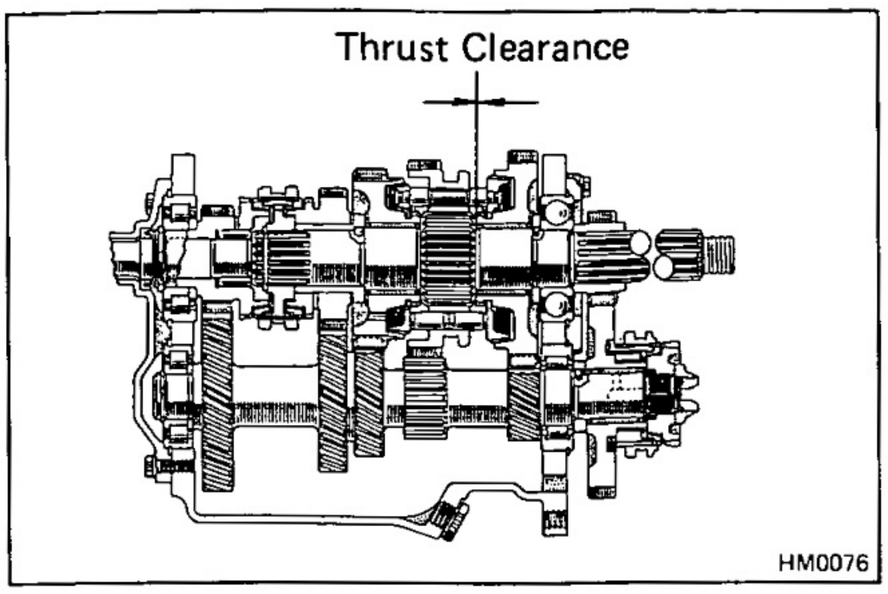

29. **MEASURE FIRST GEAR THRUST CLEARANCE**

Using a feeler gauge, measure the thrust clearance.

Standard clearance: 0.175 – 0.325 mm (0.0069 – 0.0128 in.)
Maximum clearance: 0.35 mm (0.0138 in.)

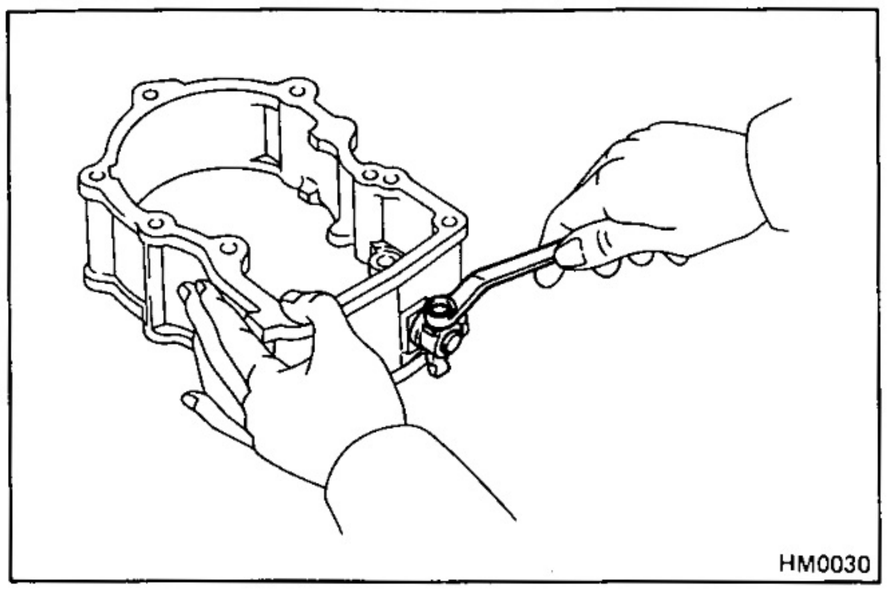

30. **INSTALL FIFTH SHIFT ARM AND SHAFT (H55F)**

(a) Install the 5th shift arm shaft through the transfer adapter and install the 5th shift arm.

(b) Install the bolt with a lock washer, and torque the bolt.

Torque: 380 kg-cm (27 ft-lb, 37 N·m)

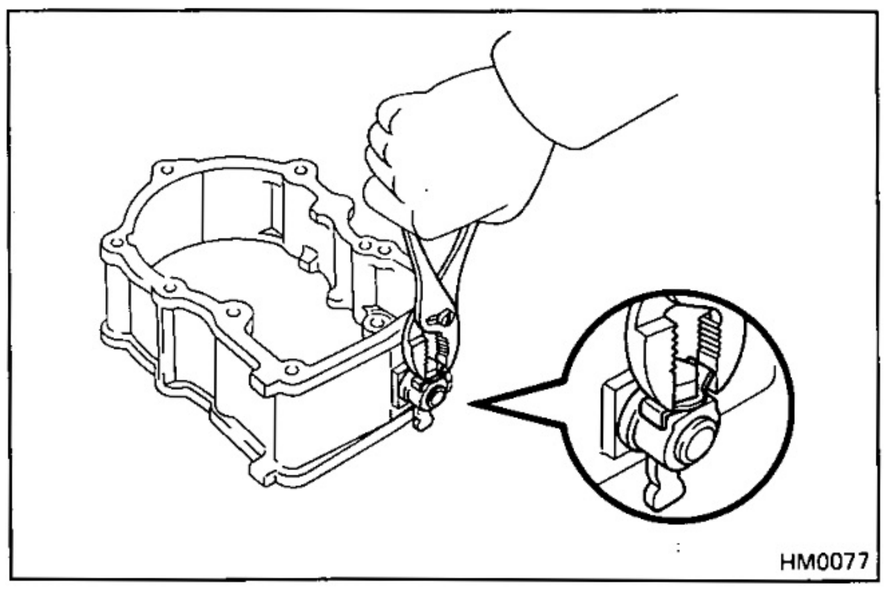

(c) Stake the lock washer.

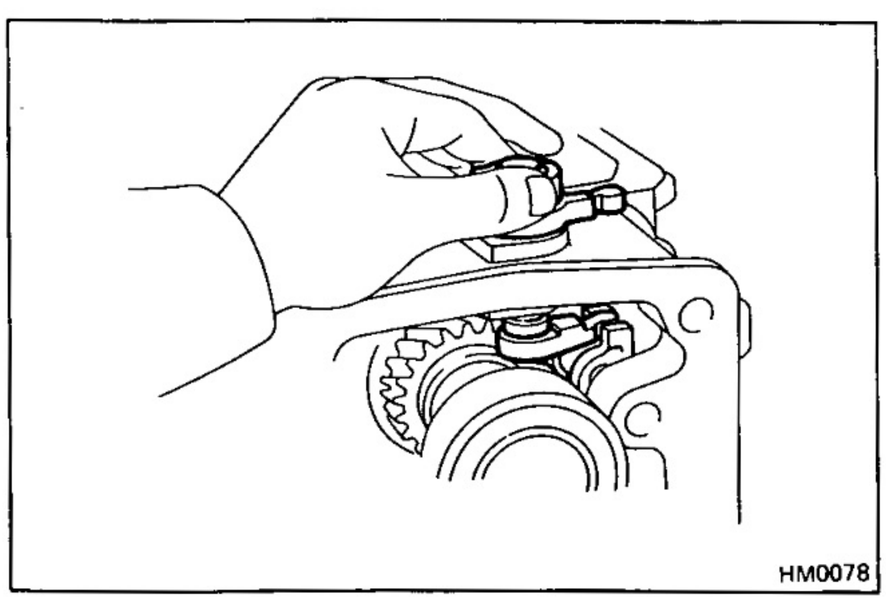

31. **INSTALL TRANSFER ADAPTER WITH A GASKET**

(a) Place a new gasket in position.

(b) Align the end of the 5th shift arm and 5th shift fork (H55F), and install the transfer adapter.

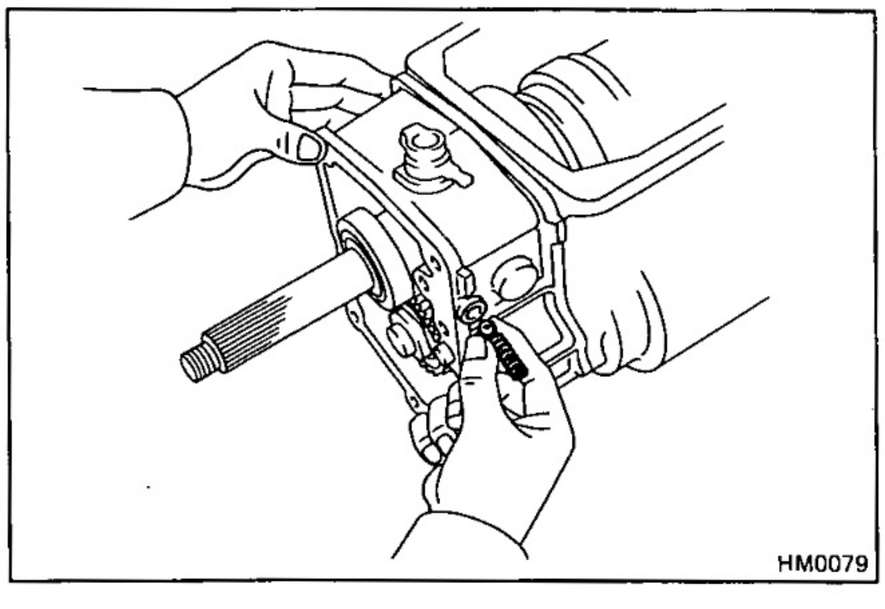

(c) Install the locking ball and spring. (H55F)

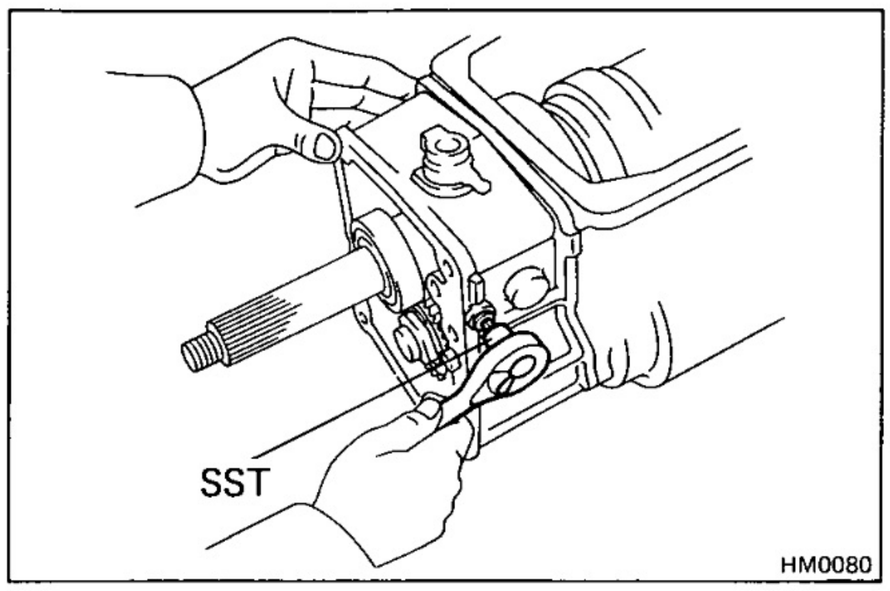

(d) Apply liquid sealer to the plug. (H55F)

(e) Using SST, install and torque the screw plug. (H55F)

SST 09313-30021

Torque: 250 kg-cm (18 ft-lb, 25 N·m)

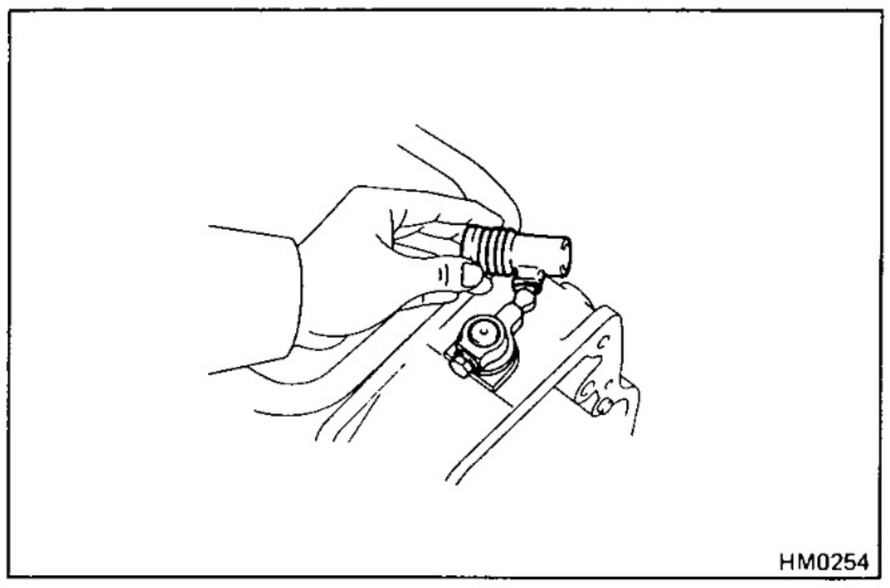

32. INSTALL CASE COVER

(a) Install the dust boot. (H55F)

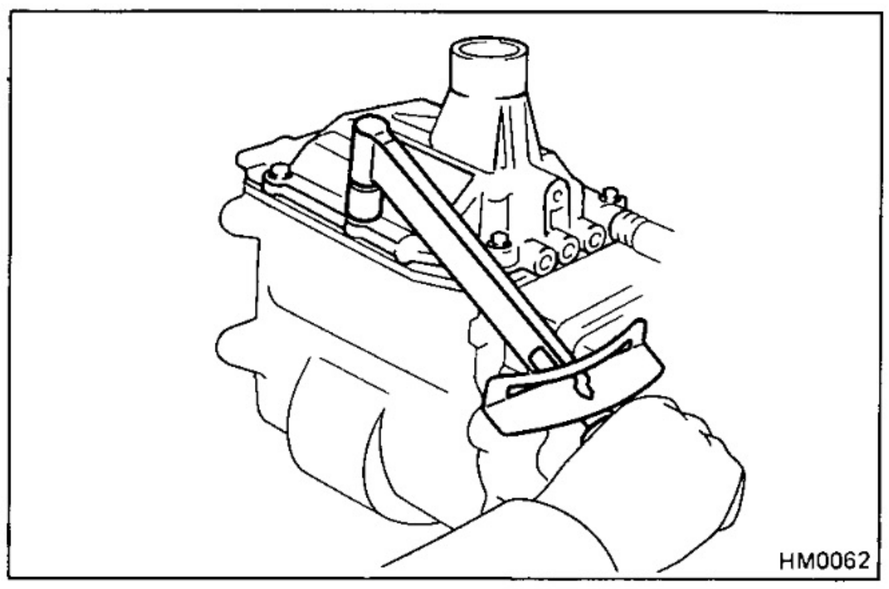

(b) Install the case cover with a gasket. Torque the bolts.

Torque: 400 kg-cm (29 ft-lb, 39 N·m)

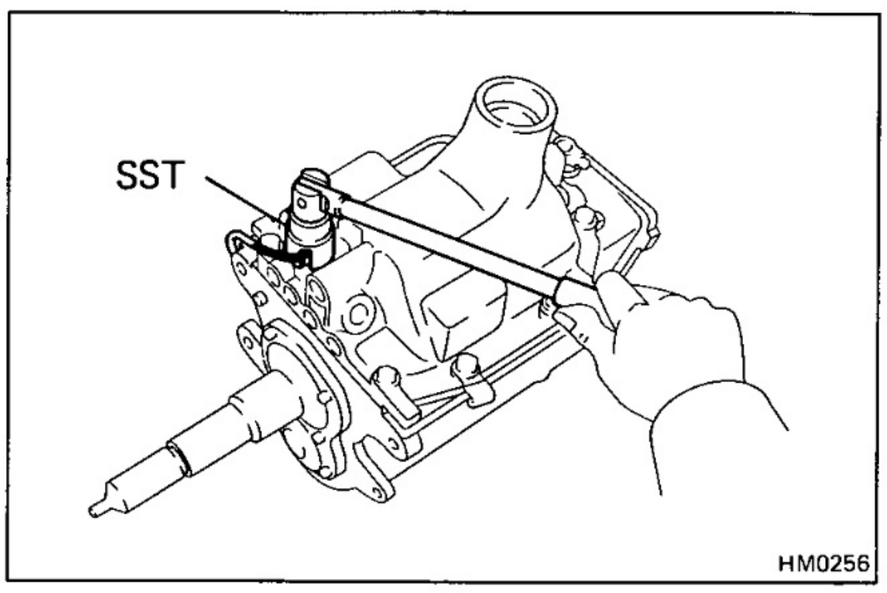

33. INSTALL BACK-UP LIGHT SWITCH

Using SST, install the back-up light switch.

SST 09817-16011

34. INSTALL TRANSFER

(See page TF-25)

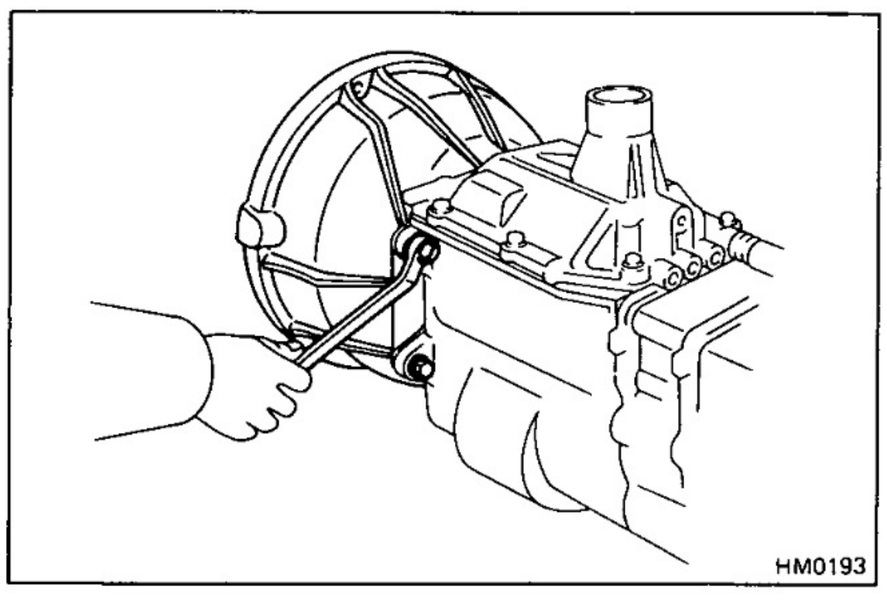

35. INSTALL CLUTCH HOUSING (HJ, BJ)

Torque the bolts.

Torque: 650 kg-cm (47 ft-lb, 64 N·m)

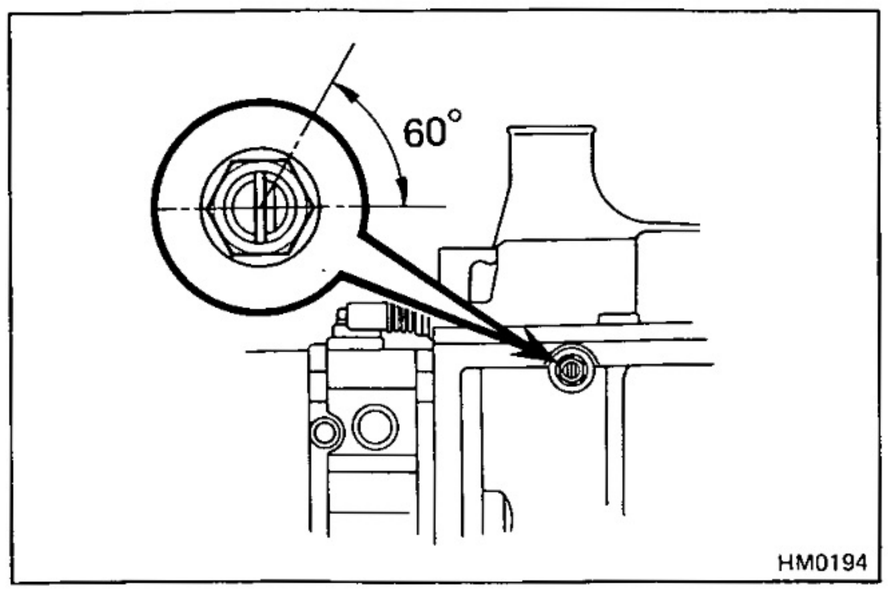

36. ADJUST REVERSE SHIFT ARM PIVOT POSITION

(a) Position the adjustment mark on the shift arm pivot end toward the front.

(b) Temporarily install the shift lever, and if the shift lever is catching on something in the selecting direction, adjust by moving the position of the alignment mark by 60°.

(c) Torque the nut.

Torque: 250 kg-cm (18 ft-lb, 25 N·m)

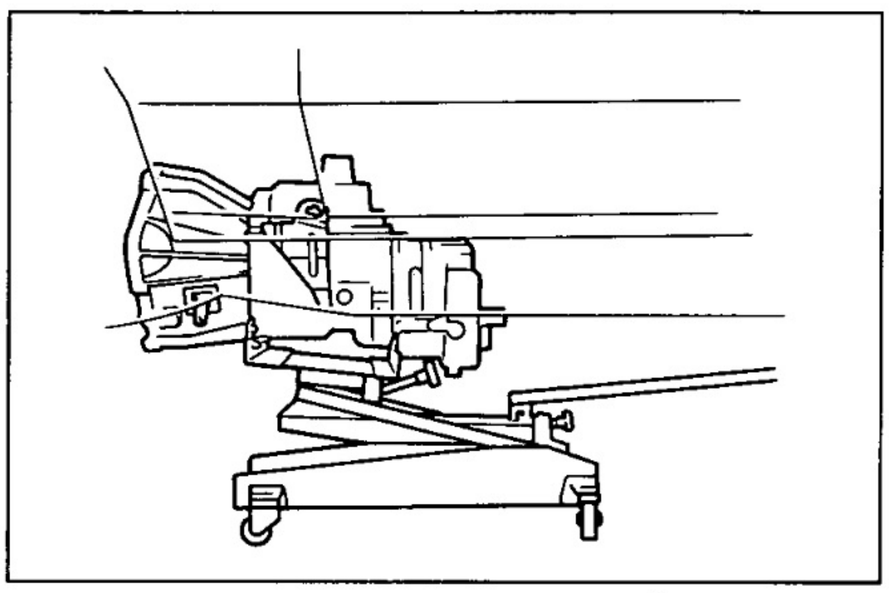

INSTALLATION OF TRANSMISSION WITH TRANSFER

1. INSTALL TRANSMISSION WITH TRANSFER

Align the input shaft spline with the clutch disc, and install the transmission to the clutch housing (FJ) or engine (BJ, HJ). Torque the bolts.

Torque:	**FJ**		**650 kg-cm (47 ft-lb, 64 N·m)**
	BJ		**730 kg-cm (53 ft-lb, 72 N·m)**
	HJ	**17mm**	**730 kg-cm (53 ft-lb, 72 N·m)**
		14 mm	**380 kg-cm (27 ft-lb, 37 N·m)**
		12 mm	**185 kg-cm (13 ft-lb, 18 N·m)**

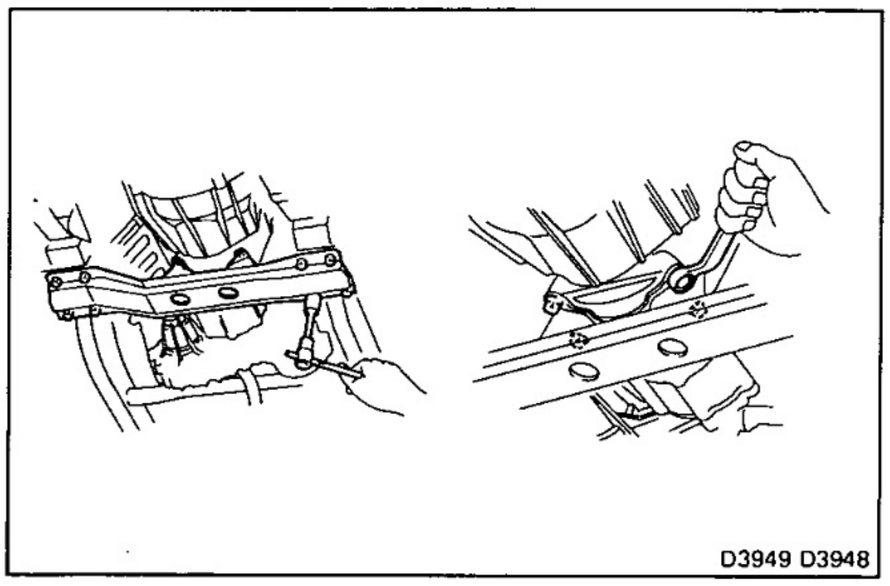

2. INSTALL ENGINE REAR SUPPORT MEMBER

(a) Install the bolts to both sides of the member.

Torque: 400 kg-cm (29 ft-lb, 39 N·m)

(b) Install the four bolts to the member.

Torque: 600 kg-cm (43 ft-lb, 59 N·m)

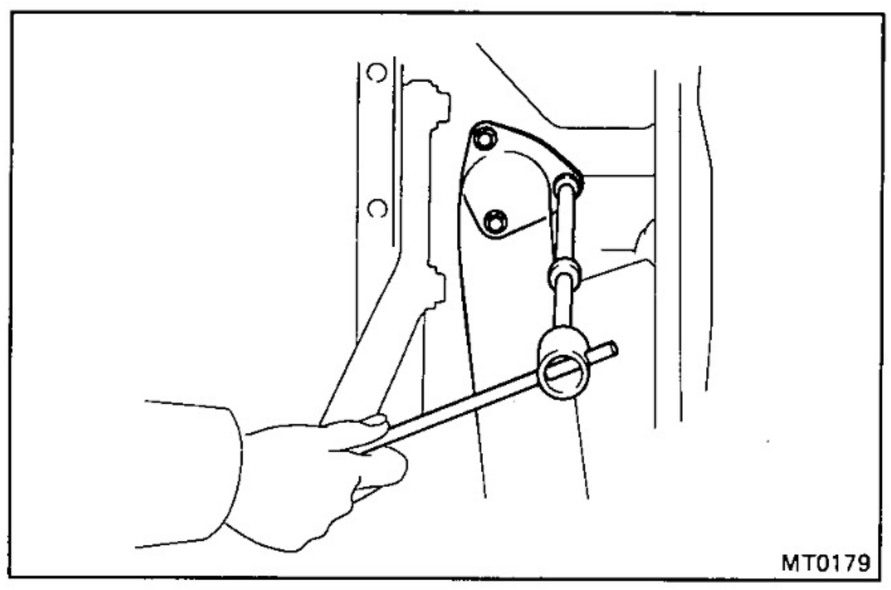

3. INSTALL EXHAUST PIPE

Torque: 630 kg-cm (46 ft-lb, 62 N·m)

4. INSTALL STARTER (BJ, HJ)

(a) Install the starter with the two bolts.

Torque:	**BJ**	**720 kg-cm (52 ft-lb, 71 N·m)**
	HJ	**730 kg-cm (53 ft-lb, 72 N·m)**

(b) Connect the cable and connector.

5. INSTALL CLUTCH RELEASE CYLINDER (BJ, HJ)

Torque: 120 kg-cm (9 ft-lb, 12 N·m)

6. INSTALL TRANSFER SHIFT LEVER TO TRANSFER

Torque: 250 kg-cm (18 ft-lb, 25 N·m)

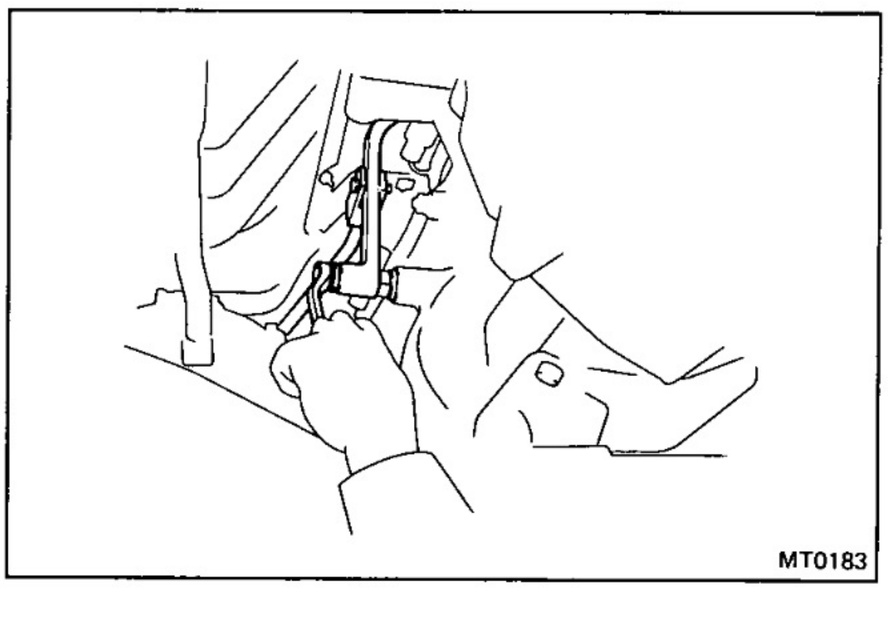

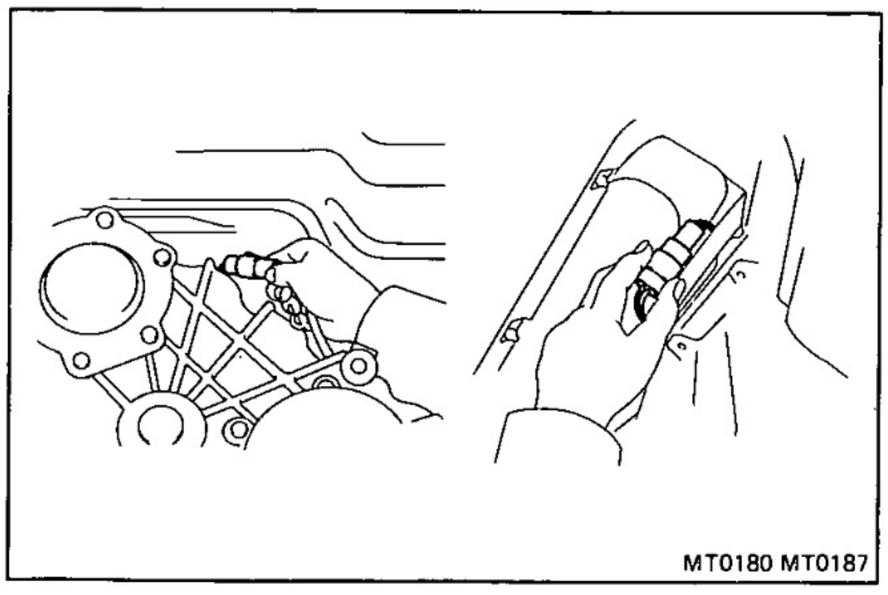

7. INSTALL 4WD AND BACK-UP LIGHT SWITCH CONNECTOR

8. INSTALL L4 SWITCH CONNECTOR (ELECTRICAL SHIFT TYPE)

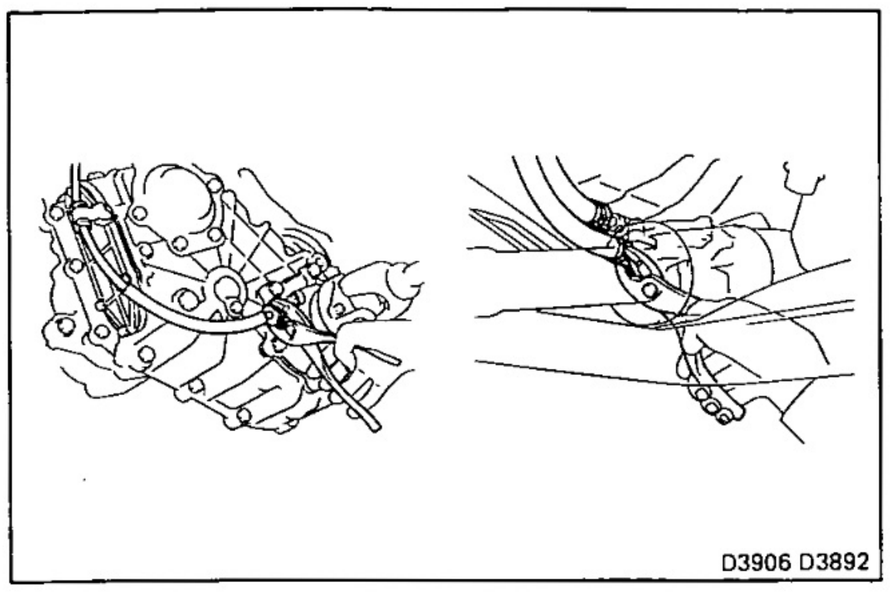
D3906 D3892

9. INSTALL SPEEDOMETER CABLE

10. INSTALL DIAPHRAGM CYLINDER VACUUM HOSE (ELECTRICAL SHIFT TYPE)

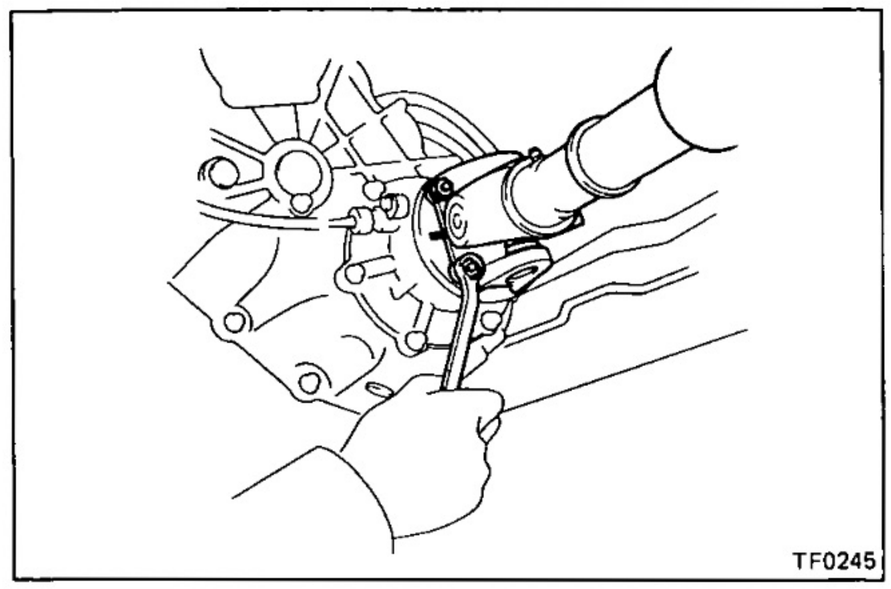
TF0245

11. INSTALL FRONT AND REAR PROPELLER SHAFTS
(See page PR-7)

Torque: 900 kg-cm (65 ft-lb, 88 N·m)

12. INSTALL TRANSMISSION UNDERCOVER

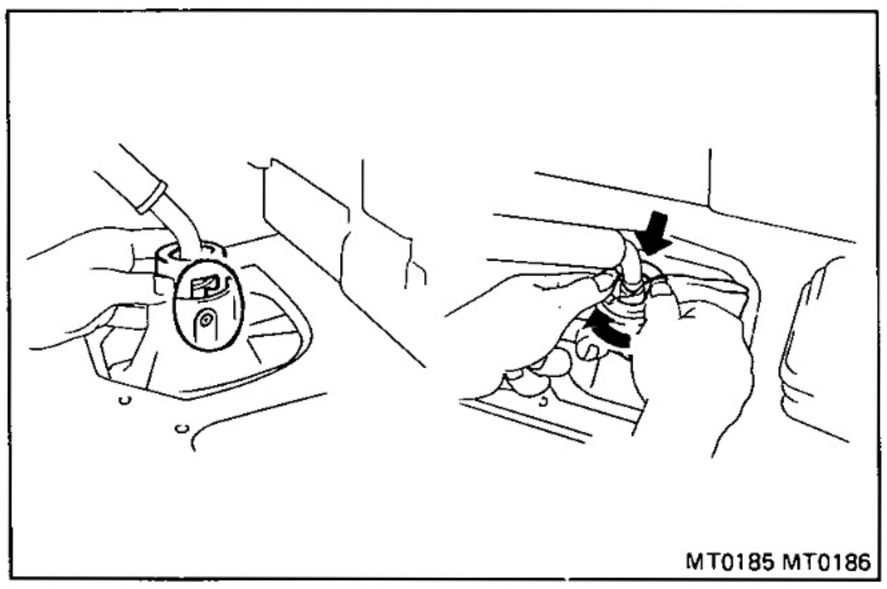
MT0185 MT0186

13. INSTALL TRANSMISSION SHIFT LEVER

(a) Align the gloove of the shift lever cap and the pin part of the case cover.

(b) Cover the shift lever cap with a cloth.

(c) Then, pressing down on the shift lever cap, rotate it clockwise to install.

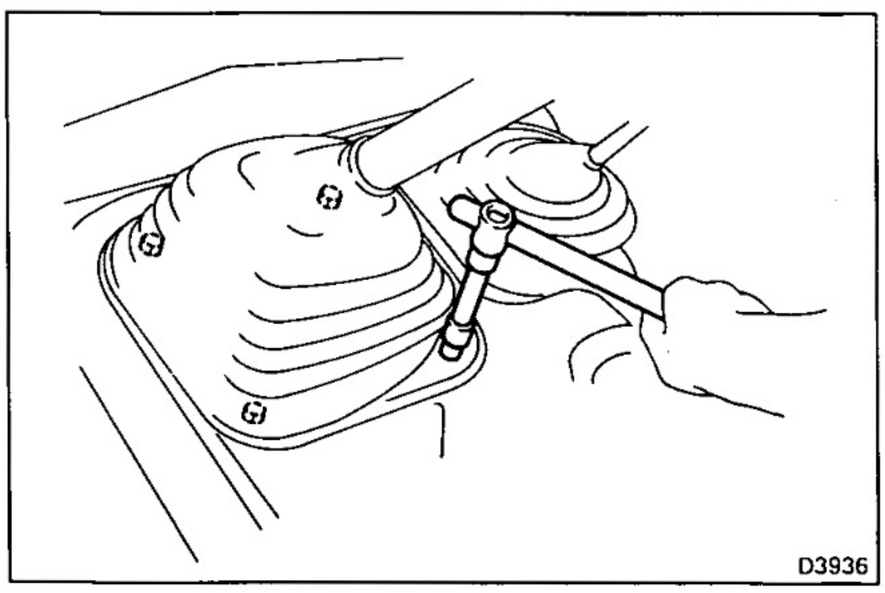
D3936

(d) Install the shift lever boot.

14. CONNECT NEGATIVE BATTERY TERMINAL WIRE

15. FILL TRANSMISSION AND TRANSFER WITH OIL

Oil grade:

H41	API GL-4, 5 SAE 90
H55F	API GL-4, 5 SAE 90

Capacity:

TRANSMISSION

H41	3.5 liters (3.7 US qts, 3.1 Imp. qts)
H55F	4.9 liters (5.2 US qts, 4.3 Imp. qts)

TRANSFER

2.2 liters (2.3 US qts, 1.9 Imp. qts)

16. PERFORM ROAD TEST

Check for abnormal noise and smooth operation.

AUTOMATIC TRANSMISSION

	Page
TROUBLESHOOTING	AT-2
ATF INSPECTION	AT-5
ADJUSTMENTS	AT-6
TESTS	AT-7
AUTOMATIC SHIFT DIAGRAM	AT-16
ON-VEHICLE REPAIR	AT-18
REMOVAL OF TRANSMISSION	AT-24
INSTALLATION OF TRANSMISSION	AT-30

TROUBLESHOOTING

GENERAL NOTES

1. Troubles occuring with the automatic transmission can be caused by either the engine or the automatic transmission itself. These two areas should be distinctly isolated before proceeding with troubleshooting.

2. Troubleshooting should begin with the simpliest operation, working up in order of difficulty, but initially determine whether the trouble lies within the engine or transmission.

3. Proceed with the inspection as follows.

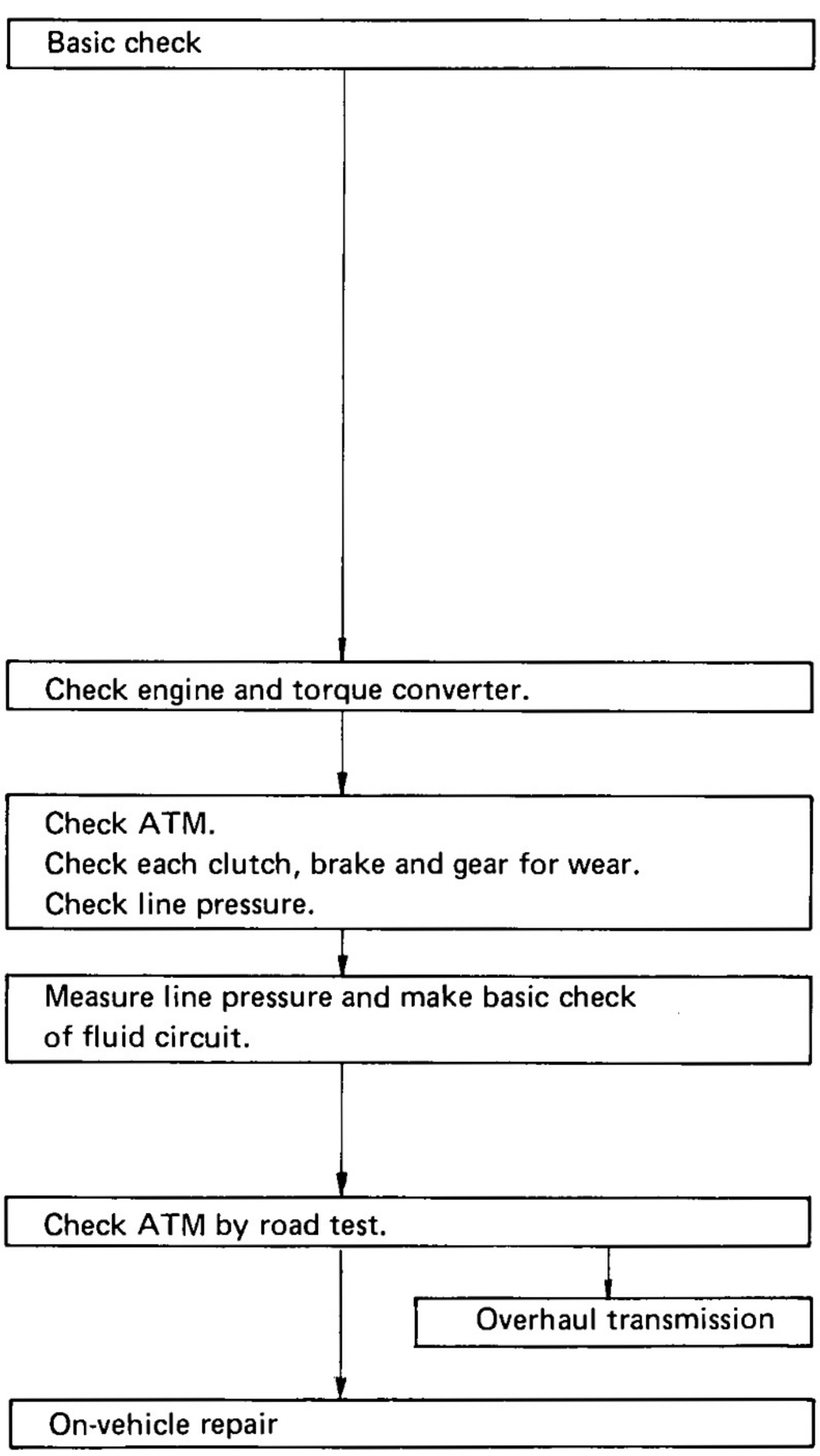

(1) Preliminary Check

(a) Check the fluid level

(b) Check the throttle cable mark

(c) Check the shift linkage

(d) Check the neutral start switch

(e) Check the idling speed

(f) Check the tire inflation pressures (See Front Axle and Suspension Section)

Repair as necessary.

(2) Stall Test

Repair as necessary.

(3) Time Lag Test

Confirm by road test and repair as necessary.

(4) Hydraulic Test

Confirm the shift point and extent of shock by a road test. Repair as necessary.

(5) Road Test

Confirm whether the trouble lies within the ATM. If noisy or vibrating, the cause is possibly in the compressor, engine, propeller shaft, tires, etc.

TROUBLESHOOTING

Problem	Possible cause	Remedy	Page
Fluid discolored or smells burnt	Fluid contaminated	Replace fluid	AT-5
	Torque converter faulty	Replace torque converter	AT-30
	Transmission faulty	Disassemble and inspect transmission	
Vehicle does not move in any drive range	Manual shift linkage out of adjustment	Adjust shift linkage	AT-6
	Valve body or primary regulator faulty	Inspect valve body	AT-18
	Parking lock pawl faulty	Inspect parking pawl	
	Torque converter faulty	Replace torque converter	AT-30
	Drive plate broken	Replace drive plate	AT-30
	Oil pump intake strainer blocked	Clean strainer	AT-18
Shift lever position incorrect	Manual shift linkage out of adjustment	Adjust shift linkage	AT-6
	Manual valve and lever faulty	Inspect valve body	AT-18
	Transmission faulty	Disassemble and inspect transmission	
Harsh engagement into any drive range	Throttle cable out of adjustment	Adjust throttle cable	AT-6
	Valve body or primary regulator faulty	Inspect valve body	AT-18
	Accumulator pistons faulty	Inspect accumulator pistons	
	Transmission faulty	Disassemble and inspect transmission	
Delayed 1-2, 2-3 or 3-OD up-shift, or down-shifts from OD-3 or 3-2 then shifts back to OD or 3	Throttle cable out of adjustment	Adjust throttle cable	AT-6
	Throttle cable and cam faulty	Inspect throttle cable and cam	AT-21
	Governor faulty	Inspect governor	
	Valve body faulty	Inspect valve body	AT-18
Slips on 1-2, 2-3 or 3-OD up-shift, or slips or shudders on take-off	Manual shift linkage out of adjustment	Adjust shift linkage	AT-6
	Throttle cable out of adjustment	Adjust throttle cable	AT-6
	Valve body faulty	Inspect valve body	AT-18
	Transmission faulty	Disassemble and inspect transmission	
Drag, binding or tie-up on 1-2, 2-3 or 3-OD up-shift	Valve body faulty	Inspect valve body	AT-18
	Transmission faulty	Disassemble and inspect transmission	

TROUBLESHOOTING(Cont'd)

Problem	Possible cause	Remedy	Page
Harsh down-shift	Throttle cable out of adjustment	Adjust throttle cable	AT-6
	Throttle cable and cam faulty	Inspect throttle cable and cam	AT-21
	Accumulator pistons faulty	Inspect accumulator pistons	
	Valve body faulty	Inspect valve body	AT-18
	Transmission faulty	Disassemble and inspect transmission	
No down-shift when coasting	Governor faulty	Inspect governor	
	Valve body faulty	Inspect valve body	AT-18
Down-shift occurs too quick or too late while coasting	Throttle cable out of adjustment	Adjust throttle cable	AT-6
	Throttle cable faulty	Inspect throttle cable	AT-21
	Governor faulty	Inspect governor	
	Valve body faulty	Inspect valve body	AT-18
	Transmission faulty	Disassemble and inspect transmission	
No OD-3, 3-2 or 2-1 kick-down	Throttle cable out of adjustment	Adjust throttle cable	AT-6
	Governor faulty	Inspect governor	
	Valve body faulty	Inspect valve body	AT-18
No engine braking in "2" range	Valve body faulty	Inspect valve body	AT-18
	Transmission faulty	Disassemble and inspect transmission	
Vehicle does not hold in "P"	Manual shift linkage out of adjustment	Adjust shift linkage	AT-6
	Parking lock pawl cam and spring faulty	Inspect cam and spring	

ATF INSPECTION

1. CHECK FLUID LEVEL

NOTE: The vehicle must have been driven so that the engine and transmission are at normal operating temperature. (fluid temperature: 50 – 80°C or 122 – 176°F)

(a) Park the vehicle on a level surface.

(b) With the engine idling, shift the selector into each gear from the "P" range to the "L" range and return to the "P" range again.

(c) Pull out the transmission dipstick and wipe it clean.

(d) Push it back fully into the filler tube.

(e) Pull it out and check that the fluid level is in the HOT range.

If low, add fluid.

Fluid type: ATF DEXRON® II

CAUTION: Do not overfill.

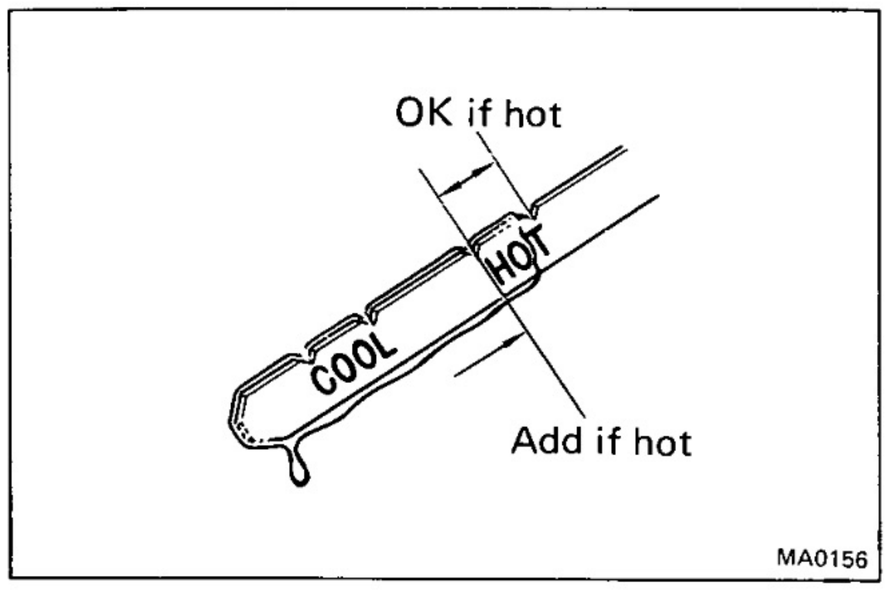

2. CHECK FLUID CONDITION

If the fluid smells burnt or is black, replace it.

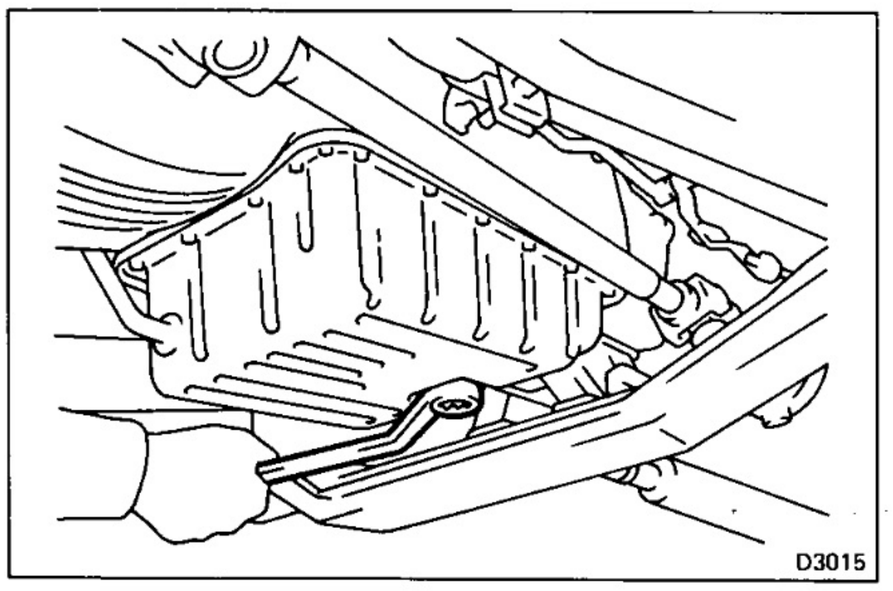

3. REPLACE FLUID

(a) Remove the drain plug and drain the fluid.

(b) Reinstall the drain plug securely.

Torque: 205 kg-cm (15 ft-lb, 20 N·m)

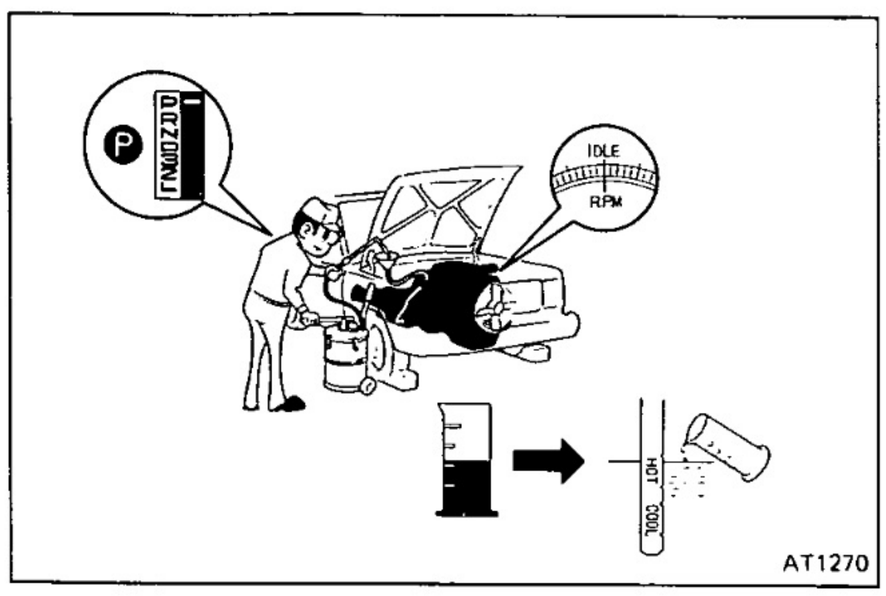

(c) Pour ATF through the filler tube.

Fluid: ATF DEXRON® II

(d) With the engine idling, shift the selector into each gear from the "P" range to the "L" range and return to the "P" range again.

(e) With the engine idling, check the fluid level. Add fluid up to the "COOL" level on the dipstick.

(f) Check the fluid level with the normal fluid temperature (50 – 80°C or 122 – 176°F) and add as necessary.

CAUTION: Do not overfill.

Drain and refill capacity:
5.0 liters (5.3 US qts, 4.4 Imp. qts)

Dry fill capacity:
15.0 liters (15.9 US qts, 13.2 Imp. qts)

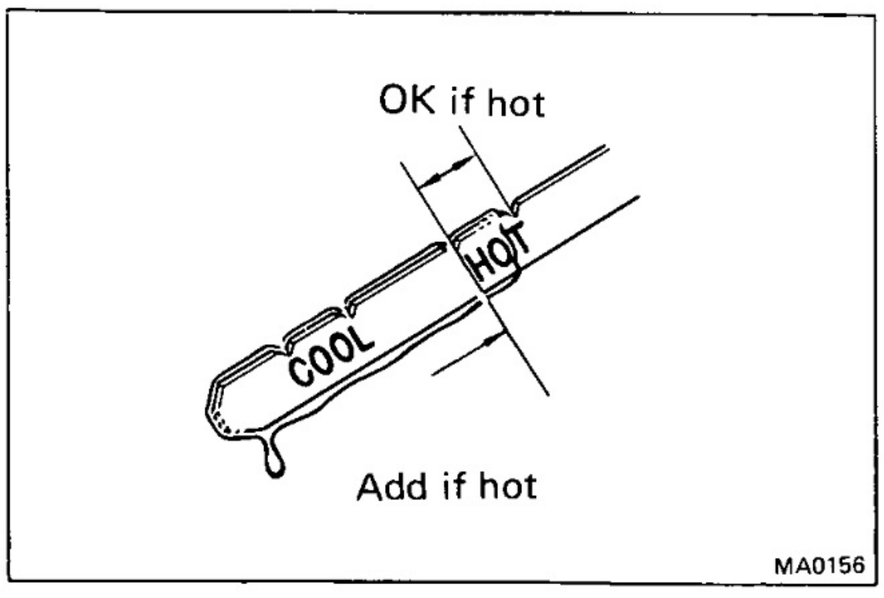

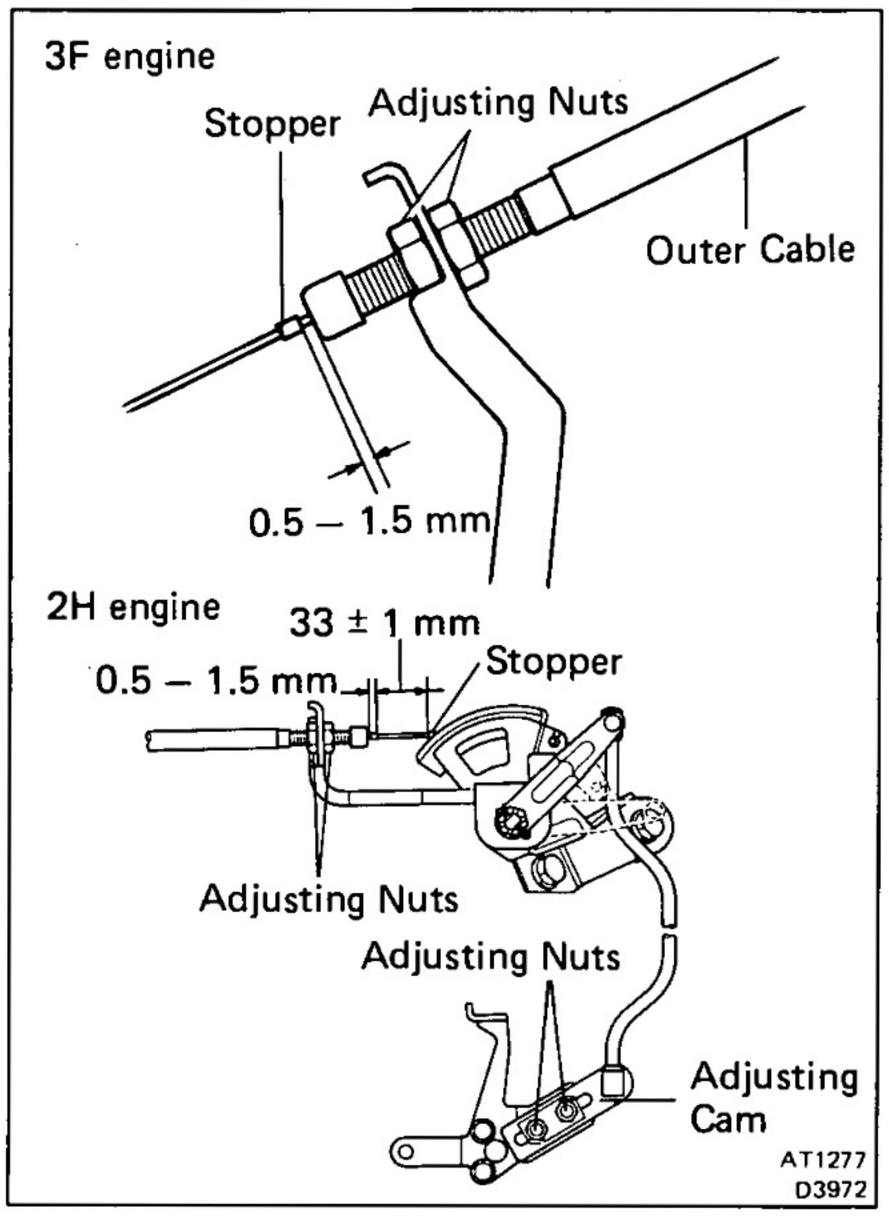

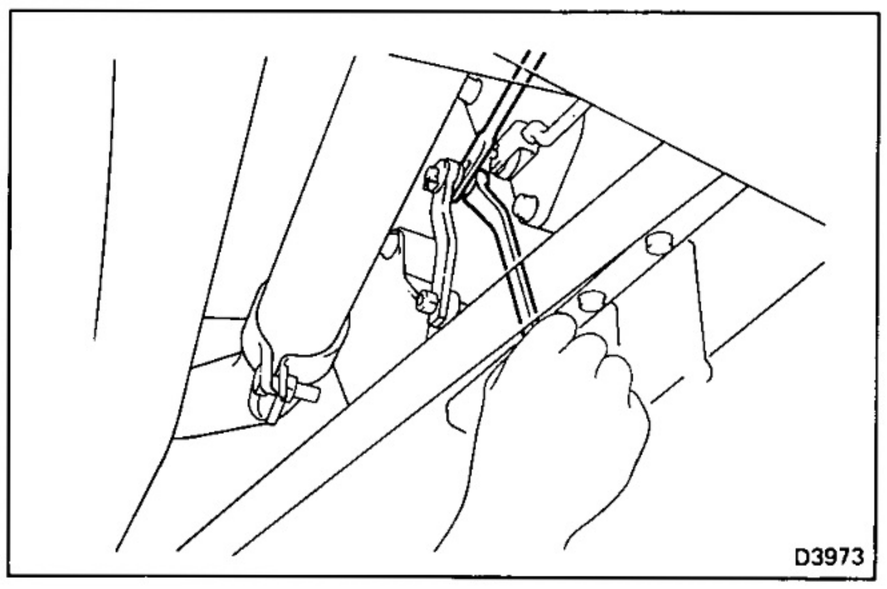

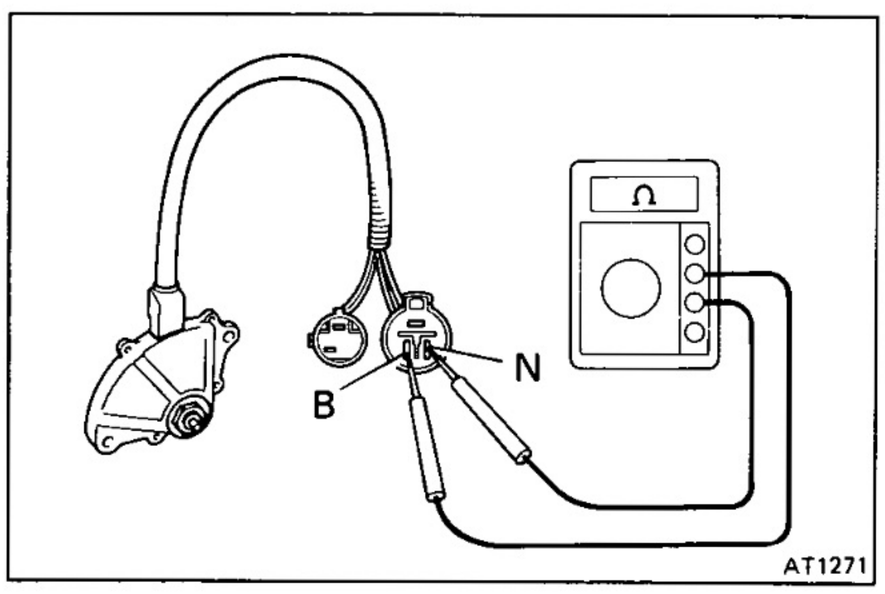

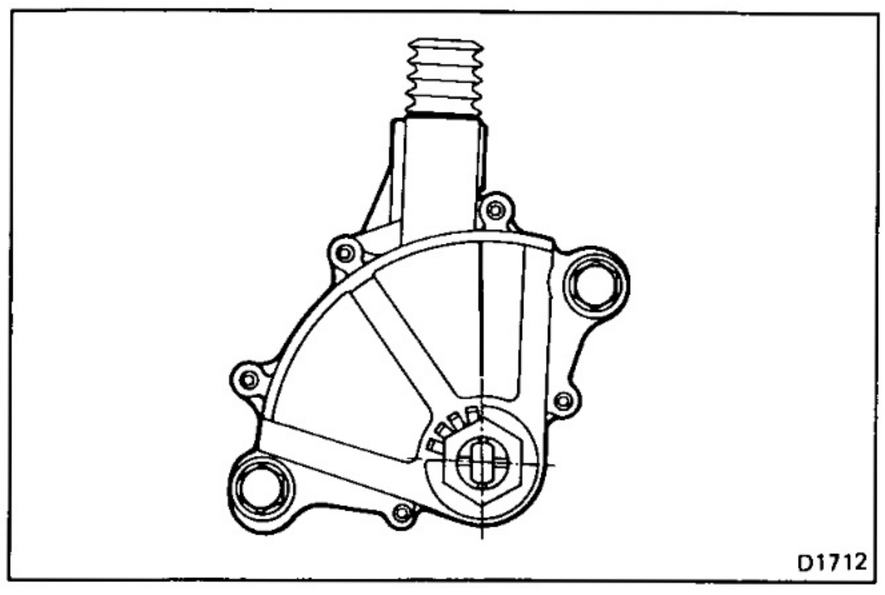

ADJUSTMENTS

ADJUSTMENT OF THROTTLE CABLE

1. DEPRESS ACCELERATOR PEDAL AND CHECK THAT THROTTLE VALVE OPENS FULLY

If the throttle valve does not open fully, adjust the accelerator link.

2. CHECK AND ADJUST THROTTLE CABLE

(a) Check that the throttle cable is installed correctly and not bending.

(b) When the throttle valve is fully closed, adjust the cable housing so that the distance between the end of the boot and the stopper on the cable is correct.

Distance: 0.5 – 1.5 mm (0.020 – 0.059 in.)

(c) 2H engine only – Fully depress the accelerator, measure the cable stroke.

Cable stroke: 33 ± 1 mm (1.30 ± 0.04 in.)

If not within specification, loosen the adjusting nut and adjust by moving the adjusting cam. Then recheck the adjustment.

ADJUSTMENT OF SHIFT LINKAGE

ADJUST FLOOR SHIFT LINKAGE

(a) Loosen the nut on the connecting rod.

(b) Push the manual lever fully toward the front of the vehicle.

(c) Return the manual lever two notches to the "N" position.

(d) Set the shift lever at "N".

(e) While holding the lever lightly toward the "R" range side, tighten the connecting rod nut.

ADJUSTMENT OF NEUTRAL START SWITCH

If the engine will start with the shift selector in any range other than "N" or "P", adjustment is required.

1. LOOSEN NEUTRAL START SWITCH BOLTS

2. SET SHIFT LEVER TO "N" OR "P"

3. ADJUST NEUTRAL START SWITCH

(a) Disconnect the neutral start switch connector.

(b) Connect an ohmmeter between the terminals N and B.

(c) Adjust the switch to the point where there is continuity between terminals N and B.

(d) Connect the neutral start switch connector.

4. TIGHTEN NEUTRAL START SWITCH BOLTS

Torque: 130 kg-cm (9 ft-lb, 13 N·m)

TESTS

STALL TEST

The object of this test is to check the overall performance of the transmission and engine by measuring the maximum engine speeds in the "D" and "R" ranges.

CAUTION:

(a) **Perform the test at normal operational fluid temperature (50 — 80°C or 122 — 176°F).**

(b) **Do not continuously run this test longer than 5 seconds.**

MEASURE STALL SPEED

(a) Chock the four wheels.

(b) Mount an engine tachometer.

(c) Fully apply the parking brake.

(d) Step down strongly on the brake pedal with your left foot.

(e) Start the engine.

(f) Shift into the "D" range. Step all the way down on the accelerator pedal with your right foot. Quickly read the highest engine rpm at this time.

Stall speed: 3F engine 1,850 ± 150 rpm
2H engine 1,900 ± 150 rpm

(g) Perform the same test in the "R" range.

EVALUATION

(a) If the stall speed is the same for both ranges but lower than the specified value:

- Engine output is insufficient.
- Stator one-way clutch is not operating properly.

NOTE: If more than 600 rpm below the specified value, the torque converter could be at fault.

(b) If the stall speed in the "D" range is higher than specified:

- Line pressure too low
- Front clutch slipping
- No. 2 one-way clutch not operating properly
- OD one-way clutch not operating properly

(c) If the stall speed in the "R" range is higher than specified:

- Line pressure too low
- Rear clutch slipping
- No.3 brake slipping
- OD one-way clutch not operating properly

(d) If the stall speed in the "R" and "D" ranges is higher than specified:

- Line pressure too low
- Improper fluid level
- OD one-way clutch not operating properly

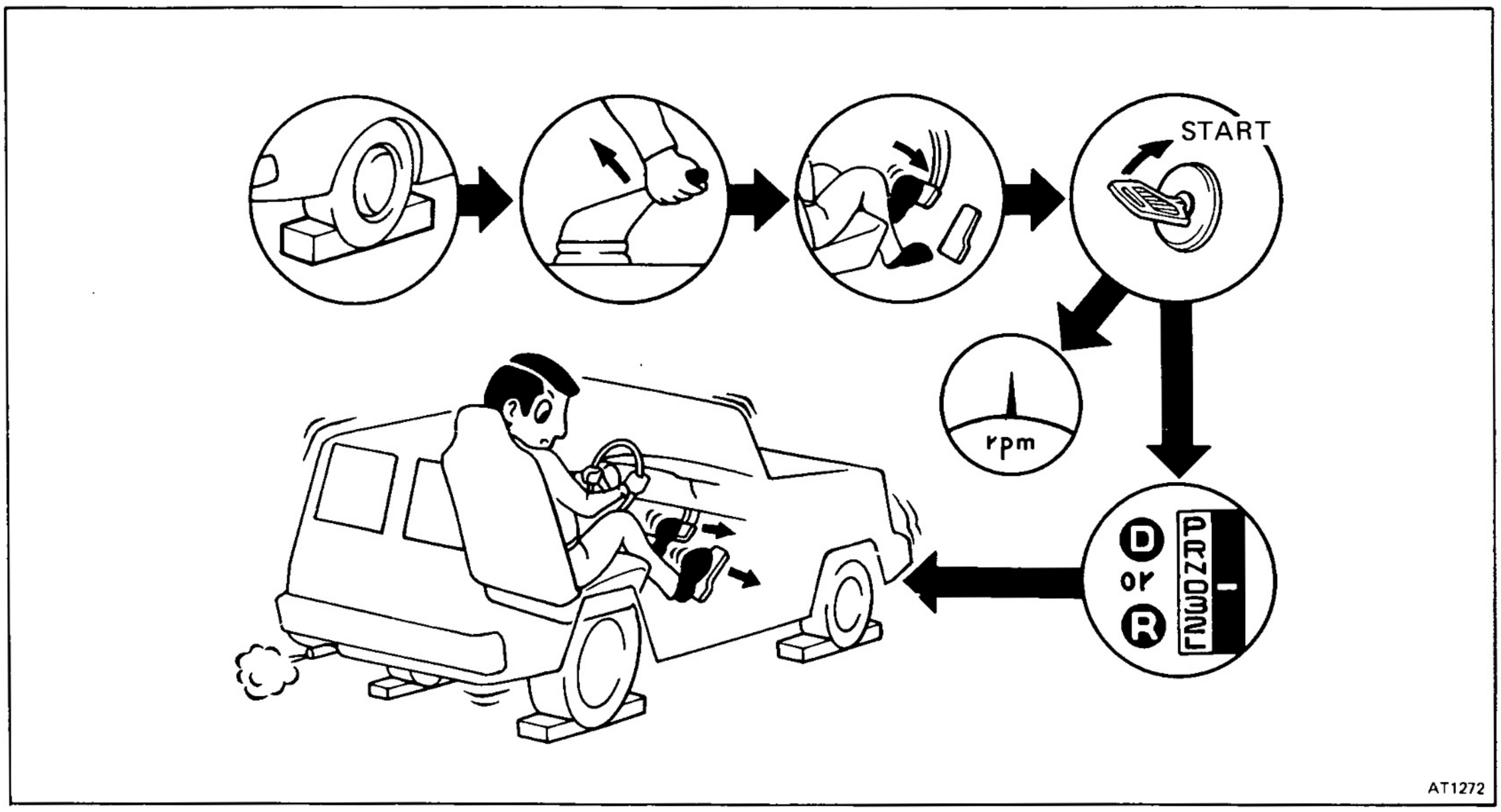

TIME LAG TEST

If the shift lever is shifted while the engine is idling, there will be a certain time elapse or lag before the shock can be felt. This is used for checking the condition of the OD clutch, front clutch, rear clutch and No.3 brake.

MEASURE TIME LAG

(a) Fully apply the parking brake.

(b) Start the engine and check the idle speed.

Idle speed: 3F engine 750 rpm
2H engine 750 rpm

(c) Shift the shift lever from the "N" to "D" range. Using a stop watch, measure the time it takes from shifting the lever until the shock is felt.

Time lag: Less than 0.7 seconds

(d) In same manner, measure the time lag for "N" → "R".

Time lag: Less than 1.2 seconds

CAUTION:

(a) Perform the test at normal operational fluid temperature (50 – 80°C or 122 – 176°F).

(b) Be sure to allow a one minute interval between tests.

(c) Make three measurements and take the average value.

EVALUATION

(a) If "N" → "D" time lag is longer than specified:
- Line pressure is too low
- Front clutch worn
- OD one-way clutch not operating properly

(b) If "N" → "R" time lag is longer than specified:
- Line pressure is too low
- Rear clutch worn
- No. 3 brake worn
- OD one-way clutch not operating properly

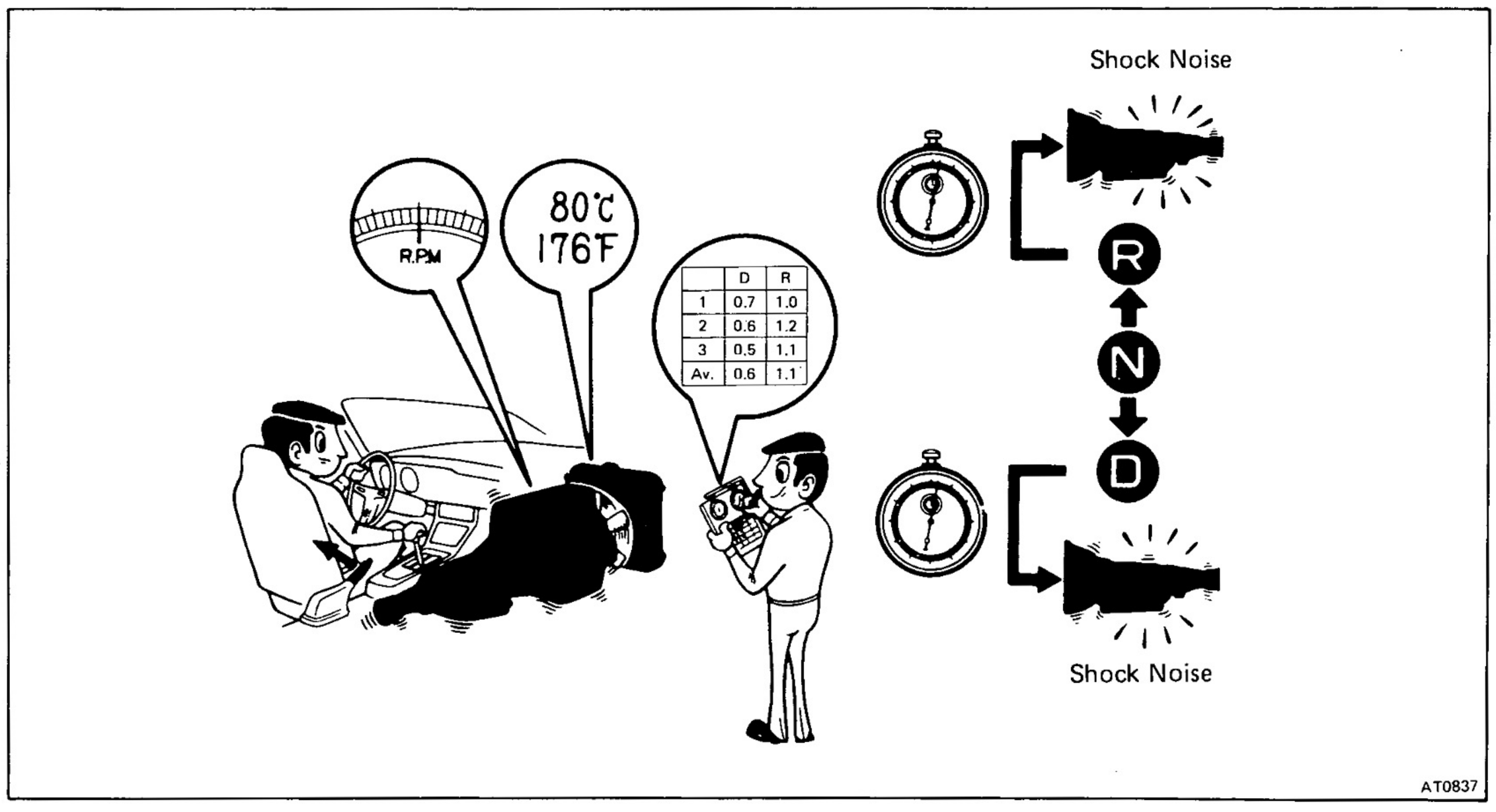

HYDRAULIC TEST

1. PREPARATION

(a) Warm up the transmission fluid.

(b) Shift the transfer shift lever to the "H2" position.

(c) Chock the front wheels.

(d) Jack up rear of the vehicle and support it on stands.

(e) Remove the transmission case test plugs and mount hydraulic pressure gauges.

SST 09992-00093

CAUTION:

(a) Perform the test at normal operational fluid temperature (50 – 80°C or 122 – 176°F).

(b) Measurement can be made with a 1,000 rpm test, but if tests are to be made at 1,800 and 3,500 rpm, it would be safer to do it on road or using a chassis dynamometer because an on-stand test could be hazardous.

2. MEASURE GOVERNOR PRESSURE

(a) Check that the parking brake is not applied.

(b) Start the engine.

(c) Shift into the "D" range and measure the governor pressures at the speeds specified in the table.

EVALUATION

If governor pressure is defective:

- Line pressure defective
- Fluid leakage in governor pressure circuit
- Governor valve operation defective

FJ series Differential gear ratio 4.111

Output shaft rpm	Vehicle speed (Reference) km/h (mph) Tire size 7.50-16-6	7.00-15-6	H-78	Governor pressure kg/cm² (psi, kPa)
1,000	35 (22)	33 (21)	31 (19)	1.0 – 1.4 (14 – 20, 98 – 137)
1,800	64 (40)	59 (37)	57 (35)	2.2 – 2.6 (31 – 37, 216 – 255)
3,500	124 (77)	115 (71)	110 (68)	5.7 – 6.3 (81 – 90, 559 – 618)

HJ series Differential gear ratio 4.111

	10R-15	205SR-16	–	Governor pressure kg/cm² (psi, kPa)
1,000	34 (21)	33 (21)	–	1.0 – 1.4 (14 – 20, 98 – 137)
1,800	62 (39)	59 (37)	–	2.4 – 2.8 (34 – 40, 235 – 275)
3,500	120 (75)	114 (71)	–	6.0 – 6.6 (85 – 94, 588 – 647)

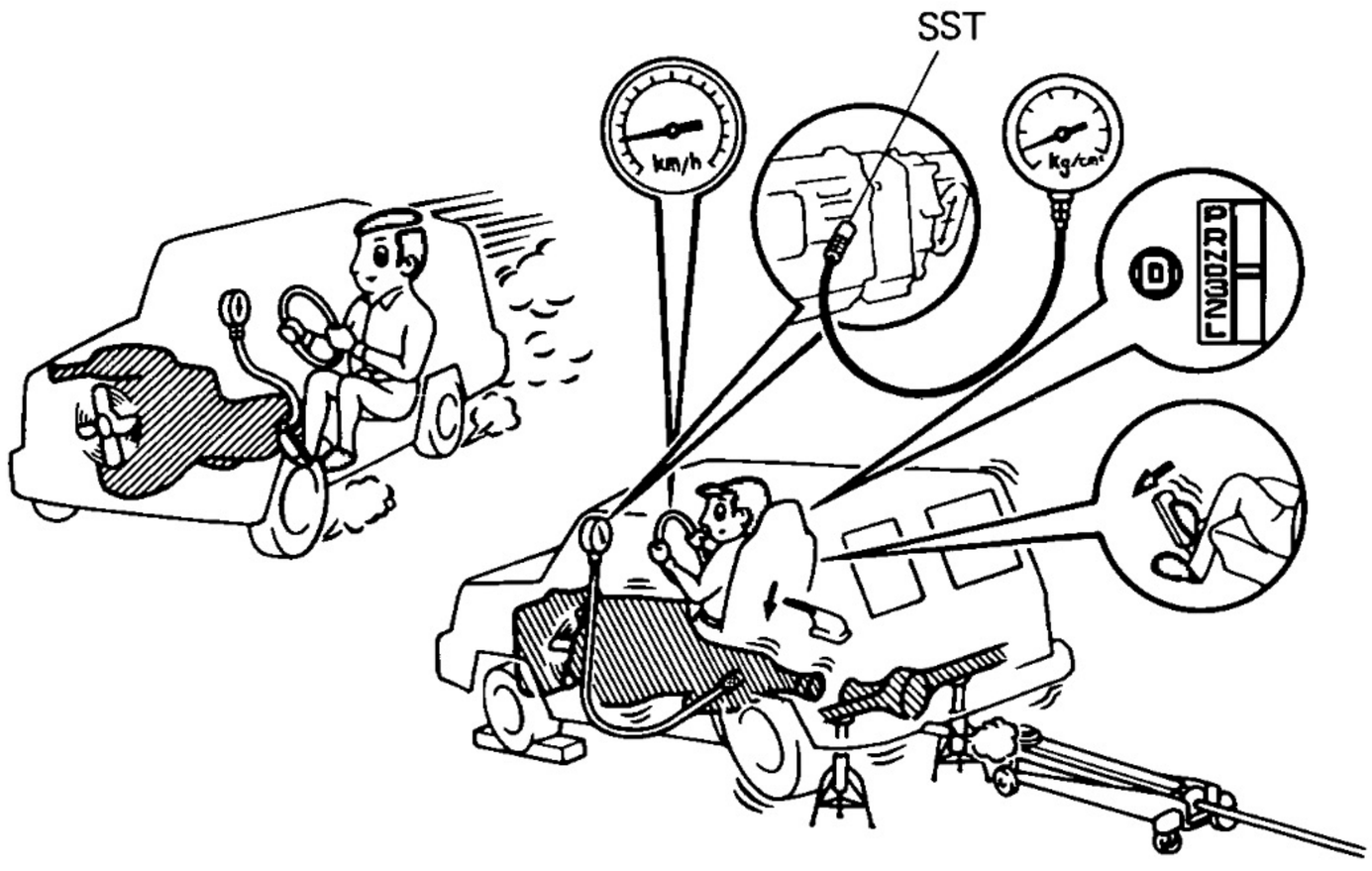

3. MEASURE LINE PRESSURE

(a) Fully apply the parking brake and chock the four wheels.

(b) Start the engine and check idling rpm.

(c) Shift into the "D" range, step down strongly on the brake pedal with your left foot and, while manipulating the accelerator pedal with the right foot, measure the line pressures at the engine speeds specified in table.

CAUTION:

(a) **Perform the test at normal operational fluid temperature (50 – 80°C or 122 – 176°F).**

(b) **Do not continuously run this test longer than 5 seconds.**

(d) In the same manner, perform the test in the "R" range.

Engine speed	Line pressure kg/cm² (psi) [kPa]	
	"D" range	"R" range
Idling	3.7 – 4.3 (53 – 61) [363 – 422]	4.5 – 5.5 (64 – 78) [441 – 539]
Stall	11.1 – 13.6 (158 – 193) [1,089 – 1,334]	14.0 – 17.0 (199 – 242) [1,373 – 1,667]

(e) If the measured pressures are not up to specified values, recheck the throttle cable adjustment and retest.

EVALUATION

(a) If the measured values at all ranges are higher than specified:
- Throttle cable out-of-adjustment
- Throttle valve defective
- Regulator valve defective

(b) If the measured values at all ranges are lower than specified:
- Throttle cable out-of-adjustment
- Throttle valve defective
- Regulator valve defective
- Oil pump defective
- OD clutch defective

(c) If pressure is low in "D" range only:
- "D" range circuit fluid leakage
- Front clutch defective
- OD clutch defective

(d) If pressure is low in "R" range only:
- "R" range circuit fluid leakage
- Rear clutch defective
- No. 3 brake defective
- OD clutch defective

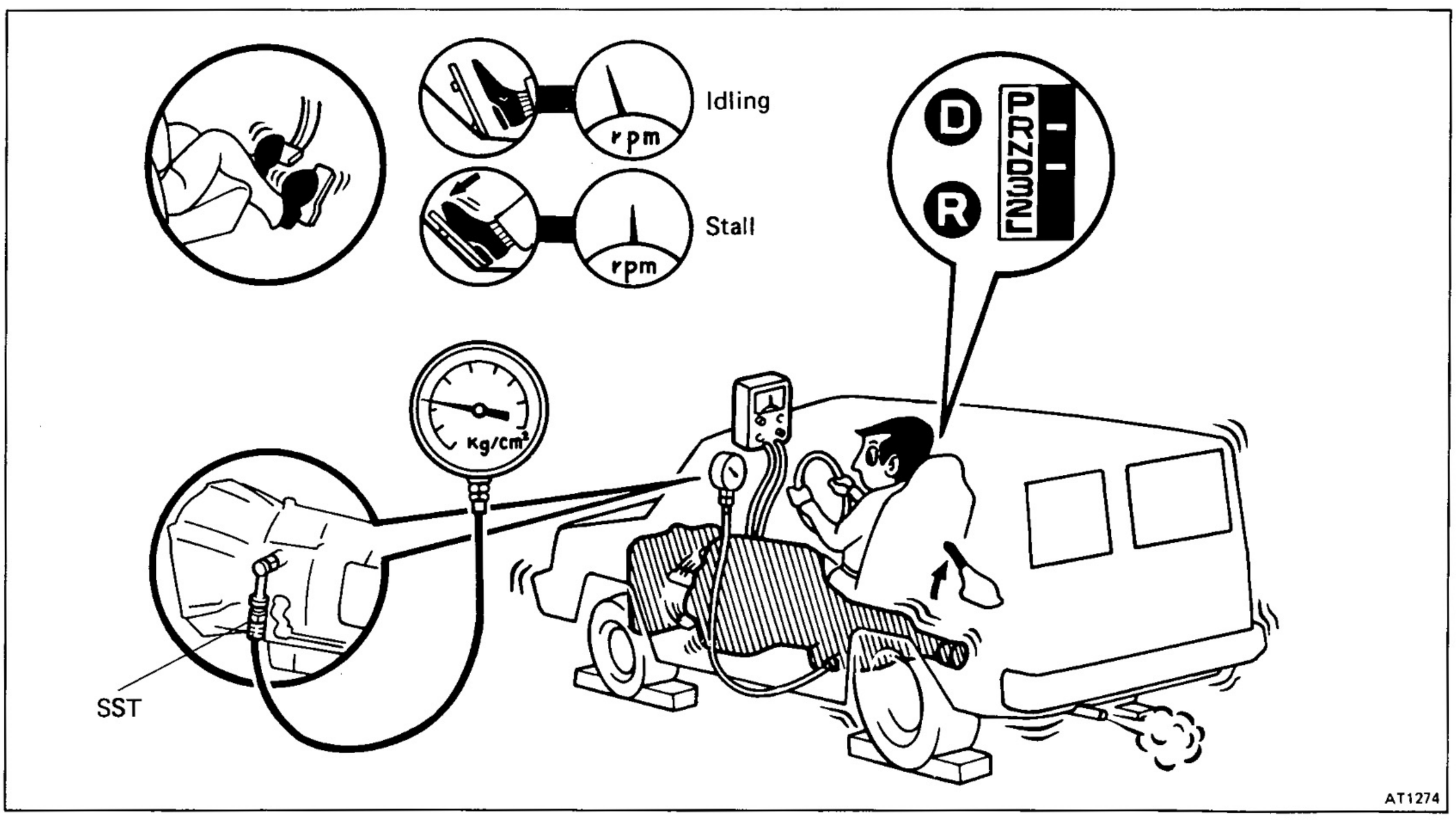

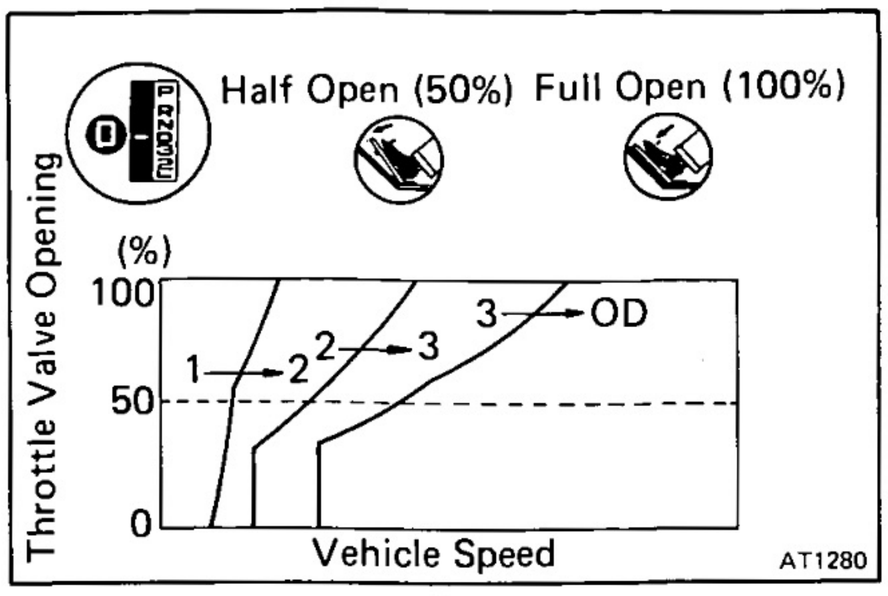

ROAD TEST

CAUTION: Perform the test at normal operational fluid temperature (50 – 80°C or 122 – 176°F).

1. "D" RANGE TEST

Shift into the "D" range and, while driving with the accelerator pedal held constant at specified points (throttle valve opening 50% and 100%), check the following points.

(a) At each of the above throttle openings, check to see that 1→2, 2→3 and 3→OD up-shift take place and also that the shift points conform to those shown in the automatic shift diagram.

EVALUATION

(1) If there is no 1→2 up-shift:
- Governor valve is defective
- 1-2 shift valve is stuck

(2) If there is no 2→3 up-shift:
- 2-3 shift valve is stuck

(3) If there is no 3→OD up-shift
- 3-4 shift valve is stuck

(4) If the shift point is defective:
- Throttle cable is out-of-adjustment
- Throttle valve, 1-2 shift valve, 2-3 shift valve, 3-4 shift valve, etc. are defective

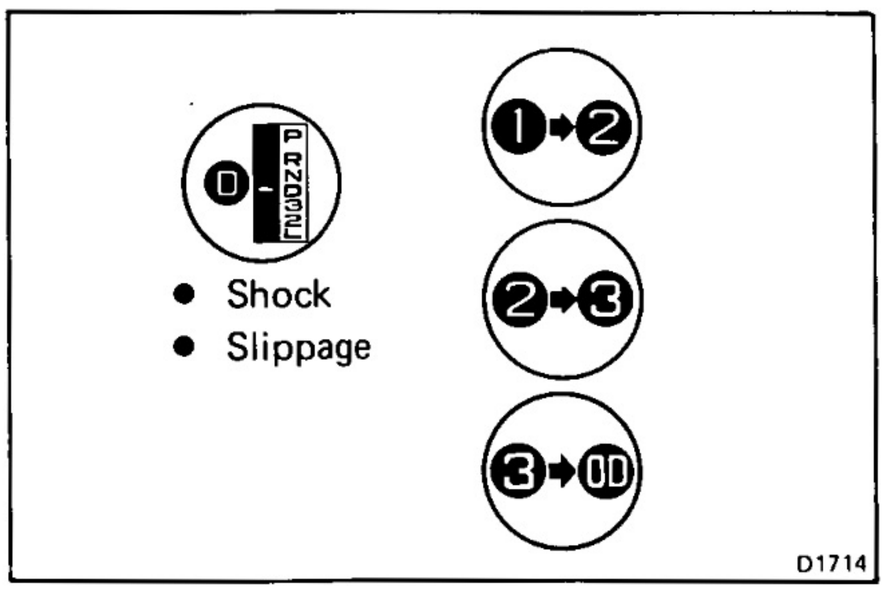

(b) In the same manner, check the shock and the slip at 1→2, 2→3 and 3→OD up-shifts.

EVALUATION

If the shock is severe:
- Line pressure is too high
- Accumulator is defective
- Check ball is defective

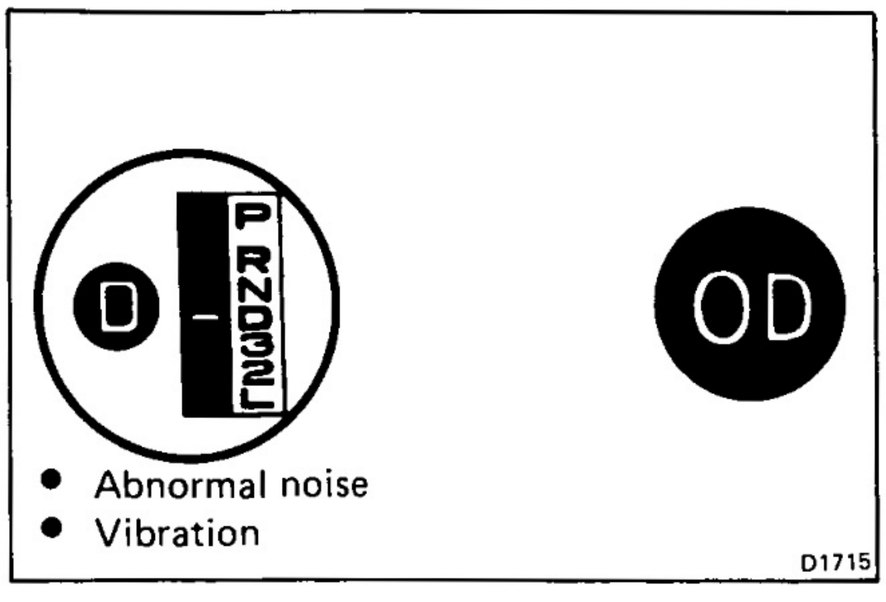

(c) In "D" range OD gear, check for abnormal noise and vibration.

NOTE: The check for cause of abnormal noise and vibration must be made with extreme care as they could also be due to an unbalance in the propeller shafts, differential, tire, torque converter, etc. or insufficient bending rigidity, etc. in the power train.

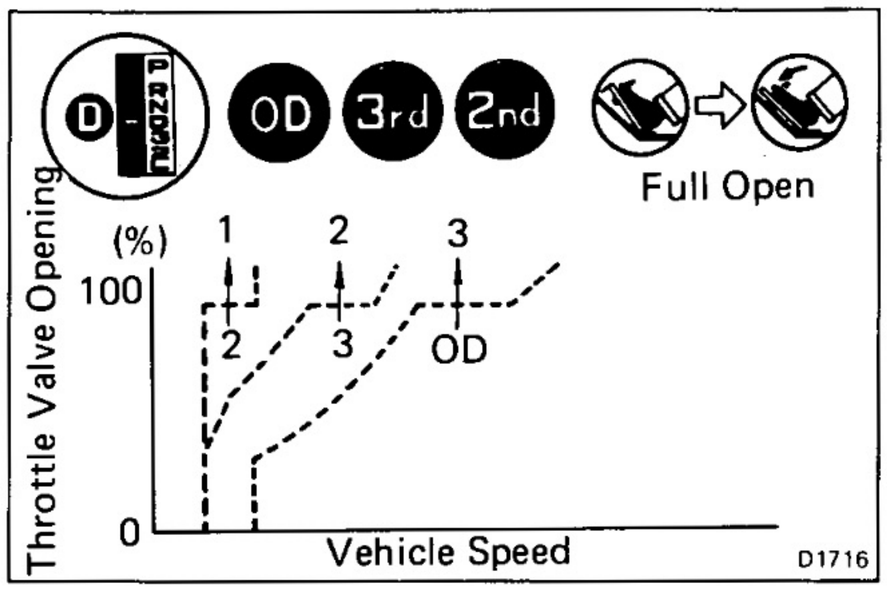

(d) While running in the "D" range, 2nd, 3rd gears and OD, check to see that the possible kick-down vehicle speed limits for 2→1, 3→1, 3→2, OD→3 and OD→2 kick-downs conform to those indicated in the automatic shift diagram.

(e) Check for abnormal shock and slip at kick-down.

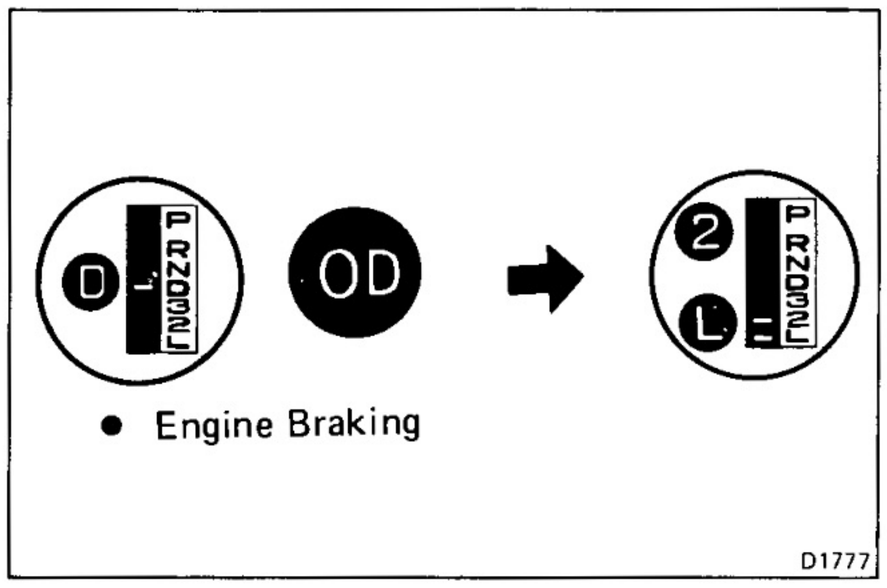

(f) While running in the "D" range, OD gear, shift to the "2" and "L" ranges and check the engine braking effect in each of these ranges.

EVALUATION

(1) If there is no engine braking effect in the "2" range:
- Brake No. 1 is defective

(2) If there is no engine braking effect in the "L" range:
- Brake No. 3 is defective

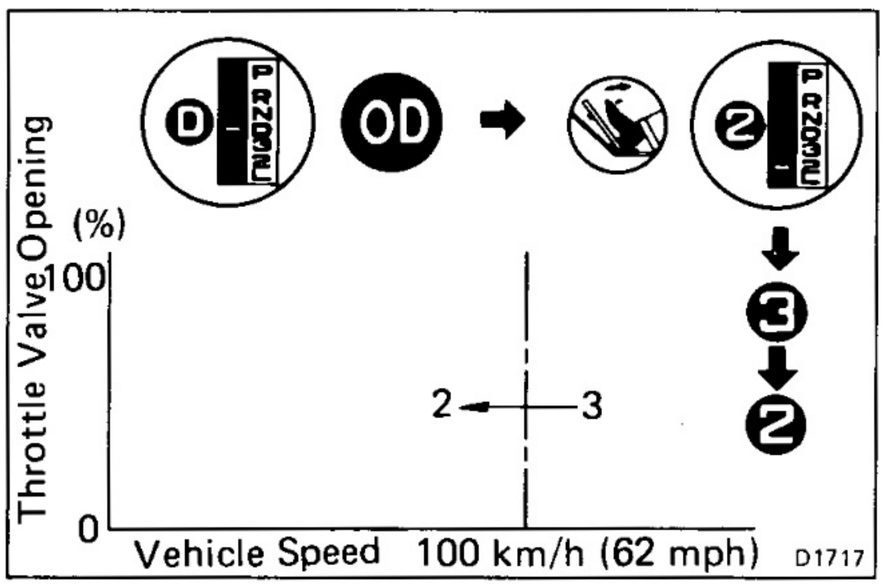

(g) While running at approx. 100 km/h (62 mph) in OD of the "D" range, release your foot from the accelerator. Check that after shifting into the "2" range the OD→3 shift takes place immediately afterward and that the 3→2 shift conforms with the specifications in the automatic shift diagram.

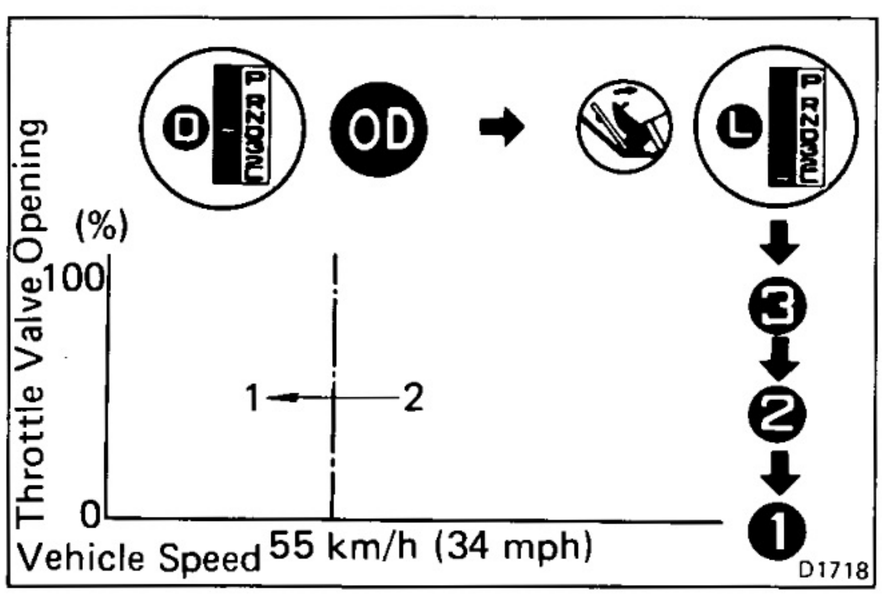

(h) While running at approx. 55 km/h (34 mph) in OD of the "D" range, release your foot from the accelerator. Check that after shifting into the "L" range the OD→3→2 shift takes place immediately afterward and that the 2→1 shift conforms with the specifications in the automatic shift diagram.

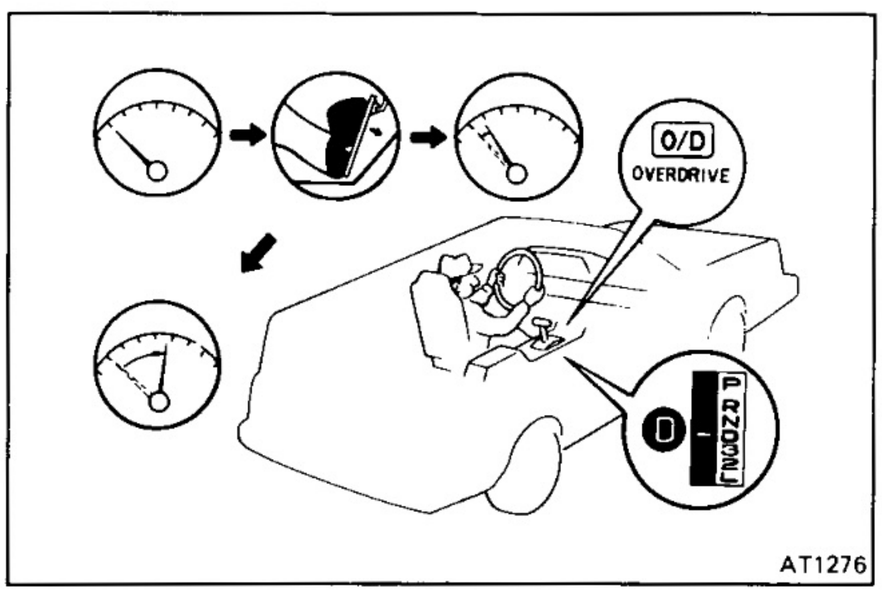

(i) While driving in overdrive at a steady speed (lock-up ON) of about 80 km/h (50 mph), lightly depress the accelerator pedal and check that the engine rpm does not change abruptly.

NOTE: If the lock-up is not operating, drive power will not be transmitted via the torque converter fluid. Consequently, the torque converter will slip when the pedal is depressed, causing an abrupt change in engine rpm.

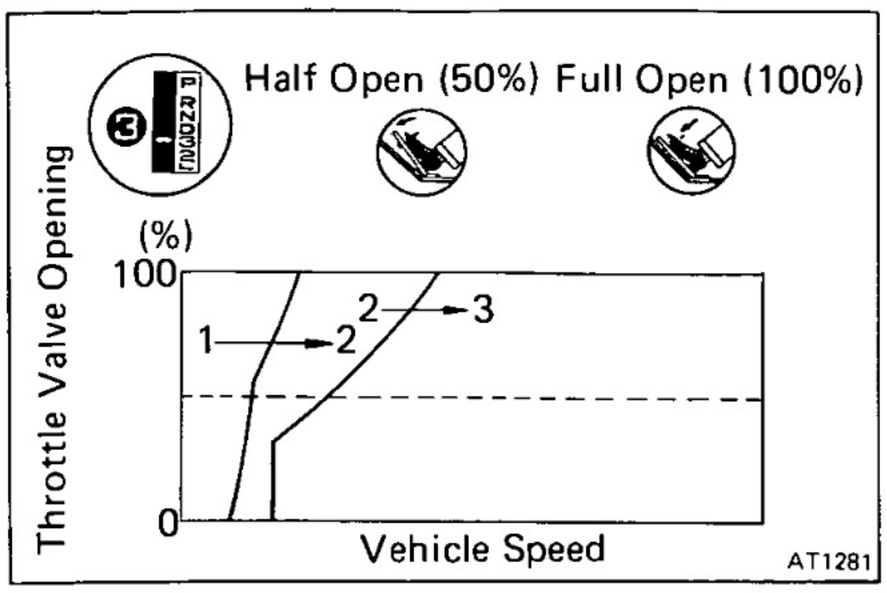

2. "3" RANGE TEST

(a) Shift into "3" and run with the throttle valve opening at 50% and 100%, respectively. Then check the 1→2 and 2→3 up-shift points at each of the throttle valve openings to see that it conforms to those indicated in the automatic shift diagram.

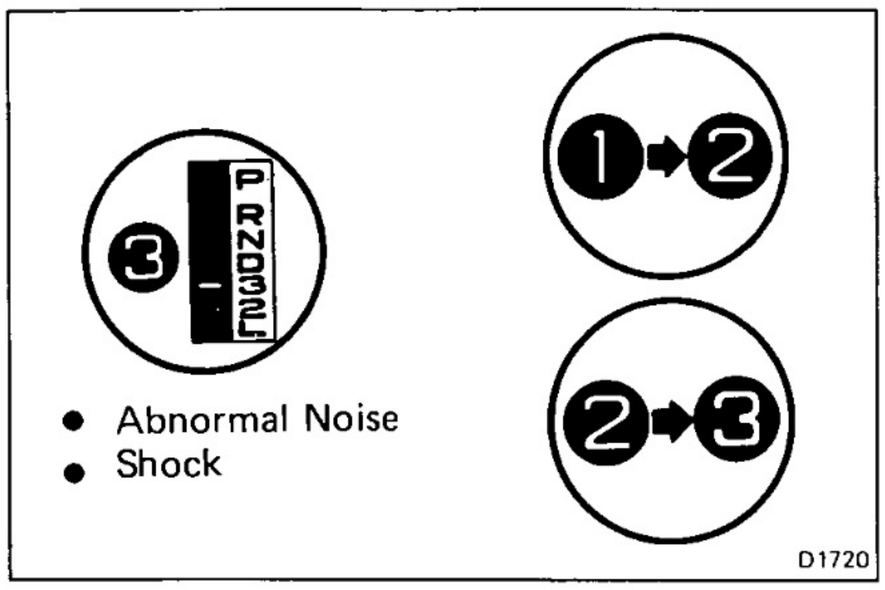

(b) Check for abnormal noise at acceleration and deceleration, and for shock at up-shift and down-shift.

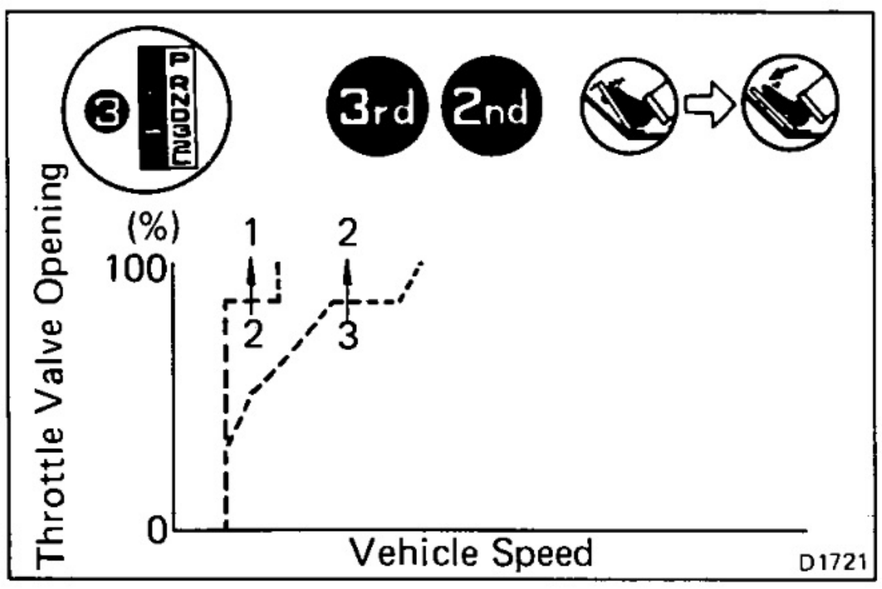

(c) Perform a kick-down from 2nd and 3rd gear of the "3" range, and check the possible 2→1, 3→2, 3→1 kickdowns vehicle speed limit to see if it conforms to that indicated in the automatic shift diagram.

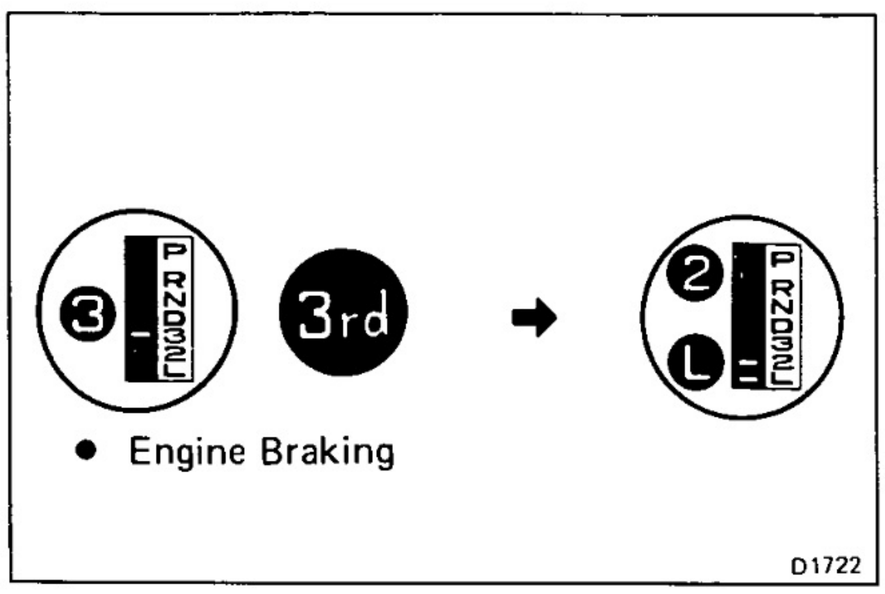

(d) While running in the "3" range, shift into the "2" and "L" range, release the accelerator pedal and check the engine braking effect.

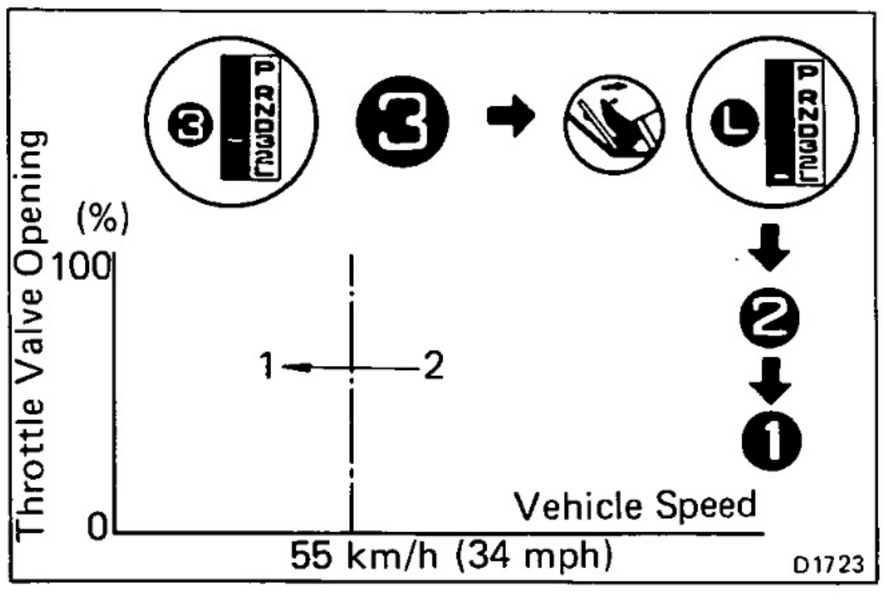

(e) While running at approx. 55km/h (34 mph) in the 3rd gear of the "3" range, release your foot from the accelerator. Check that after shifting into the "L" range the 3→2 shift takes place immediately afterward and that the 2→1 shift conforms to the specifications in the automatic shift diagram.

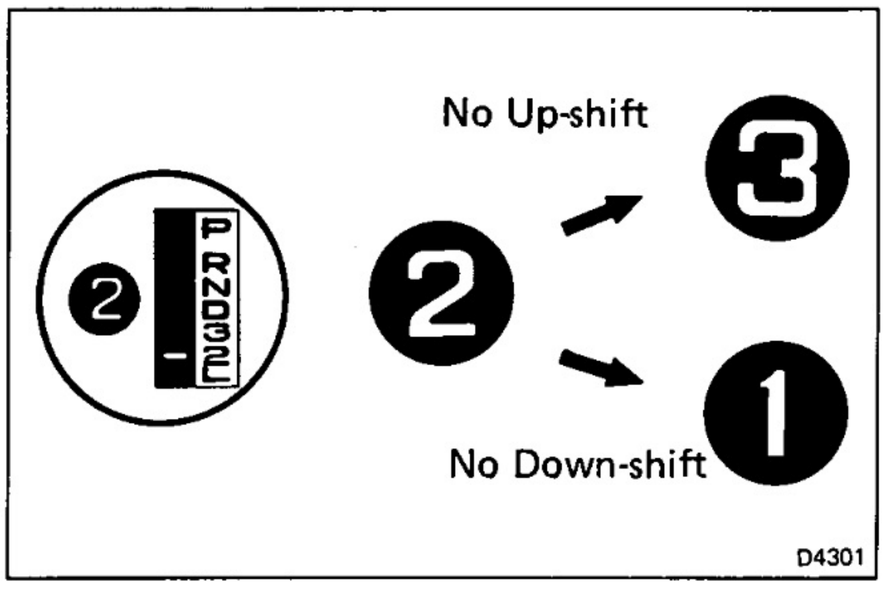

3. "2" RANGE TEST

(a) While running in 2nd gear of the "2" range, check to see that there is no up-shift to 3rd gear.

(b) While running in 2nd gear of the "2" range, check to see that there is no down-shift to 1st gear.

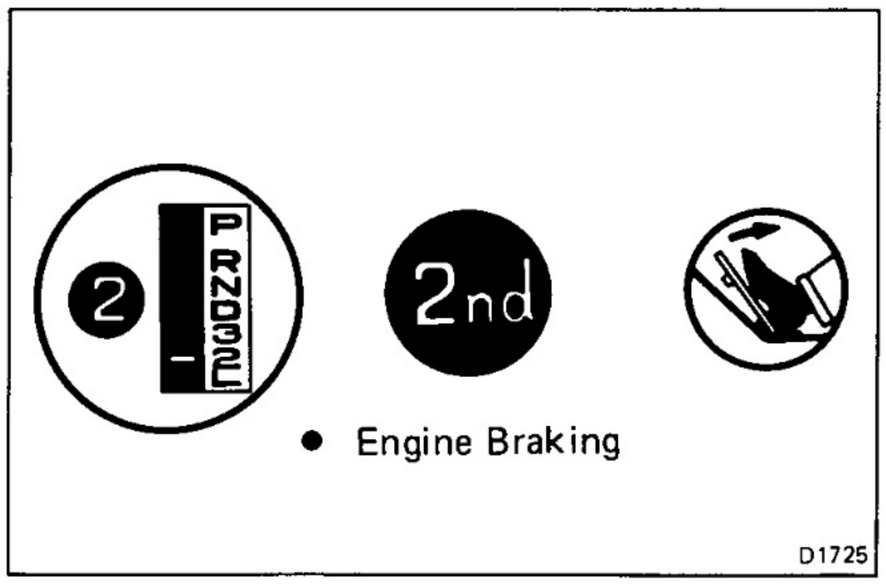

(c) While running in 2nd gear of the "2" range, release the accelerator pedal and check the engine braking effect.

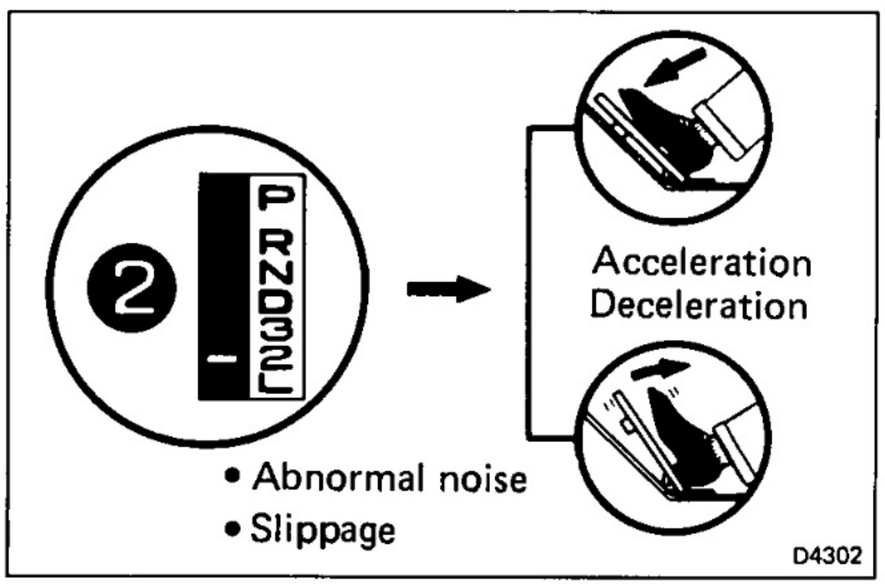

(d) Check for abnormal noise at acceleration and deceleration.

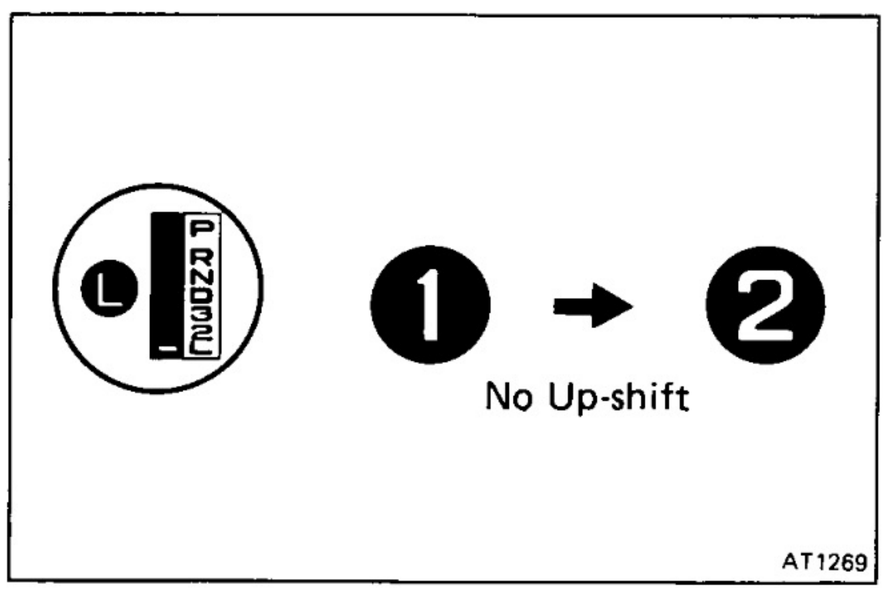

4. "L" RANGE TEST

(a) While running in the "L" range, check to see that there is no up-shift to 2nd gear.

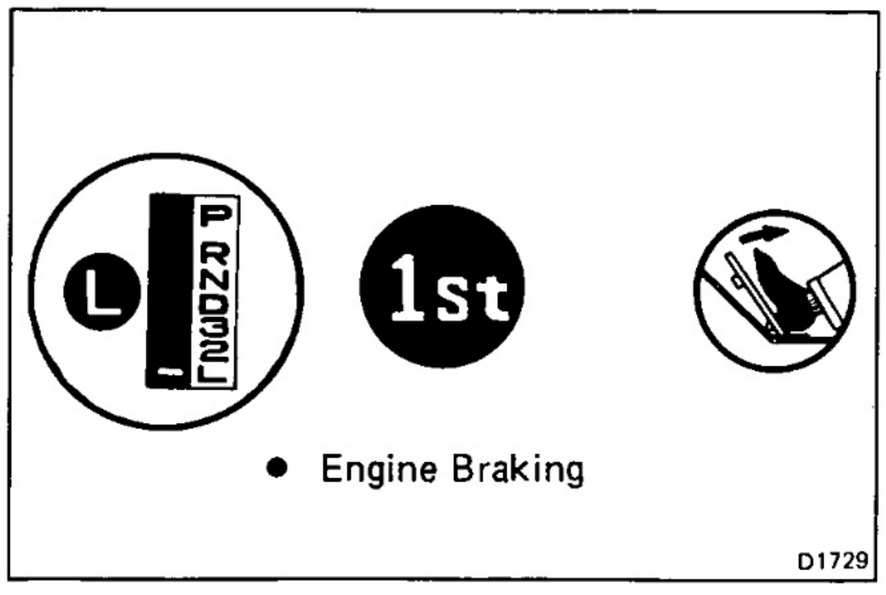

(b) While running in the "L" range, release the accelerator pedal and check the engine braking effect.

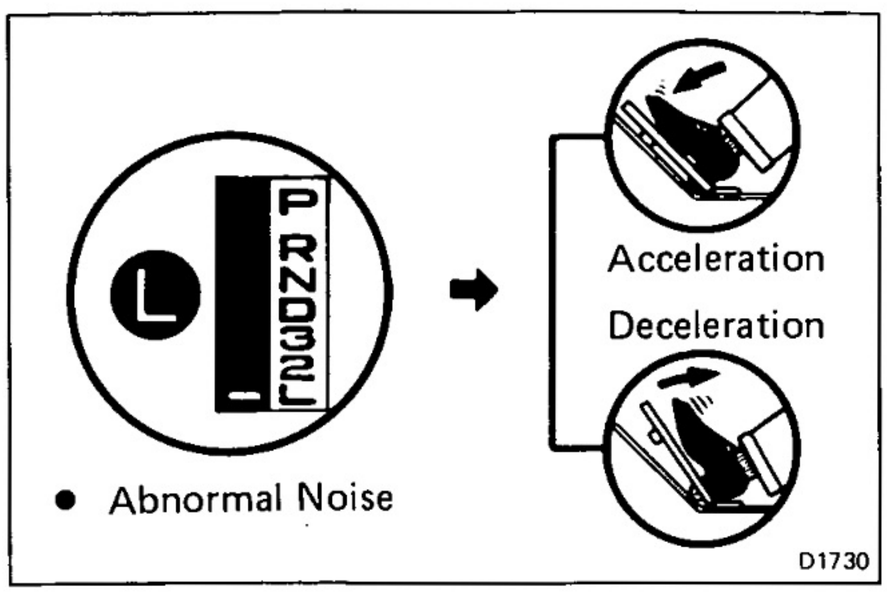

(c) Check for abnormal noise at acceleration and deceleration.

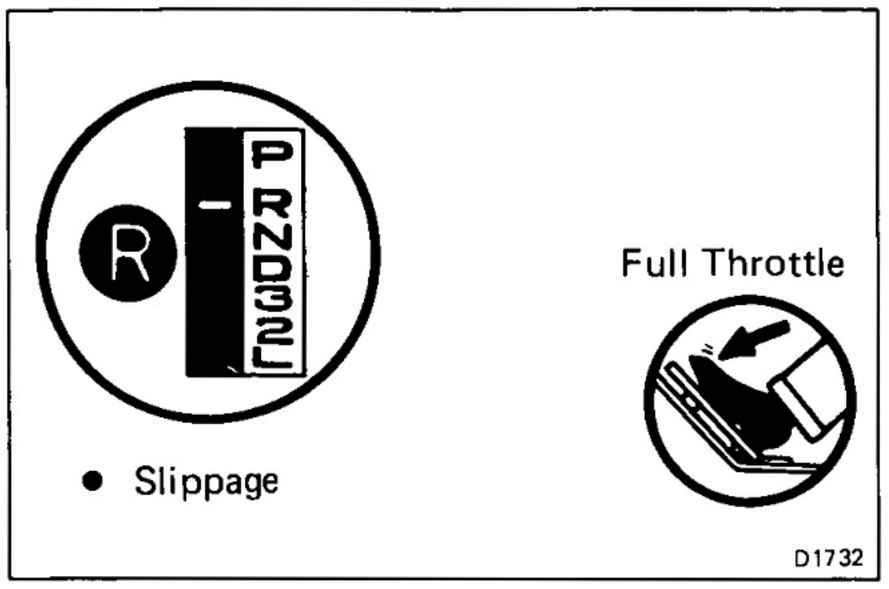

5. "R" RANGE TEST

Shift into the "R" range and check for slipping while running at full throttle.

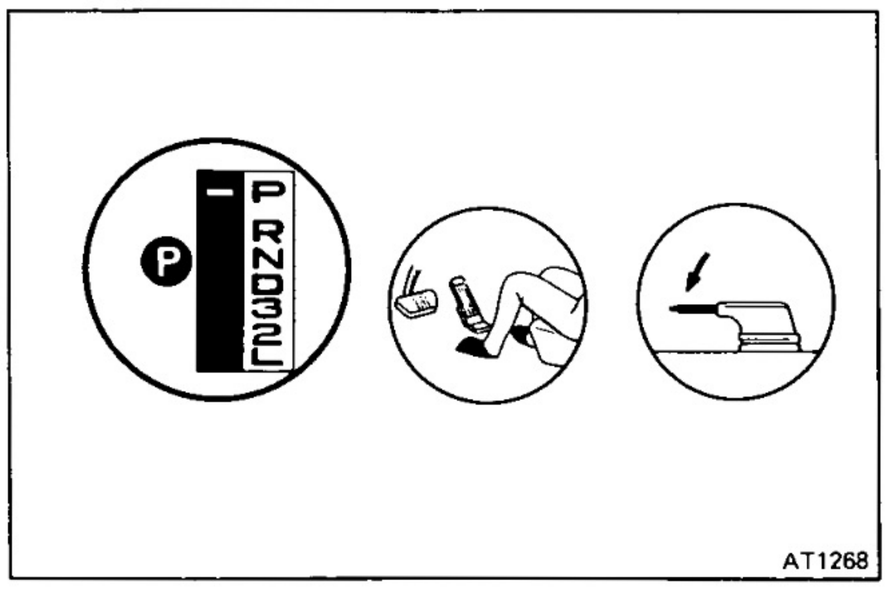

6. "P" RANGE TEST

Stop the vehicle on a gradient (more than 9%) and, after shifting into the "P" range, release the parking brake. Then check that the parking lock pawl prevents the vehicle from moving.

AUTOMATIC SHIFT DIAGRAM

FJ series

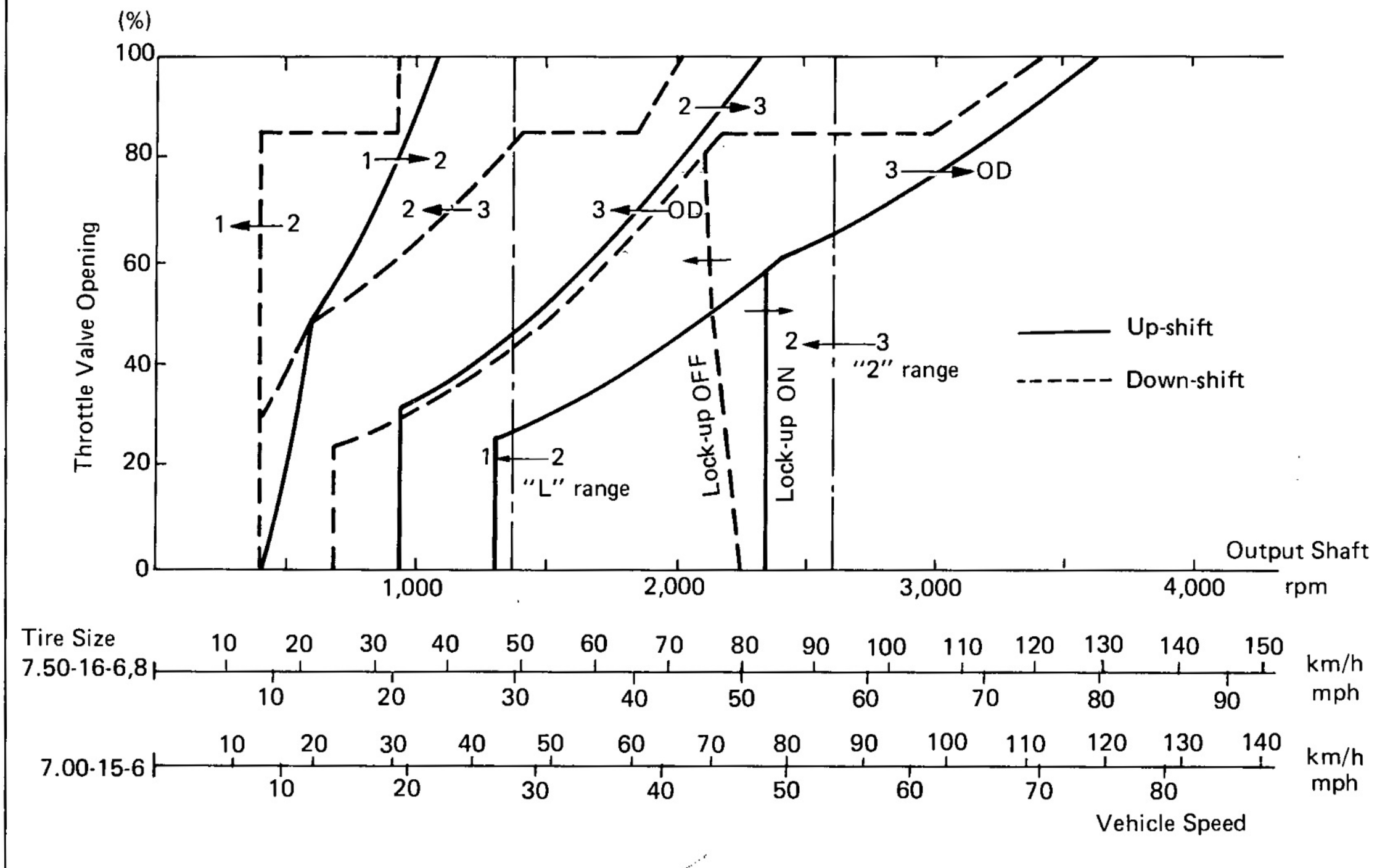

km/h (mph)

Tire Size	"D" range (throttle valve fully open)						(fully closed)		"2" range	"L" range
	1 → 2	2 → 3	3 → OD	OD → 3	3 → 2	2 → 1	Lock-up ON	Lock-up OFF	3 → 2	2 → 1
7.00-16-6 7.50-16-6 7.50R-16-6, 8 9.00-15-6 10R-15	34–47 (21–29)	76–92 (47–57)	120–140 (75–87)	111–130 (69–81)	65–81 (40–50)	31–40 (19–25)	70–90 (43–56)	65–85 (40–53)	80–97 (50–60)	38–50 (24–31)
7.00-15-6 205SR-16	32–44 (20–27)	70–86 (43–53)	113–131 (70–81)	106–122 (66–76)	63–76 (39–47)	29–37 (18–23)	66–85 (41–53)	62–81 (39–50)	76–91 (47–57)	36–47 (22–29)
H78	30–41 (19–25)	69–80 (43–50)	110–122 (68–76)	98–113 (61–70)	56–71 (35–44)	24–35 (15–22)	71–85 (44–53)	66–81 (41–50)	70–84 (43–52)	31–44 (19–27)

AT1278

AUTOMATIC SHIFT DIAGRAM (Cont'd)

HJ series

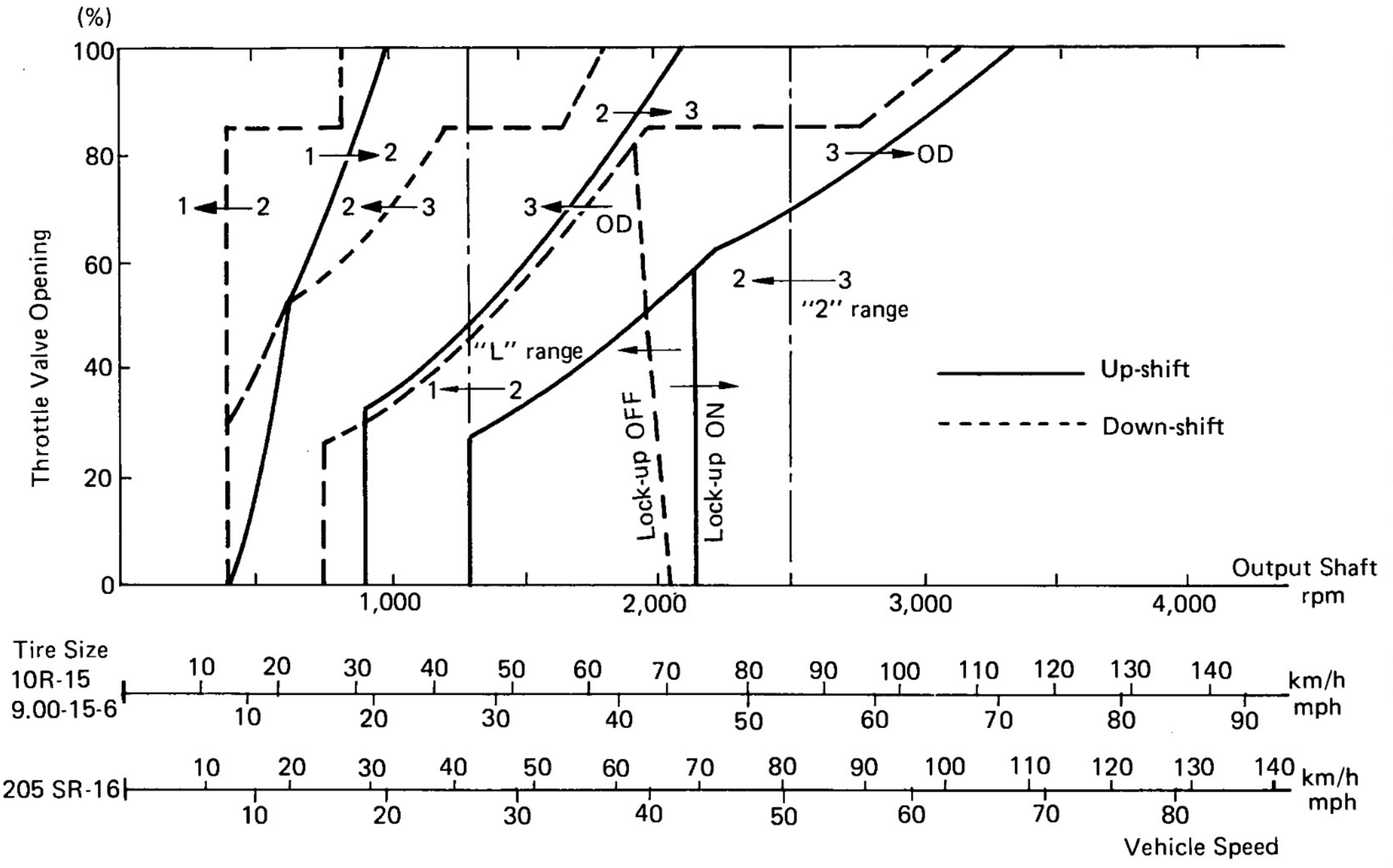

km/h (mph)

Tire Size	"D" range (throttle valve fully open)						(fully closed)		"2" range	"L" range
	1 → 2	2 → 3	3 → OD	OD → 3	3 → 2	2 → 1	Lock-up ON	Lock-up OFF	3 → 2	2 → 1
7.50R-16-6, 8 10R-15	32–44 (20–27)	68–84 (42–52)	110–129 (68–80)	103–121 (64–75)	58–73 (36–45)	26–36 (16–22)	68–86 (42–53)	64–82 (40–51)	77–93 (48–58)	36–48 (22–30)
205R16C-6 205SR-16	30–40 (19–25)	64–76 (40–47)	103–117 (64–73)	94–110 (58–68)	51–66 (32–41)	21–32 (13–20)	62–78 (39–48)	59–74 (37–46)	69–85 (43–53)	30–43 (19–27)

AT1279

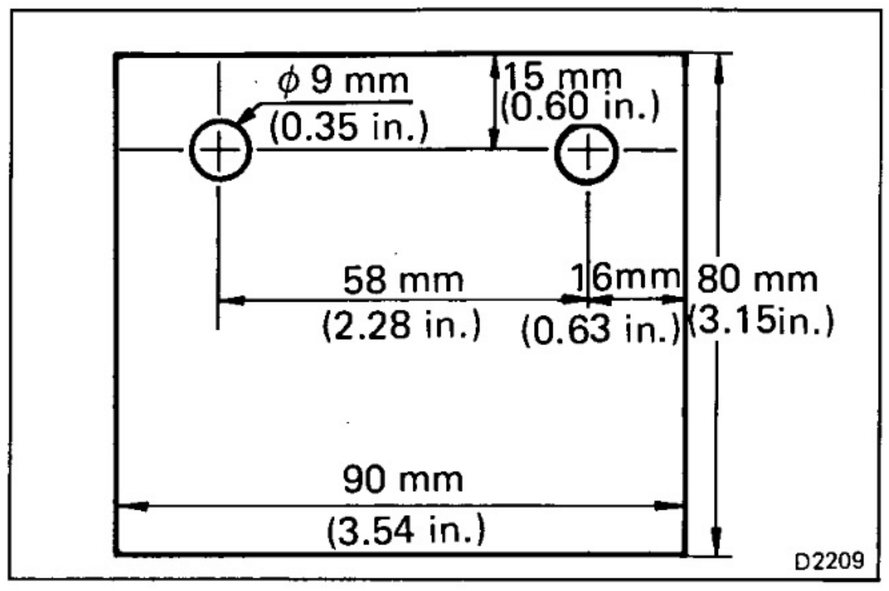

ON-VEHICLE REPAIR

REMOVAL OF VALVE BODY

1. MAKE PLATE TO RETAIN ACCUMULATOR PISTONS

   A retainer is helpful for holding accumulator pistons in the case during removal and installation of the valve body.

   The plate may be made from aluminum or plastic.

2. REMOVE TRANSMISSION AND TRANSFER UNDER-COVERS

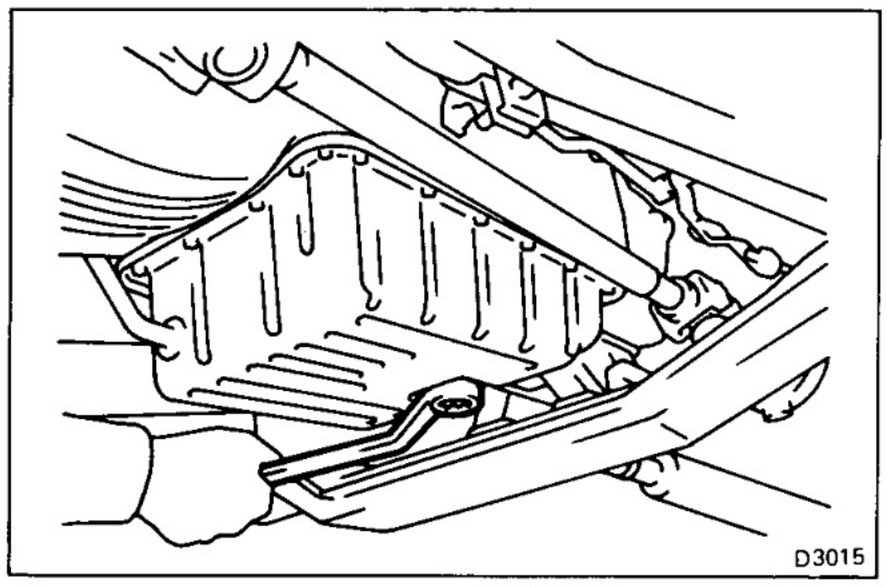

3. CLEAN TRANSMISSION EXTERIOR

   To help prevent contamination, clean the exterior of the transmission.

4. DRAIN TRANSMISSION FLUID

   Remove the drain plug and drain fluid into a suitable container.

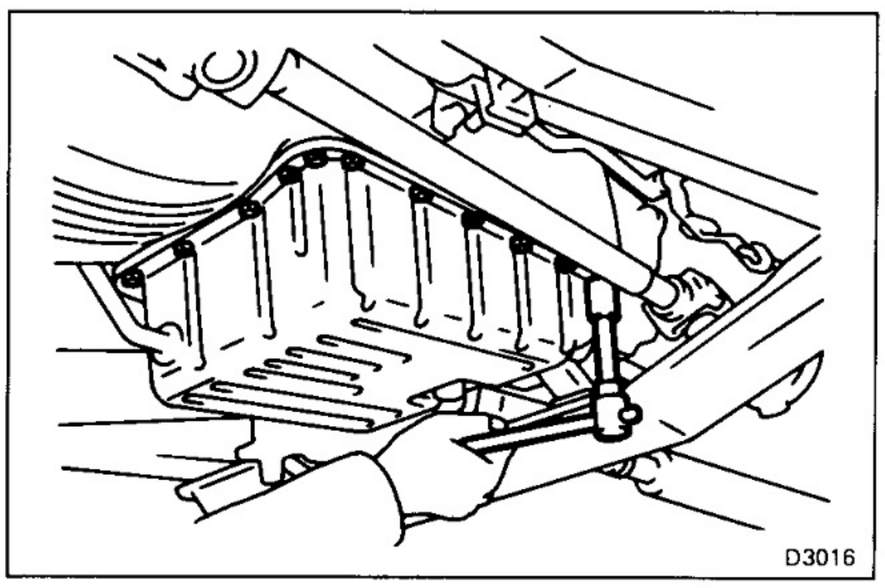

5. REMOVE OIL PAN AND GASKET

   CAUTION: Some fluid will remain in the oil pan.

   Remove the twenty pan bolts, and carefully remove the pan assembly. Discard the gasket.

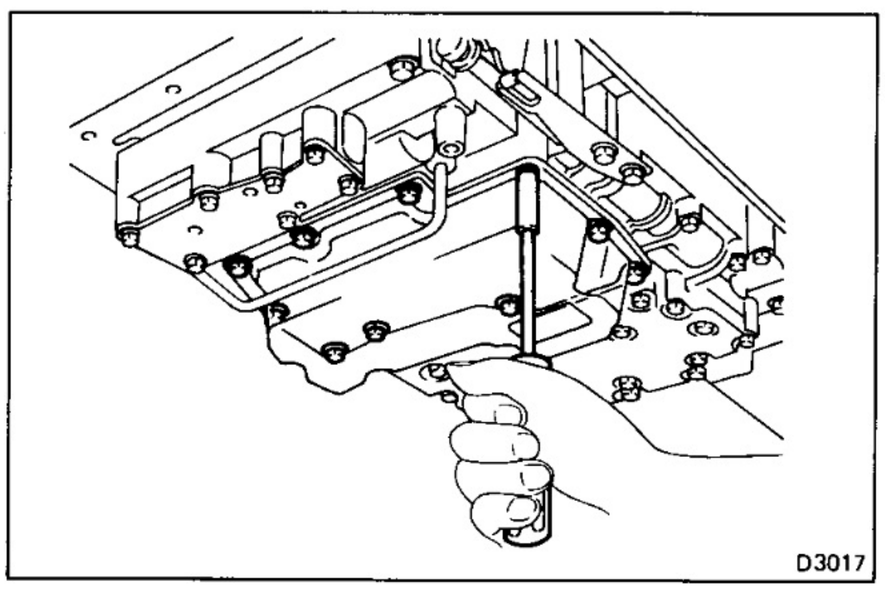

6. REMOVE OIL STRAINER AND GASKET

   (a) Remove the ten bolts and oil strainer.

   CAUTION: Be careful as some oil will come out with the filter.

   (b) Remove the gasket.

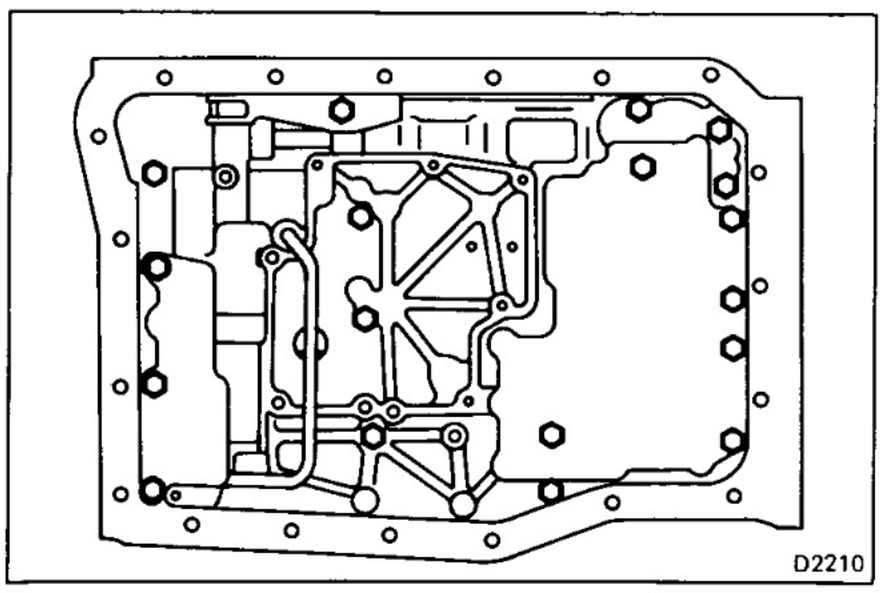

7. REMOVE VALVE BODY

   (a) Remove the eighteen bolts.

   NOTE: Support the valve body by hand to prevent it from falling.

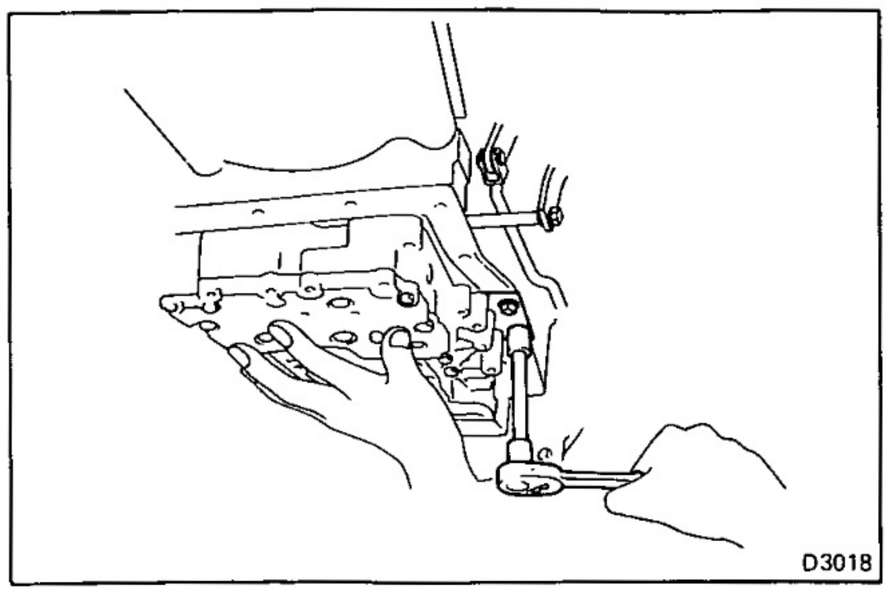

(b) Lower valve body slightly, and install the accumulator piston retaining plate. Hold in place with two pan bolts, and hand tighten.

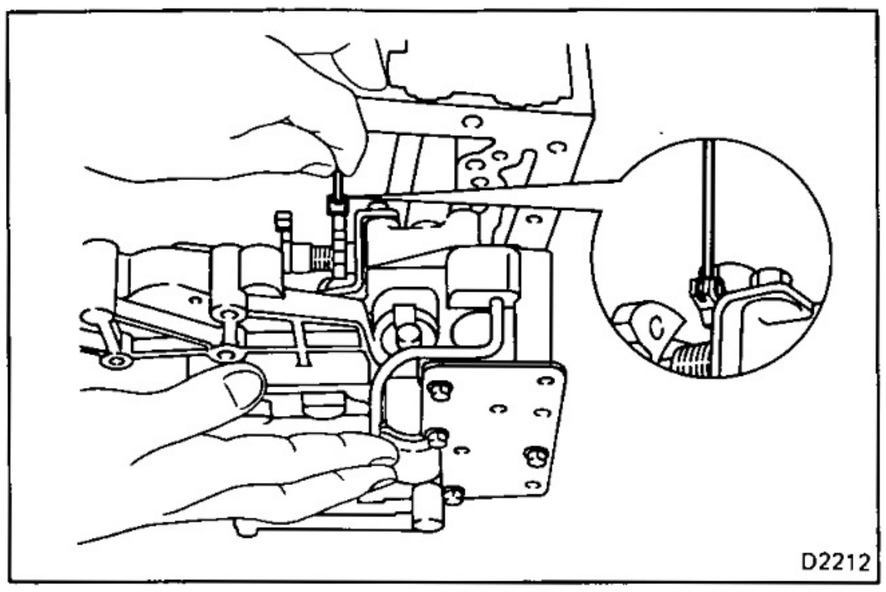

(c) Disconnect the throttle cable from the cam and remove the valve body.

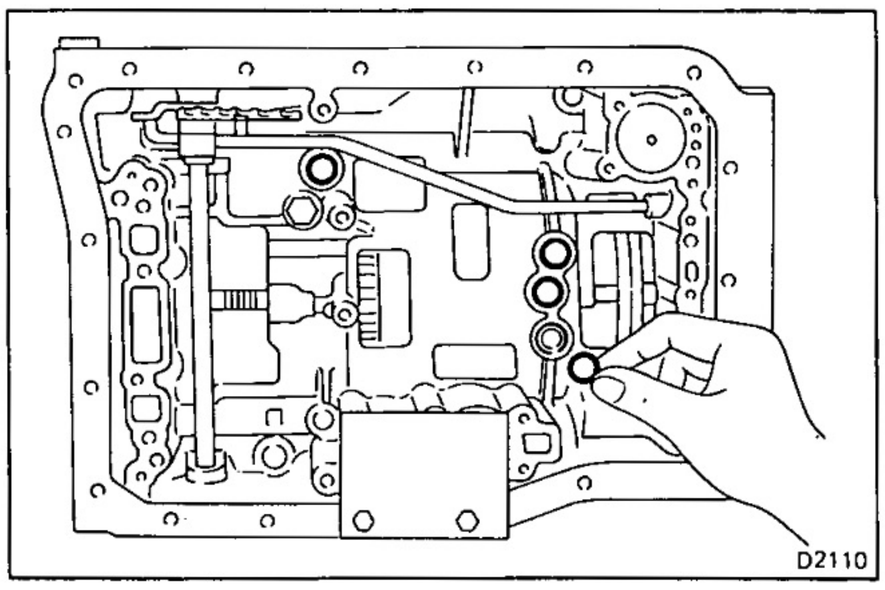

8. REMOVE FOUR CENTER SUPPORT APPLY GASKETS

INSTALLATION OF VALVE BODY

1. INSTALL FOUR CENTER SUPPORT APPLY GASKETS

Install the four center support apply gaskets, facing the pitted sides toward the transmission case.

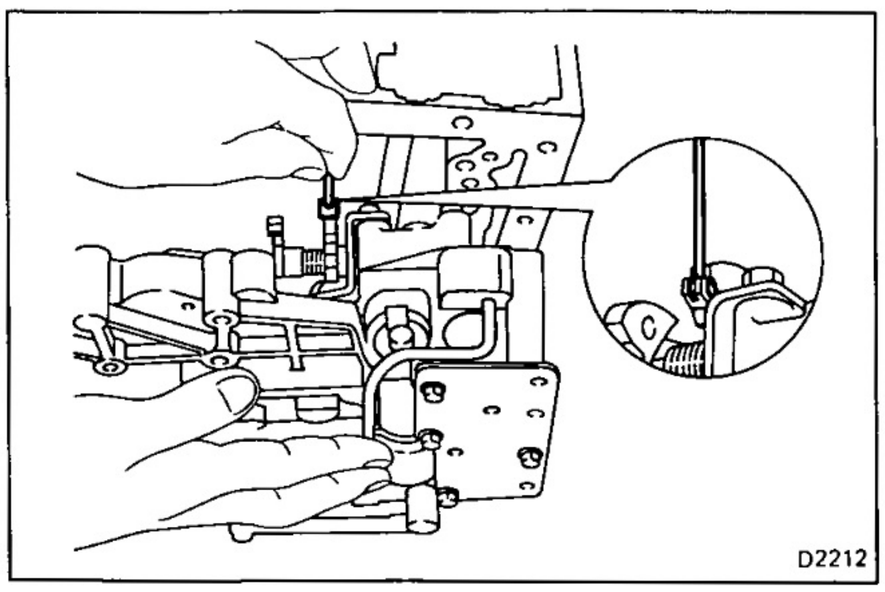

2. CONNECT THROTTLE CABLE TO CAM

Push the cable fitting into the cam.

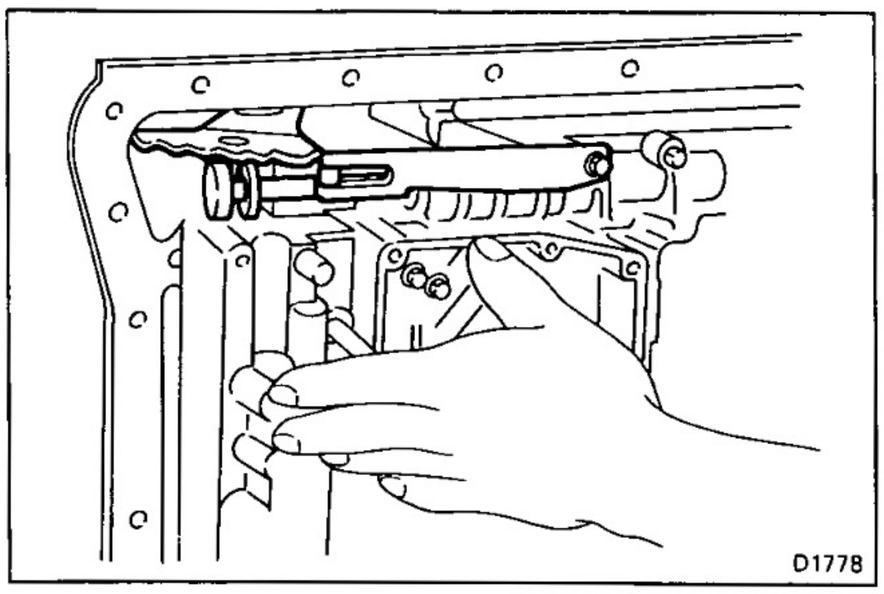

3. INSTALL VALVE BODY

(a) Align the manual valve lever with the manual valve.

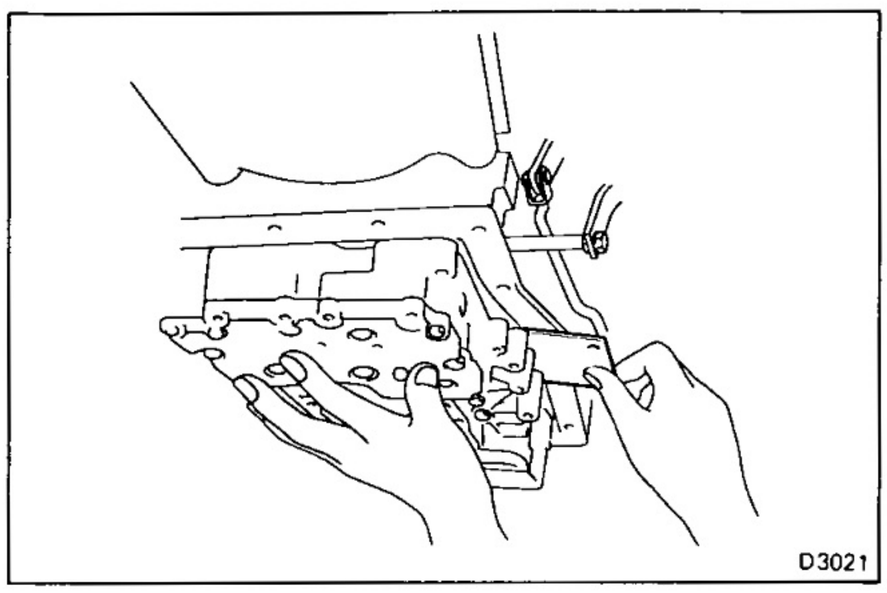

(b) Remove the two pan bolts, and slide out the accumulator retaining plate.

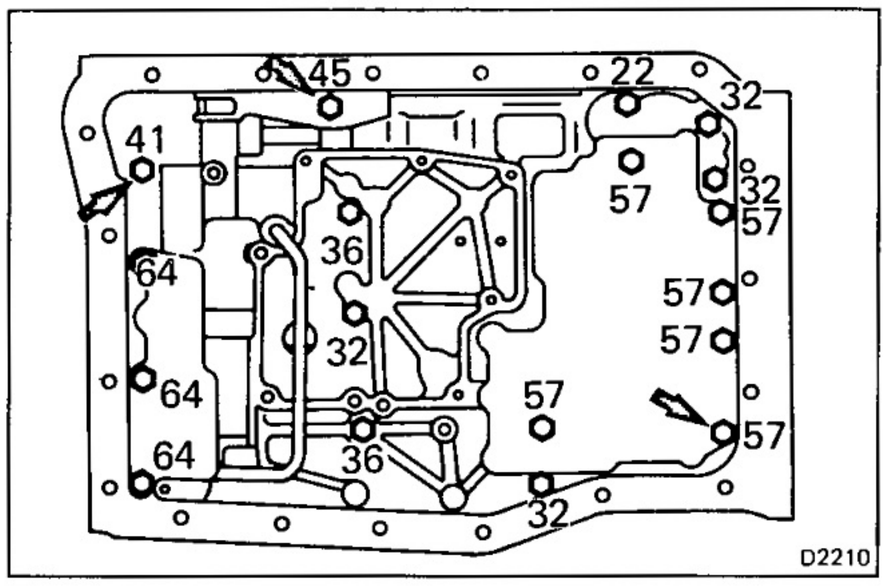

4. INSTALL VALVE BODY BOLTS

(a) Install the three bolts indicated by the arrows.

(b) Install the other bolts.

(c) Check that the manual valve lever contacts the center of the roller at the tip of the detent spring.

(d) Tighten the bolts.

Torque: 100 kg-cm (7 ft-lb, 10 N·m)

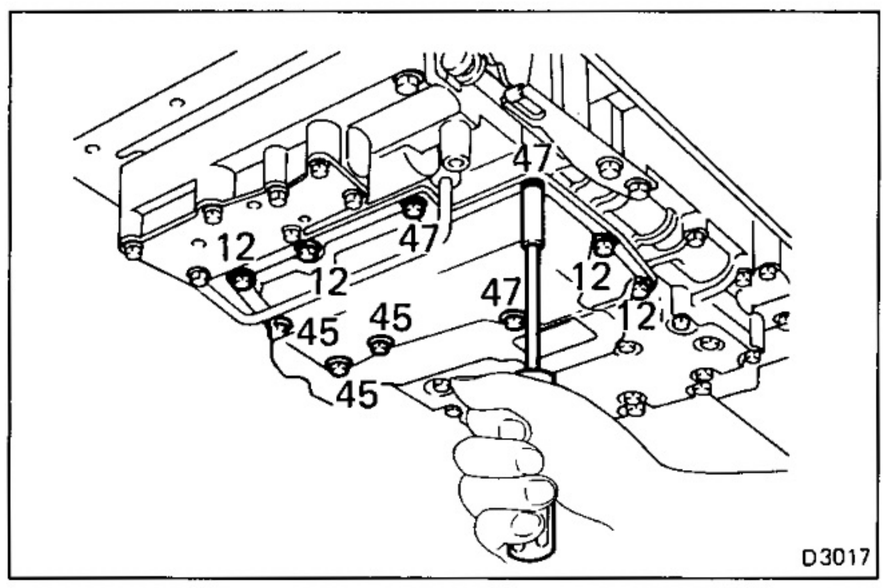

5. INSTALL OIL STRAINER

Be sure the strainer is clean. Install a new gasket and strainer.

Torque: 5 mm bolt 55 kg-cm (48 in.-lb, 5.4 N·m)
6 mm bolt 100 kg-cm (7 ft-lb, 10 N·m)

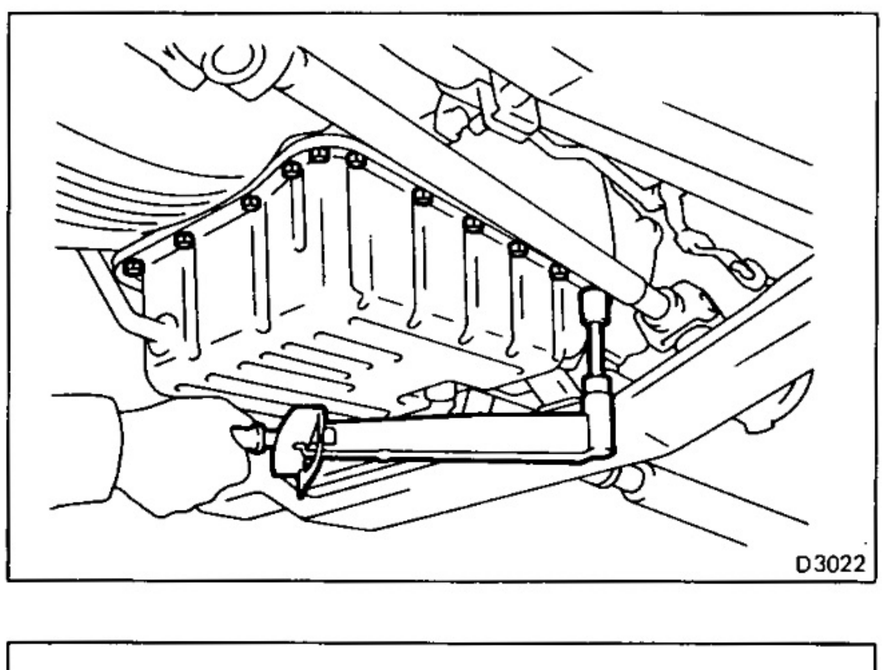

6. INSTALL PAN WITH NEW GASKET

Be sure the pan is clean and the two magnets are in place.

CAUTION: Do not use gasket sealer.

Tighten the bolts evenly.

Torque: 70 kg-cm (61 in.-lb, 6.9 N·m)

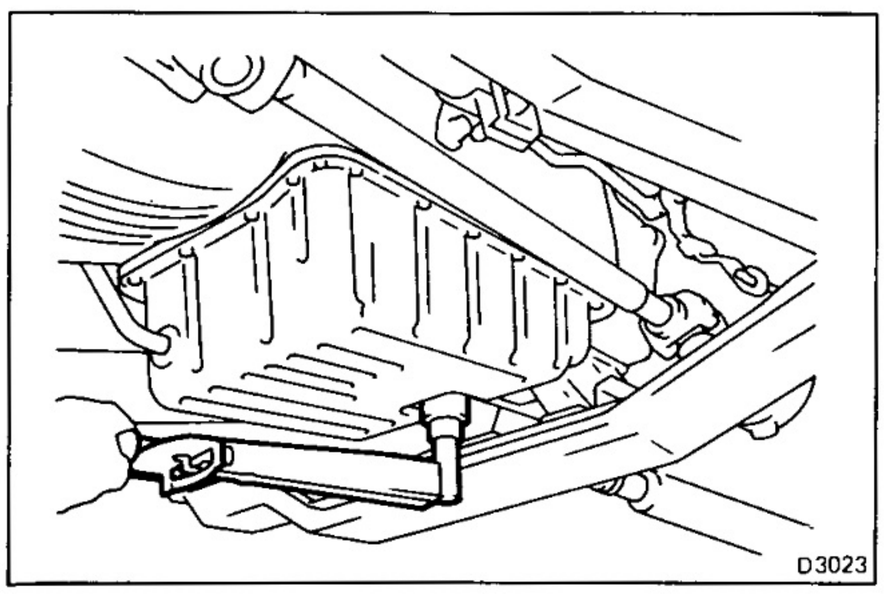

7. INSTALL DRAIN PLUG

(a) Install a new gasket and drain plug.

(b) Torque the drain plug.

Torque: 280 kg-cm (20 ft-lb, 27 N·m)

8. INSTALL TRANSMISSION UNDERCOVER AND TRANSFER UNDERCOVER

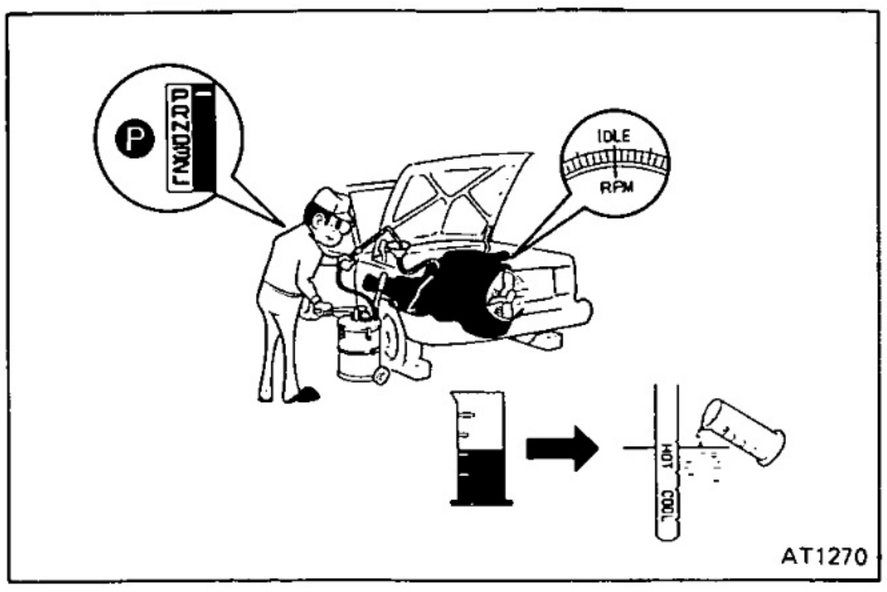

9. FILL TRANSMISSION WITH ATF

Add 6 liters (6.3 US qts, 5.3 Imp. qts)

CAUTION: Do not overfill.

Fluid type: ATF DEXRON® II

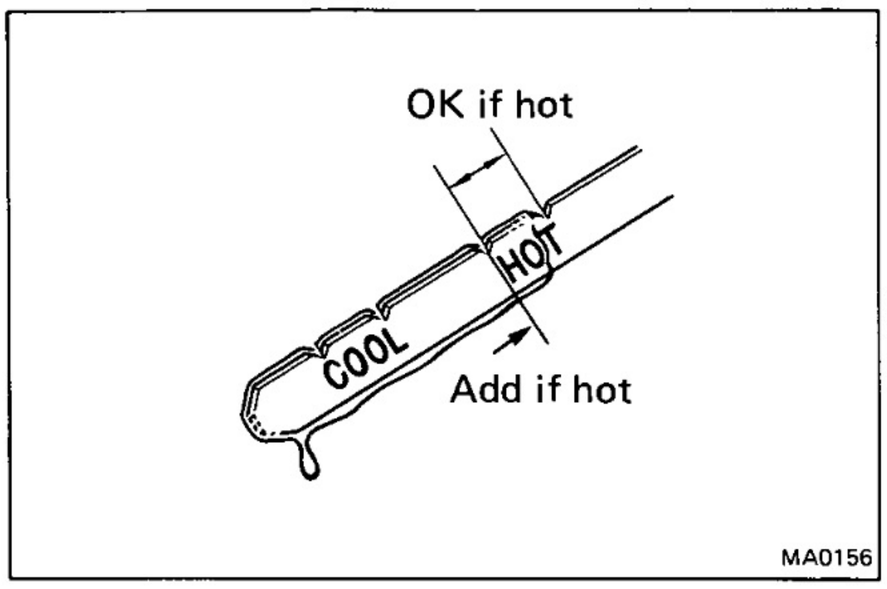

10. CHECK FLUID LEVEL (See page AT-5)

REMOVAL OF THROTTLE CABLE

1. DISCONNECT THROTTLE CABLE
   (a) Disconnect the cable housing from the bracket.
   (b) Disconnect the cable from the throttle linkage.
2. REMOVE VALVE BODY (See page AT-18)

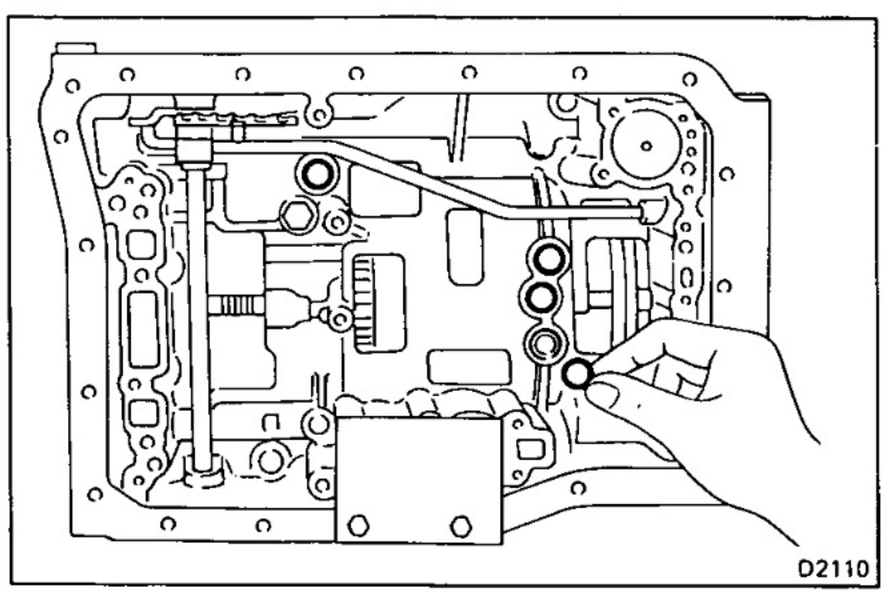

3. REMOVE FOUR CENTER SUPPORT APPLY GASKETS

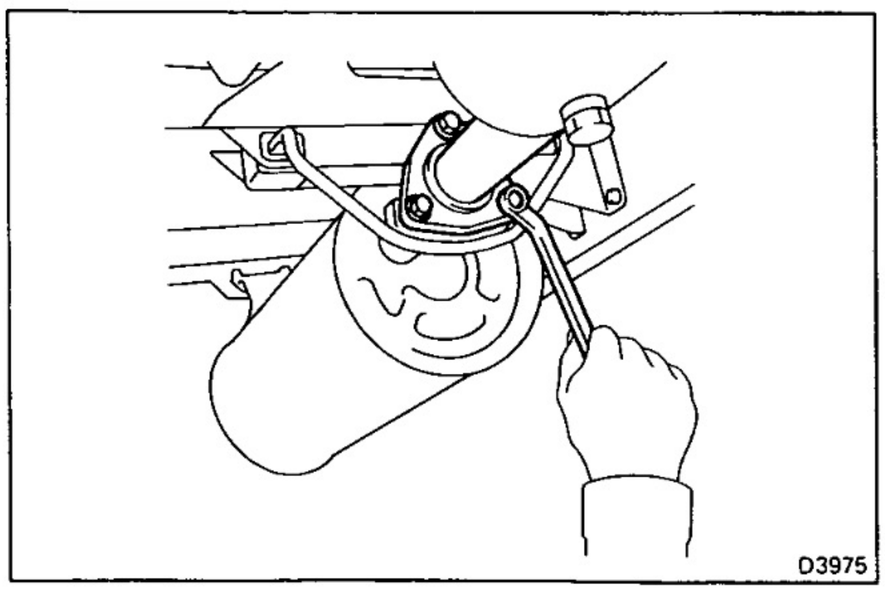

4. DISCONNECT EXHAUST FRONT PIPE FROM TAIL PIPE

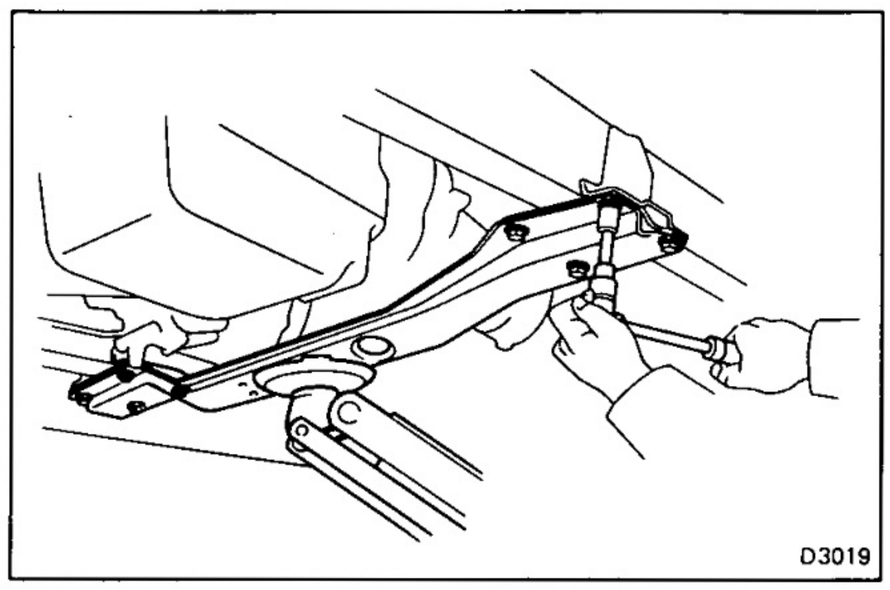

5. **REMOVE FRAME CROSSMEMBER SET BOLTS**
   (a) Support the frame crossmember with jack.
   (b) Remove the eight set bolts.

6. **REMOVE THROTTLE CABLE CLAMP**
   (a) Lower the jack.
   (b) Remove the cable clamp from the transmission housing.

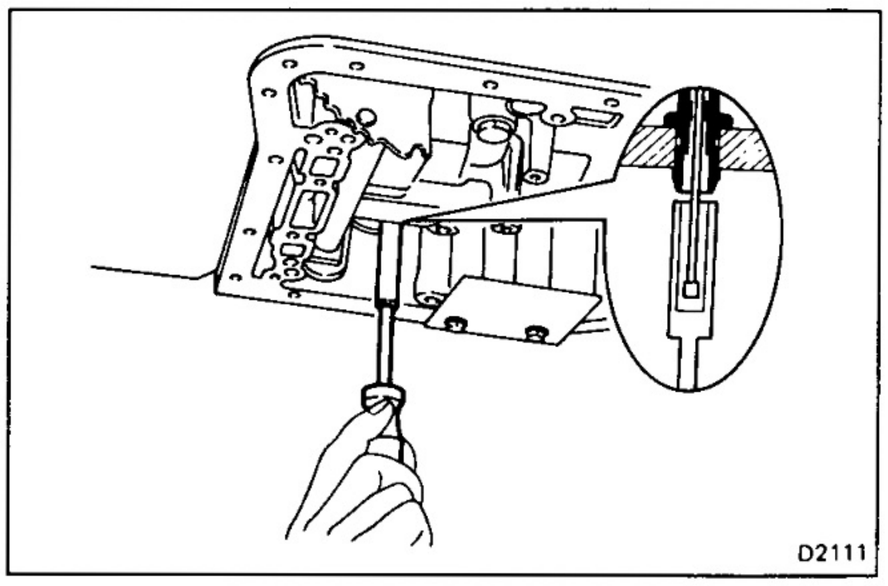

7. **PUSH THROTTLE CABLE OUT OF TRANSMISSION CASE**
   Using a 10-mm socket, push the throttle cable out.

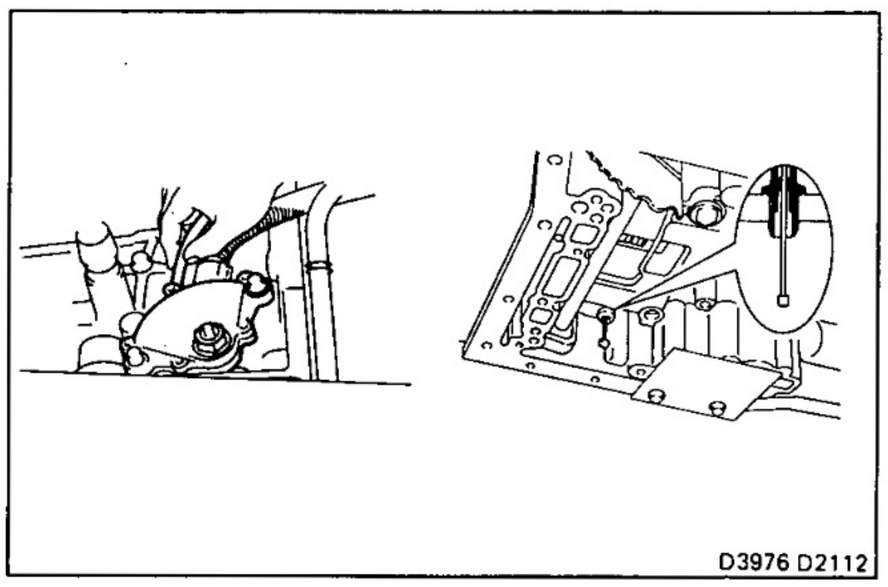

INSTALLATION OF THROTTLE CABLE

1. **INSTALL CABLE IN TRANSMISSION CASE**
   Be sure to push it in all the way.

2. **INSTALL THROTTLE CABLE CLAMP TO TRANSMISSION HOUSING**

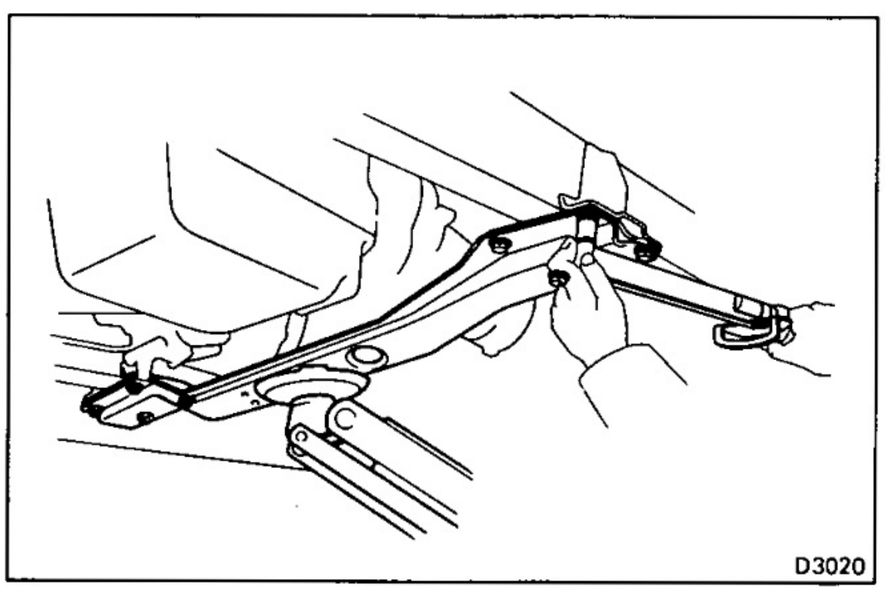

3. **INSTALL FRAME CROSSMEMBER SET BOLTS**
   Torque: 400 kg-cm (29 ft-lb, 39 N·m)

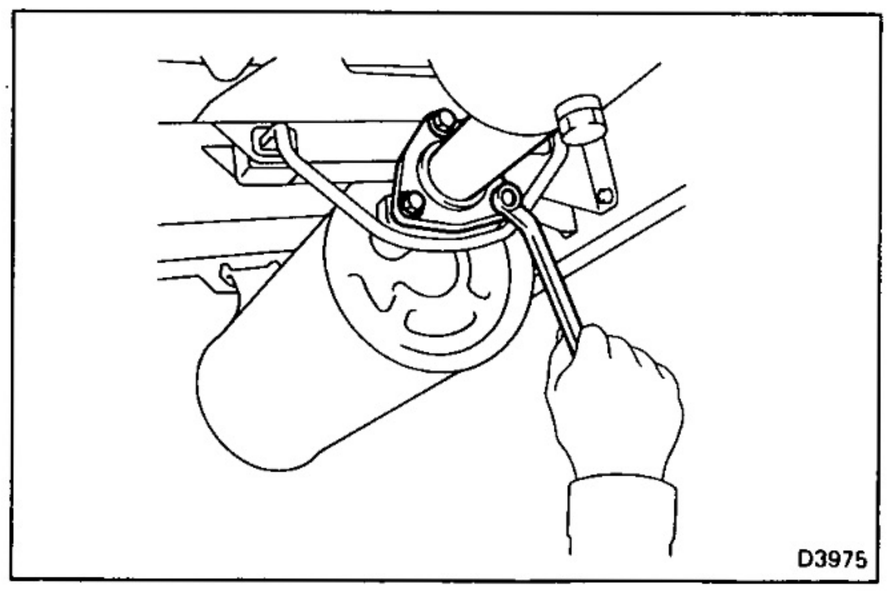

4. **CONNECT EXHAUST FRONT PIPE TO TAIL PIPE**
   (a) Install a new gasket.
   (b) Connect the exhaust front pipe to the tail pipe.
   Torque: 400 kg-cm (29 ft-lb, 39 N·m)

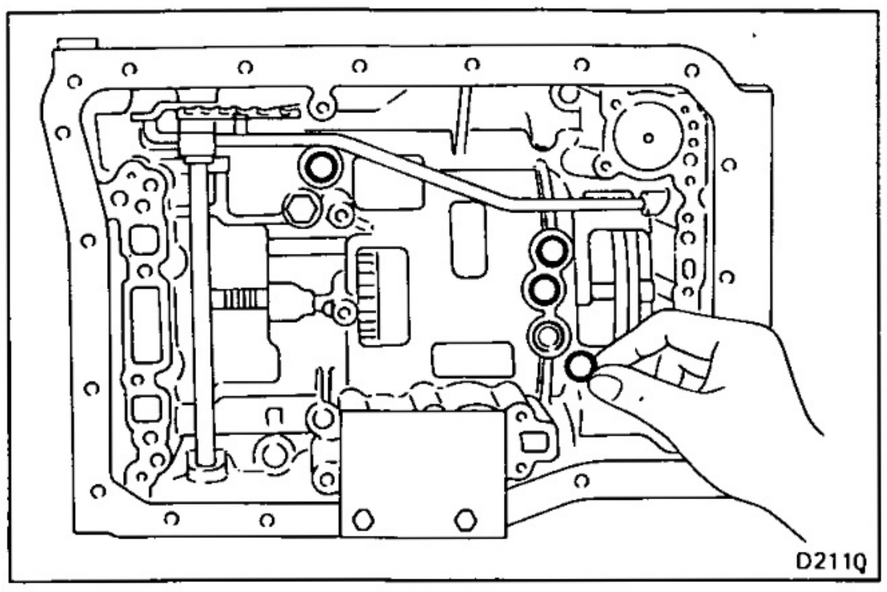

5. INSTALL FOUR CENTER SUPPORT APPLY GASKETS

6. INSTALL VALVE BODY (See page AT-19)

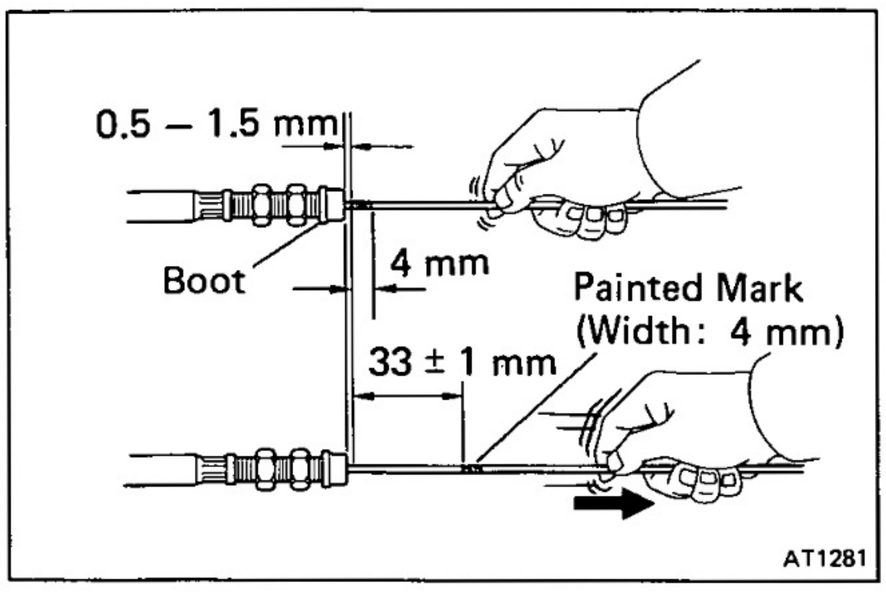

7. IF THROTTLE CABLE IS NEW, PAINT MARK ON INNER CABLE

NOTE: New cables do not have a cable stopper installed. Therefore to make adjustment possible, paint a mark as described below.

(a) Connect the throttle cable to the throttle cam of valve body.

(b) Pull the inner cable lightly until resistance is felt, and hold it.

(c) Paint a mark as shown, about 4 mm (0.16 in.) in width.

(d) Pull the inner cable fully, measure the cable stroke.

Cable stroke: 33 ± 1 mm (1.30 ± 0.04 in.)

8. CONNECT THROTTLE CABLE

(a) Connect the cable to the throttle linkage.

(b) Connect the cable housing to the bracket on the valve cover.

9. ADJUST THROTTLE CABLE (See page AT-6)

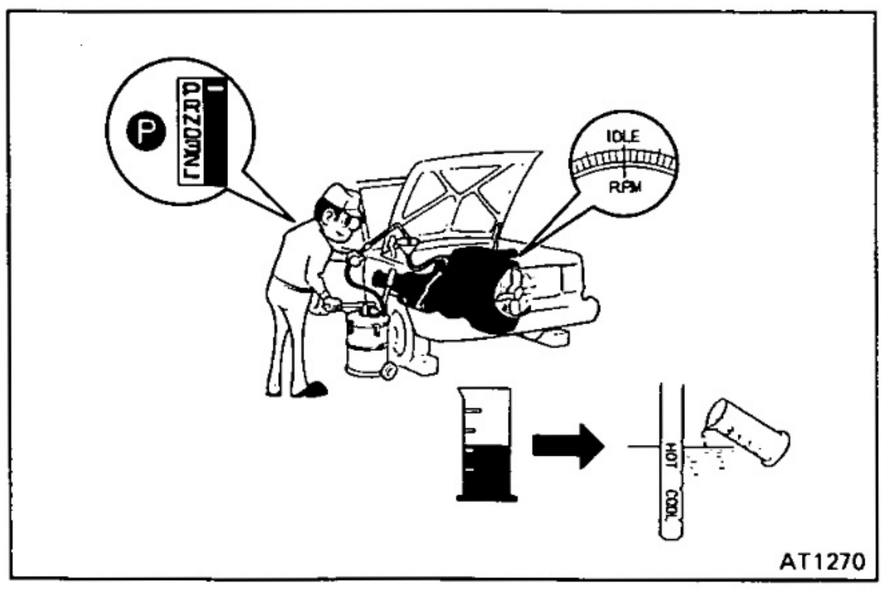

10. FILL TRANSMISSION WITH ATF

Add 6 liters (6.3 US qts, 5.3 Imp. qts) of ATF.

CAUTION: Do not overfill.

Fluid type: ATF DEXRON® II

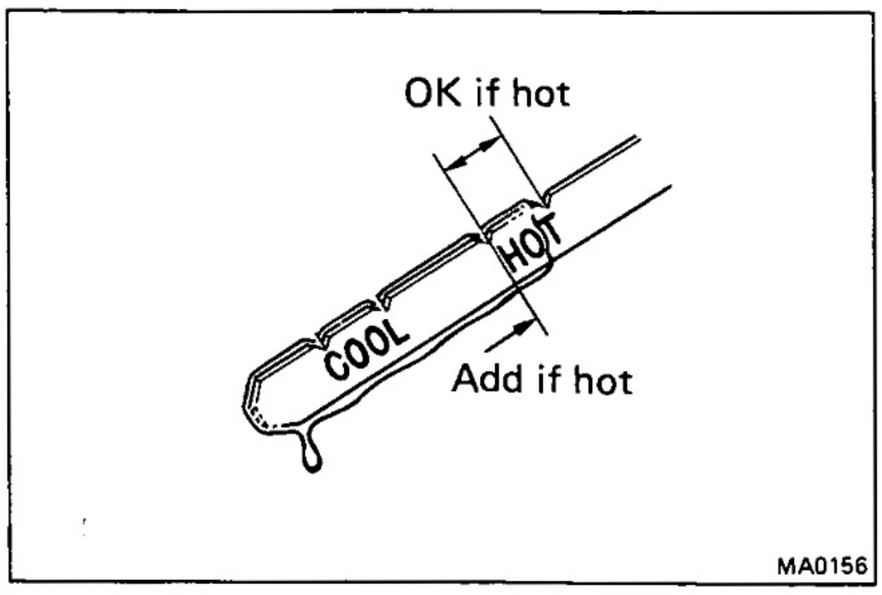

11. CHECK FLUID LEVEL (See page AT-5)

REMOVAL OF TRANSMISSION

1. DISCONNECT BATTERY CABLE FROM NEGATIVE TERMINAL

2. DRAIN COOLANT

   Open the radiator drain cock and drain coolant into a suitable container.

3. DISCONNECT UPPER RADIATOR HOSE

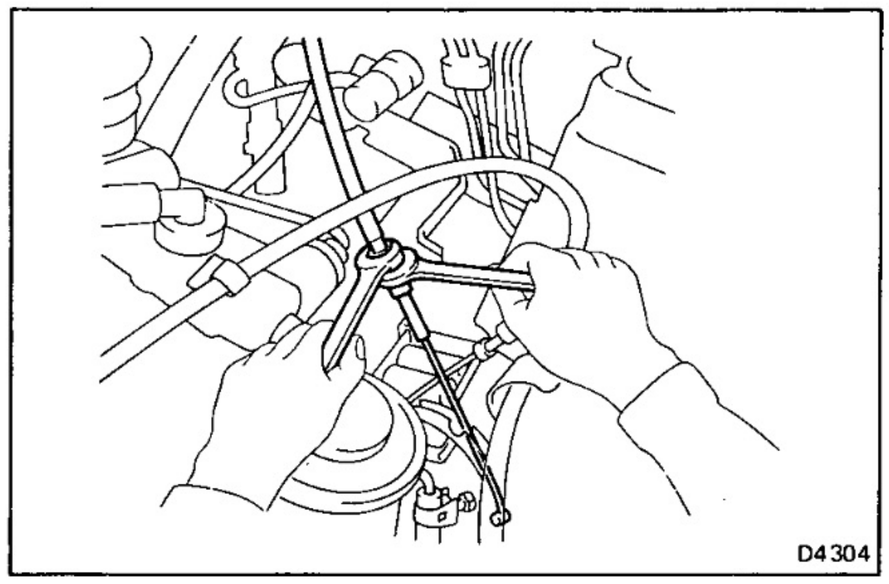

4. DISCONNECT THROTTLE CABLE

   (a) Loosen the adjusting nuts, and disconnect the cable housing from the bracket.

   (b) Disconnect the cable from the throttle linkage.

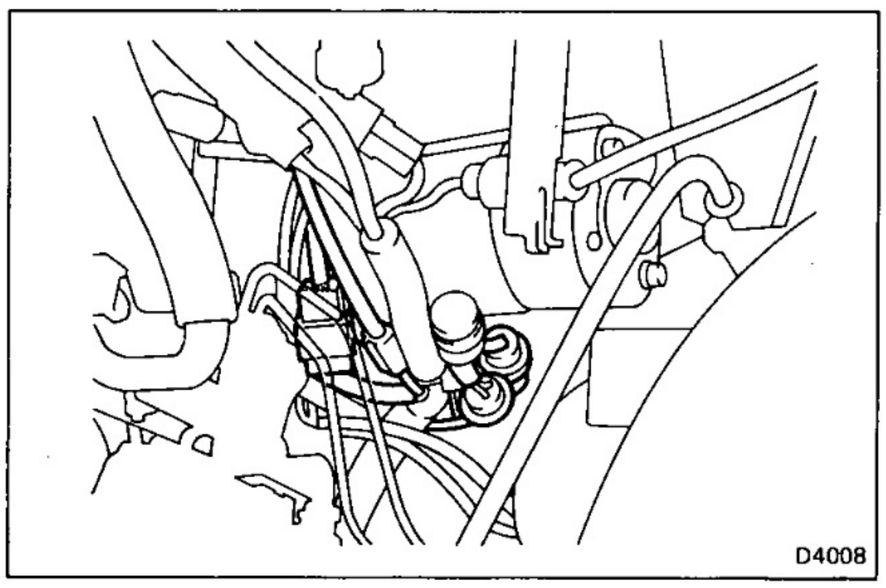

5. DISCONNECT CONNECTORS

   Disconnect the connectors located near the starter.

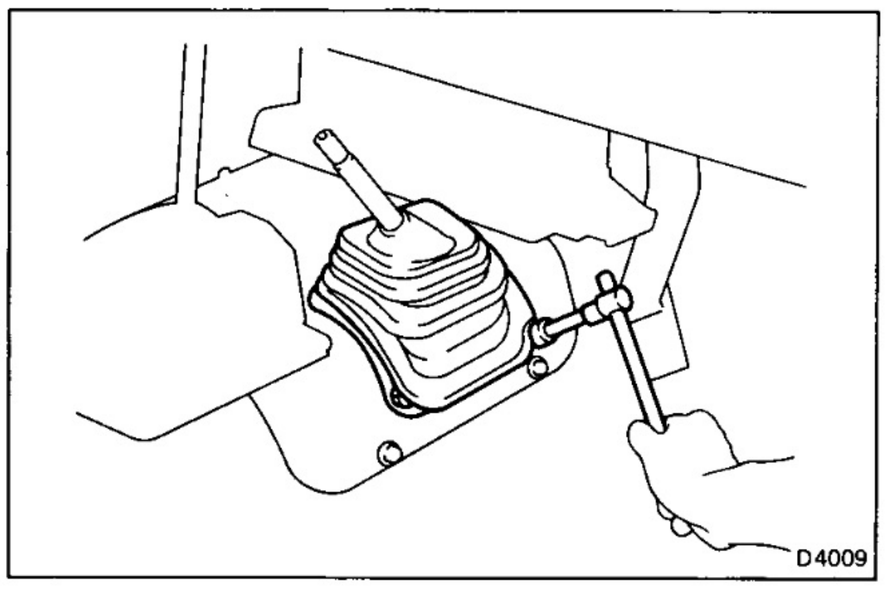

6. REMOVE TRANSFER SHIFT LEVER BOOT

   (a) Remove the shift lever knob.

   (b) Remove the four bolts and shift lever boot.

7. RAISE VEHICLE AND DRAIN TRANSMISSION

   CAUTION: Be sure the vehicle is securely supported.

8. REMOVE TRANSMISSION UNDERCOVER AND TRANSFER UNDERCOVER

9. DRAIN ATF

   Remove the drain plug and drain ATF into a suitable container.

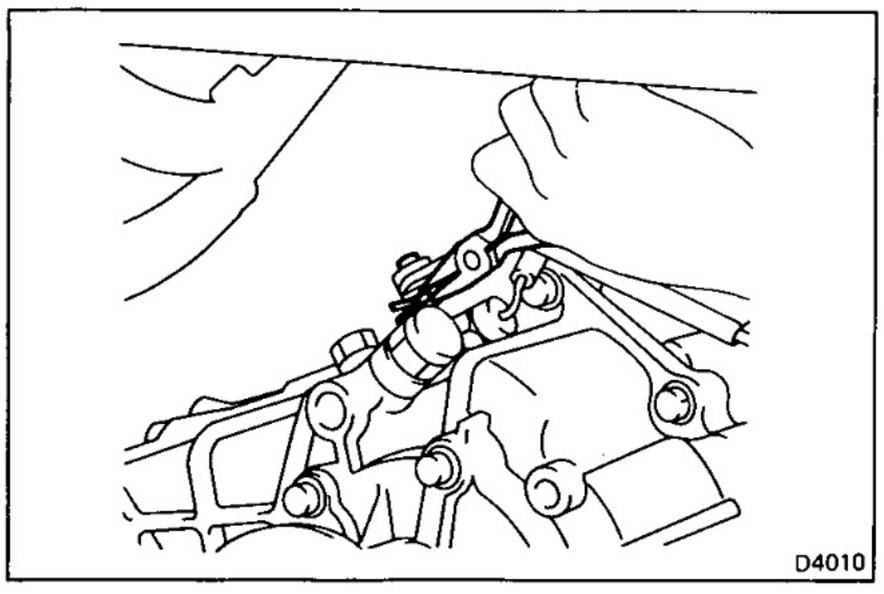

10. REMOVE TRANSFER SHIFT LEVER

    (a) Remove the clip and pin, disconnect the shift rod from the transfer.

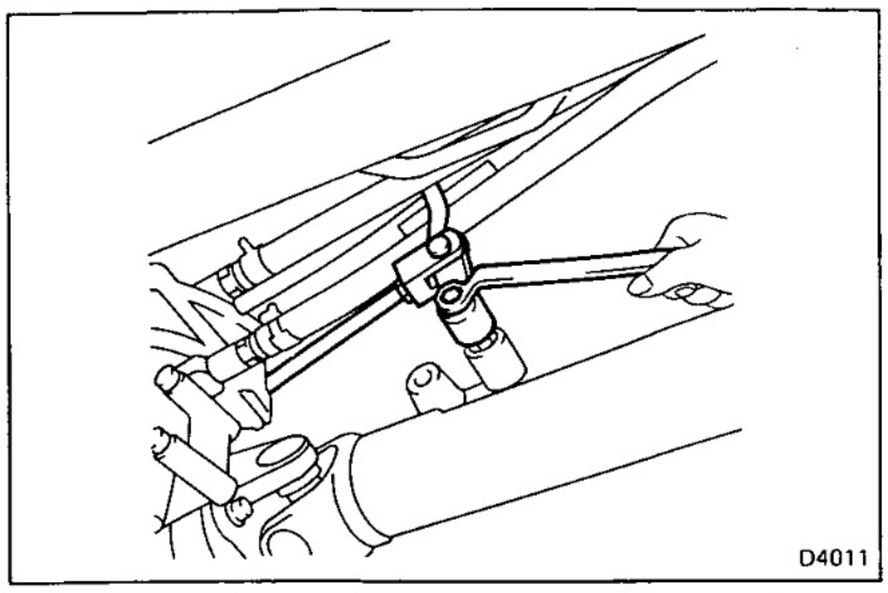

(b) Remove the nut and then remove the washers and the transfer shift lever with control rod.

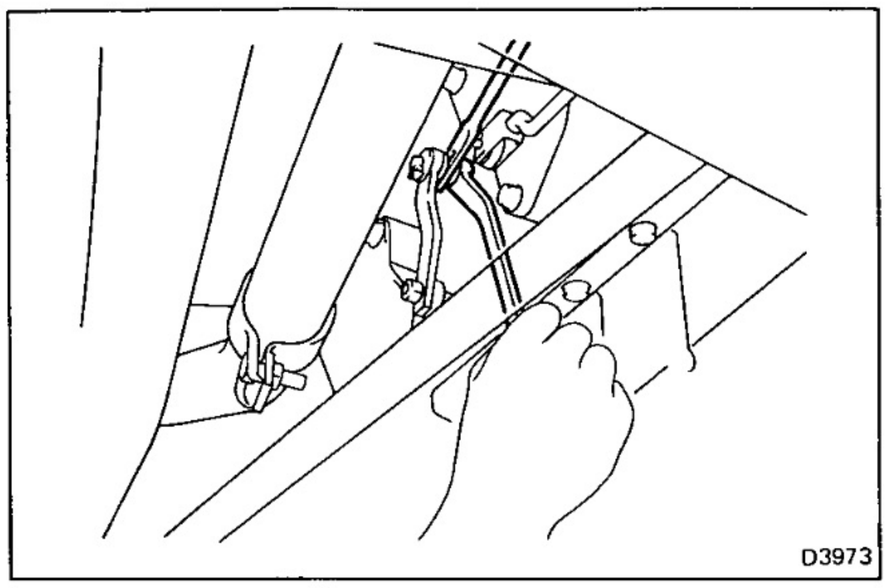

11. DISCONNECT TRANSMISSION CONTROL ROD

Remove the nut and disconnect the control rod from the control shaft lever.

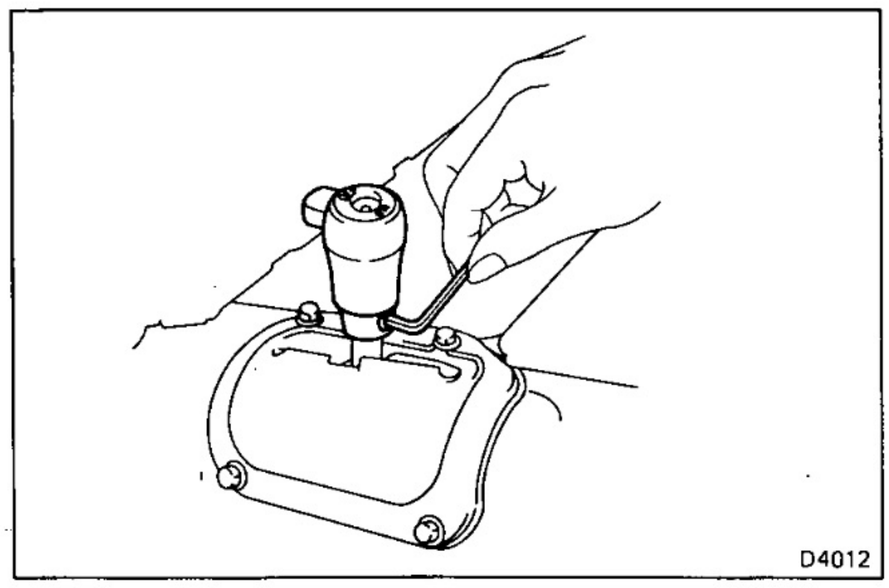

12. REMOVE POWER TAKE-OFF SHIFT LEVER (w/ MECHANICAL WINCH)

(a) Remove the knob button.

(b) Remove the spring.

(c) Using a hexagon wrench, remove the two screws and shift lever knob.

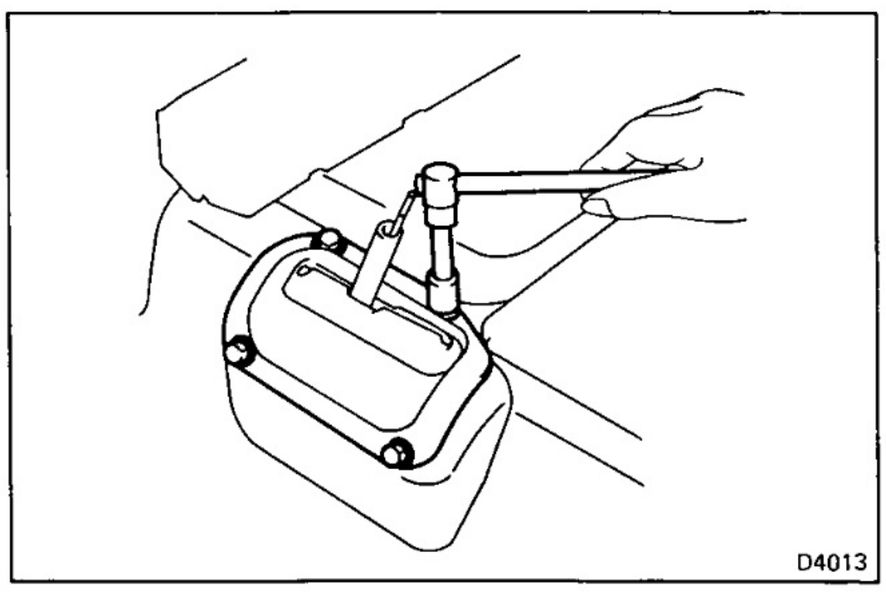

(d) Remove the four bolts and shift lever boot.

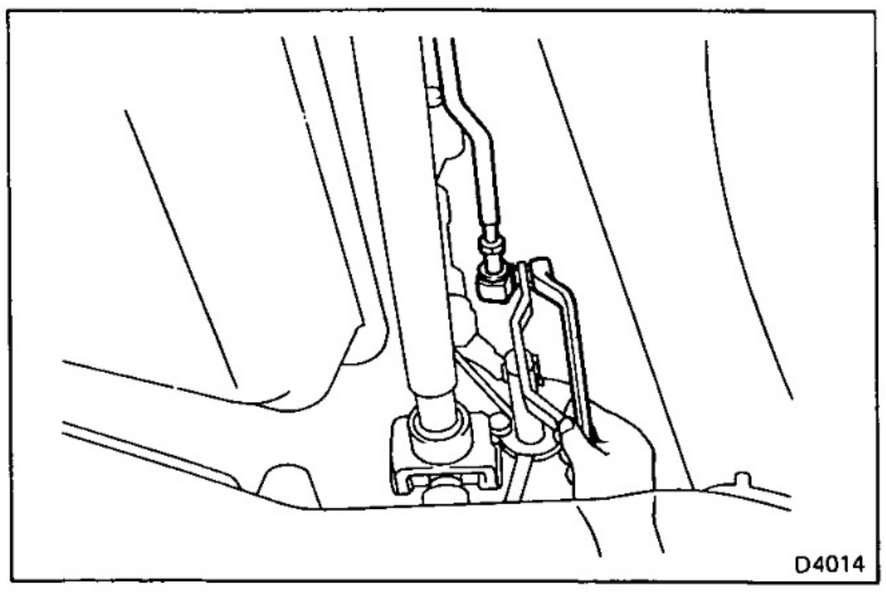

(e) Remove the nut and disconnect the shift rod from the PTO.

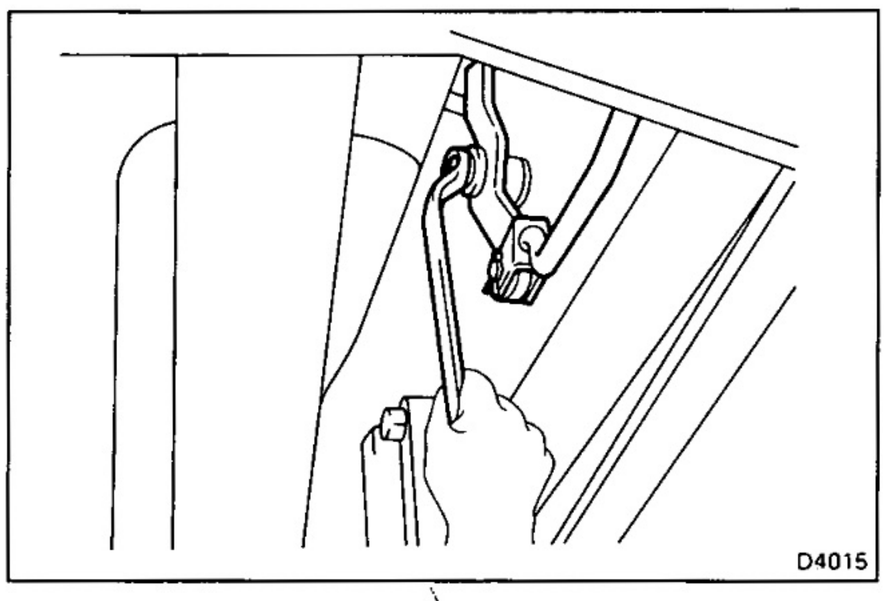

(f) Remove the bolt, and then remove the shift lever with shift rod.

13. REMOVE PROPELLER SHAFT (See page PR-3)

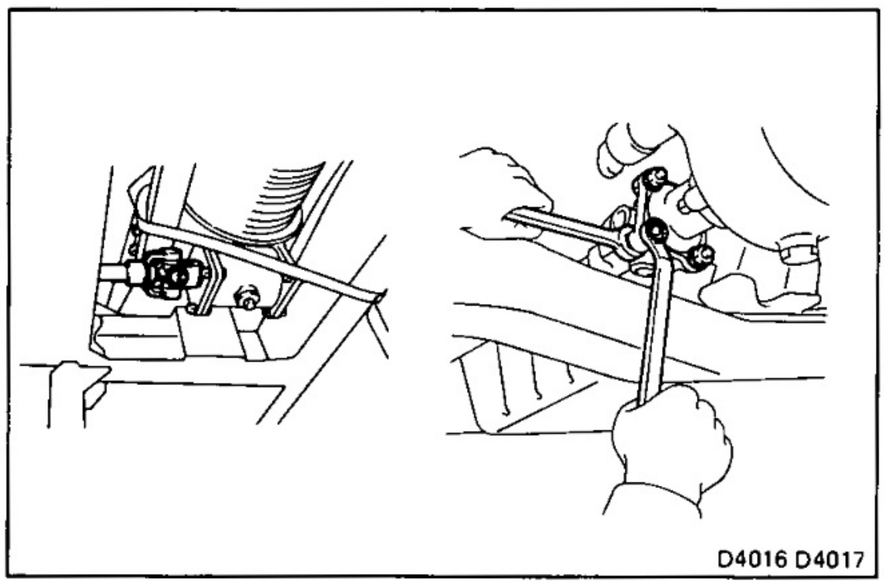

14. REMOVE POWER TAKE-OFF DRIVE SHAFT (w/ MECHANICAL WINCH)

(a) Remove the engine undercover.

(b) Place matchmarks on the yoke and flange.

(c) Remove the bolts and nuts, and disconnect the drive shaft from the PTO.

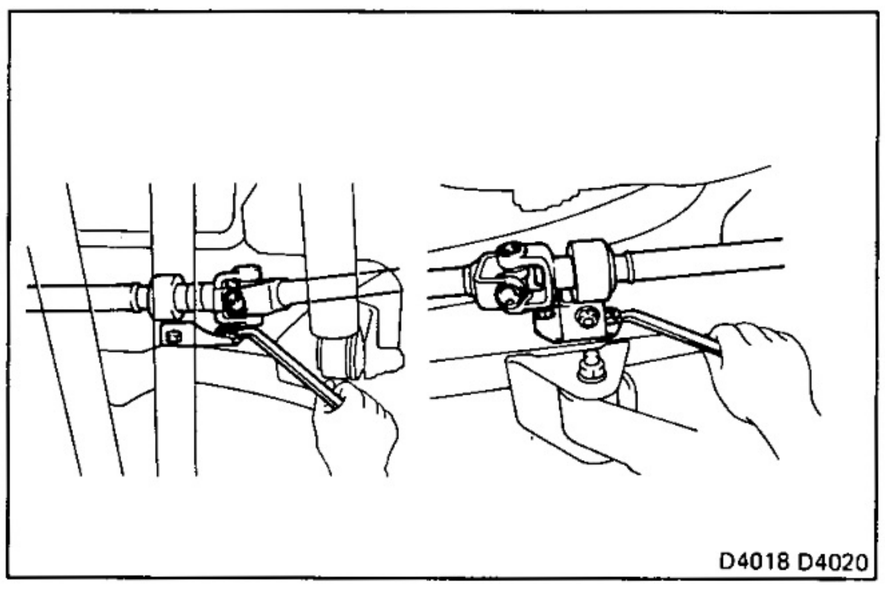

(d) Remove the front and rear bracket set bolts, and then remove the drive shaft.

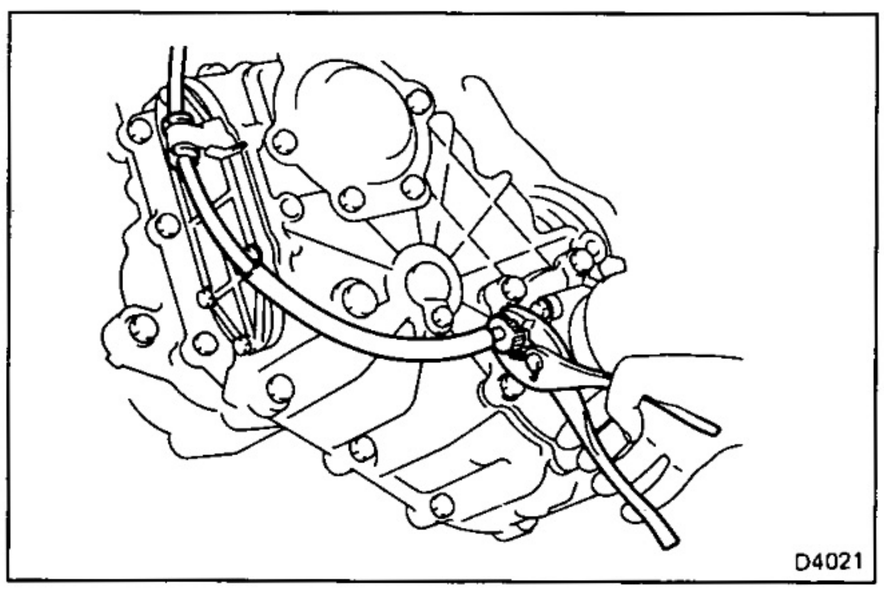

15. DISCONNECT SPEEDOMETER CABLE

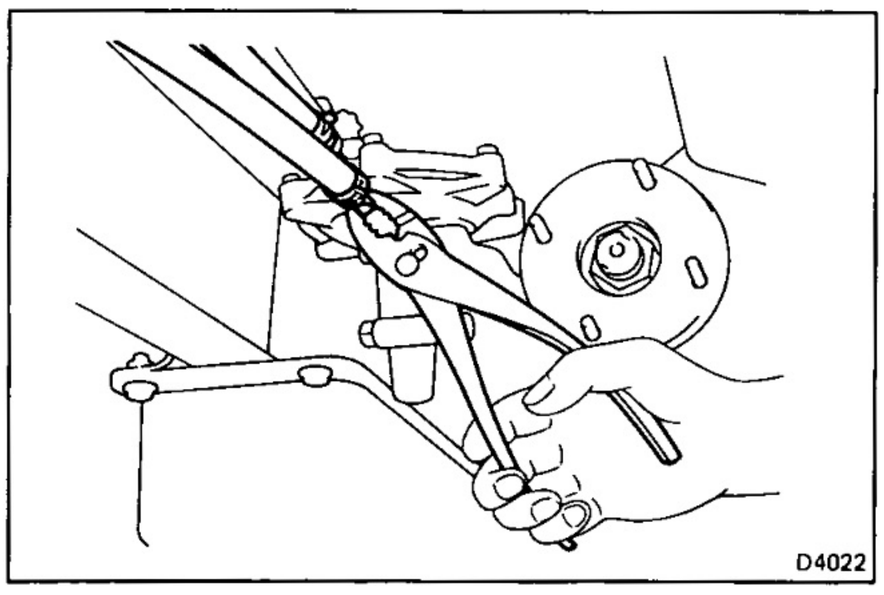

16. DISCONNECT TWO VACUUM HOSES

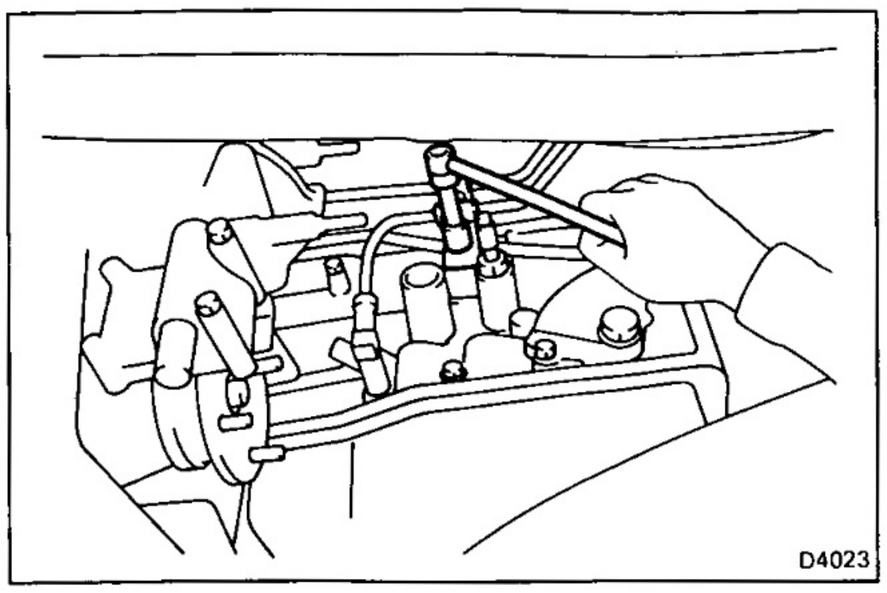

17. DISCONNECT TWO OIL COOLER TUBES

(a) Remove the cooler tube clamps.

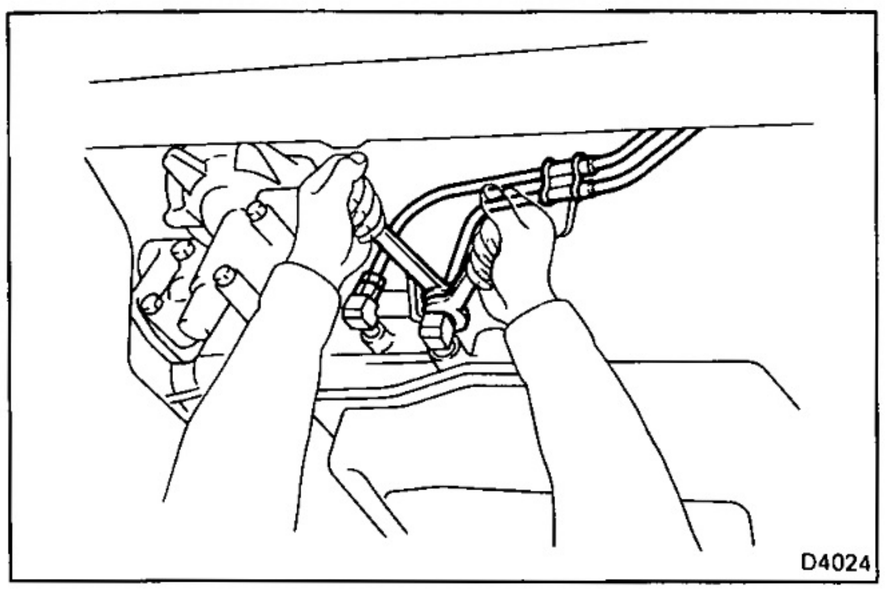

(b) Disconnect the two oil cooler tubes.

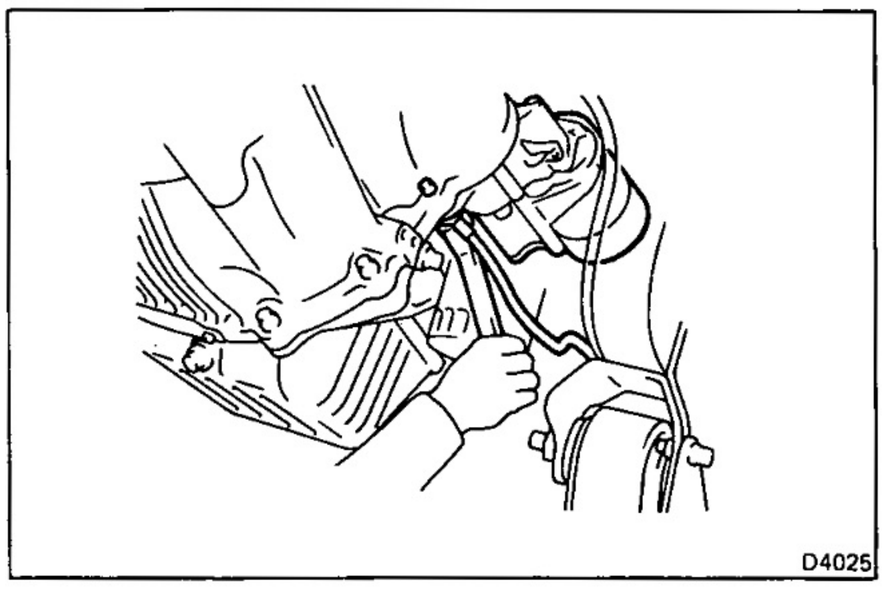

18. REMOVE STARTER

(a) Disconnect the connector and cable.

(b) Remove the bolt, nut and starter.

19. REMOVE OIL FILLER TUBE

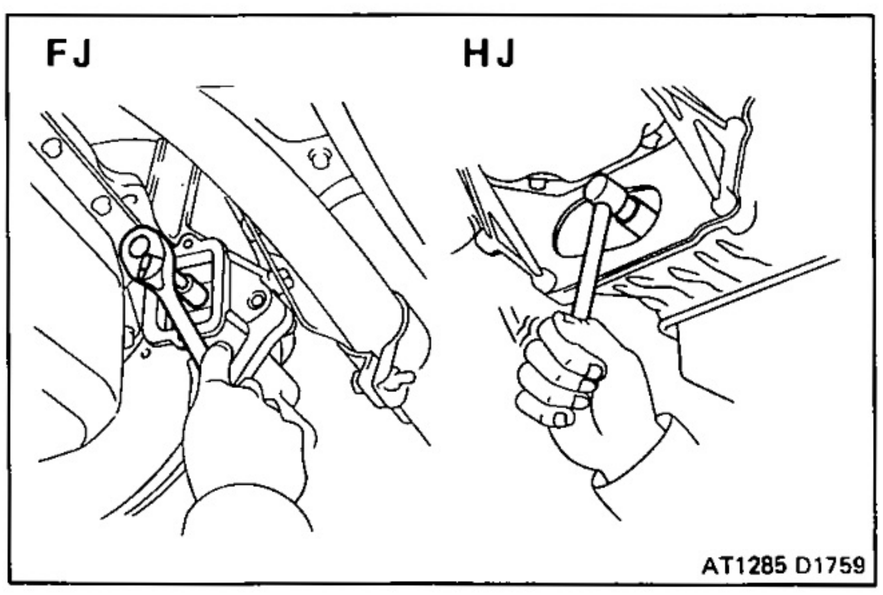

20. REMOVE SIX TORQUE CONVERTER MOUNTING BOLTS

(a) Remove the end plate hole plug.

(b) Turn the crankshaft to gain access to each bolt. Remove the six bolts.

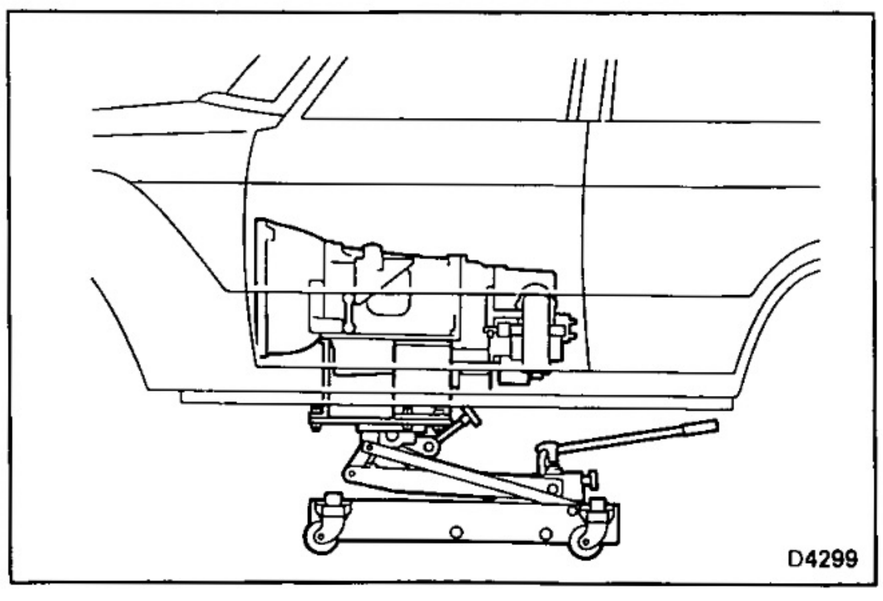

21. REMOVE FRAME CROSSMEMBER

(a) Support the transmission with the transmission jack.

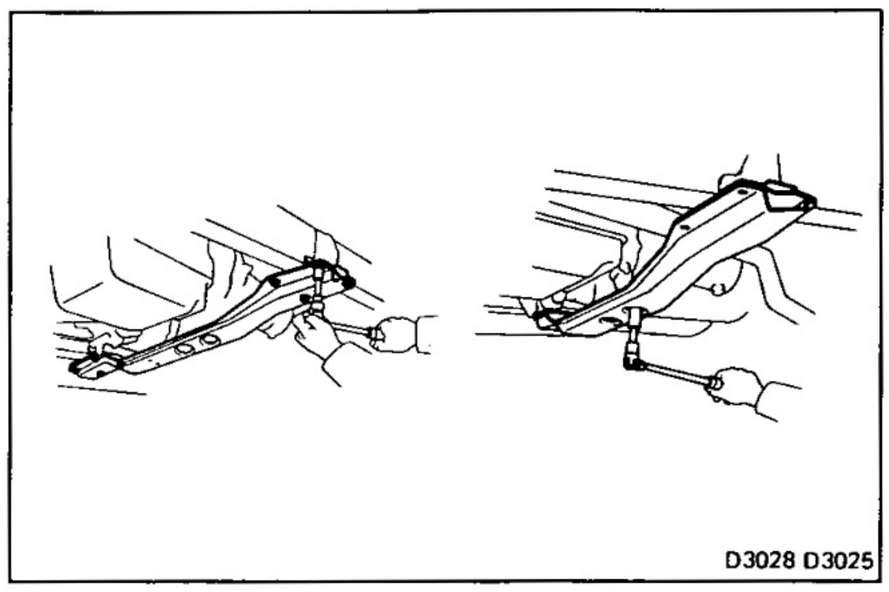

(b) Remove the eight bolts and two nuts, and then remove the frame crossmember.

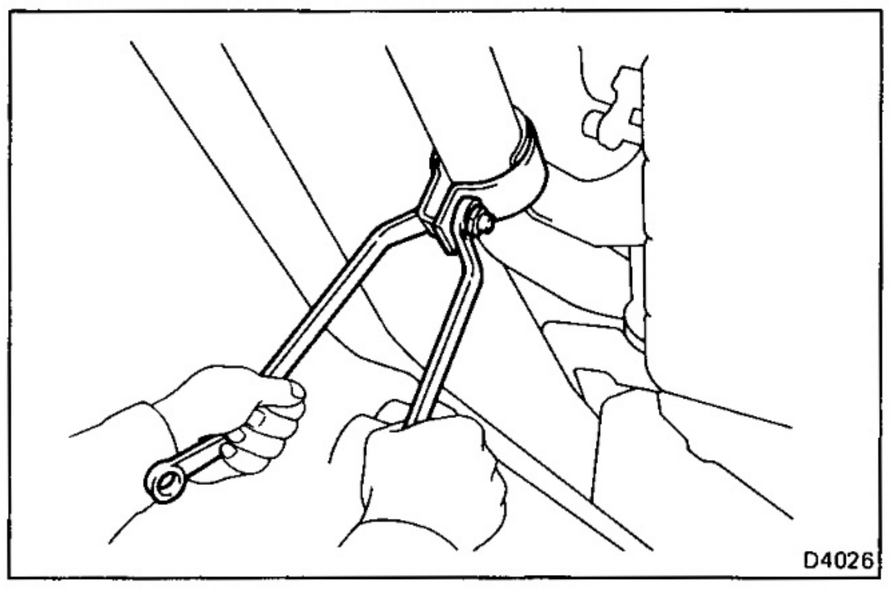

22. DISCONNECT EXHAUST FRONT PIPE

(a) Remove the exhaust pipe clamp.

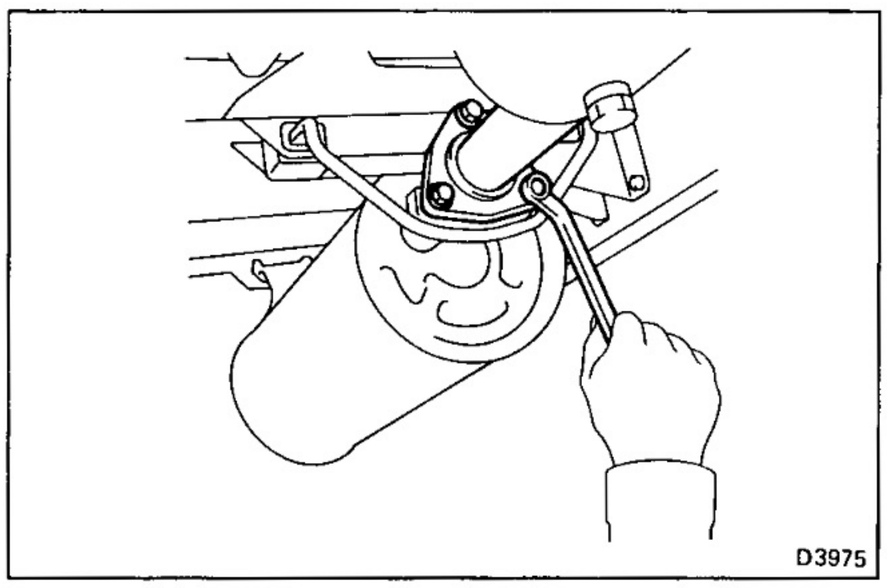

(b) Remove the three bolts, disconnect the front pipe from the tail pipe.

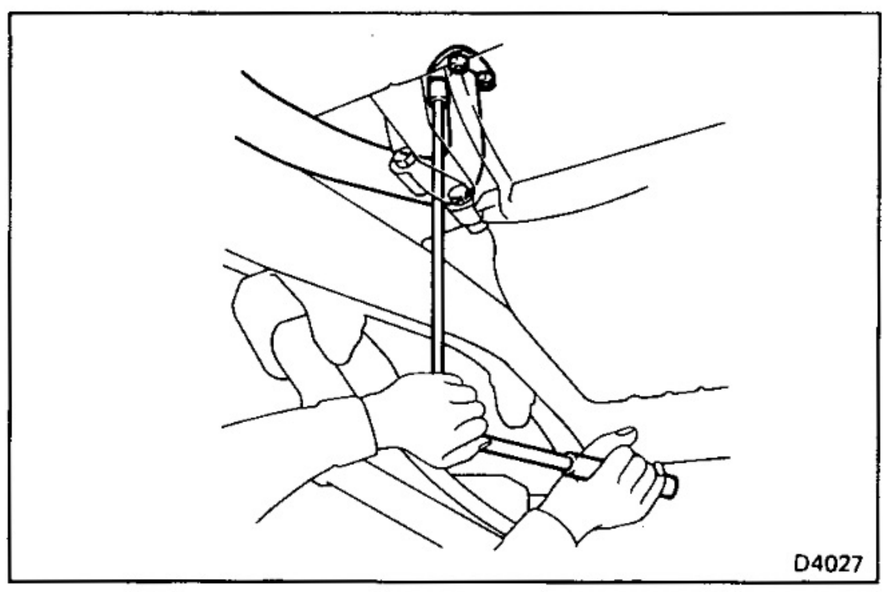

(c) Remove the three nuts and front pipe from the exhaust manifold.

(d) Remove the two gaskets.

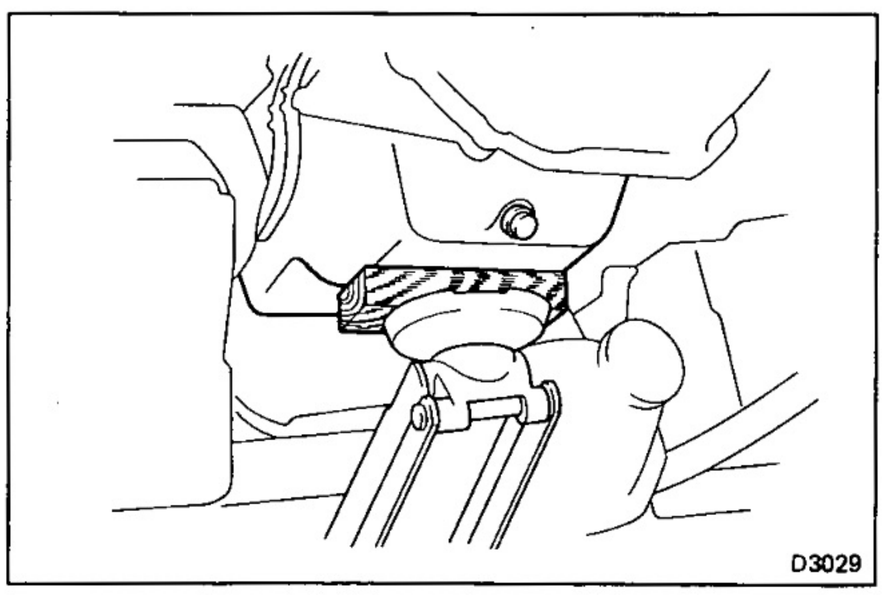

23. REMOVE TRANSMISSION ASSEMBLY

(a) Be sure to put a wooden block between the jack and the engine oil pan to prevent damage. Support the oil pan with a jack.

(b) Lower the rear end of transmission.

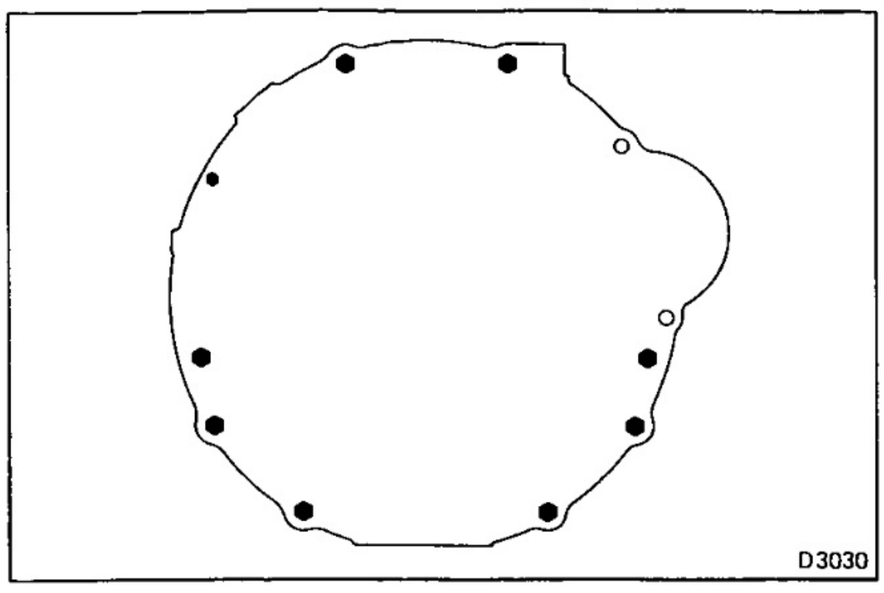

(c) Remove the nine transmission mounting bolts.

(d) Draw out the transmission down and toward the rear.

CAUTION: Be careful not to snag the throttle cable or neutral start switch cable. Keep the oil pan positioned downward.

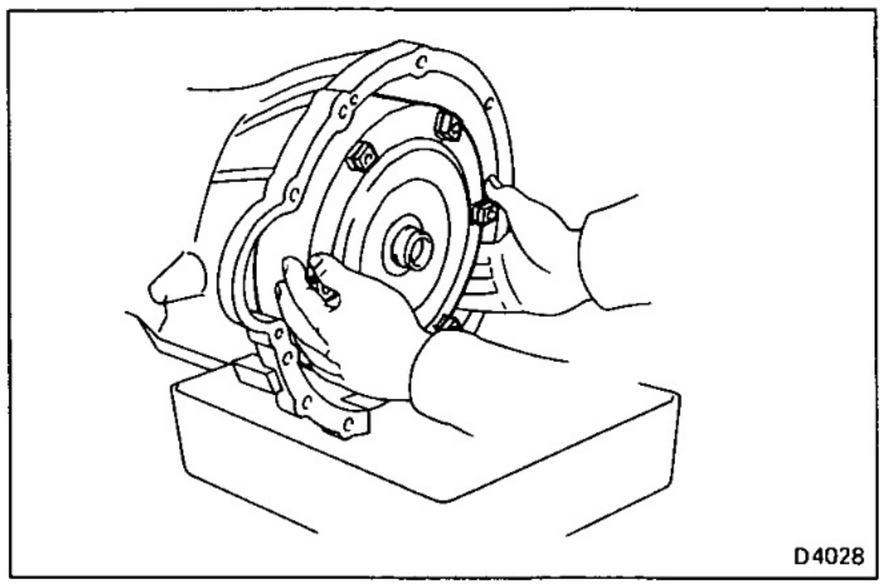

24. PLACE PAN UNDER CONVERTER HOUSING, AND REMOVE CONVERTER

Pull the converter straight off, and allow the fluid to drain into the pan.

INSTALLATION OF TRANSMISSION

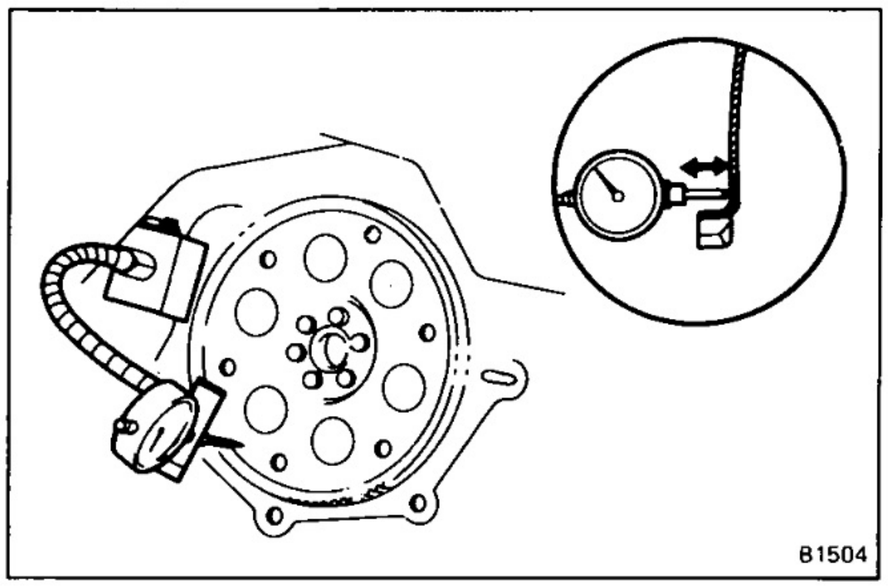

1. MEASURE DRIVE PLATE RUNOUT AND INSPECT RING GEAR

Set up a dial indicator and measure the drive plate runout.

If runout exceeds 0.20 mm (0.0079 in.) or if the ring gear is damaged, replace the drive plate. If installing a new drive plate, note the orientation of spacers and tighten the bolts.

Torque: 3F engine 890 kg-cm (64 ft-lb, 87 N·m)
2H engine 1,000 kg-cm (72 ft-lb, 98 N·m)

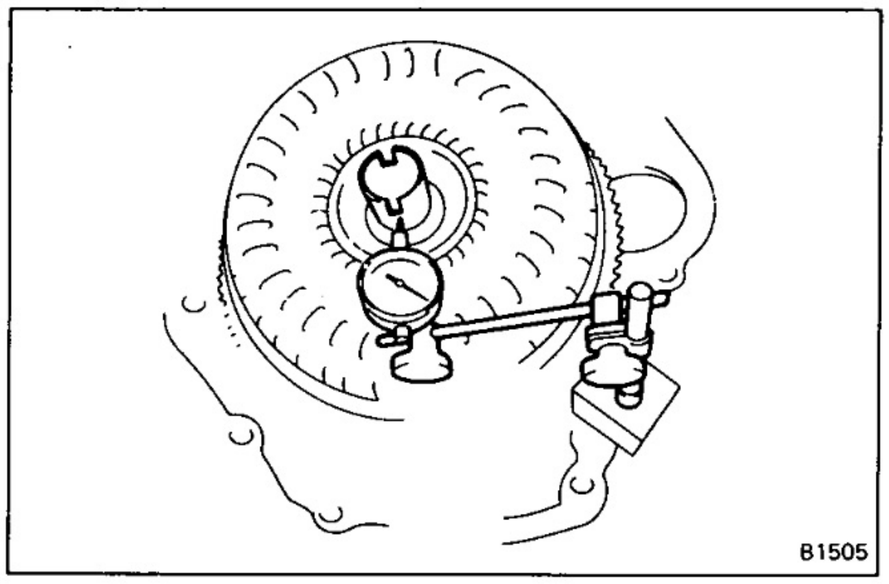

2. MEASURE TORQUE CONVERTER SLEEVE RUNOUT

(a) Temporarily mount the torque converter to the drive plate. Set up a dial indicator.

If runout exceeds 0.30 mm (0.0118 in.), try to correct by reorienting the installation of the converter. If excessive runout cannot be corrected, replace the torque converter.

NOTE: Mark the position of the converter to ensure correct installation.

(b) Remove the torque converter.

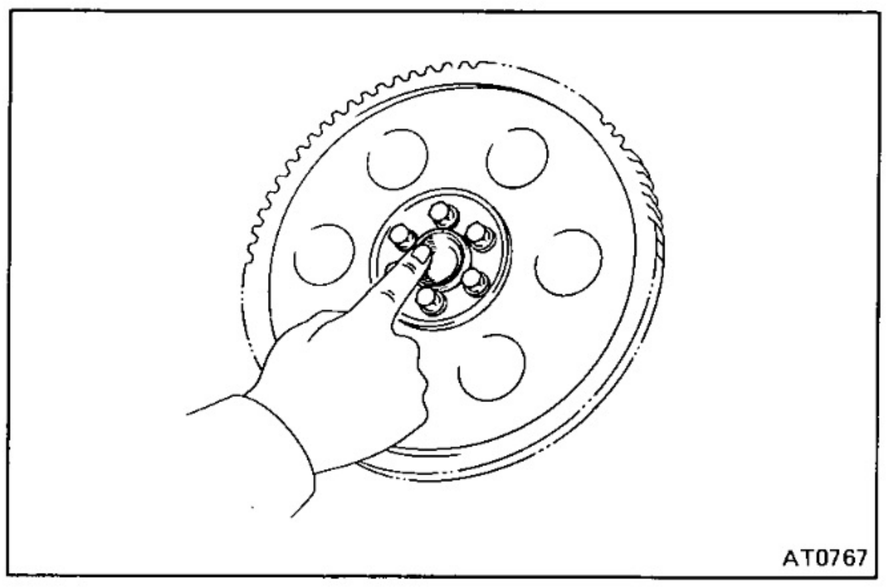

3. APPLY GREASE TO CENTER HUB OF TORQUE CONVERTER AND PILOT HOLE IN CRANKSHAFT

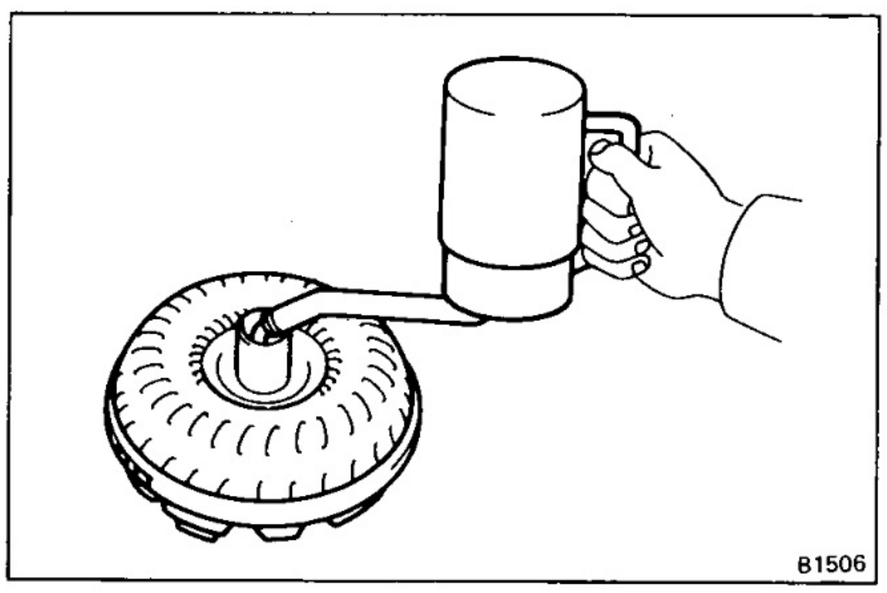

4. INSTALL TORQUE CONVERTER IN TRANSMISSION

If the torque converter has been drained and washed, refill with fresh ATF.

Refill capacity: 2.0 liters (2.1 US qts, 1.8 Imp. qts)
Dry fill capacity: 5.4 liters (5.7 US qts, 4.8 Imp. qts)
Fluid type: ATF DEXRON® II

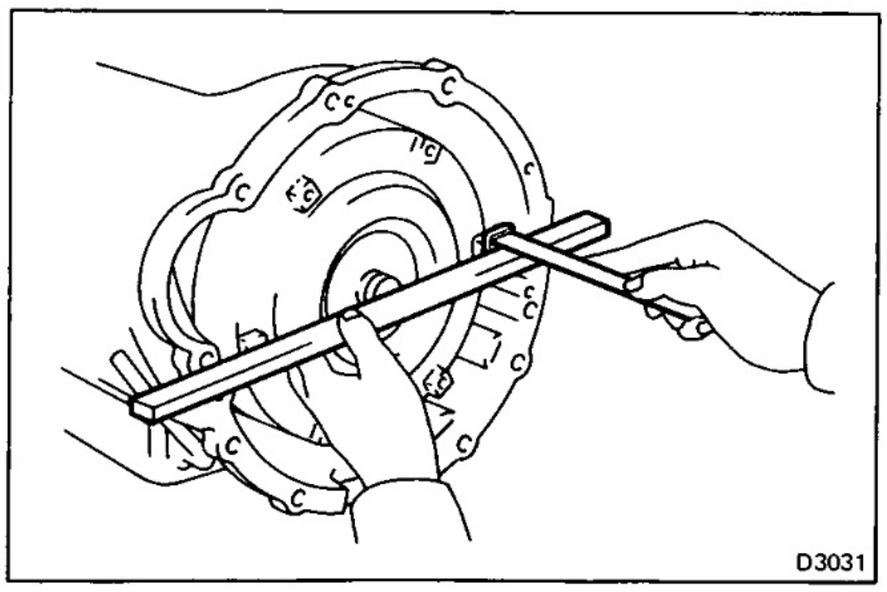

5. CHECK TORQUE CONVERTER INSTALLATION

Using calipers and a straight edge, measure from the installed surface to the front surface of the transmission housing.

Correct distance:
3F engine 16.5 mm (0.650 in.) or more
2H engine 41.2 mm (1.622 in.) or more

CAUTION: Install the converter horizontally to prevent oil seal from damage.

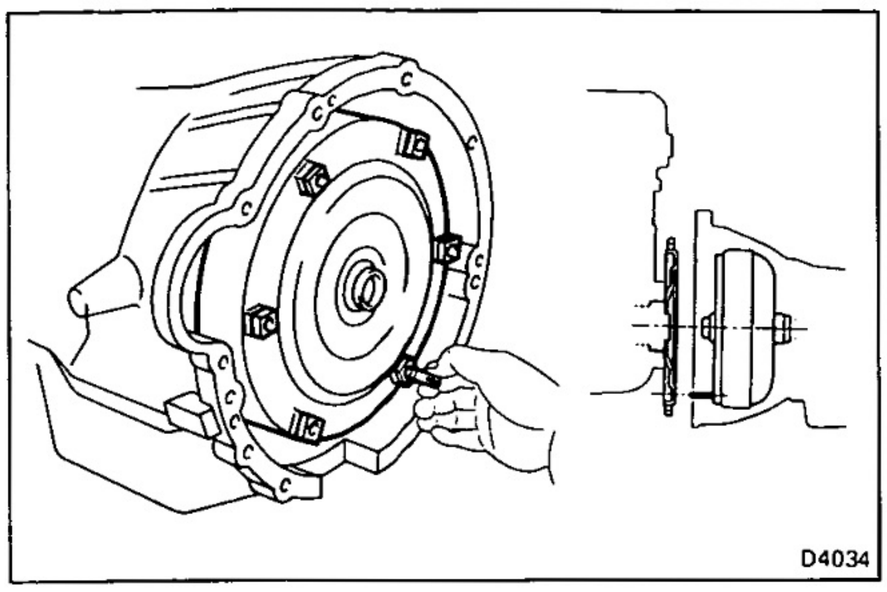

6. INSTALL TRANSMISSION ASSEMBLY

(a) Install the guide pin in the torque converter.

(b) Align the guide pin with one of the drive plate holes.

(c) Align two sleeves on the block with the converter housing.

(d) Temporarily install one bolt.

CAUTION: Be careful not to tilt the transmission forward because the torque converter could slide out.

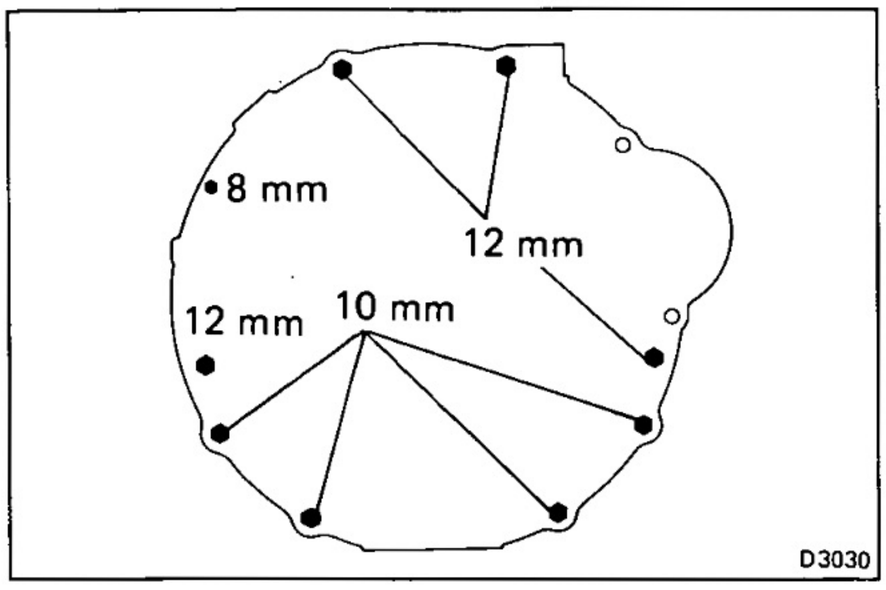

(e) Install the nine transmission mounting bolts.

Torque: 8 mm bolt 185 kg-cm (13 ft-lb, 18 N·m)
10 mm bolt 380 kg-cm (27 ft-lb, 37 N·m)
12 mm bolt 730 kg-cm (53 ft-lb, 72 N·m)

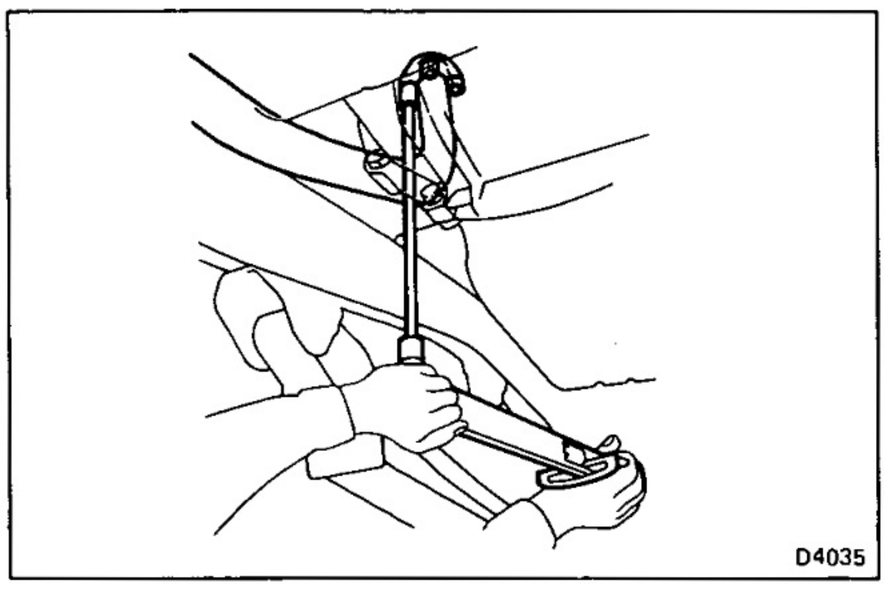

7. INSTALL EXHAUST FRONT PIPE

(a) Install a new gasket and front pipe to the exhaust manifold. Install new nuts and torque them.

Torque: 630 kg-cm (46 ft-lb, 62 N·m)

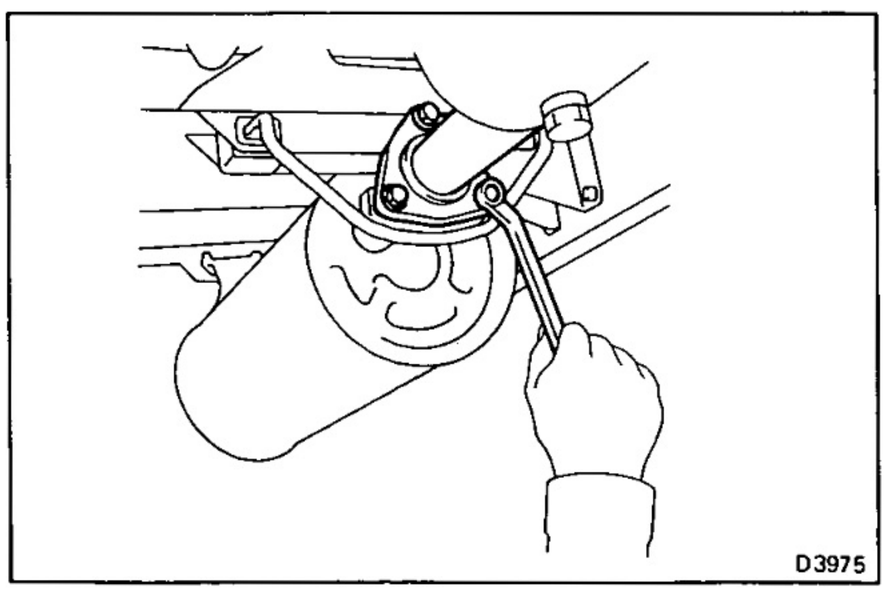

(b) Install a new gasket and connect the front pipe to the tail pipe.

Torque: 400 kg-cm (29 ft-lb, 39 N·m)

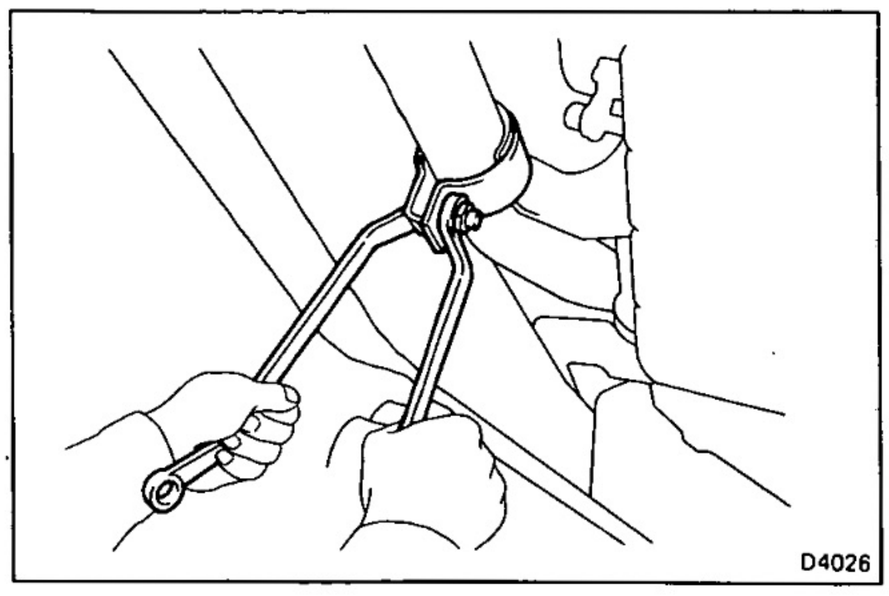

(c) Install the exhaust pipe clamp.

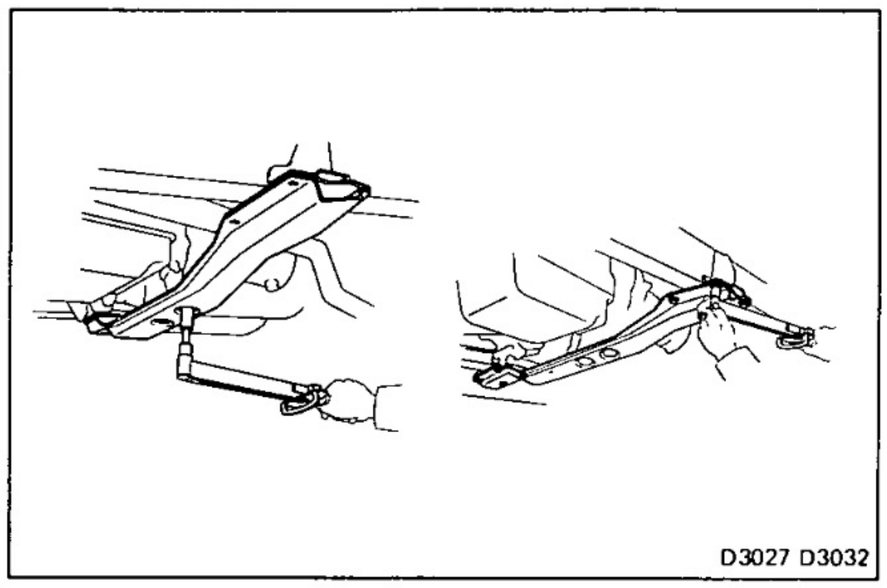

8. INSTALL FRAME CROSSMEMBER

(a) Install the frame crossmember, and torque the eight bolts and two nuts.

Torque: Bolt 400 kg-cm (29 ft-lb, 39 N·m)
Nut 600 kg-cm (43 ft-lb, 59 N·m)

(b) Remove the transmission jack.

(c) Remove the jack from the engine oil pan.

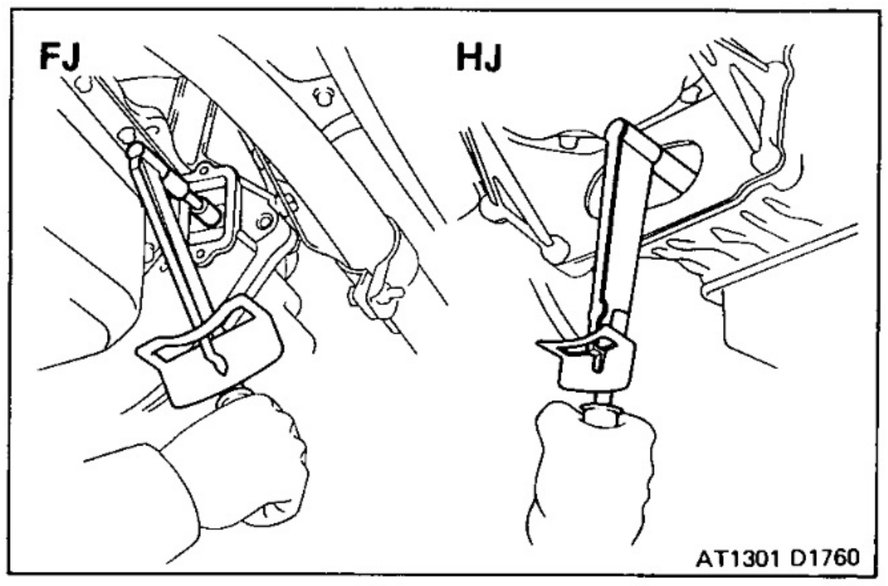

9. INSTALL SIX TORQUE CONVERTER BOLTS

(a) Remove the guide pin.

(b) Install the six bolts hand tight. Turn the crankshaft to gain access.

(c) Tighten the bolts evenly.

Torque: 290 kg-cm (21 ft-lb, 28 N·m)

(d) Install the end plate hole plug.

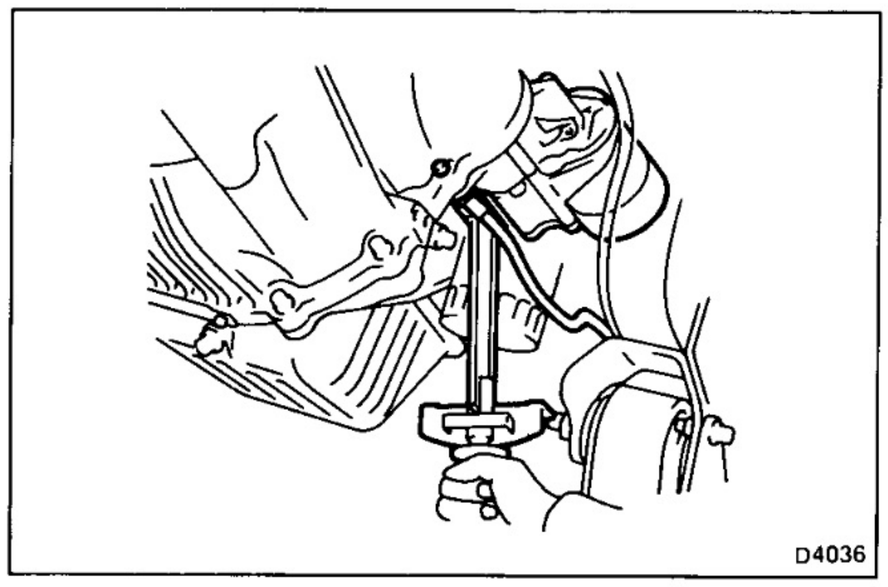

10. INSTALL OIL FILLER TUBE

(a) Install a new O-ring to the filler tube.

(b) Install the filler tube to the transmission.

(c) Install the bleeder hose.

11. INSTALL STARTER

(a) Install the starter with bolt and nut.

(b) Connect the cable and connector.

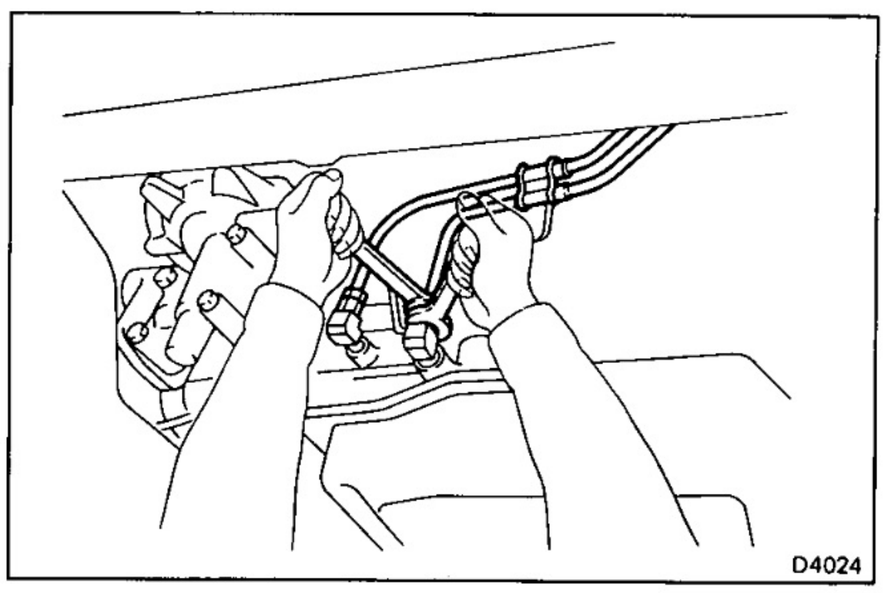

12. CONNECT OIL COOLER TUBES

(a) Connect the cooler tubes by hand.

(b) Torque the union nuts.

Torque: 350 kg-cm (25 ft-lb, 34 N·m)

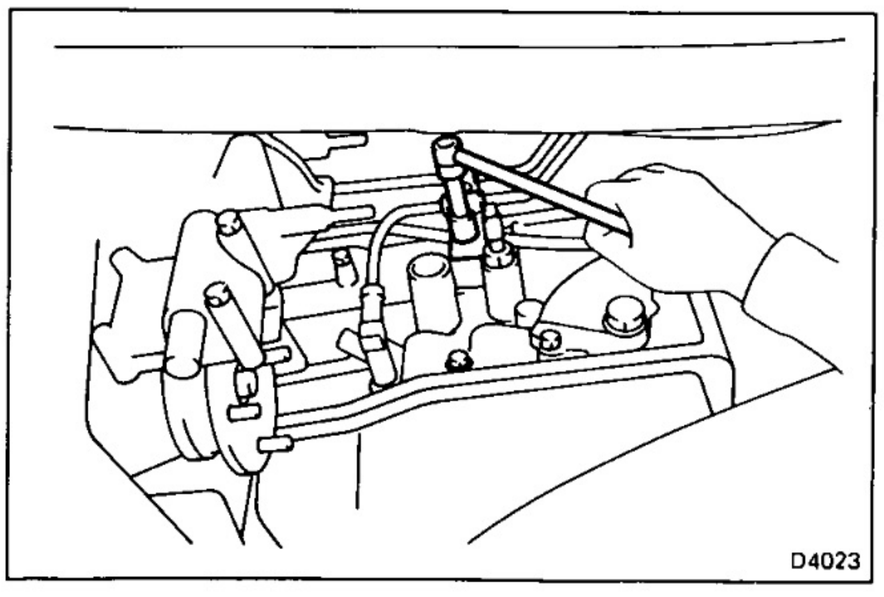

(c) Install the cooler tube clamp.

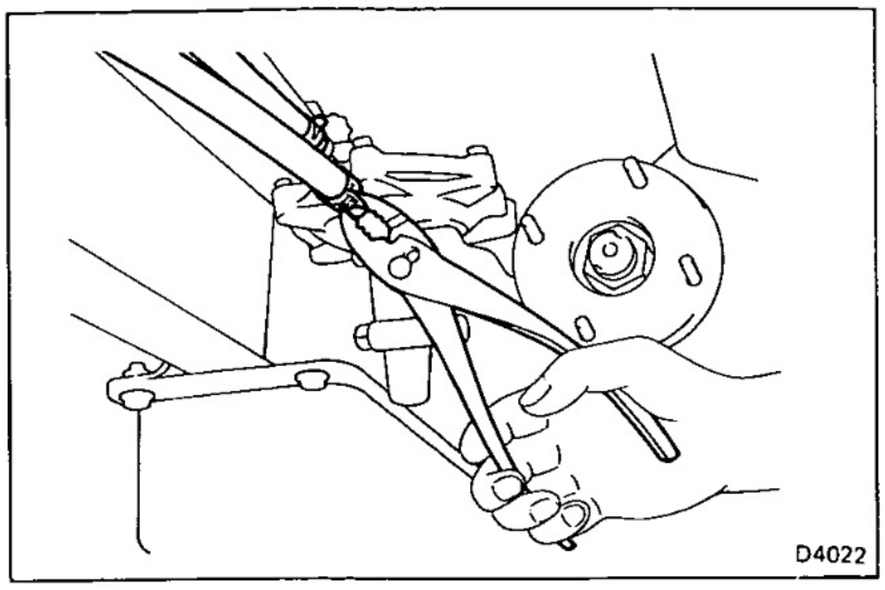

13. CONNECT TWO VACUUM HOSES

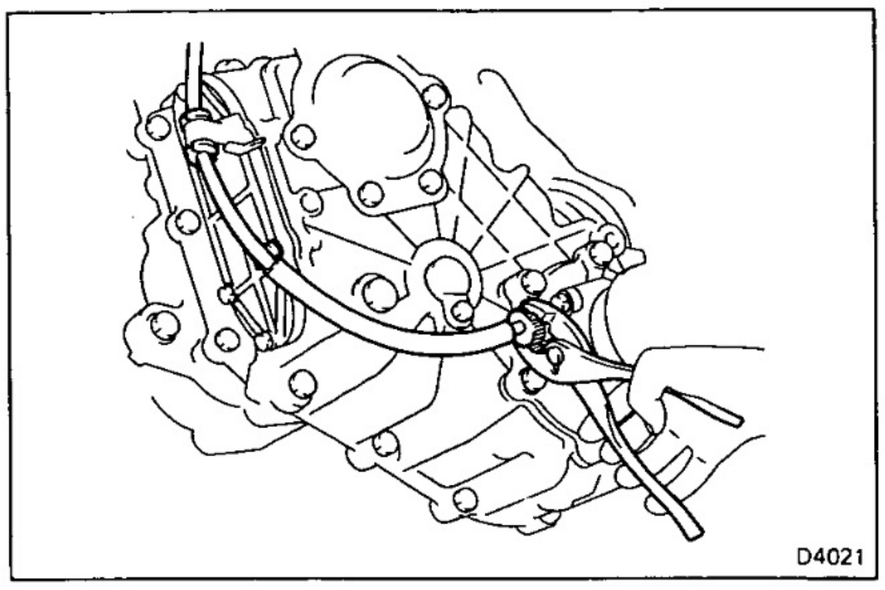

14. CONNECT SPEEDOMETER CABLE

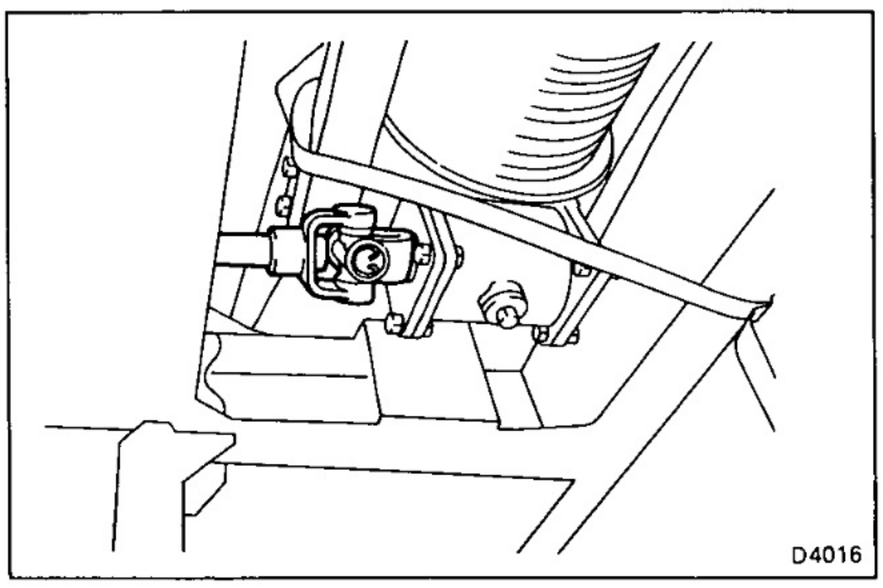

15. INSTALL POWER TAKE-OFF DRIVE SHAFT (w/ MECHANICAL WINCH)

(a) Align the matchmarks on the joint flange yoke and drive shaft.

(b) Install the drive shaft.

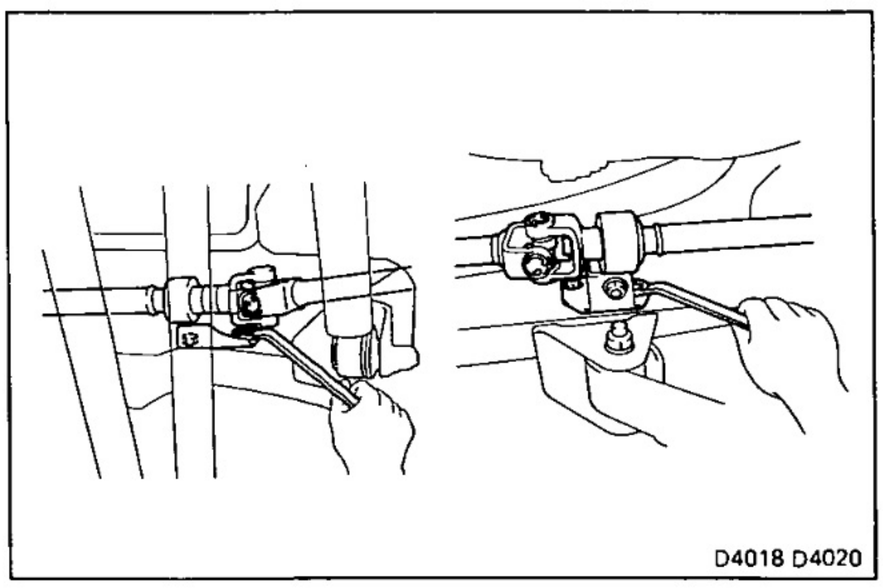

(c) Install the front and rear bracket.

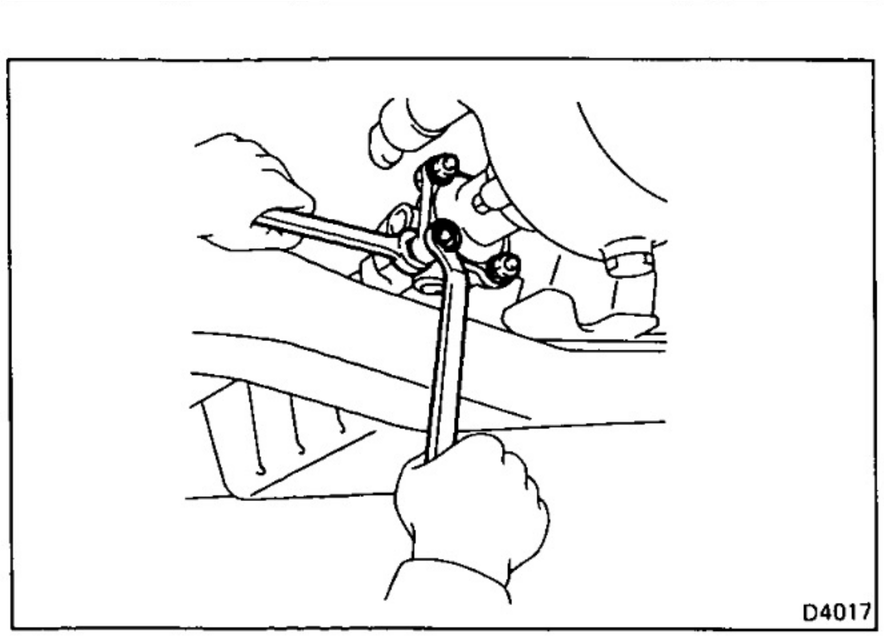

(d) Align the matchmarks on the drive shaft and PTO.

(e) Torque the nuts.

Torque: 200 kg-cm (14 ft-lb, 20 N·m)

16. INSTALL ENGINE UNDERCOVER

17. INSTALL PROPELLER SHAFTS

(See page PR-7)

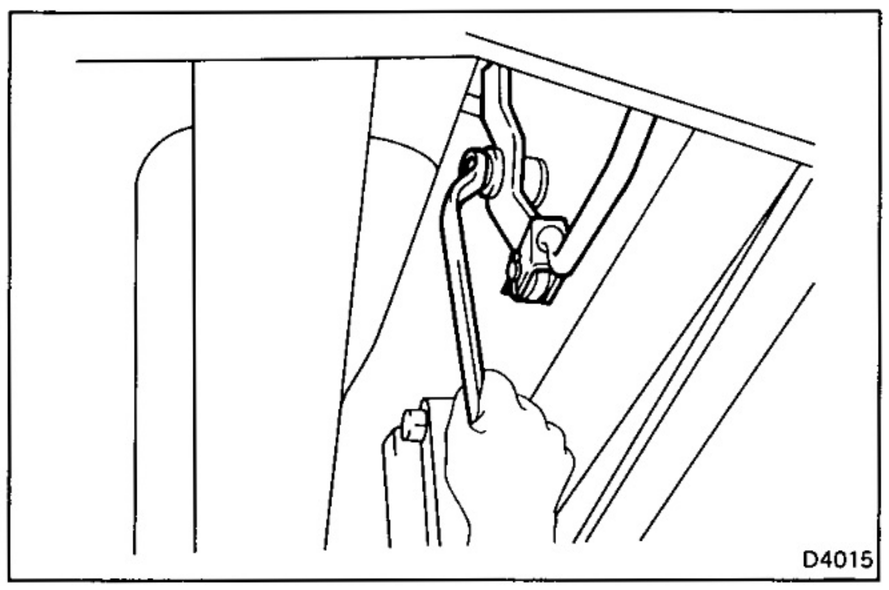

18. INSTALL POWER TAKE-OFF SHIFT LEVER (w/ MECHANICAL WINCH)

(a) Install the shift lever to the transmission.

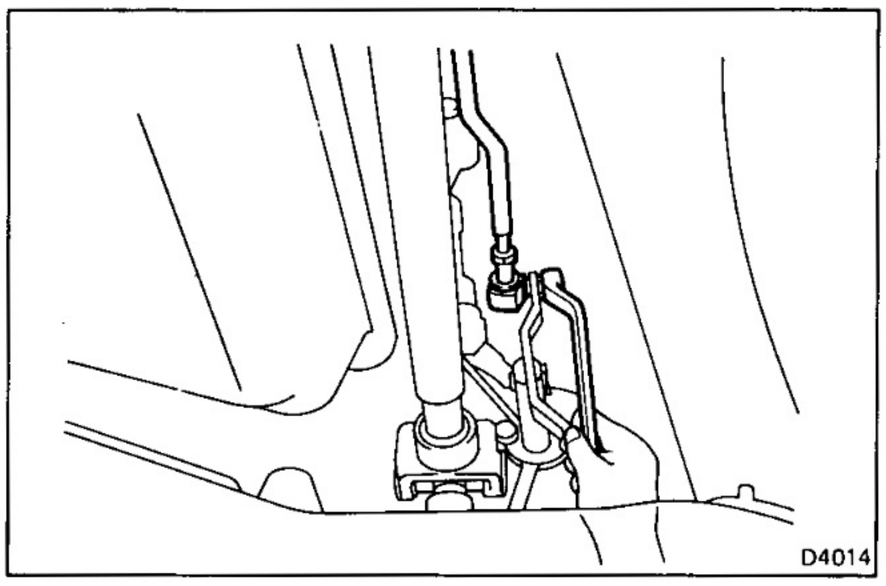

(b) Install the shift rod to the PTO.

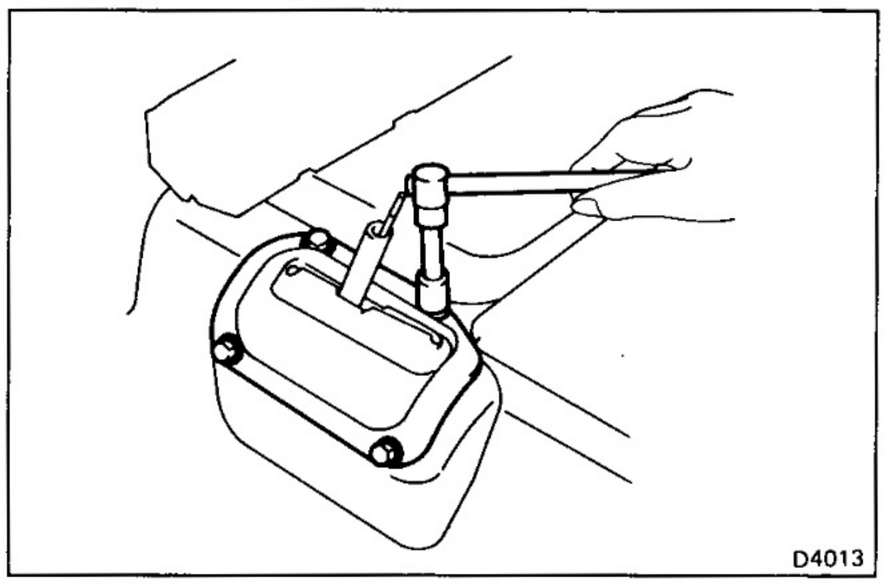

(c) Install the shift lever boot with the four bolts.

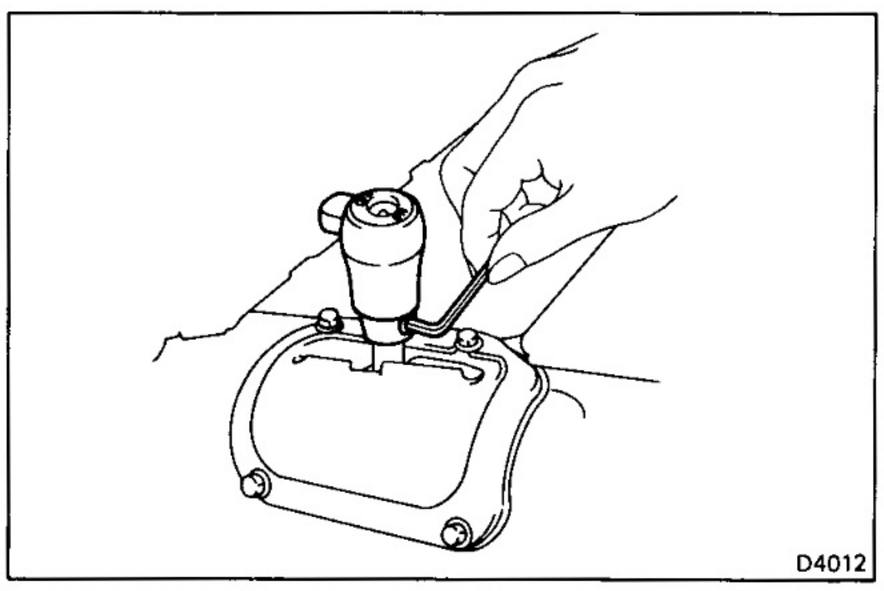

(d) Install the shift lever knob to the shift lever, and torque the two screws with hexagon wrench.

(e) Install the spring and knob button.

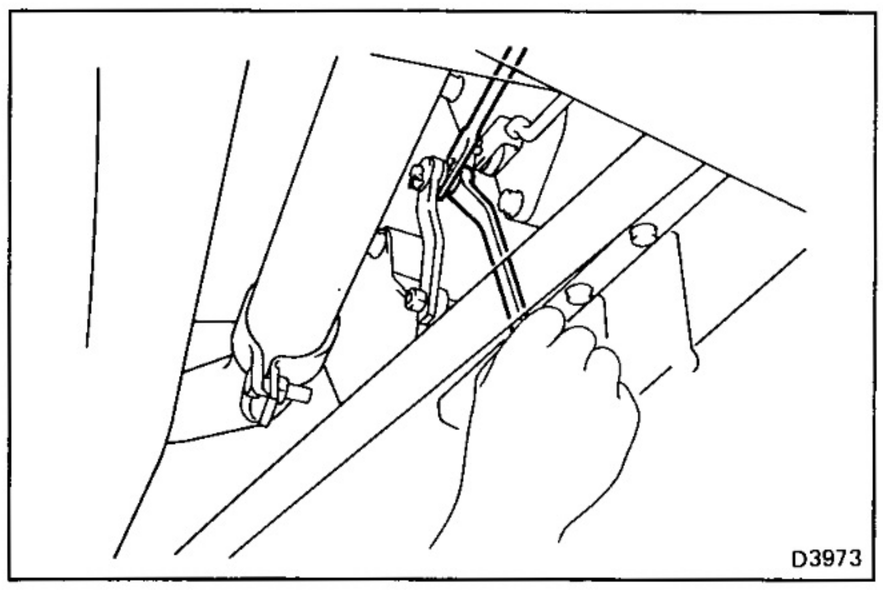

19. CONNECT AND ADJUST TRANSMISSION CONTROL ROD (See page AT-6)

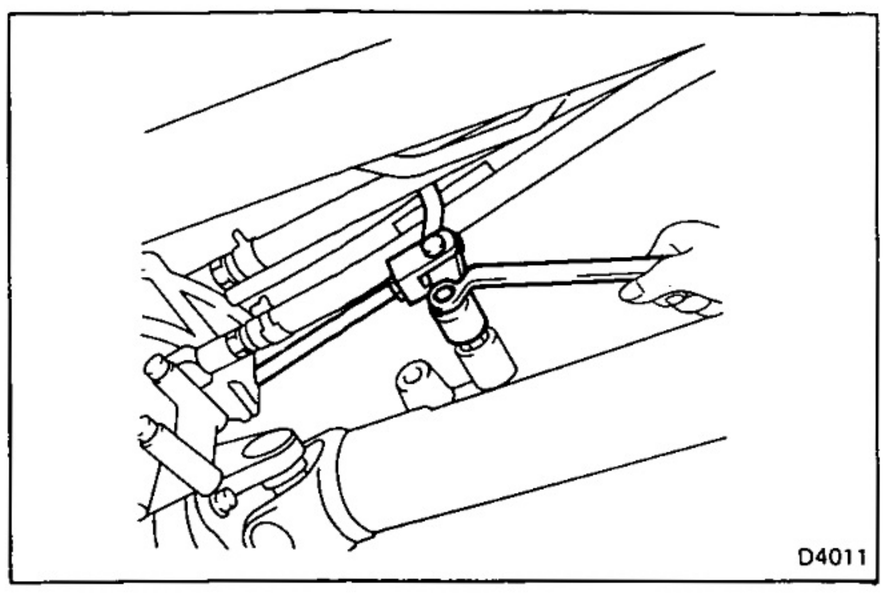
D4011

20. INSTALL TRANSFER SHIFT LEVER

(a) Install the washers and shift lever to the transmission.

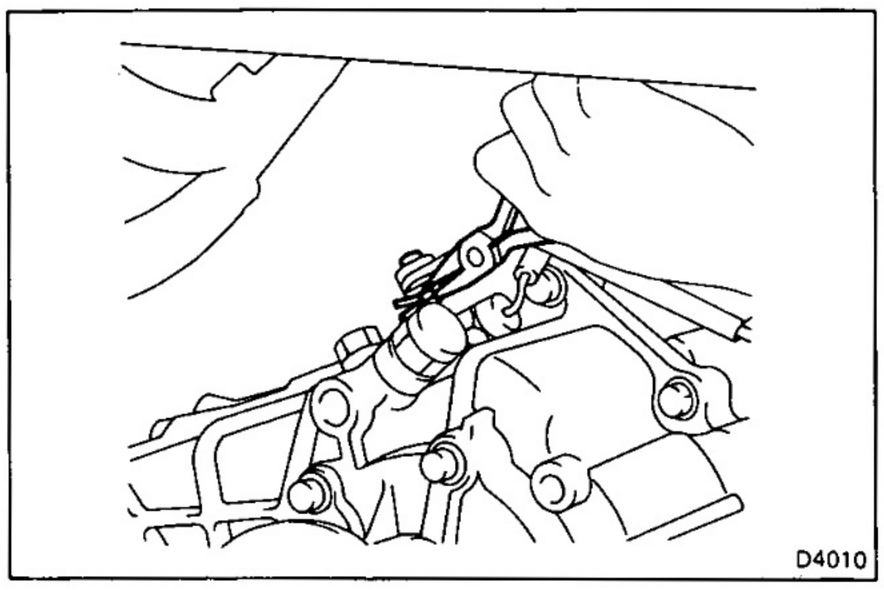
D4010

(b) Install the shift rod and pin to the transfer.

(c) Install the clip.

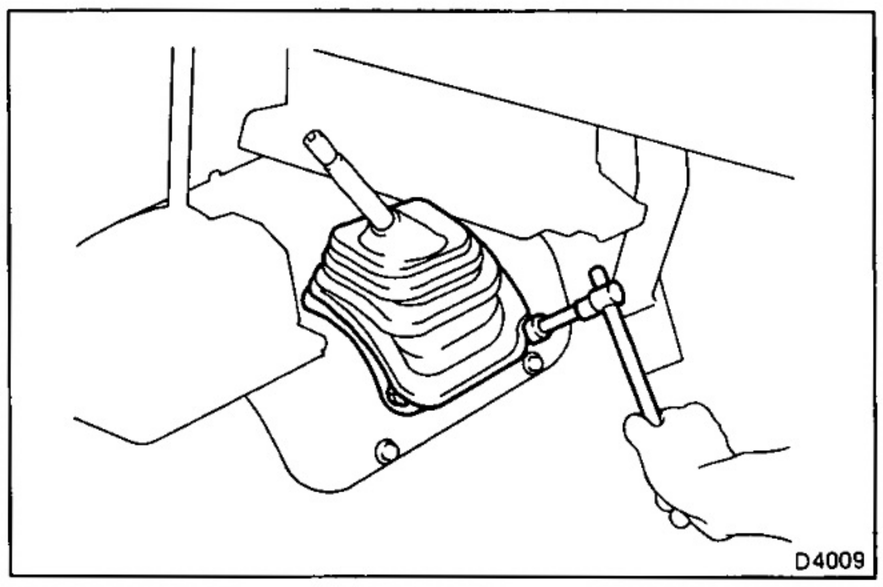
D4009

(d) Install the shift lever boot with the four bolts.

(e) Install the shift lever knob.

21. INSTALL TRANSMISSION UNDERCOVER AND TRANSFER UNDERCOVER

22. LOWER VEHICLE AND CONNECT UPPER RADIATOR HOSE

23. FILL COOLANT

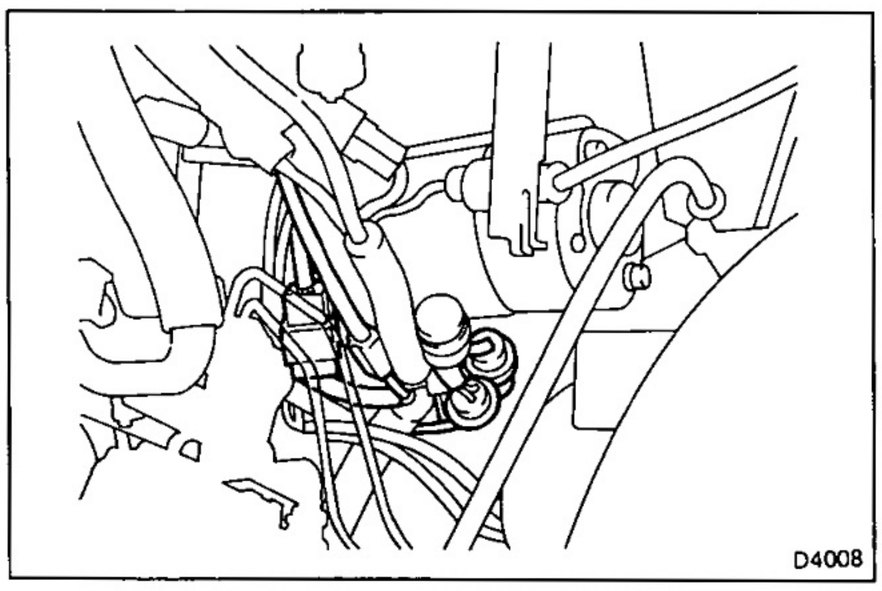
D4008

24. CONNECT CONNECTORS

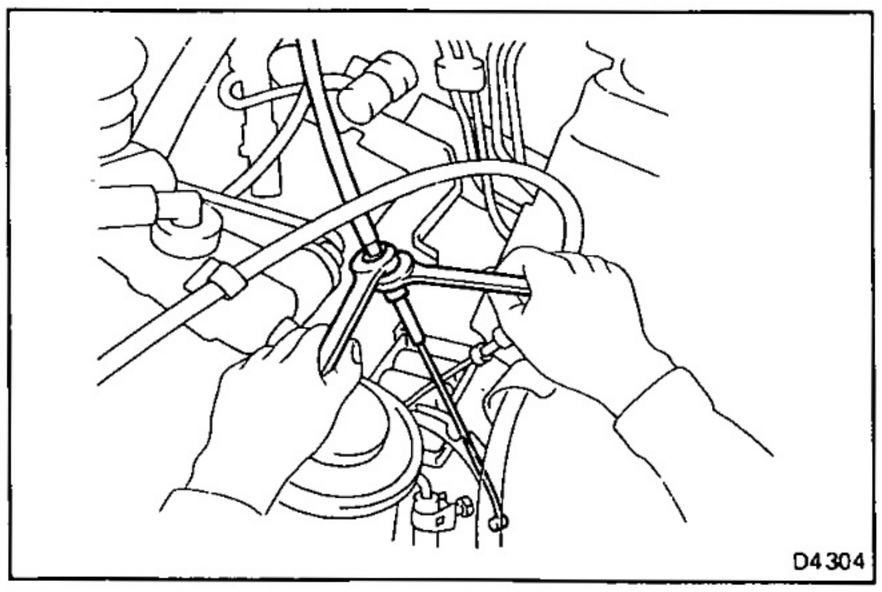
D4304

25. CONNECT THROTTLE CABLE

(a) Connect the cable to the throttle linkage.

(b) Connect the cable housing to the bracket.

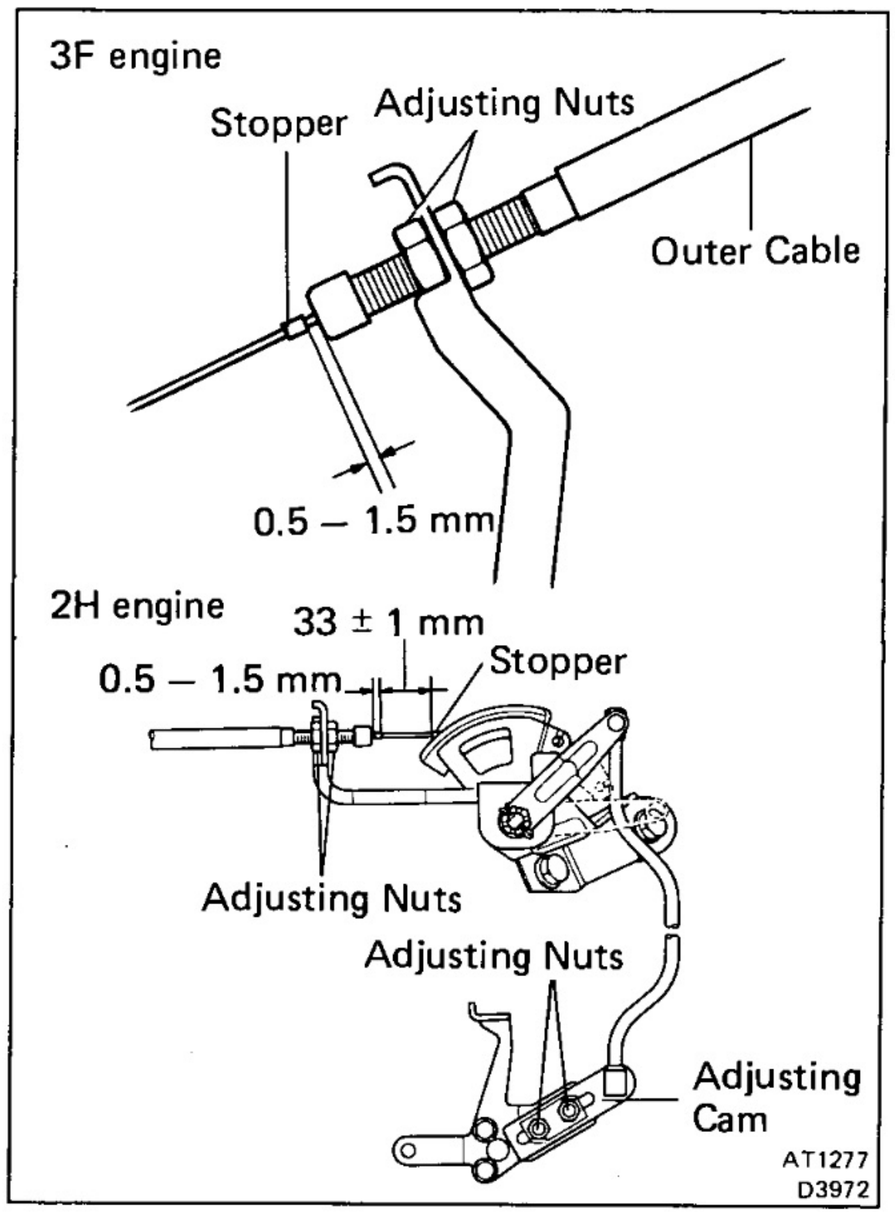

26. ADJUST THROTTLE CABLE
(See page AT-6)

27. CONNECT BATTERY CABLE TO NEGATIVE (–) TERMINAL

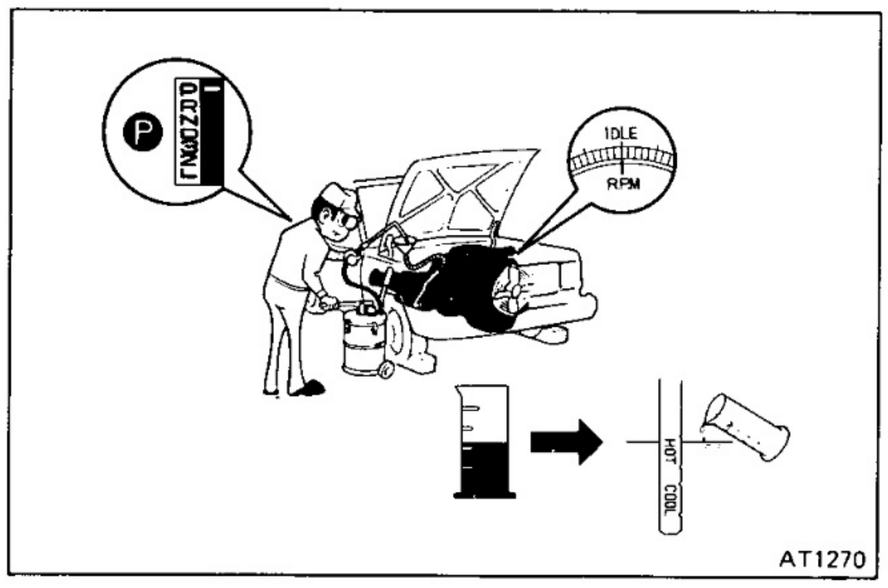

28. FILL TRANSMISSION WITH ATF AND CHECK FLUID LEVEL (See page AT-5)

Fluid type: ATF DEXRON® II

Total capacity: 15.0 liters (15.9 US qts, 13.2 Imp. qts)

Drain and refill capacity:
5.0 liters (5.3 US qts, 4.4 Imp. qts)

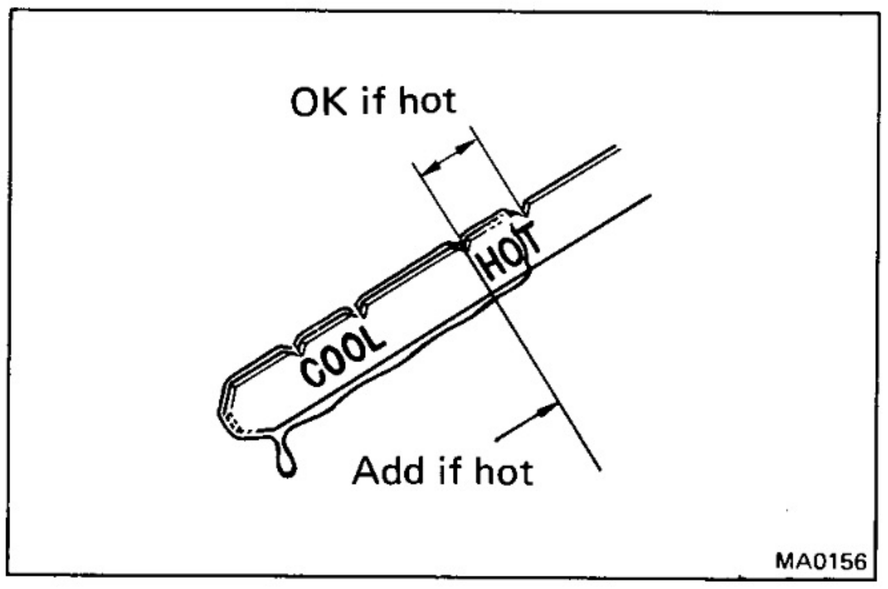

29. PERFORM ROAD TEST

Check for abnormal noise, shock slippage, correct shift points and smooth operation.

TRANSFER

	Page
TROUBLESHOOTING	TF-2
TRANSFER	TF-3
On-Vehicle Replacement of Front and Rear Output Shaft Oil Seal	TF-3
Removal of Transfer	TF-4
Diaphragm Cylinder Components	TF-5
Disassembly of Diaphragm Cylinder	TF-5
Inspection of Diaphragm Cylinder Components	TF-7
Assembly of Diaphragm Cylinder	TF-8
Transfer Components	TF-10
Disassembly of Transfer	TF-12
Inspection of Transfer Components	TF-19
Assembly of Transfer	TF-25
Installation of Transfer	TF-33
ELECTRICAL SHIFT TYPE	TF-34
A/T FLUID TEMPERATURE WARNING	TF-38

TROUBLESHOOTING

Problem	Possible cause	Remedy	Page
Hard to shift or will not shift	Splines on input shaft dirty or burred	Repair as necessary	TF-3
	Transfer faulty	Disassemble and inspect transfer	TF-3
Transfer jumps out of gear	Transfer faulty	Disassemble and inspect transfer	TF-3

TRANSFER

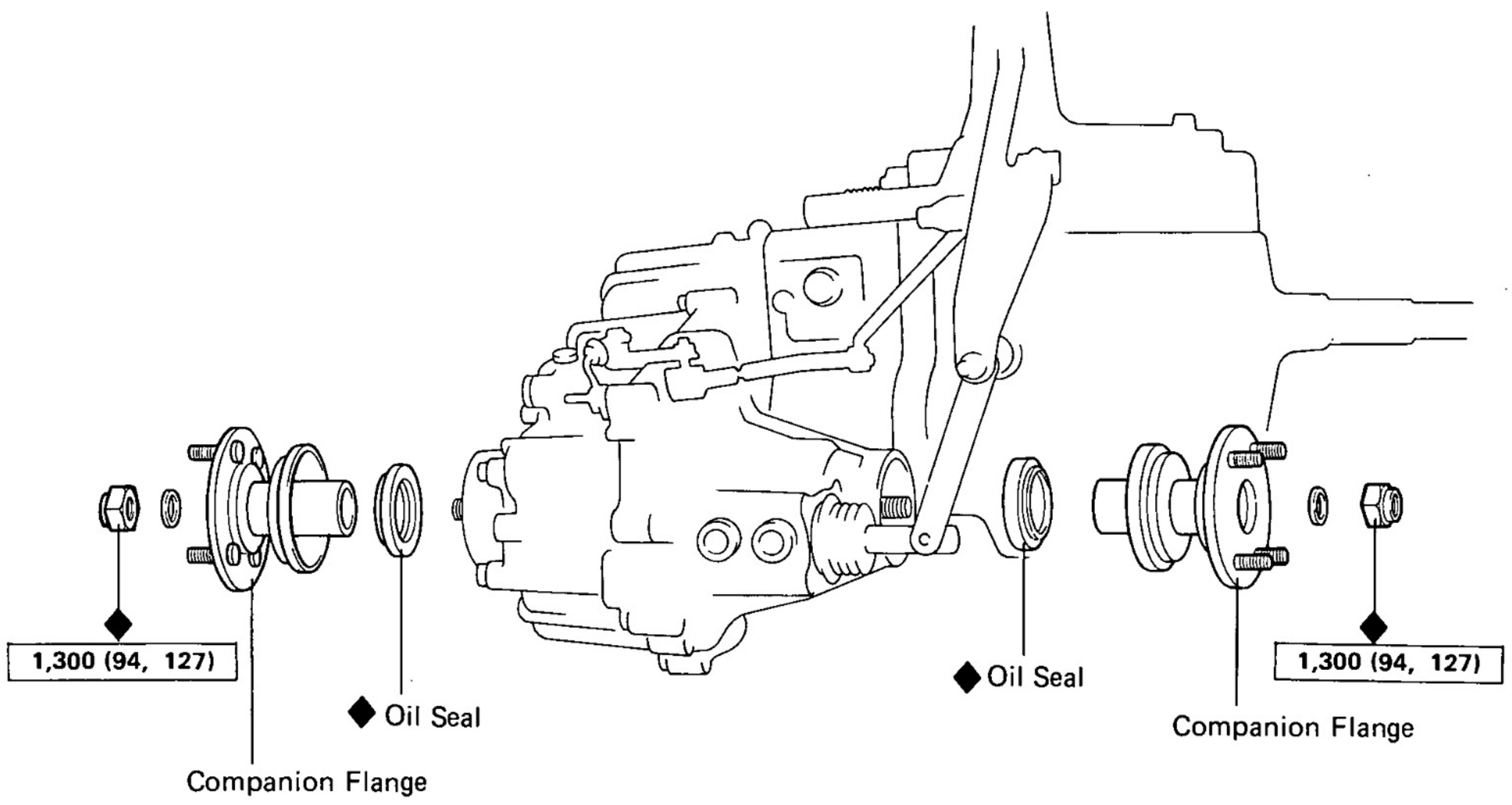

kg-cm (ft-lb, N·m) : Specified torque

◆ : Non-reusable part

TF0246

ON-VEHICLE REPLACEMENT OF FRONT AND REAR OUTPUT SHAFT OIL SEAL

1. DRAIN GEAR OIL FROM TRANSFER

2. REMOVE TRANSFER UNDERCOVER

3. REMOVE FRONT AND REAR PROPELLER SHAFTS
(See page PR-3)

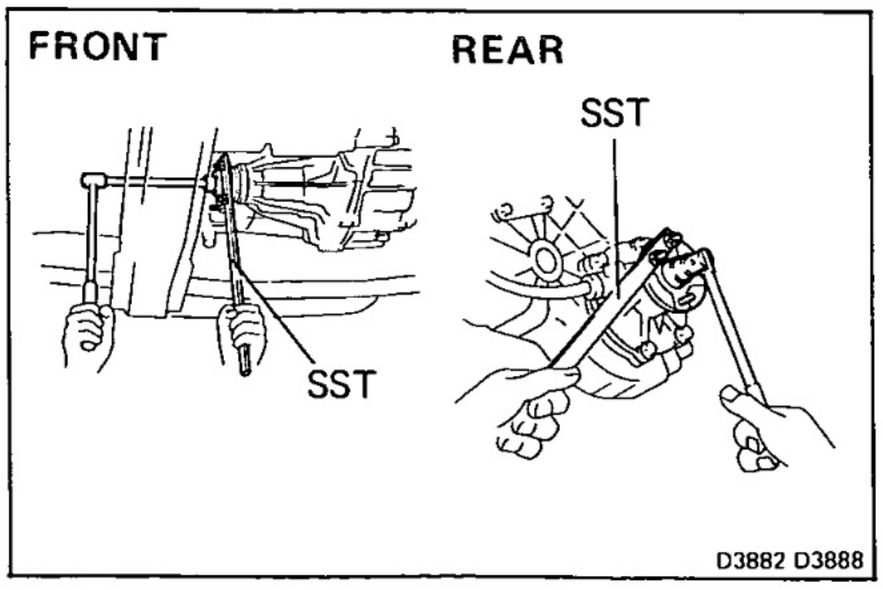

4. REMOVE COMPANION FLANGE

(a) Using a hammer and chisel, loosen the staked part of the nut.

(b) Using SST to hold the companion flange, remove the companion flange lock nut.

SST 09330-00021

(c) Remove the companion flange.

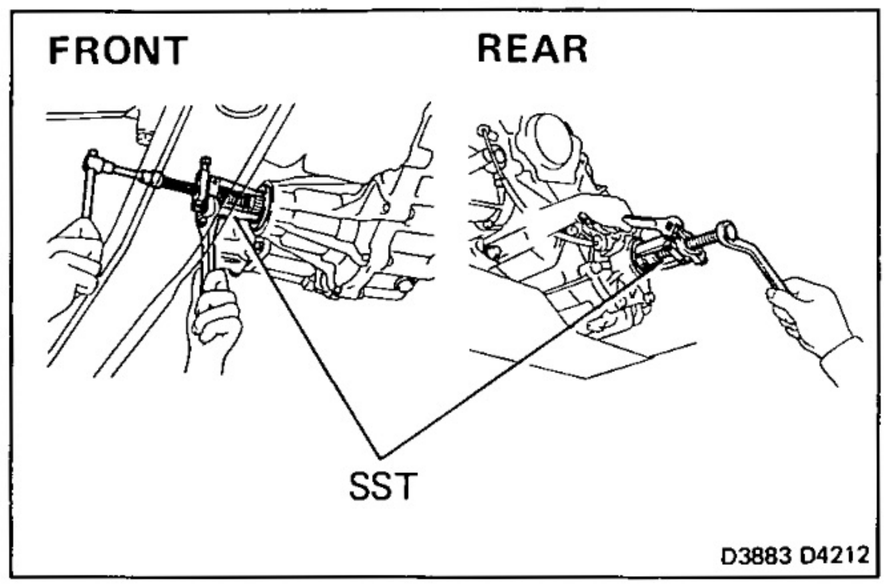

5. **REMOVE OIL SEAL**

Using SST, remove the output shaft oil seal.

SST 09308-10010

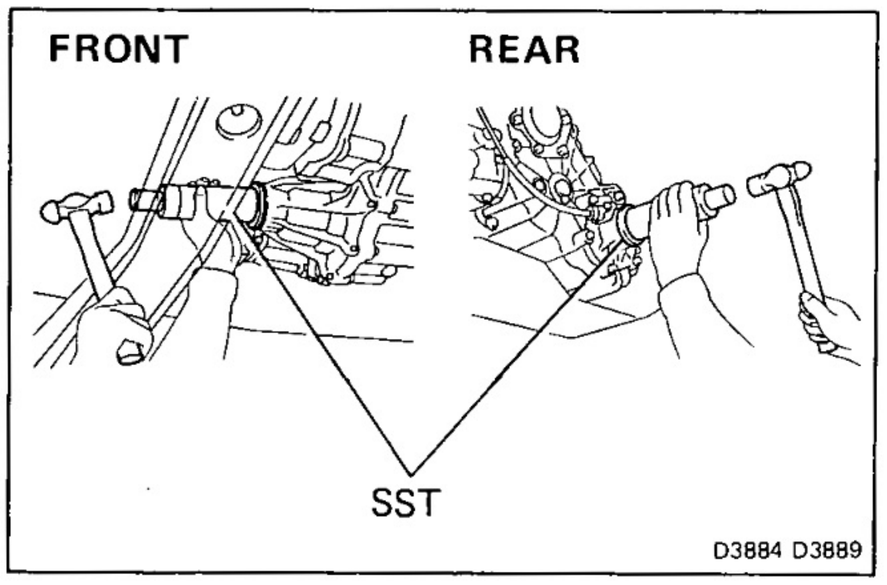

6. **INSTALL OIL SEAL**

(a) Using SST, drive in a new oil seal.

SST 09316-60010

(b) Apply MP grease to the oil seal lip.

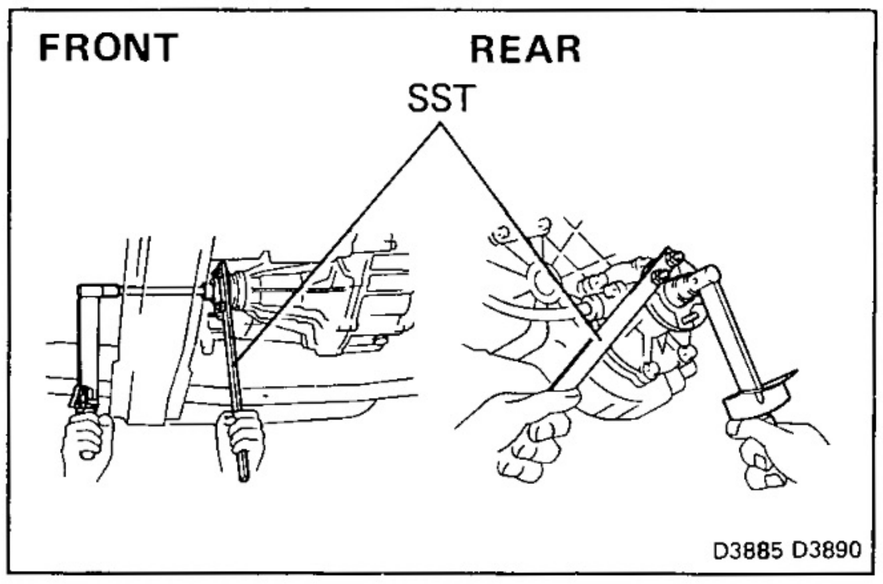

7. **INSTALL COMPANION FLANGE**

(a) Install the companion flange.

(b) Using SST to hold the companion flange, install the companion flange lock nut.

SST 09330-00021

Torque: 1,300 kg-cm (94 ft-lb, 127 N·m)

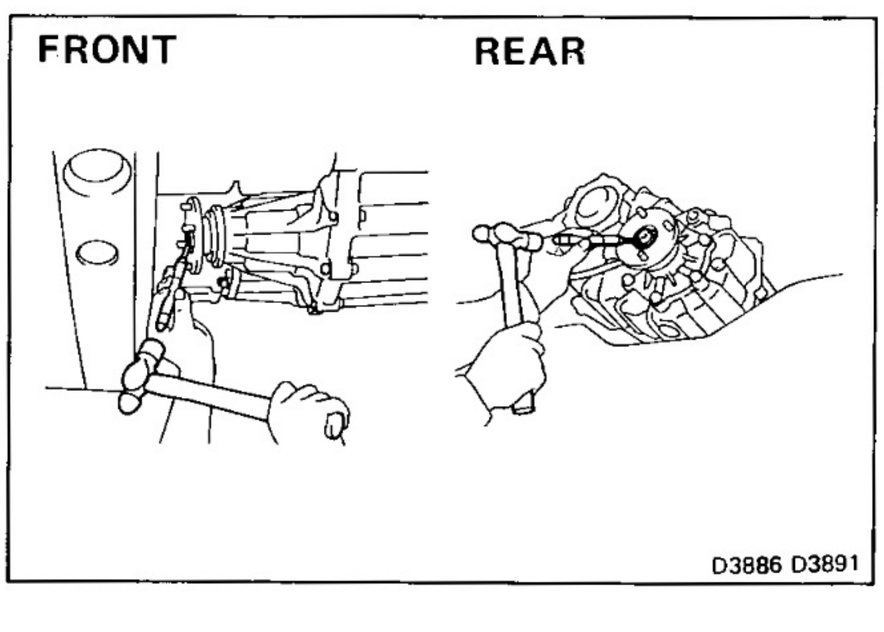

(c) Stake the companion flange lock nut.

8. **INSTALL FRONT AND REAR PROPELLER SHAFTS**
(See page PR-7)

Torque: 900 kg-cm (65 ft-lb, 88 N·m)

9. **INSTALL TRANSFER UNDERCOVER**

10. **FILL TRANSFER WITH OIL**

Oil grade: API GL-4,5 SAE 90
Capacity:

MTM	**2.2 liters (2.3 US qts, 1.9 Imp. qts)**
ATM	**2.1 liters (2.2 US qts, 1.8 Imp. qts)**

REMOVAL OF TRANSFER

(See page MT-3 or AT-24)

DIAPHRAGM CYLINDER COMPONENTS

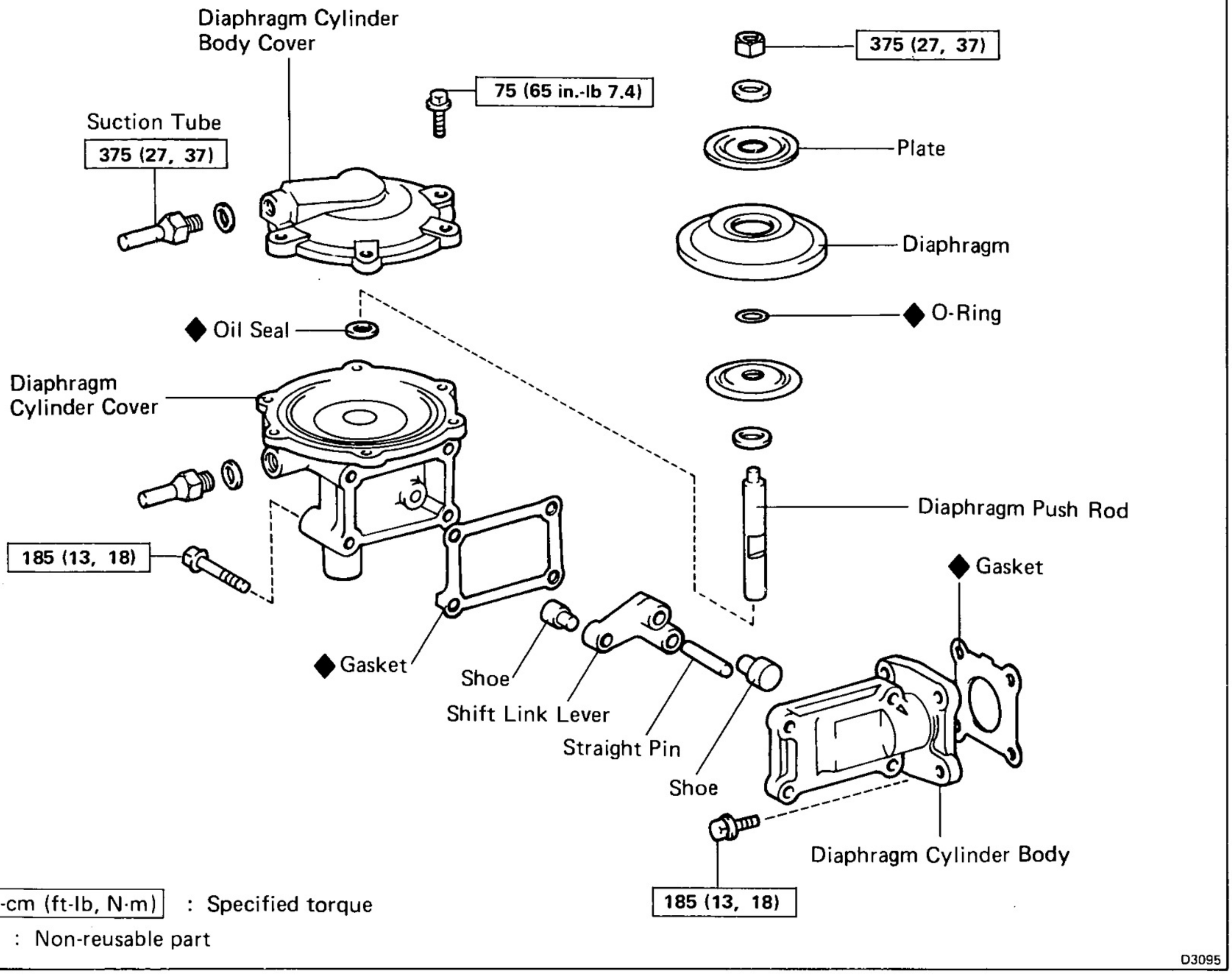

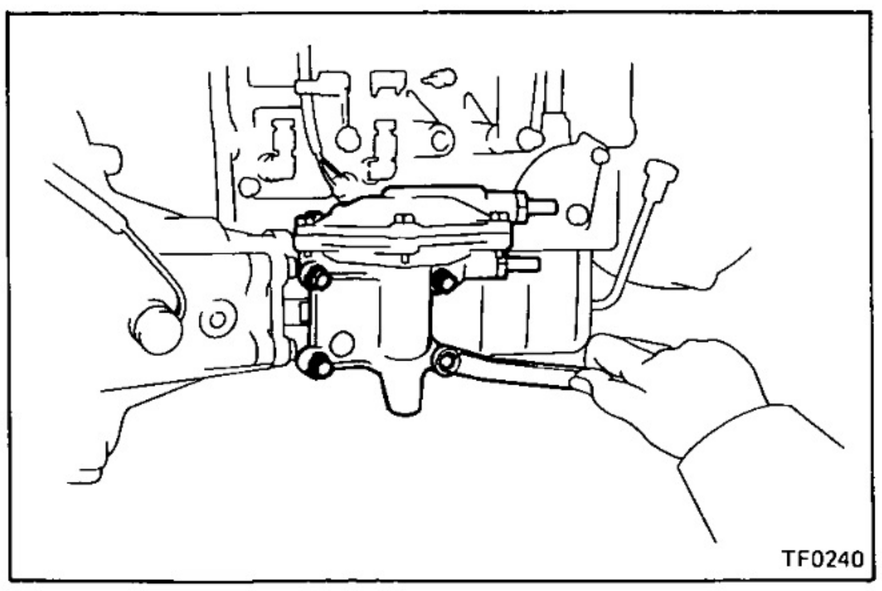

DISASSEMBLY OF DIAPHRAGM CYLINDER

1. REMOVE DIAPHRAGM CYLINDER ASSEMBLY

(a) Remove the diaphragm cylinder assembly from the diaphragm cylinder body.

(b) Remove the gasket.

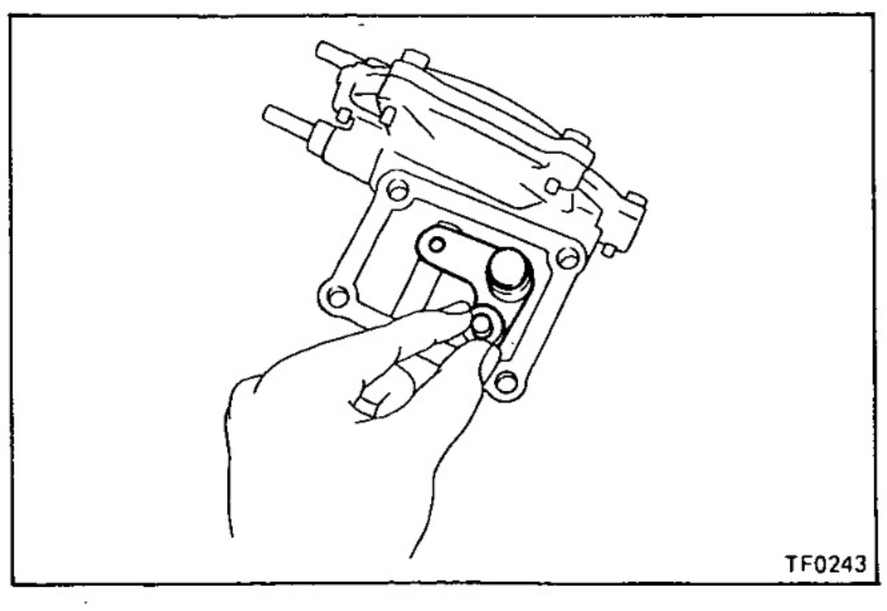

2. REMOVE SHIFT LINK LEVER AND STRAIGHT PIN

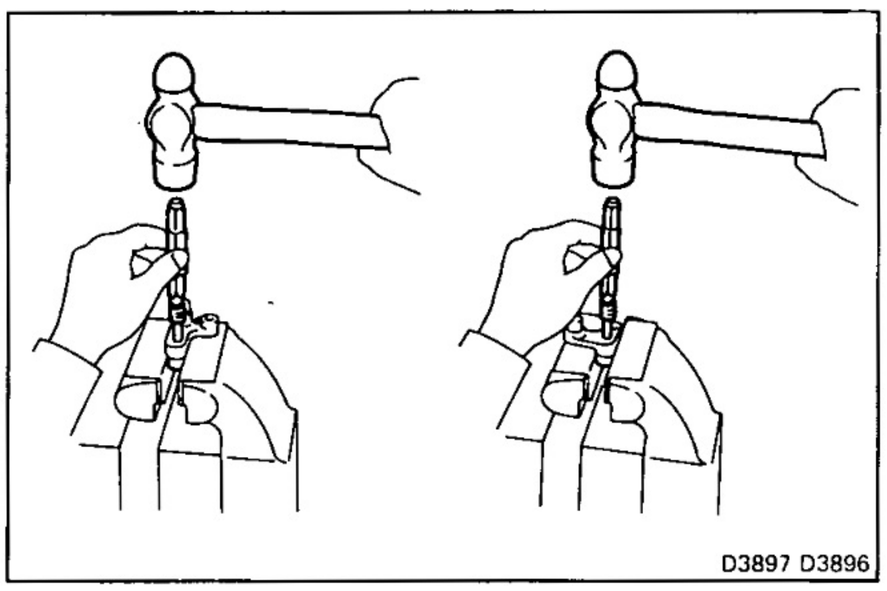

3. REMOVE SHOE FROM SHIFT LINK LEVER

Using a pin punch and hammer, remove the two shoes from the shift link lever.

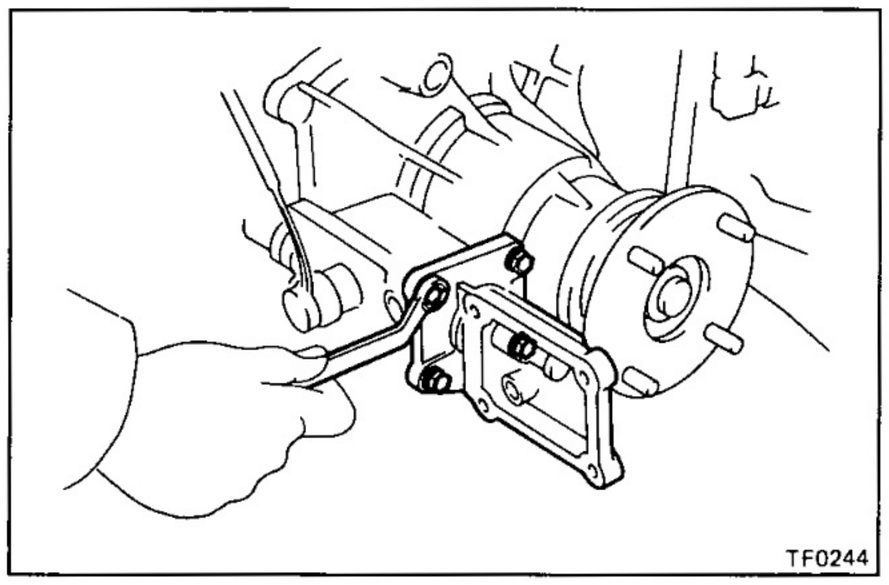

4. REMOVE DIAPHRAGM CYLINDER BODY

(a) Remove the diaphragm cylinder body from the transfer case.

(b) Remove the gasket.

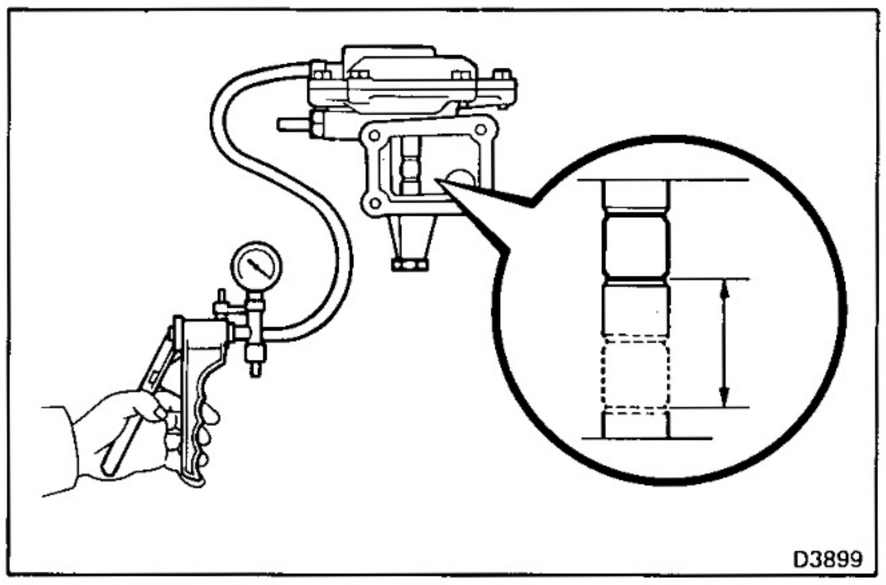

5. INSPECT DIAPHRAGM CYLINDER ASSEMBLY

(a) With at least 400 mmHg (15.75 in.Hg, 53.3 kPa) of vacuum in the diaphragm, confirm that the shaft moves.

Standard stroke: 22 mm (0.87 in.)

(b) Confirm again on the diaphragm side.

(c) With at least 400 mmHg (15.75 in. Hg, 53.3 kPa) of vacuum in the diaphragm, confirm the gauge needle is stable.

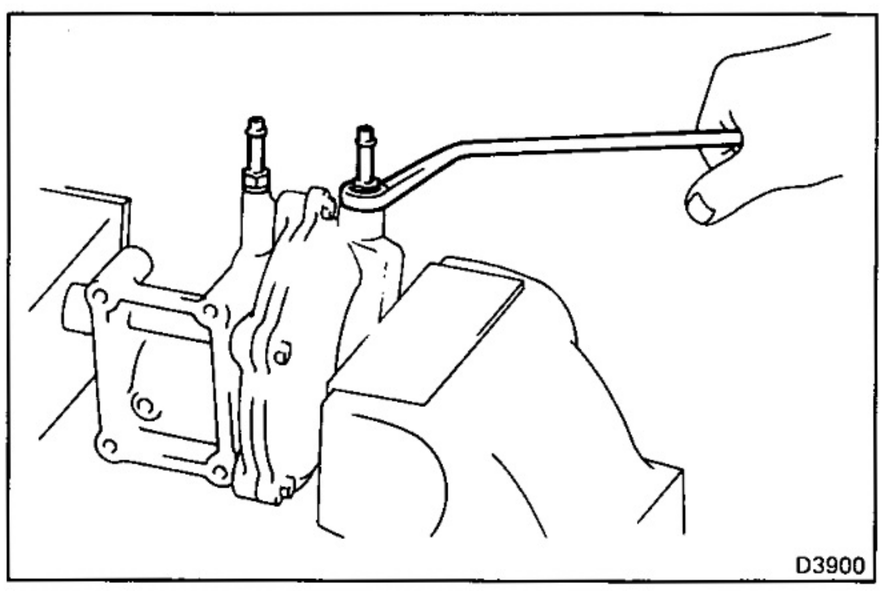

6. REMOVE SUCTION TUBE

(a) Remove the suction tube from the diaphragm cylinder body cover.

(b) Remove the gasket.

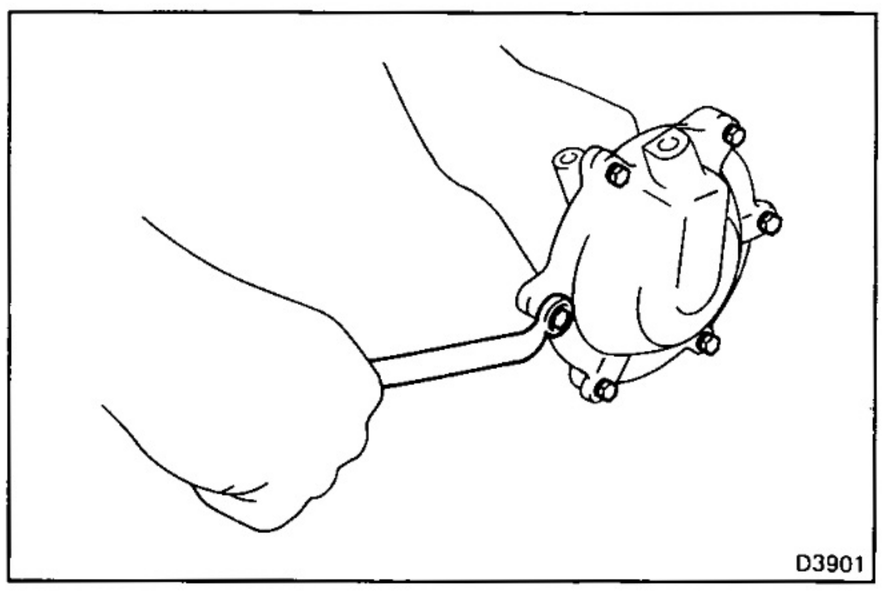

7. REMOVE DIAPHRAGM CYLINDER BODY COVER

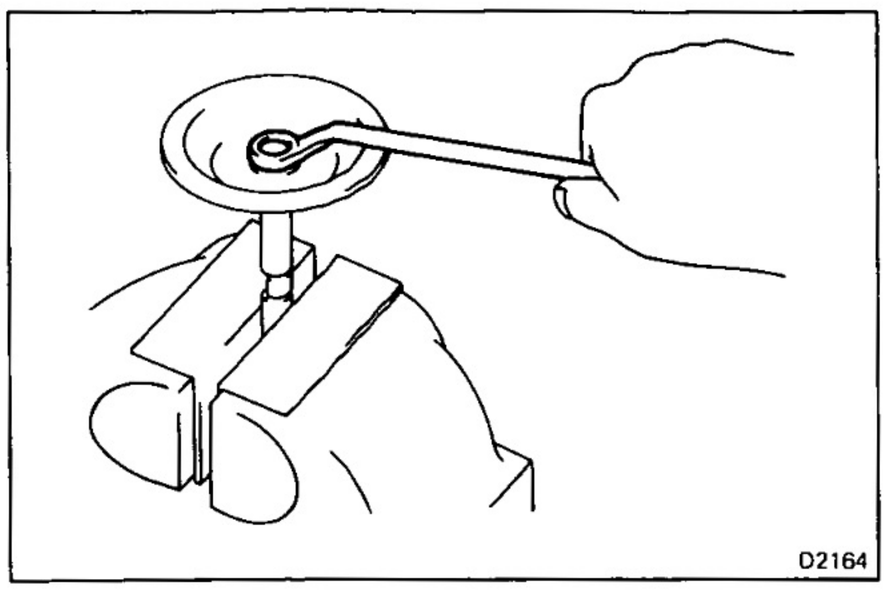

8. **REMOVE FOLLOWING PARTS FROM DIAPHRAGM PUSH ROD**
   - Two washers
   - Two plates
   - Diaphragm
   - O-ring

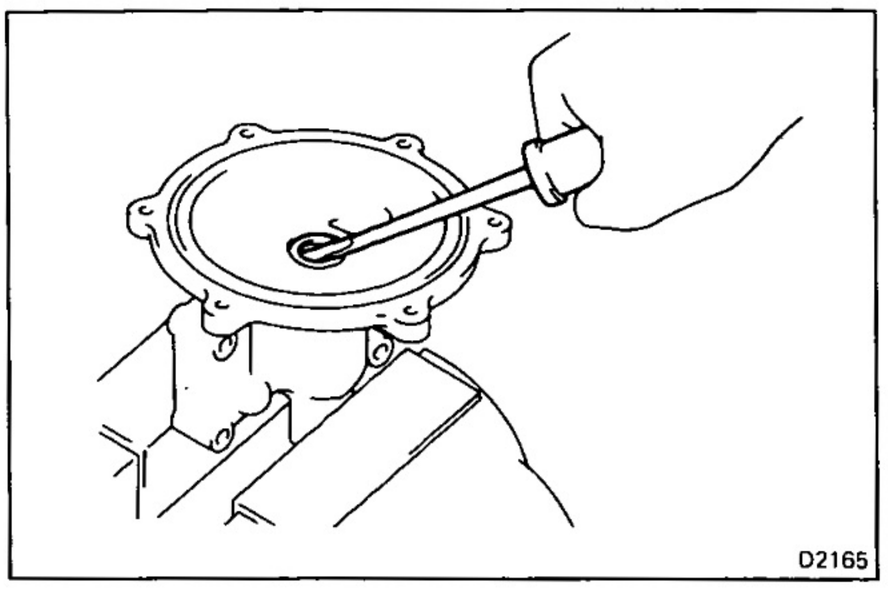

INSPECTION OF DIAPHRAGM CYLINDER COMPONENTS

IF NECESSARY, REPLACE OIL SEAL

(a) Using a screwdriver, remove the oil seal.

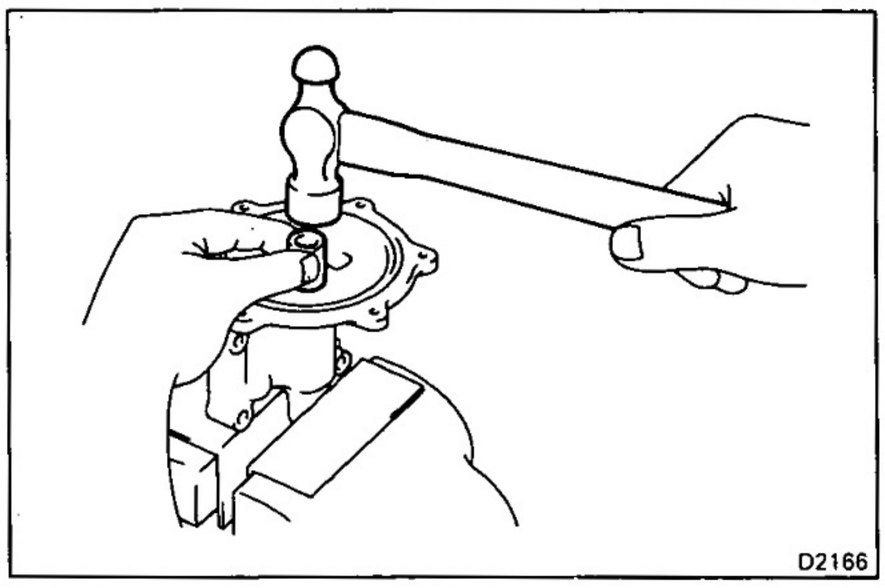

(b) Using a socket wrench, drive in a new oil seal.

(c) Apply MP grease to the oil seal lip.

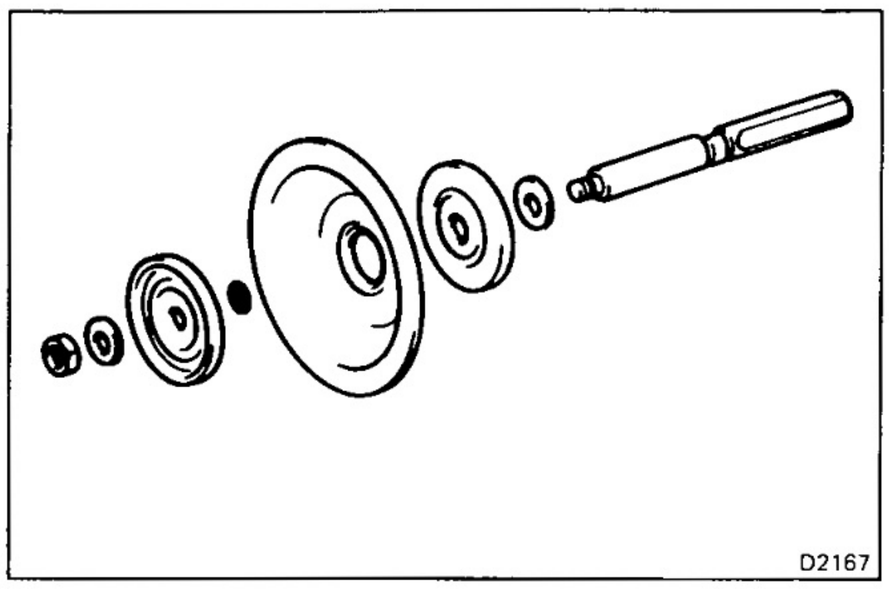

ASSEMBLY OF DIAPHRAGM CYLINDER

1. INSTALL FOLLOWING PARTS TO DIAPHRAGM PUSH ROD
   - Two washers
   - Two plates
   - Diaphragm
   - O-ring

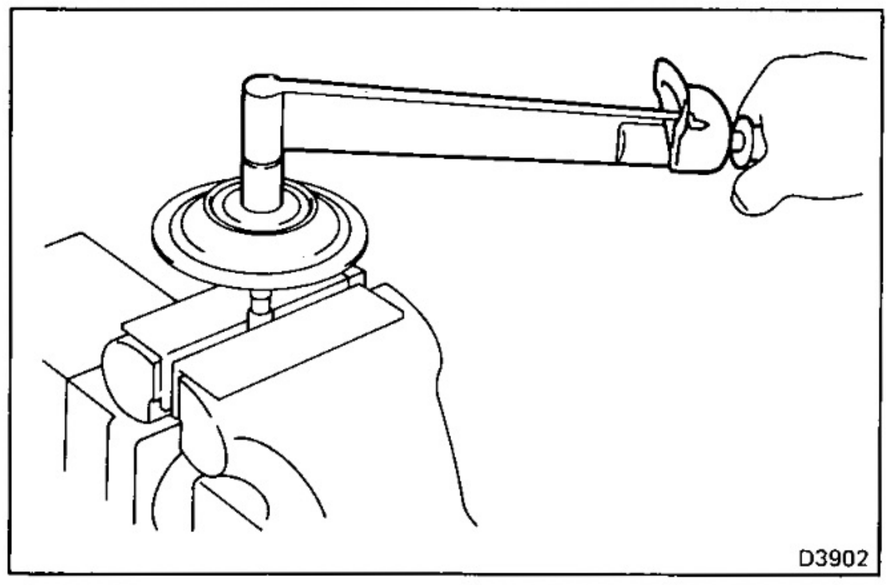

2. TORQUE DIAPHRAGM PUSH ROD NUT
   Torque: 375 kg-cm (27 ft-lb, 37 N·m)

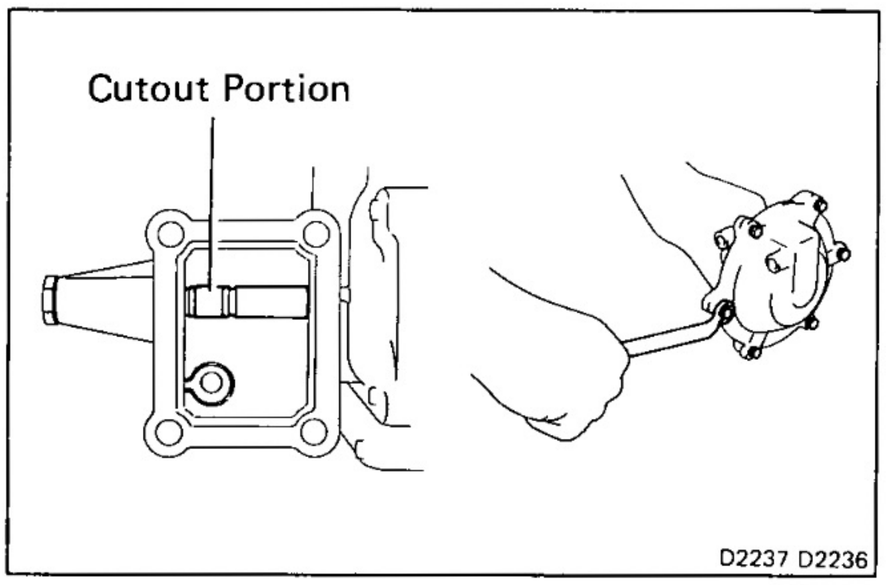

3. INSTALL DIAPHRAGM PUSH ROD INTO DIAPHRAGM CYLINDER COVER

4. INSTALL DIAPHRAGM CYLINDER BODY COVER
   Install the diaphragm cylinder body cover to the diaphragm cylinder cover.
   Torque the bolts.
   Torque: 75 kg-cm (65 in.-lb, 7.4 N·m)

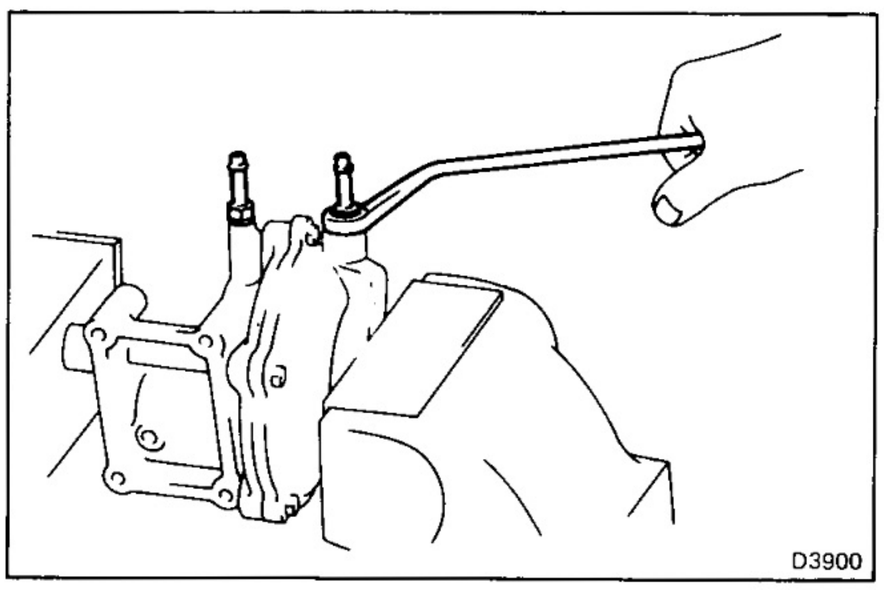

5. INSTALL SUCTION TUBE
   Torque: 375 kg-cm (27 ft-lb, 37 N·m)

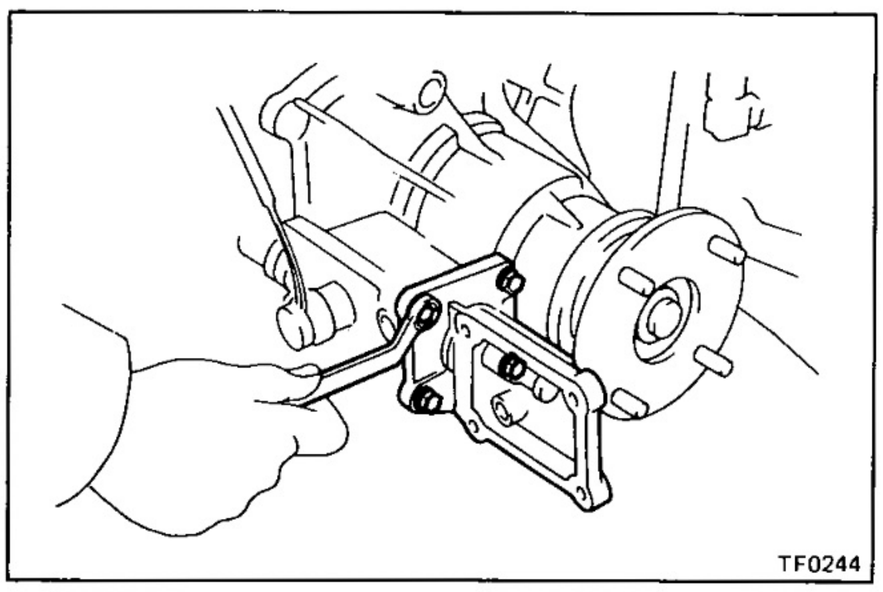

6. INSTALL DIAPHRAGM CYLINDER BODY
   Install the diaphragm cylinder body with a new gasket to the transfer case.
   Torque the bolts.
   Torque: 185 kg-cm (13 ft-lb, 18 N·m)

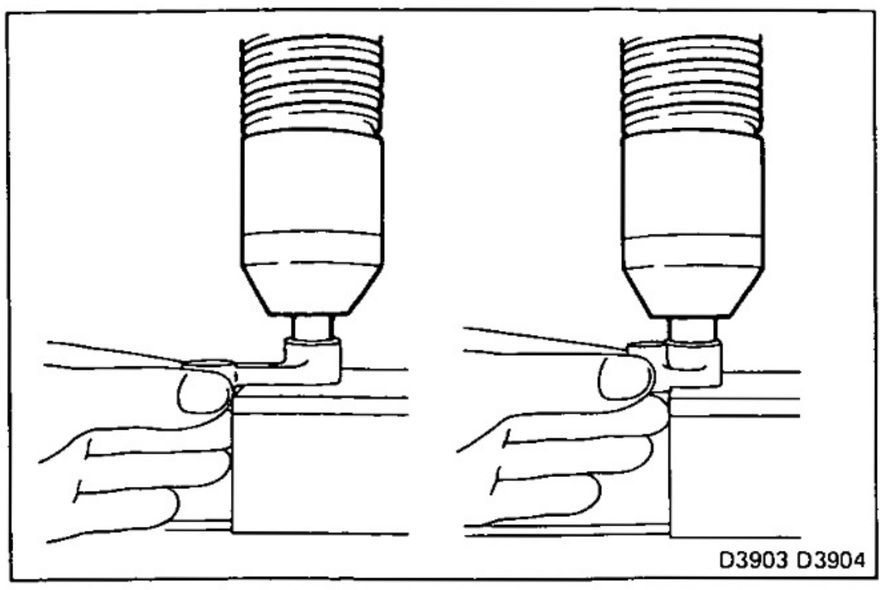

7. INSTALL SHOE TO SHIFT LINK LEVER

Using a press, install two shoes to shift link lever.

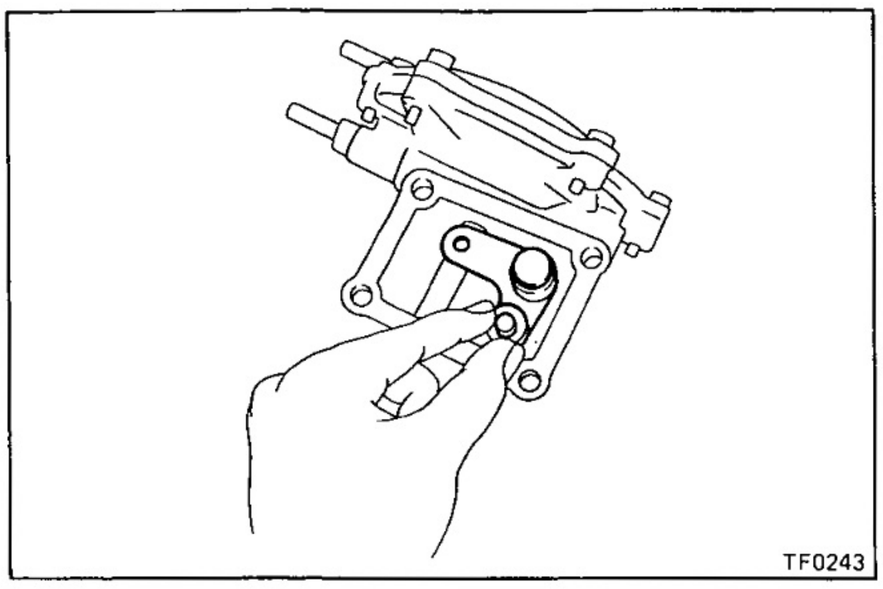

8. INSTALL SHIFT LINK LEVER AND STRAIGHT PIN

(a) Apply MP grease to shoe and straight pin.

(b) Install the shift link lever and straight pin.

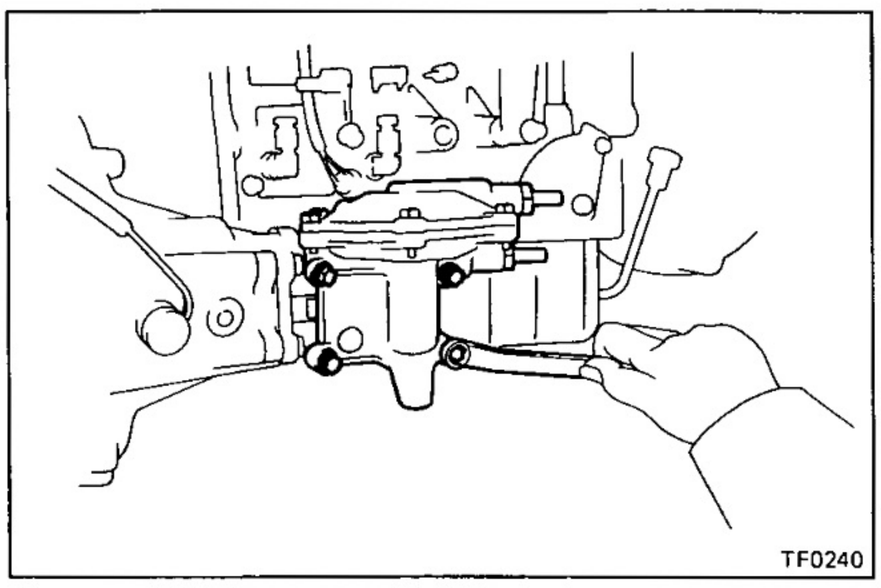

9. INSTALL DIAPHRAGM CYLINDER ASSEMBLY

Install the diaphragm cylinder assembly with a new gasket to the diaphragm cylinder body.
Torque the bolts.

Torque: 185 kg-cm (13 ft-lb, 18 N·m)

TRANSFER COMPONENTS

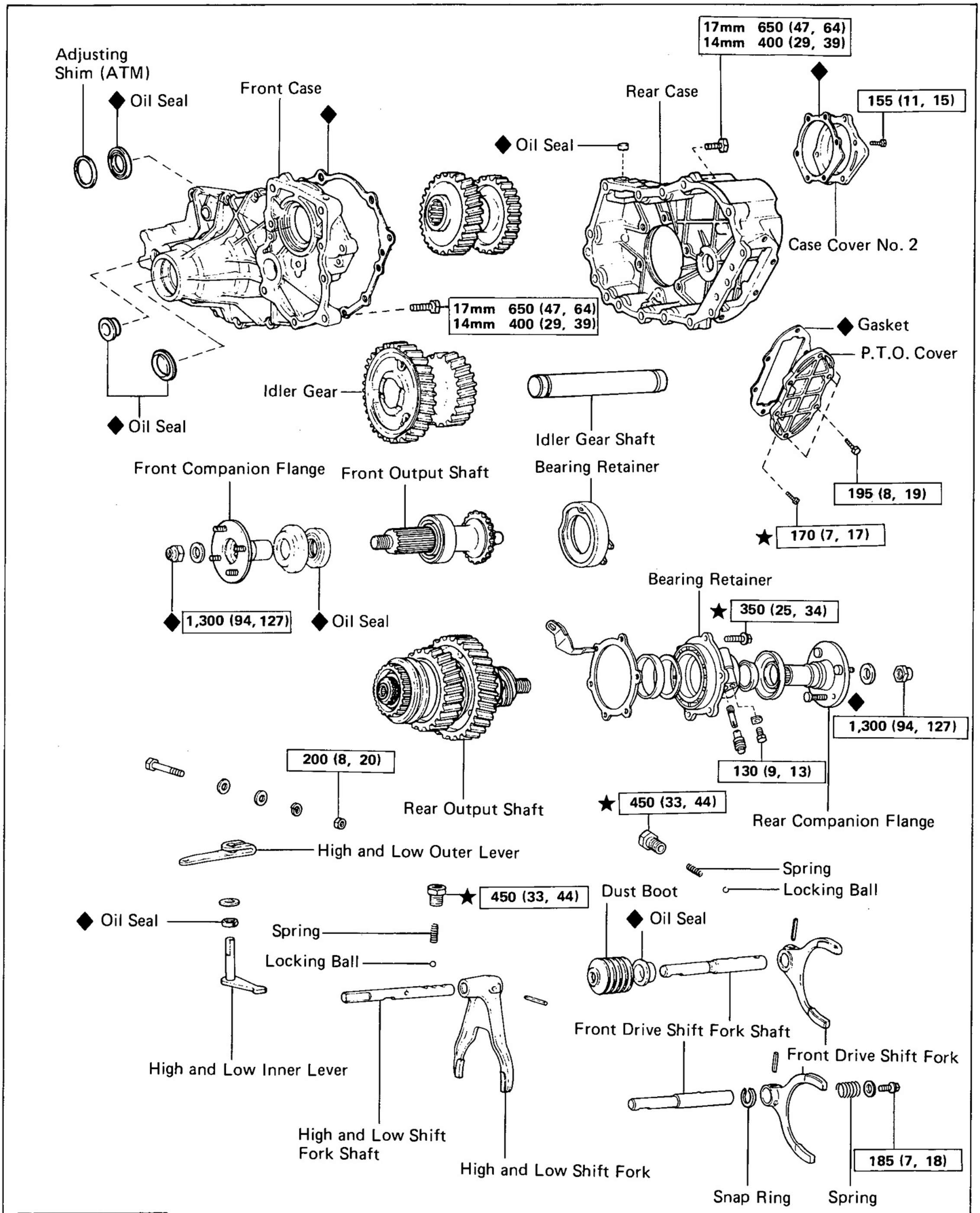

kg-cm (ft-lb, N·m) : Specified torque

◆ : Non-reusable part

★ : Precoated part

TF0251

COMPONENTS(Cont'd)

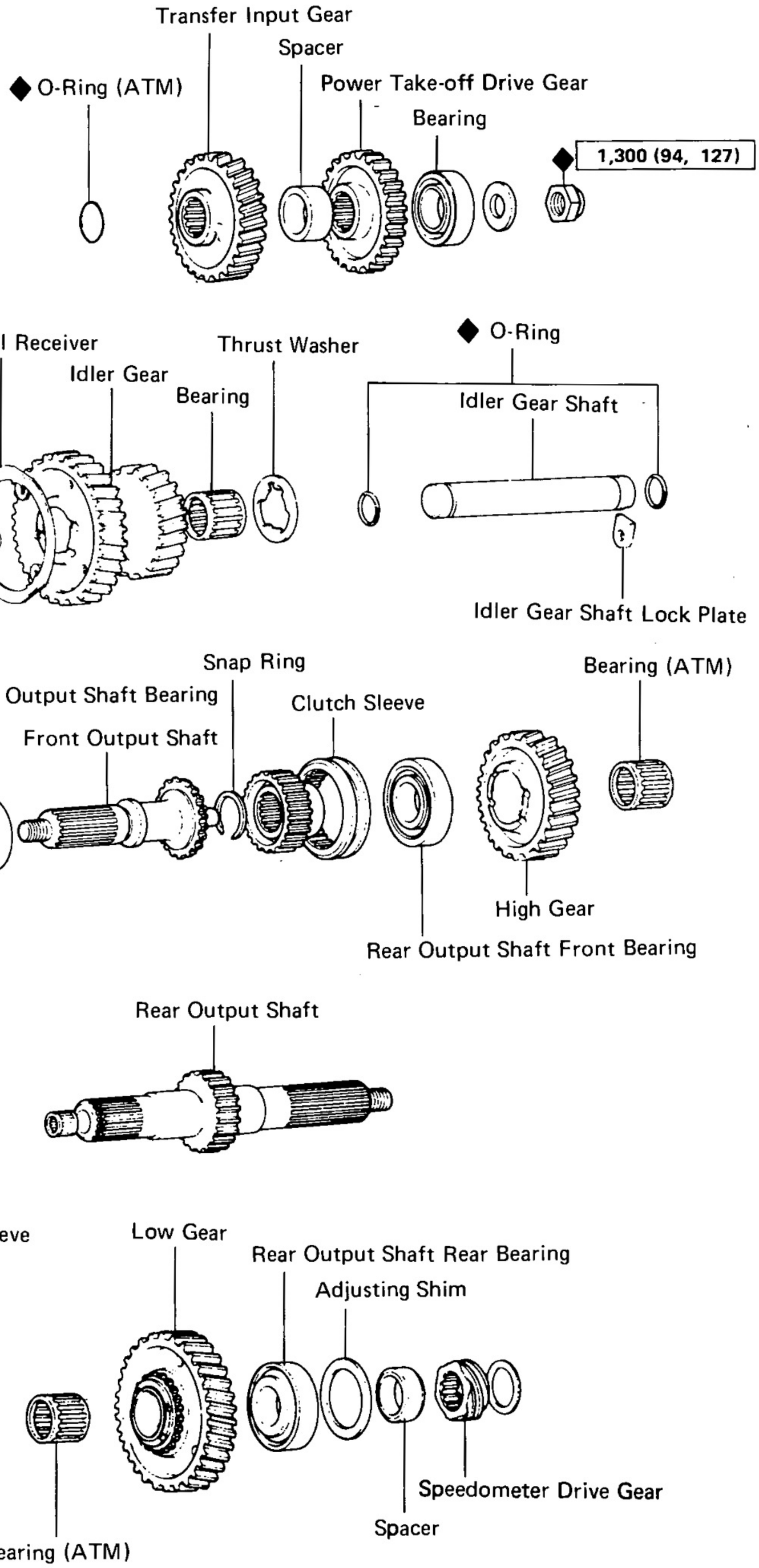

kg-cm (ft-lb, N·m) : Specified torque

◆ : Non-reusable part

TF0218

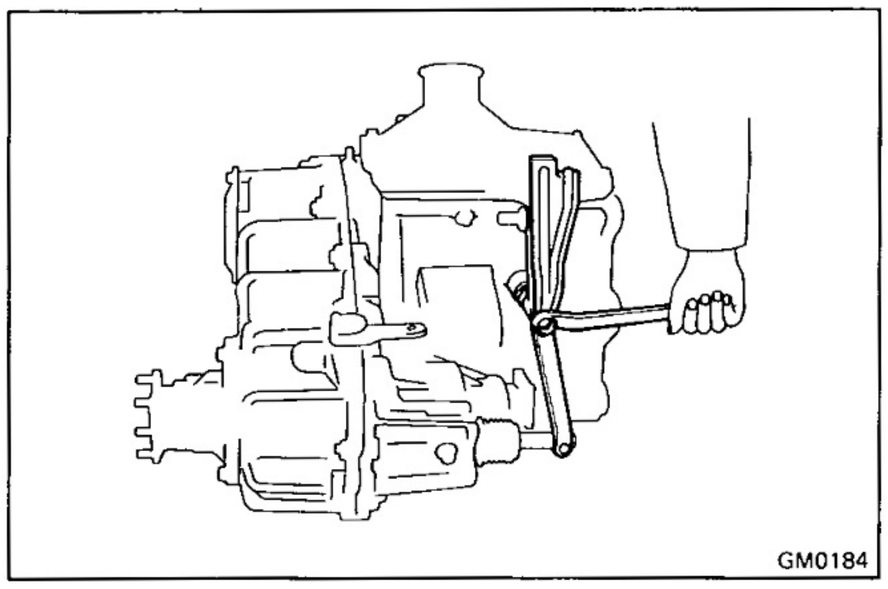

DISASSEMBLY OF TRANSFER

(See pages TF-10, 11)

1. REMOVE DIAPHRAGM CYLINDER (ELECTRICAL SHIFT TYPE) (See page TF-5)

2. REMOVE TRANSFER FRONT DRIVE SHIFT LEVER (MECHANICAL SHIFT TYPE)

   (a) Remove the transfer front drive shift lever.

   (b) Remove the dust boot.

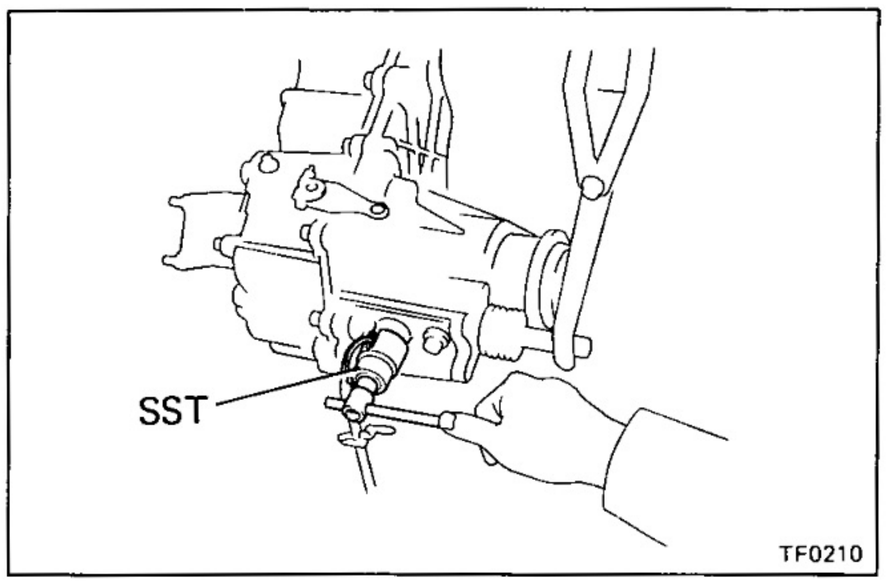

3. REMOVE 4WD INDICATOR SWITCH

   Using SST, remove the 4WD indicator switch.

   SST 09817-16011

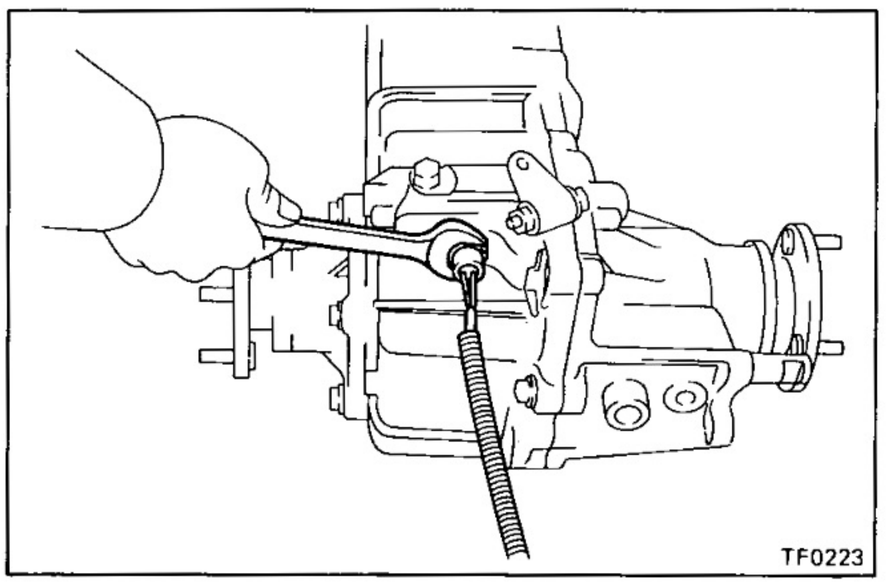

4. REMOVE L4 POSITION SWITCH (ELECTRICAL SHIFT TYPE)

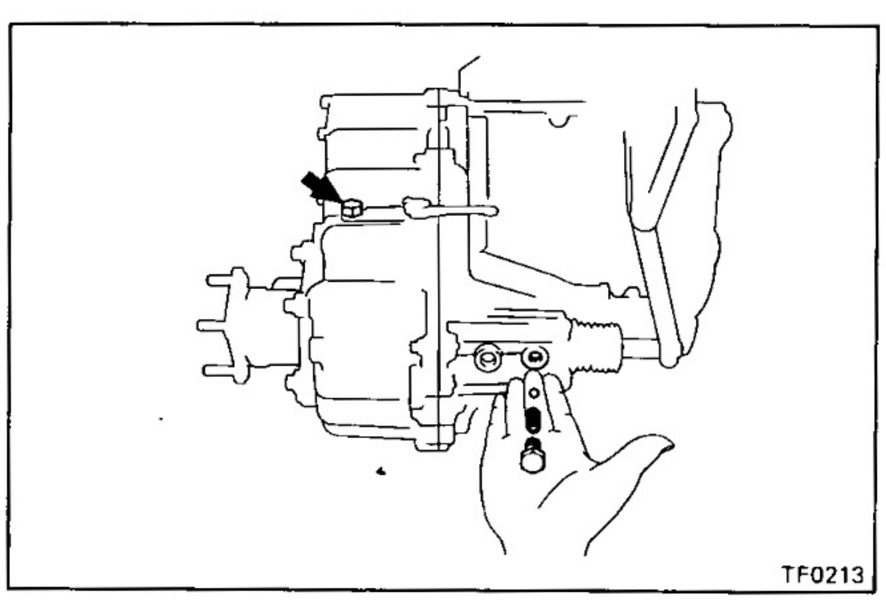

5. REMOVE PLUGS, SPRINGS AND LOCKING BALLS

   [Mechanical Shift Type]

   Remove the plugs and, using a magnetic finger, remove the springs and locking balls.

   [Electrical Shift Type]

   Remove the plug and, using a magnetic finger, remove the spring and locking ball.

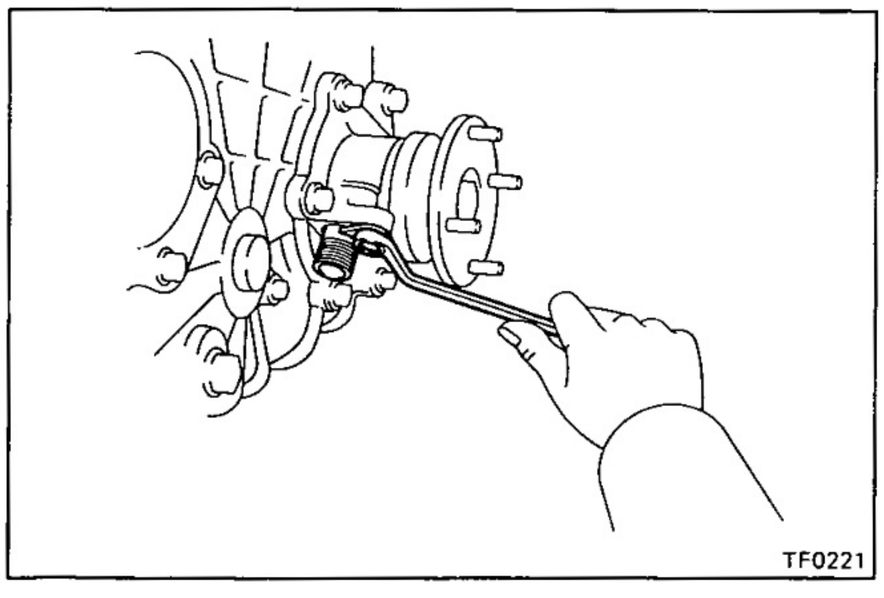

6. REMOVE SPEEDOMETER DRIVEN GEAR

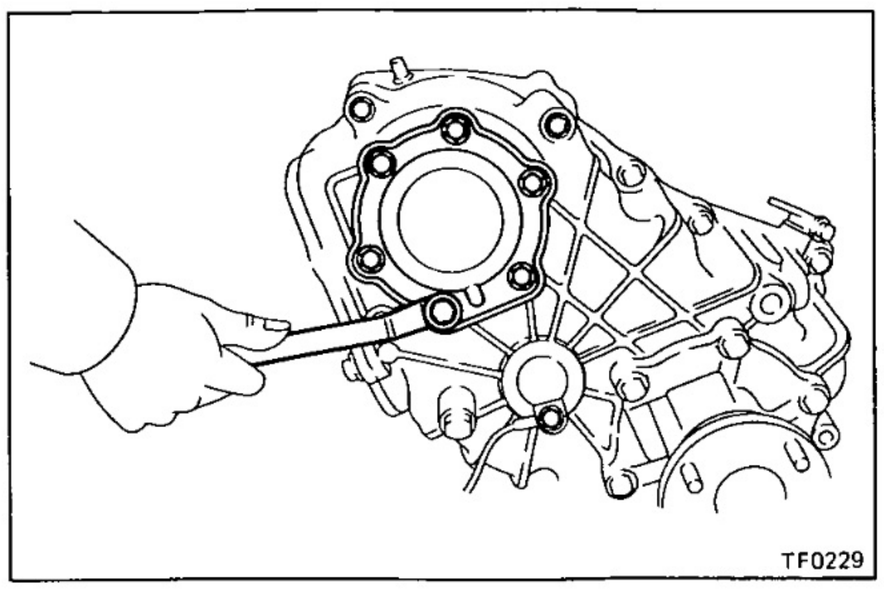

7. REMOVE TRANSMISSION OUTPUT SHAFT LOCK NUT

(a) Remove the transfer case cover No. 2 and gasket.

(b) Using a hammer and chisel, loosen the staked part of the nut.

(c) Using SST to hold the rear companion flange, remove the transmission output shaft lock nut.

SST 09330-00021

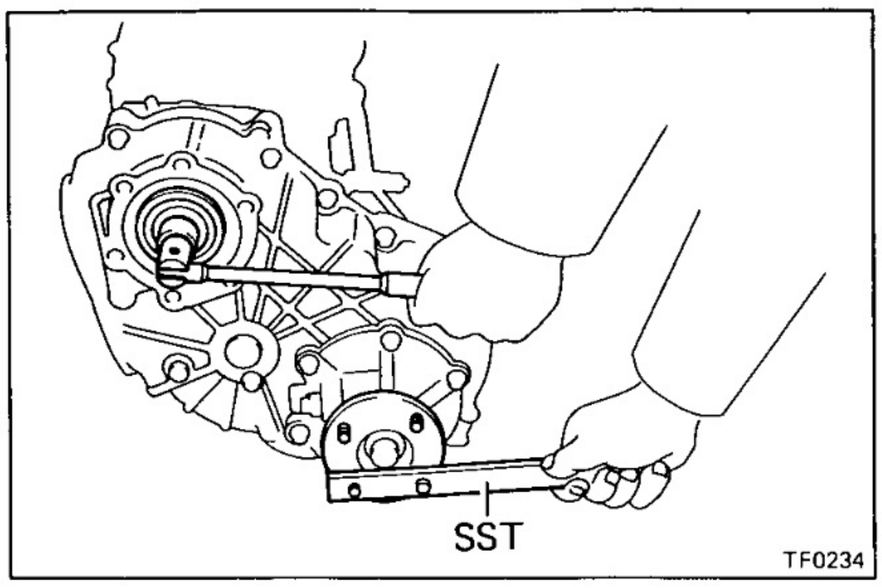

8. REMOVE FRONT AND REAR COMPANION FLANGE

(a) Using a hammer and chisel, loosen the staked part of the nut.

(b) Using SST to hold the companion flange, remove the companion flange lock nut.

SST 09330-00021

(c) Remove the companion flange.

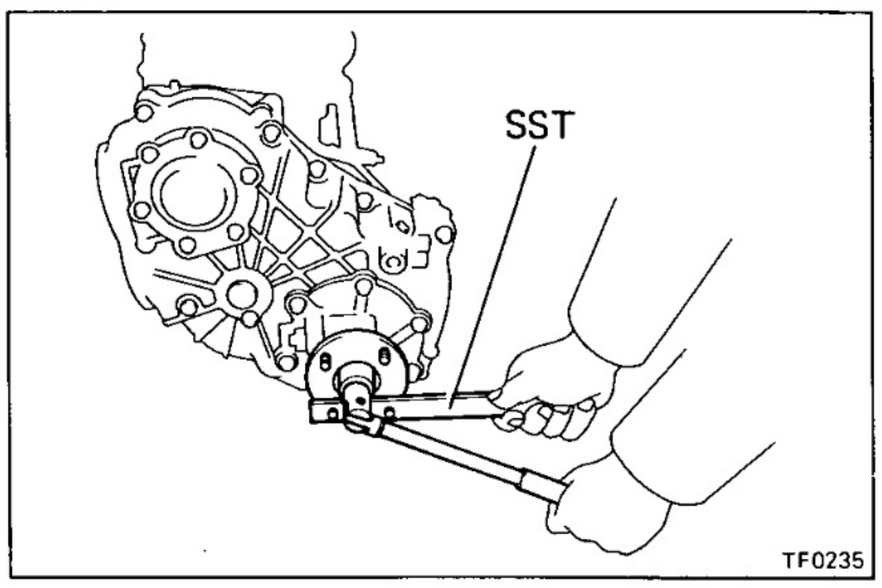

9. REMOVE POWER TAKE-OFF COVER

Remove the six bolts, and remove the power take-off cover.

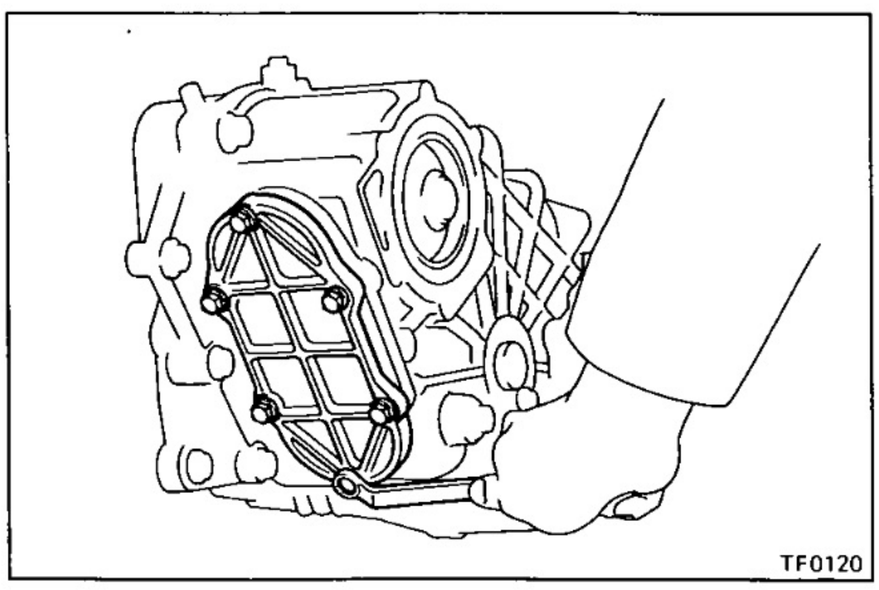

10. MEASURE IDLER GEAR THRUST CLEARANCE

Using a feeler gauge, measure the clearance between the idler gear and thrust washer.

Standard clearance : 0.275 — 0.625 mm (0.0110 — 0.0246 in.)

Maximum clearance : 0.625 mm (0.0246 in.)

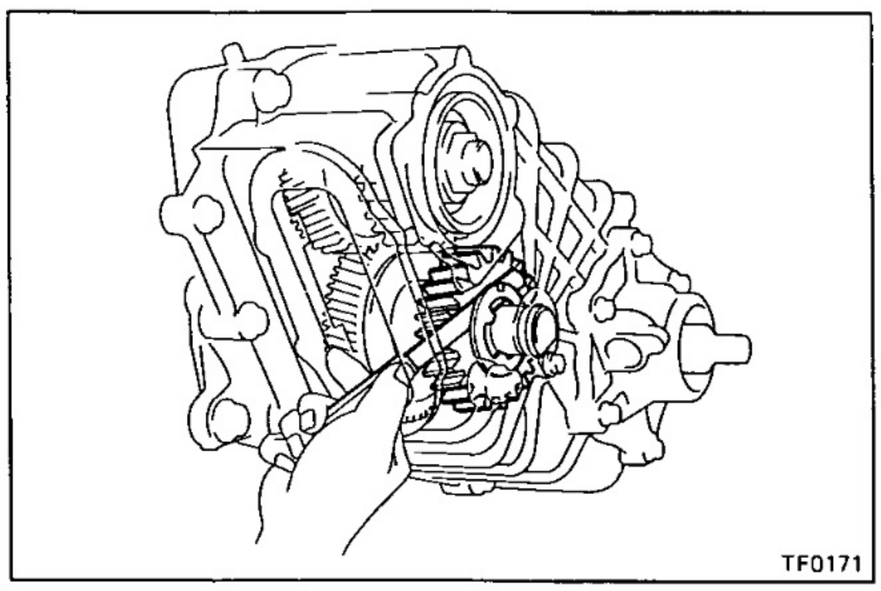

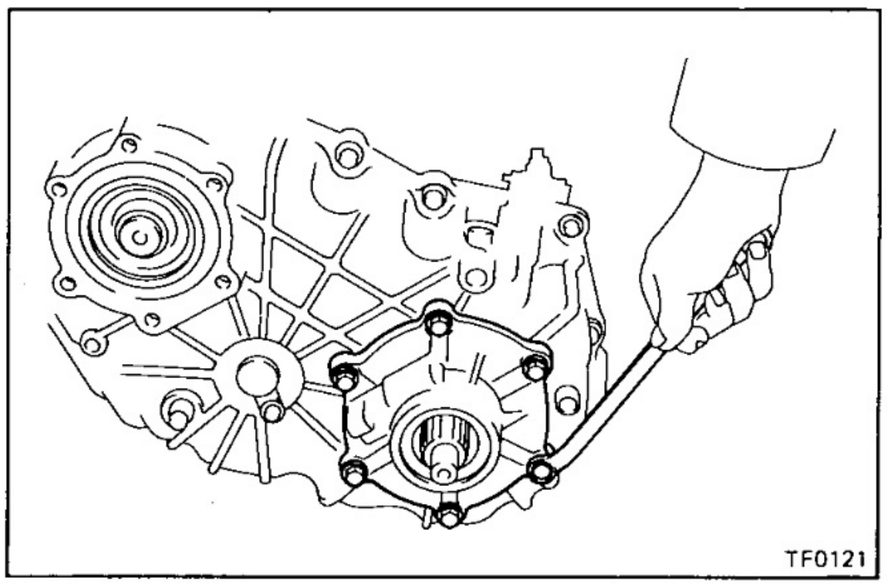

11. REMOVE REAR OUTPUT SHAFT REAR BEARING RETAINER

(a) Remove the six bolts, and remove the rear output shaft rear bearing retainer.

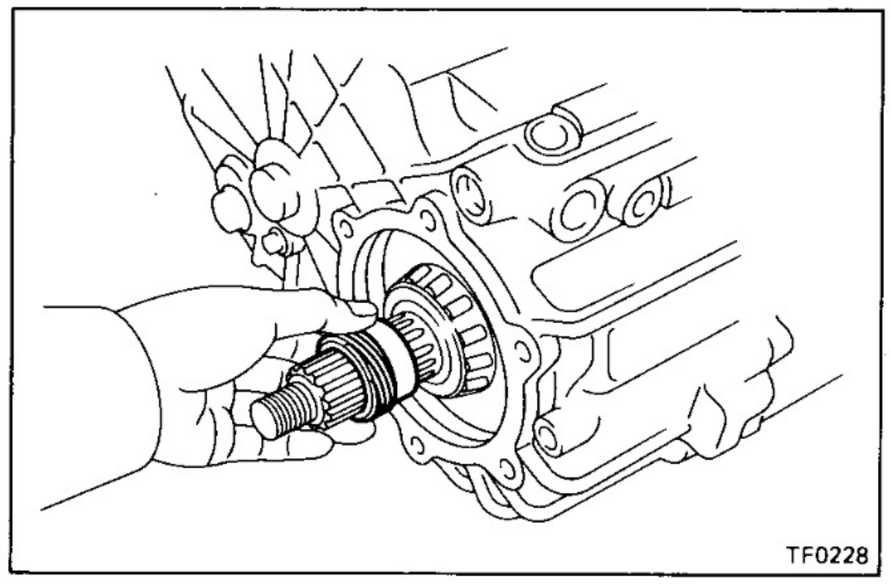

(b) Remove the speedometer drive gear and spacer.

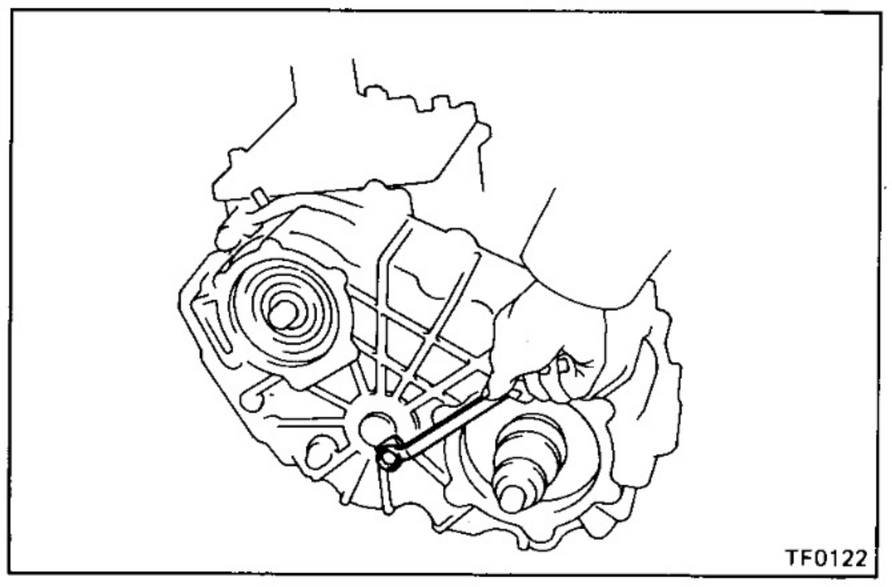

12. REMOVE IDLER GEAR SHAFT LOCK PLATE

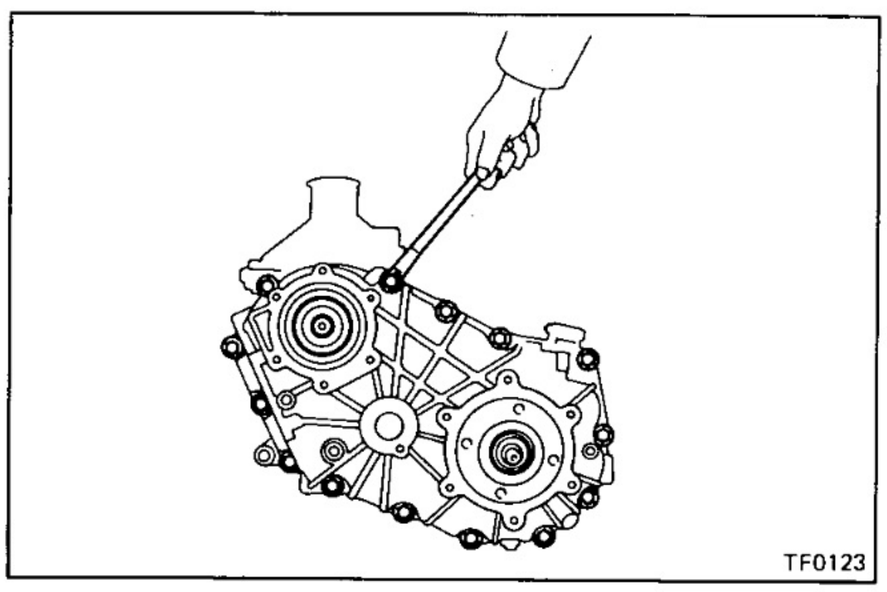

13. REMOVE TRANSFER REAR CASE

(a) Remove the bolts.

(b) Using a plastic hammer, remove the transfer rear case.

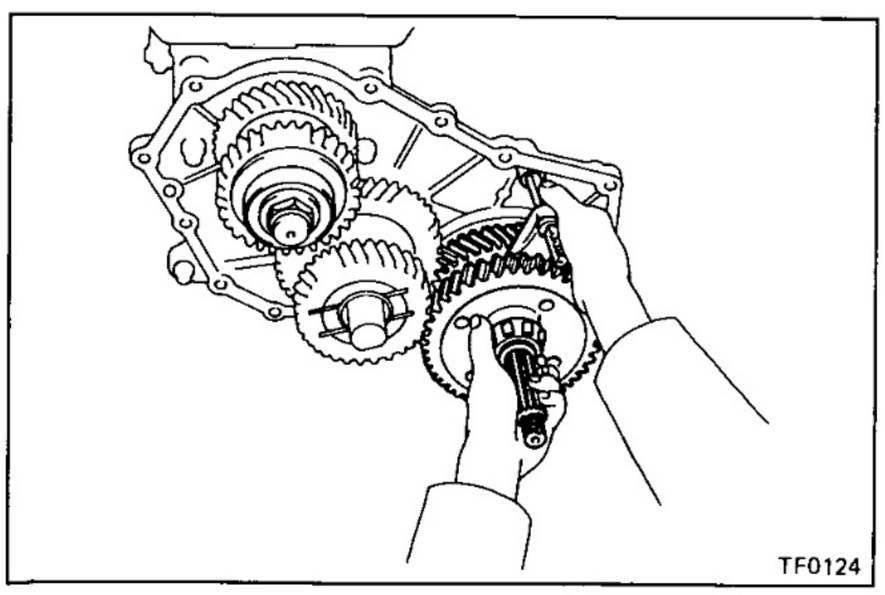

14. REMOVE REAR OUTPUT SHAFT ASSEMBLY WITH SHIFT FORK AND SHIFT FORK SHAFT

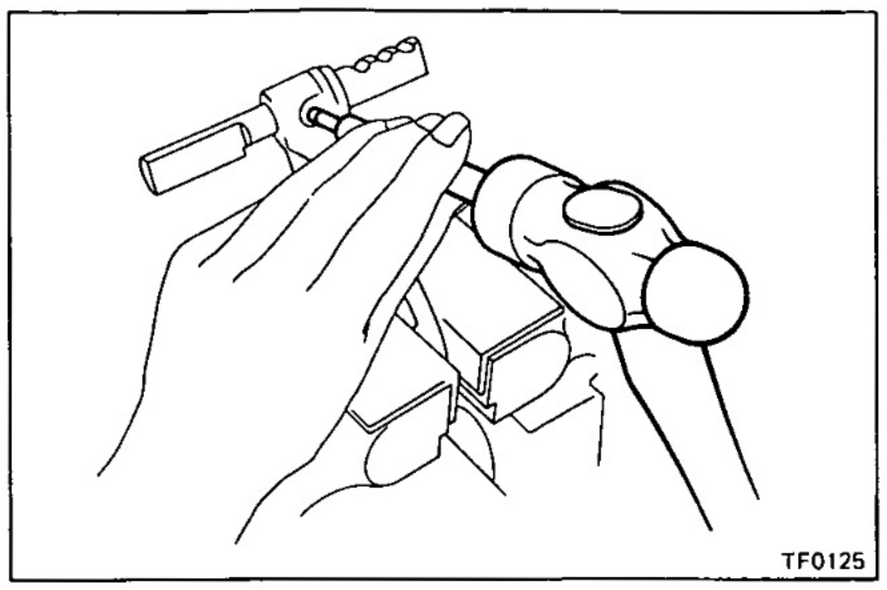

15. REMOVE SHIFT FORK SHAFT

(a) Using a pin punch and hammer, drive out the slotted spring pin.

(b) Remove the shift fork shaft from the shift fork.

NOTE: Use a set of soft jaws in the vise to protect the shift fork.

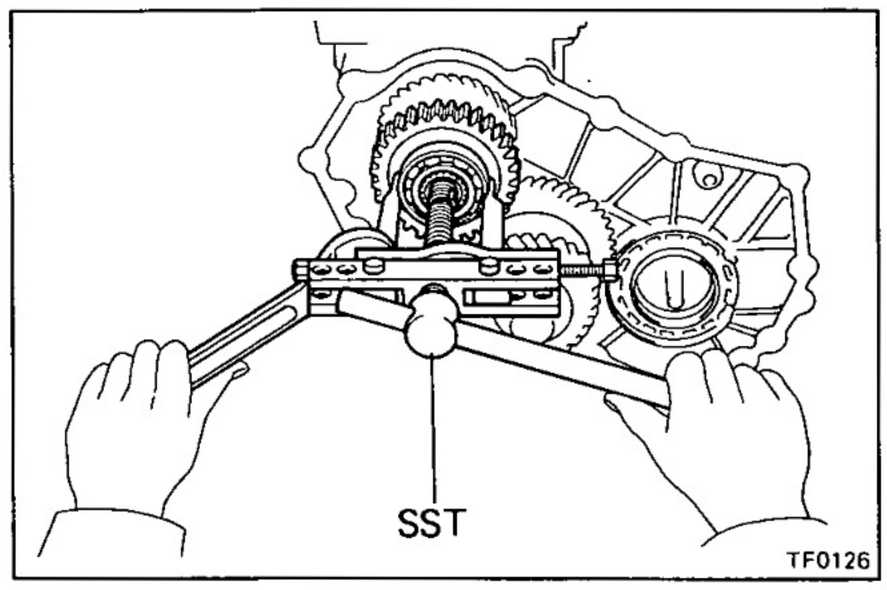

16. REMOVE TRANSFER INPUT GEAR BEARING, POWER TAKE-OFF DRIVE GEAR AND SPACER

(a) Using SST, remove the transfer input gear bearing.

SST 09950-20016

(b) Remove the power take-off drive gear and spacer.

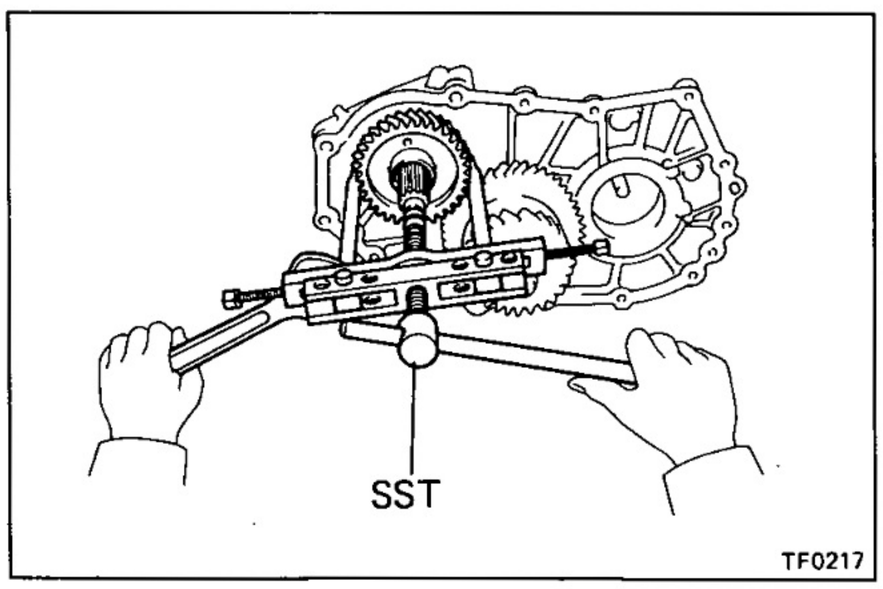

17. REMOVE TRANSFER INPUT GEAR

Using SST, remove the transfer input gear.

SST 09950-20016

18. REMOVE O-RING FROM TRANSMISSION OUTPUT SHAFT (ATM)

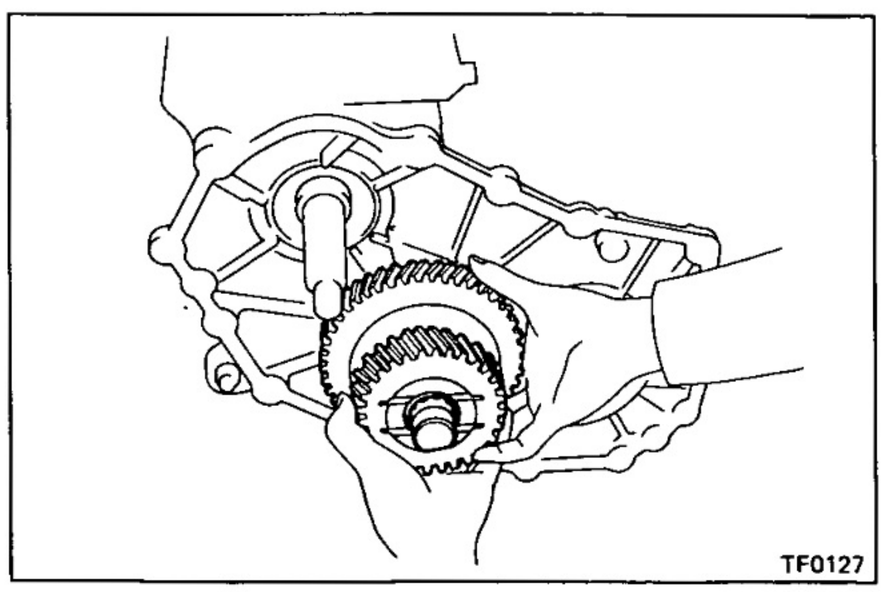

19. REMOVE IDLER GEAR, BEARINGS, SPACER THRUST WASHERS AND IDLER GEAR SHAFT

(a) Remove the O-ring.

(b) Remove the idler gear, thrust washers, bearing and spacer.

(c) Remove the idler gear shaft.

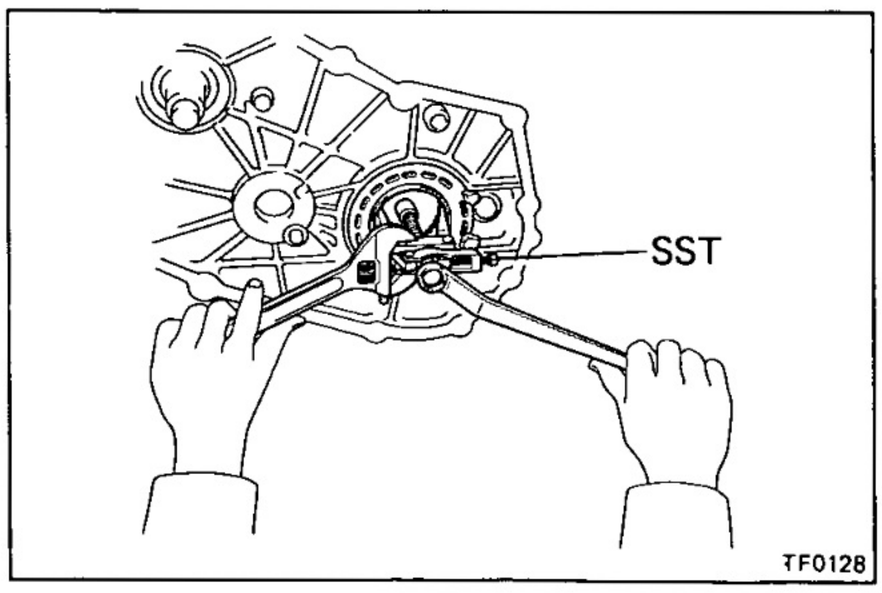

20. REMOVE REAR OUTPUT SHAFT FRONT BEARING RETAINER

Using SST, remove the output shaft front bearing retainer.

SST 09308-10010

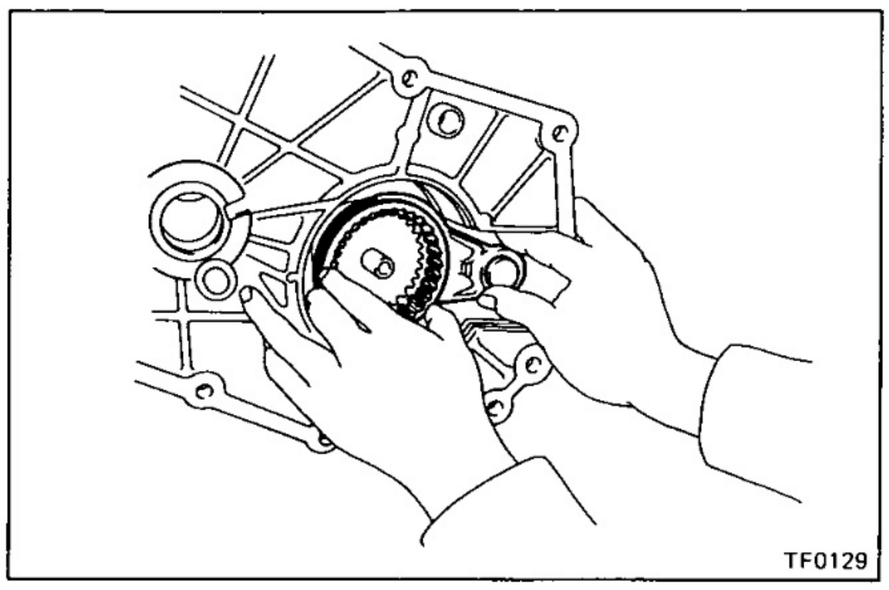

21. REMOVE CLUTCH SLEEVE

Remove the clutch sleeve with the shift fork and shift fork shaft.

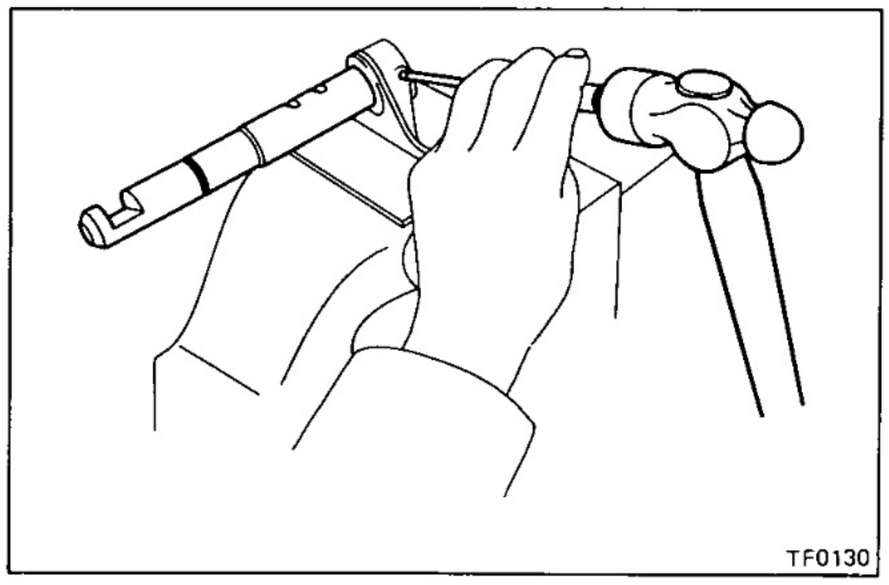

22. REMOVE SHIFT FORK SHAFT

[Mechanical Shift Type]

(a) Using a pin punch and hammer, drive out the slotted spring pin.

(b) Remove the shift fork from the shift fork shaft.

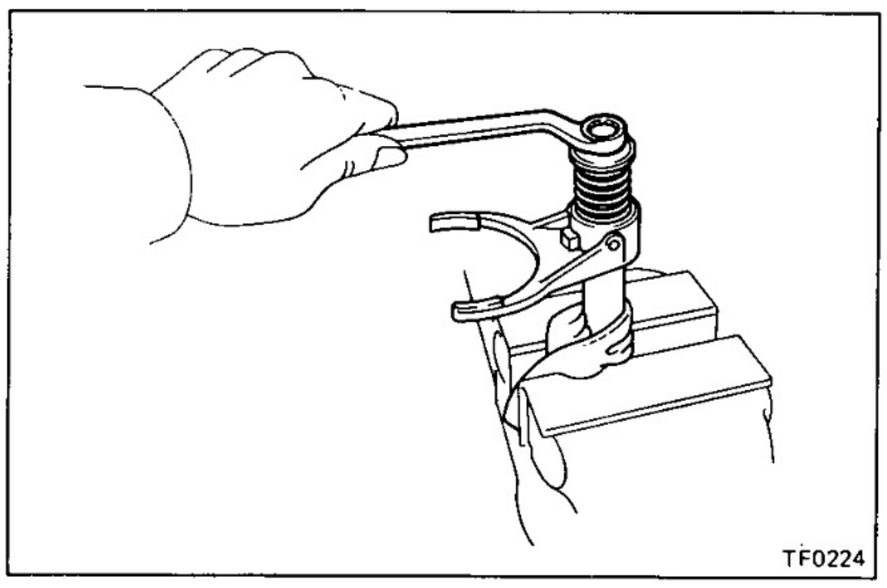

[Electrical Shift Type]

(a) Remove the retainer, spring and shift fork from the shift fork shaft.

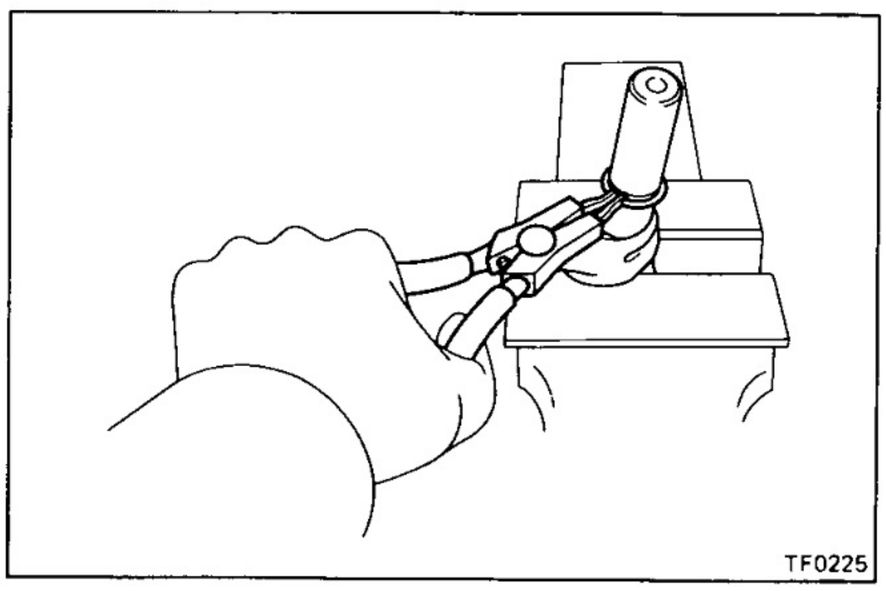

(b) Using snap ring pliers, remove the snap ring.

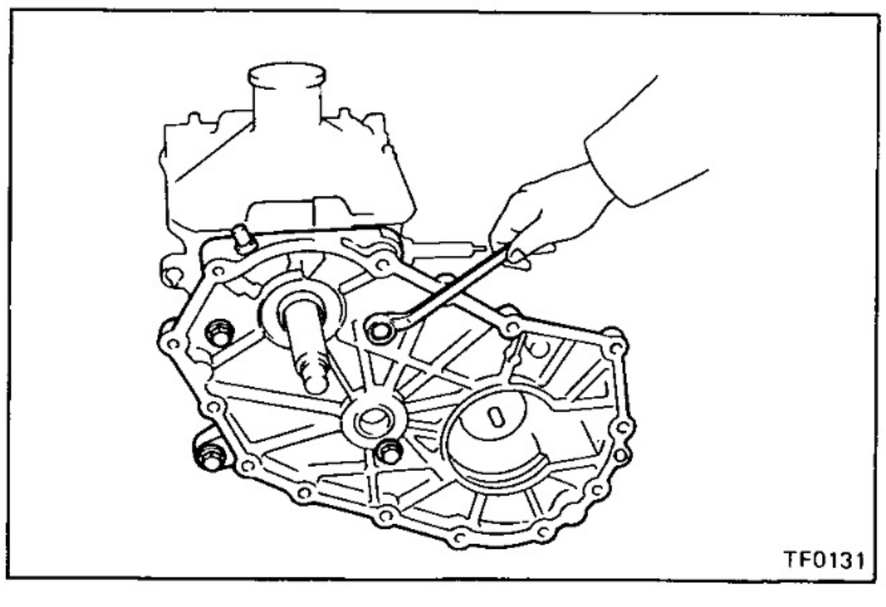

23. REMOVE TRANSFER FRONT CASE

(a) Remove the four bolts (5-Speed) or five bolts (4-Speed).

(b) Using a plastic hammer, remove the transfer front case.

(c) Remove the adjusting shim from the transfer front case. (ATM)

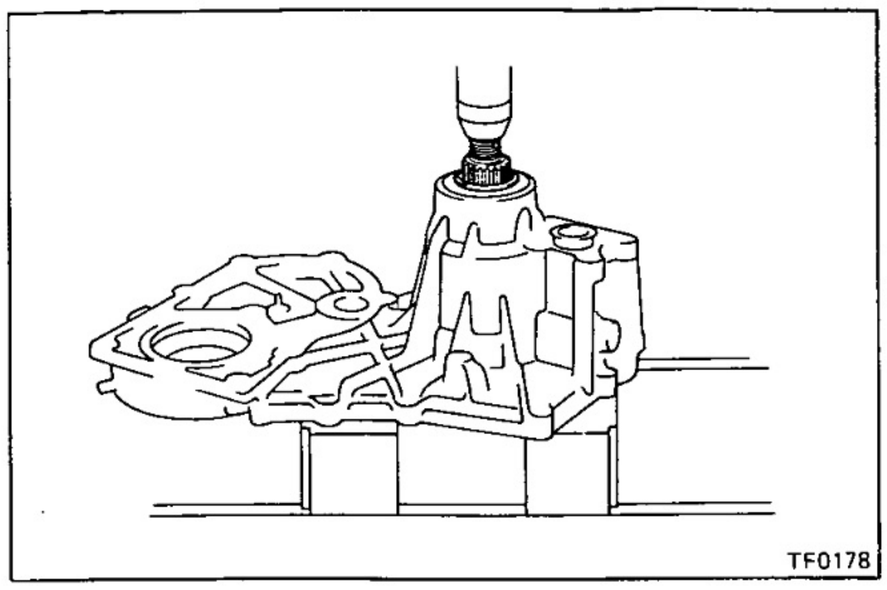

24. REMOVE FRONT OUTPUT SHAFT

Using a press, remove the front output shaft.

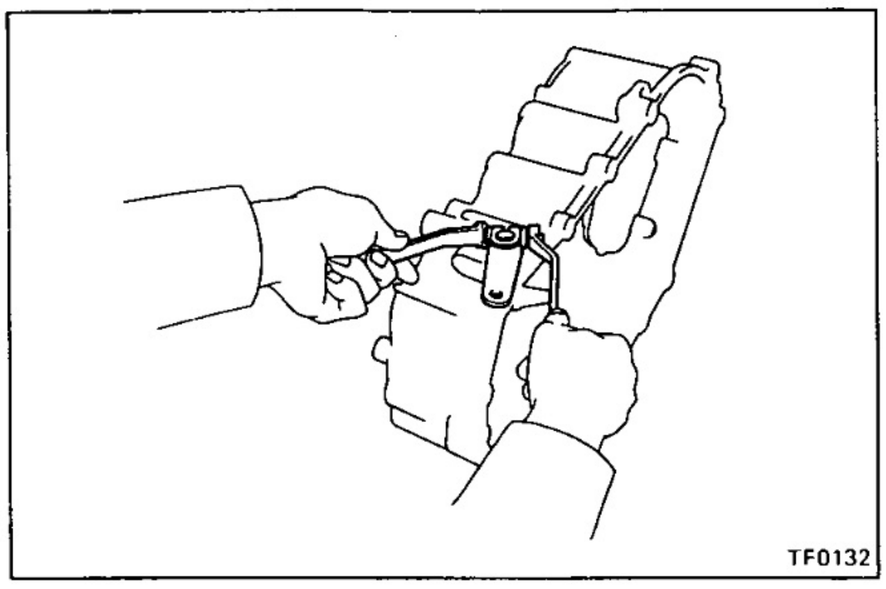

25. REMOVE TRANSFER HIGH AND LOW SHIFT OUTER AND INNER LEVER

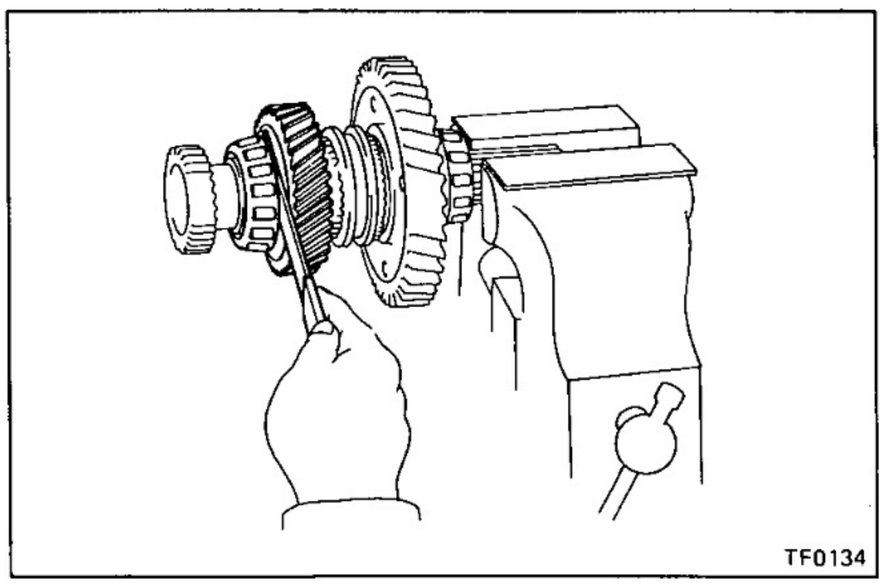

26. MEASURE THRUST CLEARANCE OF HIGH AND LOW GEAR

(a) Using a feeler gauge, measure the thrust clearance of the high gear.

Standard clearance:	**MTM**	**0.10 – 0.25 mm (0.0039 – 0.0098 in.)**
	ATM	**0.15 – 0.30 mm (0.0059 – 0.0118 in.)**
Maximum clearance:	**MTM**	**0.25 mm (0.0098 in.)**
	ATM	**0.30 mm (0.0118 in.)**

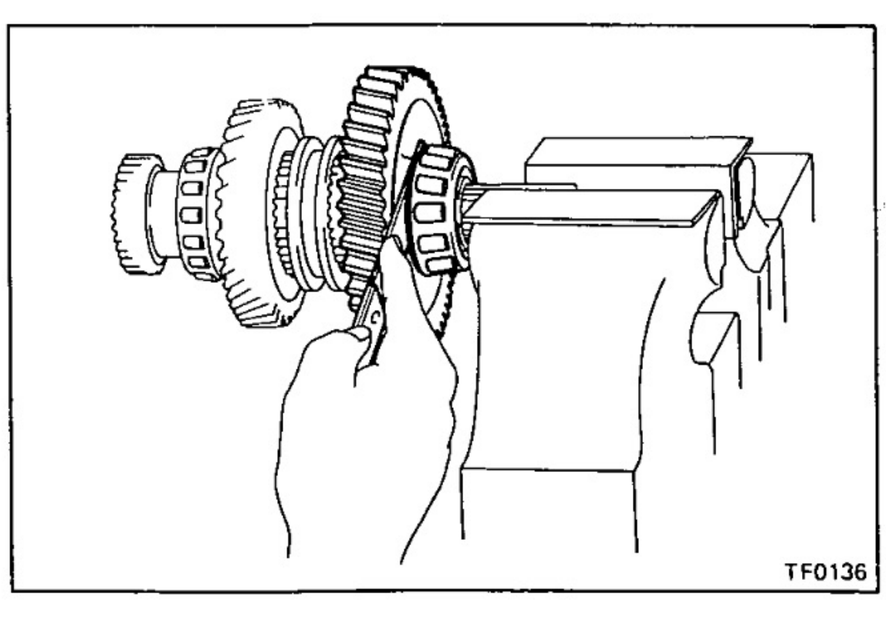

(b) Using a feeler gauge, measure the thrust clearance of the low gear.

Standard clearance:	**MTM**	**0.10 – 0.25 mm (0.0039 – 0.0098 in.)**
	ATM	**0.15 – 0.30 mm (0.0059 – 0.0118 in.)**
Maximum clearance:	**MTM**	**0.25 mm (0.0098 in.)**
	ATM	**0.30 mm (0.0118 in.)**

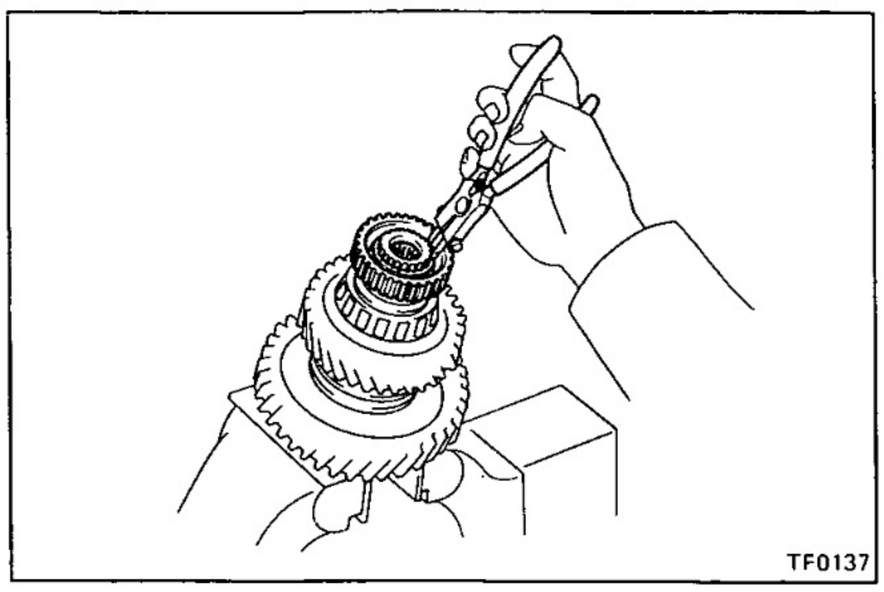

27. REMOVE HIGH GEAR FROM REAR OUTPUT SHAFT

(a) Using snap ring pliers, remove the snap ring.

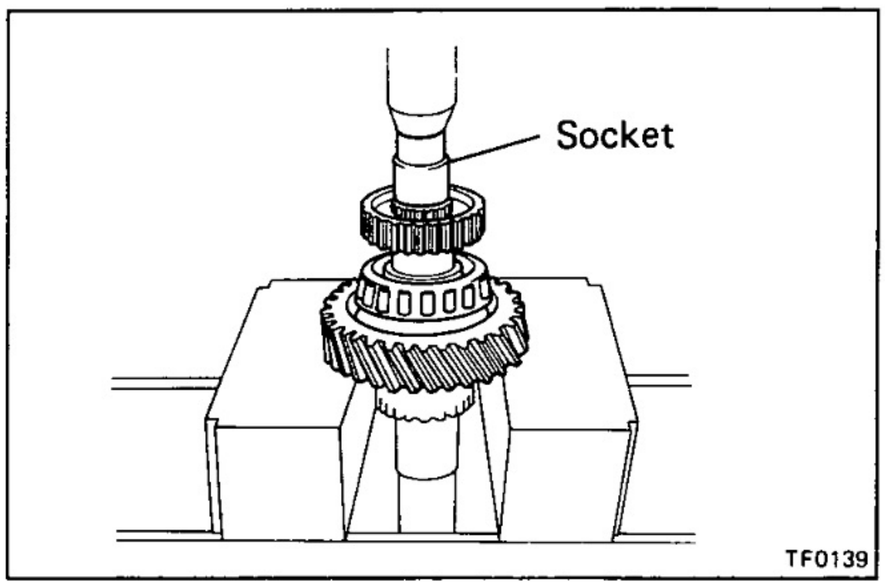

(b) Using a press and socket wrench, remove the following parts.
- Clutch hub
- Output shaft front bearing
- High gear
- High gear bearing (ATM)
- Clutch sleeve

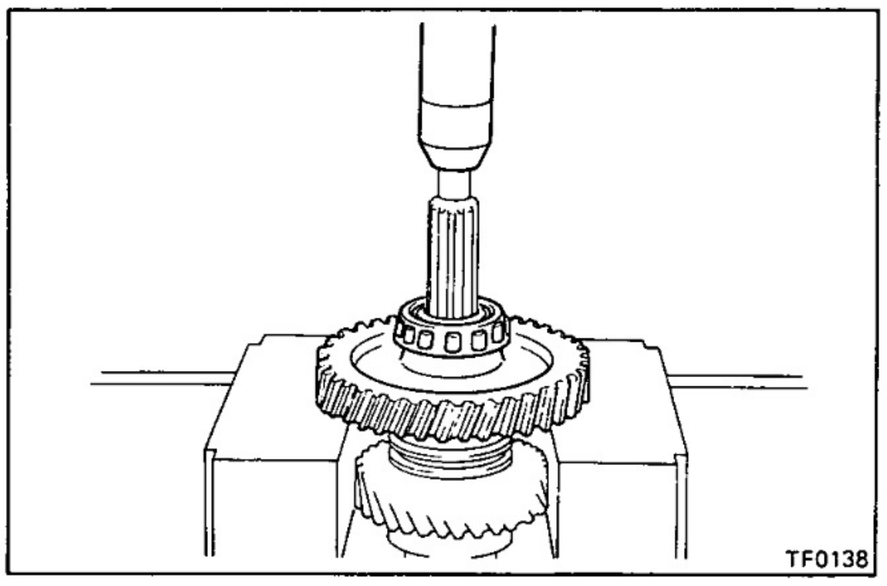

28. REMOVE LOW GEAR FROM REAR OUTPUT SHAFT

Using a press, remove the following parts:
- Output shaft rear bearing
- Low gear
- Low gear bearing (ATM)

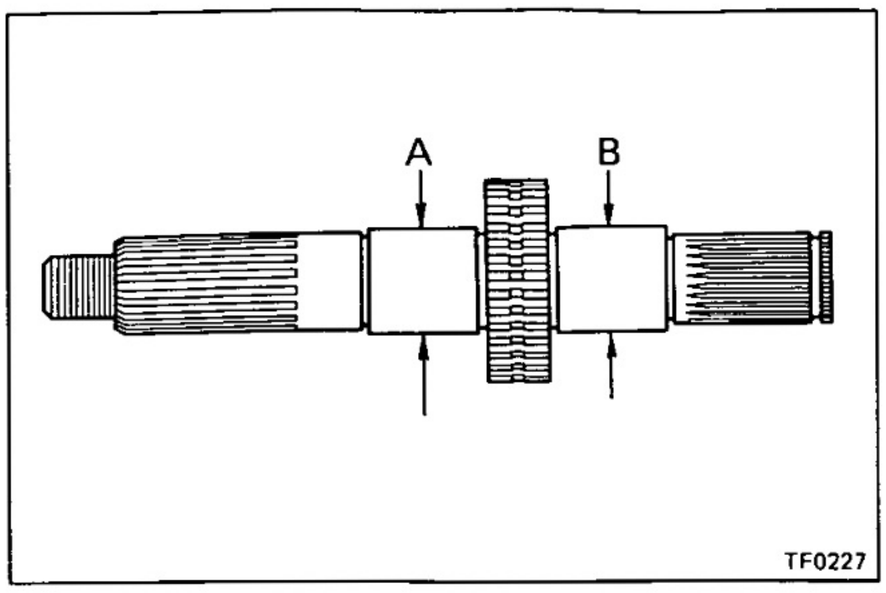

INSPECTION OF TRANSFER COMPONENTS

1. INSPECT REAR OUTPUT SHAFT

(a) Check the rear output shaft for wear or damage.

(b) Using a micrometer, measure the outer diameter of the rear output shaft journal surface.

Minimum outer diameter:

Part A 40.009 mm (1.5752 in.)
B 40.009 mm (1.5752 in.)

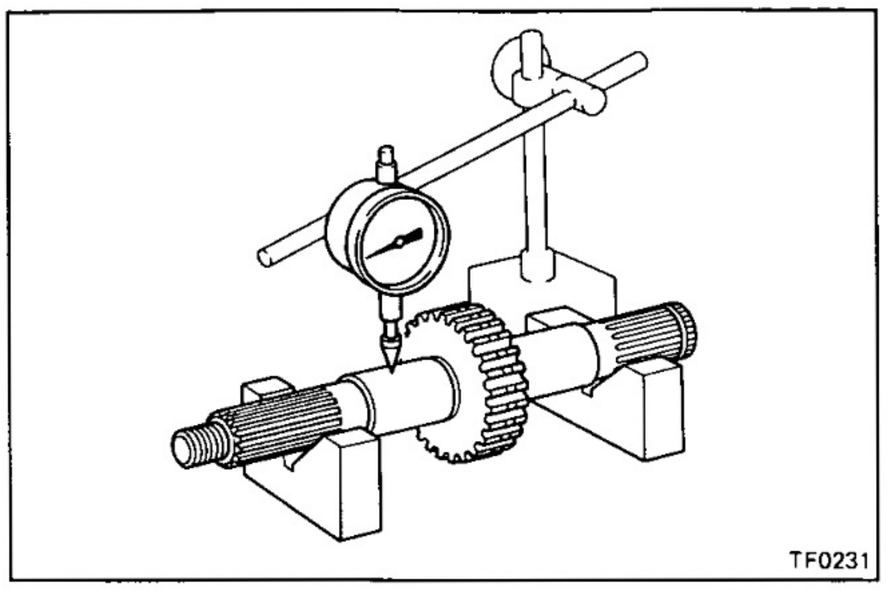

(c) Using a dial indicator, check the shaft runout.

Maximum runout: 0.03 mm (0.0012 in.)

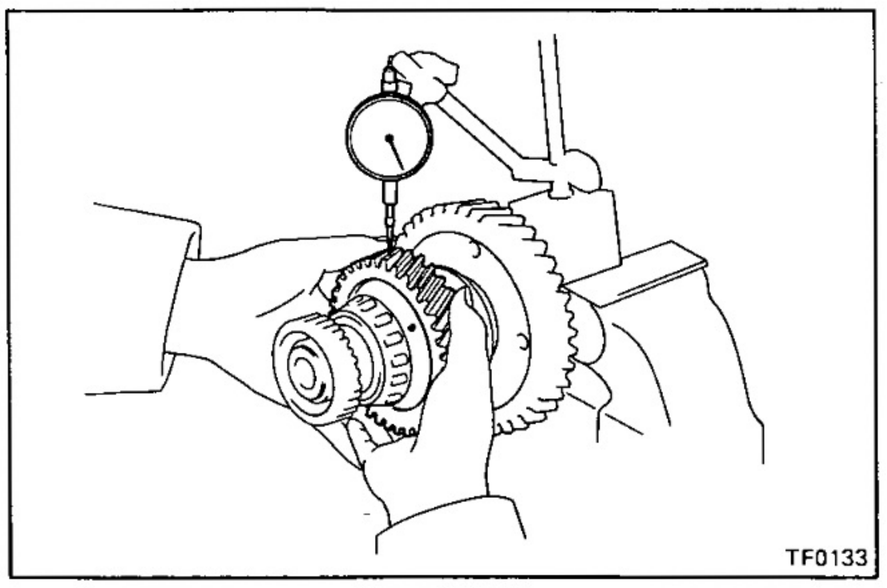

2. CHECK OIL CLEARANCE OF LOW AND HIGH GEAR

(a) Using a dial indicator, measure oil clearance between the high gear and shaft.

Standard clearance: MTM 0.035 – 0.081 mm (0.0014 – 0.0032 in.)
ATM 0.019 – 0.068 mm (0.0007 – 0.0027 in.)

Maximum clearance: MTM 0.081 mm (0.0032 in.)
ATM 0.068 mm (0.0027 in.)

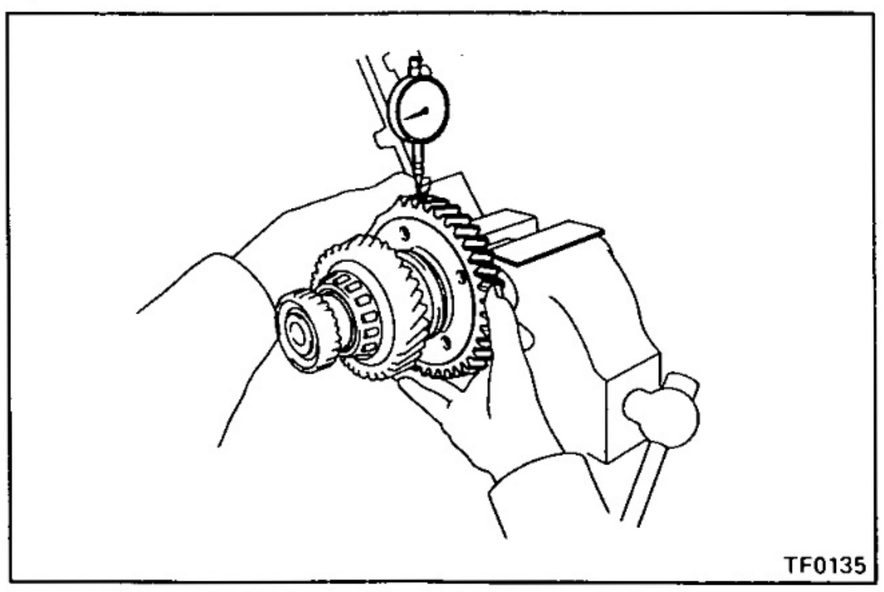

(b) Using a dial indicator, measure the oil clearance between the low gear and shaft.

Standard clearance: MTM 0.035 – 0.081 mm (0.0014 – 0.0032 in.)
ATM 0.019 – 0.068 mm (0.0007 – 0.0027 in.)

Maximum clearance: MTM 0.081 mm (0.0032 in.)
ATM 0.068 mm (0.0027 in.)

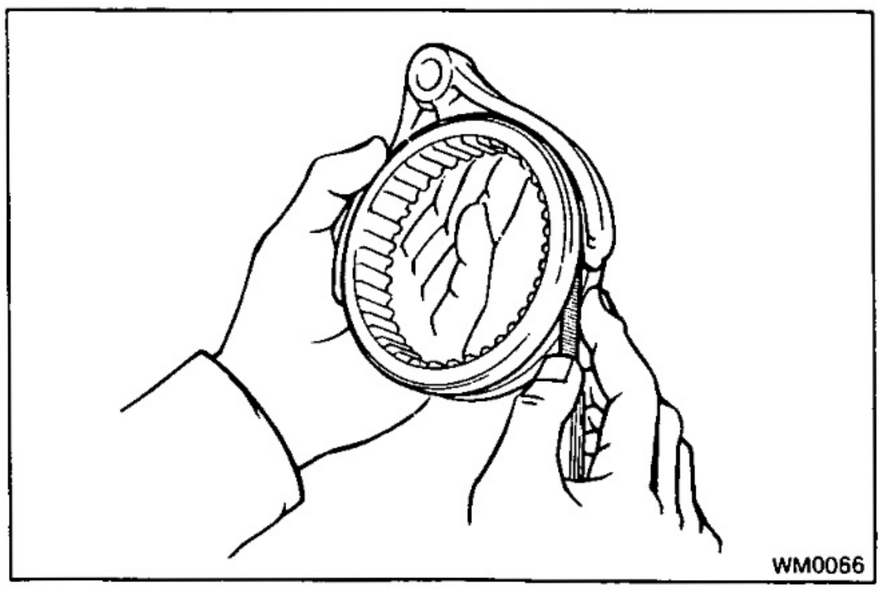

3. MEASURE CLEARANCE OF SHIFT FORKS AND HUB SLEEVES

Using a feeler gauge, measure the clearance between the hub sleeves and shift fork.

Maximum clearance: 1.0 mm (0.039 in.)

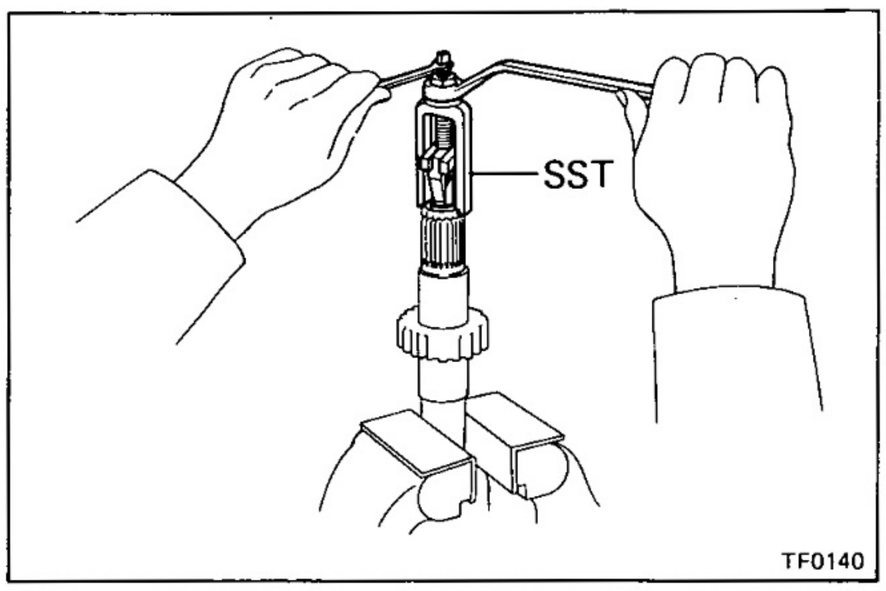

4. IF NECESSARY, REPLACE REAR OUTPUT SHAFT PILOT BEARING

(a) Using SST, remove the rear output shaft pilot bearing.

SST 09319-60020

NOTE: The bearing will break.

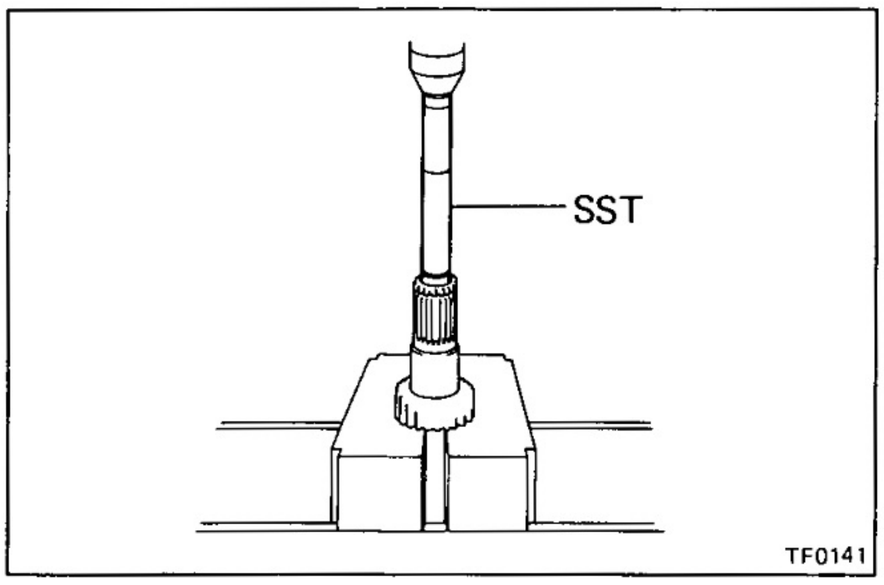

(b) Using SST, press in a new pilot bearing.

SST 09608-20011

(c) Apply MP grease to the pilot bearing.

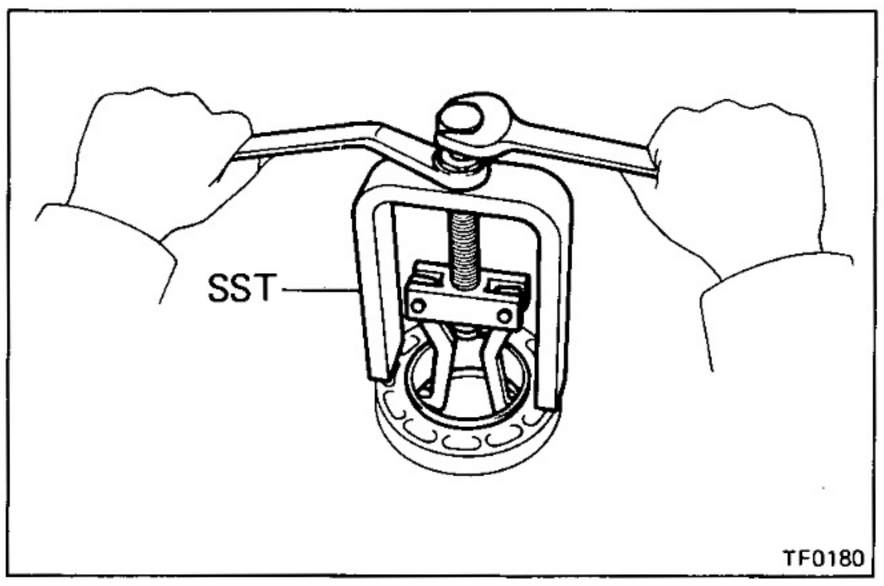

5. IF NECESSARY, REPLACE REAR OUTPUT SHAFT FRONT BEARING OUTER RACE

(a) Using SST, remove the rear output shaft front bearing outer race.

SST 09514-35011

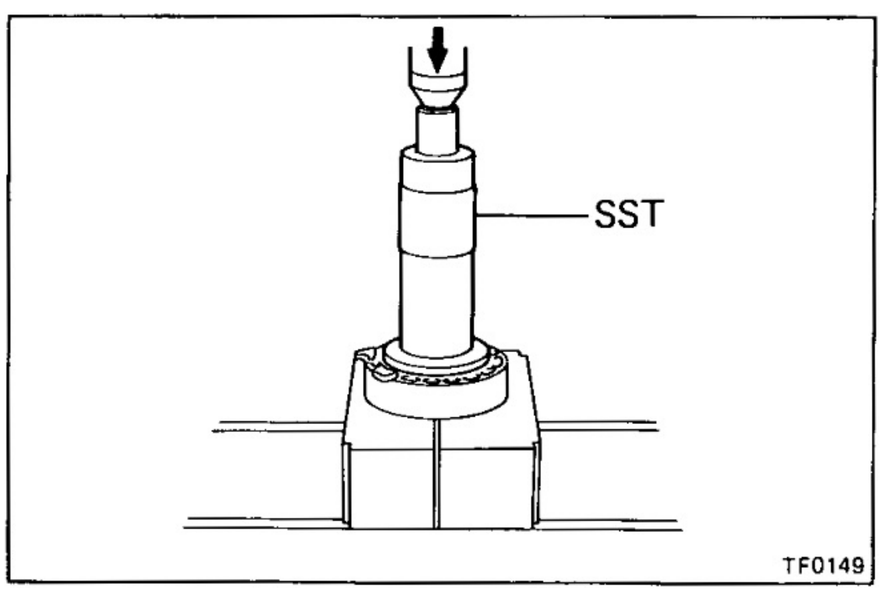

(b) Using SST, press a new front outer race into the front bearing retainer.

SST 09316-60010

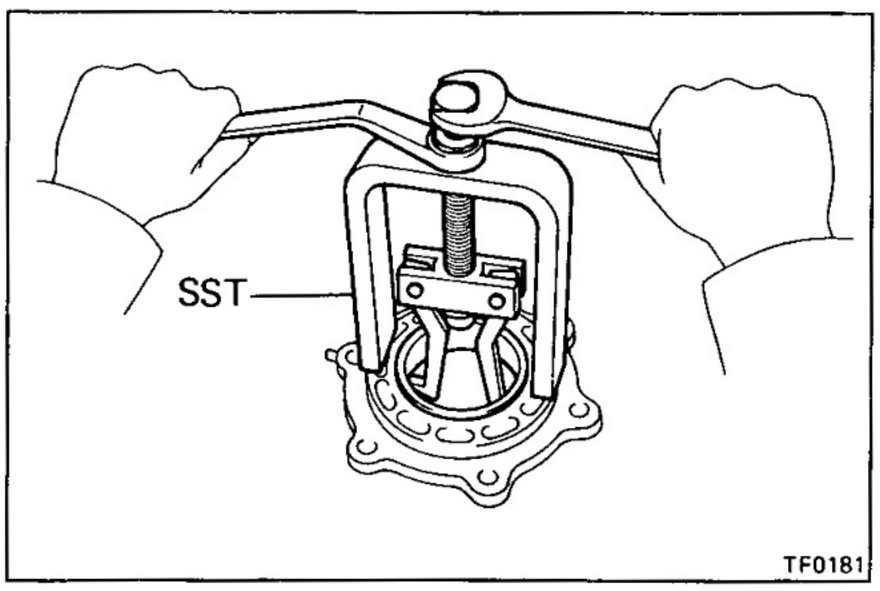

6. IF NECESSARY, REPLACE REAR OUTPUT SHAFT REAR BEARING OUTER RACE

(a) Using SST, remove the rear output shaft rear bearing outer race and shim.

SST 09514-35011

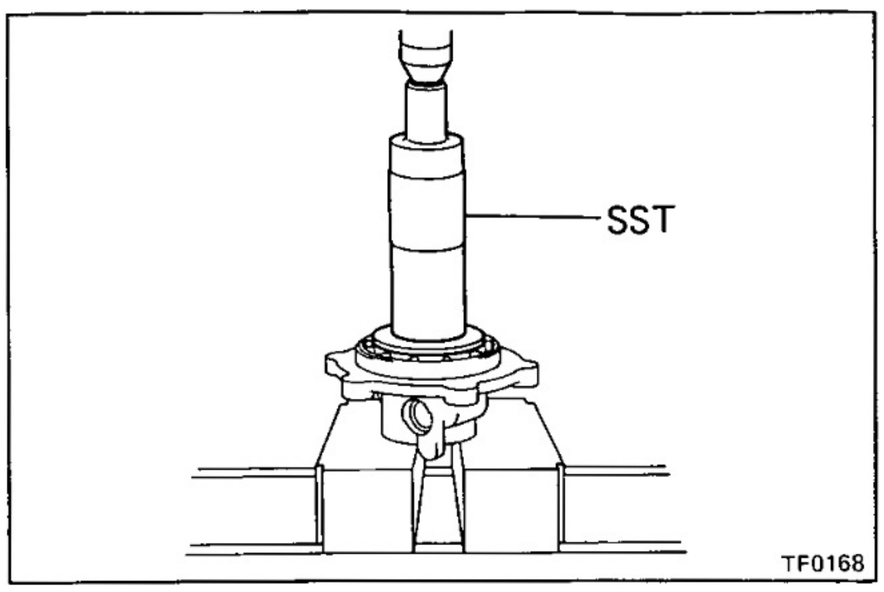

(b) Install the thinnest shim into the rear bearing retainer.

(c) Using SST, press in a new rear outer race to the rear bearing retainer.

SST 09316-60010

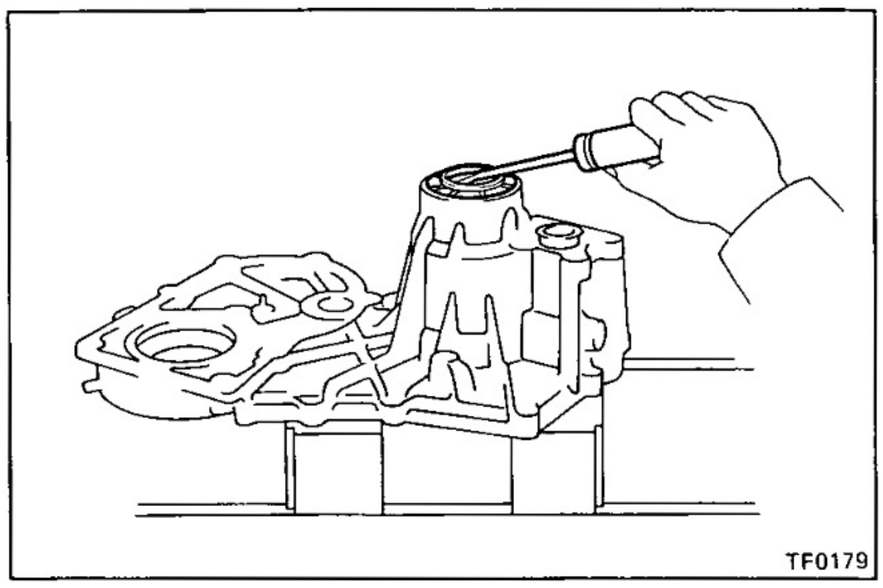

7. IF NECESSARY, REPLACE FRONT OUTPUT SHAFT OIL SEAL

(a) Using a screwdriver, remove the oil seal.

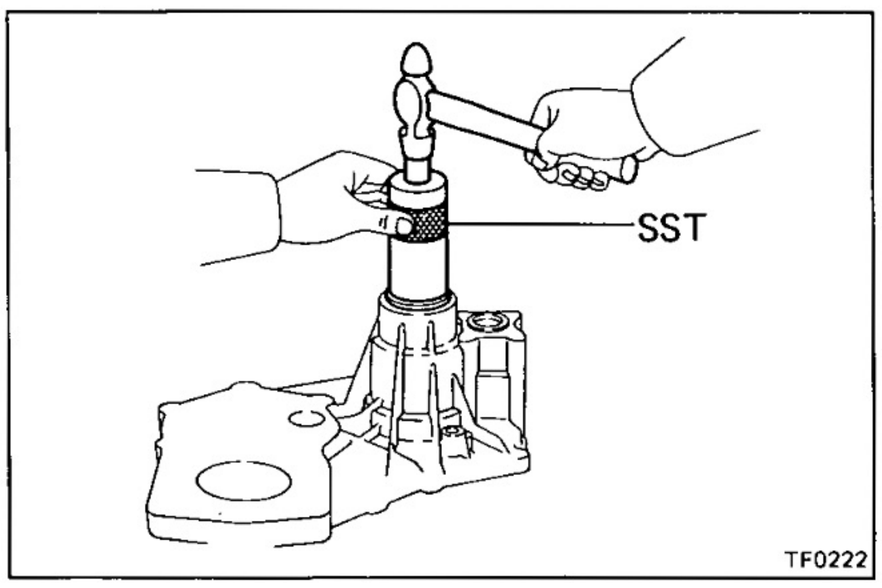

(b) Using SST, drive in a new oil seal.

SST 09316-60010

(c) Apply MP grease to the oil seal lip.

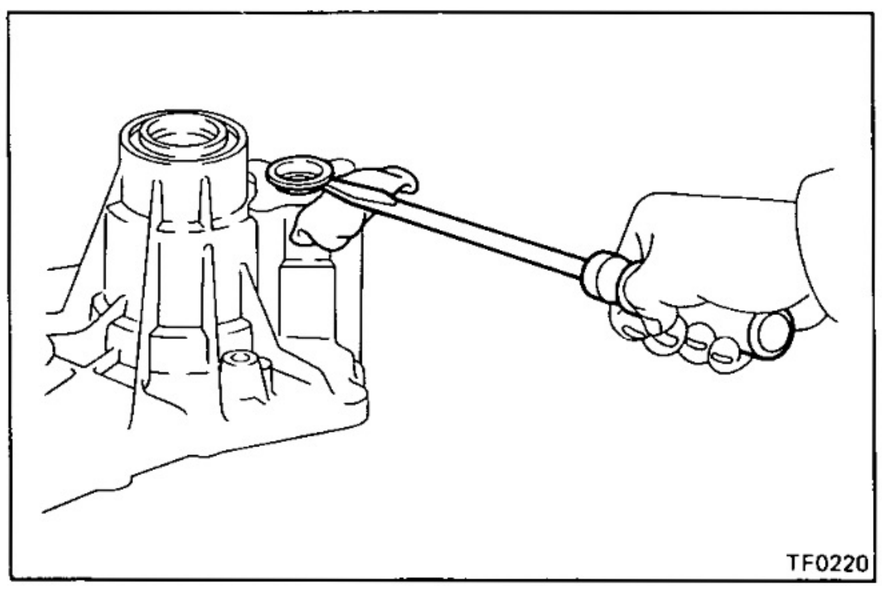

8. IF NECESSARY, REPLACE FRONT DRIVE SHIFT FORK SHAFT OIL SEAL

(a) Using a screwdriver, remove the oil seal.

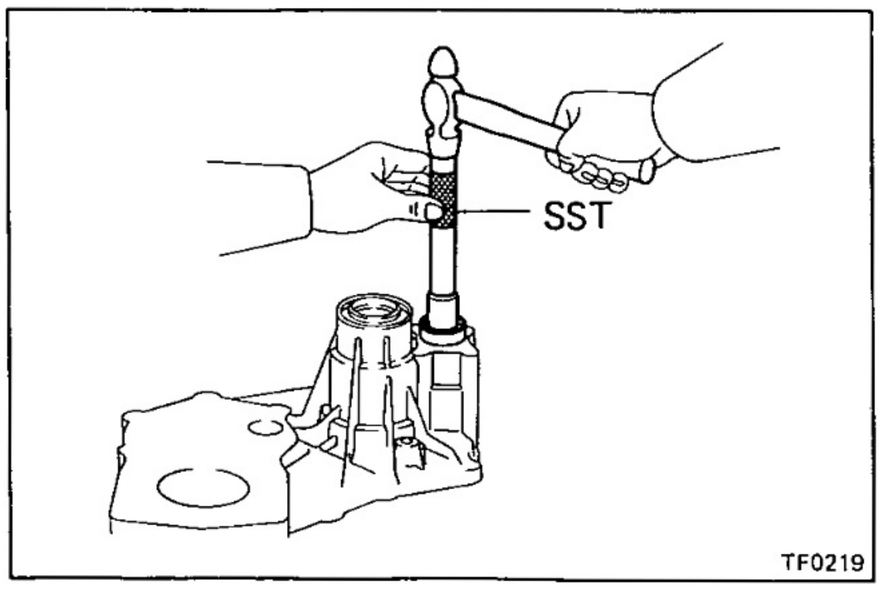

(b) Using SST, drive in a new oil seal.

SST 09608-20011

(c) Apply MP grease to the oil seal lip.

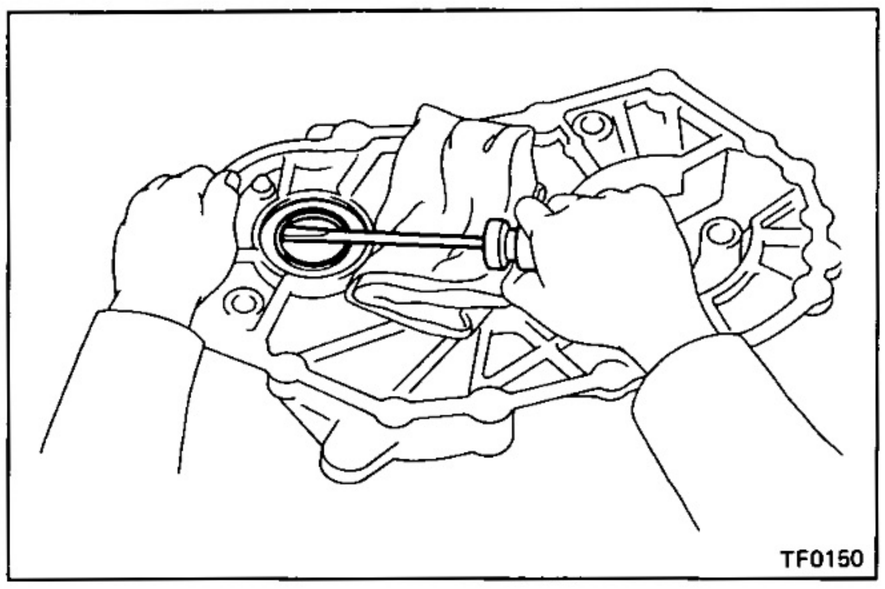

9. IF NECESSARY, REPLACE TRANSMISSION REAR OIL SEAL

(a) Using a screwdriver, remove the transmission rear oil seal.

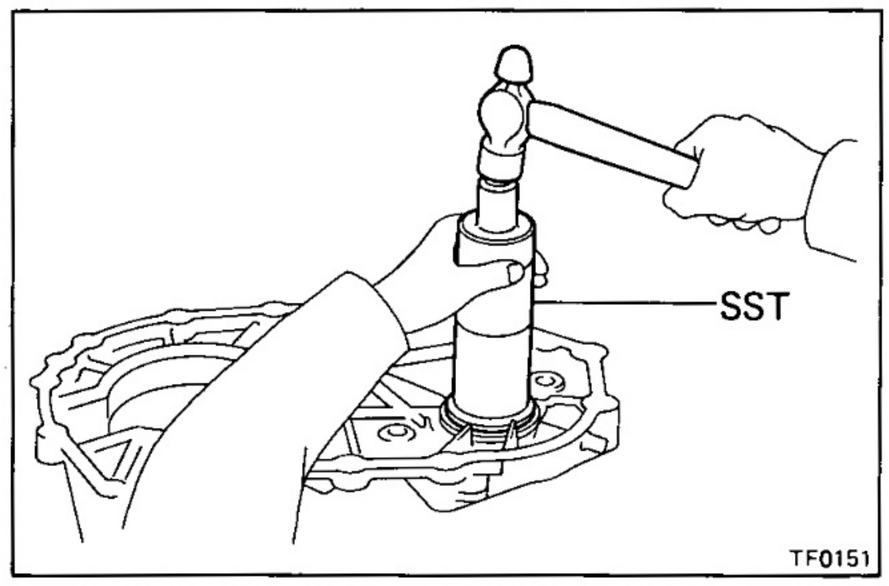

(b) Using SST, drive in a new oil seal.

SST 09316-60010

(c) Apply MP grease to the oil seal lip.

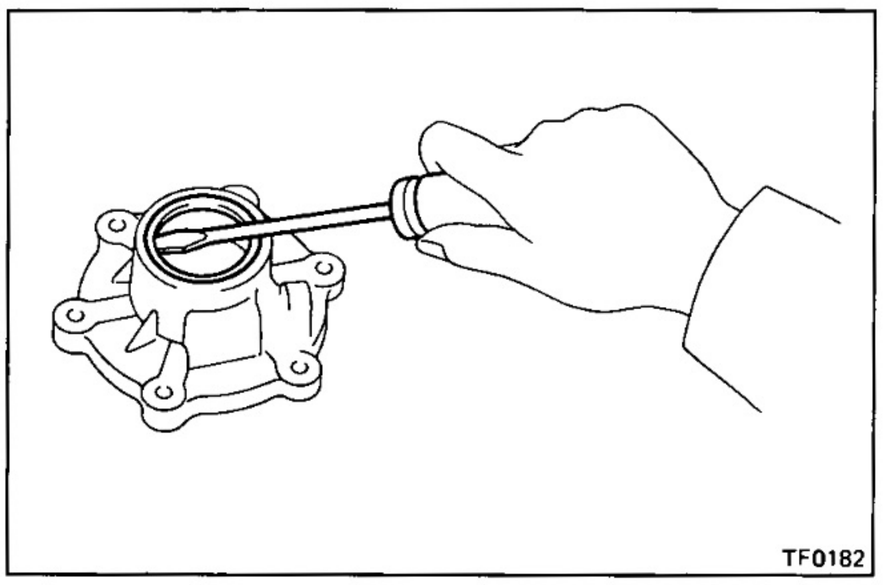

10. IF NECESSARY, REPLACE REAR OUTPUT SHAFT OIL SEAL

(a) Using a screwdriver, remove the oil seal.

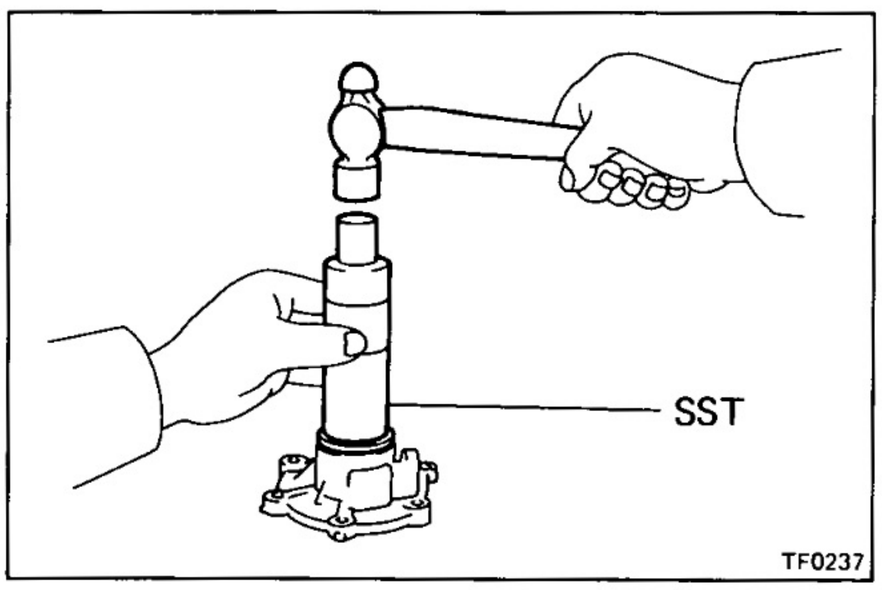

(b) Using SST, drive in a new oil seal.

SST 09316-60010

(c) Apply MP grease to the oil seal lip.

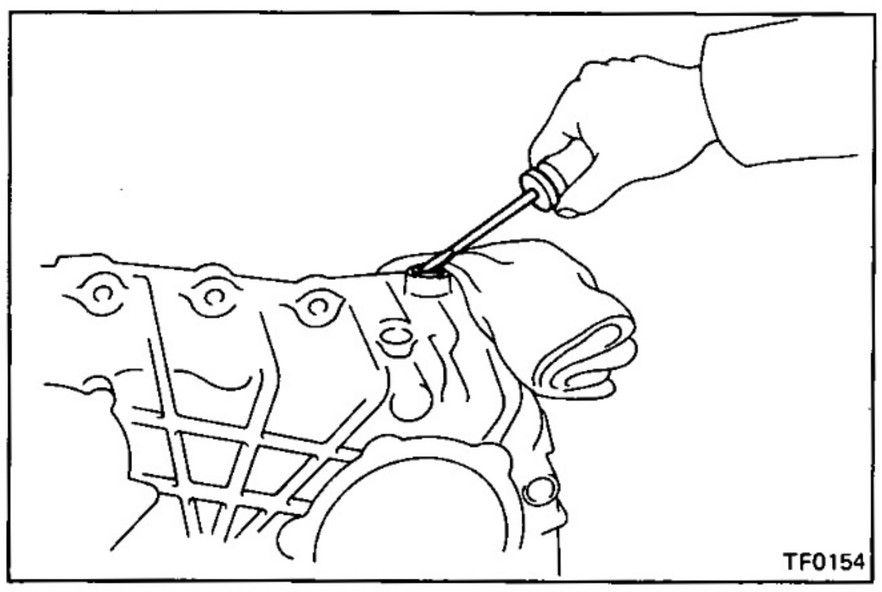

11. IF NECESSARY, REPLACE HIGH AND LOW GEAR SELECT LEVER OIL SEAL

(a) Using a screwdriver, remove the oil seal.

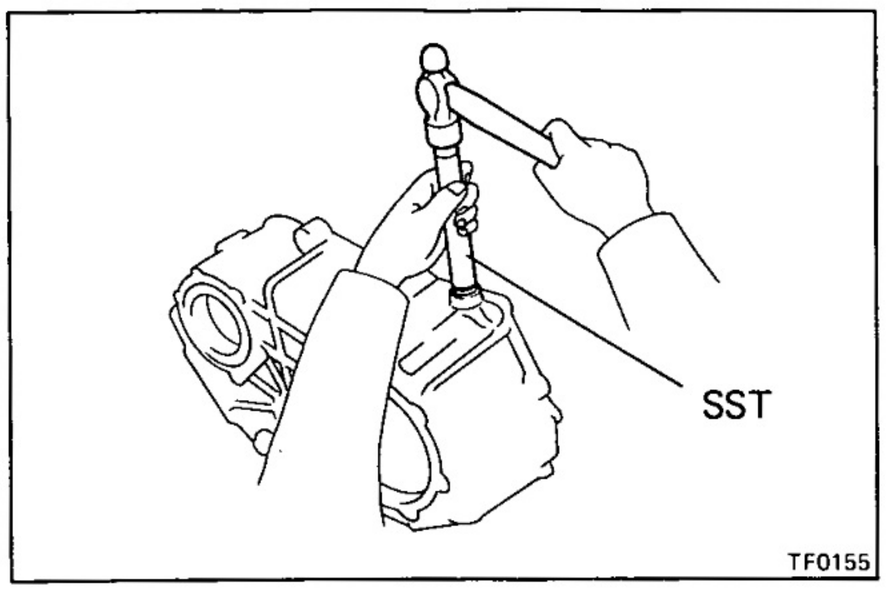

(b) Using SST and hammer, drive in a new oil seal.

SST 09608-20010

(c) Apply MP grease to the oil seal lip.

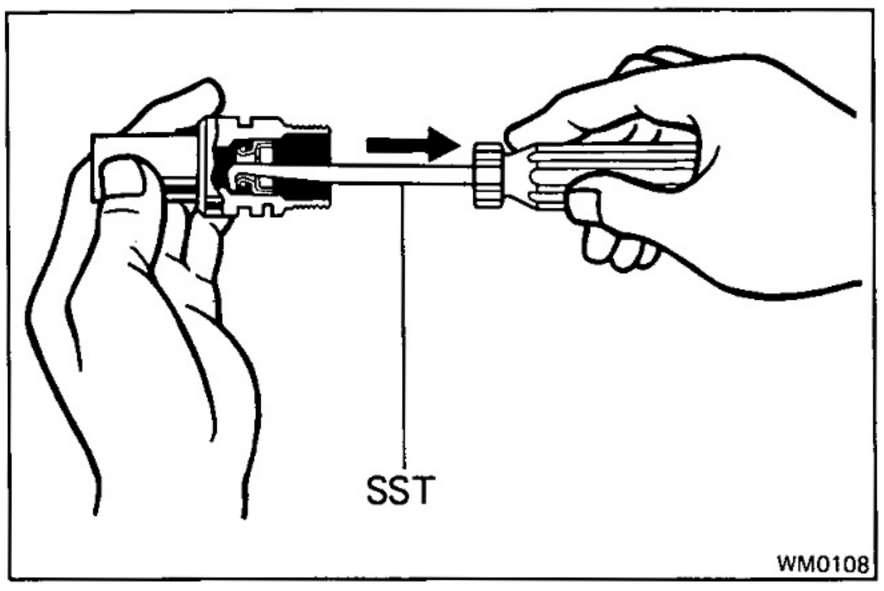

12. IF NECESSARY, REPLACE SPEEDOMETER DRIVEN GEAR OIL SEAL

(a) Using SST, pull out the oil seal.

SST 09921-00010

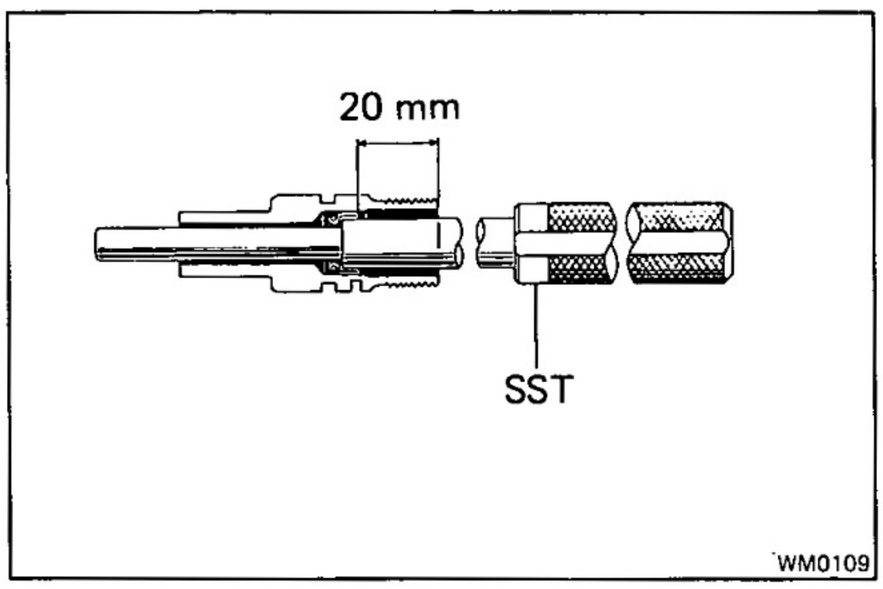

(b) Using SST, drive a new oil seal into the sleeve.

SST 09201-60011

Oil seal depth: 20 mm (0.79 in.)

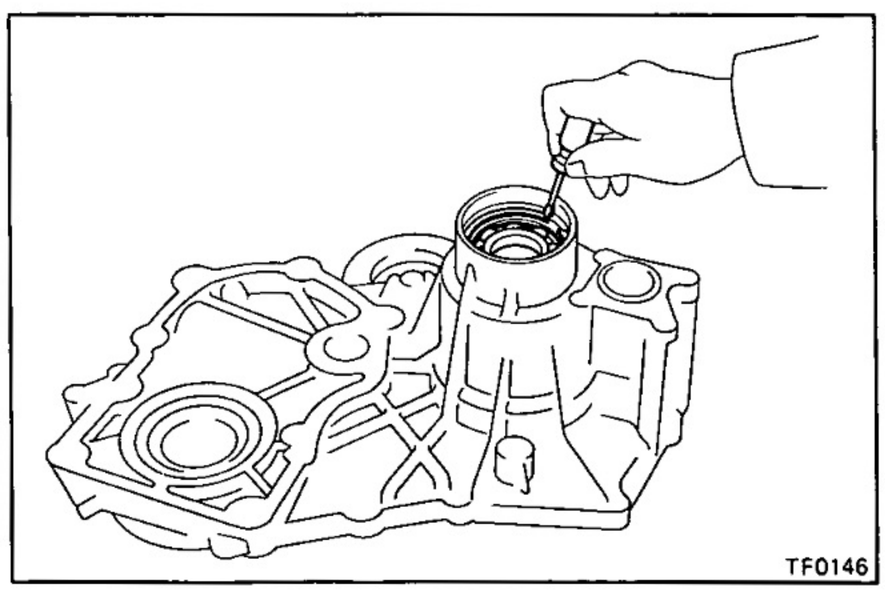

13. IF NECESSARY, REPLACE FRONT OUTPUT SHAFT BEARING

(a) Remove the oil seal. (See page TF-21)

(b) Using a screwdriver, remove the snap ring.

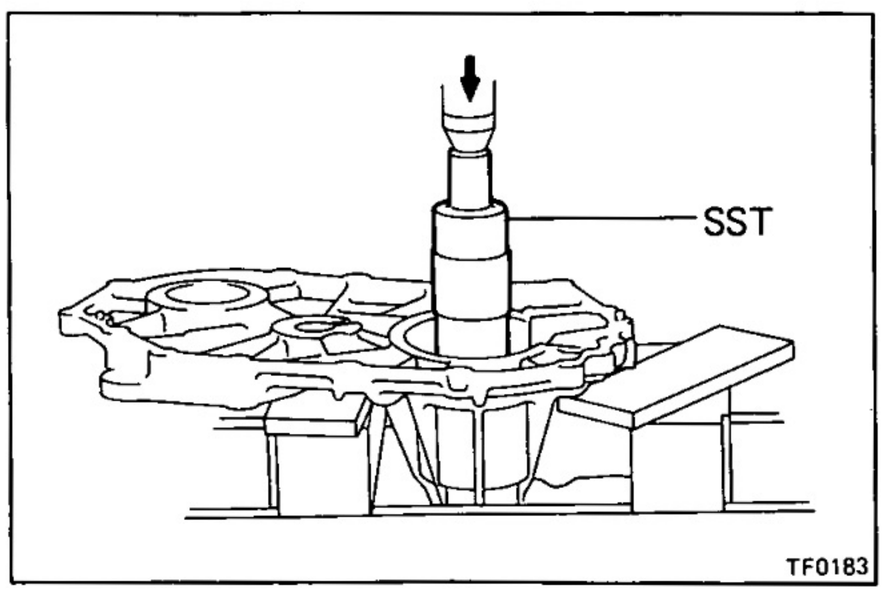

(c) Using SST, press out the bearing.

SST 09316-60010

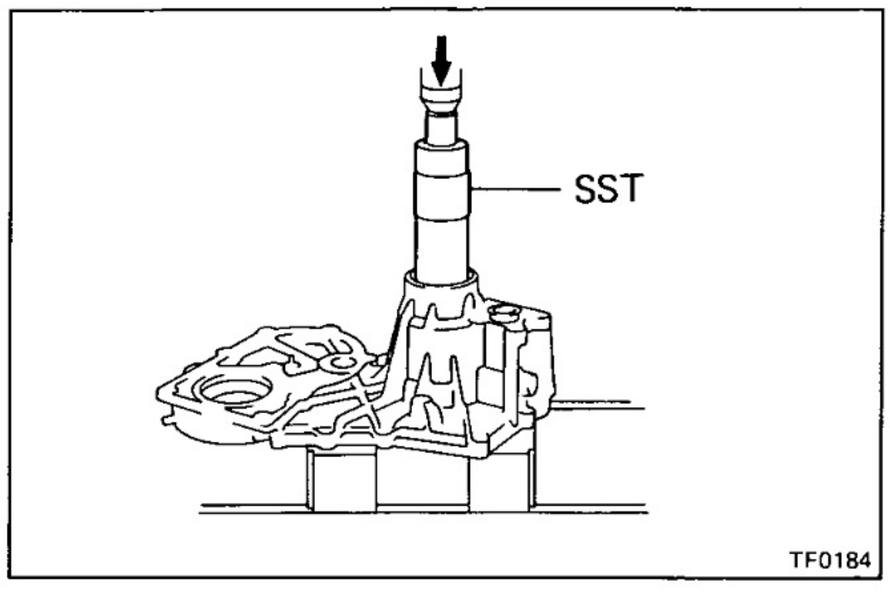

(d) Using SST, press in a new bearing.

SST 09316-60010

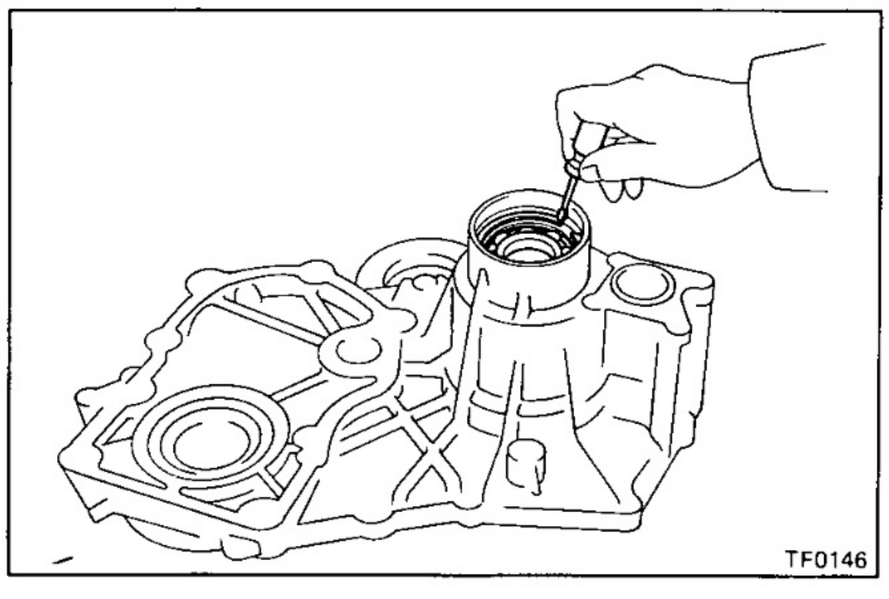

(e) Install the snap ring.

(f) Install a new oil seal. (See page TF-21)

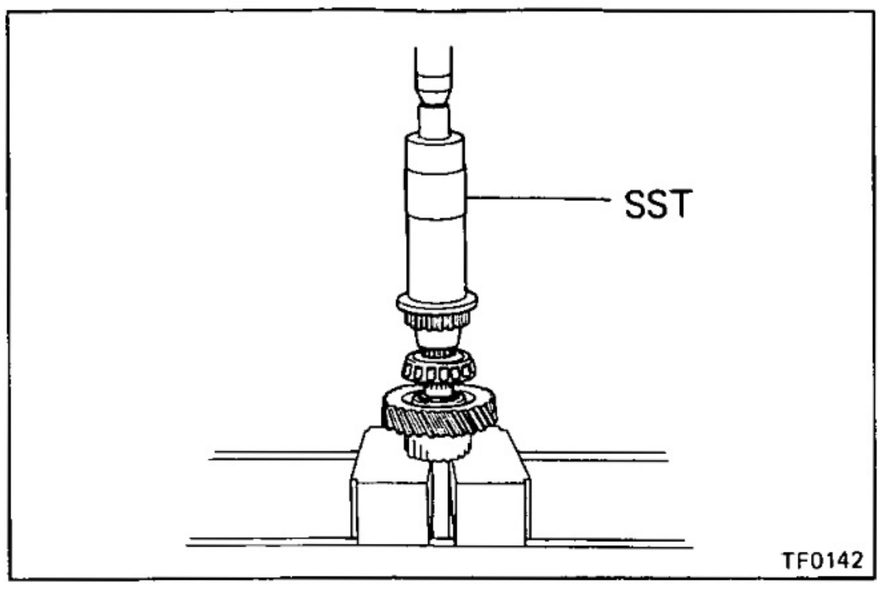

ASSEMBLY OF TRANSFER

(See pages TF-10, 11)

1. INSTALL HIGH GEAR TO REAR OUTPUT SHAFT

Using SST, press in the following parts:

- High gear bearing (ATM)
- High gear
- Output shaft front bearing
- Clutch hub

SST 09316-60010

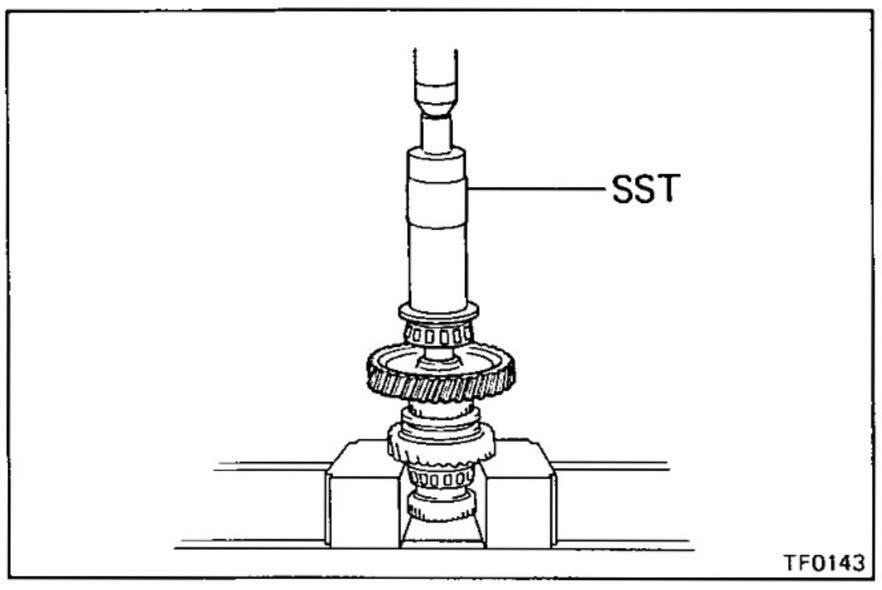

2. INSTALL LOW GEAR TO REAR OUTPUT SHAFT

Using SST, press in the following parts:

- Clutch sleeve
- Low gear bearing (ATM)
- Low gear
- Output shaft rear bearing

SST 09316-60010

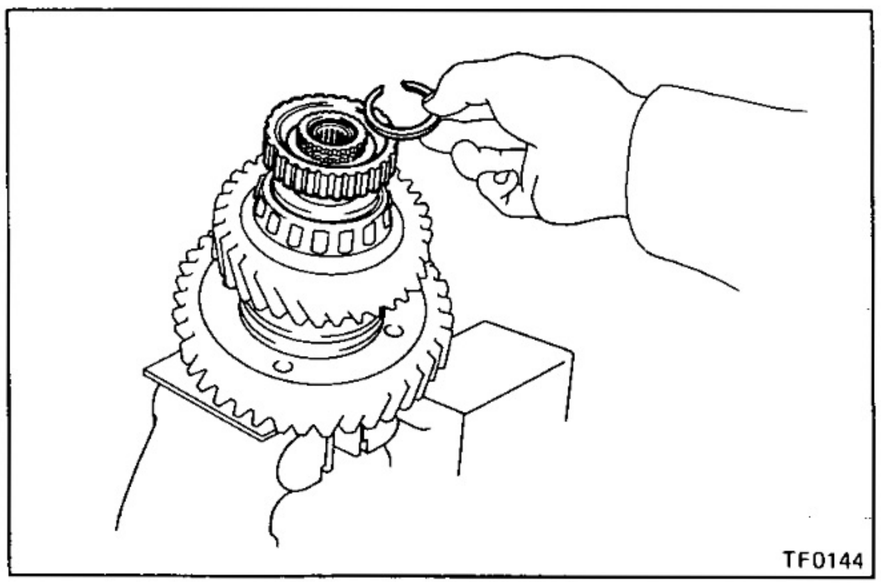

3. INSTALL SNAP RING

Select a snap ring that will allow minimum axial play and install it on the shaft.

Mark	Thickness	mm (in.)
11	2.30 – 2.35	(0.0906 – 0.0925)
17	2.60 – 2.65	(0.1024 – 0.1043)

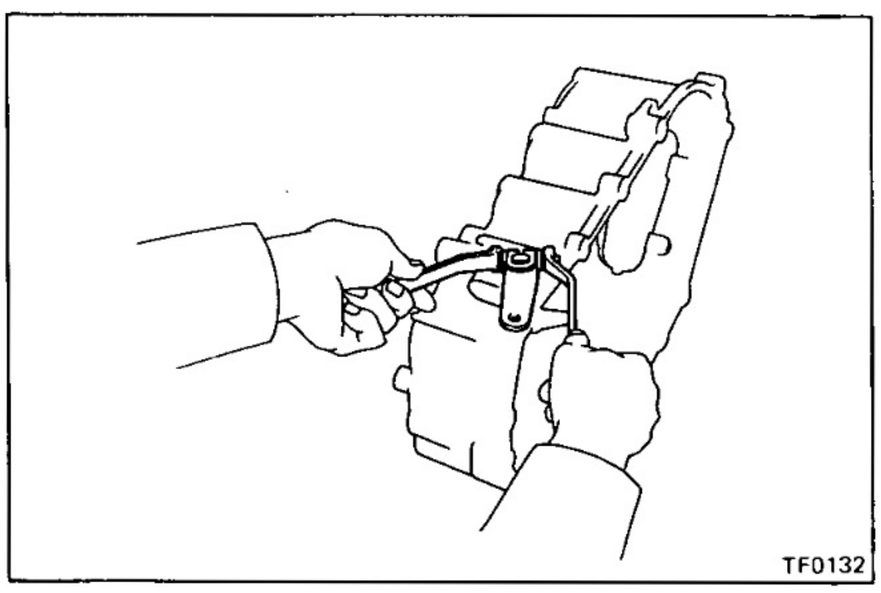

4. INSTALL TRANSFER HIGH AND LOW SHIFT OUTER AND INNER LEVER

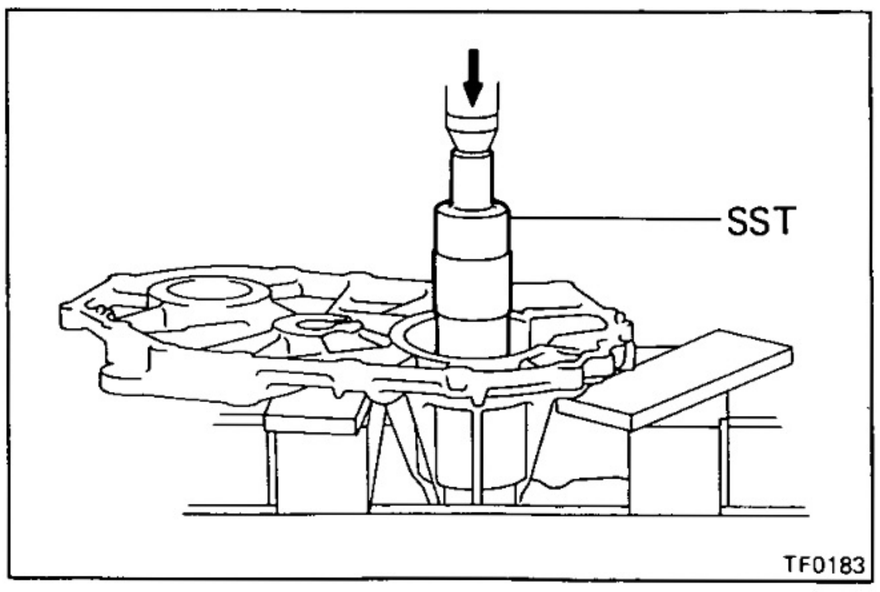

5. INSTALL FRONT OUTPUT SHAFT

Using SST, press in the front output shaft to the transfer front case.

SST 09316-60010

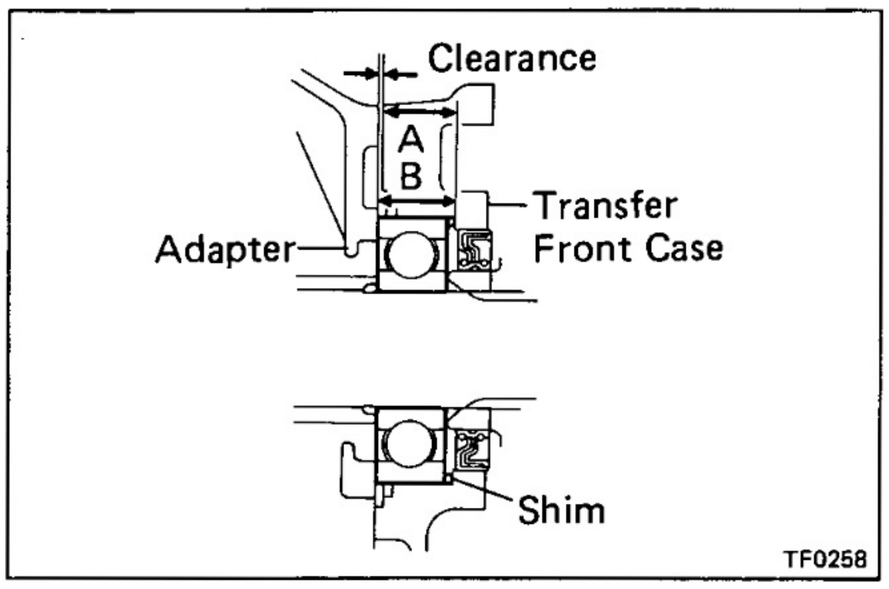

6. INSTALL ADJUSTING SHIM TO TRANSFER FRONT CASE (ATM)

(a) Measure the difference of A and B (left), and select a shim of a thickness so the gap between the transfer adapter and front case is within the standard clearance.

Standard clearance: 0.4 – 0.5 mm (0.016 – 0.020 in.)

Adjusting shim thickness mm (in.)	
2.28 – 2.32	(0.0898 – 0.0913)
2.38 – 2.42	(0.0937 – 0.0953)
2.48 – 2.52	(0.0976 – 0.0992)

(b) Install the adjusting shim to the transfer front case.

7. INSTALL TRANSFER FRONT CASE

(a) Apply MP grease to the oil seal.

(b) Install the front case with a new gasket to the transfer adapter.

(c) Apply liquid sealer to the bolts, and install and torque as shown.

4-Speed: Four bolts
5-Speed: Three bolts

Torque: 17 mm 650 kg-cm (47 ft-lb, 64 N·m)
14 mm 400 kg-cm (29 ft-lb, 39 N·m)

(d) Install and torque the other bolts.

Torque: 650 kg-cm (47 ft-lb, 64 N·m)

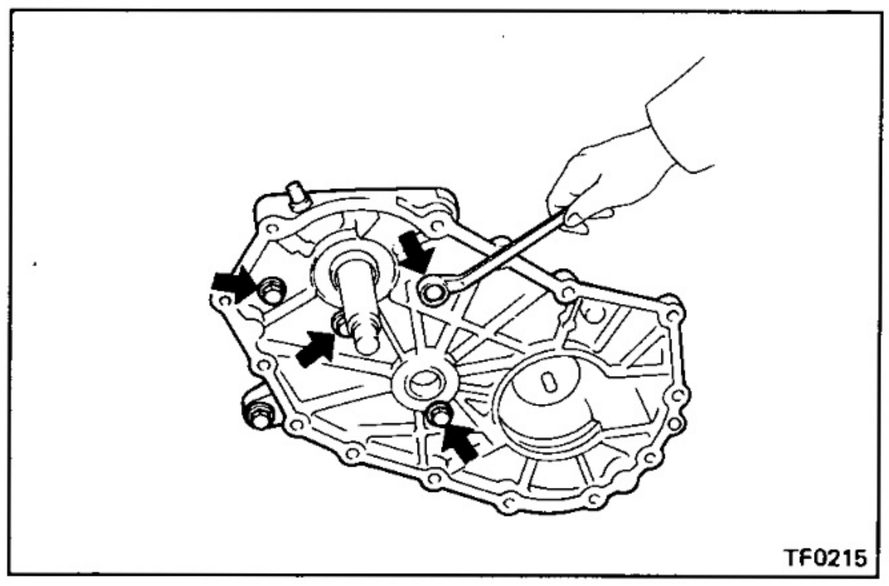

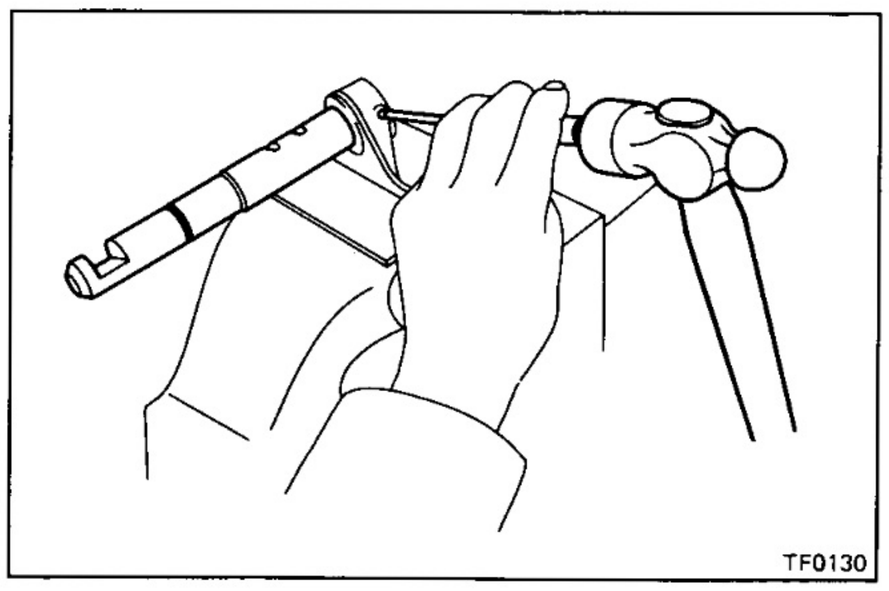

8. INSTALL SHIFT FORK SHAFT

[Mechanical Shift Type]

(a) Install the shift fork shaft into shift fork No. 1.

(b) Using a pin punch and a hammer, drive in the slotted spring pin.

NOTE: Use a set of soft jaws in the vise to protect the shift fork.

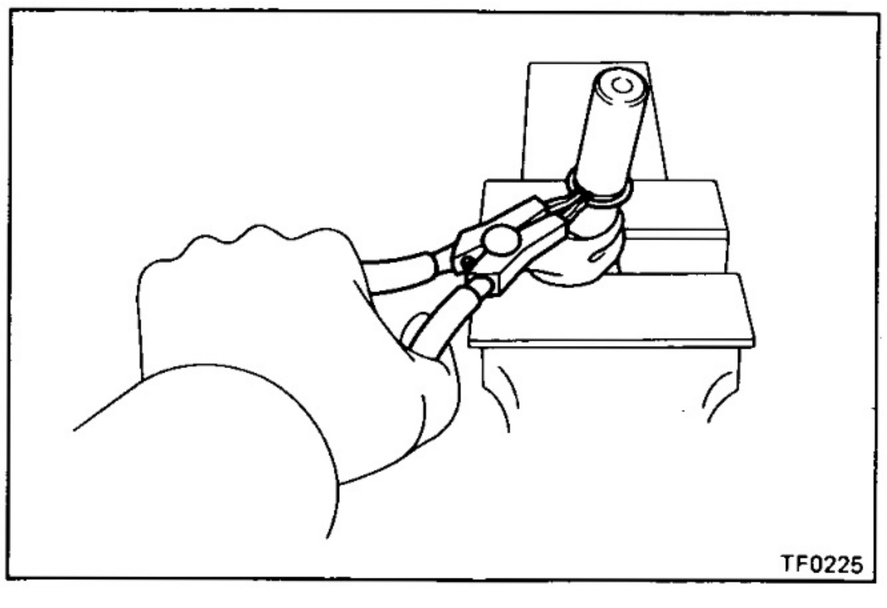

[Electrical Shift Type]

(a) Using snap ring pliers, install the snap ring.

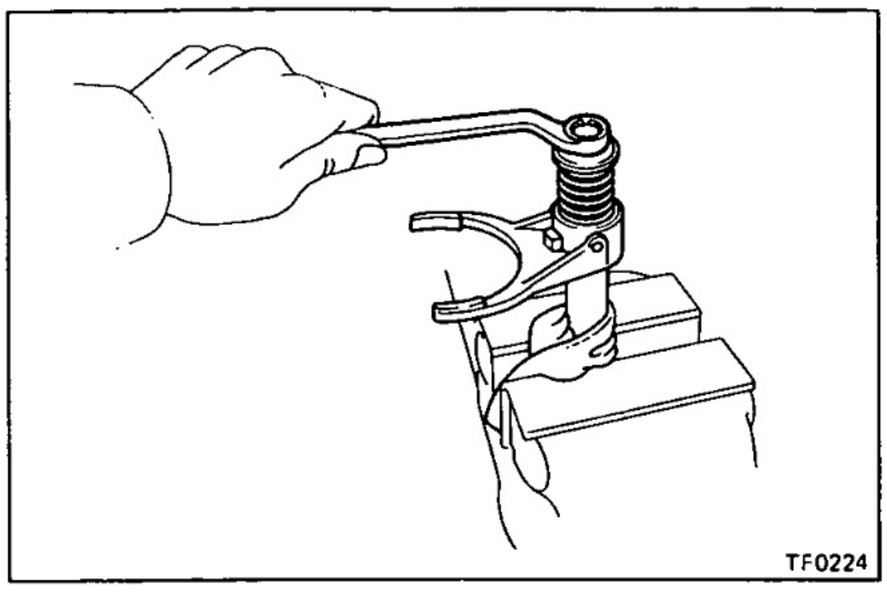

(b) Install the shift fork, spring and retainer to the shift fork shaft.

Torque: 185 kg-cm (14 ft-lb, 18 N-m)

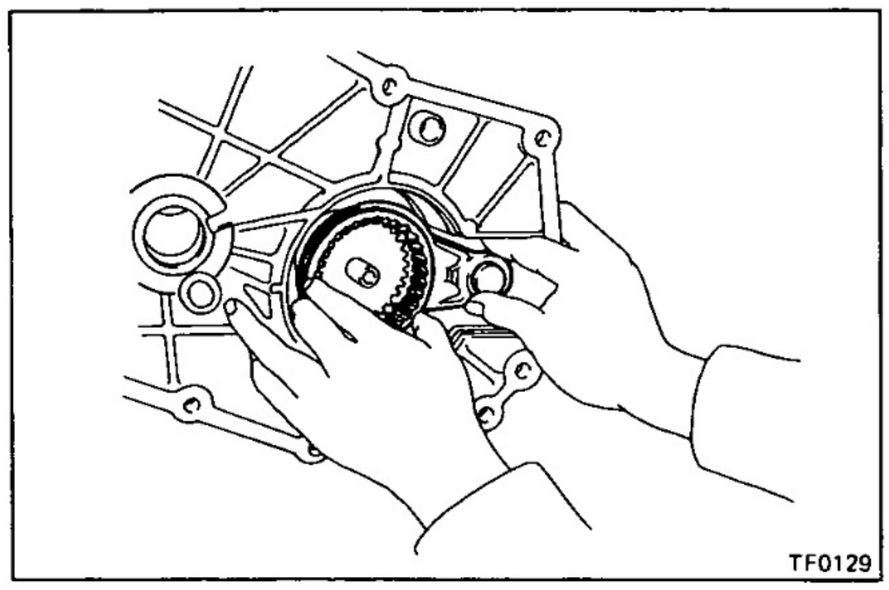

9. INSTALL CLUTCH SLEEVE

Install the clutch sleeve with the shift fork and shift fork shaft.

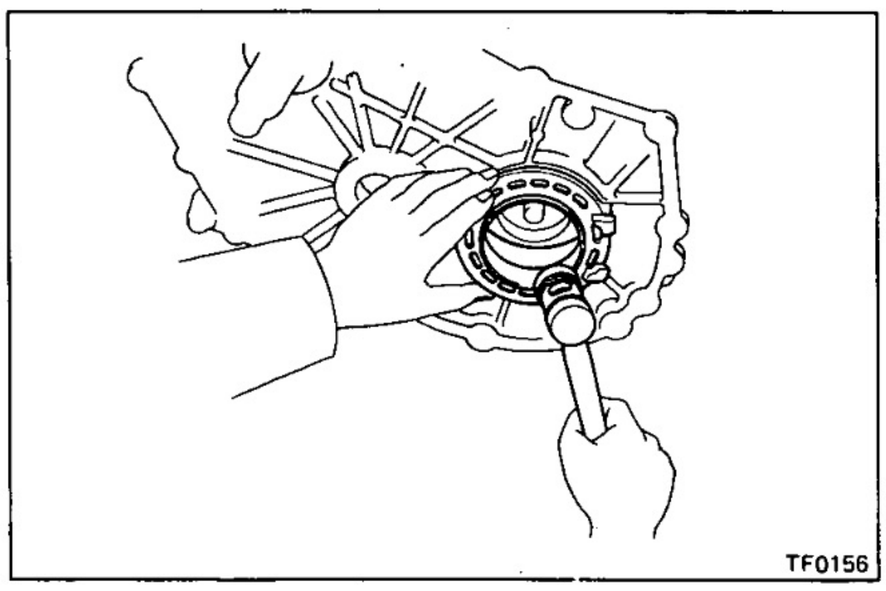

10. INSTALL REAR OUTPUT SHAFT FRONT BEARING RETAINER

Using a plastic hammer, install the rear output shaft front bearing retainer.

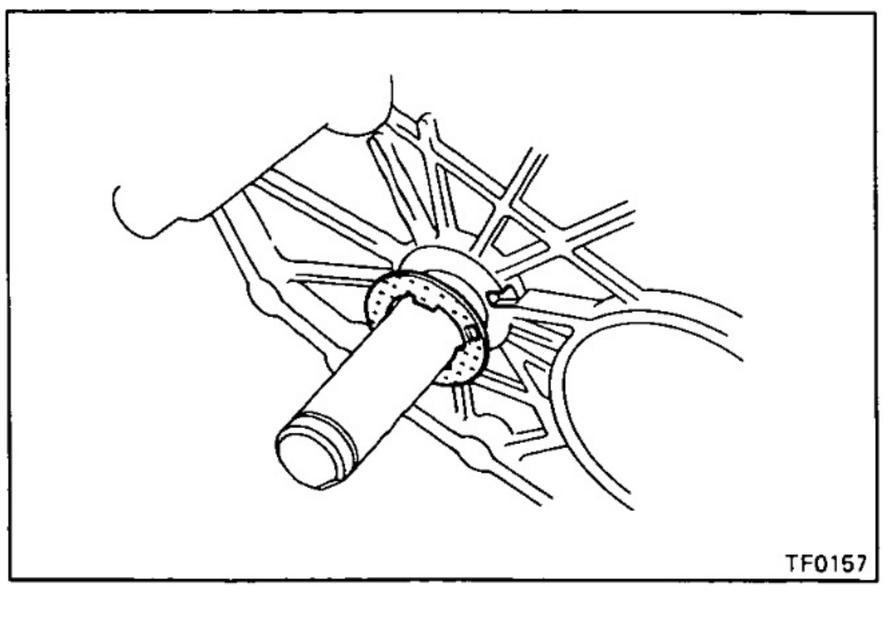

11. INSTALL IDLER GEAR

(a) Install a new O-ring on the idler gear shaft front side groove.

(b) Install the idler gear shaft to the transfer front case.

(c) Install the idler gear thrust washer.

NOTE: Be sure that protruding part of washer fits in the case groove.

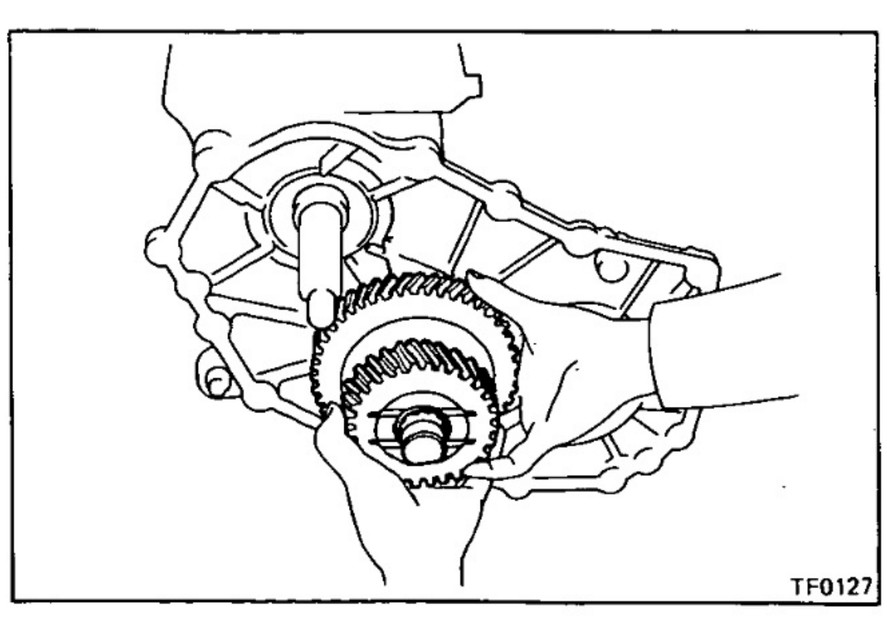

(d) Apply MP grease to the two bearings.

(e) Install the two bearings and spacer to the idler gear shaft.

(f) Install the idler gear to the idler gear shaft.

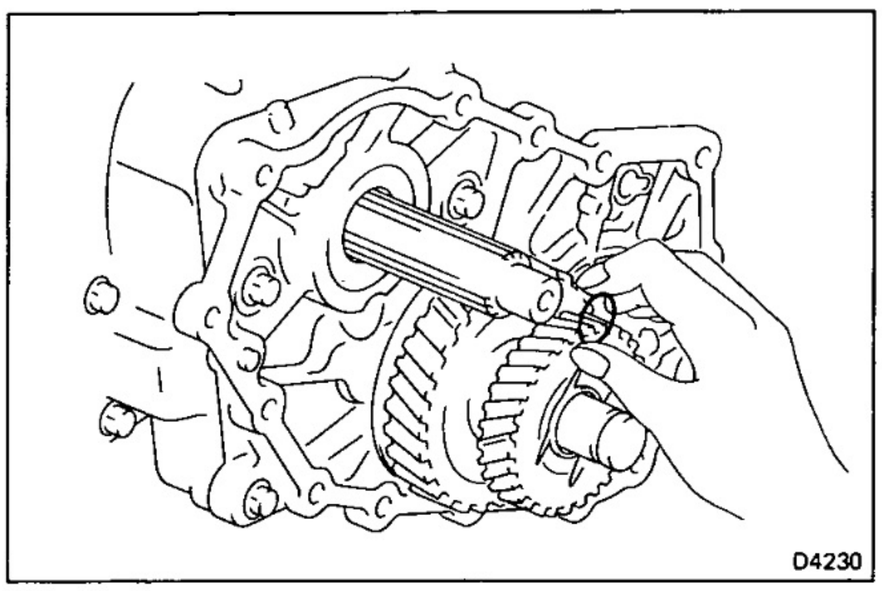

12. INSTALL O-RING TO TRANSMISSION OUTPUT SHAFT (ATM)

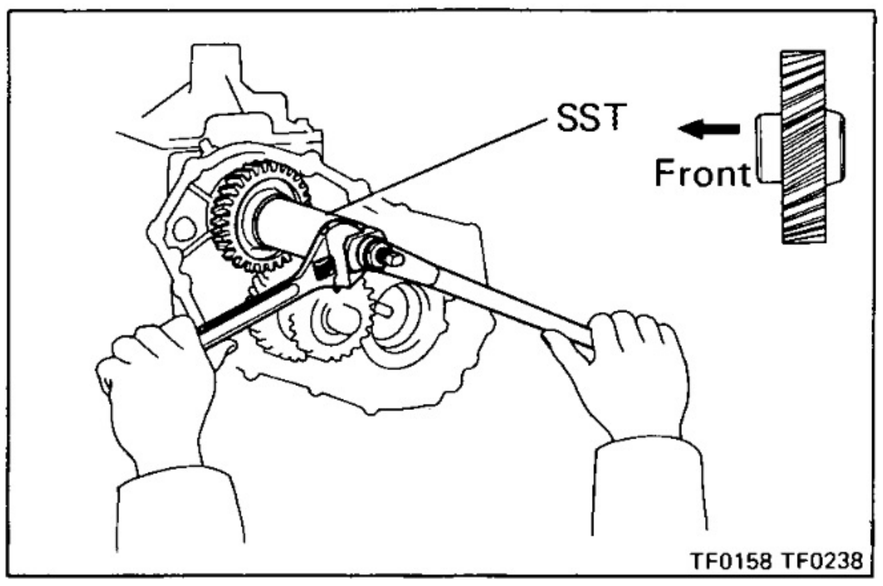

13. INSTALL TRANSFER INPUT GEAR

Using SST, install the transfer input gear.

SST 09309-36033

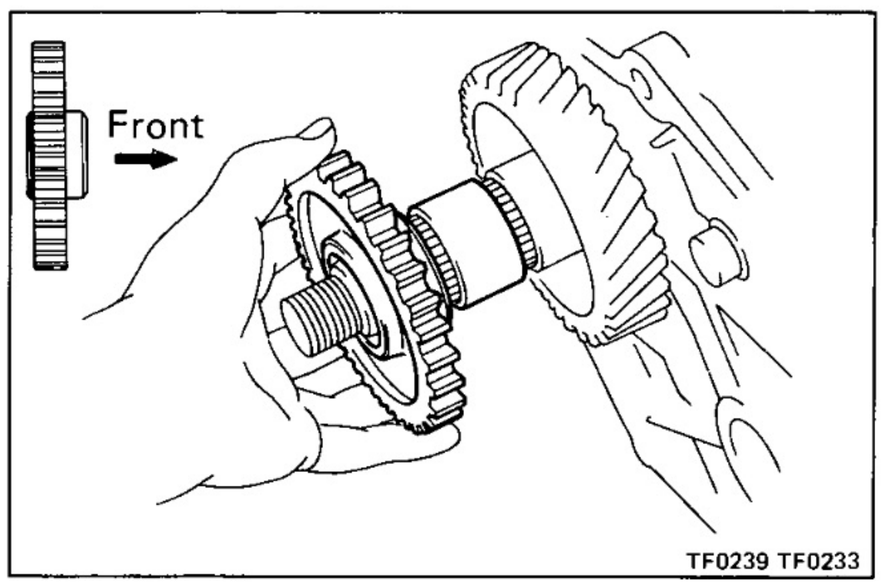

14. INSTALL SPACER AND POWER TAKE-OFF DRIVE GEAR

Install the spacer and power take-off drive gear to the output shaft.

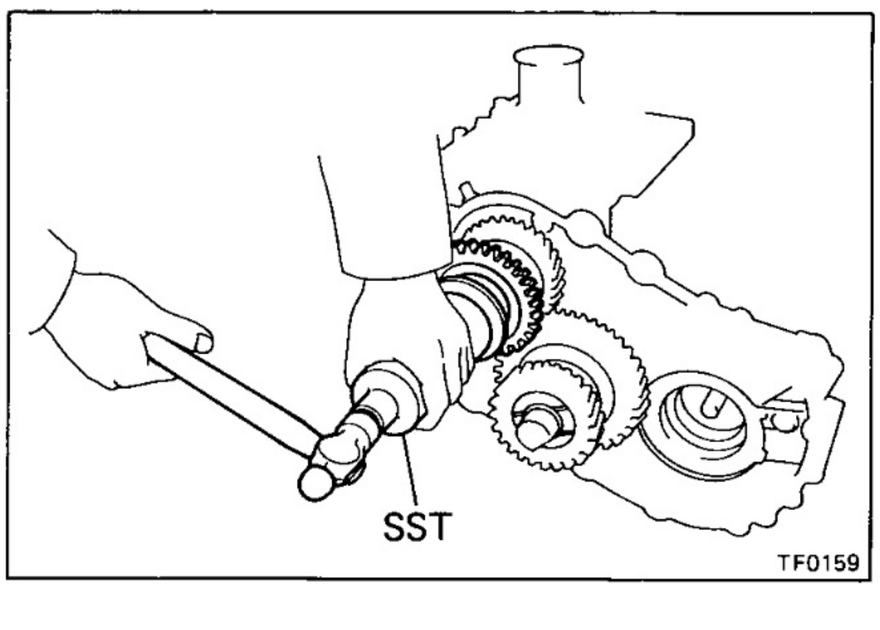

15. INSTALL OUTPUT SHAFT REAR BEARING

Using SST and hammer, drive in the output shaft bearing.

SST 09316-60010

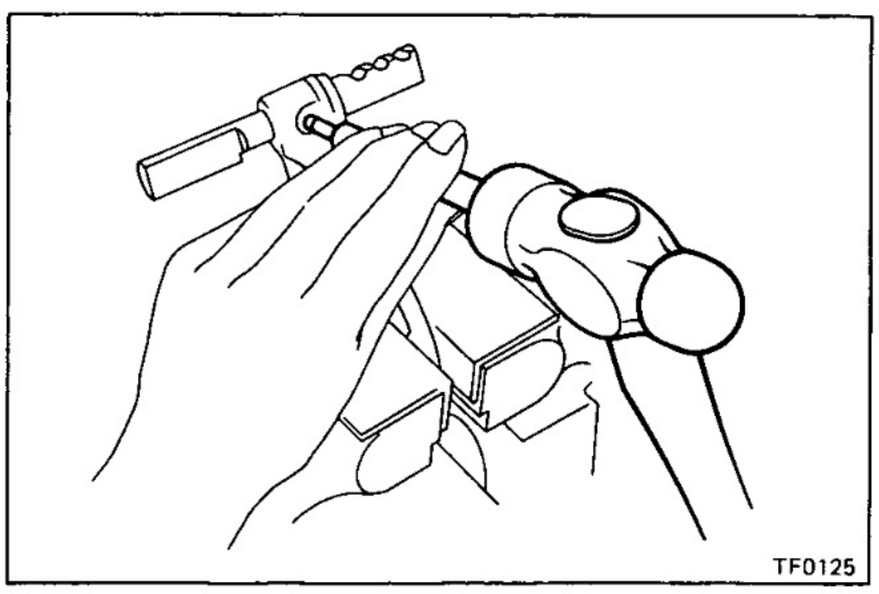

16. INSTALL SHIFT FORK SHAFT

(a) Install the high and low shift fork shafts into the shift fork.

(b) Using a pin punch and a hammer, drive in the slotted spring pin.

NOTE: Use a set of soft jaws in the vise to protect the shift fork.

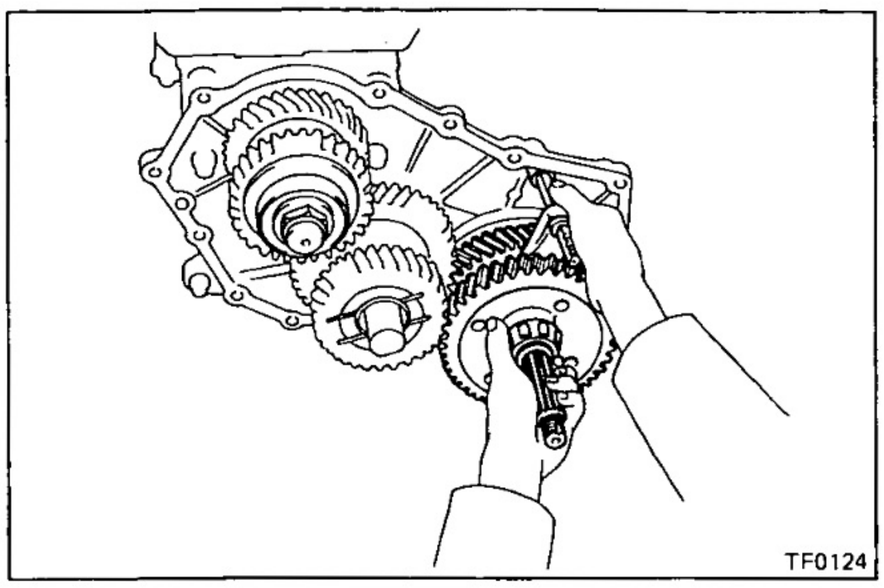

17. INSTALL REAR OUTPUT SHAFT WITH SHIFT FORK AND SHAFT

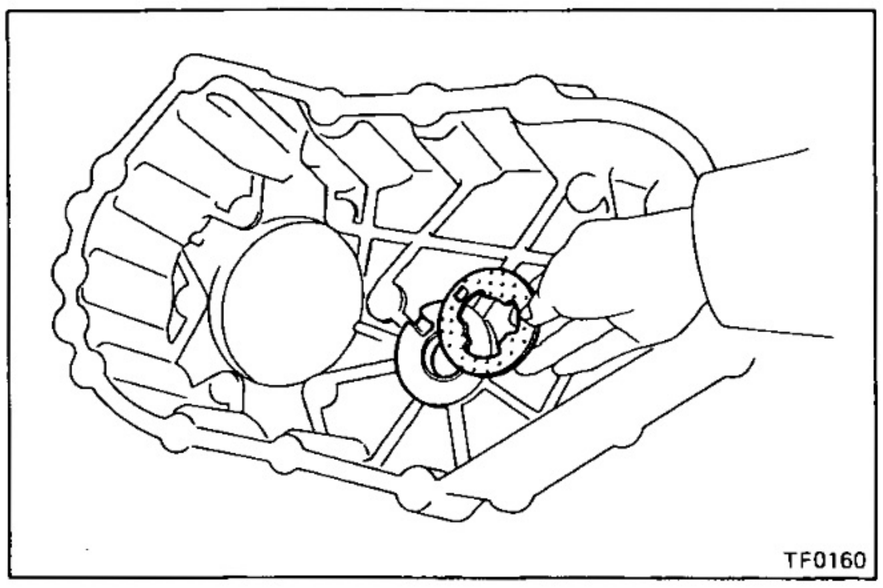

18. STICK ON THRUST WASHER

Stick the thrust washer to the transfer rear case with MP grease.

NOTE: Be sure that protruding part of washer fits in the case groove.

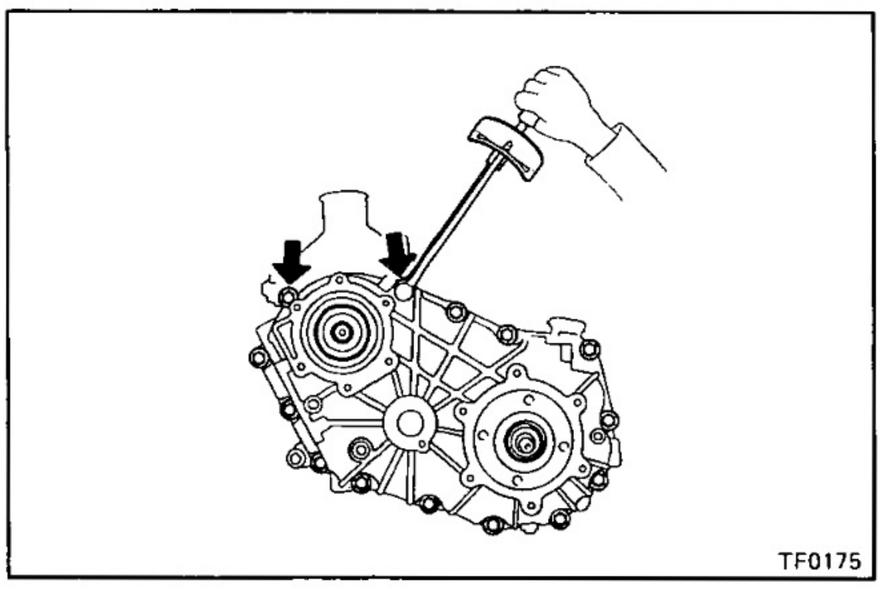

19. INSTALL TRANSFER REAR CASE

(a) Place a new gasket on the front case.

(b) Install the rear case.

NOTE: Align the high and low shift lever tip with the shift fork shaft groove.

(c) Apply liquid sealer to the two bolts, and install and torque as shown.

Torque: 650 kg-cm (47 ft-lb, 64 N·m)

(d) Install and torque the other bolts.

Torque: 17 mm 650 kg-cm (47 ft-lb, 64 N·m)
14 mm 400 kg-cm (29 ft-lb, 39 N·m)

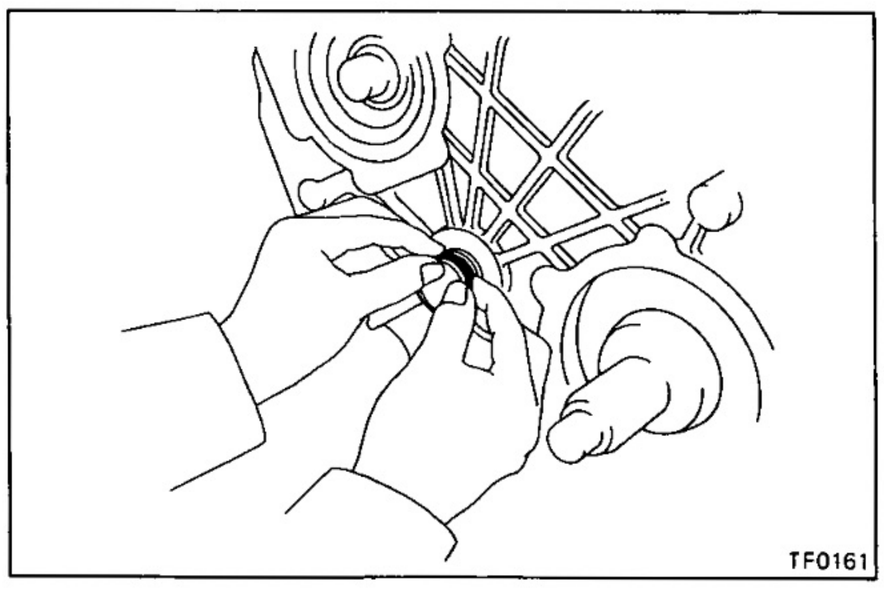

20. INSTALL O-RING AND LOCK PLATE

(a) Align the shaft groove to the bolt hole.

(b) Install an O-ring on the shaft groove.

(c) Using a plastic hammer, drive in the shaft.

(d) Install the lock plate and bolt. Tighten the bolt.

Torque: 130 kg-cm (9 ft-lb, 13 N·m)

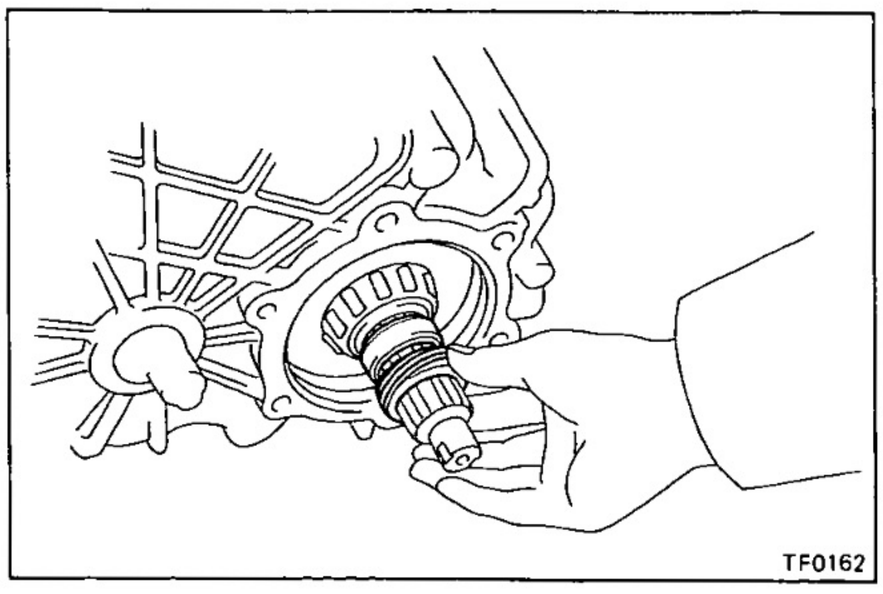

21. INSTALL SPEEDOMETER DRIVE GEAR AND SPACER

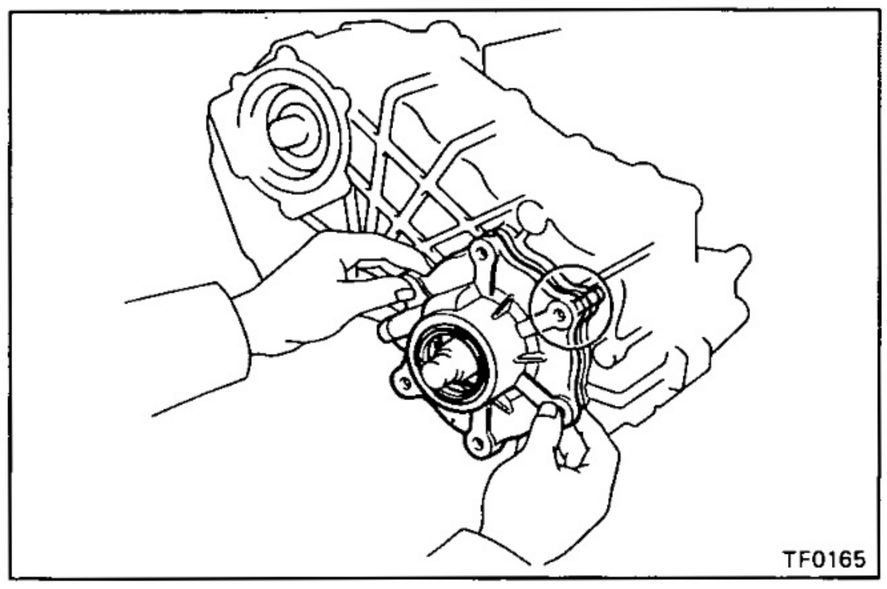
TF0165

22. ADJUST REAR OUTPUT SHAFT PRELOAD

(a) Install the rear output shaft rear bearing retainer.

NOTE: Align the bearing retainer rib with the case.

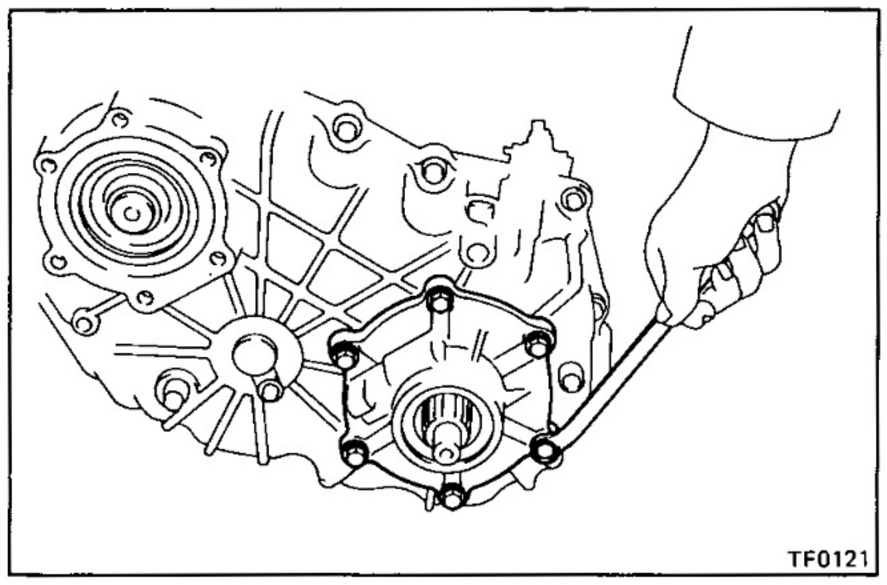
TF0121

(b) Torque the six bolts.

Torque: 350 kg-cm (25 ft-lb, 34 N·m)

(c) Shift the transfer lever to the "N" position.

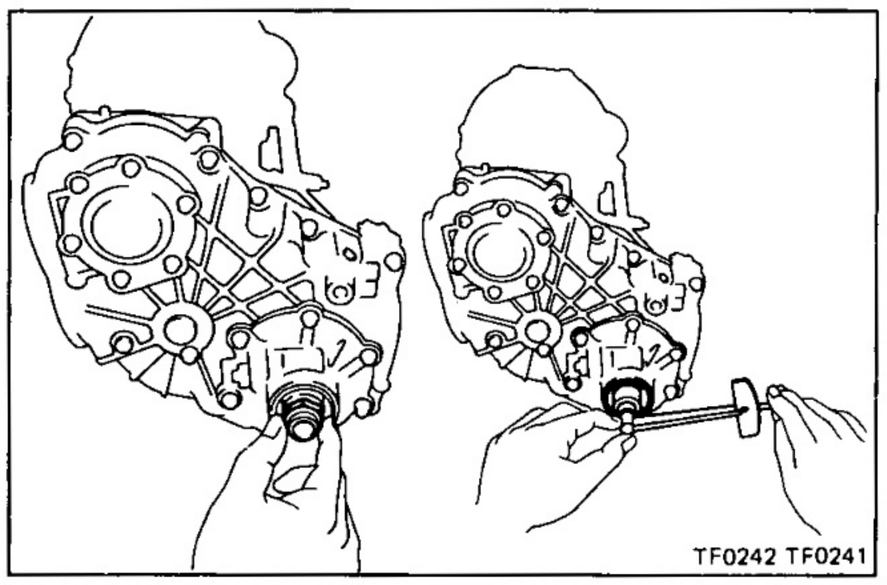
TF0242 TF0241

(d) Temporarily install the rear companion flange lock nut.

(e) Using a torque meter, measure the rear output shaft preload. (Starting torque)

Preload:

New bearing	**15 – 24.7 kg-cm (13.0 – 21.4 in.-lb, 1.5 – 2.4 N·m)**
Reused bearing	**7 – 12 kg-cm (6.1 – 10.4 in.-lb, 0.7 – 1.2 N·m)**

If the preload is not within specification, remove the outer race of the rear output shaft rear bearing with SST.

SST 09514-35011

Reselect an adjusting shim.

Mark	Thickness mm (in.)	Mark	Thickness mm (in.)
0	0.15 (0.0059)	10	1.0 (0.039)
4	0.4 (0.016)	11	1.1 (0.043)
5	0.5 (0.020)	12	1.2 (0.047)
6	0.6 (0.024)	13	1.3 (0.051)
7	0.7 (0.028)	14	1.4 (0.055)
8	0.8 (0.031)	15	1.5 (0.059)
9	0.9 (0.035)		

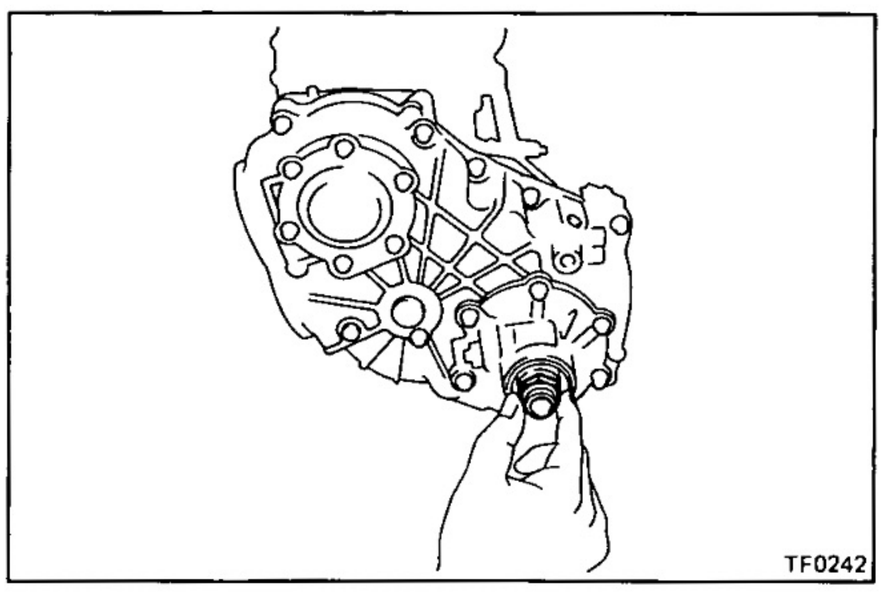
TF0242

NOTE: The preload will change about 10.0 kg-cm (8.7 in.-lb, 1.0 N·m) with each shim thickness.

(f) Remove the rear companion flange lock nut.

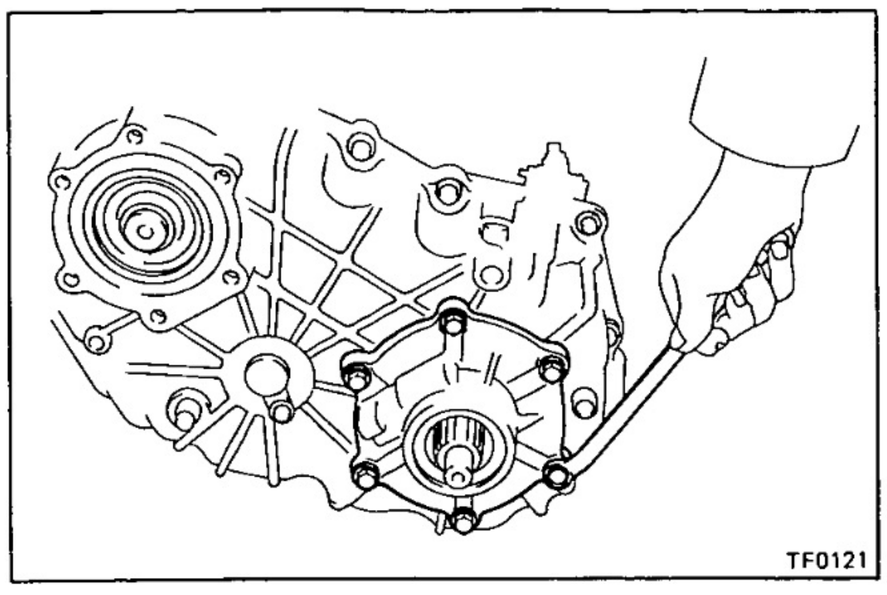

23. REMOVE REAR OUTPUT SHAFT REAR BEARING RETAINER

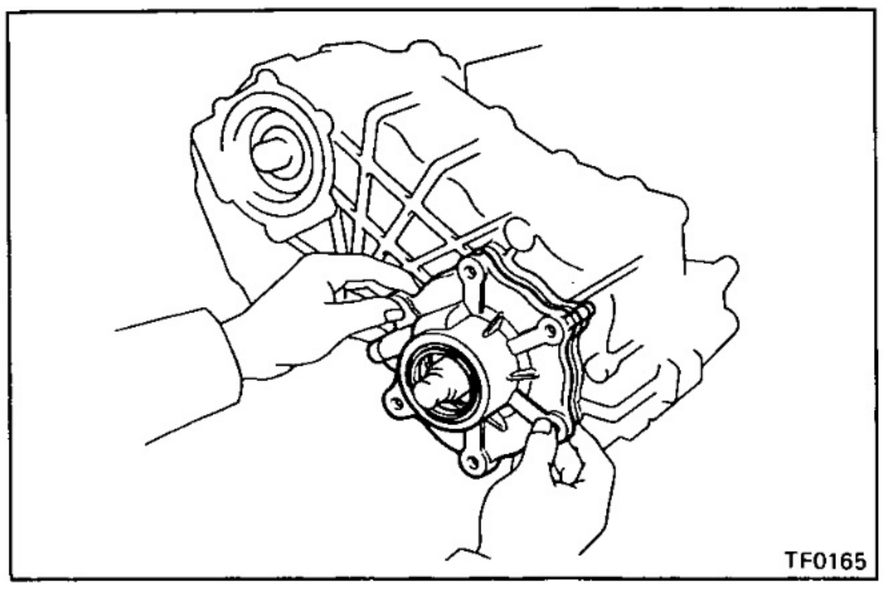

24. INSTALL REAR OUTPUT SHAFT REAR BEARING RETAINER

(a) Align the bearing retainer rib with the case rib and install the retainer with a new gasket.

(b) Apply liquid sealer to the six bolts.

(c) Install and torque the bolts.

Torque: 350 kg-cm (25 ft-lb, 34 N·m)

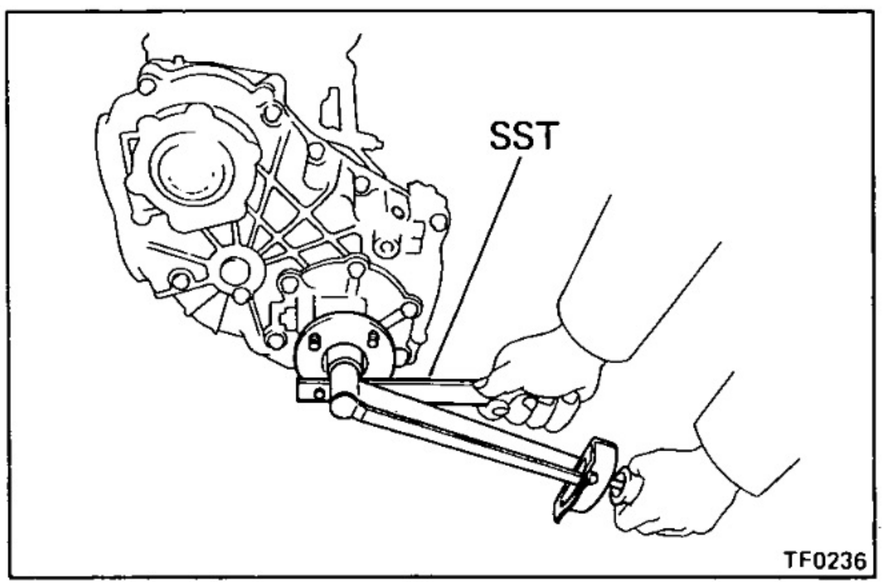

25. INSTALL FRONT AND REAR COMPANION FLANGE

(a) Install the companion flange.

(b) Using SST to hold the companion flange, install the companion flange lock nut.

SST 09330-00021

Torque: 1,300 kg-cm (94 ft-lb, 127 N·m)

(c) Stake the companion flange lock nut.

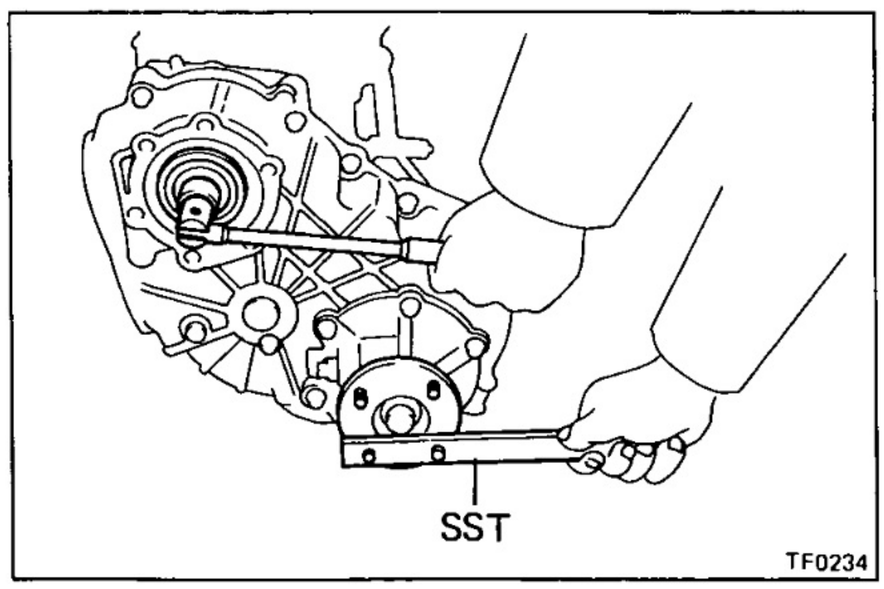

26. INSTALL TRANSMISSION OUTPUT SHAFT LOCK NUT

(a) Using SST to hold the rear companion flange, install the transmission output shaft lock nut.

SST 09330-00021

Torque: 1,300 kg-cm (94 ft-lb, 127 N·m)

(b) Stake the transmission output shaft lock nut.

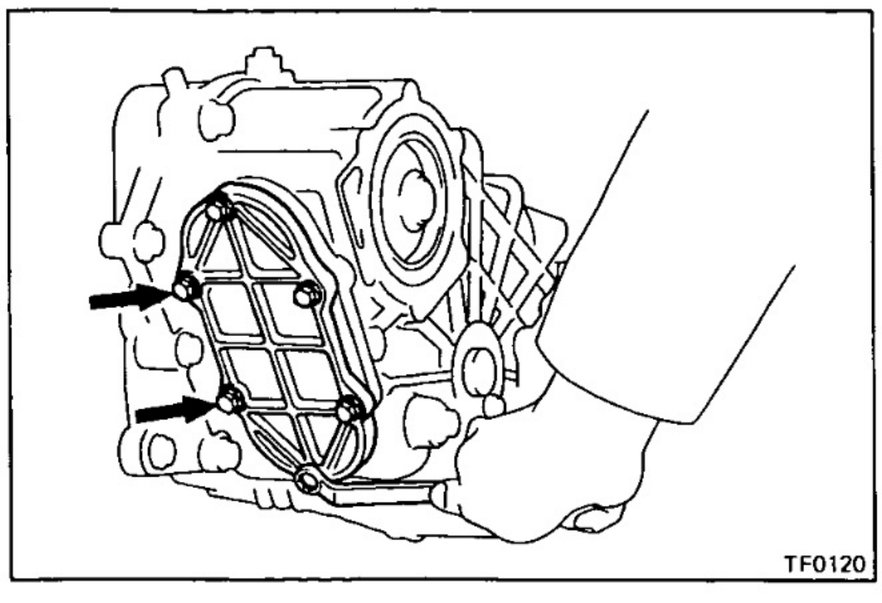

27. INSTALL POWER TAKE-OFF COVER

(a) Install the power take-off cover with a new gasket to the transfer rear case.

(b) Apply liquid sealer to the two bolts, and install and torque as shown.

Torque: 170 kg-cm (12 ft-lb, 17 N·m)

(c) Install and torque the other bolts.

Torque: 195 kg-cm (14 ft-lb, 19 N·m)

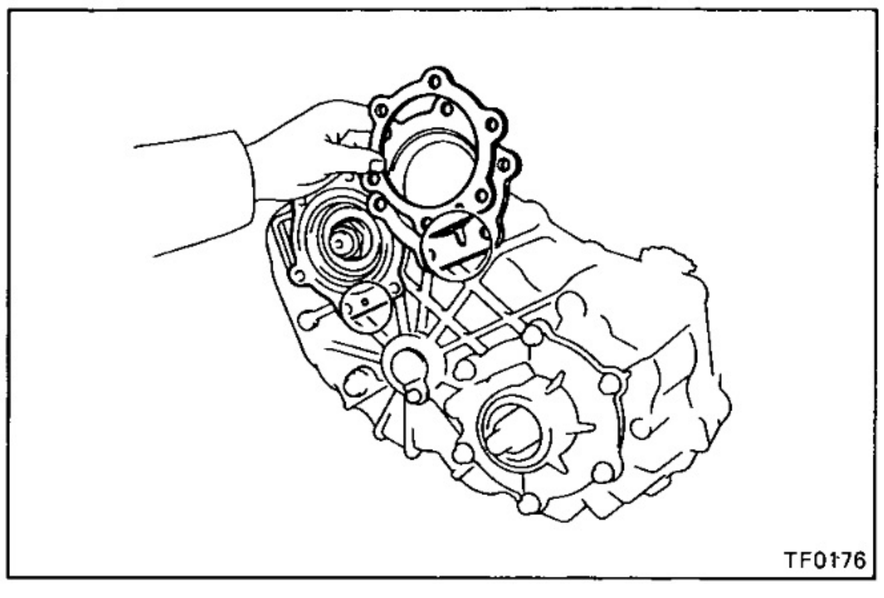

28. INSTALL TRANSFER CASE COVER NO. 2

(a) Install the transfer case cover No. 2 with a new gasket to the transfer rear case.

NOTE: Face the gasket notch downward.

(b) Apply liquid sealer to the six bolts.

(c) Install and torque the bolts.

Torque: 155 kg-cm (11 ft-lb, 15 N·m)

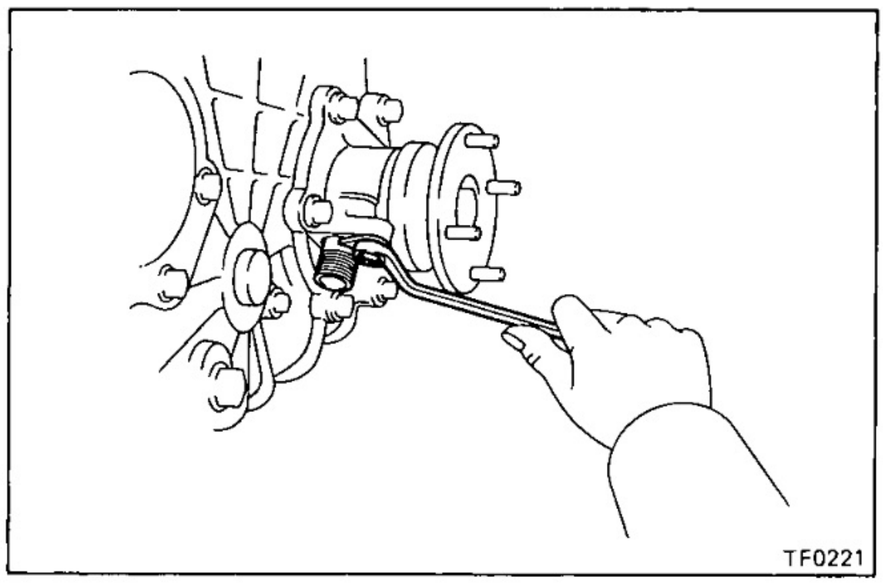

29. INSTALL SPEEDOMETER DRIVEN GEAR

Torque: 130 kg-cm (9 ft-lb, 13 N·m)

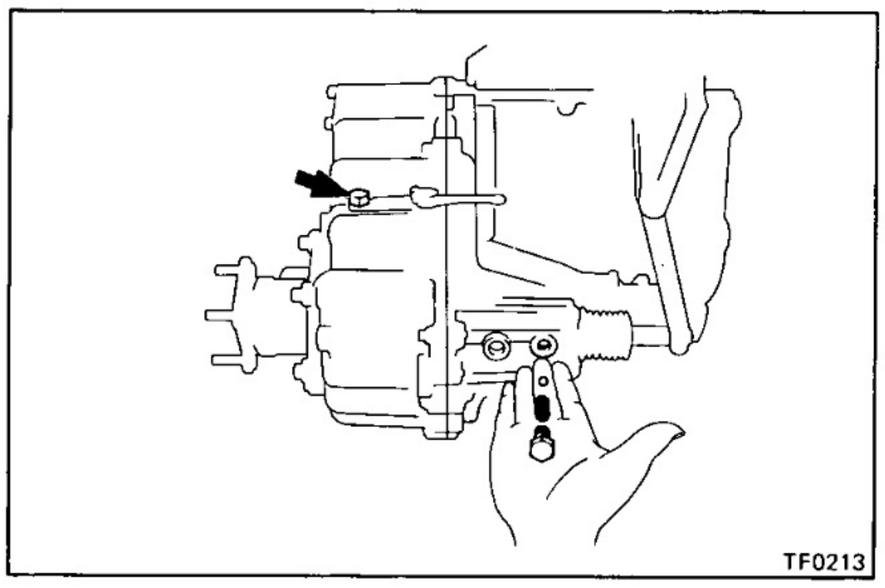

30. INSTALL PLUG, SPRING AND LOCKING BALL

[Mechanical Shift Type]

Apply liquid sealer to the plugs and install the locking balls, springs and plugs.

Torque: 450 kg-cm (33 ft-lb, 44 N·m)

[Electrical Shift Type]

Apply liquid sealer to the plug and install the locking ball, spring and plug.

Torque: 450 kg-cm (33 ft-lb, 44 N·m)

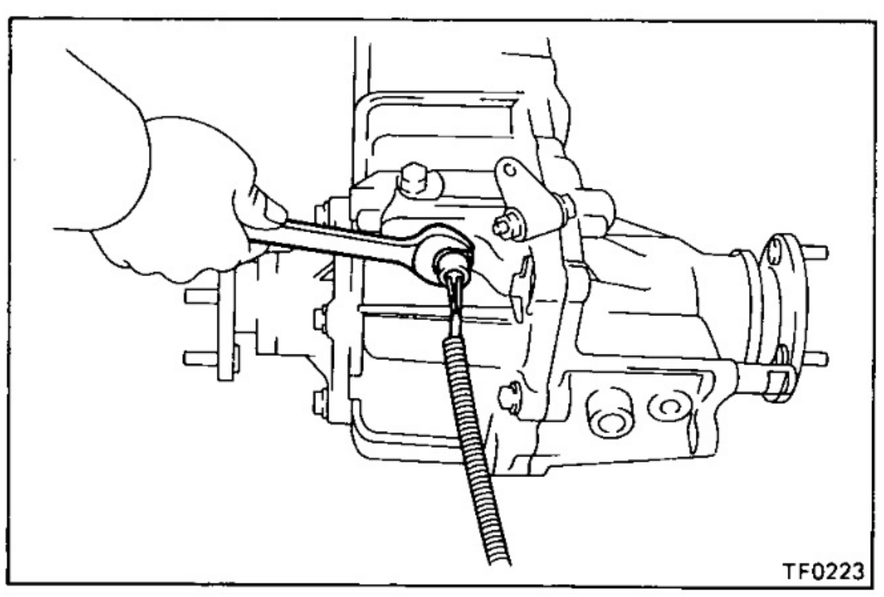

31. INSTALL L4 POSITION SWITCH (ELECTRICAL SHIFT TYPE)

Torque: 450 kg-cm (33 ft-lb, 44 N·m)

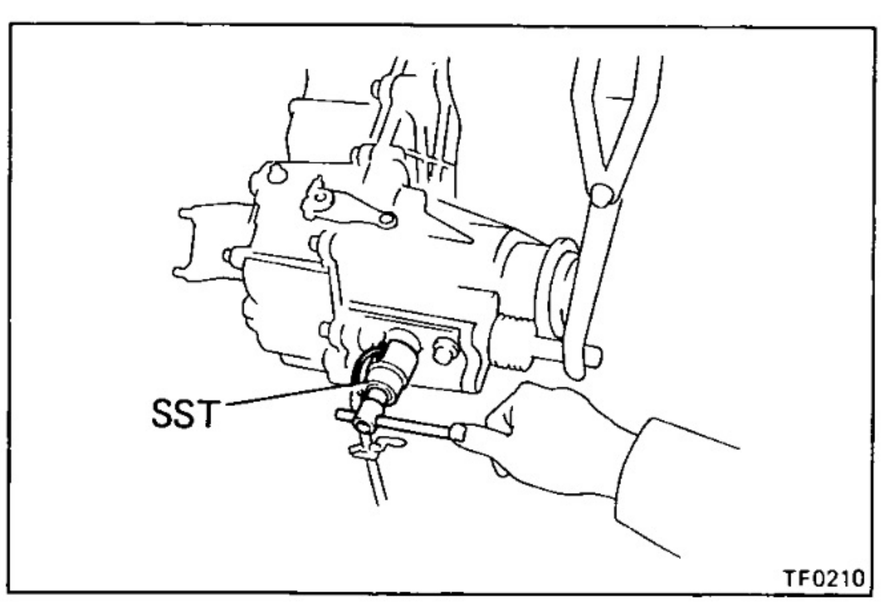

32. INSTALL 4WD INDICATOR SWITCH

Using SST, install the 4WD indicator switch.

SST 09817-16011

Torque: 450 kg-cm (33 ft-lb, 44 N·m)

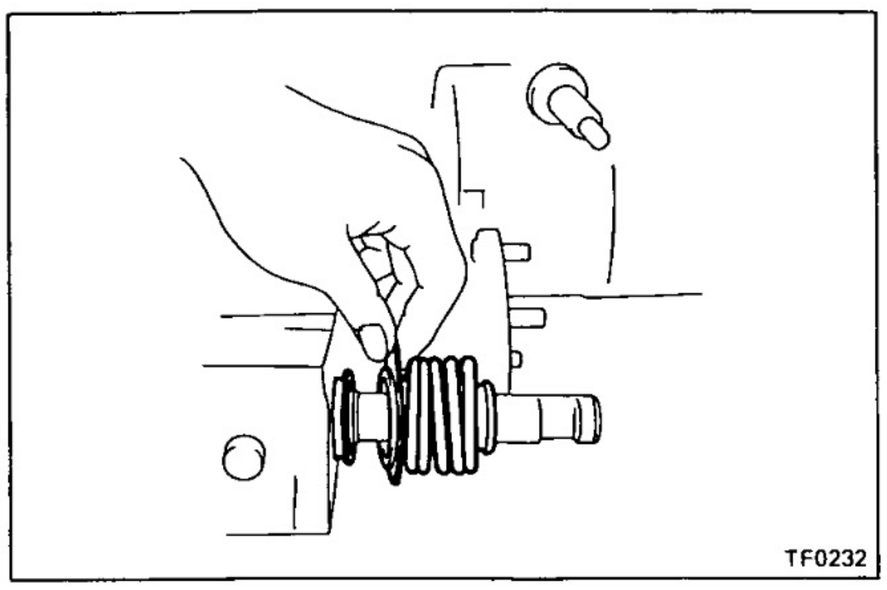

33. INSTALL DUST BOOT

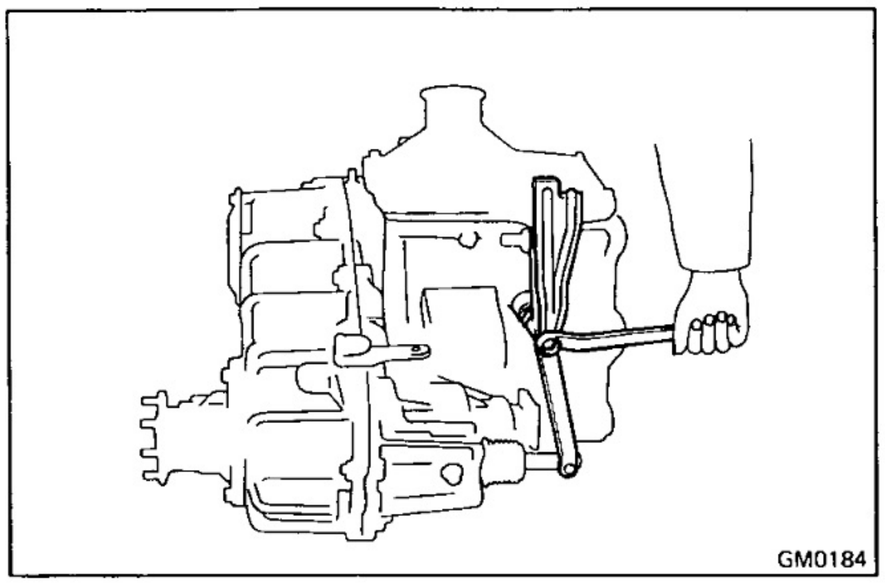

34. INSTALL TRANSFER FRONT DRIVE SHIFT LEVER (MECHANICAL SHIFT TYPE)

35. INSTALL DIAPHRAGM CYLINDER (ELECTRICAL SHIFT TYPE)
(See page TF-8)

INSTALLATION OF TRANSFER

(See page MT-40 or AT-30)

ELECTRICAL SHIFT TYPE
Wiring Diagram

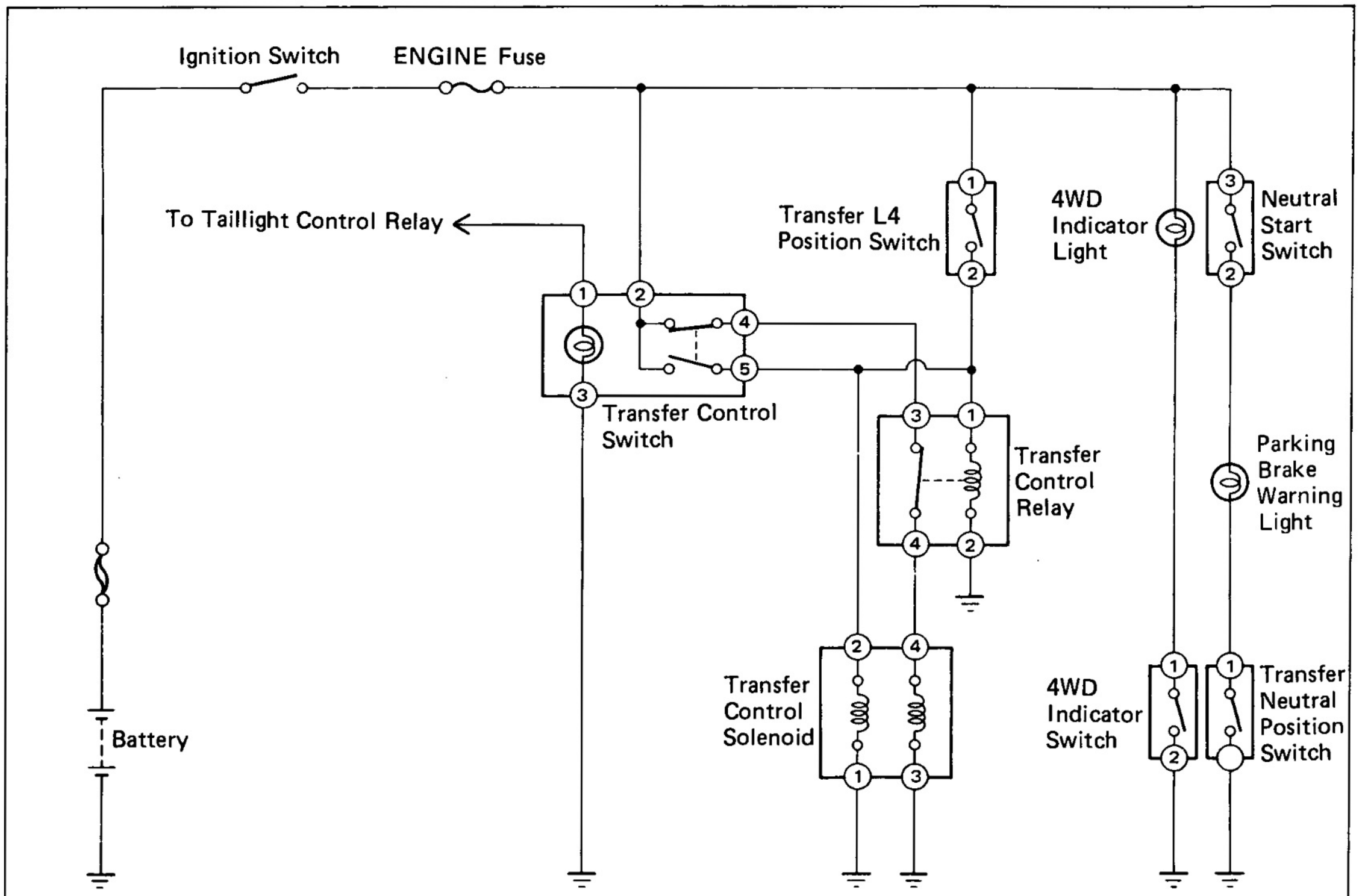

Transfer Control Switch

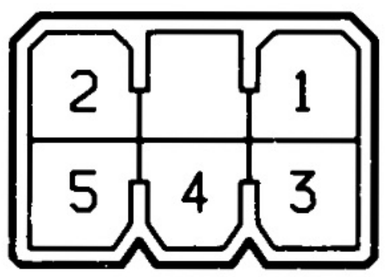

Transfer L4 Position Switch

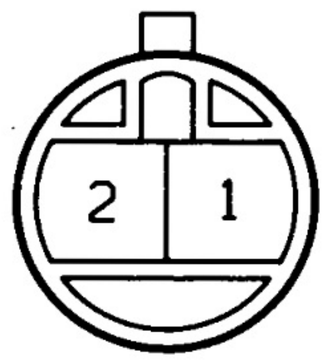

Transfer Control Relay

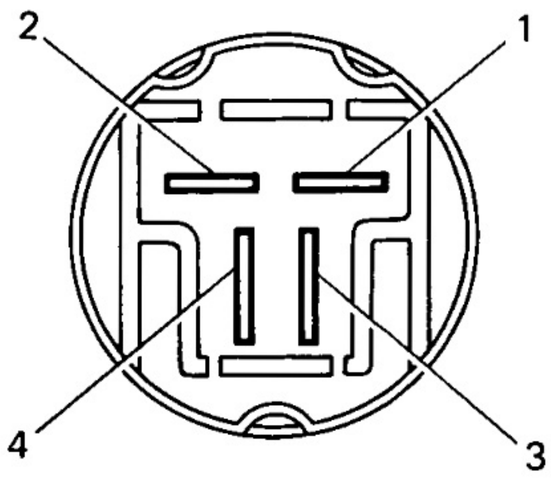

Transfer Control Solenoid

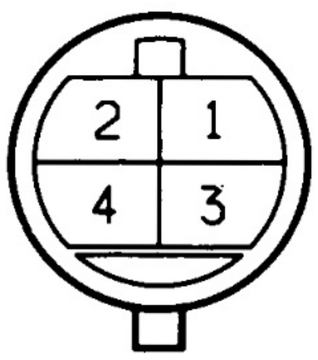

4WD Indicator Switch

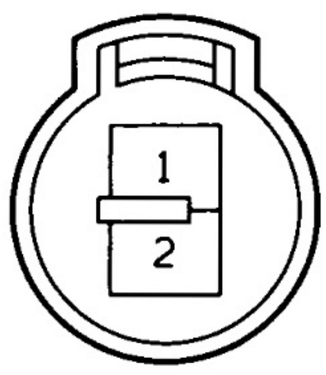

Neutral Start Switch

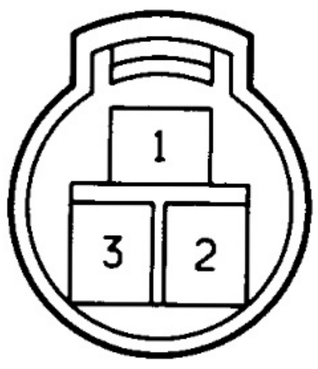

Transfer Neutral Position Switch



TF0253

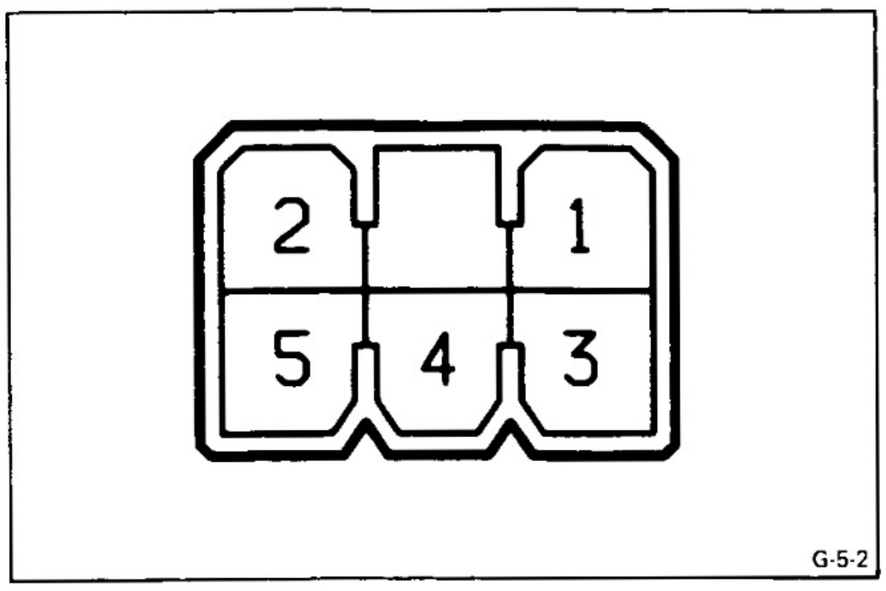

Transfer Control Switch

INSPECTION OF TRANSFER CONTROL SWITCH

INSPECT SWITCH CONTINUITY

Inspect the switch continuity between terminals.

Switch position \ Terminal	2	5	4
ON (H4)	○——	——○	
OFF (H2)	○		○

If continuity is not as specified, replace the switch.

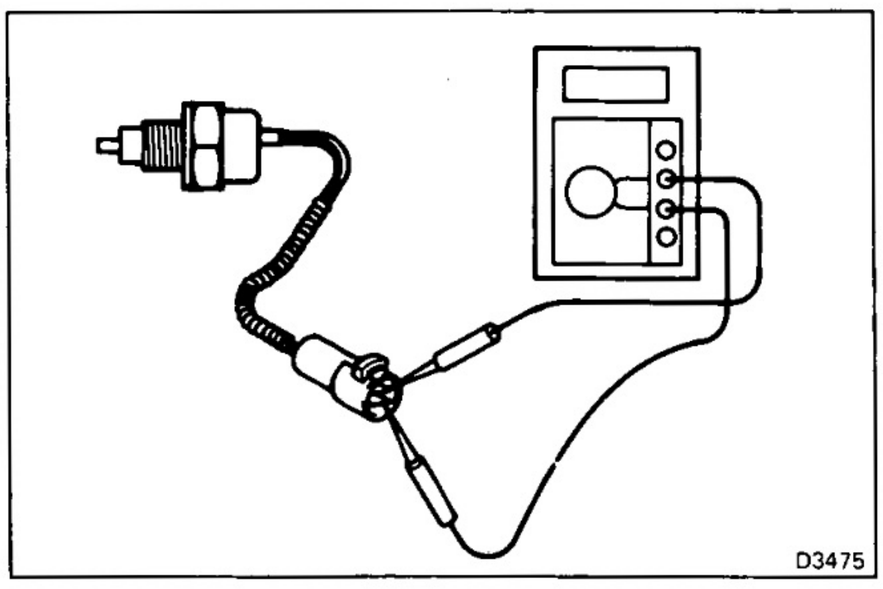

Transfer L4 Position Switch

INSPECTION OF TRANSFER L4 POSITION SWITCH

INSPECT SWITCH CONTINUITY

(a) Check that there is continuity between terminals when the switch is pushed (transfer in "H4" position).

(b) Check that there is no continuity between terminals when the switch is free (transfer in "H2" position).

If continuity is not as specified, replace the switch..

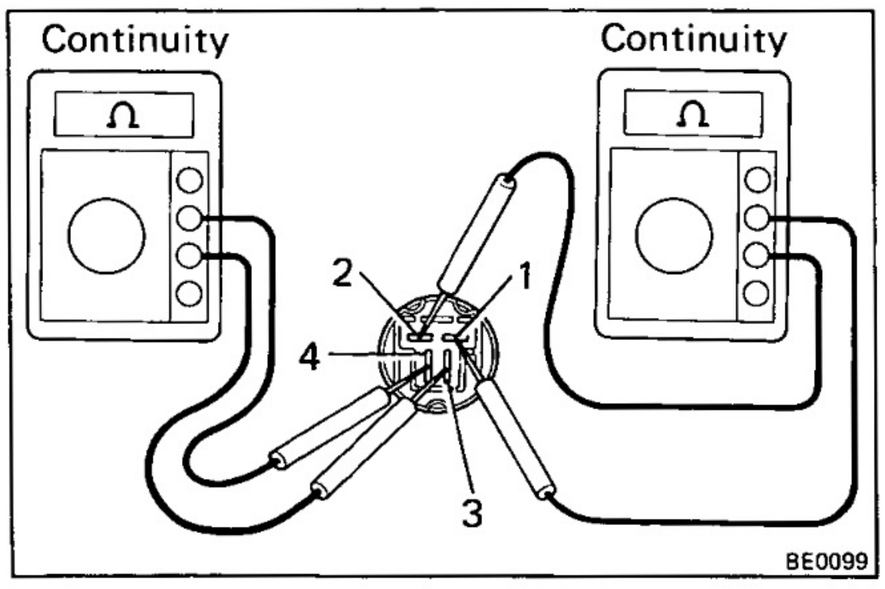

Transfer Control Relay

INSPECTION OF TRANSFER CONTROL RELAY

1. INSPECT RELAY CONTINUITY

(a) Check that there is continuity between terminals 1 and 2.

(b) Check that there is continuity between terminals 3 and 4.

(c) Check that there is no continuity between terminals 1 and 3.

If continuity is not as specified, replace the relay.

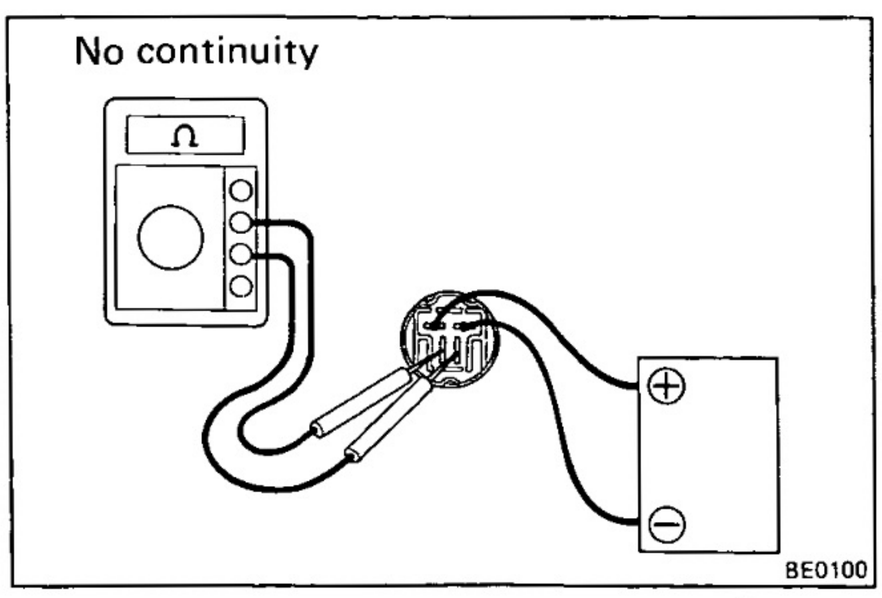

2. INSPECT RELAY OPERATION

Apply the battery voltage across terminals 1 and 2.
Check that there is no continuity between terminals 3 and 4.

If operation is not as specified, replace the relay.

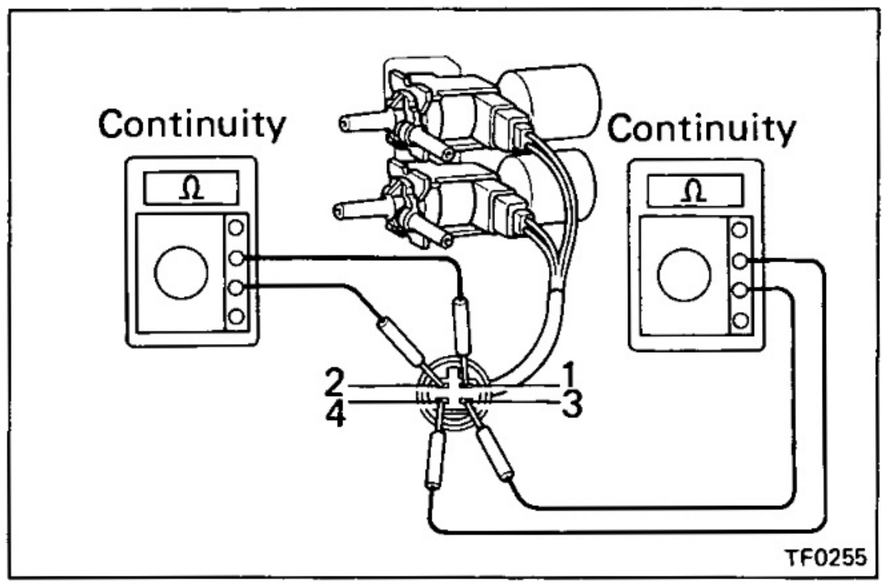

Transfer Control Solenoid

INSPECTION OF TRANSFER CONTROL SOLENOID

1. INSPECT SOLENOID CONTINUITY

(a) Check that there is continuity between terminals 1 and 2.

(b) Check that there is continuity between terminals 3 and 4.

(c) Check that there is no continuity between terminals 1 and 3.

If continuity is not as specified, replace the solenoid.

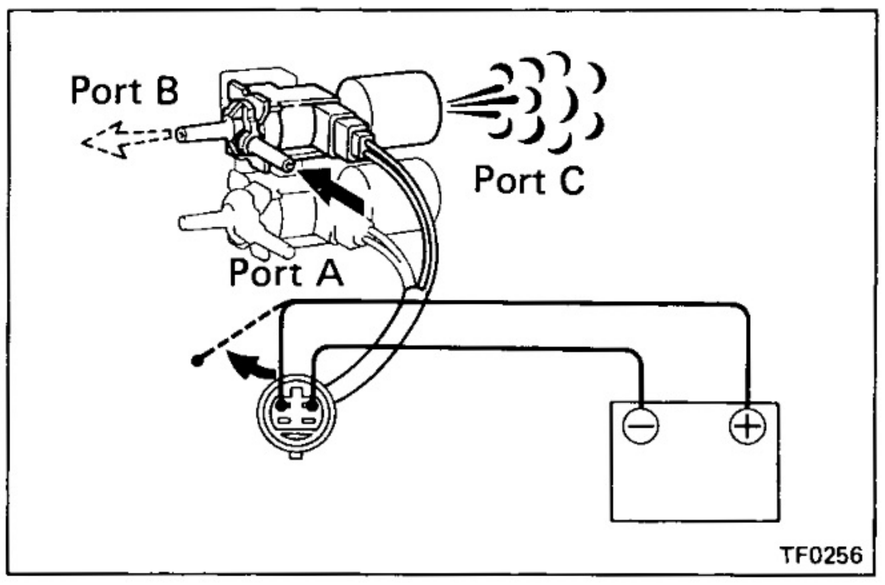

2. INSPECT H2 SOLENOID OPERATION

(a) Apply the battery voltage across terminals 1 and 2. Check that air flows from port A to port C. Check that air does not flow from port A to port B.

(b) Check that air flows from port A to port B. Check that air does not flow from port A to port C.

If operation is not as specified, replace the solenoid.

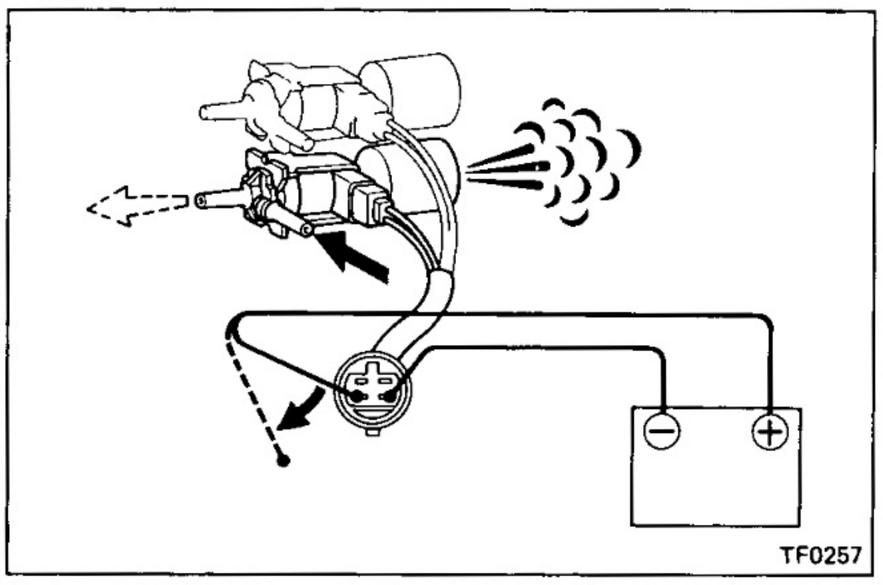

3. INSPECT H4 SOLENOID OPERATION

(a) Apply the battery voltage across terminals 3 and 4. Check that air flows from port A to port C. Check that air does not flow from port A to port B.

(b) Check that air flows from port A to port B. Check that air does not flow from port A to port C.

If operation is not as specified, replace the solenoid.

4WD Indicator Light

INSPECTION OF 4WD INDICATOR LIGHT

INSPECT INDICATOR LIGHT OPERATION

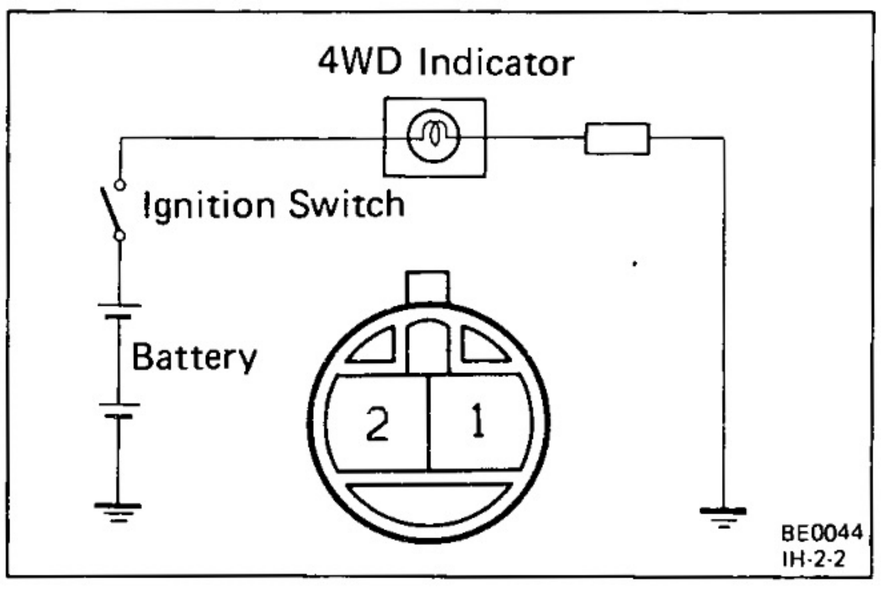

(a) Disconnect the connector from the 4WD indicator switch. Connect terminal 1 of the 4WD indicator switch and body ground.

(b) Turn the ignition switch or starter switch on. Check that the bulb lights.

If operation is not correct, remove and test the bulb.

4WD Indicator Switch

INSPECTION OF 4WD INDICATOR SWITCH

INSPECT SWITCH CONTINUITY

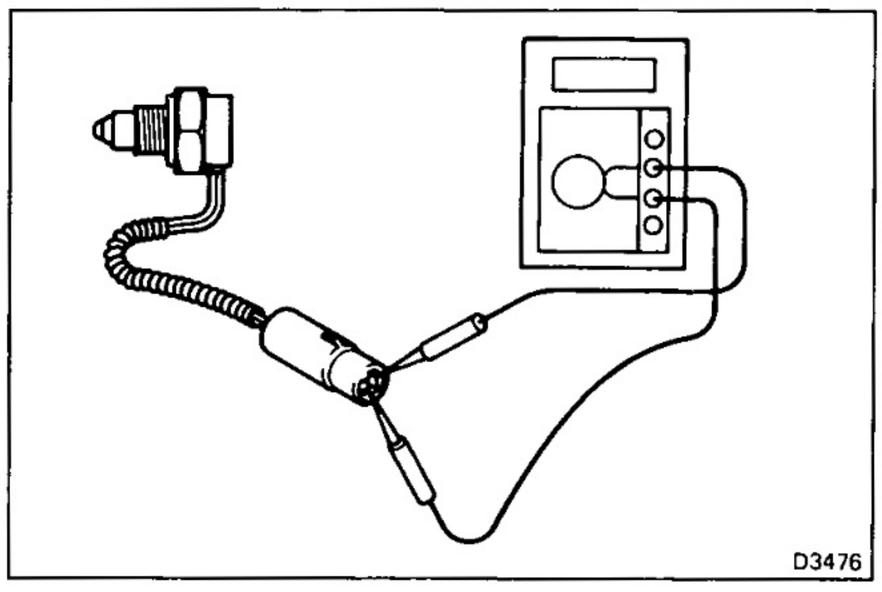

(a) Check that there is continuity between terminals when the switch is pushed (transfer is in the "4WD" position).

(b) Check that there is no continuity between terminals when the switch is free (transfer is not in "4WD" position).

If continuity is not as specified, replace the switch.

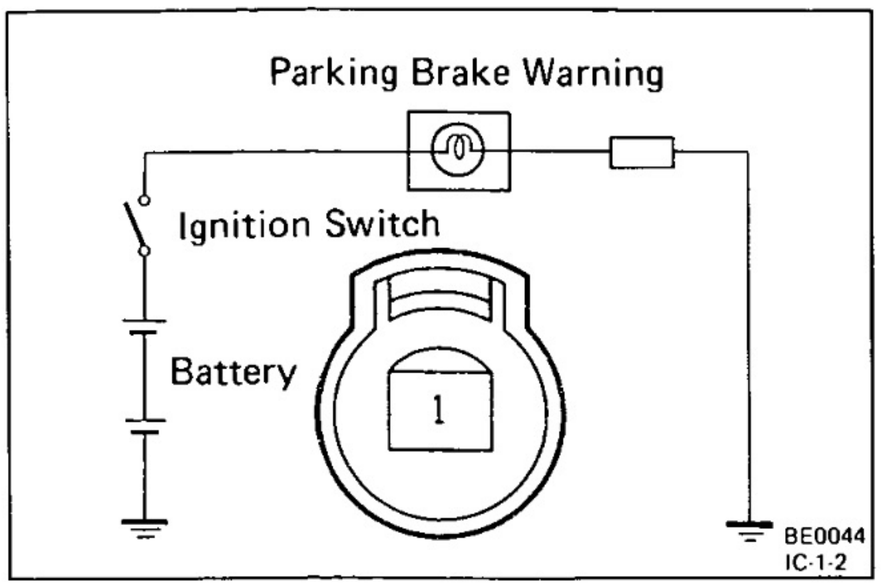

Parking Brake Warning Light

INSPECTION OF PARKING BRAKE WARNING LIGHT

INSPECT WARNING LIGHT OPERATION

(a) Disconnect the connector from the transfer neutral position switch. Connect the switch terminal and body ground.

(b) Turn the ignition switch or starter switch on. Check that the bulb lights when the neutral start switch is the "N" position.

If operation is not as specified, remove and test the bulb and neutral position switch.

Neutral Start Switch

(See page AT-6)

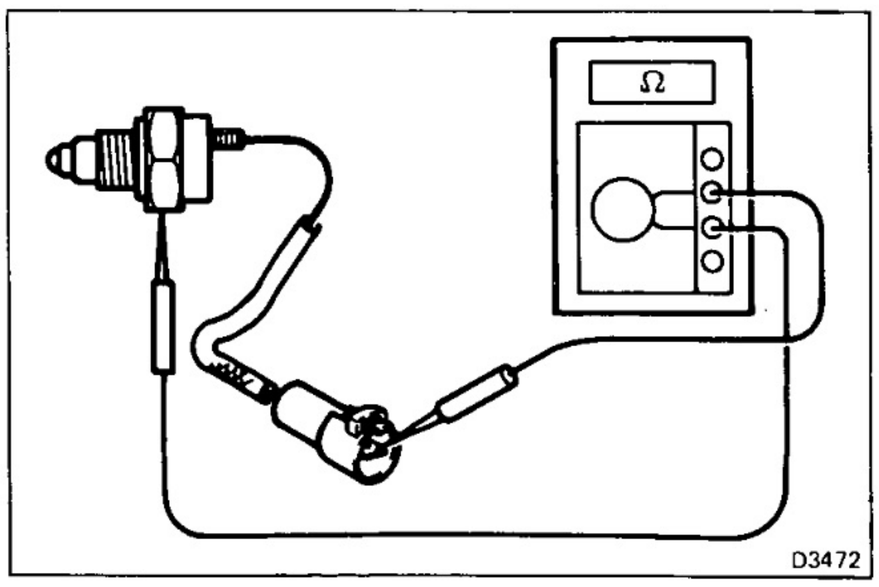

Transfer Neutral Position Switch

INSPECTION OF TRANSFER NEUTRAL POSITION SWITCH

INSPECT SWITCH CONTINUITY

(a) Check that there is continuity between terminal and switch body when the switch is pushed (transfer in the "N" position).

(b) Check that there is no continuity between terminal and switch body when the switch is free (transfer not in the "N" position).

If continuity is not as specified, replace the switch.

A/T FLUID TEMPERATURE WARNING

Wiring Diagram

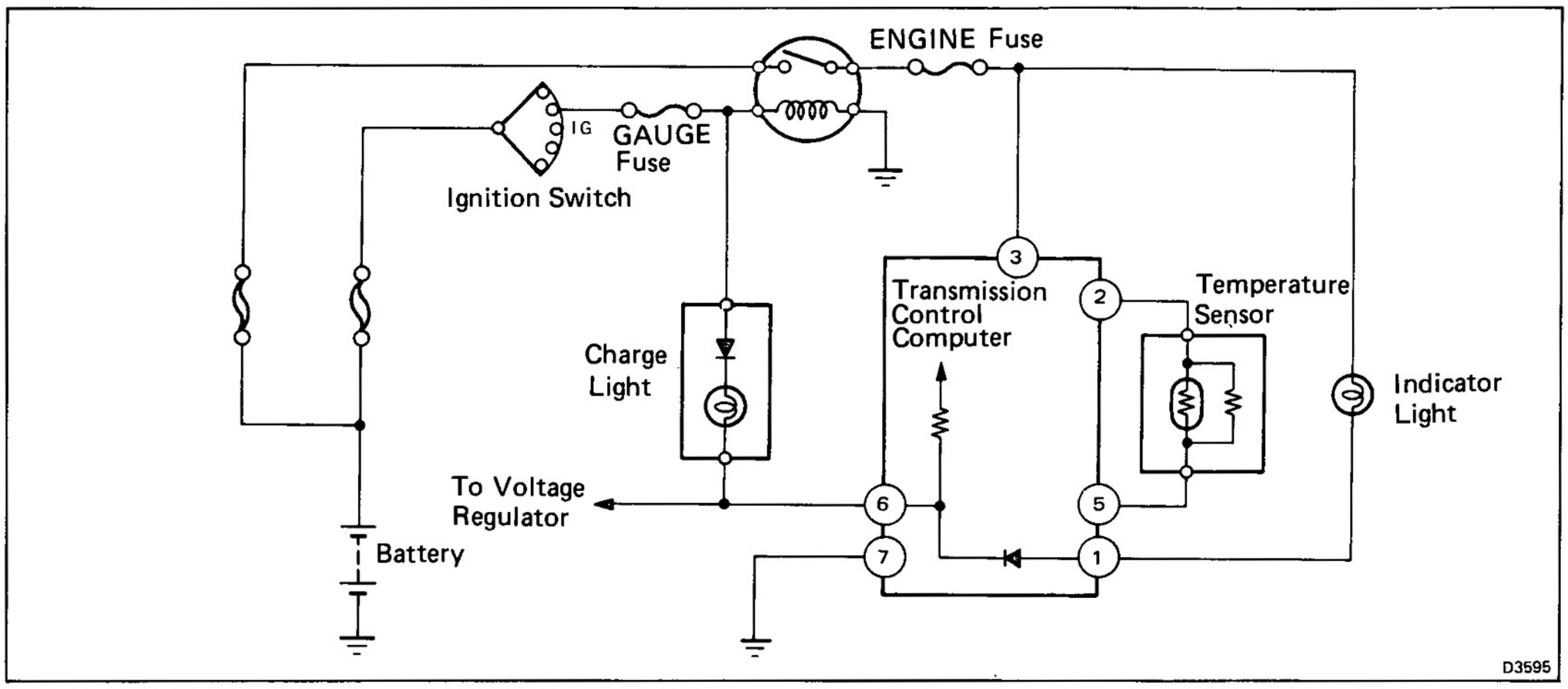

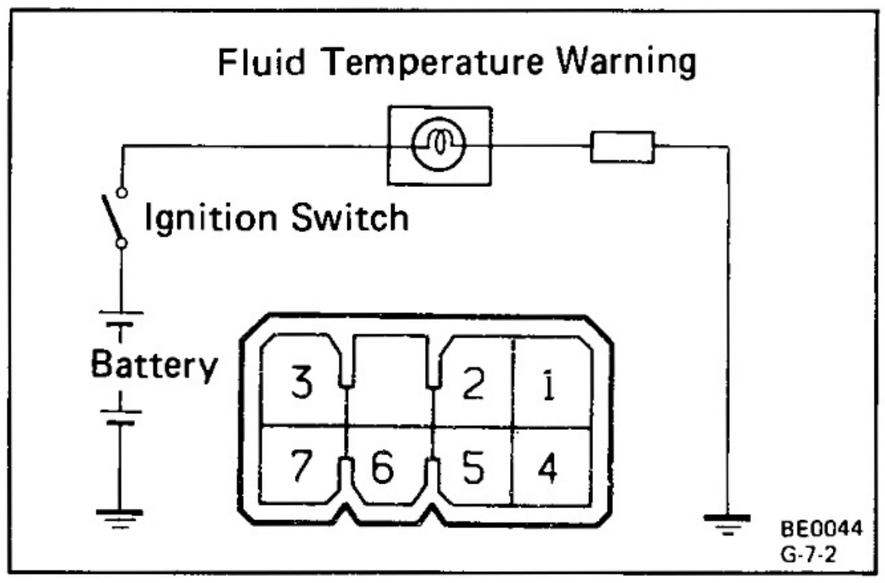

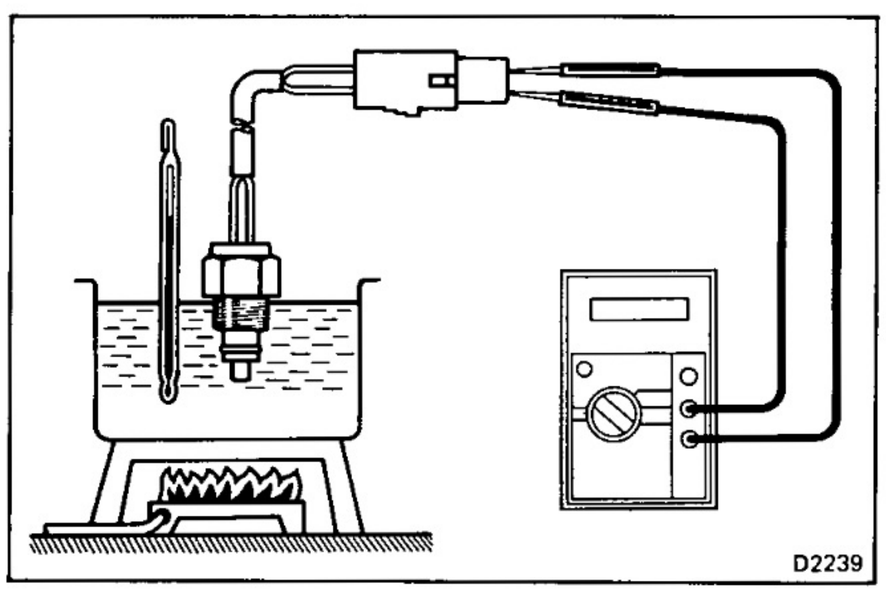

A/T Fluid Temperature Warning Light

INSPECTION OF A/T FLUID TEMPERATURE WARNING LIGHT

INSPECT WARNING LIGHT OPERATION

(a) Disconnect the connector from the transmission control computer. Connect the terminal 1 wire harness side connector and body ground.

(b) Turn the ignition switch or starter switch on. Check that the bulb lights.

If operation is not as specified, remove and test the bulb.

A/T Fluid Temperature Sender Gauge

INSPECTION OF A/T FLUID TEMPERATURE SENDER GAUGE

MEASURE RESISTANCE OF SENDER GAUGE

Measure the resistance between terminals.

If resistance value is not as shown in the table below, replace the sender gauge.

Temperature	Resistance
25°C (77°F)	3.38 kΩ
120°C (248°F)	0.55 kΩ

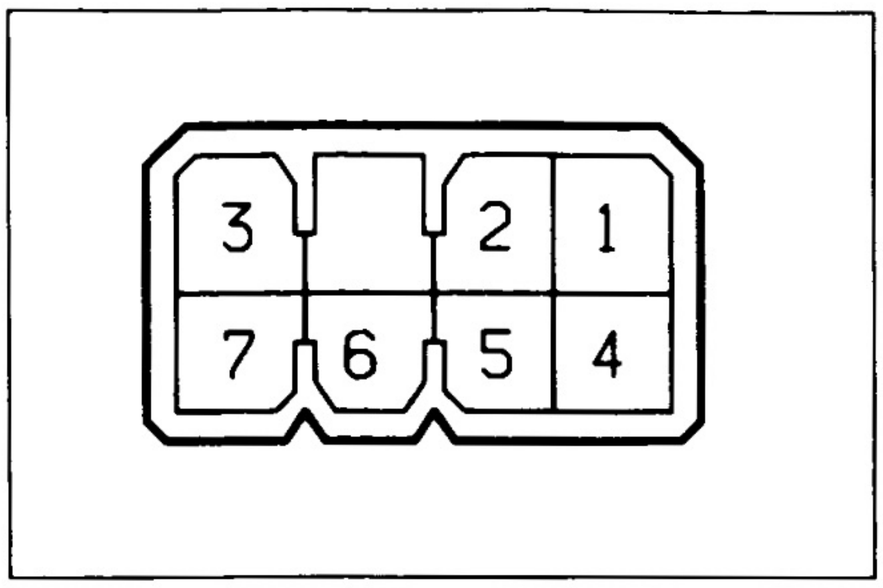

Transmission Control Computer

INSPECTION OF TRANSMISSION CONTROL COMPUTER

INSPECT TRANSMISSION CONTROL COMPUTER CIRCUIT

Disconnect the computer and inspect the connector on the wire harness side as shown in the table below.

Terminal	Check Item	Tester Connection	Condition	Voltage or Resistance Value
2	Continuity	2 – 5		25°C (77°F) 3.38 kΩ
3	Voltage	3 – Body Ground	Turn ignition switch on.	Battery voltage
			Turn ignition switch off.	No voltage
6	Voltage	6 – Body Ground	Turn ignition switch on.	Battery voltage
			Engine running.	Continuity
7	Continuity	7 – Body Ground		Continuity

If circuit is correct, replace the computer.

PROPELLER SHAFT

	Page
PRECAUTIONS	PR-2
TROUBLESHOOTING	PR-2
PROPELLER SHAFT	PR-2

PRECAUTIONS

Be careful not to grip the propeller shaft tube too tightly in the vise as this will cause deformation.

TROUBLESHOOTING

Problem	Possible cause	Remedy	Page
Noise	Sleeve yoke spline worn	Replace sleeve yoke	PR-4
	Spider bearing worn or stuck	Replace spider bearing	PR-4
Vibration	Propeller shaft runout	Replace propeller shaft	PR-3
	Propeller shaft imbalance	Balance propeller shaft	
	Sleeve yoke spline stuck	Replace sleeve yoke	PR-4

PROPELLER SHAFT

COMPONENTS

Front and Rear Propeller Shaft

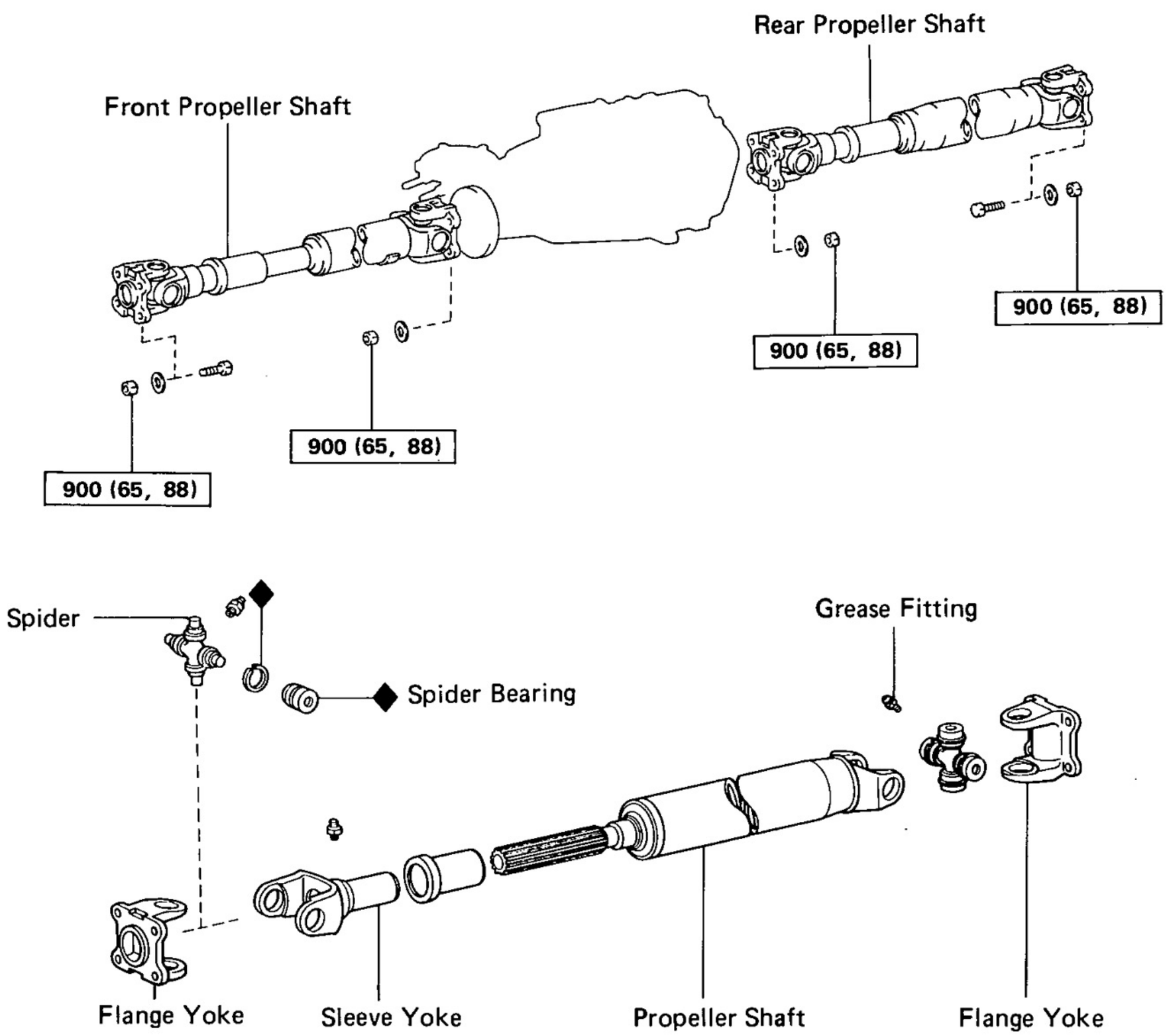

kg-cm (ft-lb, N·m) : Specified torque

◆ : Non-reusable part

D3796
D3165

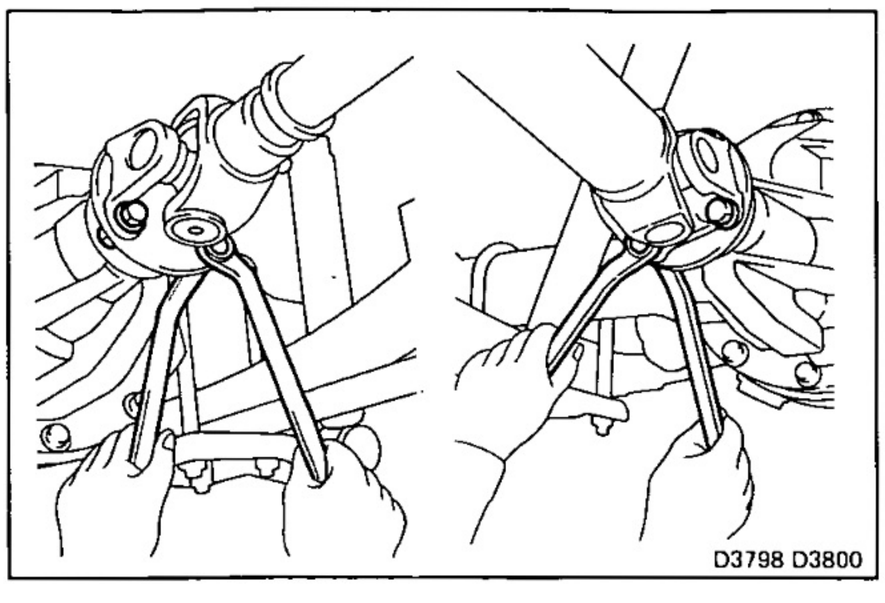

REMOVAL OF FRONT AND REAR PROPELLER SHAFT

1. DISCONNECT PROPELLER SHAFT FLANGE FROM COMPANION FLANGE ON DIFFERENTIAL
   (a) Put matchmarks on the flanges.
   (b) Remove the four bolts and nuts.

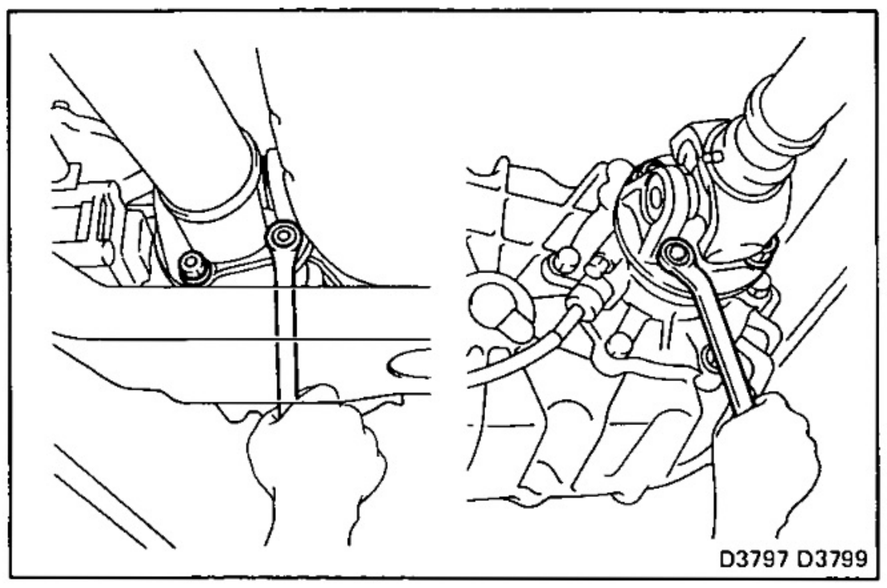

2. DISCONNECT PROPELLER SHAFT FLANGE FROM COMPANION FLANGE ON TRANSFER
   (a) Put matchmarks on the flanges.
   (b) Remove the four nuts.
   (c) Remove the propeller shaft.

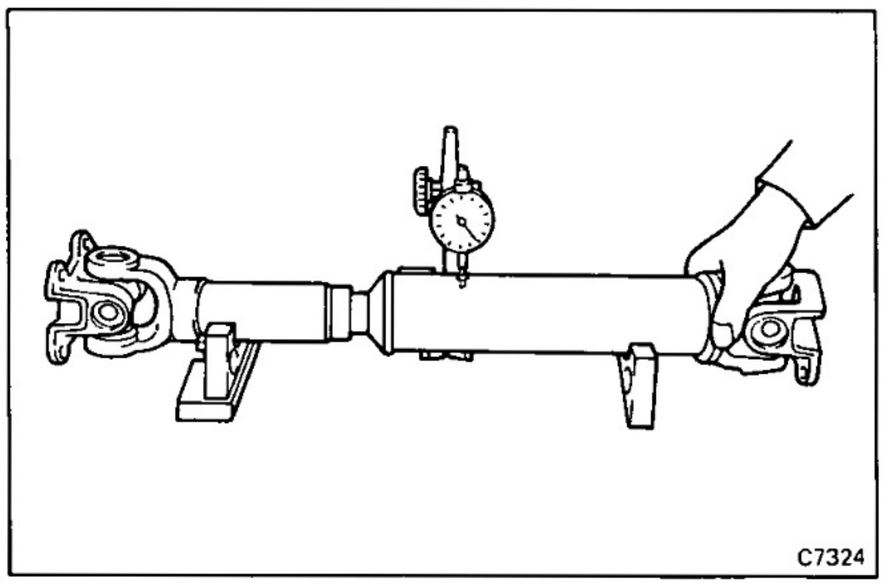

INSPECTION OF PROPELLER SHAFT COMPONENTS

1. INSPECT FRONT AND REAR PROPELLER SHAFTS FOR DAMAGE OR RUNOUT

   If shaft runout is greater than maximum, replace the shaft.

   Maximum runout; 0.8 mm (0.031 in.)

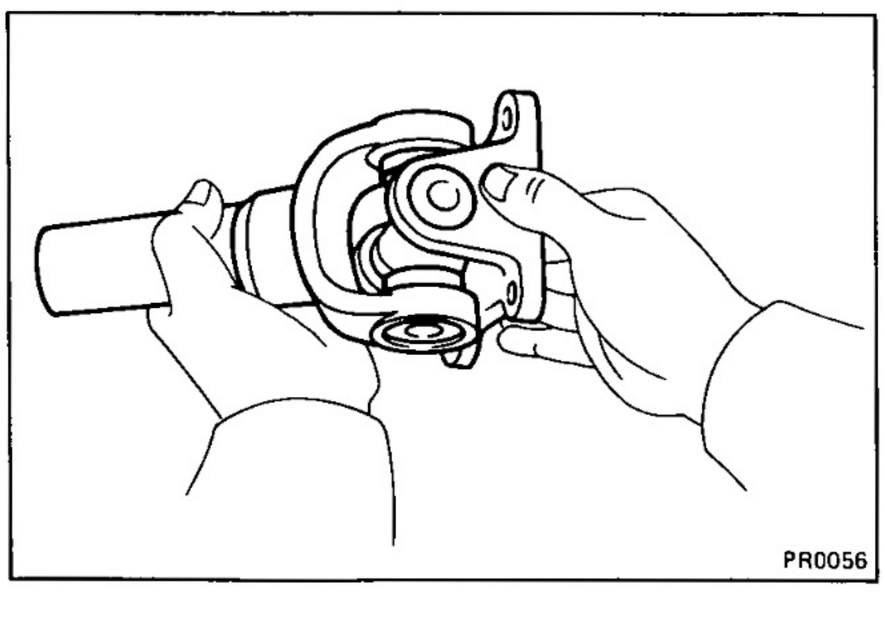

2. INSPECT SPIDER BEARINGS
   (a) Inspect the spider bearings for wear or damage.
   (b) Check the spider bearing axial play by turning the yoke while holding the shaft tightly.

   Bearing axial play: Less than 0.05 mm (0.0020 in.)

   If necessary, replace the spider bearing.

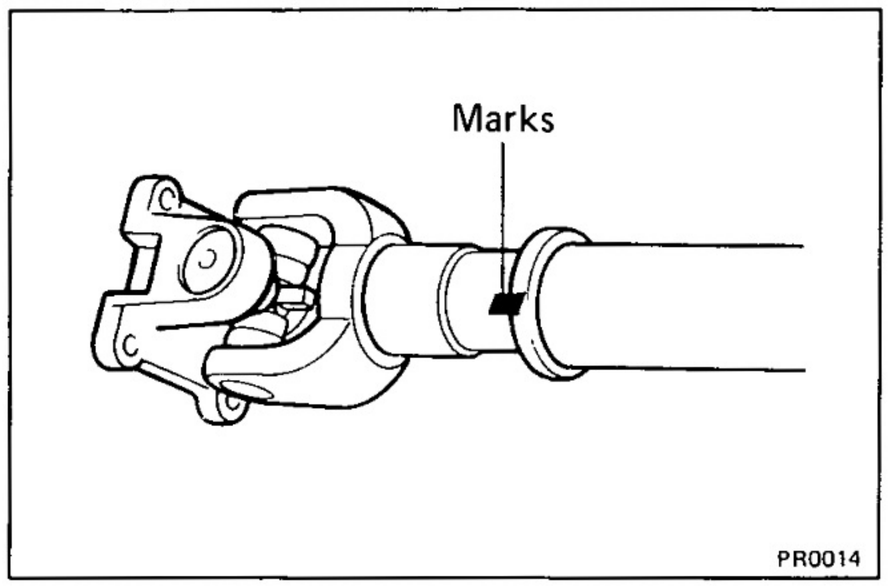

DISASSEMBLY OF PROPELLER SHAFT

1. REMOVE SLEEVE YOKE FROM PROPELLER SHAFT

(a) Place matchmarks on the sleeve yoke and shaft.

(b) Pull out the sleeve yoke from the shaft.

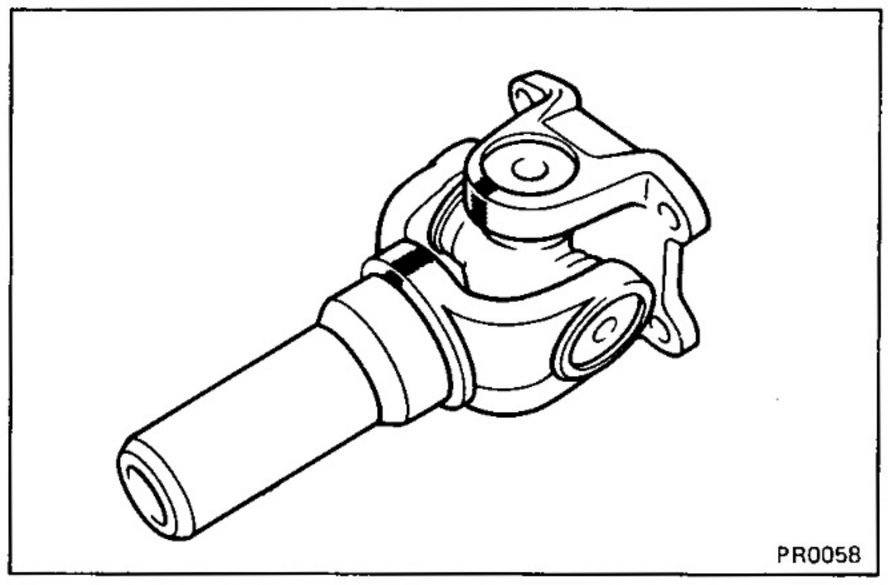

2. REMOVE SPIDER BEARING

(a) Put matchmarks on the sleeve yoke and flange.

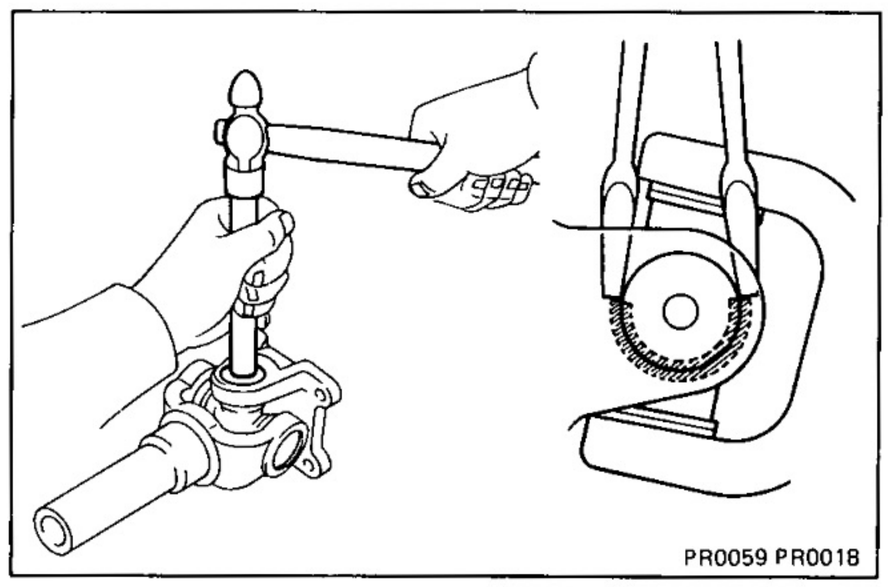

(b) Slightly tap in the bearing outer races.

(c) Using two screwdrivers, remove the four snap rings from the grooves.

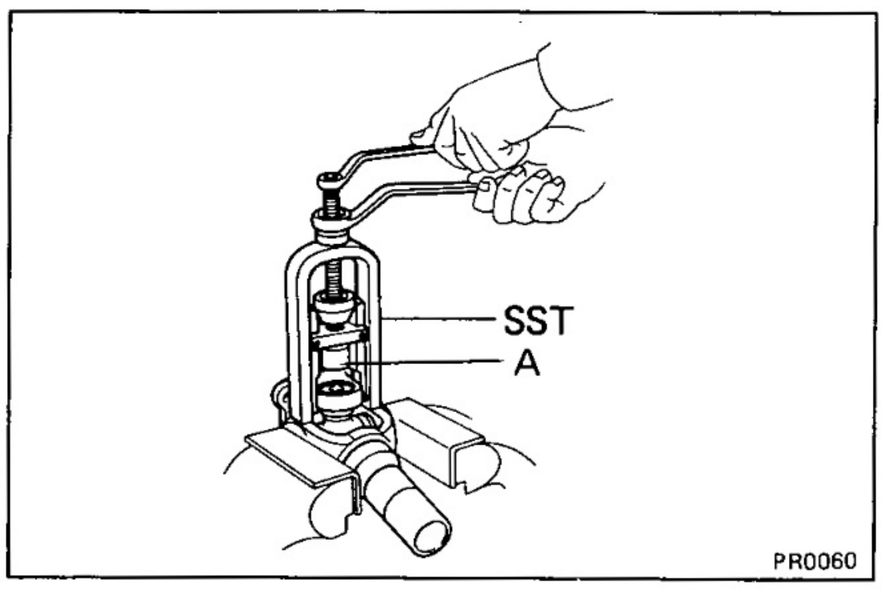

(d) Using SST, push out the bearing from the flange.

SST 09332-25010

NOTE: Sufficiently raise the part indicated by A so that it does not come into contact with the bearing.

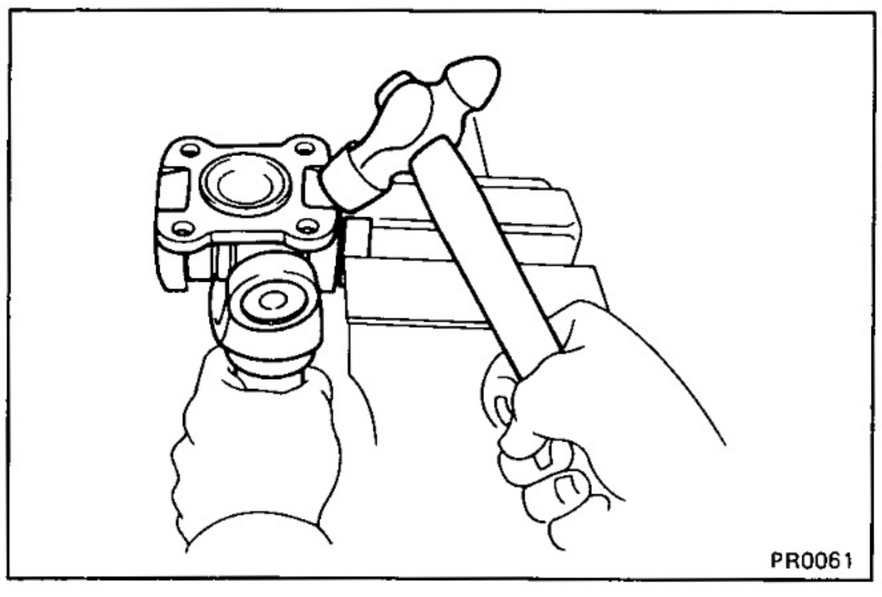

(e) Clamp the bearing outer race in a vise and tap off the flange with a hammer.

NOTE: Remove the bearing on the opposite side in the same procedure.

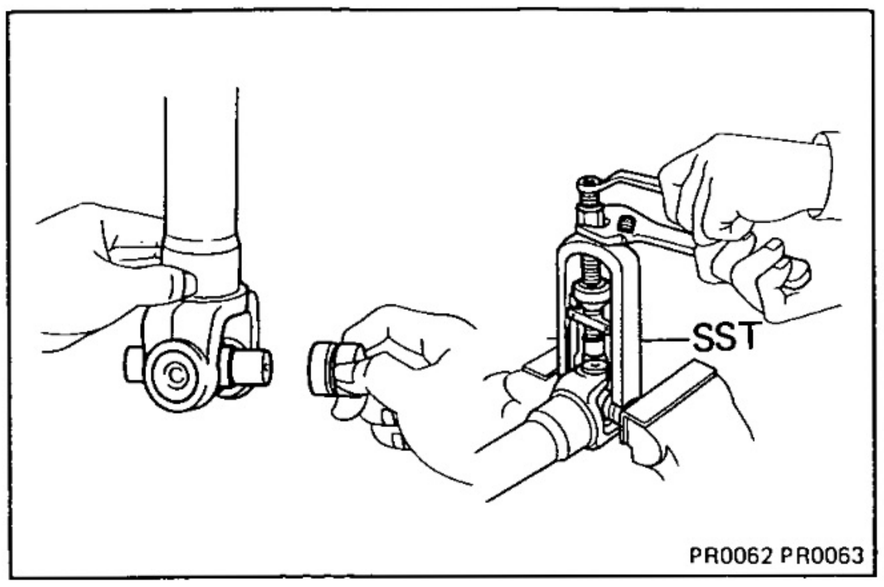

(f) Install the two removed bearing outer races to the spider.

(g) Using SST, push out the bearing from the yoke.

SST 09332-25010

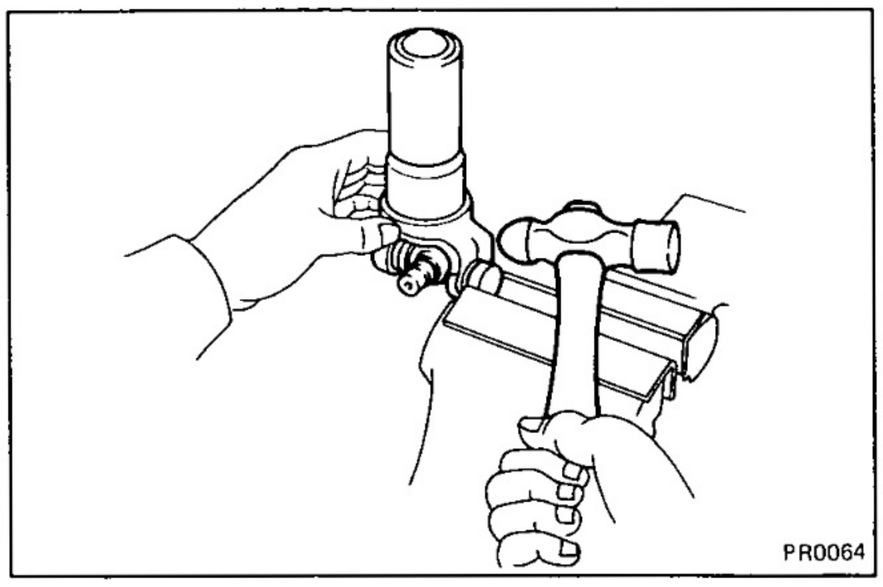

(h) Clamp the outer bearing race in a vise and tap off the yoke with a hammer.

NOTE: Remove the bearing on the opposite side in the same procedure.

ASSEMBLY OF PROPELLER SHAFT

(See page PR-2)

NOTE: When replacing the spider, be sure that the grease fitting assembly hole is facing in the direction shown in figure.

SPIDER GREASE FITTING ASSEMBLY DIRECTION

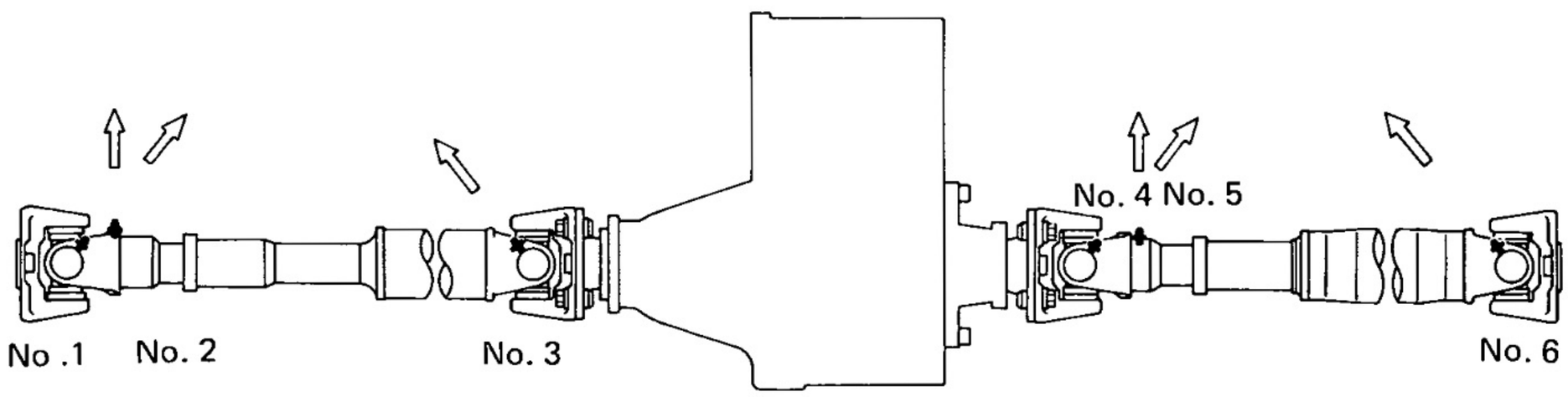

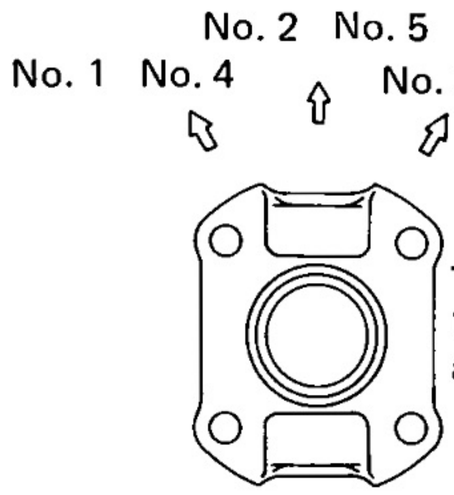

The figure at left shows the locations of the grease fittings as seen from the rear.

D3169

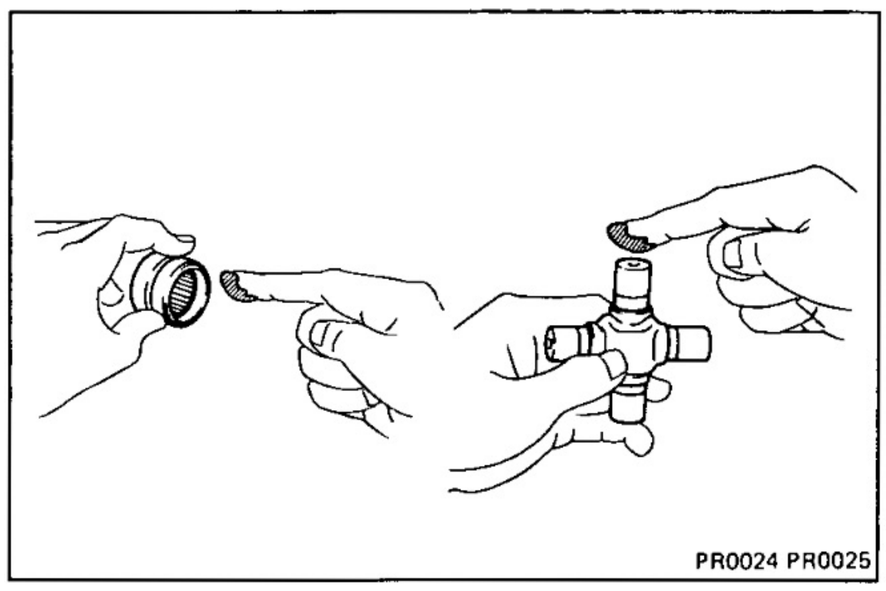
PR0024 PR0025

1. INSTALL SPIDER BEARINGS

(a) Apply MP grease to the spider and bearings.

NOTE: Be careful not to apply too much grease.

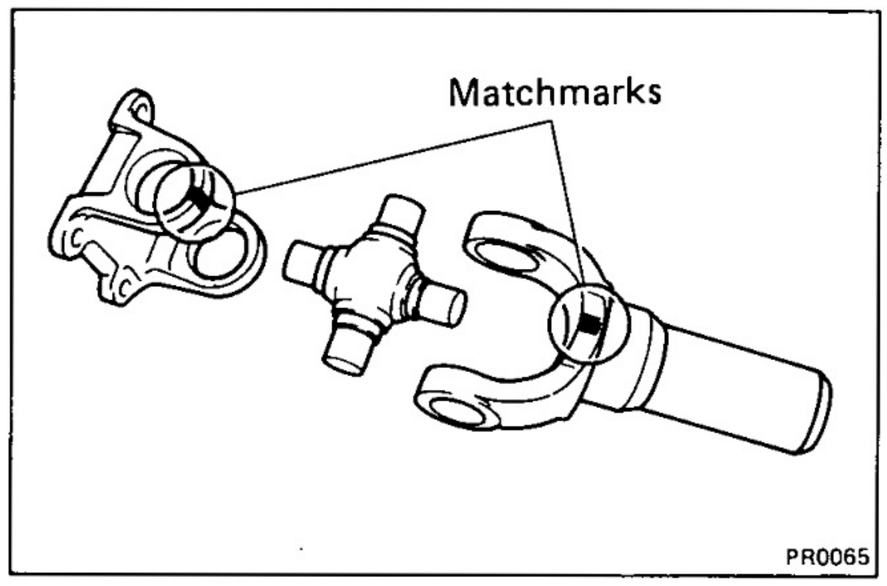

PR0065

(b) Align the matchmarks on the yoke and flange.

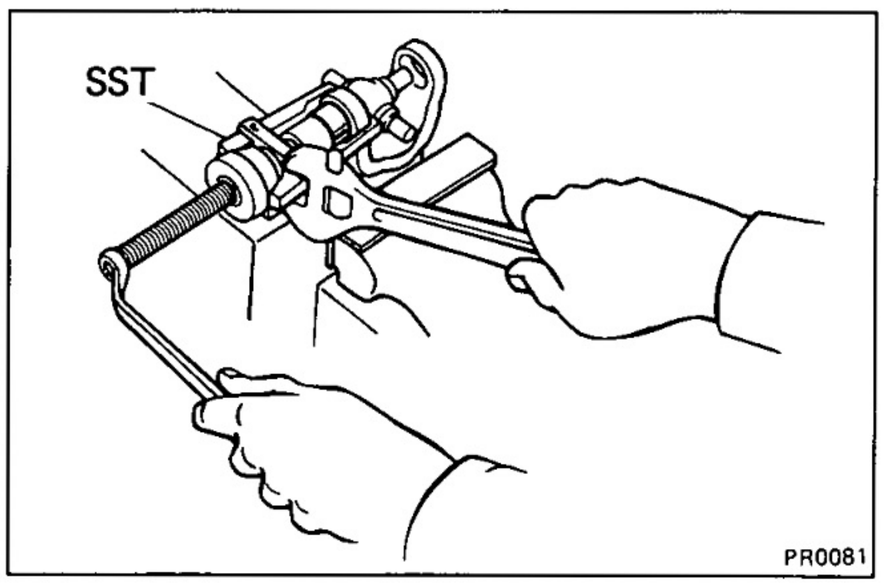

PR0081

(c) Fit the new spider into the yoke.

(d) Using SST, install the new bearings on the spider.

SST 09332-25010

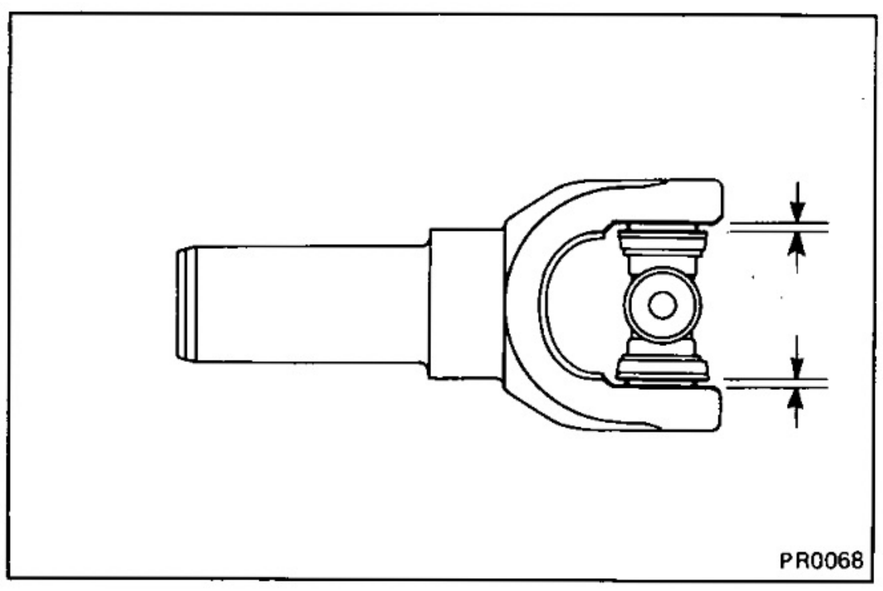
PR0068

(e) Using SST, adjust both bearings so that the snap ring grooves are at maximum and equal widths.

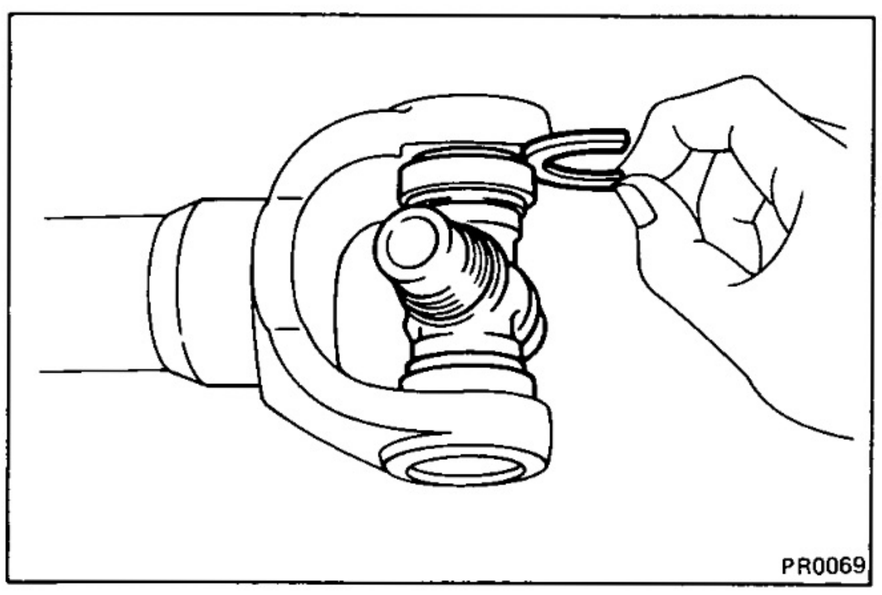
PR0069

(f) Install two snap rings of equal thickness which will allow 0 – 0.05 mm (0 – 0.0020 in.) axial play.

NOTE: Do not reuse the snap rings.

Thickness of snap ring

Thickness mm (in.)	Color
2.00 (0.0787)	–
2.03 (0.0799)	Brown
2.06 (0.0811)	Blue
2.09 (0.0823)	–

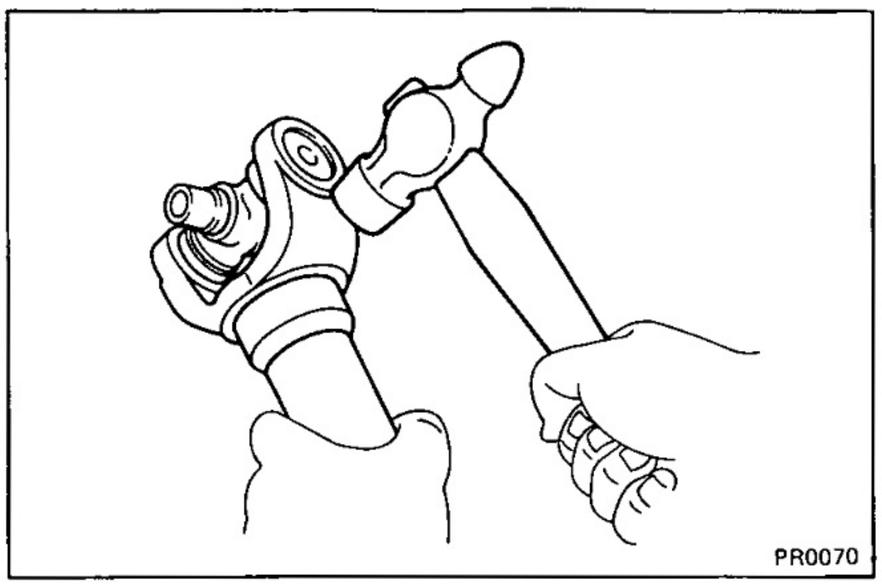
PR0070

(g) Using a hammer, tap the yoke until there is no clearance between the bearing outer race and snap ring.

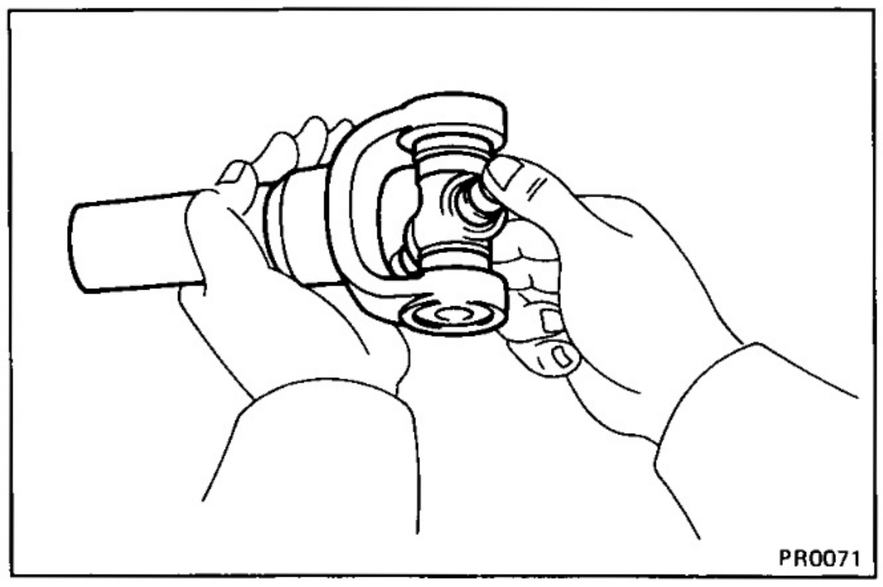
PR0071

(h) Check that the spider bearing moves smoothly.

(i) Check the spider bearing axial play.

Bearing axial play: Less than 0.05 mm (0.0020 in.)

NOTE: Install new spider bearings on the flange side in the procedure described above.

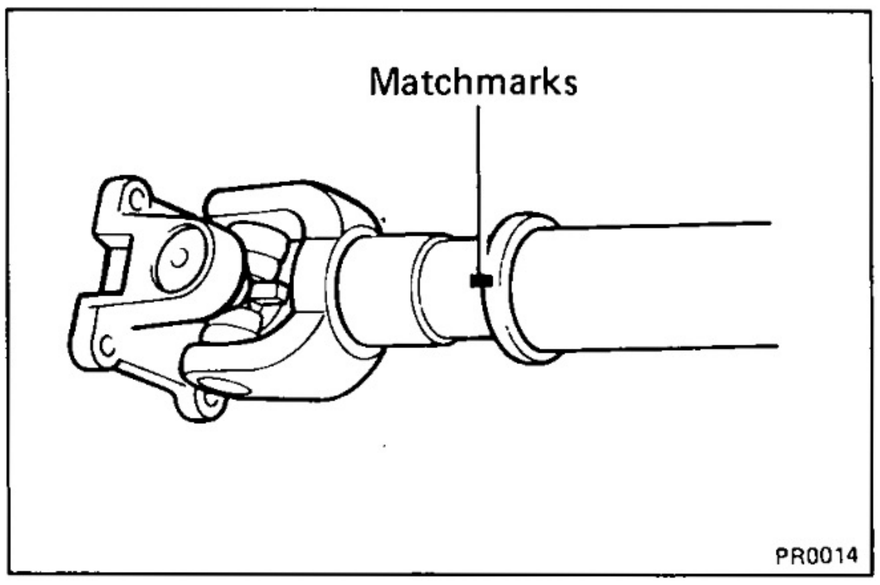

PR0014

2. INSERT SLEEVE YOKE INTO PROPELLER SHAFT

(a) Apply MP grease to the propeller shaft spline and sleeve yoke sliding surface.

(b) Align the matchmarks on the sleeve yoke and propeller shaft.

(c) Install the propeller shaft into the sleeve yoke.

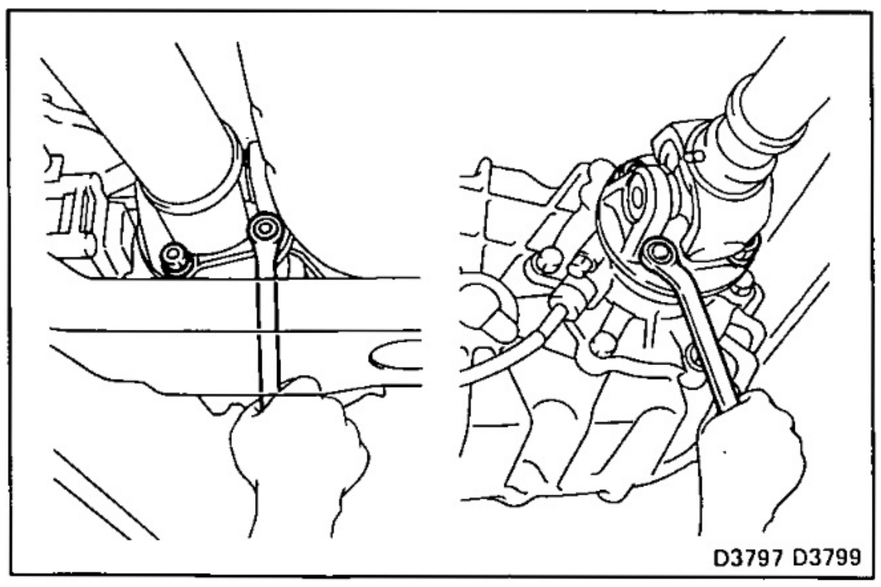
D3797 D3799

INSTALLATION OF FRONT AND REAR PROPELLER SHAFTS

1. CONNECT PROPELLER SHAFT FLANGE TO COMPANION FLANGE ON TRANSFER

(a) Align the matchmarks on the flanges and connect the flanges with four nuts.

(b) Torque the nuts.

Torque: 900 kg-cm (65 ft-lb, 88 N·m)

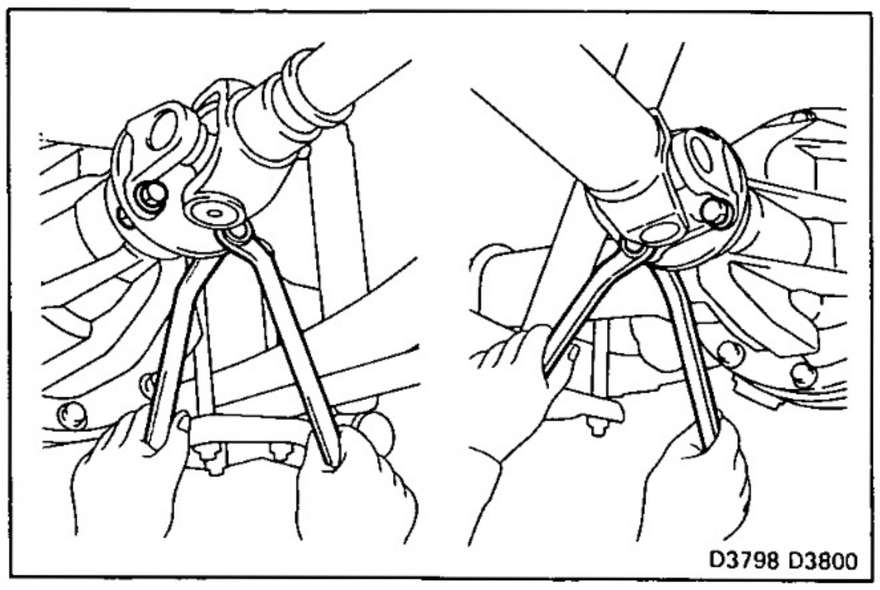
D3798 D3800

2. CONNECT PROPELLER SHAFT FLANGE TO COMPANION FLANGE ON DIFFERENTIAL

(a) Align the matchmarks on the flanges and connect the flanges with four bolts and nuts.

(b) Torque the bolts and nuts.

Torque: 900 kg-cm (65 ft-lb, 88 N·m)

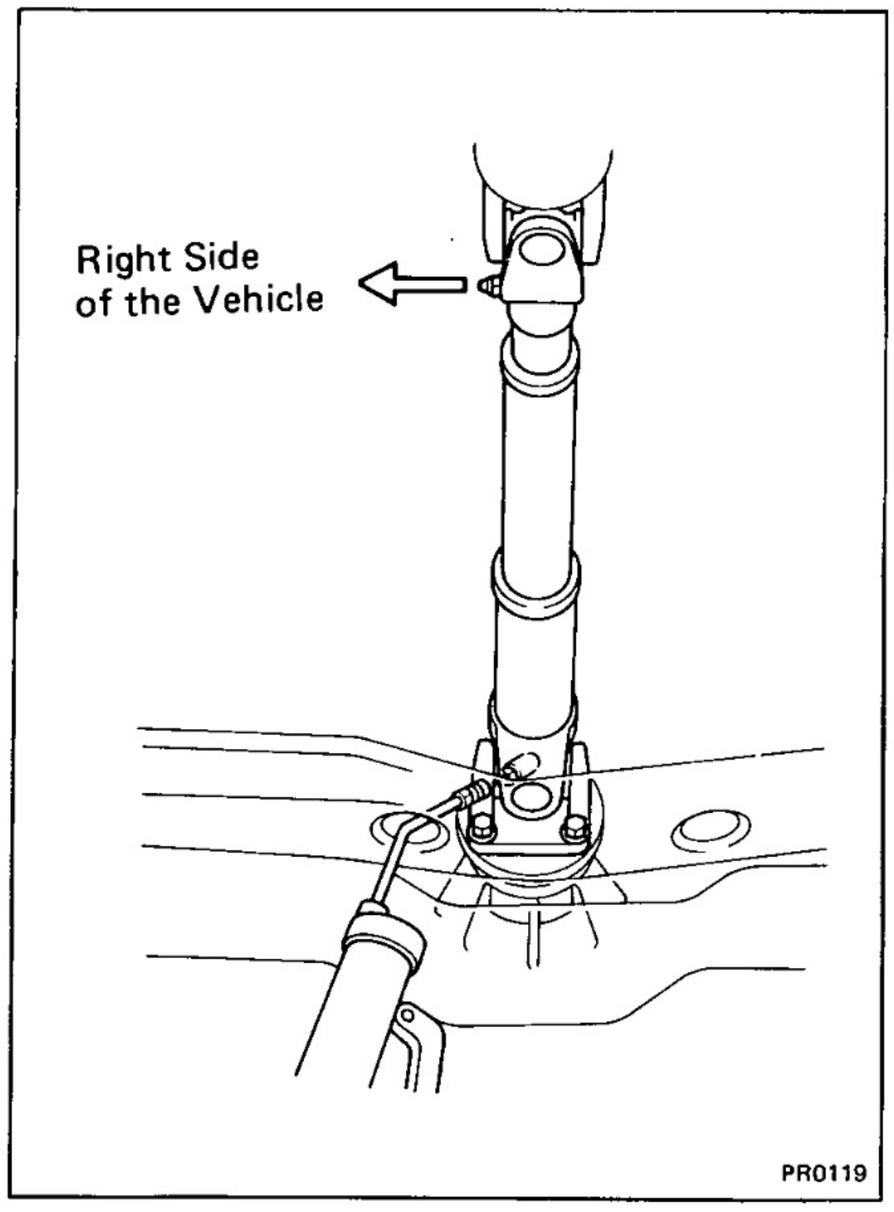

3. APPLY MP GREASE TO GREASE FITTING

With a grease gun, pump the MP grease into each fitting until it begins to flow from around the oil seal.

NOTE: Turn the front propeller shaft until the yoke fitting faces the right side of the vehicle and apply grease to the spider fitting through the side member(MT) or AT oil pan under cover hole.

FRONT AXLE AND SUSPENSION

	Page
TROUBLESHOOTING	FA-2
FRONT WHEEL ALIGNMENT	FA-3
FREE WHEEL HUB	FA-6
FRONT AXLE HUB	FA-12
STEERING KNUCKLE AND AXLE SHAFT	FA-17
FRONT DIFFERENTIAL	FA-28
FRONT SUSPENSION	FA-31
Leaf Spring and Shock Absorber	FA-31
Stabilizer Bar	FA-35

TROUBLESHOOTING

Problem	Possible cause	Remedy	Page
Oil leak at front axle	Oil seals damaged or worn	Replace oil seal	FA-18
	Front axle housing cracked	Repair as necessary	
Oil leak at pinion shaft	Oil level too high or wrong grade	Drain and replace oil	A-26
	Oil seal worn or damaged	Replace oil seal	FA-28
	Companion flange loose or damaged	Tighten or replace flange	RA-16
Noises in front axle	Oil level low or wrong grade	Drain and replace oil	A-26
	Excessive backlash between pinion and ring or side gear	Check backlash	RA-17
	Ring, pinion or side gears worn or chipped	Inspect gears	RA-21
	Pinion shaft bearing worn	Replace bearing	RA-21
	Wheel bearing worn	Replace bearing	FA-13
	Differential bearing loose or worn	Tighten or replace bearings	RA-21
Wanders/pulls	Tires worn or improperly inflated	Replace tire or inflate tires to proper pressure	A-10
	Alignment incorrect	Check front end alignment	FA-3
	Wheel bearing adjusted too tightly	Adjust wheel bearing	FA-12
	Front or rear suspension parts loose or broken	Tighten or replace suspension part	FA-31
	Steering linkage loosen or worn	Tighten or replace steering linkage	SR-72
	Steering gear out of adjustment or broken	Adjust or repair steering gear	SR-3, 22, 57
Bottoming	Vehicle overloaded	Check loading	
	Shock absorber worn out	Replace shock absorber	FA-31
	Springs weak	Replace spring	FA-31
Sways/pitches	Tires improperly inflated	Inflate tires to proper pressure	A-10
	Stabilizer bar bent or broken	Inspect stabilizer bar	FA-35
	Shock absorber worn out	Replace shock absorber	FA-31
Front wheel shimmy	Tires worn or improperly inflated	Replace tire or inflate tires to proper pressure	
	Wheels out of balance	Balance wheels	
	Steering damper worn out	Replace steering damper	SR-72
	Shock absorber worn out	Replace shock absorber	FA-31
	Alignment incorrect	Check front end alignment	FA-3
	Wheel bearings worn or improperly adjusted	Replace or adjust wheel bearings	FA-12
	Steering knuckle bearing worn	Replace bearing	FA-17
	Steering linkage loose or worn	Tighten or replace steering linkage	SR-72
	Steering gear out of adjustment or broken	Adjust or repair steering gear	SR-3,22,57
Abnormal tire wear	Tires improperly inflated	Inflate tire to proper pressure	A-10
	Shock absorbers worn out	Replace shock absorber	FA-31
	Alignment incorrect	Check toe-in	FA-3

FRONT WHEEL ALIGNMENT

1. MAKE FOLLOWING CHECKS AND CORRECT ANY PROBLEMS

(a) Check the tires for wear and proper inflation.

Correct tire pressure: **See page A-10**

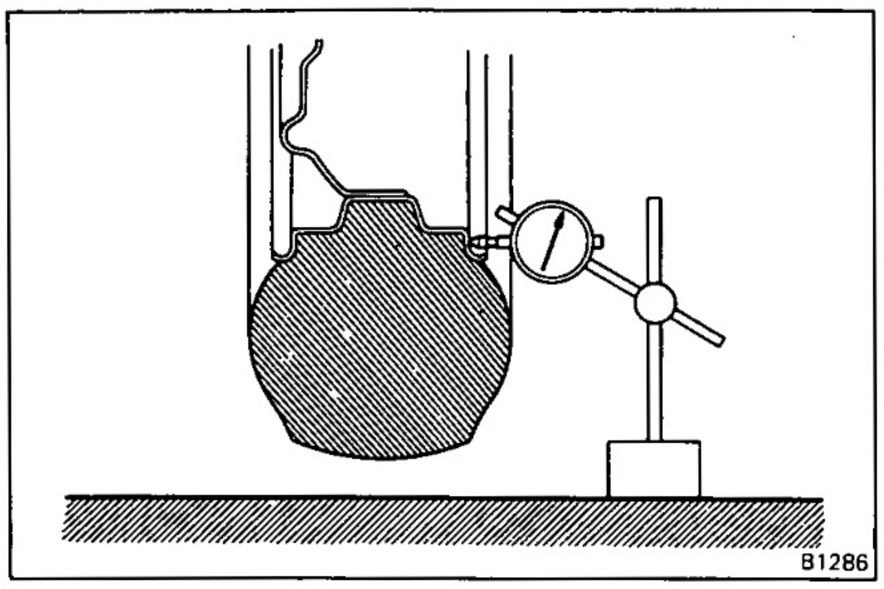

(b) Check the wheel runout.

Lateral runout: Less than 1.2 mm (0.047 in.)

(c) Check the front wheel bearings for looseness.

(d) Check the front suspension for looseness.

(e) Check the steering linkage for looseness.

(f) Use the standard bounce test to check that the front absorbers work properly.

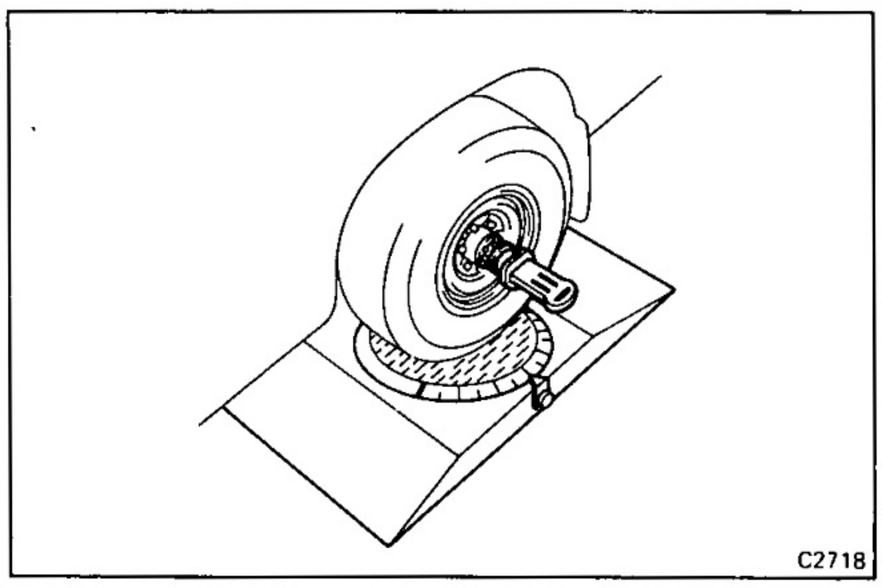

2. INSTALL WHEEL ALIGNMENT EQUIPMENT

Follow the specific instructions of the equipment manufacturer.

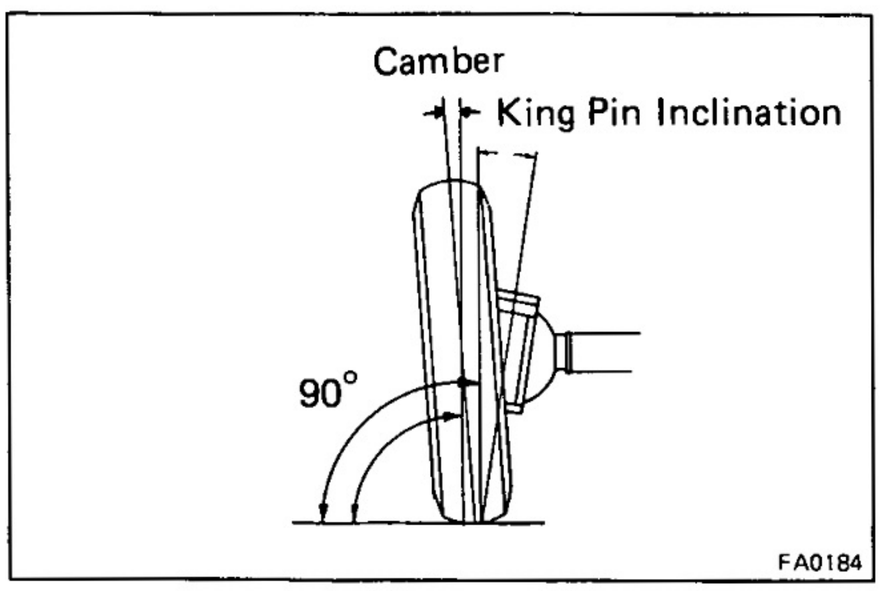

3. CHECK CAMBER AND KING PIN INCLINATION

Camber: 1° ± 45'
King pin inclination: 9°30' ± 45'

If camber or king pin inclination checks are not within specification, recheck the steering knuckle parts and the front wheel for bending or looseness.

4. CHECK CASTER

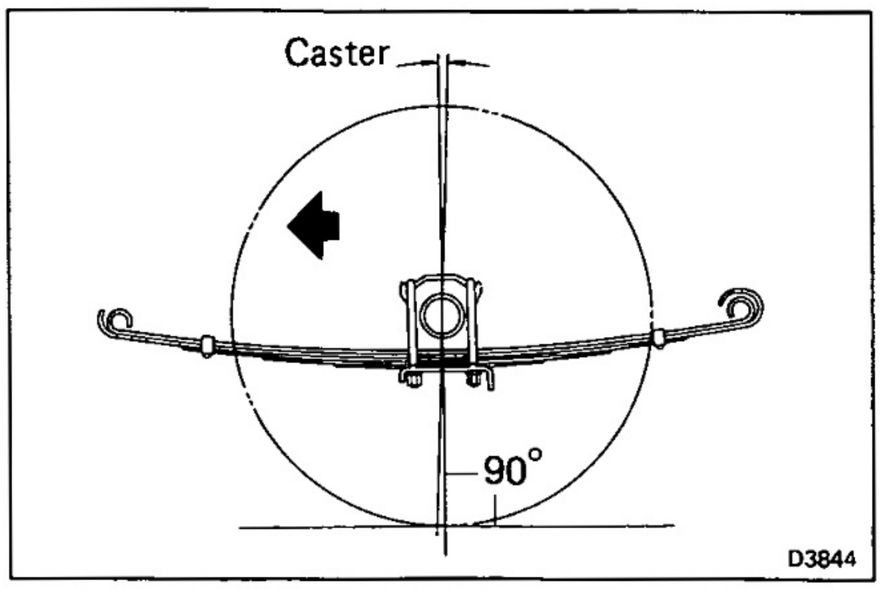

Caster

FJ62, BJ·HJ60L(R)G	0°50' ± 1°
FJ62, BJ·HJ60L(R)V	1°05' ± 1°
FJ · BJ 70 · 73 series	1°05' ± 1°
FJ · BJ · HJ 75LV · 75RV series	0°45' ± 1°
FJ · BJ · HJ 75LP · 75RP series	0°55' ± 1°

If caster is not as specified, inspect and replace damaged or worn parts.

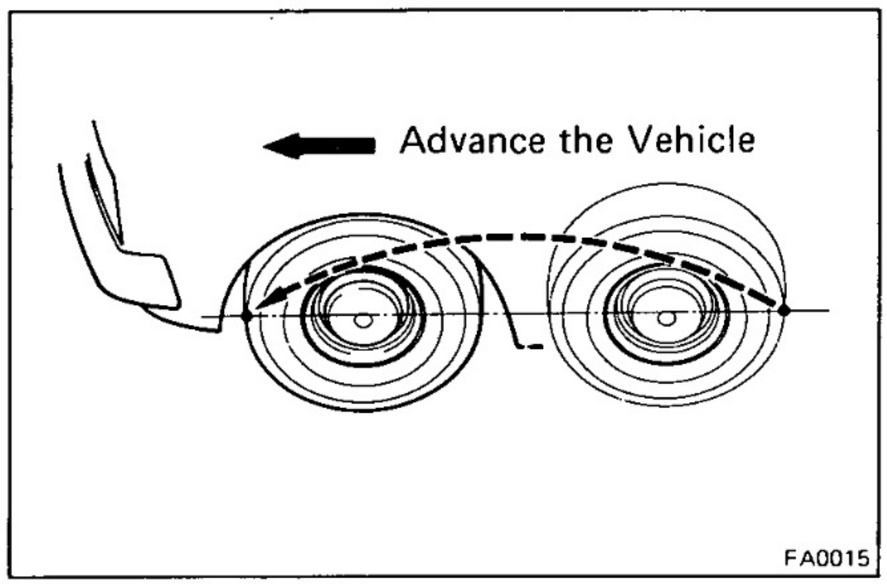

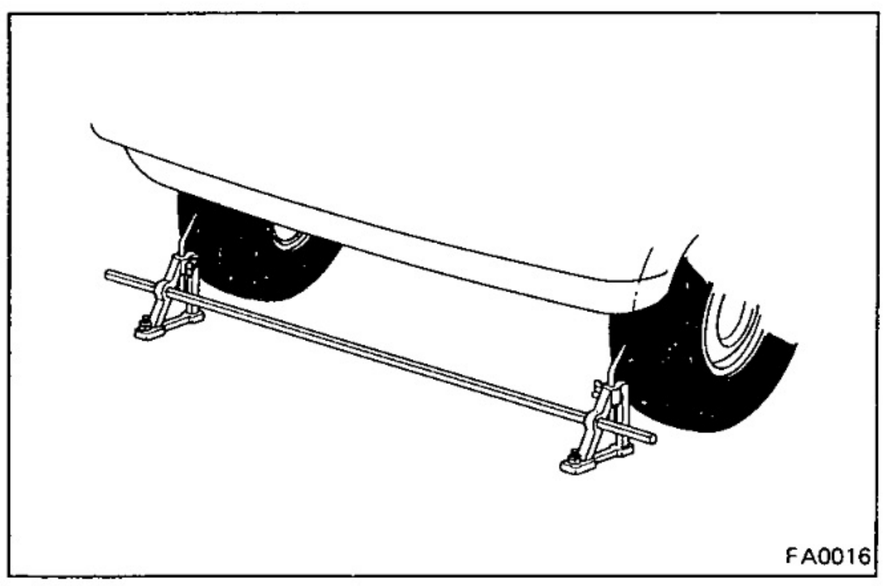

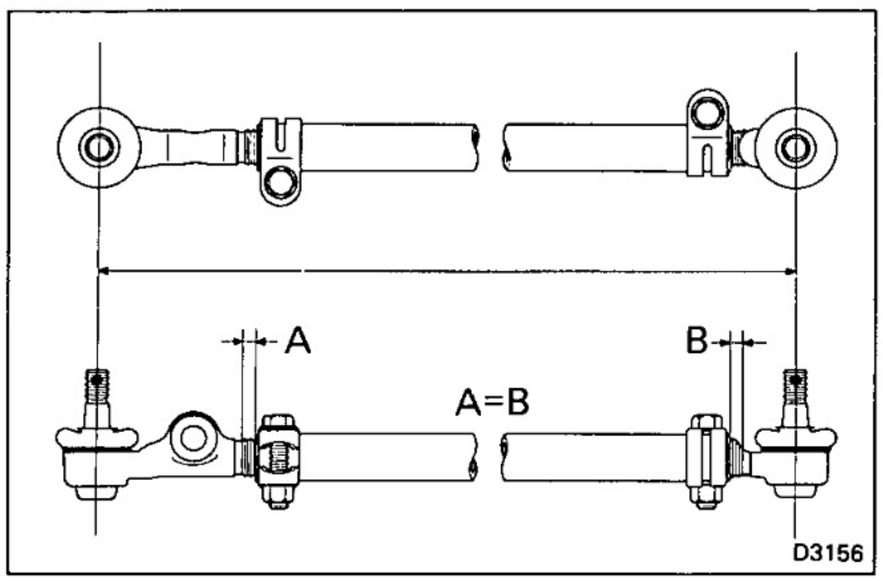

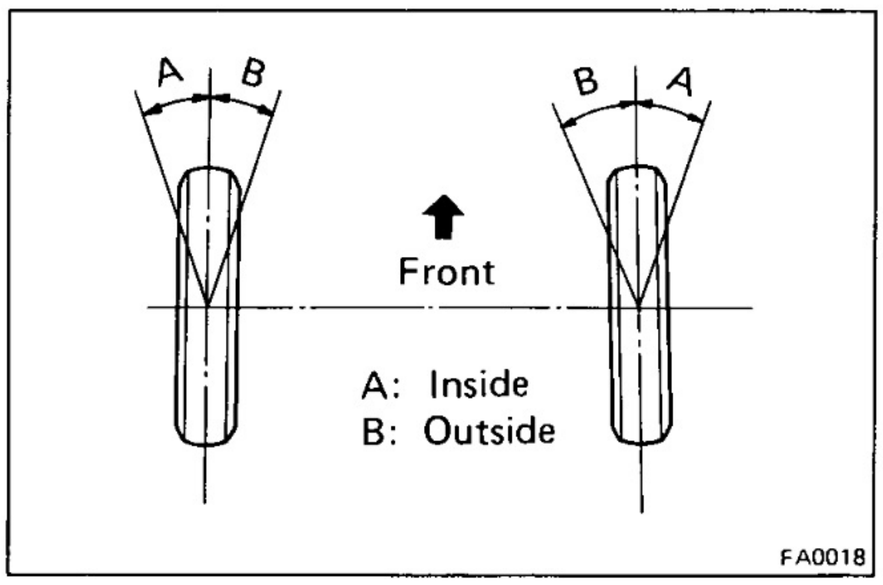

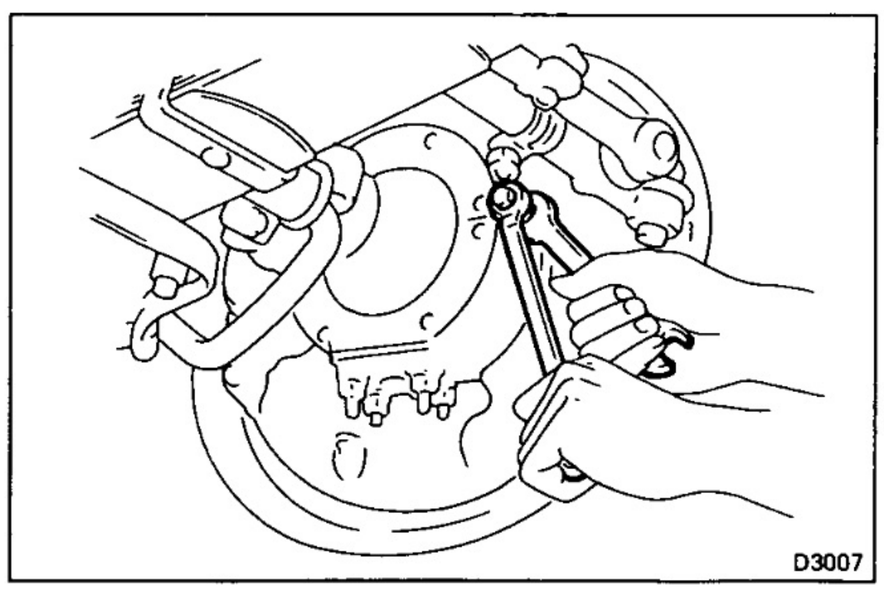

5. ADJUST TOE-IN

(a) Make sure the wheels are positioned straight ahead.

(b) Mark the center of each rear tread at spindle height and measure the distance between the marks of right and left tires.

(c) Advance the vehicle until the marks on the rear side of the tires come to the front.

NOTE: The toe-in should be measured at the same point on the tire and at the same level.

(d) Measure the distance between the marks on the front side of the tires.

Tire		Toe-in mm (in.)	
		Inspection STD	Adjustment STD
Radial	10R-15 7.50R-16	–1±2 (–0.04±0.08)	–1±1 (–0.04±0.04)
	Other	1 ± 2 (0.04 ± 0.08)	1 ± 1 (0.04 ± 0.04)
Bias		4 ± 2 (0.16 ± 0.08)	4 ± 1 (0.16 ± 0.04)

(e) Make sure the steering gear is centered.

(f) Loosen the nuts holding the clamps to the tie rod.

(g) Adjust toe-in to the correct value by turning the tie rod.

(h) Torque the nuts holding the clamps.

Torque: 375 kg-cm (27 ft-lb, 37 N·m)

NOTE: Insure that the lengths of the tie rod ends are the same.

6. ADJUST WHEEL ANGLE

Remove the caps of the knuckle stopper bolts and check the steering angles.

Wheel angle		
Max.	Inside wheel	$32^\circ {}^{+0^\circ}_{-3^\circ}$
	Outside wheel	30°
at 20° (Outside wheel)	Inside wheel	21°

NOTE: When the steering wheel is fully turned, make sure that the wheel is not touching the body or brake flexible hose.

If maximum steering angles differ from the standard value, adjust the wheel angle with the knuckle stopper bolts.

Torque: 450 kg-cm (33 ft-lb, 44 N·m)

If the wheel angle still cannot be adjusted within limits, inspect and replace damaged or worn steering parts.

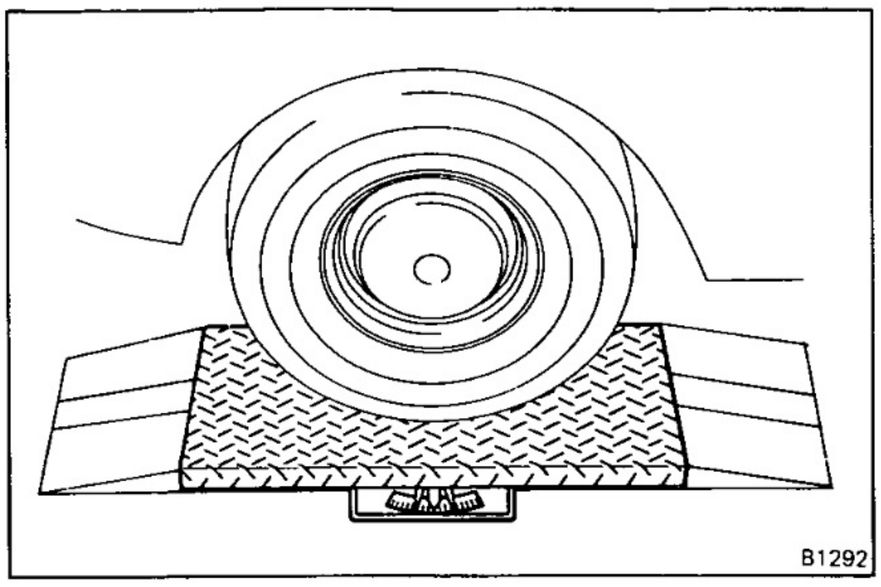

7. INSPECT SIDE SLIP WITH SIDE SLIP TESTER

Side slip limit:

Less than 3.0 mm/m (0.118 in./3.3 ft)

If the side slip exceeds the limit, the toe-in or other front wheel alignment may not be correct.

FREE WHEEL HUB

COMPONENTS

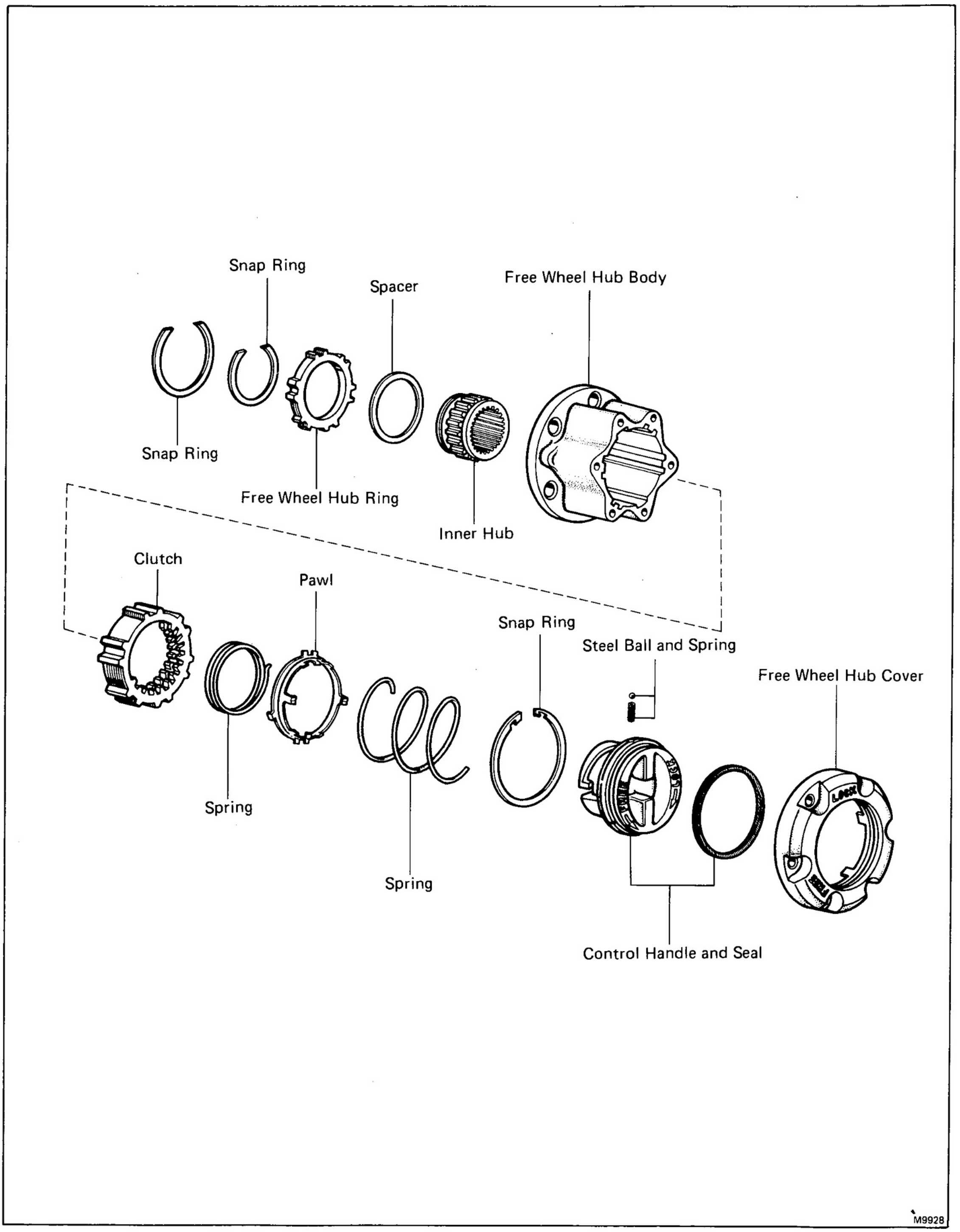

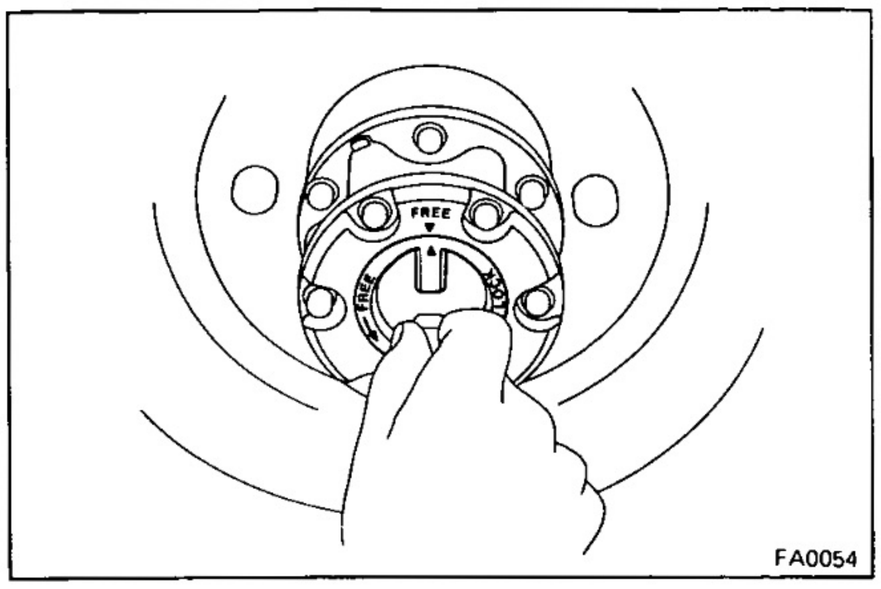

REMOVAL OF FREE WHEEL HUB

1. REMOVE FREE WHEEL HUB COVER

(a) Set the control handle to FREE.

(b) Remove the cover mounting bolts and pull off the cover.

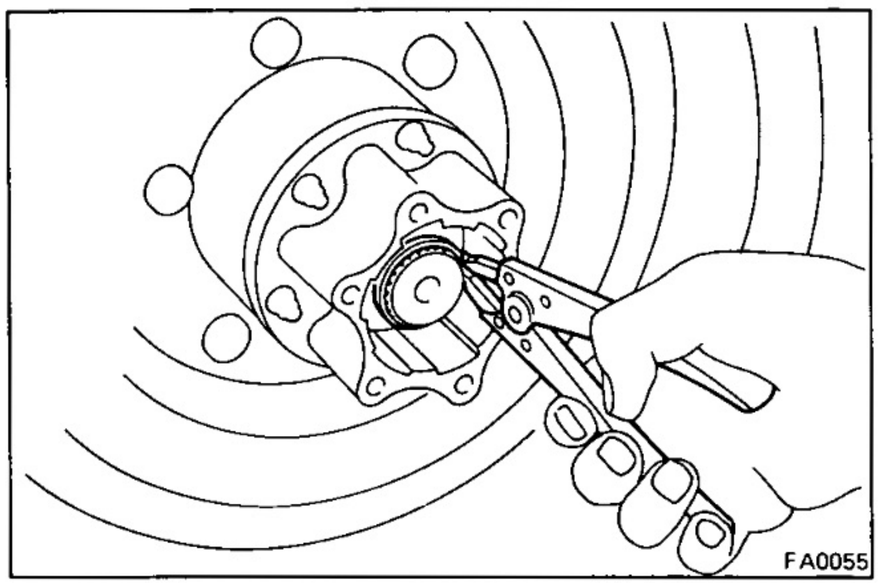

2. REMOVE SNAP RING

Using snap ring pliers, remove the snap ring.

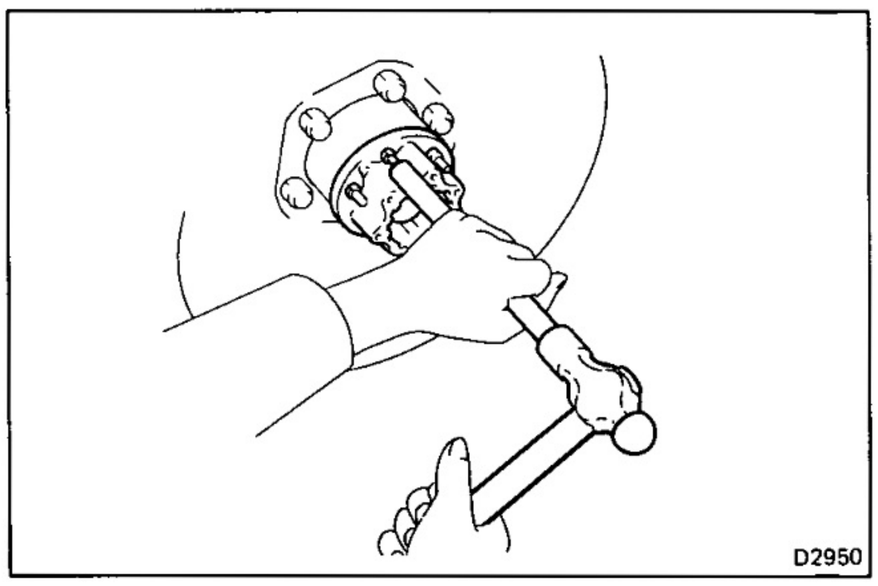

3. REMOVE FREE WHEEL HUB BODY

(a) Remove the mounting nuts.

(b) Using a brass bar and hammer, tap the bolt heads and remove the cone washers.

(c) Pull off the free wheel hub body.

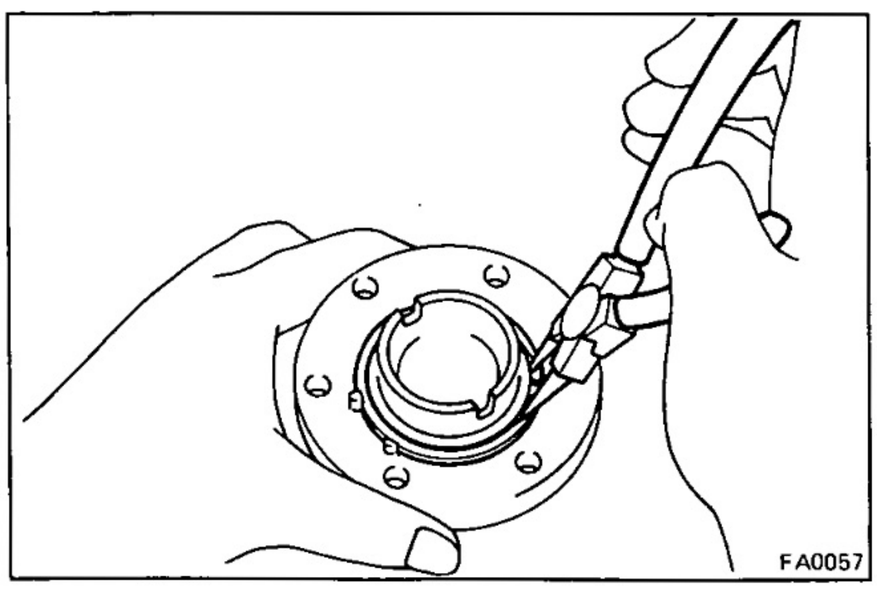

DISASSEMBLY OF FREE WHEEL HUB

1. REMOVE CONTROL HANDLE FROM FREE WHEEL HUB COVER

(a) Using snap ring pliers, remove the snap ring.

(b) Remove the control handle.

(c) Remove the steel ball and spring from the control handle.

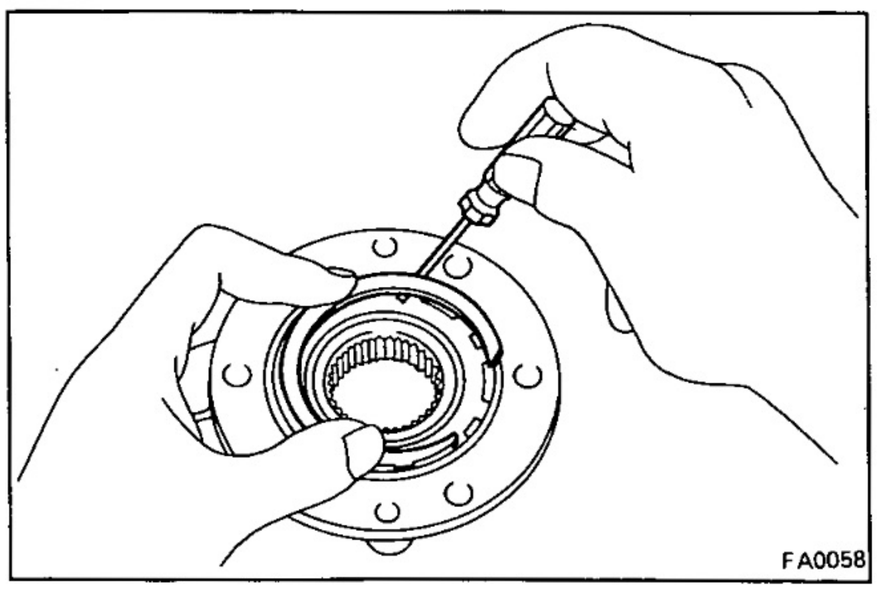

2. REMOVE INNER HUB AND FREE WHEEL HUB RING FROM FREE WHEEL HUB BODY

(a) Using a screwdriver, remove the snap ring.

(b) Remove the inner hub and free wheel hub ring.

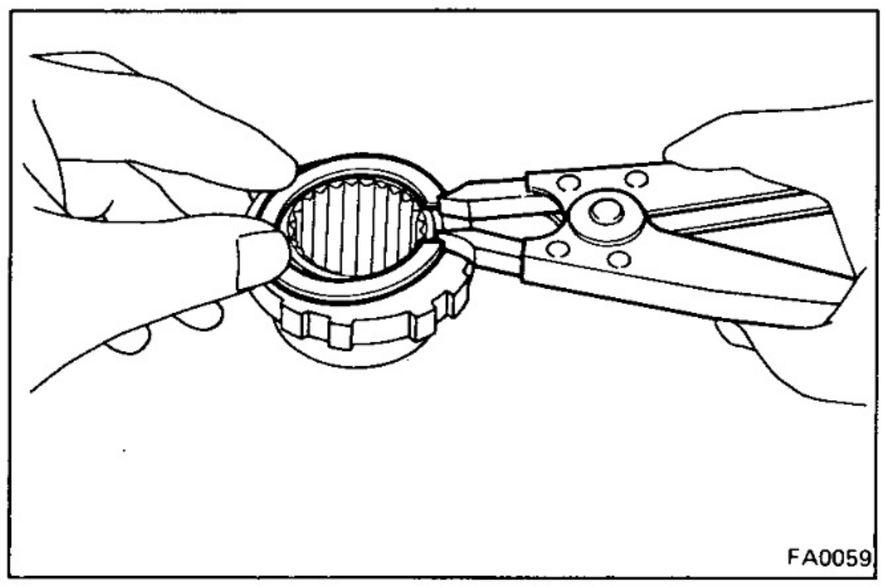

3. REMOVE FREE WHEEL HUB RING FROM INNER HUB

(a) Using snap ring pliers, remove the snap ring.

(b) Remove the free wheel hub ring and spacer.

INSPECTION OF FREE WHEEL HUB

1. INSPECT COVER, HANDLE AND SEAL

Temporarily install the handle in the cover and check that the handle moves smoothly and freely.

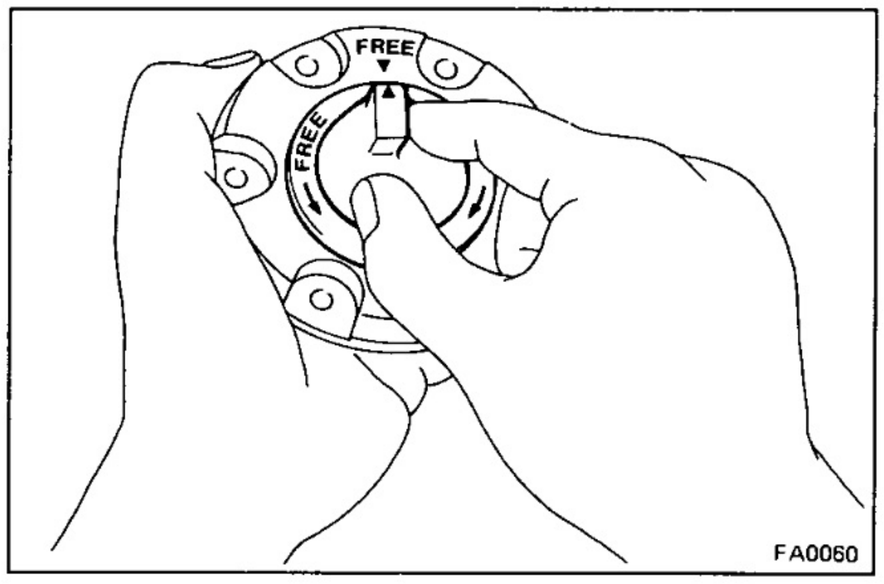

2. INSPECT BODY AND CLUTCH

Check that the clutch moves smoothly in the body.

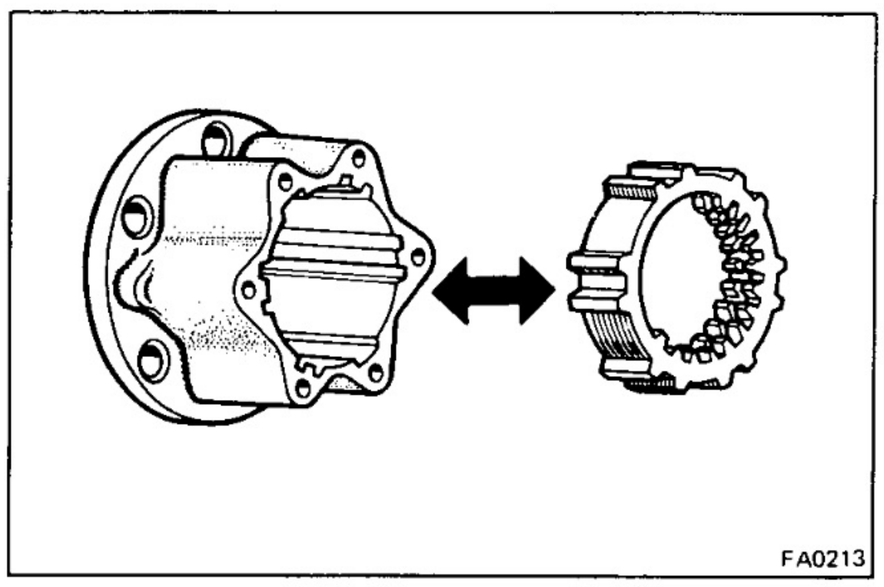

3. MEASURE OIL CLEARANCE BETWEEN INNER HUB AND FREE WHEEL HUB RING

Oil clearance (A – B): 0.3 mm (0.012 in.)

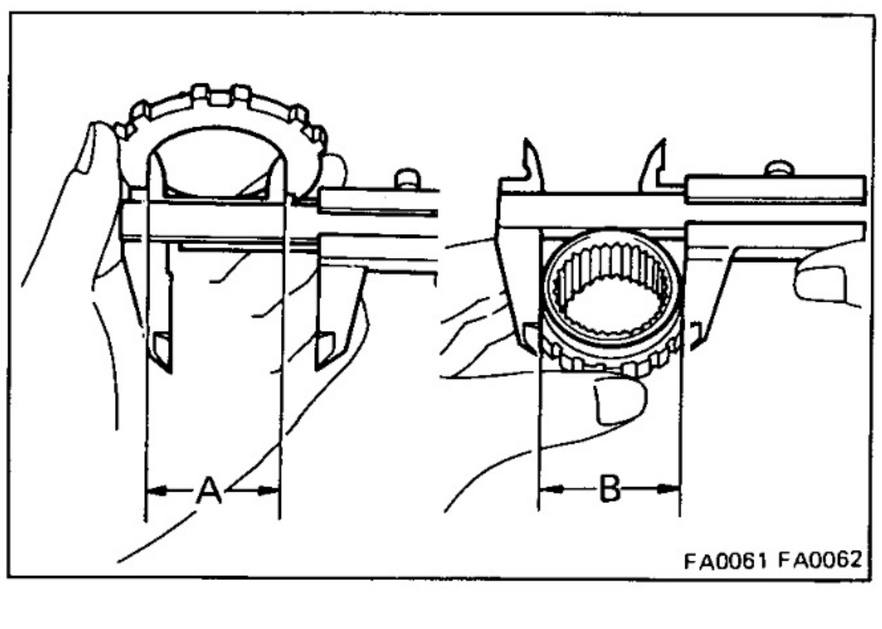

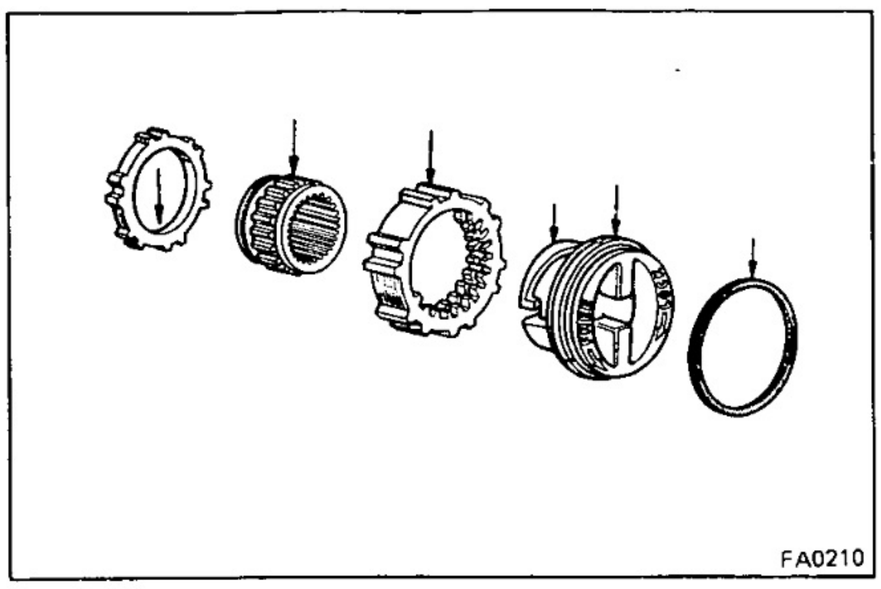

ASSEMBLY OF FREE WHEEL HUB

(See page FA-6)

1. APPLY MP GREASE TO SLIDING SURFACE OF PARTS

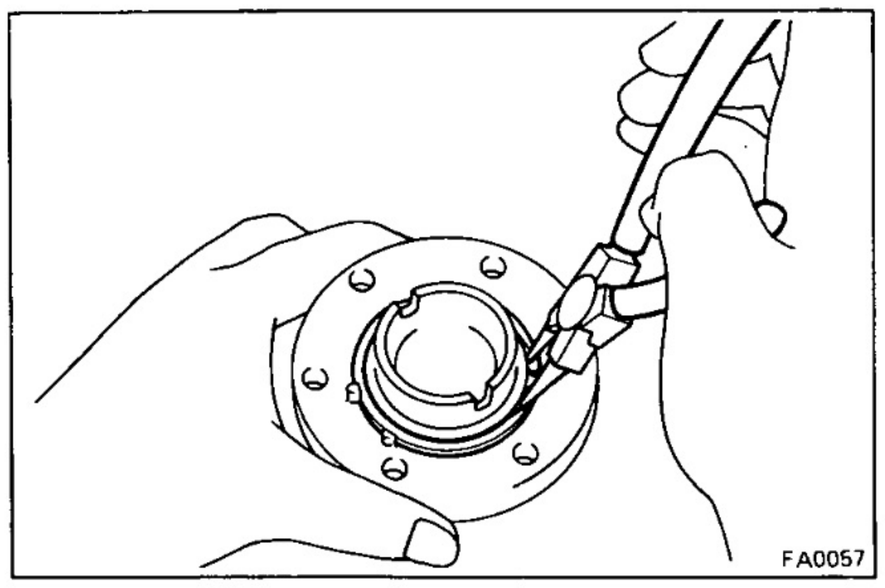

2. INSTALL CONTROL HANDLE TO COVER

(a) Install the seal, spring and steel ball to the handle.

(b) Insert the handle in the cover and install the snap ring with snap ring pliers.

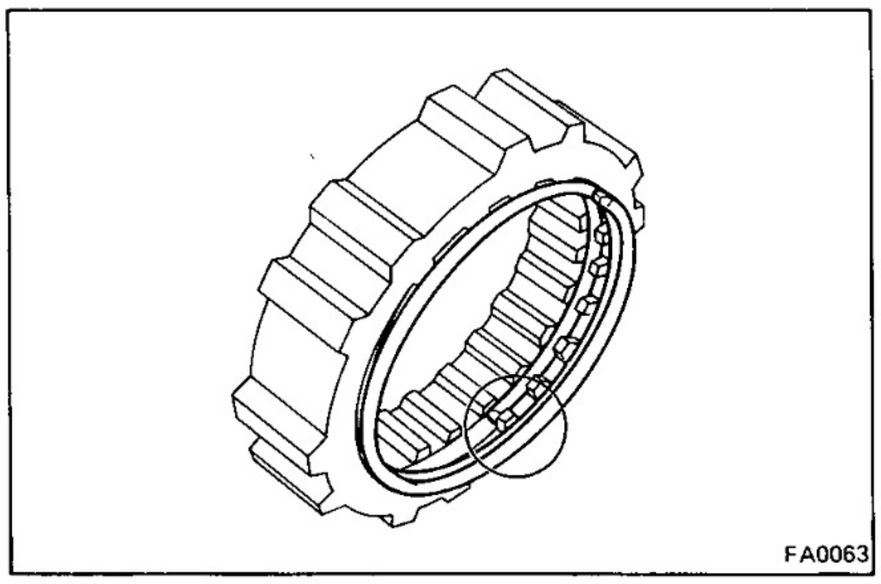

3. INSTALL TENSION SPRING IN CLUTCH

Install the tension spring in the clutch with the spring end aligned with the initial groove.

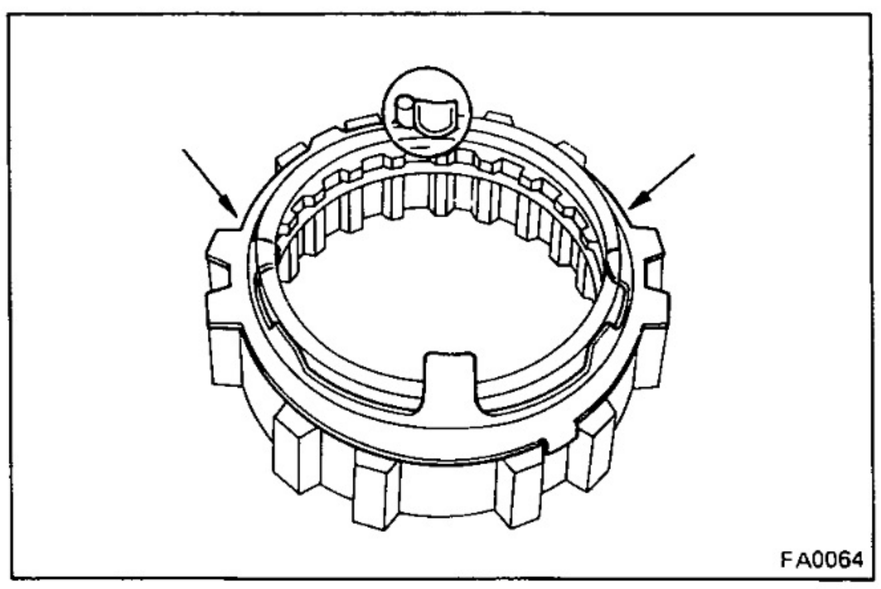

4. INSTALL FOLLOWER PAWL TO CLUTCH

(a) Place the follower pawl on the tension spring with one of the large tabs against the bent spring end.

(b) Place the top ring of the spring on the small tabs.

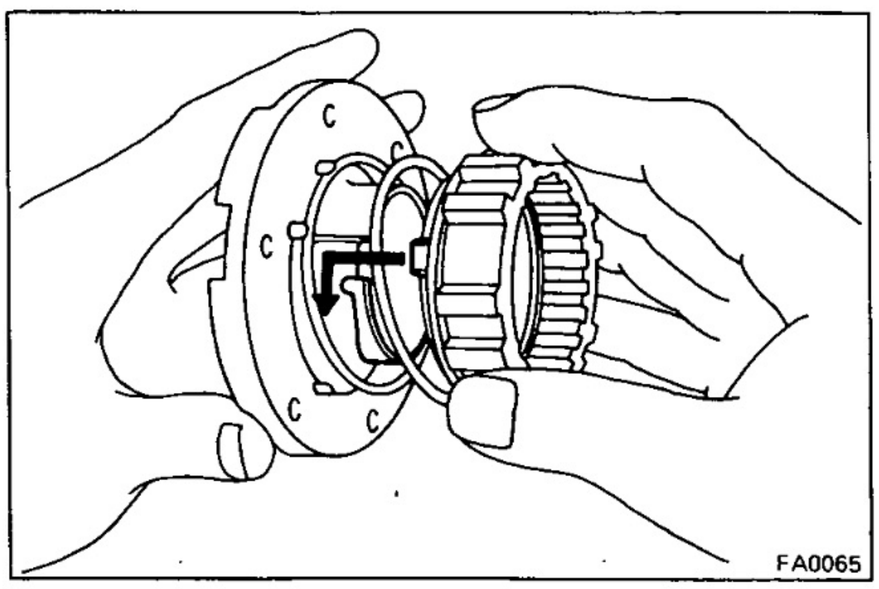

5. INSTALL CLUTCH AND SPRING INTO COVER

(a) Place the spring between the cover and clutch with the large spring end toward the cover.

(b) Compress the spring and install the clutch with the pawl tab fit to the handle cam.

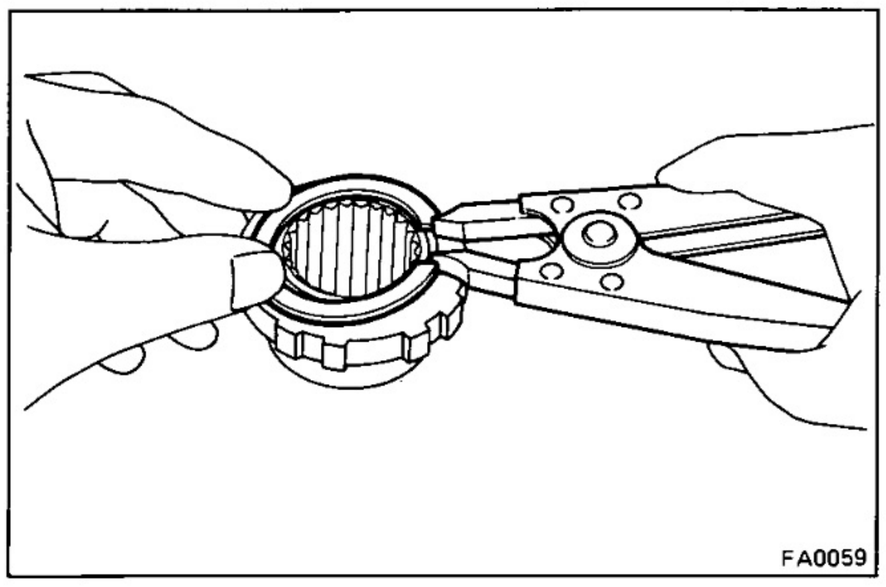

6. **INSTALL SPACER AND FREE WHEEL HUB RING TO INNER HUB**

(a) Install the spacer and free wheel hub ring to the inner hub.

(b) Using snap ring pliers, install the snap ring.

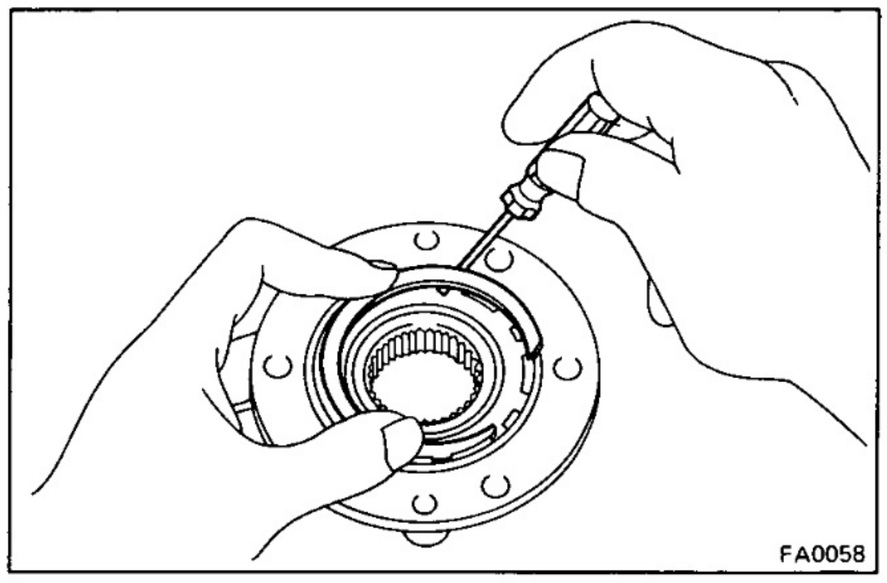

7. **INSTALL INNER HUB AND FREE WHEEL HUB RING IN FREE WHEEL HUB BODY**

(a) Insert the inner hub and free wheel hub ring in the body.

(b) Using a screwdriver, install the snap ring.

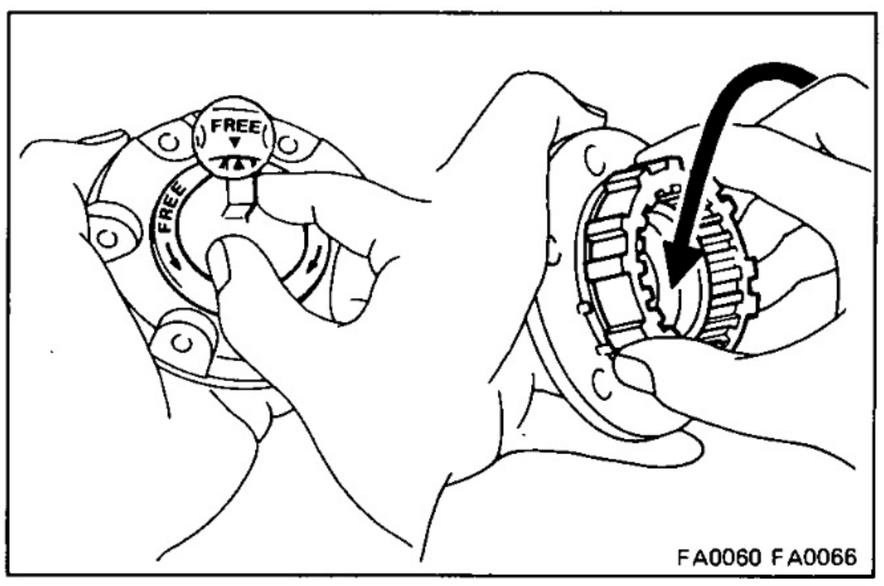

8. **TEMPORARILY INSTALL COVER TO BODY AND CHECK FREE WHEEL HUB**

(a) Set the control handle and clutch to the free position.

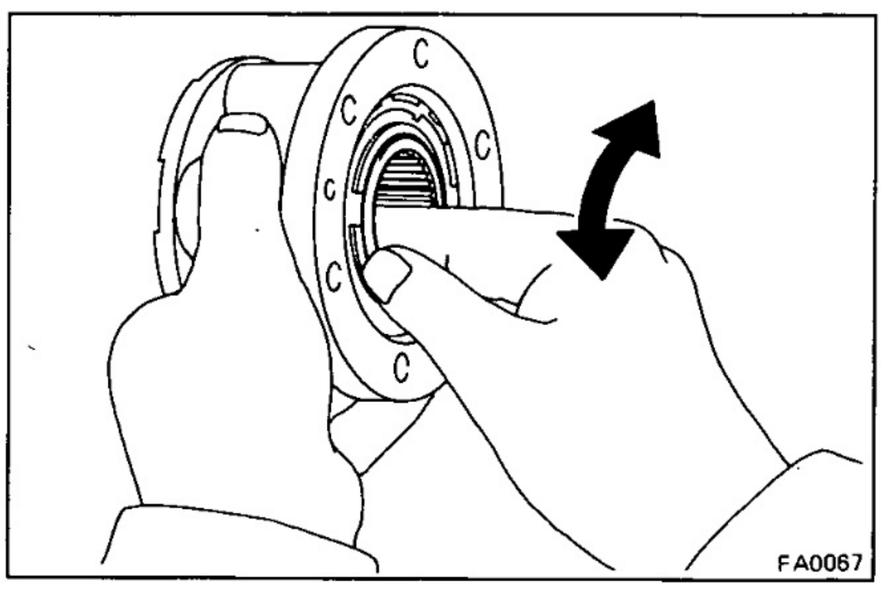

(b) Insert the cover in the body and verify that the inner hub turns smoothly.

(c) Remove the cover from the body.

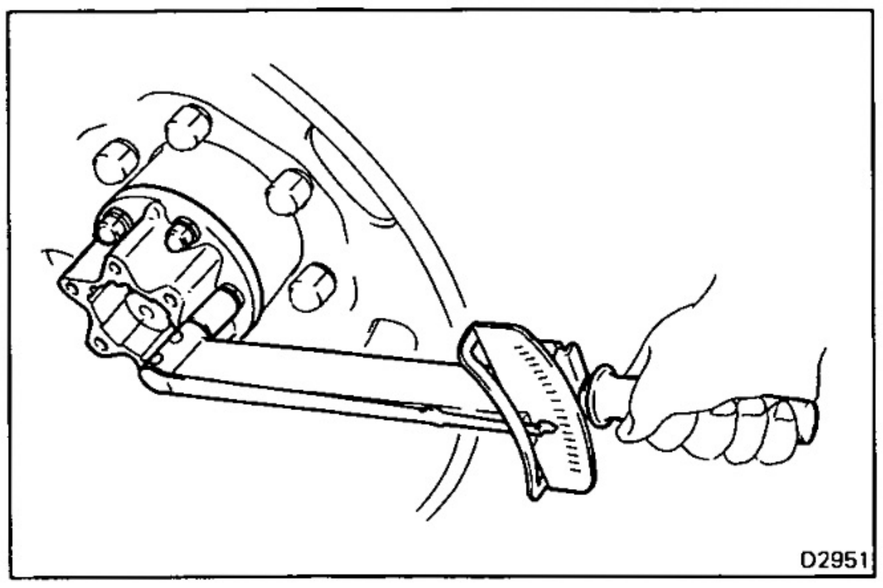

INSTALLATION OF FREE WHEEL HUB

(See page FA-6)

1. INSTALL FREE WHEEL HUB BODY

(a) Place the gasket in position on the front axle hub.

(b) Install the free wheel hub body with six cone washes and nuts. Tighten the nuts.

Torque: 315 kg-cm (23 ft-lb, 31 N·m)

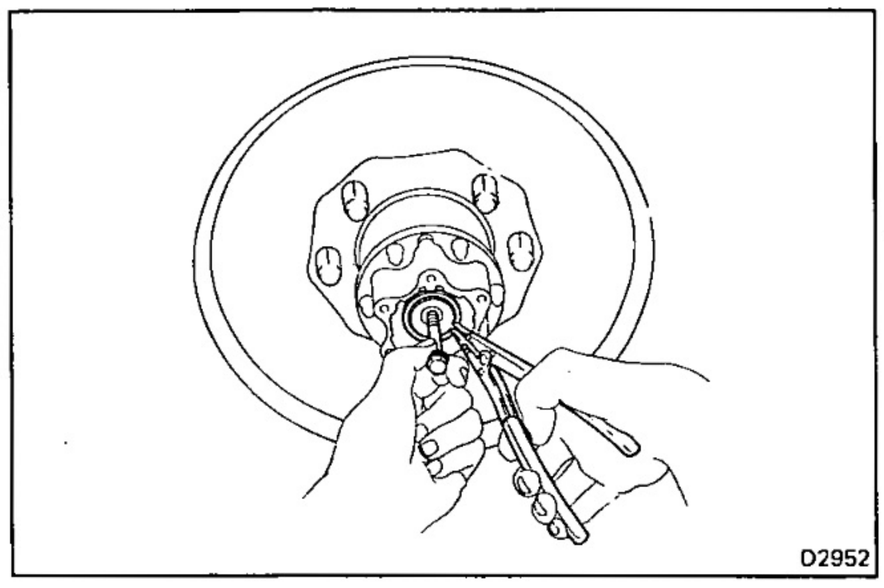

2. INSTALL SNAP RING

(a) Install a bolt in the axle shaft and pull it out.

(b) Using snap ring pliers, install the snap ring.

(c) Remove the bolt.

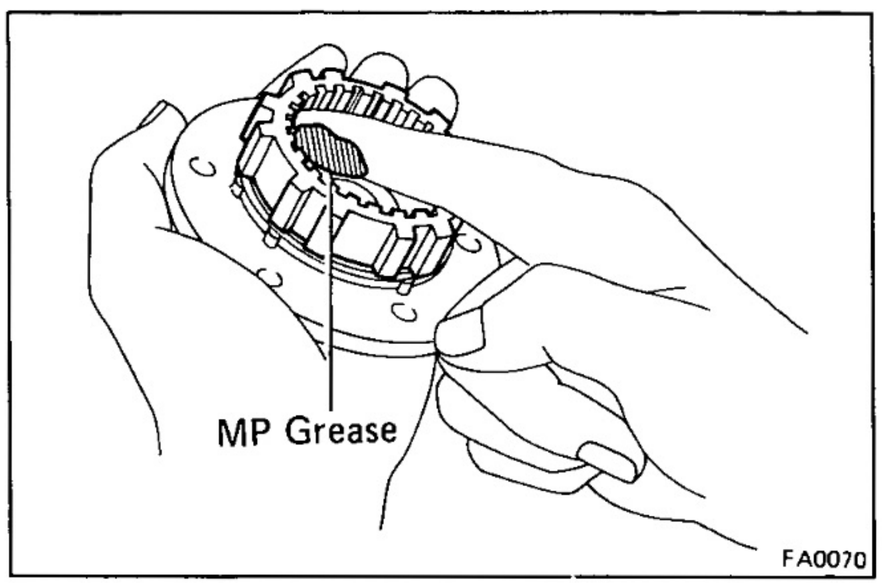

3. APPLY MP GREASE TO INNER HUB SPLINES

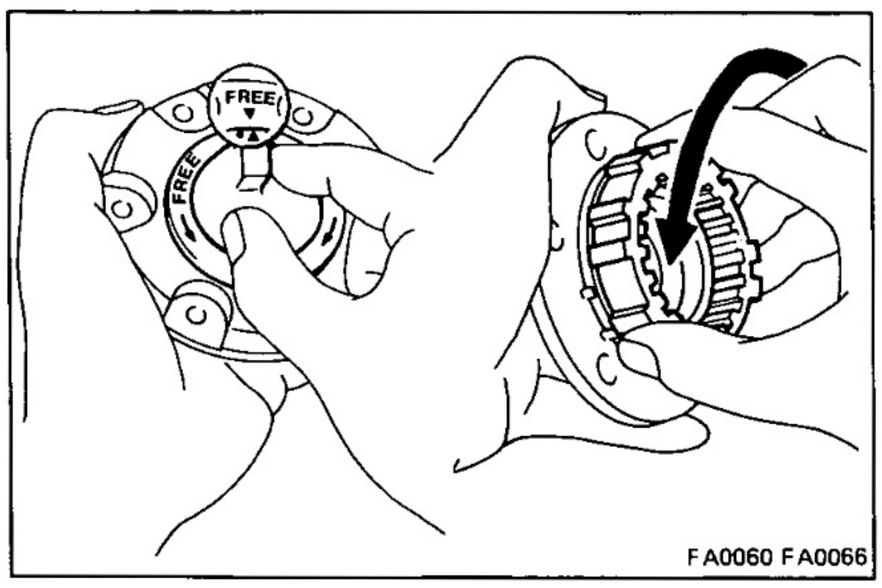

4. INSTALL FREE WHEEL HUB COVER WITH NEW GASKET

(a) Set the control handle and clutch to the free position.

(b) Place a new gasket in position on the cover.

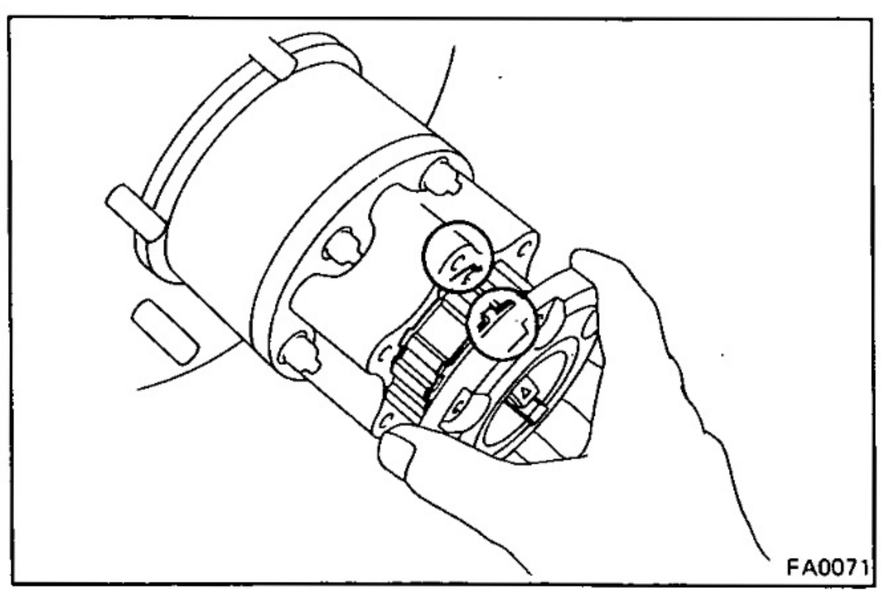

(c) Install the cover to the body with the follower pawl tabs aligned with the non-toothed portions of the body.

(d) Tighten the cover mounting bolts.

Torque: 100 kg-cm (7 ft-lb, 10 N·m)

FRONT AXLE HUB

COMPONENTS

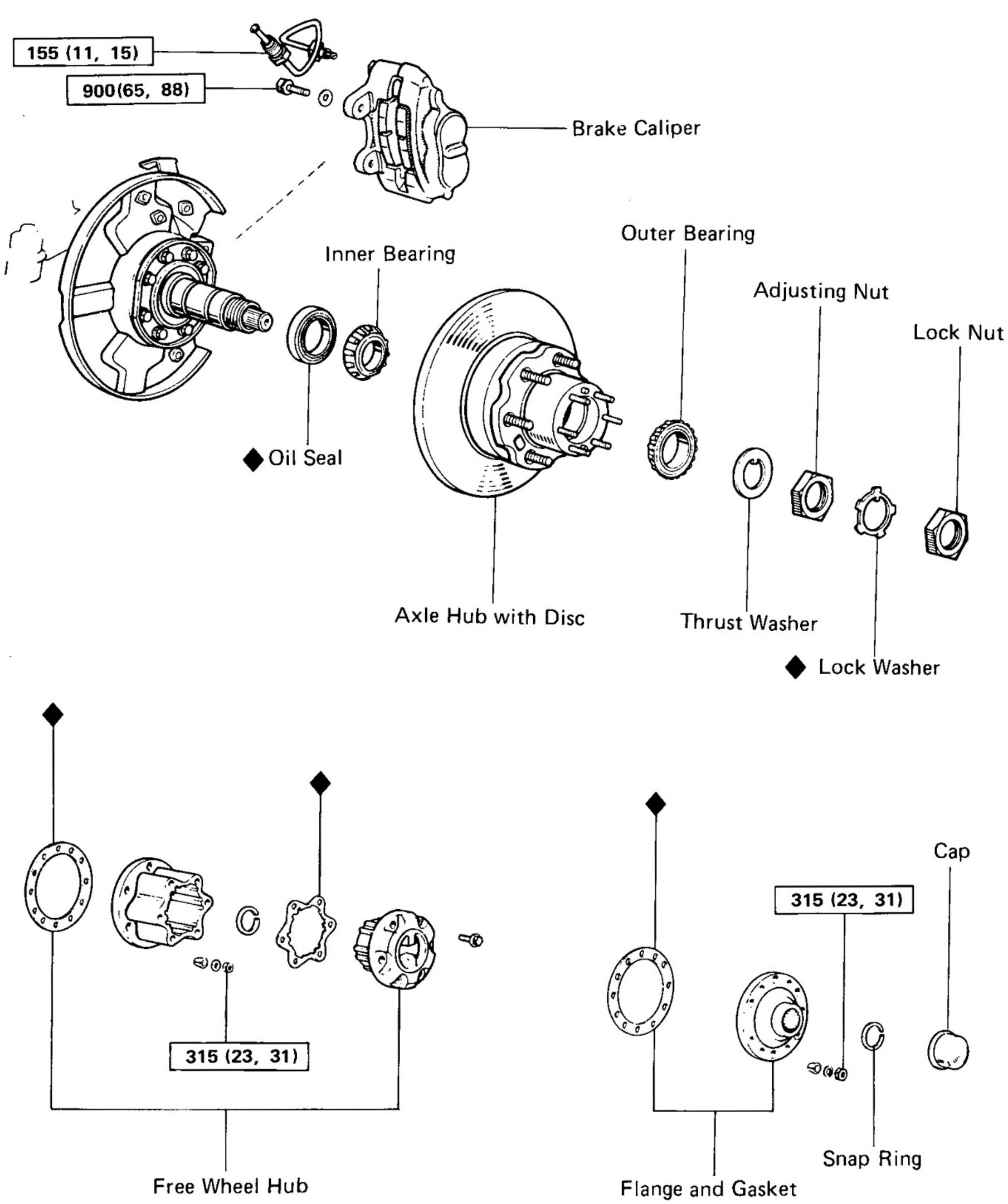

kg-cm (ft-lb, N·m) : Specified torque

◆ : Non-reusable part

FA0503
FA0086

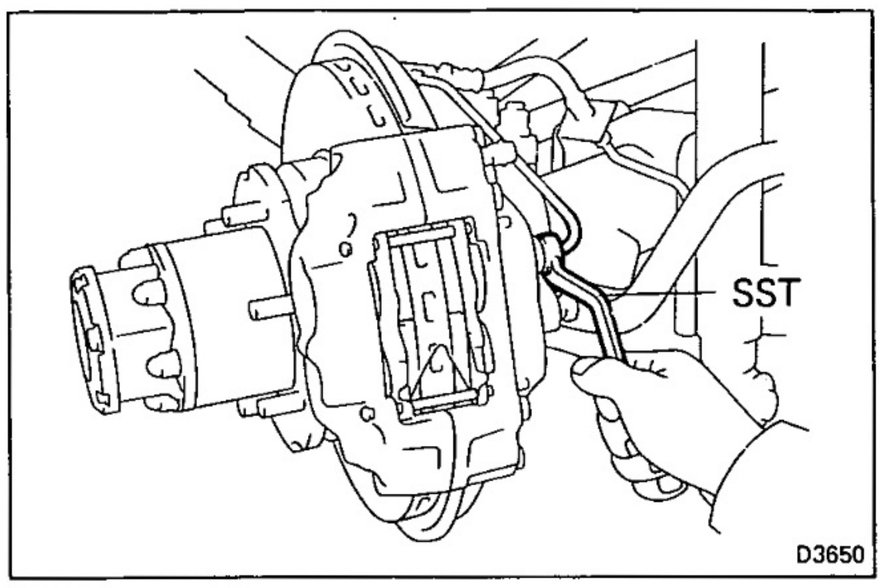

Front Axle Hub

DISASSEMBLY OF FRONT AXLE HUB

1. REMOVE DISC BRAKE CYLINDER
   (a) Using SST, disconnect the brake tube.
   SST 09751-36011
   (b) Remove the brake caliper.

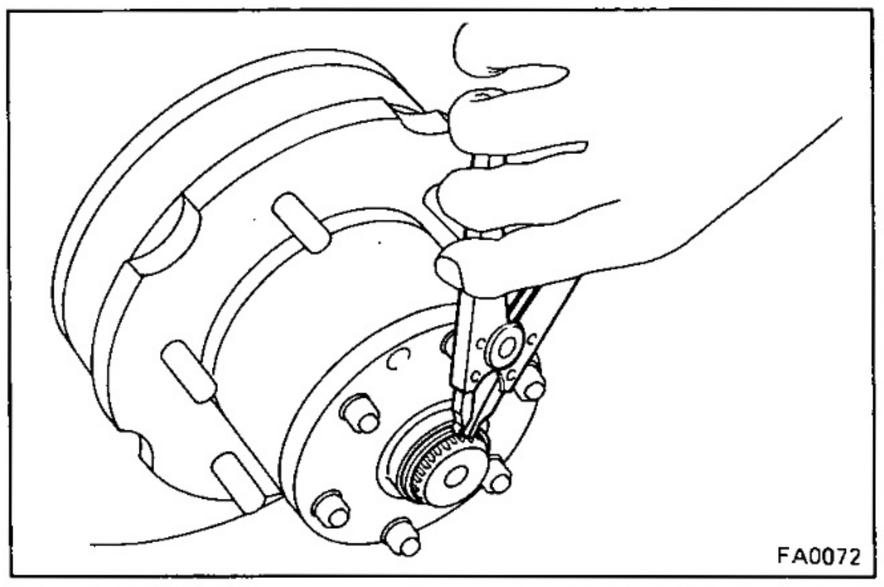

2. REMOVE FLANGE OR FREE WHEEL HUB
   NOTE: For the free wheel hub. (See page FA-7)
   (a) Remove the cap from the flange.
   (b) Using snap ring pliers, remove the snap ring.
   (c) Remove the mounting nuts.

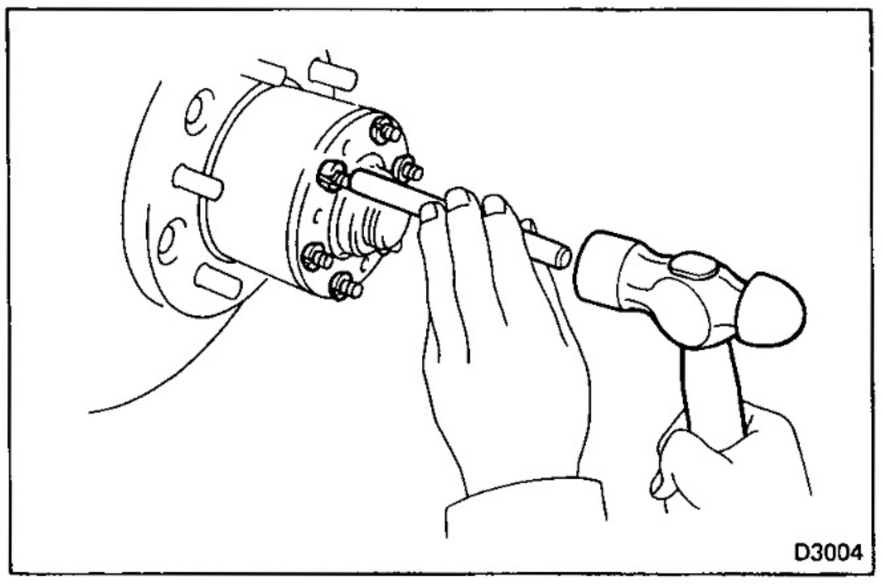

   (d) Using a brass bar and hammer, tap the bolt heads and remove the cone washers.

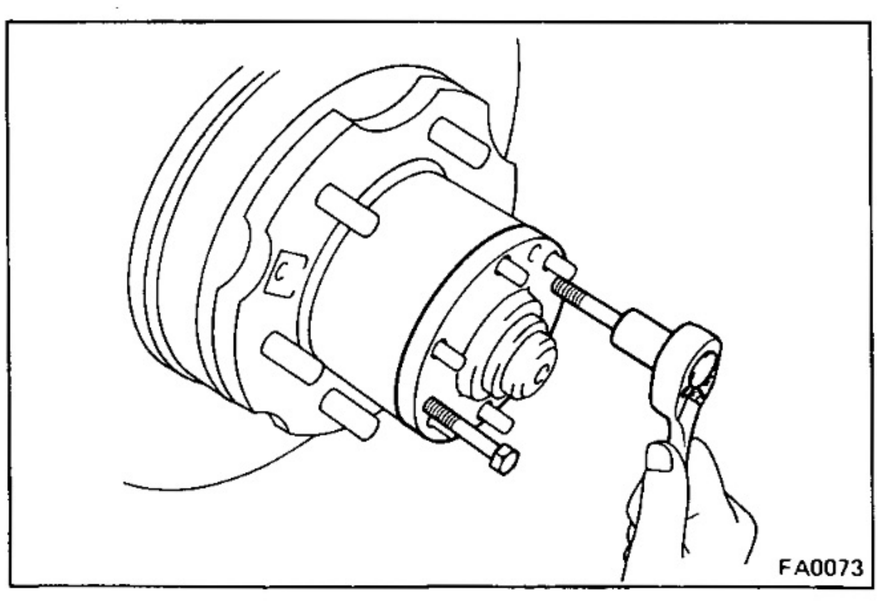

   (e) Install and tighten the two bolts, and remove the flange.

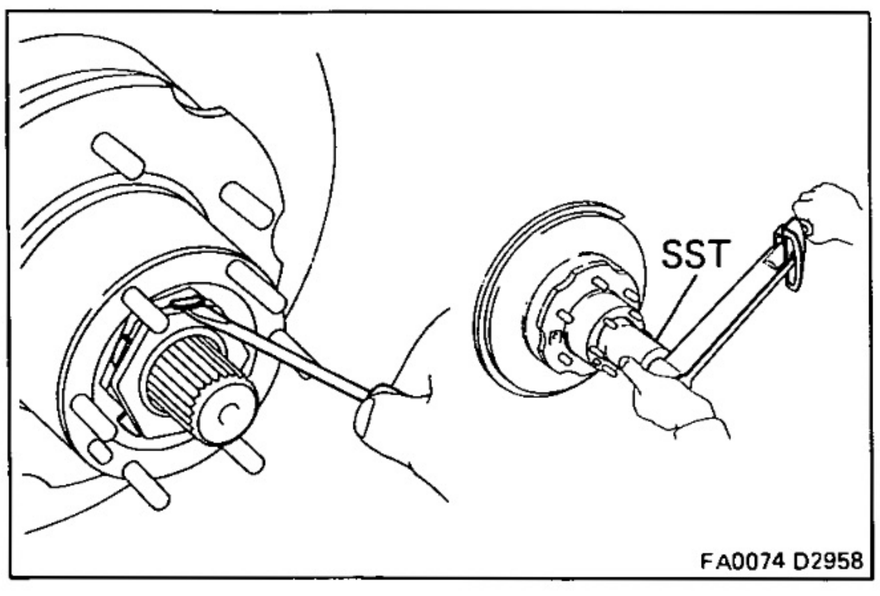

3. REMOVE AXLE HUB WITH DISC
   (a) Using a screwdriver, release the lock washer.
   (b) Using SST, remove the lock nut.
   SST 09607-60020
   (c) Remove the lock washer and adjusting nut.
   (d) Remove the axle hub with the disc.

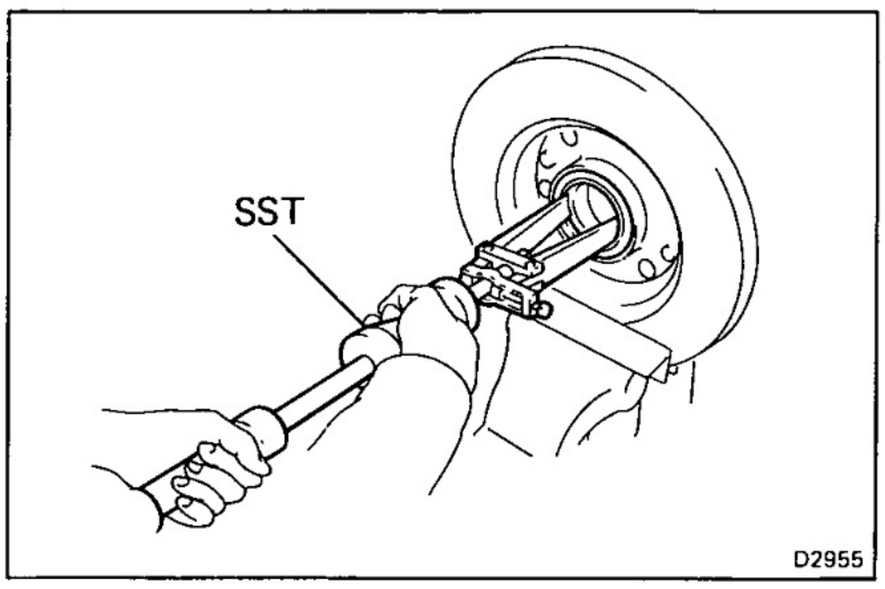

4. REMOVE INNER BEARING AND OIL SEAL

(a) Using SST, remove the oil seal.

SST 09308-00010

(b) Remove the inner bearing from the hub.

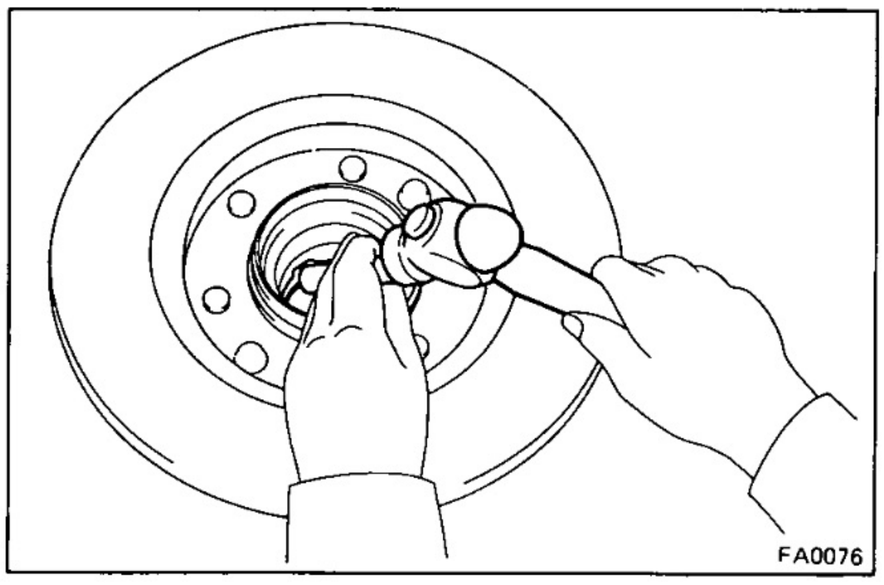

INSPECTION AND REPAIR OF FRONT AXLE HUB

1. INSPECT BEARING

Clean the bearings and outer races and inspect them for wear or damage.

2. REPLACE BEARING OUTER RACE

(a) Using a brass bar and hammer, drive out the bearing outer race.

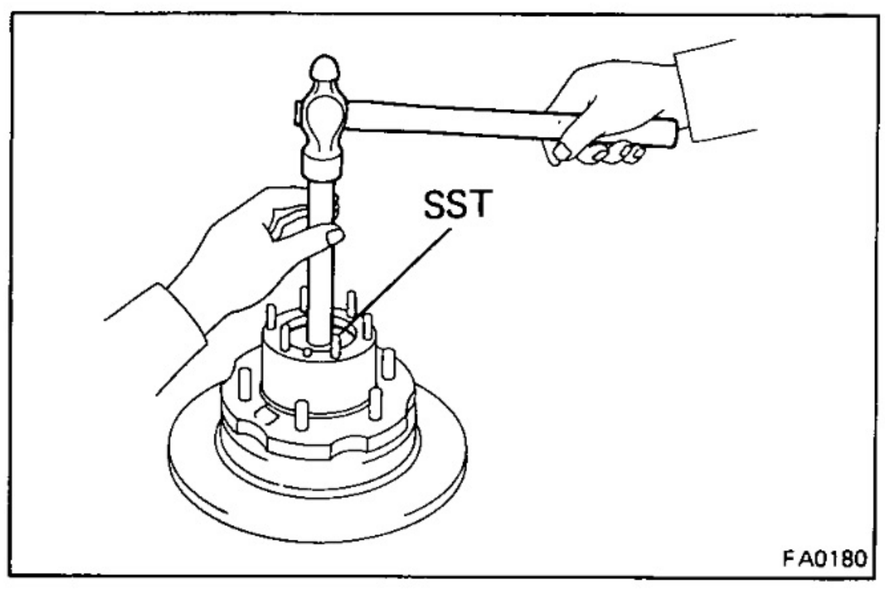

(b) Using SST, carefully drive in the new bearing outer race.

SST 09608-35013

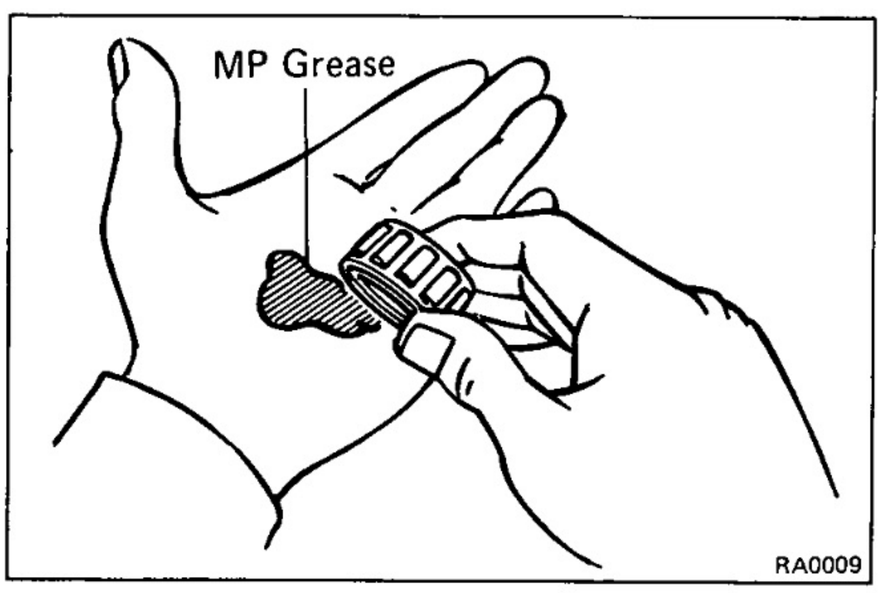

ASSEMBLY OF FRONT AXLE HUB

(See page FA-12)

1. PACK BEARINGS WITH MP GREASE

(a) Place MP grease in the palm of your hand.

(b) Pack grease into the bearing, continuing until the grease oozes out from the other side.

(c) Do the same around the bearing circumference.

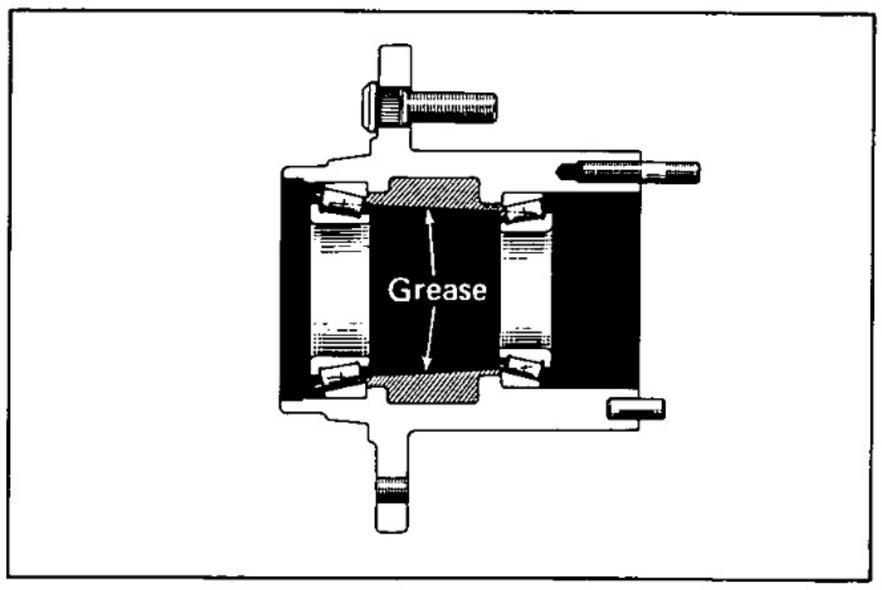

2. COAT INSIDE OF HUB AND CAP WITH MP GREASE

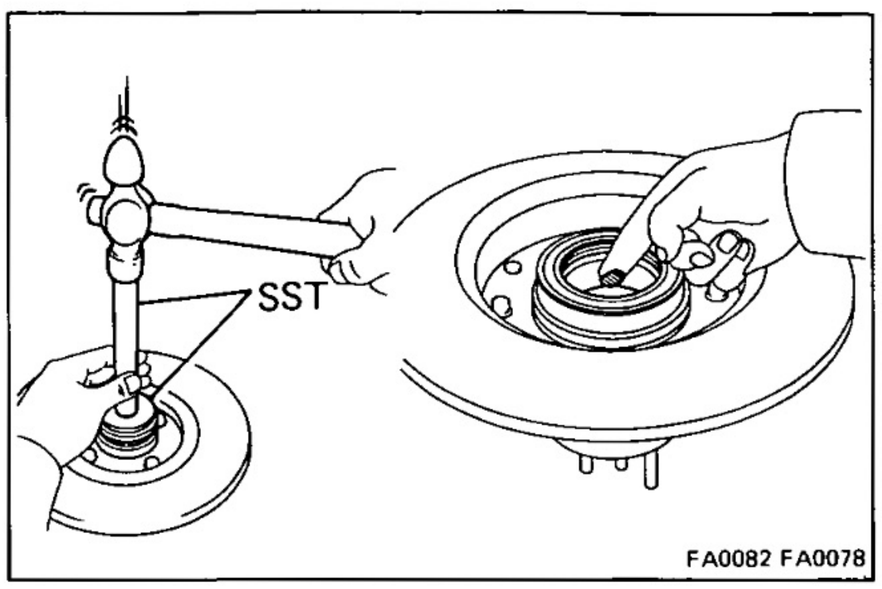

3. INSTALL INNER BEARING AND OIL SEAL

Place inner bearing into the hub. Using SST, drive the oil seal into the hub. Coat the oil seal with MP grease.

SST 09608-35013

4. INSTALL AXLE HUB ON SPINDLE

(a) Place the axle hub on the spindle.

(b) Install the outer bearing and thrust washer.

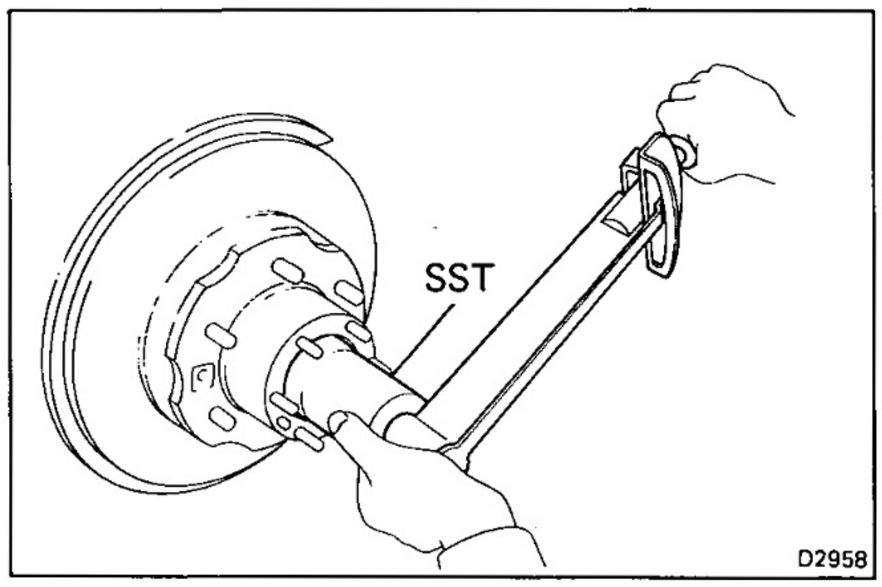

5. ADJUST PRELOAD

(a) Using SST, torque the bearing adjusting nut.

SST 09607-60020

Torque: 600 kg-cm (43 ft-lb, 59 N·m)

(b) Turn the hub right and left two or three times.

(c) Using SST, retighten the bearing adjusting nut.

SST 09607-60020

Torque: 600 kg-cm (43 ft-lb, 59 N·m)

(d) Loosen the nut until it can be turned by hand.

(e) Using a spring tension gauge, measure the frictional force of the oil seal at the hub bolt.

(f) Retighten the adjusting nut.

Torque: 40 – 70 kg-cm (35 – 60 in.-lb, 4.0 – 6.8 N·m)

(g) Using a spring tension gauge, measure the preload.

Preload (starting):

Frictional force plus 0.4 – 3.3 kg (0.9 – 7.3 lb, 4 – 32 N)

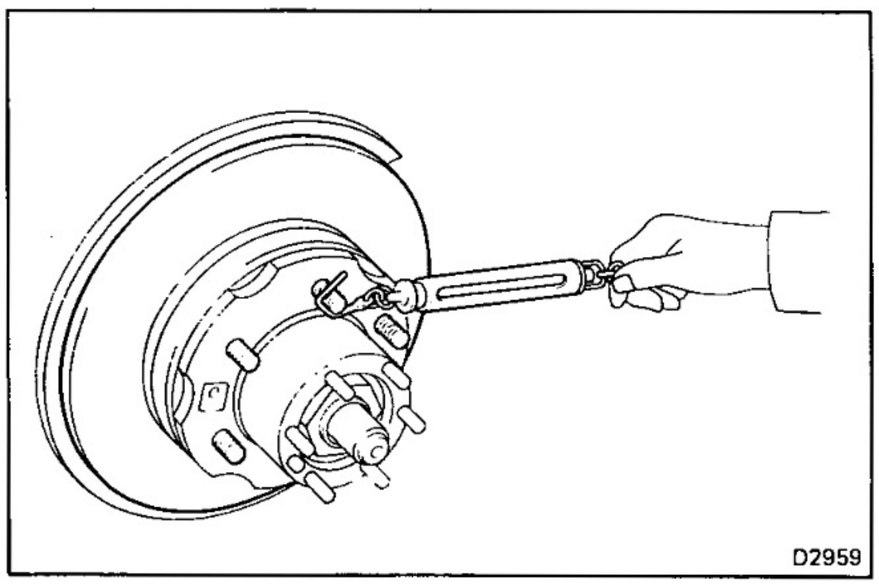

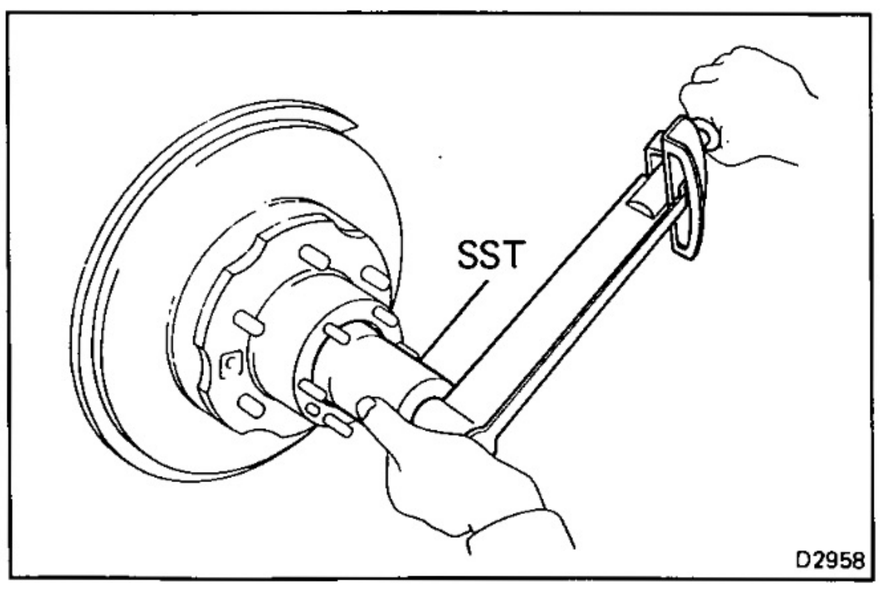

6. INSTALL LOCK WASHER AND LOCK NUT

(a) Install the lock washer and lock nut.

(b) Using SST, torque the lock nut.

SST 09607-60020

Torque: 800 kg-cm (58 ft-lb, 78 N·m)

(c) Check that the bearing has no play.

(d) Using a spring tension gauge, check the preload.

Preload (starting):

Frictional force plus 0.4 – 3.3 kg (0.9 – 7.3 lb, 4 – 32 N)

If not within specification, adjust with the adjusting nut.

(e) Secure the lock nut by bending one of the lock washer teeth inward and another lock washer tooth outward.

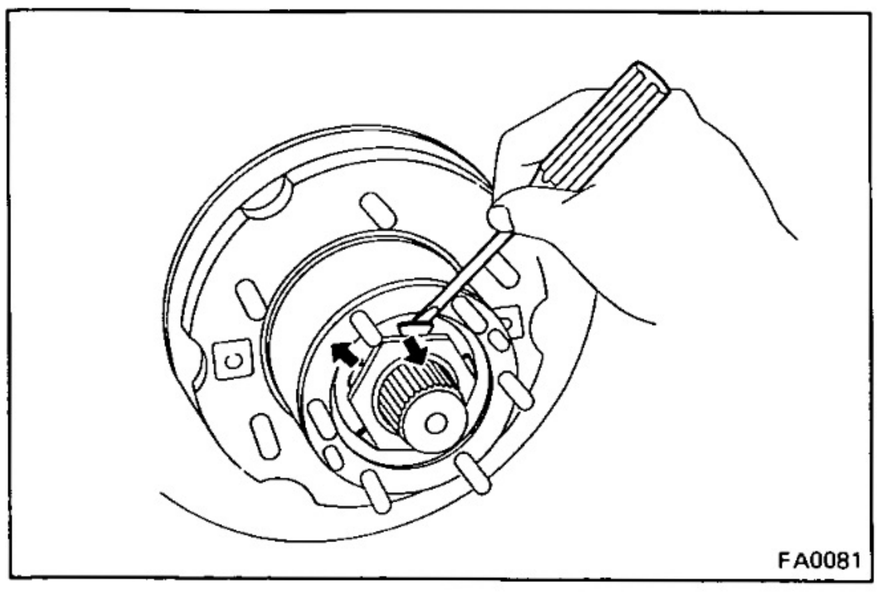

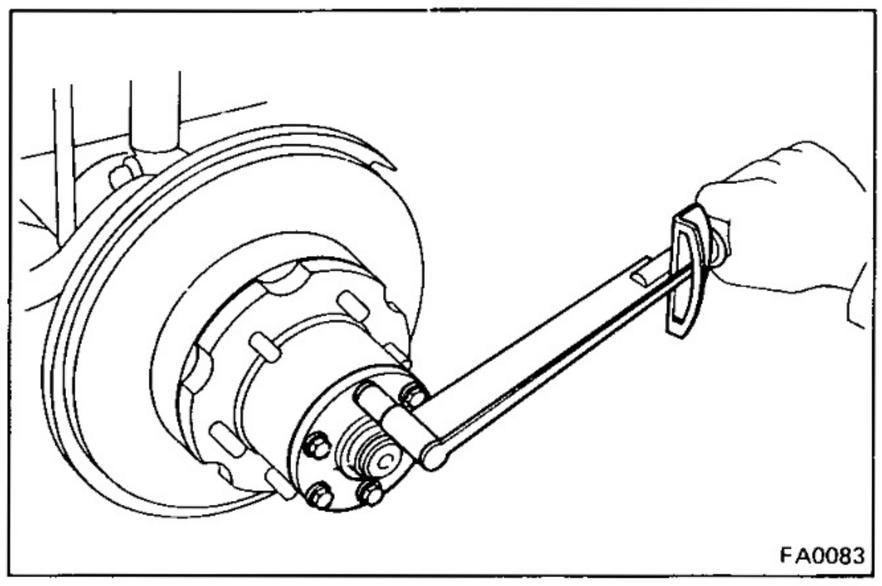

7. INSTALL FLANGE OR FREE WHEEL HUB

NOTE: In the case of the free wheel hub. (See page FA-9)

(a) Place the gasket in position on the axle hub.

(b) Install the flange to the axle hub.

(c) Install six cone washers and nuts.
Torque the nuts.

Torque: 315 kg-cm (23 ft-lb, 31 N·m)

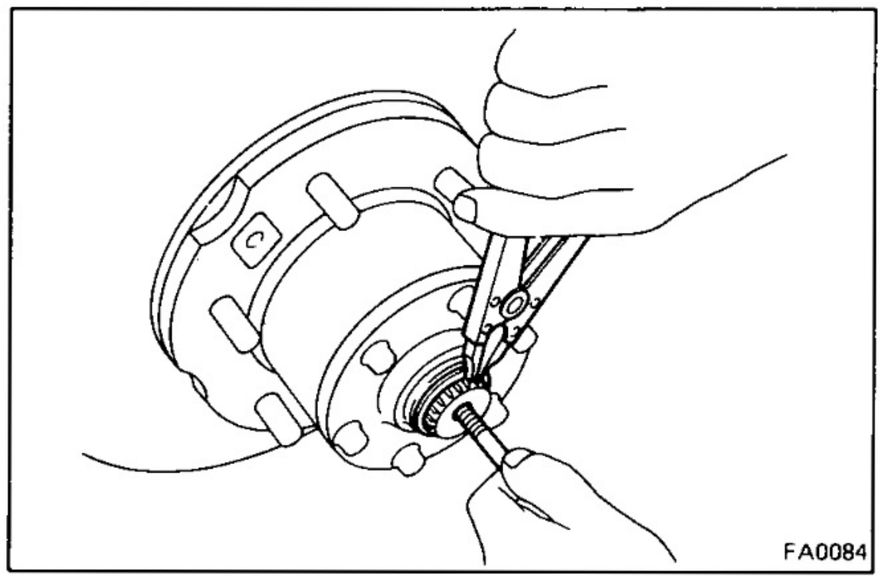

(d) Install a bolt in the axle shaft and pull it out.

(e) Using snap ring pliers, install the snap ring.

(f) Remove the bolt.

(g) Install the cap to the flange.

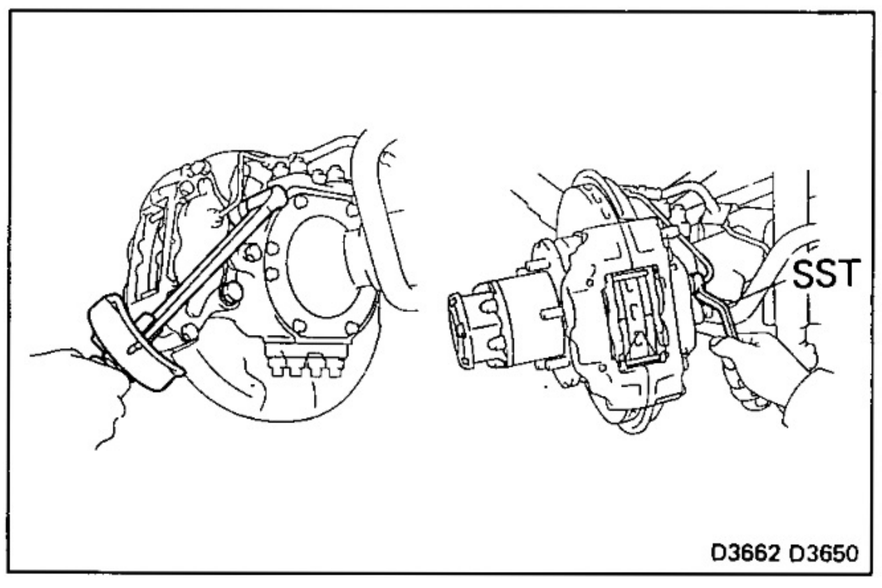

8. INSTALL BRAKE CALIPER

(a) Install the brake caliper to the steering knuckle.
Torque the mounting bolts.

Torque: 900 kg-cm (65 ft-lb, 88 N·m)

(b) Using SST, connect the brake tube.

SST 09751-36011

Torque: 155 kg-cm (11 ft-lb, 15 N·m)

9. BLEED BRAKE LINE

(See page BR-6)

STEERING KNUCKLE AND AXLE SHAFT

COMPONENTS

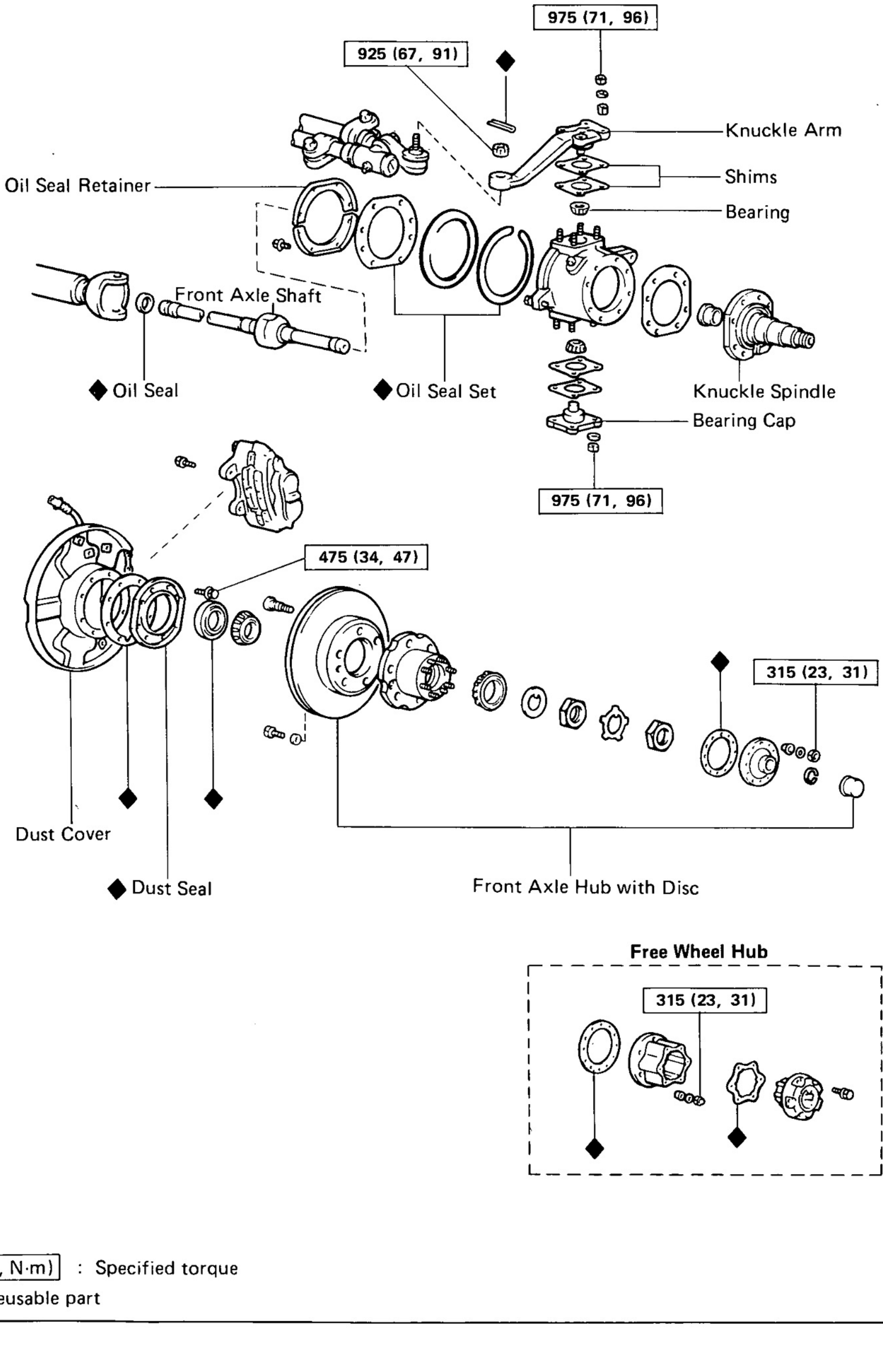

kg-cm (ft-lb, N·m) : Specified torque

◆ : Non-reusable part

D2953

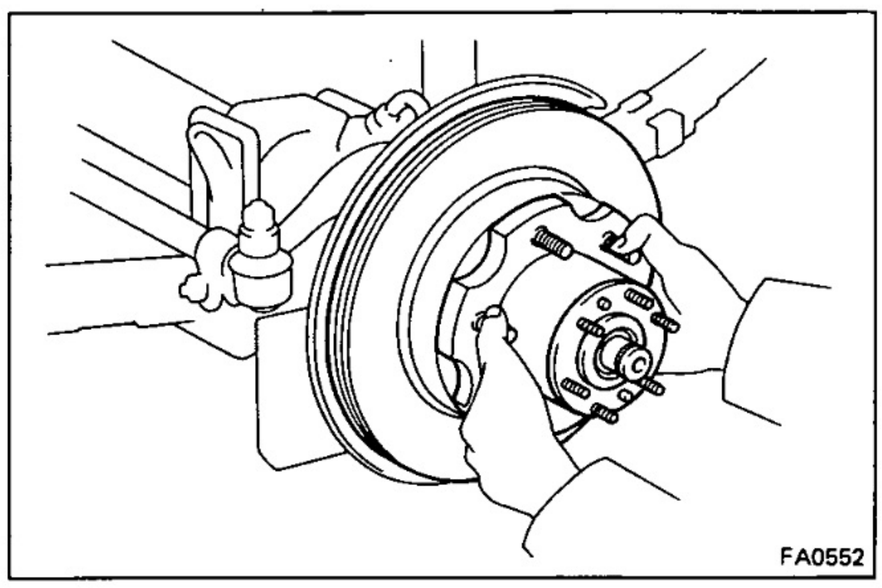

DISASSEMBLY OF STEERING KNUCKLE AND AXLE SHAFT

1. REMOVE FRONT AXLE HUB
(See page FA-13)

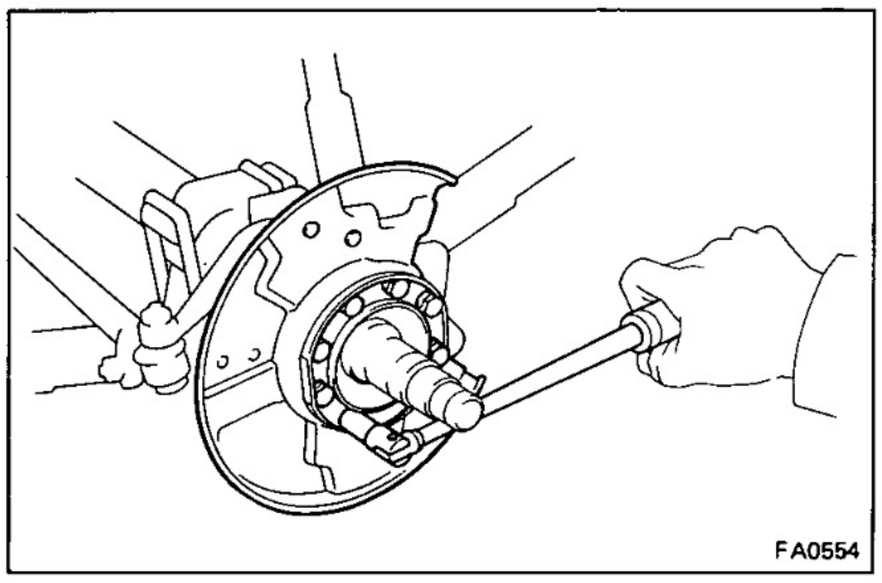

2. REMOVE KNUCKLE SPINDLE MOUNTING BOLTS

3. REMOVE DUST SEAL AND DUST COVER

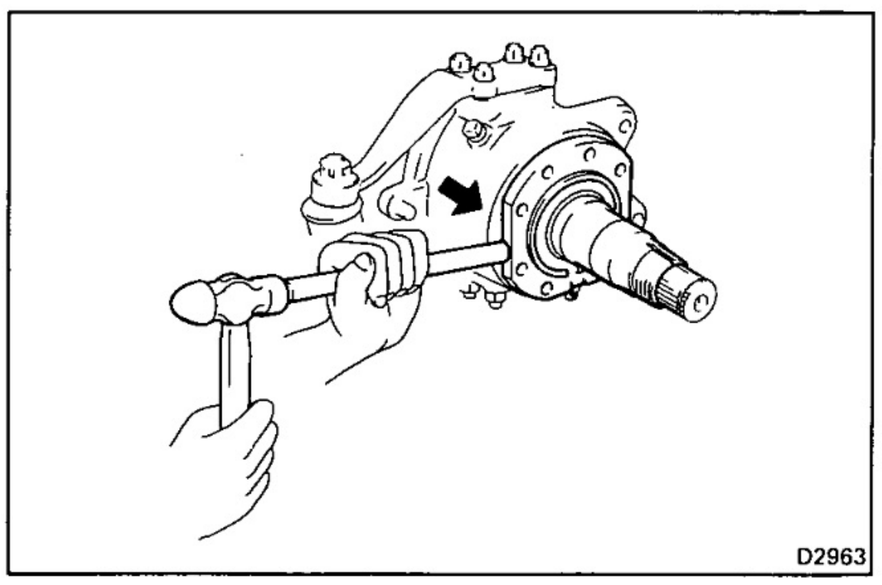

4. REMOVE KNUCKLE SPINDLE

Using a brass bar, tap the knuckle spindle off of the steering knuckle.

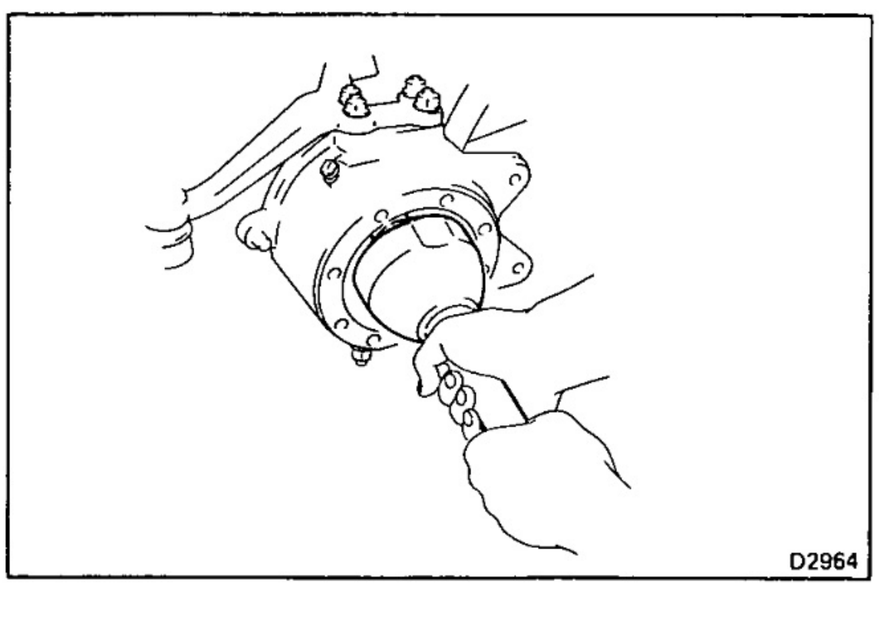

5. REMOVE AXLE SHAFT

Position one flat part of the outer shaft upward and pull out the axle shaft.

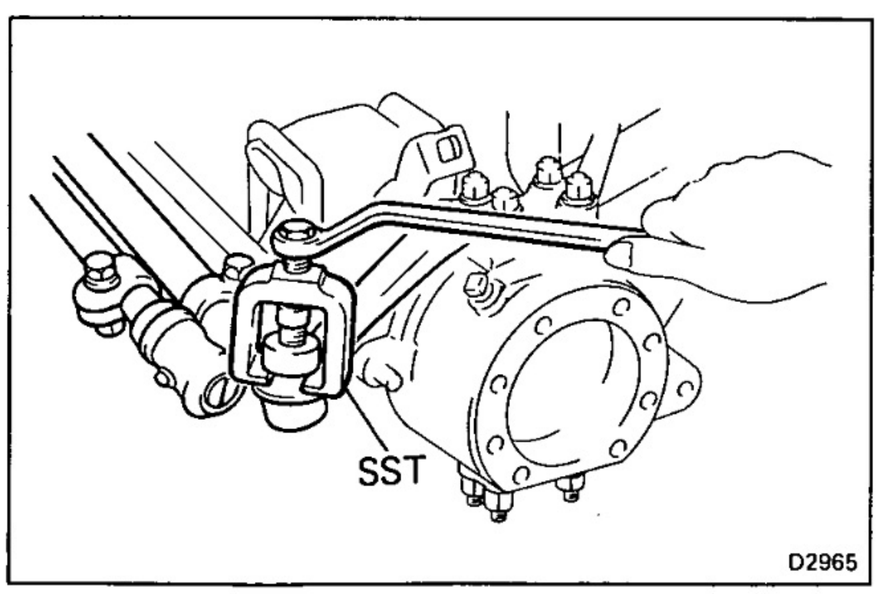

6. DISCONNECT TIE ROD FROM KNUCKLE ARM

Using SST, disconnect the tie rod from the knuckle arm.

SST 09611-22012

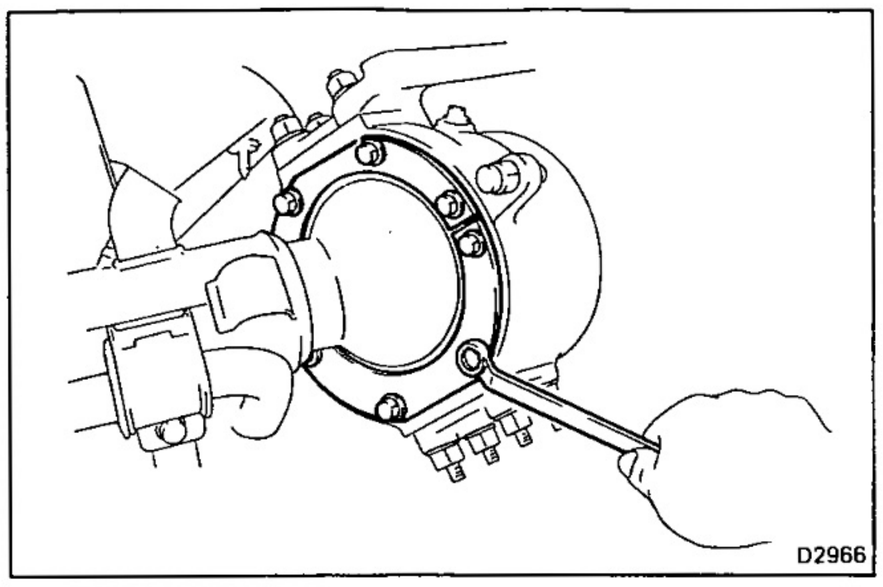

7. REMOVE OIL SEAL SET AND RETAINER

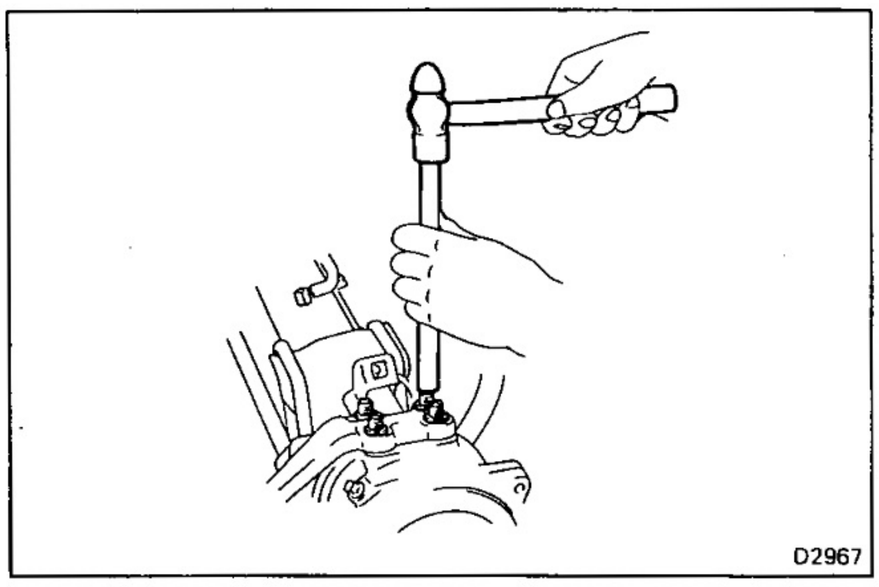

8. REMOVE KNUCKLE ARM AND BEARING CAP

(a) Remove the knuckle arm and bearing cap mounting nuts.

(b) Using a brass bar, tap the slits of the cone washers and remove them from the knuckle arm.

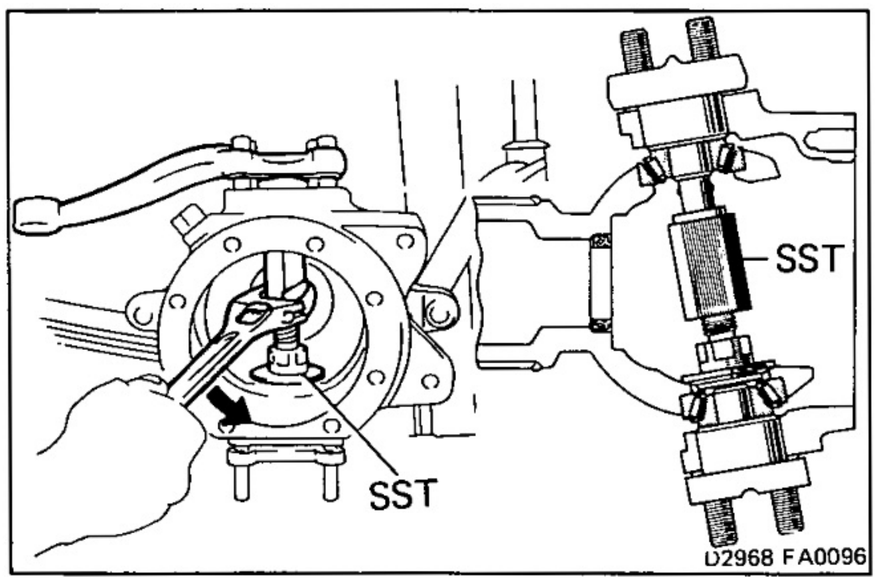

(c) Using SST, push out the knuckle arm and shims from the steering knuckle.

SST 09606-60020

NOTE: Use the SST without a collar.

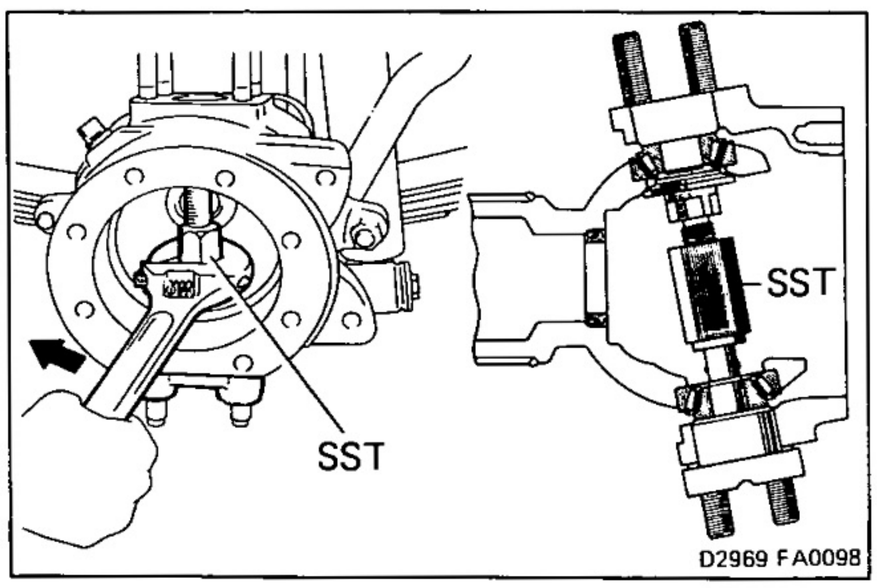

(d) Using SST, push out the bearing cap and shims from the steering knuckle.

SST 09606-60020

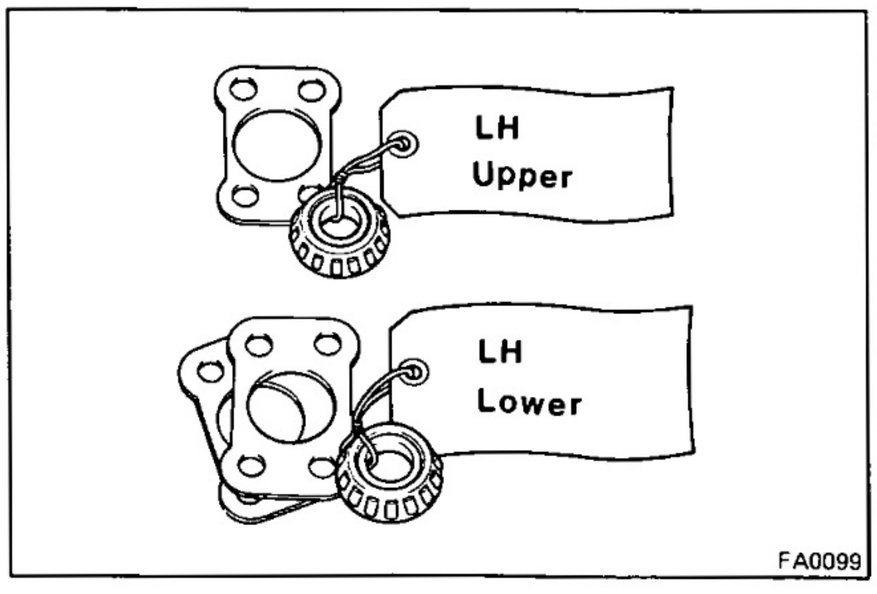

9. REMOVE STEERING KNUCKLE AND BEARING

NOTE: Mark the removed adjusting shims and bearings so as to enable reassembling them to their proper positions.

INSPECTION AND REPAIR OF STEERING KNUCKLE AND AXLE SHAFT

1. INSPECT KNUCKLE SPINDLE

Clean the knuckle spindle and inspect the bushing for wear or damage.

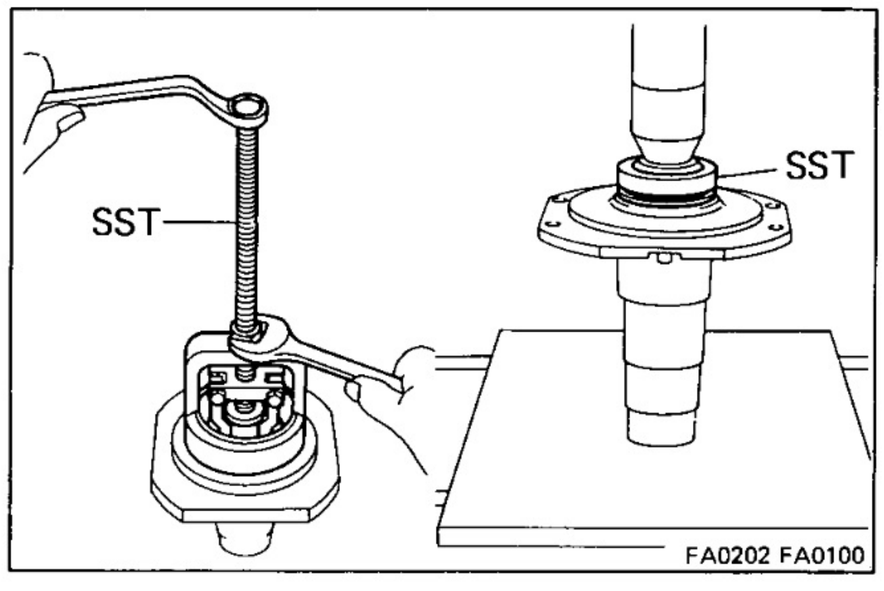

2. REPLACE BUSHING

(a) Using SST, remove the bushing.

SST 09612-65013

(b) Using SST, press a new bushing into the spindle.

SST 09608-35013

3. INSPECT BEARING

Clean the bearings and outer races and inspect them for wear or damage.

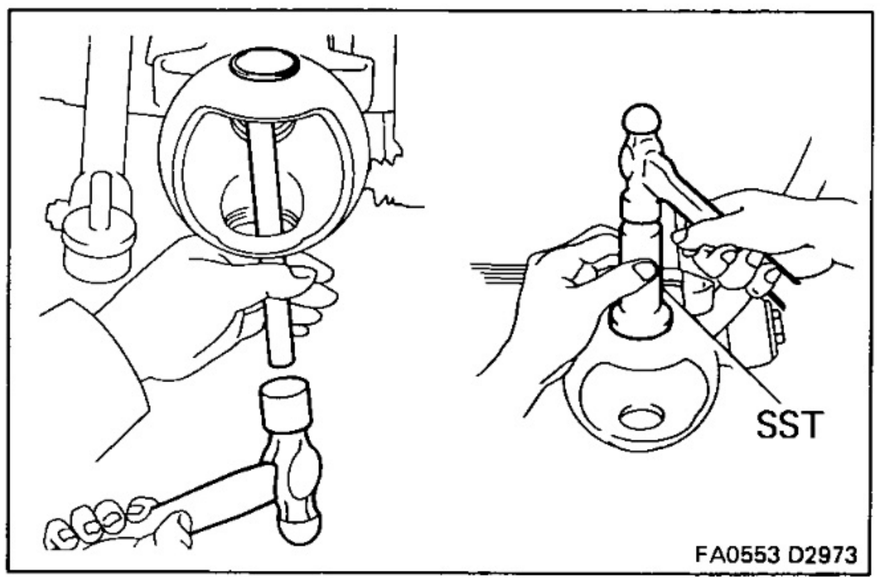

4. IF NECESSARY, REPLACE BEARING OUTER RACE

(a) Using a brass bar, drive out the bearing outer race.

(b) Using SST, carefully drive in a new bearing outer race.

SST 09605-60010

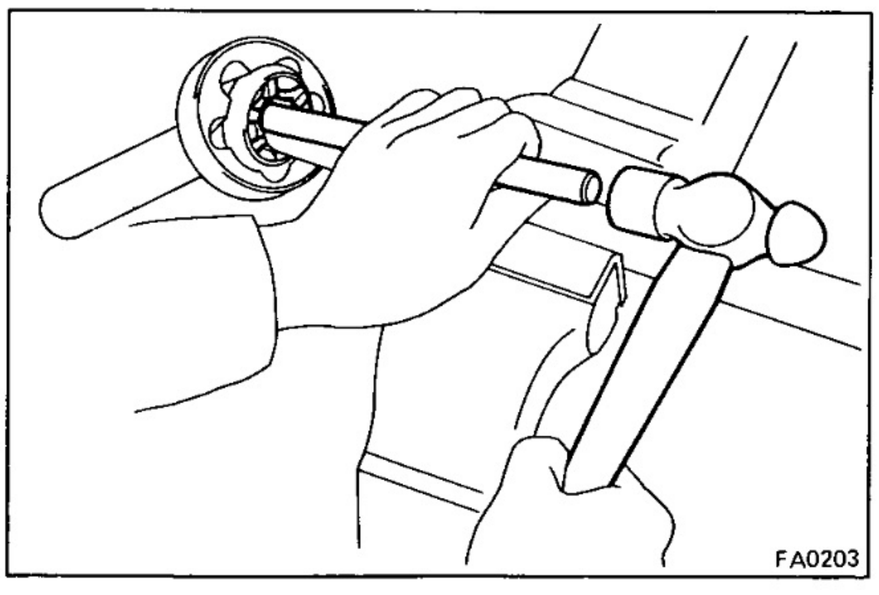

5. INSPECT BIRFIELD JOINT INNER PARTS

(a) Hold the inner shaft in a vise.

(b) Place a brass bar against the joint inner race and drive out the outer shaft.

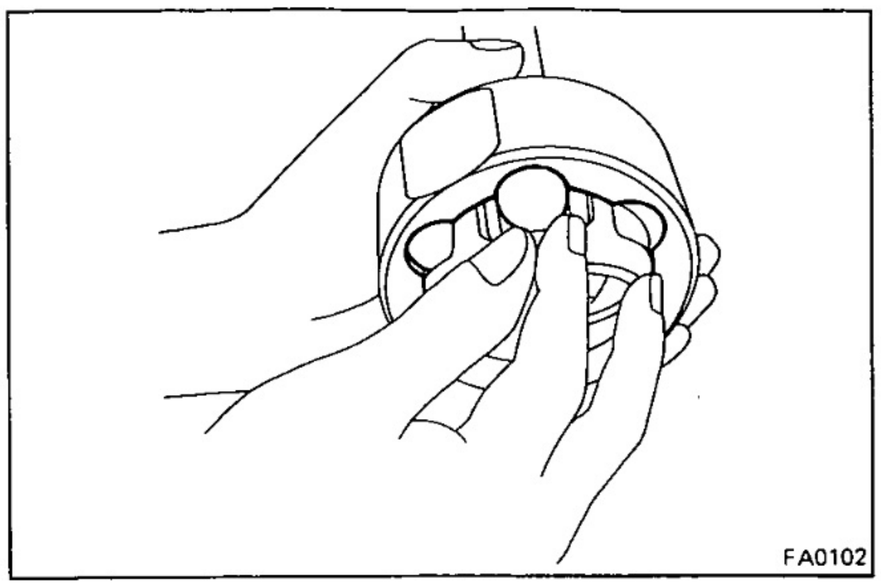

(c) Tilt the inner race and cage and take out the bearing balls one by one.

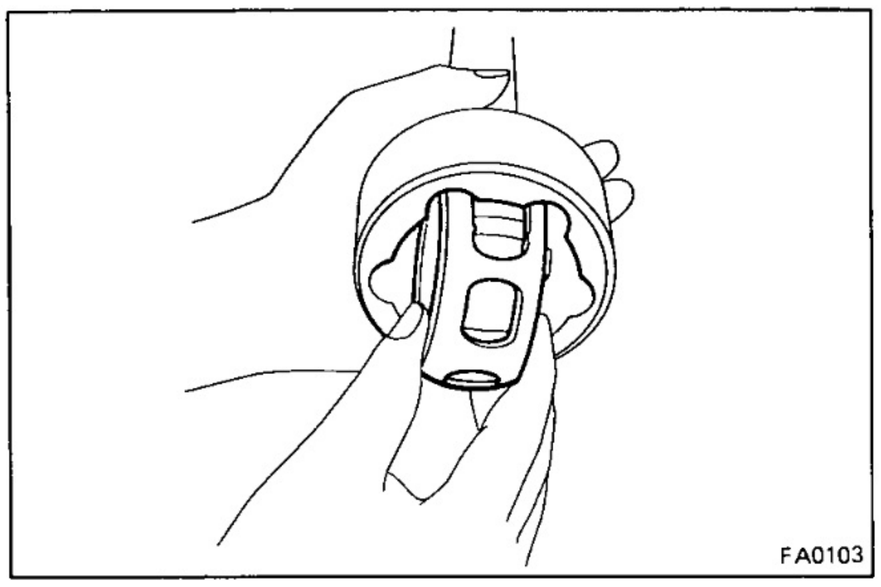

(d) Fit the two large openings in the cage against the protruding parts of the outer shaft. Pull out the cage and inner race.

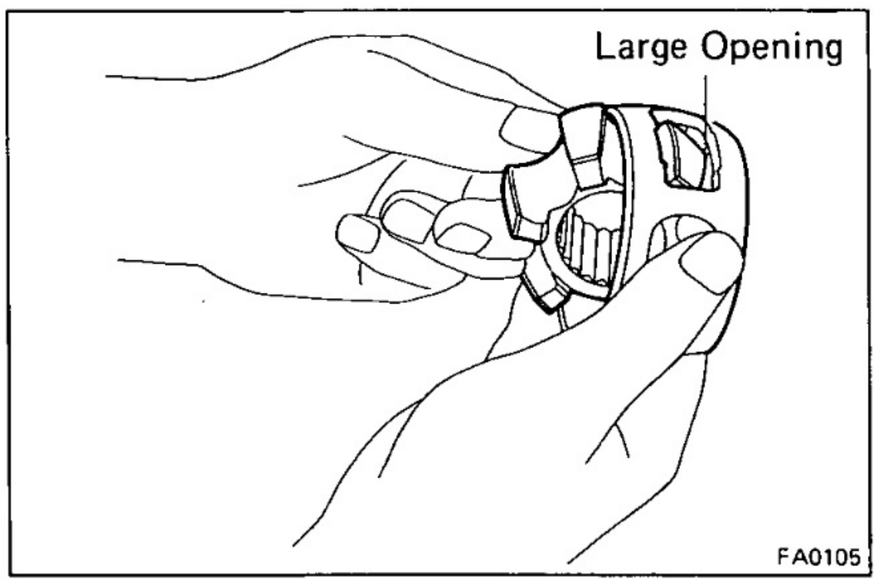

(e) Take out the inner race from the cage through the large opening.

(f) Clean and inspect the joint inner parts for wear or damage.

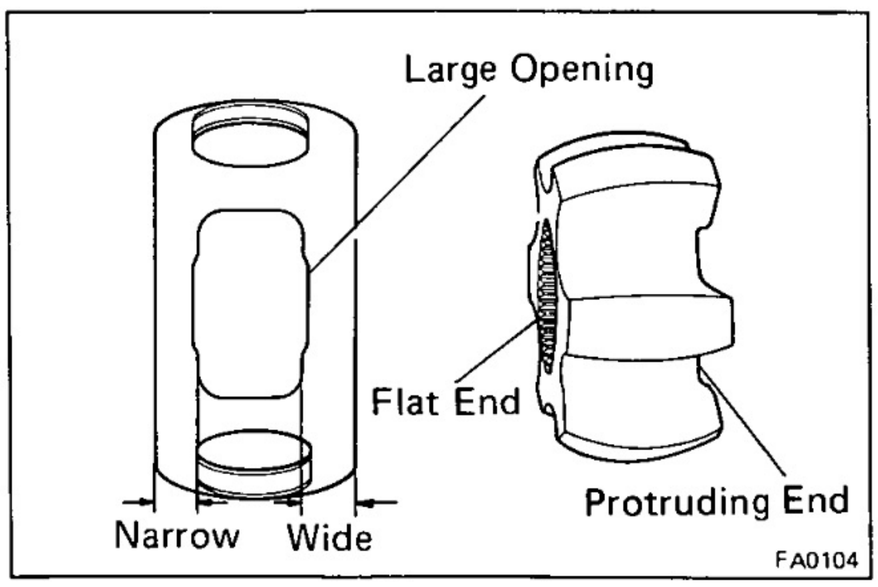

(g) Coat the joint inner parts and inside of the outer shaft with Molybdenum disulphide lithium base grease.

(h) Insert the inner race in the cage through the large opening.

(i) Position the protruding end and the inner race toward the wide side of the cage.

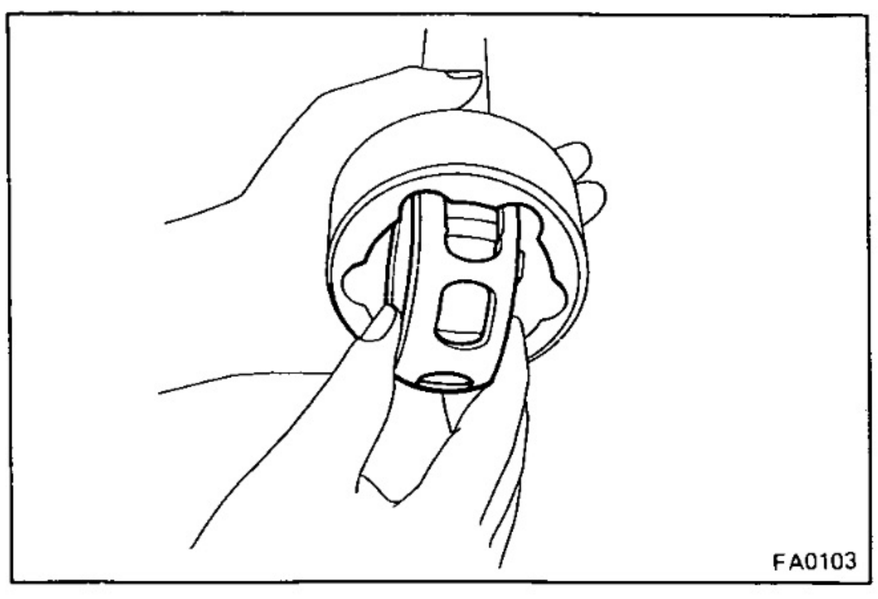

(j) Assemble the cage and inner race to the outer shaft by fitting the two large openings in the cage against the protruding parts of the outer shaft.

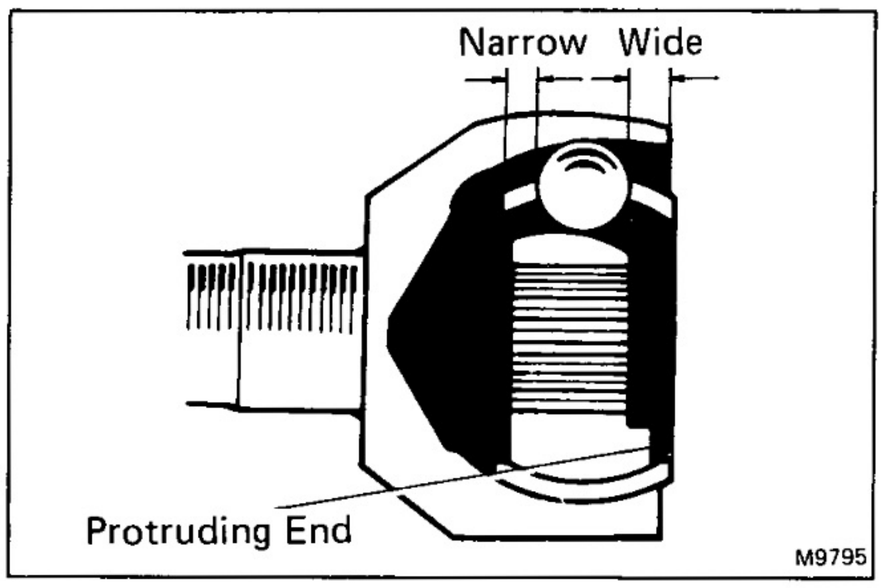

(k) Make sure to position the wide side of the cage and the inner race protruding end outward.

(l) Fit in the inner race and cage, and install the six bearing balls in the outer shaft. (See step (c))

(m) Pack Molybdenum disulphide lithium base grease in the outer shaft.

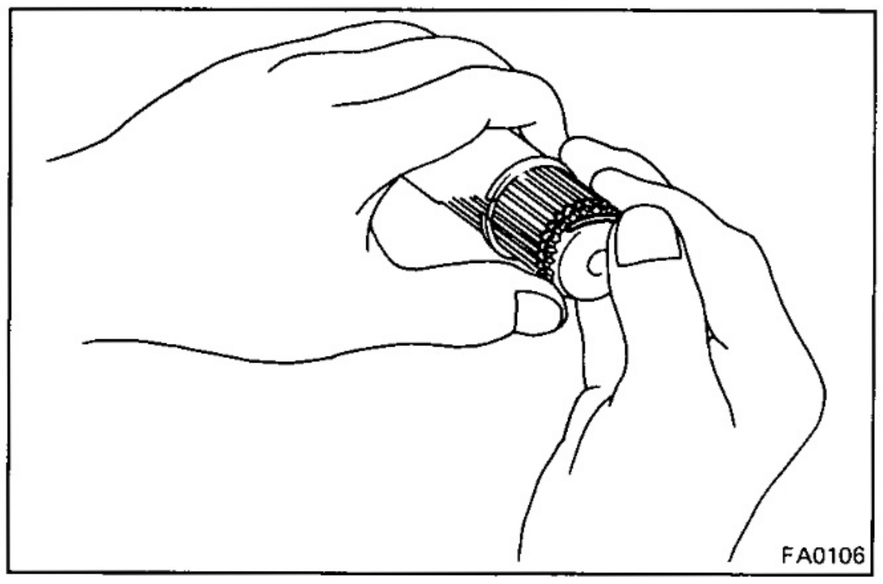

(n) Install the new snap rings on the inner shaft.

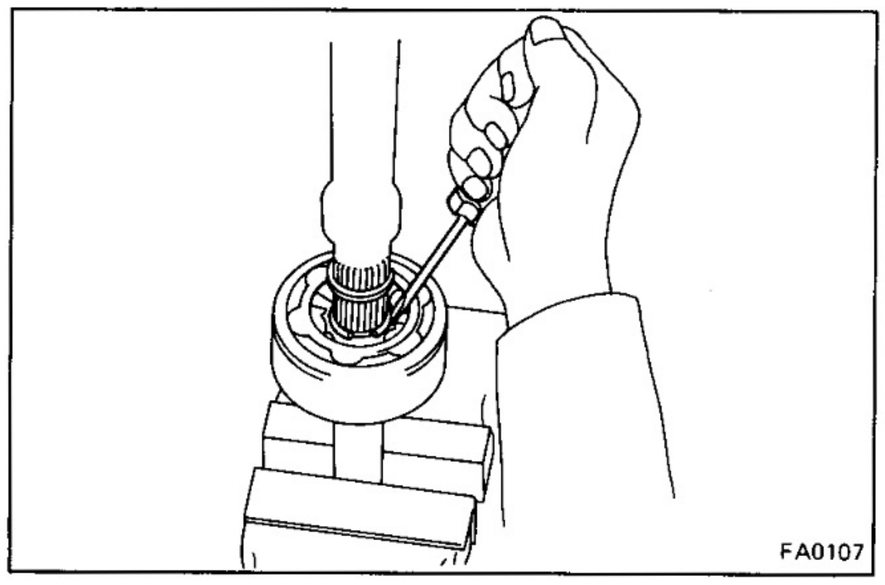

(o) Hold the outer shaft in a vise and, while compressing the snap inner ring, install the inner shaft to the outer shaft.

(p) Verify that the inner shaft cannot be pulled out.

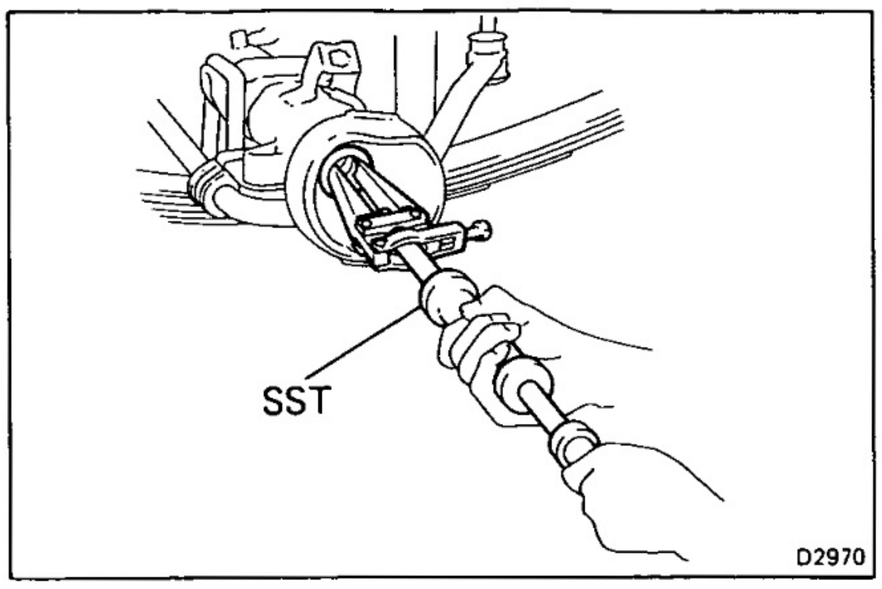

ADJUSTMENT OF STEERING KNUCKLE ALIGNMENT AND BEARING PRELOAD

NOTE: Whenever the axle housing or the steering knuckle is replaced, the steering knuckle alignment and knuckle bearing preload are to be adjusted with the SST.

SST 09634-60013

1. ADJUST BEARING PRELOAD

(a) Using SST, remove the oil seal.

SST 09308-00010

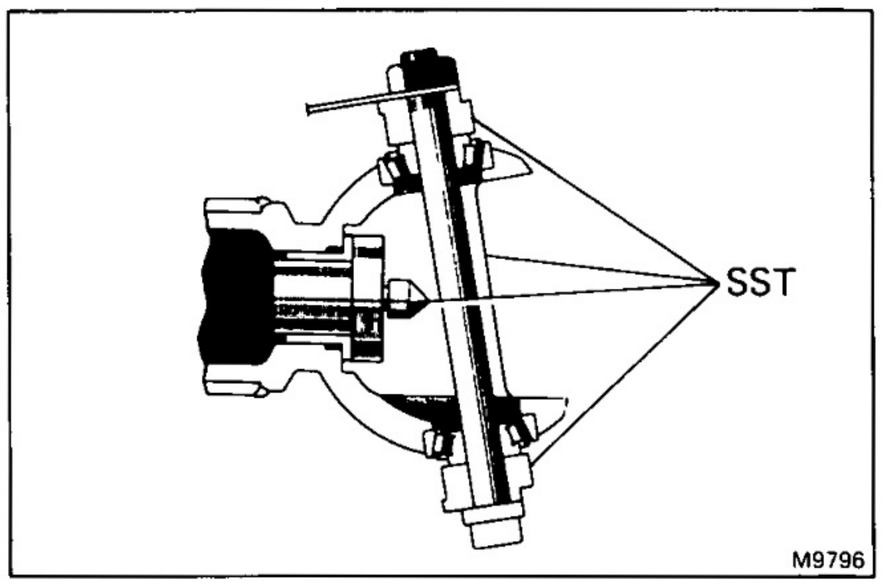

(b) Coat the knuckle bearings lightly with Molybdenum disulphide lithium base grease.

(c) Mount the SST on the housing with the bearings.

SST 09634-60013

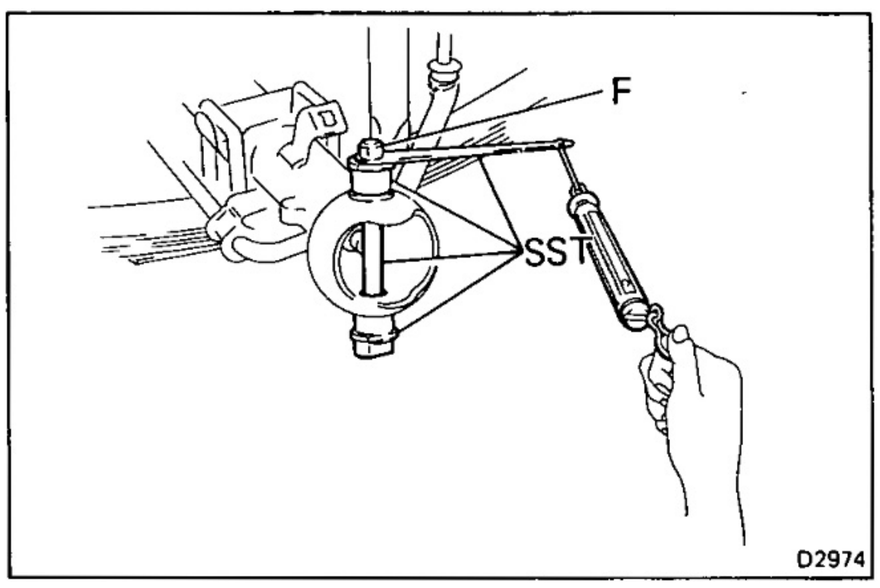

(d) Add preload to the bearings by tightening nut F.

Using a spring tension gauge, measure the preload.

Preload (starting): 3.0 – 6.0 kg (6.6 – 13.2 lb) (29 – 59 N)

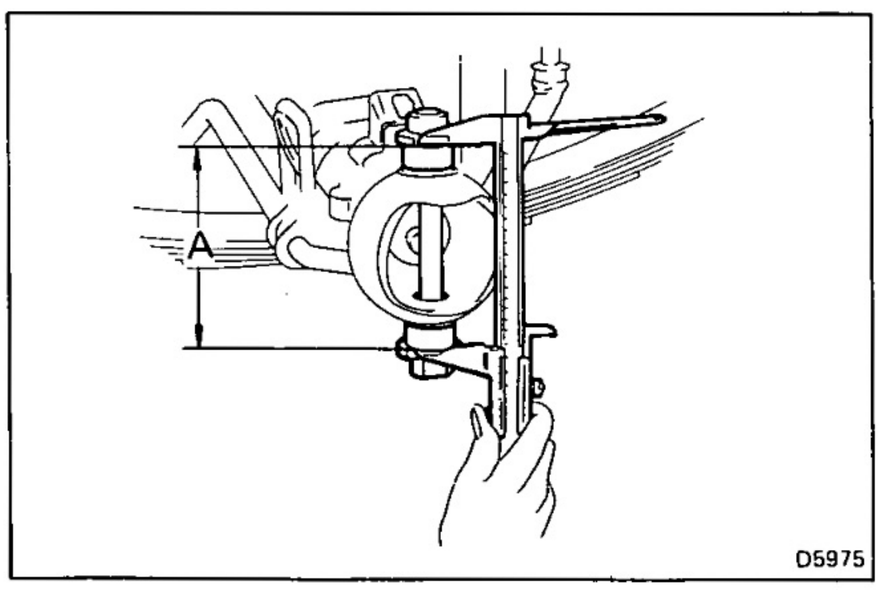

(e) Measure distance A.

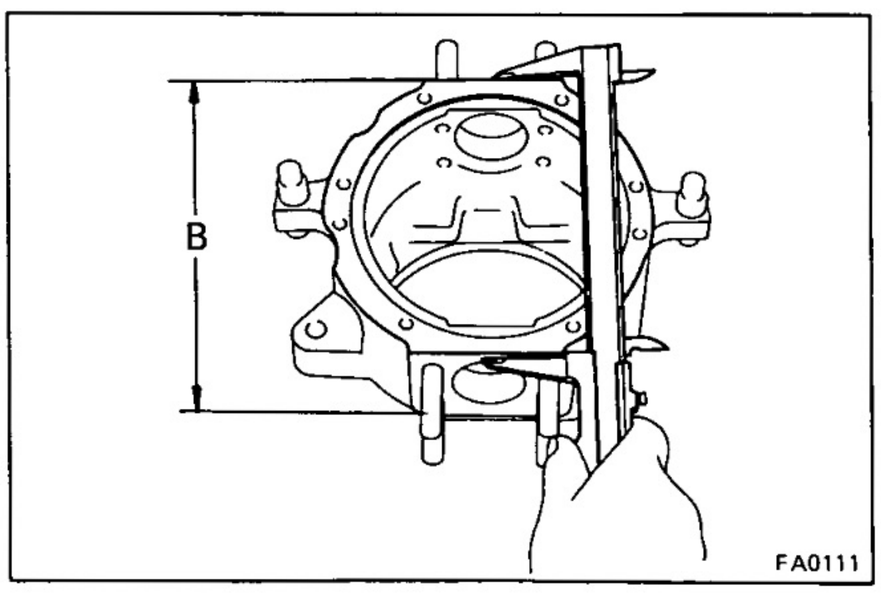

(f) Measure distance B.

The difference between A and B is the total adjusting shim thickness that is required to maintain the correct bearing preload.

TOTAL SHIM THICKNESS C

C = A – B

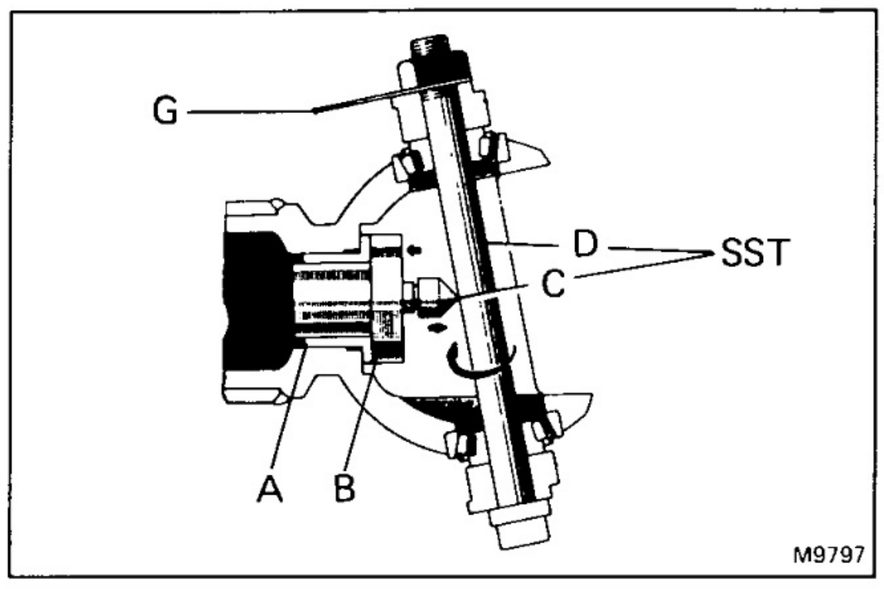

2. ADJUST STEERING KNUCKLE ALIGNMENT

(a) Apply a light coat of red lead on the center part of rod D.

(b) Press adapters A and B against the housing, press plug C against the rod D and turn lever G so that a line will be described on rod D.

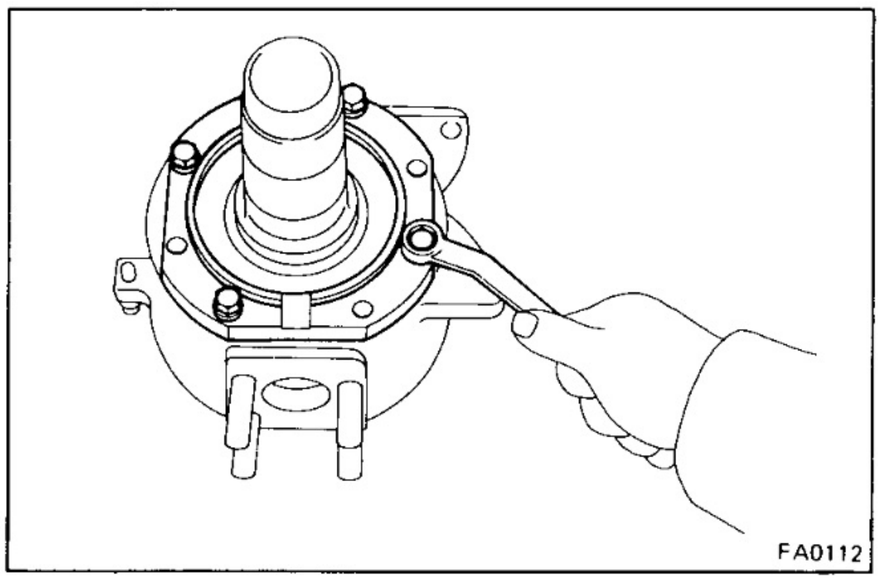

(c) Temporarily install the spindle to the knuckle. Tighten the bolt with two washers.

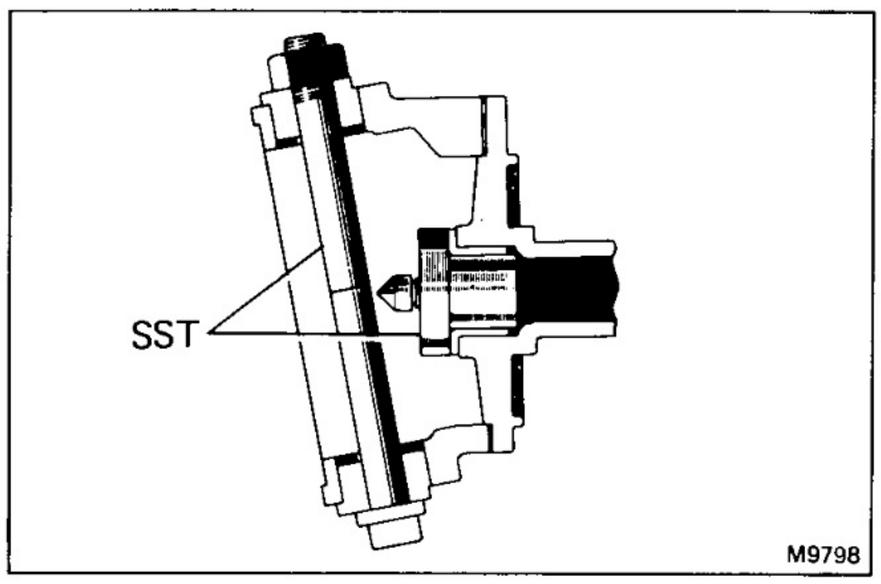

(d) Dismount the SST from the housing, and mount it on the knuckle.

SST 09634-60013

NOTE: Use care not to erase the line when dismounting and remounting the SST.

Make sure that rod D is in the same vertical direction that it was when mounted on the housing.

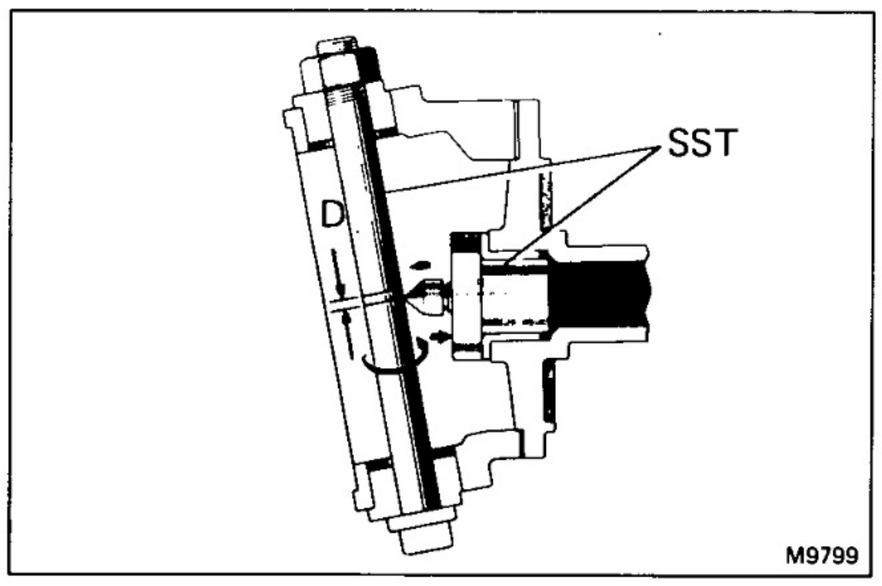

(e) Turn rod D and mark another line on it.
Measure distance D between the two lines.

The thickness of the steering knuckle lower bearing shim E will be the distance D less 3 mm (0.12 in.)

LOWER SHIM THICKNESS E
E = D – 3 mm

The thickness of the steering knuckle upper bearing shim F will be the difference between the total adjusting shim thickness C and shim thickness E.

UPPER SHIM THICKNESS F
F = C – E

NOTE: Compare E and F with the thicknesses of the shims removed at disassembly. If there is considerable difference, remeasure E and F.

(f) Apply Molybdenum disulphide lithium base grease to the front axle shaft bushing.

Adjusting shim thickness

Thickness mm (in.)
0.1 (0.004)
0.2 (0.008)
0.3 (0.012)
0.5 (0.020)
1.0 (0.039)

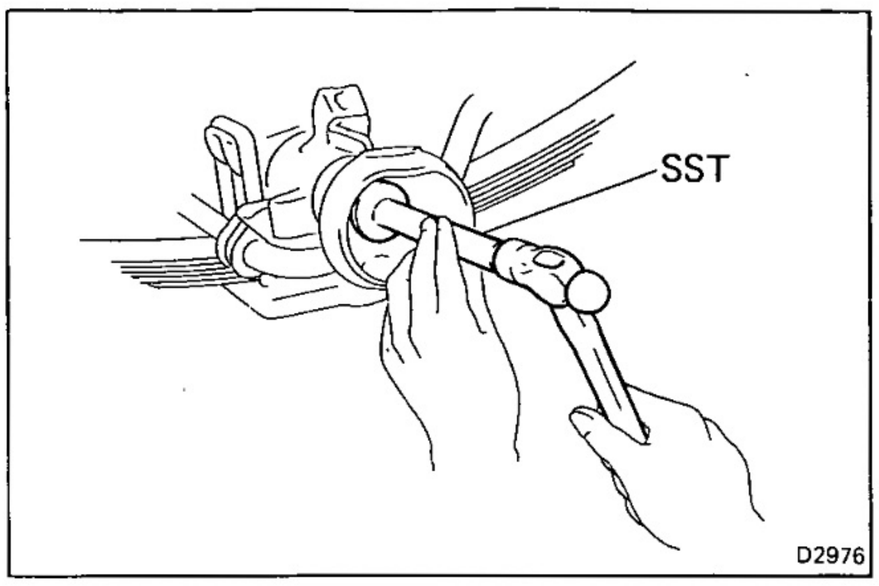

ASSEMBLY OF STEERING KNUCKLE AND AXLE SHAFT

(See page FA-17)

1. INSTALL OIL SEAL TO AXLE HOUSING

Using SST drive the oil seal into the axle housing.

SST 09618-60010

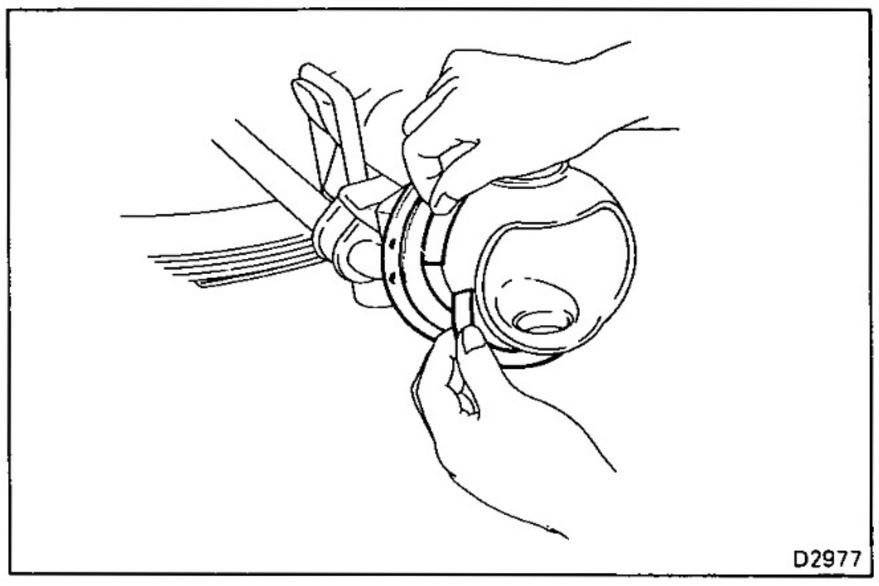

2. INSTALL OIL SEAL SET

Install the parts in the following order:

(a) Felt dust seal

(b) Rubber seal

(c) Steel ring

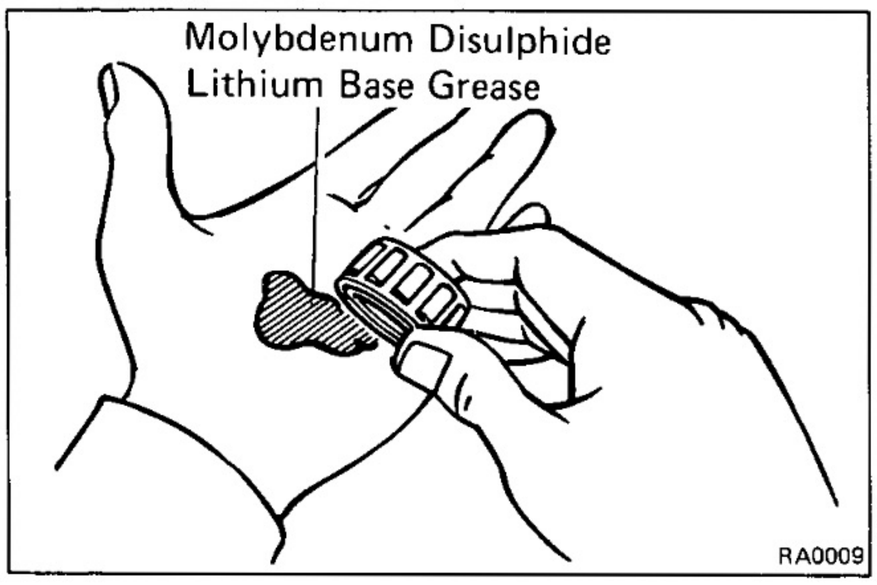

3. PACK BEARINGS WITH MOLYBDENUM DISULPHIDE LITHIUM BASE GREASE

(a) Place Molybdenum disulphide lithium base grease in the palm of your hand.

(b) Pack grease into the bearing and continue until the grease oozes out from the other side.

(c) Do the same around the bearing circumference.

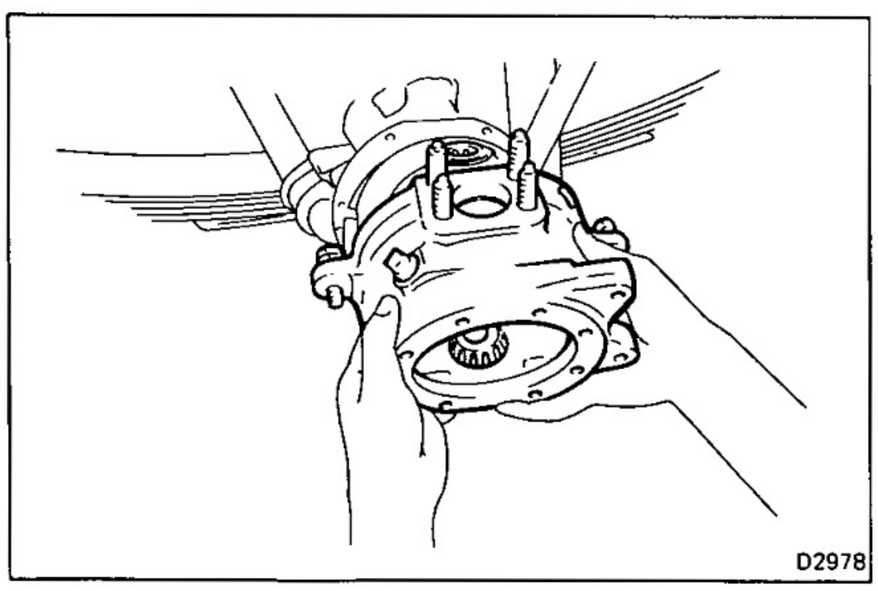

4. INSTALL STEERING KNUCKLE AND BEARINGS

(a) Place the bearings in position on the knuckle and axle housing.

(b) Insert the knuckle on the axle housing.

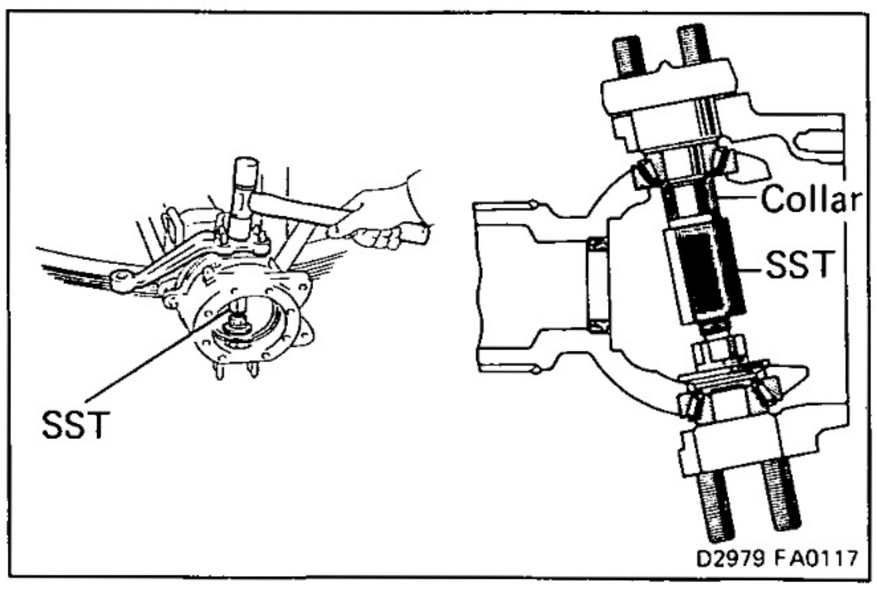

5. INSTALL KNUCKLE ARM AND BEARING CAP

(a) Using SST, support the upper bearing inner race.

SST 09606-60020

NOTE: Use SST with a collar.

(b) Install the knuckle arm over the shims that were originally used or were selected in the adjustment operations.

(c) Using a hammer, tap the knuckle arm into the bearing inner race.

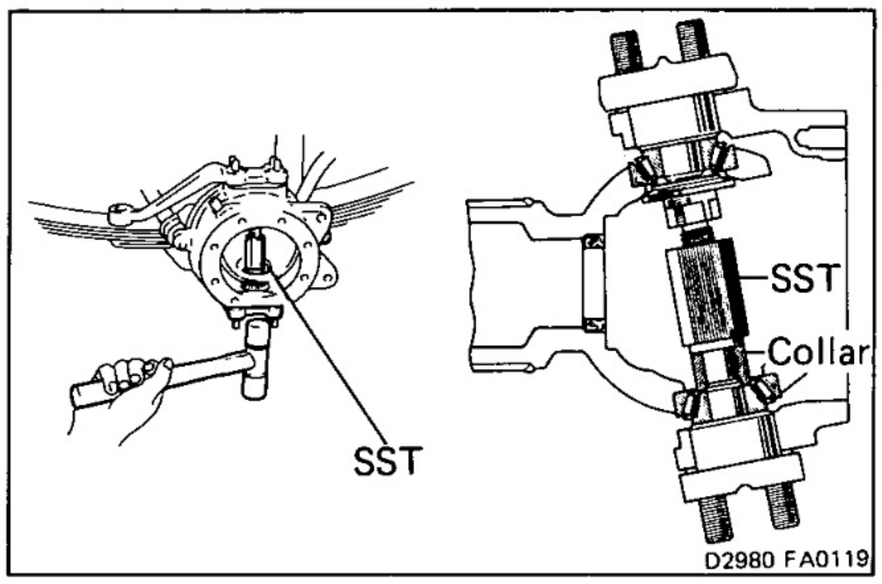

(d) Using SST, support the lower bearing inner race.

SST 09606-60020

NOTE: Use SST with a collar.

(e) Install the bearing cap over the shims that were originally used or were selected as described in adjustment operations.

(f) Using a hammer, tap the bearing cap into the bearing inner race.

(g) Remove SST from the knuckle.

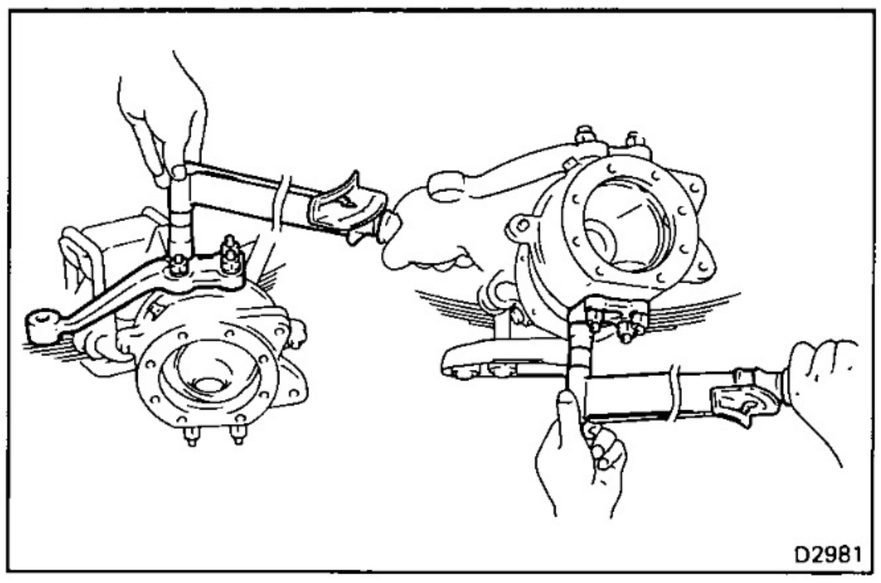

(h) Install the cone washers to the third arm and torque the nuts.

Torque: 975 kg-cm (71 ft-lb, 96 N·m)

(i) Install the cone washers to the knuckle arm and torque the nuts.

Torque: 975 kg-cm (71 ft-lb, 96 N·m)

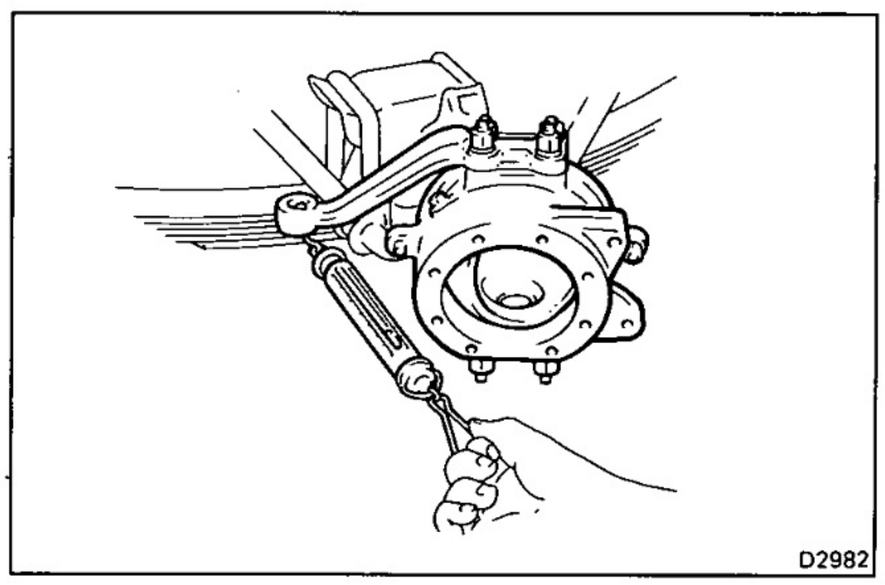

6. MEASURE BEARING PRELOAD

Using a spring tension gauge, measure the preload.

Preload (starting): 3.0 – 6.0 kg (6.6 – 13.2 lb) (29 – 59 N)

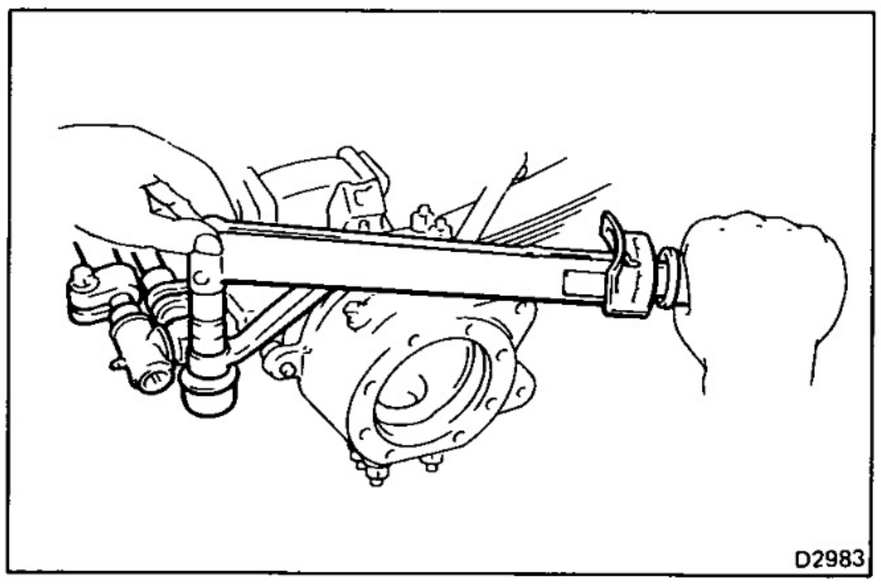

7. CONNECT TIE ROD TO KNUCKLE ARM

Torque the castle nut and secure it with a new cotter pin.

Torque: 925 kg-cm (67 ft-lb, 91 N·m)

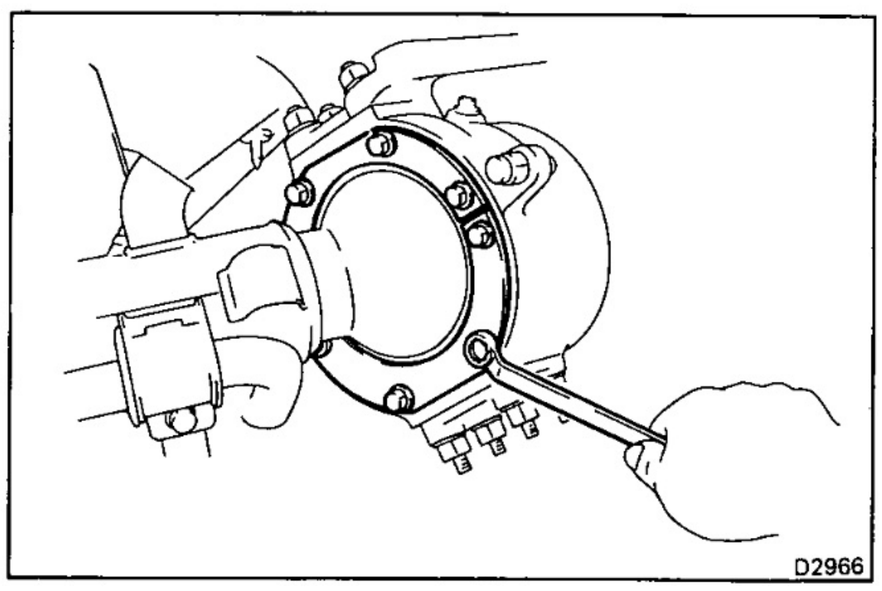

8. INSTALL OIL SEAL SET TO KNUCKLE

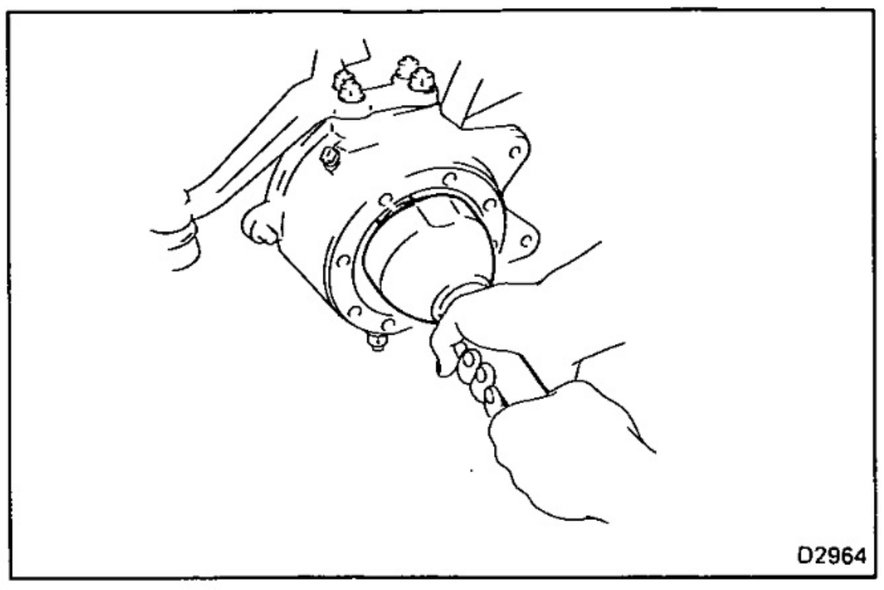

9. INSTALL AXLE SHAFT

Position one flat part of the outer shaft upward, and install the shaft.

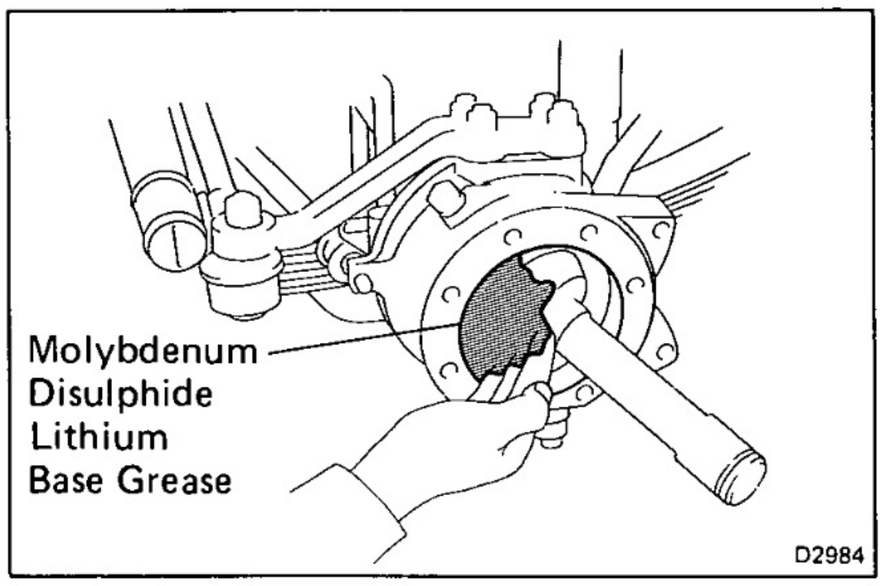

10. PACK MOLYBDENUM DISULPHIDE LITHIUM BASE GREASE

Pack Molybdenum disulphide lithium base grease into the knuckle to about three fourths of the knuckle.

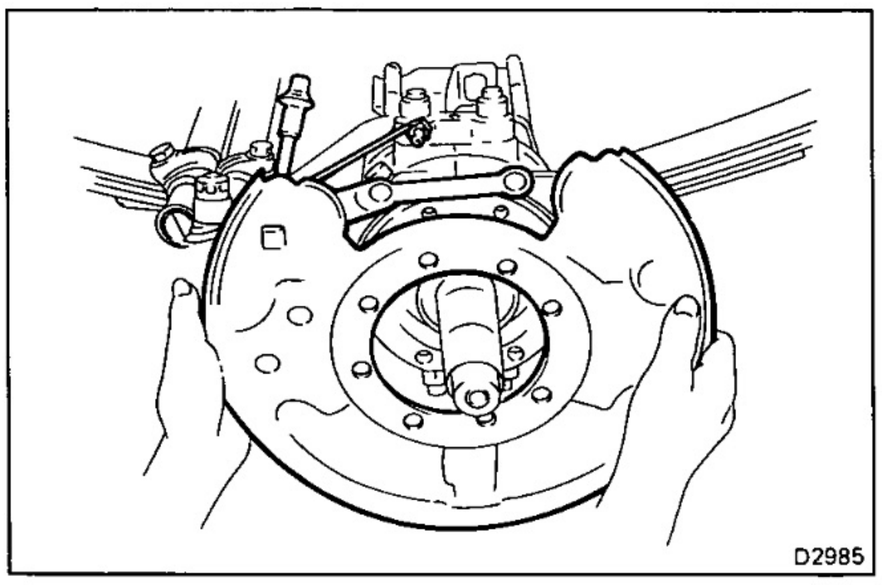

11. INSTALL KNUCKLE SPINDLE, DUST COVER WITH NEW GASKETS AND DUST SEAL

(a) Place a new gasket in position on the knuckle and install the spindle.

(b) Place the gasket, dust cover and dust seal on the spindle.

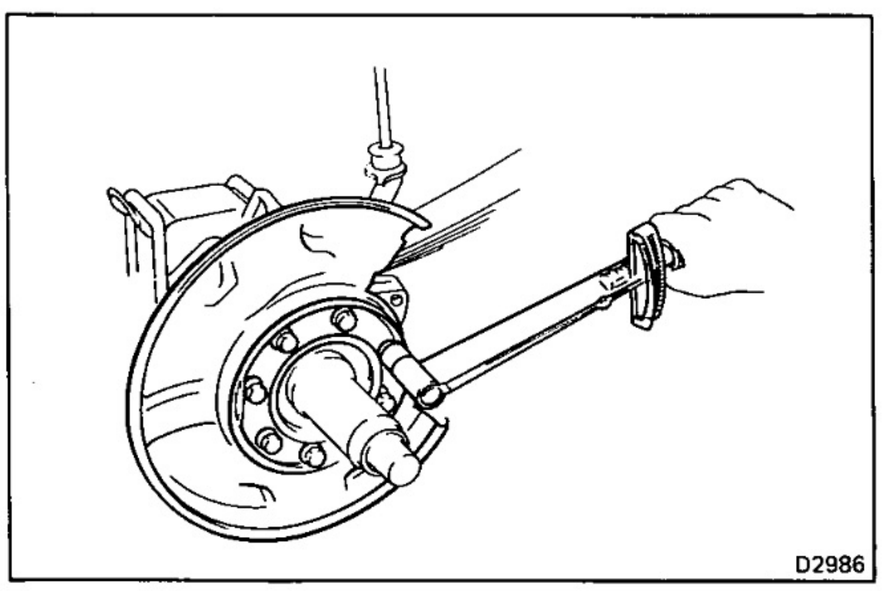

(c) Torque the spindle mounting bolts.

Torque: 475 kg-cm (34 ft-lb, 47 N·m)

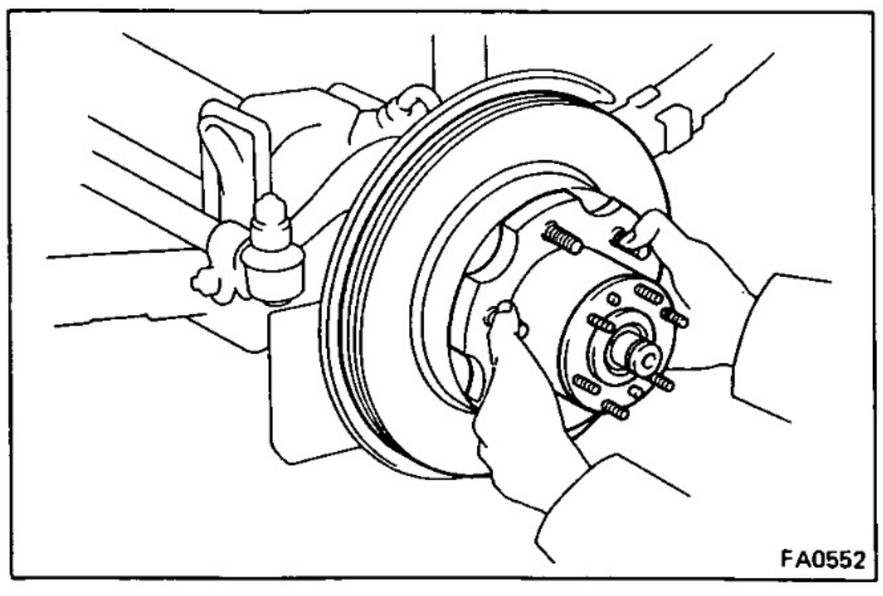

12. INSTALL AXLE HUB (See page FA-14)

FRONT DIFFERENTIAL

COMPONENTS

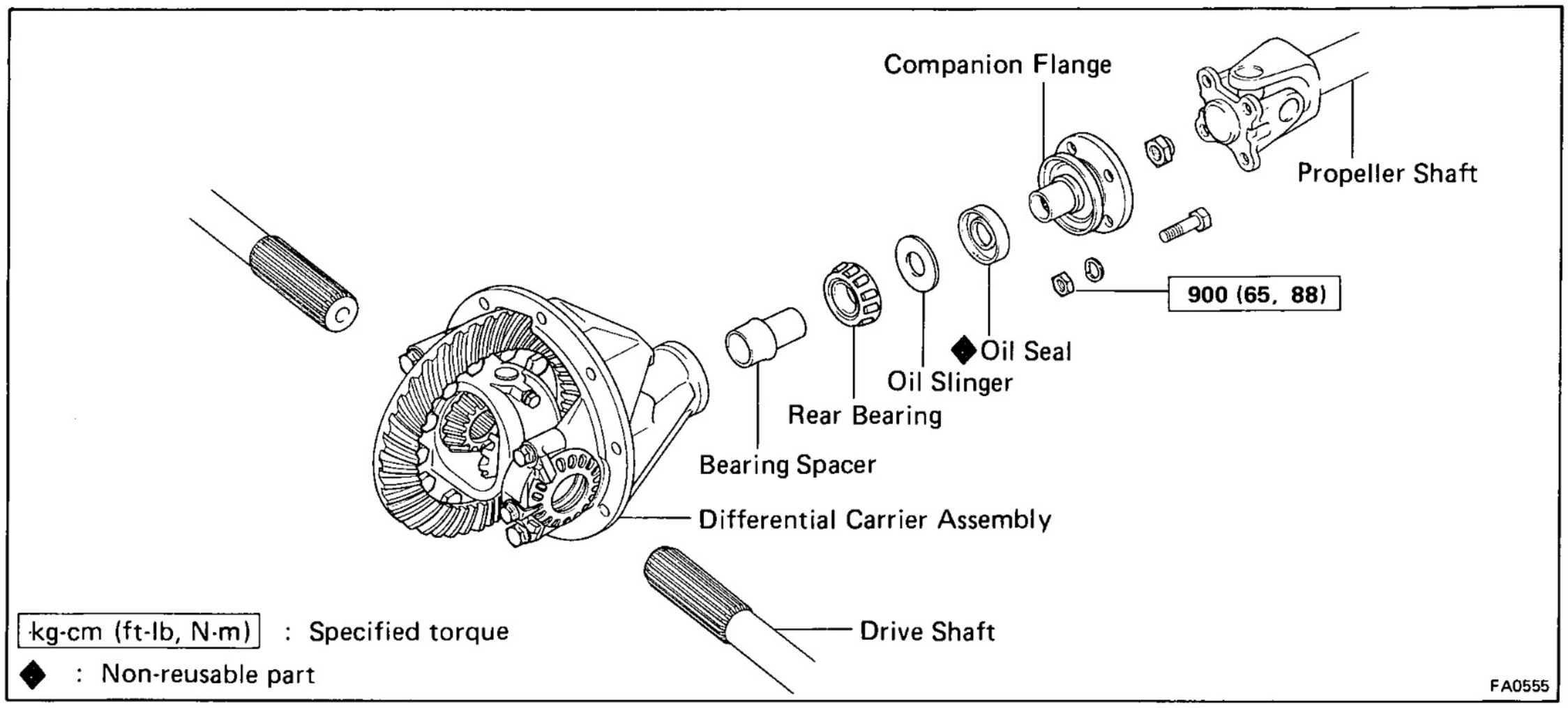

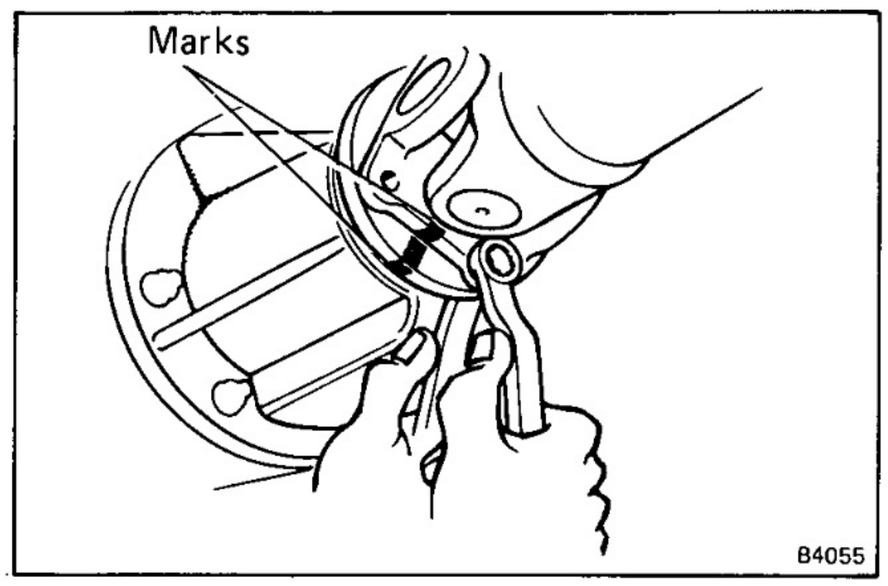

ON-VEHICLE REPLACEMENT OF OIL SEAL

1. DISCONNECT PROPELLER SHAFT FROM DIFFERENTIAL
   (a) Place alignment marks on the flanges.
   (b) Remove the four bolts and nuts.

2. REMOVE COMPANION FLANGE
   (See step 2 on page RA-15)

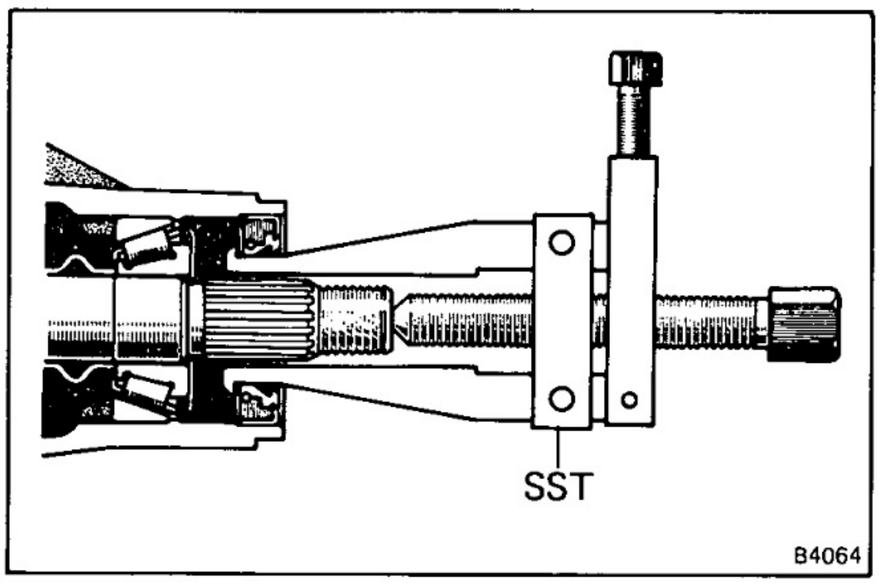

3. REMOVE OIL SEAL AND OIL SLINGER
   (a) Using SST, remove the oil seal from the housing.
   SST 09308-10010
   (b) Remove the oil slinger.

4. REMOVE REAR BEARING AND BEARING SPACER
   (See step 4 on page RA-16)

5. INSTALL NEW BEARING SPACER AND FRONT BEARING

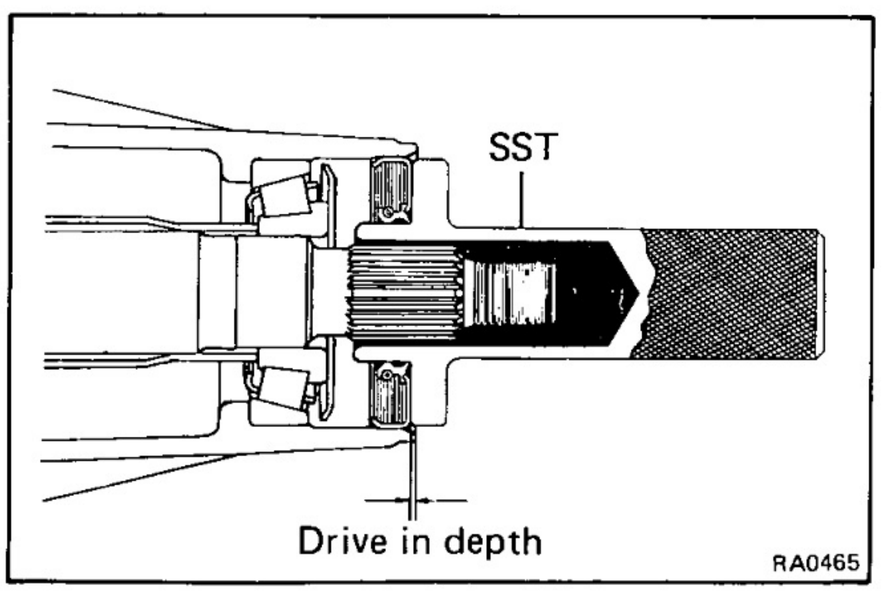

6. INSTALL OIL SLINGER AND NEW OIL SEAL
   (a) Install the oil slinger facing as shown.
   (b) Using SST, drive in a new oil seal as shown.
   SST 09554-30011
   Oil seal drive in depth: 1.0 mm (0.039 in.)
   (c) Apply MP grease to the oil seal lip.

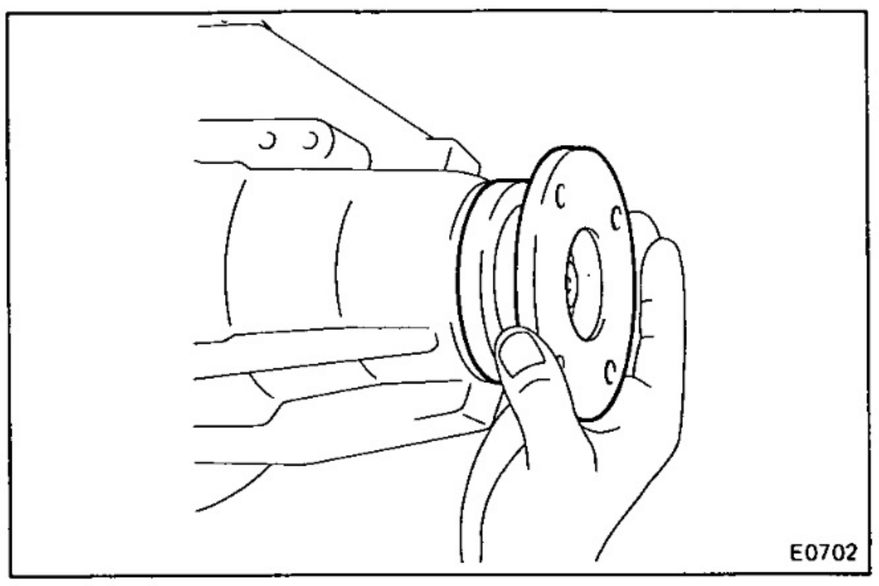

7. INSTALL COMPANION FLANGE
(See step 6 on page RA-16)

8. STAKE DRIVE PINION NUT

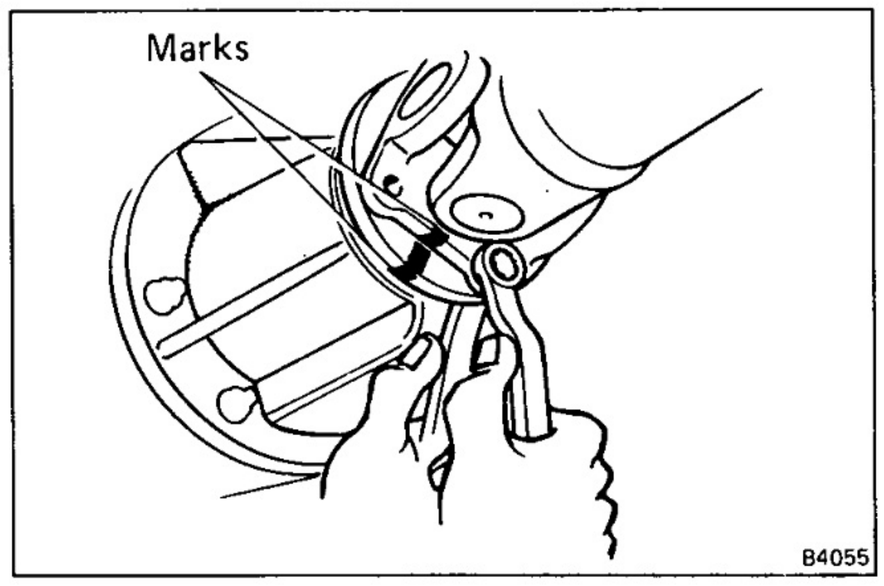

9. CONNECT PROPELLER SHAFT FLANGE TO COMPANION FLANGE
   (a) Align the marks on the flanges and connect the flanges with four bolts and nuts.
   (b) Torque the four bolts and nuts.

   Torque: 750 kg-cm (54 ft-lb, 74 N·m)

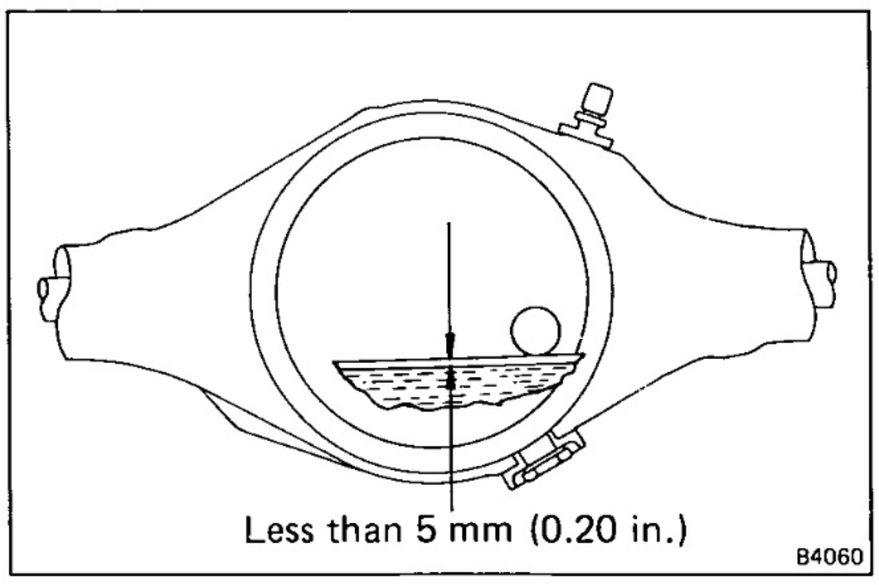

10. CHECK DIFFERENTIAL OIL LEVEL
    Fill with hypoid gear oil if necessary.

    Hypoid gear oil: API GL-5
    Above –18°C (0°F) SAE 90
    Below –18°C (0°F) SAE 80W or 80W-90
    Capacity: 3.0 liters (3.2 US qts, 2,6 Imp. qts)

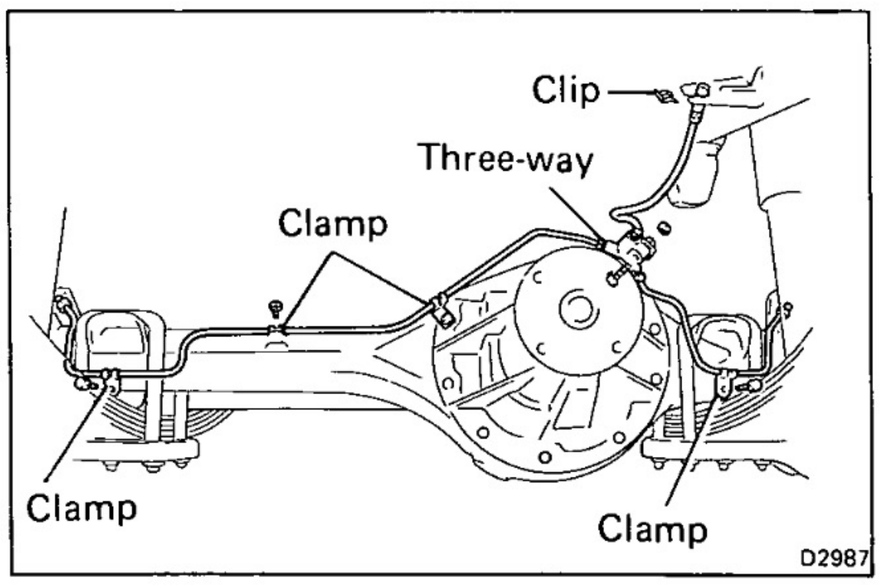

REMOVAL OF FRONT DIFFERENTIAL

1. DRAW OUT FLUID WITH CONTAINER

2. REMOVE FRONT AXLE SHAFTS
   (See page FA-18)

3. DISCONNECT PROPELLER SHAFT

4. REMOVE FRONT BRAKE TUBE
   (a) Remove the three clamp bolts and nut.
   (b) Using SST, disconnect the brake hose at the frame side and remove the clip.

   SST 09751-36011

   (c) Remove the three-way with the brake hose and tubes.

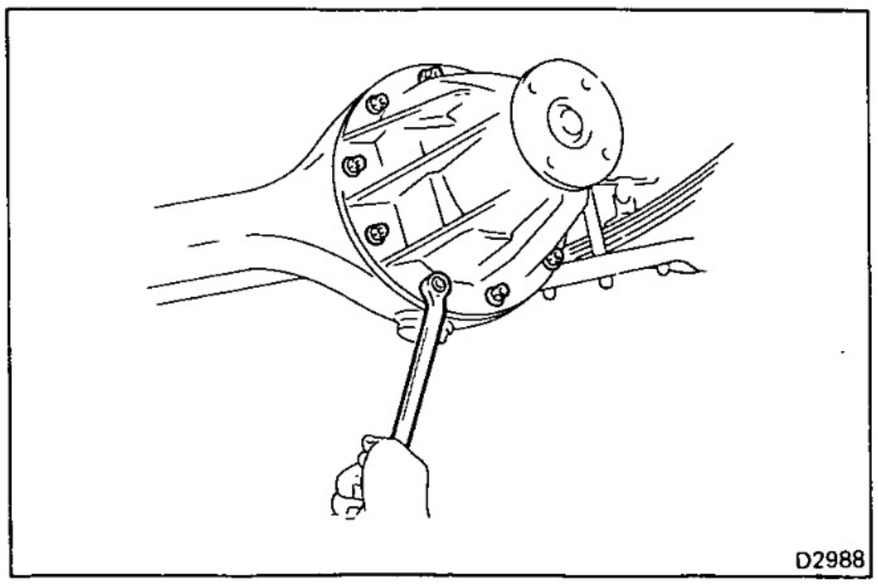

5. REMOVE DIFFERENTIAL CARRIER ASSEMBLY

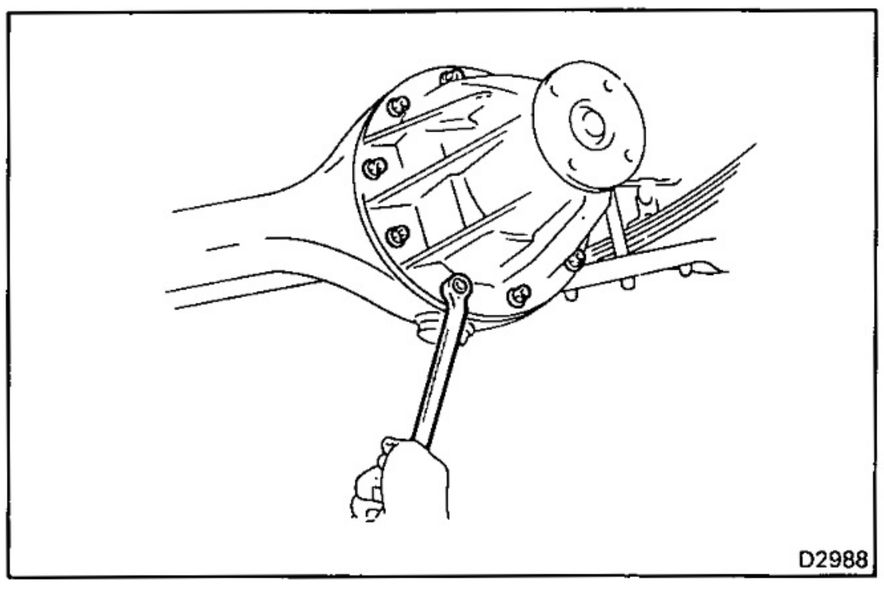
D2988

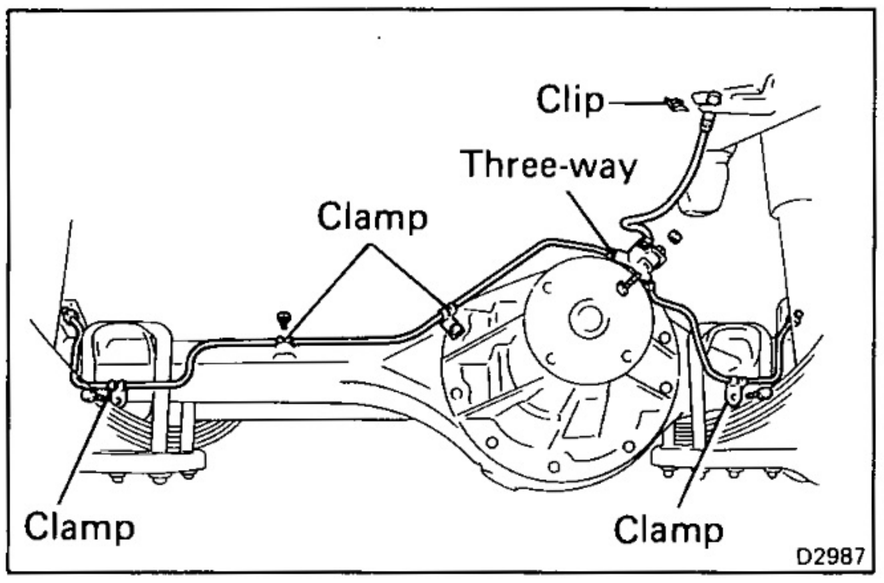

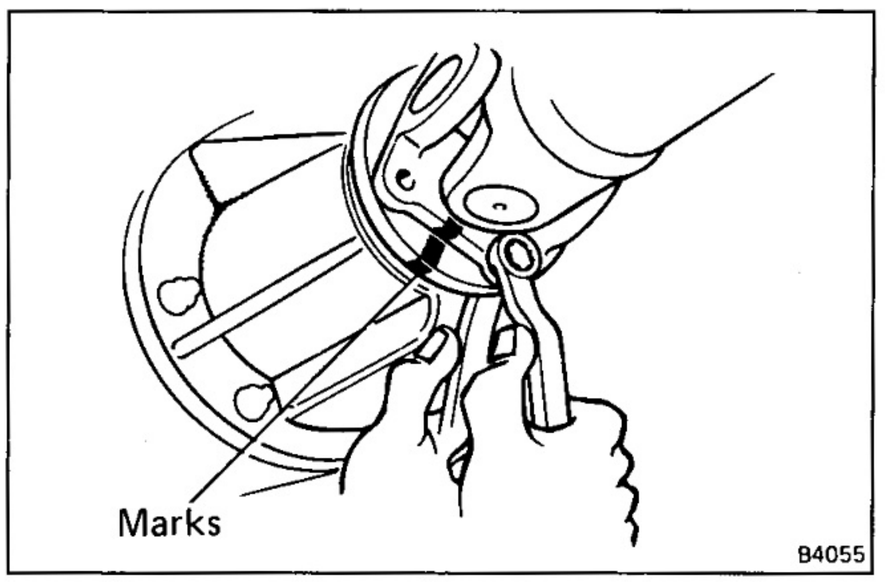

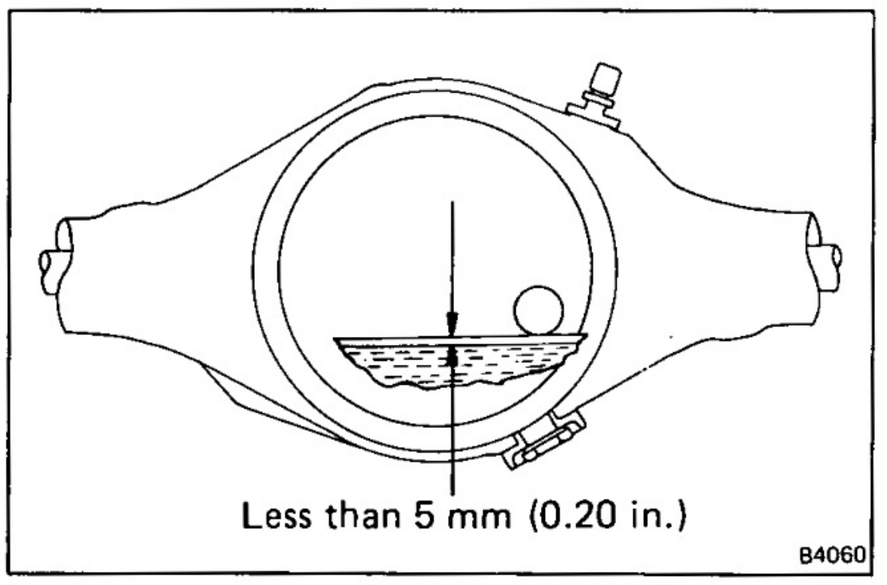

DISASSEMBLY OF DIFFERENTIAL

(See page RA-21)

INSTALLATION OF DIFFERENTIAL

(See page FA-28)

1. INSTALL A NEW GASKET

Install a new gasket onto the axle housing.

2. INSTALL DIFFERENTIAL CARRIER ASSEMBLY

Install the differential carrier assembly in the axle and install the ten nuts.

3. INSTALL FRONT BRAKE TUBE

(a) Install the three-way with the brake hose and tubes to the axle housing.

(b) Using SST, connect the brake hose at the frame side, and install the clip.

SST 09751-36011

(c) Install the four clamp to the axle housing with bolts.

4. CONNECT PROPELLER SHAFT FLANGE TO COMPANION FLANGE

(a) Align the marks on the flanges and connect the flanges with the four bolts and nuts.

(b) Torque the bolts and nuts.

Torque: 750 kg-cm (54 ft-lb, 74 N·m)

5. INSTALL FRONT AXLE SHAFT

(See page FA-25)

6. INSTALL DRAIN PLUG AND FILL DIFFERENTIAL WITH GEAR OIL

Differential oil:
API GL-5 hypoid gear oil
SAE 90 above –18°C (0°F)
SAE 80W or 80W-90 below –18°C (0°F)
Capacity: 3.0 liters (3.2 US qts, 2.6 Imp. qts)

Install a filler plug.

7. BLEED BRAKE LINE

(See page BR-6)

FRONT SUSPENSION

COMPONENTS

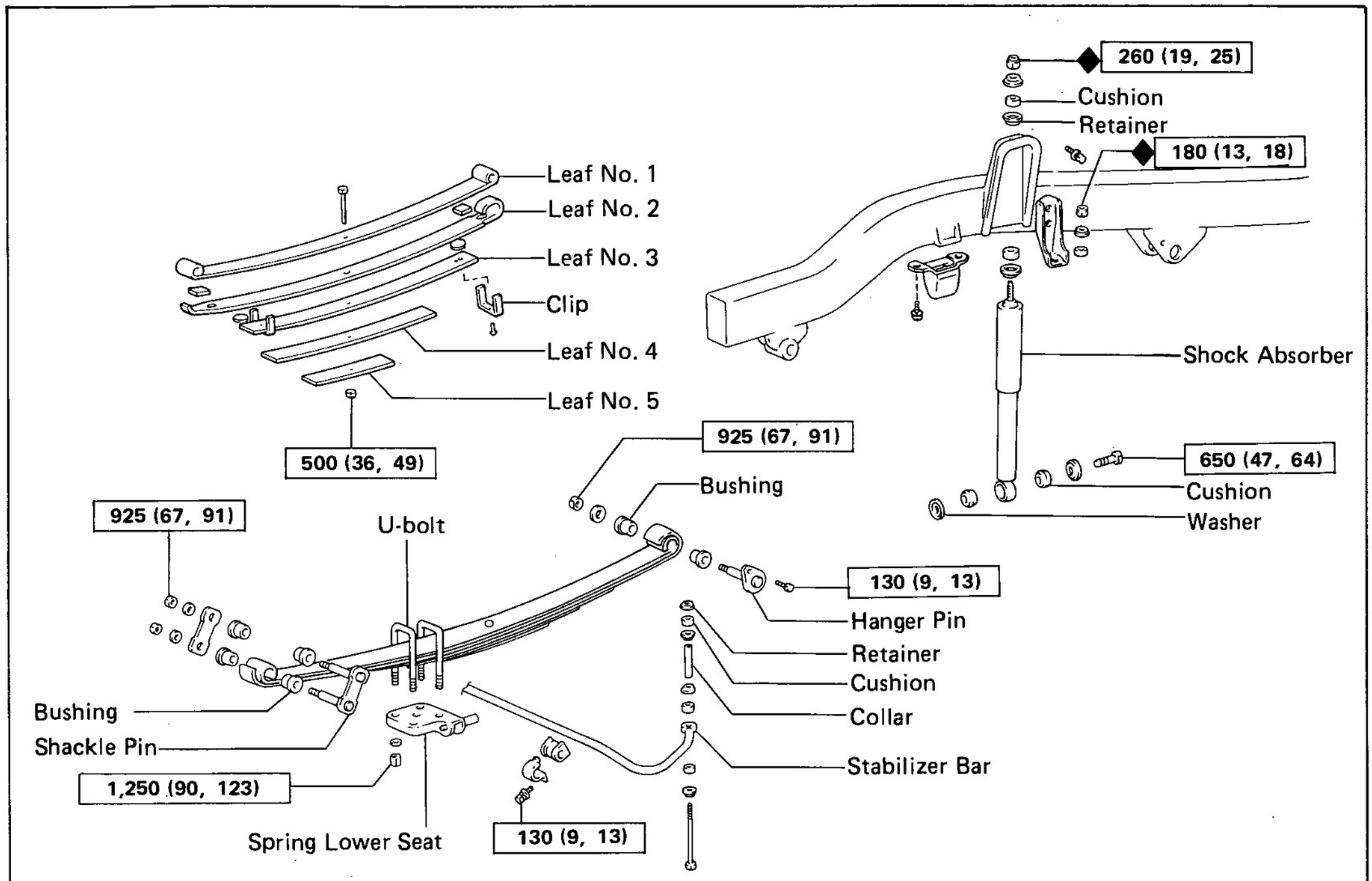

kg-cm (ft-lb, N·m) : Tightening torque

◆ : Non-reusable part

FA0558

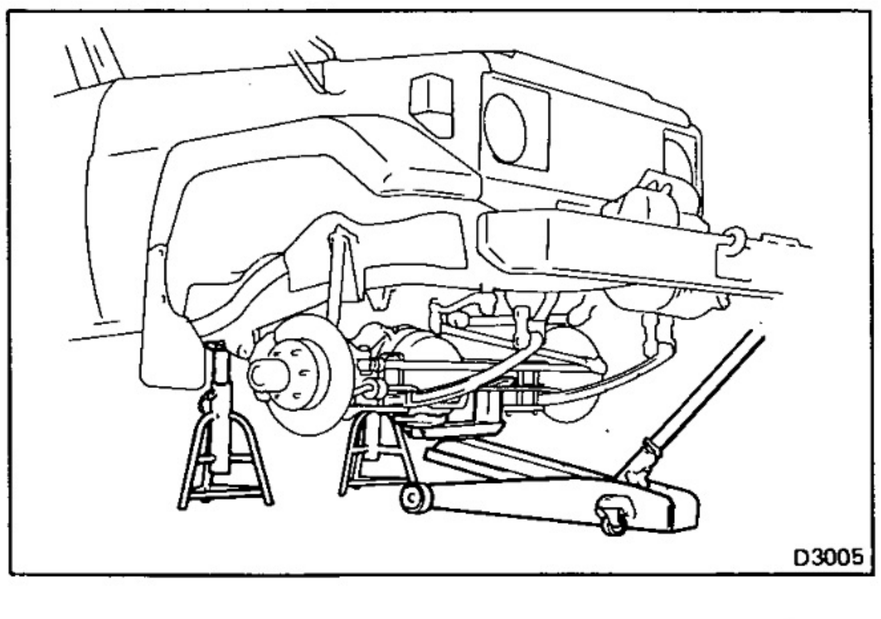
D3005

Leaf Spring and Shock Absorber

REMOVAL OF LEAF SPRING AND SHOCK ABSORBER

1. JACK UP AND SUPPORT BODY

(a) Jack up and support the body on stands.

(b) Lower the axle housing until the leaf spring tension is free, and keep it at this position.

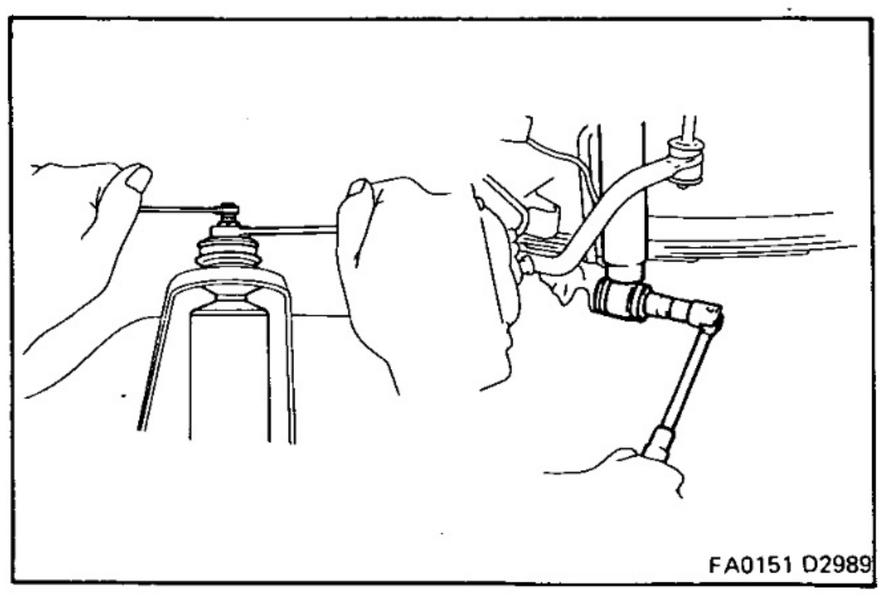
FA0151 D2989

2. REMOVE SHOCK ABSORBER

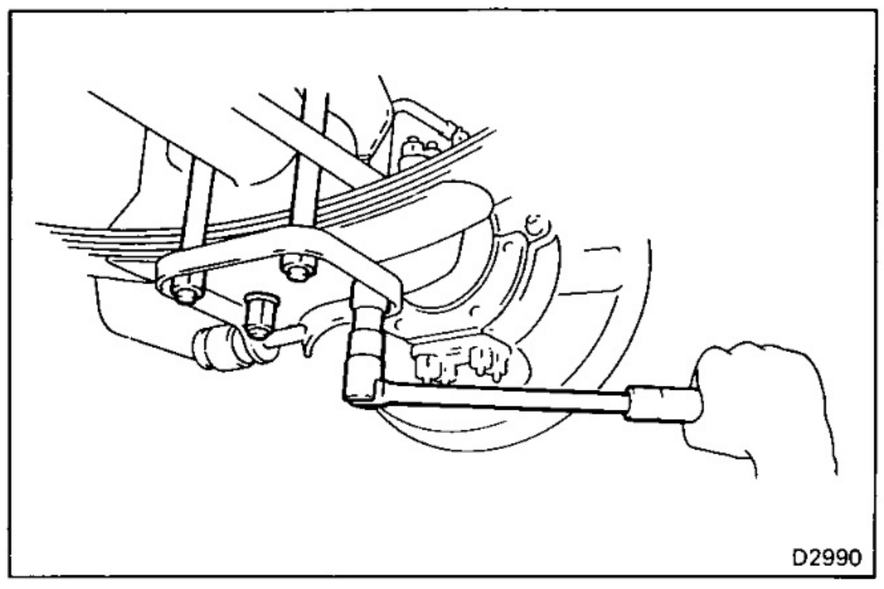

3. REMOVE U-BOLTS

(a) Remove the U-bolt mounting nuts.

(b) Remove the spring lower seat.

(c) Remove the U-bolts.

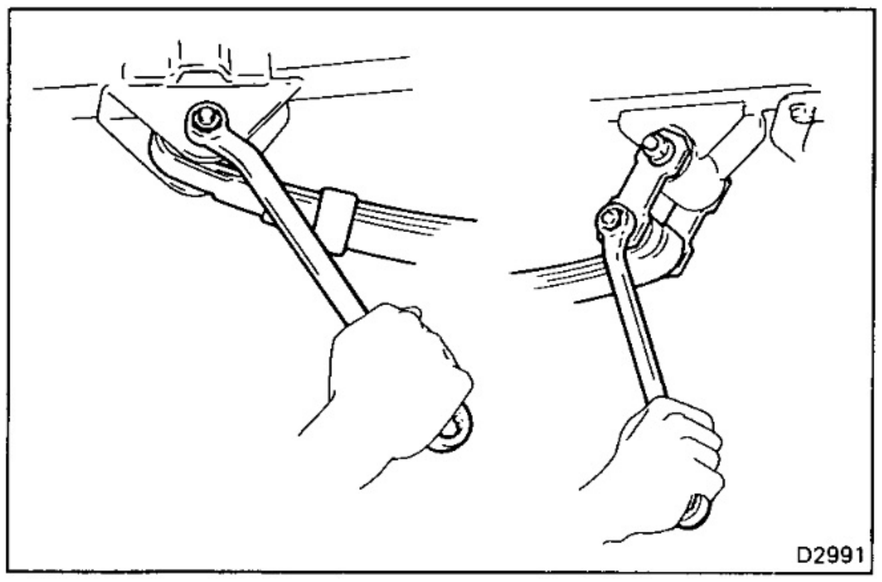

4. REMOVE LEAF SPRING

(a) Remove the hanger pin mounting nut.

(b) Remove the shackle pin mounting nuts.

(c) Remove the hanger pin.

(d) Remove the shackle pin.

(e) Remove the leaf spring.

REPLACEMENT OF LEAF SPRING

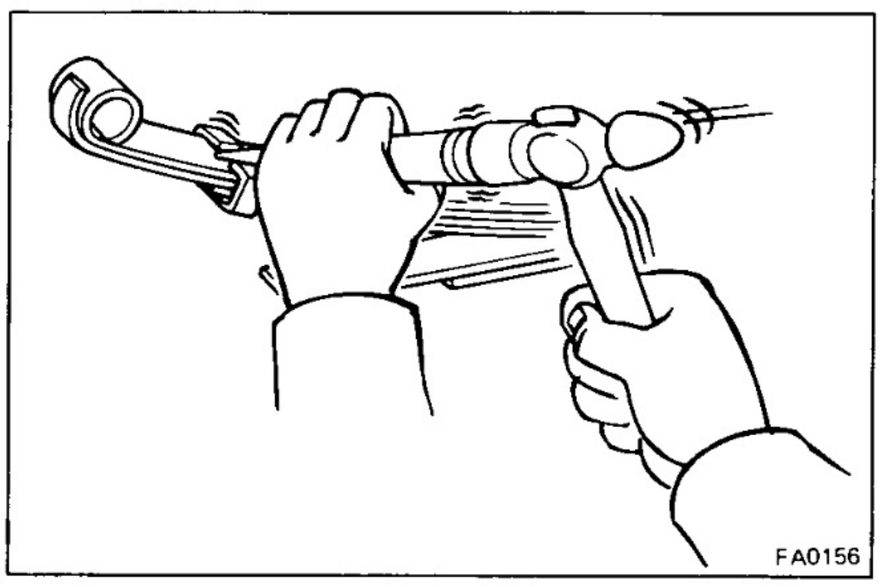

1. BEND OPEN SPRING CLIP

Using a chisel, pry up the spring clip.

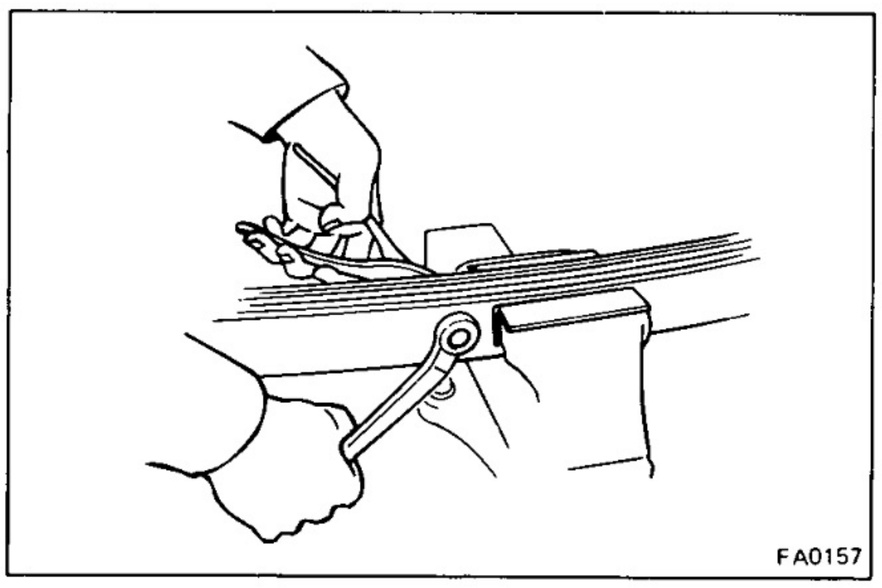

2. REMOVE CENTER BOLT

Hold the spring near the center bolt in a vise and remove the center bolt.

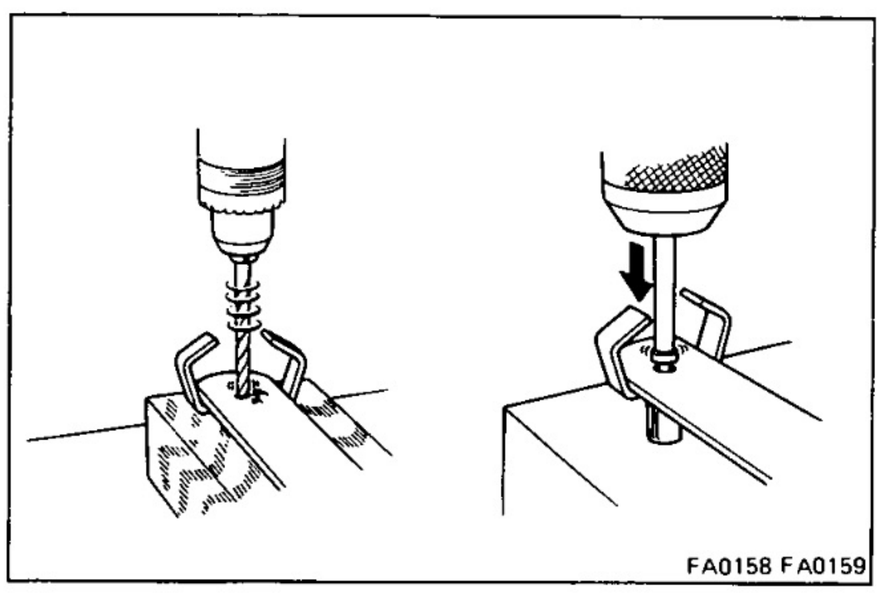

3. IF NECESSARY, REPLACE SPRING CLIP

(a) Drill off the head of the rivet, and drive it out.

(b) Install a new rivet into the holes of the leaf spring and clip. Then rivet with a press.

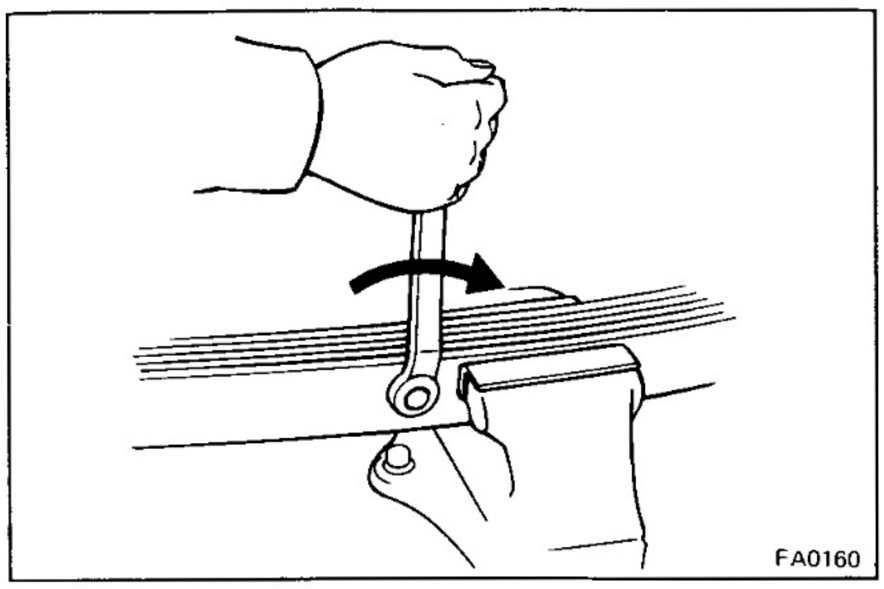

4. INSTALL SPRING CENTER BOLT

(a) Attach the spring silencer.

(b) Align the leaf holes and secure the leaves with a vise.

(c) Install and tighten the spring center bolt.

Torque: 350 – 550 kg-cm (26 – 39 ft-lb, 35 – 53 N·m)

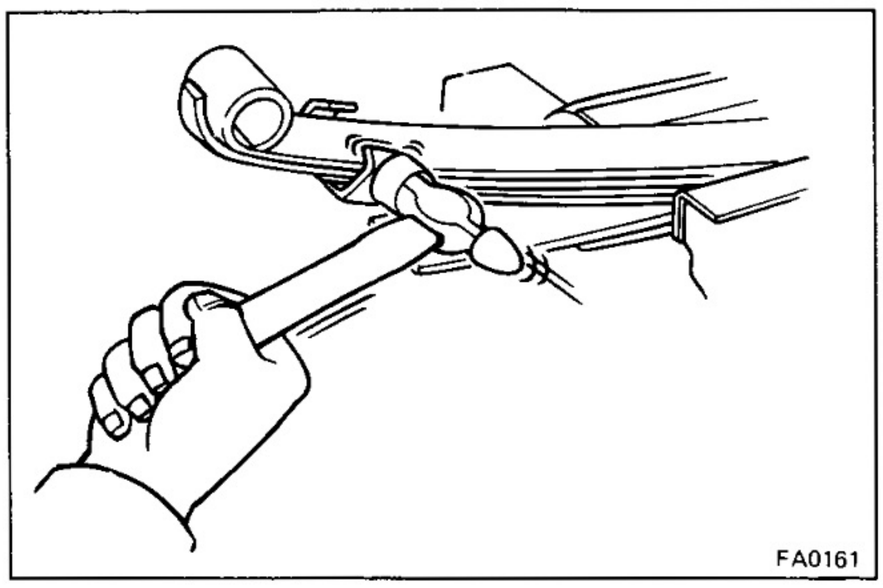

5. BEND SPRING CLIP

Using a hammer, bend the spring clip into position.

INSTALLATION OF LEAF SPRING

1. INSTALL LEAF SPRING

(a) Insert the bushings into the frame and into both ends of the leaf spring.

(b) Place the leaf spring in position.

(c) Install the hanger pin and tighten the nut.

Torque: 130 kg-cm (9 ft-lb, 13 N·m)

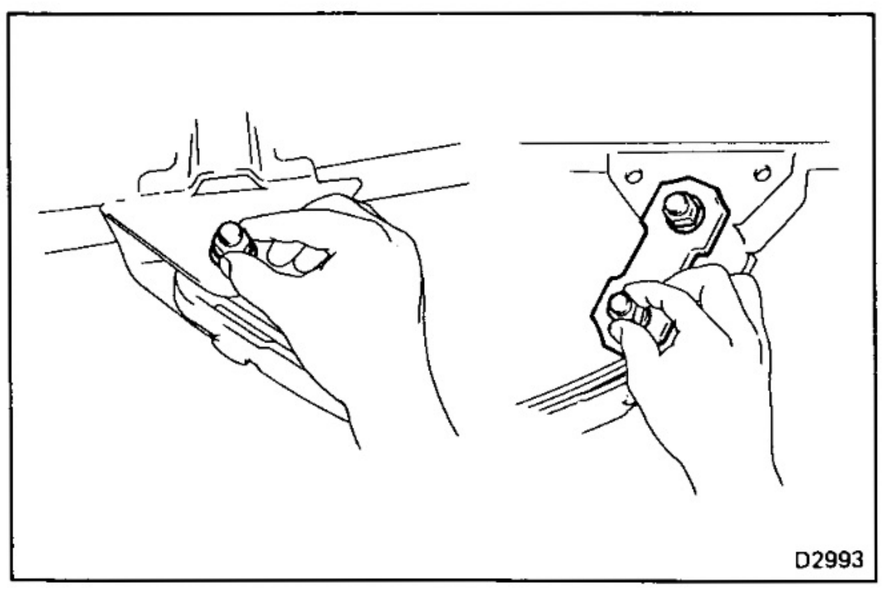

(d) Install the shackle pin.

(e) Install the plate and provisionally install the nuts.

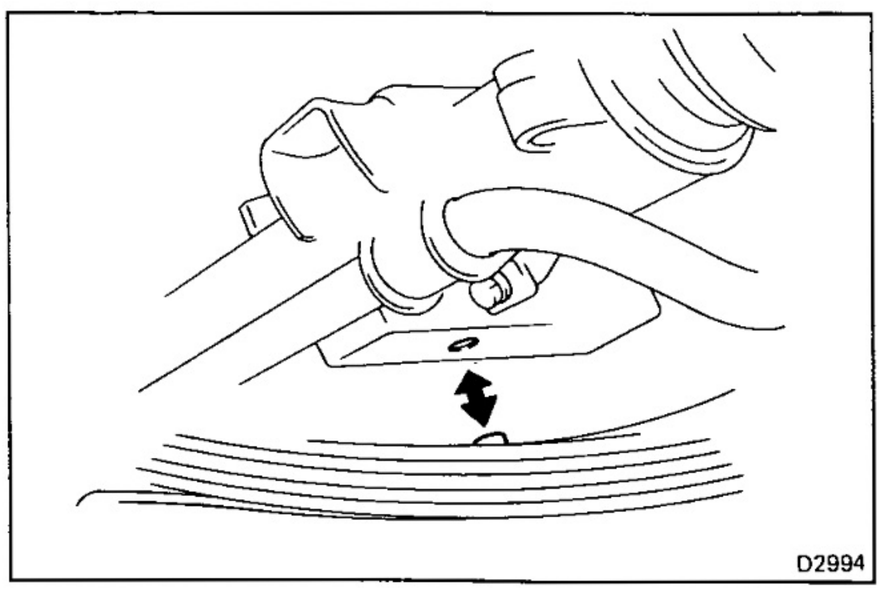

2. INSTALL U-BOLTS

(a) Insert the head of the leaf spring center bolt into the hole in the axle housing bracket and install.

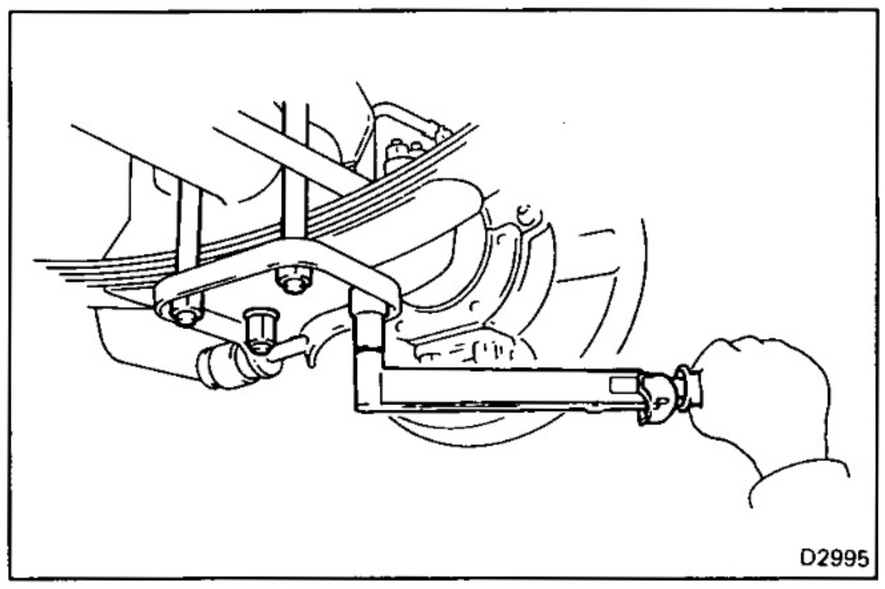

(b) Install the spring seat and nuts.

(c) Tighten the U-bolt mounting nuts.

Torque: 1,250 kg-cm (90 ft-lb, 123 N·m)

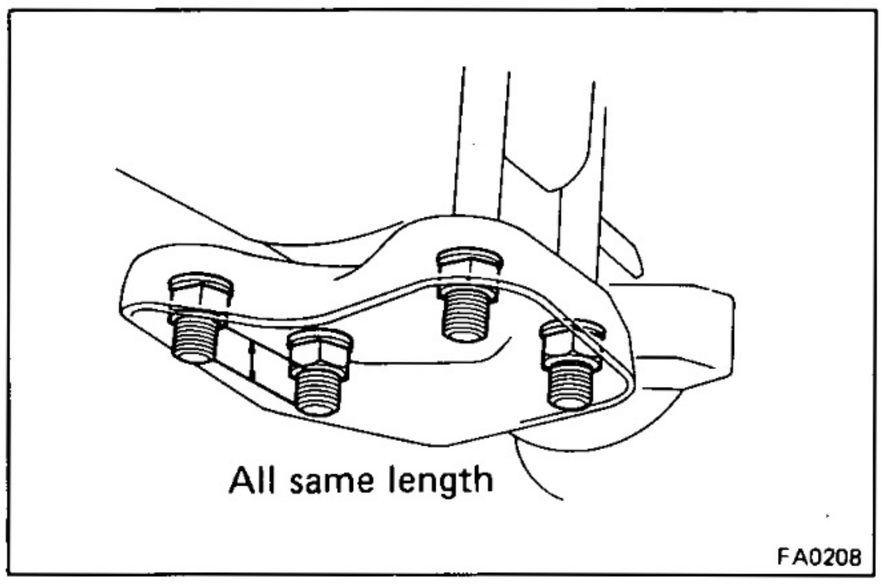

NOTE: Tighten the U-bolts so that the length of all the U-bolts under the spring seat are the same.

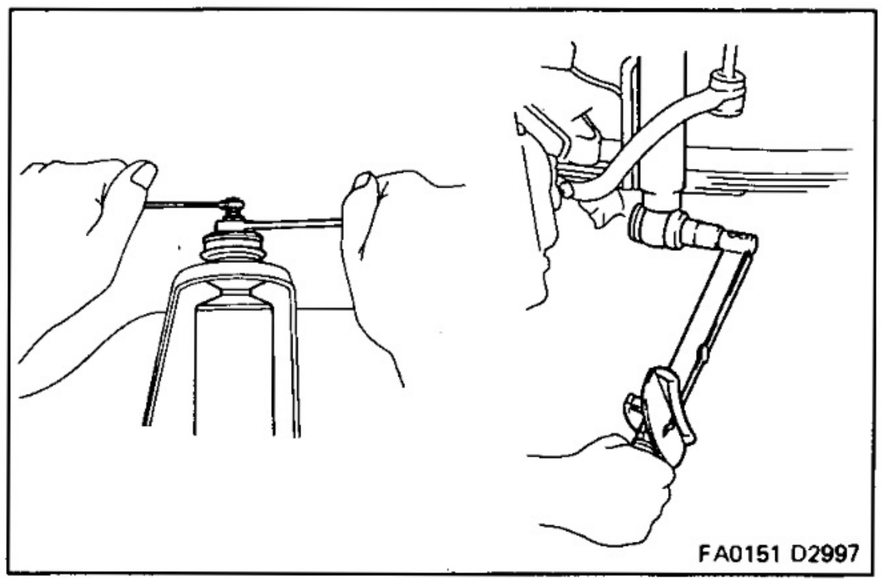

3. INSTALL SHOCK ABSORBER

(a) Position the shock absorber and install the bushings retainers and nut.

Torque: 260 kg-cm (19 ft-lb, 25 N·m)

(b) Install the lower mounting bolt.

Torque: 970 kg-cm (70 ft-lb, 95 N·m)

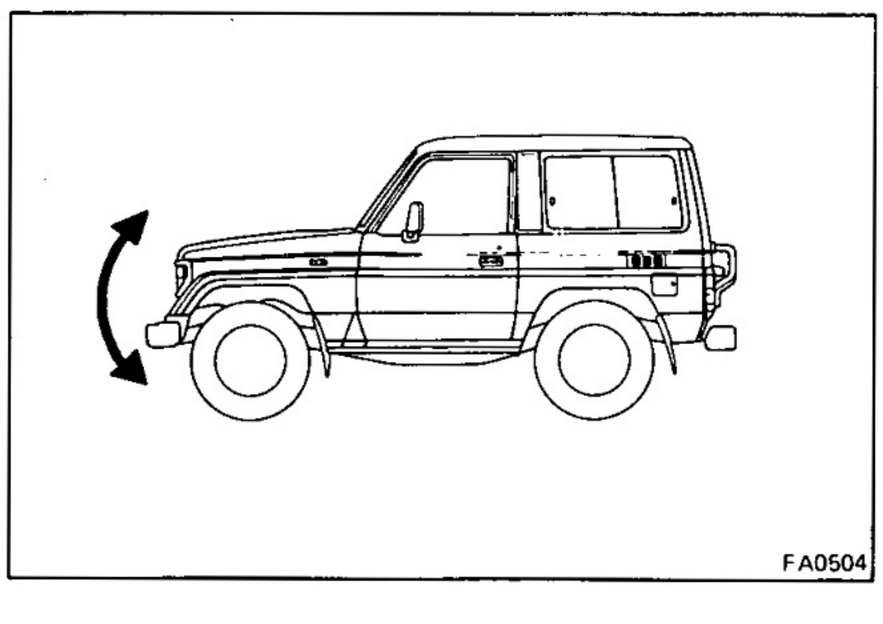

4. STABILIZE SUSPENSION

Remove the stands and bounce the car to stabilize the suspension.

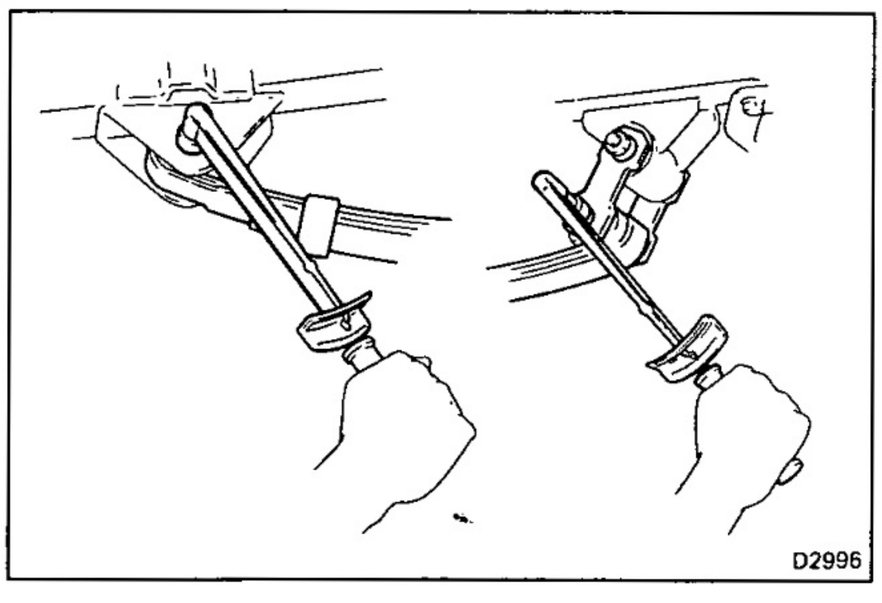

5. TIGHTEN HANGER PIN AND SHACKLE PIN

Tighten the hanger pin nut.

Torque: 930 kg-cm (67 ft-lb, 91 N·m)

Tighten the shackle pin nut.

Torque: 930 kg-cm (67 ft-lb, 91 N·m)

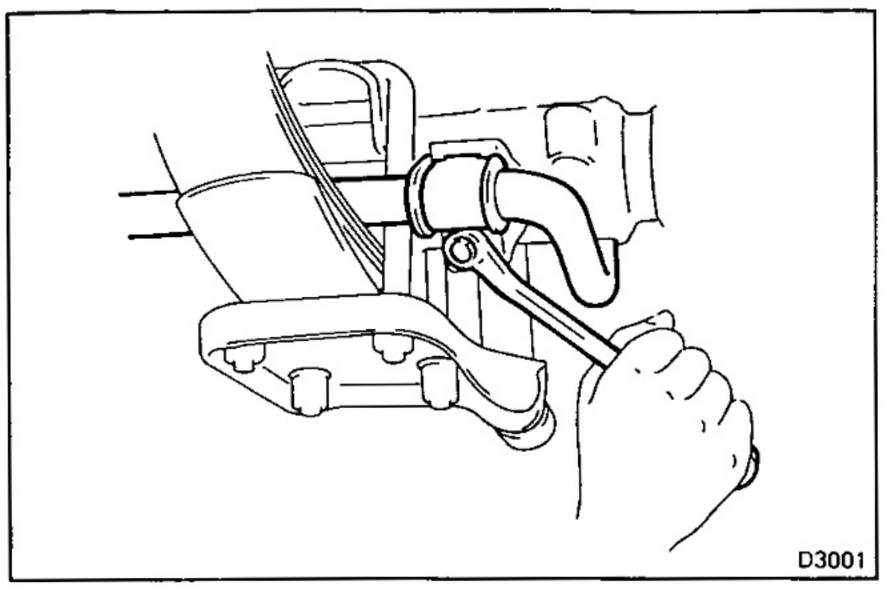

Stabilizer Bar

REMOVAL OF STABILIZER BAR

(See page FA-31)

1. DISCONNECT STABILIZER BAR FROM FRONT AXLE HOUSING

   Remove both stabilizer bar brackets from the axle housing.

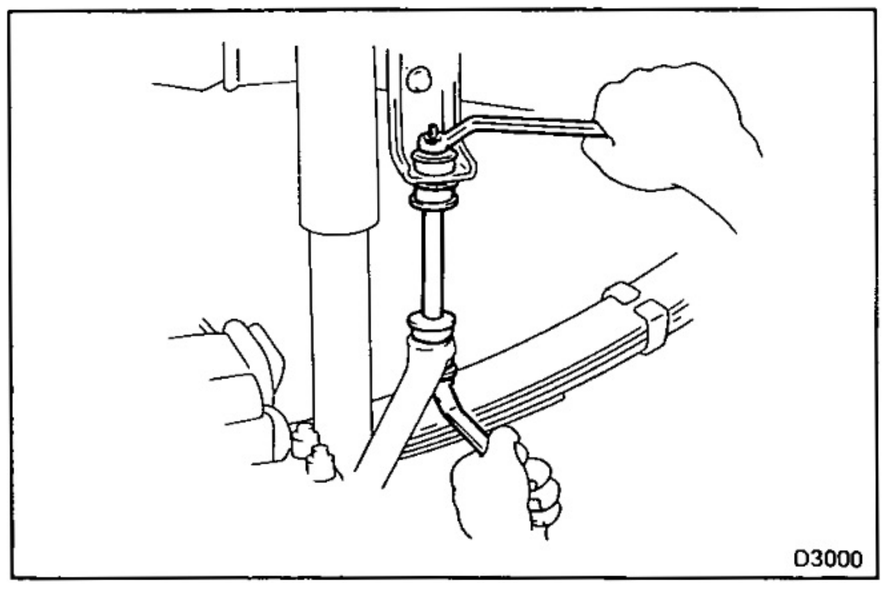

2. DISCONNECT STABILIZER BAR FROM FRAME

   Remove the nuts, cushions and bolts holding both sides of the stabilizer bar to the frame and remove the stabilizer bar.

INSTALLATION OF STABILIZER BAR

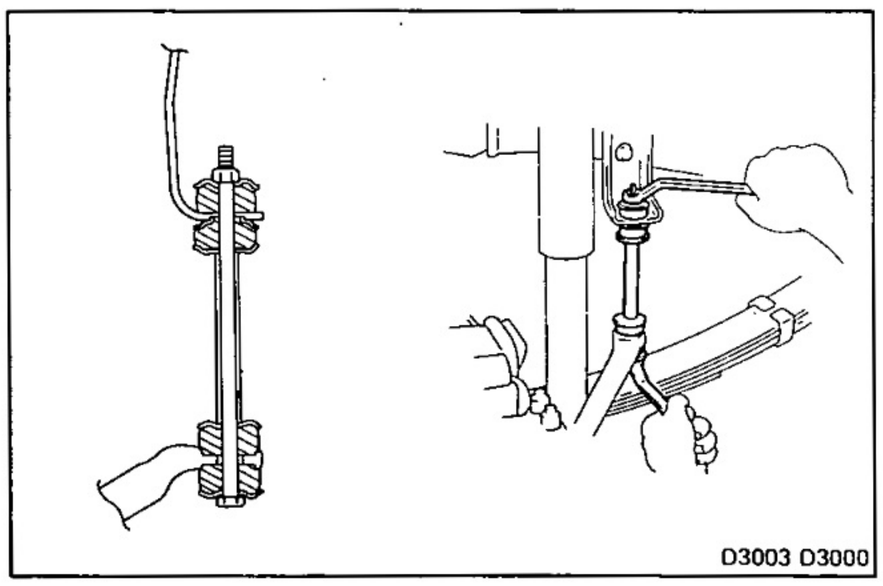

1. CONNECT STABILIZER BAR TO FRAME

   Connect the stabilizer bar on both sides to the frame with bolts.
   Cushions and nuts as shown.

   Torque: 180 kg-cm (13 ft-lb, 18 N·m)

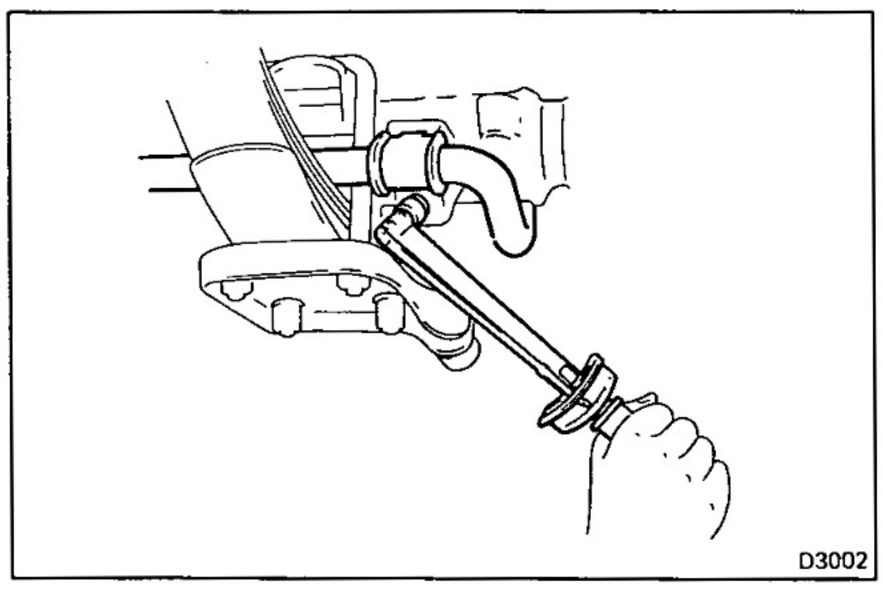

2. CONNECT STABILIZER BAR TO AXLE HOUSING

   Connect the stabilizer bar with the bracket and cushion.

   Torque: 130 kg-cm (9 ft-lb, 13 N·m)

REAR AXLE AND SUSPENSION

	Page
TROUBLESHOOTING	RA-2
REAR AXLE SHAFT (Semi-floating Type)	RA-3
REAR AXLE SHAFT AND AXLE HUB (Full-floating Type)	RA-8
REAR DIFFERENTIAL	RA-15
Conventional Type Differential	RA-21
Limited Slip Differential	RA-32
REAR SUSPENSION	RA-37
Rear Shock Absorber and Leaf Spring	RA-39
Stabilizer Bar	RA-43

TROUBLESHOOTING

Problem	Possible cause	Remedy	Page
Oil leak from rear axle	Oil seals worn or damaged	Replace oil seal	RA-3, 8
	Bearing retainer loose	Replace retainer	RA-3, 8
	Rear axle housing cracked	Repair as necessary	
Oil leak from pinion shaft	Oil level too high or wrong grade	Drain and replace oil	RA-17
	Oil seal worn or damaged	Replace oil seal	RA-15
	Companion flange loose or damaged	Tighten or replace flange	RA-15
Noises in rear axle	Oil level low or wrong grade	Drain and replace oil	RA-17
	Excessive backlash between pinion and ring or side gear	Check backlash	RA-18
	Ring, pinion or side gears worn or chipped	Inspect gears	RA-21
	Pinion shaft bearing worn	Replace bearing	RA-21
	Axle shaft bearing worn	Replace bearing	RA-3, 8
	Differential bearing loose or worn	Tighten or replace bearings	RA-21
Bottoming	Vehicle overloaded	Check loading	
	Shock absorber worn out	Replace shock absorber	RA-38
	Springs weak	Replace spring	RA-38

REAR AXLE SHAFT (Semi-floating Type)

COMPONENTS

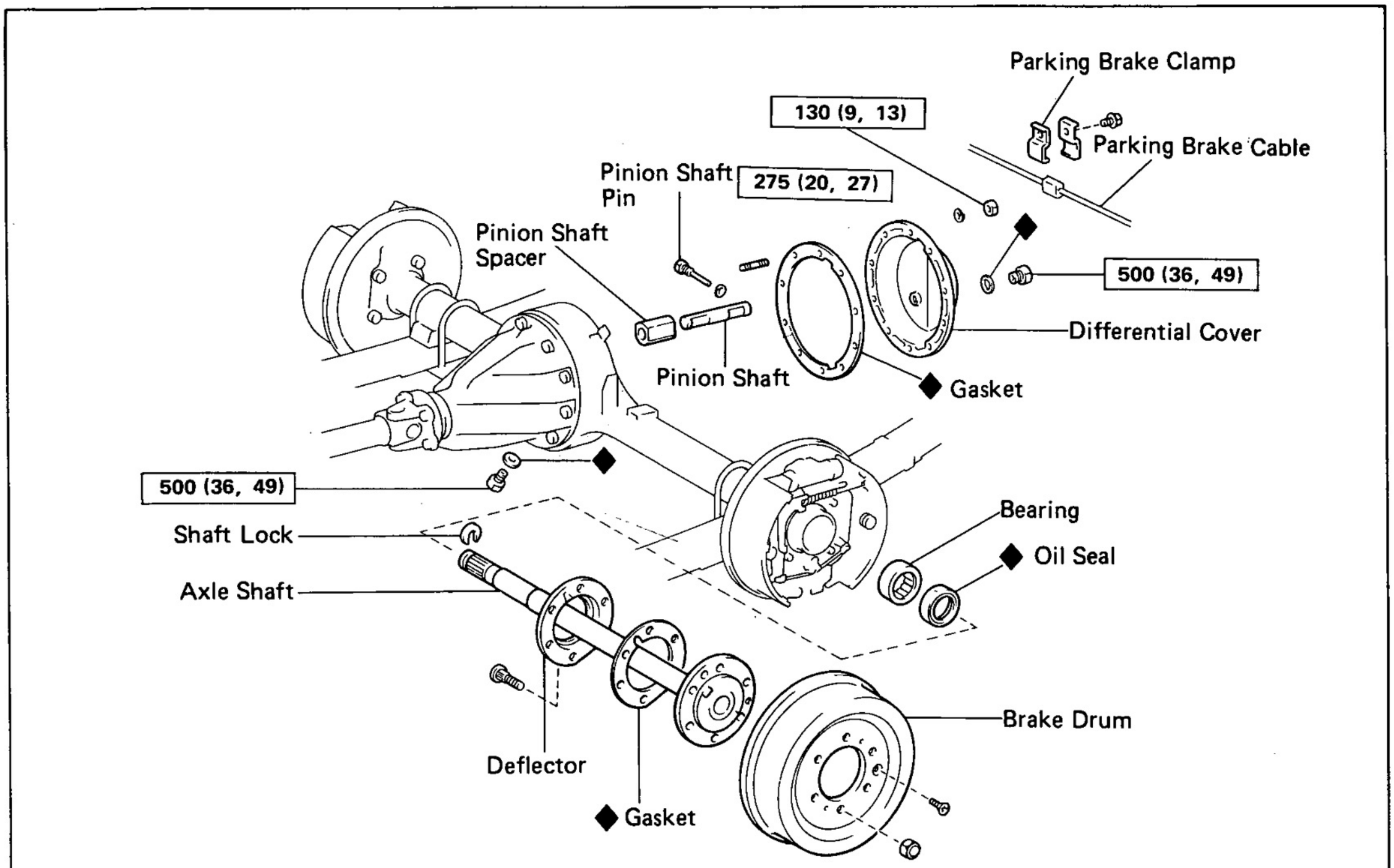

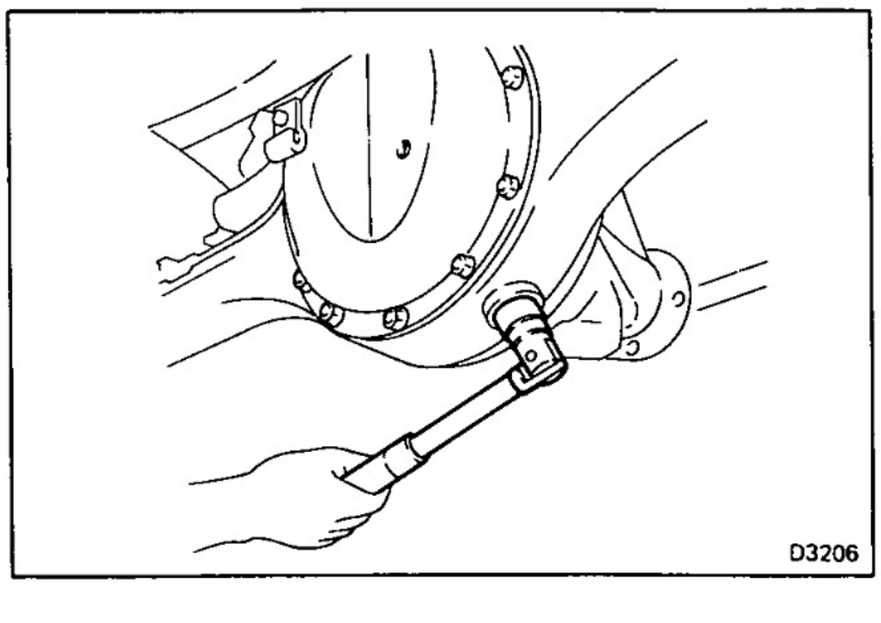

REMOVAL OF REAR AXLE SHAFT

1. JACK UP AND SUPPORT VEHICLE
2. REMOVE WHEEL AND BRAKE DRUM
3. REMOVE DRAIN PLUG AND DIFFERENTIAL OIL
4. REMOVE PARKING BRAKE CABLE CLAMP

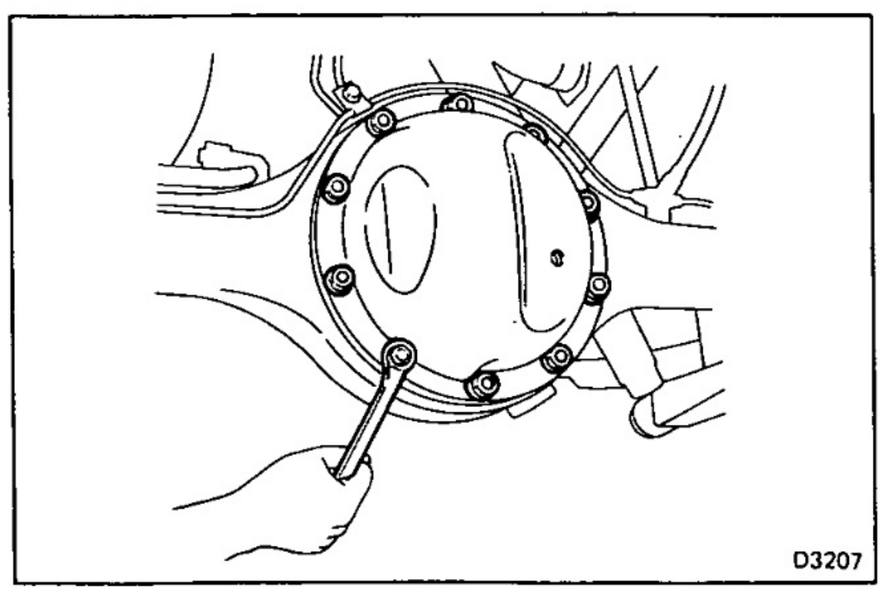

5. REMOVE DIFFERENTIAL COVER
   (a) Remove the ten nuts and washer.
   (b) Remove the differential cover with gasket.

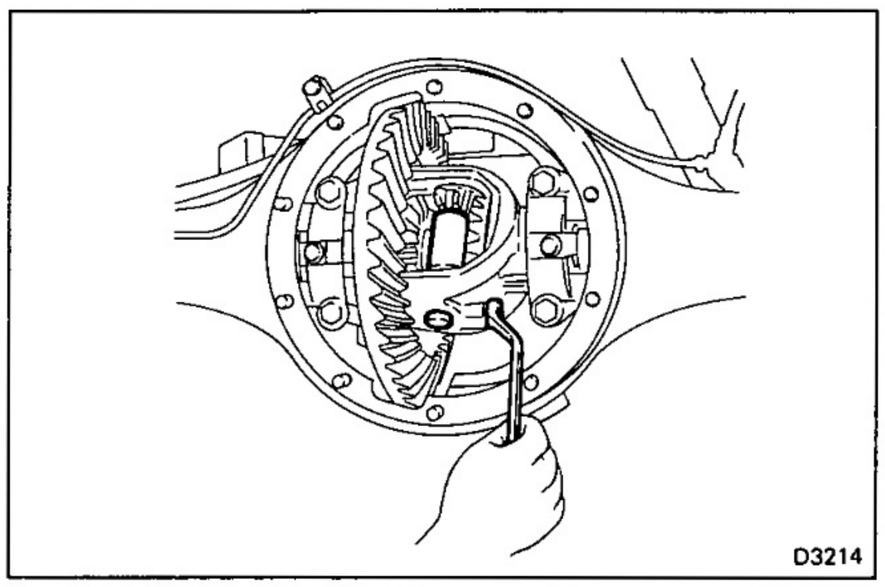

6. REMOVE PINION SHAFT AND PINION SPACER

(a) Remove the pinion shaft pin from the differential.

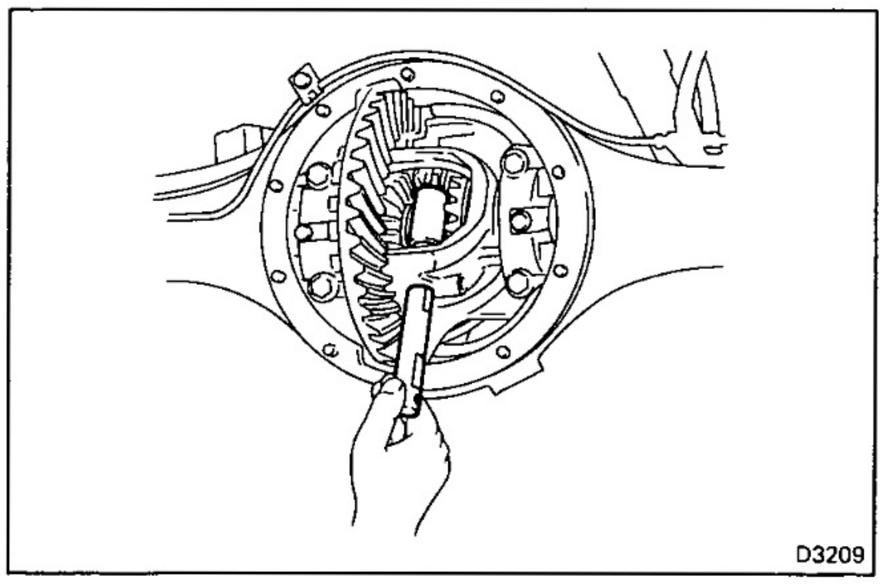

(b) Remove the pinion shaft and spacer.

NOTE: When the pinion shaft is removed, the pinion gear and thrust washer will come off also.

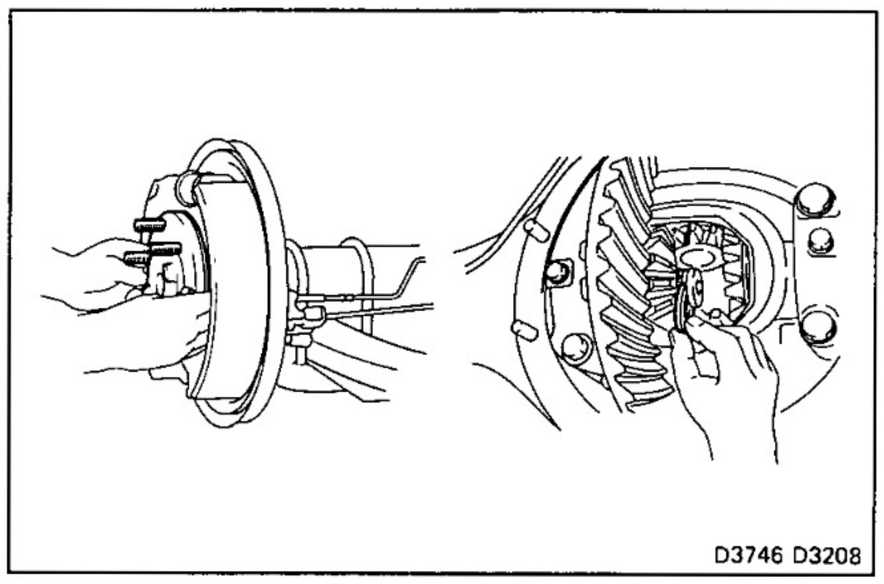

7. REMOVE AXLE SHAFT LOCK

Push the axle shaft to the differential side and remove the axle shaft lock.

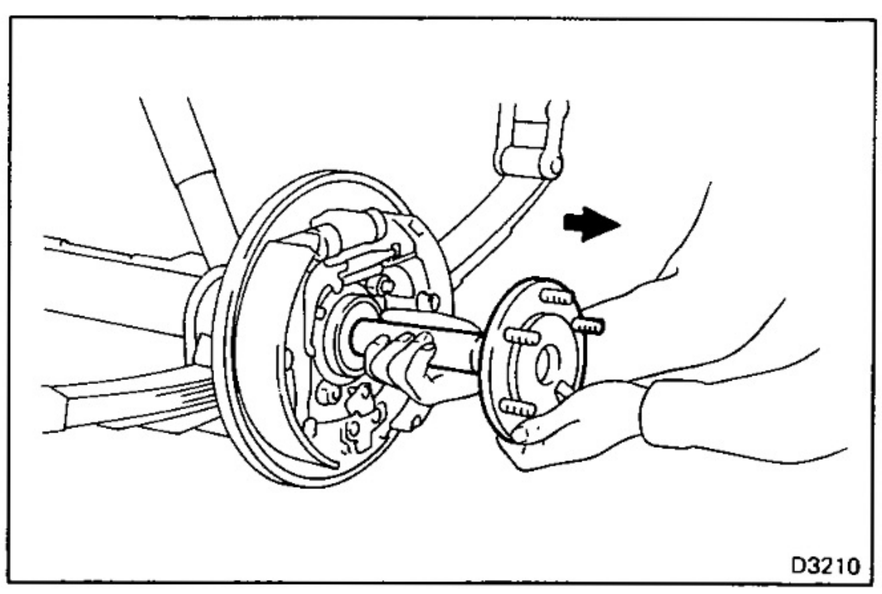

8. REMOVE AXLE SHAFT

CAUTION: When pulling out the axle shaft, be careful not damage the oil seal.

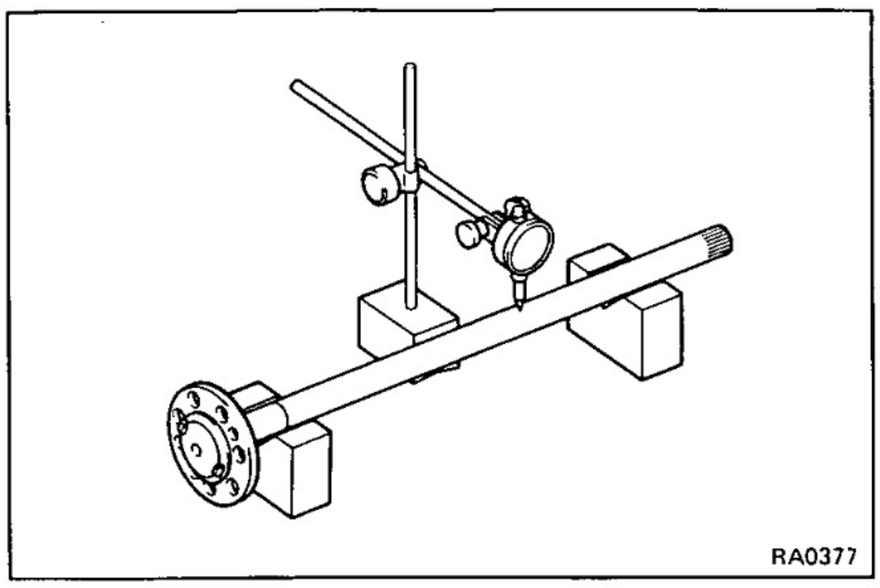

INSPECTION AND REPLACEMENT OF REAR AXLE SHAFT COMPONENTS

1. INSPECT REAR AXLE SHAFT

(a) Check for wear or damage.

(b) Check the runout of axle shaft.

Maximum runout: 0.8 mm (0.031 in.)

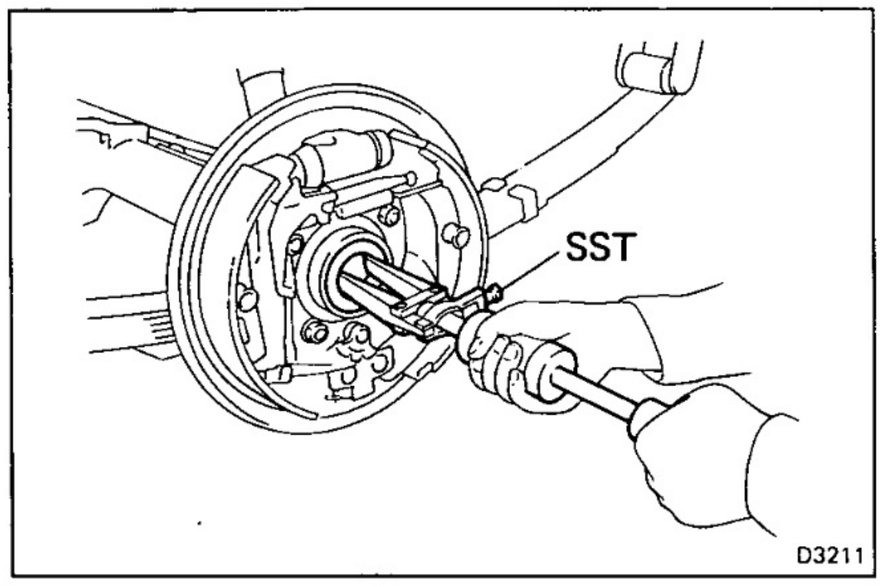

2. INSPECT OIL SEAL AND BEARING FOR WEAR OR DAMAGE

If the oil seal and bearing is damaged or worn, replace it.

3. REPLACE OIL SEAL AND BEARING

(a) Using SST, remove the oil seal.

SST 09308-00010

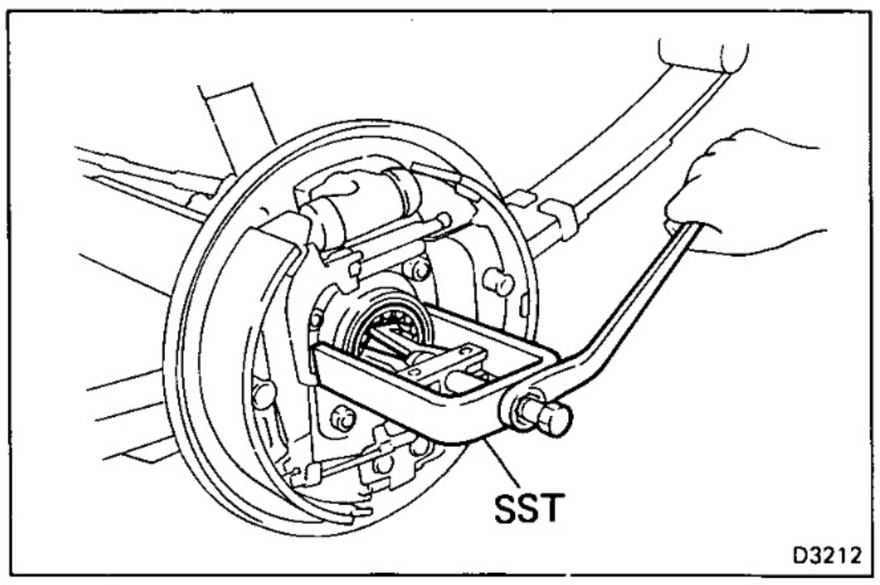

(b) Using SST, remove the bearing.

SST 09514-35011

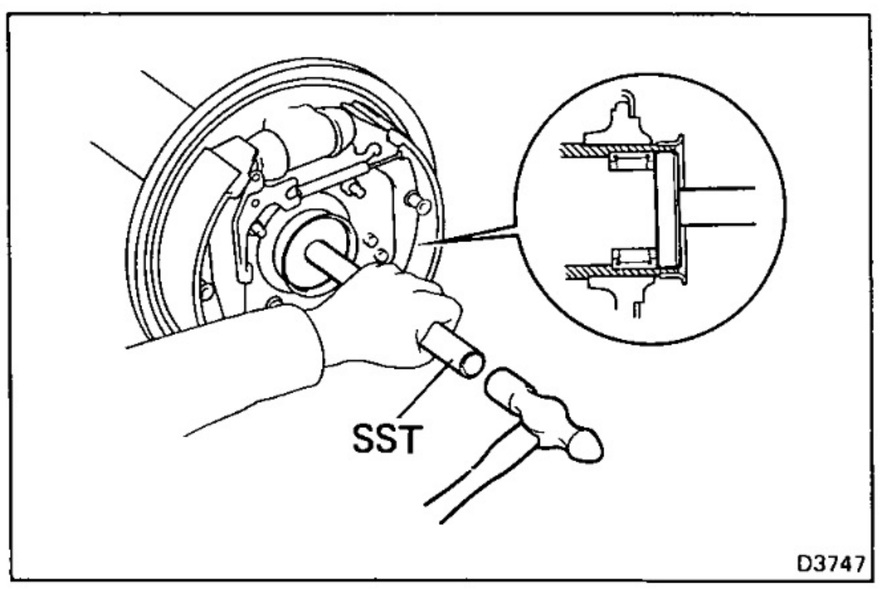

(c) Apply MP grease to the bearing.

(d) Using SST, drive in the bearing.

SST 09608-20011

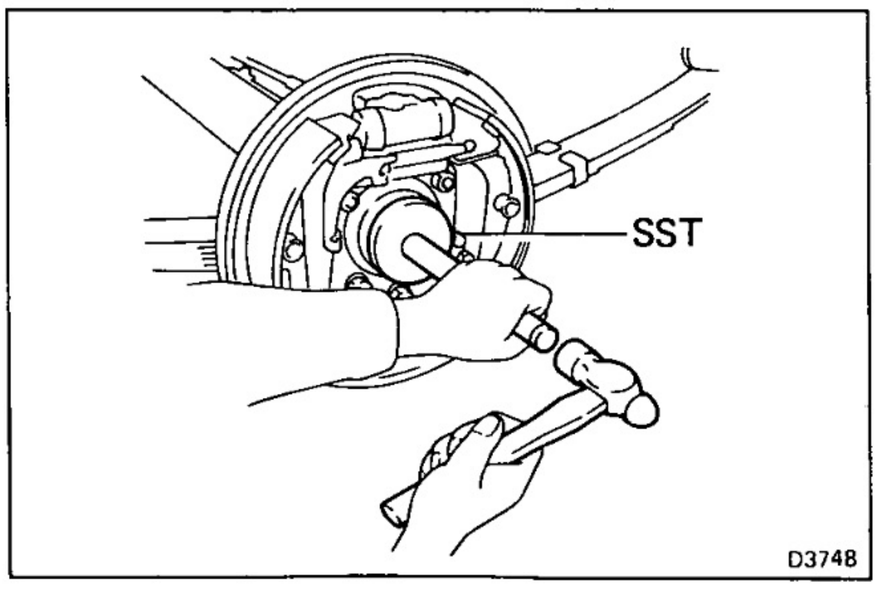

(e) Using SST, drive in the oil seal.

SST 09608-20011

(f) Apply MP grease to the oil seal lip.

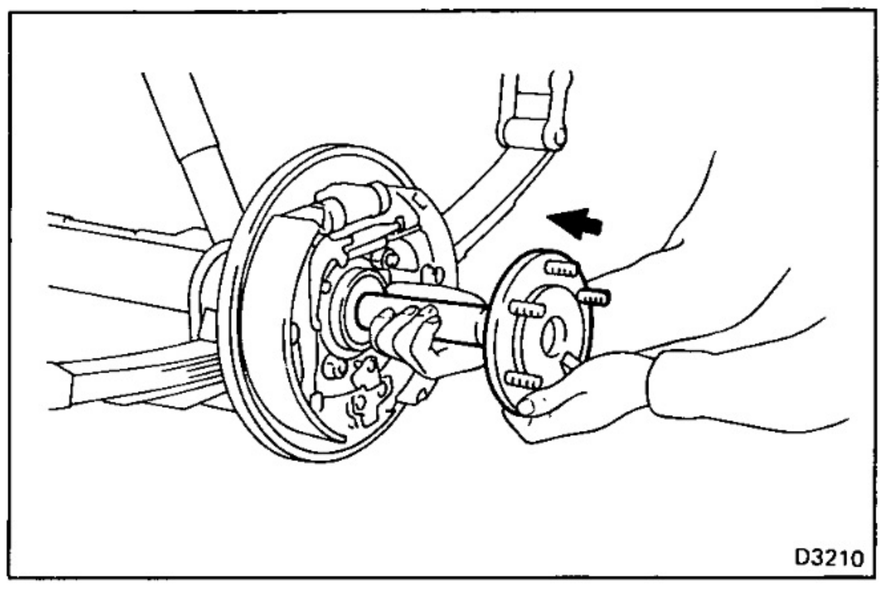
D3210

INSTALLATION OF REAR AXLE SHAFT

(See page RA-3)

1. INSTALL REAR AXLE SHAFT IN AXLE HOUSING

Insert the axle shaft into the housing.

CAUTION: When inserting the axle shaft, be careful not to damage the oil seal.

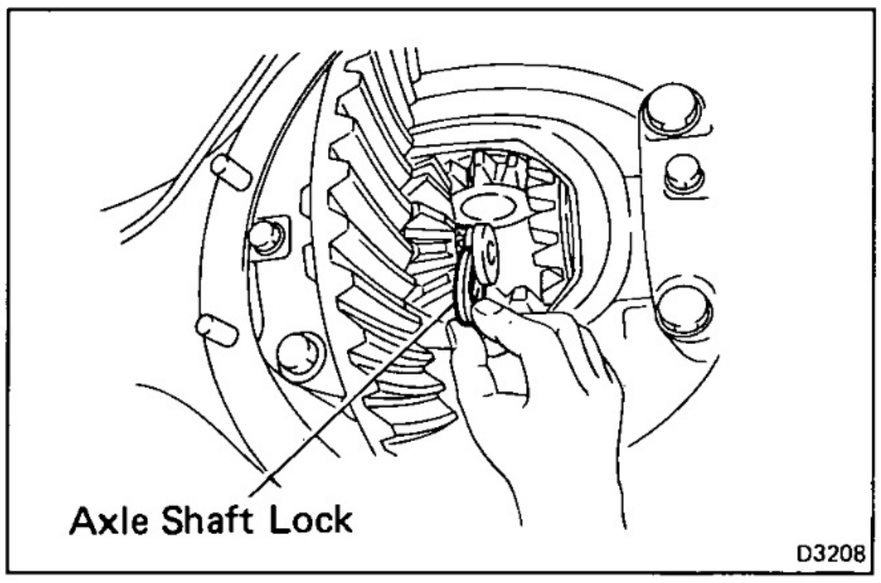

D3208

2. INSTALL AXLE SHAFT LOCK

(a) Install the axle shaft lock to the axle shaft.

(b) Pull the axle shaft fully toward the outer side of vehicle.

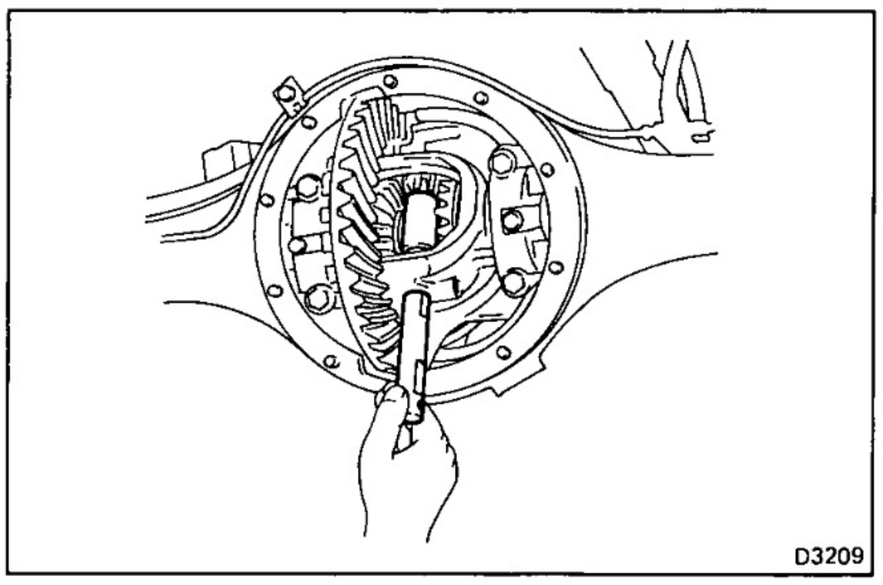
D3209

3. INSTALL PINION SHAFT AND PINION SPACER

(a) Install the spacer and pinion shaft to the differential.

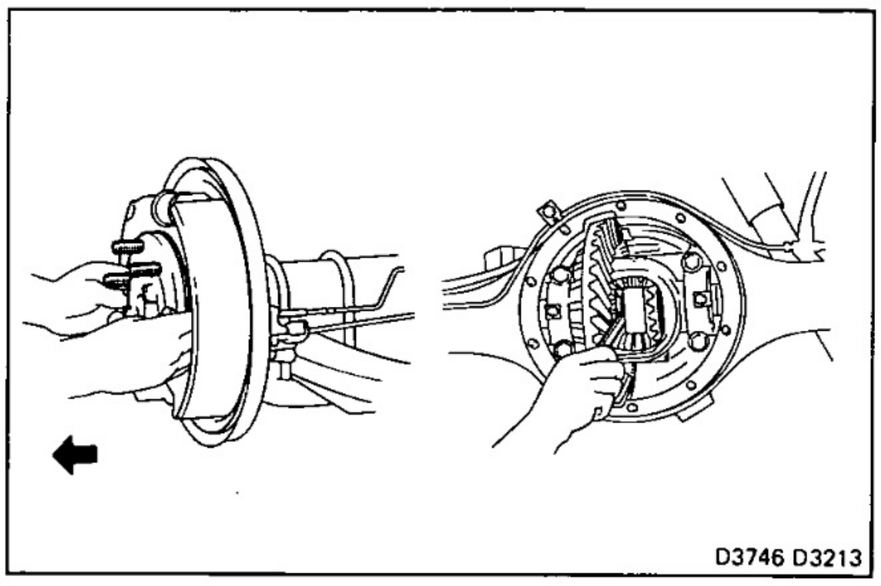
D3746 D3213

(b) Measure the thrust clearance between the axle shaft and spacer.

Maximum clearance 0.5 mm (0.020 in.)

If necessary, select the spacer.

Spacer thicknesses

Thickness	mm (in.)
29.0	(1.142)
29.4	(1.157)
29.8	(1.173)
30.2	(1.189)
30.6	(1.205)

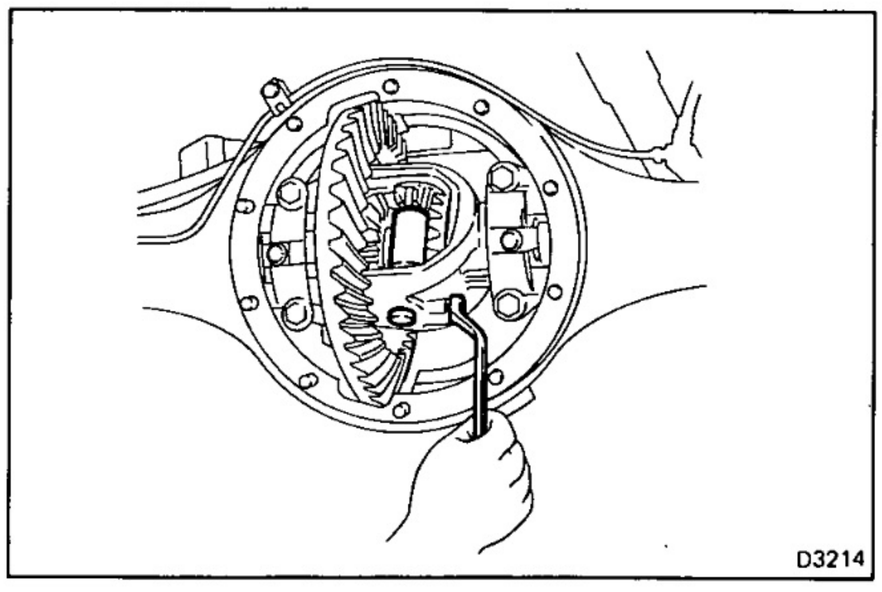
D3214

(c) Install the pinion shaft pin.

Torque: 275 kg-cm (20 ft-lb, 27 N·m)

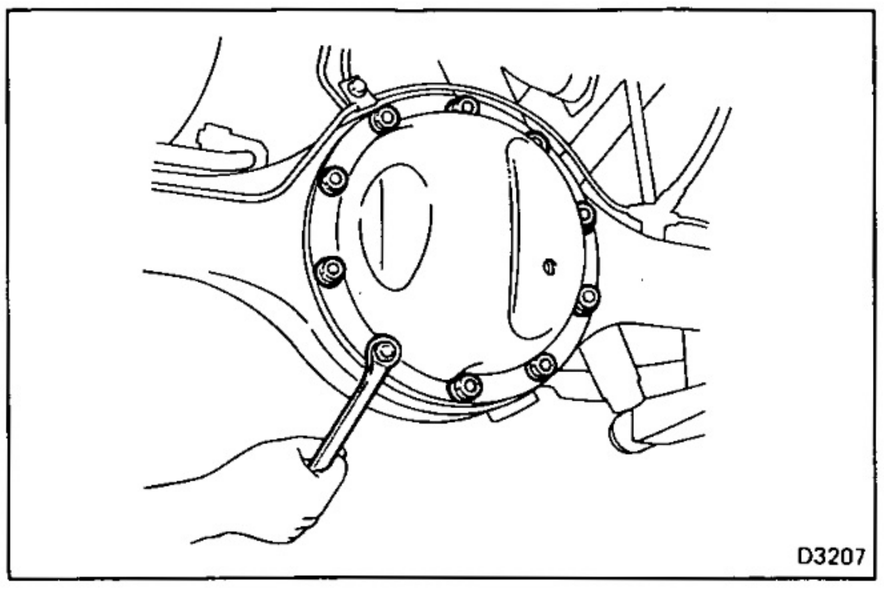

4. INSTALL DIFFERENTIAL COVER

(a) Install the new gasket and differential cover to the axle housing.

(b) Install the ten nuts and washers.

Torque: 130 kg-cm (9 ft-lb, 13 N·m)

5. INSTALL PARKING BRAKE CABLE CLAMP

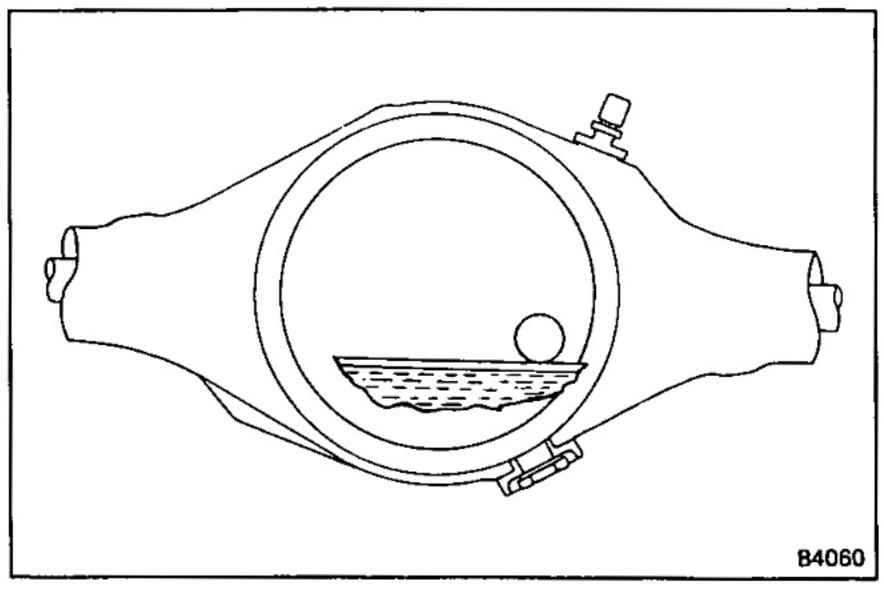

6. INSTALL BRAKE DRUM AND WHEEL

7. FILL DIFFERENTIAL WITH GEAR OIL

Hypoid gear oil: API GL-5
Above –18°C (0°F) SAE90
Below –18°C (0°F)
SAE 80W or 80W-90
Capacity: 2.5 liters (2.6 US qts, 2.2 Imp. qts)

NOTE: With LSD fill in hypoid gear oil
LSD, SAE 90 API GL-5

8. LOWER VEHICLE

REAR AXLE SHAFT AND AXLE HUB (Full-floating Type)

COMPONENTS

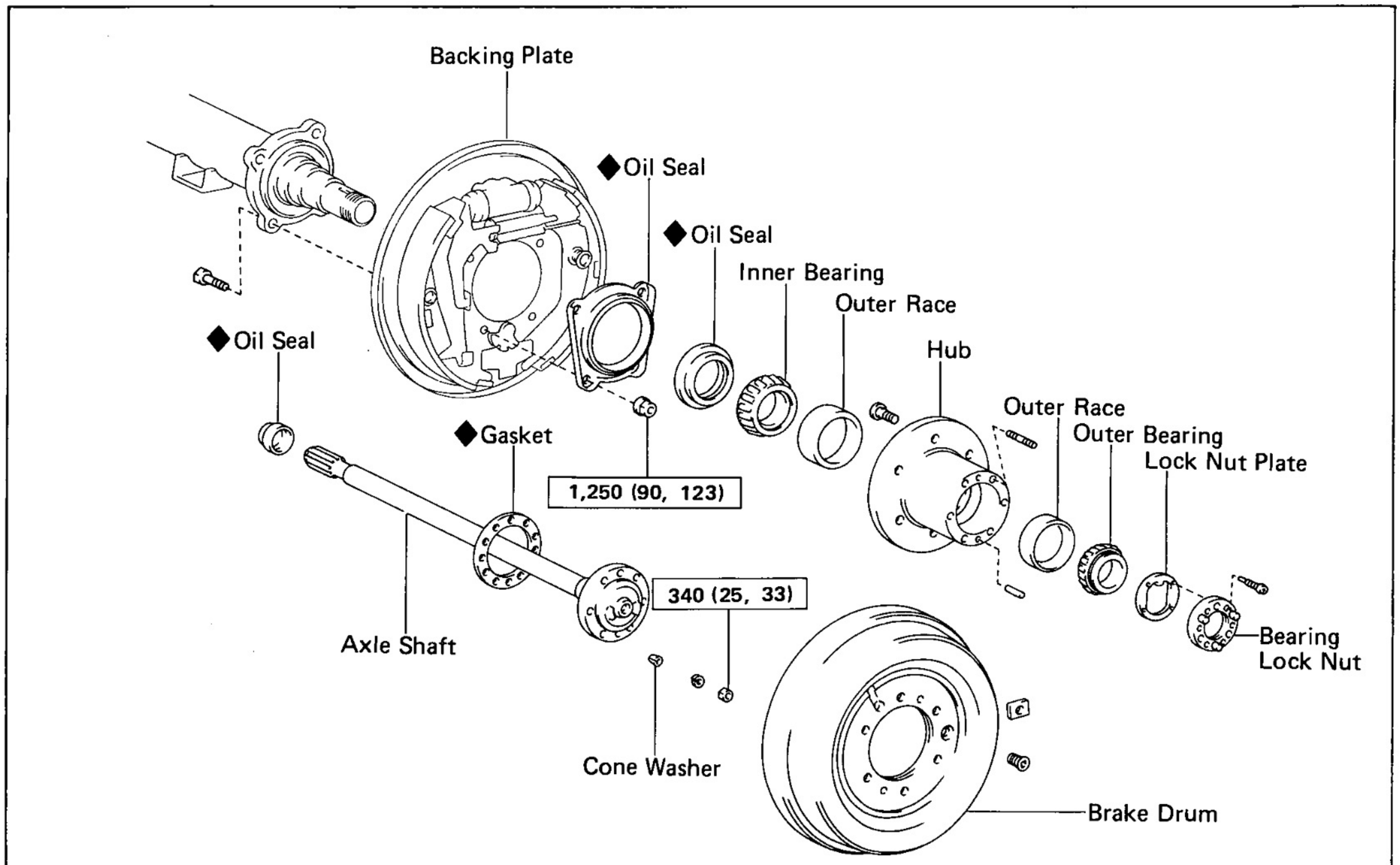

kg-cm (ft-lb, N·m) : Specified torque

◆ : Non-reusable part

D3239

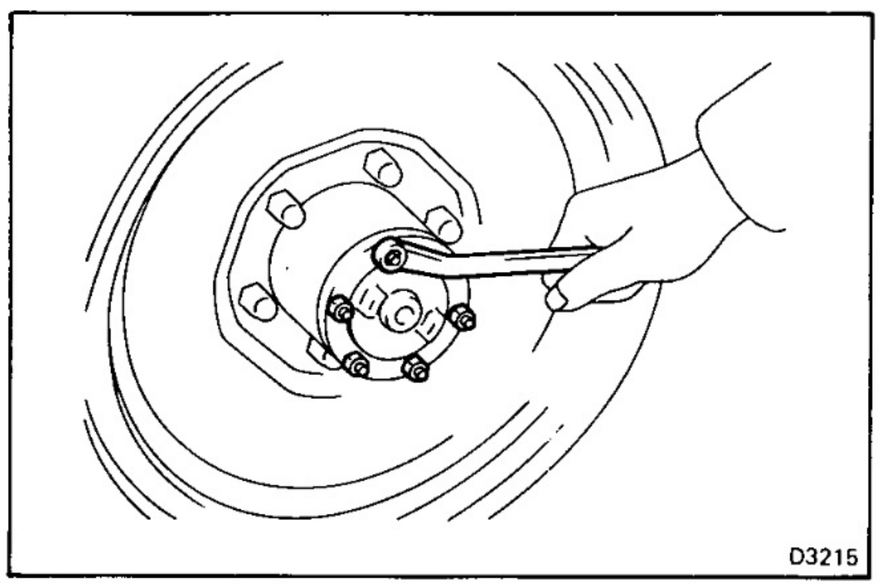

D3215

REMOVAL OF REAR AXLE SHAFT

1. REMOVE AXLE SHAFT SET NUT

Remove the six set nuts and washers.

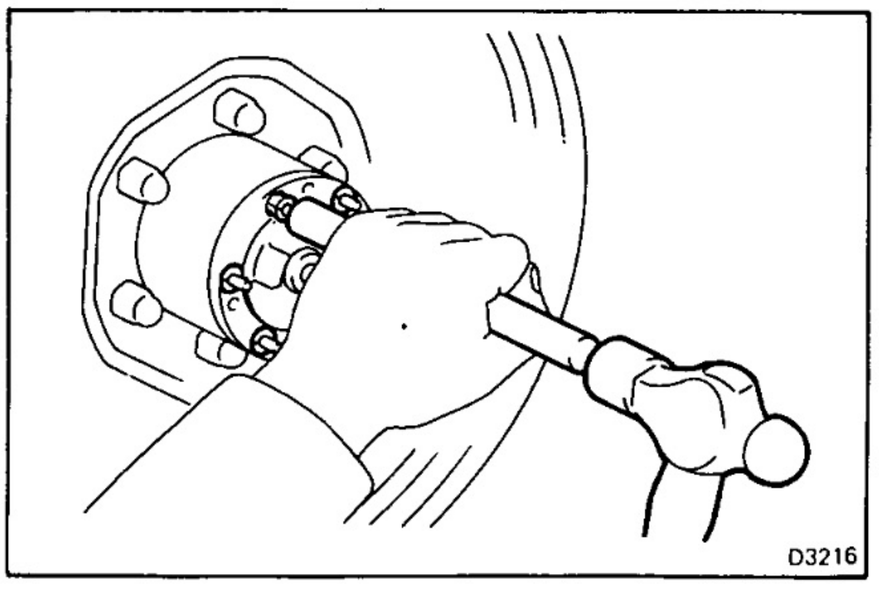

D3216

2. REMOVE CONE WASHER

Using a hammer and brass-bar, tap on the bolt and remove the six cone washers.

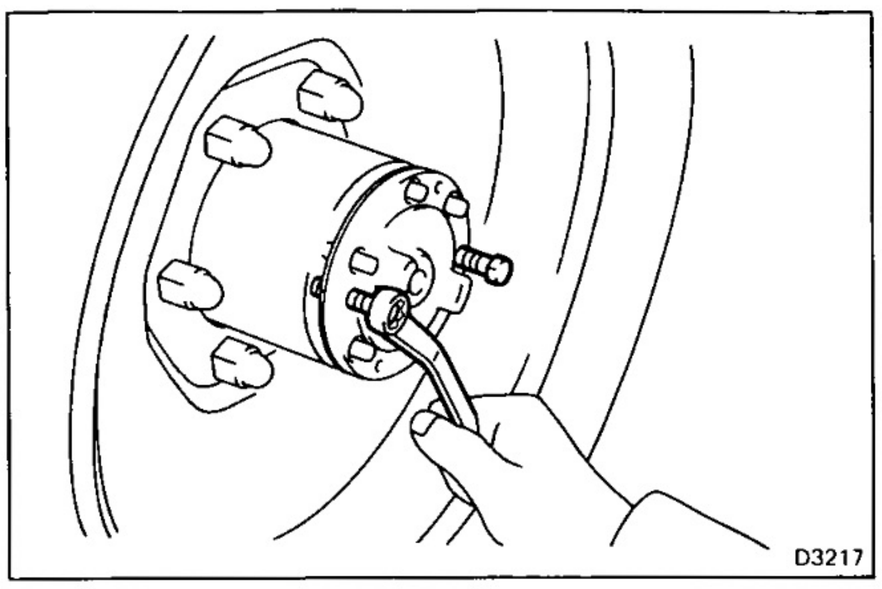

3. REMOVE REAR AXLE SHAFT

(a) Install and tighten the two service bolts to the service hole.

(b) If the axle shaft separates, remove the two service bolts.

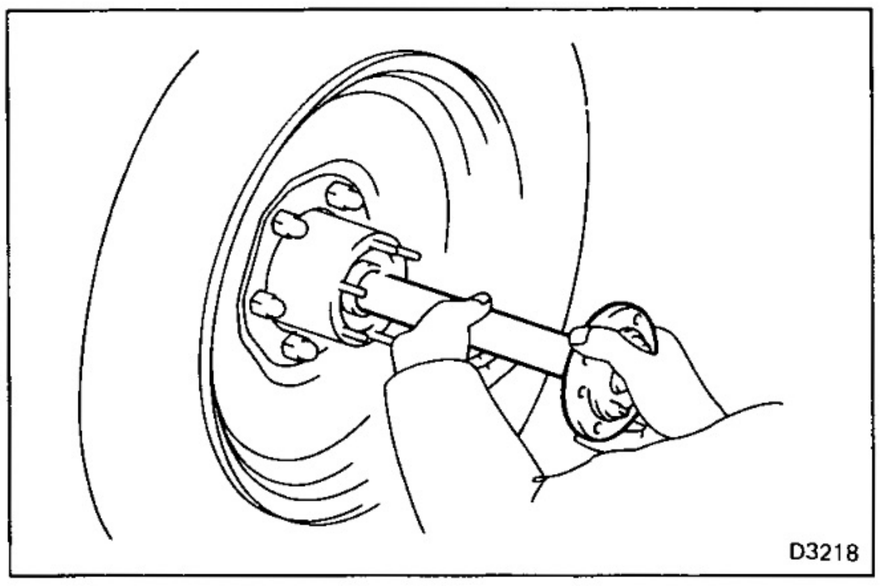

(c) Remove the axle shaft with the gasket.

CAUTION: When pulling out the axle shaft, be careful not to damage the oil seal.

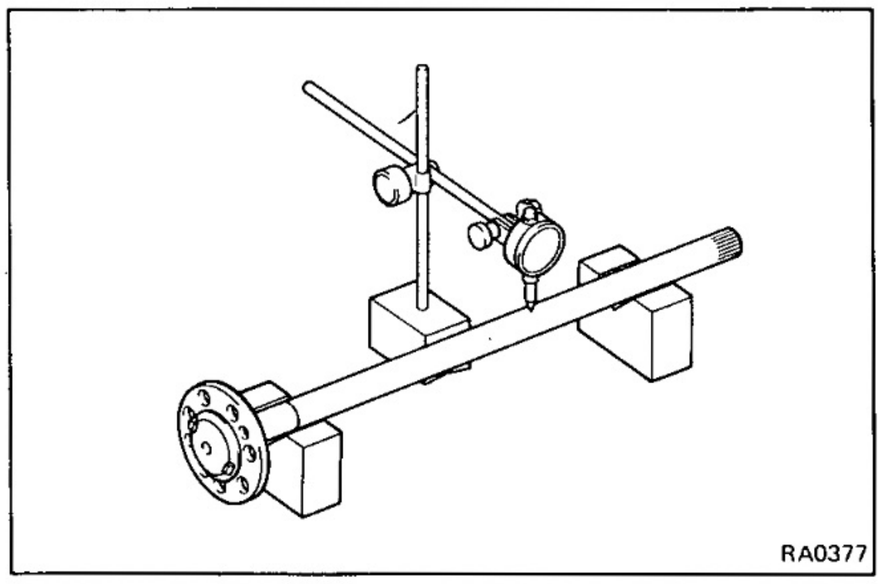

INSPECTION OF REAR AXLE SHAFT COMPONENTS

1. INSPECT REAR AXLE SHAFT

Check for wear or damage.

Maximum runout: 0.8 mm (0.031 in.)

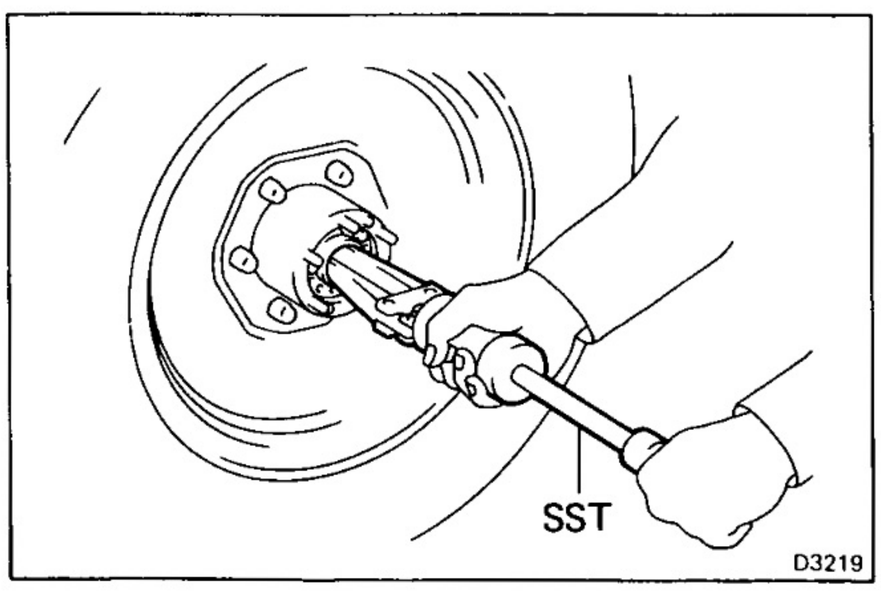

2. INSPECT OIL SEAL FOR WEAR OR DAMAGE

If the oil seal is damaged or worn, replace it.

3. IF NECESSARY, REPLACE OIL SEAL

(a) Using SST, remove the oil seal.

SST 09308-00010

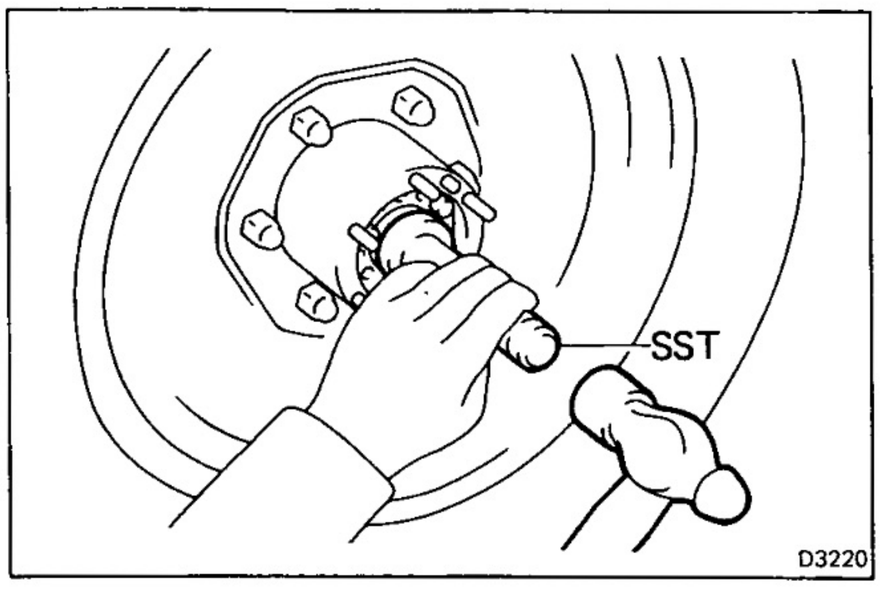

(b) Using SST, drive in the oil seal.

SST 09517-36010

(c) Apply MP grease to the oil seal lip.

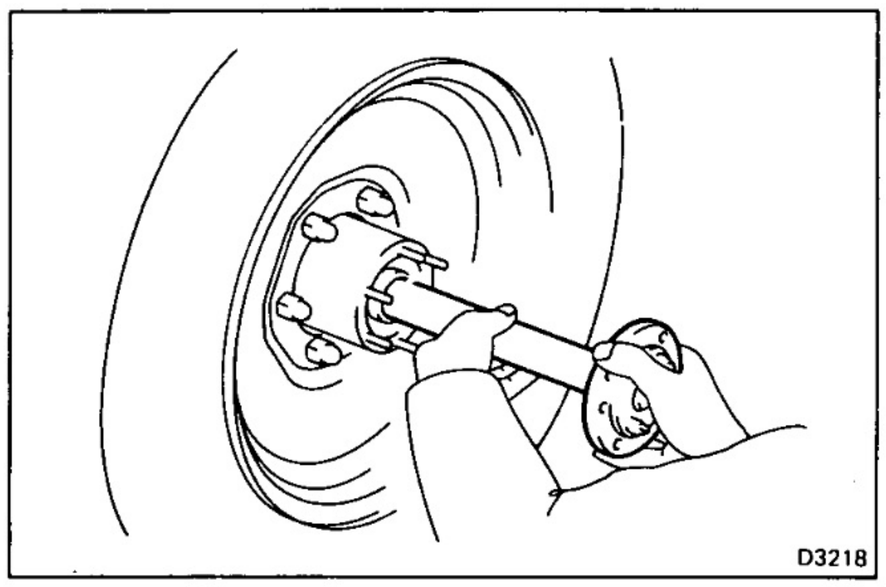

INSTALLATION OF REAR AXLE SHAFT

(See page RA-8)

1. APPLY MP GREASE TO OIL SEAL LIP

2. INSTALL NEW GASKET AND INSERT AXLE SHAFT

   CAUTION: When inserting the axle shaft, be careful not to damage the oil seal.

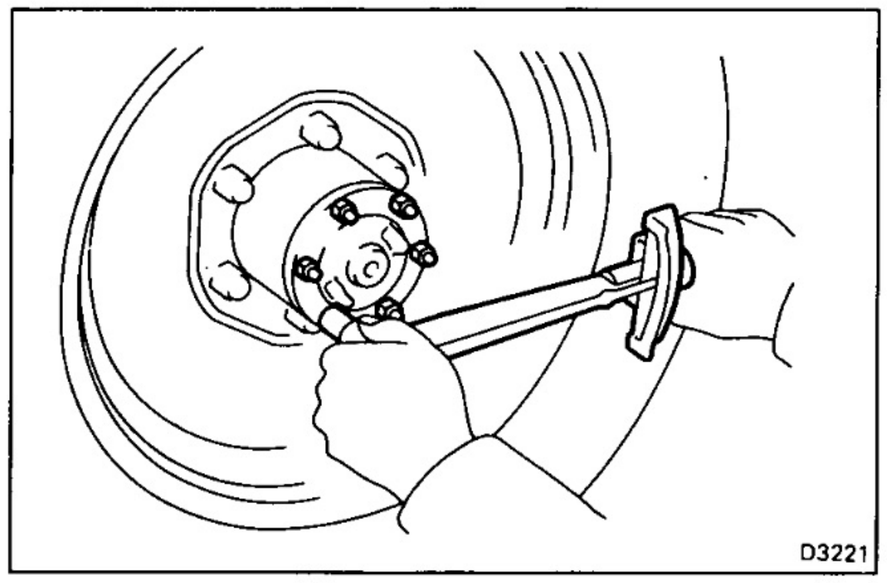

3. INSTALL CONE WASHER AND SET NUT

   Install the cone washers and spring washers with six nuts.

   Torque: 340 kg-cm (25 ft-lb, 33 N·m)

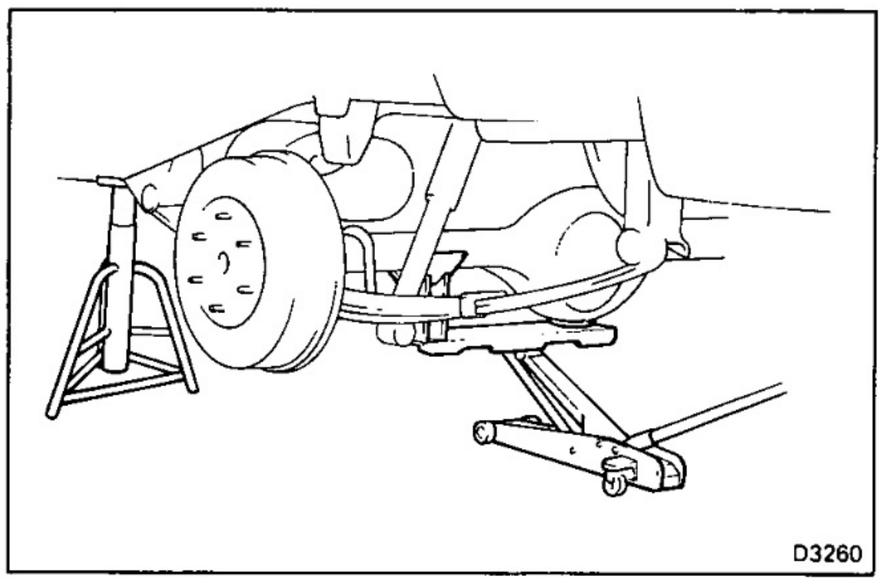

REMOVAL OF REAR AXLE HUB

(See page RA-8)

1. JACK UP VEHICLE AND REMOVE WHEEL

2. REMOVE REAR AXLE SHAFT
   (See page RA-8)

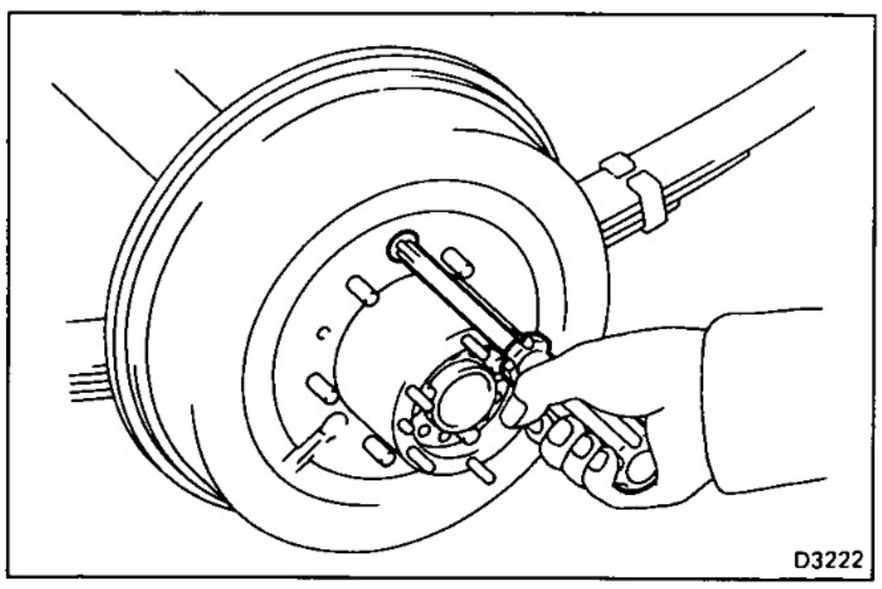

3. REMOVE BRAKE DRUM

   (a) Remove the two bolts from the brake drum.

   (b) Remove the brake drum from the axle hub.

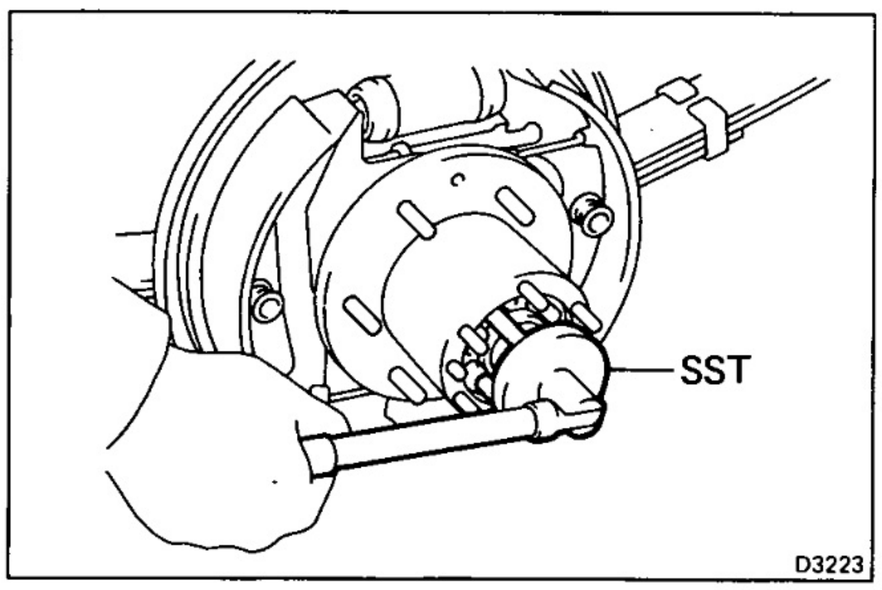

4. REMOVE BEARING LOCK NUT

   (a) Remove the two lock nut bolts.

   (b) Using SST, remove the lock nut.

   SST 09509-25011

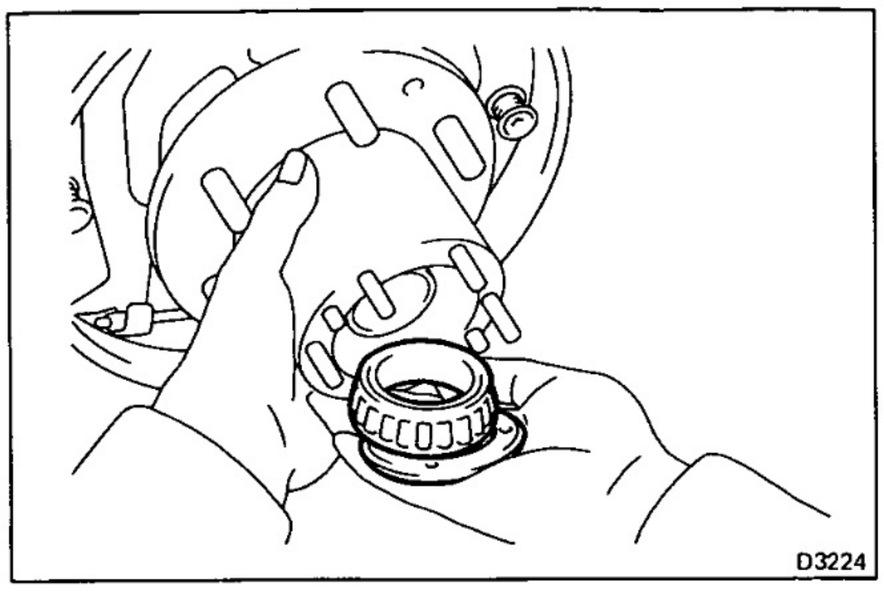

5. REMOVE REAR AXLE HUB

Remove the axle hub with the lock nut plate and outer bearing.

INSPECTION AND REPLACEMENT OF AXLE HUB COMPONENTS

1. INSPECT AXLE HOUSING

Using a magnetic flaw detector or flaw detecting penetrant, check for damage or cracks.

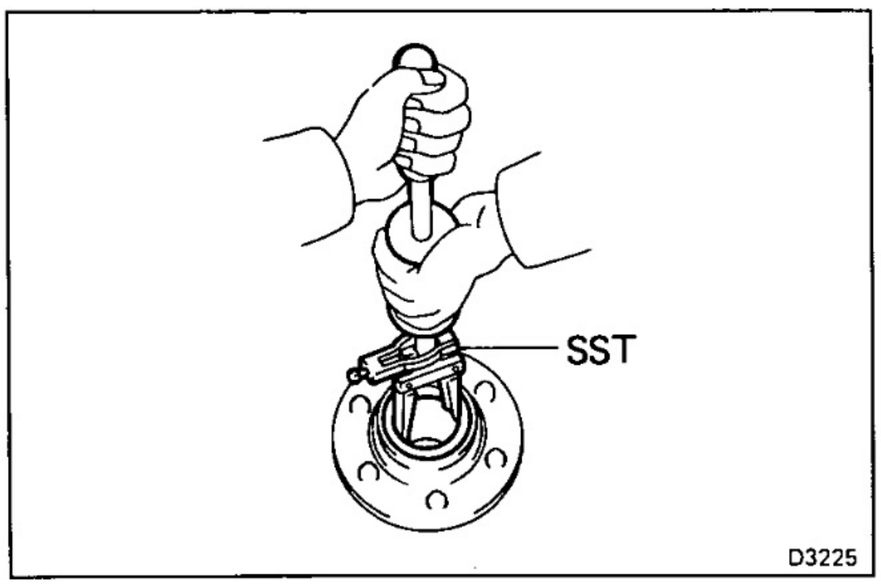

2. REMOVE OIL SEAL AND INNER BEARING

(a) Using SST, remove the oil seal.

SST 09308-00010

(b) Remove the inner bearing from the axle hub.

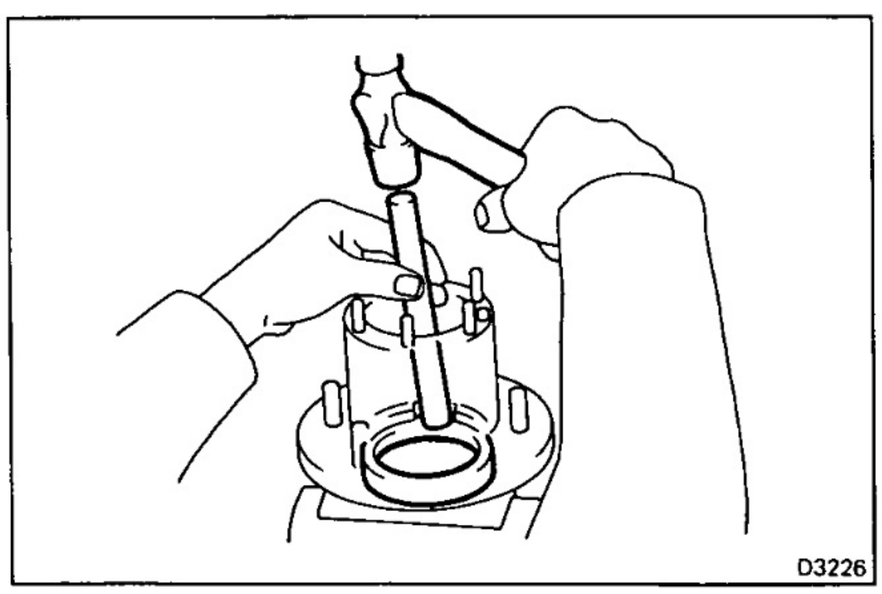

3. REMOVE BEARING OUTER RACE

Using a hammer and brass bar, drive out the bearing outer race from the axle hub.

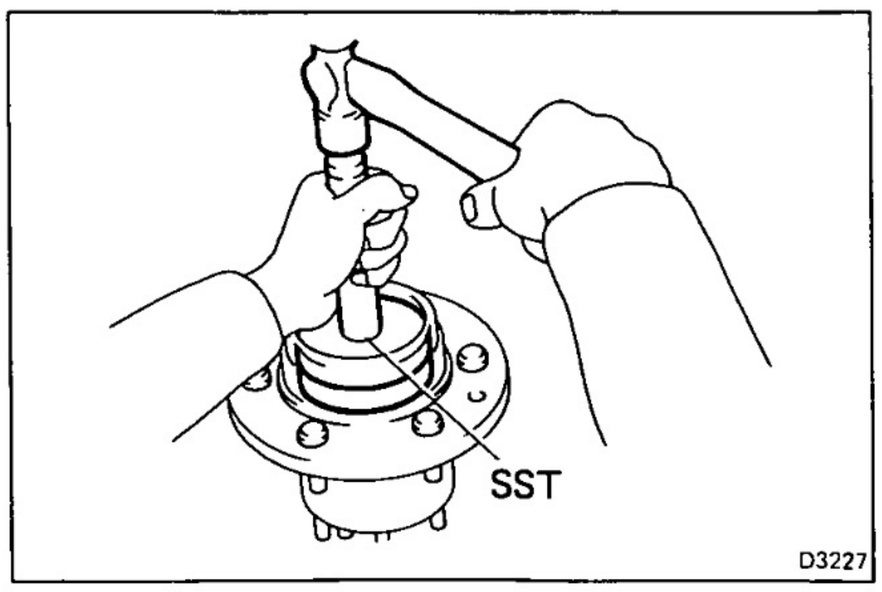

4. INSTALL BEARING OUTER RACE

Using SST, drive in the bearing outer race to the axle hub.

SST 09608-35013

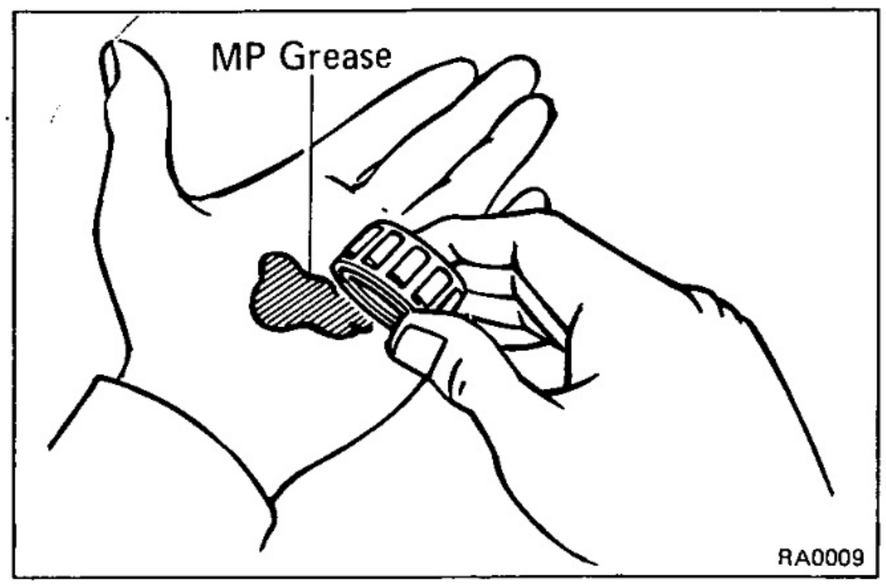

5. PACK BEARING WITH MP GREASE

(a) Place MP grease in the palm of your hand.

(b) Pack grease into the bearing, continuing until the grease oozes out from the other side.

(c) Do the same around the bearing circumference.

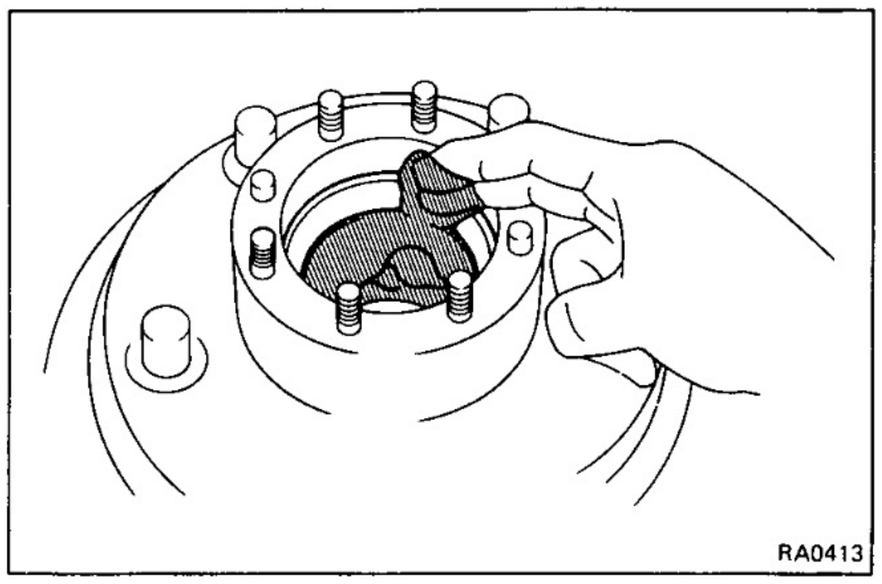

6. COAT INSIDE OF HUB WITH MP GREASE

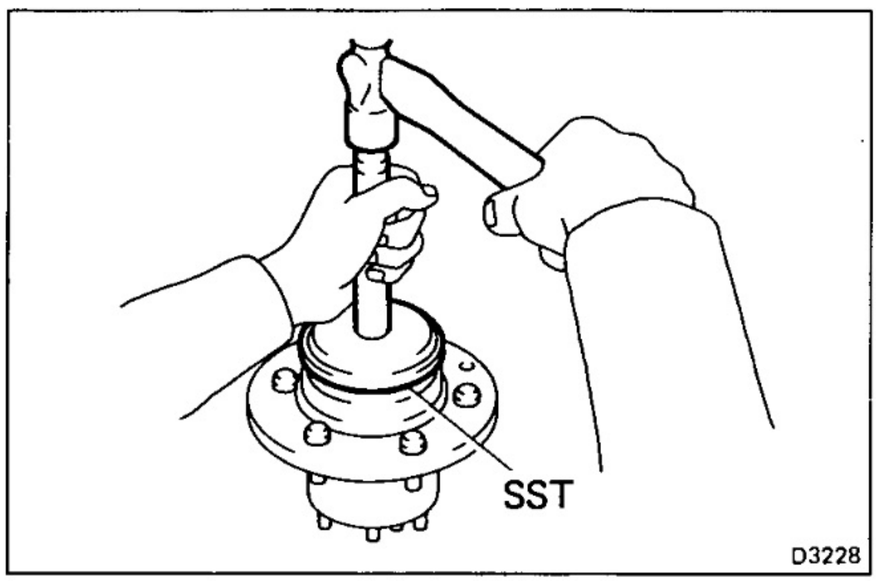

7. INSTALL INNER BEARING AND OIL SEAL

(a) Install the inner bearing to the axle hub.

(b) Using SST, drive in the oil seal to the axle hub.

SST 09608-35013

(c) Apply MP grease to the oil seal lip.

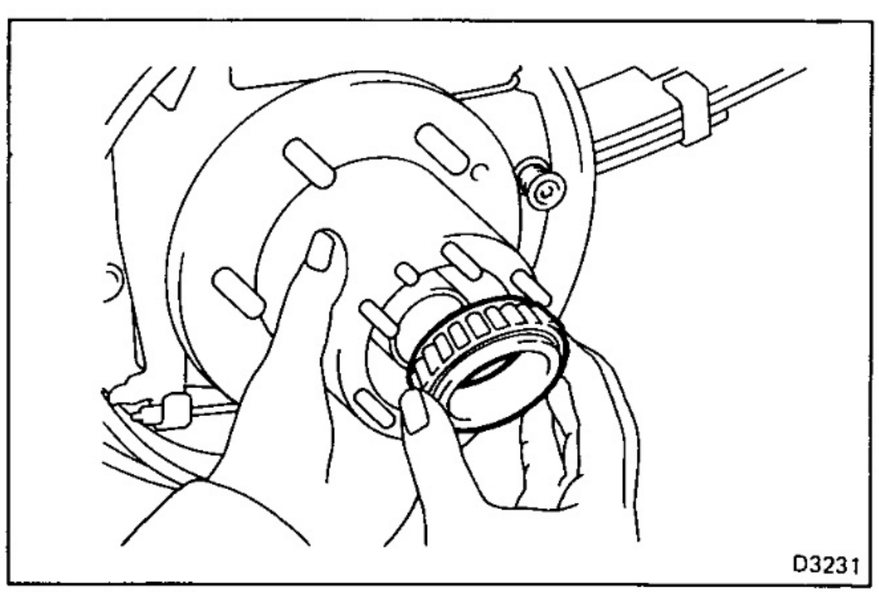

INSTALLATION OF REAR AXLE HUB

(See page RA-8)

1. INSTALL AXLE HUB

(a) Install the axle hub to the axle housing.

CAUTION: Be careful not to damage the oil seal.

(b) Install the outer bearing.

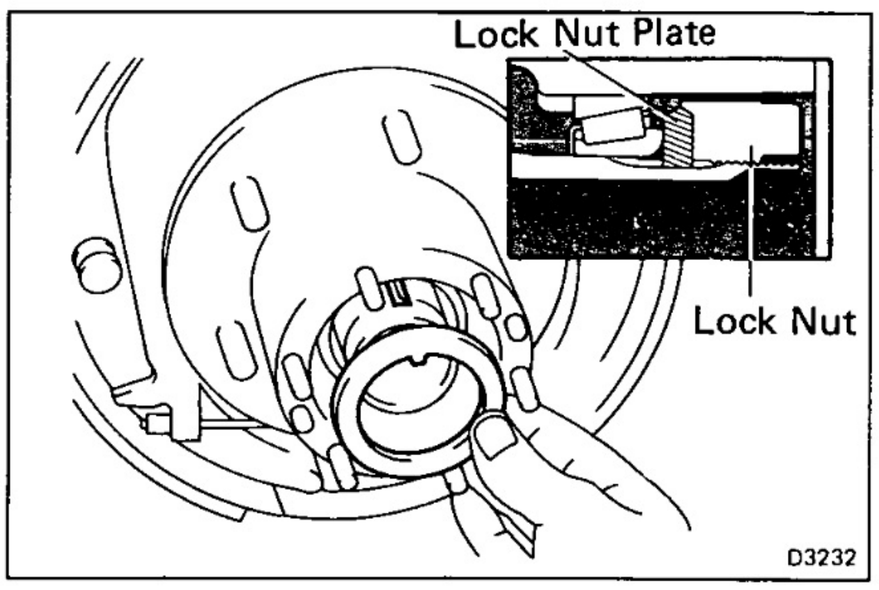

2. INSTALL LOCK PLATE AND BEARING LOCK NUT

(a) After fully pushing in the outer bearing, position the protrusion of the lock nut plate into the axle housing groove.

(b) Temporarily install the bearing lock nut.

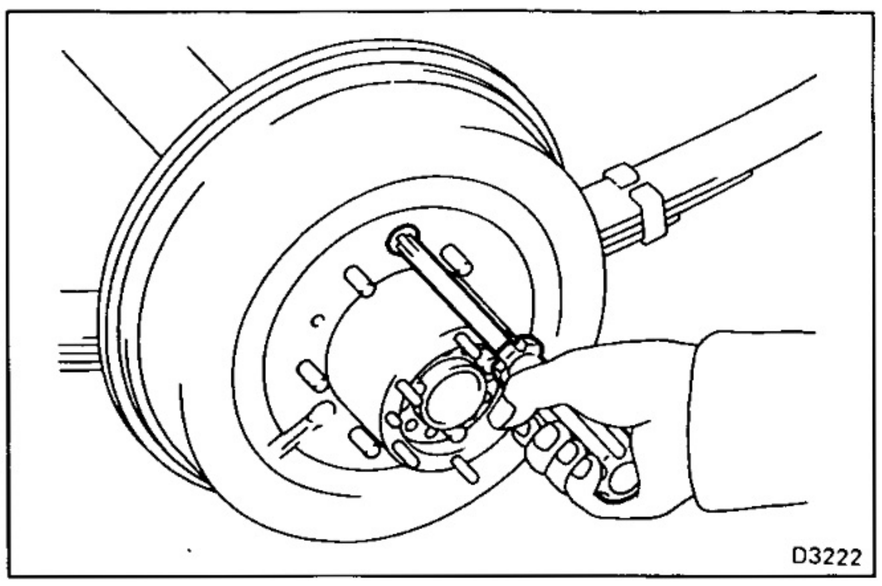

3. INSTALL BRAKE DRUM

(a) Install the brake drum.

(b) Tighten the two bolts.

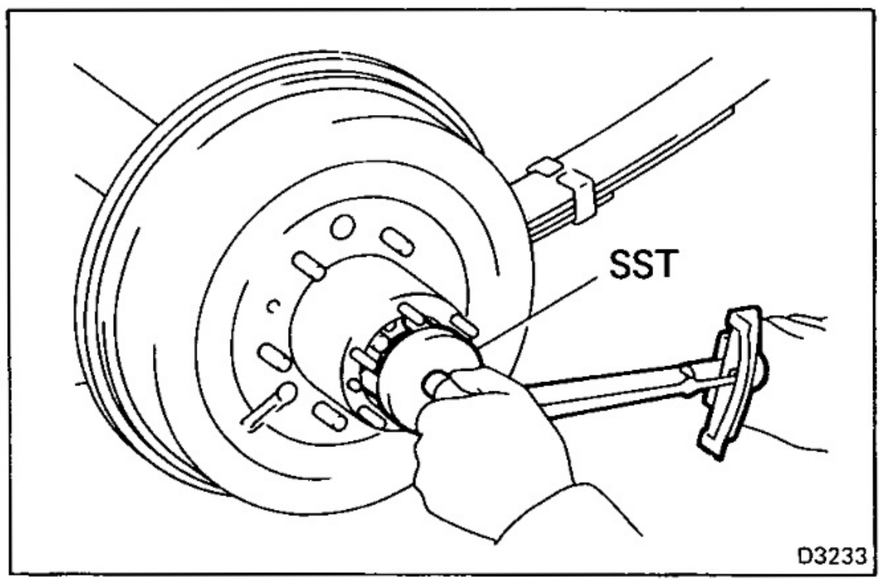

4. ADJUST PRELOAD

(a) Using SST, torque the bearing lock nut.

SST 09509-25011

Torque: 600 kg-cm (43 ft-lb, 59 N·m)

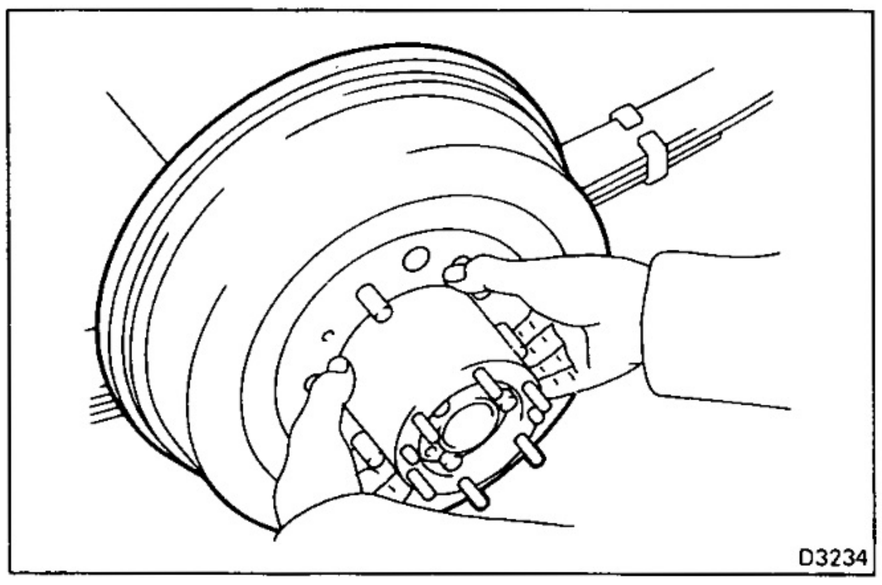

(b) Snug down the bearing by turning the hub several times.

(c) Using SST, retighten the bearing lock nut.

SST 09509-25011

Torque: 600 kg-cm (43 ft-lb, 59 N·m)

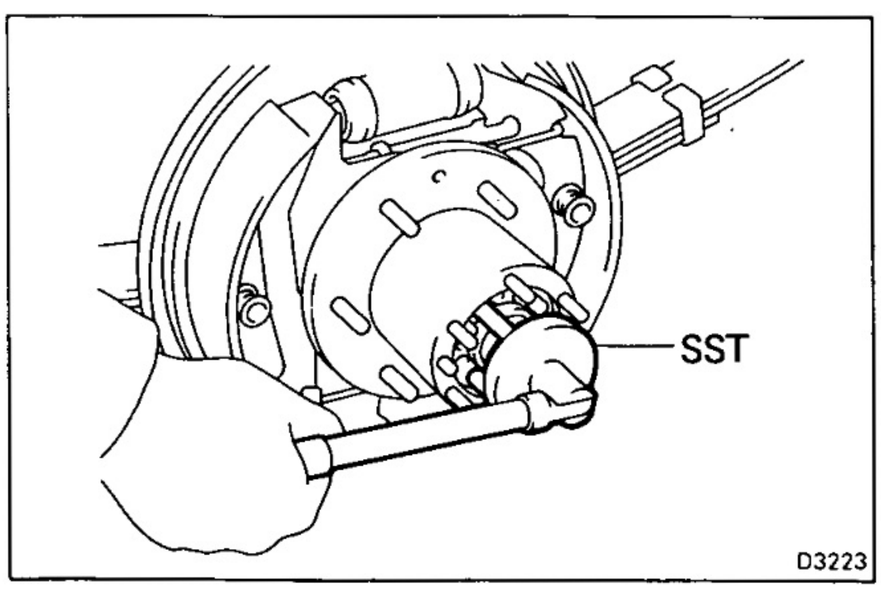

(d) Using SST, loosen the bearing lock nut until you can rotate it by hand.

SST 09509-25011

(e) Using a spring tension gauge, measure the frictional force of the oil seal.

(f) Using SST, retighten the bearing lock nut.

SST 09509-25011

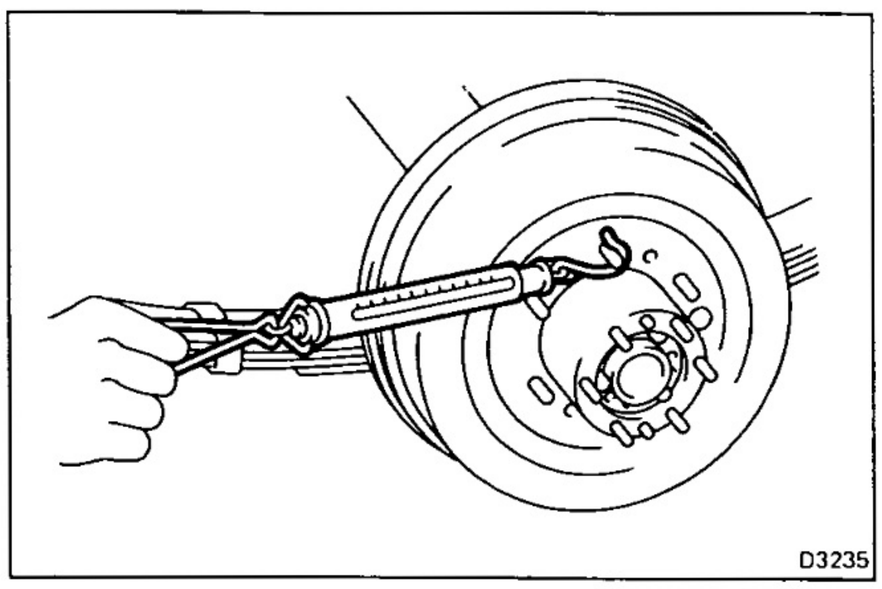

(g) Using a spring tension gauge, measure the preload at the hub bolt.

Rear wheel bearing preload (at starting):

Frictional force plus 0.4 – 3.3 kg (0.9 – 7.3 lb, 4 – 32 N)

If preload is not within specification, the procedure above must be repeated.

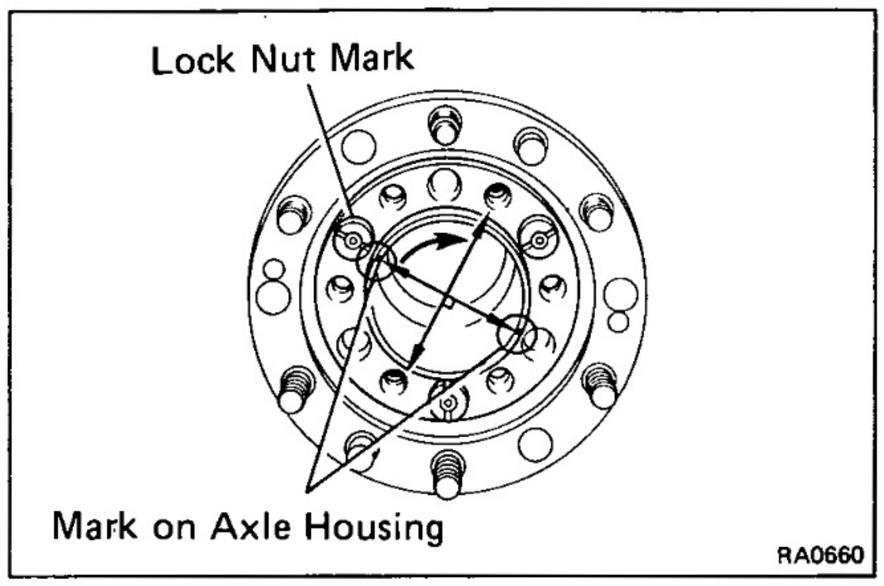

(h) Align the lock nut mark with one of the marks on the axle housing, and place lock bolts in the holes at right angles to the lock nut.

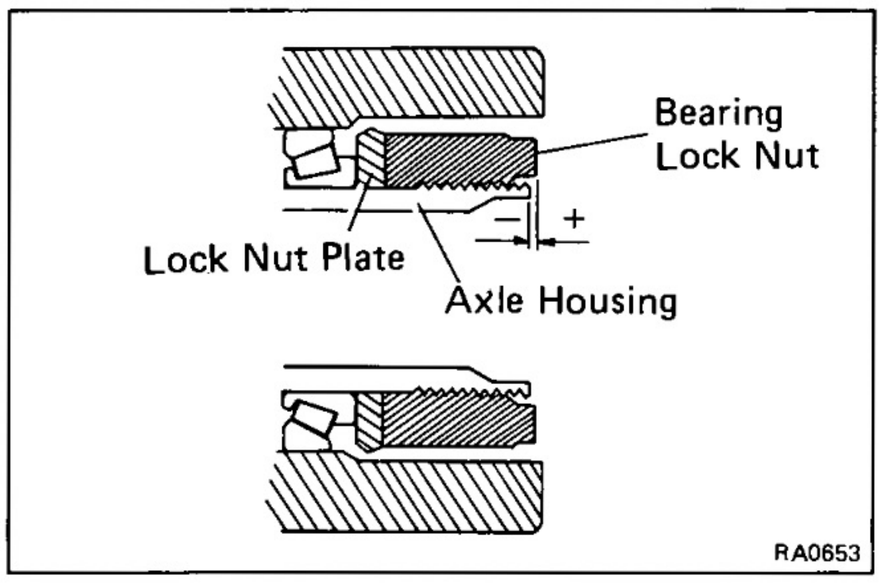

(i) Measure the distance between the top surface of axle housing and the lock nut.

Standard distance: –0.2 – 0.9 mm (–0.008 – 0.035 in.)

If not within specification, reinstall the axle hub.

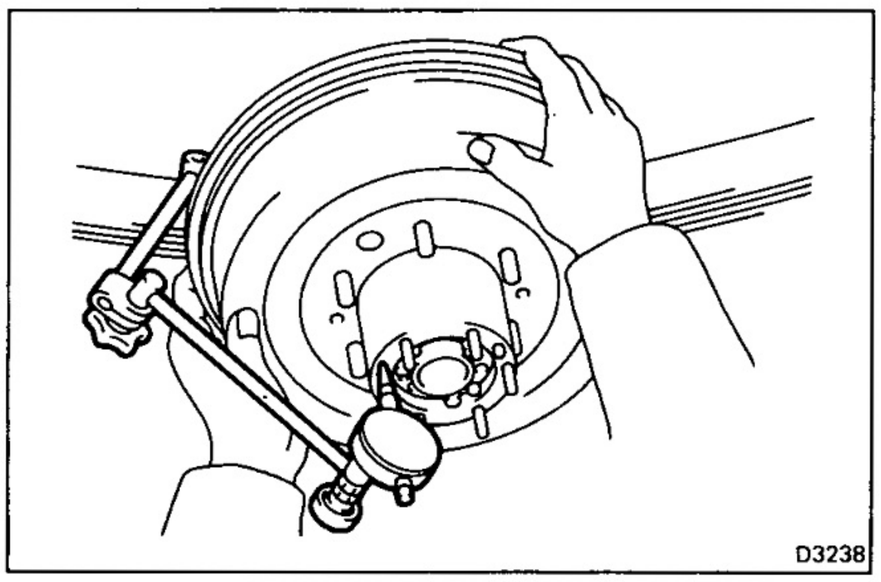

(j) Check the movement of the drum.

(k) Check the hub axial play.

Hub axial play:

Less than 0.1 mm (0.004 in.)

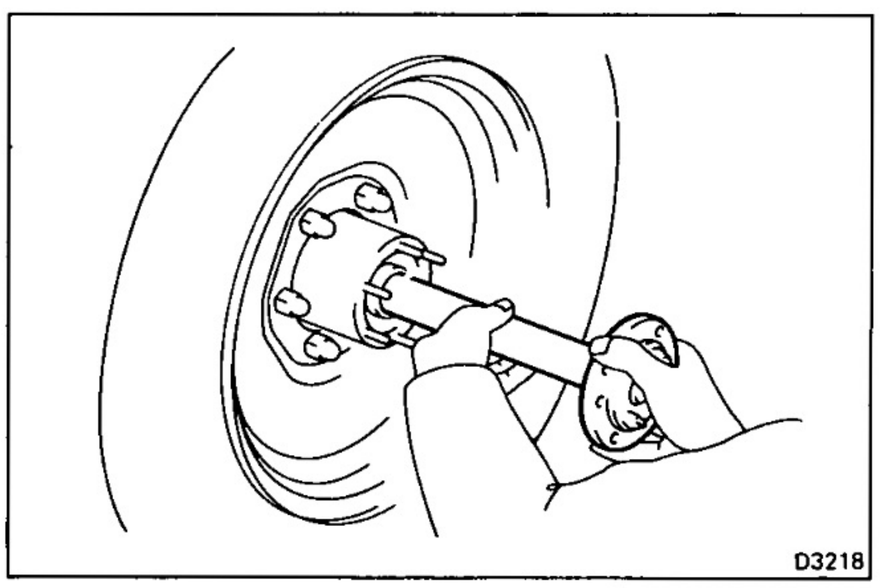

5. INSTALL REAR AXLE SHAFT
(See page RA-10)

6. INSTALL WHEEL AND LOWER VEHICLE

REAR DIFFERENTIAL

COMPONENTS

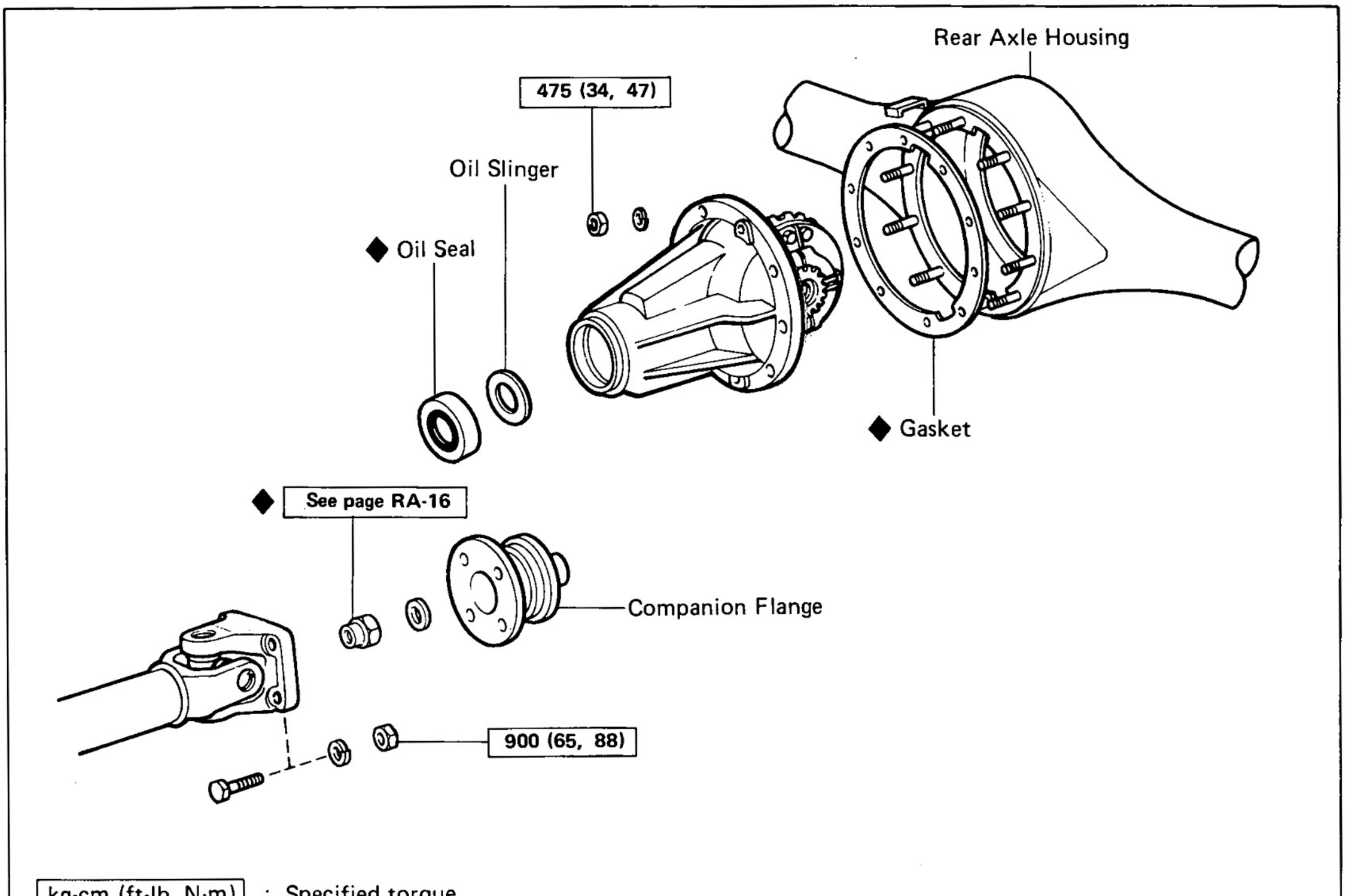

kg-cm (ft-lb, N·m) : Specified torque

◆ : Non-reusable part

RA0652

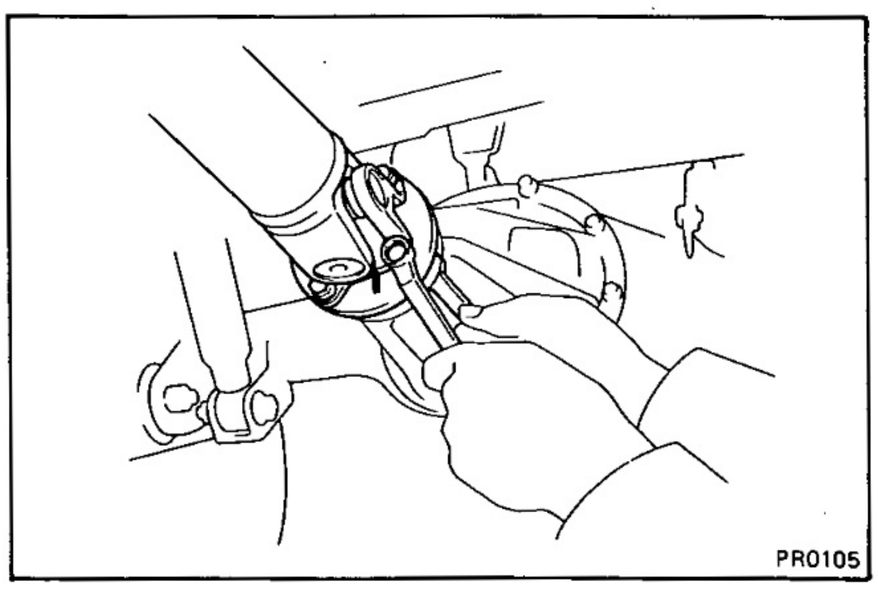

PR0105

ON-VEHICLE REPLACEMENT OF OIL SEAL

1. DISCONNECT PROPELLER SHAFT FROM DIFFERENTIAL

(a) Place matchmarks on the flanges.

(b) Remove the four bolts and nuts.

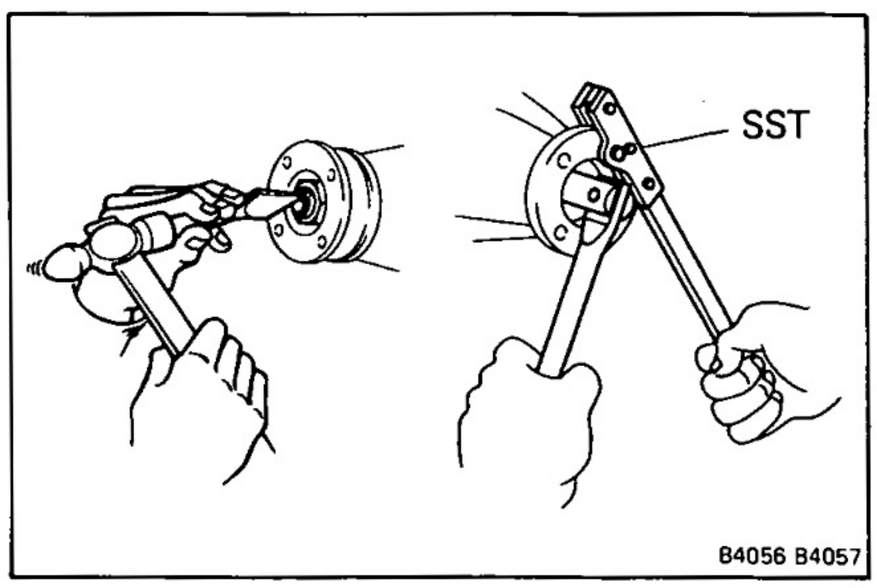

B4056 B4057

2. REMOVE COMPANION FLANGE

(a) Using a hammer and chisel, loosen the staked part of the nut.

(b) Using SST to hold the flange, remove the nut.

SST 09330-00021

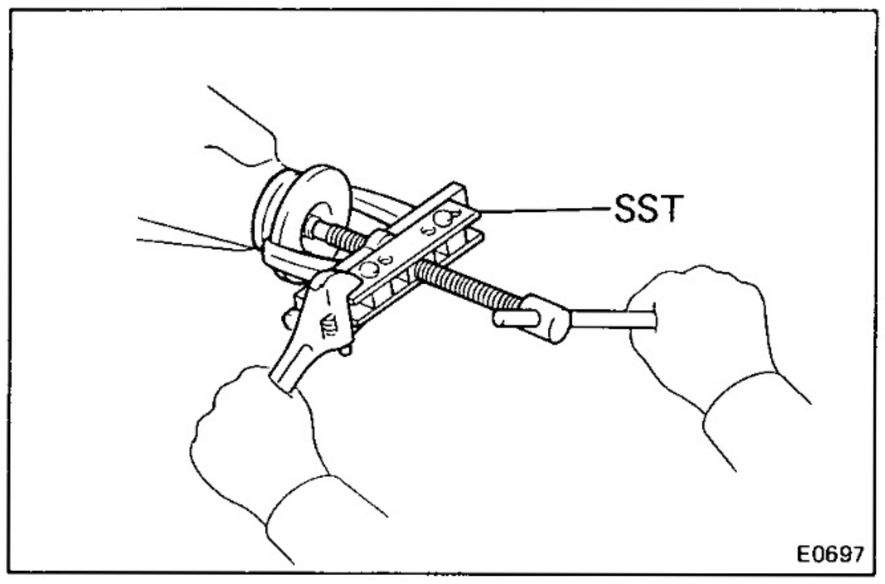

(c) Using SST, remove the companion flange.

SST 09950-20016

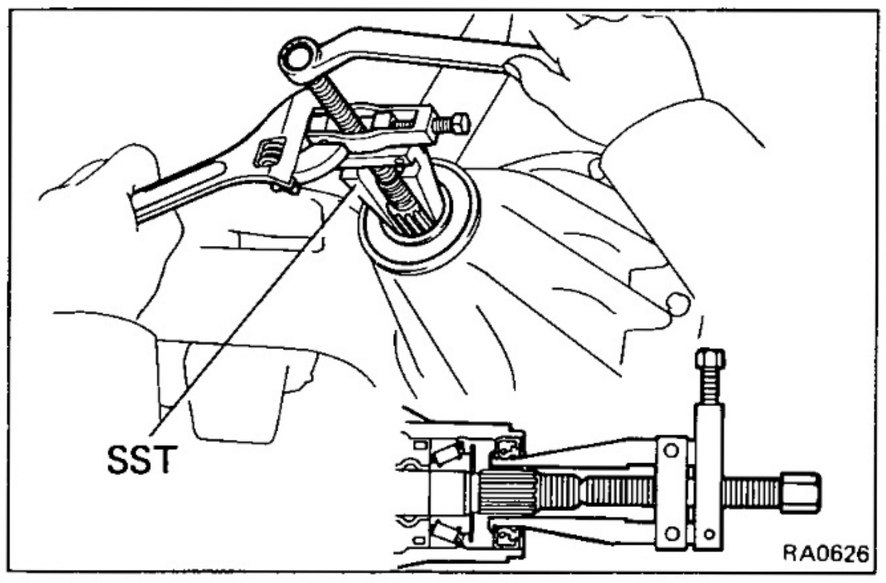

3. REMOVE OIL SEAL AND OIL SLINGER

(a) Using SST, remove the oil seal.

SST 09308-10010

(b) Remove the oil slinger.

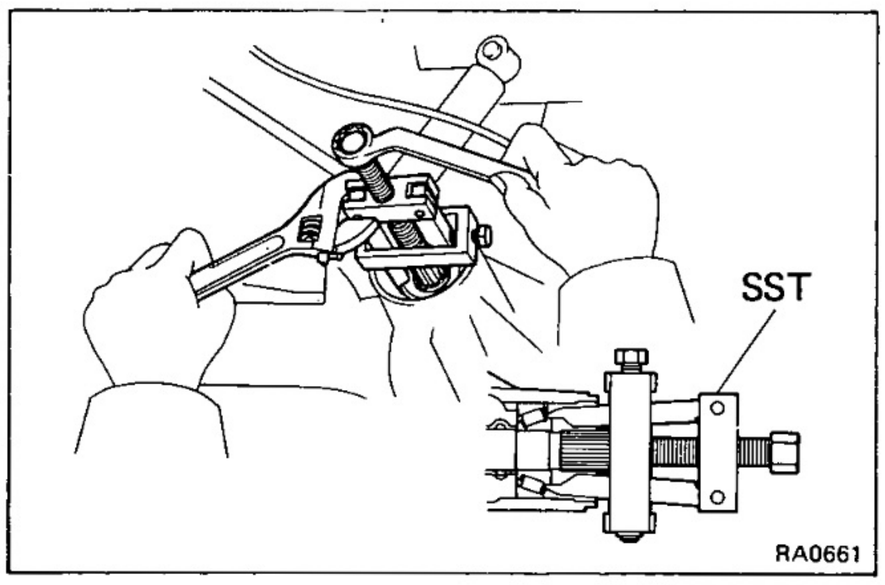

4. REMOVE FRONT BEARING AND BEARING SPACER

(a) Using SST, remove the front bearing from the drive pinion.

SST 09556-30010

(b) Remove the bearing spacer.

5. INSTALL NEW BEARING SPACER AND FRONT BEARING

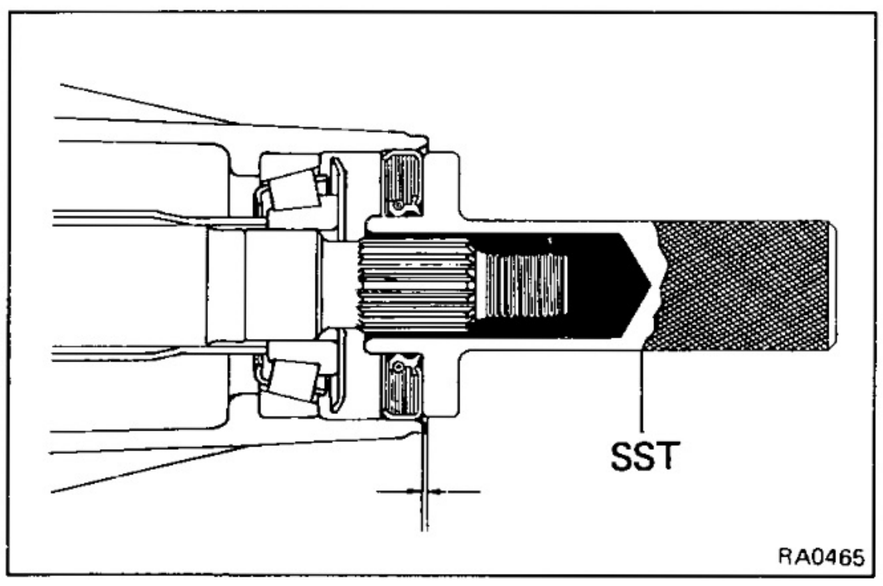

6. INSTALL OIL SEAL AND OIL SLINGER

(a) Install the oil slinger.

(b) Using SST, install a new oil seal.

SST 09554-30011

Oil seal drive in depth: 1.0 mm (0.0394 in.)

(c) Apply MP grease to the oil seal lip.

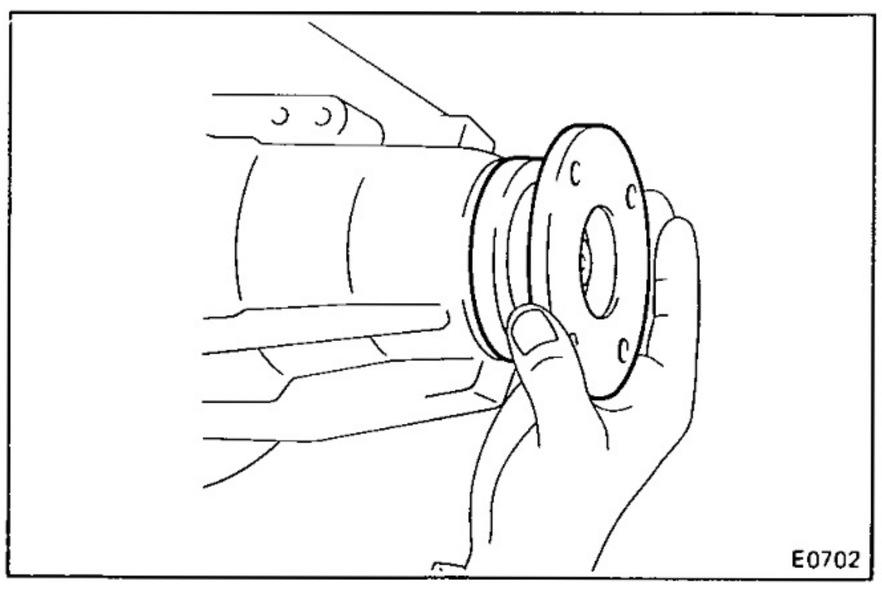

7. INSTALL COMPANION FLANGE

(a) Install the companion flange.

(b) Coat the threads of a new nut with gear oil.

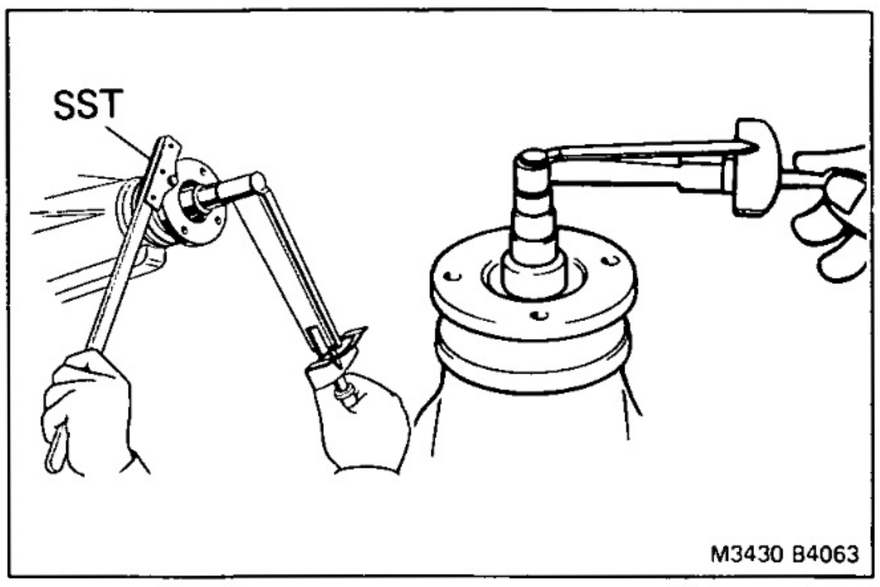

(c) Using SST to hold the flange, tighten the nut.

SST 09330-00021

Torque: 2,500 – 4,500 kg-cm (181–325 ft-lb, 245–441 N·m)

NOTE: Torque the nut to the values above and the preload indicated below.

Preload (at starting): 9 – 13 kg-cm (7.8 – 11.3 in.-lb, 0.9 – 1.3 N·m)

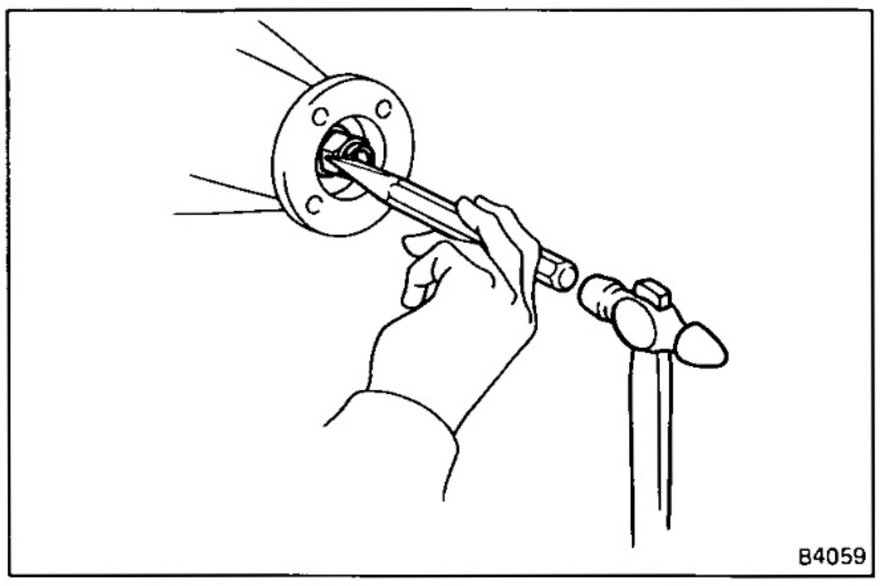

8. STAKE DRIVE PINION NUT

9. CONNECT PROPELLER SHAFT TO COMPANION FLANGE

(a) Align the matchmarks on the flanges and connect the flange with four bolts and nuts.

(b) Torque the four bolts and nuts.

Torque: 900 kg-cm (65 ft-lb, 88 N·m)

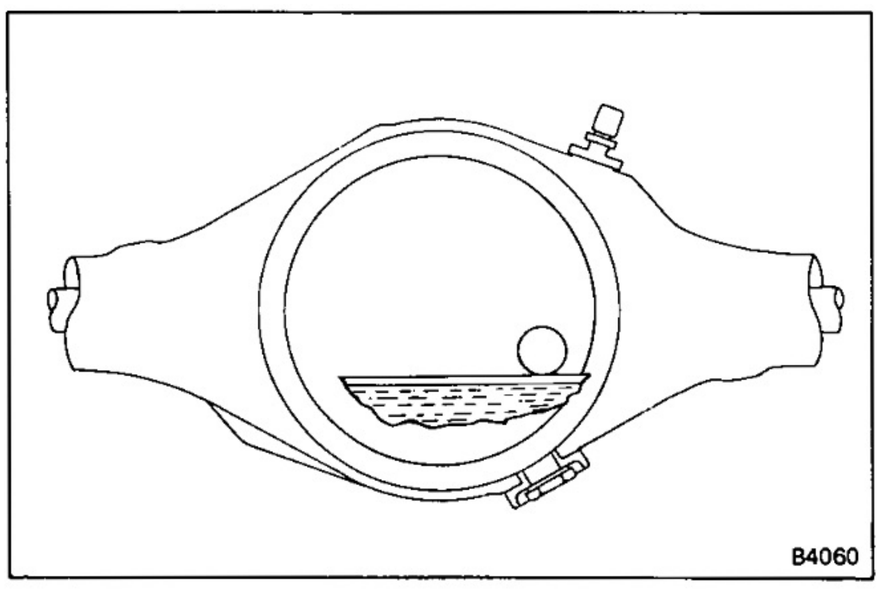

10. CHECK DIFFERENTIAL OIL LEVEL

Fill with hypoid gear oil if necessary.

Hypoid gear oil: API GL-5
Above –18°C (0°F) SAE 90
Below –18°C (0°F) SAE 80W or 80W-90
Capacity: 2.5 liters (2.6 US qts, 2.2 Imp. qts)

NOTE: With LSD fill in hypoid gear oil
LSD, SAE 90 API GL-5

REMOVAL OF REAR DIFFERENTIAL

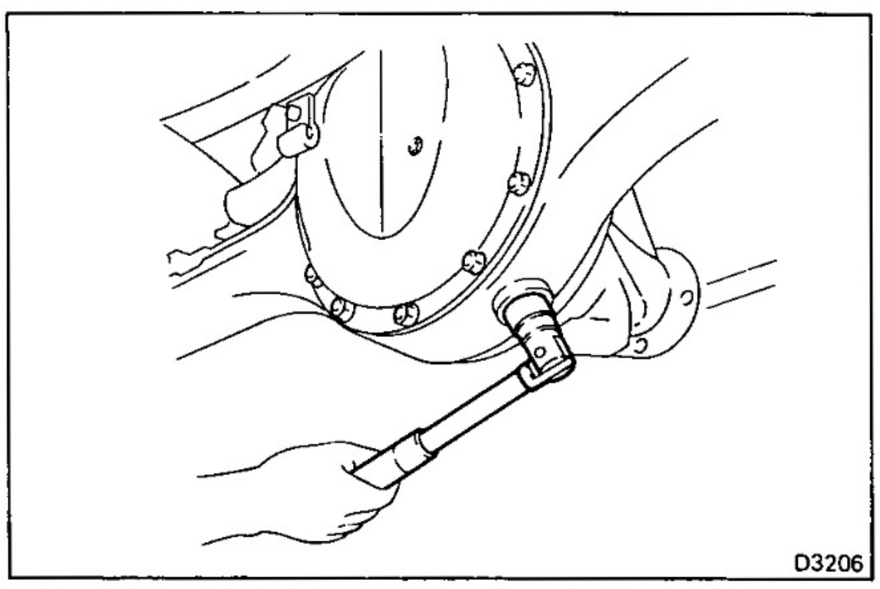

1. DRAIN DIFFERENTIAL OIL

2. REMOVE REAR AXLE SHAFT ASSEMBLY

(Semi-floating Type: See page RA-3)
(Full-floating Type: See page RA-8)

NOTE (For Semi-floating type): To prevent the pinion and washer from falling, after extracting the axle shaft, install the pinion shaft and shaft pin.

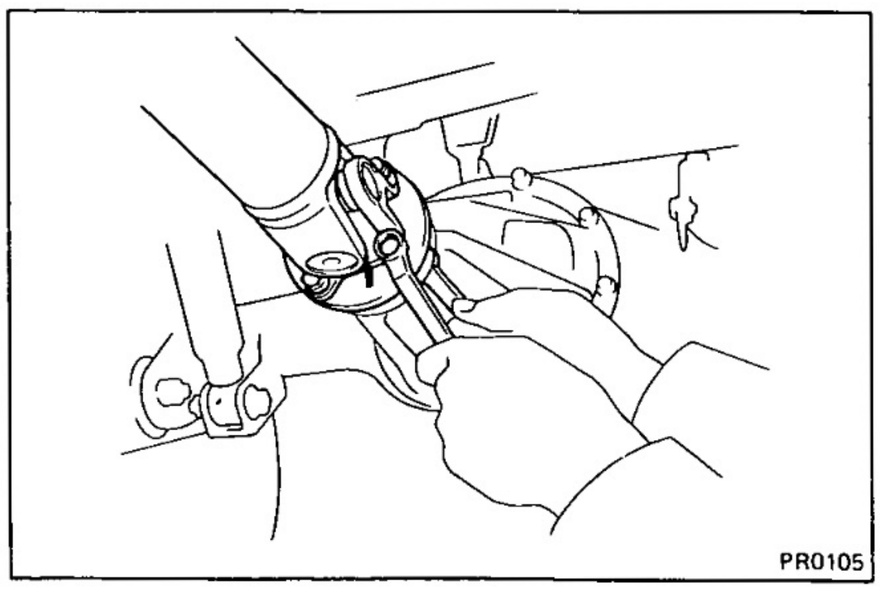

3. DISCONNECT PROPELLER SHAFT FROM COMPANION FLANGE

(a) Place matchmarks on the flanges.

(b) Remove the four bolts and nuts.

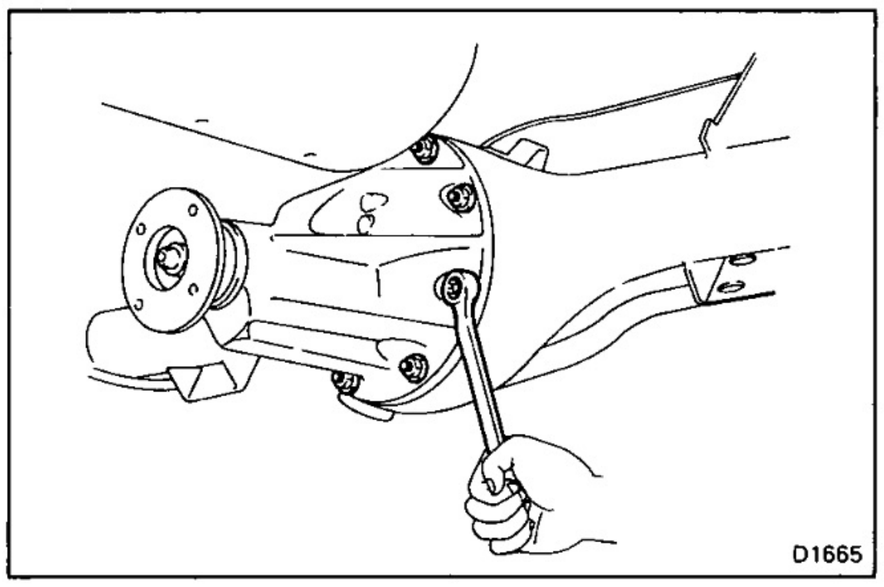

4. REMOVE DIFFERENTIAL CARRIER ASSEMBLY

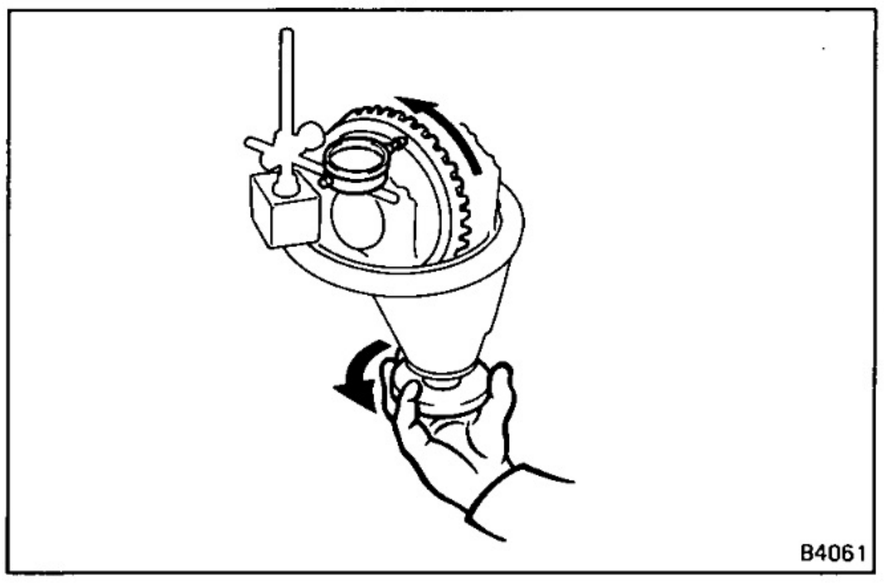

INSPECTION OF DIFFERENTIAL

1. CHECK RING GEAR RUNOUT

Replace if the runout is greater than the maximum allowable.

Maximum runout: 0.10 mm (0.0039 in.)

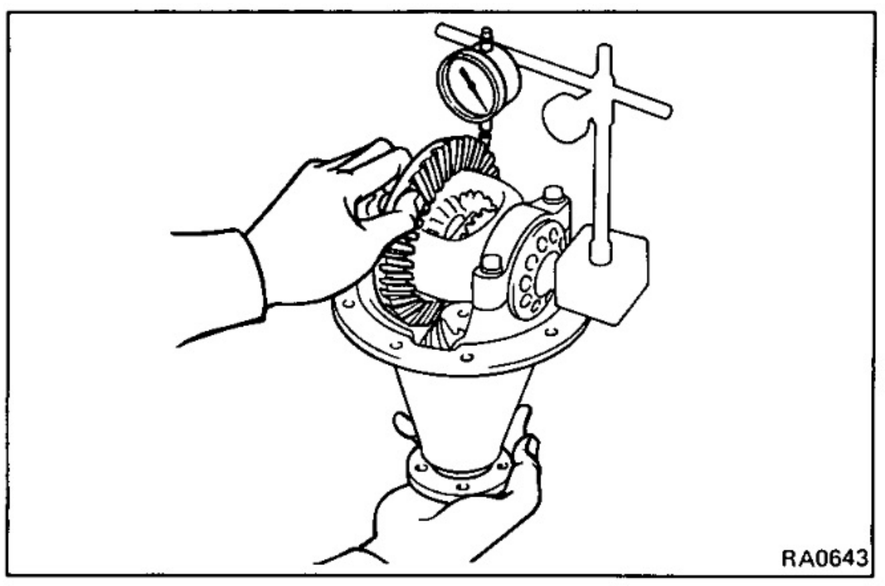

2. CHECK RING GEAR BACKLASH

If the backlash is not within specifications, adjust the side bearing preload or repair.

Backlash: 0.15 – 0.20 mm (0.0059 – 0.0079 in.)

NOTE: Measure the backlash at three or four places and confirm that it is the same value.

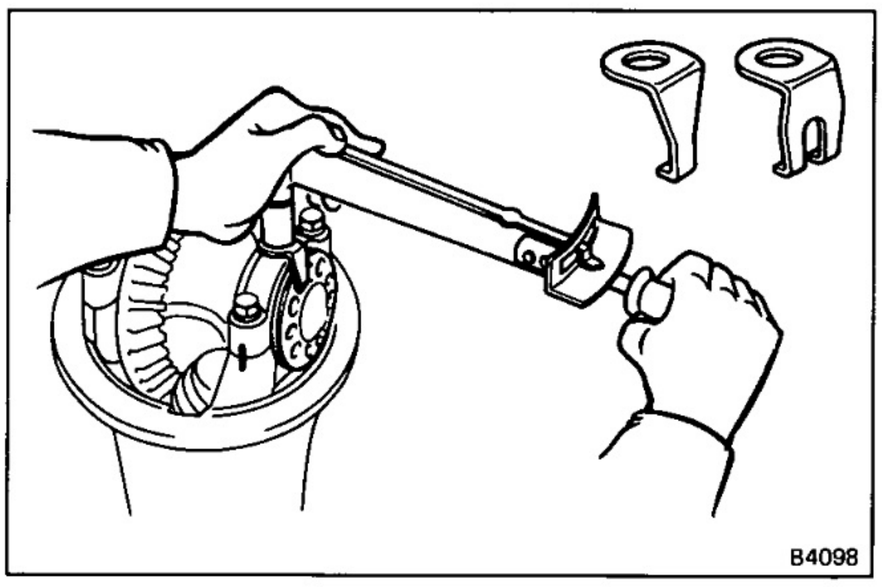

3. ADJUST RING GEAR BACKLASH

(a) Remove the two adjusting nut locks.

(b) Loosen the bearing cap bolt until it turns the adjusting nut.

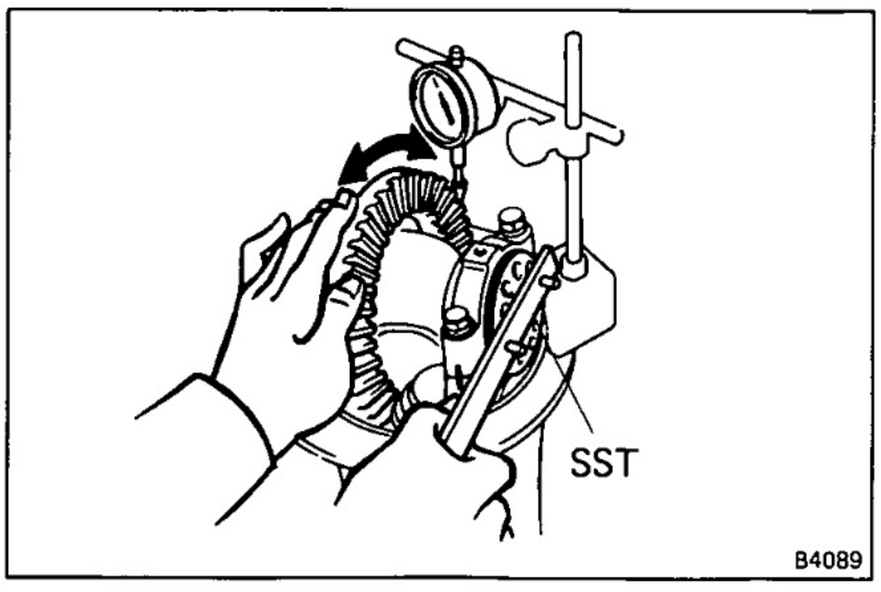

(c) Using SST, adjust the ring gear backlash until it is within specification.

Backlash: 0.15 – 0.20 mm (0.0059 – 0.0079 in.)

SST 09504-00011

NOTE: The backlash is adjusted by turning the left and right adjusting nuts equal amounts. For example, loosen the nut on the left side one notch and tighten the nut on the right side one notch.

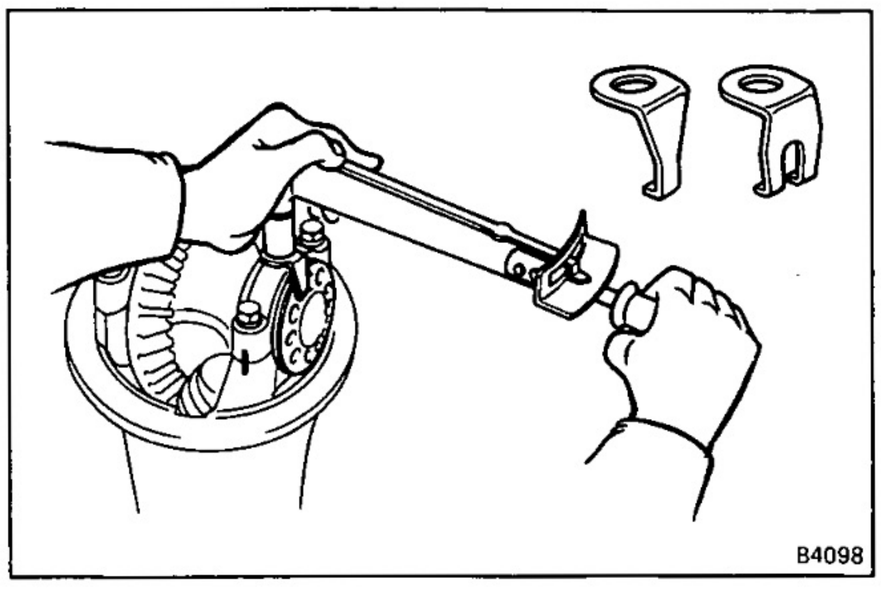

(d) Torque the bearing cap bolts.

Torque: 800 kg-cm (58 ft-lb, 78 N·m)

(e) Select and install the adjusting nut lock on the bearing cap.

Torque: 130 kg-cm (9 ft-lb, 13 N·m)

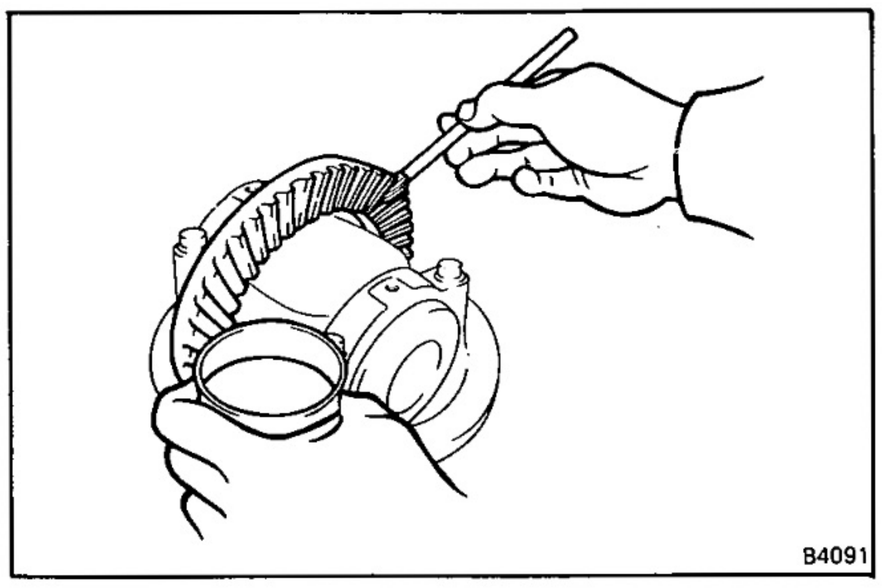

4. INSPECT TOOTH CONTACT BETWEEN RING GEAR AND DRIVE PINION

(a) Coat three or four teeth at three different positions on the ring gear with red lead.

(b) Hold the companion flange firmly and rotate the ring gear in both directions.

(c) Inspect the tooth pattern.

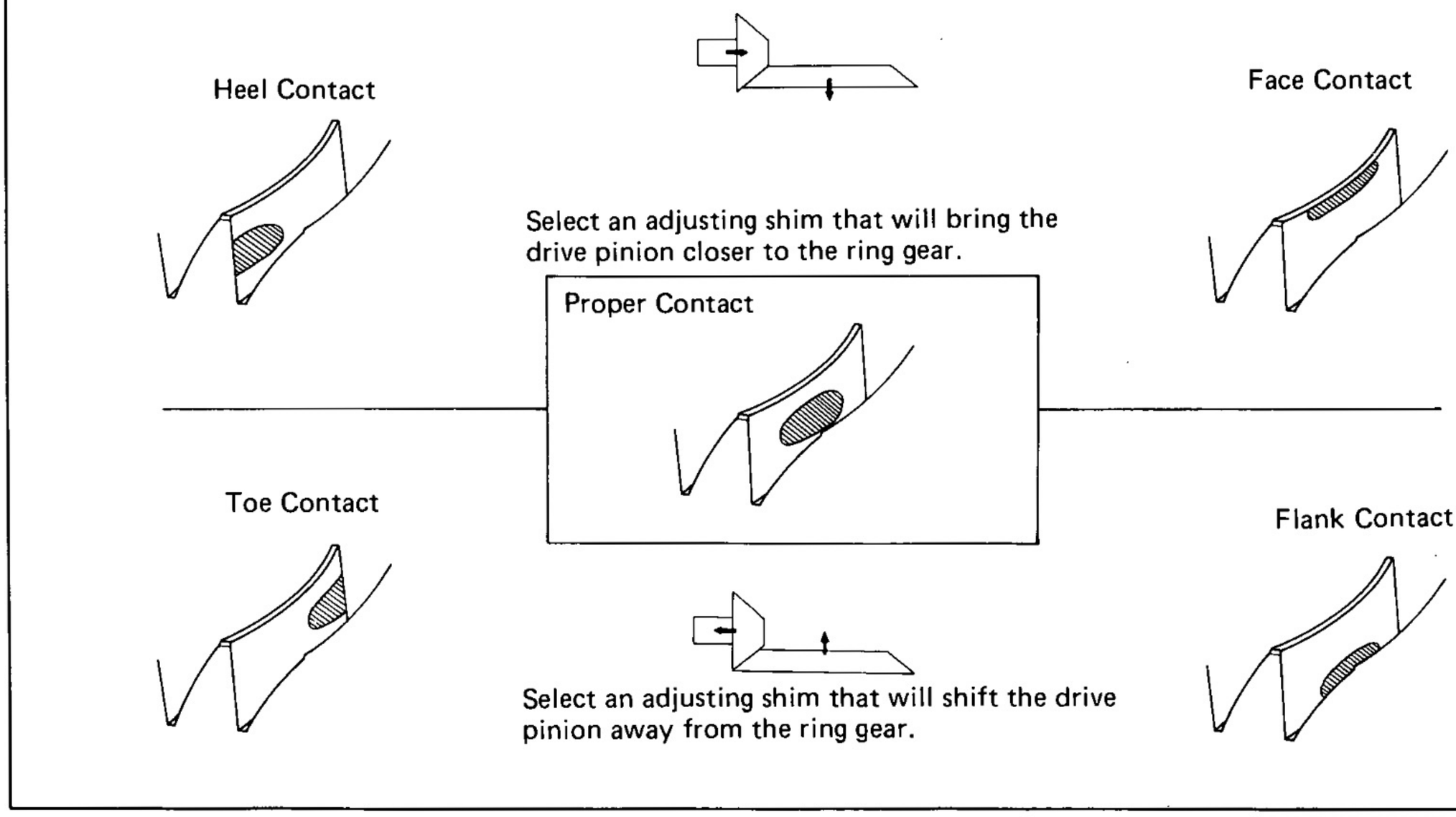

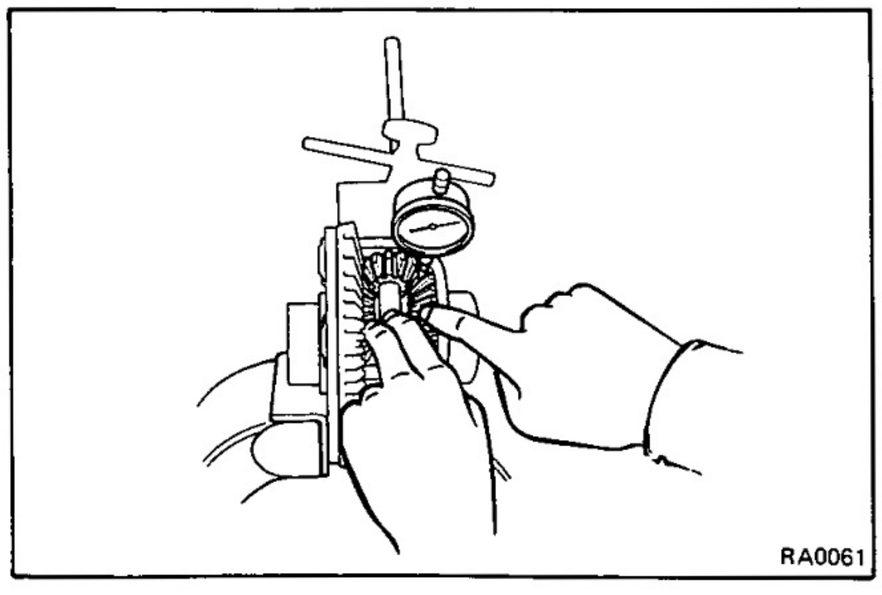

5. CHECK SIDE GEAR BACKLASH (Ex. LSD)

Measure the side gear backlash while holding one pinion gear toward the case.

Backlash: 0.02 – 0.24 mm (0.0008 – 0.0094 in.)

If the backlash is not within specification, install the proper thrust washers.

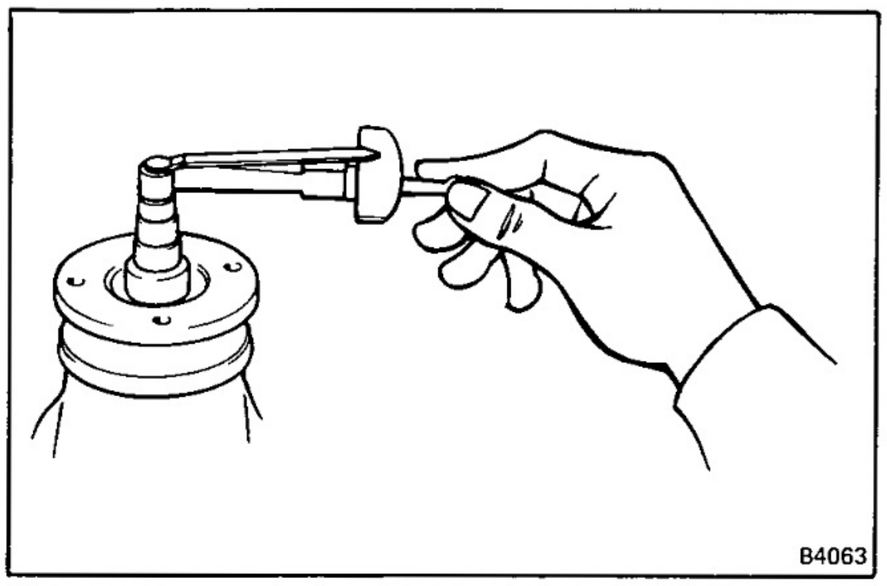

6. MEASURE PRELOAD

Using a torque meter, measure the preload.

Preload (at starting): 9 – 13 kg-cm (7.8–11.3 in.-lb, 0.9–1.3 N·m)

7. MEASURE TOTAL PRELOAD

Total preload (while turning):
Add preload (at starting) 4 – 6 kg-cm (3.5–5.2 in.-lb, 0.4–0.6 N·m)

INSTALLATION OF REAR DIFFERENTIAL

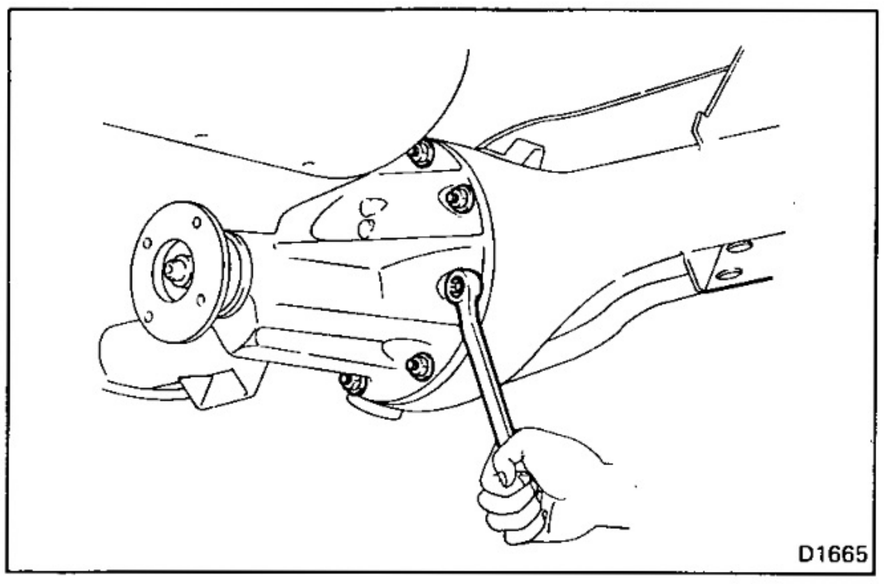

1. INSTALL DIFFERENTIAL CARRIER ASSEMBLY

(a) Install a new gasket.

(b) Install the differential carrier assembly in the axle housing.

(c) Tighten the ten nuts.

Torque: 475 kg-cm (34 ft-lb, 47 N·m)

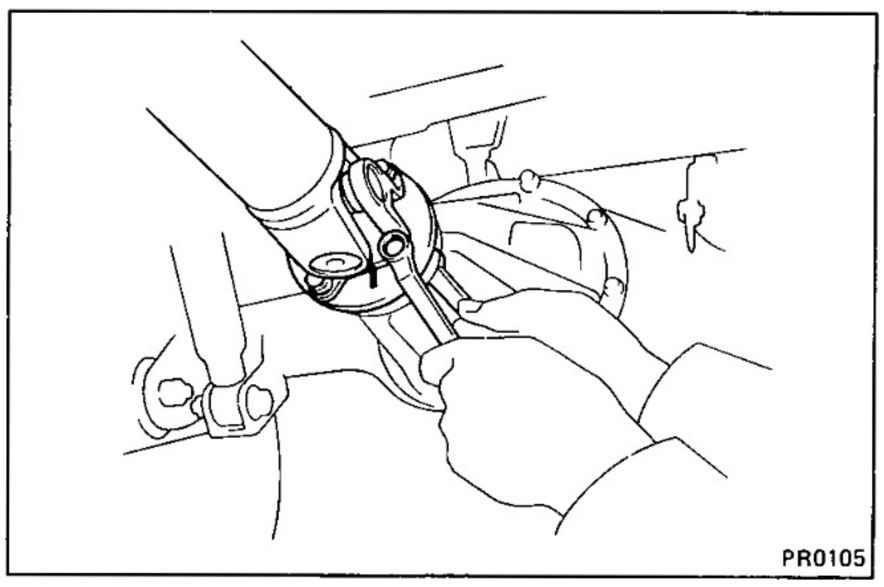

2. CONNECT PROPELLER SHAFT TO DIFFERENTIAL

(a) Align the matchmarks on the flanges.

(b) Torque the four bolts and nuts.

Torque: 900 kg-cm (65 ft-lb, 88 N·m)

3. INSTALL REAR AXLE SHAFT ASSEMBLY

(Semi-floating Type : See page RA-6)
(Full-floating Type : See page RA-10)

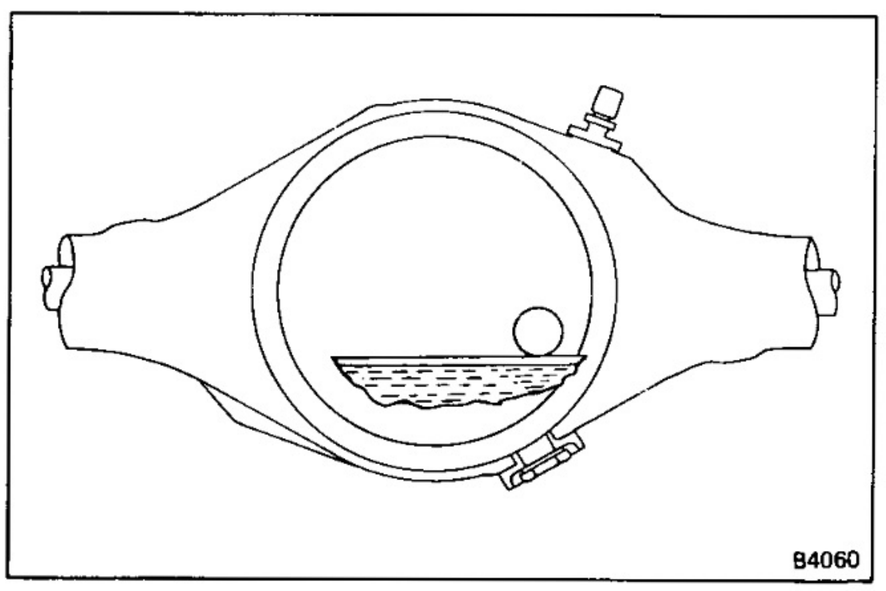

4. FILL DIFFERENTIAL WITH GEAR OIL

Hypoid gear oil: API GL-5
Above –18°C (0°F) SAE 90
Below –18°C (0°F) SAE 80W or 80W-90
Capacity: 2.5 liters (2.6 US qts, 2.2 Imp. qts)

NOTE: With LSD fill in hypoid gear oil
LSD, SAE 90 API GL-5

Conventional Type Differential

COMPONENTS

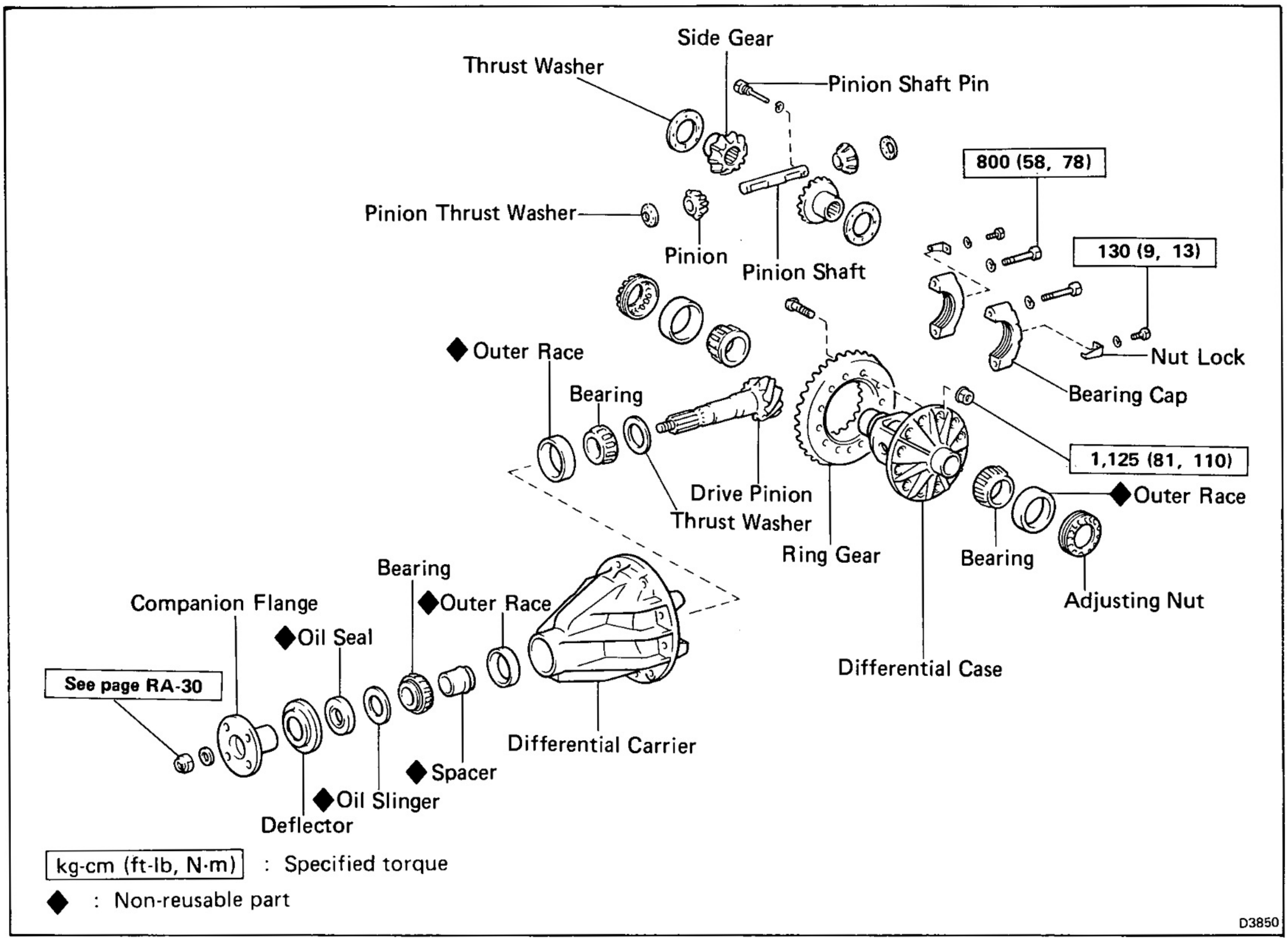

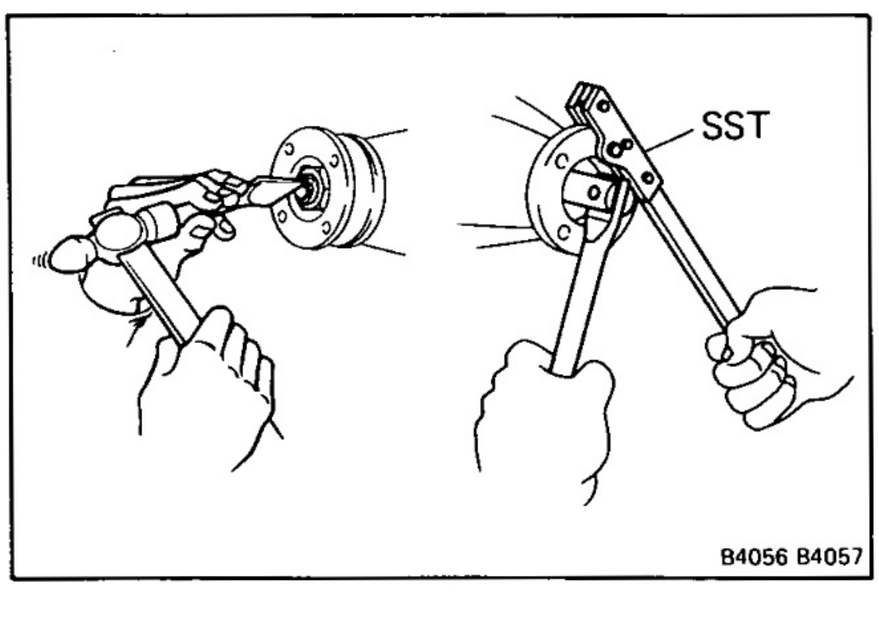

REMOVAL OF DIFFERENTIAL

(See page RA-17)

DISASSEMBLY OF DIFFERENTIAL

1. REMOVE COMPANION FLANGE

(a) Using a hammer and chisel, loosen the staked part of the nut.

(b) Using SST to hold the flange, remove the nut.

SST 09330-00021

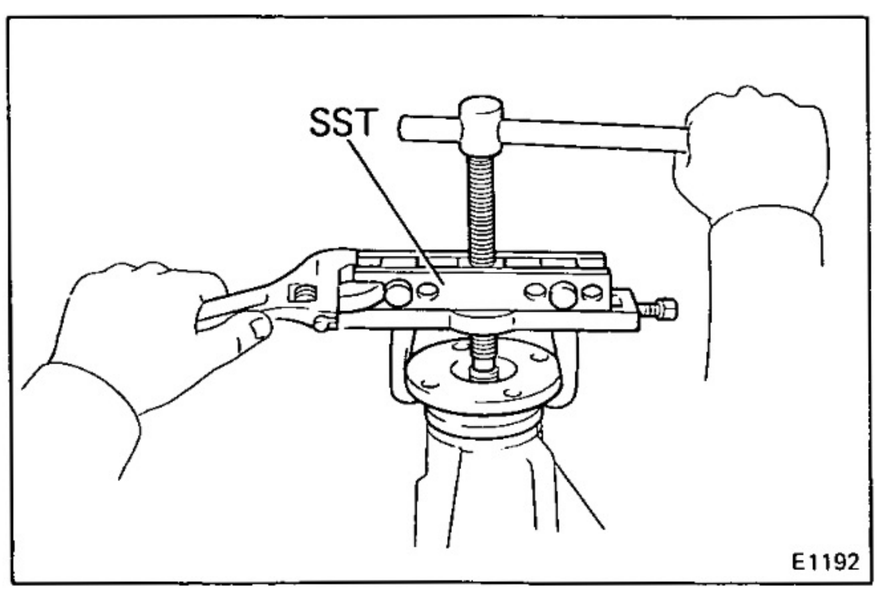

(c) Using SST, remove the companion flange.

SST 09950-20016

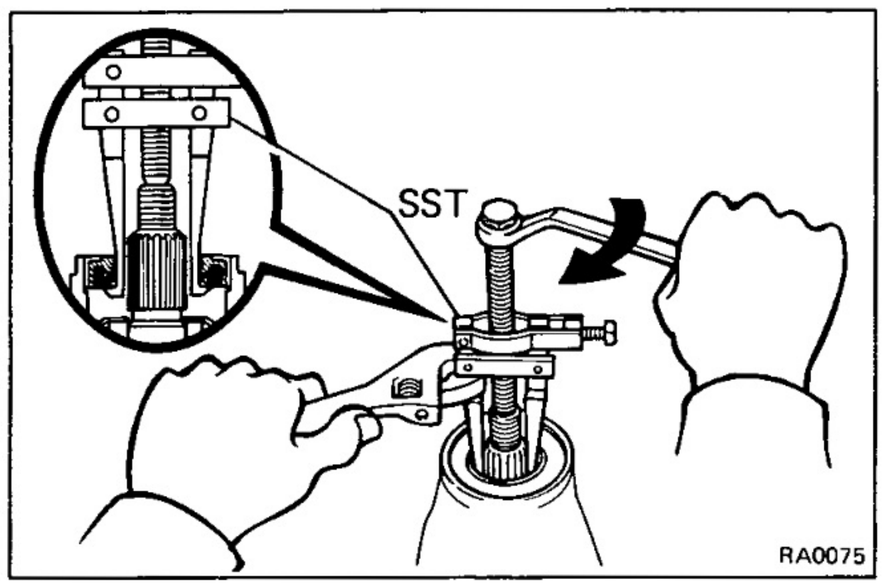

2. REMOVE OIL SEAL AND OIL SLINGER

(a) Using SST, remove the oil seal from the housing.

SST 09308-10010

(b) Remove the oil slinger.

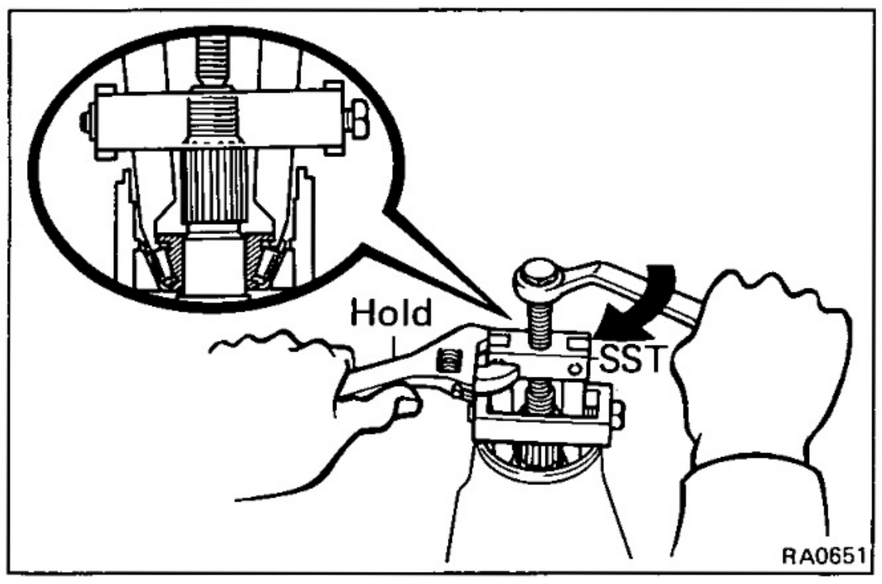

3. REMOVE FRONT BEARING AND BEARING SPACER

(a) Using SST, remove the front bearing from the drive pinion.

SST 09556-30010

(b) Remove the bearing spacer.

If the front bearing is damaged or worn, replace the bearing.

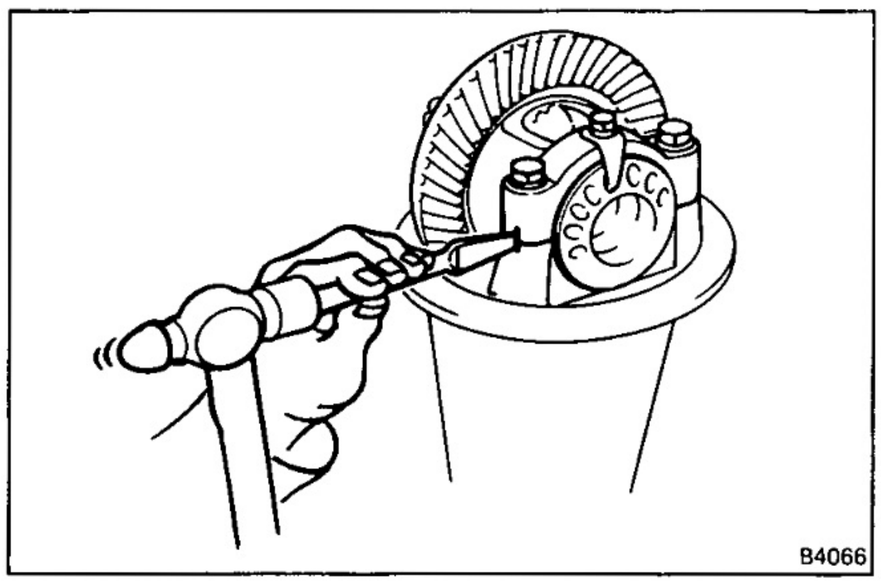

4. REMOVE DIFFERENTIAL CASE AND RING GEAR

(a) Place matchmarks on the bearing cap and differential carrier.

(b) Remove the two adjusting nut locks.

(c) Remove the two bearing caps and two adjusting nuts.

(d) Remove the bearing outer races.

(e) Remove the differential case from the carrier.

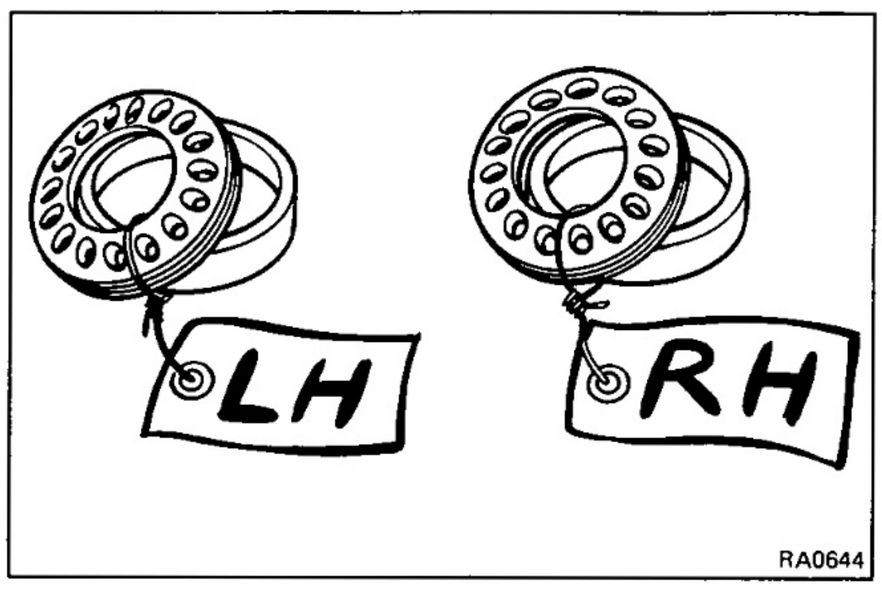

NOTE: Tag the disassembled parts to show their location for reassembly.

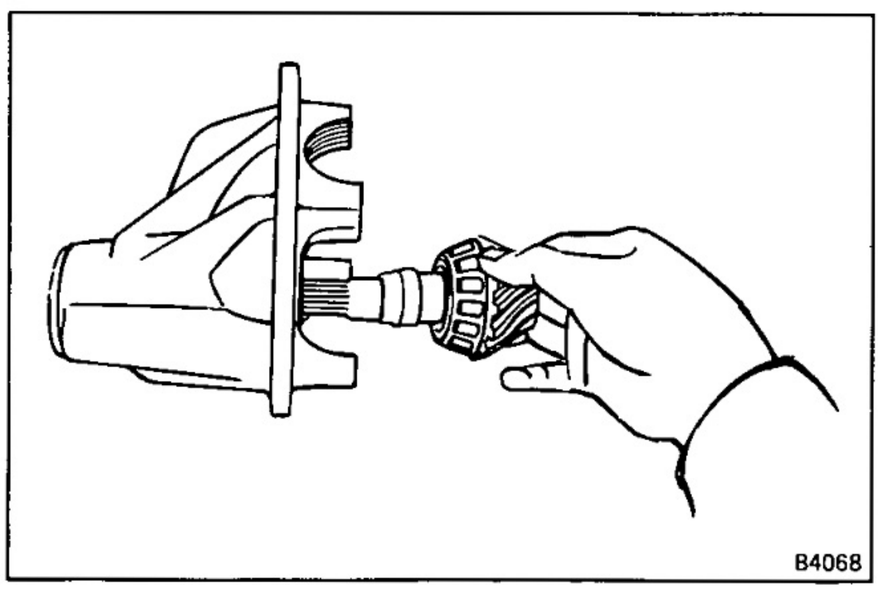

5. REMOVE DRIVE PINION FROM DIFFERENTIAL CARRIER

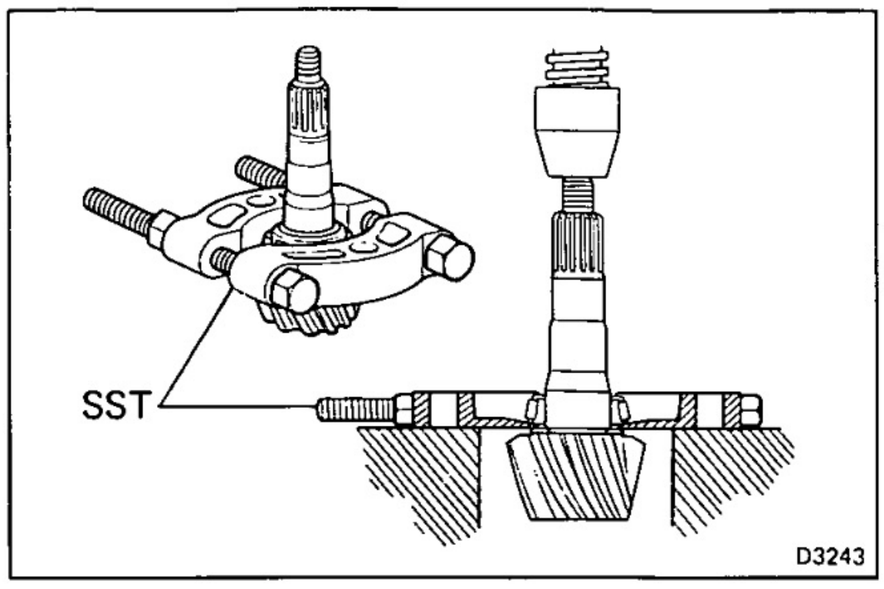

INSPECTION AND REPLACEMENT OF DIFFERENTIAL COMPONENTS

1. REPLACE DRIVE PINION REAR BEARING

(a) Using a press and SST, pull out the rear bearing from the drive pinion.

SST 09950-00020

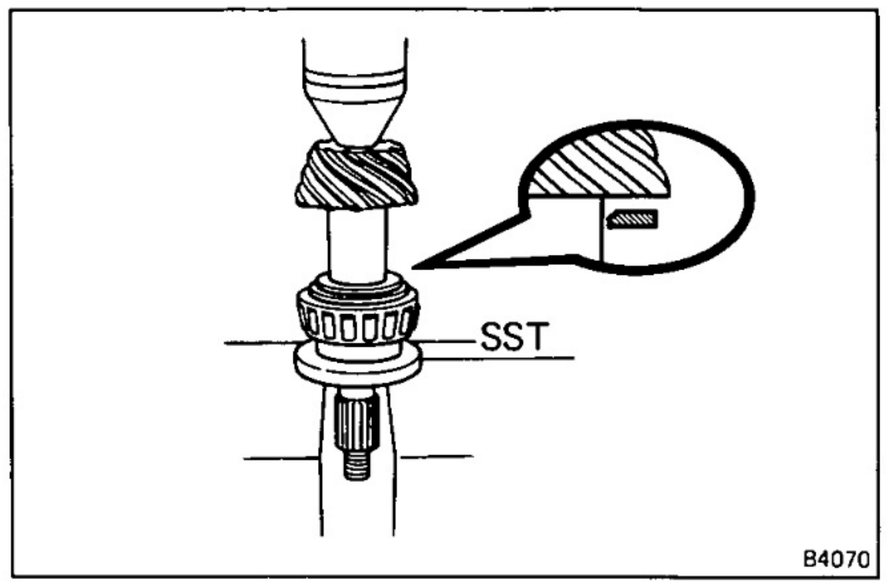

(b) Install the washer on the drive pinion with the chamfered end facing the pinion gear.

(c) Using a press and SST, press the reused washer and new rear bearing on the drive pinion.

SST 09506-30011

2. REPLACE DRIVE PINION FRONT AND REAR BEARING OUTER RACE

(a) Using a hammer and brass bar, drive out the outer race.

(b) Using a press and SST, drive in a new outer race.

SST 09608-35013

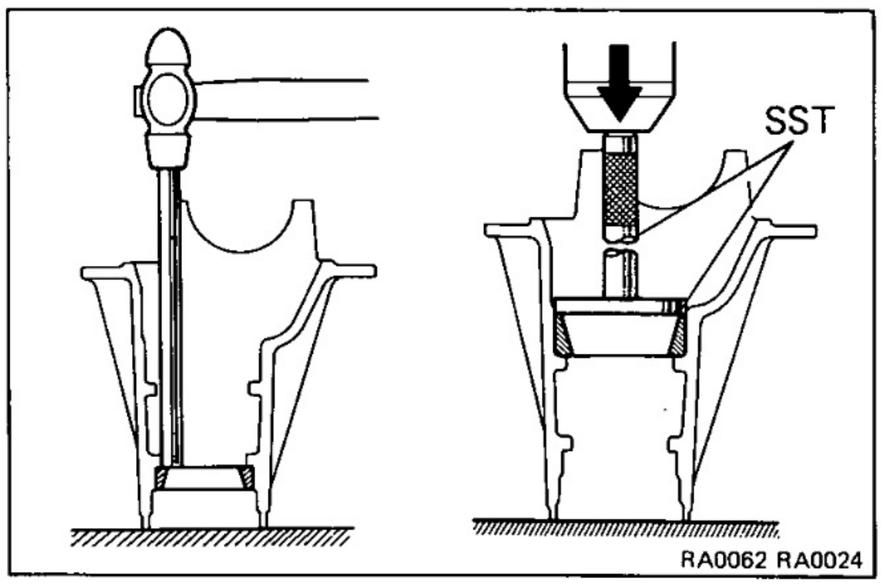

3. REMOVE SIDE BEARINGS FROM DIFFERENTIAL CASE

Using SST, pull the side bearing from the differential case.

SST 09950-20016

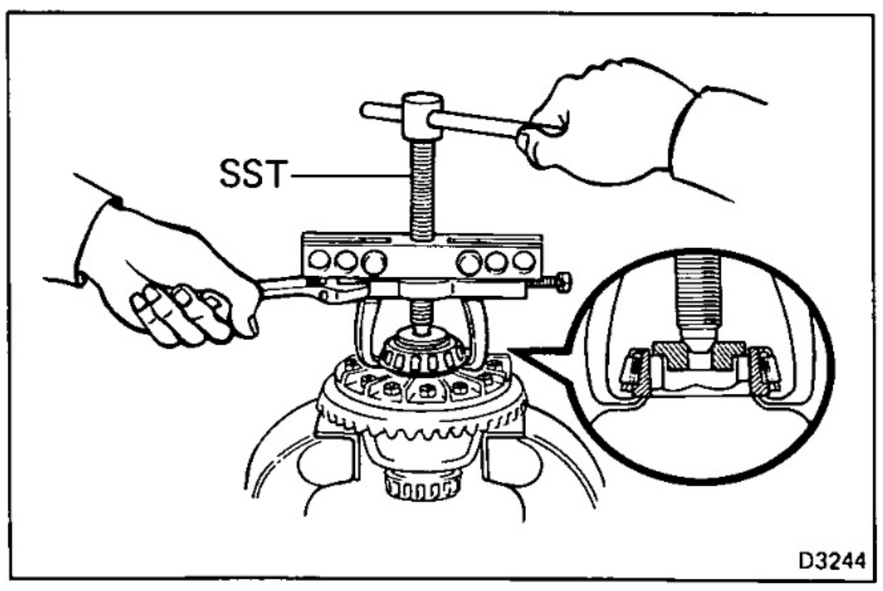

4. REMOVE RING GEAR

(a) Remove the ring gear set bolts and lock plates.

(b) Place matchmarks on the ring gear and differential case.

(c) Using a plastic or copper hammer, tap on the ring gear to separate it from the differential case.

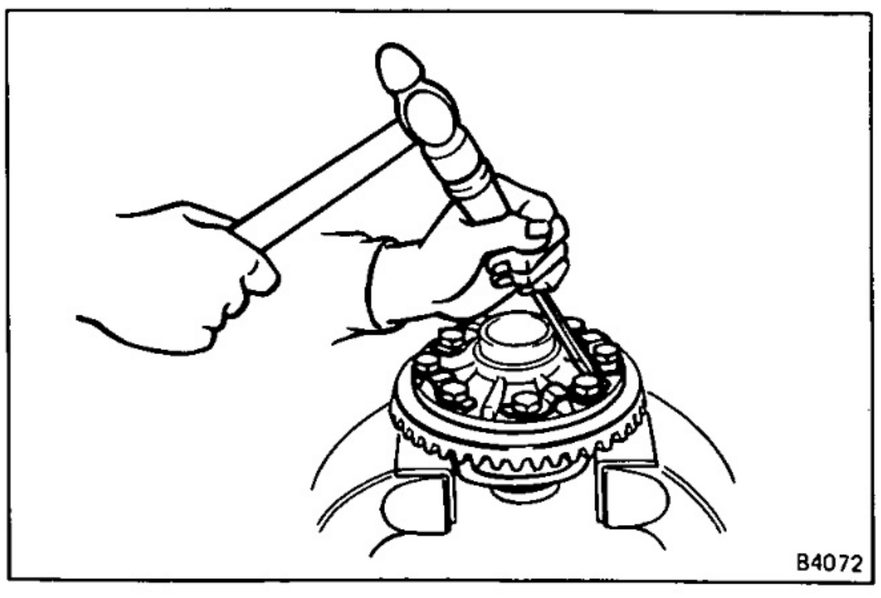

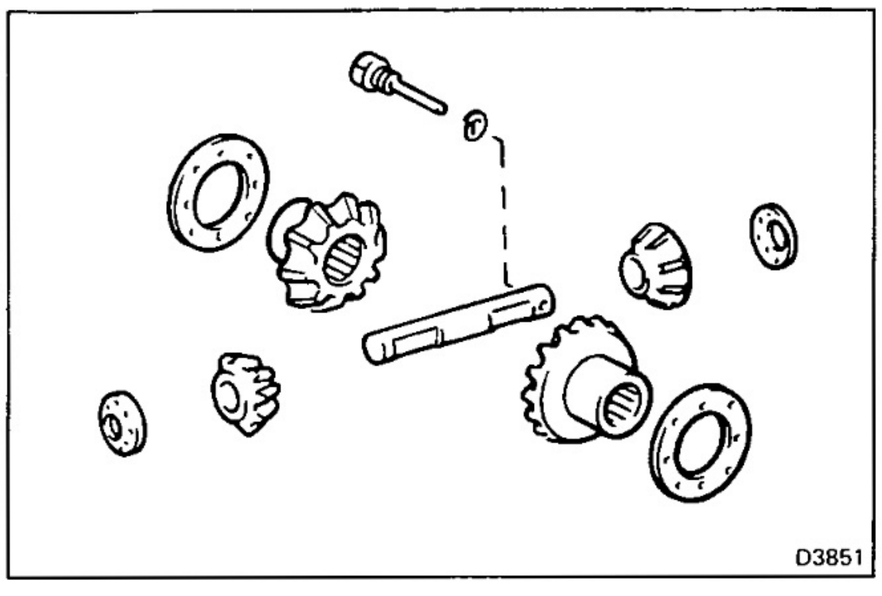

5. DISASSEMBLE DIFFERENTIAL CASE

(a) Remove the pinion shaft pin.

(b) Remove the following parts:

- Pinion shaft
- Two pinion gears and pinion thrust washers
- Two side gears and side gear thrust washers

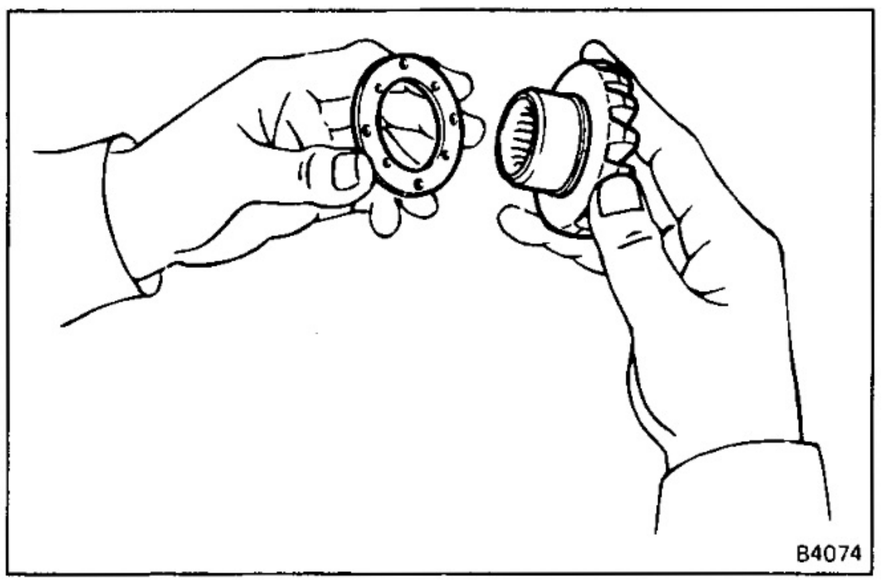

6. ASSEMBLE DIFFERENTIAL CASE

(a) Install the following parts:

- Two side gears with side gear thrust washers
- Two pinion gears with pinion thrust washers
- Pinion shaft

(b) Install the pinion shaft pin.

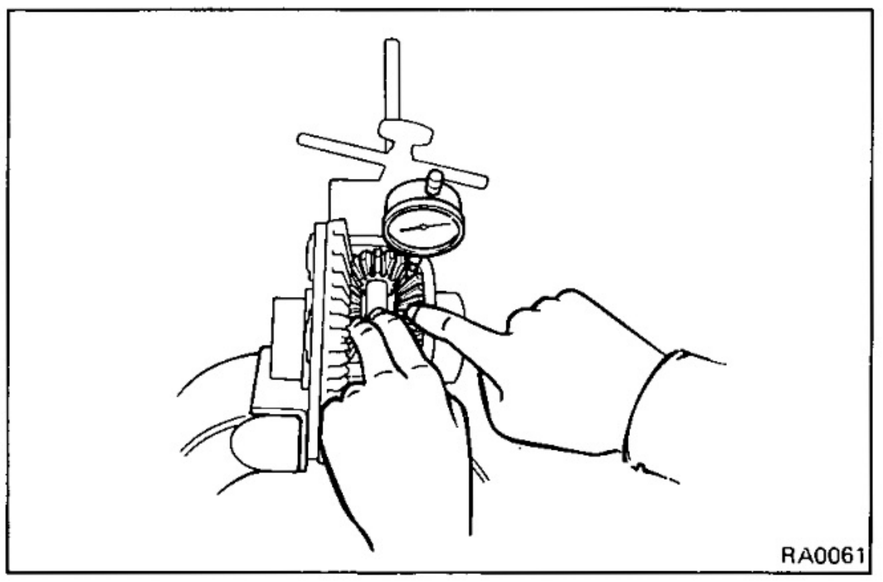

(c) Check the side gear backlash.
Measure the side gear backlash while holding one pinion gear toward the case.

Standard backlash: 0.05 – 0.20 mm (0.0020 – 0.0079 in.)

Using the table below, select thrust washers which will ensure that the backlash is within specification.
Try to select washers of the same size for both sides.

Thrust washer thickness

Thickness mm (in.)	
1.55 – 1.65	(0.0610 – 0.0650)
1.70 – 1.80	(0.0669 – 0.0709)
1.85 – 1.95	(0.0728 – 0.0768)
2.00 – 2.10	(0.0787 – 0.0827)

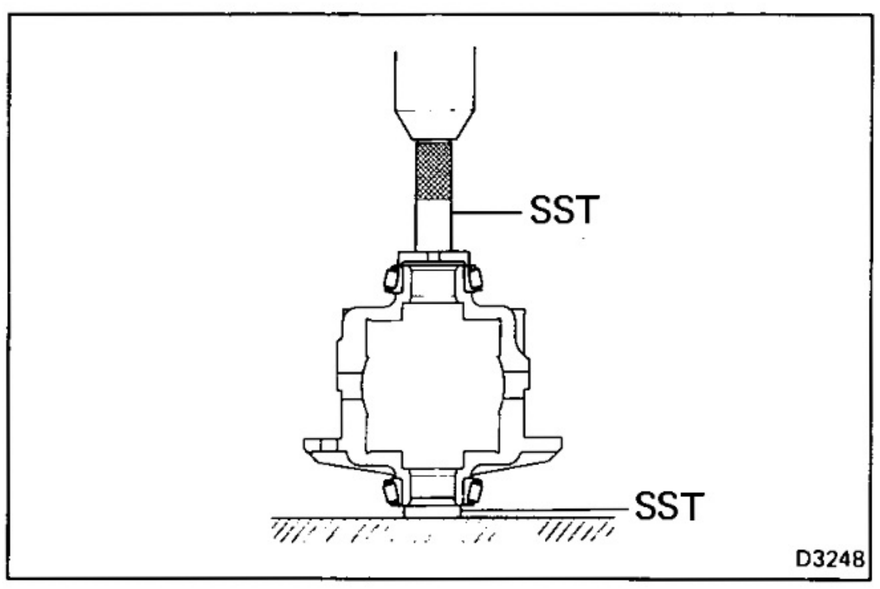

7. INSTALL SIDE BEARINGS

Using a press and SST, press the side bearings on the differential case.

SST 09550-10012

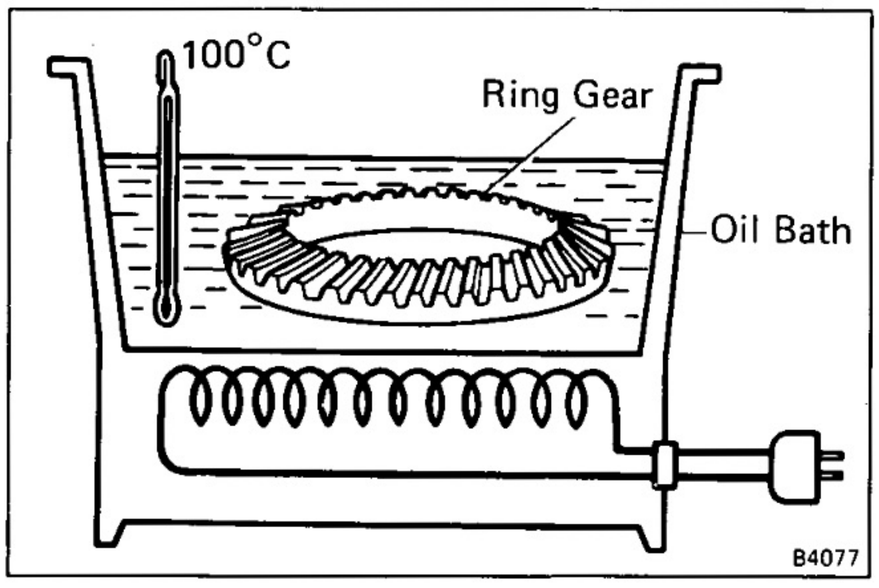

8. INSTALL RING GEAR ON DIFFERENTIAL CASE

(a) Clean the contact surface of the differential case.

(b) Heat the ring gear to about 100°C (212°F) in an oil bath.

CAUTION: Do not heat the ring gear above 110°C (230°F).

(c) Clean the contact surface of the ring gear with cleaning solvent.

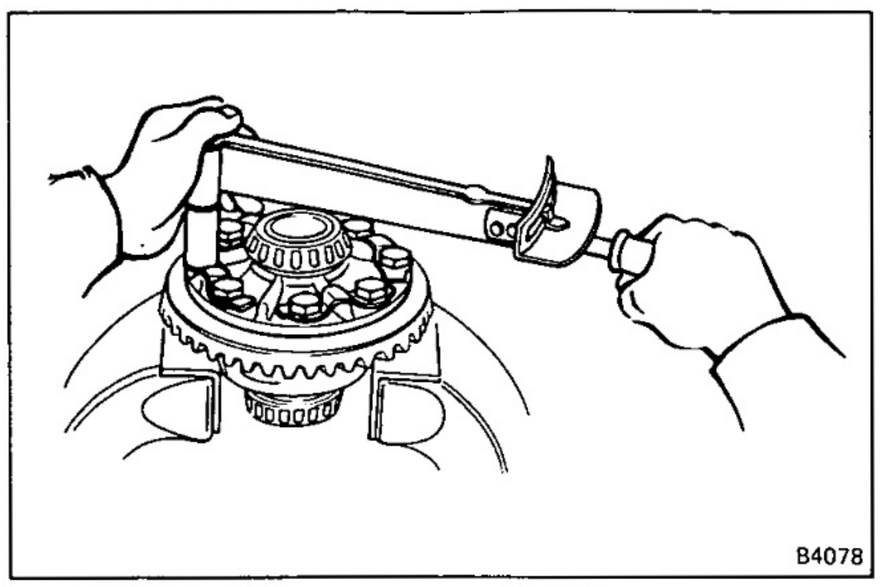
B4078

(d) Then quickly install the ring gear on the differential case.

(e) Align the marks on the ring gear and differential case.

(f) Coat the ring gear set bolts with gear oil.

(g) Install the new lock plates and set bolts. Tighten the set bolts uniformly and a little at a time. Torque the bolts.

Torque: 1,125 kg-cm (81 ft-lb, 110 N·m)

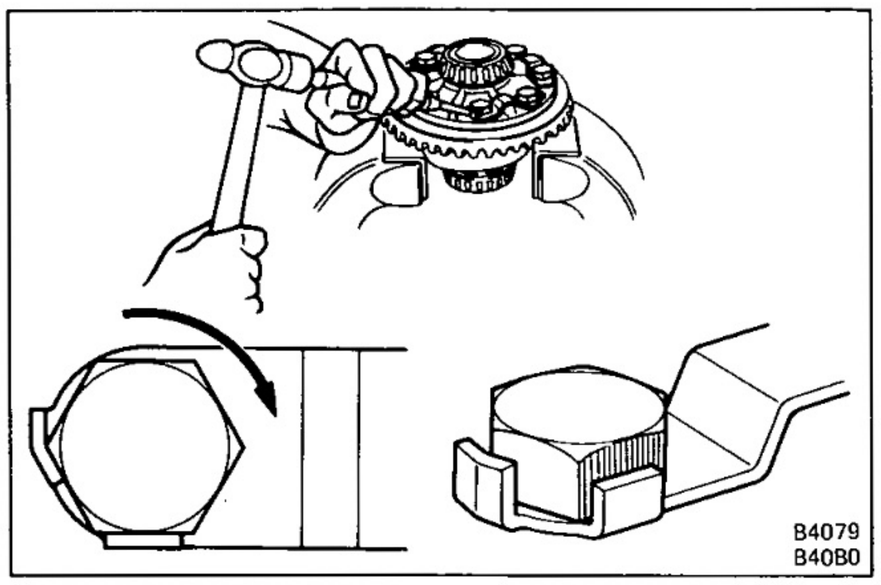
B4079
B40B0

(h) Using a hammer and drift punch, stake the lock plates.

NOTE: Stake one claw flush with the flat surface of the nut. For the claw contacting the protruding portion of the nut, stake only the half on the tightened side.

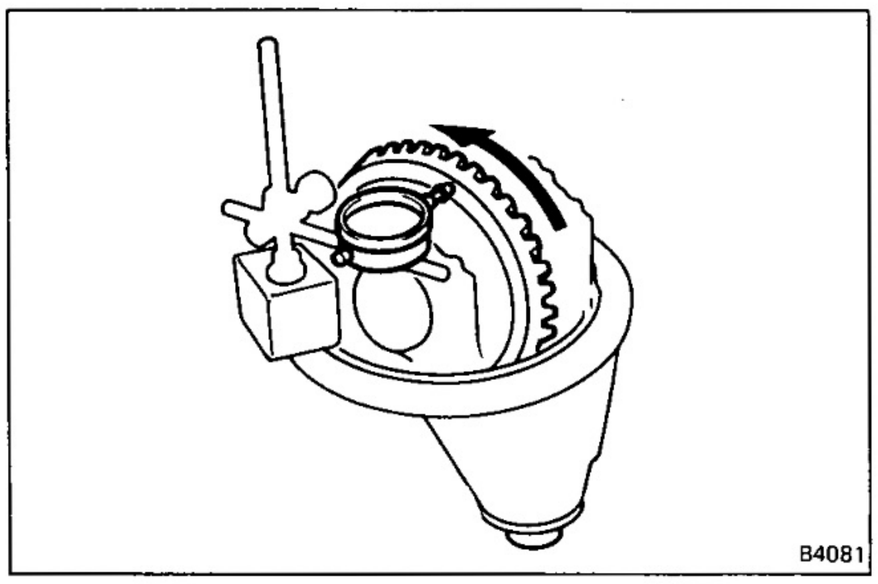
B4081

(i) Check the ring gear runout.

Maximum runout: 0.10 mm (0.0039 in.)

Install the differential case onto the carrier and tighten the adjusting nut just to where there is no play in the bearing.

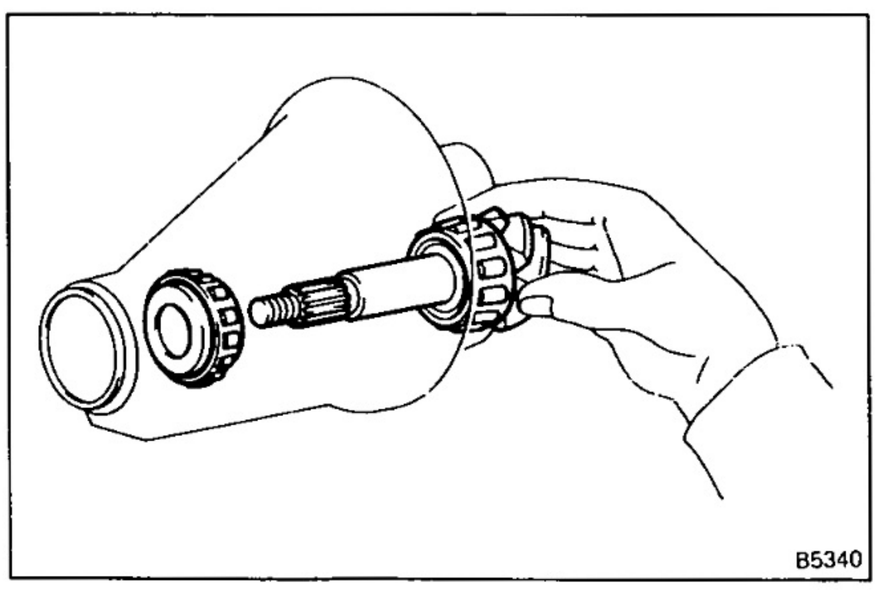
B5340

ASSEMBLY OF DIFFERENTIAL

(See page RA-21)

1. TEMPORARILY ADJUST DRIVE PINION PRELOAD

(a) Install the following parts:

- Drive pinion
- Front bearing

NOTE: Assemble the spacer, oil slinger and oil seal after adjusting the gear contact pattern.

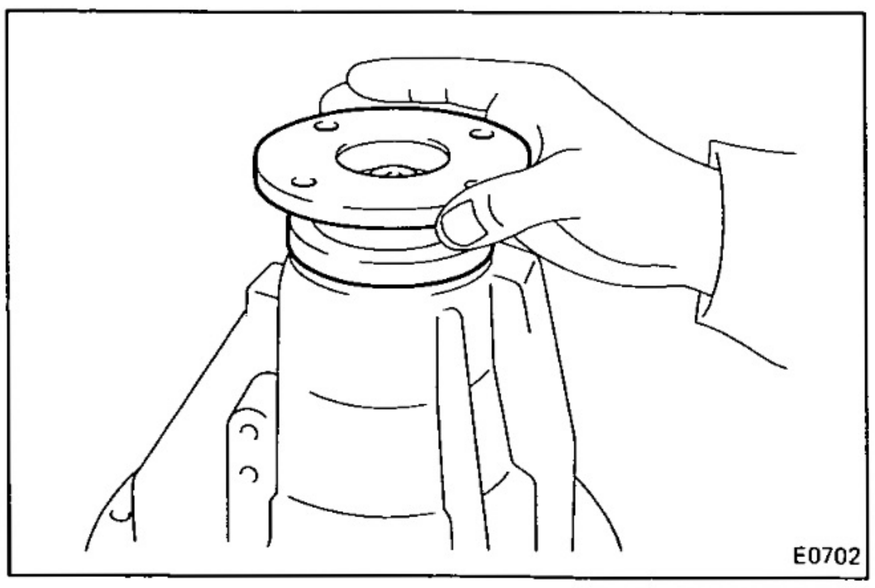
E0702

(b) Install the companion flange.

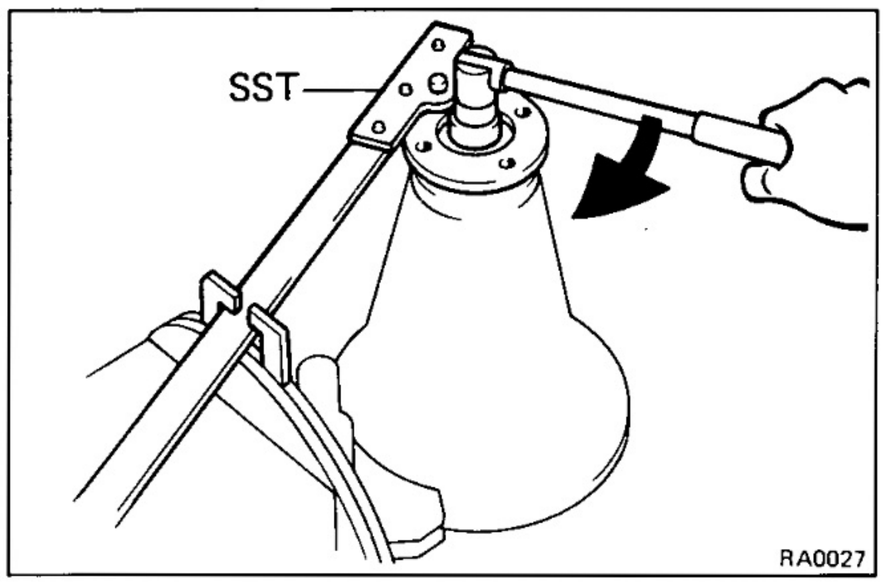

(c) Adjust the drive pinion preload by tightening the companion flange nut.

Using SST to hold the flange, tighten the nut.

SST 09330-00021

CAUTION: As there is no spacer, tighten a little at a time, being careful not to overtighten.

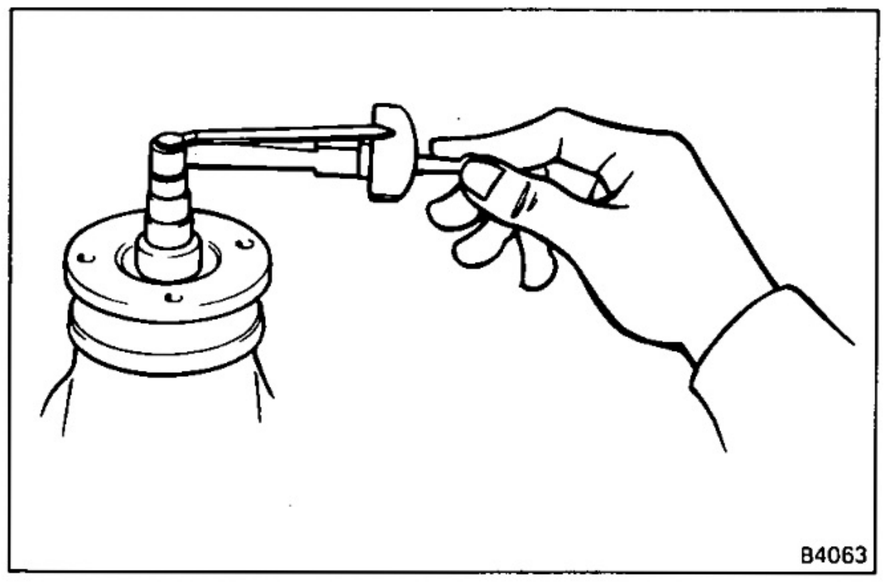

(d) Using a torque meter, measure the preload.

Preload:

New bearing
19 – 26 kg-cm (16.5–22.6 in.-lb, 1.9–2.5 N·m)
Reused bearing
9 – 13 kg-cm (7.8–11.3 in.-lb, 0.9–1.3 N·m)

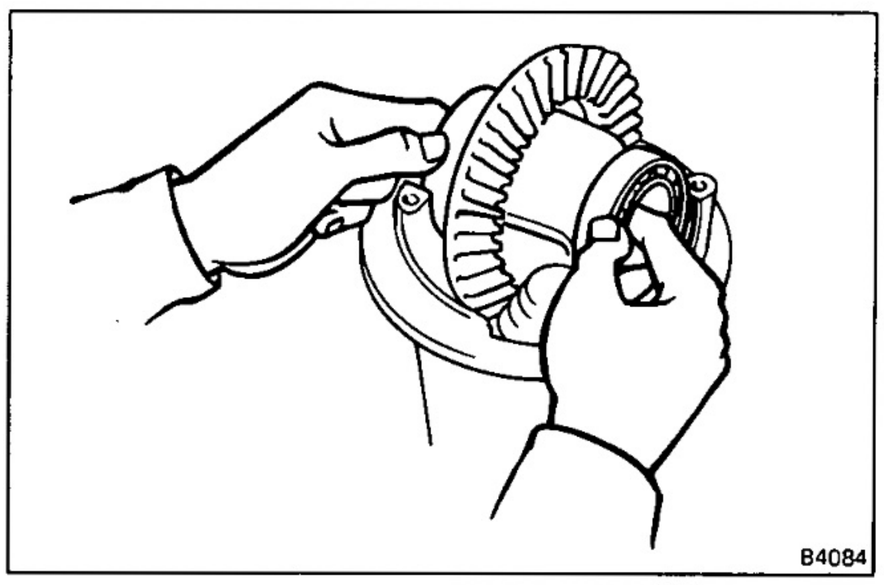

2. INSTALL DIFFERENTIAL CASE IN CARRIER

(a) Place the bearing outer races on their respective bearings. Make sure the left and right outer races are not interchanged.

(b) Install the case in the carrier.

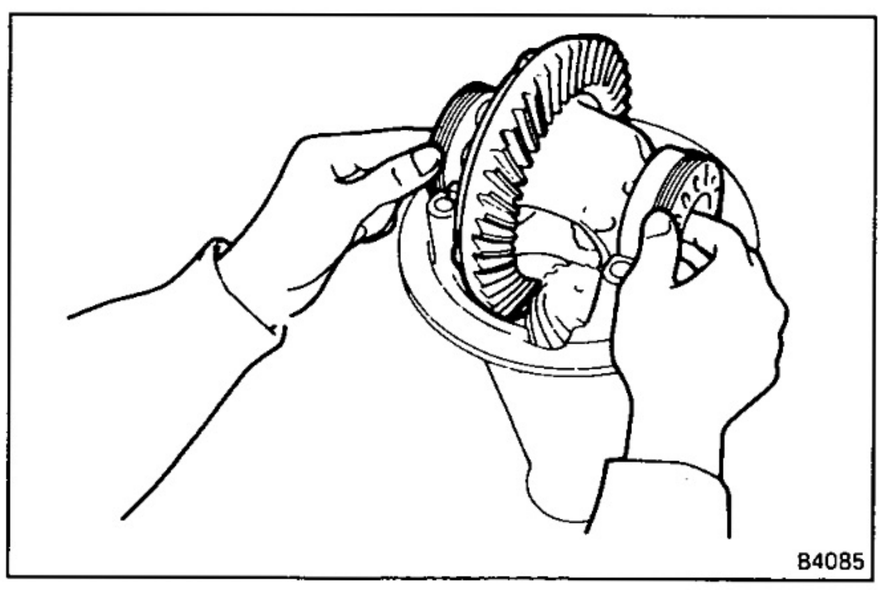

3. INSTALL ADJUSTING NUTS

Install the adjusting nuts on their respective carrier, making sure the nuts are threaded properly.

NOTE: Make sure that there is backlash between the ring gear and drive pinion.

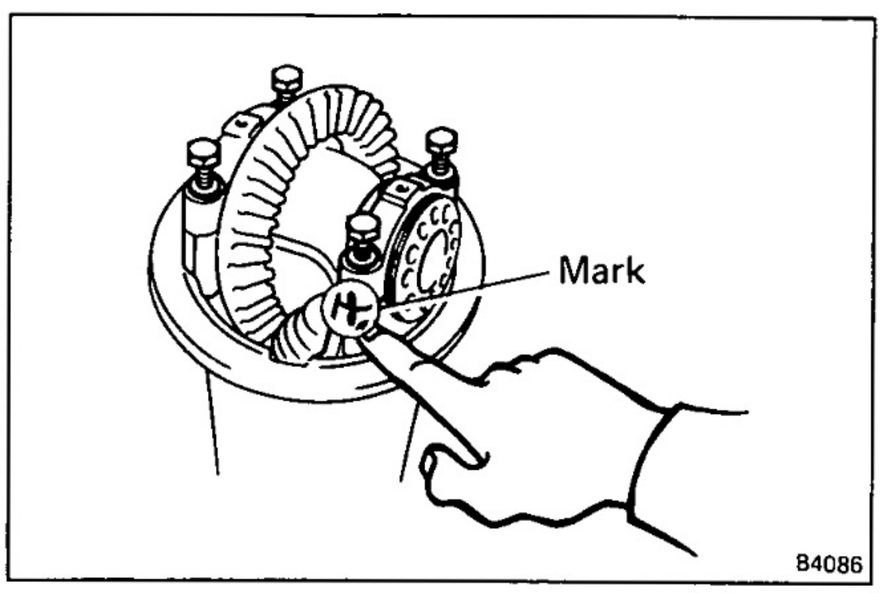

4. INSTALL BEARING CAPS

Align the marks on the cap and carrier. Screw in the two bearing cap bolts two or three turns and press down the bearing cap by hand.

NOTE: If the bearing cap does not fit tightly on the carrier, the adjusting nuts are not threaded properly.
Reinstall the adjusting nuts if necessary.

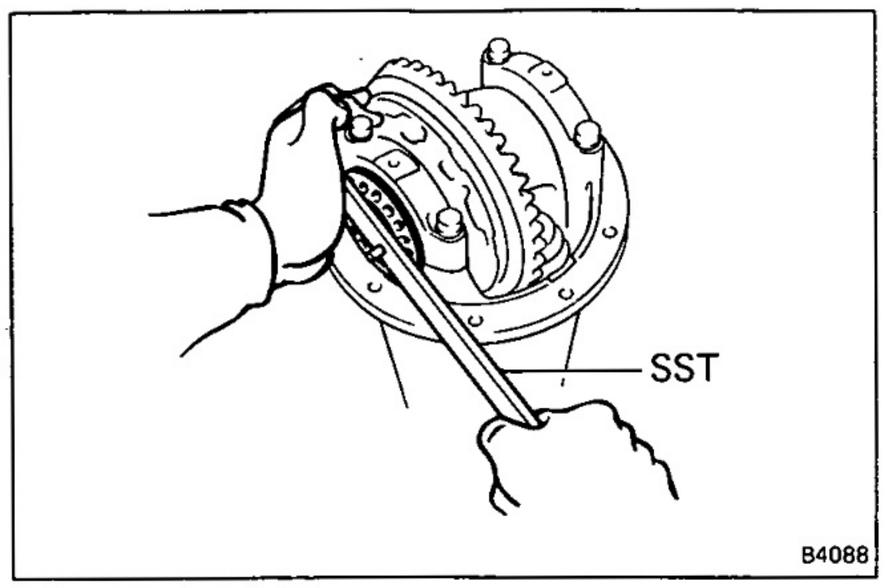

5. ADJUST SIDE BEARING PRELOAD

(a) Tighten the bearing cap bolts until the spring washers are slightly compressed.

(b) Using SST, tighten the adjusting nut on the ring gear side until the ring gear has a backlash of about 0.2 mm (0.008 in.).

SST 09504-00011

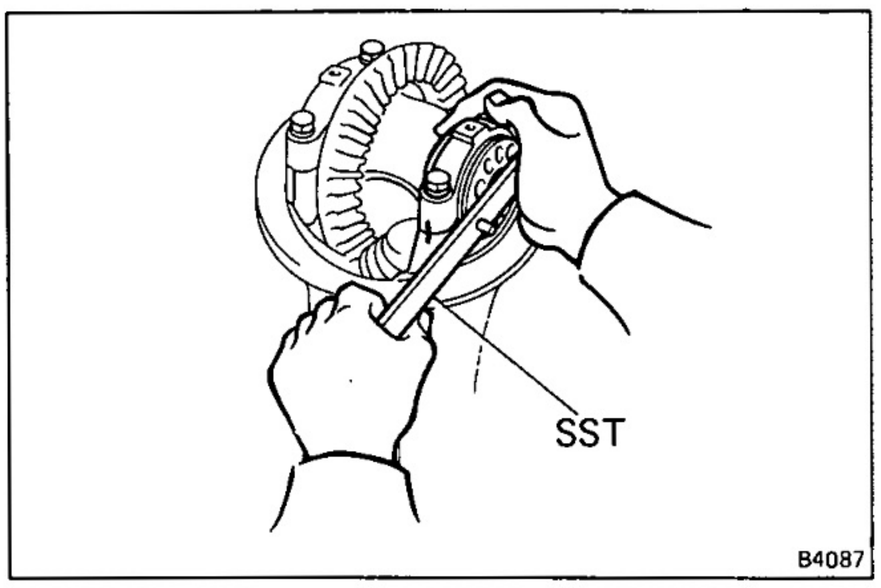

(c) Using SST, firmly tighten the adjusting nut on the drive pinion side.

(d) Check the ring gear backlash.

If tightening the adjusting nut creates ring gear backlash, loosen the nut so that backlash is eliminated.

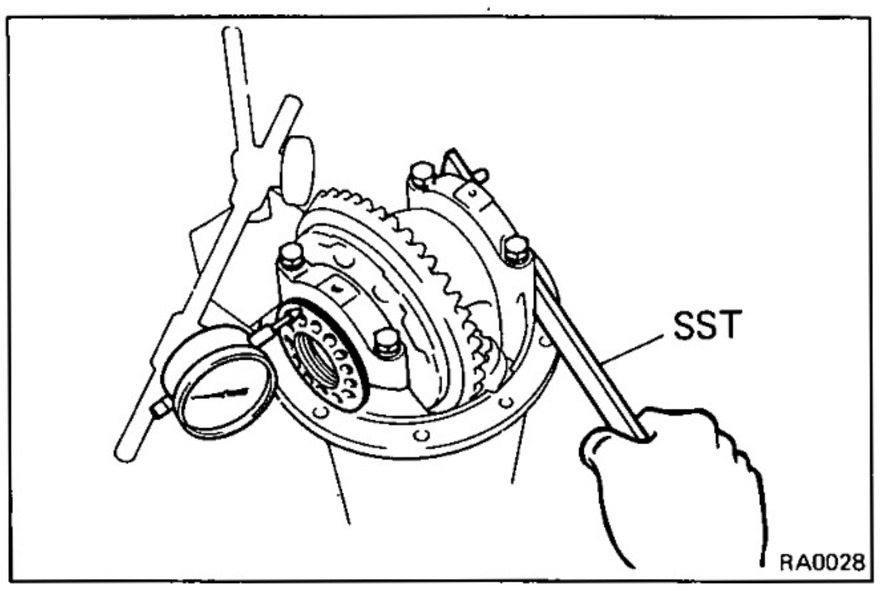

(e) Place a dial indicator on the top of the bearing cap on the ring gear side.

(f) Adjust the side bearing for zero preload by tightening the other adjusting nut until the pointer on the indicator begins to move.

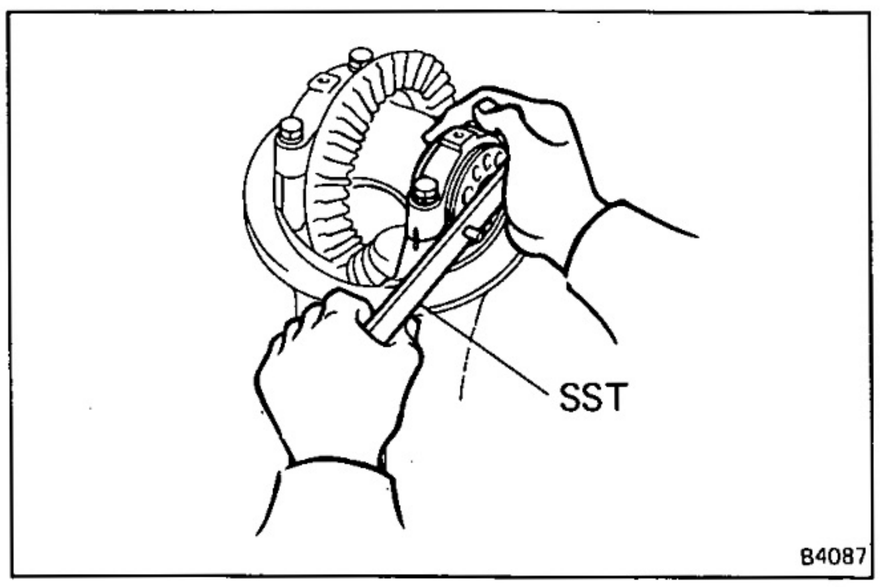

(g) Tighten the adjusting nut 1 – 1½ notches from the zero preload position.

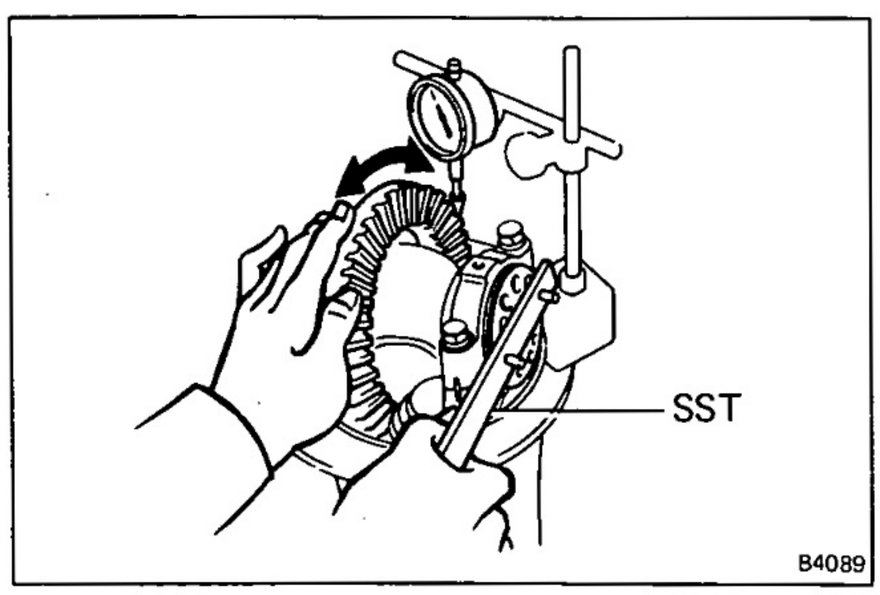

(h) Using a dial indicator, adjust the ring gear backlash until it is within specification.

Backlash: 0.15 – 0.20 mm (0.0059 – 0.0079 in.)

NOTE: The backlash is adjusted by turning the left and right adjusting nuts equal amounts. For example, loosen the nut on the left side one notch and tighten the nut on the right side one notch.

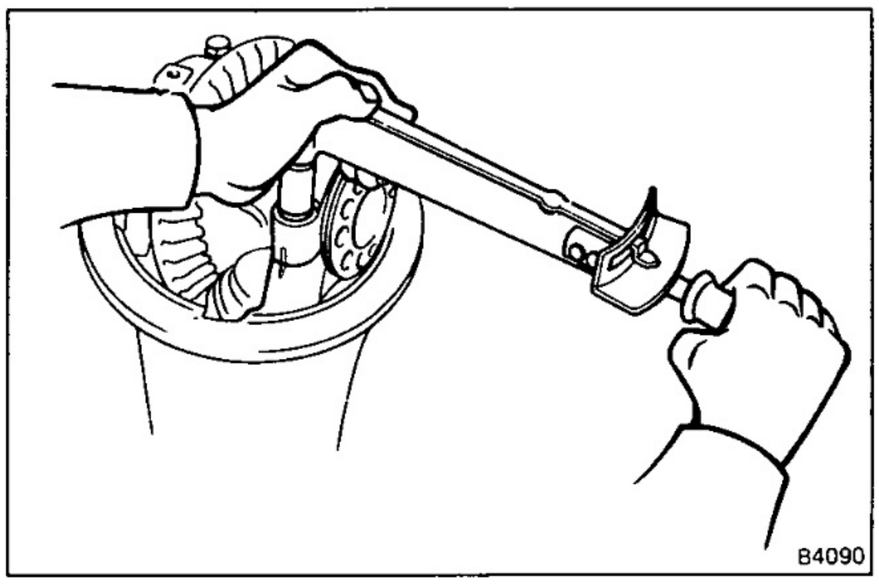

(i) Torque the bearing cap bolts.

Torque: 800 kg-cm (58 ft-lb, 78 N·m)

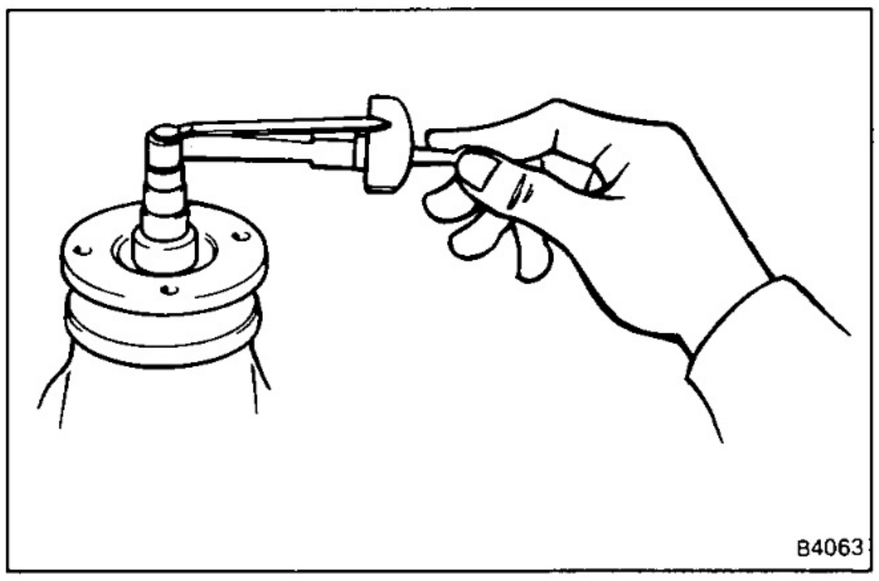

(j) Recheck the ring gear backlash.

(k) Using a torque meter, measure the total preload.

Total preload:
In addition to drive pinion preload
4 – 6 kg-cm (3.5–5.2 in.-lb, 0.4–0.6 N·m)
Backlash: 0.15 – 0.20 mm (0.0059 – 0.0079 in.)

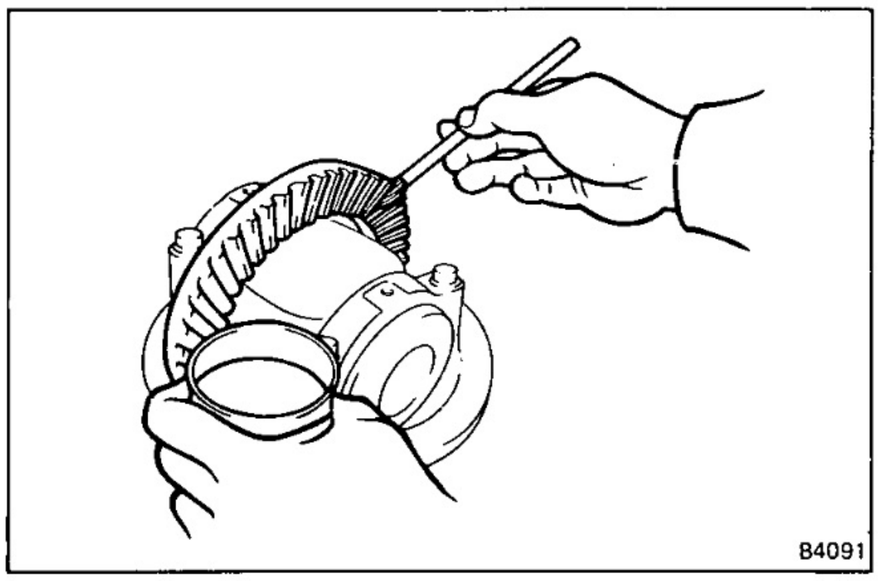

6. INSPECT TOOTH CONTACT BETWEEN RING GEAR AND DRIVE PINION

(a) Coat 3 or 4 teeth at three different positions on the ring gear with red lead.

(b) Hold the companion flange firmly and rotate the ring gear in both directions.

(c) Inspect the tooth pattern.

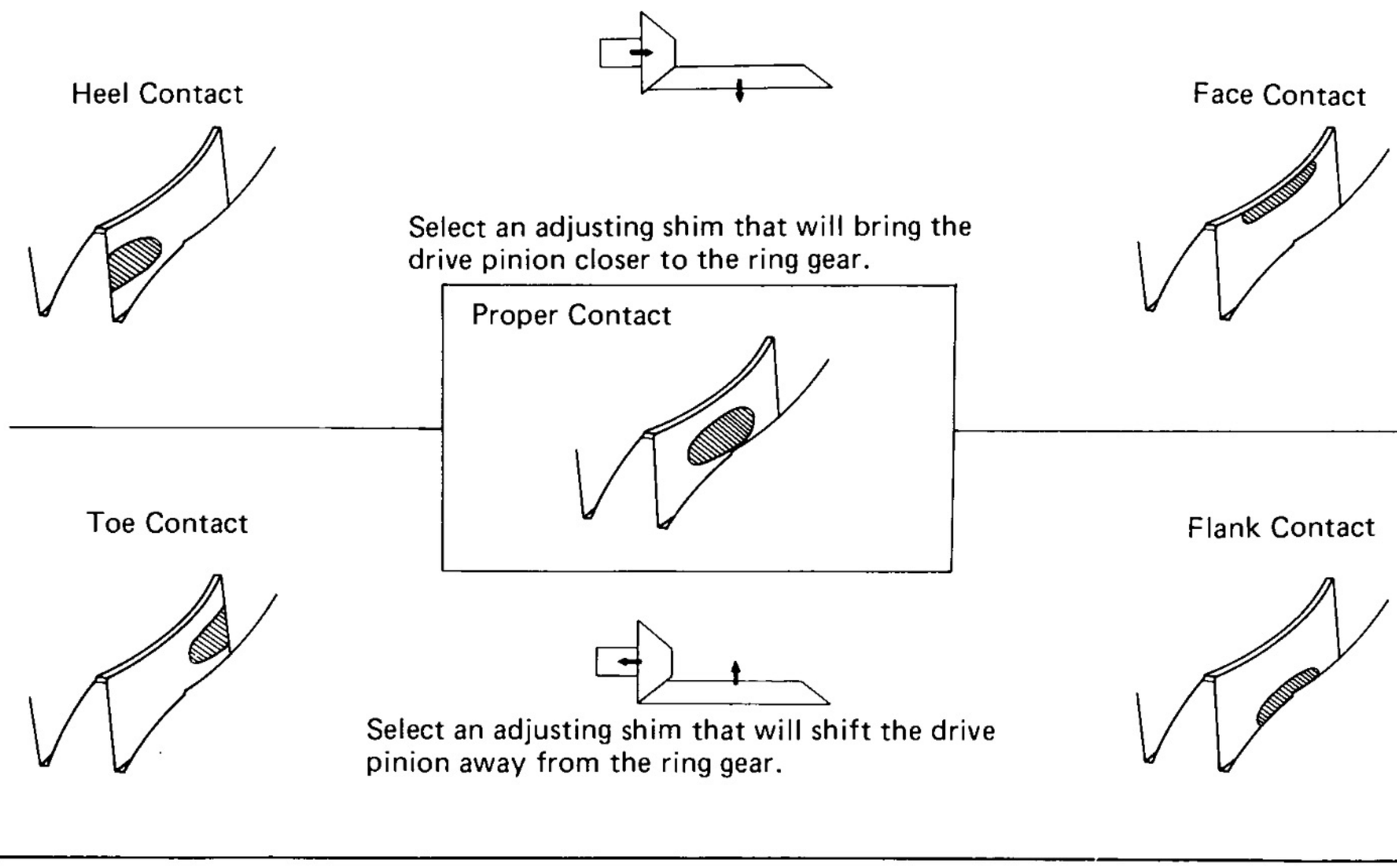

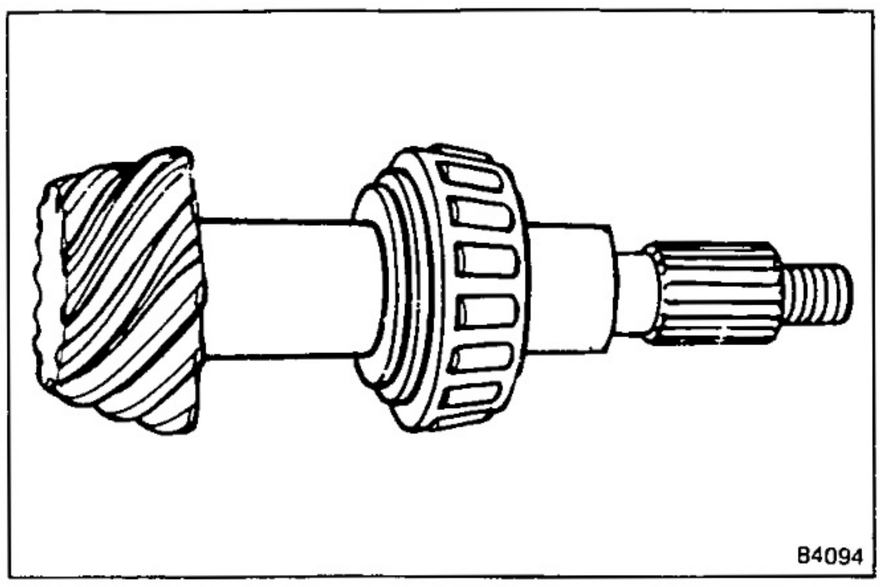

If the teeth are not contacting properly, use the following chart to select a proper washer for correction.

Washer thicknesses

Thickness	mm (in.)
1.05 (0.0413)	1.35 (0.0531)
1.10 (0.0433)	1.40 (0.0551)
1.15 (0.0453)	1.45 (0.0571)
1.20 (0.0472)	1.50 (0.0591)
1.25 (0.0492)	1.55 (0.0610)
1.30 (0.0512)	

7. REMOVE COMPANION FLANGE
(See page RA-21)

8. REMOVE FRONT BEARING
(See page RA-22)

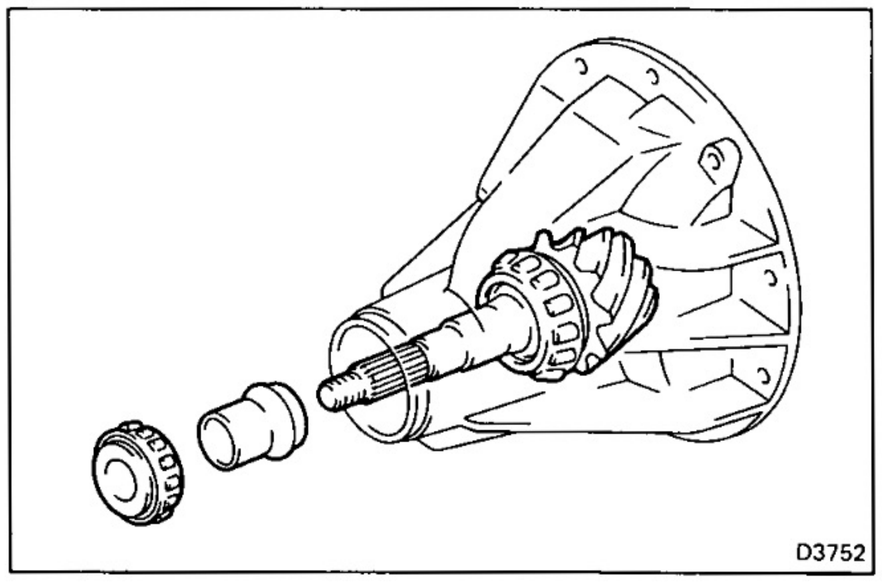

9. INSTALL NEW BEARING SPACER AND FRONT BEARING

(a) Install a new bearing spacer on the shaft.

(b) Install the front bearing on the shaft.

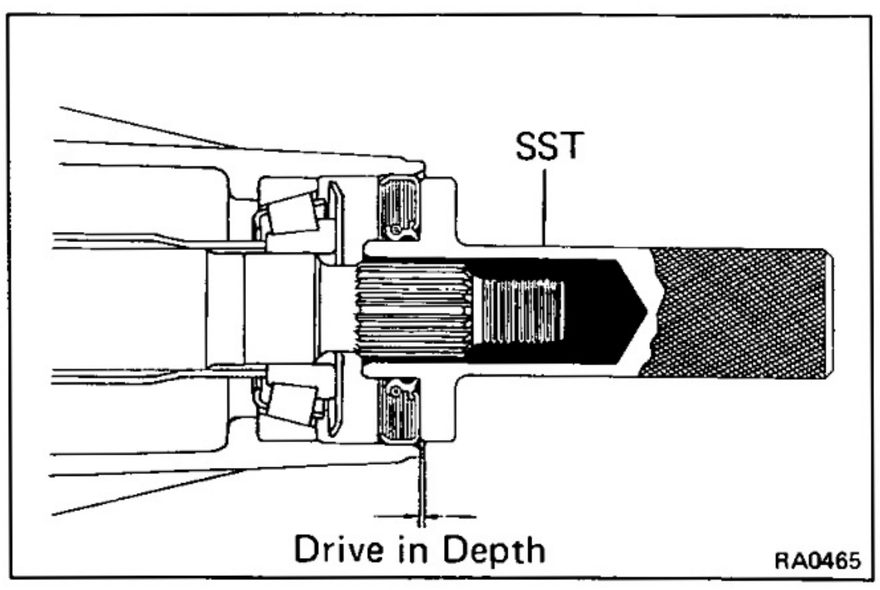

10. INSTALL OIL SLINGER AND NEW OIL SEAL

(a) Install the oil slinger facing as shown.

(b) Using SST, drive in a new oil seal as shown.

SST 09554-30011

Oil seal drive in depth: 1.0 mm (0.039 in.)

(c) Apply MP grease to the oil seal lip.

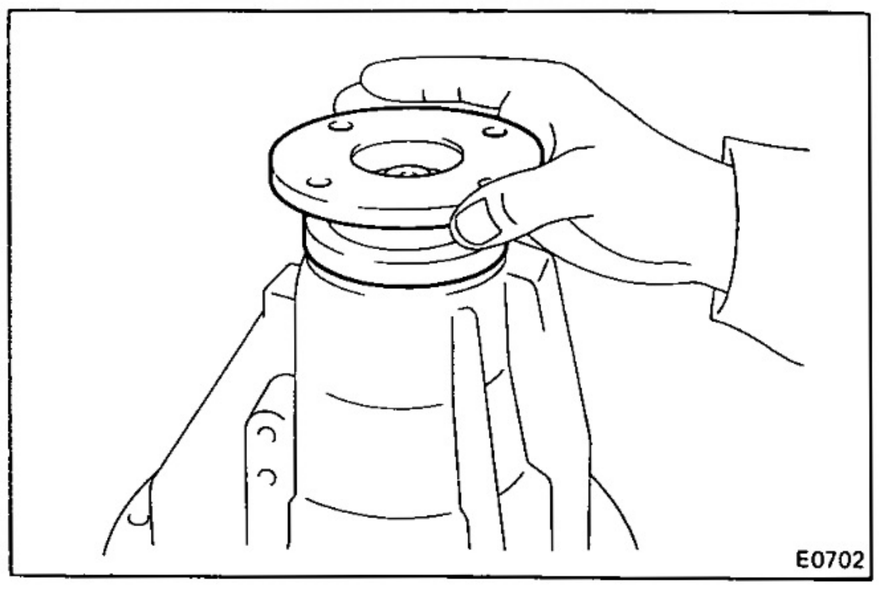

11. INSTALL COMPANION FLANGE

(a) Install the companion flange.

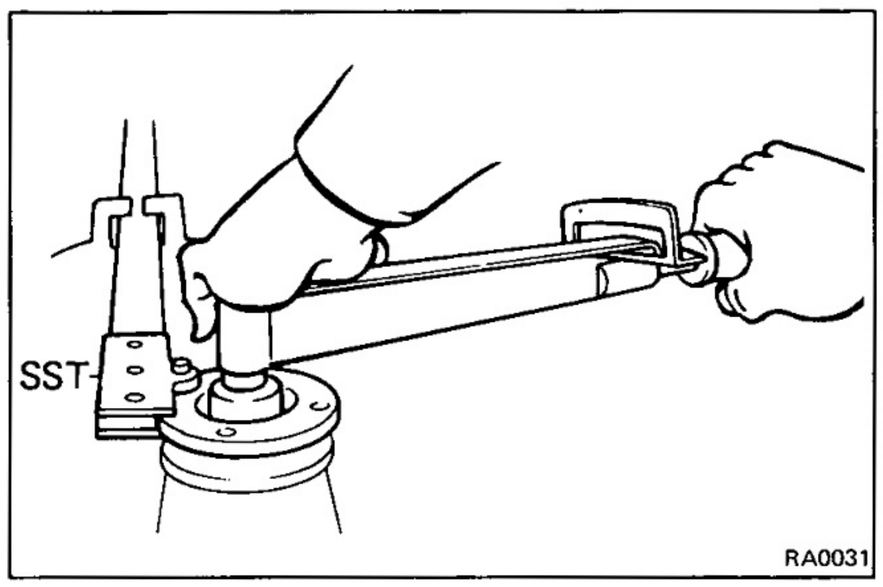

(b) Coat the threads of a new nut with MP grease.

(c) Using SST to hold the flange, tighten the nut. Torque the nut.

SST 09330-00021

Torque: 2,500 – 4,500 kg-cm (181 – 325 ft-lb, 245 – 441 N·m)

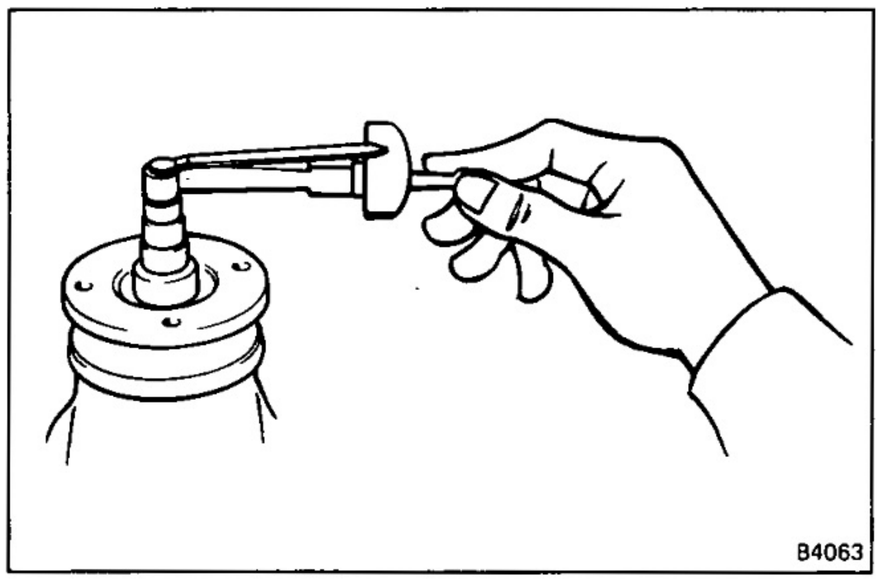

12. ADJUST DRIVE PINION PRELOAD

Using a torque meter, measure the preload of the backlash between the drive pinion and ring gear.

Preload:

New bearing
19 – 26 kg-cm (16.5–22.6 in.-lb, 1.9–2.5 N·m)
Reused bearing
9 – 13 kg-cm (7.8–11.3 in.-lb, 0.9–1.3 N·m)

(a) If preload is greater than the specification, replace the bearing spacer.

(b) If preload is less than specification, retighten the nut 130 kg-cm (9 ft-lb, 13 N·m) at a time until the specified preload is reached.

If the maximum torque is exceeded while retightening the nut, replace the bearing spacer and repeat the preload procedure. Do not back off the pinion nut to reduce the preload.

Maximum torque:
4,500 kg-cm (325 ft-lb, 441 N·m)

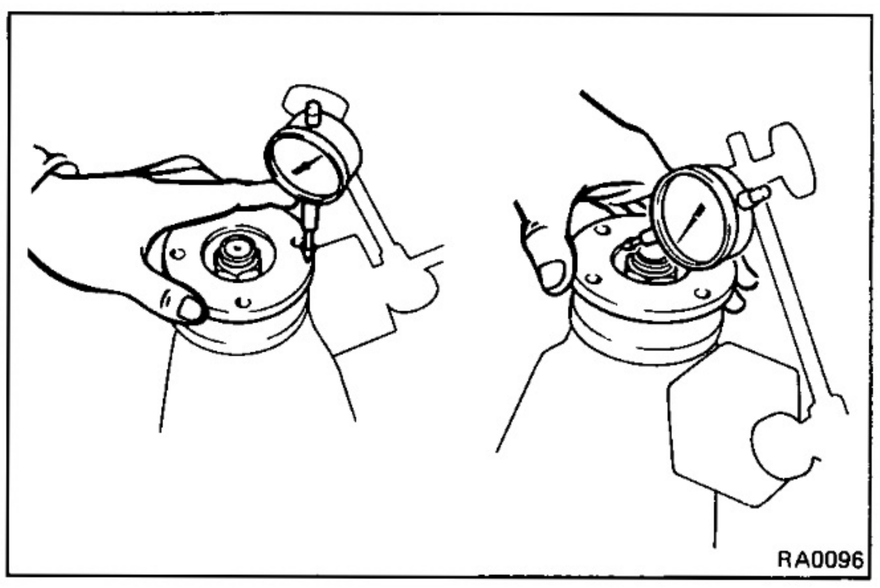

13. CHECK RUNOUT OF COMPANION FLANGE

Maximum lateral runout:
0.10 mm (0.0039 in.)
Maximum radial runout:
0.10 mm (0.0039 in.)

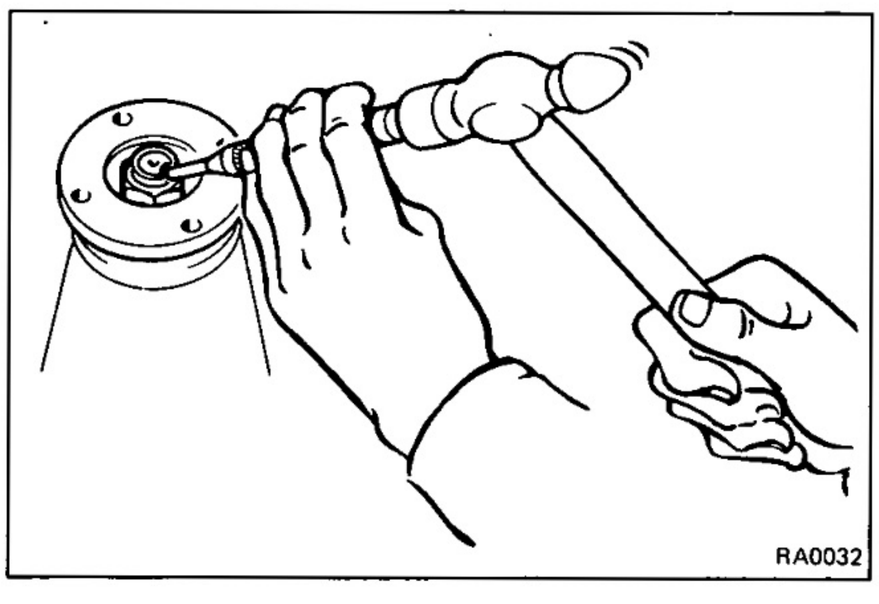

14. STAKE DRIVE PINION NUT

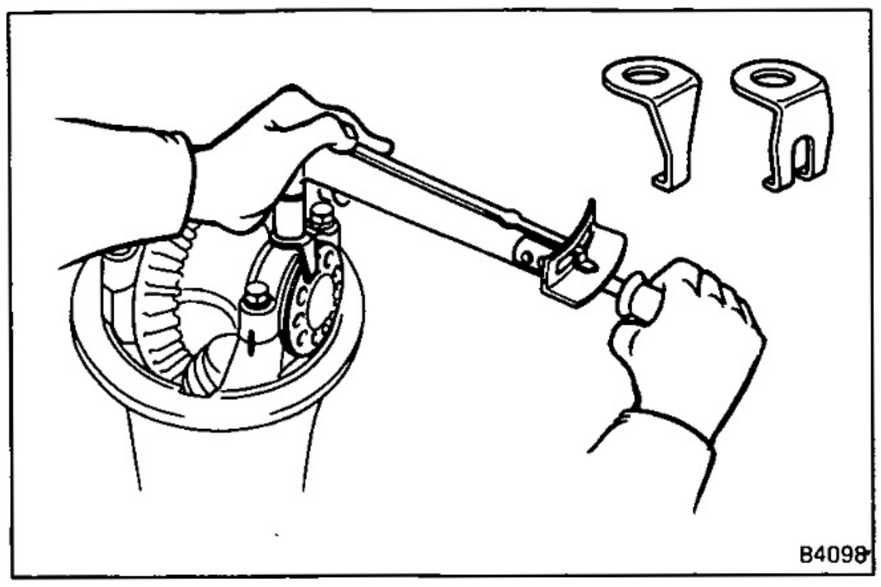

15. **INSTALL ADJUSTING NUT LOCKS**

(a) Select either a No.1 or No.2 lock, whichever will fit the adjusting nuts.

(b) Install the lock on the bearing caps.

Torque: 130 kg-cm (9 ft-lb, 13 N·m)

INSTALLATION OF DIFFERENTIAL

(See page RA-20)

Limited Slip Differential (LSD)

COMPONENTS

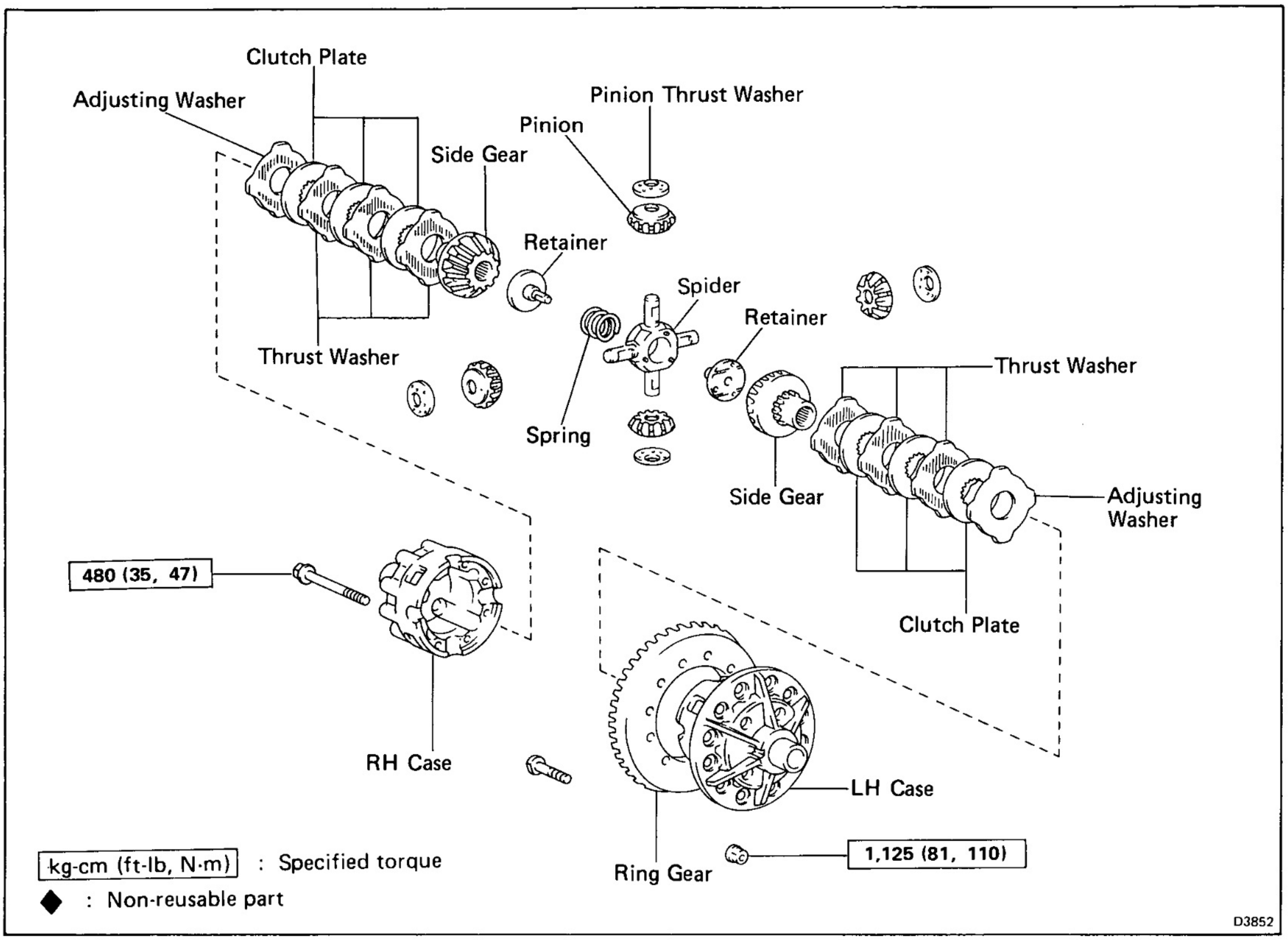

REMOVAL OF DIFFERENTIAL CASE

1. REMOVE DIFFERENTIAL (See page RA-17)
2. REMOVE DIFFERENTIAL CASE FROM CARRIER (See page RA-22)

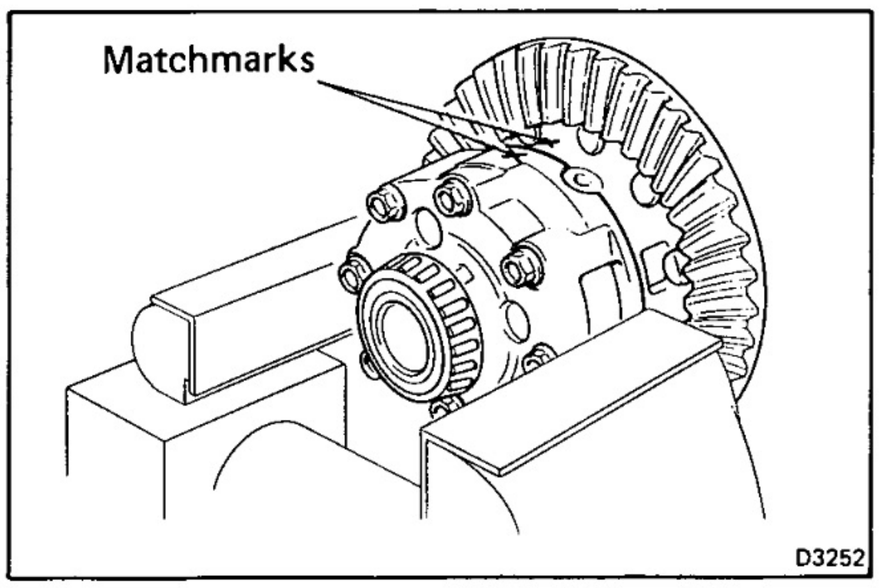

DISASSEMBLY OF LIMITED SLIP DIFFERENTIAL

1. PUT MATCHMARKS ON RH AND LH CASE

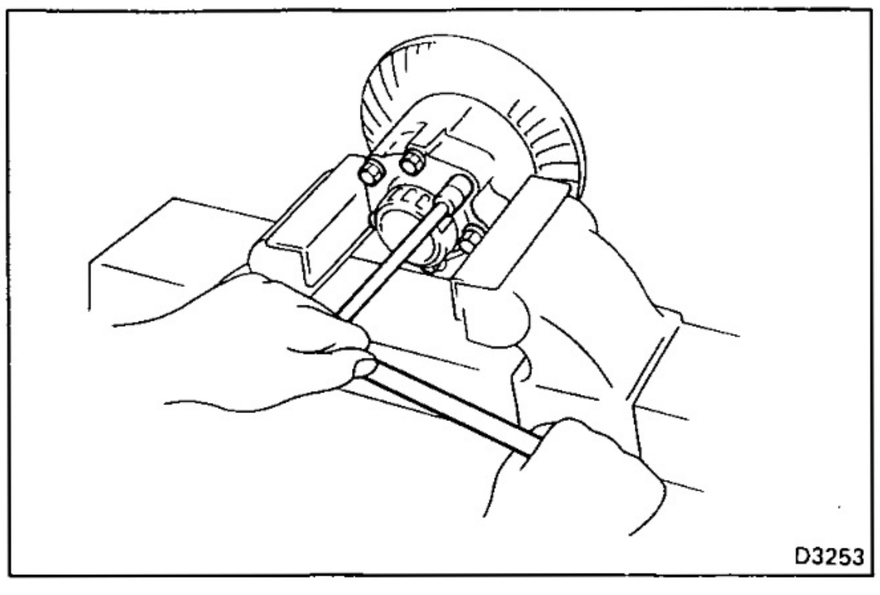

2. **DISASSEMBLE DIFFERENTIAL CASE**

Remove the bolts uniformly a little a time.

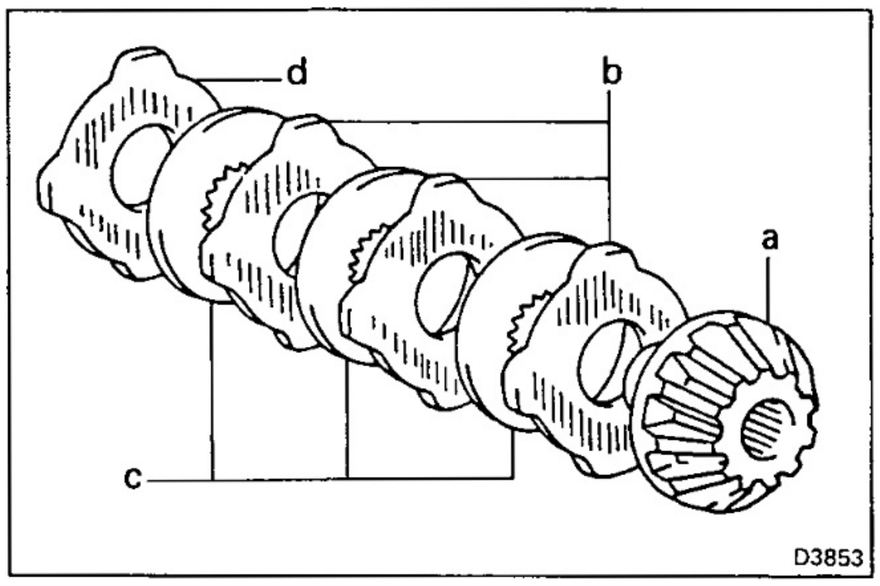

3. **REMOVE FOLLOWING PARTS FROM RH CASE:**

(a) Side gear
(b) Side gear thrust washer (3 pieces)
(c) Clutch plate (3 pieces)
(d) Adjusting washer

NOTE: Keep the disassembled parts in order.

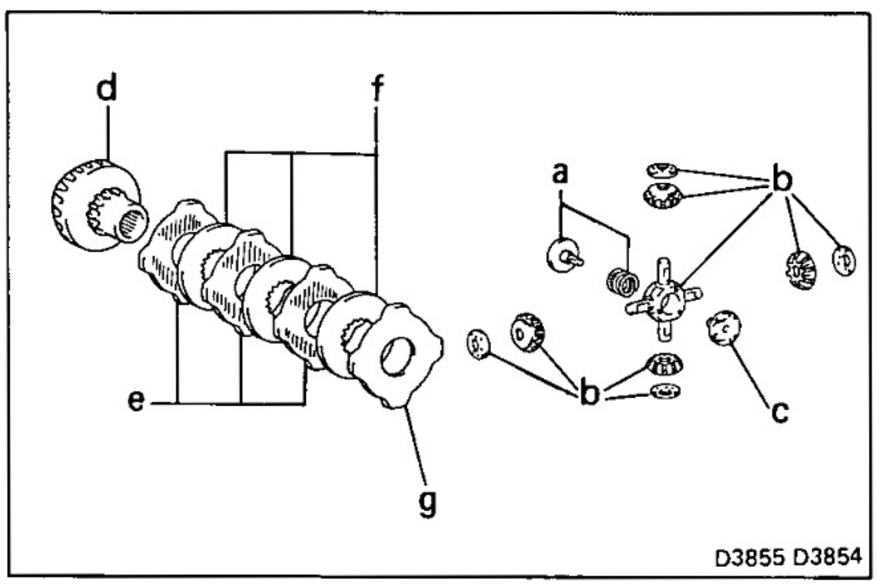

4. **REMOVE FOLLOWING PARTS FROM LH CASE:**

(a) Spring RH retainer and spring
(b) Spider with pinion gear and thrust washer
(c) Spring LH retainer
(d) Side gear
(e) Side gear thrust washer (3 pieces)
(f) Clutch plate (3 pieces)
(g) Adjusting washer

NOTE: Keep the disassembled parts in order.

INSPECTION OF COMPONENTS

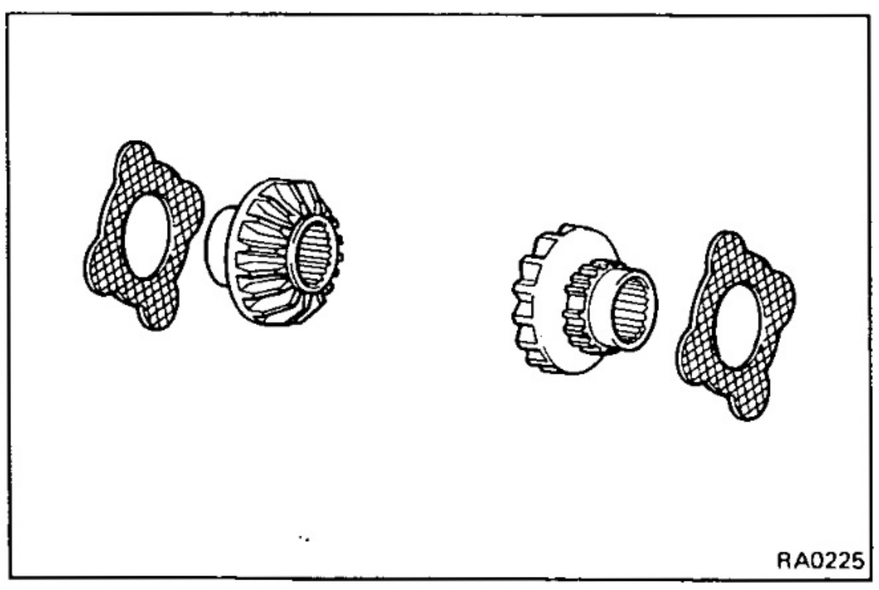

1. **REPLACE PARTS THAT ARE DAMAGED OR WORN**

NOTE: If replacing the side gear, also replace the thrust washer making contact with it.

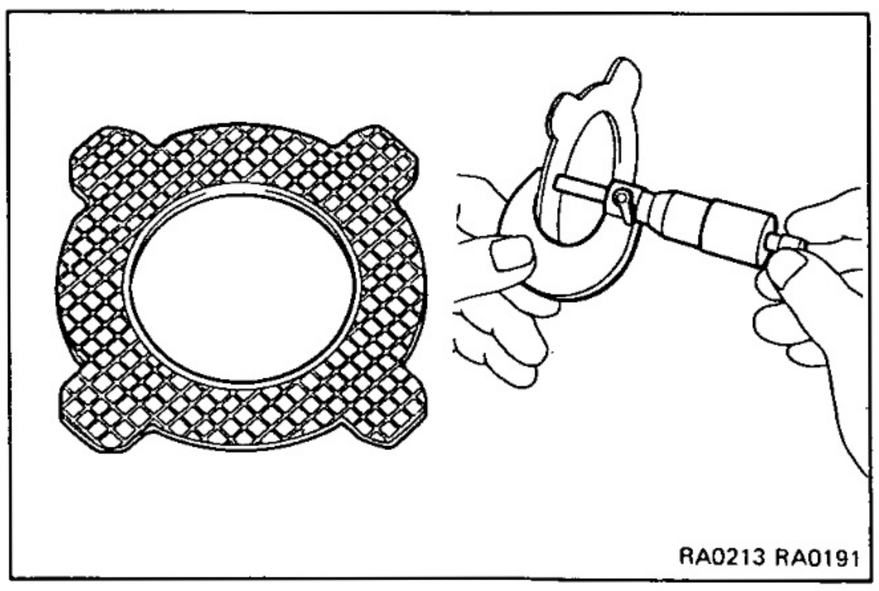

2. **INSPECT THRUST WASHERS FOR WEAR OR DAMAGE**

Check that the contact surface of the thrust washer is even and that no bare metal is showing.

(For reference)
Thickness limit: 1.74 mm (0.0685 in.)

If necessary, replace the thrust washers.

NOTE: If replacing the thrust washer also replace the clutch plate making contact with it.

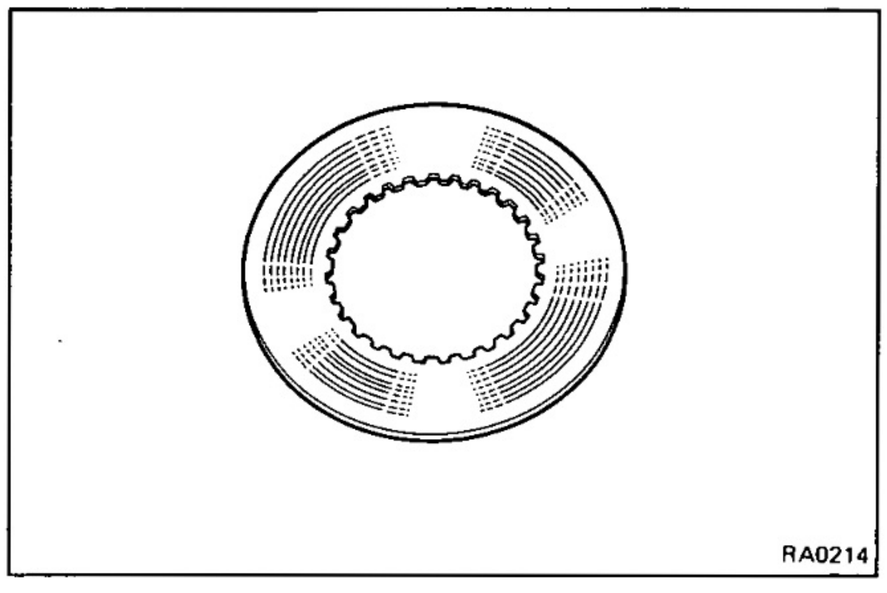

3. INSPECT CLUTCH PLATE FOR WEAR OR DAMAGE

Check to see that there is no abnormal wear.

If necessary, replace the clutch plate.

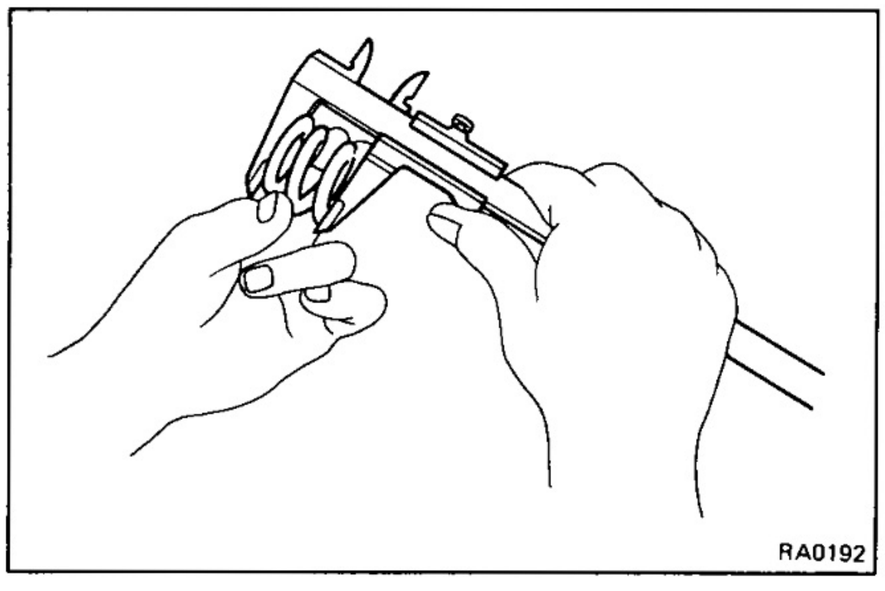

4. INSPECT SPRING FREE LENGTH

Measure the free length of the spring.

Limit: 38.6 mm (1.520 in.)

ASSEMBLY OF DIFFERENTIAL CASE

(See page RA-32)

NOTE:

(a) Using a rag, clean off any foreign matter from the parts.

(b) Apply LSD oil to the contact surfaces of the clutch plates and the thrust washers.

(c) Degrease the differential case bolts.

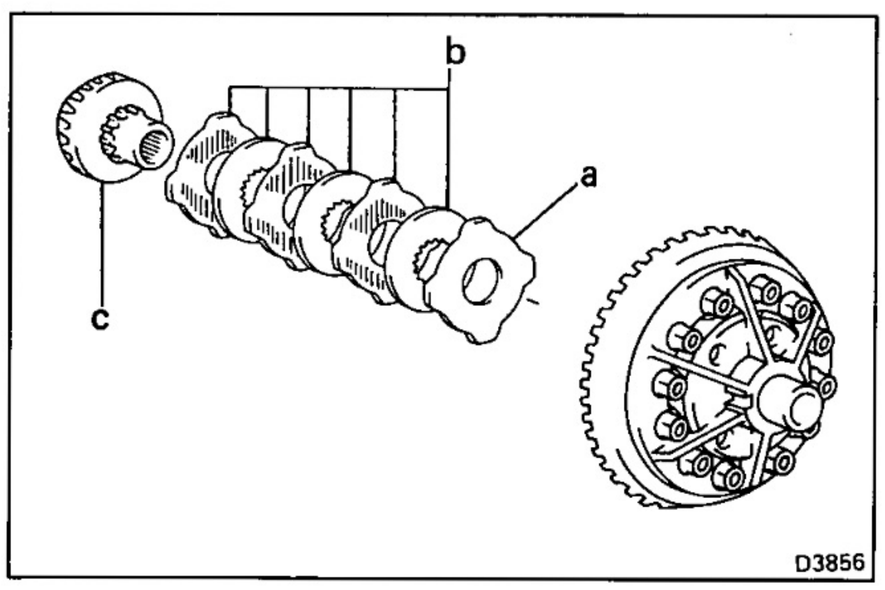

1. INSTALL FOLLOWING PARTS TO LH CASE

(a) Adjusting washer

NOTE: Assemble the adjusting washers so the washer without oil grooves faces into the case.

(b) Clutch plates and side gear thrust washers.

(c) Side gear

(d) Spring retainer

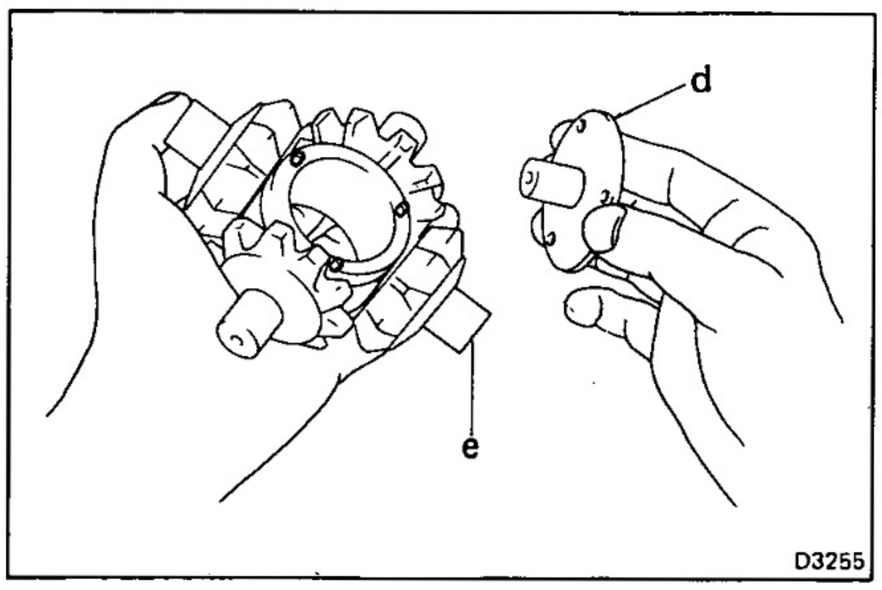

(e) Spider with pinion gear and thrust washer.

NOTE: Align the holes of the spider and retainer.

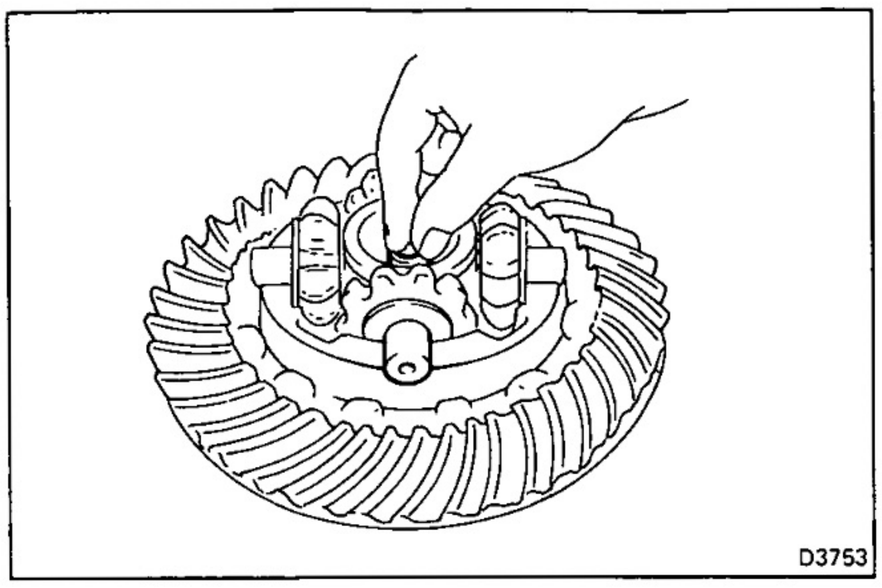

2. **INSTALL FOLLOWING PARTS TO RH CASE:**

(a) Adjusting washer

NOTE: Assemble the adjusting washers so the washer without oil grooves face into the case.

(b) Clutch plates and side gear thrust washers.

(c) Side gear

(d) Spring retainer

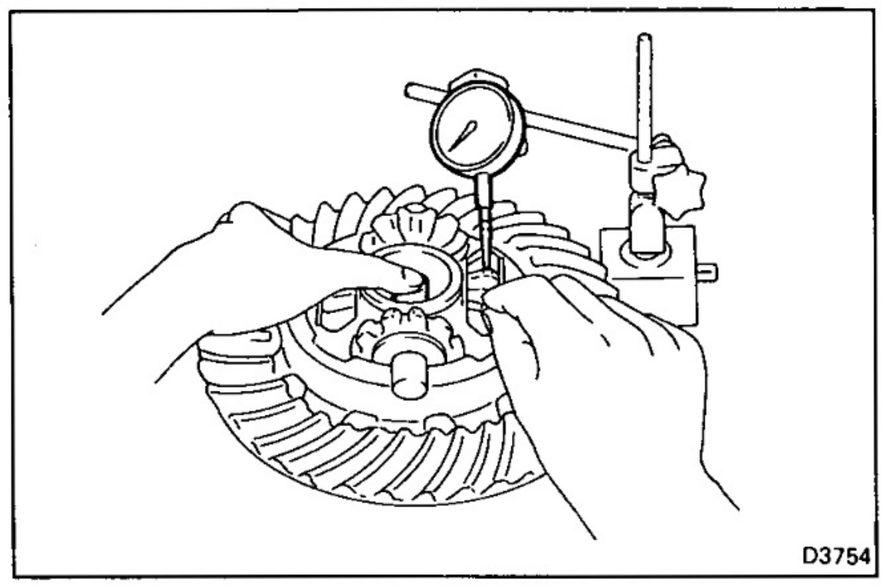

3. **MEASURE SIDE GEAR BACKLASH**

Secure the LH side gear and measure the backlash while pushing in the spring retainer.

Backlash: 0.05 – 0.24 mm (0.0020 – 0.0094 in.)

If the backlash is not within specification, adjust with an adjusting washer of a different thickness.

Adjusting washer thicknesses mm (in.)

Mark	Thickness	Mark	Thickness
A	2.20 (0.0866)	H	2.55 (0.1004)
B	2.25 (0.0886)	J	2.60 (0.1024)
C	2.30 (0.0906)	K	2.65 (0.1043)
D	2.35 (0.0925)	L	2.70 (0.1063)
E	2.40 (0.0945)	M	2.75 (0.1083)
F	2.45 (0.0965)	N	2.80 (0.1102)
G	2.50 (0.0984)		

4. **MEASURE RH CASE IN SAME MANNER**

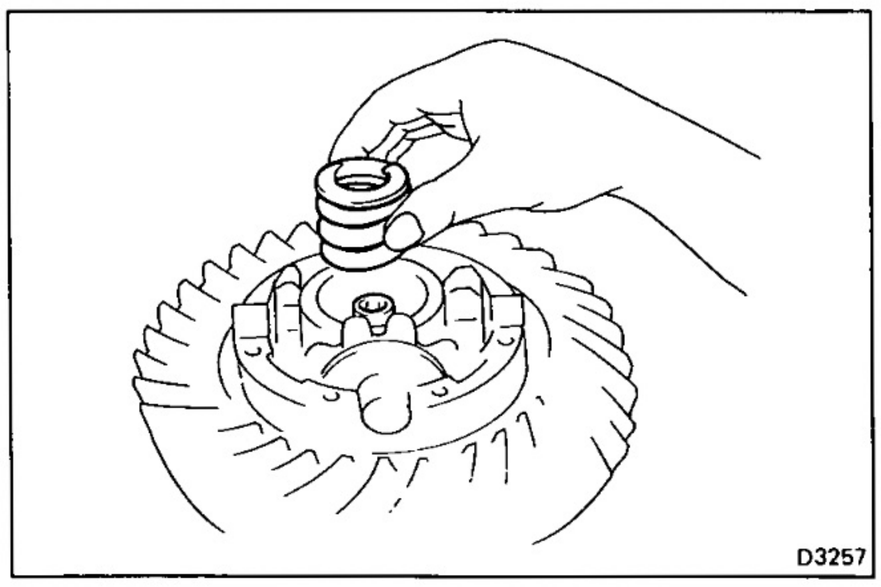

5. **INSTALL SPRING AND RH RETAINER**

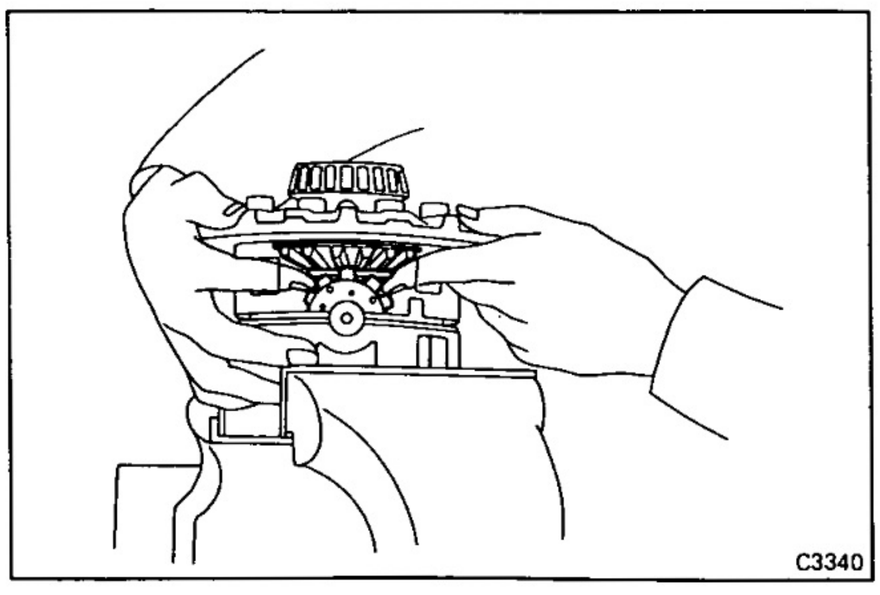

6. **ASSEMBLE RH AND LH CASE**

(a) Align the marks on RH and LH case.

NOTE: Be careful not to drop the side gear, and check the pinion and side gear alignment.

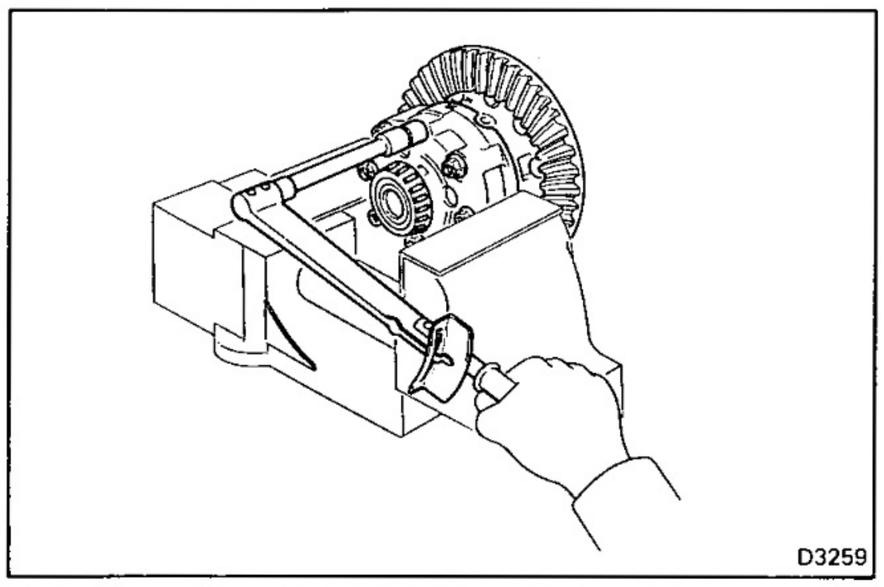

(b) Tighten the bolts uniformly a little at a time.

Torque: 480 kg-cm (35 ft-lb, 47 N·m)

INSTALLATION OF DIFFERENTIAL

1. INSTALL DIFFERENTIAL CASE IN CARRIER
(See page RA-26)

2. INSTALLATION OF DIFFERENTIAL
(See page RA-20)

REAR SUSPENSION

COMPONENTS

FJ, BJ, HJ 70 series

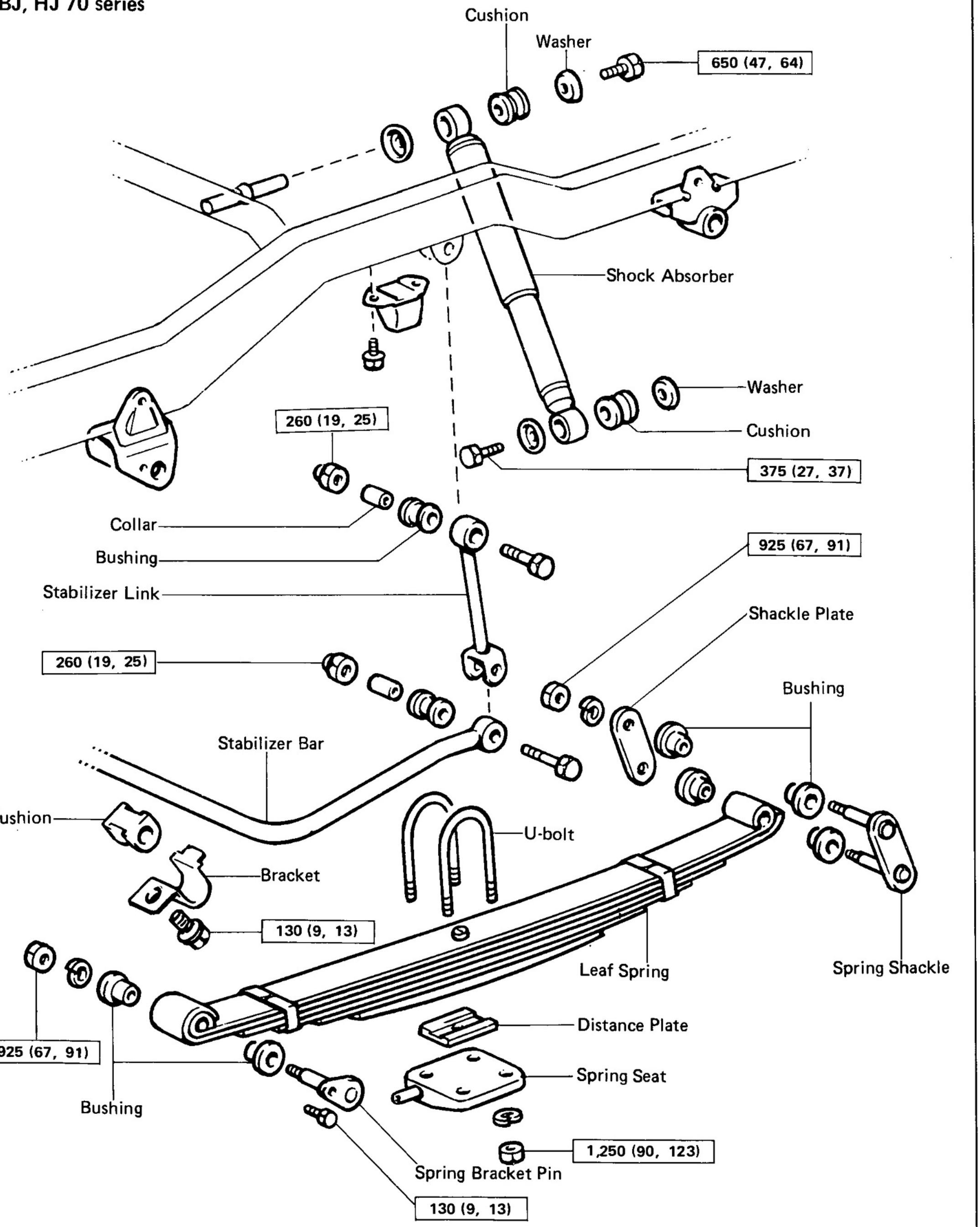

kg-cm (ft-lb, N·m) : Specified torque

◆ : Non-reusable part

COMPONENTS (Cont'd)

FJ, BJ, HJ 60 series

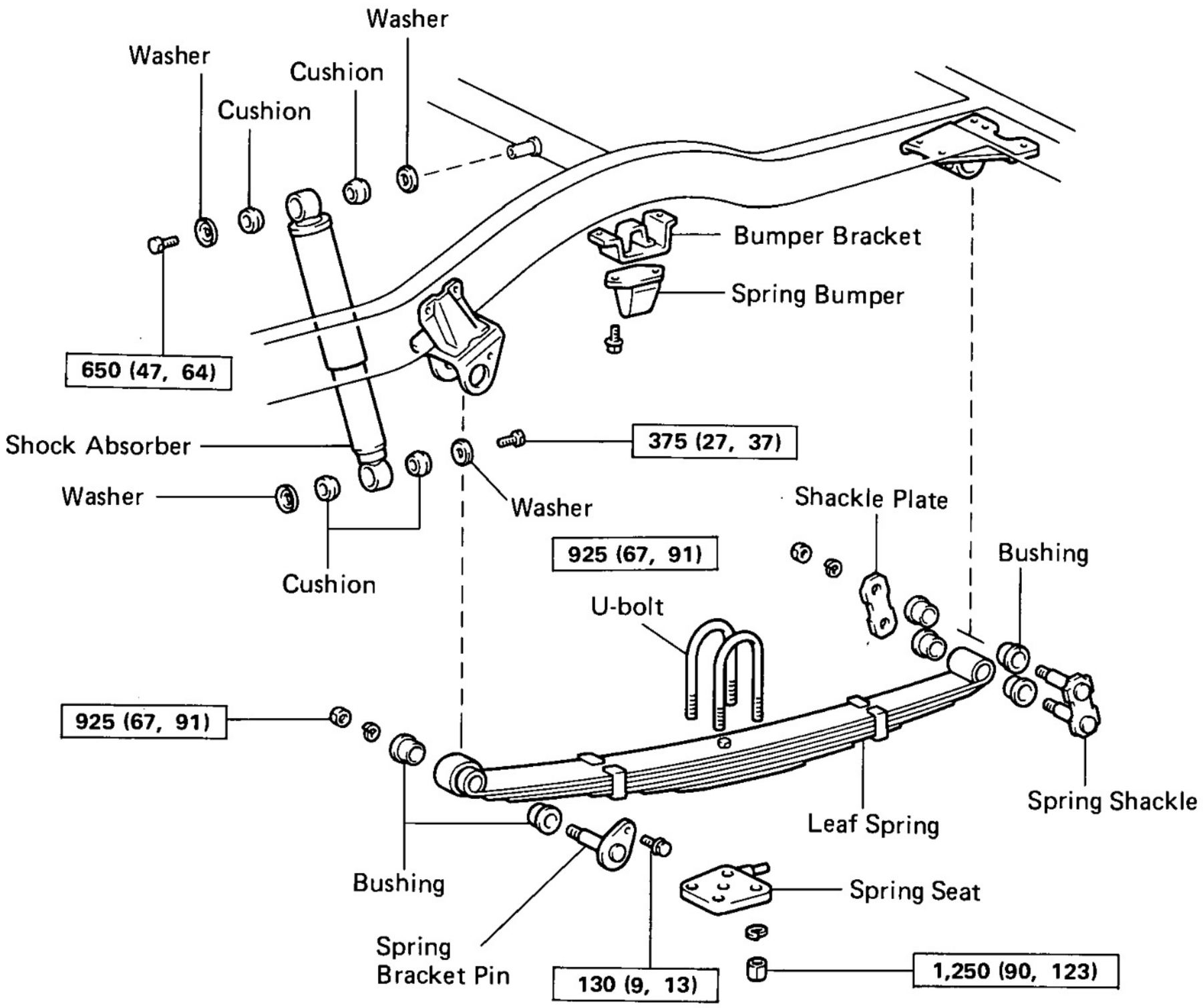

Leaf Spring Component

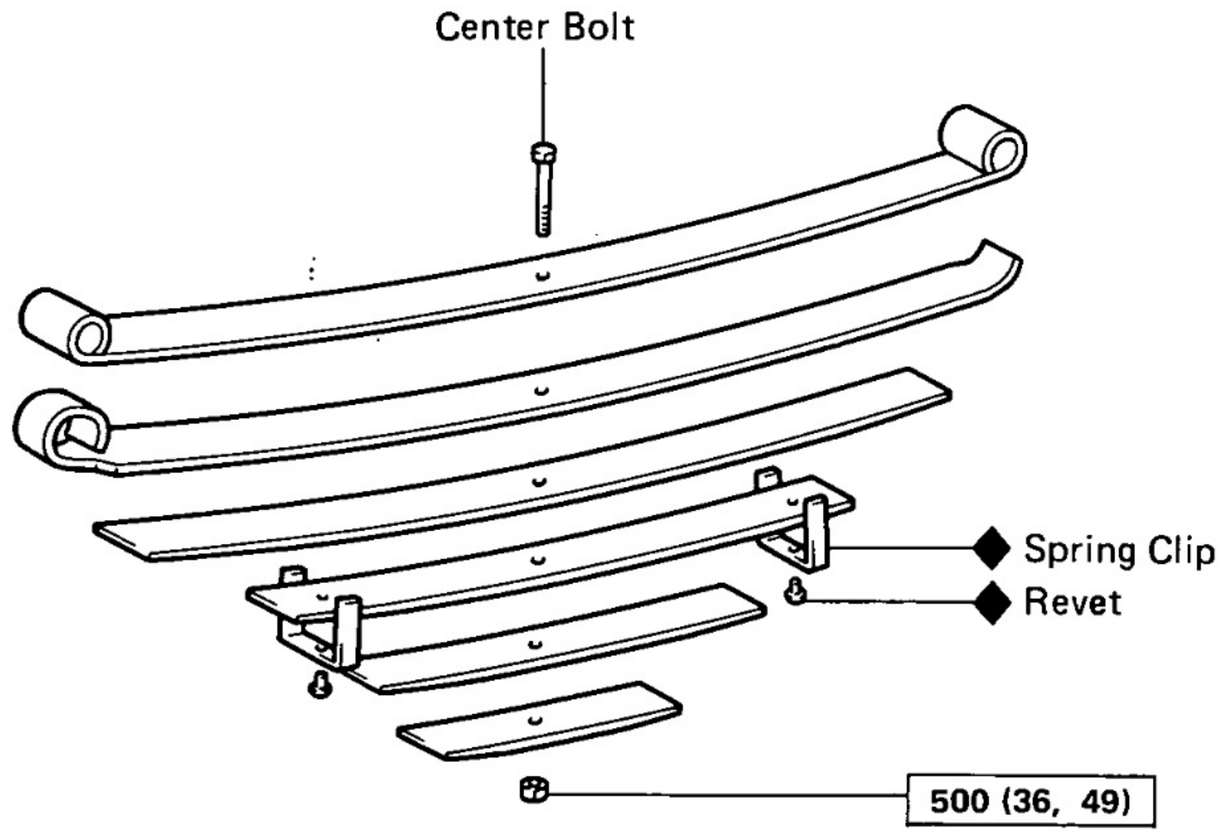

kg-cm (ft-lb, N·m) : Specified torque

◆ : Non-reusable part

D4220

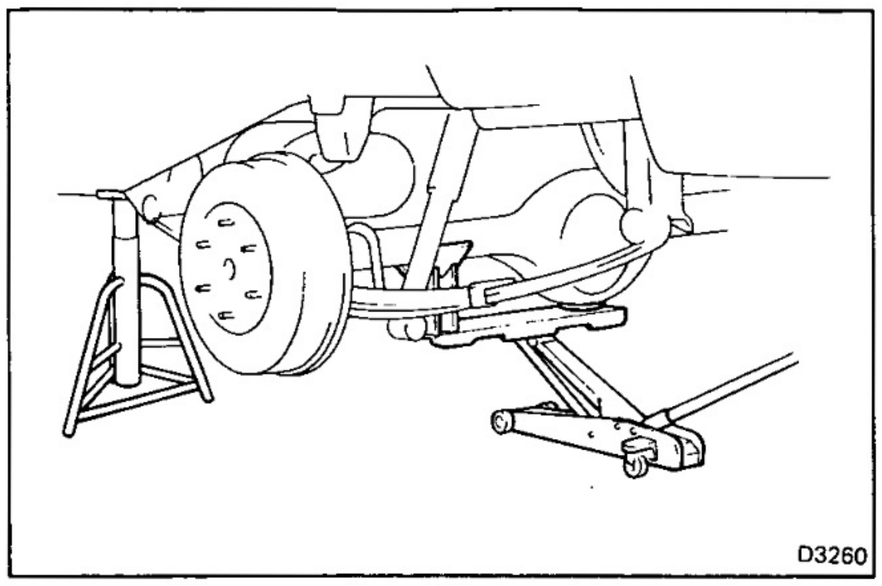

Rear Shock Absorber and Leaf Spring

REMOVAL OF REAR SHOCK ABSORBER AND LEAF SPRING

(See Page RA-37)

1. JACK UP AND SUPPORT VEHICLE WITH FRAME

2. SUPPORT AXLE HOUSING

   Jack up the axle housing until the leaf spring force is free, and keep it there.

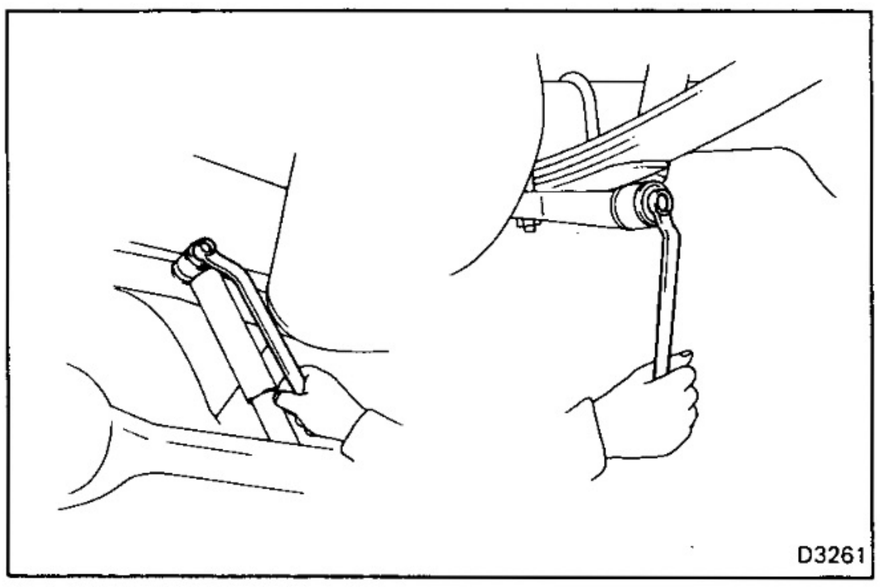

3. REMOVE REAR WHEEL

4. REMOVE SHOCK ABSORBER

   (a) Disconnect the shock absorber from the frame.

   (b) Disconnect the shock absorber from the spring seat.

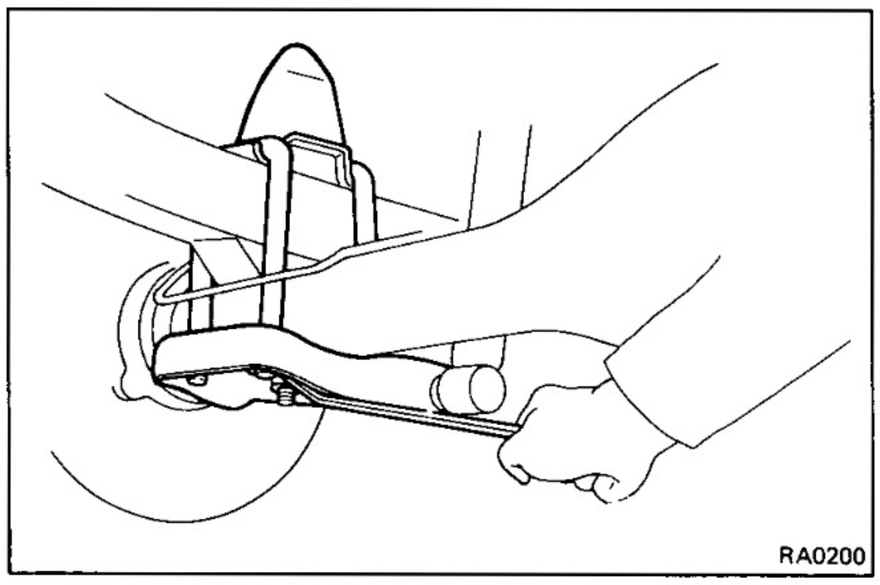

5. REMOVE U-BOLTS

   (a) Remove the four U-bolt mounting nuts with the spring seat and distance plate.

   (b) Remove the two U-bolts.

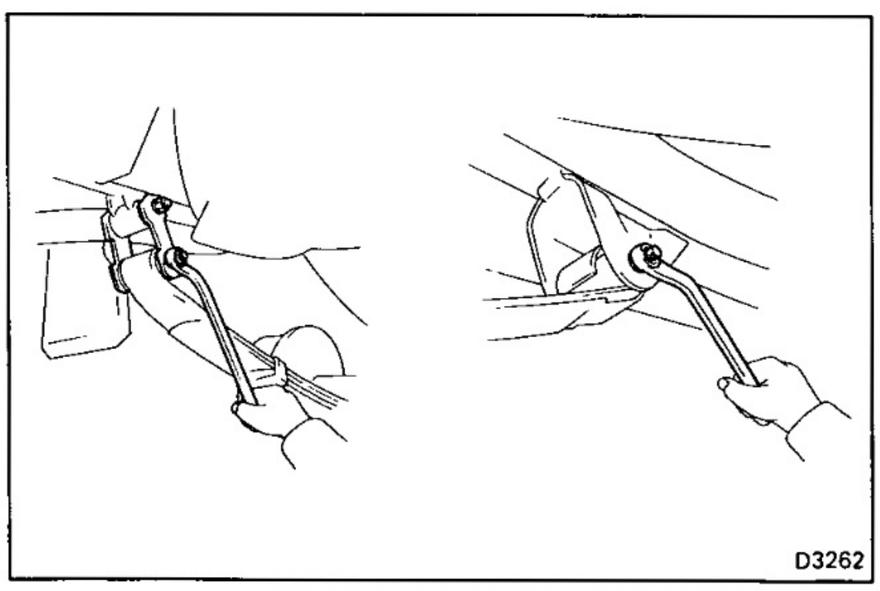

6. REMOVE LEAF SPRING

   (a) Remove the spring bracket pin nut.

   (b) Remove the two bolts and spring bracket pin.

   (c) Remove the two shackle nuts and shackle inner plate.

   (d) Remove the spring shackle and leaf spring.

7. REMOVE BUSHING FROM LEAF SPRING

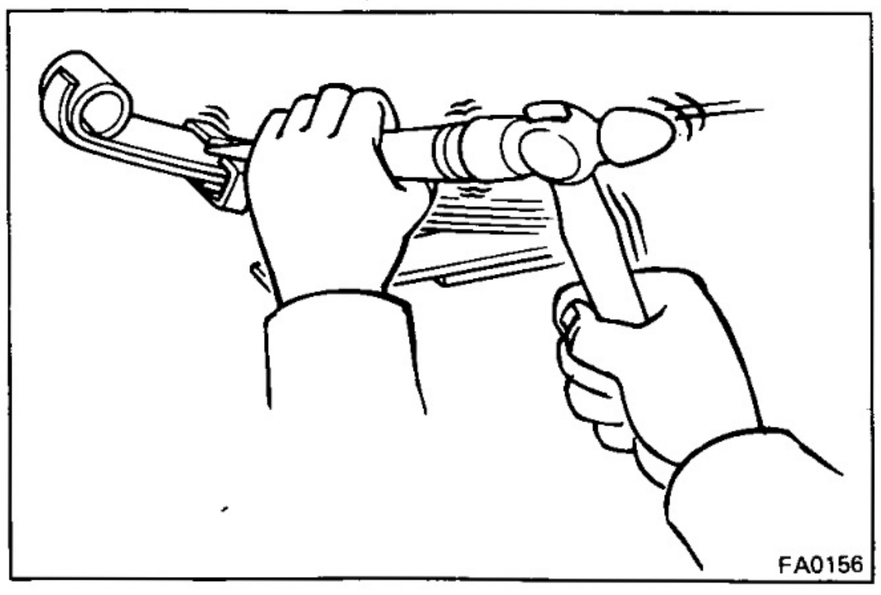

REPLACEMENT OF LEAF SPRING

1. BEND OPEN SPRING CLIP

   Using a chisel, pry up the spring clip.

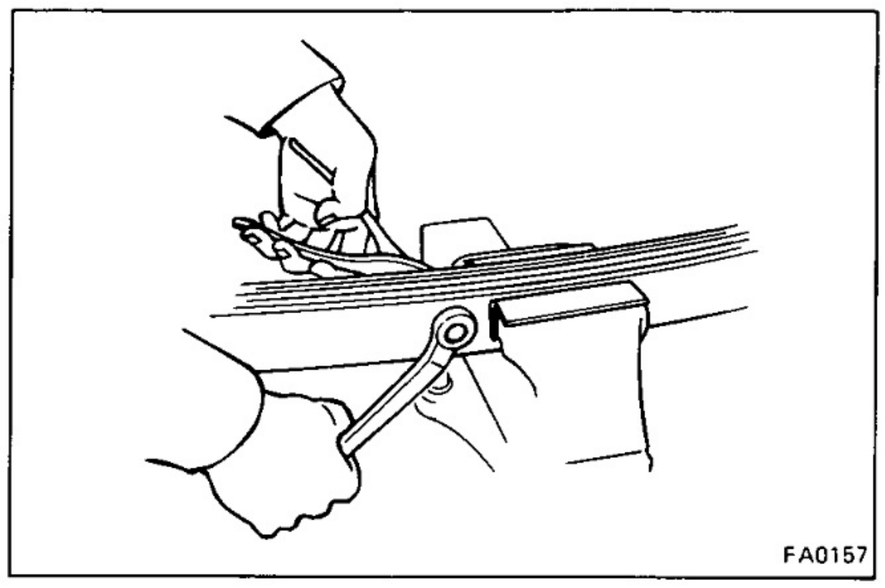
FA0157

2. REMOVE SPRING CENTER BOLT

Hold the spring near the center bolt in a vise and remove the center bolt.

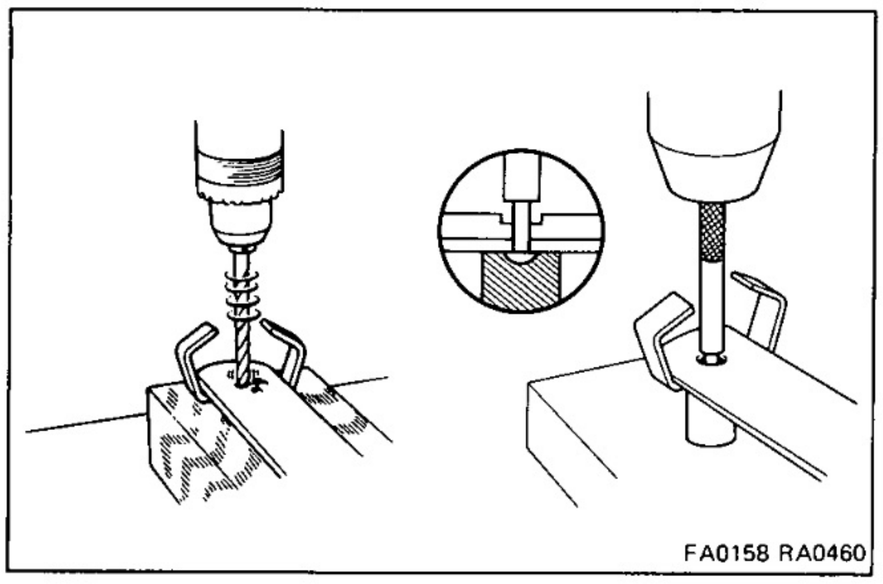
FA0158 RA0460

3. REPLACE SPRING CLIP

(a) Drill off the head of the rivet, and drive it out.

(b) Install a new rivet into the holes of the spring leaf and clip. Then rivet with a press.

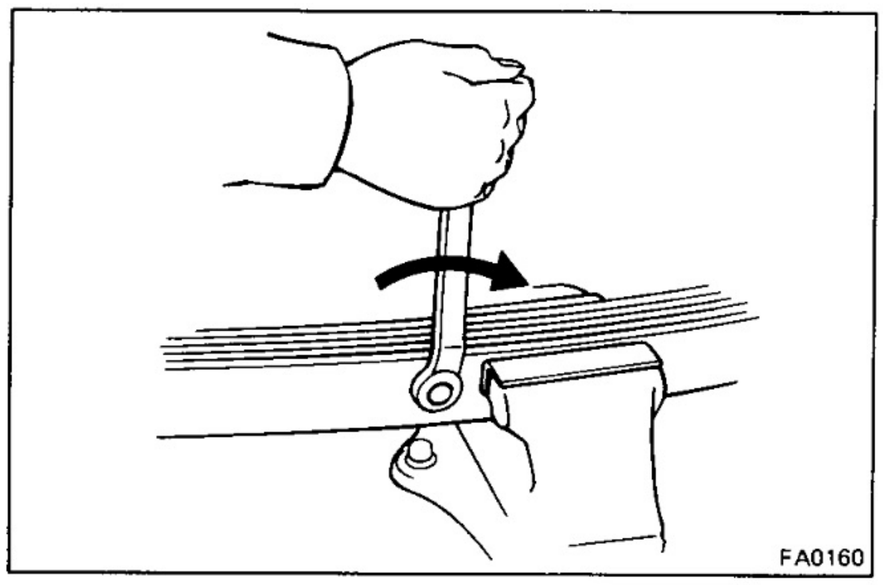
FA0160

4. INSTALL SPRING CENTER BOLT

(a) Align the leaf holes and secure the leaves with a vise.

(b) Install and tighten the spring center bolt.

Torque: 500 kg-cm (36 ft-lb, 49 N·m)

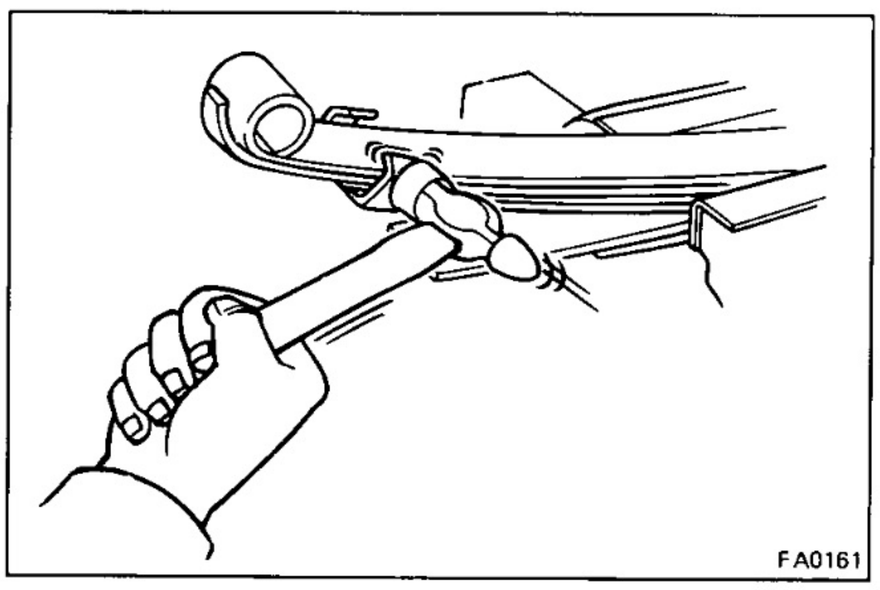
FA0161

5. BEND SPRING CLIP

Using a hammer, bend the spring clip into position.

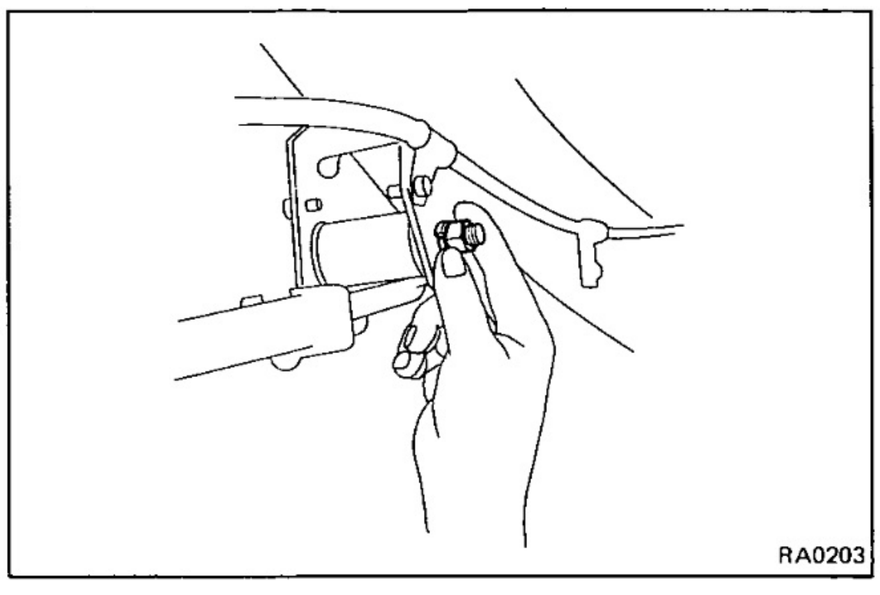
RA0203

INSTALLATION OF LEAF SPRING AND SHOCK ABSORBER

(See page RA-37)

1. INSTALL BUSHING TO LEAF SPRING

2. INSTALL LEAF SPRING

(a) Install the spring shackle to the leaf spring.

(b) Place the front end of leaf spring in the front hanger and install the spring bracket pin. Torque the bracket pin bolt.

Torque: 130 kg-cm (9 ft-lb, 13 N·m)

(c) Hand tighten the bracket pin nut.

(d) Place the rear end of leaf spring in the rear bracket, and install the shackle pin.

(e) Install the plate and hand tighten the nuts.

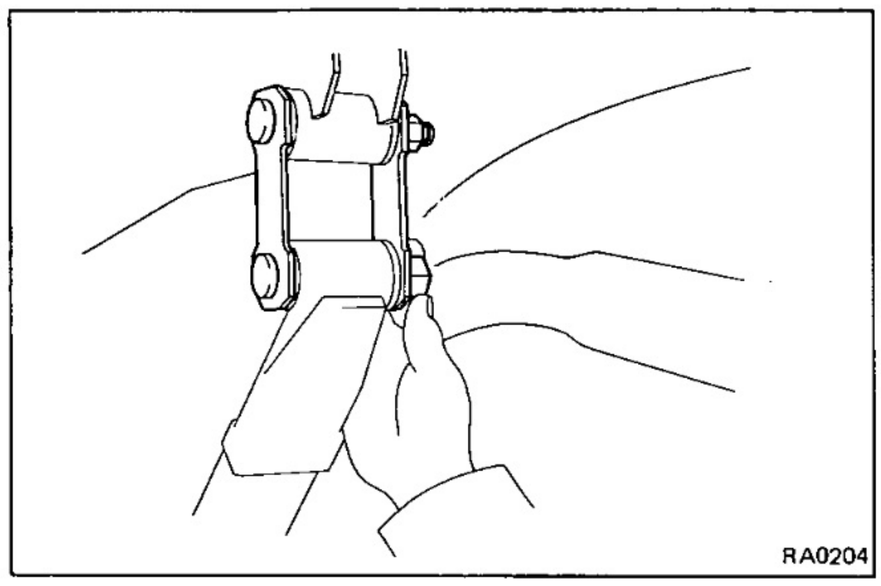
RA0204

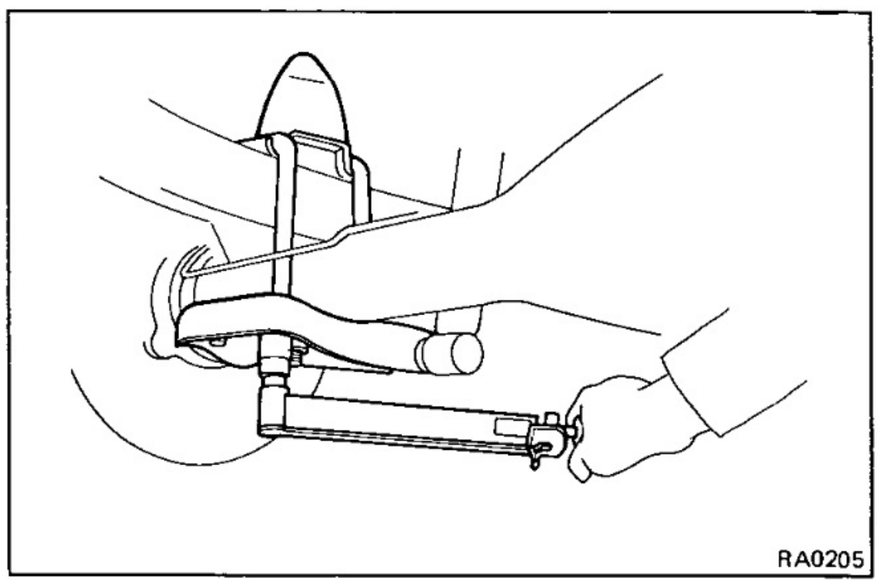
RA0205

3. INSTALL U-BOLT

(a) Install the two U-bolts onto the leaf spring.

(b) Install the distance plate and spring seat. Torque the four U-bolt mounting nuts.

Torque: 1,250 kg-cm (90 ft-lb, 123 N·m)

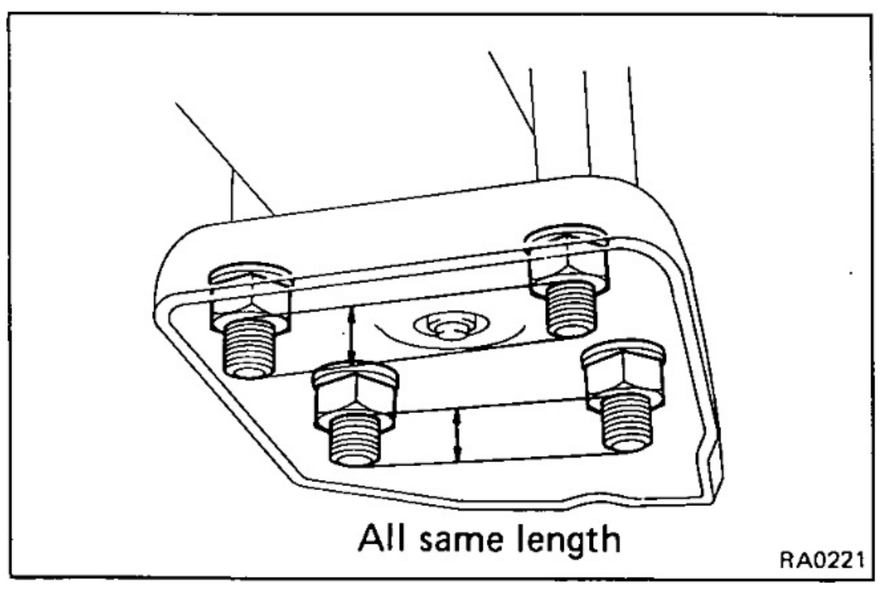

RA0221

NOTE: Tighten the U-bolts so that the lengths of all the U-bolts under the spring seat are the same.

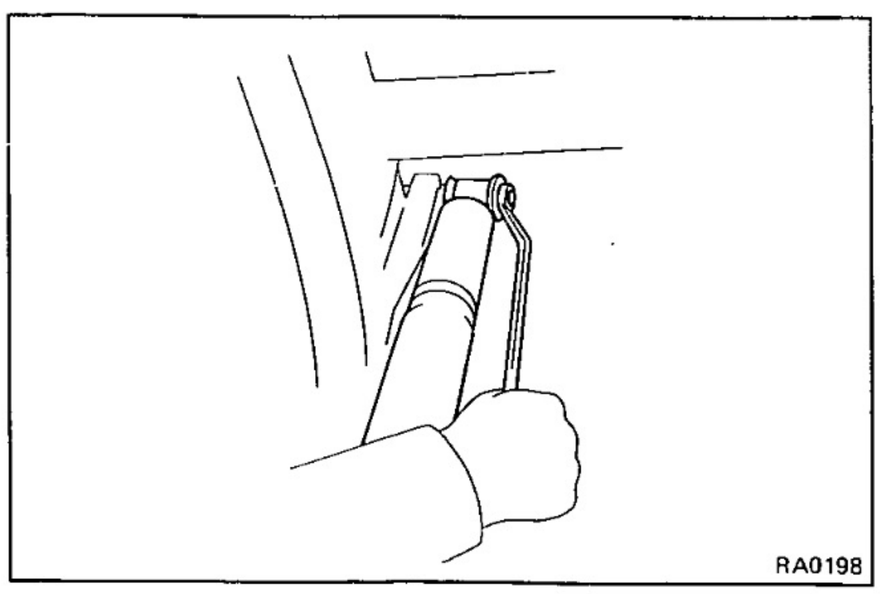
RA0198

4. INSTALL REAR SHOCK ABSORBER

(a) Connect the shock absorber to the frame with the bolt. Tighten the bolt.

Torque: 650 kg-cm (47 ft-lb, 64 N·m)

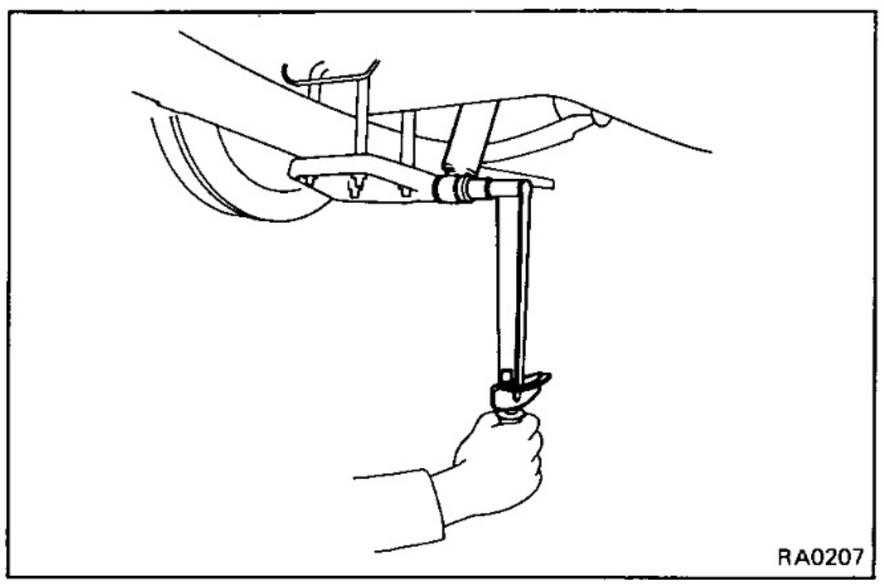
RA0207

(b) Connect the shock absorber to the spring seat with the bolt. Tighten the bolt.

Torque: 375 kg-cm (27 ft-lb, 37 N·m)

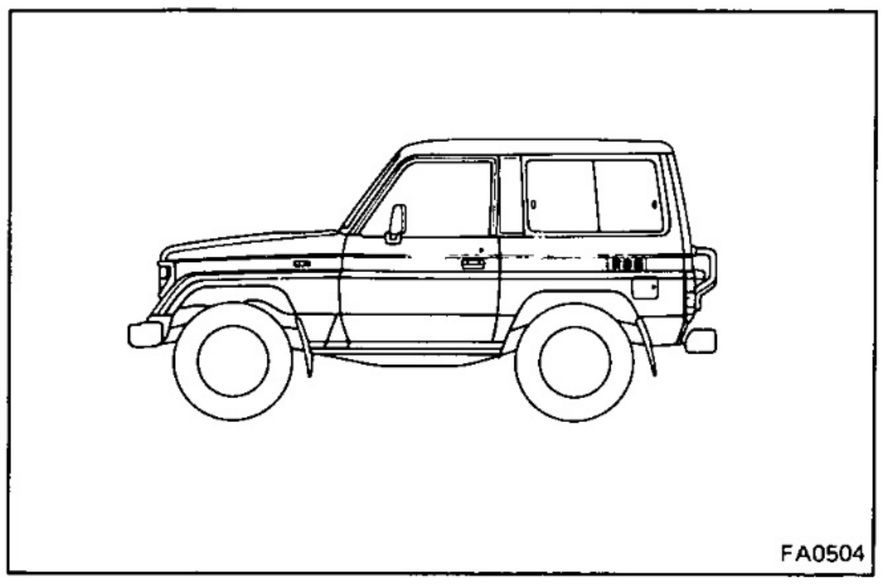
FA0504

5. INSTALL WHEEL AND LOWER VEHICLE

6. STABILIZE SUSPENSION

Bounce the vehicle to stabilize the suspension.

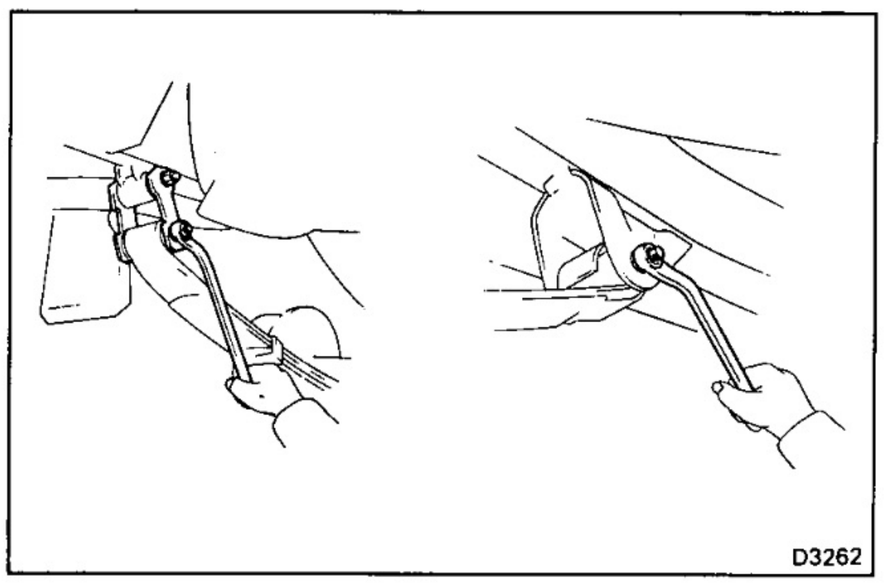
D3262

7. TIGHTEN SPRING BRACKET PIN AND SHACKLE PIN

(a) Torque the bracket pin nut.

Torque: 925 kg-cm (67 ft-lb, 91 N·m)

(b) Torque the shackle pin nuts.

Torque: 925 kg-cm (67 ft-lb, 91 N·m)

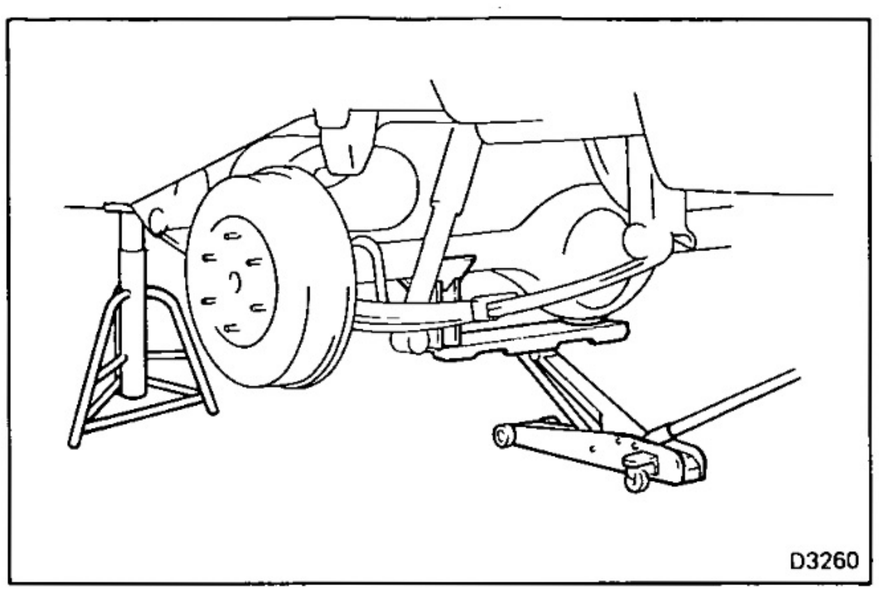

Stabilizer Bar

REMOVAL OF STABILIZER BAR

(See page RA-37)

1. JACK UP AND SUPPORT VEHICLE

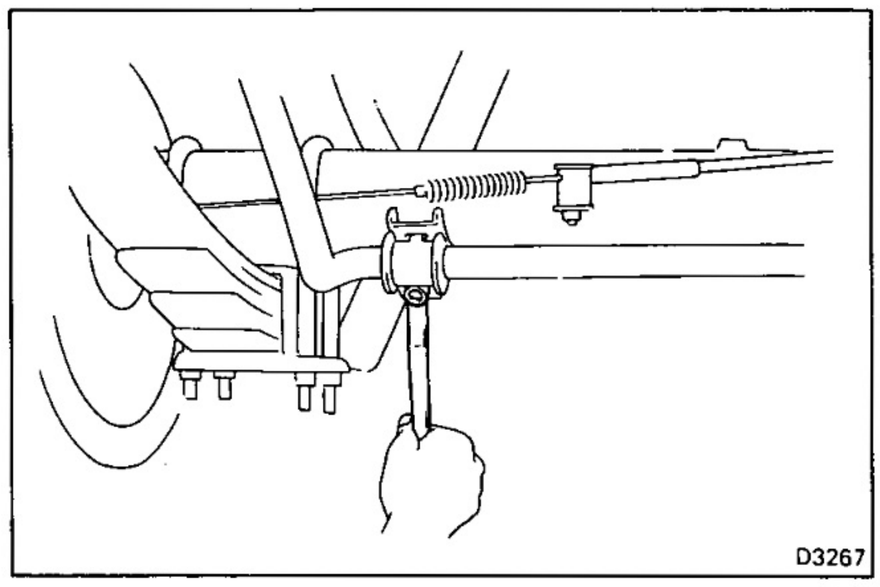

2. REMOVE STABILIZER BAR

(a) Remove the stabilizer bar bracket from the axle housing.

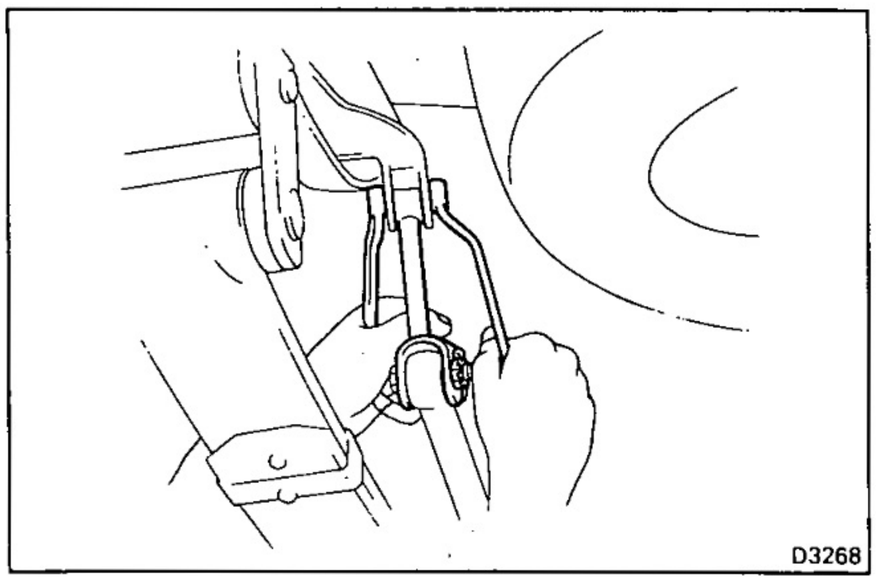

(b) Remove the stabilizer bar link with the stabilizer bar from the frame.

3. REMOVE STABILIZER BAR LINK FROM STABILIZER BAR

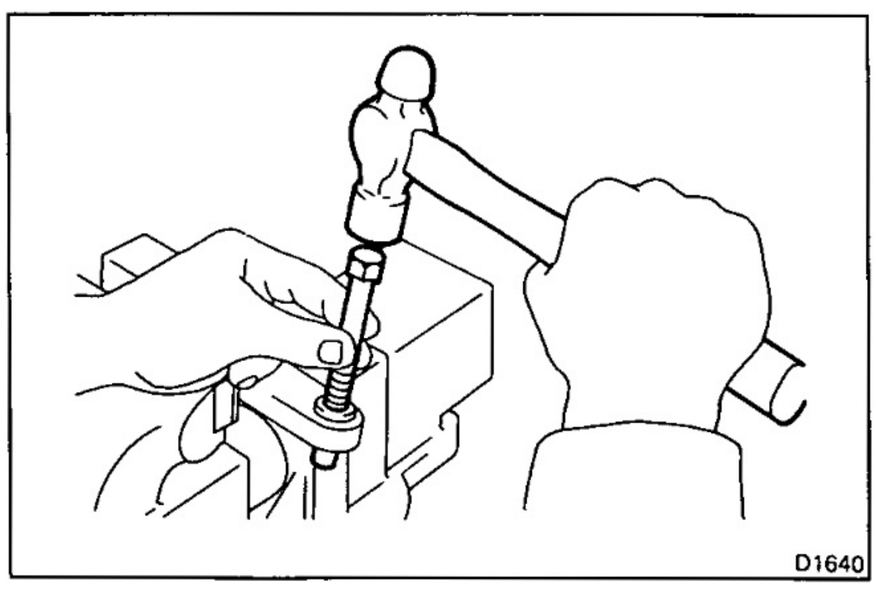

REPLACEMENT OF STABILIZER BAR BUSHING

1. REMOVE COLLAR AND BUSHING

(a) Using a hammer and bolt (12 mm or 0.47 in.), tap out the collar.

(b) Remove the bushing.

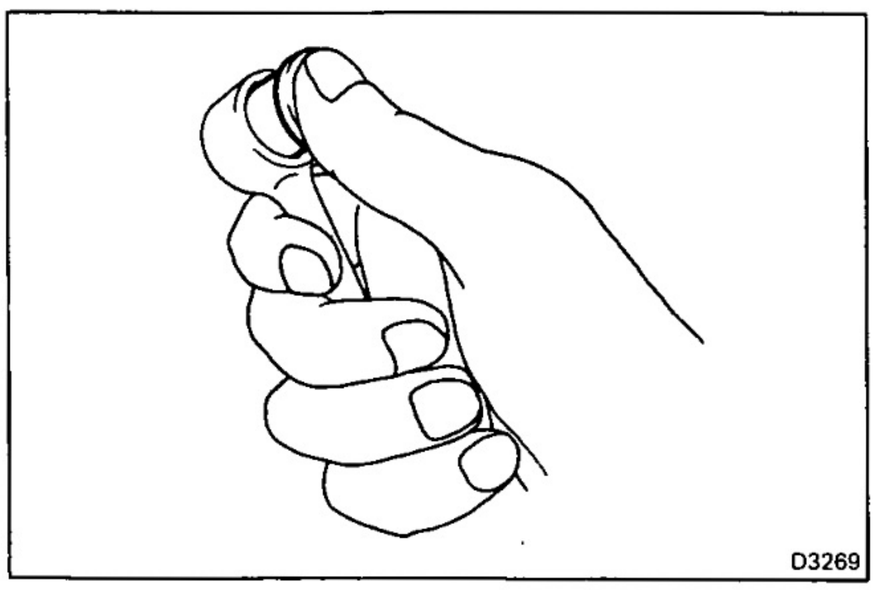

2. INSTALL BUSHING AND COLLAR

Install the new bushing and collar to the stabilizer bar.

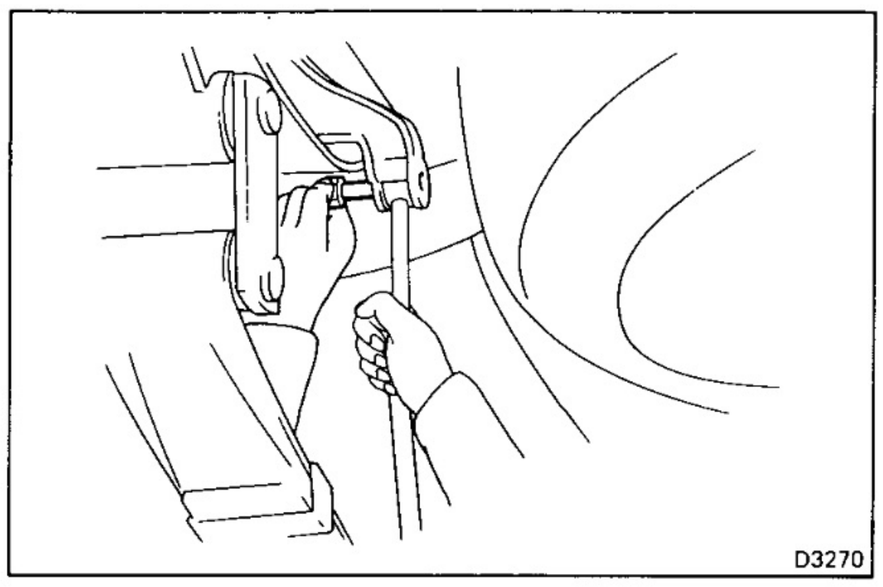

INSTALLATION OF STABILIZER BAR

(See page RA-37)

1. INSTALL STABILIZER BAR LINK TO STABILIZER BAR

   Install the stabilizer bar link to the stabilizer bar and temporarily install the new nut.

2. INSTALL STABILIZER BAR

   (a) Install the cushion and bracket to the stabilizer bar.

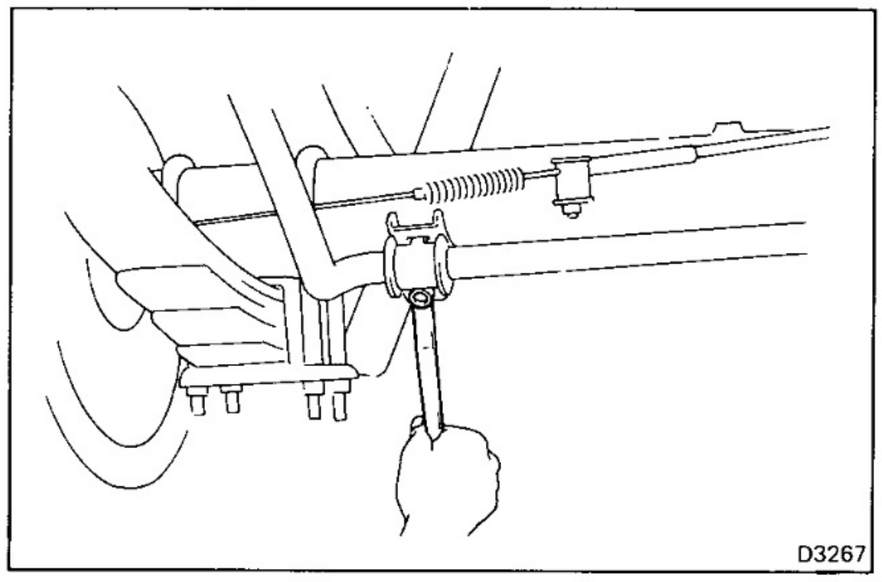

   (b) Temporarily install the bracket to the axle housing.

   (c) Temporarily install the stabilizer link to the frame with the new nut.

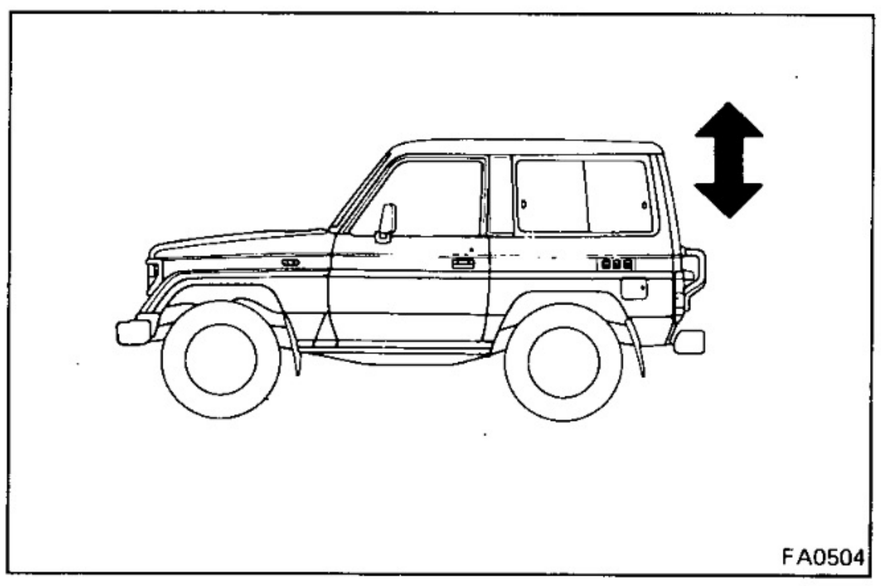

3. INSTALL WHEEL AND LOWER VEHICLE

4. STABILIZE SUSPENSION

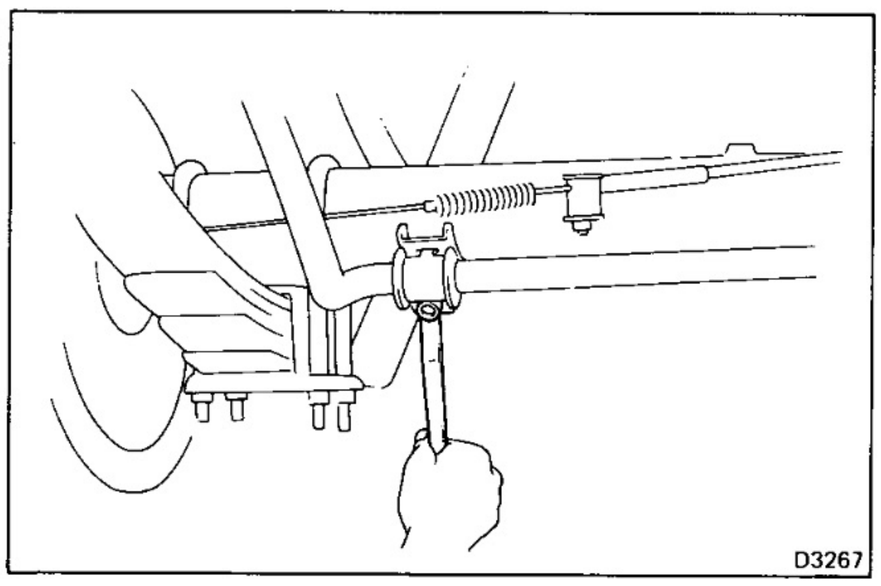

5. TIGHTEN BRACKET AND LINK

   (a) Torque the bracket bolt.

   Torque: 120 kg-cm (9 ft-lb, 12 N·m)

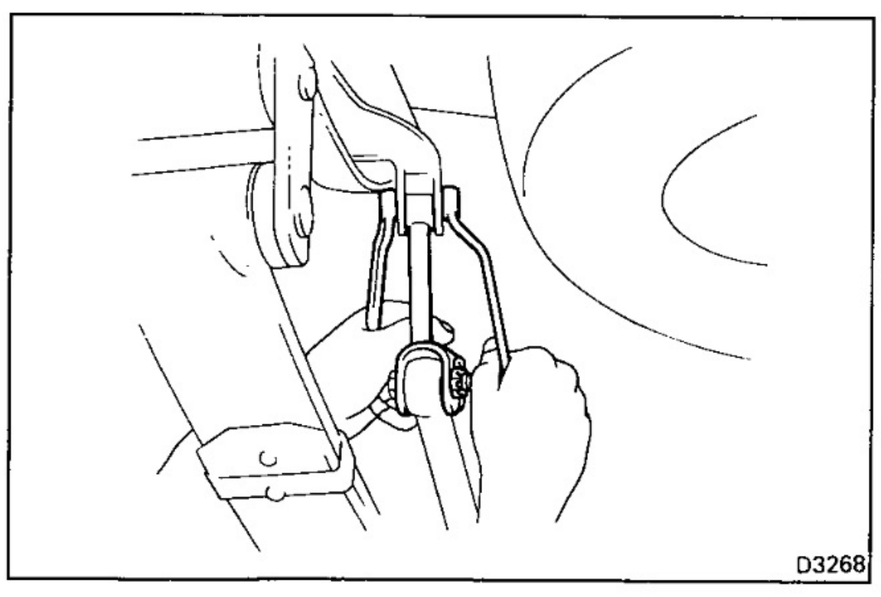

   (b) Torque the stabilizer bar link nut.

   Torque: 120 kg-cm (9 ft-lb, 12 N·m)

BRAKE SYSTEM

	Page
PRECAUTIONS	BR-2
TROUBLESHOOTING	BR-2
CHECKS AND ADJUSTMENTS	BR-5
MASTER CYLINDER	BR-9
BRAKE BOOSTER	BR-16
VACUUM PUMP	BR-25
FRONT BRAKE	BR-30
Drum Brake	BR-30
Disc Brake	BR-37
REAR BRAKE	BR-44
LOAD SENSING PROPORTIONING VALVE	BR-53
BRAKE HOSES AND TUBES	BR-63

PRECAUTIONS

1. Care must be taken to replace each part properly as it could affect the performance of the brake system and result in a driving hazard. Replace the parts with parts of the same part number or equivalent.
2. It is very important to keep parts and the area clean when repairing the brake system.

TROUBLESHOOTING

Problem	Possible cause	Remedy	Page
Low or spongy pedal	Linings worn	Replace brake shoes or pads	BR-30,37,44
	Leak in brake system	Repair leak	
	Master cylinder faulty	Repair or replace master cylinder	BR-9
	Air in brake system	Bleed brake system	BR-6
	Wheel cylinder faulty	Repair wheel cylinder	BR-30,44
	Piston seals worn or damaged	Repair brake calipers	BR-39
	Rear brake automatic adjuster faulty	Repair or replace adjuster	BR-44
Brakes drag	Parking brake out of adjustment	Adjust parking brake	BR-7
	Parking brake wire binding	Repair as necessary	
	Booster push rod out of adjustment	Adjust push rod	BR-16
	Return spring faulty	Replace spring	BR-16
	Brake line restricted	Repair as necessary	
	Lining cracked or distorted	Replace brake shoes and pads	BR-30,37,44
	Wheel cylinder or caliper piston sticking	Repair as necessary	BR-30,39,44
	Automatic adjuster broken	Replace adjuster	BR-44
	Master cylinder faulty	Repair or replace master cylinder	BR-9
Brakes pull	Tires improperly inflated	Inflate tires to proper pressure	
	Oil or grease on linings	Check for cause. Replace shoes	BR-30,37,44
	Brake shoes distorted, linings worn or glazed	Replace brake shoes	BR-30,44
	Drum or disc out of round	Replace drum or disc	BR-30,39,44
	Return spring faulty	Replace spring	BR-30,44
	Wheel cylinder faulty	Repair wheel cylinder	BR-30,44
	Piston frozen in caliper	Repair caliper	BR-39
	Disc brake pad sticking	Replace pads	BR-37
Brakes grab/chatter	Oil or grease on linings	Check for cause. Replace shoes	BR-30,37,44
	Drum or disc scored or out of round	Replace drum or disc	BR-30,39,44
	Brake shoes distorted, linings worn or glazed	Replace brake shoes	BR-30,44
	Wheel cylinder faulty	Repair wheel cylinder	BR-30,44
	Disc brake pad sticking	Replace pads	BR-37
	Brake booster faulty	Repair booster	BR-16

TROUBLESHOOTING (Cont'd)

Problem	Possible cause	Remedy	Page
Hard pedal but brakes inefficient	Oil or grease on linings	Check for cause. Replace shoes	BR-30,37,44
	Brake shoes distorted, linings worn or glazed, drums worn	Replace as required	BR-30,44
	Disc brake pads worn	Replace pads	BR-37
	Piston frozen in caliper	Repair caliper	BR-39
	Brake booster faulty	Repair booster	BR-16
	Brake line restricted	Repair as necessary	
	Vacuum leaking	Repair as necessary	
	Vacuum pump faulty	Repair or replace vacuum pump	BR-25
Snapping or clicking noise when brakes are applied	On drum brakes—brake shoes binding at backing plate ledges	Lubricate	BR-30,44
	On drum brakes—backing plate ledges worn	Replace and lubricate ledges	BR-30,44
	On drum brakes—loose or missing hold-down spring	Replace	BR-30,44
	On drum brakes—loose set bolt at backing plate	Tighten	BR-30,44
	On disc brakes—rust on front edge of inboard shoes	Inspect, lubricate. Replace if necessary	BR-37
	On disc brakes—loose installation bolt	Tighten	BR-37
Scraping or grinding noise when brakes are applied	Worn brake linings	Replace, refinish drums or rotors if heavily scored	BR-30,44
	Caliper to wheel or rotor interference	Replace as required	BR-39
	Dust cover to rotor or drum interference	Correct or replace	
	Other brake system components: Warped or bent brake backing plate, cracked drum or rotor	Inspect and service	BR-30,39,44
	Tires rubbing against chassis and body	Inspect and service	
Squealing, groaning or chattering noise when brakes are applied Note: Brake friction materials inherently generate noise and heat in order to dissipate energy. As a result, occasional squeal is normal and is aggravated by severe environmetal conditions such as cold, heat, wetness, snow, salt, mud, etc. This occasional squeal is not a functional problem and does not indicate any loss of brake effectiveness	Brake drums and linings rotors and pads worn or scored	Inspect, service or replace	BR-30,39,44
	Disc brakes—burred or rusted calipers	Clean deburr	BR-39
	Dirty, greased, contaminated or glazed linings	Clean or replace	BR-30,44
	Improper lining parts	Inspect for correct usage replace	BR-30,44
	Mal adjustment of brake pedal or booster push-rod	Inspect and adjust	BR-5, 16
	Drum brakes—weak damaged or incorrect shoe hold-down springs, loose or damaged shoe hold-down pins and springs and grooved backing plate ledges	Inspect, service or replace	BR-30,44

TROUBLESHOOTING (Cont'd)

Problem	Possible cause	Remedy	Page
Squealing noise when brakes are not applied	Bent or warped backing plate causing interference with drum	Service or replace	BR-30,44
	Improper machining of drum causing interference with backing plate or shoe	Replace drum	BR-30,44
	Mal adjustment of brake pedal or booster push-rod	Inspect and adjust	BR-5,16
	Poor return of brake booster or master cylinder or wheel cylinder	Inspect, service or replace	BR-9,16,30, 44
	Disc brakes—rusted, stuck	Inspect. Lubricate if necessary	BR-39
	Other brake system components: Loose or extra parts in brakes Rear drum adjustment too tight causing lining to glaze Worn, damaged or insufficiently lubricated wheel bearings	Inspect, service, replace as required	BR-30,44
	Drum brakes—weak, damaged or incorrect shoe retracting springs		BR-30,44
	Drum brakes—grooved backing plate ledges		BR-30,44
	Improper positioning of pads in caliper		
	Outside diameter of rotor rubbing caliper housing		
Groaning, clicking or rattling noise when brakes are not applied	Stones or foreign material trapped inside wheel covers	Remove stones, etc.	
	Loose wheel hub nuts	Tighten to correct torque. Replace if stud holes are elongated	
	Disc brakes—loose installation bolt	Inspect. Tighten if necessary	BR-39
	Mal adjustment of brake pedal or booster push-rod	Inspect and adjust	BR-5,16
	Disc brakes—poor return of piston	Inspect, service or replace	
	Drum brakes—loose or extra parts	Inspect, remove or service	BR-30,44
	Worn, damaged or dry wheel bearings	Inspect, lubricate or replace	

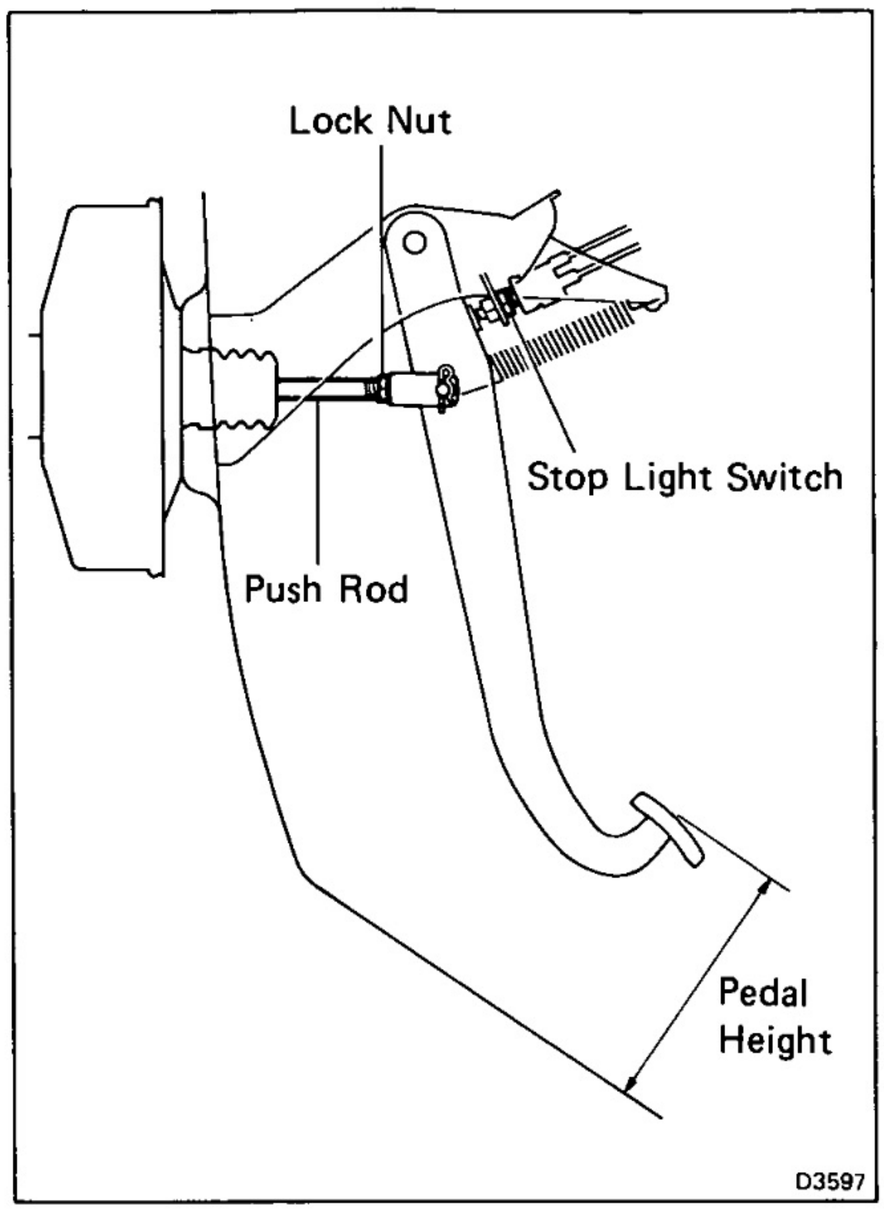

CHECKS AND ADJUSTMENTS

CHECK AND ADJUSTMENT OF BRAKE PEDAL

1. CHECK THAT PEDAL HEIGHT IS CORRECT

Pedal height from asphalt sheet:

70 series	**169 – 179 mm (6.65 – 7.05 in.)**
60 series	**180 mm (7.09 in.)**

If incorrect, adjust the pedal height.

2. IF NECESSARY, ADJUST PEDAL HEIGHT

(a) Disconnect the stop light switch connector and sufficiently loosen the switch.

(b) Adjust the pedal height by turning the pedal push rod.

(c) Return the stop light switch until its body lightly contacts the pedal stopper.

(d) After adjusting the pedal height, check and adjust the pedal freeplay.

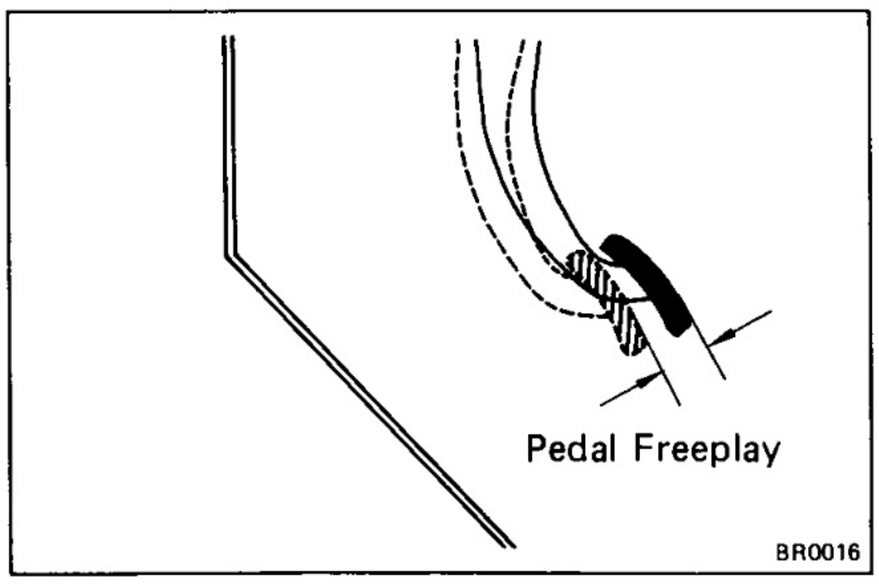

3. CHECK PEDAL FREEPLAY

(a) Stop the engine and depress the brake pedal several times until there is no more vacuum left in the booster.

(b) Push in the pedal until the beginning of resistance is felt. Measure the distance, as shown.

Pedal freeplay: 3 – 6 mm (0.12 – 0.24 in.)

NOTE: The pedal freeplay is the amount of the stroke until the booster air valve is moved by the pedal push rod.

4. IF NECESSARY, ADJUST PEDAL FREEPLAY

(a) If incorrect, adjust the pedal freeplay by turning the pedal push rod.

(b) Start the engine and confirm that pedal freeplay exists.

(c) After adjusting the pedal freeplay, check the pedal height.

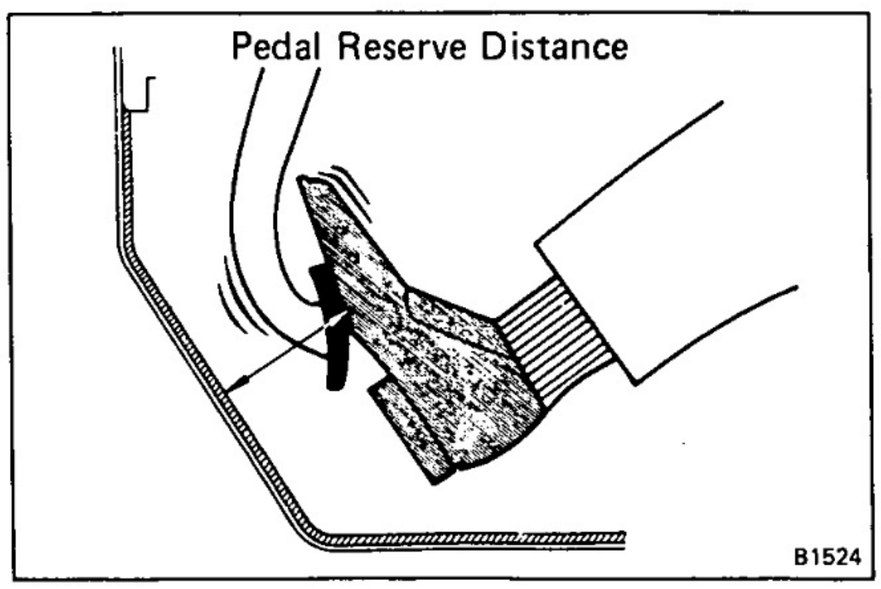

5. CHECK THAT PEDAL RESERVE DISTANCE IS CORRECT

Release the parking brake.
With engine running, depress the pedal and measure the pedal reserve distance, as shown.

Pedal reserve distance from asphalt sheet at 50 kg (110 lb, 490 N):

FJ, BJ, HJ 60 series

Front disc type	**More than 90 mm (3.54 in.)**
Front drum type	**More than 103 mm (4.06 in.)**

FJ, BJ, HJ 70 series

Front disc type	**More than 80 mm (3.15 in.)**
Front drum type	
(FJ, BJ, HJ 75 series)	**More than 90 mm (3.54 in.)**
(Except 75 series)	**More than 100 mm (3.94 in.)**

If incorrect, troubleshoot the brake system.

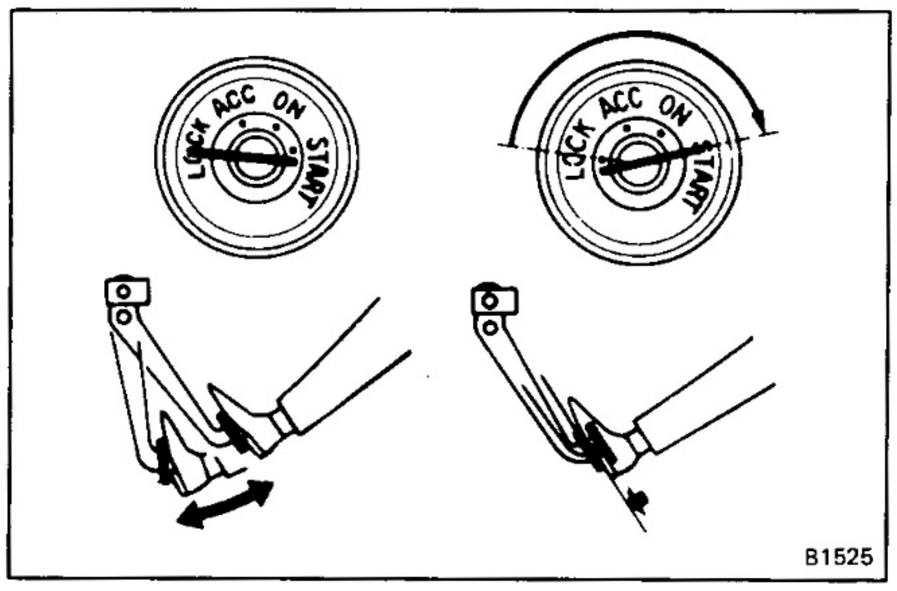

OPERATIONAL TEST OF BRAKE BOOSTER

NOTE: If there is leakage or lack of vacuum, repair before testing.

1. OPERATING CHECK

(a) Depress the brake pedal several times with the engine off, and check that there is no change in the pedal reserve distance.

(b) Depress the brake pedal and start the engine. If the pedal goes down slightly, operation is normal.

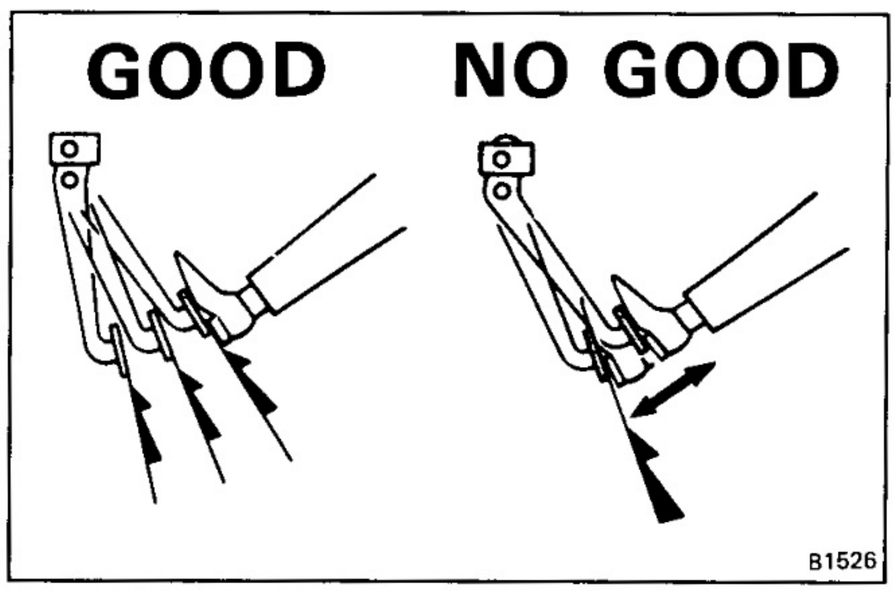

2. AIR TIGHTNESS

(a) Start the engine and stop it after one or two minutes. Depress the brake pedal several times slowly. If the pedal goes down furtherest the first time, but gradually rises after the second or third time, the booster is air tight.

(b) Depress the brake pedal while the engine is running, and stop it with the pedal depressed. If there is no change in pedal reserve travel after holding the pedal for thirty seconds, the booster is air tight.

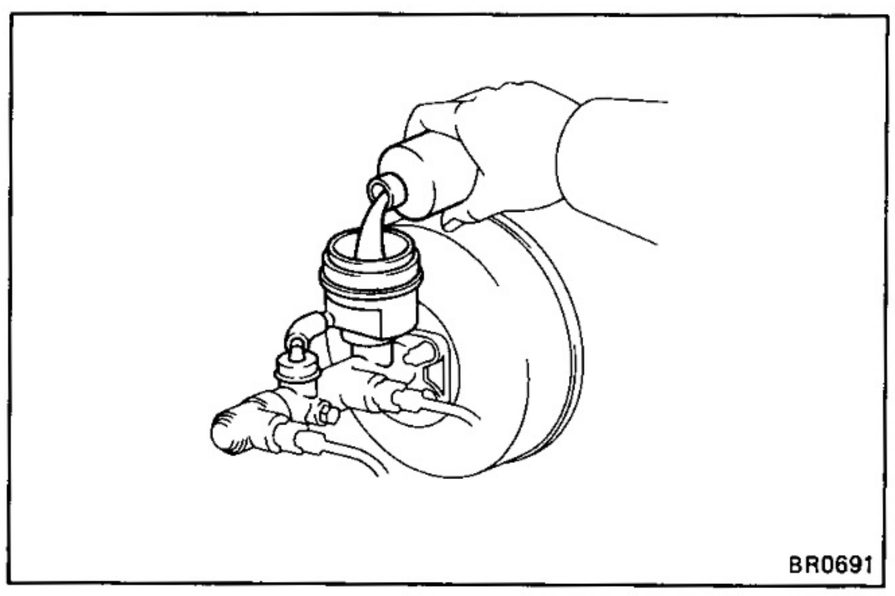

BLEEDING OF BRAKE SYSTEM

NOTE: If any work is done on the brake system or if air is suspected in the brake lines, bleed the system of air.

CAUTION: Do not let brake fluid remain on a painted surface. Wash it off immediately.

1. FILL BRAKE RESERVOIR WITH BRAKE FLUID

Check the fluid level in the reservoir. If necessary, add brake fluid.

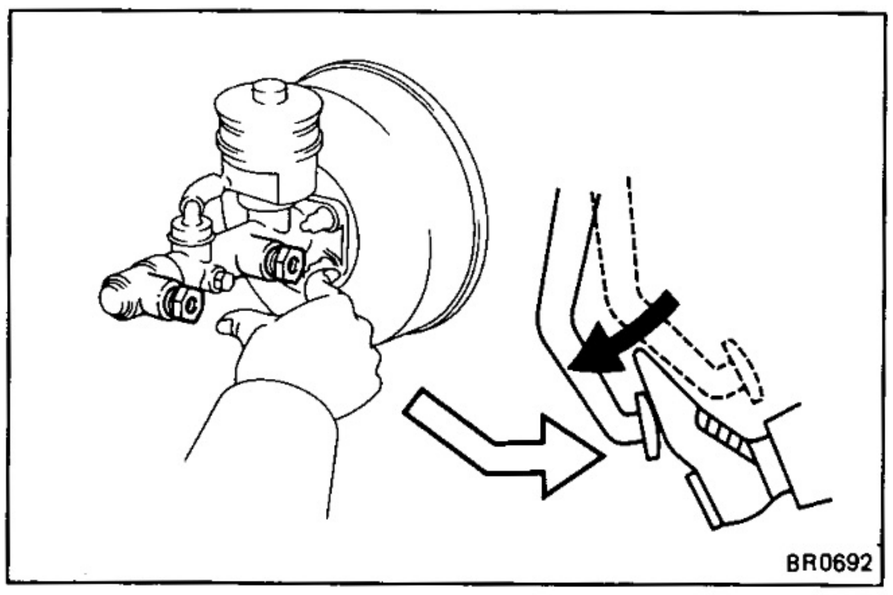

2. BLEED MASTER CYLINDER

NOTE: If the master cylinder was disassembled or if the reservoir becomes empty, bleed the air from the master cylinder.

(a) Disconnect the brake tubes from the master cylinder.

(b) Depress the brake pedal and hold it.

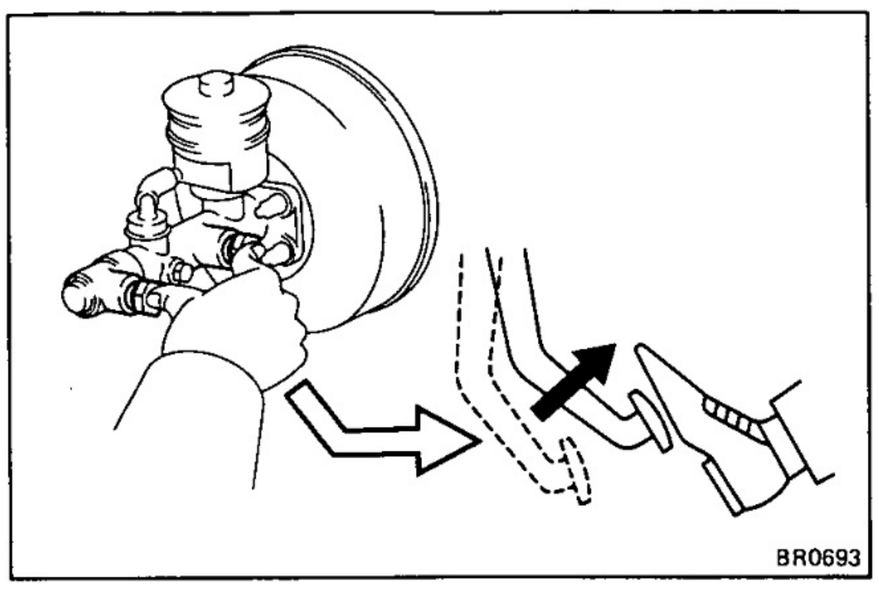

(c) Block off the outlet holes with your fingers, and release the brake pedal.

(d) Repeat (b) and (c) three or four times.

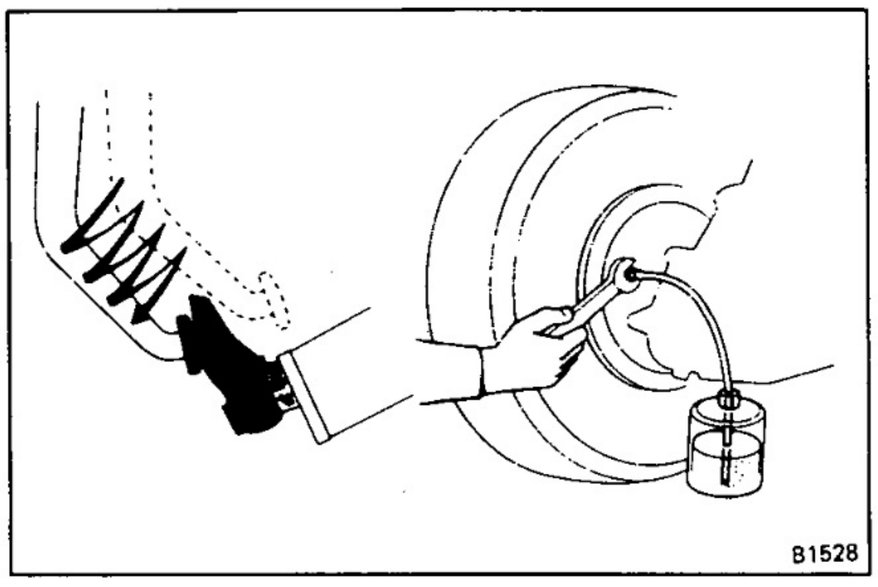

3. BEGIN BLEEDING AIR FROM WHEEL CYLINDER WITH LONGEST HYDRAULIC LINE

(a) Connect the vinyl tube to the brake cylinder bleeder plug, and insert the other end of the tube in a half-full container of brake fluid.

(b) Slowly pump the brake pedal several times.

(c) While having an assistant press on the pedal, loosen the bleeder plug until fluid starts to runout. Then close the bleeder plug.

(d) Repeat (b) and (c) until there are no more air bubbles in the fluid.

(e) Tighten the bleeder plug.

Bleeder plug tightening torque:
110 kg-cm (8 ft-lb, 11 N·m)

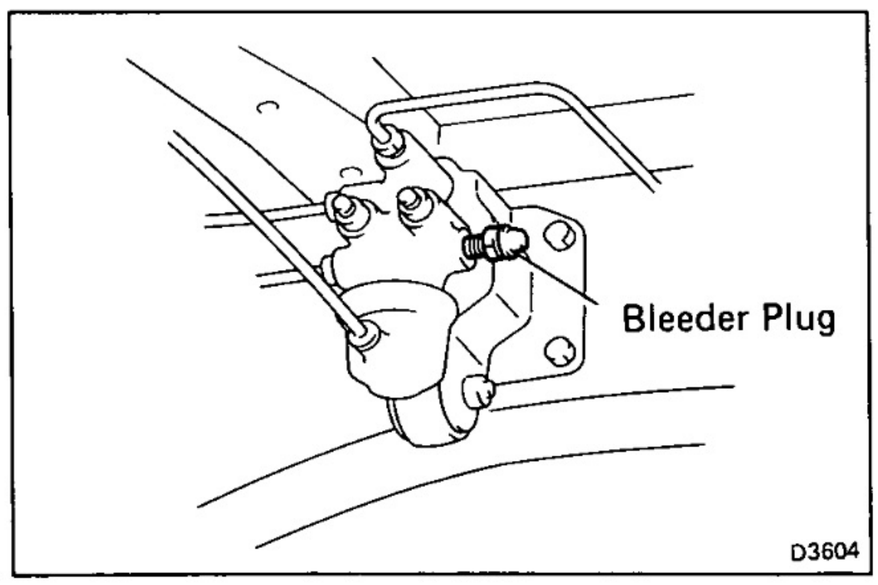

4. REPEAT PROCEDURE FOR EACH WHEEL

5. BLEED AIR FROM LSPV

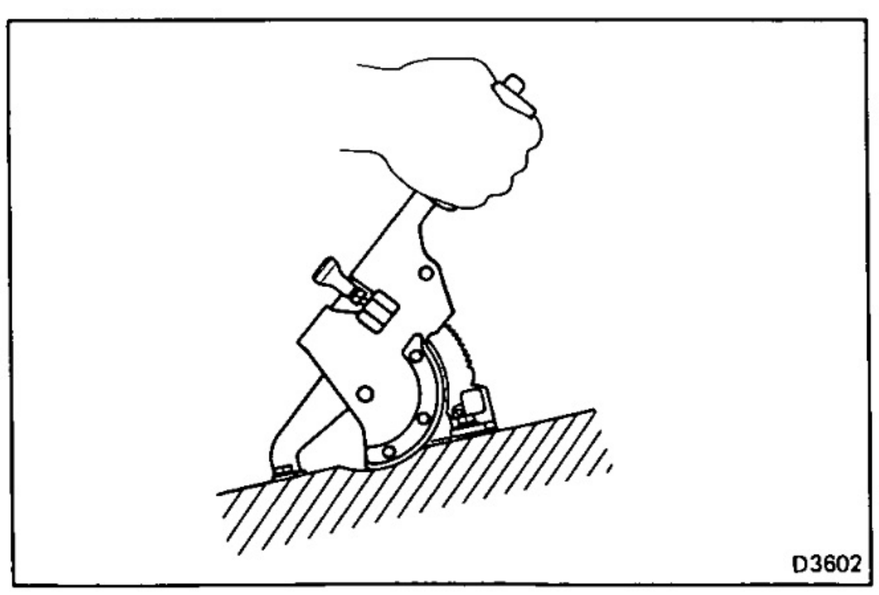

CHECK AND ADJUSTMENT OF PARKING BRAKE

1. CHECK THAT PARKING BRAKE LEVER TRAVEL IS CORRECT

Pull the parking brake lever all the way up, and count the number of clicks.

Parking brake lever travel at 20 kg (44.1 lb, 196 N):
7 – 9 clicks

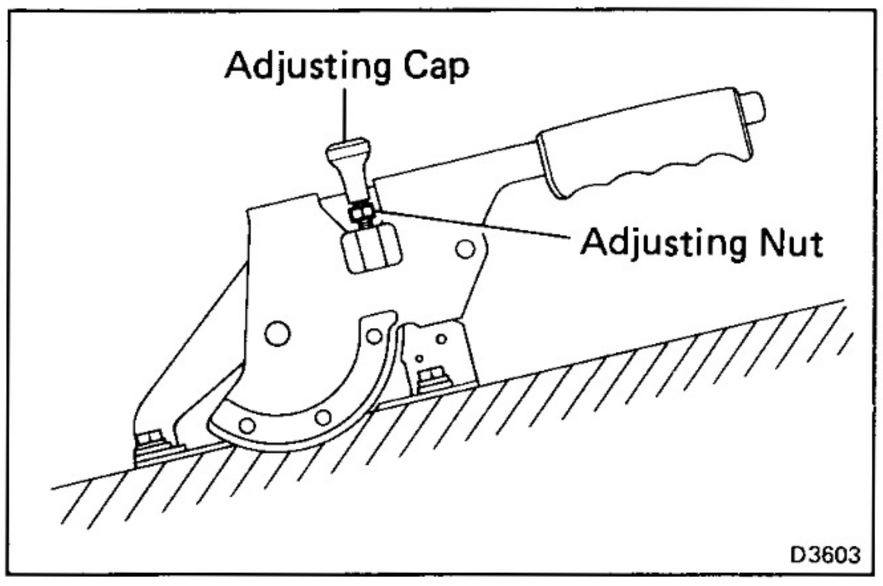

2. IF NECESSARY, ADJUST PARKING BRAKE LEVER TRAVEL

NOTE: Before adjusting the parking brake, make sure that the rear brake shoe clearance has been adjusted.

(a) Remove the console assembly and/or parking brake lever cover.

(b) Loosen the adjusting cap and turn the adjusting nut until the travel is correct.

(c) Tighten the adjusting cap.

(d) Install the console assembly and/or parking brake lever cover.

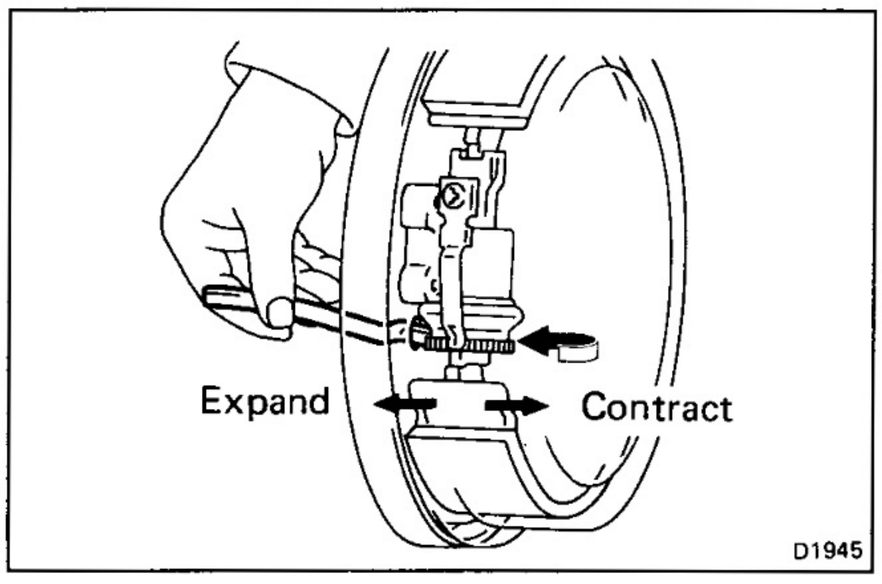

ADJUSTMENT OF BRAKE SHOE CLEARANCE FOR DRUM BRAKE TYPE

ADJUST BRAKE SHOE CLEARANCE

(a) Jack up and support the vehicle.

(b) Remove the shoe adjusting hole plugs from the backing plate.

(c) Using a brake adjusting tool, turn the adjusting nut until the wheel locks.

(d) Using a brake adjusting tool, turn the adjusting nut until the wheel turns freely.

Standard number of notches to be backed off:

5 notches

(e) Repeat the steps (c) and (d) for other wheels.

(f) Install the shoe adjusting hole plugs.

(g) Check that the pedal reserve distance is correct. (See pages BR-5 and BR-6)

MASTER CYLINDER

REMOVAL OF MASTER CYLINDER

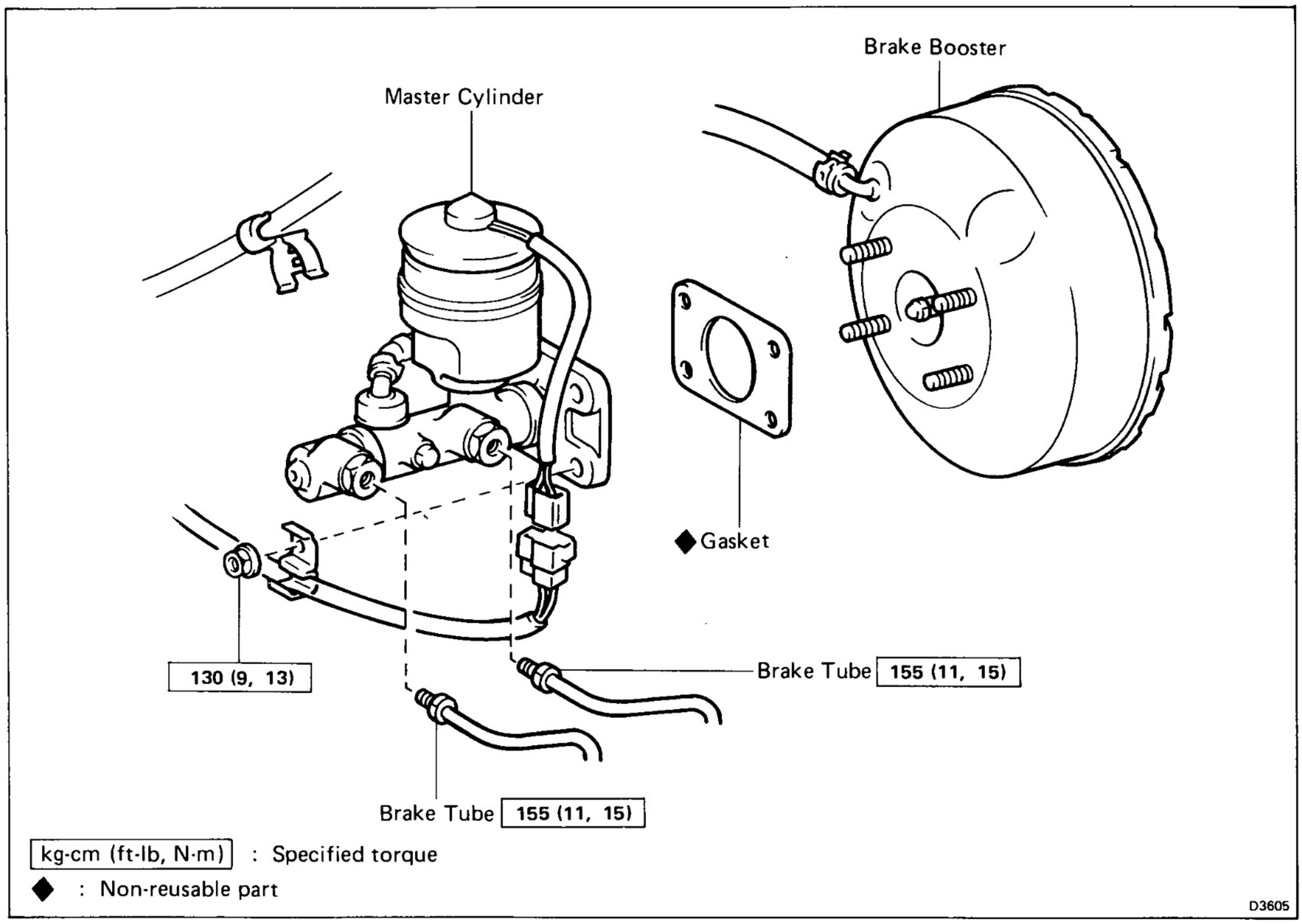

1. DISCONNECT LEVEL WARNING SWITCH CONNECTOR

2. TAKE OUT FLUID WITH SYRINGE OR SUCH

   CAUTION: Do not let brake fluid remain on a painted surface. Wash it off immediately.

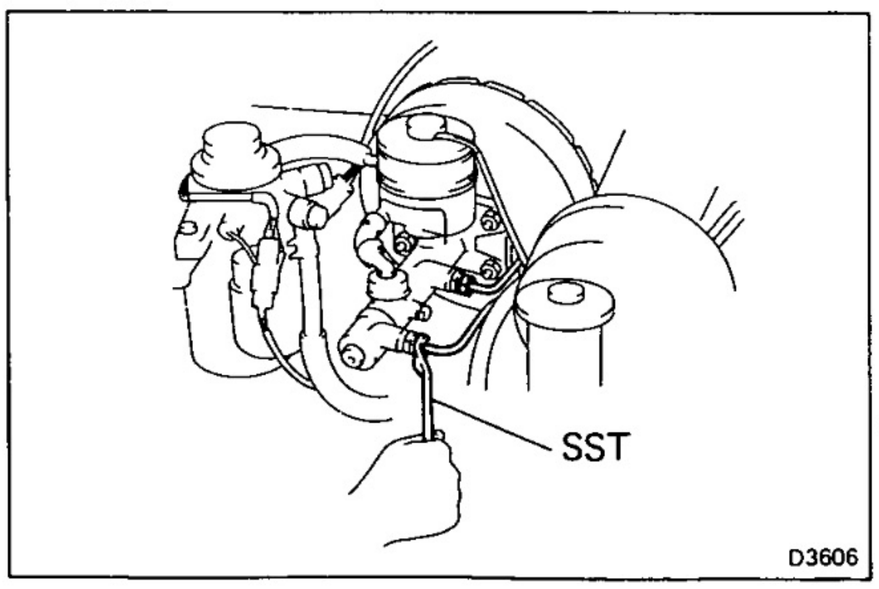

3. DISCONNECT TWO BRAKE TUBES

   Using SST, disconnect two brake tubes from the master cylinder.

   SST 09751-36011

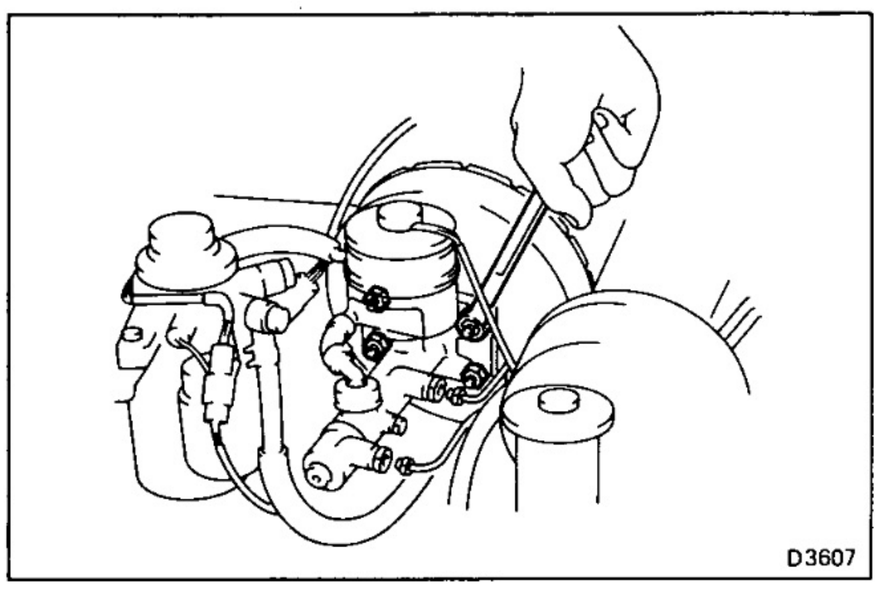

4. REMOVE MASTER CYLINDER

(a) Remove the four nuts.

(b) Remove the master cylinder, clamp and gasket from the brake booster.

COMPONENTS

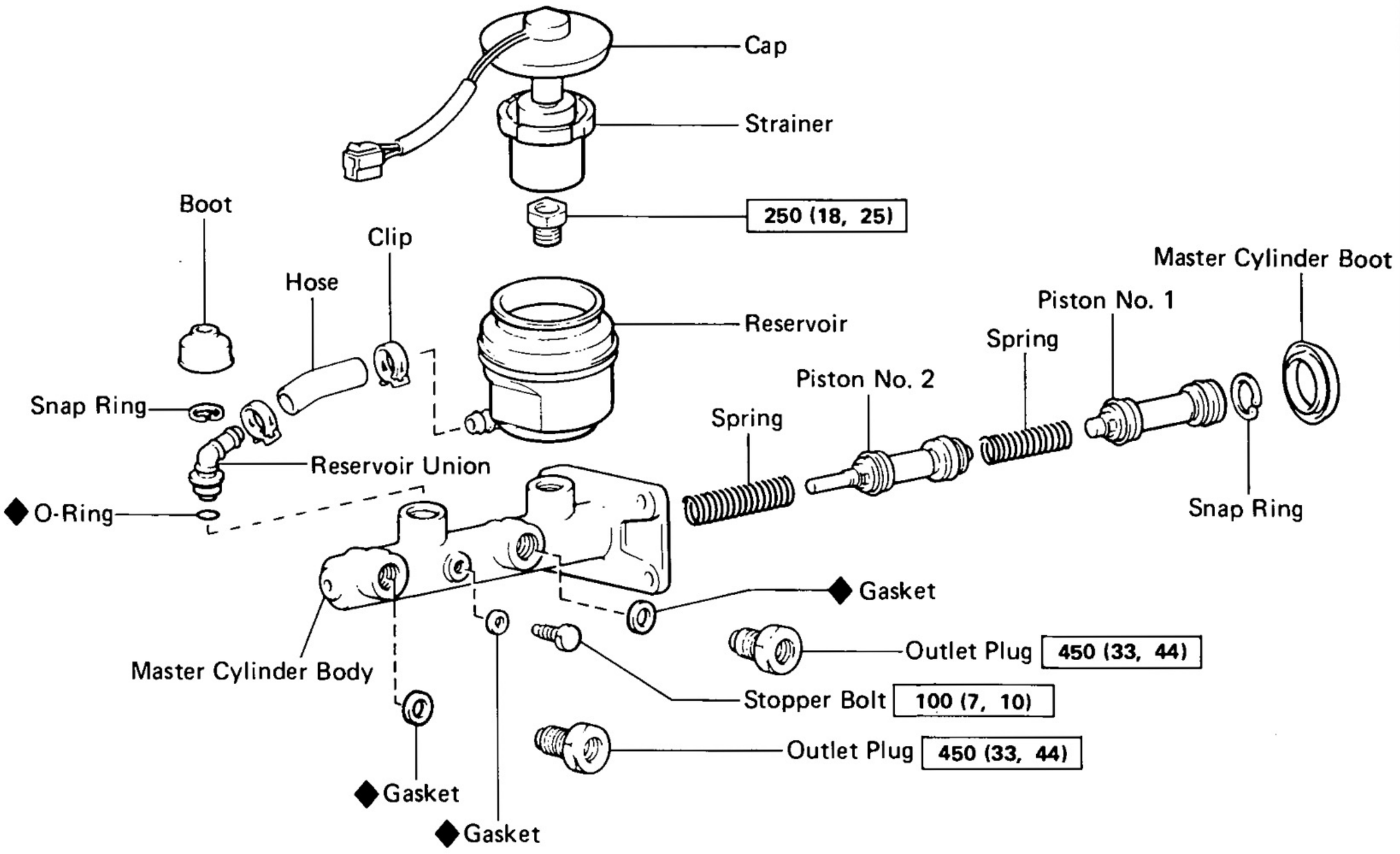

kg-cm (ft-lb, N·m) : Specified torque

◆ : Non-reusable part

D3608

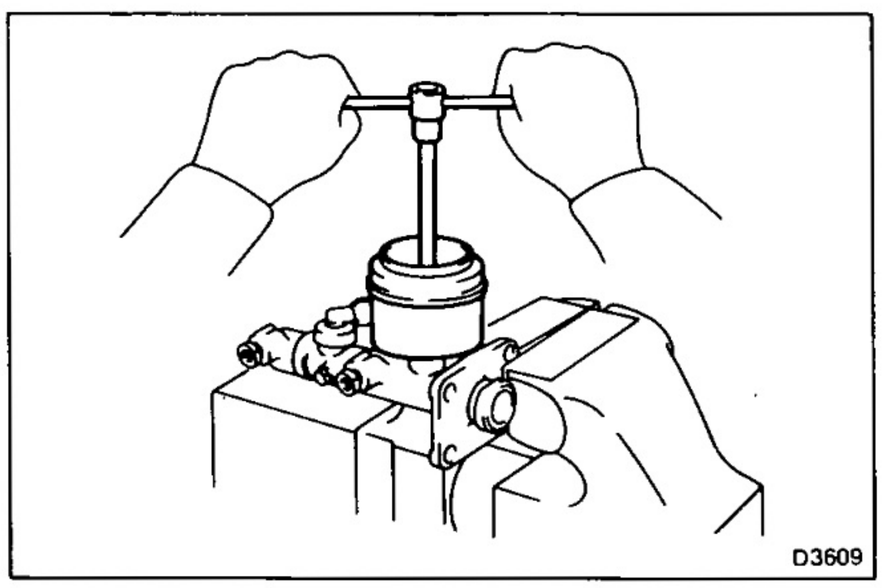

D3609

DISASSEMBLY OF MASTER CYLINDER

1. PLACE CYLINDER IN VISE

2. REMOVE RESERVOIR AND HOSE
   (a) Remove the set bolt from the reservoir.
   (b) Remove the reservoir with the hose from the master cylinder.

3. REMOVE BOOT

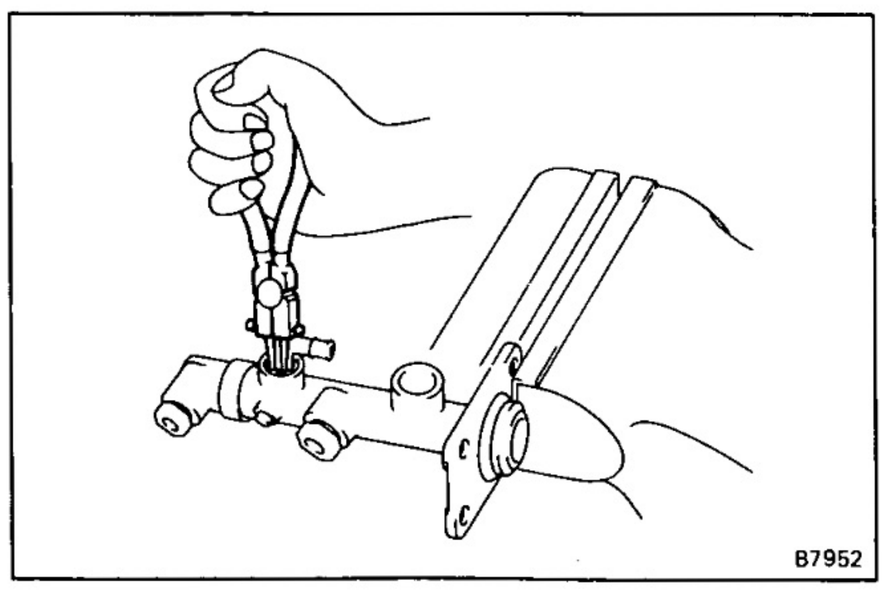

B7952

4. REMOVE RESERVOIR UNION
   (a) Using a snap ring pliers, remove the snap ring.
   (b) Remove the reservoir union and O-ring.

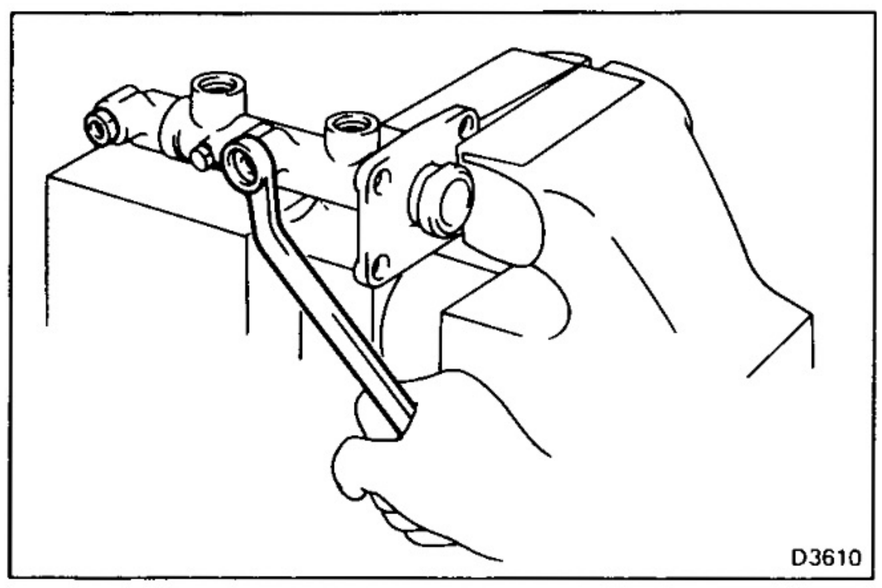

5. REMOVE OUTLET PLUGS

Remove the two outlet plugs and gaskets.

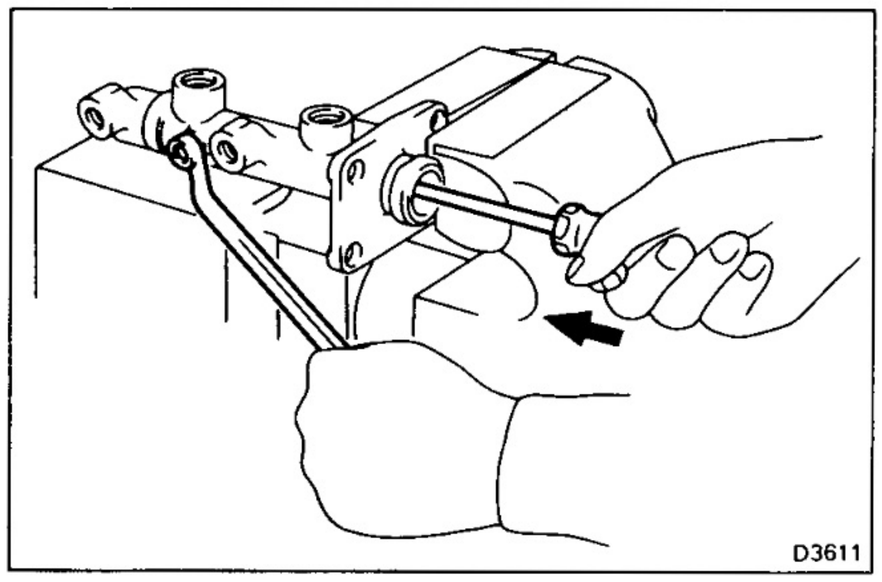

6. REMOVE PISTON STOPPER BOLT

Using a screwdriver, push the pistons in all the way, and remove the piston stopper bolt and gasket.

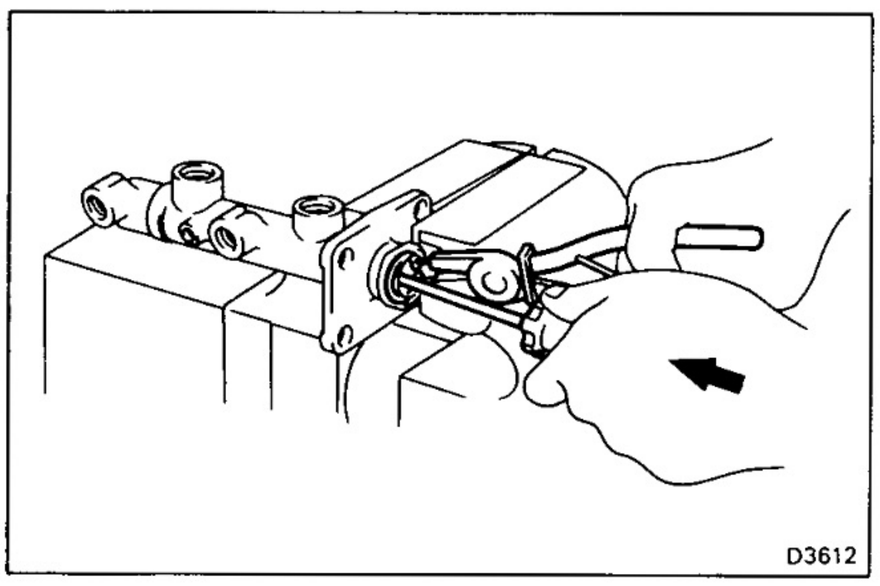

7. REMOVE TWO PISTONS AND SPRINGS

(a) Push in the piston with a screwdriver and remove the snap ring with snap ring pliers.

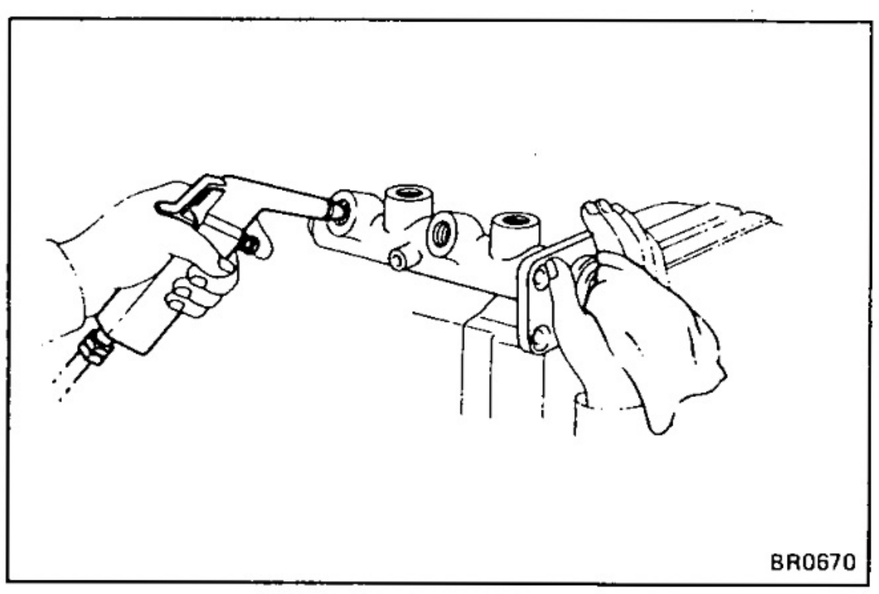

(b) Remove the two pistons and springs from the master cylinder. If necessary, inject compressed air into the outlet hole to force out the piston.

INSPECTION OF MASTER CYLINDER

NOTE: Clean the disassembled parts with compressed air.

1. INSPECT CYLINDER BORE FOR RUST AND SCORING

2. INSPECT CYLINDER FOR WEAR OR DAMAGE

If necessary, clean or replace the cylinder.

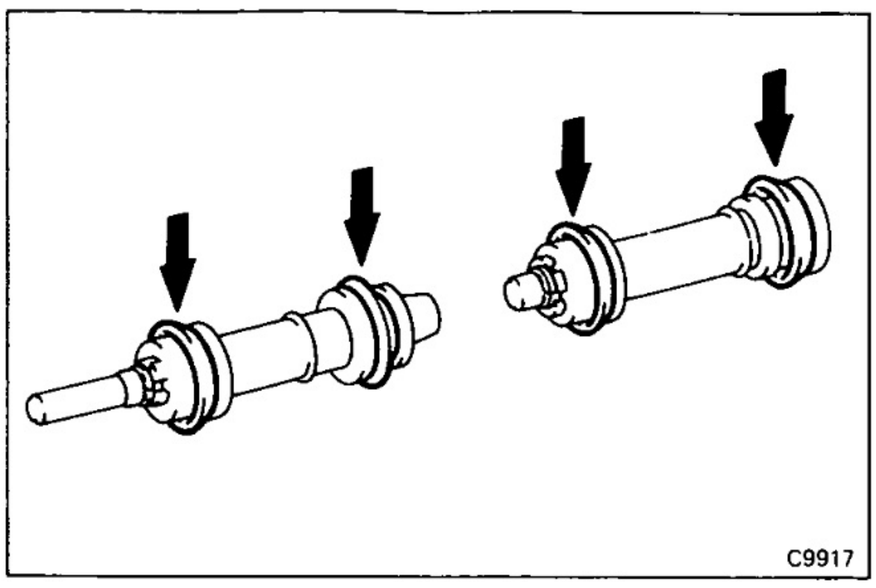

ASSEMBLY OF MASTER CYLINDER

(See page BR-11)

1. APPLY LITHIUM SOAP BASE GLYCOL GREASE TO RUBBER PARTS OF PISTON

2. INSTALL TWO SPRINGS AND PISTONS

CAUTION: Be careful not to damage the rubber lips on the pistons.

(a) Insert two springs and pistons straight in, not at an angle.

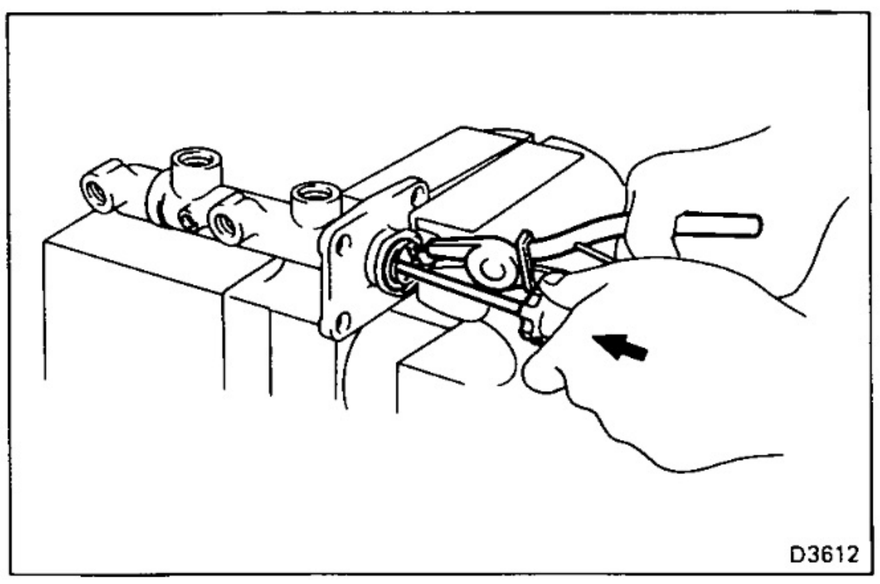

(b) Using snap ring pliers, install the snap ring.

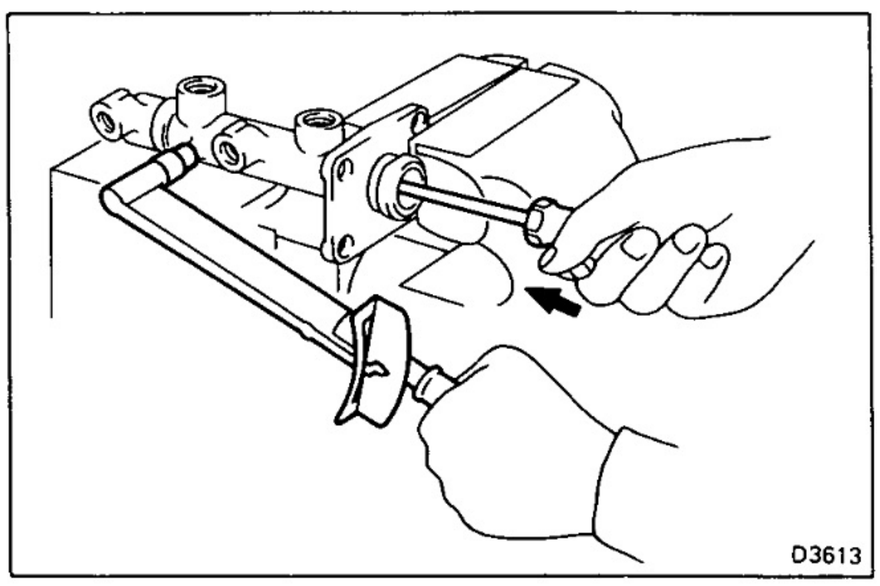

3. INSTALL PISTON STOPPER BOLT AND NEW GASKET

Using a screwdriver, push the pistons in all the way and install the piston stopper bolt through the new gasket. Torque the bolt.

Torque: 100 kg-cm (7 ft-lb, 10 N·m)

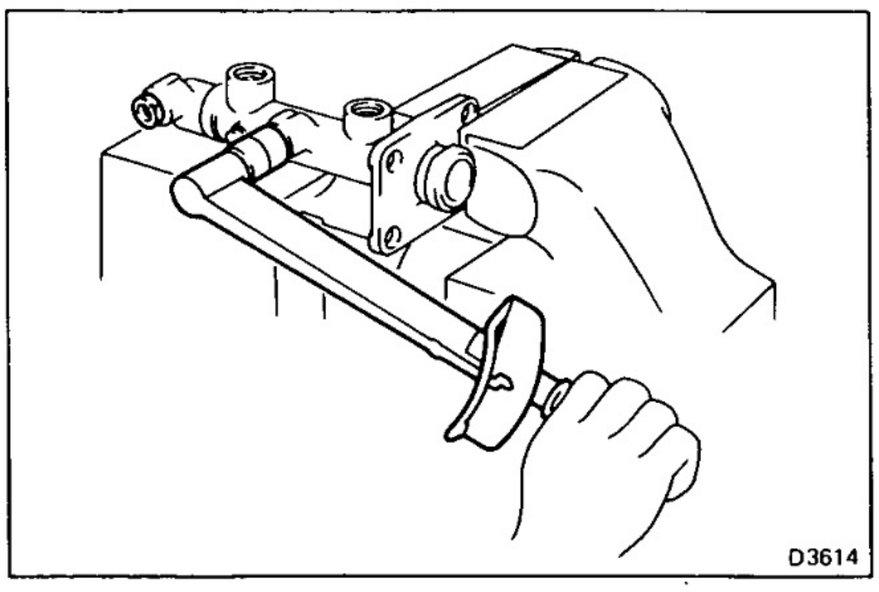

4. INSTALL OUTLET PLUGS

Install the two outlet plugs through the new gaskets, and torque the plugs.

Torque: 450 kg-cm (33 ft-lb, 44 N·m)

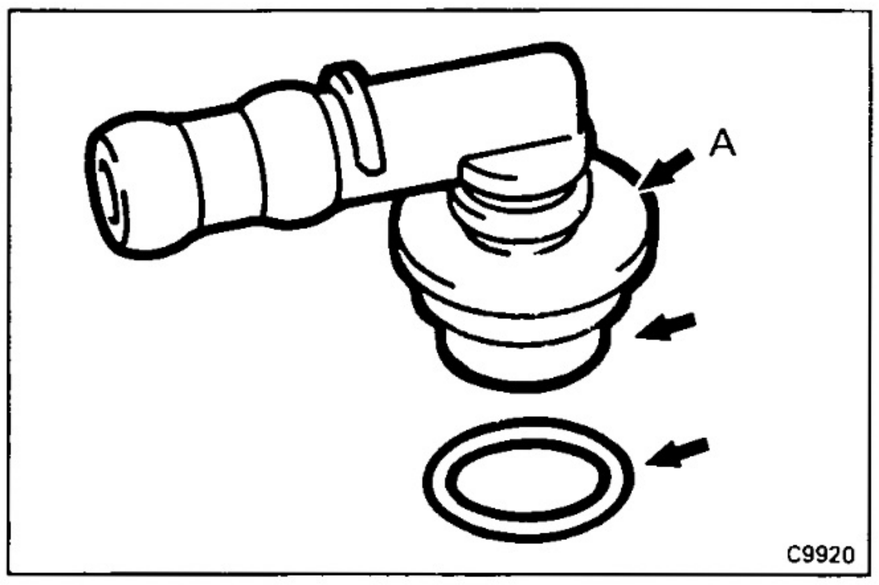

5. INSTALL RESERVOIR UNION

(a) Apply lithium soap base glycol grease to the reservoir union.

(b) Pack the lithium soap base glycol grease on the union (A).

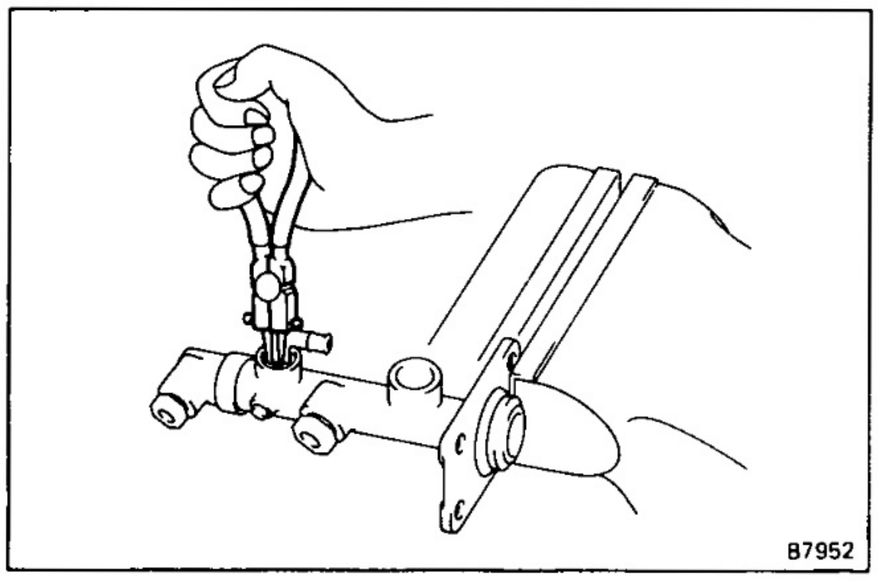

(c) Install the union through the new O-ring.

(d) Using a snap ring pliers, install the new snap ring.

(e) Install the boot.

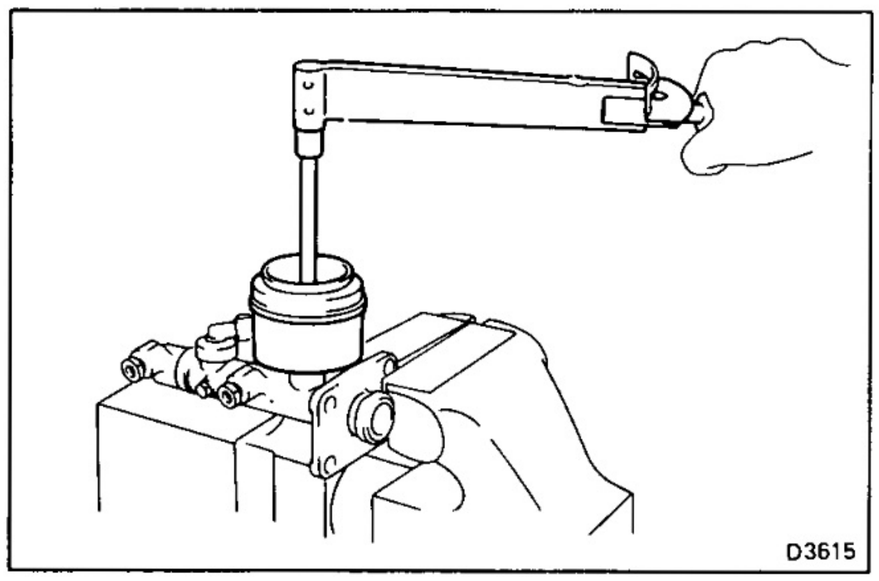

6. INSTALL RESERVOIR AND HOSE

(a) Connect the hose to union and reservoir.

(b) Install the reservoir on the master cylinder with the "MAX" mark facing toward the front.

(c) Install the bolt and torque it.

Torque: 250 kg-cm (18 ft-lb, 25 N·m)

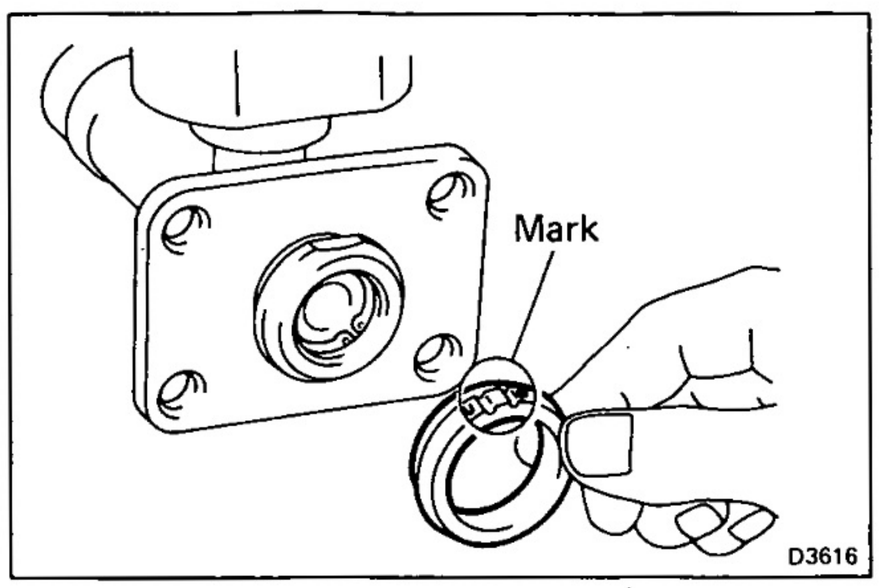

INSTALLATION OF MASTER CYLINDER

1. CLEAN OUT GROOVE ON LOWER INSTALLATION SURFACE OF MASTER CYLINDER

2. CONFIRM THAT "UP" MARK ON MASTER CYLINDER BOOT IS IN CORRECT POSITION

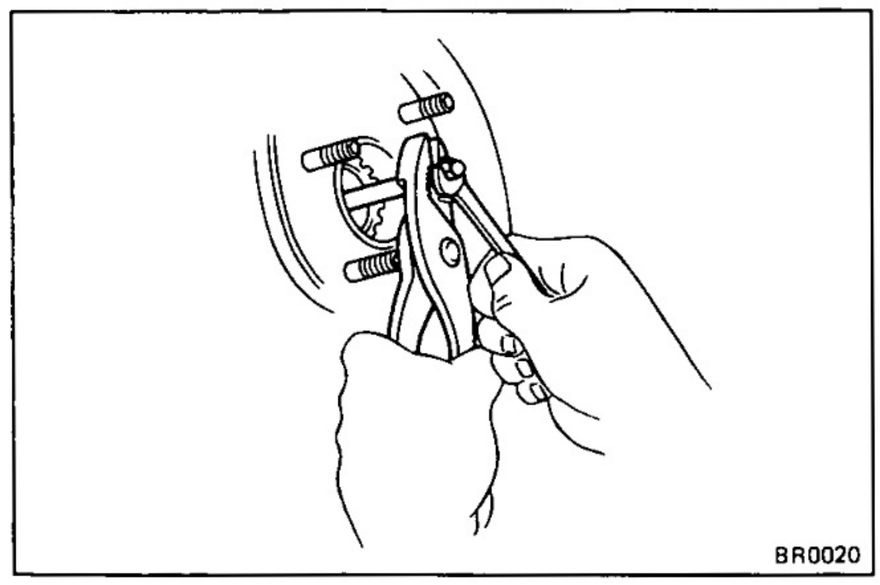

3. ADJUST LENGTH OF BRAKE BOOSTER PUSH ROD BEFORE INSTALLING MASTER CYLINDER
(See page BR-23)

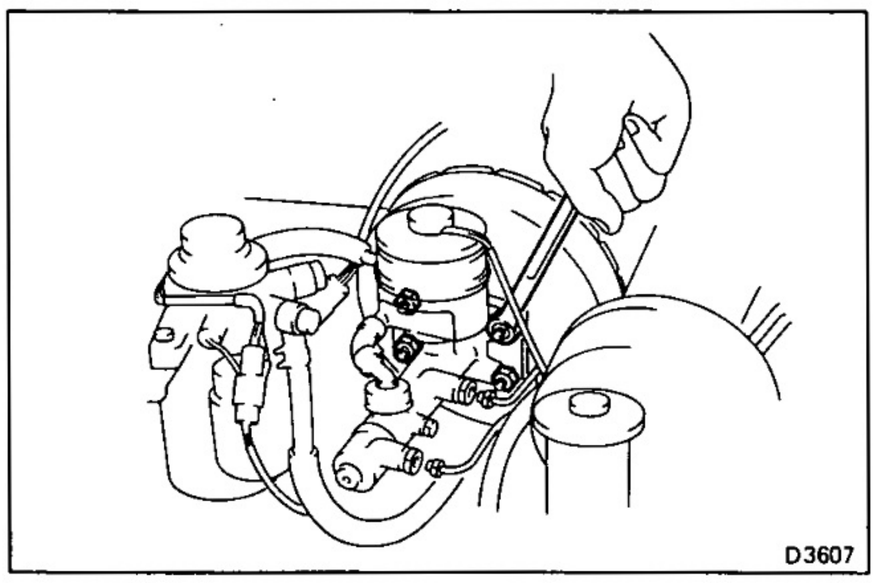

4. INSTALL MASTER CYLINDER

Install the master cylinder and clamp on the brake booster with four nuts through the new gasket.

Torque: 130 kg-cm (9 ft-lb, 13 N·m)

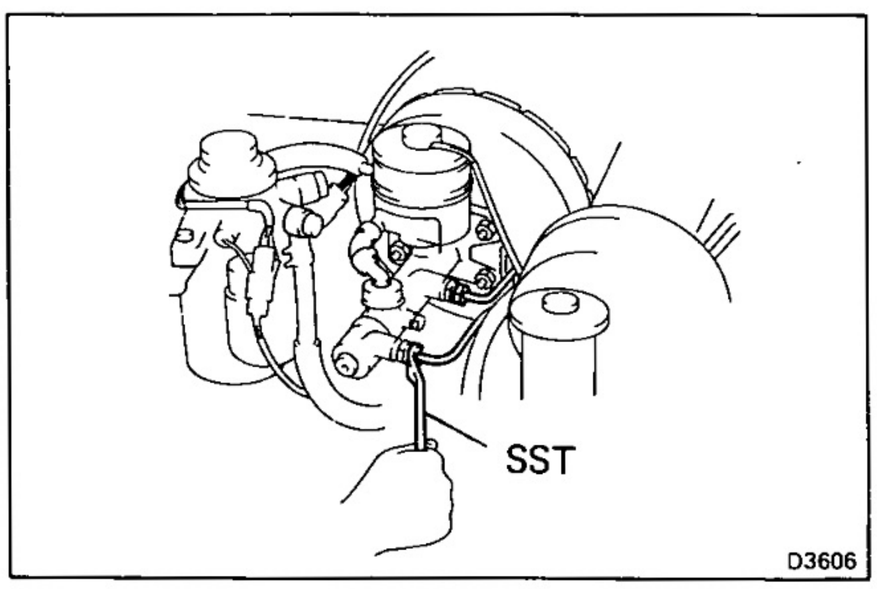

5. CONNECT TWO BRAKE TUBES

(a) Finger tighten the union nuts.

(b) Using SST, torque the union nuts.

SST 09751-36011

Torque: 155 kg-cm (11 ft-lb, 15 N·m)

6. CONNECT LEVEL WARNING SWITCH CONNECTOR

7. FILL BRAKE RESERVOIR WITH BRAKE FLUID AND BLEED BRAKE SYSTEM (See page BR-6)

8. CHECK FOR LEAKS

9. CHECK AND ADJUST BRAKE PEDAL
(See page BR-5)

BRAKE BOOSTER

REMOVAL OF BRAKE BOOSTER

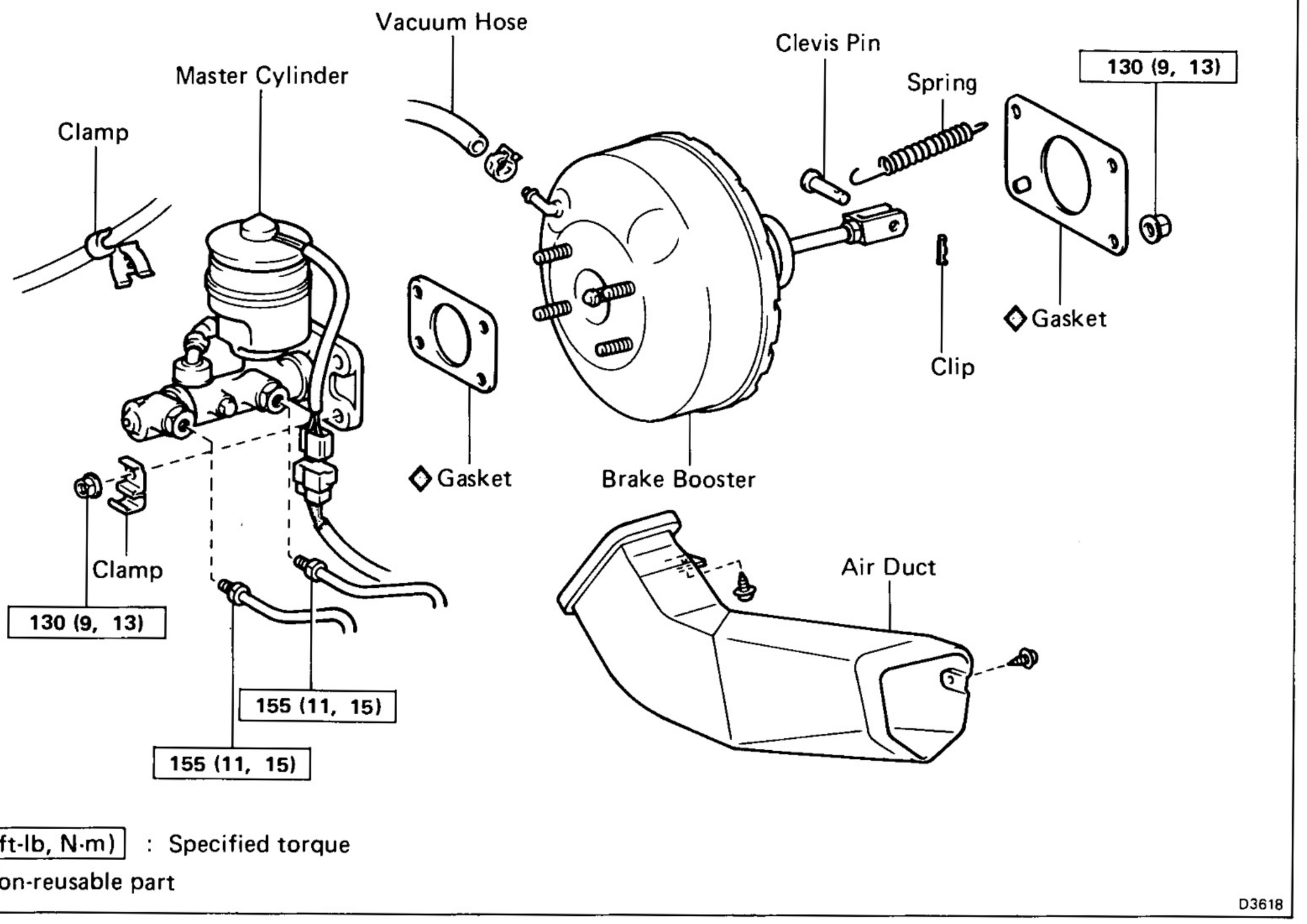

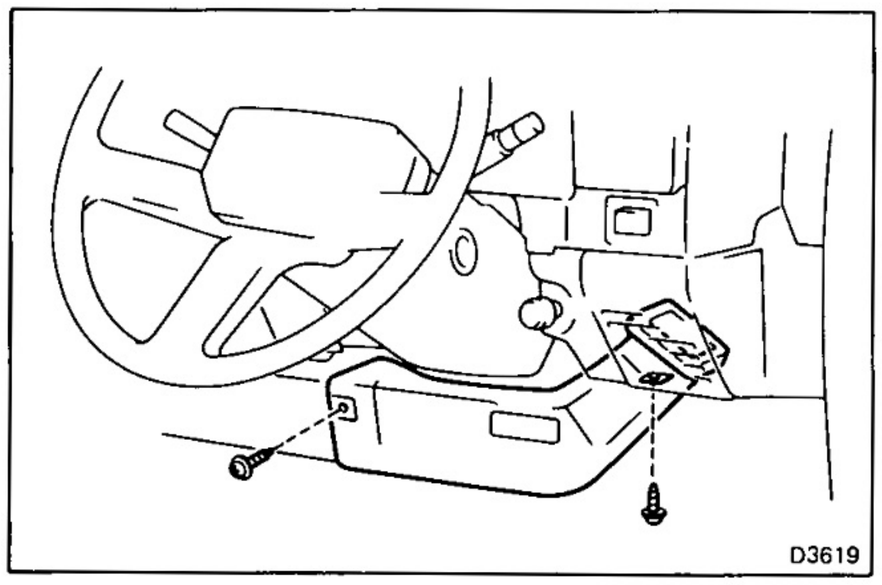

1. REMOVE MASTER CYLINDER (See page BR-9)
2. DISCONNECT VACUUM HOSE FROM BRAKE BOOSTER
3. REMOVE CLUTCH BOOSTER (See page CL-9)
4. REMOVE AIR DUCT

   Remove the two screws and air duct.
5. REMOVE PEDAL RETURN SPRING

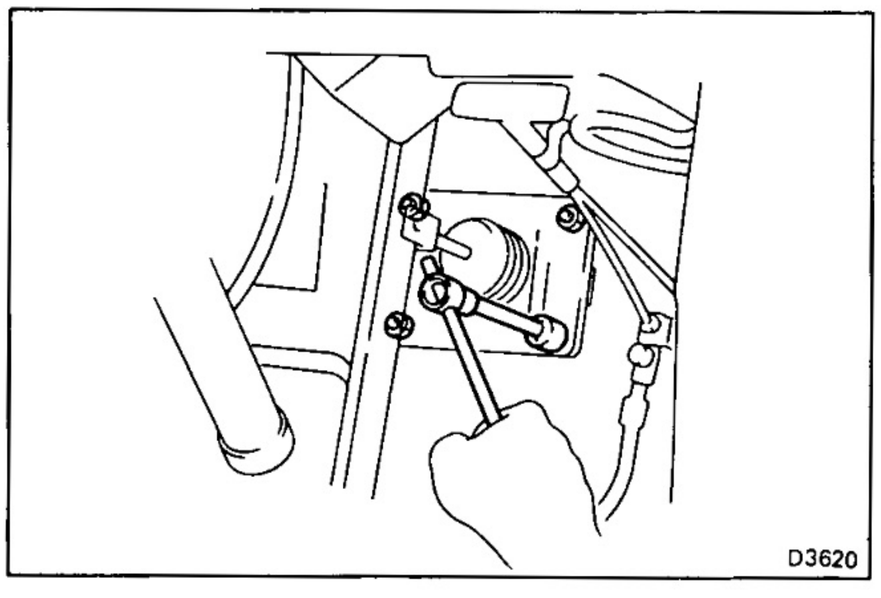

6. REMOVE CLIP AND CLEVIS PIN
7. REMOVE BRAKE BOOSTER

   Remove the four nuts, and pull out the brake booster with gasket.

COMPONENTS

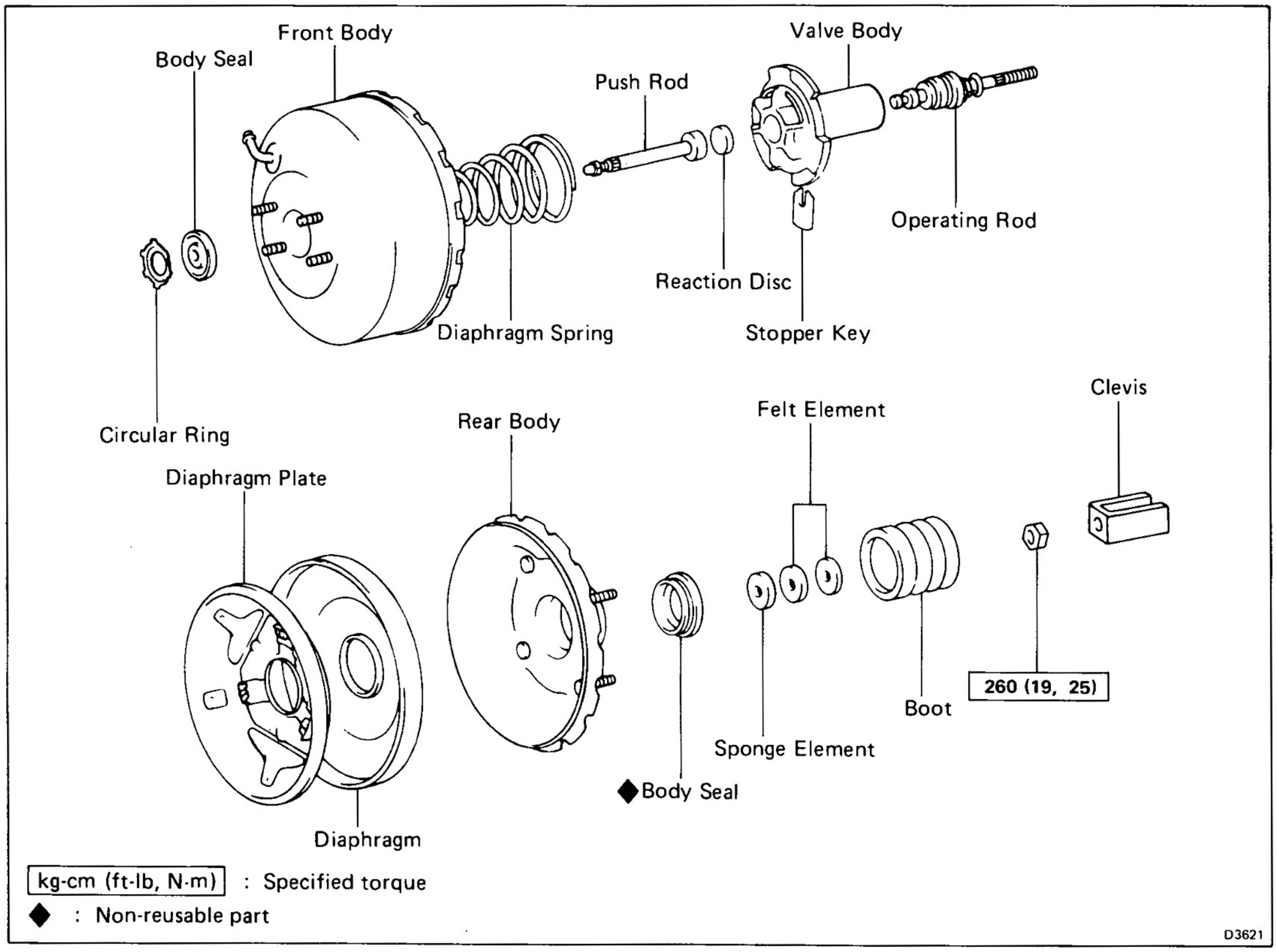

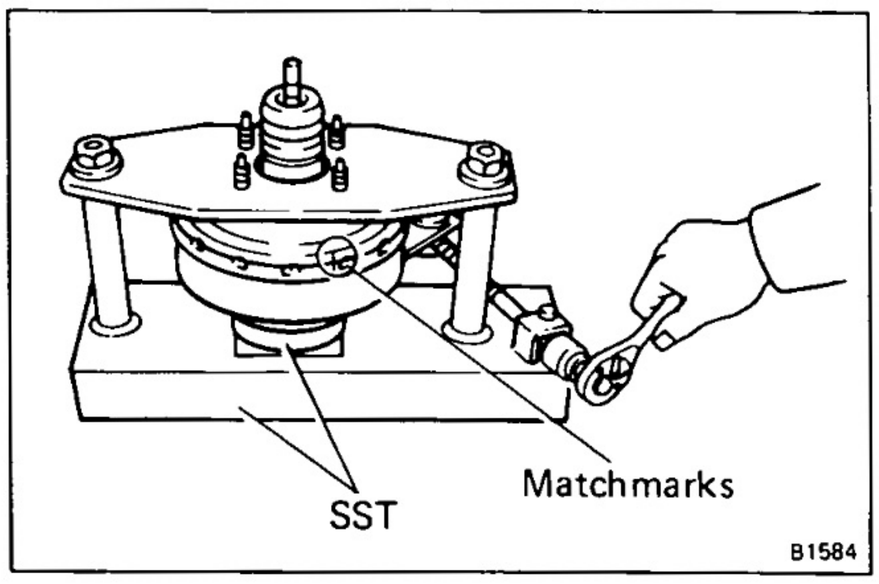

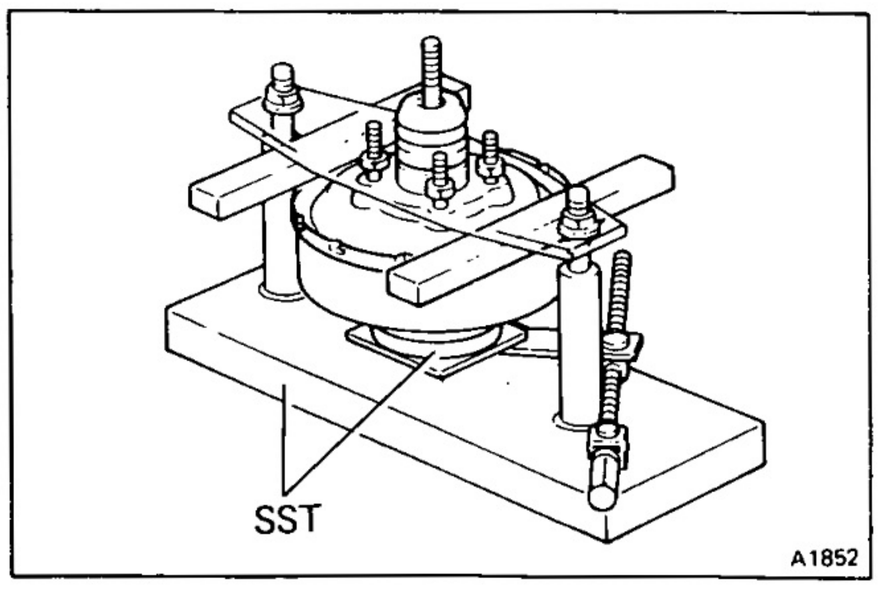

DISASSEMBLY OF BRAKE BOOSTER

1. REMOVE CLEVIS AND LOCK NUT

2. SEPARATE FRONT AND REAR BODIES

(a) Place the matchmarks on the front and rear bodies.

(b) Set the booster in SST.

SST 09753-00012 and 09753-40010

CAUTION: Be careful not to tighten the two nuts of SST too tightly.

(c) Turn the front body, clockwise until the front and rear bodies separate.

(d) Loosen the upper left and right nuts of the SST, and insert pieces of wood between the front body and upper plate.

CAUTION: Be careful that pieces of wood do not contact the rear body.

(e) Evenly tighten the four booster mounting nuts to separate the front and rear bodies.

(f) Remove the diaphragm spring and push rod.

3. REMOVE BOOT FROM REAR BODY

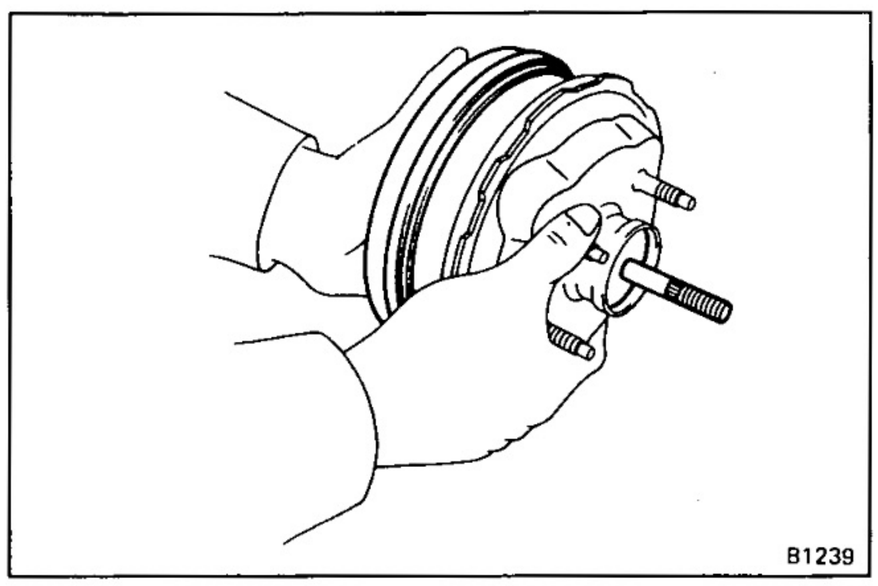

4. REMOVE DIAPHRAGM ASSEMBLY FROM REAR BODY

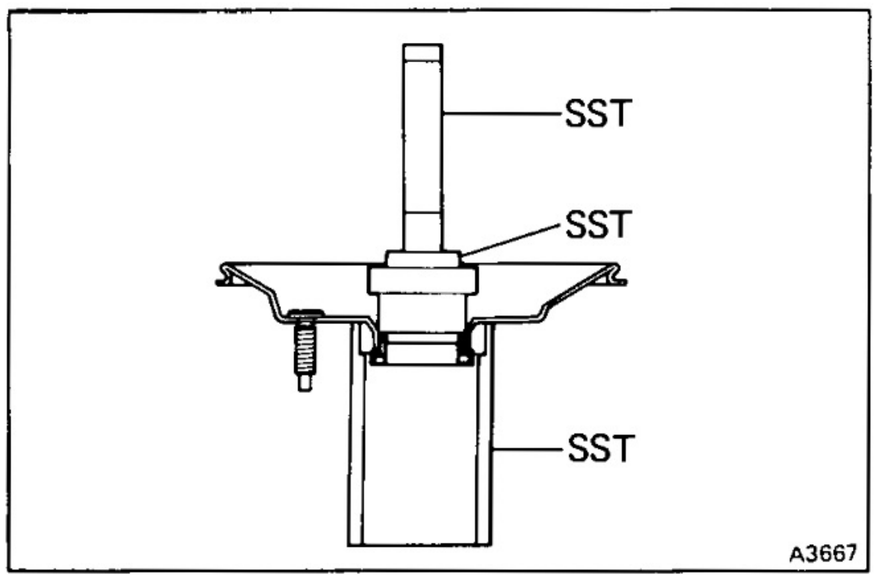

5. REMOVE BODY SEAL FROM REAR BODY

Using SST, remove the seal.

SST 09608-30011
09753-30020
09612-30012

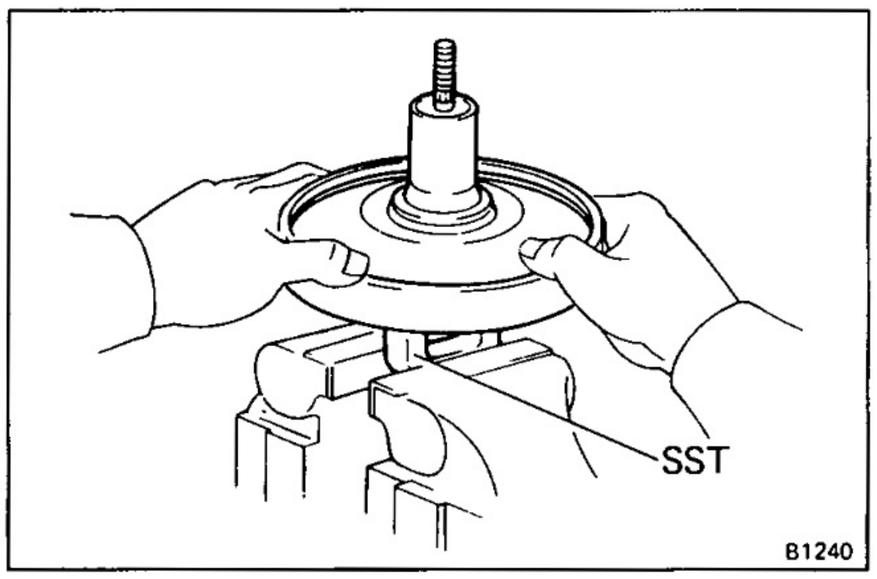

6. REMOVE VALVE BODY AND DIAPHRAGM FROM DIAPHRAGM PLATE

(a) Mount SST in a vise.

SST 09736-27010

(b) Put the diaphragm assembly on SST and turn it to separate the valve body and diaphragm plate.

(c) Remove the diaphragm from the plate.

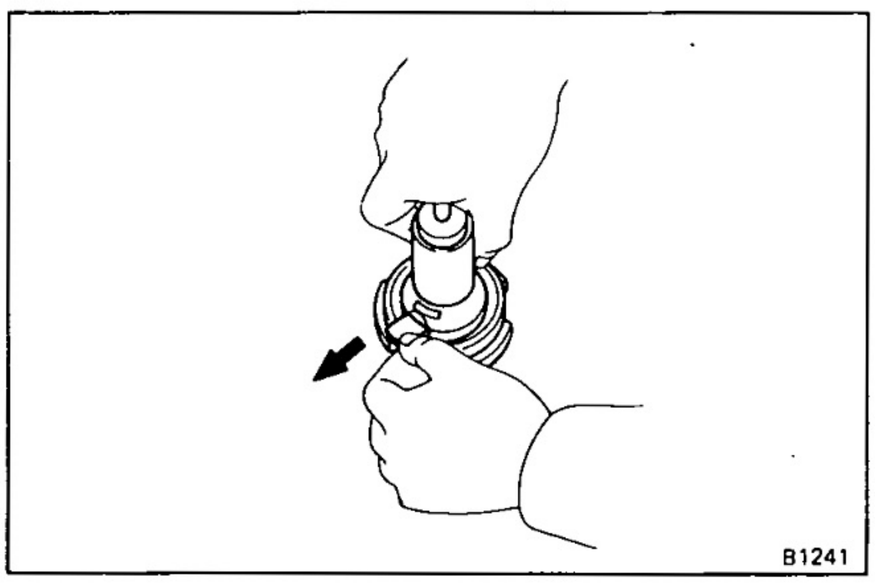

7. REMOVE OPERATING ROD FROM VALVE BODY

(a) Push the operating rod in the valve body and remove the stopper key.

(b) Pull out the operating rod with the three elements.

8. REMOVE REACTION DISC FROM VALVE BODY

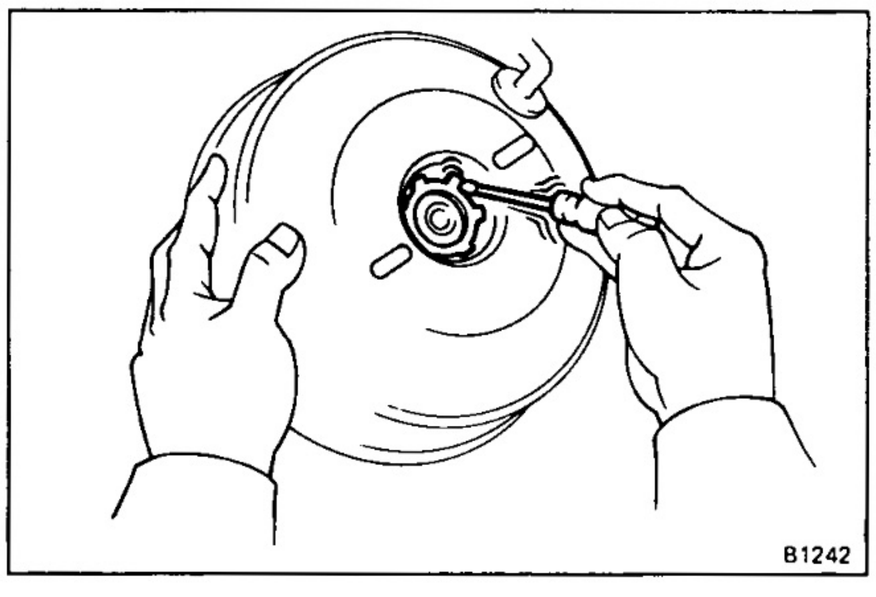

9. REMOVE BODY SEAL FROM FRONT BODY

Using a screwdriver, pry out the circular ring, and remove the seal.

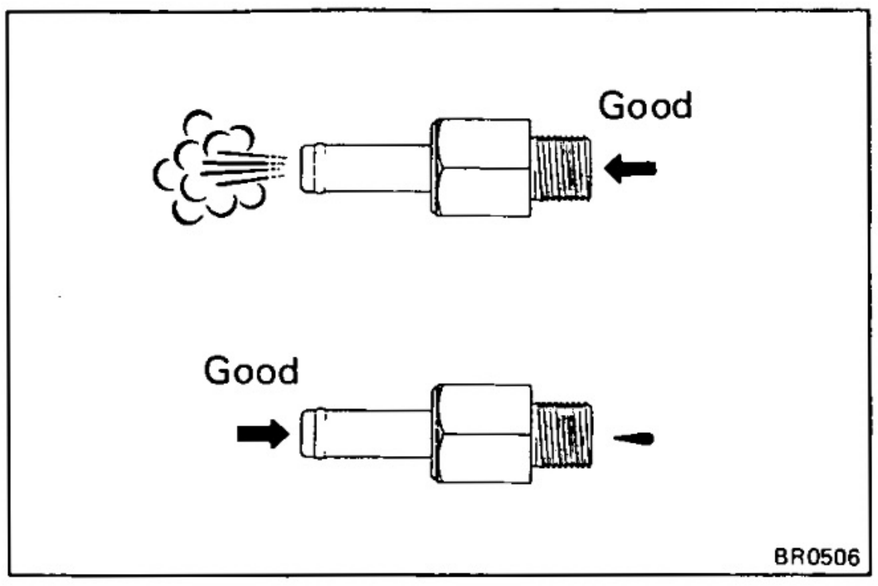

INSPECTION OF BRAKE BOOSTER

INSPECT CHECK VALVE OPERATION

(a) Check that air flows from the booster side to the hose side.

(b) Check that air does not flow from the hose side to the booster side.

If necessary, replace the check valve.

ASSEMBLY OF BRAKE BOOSTER

(See page BR-17)

1. APPLY SILICONE GREASE TO PARTS SHOWN BELOW

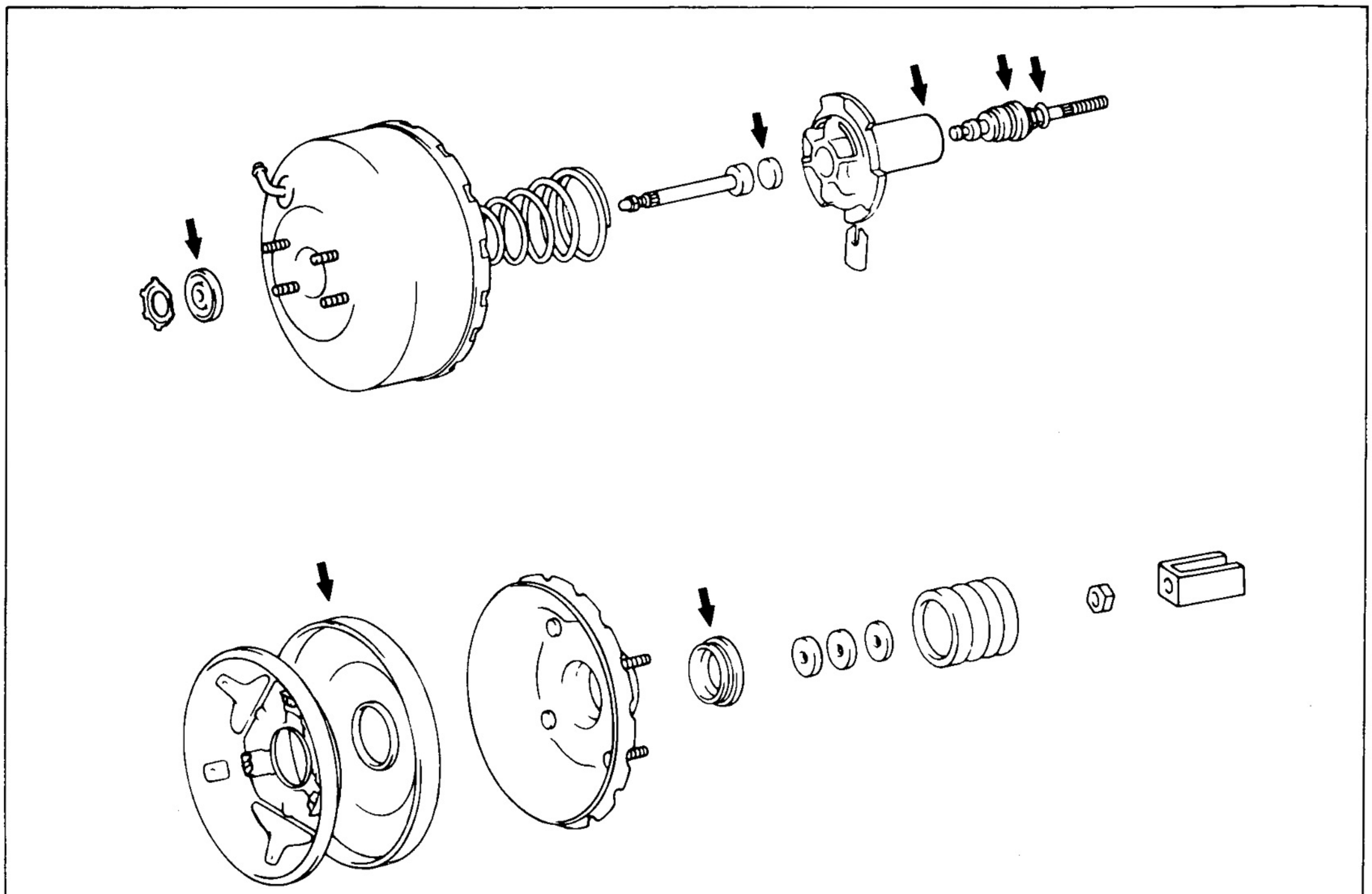

D3621

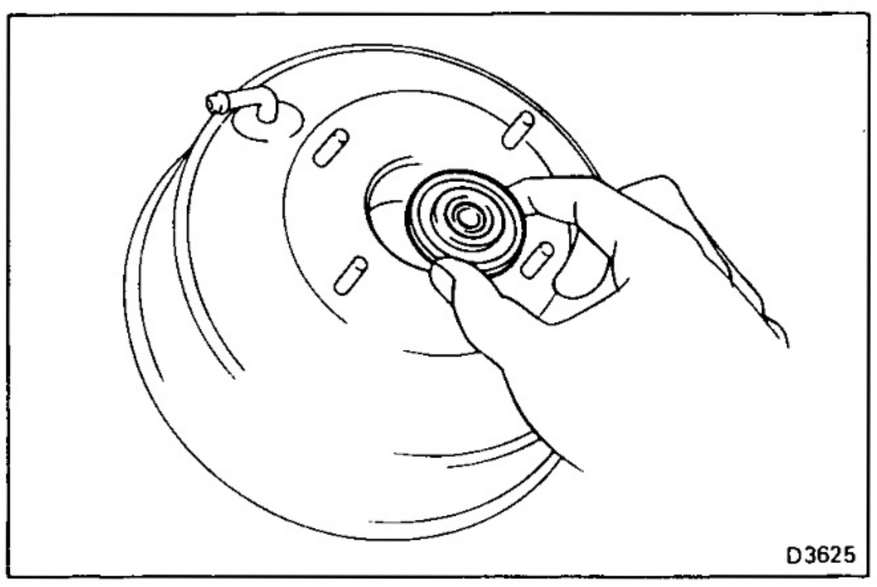

D3625

2. INSTALL BODY SEAL TO FRONT BODY

(a) Place the body seal in position.

(b) Secure the body seal with the circular ring.

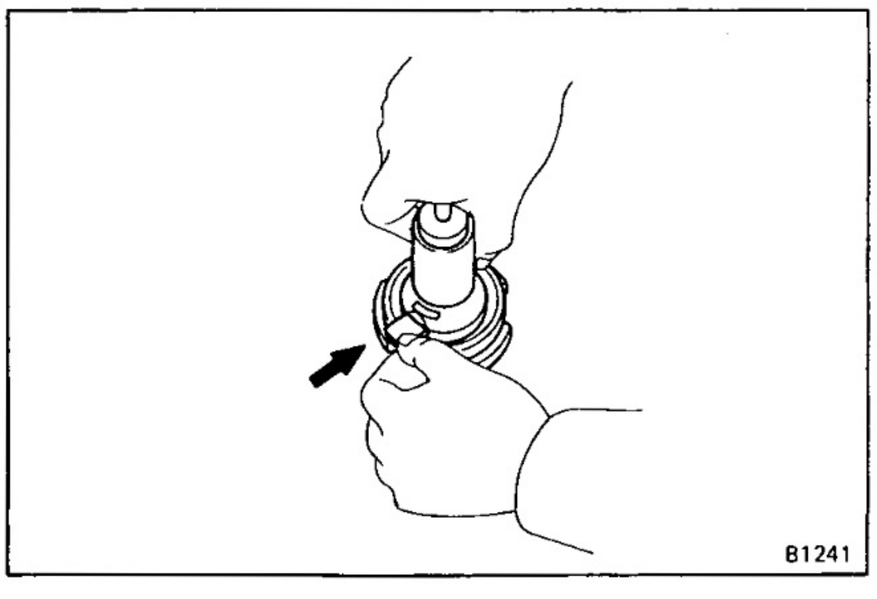

B1241

3. INSTALL OPERATING ROD TO VALVE BODY

(a) Insert the operating rod in the valve body.

(b) Push the operating rod in the valve body and install the stopper key.

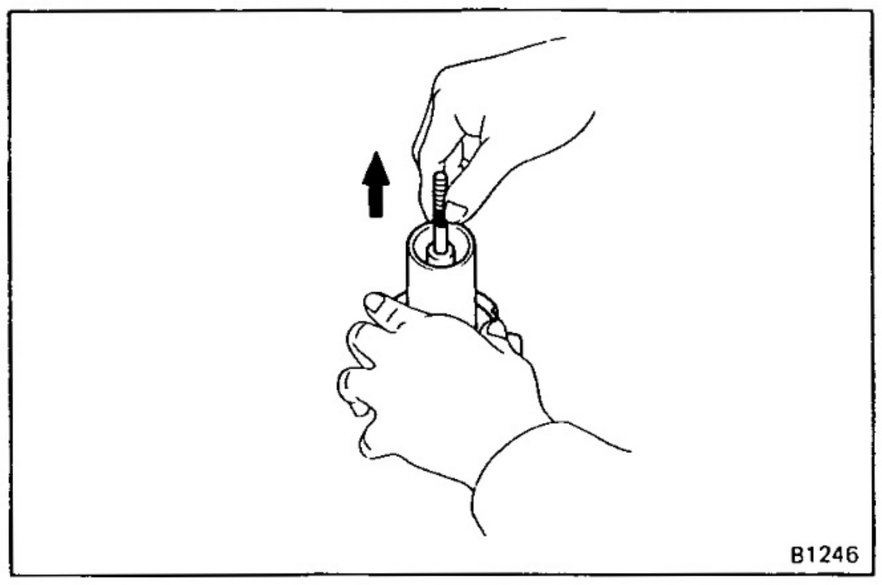

(c) Pull the operating rod and confirm that the stopper key is working.

4. INSTALL REACTION DISC TO VALVE BODY

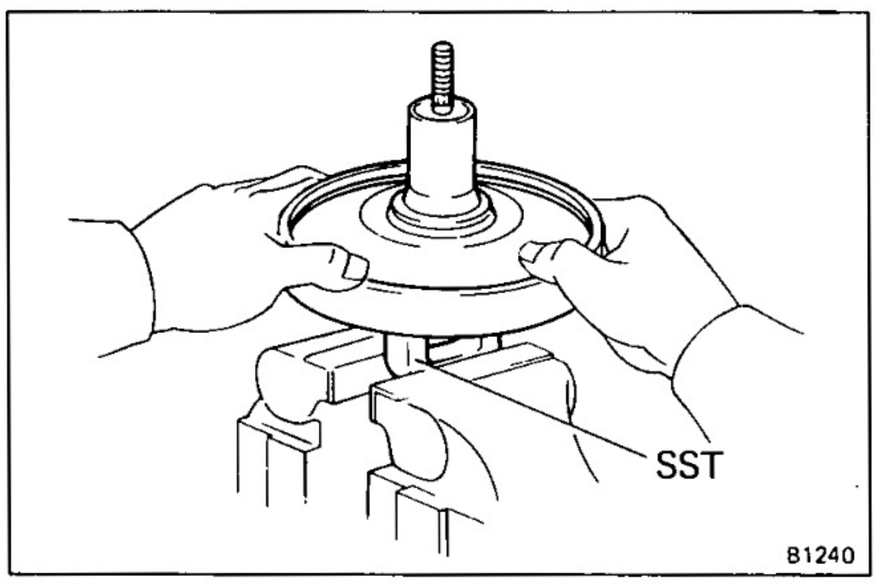

5. INSTALL VALVE BODY AND DIAPHRAGM TO DIAPHRAGM PLATE

(a) Install the diaphragm to the plate.

(b) Insert the valve body to the plate.

(c) Mount SST in a vise.

SST 09736-27010

(d) Put the diaphragm assembly on SST, and turn it to install.

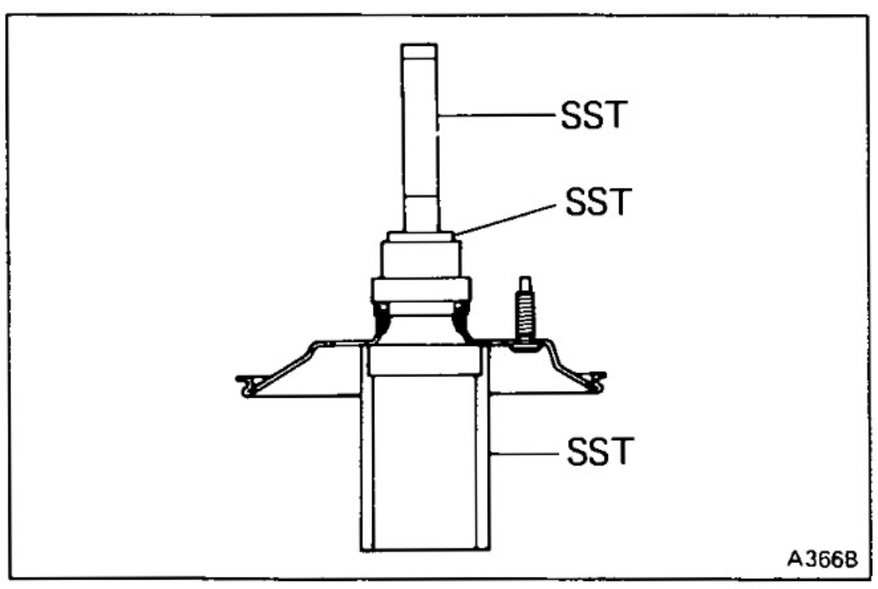

6. INSTALL BODY SEAL TO REAR BODY

Using SST, drive in the seal.

SST 09608-30011
09753-30020
09612-30012

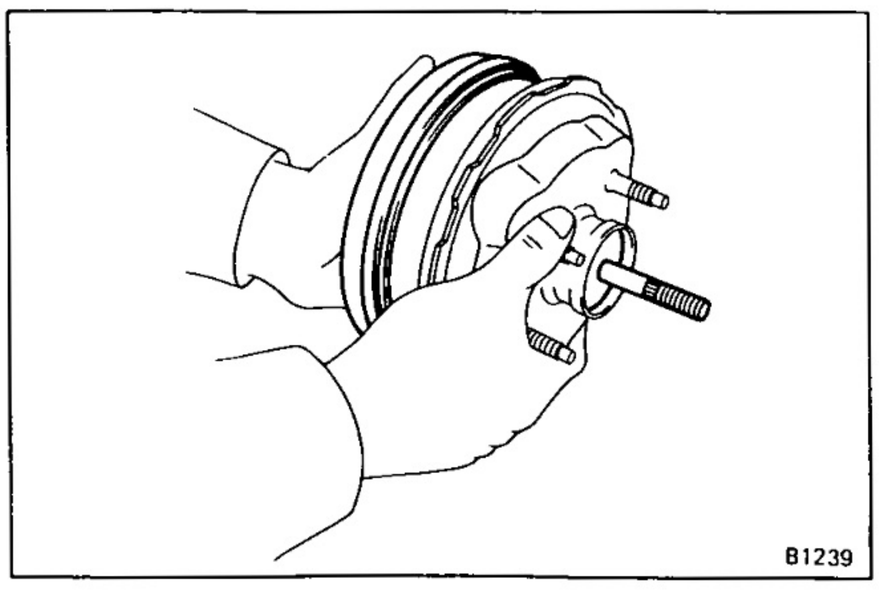

7. INSTALL DIAPHRAGM ASSEMBLY TO REAR BODY

8. INSTALL FOLLOWING PARTS TO REAR BODY:

(a) Felt elements

(b) Sponge element

(c) Boot

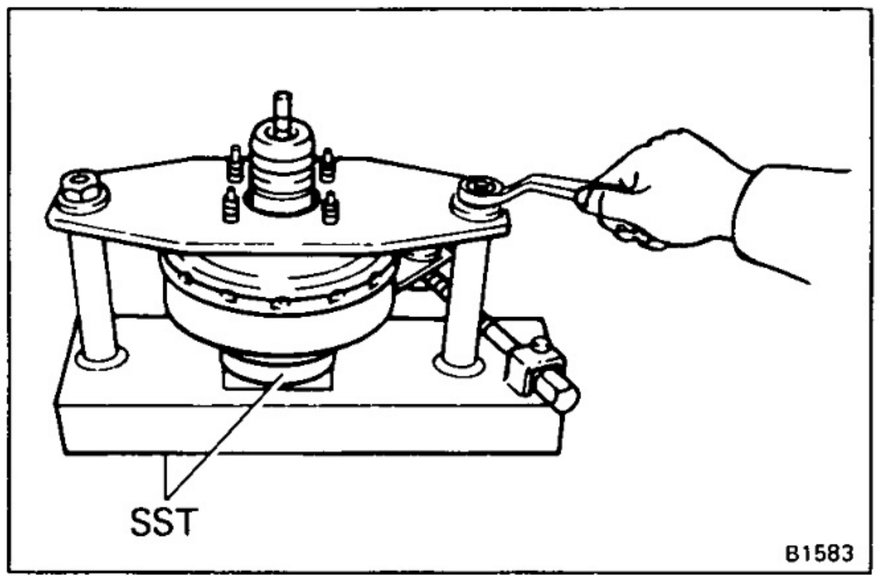

9. ASSEMBLE FRONT AND REAR BODIES

(a) Place the spring and push rod in the front body.

(b) Using SST, compress the spring between the front and rear bodies.

SST 09753-40010 and 09753-00012

CAUTION: Be careful not to tighten the two nuts of the SST too tightly.

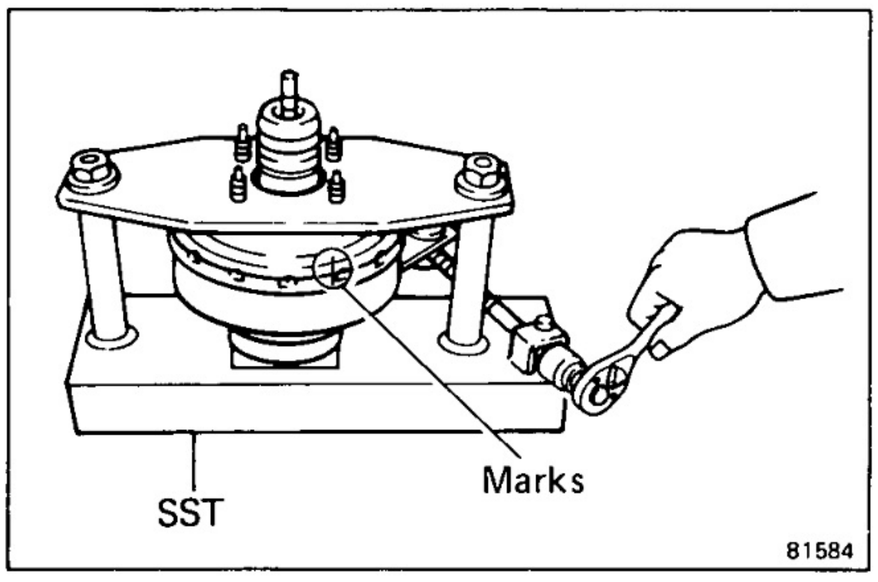

(c) Assemble the front and rear bodies by turning the front body counterclockwise until the alignment marks match.

NOTE: If the front body is too tight to be turned, apply more silicone grease on the diaphragm edge that contacts the front and rear bodies.

10. INSTALL CLEVIS AND LOCK NUT

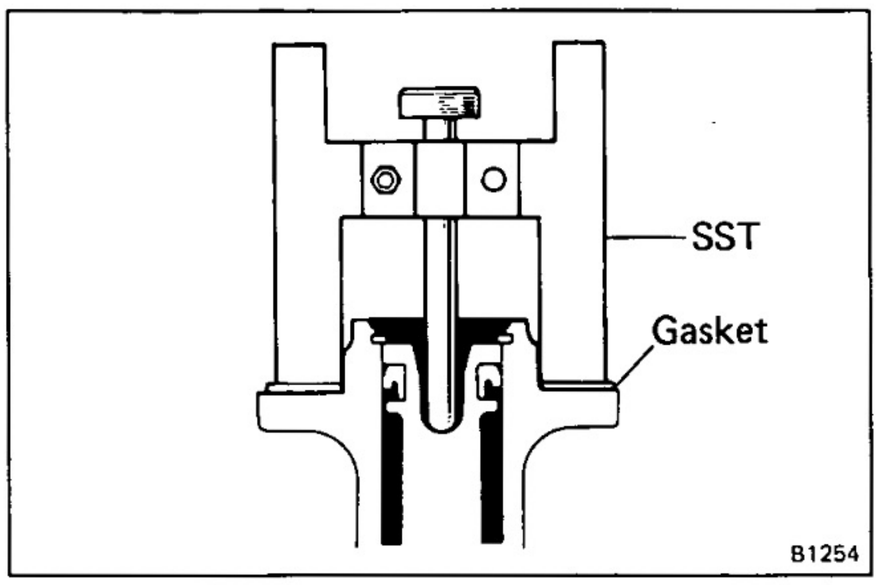

INSTALLATION OF BRAKE BOOSTER

1. ADJUST LENGTH OF BOOSTER PUSH ROD

(a) Set SST on the master cylinder with the gasket, and lower the pin until its tip slightly touches the piston.

SST 09737-00010

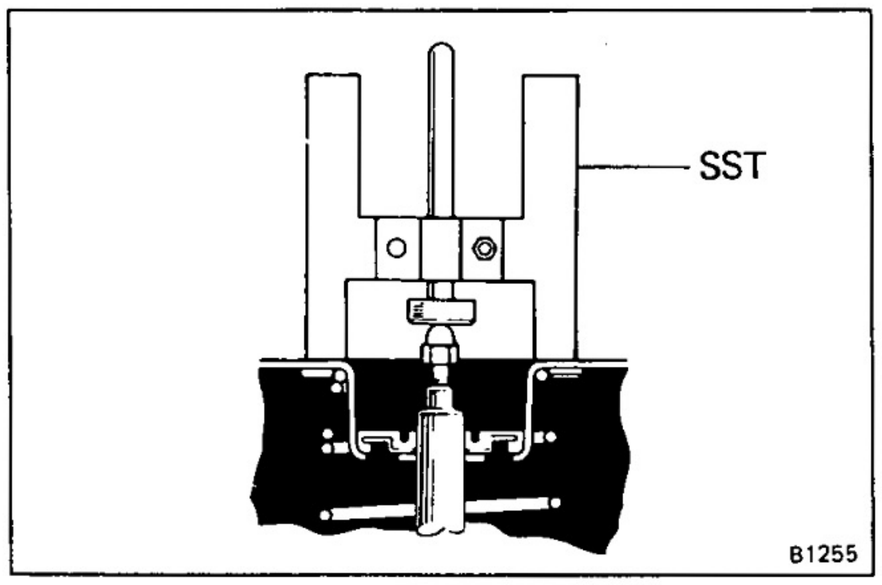

(b) Turn SST upside down, and set it on the booster.

SST 09737-00010

(c) Measure the clearance between the booster push rod and pin head (SST).

Clearance: 0 mm (0 in.)

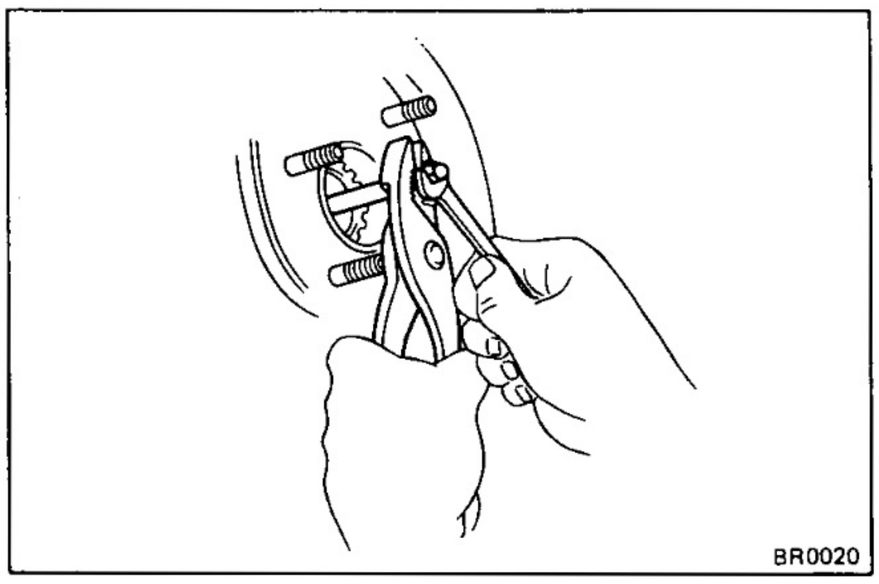

(d) Adjust the booster push rod length until the push rod lightly touches the pin head.

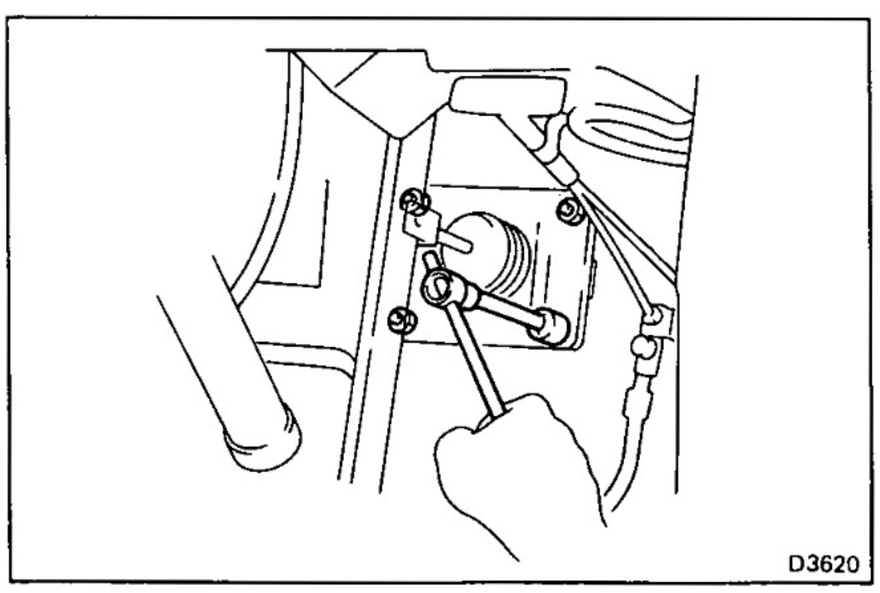

2. INSTALL BRAKE BOOSTER

Install the brake booster, and torque the four nuts.

Torque: 130 kg-cm (9 ft-lb, 13 N·m)

3. CONNECT CLEVIS TO BRAKE PEDAL

Insert the clevis pin into the clevis and brake pedal and install the clip to the clevis pin.

4. INSTALL PEDAL RETURN SPRING

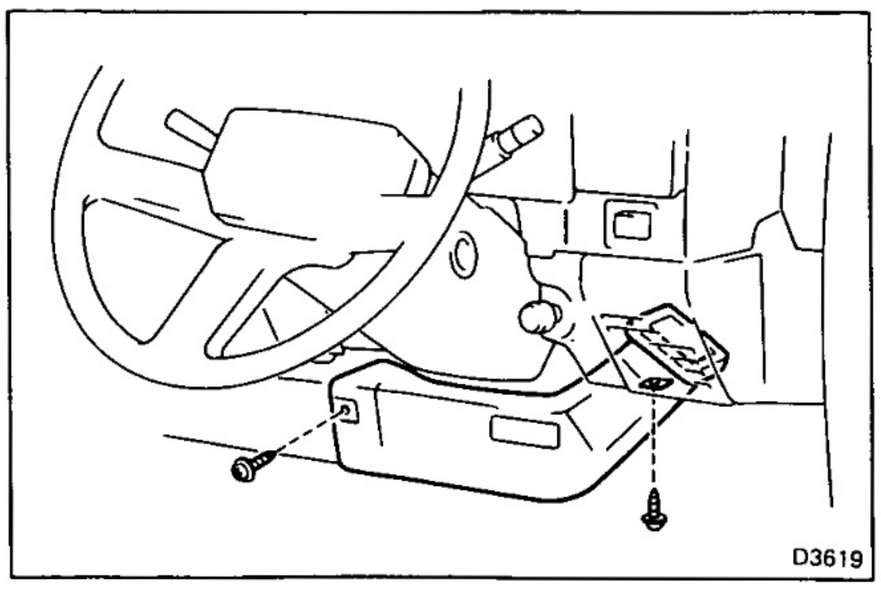

5. INSTALL AIR DUCT

6. INSTALL CLUTCH BOOSTER

(See page CL-15)

7. INSTALL MASTER CYLINDER (See page BR-15)
8. CONNECT HOSE TO BRAKE BOOSTER
9. FILL BRAKE RESERVOIR WITH BRAKE FLUID AND BLEED BRAKE SYSTEM (See page BR-6)
10. CHECK FOR LEAKS
11. CHECK AND ADJUST BRAKE PEDAL (See page BR-5)
12. PERFORM OPERATIONAL CHECK (See page BR-6)

VACUUM PUMP

COMPONENTS

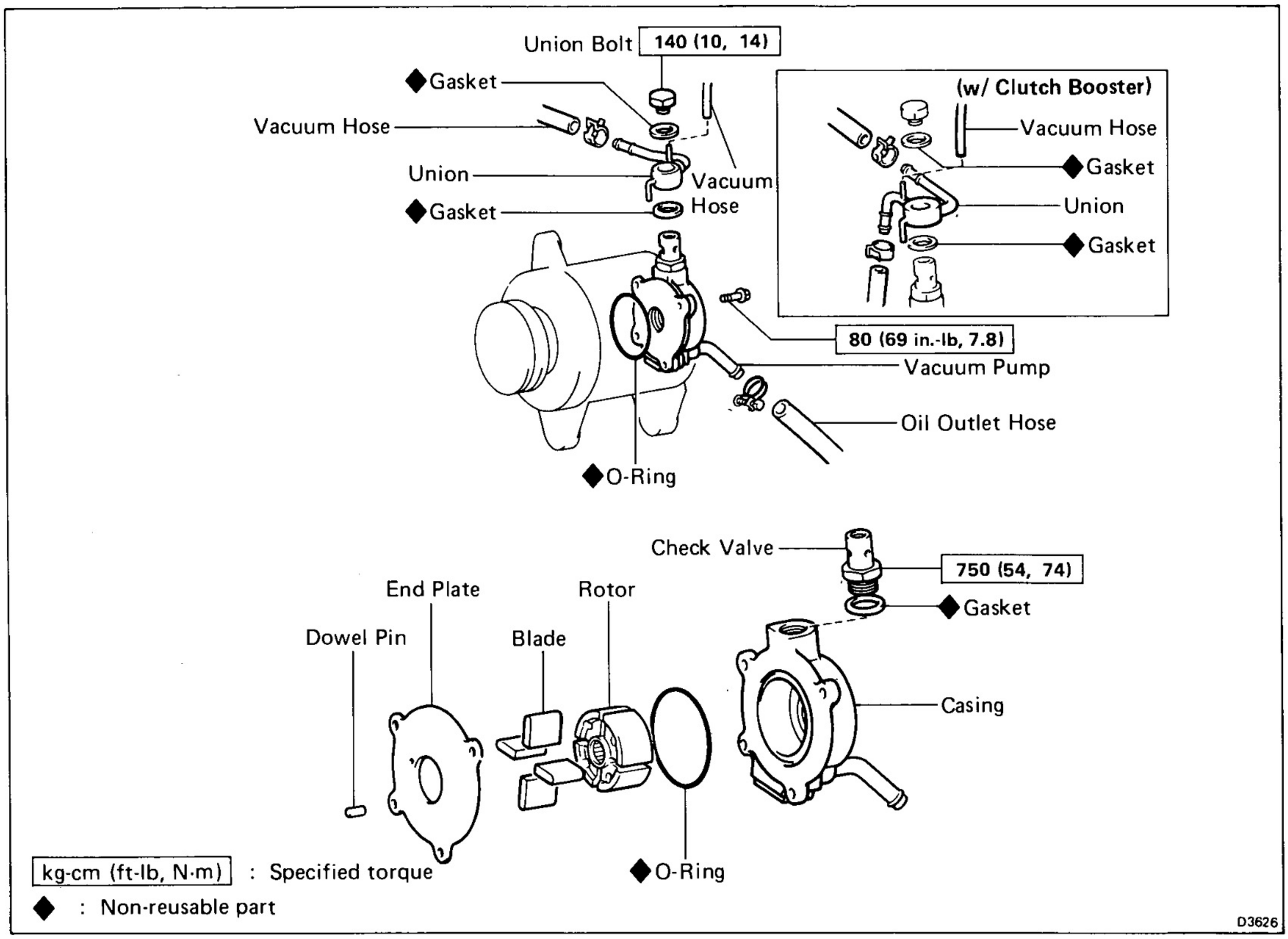

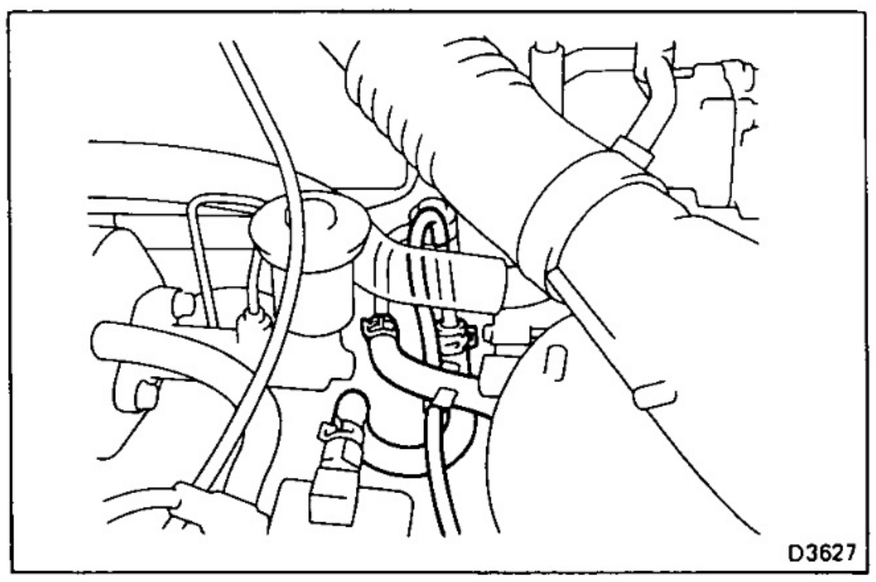

REMOVAL OF VACUUM PUMP

1. DISCONNECT VACUUM HOSES
2. DISCONNECT OIL OUTLET HOSE

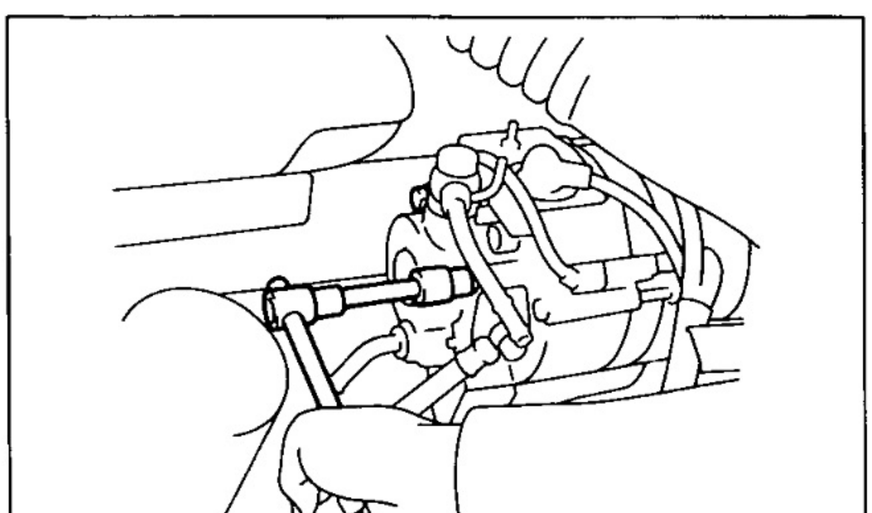

3. REMOVE VACUUM PUMP AND O-RING
   (a) Remove the three mounting bolts.
   (b) Remove the pump.
   (c) Remove the O-ring.

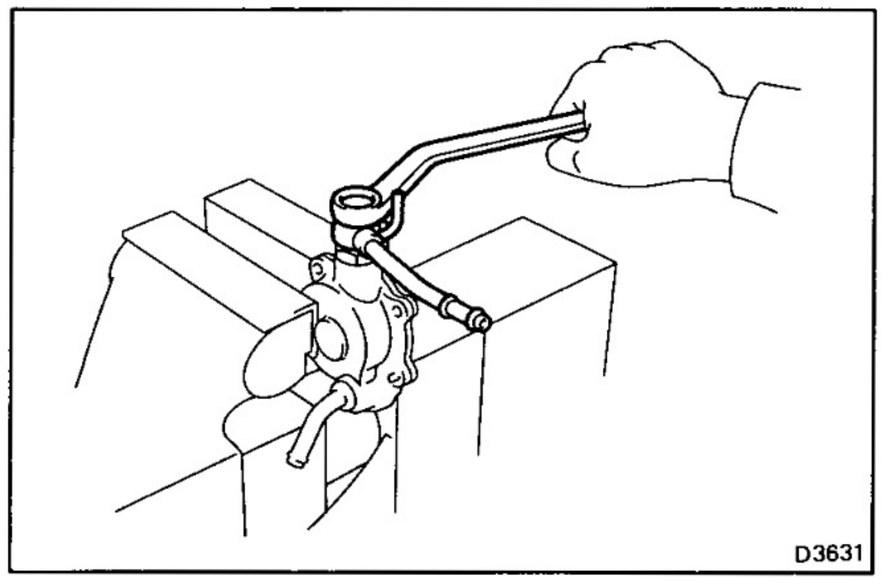

DISASSEMBLY OF VACUUM PUMP

(See page BR-25)

1. REMOVE UNION BOLT, UNION AND CHECK VALVE

(a) Remove the union bolt, union and gaskets.

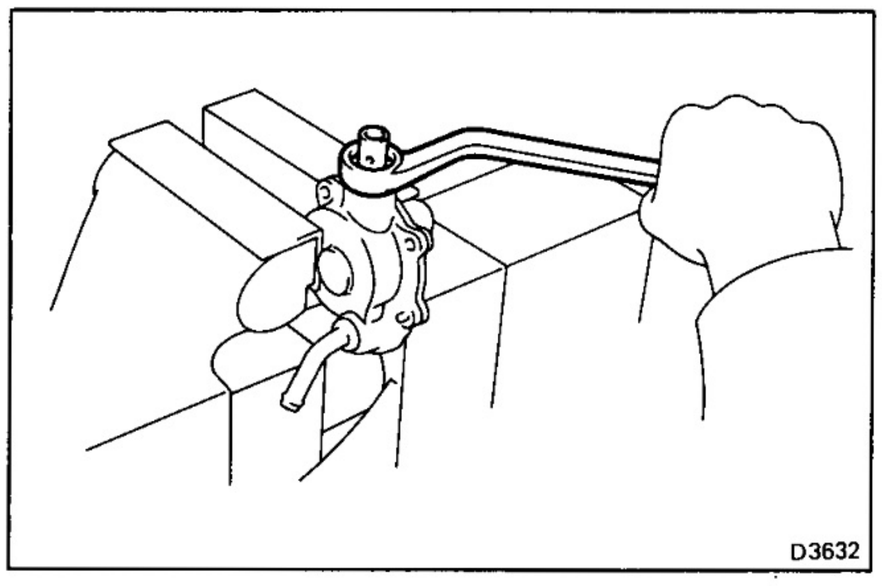

(b) Remove the check valve and gasket.

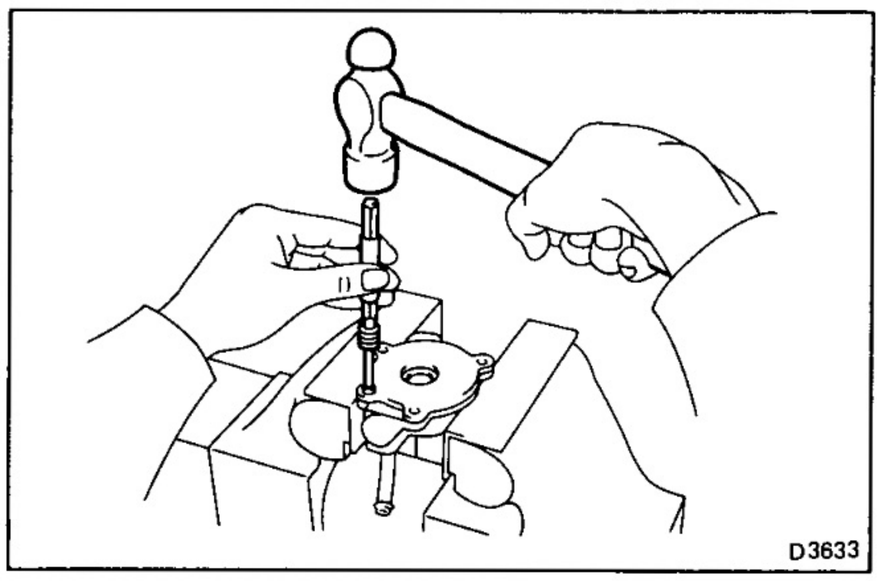

2. REMOVE VACUUM PUMP END PLATE

Using a pin punch and hammer, tap out the dowel pin rearward and remove the end plate.

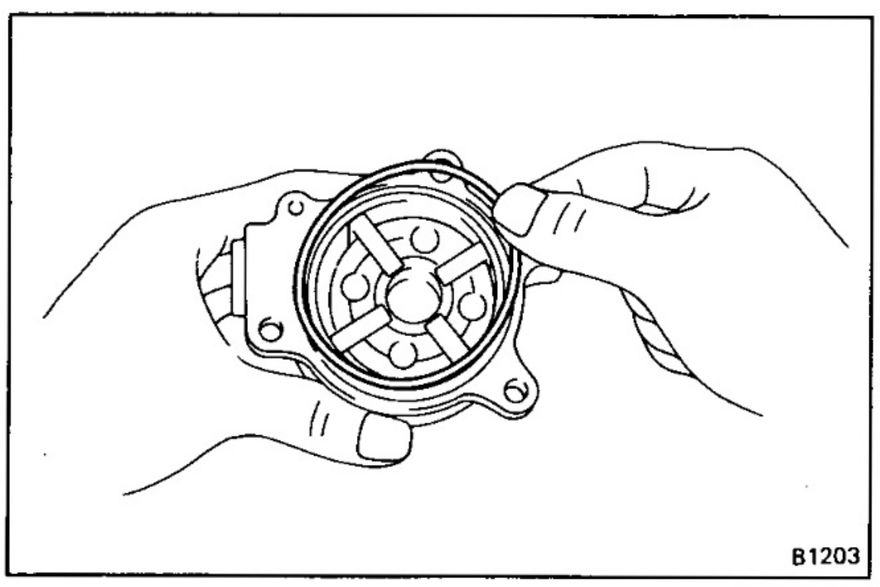

3. REMOVE O-RING

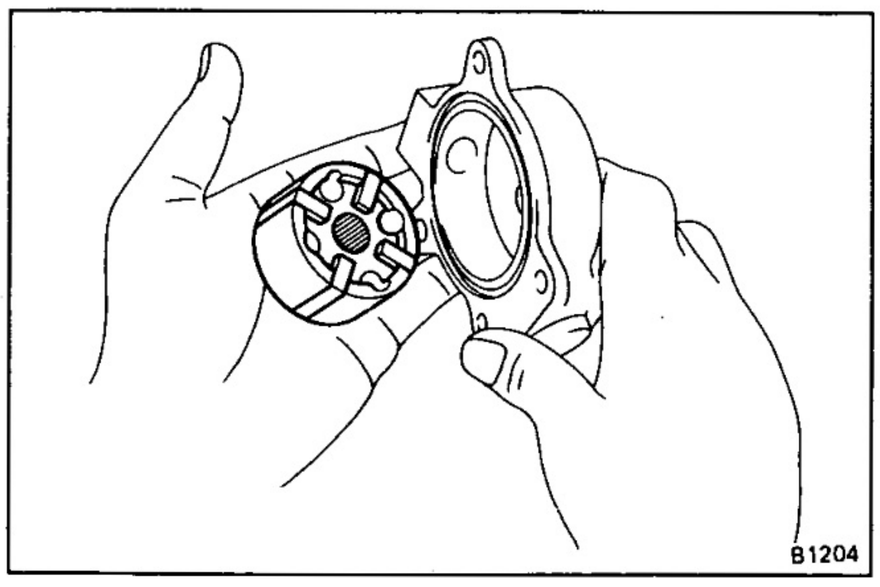

4. REMOVE ROTOR AND BLADES

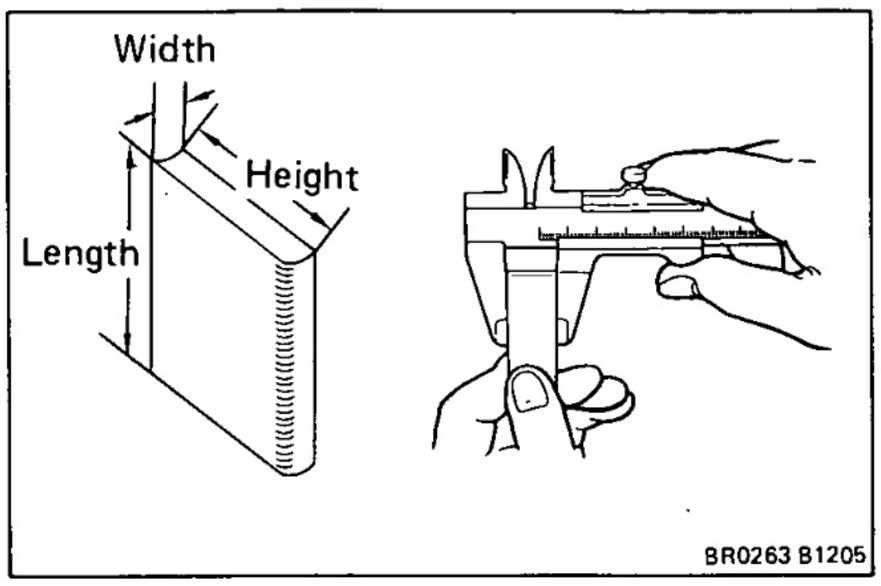

INSPECTION OF VACUUM PUMP COMPONENTS

1. INSPECT BLADE

(a) Check for wear or damage.

(b) Using calipers, measure the height, width and length of the blade.

Minimum height: 13.80 mm (0.5433 in.)
Minimum width : 5.95 mm (0.2343 in.)
Minimum length: 39.98 mm (1.5740 in.)

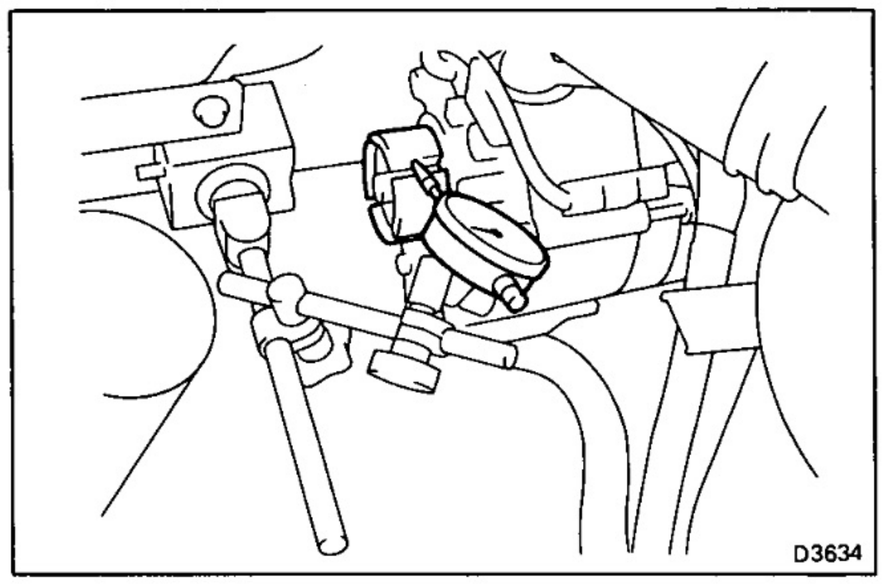

2. INSPECT ROTOR

(a) Check for wear or damage.

(b) Assemble the rotor to the alternator and check the amount of play in the direction of rotor spline rotation.

Maximum play: 1.0 mm (0.039 in.)

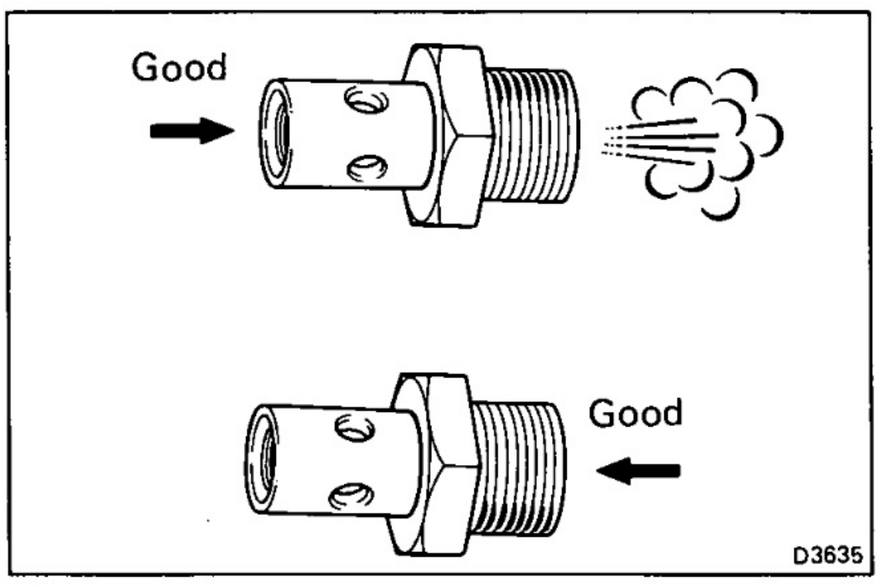

3. INSPECT CHECK VALVE OPERATION

(a) Check that air flow from the union side to the pump side.

(b) Check that air does not flow from the pump side to the union side.

If necessary, replace the check valve.

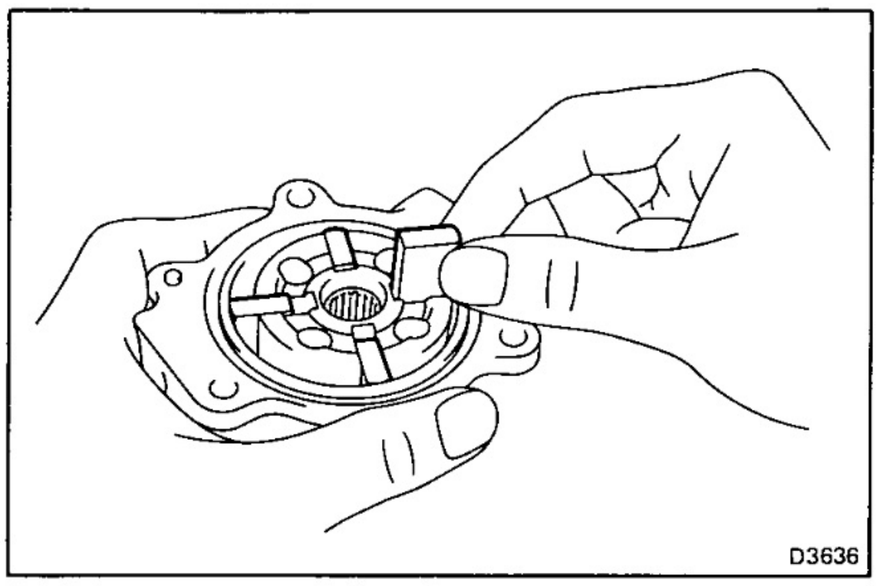

ASSEMBLY OF VACUUM PUMP

(See page BR-25)

1. INSTALL ROTOR AND BLADES

(a) Apply engine oil to the rotor and blades.

(b) Place the rotor into the casing.

(c) Insert the blades with round end facing outward.

NOTE: Be sure that the blade and rotor surface are even.

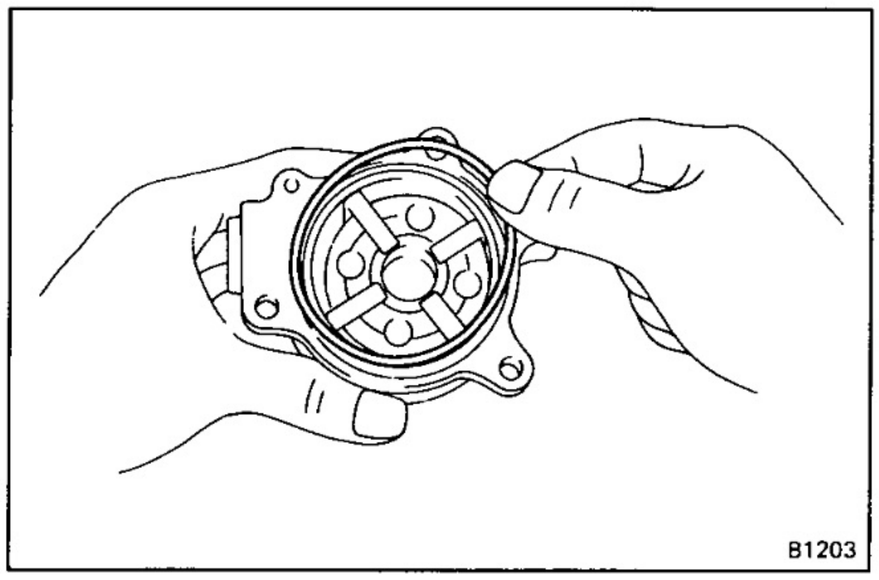

2. INSTALL O-RING AND END PLATE

(a) Install the O-ring into the groove.

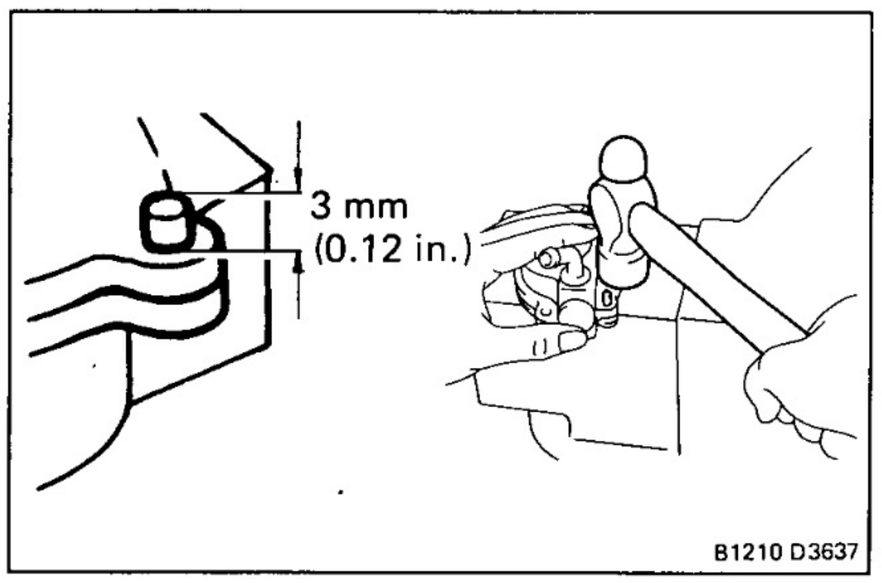

(b) Place the end plate onto the casing.

(c) Align the pin hole and tap in the pin.

NOTE: Be careful not to damaged the casing and end plate.

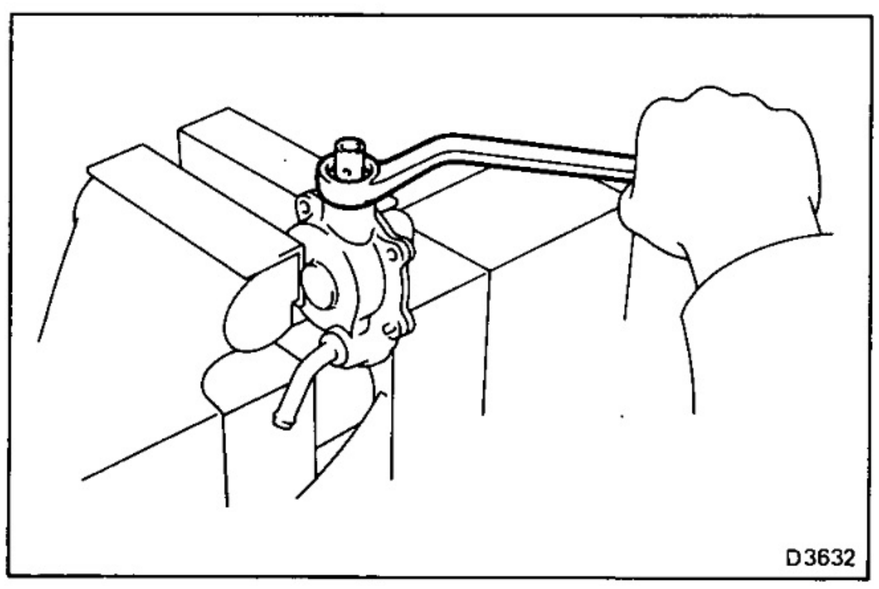

3. INSTALL CHECK VALVE

Install and torque the check valve with a new gasket.

Torque: 750 kg-cm (54 ft-lb, 74 N·m)

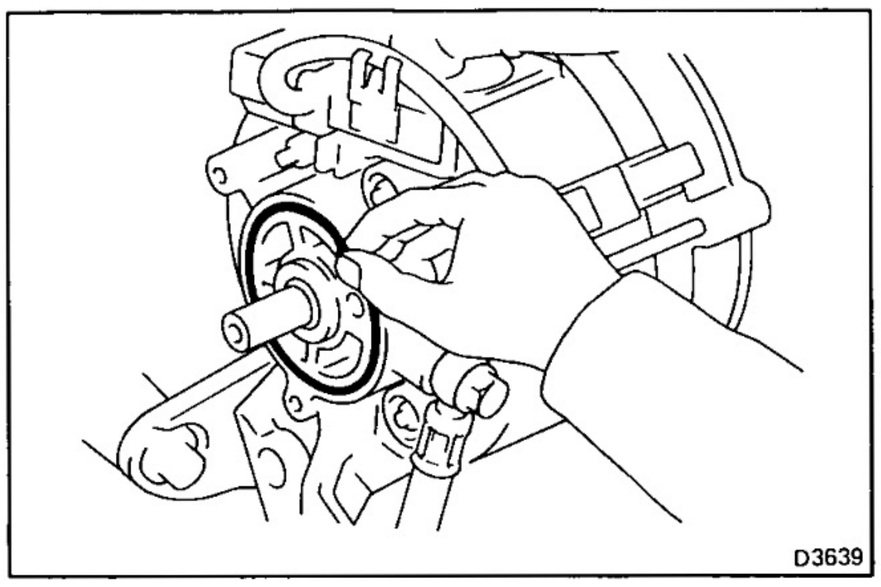
D3639

INSTALLATION OF VACUUM PUMP

(See page BR-25)

1. INSTALL O-RING

Install the O-ring into the groove of the alternator.

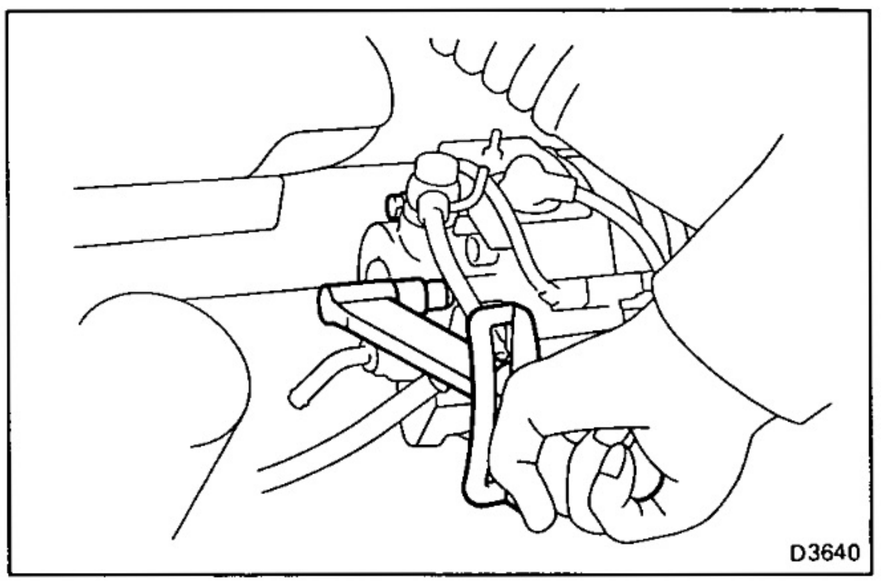
D3640

2. INSTALL VACUUM PUMP

Install the vacuum pump with three bolts. Torque the bolts.

Torque: 80 kg-cm (69 in.-lb, 7.8 N·m)

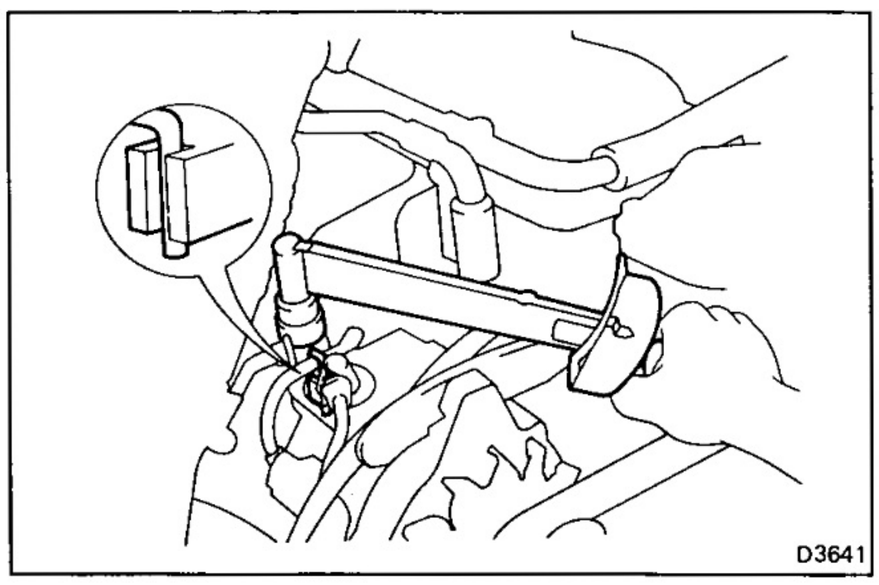
D3641

3. INSTALL UNION AND BOLT

Install the union and bolt with a new gaskets. Torque the bolt.

Torque: 140 kg-cm (10 ft-lb, 14 N·m)

NOTE: Be sure to align the alignment pin of union and groove of casing.

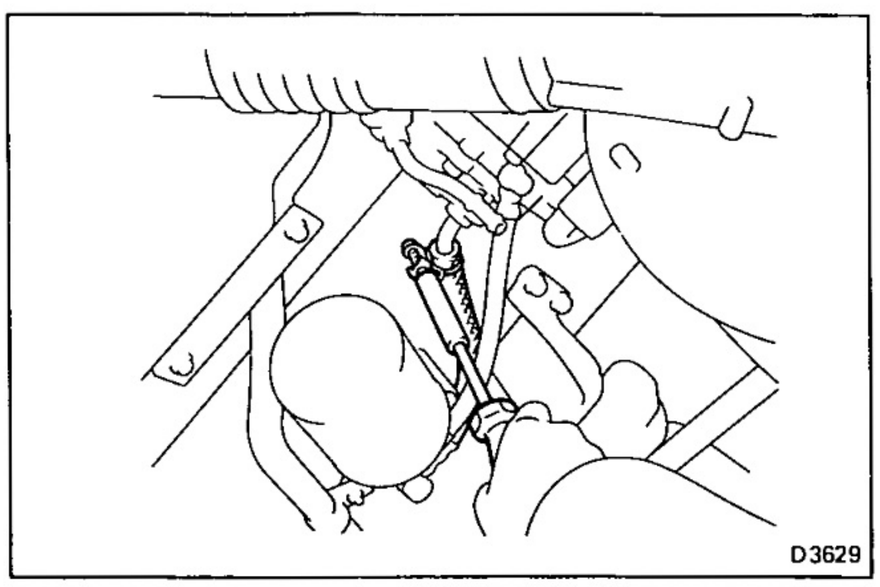
D3629

4. CONNECT OIL OUTLET HOSE

Connect the oil outlet hose on the fitting and tighten the clamp.

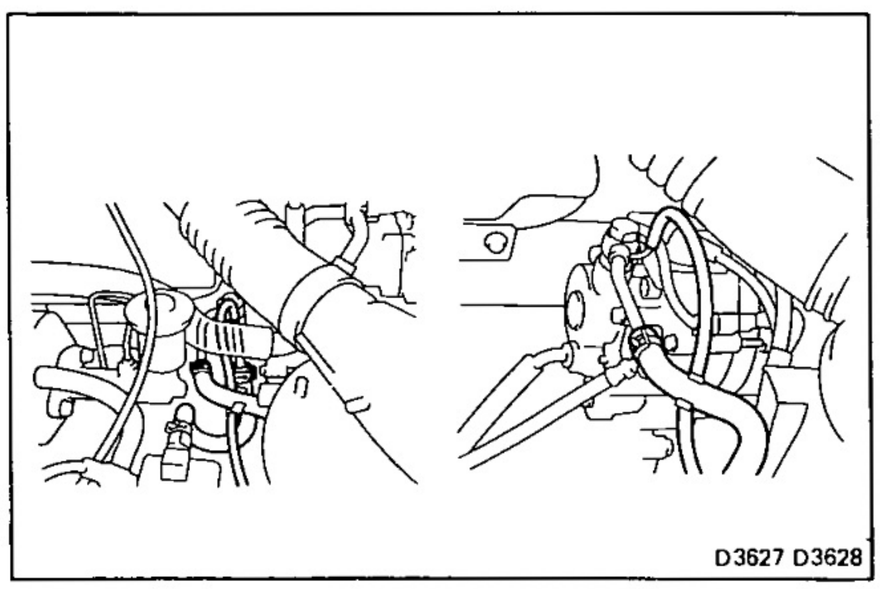
D3627 D3628

5. CONNECT VACUUM HOSES

Connect the vacuum hose on the fitting and install the clip.

6. CHECK VACUUM PUMP OPERATION

FRONT BRAKE

Drum Brake

COMPONENTS

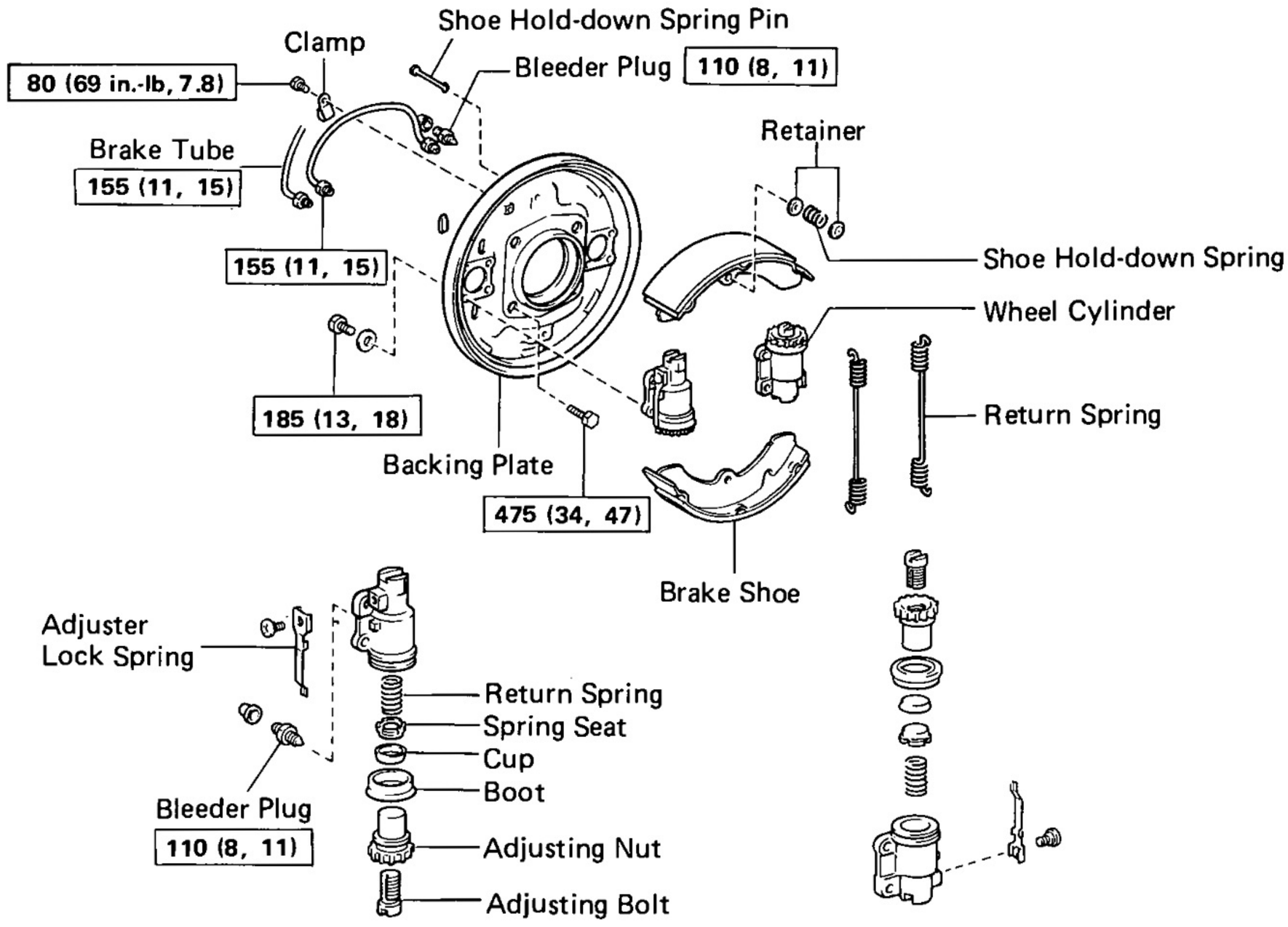

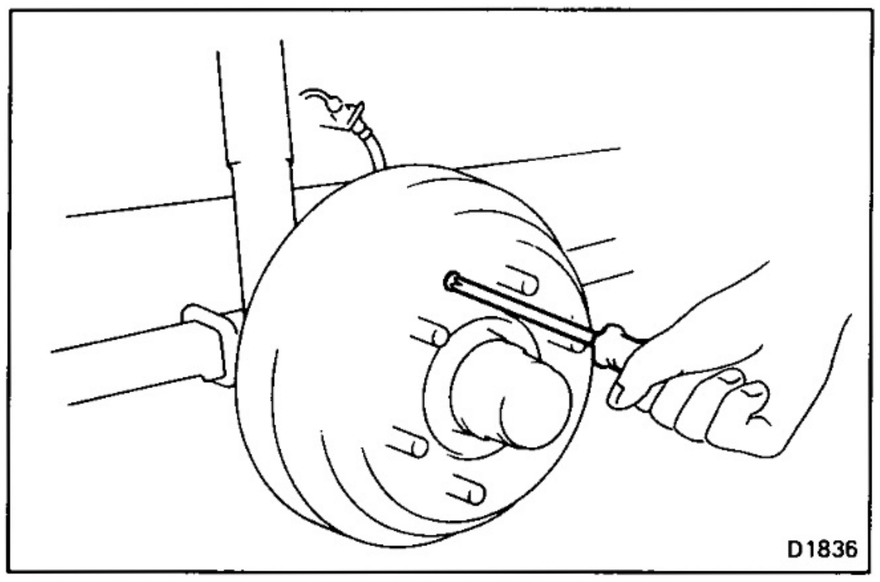

REMOVAL OF FRONT BRAKE

1. REMOVE WHEEL
2. REMOVE DRUM

   Remove the screw and then remove the drum.

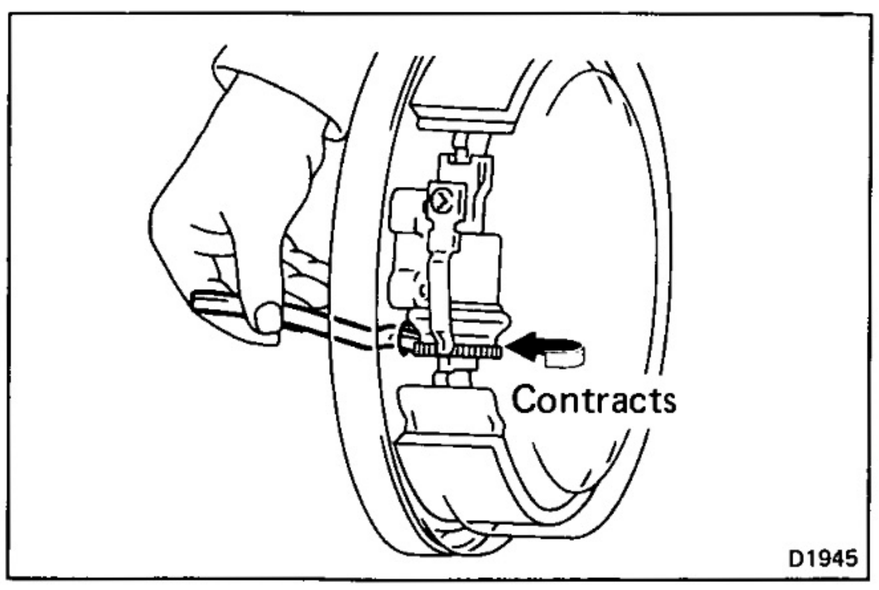

NOTE: If the drum cannot be removed easily, return the shoe adjuster until the wheel turns freely.

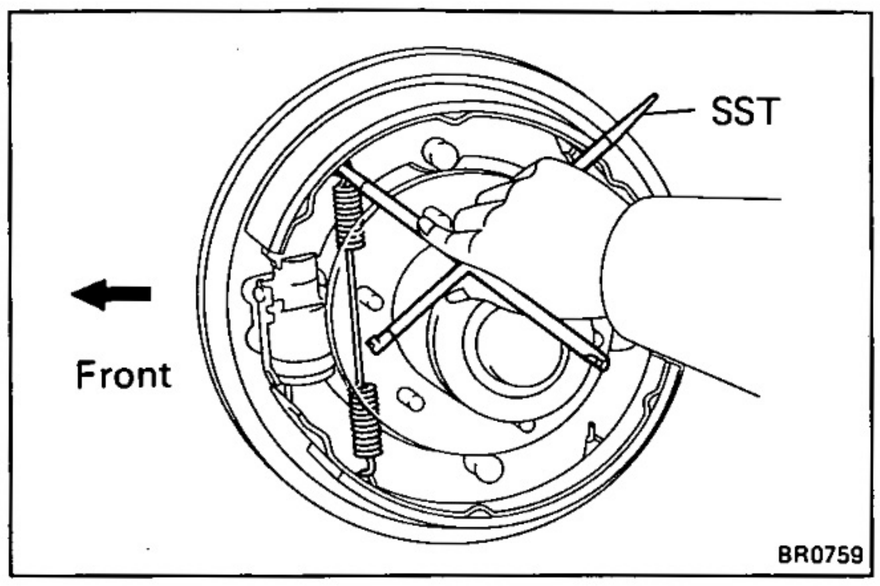

3. REMOVE FRONT SIDE RETURN SPRING

Using SST, remove the front side return spring.

SST 09703-30010

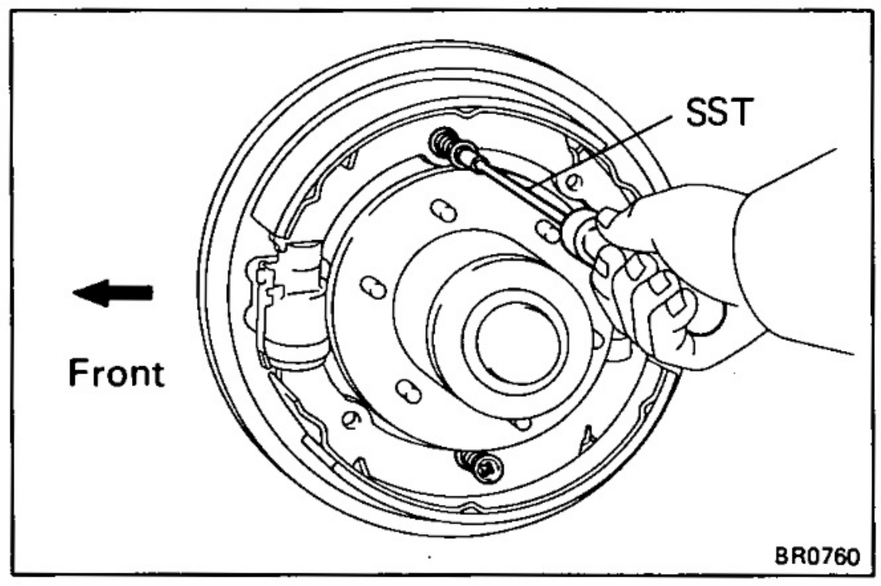

4. REMOVE SHOE HOLD-DOWN SPRINGS

Using SST, remove the spring, retainers and pin.

SST 09718-00010

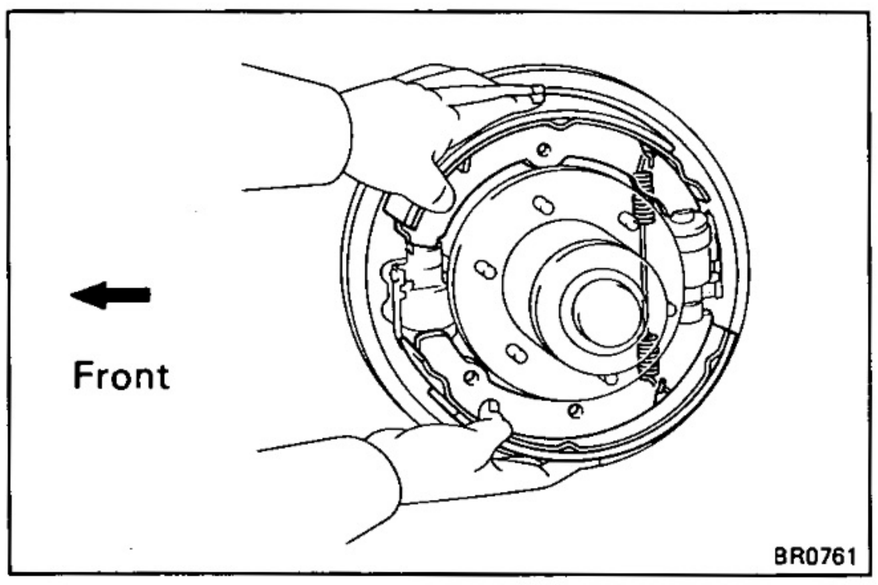

5. REMOVE BRAKE SHOES AND REAR SIDE RETURN SPRING

Slide the shoes and remove them together with the rear side return spring.

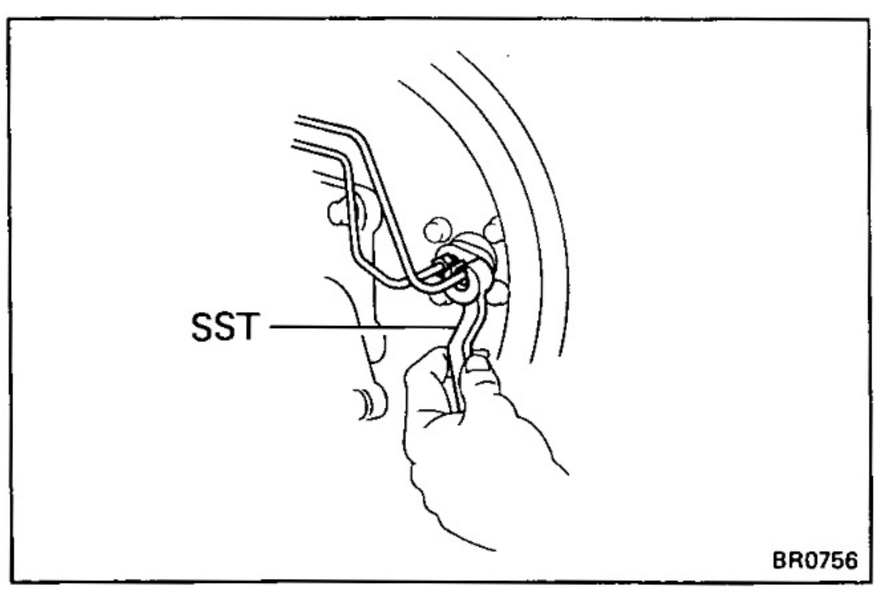

6. IF NECESSARY, REMOVE WHEEL CYLINDER

(a) Remove the brake tube clamp.

(b) Using SST, disconnect the brake tube from the wheel cylinder.

SST 09751-36011

NOTE: Use a container to catch the brake fluid.

(c) Remove the bleeder plug from the rear wheel cylinder.

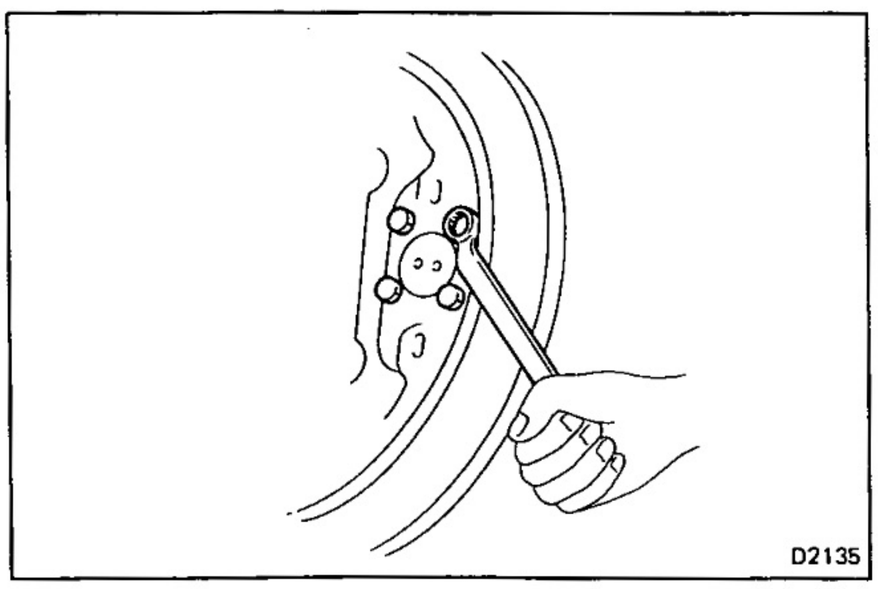

(d) Remove the four bolts and wheel cylinder.

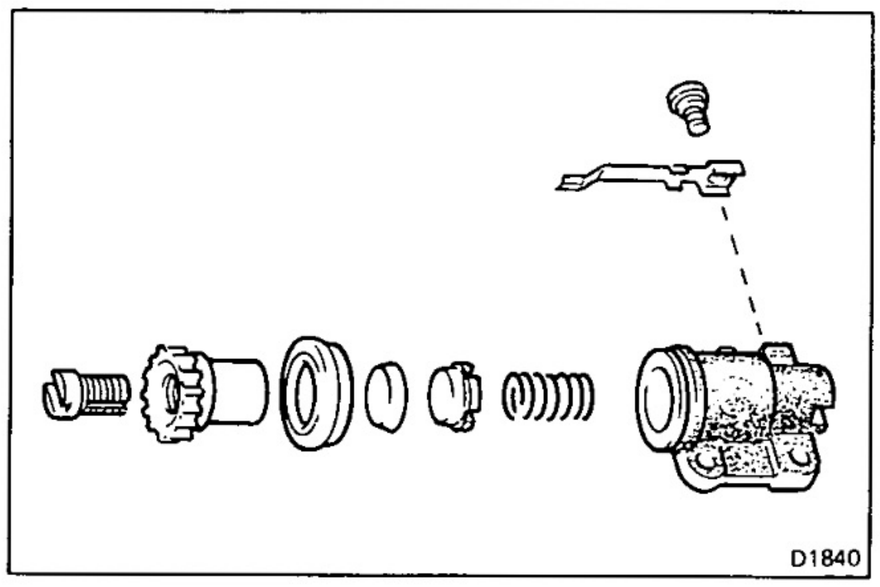

7. **IF NECESSARY, DISASSEMBLE WHEEL CYLINDER**

(a) Remove the following parts from the wheel cylinder.

- Adjusting bolt and nut
- Boot
- Cup
- Spring seat
- Return spring

(b) Remove the screw and adjuster lock spring.

INSPECTION AND REPAIR OF FRONT BRAKE COMPONENTS

1. INSPECT DISASSEMBLED PARTS

Inspect the disassembled parts for wear, rust or damage.

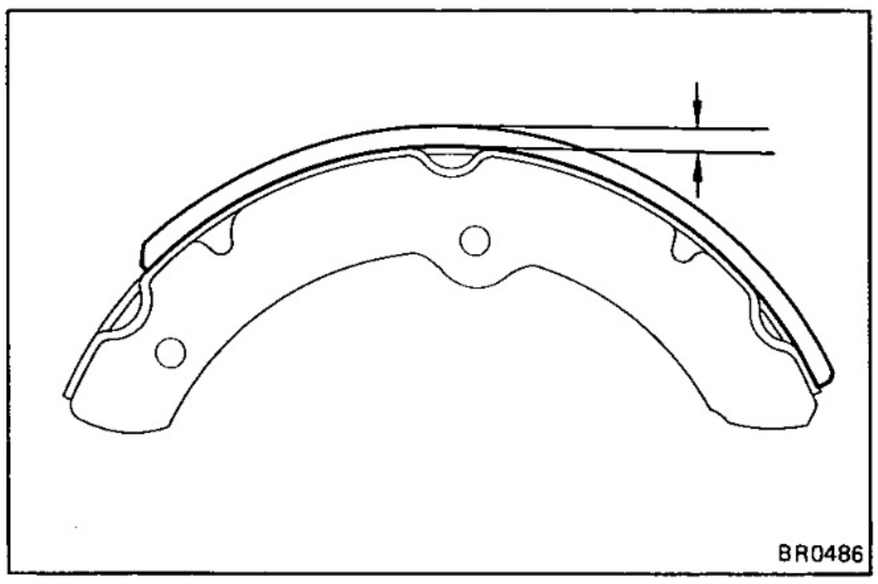

2. MEASURE BRAKE SHOE LINING THICKNESS

Standard thickness: 6.5 mm (0.256 in.)
Minimum thickness: 1.5 mm (0.059 in.)

If the shoe lining is less than minimum or shows signs of uneven wear, replace the brake shoes.

NOTE: If any of the brake shoes have to be replaced, replace all of the brake shoes in order to maintain even braking.

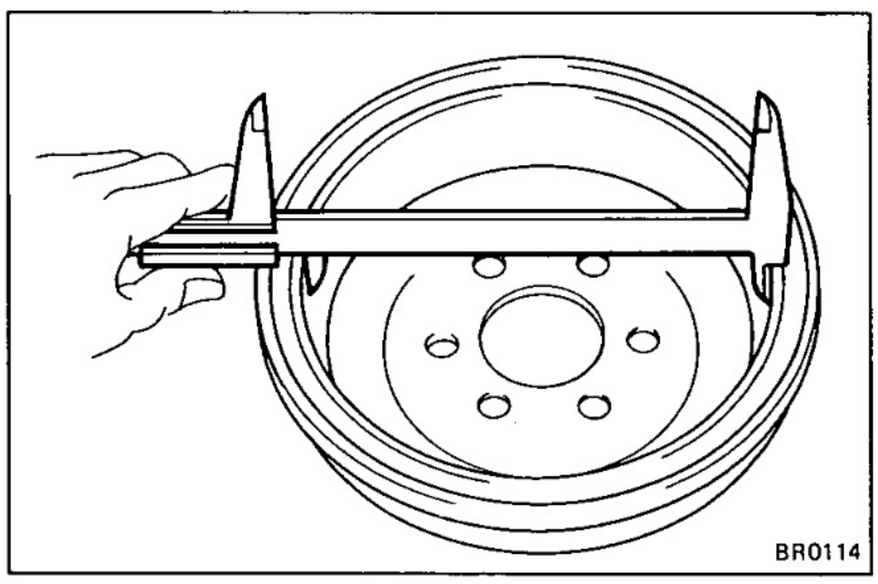

3. MEASURE BRAKE DRUM INSIDE DIAMETER

Standard inside diameter: 295.0 mm (11.614 in.)
Maximum inside diameter: 297.0 mm (11.693 in.)

If the drum is scored or worn, the brake drum may be lathed to the maximum inside diameter.

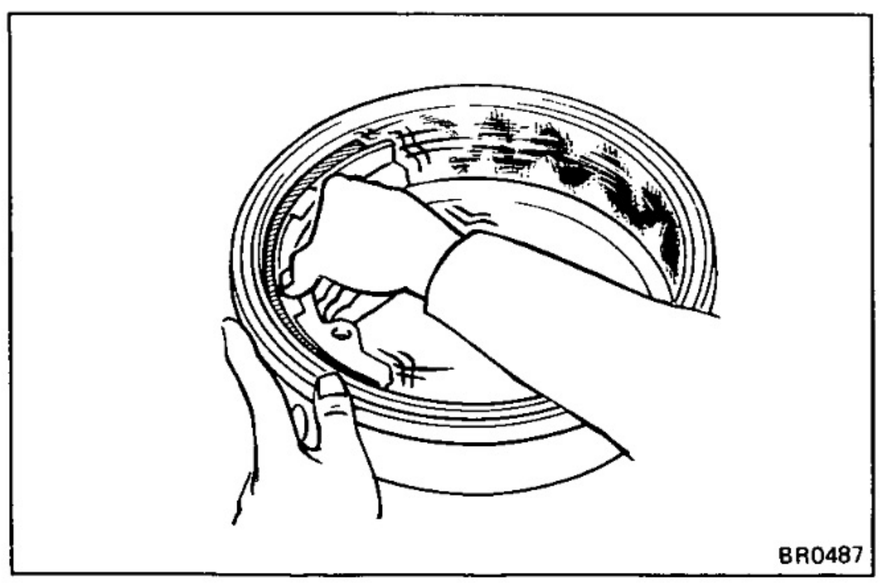

4. INSPECT BRAKE LINING AND DRUM FOR PROPER CONTACT

If the contact between the brake lining and drum is improper, repair the lining with a brake shoe grinder, or replace the brake shoe assembly.

ASSEMBLY OF FRONT BRAKE

(See page BR-30)

NOTE: Assemble the parts in the direction shown.

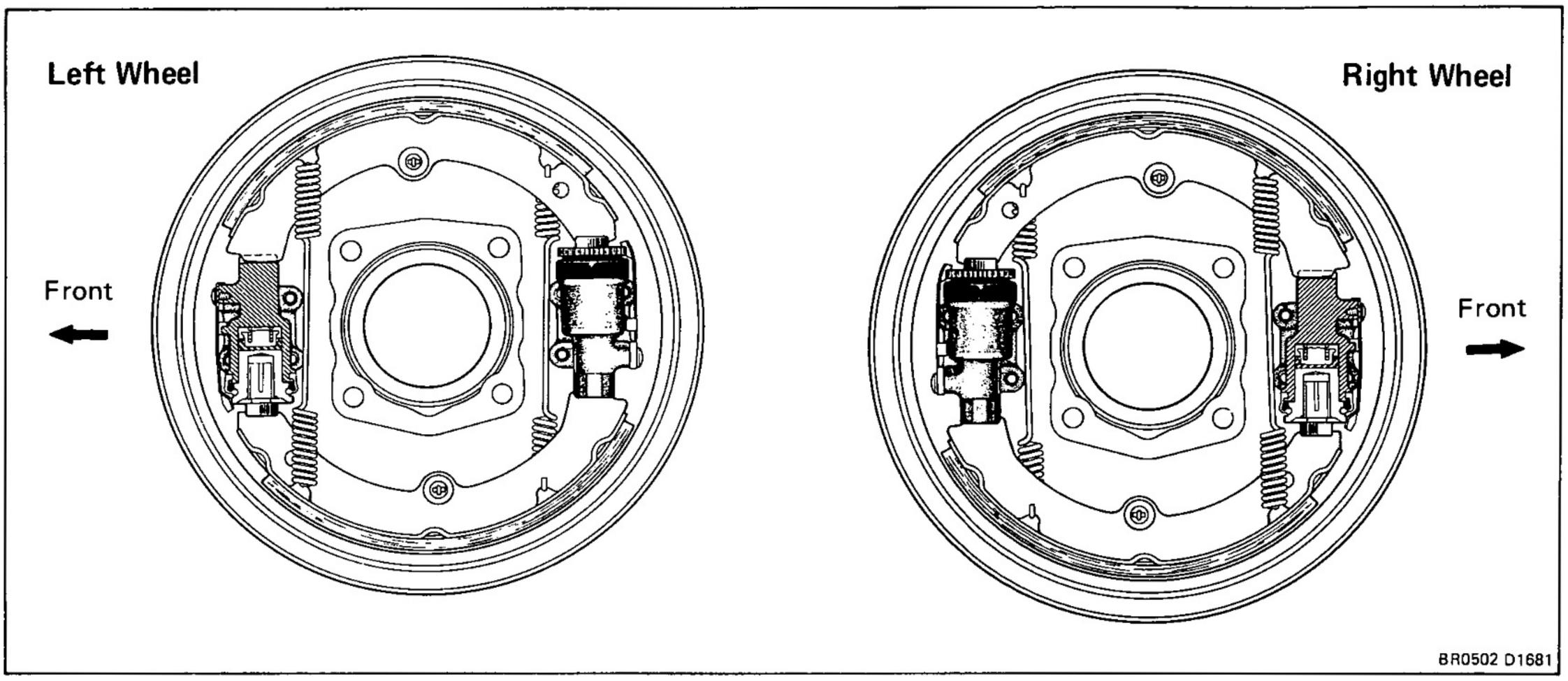

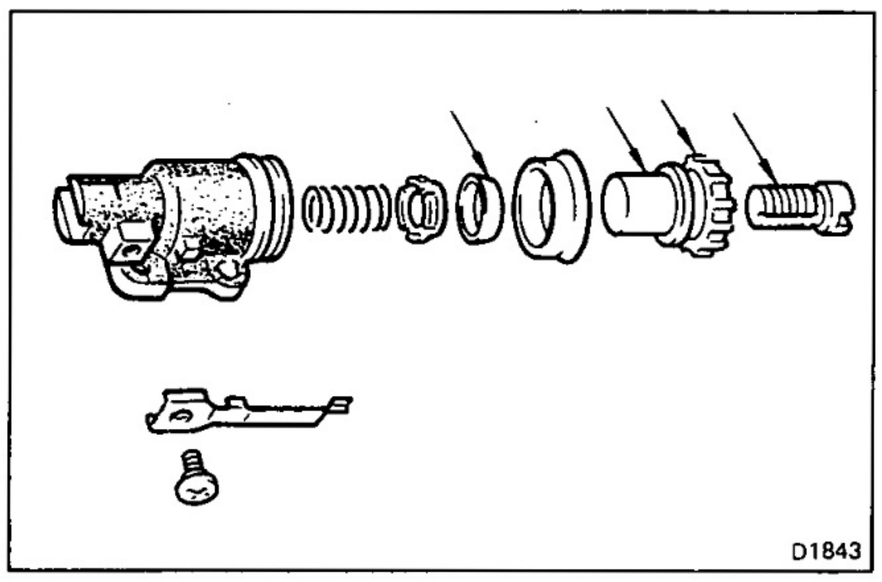

1. ASSEMBLE WHEEL CYLINDER

(a) Apply lithium soap base glycol grease to parts as shown.

(b) Assemble the wheel cylinder.

NOTE: Install in proper direction only.

- Return spring
- Spring seat
- Cup
- Boot

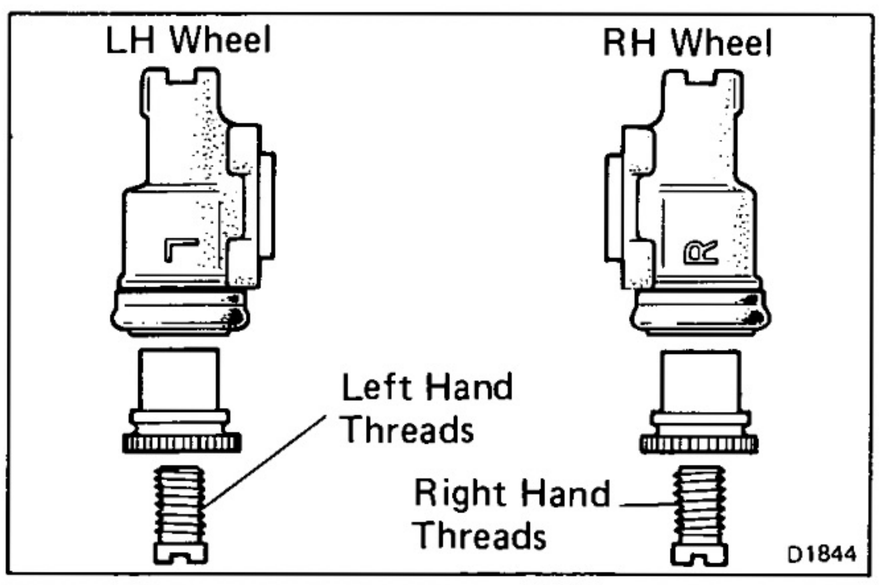

(c) Install the adjusting bolt and nut to the wheel cylinder.
There are two kinds of adjusting nuts and bolts. Use each at the proper location.

RH wheel cylinder-Right-hand threads
(R mark) (Yellow color)
LH wheel cylinder-Left-hand threads
(L mark) (White color)

(d) Install the adjusting lock spring with the screw.

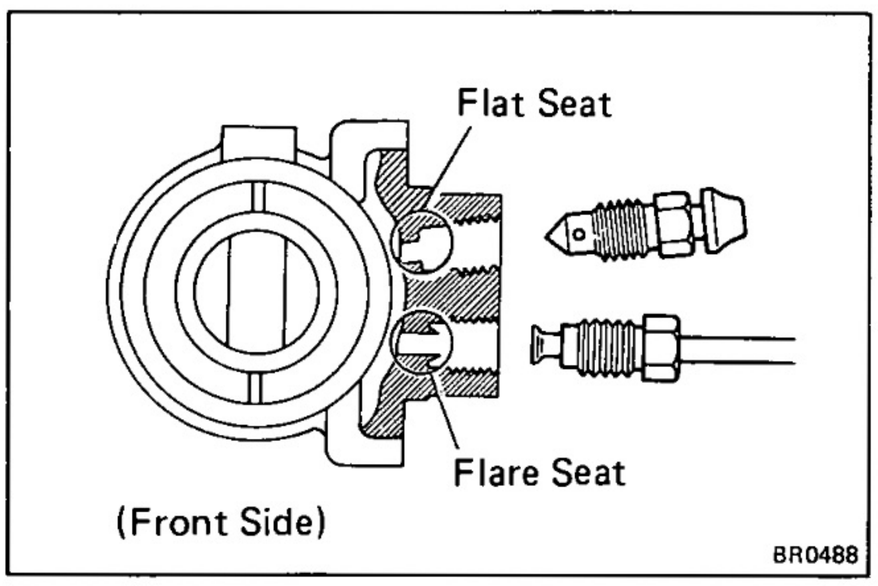

2. INSTALL BLEEDER PLUG

Temporarily install the bleeder plug as shown.

NOTE:

1. Front wheel cylinder union seats are flat and flare shaped as shown.
2. Both union seats of rear wheel cylinder are flat.

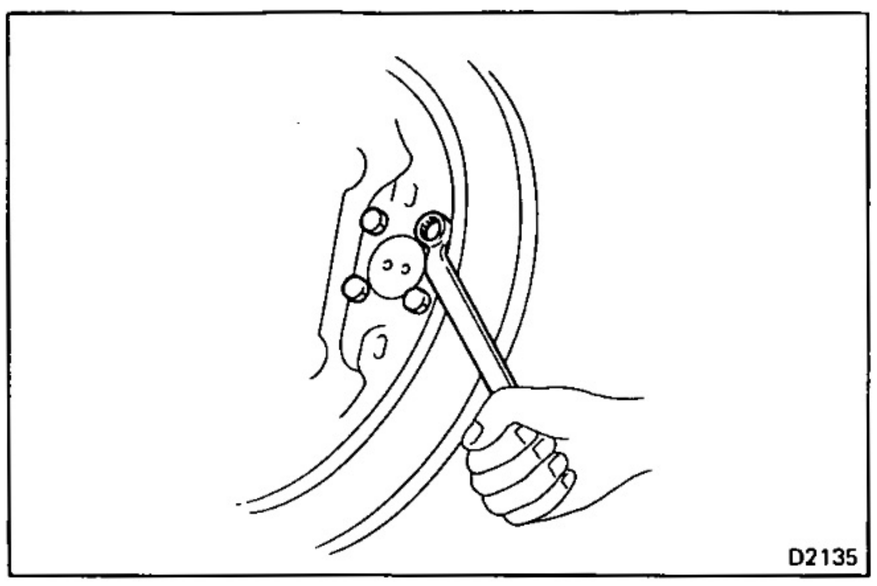

3. INSTALL WHEEL CYLINDER TO BACKING PLATE

(a) Install the front wheel cylinder with the adjuster facing downward. (See page BR-34)

(b) Install the rear wheel cylinder with the adjuster facing upward. (See page BR-34)

(c) Torque the bolts.

Torque: 185 kg-cm (13 ft-lb, 18 N·m)

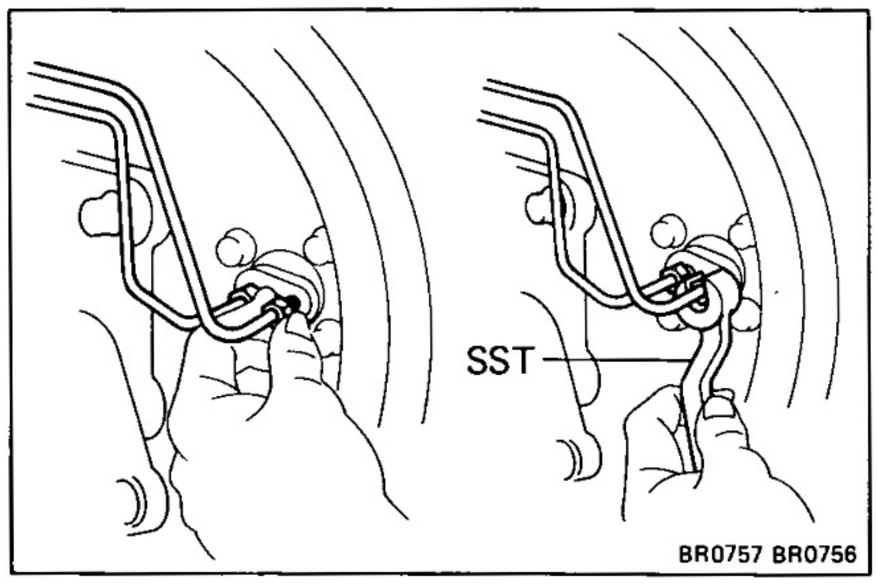

4. INSTALL BRAKE TUBE TO WHEEL CYLINDER

After tightening by finger, tighten the nut with SST.

SST 09751-36011

Torque: 155 kg-cm (11 ft-lb, 15 N·m)

5. INSTALL BRAKE TUBE CLAMP

Torque: 80 kg-cm (69 in-lb, 7.8 N·m)

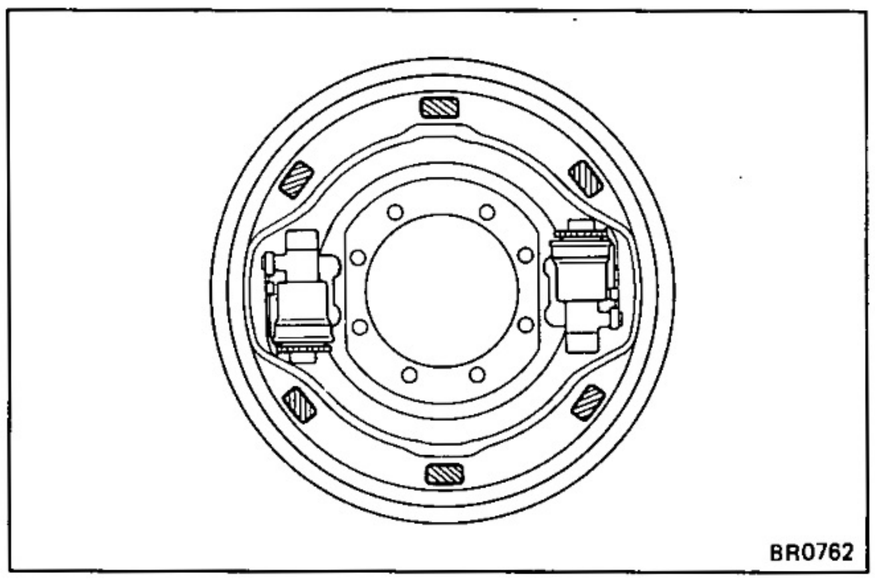

6. INSTALL BRAKE SHOES AND RETURN SPRINGS

(a) Apply high temperature grease to the brake shoe contact surfaces as shown.

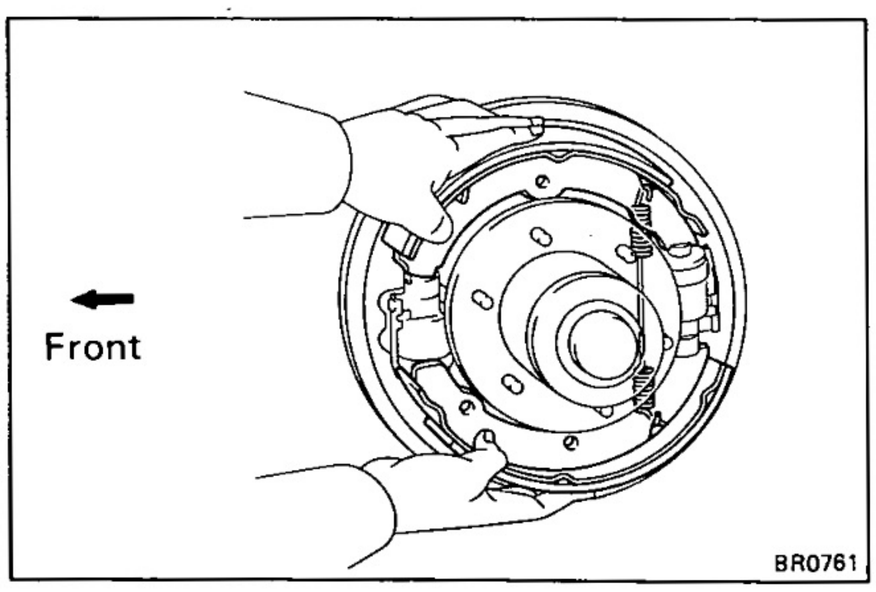

(b) Hook the return spring to the brake shoe rear inner side.

(c) Install the brake shoes assembly.

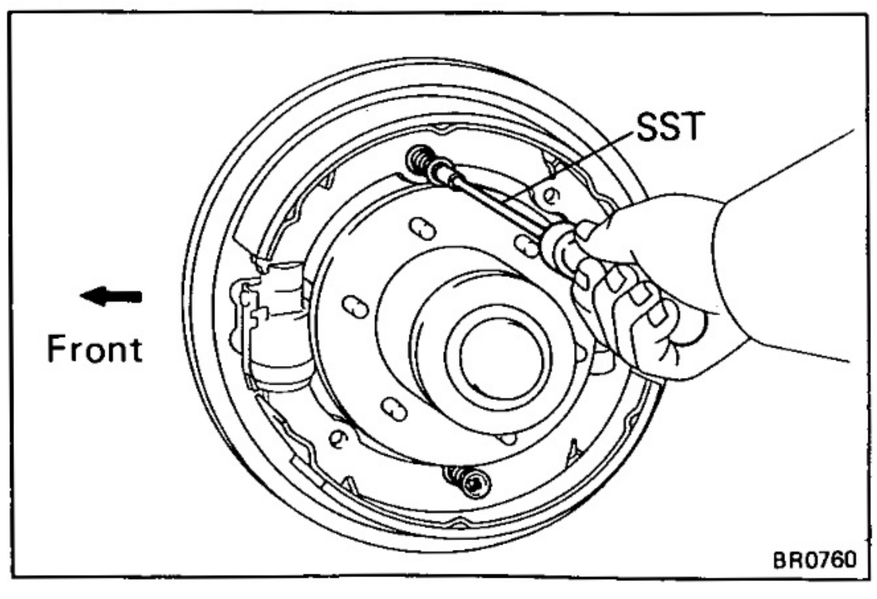

(d) Using SST, install the shoe hold-down spring, two retainers and pin.

SST 09718-00010

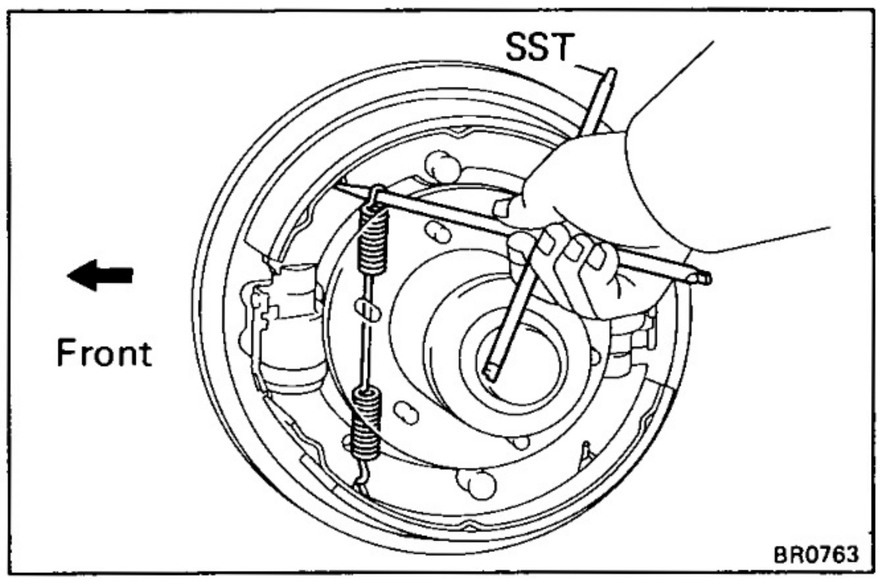

(e) Using SST, install the other side return spring.
SST 09703-30010

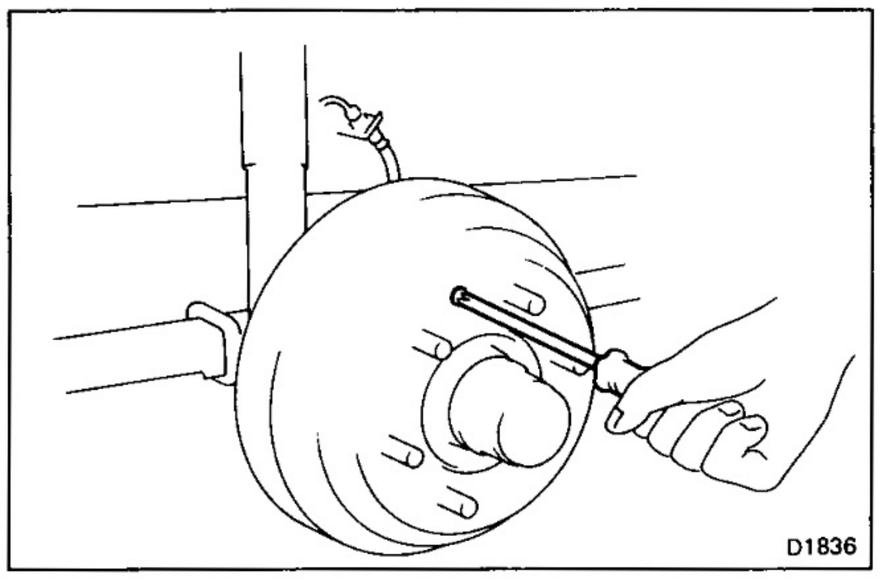

7. CLEAN LINING AND INNER DRUM WITH SANDPAPER

8. INSTALL DRUM
Install the drum with screw.

9. FILL BRAKE RESERVOIR WITH BRAKE FLUID AND BLEED BRAKE SYSTEM (See page BR-6)

10. CHECK FLUID LEAKAGE

11. ADJUST BRAKE SHOE CLEARANCE (See page BR-8)

12. INSTALL WHEELS

FRONT BRAKE
Disc Brake
COMPONENTS

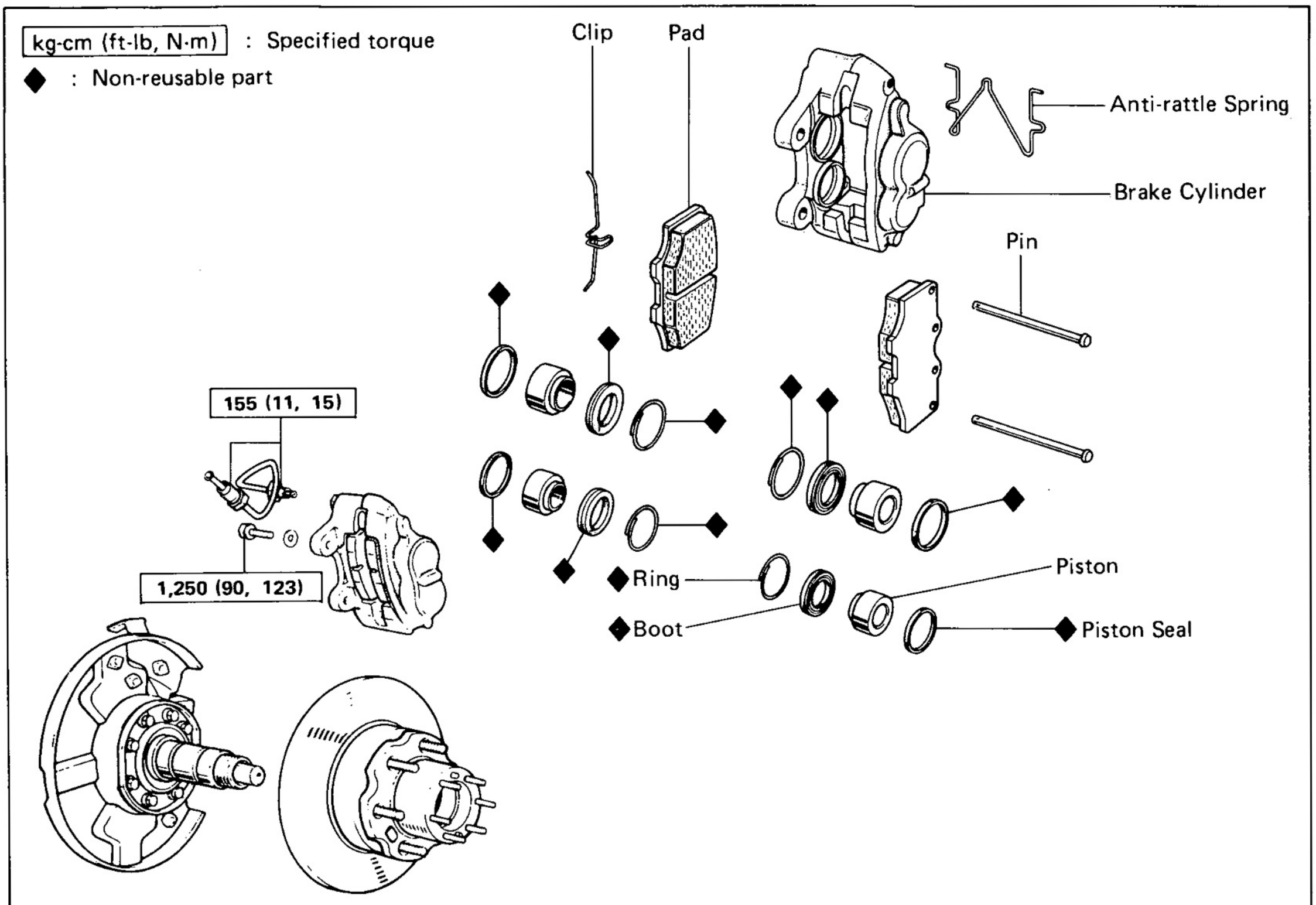

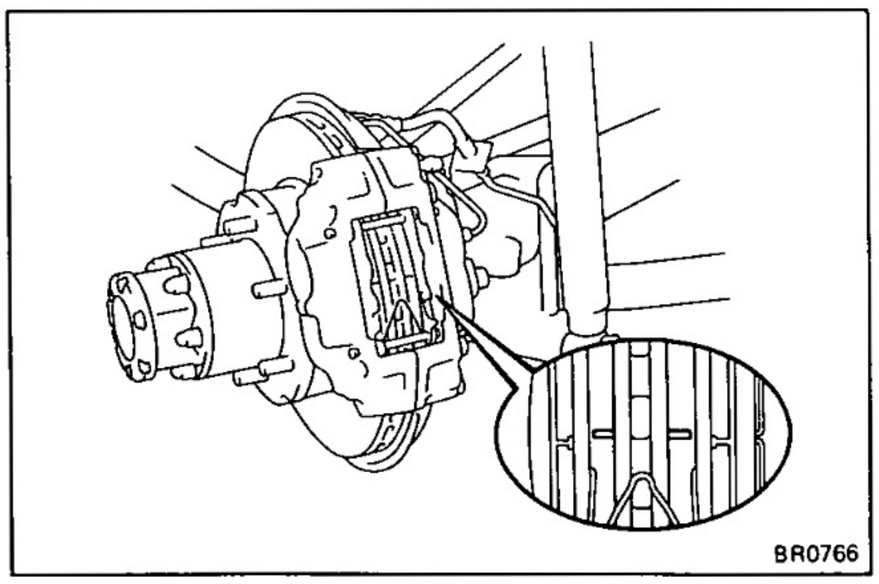

REPLACEMENT OF BRAKE PADS

1. REMOVE FRONT WHEEL

2. INSPECT PAD LINING THICKNESS

Check the pad thickness through the cylinder inspection hole and replace pads if not within specification.

Standard thickness : 10.0 mm (0.394 in.)
Minimum thickness : 1.0 mm (0.039 in.)

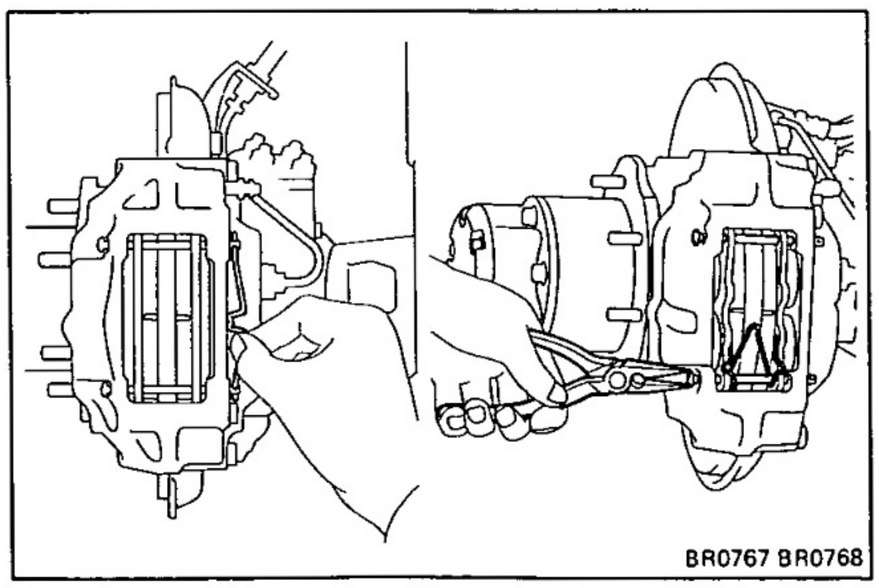

3. REMOVE FOLLOWING PARTS:

(a) Anti-rattle clip
(b) Two anti-rattle pins
(c) Anti-rattle spring
(d) Two pads

4. CHECK ROTOR DISC THICKNESS
(See step 2 on page BR-41)

5. CHECK ROTOR DISC RUNOUT
(See step 3 on page BR-41)

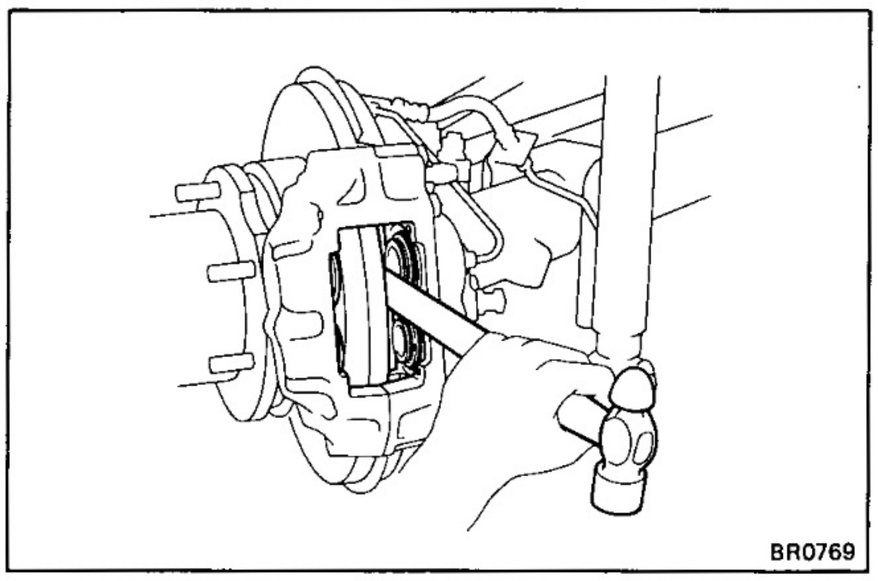
BR0769

6. INSTALL NEW PADS

(a) Draw out a small amount of brake fluid from the reservoir.

(b) Press in the piston with a hammer handle or such.

NOTE: Always change the pad on one wheel at a time as there is a possibility of the opposite piston flying out.

(c) Install the new pads into the cylinder.

CAUTION: Do not allow oil or grease to get on the rubbing face.

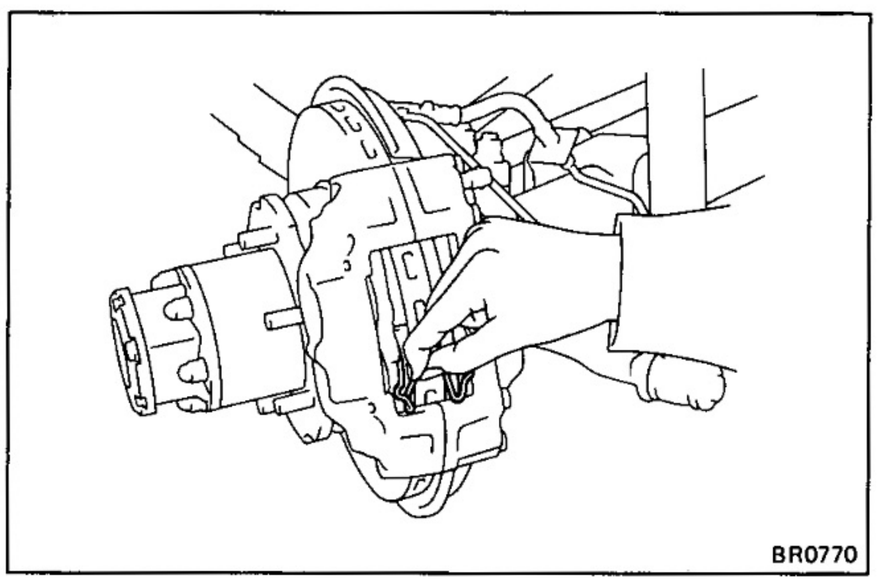
BR0770

7. INSTALL ANTI-RATTLE SPRING

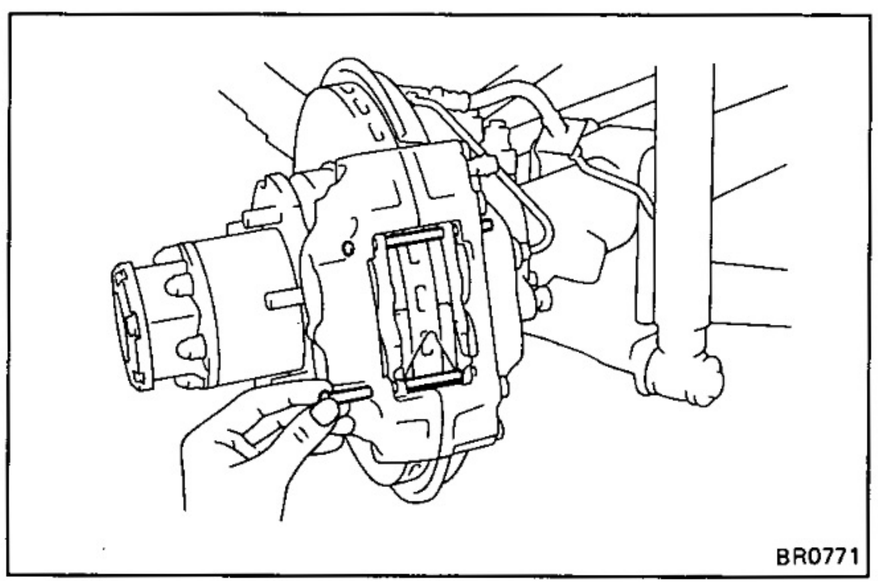
BR0771

8. INSTALL TWO PINS

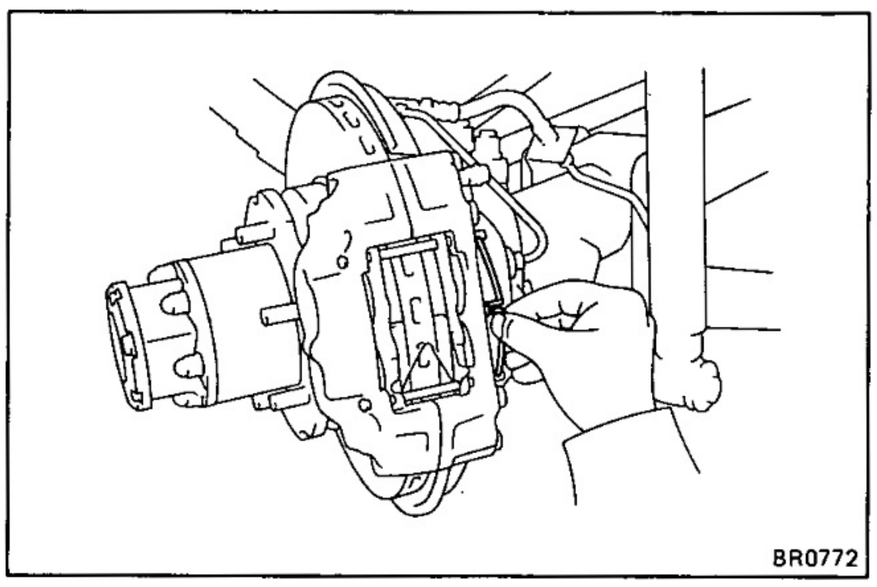
BR0772

9. INSTALL ANTI-RATTLE CLIP

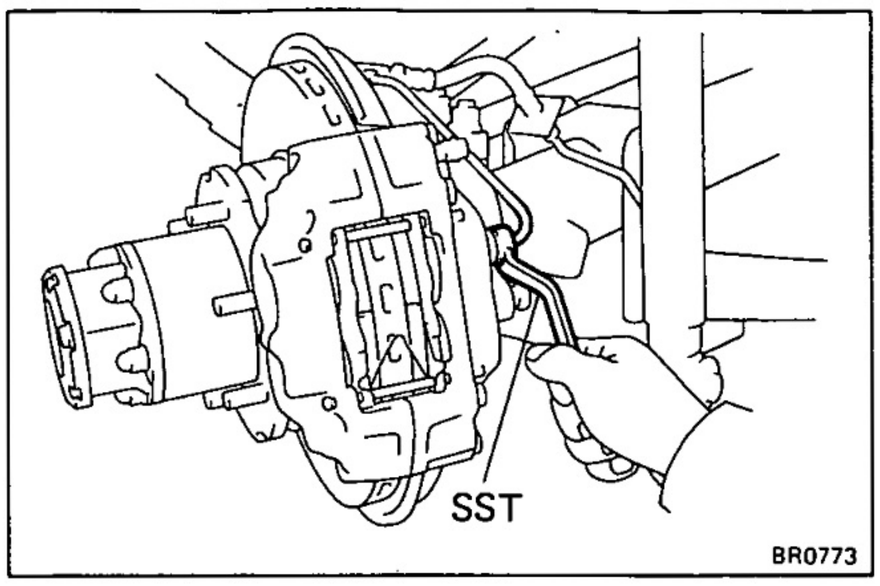

REMOVAL OF CYLINDER

(See page BR-37)

1. REMOVE FRONT WHEEL

2. DISCONNECT BRAKE LINE

   Using SST, disconnect the brake line.
   Use a container to catch the brake fluid.

   SST 09751-36011

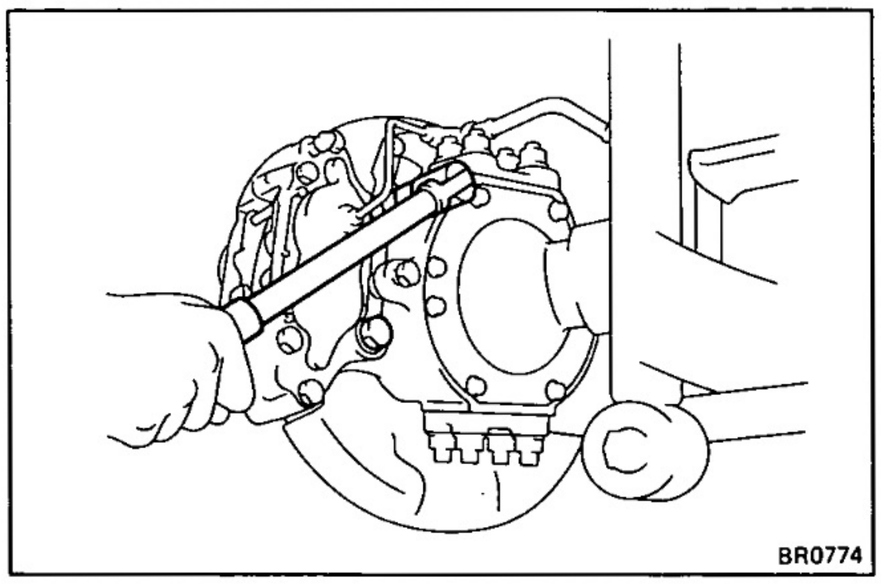

3. REMOVE CYLINDER

   Remove the two mounting bolts and cylinder.

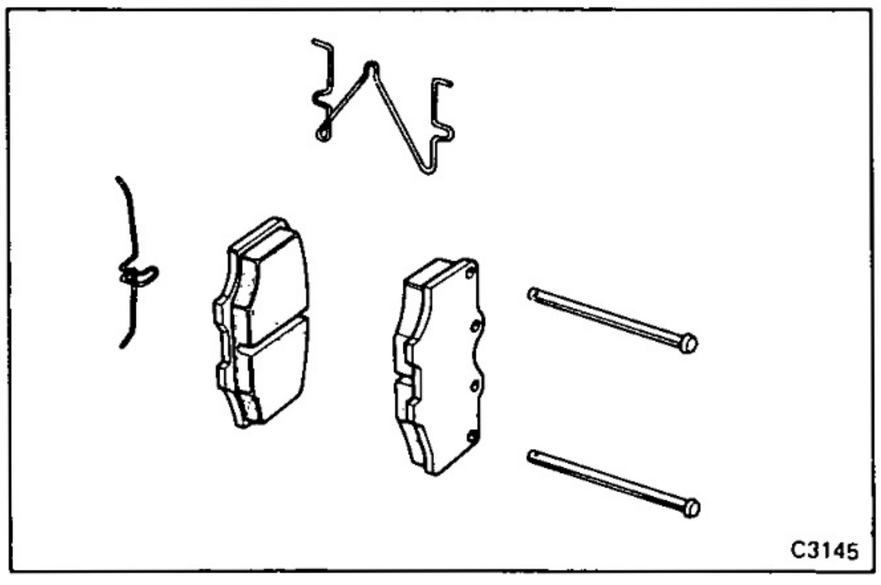

4. REMOVE FOLLOWING PARTS:

   (a) Anti-rattle clip
   (b) Two anti-rattle pins
   (c) Anti-rattle spring
   (d) Two pads

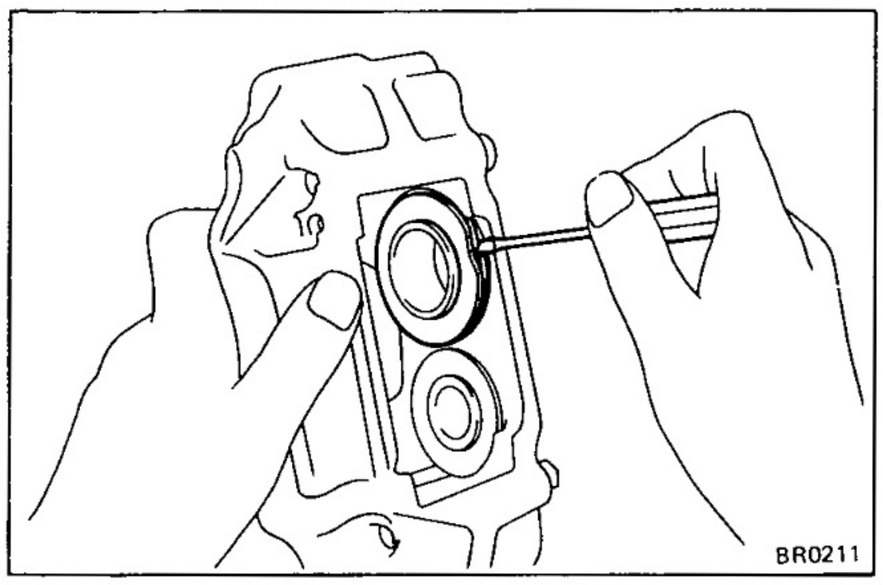

DISASSEMBLY OF CYLINDER

1. REMOVE CYLINDER BOOT SET RING AND BOOT

Using a screwdriver, remove the cylinder boot set ring and boot.

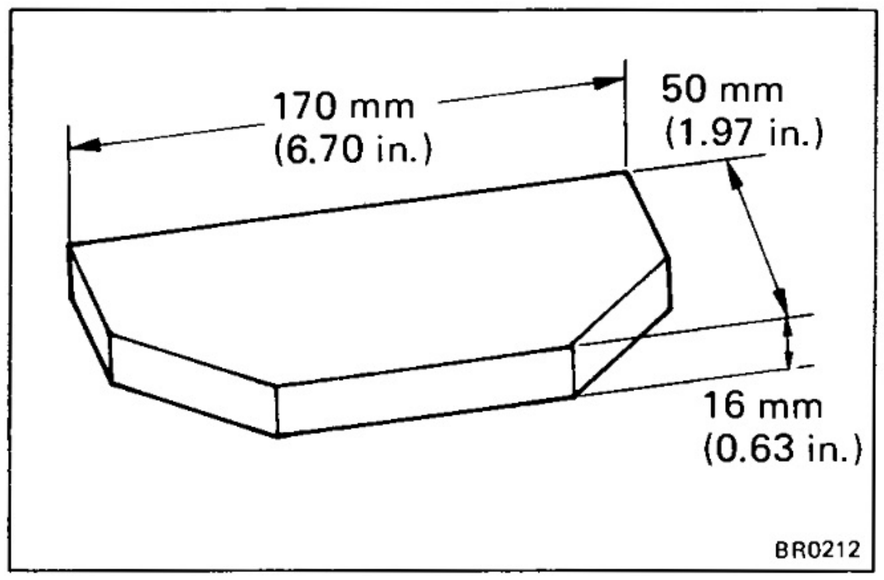

2. REMOVE PISTON FROM CYLINDER

(a) Prepare the wooden plate as shown in the figure to hold the piston.

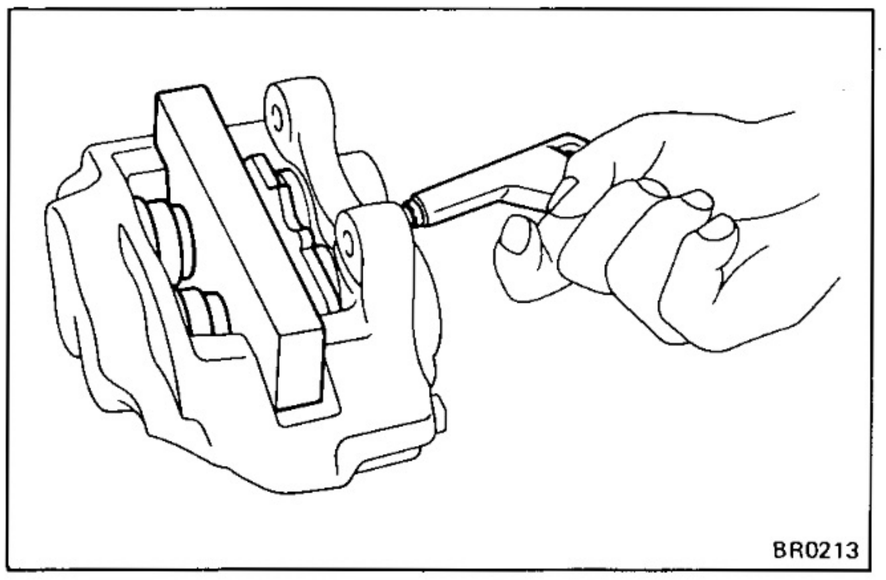

(b) Place the plate between the pistons and insert a pad at one side.

(c) Use compressed air to remove the pistons alternately from the cylinder.

WARNING: Do not place your fingers in front of the piston when using compressed air.

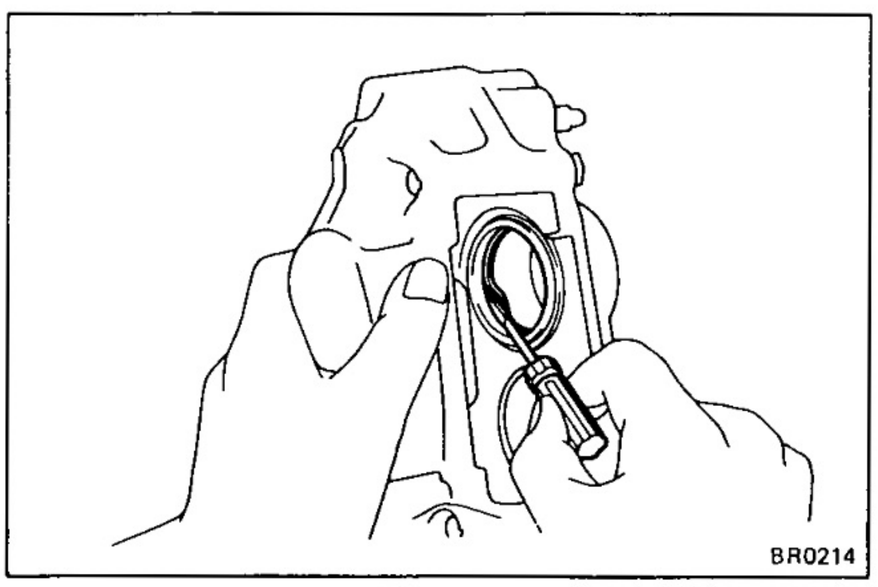

3. REMOVE PISTON SEAL

Using a screwdriver, remove the seal from the cylinder.

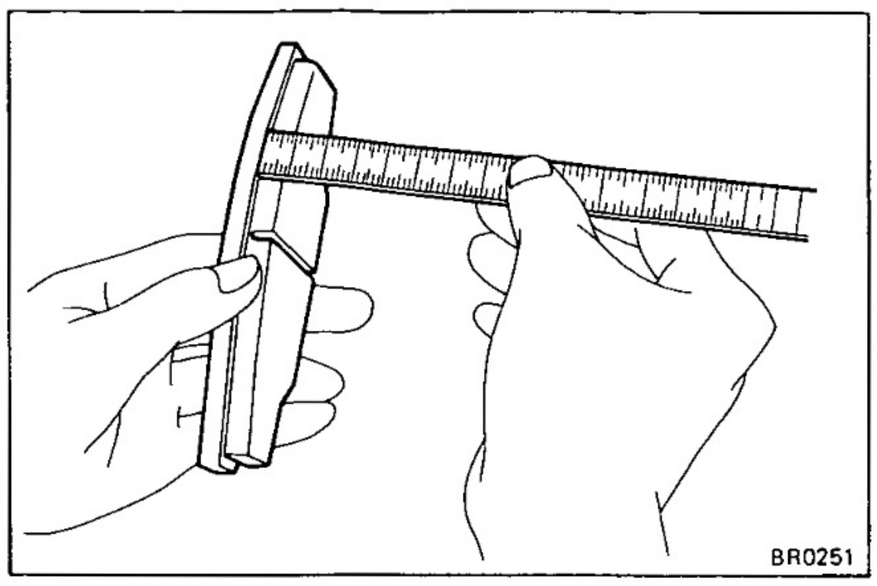

INSPECTION AND REPAIR OF FRONT BRAKE COMPONENTS

1. MEASURE PAD LINING THICKNESS

Standard thickness : 10.0 mm (0.394 in.)
Minimum thickness : 1.0 mm (0.039 in.)

Replace the pad if the thickness is less than the minimum (the 1.0 mm slit is no longer visible) or if it shows signs of uneven wear.

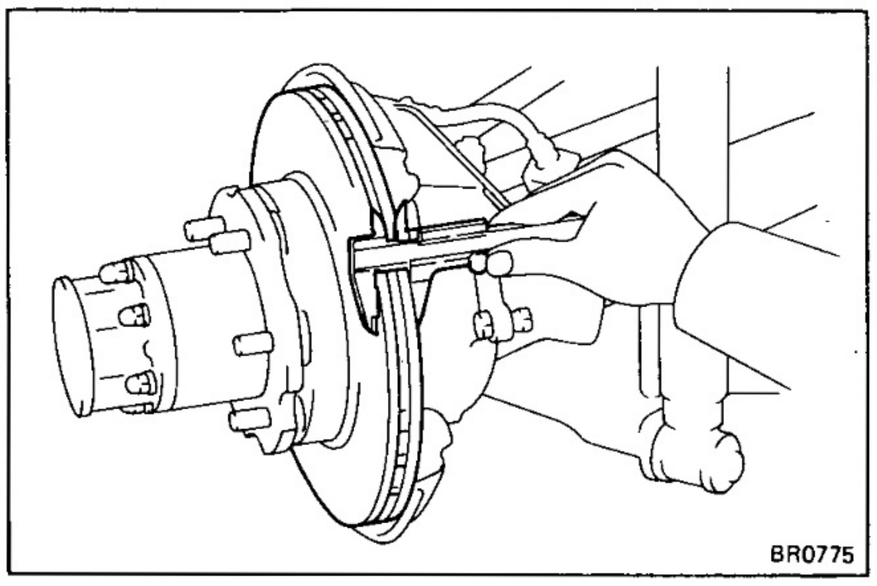

2. MEASURE ROTOR DISC THICKNESS

Standard thickness : 20.0 mm (0.787 in.)
Minimum thickness : 19.0 mm (0.748 in.)

If the disc is scored or worn, or if thickness is less than minimum, repair or replace the disc.

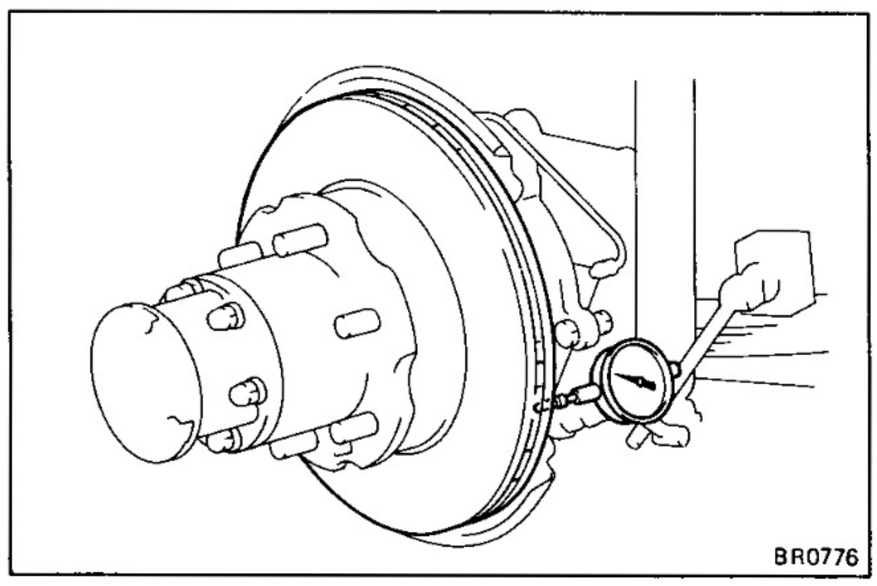

3. MEASURE ROTOR DISC RUNOUT

Measure the rotor disc runout at 10 mm (0.39 in.) from the outer edge of the rotor disc.

Maximum disc runout: 0.15 mm (0.0059 in.)

If the runout is greater than the maximum, replace the disc.

NOTE: Before measuring the runout, confirm that the front bearing play is within specification.

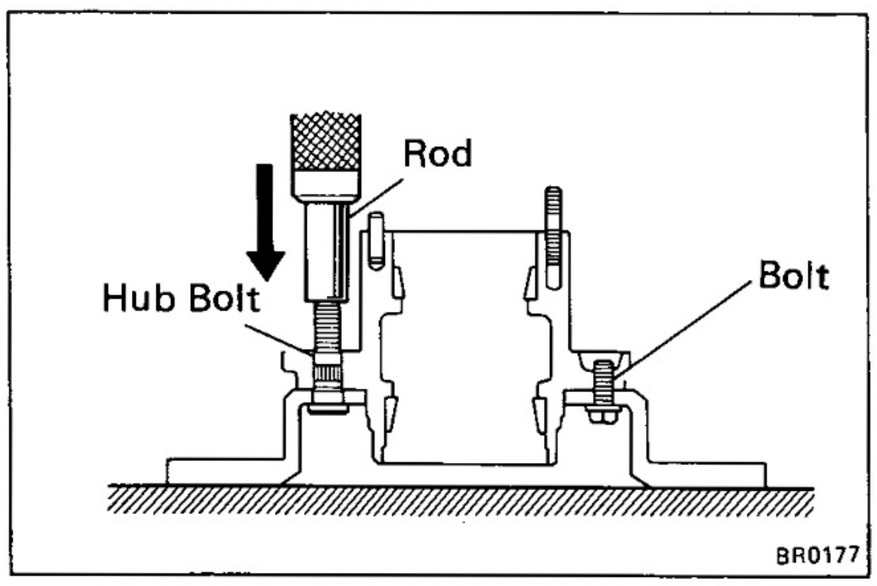

4. IF NECESSARY, REPLACE DISC

(a) Remove the axle hub. (See page FA-13)

(b) Using rod, press the hub bolts out of the axle hub.

(c) Remove the two bolts and separate the disc and hub.

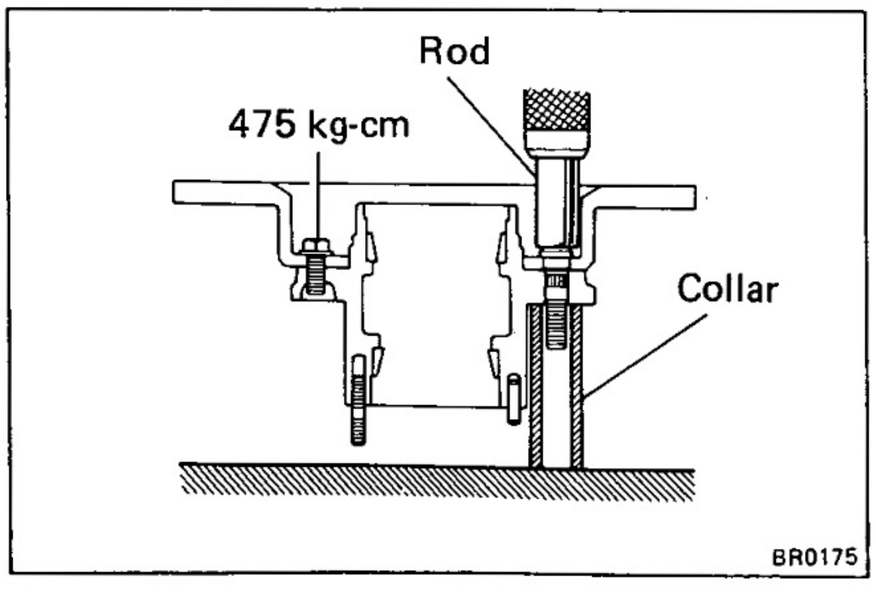

(d) Install a new disc to the axle hub and tighten the two bolts.

Torque: 475 kg-cm (34 ft-lb, 47 N·m)

(e) Using a collar and rod, press the hub bolts into the hub.

(f) Install the axle hub and adjust the front bearing pre-load. (See page FA-14)

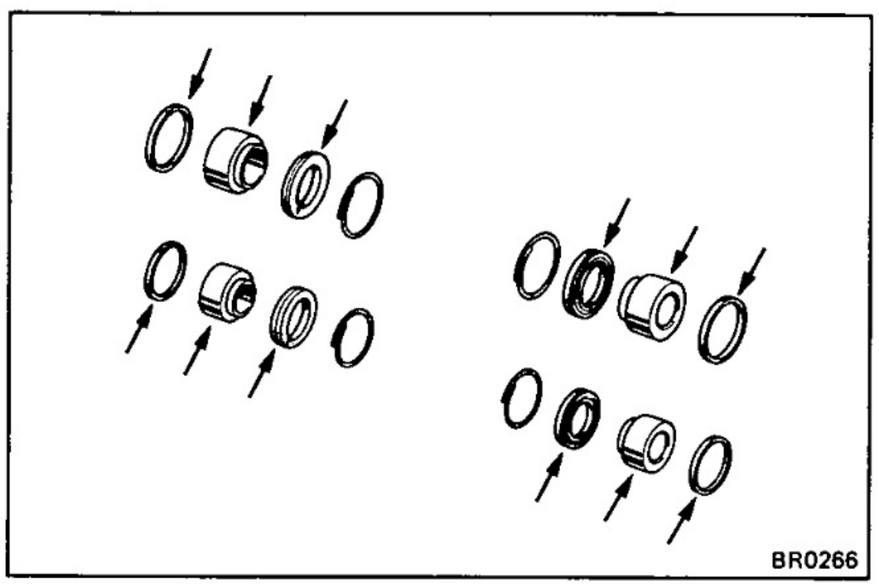

ASSEMBLY OF CYLINDER

(See page BR-37)

1. APPLY LITHIUM SOAP BASE GLYCOL GREASE TO PARTS INDICATED BY ARROWS

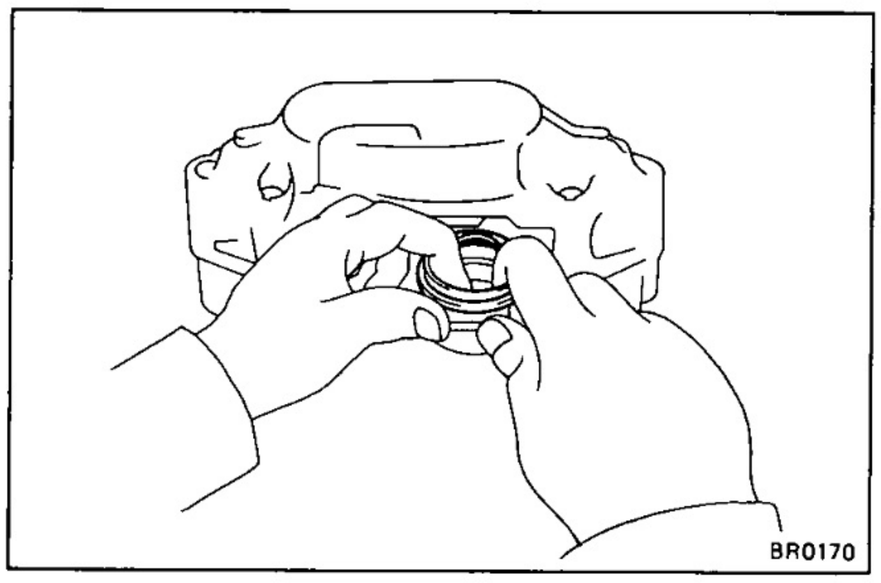

2. INSTALL PISTON SEAL IN CYLINDER

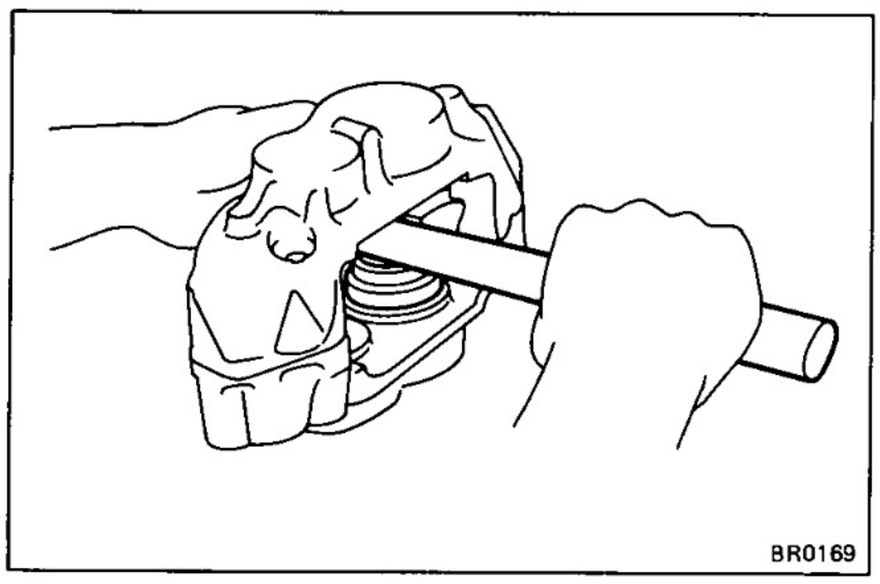

3. INSTALL PISTON IN CYLINDER

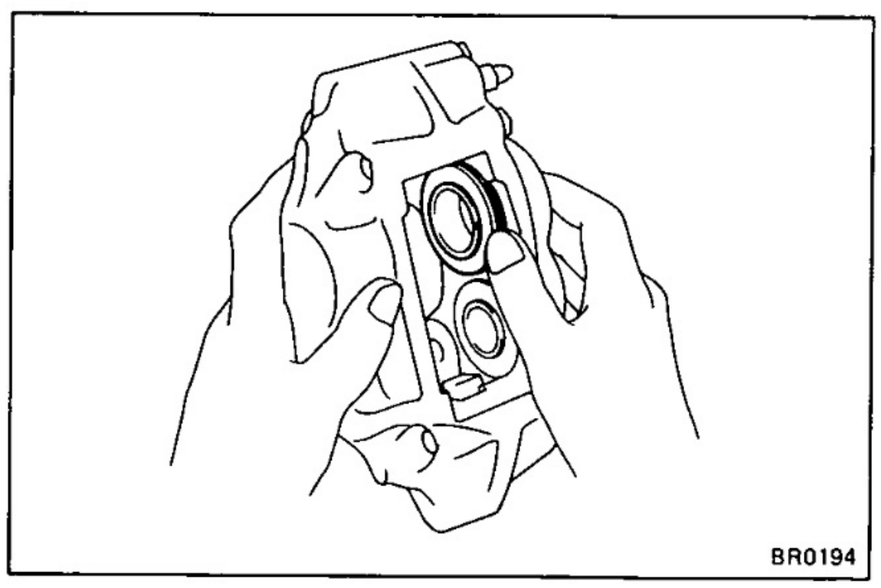

4. INSTALL CYLINDER BOOT AND SET RING IN CYLINDER

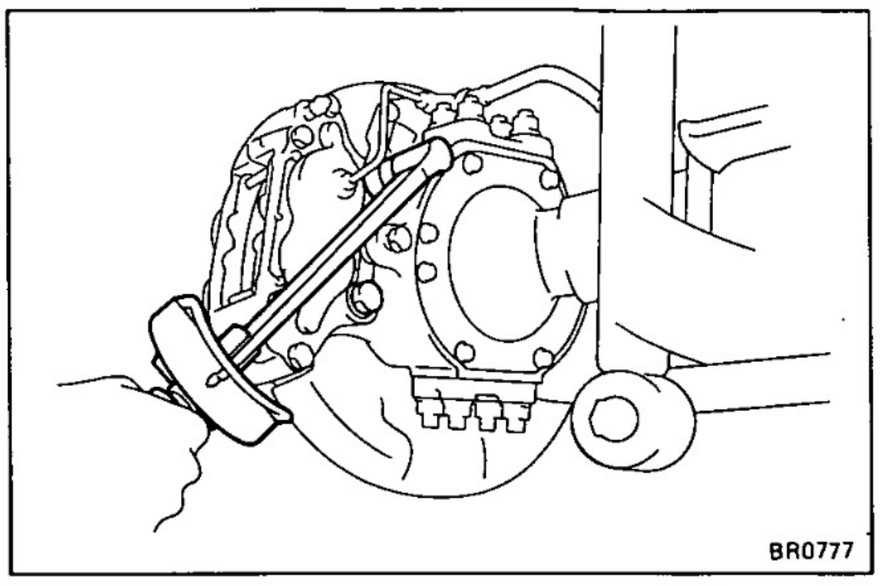

INSTALLATION OF CYLINDER

(See page BR-37)

1. INSTALL CYLINDER

Install and torque the mounting bolts.

Torque: 1,250 kg-cm (90 ft-lb, 123 N·m)

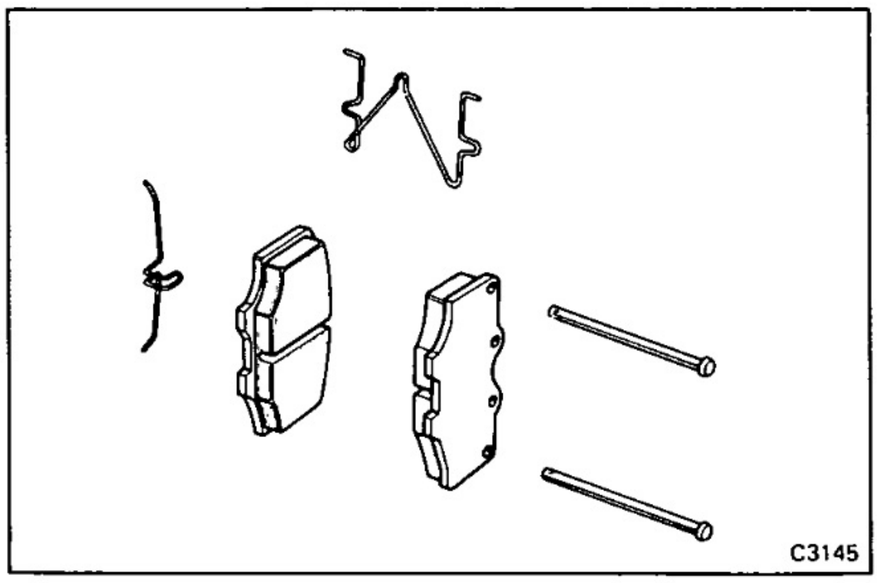

2. INSTALL FOLLOWING PARTS:

(a) Two pads

(b) Anti-rattle spring

(c) Two anti-rattle pins

(d) Anti-rattle clip

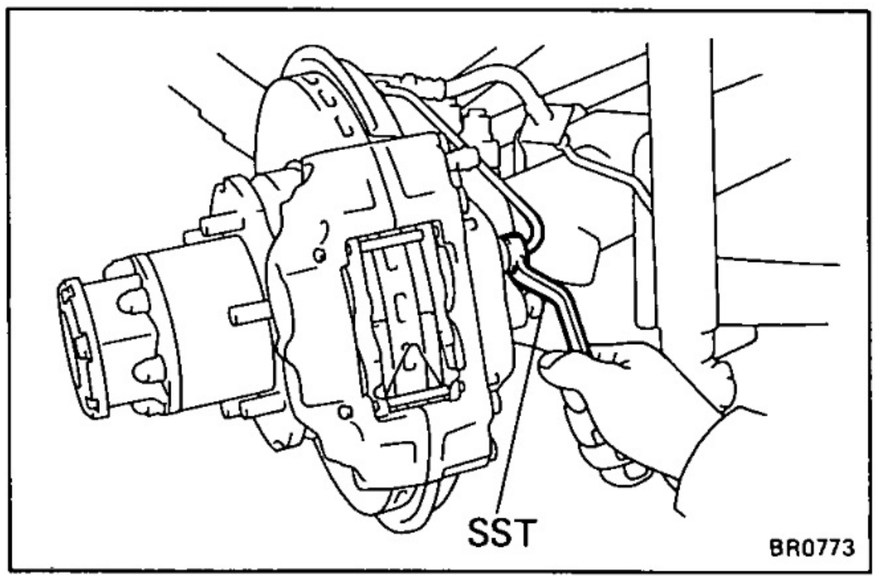

3. CONNECT BRAKE LINE

Using SST, connect the brake line.

SST 09751-36011

Torque: 155 kg-cm (11 ft-lb, 15 N·m)

4. FILL BRAKE RESERVOIR WITH BRAKE FLUID AND BLEED BRAKE SYSTEM

(See page BR-6)

5. CHECK FOR FLUID LEAKAGE

6. INSTALL FRONT WHEEL

REAR BRAKE

COMPONENTS

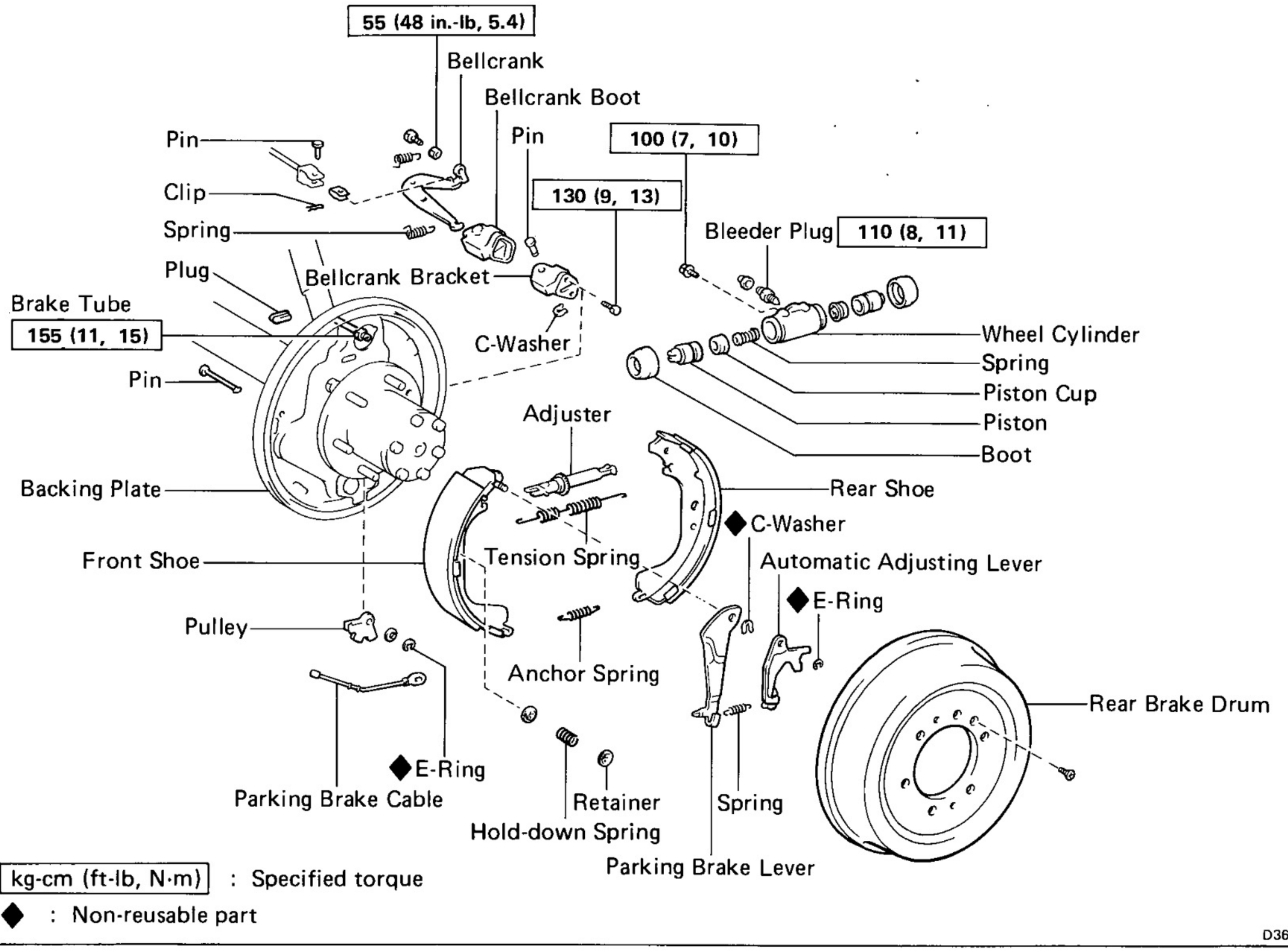

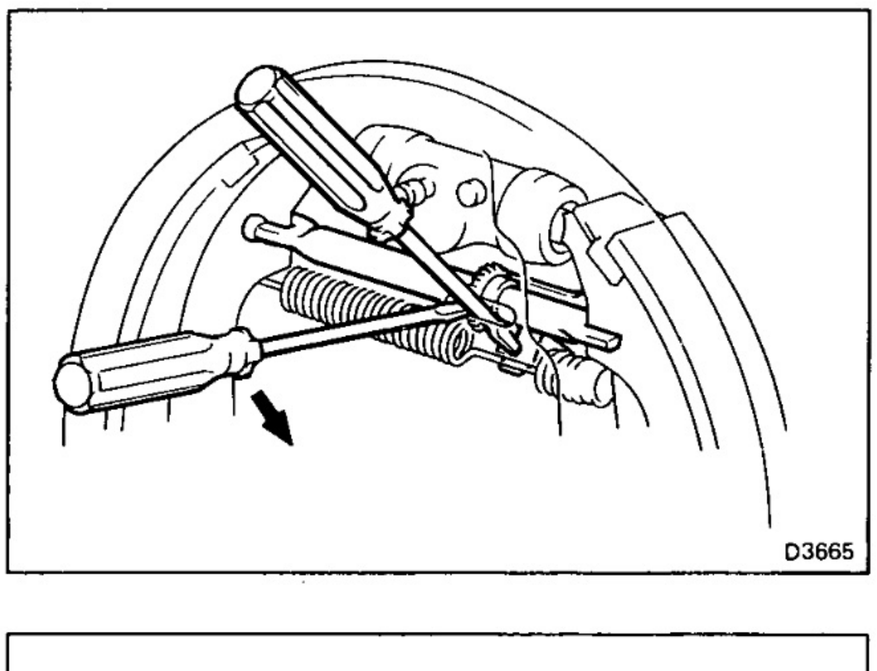

REMOVAL OF REAR DRUM BRAKE

1. REMOVE REAR WHEEL AND BRAKE DRUM

NOTE: If the brake drum cannot be removed easily, perform the following.

(a) Insert a screwdriver through the hole in the backing plate, and hold the automatic adjusting lever away from the adjusting bolt.

(b) Using another screwdriver, reduce the brake shoe adjustment by turning the adjusting bolt clockwise.

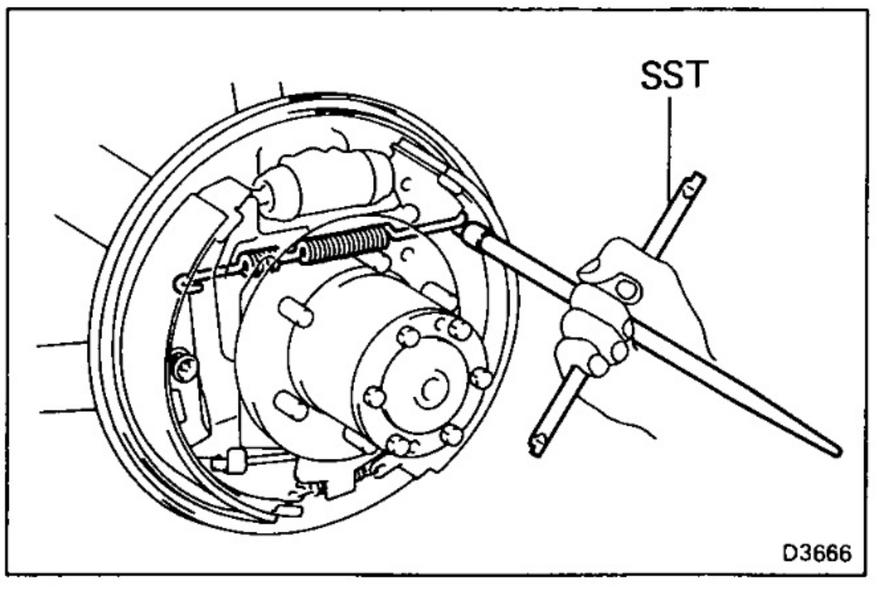

2. REMOVE REAR SHOE

(a) Using SST, remove the tension spring.

SST 09703-30010

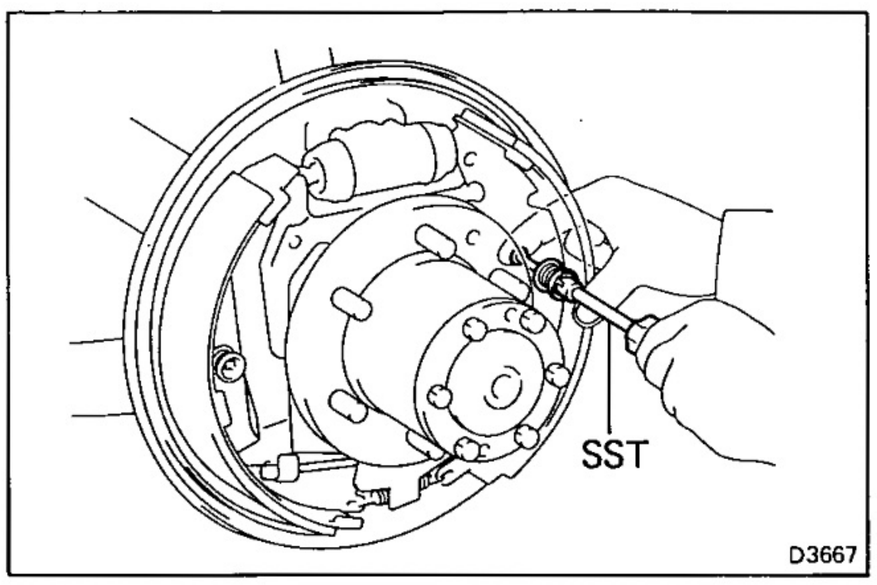

(b) Using SST, remove the rear shoe hold-down spring and pin.

SST 09718-00010

(c) Remove the rear brake shoe and anchor spring.

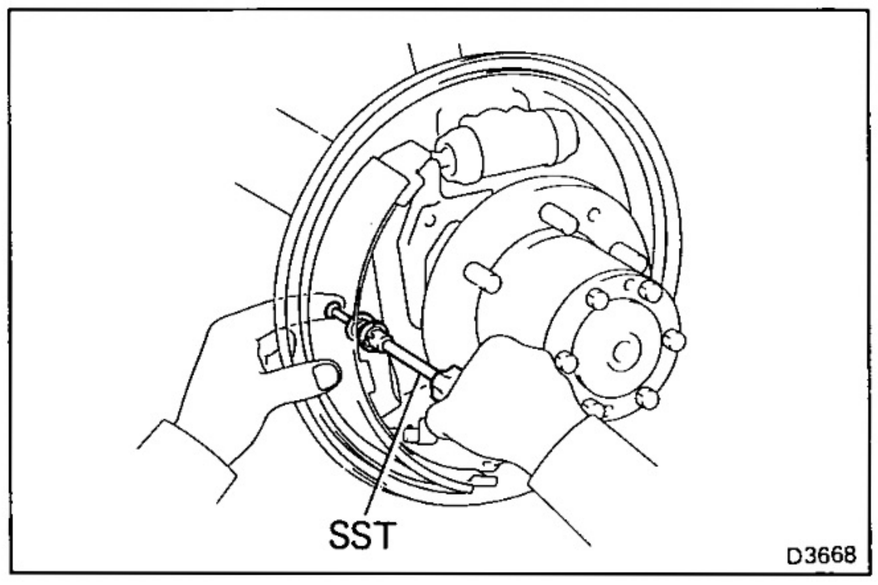

3. REMOVE FRONT SHOE

(a) Using SST, remove the hold-down spring and pin.

SST 09718-00010

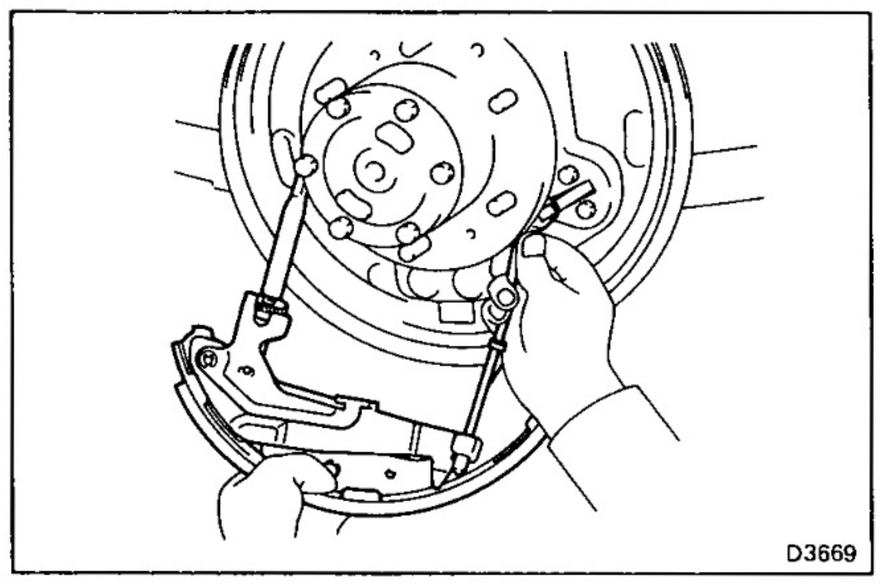

(b) Disconnect the parking brake cable from the parking brake bellcrank.

(c) Remove the front shoe with adjuster.

(d) Disconnect the parking brake cable from the front shoe.

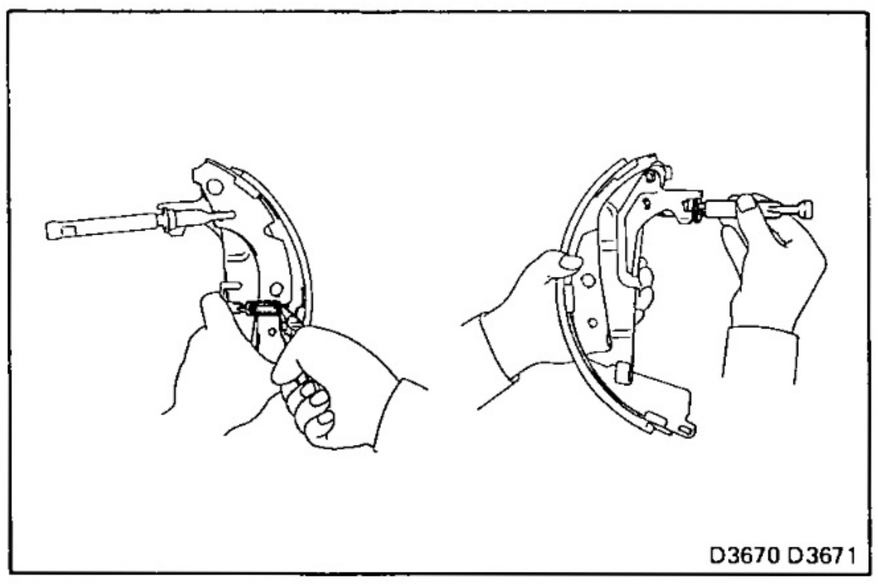

4. REMOVE ADJUSTER FROM FRONT SHOE

(a) Remove the adjusting lever spring.

(b) Remove the adjuster.

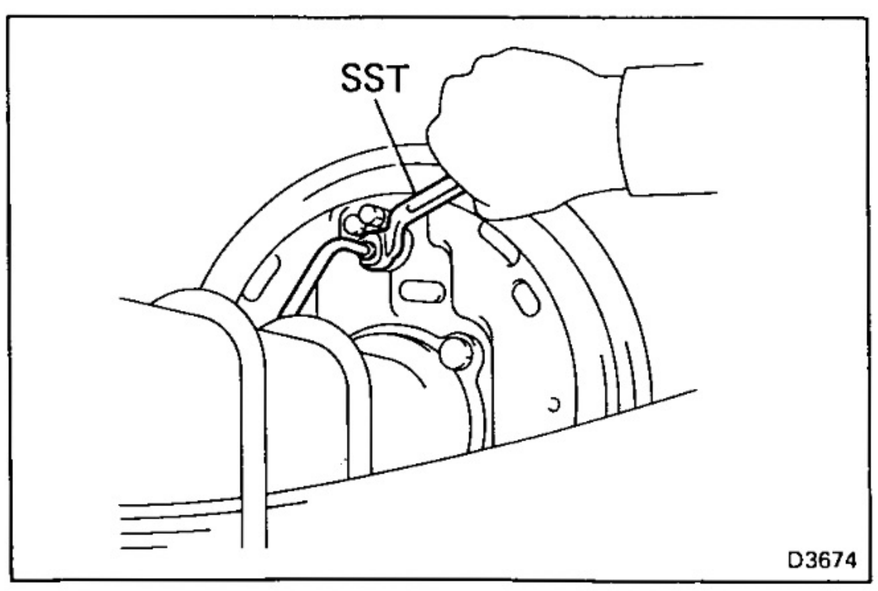

5. IF NECESSARY, REMOVE AND DISASSEMBLE WHEEL CYLINDER

(a) Using SST, disconnect the brake tube.

SST 09751-36011

(b) Remove two bolts and the wheel cylinder.

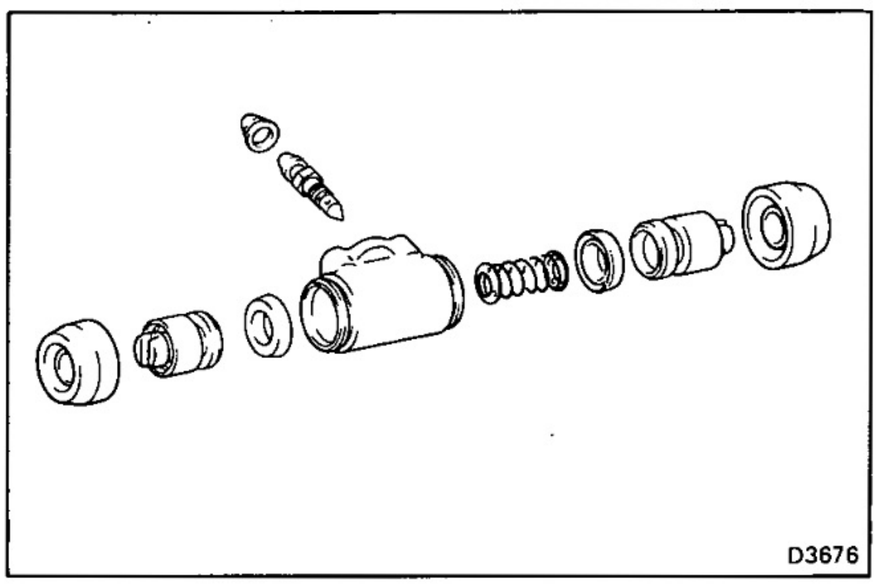

6. DISASSEMBLE WHEEL CYLINDER

Remove the following parts from the wheel cylinder:

- Two boots
- Two pistons
- Two piston cups
- Spring

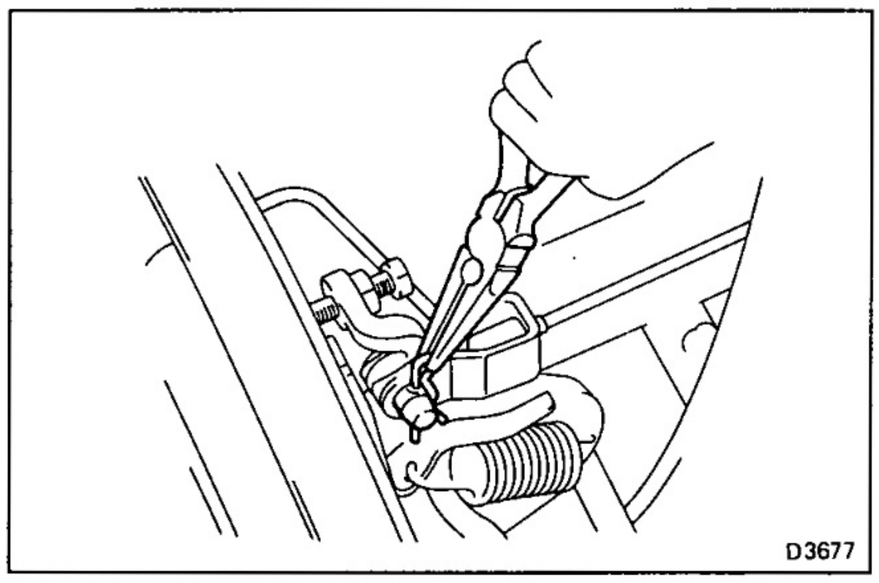

7. IF NECESSARY, REMOVE AND DISASSEMBLE PARKING BRAKE BELLCRANK ASSEMBLY

(a) Remove the clip and disconnect the parking brake cable.

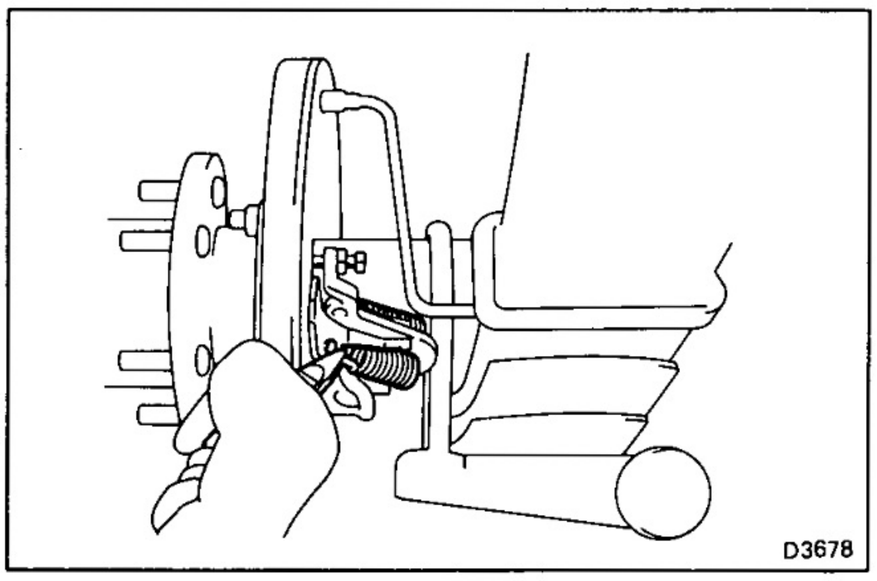

(b) Remove the two tension springs.

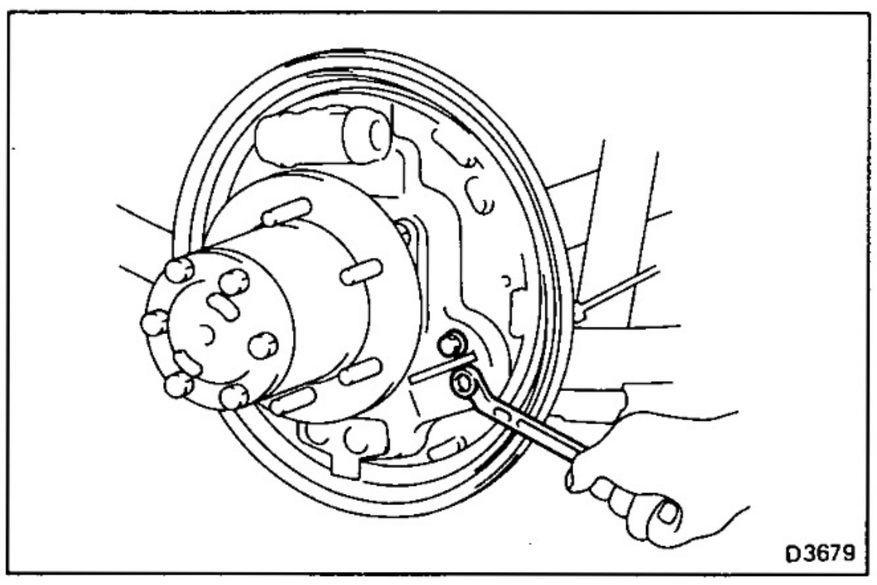

(c) Remove the parking brake bellcrank assembly with the two bolts.

(d) Remove the boot from the parking brake bellcrank assembly.

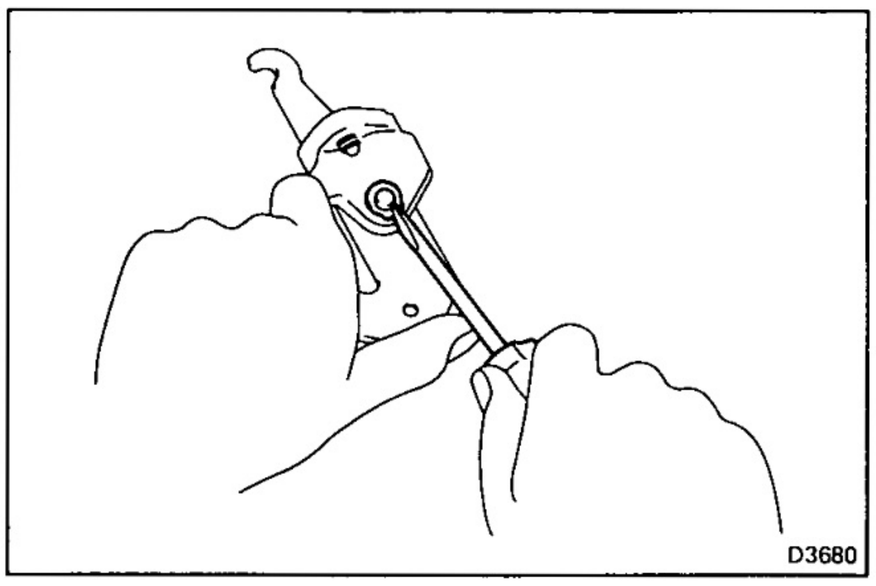

(e) Using a screwdriver, remove the C-washer and pin.

(f) Remove the parking brake bellcrank from the crank bracket.

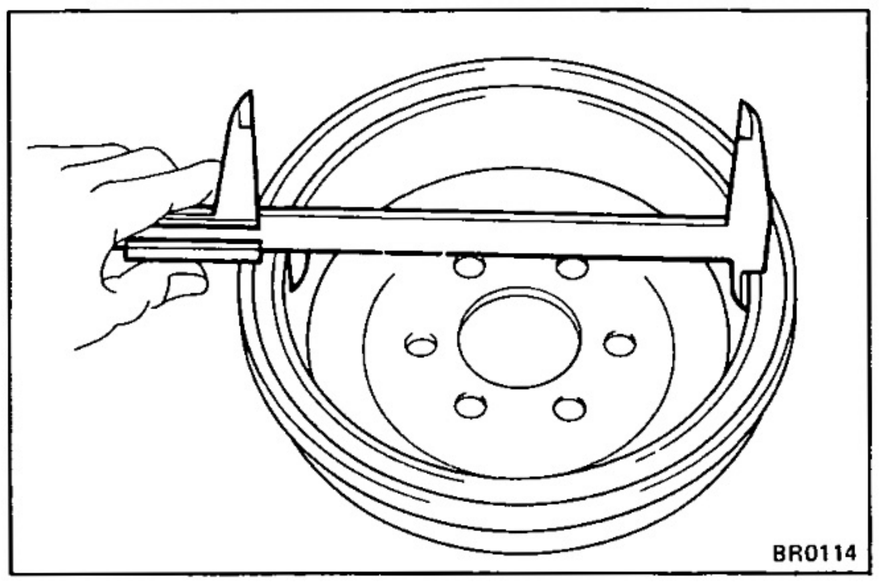

INSPECTION OF REAR BRAKE COMPONENTS

1. MEASURE BRAKE DRUM INSIDE DIAMETER

Standard inside diameter: 295.0 mm (11.614 in.)
Maximum inside diameter: 297.0 mm (11.693 in.)

If the drum is scored or worn, the brake drum may be lathed to the maximum inside diameter.

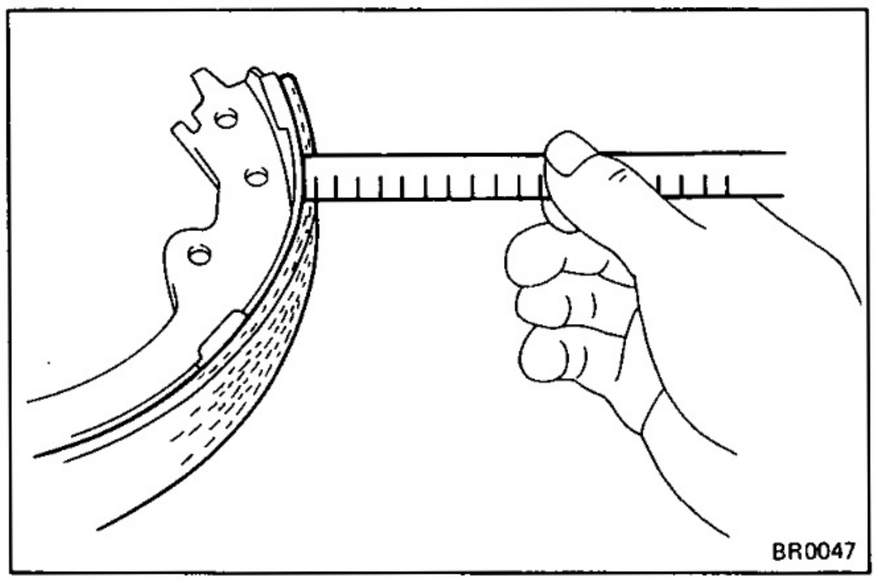

2. MEASURE BRAKE SHOE LINING THICKNESS

Standard thickness: 6.5 mm (0.256 in.)
Minimum thickness: 1.5 mm (0.059 in.)

If the shoe lining is less than minimum or shows signs of uneven wear, replace the brake shoes.

NOTE: If any of the brake shoes have to be replaced, replace all of the brake shoes in order to maintain even braking.

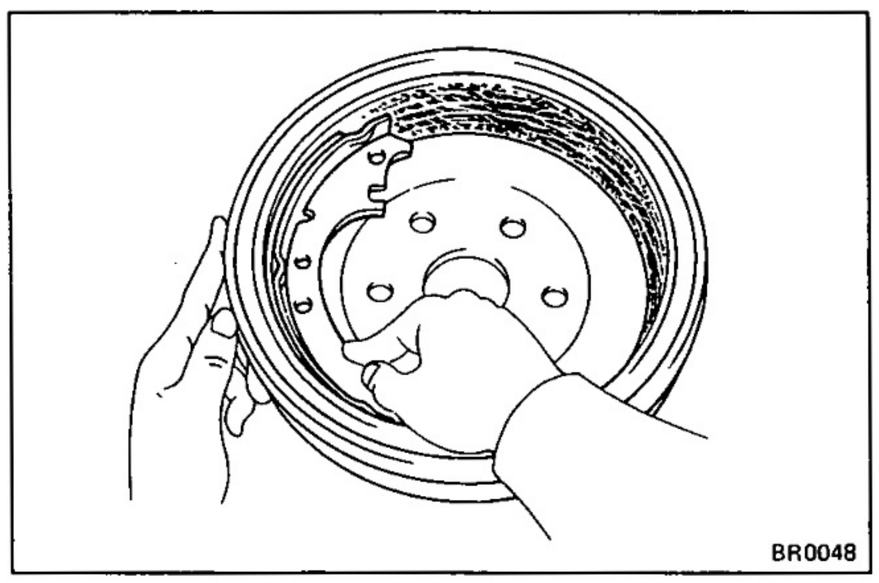

3. INSPECT BRAKE LINING AND DRUM FOR PROPER CONTACT

If the contact between the brake lining and drum is improper, repair the lining with a brake shoe grinder, or replace the brake shoe assembly.

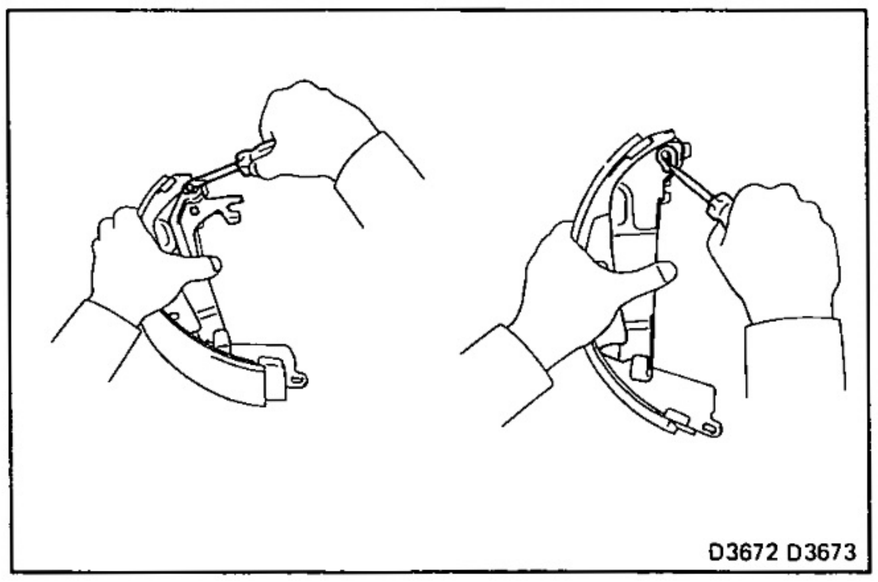

4. IF NECESSARY, REPLACE BRAKE SHOES

(a) Using a screwdriver, remove the automatic adjusting lever from the front shoe.

(b) Using a screwdriver, remove the parking brake lever from the front shoe.

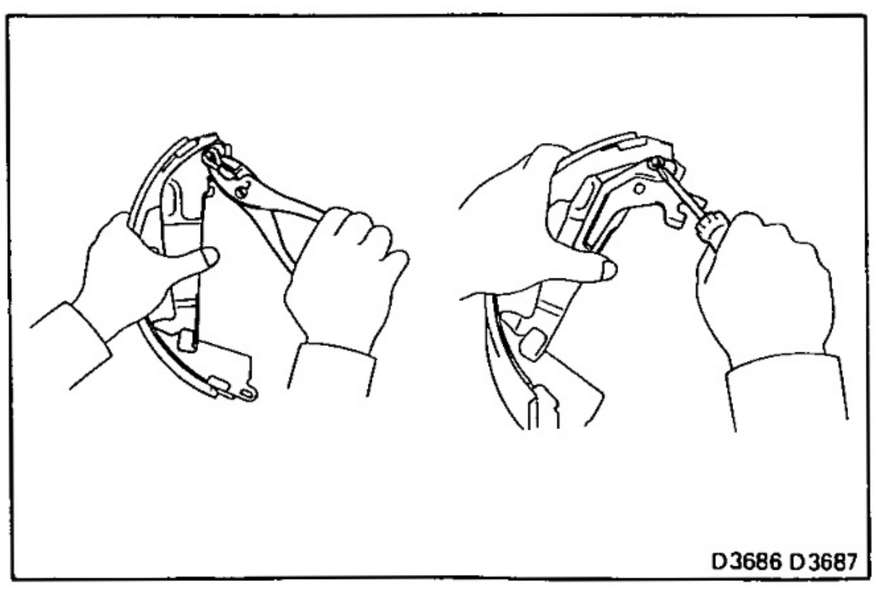

(c) Using pliers, install the parking brake lever with a new C-washer.

(d) Install the automatic adjusting lever with a new E-ring.

5. INSPECT WHEEL CYLINDER FOR CORROSION OR DAMAGE

6. INSPECT BACKING PLATE FOR WEAR OR DAMAGE

7. INSPECT BELLCRANK PARTS FOR BENDING, WEAR OR DAMAGE

ASSEMBLY OF REAR BRAKES

(See page BR-44)

NOTE: Assemble the parts in the correct direction as shown.

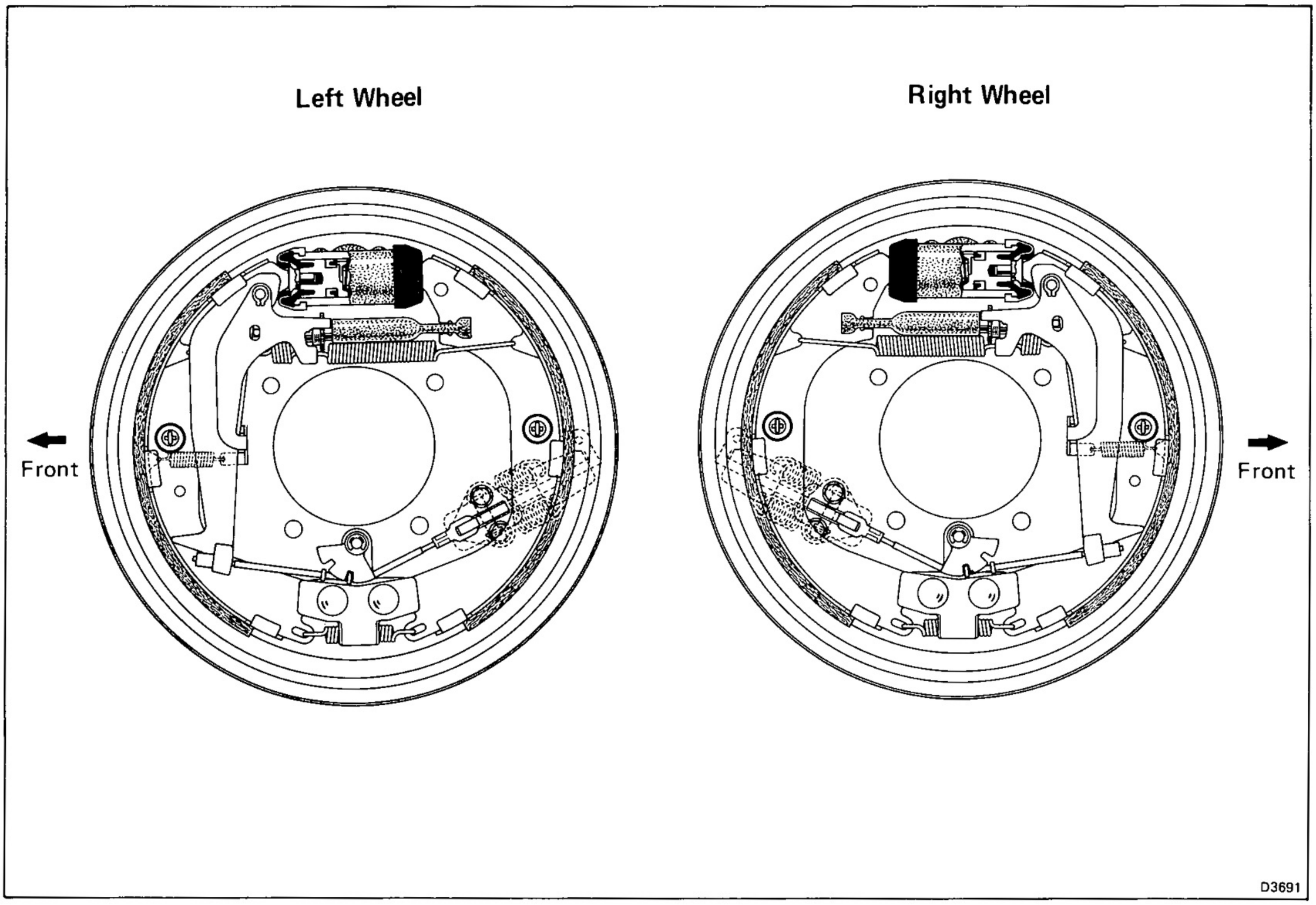

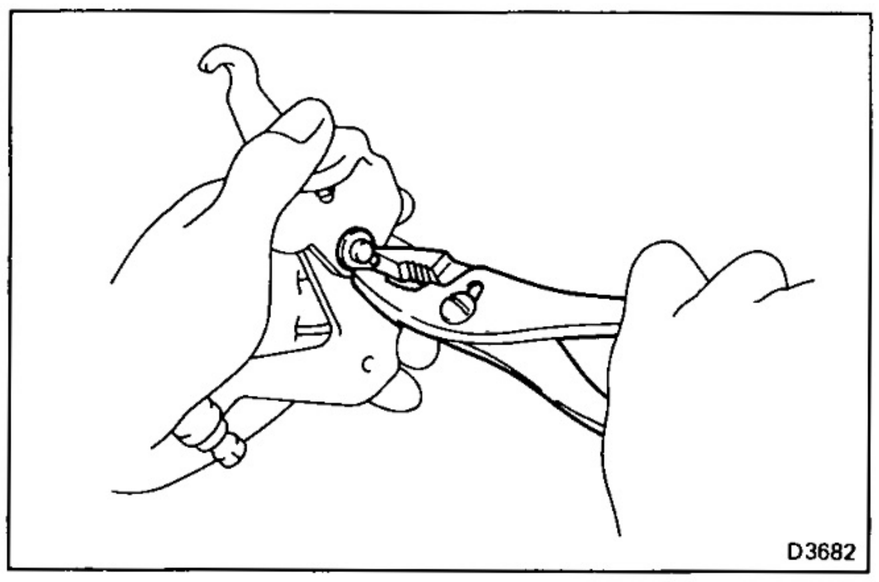

1. **IF NECESSARY, ASSEMBLE AND INSTALL PARKING BRAKE BELLCRANK ASSEMBLY**
   (a) Install the parking brake bellcrank to the crank bracket.
   (b) Install the pin with the new C-washer.

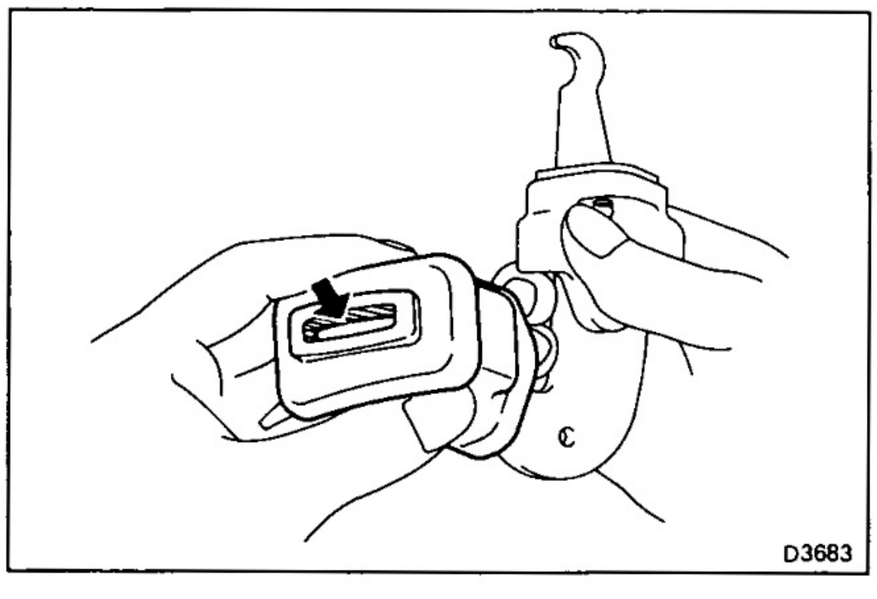

(c) Apply lithium soap base glycol grease to the boot.

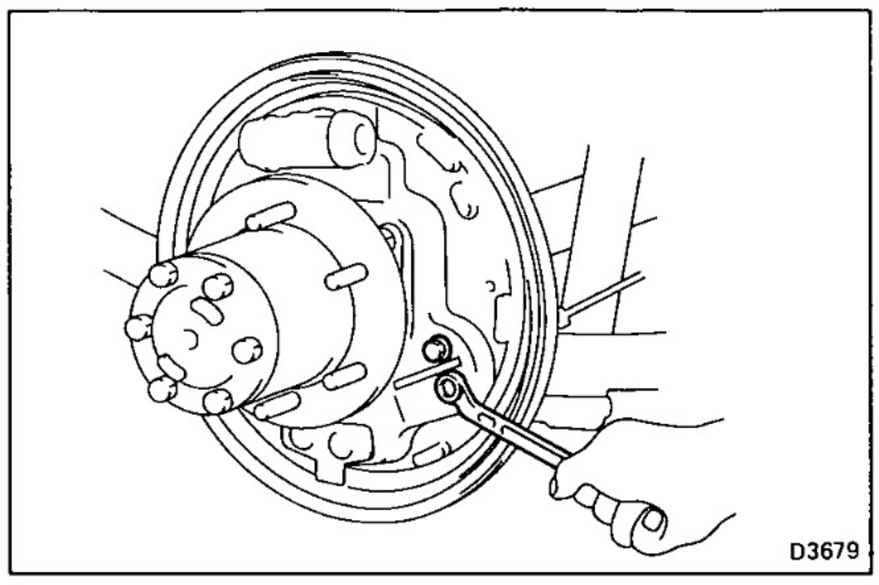

(d) Install the parking brake bellcrank assembly on the backing plate with two bolts.

(e) Torque the bolts.

Torque: 130 kg-cm (9 ft-lb, 13 N·m)

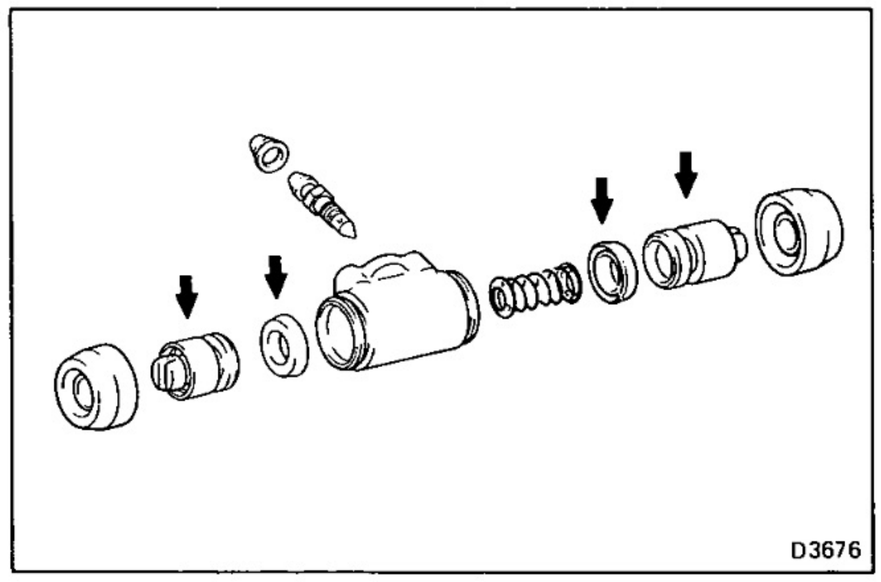

2. IF NECESSARY, ASSEMBLE AND INSTALL WHEEL CYLINDER

(a) Apply lithium soap base glycol grease to the piston cups and pistons.

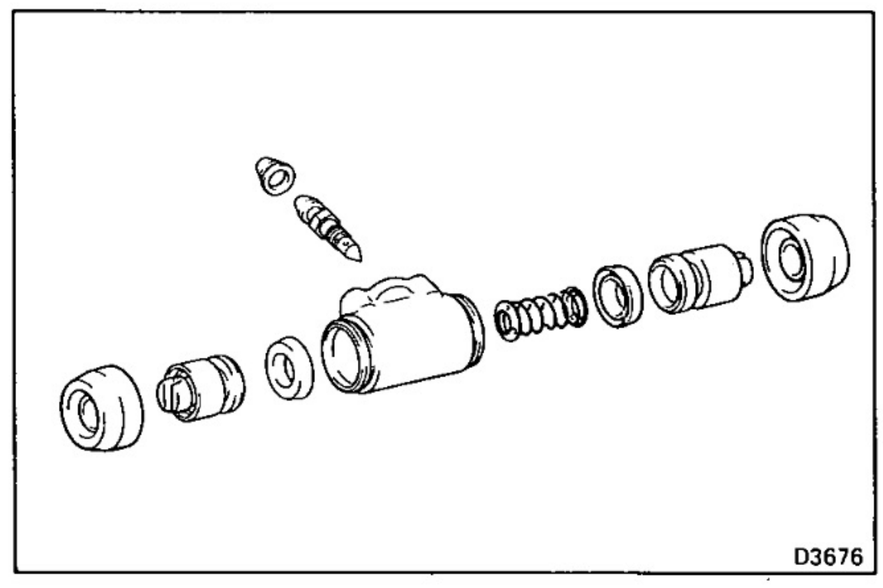

(b) Install the spring and two piston cups in the wheel cylinder.
Make sure flanges of the cups are pointed inward.

(c) Install the two pistons, boots and spring in the cylinder.

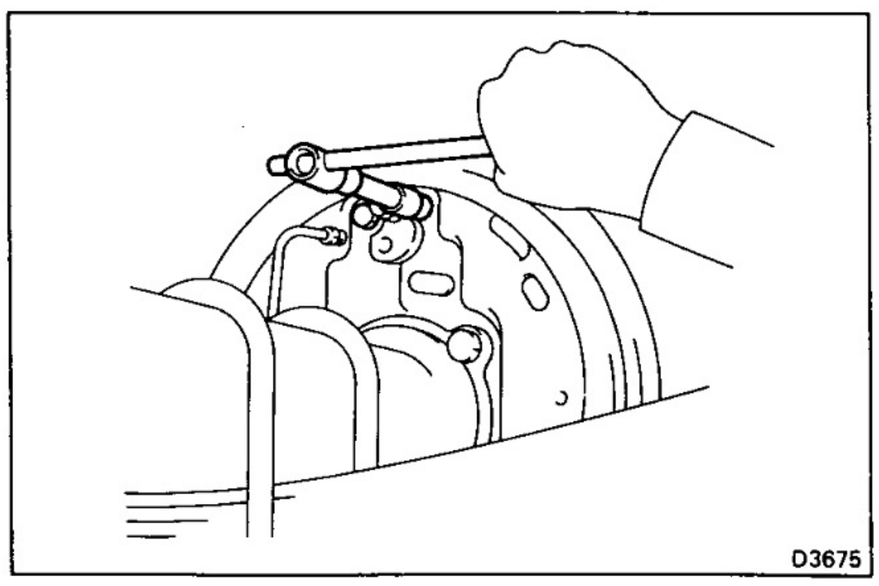

(d) Install the wheel cylinder on the backing plate with two bolts.

Torque: 100 kg-cm (7 ft-lb, 10 N·m)

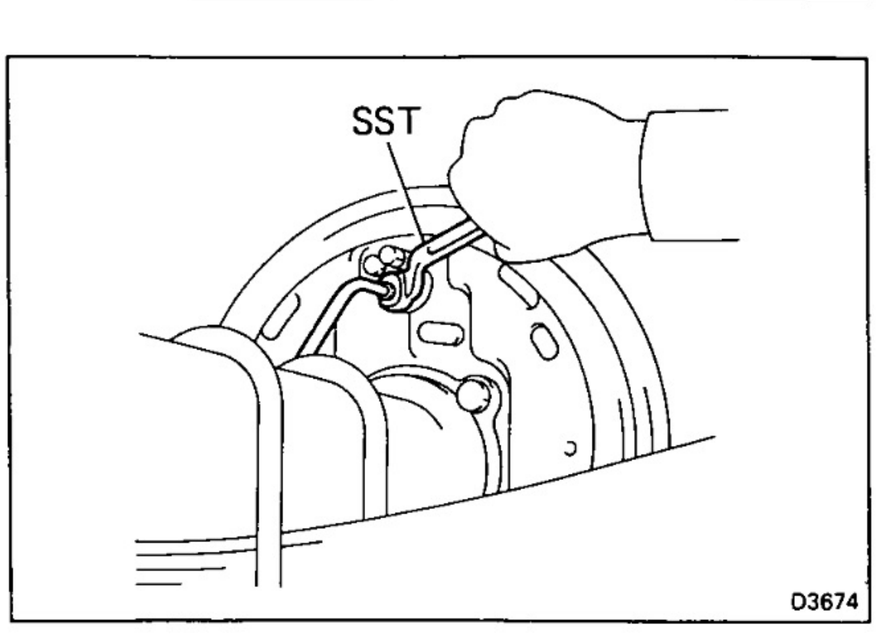

(e) Using SST, connect the brake line.

SST 09751-36011

Torque: 155 kg-cm (11 ft-lb, 15 N·m)

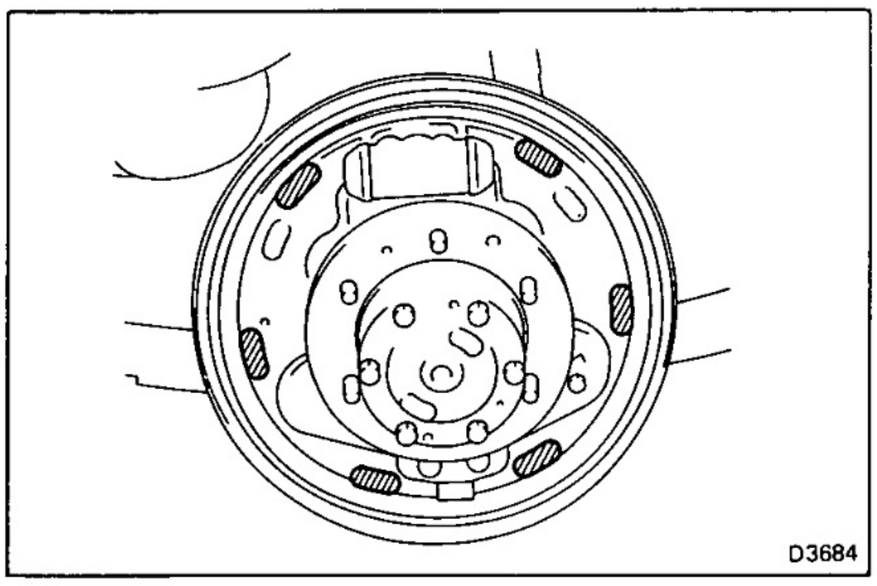

3. APPLY GREASE ON BACKING PLATE, AS SHOWN

Use high-temperature type grease.

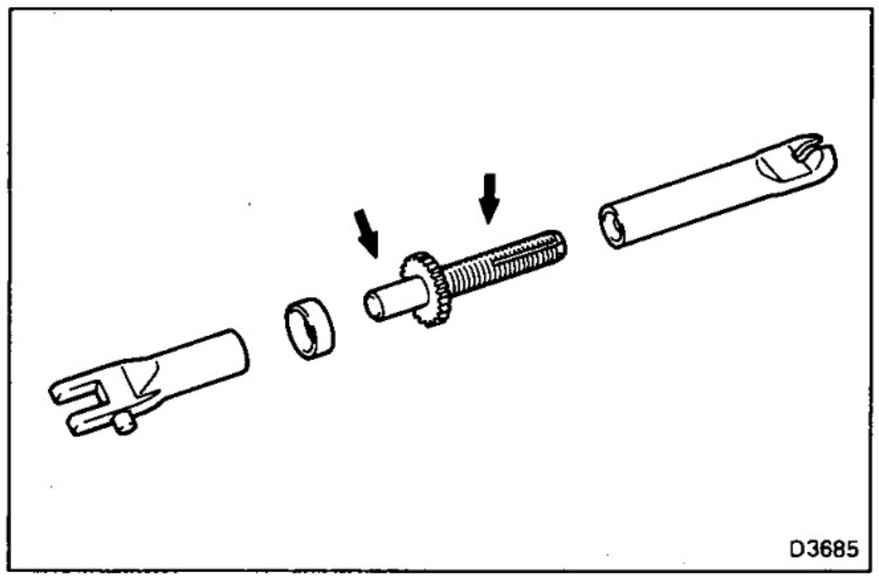

4. APPLY GREASE TO ADJUSTER BOLT THREADS AND END

Use high-temperature type grease.

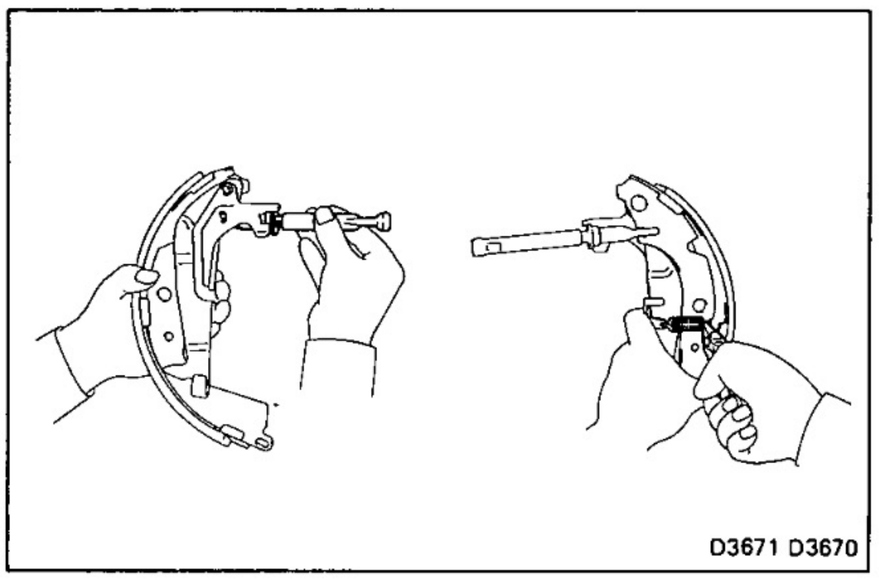

5. INSTALL ADJUSTER TO FRONT SHOE

(a) Install the adjuster to the adjust lever.

(b) Install the adjust lever spring.

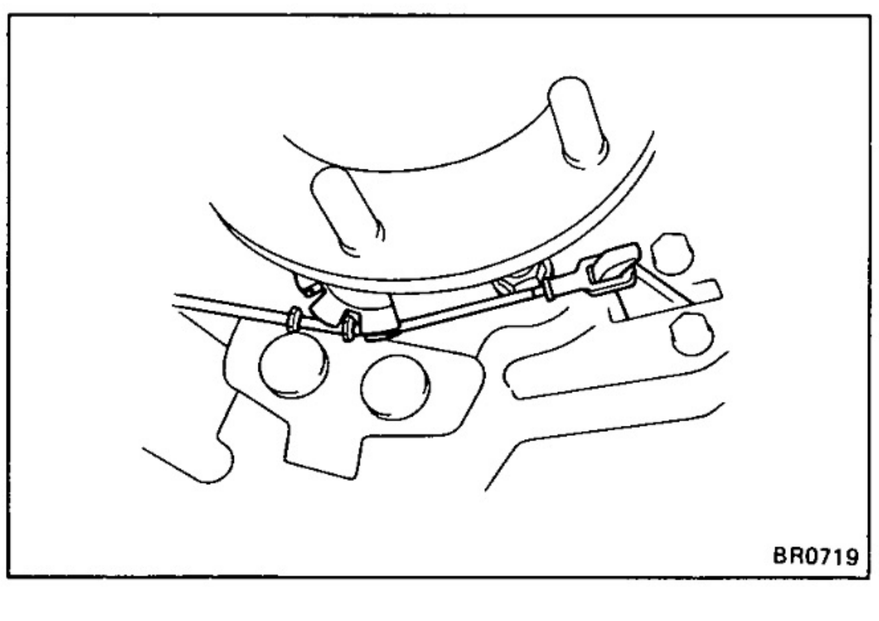

6. INSTALL FRONT SHOE

(a) Install the parking brake cable to the parking brake shoe lever.

(b) Install the parking brake cable to the bellcrank as shown.

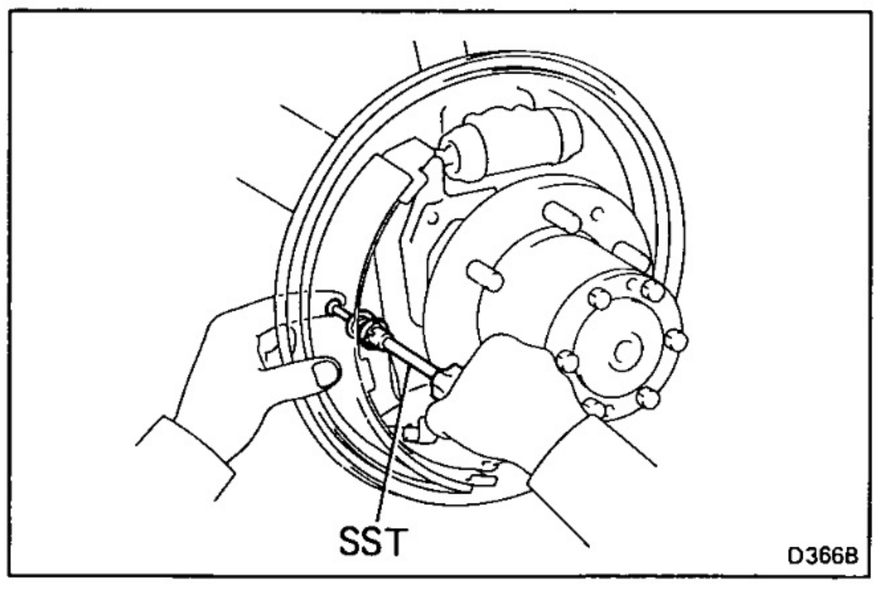

(c) Set the front shoe in place with the end of the shoe inserted in the piston.

(d) Using SST, install the shoe hold-down spring and pin.

SST 09718-00010

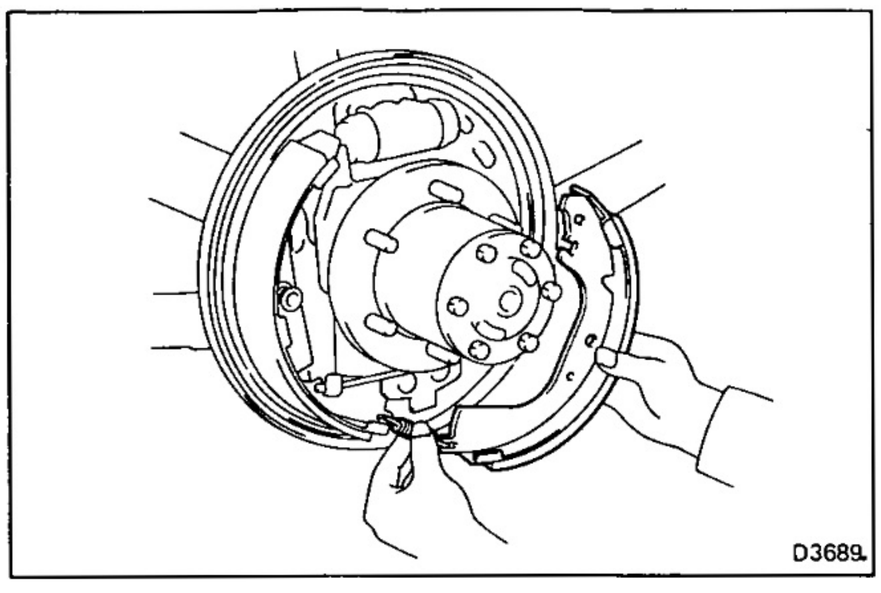

7. INSTALL REAR SHOE

(a) Install the anchor spring to the front shoe and rear shoe.

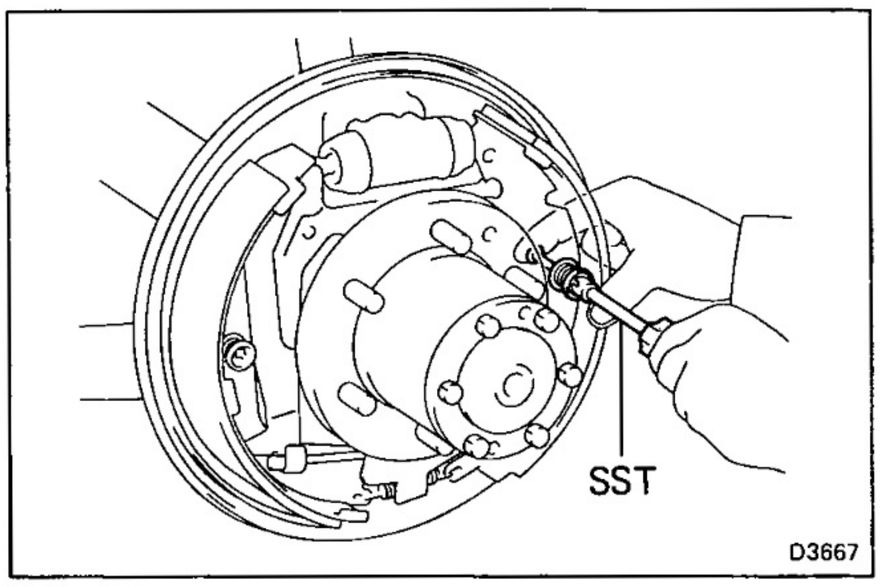

(b) Set the rear shoe in place with the end of the shoe inserted in the piston.

(c) Using SST, install the shoe hold-down spring and pin.

SST 09718-00010

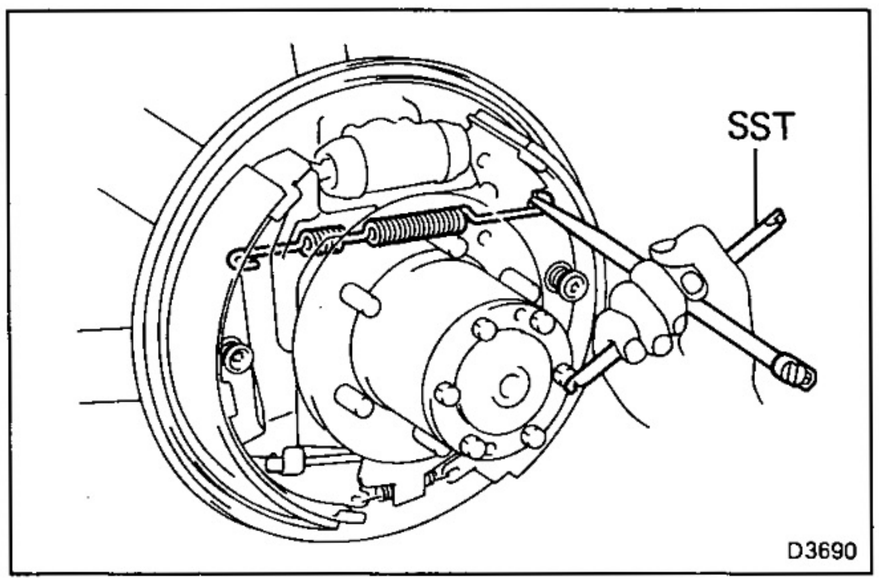

(d) Using SST, install the tension spring.

SST 09703-30010

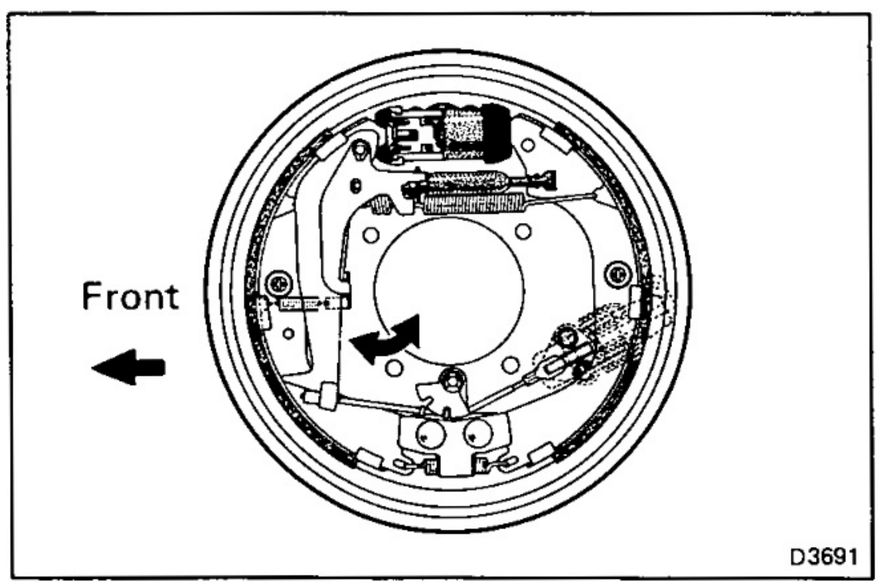

8. CHECK OPERATION OF AUTOMATIC ADJUSTER MECHANISM

(a) Pull the parking brake cable backward as shown, and release.

Check that the adjusting bolt turns.

If the bolt does not turn, check for incorrect installation of the rear brakes.

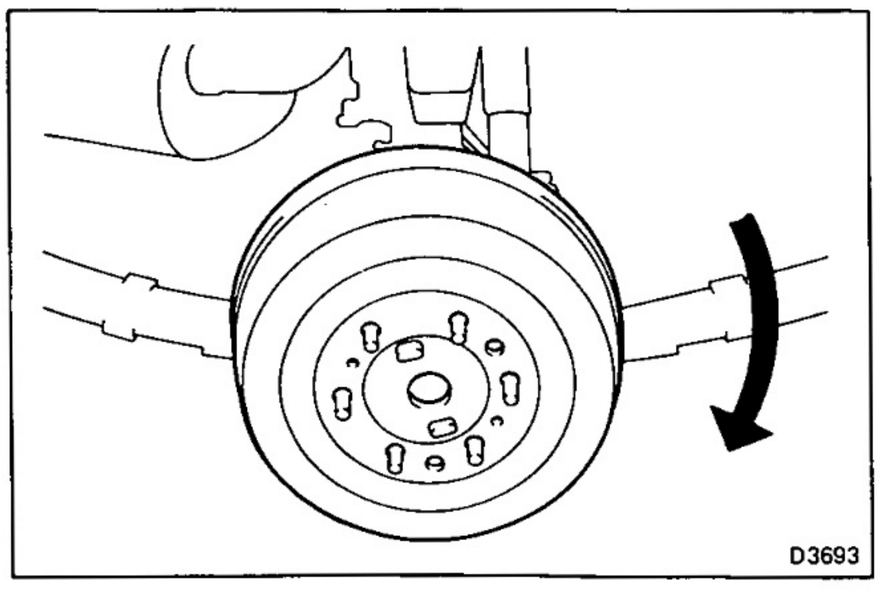

(b) Adjust the adjuster to the shortest possible length.

(c) Install the drum.

(d) Turn the brake drum in the reverse direction and depress the brake pedal. Repeat this procedure several times.

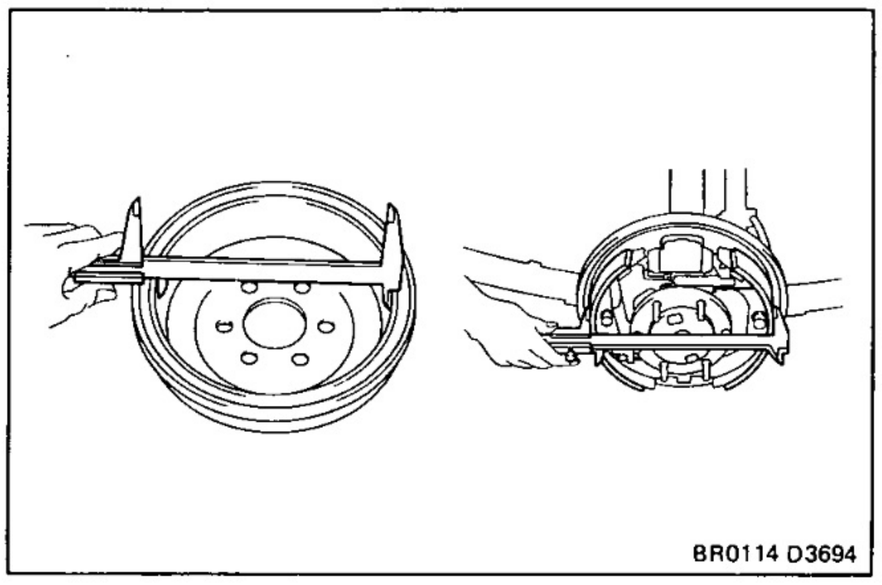

9. CHECK CLEARANCE BETWEEN BRAKE SHOES AND DRUM

(a) Remove the drum.

(b) Measure the brake drum inside diameter and diameter of the brake shoes. Check that the difference between the diameters is the correct shoe clearance.

Shoe clearance: 0.6 mm (0.024 in.)

If incorrect, check the parking brake system.

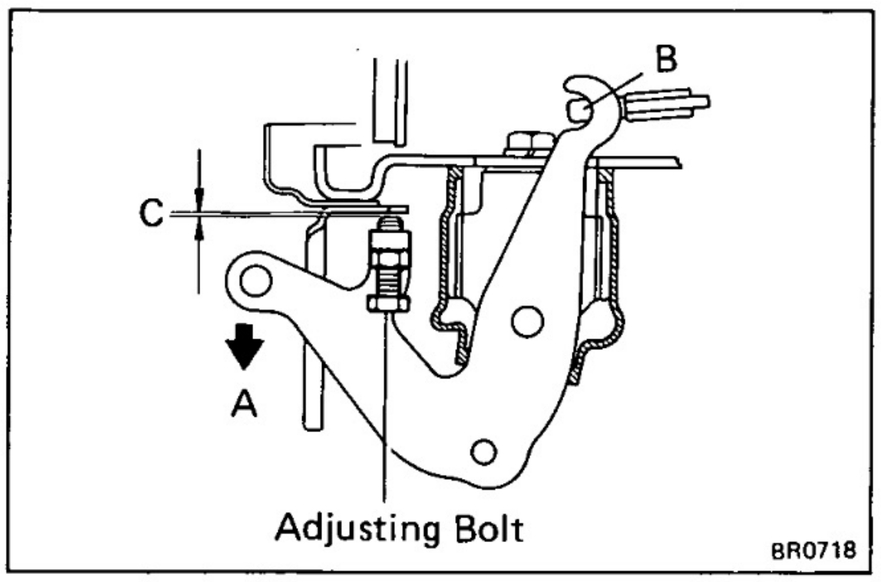

10. IF NECESSARY, ADJUST BELLCRANK

(a) Lightly pull the bellcrank in direction A until there is no slack at part B.

(b) In this condition, turn the adjusting bolt so that dimension C will be 0.4 – 0.8 mm (0.016 – 0.031 in.).

(c) Lock the adjust bolt with the lock nut.

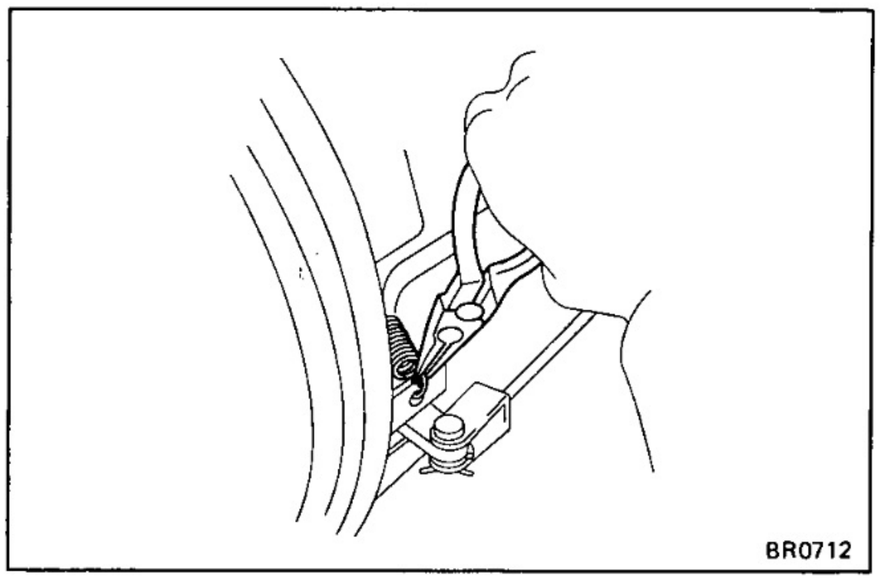

(d) Connect the parking brake cable No. 2 to the bellcrank.

(e) Install the tension spring.

11. INSTALL BRAKE DRUM AND REAR WHEEL

12. FILL BRAKE RESERVOIR WITH BRAKE FLUID AND BLEED BRAKE SYSTEM (See page BR-6)

LOAD SENSING PROPORTIONING VALVE

COMPONENTS

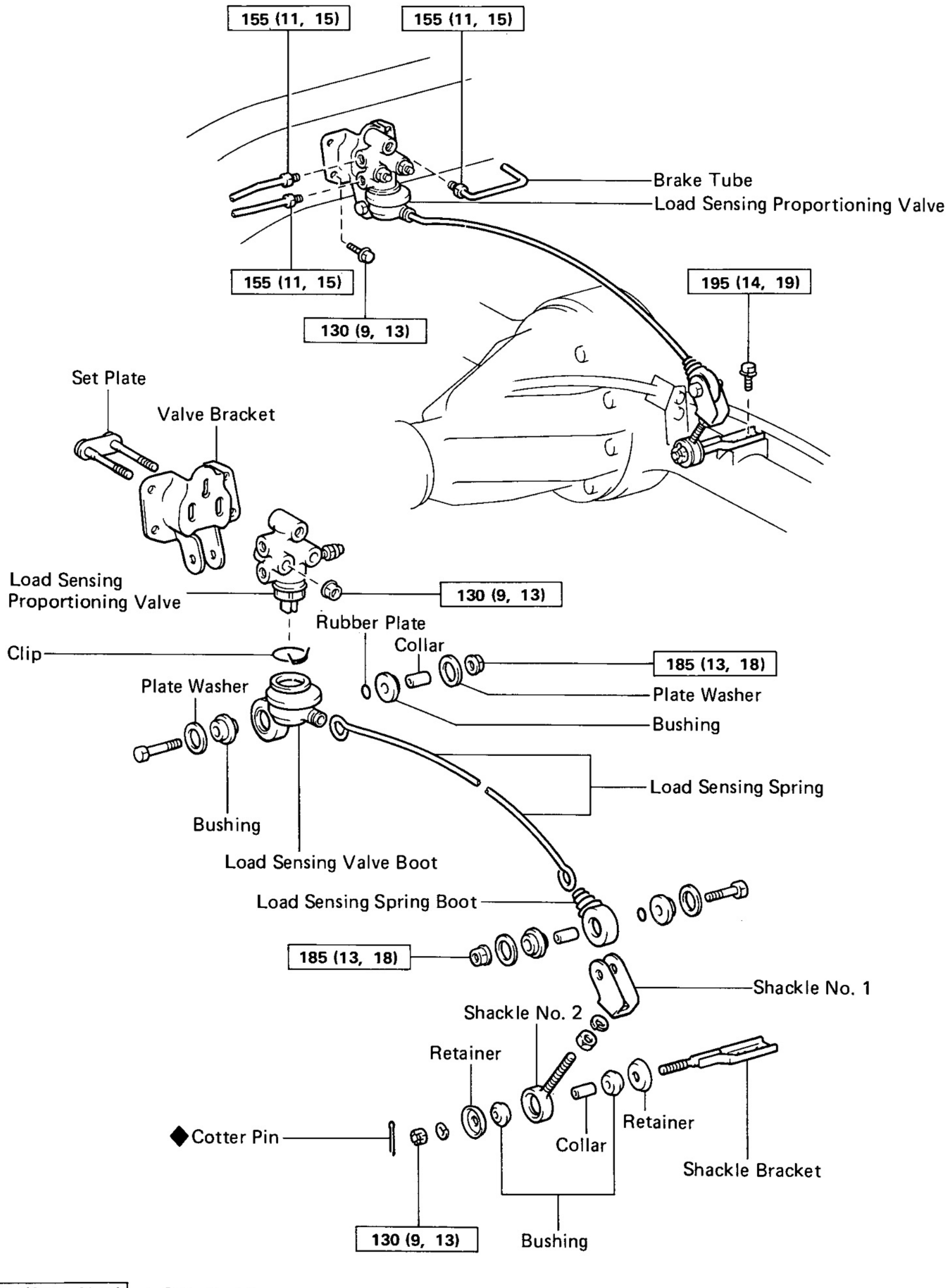

kg-cm (ft-lb, N·m) : Specified torque

◆ : Non-reusable part

D3696

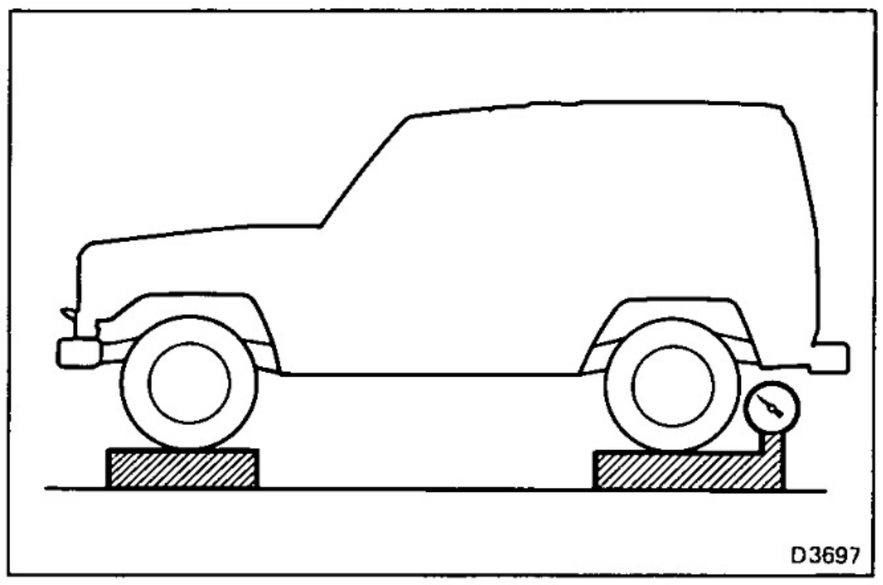

CHECK AND ADJUSTMENT OF FLUID PRESSURE

1. SET REAR AXLE LOAD

Rear axle load (include vehicle weight):

70, 73 series	1,120 kg (2,469 lb)
75 series	1,160 kg (2,557 lb)
60 series	1,200 kg (2,646 lb)

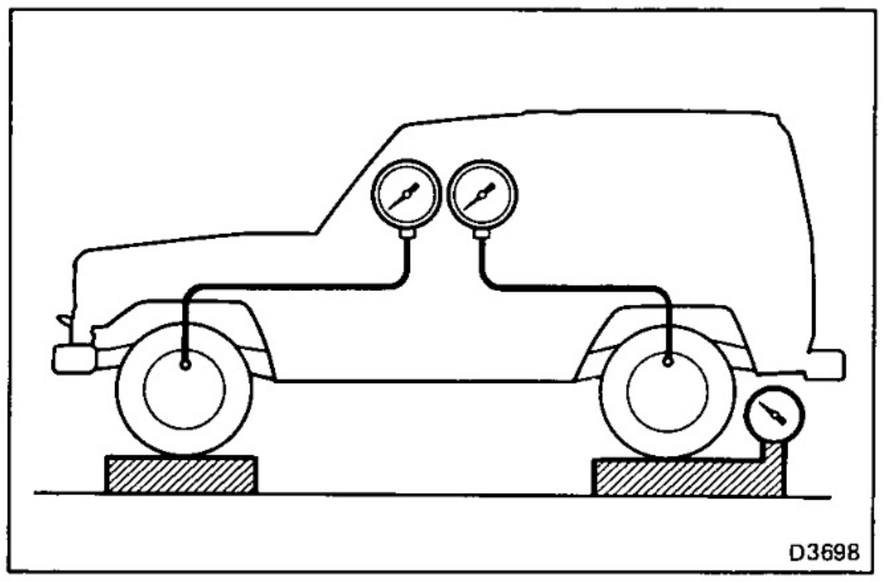

2. INSTALL LSPV GAUGE (SST) AND BLEED AIR

SST 09709-29017

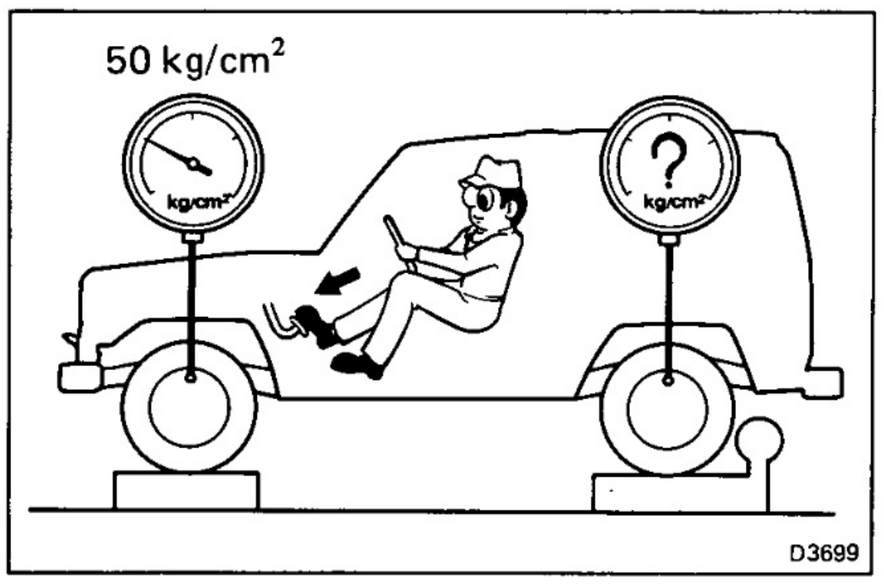

3. RAISE FRONT BRAKE PRESSURE TO 50 kg/cm² (711 psi, 4,903 kPa) AND CHECK REAR BRAKE PRESSURE

Rear brake pressure:

70, 73 series	34 ± 5 kg/cm² (484 ± 71 psi, 3,334 ± 490 kPa)
75 series	41 ± 5 kg/cm² (583 ± 71 psi, 4,021 ± 490 kPa)
60 series	40 ± 5 kg/cm² (569 ± 71 psi, 3,923 ± 490 kPa)

NOTE: The brake pedal should not be depressed twice and/or returned while setting to the specified pressure. Read the value of rear brake pressure two seconds after adjusting the specified fluid pressure.

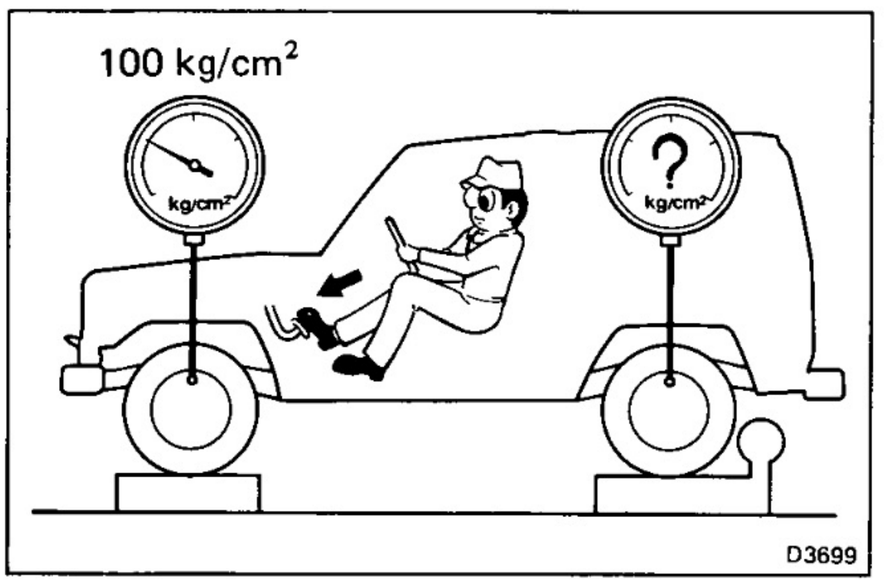

4. RAISE FRONT BRAKE PRESSURE TO 100 kg/cm² (1,422 psi, 9,807 kPa) AND CHECK REAR BRAKE PRESSURE

Rear brake pressure:

70, 73 series	46 ± 7 kg/cm² (654 ± 100 psi, 4,511 ± 686 kPa)
75 series	60 ± 7 kg/cm² (853 ± 100 psi, 5,884 ± 686 kPa)
60 series	58 ± 7 kg/cm² (825 ± 100 psi, 5,688 ± 686 kPa)

If the brake pressure is incorrect, adjust the fluid pressure.

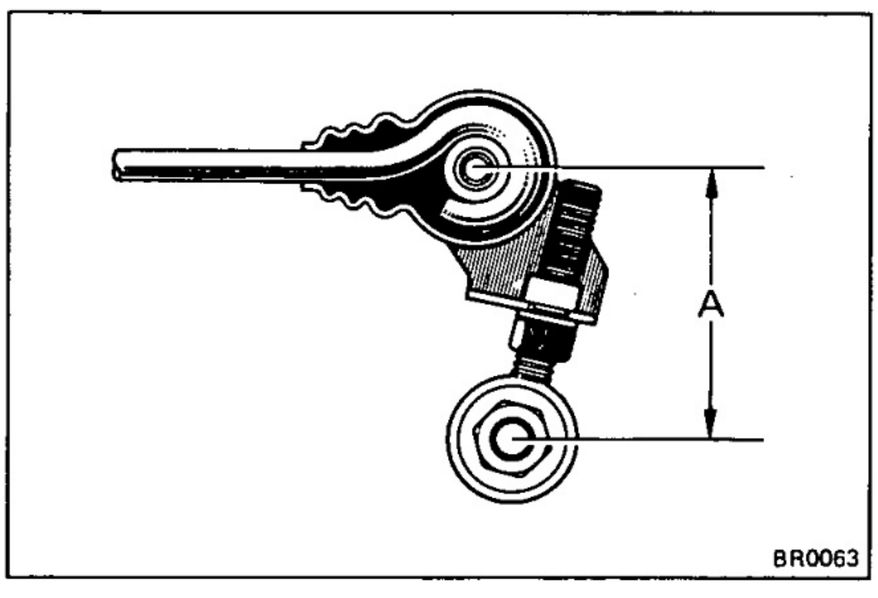

5. IF NECESSARY, ADJUST FLUID PRESSURE

(a) Adjust the length of the No. 2 shackle.

Low pressure – Lengthen A
High pressure – Shorten A

Initial set:	70, 73, 75 series	90 mm (3.54 in.)
	60 series	78 mm (3.07 in.)

Adjusting range:

70, 73, 75 series	84 – 93 mm (3.31 – 3.66 in.)
60 series	72 – 84 mm (2.83 – 3.31 in.)

NOTE: One turn of the No. 2 shackle changes the fluid pressure about 0.6 kg/cm² (8.5 psi, 59 kPa).

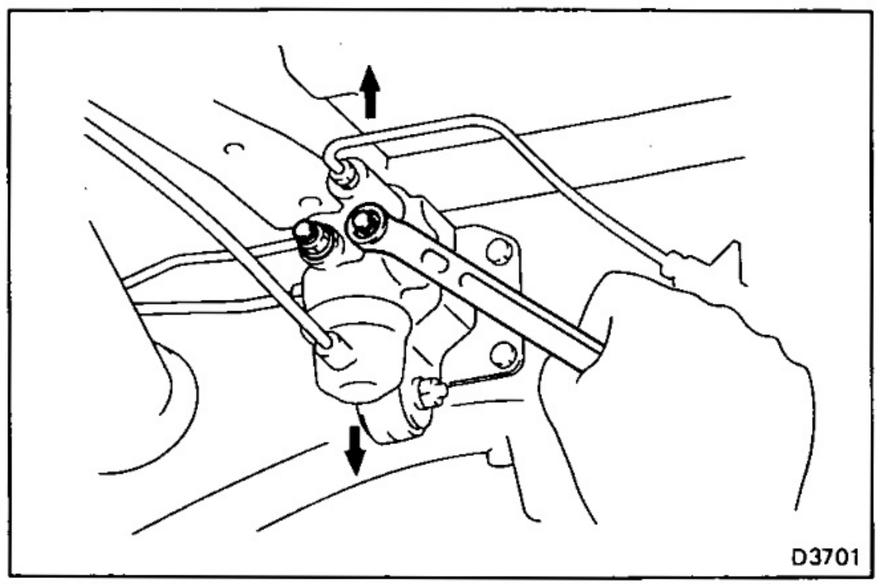

(b) In event pressure cannot be adjusted by the No. 2 shackle, raise or lower the valve body.

Low pressure – Lower
High pressure – Raise

(c) Torque the nuts.

Torque: 130 kg-cm (9 ft-lb, 13 N·m)

(d) Adjust the length of the No. 2 shackle again.

If it cannot be adjusted, inspect the valve housing.

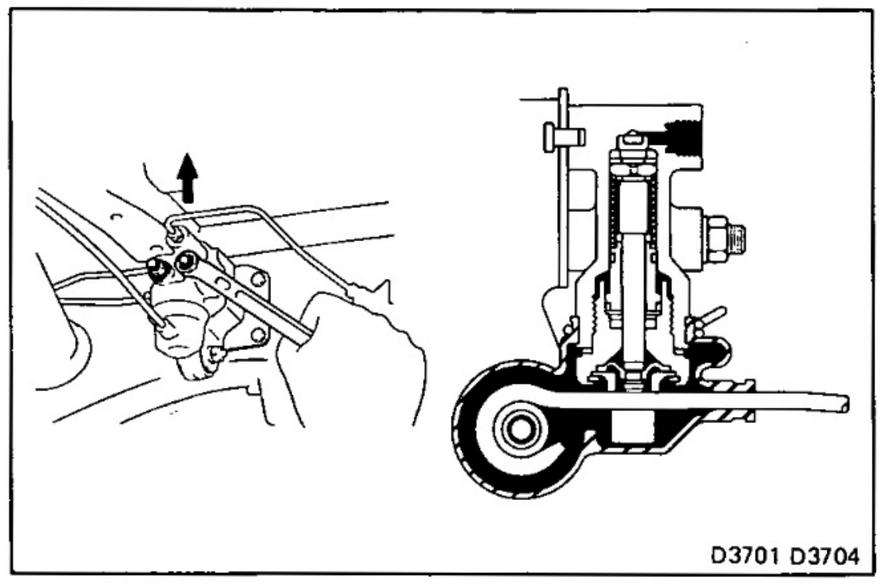

6. IF NECESSARY, CHECK VALVE BODY

(a) Assemble the valve body in the uppermost position.

NOTE: When the brakes are applied, the piston will move down about 1 mm (0.04 in.). Even at this time, the piston should not make contact with or move the load sensing spring.

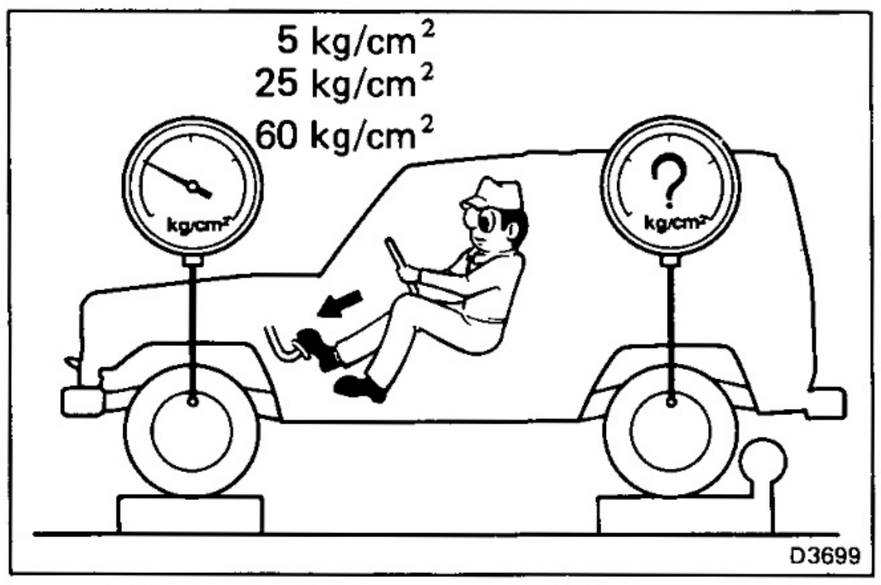

(b) In this position, check the rear brake pressure.

70, 73 series kg/cm² (psi, kPa)

Front brake pressure	Rear brake pressure
5 (71, 490)	5 (71, 490)
25 (356, 2,452)	8.0 – 12.0 (114 – 171, 785 – 1,177)
60 (853, 5,884)	15.3 – 22.3 (218 – 317, 1,500 – 2,187)

75, 60 series kg/cm² (psi, kPa)

Front brake pressure	Rear brake pressure
5 (71, 490)	5 (71, 490)
25 (356, 2,452)	10.4 – 14.4 (148 – 205, 1,020 – 1,412)
60 (853, 5,884)	21.9 – 28.9 (311 – 411, 2,148 – 2,834)

If the measured value is not within standard, replace the valve body.

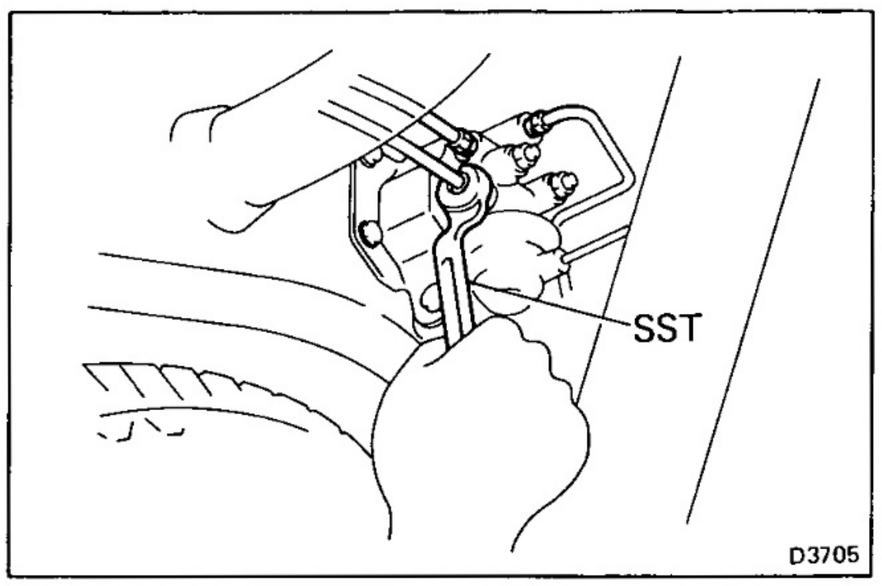

REMOVAL OF LSPV ASSEMBLY

(See page BR-53)

1. DISCONNECT BRAKE TUBES

Using SST, disconnect the brake tubes from the valve body.

SST 09751-36011

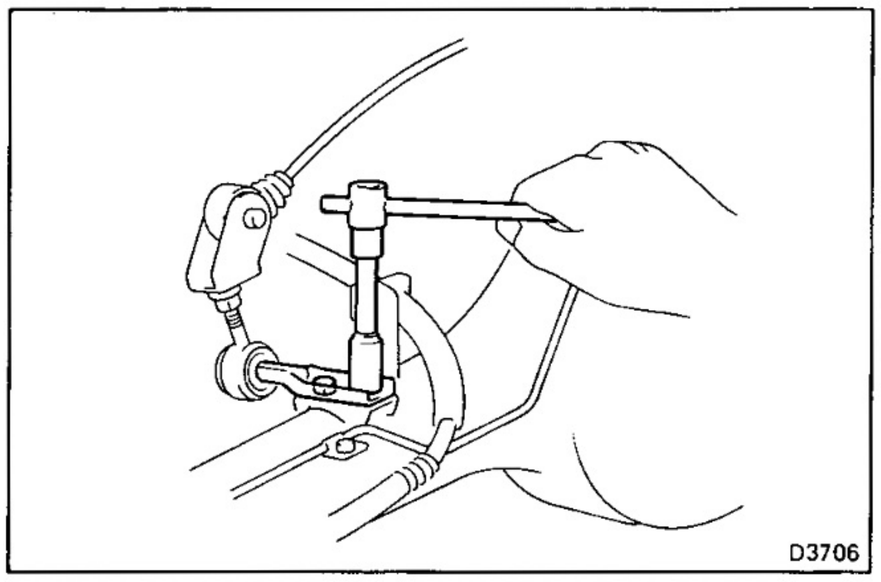

2. REMOVE LSPV ASSEMBLY

(a) Remove the two bolts and remove the shackle bracket.

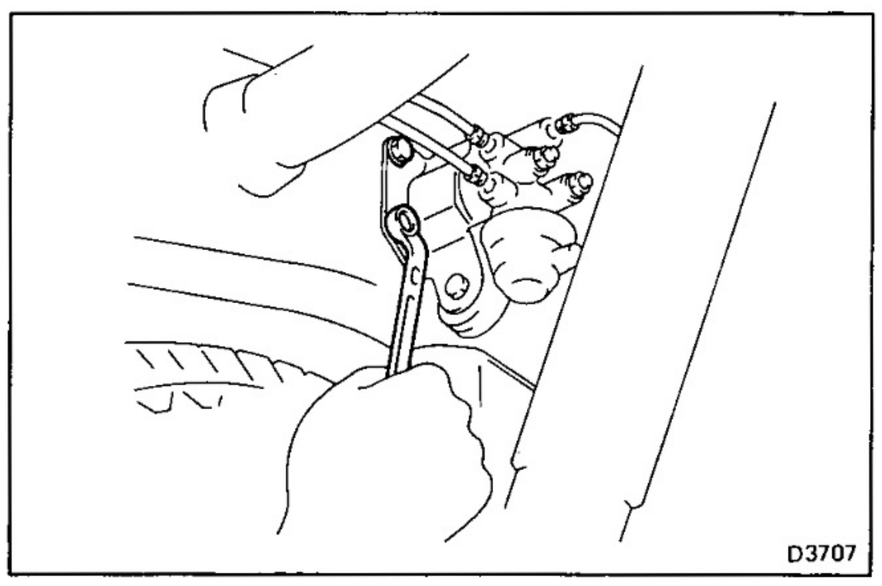

(b) Remove the valve bracket mounting bolts and remove the LSPV assembly.

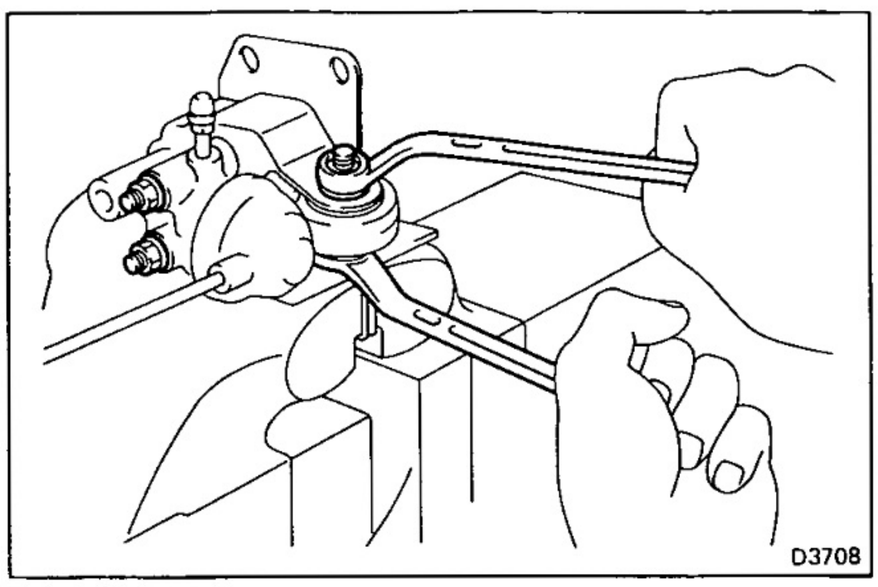

DISASSEMBLY OF LOAD SENSING SPRING ASSEMBLY

1. REMOVE VALVE BRACKET

Remove the three nuts and bolt, and remove the valve bracket.

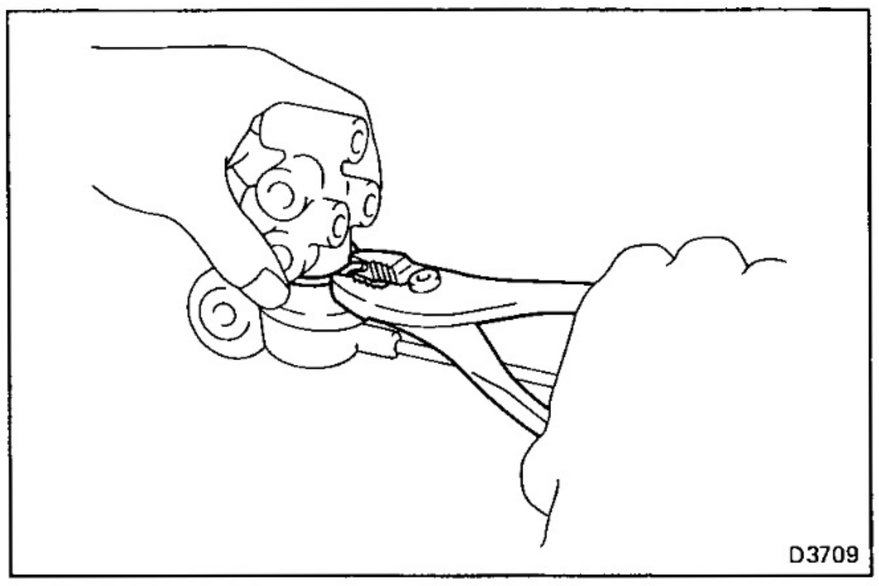

2. DISCONNECT SPRING FROM VALVE

Using pliers, remove the clip, and remove the spring from the valve.

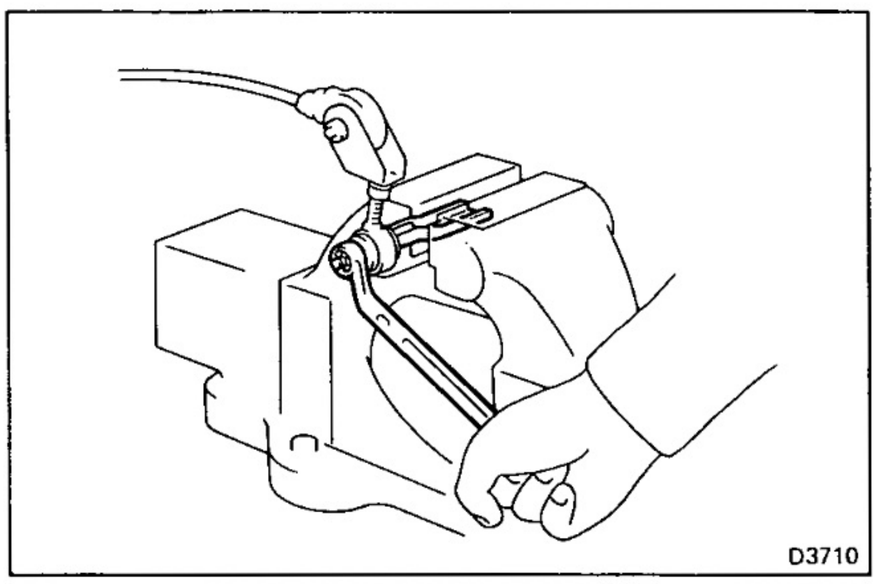

3. REMOVE SHACKLE BRACKET

(a) Remove the cotter pin.

(b) Remove the nut, and remove the shackle bracket, two retainers, two bushings and collar.

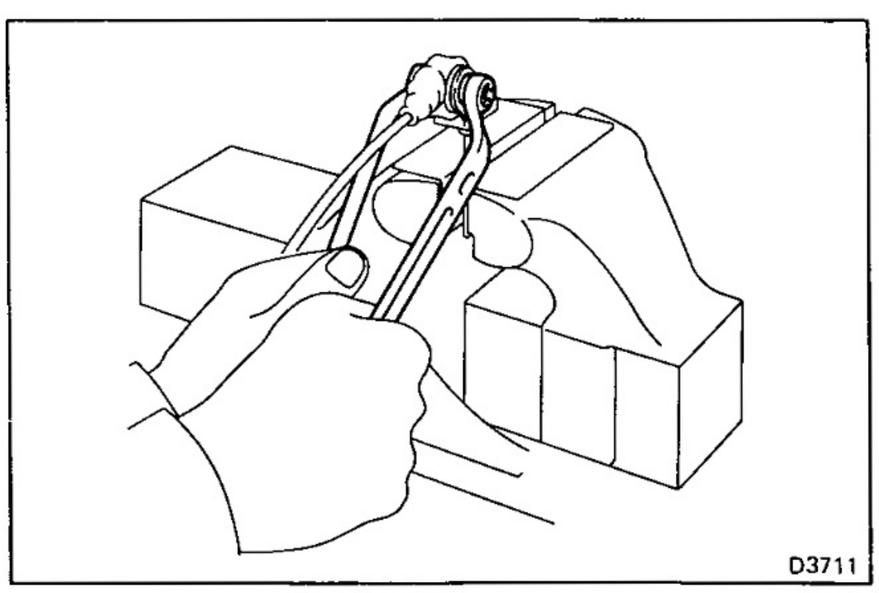

4. REMOVE SHACKLE NO.1 AND NO.2

Remove the nut, and remove the shackle No.1 and 2, and two plate washers.

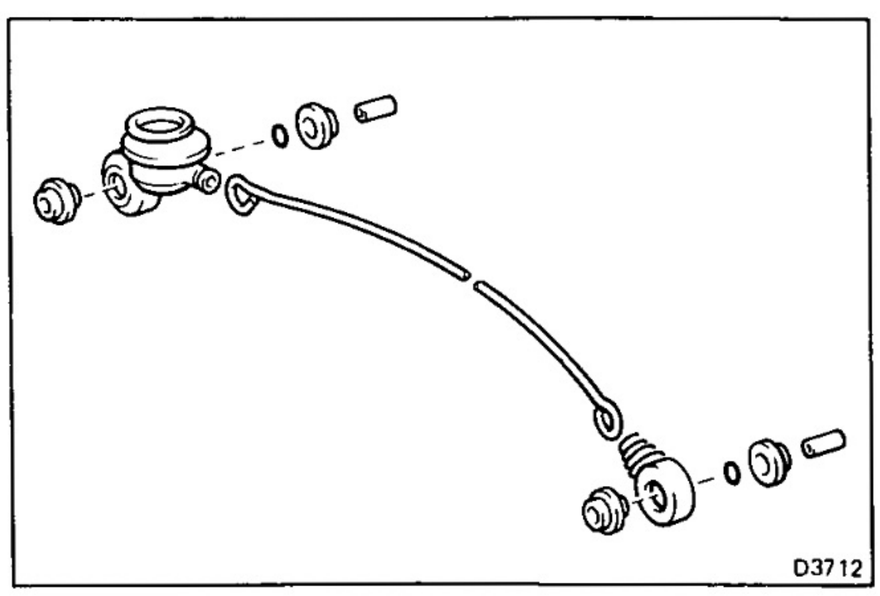

5. DISASSEMBLE LOAD SENSING SPRING

Disassemble the following parts:

(a) Bushings

(b) Collars

(c) Rubber plates

(d) Load sensing valve boot

(e) Load sensing spring boot

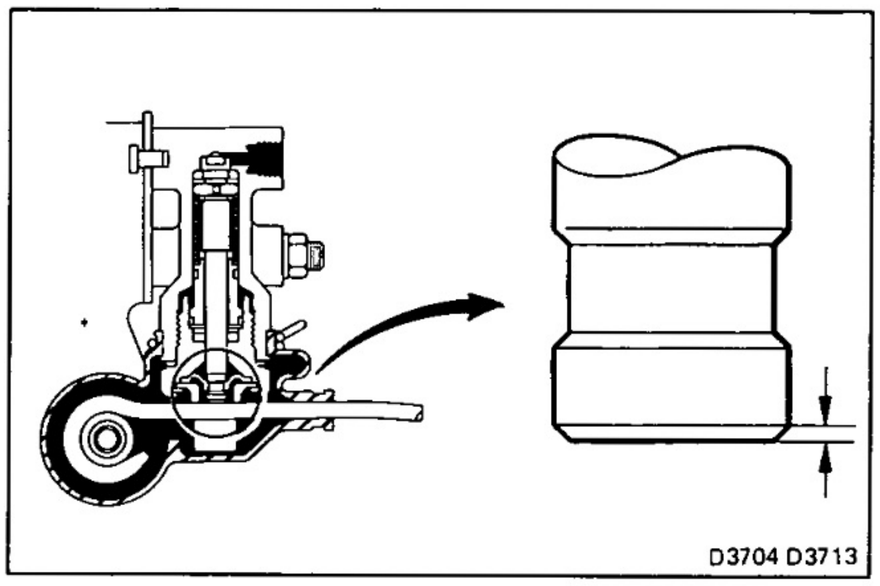

INSPECTION OF LSPV

INSPECT VALVE PISTON PIN AND LOAD SENSING CONTACT SURFACE FOR WEAR

Wear limit: 0.7 mm (0.028 in.)

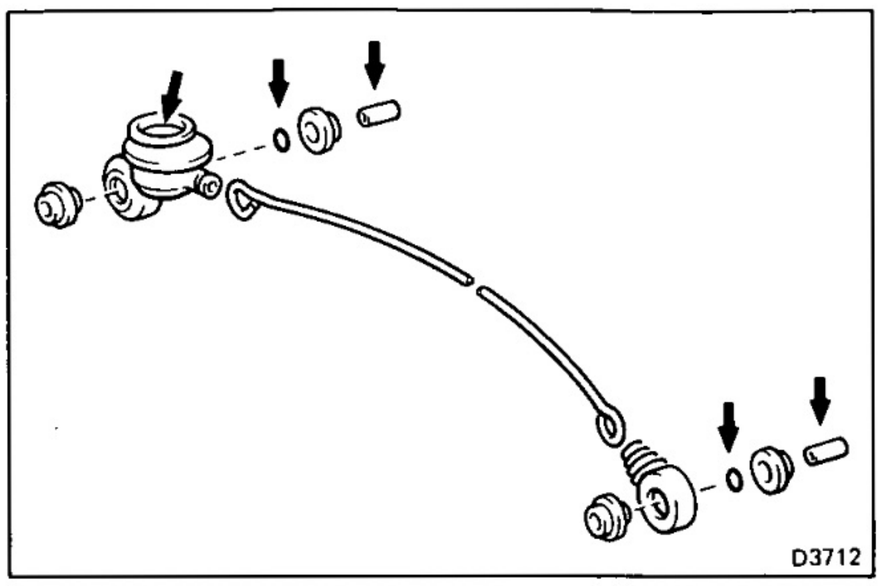

ASSEMBLY OF LSPV ASSEMBLY

(See page BR-53)

1. ASSEMBLE FOLLOWING PARTS TO LOAD SENSING SPRING
   (a) Load sensing valve boot
   (b) Load sensing spring boot
   (c) Collars
   (d) Rubber plates
   (e) Bushings

   NOTE: Apply lithium soap base glycol grease to all rubbing areas.

   Do not mistake the valve side for the shackle side of the load sensing spring.

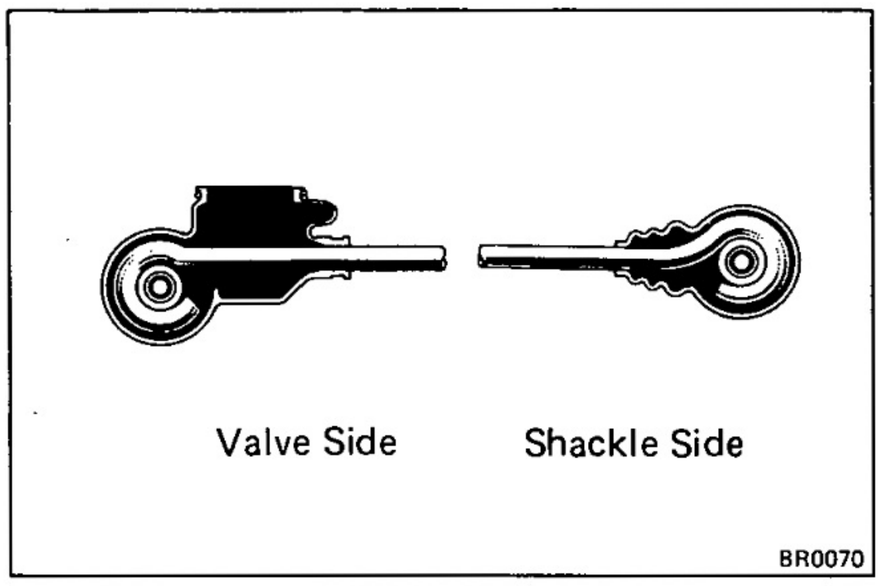

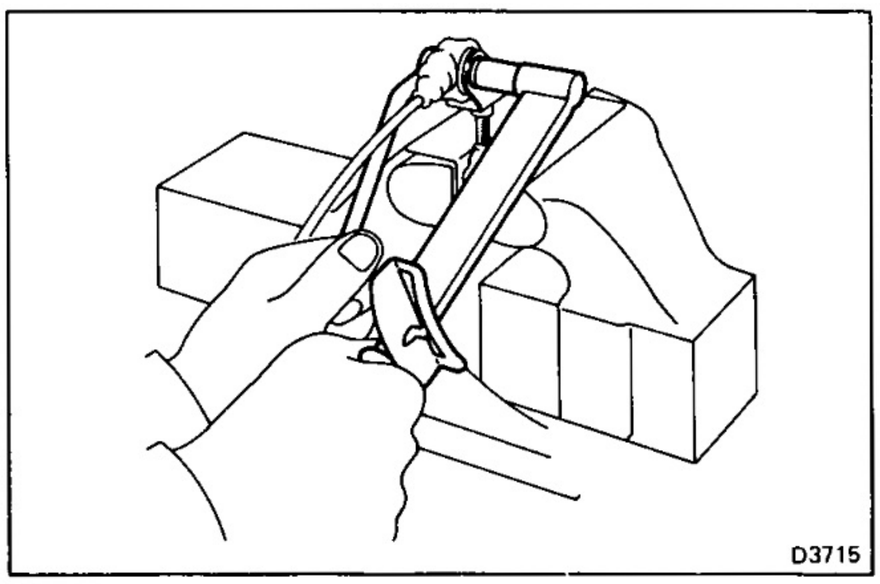

2. INSTALL SHACKLE NO.1 AND NO.2 TO LOAD SENSING SPRING

   Install the shackle to the load sensing spring through the two plate washers.

   Torque: 185 kg-cm (13 ft-lb, 18 N·m)

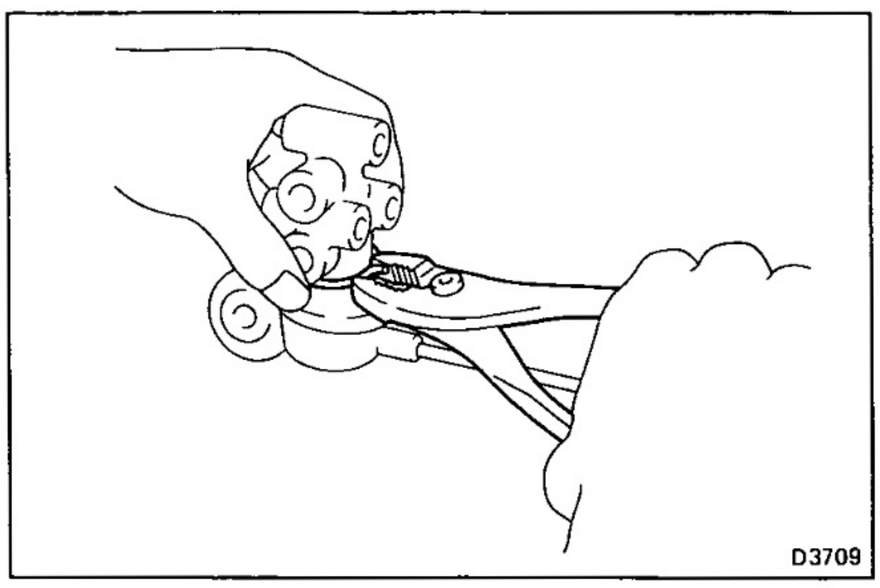

3. INSTALL LOAD SENSING SPRING TO VALVE

   Install the load sensing spring assembly to the load sensing valve with a clip.

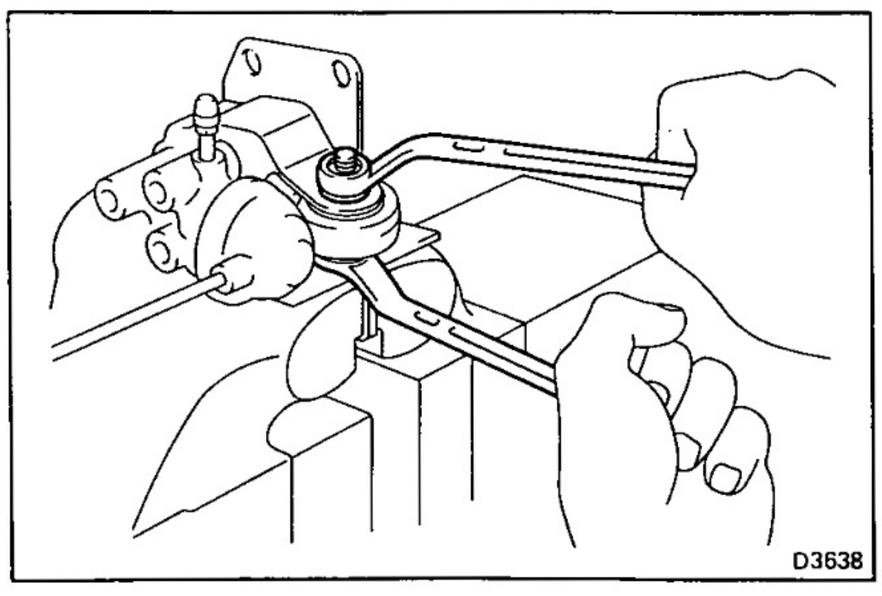

4. INSTALL VALVE BRACKET
   (a) Install the valve assembly to the bracket and torque the bolt and nut of load sensing spring boot through the two plate washers.

   Torque: 185 kg-cm (13 ft-lb, 18 N·m)

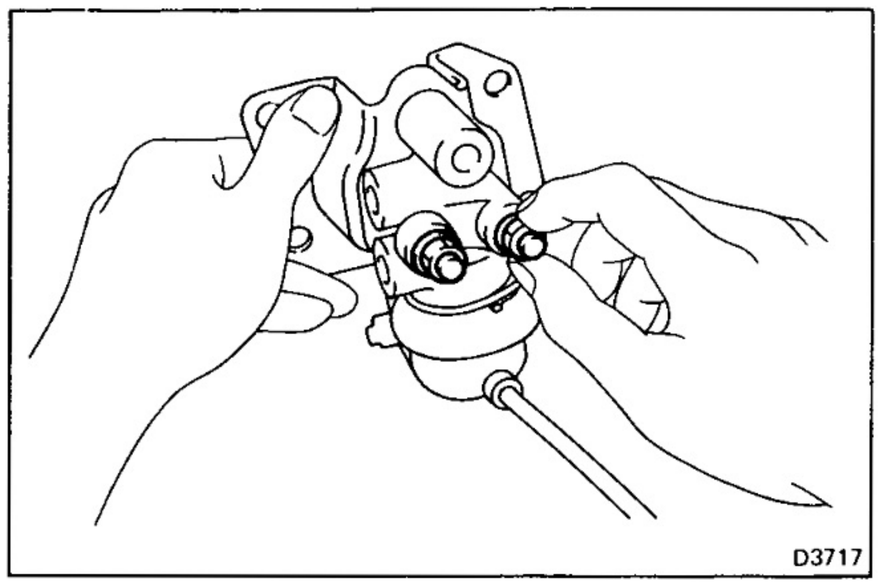

(b) Install the set plate to the valve assembly and temporarily tighten the two valve body mounting nuts.

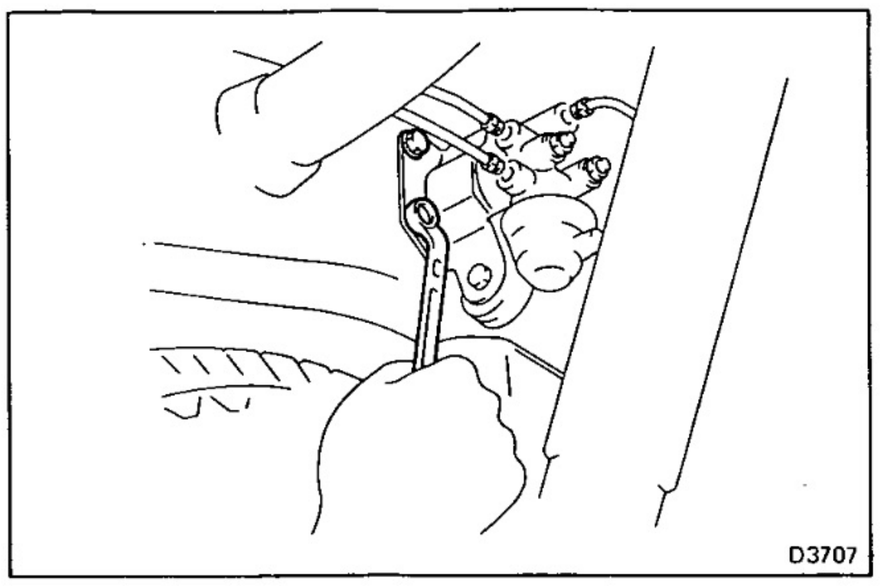

INSTALLATION OF LSPV

1. INSTALL LSPV ASSEMBLY

(a) Install the LSPV assembly to the frame with four bolts.

Torque: 130 kg-cm (9 ft-lb, 13 N·m)

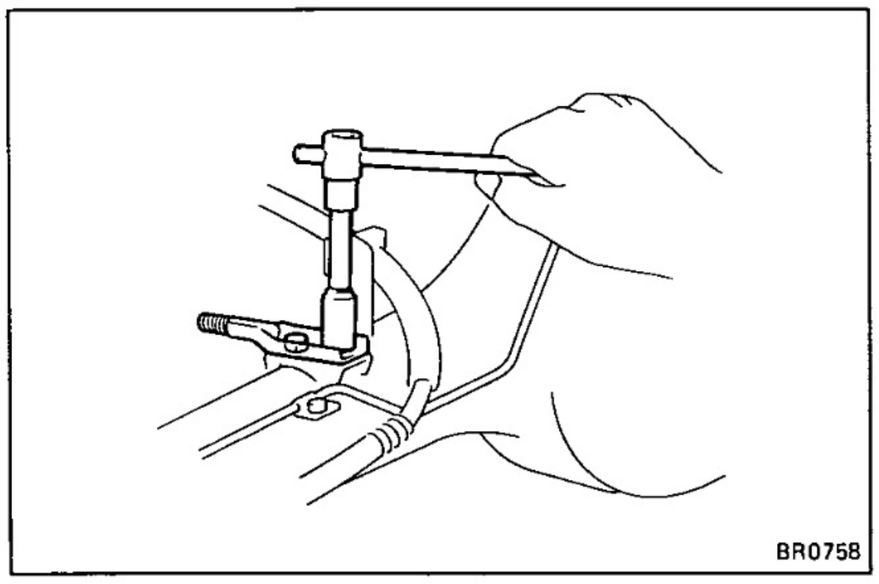

(b) Install the shackle bracket to rear axle housing with two bolts.

Torque: 195 kg-cm (14 ft-lb, 19 N·m)

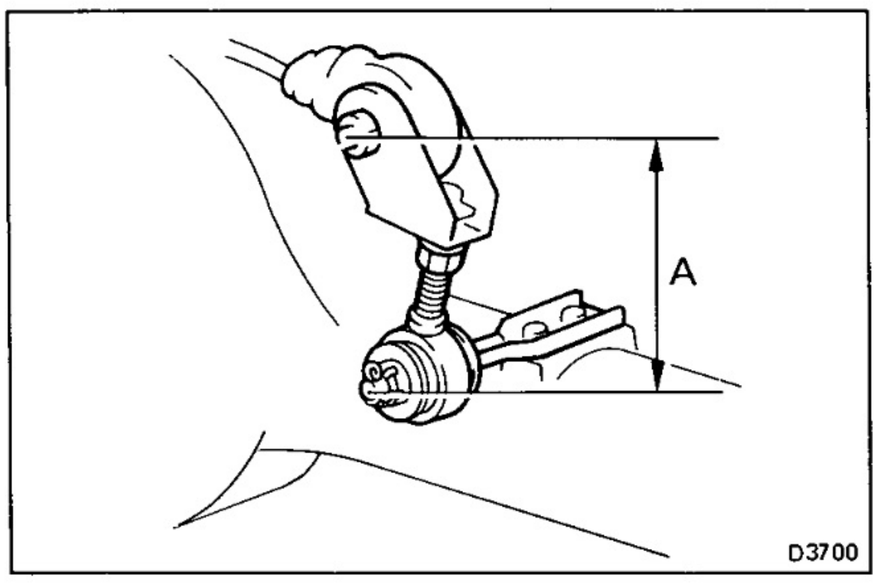

2. CONNECT SHACKLE NO. 2 TO BRACKET

(a) Set the dimension A by turning shackle No. 2.

Initial set: 120 mm (4.72 in.)

(b) Tighten the lock nut.

Torque: 250 kg-cm (18 ft-lb, 25 N·m)

(c) Install the two bushings and collar to the load sensing spring shackle.

(d) Install the load sensing spring to the shackle bracket with the two retainer and a nut.

Torque: 130 kg-cm (9 ft-lb, 13 N·m)

(e) Install the new cotter pin.

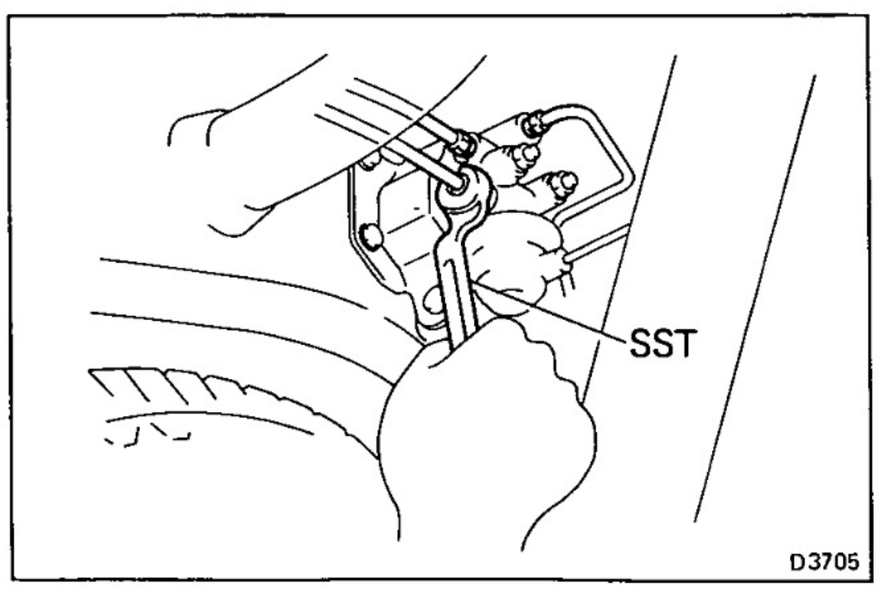

3. CONNECT BRAKE TUBES

Using SST, connect the brake tubes.

SST 09751-36011

Torque: 155 kg-cm (11 ft-lb, 15 N·m)

4. SET REAR AXLE LOAD

(See page BR-54)

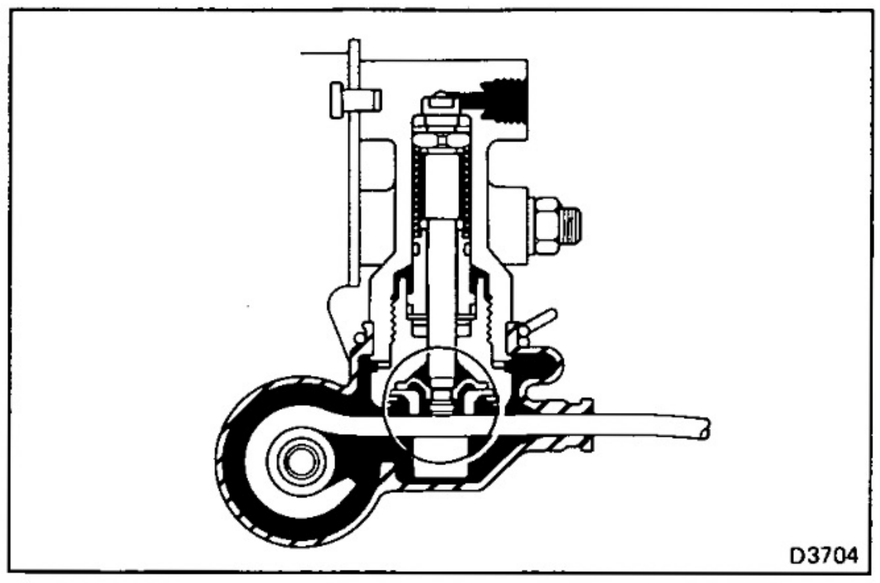

5. SET VALVE BODY

(a) When pulling down the load sensing spring, confirm that the valve piston moves down smoothly.

(b) Position the valve body so that the valve piston lightly contacts the load sensing spring.

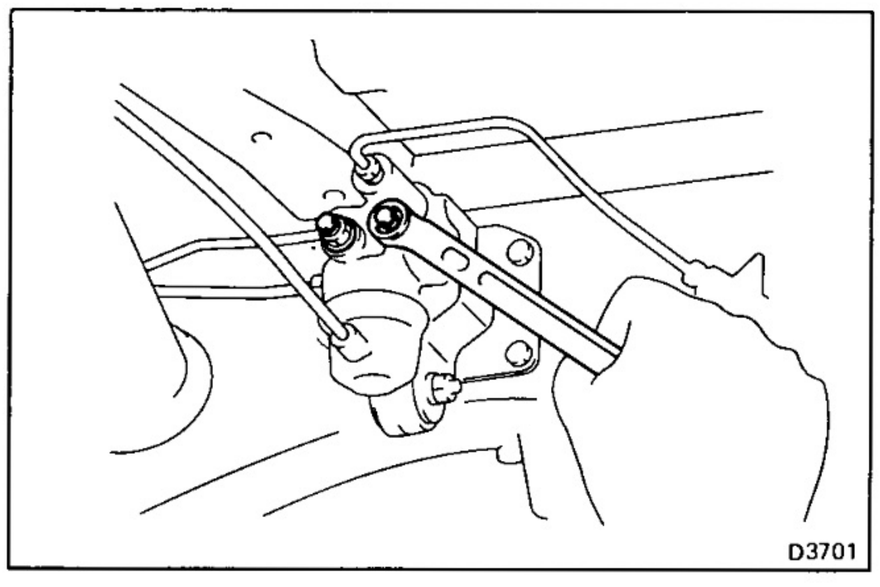

(c) Tighten the valve body mounting nuts.

Torque: 130 kg-cm (9 ft-lb, 13 N·m)

6. BLEED BRAKE LINE

7. CHECK FOR FLUID LEAKAGE

8. CHECK AND ADJUST LSPV FLUID PRESSURE

(See page BR-54)

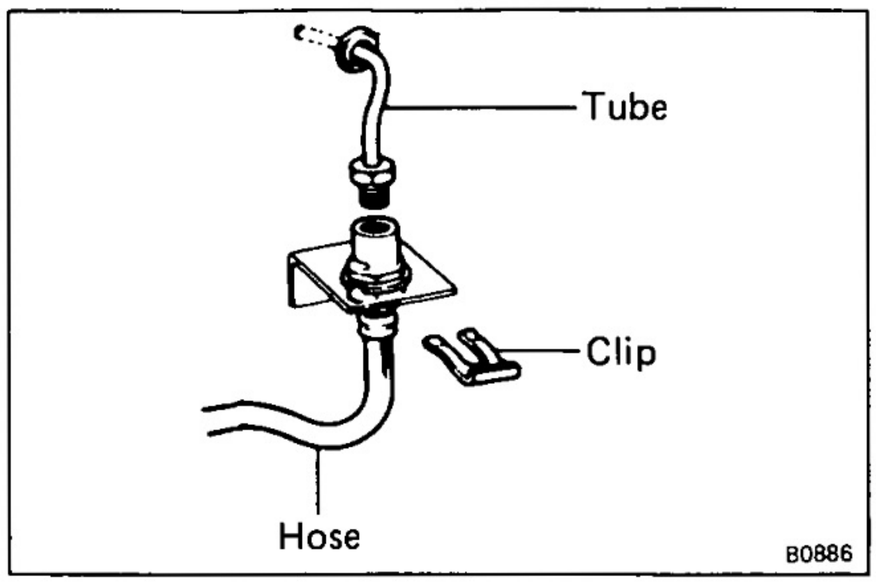

BRAKE HOSES AND TUBES

DISCONNECT AND CONNECT HOSE AND TUBE

1. DISCONNECT HOSE AND TUBE

(a) Disconnect the clip.

(b) Using a wrench to hold the hose and SST to hold the tube, disconnect the tube and hose.

SST 09751-36011

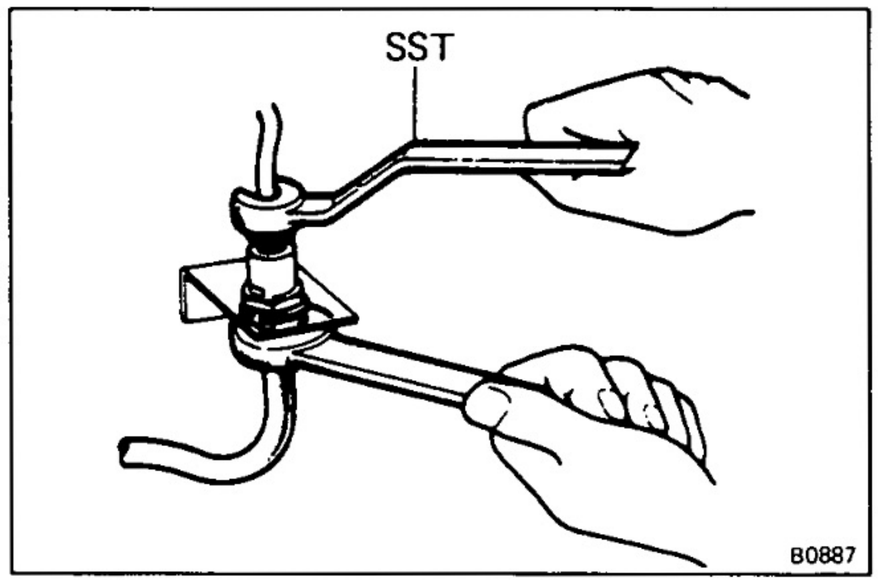

2. CONNECT HOSE AND TUBE

(a) Connect the hose and tube by hand.

(b) Using a wrench to hold the hose and SST to hold the tube, torque the connection.

SST 09751-36011

Torque: 155 kg-cm (11 ft-lb, 15 N·m)

(c) Install a new hose clip.

INSPECTION OF BRAKE HOSES AND TUBES

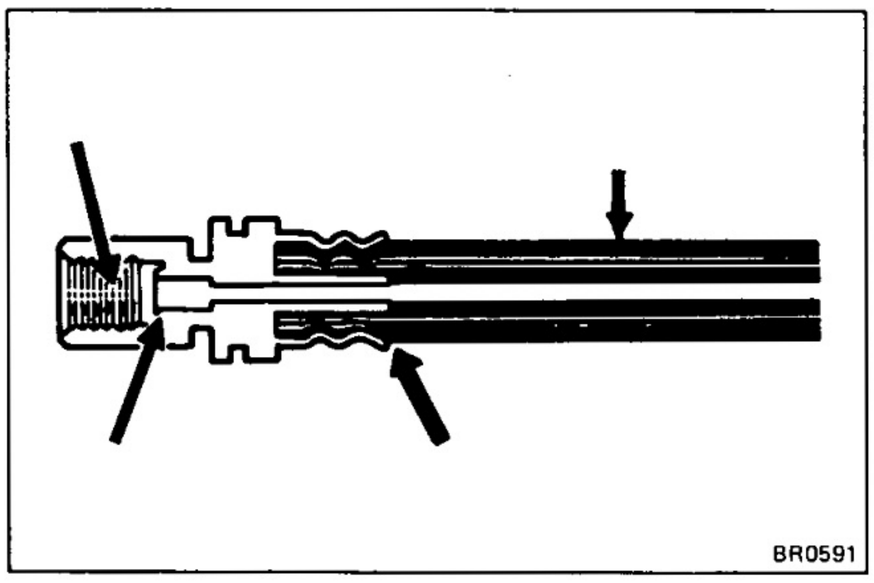

1. INSPECT BRAKE HOSES

(a) Inspect the hose for damage, cracks or swelling.

(b) Inspect the threads for damage.

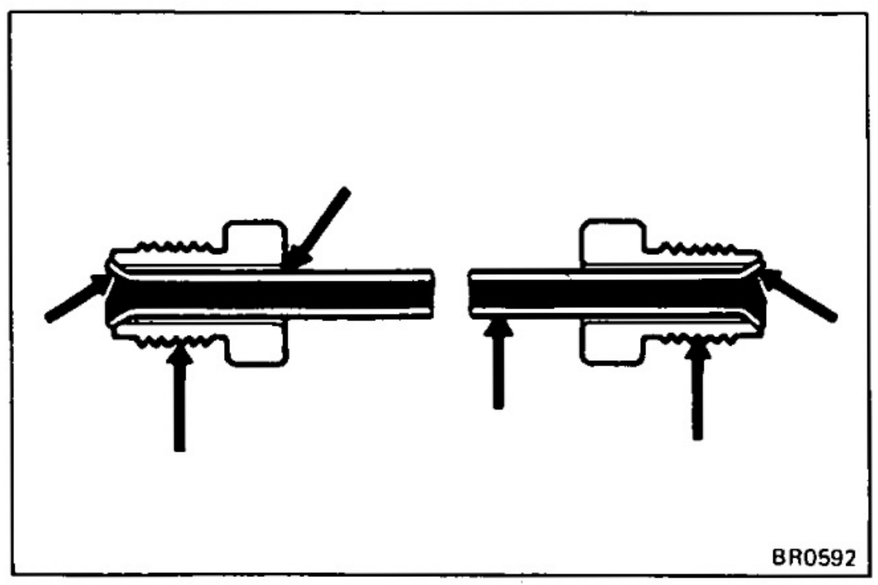

2. INSPECT BRAKE TUBES

(a) Inspect the tube for damage, cracks, dents or corrosion.

(b) Inspect the threads for damage.

STEERING

	Page
PRECAUTIONS	SR-2
TROUBLESHOOTING	SR-2
ON-VEHICLE INSPECTION	SR-3
STEERING COLUMN ASSEMBLY WITH TILT STEERING	SR-4
STEERING COLUMN ASSEMBLY	SR-18
STEERING GEAR HOUSING	SR-22
POWER STEERING	SR-32
On-Vehicle Inspection	SR-32
Bleeding of Power Steering System	SR-35
Oil Pressure Check	SR-35
Power Steering Pump	SR-37
Gear Housing	SR-57
STEERING LINKAGE	SR-72

PRECAUTIONS

Care must be taken to replace parts properly because they could affect the performance of the steering system and result in a driving hazard.

TROUBLESHOOTING

Problem	Possible cause	Remedy	Page
Hard steering	Tires improperly inflated	Inflate tires to proper pressure	A-10
	Excessive caster	Check front end alignment	FA-3
	Ball joints worn	Replace ball joints	SR-72
	Steering knuckle bearing worn	Replace knuckle bearing	FA-17
	Insufficient lubricant	Lubricate suspension and steering linkage	
	Steering linkage worn or bent	Check linkage	SR-72
	Steering gear out of adjustment or broken	Adjust or repair steering gear	SR-3, 22 57
	Power steering belt loose	Tighten belt	SR-32
	Fluid level in reservoir low	Check reservoir	SR-33
	Power steering fluid foaming	Check power steering fluid	SR-33
	Power steering unit faulty	Check power steering unit	SR-37
	Steering column binding	Check steering column	SR-4, 18
Poor return	Tire improperly inflated	Inflate tires to proper pressure	A-10
	Wheel alignment incorrect	Check front end alignment	FA-3
	Steering column binding	Check steering column	SR-4, 18
	Insufficient lubricant	Lubricate suspension and steering linkage	
	Steering gear out of adjustment or broken	Adjust or repair steering gear	SR-3, 22 57
Excessive play	Steering linkage worn	Check linkage	SR-72
	Steering gear loose	Tighten gear bolts	
	Steering shaft coupling worn	Inspect coupling	
	Ball joints worn	Replace ball joint	SR-72
	Steering knuckle bearing worn	Replace knuckle bearing	SR-17
	Steering gear out of adjustment or broken	Adjust or repair steering gear	SR-3, 22 57

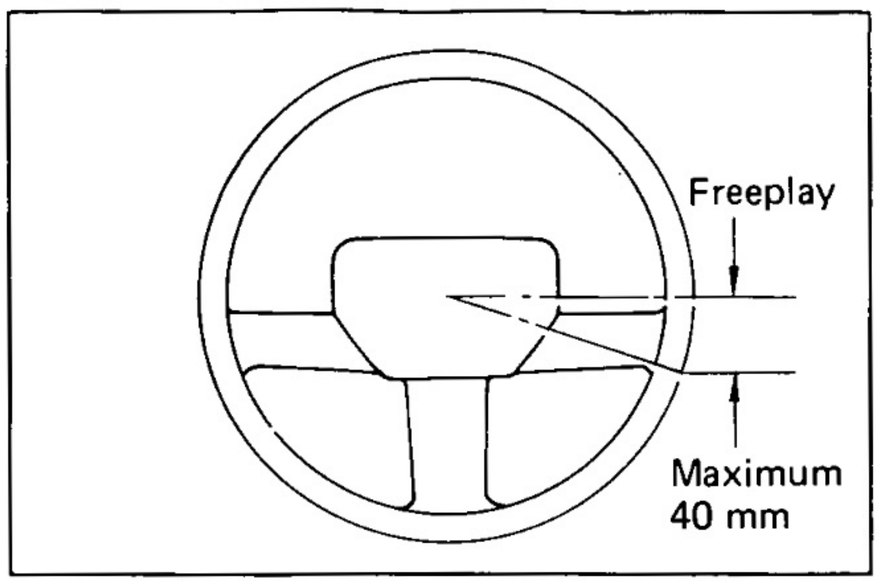

ON-VEHICLE INSPECTION

STEERING WHEEL FREEPLAY

1. CHECK THAT STEERING WHEEL FREEPLAY IS CORRECT

With the vehicle stopped and tires pointed straight ahead, rock the steering wheel gently back and forth with light finger pressure. Freeplay should not exceed the maximum limit.

Maximum play: 40 mm (1.57 in.)

If incorrect, adjust or repair as required.

2. POINT WHEELS STRAIGHT AHEAD

3. ADJUST STEERING GEAR BOX

(a) Loosen the lock nut.

(b) Turn the adjusting screw clockwise to decrease wheel freeplay and counterclockwise to increase it.

NOTE: Turn the adjusting screw in small increments and check the wheel freeplay between each adjustment.

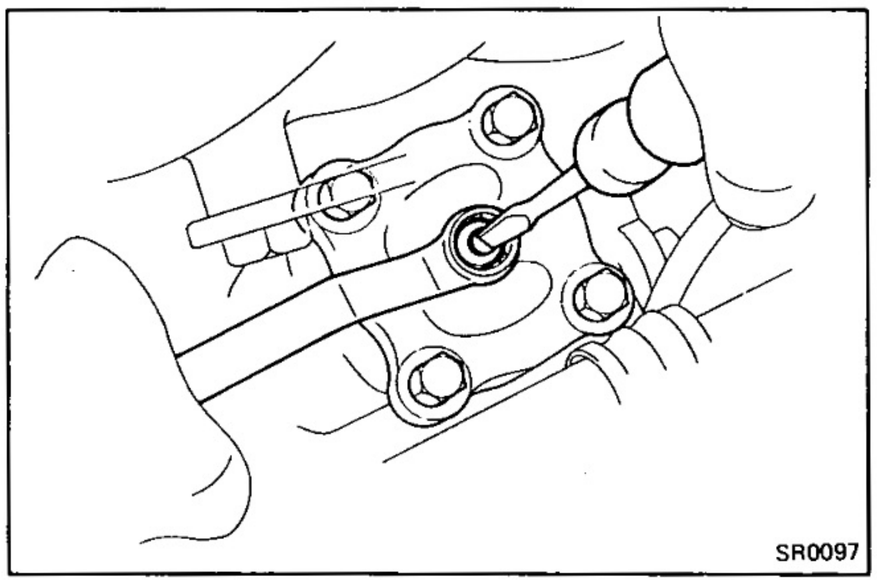

4. CHECK THAT STEERING DOES NOT BIND

Turn the steering wheel one full turn in both directions.

Check that the freeplay is correct and steering is smooth and without rough spots.

5. HOLD ADJUSTING SCREW AND TIGHTEN LOCK NUT

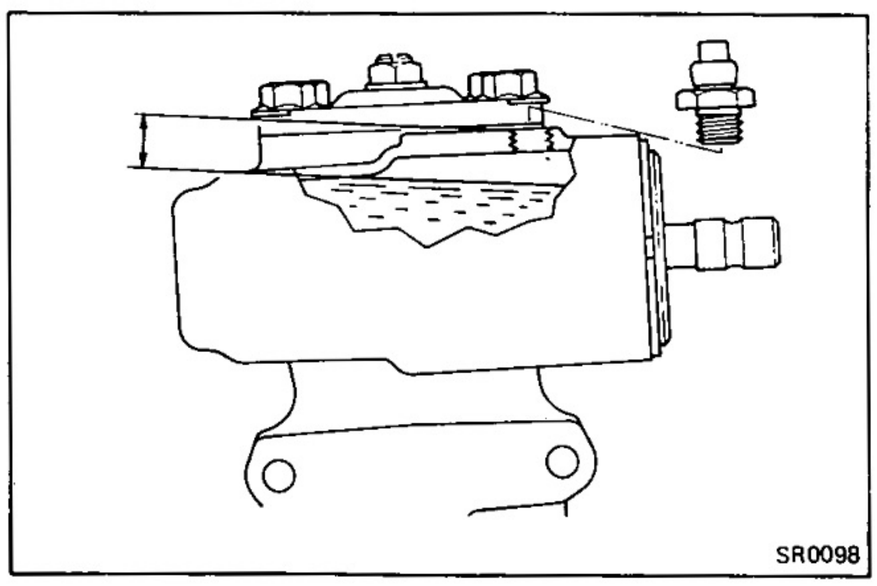

OIL LEVEL

CHECK STEERING GEAR BOX OIL LEVEL

Oil level: 12 – 17 mm (0.47 – 0.67 in.) from top

If low, fill with gear oil and check for oil leaks.

STEERING COLUMN ASSEMBLY WITH TILT STEERING

REMOVAL OF STEERING COLUMN ASSEMBLY

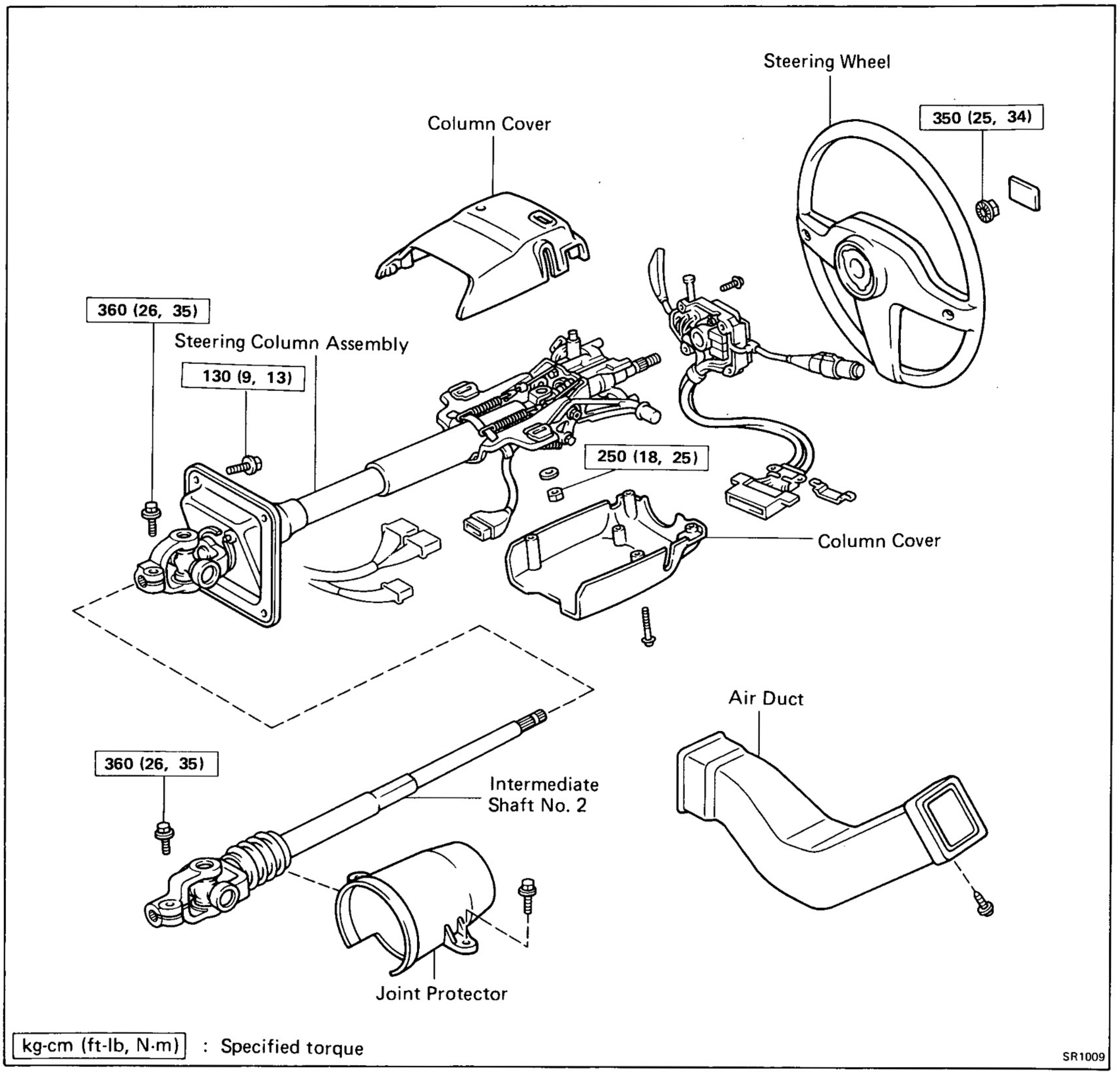

1. DISCONNECT NEGATIVE CABLE FROM BATTERY

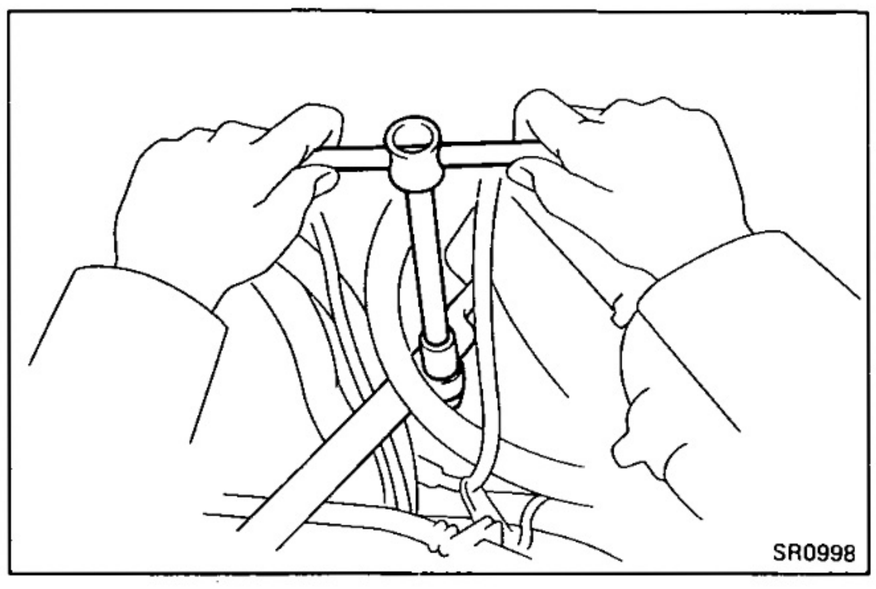

2. **DISCONNECT INTERMEDIATE SHAFT NO. 2 FROM NO. 1**
   (a) Place matchmarks on the intermediate shaft No. 1 and No. 2 joint yoke.
   (b) Remove the set bolt.
   (c) Pull out the intermediate shaft No. 1 from No. 2.

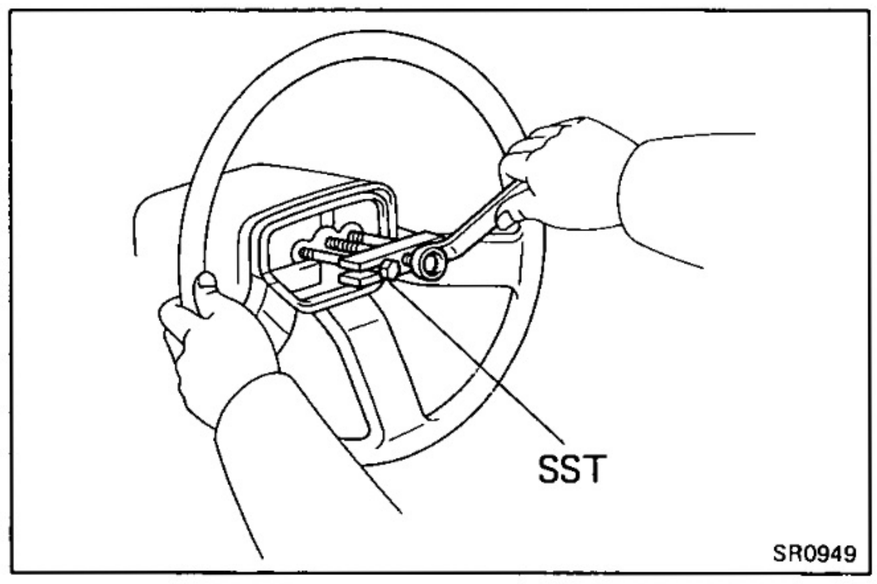

3. **REMOVE STEERING WHEEL**
   (a) Remove the steering wheel pad.
   (b) Remove the set nut.
   (c) Place matchmarks on the steering wheel and main shaft.
   (d) Using SST, remove the steering wheel.

   SST 09609-20011

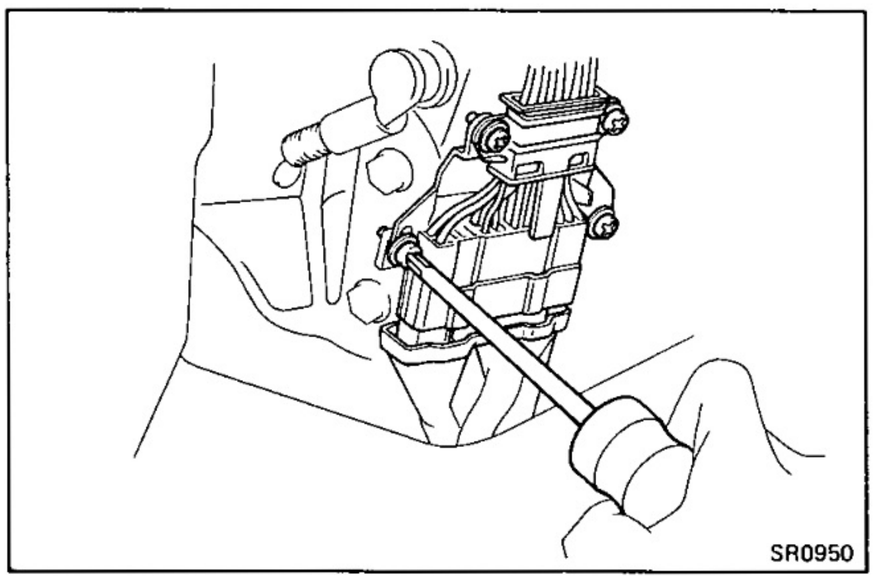

4. **REMOVE AIR DUCT**

5. **REMOVE COLUMN COVER**

6. **REMOVE COMBINATION SWITCH**

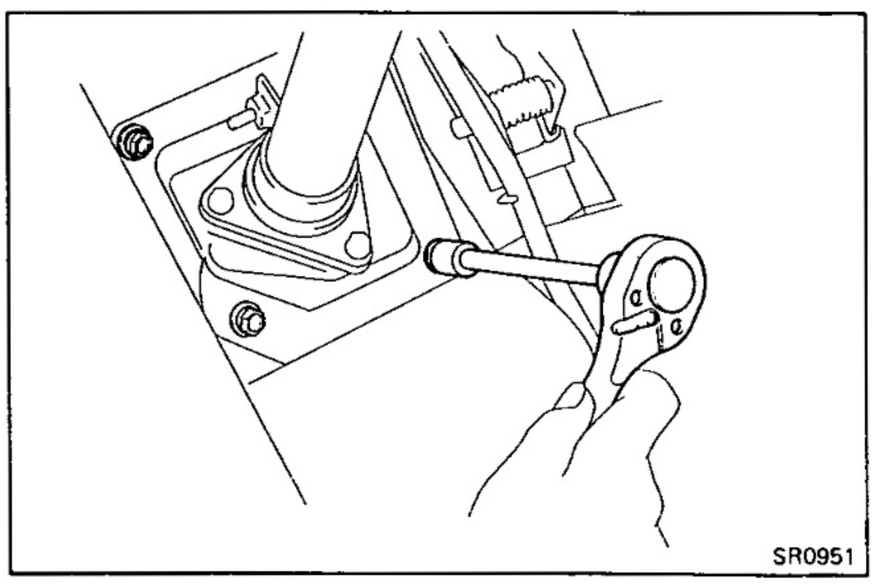

7. **REMOVE FOUR BOLTS FROM COLUMN HOLE COVER**

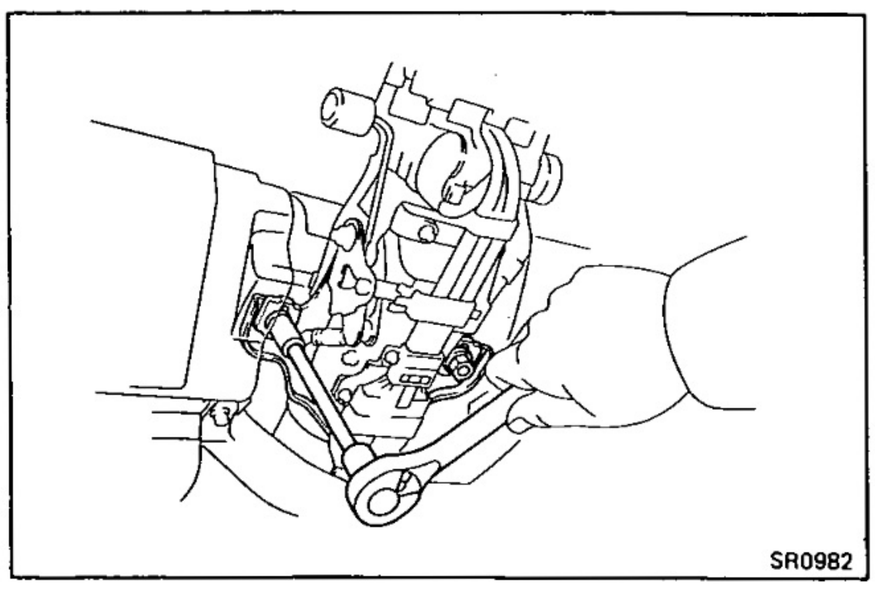

8. **REMOVE STEERING COLUMN ASSEMBLY**
   (a) Disconnect the ignition switch connector.
   (b) Remove the two mount nuts.
   (c) Pull out the steering column assembly.

COMPONENTS

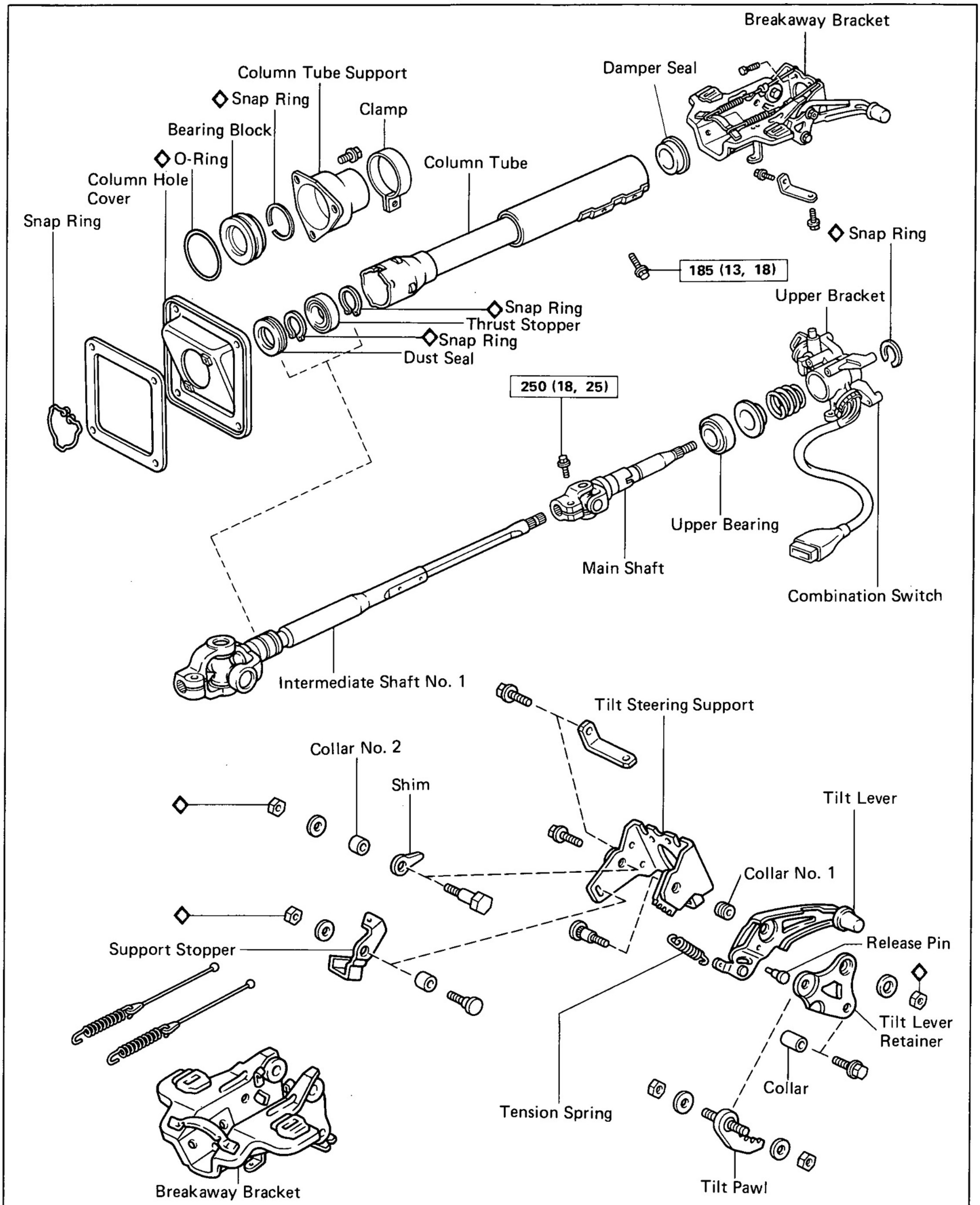

kg-cm (ft-lb, N·m) : Specified torque

◇ : Non-reusable part

SR1010
SR1008

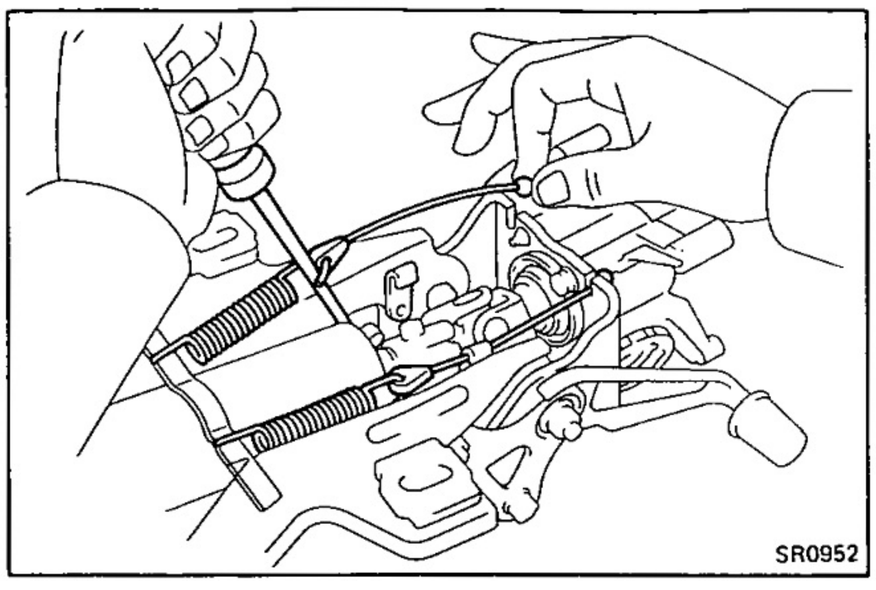

DISASSEMBLY OF STEERING COLUMN ASSEMBLY AND TILT MECHANISM

(See page SR-6)

1. REMOVE TENSION SPRINGS AND CORDS

(a) Fully tilt the main shaft upward.

(b) Release the cord from the hook.

(c) Using a screwdriver, pry out the cord tip and remove the spring and cord.

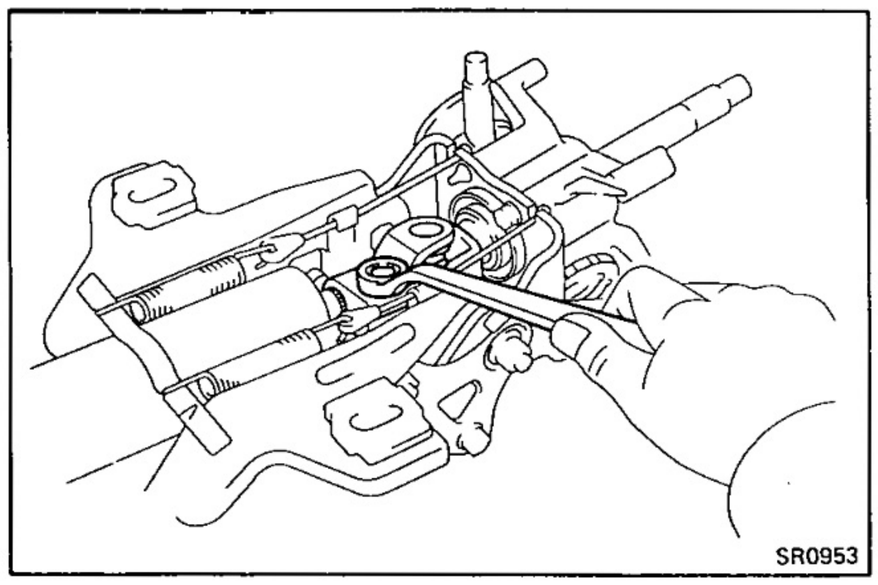

2. DISCONNECT INTERMEDIATE SHAFT FROM MAIN SHAFT

(a) Place matchmarks on the intermediate shaft and universal joint.

(b) Remove the bolt.

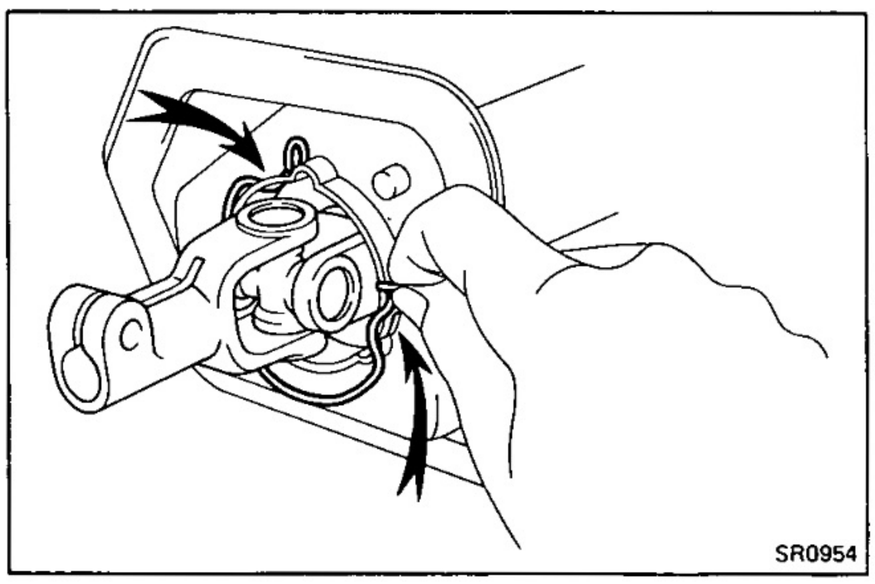

(c) Remove the snap ring.

(d) Pull out the intermediate shaft from the main shaft.

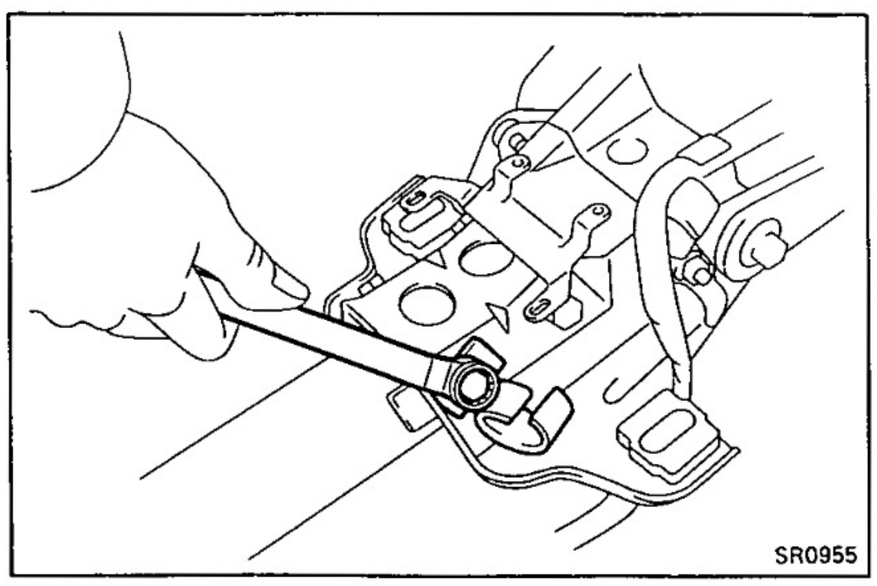

3. REMOVE COLUMN TUBE FROM BREAKAWAY BRACKET

Remove the four bolts with a clamp.

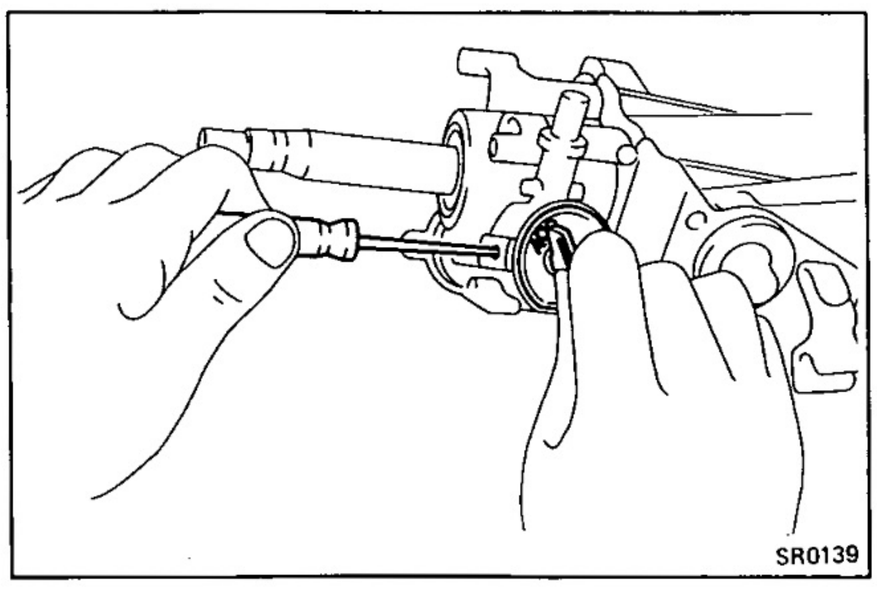

4. REMOVE IGNITION KEY CYLINDER

(a) Place the ignition key at the "ACC" position.

(b) Push down the stop key with a thin rod, and pull out the key cylinder.

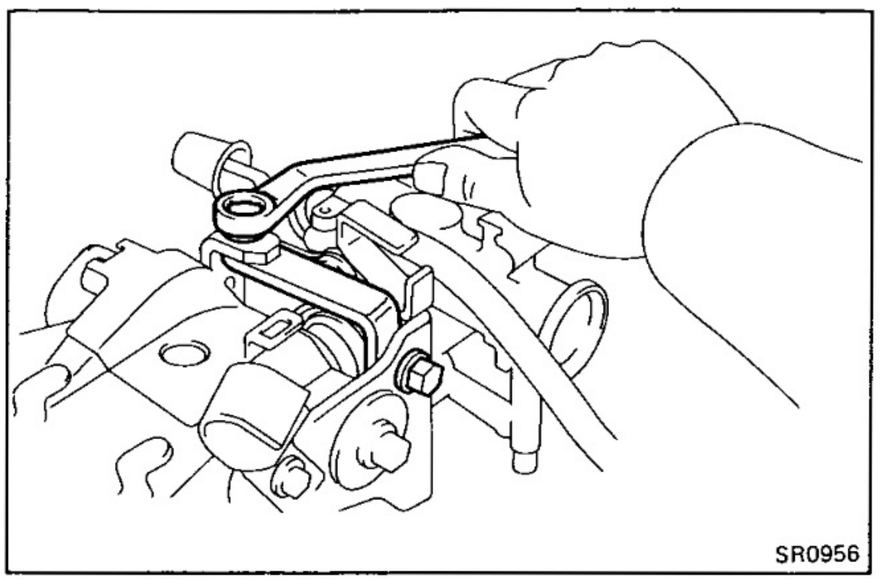

5. **REMOVE UPPER BRACKET WITH MAIN SHAFT FROM BREAKAWAY BRACKET**

(a) Remove the support reinforcement with two bolts.

(b) Loosen the broken bolt by tapping the chisel.

(c) Remove the three bolts.

(d) Disconnect the upper bracket from the breakaway bracket.

6. **REMOVE IGNITION SWITCH**

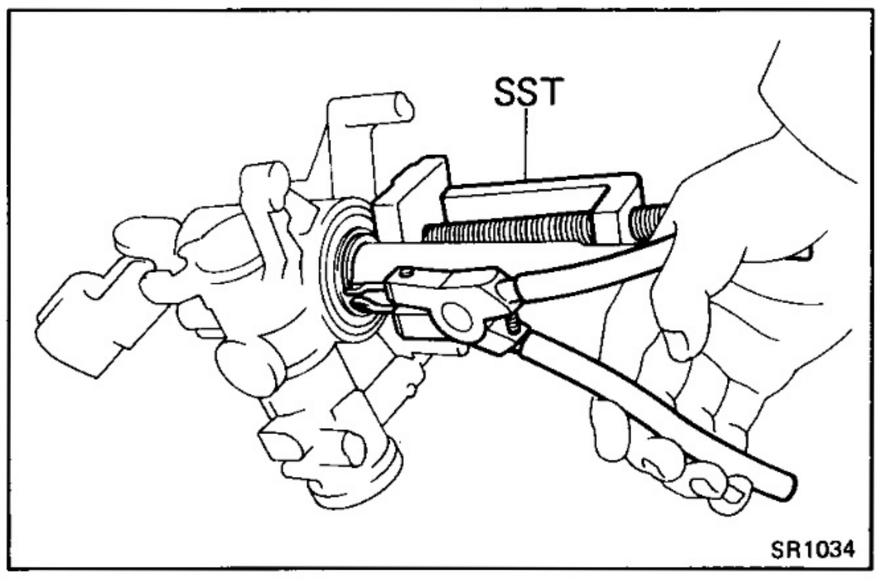

7. **REMOVE MAIN SHAFT FROM UPPER BRACKET**

(a) Using SST, compress the main shaft and upper bracket.

SST 09950-20016

CAUTION: Do not tighten the SST too tightly.

(b) Using snap ring pliers, remove the snap ring.

(c) Loosen SST and remove the main shaft, spring and collar from the upper bracket.

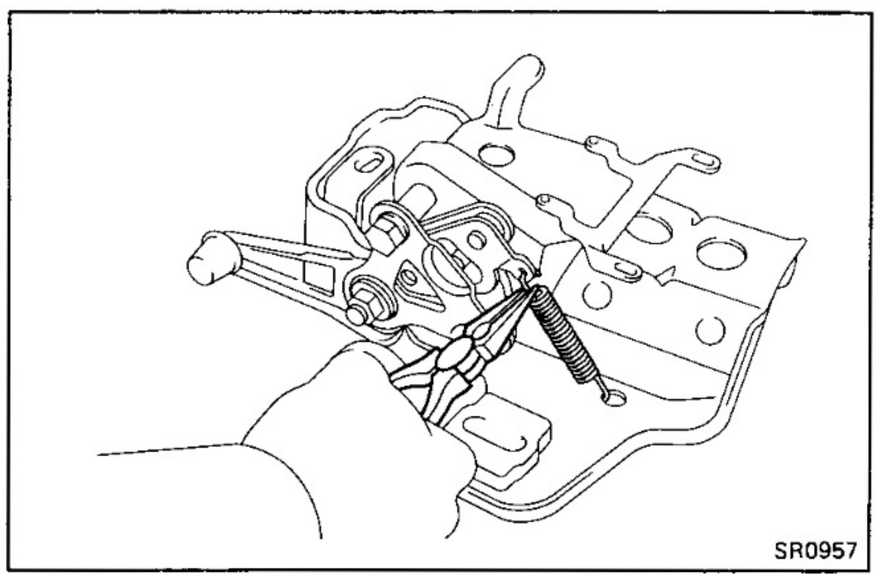

8. **DISASSEMBLE TILT STEERING SUPPORT AND BREAKAWAY BRACKET**

(a) Remove the tension spring.

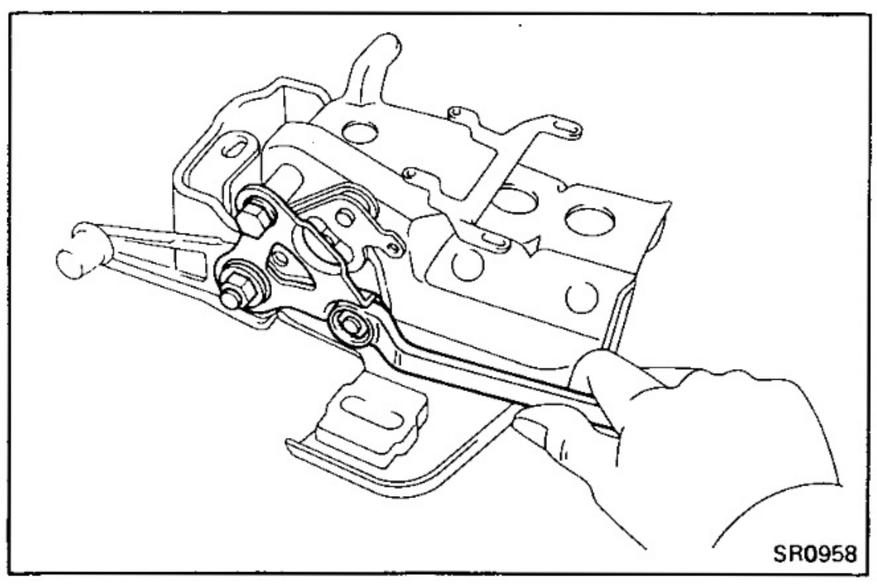

(b) Remove the two nuts and bolt.

(c) Remove the tilt lever retainer and collar.

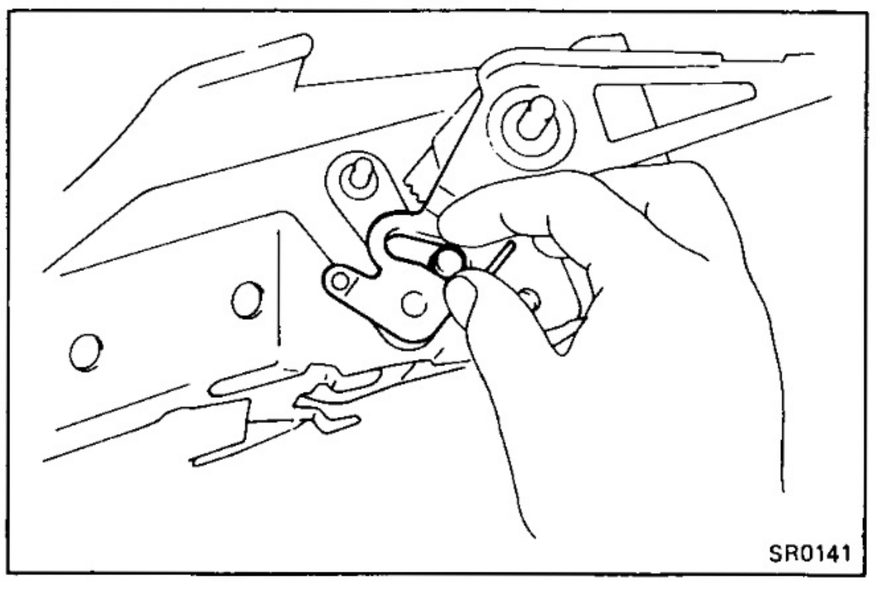

(d) Remove the release pin.

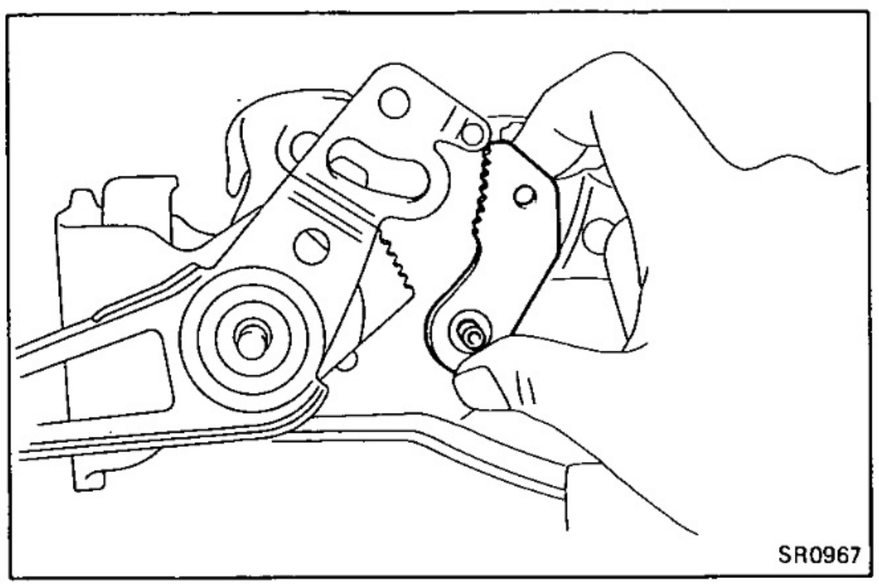

(e) Remove the tilt steering pawl.

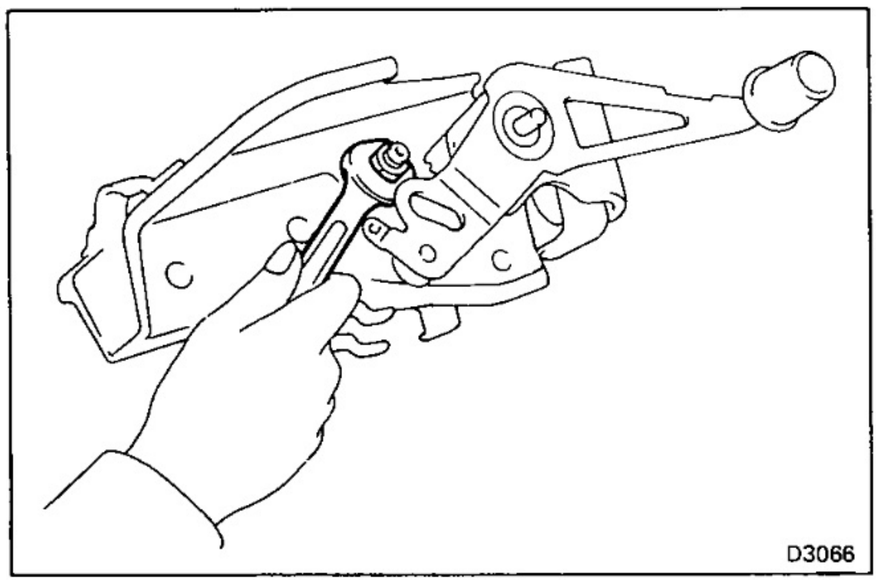

(f) Remove the tilt pawl set bolt.

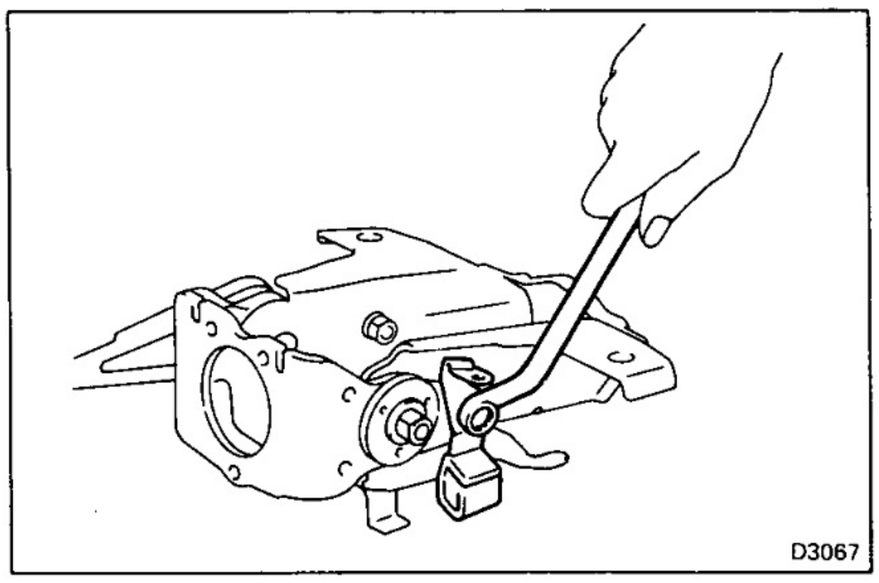

(g) Remove the nut and support stopper bolt with a clamp.

(h) Remove the tilt lever set nut.

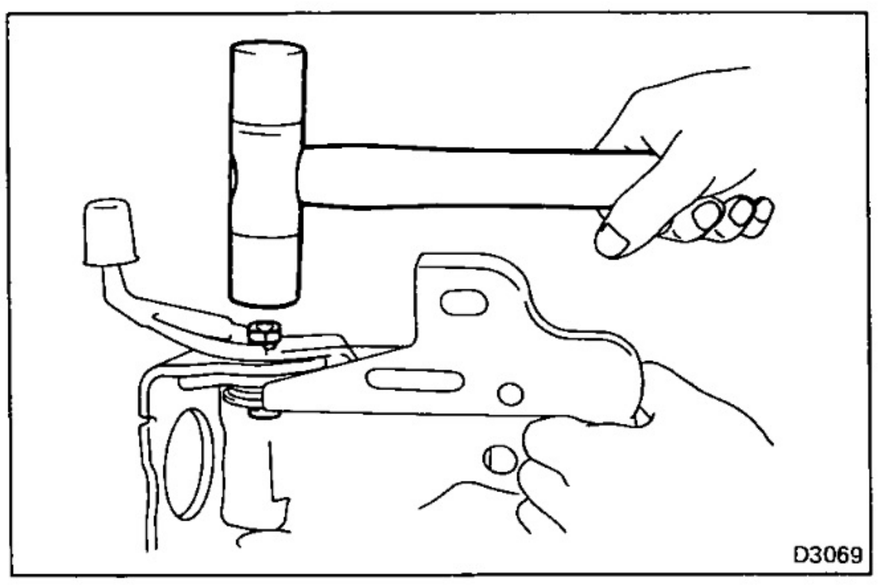

(i) Temporarily install the nut flat with the end of the bolt and tap it with a hammer.

(j) Remove the nut.

(k) Remove the collar and shim.

(l) Remove the another set bolt, nut and collar.

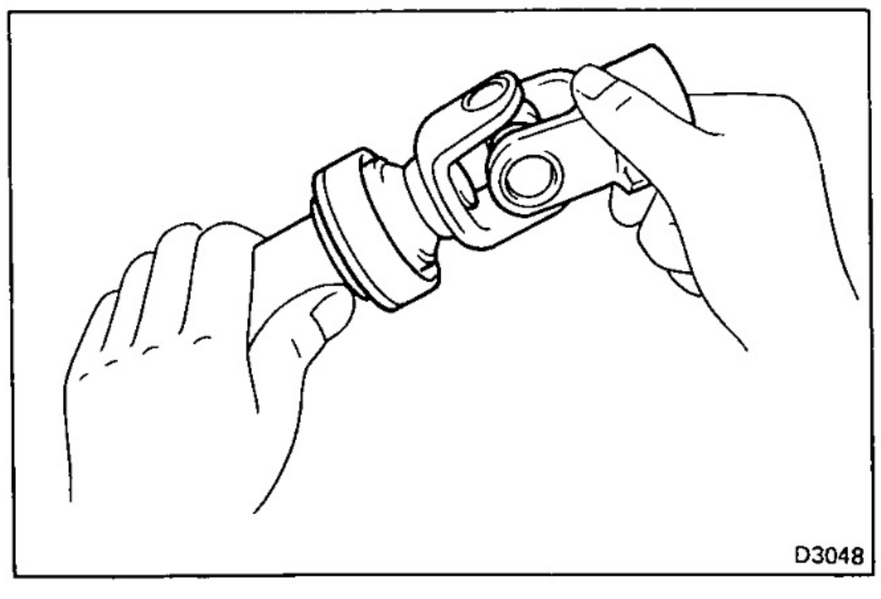

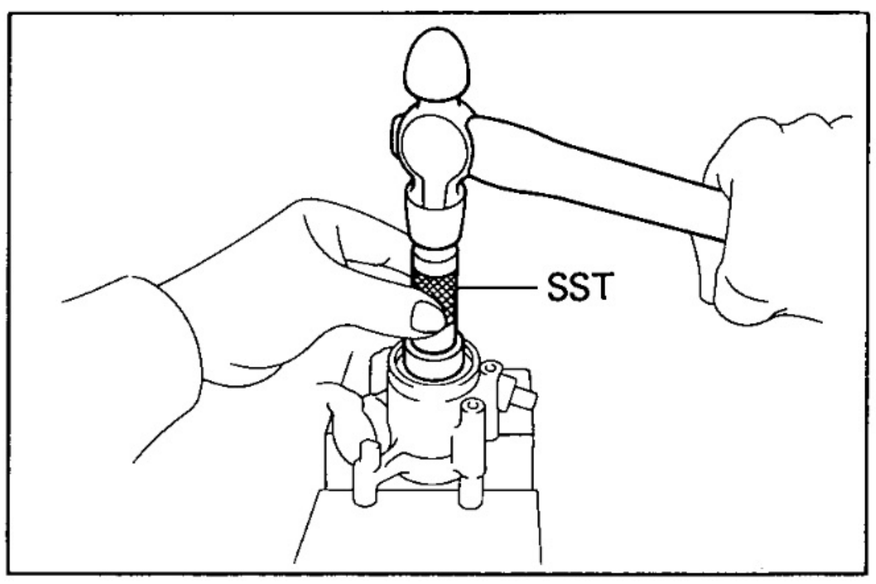

INSPECTION AND REPAIR OF STEERING COLUMN ASSEMBLY

1. **(FJ, BJ, HJ 6_series)**
   IF NECESSARY, REPLACE BEARING IN UPPER BRACKET

   (a) Using SST and a hammer, remove the bearing.

   SST 09620-30010

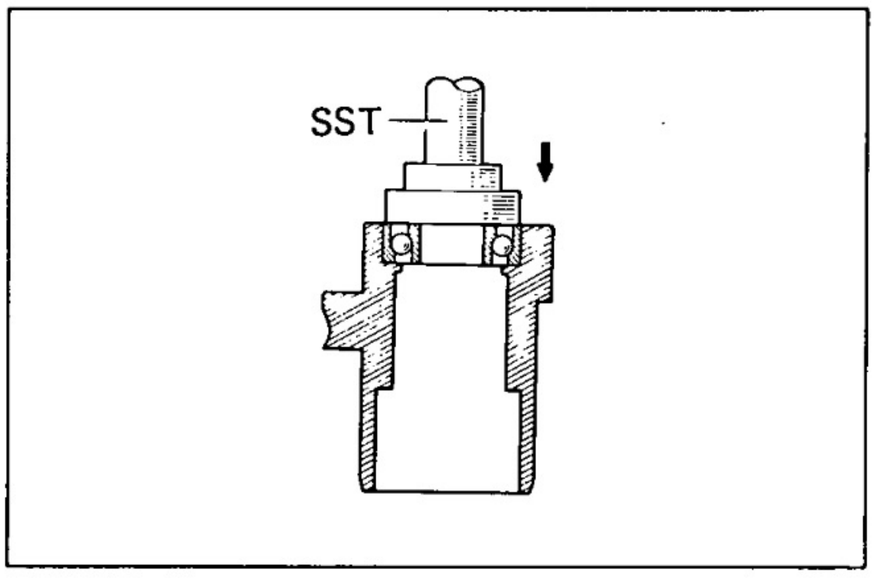

   (b) Pack MP grease into the bearing.

   (c) Using SST and a hammer, drive the bearing into the bracket.

   SST 09620-30010

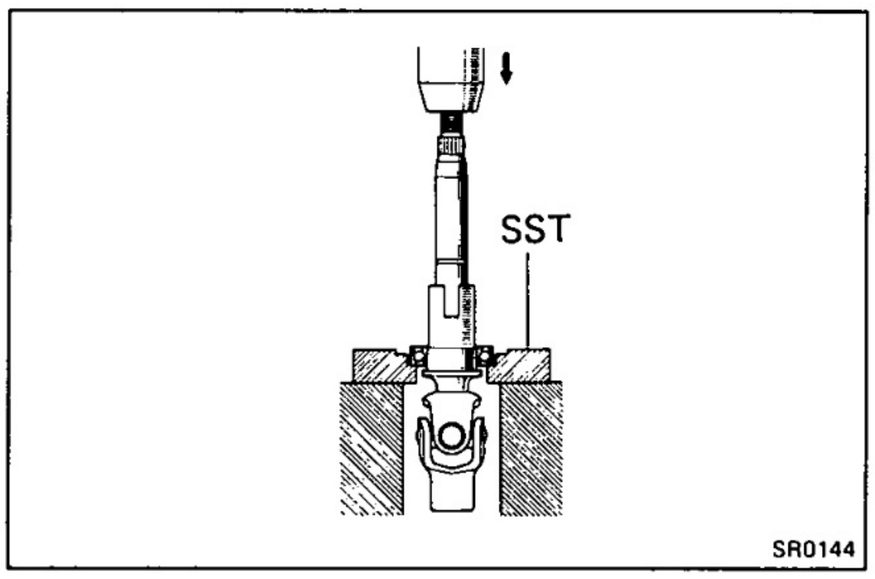

2. **IF NECESSARY, REPLACE LOWER BEARING**

   (a) Using SST and a press, remove the lower bearing from the main shaft.

   SST 09527-20011

   (b) Pack MP grease into the bearing.

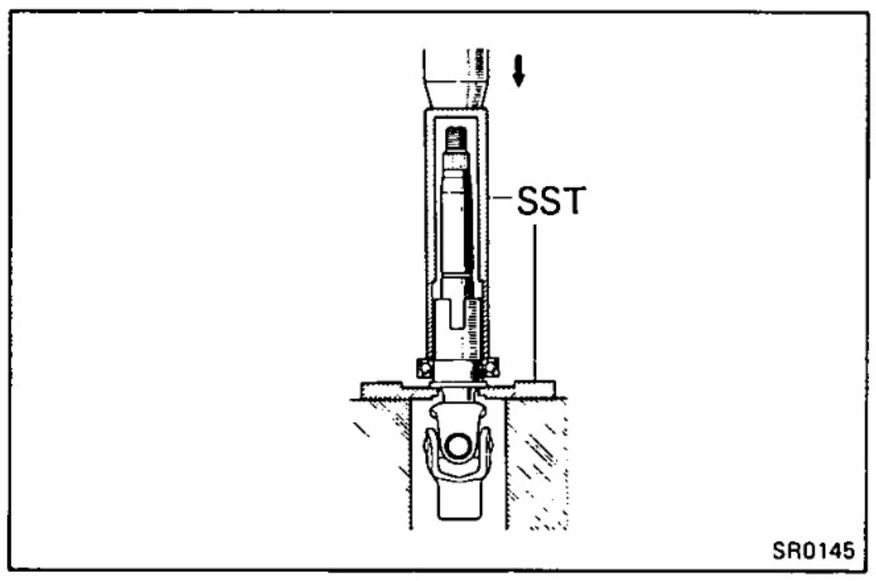

   (c) Using SST and a press, assemble the lower bearing and main shaft.

   SST 09236-00101 and 09612-22011

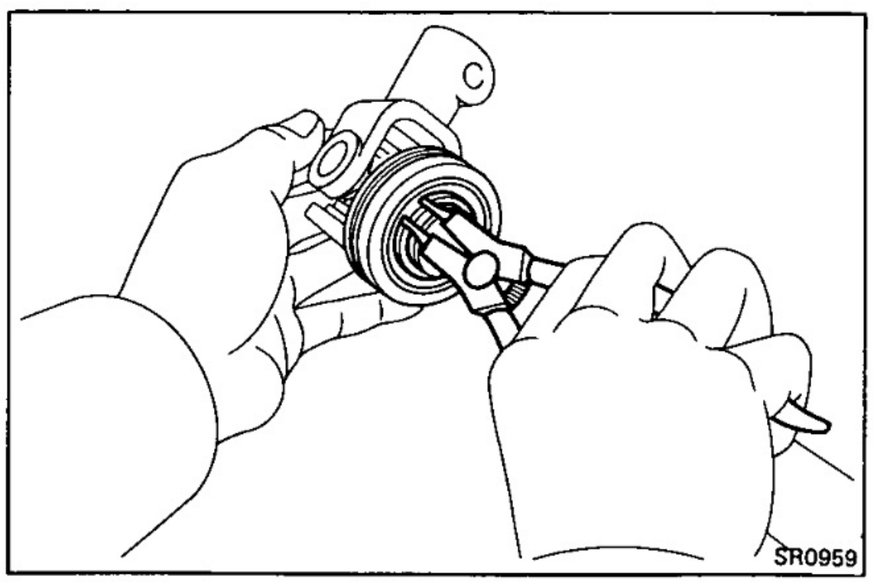

3. **IF NECESSARY, REPLACE INTERMEDIATE SHAFT BEARING**

   (a) Using snap ring pliers, remove the snap ring.

   (b) Pull out the bearing from the intermediate shaft.

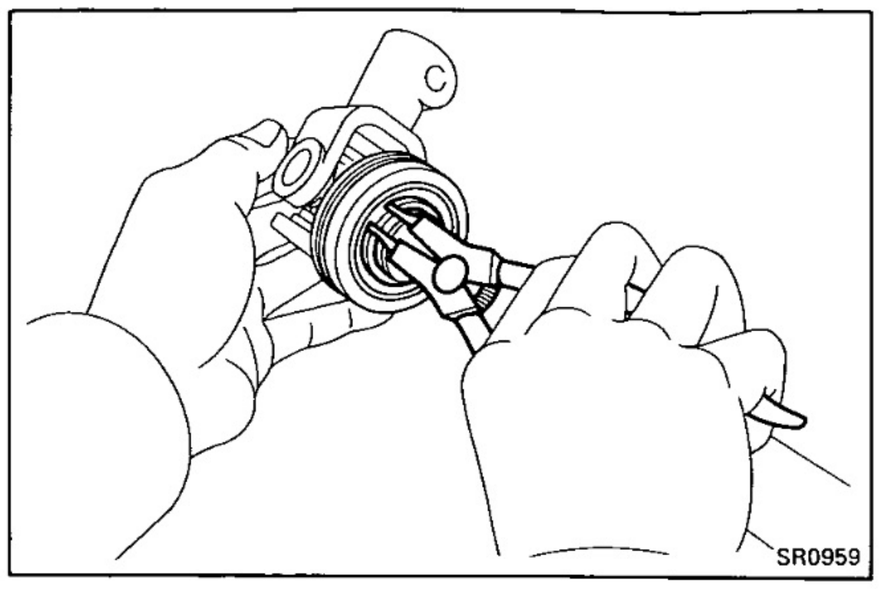

(c) Install the bearing.

(d) Using snap ring pliers, install the snap ring.

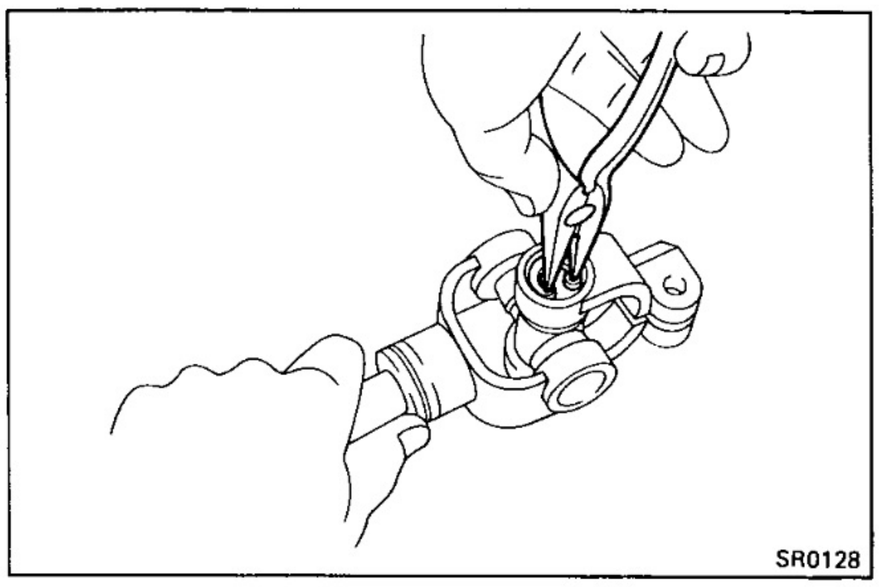

4. **(FJ, BJ, HJ 6_series)**
IF NECESSARY, REPLACE SPIDER BEARING

(a) Using needle-nose pliers, remove the four snap rings.

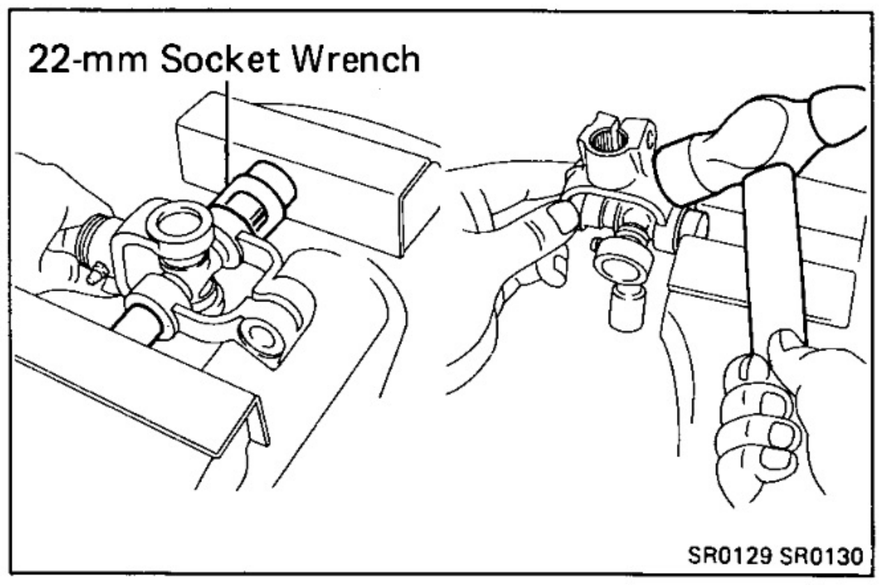

(b) Using a 12-mm and 22-mm socket wrench and vise, press out the yoke side outer race.

(c) Clamp the outer race in a vise and tap off the yoke with a hammer.

NOTE: Remove the other bearing races in the same procedure.

(d) Apply molybdenum disulphide lithium base grease to the spider and bearings.

NOTE: Be careful not to apply too much grease.

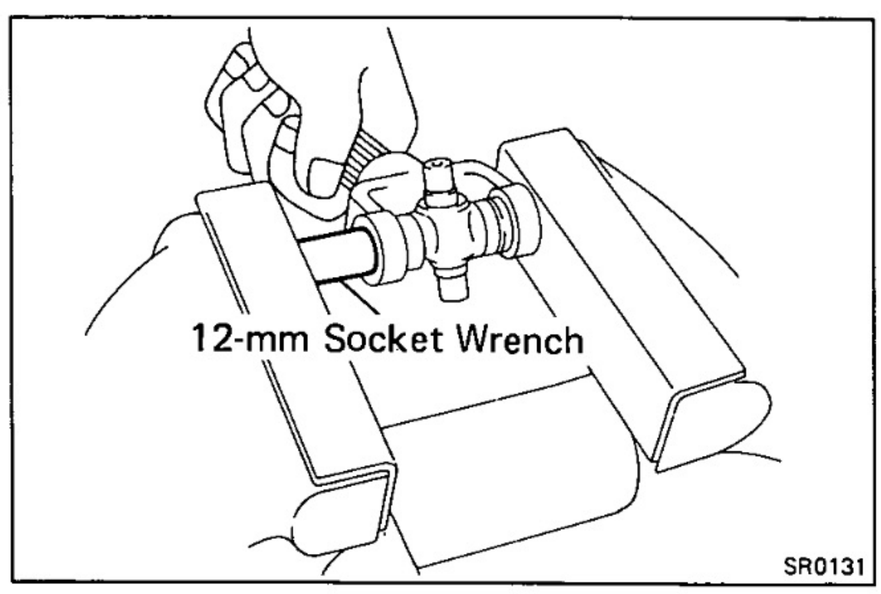

(e) Using a 12-mm socket wrench and vise, press the bearing outer race.

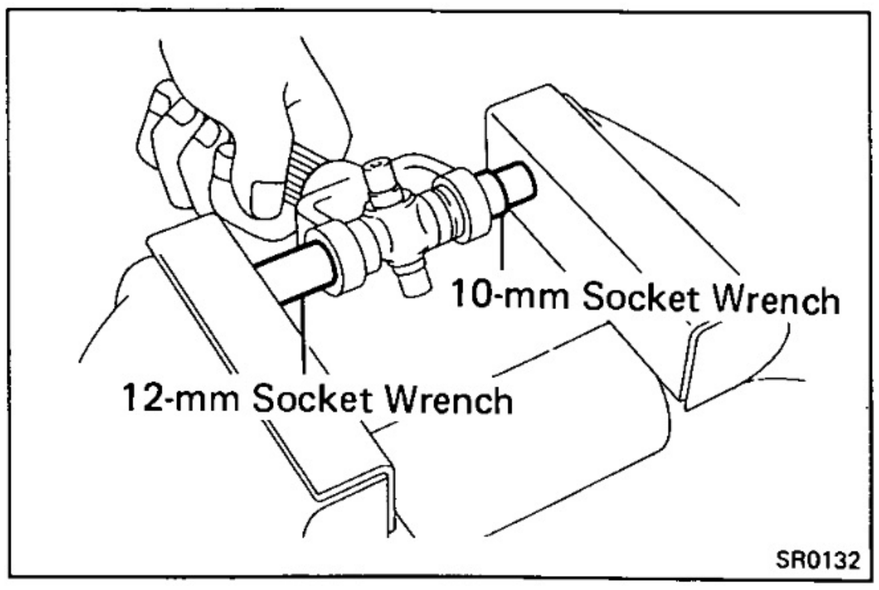

(f) Using a 10-mm and 12-mm socket wrench, adjust both bearings so that the snap ring grooves are at maximum and equal widths.

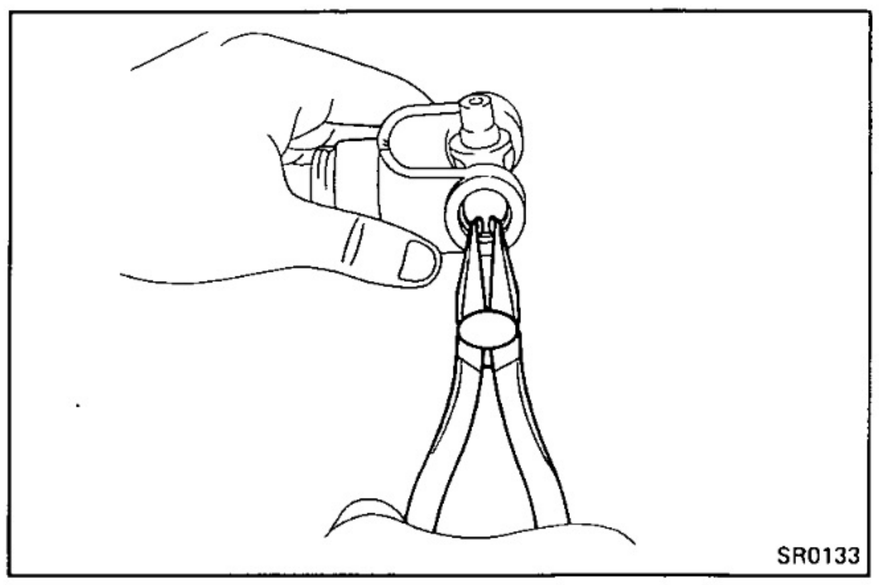
SR0133

(g) Select two snap rings of the same thickness, which will allow 0 – 0.05 mm (0 – 0.0020 in.) of axial play.

NOTE: Do not reuse the snap rings.

Snap ring thickness

Mark	Thickness	mm (in.)
None	1.175 – 1.225	(0.0463 – 0.0482)
Brown	1.225 – 1.275	(0.0482 – 0.0502)
Blue	1.275 – 1.325	(0.0502 – 0.0522)

(h) Using needle-nose pliers, install the snap rings.

NOTE: Install the bearing outer races in the yoke side using the same procedure.

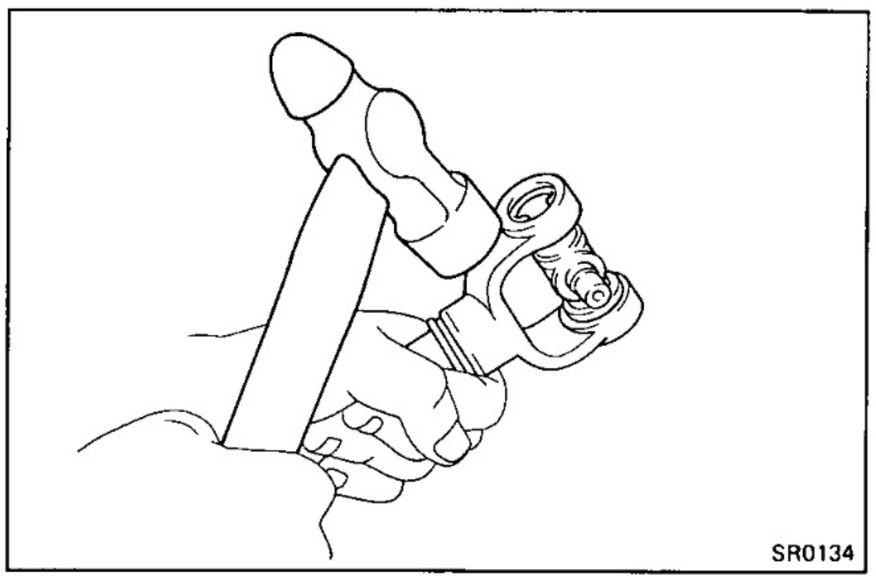
SR0134

(i) Using a hammer, tap the shaft and yoke until the clearance between the bearing outer race and snap ring is zero.

(j) Check the spider bearing.

- Check that the spider bearing moves smoothly.
- Check the spider bearing axial play.

Bearing axial play: 0.05 mm (0.0020 in.) or less

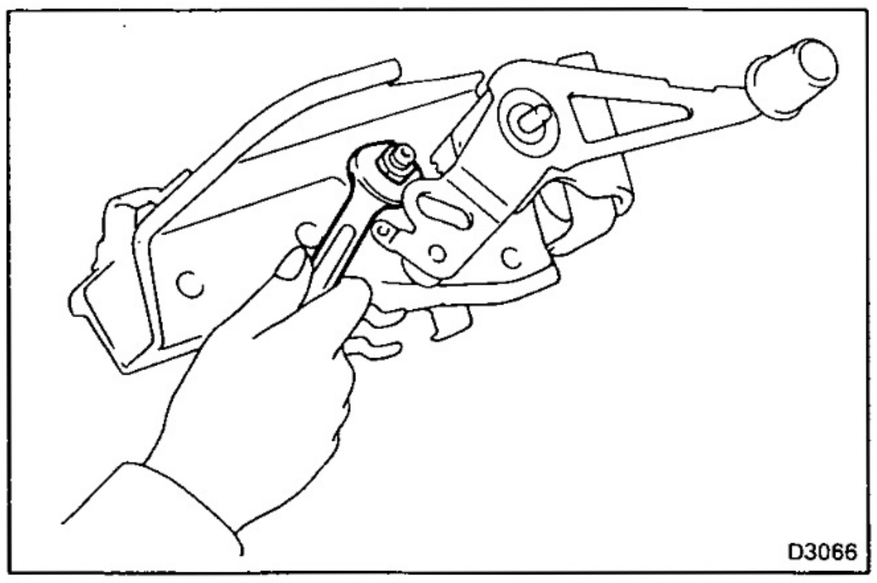

ASSEMBLY OF STEERING COLUMN ASSEMBLY AND TILT MECHANISM

(See page SR-6)

1. COAT ALL RUBBING PARTS WITH MP GREASE

2. ASSEMBLE PAWL SET BOLT

   Torque: 185 kg-cm (13 ft-lb, 18 N·m)

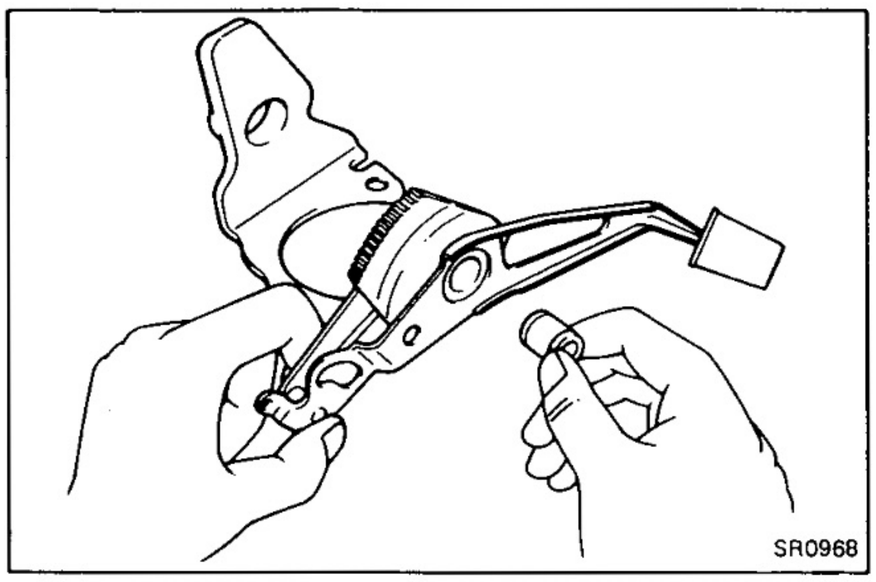

3. ASSEMBLE TILT LEVER TO SUPPORT

(a) Select a collar No. 1 which will eliminate play.

Outer diameter	mm (in.)
17.989 – 17.996	(0.7082 – 0.7085)
17.996 – 18.003	(0.7085 – 0.7088)
18.003 – 18.010	(0.7088 – 0.7091)
18.010 – 18.017	(0.7091 – 0.7093)
18.017 – 18.024	(0.7093 – 0.7096)

(b) Install tilt lever and collar No. 1 to the support.

(c) Select a collar No. 2 which will eliminate all play.

Outer diameter	mm (in.)
17.982 – 18.000	(0.7080 – 0.7087)
18.000 – 18.018	(0.7087 – 0.7094)

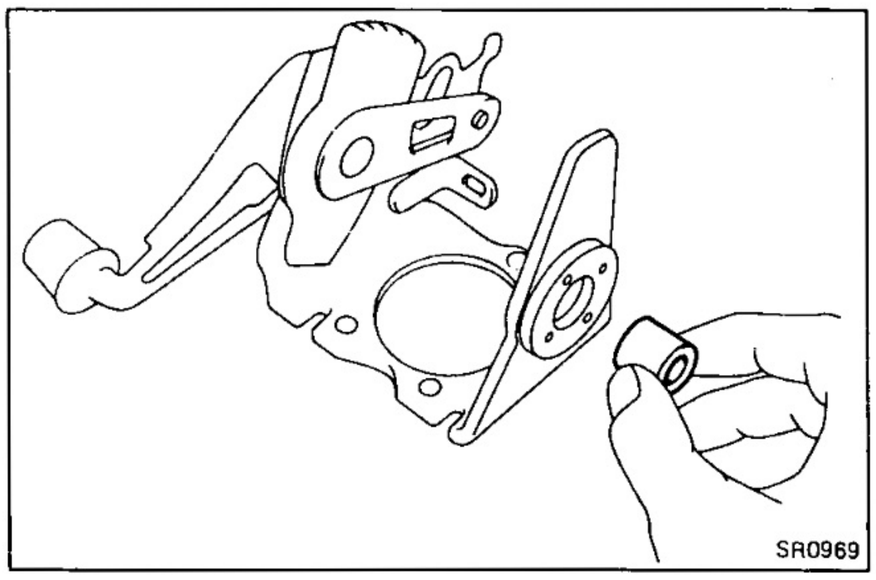

(d) Install collar No. 2 to the support.

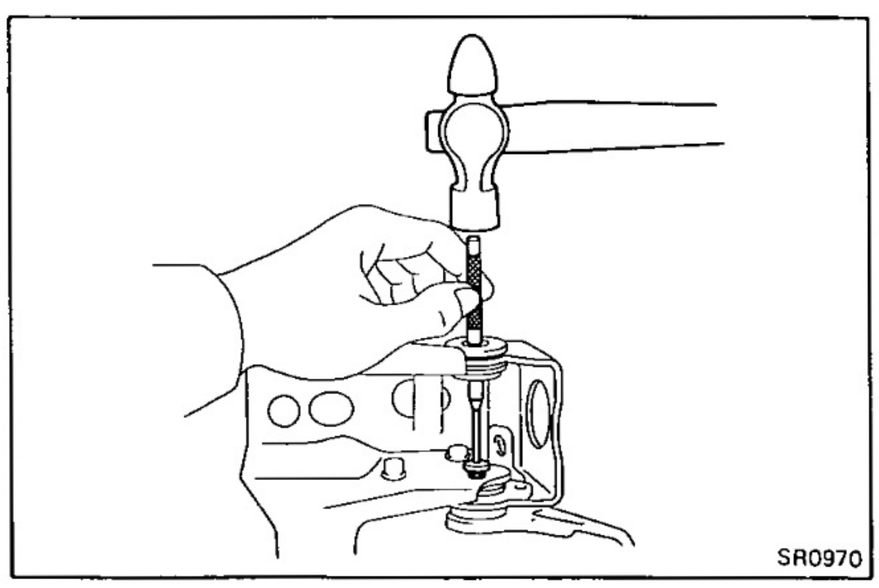

(e) Drive in the serration bolt to the support.

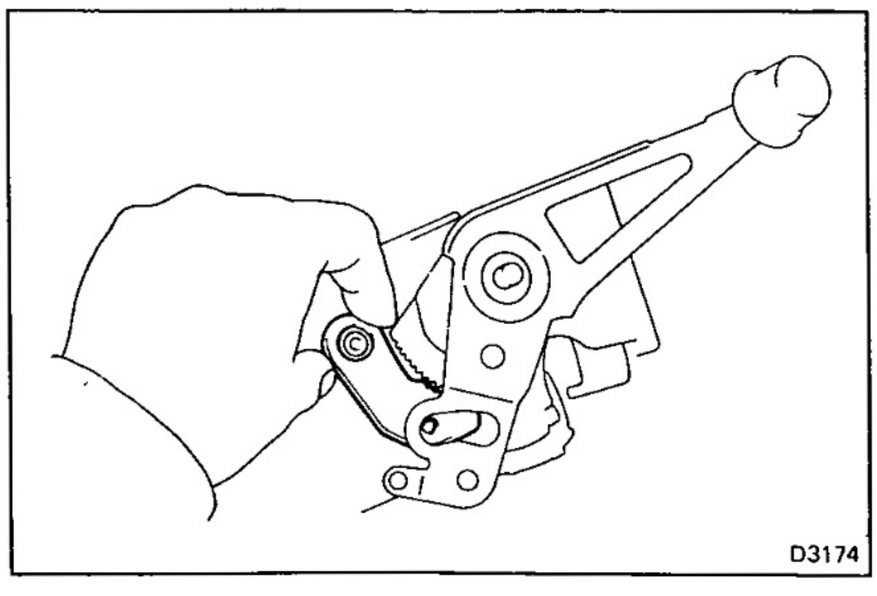

(f) Install the tilt pawl.

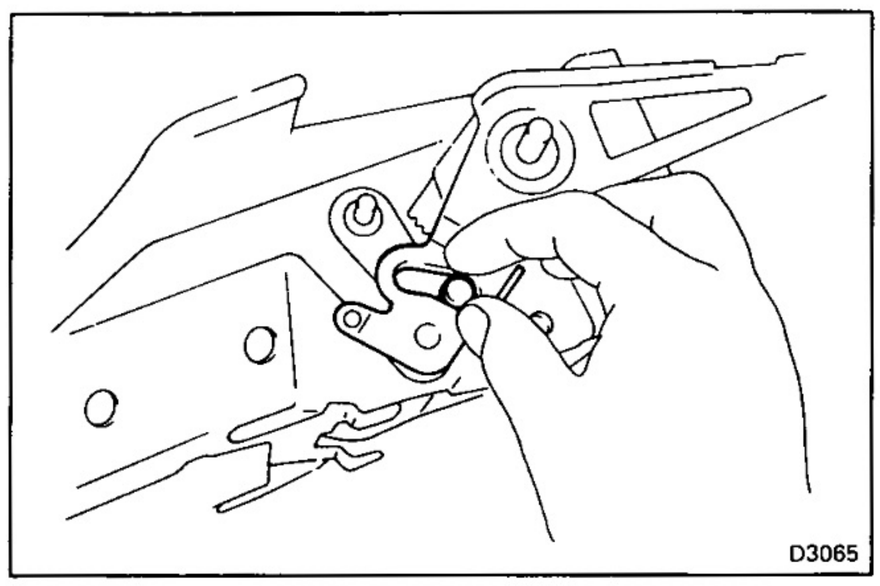

(g) Install the tension spring and the release pin.

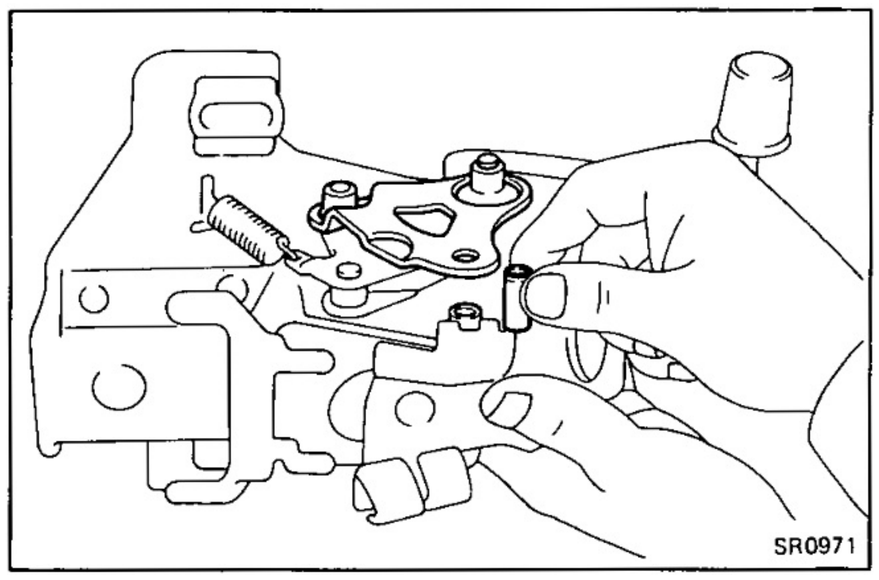

(h) Assemble the collar and tilt lever retainer.

Torque: 185 kg-cm (13 ft-lb, 18 N·m)

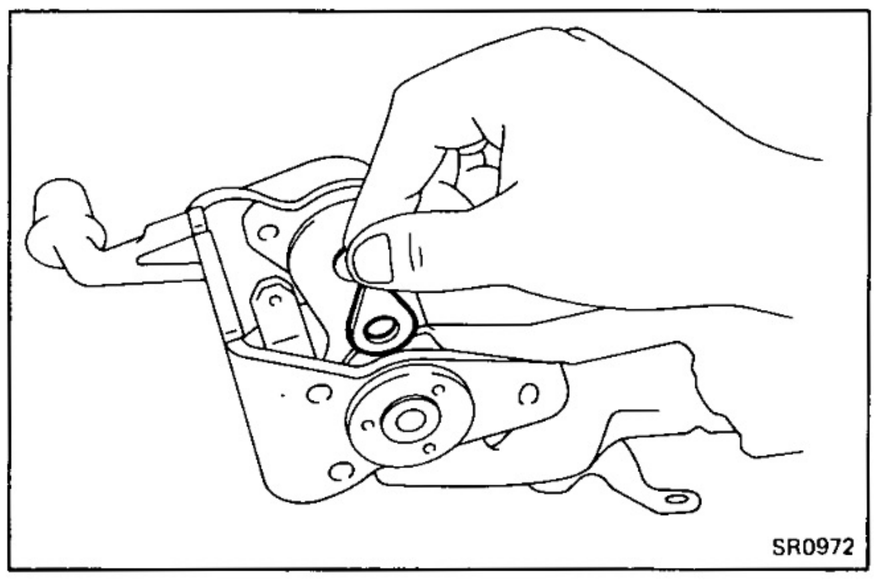

4. INSTALL SHIM, BOLT AND NUT

(a) Select a shim which fits snugly when pressed in by hand.

Mark	Thickness	mm (in.)
None	0.197 – 0.203	(0.0078 – 0.0080)
5	0.495 – 0.505	(0.0195 – 0.0199)
8	0.795 – 0.805	(0.0313 – 0.0317)
14	1.395 – 1.405	(0.0549 – 0.0553)
18	1.795 – 1.805	(0.0707 – 0.0711)

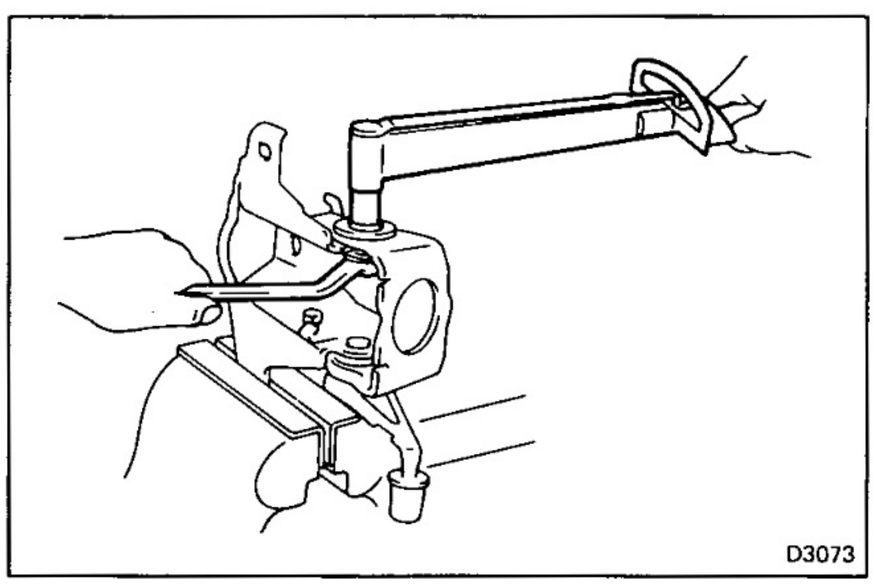

(b) Install the shim, bolt, washer and a lock nut.

Torque: 185 kg-cm (13 ft-lb, 18 N·m)

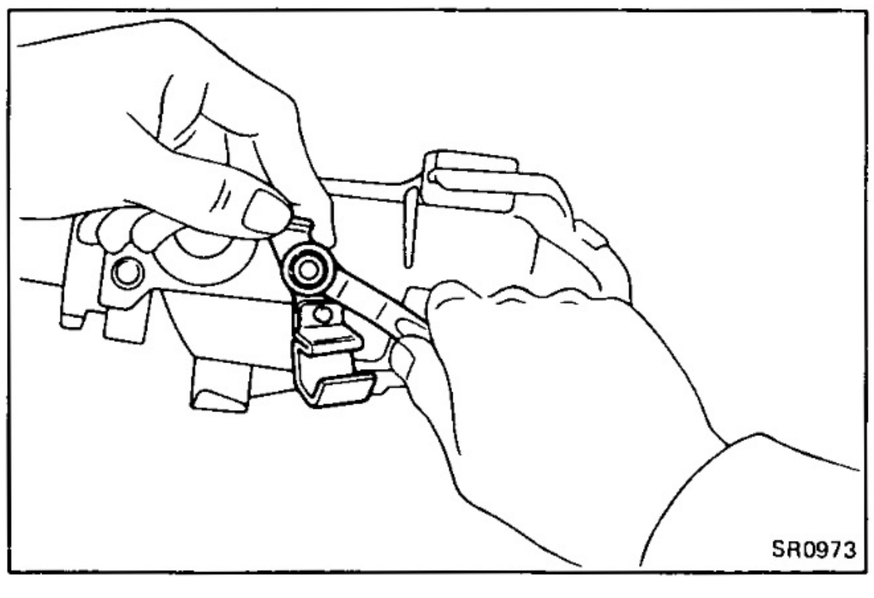

5. INSTALL TILT STEERING SUPPORT STOPPER BOLT

(a) Install the stopper bolt, bracket, washer and nut.

(b) Tighten the nut by holding the bracket as shown.

Torque: 100 kg-cm (7 ft-lb, 10 N·m)

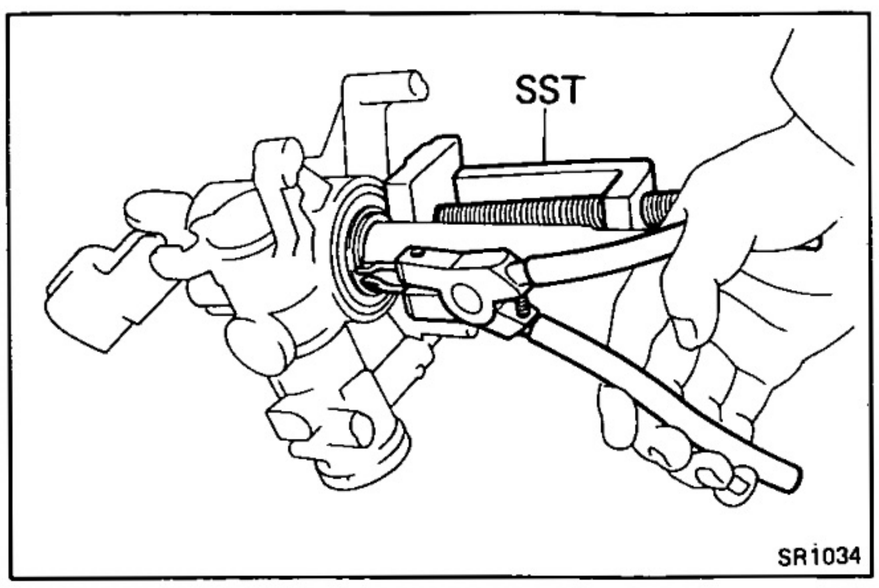

6. ASSEMBLE MAIN SHAFT AND UPPER BRACKET

(a) Assemble the collar, spring and main shaft, and insert them into the bracket.

(b) Using SST and snap ring pliers, install the snap ring by compressing the main shaft and upper bearing.

SST 09950-20016

CAUTION: Do not tighten the SST more than necessary.

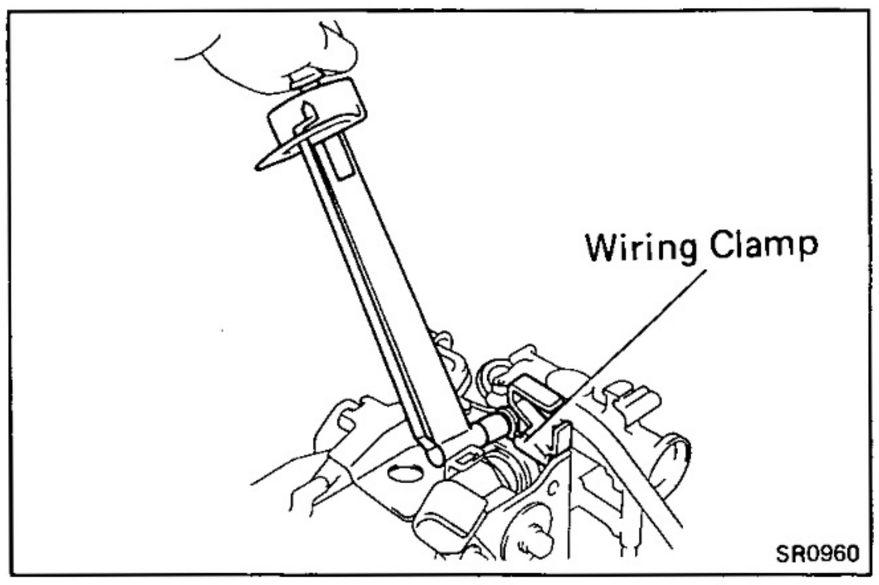

7. ASSEMBLE UPPER BRACKET AND SUPPORT

(a) Apply anaerobic adhesive and sealant [THREE BOND 1324 (Part No. 08833-00070) or equivalent] to one or two threads of the bolt end.

NOTE: This adhesive will not harden while exposed to air. It will act as a sealer or binding agent only when applied to threads, etc. and the air is cut off.

(b) Install the two bolts; one with a wiring clamp.

Torque: 75 kg-cm (65 in.-lb, 7.4 N·m)

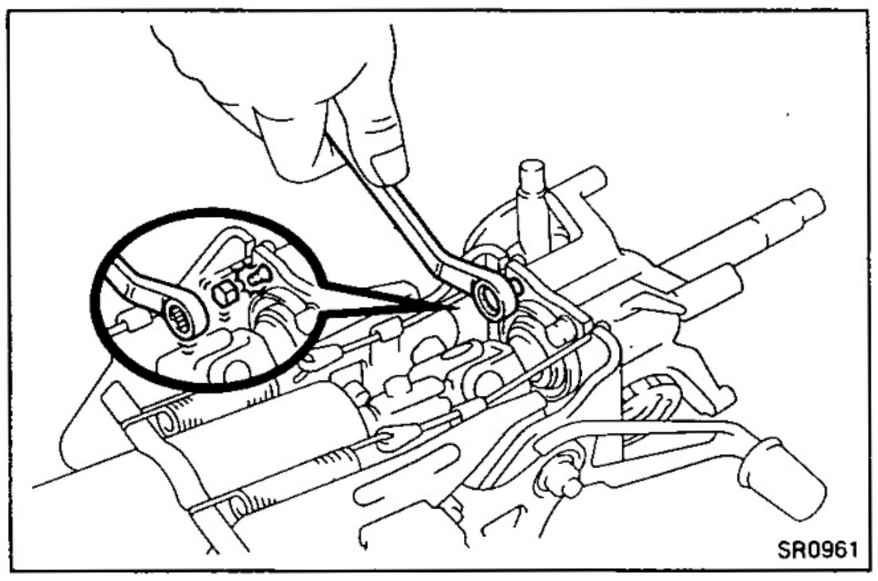

(c) Install the break down bolt and tighten until the bolt head breaks off.

(d) Install the support reinforcement.

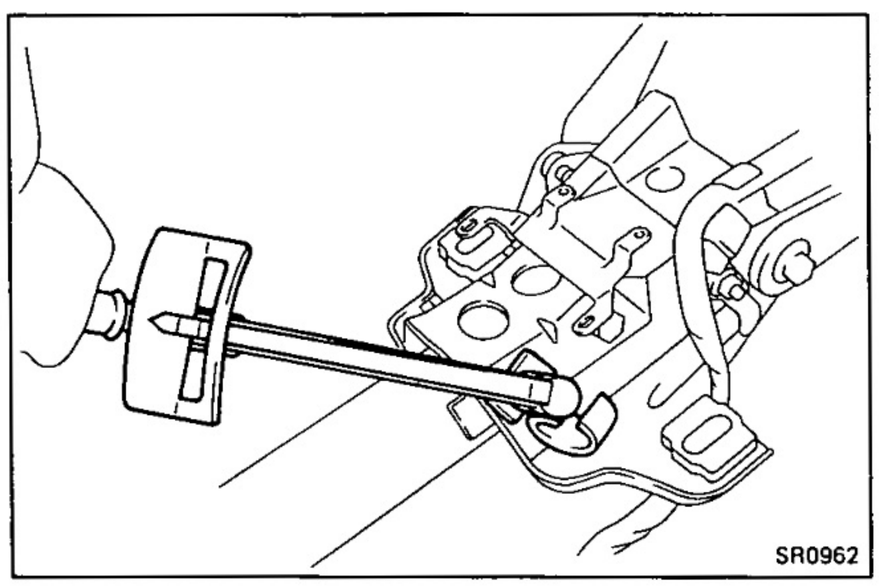

8. INSTALL BREAKAWAY BRACKET TO COLUMN TUBE

Torque: 185 kg-cm (13 kg-cm, 18 N·m)

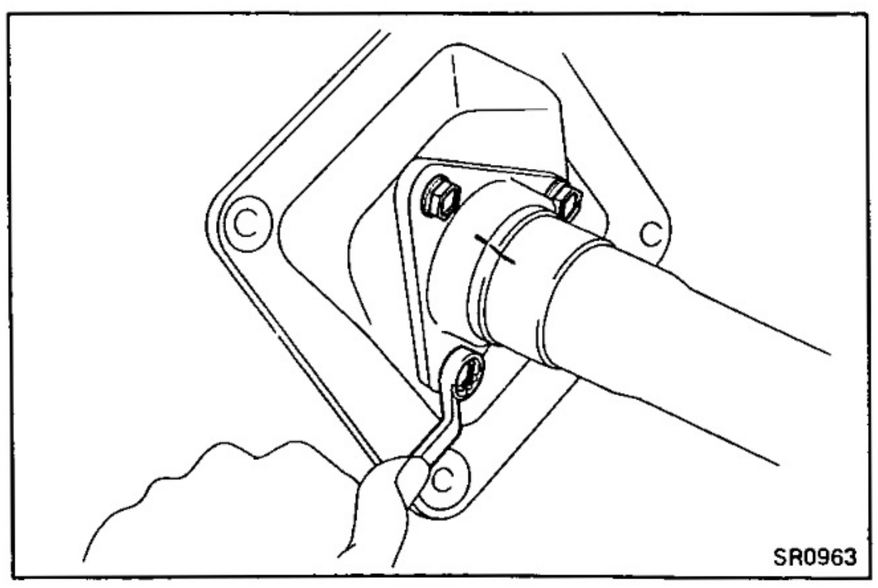

9. INSTALL COLUMN HOLE COVER TO COLUMN TUBE

Torque: 185 kg-cm (13 ft-lb, 18 N·m)

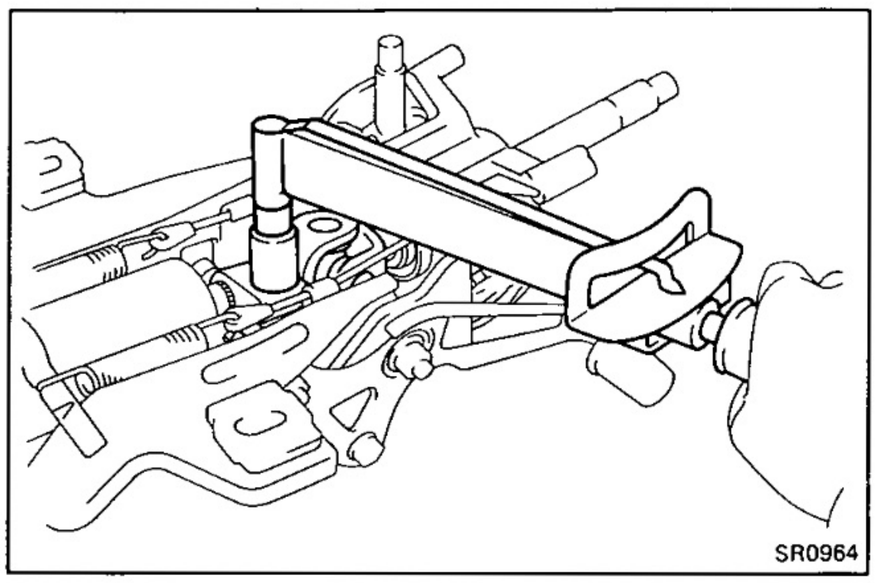

10. CONNECT MAIN SHAFT AND INTERMEDIATE SHAFT

(a) Align the marks on the joint yoke and intermediate shaft and tighten the bolt.

Torque: 250 kg-cm (18 ft-lb, 25 N·m)

NOTE: Be careful not to push out the damper seal while installing the intermediate shaft.

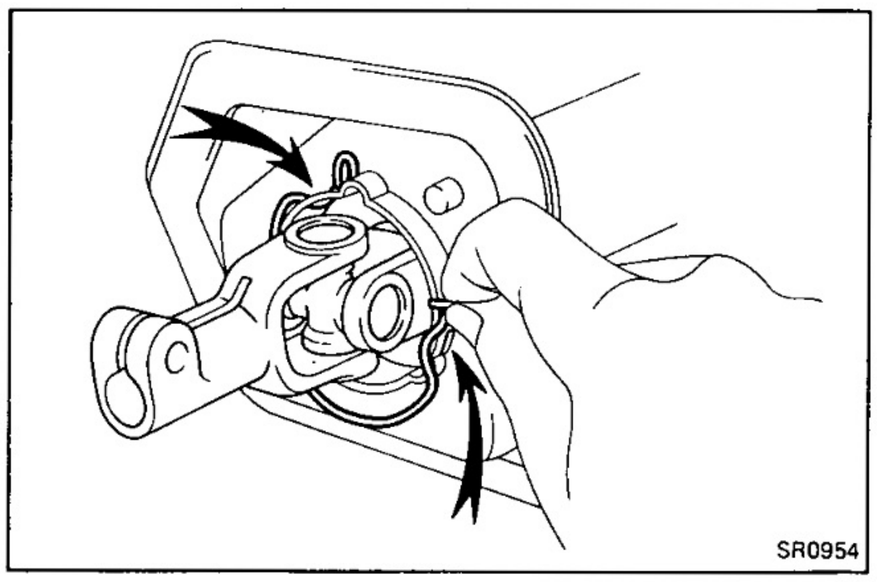

(b) Install the snap ring.

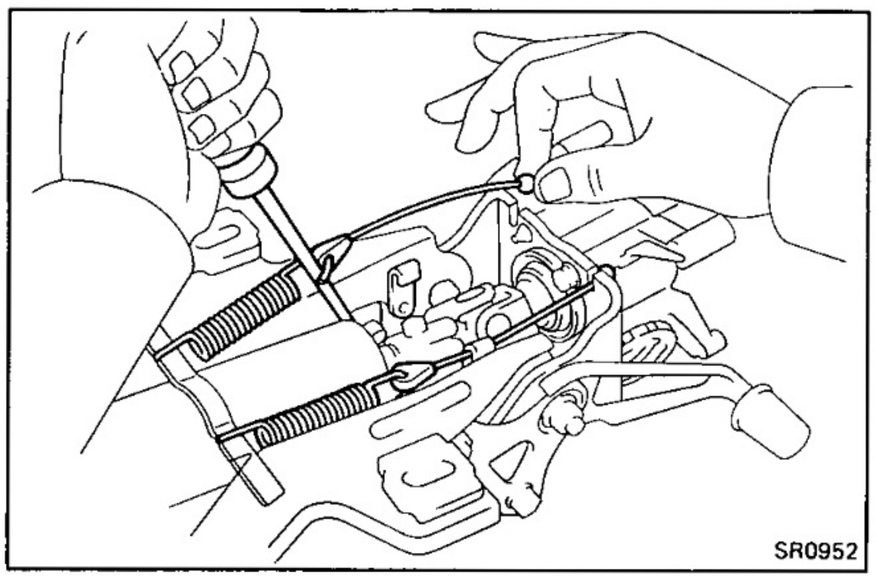

11. INSTALL TWO SPRINGS AND TWO CORDS

(a) Connect the tension spring and cord, and hook the spring to the hanger.

(b) Pry the spring end and hook the cord end to the support.

(c) Hook the cord to the cord guides.

12. CHECK OPERATION OF TILT STEERING LEVER AND SUPPORT

(a) Check that there is no axial or horizontal play at the end of the main shaft.

(b) Check that the main shaft locks securely in all six positions.

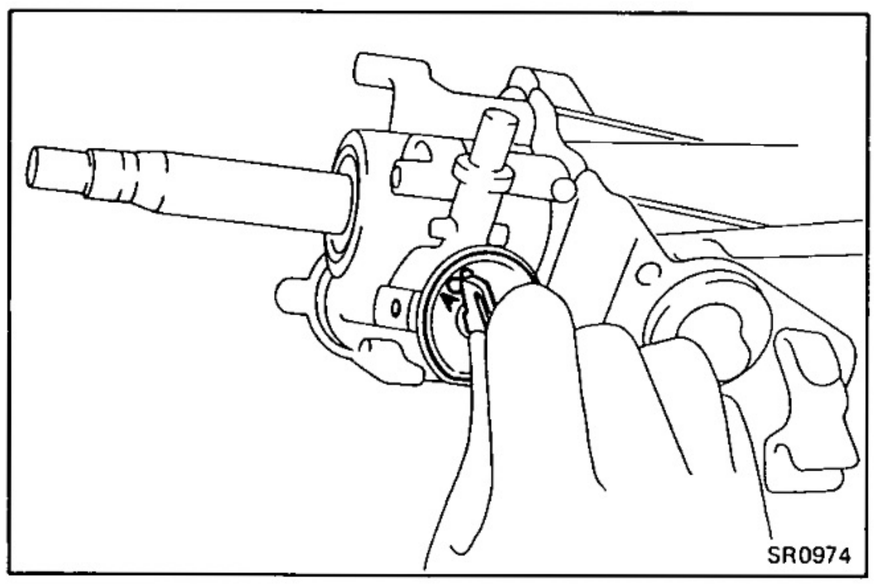

13. INSTALL IGNITION SWITCH

(a) Turn the ignition key plate to the "ACC" position and install the key cylinder into the upper bracket.

(b) Install the ignition switch.

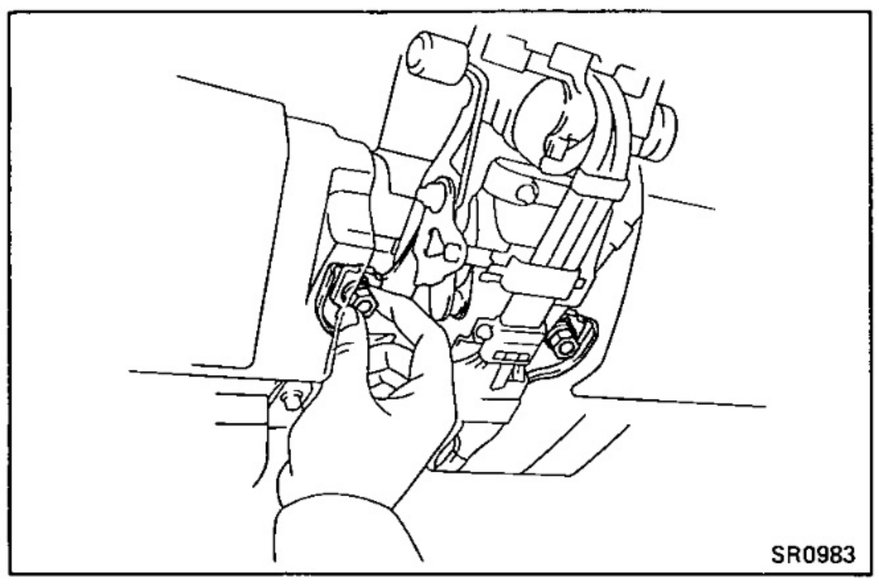
SR0983

INSTALLATION OF STEERING COLUMN ASSEMBLY

(See page SR-4)

1. INSTALL STEERING COLUMN ASSEMBLY

(a) Place the steering column assembly in the installed position.

(b) Temporarily install the two breakaway bracket mount nuts.

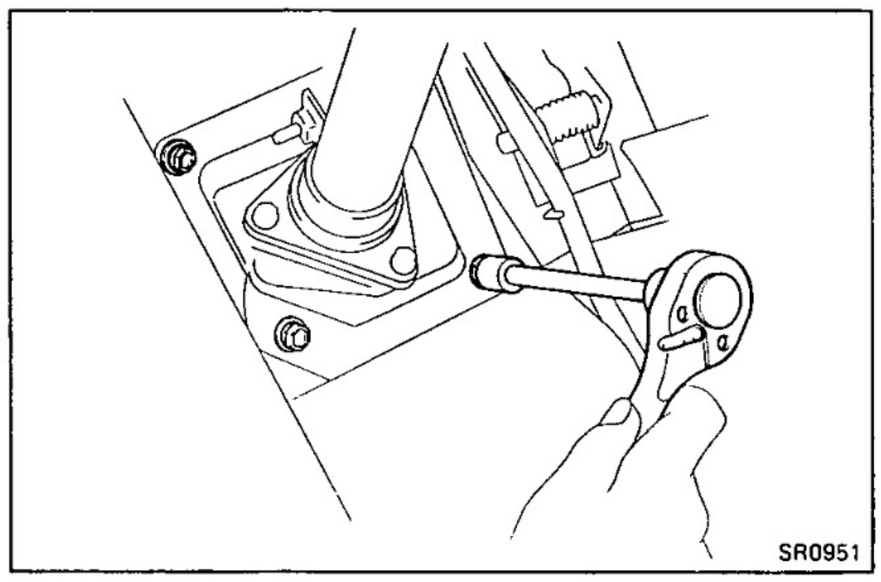
SR0951

(c) Install and torque the four column hole cover bolts.

Torque: 130 kg-cm (9 ft-lb, 13 N·m)

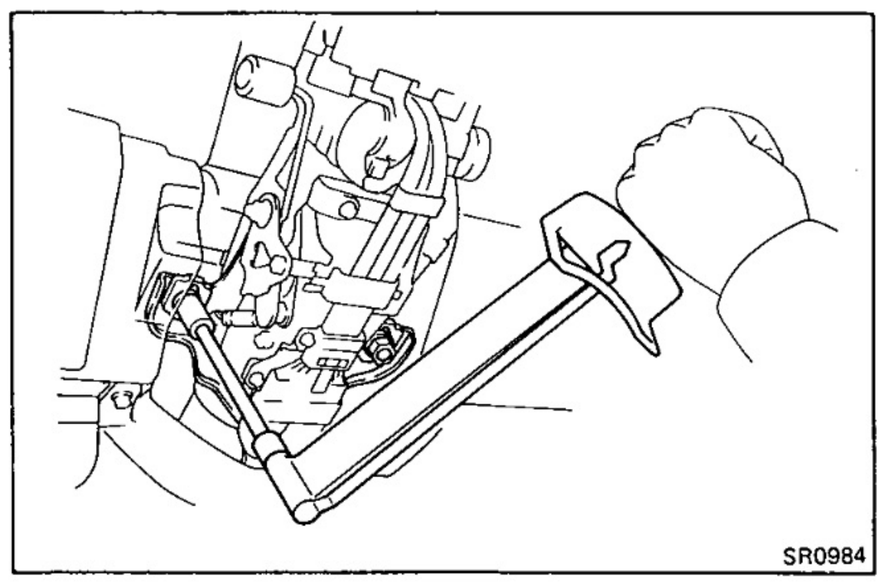
SR0984

(d) Torque the two breakaway bracket mount nuts.

Torque: 250 kg-cm (18 ft-lb, 25 N·m)

2. INSTALL COMBINATION SWITCH

3. INSTALL COLUMN COVER AND AIR DUCT

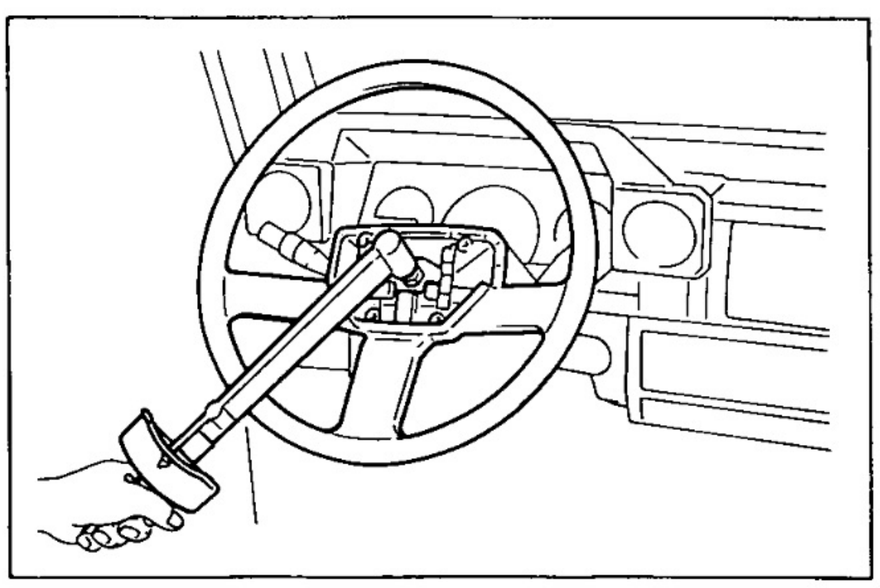

4. INSTALL STEERING WHEEL

(a) Align matchmarks on the steering wheel and main shaft, and install the steering wheel to the main shaft.

(b) Install and torque the set nut.

Torque: 350 kg-cm (25 ft-lb, 34 N·m)

(c) Install the steering wheel pad.

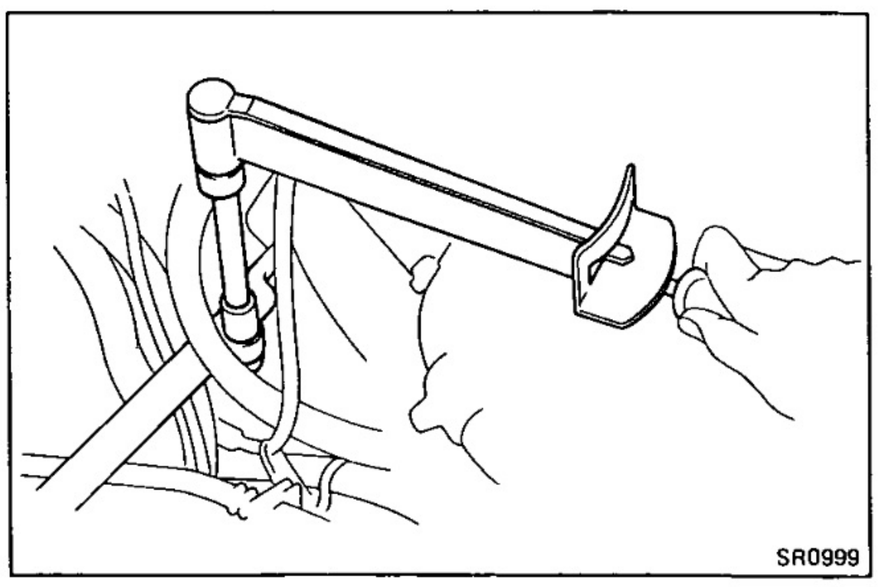
SR0999

5. CONNECT INTERMEDIATE SHAFT NO. 1 TO NO. 2

(a) Align the matchmarks on the joint yoke of intermediate shaft No. 1 and intermediate shaft No. 2 and connect them.

(b) Install and torque the set bolt.

Torque: 360 kg-cm (26 ft-lb, 35 N.m)

6. CONNECT NEGATIVE TERMINAL OF BATTERY

7. CHECK STEERING WHEEL CENTER POINT

STEERING COLUMN ASSEMBLY

REMOVAL OF STEERING COLUMN ASSEMBLY

(See page SR-4)

COMPONENTS

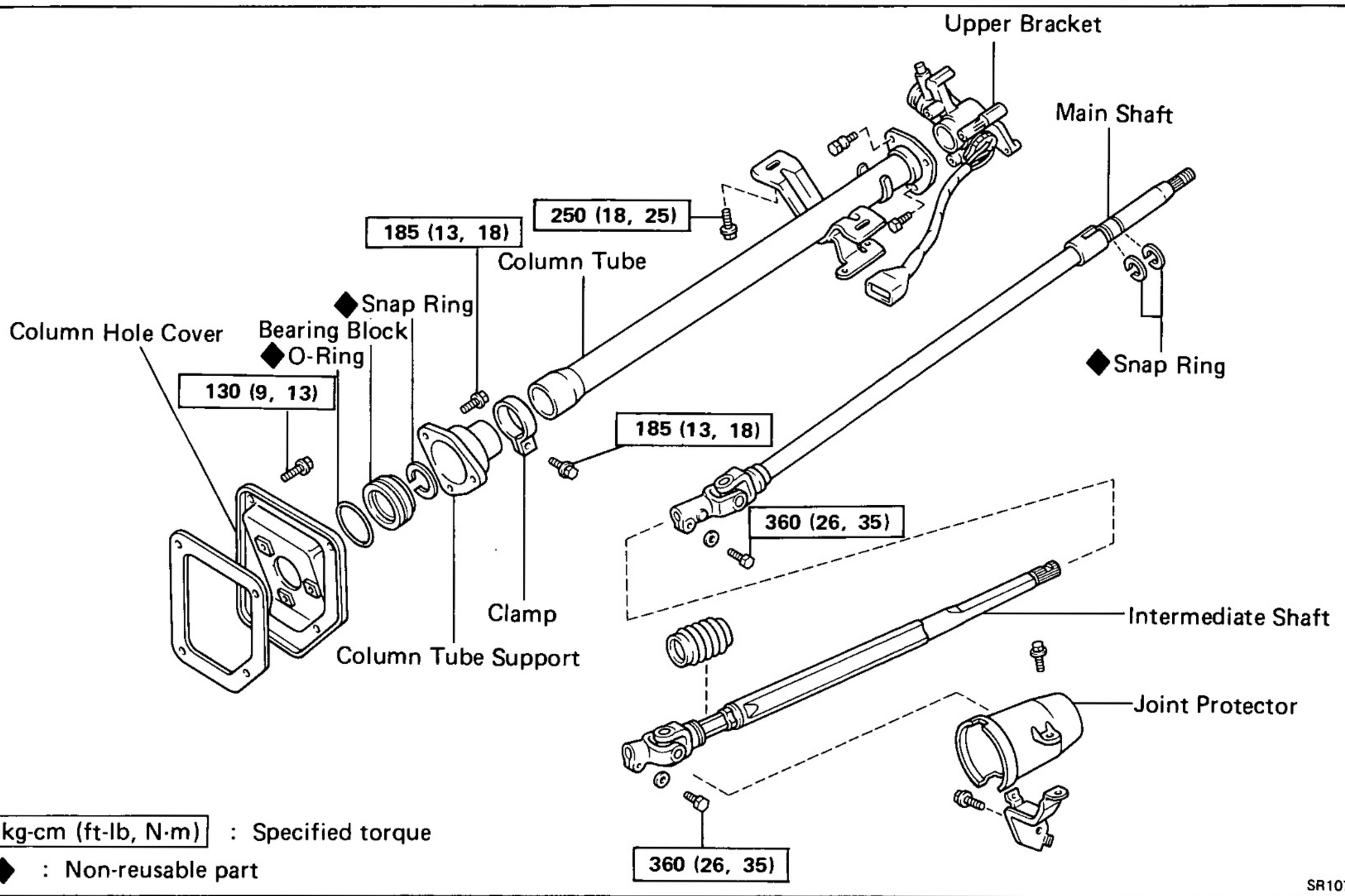

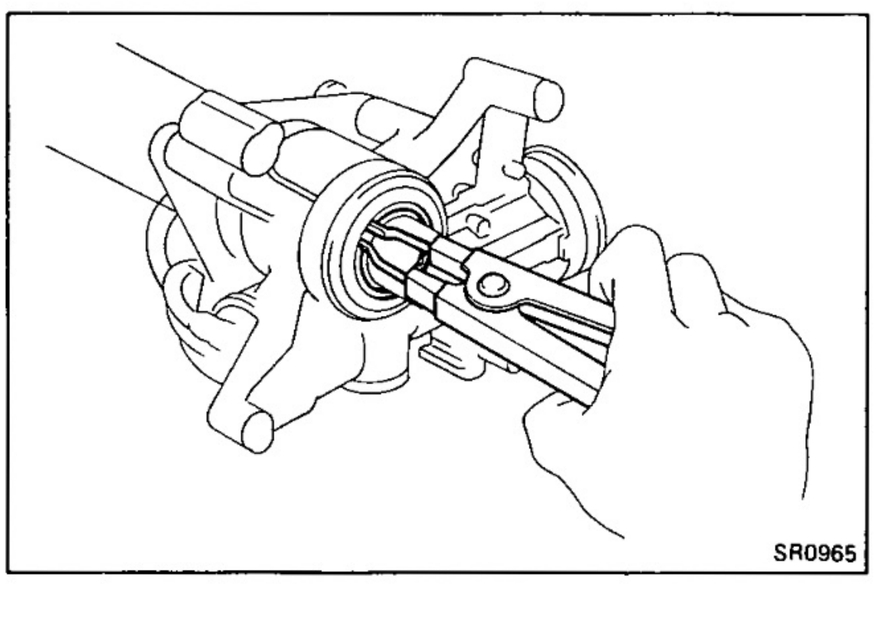

DISASSEMBLY OF STEERING COLUMN ASSEMBLY

1. REMOVE MAIN SHAFT

(a) Turn ignition key to the "ACC" position.

(b) Using snap ring pliers, remove the snap ring.

(c) Pull out the main shaft.

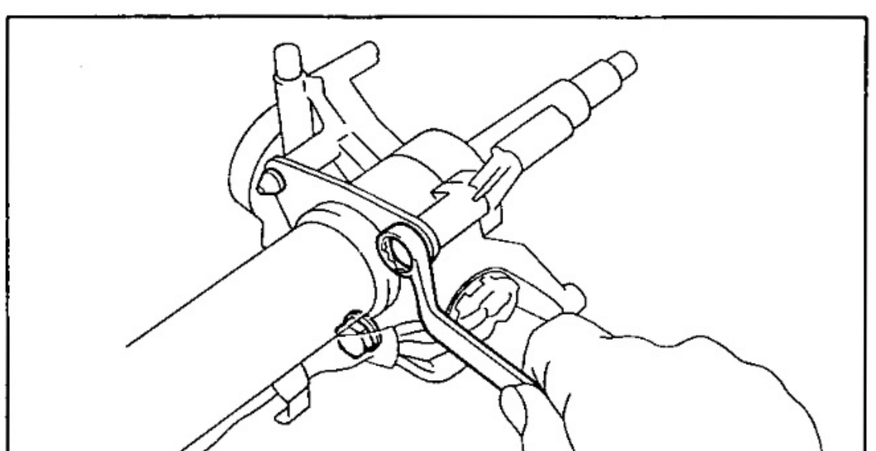

2. REMOVE UPPER BRACKET FROM COLUMN TUBE

(a) Loosen the broken bolt by tapping the chisel.

(b) Remove the three bolts.

(c) Disconnect the upper bracket from the breakaway bracket.

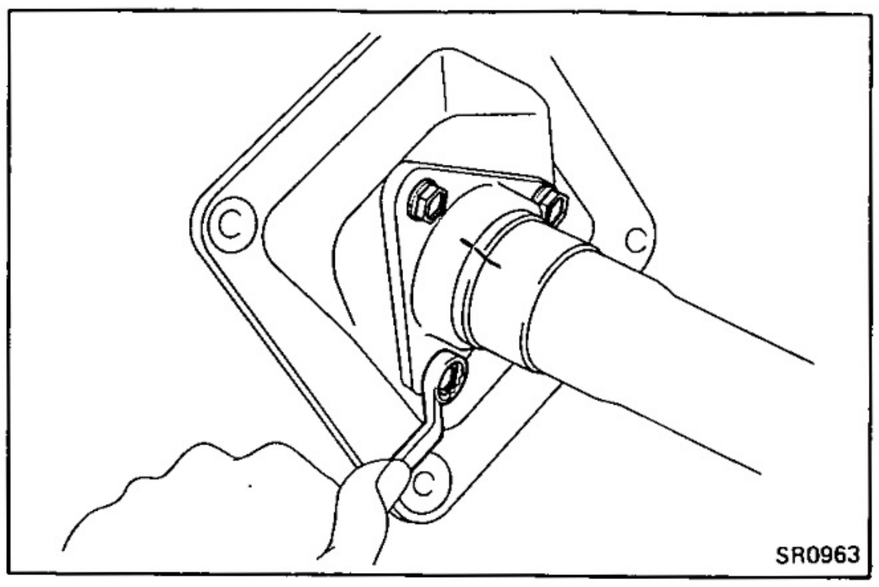

3. REMOVE COLUMN HOLE COVER FROM COLUMN TUBE

(a) Remove the three bolts.

(b) Remove the column hole cover.

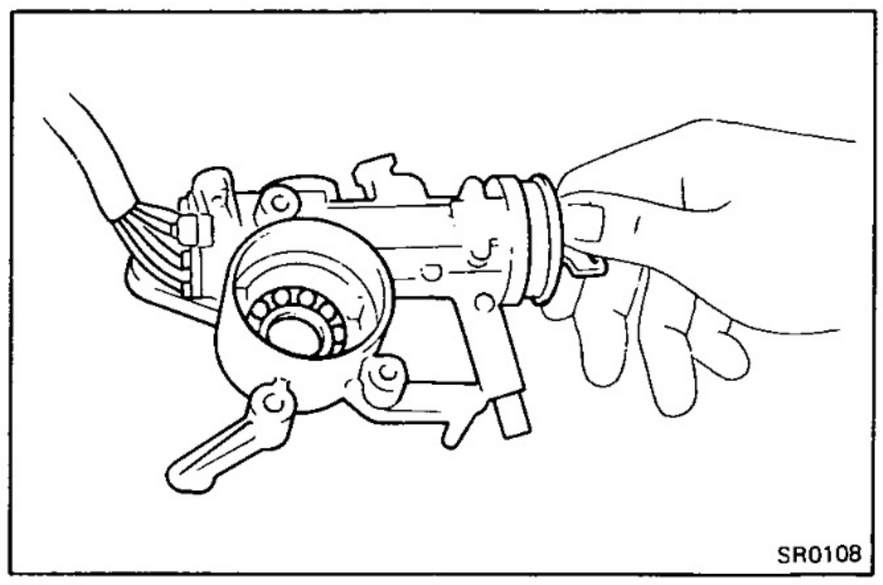

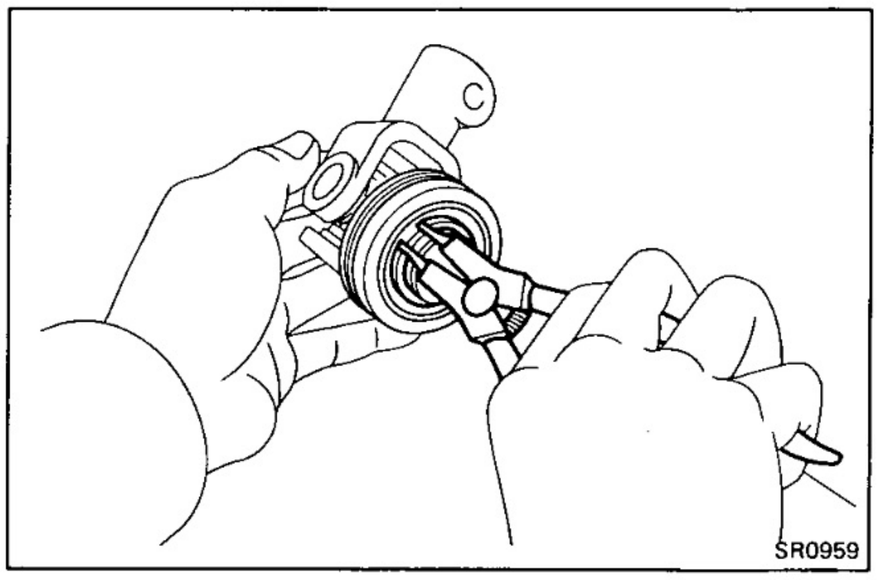

INSPECTION AND REPAIR OF STEERING COLUMN ASSEMBLY

1. INSPECT UPPER BRACKET

(a) Check that the steering lock mechanism operates properly.

(b) Check the upper bearing rotation condition and check for abnormal noise.

If the bearing is worn or damaged, replace the upper bracket.

2. IF NECESSARY, REPLACE MAIN SHAFT LOWER BEARING

(a) Remove the dust seal.

(b) Using snap ring pliers, remove the snap ring.

(c) Pull out the lower bearing.

(d) Push in the lower bearing.

(e) Using snap ring pliers, install the snap ring.

(f) Install the dust seal.

3. (FJ, BJ, HJ 6_series) IF NECESSARY, REPLACE SPIDER BEARING

(See page SR-11)

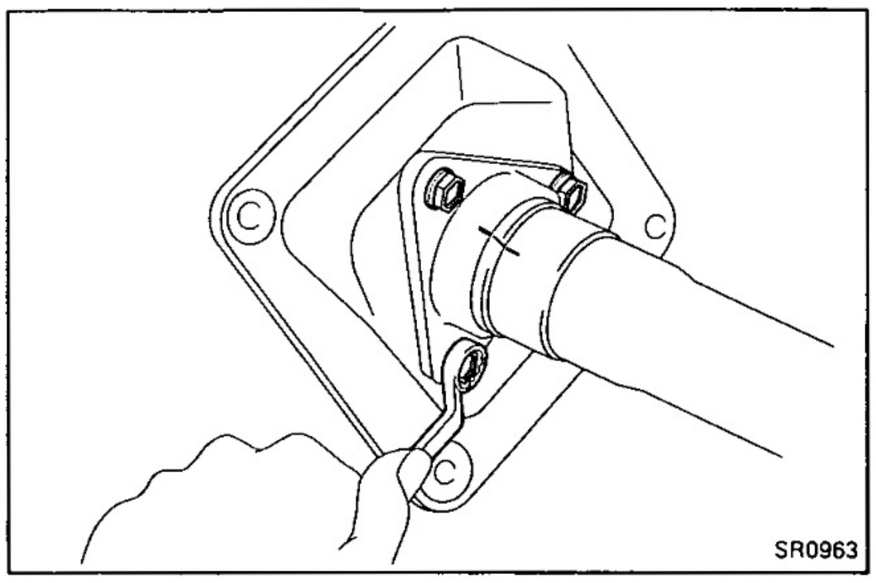

ASSEMBLY OF STEERING COLUMN ASSEMBLY

(See page SR-18)

1. INSTALL COLUMN HOLE COVER TO COLUMN TUBE

   Install the column hole cover with three bolts.

   Torque: 185 kg-cm (13 ft-lb, 18 N·m)

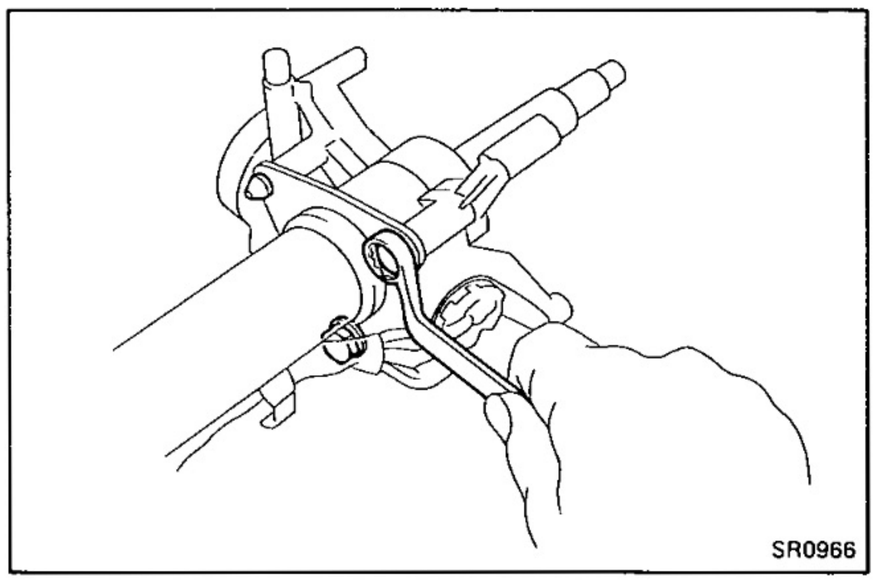

2. INSTALL UPPER BRACKET TO COLUMN TUBE

   Install the upper bracket with three bolts.
   (See page SR-15)

   Torque: 75 kg-cm (65 in.-lb, 7.4 N·m)

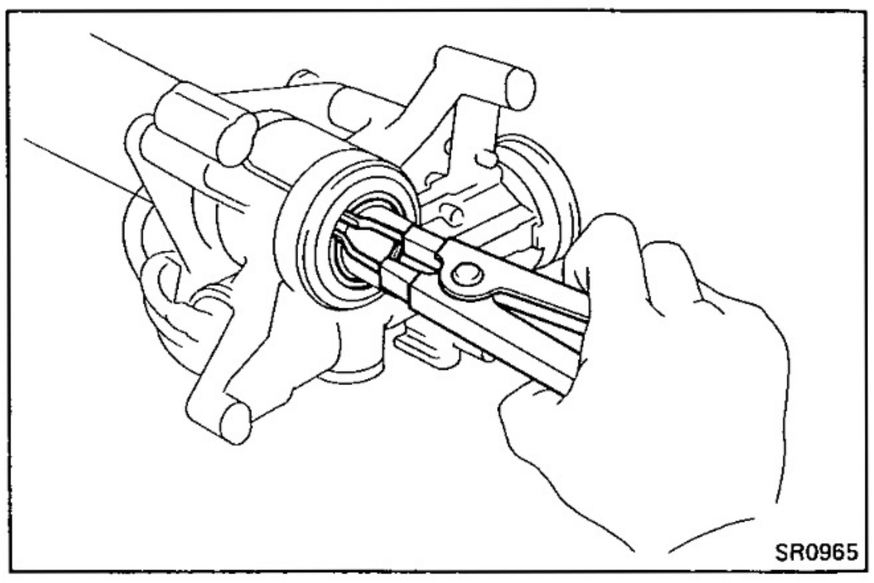

3. INSTALL MAIN SHAFT TO COLUMN TUBE

   (a) Turn the ignition key to the ACC position.

   (b) Insert the main shaft in the column tube.

   (c) Using snap ring pliers, install the snap ring.

INSTALLATION OF STEERING COLUMN ASSEMBLY

(See page SR-17)

STEERING GEAR HOUSING

REMOVAL OF GEAR HOUSING

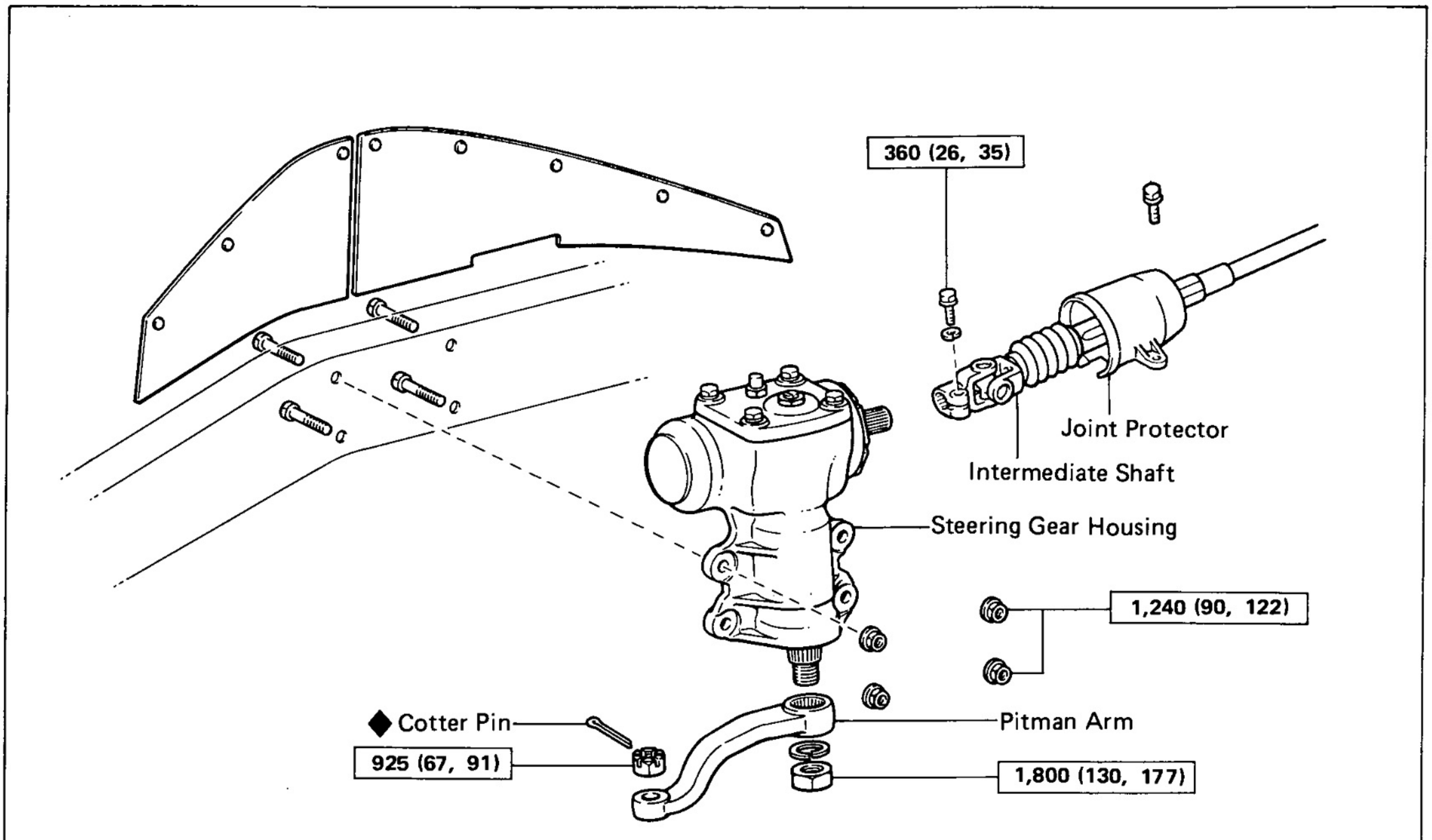

kg-cm (ft-lb, N·m) : Specified torque

◆ : Non-reusable part

SR1035

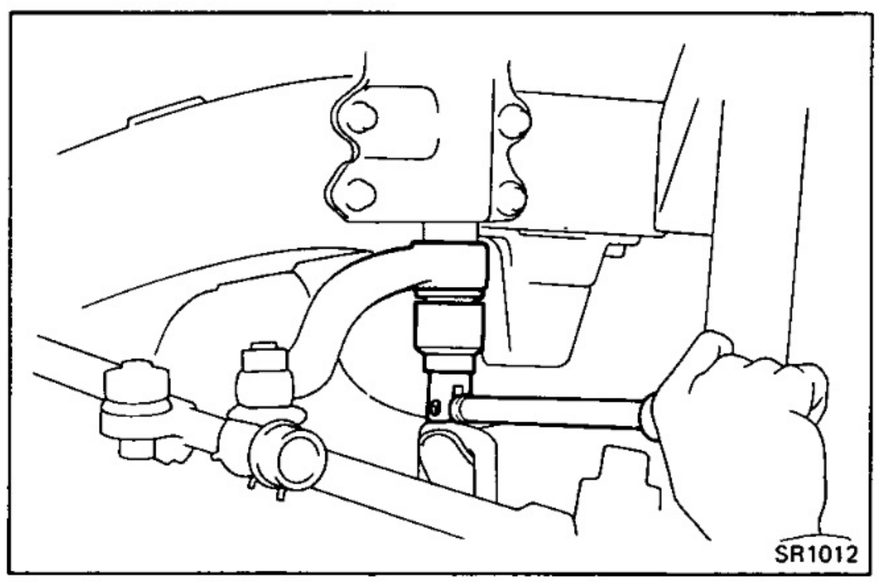

1. DISCONNECT INTERMEDIATE SHAFT

(a) Remove joint protector.

(b) Place matchmarks on the worm shaft and intermediate shaft joint yoke.

(c) Remove the two set bolts from joint yokes.

(d) Disconnect the intermediate shaft from the worm shaft.

2. LOOSEN PITMAN ARM SET NUT

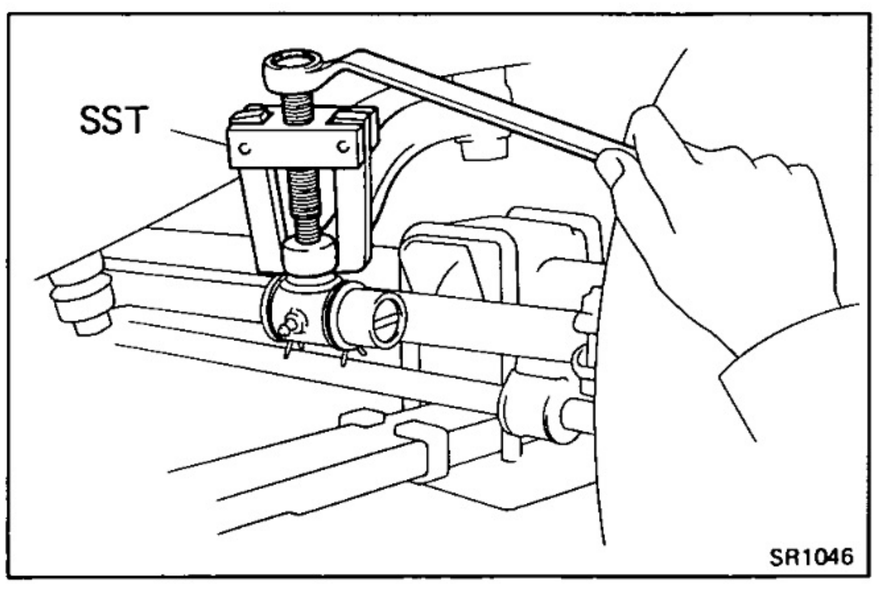

3. DISCONNECT RELAY ROD FROM PITMAN ARM

(a) Remove the cotter pin.

(b) Remove the set nut.

(c) Using SST, disconnect the relay rod end from the pitman arm.

SST 09628-62011

4. REMOVE GEAR HOUSING

Remove the four nuts, four bolts and gear housing.

COMPONENTS

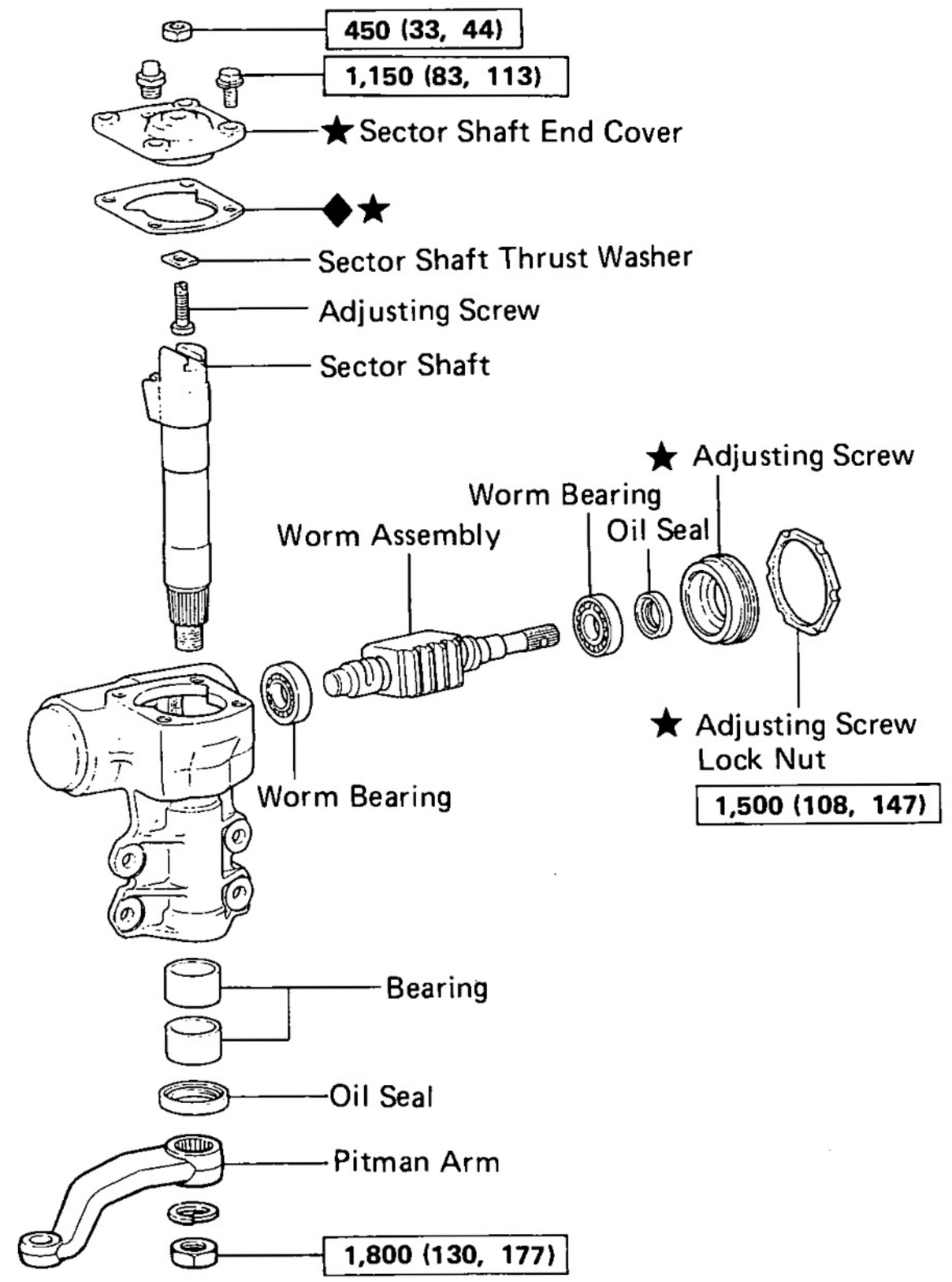

kg-cm (ft-lb, N·m) : Specified torque
◆ : Non-reusable part
★ : Precoated part

SR1024

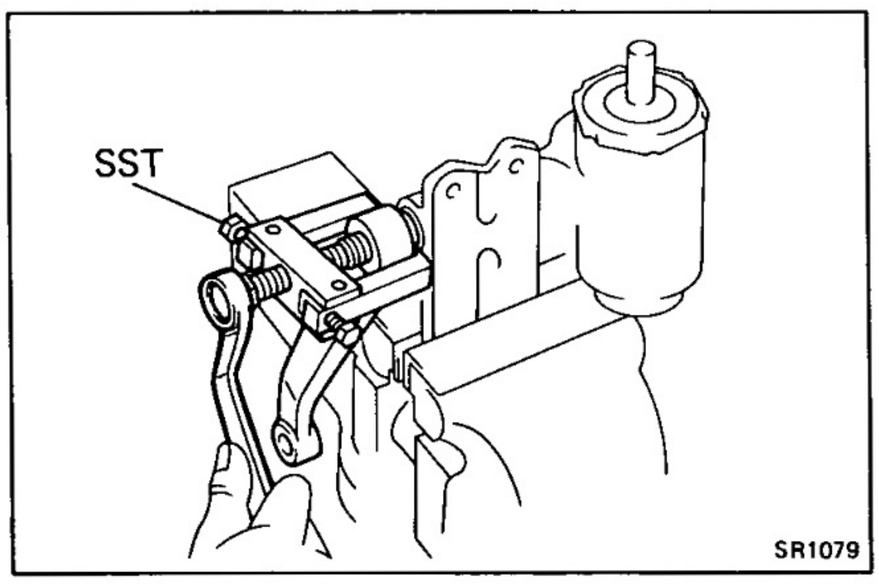

SR1079

DISASSEMBLY OF GEAR HOUSING

1. REMOVE BREATHER PLUG AND DRAIN GEAR OIL

2. DISCONNECT PITMAN ARM FROM GEAR HOUSING

   (a) Remove the pitman arm set nut.

   (b) Using SST, disconnect the pitman arm from the gear housing.

   SST 09628-62011

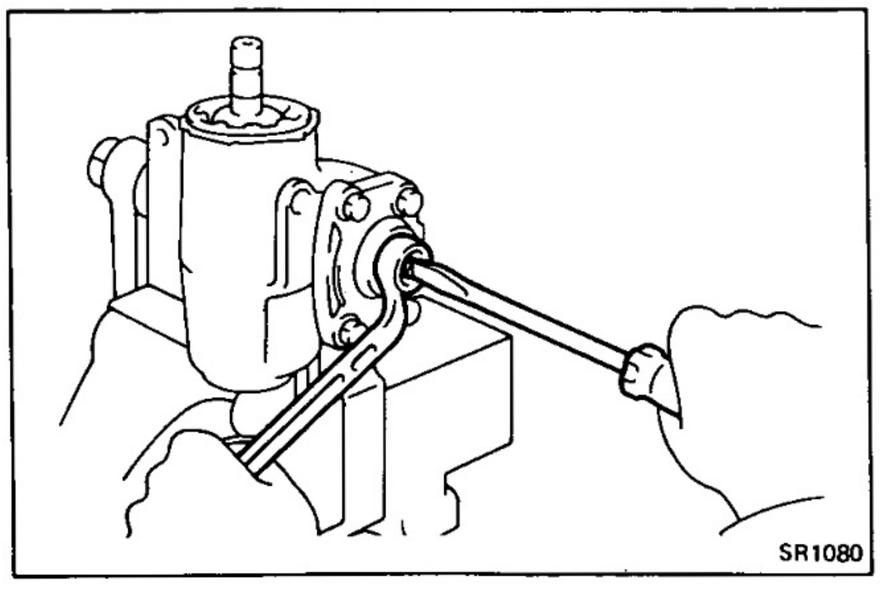

SR1080

3. REMOVE END COVER

   (a) Remove the adjusting screw lock nut and four nuts.

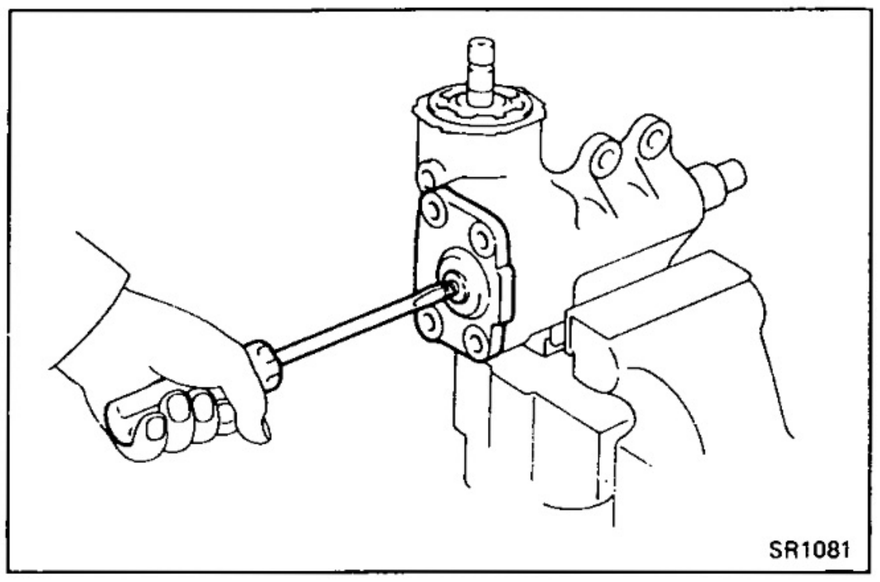

(b) Remove the end cover by turning the adjusting screw clockwise.

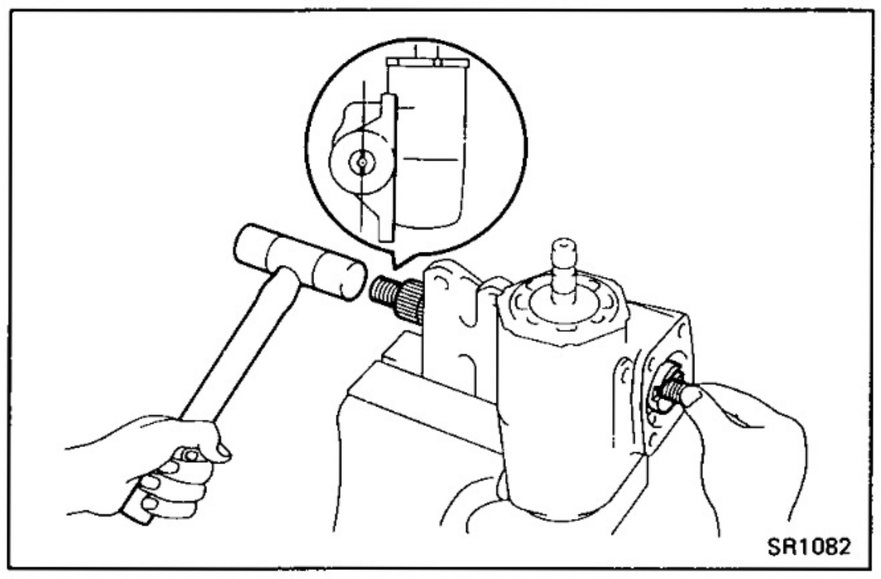

4. REMOVE SECTOR SHAFT

(a) Using a plastic hammer, tap out the sector shaft.

(b) Remove the sector shaft.

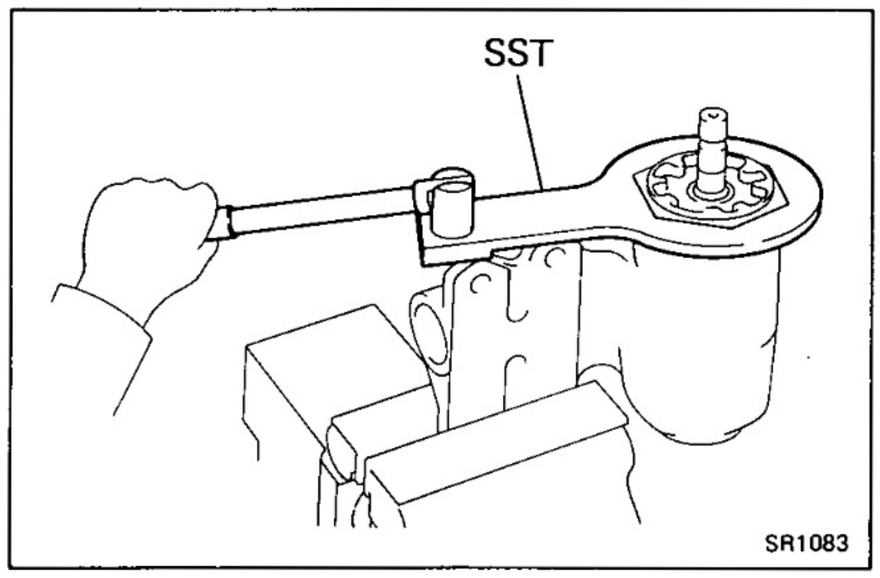

5. REMOVE WORM BEARING ADJUSTING SCREW LOCK NUT

Using SST, remove the lock nut.

SST 09617-60010

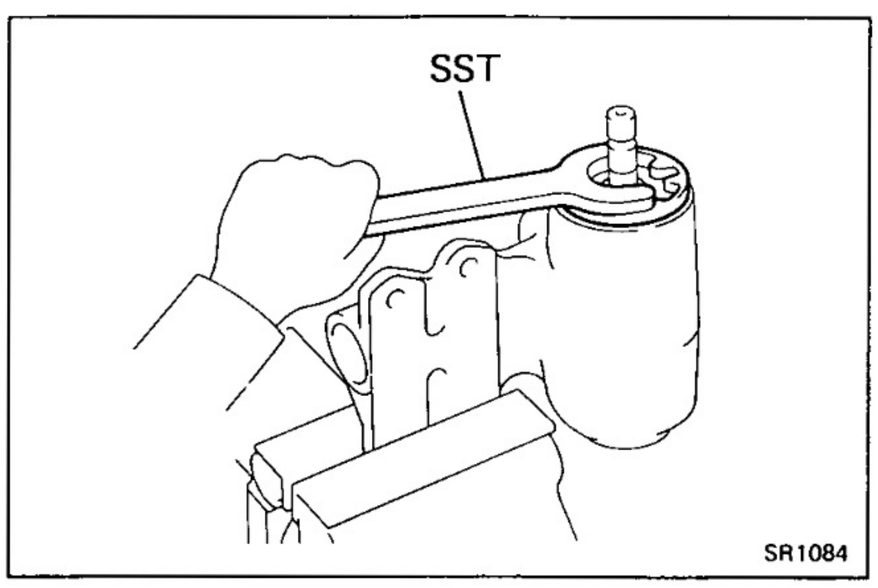

6. REMOVE WORM BEARING ADJUSTING SCREW

Using SST, remove the adjusting screw.

SST 09616-30020

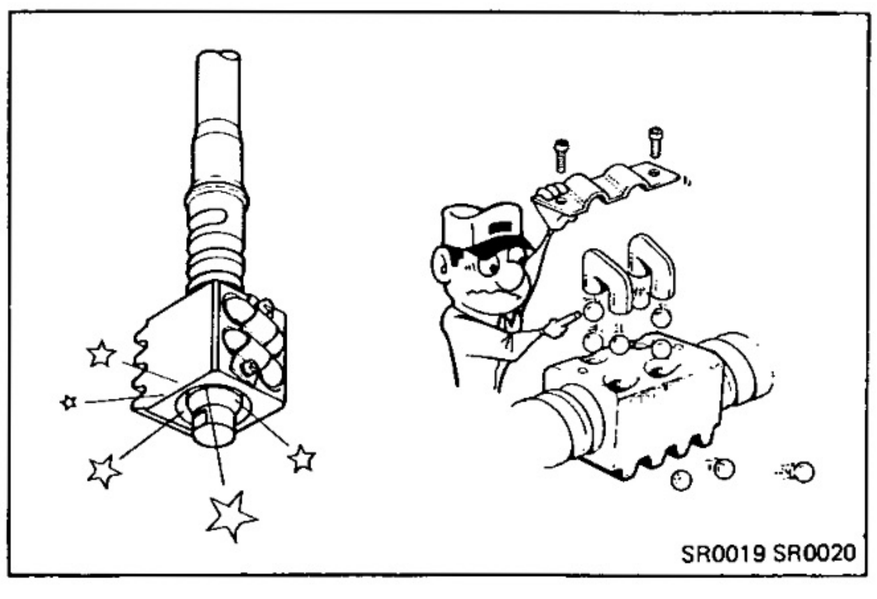

7. REMOVE WORM SHAFT

Pull the worm shaft out of the gear housing.

CAUTION: Do not disassemble the ball nut from the steering worm shaft. Do not allow the ball nut to hit the end of the worm shaft.

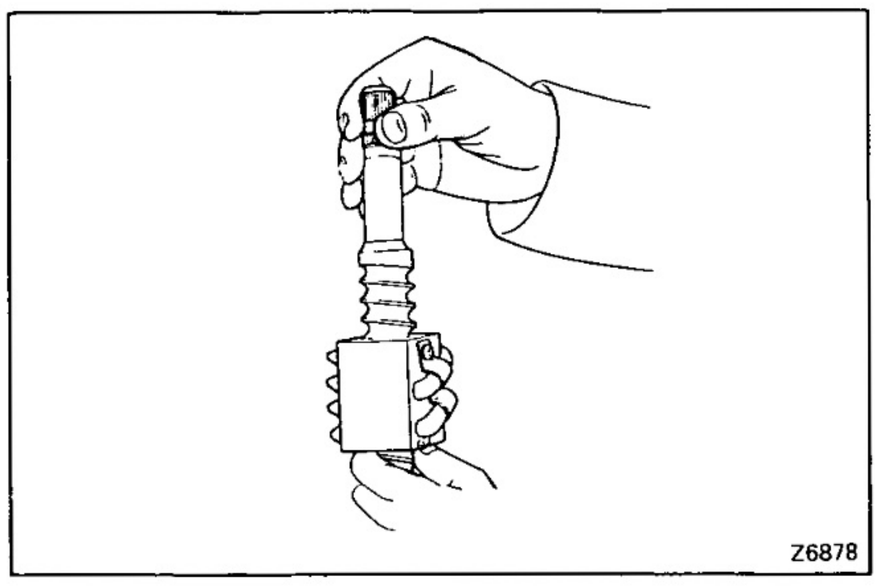

INSPECTION AND REPAIR OF STEERING GEAR HOUSING

1. INSPECT WORM AND BALL NUT

(a) Check the worm and ball nut for wear or damage.

(b) Check that the nut rotates smoothly down the shaft by its own weight.

If a problem is found, repair or replace the worm.

CAUTION: Do not allow the ball nut to hit the end of the worm shaft.

2. IF NECESSARY, REPLACE WORM BEARING

(a) Using SST, remove the both side bearings.

SST 09950-20016

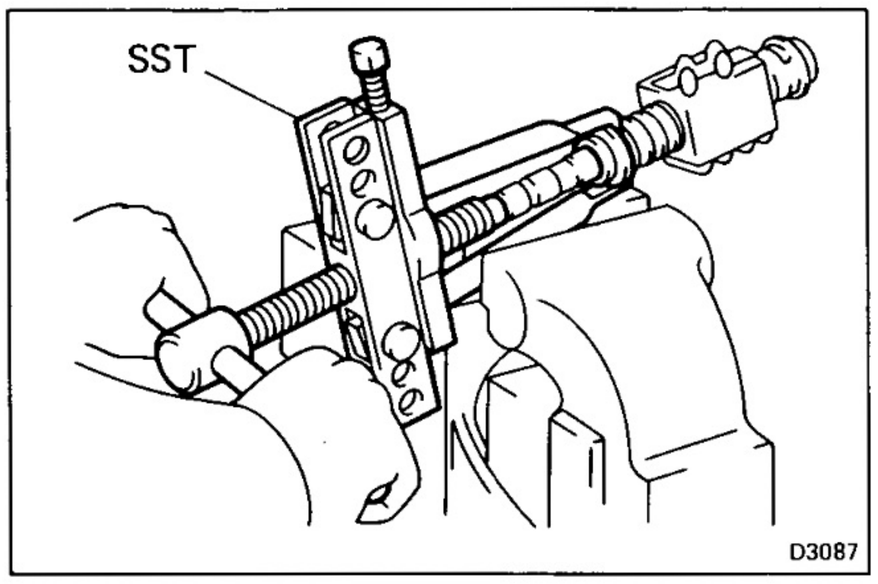

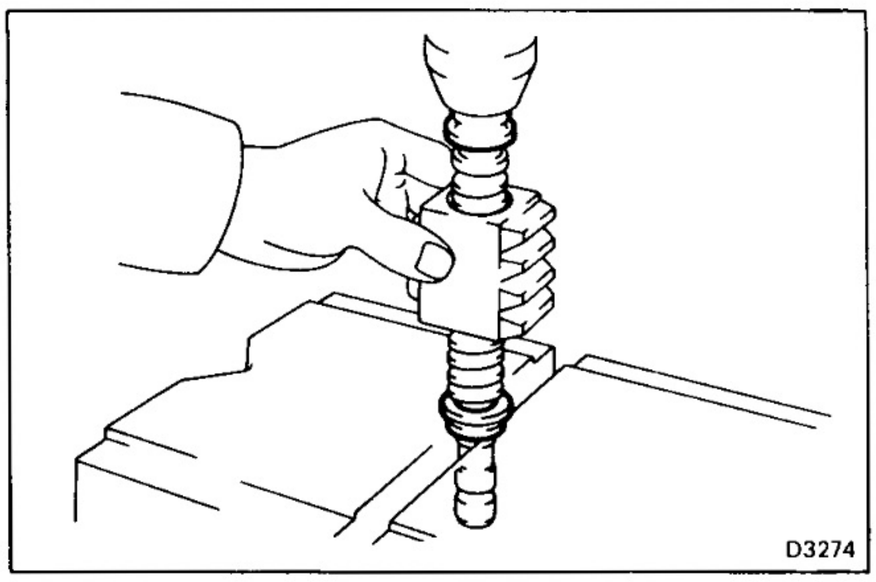

(b) Using a press, install both side bearings.

CAUTION: Be careful not to damage the ball nut while holding it by hand.

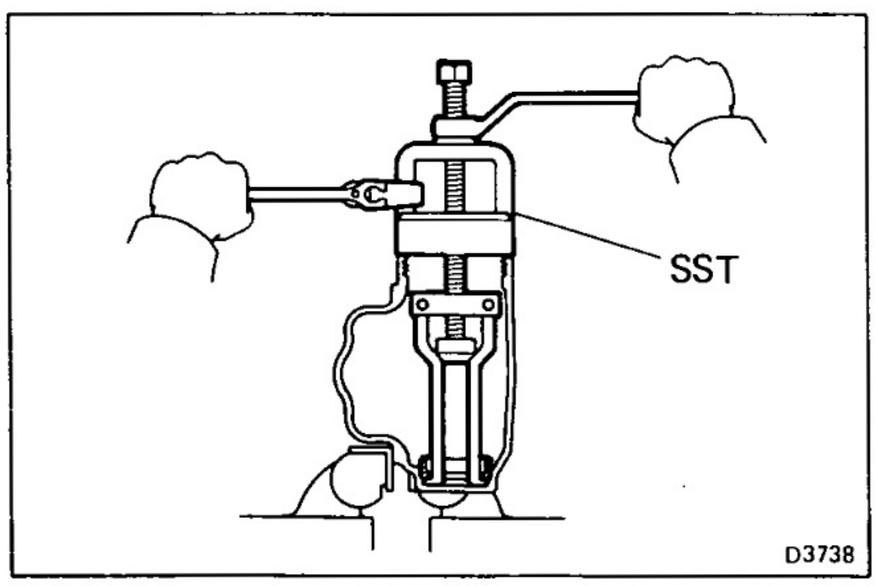

(c) Using SST, remove the outer race from the gear housing.

SST 09612-65013

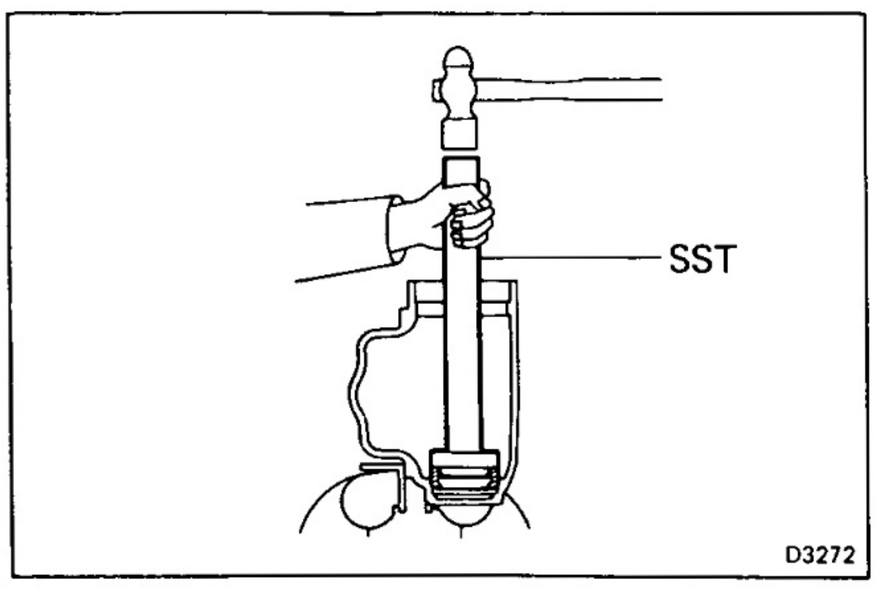

(d) Using SST, drive in the outer race into the gear housing.

SST 09550-10012

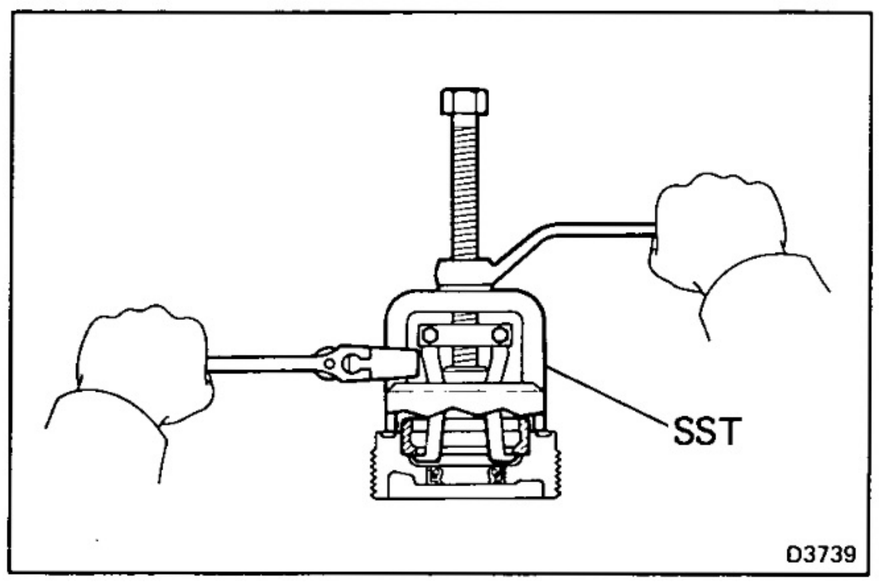

(e) Using SST, remove the outer race from the adjusting screw.

SST 09612-65013

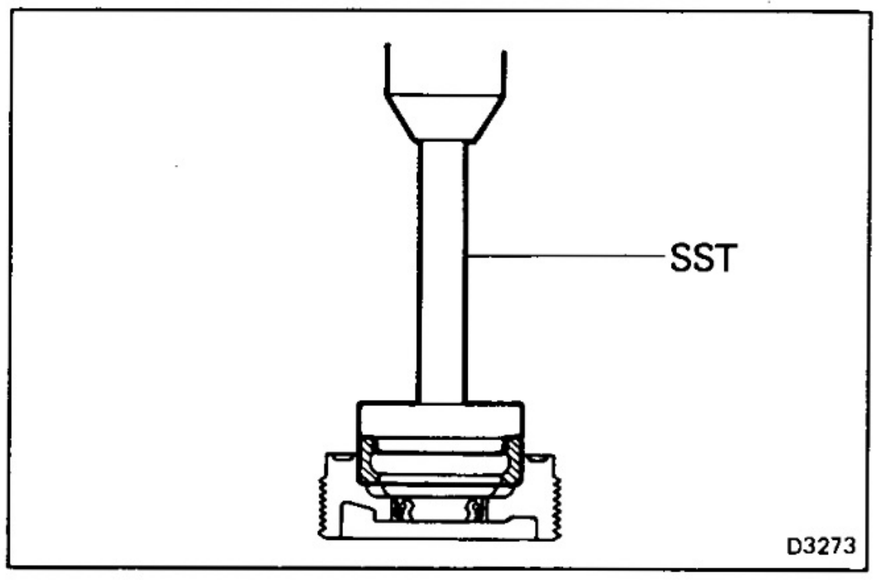

(f) Using SST, press the outer race into the adjusting screw.

SST 09550-10012

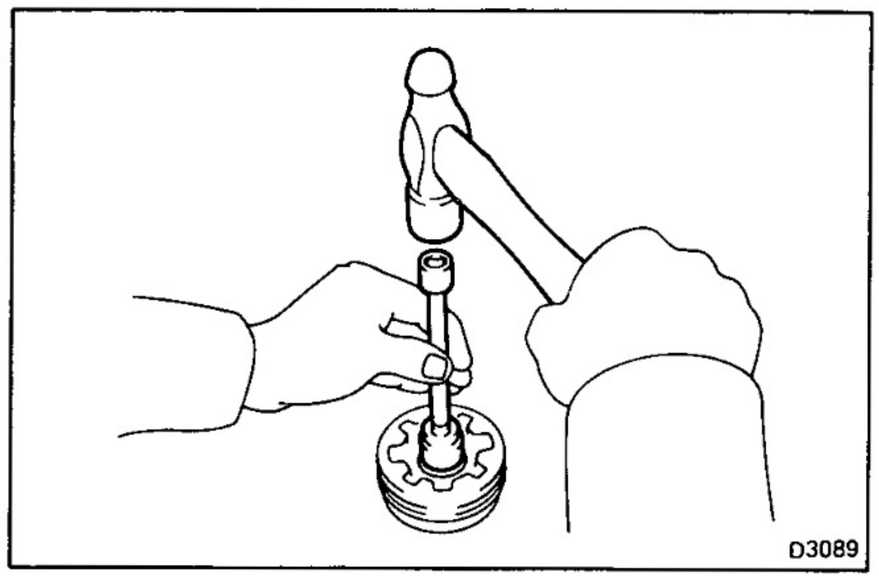

3. IF NECESSARY, REPLACE WORM SHAFT OIL SEAL

(a) Using a 19-mm socket wrench, drive out the oil seal.

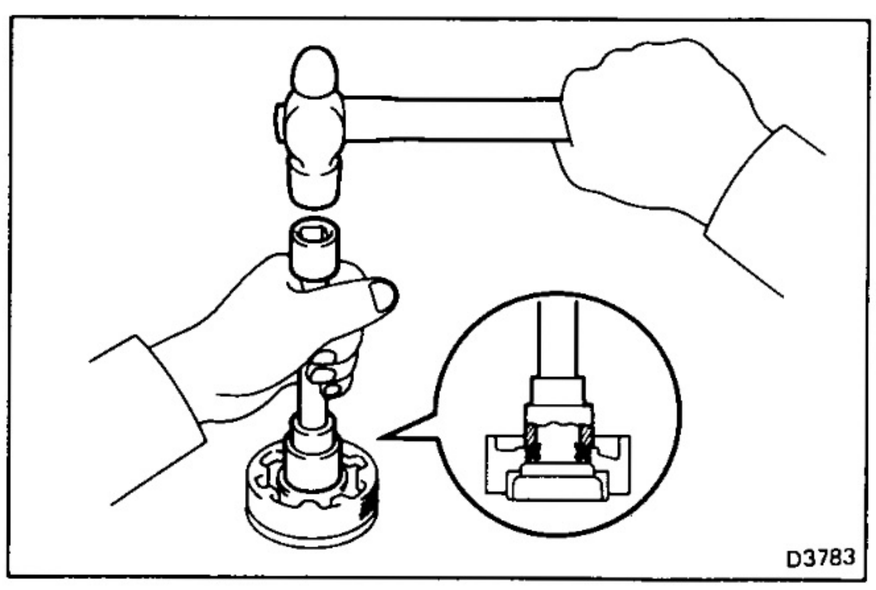

(b) Using a 23-mm socket wrench, drive in the oil seal.

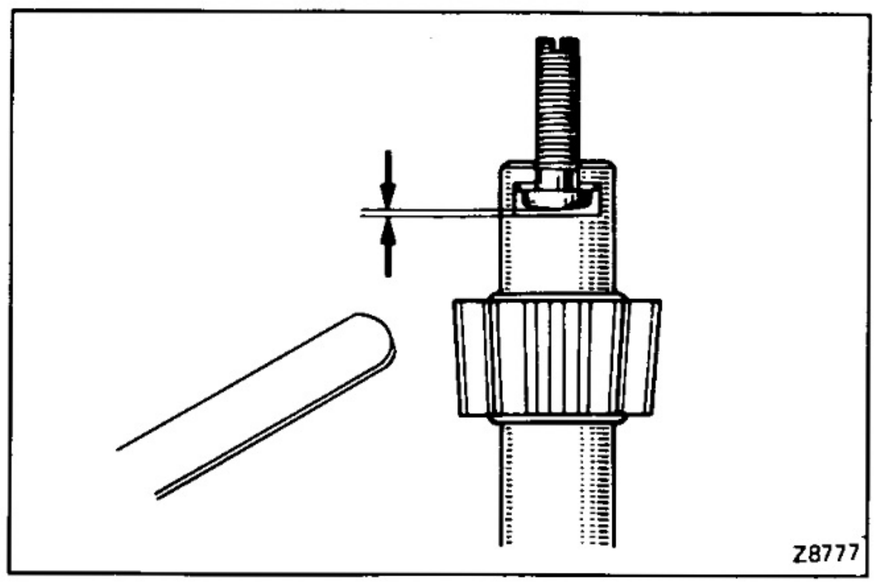

4. MEASURE SECTOR SHAFT THRUST CLEARANCE

Using a feeler gauge, measure the shaft thrust clearance.

Maximum clearance: 0.05 mm (0.0020 in.) or less

If necessary, install a new thrust washer to provide the minimum clearance between the sector shaft and adjusting screw.

Thrust washer thickness		mm (in.)	
1.95	(0.0768)	2.05	(0.0807)
2.00	(0.0787)		

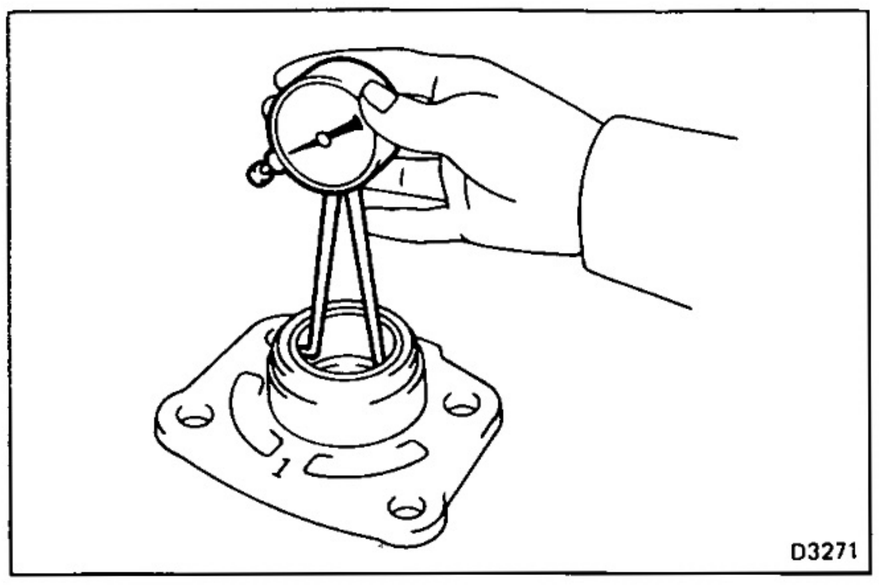

5. INSPECT SECTOR SHAFT END COVER

(a) Check for damage.

(b) Check the bushing for wear or damage.

If necessary, replace the end cover.

No.	Bushing inside diameter mm (in.)
1	36.055 – 36.065 (1.4195 – 1.4199)
2	36.045 – 36.055 (1.4191 – 1.4195)
3	36.035 – 36.045 (1.4187 – 1.4191)
4	36.025 – 36.035 (1.4183 – 1.4187)

NOTE: When replacing the end cover, replace with one having the same number.

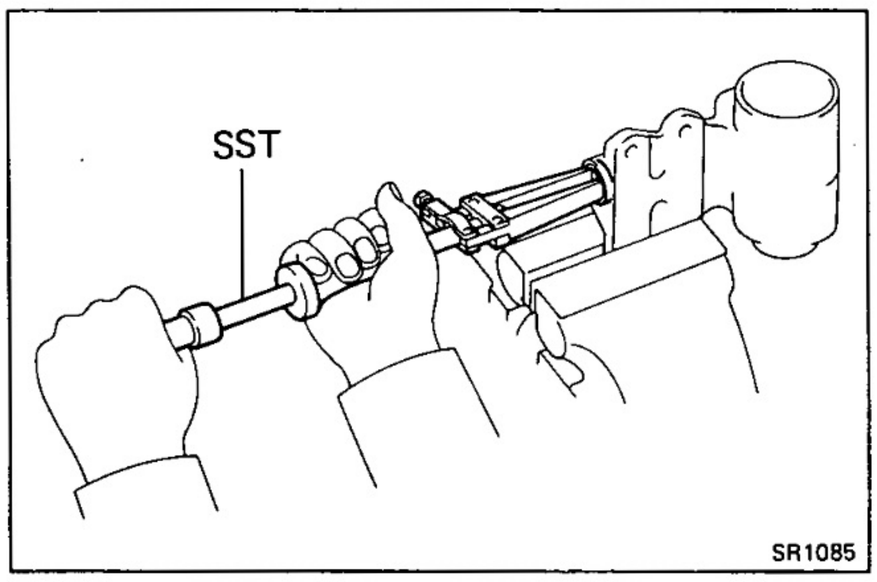

6. IF NECESSARY, REPLACE SECTOR SHAFT OIL SEAL

(a) Using SST, remove the oil seal.

SST 09308-00010

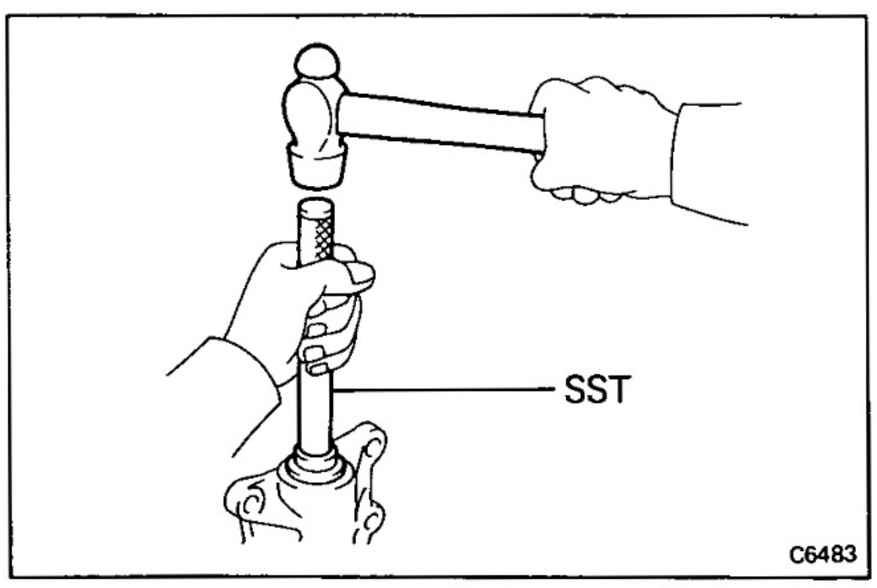

(b) Using SST, drive in the oil seal.

SST 09550-10012

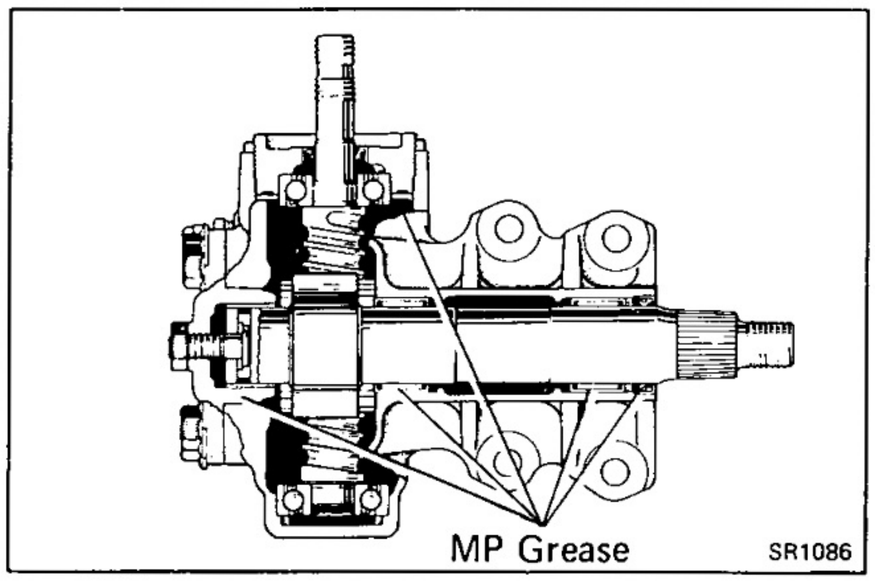

ASSEMBLY OF STEERING GEAR HOUSING

(See page SR-23)

1. APPLY MP GREASE TO BUSHING, NEEDLE ROLLER BEARING AND OIL SEALS

2. INSERT WORM SHAFT INTO GEAR HOUSING

Place the worm bearing on the shaft and insert the shaft into the housing.

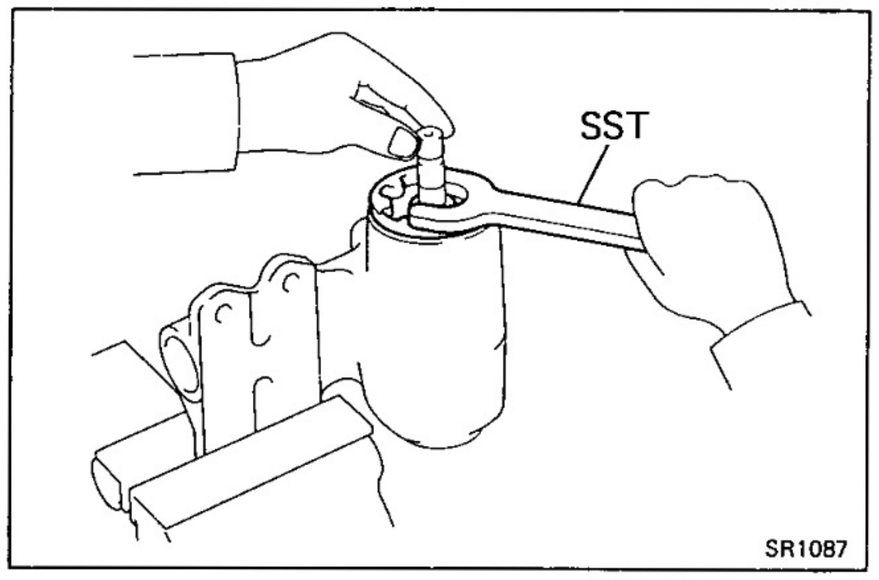

3. INSTALL AND ADJUST BEARING ADJUSTING SCREW

(a) Using SST, gradually tighten the adjusting screw until it is snug.

SST 09616-30020

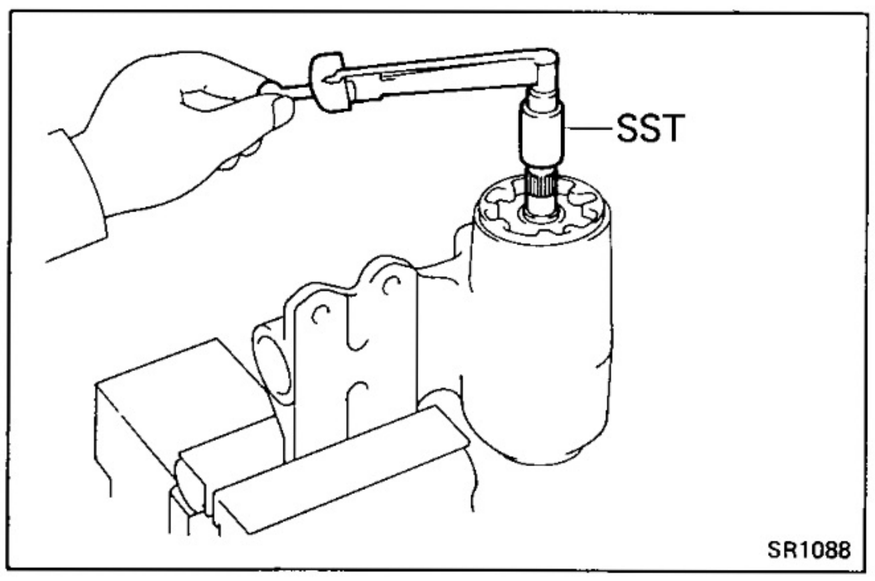

(b) Using a torque meter and SST, measure the bearing preload in both directions. Turn the adjusting screw until the preload is correct.

Preload (starting): 3.5 – 5 kg-cm (3.0 – 4.3 in.-lb, 0.34 – 0.49 N·m)

SST 09616-00010

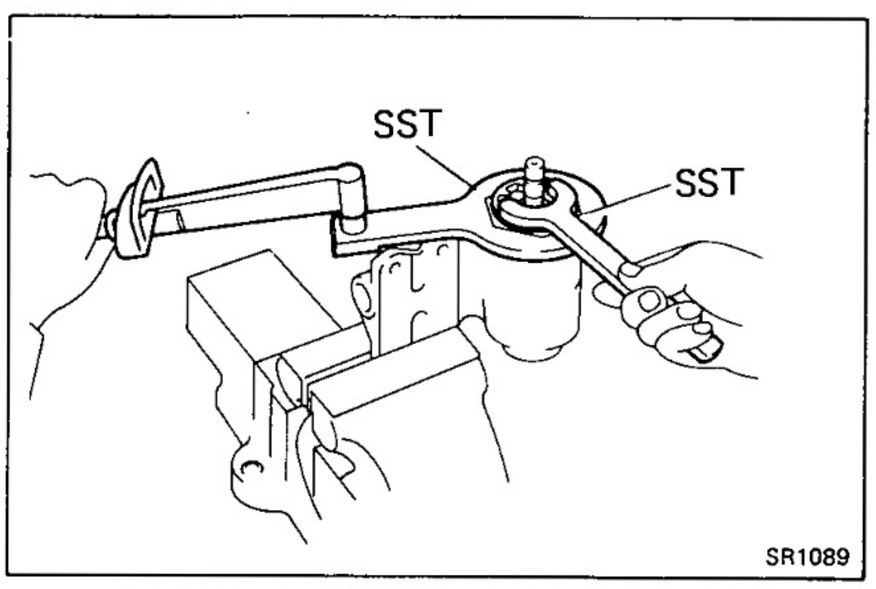

(c) Hold the adjusting screw in position with SST and tighten the lock nut with SST.

Torque: 1,500 kg-cm (108 ft-lb, 147 N·m)

SST 09616-30020 and 09617-60010

NOTE: Check that the bearing preload is still correct.

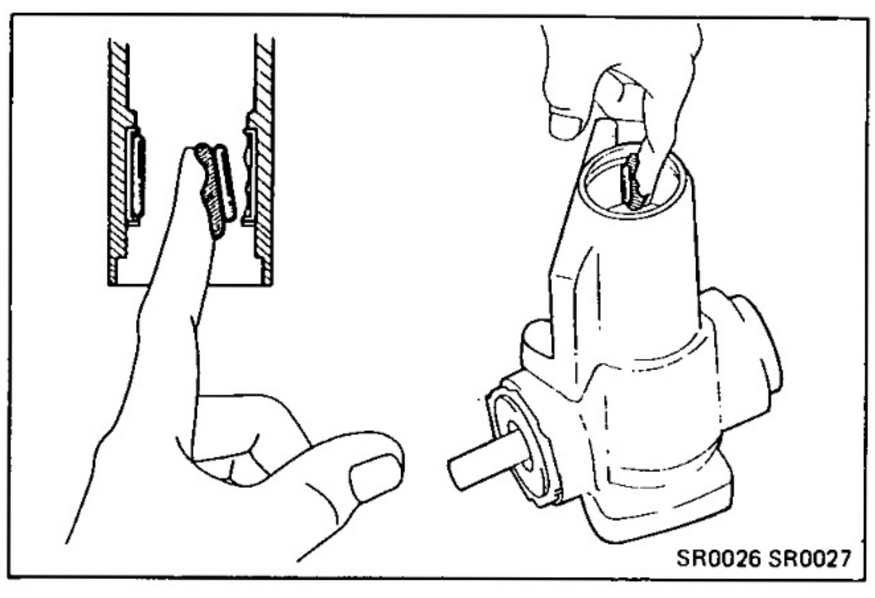

4. INSTALL NEEDLE ROLLER BEARING

Apply MP grease to the needle rollers and install them into the housing.

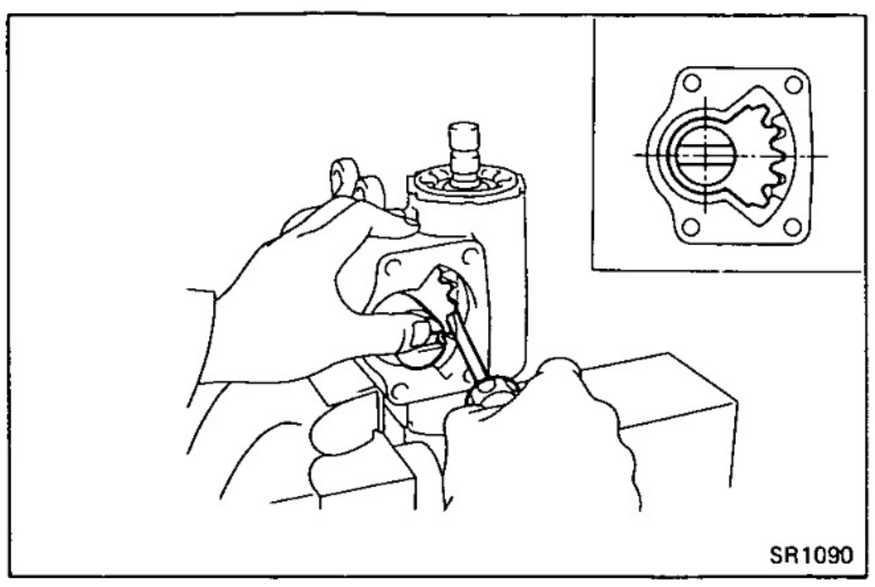

5. INSTALL SECTOR SHAFT

(a) Install the adjusting screw and thrust washer onto the sector shaft.

(b) Set the ball nut at the center of the worm shaft. Insert the sector shaft into the gear housing so that the center teeth mesh together.

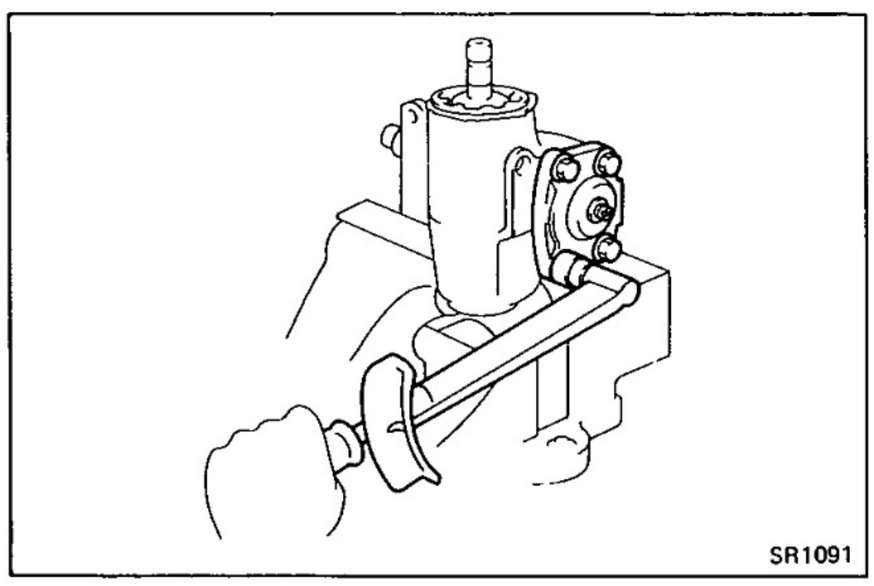

6. INSTALL END COVER

(a) Apply liquid sealer to the gasket and end cover.

(b) Install the end cover over the gasket.

(c) Loosen the adjusting screw as far as possible.

(d) Torque the three cover bolts.

Torque: 1,150 kg-cm (83 ft-lb, 113 N·m)

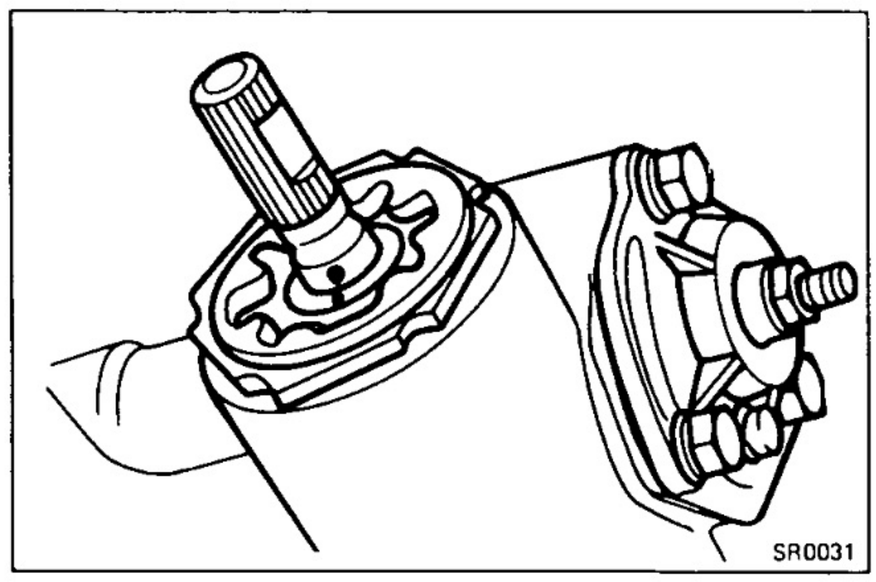

7. PLACE WORM SHAFT IN NEUTRAL POSITION

(a) Fully turn the worm shaft while counting the rotations.

(b) Then, turn the shaft back half that number. The shaft is now in neutral.

(c) Place matchmarks on the worm shaft and housing to show neutral position.

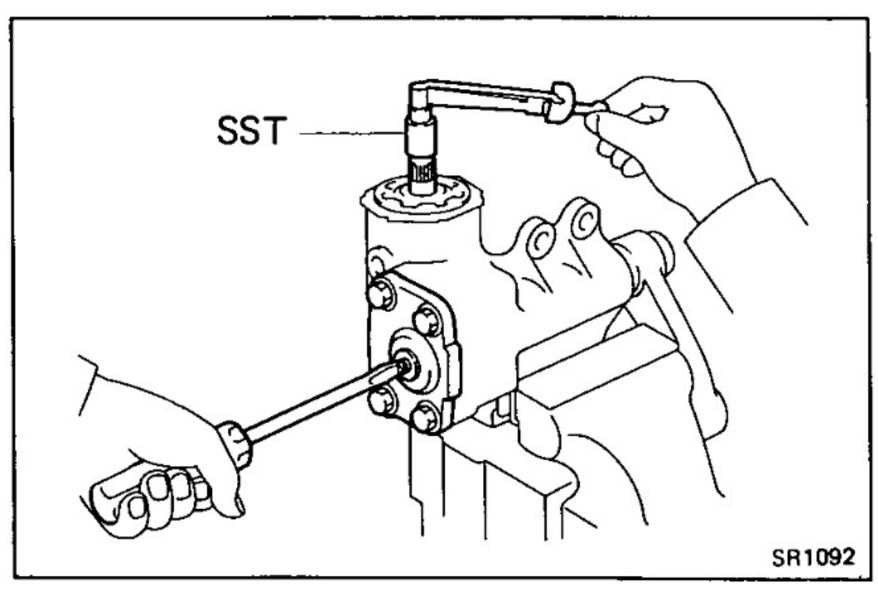

8. ADJUST TOTAL PRELOAD

Using a torque meter and SST, turn the adjusting screw until the preload is correct.

NOTE: Be sure that the worm shaft is in neutral.

Preload (starting): 8 — 11 kg-cm (6.9 — 9.5 in.-lb, 0.78 — 1.08 N·m)

SST 09616-00010

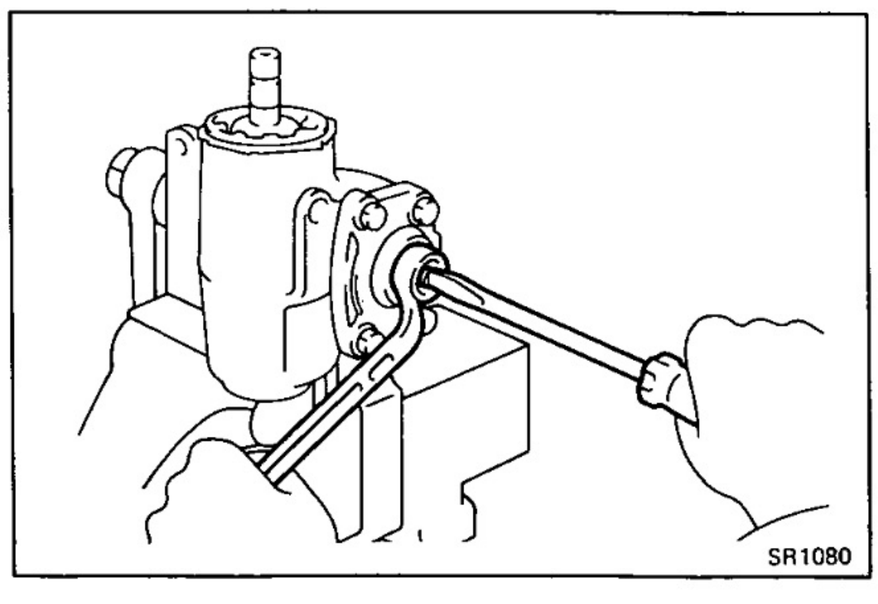

9. TIGHTEN ADJUSTING SCREW LOCK NUT

(a) Hold the screw with a screwdriver while tightening the lock nut.

(b) Torque the lock nut.

Torque: 450 kg-cm (33 ft-lb, 44 N·m)

NOTE: Check that the preload is still correct.

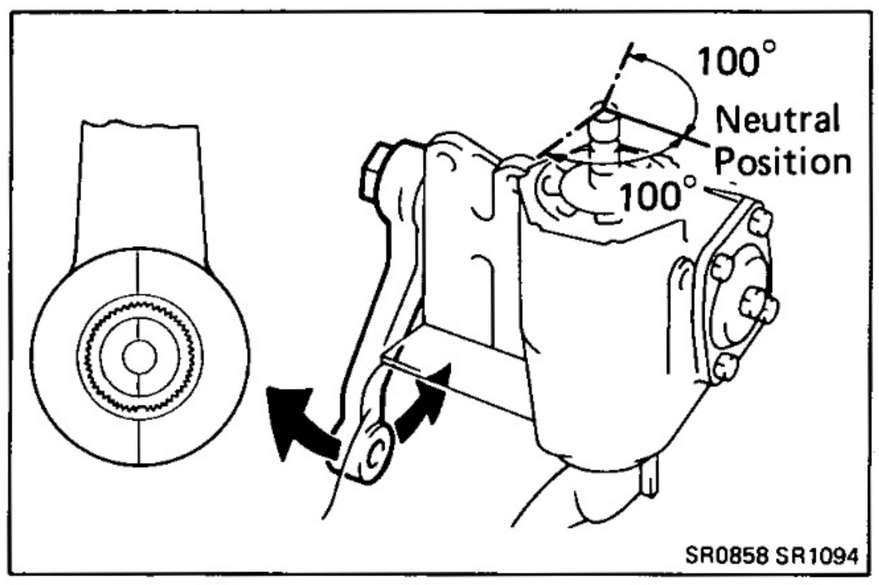

10. MEASURE SECTOR SHAFT BACKLASH

(a) Align the marks on the sector shaft with the pitman arm. Install the pitman arm and tighten the nut finger tight.

(b) Install the backlash gauge. Check that the sector shaft has no backlash within 100 degrees of either side of the neutral position.

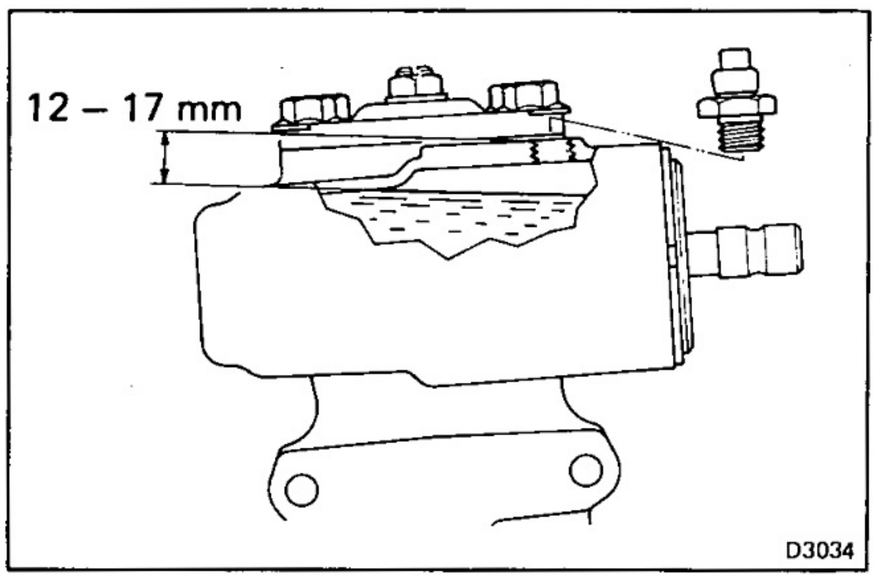

11. REPLENISH GEAR OIL

Oil level: 12 – 17 mm (0.47 – 0.67 in.)
Capacity: 630 cc (38.4 cu.in.)

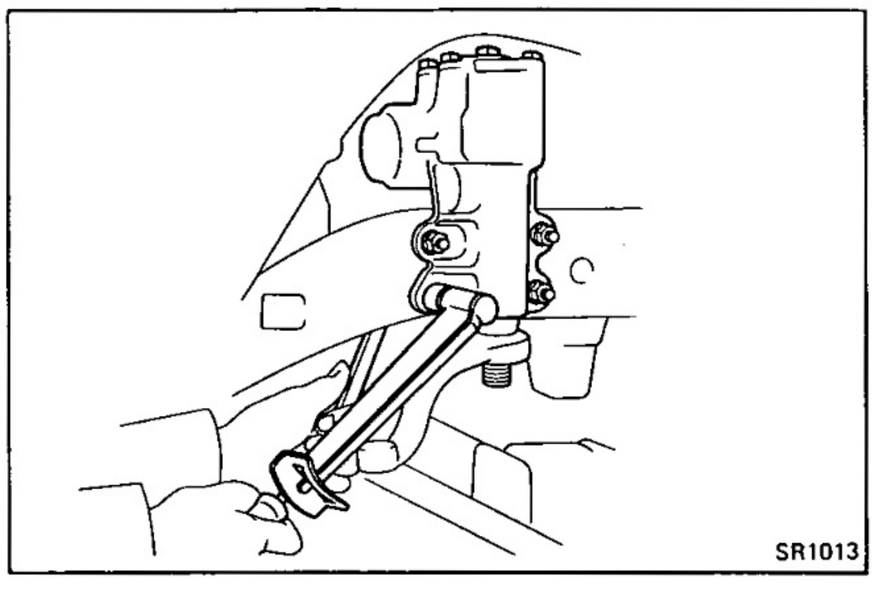

INSTALLATION OF STEERING GEAR HOUSING

(See page SR-22)

1. INSTALL GEAR HOUSING

Install the gear housing with the four bolts and nuts.

Torque: 1,240 kg-cm (90 ft-lb, 122 N·m)

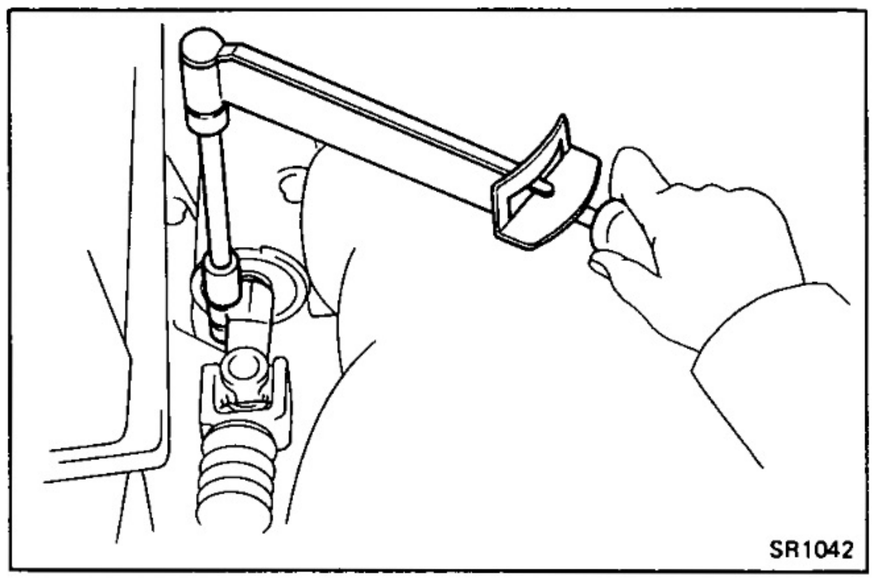

2. CONNECT INTERMEDIATE SHAFT

(a) Align matchmarks on the worm shaft and intermediate shaft joint yoke and connect them.

(b) Install and torque the two bolts.

Torque: 360 kg-cm (26 ft-lb, 35 N·m)

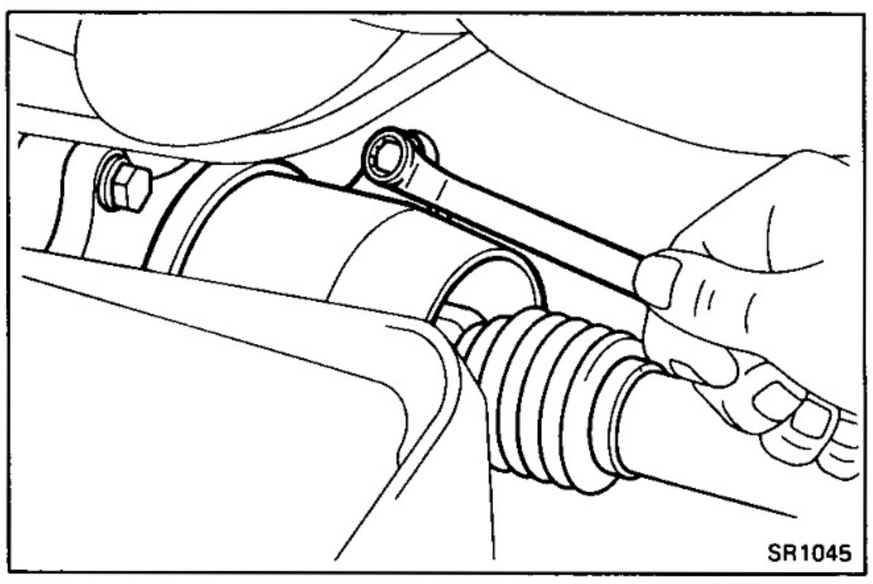

3. INSTALL JOINT PROTECTOR

(a) Install the joint protector.

(b) Install and torque the bolt.

Torque: 65 kg-cm (56 in.-lb, 6.4 N·m)

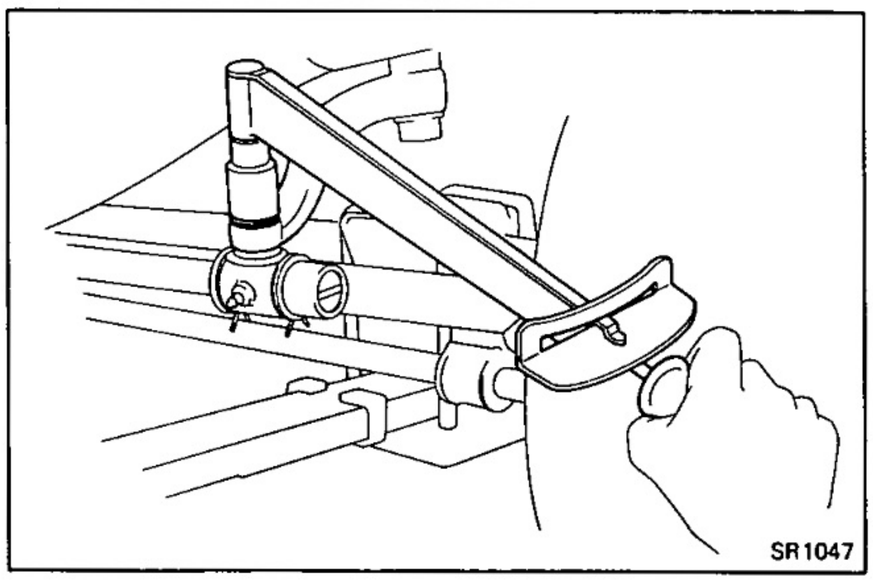

4. CONNECT RELAY ROD

(a) Install the pitman arm to the relay rod.

(b) Install and torque the nut.

Torque: 925 kg-cm (67 ft-lb, 91 N·m)

(c) Install the cotter pin.

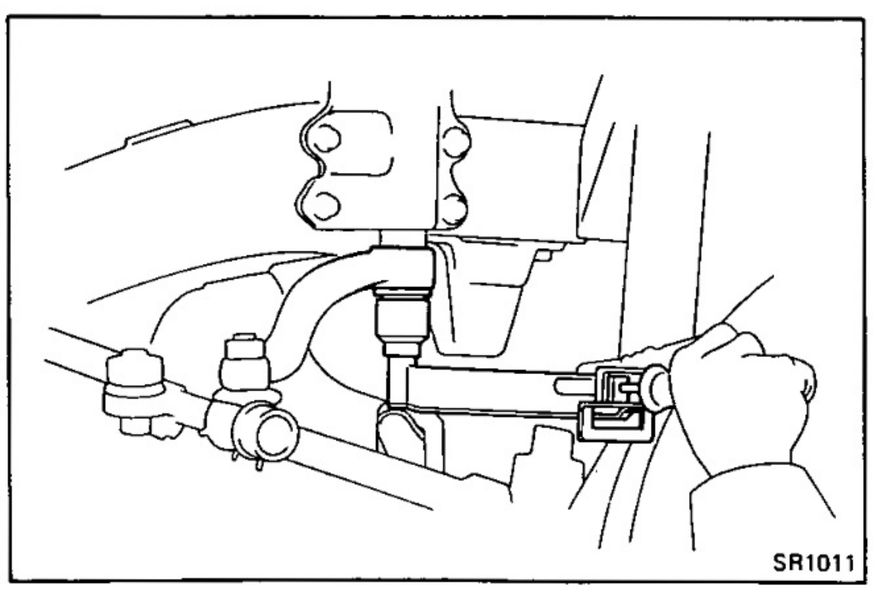

5. TORQUE PITMAN ARM SET NUT

Torque: 1,800 kg-cm (130 ft-lb, 177 N·m)

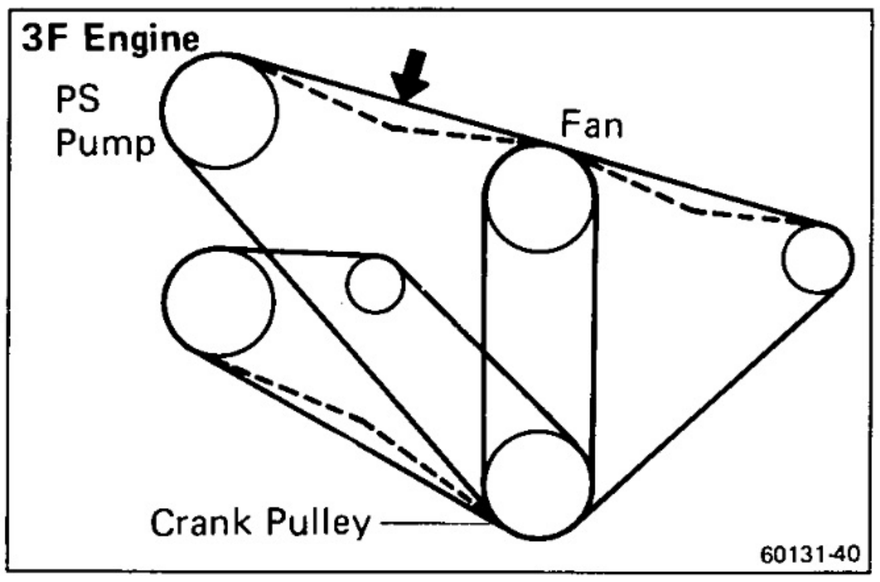

POWER STEERING

On-Vehicle Inspection

CHECKING DRIVE BELT DEFLECTION

Measure the drive belt deflection.

Drive belt deflection: at 10 kg (22.0 lb, 98 N)

[3F Engine]

New belt: 7 – 9.5 mm (0.28 – 0.37 in.)
Used belt: 8 – 10 mm (0.31 – 0.39 in.)

[3B Engine]

New belt: 13 – 17 mm (0.51 – 0.67 in.)
Used belt: 16 – 22 mm (0.63 – 0.87 in.)

[2H Engine]

New belt: 6.5 – 8.5 mm (0.26 – 0.33 in.)
Used belt: 7 – 9 mm (0.28 – 0.35 in.)

NOTE:

- "New belt" refers to a new belt which has never been used.
- "Used belt" refers to a belt which has been used on a running engine for 5 minutes or more.

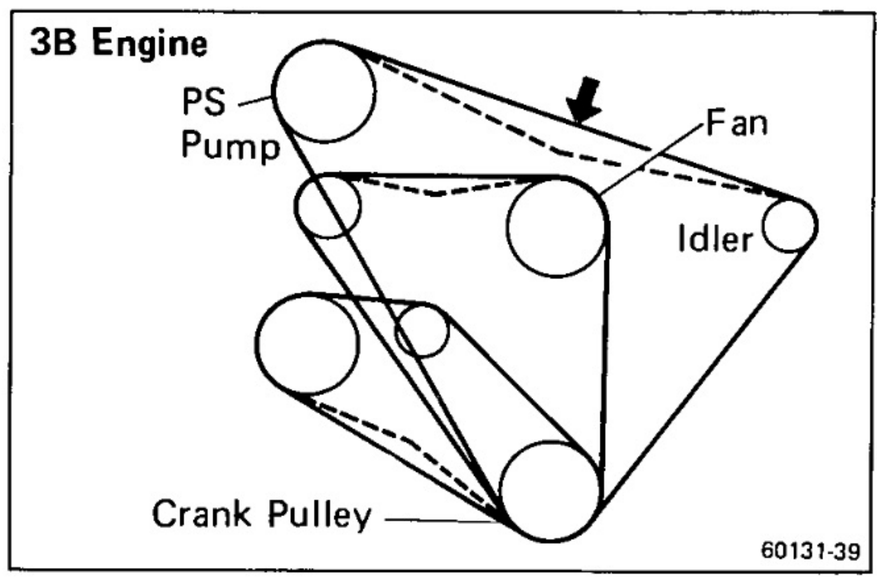

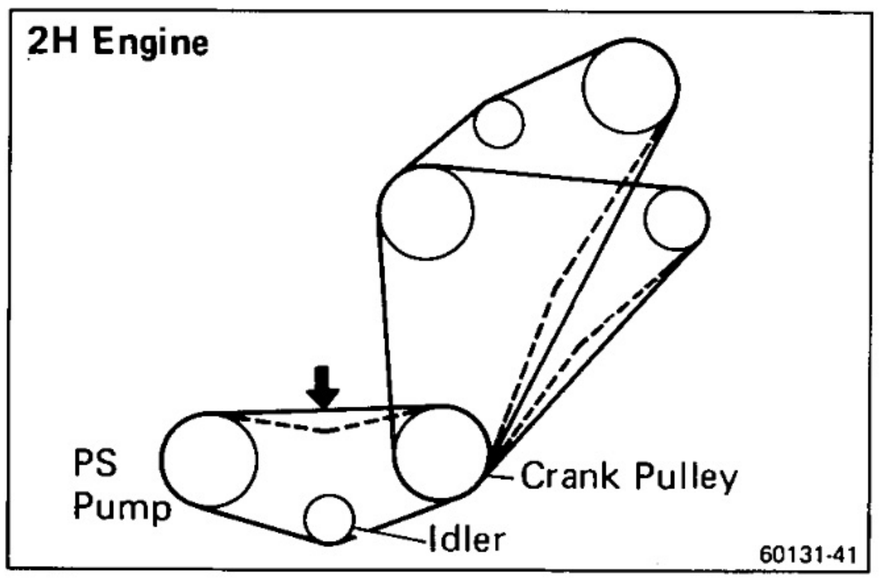

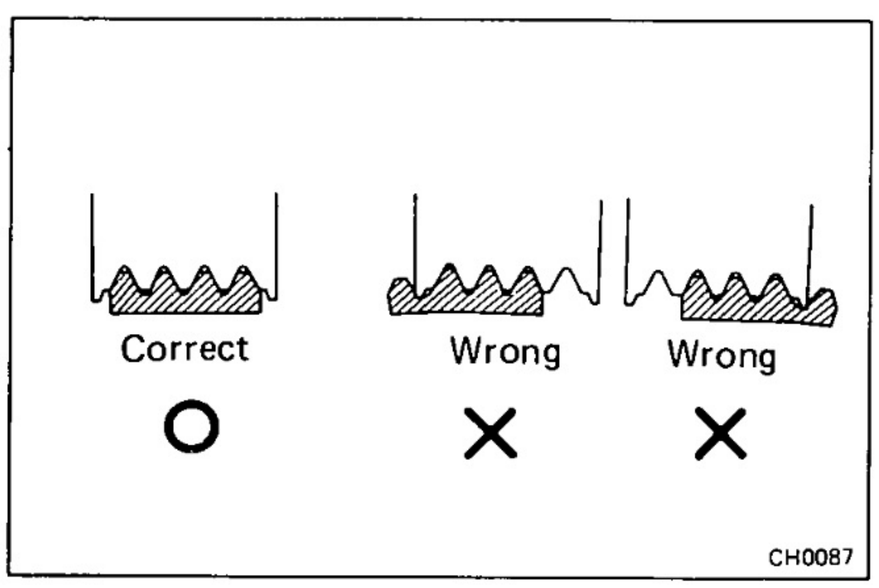

- After installing the drive belt, check that it fits properly in the ribbed grooves.

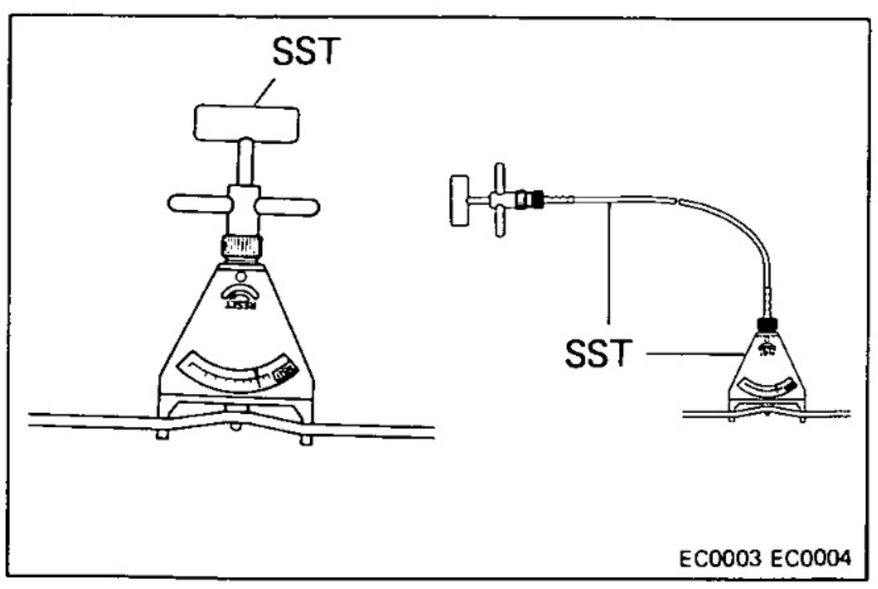

- Using SST, check the drive belt tension.

SST 09216-00020 and 09216-00030

Drive belt tension

New belt: 45 – 55 kg
Used belt: 20 – 35 kg

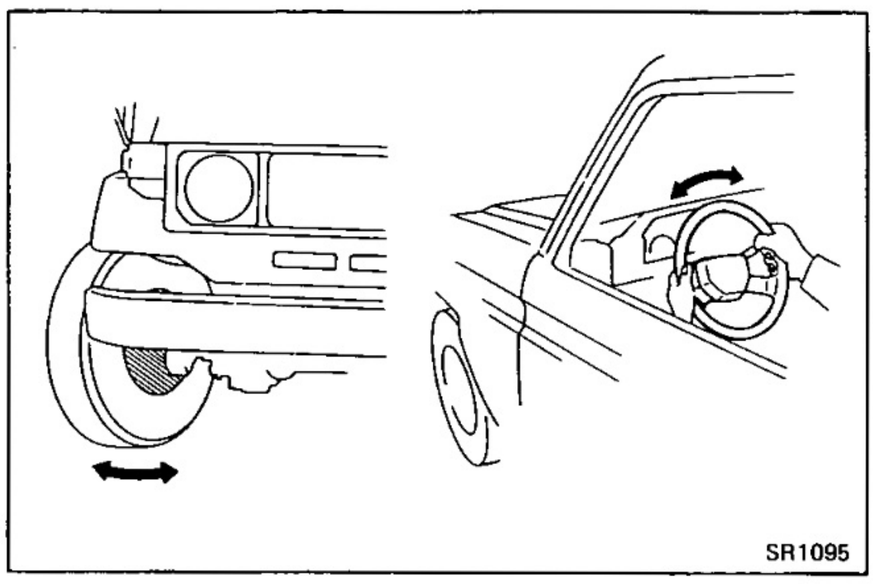

FLUID LEVEL CHECK

1. KEEP VEHICLE LEVEL

2. BOOST FLUID TEMPERATURE

With the engine idling at 1,000 rpm or less, turn the steering wheel from lock to lock several times to boost fluid temperature.

Fluid temperature: 80°C (176°F)

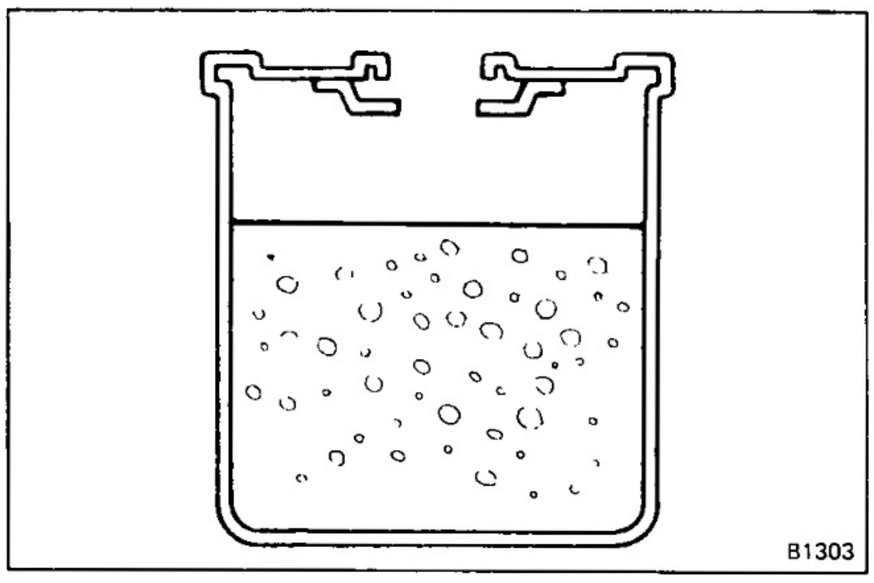

3. CHECK FOR FOAMING OR EMULSIFICATION

NOTE: Foaming and emulsification indicate either the existence of air in the system or that the fluid level is too low.

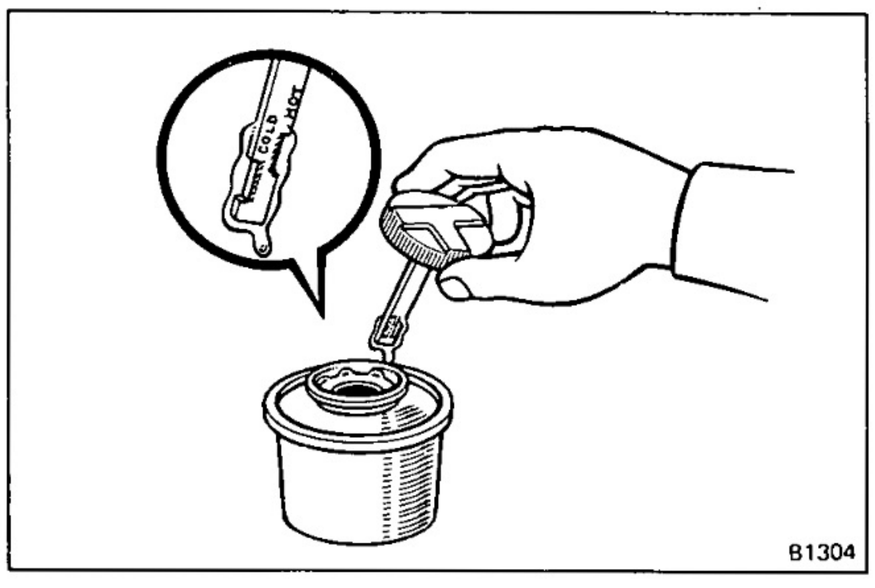

4. CHECK FLUID LEVEL IN RESERVOIR

Check the fluid level and add fluid if necessary.

Fluid: ATF DEXRON® or DEXRON® II

NOTE: Check that the fluid level is within the HOT LEVEL of the dipstick. If the fluid is cold, check that it is within the COLD level of the dipstick.

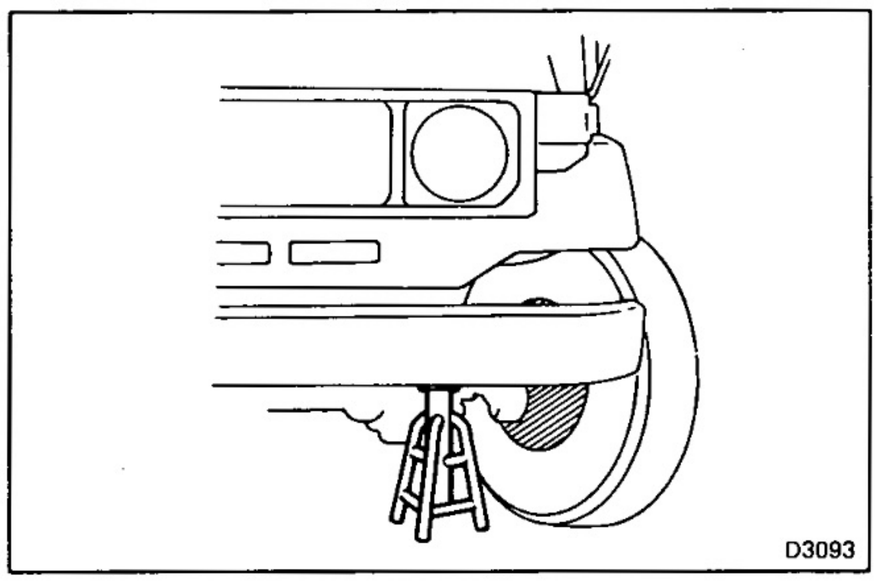

REPLACEMENT OF POWER STEERING FLUID

1. JACK UP FRONT OF VEHICLE AND SUPPORT IT WITH STANDS

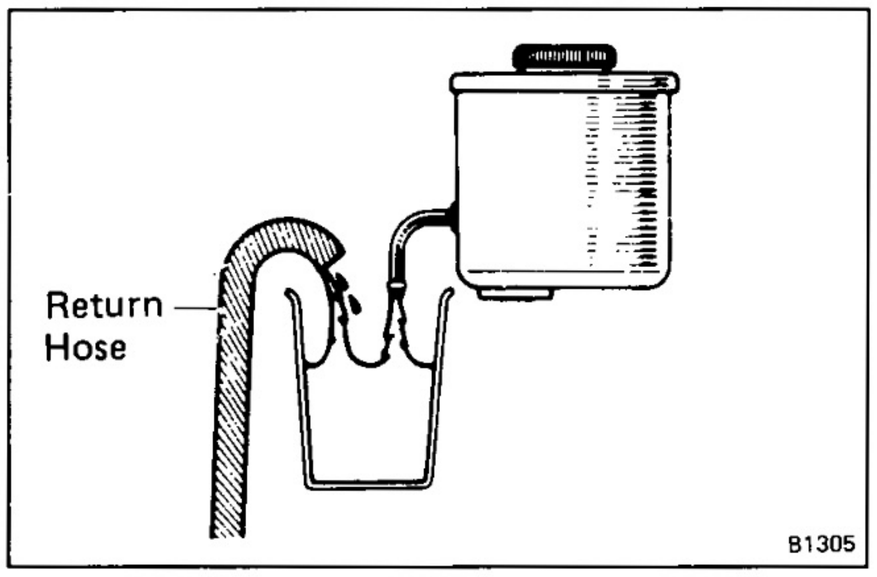

2. REMOVE FLUID RETURN HOSE FROM RESERVOIR TANK AND DRAIN FLUID INTO CONTAINER

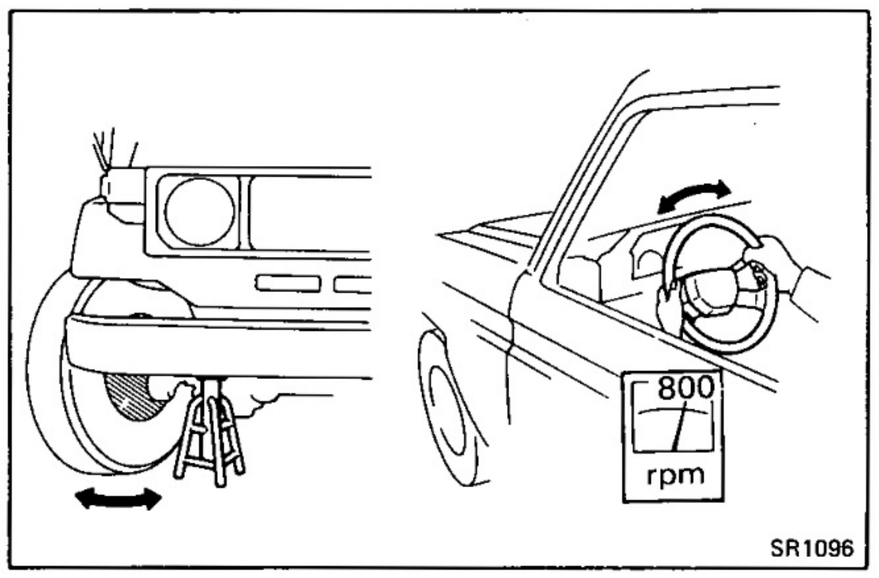

3. WITH ENGINE IDLING, DRAIN FLUID WHILE TURNING STEERING WHEEL FROM LOCK TO LOCK

4. STOP ENGINE

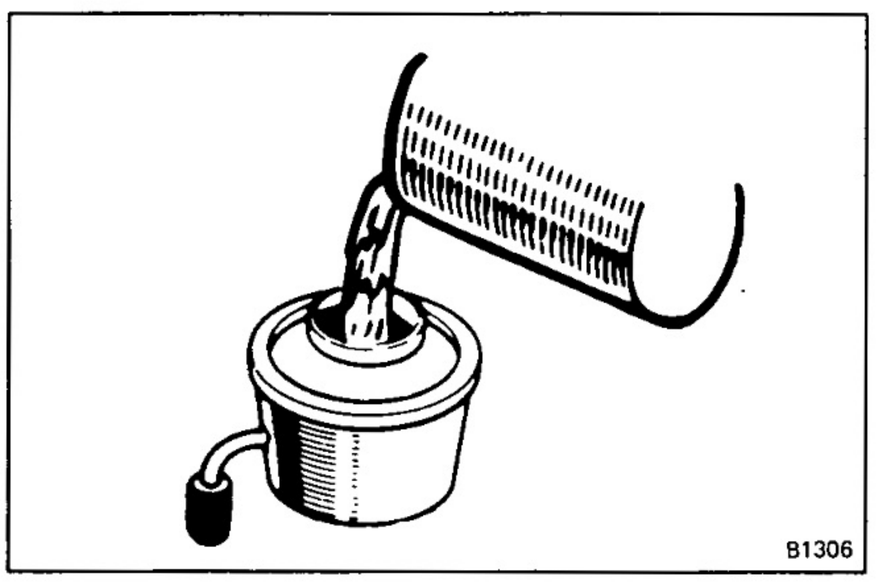

5. FILL RESERVOIR TANK WITH FRESH FLUID
   Fluid: ATF DEXRON® or DEXRON® II

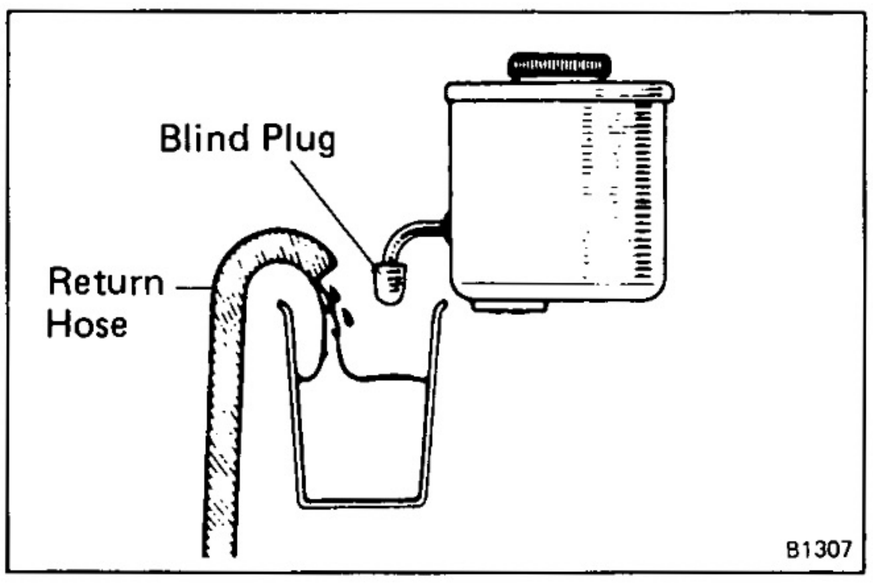

6. START ENGINE AND RUN IT AT 1,000 RPM
   After one or two seconds, fluid will begin to discharge from the return hose. Stop the engine immediately at this time.

7. REPEAT STEPS 5 AND 6 FOUR OR FIVE TIMES UNTIL THERE IS NO MORE AIR IN FLUID

8. CONNECT RETURN HOSE TO RESERVOIR TANK

9. BLEED POWER STEERING SYSTEM

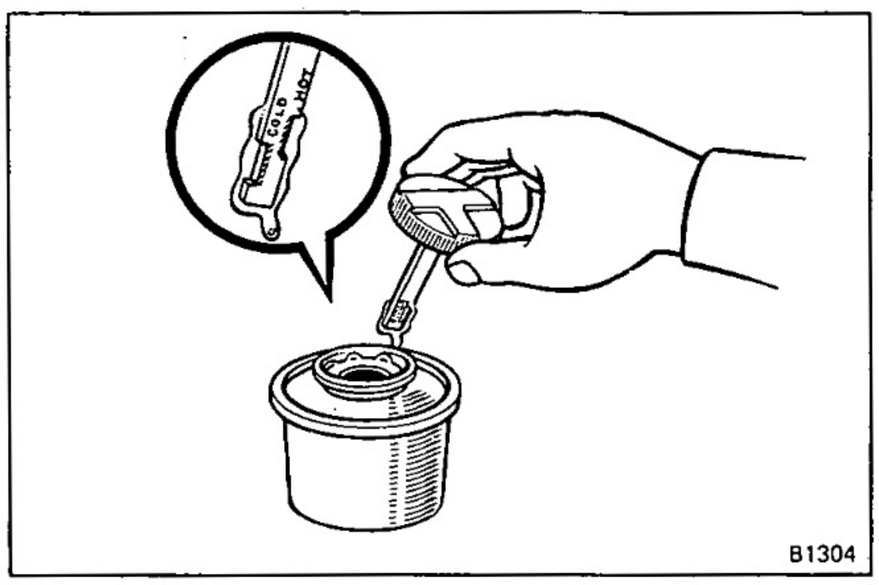

Bleeding of Power Steering System

1. CHECK FLUID LEVEL IN RESERVOIR TANK

Check the fluid level and add fluid if necessary.

Fluid: ATF DEXRON® or DEXRON® II

NOTE: Check that the fluid level is within the HOT LEVEL of the dipstick. If the fluid is cold, check that it is within the COLD LEVEL of the dipstick.

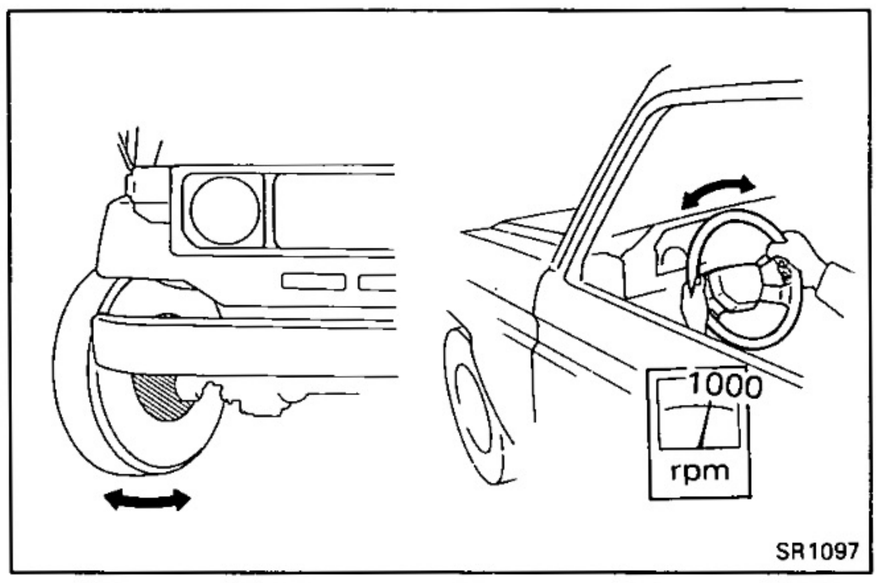

2. START ENGINE AND TURN STEERING WHEEL FROM LOCK TO LOCK THREE OR FOUR TIMES

Run the engine at 1,000 rpm or less.

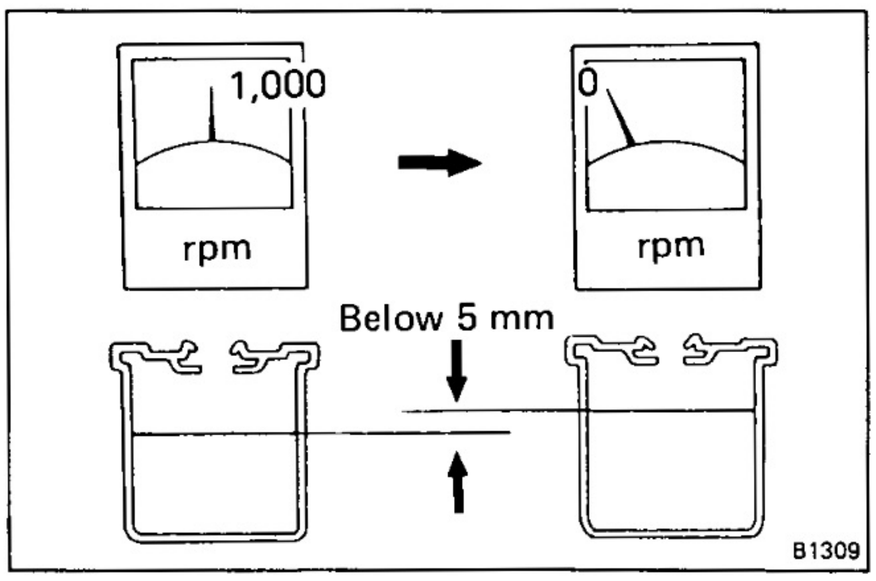

3. CHECK THAT FLUID IN RESERVOIR IS NOT FOAMY OR CLOUDY AND DOES NOT RISE OVER MAXIMUM WHEN ENGINE IS STOPPED

Measure the fluid level with the engine running. Stop the engine and measure the fluid level.

Maximum rise: 5 mm (0.20 in.)

If a problem is found, repeat step 7. Repair the PS pump if the problem persists.

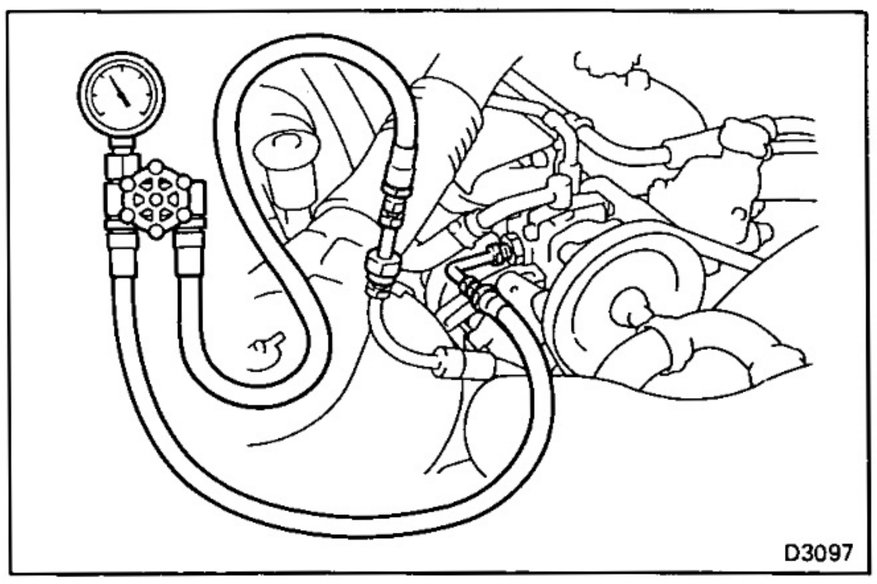

Oil Pressure Check

1. CONNECT PRESSURE GAUGE

(a) Using SST, remove the pressure line from the PS pump.

SST 09631-22020

(b) Connect the gauge side of the pressure gauge to the PS pump and the valve side to the pressure line.

(c) Bleed the system. Start the engine and turn the steering wheel from lock to lock two or three times.

(d) Check that the fluid level is correct.

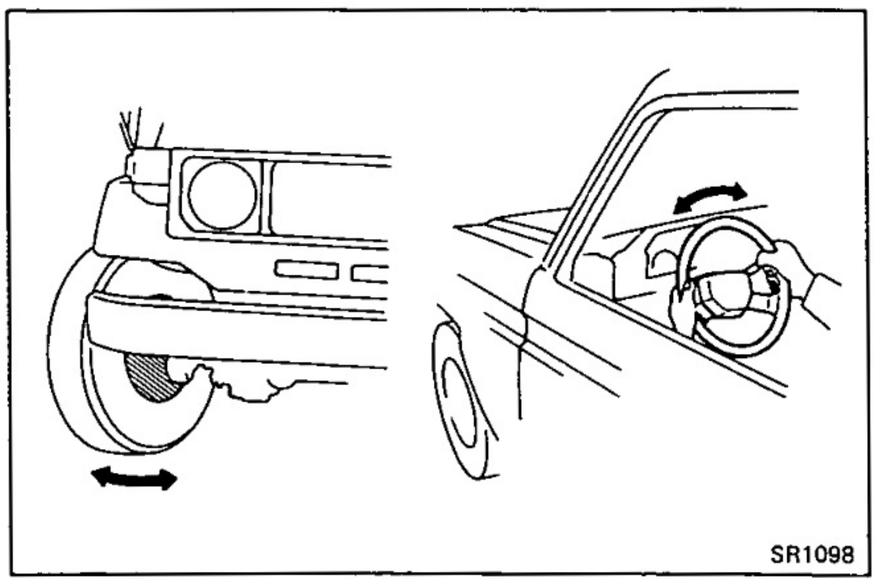

2. CHECK THAT FLUID TEMPERATURE IS AT LEAST 80°C (176°F)

3. START ENGINE AND RUN IT AT IDLE

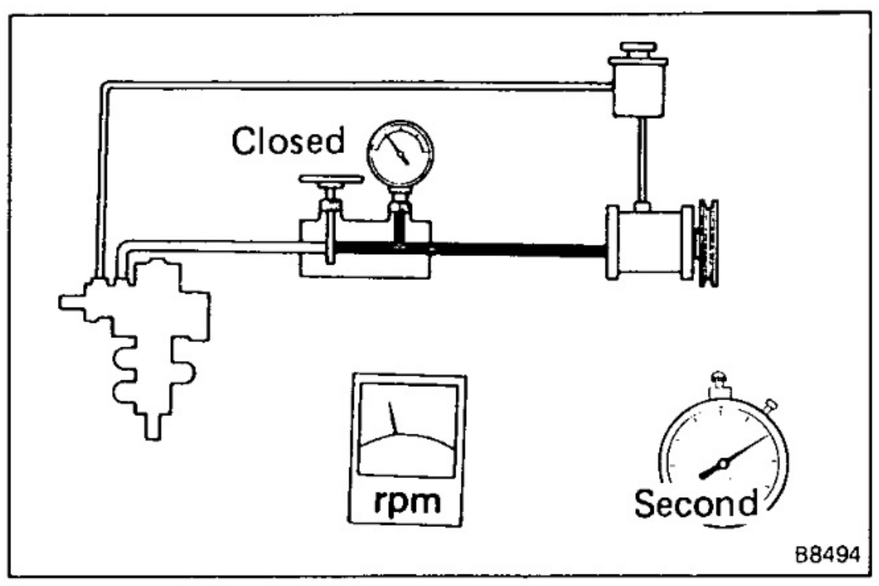

4. **CHECK FLUID PRESSURE READING WITH VALVE CLOSED**

Close the pressure gauge valve and observe the reading on the gauge.

Minimum pressure: 75 kg/cm² (1,067 psi, 7,355 kPa)

NOTE: Do not keep the valve closed for more than 10 seconds.

If pressure is low, repair or replace the PS pump.

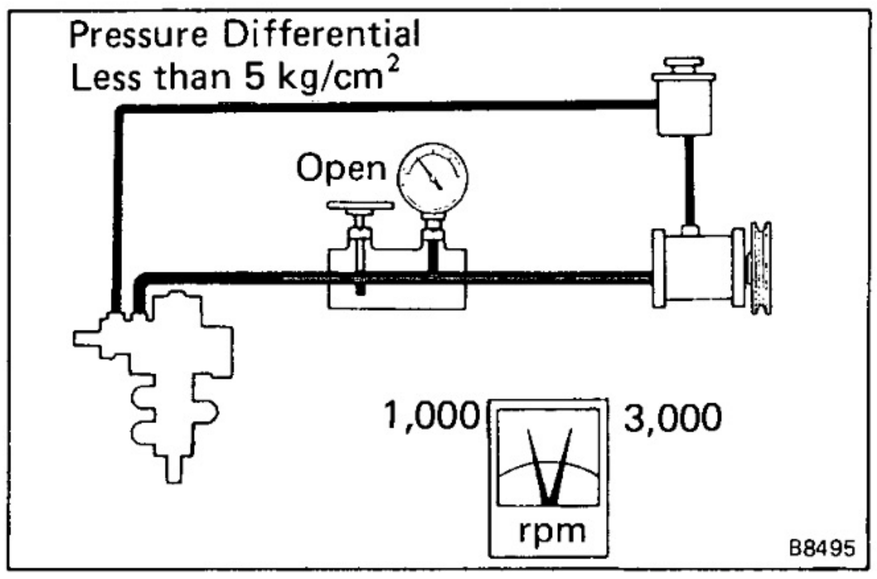

5. **FULLY OPEN VALVE**

6. **CHECK AND RECORD PRESSURE READING AT 1,000 RPM**

7. **CHECK AND RECORD PRESSURE READING AT 3,000 RPM**

Check that there is less than 5 kg/cm² (71 psi, 490 kPa) difference in pressure between the 1,000 rpm and 3,000 rpm checks.

If the difference is excessive, repair or replace the flow control valve of the PS pump.

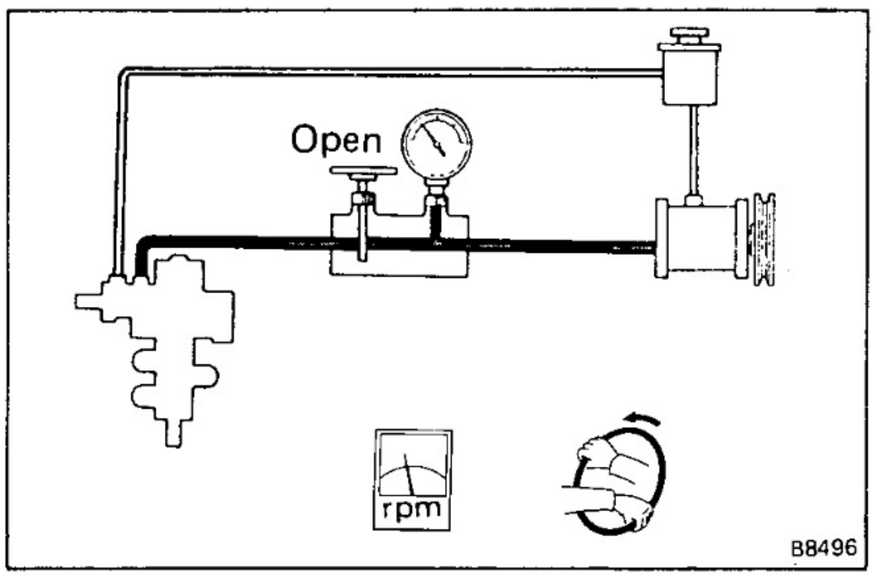

8. **CHECK PRESSURE READING WITH STEERING WHEEL TURNED TO FULL LOCK**

Be sure the pressure gauge valve is fully opened and the engine idling.

Minimum pressure: 75 kg/cm² (1,067 psi, 7,355 kPa)

If pressure is low, the gear housing has an internal leak and must be repaired or replaced.

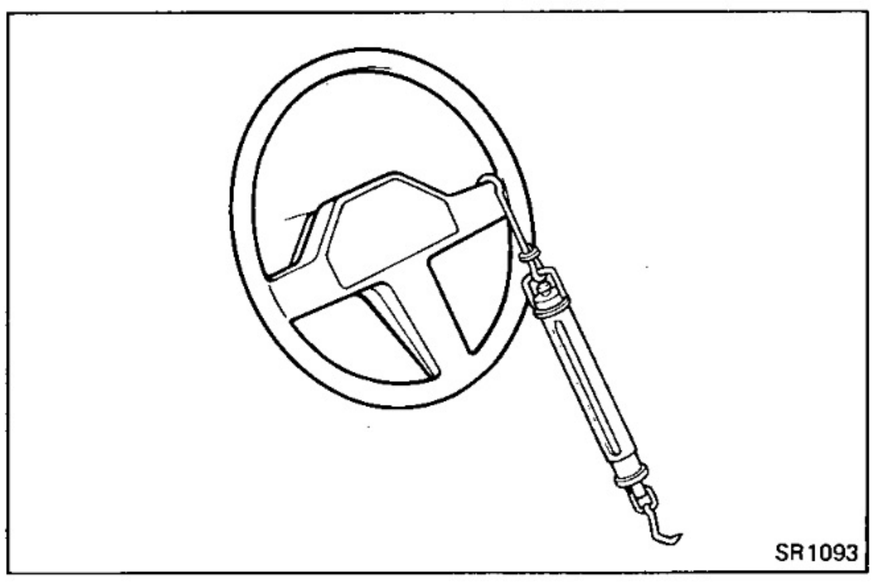

9. **MEASURE STEERING EFFORT**

Center the steering wheel and run the engine at idle.

Using a scale, measure the steering effort in both directions.

Maximum steering effort: 4 kg (8.8 lb, 39 N)

If steering effort is excessive, repair the power steering unit.

NOTE: Be sure to consider the tire type, pressure and contact surface before making your diagnosis.

Power Steering Pump

REMOVAL OF POWER STEERING PUMP

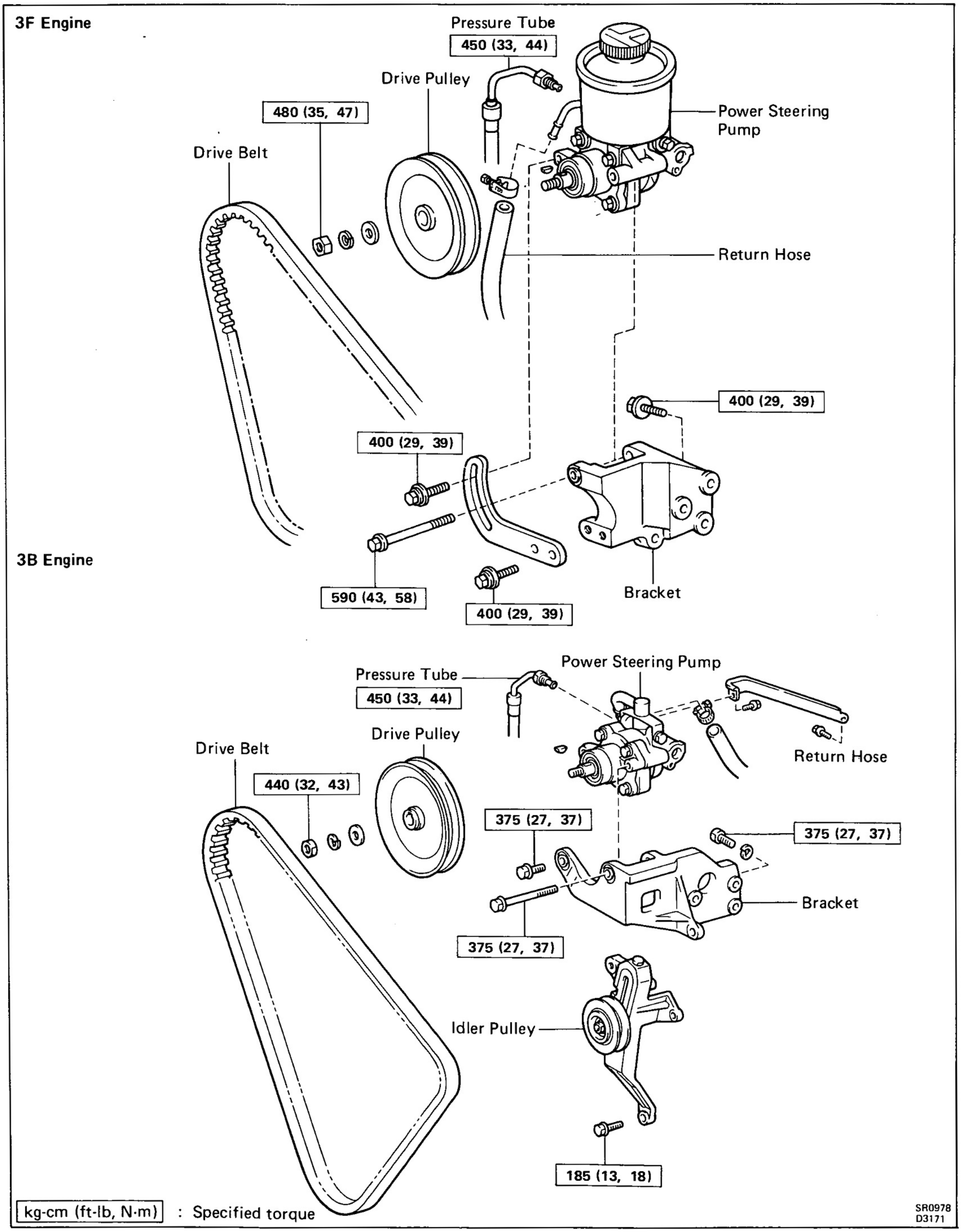

2H Engine

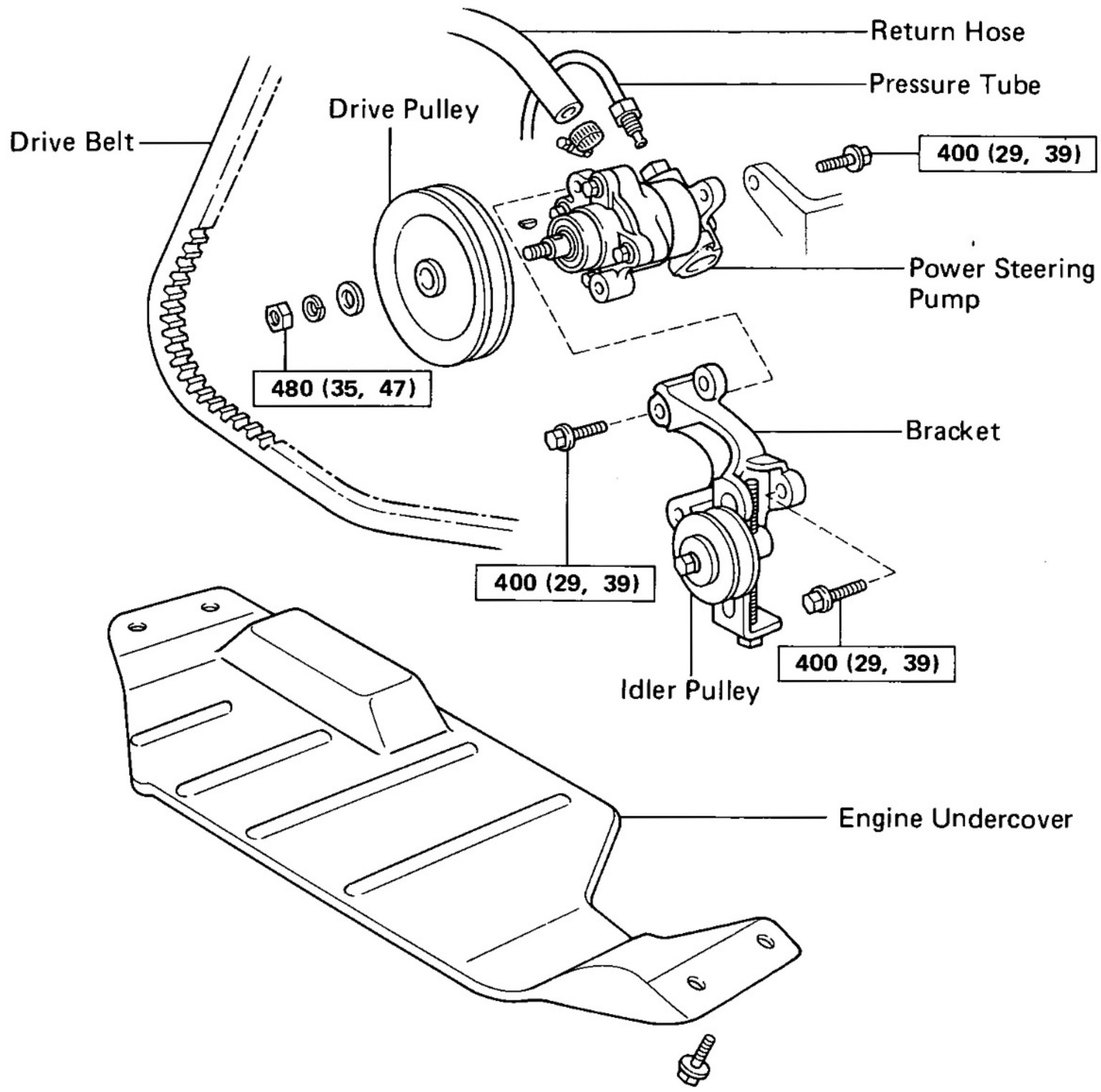

kg-cm (ft-lb, N·m) : Specified torque

SR0979

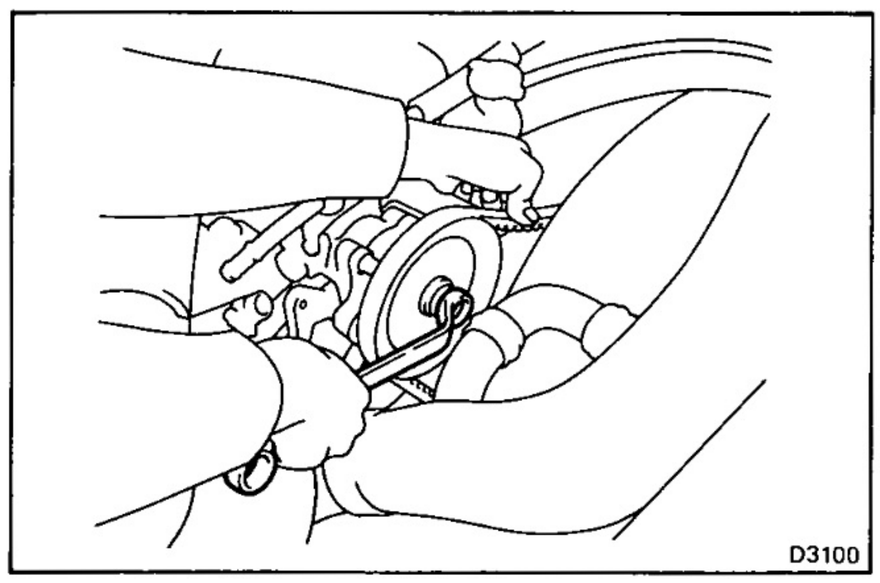

D3100

1. (2H ENGINE)
   REMOVE ENGINE UNDERCOVER

2. DRAW OUT FLUID FROM RESERVOIR TANK

3. LOOSEN DRIVE PULLEY NUT

   Push on the drive belt to hold the pulley in place and loosen the pulley nut.

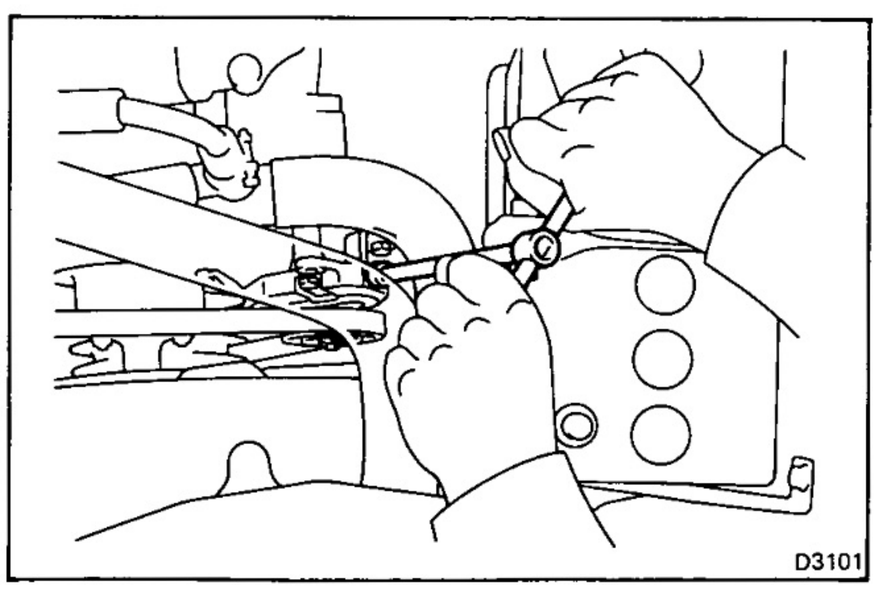

D3101

4. REMOVE DRIVE BELT

   (a)-1 (3F and 3B Engine)
   Loosen the idler pulley nut.

   (a)-2 (2H Engine)
   Loosen the pivot nut.

   (b) Loosen the adjusting bolt and remove the drive belt.

5. REMOVE DRIVE PULLEY AND WOODRUFF KEY

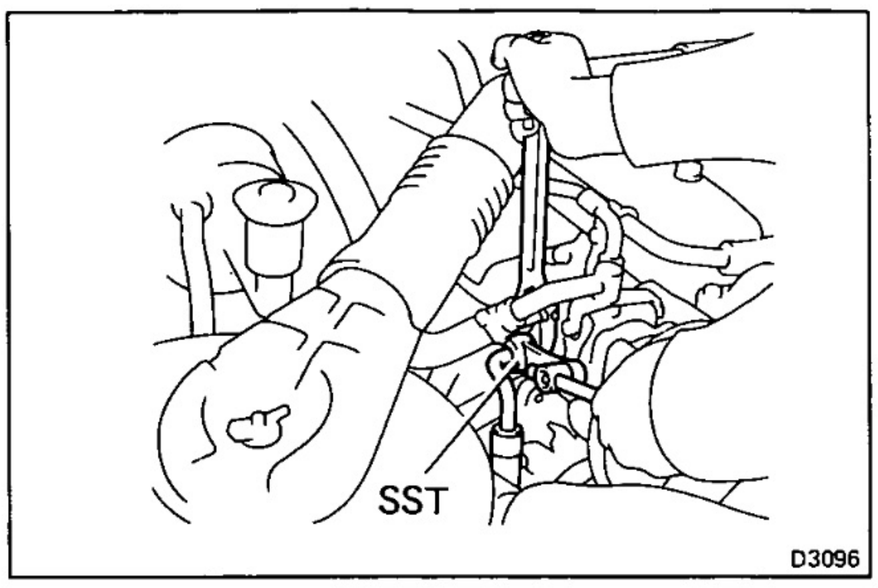

6. DISCONNECT PRESSURE HOSE

Using SST, disconnect the pressure hose.

SST 09631-22020

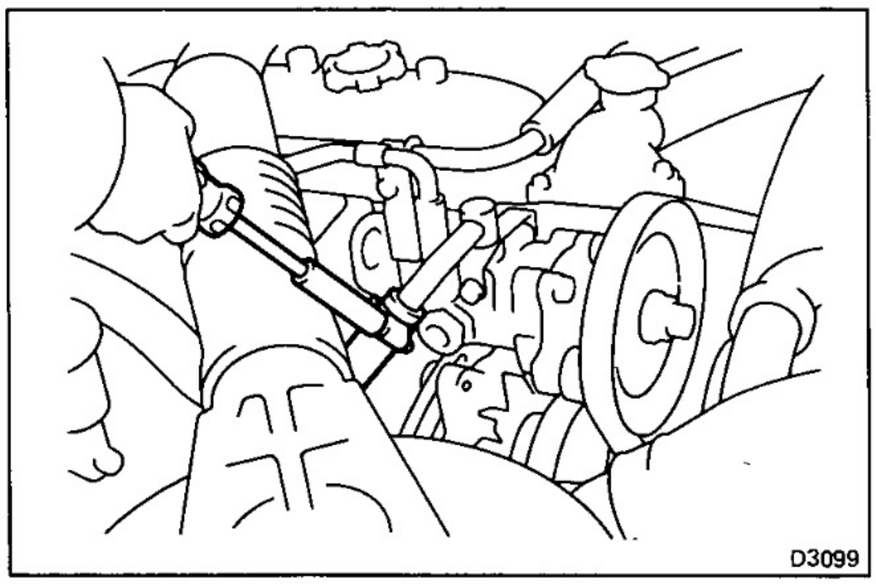

7. DISCONNECT RETURN HOSE

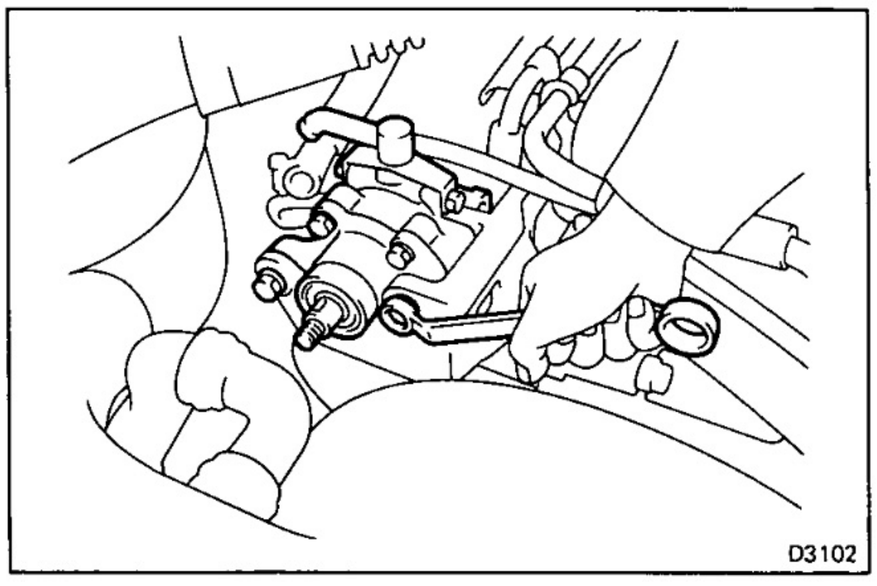

8. REMOVE POWER STEERING PUMP

Remove PS pump mount bolts, and remove the PS pump from the bracket.

COMPONENTS

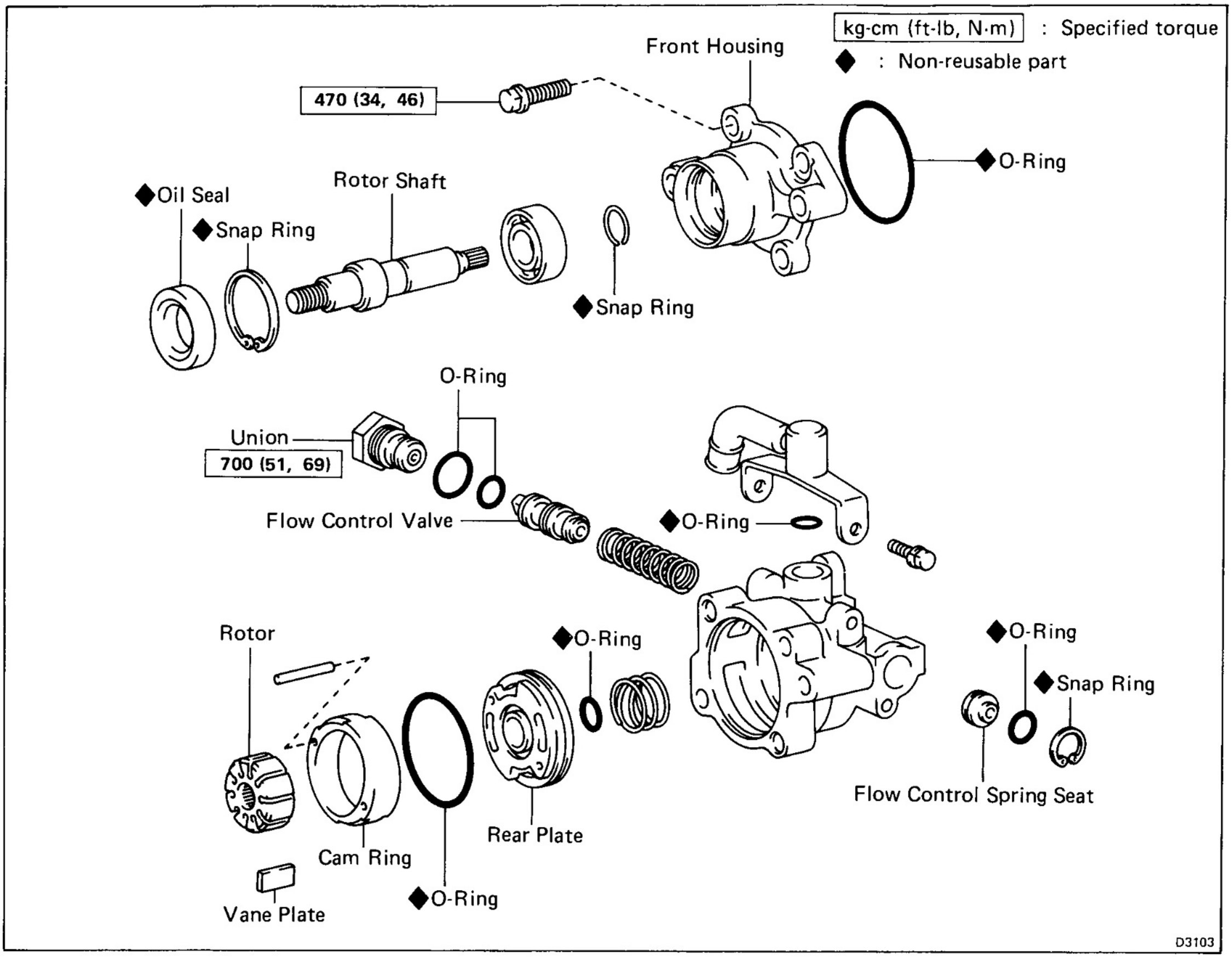

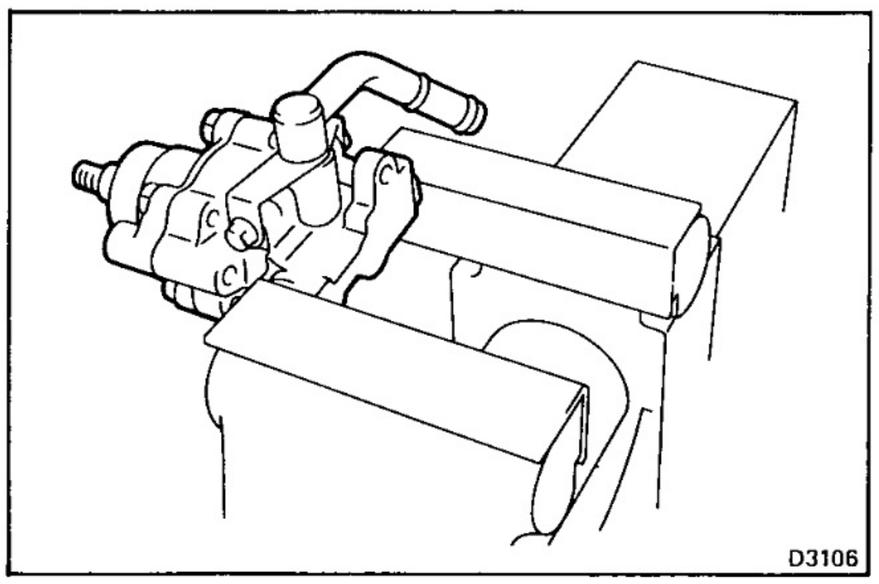

DISASSEMBLY OF POWER STEERING PUMP

1. CLAMP POWER STEERING PUMP IN VISE

   CAUTION: Do not tighten the vise more than necessary.

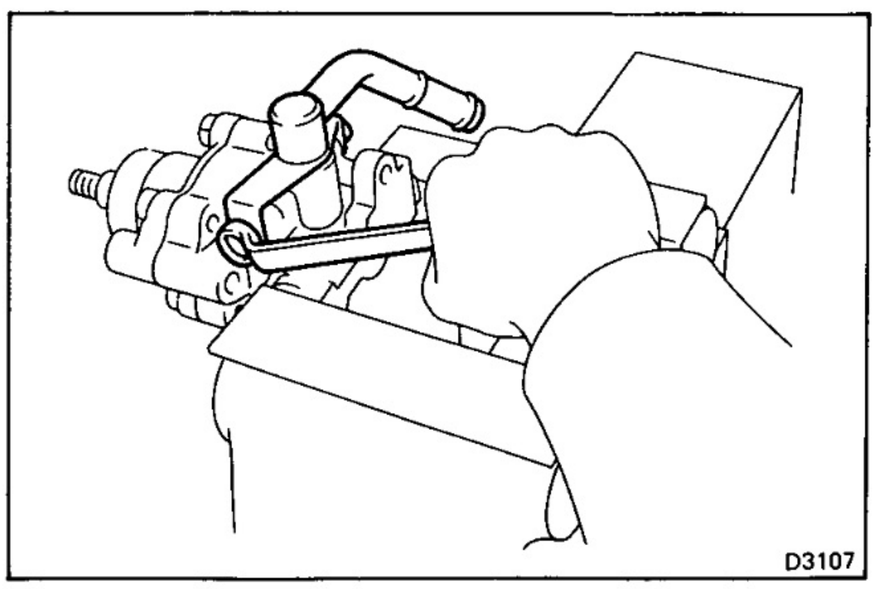

2.-1 (3F ENGINE)
REMOVE RESERVOIR TANK AND O-RING

2.-2 (3B AND 2H ENGINE)
REMOVE SUCTION PORT UNION AND O-RING

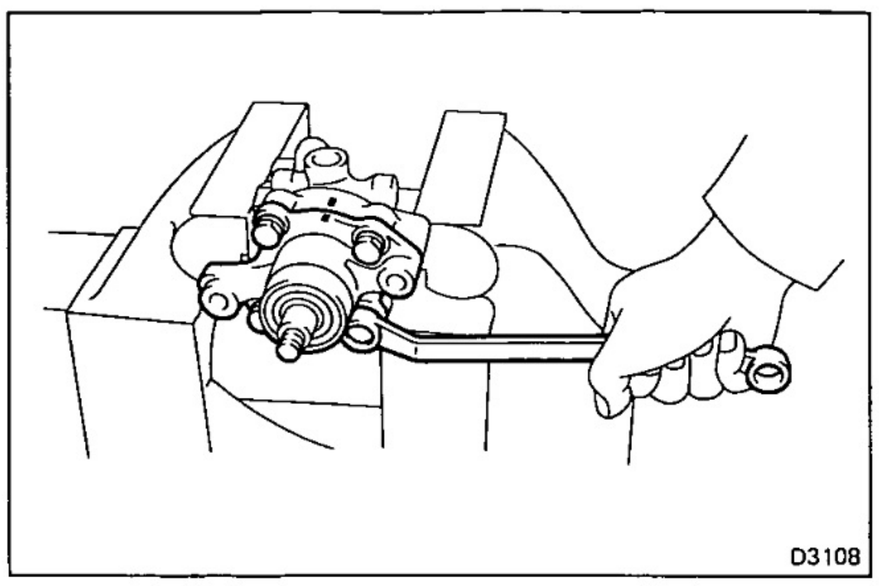

3. REMOVE FRONT HOUSING

(a) Place matchmarks on the front and the rear housing.

(b) Remove the four bolts and tap off the front housing with a plastic hammer.

CAUTION: Be careful that the vane plates, rotor and cam ring do not fall out.

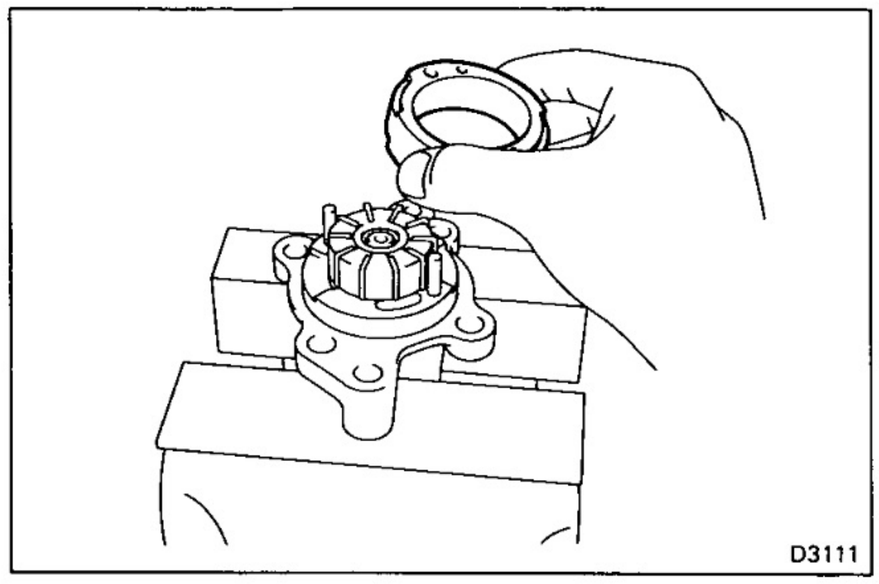

4. REMOVE CAM RING, ROTOR AND VANE PLATES

CAUTION: Be careful not to scratch the cam ring, rotor or vane plates.

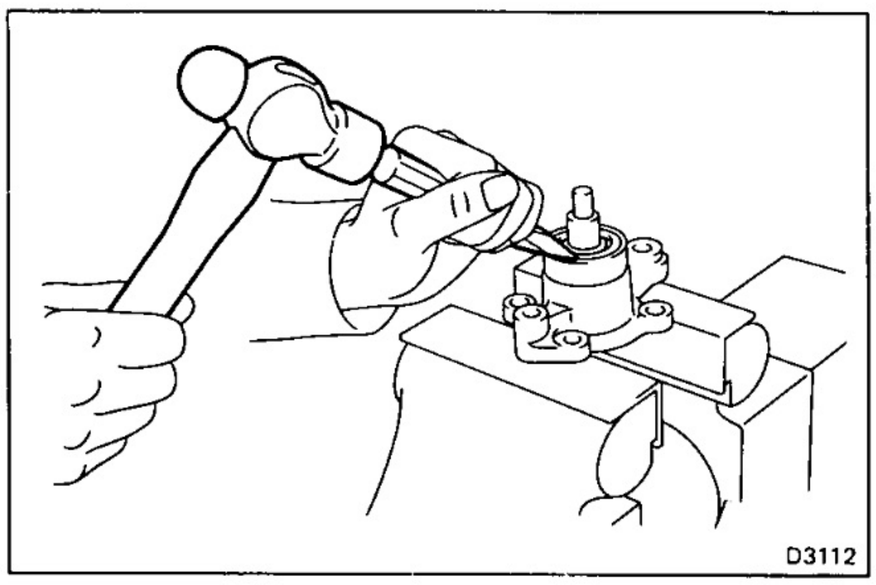

5. REMOVE ROTOR SHAFT

(a) Clamp the front housing in a vise.

CAUTION: Do not tighten the vise more than necessary.

(b) Using a chisel and hammer, pry off the oil seal.

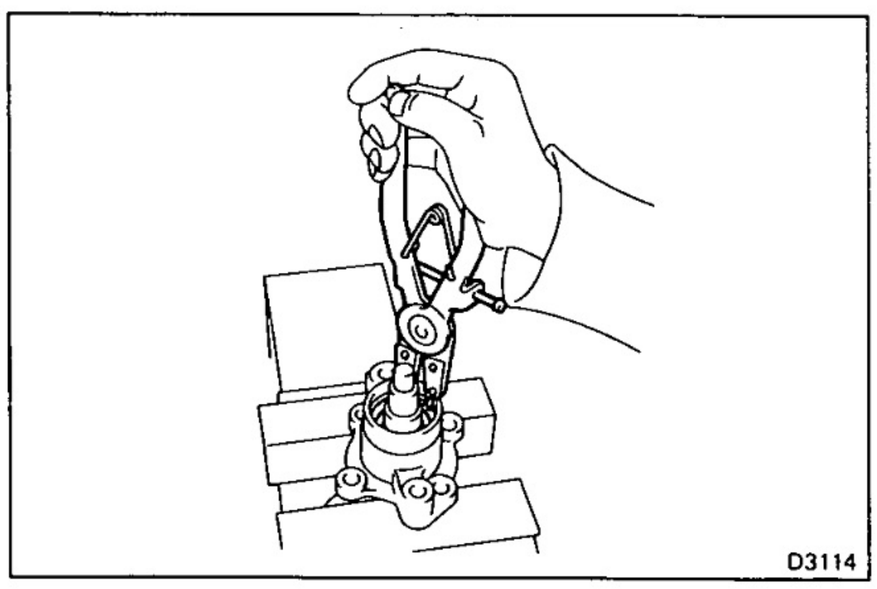

(c) Using snap ring pliers, remove the snap ring.

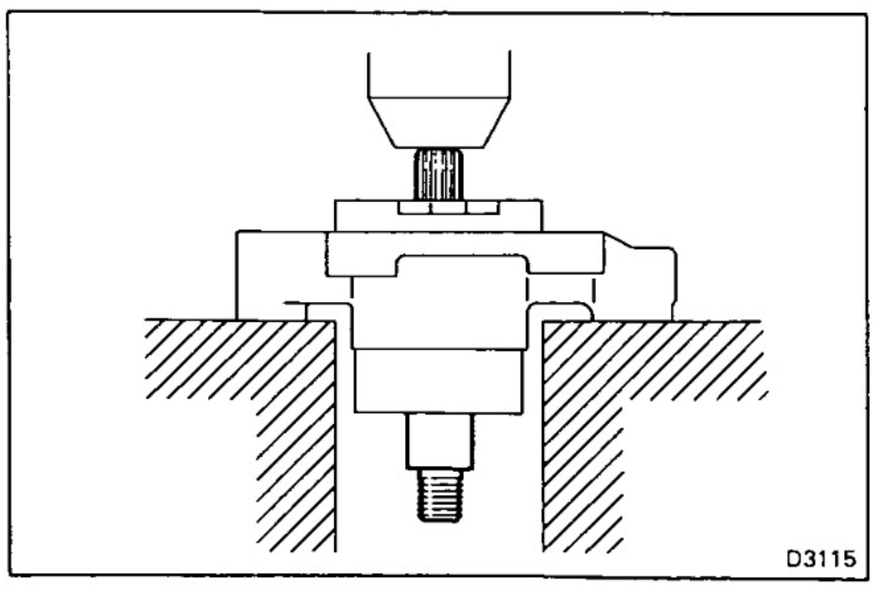

(d) Using a press, remove the rotor shaft from the front housing.

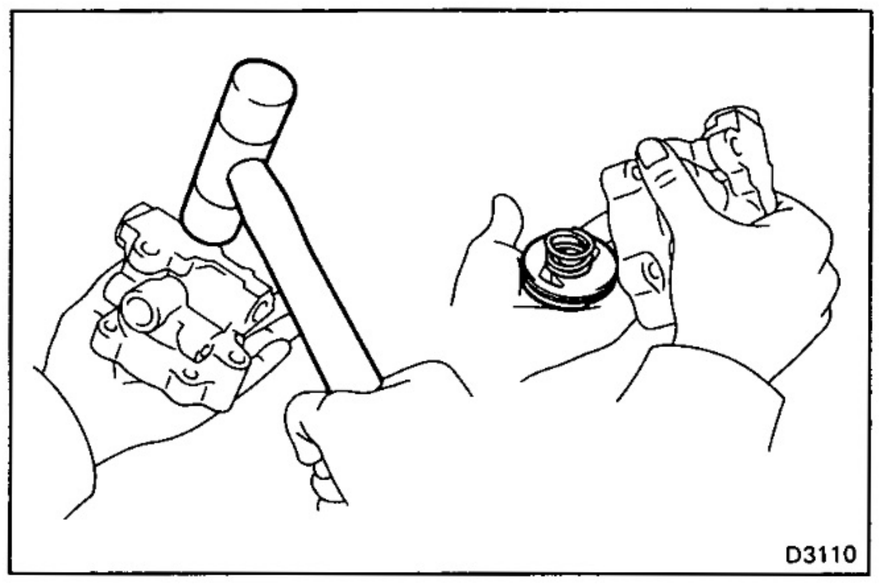

6. REMOVE REAR PLATE AND SPRING

(a) Using a plastic hammer, tap the bottom end of the rear housing and remove the rear plate and spring.

CAUTION: Avoid gripping the rear plate with pliers as this could damage it.

(b) Remove the two O-rings from the front housing and rear plate.

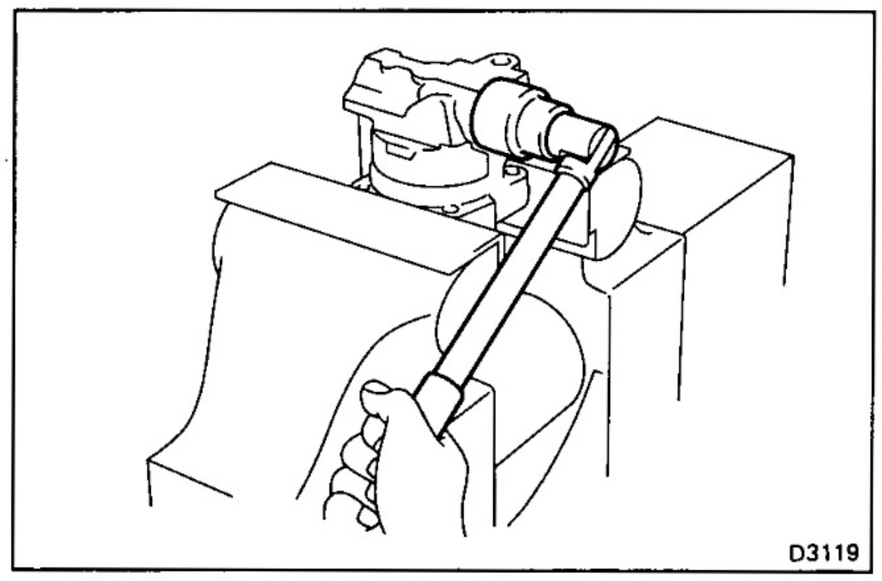

7. REMOVE PRESSURE PORT UNION

8. REMOVE FLOW CONTROL VALVE AND SPRING

CAUTION: Use care not drop, scratch or nick this valve.

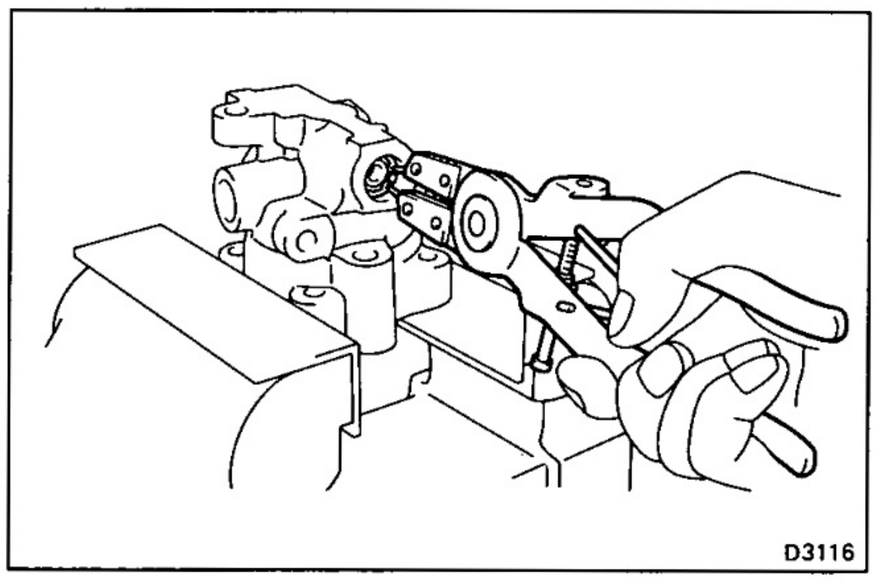

9. REMOVE FLOW CONTROL SPRING SEAT

(a) Using snap ring pliers, remove the snap ring.

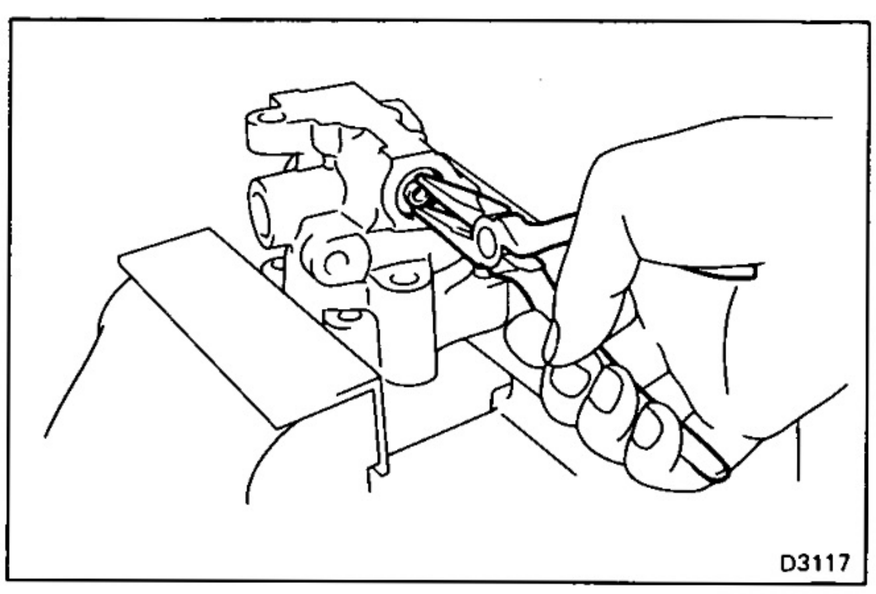

(b) Using needle nose pliers, remove the spring seat.

(c) Remove the O-ring from the spring seat.

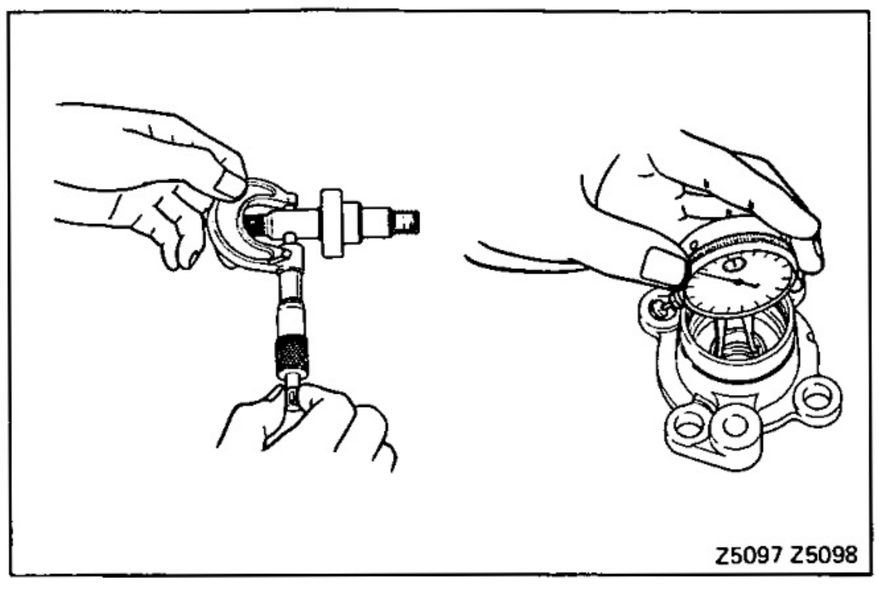
Z5097 Z5098

INSPECTION OF POWER STEERING PUMP

1. INSPECT BUSHING AND MEASURE BUSHING OIL CLEARANCE

(a) Check bushing for wear or damage. The bushing cannot be replaced separately.

If wear or damage is found, replace the entire housing.

(b) Check the oil clearance between the bushing and rotor shaft.

Maximum oil clearance: 0.03 mm (0.0012 in.)

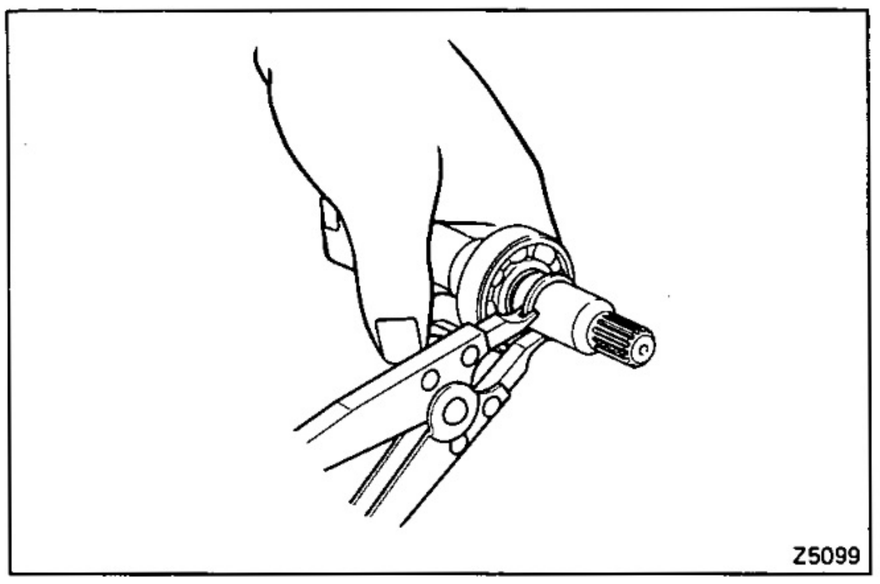
Z5099

2. IF NECESSARY, REPLACE ROTOR SHAFT BEARING

(a) Using snap ring pliers, remove the snap ring.

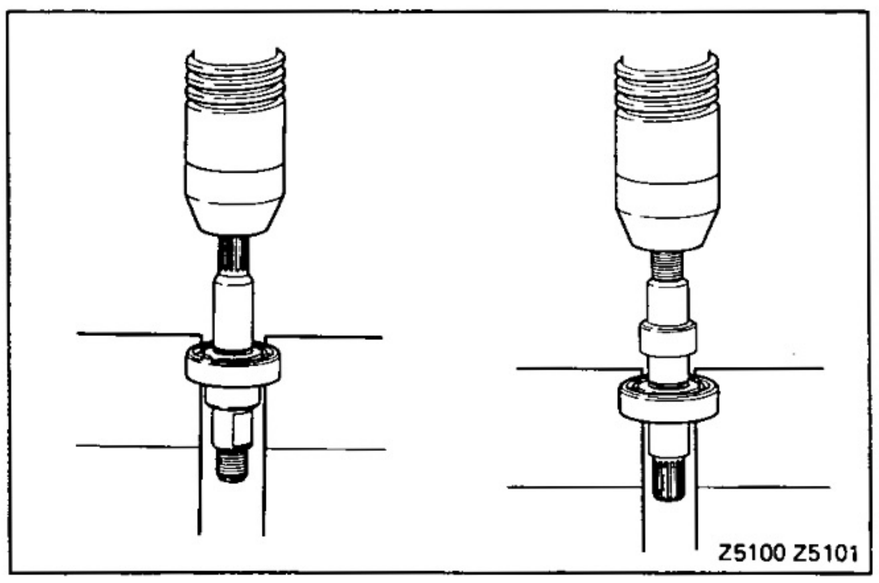
Z5100 Z5101

(b) Using a press, press out the bearing.

(c) Using a press, press in the bearing.

(d) Using snap ring pliers, install the snap ring.

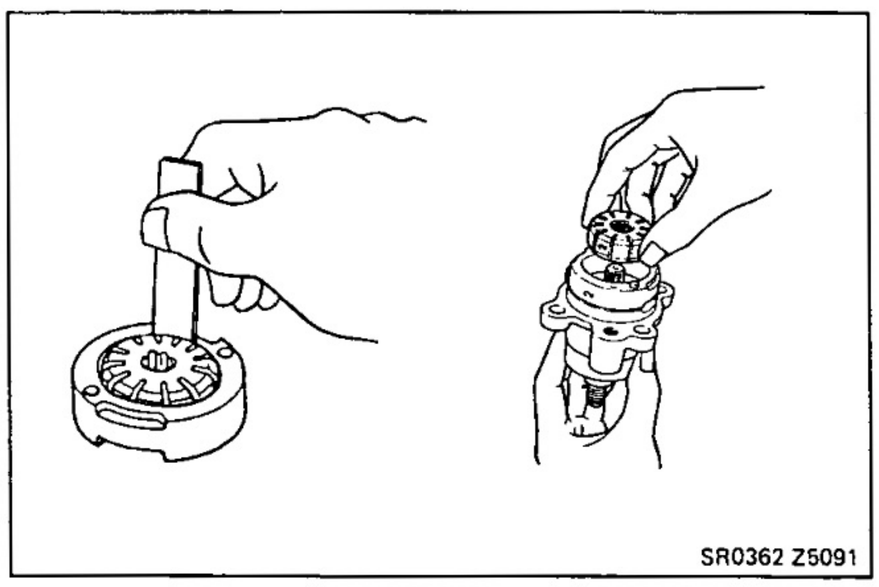
SR0362 Z5091

3. INSPECT ROTOR AND CAM RING

Measure the cam ring clearance.

Maximum clearance: 0.06 mm (0.0024 in.)

If the difference is excessive, replace the cam ring with one having the same letter as on the rotor.

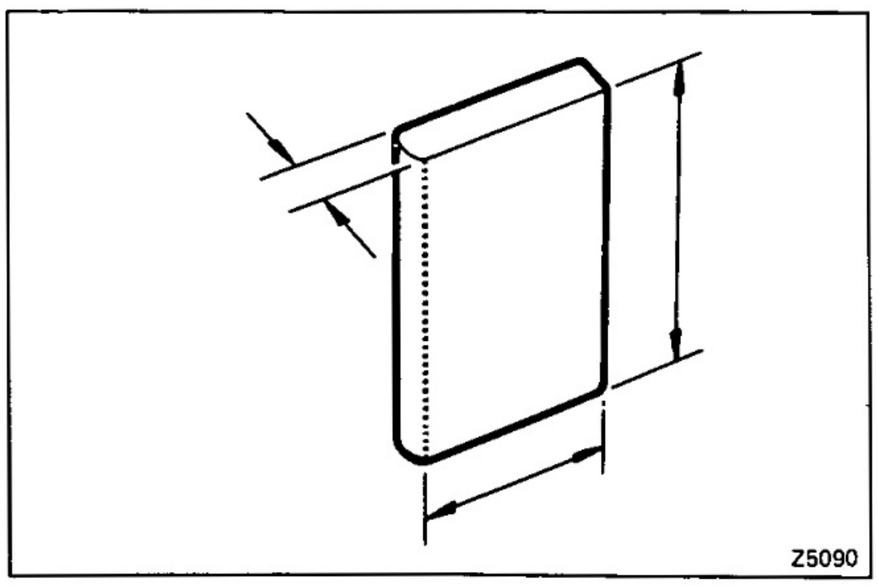
Z5090

4. INSPECT AND MEASURE VANE PLATES

(a) Check the vane plates for wear or scratches.

(b) Measure the length, height and width of the vane plates.

Minimum length: 14.97 mm (0.5894 in.)
Minimum height: 8.1 mm (0.3189 in.)
Minimum width: 1.77 mm (0.0697 in.)

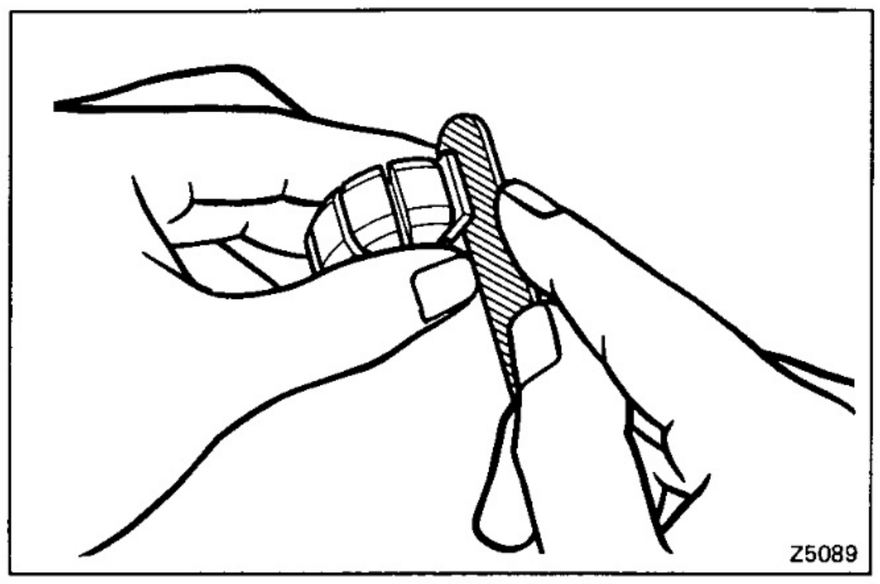

(c) Measure the clearance between the vane plate and rotor groove.

Maximum clearance: 0.03 mm (0.0012 in.)

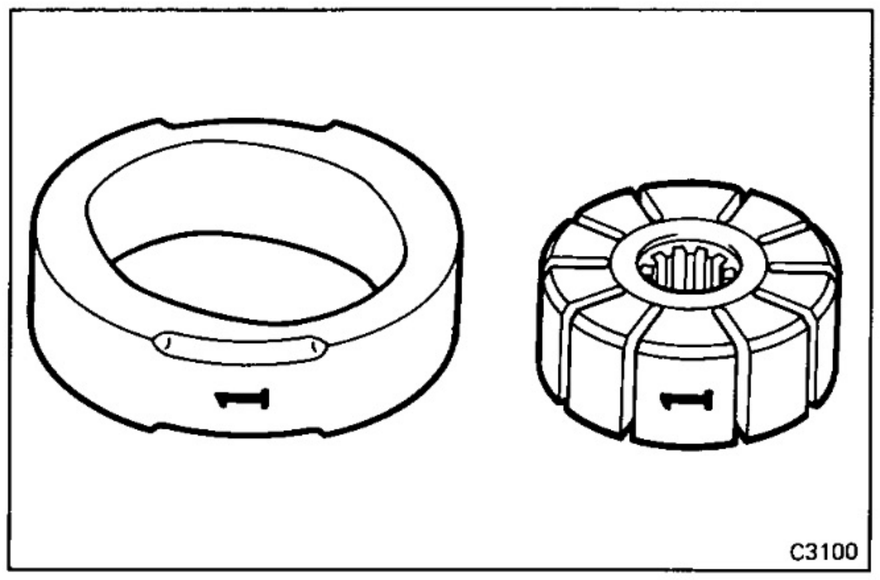

NOTE: There are five vane lengths with the following rotor and cam ring marks:

Rotor and cam ring mark	Vane length mm (in.)
None	14.996 – 14.998 (0.5904 – 0.5905)
1	14.994 – 14.996 (0.5903 – 0.5904)
2	14.992 – 14.994 (0.5902 – 0.5903)
3	14.990 – 14.992 (0.59016 – 0.59024)
4	14.988 – 14.990 (0.5901 – 0.5902)

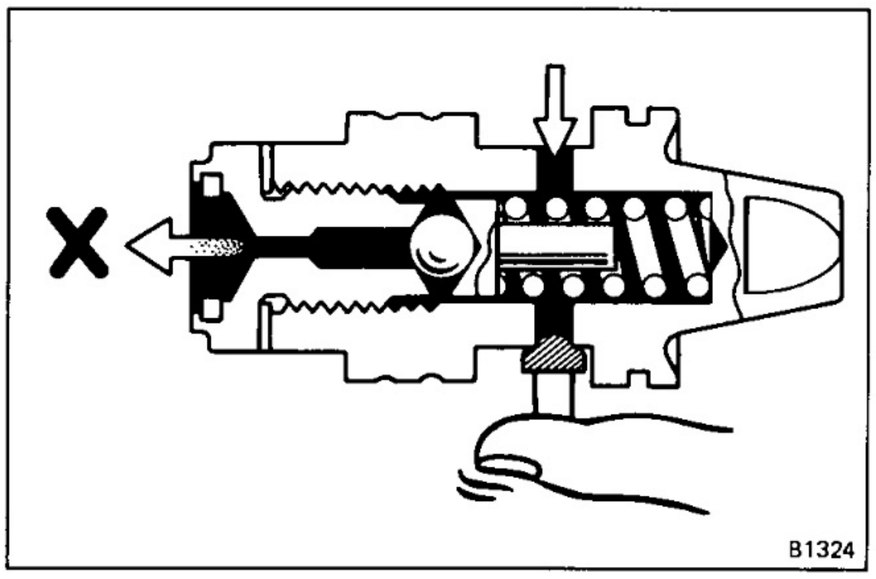

5. INSPECT FLOW CONTROL VALVE AND MEASURE SPRING

(a) Check the flow control valve for wear or damage.

(b) Apply fluid to the valve and check that it falls smoothly into the valve hole by its own weight.

(c) Check the flow control valve for leakage.

- Close one of the holes and apply compressed air [4 or 5 kg/cm² (57 or 71 psi, 392 – 490 kPa)] into the opposite side.
- Confirm that air does not come out from the end hole.

If necessary, replace the valve with one having the same letter as on the rear housing.

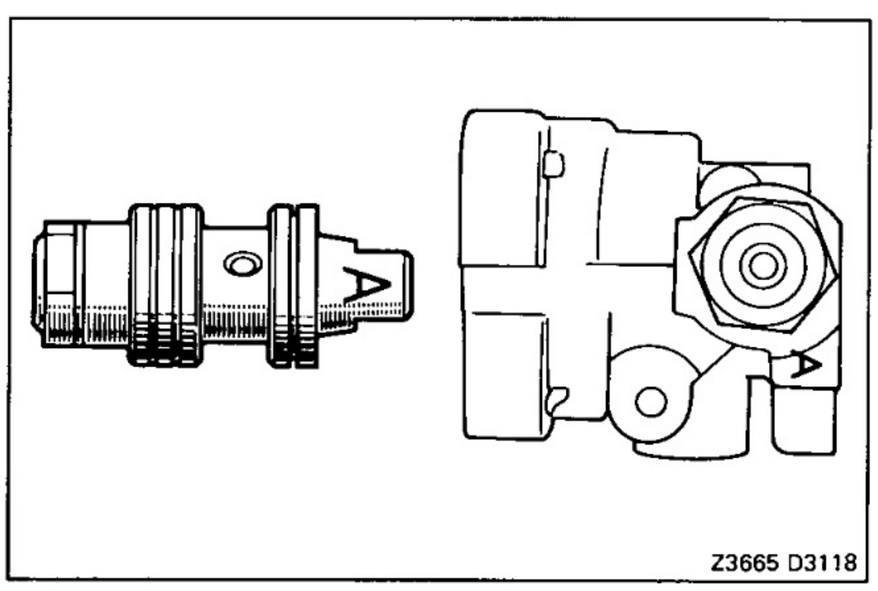

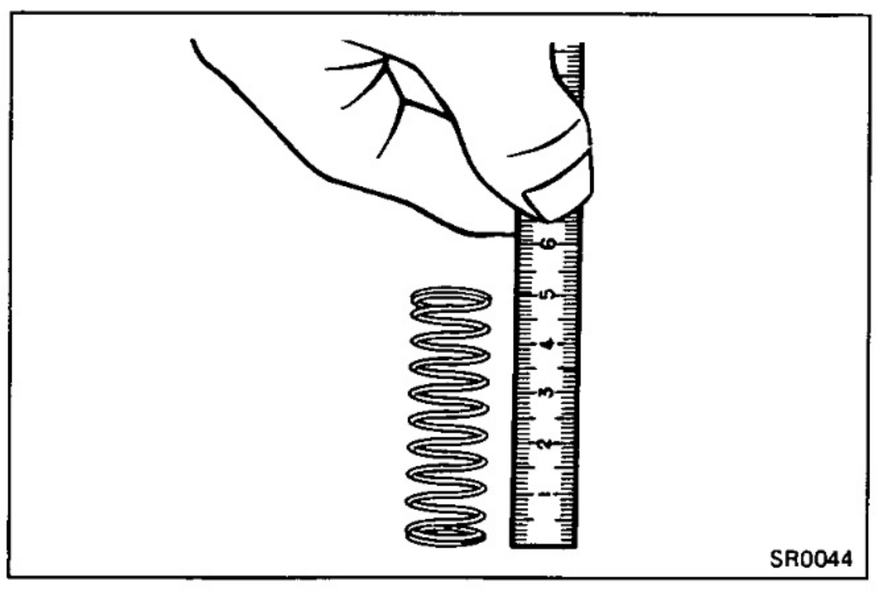

(d) Check that the spring is within specification.

Spring length: 47 – 50 mm (1.85 – 1.97 in.)

If the spring is not within specification, replace it.

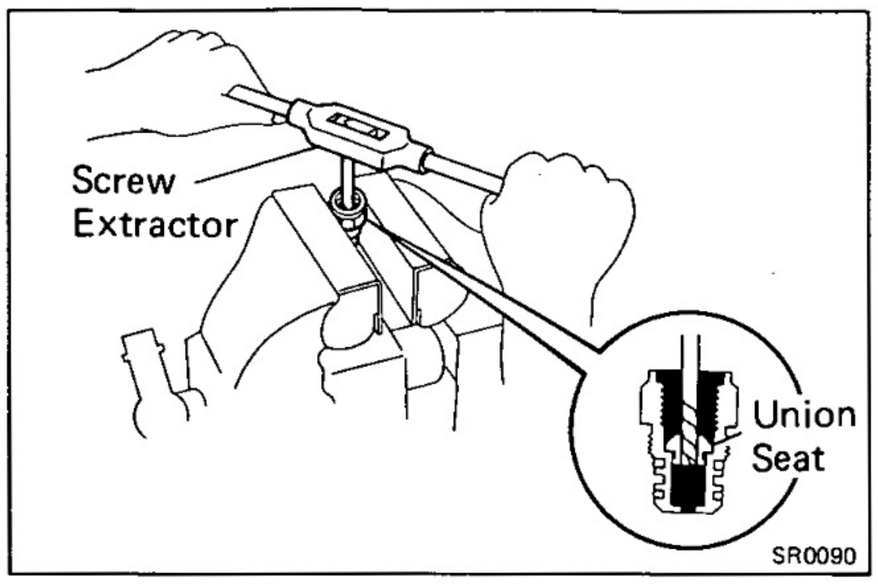

6. IF NECESSARY, REPLACE UNION SEAT

(a) Using a screw extractor wrench, remove the union seat.

(b) Install a new union seat.

NOTE: Only floating type parts are available.

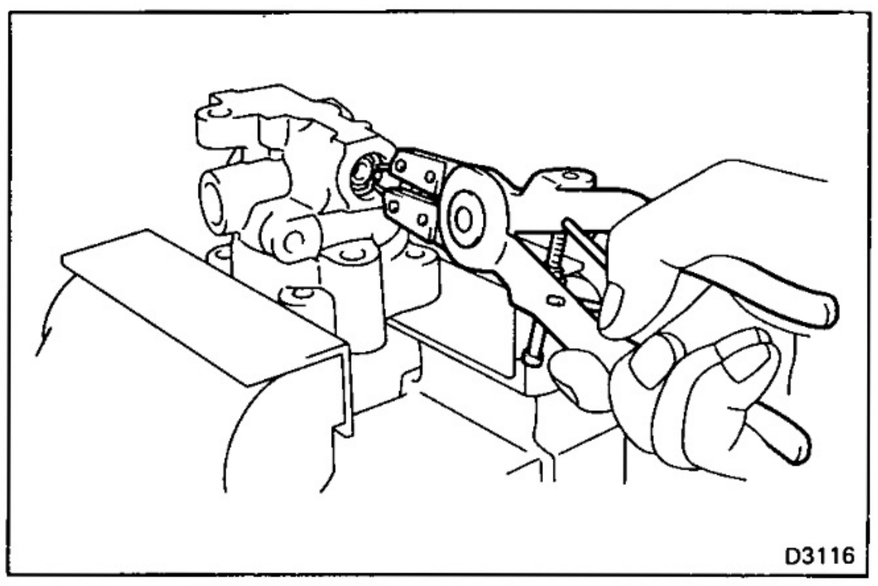

ASSEMBLY OF POWER STEERING PUMP

(See page SR-40)

1. INSTALL FLOW CONTROL SPRING SEAT

(a) Install the O-ring to the spring seat.

(b) Push in the spring seat to the front housing.

(c) Using snap ring pliers, install the snap ring.

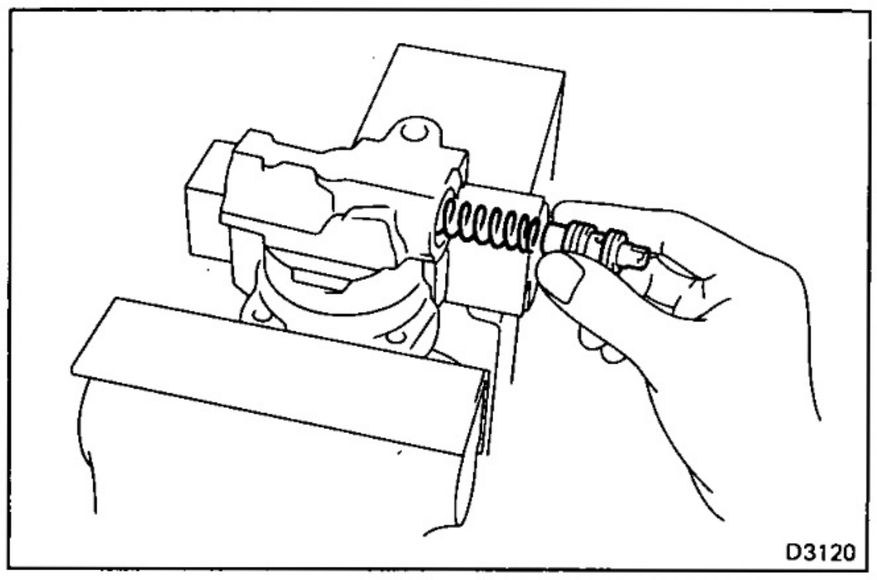

2. INSTALL SPRING AND FLOW CONTROL VALVE

Push in the spring and valve to the front housing.

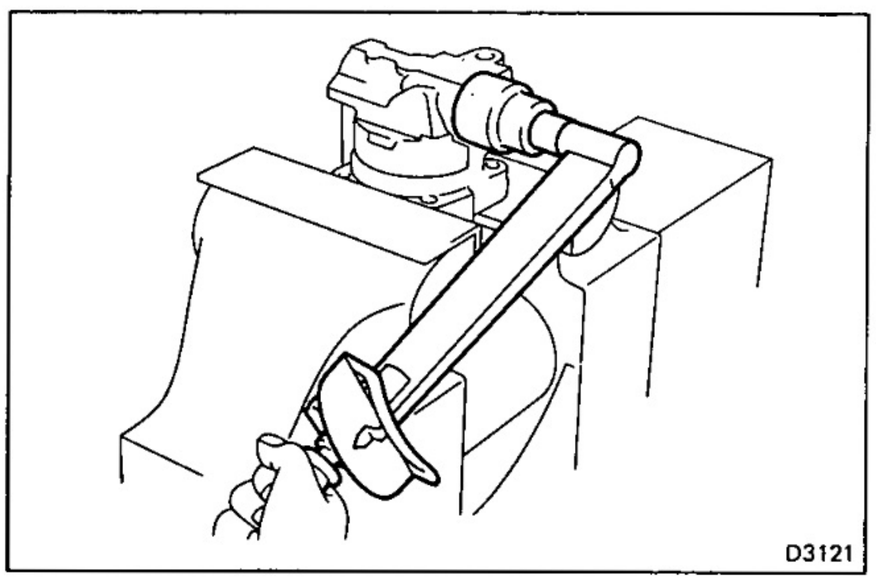

3. INSTALL PRESSURE PORT UNION

(a) Install the two O-rings to the pressure port union and the front housing.

(b) Install and torque the pressure port union.

Torque: 700 kg-cm (51 ft-lb, 69 N·m)

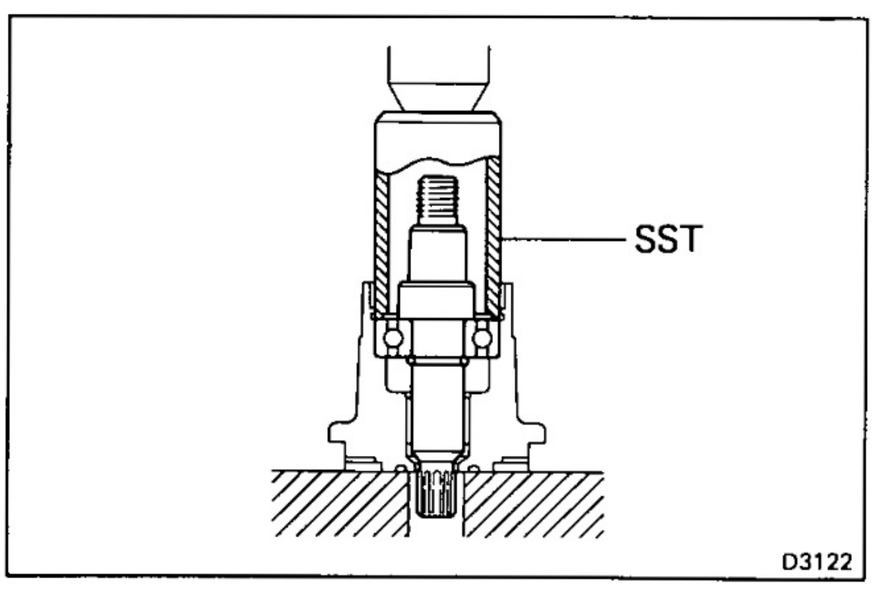

4. INSTALL ROTOR SHAFT TO FRONT HOUSING

(a) Using SST, press in the rotor shaft to the front housing.

SST 09632-36010

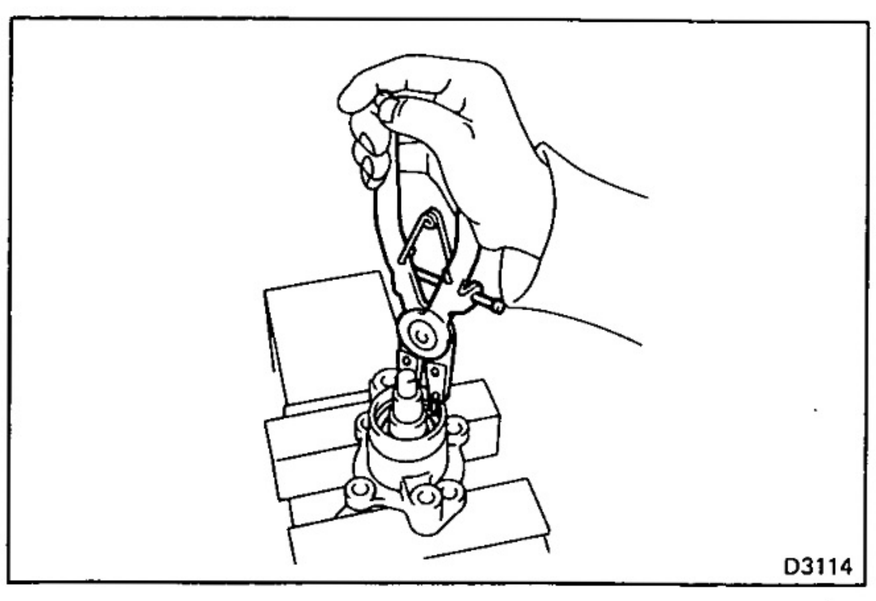

(b) Using snap ring pliers, install the snap ring.

5. INSTALL O-RING AND PIN TO FRONT HOUSING

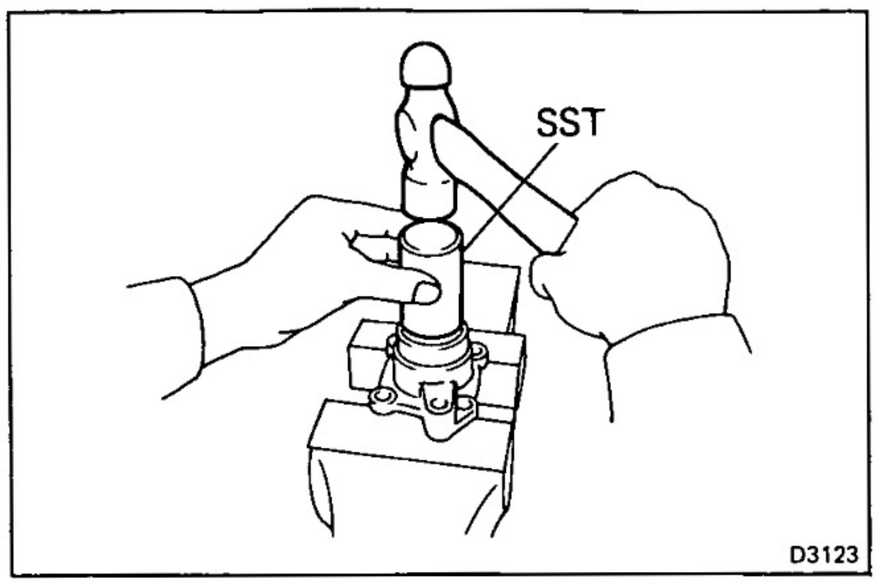

6. INSTALL OIL SEAL

(a) Apply a light coat of MP grease to the oil seal lip.

(b) Using SST and hammer, install the oil seal.

SST 09632-36010

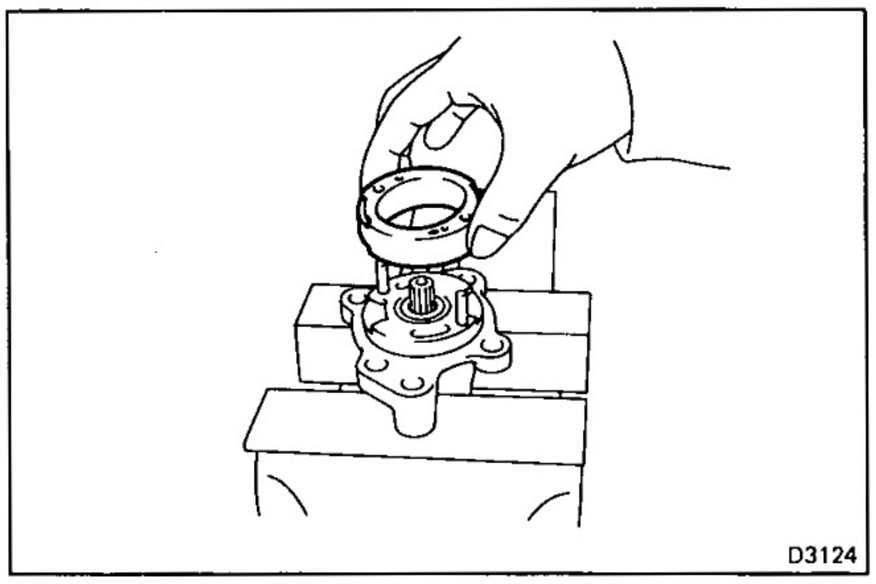

7. INSTALL CAM RING

Align and install large hole of the cam ring to the pin.

NOTE: Be sure the letters inscribed on the cam ring facing upward.

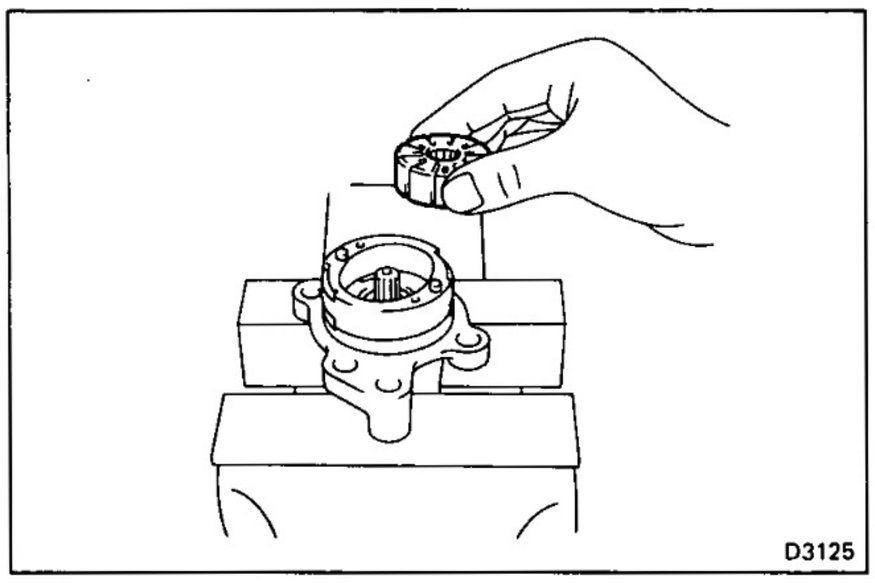

8. INSTALL ROTOR

Install the rotor with the letters inscribed facing upward.

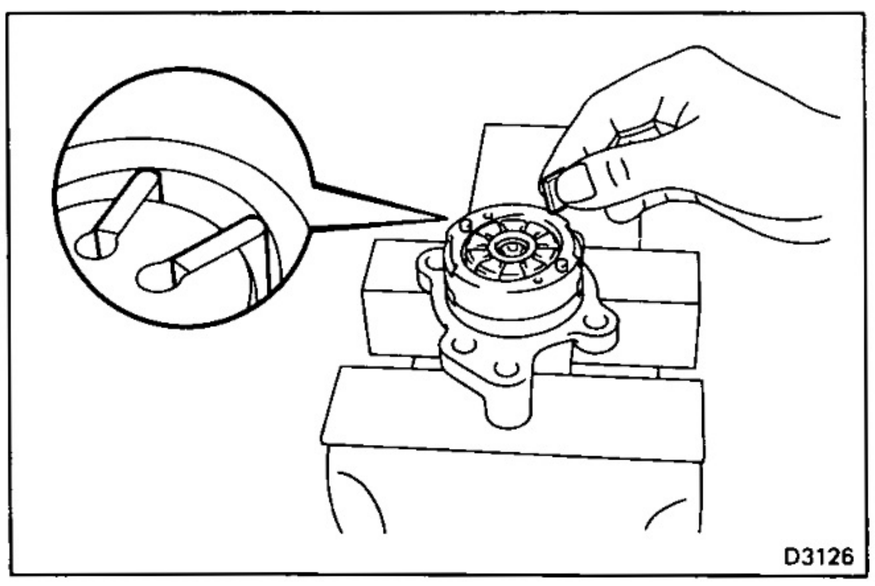

9. INSTALL VANE PLATES

Install the vane plates with the round end facing outward.

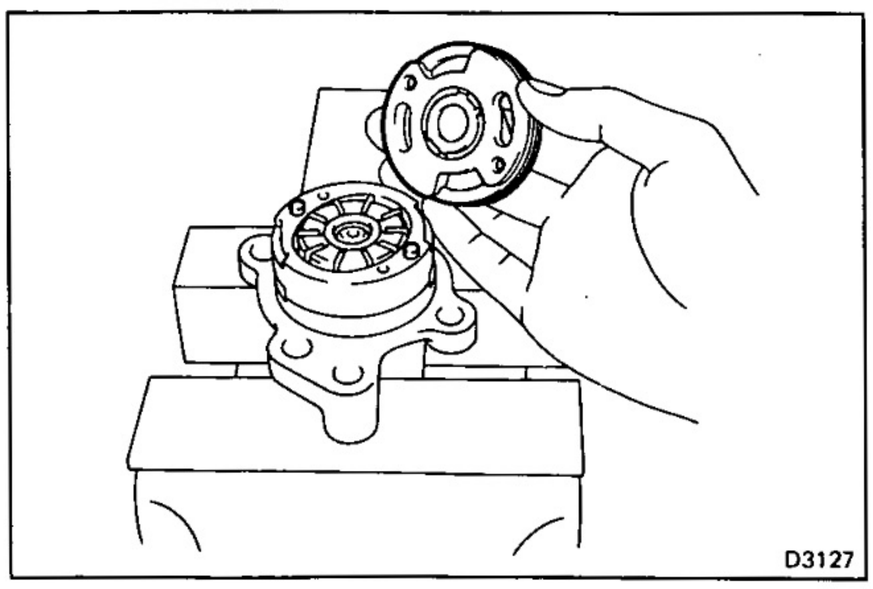

10. INSTALL REAR PLATE AND SPRING

(a) Install the two O-rings to the rear plate.

(b) Place the rear plate on the cam ring with pin holes aligned with the pins.

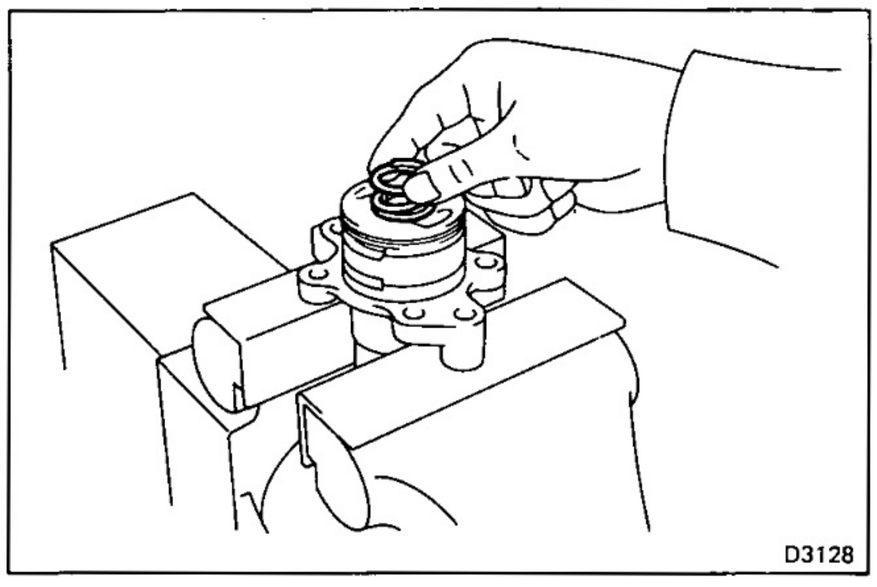

(c) Place the spring on the rear plate.

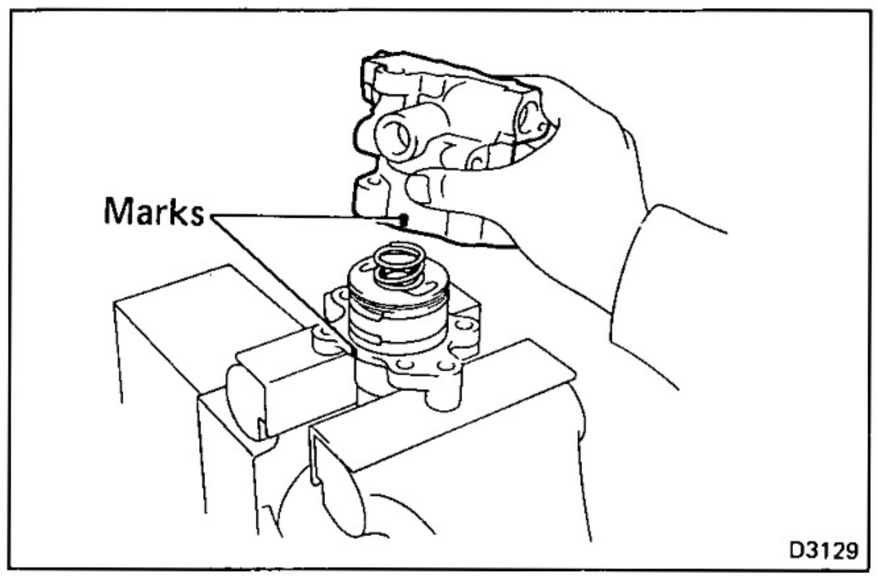

11. INSTALL REAR HOUSING

(a) Align the matchmarks on the front and rear housing and assemble them.

(b) (3F Engine)
Install the reservoir tank and O-ring.

(c) Install and temporarily tighten front housing mount bolts.

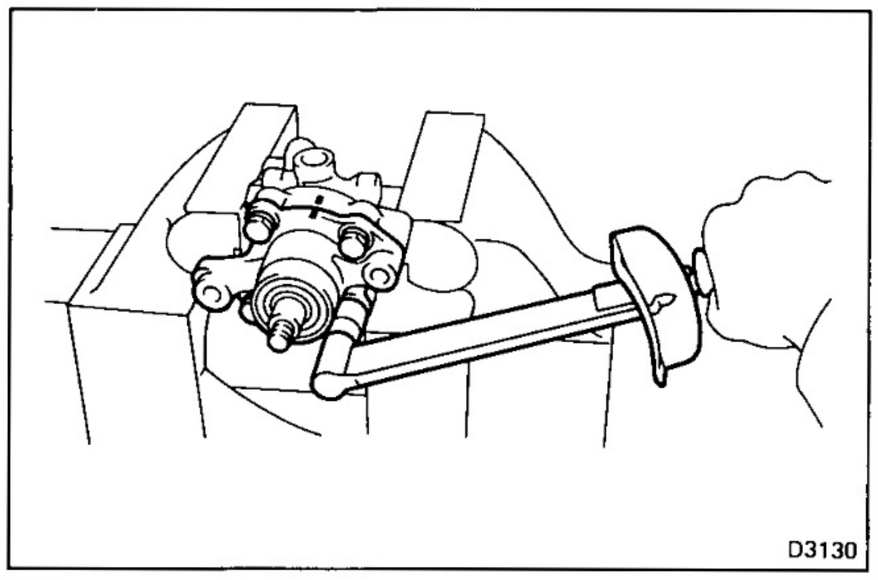

(d) Clamp the rear housing in a vise.

CAUTION: Do not tighten the vise too tightly.

(e) Evenly tighten the four housing bolts in several passes.

Torque: 470 kg-cm (34 ft-lb, 46 N·m)

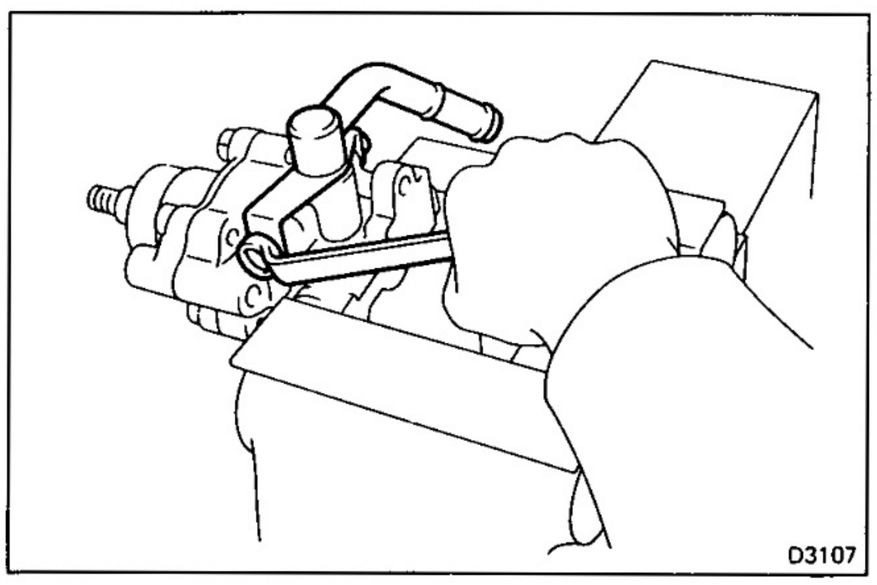

12. (3B and 2H Engine) INSTALL SUCTION PORT UNION

(a) Install the suction port union with an O-ring.

(b) Install and torque the two bolts.

Torque: 130 kg-cm (9 ft-lb, 13 N·m)

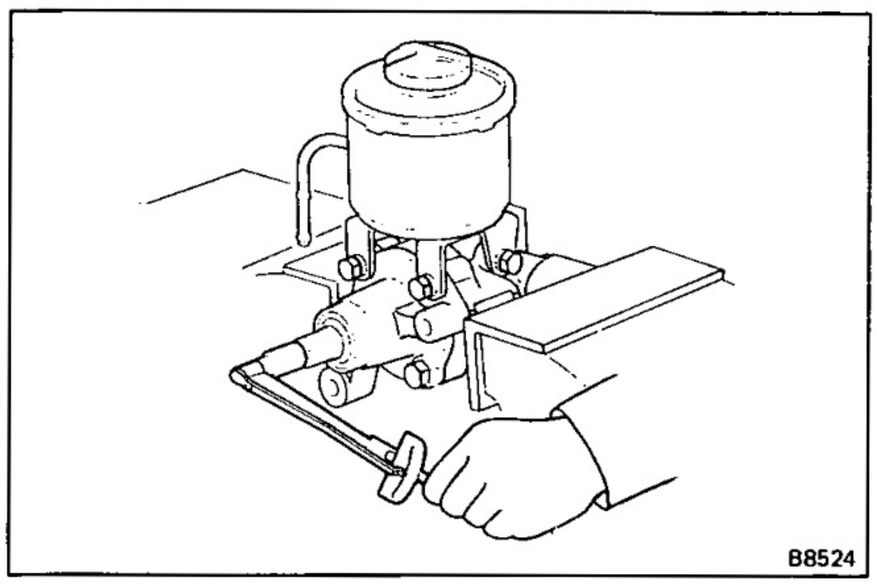

13. CHECK ROTOR SHAFT ROTATION CONDITION

(a) Check that the rotor shaft rotates smoothly without abnormal noise.

(b) Provisionally install the pulley nut and check the rotating torque.

Rotating torque: 2.8 kg-cm or less (2.4 in.-lb, 0.3 N·m)

COMPONENTS
(For USA)

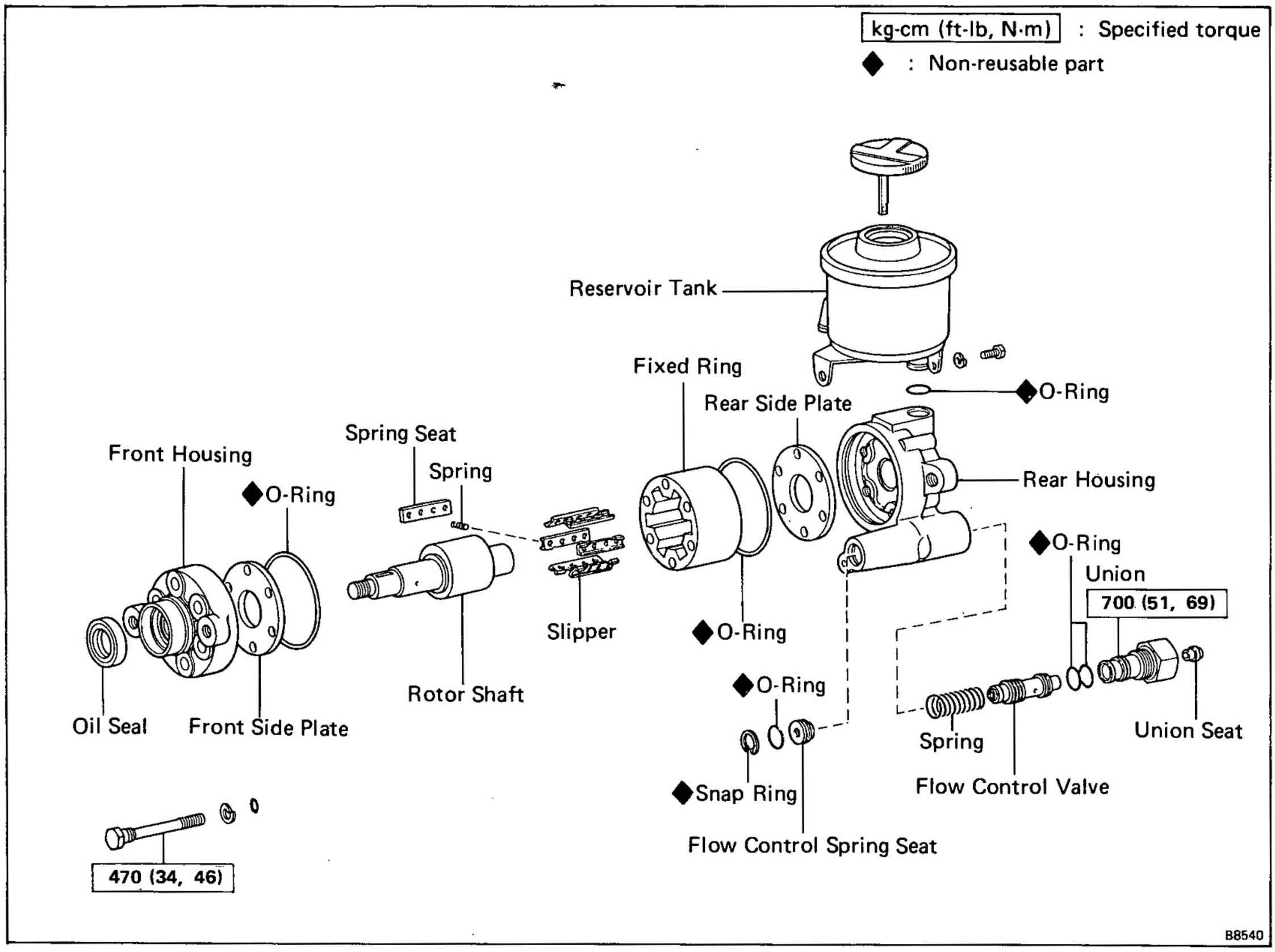

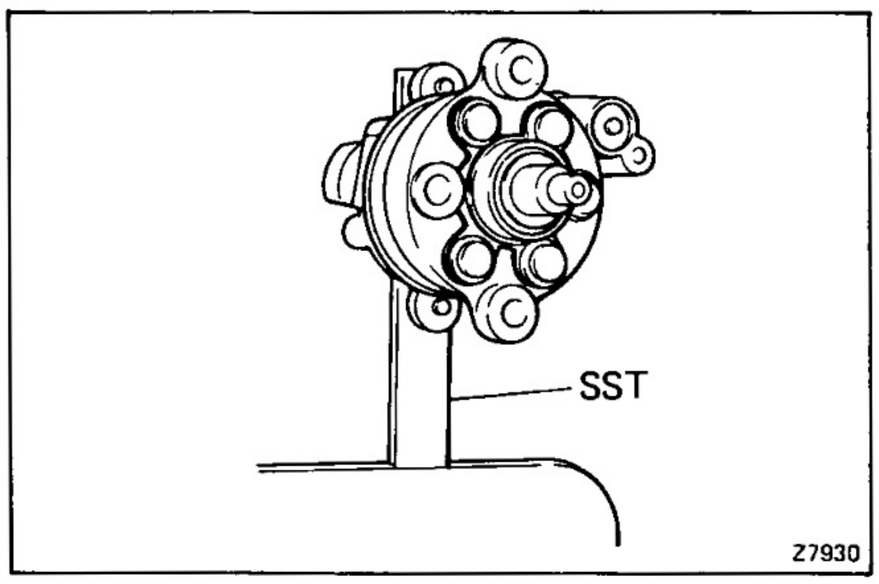

DISASSEMBLY OF POWER STEERING PUMP

1. ATTACH SST TO POWER STEERING PUMP AND HOLD POWER STEERING PUMP

   SST 09630-00011

2. REMOVE FRONT HOUSING MOUNT BOLTS

3. REMOVE RESERVOIR TANK AND O-RING

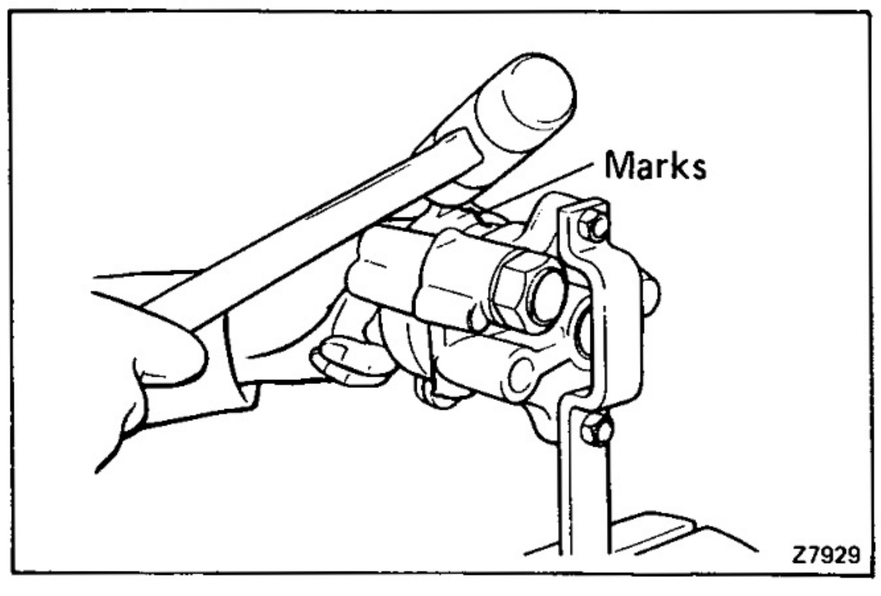

4. MARK FRONT HOUSING AND FIXED RING

5. REMOVE FRONT HOUSING

   Using a plastic hammer, tap off the front housing and remove the O-ring and side plate.

   CAUTION:
   - **Do not pull out the rotor or fixed ring.**
   - **Do not allow the slippers or springs to fly out.**

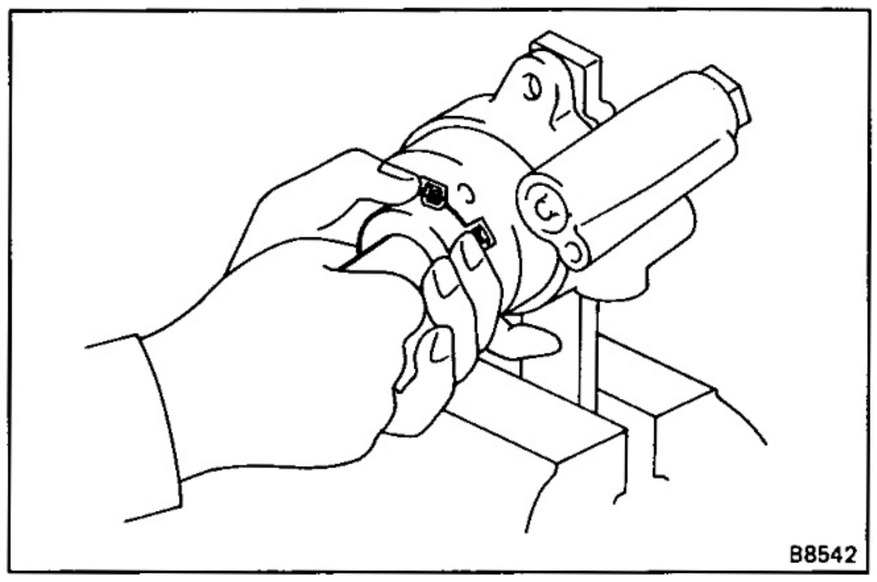

6. REMOVE ROTOR SHAFT

(a) Remove the rotor shaft.

(b) Remove the spring, spring seat and slipper.

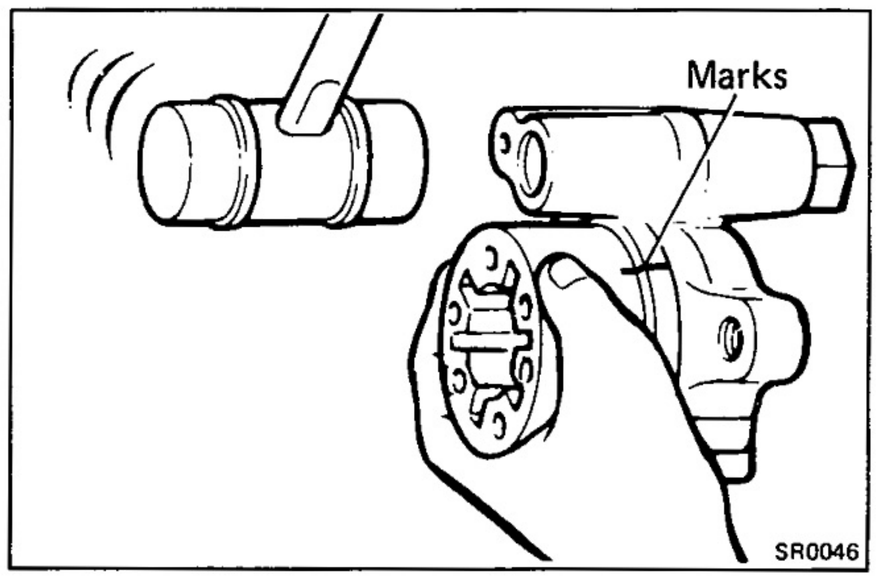

7. MARK REAR HOUSING AND FIXED RING

8. REMOVE FIXED RING

(a) Using a plastic hammer, tap off the fired ring.

(b) Remove the O-ring and side plate.

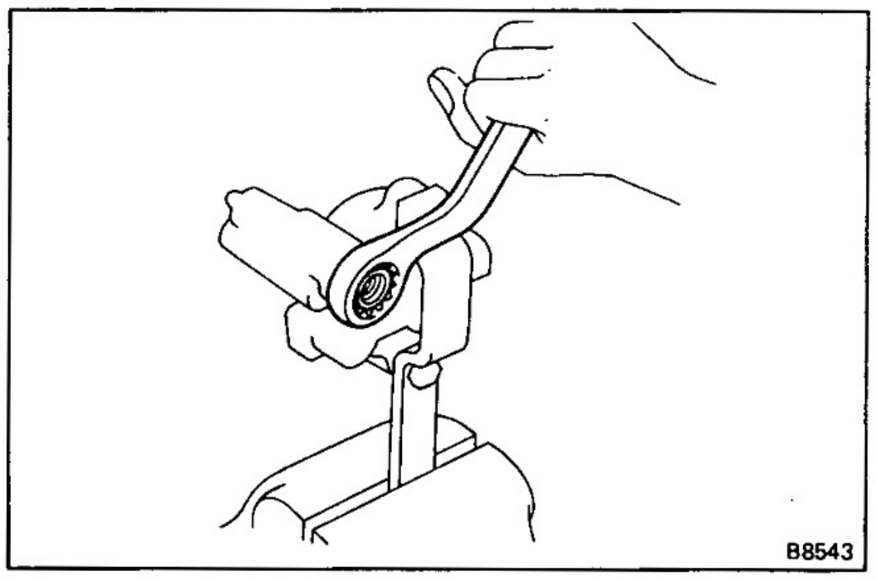

9. REMOVE PRESSURE PORT UNION

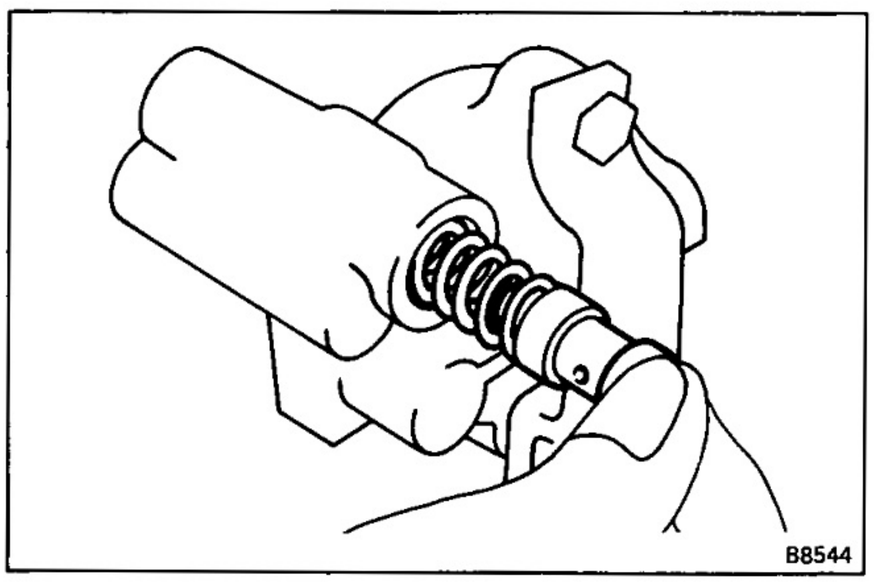

10. REMOVE FLOW CONTROL VALVE AND SPRING

CAUTION: Avoid gripping the rear plate with pliers as this could damage it.

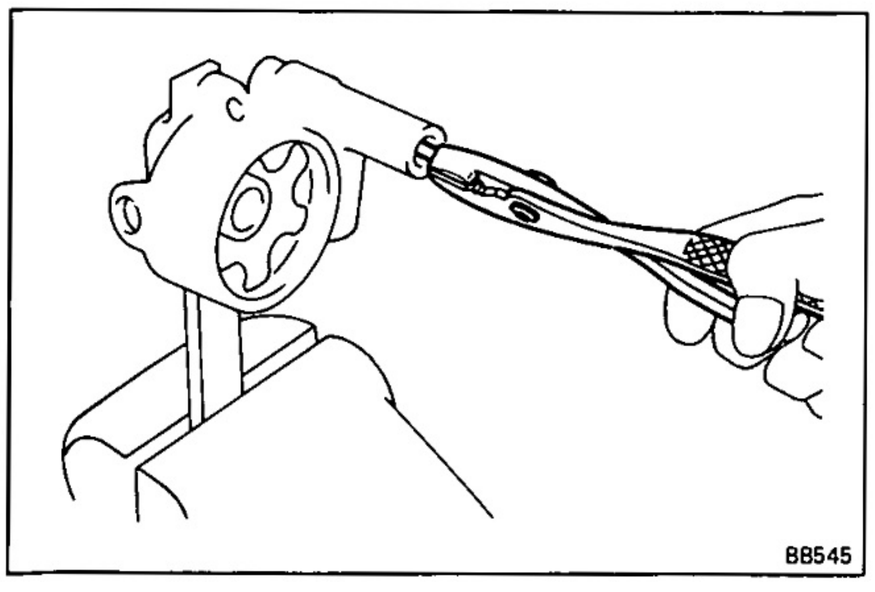

11. REMOVE FLOW CONTROL SPRING SEAT

(a) Using snap ring pliers, remove the snap ring.

(b) Install a suitable bolt to the spring seat and pull it out.

INSPECTION OF POWER STEERING PUMP

1. INSPECT ROTOR SHAFT AND FIXED RING

(a) Check to oil seal tip contact surface and bushing contact for wear or damage.

(b) Check the circumferential surface of the rotor for abnormal wear (burns and scratches).

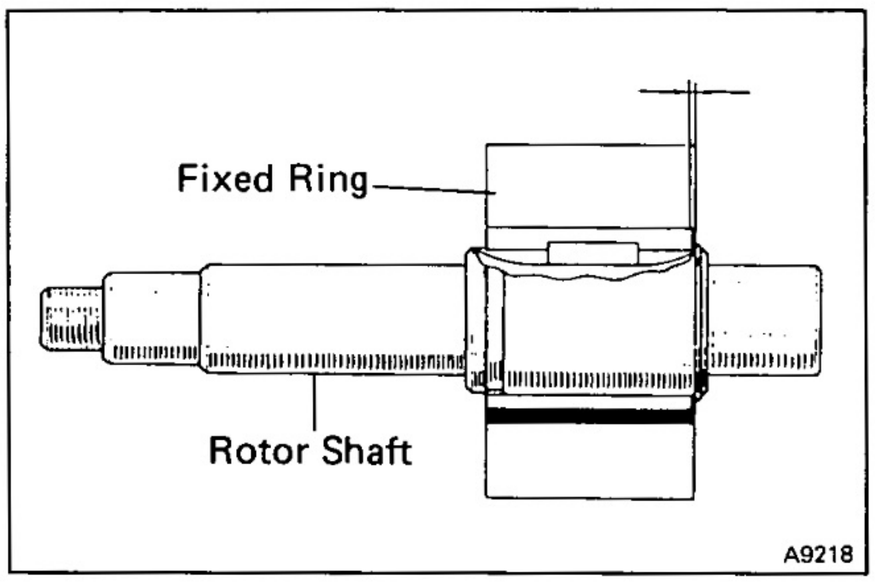

(c) Measure the rotor shaft length (side plate contact surface) and the fixed ring length, and check that the difference is within the limit shown below.

Limit: 0.06 mm (0.0024 in.)

If not within specification, replace the rotor shaft.

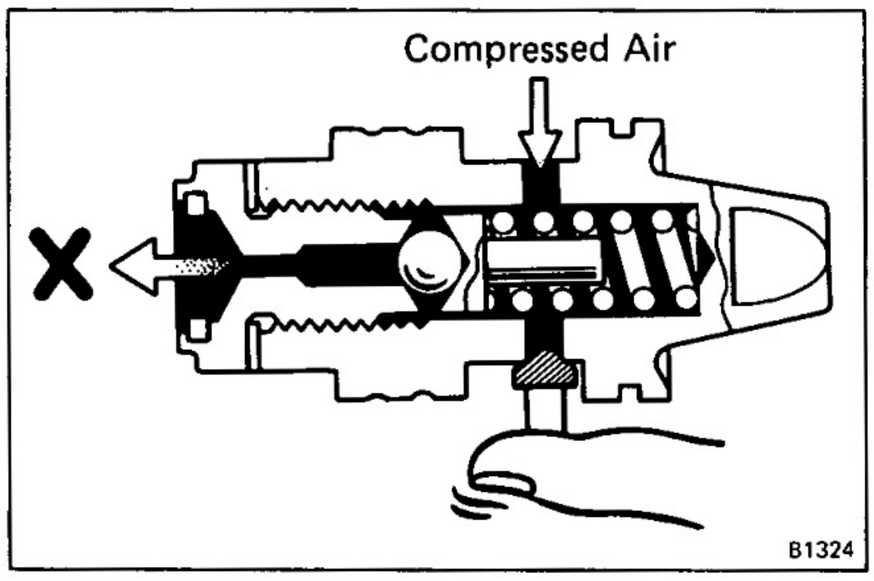

2. INSPECT FLOW CONTROL VALVE AND MEASURE SPRING

(a) Check the flow control valve for wear or damage.

(b) Apply fluid the valve and check that it falls smoothly into the valve hole by its own weight.

(c) Check the flow control valve for leakage.

- Close one of the holes and apply compressed air [4 or 5 kg/cm^2 (57 – 71 psi, 392 – 490 kPa)] into the opposite side.
- Confirm that air does not come out from the end hole.

If necessary, replace the valve with one having the same letter on the rear housing.

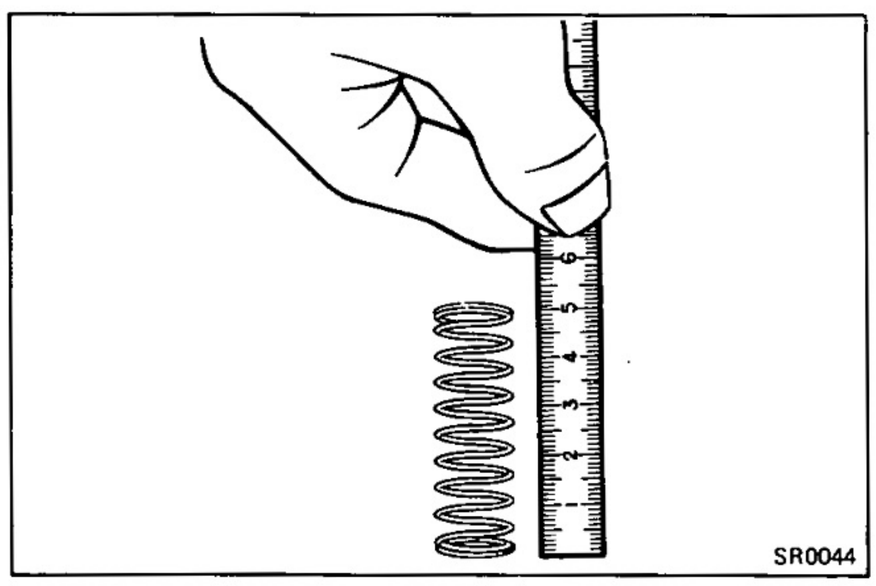

(d) Check that the spring is within specification.

Spring length: 47 – 50 mm (1.85 – 1.97 in.)

If the spring is not within specification, replace it.

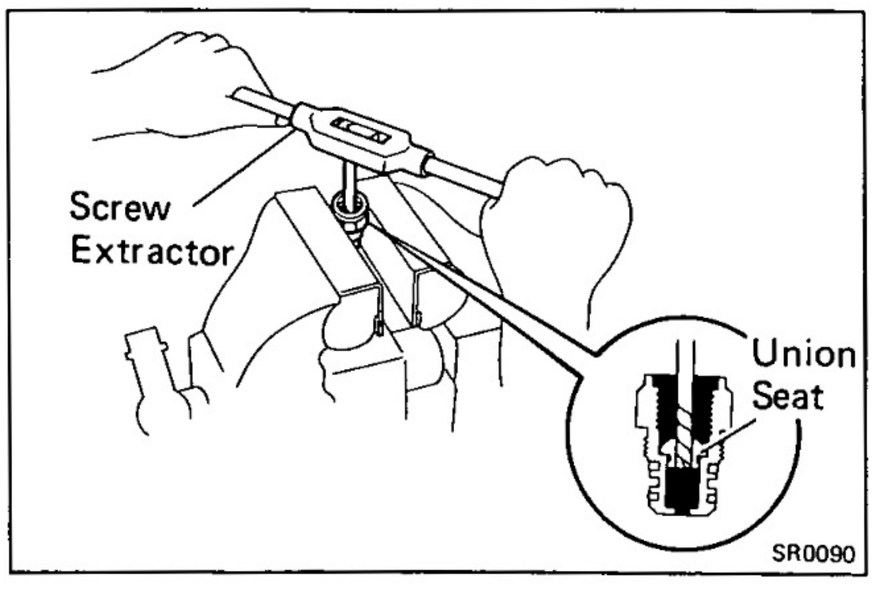

3. IF NECESSARY, REPLACE UNION SEAT

(a) Using a screw extractor, remove the union seat.

(b) Install a new floating type union seat.

NOTE: Only floating type parts are available.

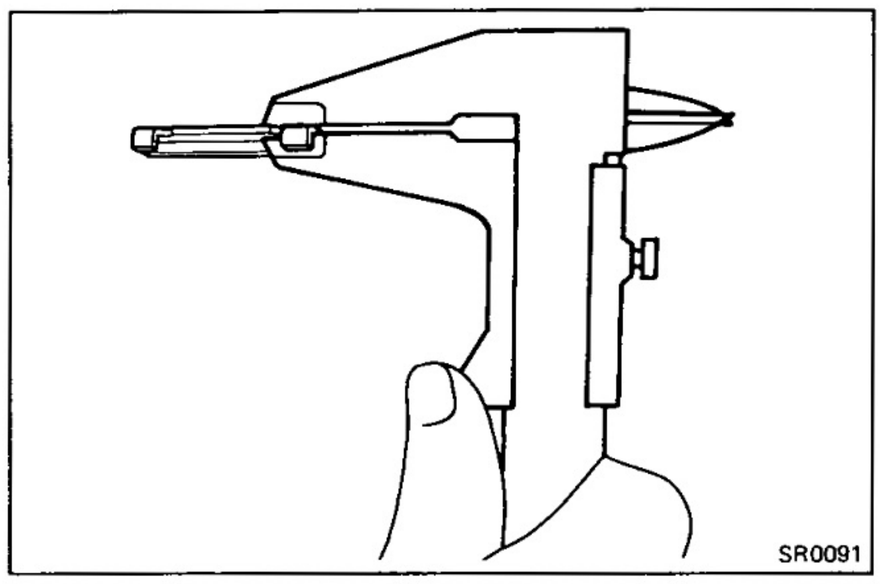

4. INSPECT SLIPPER AND SPRING

(a) Check the slipper for wear or scratches.

(b) Measure the thickness and length of the slipper.

Minimum thickness: 1.40 mm (0.0551 in.)
Minimum length: 39.920 mm (1.5717 in.)

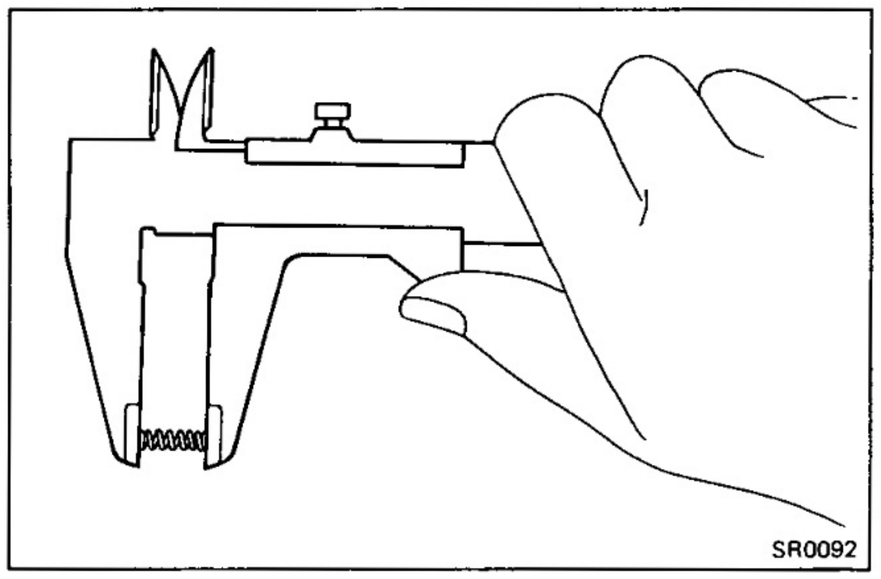

(c) Check that the spring length is within specification.

Spring length: 13 – 14 mm (0.512 – 0.551 in.)

If the spring is not within specification, replace it.

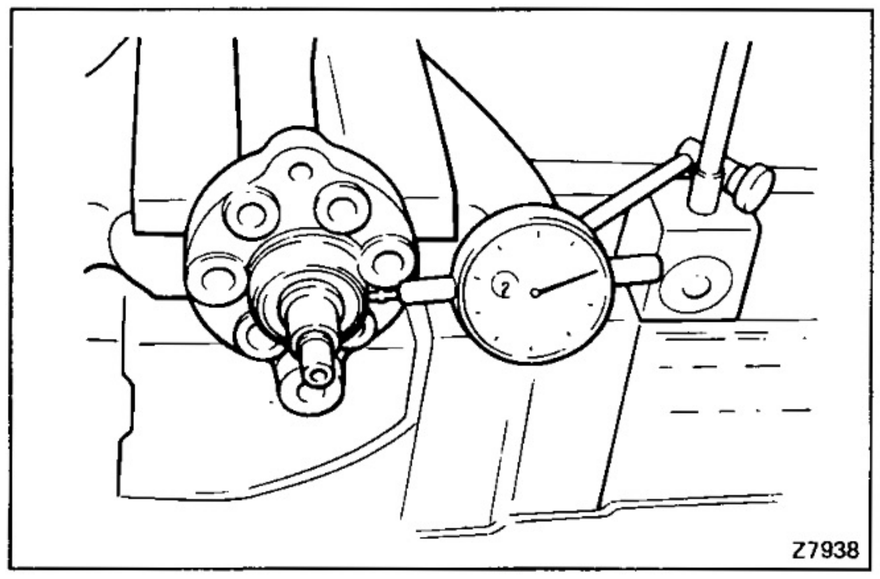

5. INSPECT FRONT AND REAR HOUSING BUSHING

(a) Check the front and rear bushing for wear or cracks.

(b) Measure the clearance between rotor shaft and bushing.

Maximum clearance: 0.03 mm (0.0012 in.)

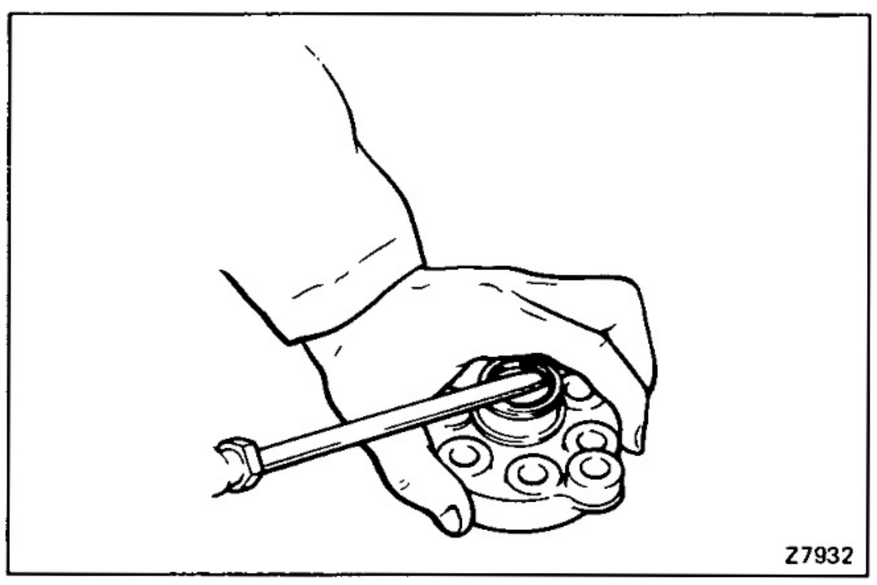

6. IF NECESSARY, REPLACE OIL SEAL

(a) Using a screwdriver, remove the oil seal.

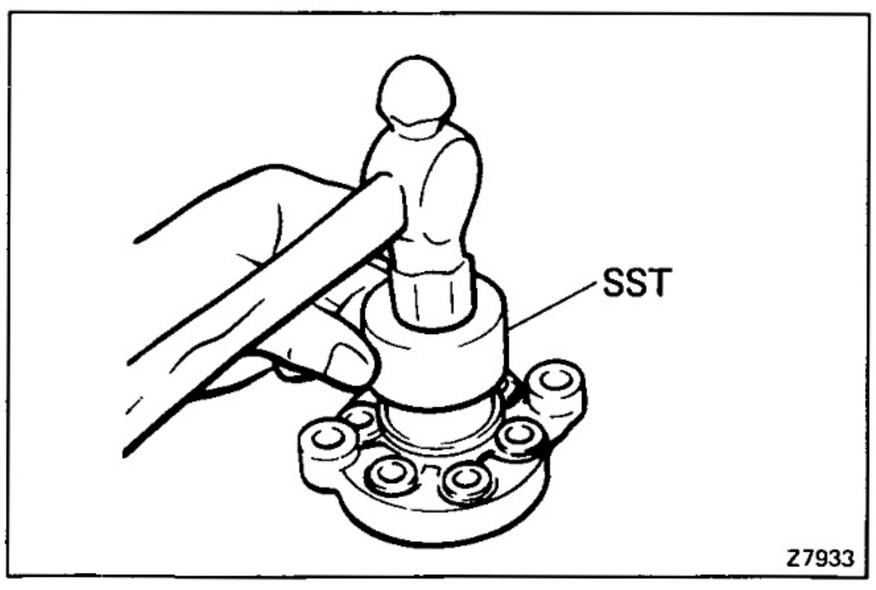

(b) Using SST, drive in a new oil seal.

SST 09630-00011

7. INSPECT SIDE PLATES

Check the front and rear side plates on the rotor contact surface. If worn or damaged, replace it.

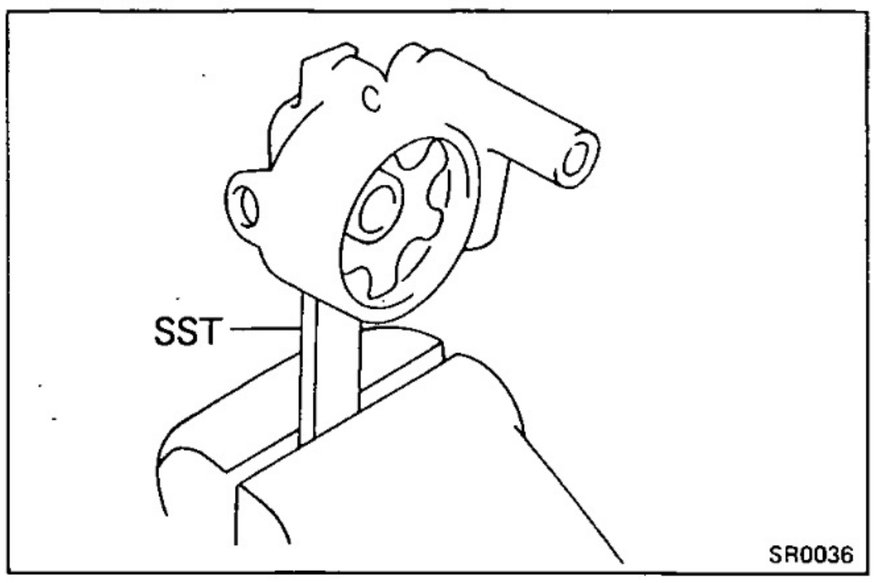

ASSEMBLY OF POWER STEERING PUMP

(See page SR-49)

1. ATTACH REAR HOUSING TO SST AND FIX SST TO A VISE

   SST 09630-00011

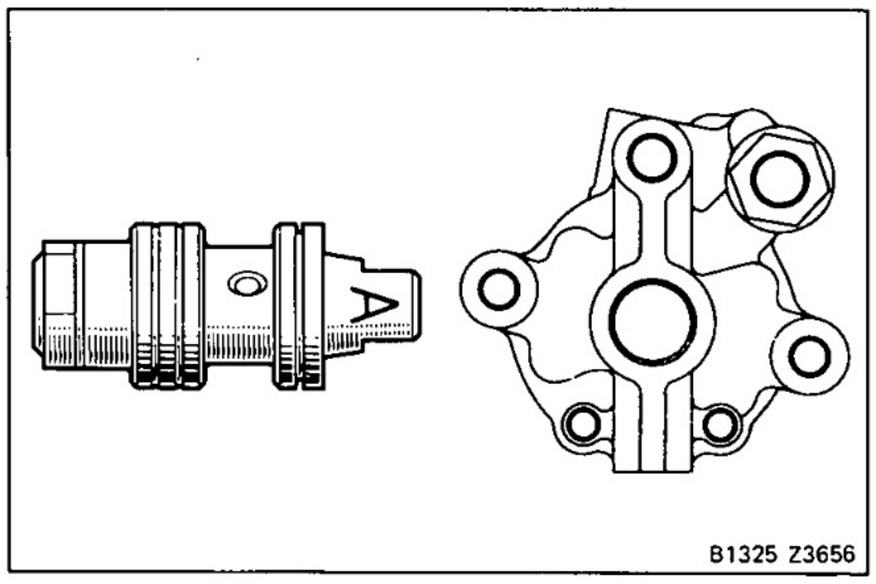

2. INSTALL SPRING AND FLOW CONTROL VALVE

   NOTE: Be sure the letter inscribed on the flow control valve matches the letter stamped on the rear of the pump body.

   Inscribed mark: A, B, C, D, E, or F

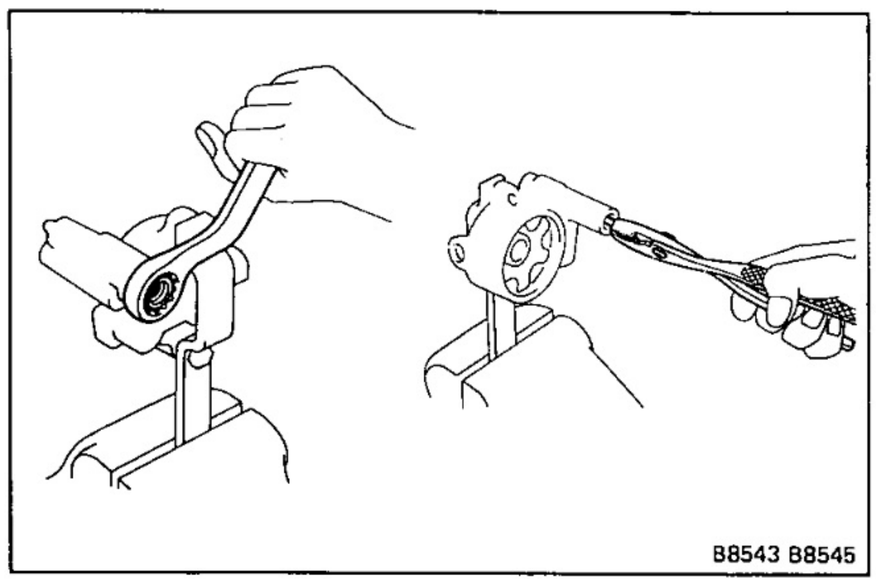

3. INSTALL PRESSURE PORT UNION

   Install and torque the union.

   Torque: 700 kg-cm (51 ft-lb, 69 N·m)

4. INSTALL FLOW CONTROL SPRING SEAT

   (a) Temporarily install a suitable bolt to the spring seat.

   (b) Push in the bolt and install the snap ring with snap ring pliers.

   (c) Remove the bolt.

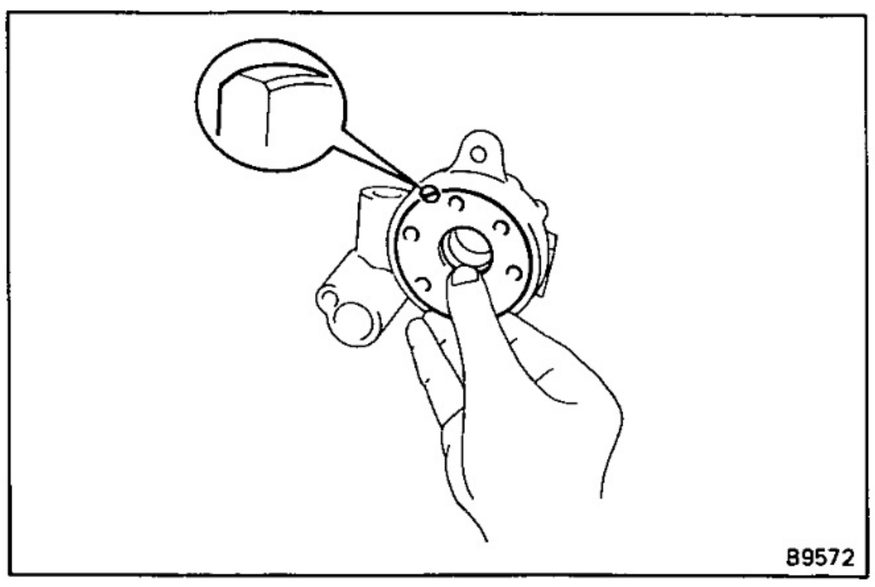

5. INSTALL FIXED RING

   (a) Install the side plate to the rear housing.

   (b) Install the O-ring to the rear housing.

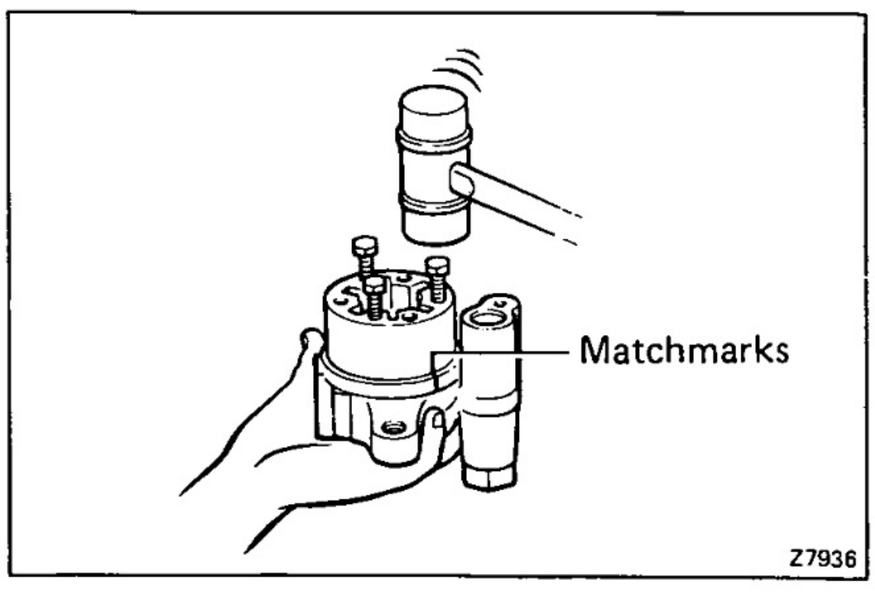

   (c) Align the marks on the fixed ring and rear housing.

   (d) Temporarily install the three bolts.

   (e) Using a plastic hammer, install the fixed ring.

   (f) Remove the three bolts.

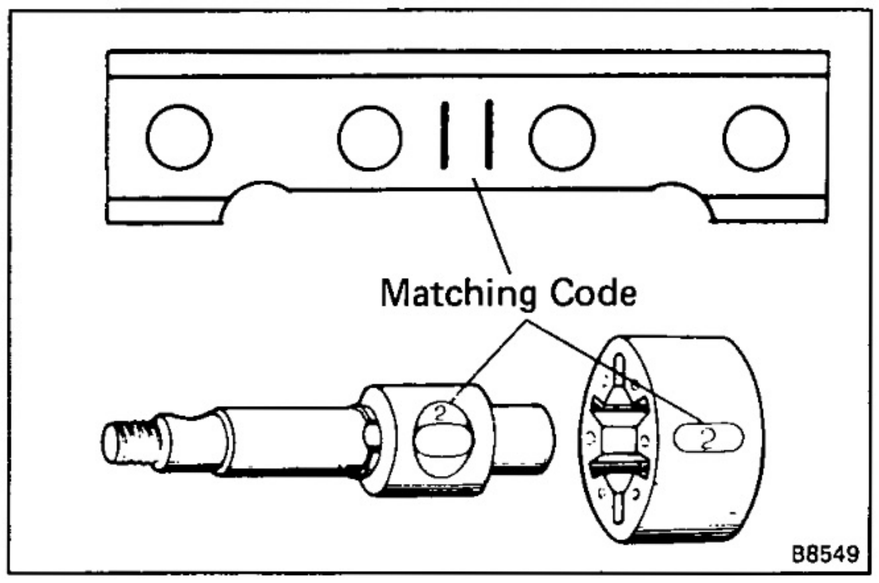

6. INSTALL ROTOR SHAFT

Select a fixed ring, rotor shaft and slipper with matching code numbers.

Inscribed mark: 1, 2, 3, 4, or None

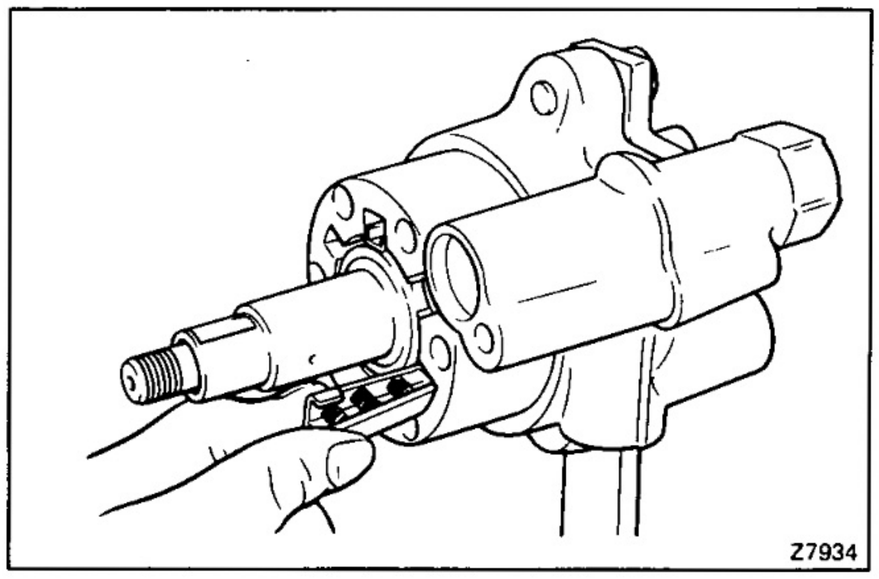

7. INSTALL SLIPPER, SPRING AND SPRING SEAT

Compress the spring with the slipper and spring seat and install it.

Position the slipper notch in the direction shown in the figure.

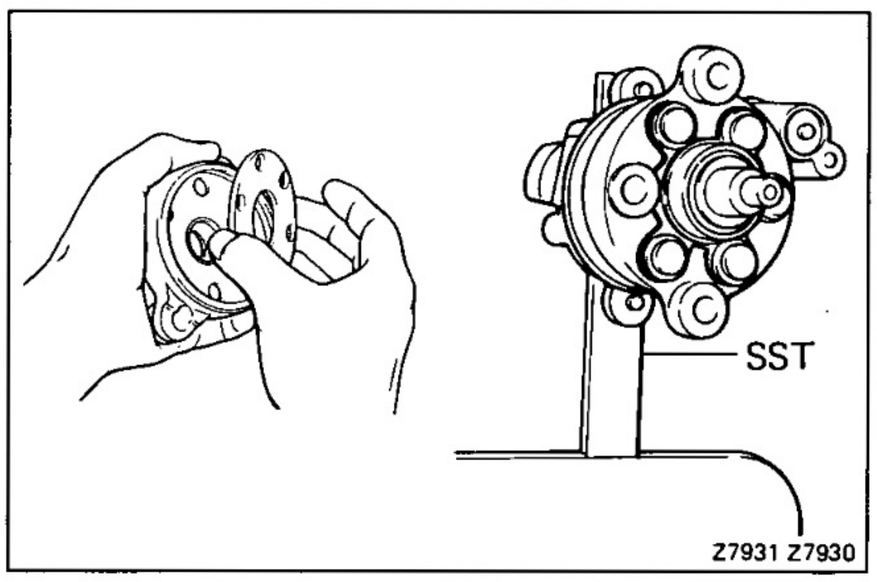

8. INSTALL FRONT HOUSING

(a) Install the side plate to the front housing.

(b) Install the O-ring to the front housing.

(c) Align the marks on the fixed ring and front housing.

(d) Temporarily install the five bolts.

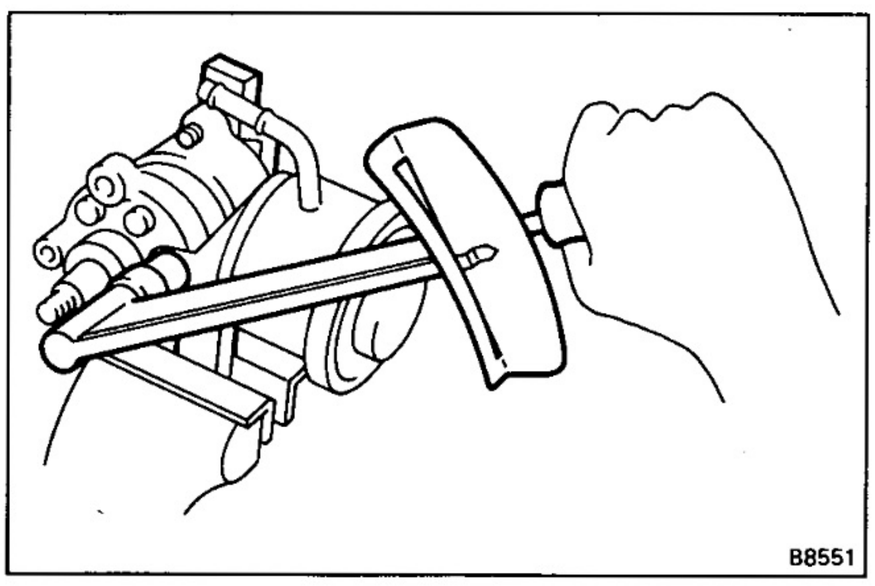

9. TIGHTEN FIVE HOUSING BOLTS

Evenly tighten the fire housing bolts in several passes.

Torque: 470 kg-cm (34 ft-lb, 46 N·m)

10. INSTALL RESERVOIR TANK

(a) Install the O-ring to the reservoir tank.

(b) Install the reservoir tank and torque the three bolts.

Torque:

Front housing side
470 kg-cm (34 ft-lb, 46 N·m)

Rear housing side
130 kg-cm (9 ft-lb, 13 N·m)

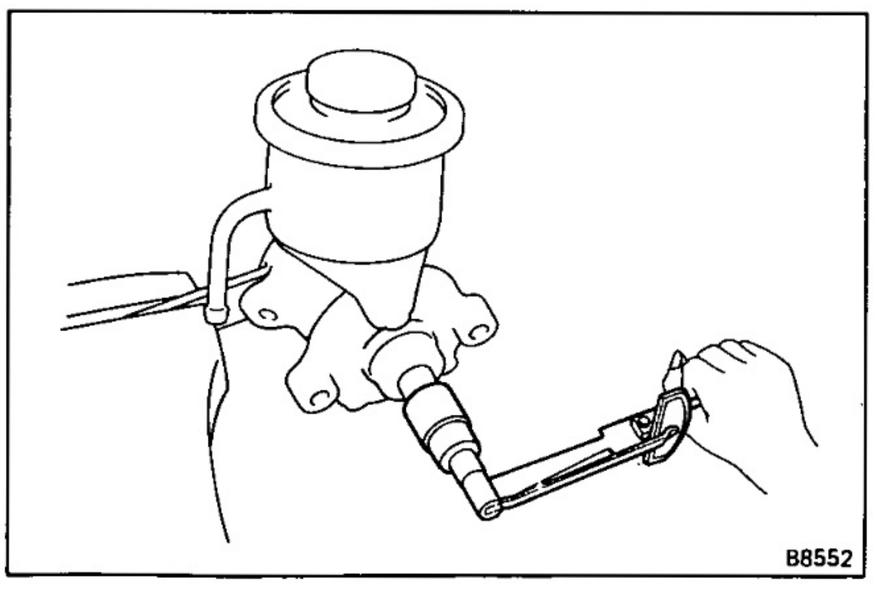

11. CHECK ROTOR SHAFT ROTATION CONDITION

(a) Check that the rotor shaft rotates smoothly without abnormal noise.

(b) Provisionally install the pulley nut and check the rotating torque.

Rotating torque: 2.5 kg-cm or less (2.2 in.-lb, 0.3 N·m)

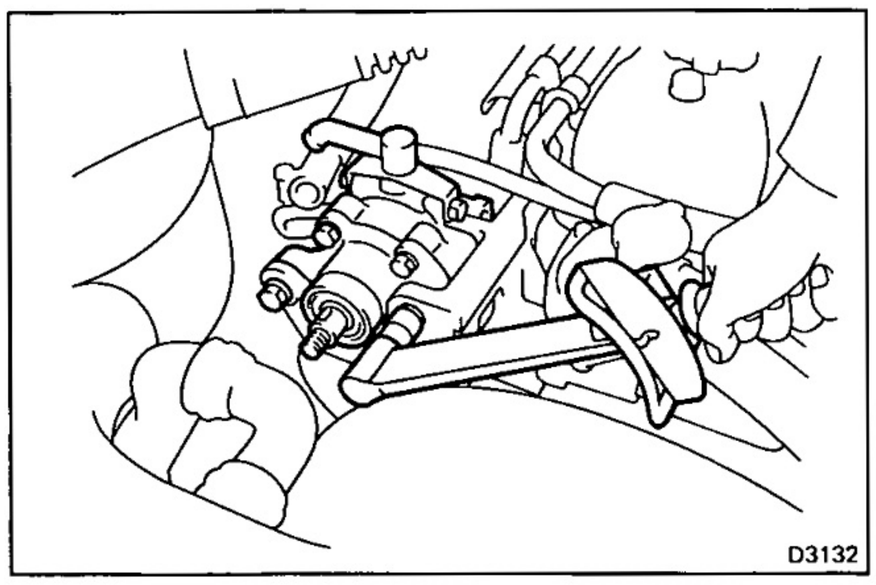
D3132

INSTALLATION OF POWER STEERING PUMP

(See pages SR-37, 38)

1. INSTALL PS PUMP

(3F Engine)
Place the PS pump in position and install mount bolts.

(3B and 2H Engine)
Place the PS pump in position and torque mount bolts.

Torque: (3B Engine)
375 kg-cm (27 ft-lb, 37 N·m)
(2H Engine)
400 kg-cm (29 ft-lb, 39 N·m)

2. INSTALL PULLEY AND DRIVE BELT

(a) Install the woodruff key, pulley and set nut.

(b) Install the drive belt.

(c)-1 (3F Engine)
Adjust the drive belt tension and torque mount bolts.

Torque: 400 kg-cm (29 ft-lb, 39 N·m)

Drive belt tension: at 10 kg (22.0 lb, 98 N)
New belt: 7 – 9.5 mm (0.28 – 0.37 in.)
Used belt: 8 – 10 mm (0.31 – 0.39 in.)

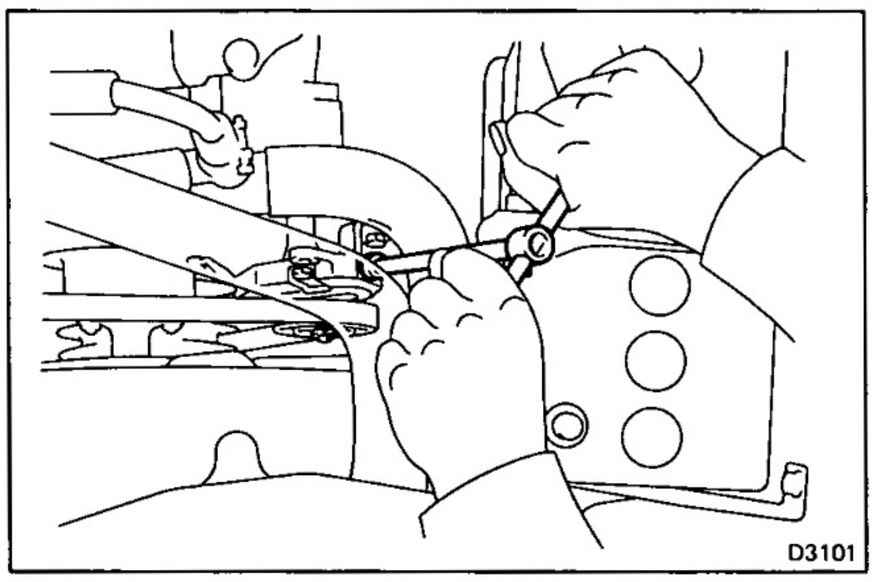
D3101

(c)-2 (3B and 2H Engine)
Turn the adjust bolt until the belt tension is the specified value.

Drive belt tension: at 10 kg (22.0 lb, 98 N)
[3B Engine]
New belt: 13 – 17 mm (0.51 – 0.67 in.)
Used belt: 16 – 22 mm (0.63 – 0.87 in.)
[2H Engine]
New belt: 6.5 – 8.5 mm (0.26 – 0.33 in.)
Used belt: 7 – 9 mm (0.28 – 0.35 in.)

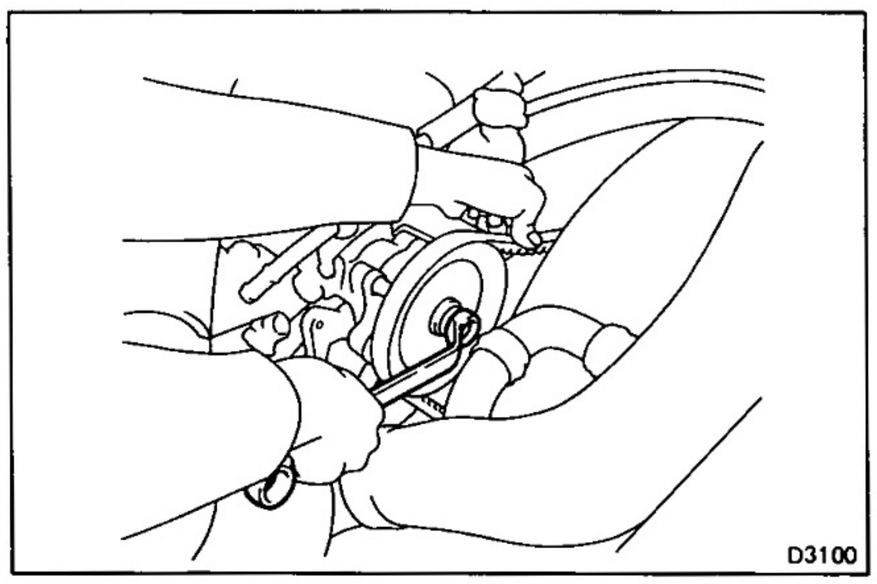
D3100

NOTE:
- "New belt" refers to a new belt which has never been used.
- "Used belt" refers to a belt which has been used on a running engine for 5 minutes or more.

(d) (3B and 2H Engine)
Tighten the idler pulley nut and adjust bolt.

(e) Push down on the drive belt to hold the pulley in place and torque the pulley set nut.

Torque: (3B Engine)
440 kg-cm (32 ft-lb, 43 N·m)
(3F & 2H Engine)
480 kg-cm (35 ft-lb, 47 N·m)

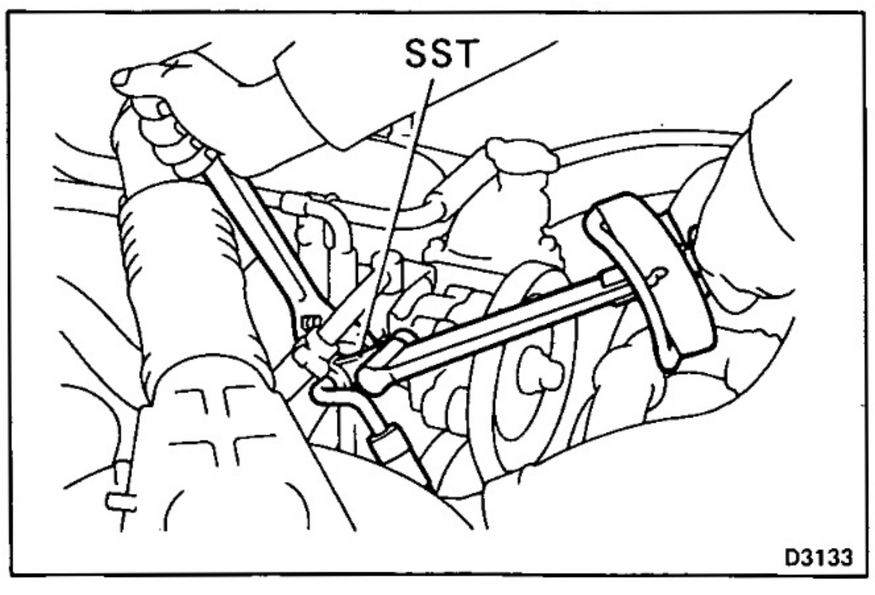

D3133

3. CONNECT RETURN HOSE TO RESERVOIR TANK

4. CONNECT PRESSURE TUBE TO POWER STEERING PUMP

Using SST, torque the flare nut.

SST 09631-22020

Torque: 450 kg-cm (33 ft-lb, 44 N·m)

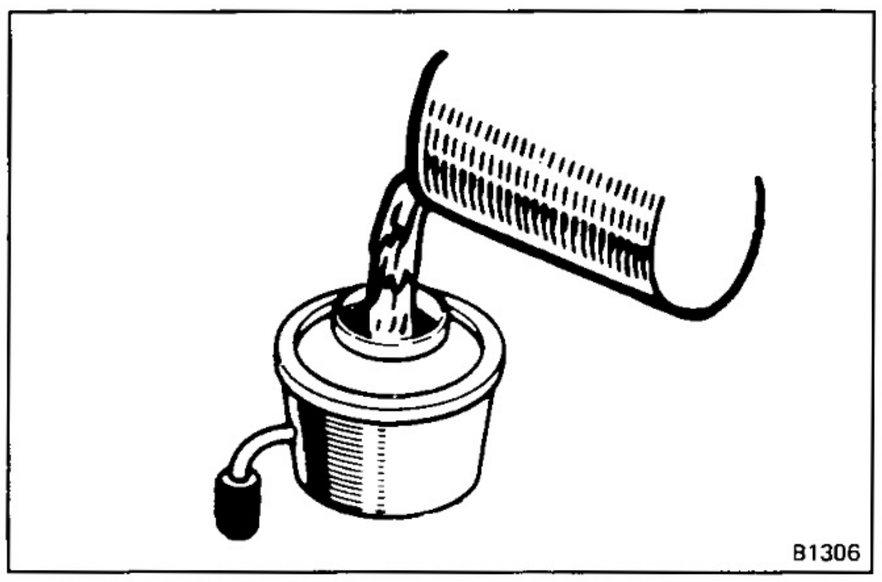

5. FILL RESERVOIR WITH FLUID
   Fluid: ATF DEXRON® or DEXRON® II
6. BLEED POWER STEERING
7. CHECK FOR FLUID LEAKS

Gear Housing

REMOVAL OF GEAR HOUSING

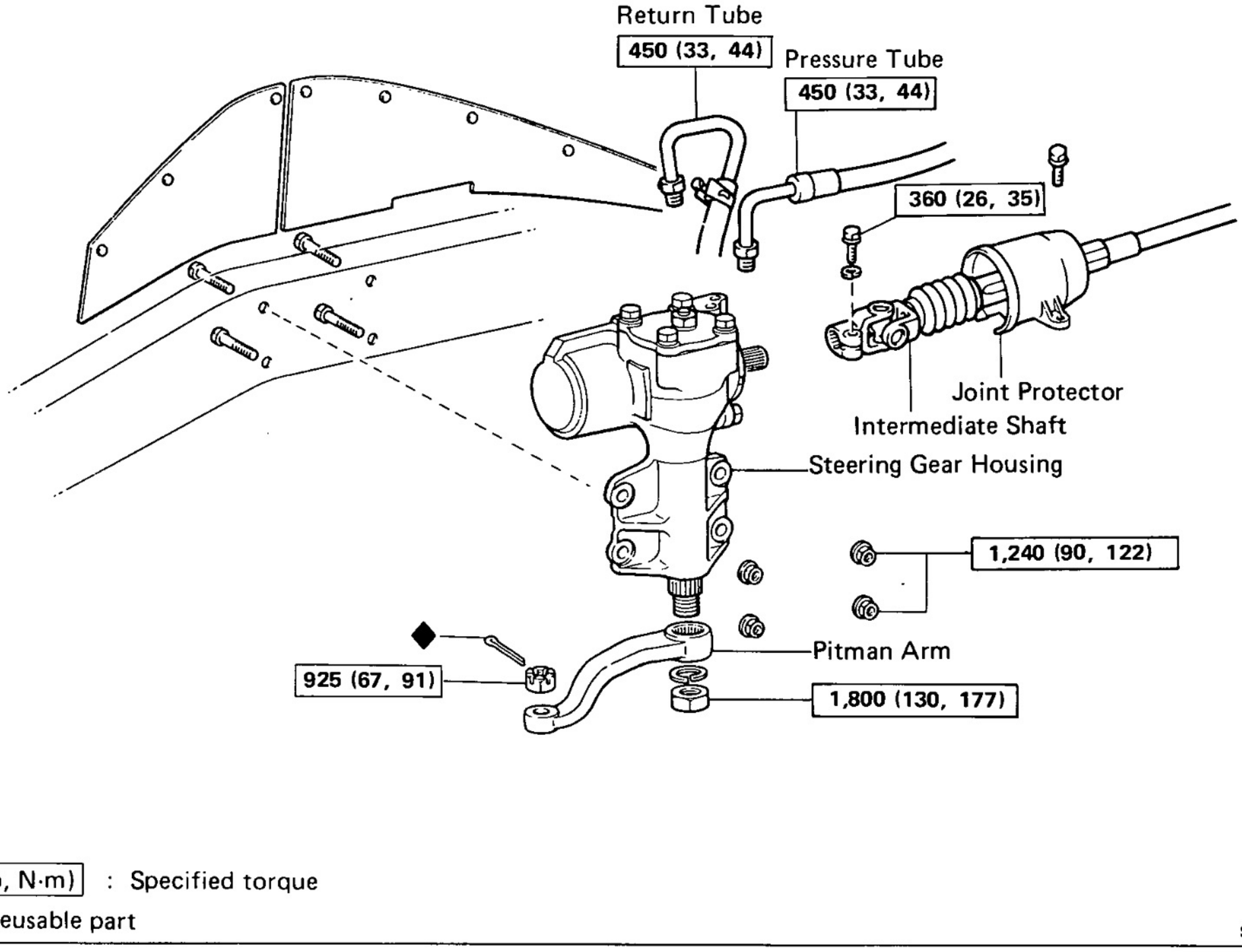

kg-cm (ft-lb, N·m) : Specified torque

◆ : Non-reusable part

SR1036

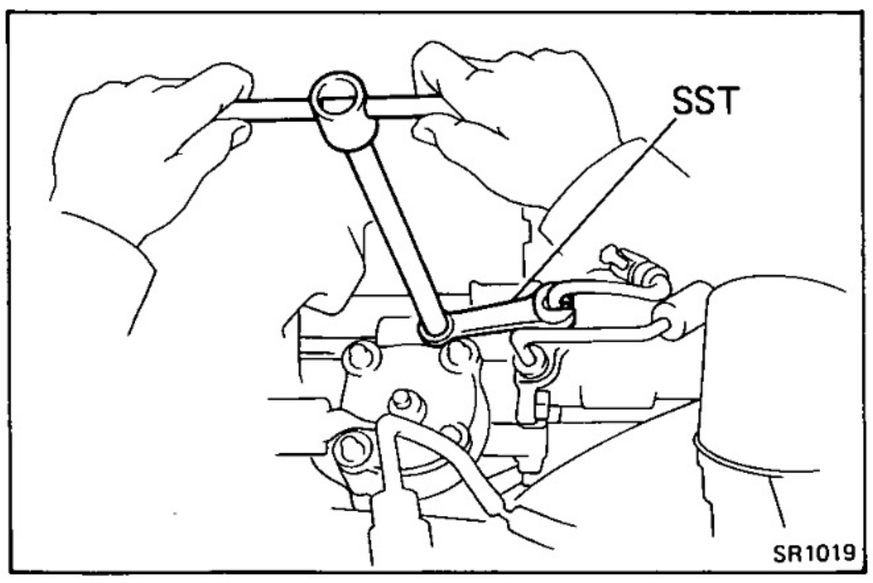

1. DISCONNECT RETURN LINE AND PRESSURE LINE

Using SST, disconnect the return and pressure line.

SST 09631-22020

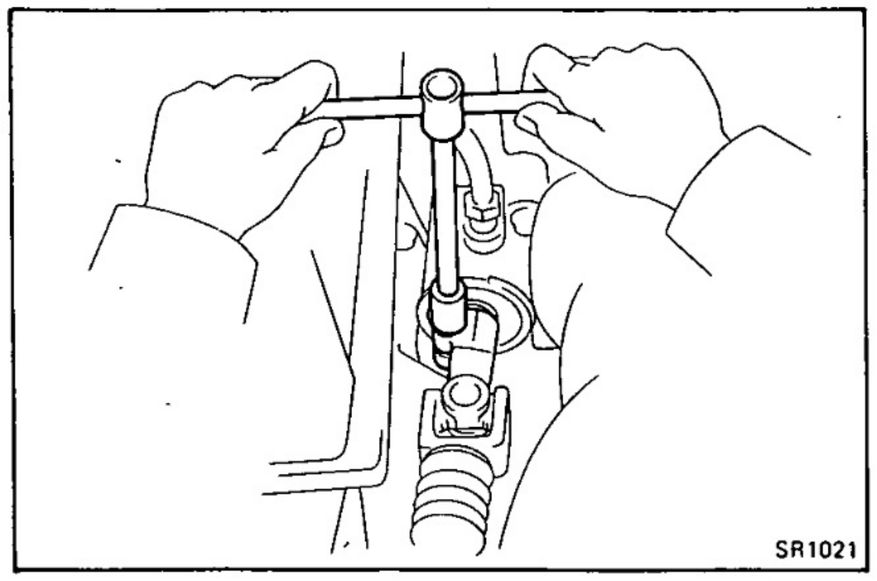

2. DISCONNECT INTERMEDIATE SHAFT

(a) Remove the joint protector.

(b) Place matchmarks on the worm shaft and intermediate shaft joint yoke.

(c) Remove the two set bolts from joint yokes.

(d) Disconnect the intermediate shaft from the worm shaft.

3. LOOSEN PITMAN ARM SET NUT

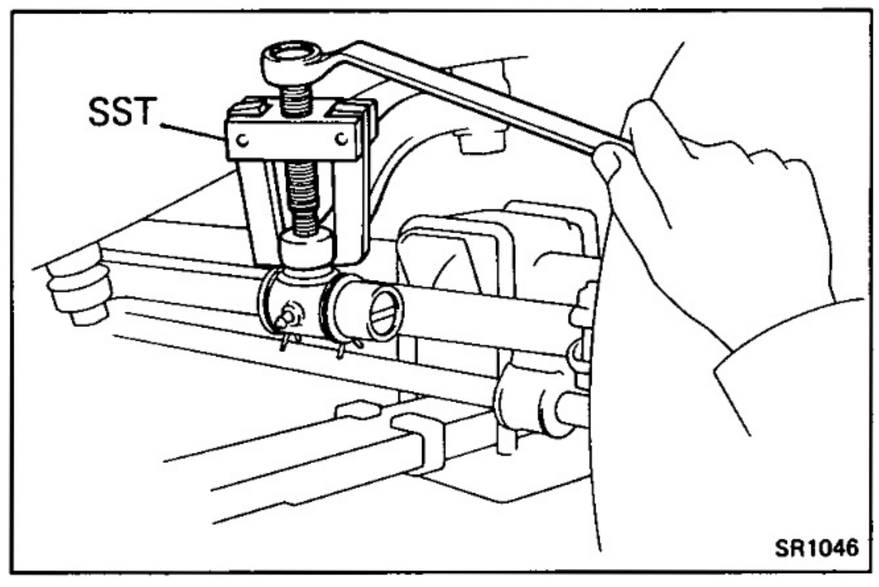

4. DISCONNECT RELAY ROD FROM PITMAN ARM

(a) Remove the cotter pin.

(b) Remove the set nut.

(c) Using SST, disconnect the relay rod from the pitman arm.

SST 09628-62011

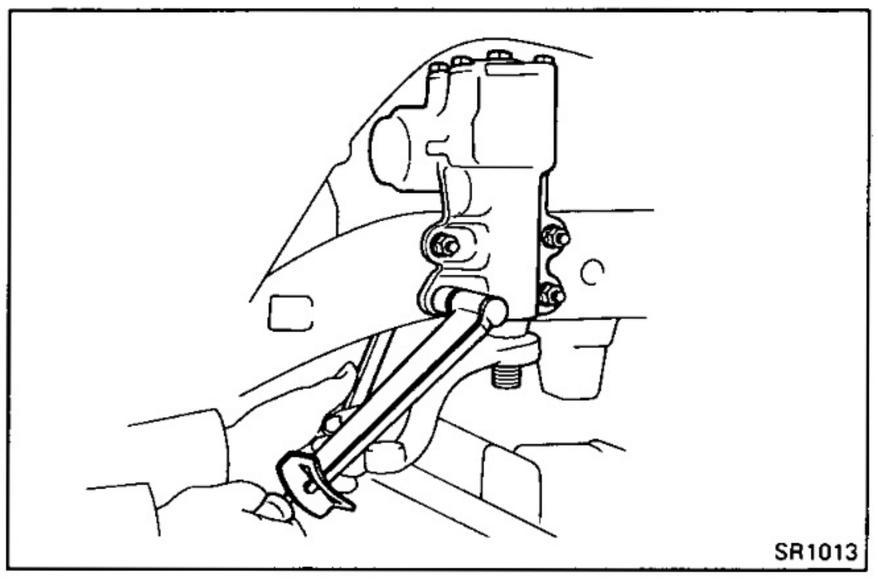

5. REMOVE GEAR HOUSING

Remove the four nuts, bolts and gear housing.

COMPONENTS

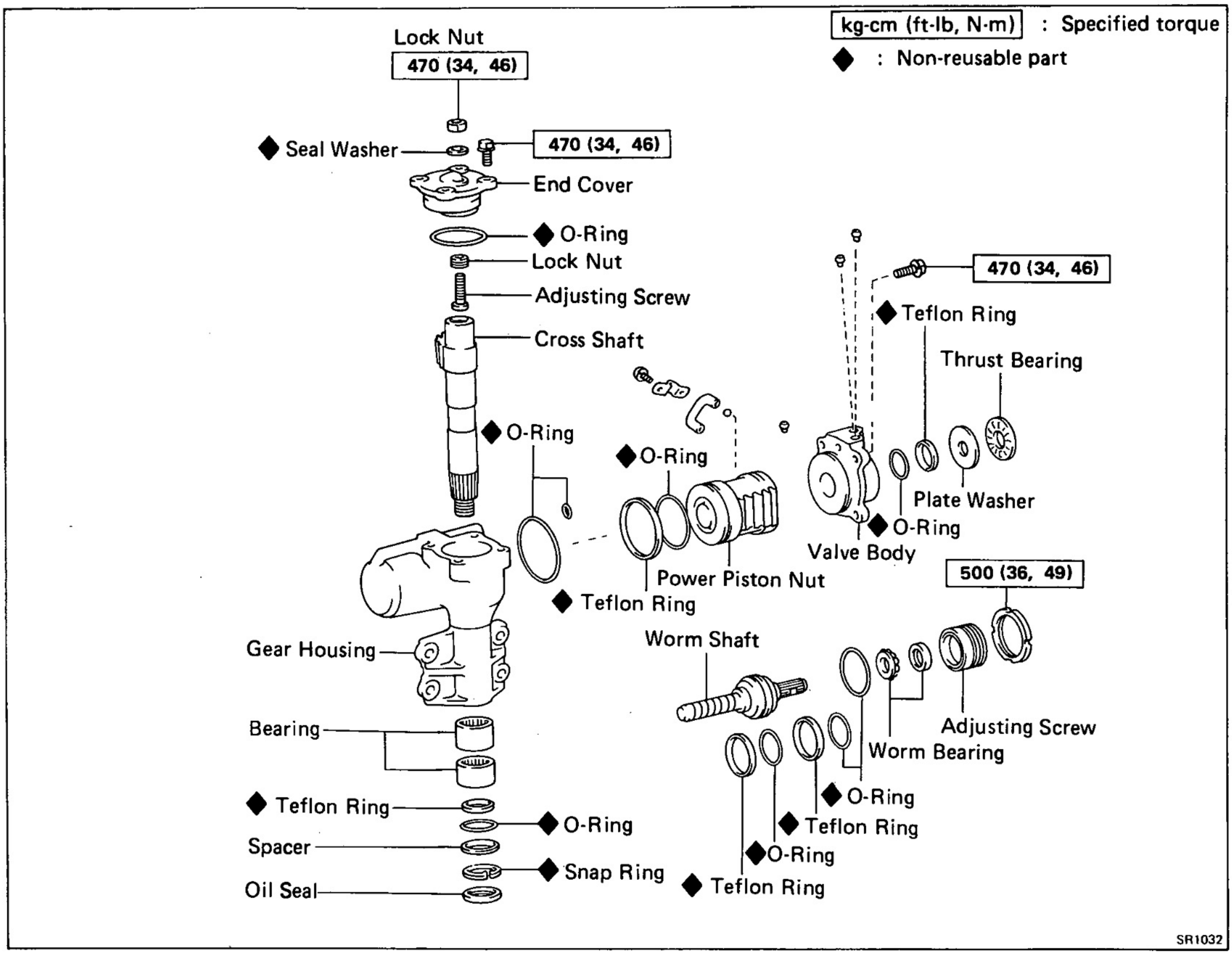

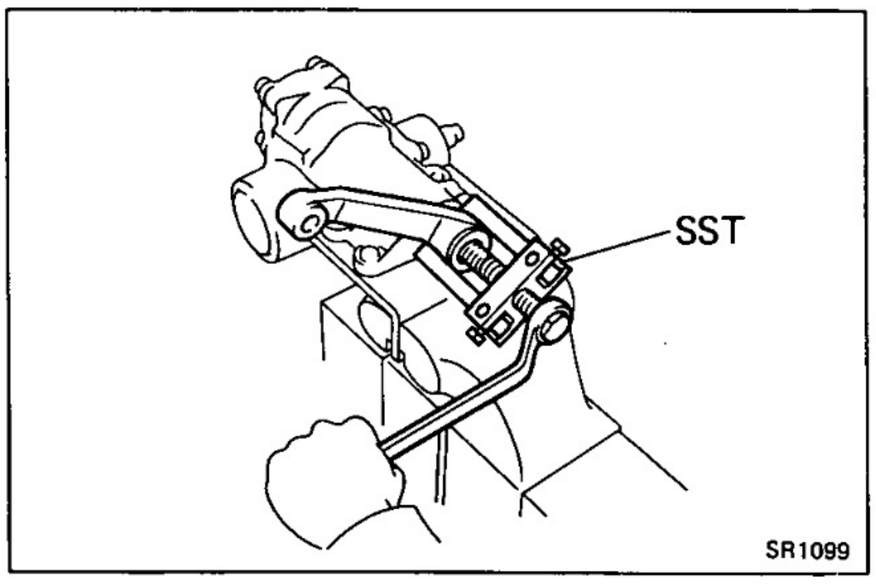

DISASSEMBLY OF GEAR HOUSING

1. REMOVE PITMAN ARM

(a) Mount the gear housing on SST and clamp SST in vise.

SST 09630-00011

(b) Using SST, remove the pitman arm.

SST 09628-62011

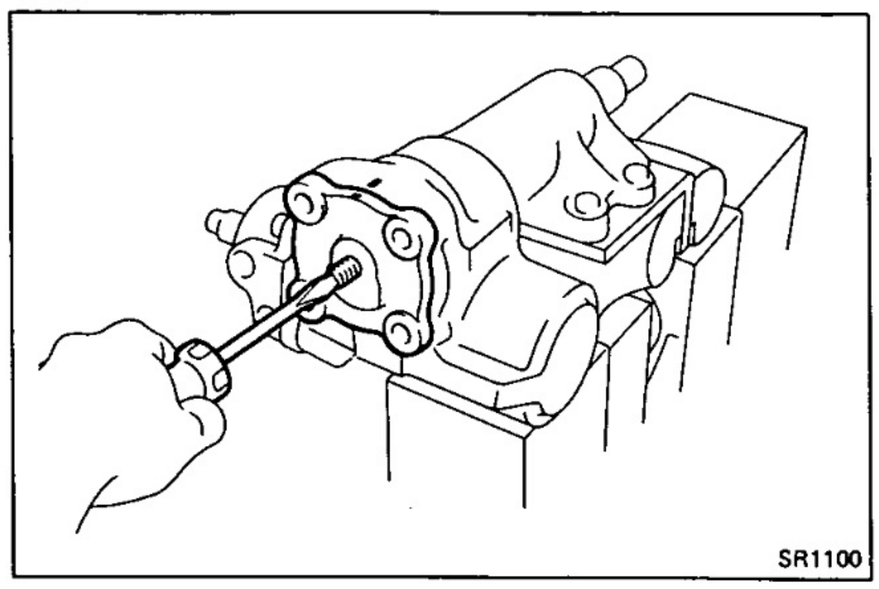

2. REMOVE END COVER

(a) Remove the adjusting screw lock nut.

(b) Remove the four bolts.

(c) Screw in the adjusting screw until the cover is removed.

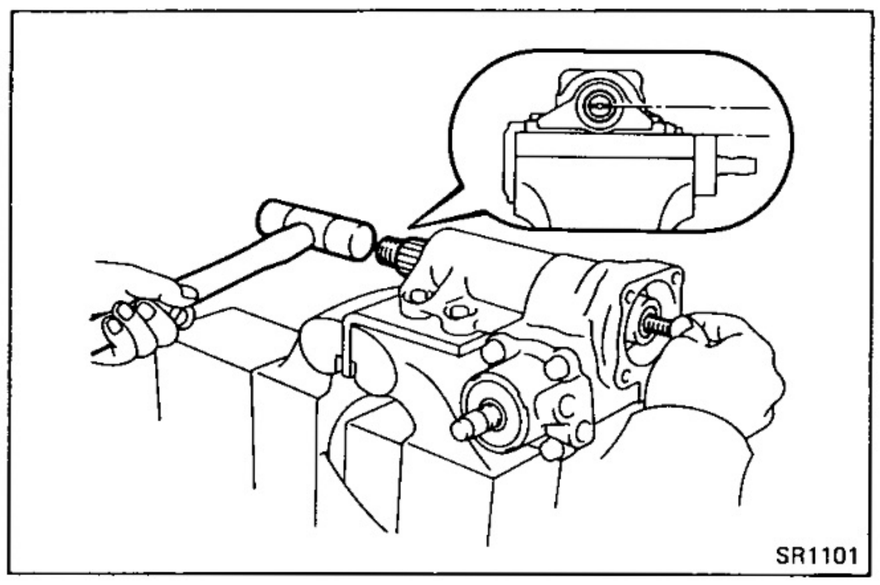

3. REMOVE CROSS SHAFT

Using a plastic hammer, tap on the cross shaft end and pull out the shaft.

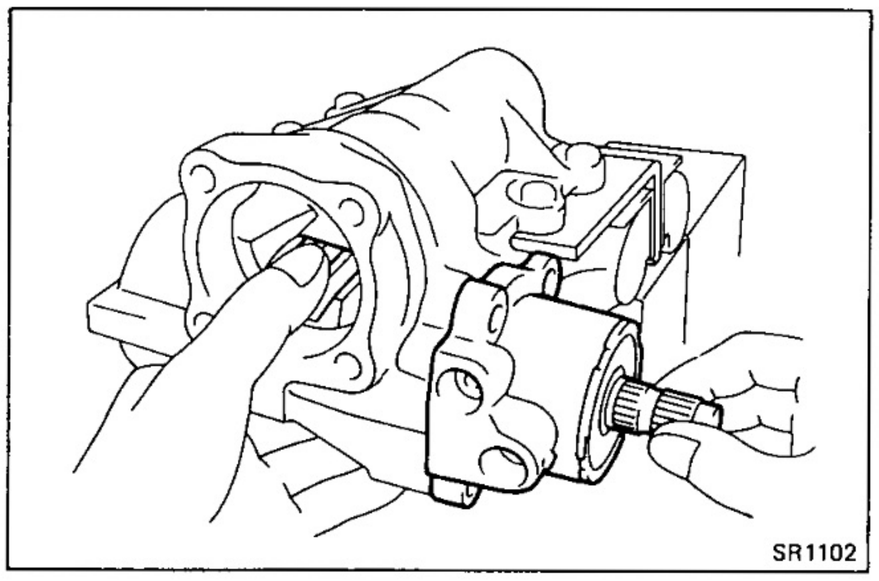

4. REMOVE WORM GEAR VALVE BODY ASSEMBLY

(a) Remove the four cap screws from the housing.

(b) Hold the power piston nut with your thumb so it cannot move and turn the worm shaft clockwise. Then, withdraw the valve body and power piston assembly.

CAUTION: Ensure that the power piston nut does not come off the worm shaft.

(c) Remove the O-ring.

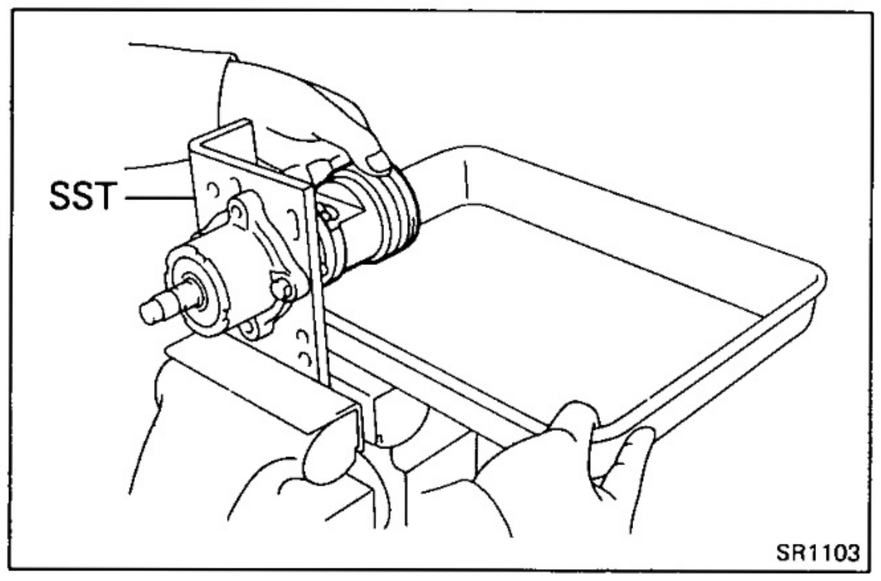

5. REMOVE POWER PISTON NUT

(a) Mount the valve body on SST and clamp SST in vise.

SST 09630-00011

(b) Pull out the power piston nut.

CAUTION: Do not lose the ball.

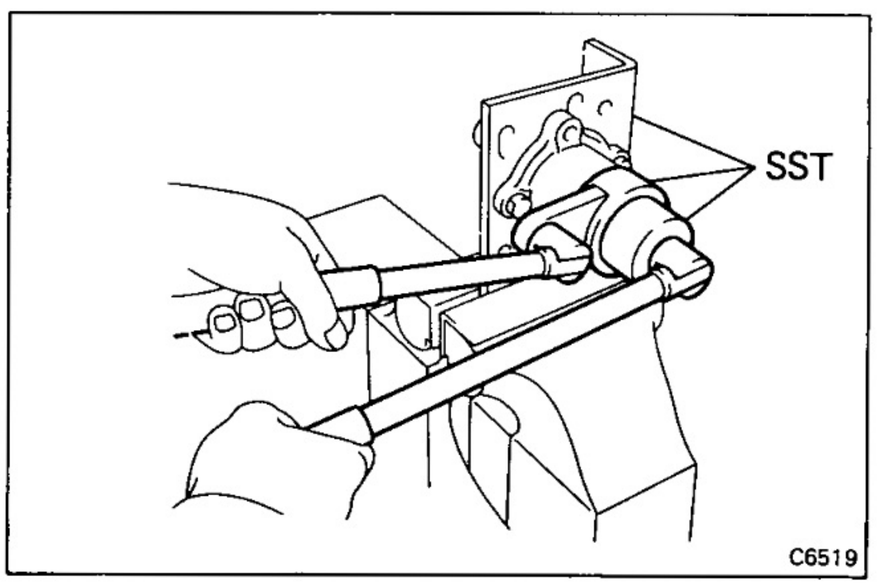

6. REMOVE LOCK NUT

(a) Using SST, hold the adjusting screw and remove the lock nut with SST.

SST 09630-00011

(b) Using SST, remove the adjust screw.

SST 09630-00011

(c) Remove the bearing.

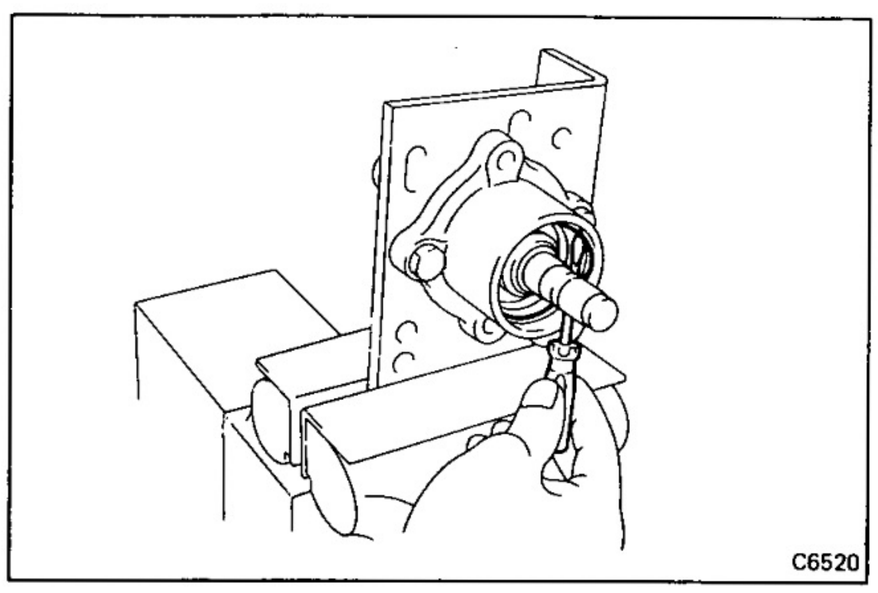

7. REMOVE O-RING

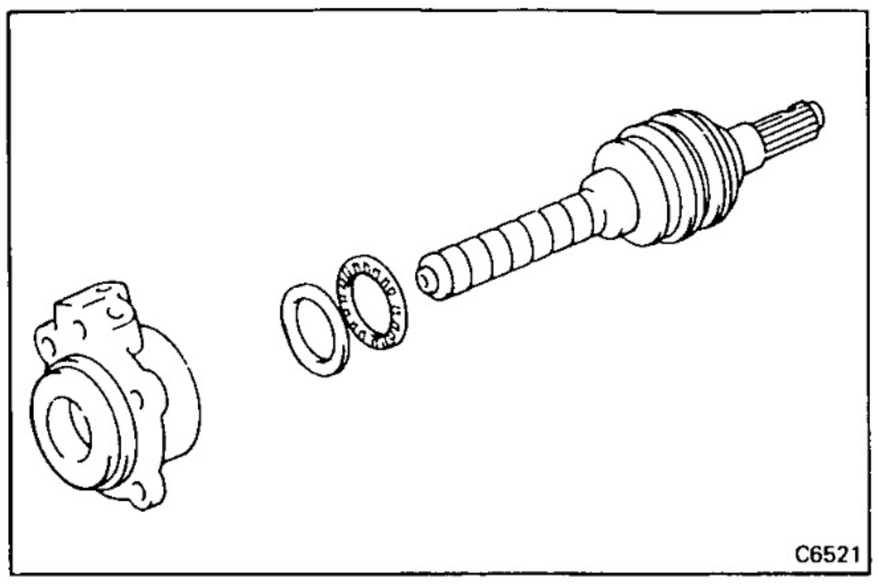

8. **REMOVE FOLLOWING PARTS:**
   (a) Worm shaft
   (b) Thrust bearing
   (c) Plate washer
   (d) Teflon ring
   (e) O-ring

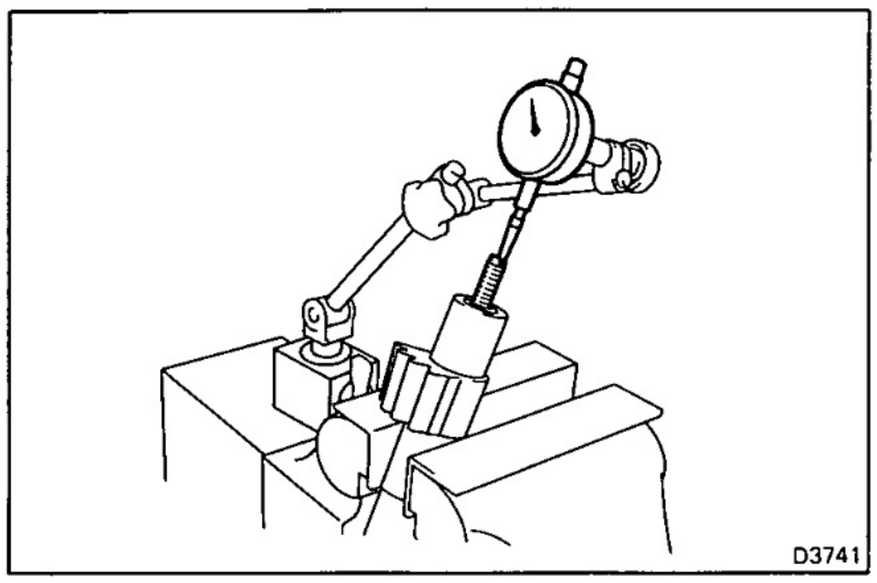

INSPECTION AND REPAIR OF STEERING GEAR HOUSING

1. INSPECT CROSS SHAFT ADJUSTING SCREW THRUST CLEARANCE

(a) Clamp the cross shaft in a vise.

(b) Using a dial indicator, measure the thrust clearance.

Thrust clearance: 0.03 – 0.05 mm (0.0012 – 0.0020 in.)

If thrust clearance is not correct, adjust the thrust clearance.

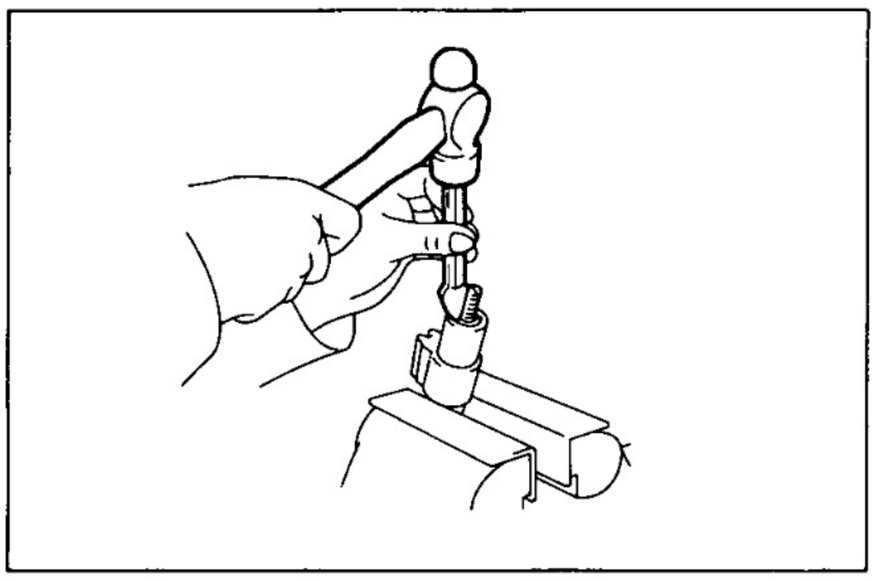

2. IF NECESSARY, ADJUST THRUST CLEARANCE

(a) Using a chisel and hammer, remove the lock nut stake.

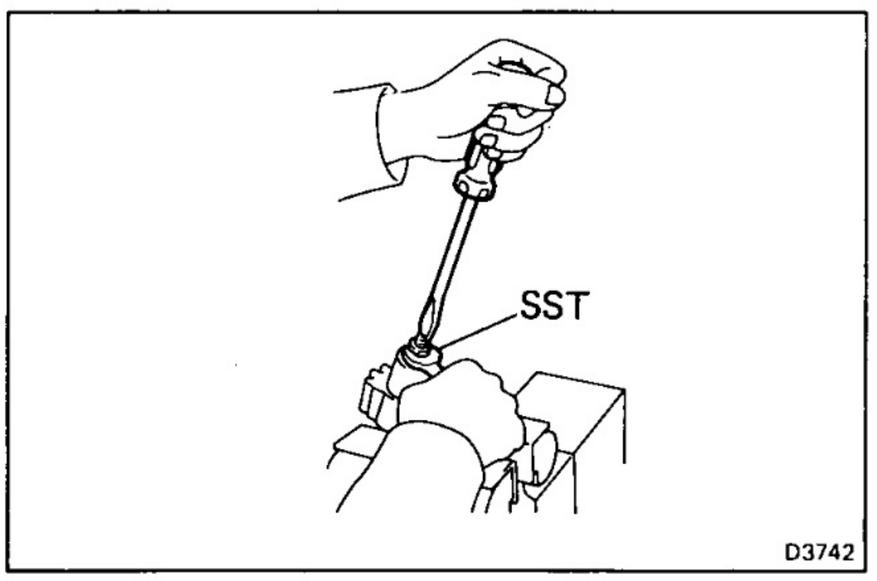

(b) Using SST, loosen the lock nut.

SST 09630-00011

(c) Adjust the adjusting screw for correct thrust clearance and tighten the lock nut.

(d) Stake the lock nut.

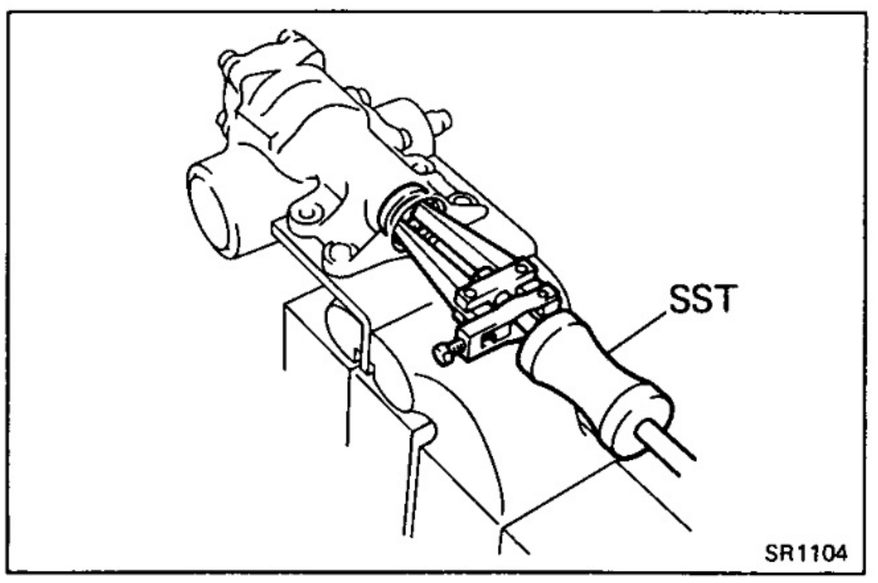

3. REPLACE NEEDLE ROLLER BEARINGS

(a) Using SST, remove the oil seal.

SST 09308-00010

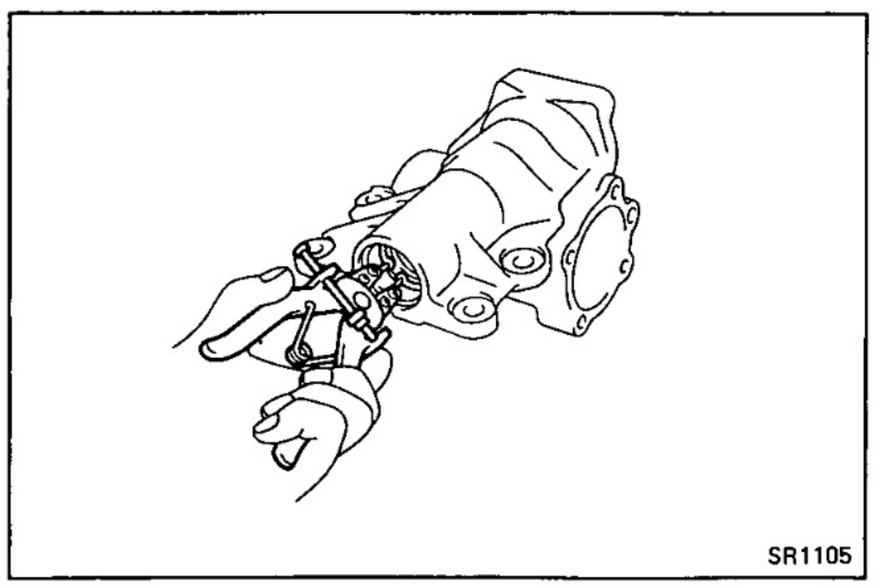

(b) Using snap ring pliers, remove the snap ring.

(c) Remove the metal spacer, teflon ring and O-ring.

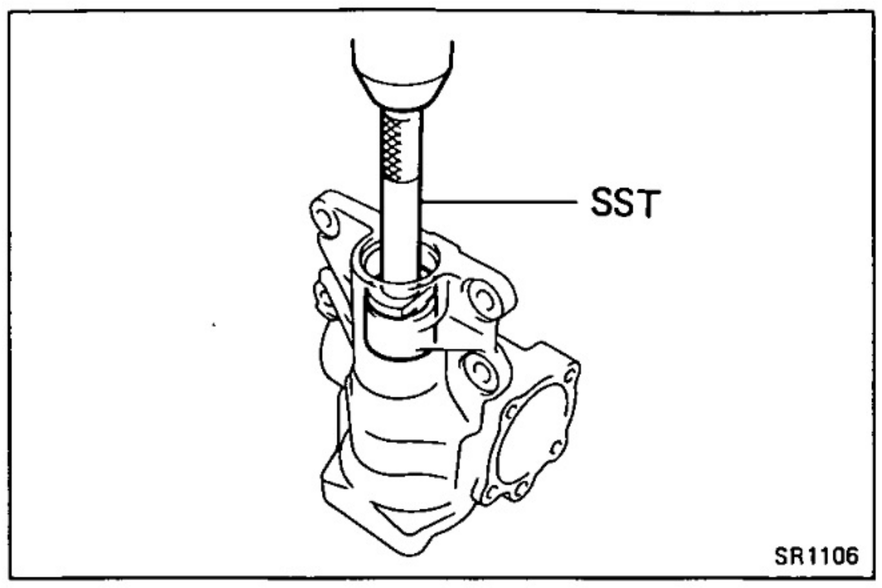

(d) Using SST, press out the bearing.

SST 09630-00011

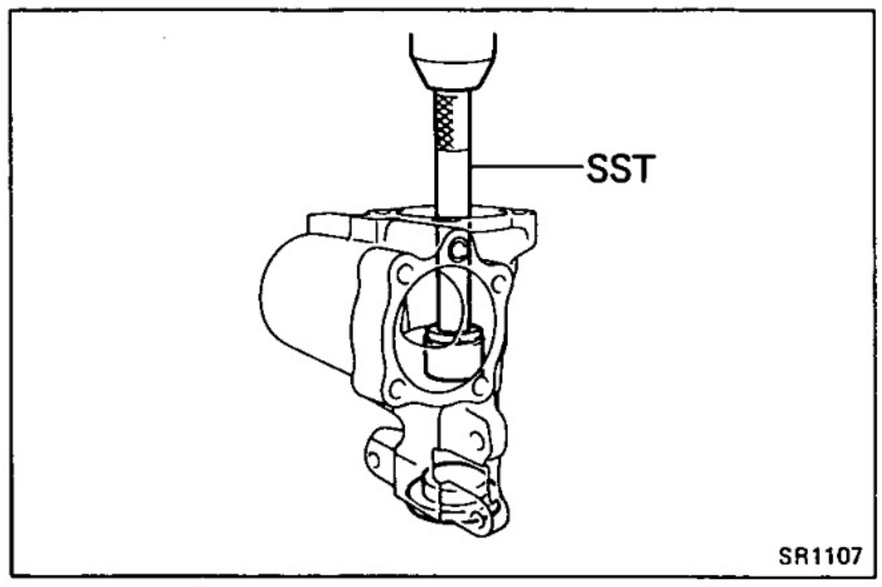

(e) Using SST, press in the upper bearing.

SST 09630-00011

NOTE: The bearing top end should be installed so that it aligns with the upper end of the housing hole.

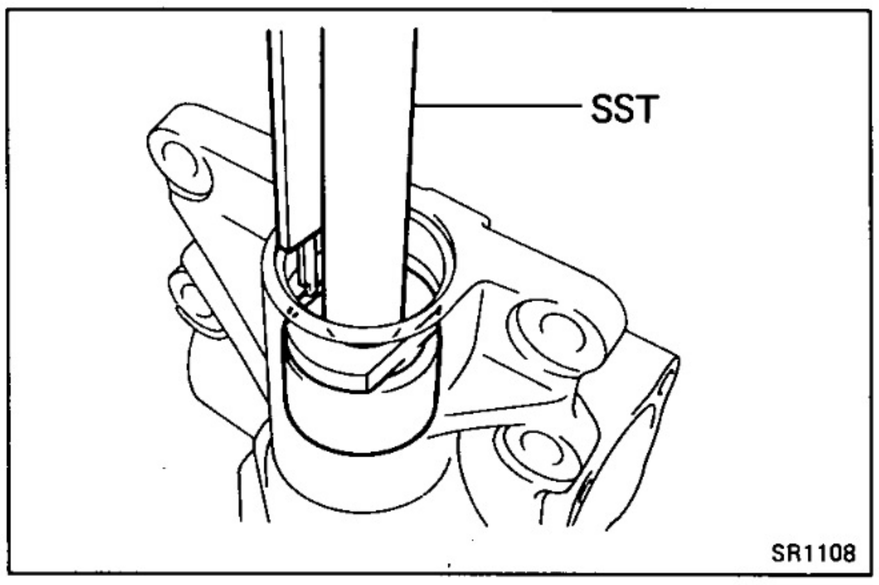

(f) Using SST, install the lower bearing so that it is positioned 23.1 mm (0.909 in.) away from the lower end of the housing hole.

SST 09630-00011

(g) Install the O-ring.

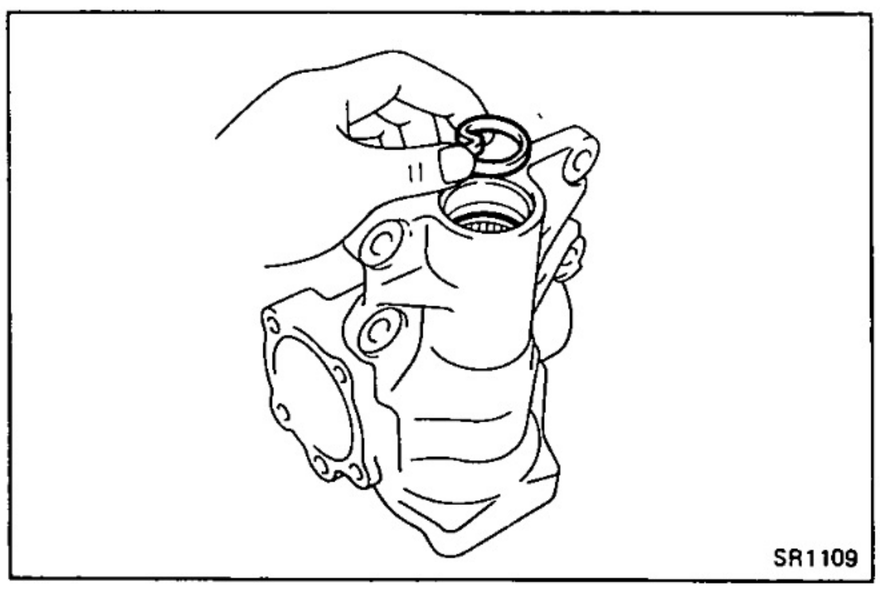

(h) Form the teflon ring into a heart shape and install it with your finger.

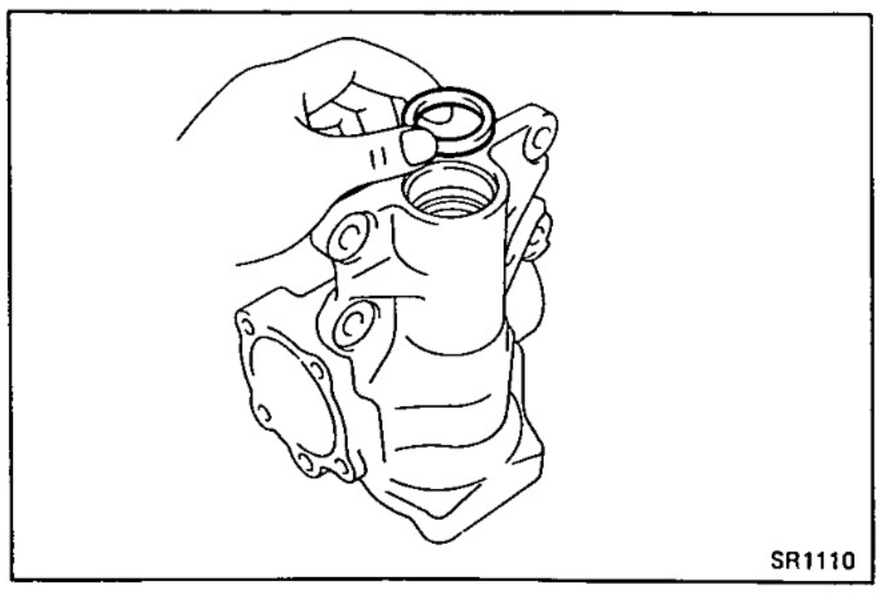

(i) Install the metal spacer.

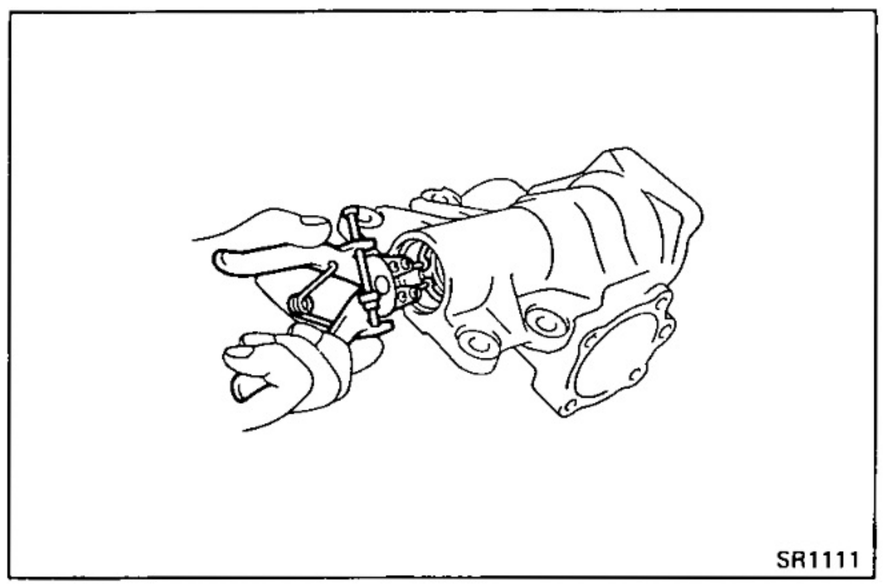

(j) Using snap ring pliers, install the snap ring.

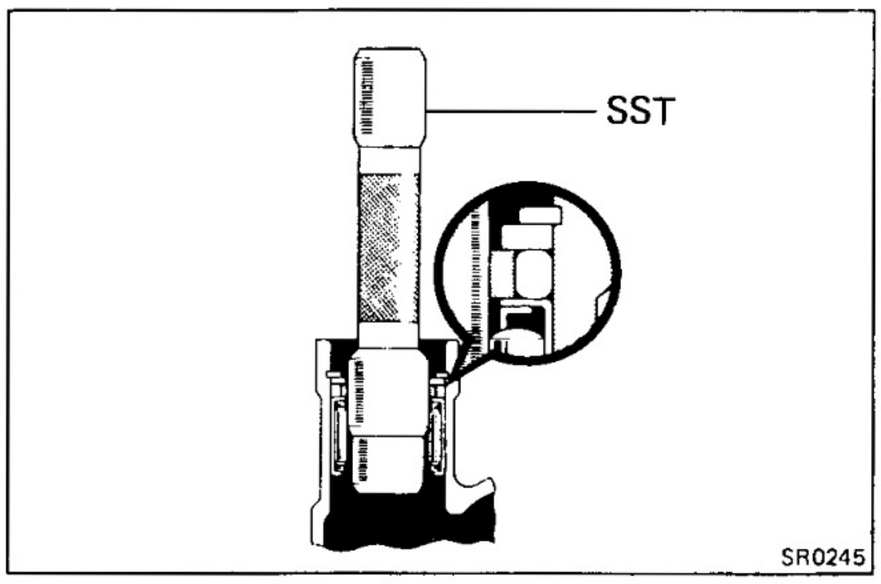

(k) Using SST, form the teflon ring.

SST 09630-00011

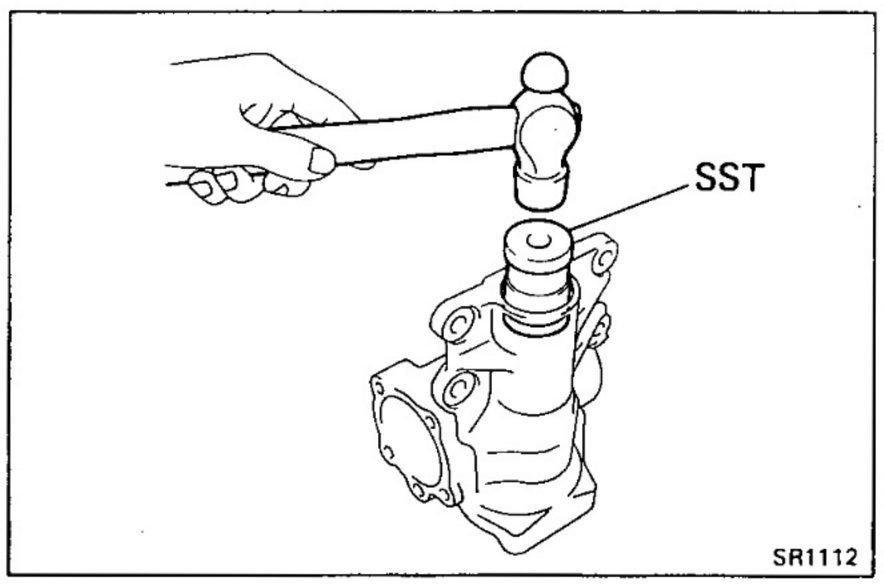

(l) Using SST, drive in the oil seal.

SST 09630-00011

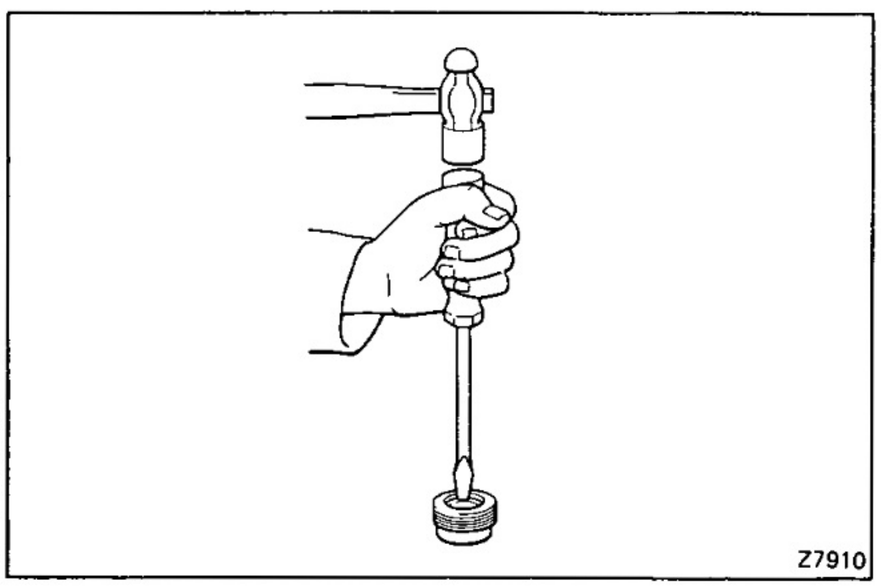

4. IF NECESSARY, REPLACE ADJUSTING SCREW OIL SEAL

(a) Using a screwdriver, drive out the oil seal.

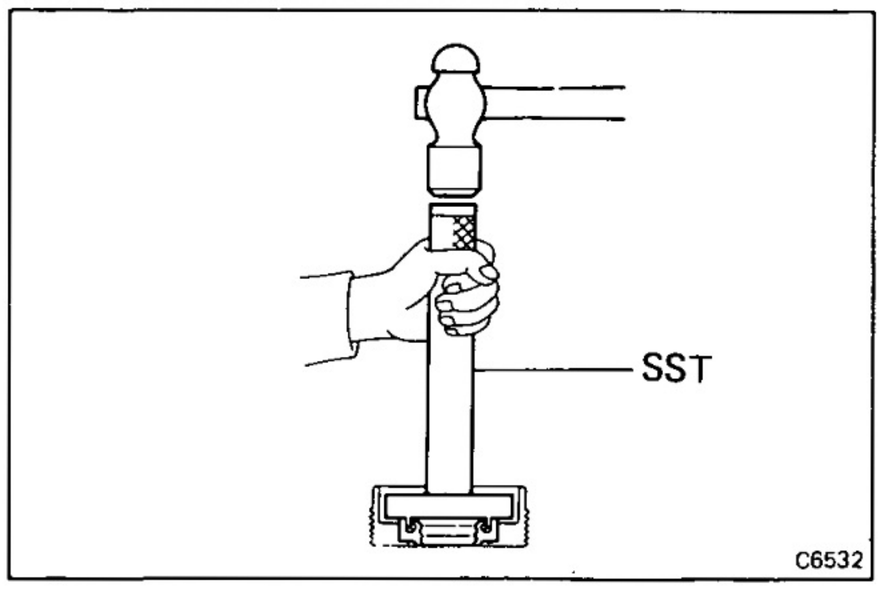

(b) Using SST, install the oil seal.

SST 09630-00011

(c) Apply MP grease to the oil seal lip.

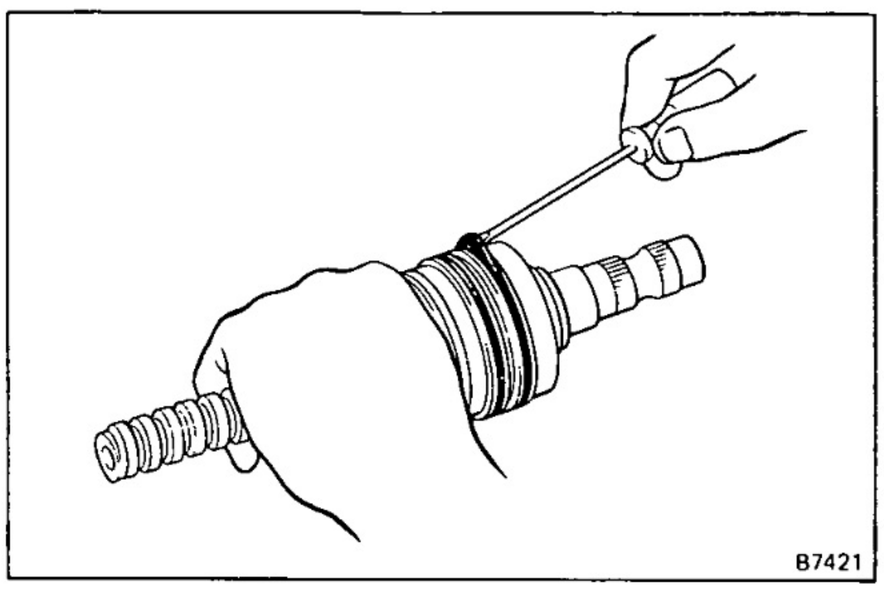

5. IF NECESSARY, REPLACE CONTROL VALVE TEFLON RING

(a) Using a screwdriver, remove the two teflon ring.

NOTE: Be careful not to damage the control valve.

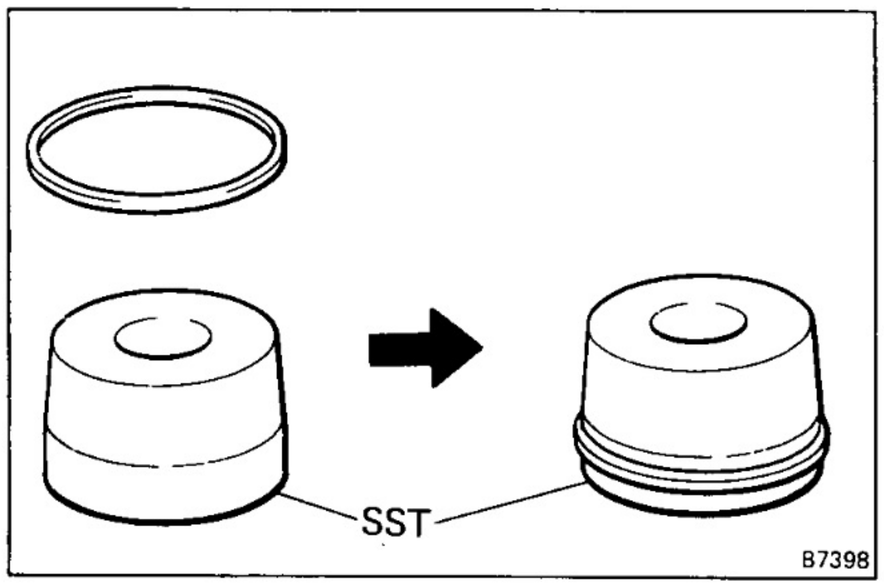

(b) Install the teflon ring to SST and expand it.

SST 09630-00011

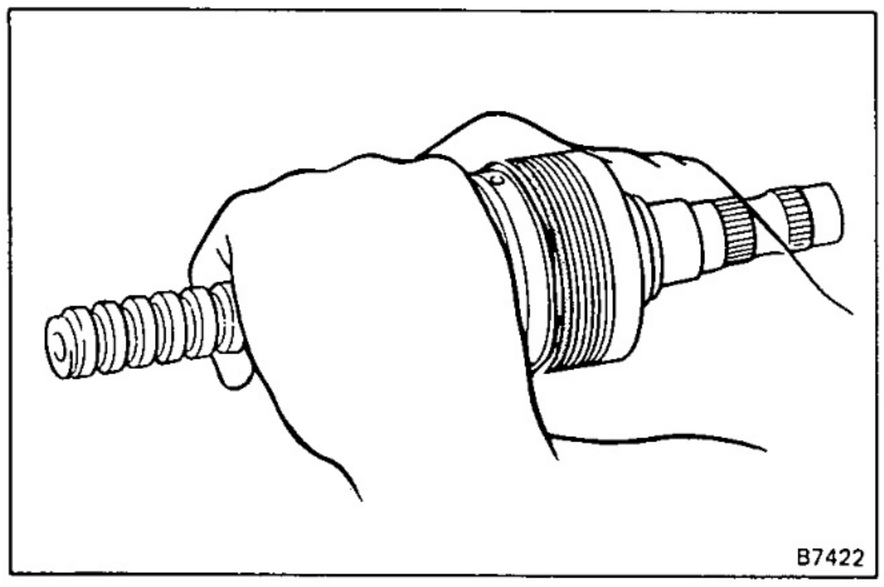

(c) Install the expanded teflon ring to the control valve and snug down it by hand.

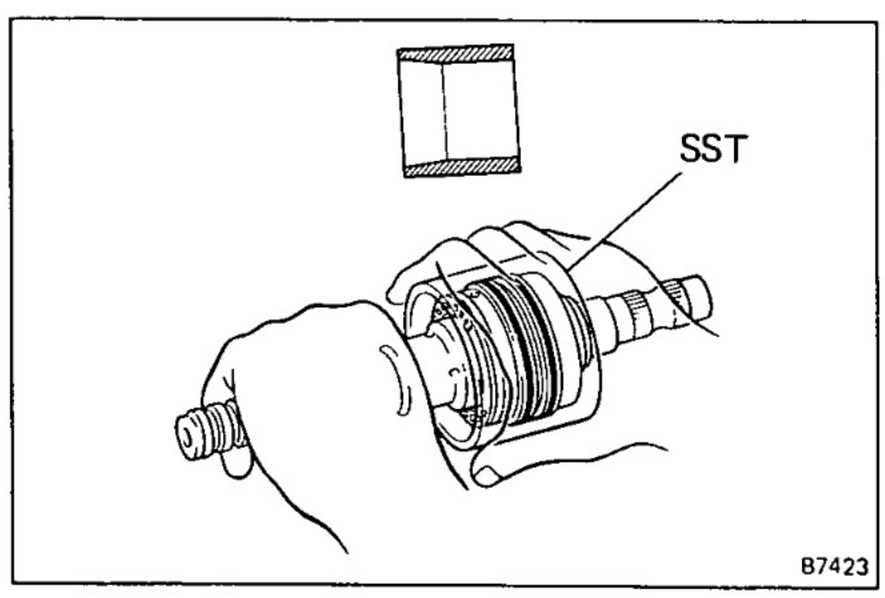

(d) Coat the teflon ring with power steering fluid and snug down it with SST.

SST 09630-00011

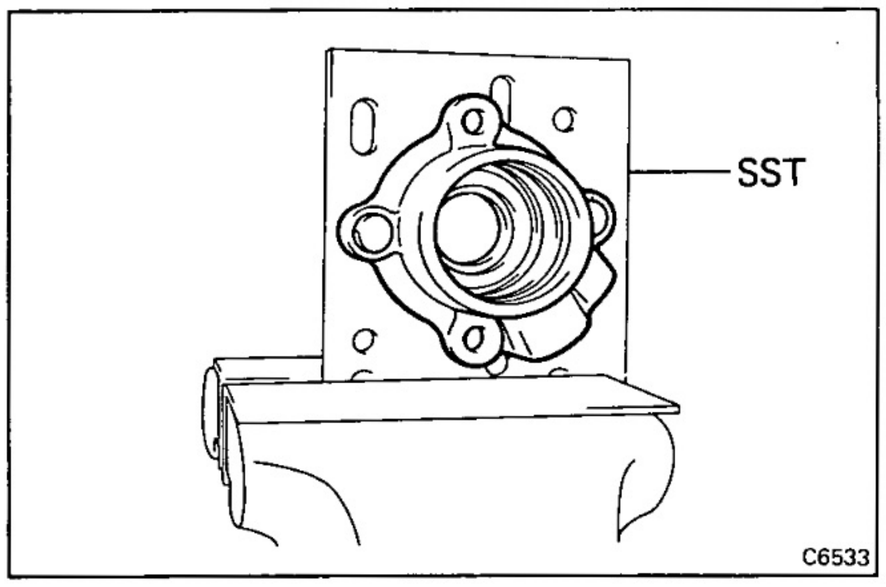

ASSEMBLY OF GEAR HOUSING

(See page SR-59)

1. COAT ALL PARTS WITH POWER STEERING FLUID

2. MOUNT VALVE BODY IN VISE

Mount the valve body on SST and clamp SST in vise.

SST 09630-00011

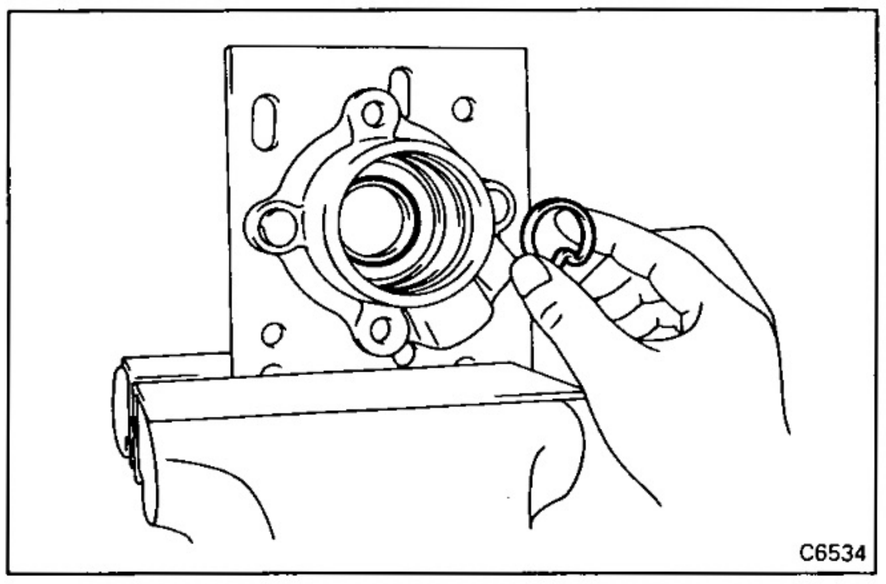

3. INSTALL O-RING AND TEFLON RING

(a) Install the O-ring.

(b) Form the teflon ring into a heart shape and install it with your finger.

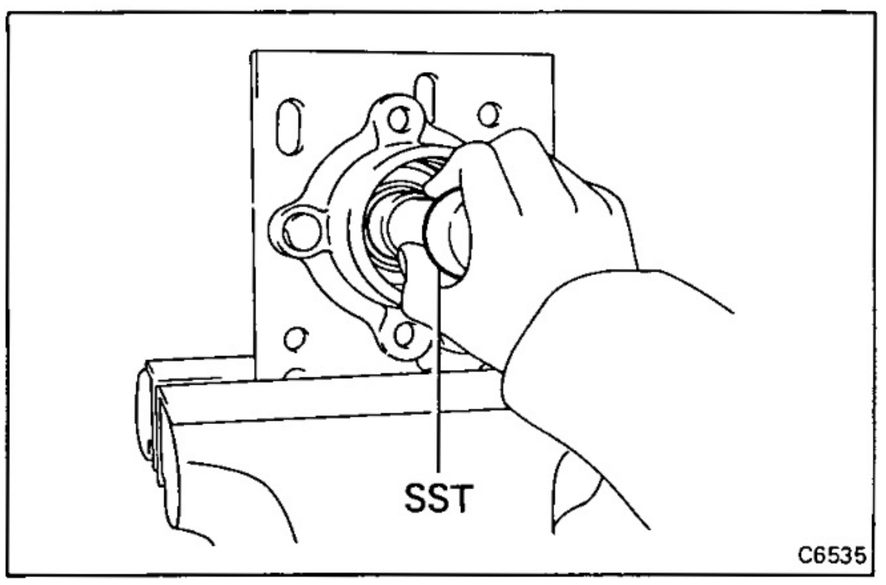

(c) Using SST, form the teflon ring.

SST 09630-00011

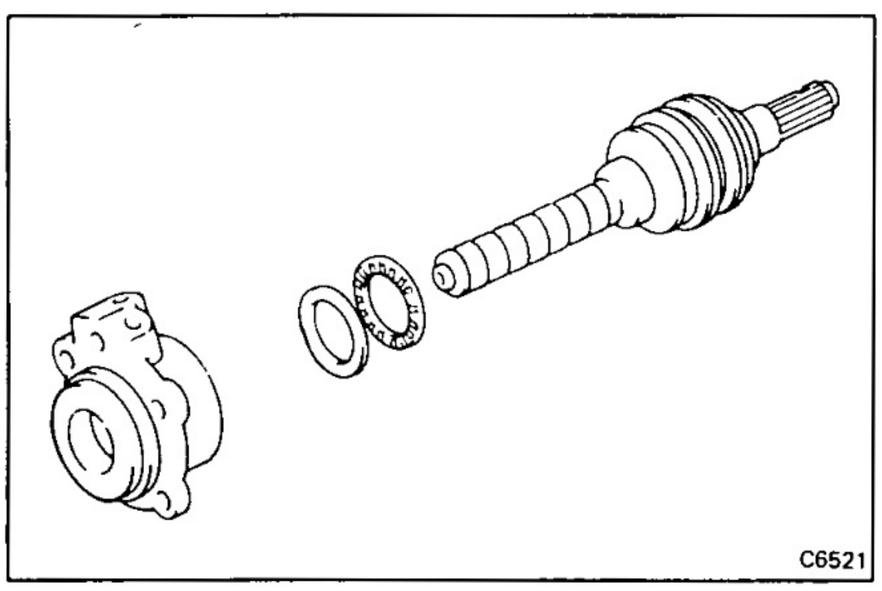

4. INSTALL WORM SHAFT

Install the worm shaft with the thrust bearing and the plate washer to the valve body.

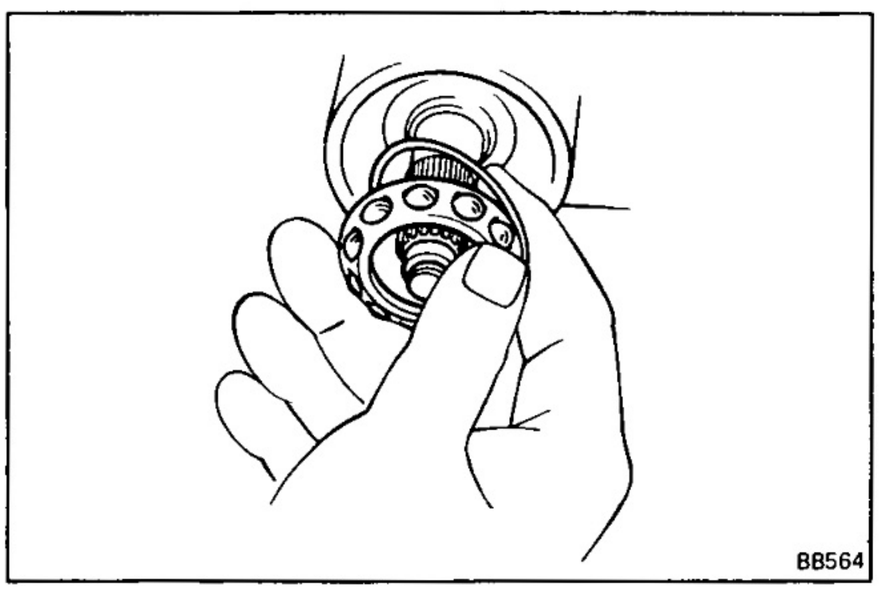

5. INSTALL O-RING AND BEARING TO CONTROL VALVE

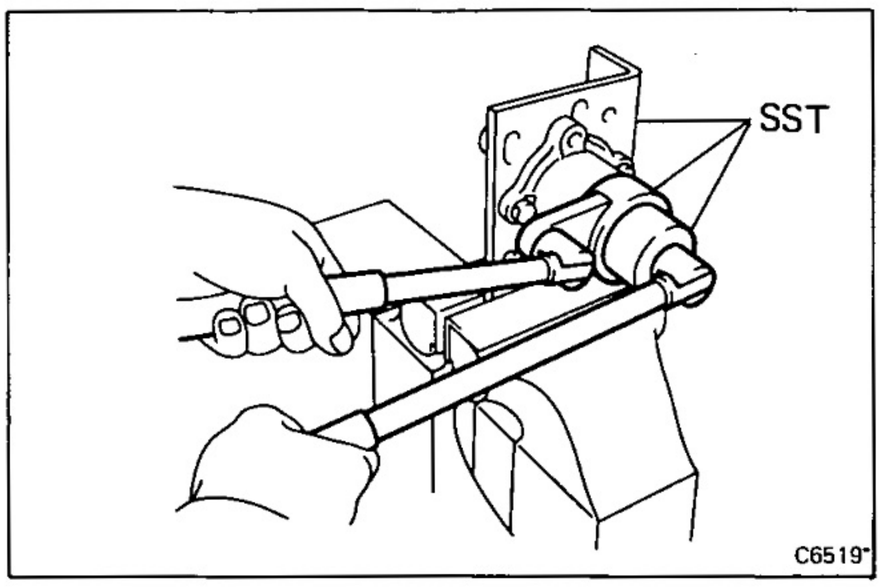

6. **INSTALL ADJUSTING SCREW AND LOCK NUT**

Using SST, temporarily tighten the adjusting screw and lock nut.

SST 09630-00011

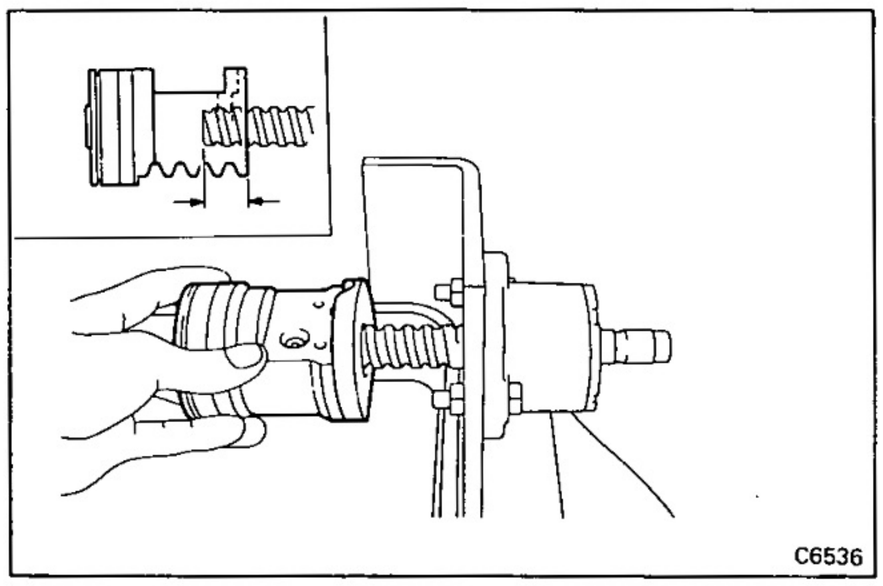

7. **INSTALL POWER PISTON NUT AND BALLS**

(a) Clean all parts with power steering fluid.

(b) Insert the power piston nut about 15 mm (0.59 in.) from the worm shaft end, and align the ball transfer surface with the ball hole.

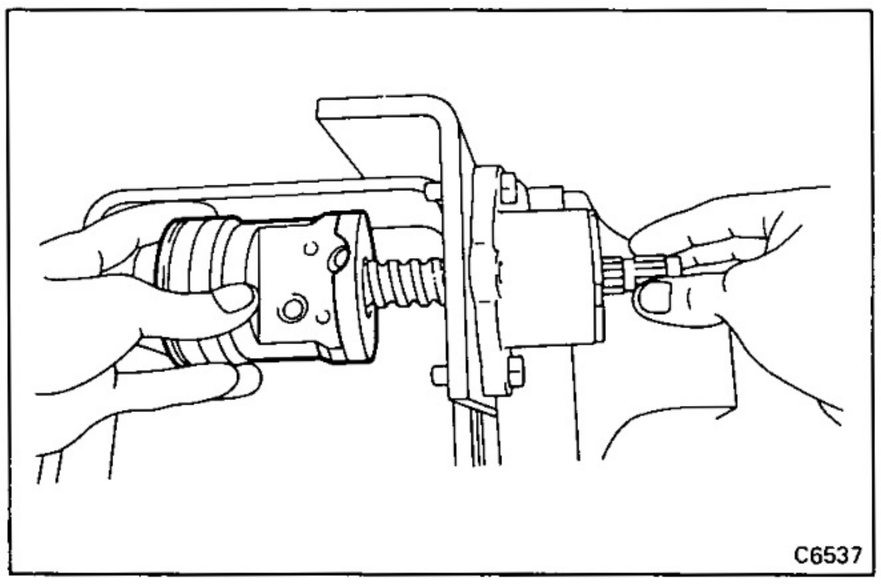

(c) Insert the balls one at a time into the holes, and turn the worm shaft a little with each insertion. Then, securely insert the 33 balls into the piston.

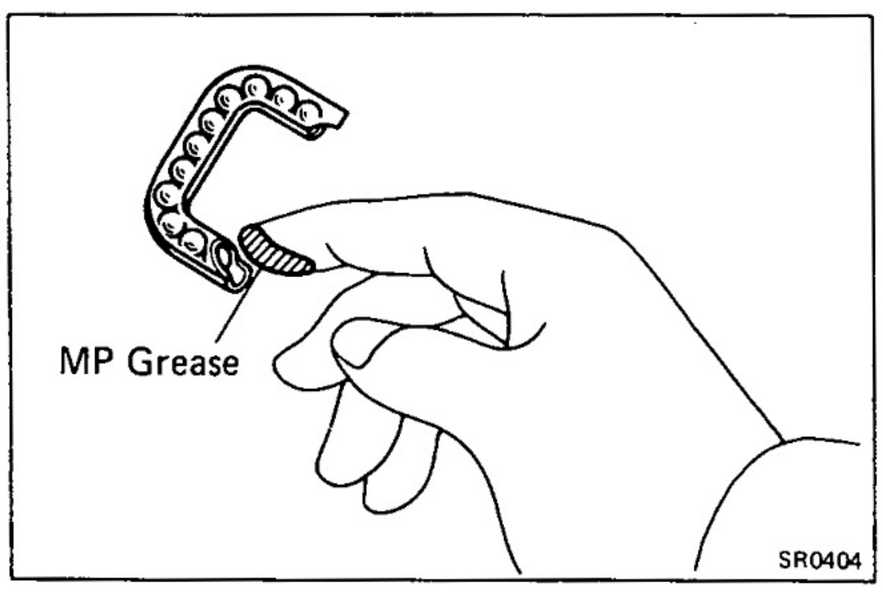

(d) Install eleven new balls to the ball guide, and apply MP grease to the ball guide lips so the balls do not fall out.

(e) Install the ball guide to the power piston nut.

NOTE: Be careful not to damage the ball guide.

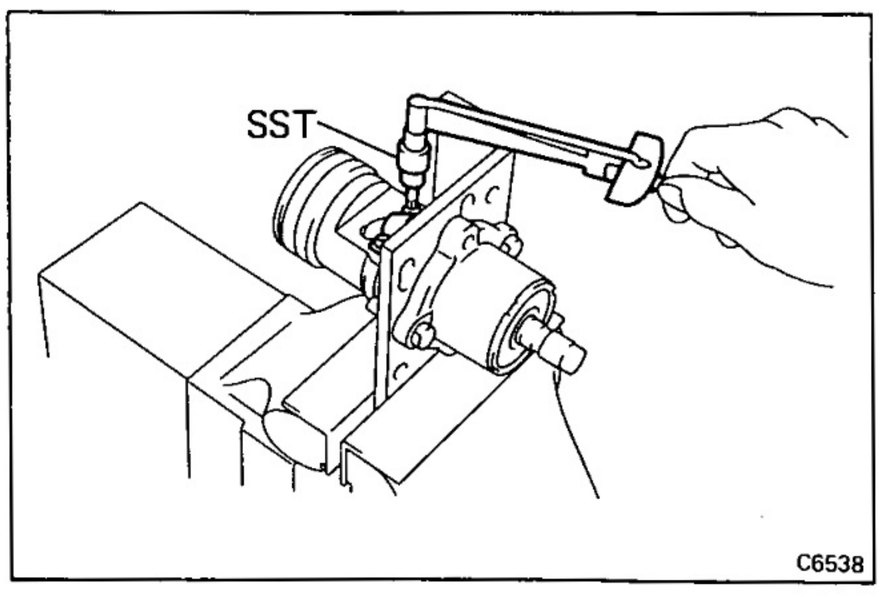

(f) Using SST, install the ball guide clamp.

SST 09060-20010

Torque: 30 kg-cm (26 in.-lb, 2.9 N·m)

(g) Check that the power piston nut rotates smoothly.

(h) Turn the power piston nut, and insure that it is adhered to the tip surface of the valve body.

NOTE: If a ball has fallen out, there will be a gap.

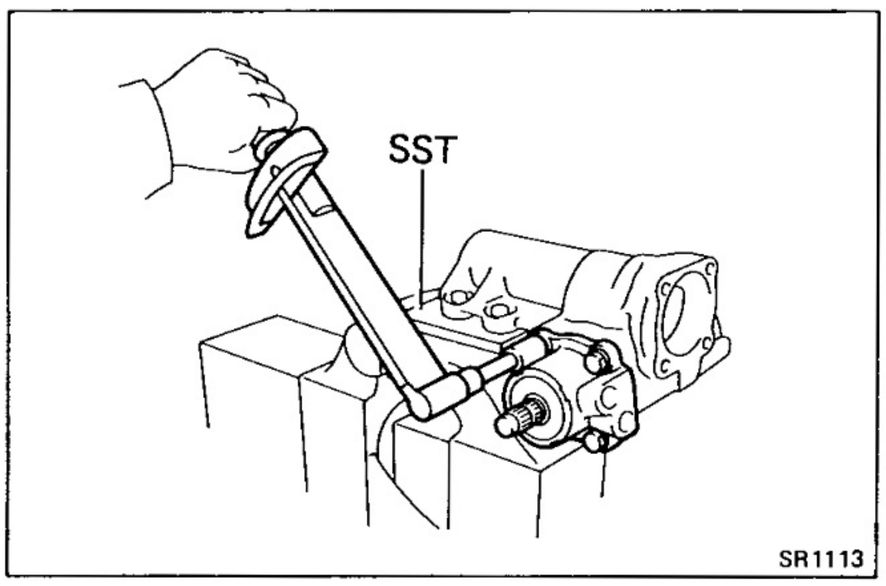

8. INSTALL WORM GEAR VALVE BODY ASSEMBLY

(a) Install the two O-rings to the gear housing and valve body.

(b) Mount the gear housing on SST and clamp SST in vise.

SST 09630-00011

(c) Install and torque the four bolts.

Torque: 470 kg-cm (34 ft-lb, 46 N·m)

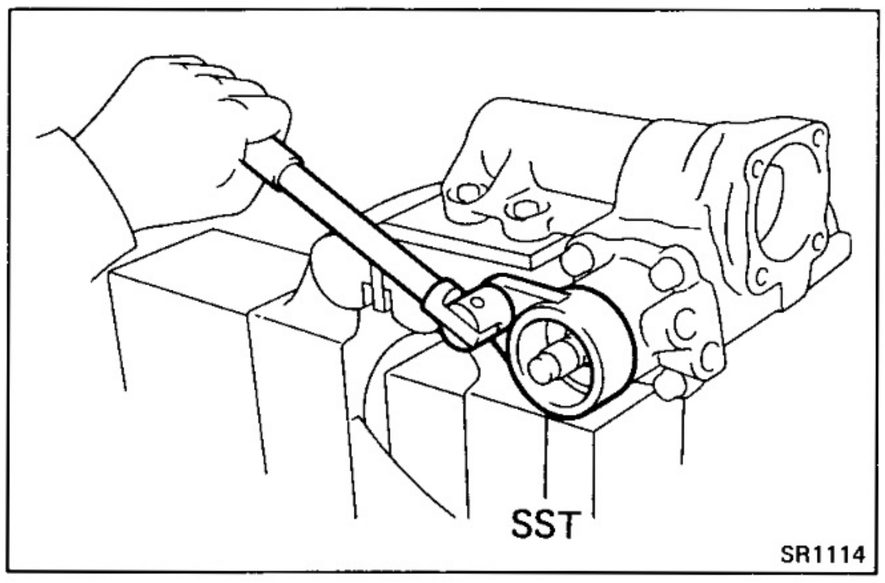

9. ADJUST WORM BEARING PRELOAD

(a) Using SST, remove the lock nut.

SST 09630-00011

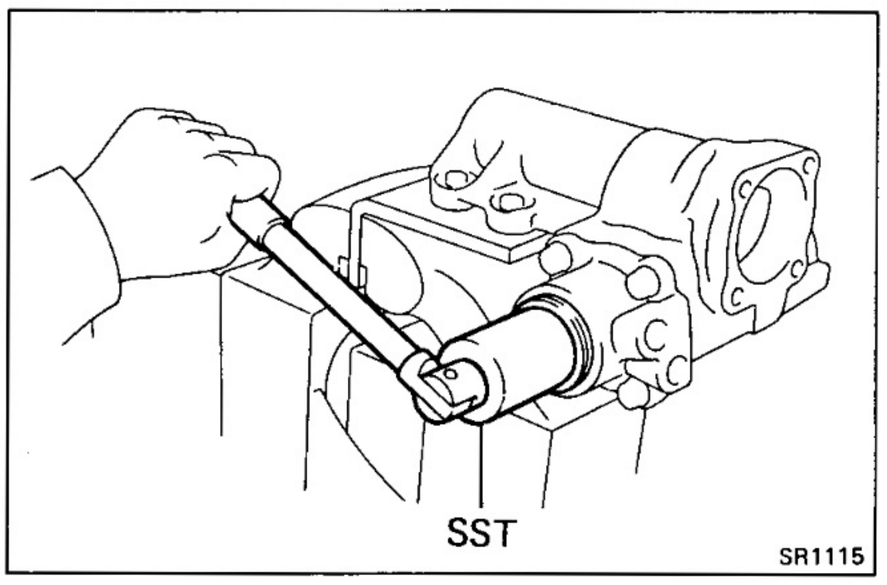

(b) Using SST, tighten the adjusting screw.

SST 09630-00011

(c) Turn the worm shaft to right and left and snug down the bearing.

(d) Slightly loosen the adjusting screw.

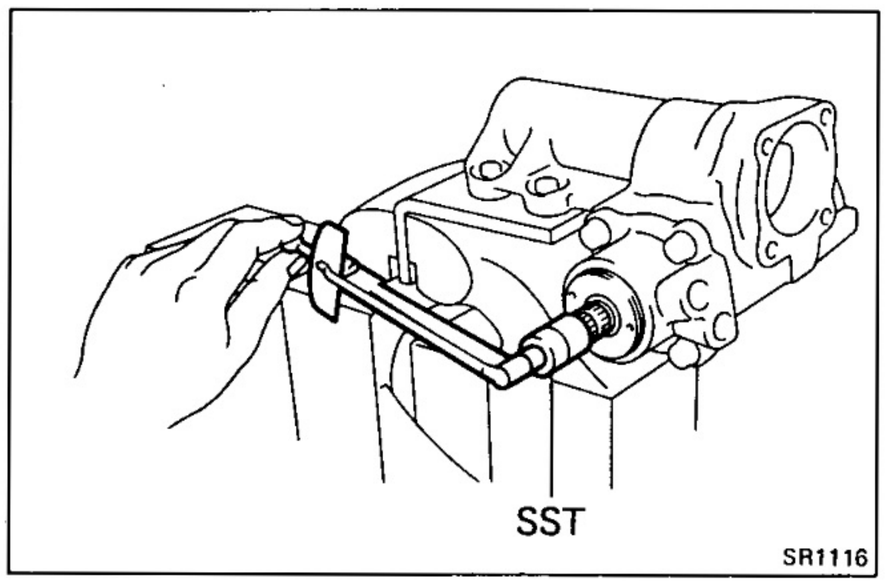

(e) Using SST, slightly tighten the adjusting screw until the preload is correct.

SST 09630-00011

(f) Using SST and a torque meter, check the preload of the bearing.

SST 09616-00010

Preload: 4.0 – 6.5 kg-cm (3.5 – 5.6 in.-lb, 0.4 – 0.6 N·m)

NOTE: Hold the power piston nut to prevent it from turning.

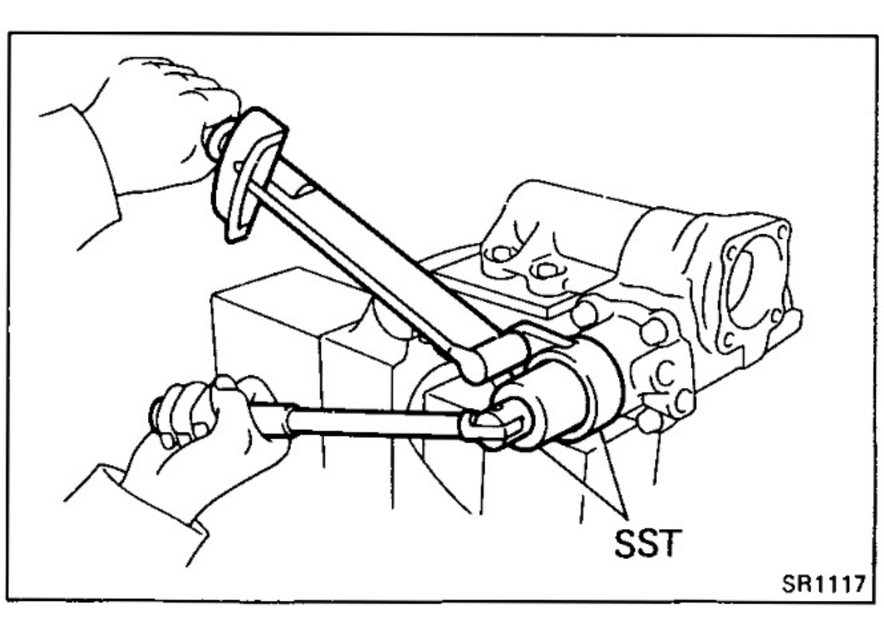

(g) Using SST, torque the lock nut while holding the adjusting screw with SST.

SST 09630-00011

Torque: 500 kg-cm (36 ft-lb, 49 N·m)

(h) Recheck the preload.

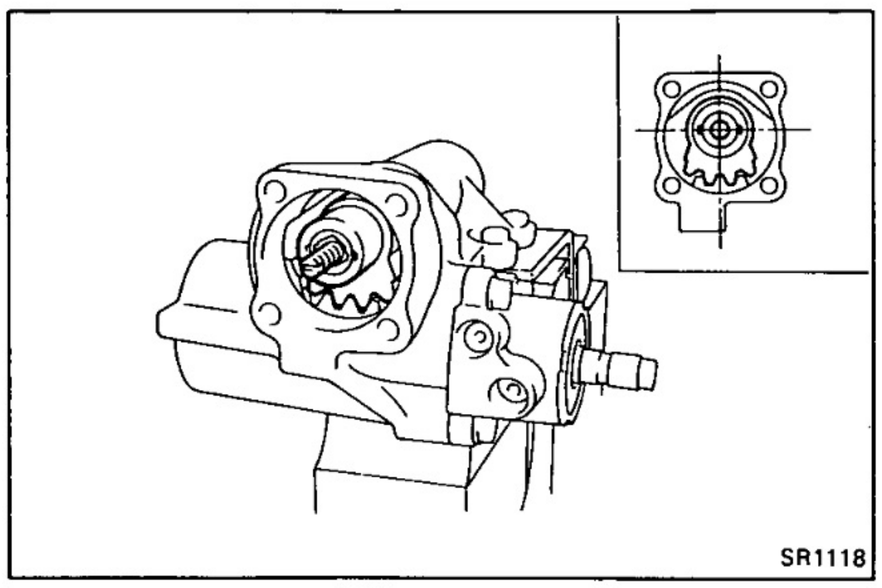

10. INSTALL CROSS SHAFT AND END COVER

(a) Install the O-ring on the end cover.

(b) Wrap the tape to the serration of the cross shaft.

(c) Set the worm gear at the center of the gear housing.

(d) Insert and push the cross shaft into the gear housing so that the center teeth mesh.

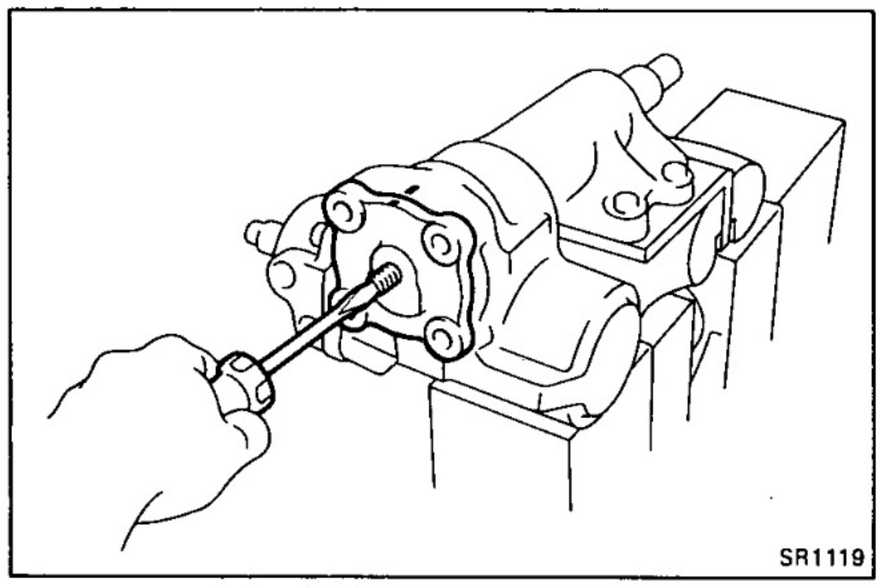

(e) Fully loosen the adjusting screw and install the end cover with four bolts.

Torque: 470 kg-cm (34 ft-lb, 46 N·m)

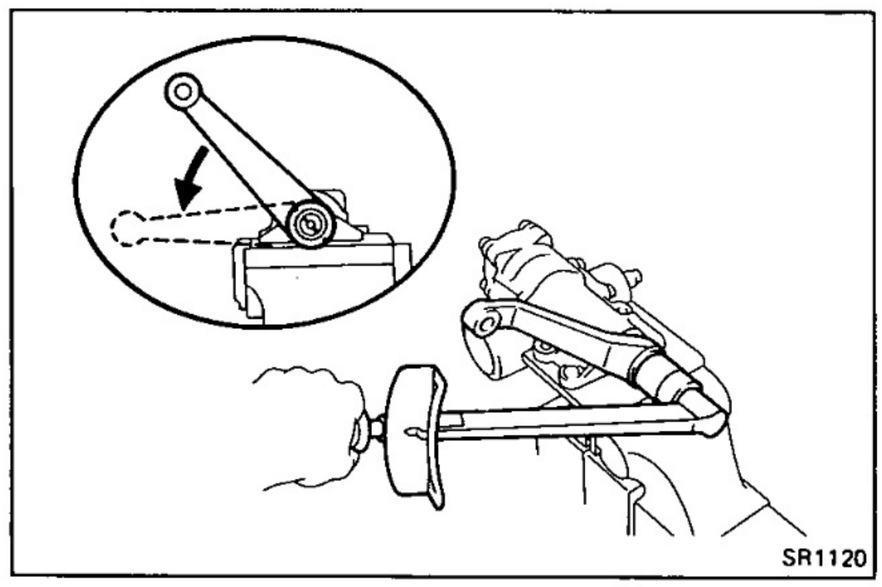

11. ADJUST TOTAL PRELOAD

(a) Match the alignment mark on the pitman arm and cross shaft, and install them.

(b) Install and torque the pitman arm set nut.

Torque: 1,800 kg-cm (130 ft-lb, 177 N·m)

(c) Turn the pitman arm until the alignment mark is horizontal.

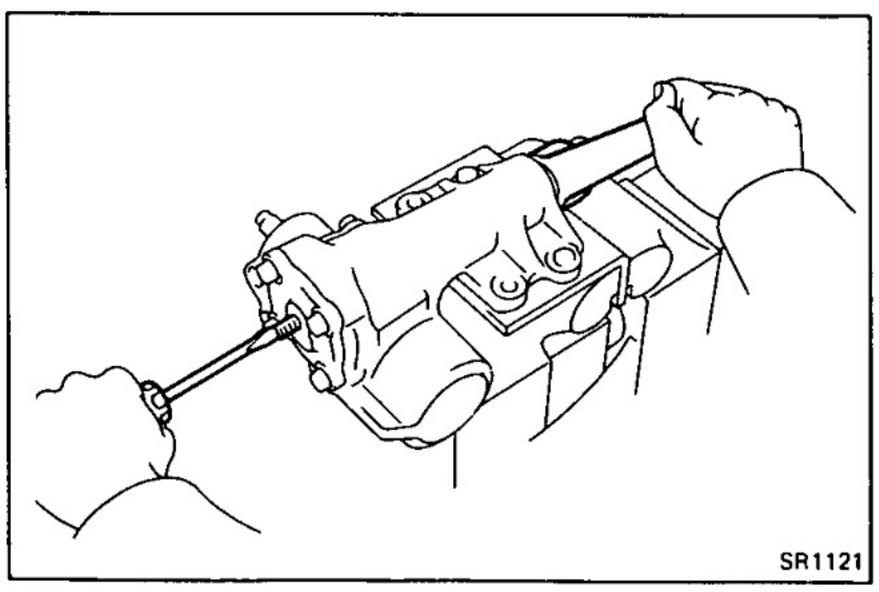

(d) Tighten the adjusting screw until the backlash is zero.

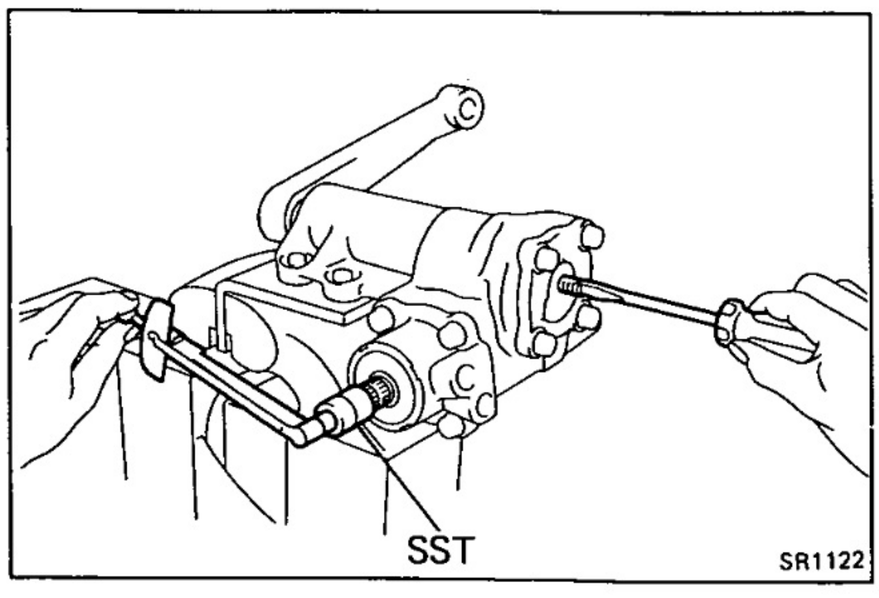

(e) While measuring the preload, tighten the adjusting screw until the preload is correct.

SST 09616-00010

Total preload: 6.0 – 9.5 kg-cm (5.2 – 8.2 in.-lb, 0.6 – 0.9 N·m)

NOTE: Be sure that the worm shaft is in the neutral position.

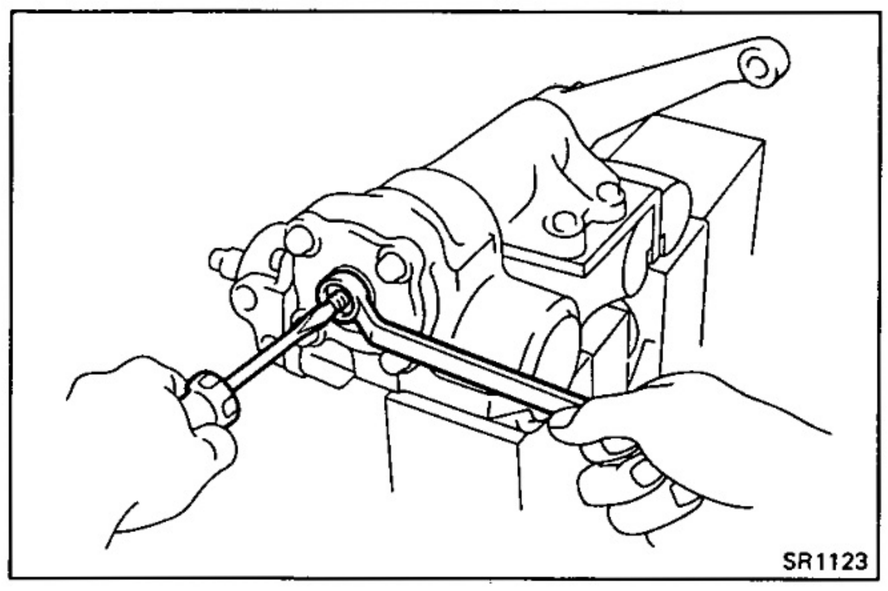

(f) While holding the adjusting screw, install and torque the lock nut.

Torque: 470 kg-cm (34 ft-lb, 46 N·m)

(g) Recheck the total preload.

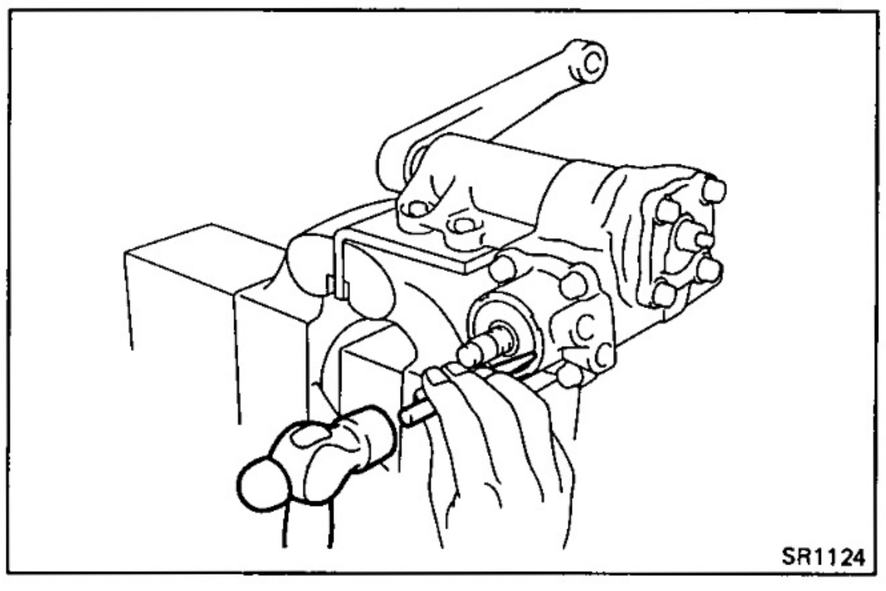

12. STAKE LOCK NUT

Using a punch and hammer, stake the lock nut.

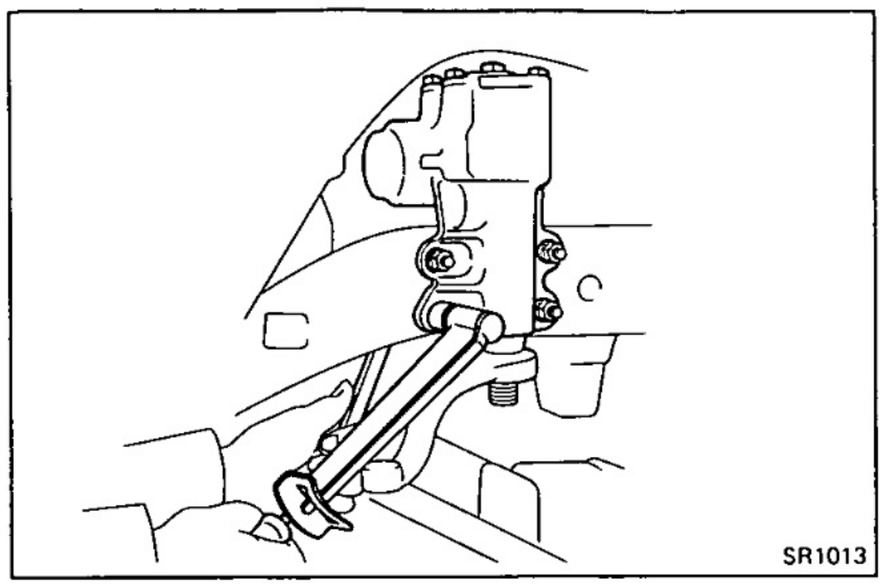

INSTALLATION OF GEAR HOUSING

(See page SR-57)

1. INSTALL GEAR HOUSING

Install the gear housing with the four bolts and nuts.

Torque: 1,240 kg-cm (90 ft-lb, 122 N·m)

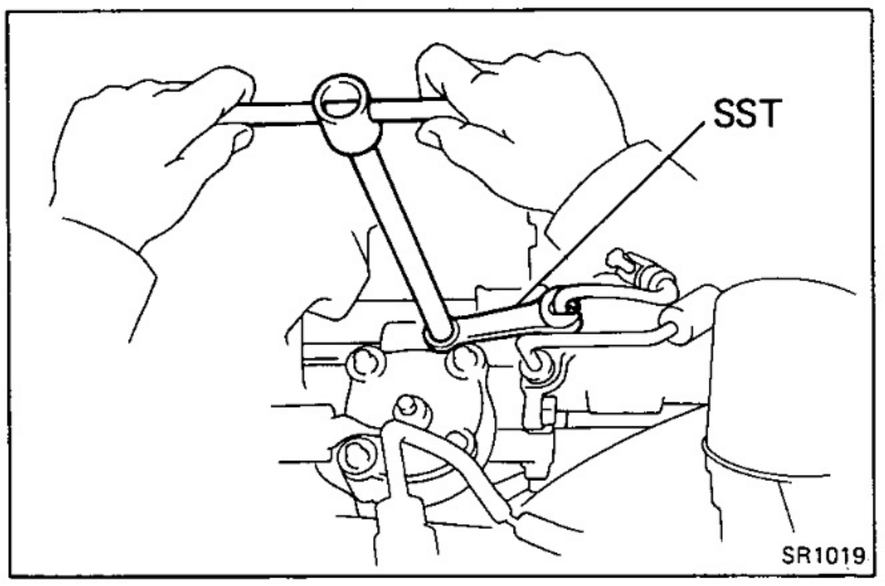

2. CONNECT PRESSURE AND RETURN LINE

Using SST, install and torque the union nuts.

SST 09631-22020

Torque: 450 kg-cm (33 ft-lb, 44 N·m)

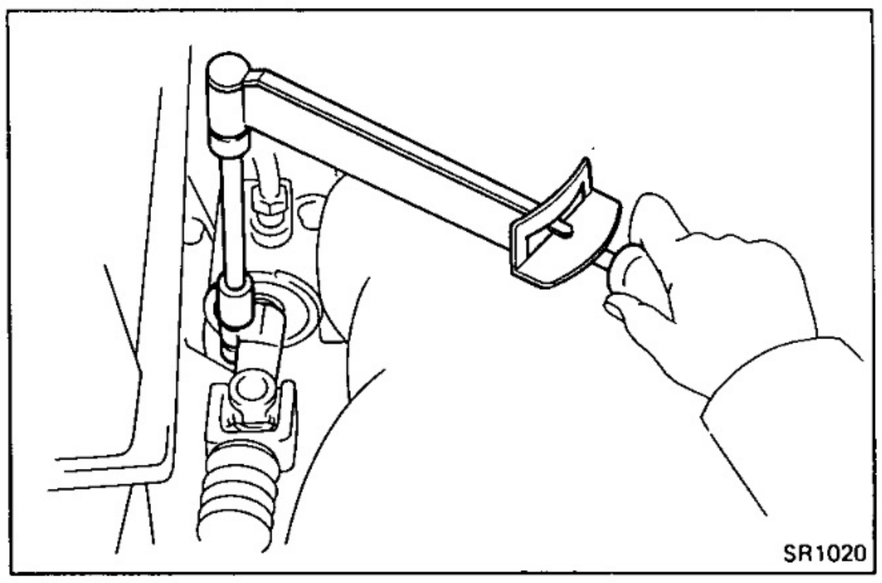

3. CONNECT INTERMEDIATE SHAFT

(a) Align matchmarks on the worm shaft and intermediate shaft joint yoke, and connect them.

(b) Install and torque the two bolts.

Torque: 360 kg-cm (26 ft-lb, 35 N·m)

(c) Install the joint protector and bolt.

Torque: 65 kg-cm (56 in.-lb, 6.4 N·m)

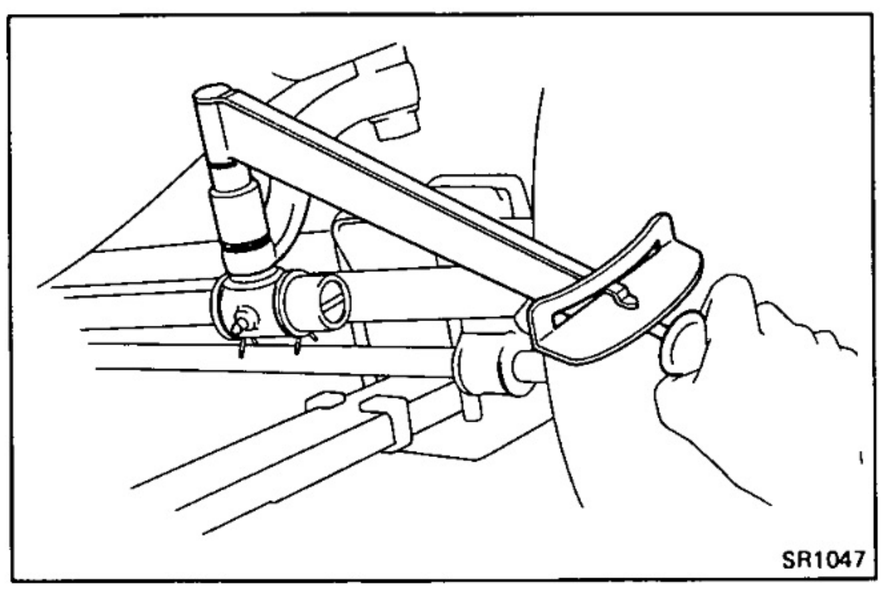

4. CONNECT PITMAN ARM TO RELAY ROD

(a) Connect the pitman arm to the relay rod end and install the nut.

Torque: 925 kg-cm (67 ft-lb, 91 N·m)

(b) Install the cotter pin.

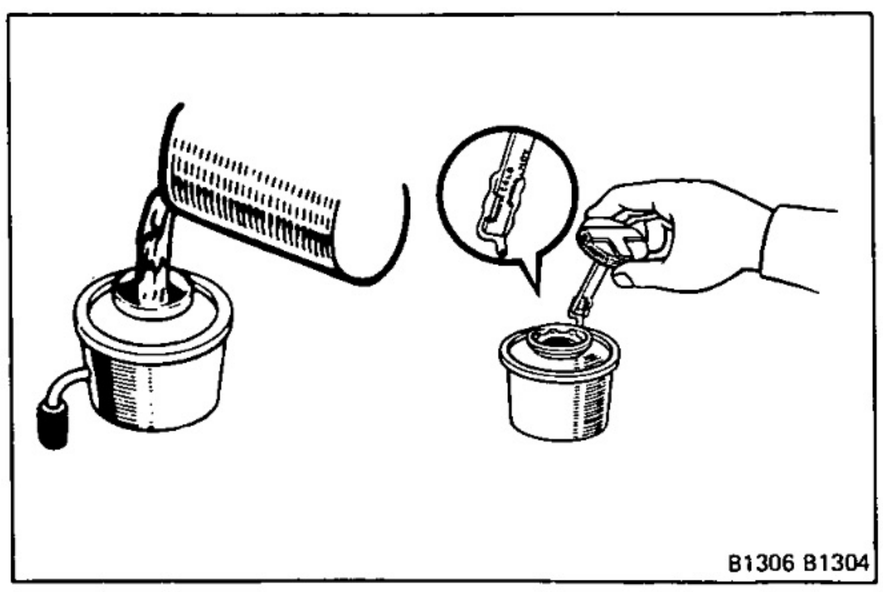

5. FILL RESERVOIR WITH FLUID

Fluid: ATF DEXRON® or DEXRON® II

6. BLEED SYSTEM AND PERFORM PRESSURE CHECK

(See page SR-35)

STEERING LINKAGE

REMOVAL OF STEERING LINKAGE

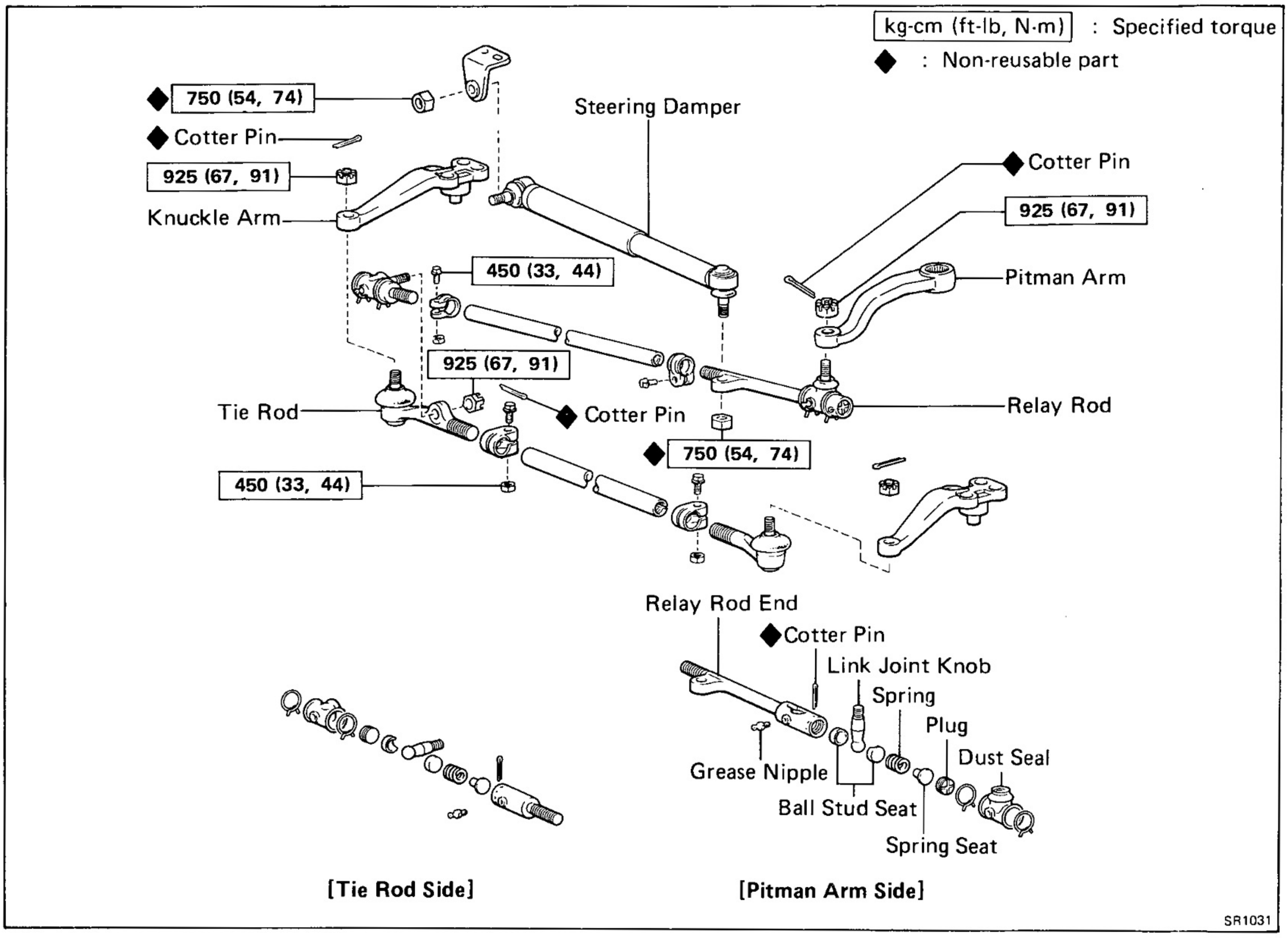

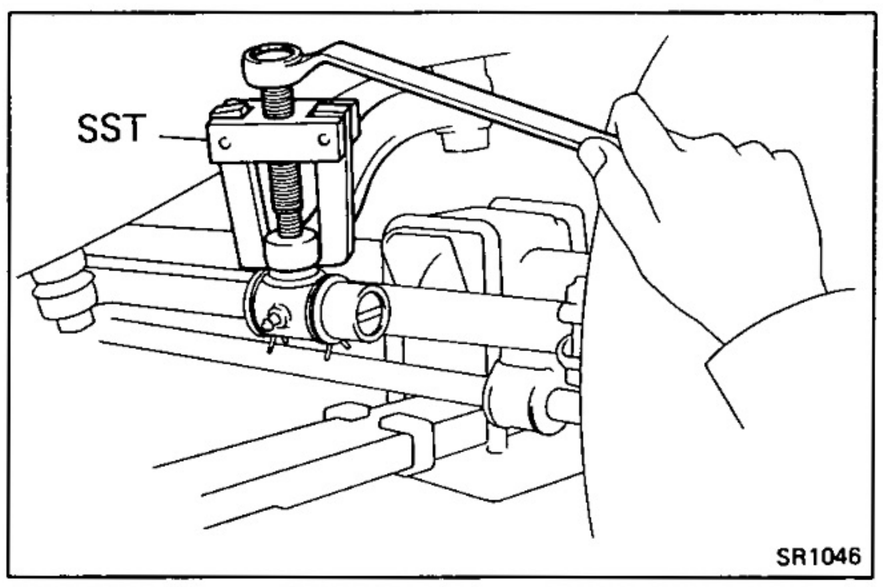

1. **REMOVE WHEEL**

2. **DISCONNECT RELAY ROD FROM PITMAN ARM**
   (a) Remove the cotter pin and nut.
   (b) Using SST, disconnect the relay rod from the pitman arm.

   SST 09628-62011

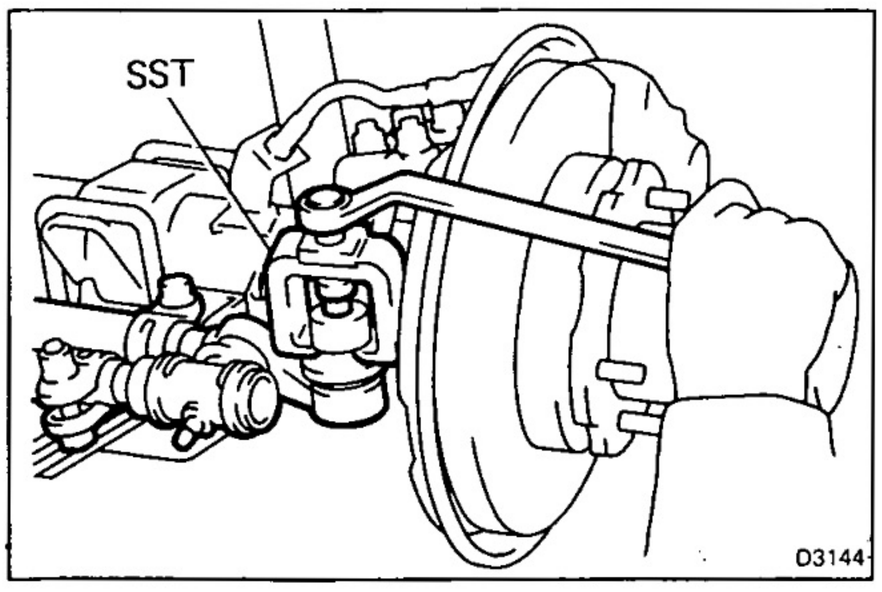

3. **DISCONNECT TIE ROD FROM KNUCKLE ARM**
   (a) Remove the cotter pin and nut.
   (b) Using SST, disconnect the tie rod from the knuckle arm.

   SST 09611-22012

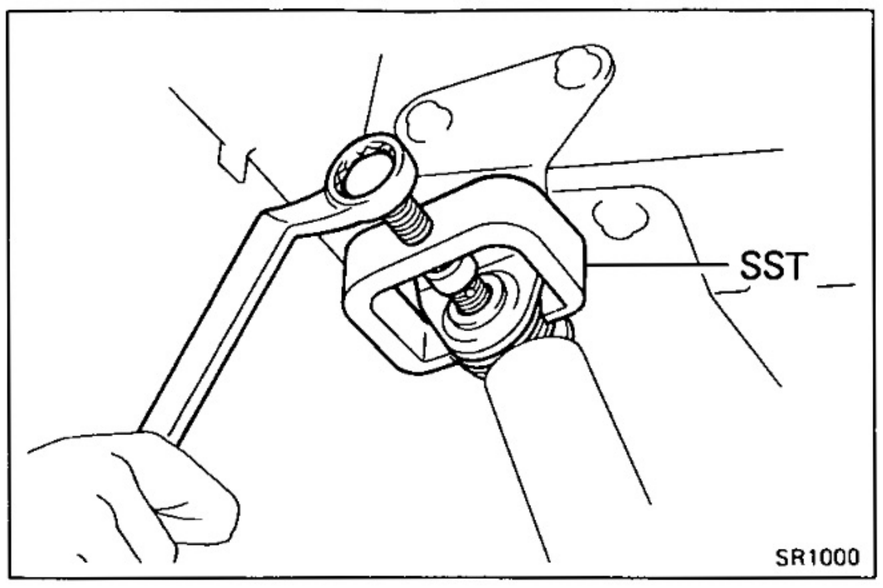

4. **DISCONNECT STEERING DAMPER FROM DAMPER BRACKET**

(a) Remove the nut.

(b) Using SST, disconnect the steering damper from the damper bracket.

SST 09628-12022

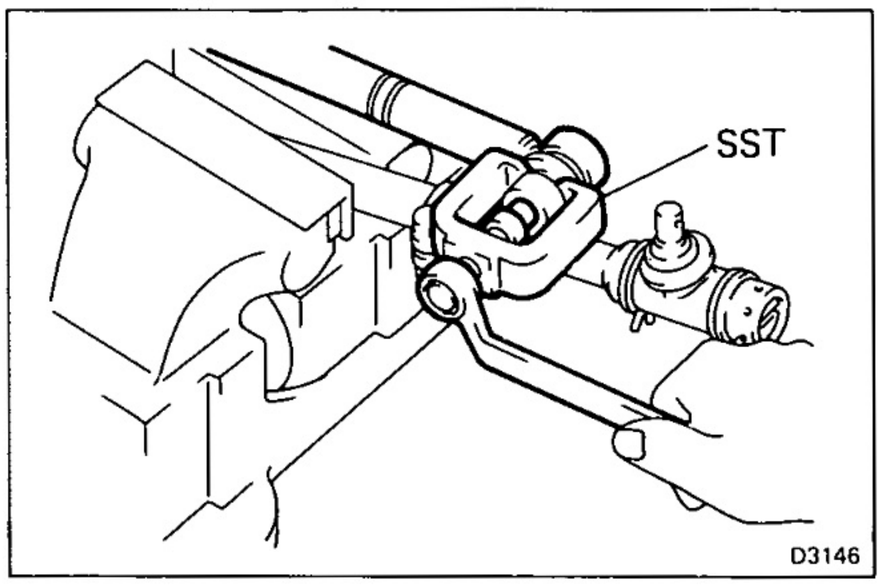

5. **DISCONNECT STEERING DAMPER FROM RELAY ROD**

(a) Remove the nut.

(b) Using SST, disconnect the steering damper from the relay rod.

SST 09611-22012

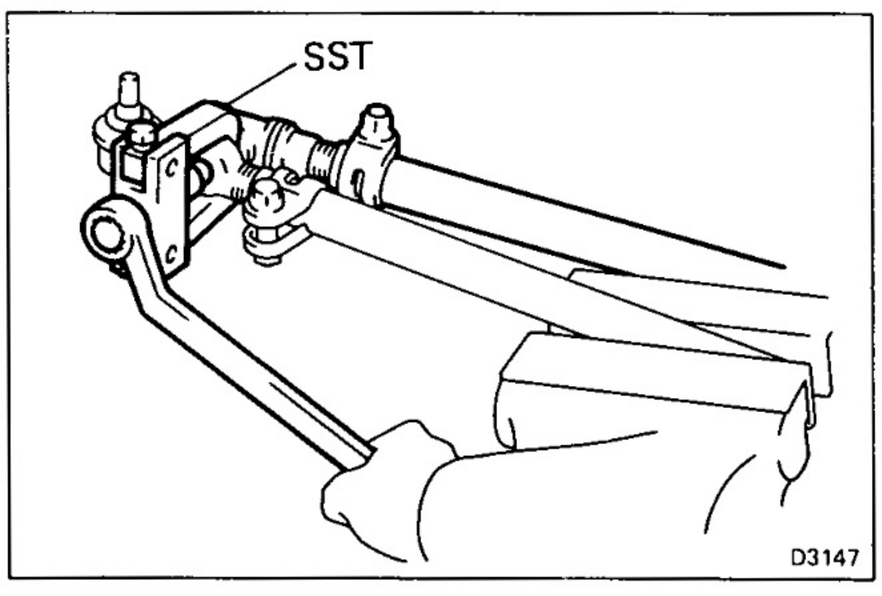

6. **DISCONNECT RELAY ROD FROM TIE ROD**

(a) Remove the cotter pin and nut.

(b) Using SST, disconnect the relay rod from the tie rod.

SST 09628-62011

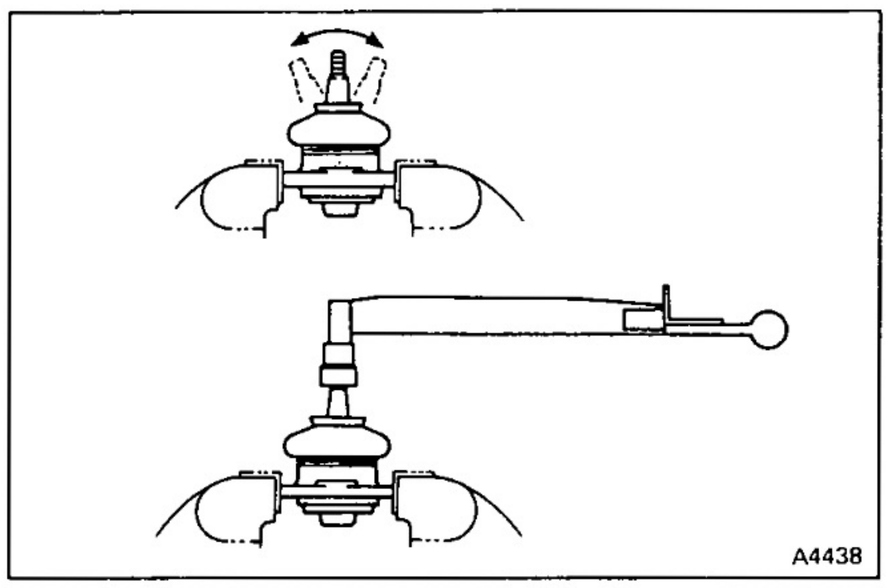

INSPECTION OF STEERING LINKAGE

1. INSPECT BALL JOINT FOR ROTATION CONDITION

(a) Clamp the ball joint in vise.

(b) As shown in the figure, flip the ball joint stud back and forth 5 times before installing the nut.

(c) Using a torque gauge, turn the nut continuously one turn each 2-4 seconds and take the torque reading on the fifth turn.

Torque (turning): 10 – 30 kg-cm
(8.7 – 26.0 in.-lb, 1.0 – 2.9 N·m)

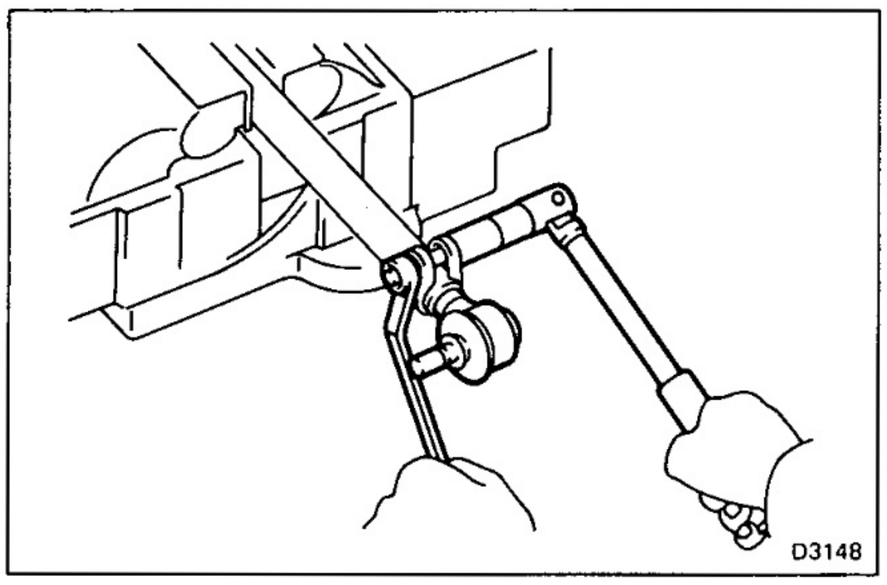

2. IF NECESSARY, REPLACE TIE ROD END

(a) Loosen the tie rod end clamp and remove the tie rod end.

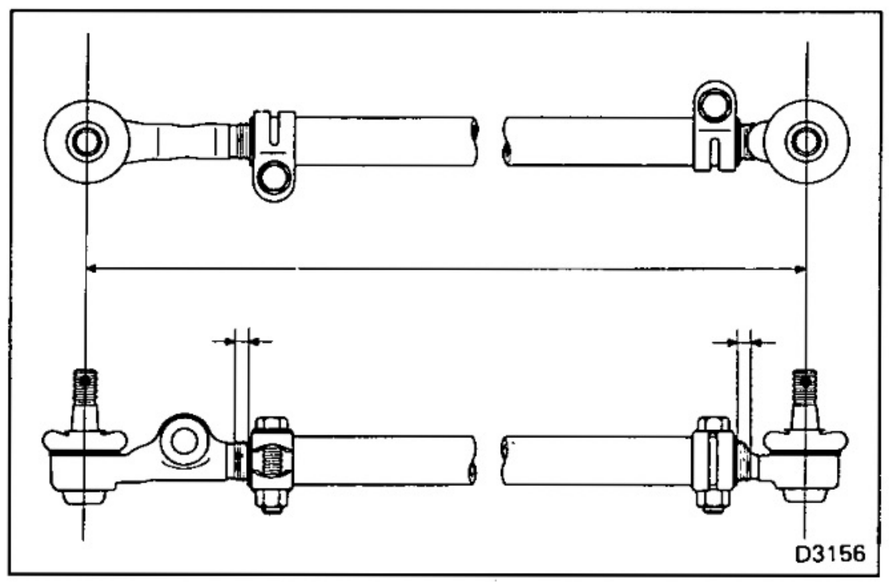

(b) Turn the tie rod ends equal amounts into the tie rod tube, Tie rods should be approximately 1,267 mm (49.88 in.).

(c) Temporarily tighten the tie rod end clamp.

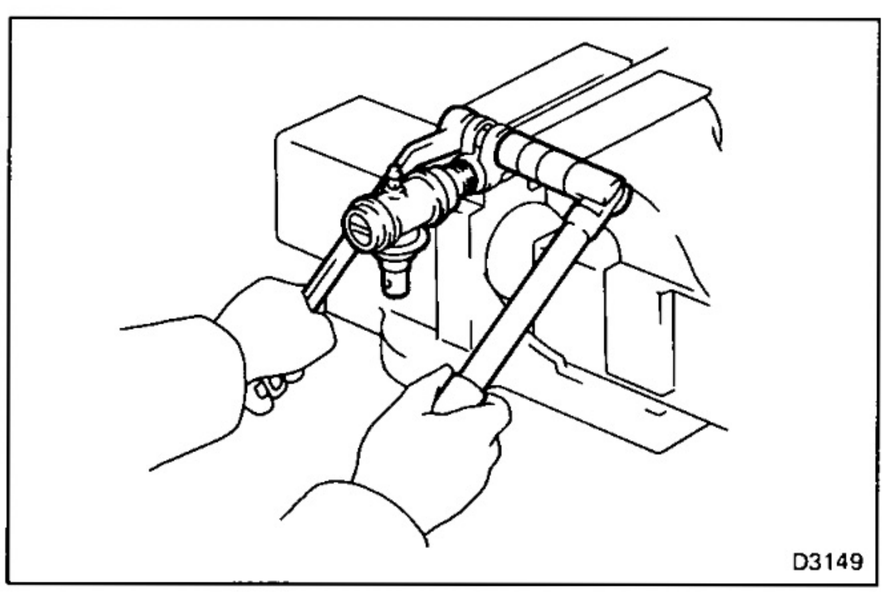

3. IF NECESSARY, REPLACE RELAY ROD END

(a) Loosen the relay rod end clamp and remove the relay rod end.

(b) Remove the cotter pin.

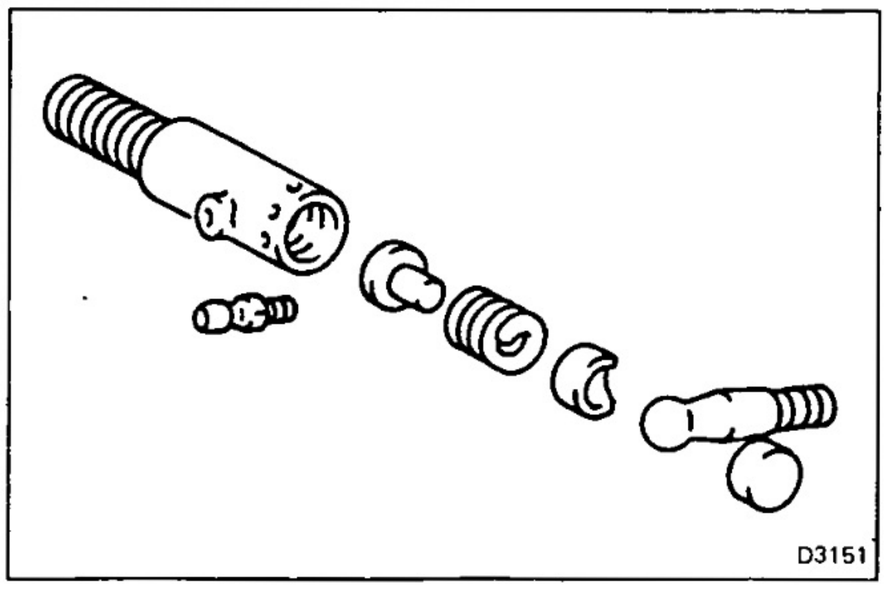

(c) Using a screwdriver, remove the plug, two ball stud seats, link joint knob, spring and spring seat.

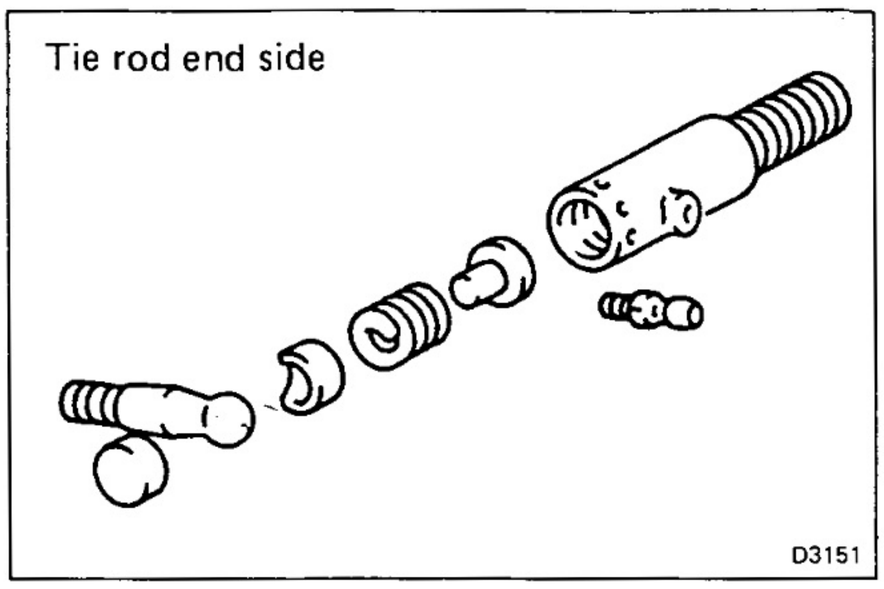

(d) Apply molybdenum disulphide lithium base grease to the joint parts.

(e) Install the spring seat, spring, link joint knob and two ball stud seats.

(f) Tighten the plug completely.

(g) Loosen the plug 1 — 1 1/3 turns and install a new cotter pin.

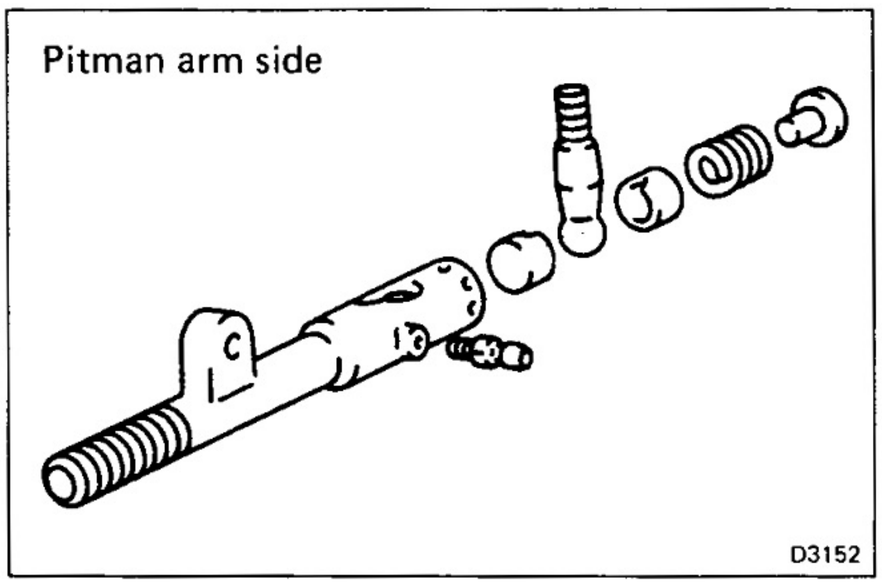

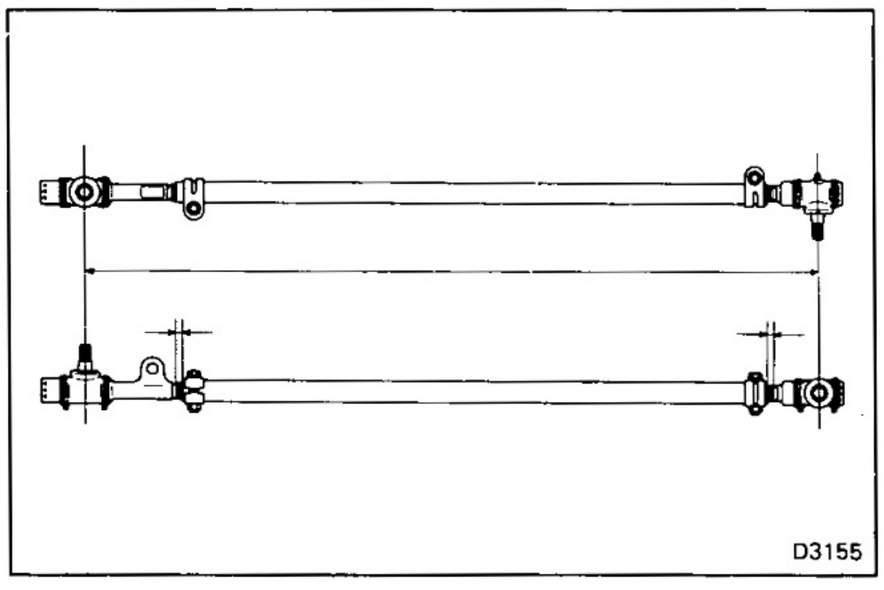

(h) Turn the relay rod ends equal amounts into the relay rod tube.
Relay rod should be approximately 1,001 mm (39.41 in.).

(i) Torque the clamp bolts.

Torque: 450 kg-cm (33 ft-lb, 44 N·m)

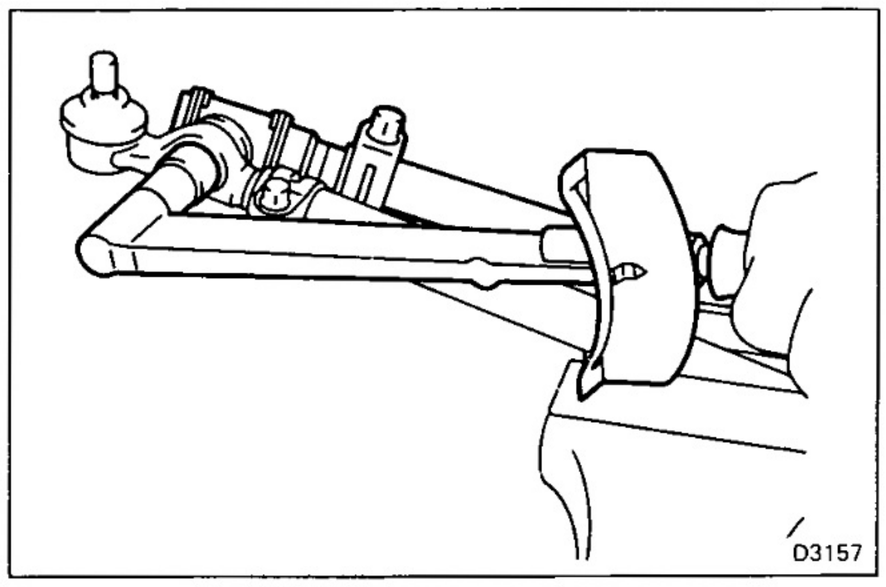

INSTALLATION OF STEERING LINKAGE

1. CONNECT RELAY ROD TO TIE ROD

(a) Torque the nut.

Torque: 925 kg-cm (67 ft-lb, 91 N·m)

(b) Install a new cotter pin.

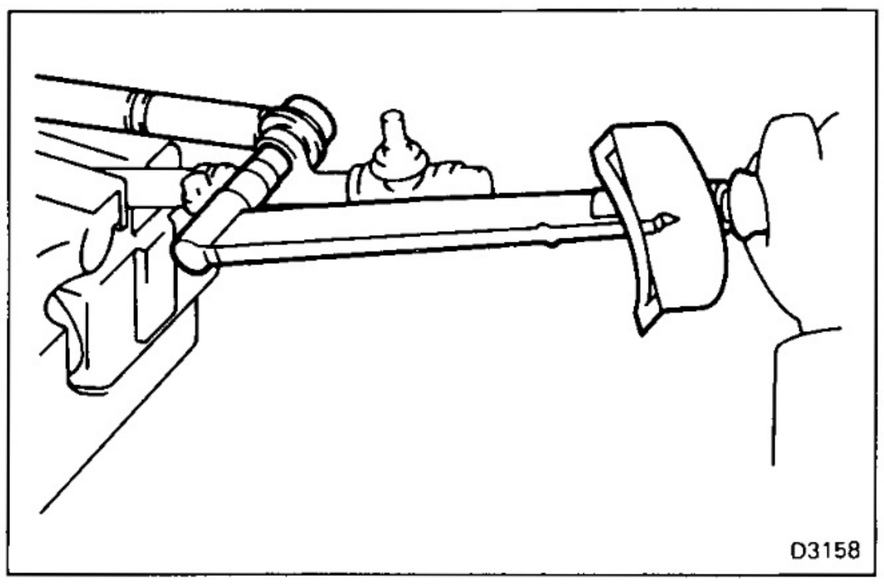

2. CONNECT STEERING DAMPER TO RELAY ROD

Torque the nut.

Torque: 750 kg-cm (54 ft-lb, 74 N·m)

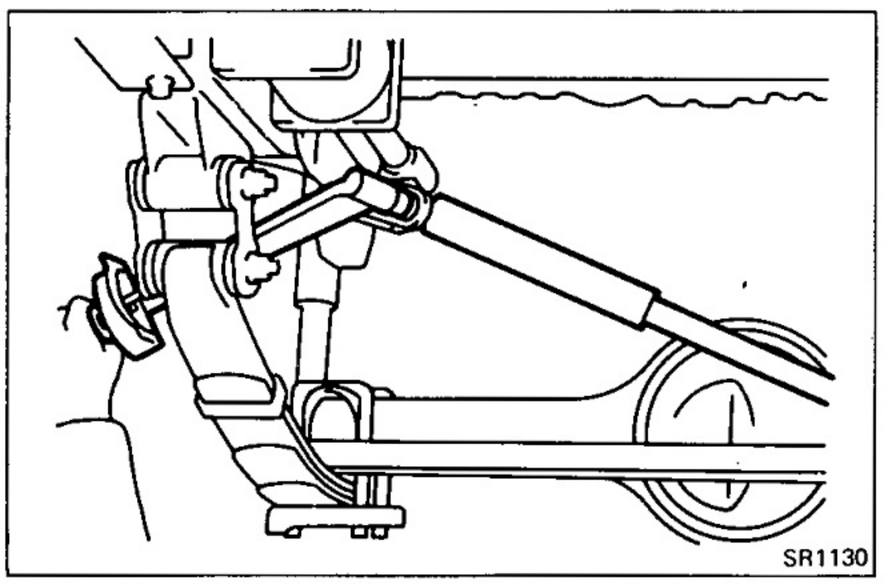

3. CONNECT STEERING DAMPER TO DAMPER BRACKET

Torque the nut.

Torque: 750 kg-cm (54 ft-lb, 74 N·m)

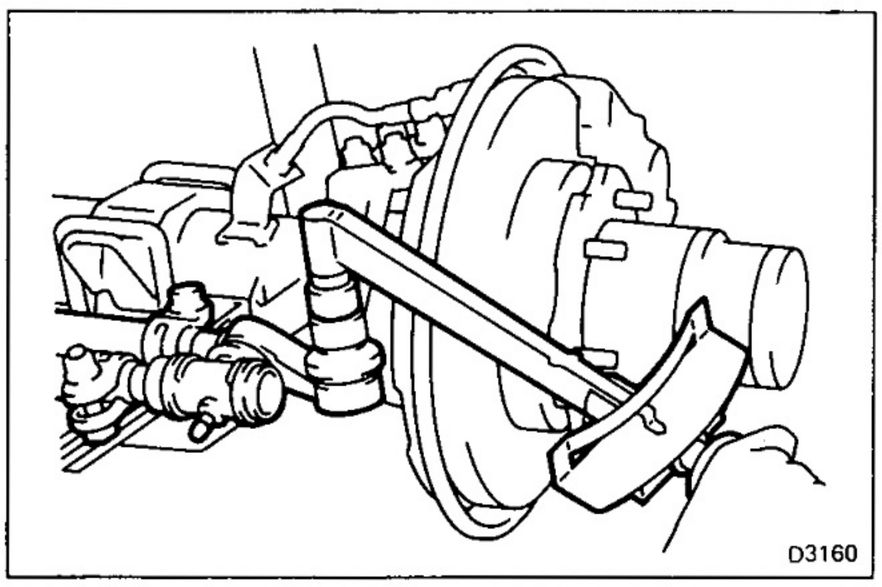

4. CONNECT TIE ROD TO KNUCKLE ARM

(a) Torque the nut.

Torque: 925 kg-cm (67 ft-lb, 91 N·m)

(b) Install the new cotter pin.

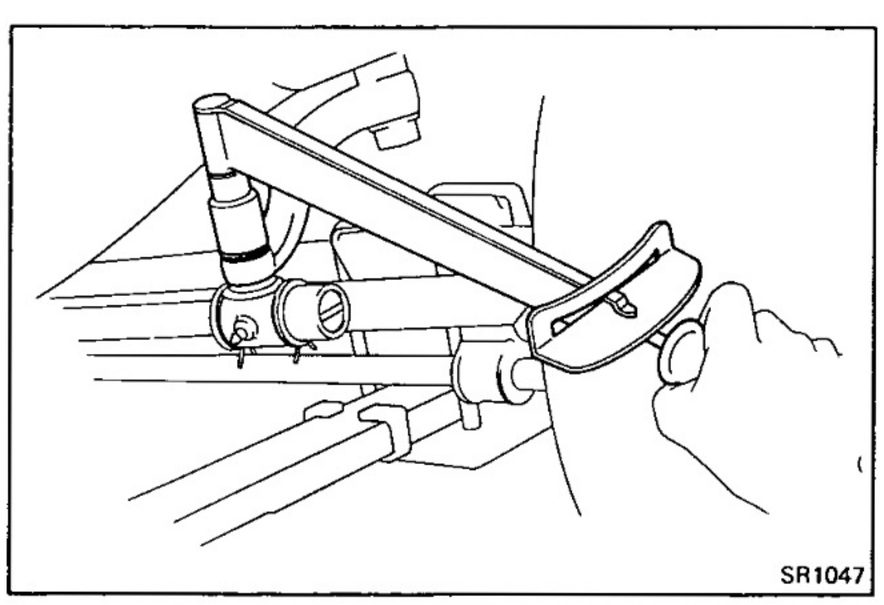

5. CONNECT RELAY ROD TO PITMAN ARM

(a) Torque the nut.

Torque: 925 kg-cm (67 ft-lb, 91 N·m)

(b) Install a new cotter pin.

6. APPLY MOLYBDENUM DISULPHIDE LITHIUM BASE GREASE TO BOTH NIPPLES

7. INSTALL WHEEL

8. ADJUST TOE-IN (See page FA-4)

BODY ELECTRICAL SYSTEM

	Page
PRECAUTIONS	BE-2
LOCATION OF SWITCHES AND RELAYS	BE-5
IGNITION SWITCH AND STARTER SWITCH	BE-13
LIGHTING	BE-14
HEADLIGHT CLEANER	BE-21
WIPERS AND WASHERS	BE-23
INSTRUMENTS, GAUGES AND WARNING LIGHTS	BE-28
REAR WINDOW DEFOGGER	BE-40
HEATER	BE-43
POWER WINDOW	BE-51
DOOR LOCK CONTROL SYSTEM	BE-54
SUN ROOF	BE-56
RADIO, STEREO TAPE PLAYER AND ANTENNA	BE-58
CLOCK	BE-66

PRECAUTIONS

WIRING COLOR CODE

Wire colors are indicated by an alphabetical code.
The 1st letter indicates the basic wire color and the 2nd indicates the stripe color.

B = Black	BR = Brown
G = Green	GR = Grey
L = Light Blue	LG = Light Green
O = Orange	P = Pink
R = Red	V = Violet
W = White	Y = Yellow

Example: R-G indicates a red wire with a green stripe.

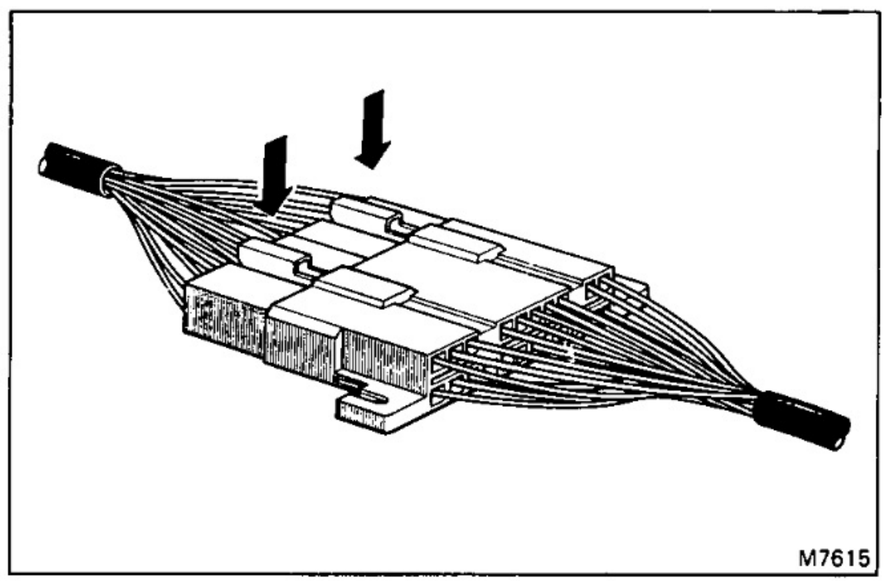
M7615

HANDLING AND INSPECTION OF BULKHEAD TYPE CONNECTOR

DISCONNECT BULKHEAD TYPE CONNECTOR

To remove the connector, push the lock levers shown in the figure and pull out.

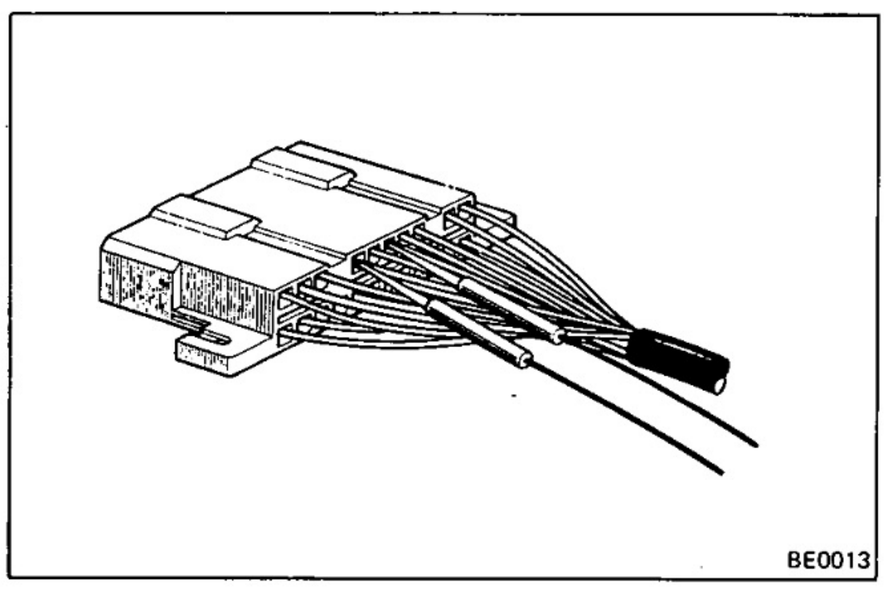
BE0013

INSPECT BULKHEAD TYPE CONNECTOR

When checking the continuity or voltage with a circuit tester, insertion of the test probe into the receptacle connector may open the fitting to the connector and result in poor contact.

Therefore, ensure that the test probe is inserted only from the wire harness side as shown in the figure.

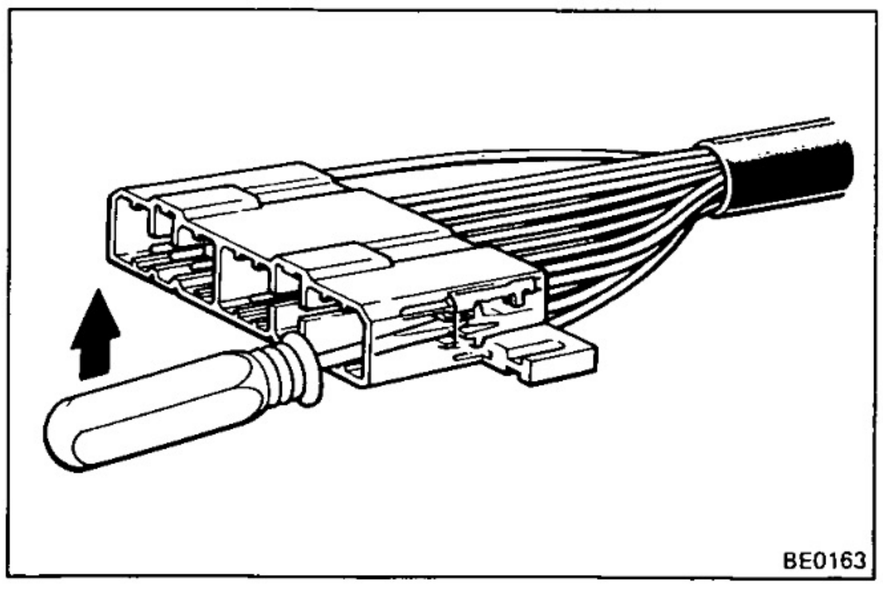
BE0163

REPLACEMENT OF COMBINATION SWITCH

REMOVE TERMINALS FROM CONNECTOR

(a) From the open end, insert a miniature screwdriver between the locking lugs and terminal.

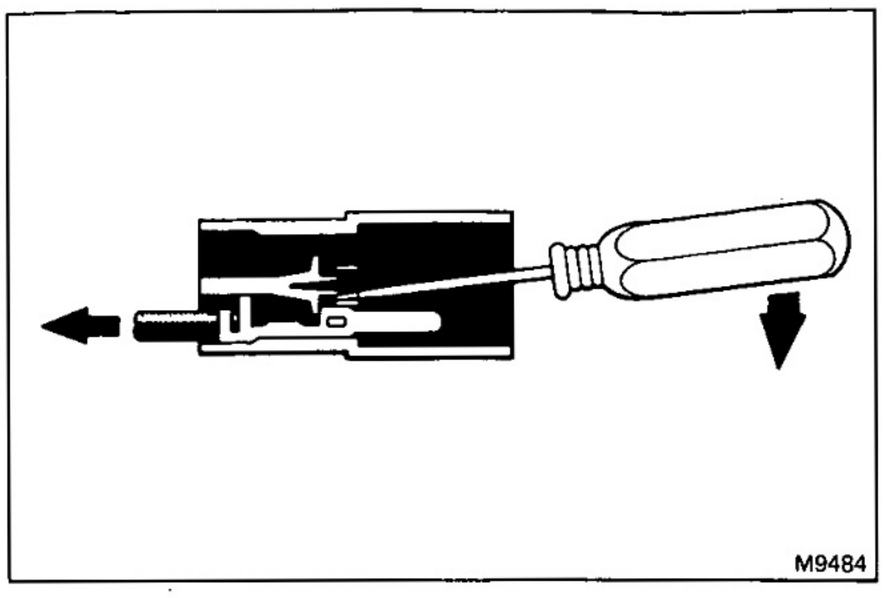

(b) Pry up the locking lugs with the screwdriver and pull the terminal out from the rear.

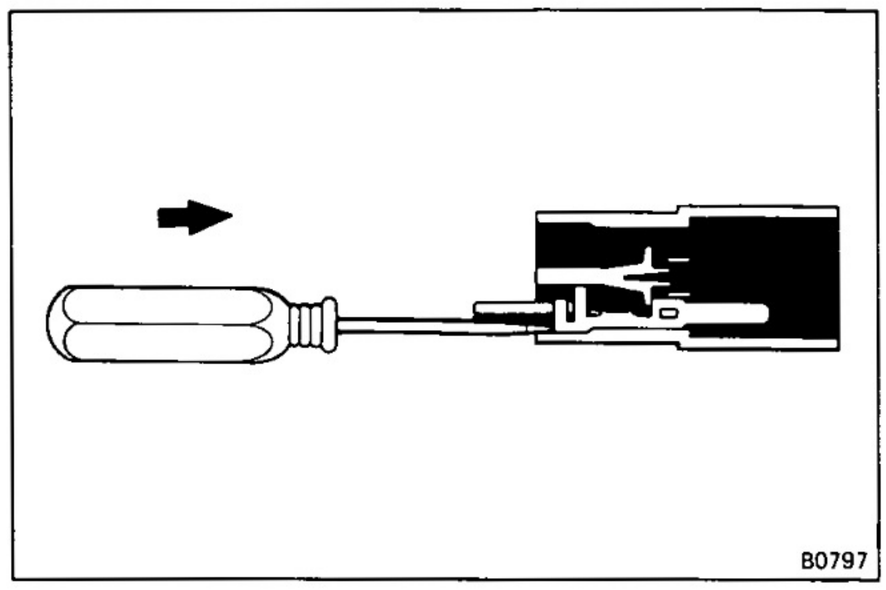

INSTALL TERMINALS TO CONNECTOR

(a) Push in the terminal until it is securely locked in the connector lug.

(b) Pull on the wire to confirm that it is securely locked.

INSPECTION OF CIRCUIT AND CONNECTOR

INSPECT CIRCUIT

When inspecting the circuit, refer to the diagram at the back of the manual.

INSPECT CONNECTOR

All connectors are shown from the component side. Therefore when inspecting from the body side, the left and right terminal connections will be in reverse.

REPLACEMENT OF FUSE

Install a new fuse with the correct amperage.

CAUTION:

1. **Turn off all electrical components and the ignition switch before replacing a fuse. Do not exceed the fuse amp rating.**
2. **Always use a fuse puller for removing and inserting a fuse. Remove and insert straight in and out without twisting. Twisting could force open the terminals too much, resulting in a bad connection.**

If a fuse continues to blow, a short circuit is indicated. The system must be checked by a qualified technician.

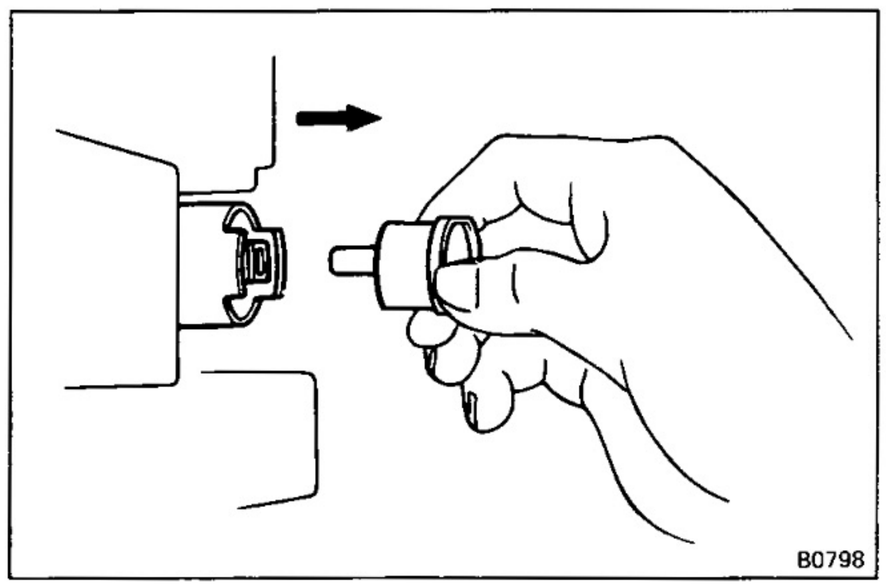

RESET CIRCUIT BREAKER

1. REMOVE CIRCUIT BREAKER

(a) Remove the kick panel.

(b) Remove the circuit breaker.

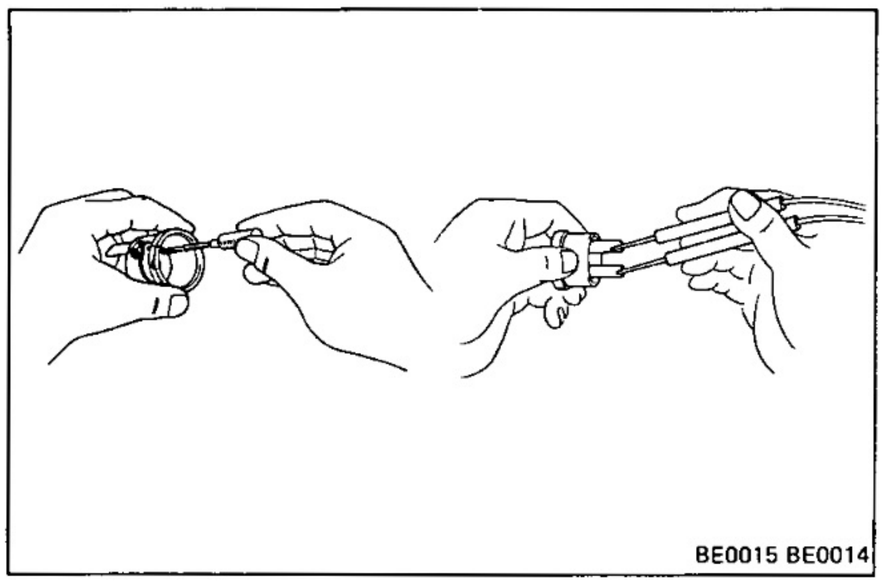

2. RESET CIRCUIT BREAKER

(a) Insert the needle into the reset hole and push it.

(b) Using an ohmmeter, check that there is continuity between both terminals of the circuit breaker.

If there is no continuity, replace the circuit breaker.

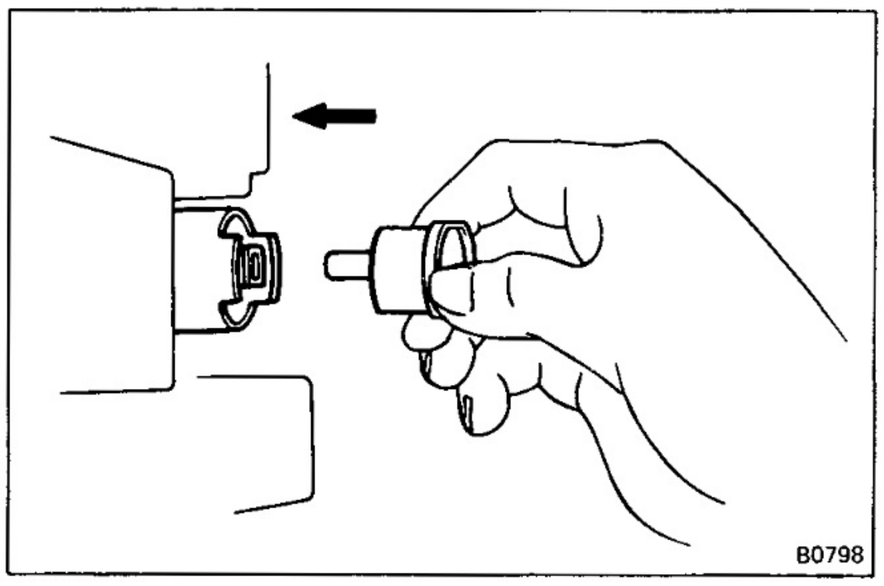

3. INSTALL CIRCUIT BREAKER

(a) Install the circuit breaker.

NOTE: If a circuit breaker continues to cut out, a short circuit is indicated. The system must be checked by a qualified technician.

(b) Install the kick panel.

LOCATION OF SWITCHES AND RELAYS

ENGINE COMPARTMENT SWITCHES AND RELAYS

2H Engine

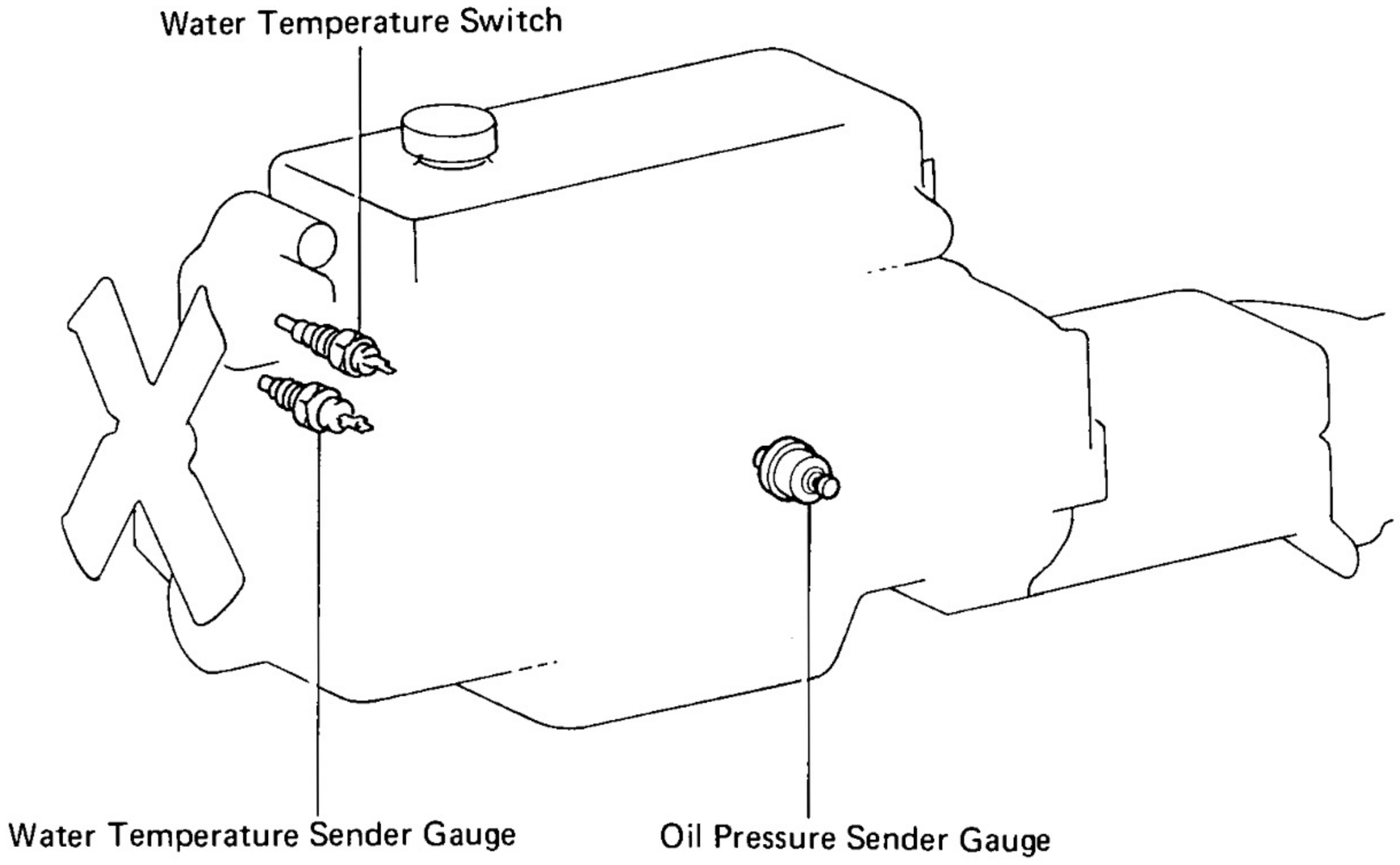

3B Engine

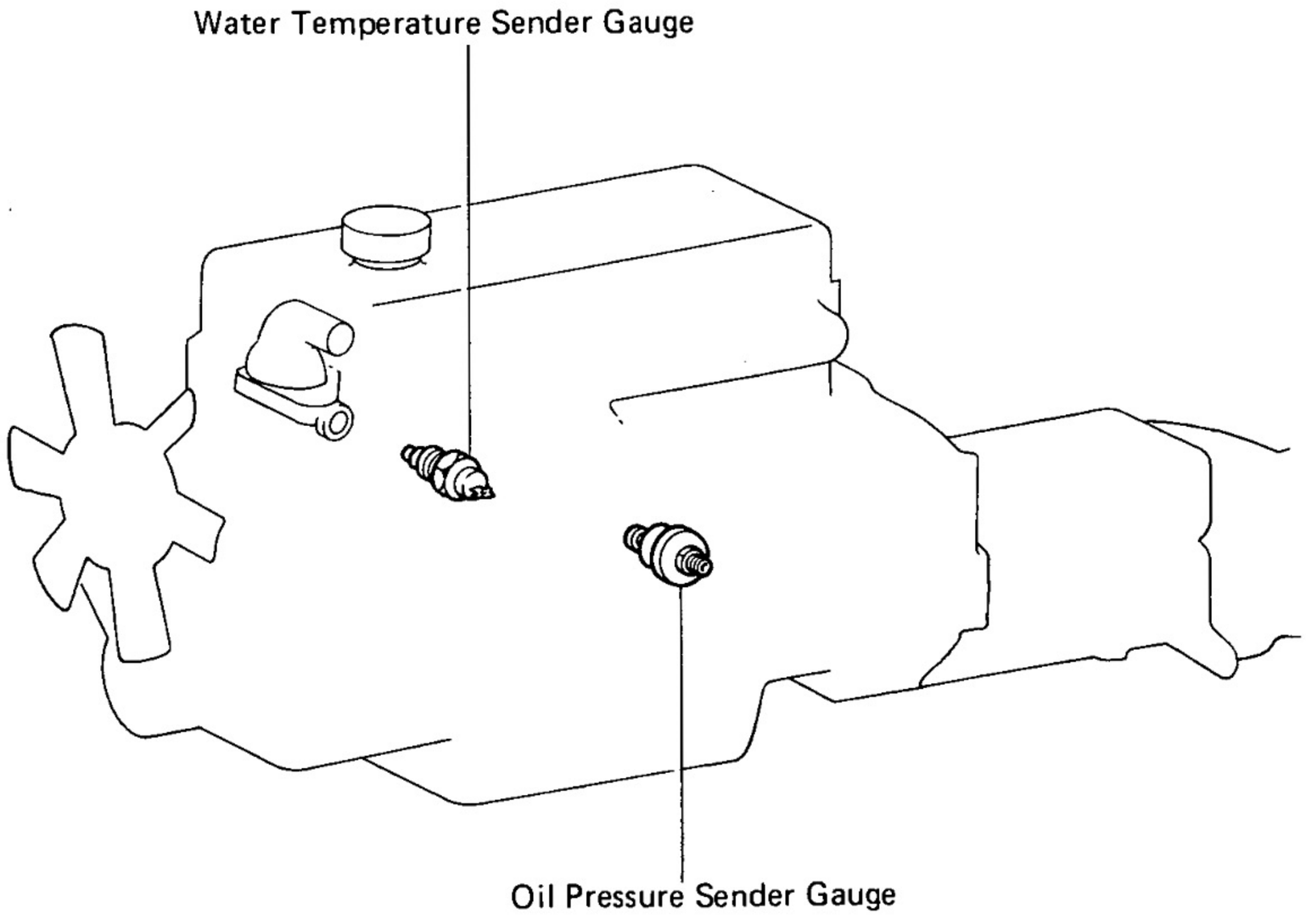

BE0737
BE0738

ENGINE COMPARTMENT SWITCHES AND RELAYS (Cont'd)

3F Engine

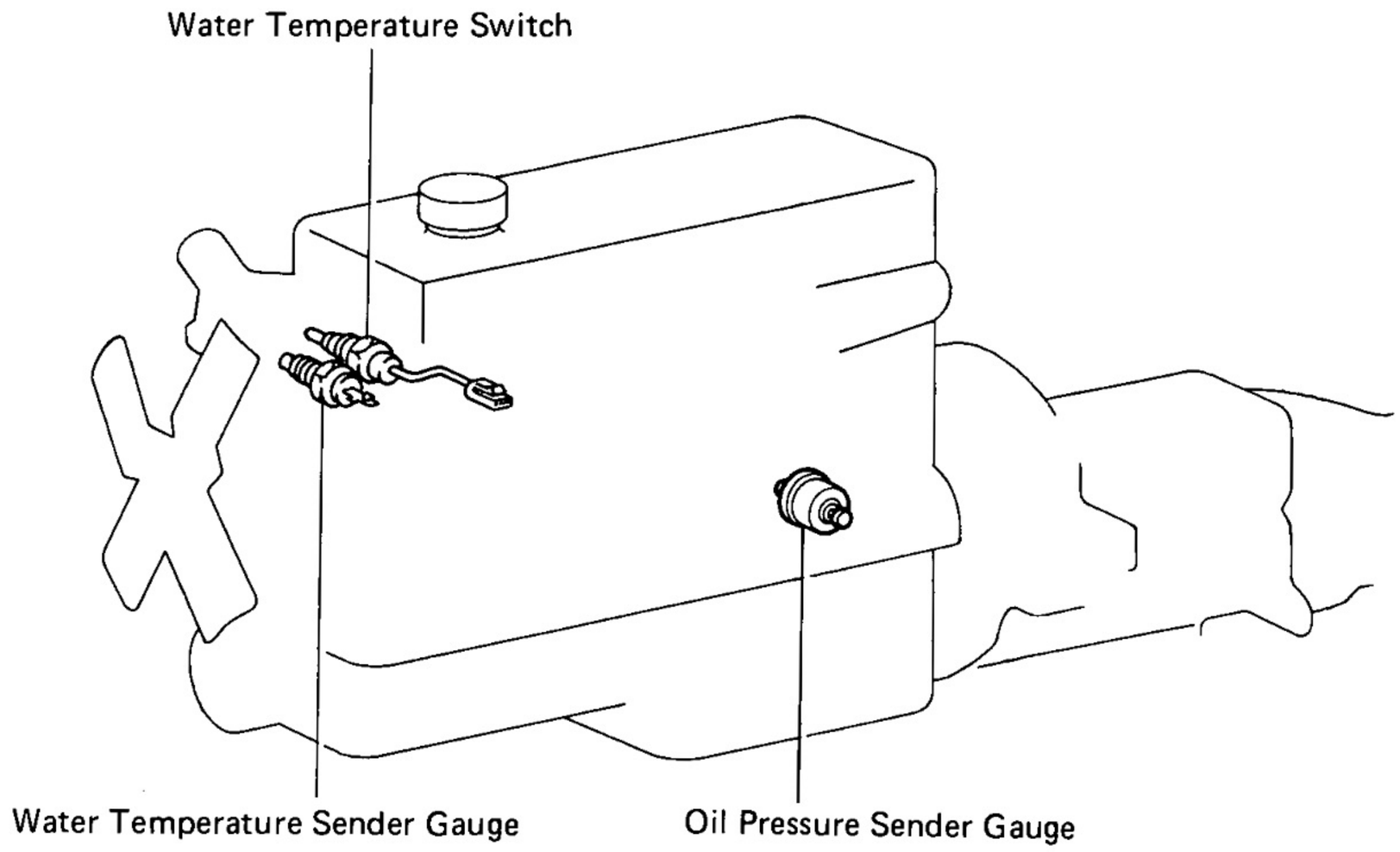

70 Series

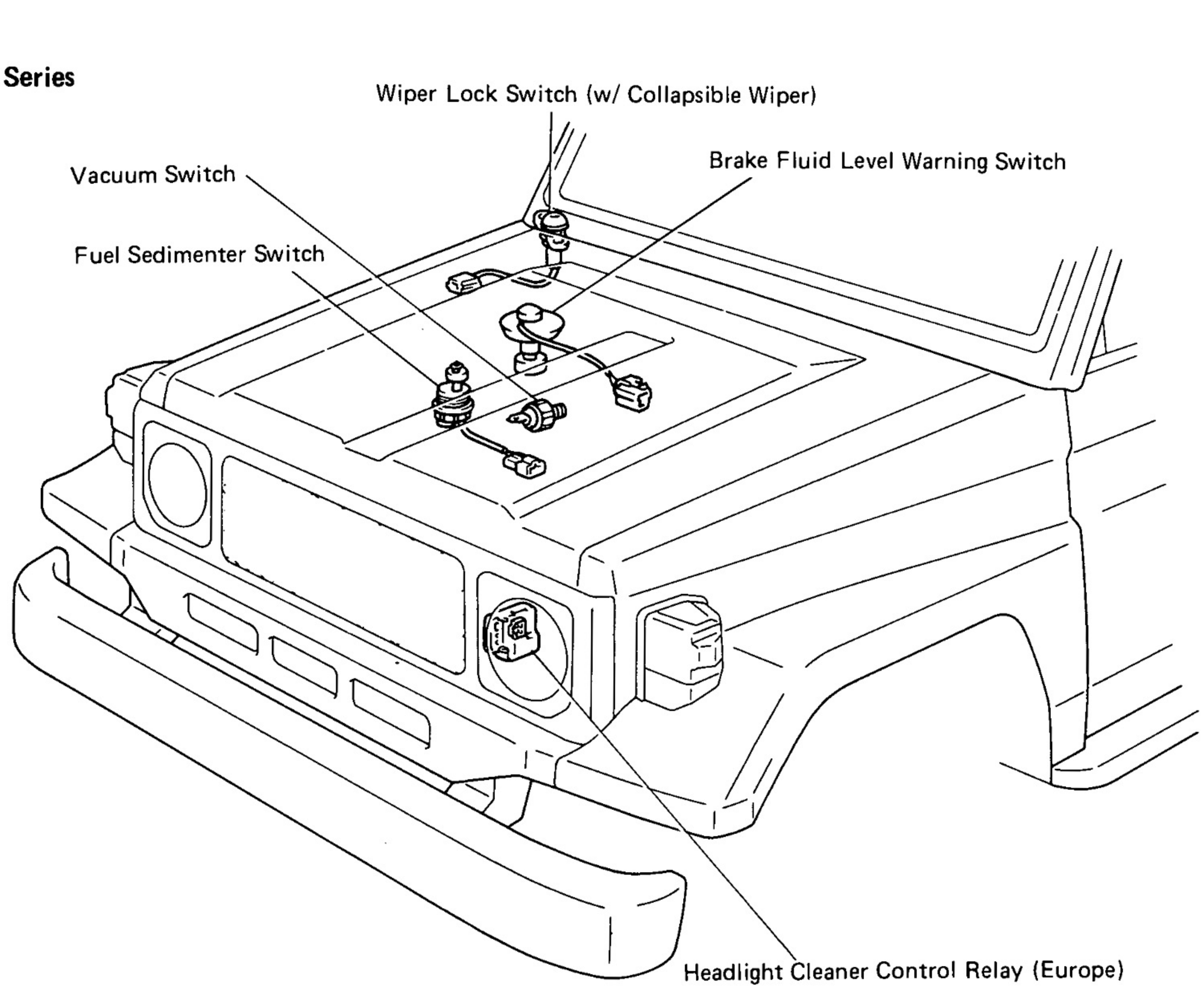

BE0739
BE0740

INSTRUMENT PANEL SWITCHES AND RELAYS

70 Series

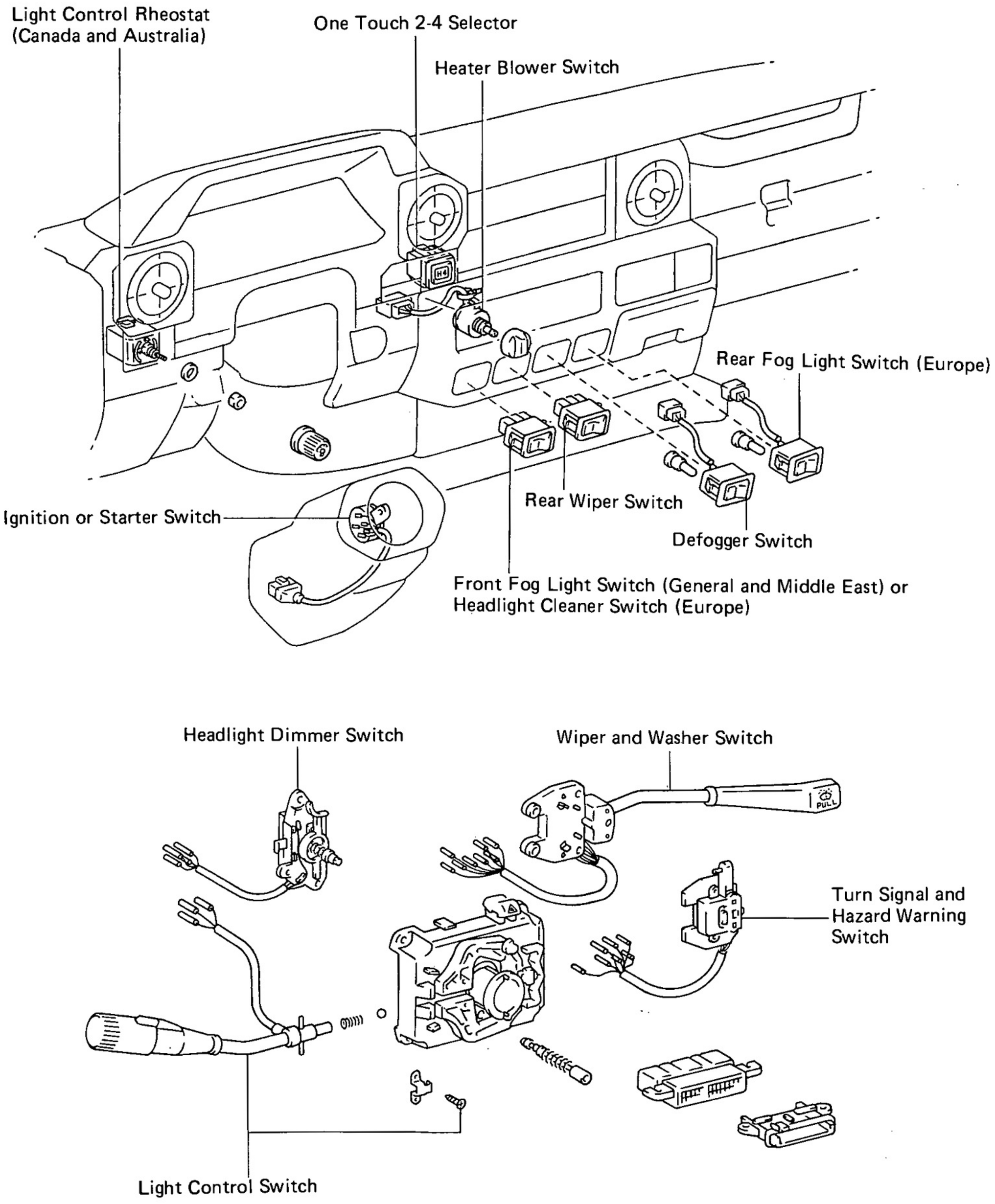

BE0741

INSTRUMENT PANEL SWITCHES AND RELAYS (Cont'd)

60 Series

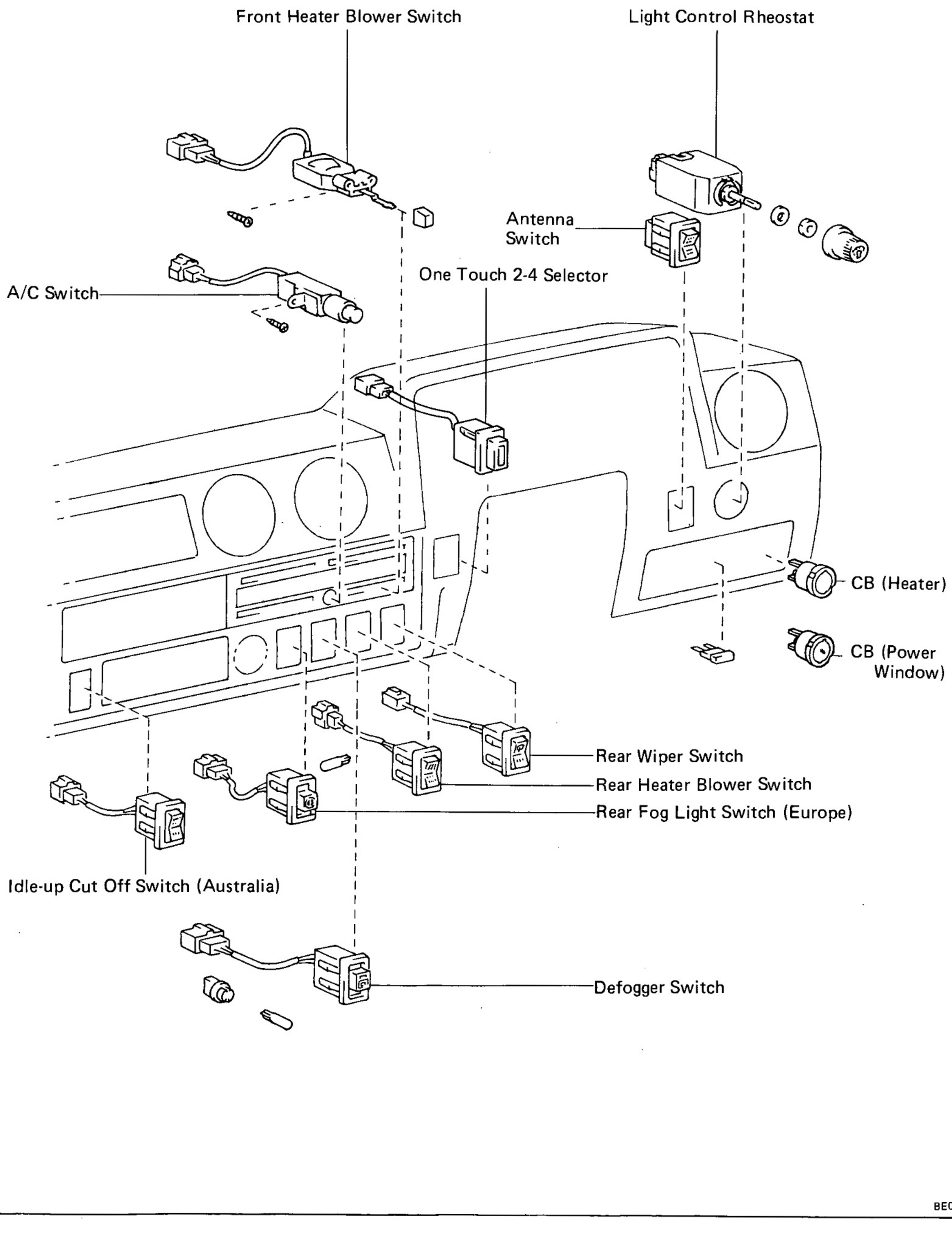

BE0742

DRIVER AND PASSENGER COMPARTMENT SWITCHES AND RELAYS

70 Series

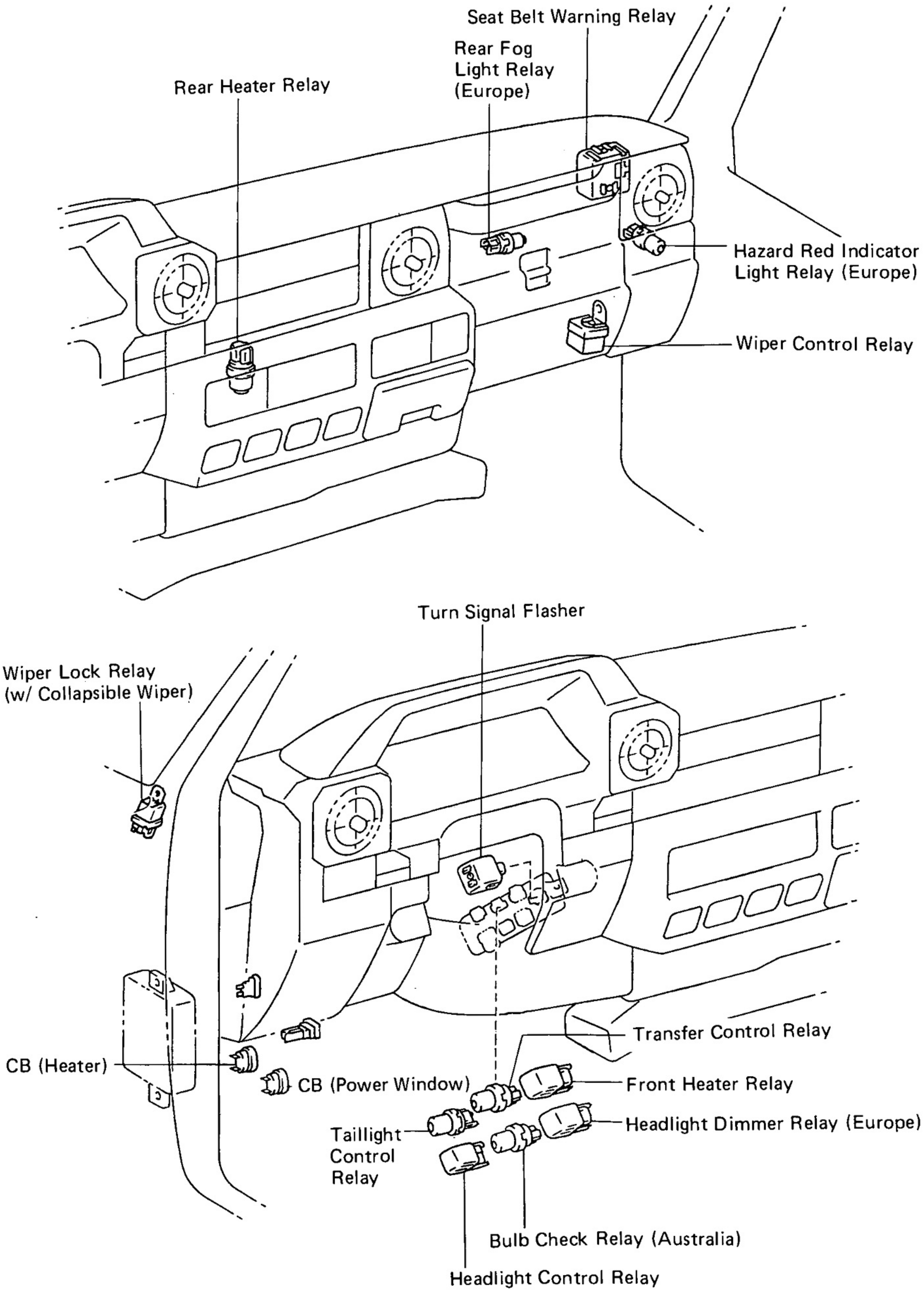

BE0743

DRIVER AND PASSENGER COMPARTMENT SWITCHES AND RELAYS (Cont'd)

60 Series

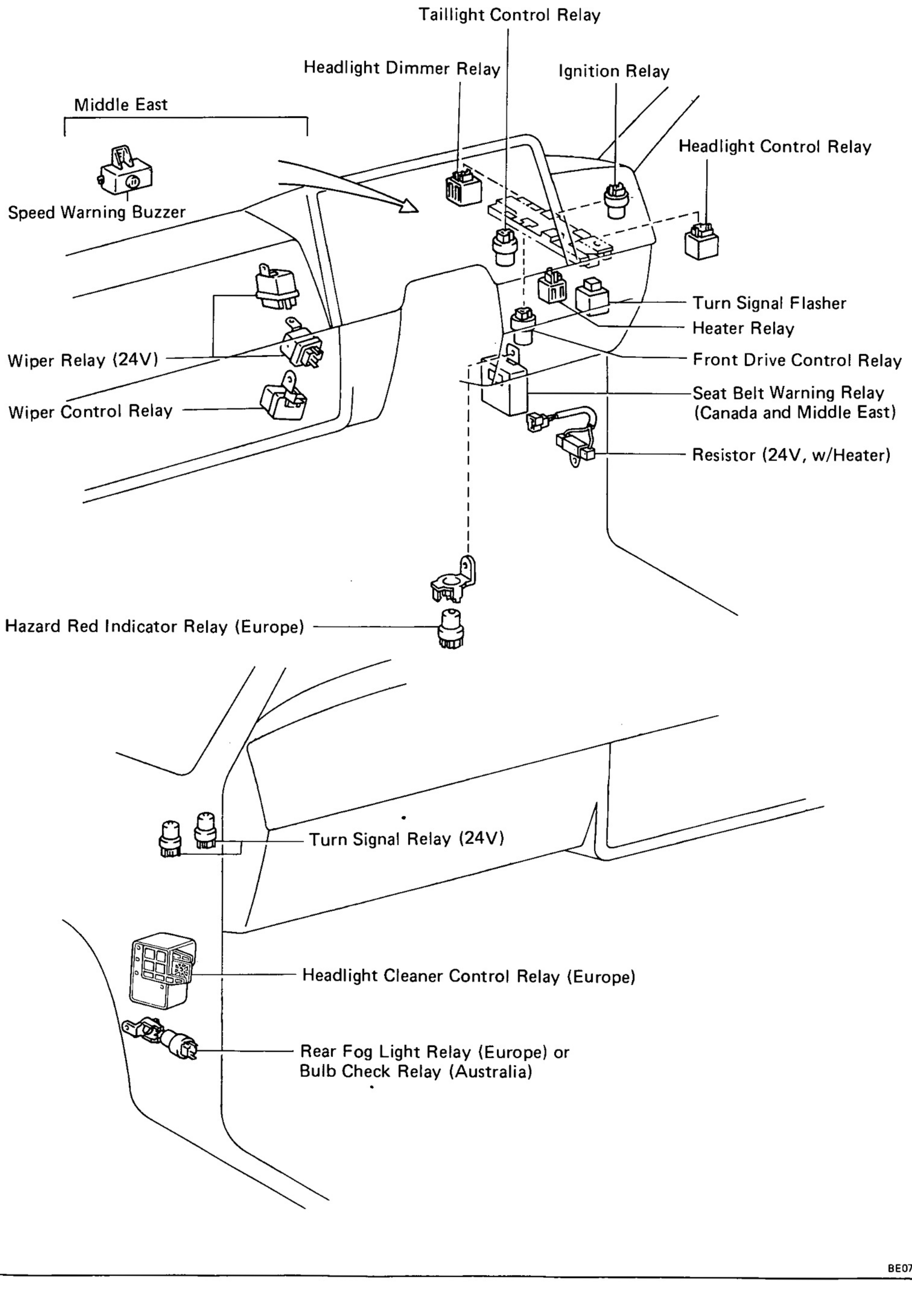

BE0744

PASSENGER AND LUGGAGE COMPARTMENT SWITCHES AND RELAYS

70 Series

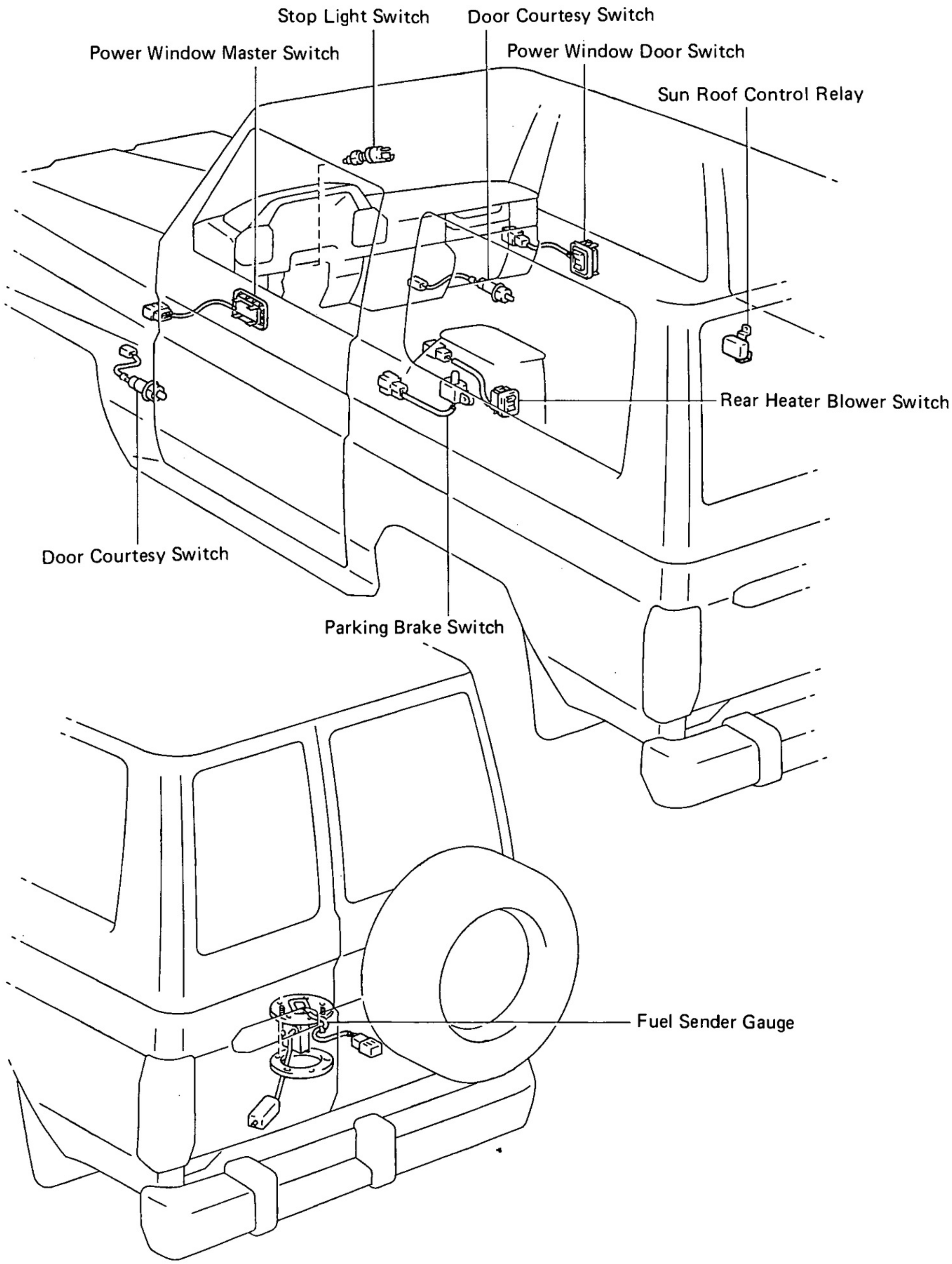

PASSENGER AND LUGGAGE COMPARTMENT SWITCHES AND RELAYS (Cont'd)

60 Series

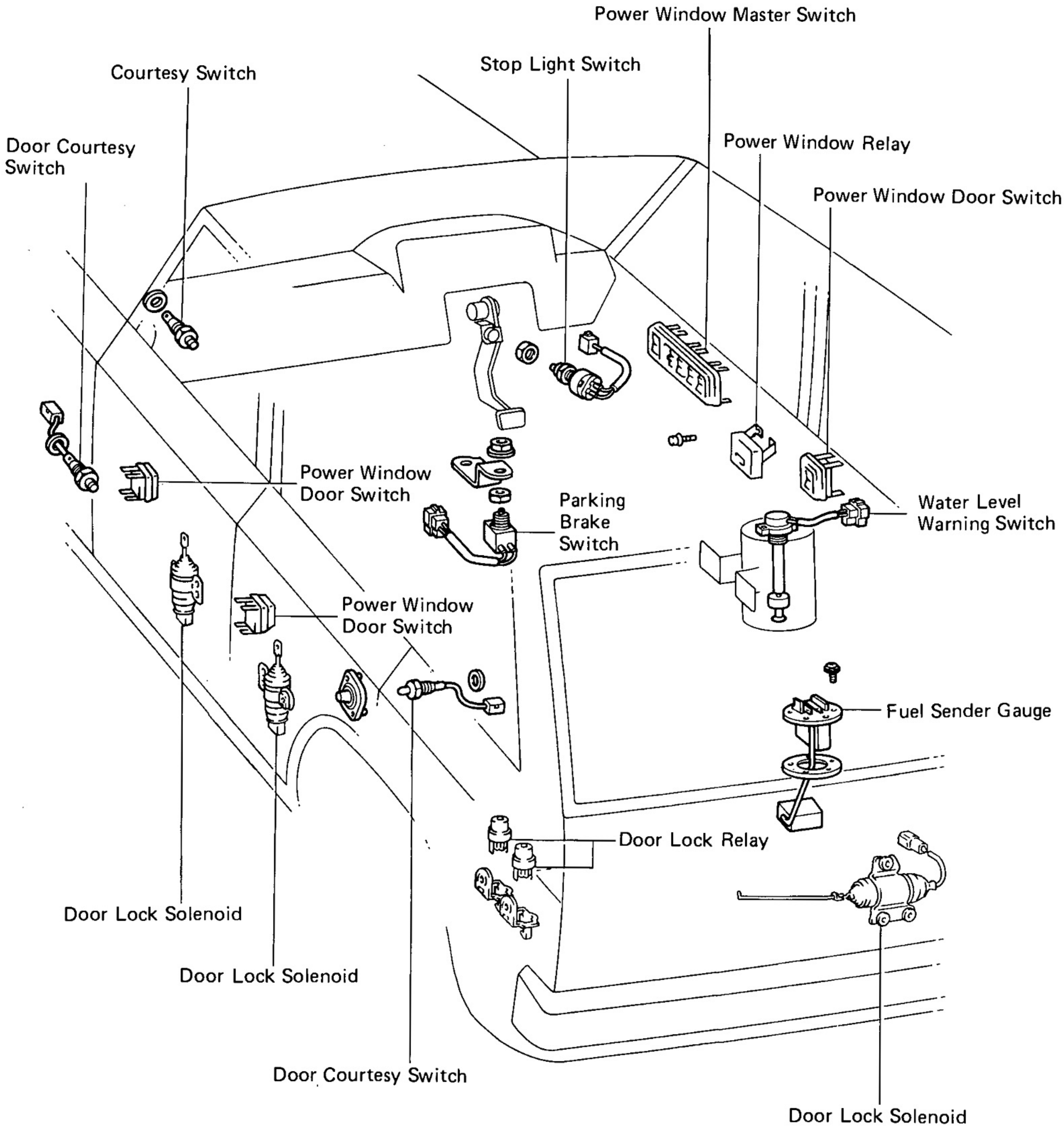

IGNITION SWITCH AND STARTER SWITCH

INSPECTION OF IGNITION SWITCH AND STARTER SWITCH

INSPECT SWITCH CONTINUITY

Inspect the switch continuity between terminals.

Connector A

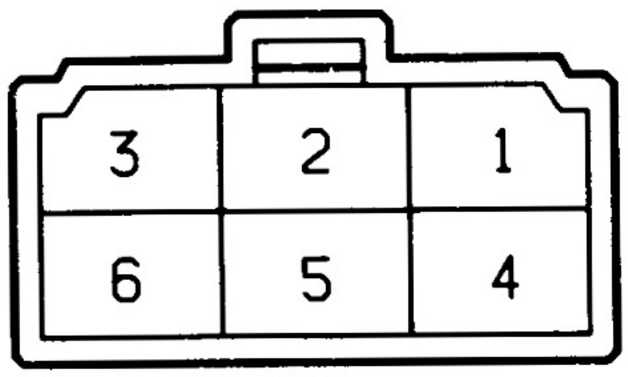

Connector B

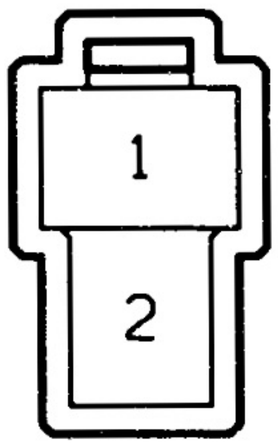

H-6-2
H-2-2

Ignition switch (Canada 60 Series)

Switch position \ Terminal		A					
		1	3	6	4	2	5
LOCK						○—○	
ACC		○—○				○—○	
ON		○—○	○—○				
START		○—	—○	○—	○		
Warning	Normal						
	Push					○—○	

Ignition switch (Ex. Canada 60 Series)

Switch position \ Terminal		A					B	
		1	3	6	4	2	1	2
LOCK								
ACC		○—○						
ON		○—○	○—	—○				
START		○—	—	—○	○—	—○		
Warning	Normal							
	Push						○—○	

Connector B : Canada 70 Series only

Starter switch

Switch position \ Terminal	A				
	3	1	6	2	5
LOCK					
ACC	○—○				
ON	○—	—○	○		
GLOW	○—	—	—○	—○	
START	○—	—	—○	—	—○

If continuity is not as specified, replace the switch.

LIGHTING
Troubleshooting

Problem	Possible cause	Remedy	Page
Only one light does not light (all exterior)	Light bulb burned out Socket, wire or ground faulty	Replace bulb Repair as necessary	
No headlights light	Fusible link blown Headlight control relay faulty Light control switch faulty Wiring or ground faulty	Replace fusible link Check relay Check switch Repair as necessary	 BE-16 BE-15
High beam headlights or headlight flashers do not operate	Light control switch faulty Wiring faulty	Check switch Repair as necessary	BE-15
Tail, parking and license lights do not light	TAIL fuse blown Fusible link blown Taillight control relay faulty Light control switch faulty Wiring or ground faulty	Replace fuse and check for short Replace fusible link Check relay Check switch Repair as necessary	BE-3 BE-16 BE-15
Stop lights do not light	STOP fuse blown Stop light switch faulty Wiring or ground faulty	Replace fuse and check for short Adjust or replace switch Repair as necessary	BE-3
Stop lights stay on	Stop light switch faulty	Adjust or replace switch	
Instrument lights do not light (taillights light)	Light control rheostat faulty Wiring or ground faulty	Check rheostat Repair as necessary	BE-15
Turn signal does not flash on one side	Turn signal switch faulty Wiring or ground faulty	Check switch Repair as necessary	BE-19
Turn signals do not operate	TURN fuse blown Turn signal flasher faulty Turn signal/hazard switch faulty Turn signal relay faulty (24V, 60 series) Wiring or ground faulty	Replace fuse and check for short Check flasher Check switch Check relay Repair as necessary	BE-3 BE-19 BE-19 BE-20
Hazard warning lights do not operate	HAZ-HORN fuse blown Turn signal flasher faulty Turn signal/hazard switch faulty Turn signal relay faulty (24V, 60 series) Wiring or ground faulty	Replace fuse and check for short Check flasher Check switch Check relay Repair as necessary	BE-3 BE-19 BE-19 BE-20
Hazard red indicator light does not operate	Hazard red indicator light relay faulty Wiring or ground faulty	Check relay Repair as necessary	BE-20
Rear fog lights do not light	DOME or HEAD RH-LWR fuse blown Rear fog light switch faulty Rear fog light relay faulty Wiring or ground faulty	Replace fuse and check for short Check switch Check relay Repair as necessary	BE-3 BE-18 BE-18

Light Control Switch and Headlight Dimmer Switch

INSPECTION OF LIGHT CONTROL SWITCH AND HEADLIGHT DIMMER SWITCH

INSPECT CONTINUITY OF LIGHT CONTROL SWITCH AND HEADLIGHT DIMMER SWITCH

Inspect the switch continuity between terminals.

Light control switch

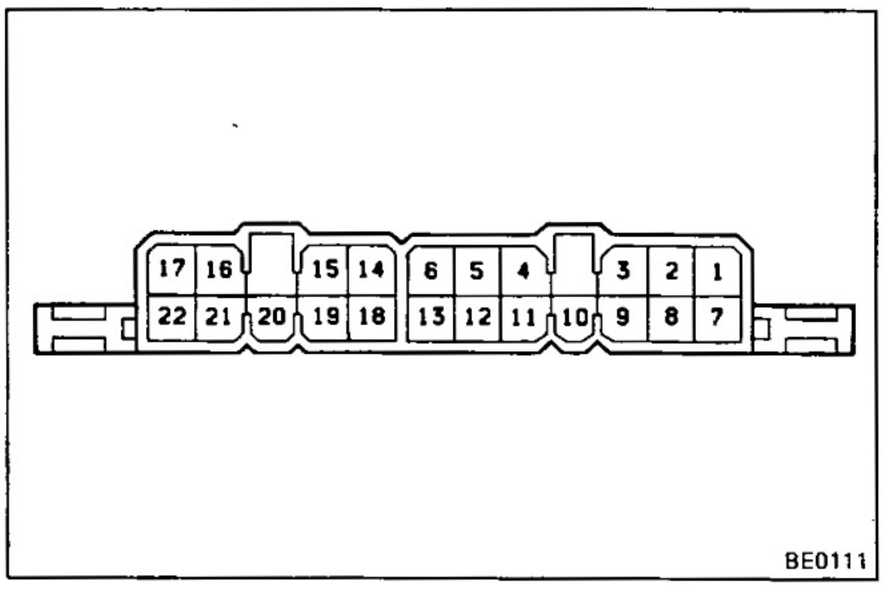

Switch position \ Terminal (Wire color)	10 EL (W)	11 T (W)	4 H (R)
OFF			
TAIL	○——	——○	
HEAD	○——	——○	——○

Headlight dimmer switch

Switch position \ Terminal (Wire color)	13 ED (W-B)	6 HL (R-G)	5 HU (R-Y)	12 HF (R-W)
Flash	○——	——	——○	——○
Low Beam	○——	——○		
High Beam	○——	——	——○	

If continuity is not as specified, replace the switch.

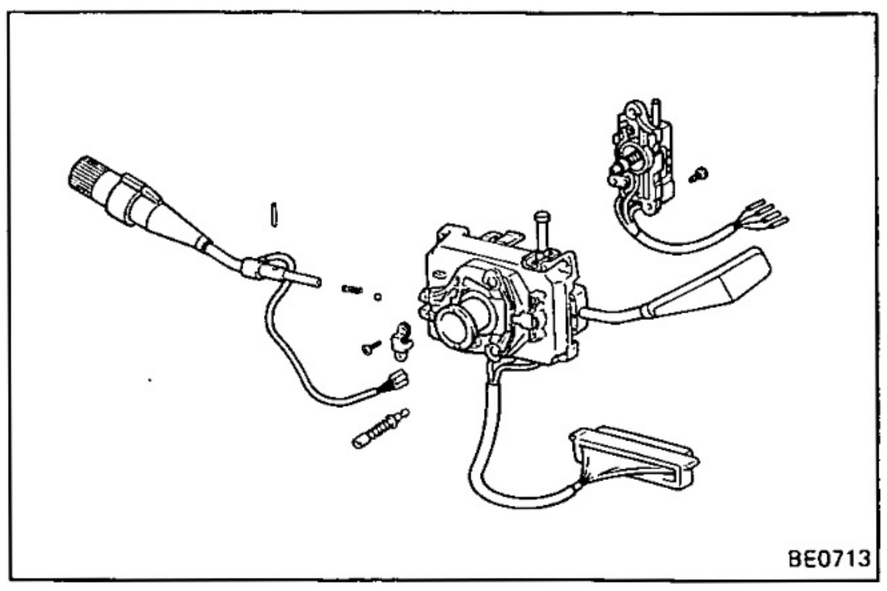

REPLACEMENT OF LIGHT CONTROL SWITCH AND HEADLIGHT DIMMER SWITCH

REPLACE LIGHT CONTROL SWITCH AND HEADLIGHT DIMMER SWITCH

(a) Remove the terminals from the connector. (See page BE-3)

(b) Remove the light control switch.

(c) Remove the headlight dimmer switch.

(d) Install the headlight dimmer switch.

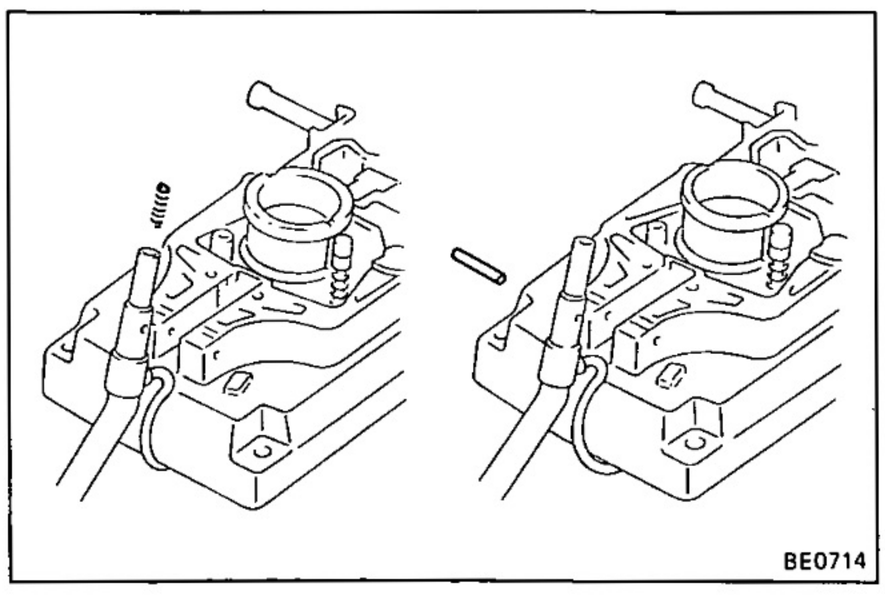

(e) Insert the spring into the lever and install the lever with the pin.

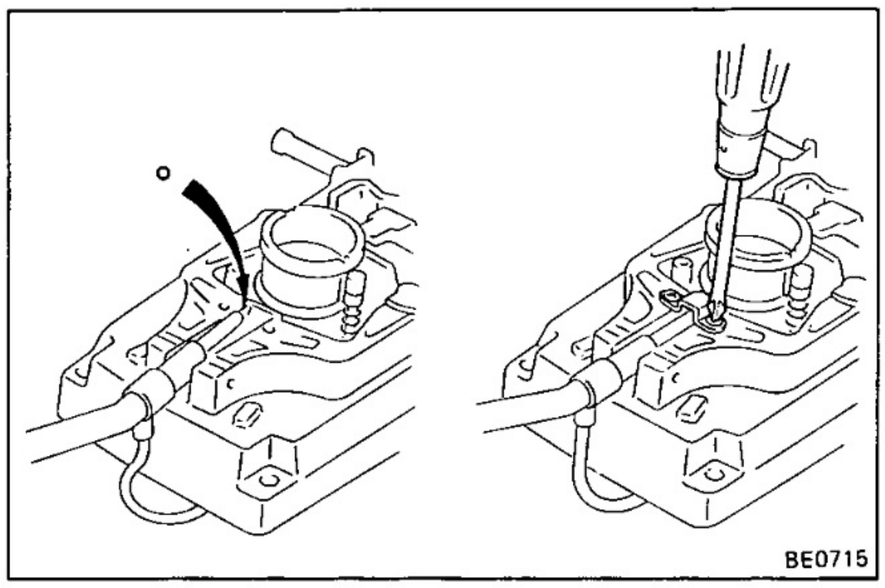

(f) Place the ball on the spring, position the lever at "HI" and install the plate.

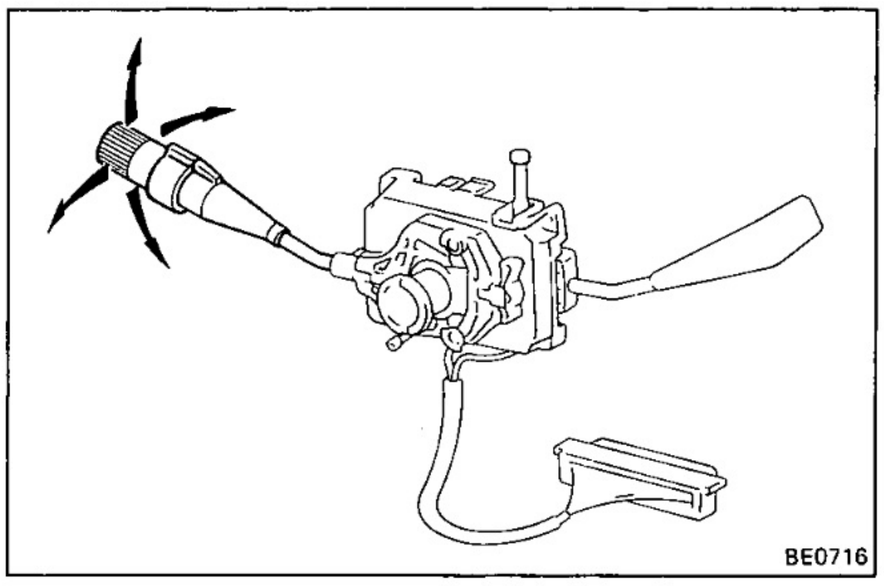

(g) Insure that the switch operates smoothly.

(h) Install the terminals to the connector.
(See page BE-3)

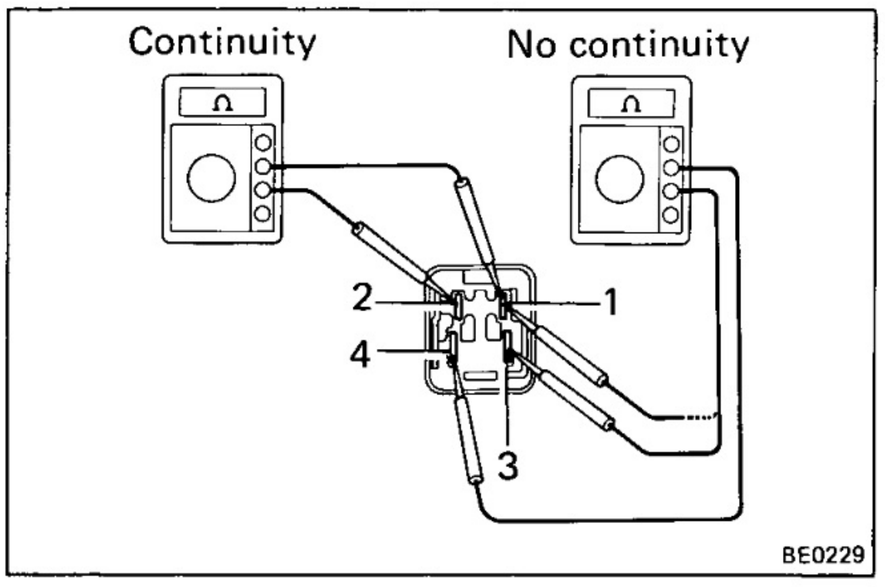

Headlight Control Relay

INSPECTION OF HEADLIGHT CONTROL RELAY

1. INSPECT RELAY CONTINUITY

(a) Check that there is continuity between terminals 1 and 2.

(b) Check that there is no continuity between terminals 3 and 4.

(c) Check that there is no continuity between terminals 1 and 4.

If continuity is not as specified, replace the relay.

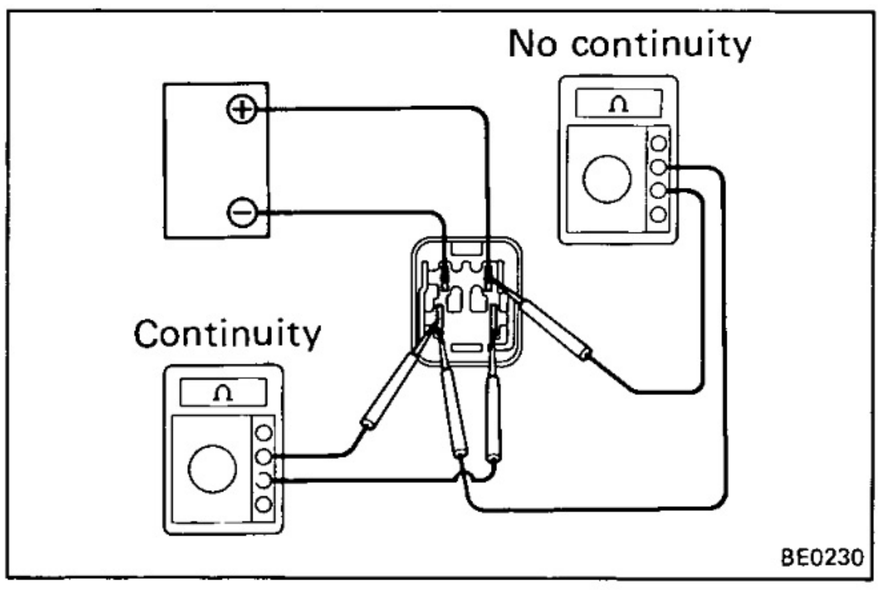

2. INSPECT RELAY OPERATION

(a) Apply battery voltage across terminals 1 and 2.

(b) Check that there is continuity between terminals 3 and 4.

(c) Check that there is no continuity between terminals 1 and 4.

If operation is not as described, replace the relay.

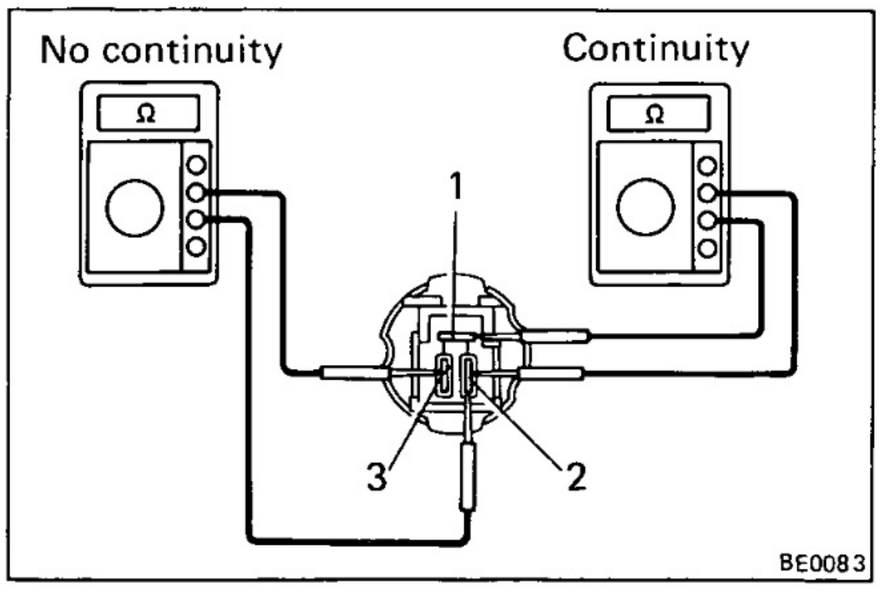

Taillight Control Relay

INSPECTION OF TAILLIGHT CONTROL RELAY

1. INSPECT RELAY CONTINUITY

(a) Check that there is continuity between terminals 1 and 2.

(b) Check that there is no continuity between terminals 2 and 3.

If continuity is not as specified, replace the relay.

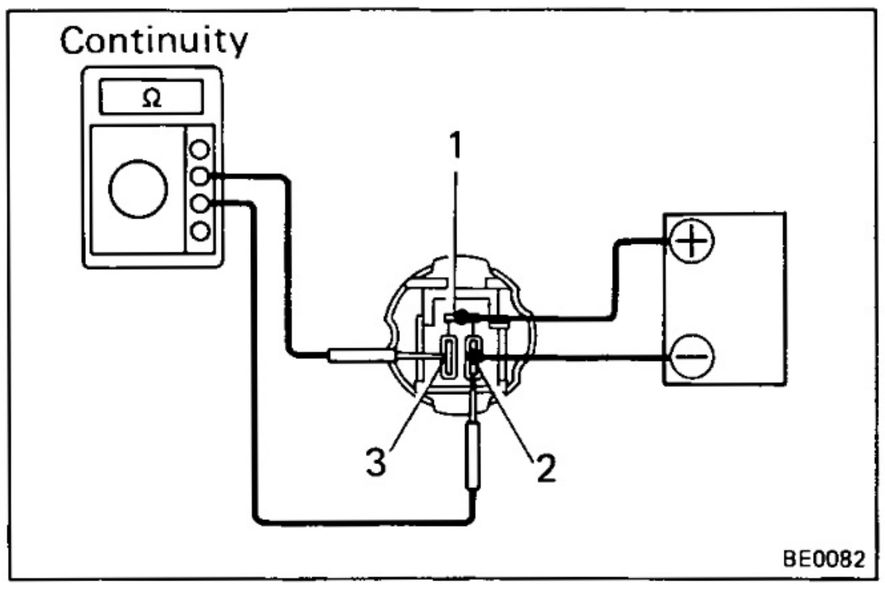

2. INSPECT RELAY OPERATION

(a) Apply battery voltage across terminals 1 and 2.

(b) Check that there is continuity between terminals 2 and 3.

If operation is not as described, replace the relay.

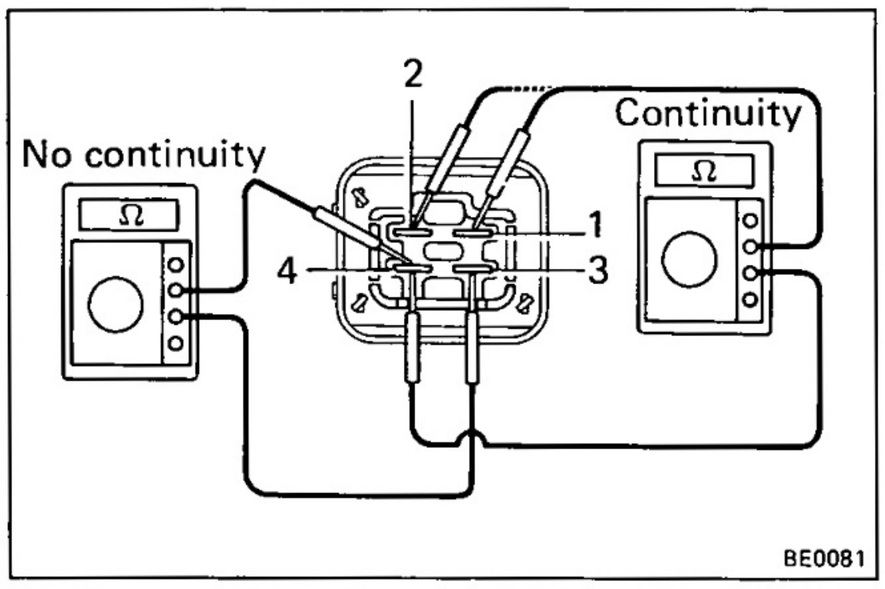

Dimmer Relay

INSPECTION OF DIMMER RELAY

1. INSPECT RELAY CONTINUITY

(a) Check that there is continuity between terminals 1 and 4.

(b) Check that there is continuity between terminals 2 and 4.

(c) Check that there is no continuity between terminals 3 and 4.

If continuity is not as specified, replace the relay.

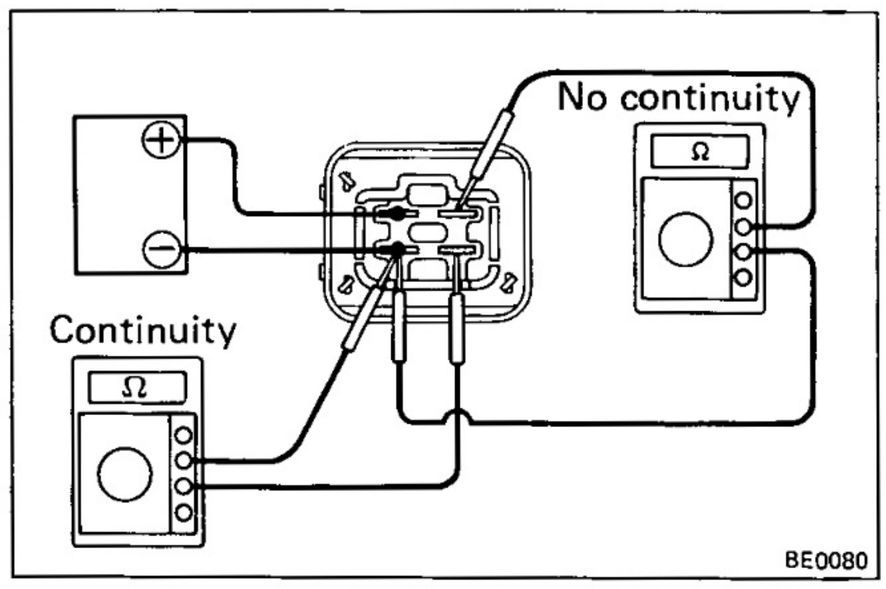

2. INSPECT RELAY OPERATION

(a) Apply battery voltage across terminals 2 and 4.

(b) Check that there is continuity between terminals 3 and 4.

(c) Check that there is no continuity between terminals 1 and 4.

If operation is not as described, replace the relay.

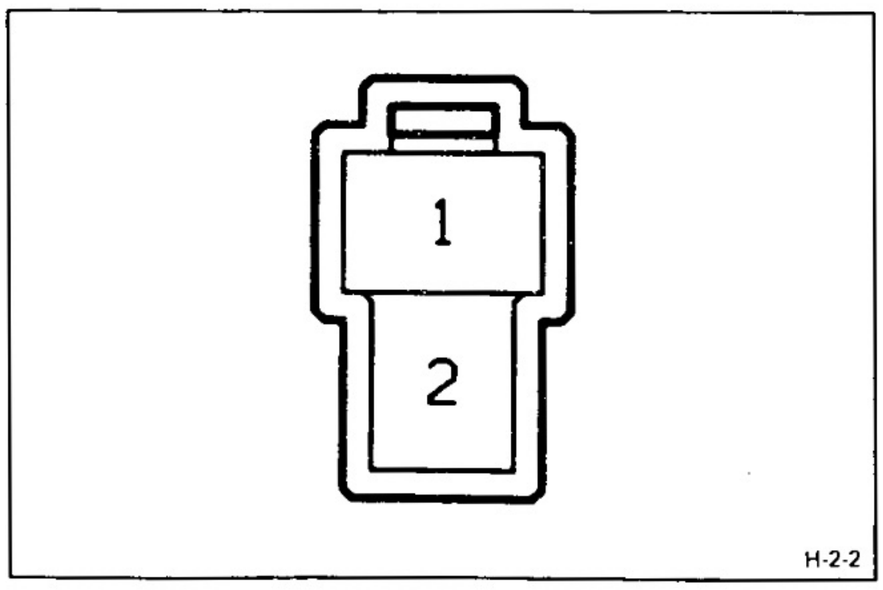

Front Fog Light Switch

INSPECTION OF FRONT FOG LIGHT SWITCH

INSPECT SWITCH CONTINUITY

Inspect the switch continuity between terminals.

Switch position \ Terminal	1	2
OFF		
ON	○	○

If continuity is not as specified, replace the switch.

70 Series

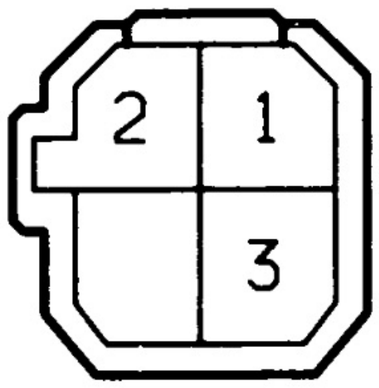

60 Series

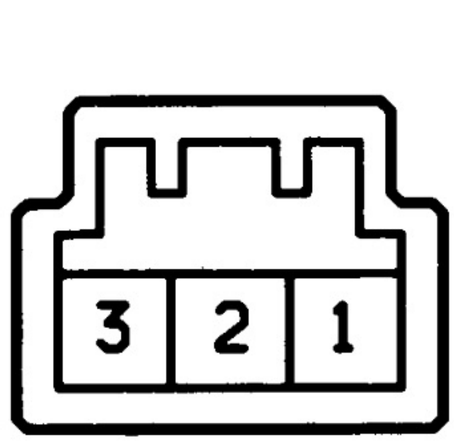

GA-4-2
G-3-2

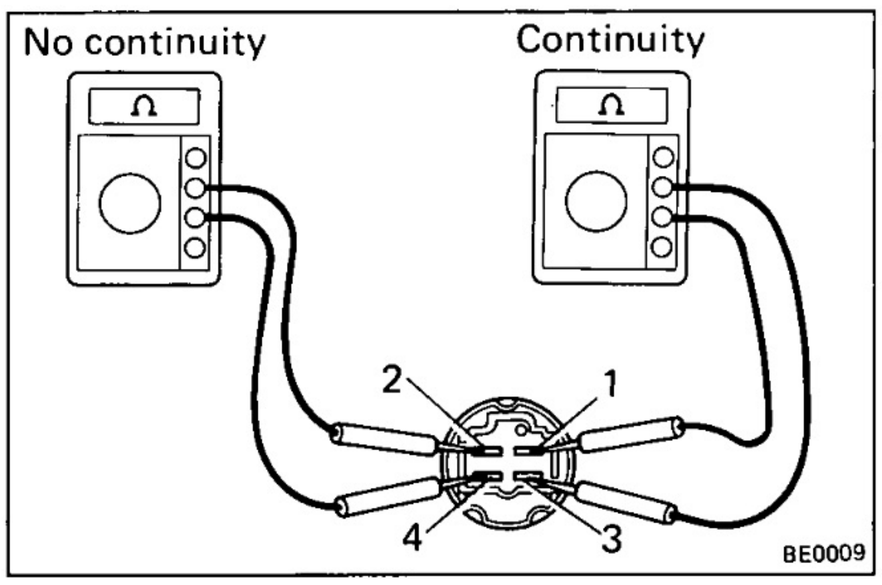

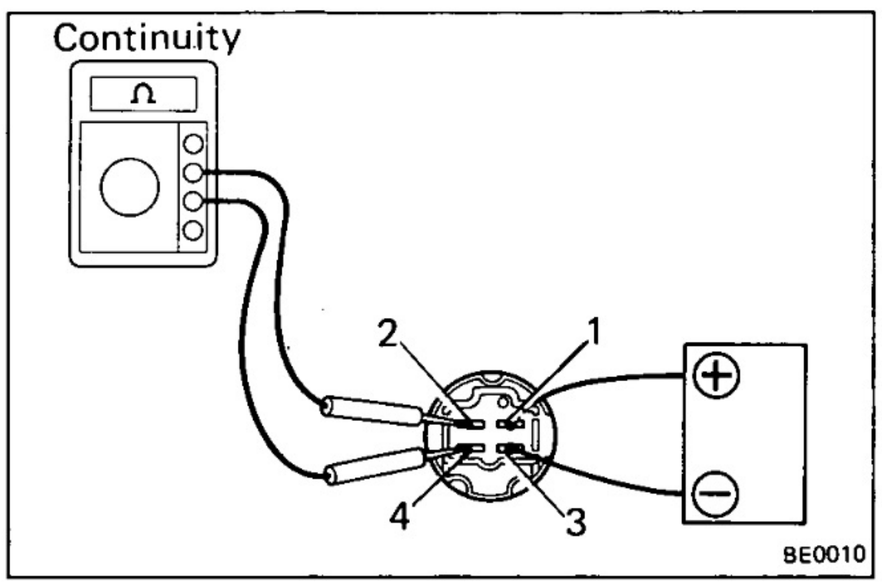

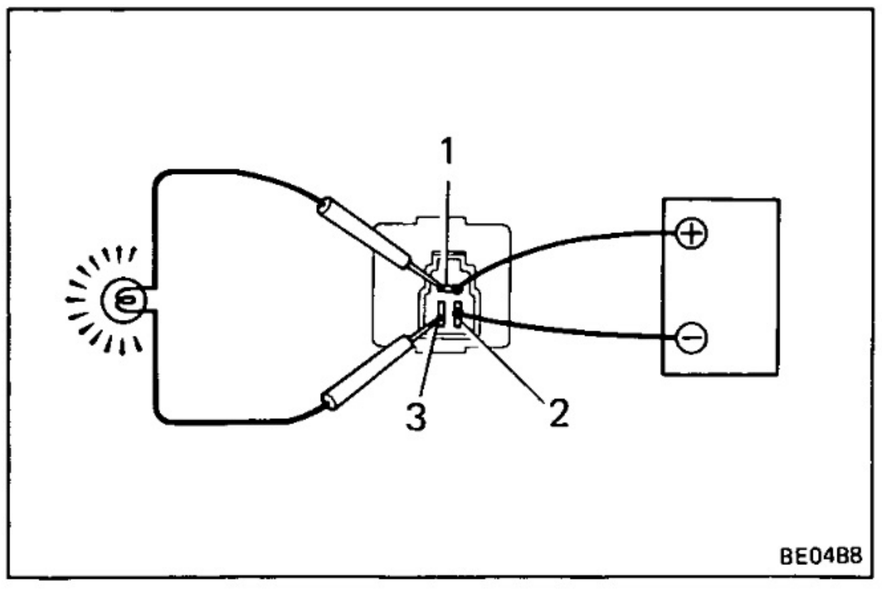

Rear Fog Light Switch

INSPECTION OF REAR FOG LIGHT SWITCH

INSPECT SWITCH CONTINUITY

Inspect the switch continuity between terminals.

70 Series

Switch position \ Terminal	2	1	3
OFF		○	○
ON	○	○	○

60 Series

Switch position \ Terminal	3	2	1
OFF		○	○
ON	○	○	○

If continuity is not as specified, replace the switch or bulb.

Rear Fog Light Relay

INSPECTION OF REAR FOG LIGHT RELAY

1. INSPECT RELAY CONTINUITY

(a) Check that there is continuity between terminals 1 and 3.

(b) Check that there is no continuity between terminals 2 and 4.

(c) Check that there is no continuity between terminals 3 and 4.

If continuity is not as specified, replace the relay.

2. INSPECT RELAY OPERATION

(a) Apply battery voltage across terminals 1 and 3.

(b) Check that there is continuity between terminals 2 and 4.

(c) Check that there is no continuity between terminals 3 and 4.

If operation is not as described, replace the relay.

Light Control Rheostat

INSPECTION OF LIGHT CONTROL RHEOSTAT

INSPECT RHEOSTAT OPERATION

Connect the positive (+) lead from the battery to terminal 1. Connect the negative (—) lead from the battery to terminal 2, and connect a 3.4W test bulb between terminals 1 and 3.
Gradually slide the rheostat knob toward the bright side and/or dark side and check that the test bulb brightness changes.

If operation is not as described, replace the rheostat.

Turn Signal and Hazard Warning Switch

INSPECTION OF TURN SIGNAL AND HAZARD WARNING SWITCH

INSPECT CONTINUITY OF TURN SIGNAL AND HAZARD WARNING SWITCH

Inspect the switch continuity between terminals.

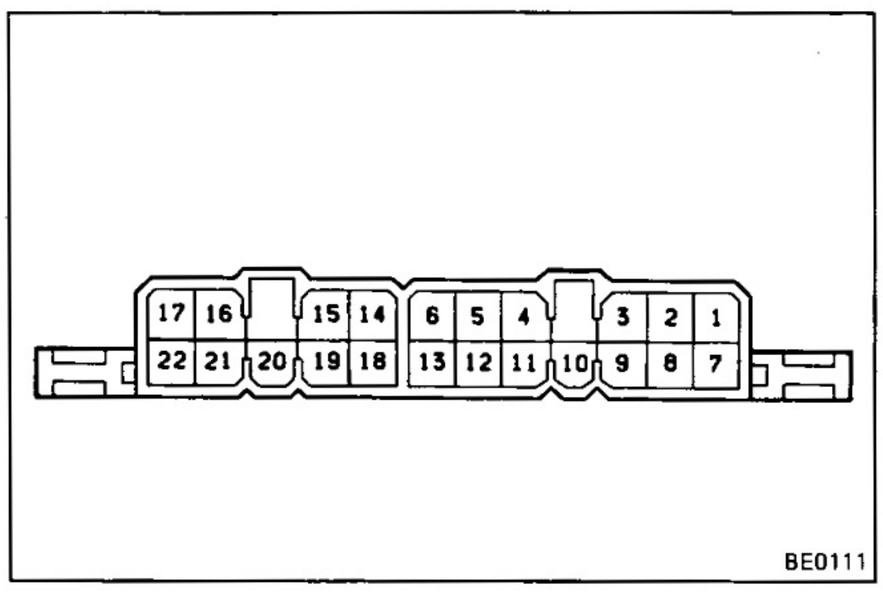

Switch position \ Terminal (Wire color)		9 TL (G-B)	3 TB (G-W)	8 TR (G-Y)	2 B1 (G-L)	7 F (G)	1 B2 (G-O)
Turn signal	L	○—○	○—○		○—○	○—○	
	N				○—○	○—○	
	R		○—○	○—○	○—○	○—○	
Hazard	ON	○—○	○—○	○—○		○—○	○—○

If continuity is not as specified, replace the switch.

REPLACEMENT OF TURN SIGNAL AND HAZARD WARNING SWITCH

REPLACE TURN SIGNAL AND HAZARD WARNING SWITCH

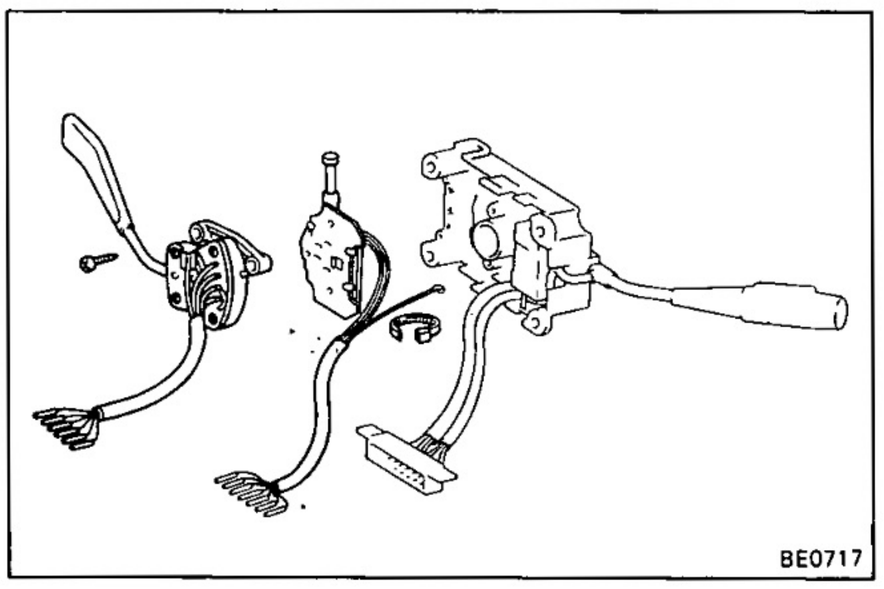

(a) Remove the terminals from the connector.
(See page BE-3)

(b) Remove the three screws, and remove the wiper and washer switch.

(c) Remove the turn signal and hazard switch.

(d) Install the turn signal and hazard switch.

(e) Install the wiper and washer switch.

(f) Connect the terminals to the connector.
(See page BE-3)

Turn Signal Flasher

INSPECTION OF TURN SIGNAL FLASHER

INSPECT FLASHER OPERATION

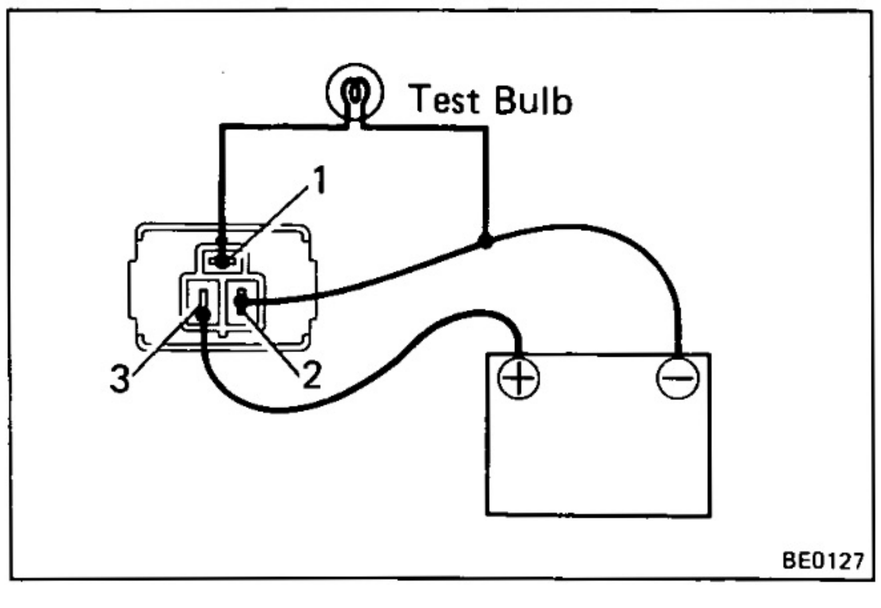

(a) Connect the positive (+) lead from the battery to terminal 3. Connect the negative (—) lead to terminal 2.

(b) Connect a test bulb between terminals 1 and 2, and check that the bulb goes on and off.

Test bulb
12V system 55W
24V system 50W

NOTE: The turn signal lights should flash 75 to 95 times per minute.

If one of the front or rear turn signal lights has an open circuit, the number of flashes would be more than 120 per minute.

If operation is not as described, replace the flasher.

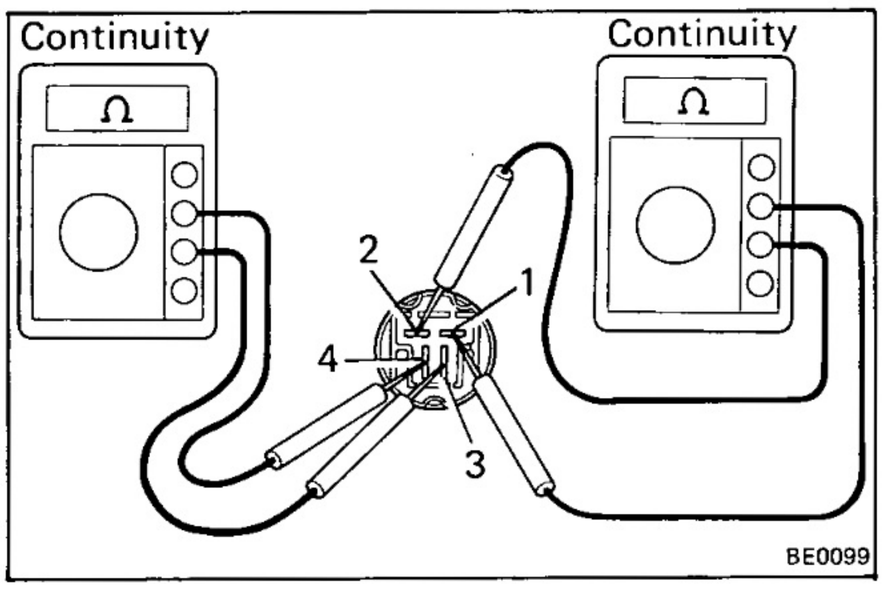

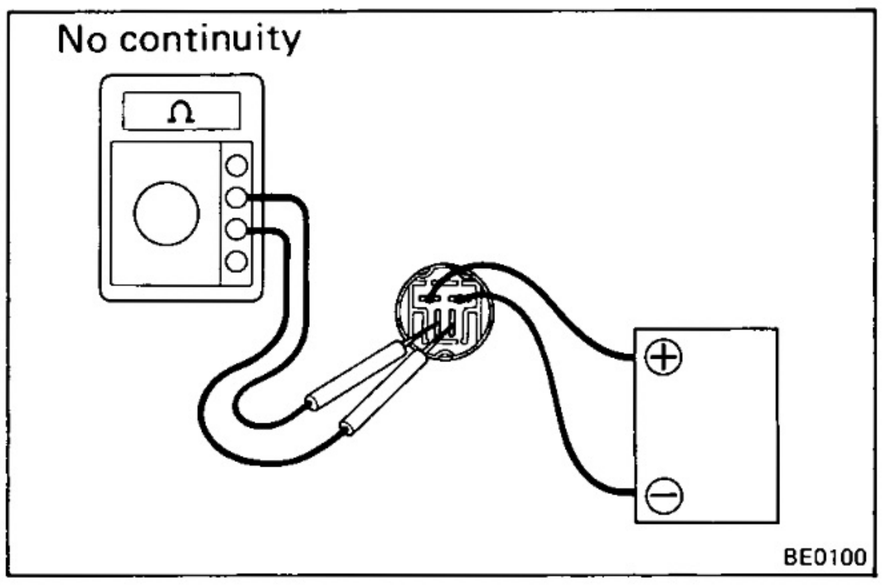

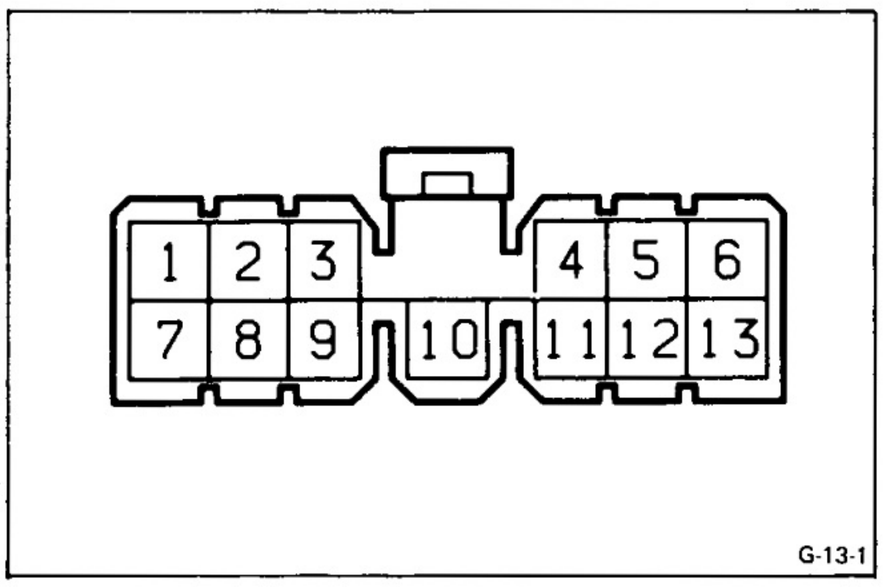

Hazard Red Indicator Light Relay

INSPECTION OF RED INDICATOR LIGHT RELAY

1. INSPECT RELAY CONTINUITY

   (a) Check that there is continuity between terminals 1 and 2.

   (b) Check that there is continuity between terminals 3 and 4.

   If continuity is not as specified, replace the relay.

2. INSPECT RELAY OPERATION

   (a) Apply battery voltage across terminals 1 and 2.

   (b) Check that there is no continuity between terminals 3 and 4.

   If operation is not as described, replace the relay.

Turn Signal Relay (24V,60 Series)

(See Rear Fog Light Relay on page BE-18)

Running Light Relay (Norway only)

INSPECTION OF RUNNING LIGHT RELAY

INSPECT RUNNING LIGHT RELAY CIRCUIT

Disconnect the relay connector and inspect the connector on wire harness side as shown in the chart below.

If circuit is correct as specified, replace the relay.

Terminal	Check Item	Tester Connection	Condition	Voltage or Continuity
1	Continuity	1 – Body ground	Turn headlight dimmer switch to Flash or High beam	Continuity
			Turn headlight dimmer switch to Low beam	No continuity
2	Voltage	2 – Body ground	–	Battery voltage
3	Continuity	3 – Body ground	Turn light control switch to TAIL or HEAD	Continuity
			Turn light control switch to OFF	No continuity
4	Voltage	4 – Body ground	–	Battery voltage
5	Continuity	5 – Body ground	Turn light control switch to TAIL	Continuity
			Turn light control switch to OFF	No continuity
6	Voltage	6 – Body ground	Turn ignition switch or starter switch to ON	Battery voltage
			Turn ignition switch or starter switch to OFF	No voltage
7	Voltage	7 – Body ground	Turn light control switch to HEAD	Battery voltage
			Turn light control switch to OFF	No voltage
8	Continuity	8 – Body ground	Turn headlight dimmer switch to High beam	Continuity
			Turn headlight dimmer switch to Low beam	No continuity
9	Continuity	9 – 10	–	Continuity
10	Voltage	10 – Body ground	–	Battery voltage
12	Continuity	12 – Body ground	Turn ignition switch to START or starter switch GLOW	Continuity
			Turn ignition switch or starter switch to ON or ACC	No continuity
13	Continuity	13 – Body ground	Turn ignition switch to START	Continuity
			Turn ignition switch to ON or ACC	No continuity

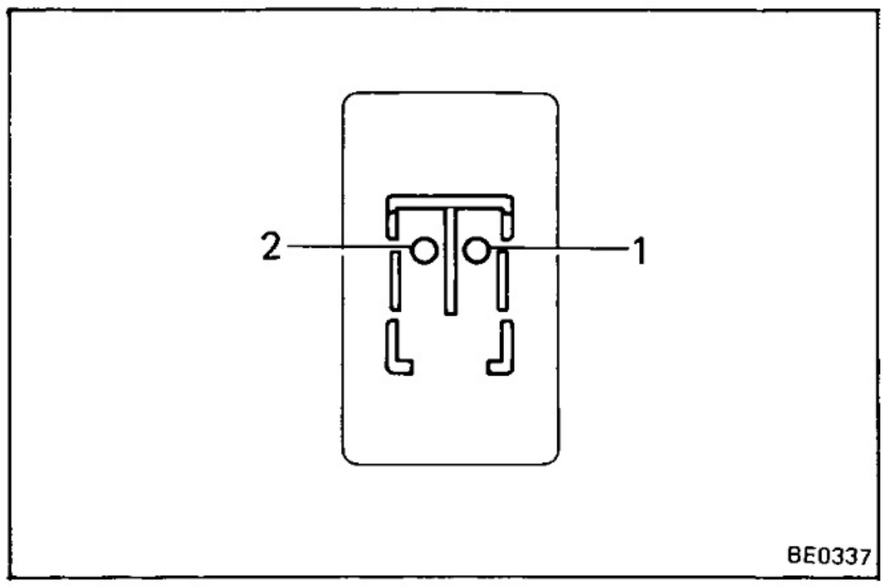

HEADLIGHT CLEANER

Headlight Cleaner Switch (70 Series)

INSPECTION OF HEADLIGHT CLEANER SWITCH

INSPECT SWITCH CONTINUITY

Inspect the switch continuity between terminals.

Switch position \ Terminal	1	2
OFF		
ON	○	○

If continuity is not as specified, replace the switch.

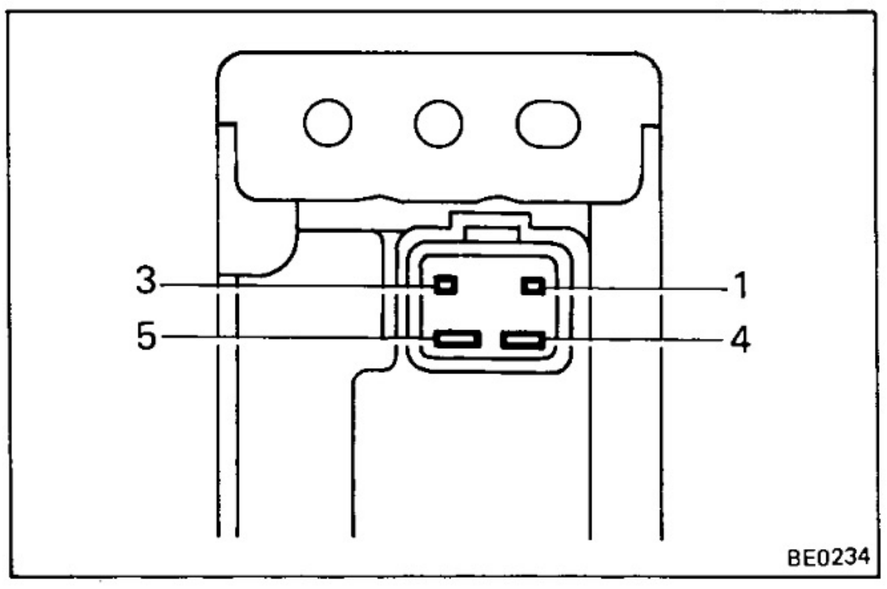

Headlight Cleaner Control Relay

INSPECTION OF HEADLIGHT CLEANER CONTROL RELAY (70 Series)

INSPECT CONTROL RELAY CIRCUIT

(a) Disconnect the control relay connector and inspect the connector on the wire harness side as shown in the chart below.

Terminal	Check Item	Tester Connection	Condition	Voltage or Continuity
1	Continuity	1 – Body ground	Turn light control switch to HEAD and turn headlight cleaner switch ON	Continuity
			Turn light control switch to OFF or turn headlight cleaner switch OFF	No continuity
3	Voltage	3 – Body ground	Turn ignition switch to ON	Battery voltage
			Turn ignition switch to LOCK or ACC	No voltage
5	Continuity	5 – Body ground	—	Continuity

(b) With terminal 4 on the connector side grounded, check that the cleaner motor operates.

CAUTION: These tests must be performed quickly (within 3 – 5 seconds) to prevent the coil from burning out.

If circuit is correct as specified, replace the relay.

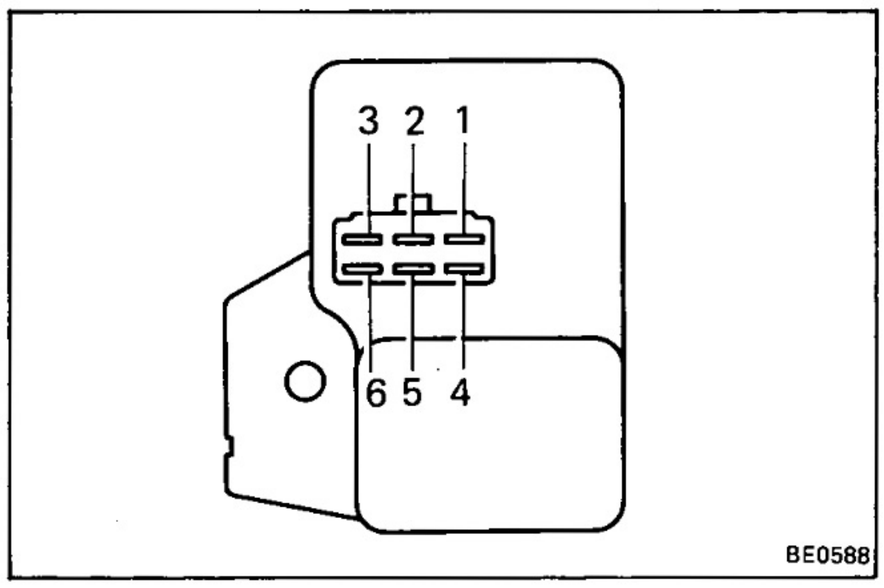

INSPECTION OF HEADLIGHT CLEANER CONTROL RELAY (60 Series)

INSPECT CONTROL RELAY CIRCUIT

(a) Disconnect the control relay connector and inspect the connector on the wire harness side as shown in the chart below.

Terminal	Check Item	Tester Connection	Condition	Voltage or Continuity
2	Voltage	2 – Body ground	Turn light control switch to TAIL	Battery voltage
			Turn light control switch to OFF	No voltage
3	Voltage	3 – Body ground	Turn ignition switch to ON and washer switch OFF	Battery voltage
			Turn washer switch to ON and ignition switch ON	No voltage
5	Continuity	5 – Body ground	—	Continuity
6	Voltage	6 – Body ground	Turn ignition switch to ON	Battery voltage
			Turn ignition switch to LOCK or ACC	No voltage

(b) With terminal 4 on the connector side grounded, check that the cleaner motor operates.

CAUTION: These tests must be performed quickly (within 3 – 5 seconds) to prevent the coil from burning out.

If circuit is correct as specified, replace the relay.

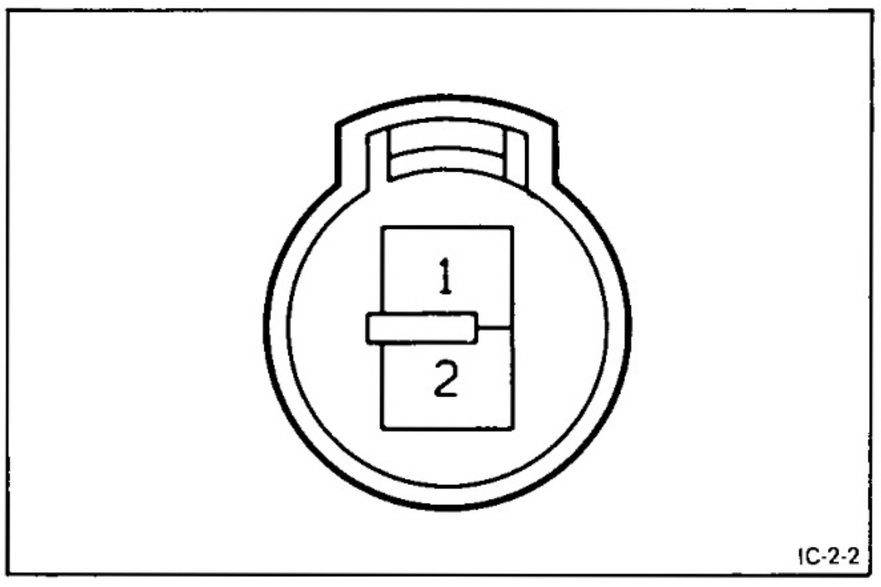

Cleaner Motor

INSPECTION OF CLEANER MOTOR

INSPECT MOTOR OPERATION

(a) Connect the positive (+) lead from the battery to terminal 2. Connect the negative (–) lead to terminal 1.

(b) Check that the motor operates.

CAUTION: These tests must be performed quickly (within 3 – 5 seconds) to prevent the coil from burning out.

If operation is not as described, replace the motor.

WIPERS AND WASHERS

Troubleshooting

Problem	Possible cause	Remedy	Front Page	Rear Page
Wipers do not operate or return to off position	WIPER fuse blown	Replace fuse and check for short	BE-3	BE-3
	Wiper motor faulty	Check motor	BE-25	BE-27
	Wiper switch faulty	Check switch	BE-23	BE-26
	Wiper relay faulty (24V, 60 series)	Check relay	BE-24	
	Wiper lock relay faulty	Check relay	BE-26	
	Wiper lock switch faulty	Check switch	BE-26	
	Wiring or ground faulty	Repair as necessary		
Wipers do not operate in INT position	Wiper relay faulty (24V, 60 series)	Check relay	BE-24	
	Wiper control relay faulty	Check relay	BE-24	
	Wiper motor faulty	Check motor	BE-25	
	Wiring or ground faulty	Repair as necessary		
Washer does not operate	Washer hose or nozzle clogged	Repair as necessary		
	Washer motor faulty	Replace motor		
	Wiper switch faulty	Check switch	BE-23	BE-26
	Wiring or ground faulty	Repair as necessary		

Front Wiper and Washer Switch

INSPECTION OF FRONT WIPER AND WASHER SWITCH

INSPECT WIPER AND WASHER SWITCH CONTINUITY

Inspect the switch continuity between terminals.

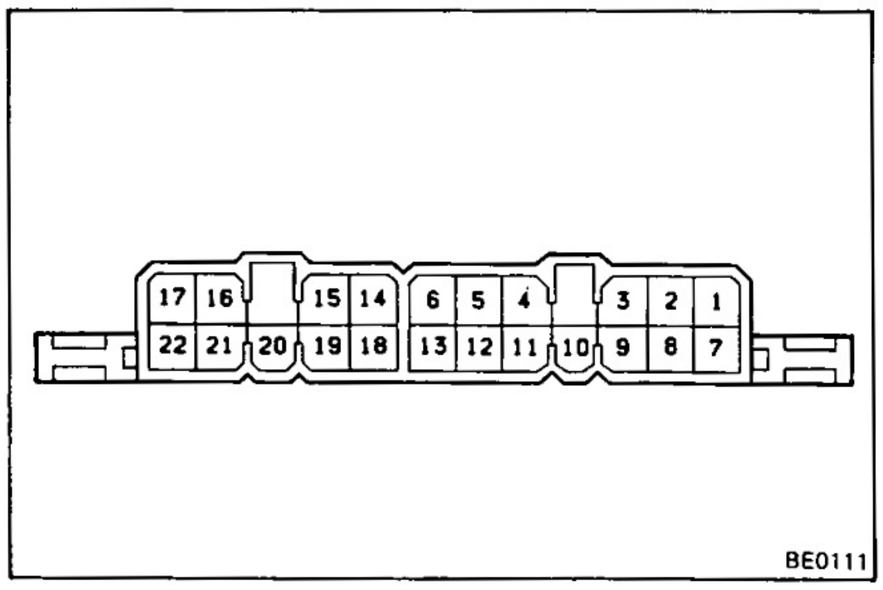

Switch position \ Terminal (Wire color)		20 +S (L-R)	21 +1 (L-R)	17 +B (L-W)	22 +2 (L-O)	19 C1 (Lg-R)	14 Ew (B)	15 W (L)
MIST			○—○					
OFF		○—○						
INT		○—○				○—○		
LO			○—○					
HI				○—○				
Washer	OFF							
	ON						○—○	

If continuity is not as specified, replace the switch.

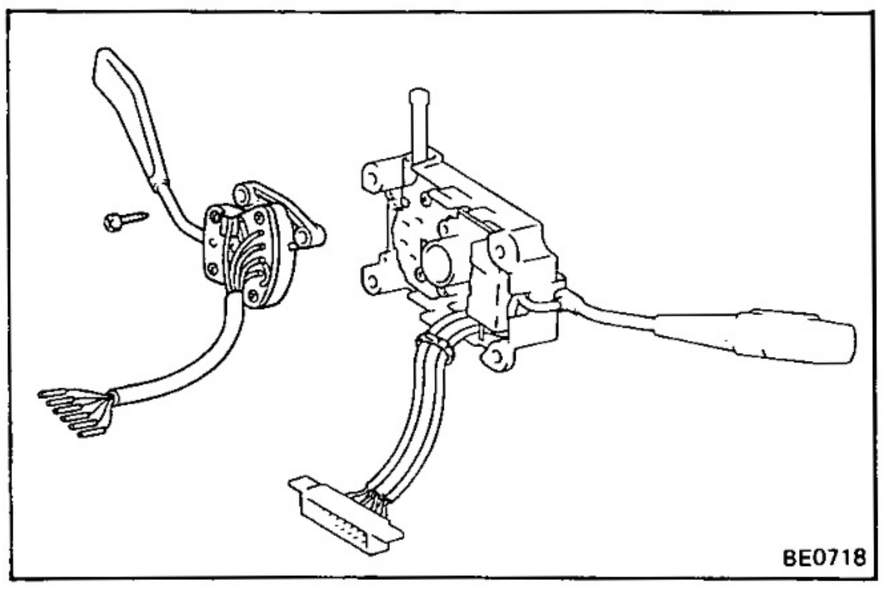

REPLACEMENT OF FRONT WIPER AND WASHER SWITCH

REPLACE WIPER AND WASHER SWITCH

(a) Remove the terminals from the connector. (See page BE-3)

(b) Remove the wiper and washer switch.

(c) Install the wiper and washer switch.

(d) Connect the terminals to the connector. (See page BE-3)

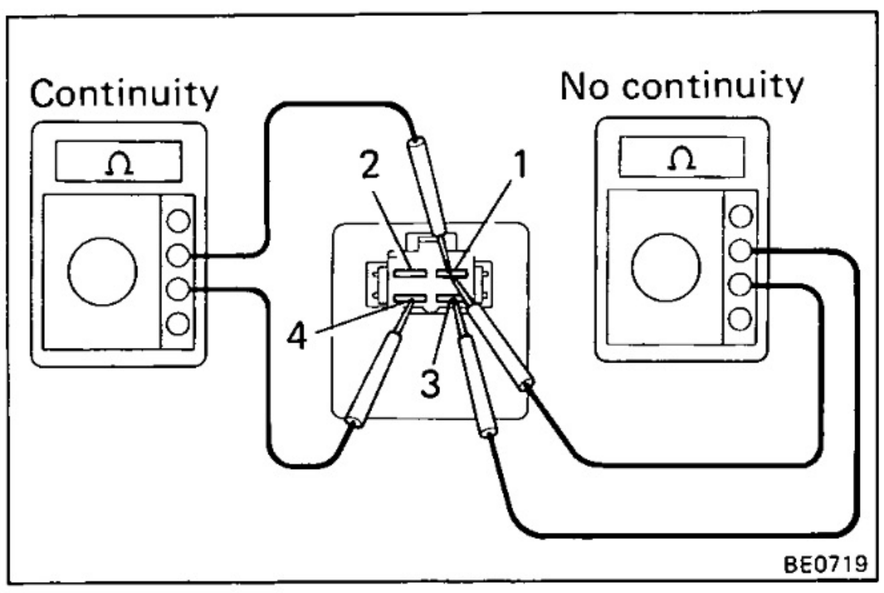

Front Wiper Control Relay

INSPECTION OF FRONT WIPER CONTROL RELAY

1. INSPECT RELAY CONTINUITY

(a) Check that there is continuity between terminals 1 and 4.

(b) Check that there is no continuity between terminals 1 and 3.

If continuity is not as specified, replace the relay.

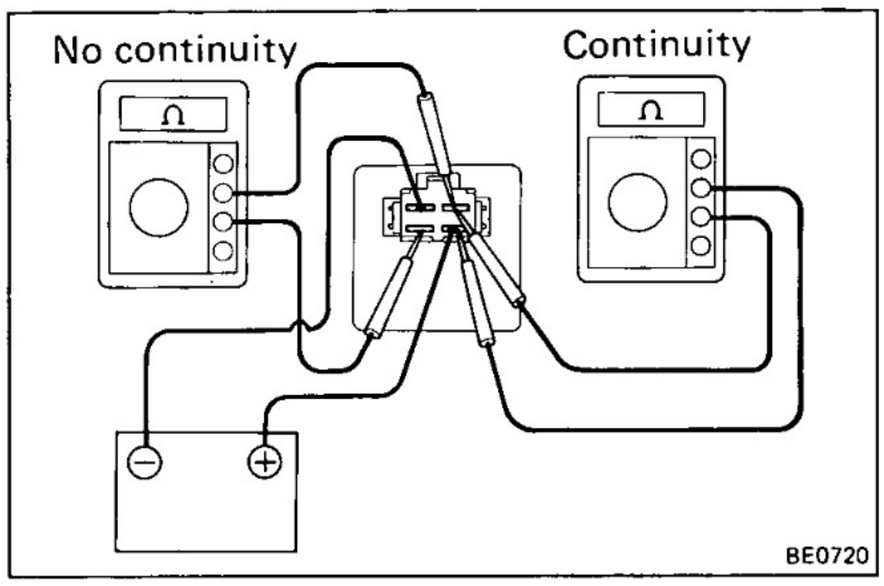

2. INSPECT RELAY OPERATION

(a) Connect the positive (+) lead from the battery to terminal 3. Connect the negative (–) lead to terminal 2.

(b) Check that there is no continuity between terminals 1 and 4.

(c) Check that there is continuity between terminals 1 and 3.

If operation is not as described, replace the relay.

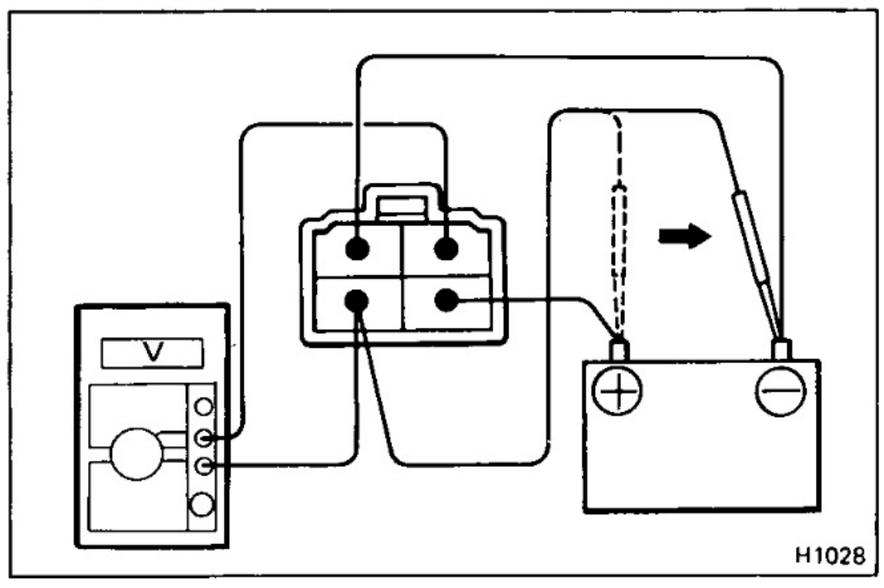

3. INSPECT INTERMITTENT OPERATION

(a) Connect the positive (+) lead from the battery to terminal 3 and connect the negative (–) lead from the battery to terminal 2.

(b) Connect the positive (+) lead from the voltmeter to terminal 1 and connect the negative (–) lead from the voltmeter to terminal 4.

(c) Connect terminal 4 to the battery positive (+) terminal for 1 second, and then connect to the battery negative (–) terminal. The voltages should be 0V on the battery positive (+) terminal and jump to 12V on the battery negative (–) terminal.
There should be a 4 second delay before battery voltage is indicated after connecting to battery negative (–) terminal.

If operation is not as described, replace the relay.

Wiper Relay (24V,60 Series)

INSPECTION OF WIPER RELAY

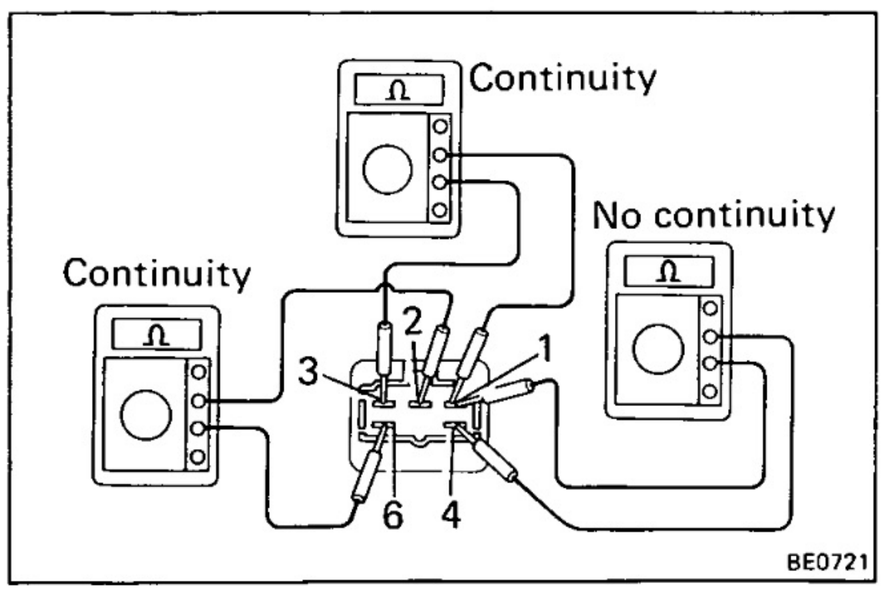

1. INSPECT RELAY CONTINUITY

(a) Check that there is continuity between terminals 1 and 3.

(b) Check that there is continuity between terminals 2 and 6.

(c) Check that there is no continuity between terminals 1 and 4.

If continuity is not as specified, replace the relay.

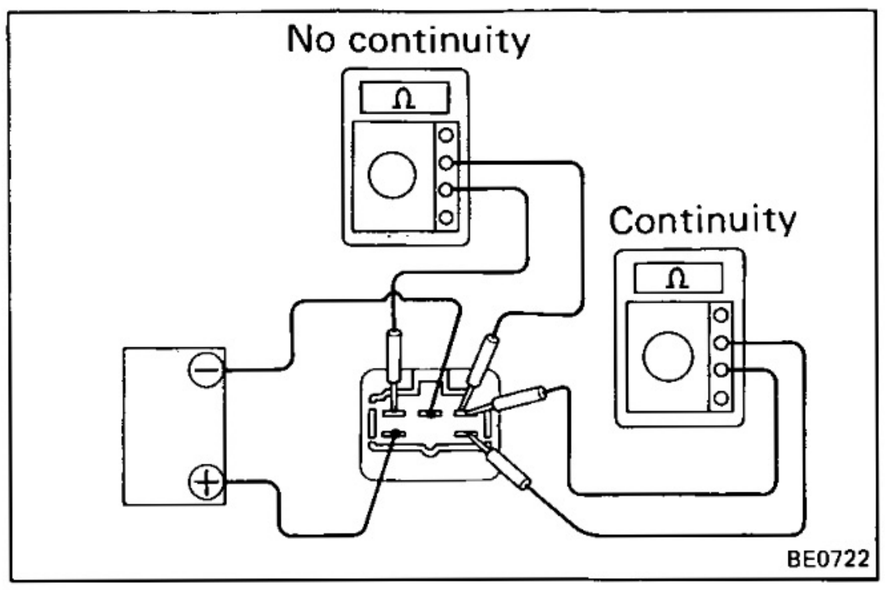

2. INSPECT RELAY OPERATION

(a) Apply battery voltage across terminals 2 and 6.

(b) Check that there is continuity between terminals 1 and 4.

(c) Check that there is no continuity between terminals 1 and 3.

If operation is not as described, replace the relay.

Front Wiper Motor

INSPECTION OF FRONT WIPER MOTOR

1. INSPECT THAT MOTOR OPERATES AT LOW SPEED

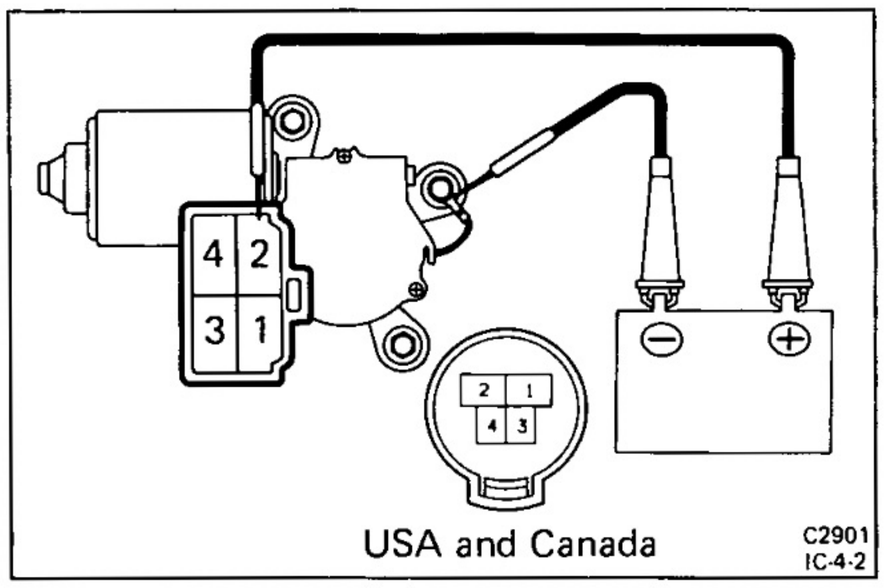

(a) Disconnect the connector from the wiper motor.

(b) Connect the positive (+) lead from the battery to terminal 2. Connect the negative (—) lead to the motor body.

(c) Check that the motor operates at low speed.

2. INSPECT THAT MOTOR OPERATES AT HIGH SPEED

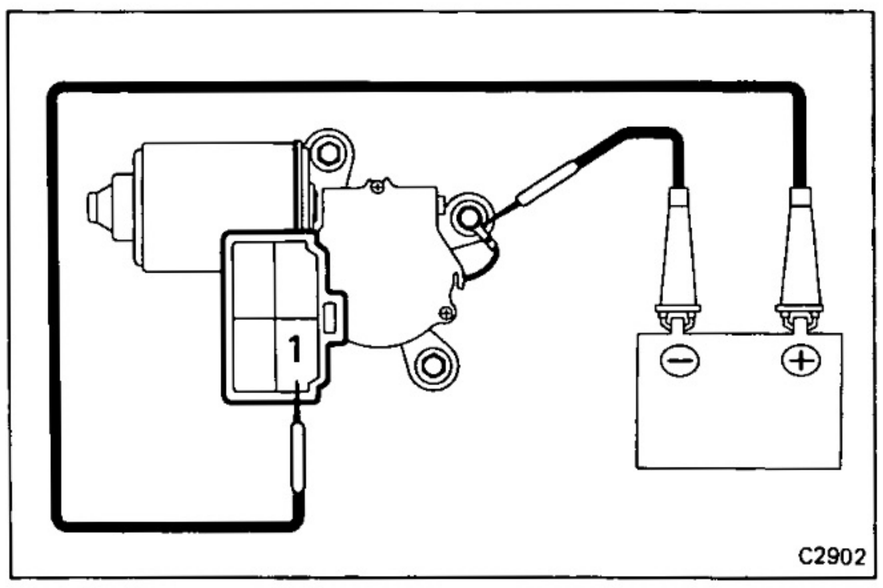

(a) Connect the positive (+) lead from the battery to terminal 1. Connect the negative (—) lead to the motor body.

(b) Check that the motor operates at high speed.

3. INSPECT THAT MOTOR OPERATES, STOPPING AT STOP POSITION

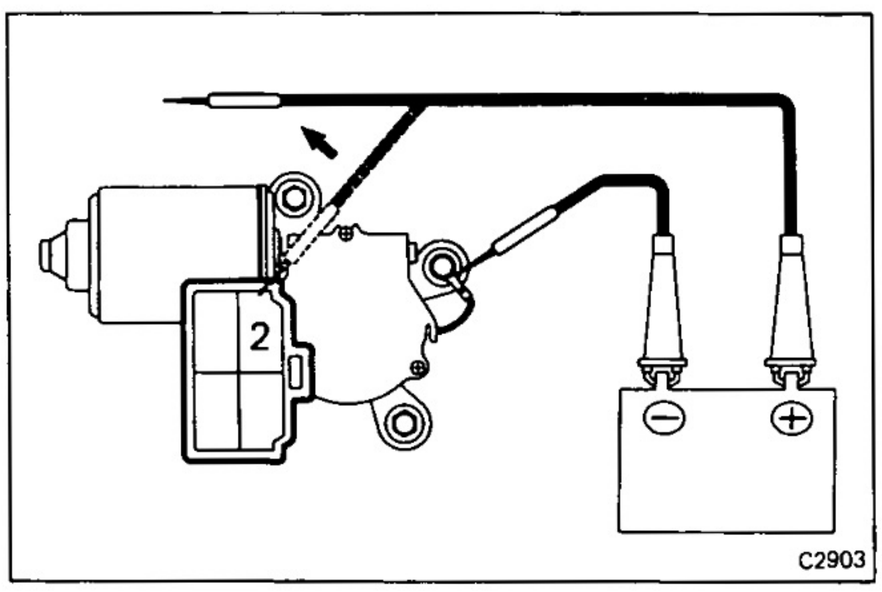

(a) Operate the motor at low speed.

(b) Stop the motor operation anywhere except the stop position by disconnecting the battery positive (+) terminal.

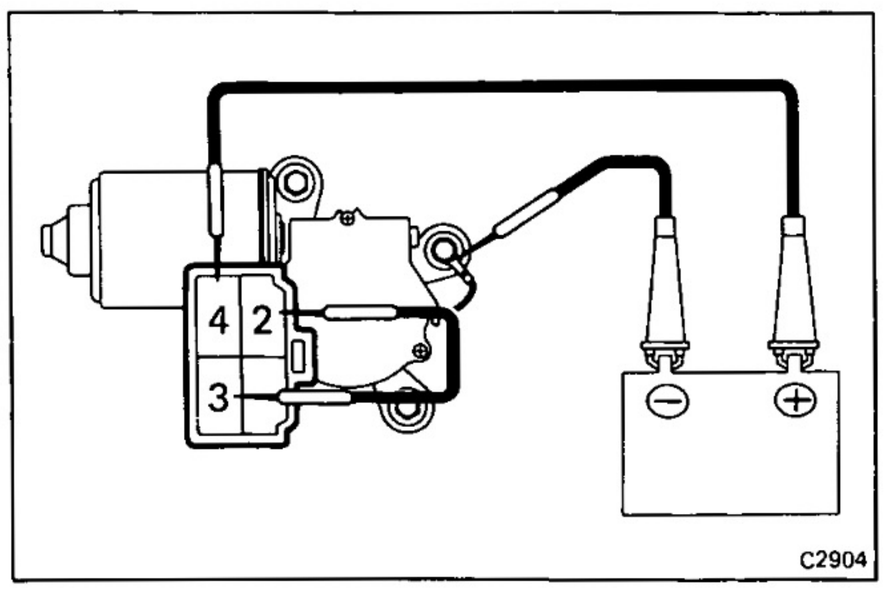

(c) Connect the positive (+) lead from the battery to terminal 4. Connect the negative (—) lead to the motor body. Connect terminals 2 and 3.

(d) Check that the motor stops running at the stopped position after the motor operates again.

If operation is not as described, replace the motor.

Wiper Lock Relay (with Collapsible Wiper)

(See Wiper Relay on pages BE-24, 25)

Wiper Lock Switch (with Collapsible Wiper)

INSPECTION OF WIPER LOCK SWITCH

INSPECT SWITCH CONTINUITY

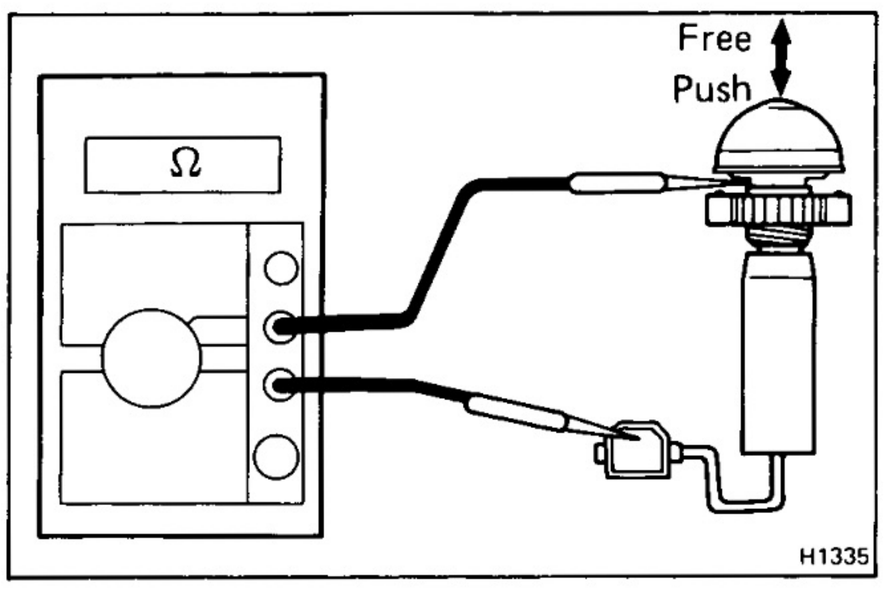

Using an ohmmeter, inspect the continuity between the terminal and body ground.

(a) Check that there is continuity when the switch is pushed.

(b) Check that there is no continuity when the switch is free.

If continuity is not as specified, replace the switch.

Rear Wiper and Washer Switch

INSPECTION OF REAR WIPER AND WASHER SWITCH

INSPECT SWITCH CONTINUITY

Inspect the continuity between terminals for each switch position shown in the table below.

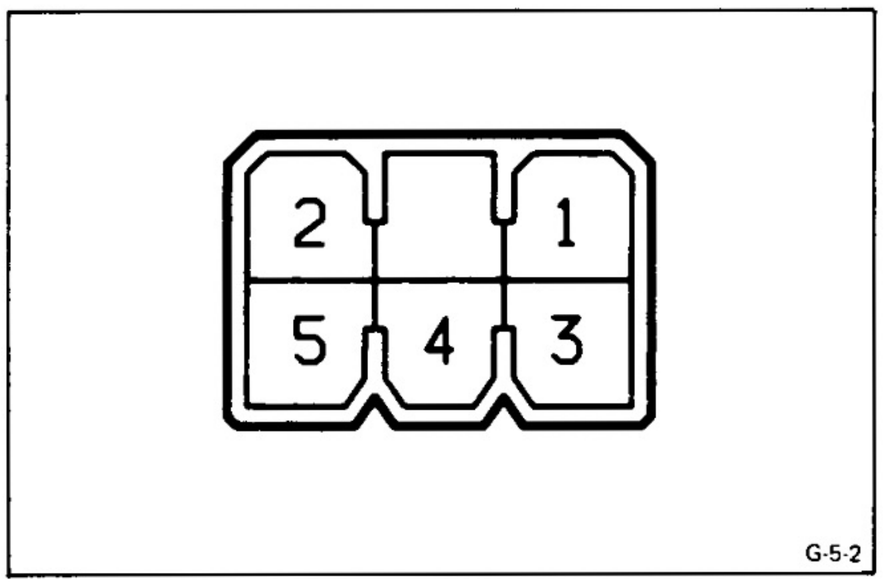

70 Series

Switch position \ Terminal	3	4	5	2	1
OFF	○——	——○			
ON		○——	——○		
Washer		○——	——○	○——	——○

60 Series

Switch position \ Terminal	5	4	3	2	1
Washer I	○——	——○		○——	——○
OFF	○——	——○			
ON		○——	——○		
Washer II		○——	——○	○——	——○

If continuity is not as specified, replace the switch.

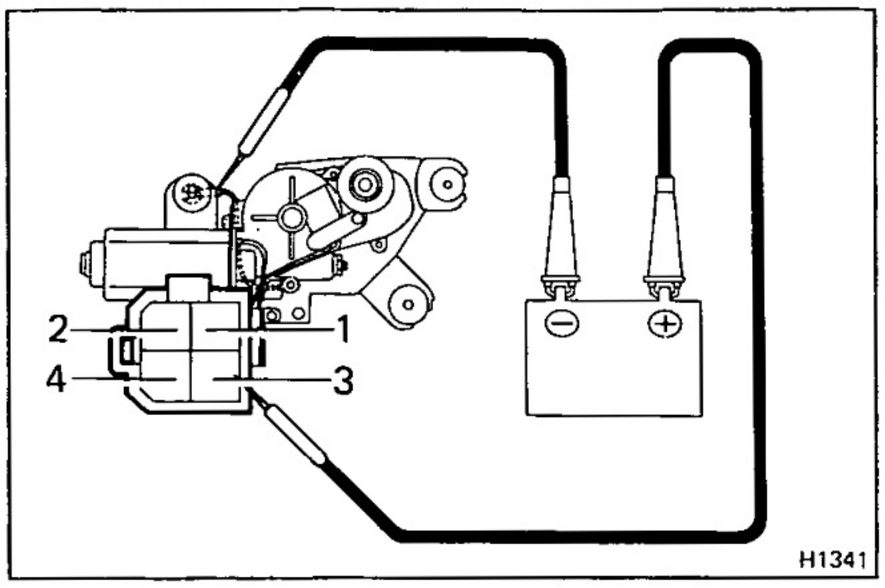

Rear Wiper Motor

INSPECTION OF REAR WIPER MOTOR

1. INSPECT THAT MOTOR OPERATES

(a) Connect the positive (+) lead from the battery to terminal 3. Connect the negative (—) lead to the motor body.

(b) Check that the motor operates.

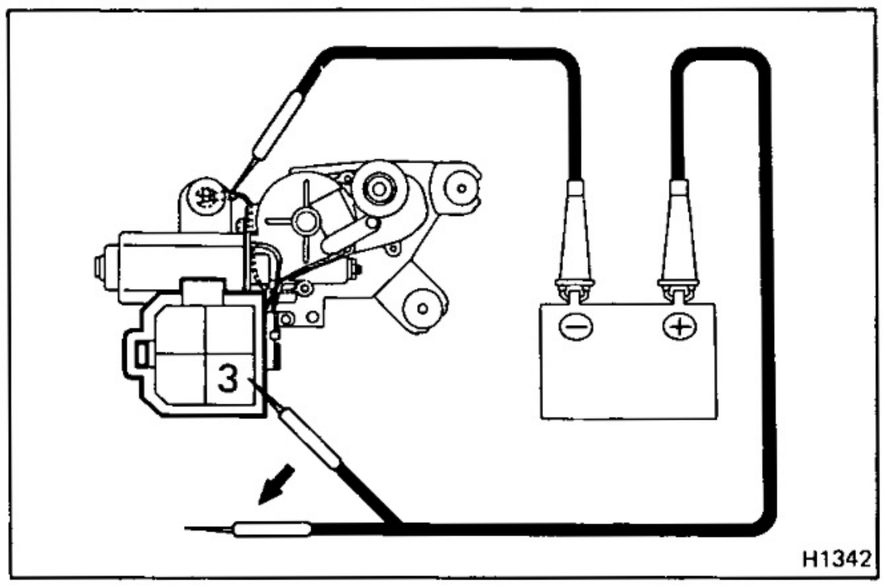

2. INSPECT THAT MOTOR OPERATES, STOPPING AT STOP POSITION

(a) Connect the positive (+) lead from the battery to terminal 3. Connect the negative (—) lead to the motor body. Operate the motor.

(b) Stop motor operation anywhere except stop position by disconnecting terminal 3.

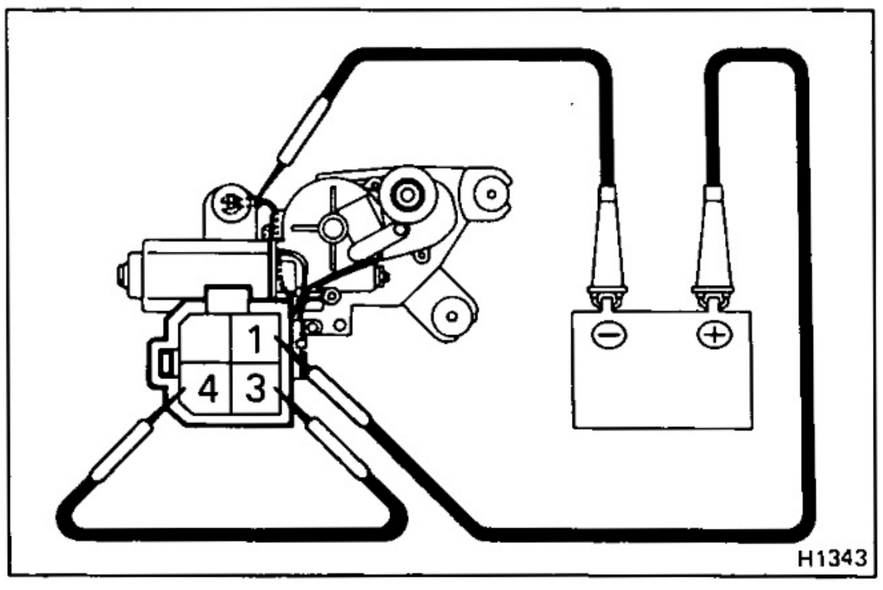

(c) Connect terminals 3 and 4.

(d) Connect the positive (+) lead from the battery to terminal 1.

(e) Check that the motor stops running at stop position after the motor operates again.

If operation is not as described, replace the motor.

INSTRUMENTS, GAUGES AND WARNING LIGHTS

Troubleshooting

Problem	Possible cause	Remedy	Page
Tachometer does not work	Fuses blown	Replace in-line fuses and check for short	
	Tachometer faulty	Check tachometer	BE-32
	Wiring faulty	Repair as necessary	
Tachometer does not work	"GAUGE" fuse blown	Replace fuse and check for short	BE-3
	Tachometer faulty	Check tachometer	BE-32
	Wiring faulty	Repair as necessary	
Fuel gauge does not work	"GAUGE" fuse blown	Replace fuse and check for short	BE-3
	Fuel gauge faulty	Check gauge	BE-33
	Sender gauge faulty	Check sender gauge	BE-34
	Wiring or ground faulty	Repair as necessary	
Water temperature gauge does not work	"GAUGE" fuse blown	Replace fuse and check for short	BE-3
	Water temperature gauge faulty	Check gauge	BE-35
	Water temperature sender gauge faulty	Check sender gauge	BE-36
	Wiring or ground faulty	Repair as necessary	
Low oil pressure warning light does not work	"GAUGE" fuse blown	Replace fuse and check for short	BE-3
	Bulb burned out	Replace bulb	
	Oil pressure warning switch faulty	Check switch	BE-37
	Wiring or ground faulty	Repair as necessary	
Brake warning light does not light	"GAUGE" fuse blown	Replace fuse and check for short	BE-3
	Bulb burned out	Replace bulb	
	Brake fluid level warning switch faulty	Check switch	BE-37
	Wiring or ground faulty	Repair as necessary	
Discharge warning light does not light	"GAUGE" fuse blown	Replace fuse and check for short	BE-3
	Bulb burned out	Replace bulb	
	Wiring or ground faulty	Repair as necessary	
Parking brake indicator light does not light (Australia only)	"GAUGE" fuse blown	Replace fuse and check for short	BE-3
	Bulb burned out	Replace bulb	
	Parking brake switch faulty	Check switch	BE-37,38
	Wiring or ground faulty	Repair as necessary	

Combination Meter and Gauge (70 Series and w/ Tachometer)

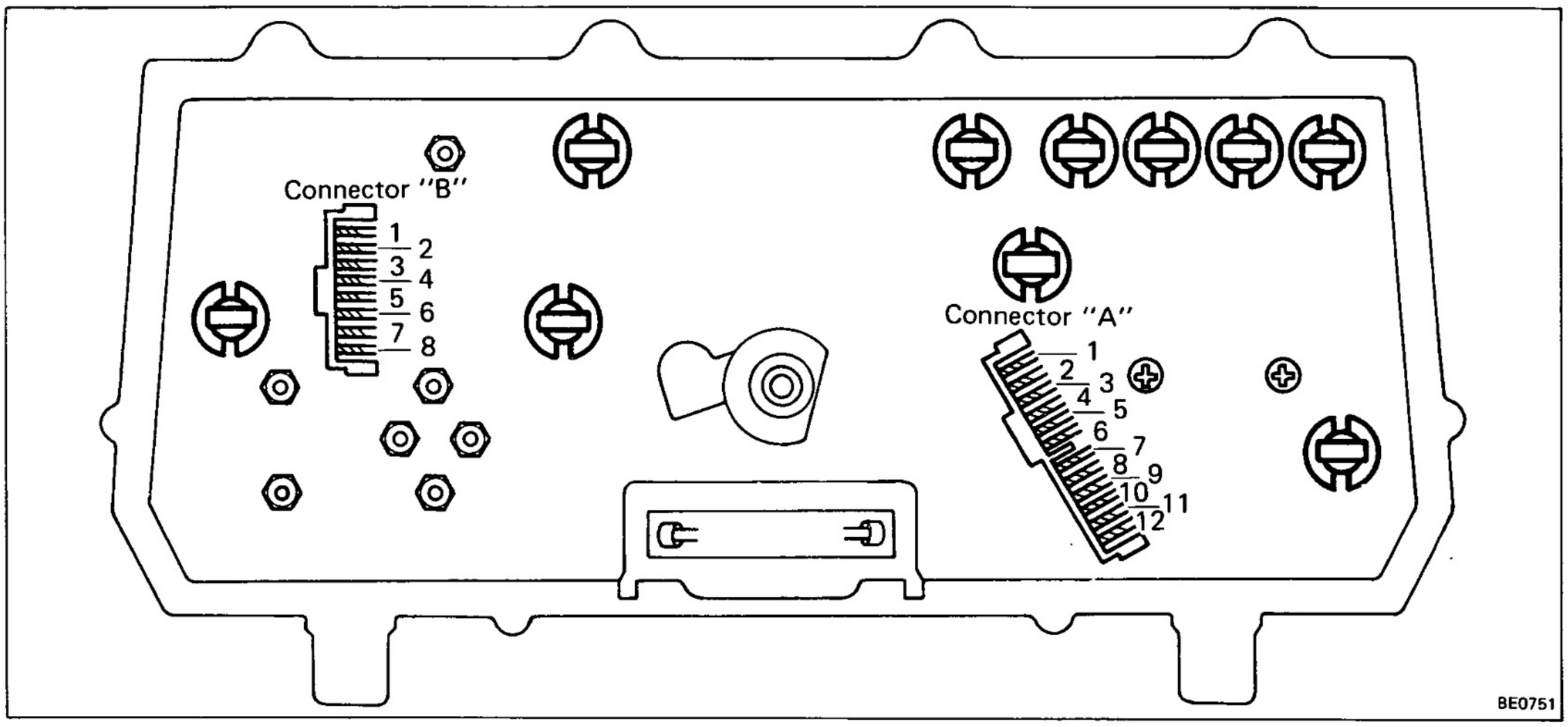

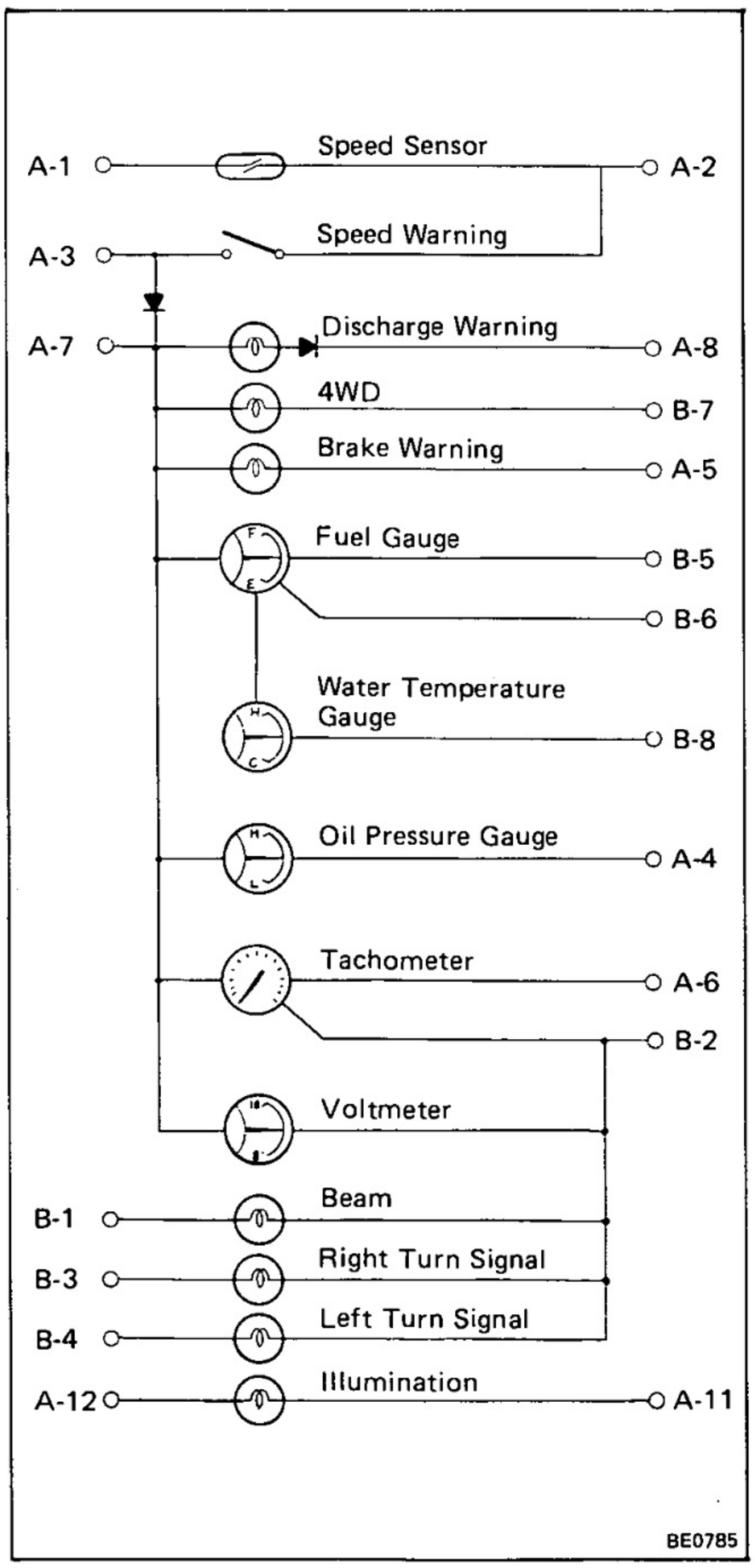

COMBINATION METER CIRCUIT

No.		Wiring Connector Sides
A	1	Emission Computer
	2	Ground
	3	Speed Warning Buzzer
	4	Oil Pressure Sender Gauge
	5	Vacuum Switch, Parking Brake Switch and Brake Fluid Level Warning Switch
	6	Ignition Coil or Tach. Sensor
	7	ENGINE Fuse
	8	CHARGE Fuse
	11	Light Control Rheostat Terminal or Ground
	12	TAIL Fuse
B	1	Headlight Dimmer Switch Terminal
	2	Ground
	3	Turn Signal Switch Terminal
	4	Turn Signal Switch Terminal
	5	Fuel Sender Gauge Terminal 1
	6	Ground
	7	4WD Indicator Switch
	8	Water Temperature Sender Gauge

Combination Meter and Gauge (70 Series and w/o Tachometer)

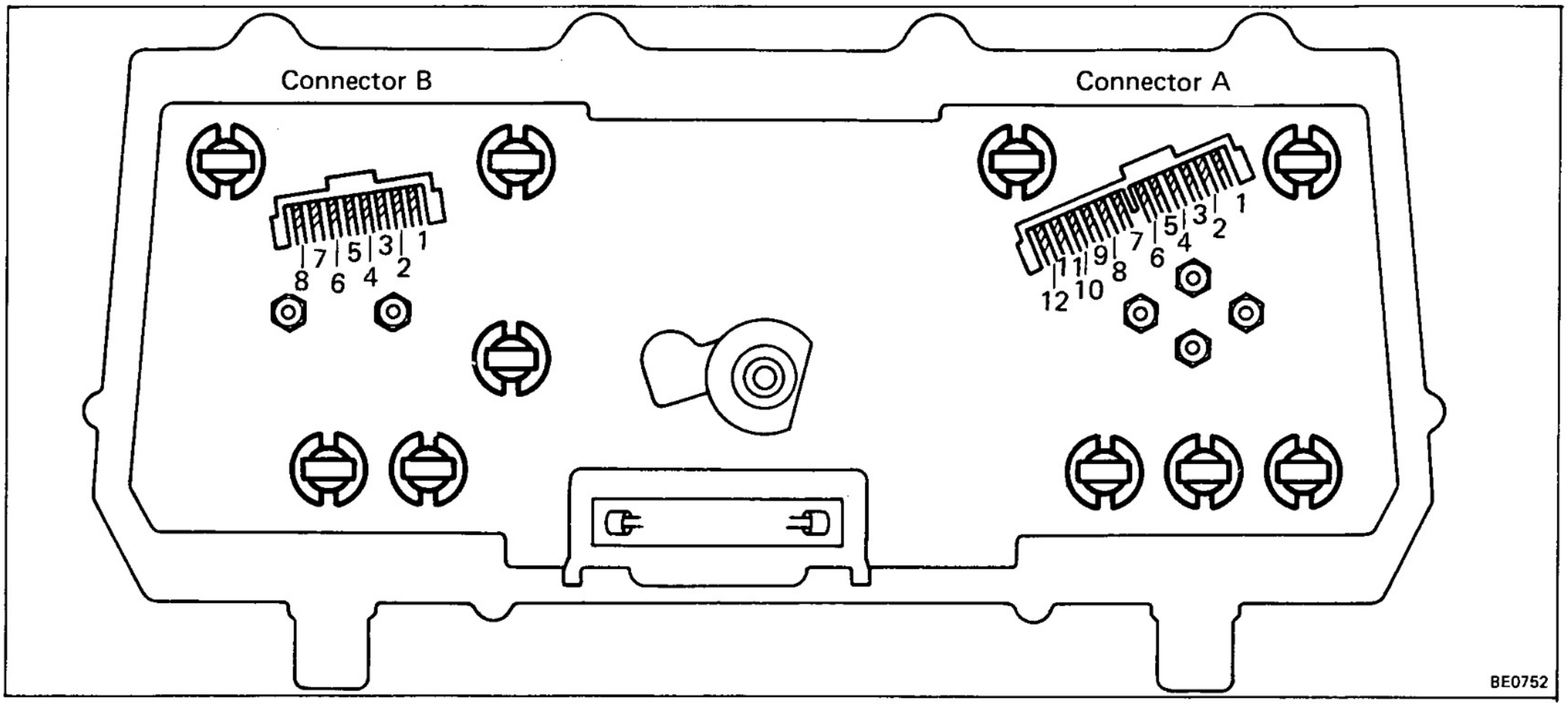

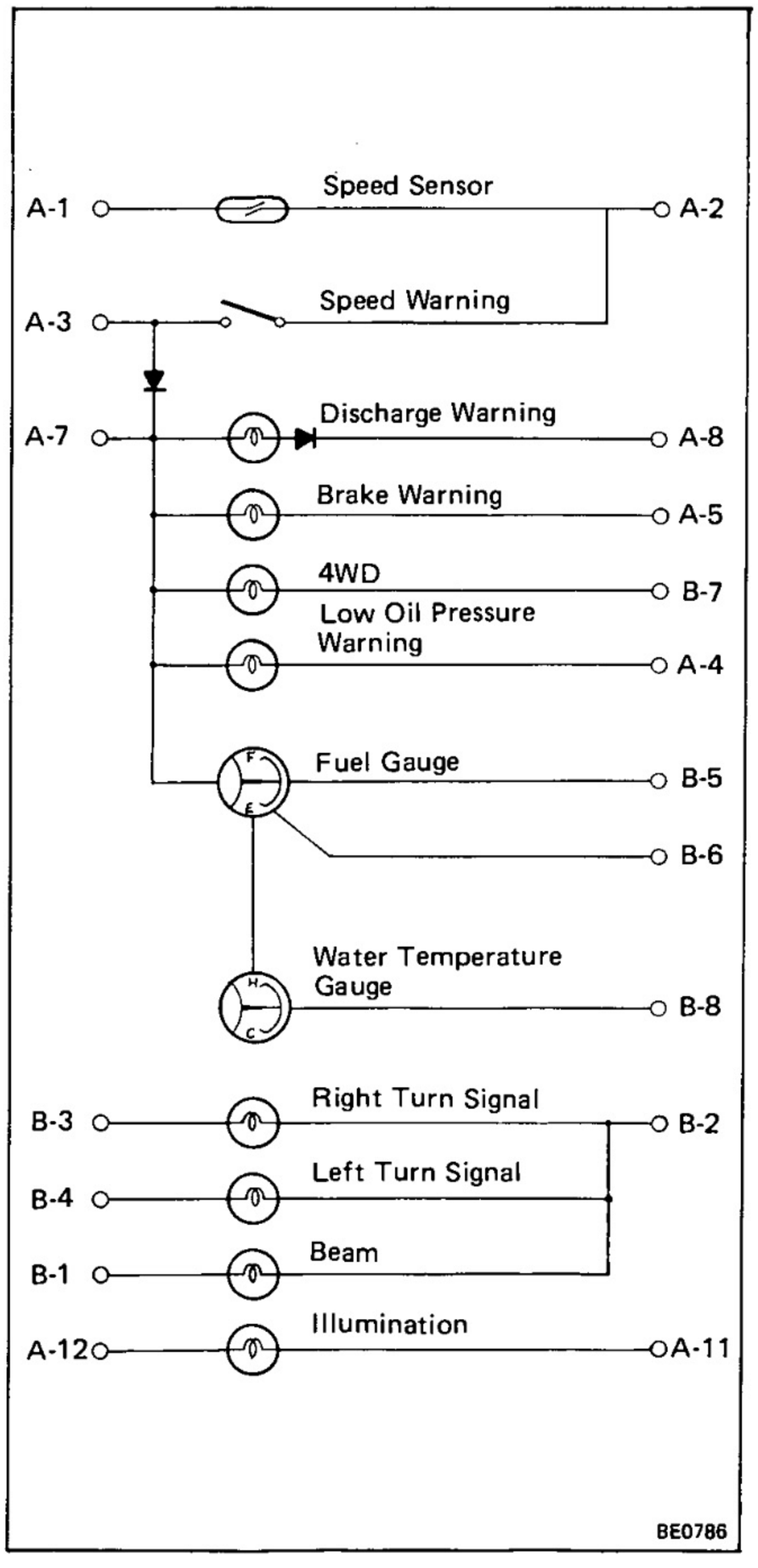

COMBINATION METER CIRCUIT

No.		Wiring Connector Sides
A	1	Emission Computer
	2	Ground
	3	Speed Warning Buzzer
	4	Oil Pressure Switch
	5	Vacuum Switch, Parking Brake Switch and Brake Fluid Level Warning Switch
	7	ENGINE Fuse
	8	CHARGE Fuse
	11	Ground
	12	TAIL Fuse
B	1	Headlight Dimmer Switch Terminal
	2	Ground
	3	Turn Signal Switch Terminal
	4	Turn Signal Switch Terminal
	5	Fuel Sender Gauge Terminal 1
	6	Ground
	7	4WD Indicator Switch
	8	Water Temperature Sender Gauge

Combination Meter and Gauge (60 Series)

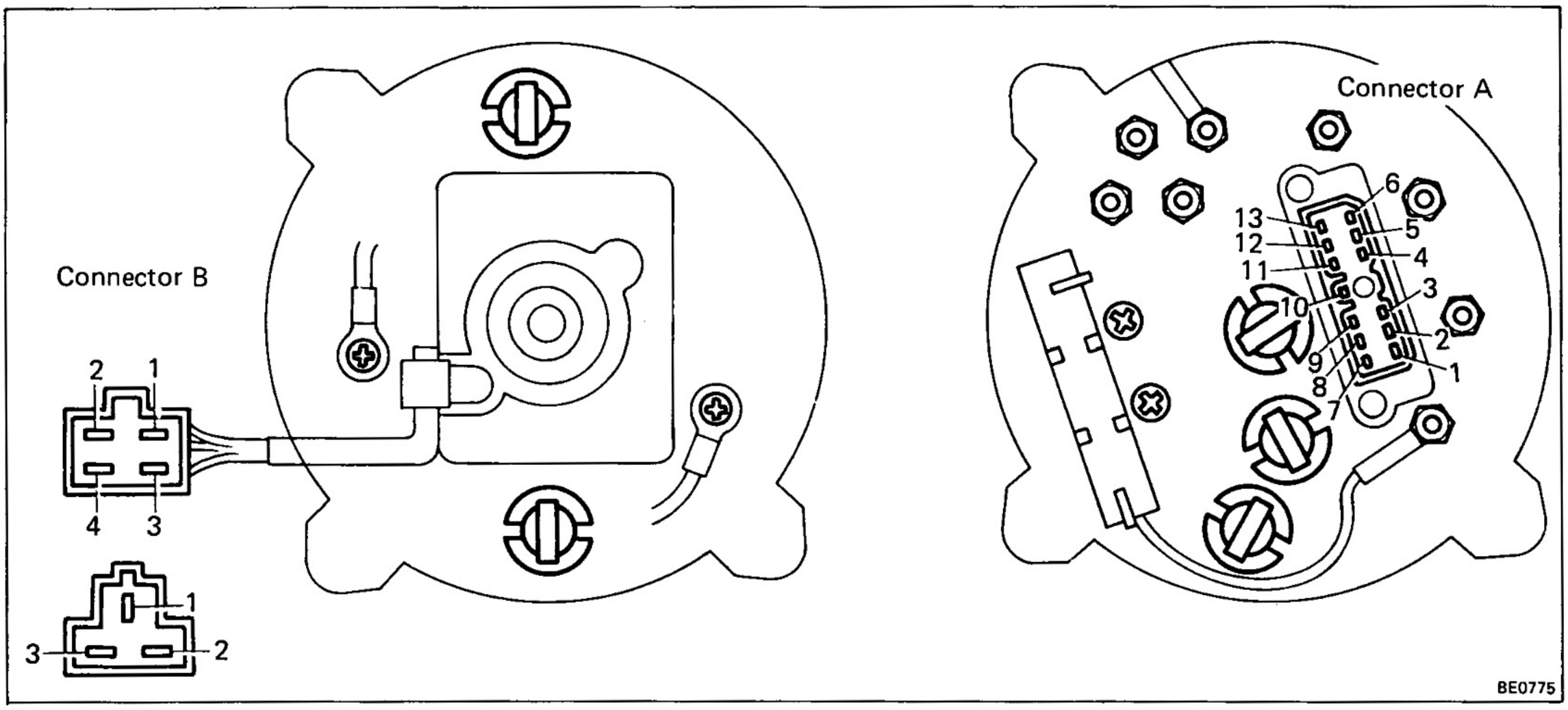

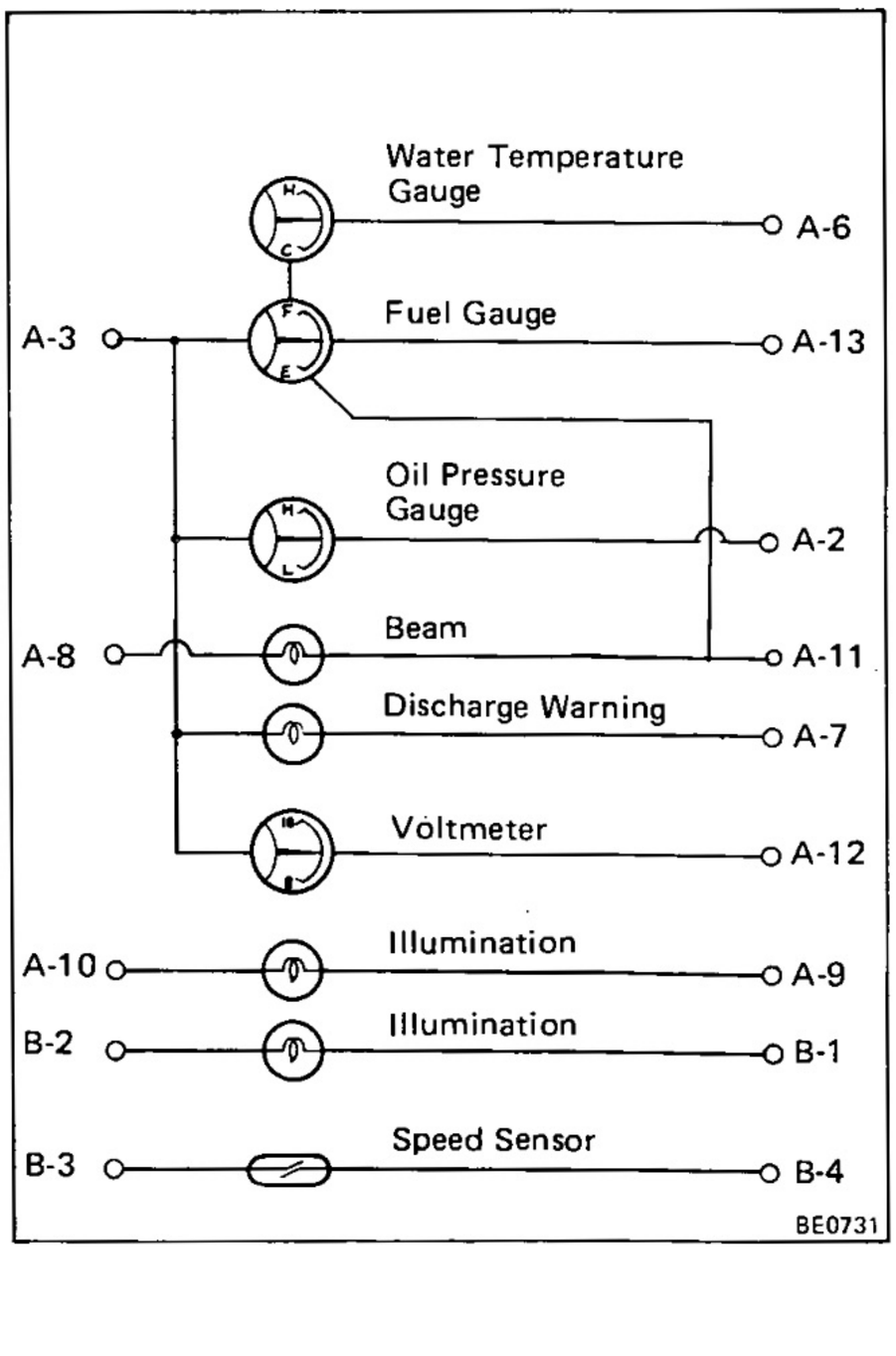

COMBINATION METER CIRCUIT

No.		Wiring Connector Sides
A	2	Oil Pressure Sender Gauge
	3	GAUGE Fuse
	6	Water Temperature Sender Gauge
	7	CHARGE Fuse
	8	Headlight Dimmer Switch Terminal
	9	Ground
	10	TAIL Fuse
	11	Ground
	12	Ground
	13	Fuel Sender Gauge
B	1	Ground
	2	TAIL Fuse
	3	Emission Computer
	4	Ground

Speedometer

ON-VEHICLE INSPECTION OF SPEEDOMETER

(a) Using a speedometer tester, inspect the speedometer for allowable indication error and check the operation of the odometer.

NOTE: Tire wear and tire over or under inflation will increase the indication error.

Standard indication (km/h)	Allowable range (km/h)	
	Ex. Australia	Australia
20	21 – 25	17.5 – 21.5
40	41.5 – 46	38 – 42
60	62.5 – 67	59 – 63.5
80	83 – 88	80 – 85
100	104 – 109	101 – 106.5
120	125 – 130.5	122 – 128
140	145.5 – 151.5	143 – 149.5

Standard indication (mph)	Allowable range (mph)
20	21 – 23.5
40	41.5 – 44
60	62.5 – 66
80	83 – 87

If error is excessive, replace the speedometer.

(b) Check the speedometer for pointer vibration and abnormal noise.

NOTE: Pointer vibration can be caused by a loose speedometer cable.

Tachometer

ON-VHICLE INSPECTION OF TACHOMETER

(a) Connect a tune-up test tachometer, and start the engine.

CAUTION:

- **Reversing the connection of the tachometer will damage the transistors and diodes inside.**
- **When removing or installing the tachometer, be careful not to drop or subject it to heavy shocks.**

(b) Compare the tester and tachometer indications.

Temp. and volts \ rpm	1,000	3,000	5,000
25°C DC13V	± 100	± 150	± 150

If error is excessive, replace the tachometer.

Voltmeter

INSPECTION OF VOLTMETER

Compare the tester and voltmeter indications.

If error is excessive, replace the voltmeter.

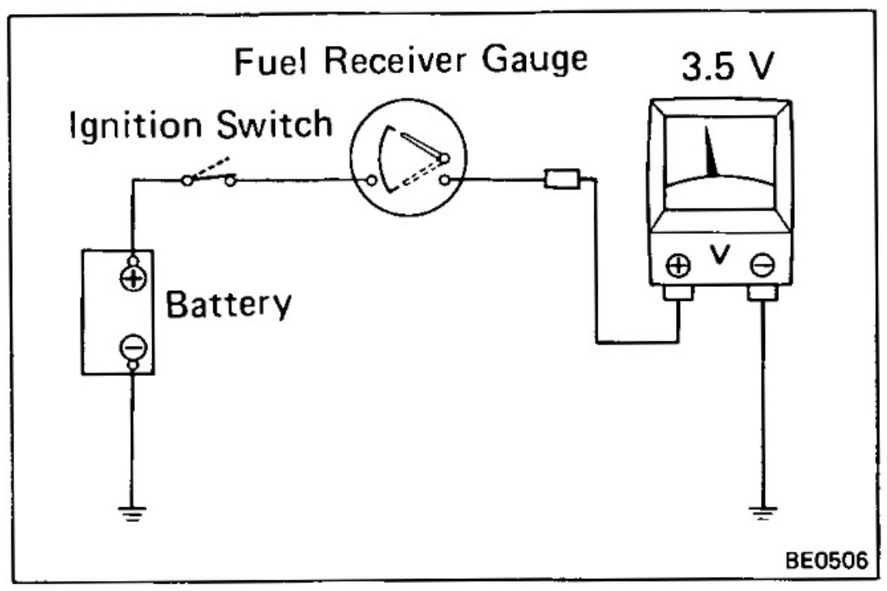

Fuel Gauge

INSPECTION OF FUEL GAUGE

1. INSPECT RECEIVER GAUGE OPERATION

(a) Disconnect the connector from the fuel sender gauge. Connect the positive (+) lead from the voltmeter to terminal 1 and connect the negative (—) lead from the voltmeter to body ground.

(b) Turn the ignition switch or starter switch on. Check that the meter needle vibrates near the 3.5V position.

If voltage is not correct, remove and test the receiver gauge.

2. MEASURE RECEIVER GAUGE RESISTANCE

Measure the resistance between terminals 1 and 2.

Resistance: Approx. 55Ω

If resistance value is not as specified, replace the receiver gauge.

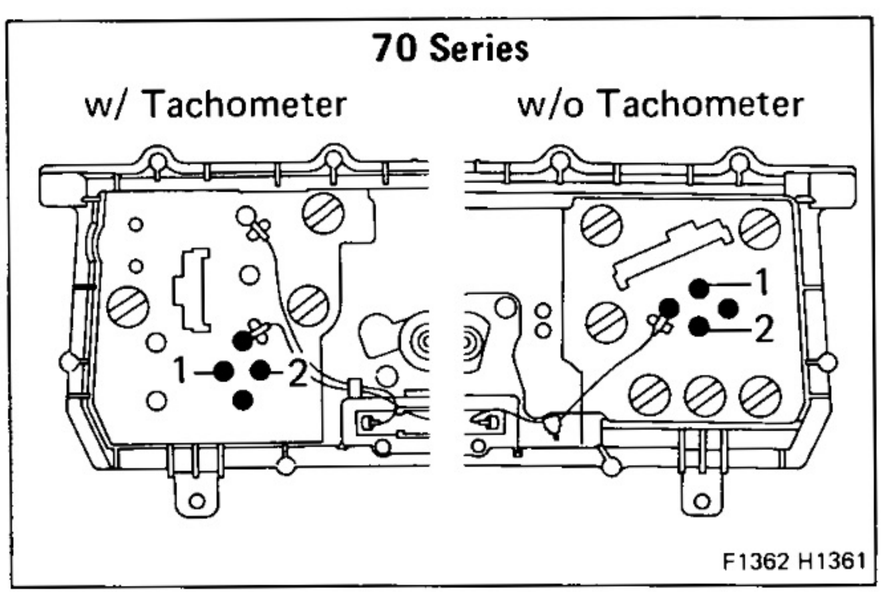

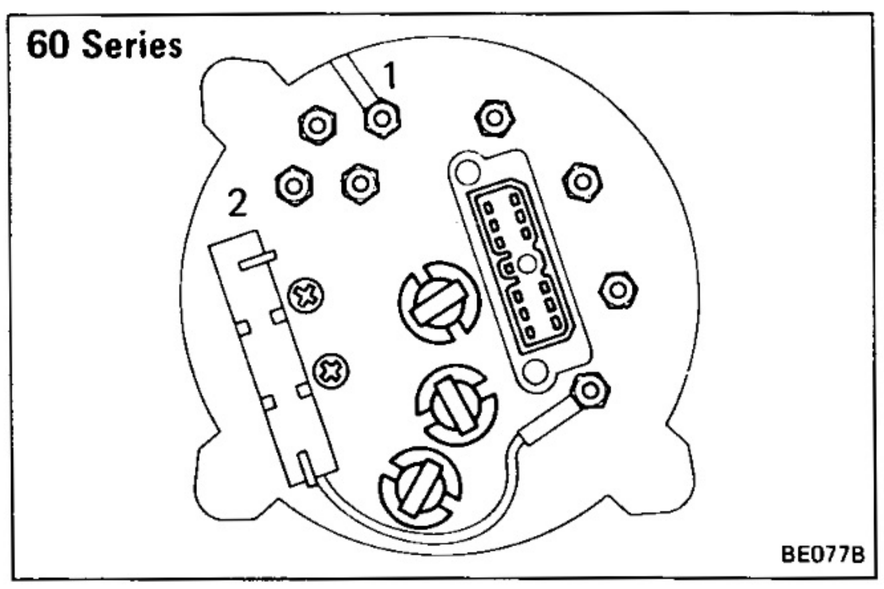

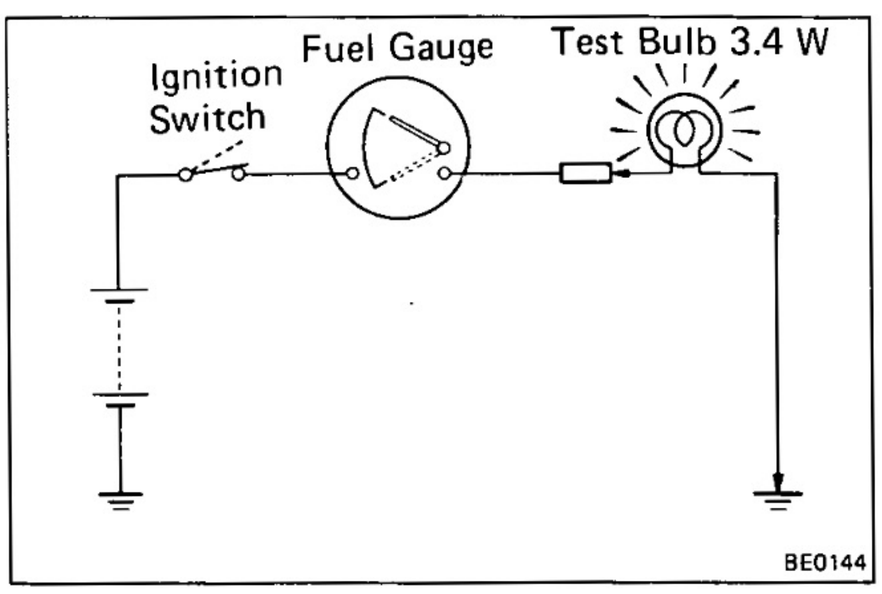

3. INSPECT SUB-FUEL RECEIVER GAUGE OPERATION

(a) Disconnect the connector from the fuel sender gauge. Turn the ignition switch or starter switch on. Check that the receiver gauge needle moves to the empty position.

(b) Connect a 3.4W bulb between terminal 1 and body ground. Check that the bulb lights and that the receiver gauge needle operates.

If indications are not correct, remove and test the receiver gauge.

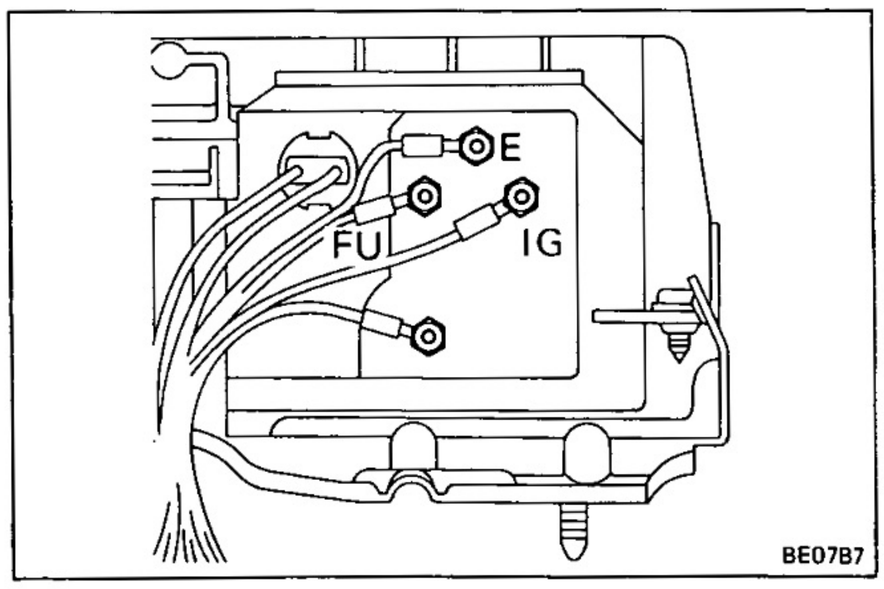

4. MEASURE SUB-FUEL RECEIVER GAUGE RESISTANCE BETWEEN TERMINALS (Non-return type)

Between terminals	Resistance (Ω)
IG – FU	Approx. 86
FU – E	Approx. 155
IG – E	Approx. 241

If each resistance value is not as shown in the table above, replace the receiver gauge.

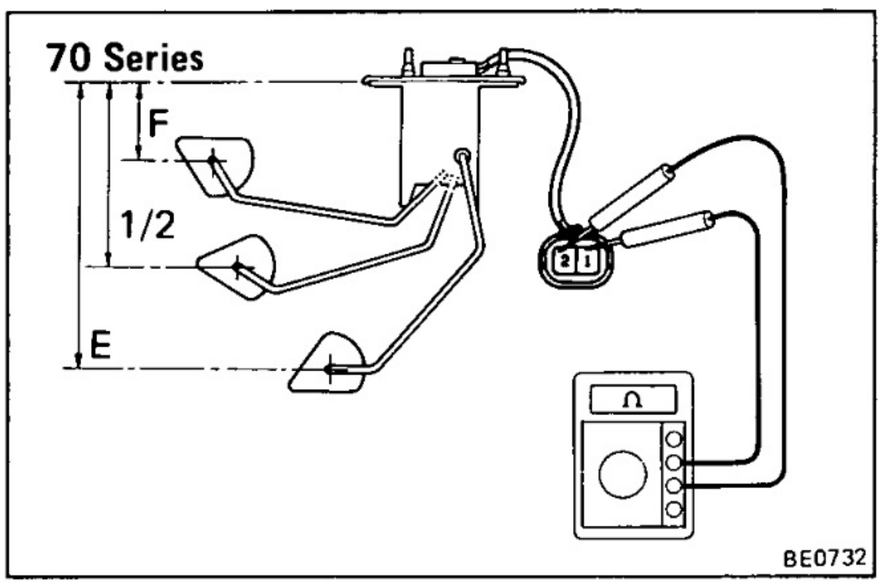

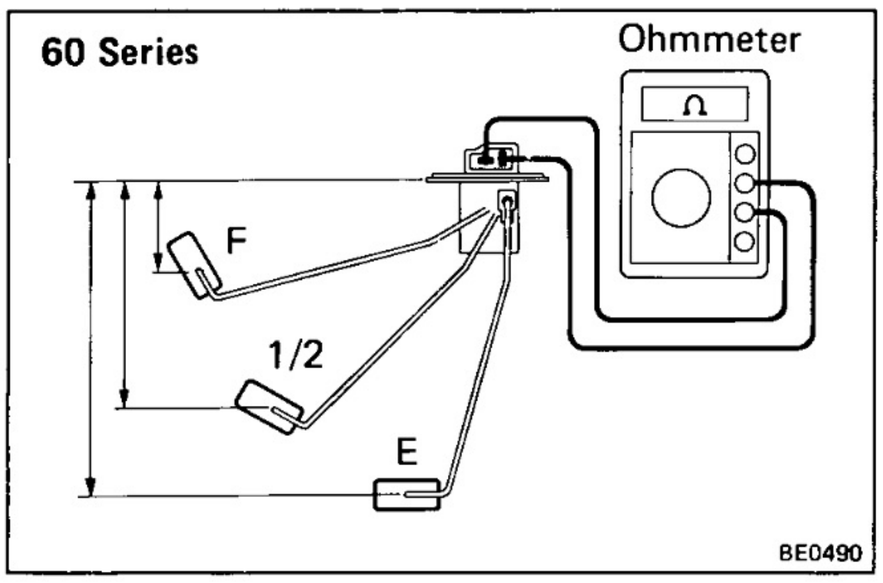

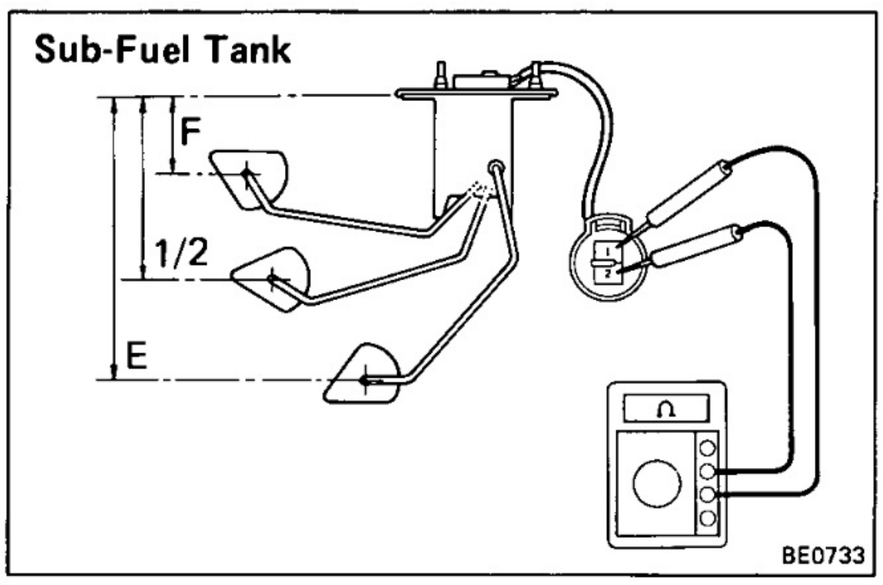

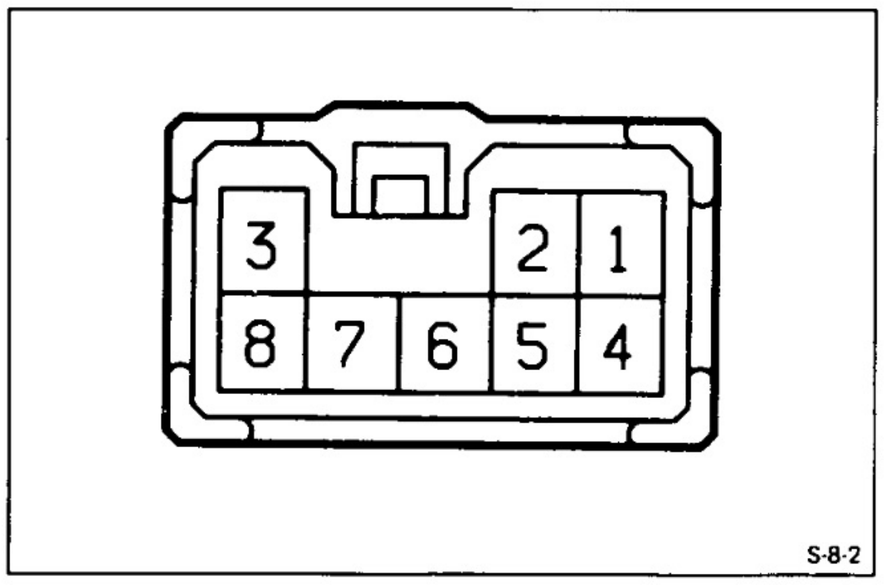

5. MEASURE SENDER GAUGE RESISTANCE

(a) Check that resistance changes as the float is moved from the top to bottom position.

(b) Measure the resistance between terminals 1 and 2 (70 series) or sender gauge body (60 series) for each float position.

70 Series

Float position mm (in.)		Resistance (Ω)
F	76.7 (3.020)	3
1/2	189.8 (7.472)	32.5
E	302.4 (11.905)	110

60 Series

Float position mm (in.)		Resistance (Ω)
F	34.5 (1.358)	17 ± 2.1
1/2	89.5 (3.524)	40 ± 4.5
E	160.5 (6.319)	120 ± 6.5

70 Series for sub-fuel tank

Float position mm (in.)		Resistance (Ω)
F	56 (2.20)	3
1/2	132.2 (5.205)	32.5
E	259.1 (10.201)	110

If each resistance value is not as shown in the table above, replace the sender gauge.

Fuel Transfer Switch

INSPECTION OF FUEL TRANSFER SWITCH

INSPECT SWITCH CONTINUITY

Inspect the switch continuity between terminals.

Terminal / Switch position	2	8
ON (Front)	○	○
OFF (Rear)		

If continuity is not as specified, replace the switch.

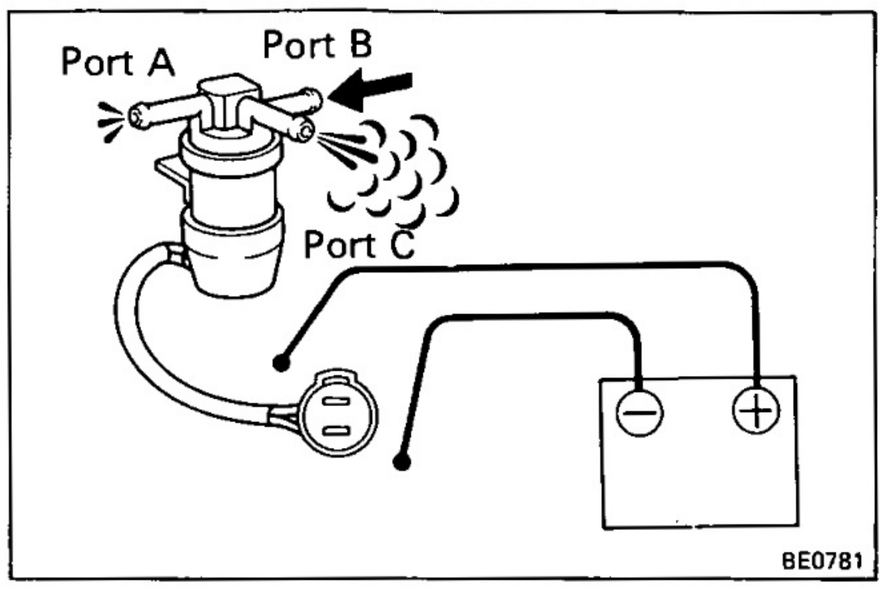

Fuel Transfer Solenoid

INSPECTION OF FUEL TRANSFER SOLENOID

INSPECT SOLENOID OPERATION

(a) Check that the air flows between ports B and C. Check that the air does not flow between ports A and B.

(b) Apply the battery voltage across the terminals. Check that the air flows between ports A and B. Check that the air does not flow between ports B and C.

If operation is not as specified, replace the solenoid.

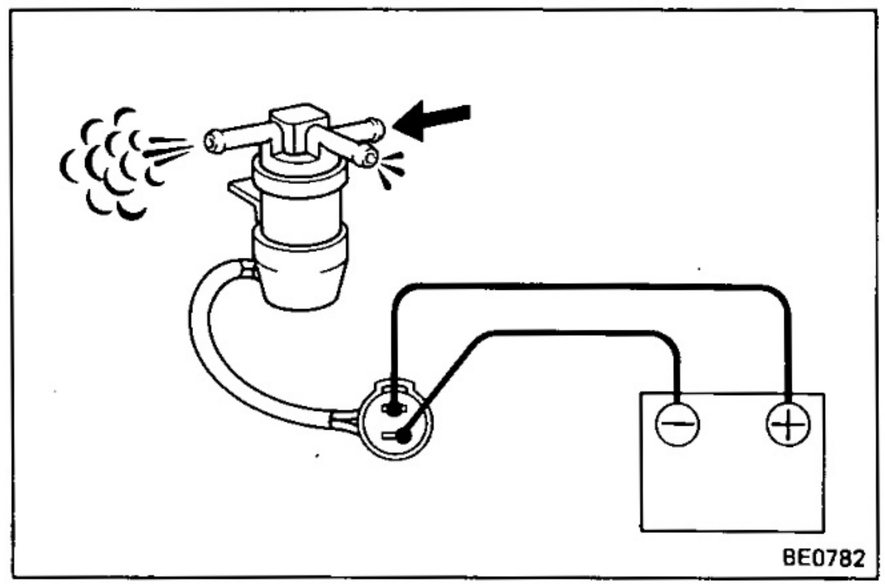

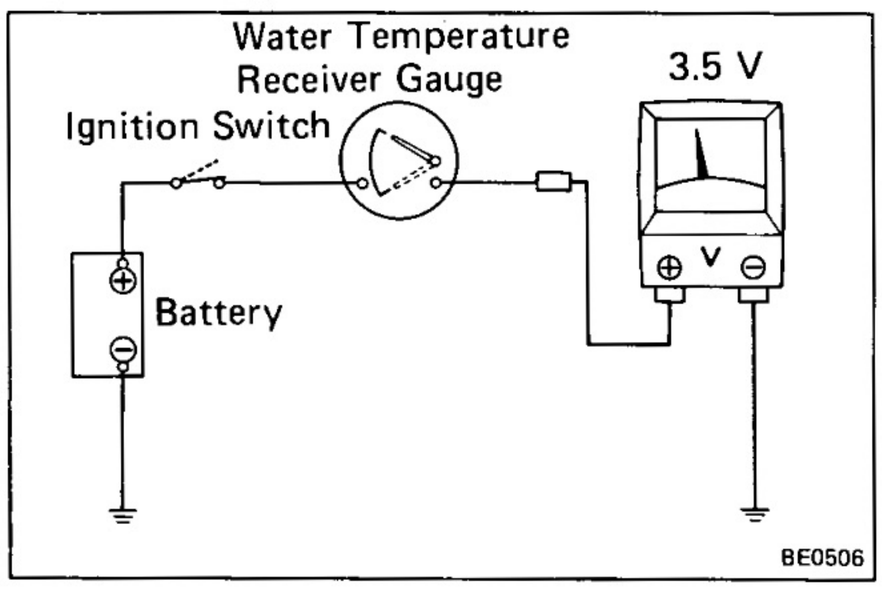

Water Temperature Gauge

INSPECTION OF WATER TEMPERATURE GAUGE

1. INSPECT RECEIVER GAUGE OPERATION

(a) Disconnect the connector from the sender gauge. Connect the positive (+) lead from the voltmeter to terminal and connect the negative (—) lead from the voltmeter to body ground.

(b) Turn the ignition switch or starter switch on. Check that the meter needle vibrates near the 3.5V position.

If voltage value is not correct, remove and test the receiver gauge.

2. MEASURE RECEIVER GAUGE RESISTANCE

Measure the resistance between terminals 1 and 2.

Resistance: Approx. 55Ω

If resistance value is not correct, replace the receiver gauge.

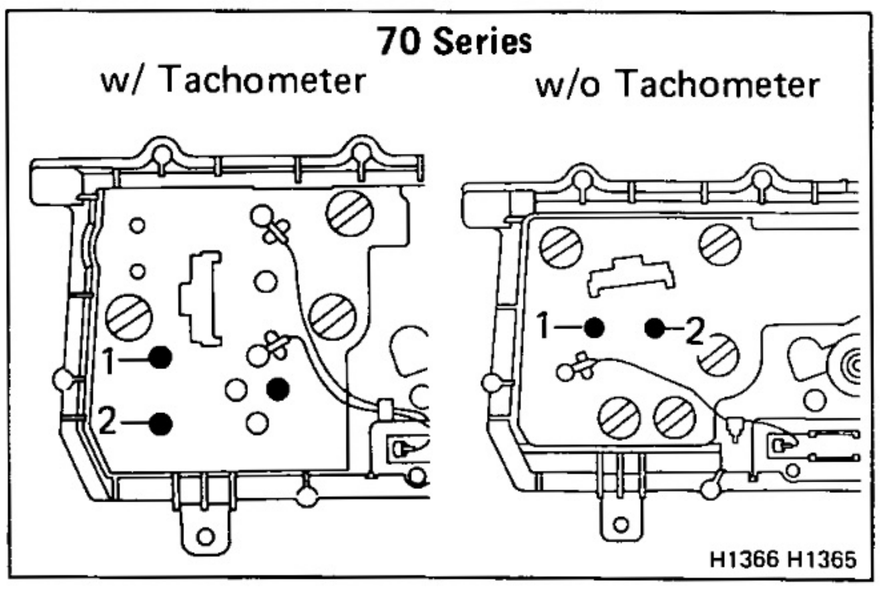

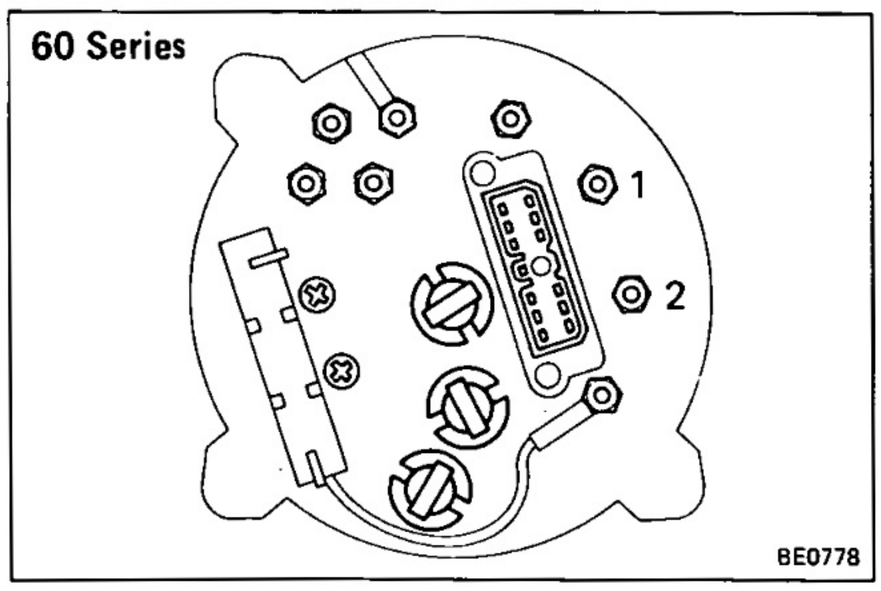

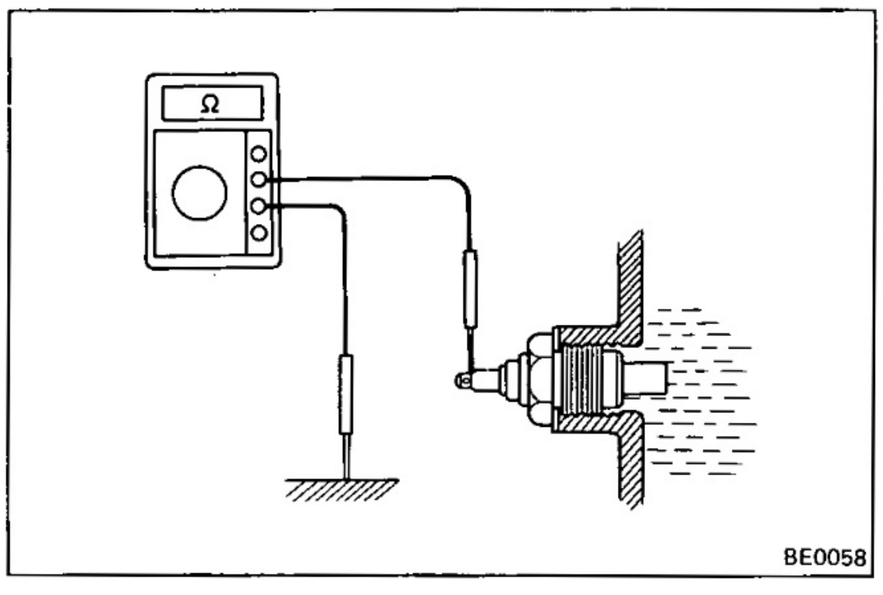

3. MEASURE SENDER GAUGE RESISTANCE

Measure the resistance between the terminal and ground.

If each resistance value is not as shown in the table below, replace the sender gauge.

Water temperature °C (°F)	Resistance (Ω)
50 (122)	226.0 $^{+33.6}_{-36.6}$
115 (239)	26.4 $^{+1.71}_{-2.21}$

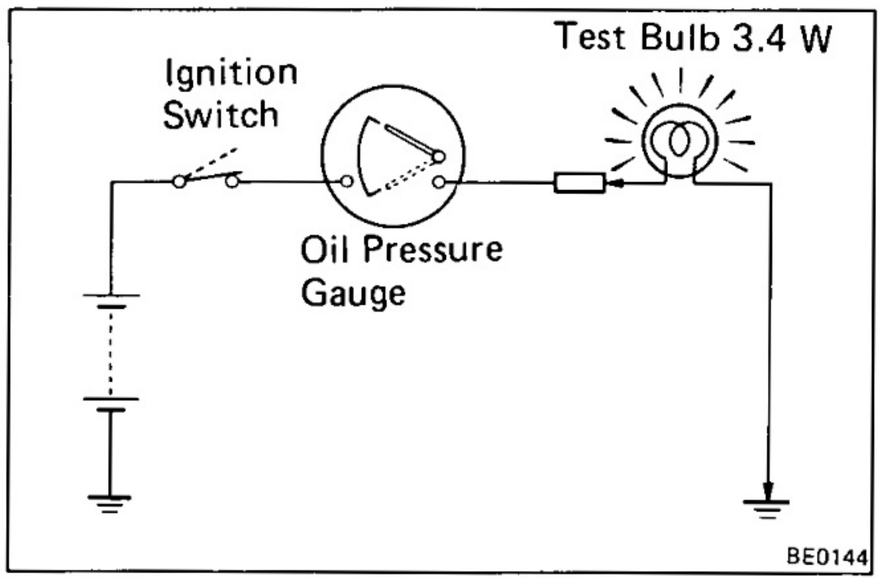

Oil Pressure Gauge

INSPECTION OF OIL PRESSURE GAUGE

1. INSPECT RECEIVER GAUGE OPERATION

(a) Disconnect the connector from the sender gauge. Ground the terminal through a 3.4 W bulb as shown.

(b) Turn the ignition switch or starter switch on. Check that the bulb starts flashing and the gauge pointer deflects.

If indications are not as specified, remove and test the receiver gauge.

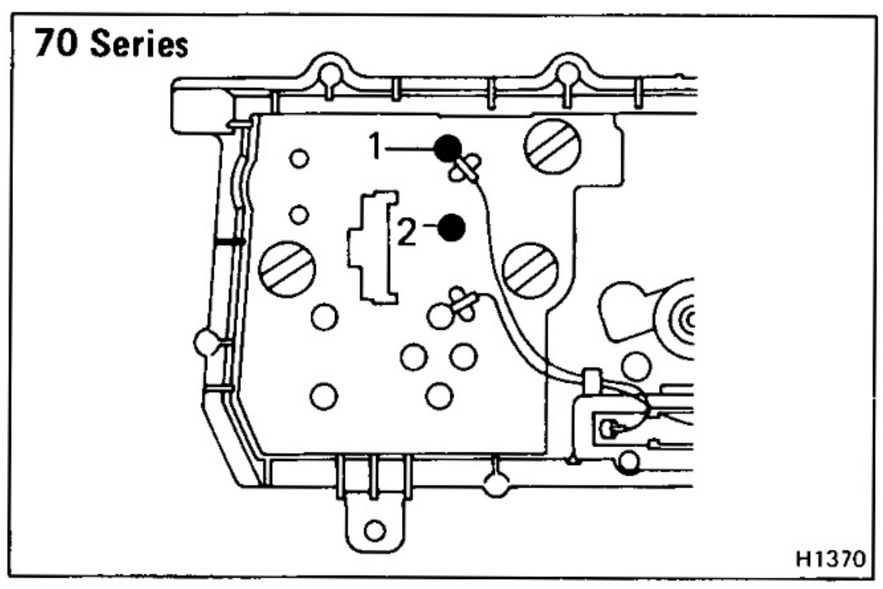

2. MEASURE RECEIVER GAUGE RESISTANCE

Measure the resistance between terminals 1 and 2.

Resistance: Approx. 55Ω

If resistance value is not correct, replace the receiver gauge.

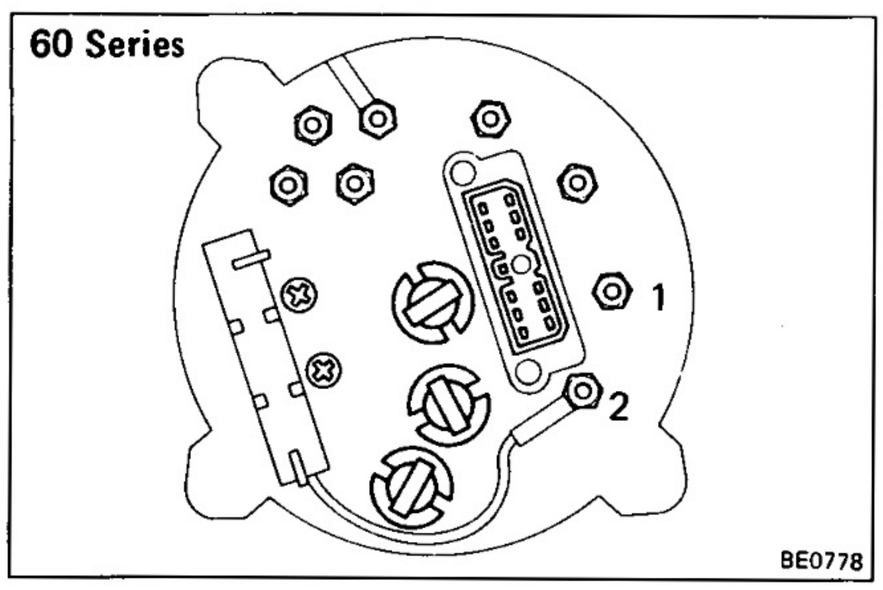

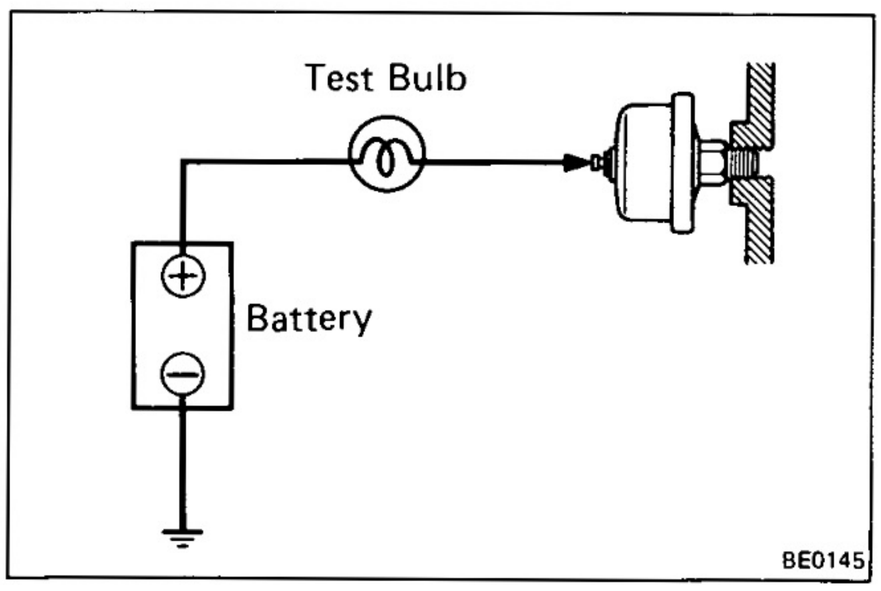

3. INSPECT SENDER GAUGE OPERATION

(a) Disconnect the connector from the sender gauge.

(b) Connect the battery to the sender gauge terminal in series with a 3.4W (12V) or 3W (24V) bulb. Check that the bulb does not light when the engine is stopped, and flashes when the engine is running. The number of flashes should vary with engine speed.

If operation is not as specified, replace the sender gauge.

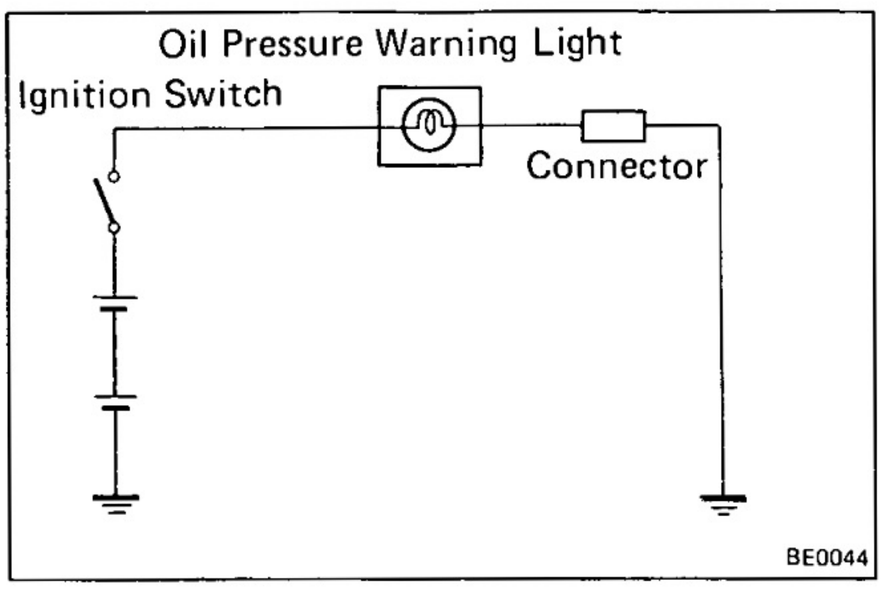

Low Oil Pressure Warning

INSPECTION OF LOW OIL PRESSURE WARNING

1. INSPECT WARNING LIGHT OPERATION

(a) Disconnect the connector from the pressure switch. Connect the wire harness side connector terminal and body ground.

(b) Turn the ignition switch or starter switch on. Check that the warning light lights.

If operation is not correct, remove and test the bulb.

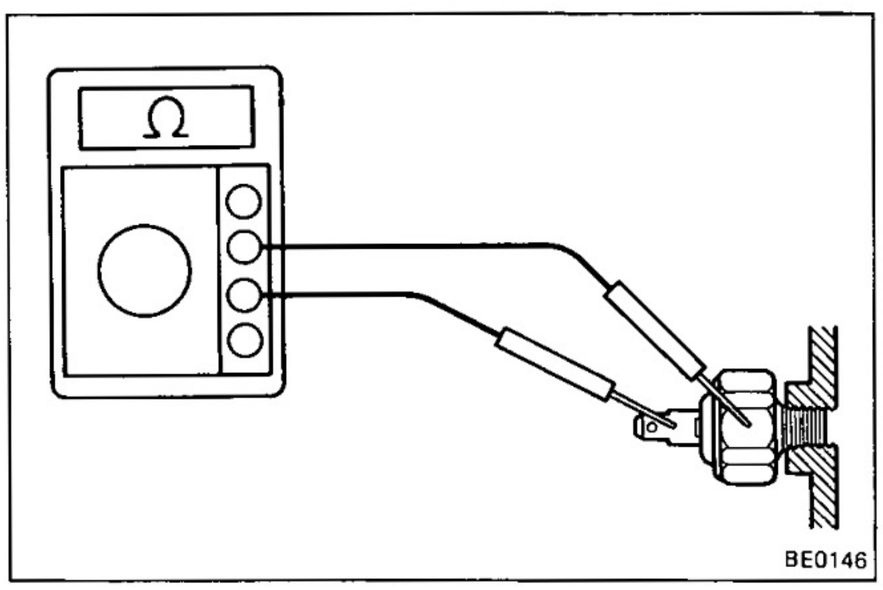

2. INSPECT WARNING SWITCH OPERATION

(a) Check that there is continuity between the terminal and body ground with the engine stopped.

(b) Check that there is no continuity between the terminal and body ground with the engine running.

NOTE: After the engine has started, oil pressure should be over 0.3 kg/cm^2 (4.3 psi, 29 kPa).

If operation is not correct, replace the switch.

Brake Warning

INSPECTION OF BRAKE WARNING

1. INSPECT WARNING LIGHT OPERATION

(a) Disconnect the connector from the switch. Connect the switch terminal and body ground.

(b) Turn the ignition or starter switch on. Check that the bulb lights.

If operation is not correct, remove and test the bulb.

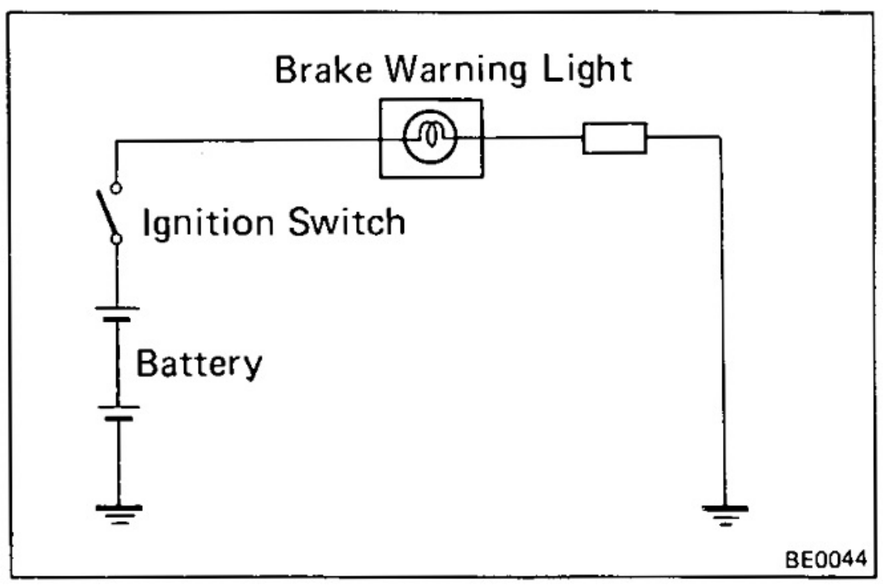

2. INSPECT BRAKE FLUID LEVEL WARNING SWITCH OPERATION

Inspect the switch operation when the switch is OFF (float up) and when the switch is ON (float down).

If operation is not correct, replace the switch.

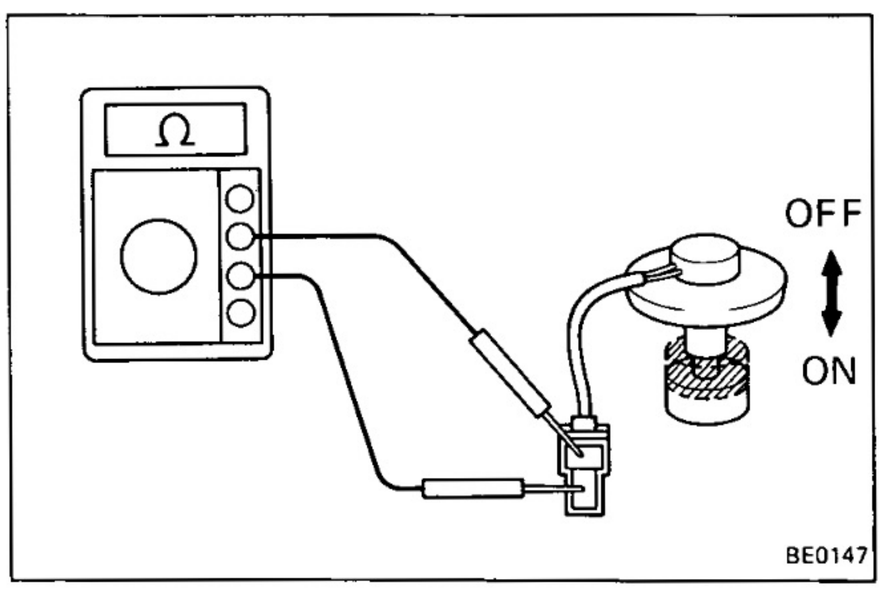

3. INSPECT PARKING BRAKE SWITCH OPERATION

(a) Check that there is continuity between the terminals with the parking brake lever pulled.

(b) Check that there is no continuity between the terminals with the parking brake lever returned.

If operation is not correct, replace the switch.

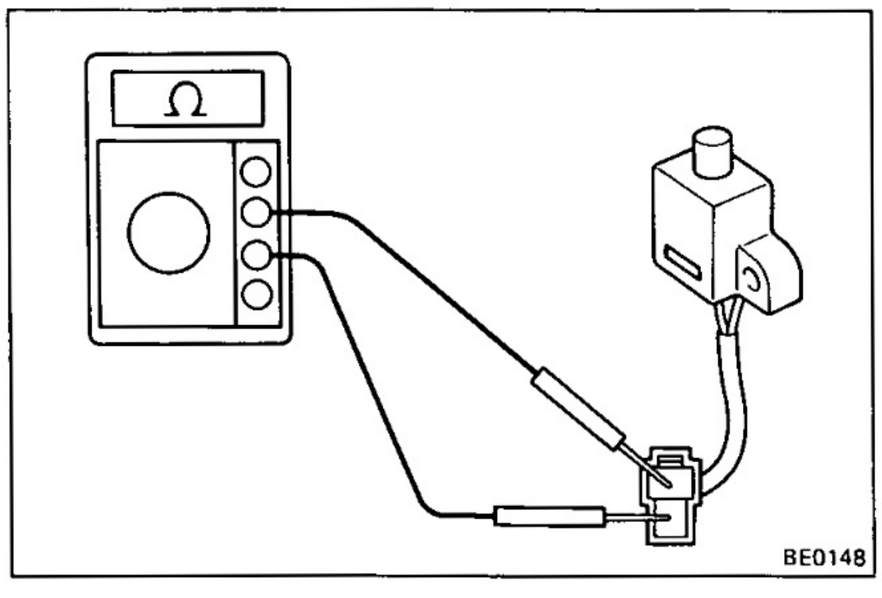

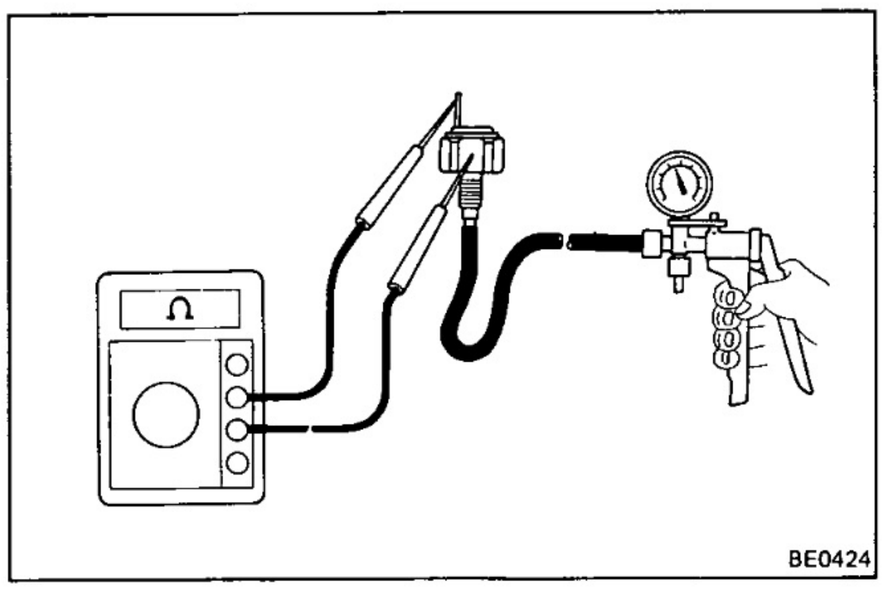

4. INSPECT VACUUM SWITCH OPERATION

(a) With a vacuum of 200 ± 40 mmHg (7.87 ± 1.57 in.Hg, 26.7 ± 5.3 kPa) or above, check that there is no continuity between the switch terminal and body.

(b) Check that there is continuity between the switch terminal and body ground with no vacuum.

If operation is not correct, replace the switch.

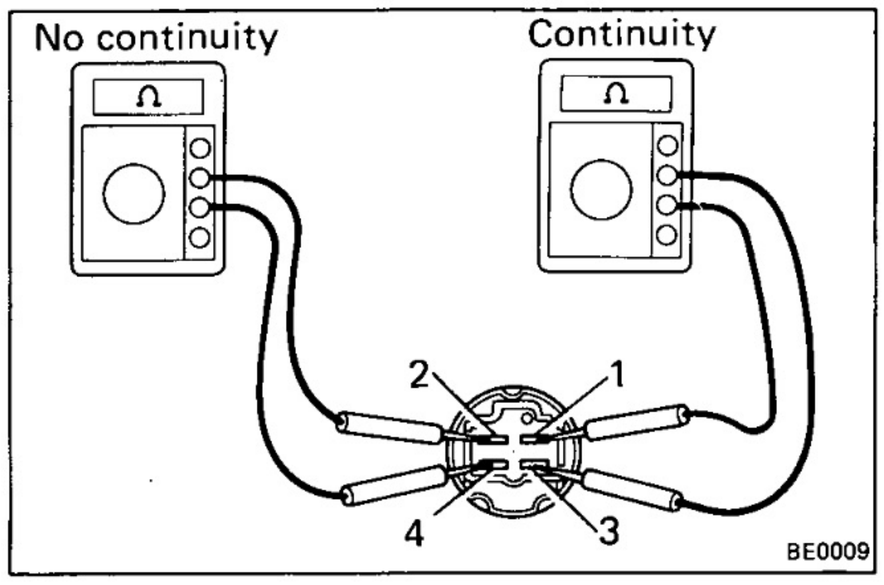

Bulb Check Relay (Australia only)

INSPECTION OF BULB CHECK RELAY

1. INSPECT RELAY CONTINUITY

(a) Check that there is continuity between terminals 1 and 3.

(b) Check that there is no continuity between terminals 2 and 4.

If continuity is not as specified, replace the relay.

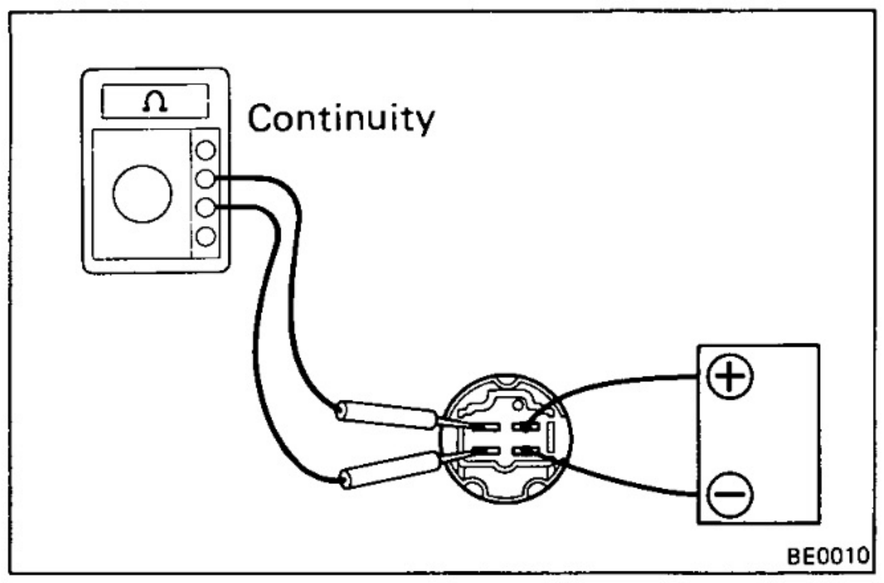

2. INSPECT RELAY OPERATION

Connect the positive (+) lead from the battery to terminal 1 and connect the negative (–) lead from the battery to terminal 3. Then, check that there is continuity between terminals 2 and 4.

If operation is not correct, replace the relay.

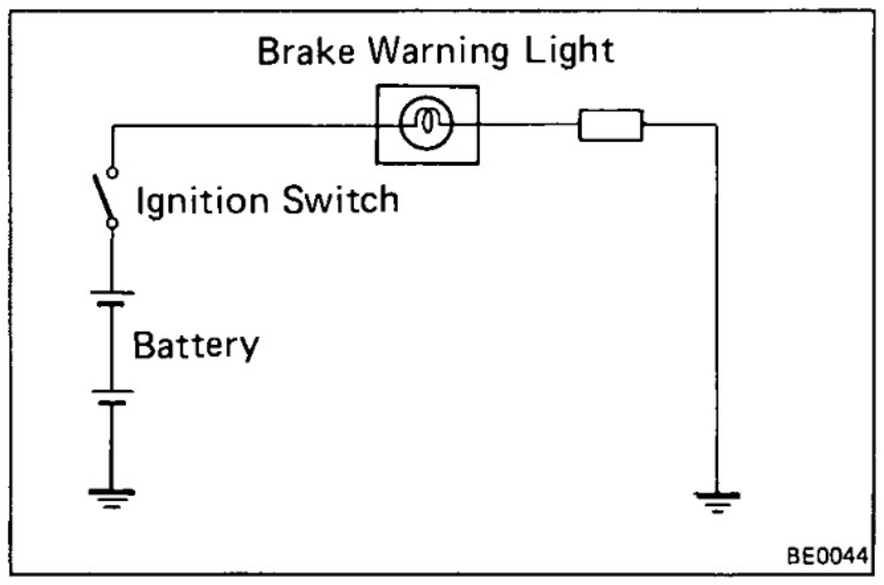

Parking Brake Warning (Australia only)

INSPECTION OF PARKING BRAKE WARNING

1. INSPECT WARNING LIGHT OPERATION

(a) Disconnect the connector from the switch. Connect the wire harness side connector terminal.

(b) Turn the ignition switch or starter switch on. Check that the warning light lights.

If operation is not correct, remove and test the bulb.

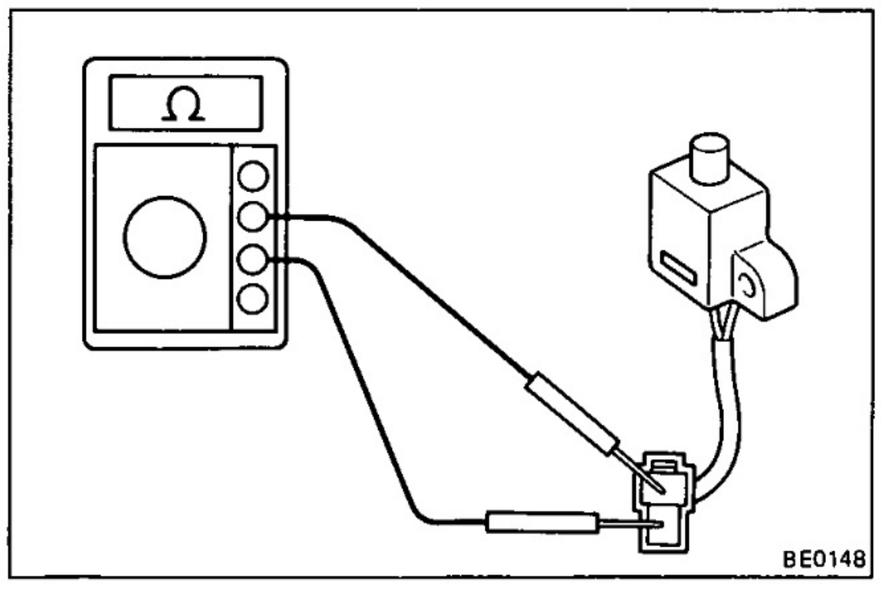

2. INSPECT PARKING BRAKE SWITCH OPERATION

(a) Check that there is continuity between the terminals with the parking brake lever pulled.

(b) Check that there is no continuity between the terminals with the parking brake lever returned.

If operation is not correct, replace the switch.

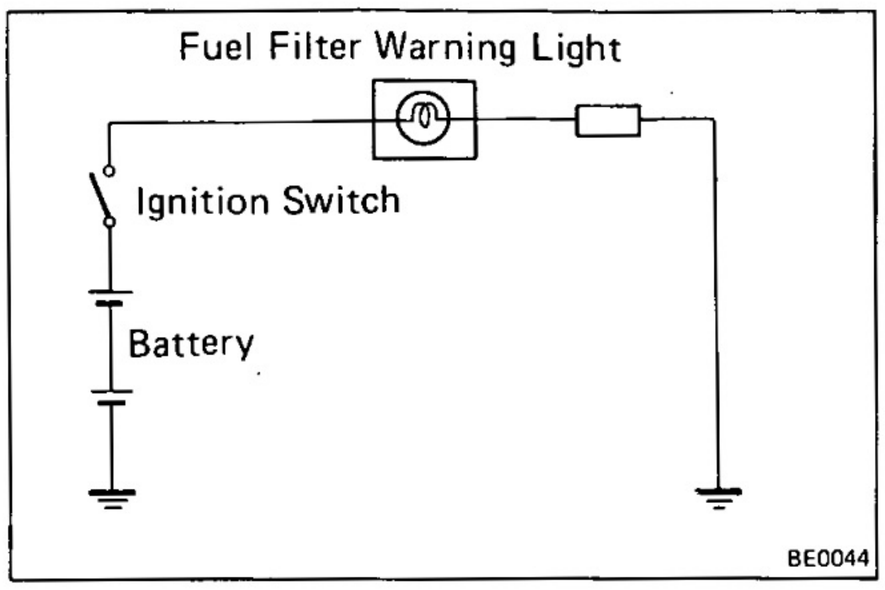

Fuel Filter Warning

INSPECTION OF FUEL FILTER WARNING

1. INSPECT WARNING LIGHT OPERATION

(a) Disconnect the connector from the switch. Connect the switch terminals.

(b) Turn the starter switch on. Check that the bulb lights.

If operation is not correct, remove and test the bulb.

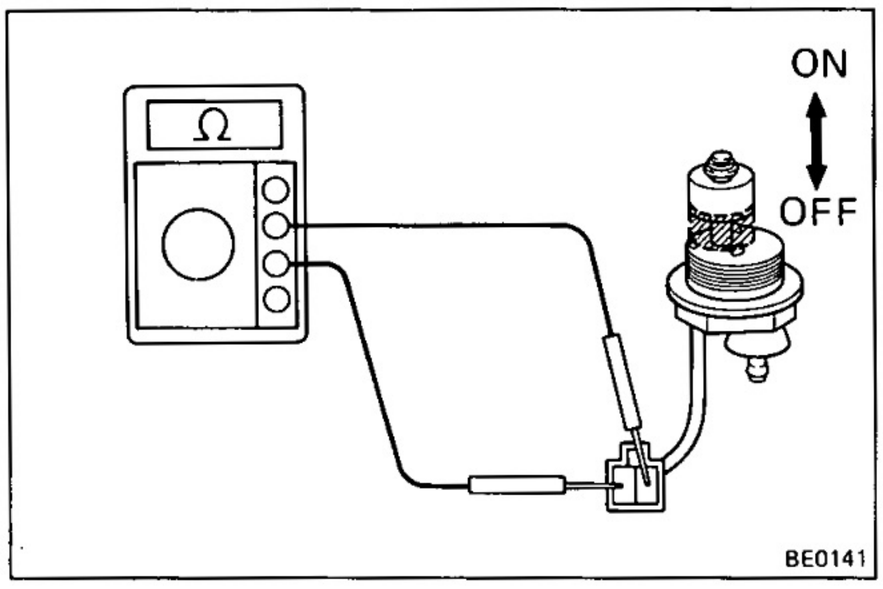

2. INSPECT WATER LEVEL WARNING SWITCH OPERATION

Inspect the switch operation when the switch is ON (float up) and when the switch is OFF (float down).

If operation is not correct, replace the switch.

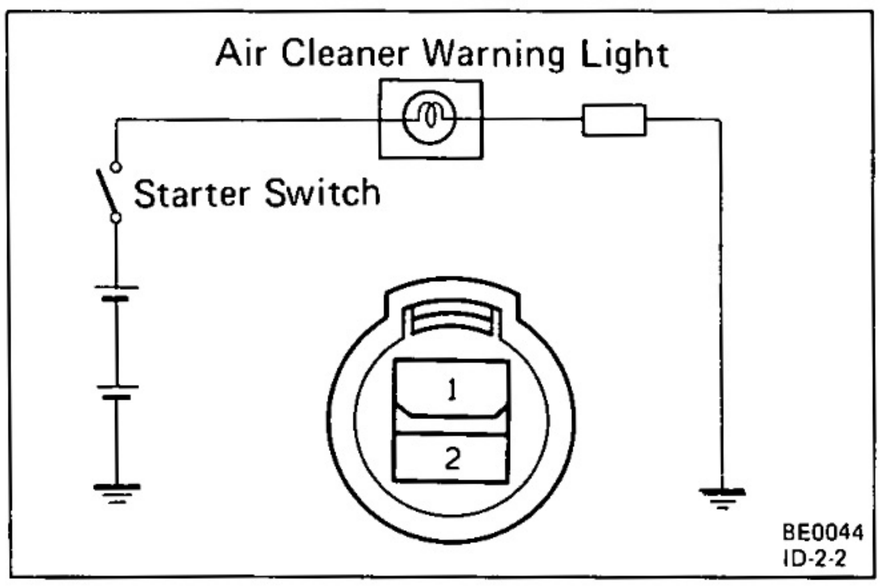

Air Cleaner Warning

INSPECTION OF AIR CLEANER WARNING

1. INSPECT WARNING LIGHT OPERATION

(a) Disconnect the connector from the vacuum sensor. Connect the wire harness side connector terminal 1 and body ground.

(b) Start the engine. Check that the bulb lights.

If operation is not correct, remove and test the bulb.

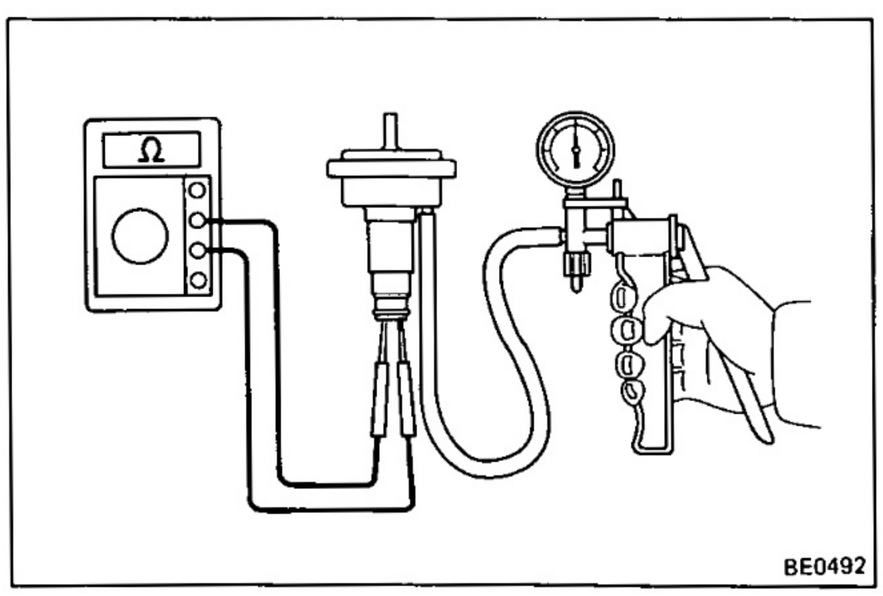

2. INSPECT VACUUM SENSOR OPERATION

(a) With a vacuum of 29.4 ± 3.7 mmHg (1.157 ± 0.146 in.Hg, 3.9 ± 0.5 kPa) or above, check that there is continuity between terminals.

(b) Check that there is no continuity between terminals with no vacuum.

If operation is not correct, replace the sensor.

REAR WINDOW DEFOGGER

Troubleshooting

Problem	Possible cause	Remedy	Page
Rear window defogger does not work	Ignition control relay faulty (60 series)	Check relay	BE-40
	DEFOG fuse blown	Replace fuse and check for short	BE-3
	Defogger switch faulty	Check switch	BE-40
	Defogger wire broken	Check wires	BE-41
	Wiring and ground faulty	Repair as necessary	

70 Series (Ex. Canada)

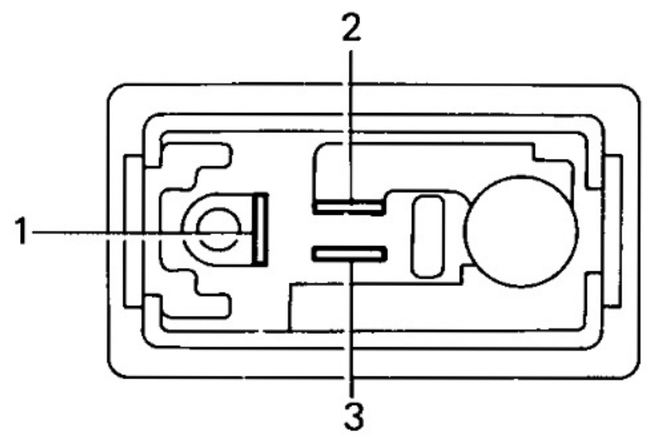

60 Series (Ex. USA and Canada)

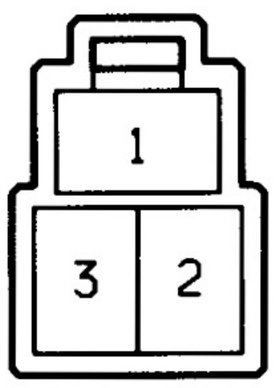

Canada 70 Series, USA and Canada 60 Series

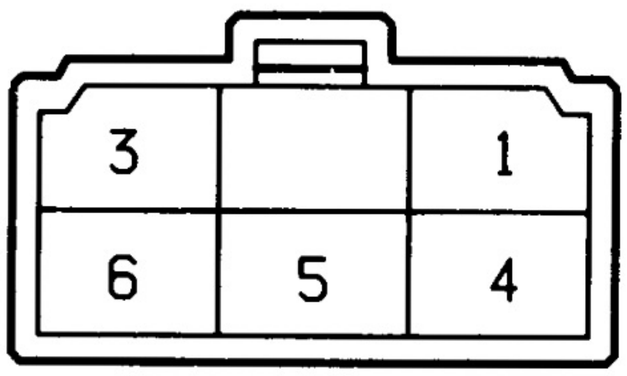

BE0712
H-3-2
H-6-2

Rear Window Defogger Switch

INSPECTION OF REAR WINDOW DEFOGGER SWITCH

INSPECT SWITCH CONTINUITY

Inspect continuity between the terminals.

60, 70 Series (Ex. USA and Canada)

Switch position \ Terminal	1	3	2
OFF		○	○
ON	○	○	○

Canada 70 Series, USA and Canada 60 Series

Switch position \ Terminal	3	1	5	Illumination 4	Illumination 6
OFF		○	○	○	○
ON	○	○	○	○	○

If the continuity is not as shown above, replace the switch or bulb.

Ignition Control Relay (60 Series only)

(See Rear Fog Light Relay on page BE-18)

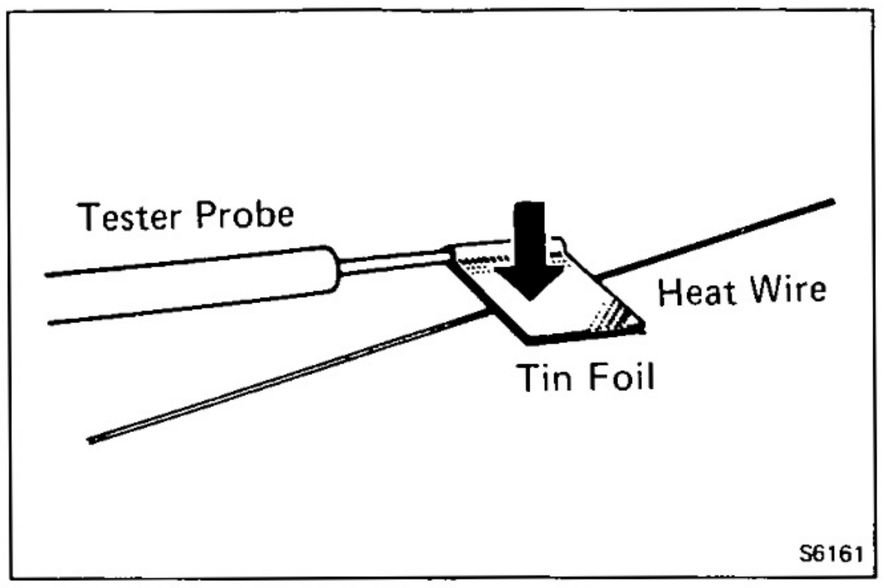

Rear Window Defogger Wires

CAUTION:

- When cleaning the glass, use a soft, dry cloth, and wipe the glass in the direction of the wire. Take care not to damage the wires.
- Do not use detergents or glass cleaners with abrasive ingredients.
- When measuring voltage, wind a piece of tin foil around the tip of the negative probe and press the foil against the wire with your finger as shown.

INSPECTION OF REAR WINDOW DEFOGGER WIRES

1. INSPECT FOR WIRE BREAKAGE

(a) Turn the ignition switch to ON.

(b) Turn the defogger switch to ON.

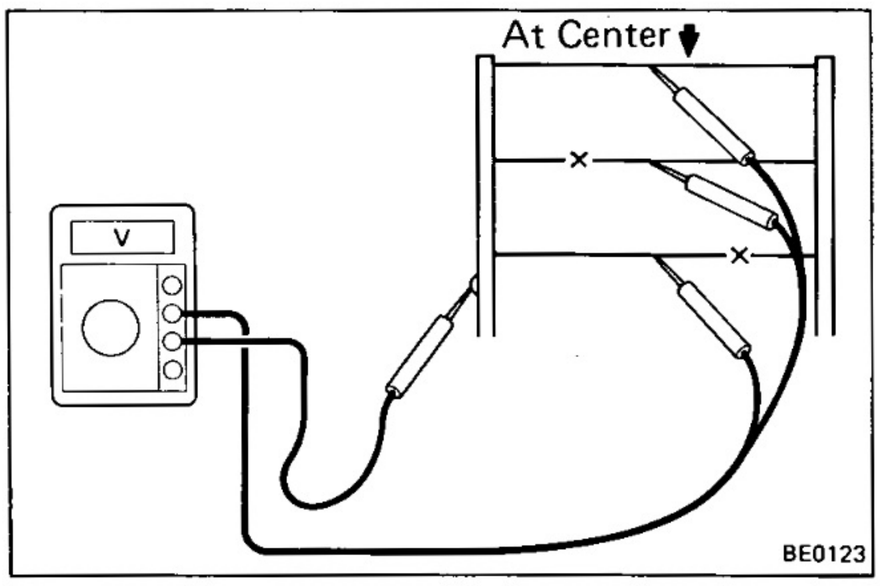

(c) Inspect the voltage at the center of each heat wire as shown.

Voltage	Criteria
Approx. 5V	Okay (No break in wire)
Approx. 10V or 0V	Broken wire

NOTE: If there are 10V, the wire is broken between the center of the wire and positive (+) end. If there is no voltage, the wire is broken between the center of the wire and ground.

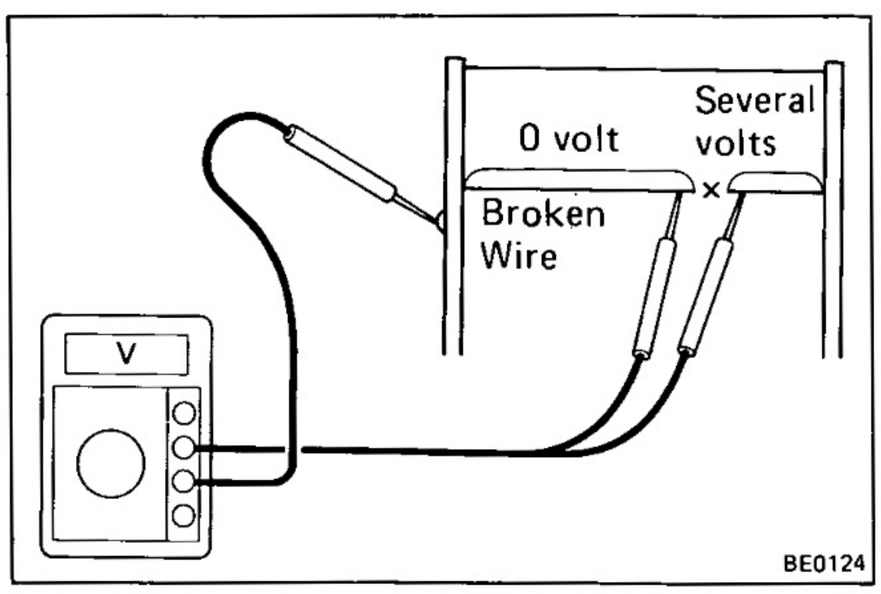

2. INSPECT FOR WIRE BREAKAGE POINT

(a) Place the voltmeter positive (+) lead against the defogger positive (+) terminal.

(b) Place the voltmeter negative (—) lead with the foil strip against the heat wire at the positive (+) terminal end and slide it toward the negative (—) terminal end.

(c) The point where the voltmeter deflects from zero to several volts is the place where the heat wire is broken.

NOTE: If the heat wire is not broken, the voltmeter will indicate 0V at the positive (+) end of the heat wire but gradually increase to about 12V as the meter probe is moved to the other end.

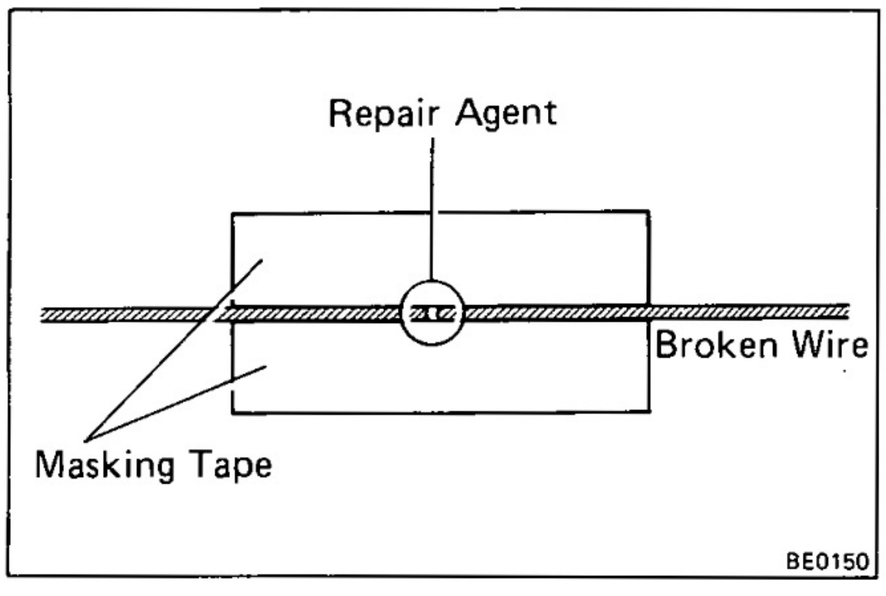

REPAIR OF REAR WINDOW DEFOGGER WIRES

1. CLEAN BROKEN WIRE TIPS WITH WHITE GASOLINE
2. PLACE MASKING TAPE ALONG BOTH SIDES OF WIRE TO BE REPAIRED

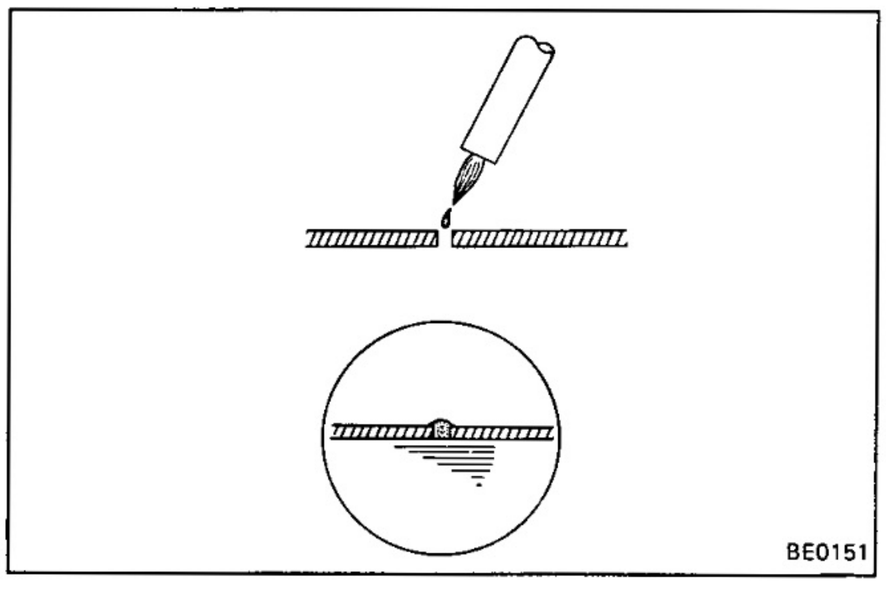

3. REPAIR DEFOGGER WIRES
   (a) Thoroughly mix the repair agent (Dupont paste No. 4817).
   (b) Using a fine tip brush, apply a small amount to the wire.
   (c) After a couple of minutes, remove the masking tape.
   (d) Allow to stand at least 24 hours.

HEATER (60 Series)

Troubleshooting

Problem	Possible cause	Remedy	Page	
			Front	Rear
Blower does not work when fan switch is on	Heater circuit breaker OFF	Reset breaker and check for short	BE-4	BE-4
	Heater relay faulty	Check relay	BE-43	
	Heater blower switch faulty	Check switch	BE-43	BE-46
	Heater blower resistor faulty	Check resistor	BE-44	
	Heater blower motor faulty	Replace motor		
	Wiring or ground faulty	Repair as necessary		
Incorrect temperature output	Control cables broken or binding	Check cables	BE-44	
	Heater hoses leaking or clogged	Replace hose		
	Water valve faulty	Replace valve		
	Air dampers broken	Repair dampers		
	Air ducts clogged	Repair ducts		
	Heater radiator leaking or clogged	Replace radiator		
	Heater control unit faulty	Repair control unit		

Front Heater Blower Switch

INSPECTION OF HEATER BLOWER SWITCH

INSPECT SWITCH CONTINUITY

Inspect the switch continuity between terminals.

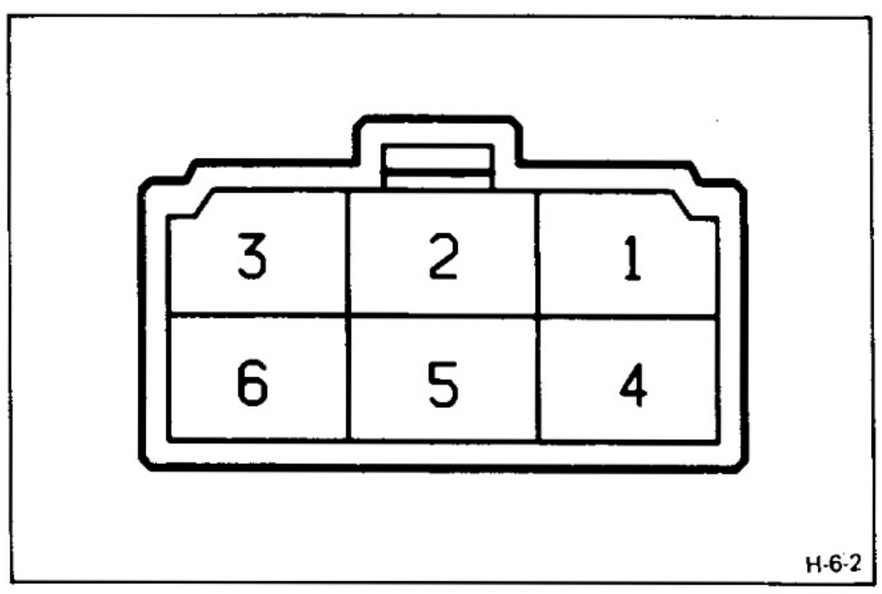

Switch position \ Terminal	3	4	2	1	6	5
OFF						
I	○	○	○			
II	○	○		○		
III	○	○			○	
IV (Hi)	○	○				○

If continuity is not as specified, replace the switch.

Front Heater Relay

INSPECTION OF HEATER RELAY

1. INSPECT RELAY CONTINUITY

(a) Check that there is continuity between terminals 1 and 3.

(b) Check that there is continuity between terminals 2 and 4.

(c) Check that there is no continuity between terminals 4 and 5.

If continuity is not as specified, replace the relay.

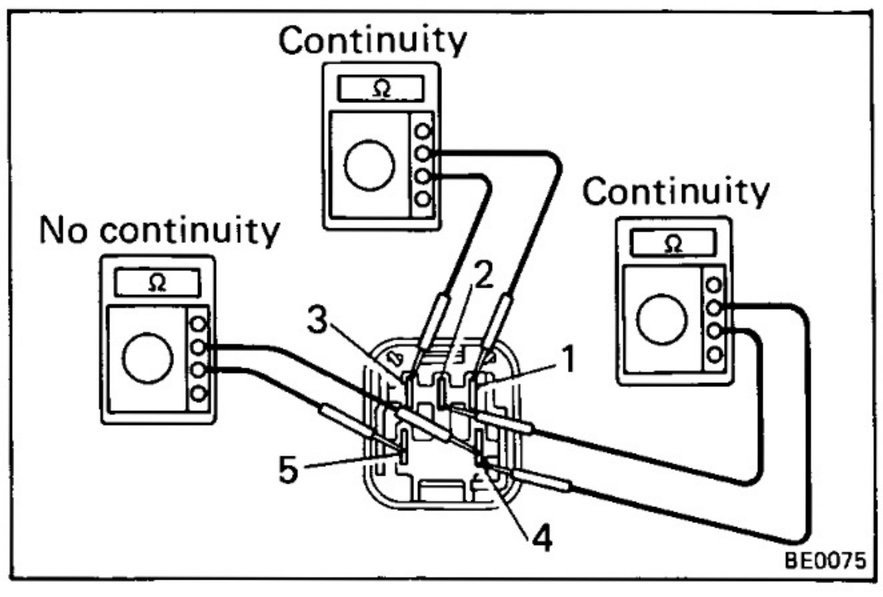

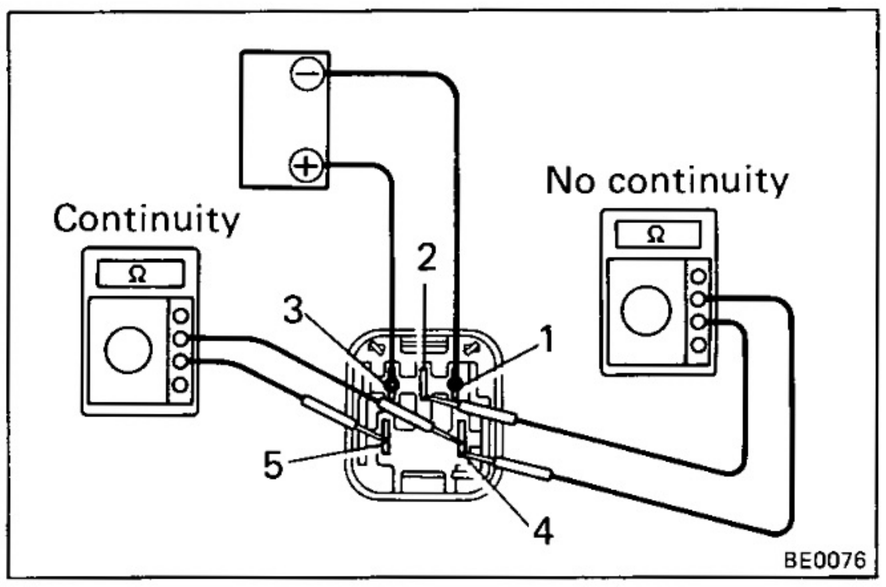

2. INSPECT RELAY OPERATION

(a) Apply battery voltage across terminals 1 and 3.

(b) Check that there is continuity between terminals 4 and 5.

(c) Check that there is no continuity between terminals 2 and 4.

If operation is not as specified, replace the relay.

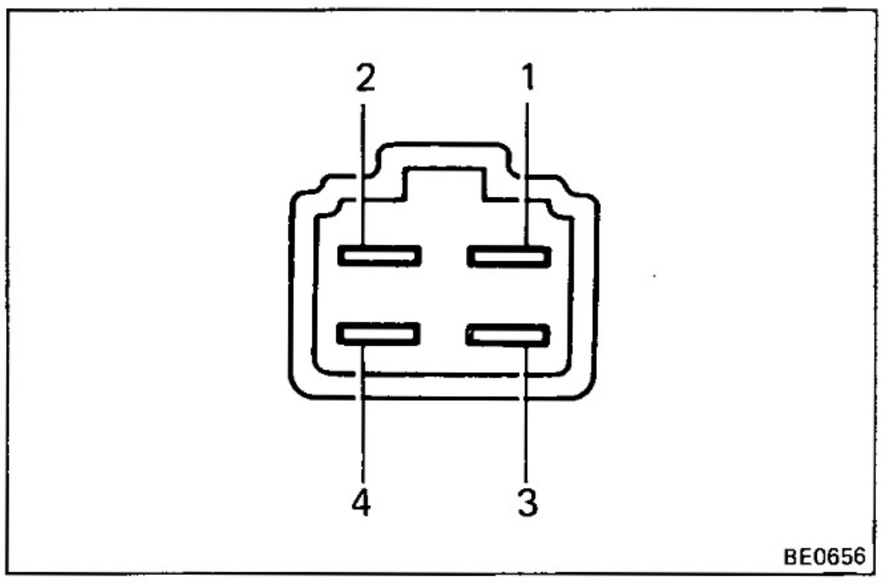

Front Heater Blower Resistor

INSPECTION OF HEATER BLOWER RESISTOR

INSPECT RESISTOR CONTINUITY

(a) Check that there is continuity between terminals 1 and 2.

(b) Check that there is continuity between terminals 1 and 3.

(c) Check that there is continuity between terminals 1 and 4.

If continuity is not as specified, replace the resistor.

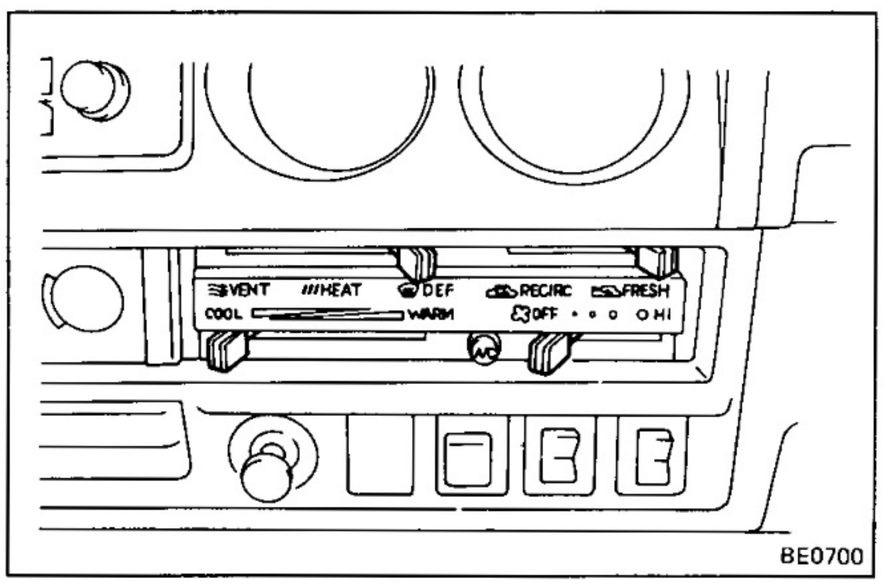

Front Heater Control

INSPECTION OF FRONT HEATER CONTROL

INSPECT HEATER CONTROL OPERATION

Move the control levers right and left, and check for stiffness and binding through the levers full range of operation.

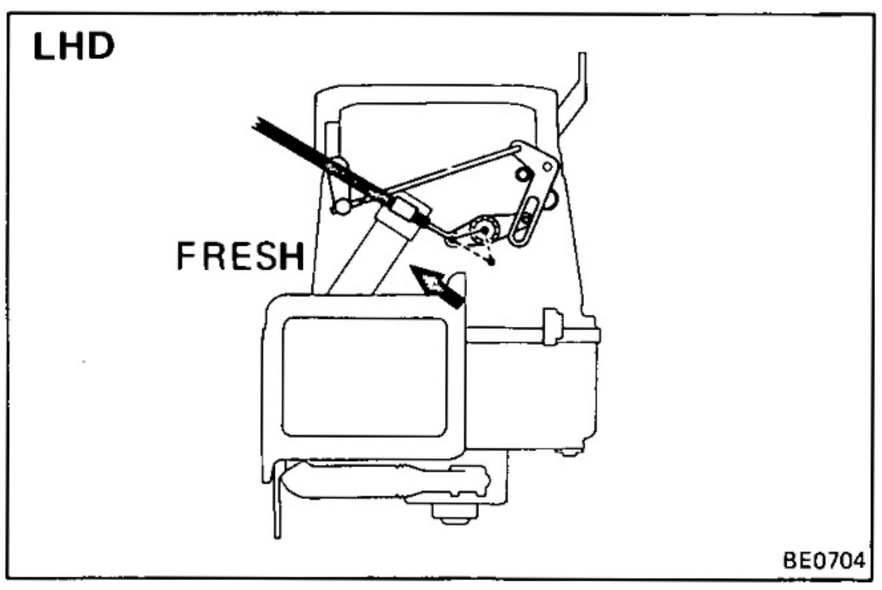

ADJUSTMENT OF FRONT HEATER CONTROL

1. ADJUST AIR INLET DAMPER

Set the air damper and control lever to "FRESH."

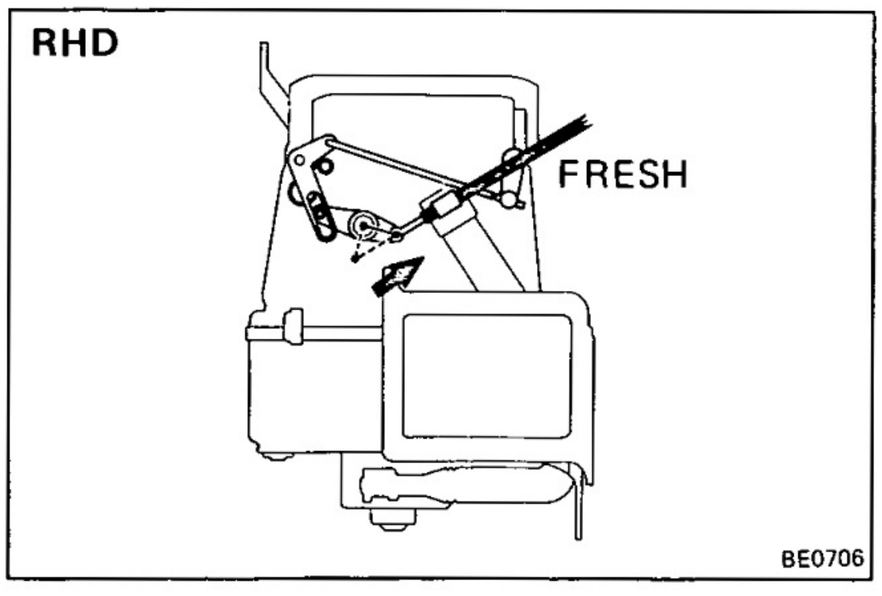

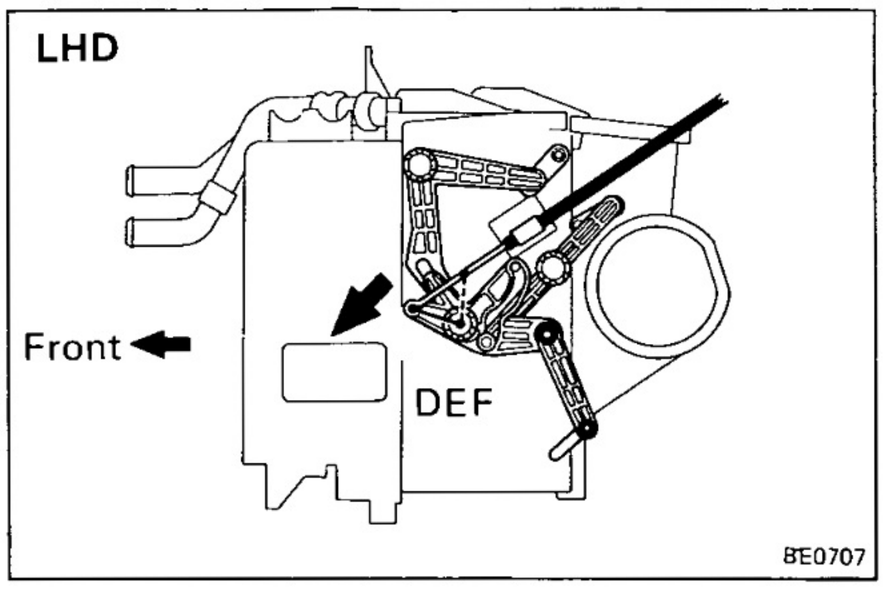

2. ADJUST MODE SELECTOR DAMPER

Set the mode selector and control lever to "DEF."

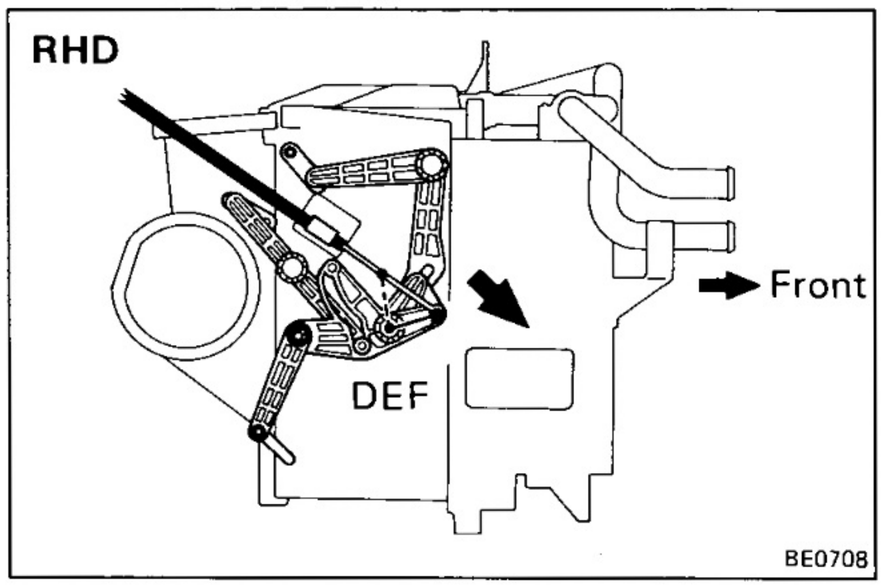

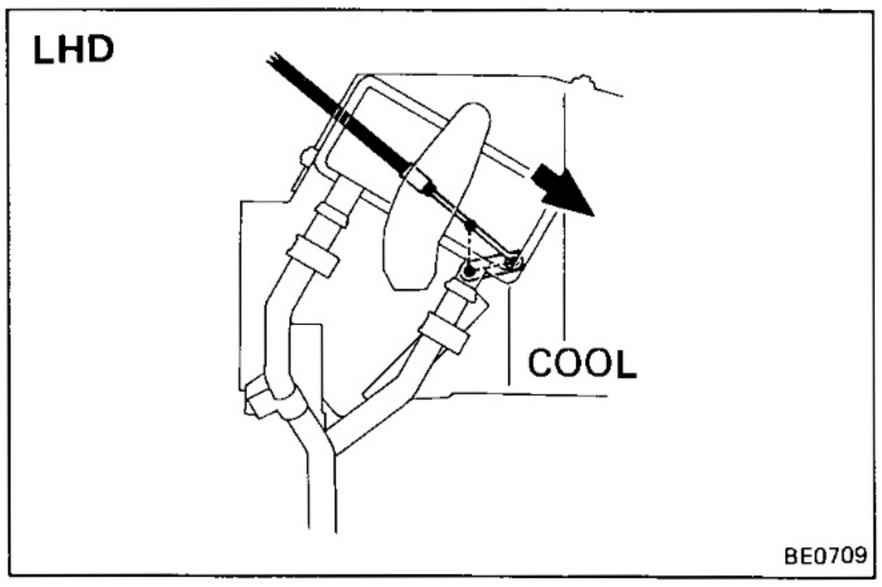

3. ADJUST AIR MIX DAMPER

Set the air mix damper and control lever to "COOL."

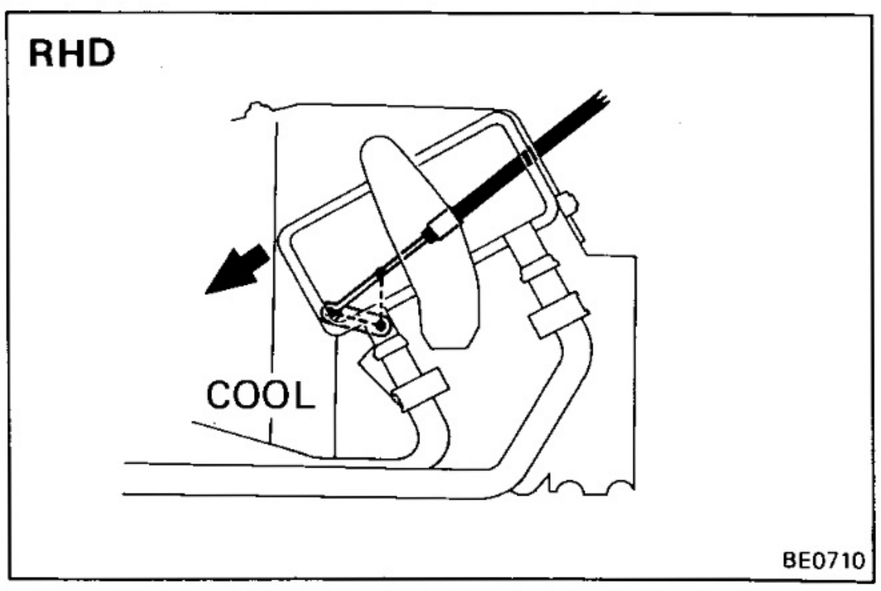

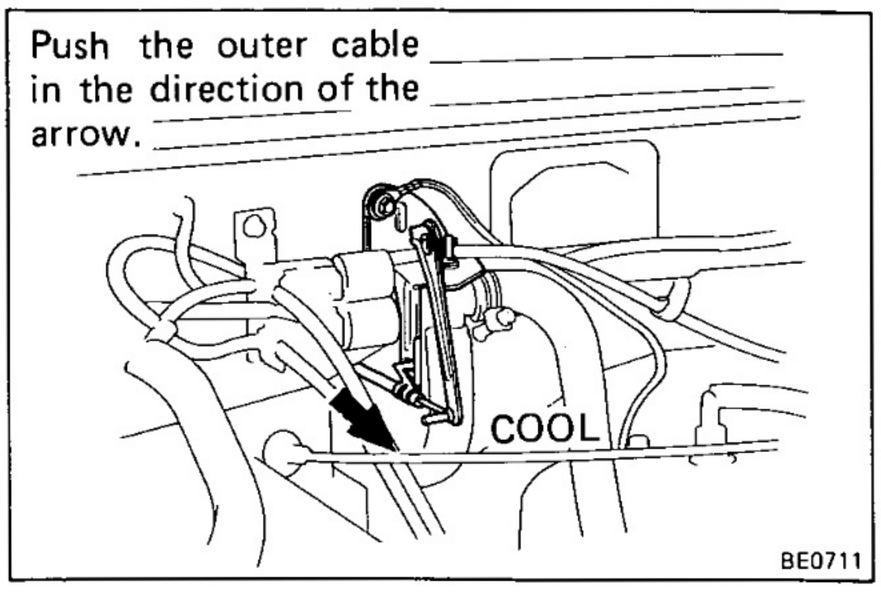

4. ADJUST WATER VALVE

Set the water valve and control lever to "COOL."

NOTE: Place the water valve lever on "COOL" and while pushing the outer cable in the "COOL" direction, clamp the outer cable to the water valve bracket.

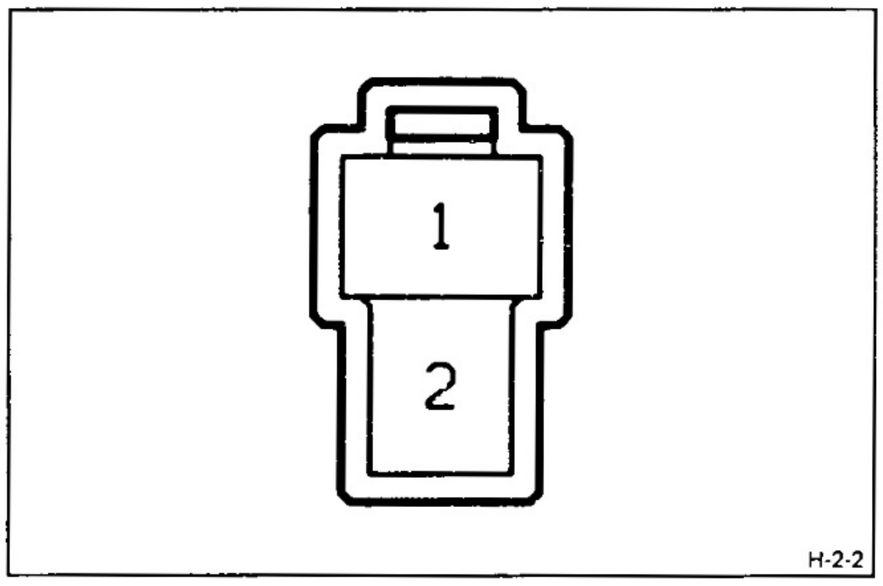

Rear Heater Blower Switch

INSPECTION OF HEATER BLOWER SWITCH

INSPECT SWITCH CONTINUITY

Inspect the switch continuity between terminals.

Switch position \ Terminal	1	2
OFF		
ON	○	○

If continuity is not as specified, replace the switch.

(70 Series)
Troubleshooting

Problem	Possible cause	Remedy	Page	
			Front	Rear
Blower does not work when fan switch is on	Heater circuit breaker OFF	Reset breaker and check for short	BE-4	BE-4
	Heater relay faulty	Check relay	BE-47	BE-50
	Heater blower switch faulty	Check switch	BE-47	BE-50
	Heater blower resistor faulty	Check resistor	BE-48	BE-50
	Heater blower motor faulty	Replace motor		
	Wiring or ground faulty	Repair as necessary		
Incorrect temperature output	Control cables broken or binding	Check cables	BE-48	
	Heater hoses leaking or clogged	Replace hose		
	Water valve faulty	Replace valve		
	Air dampers broken	Repair dampers		
	Air ducts clogged	Repair ducts		
	Heater radiator leaking or clogged	Replace radiator		
	Heater control unit faulty	Repair control unit		

Front Heater Blower Switch

INSPECTION OF HEATER BLOWER SWITCH

INSPECT SWITCH CONTINUITY

Inspect the switch continuity between terminals.

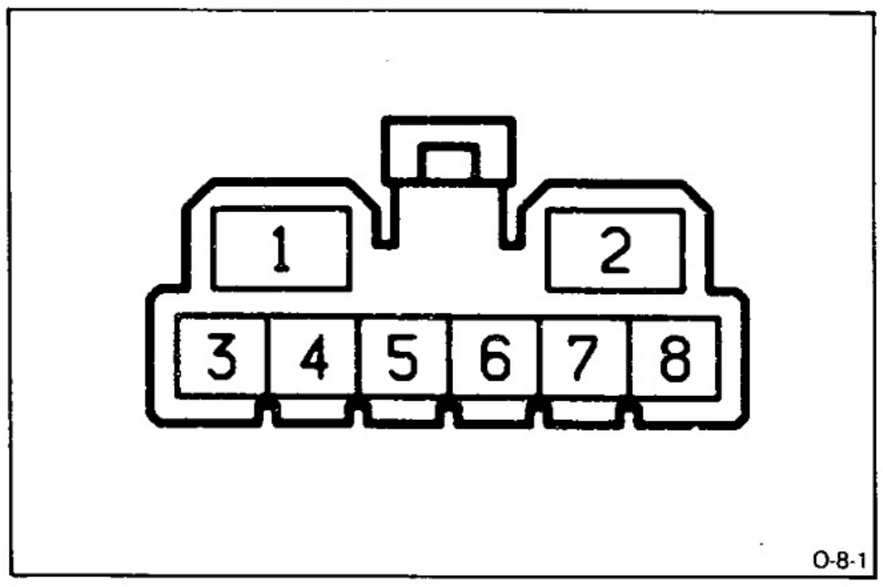

Switch position \ Terminal	2	3	4	5	6	1
OFF						
I	○	○	○			
II	○	○		○		
III	○	○			○	
IV (Hi)	○	○				○

If continuity is not as specified, replace the switch.

Front Heater Relay

INSPECTION OF HEATER RELAY

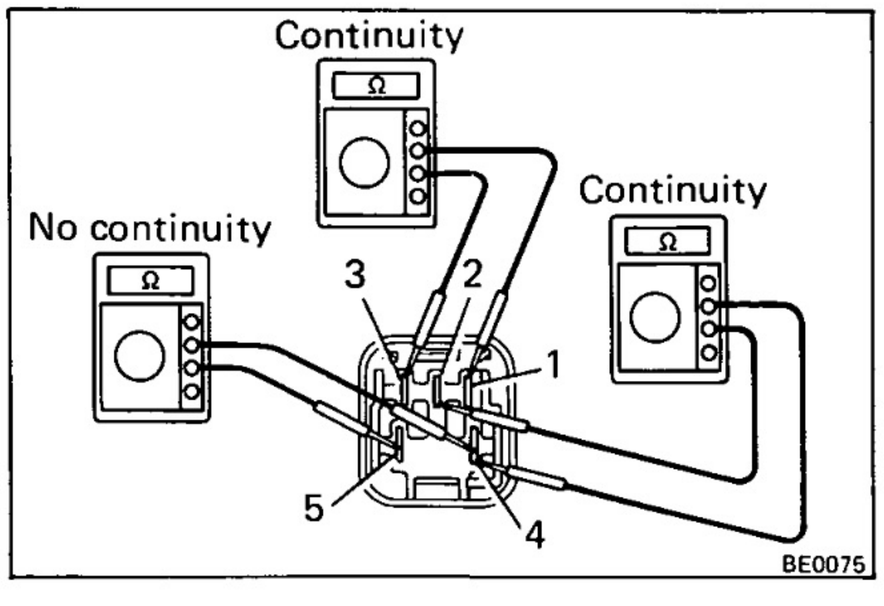

1. INSPECT RELAY CONTINUITY

(a) Check that there is continuity between terminals 1 and 3.

(b) Check that there is continuity between terminals 2 and 4.

(c) Check that there is no continuity between terminals 4 and 5.

If continuity is not as specified, replace the relay.

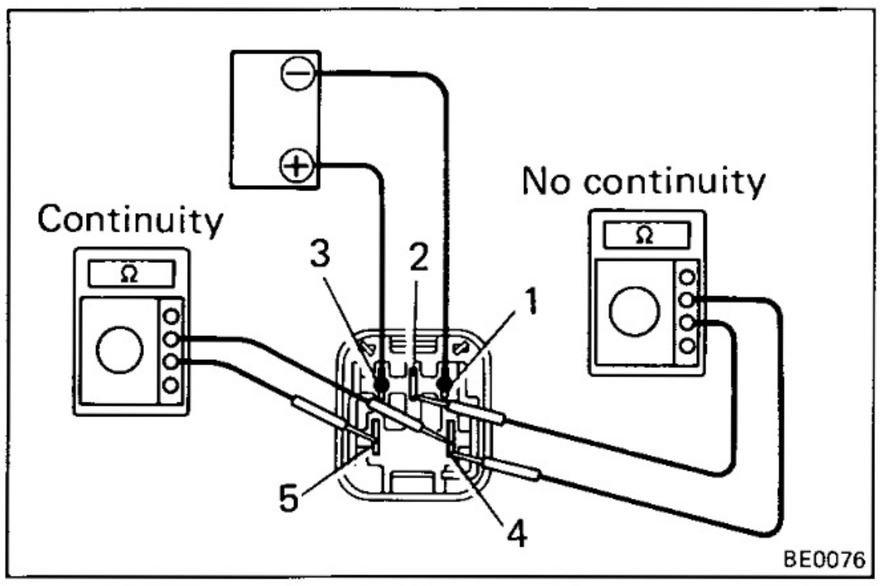

2. INSPECT RELAY OPERATION

(a) Apply battery voltage across terminals 1 and 3.

(b) Check that there is continuity between terminals 4 and 5.

(c) Check that there is no continuity between terminals 2 and 4.

If operation is not as specified, replace the relay.

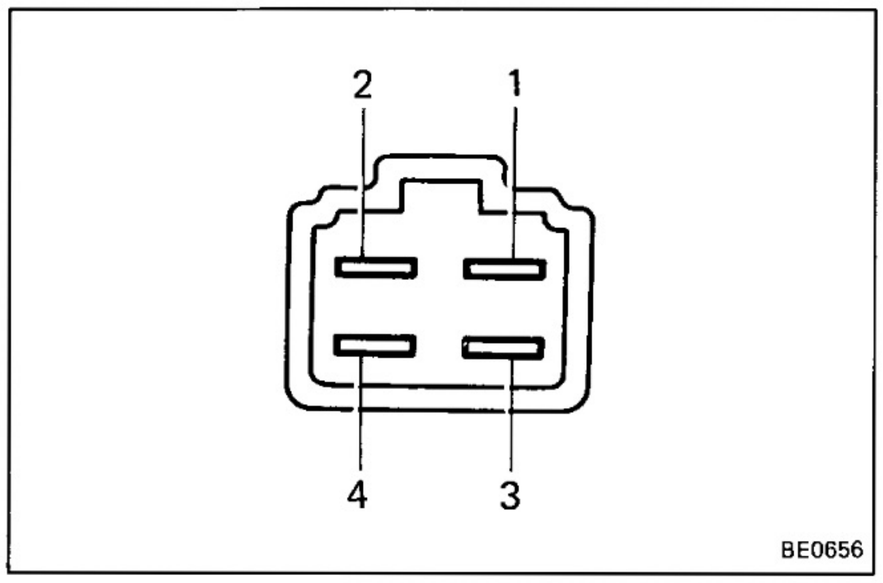

Front Heater Blower Resistor

INSPECTION OF HEATER BLOWER RESISTOR

INSPECT RESISTOR CONTINUITY

(a) Check that there is continuity between terminals 1 and 2.

(b) Check that there is continuity between terminals 1 and 3.

(c) Check that there is continuity between terminals 1 and 4.

If continuity is not as specified, replace the resistor.

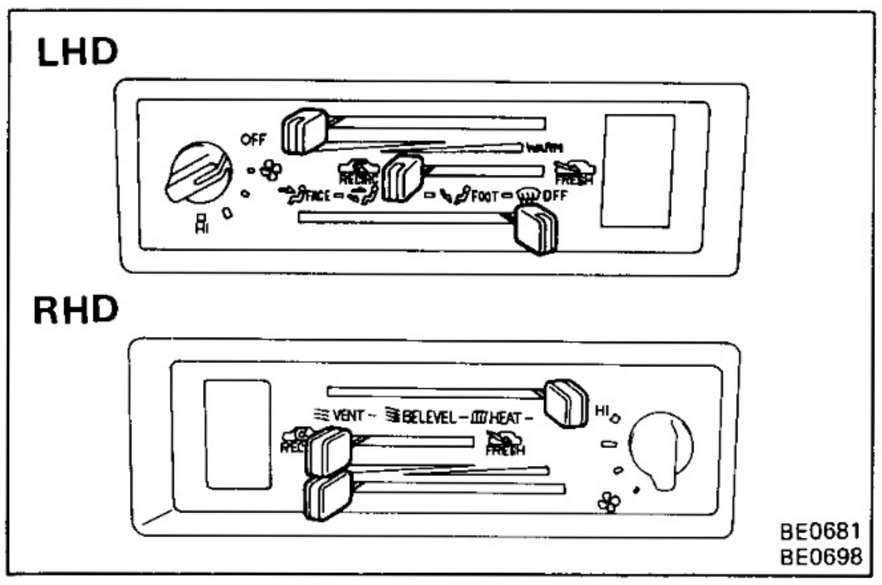

Front Heater Control

INSPECTION OF FRONT HEATER CONTROL

INSPECT HEATER CONTROL OPERATION

Move the control levers right and left, and check for stiffness and binding through the levers full range of operation.

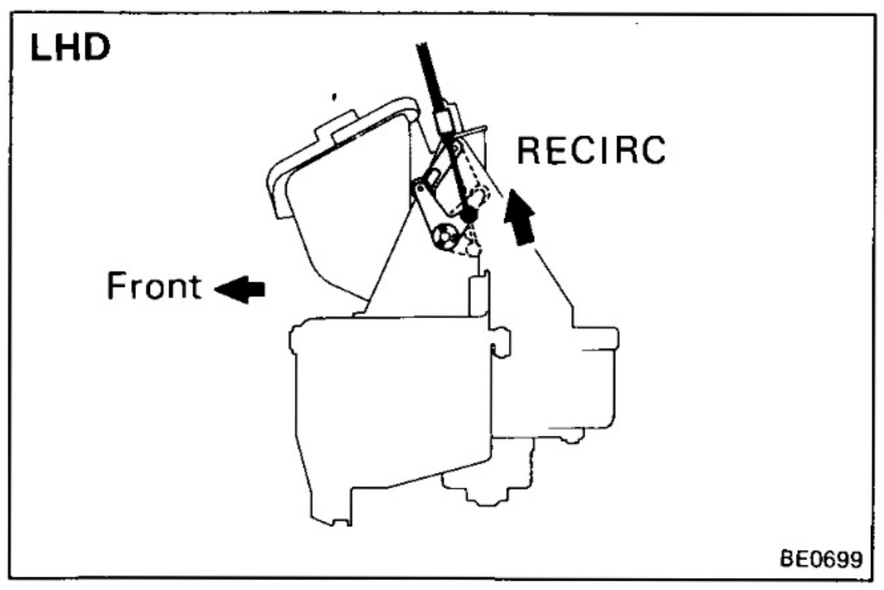

ADJUSTMENT OF FRONT HEATER CONTROL

1. ADJUST AIR INLET DAMPER

Set the air damper and control lever to "RECIRC."

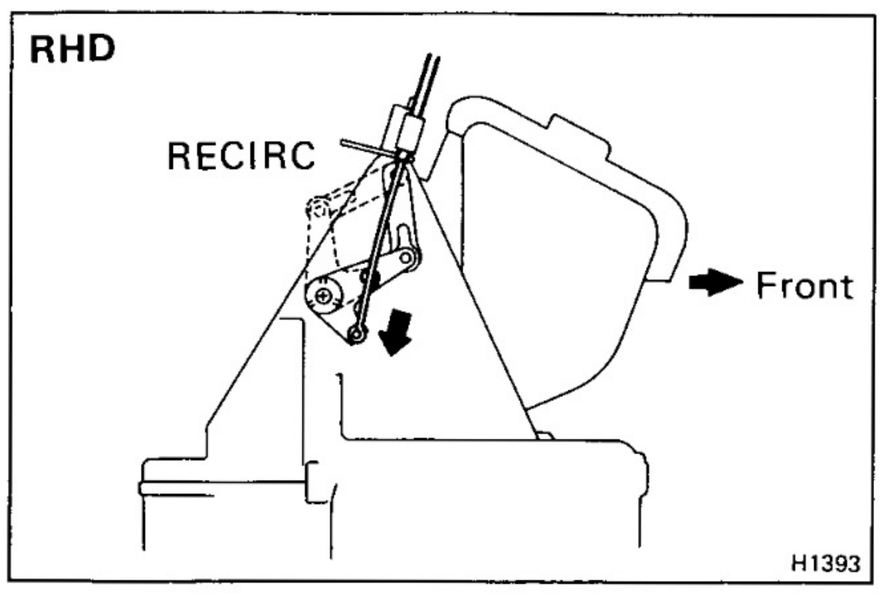

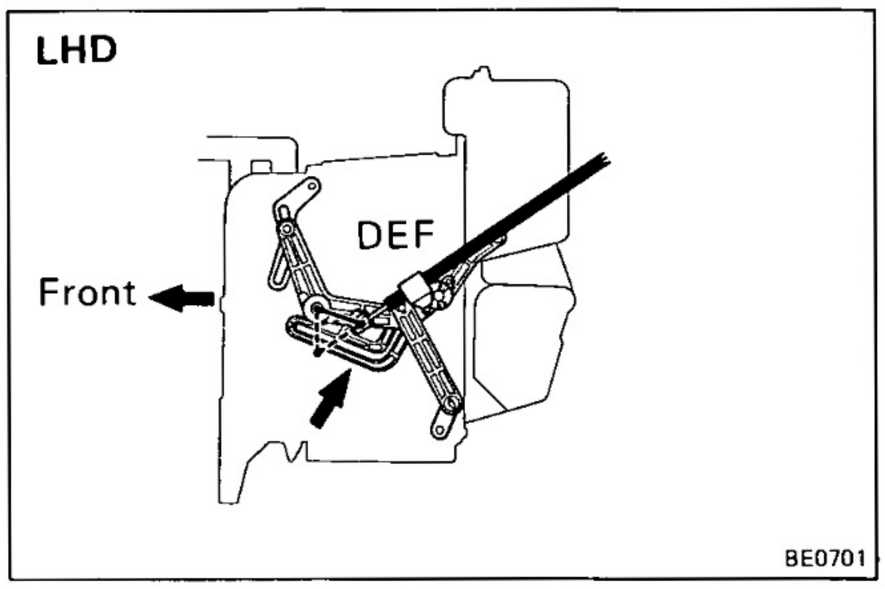

2. ADJUST MODE SELECTOR DAMPER

Set the mode selector and control lever to "DEF."

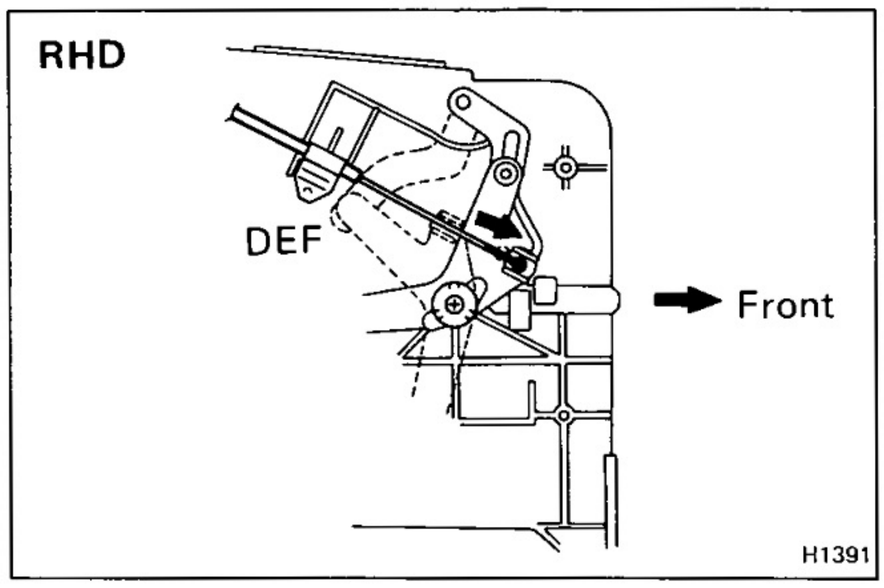

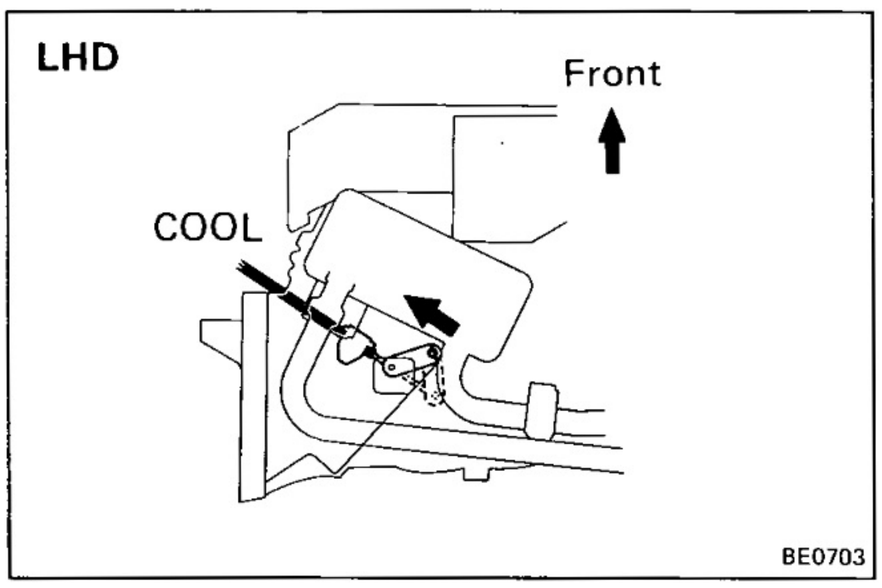

3. ADJUST AIR MIX DAMPER

Set the air mix damper and control lever to "COOL."

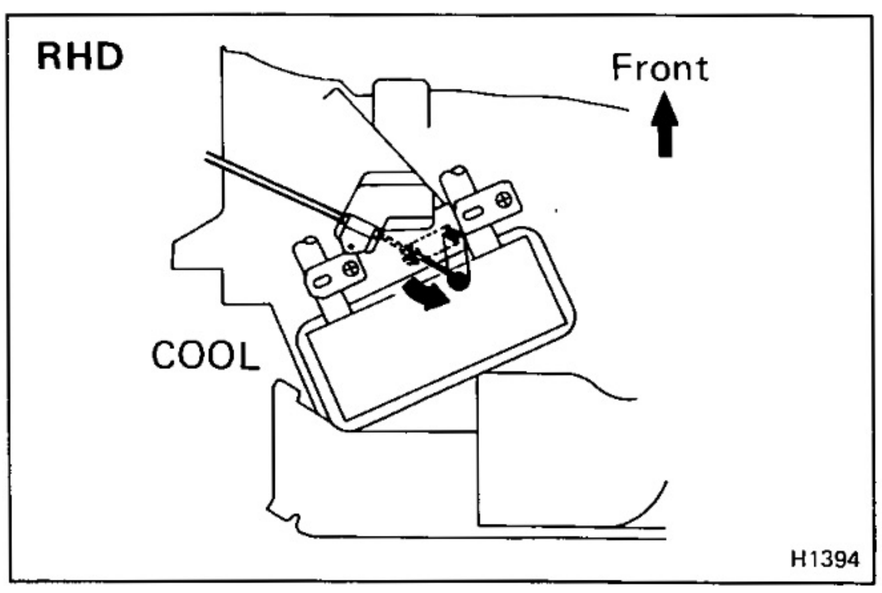

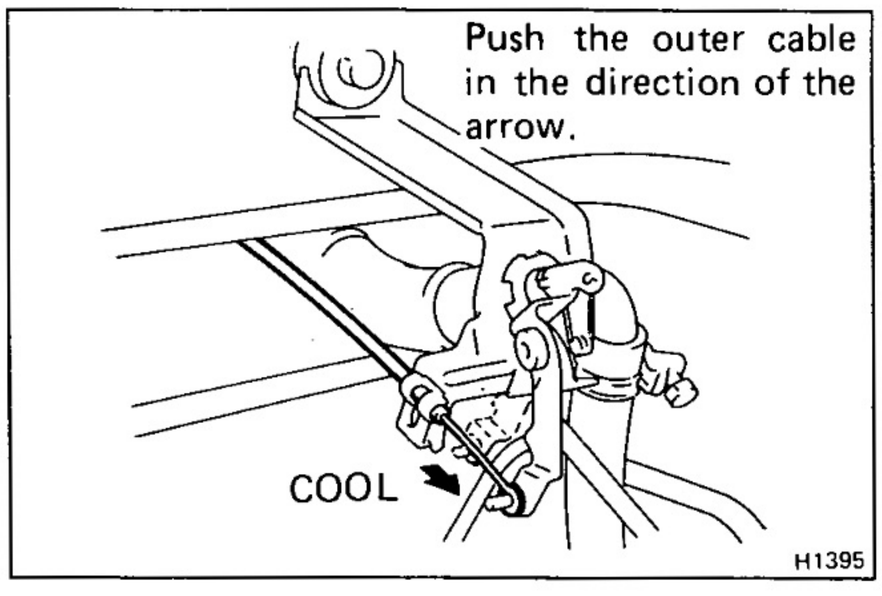

4. ADJUST WATER VALVE

Set the water valve and control lever to "COOL."

NOTE: Place the water valve lever on "COOL" and while pushing the outer cable in the "COOL" direction, clamp the outer cable to the water valve bracket.

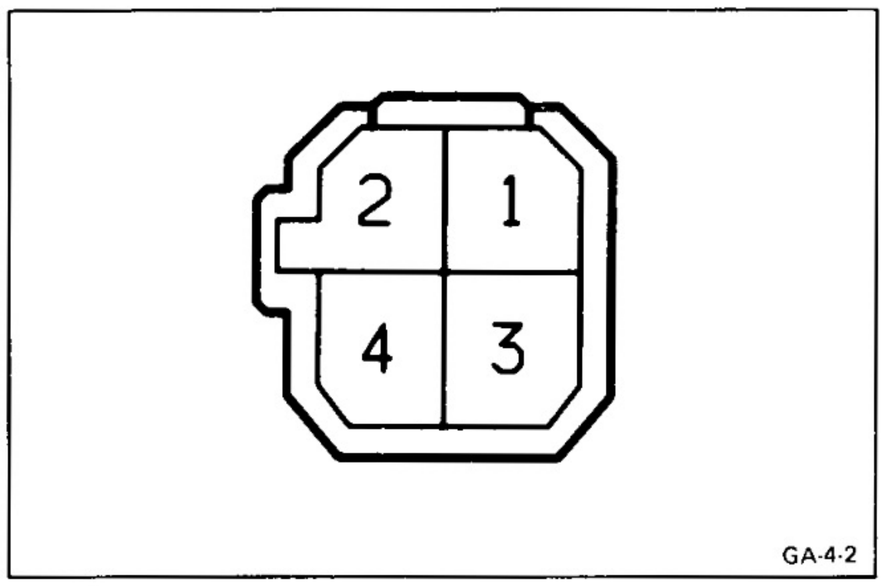

Rear Heater Blower Switch

INSPECTION OF HEATER BLOWER SWITCH

INSPECT SWITCH CONTINUITY

Inspect the switch continuity between terminals.

Switch position \ Terminal	1	2	3	4
HI	○	○		○
OFF				
LO		○	○	○

If continuity is not as specified, replace the switch.

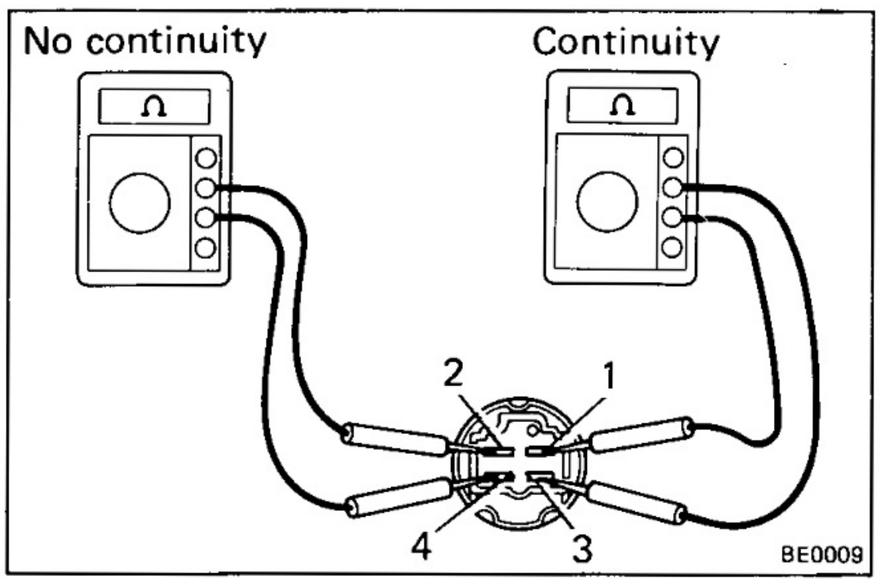

Rear Heater Relay

INSPECTION OF HEATER RELAY

1. INSPECT RELAY CONTINUITY

(a) Check that there is continuity between terminals 1 and 3.

(b) Check that there is no continuity between terminals 2 and 4.

If continuity is not as specified, replace the relay.

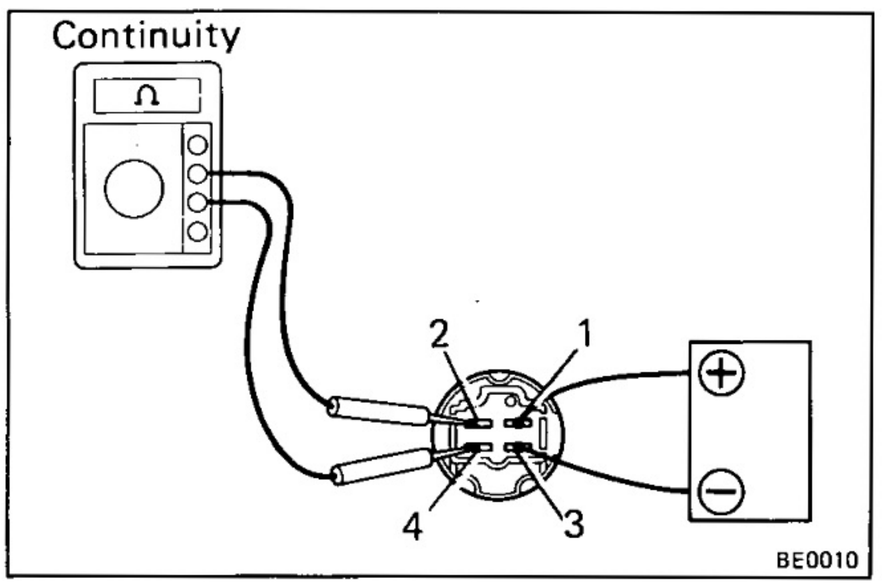

2. INSPECT RELAY OPERATION

Check that there is continuity between terminals 2 and 4 with battery voltage applied between terminals 1 and 3.

If there is no continuity, replace the relay.

Rear Heater Blower Resistor

INSPECTION OF HEATER BLOWER RESISTOR

INSPECT RESISTOR CONTINUITY

(a) Check that there is continuity between terminals 1 and 4.

(b) Check that there is continuity between terminals 2 and 3.

(c) Check that there is continuity between terminals 3 and 5.

If there is no continuity, replace the resistor.

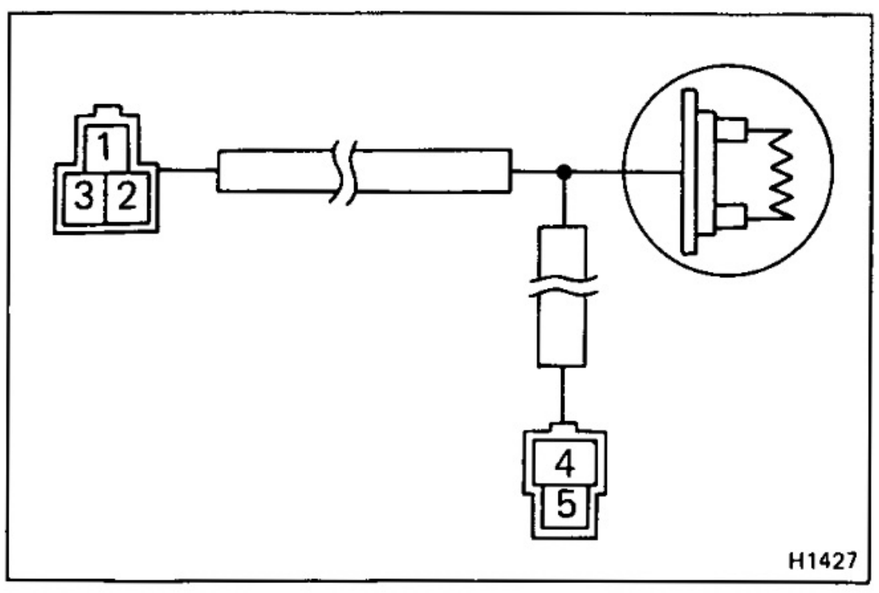

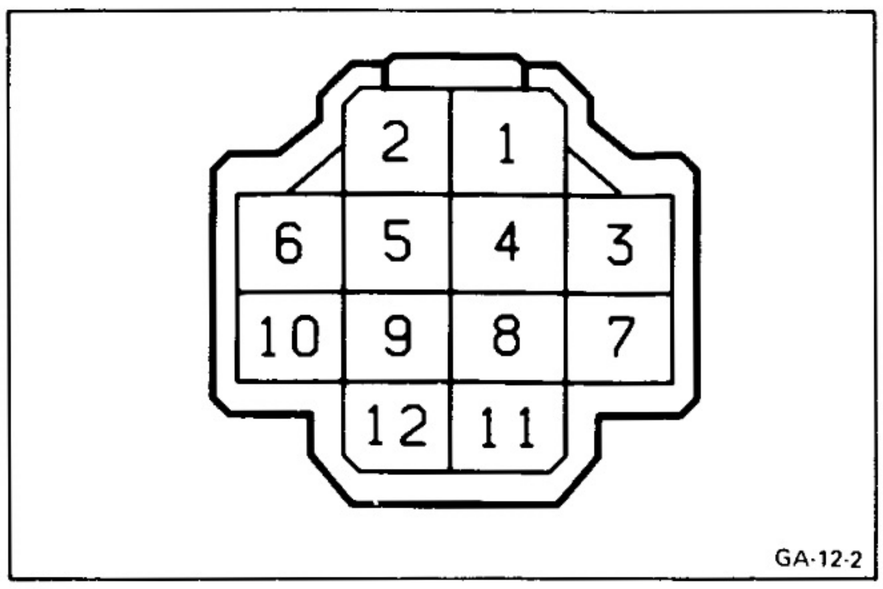

POWER WINDOW

Power Window Master Switch

INSPECTION OF POWER WINDOW MASTER SWITCH

INSPECT SWITCH CONTINUITY

Check that there is continuity between terminals.

Window Lock Switch

Switch position \ Terminal	10	0
LOCK		
UNLOCK	○——	——○

Operation Window	Front · Left				Front · Right				Rear · Left				Rear · Right			
Switch position \ Terminal	2	10	1	3	5	10	7	4	12	10	7	11	9	10	7	8
UP	○—	—○			○—	—○	○—	—○	○—	—○	○—	—○	○—	—○	○—	—○
OFF					○—		—○	—○	○—		—○	—○	○—		—○	—○
DOWN		○—	—○		○—		—○		○—		—○		○—		—○	
						—○		—○		—○		—○		—○		—○
DOWN-HOLD		○—	—○	—○												

If continuity is not as specified, replace the switch.

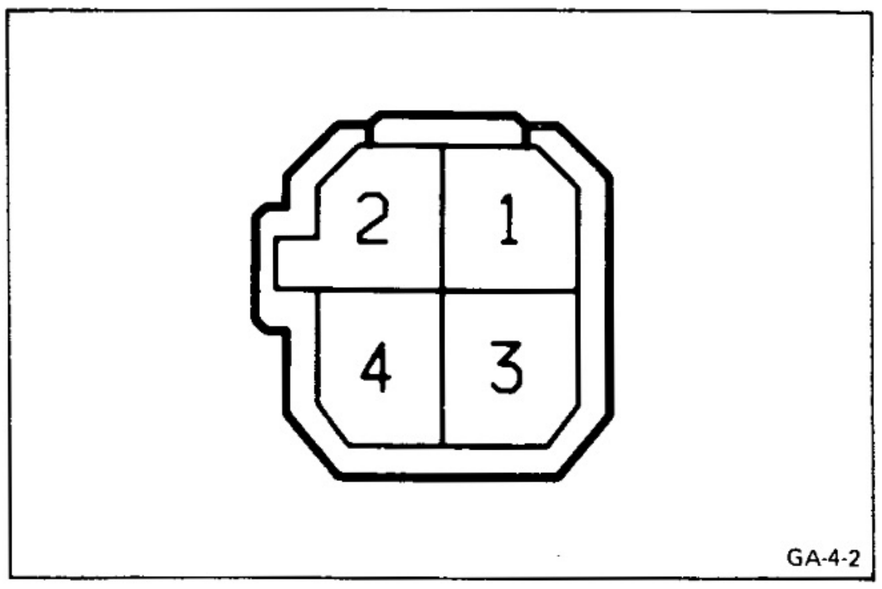

Power Window Door Switch

INSPECTION OF POWER WINDOW DOOR SWITCH

INSPECT SWITCH CONTINUITY

Check that there is continuity between terminals.

Switch position \ Terminal	1	2	4	3
UP	○—	○—	—○	—○
OFF				
DOWN	○—	—○	○—	—○

If continuity is not as specified, replace the switch.

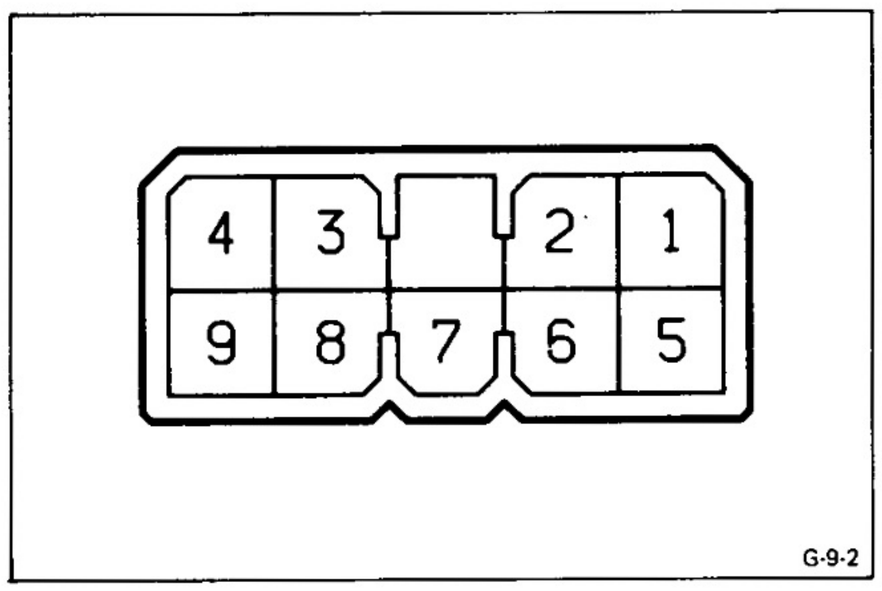

Power Window Relay

ON-VEHICLE INSPECTION OF POWER WINDOW RELAY

INSPECT RELAY CIRCUIT

(a) Disconnect the relay connector and inspect the connector on the wire harness side as shown in the table below.

Terminal	Check Item	Tester Connection	Condition	Voltage or Continuity
2	Voltage	2 – Body ground	Turn ignition switch on.	Battery voltage
			Turn ignition switch off.	No voltage
3	Continuity	3 – Body ground	—	Continuity
5	Voltage	5 – Body ground	Turn master driver side switch to UP.	Battery voltage
			Turn master driver side switch to DOWN or OFF.	No voltage
8	Voltage	8 – Body ground	Turn master auto switch to DOWN.	Battery voltage
			Turn master auto switch to OFF.	No voltage
9	Voltage	9 – Body ground	Turn master driver side switch or master auto switch to DOWN.	Battery voltage
			Turn master driver side switch or master auto switch to OFF.	Battery voltage

(b) Connect the positive (+) lead from the battery to terminal 1. Connect the negative (–) lead to terminal 4. Check that the window glass moves up.

If circuit is correct, replace the relay.

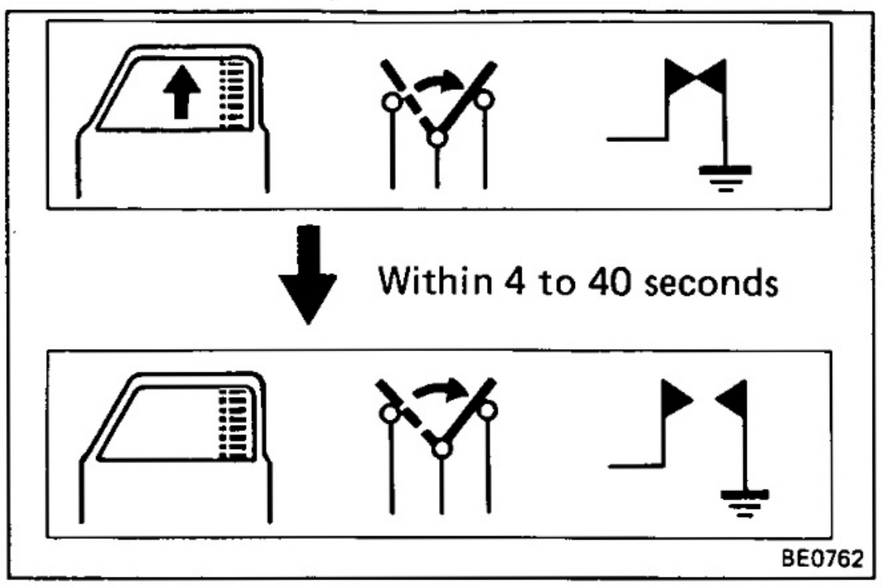

Power Window Motor

INSPECTION OF POWER WINDOW MOTOR

1. INSPECT CIRCUIT BREAKER OPERATION

(a) With the window fully closed, hold the power window switch on "UP" and check that there is a circuit breaker operation noise within 4 to 40 seconds.

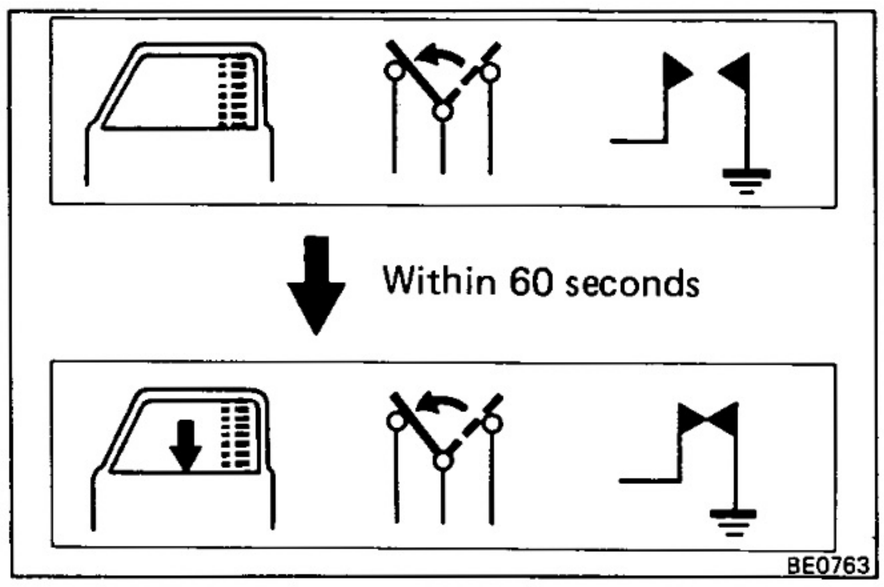

(b) With the window in the fully closed position, hold the switch on "DOWN" and check that the window begins to descend within 60 seconds.

If operation is not as specified, replace the motor.

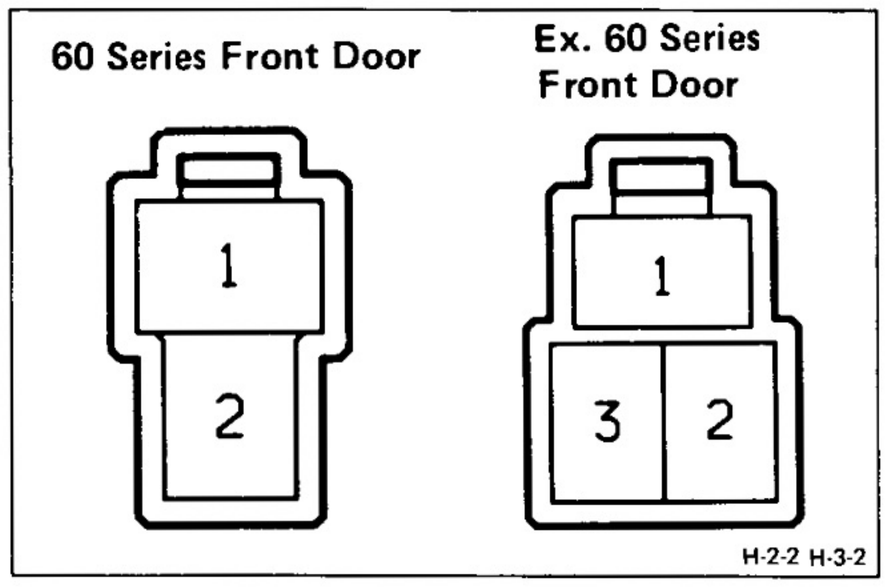

2. INSPECT MOTOR OPERATION

Apply the battery voltage across the terminals. Check that the motor turns smoothly.

If operation is not as specified, replace the motor.

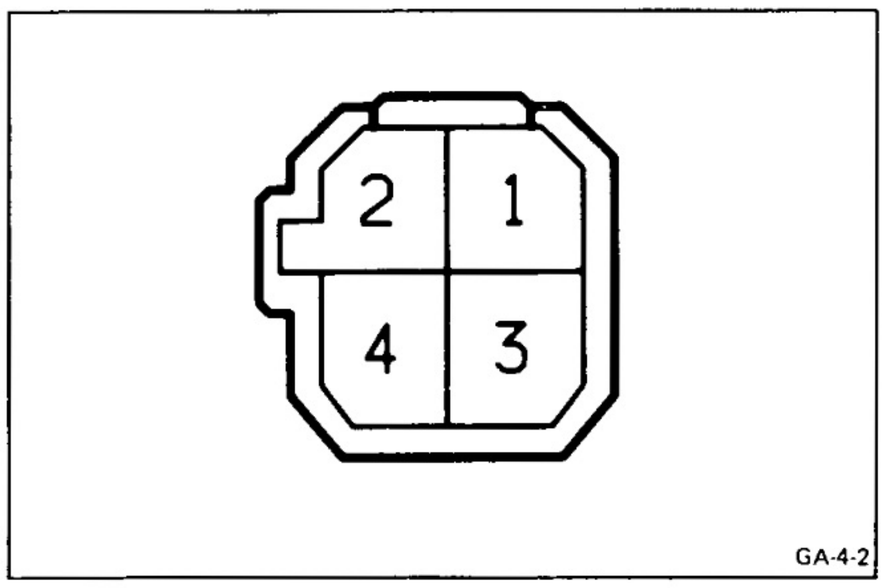

DOOR LOCK CONTROL SYSTEM

Door Lock Control Switch

INSPECTION OF DOOR LOCK CONTROL SWITCH

INSPECT SWITCH CONTINUITY

Inspect the switch continuity between terminals.

Switch position \ Terminal	2	1	4	3
LOCK	○		○	
		○		○
OFF				
UNLOCK	○		○	
		○		○

If continuity is not as specified, replace the switch.

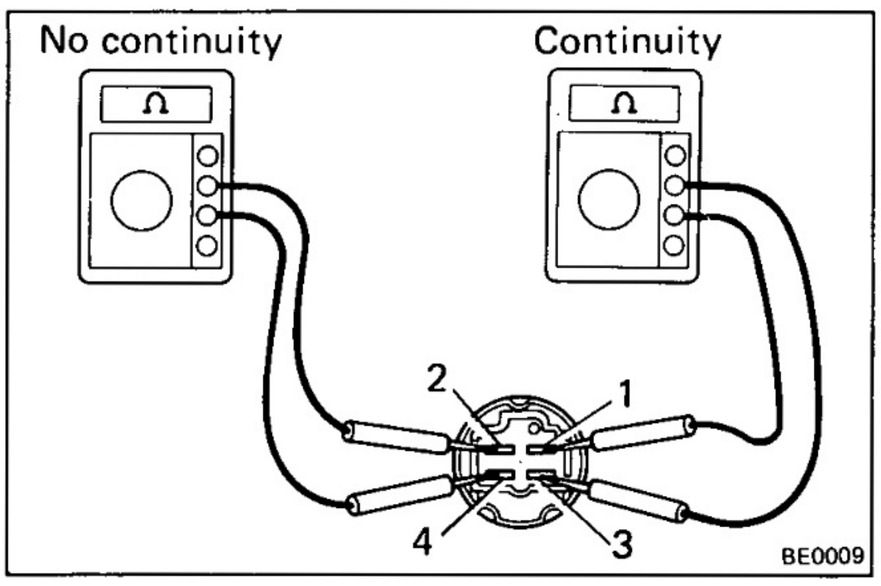

Door Lock Relay (For Back Door)

INSPECTION OF DOOR LOCK RELAY

1. INSPECT RELAY CONTINUITY

(a) Check that there is continuity between terminals 1 and 3.

(b) Check that there is no continuity between terminals 2 and 4.

If continuity is not as specified, replace the relay.

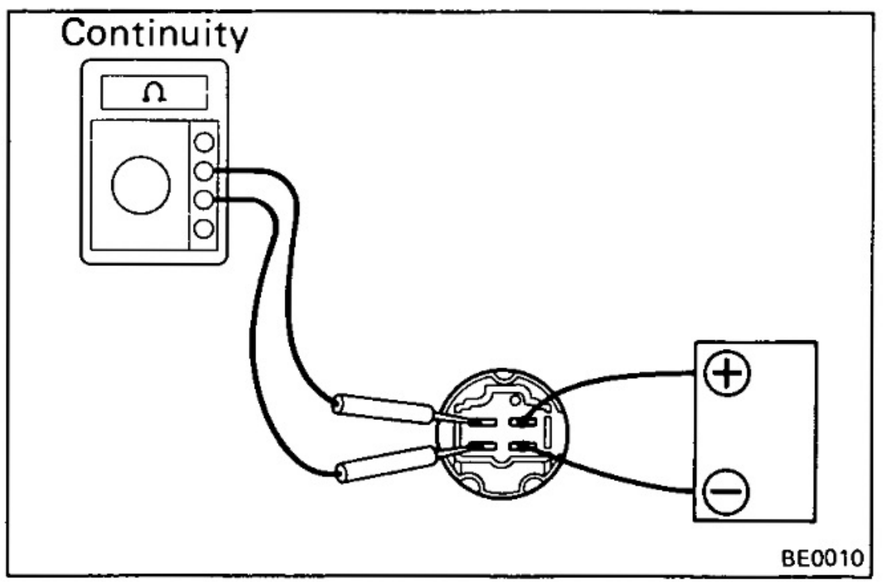

2. INSPECT RELAY OPERATION

(a) Apply battery voltage across terminals 1 and 3.

(b) Check that there is continuity between terminals 2 and 4.

If operation is not as specified, replace the relay.

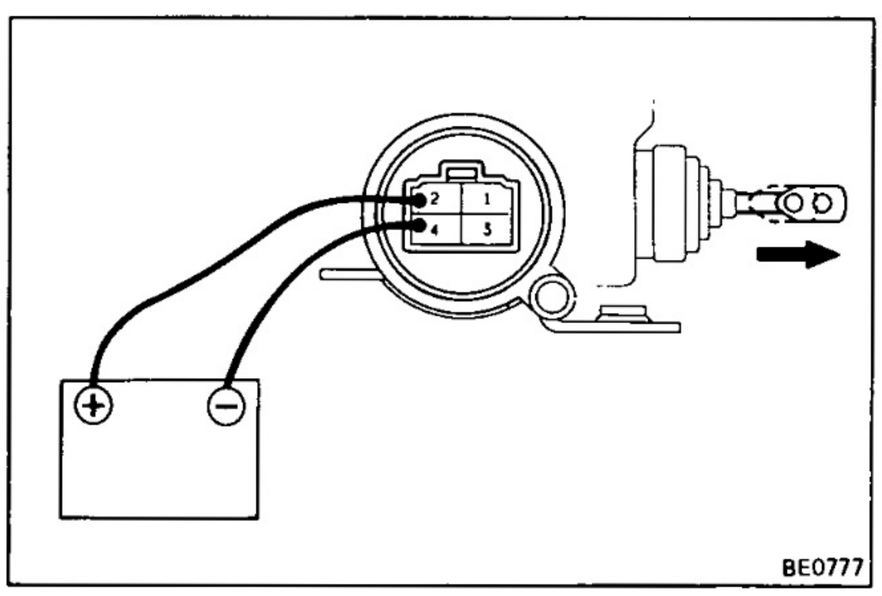

Door Lock Solenoid

INSPECTION OF DOOR LOCK SOLENOID

INSPECT SOLENOID OPERATION

(a) Connect the positive (+) lead from the battery to terminal 2. Connect the negative (–) lead to terminal 4. Check that the solenoid operates lock direction.

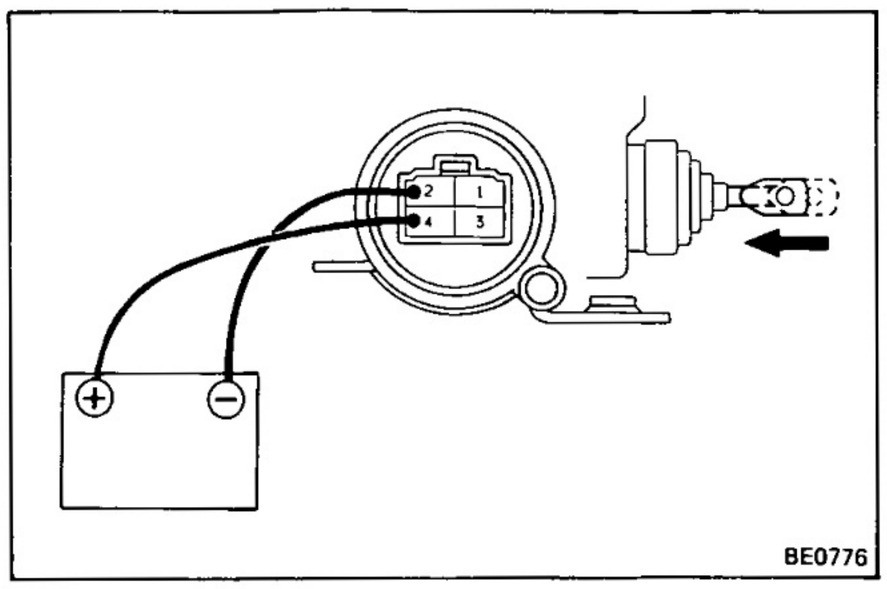

(b) Connect the positive (+) lead from the battery to terminal 4. Connect the negative (–) lead to terminal 2. Check that the solenoid operates in the unlock direction.

If operation is not as specified, replace the solenoid.

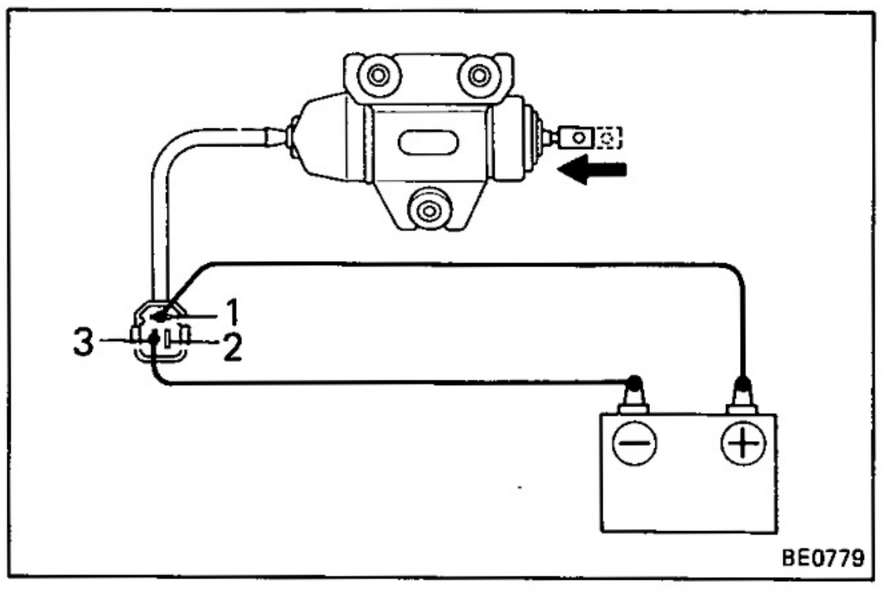

Door Lock Solenoid (For Back Door)

INSPECTION OF DOOR LOCK SOLENOID

INSPECT SOLENOID OPERATION

(a) Connect the positive (+) lead from the battery to terminal 1. Connect the negative (–) lead to terminal 3. Check that the solenoid operates in the lock direction.

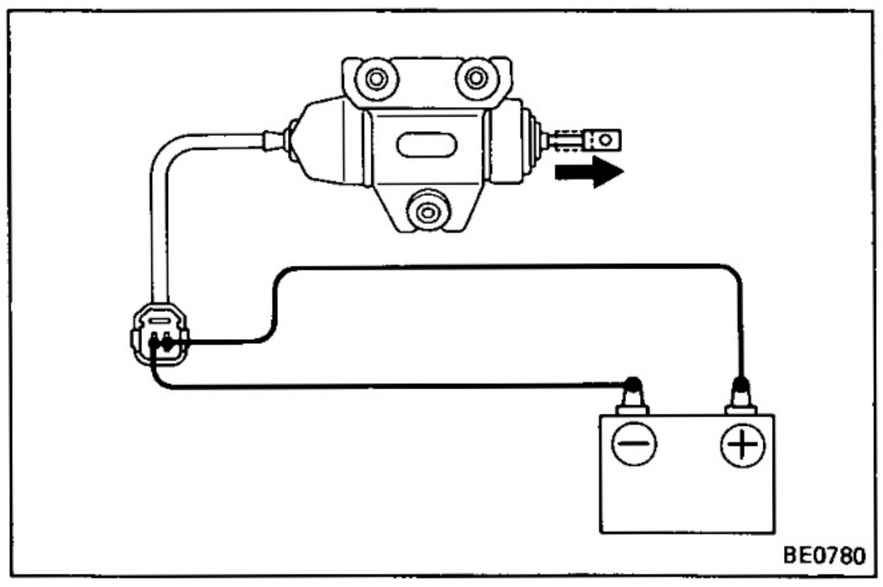

(b) Connect the positive (+) lead from the battery to terminal 2. Connect the negative (–) lead to terminal 3. Check that the solenoid operates unlock direction.

If operation is not as specified, replace the solenoid.

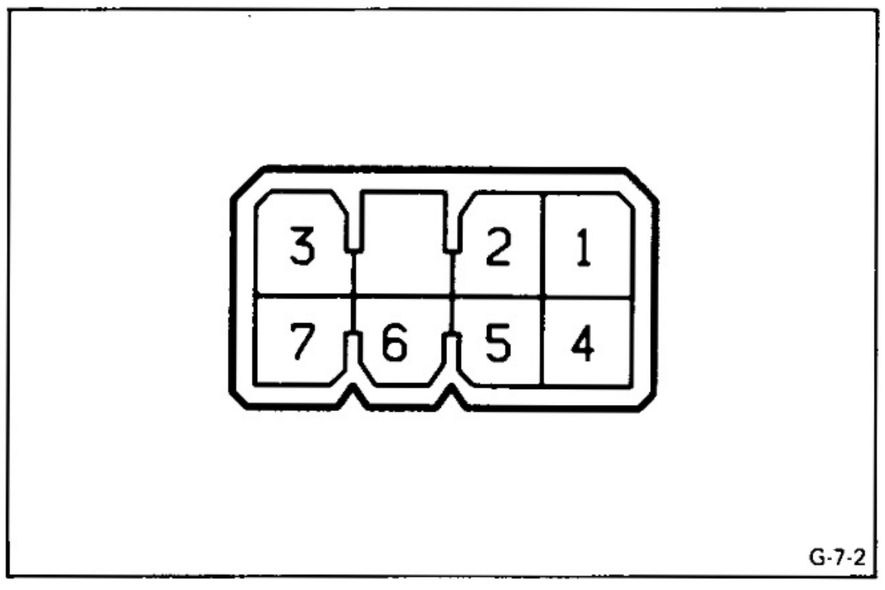

SUN ROOF

Sun Roof Control Relay

INSPECTION OF SUN ROOF CONTROL RELAY

INSPECT SUN ROOF CONTROL RELAY CIRCUIT

(a) Disconnect the relay connector and inspect the connector on the wire harness side as shown in the chart below.

Terminal	Check Item	Tester Connection	Condition	Voltage or Continuity
7	Continuity	7 – Body ground	—	Continuity
4	Voltage	4 – 7	Ignition switch OFF	No voltage
			Turn ignition switch ON	Battery voltage
2	Continuity	2 – 7	Turn sun roof switch to OPEN	Continuity
			Turn sun roof switch to except OPEN	No continuity
5	Continuity	5 – 7	Turn sun roof switch to CLOSE	Continuity
			Turn sun roof switch anywhere off CLOSE	No continuity
6	Continuity	6 – 7	Turn limit switch ON [Move sun roof to any position except 100 mm (3.94 in.) in front of closed position]	Continuity
			Turn limit switch OFF [Move sun roof approx. 100 mm (3.94 in.) in front of closed position]	No continuity
3	Continuity	3 – 1	—	Continuity

(b) Connect the battery between terminals 1 and 3 of the wire harness side and check that the motor operates.

If circuit is correct and motor operates, replace the sun roof control relay.

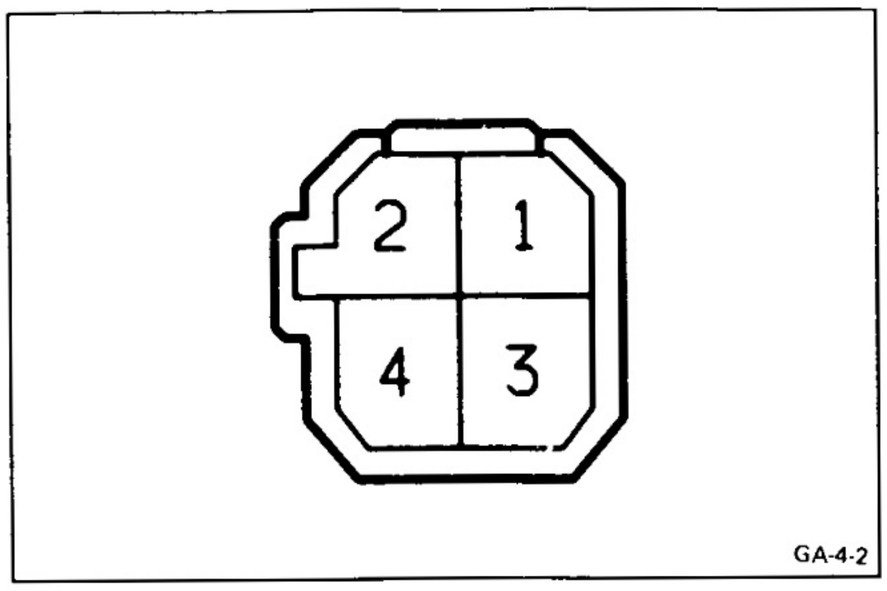

Sun Roof Switch

INSPECTION OF SUN ROOF SWITCH

INSPECT SWITCH CONTINUITY

Inspect the switch continuity between terminals.

Switch position \ Terminal		1	2	3	4
Sun Roof Switch	OPEN		○——	——○	
	CLOSE		○——		——○
Map Light Switch ON		○—(∞)—○			

If continuity is not as specified, replace the switch.

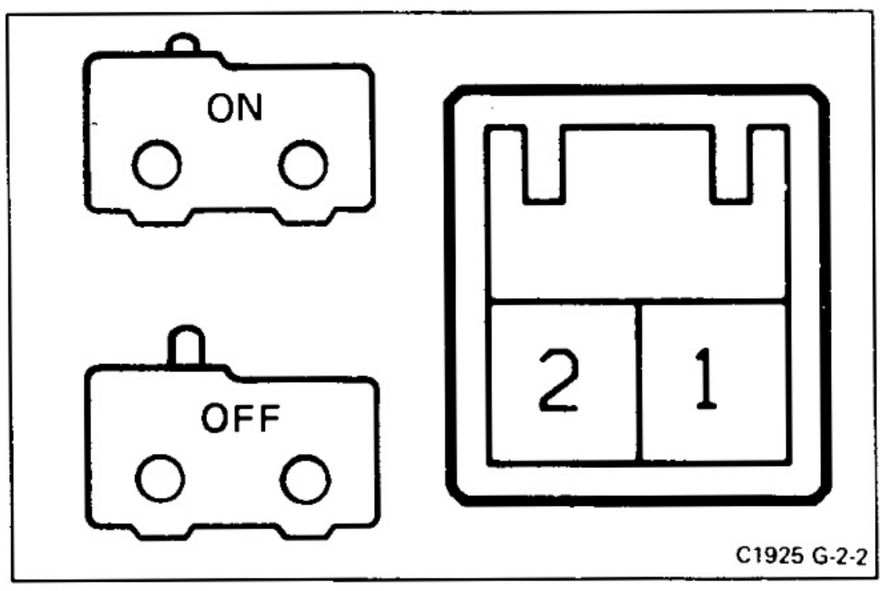

Limit Switch

INSPECTION OF LIMIT SWITCH

INSPECT LIMIT SWITCH CONTINUITY

(a) Check that there is continuity between terminals 1 and 2 when the switch is ON.

(b) Check that there is no continuity between terminals 1 and 2 when the switch is OFF.

If continuity is not as specified, replace the switch.

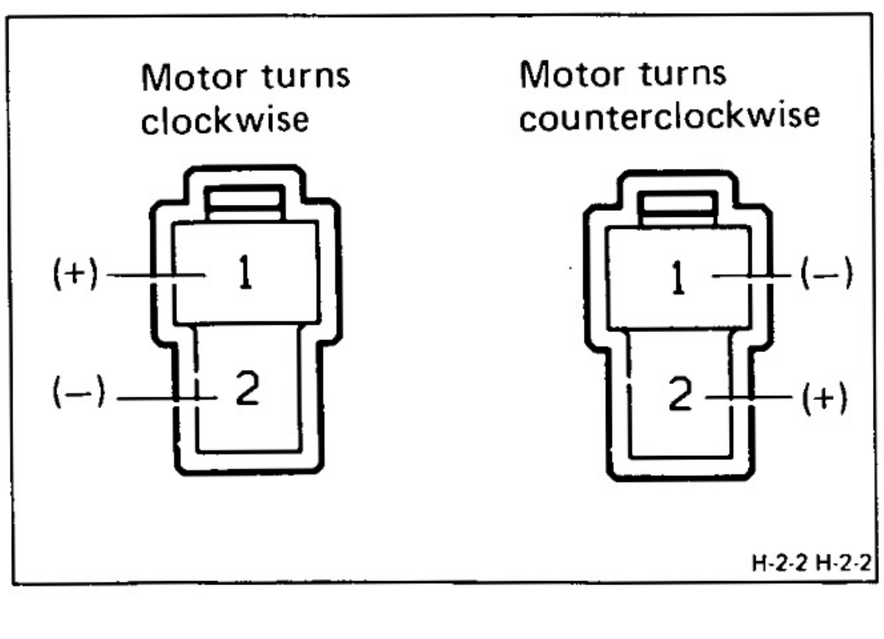

Sun Roof Motor

INSPECTION OF SUN ROOF MOTOR

INSPECT MOTOR OPERATION

(a) Connect the positive (+) lead from the battery to terminal 1 and the negative (–) lead to terminal 2 and check that the motor turns clockwise.

(b) Connect the positive (+) lead from the battery to terminal 2 and the negative (–) lead to terminal 1 and check that the motor turns counterclockwise.

If operation is not as specified, replace the motor.

RADIO, STEREO TAPE PLAYER AND ANTENNA

Troubleshooting

DESCRIPTION OF SYMBOLS

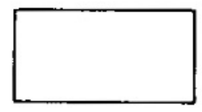

. . . . . Inspection

. . . . . Check or replace part

. . . . . Test by operating radio

1. DEAD RADIO AND TAPE PLAYER

(a) No power to radio or tape player, or power but no sound.

Possible causes:

- Blown CIG fuse
- Short circuit or broken wire in power source wire harness
- Loose connectors behind radio and tape player
- Loose speaker connector
- Defective speaker
- Broken wire in speaker wire harness
- Improperly installed radio or tape player
- Defective radio or tape player

TEST 1

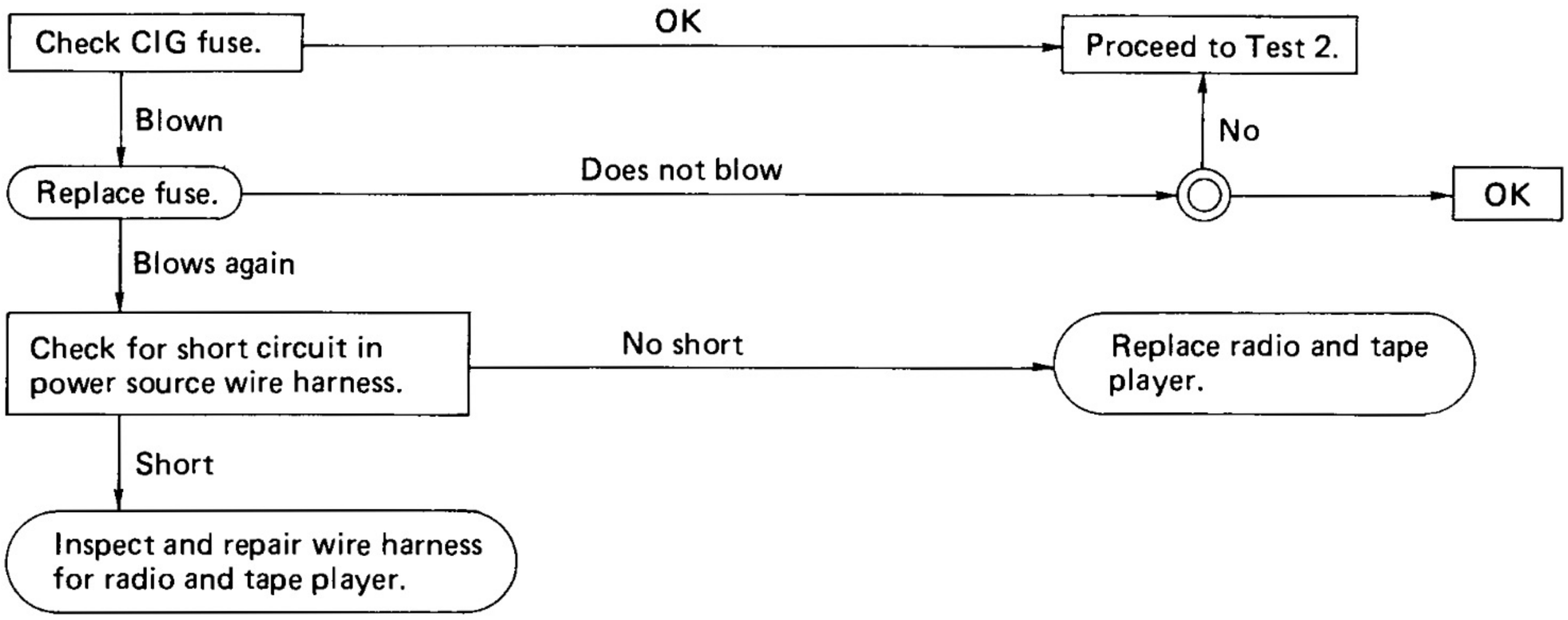

TEST 2

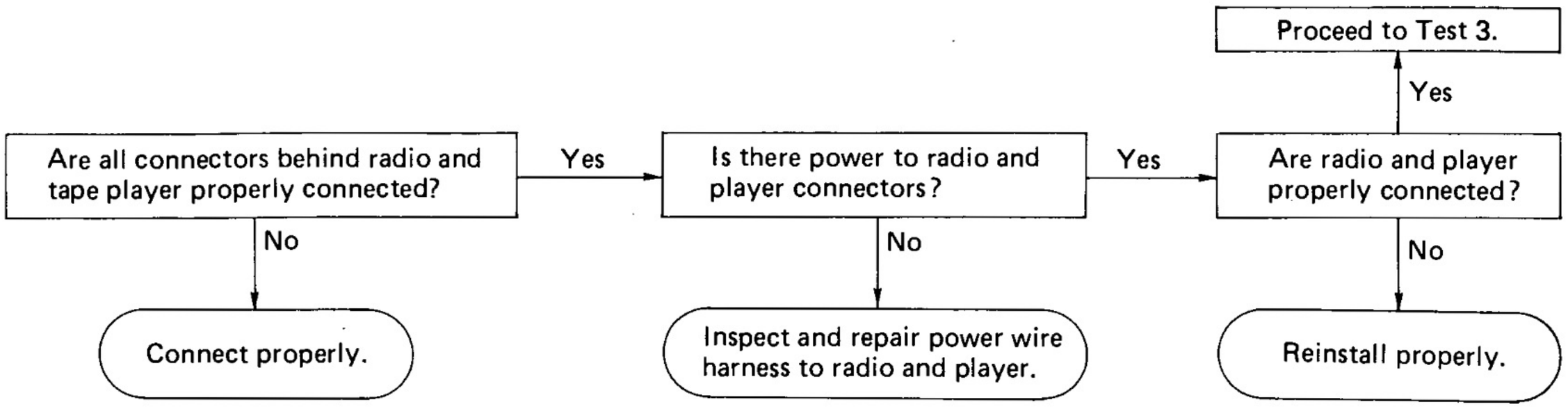
Are all connectors behind radio and tape player properly connected?
Yes
Is there power to radio and player connectors?
Yes
Are radio and player properly connected?
Proceed to Test 3.
Yes
No
No
No
Connect properly.
Inspect and repair power wire harness to radio and player.
Reinstall properly.

TEST 3

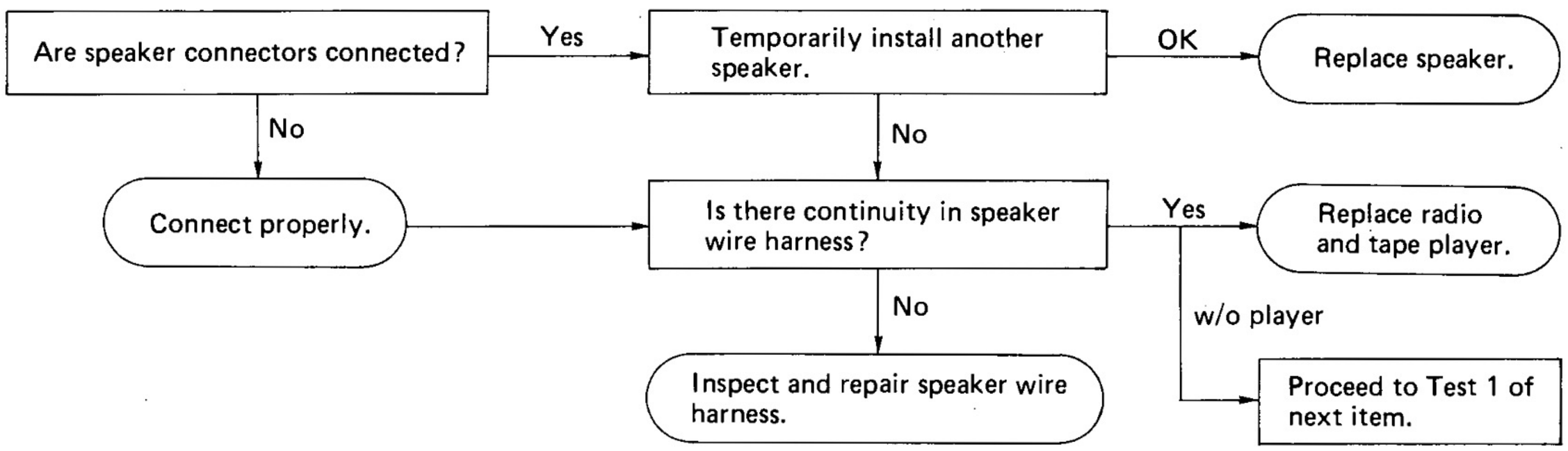
Are speaker connectors connected?
Yes
Temporarily install another speaker.
OK
Replace speaker.
No
No
Connect properly.
Is there continuity in speaker wire harness?
Yes
Replace radio and tape player.
No
w/o player
Inspect and repair speaker wire harness.
Proceed to Test 1 of next item.

(b) Tape player okay but no sound from AM and FM or either one.

Possible causes:

- Antenna disconnected
- Antenna plug not properly connected
- Defective antenna
- Defective antenna cable
- Defective radio or tape player

TEST 1

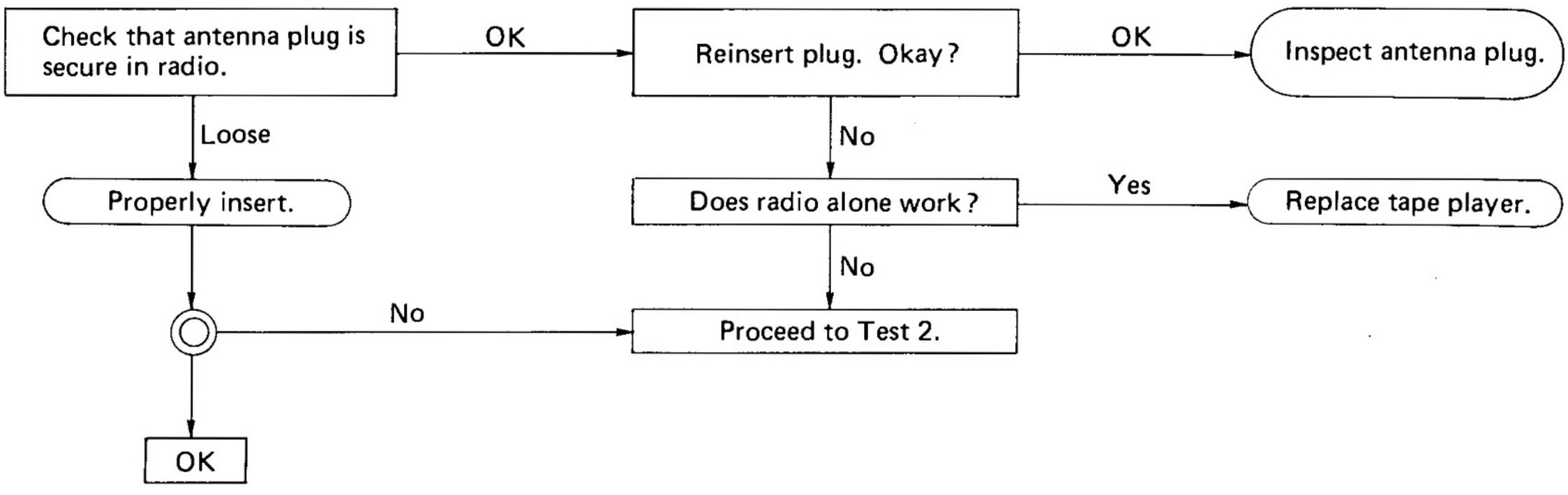

TEST 2

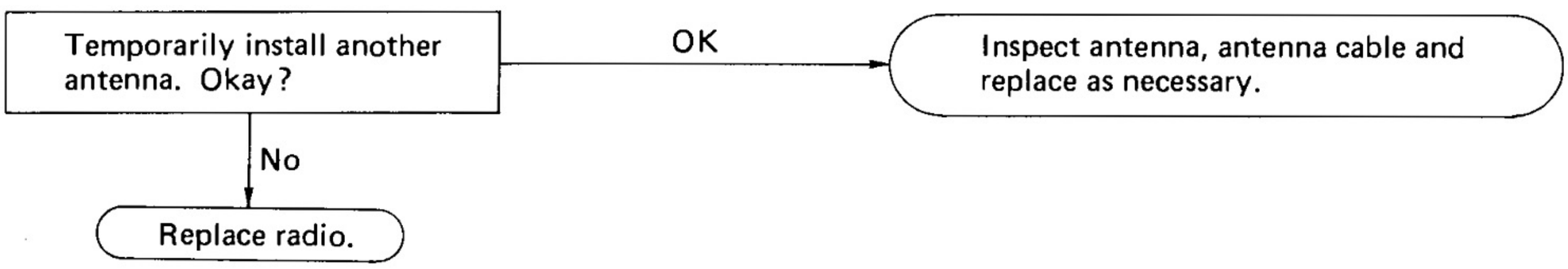

(c) No sound from one speaker.

Possible causes:

- Loose speaker connector
- Broken wire in speaker wire harness
- Defective speaker
- Defective radio and tape player

TEST 1

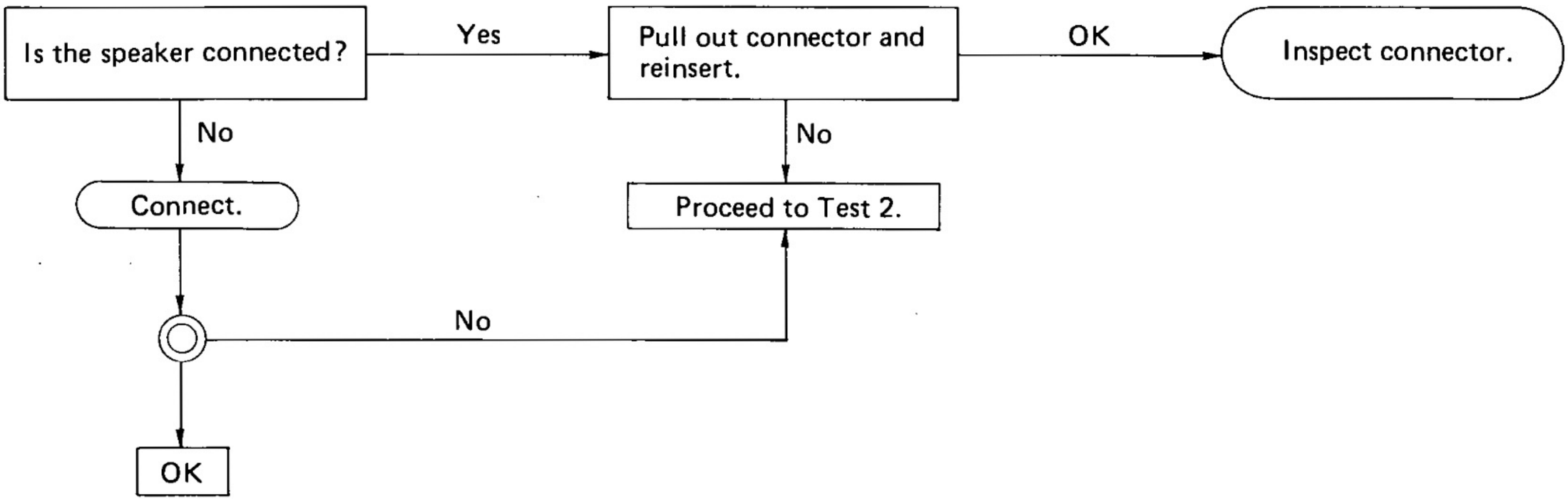

TEST 2

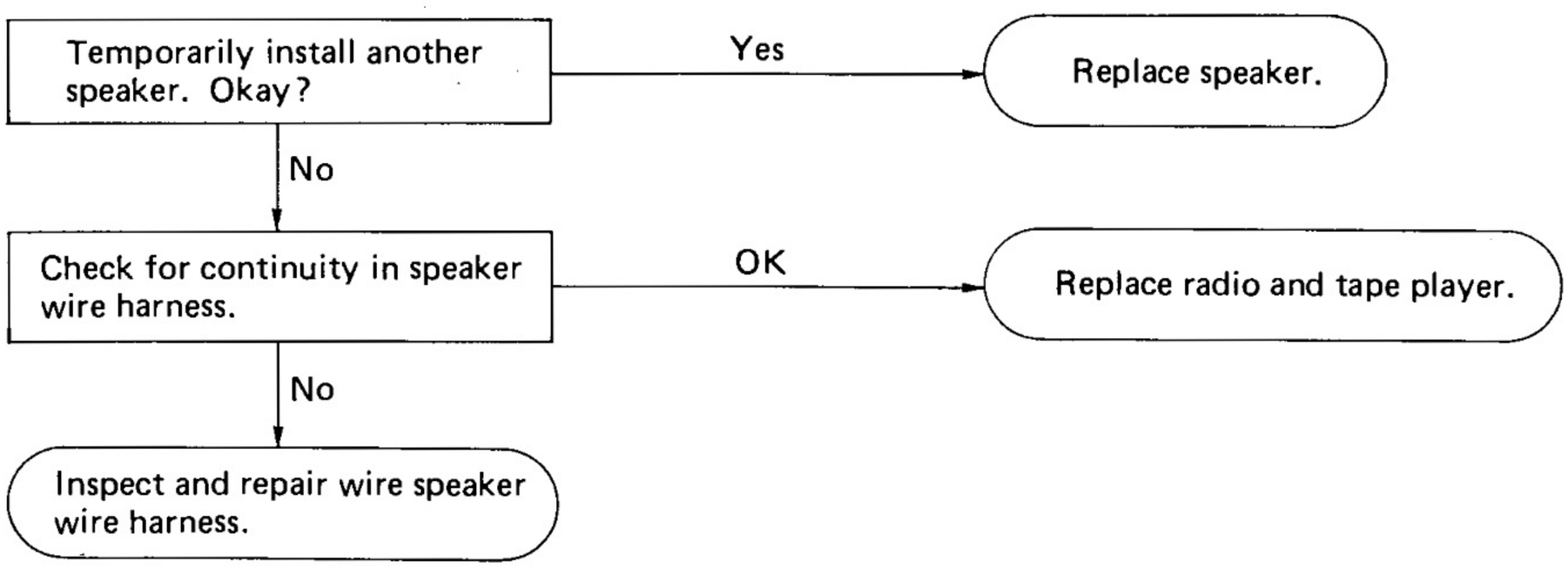

2. FAINT RECEPTION

Possible causes:

- Maladjusted antenna trimmer
- Defective antenna
- Defective antenna cable
- Defective speaker
- Defective radio

TEST

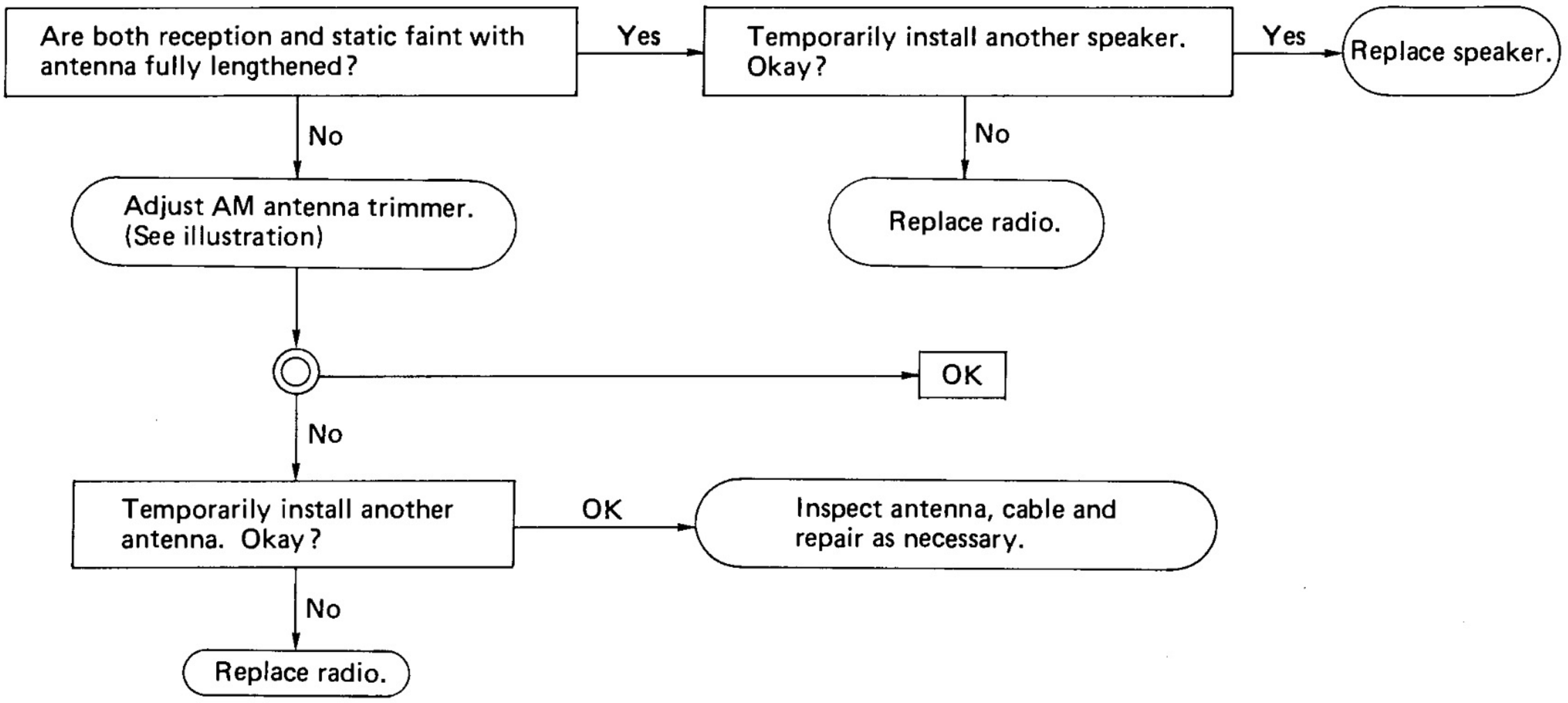

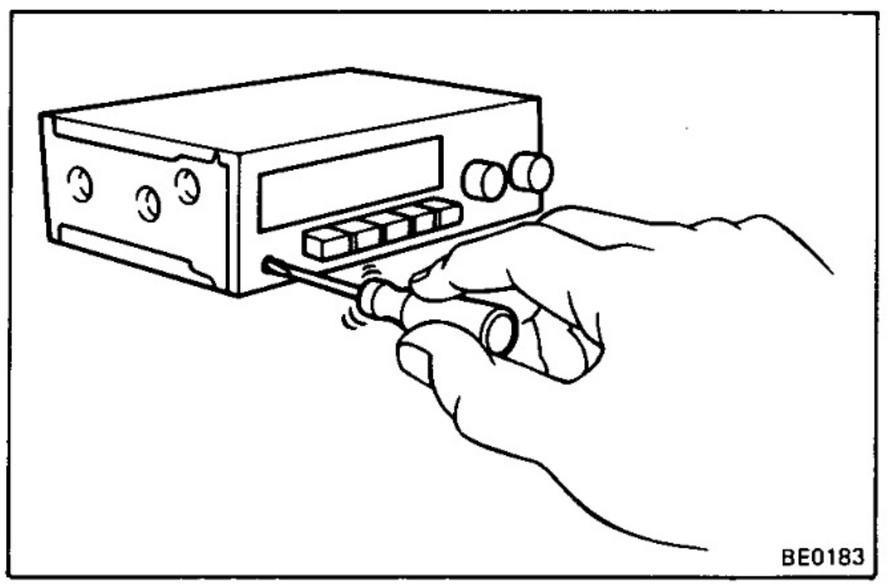

NOTE: Adjustment of antenna trimmer.

(1) Fully lengthen the antenna.

(2) With volume at maximum, turn the dial to around 1,400 kHz where there is no reception.

(3) Adjust the trimmer to where static is loudest.

3. BAD SOUND QUALITY

(a) Sound quality bad when radio played.

Possible causes:

- Multipath interference or excessive interception
- Tuner dial not synchronized with station
- Defective antenna
- Defective antenna cable
- Speaker improperly installed
- Vibration sound from components near speaker
- Defective speaker
- Defective radio

TEST 1

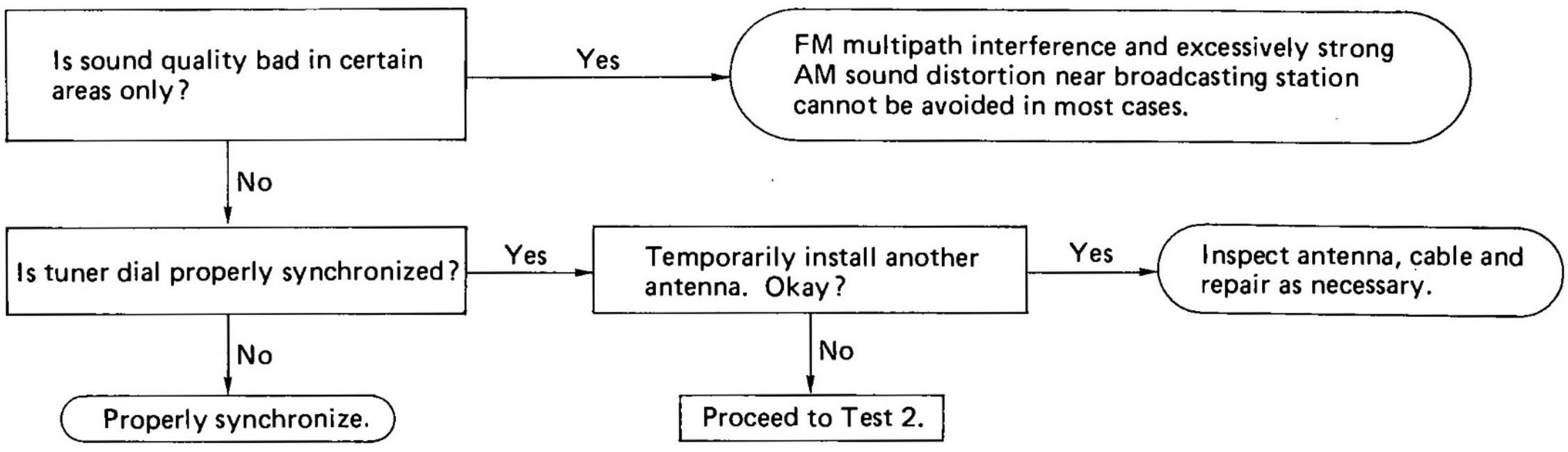

TEST 2

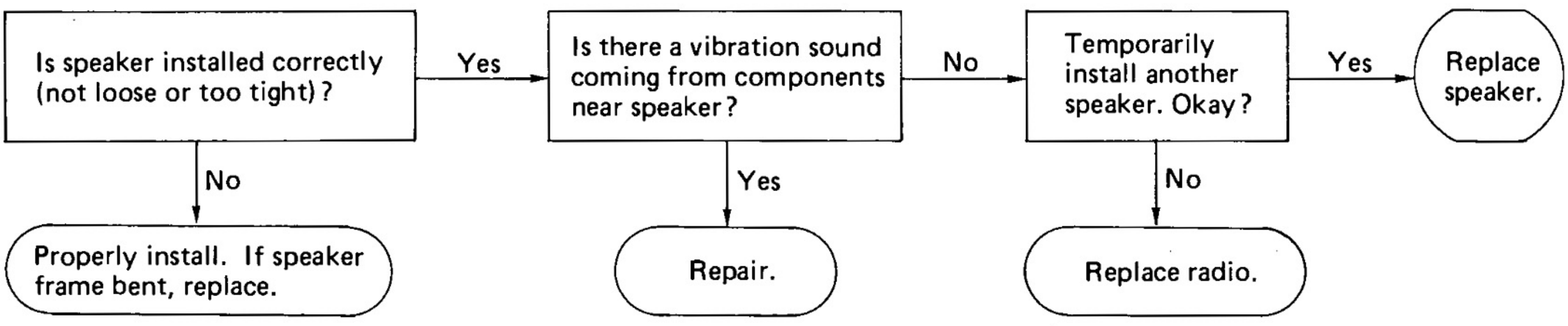

NOTE: FM distortion tends to increase sharply if the tuner not synchronized.

(b) Sound quality bad when tape player played.

Possible causes:

- Bad tape
- Dirty head
- Incorrectly installed speaker
- Vibration noise from around speaker
- Defective speaker
- Defective tape player

TEST 1

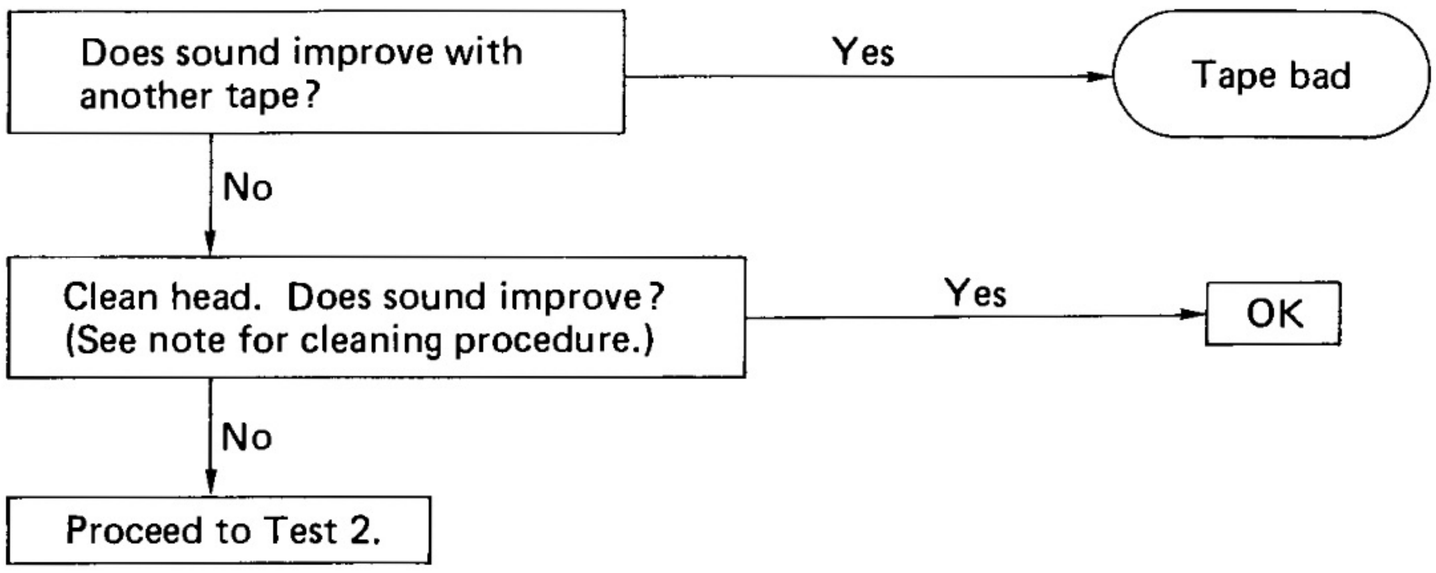

TEST 2

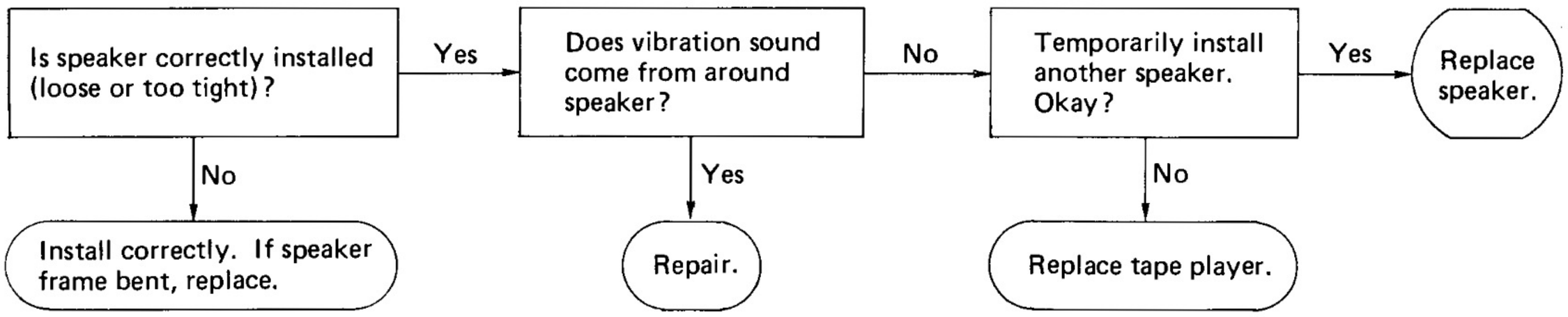

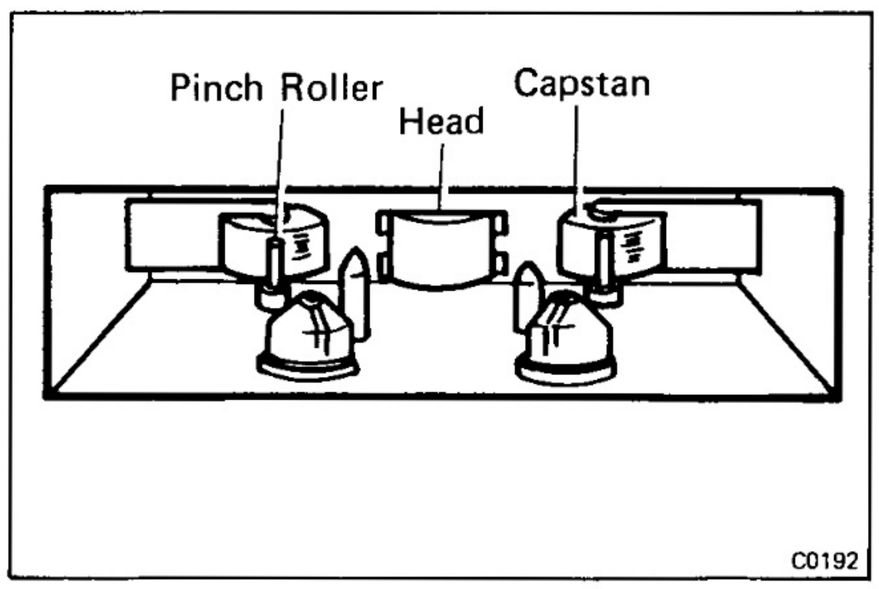

NOTE: Head cleaning procedure.

(1) Raise the cassette door with your finger. Next, using a pencil or like object, push in the guide.

(2) Using a cleaning pen or cotton applicator soaked in alcohol, clean the head surface, pinch rollers and capstans.

(3) Push in the "eject" button.

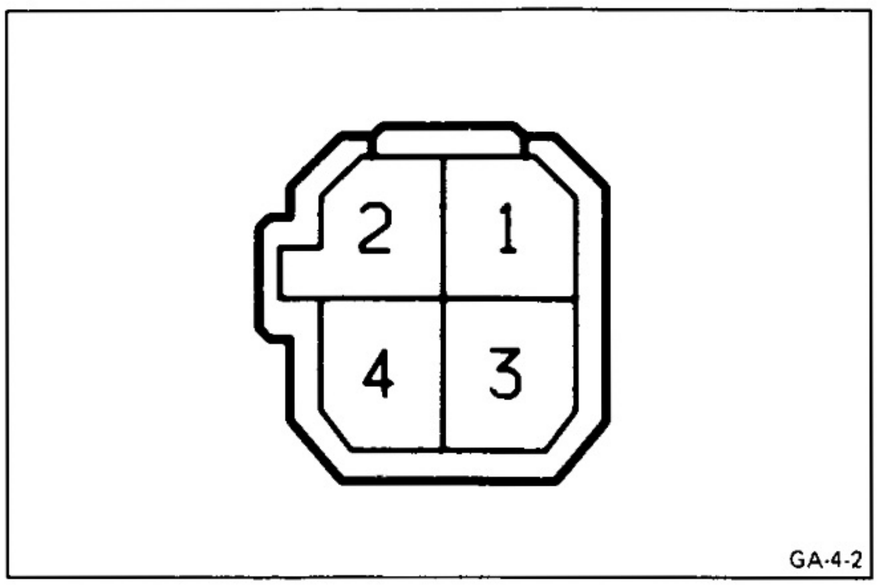

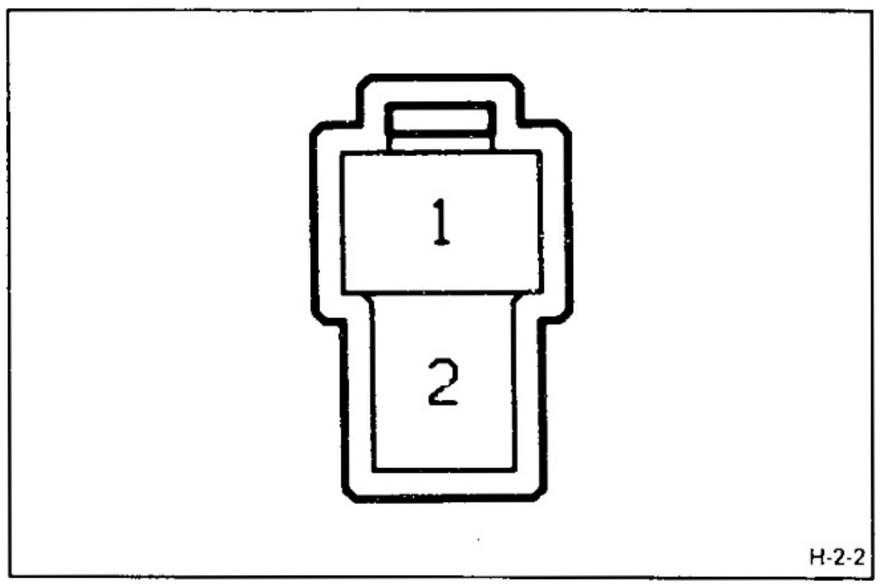

Antenna Motor Control Switch

INSPECTION OF CONTROL SWITCH

INSPECT SWITCH CONTINUITY

Inspect the switch continuity between terminals.

Switch position \ Terminal	1	2	3	4
UP	○		○	
		○		○
OFF				
DOWN	○	○	○	○

If continuity is not as specified, replace the switch.

Antenna Motor

INSPECTION OF MOTOR

INSPECT MOTOR OPERATION

(a) Connect the positive (+) lead from the battery to terminal 1 and the negative (–) lead to terminal 2, and check that the antenna rises.

(b) Connect the positive (+) lead from the battery to terminal 2 and the negative (–) lead to terminal 1, and check that the antenna descends.

CLOCK

Troubleshooting

CLOCK WILL NOT OPERATE

( ) : 24V vehicle

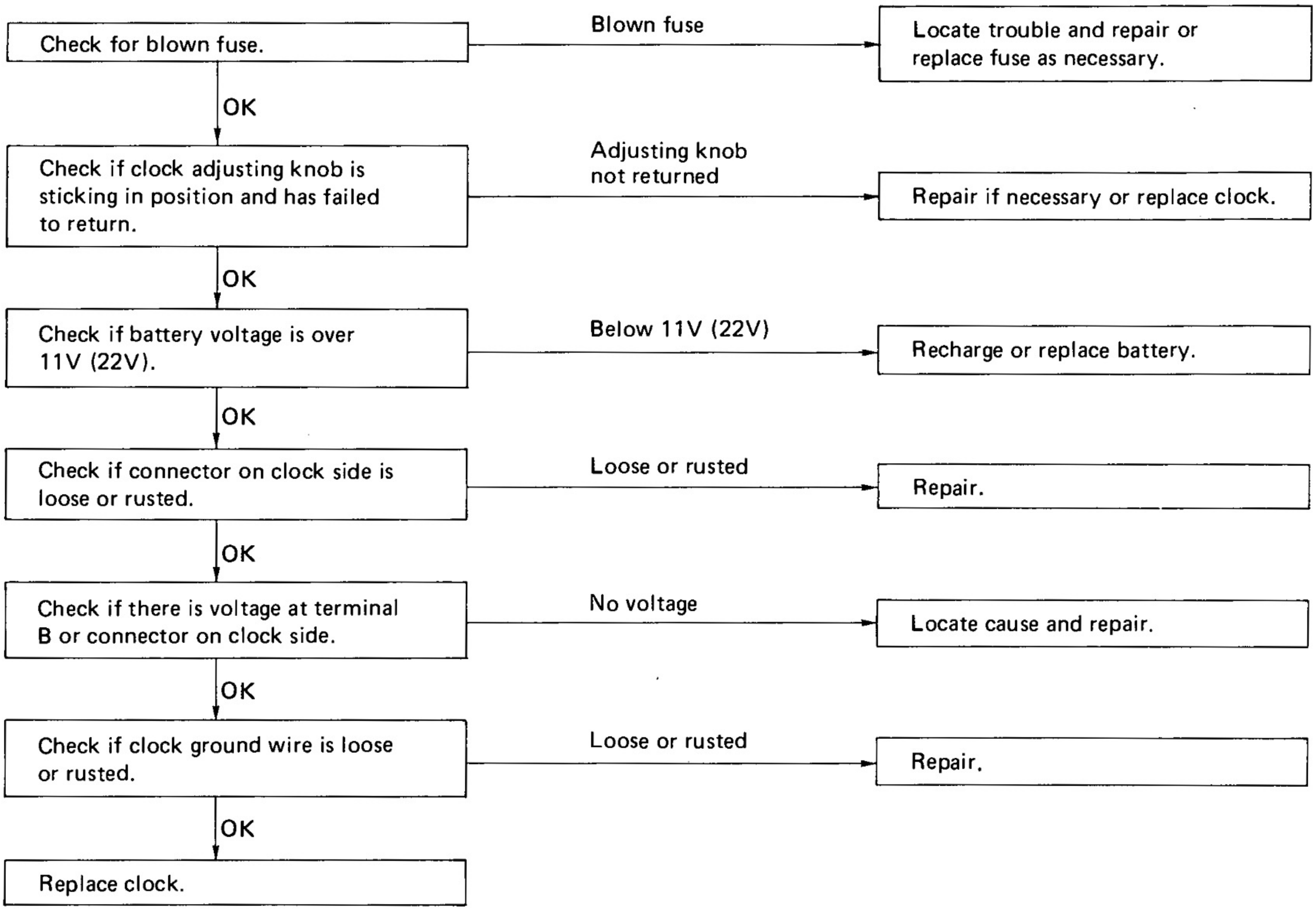

CLOCK LOSES OR GAINS TIME

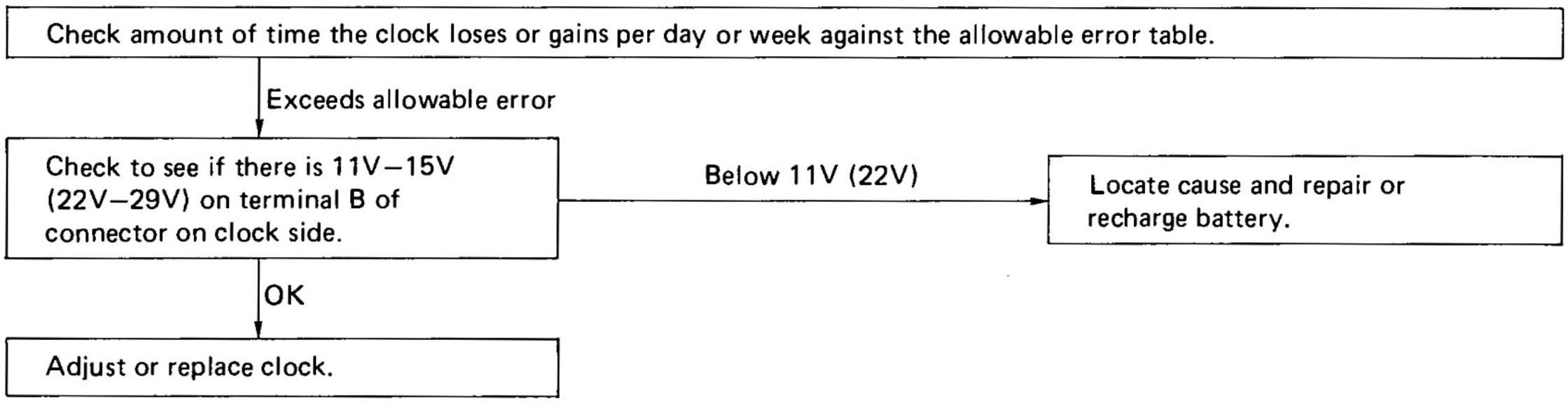

1. INSPECT ALLOWABLE ERROR OF CLOCK

Check the allowable error of the clock.

Allowable error (per day): ± 1.5 seconds

2. ADJUSTMENT OF CLOCK

Adjustment of the quartz clock requires a precise digital counter. Adjustment must be made in a shop specified by the manufacturer.

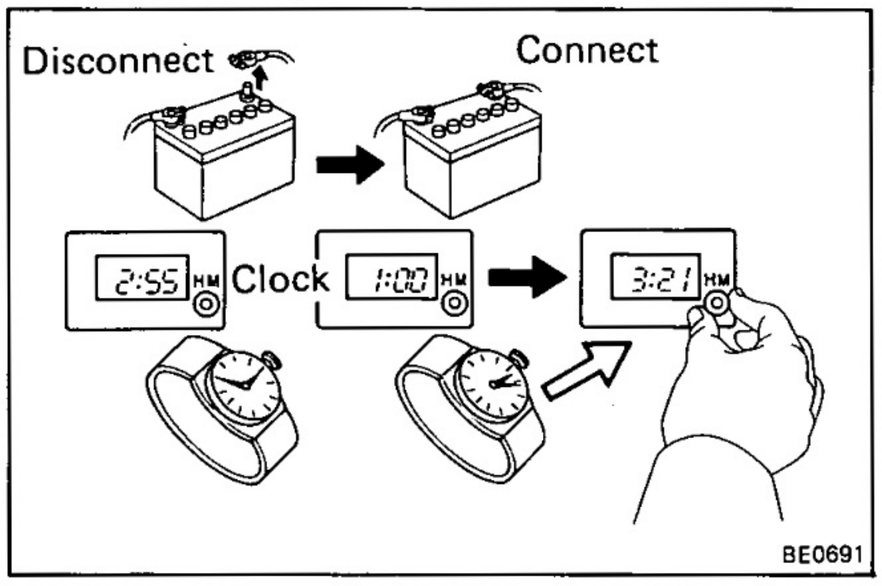

3. SETTING OF CLOCK

(a) Connect the battery terminal.

(b) Check the clock to see that it is running, and then set it to the correct time.

NOTE: Whenever the battery terminal is disconnected, make sure to set the clock to the correct time after reconnecting the battery.

BODY

	Page
HOOD	BO-2
FRONT DOOR	BO-5
60 Series	BO-5
70 Series	BO-12
REAR DOOR	BO-20
BACK DOOR	BO-26
Lift-up Type	BO-26
60 Series Swing Out Type	BO-31
70 Series Swing Out Type	BO-38
MOULDING	BO-46
WINDSHIELD	BO-51
WINDSHIELD (CANADA)	BO-55
SIDE WINDOW	BO-60
BACK DOOR GLASS	BO-66
BACK WINDOW	BO-69
SUN ROOF	BO-74
INSTRUMENT PANEL	BO-81
70, 73, 75 Series	BO-81
60, 62 Series	BO-88
TARPAULIN	BO-94
TARPAULIN SPARS	BO-99
FRP TOP	BO-100
ROLL BAR	BO-102
SEAT	BO-103
70, 73, 75 Series	BO-103
60, 62, Series	BO-108
SEAT BELT	BO-111
70, 73, 75 Series	BO-111
60, 62 Series	BO-113
FUEL TANK AND LINE	BO-115
FRAME DIMENSIONS	BO-118

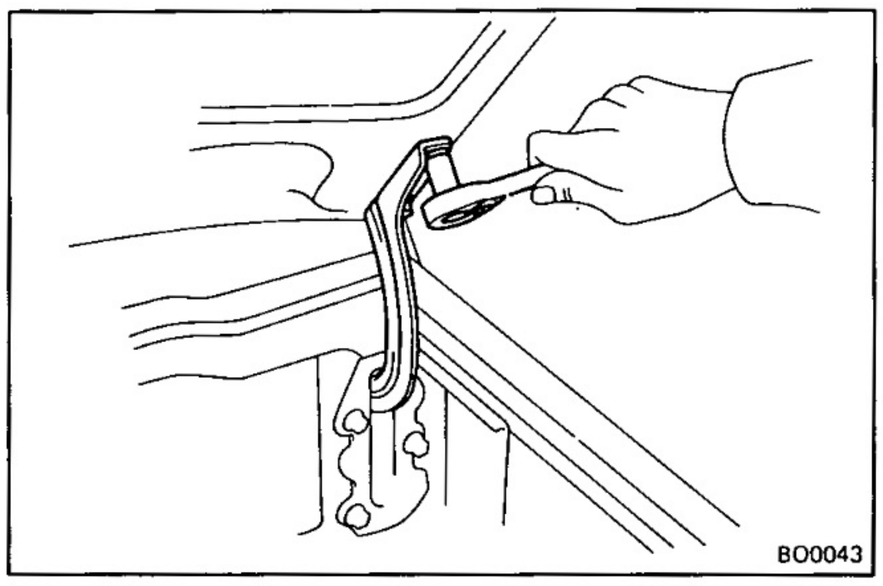

HOOD

ADJUSTMENT OF HOOD(60 Series)

1. ADJUST HOOD IN FORWARD/REARWARD AND LEFT/RIGHT DIRECTIONS

   Adjust the hood by loosening the hood side hinge bolts.

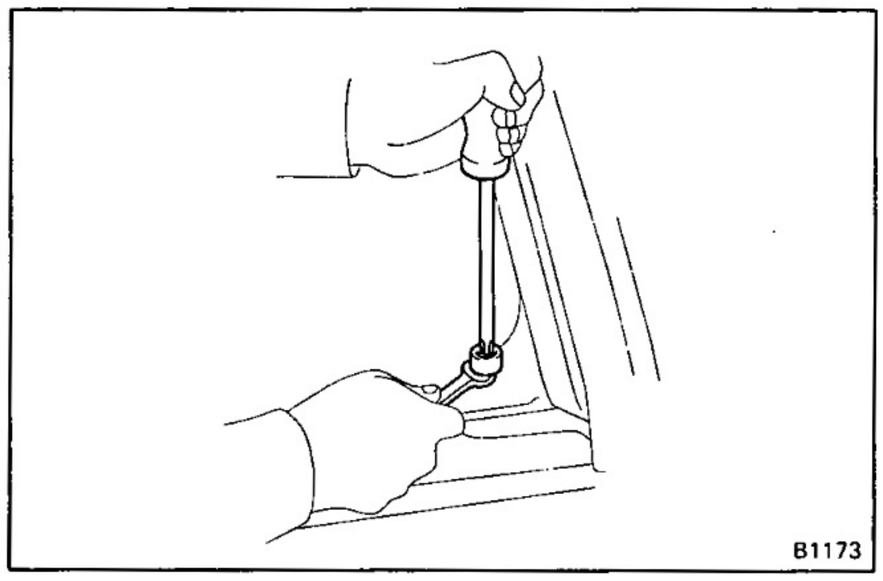

2. ADJUST FRONT EDGE OF HOOD IN VERTICAL DIRECTION

   Adjust the hood by turning the hood cushions.

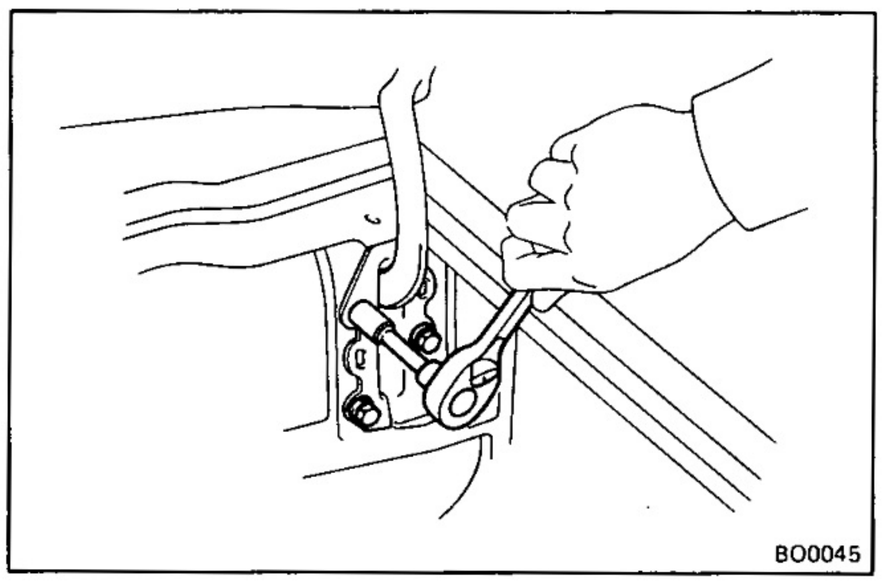

3. ADJUST REAR EDGE OF HOOD IN VERTICAL DIRECTION

   Adjust the hood by loosening the body side hinge bolts.

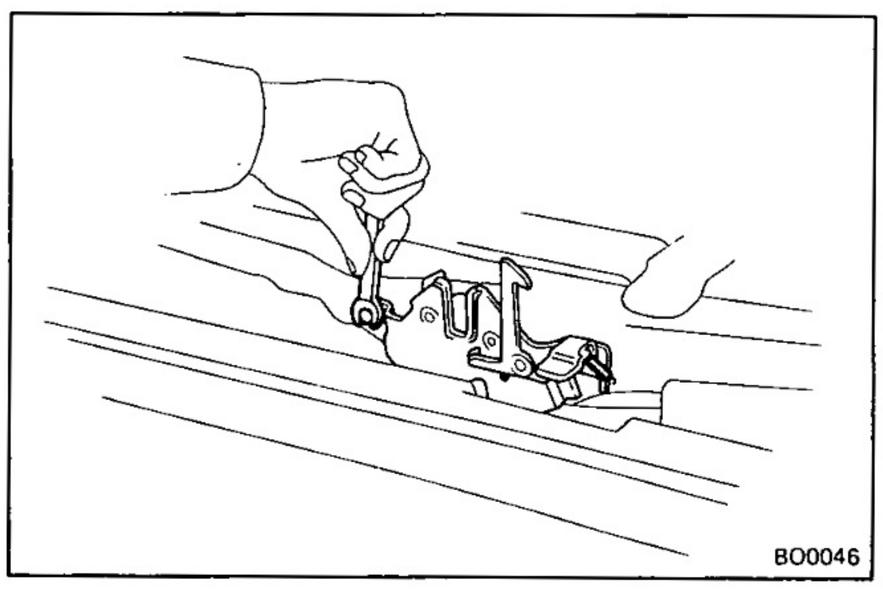

4. ADJUST HOOD LOCK

   Adjust the hood lock by loosening the mounting bolts.

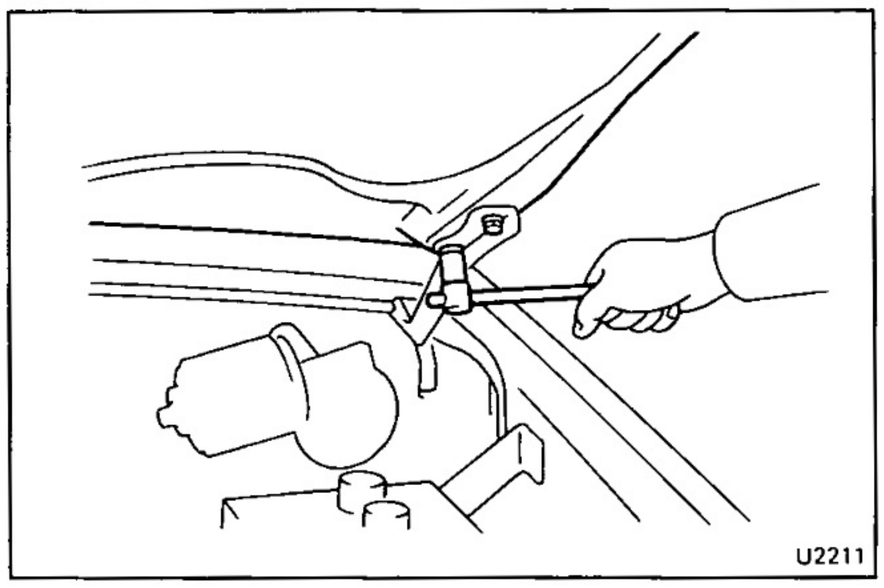

ADJUSTMENT OF HOOD (70 Series)

1. ADJUST HOOD IN FORWARD/REARWARD AND LEFT/RIGHT DIRECTIONS

   Adjust the hood by loosening the hood side hinge bolts.

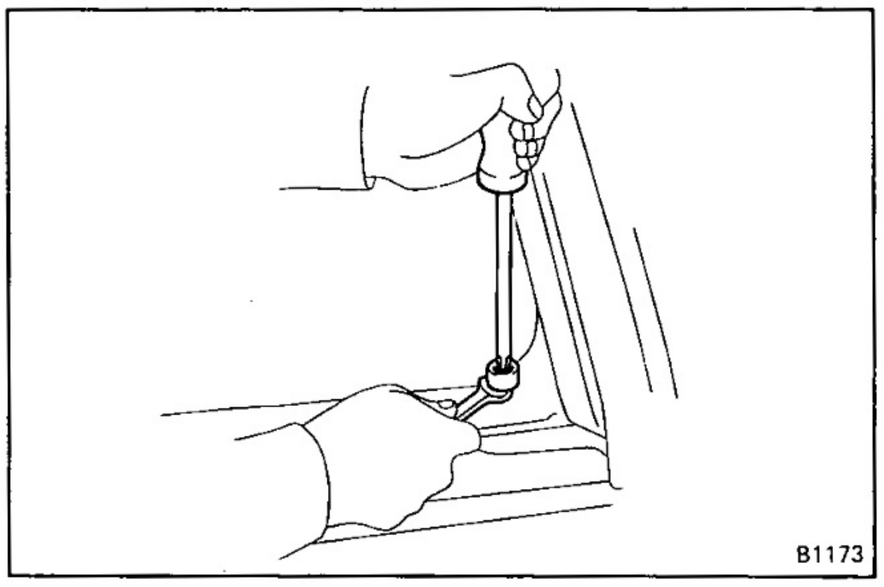

2. ADJUST FRONT EDGE OF HOOD IN VERTICAL DIRECTION

   Adjust the hood by turning the hood cushions.

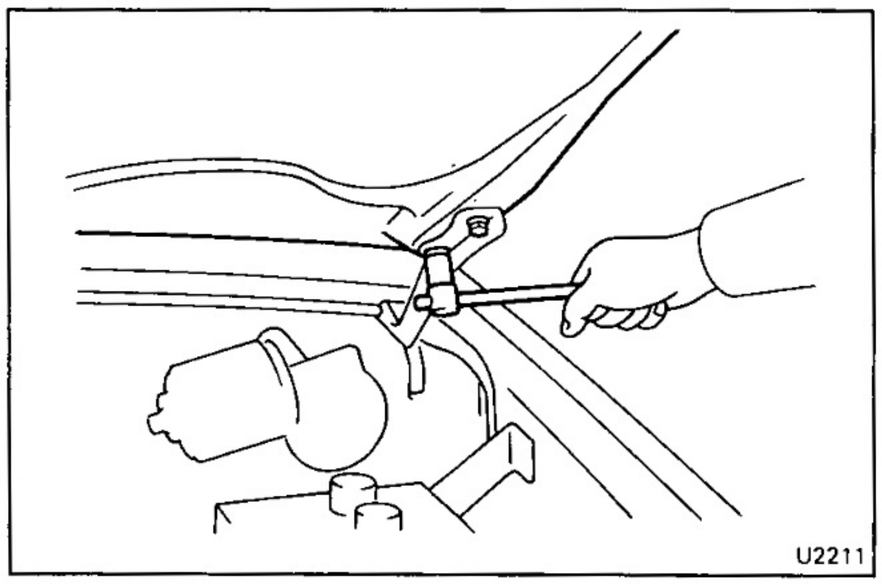

3. ADJUST REAR EDGE OF HOOD IN VERTICAL DIRECTION

   (a) Disconnect the washer hose and remove the four bolts and hood.

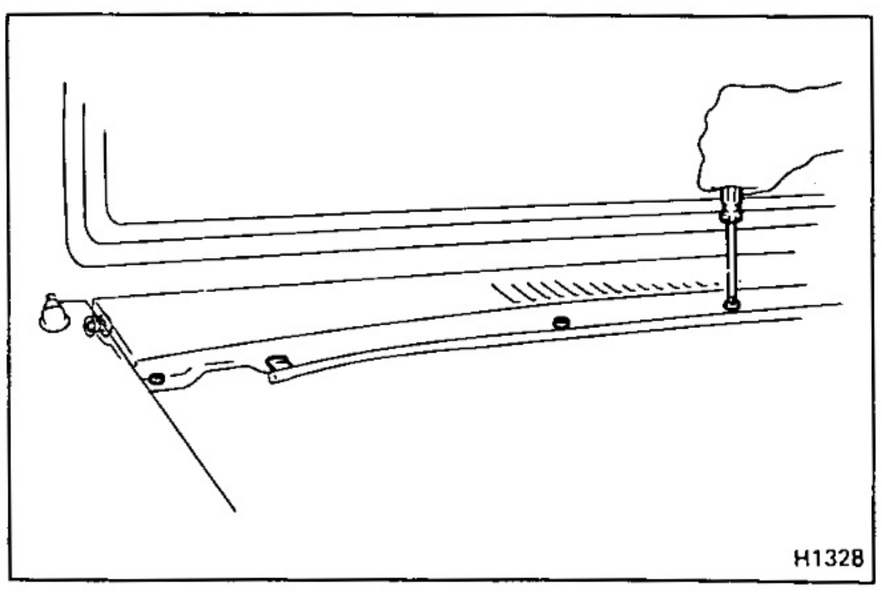

   (b) Remove the two clips and six screws and cowl louver.

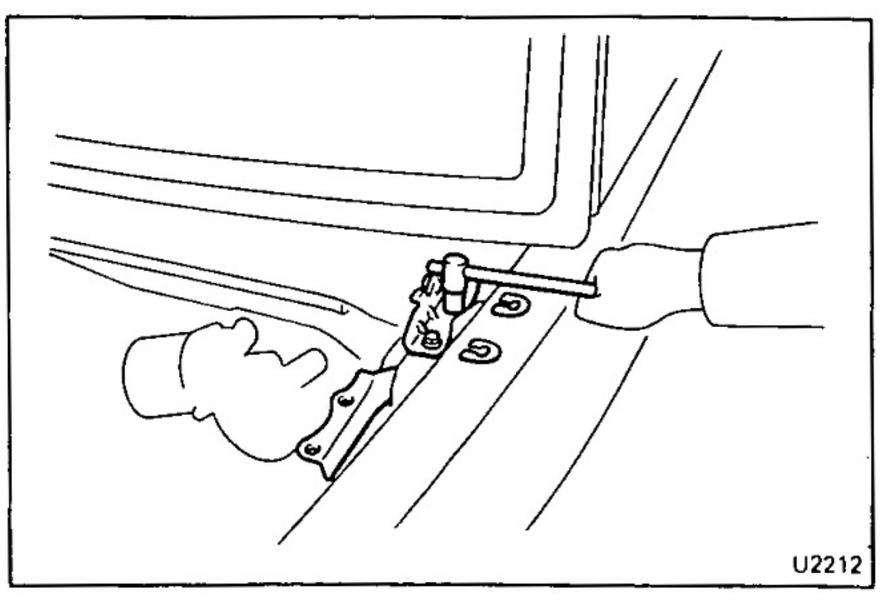

   (c) Adjust the hood by increasing or decreasing the number of shims.

   (d) Install the cowl louver with two clips and six screws.

   (e) Install the hood with four bolts and connect the washer hose.

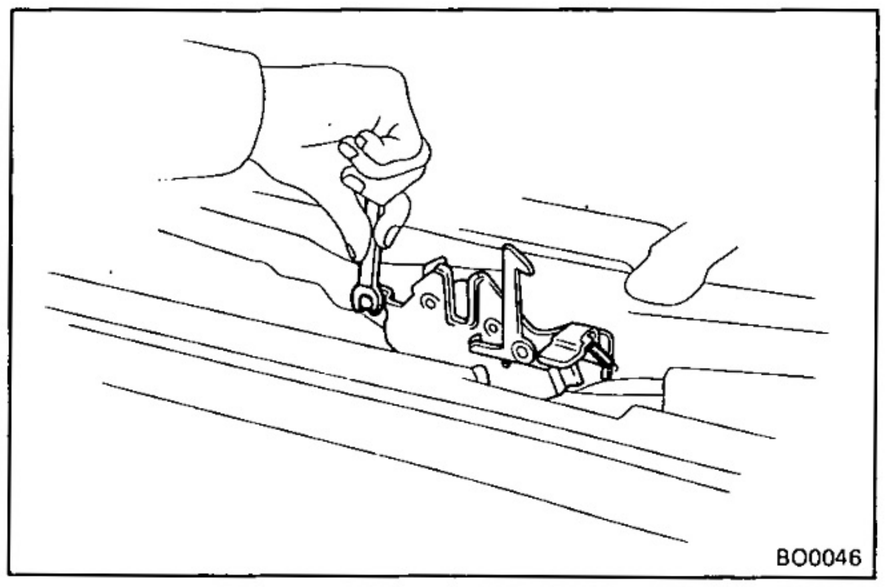

4. ADJUST HOOD LOCK

Adjust the hood lock by loosening the mounting bolts.

FRONT DOOR (60 Series)

COMPONENTS

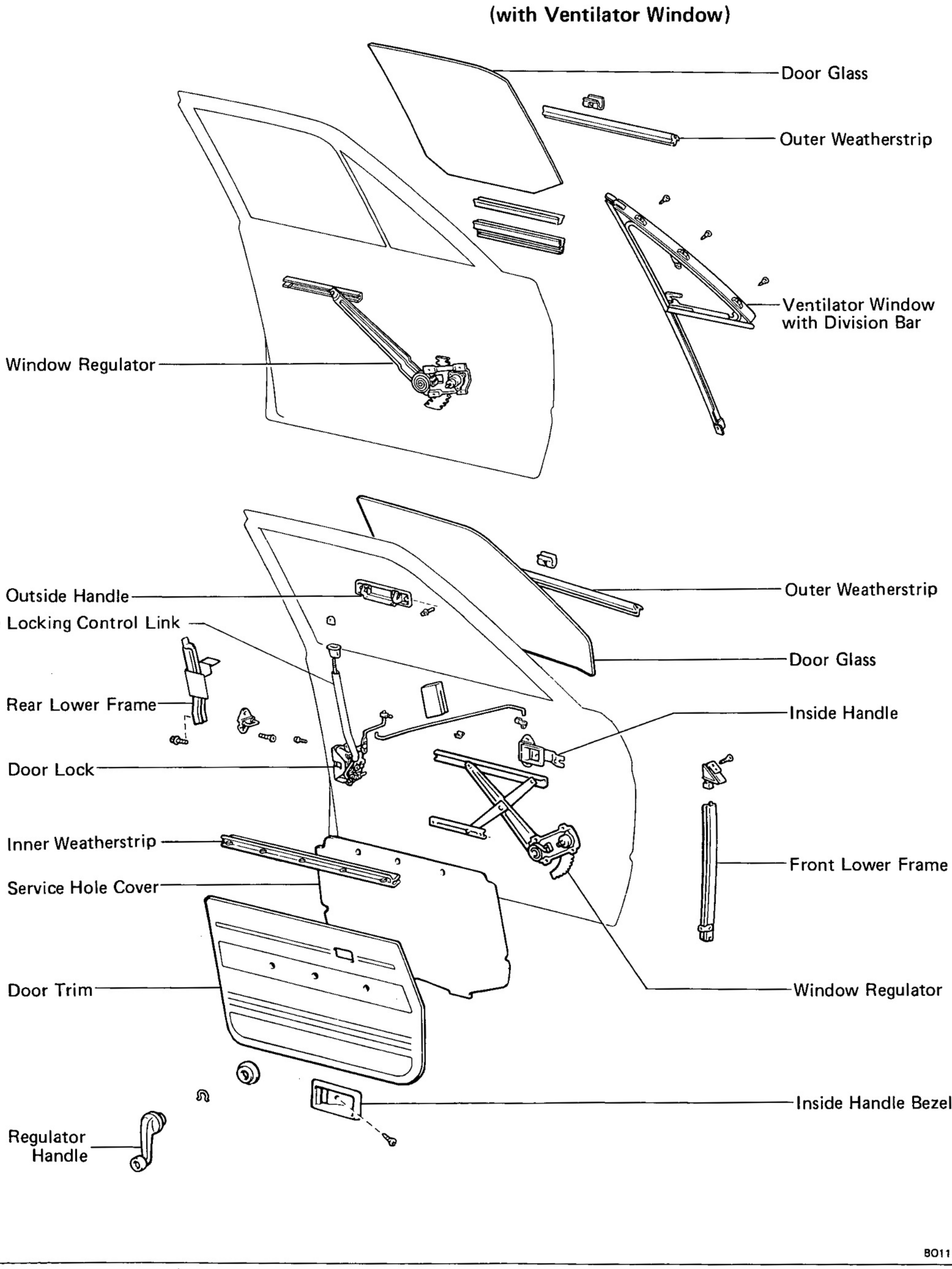

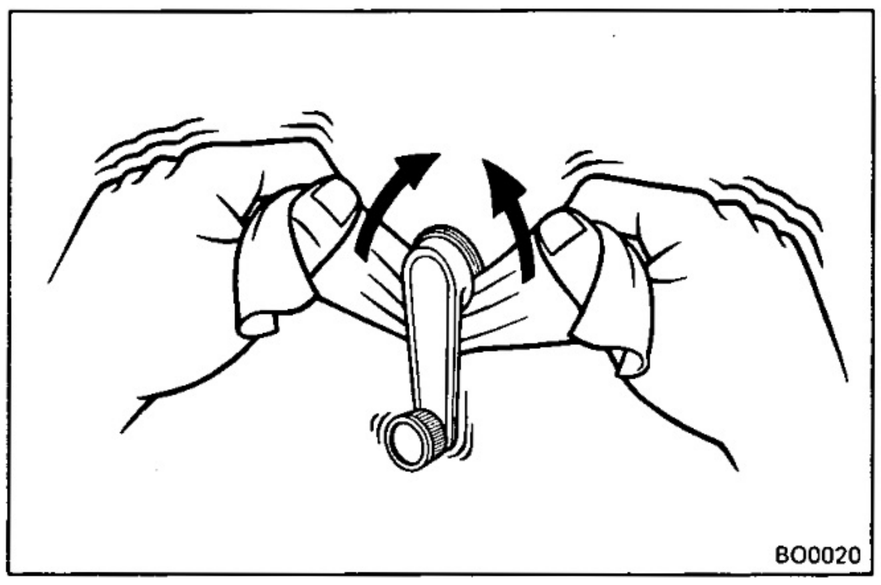

DISASSEMBLY OF FRONT DOOR

1. REMOVE WINDOW REGULATOR HANDLE

   Pull off the snap ring with a cloth and remove the regulator handle.

2. REMOVE ARMREST OR PULL HANDLE

3. REMOVE INSIDE HANDLE BEZEL

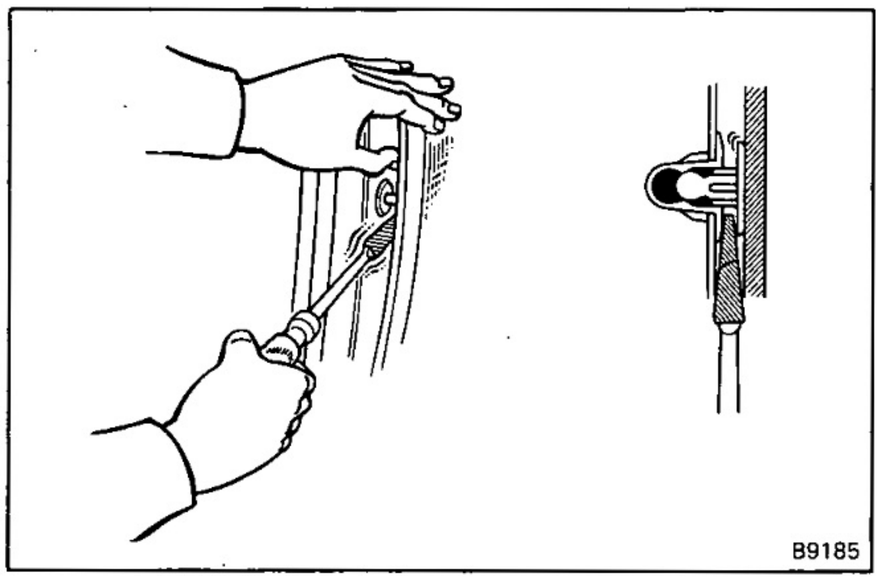

4. REMOVE DOOR TRIM

   (a) Insert a screwdriver between the trim retainers and door panel to pry it loose.

   NOTE: Tape the screwdriver tip before use.

   (b) (w/power window)
   Disconnect the connector from the switch.

5. REMOVE GLASS RUN

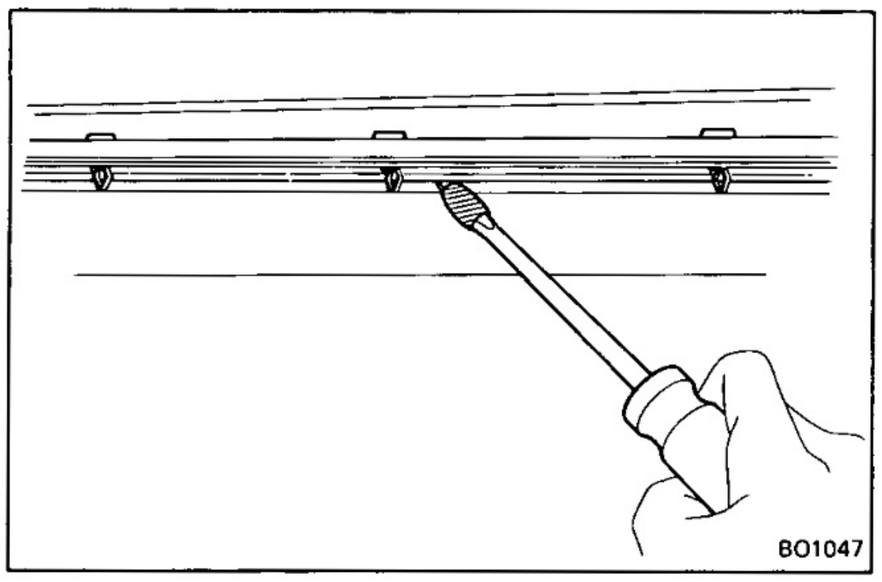

6. REMOVE OUTER AND INNER WEATHERSTRIP

   (a) Pull off the outer weatherstrip.

   (b) Using a screwdriver, remove the inner weatherstrip.

7. REMOVE REAR VIEW MIRROR

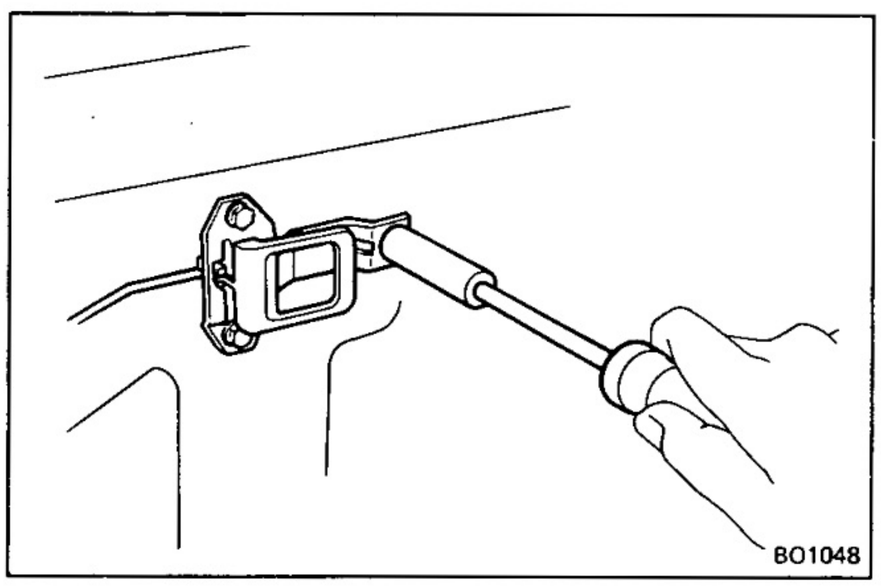

8. REMOVE INSIDE HANDLE

   (a) Remove the three screws.

   (b) Partly tear off the service hole cover and disconnect the inside handle link from the door lock.

9. REMOVE SERVICE HOLE COVER

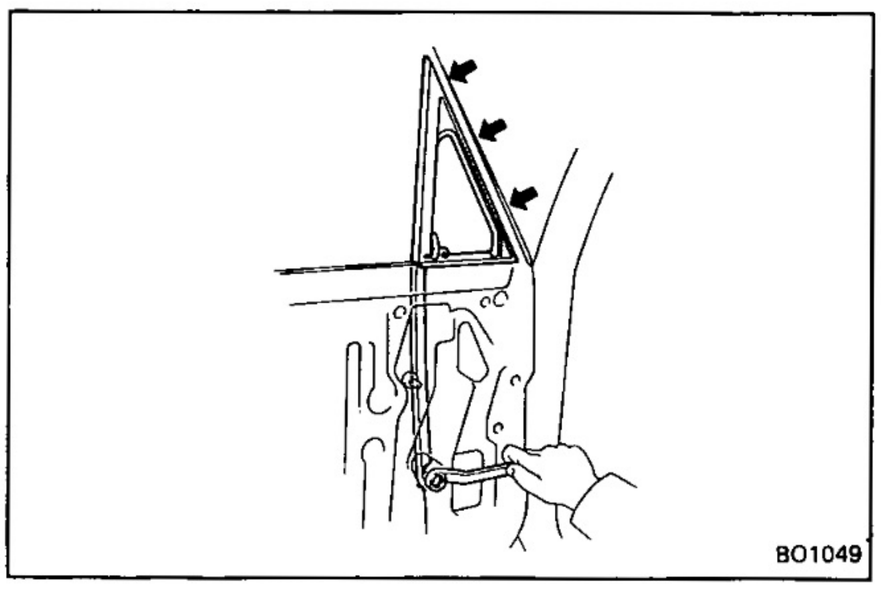

10. (w/ Ventilator Window type)
    REMOVE VENTILATOR WINDOW

    (a) Remove two glass channel mounting bolts and place the glass on the bottom of the door cavity.

    (b) Peel off the weatherstrip on the upper side of the ventilator window.

    (c) Remove the three screws.

    (d) Remove the division bar set bolt.

    (e) Remove the ventilator window by pulling it upward.

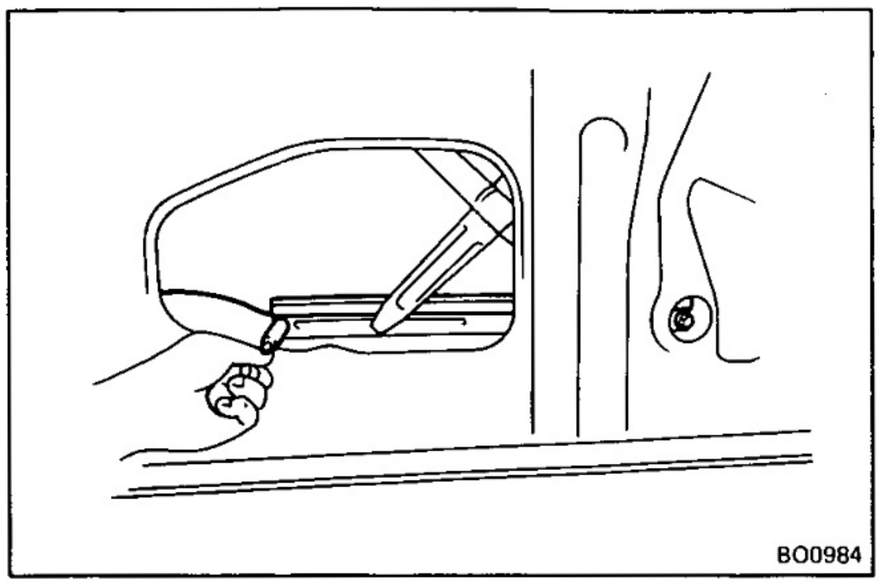

11. REMOVE DOOR GLASS

(a) (w/o ventilator window type)
Remove the two glass channel mounting bolts.

(b) Remove the door glass by pulling it upward.

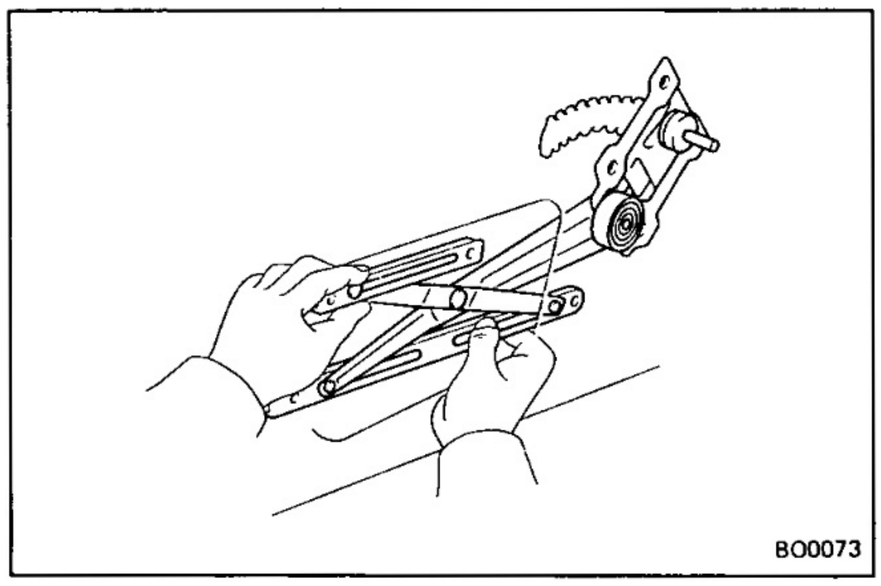

12. REMOVE WINDOW REGULATOR

(a) (w/o ventilator window type)
Remove the two equalizer arm bracket mounting bolts.

(b) (w/ power window)
Disconnect the connector from the motor and remove the four bolts.

(w/o power window)
Remove the three bolts.

(c) Remove the regulator through the service hole.

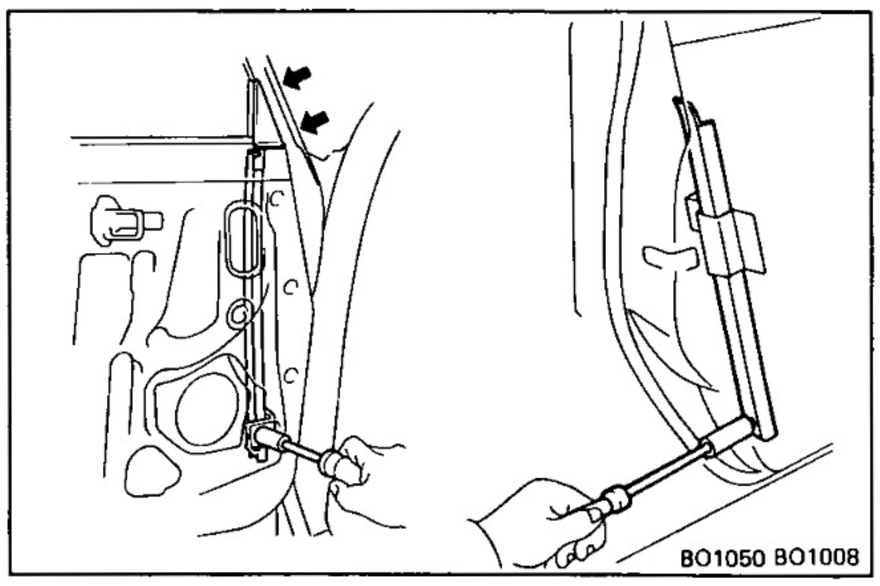

13. (w/o Ventilator Window type) REMOVE FRONT LOWER FRAME

Remove the two screws, bolt and front lower frame.

14. REMOVE REAR LOWER FRAME

Remove the bolt and rear lower frame.

15. DISCONNECT INSIDE LOCKING CONTROL LINK FROM DOOR LOCK

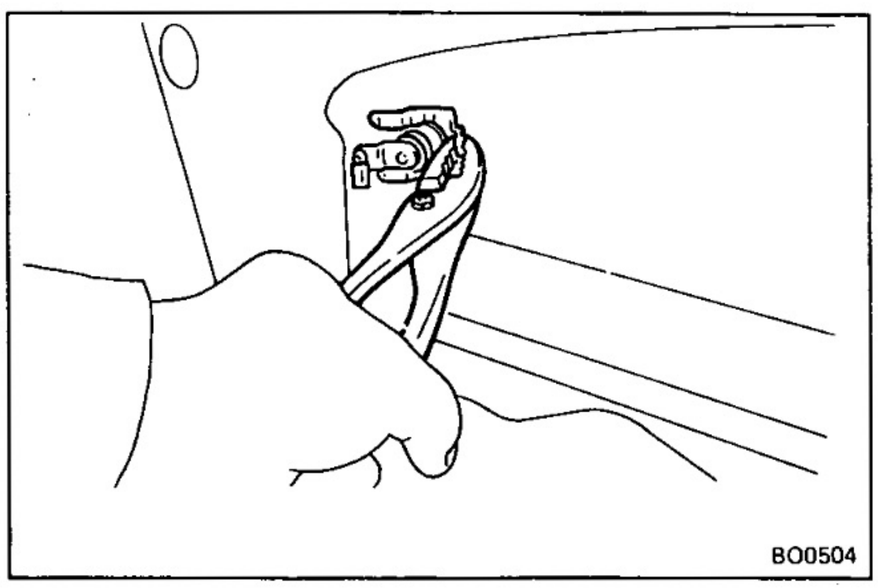

16. REMOVE DOOR LOCK CYLINDER

(a) Disconnect the link from the cylinder.

(b) Remove the retainer and cylinder.

17. REMOVE OUTSIDE HANDLE

(a) Disconnect the link from the outside handle.

(b) Remove the two bolts and outside handle.

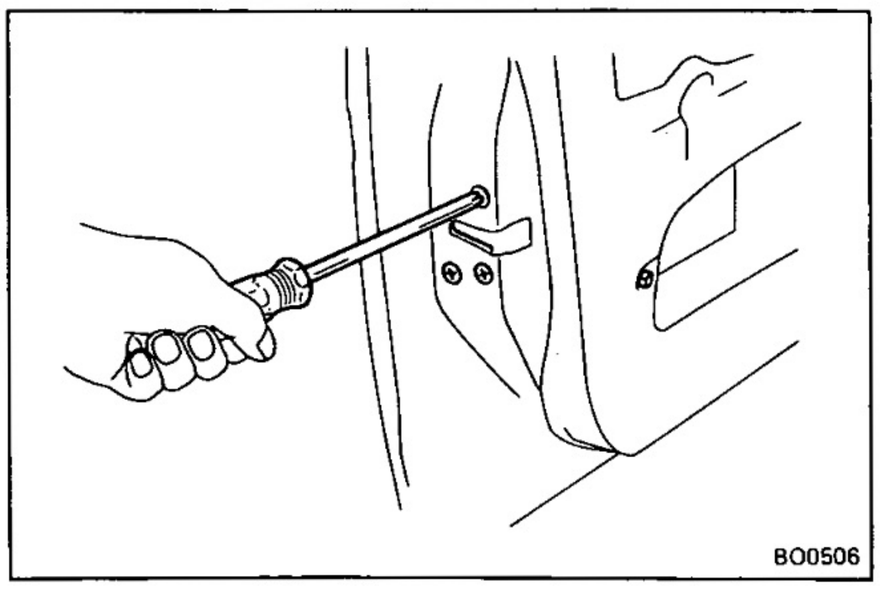

18. REMOVE DOOR LOCK

(w/ door lock solenoid)
Remove the three screws, bolt and door lock, and disconnect the connector from the solenoid.

(w/o door lock solenoid)
Remove the three screws and door lock.

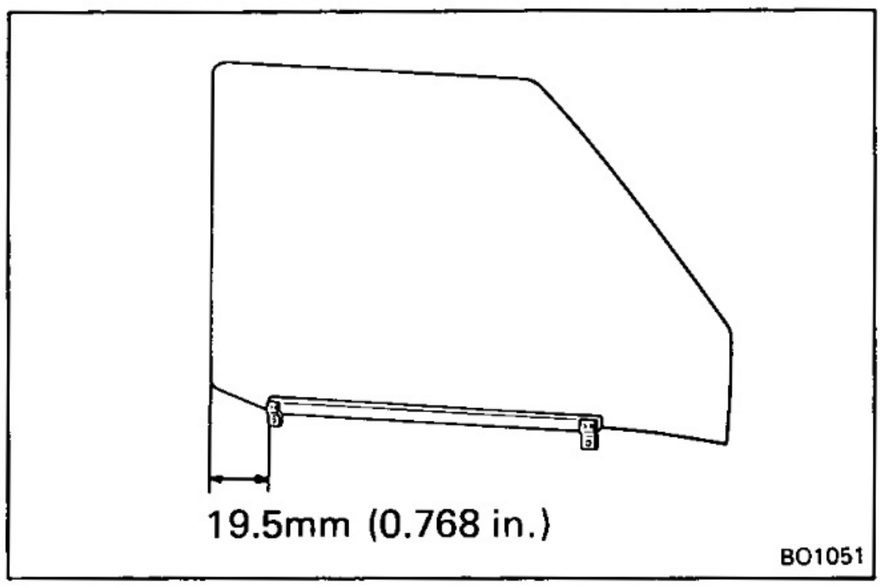

REPLACEMENT OF GLASS

1. REMOVE GLASS CHANNEL WITH SCREWDRIVER OR SUCH
2. APPLY SOAPY WATER TO INSIDE OF WEATHER-STRIP
3. TAP ON CHANNEL WITH PLASTIC HAMMER

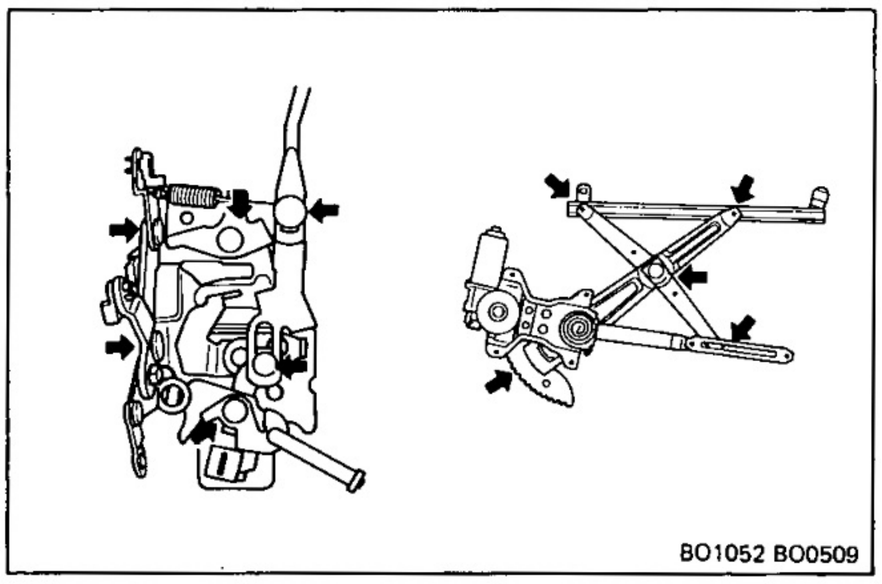

ASSEMBLY OF FRONT DOOR

1. BEFORE INSTALLING PARTS, APPLY MP GREASE TO THEM
   (a) Apply MP grease to the sliding surface and gear of the window regulator.
   (b) Apply MP grease to the sliding surface of the door lock.

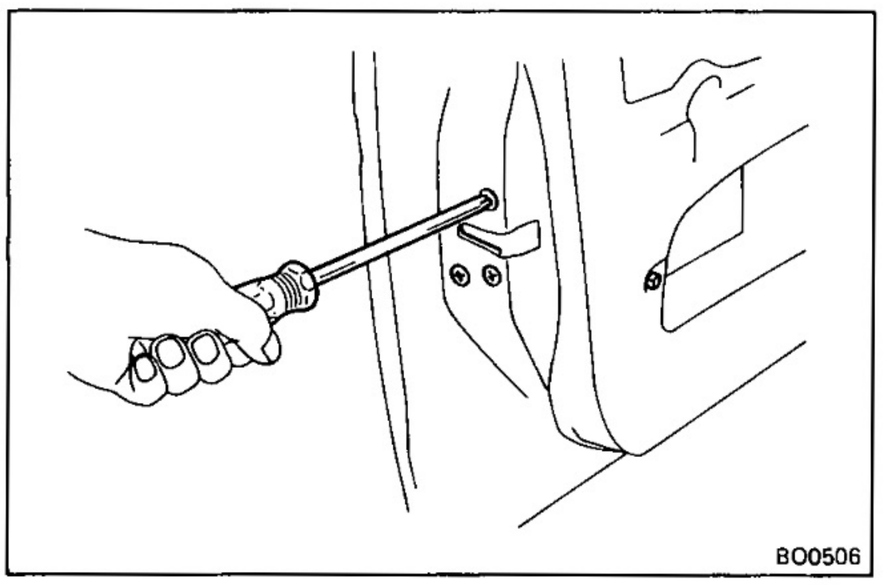

2. INSTALL DOOR LOCK

   (w/ door lock solenoid)
   Connect the connector to the door lock solenoid and install the door lock with the three screws and bolt.

   (w/o door lock solenoid)
   Install the door lock with the three screws.

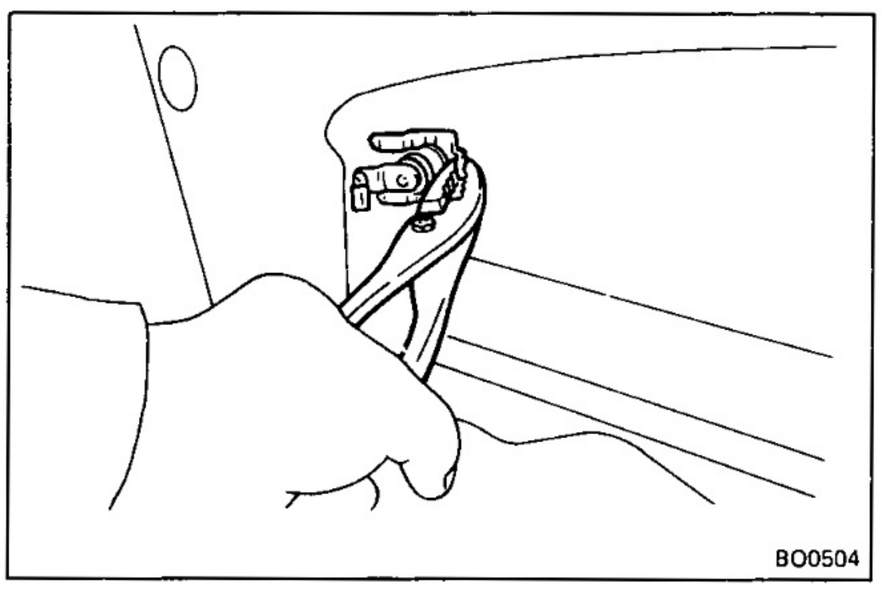

3. INSTALL DOOR LOCK CYLINDER

   Install the door lock cylinder with the retainer and connect the control link to it.

4. INSTALL OUTSIDE HANDLE

   Install the outside handle with the two bolts and connect the control link to it.

5. CONNECT INSIDE LOCKING CONTROL LINK TO DOOR LOCK

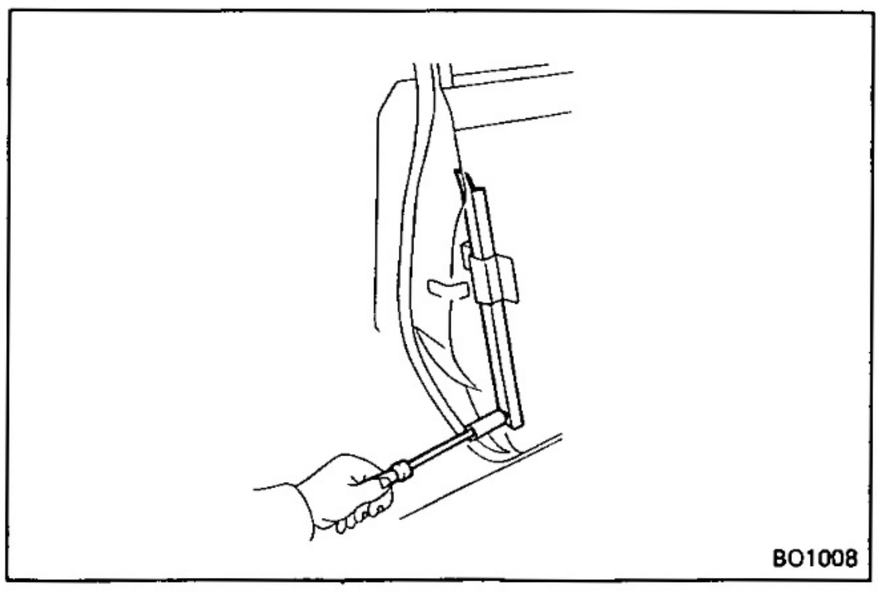

6. CHECK DOOR LOCK OPERATION
7. INSTALL REAR LOWER FRAME

   Install the rear lower frame.

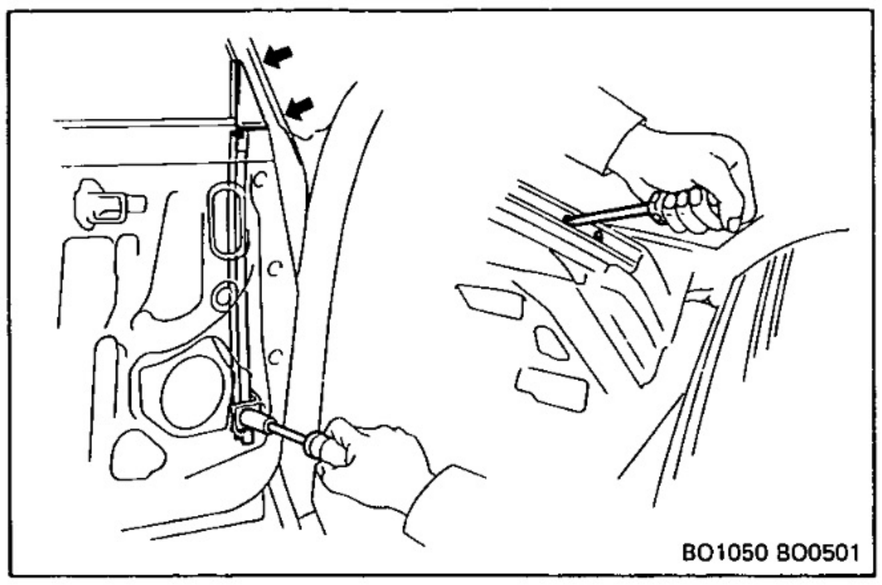

8. **(w/o Ventilator Window type)**
INSTALL FRONT LOWER FRAME

Install the front lower frame with two screws and bolt.

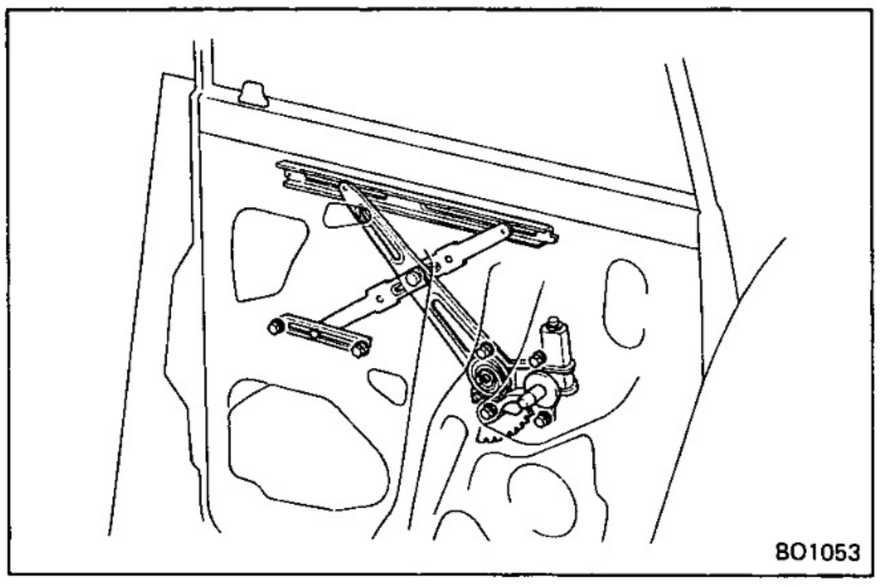

9. **INSTALL WINDOW REGULATOR**

(a) (w/ power window)
Connect the connector to the motor and install the regulator with four bolts.

(w/o power window)
Install the regulator with three bolts.

(b) (w/o ventilator window type)
Install the two equalizer arm bracket mounting bolts.

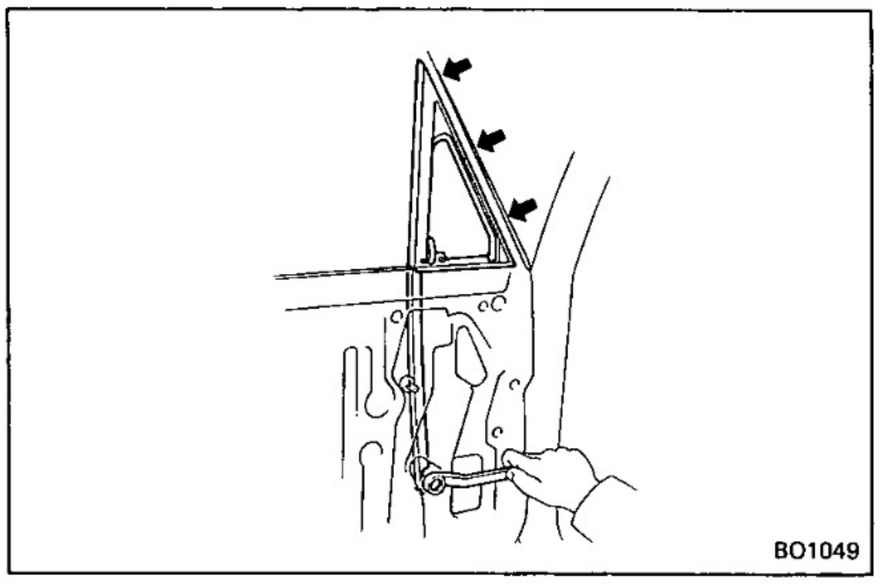

10. **PLACE DOOR GLASS IN DOOR**

Insert the door glass in the door cavity.

11. **(w/ Ventilator Window type)**
INSTALL VENTILATOR WINDOW

(a) Install the three screws.

(b) Install the division bar set bolt.

12. **INSTALL INNER AND OUTER WEATHERSTRIPS**

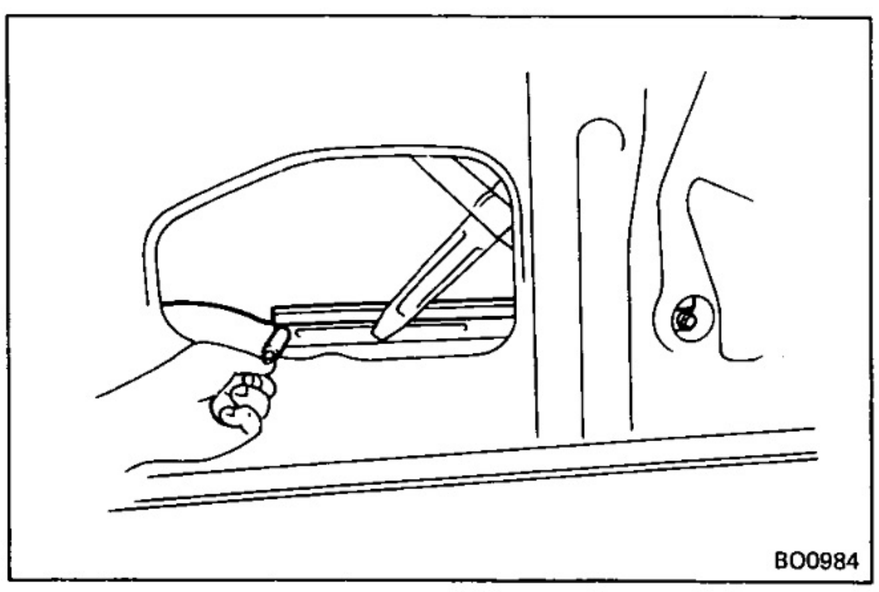

13. **INSTALL DOOR GLASS**

Install the glass to the regulator with the two mounting bolts.

14. **INSTALL GLASS RUN**

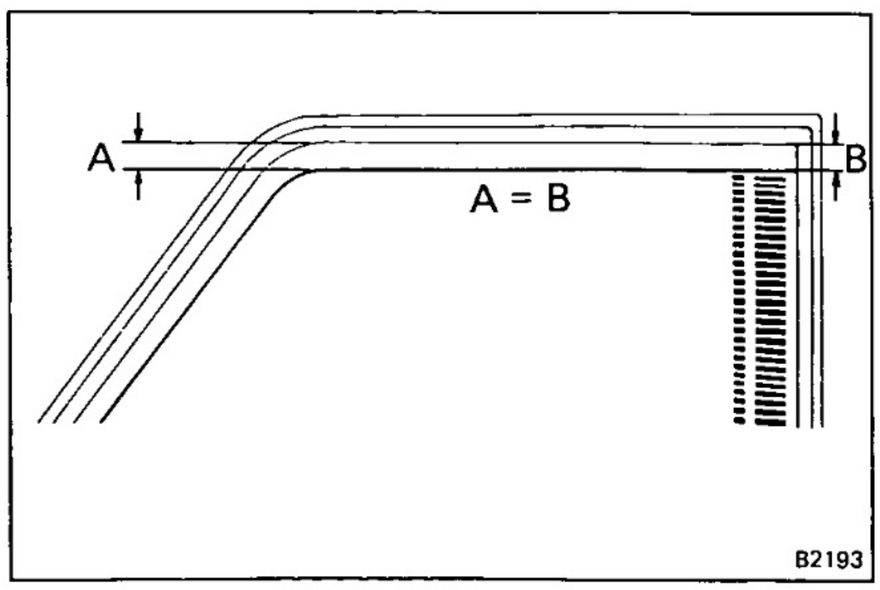

15. **ADJUST DOOR GLASS**

Adjust the equalizer arm up or down and tighten it where dimensions A and B are equal as shown.

16. **INSTALL REAR VIEW MIRROR**

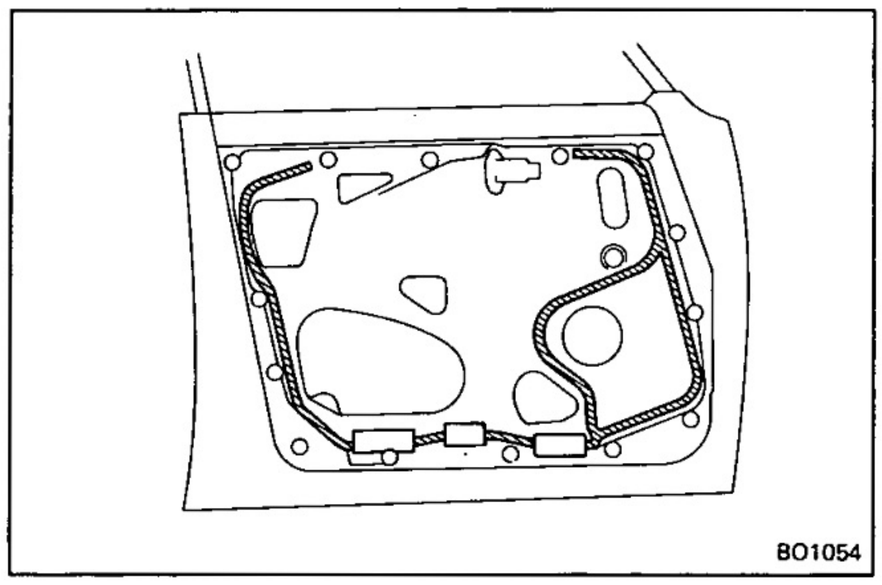

17. INSTALL SERVICE HOLE COVER

(a) Seal the service hole cover with adhesive.

(b) Insert the lower edge of the service hole cover into the panel slit.

(c) Seal the panel slit with cotton tape.

CAUTION: Do not block the trim clip seating with the tape.

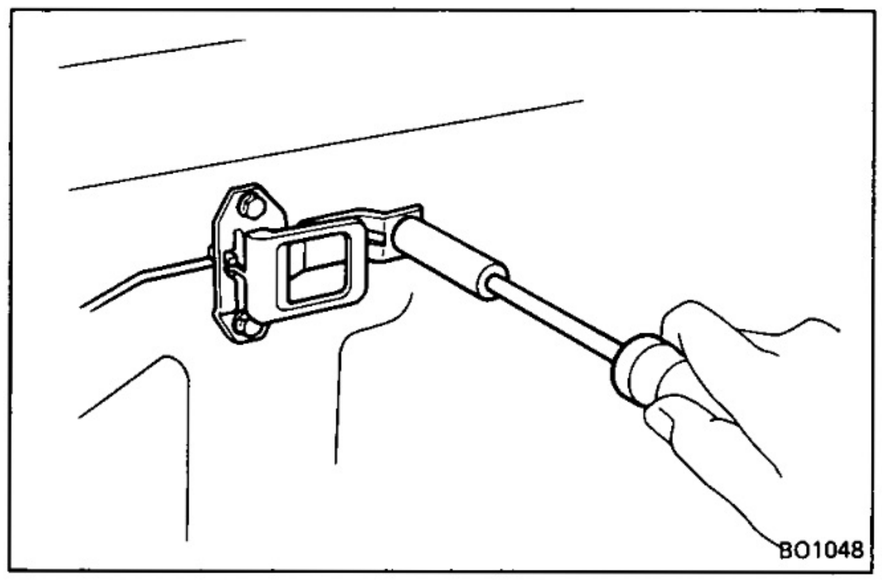

18. INSTALL INSIDE HANDLE

(a) Connect the link to the door lock.

(b) Install the inside handle with the three screws.

19. INSTALL DOOR TRIM

(a) (w/ power window)
Connect the connector to the switch.

(b) Install the door trim with clips to the inside door panel by tapping.

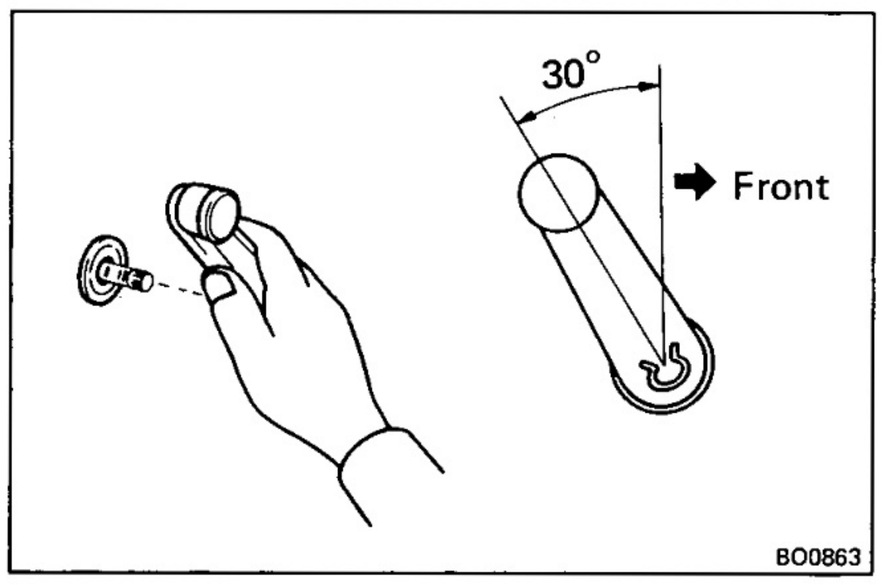

20. INSTALL WINDOW REGULATOR HANDLE

With the door glass fully closed, install the window regulator handle with a snap ring as shown.

21. INSTALL ARMREST OR PULL HANDLE

22. INSTALL INSIDE HANDLE BEZEL

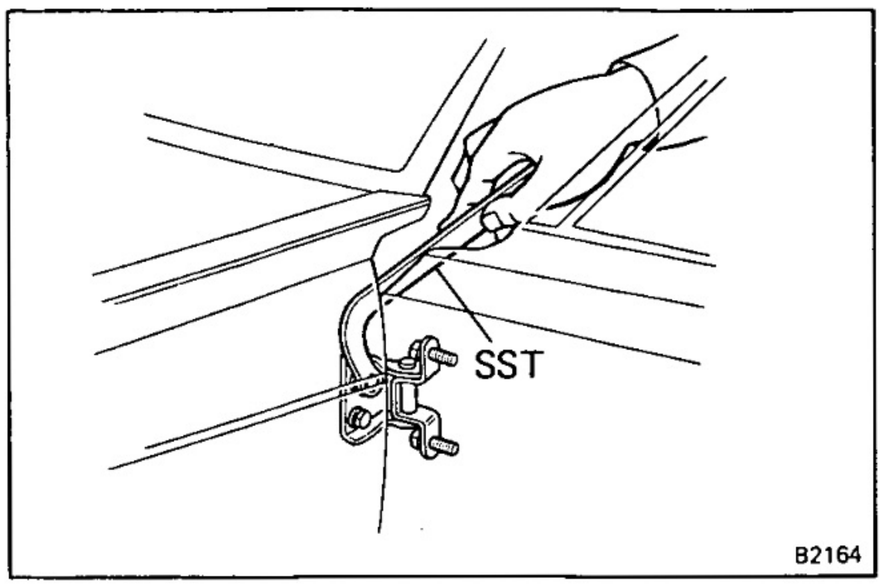

ADJUSTMENT OF FRONT DOOR

1. ADJUST DOOR IN FORWARD/REARWARD AND VERTICAL DIRECTIONS

Using SST, adjust the door by loosening the body side hinge bolts.

SST 09812-00010

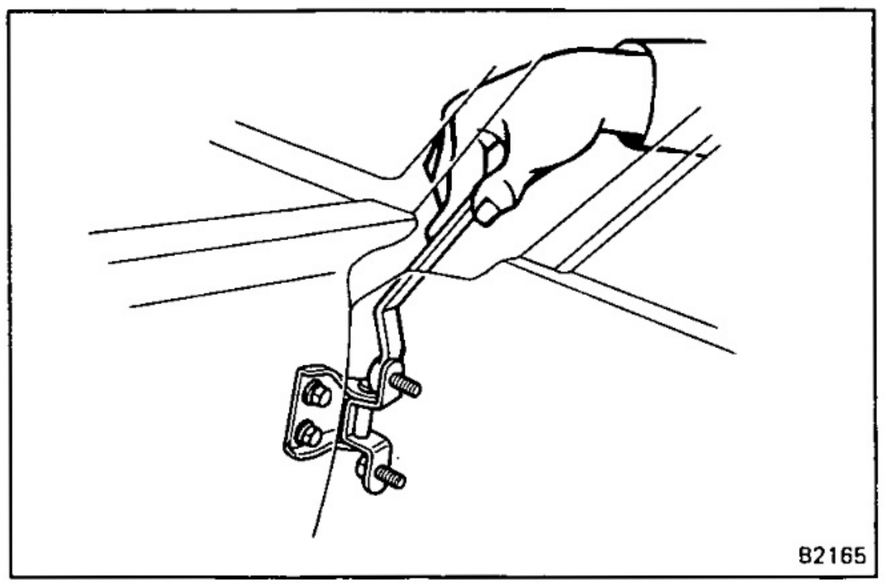

2. ADJUST DOOR IN LEFT/RIGHT AND VERTICAL DIRECTIONS

Adjust the door by loosening the door side hinge bolts.

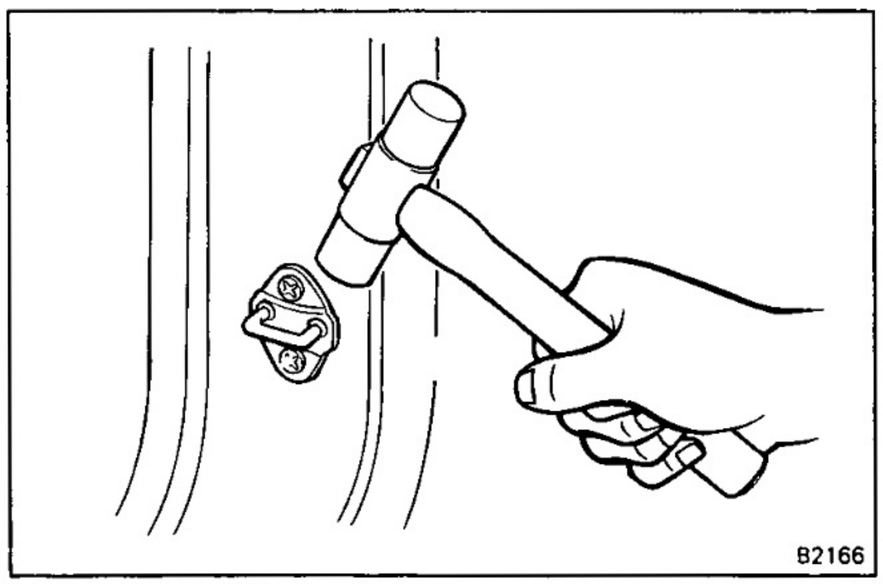

3. ADJUST DOOR LOCK STRIKER

(a) Check that the door fit and door lock linkages are adjusted correctly.

(b) Adjust the door lock striker by loosening the screws.

FRONT DOOR (70 Series)

COMPONENTS

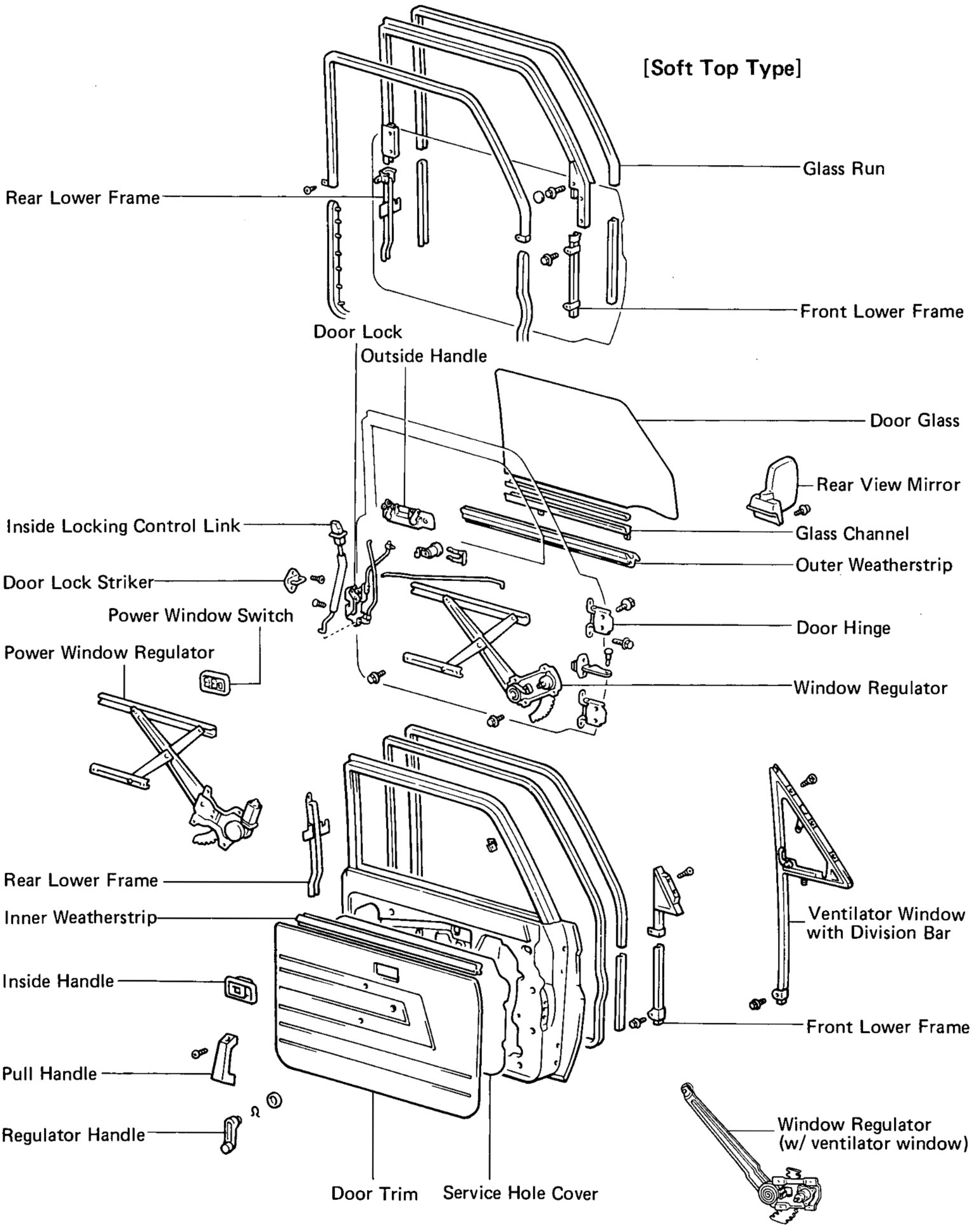

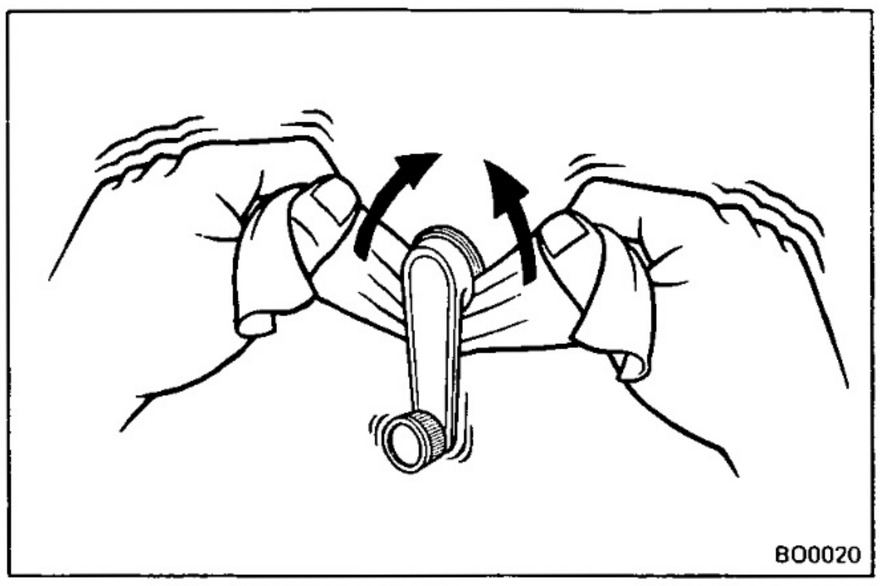

DISASSEMBLY OF FRONT DOOR

1. REMOVE WINDOW REGULATOR HANDLE

   Pull off the snap ring with a cloth and remove the regulator handle.

2. REMOVE ARMREST OR PULL HANDLE

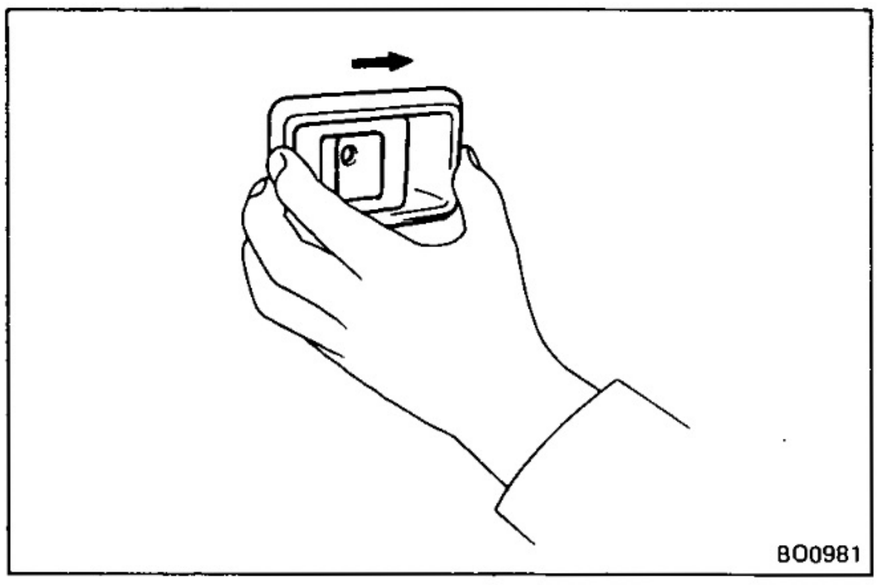

3. REMOVE INSIDE HANDLE
   (a) Remove the screw.
   (b) Slide forward and pull off the inside handle.
   (c) Disconnect the link from the inside handle.

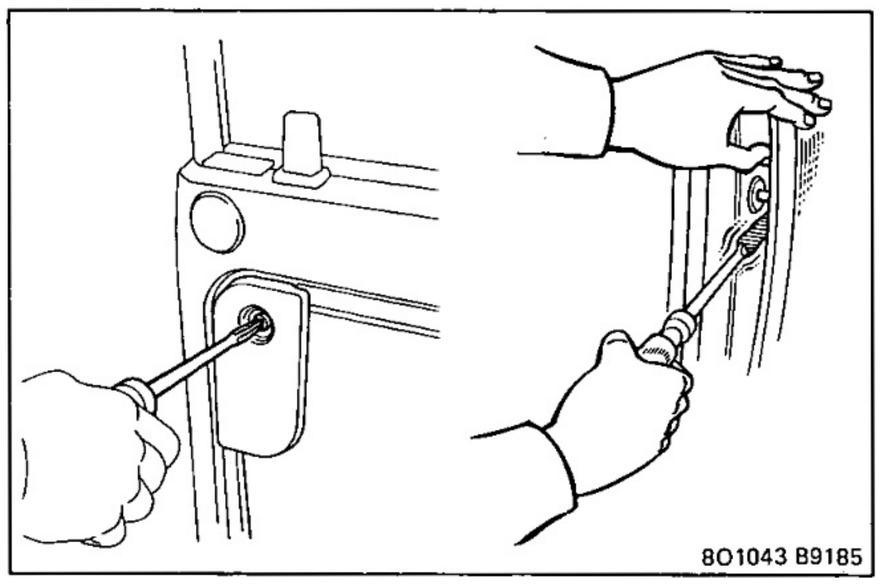

4. REMOVE DOOR TRIM
   (a) (w/ soft top)
   Remove the screw and service cover.
   (b) Insert a screwdriver between the trim retainers and door panel to pry it loose.

   NOTE: Tape the screwdriver tip before use.

   (c) (w/ power window)
   Disconnect the connector from the switch.

5. REMOVE REAR VIEW MIRROR

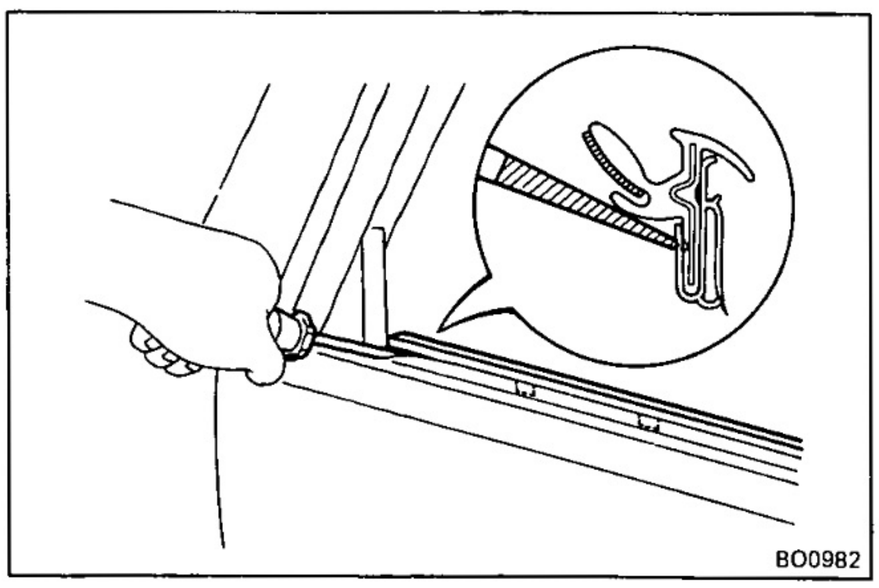

6. REMOVE INNER AND OUTER WEATHERSTRIP
   (a) Using a screwdriver, remove the inner weatherstrip.
   (b) Pull off the outer weatherstrip.

7. REMOVE SERVICE HOLE COVER

8. DISCONNECT INSIDE OPENING CONTROL LINK FROM DOOR LOCK

9. REMOVE GLASS RUN

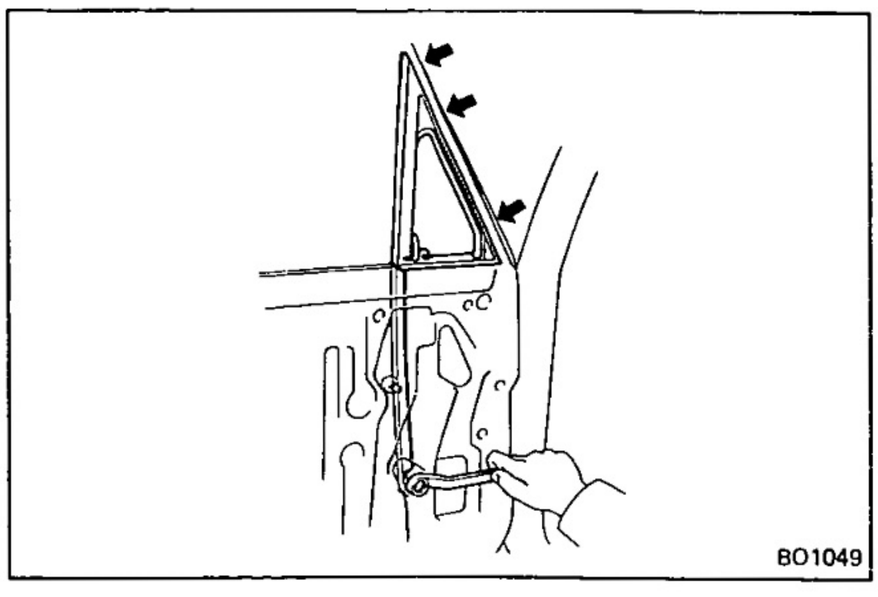

10. (w/ Ventilator Window type)
    REMOVE VENTILATOR WINDOW
    (a) Peel off the weatherstrip on the upper side of the ventilator window.
    (b) Remove the three screws.
    (c) Remove the division bar set bolt.
    (d) Remove the ventilator window by pulling it upward.

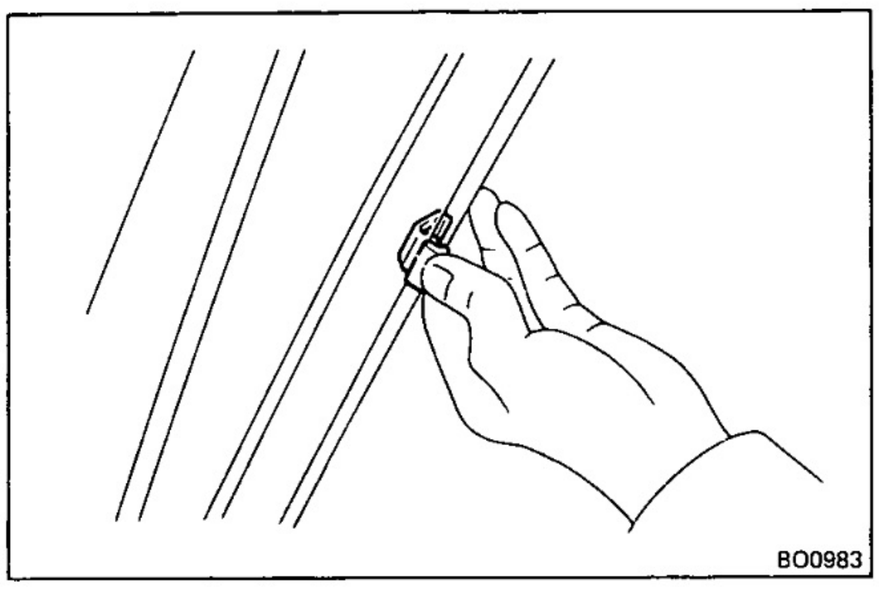

11. (w/o Ventilator Window type)
REMOVE CLIP

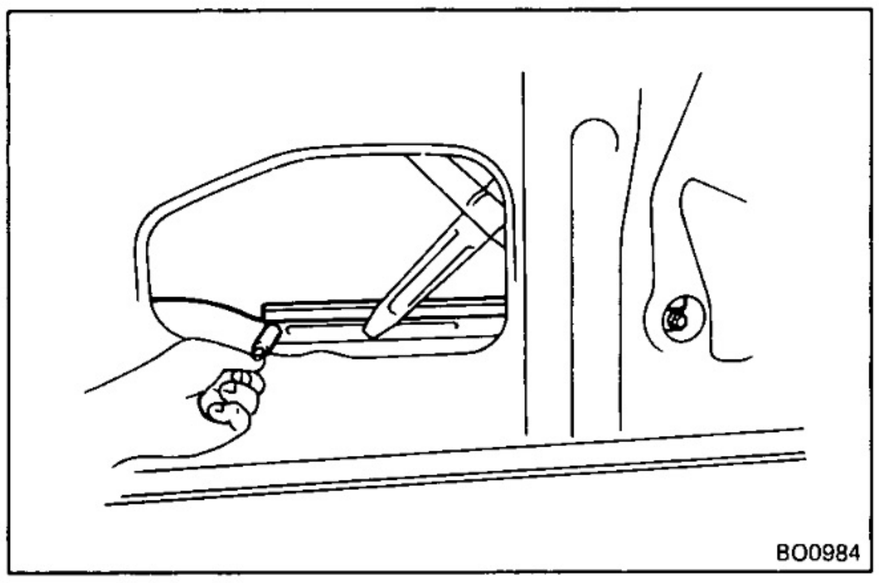

12. REMOVE DOOR GLASS

(a) (w/o ventilator window type)
Remove two glass channel mounting bolts.

(b) Incline the door glass and pull it upward.

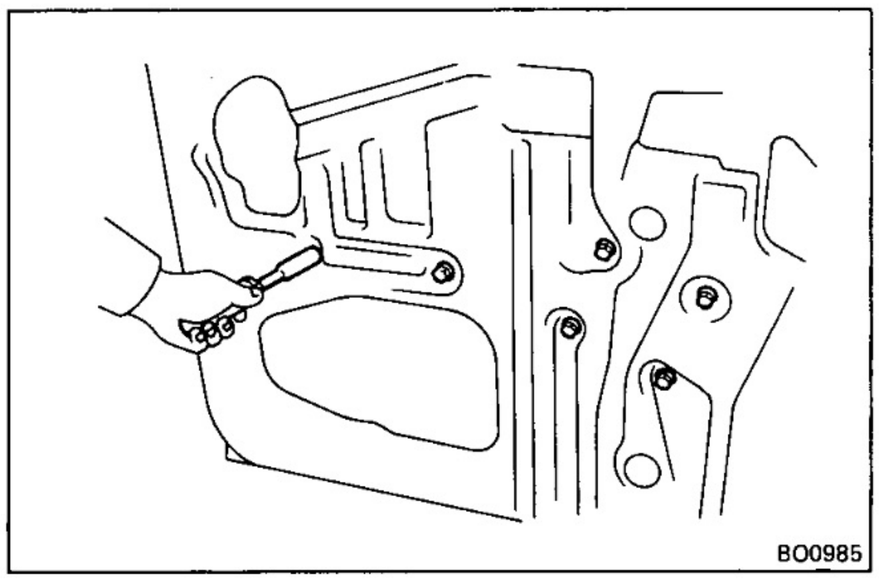

13. REMOVE WINDOW REGULATOR

(a) (w/o ventilator window type)
Remove the two equalizer arm bracket mounting bolts.

(b) (w/ power window)
Disconnect the connector from the motor and remove the four bolts.

(w/o power window)
Remove the three bolts.

(c) Remove the regulator through the service hole.

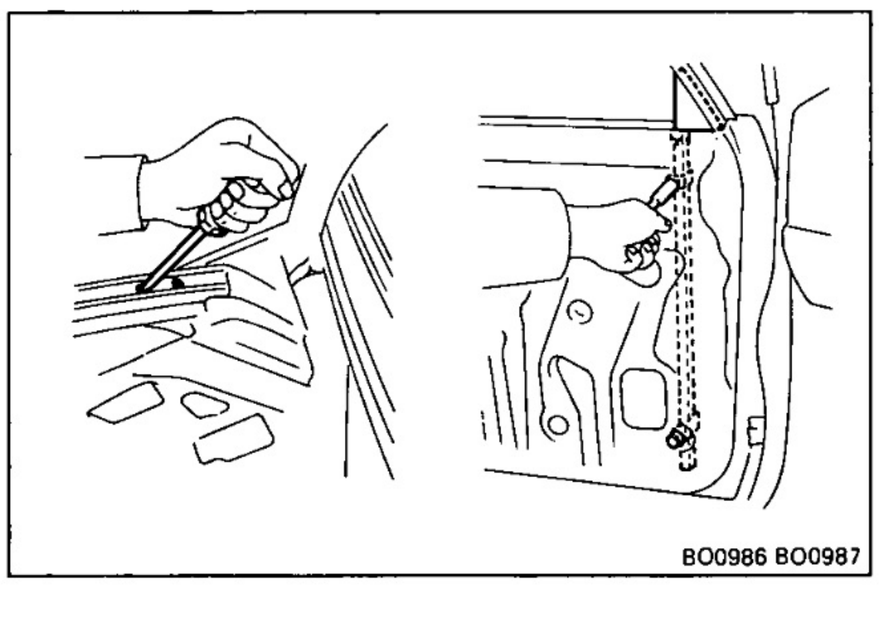

14. (w/o Ventilator Window type)
REMOVE FRONT LOWER FRAME

(w/ soft top)
Remove the two bolts and front lower frame.

(w/o soft top)
Remove the two screws, two bolts and front lower frame.

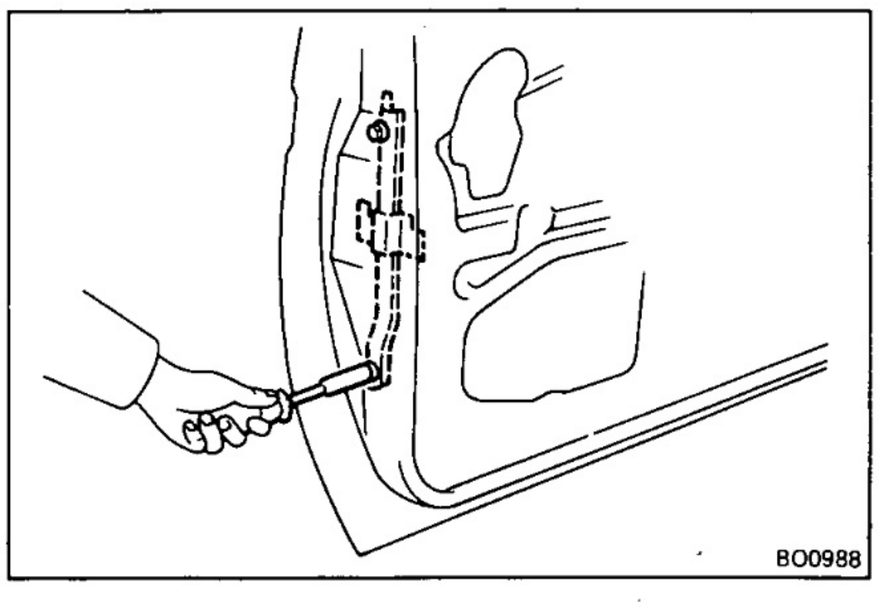

15. REMOVE REAR LOWER FRAME

(w/ soft top)
Remove the two bolts and rear lower frame.

(w/o soft top)
Remove the bolt and rear lower frame.

16. DISCONNECT INSIDE LOCKING CONTROL LINK FROM DOOR LOCK

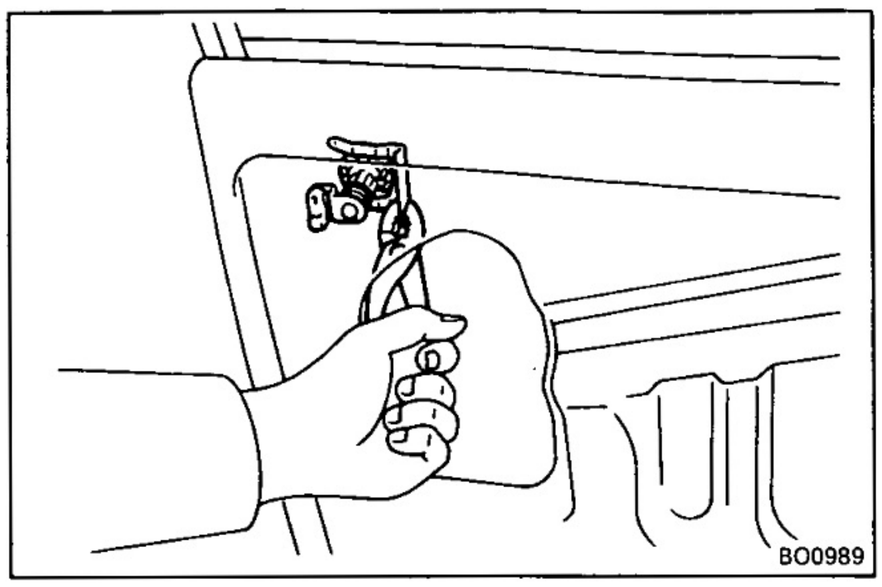

17. REMOVE DOOR LOCK CYLINDER

(a) Disconnect the link from the cylinder.

(b) Remove the retainer and cylinder.

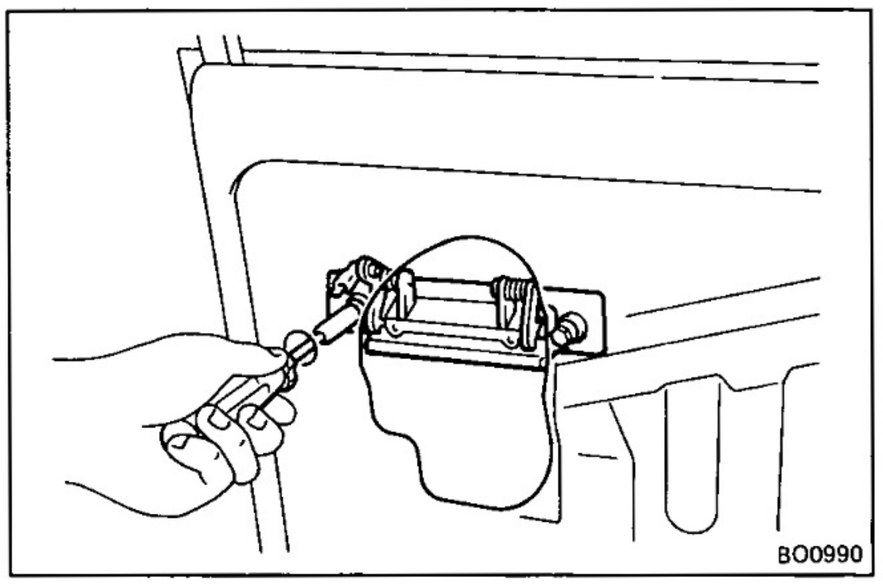

18. REMOVE OUTSIDE HANDLE

(a) Disconnect the link from the outside handle.

(b) Remove the two bolts and outside handle.

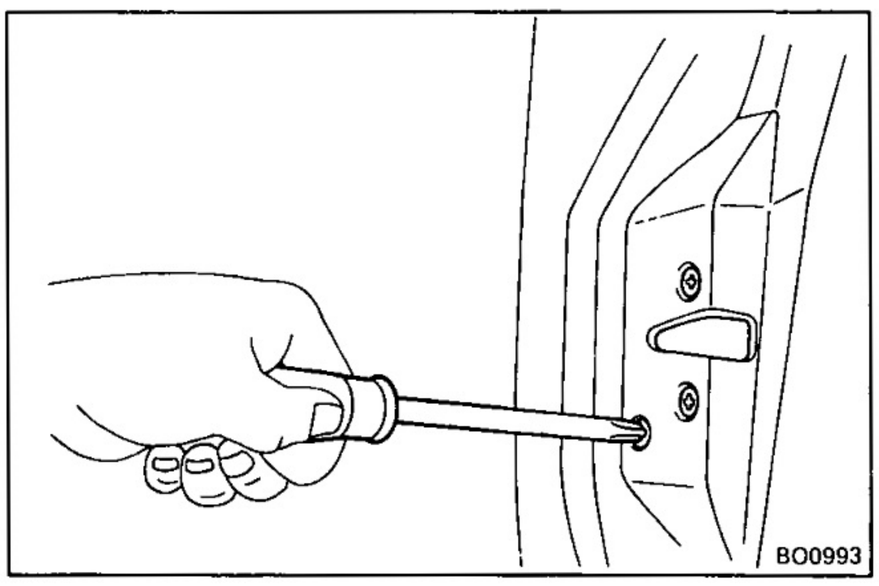

19. REMOVE DOOR LOCK

(w/ door lock solenoid)
Remove the three screws, bolt and door lock, and disconnect the connector from the solenoid.

(w/o door lock solenoid)
Remove the three screws and door lock.

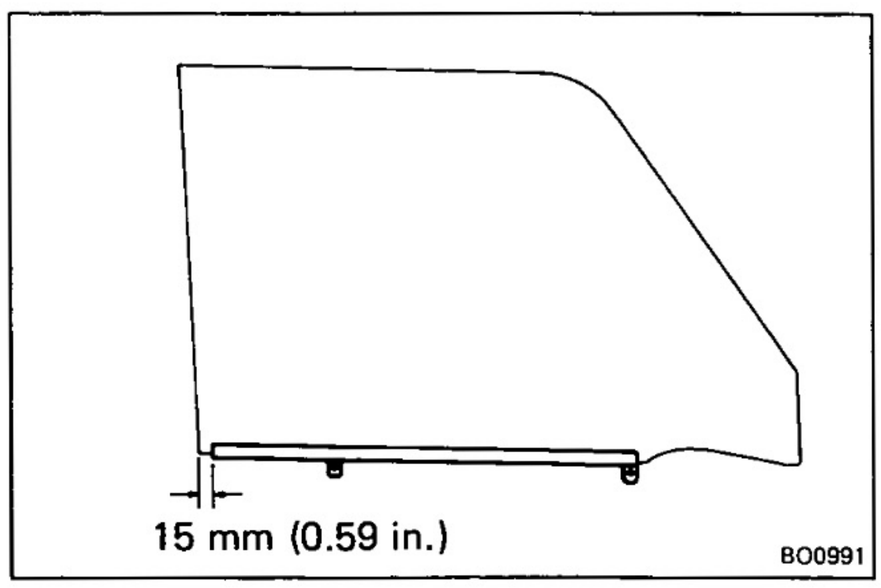

REPLACEMENT OF GLASS

1. REMOVE GLASS CHANNEL WITH SCREWDRIVER OR SUCH

2. APPLY SOAPY WATER TO INSIDE OF WEATHERSTRIP

3. TAP ON CHANNEL WITH PLASTIC HAMMER

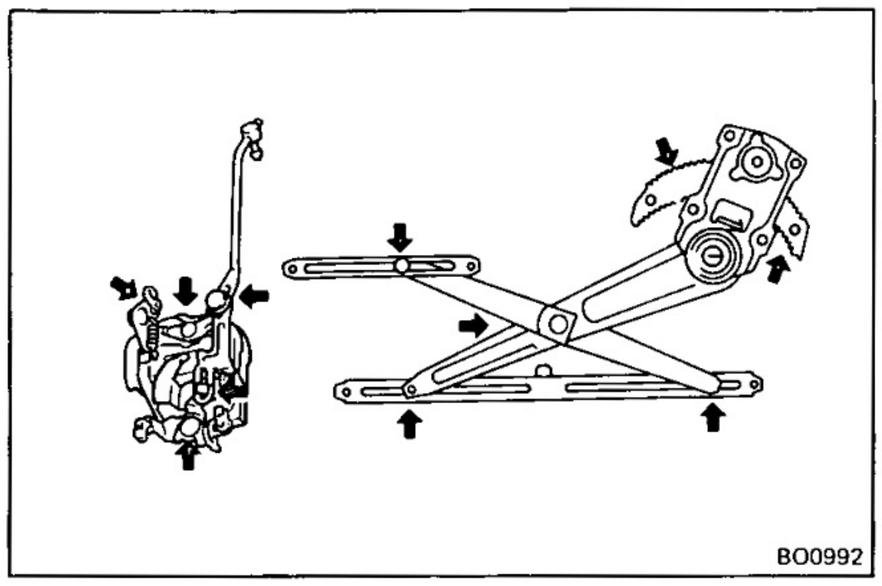

ASSEMBLY OF FRONT DOOR

1. BEFORE INSTALLING PARTS, APPLY MP GREASE TO THEM
   (a) Apply MP grease to the sliding surface and gear of the window regulator.
   (b) Apply MP grease to the sliding surface of the door lock.

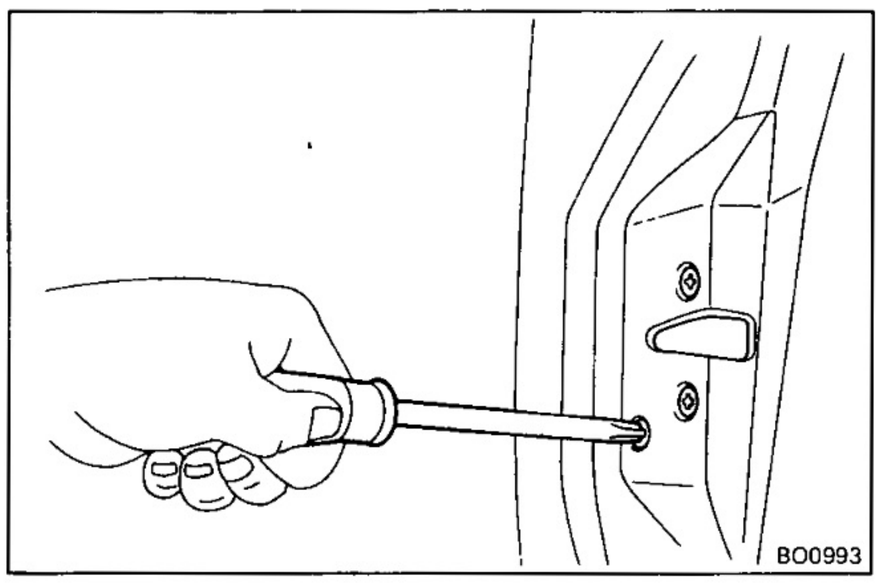

2. INSTALL DOOR LOCK

(w/ door lock solenoid)
Connect the connector to the door lock solenoid and install the door lock with the three screws and bolt.

(w/o door lock solenoid)
Install the door lock with the three screws.

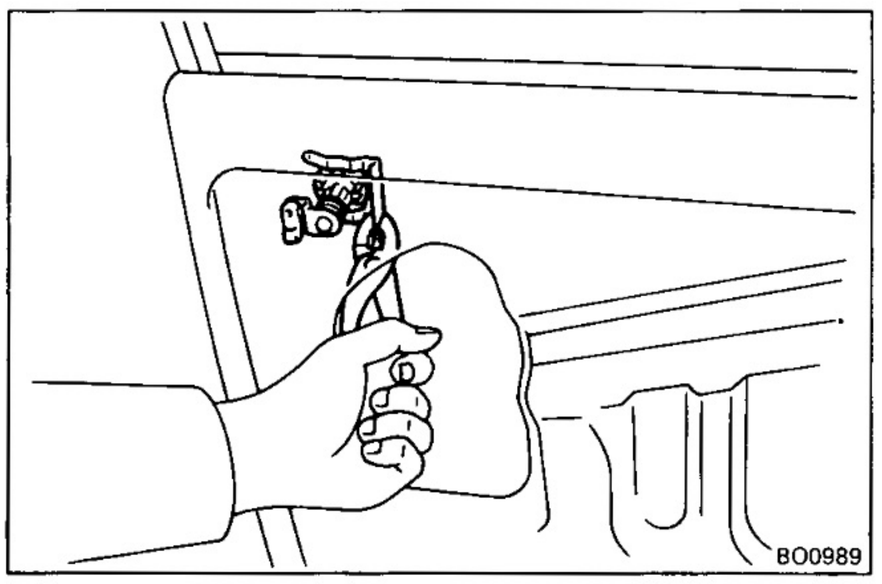

3. INSTALL DOOR LOCK CYLINDER

Install the door lock cylinder with the retainer and connect the control link to it.

4. INSTALL OUTSIDE HANDLE

Install the outside handle with the two bolts and connect the control link to it.

5. CONNECT INSIDE LOCKING CONTROL LINK TO DOOR LOCK

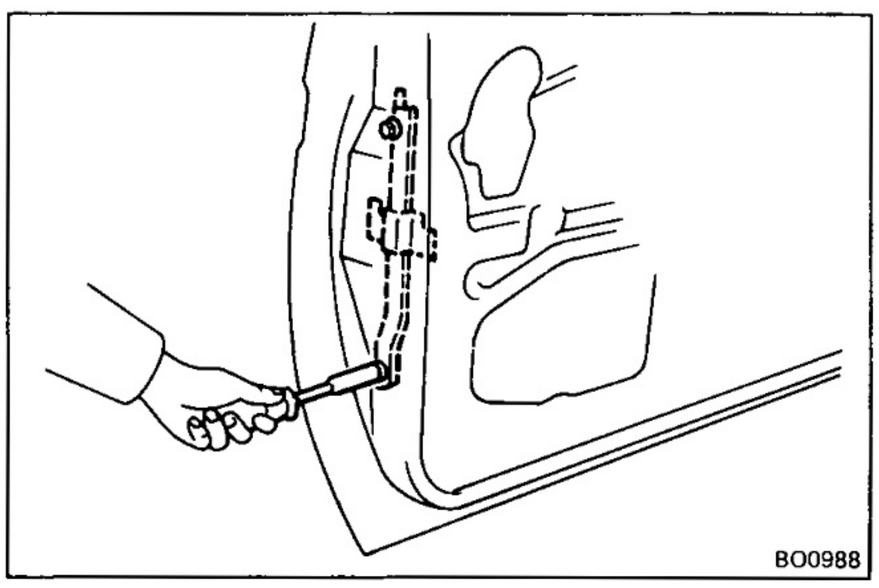

6. CHECK DOOR LOCK OPERATION

7. INSTALL REAR LOWER FRAME

(w/ soft top)
Install the rear lower frame with two bolts.

(w/o soft top)
Install the rear lower frame with bolt.

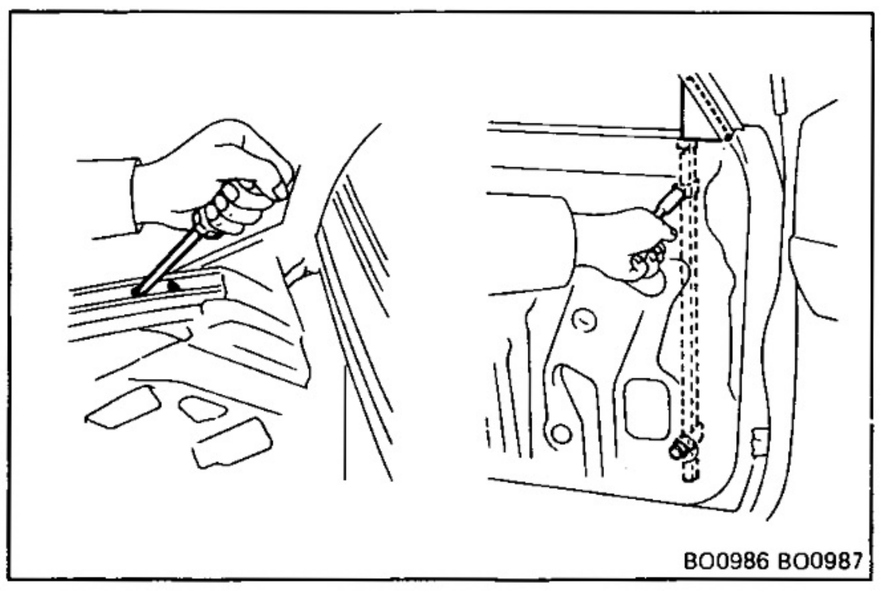

8. (w/o Ventilator Window type)
INSTALL FRONT LOWER FRAME

(w/ soft top)
Install the front lower frame with two bolts.

(w/o soft top)
Install the front lower frame with two screws and two bolts.

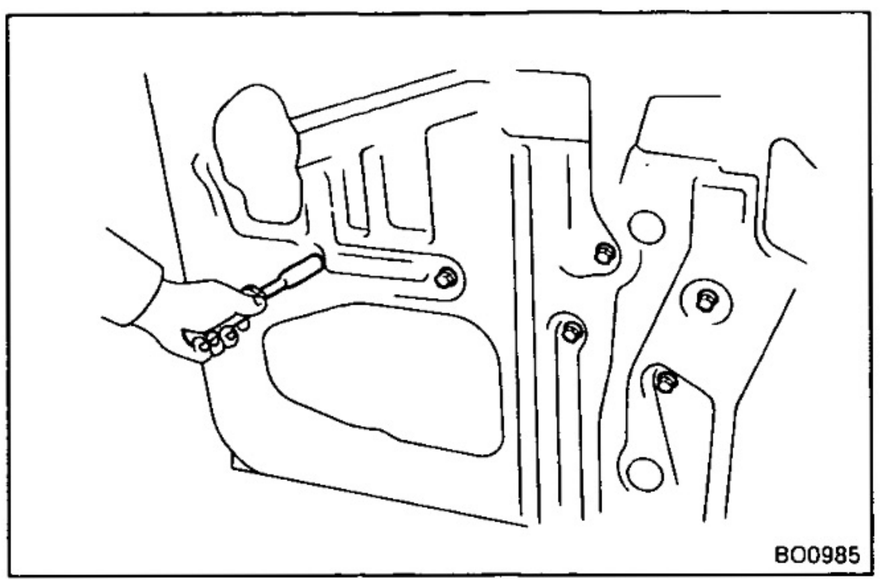

9. INSTALL WINDOW REGULATOR

(a) (w/ power window)
Connect the connector to the motor and install the regulator with the four bolts.

(w/o power window)
Install the regulator with the three bolts.

(b) (w/o ventilator window type)
Install the two equalizer arm bracket mounting bolts.

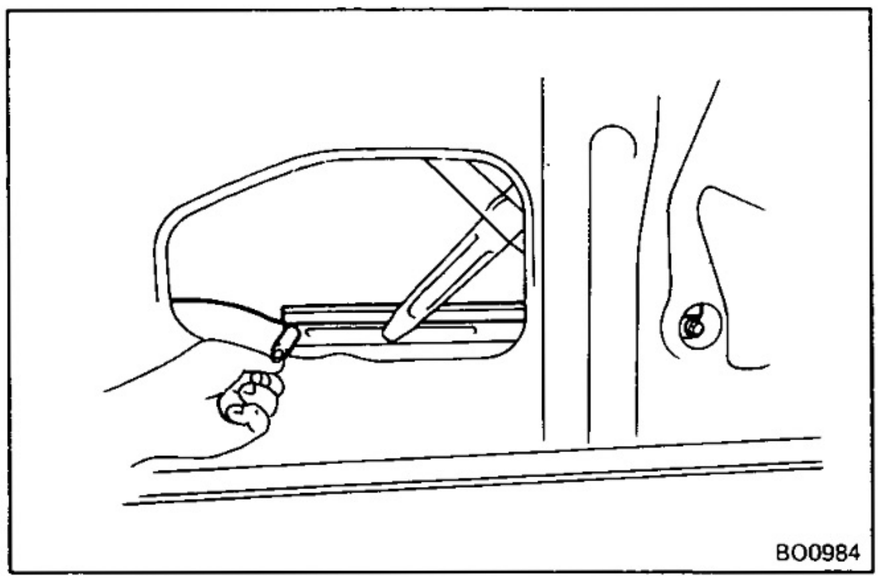

10. INSTALL DOOR GLASS

(a) Incline the door glass and install it to the window regulator.

(b) (w/o ventilator window type)
Install the two glass channel mounting bolts.

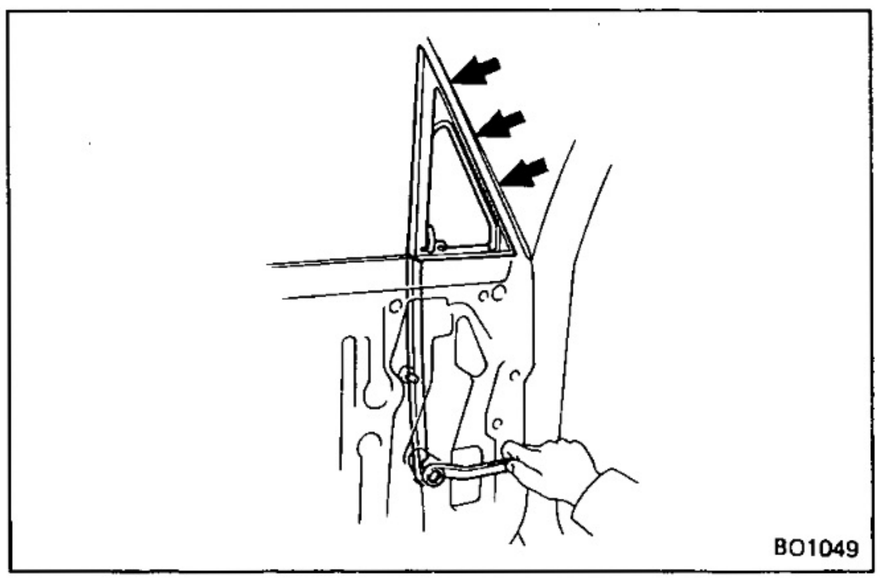

11. (w/ Ventilator Window type) INSTALL VENTILATOR WINDOW

(a) Install the three screws.

(b) Install the division bar set bolt.

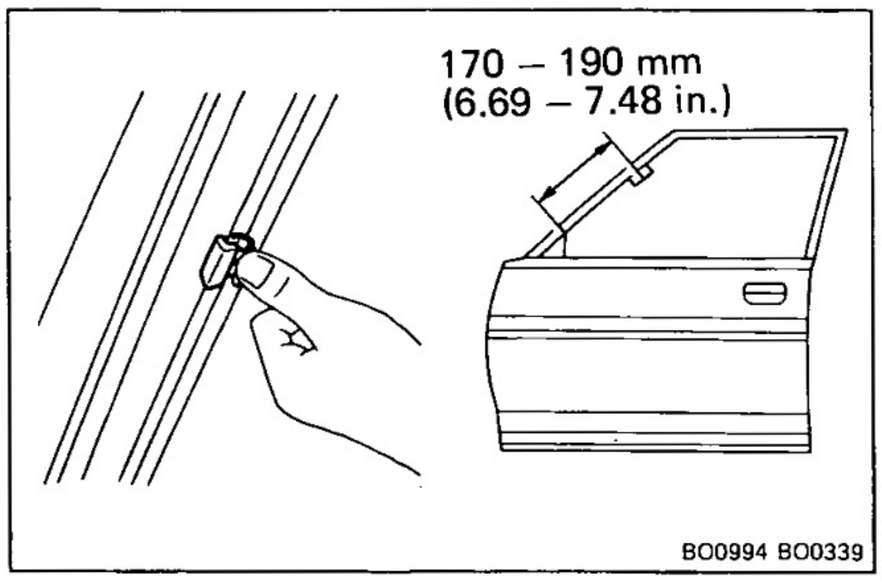

12. (w/o Ventilator Window type) INSTALL CLIP

13. INSTALL GLASS RUN

14. CONNECT INSIDE OPENING CONTROL LINK TO DOOR LOCK

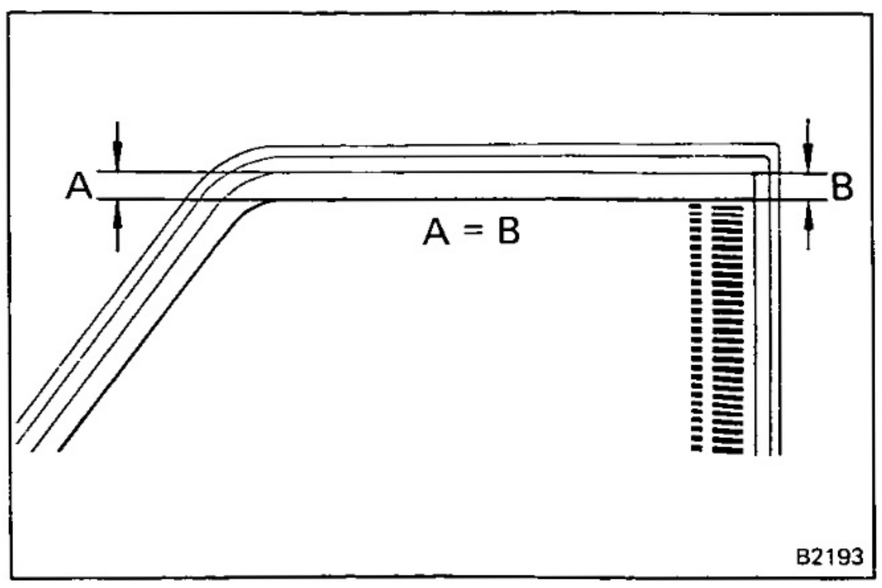

15. ADJUST DOOR GLASS

Adjust the equalizer arm up or down and tighten it where dimensions A and B are equal as shown.

16. INSTALL INNER AND OUTER WEATHERSTRIP

17. INSTALL REAR VIEW MIRROR

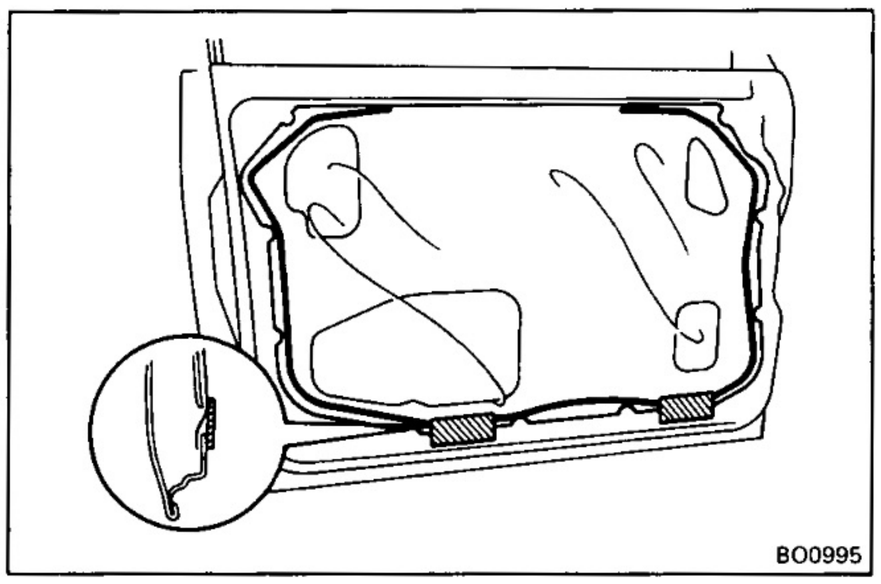

18. INSTALL SERVICE HOLE COVER

(a) Seal the service hole cover with adhesive.

(b) Insert the lower edge of the service hole cover into the panel slit.

(c) Seal the panel slit with cotton tape.

CAUTION: Do not block the trim clip seating with the tape.

19. INSTALL DOOR TRIM

(a) (w/ power window)
Connect the connector.

(b) Install the door trim with clips to the inside door panel by tapping.

(c) (w/ soft top)
Install the service cover with screw.

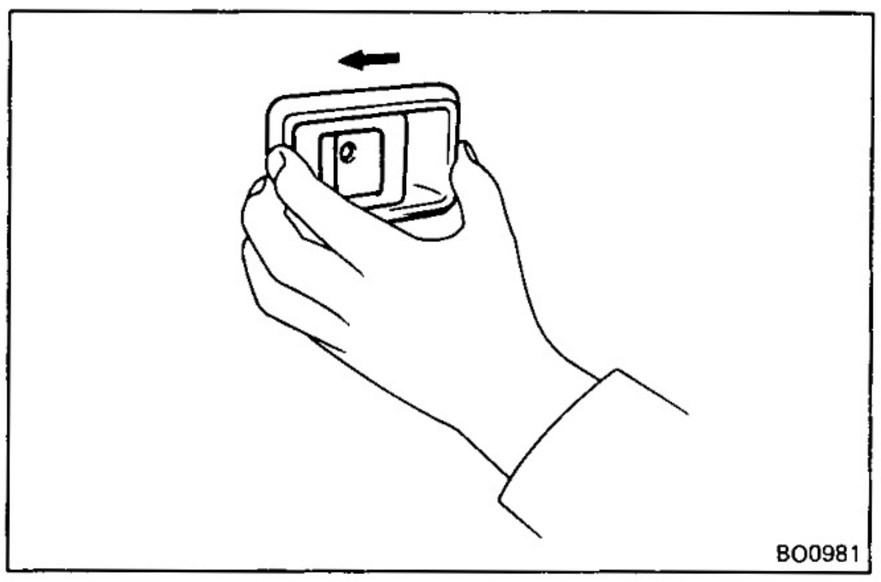

20. INSTALL INSIDE HANDLE

(a) Connect the link to the inside handle.

(b) Push the inside handle in the door panel and slide it backward.

(c) Install the screw.

21. INSTALL ARMREST OR PULL HANDLE

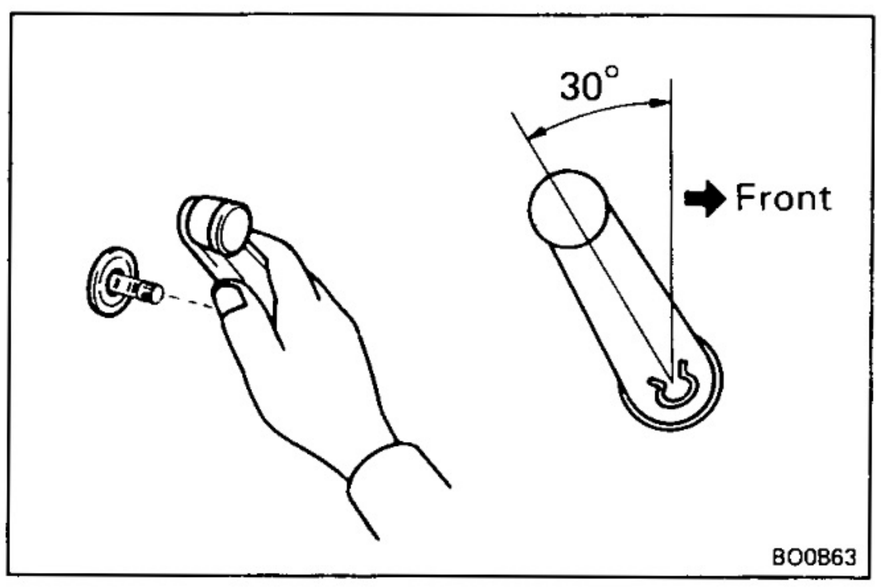

22. INSTALL WINDOW REGULATOR HANDLE

With the door glass fully closed, install the window regulator handle with a snap ring as shown.

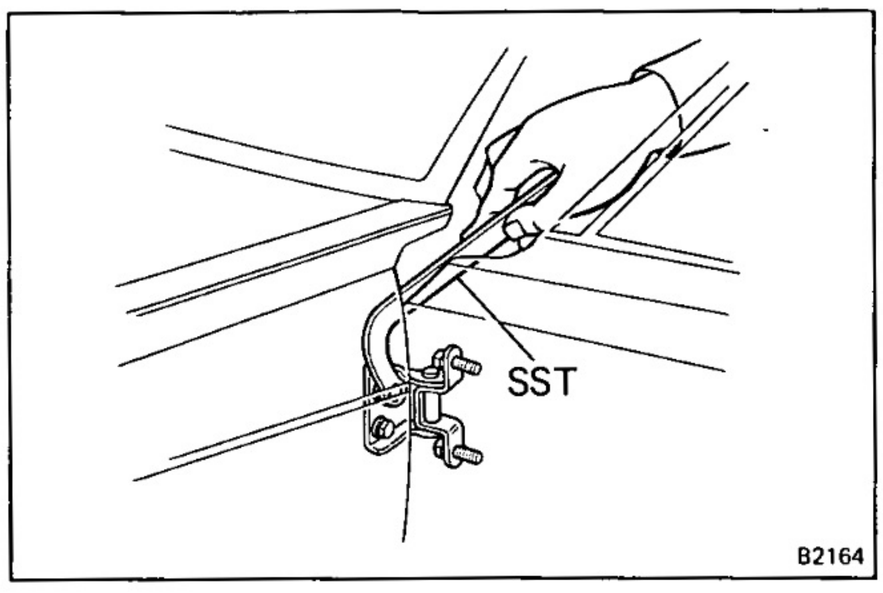

ADJUSTMENT OF FRONT DOOR

1. ADJUST DOOR IN FORWARD/REARWARD AND VERTICAL DIRECTIONS

Using SST, adjust the door by loosening the body side hinge bolts.

SST 09812-00010

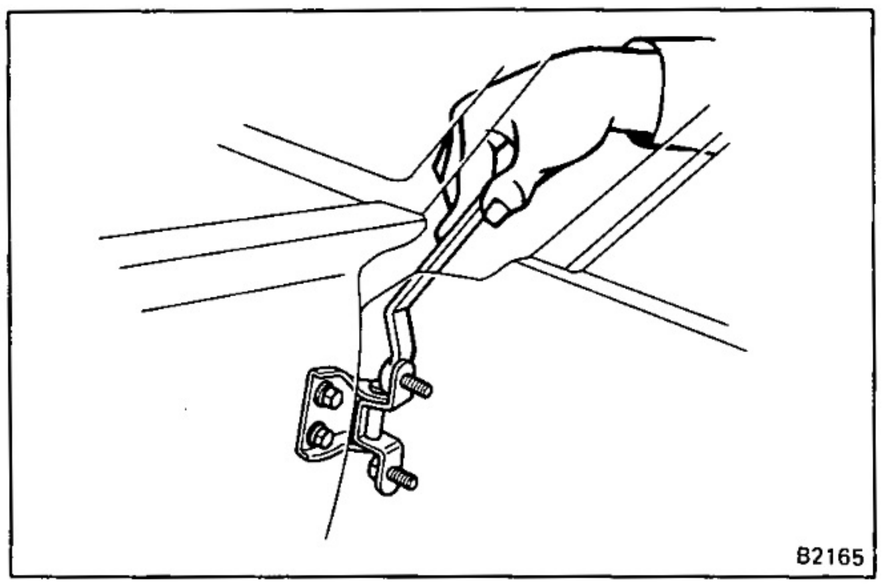

2. ADJUST DOOR IN LEFT/RIGHT AND VERTICAL DIRECTIONS

Adjust the door by loosening the door side hinge bolts.

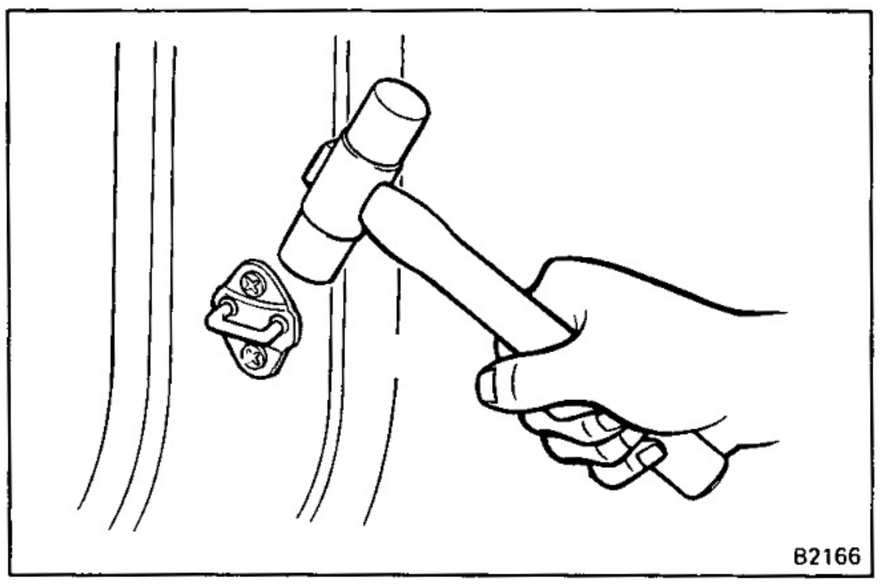

3. ADJUST DOOR LOCK STRIKER

(a) Check that the door fit and door lock linkages are adjusted correctly.

(b) Adjust the door lock striker by loosening the screws.

REAR DOOR

COMPONENTS

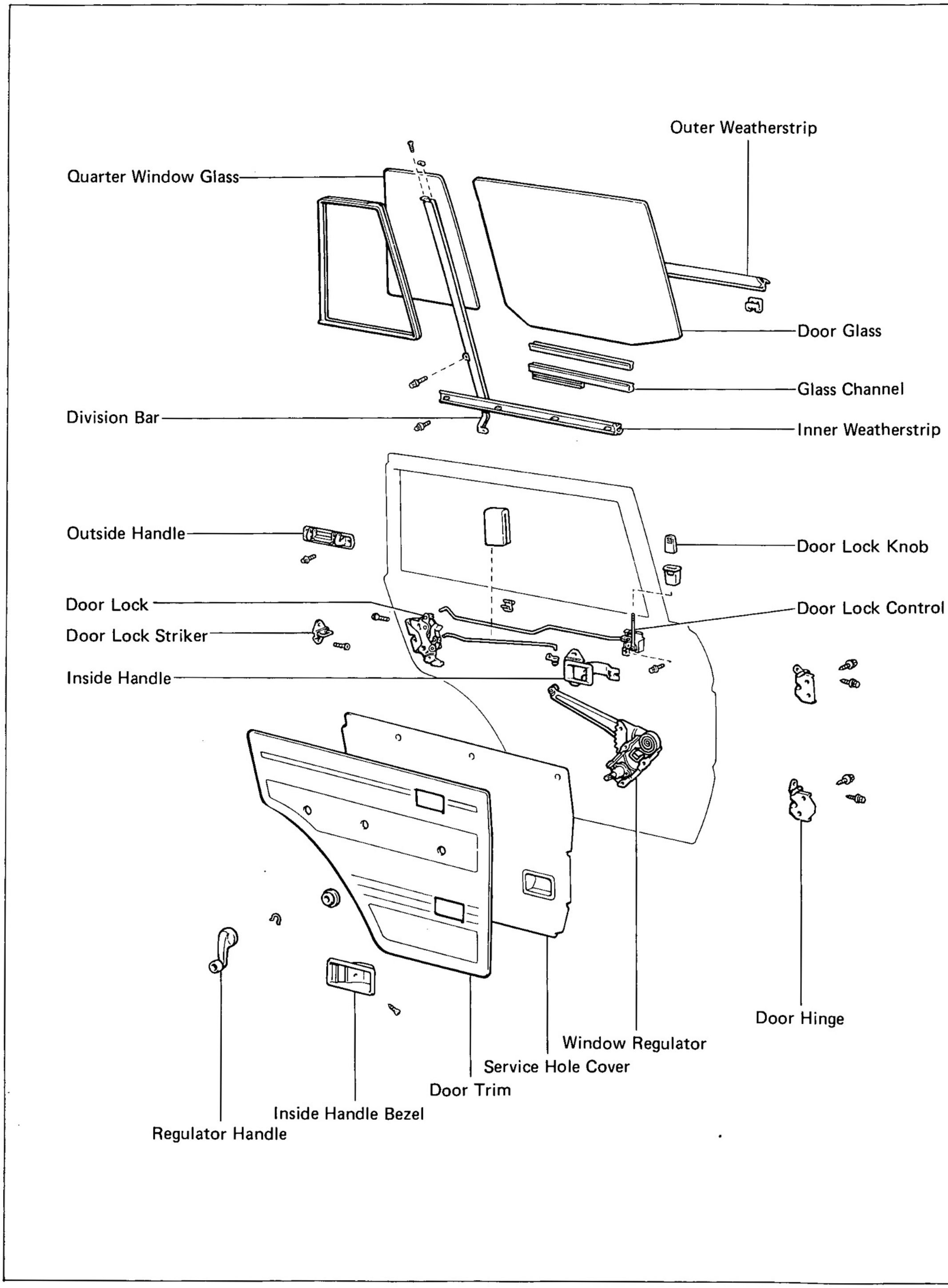

BO1044

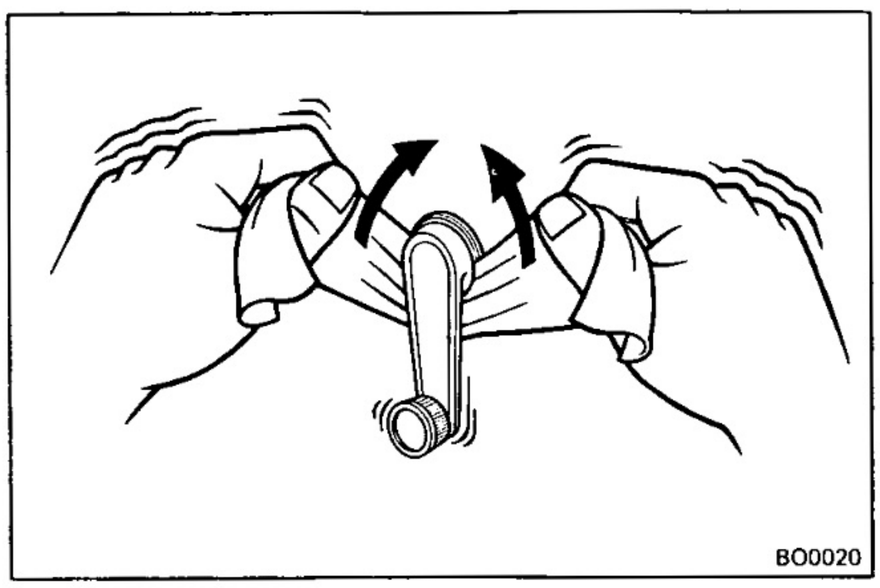

DISASSEMBLY OF REAR DOOR

1. REMOVE WINDOW REGULATOR HANDLE

   Pull off the snap ring with a cloth and remove the regulator handle.

2. REMOVE INSIDE HANDLE BEZEL

3. REMOVE ARMREST OR PULL HANDLE

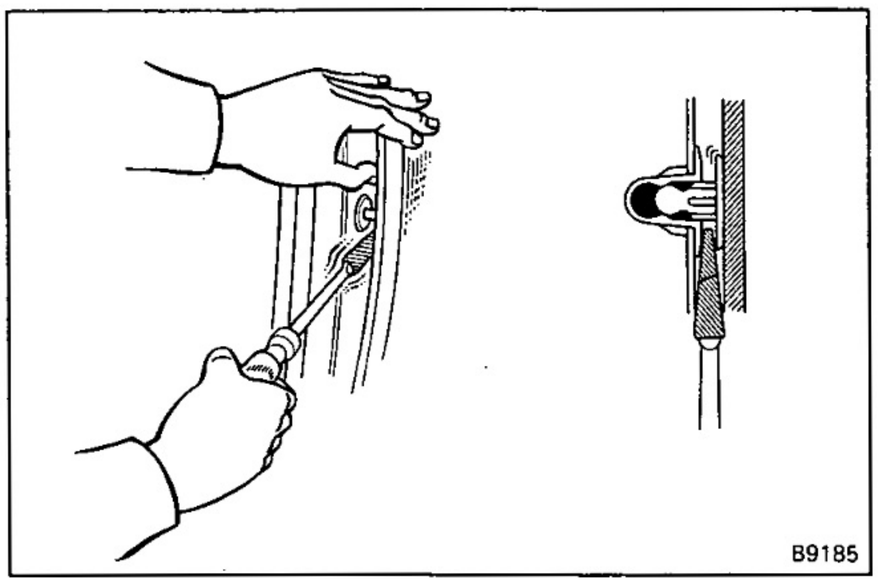

4. REMOVE DOOR TRIM

   (a) Insert a screwdriver between the trim retainers and door panel to pry it loose.

   NOTE: Tape the screwdriver tip before use.

   (b) (w/ power window)
   Disconnect the connector from the switch.

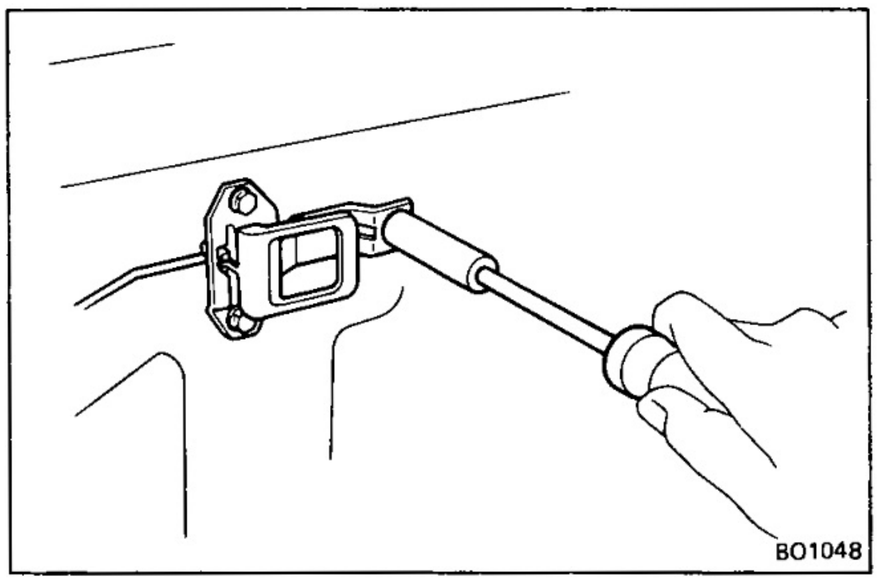

5. REMOVE INSIDE HANDLE

   (a) Remove the three screws.

   (b) Partly tear off the service hole cover and disconnect the inside handle link from the door lock.

6. REMOVE SERVICE HOLE COVER

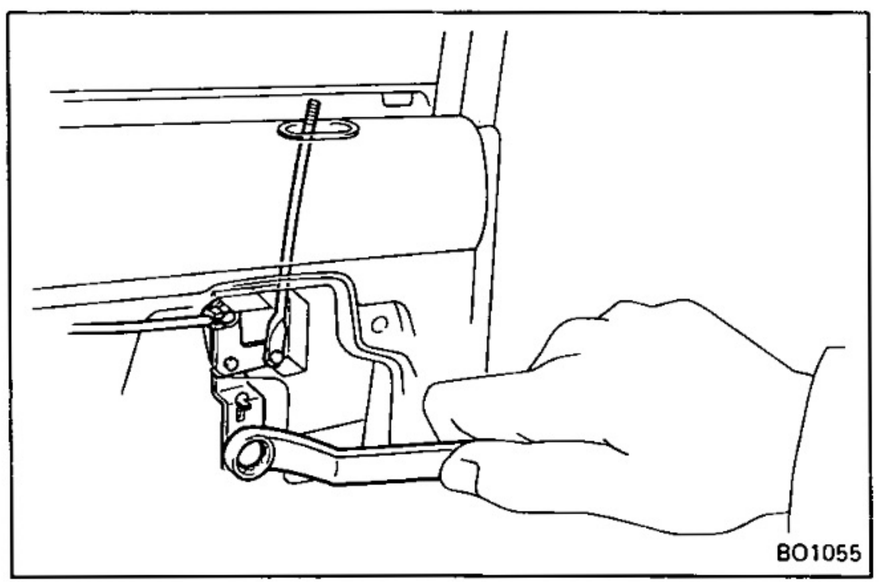

7. REMOVE INSIDE DOOR LOCK CONTROL

   (a) Disconnect the link from the door lock.

   (b) Remove the door lock knob.

   (c) Remove the bolt and door lock control.

8. REMOVE OUTER AND INNER WEATHERSTRIP

9. REMOVE GLASS RUN

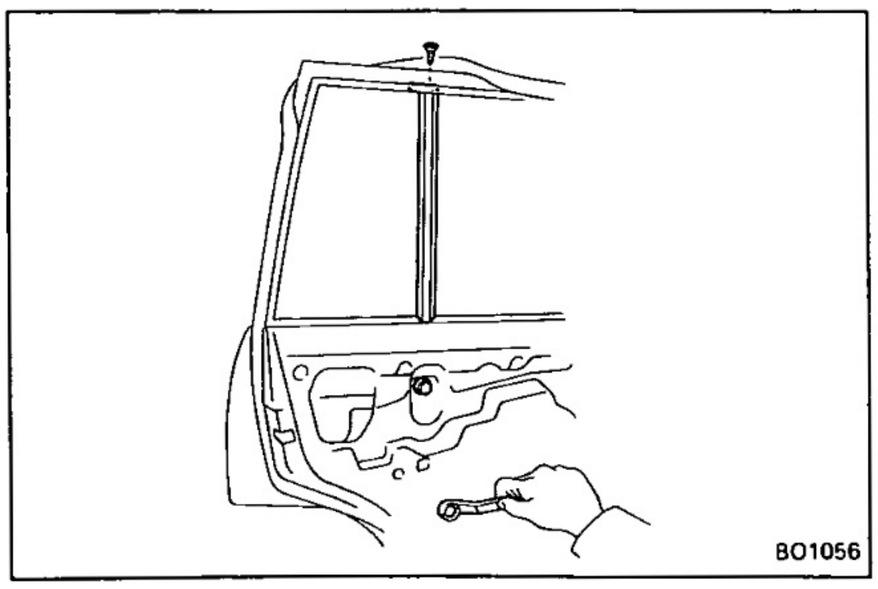

10. REMOVE DIVISION BAR

    (a) Peel off the weatherstrip on the upper side of the quarter window and remove the screw.

    (b) Remove the two bolts.

    (c) Remove the division bar by pulling it upward.

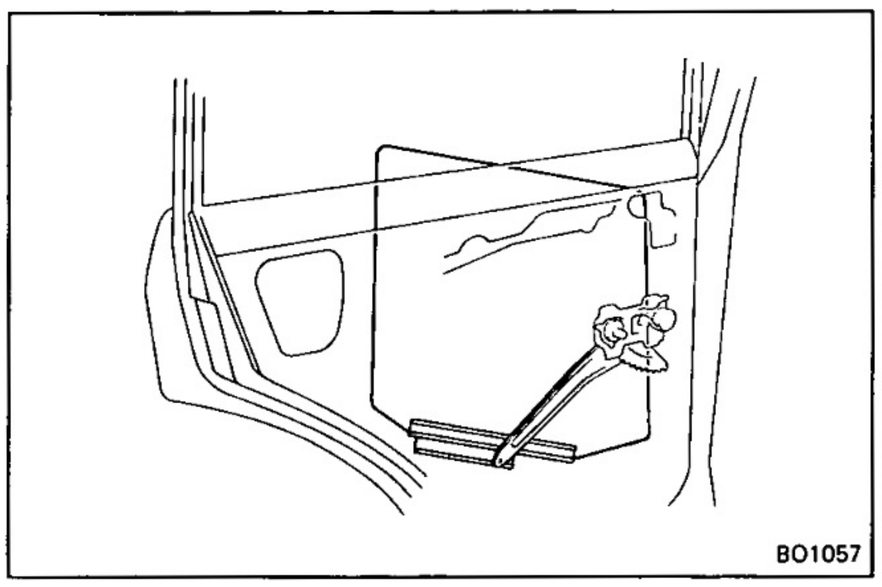

11. REMOVE DOOR GLASS

(a) Incline the door glass and remove the door glass from the regulator roller.

(b) Remove the door glass by pulling it upward.

12. REMOVE QUARTER WINDOW

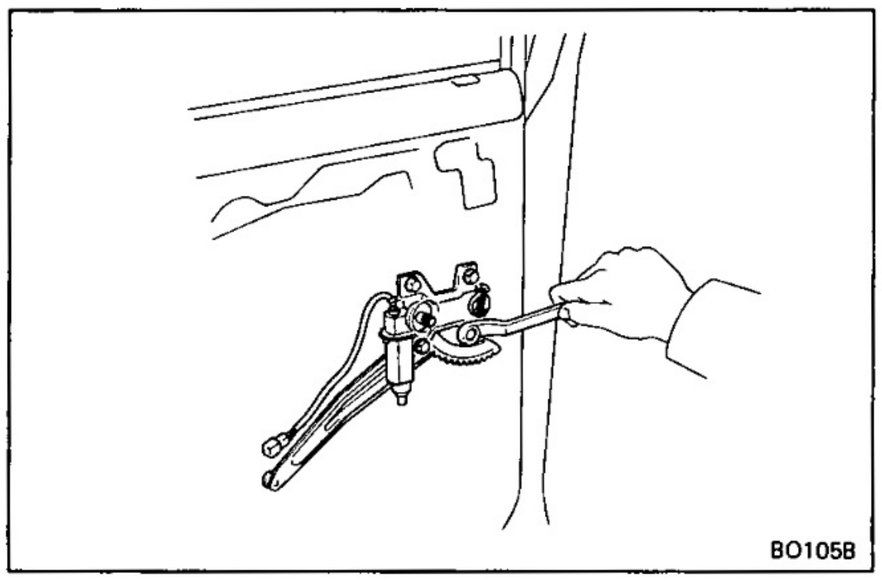

13. REMOVE WINDOW REGULATOR

(a) (w/ power window)
Remove the four bolts and window regulator.

(w/o power window)
Remove the three bolts and window regulator.

(b) (w/ power window)
Disconnect the connector from the motor.

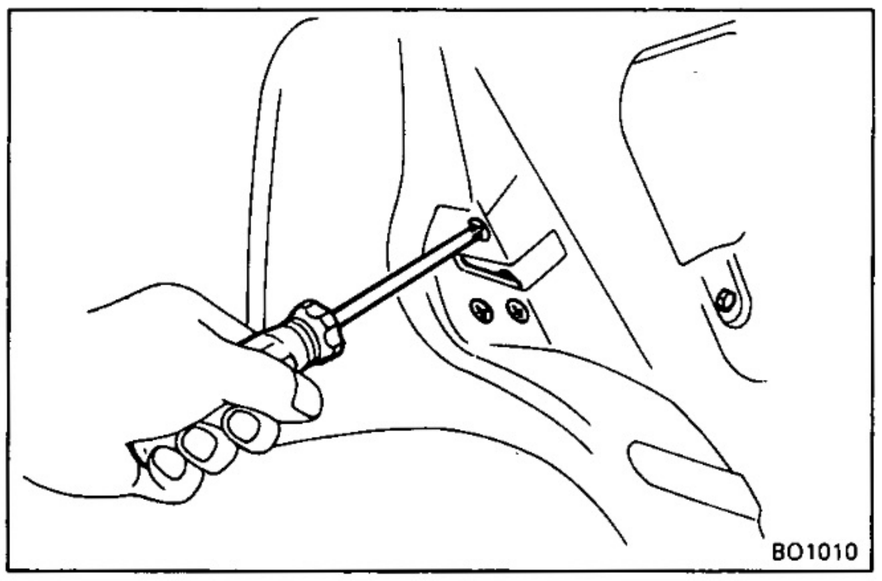

14. REMOVE DOOR LOCK

(a) (w/ door lock solenoid)
Remove the bolt, three screws and door lock.

(w/o door lock solenoid)
Remove the three screws and door lock.

(b) (w/ door lock solenoid)
Disconnect the connector from the solenoid.

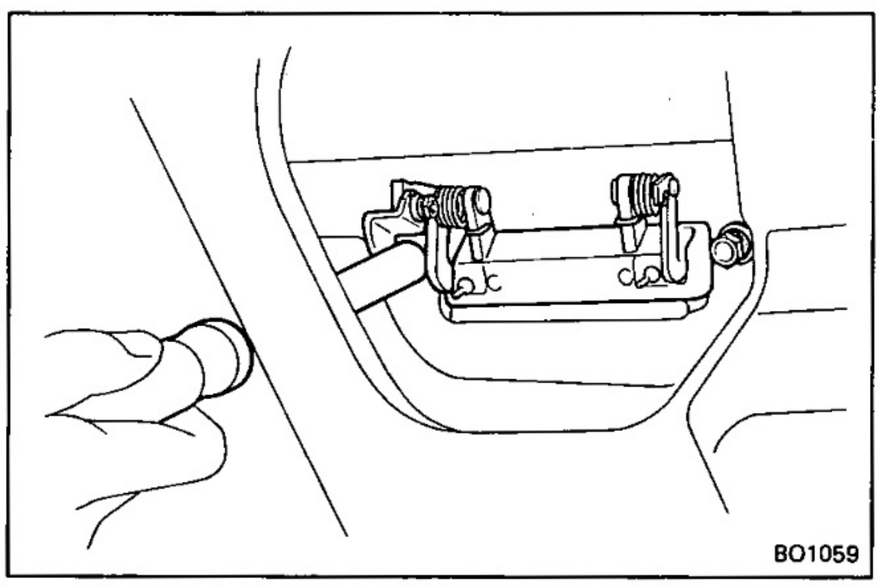

15. REMOVE OUTSIDE HANDLE

Remove the two bolts and outside handle.

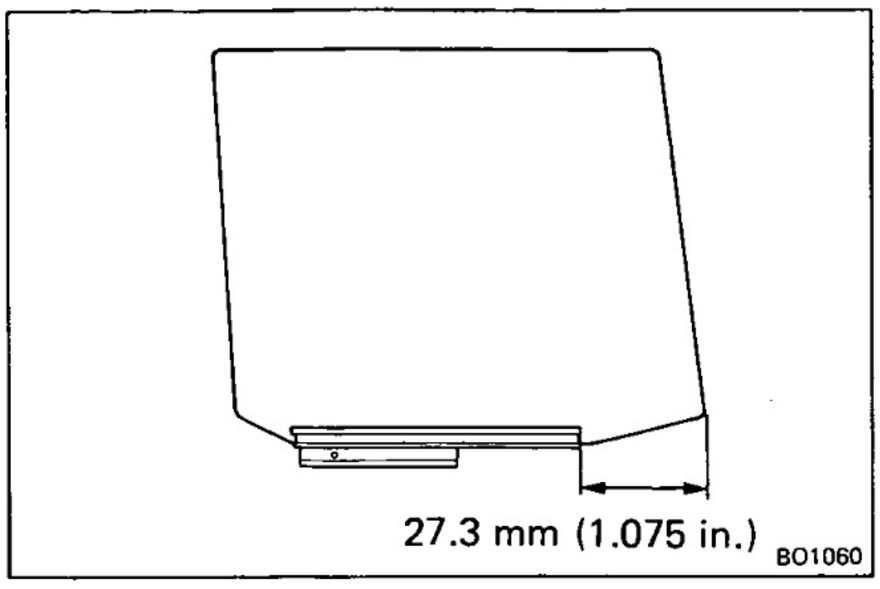

REPLACEMENT OF GLASS

1. REMOVE GLASS CHANNEL WITH SCREWDRIVER OR SUCH
2. APPLY SOAPY WATER TO INSIDE OF WEATHER-STRIP
3. TAP ON CHANNEL WITH PLASTIC HAMMER

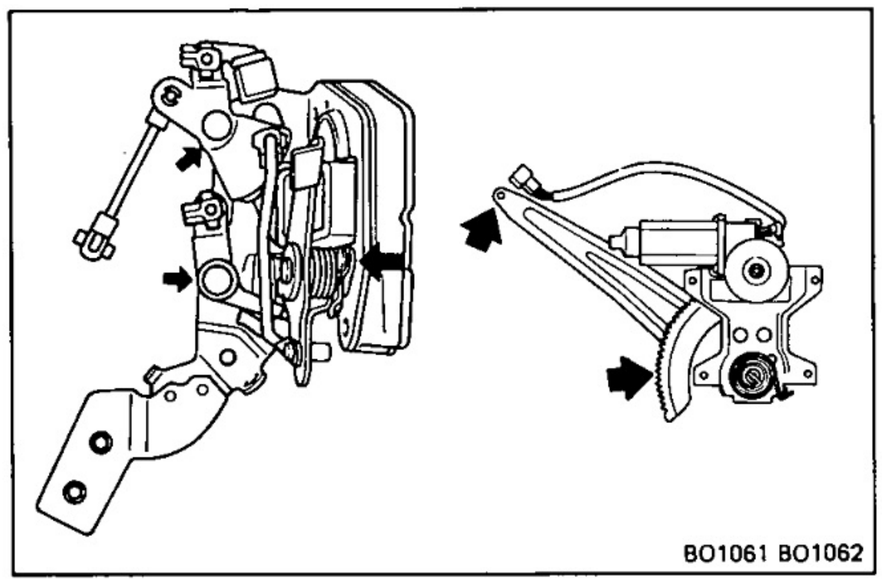

ASSEMBLY OF REAR DOOR

1. BEFORE INSTALLING PARTS, APPLY MP GREASE TO THEM
   (a) Apply MP grease to the sliding surface, gear of the window regulator.
   (b) Apply MP grease to the sliding surface of the door lock.

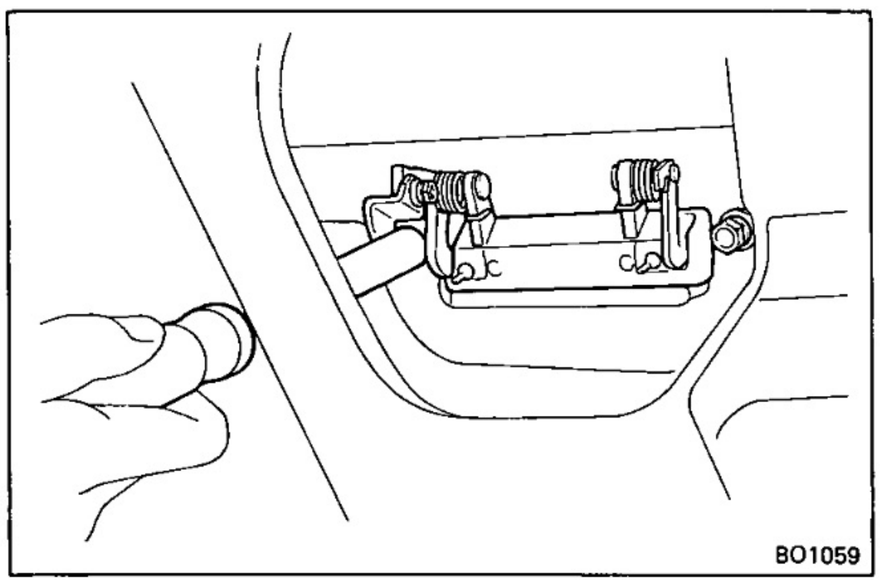

2. INSTALL OUTSIDE HANDLE
   Install the outside handle with two bolts.
3. INSTALL DOOR LOCK
   (a) (w/ door lock solenoid)
   Connect the connector to the solenoid.
   (b) (w/ door lock solenoid)
   Install the door lock with three screws and bolt.
   (w/o door lock solenoid)
   Install the door lock with three screws.

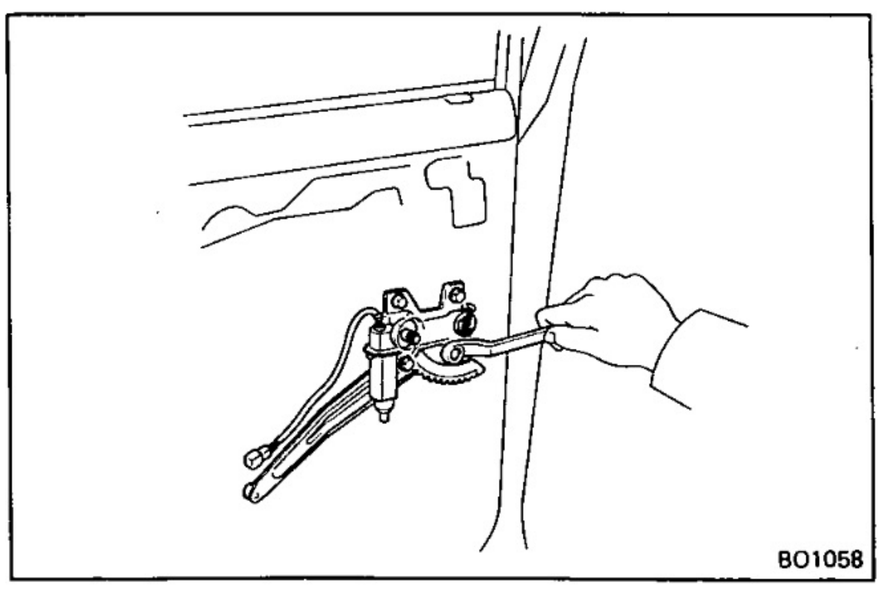

4. INSTALL WINDOW REGULATOR
   (a) (w/ power window)
   Connect the connector to the motor.
   (b) (w/ power window)
   Install the regulator with four bolts.
   (w/o power window)
   Install the regulator with three bolts.

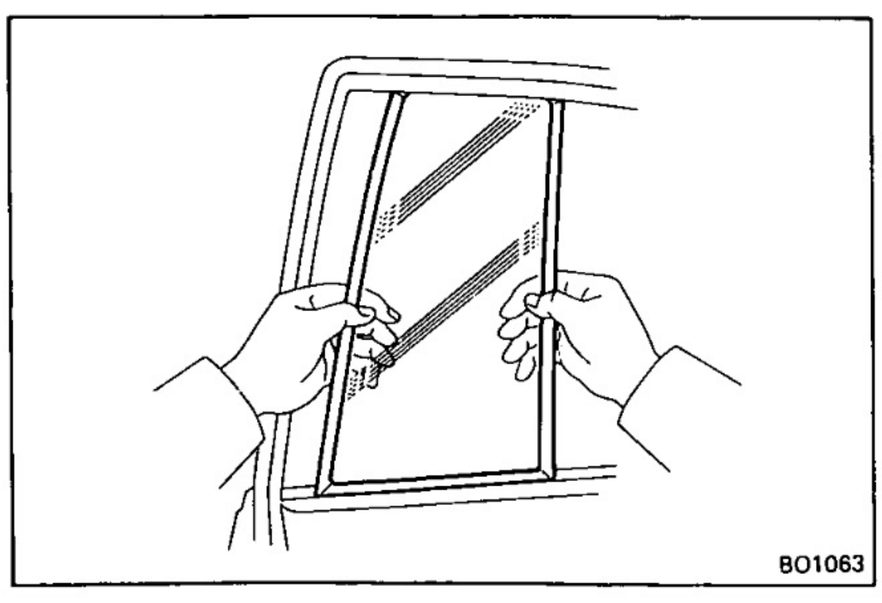

5. INSTALL QUARTER WINDOW
6. INSTALL DOOR GLASS
   Install the door glass to the regulator roller.

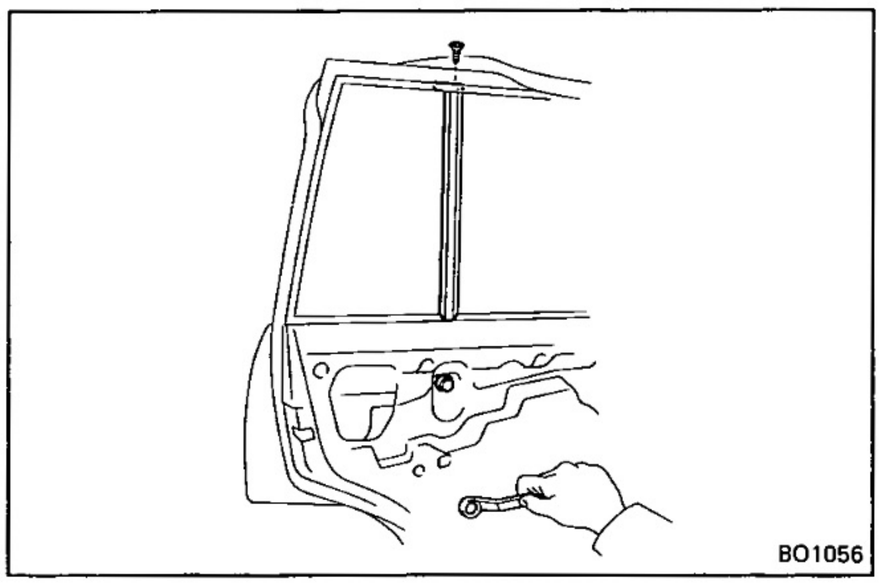

7. INSTALL DIVISION BAR

Install the division bar with the two bolts and screw.

8. INSTALL INNER AND OUTER WEATHERSTRIP

9. INSTALL GLASS RUN

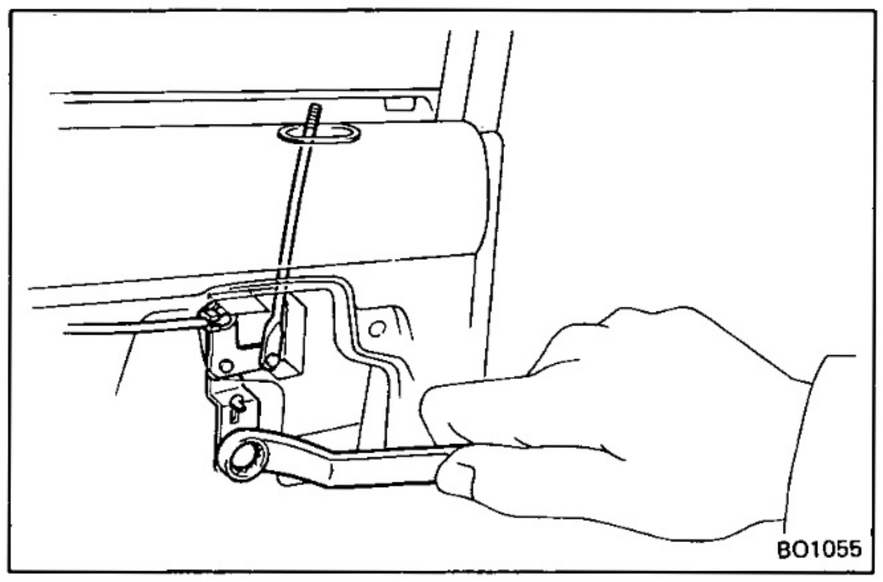

10. INSTALL INSIDE DOOR LOCK CONTROL

(a) Install the door lock control with bolt.

(b) Install the door lock knob.

(c) Connect the link to the door lock.

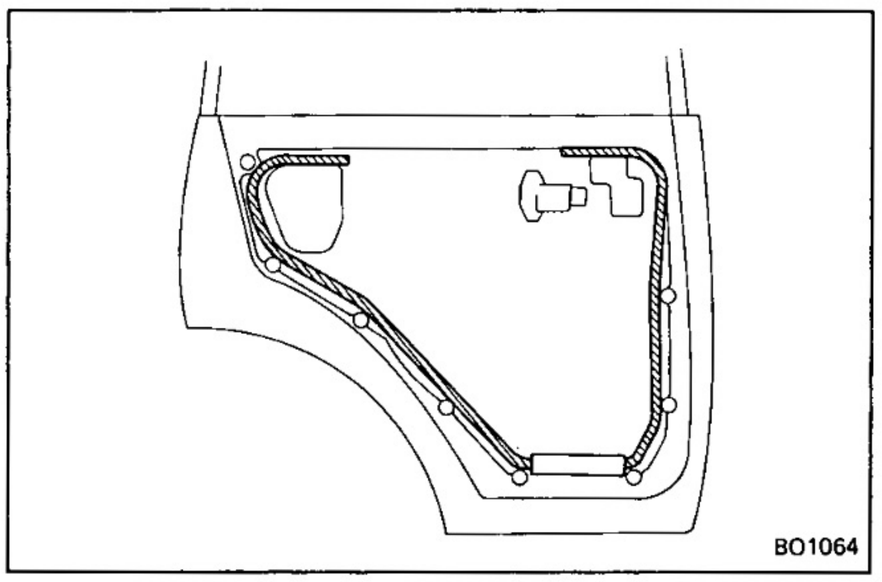

11. INSTALL SERVICE HOLE COVER

(a) Seal the service hole cover with adhesive.

(b) Insert the lower edge of the service hole cover into the panel slit.

(c) Seal the panel slit with cotton tape.

CAUTION: Do not block the trim clip seating with the tape.

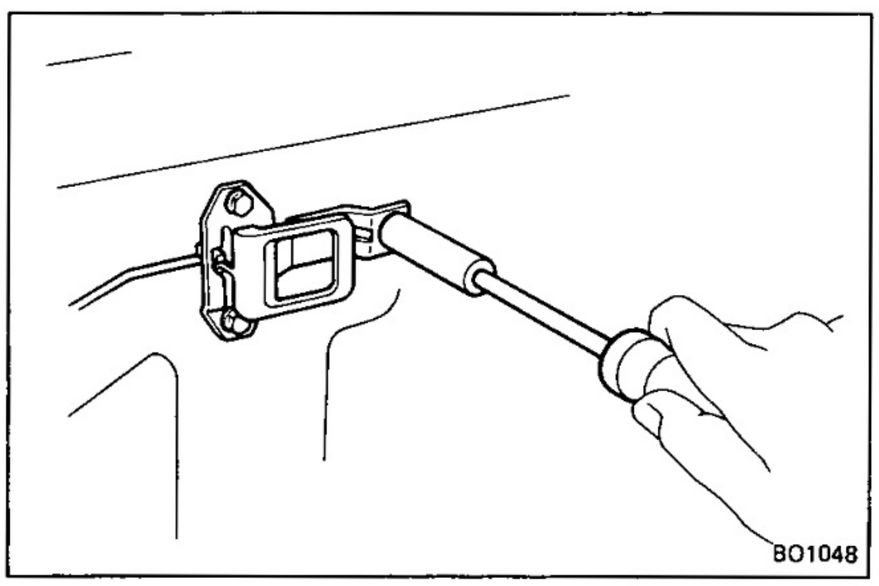

12. INSTALL INSIDE HANDLE

(a) Connect the link to the door lock.

(b) Install the inside handle with three screws.

13. INSTALL DOOR TRIM

(a) (w/ power window)
Connect the connector to the switch.

(b) Tap on the door trim with clips to the inside door panel.

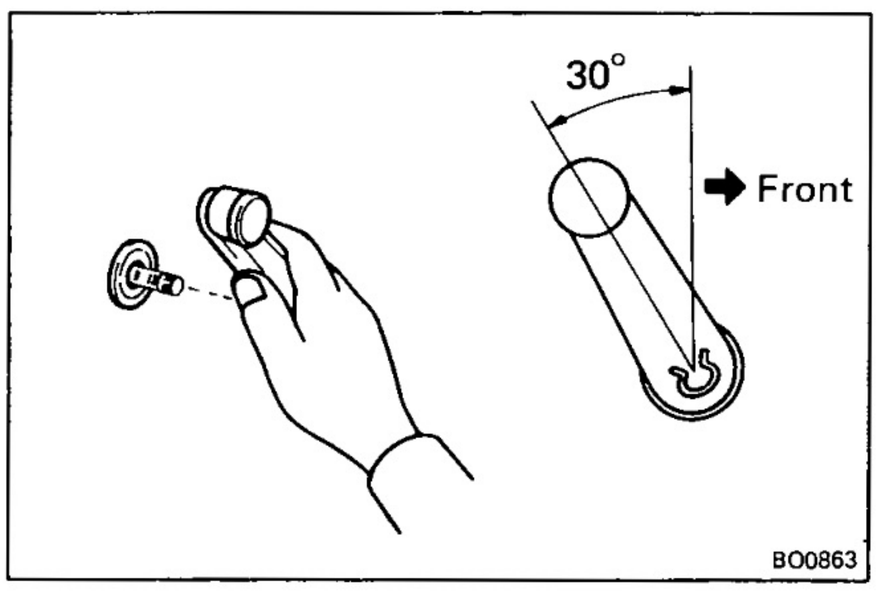

14. INSTALL WINDOW REGULATOR HANDLE

With the door glass fully closed, install the window regulator handle with a snap ring as shown.

15. INSTALL INSIDE HANDLE BEZEL

16. INSTALL ARMREST OR PULL HANDLE

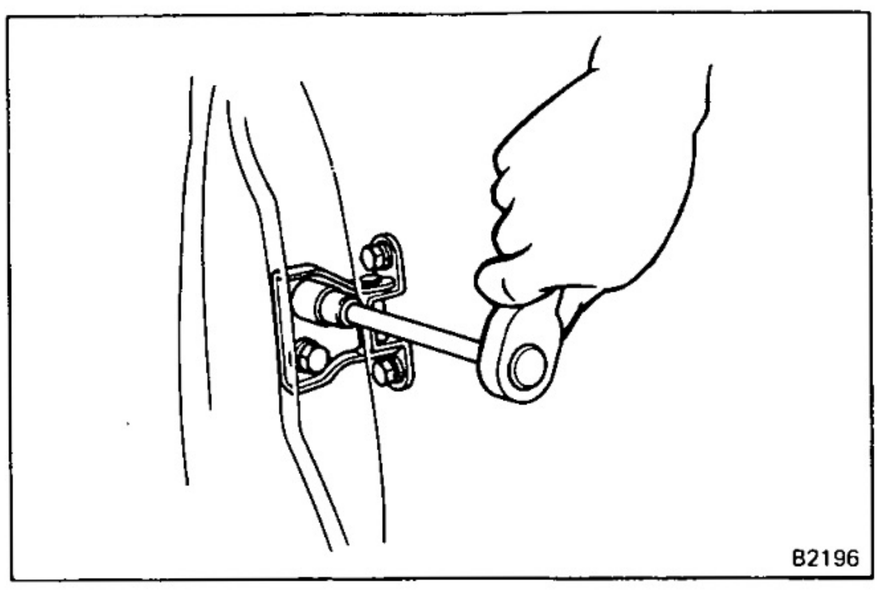

ADJUSTMENT OF REAR DOOR

1. ADJUST DOOR IN FORWARD/REARWARD AND VERTICAL DIRECTIONS

Adjust the door by loosening the body side hinge bolts.

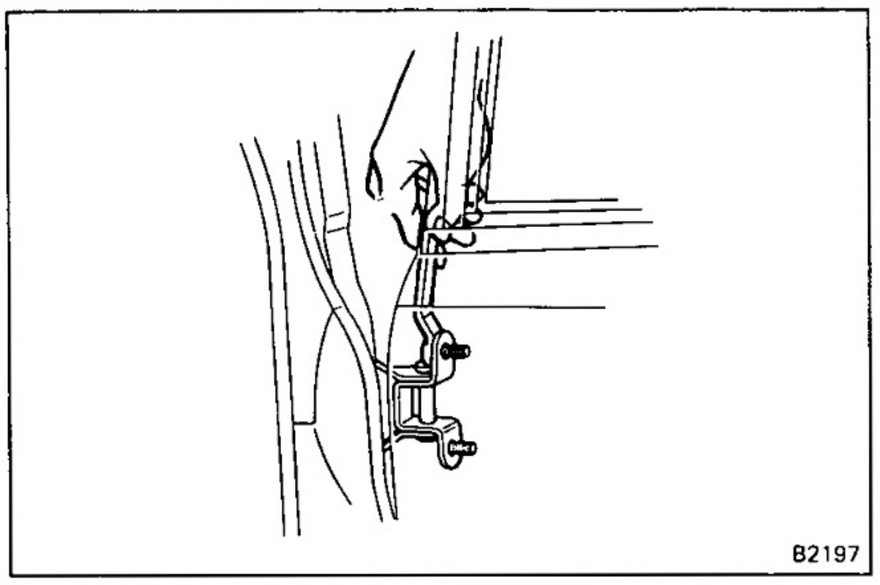

2. ADJUST DOOR IN LEFT/RIGHT AND VERTICAL DIRECTIONS

Adjust the door by loosening the door side hinge bolts.

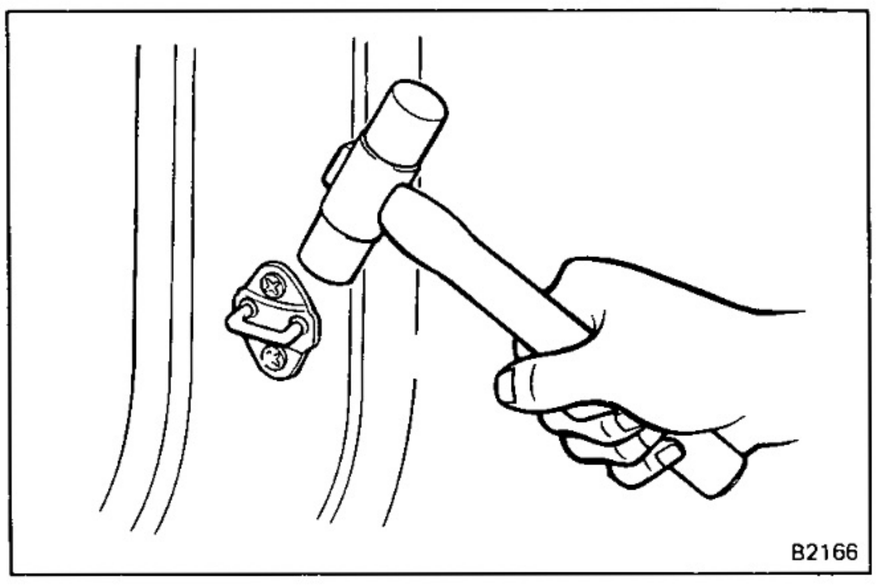

3. ADJUST DOOR LOCK STRIKER

(a) Check that the door fit and door lock linkages are adjusted correctly.

(b) Adjust the striker by loosening the striker mounting screws.

BACK DOOR (Lift-up Type)

COMPONENTS

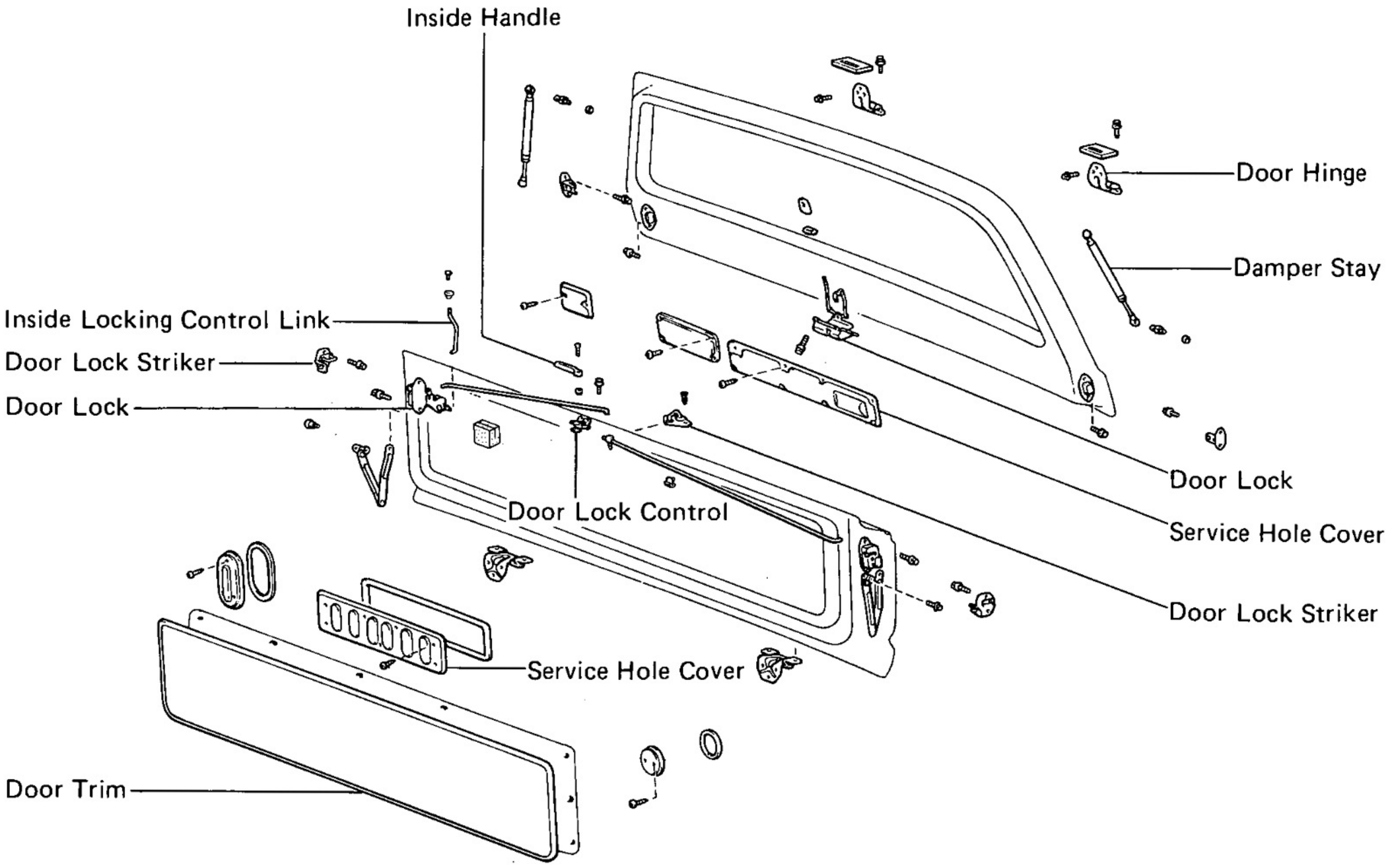

Upper Back Door

DISASSEMBLY OF UPPER BACK DOOR

1. REMOVE PULL HANDLE
2. REMOVE SERVICE HOLE COVER
3. DISCONNECT INSIDE LOCKING CONTROL LINK FROM DOOR LOCK

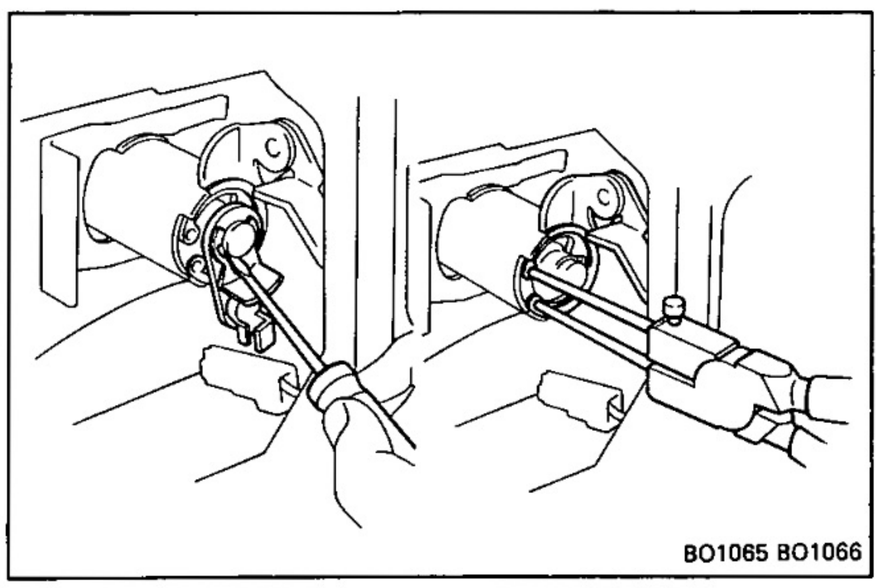

4. REMOVE DOOR LOCK CYLINDER
   (a) Disconnect the links from the cylinder.
   (b) Using a screwdriver, remove the E-ring and lever.
   (c) Using snap ring pliers, remove the snap ring and control bracket.
   (d) Remove the retainer and cylinder.
5. REMOVE DOOR LOCK

   Remove the three bolts and door lock.

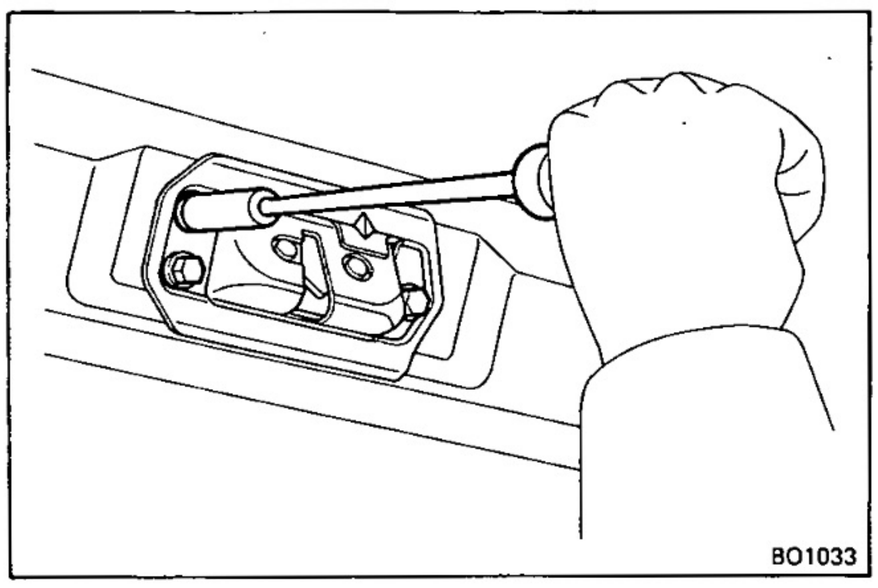

ASSEMBLY OF UPPER BACK DOOR

1. APPLY MP GREASE TO DOOR LOCK

   Apply MP grease to the sliding surface of the door lock.

2. INSTALL DOOR LOCK

   Install the door lock with three bolts.

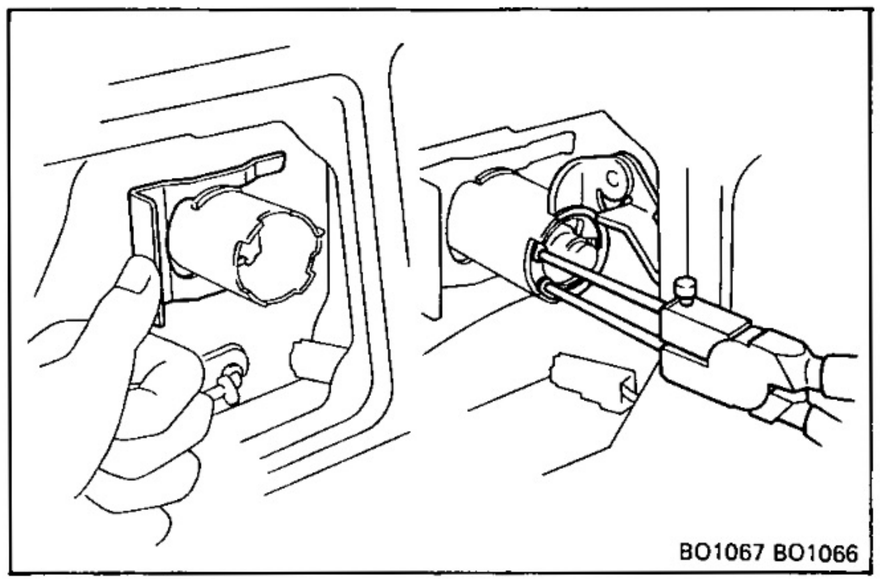

3. INSTALL DOOR LOCK CYLINDER
   (a) Install the cylinder with retainer.
   (b) Install the control bracket.
   (c) Using snap ring pliers, install snap ring.
   (d) Install the lever and E-ring.
   (e) Connect the links to the cylinder.

4. CONNECT INSIDE LOCKING CONTROL LINK TO DOOR LOCK

5. CHECK DOOR LOCK OPERATION

6. INSTALL SERVICE HOLE COVER

7. INSTALL PULL HANDLE

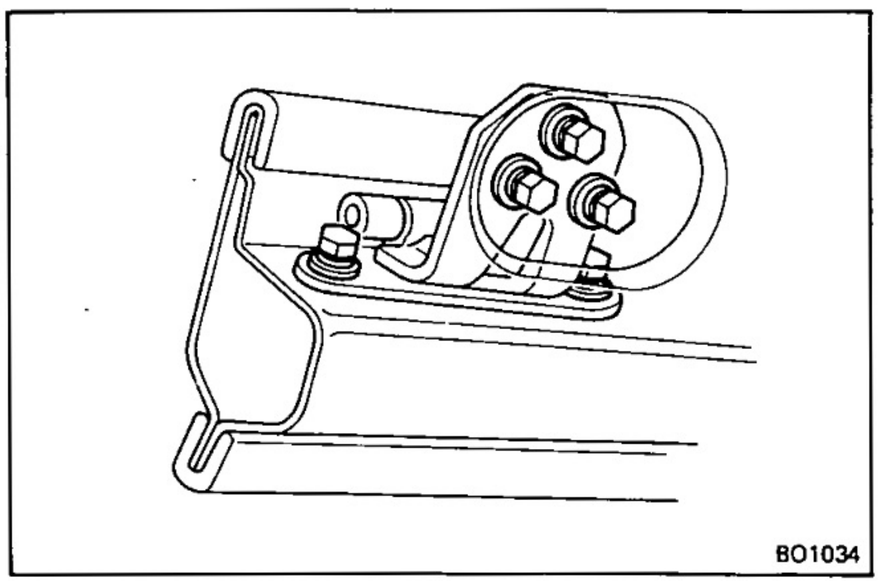

ADJUSTMENT OF UPPER BACK DOOR

1. ADJUST DOOR IN FORWARD/REARWARD AND LEFT/RIGHT DIRECTIONS

   Adjust the door by loosening the door side hinge bolts.

2. ADJUST DOOR IN LEFT/RIGHT AND VERTICAL DIRECTIONS

   Adjust the door by loosening the body side hinge bolts.

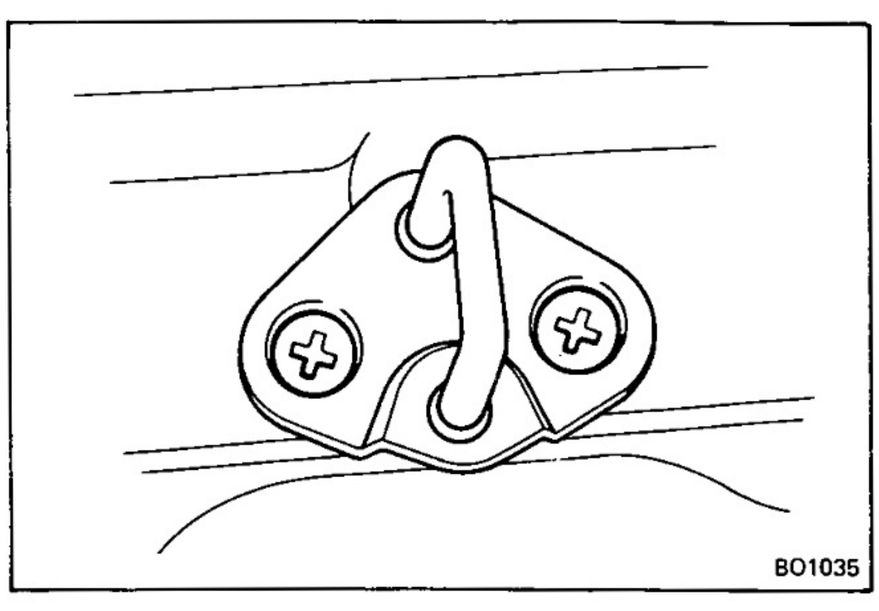

3. ADJUST DOOR LOCK STRIKER
   (a) Check that the door fit and door lock linkages are adjusted correctly.
   (b) Adjust the door lock striker by loosening the screws.

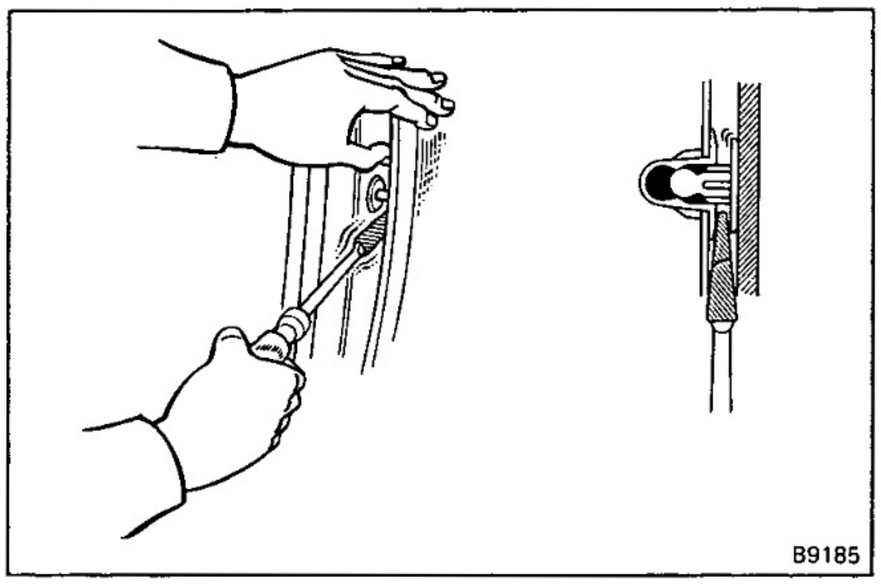

Lower Back Door

DISASSEMBLY OF LOWER BACK DOOR

1. REMOVE DOOR TRIM

   Insert a screwdriver between the trim retainers and door panel to pry it loose.

   NOTE: Tape the screwdriver tip before use.

2. REMOVE SERVICE HOLE COVER

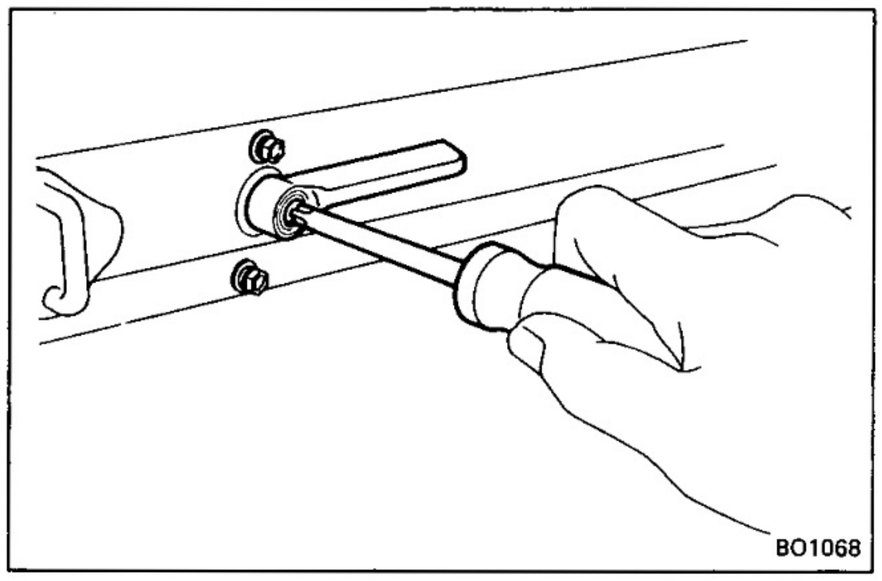

3. REMOVE DOOR LOCK CONTROL
   (a) Disconnect the links from the door lock control.
   (b) Remove the screw and inside handle.
   (c) Remove the two bolts and door lock control.

4. DISCONNECT INSIDE LOCKING CONTROL LINK FROM DOOR LOCK

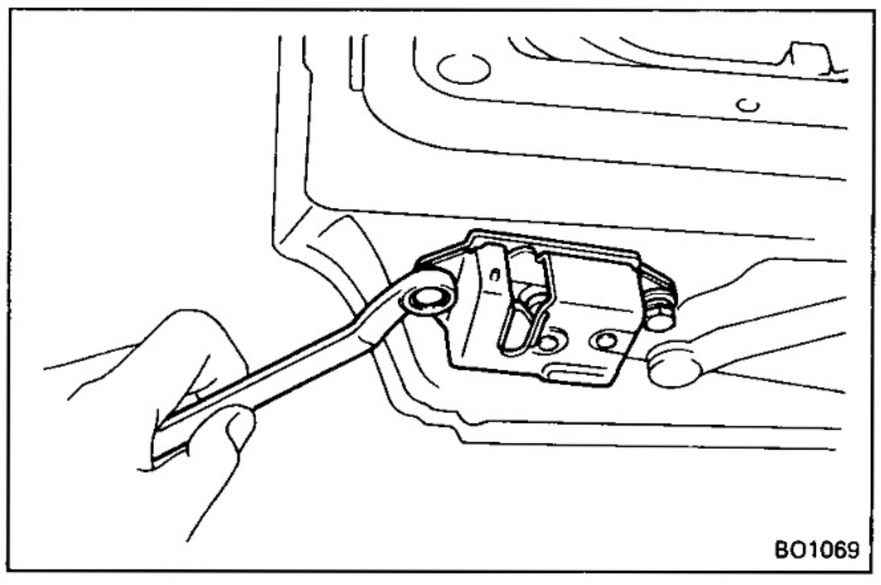

5. REMOVE DOOR LOCK

   Remove the two bolts and door lock.

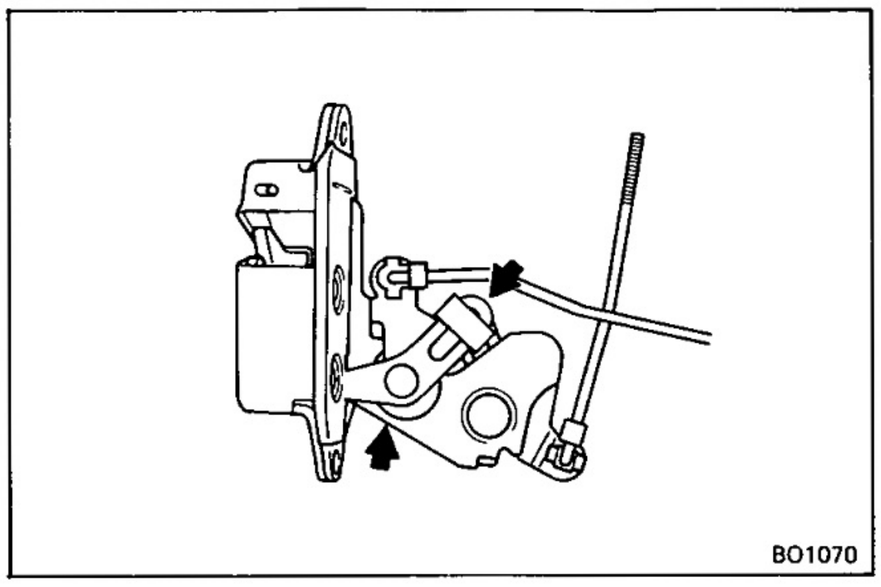

ASSEMBLY OF LOWER BACK DOOR

1. APPLY MP GREASE TO DOOR LOCK

   Apply MP grease to the sliding surface of the door lock.

2. INSTALL DOOR LOCK

   Install the door lock with two bolts.

3. CONNECT INSIDE LOCKING CONTROL LINK TO DOOR LOCK

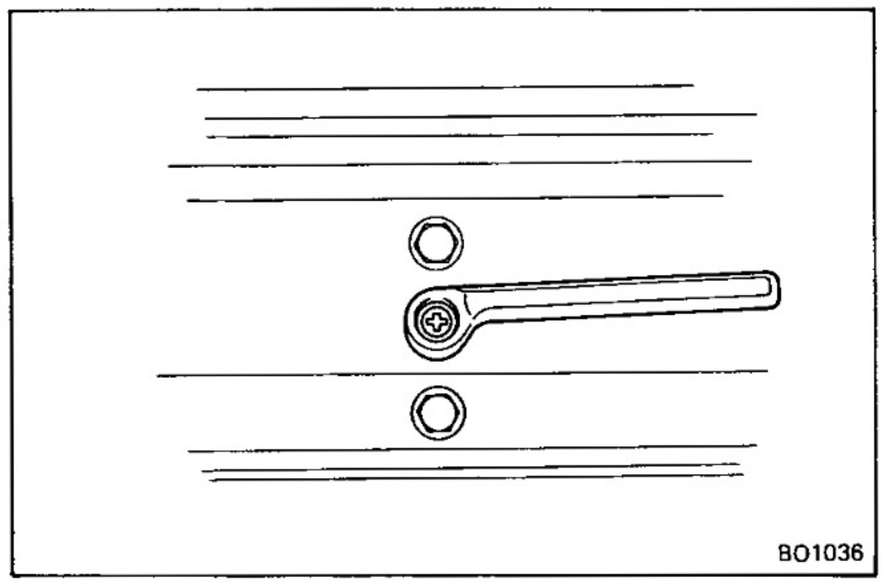

4. INSTALL DOOR LOCK CONTROL

   (a) Install the door lock control with two bolts.

   (b) Install the inside handle as shown in the figure.

   (c) Install the screw.

   (d) Connect the links to the door lock control.

5. CHECK DOOR LOCK OPERATION

6. INSTALL SERVICE HOLE COVER

7. INSTALL DOOR TRIM

   Install the door trim with clips to the inside door panel by tapping.

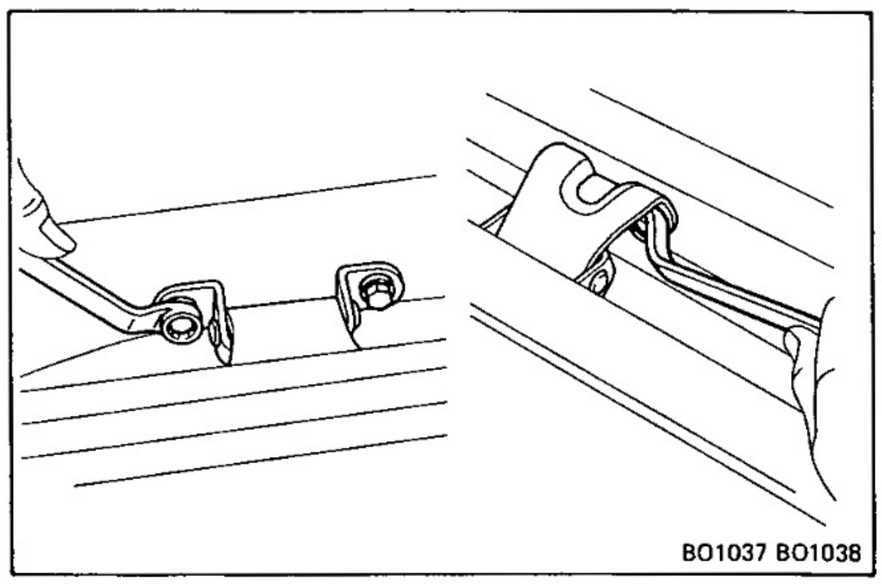

ADJUSTMENT OF LOWER BACK DOOR

1. ADJUST DOOR IN FORWARD/REARWARD AND LEFT/RIGHT DIRECTIONS

   Adjust the door by loosening the door side hinge bolts.

2. ADJUST DOOR IN LEFT/RIGHT AND VERTICAL DIRECTIONS

   Adjust the door by loosening the body side hinge bolts.

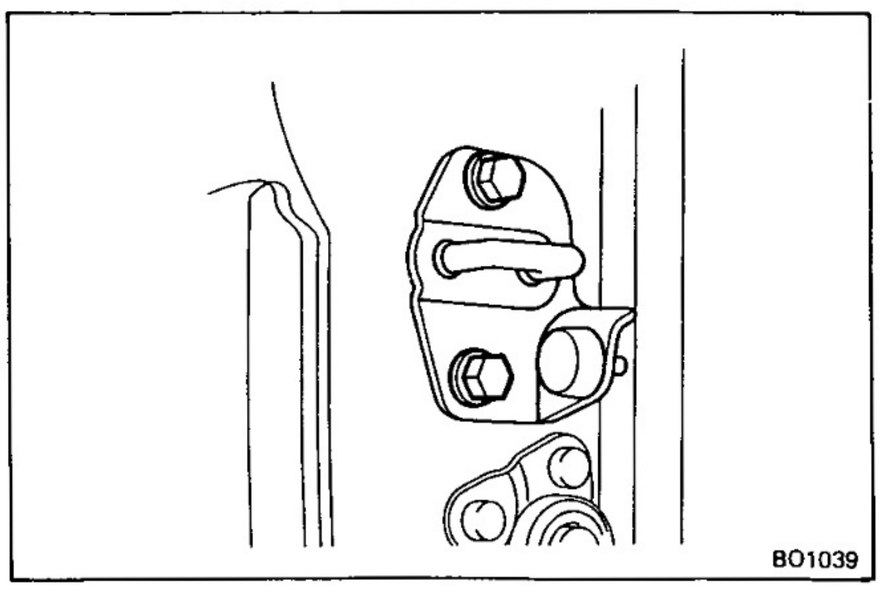

3. ADJUST DOOR LOCK STRIKER

   (a) Check that the door fit and door lock linkages are adjusted correctly.

   (b) Adjust the door lock striker by loosening the screws.

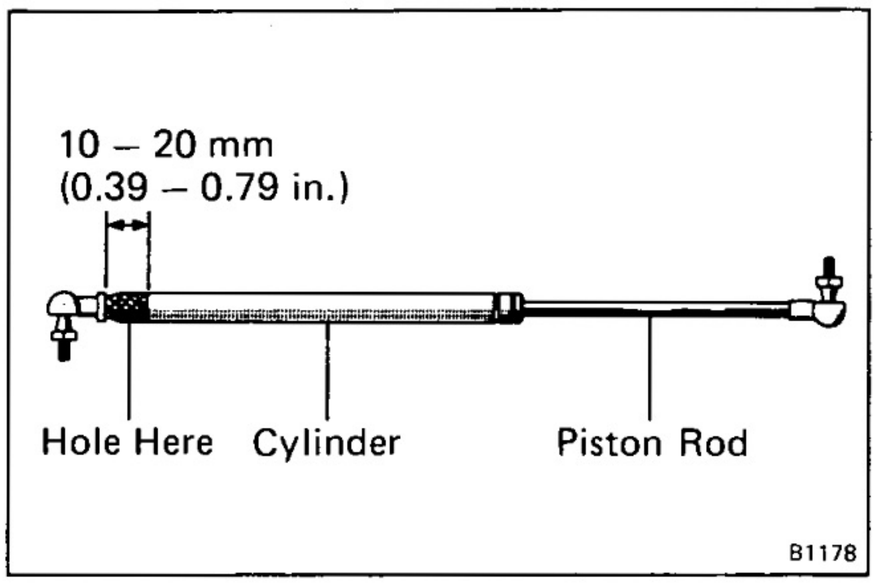

Back Door Damper Stay

CAUTION: Handling the damper.

(a) Do not disassemble the damper because the cylinder is filled with pressurized gas.

(b) If the damper is to be replaced, drill a 2.0 – 3.0 mm (0.079 – 0.118 in.) hole in the bottom of the removed damper cylinder to completely release the high-pressure gas before disposing of it.

(c) When drilling, chips may fly out so work carefully.

(d) The gas is colorless, odorless and non-toxic.

(e) When working, handle the damper carefully. Never score or scratch the exposed part of the piston rod, and never allow paint or oil to get on it.

(f) Do not turn the piston rod and cylinder with the damper fully extended.

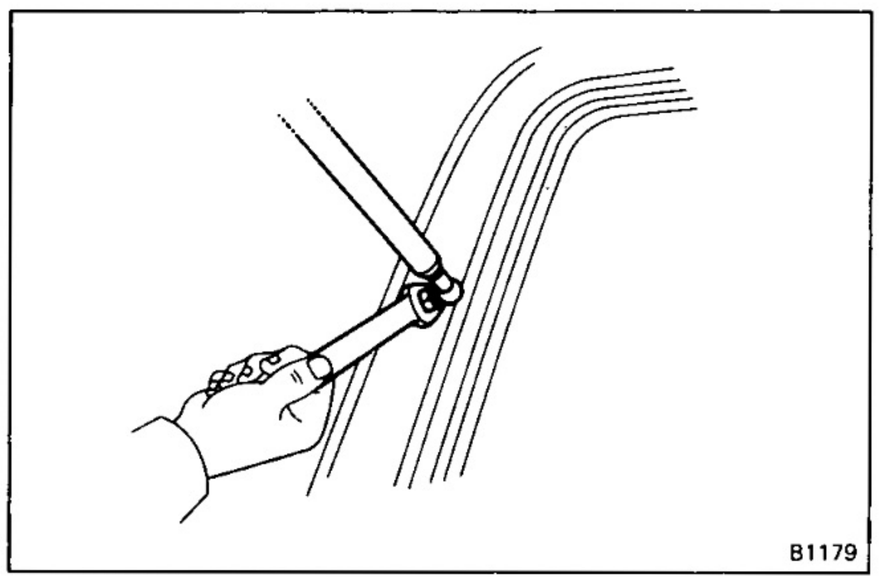

REMOVAL OF DAMPER STAY

1. REMOVE DAMPER STAY UPPER END FROM BACK DOOR
2. REMOVE DAMPER STAY LOWER END FROM BODY

INSTALLATION OF DAMPER STAY

1. INSTALL DAMPER STAY UPPER END TO BACK DOOR
2. CONNECT DAMPER STAY LOWER END TO BODY

BACK DOOR (60 Series Swing Out Type)

COMPONENTS

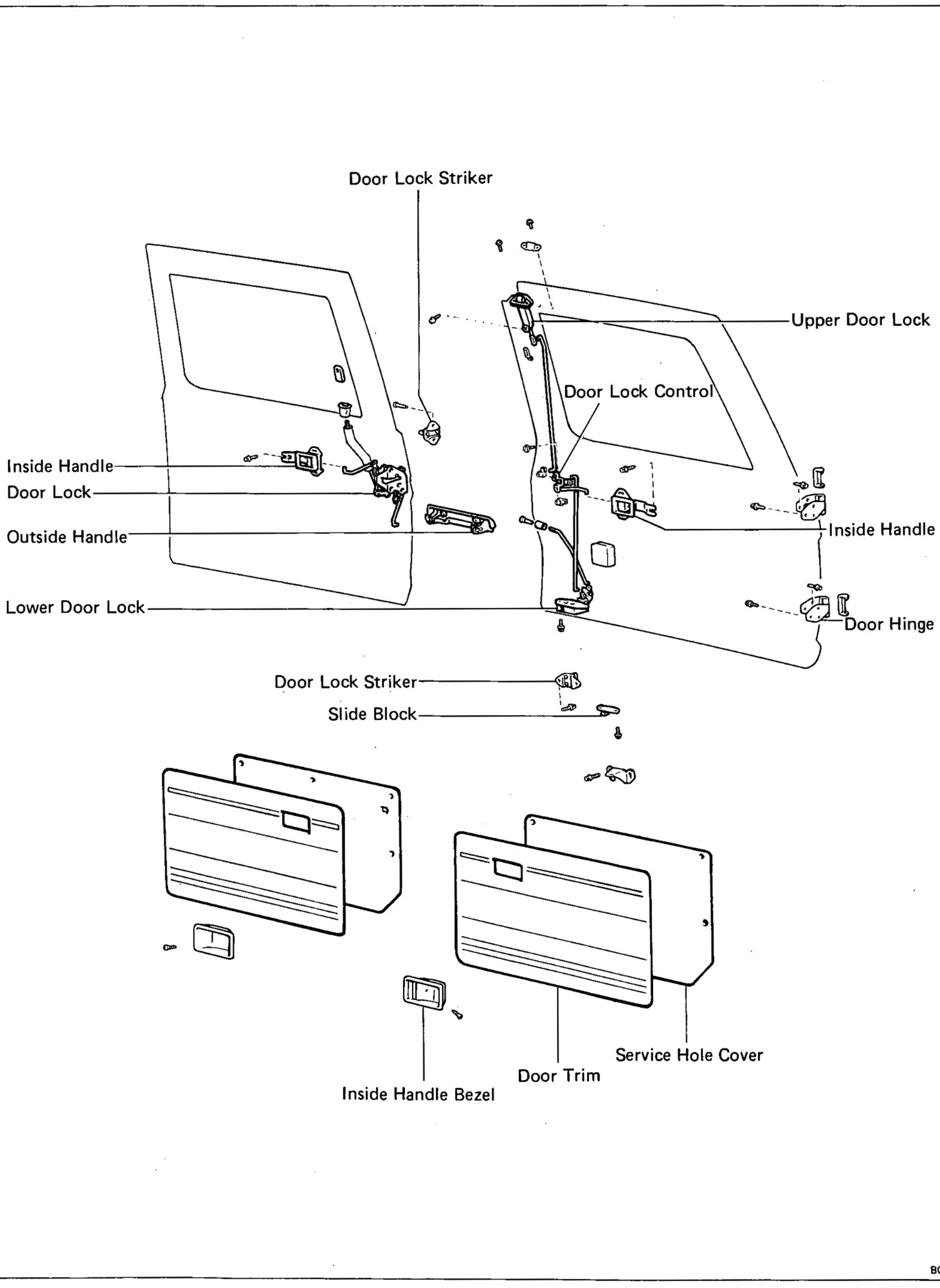

BO1045

Right Back Door

DISASSEMBLY OF RIGHT BACK DOOR

1. REMOVE INSIDE HANDLE BEZEL

2. REMOVE PULL HANDLE

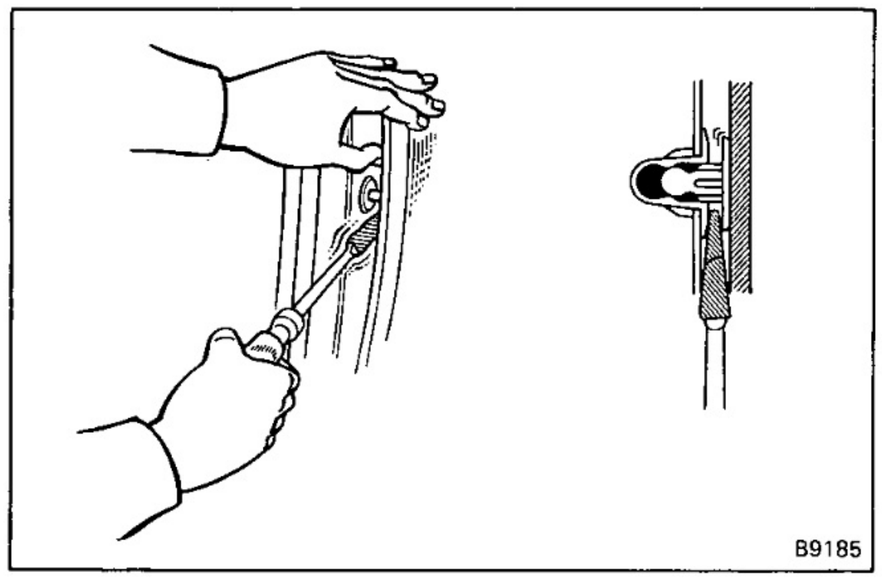

3. REMOVE DOOR TRIM

Insert a screwdriver between the trim retainers and door panel to pry it loose.

NOTE: Tape the screwdriver tip before use.

4. REMOVE SERVICE HOLE COVER

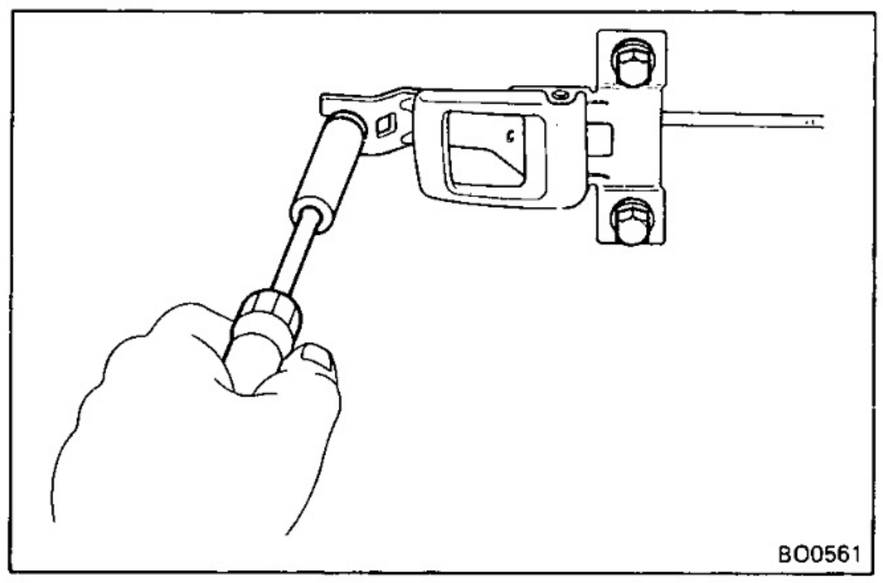

5. REMOVE INSIDE HANDLE

(a) Remove the three screws and inside handle.

(b) Disconnect the link from the inside handle.

6. REMOVE DOOR LOCK CYLINDER

(a) Disconnect the link from the cylinder.

(b) Remove the retainer and cylinder.

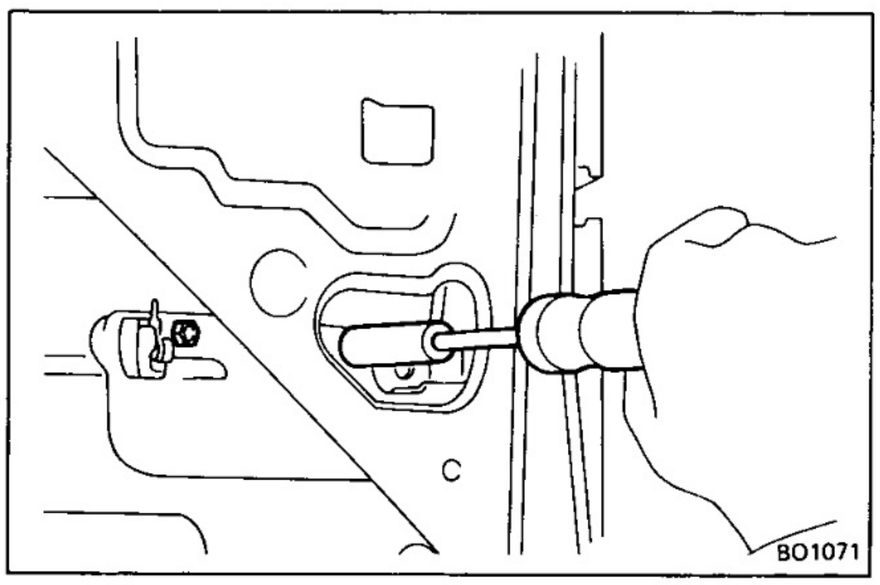

7. REMOVE OUTSIDE HANDLE

(a) Disconnect the link from the outside handle.

(b) Remove the two bolts and outside handle.

8. DISCONNECT INSIDE LOCKING CONTROL LINK FROM DOOR LOCK

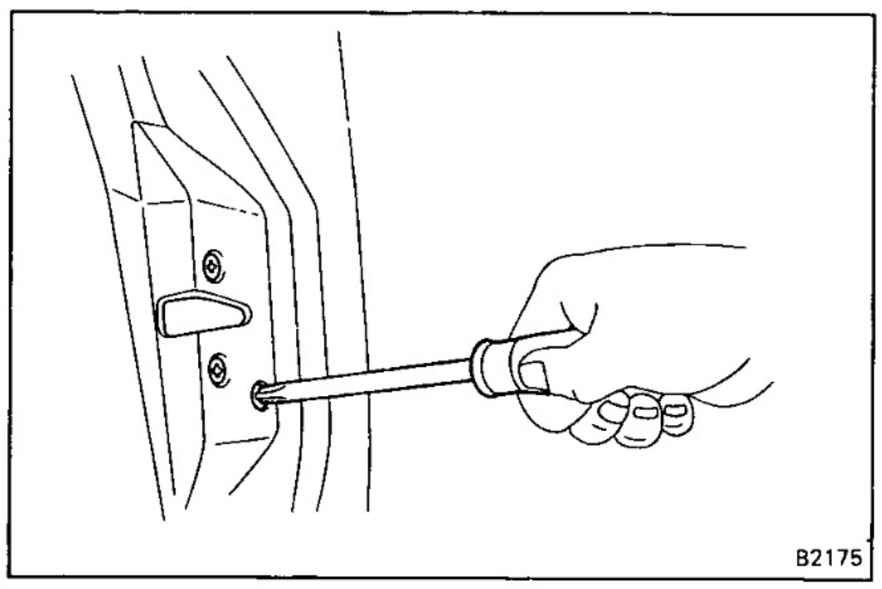

9. REMOVE DOOR LOCK

Remove the three screws and door lock.

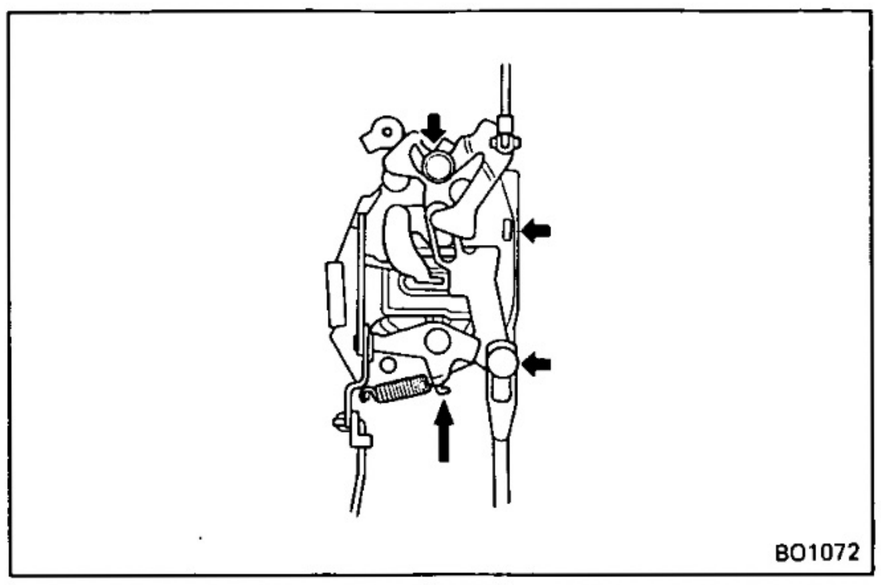

ASSEMBLY OF RIGHT BACK DOOR

1. APPLY MP GREASE TO DOOR LOCK

   Apply MP grease to the sliding surface of the door lock.

2. INSTALL DOOR LOCK

   Install the door lock with the three screws.

3. CONNECT INSIDE LOCKING CONTROL LINK TO DOOR LOCK

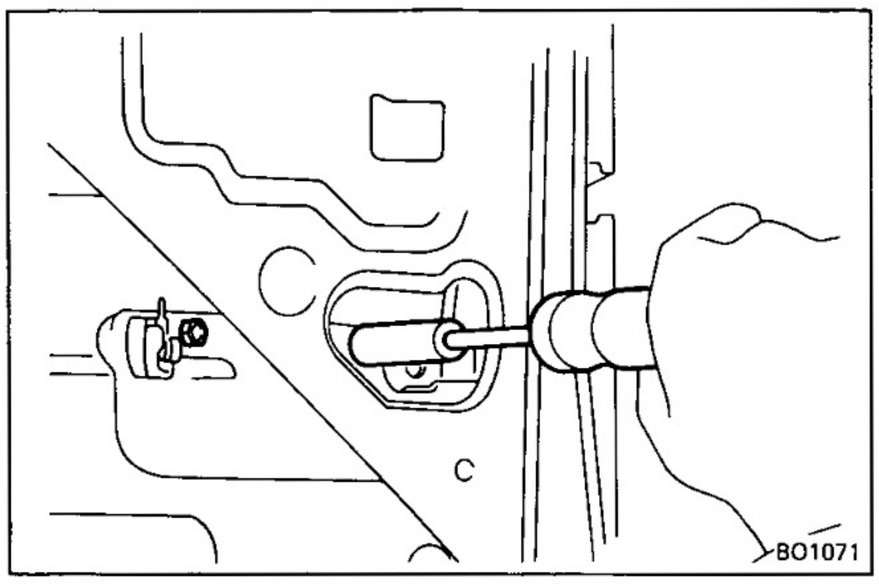

4. INSTALL OUTSIDE HANDLE

   (a) Install the outside handle with the two bolts.

   (b) Connect the link to the outside handle.

5. INSTALL DOOR LOCK CYLINDER

   (a) Install the door lock cylinder with retainer.

   (b) Connect the link to the cylinder.

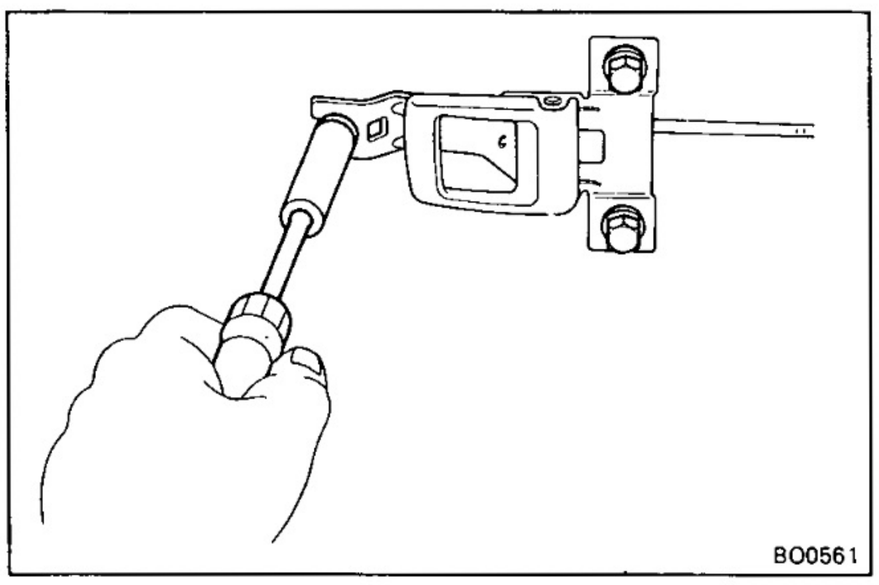

6. INSTALL INSIDE HANDLE

   (a) Connect the link to the inside handle.

   (b) Install the inside handle with the three screws.

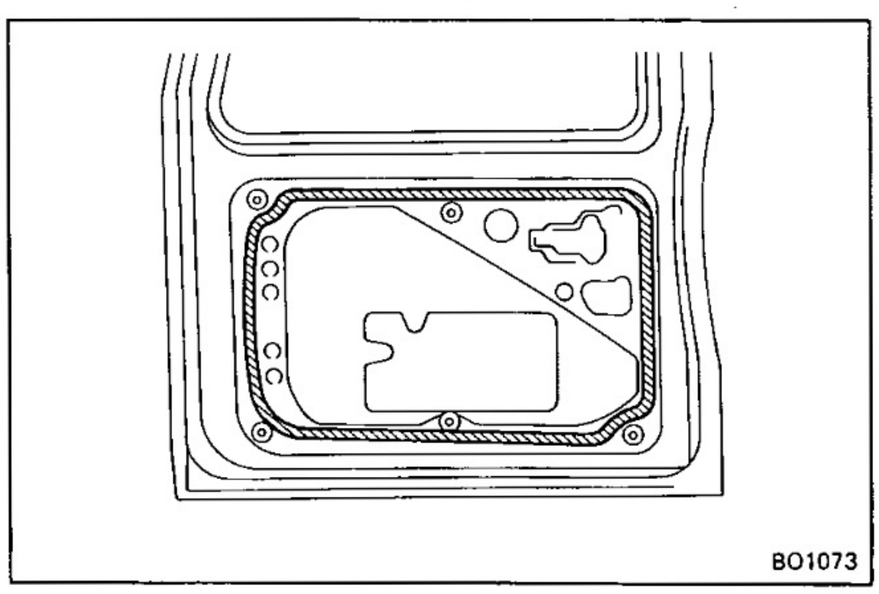

7. INSTALL SERVICE HOLE COVER

   Seal the service hole cover with adhesive.

8. INSTALL DOOR TRIM

   Install the door trim with clips to the inside door panel by tapping.

9. INSTALL PULL HANDLE

10. INSTALL INSIDE HANDLE BEZEL

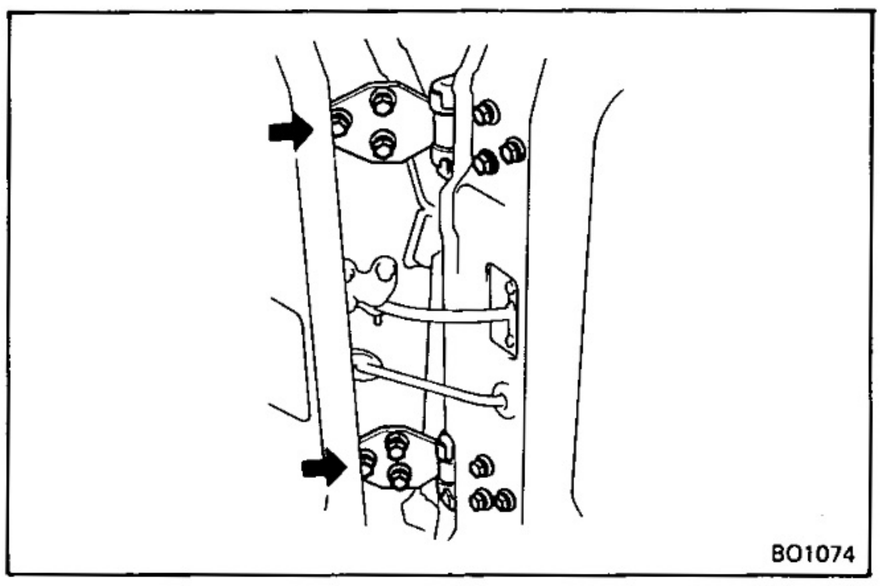

ADJUSTMENT OF RIGHT BACK DOOR

1. ADJUST DOOR IN FORWARD/REARWARD AND VERTICAL DIRECTIONS

Adjust the door by loosening the body side hinge bolts.

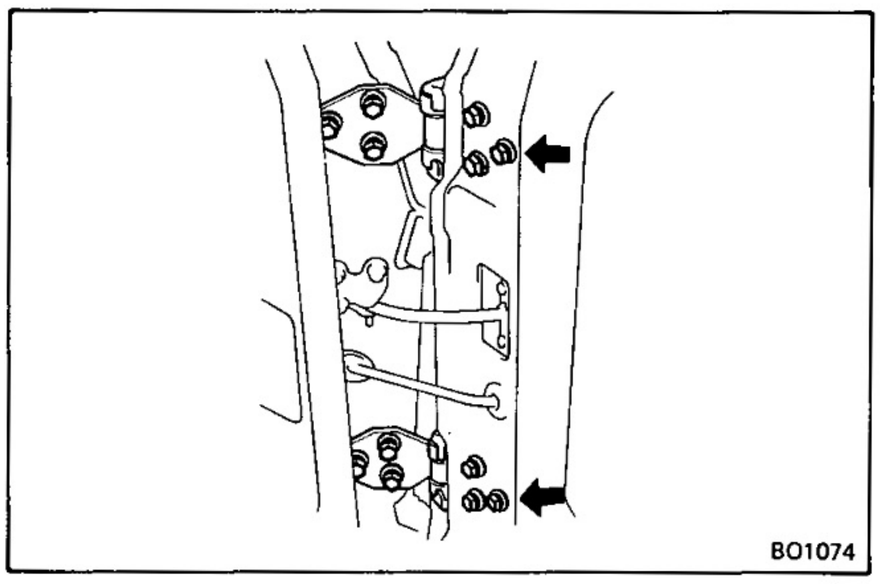

2. ADJUST DOOR IN LEFT/RIGHT AND VERTICAL DIRECTIONS

Adjust the door by loosening the door side hinge bolts.

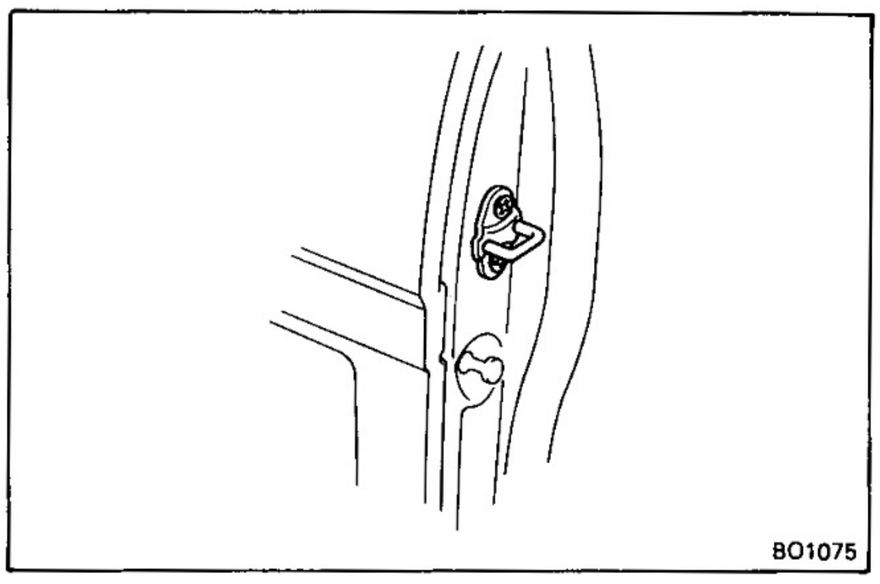

3. ADJUST DOOR LOCK STRIKER

(a) Check that the door fit and door lock linkages are adjusted correctly.

(b) Adjust the door lock striker by loosening the screws.

Left Back Door

DISASSEMBLY OF LEFT BACK DOOR

1. REMOVE INSIDE HANDLE BEZEL

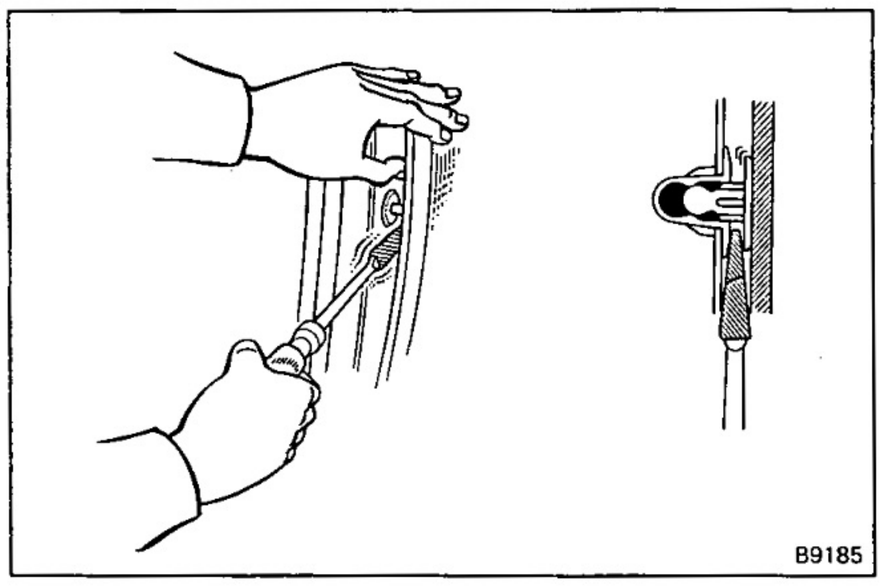

2. REMOVE DOOR TRIM

Insert a screwdriver between the trim retainers and door panel to pry it loose.

NOTE: Tape the screwdriver tip before use.

3. REMOVE SERVICE HOLE COVER

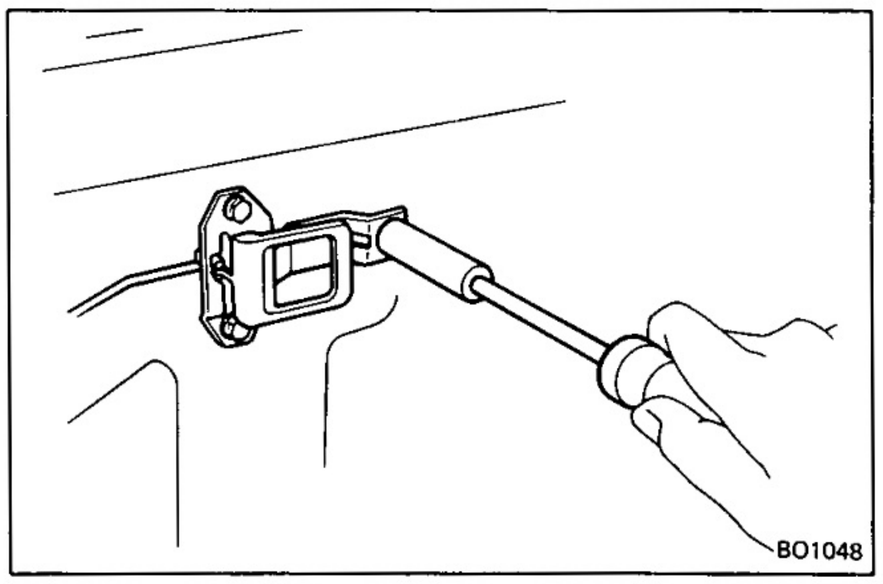

4. REMOVE INSIDE HANDLE

(a) Remove the three screws and inside handle.

(b) Disconnect the link from the inside handle.

5. DISCONNECT OUTSIDE LOCKING CONTROL LINK FROM LOWER DOOR LOCK

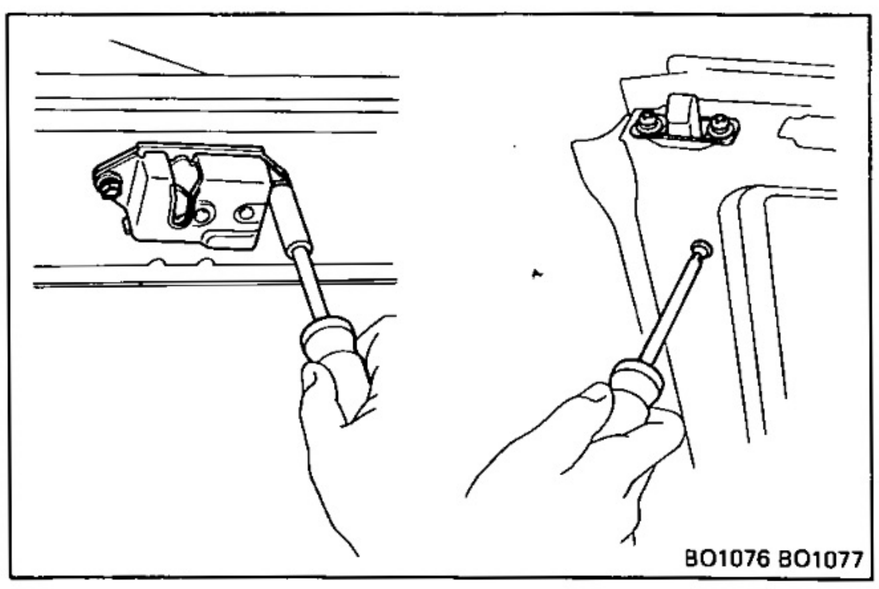

6. REMOVE LOWER DOOR LOCK

(a) Disconnect the link from the door lock control.

(b) Remove the two bolts and door lock.

7. REMOVE UPPER DOOR LOCK

(a) Disconnect the link from the door lock control.

(b) Remove the three screws and door lock.

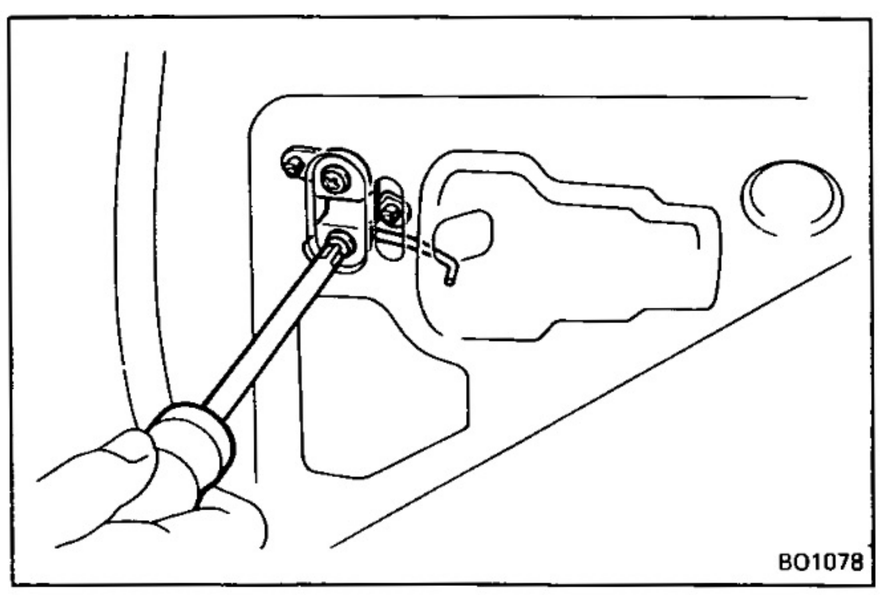

8. REMOVE DOOR LOCK CONTROL

Remove the two screws and door lock control.

9. REMOVE SLIDE BLOCK

Remove the two bolts and slide block.

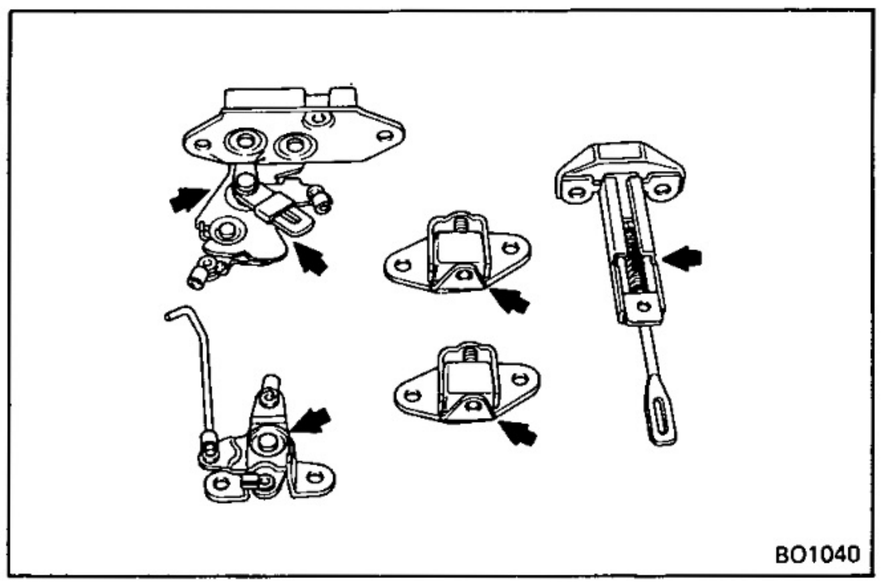

ASSEMBLY OF LEFT BACK DOOR

1. BEFORE INSTALLING PARTS, APPLY MP GREASE TO THEM
   (a) Apply MP grease to the sliding surface of the door lock.
   (b) Apply MP grease to the sliding surface of the door lock control.
   (c) Apply MP grease to the sliding surface of the slide block.

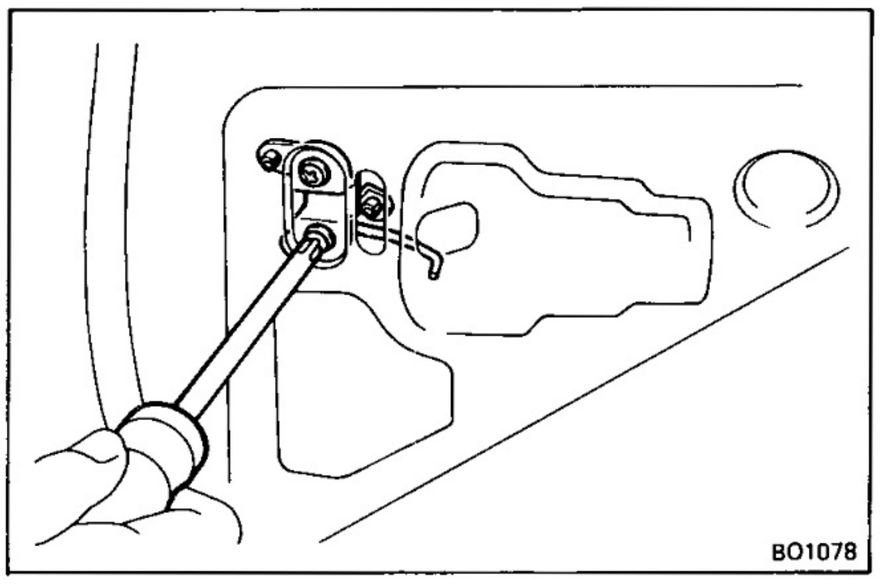

2. INSTALL SLIDE BLOCK
   Install the slide block with the two bolts.

3. INSTALL DOOR LOCK CONTROL
   Install the door lock control with the two screws.

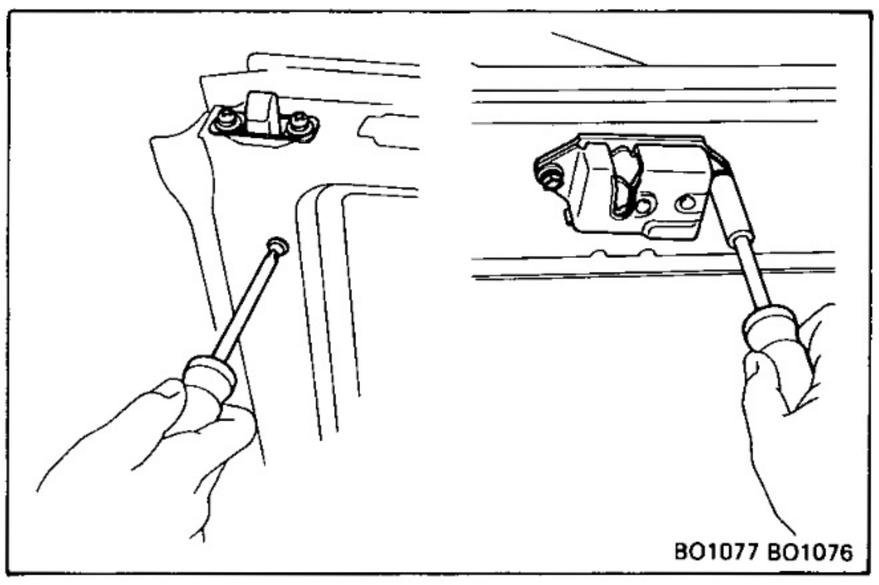

4. INSTALL UPPER DOOR LOCK
   (a) Install the upper door lock with the three screws.
   (b) Connect the link to the door lock control.

5. INSTALL LOWER DOOR LOCK
   (a) Install the lower door lock with the two bolts.
   (b) Connect the link to the door lock control.

6. CONNECT OUTSIDE LOCKING CONTROL LINK TO LOWER DOOR LOCK

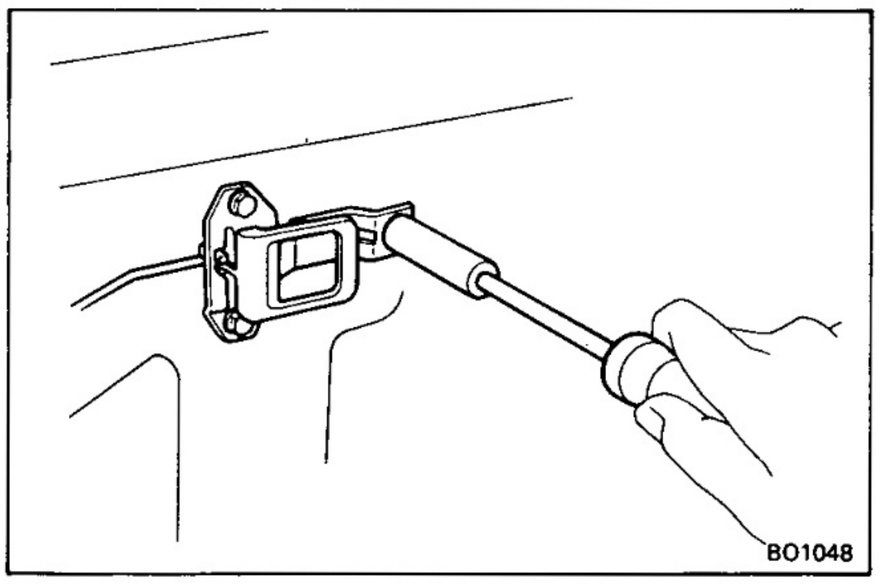

7. INSTALL INSIDE HANDLE
   (a) Connect the link to the inside handle.
   (b) Install the inside handle with the three screws.

8. CHECK DOOR LOCK OPERATION

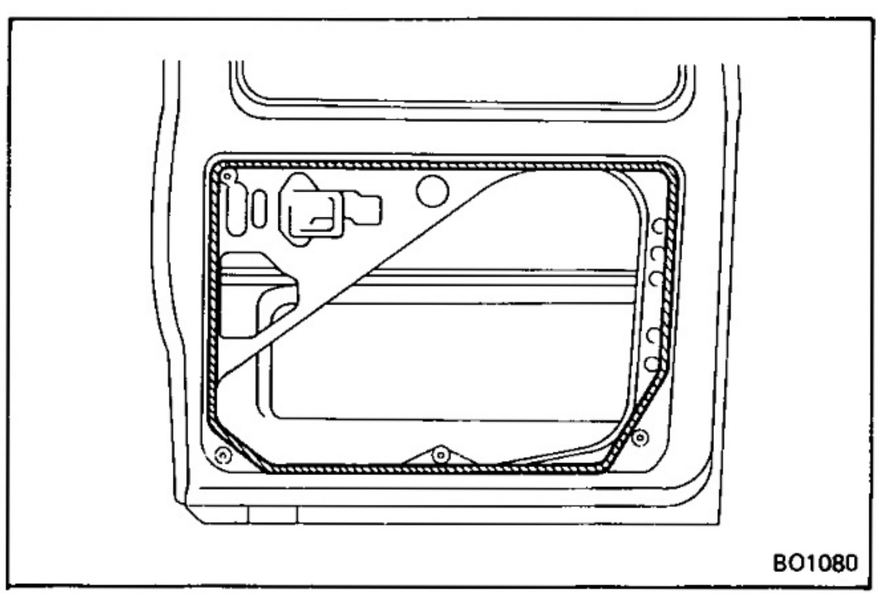

9. INSTALL SERVICE HOLE COVER
   Seal the service hole cover with adhesive.

10. INSTALL DOOR TRIM
    Install the door trim with clips to the inside door panel by tapping.

11. INSTALL INSIDE HANDLE BEZEL

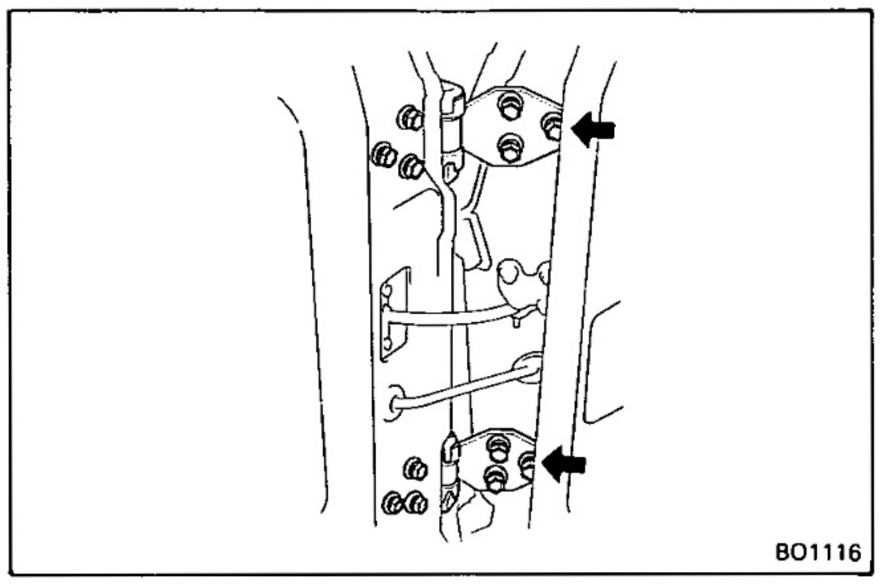

ADJUSTMENT OF LEFT BACK DOOR

1. ADJUST DOOR IN FORWARD/REARWARD AND VERTICAL DIRECTIONS

Adjust the door by loosening the body side hinge bolts.

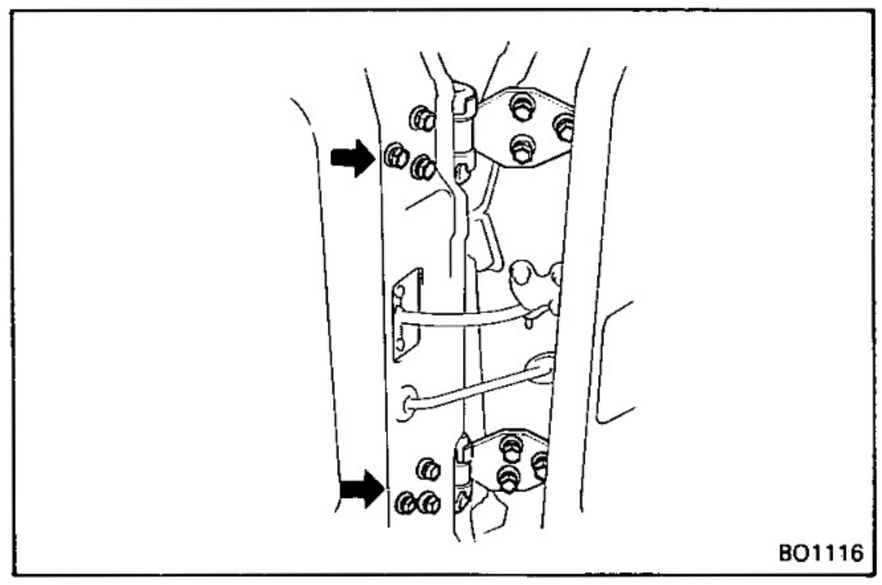

2. ADJUST DOOR IN LEFT/RIGHT AND VERTICAL DIRECTIONS

Adjust the door by loosening the door side hinge bolts.

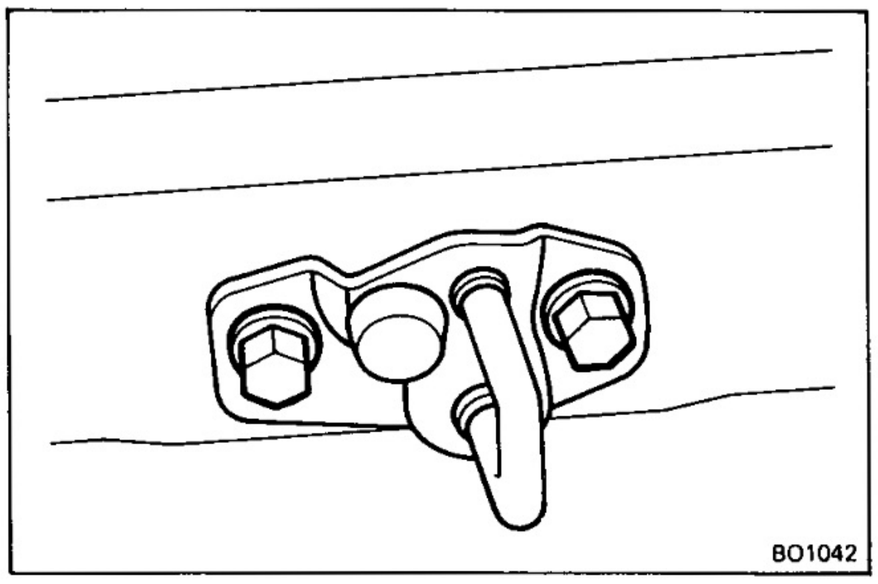

3. ADJUST DOOR LOCK STRIKER

(a) Check that the door fit and door lock linkages are adjusted correctly.

(b) Adjust the door lock striker by loosening the bolts.

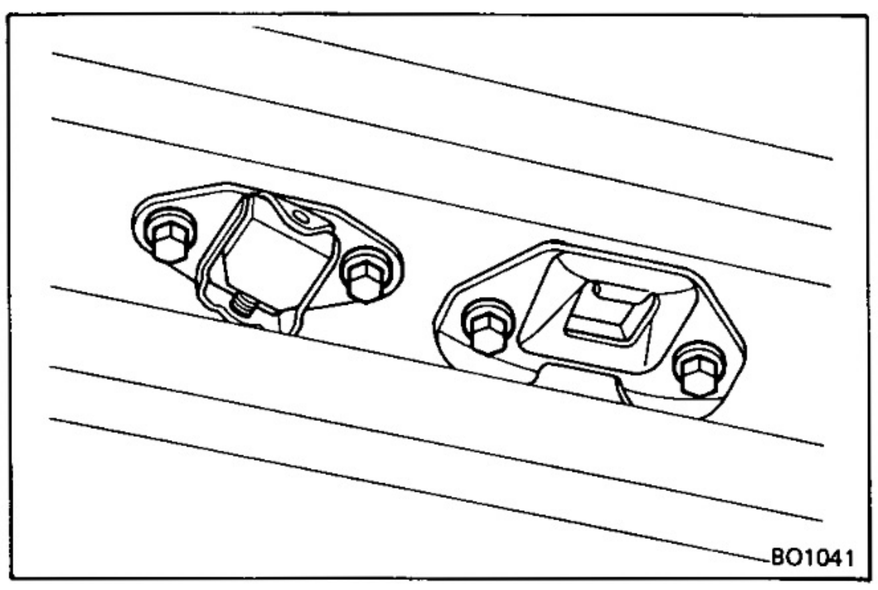

4. ADJUST SLIDE BLOCK

Adjust the slide block by loosening the bolts.

BACK DOOR (70 Series Swing Out Type)

COMPONENTS

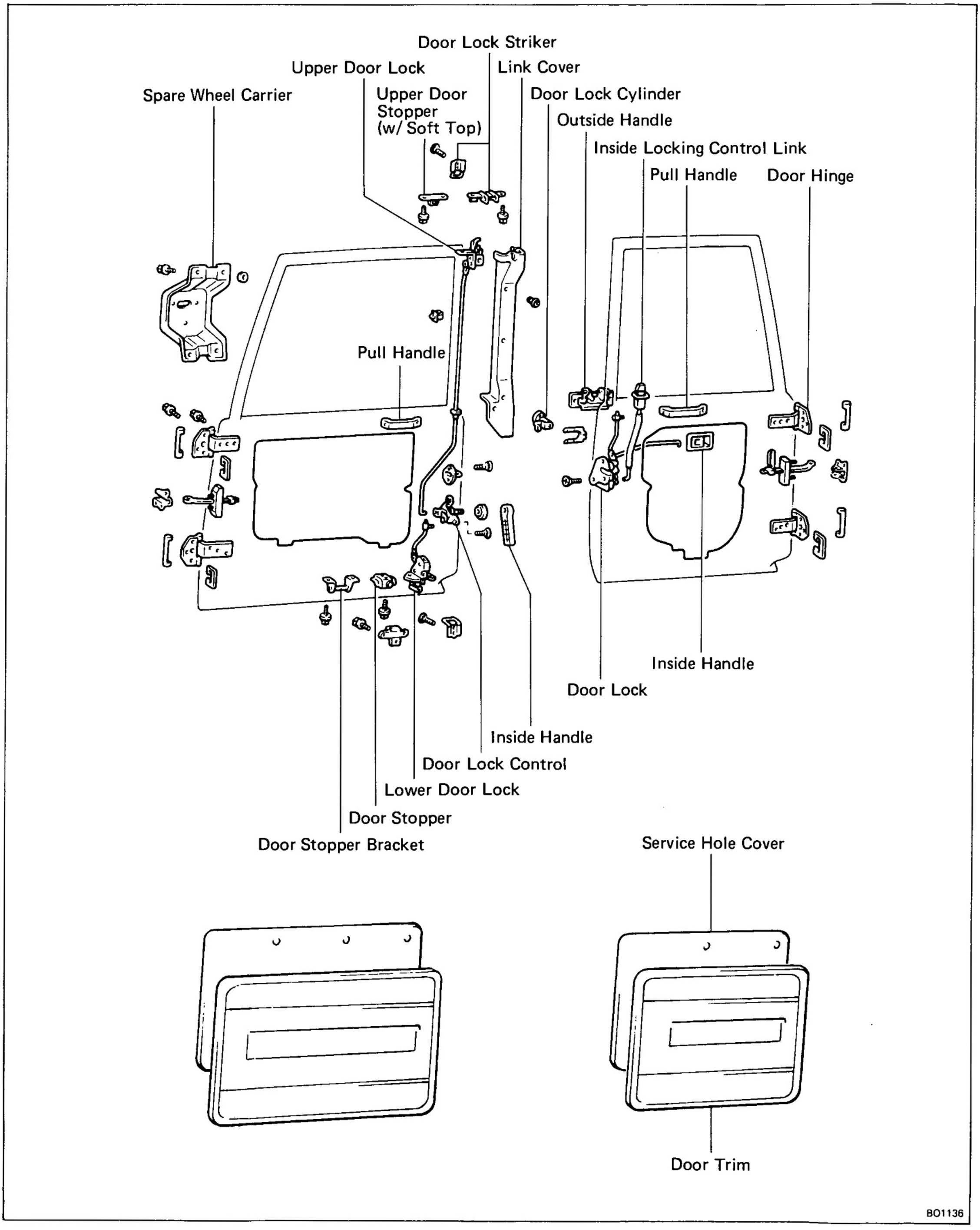

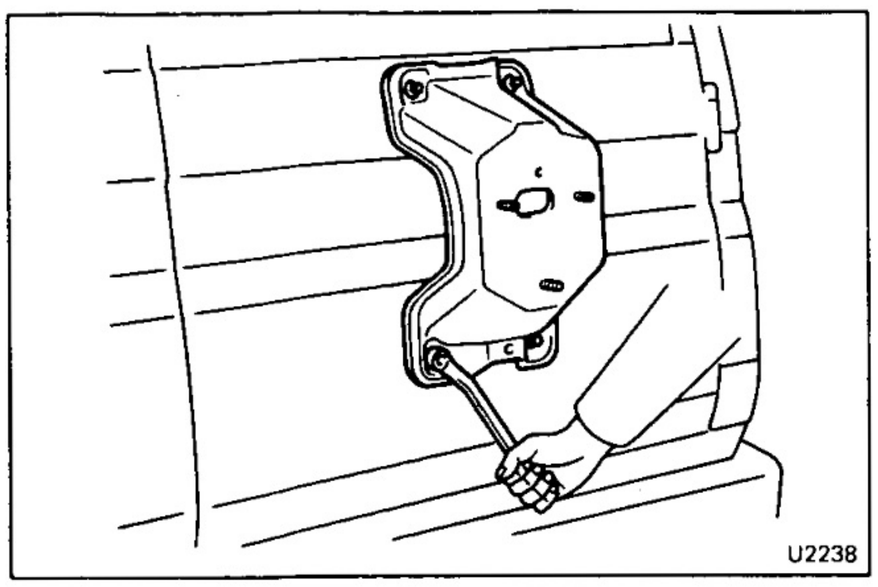

Right Back Door

DISASSEMBLY OF RIGHT BACK DOOR

1. REMOVE SPARE WHEEL

2. REMOVE SPARE WHEEL CARRIER

   Remove the four bolts and spare wheel carrier.

3. REMOVE PULL HANDLE

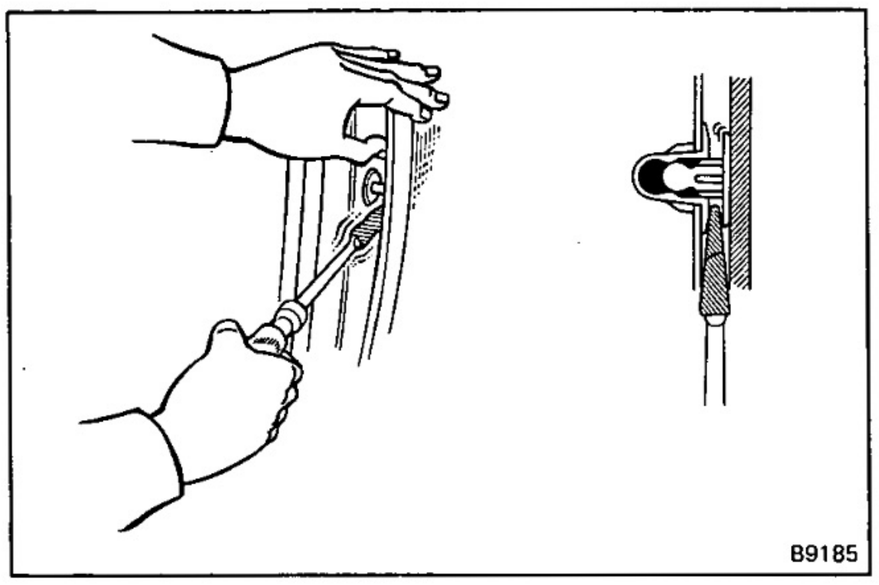

4. REMOVE DOOR TRIM

   Insert a screwdriver between the trim retainers and door panel to pry it loose.

   NOTE: Tape the screwdriver tip before use.

5. REMOVE SERVICE HOLE COVER

6. REMOVE DOOR STOPPER

7. REMOVE DOOR STOPPER BRACKET

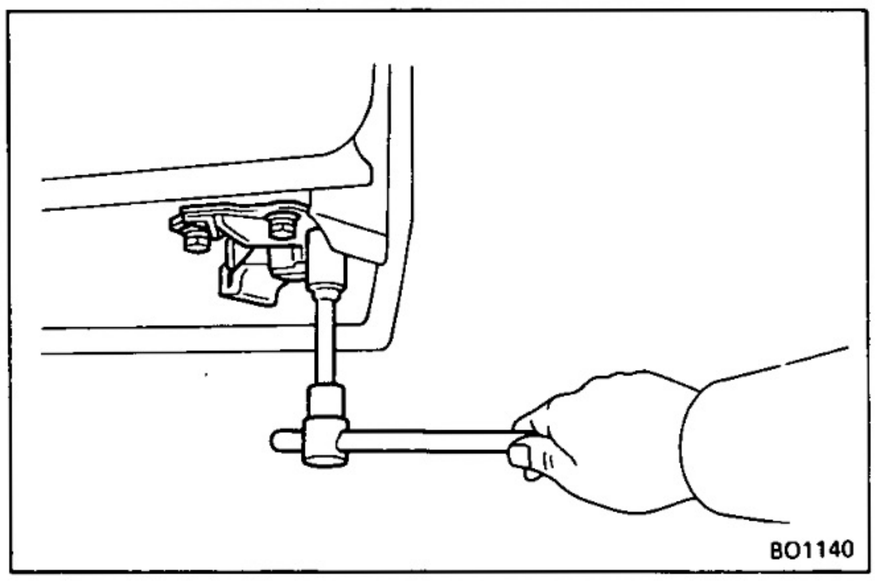

8. REMOVE LOWER DOOR LOCK

   (a) Disconnect the link from the door lock control.

   (b) Remove the three bolts and lower door lock.

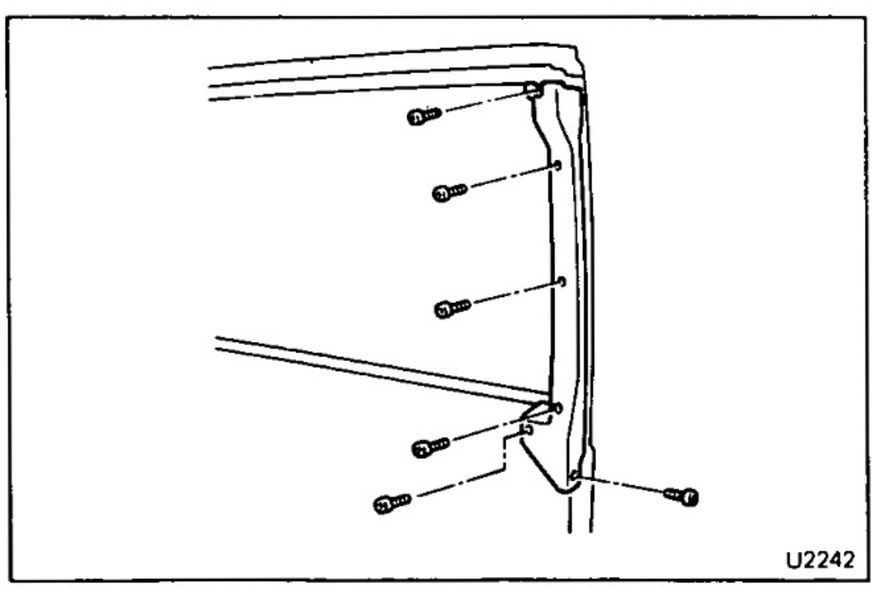

9. (w/o Soft Top)
   REMOVE UPPER DOOR LOCK

   (a) Remove the six screws and link cover.

   (b) Disconnect the link from the door lock control.

   (c) Remove the two bolts and upper door lock.

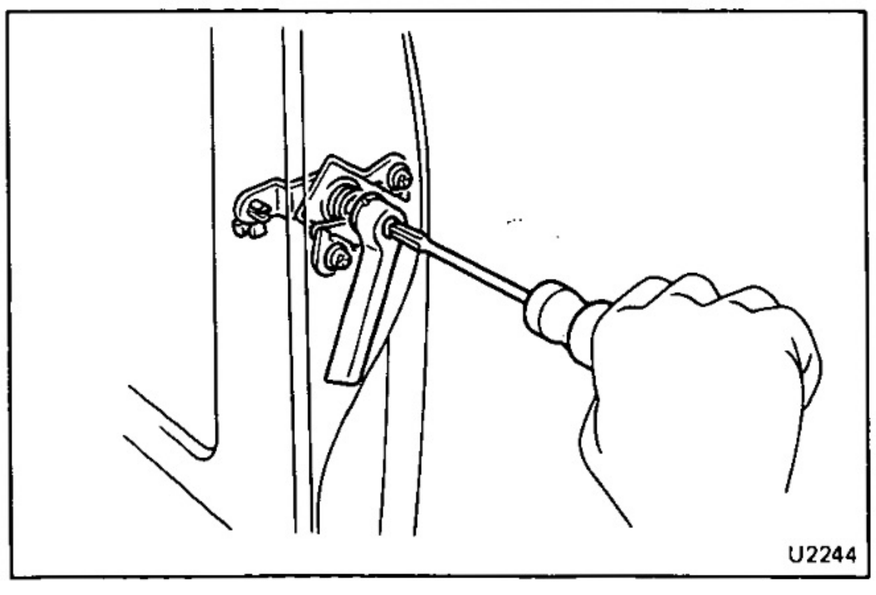

10. REMOVE DOOR LOCK CONTROL

    (a) Remove the screw and inside handle.

    (b) Remove the two screws, bushing and door lock control.

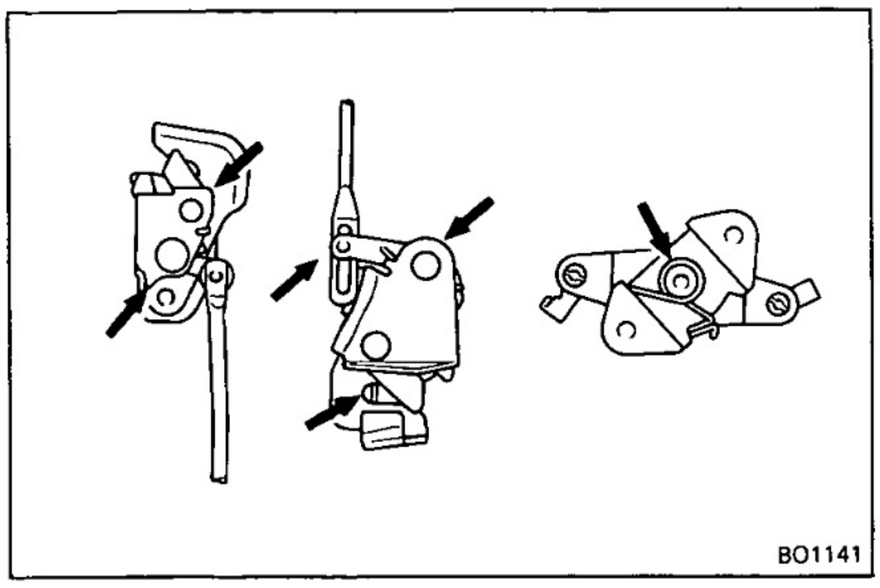

ASSEMBLY OF RIGHT BACK DOOR

1. BEFORE INSTALLING PARTS, APPLY MP GREASE TO THEM
   (a) Apply MP grease to the sliding surface of the door lock.
   (b) Apply MP grease to the sliding surface of the door lock control.

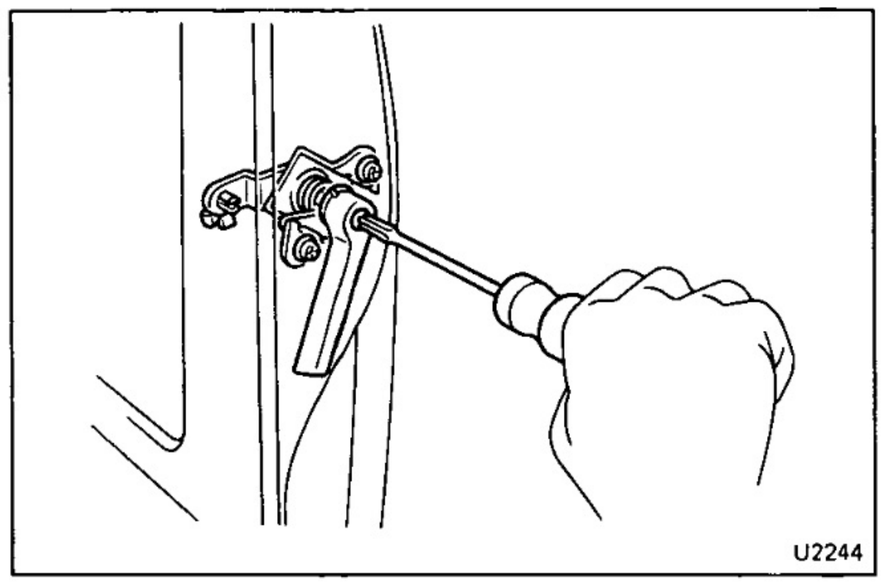

2. INSTALL DOOR LOCK CONTROL
   (a) Install the bushing and door lock control with two screws.
   (b) Install the inside handle with a screw.

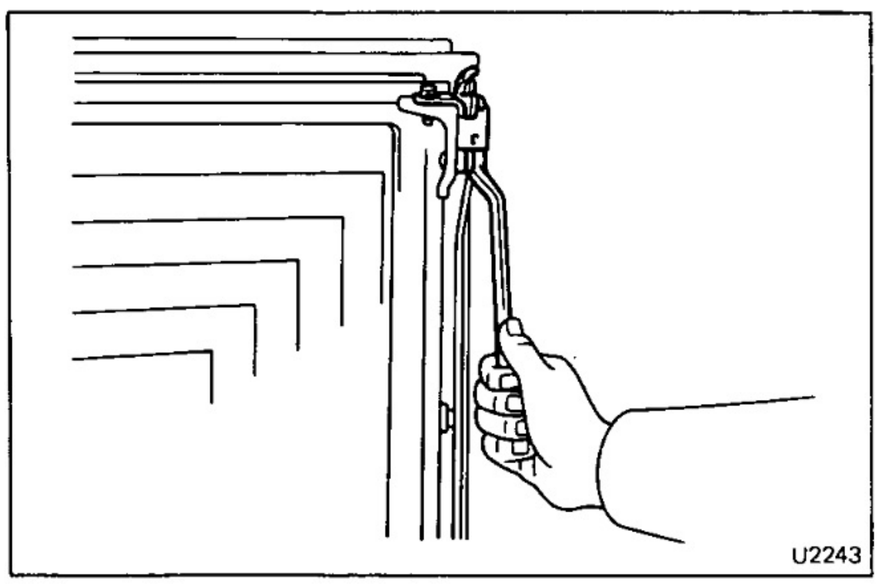

3. (w/o Soft Top)
   INSTALL UPPER DOOR LOCK
   (a) Install the upper door lock with the two bolts.
   (b) Connect the link to the door lock control.
   (c) Install the link cover with the six screws.

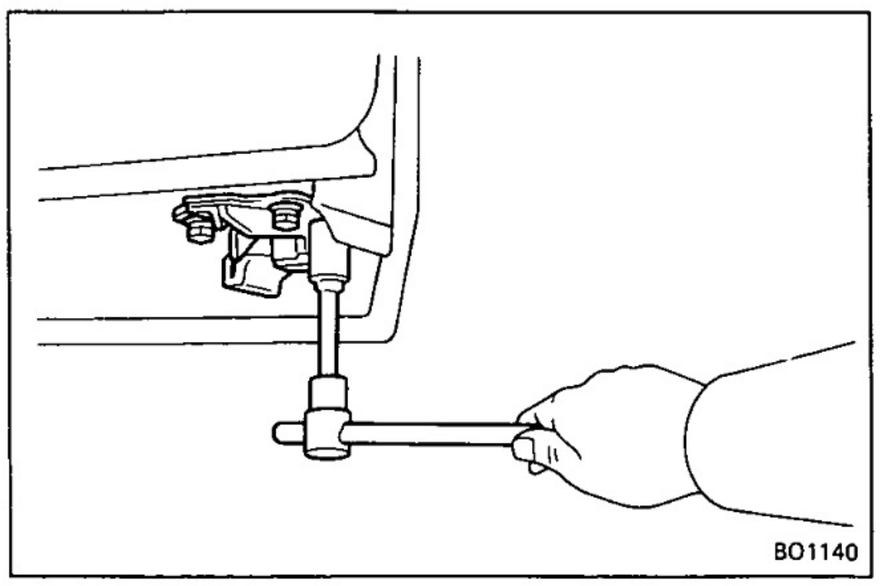

4. INSTALL LOWER DOOR LOCK
   (a) Install the lower door lock with the three bolts.
   (b) Connect the link to the door lock control.

5. CHECK DOOR LOCK OPERATION

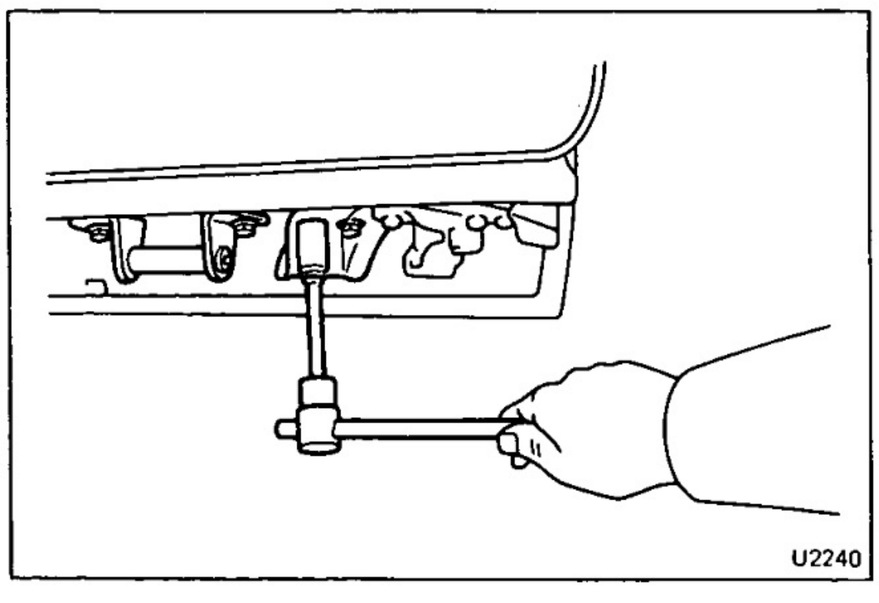

6. INSTALL DOOR STOPPER BRACKET
   Install the door stopper bracket with the two bolts.

7. INSTALL DOOR STOPPER
   Install the door stopper with the two bolts.

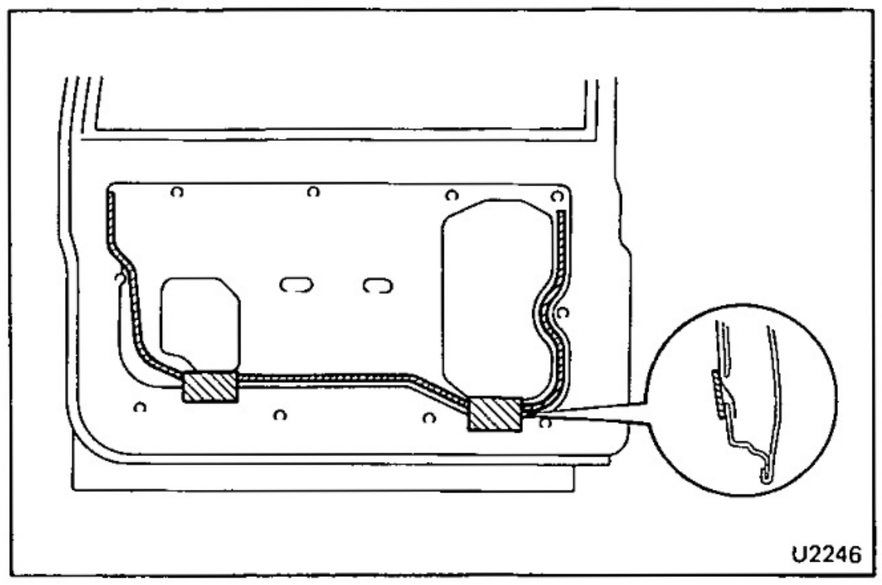

8. INSTALL SERVICE HOLE COVER

(a) Seal the service hole cover with adhesive.

(b) Insert the lower edge of the service hole cover into the panel slit.

(c) Seal the panel slit with cotton tape.

CAUTION: Do not block the trim clip seating with the tape.

9. INSTALL DOOR TRIM

Install the door trim with clips to the inside door panel by tapping.

10. INSTALL PULL HANDLE

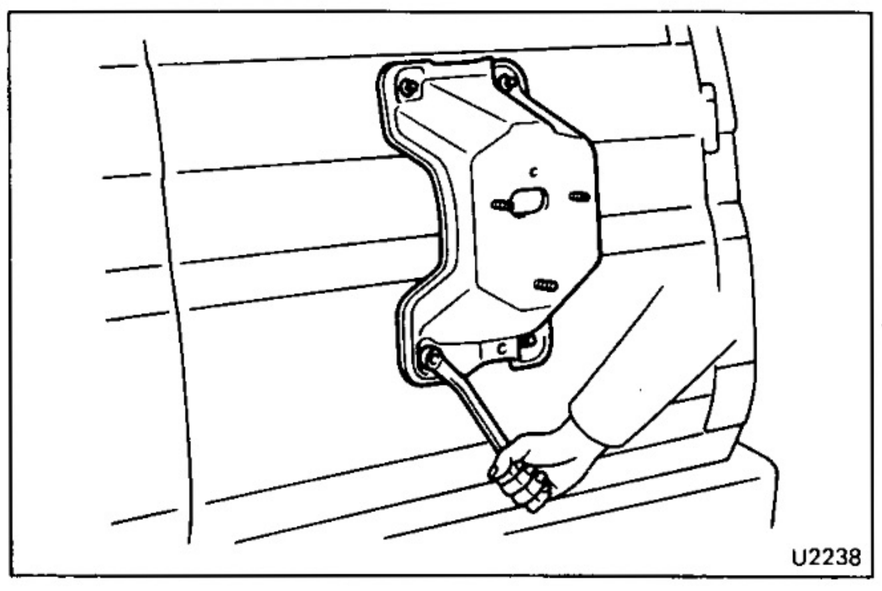

11. INSTALL SPARE WHEEL CARRIER

Install the spare wheel carrier with four bolts.

12. INSTALL SPARE WHEEL

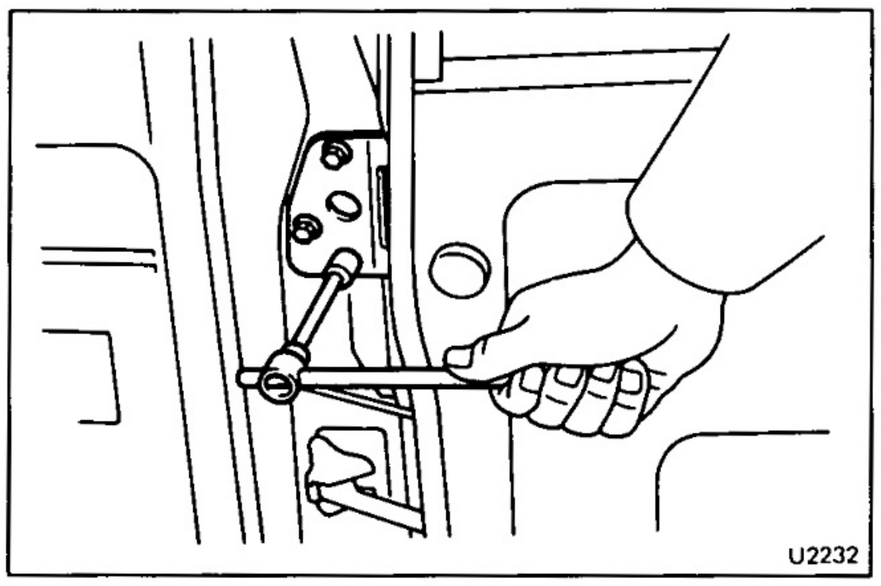

ADJUSTMENT OF RIGHT BACK DOOR

1. ADJUST DOOR IN FORWARD/REARWARD AND VERTICAL DIRECTIONS

Adjust the door by loosening the body side hinge bolts.

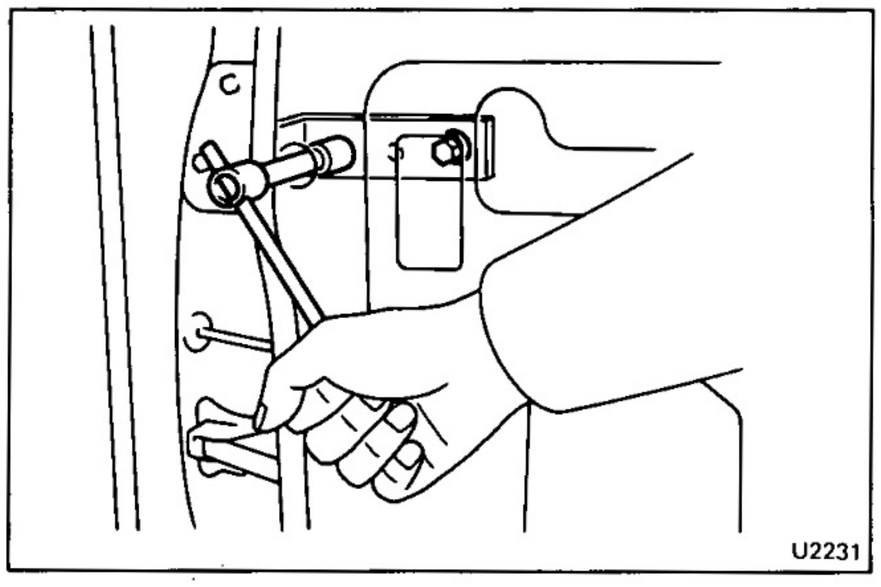

2. ADJUST DOOR IN LEFT/RIGHT AND VERTICAL DIRECTIONS

(a) Remove the pull handle and door trim.

(b) Peel off the outer ridges of the service hole cover.

(c) Adjust the door by loosening the door side hinge bolts.

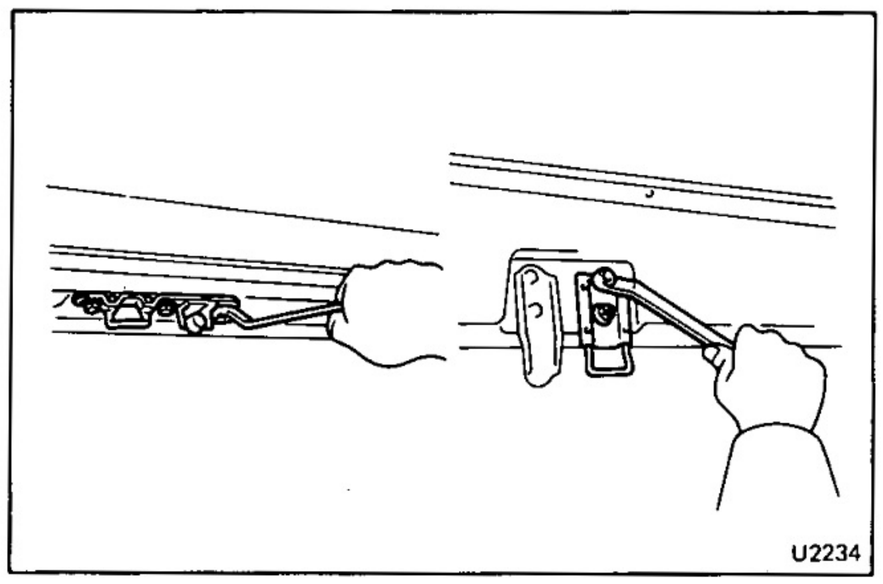

3. ADJUST DOOR LOCK STRIKER

(a) Check that the door fit and door lock linkages are adjusted correctly.

(b) Adjust the door lock striker by loosening the bolts or screws.

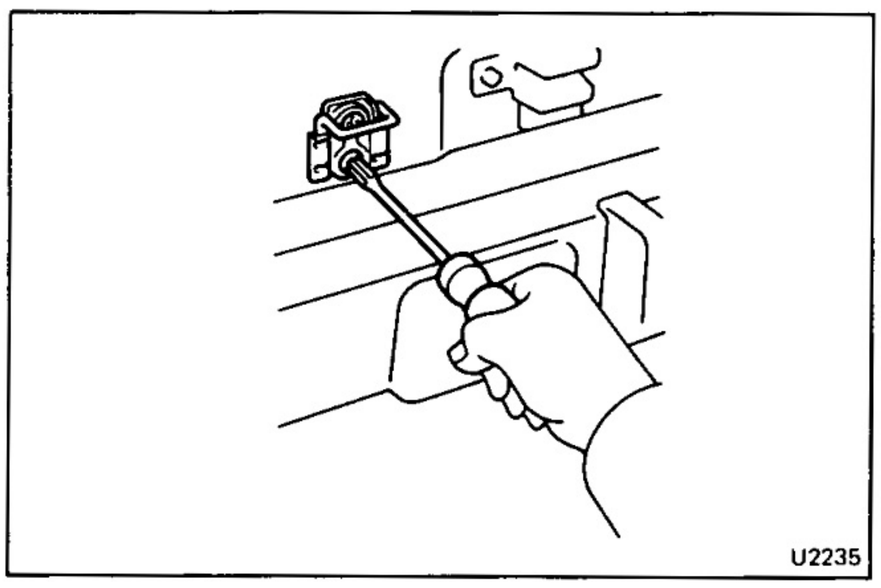

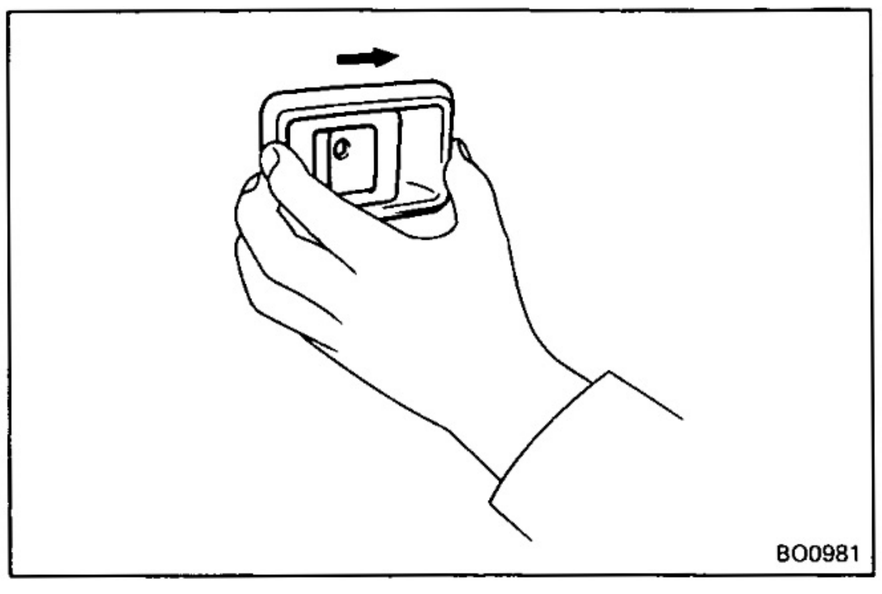

Left Back Door

DISASSEMBLY OF LEFT BACK DOOR

1. REMOVE INSIDE HANDLE
   (a) Remove the screw.
   (b) Slide and pull off the inside handle.
   (c) Disconnect the link from the inside handle.

2. REMOVE PULL HANDLE

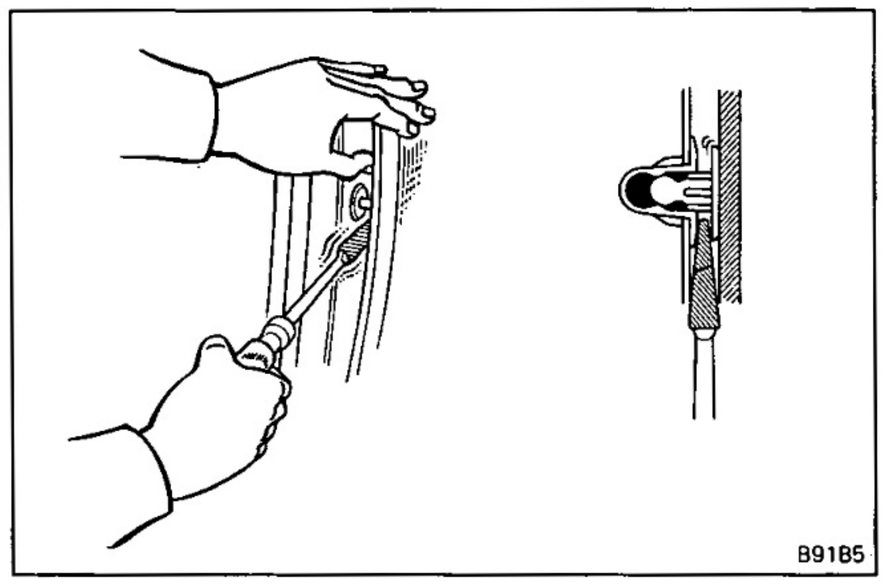

3. REMOVE DOOR TRIM
   Insert a screwdriver between the trim retainers and door panel to pry it loose.
   NOTE: Tape the screwdriver tip before use.

4. REMOVE SERVICE HOLE COVER

5. DISCONNECT INSIDE LOCKING CONTROL LINK FROM DOOR LOCK

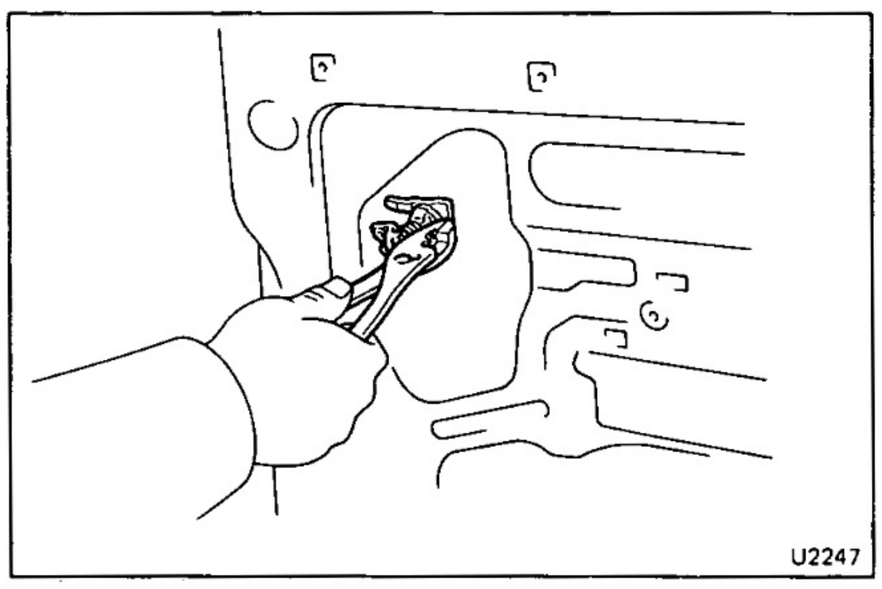

6. REMOVE DOOR LOCK CYLINDER
   (a) Disconnect the link from the door lock cylinder.
   (b) Remove the retainer and cylinder.

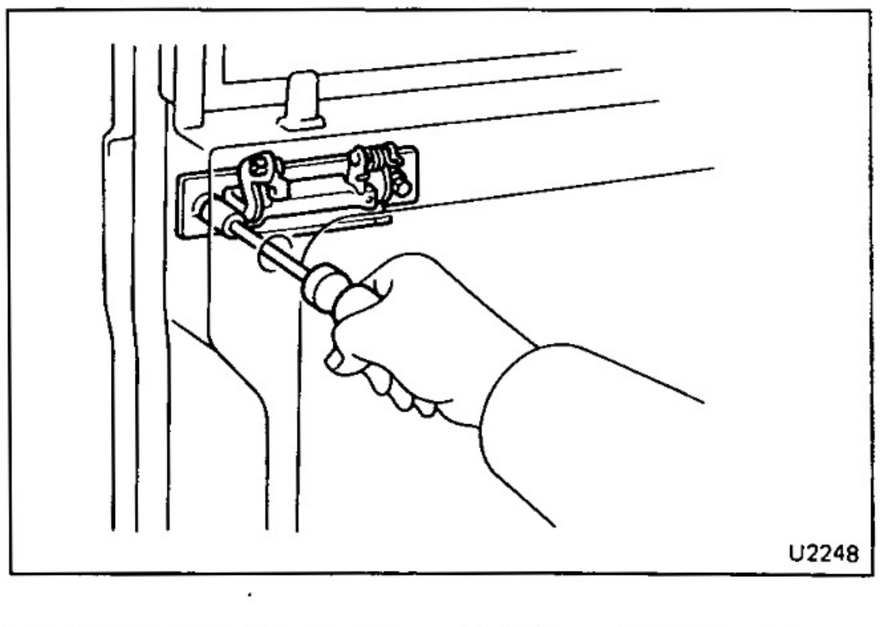

7. REMOVE OUTSIDE HANDLE
   (a) Disconnect the link from the outside handle.
   (b) Remove the two bolts and outside handle.

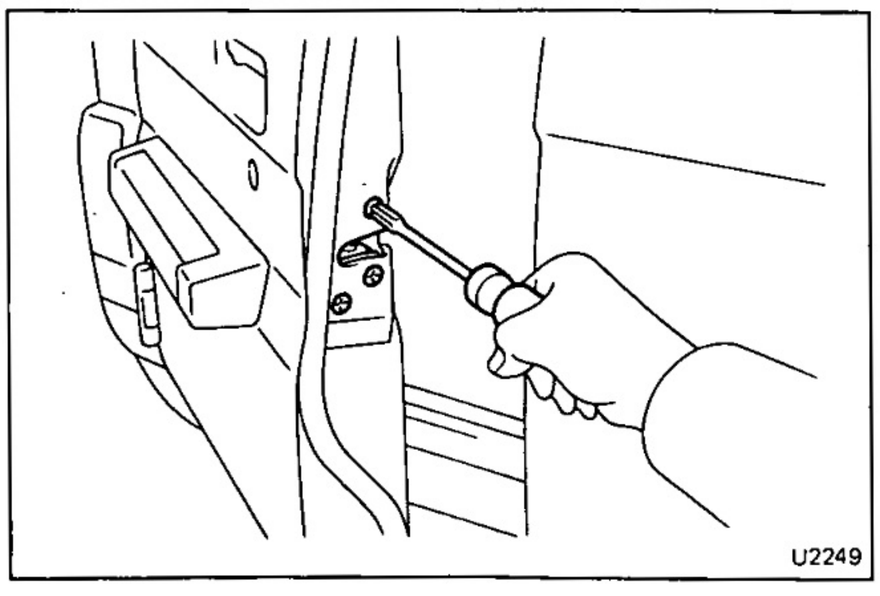

8. REMOVE DOOR LOCK
   Remove the three screws and door lock.

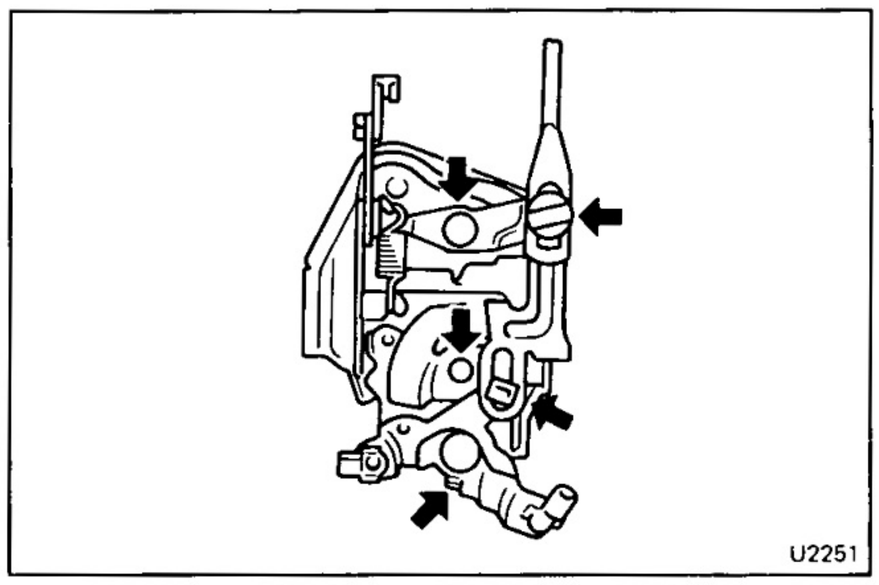

ASSEMBLY OF LEFT BACK DOOR

1. APPLY MP GREASE TO DOOR LOCK

   Apply MP grease to the sliding surface of the door lock.

2. INSTALL DOOR LOCK

   Install the door lock with the three screws.

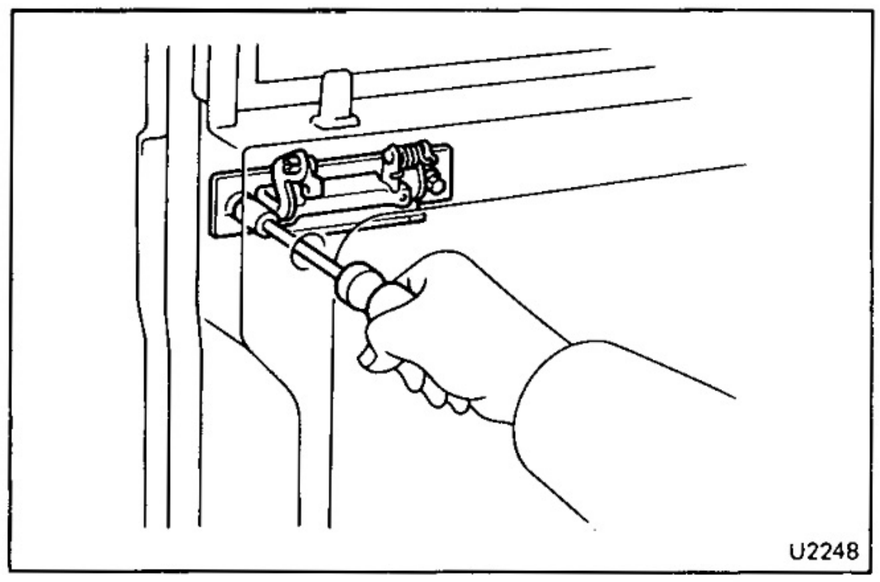

3. INSTALL OUTSIDE HANDLE

   (a) Install the outside handle with the two bolts.

   (b) Connect the link to the outside handle.

4. INSTALL DOOR LOCK CYLINDER

   (a) Install the door lock cylinder with retainer.

   (b) Connect the link to the cylinder.

5. CONNECT INSIDE LOCKING CONTROL LINK TO DOOR LOCK

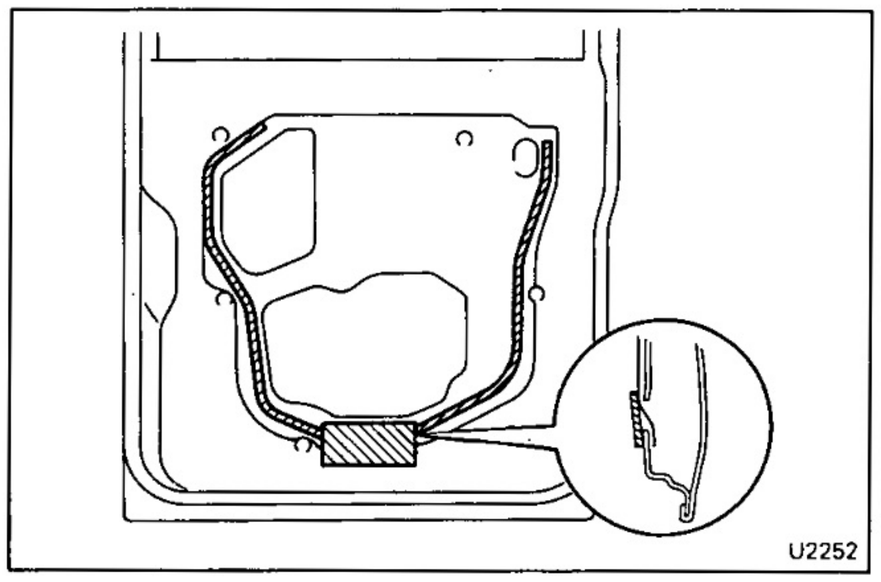

6. INSTALL SERVICE HOLE COVER

   (a) Seal the service hole cover with adhesive.

   (b) Insert the lower edge of the service hole cover into the panel slit.

   (c) Seal the panel slit with cotton tape.

   CAUTION: Do not block the trim clip seating with the tape.

7. INSTALL DOOR TRIM

   Install the door trim with clips to the inside door panel by tapping.

8. INSTALL PULL HANDLE

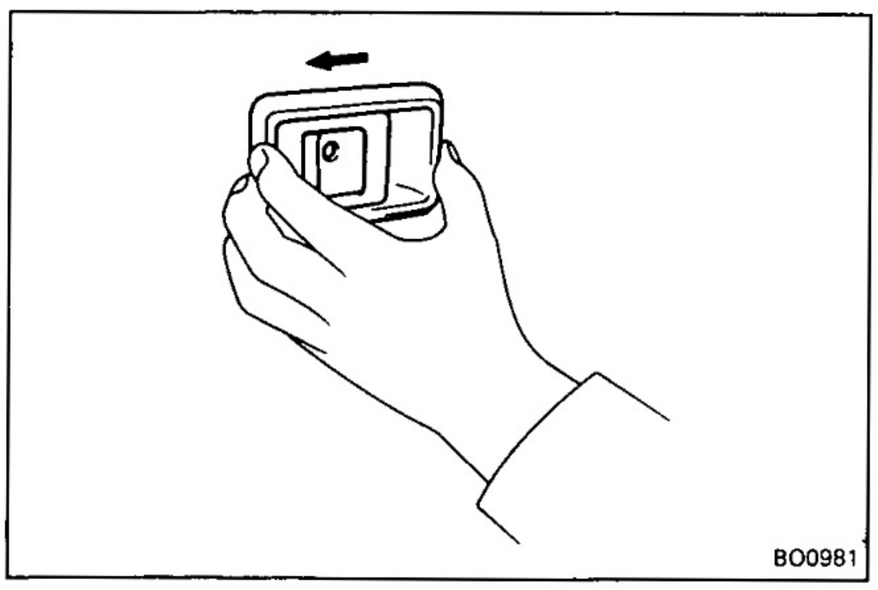

9. INSTALL INSIDE HANDLE

   (a) Connect the link to the inside handle.

   (b) Push the inside handle in the door panel and slide it.

   (c) Install the screw.

10. CHECK DOOR LOCK OPERATION

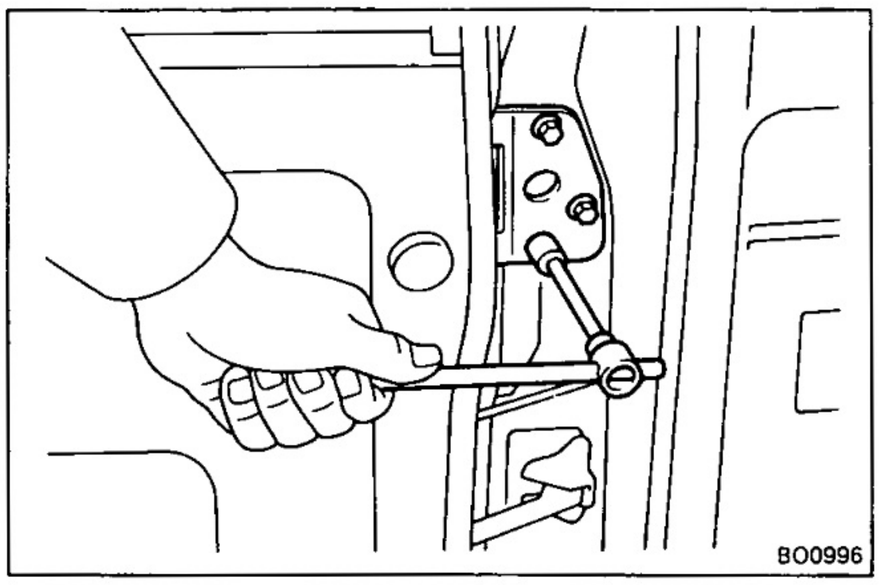

ADJUSTMENT OF LEFT BACK DOOR

1. ADJUST DOOR IN FORWARD/REARWARD AND VERTICAL DIRECTIONS

Adjust the door by loosening the body side hinge bolts.

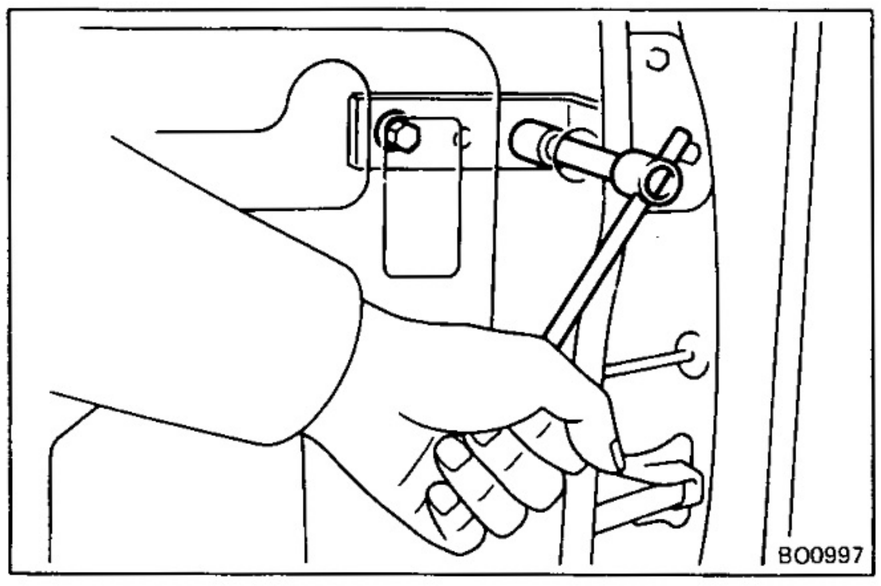

2. ADJUST DOOR IN LEFT/RIGHT AND VERTICAL DIRECTIONS

(a) Remove the pull handle, inside handle and door trim.

(b) Peel off the outer ridges of the service hole cover.

(c) Adjust the door by loosening the door side hinge bolts.

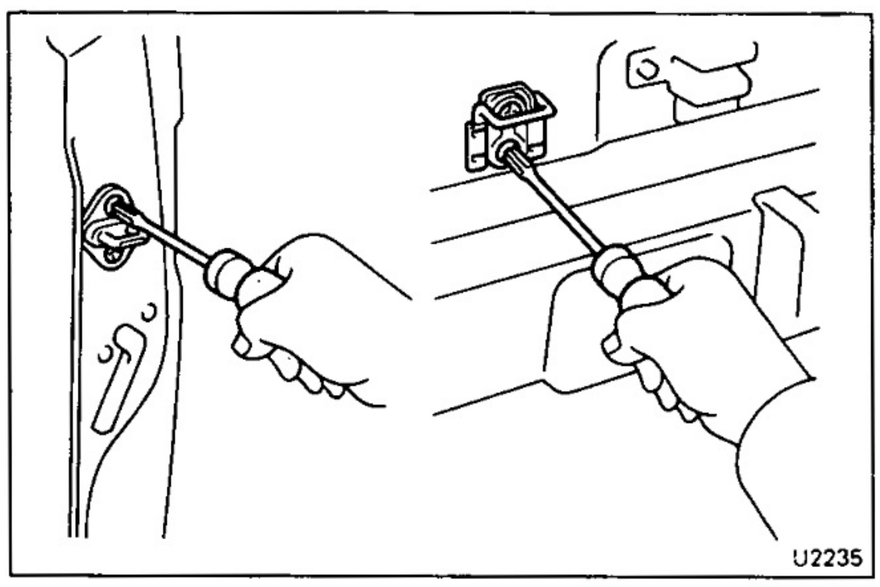

3. ADJUST DOOR LOCK STRIKER

(a) Check that the door fit and door lock linkage are adjusted correctly.

(b) Adjust the door lock striker by loosening the screws.

MOULDING

Windshield Outside Moulding

COMPONENTS

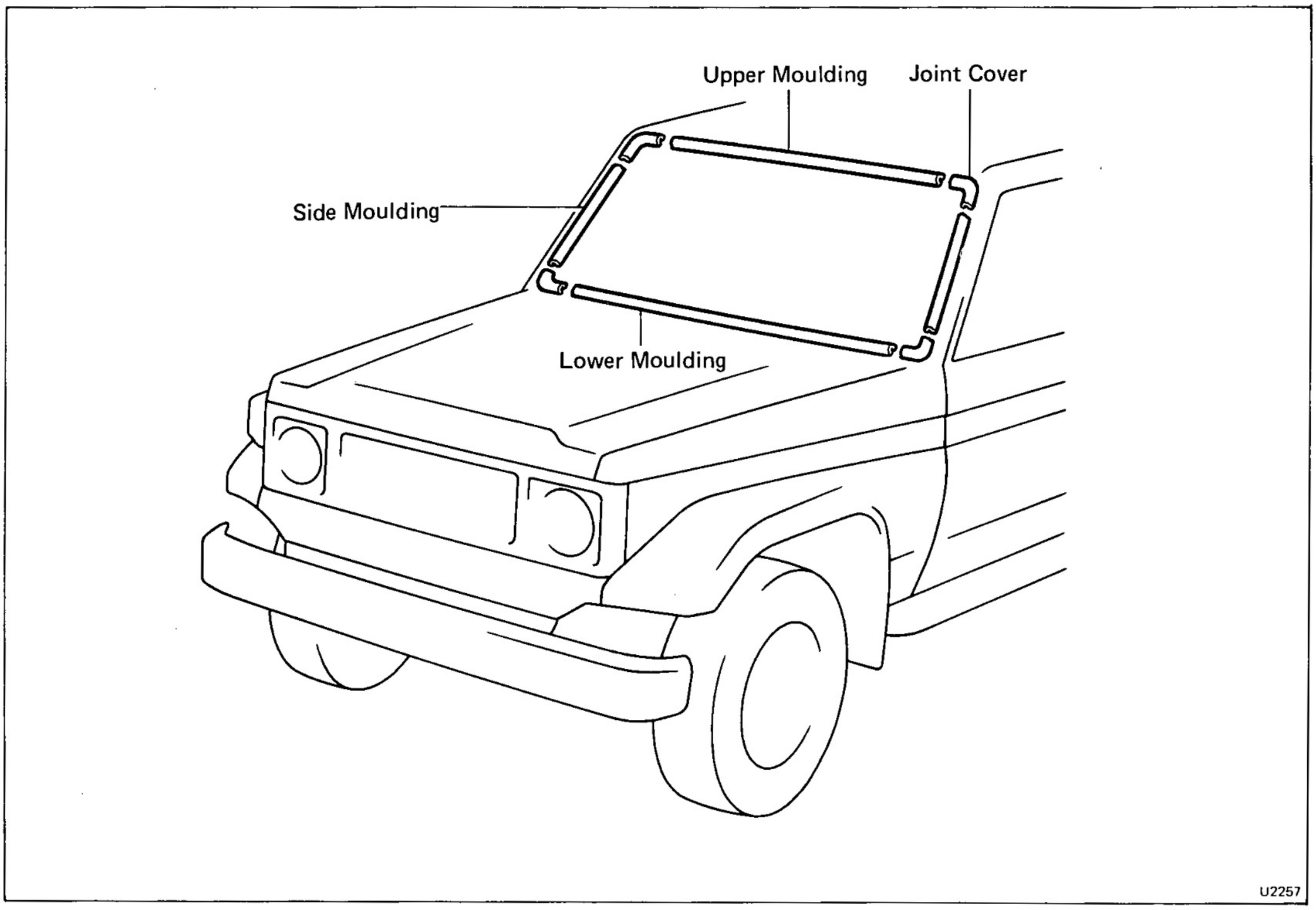

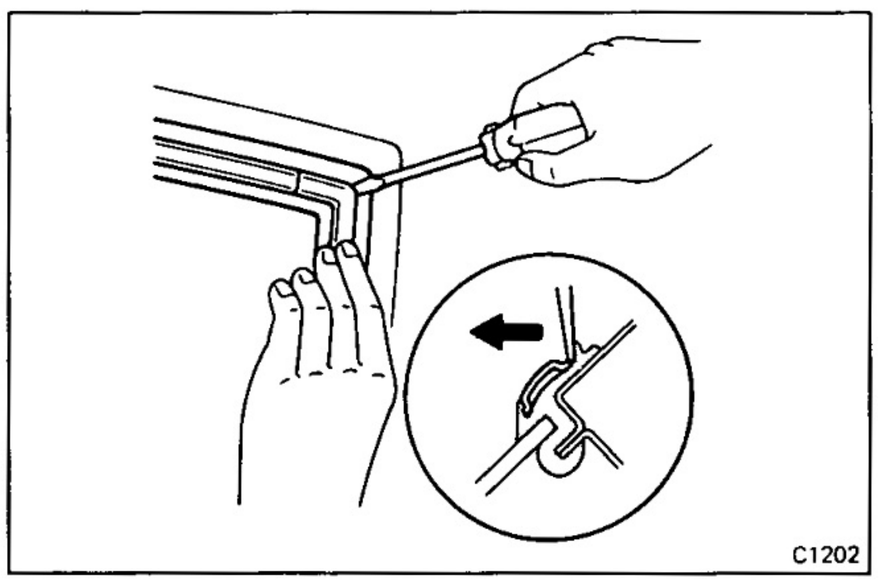

REMOVAL OF WINDSHIELD OUTSIDE MOULDING

REMOVE WINDSHIELD OUTSIDE MOULDING

(a) Using a screwdriver, pull off the joint cover.

(b) Using a screwdriver, pull off the moulding from the end.

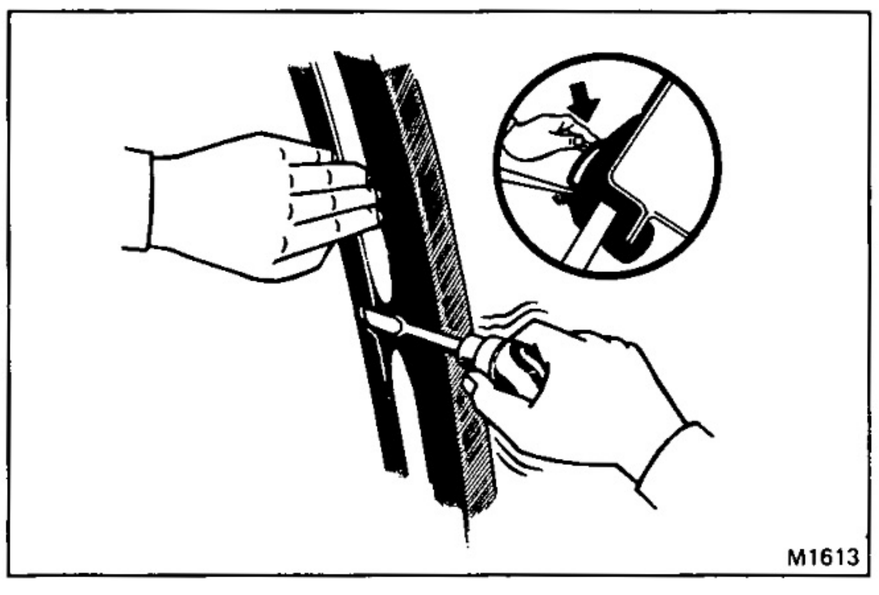

INSTALLATION OF WINDSHIELD OUTSIDE MOULDING

INSTALL WINDSHIELD OUTSIDE MOULDING

Using a screwdriver, install the moulding and joint cover.

Roof Drip Moulding

COMPONENTS

[60 Series]

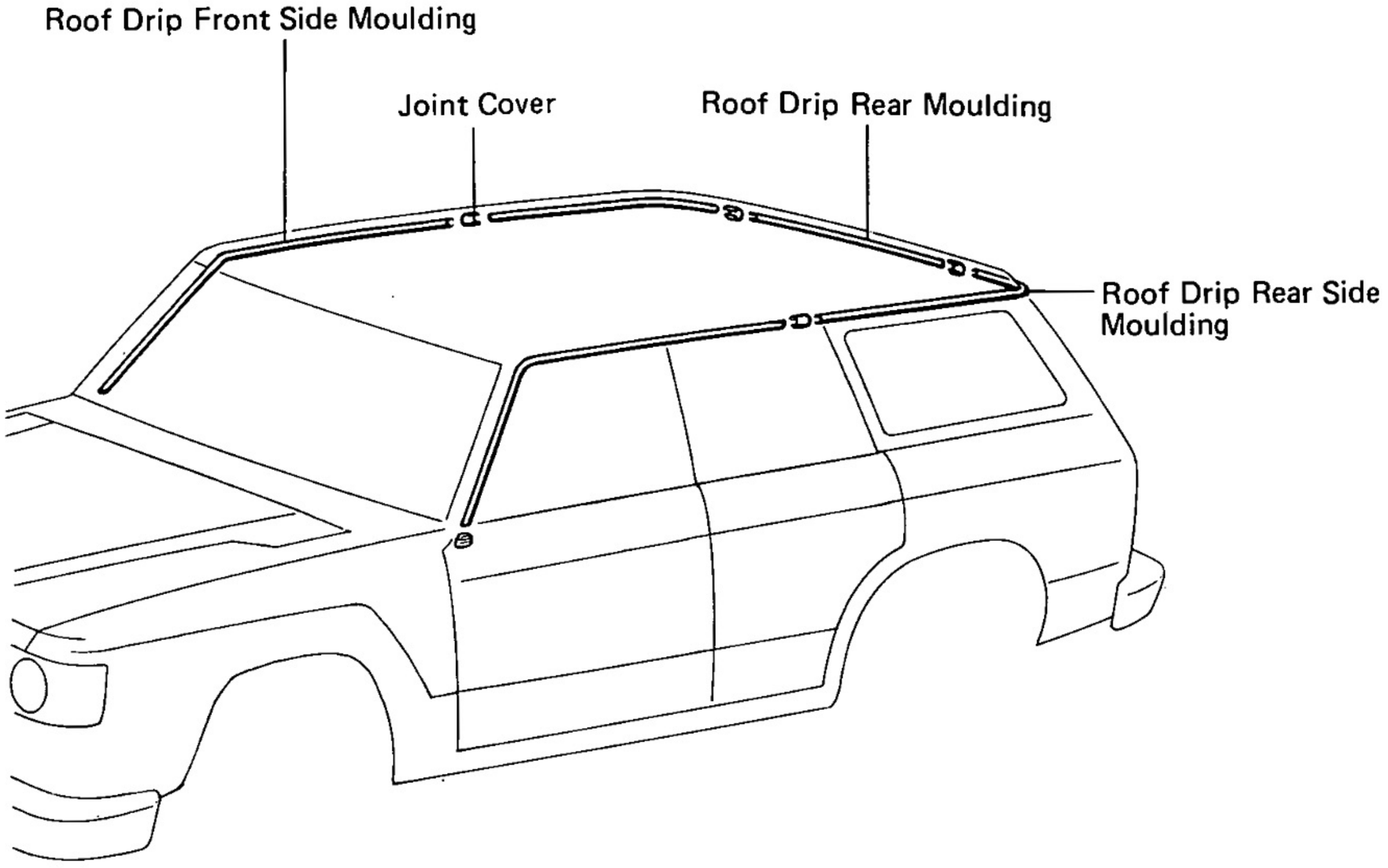

[70 Series]

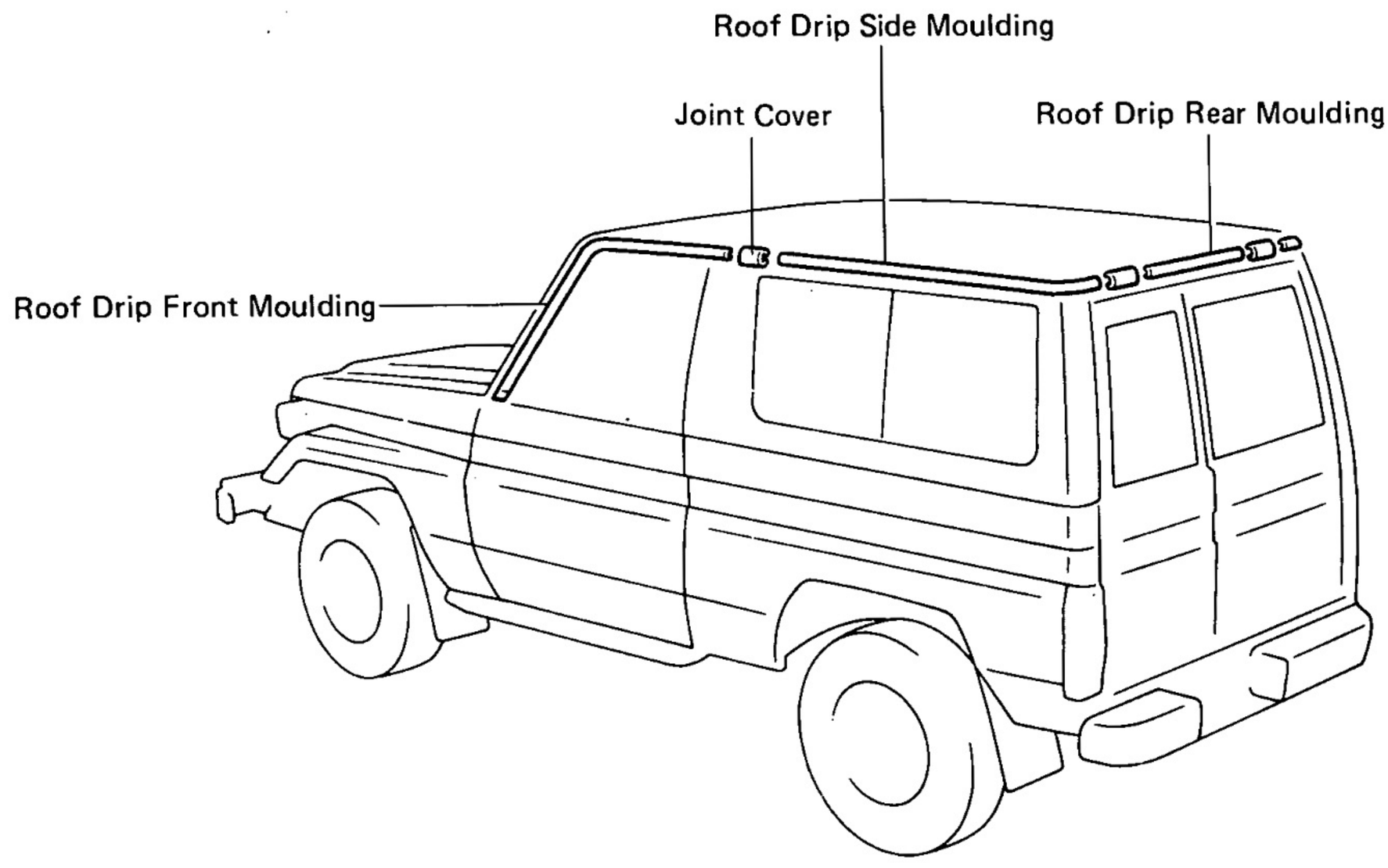

BO1142
BO1137

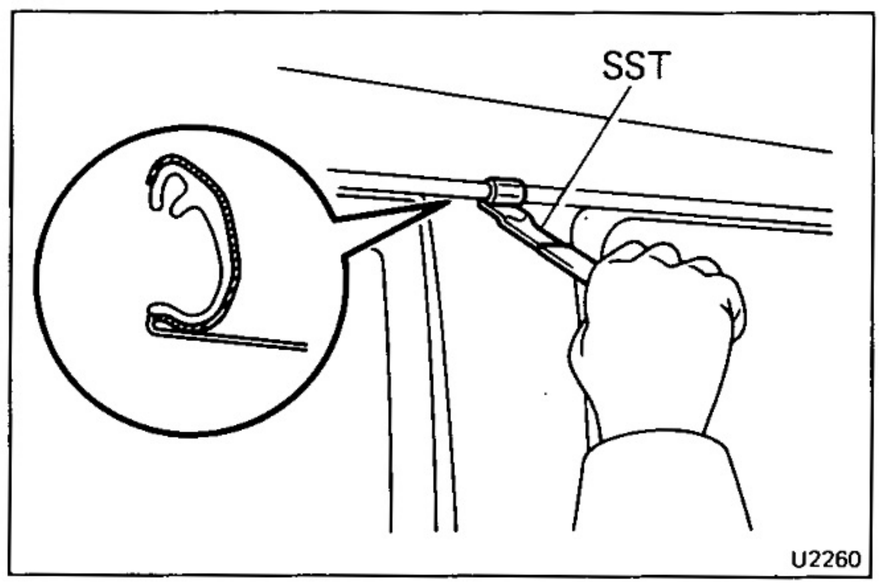

REMOVAL OF ROOF DRIP MOULDING

REMOVE ROOF DRIP MOULDING

(a) Using SST, pull off the joint cover.

SST 09806-30010

(b) Using SST, pull off the roof drip moulding from both ends.

SST 09806-30010

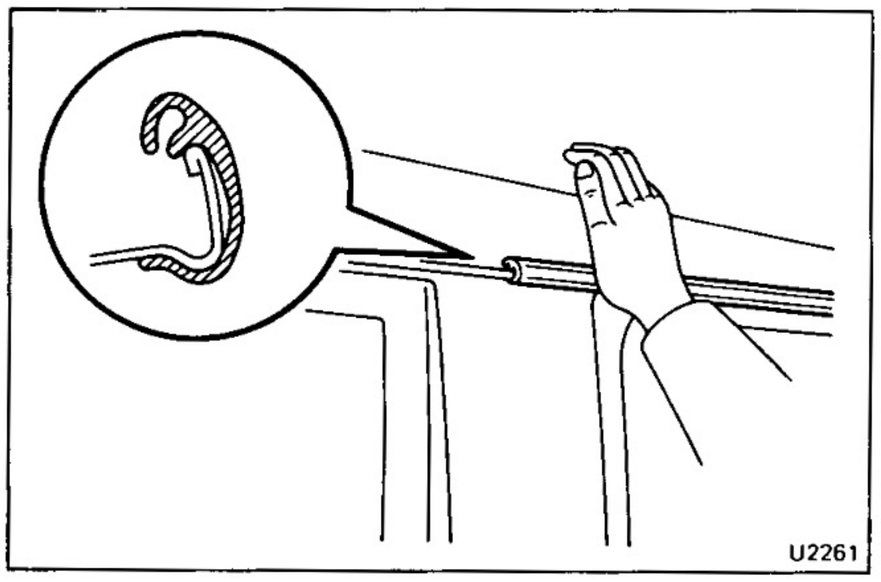

INSTALLATION OF ROOF DRIP MOULDING

INSTALL ROOF DRIP MOULDING BY HAND

Attach the upper edge of the moulding to the body flange.
Tap on the moulding by hand.

Back Door Moulding

COMPONENTS

[Lift-up type]

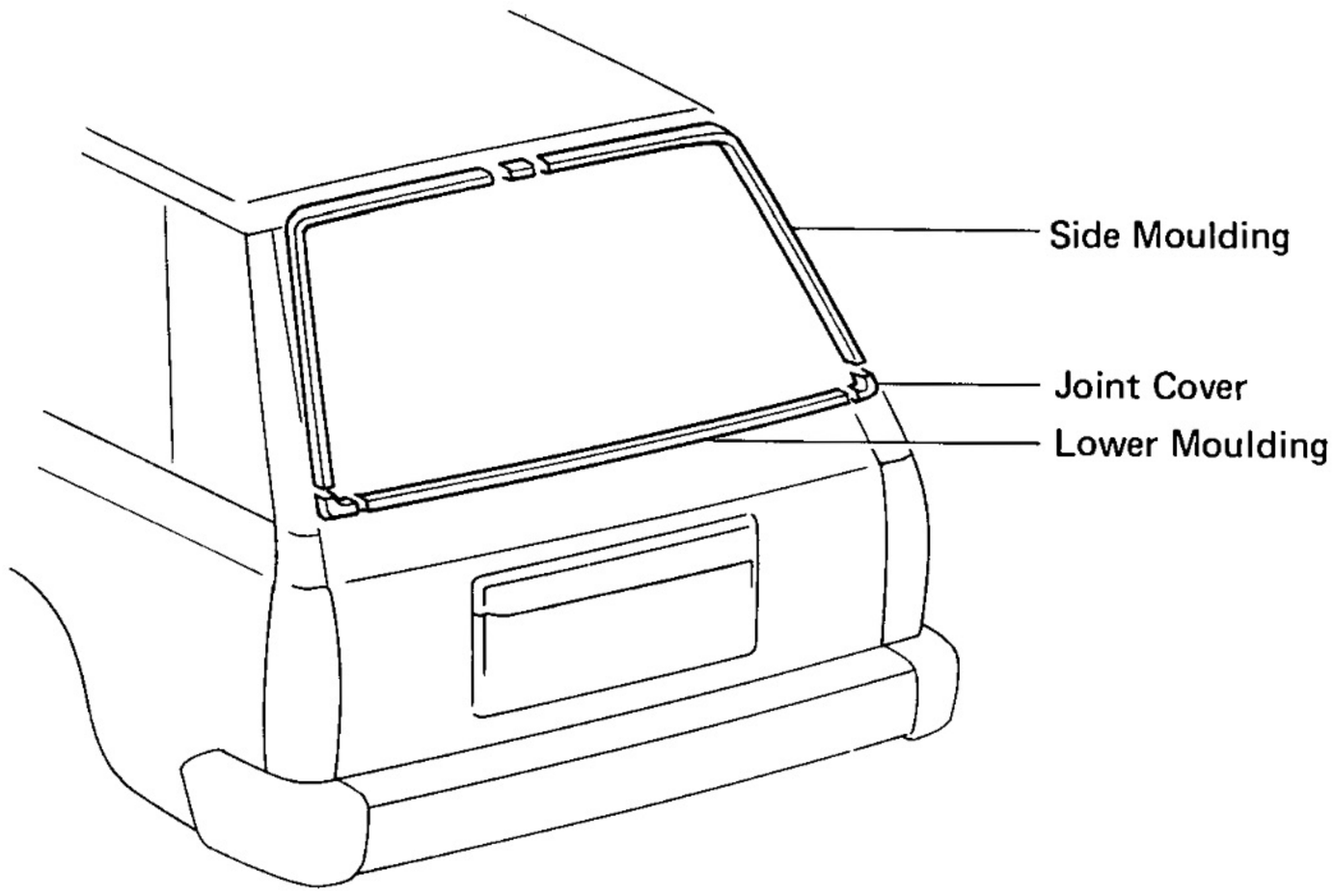

[Swing Out type]

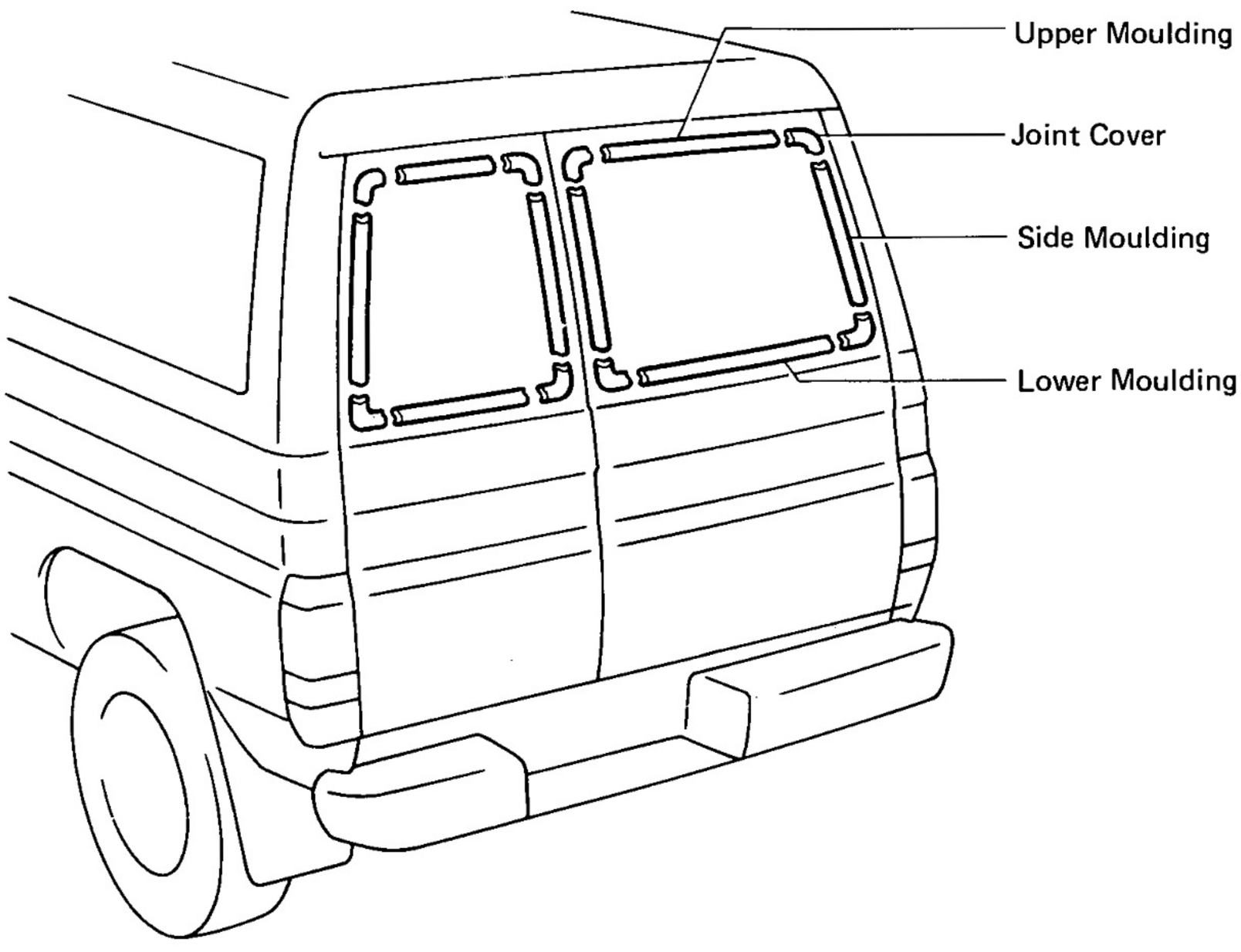

BO1117
U2259

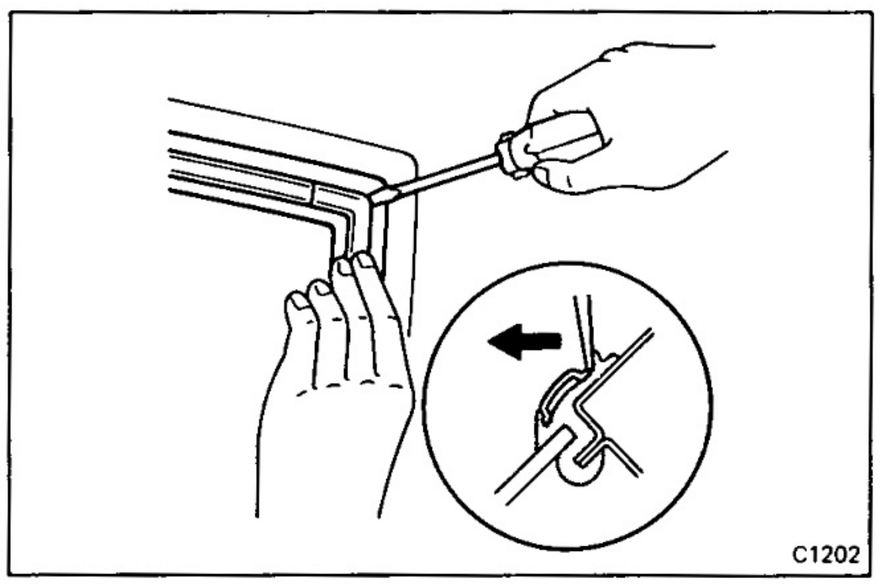

REMOVAL OF BACK DOOR MOULDING

REMOVE BACK DOOR MOULDING

(a) Using a screwdriver, pull off the joint cover.

(b) Using a screwdriver, pull off the moulding from the end.

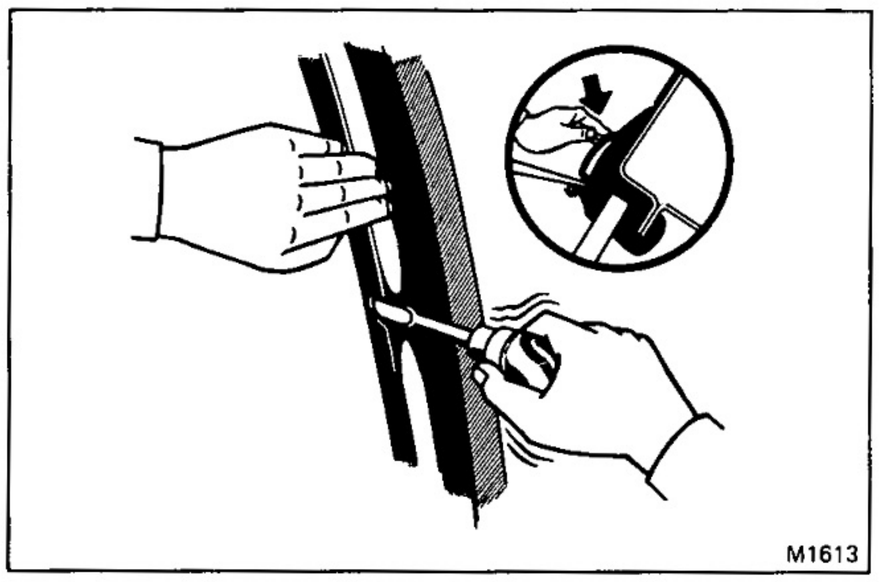

INSTALLATION OF BACK DOOR MOULDING

INSTALL BACK DOOR MOULDING

Using a screwdriver, install the moulding and joint cover.

WINDSHIELD

COMPONENTS

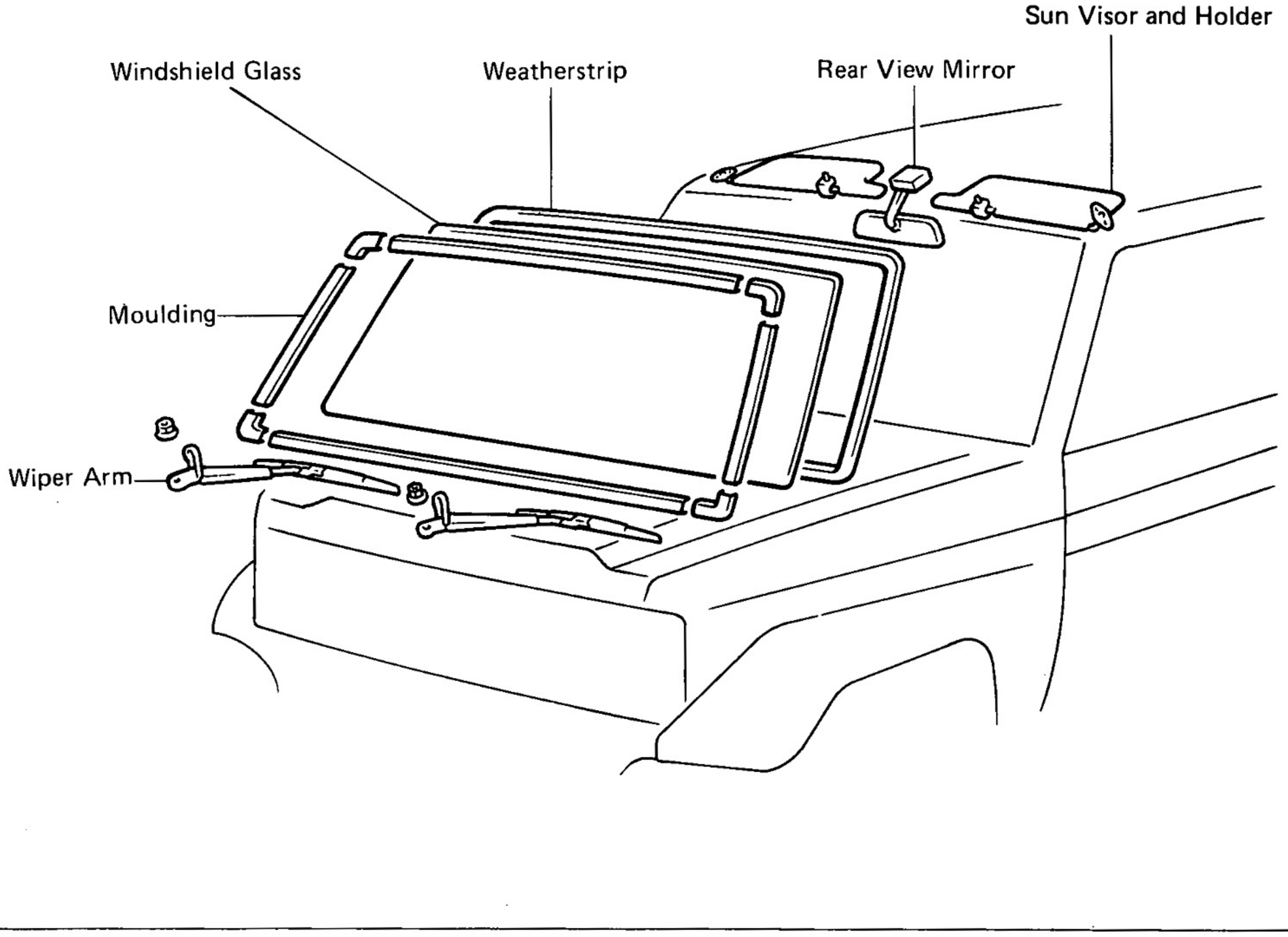

REMOVAL OF WINDSHIELD

1. REMOVE FOLLOWING PARTS:
   (a) Wiper arms
   (b) Windshield mouldings (See page BO-46)
   (c) Inner rear view mirror
   (d) Sun visors and holders

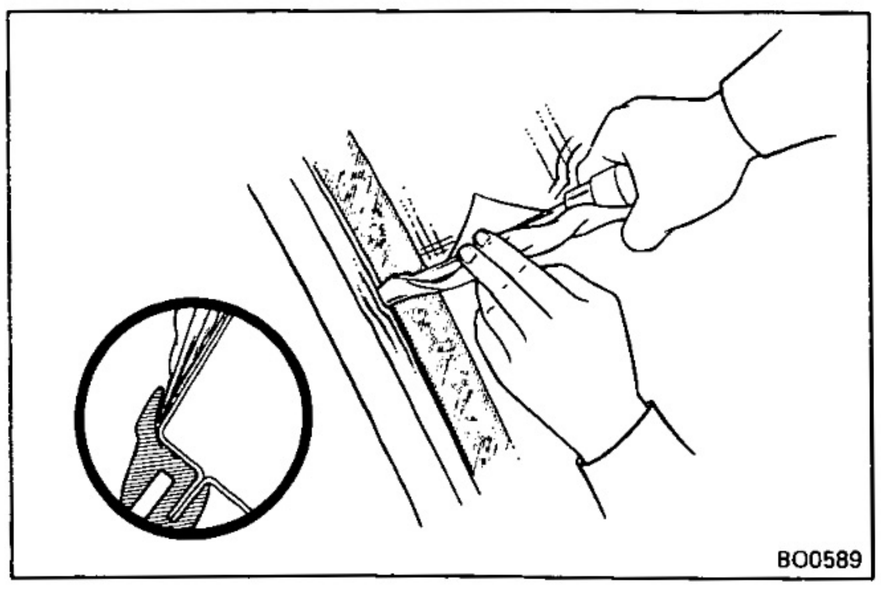

2. REMOVE WINDSHIELD

If reusing the weatherstrip:

(a) Working from the vehicle outside with a screwdriver, loosen the weatherstrip lip from the body.

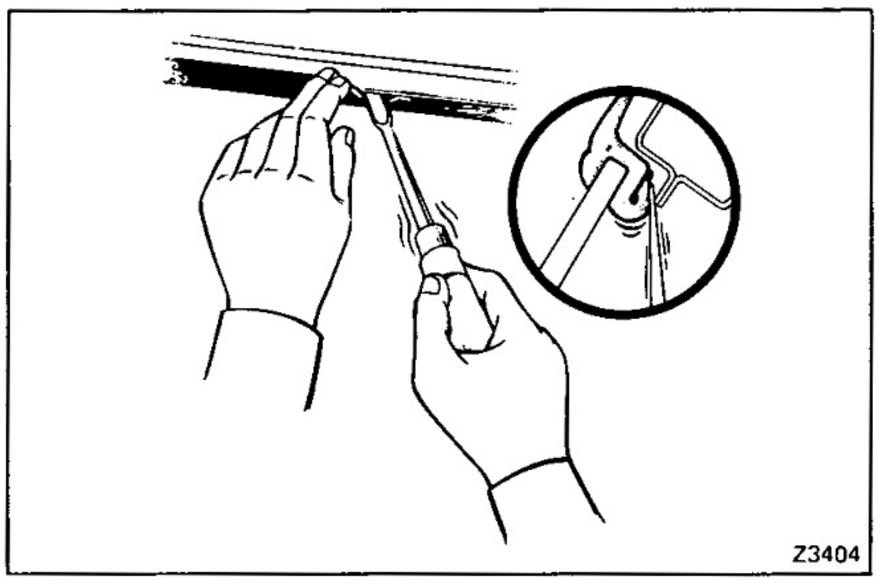

(b) From inside of vehicle, stuff lip of weatherstrip under flange with screwdriver.

(c) Push the glass out to remove.

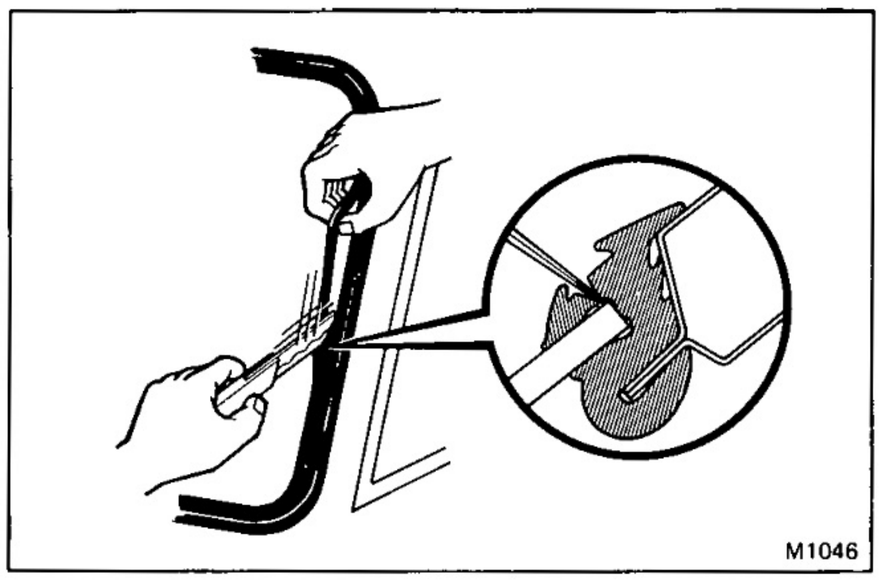

If not reusing the weatherstrip:

(a) From the outside, cut off the weatherstrip lip with a knife.

(b) From the vehicle interior, push the windshield with an even force.

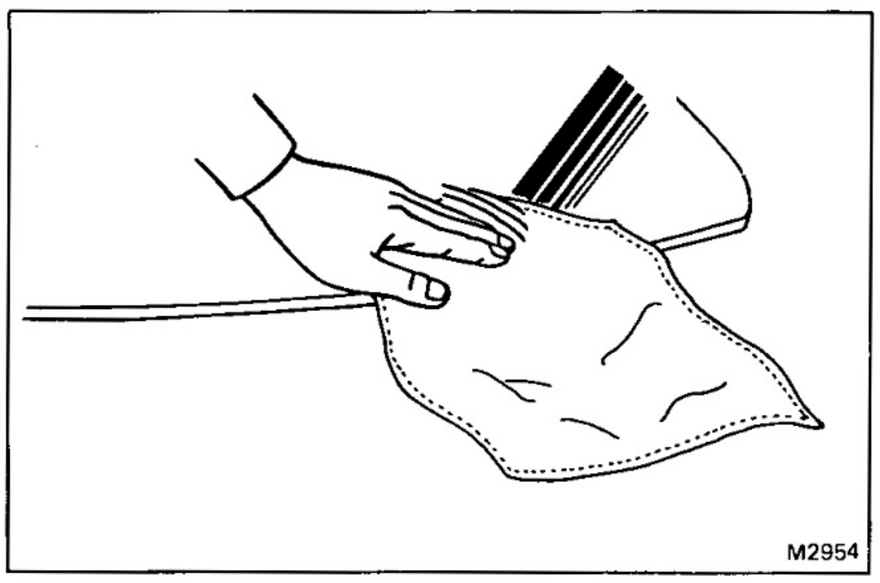

INSTALLATION OF WINDSHIELD

(See page BO-51)

1. CLEAN BODY AND GLASS

Using alcohol, wipe off any adhesive left on the body or glass.

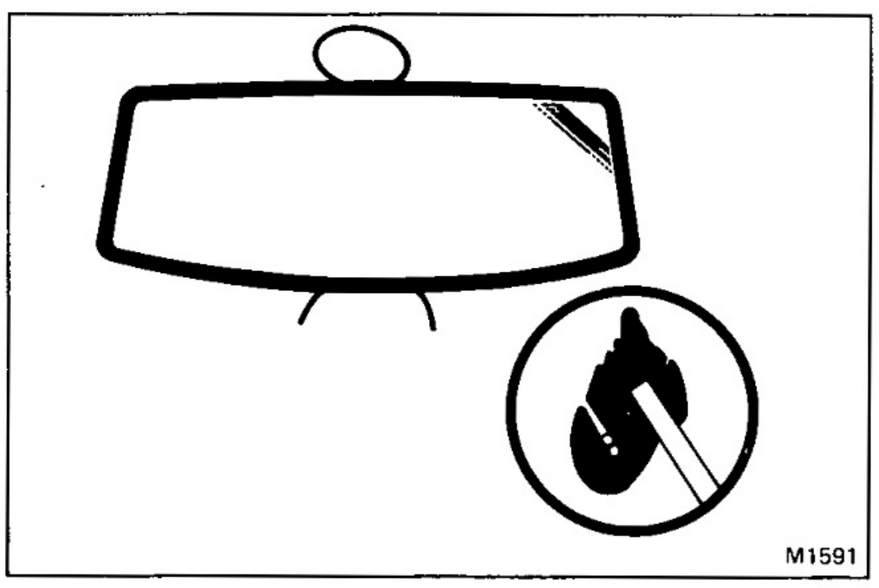

2. INSTALL WEATHERSTRIP ON GLASS

(a) Attach the weatherstrip to the glass.

CAUTION: If the weatherstrip has hardened, it may develop water leaks. Use a new one if possible.

(b) Insert a cord into the groove of the weatherstrip, all the way around and so the ends overlap.

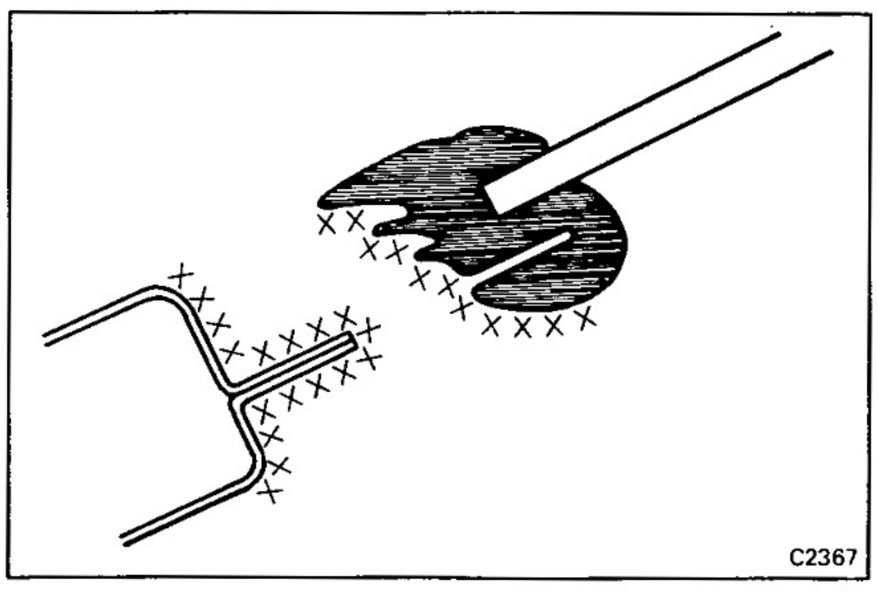

3. INSTALL GLASS

(a) Apply soapy water to the contact face of the weatherstrip lip and to the body flange.

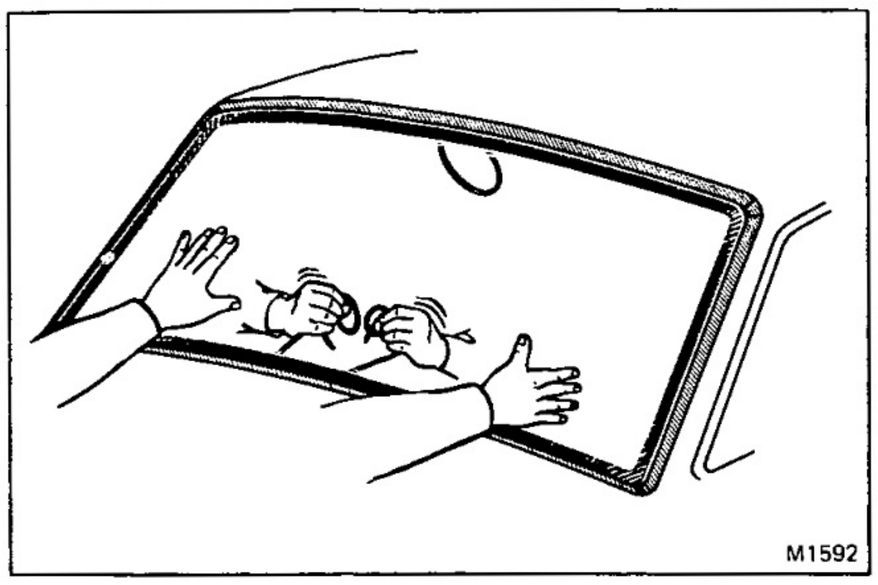

NOTE: Begin installation in the middle of the lower part of the glass.

(b) Hold the glass in position on the body.

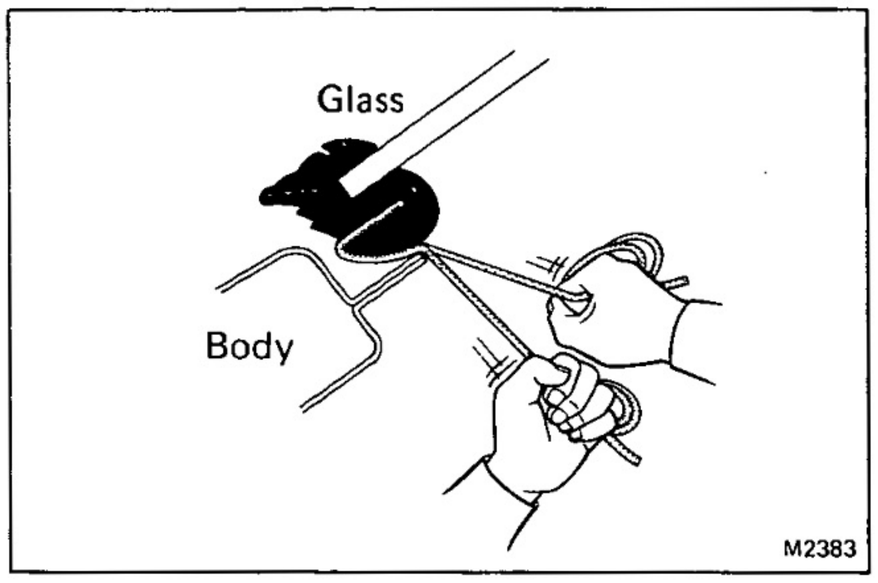

(c) From the inside, pull on one cord at an angle so it pulls the lip over the flange. From the outside, press the glass along the weatherstrip until the glass is installed.

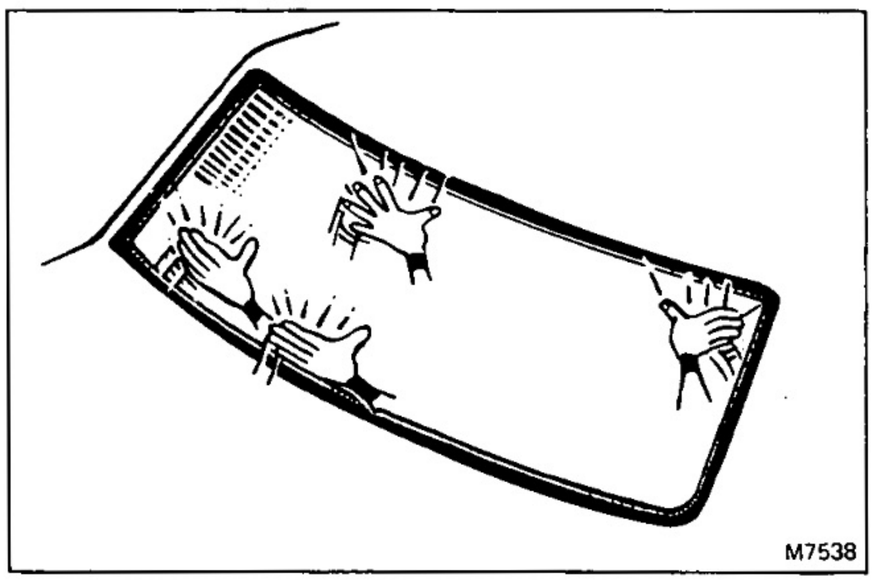

4. SNUG DOWN GLASS

To snug down the glass, tap from the outside with your open hand.

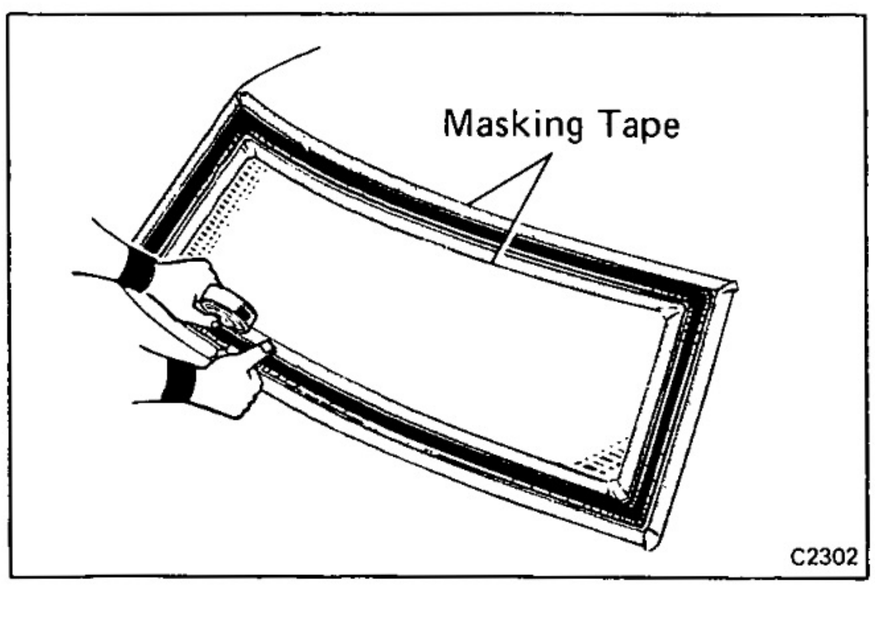

5. APPLY ADHESIVE

(a) Put masking tape around the weatherstrip to protect the paint and glass.

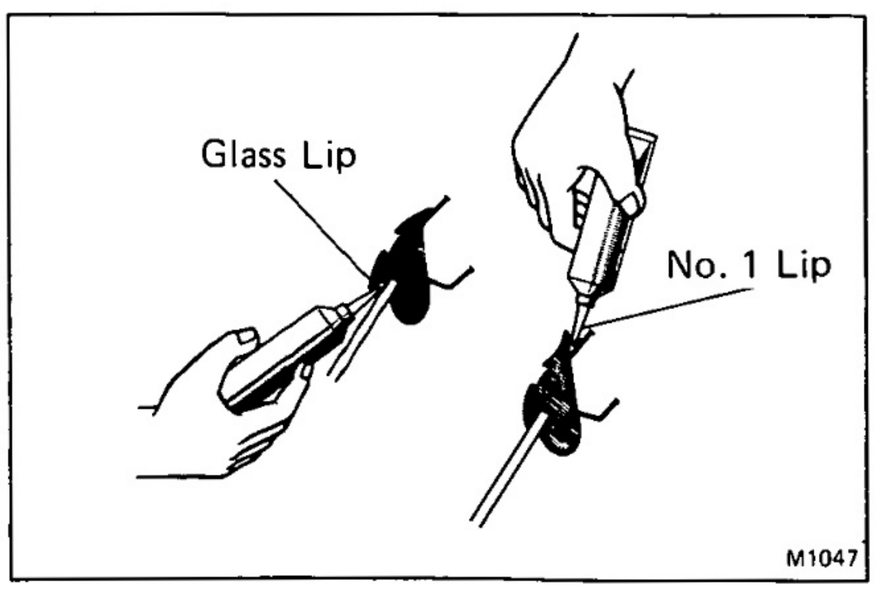

(b) Apply adhesive to the No.1 weatherstrip lip and glass lip until it oozes out.

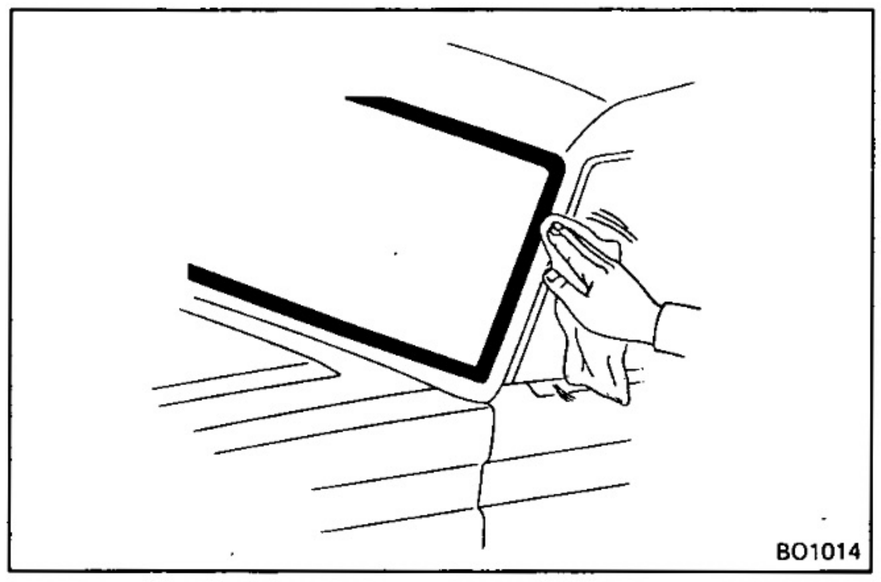

6. CLEANING ADHESIVE SURFACE

(a) When adhesive is dry, remove the masking tape.

(b) Clean off the adhesive oozing out from the masking tape with a clean rag saturated in white gasoline.

7. CHECK FOR WATER LEAKS

If necessary, apply sealant.

8. INSTALL FOLLOWING PARTS:

(a) Sun visors and holders

(b) Inner rear view mirror

(c) Windshield mouldings (See page BO-46)

(d) Wiper arms

WINDSHIELD(CANADA)

PREPARATION FOR REPLACEMENT

Prepare the following parts in advance:

Weatherstrip cleaner – white gasoline
Weatherstrip primer – AP131 (ADHESION PROMOTER UNION CARBIDE CORPORATION) or such
Primer dilution – toluene
Weatherstrip adhesive – 366ET (CEMEDINE), IMRON SEALANT (EI DUPONT DE NEMOURS CO.) or such

COMPONENTS

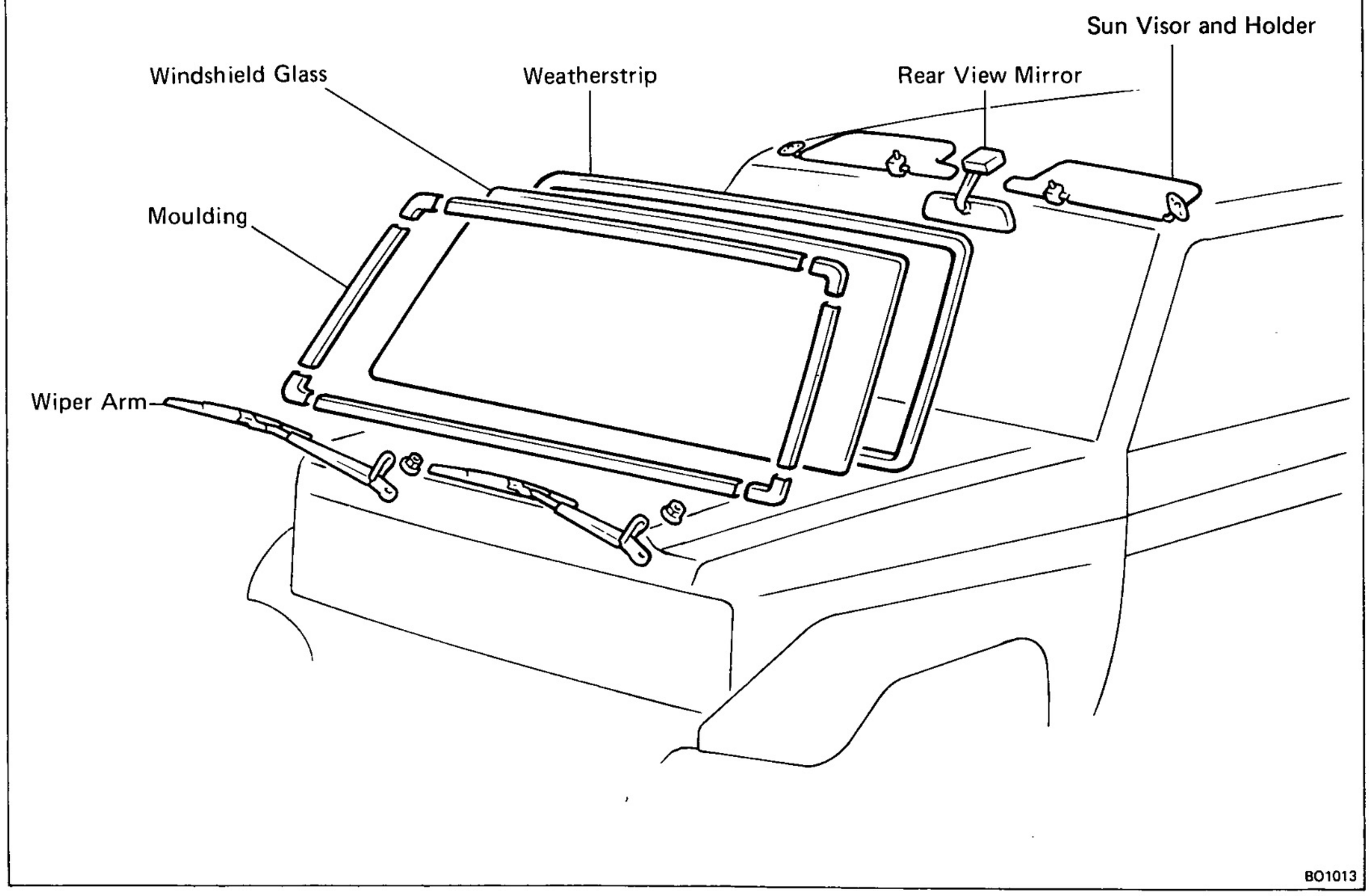

REMOVAL OF WINDSHIELD

1. REMOVE FOLLOWING PARTS:
   (a) Wiper arms
   (b) Windshield mouldings (See page BO-46)
   (c) Inner rear view mirror
   (d) Sun visors and holders

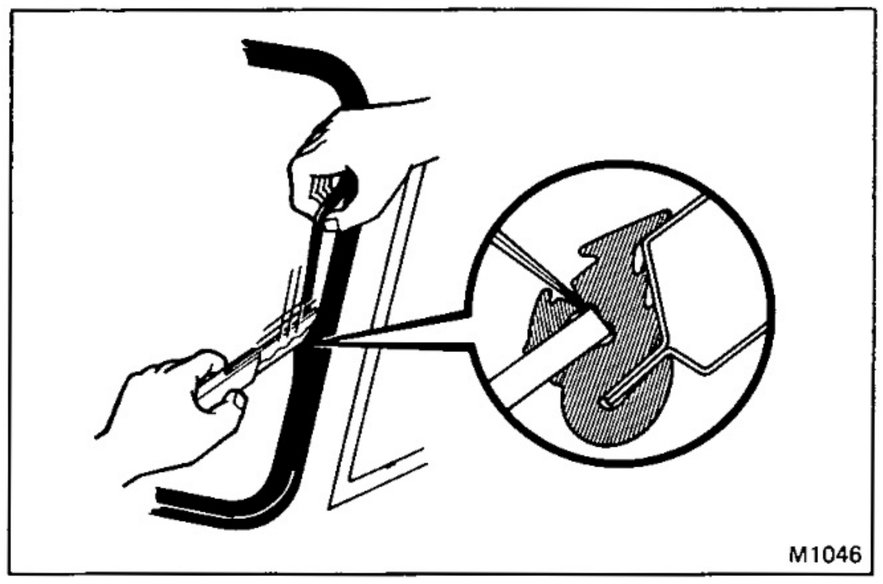

2. REMOVE WINDSHIELD GLASS

(a) From the exterior, cut off the weatherstrip lip.

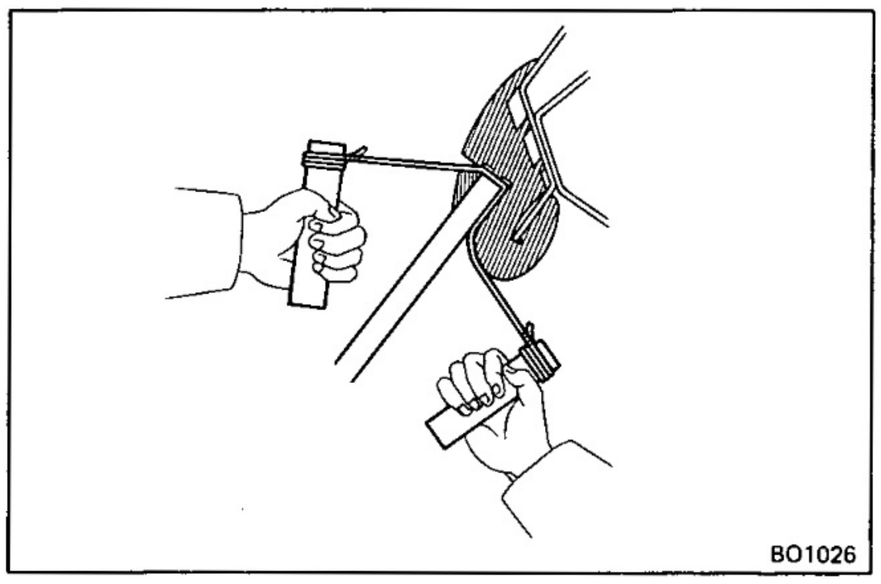

(b) Push piano wire through from the interior.

(c) Tie both wire ends to a wooden block or equivalent.

CAUTION: When separating, take care not to damage the paint or interior and exterior ornaments.

To prevent scratching the safety pad when removing the windshield, place a plastic sheet between the piano wire and safety pad.

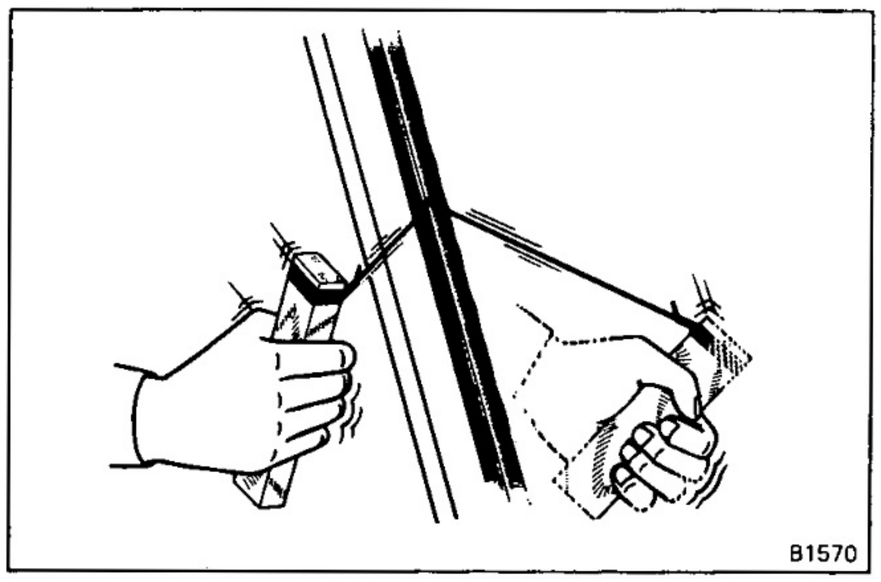

(d) Cut the adhesive by pulling the piano wire around it.

(e) Remove the glass.

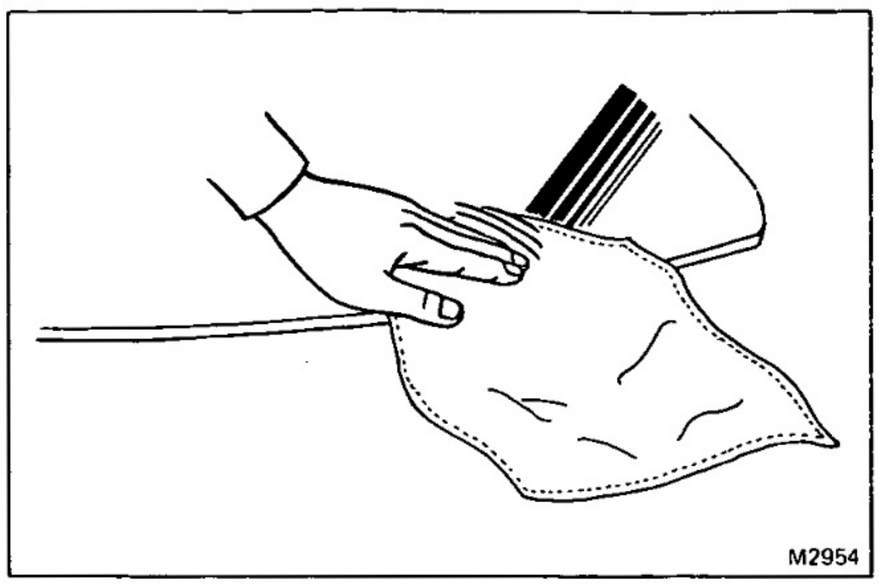

INSTALLATION OF WINDSHIELD

(See page BO-55)

1. CLEAN THE BODY AND GLASS

Using white gasoline, clean the weatherstrip contacting surface of the body and glass.

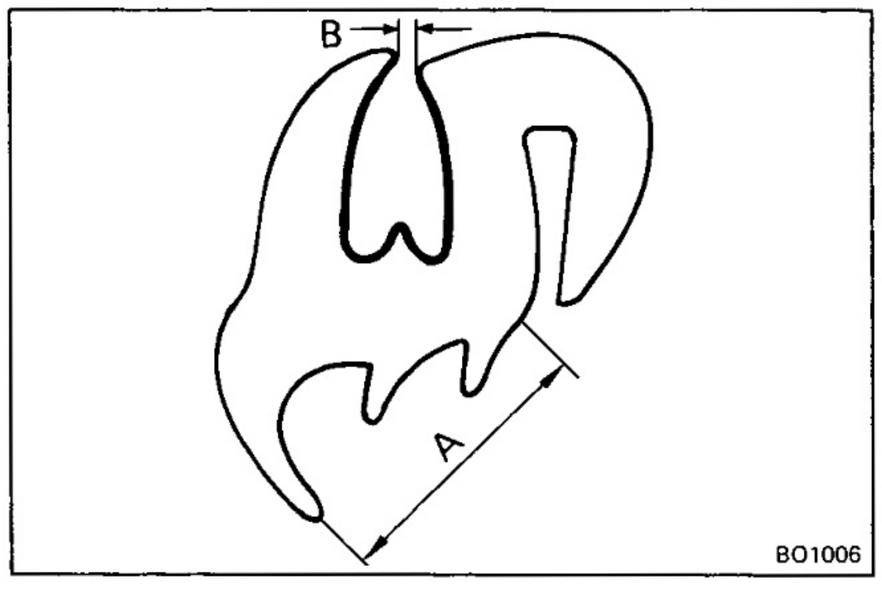

2. CLEAN WEATHERSTRIP

(a) Clean the weatherstrip surface with a piece of cloth saturated with white gasoline.

(b) Then, with another rag saturated in white gasoline, clean portions A and B all the way to the bottom of the lip as indicated in the figure.

NOTE: Do not use white gasoline that appears to be dirty.

(c) Apply primer to portions A and B after the white gasoline has dried at least 3 minutes.

NOTE: Use AP131 grade primer or such. The primer is volatile and will form deposits under humid conditions. Therefore, always store primer in a cool, dry place away from direct sunlight.

Use toluene to dilute the primer.

(d) Allow the primer to dry for at least 15 minutes.

NOTE: Be careful not to touch portions A and B of the weatherstrip after applying the primer, and attach the weatherstrip within three days.

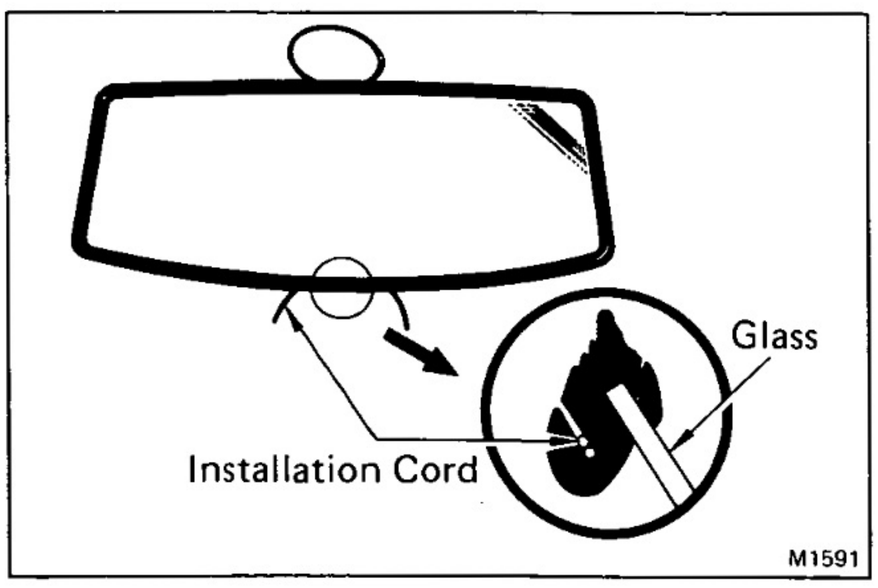

3. INSTALL WEATHERSTRIP ON GLASS

(a) Attach the weatherstrip to the glass.

(b) Apply a working cord along the weatherstrip groove as shown.

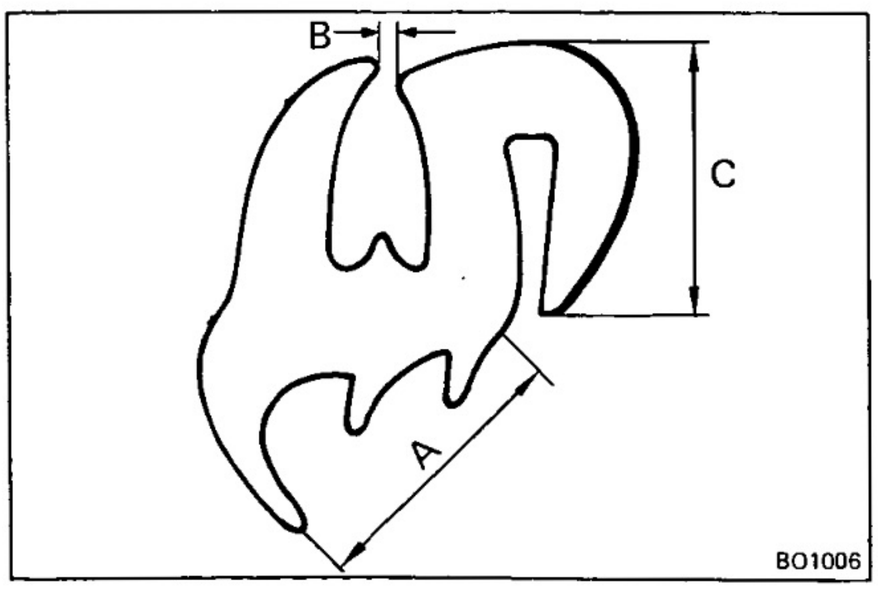

4. INSTALL GLASS

(a) Coat portion C of the weatherstrip with white kerosene. Do not coat portions A and B or the body.

NOTE: Do not use soapy water.

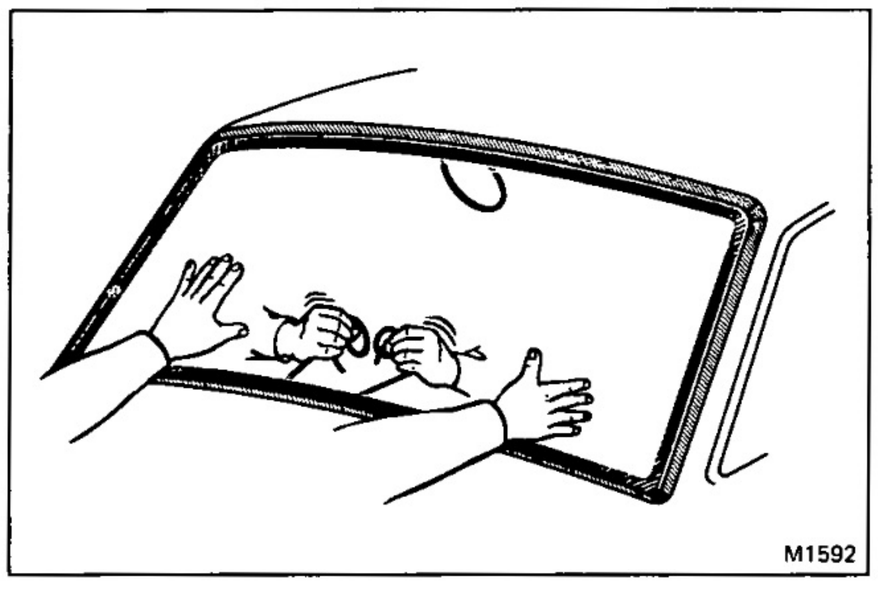

NOTE: Begin installation in the middle of the lower part of the glass.

(b) Hold the glass in position on the body.

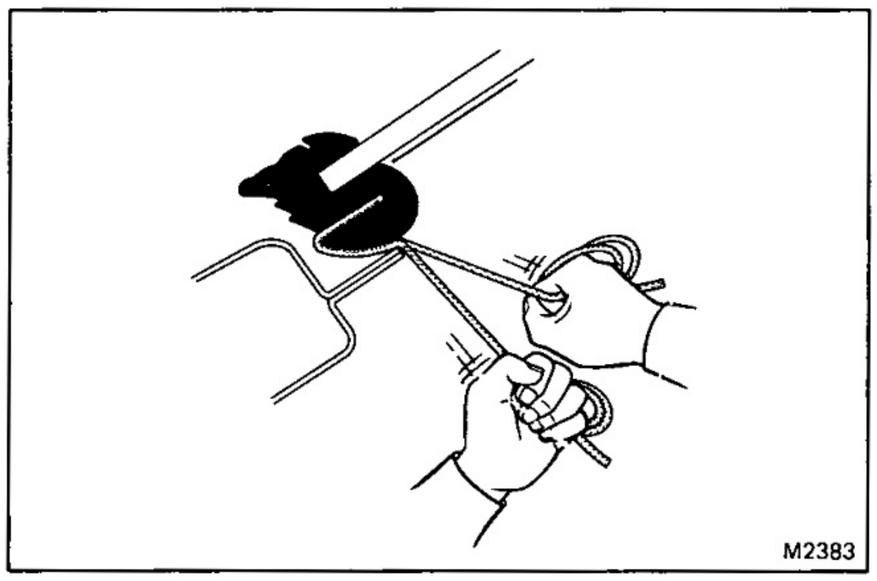

(c) From the inside, pull on one cord at an angle so it pulls the lip over the flange. From the outside, press the glass along the weatherstrip until the glass is installed.

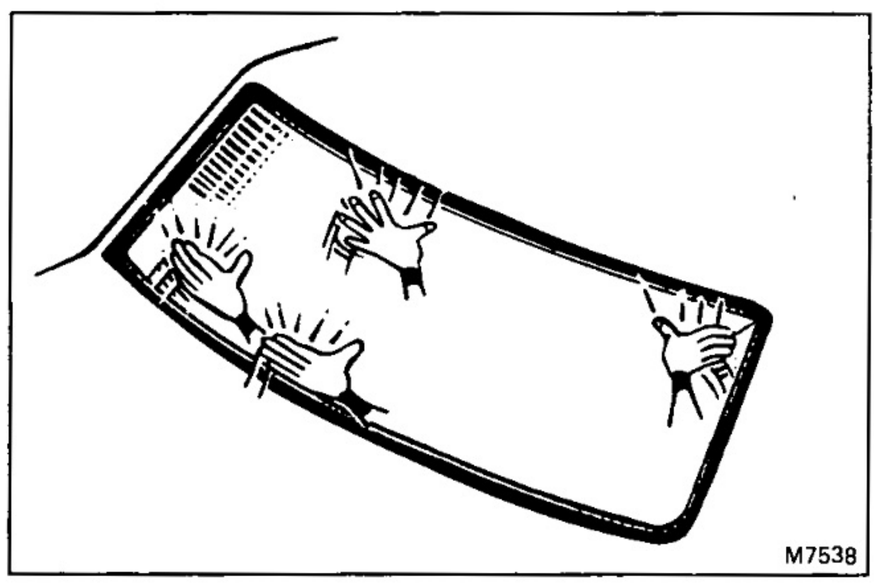

5. SNUG DOWN GLASS

To snug down the glass, tap from the outside with your open hand.

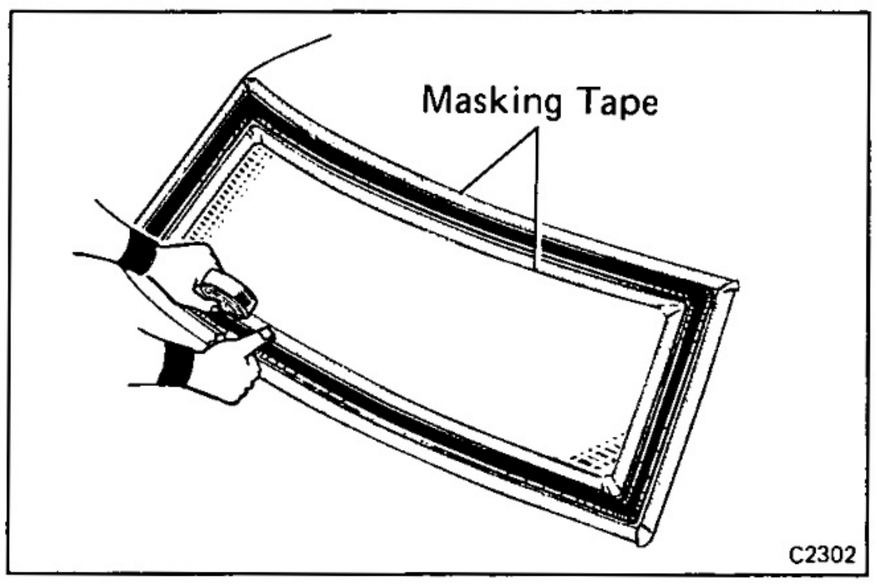

6. APPLY ADHESIVE

(a) Put masking tape around the weatherstrip to protect the paint and glass.

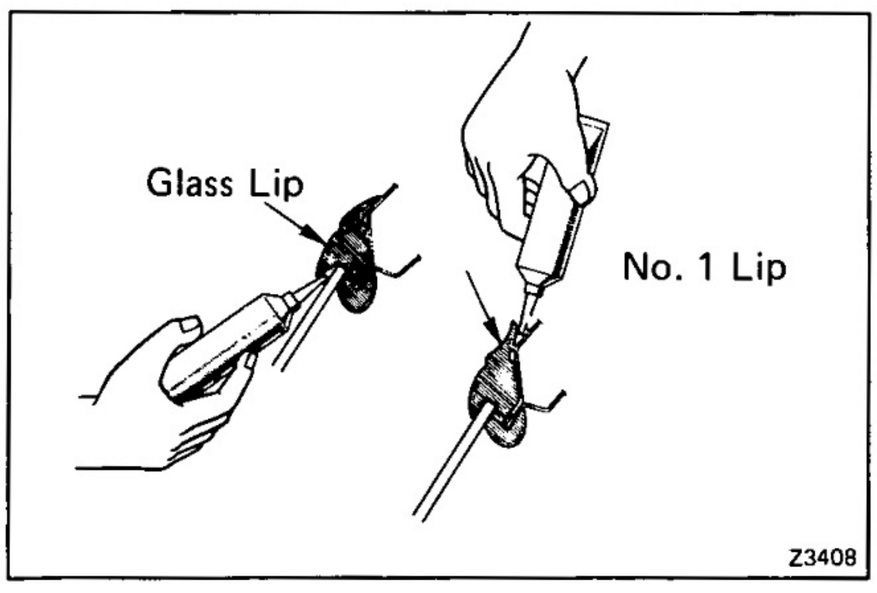

(b) Apply adhesive to the No.1 weatherstrip lip and glass lip until it oozes out.

NOTE: Use a CEMEDINE 366ET, IMRON SEALANT or equivalent.

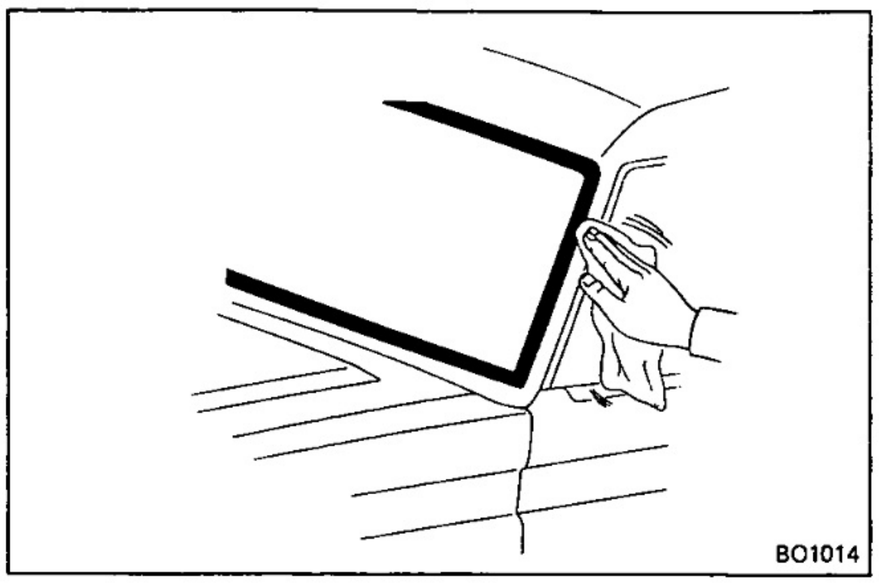

7. CLEANING THE ADHESIVE SURFACE

(a) When adhesive is dry, remove the masking tape.

NOTE: The adhesive will harden in about 15 hours.

(b) Clean off the adhesive oozing out from the masking tape with a clean rag saturated in white gasoline.

8. CHECK FOR WATER LEAKS

If necessary, apply adhesive.

NOTE: Use a CEMEDINE 366ET, IMRON SEALANT or equivalent.

9. INSTALL FOLLOWING PARTS:

(a) Sun visors and holders

(b) Inner rear view mirror

(c) Windshield mouldings (See page BO-46)

(d) Wiper arms

SIDE WINDOW

COMPONENTS

70 Series – Hard Top

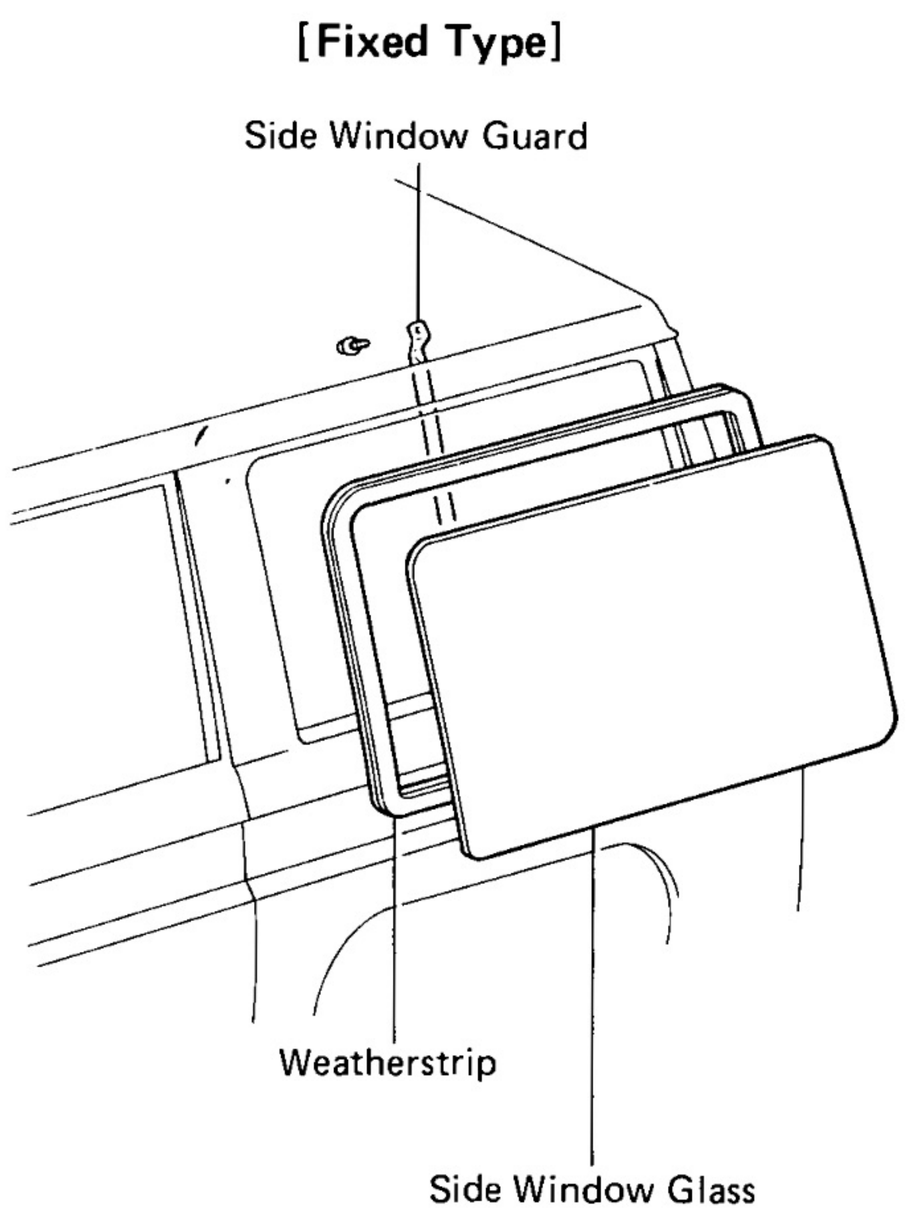

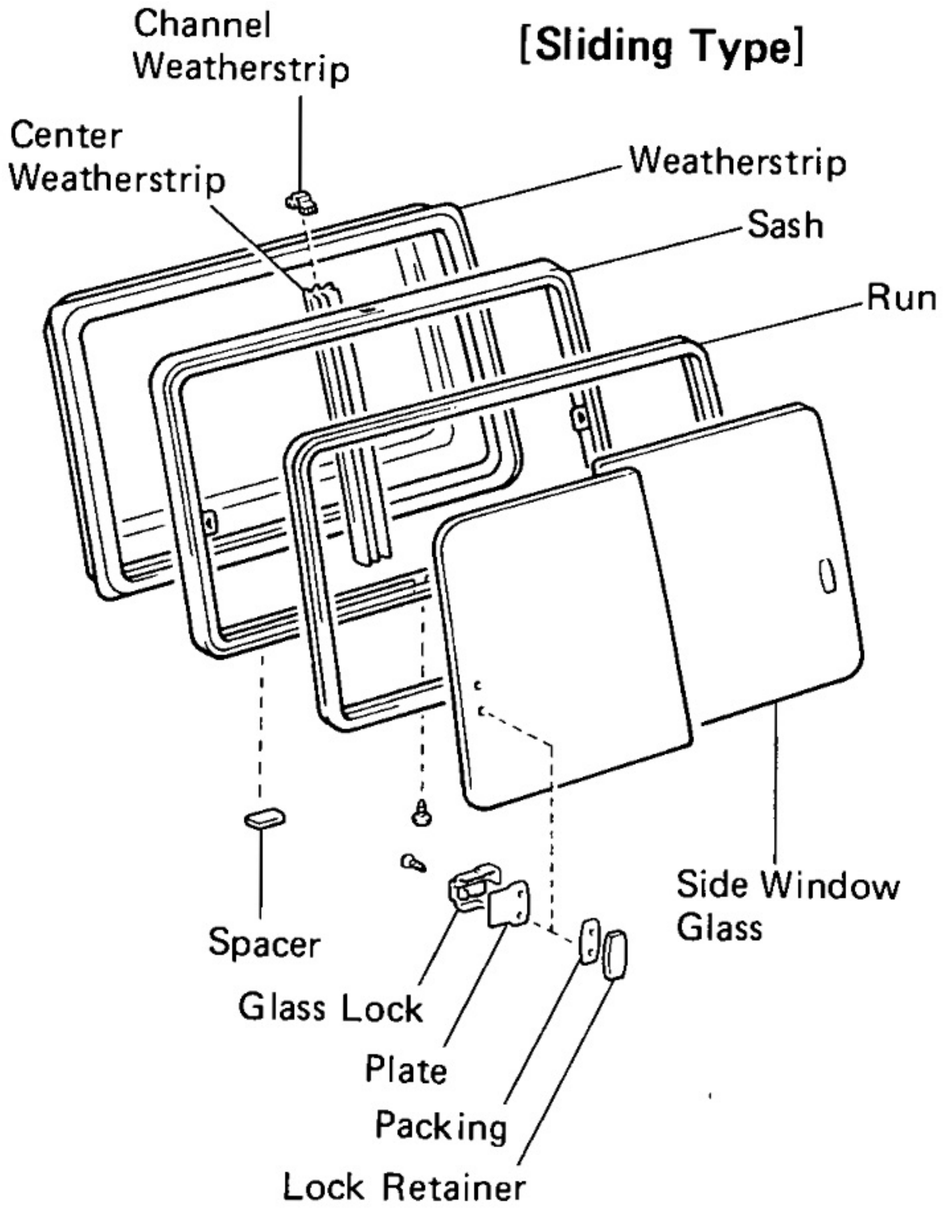

73 Series – FRP Top

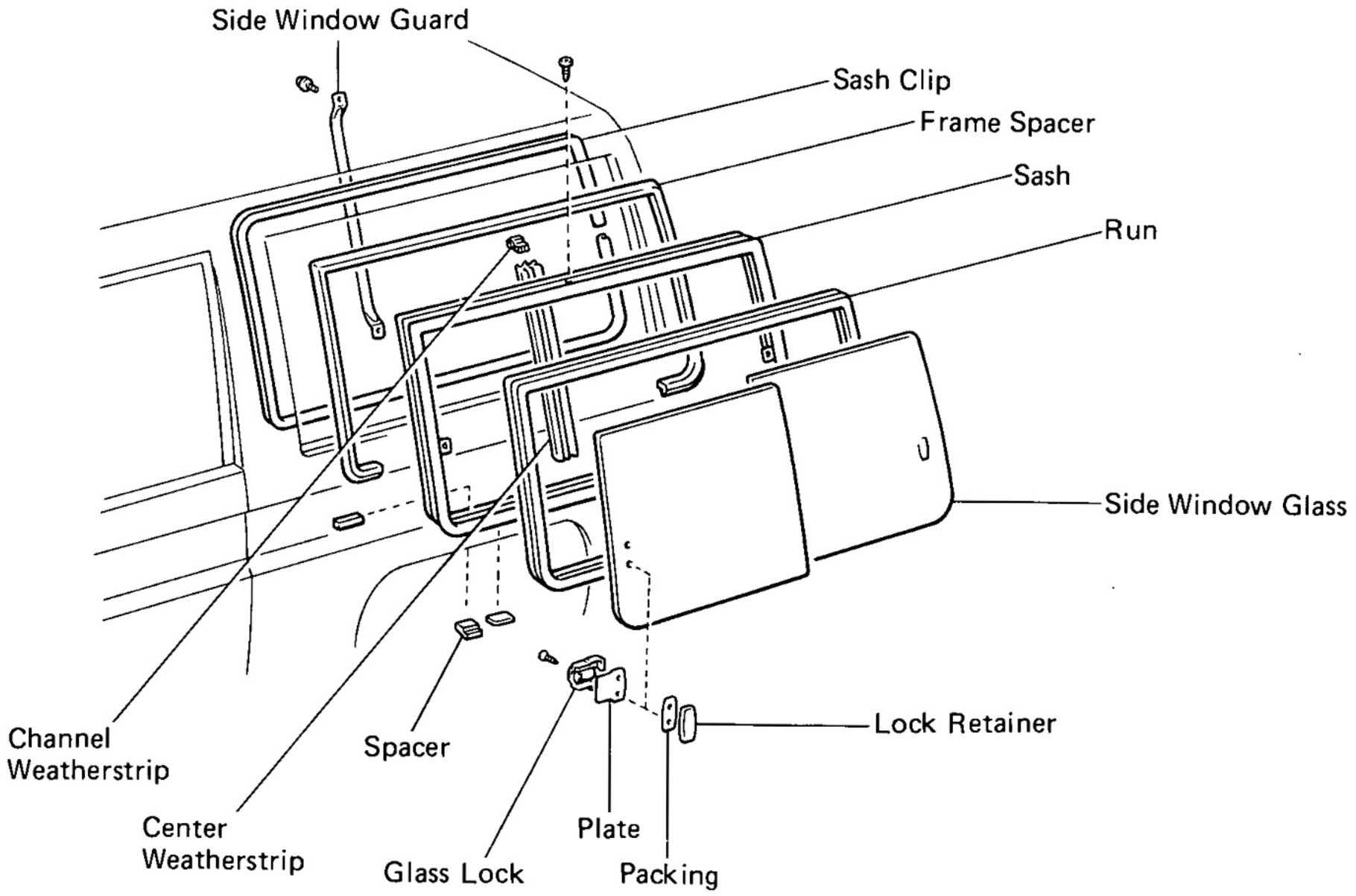

BO1020
BO1019

NOTE: Remove and install the fixed type of side window on the back door glass with the same procedure.
(See page BO-66)

COMPONENTS(Cont'd)

75 Series – Hard Top

[Fixed Type]

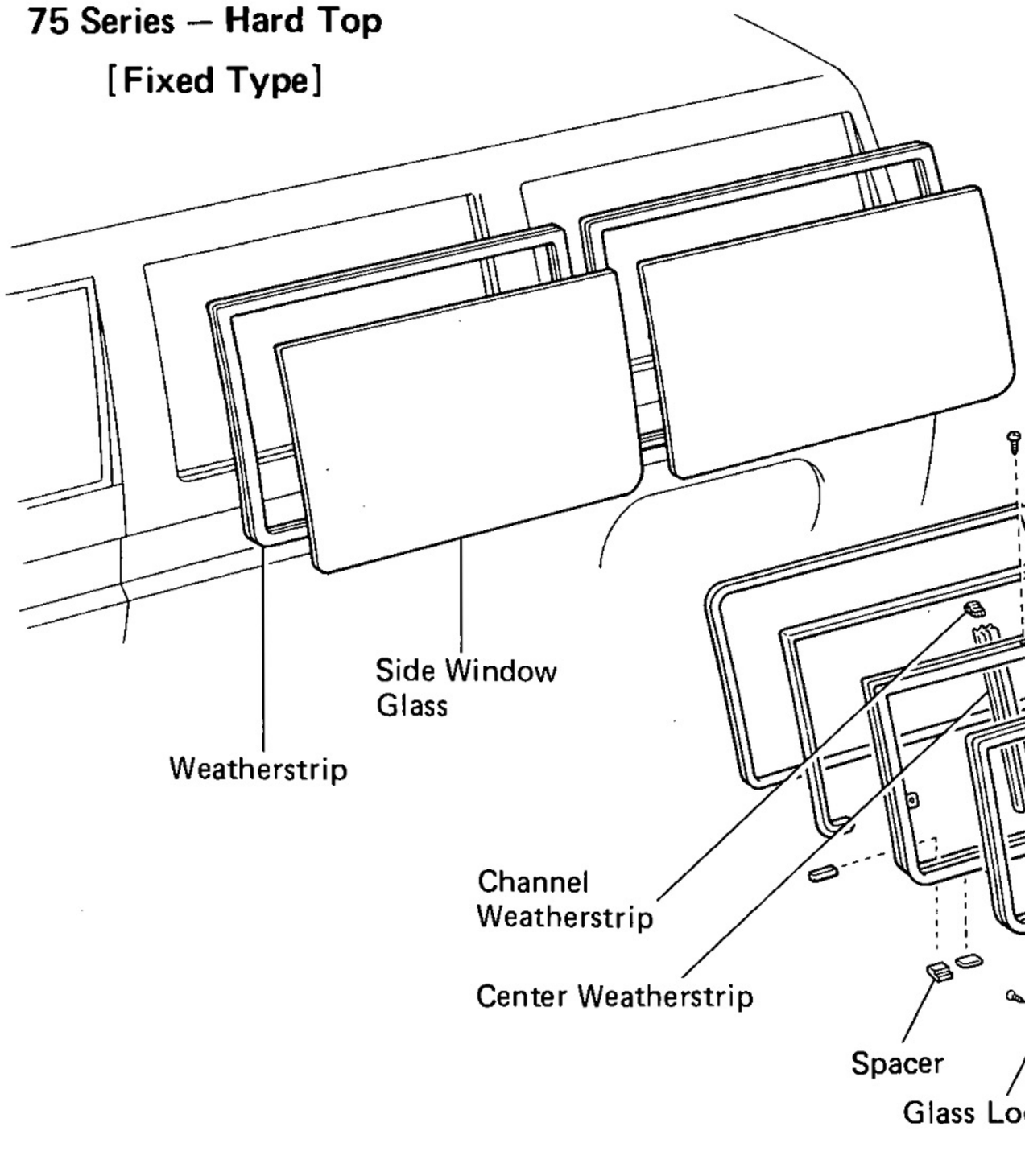

[Sliding Type]

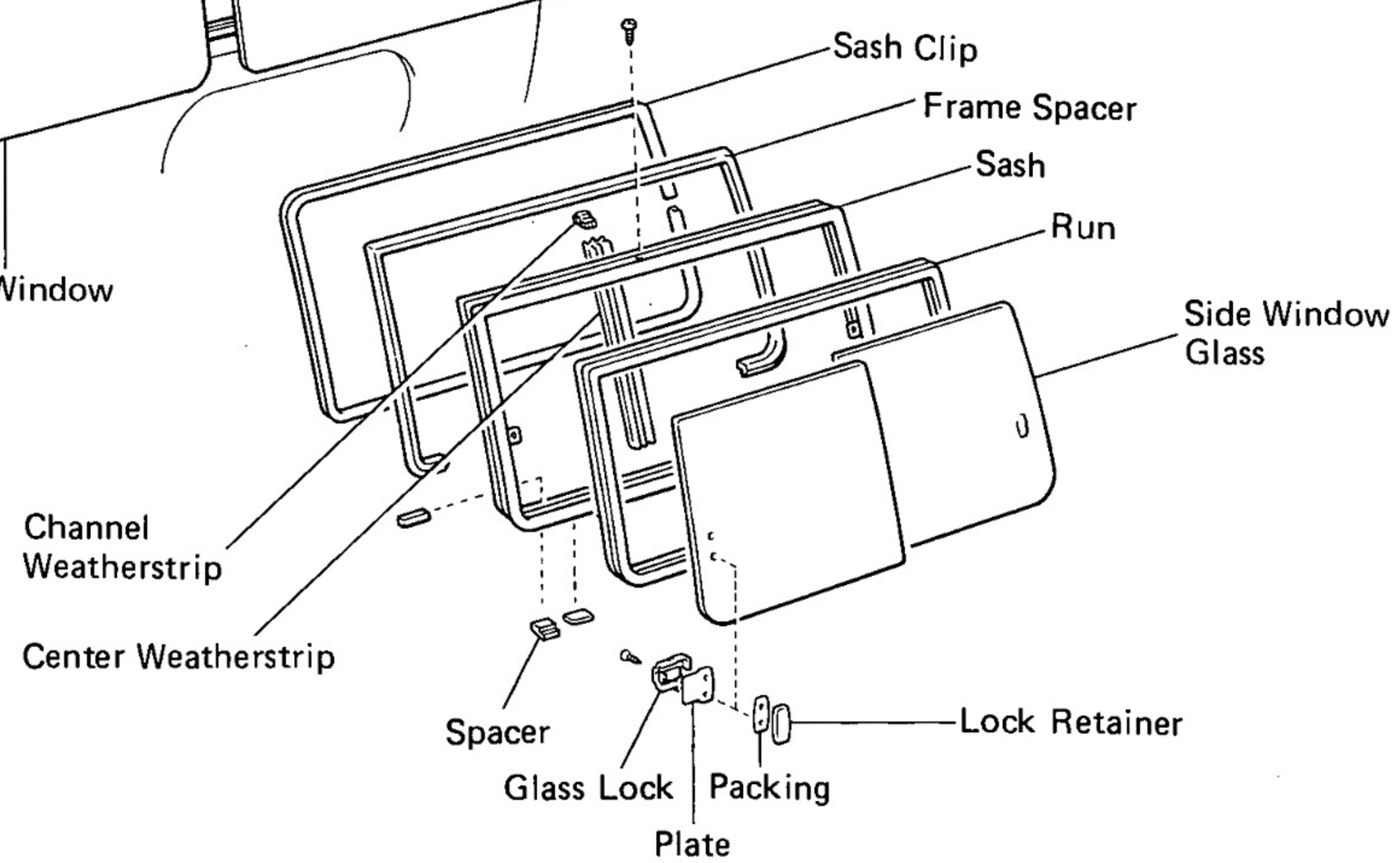

60, 62 Series

[Fixed Type]

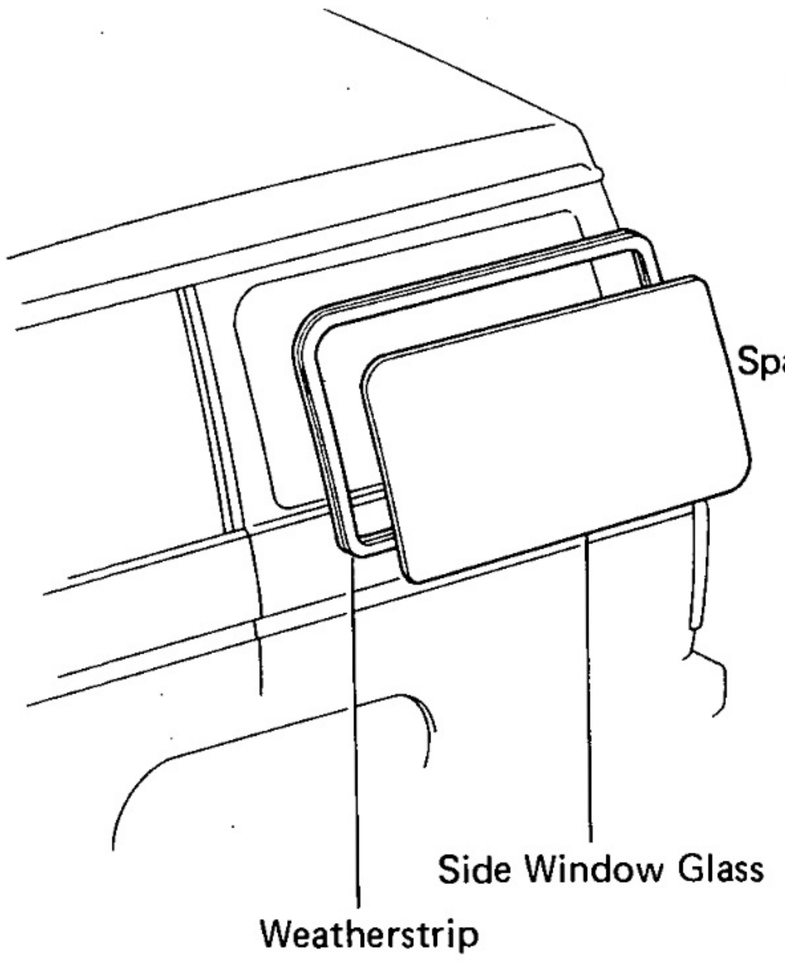

[Sliding Type]

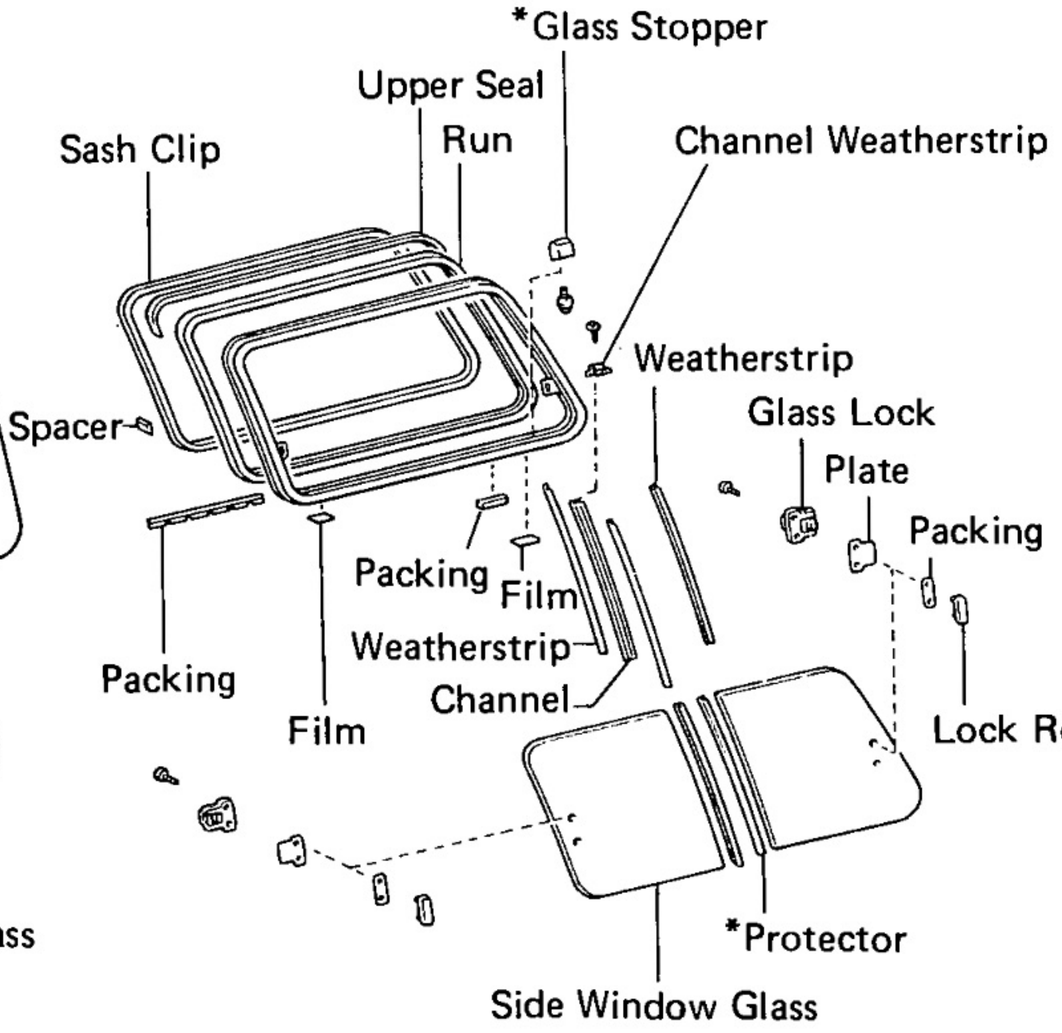

* West Germany only

BO1021
BO1027

NOTE: Remove and install the fixed type of side window on the back door glass with the same procedure.
(See page BO-66)

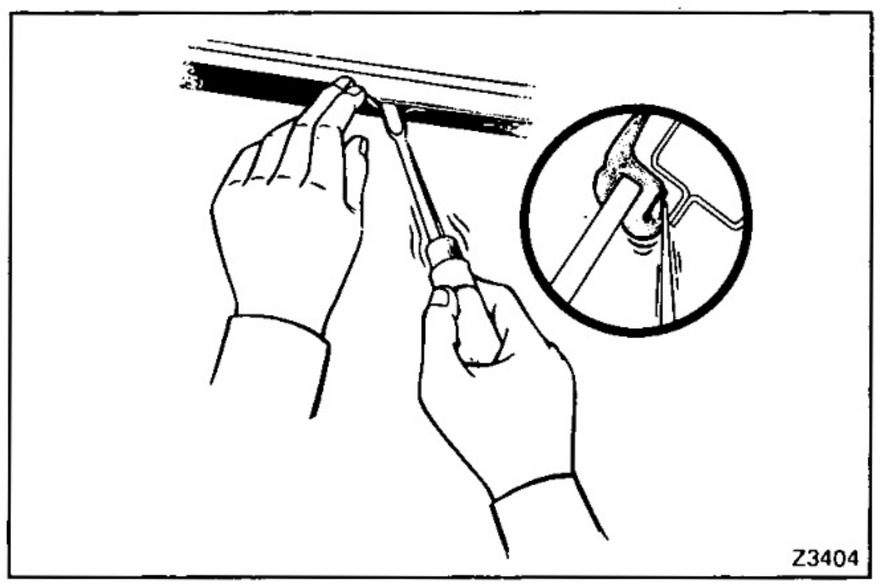

REMOVAL OF SIDE WINDOW (70 Series)

(See page BO-60)

1. REMOVE SIDE WINDOW GUARD
2. REMOVE SIDE WINDOW

If reusing the weatherstrip:

(a) From inside of vehicle, stuff lip of weatherstrip under flange with screwdriver.

(b) Push the glass out to remove.

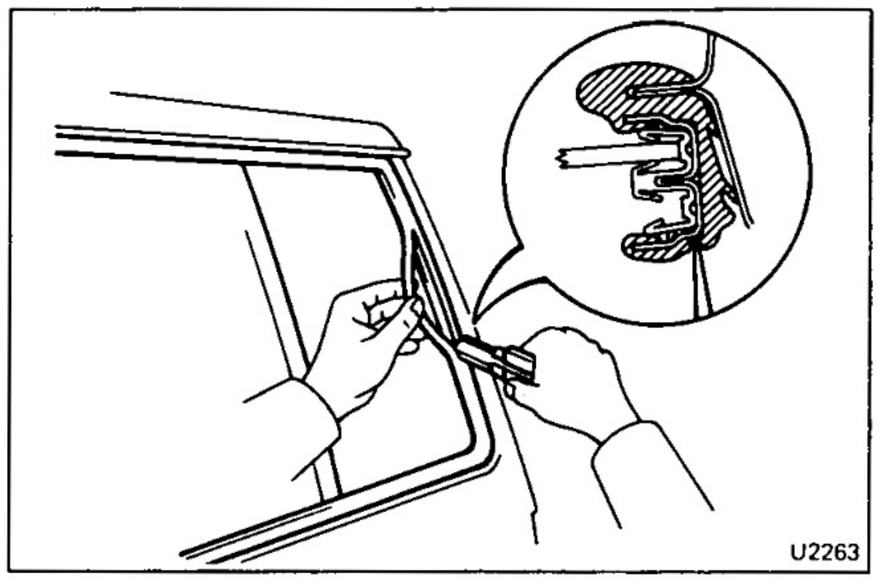

If using a new weatherstrip:

(a) From the outside of the vehicle, cut off the weatherstrip lip with a knife.

(b) Pull the side window outwards and remove the side window.

(c) Remove the remaining weatherstrip.

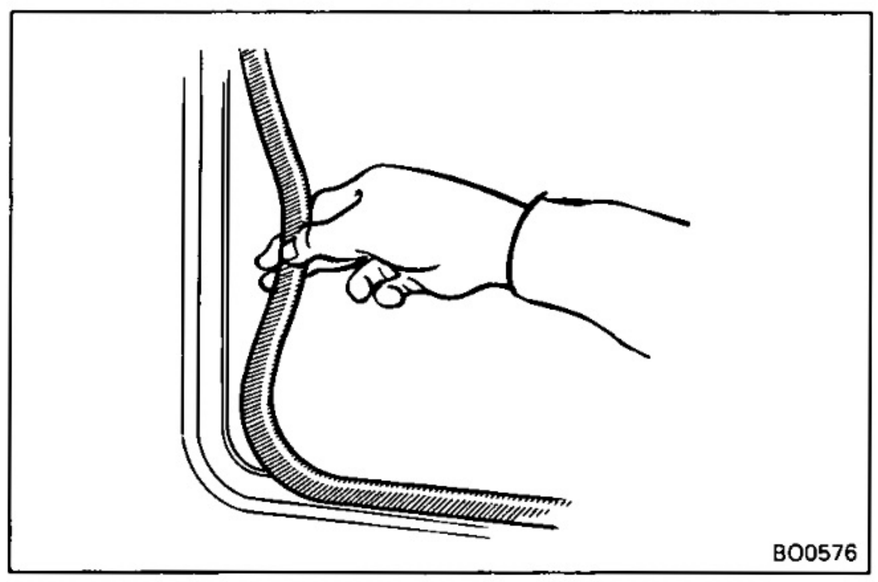

REMOVAL OF SIDE WINDOW (60,62,73,75 Series)

(See pages BO-60, 61)

1. REMOVE SIDE WINDOW GUARD
2. REMOVE SASH CLIP

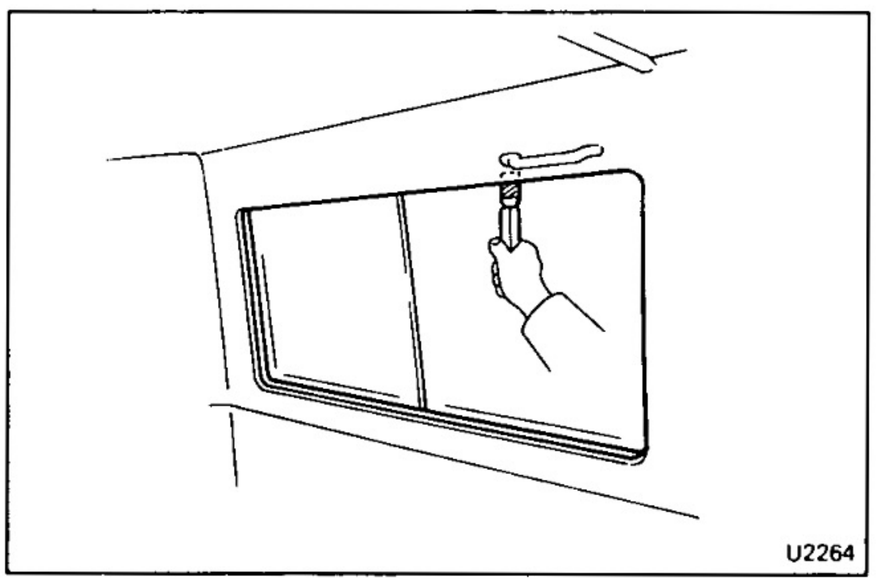

3. REMOVE SIDE WINDOW

(a) Cut the adhesive with a scraper.

NOTE: Do not bend the body or flange edge.

(b) Remove the sash assembly.

(c) Wipe off any adhesive left on the sash.

NOTE: After wiping off the adhesive, use adhesive tape to remove the remaining adhesive.

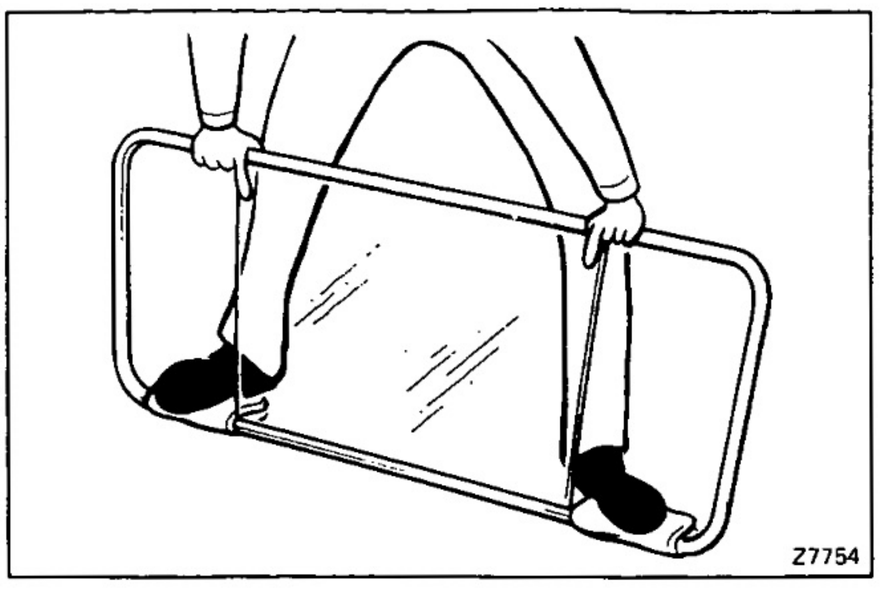

DISASSEMBLY OF SIDE WINDOW

(See pages BO-60, 61)

1. REMOVE SIDE WINDOW GLASS

   Position the glass in the center, pull up on the sash and remove the two glasses.

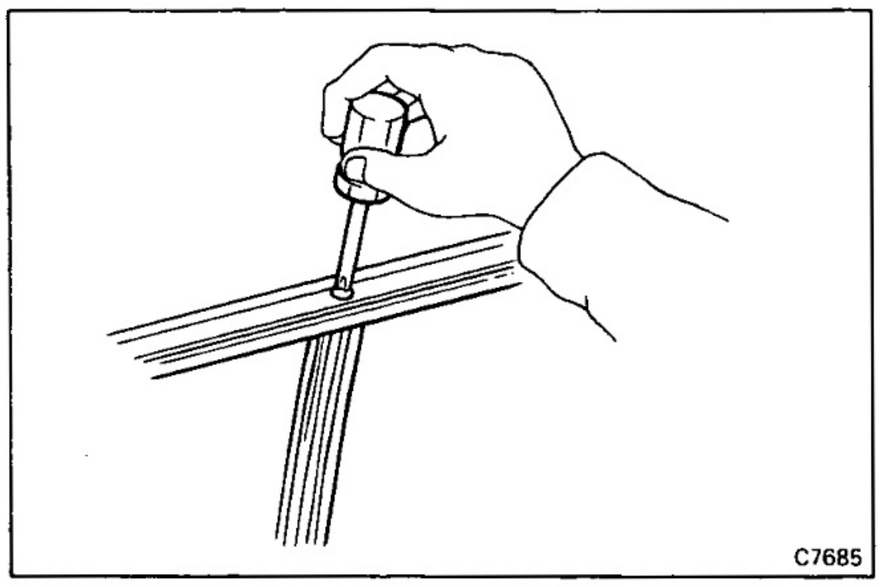

2. REMOVE CENTER WEATHERSTRIP AND CHANNEL

   Remove the screw and then remove the weatherstrip and channel.

3. REMOVE SIDE WINDOW RUN FROM SASH

4. (70 Series)
   REMOVE SIDE WINDOW WEATHERSTRIP FROM SASH

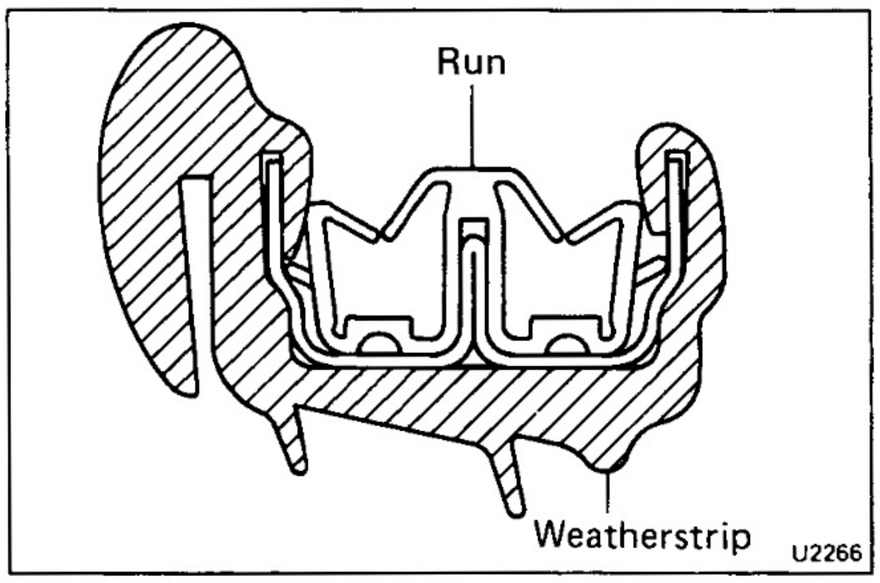

ASSEMBLY OF SIDE WINDOW

(See pages BO-60, 61)

1. (70 Series)
   INSTALL SIDE WINDOW WEATHERSTRIP ON SASH AS SHOWN

   CAUTION: If the weatherstrip has hardened, it may develop leaks. (Use a new one if possible.)

2. INSTALL SIDE WINDOW RUN AS SHOWN

   NOTE: For the 70 series, as shown in the illustration.

3. INSTALL CENTER WEATHERSTRIP AND CHANNEL

   Install the weatherstrip and channel with the screw.

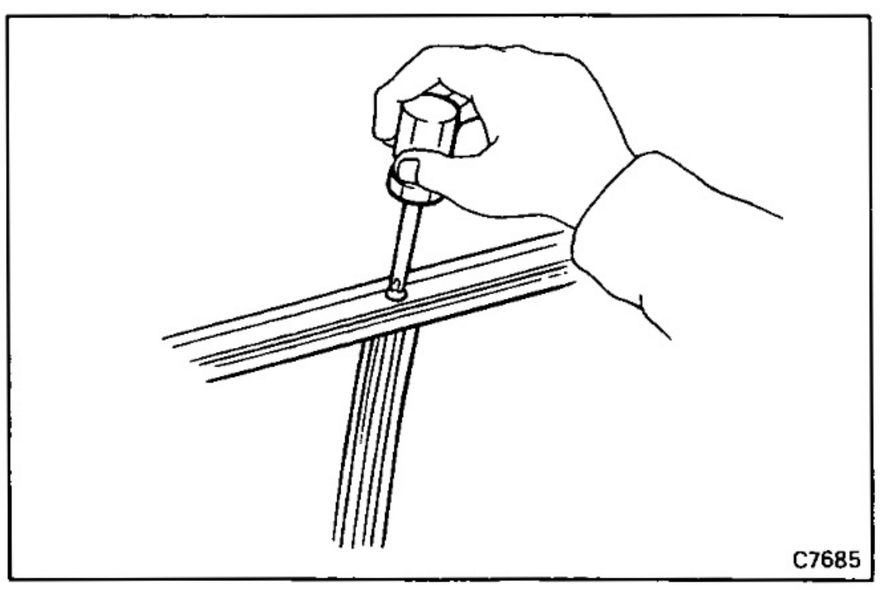

4. INSTALL SIDE WINDOW GLASS

   Pull up on the sash and install the two glass panes to the center of the sash.

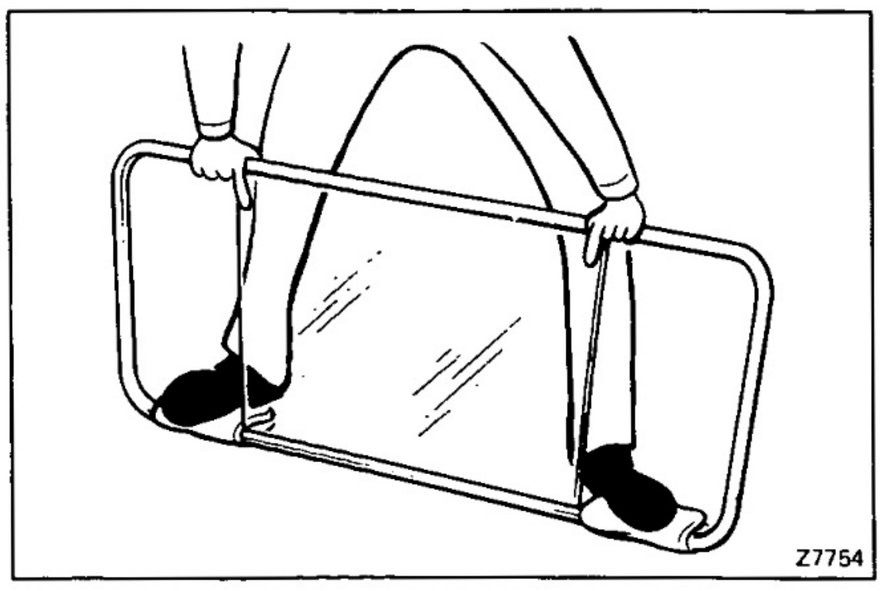

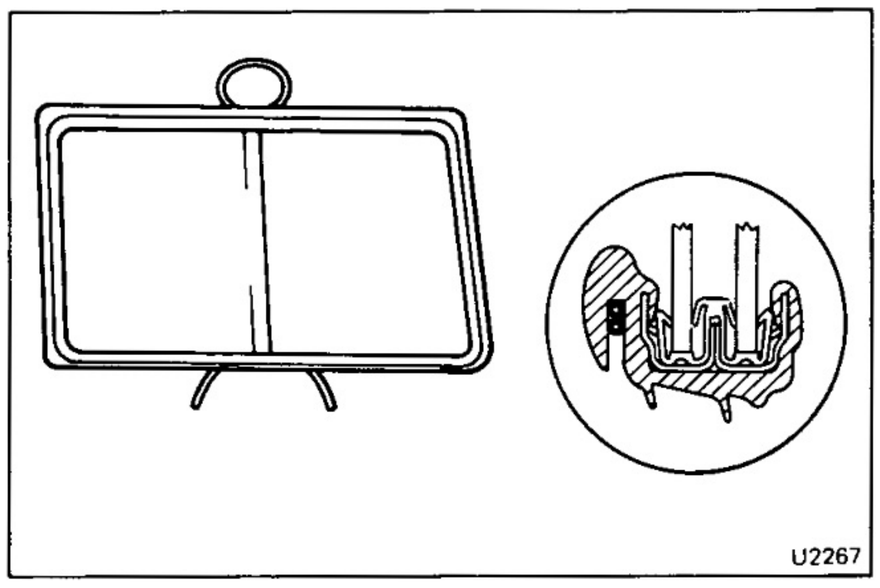

INSTALLATION OF SIDE WINDOW

(See pages BO-60, 61)

1.-1 (70 Series)
INSTALL SIDE WINDOW

(a) Insert a cord into the groove of the weatherstrip all the way around with the ends overlapping.

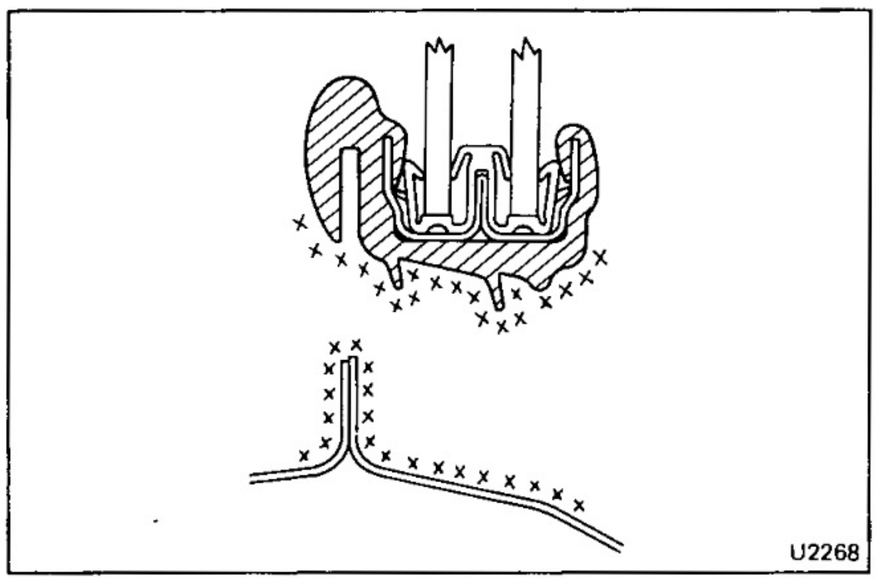

(b) Apply soapy water to the contact surface of the weatherstrip lip and to the body flange.

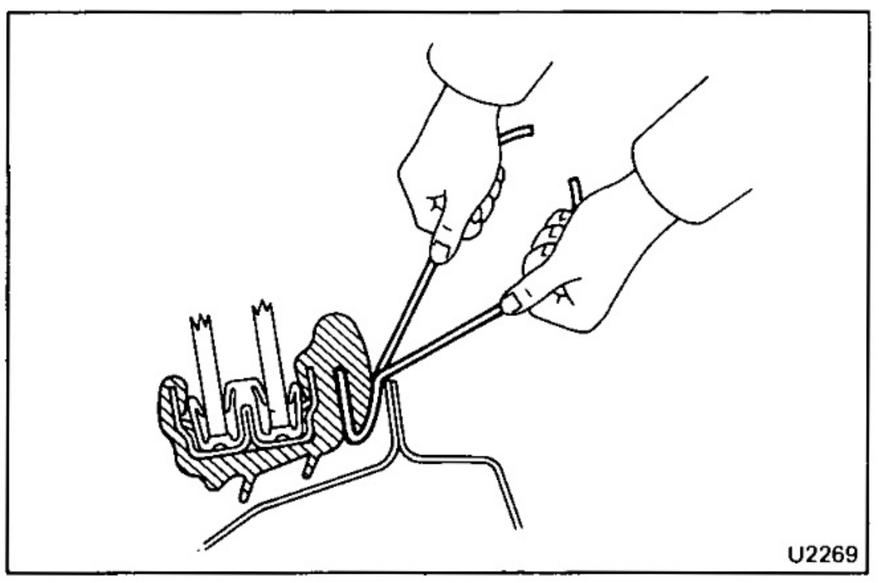

NOTE: Begin installation in the middle of the lower part of the side window.

(c) Hold the window in position on the body.

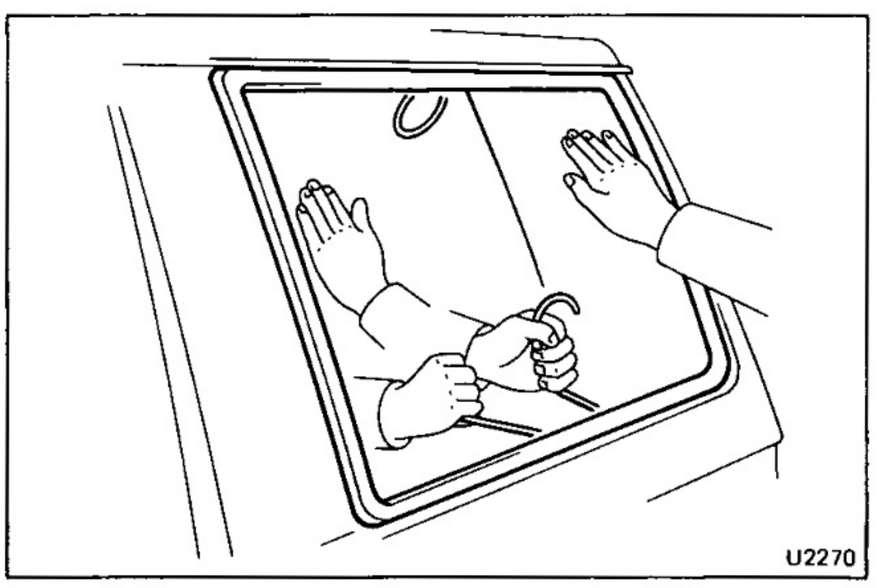

(d) From the inside, pull on one cord at an angle so it pulls the lip over the flange. From the outside, press the glass along the weatherstrip until the window is installed.

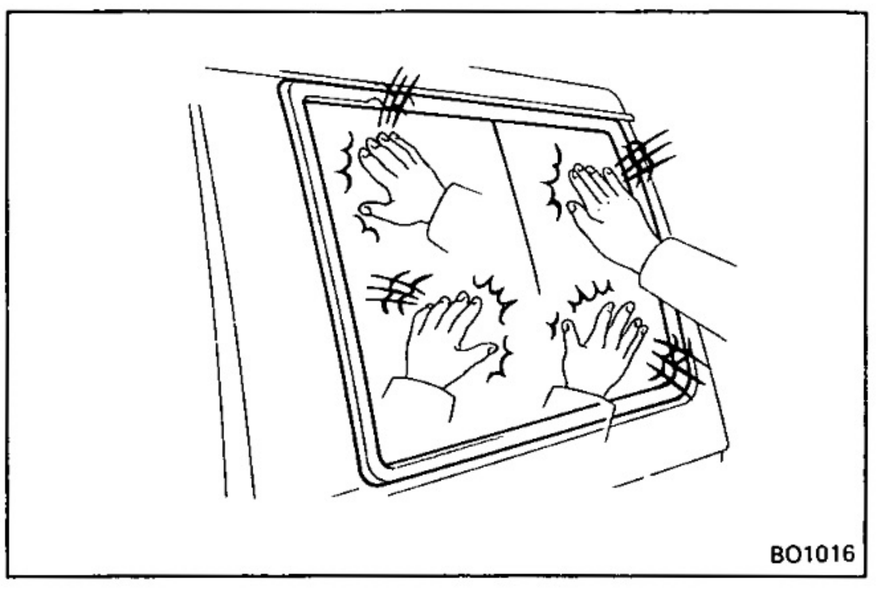

(e) Tap on the outside of the glass until it is securely in place.

1.-2 (60, 62, 73, 75 Series) INSTALL SIDE WINDOW

(a) Prepare the items listed.

Part Name and Part No.	Contents of Set
Butyl tape set (08850-00065)	Butyl tape 9 mm dia. x 2,500 mm (0.35 x 98.43 in.) Primer 5 cc (0.17 oz.) Sponge (for applying primer) Piano wire 1 mm dia. x 600 mm (0.04 x 23.62 in.) (for cutting around glass)
Materials required	Solvent (Alcohol, unleaded gasoline) (for cleaning adhering surface)

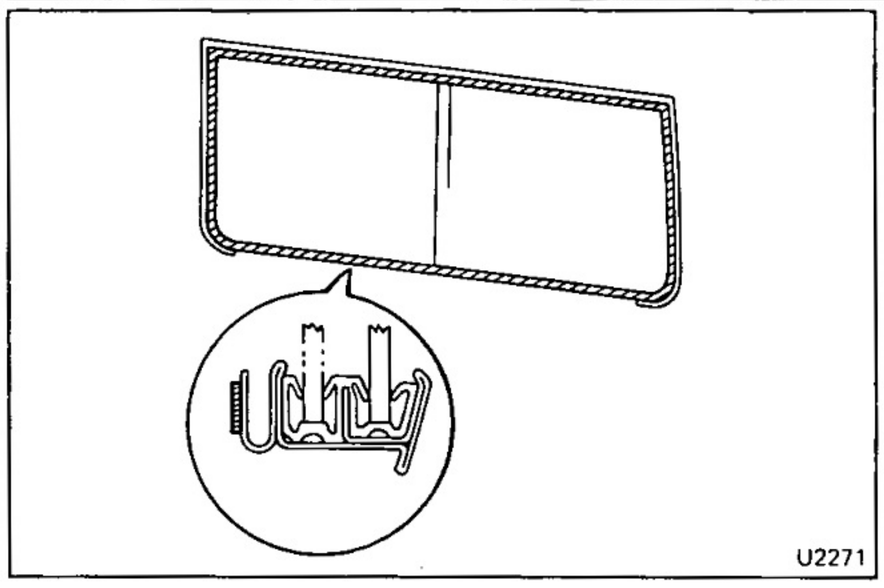

(b) Using alcohol or unleaded gasoline, wipe off any adhesive left on body and sash.

(c) Apply a butyl tape to the body.

(d) Install the side window to the body.

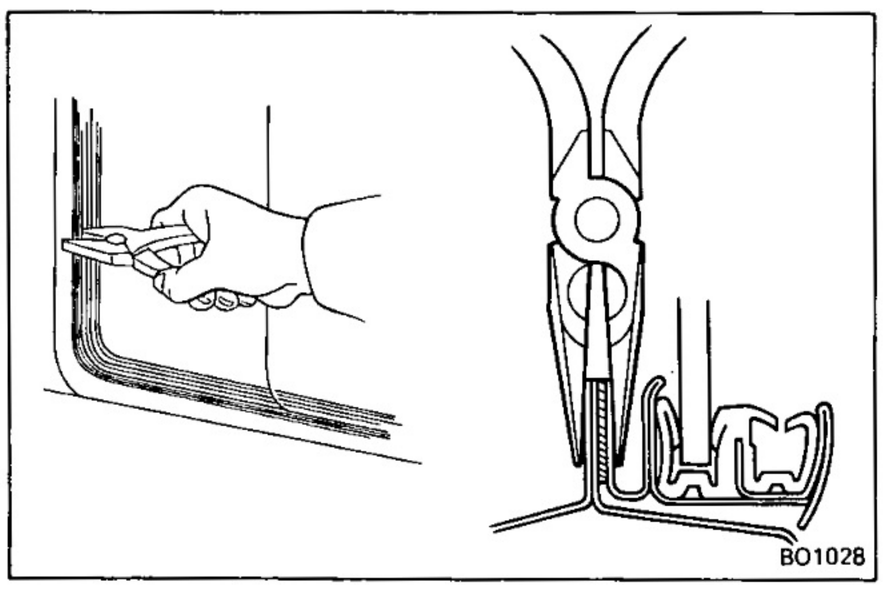

(e) To compress the butyl tape, squeeze the sash and body edge portion together with pliers.

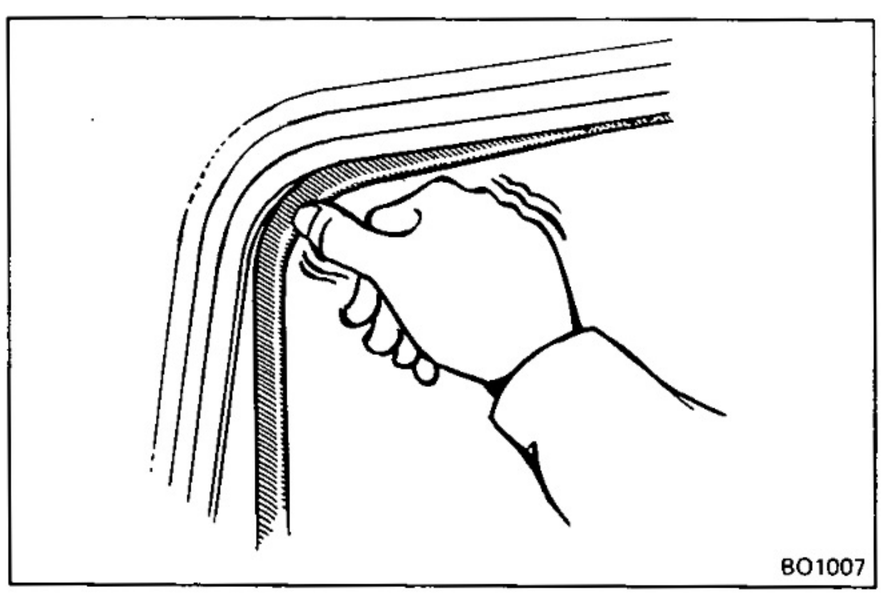

(f) Install the sash clip on the body and outer sash edges.

2. CHECK FOR WATER LEAKS

If necessary, apply sealant.

3. INSTALL SIDE WINDOW GUARD

BACK DOOR GLASS

COMPONENTS

60, 62 Series
Swing Out Type

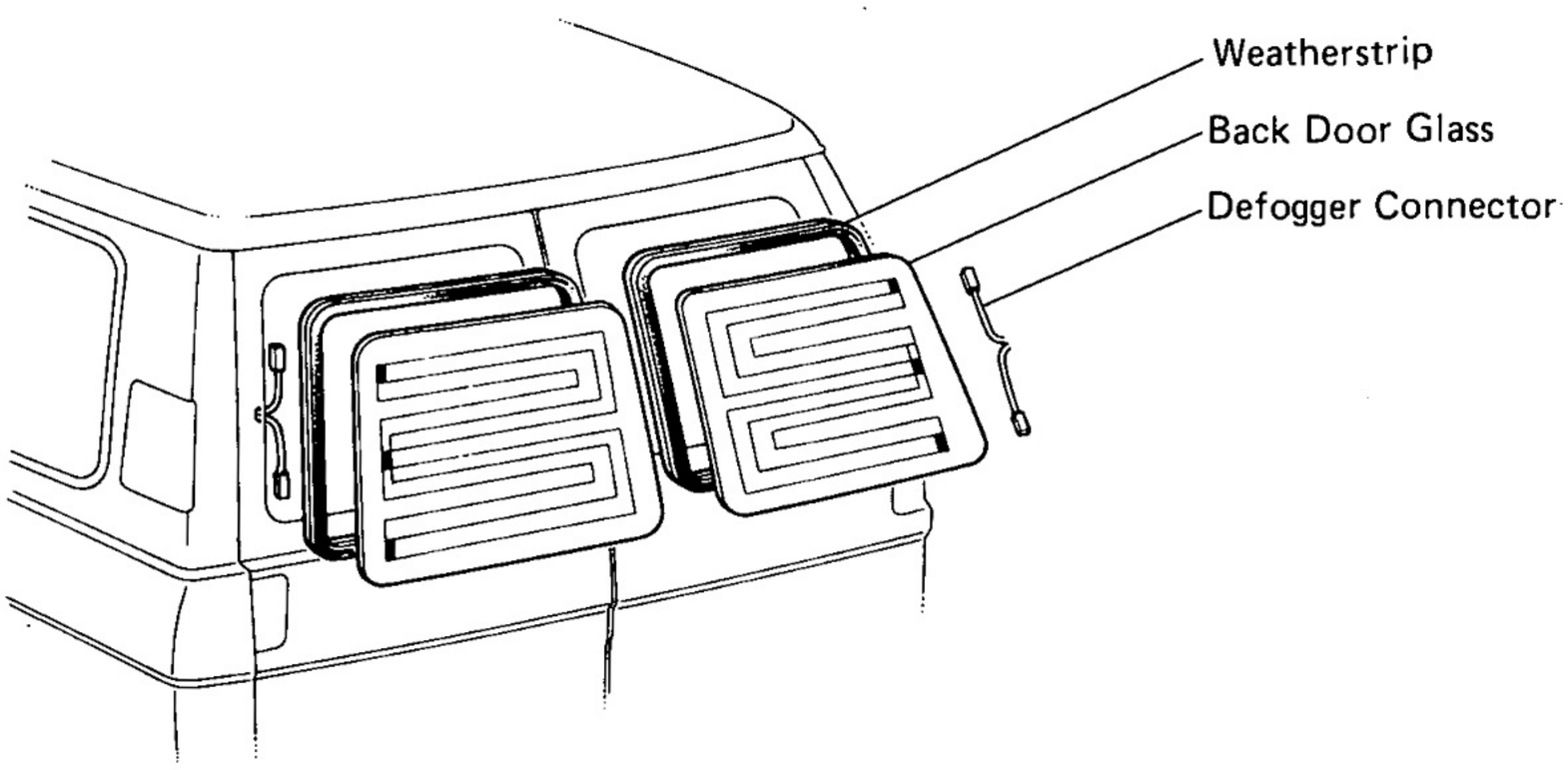

Lift-up Type

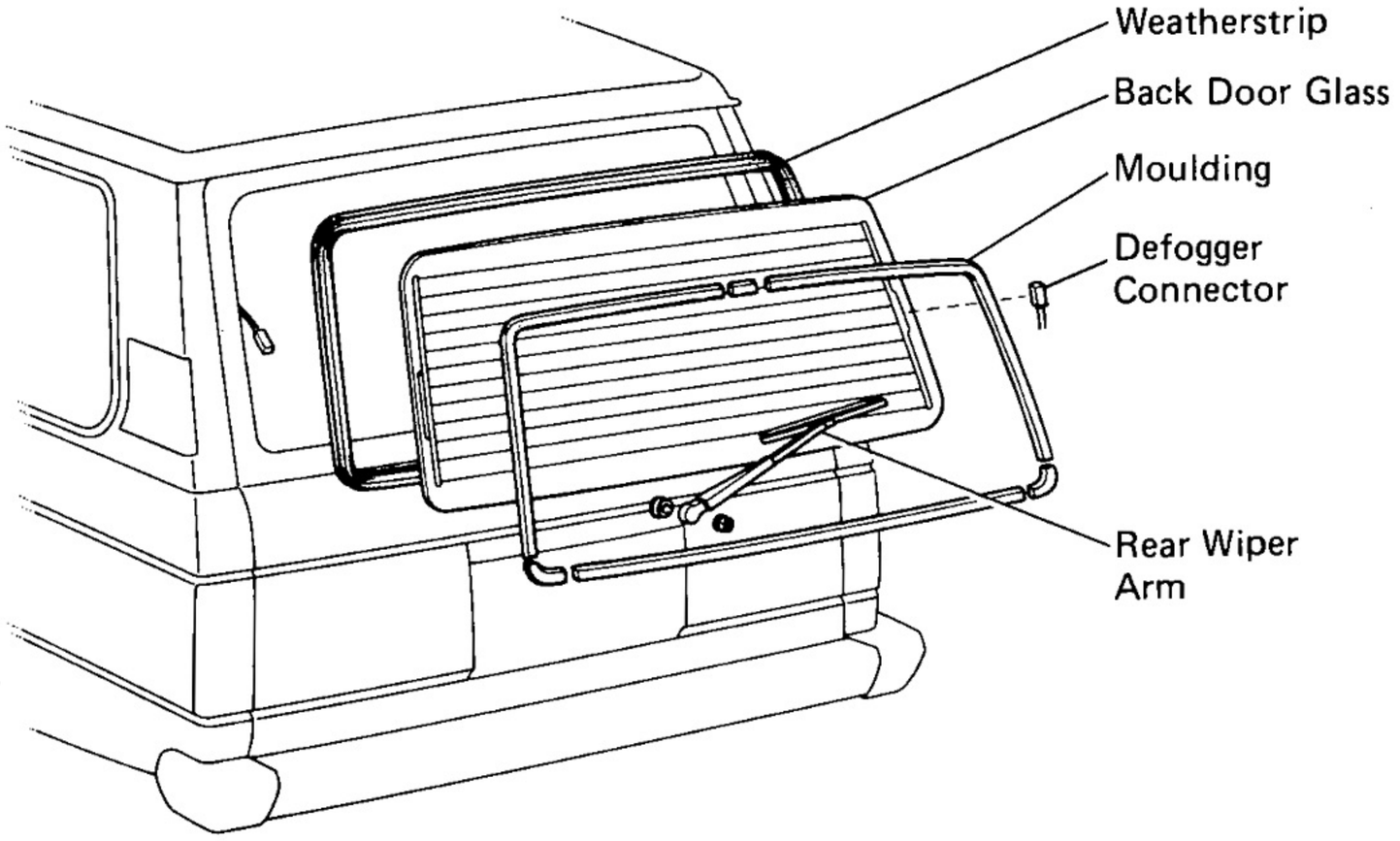

70, 73, 75 Series

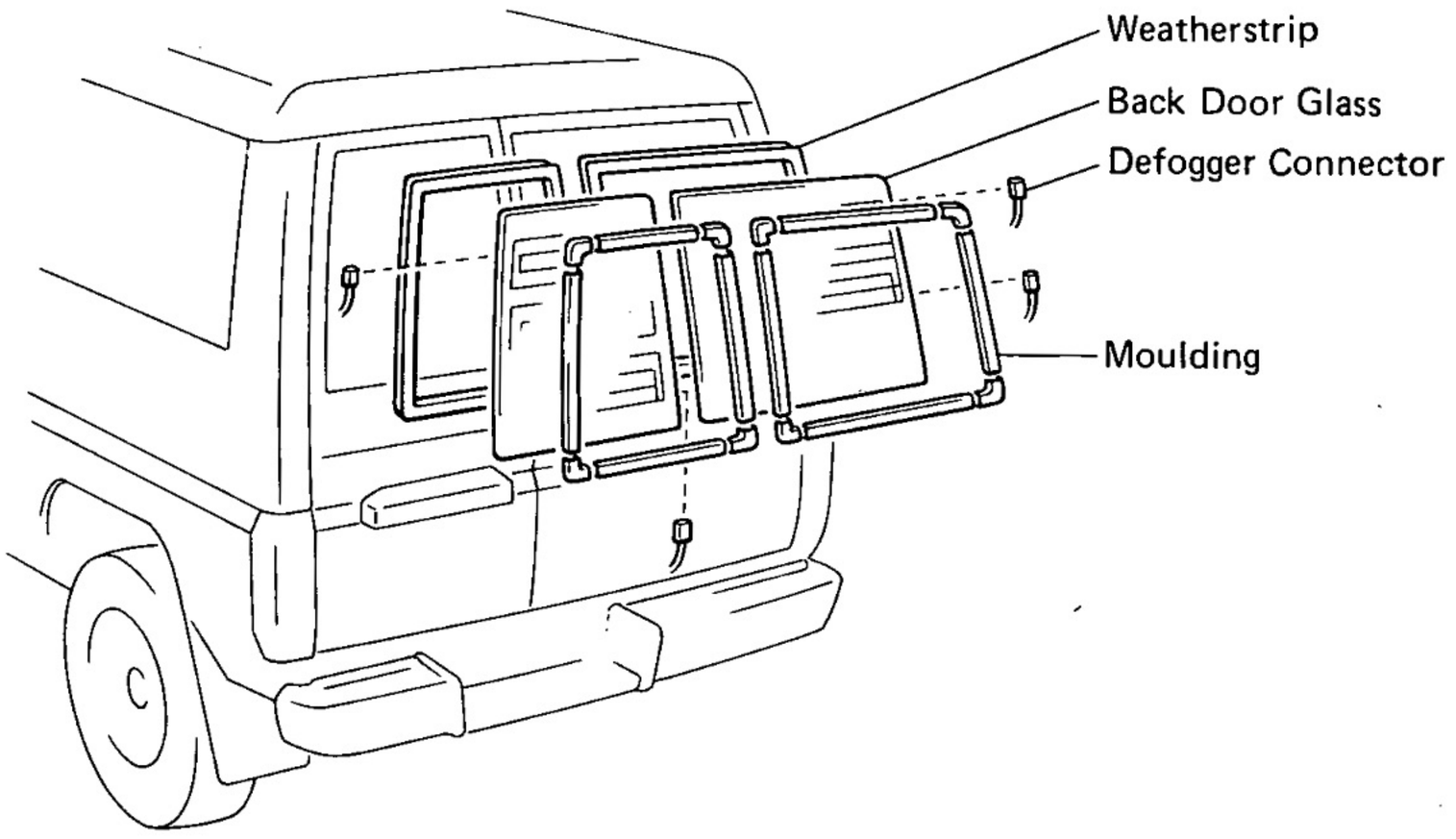

BO1003
BO1004
U2272

REMOVAL OF BACK DOOR GLASS

(See page BO-66)

1. REMOVE FOLLOWING PARTS:
   (a) Spare wheel (70, 73 series)
   (b) Rear wiper arm
   (c) Back door moulding (See page BO-49)
   (d) Defogger connector

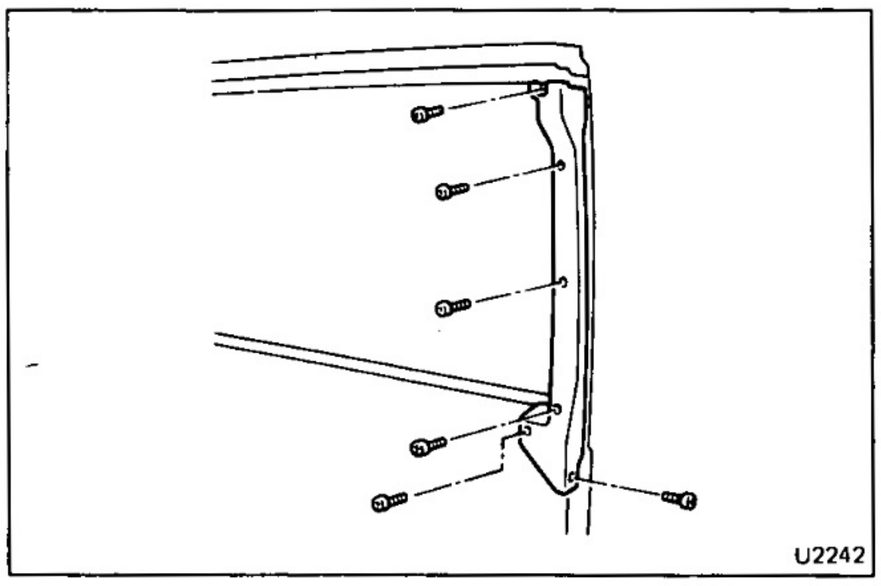

2. (70, 73, 75 Series—Ex. Soft Top)
   REMOVE DOOR CONTROL LINK COVER

   Remove the six screws and link cover.

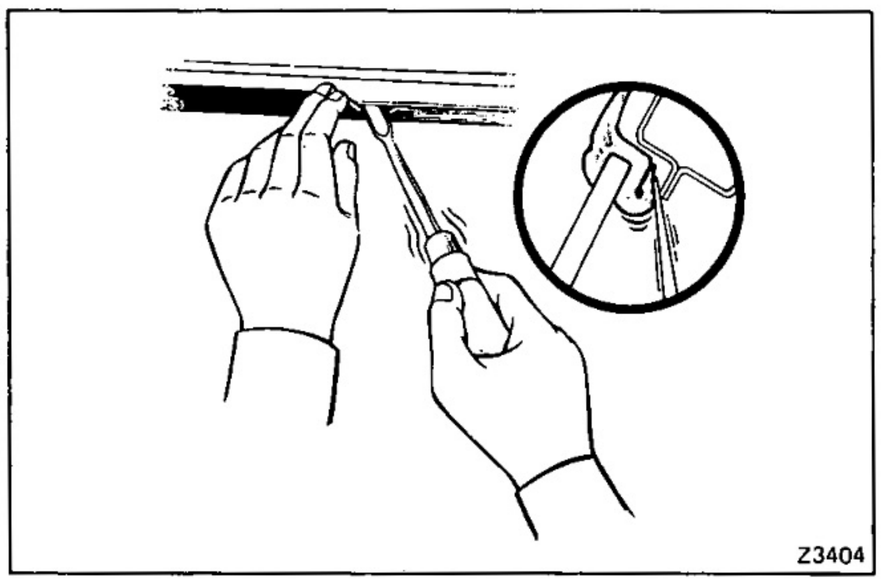

3. REMOVE BACK DOOR GLASS

   If reusing the weatherstrip:
   (a) From inside of vehicle, stuff lip of weatherstrip under flange with screwdriver.
   (b) Push the glass out to remove.

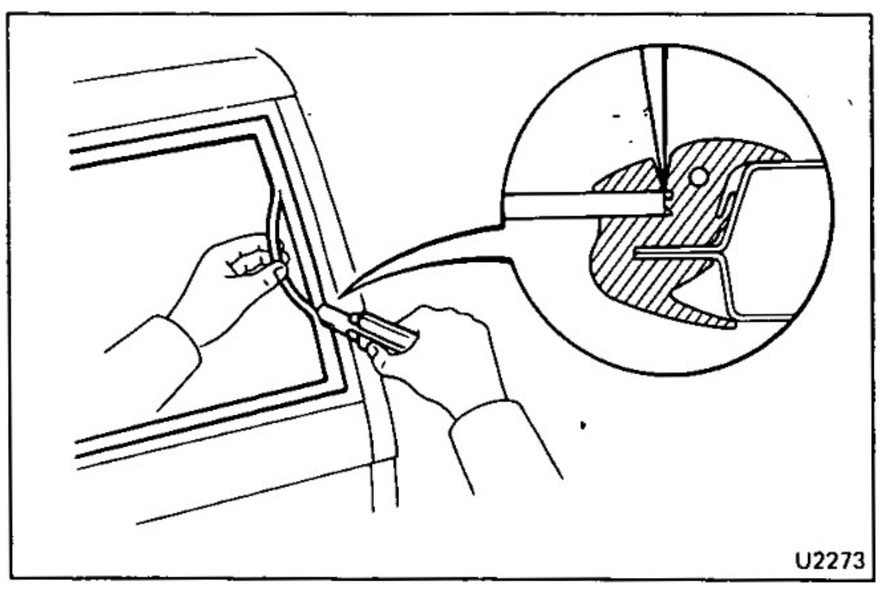

If using a new weatherstrip:
(a) From outside of the vehicle, cut off the weatherstrip lip with a knife.
(b) Push the back door glass outwards and remove the back door glass.
(c) Remove the remaining weatherstrip.

INSTALLATION OF BACK DOOR GLASS

(See page BO-66)

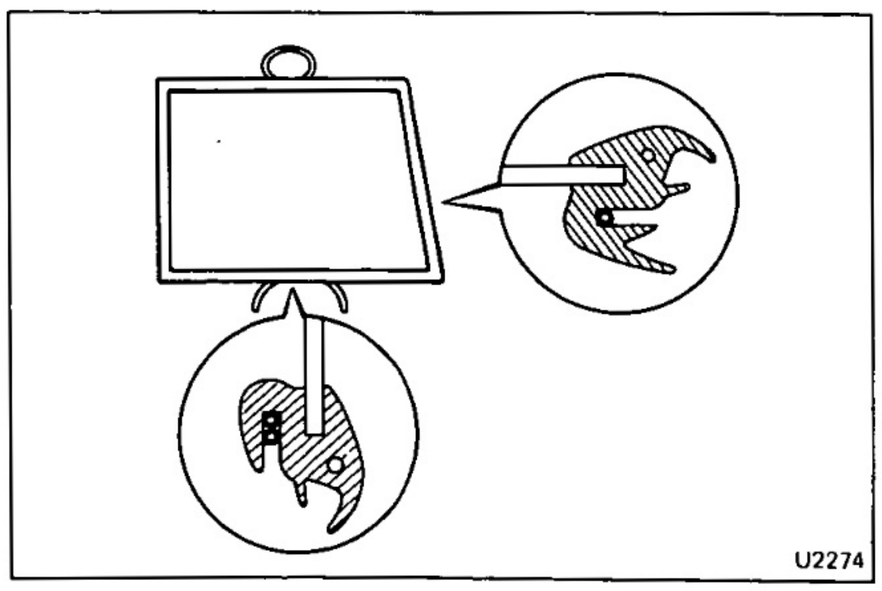

1. INSTALL WEATHERSTRIP ON GLASS
   (a) Attach the weatherstrip to the glass.

   CAUTION: If the weatherstrip has hardened, it may develop leaks. Use a new one if possible.

   (b) Insert a cord into the groove of the weatherstrip all the way around with the ends overlapping.

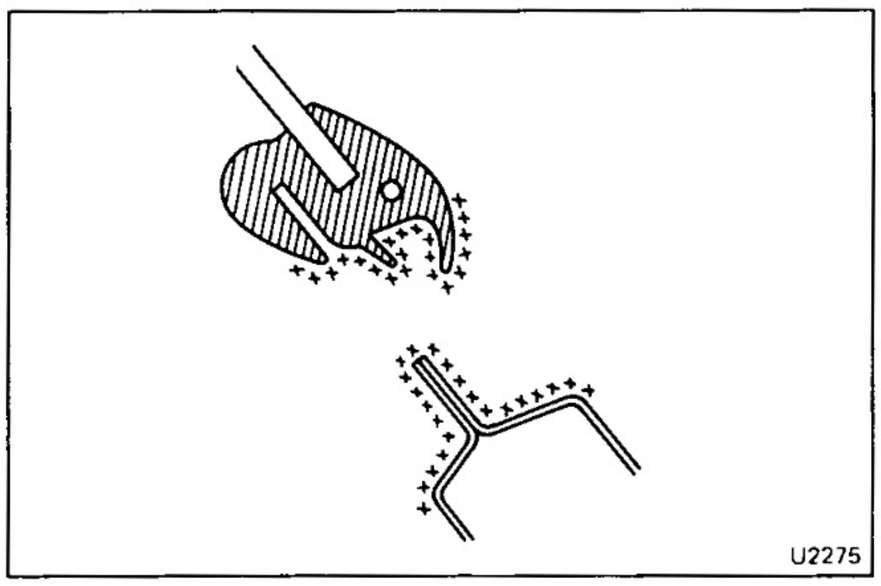

2. INSTALL BACK DOOR GLASS

(a) Apply soapy water to the contact surface of the weatherstrip lip and to the body flange.

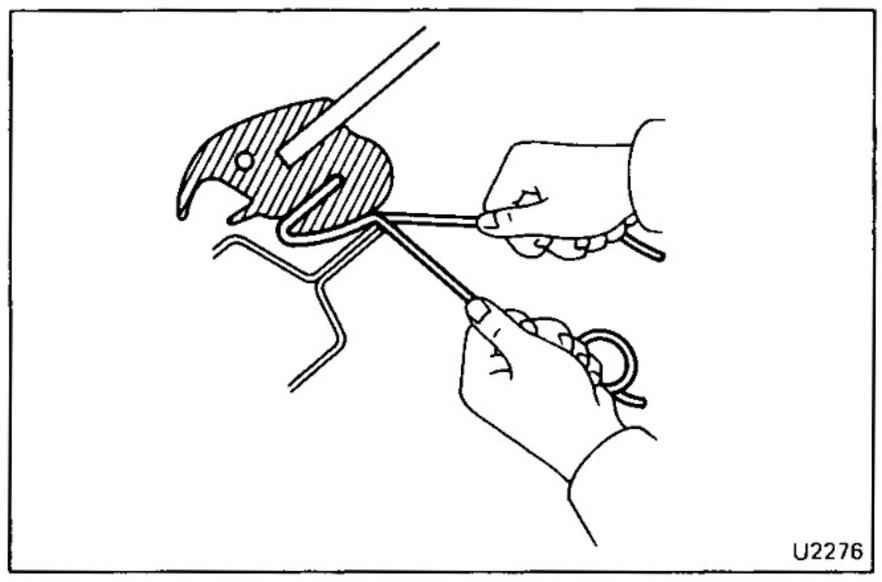

NOTE: Begin installation in the middle of the lower part of the back door glass.

(b) Hold the glass in position on the body.

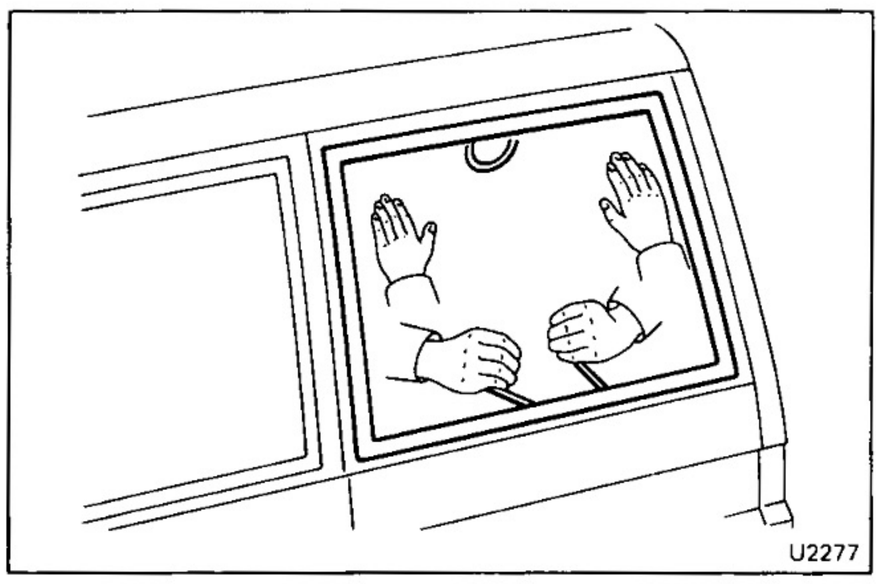

(c) From the inside, pull on one cord at an angle so it pulls the lip over the flange. From the outside, press the glass along the weatherstrip until the glass is installed.

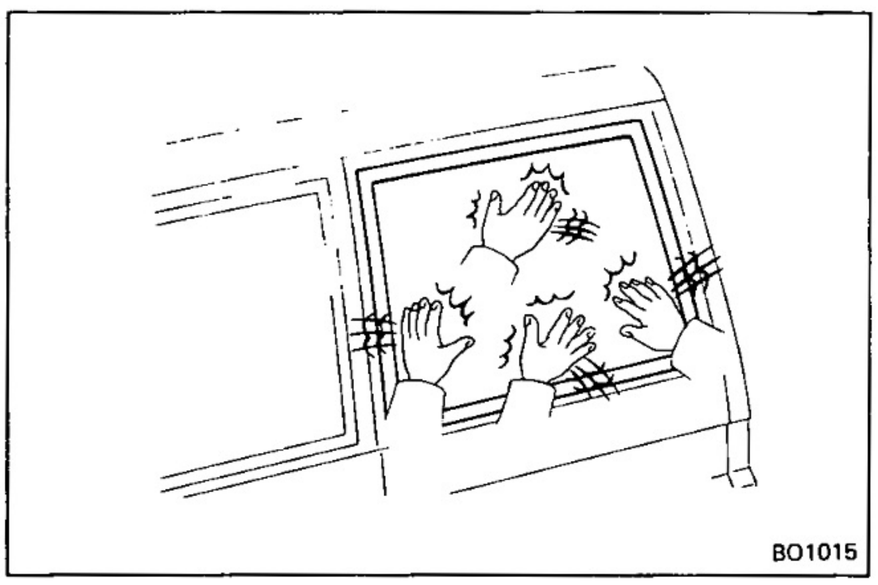

(d) Tap on the outside of the glass until it is securely in place.

3. CHECK FOR LEAKS

Pouring water on glass and weatherstrip, check seal for leaks and apply sealant where necessary.

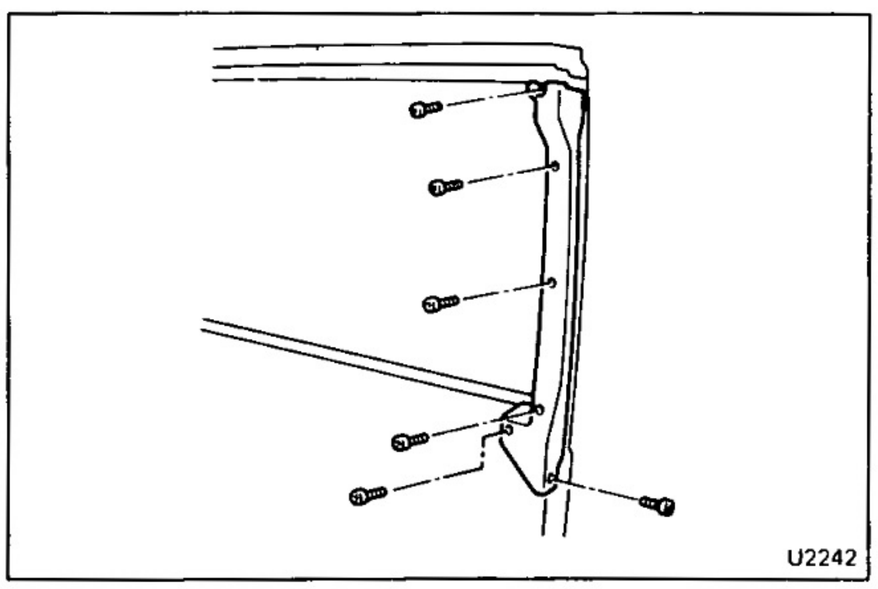

4. INSTALL BACK DOOR CONTROL LINK COVER

Install the link cover with six screws.

5. INSTALL FOLLOWING PARTS:

(a) Defogger connector

(b) Back door moulding (See page BO-49)

(c) Rear wiper arm

(d) Spare wheel (70, 73 series)

BACK WINDOW

COMPONENTS

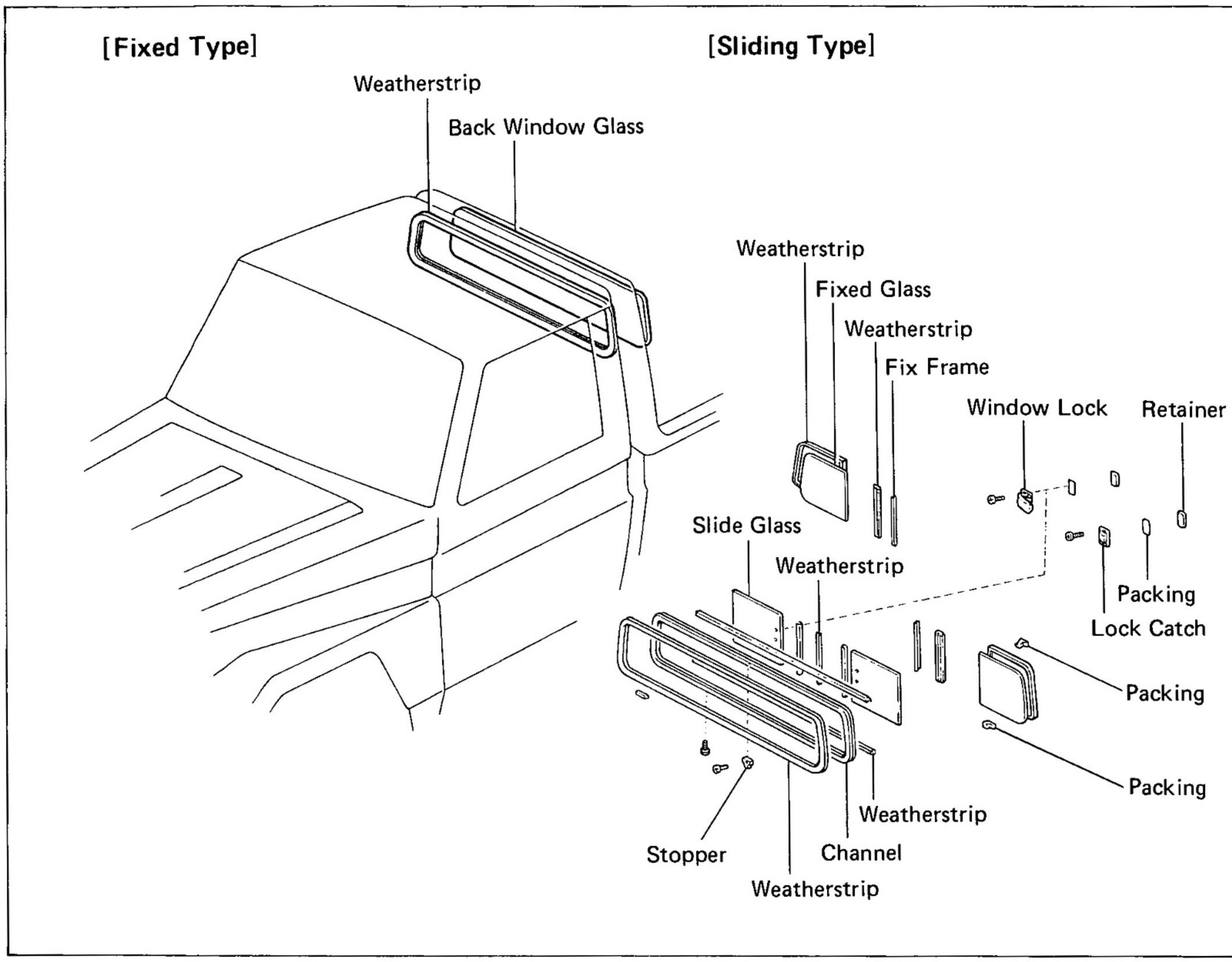

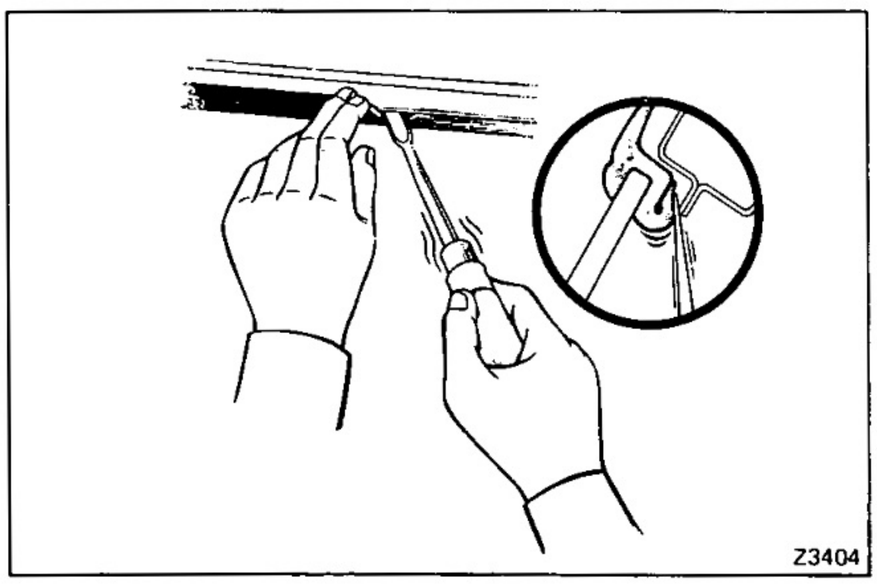

REMOVAL OF BACK WINDOW

REMOVE BACK WINDOW

Reusing the weatherstrip:

(a) From inside of vehicle, stuff lip of weatherstrip under flange with screwdriver.

(b) Push the glass out to remove.

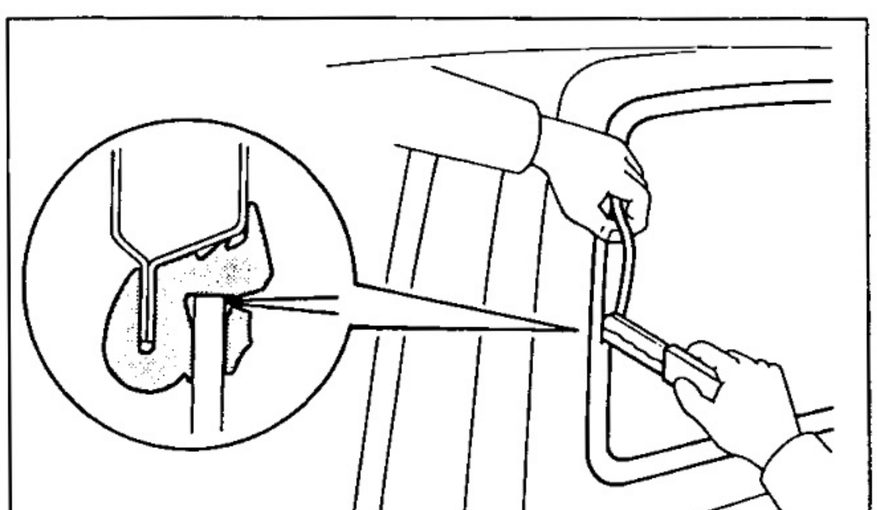

Using a new weatherstrip:

(a) From the outside of the vehicle, cut off the weatherstrip lip with a knife.

(b) Push the back window outwards and remove the back window and weatherstrip.

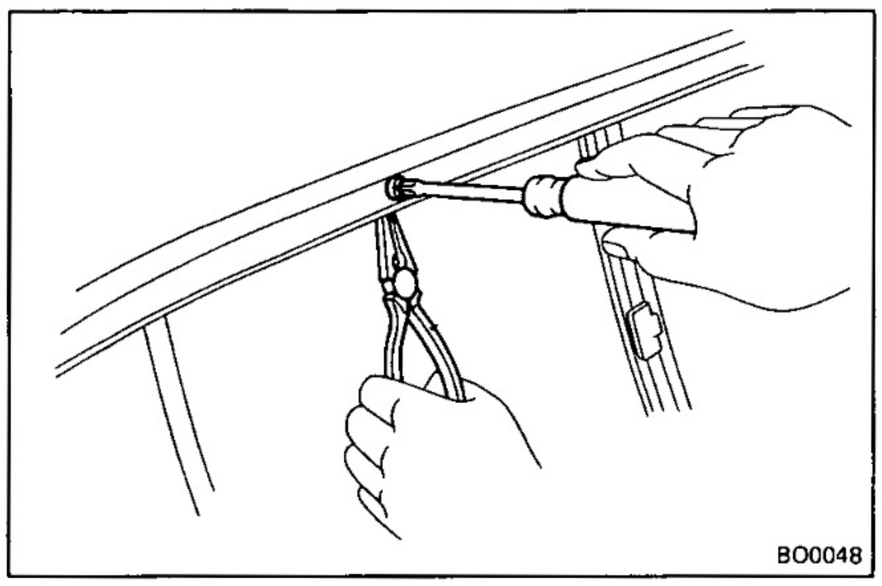

DISASSEMBLY OF BACK WINDOW (SLIDING TYPE)

(See page BO-69)

1. REMOVE SLIDE GLASS STOPPER

Remove the screw and stopper.

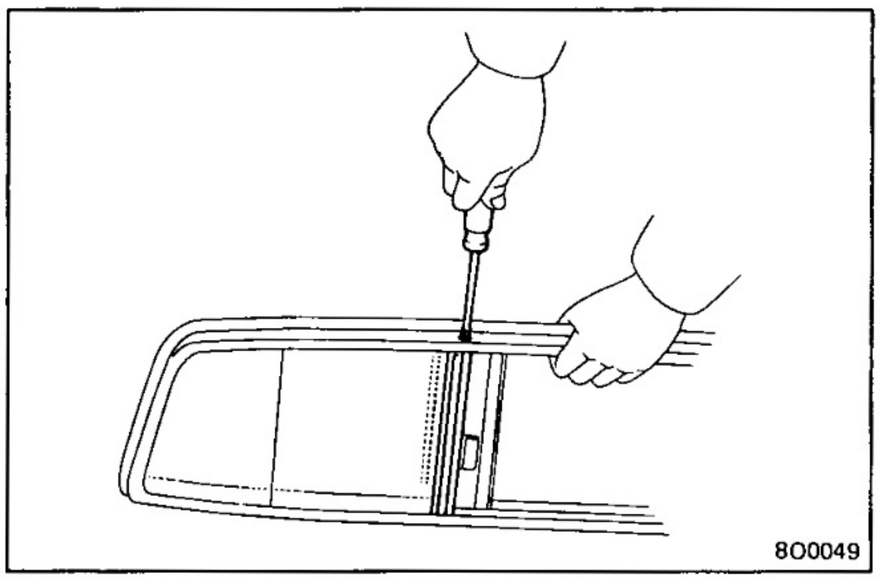

2. REMOVE FOUR FIX FRAME SCREWS

Remove the four screws holding the two fix frames.

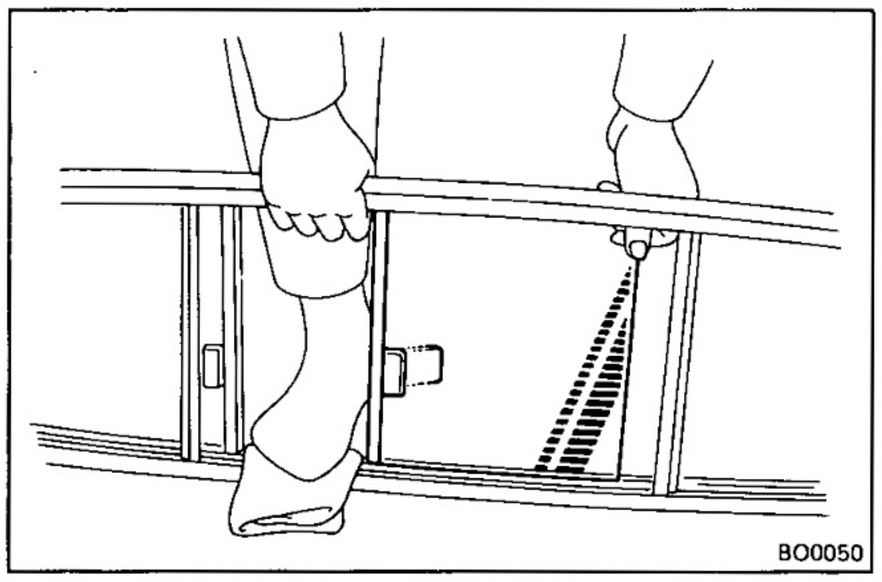

3. REMOVE SLIDE GLASS

Pull apart the channels and remove the two slide glass panes at the center of the glass channel.

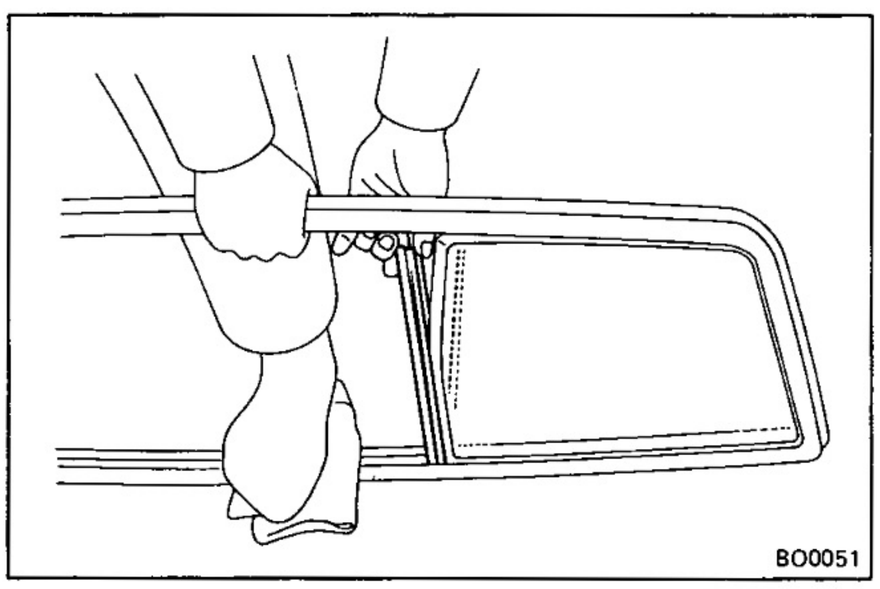

4. REMOVE FIX FRAME

(a) Remove the four packings.

(b) Pull apart the channels and remove the two fix frames as shown.

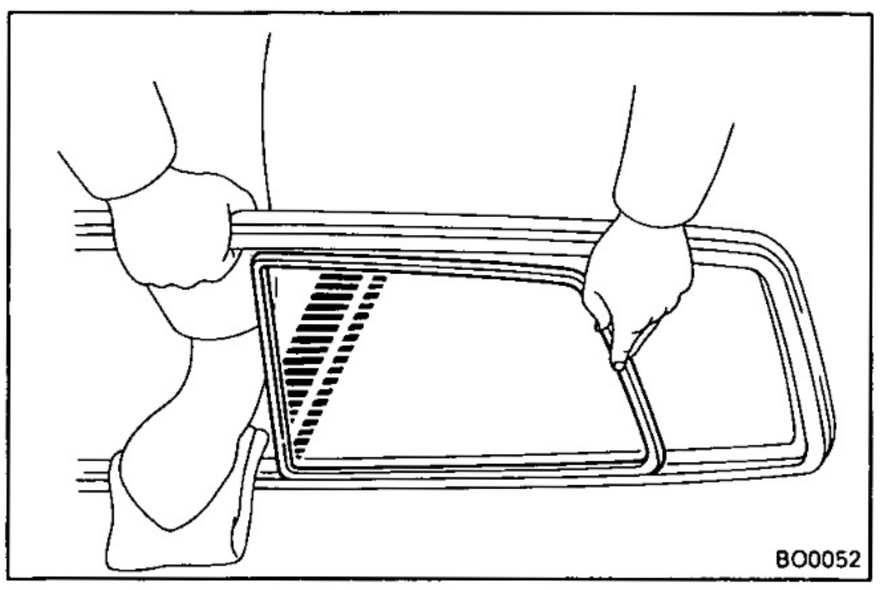

5. REMOVE FIXED GLASS

Pull apart the channels and remove the two fixed glass panes with the weatherstrip as shown.

6. REMOVE WEATHERSTRIP

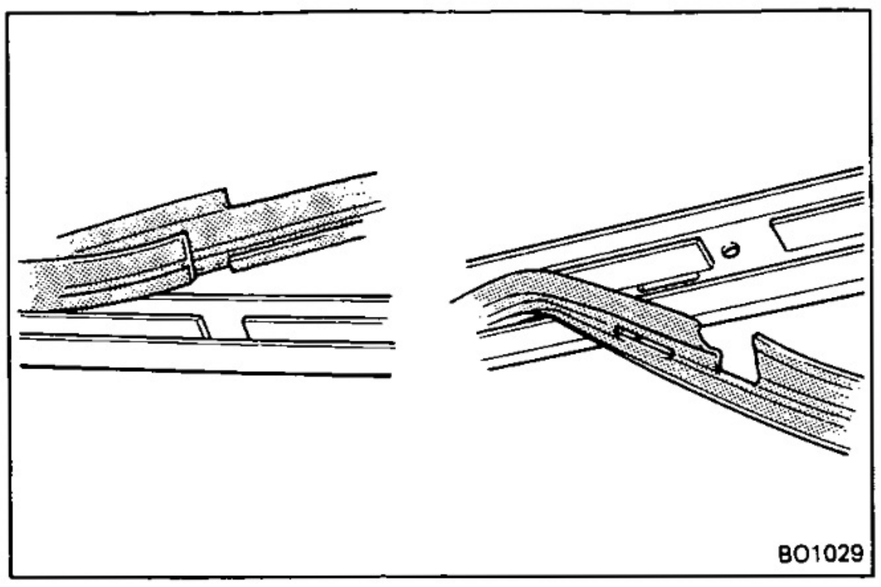

ASSEMBLY OF BACK WINDOW (SLIDING TYPE)

(See page BO-69)

1. INSTALL WEATHERSTRIP

Align the grooves on the channel and weatherstrip and install.

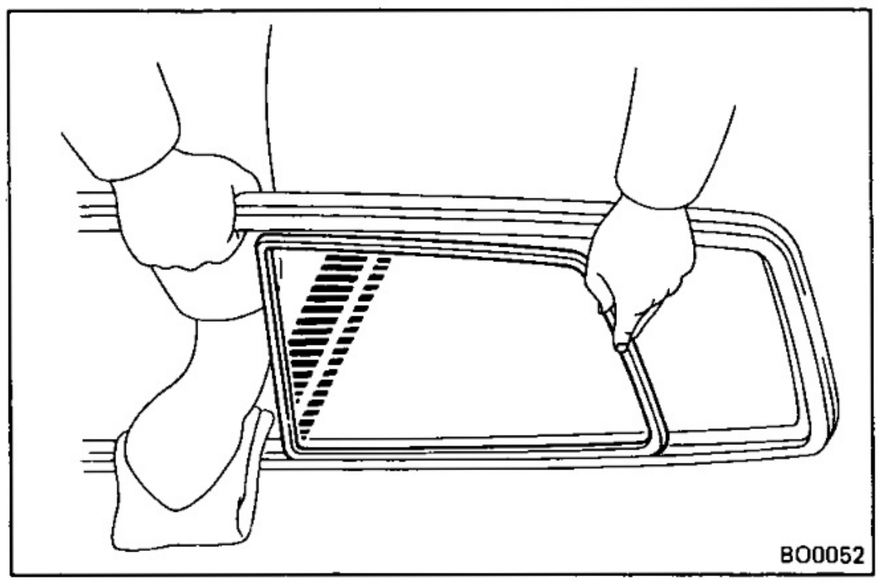

2. INSTALL FIXED GLASS

(a) Apply soapy water to the contact face of the weatherstrip and to the glass channel flange.

(b) Pull apart the channels and install the two fixed glass panes with the weatherstrip.

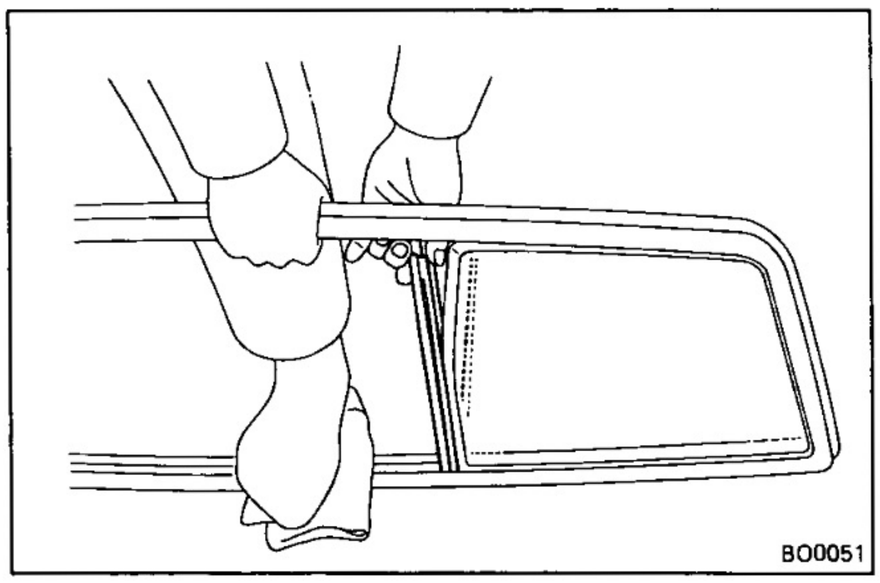

3. INSTALL FIX FRAMES

(a) Apply soapy water to the contact face of the weatherstrip and to the fix frames.

(b) Pull apart the channels and install the two fixed frames as shown.

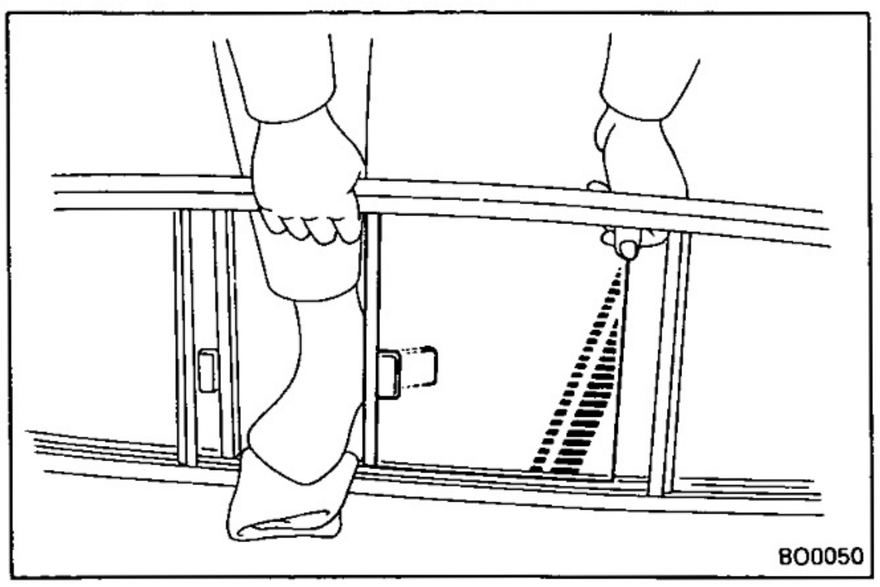

4. INSTALL SLIDE GLASS

Pull apart the channels and install the slide glass in the center of the glass channel.

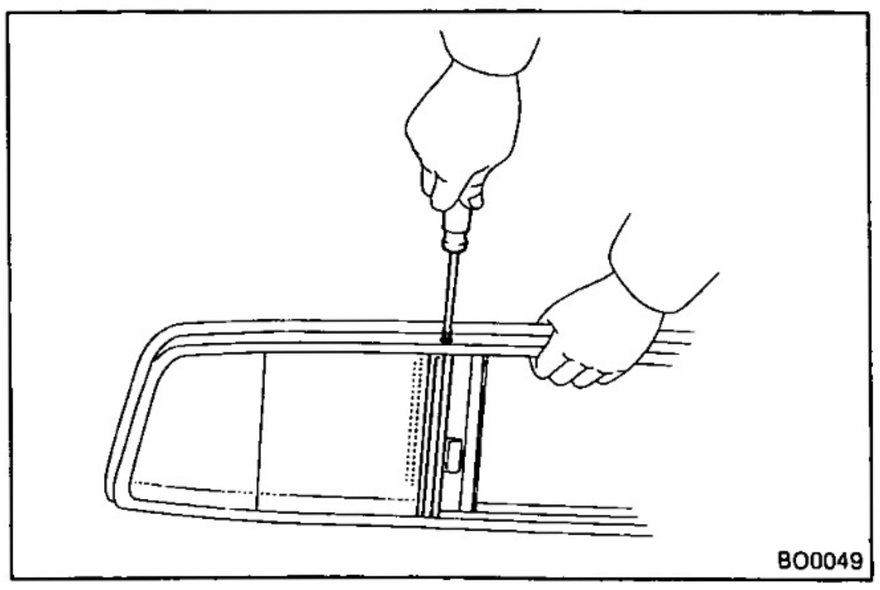

5. INSTALL FOUR FIX FRAME SCREWS AND FOUR PACKINGS

(a) Install the four screws holding the two fix frames.

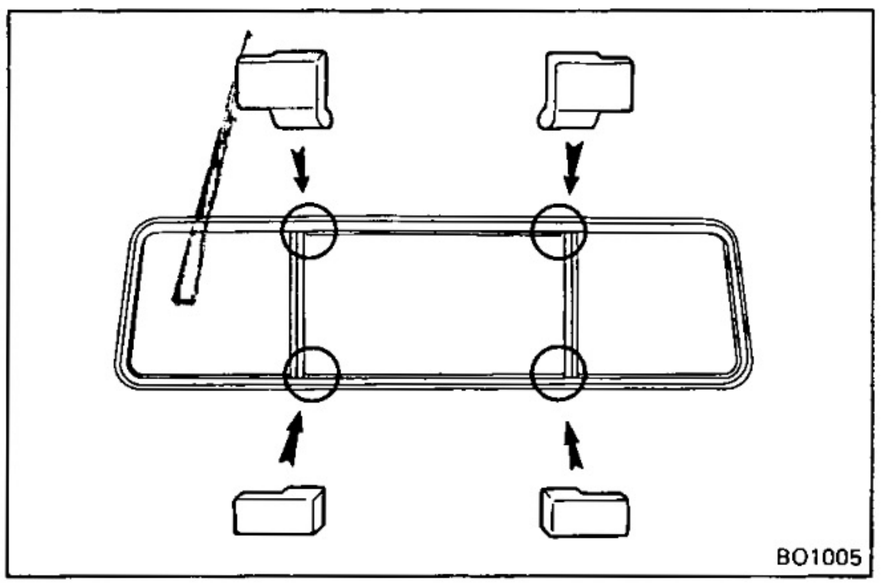

(b) Install packing (four pieces).

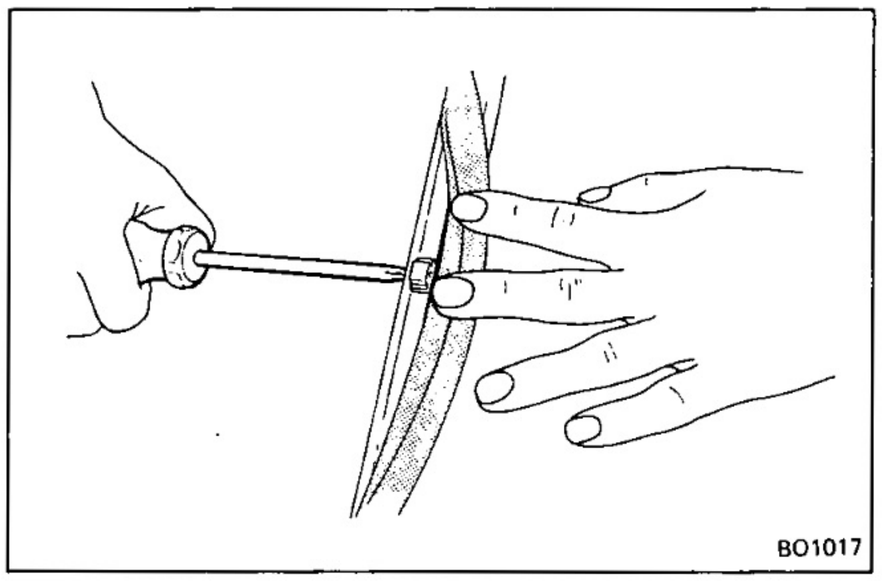

6. INSTALL SLIDING GLASS STOPPER

Install the sliding glass stopper with the screw.

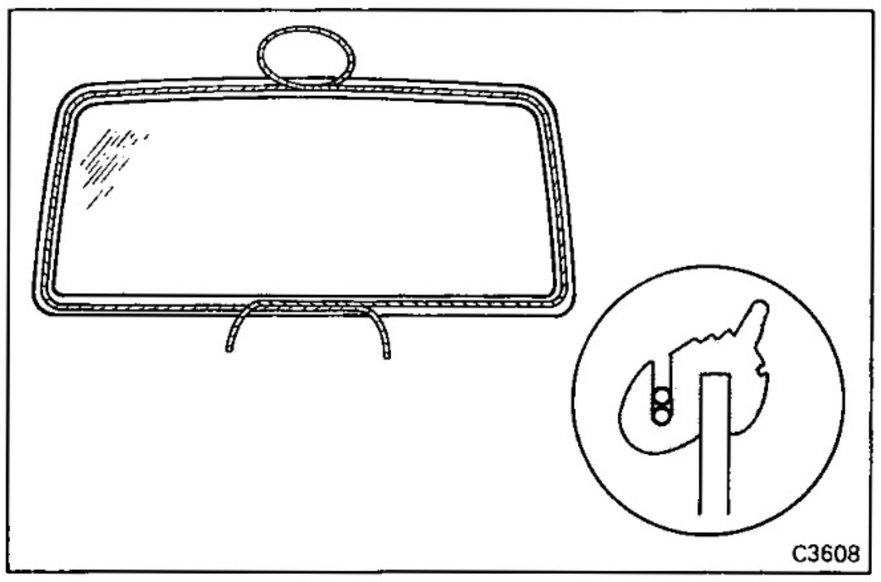

INSTALLATION OF BACK WINDOW

(See page BO-69)

1. INSTALL WEATHERSTRIP ON BACK WINDOW

(a) Attach the weatherstrip to the back window.

CAUTION: If the weatherstrip has become hard, it may develop leaks. Use a new one if possible.

(b) Insert a cord into the groove of the weatherstrip all the way around with the ends overlapping.

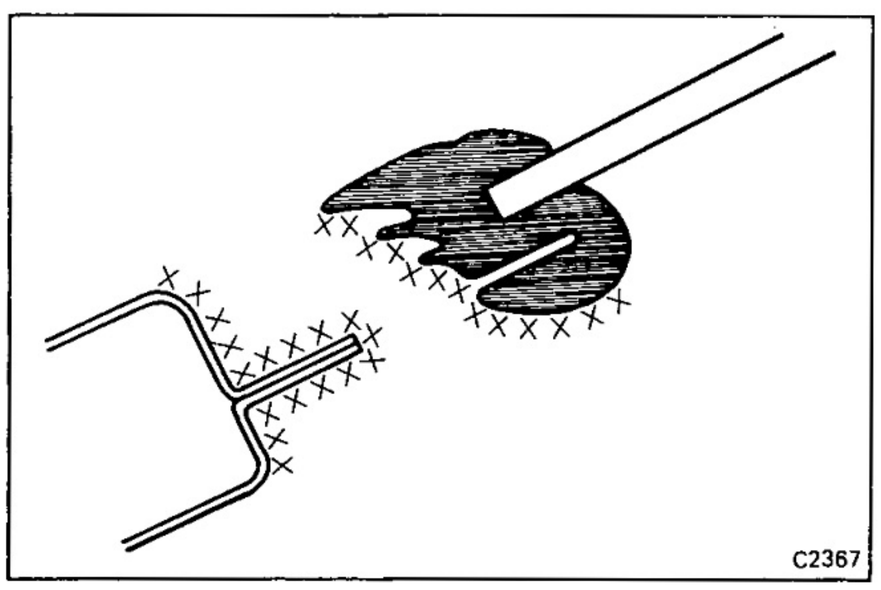

2. INSTALL BACK WINDOW

(a) Apply soapy water to the contact surface of the weatherstrip lip and to the body flange.

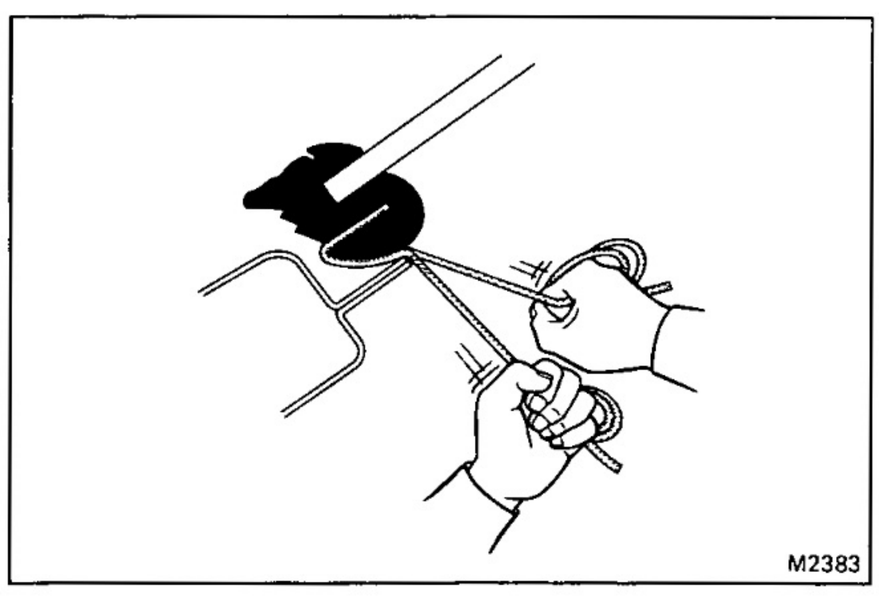

NOTE: Begin installation in the middle of the lower part of the glass.

(b) Hold the back window in position on the body.

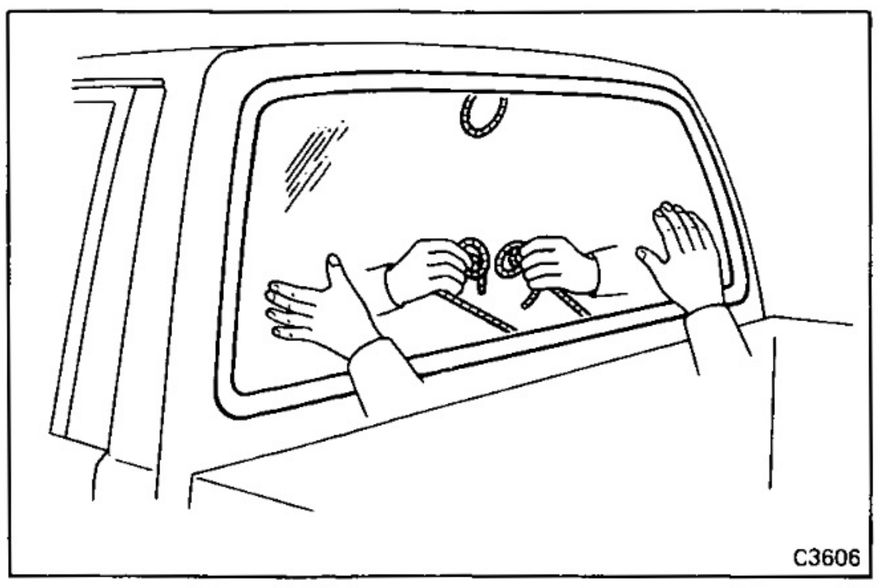
C3606

(c) From the inside, pull on one cord at an angle so it pulls the lip over the flange. From the outside, press the glass along the weatherstrip until the glass is installed.

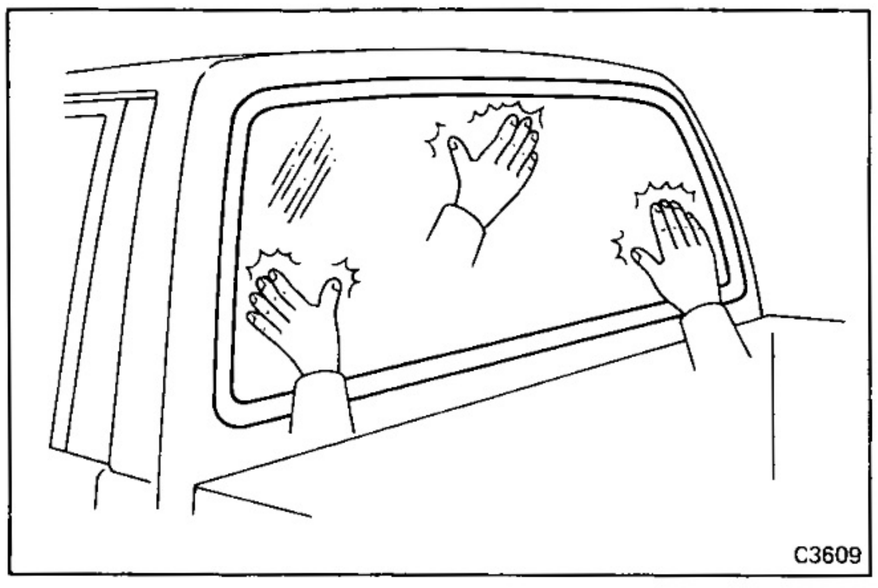
C3609

(d) Tap on the outside of the glass until it is securely in place.

3. CHECK FOR LEAKS

Pouring water on glass and weatherstrip, check seal for leaks and apply sealant where necessary.

SUN ROOF

COMPONENTS

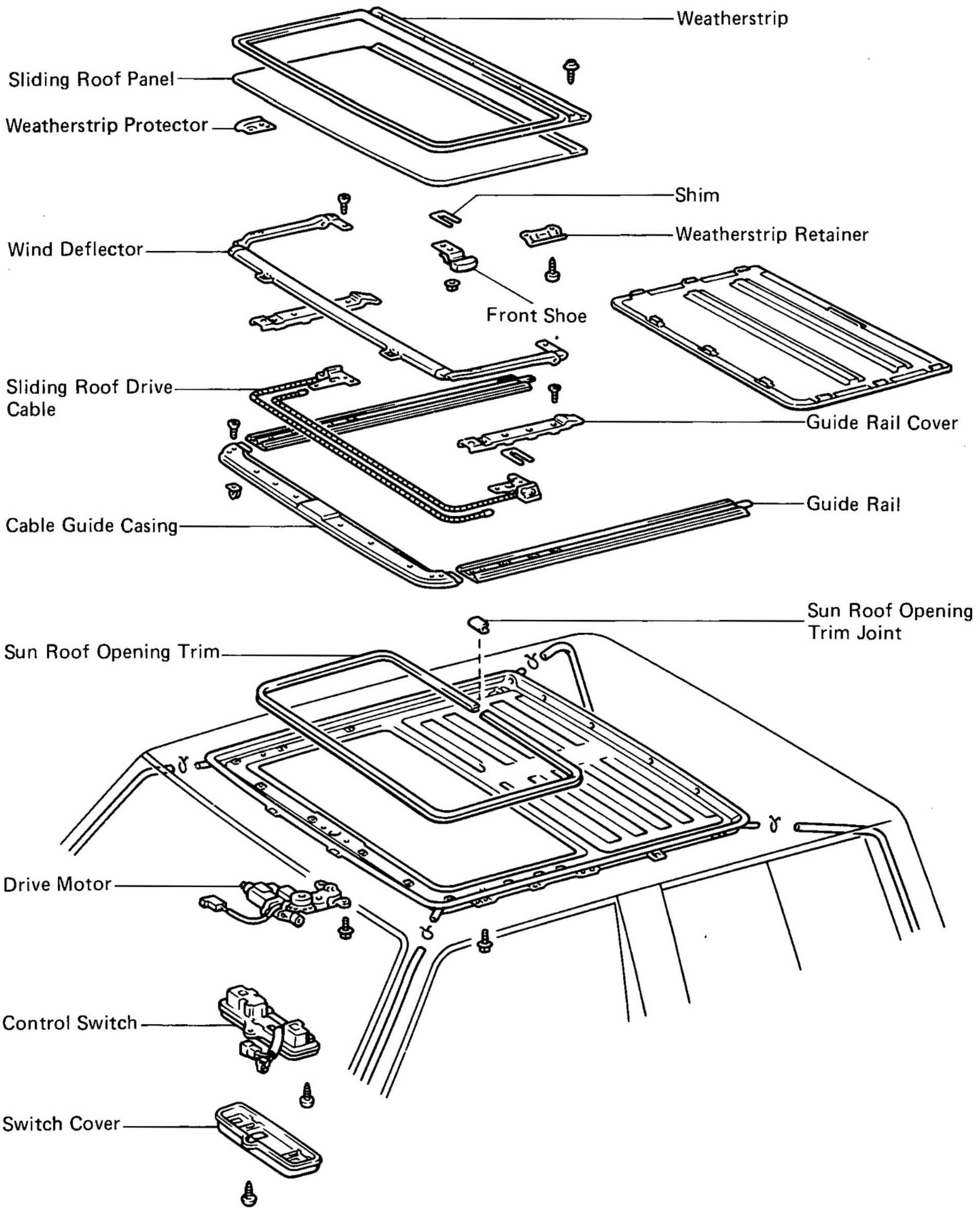

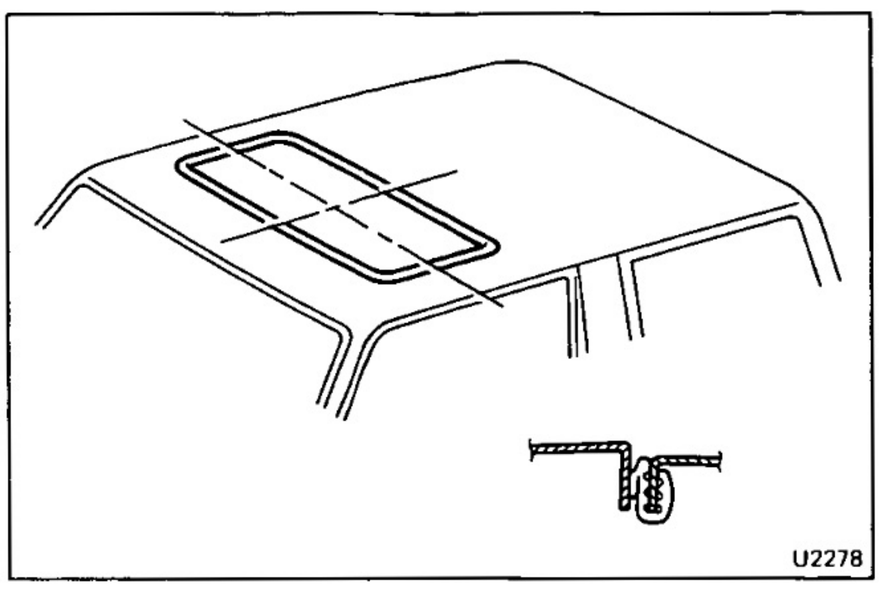

ON-VEHICLE INSPECTION

(a) Start the engine and check the operation time of the sun roof.

Operation time: Approx. 10 secs.

(b) Check for abnormal noise or binding during operation.

(c) With the sun roof fully closed, check for water leakage.

(d) Check for a difference in level between the sliding panel and roof panel.

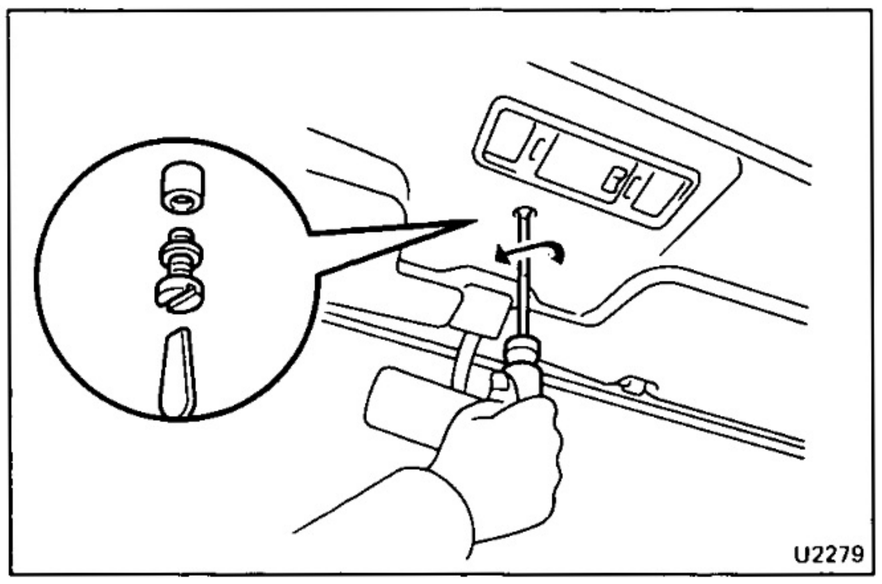

Front side : $0^{+1.0}_{-2.0}$ mm ($0^{+0.039}_{-0.079}$ in.)

Rear side : $0^{+1.0}_{-2.0}$ mm ($0^{+0.039}_{-0.079}$ in.)

Left and right side: $0^{+1.0}_{-2.0}$ mm ($0^{+0.039}_{-0.079}$ in.)

If the sliding roof does not operate:

(a) Remove the grommet in front of the control switch.

(b) Remove the screw inside.

CAUTION: Be careful not to lose the spring washer or washer.

(c) Manually operate the sun roof by inserting a screwdriver into the hole and turning the drive shaft.

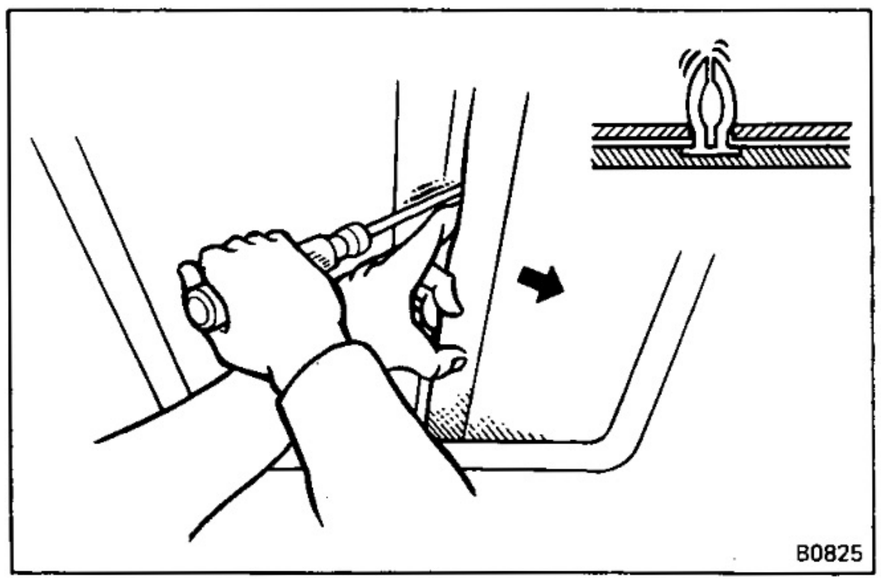

ADJUSTMENT OF SLIDING ROOF

1. REMOVE SLIDING ROOF HEADLINING

Before making adjustments, pull loose the clips and slide the headlining to the rear.

NOTE: When checking adjustment, reattach the headlining before sliding the roof.

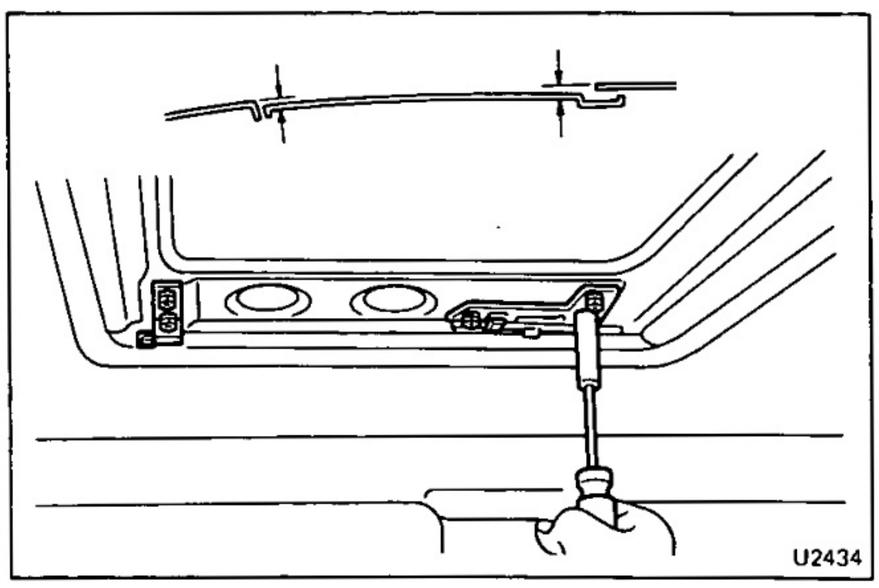

2. TO ADJUST LEVEL DIFFERENCE

Adjust by increasing or decreasing the number of shims.

NOTE: If the front end is high, even without a shoe shim, check to see if the front shoes are in contact with the stoppers.

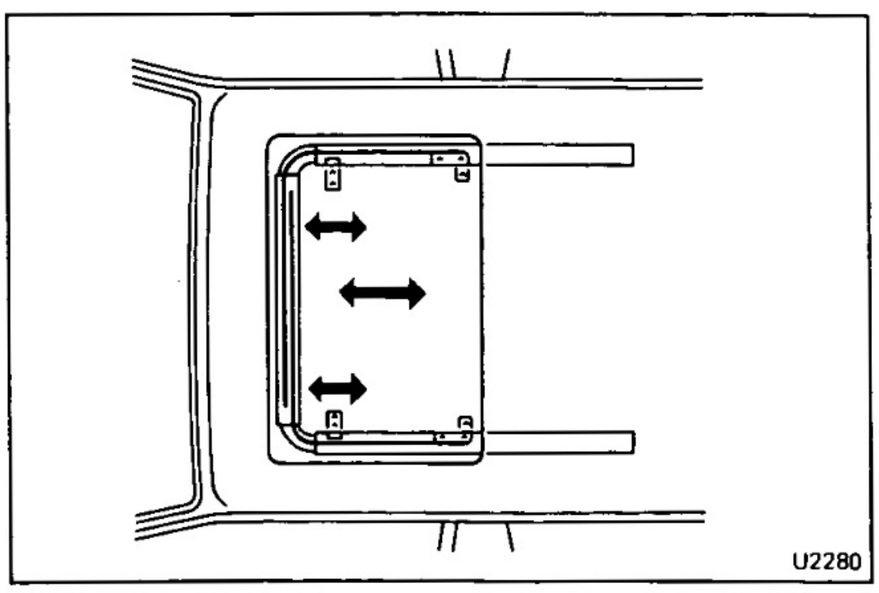

3. TO ADJUST FORWARD OR REARWARD

Adjust by moving the front shoe on both sides.

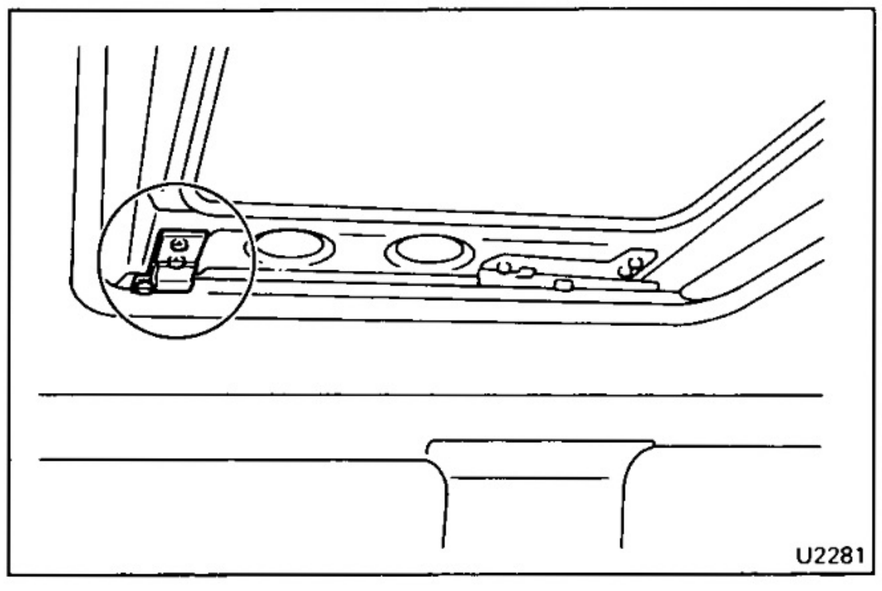

NOTE: When the sliding roof is fully closed, confirm that the front shoes are in contact with the stopper.

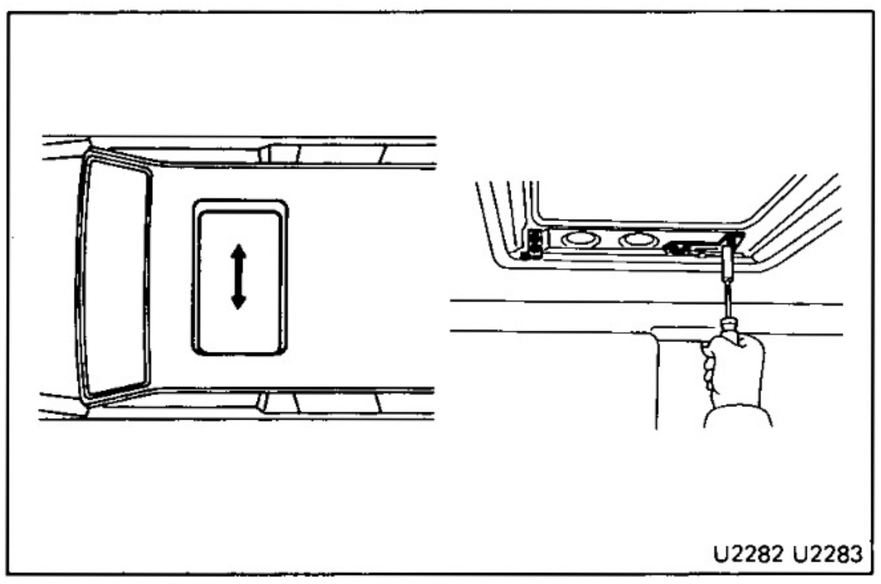

4. TO ADJUST RIGHT OR LEFT

Adjust by loosening the rear shoe nuts and moving the sliding roof to the right and left.

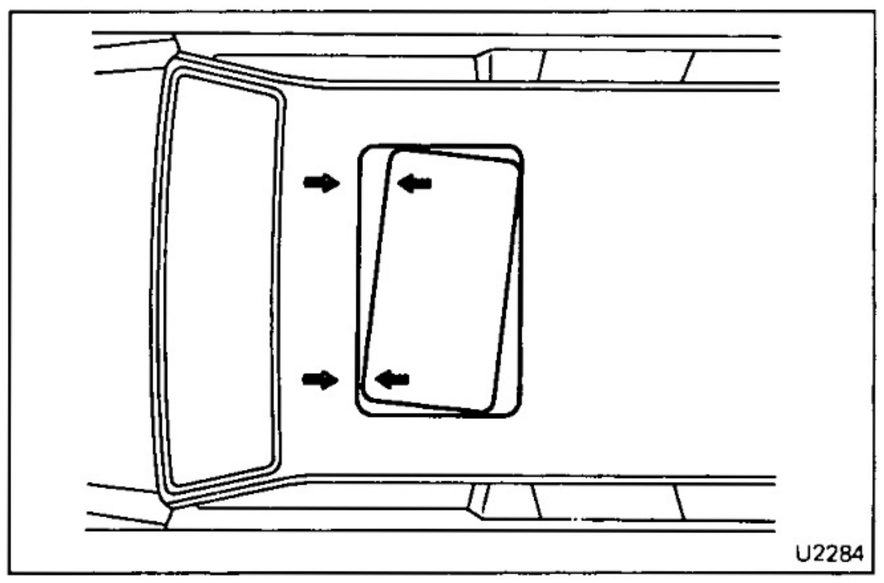

5. TO ADJUST CLEARANCE

(Difference in left and right front clearance)

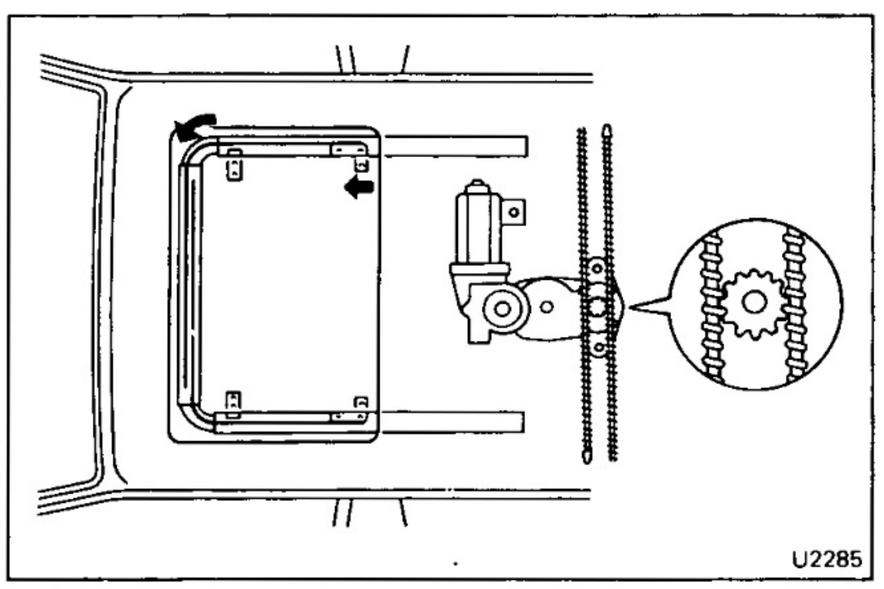

If the difference is about 2 mm (0.08 in.):

(a) Remove the drive motor and shift the cable one notch on the side with the larger clearance.

(b) Reinstall the motor.

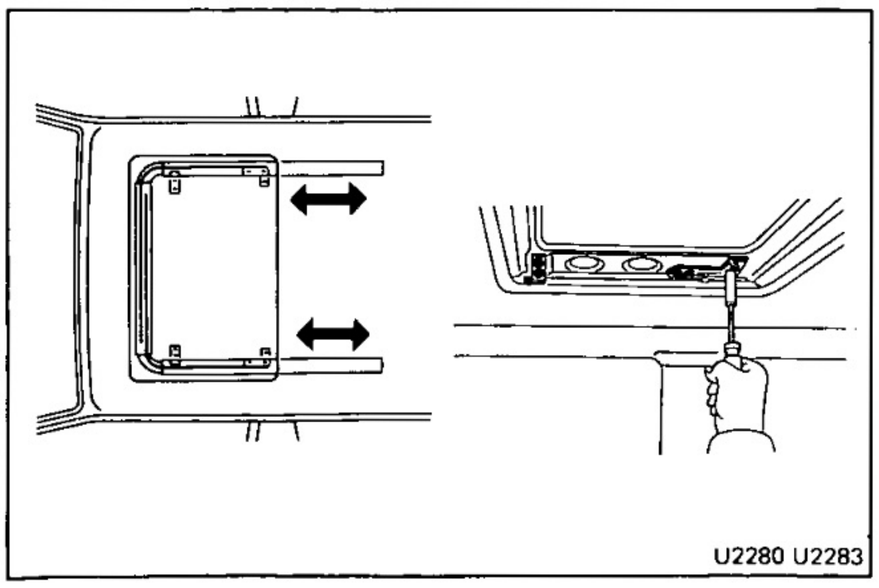

If the difference is about 1 mm (0.04 in.):

Loosen the rear shoe bolts and readjust the sliding roof to the proper position.

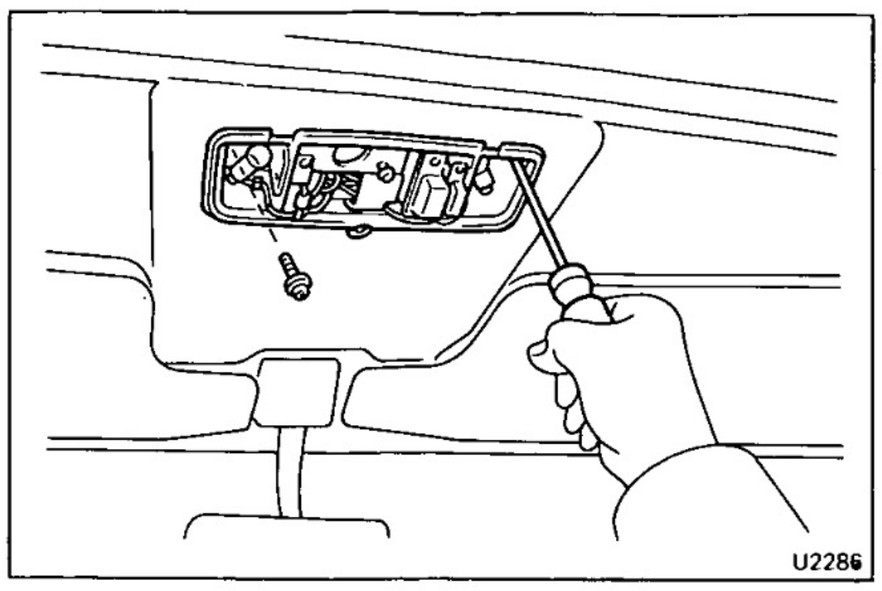

REMOVAL OF SUN ROOF

(See page BO-74)

1. DISCONNECT BATTERY CABLE FROM NEGATIVE TERMINAL
2. REMOVE SWITCH COVER
3. REMOVE CONTROL SWITCH
4. REMOVE SUN ROOF OPENING TRIM

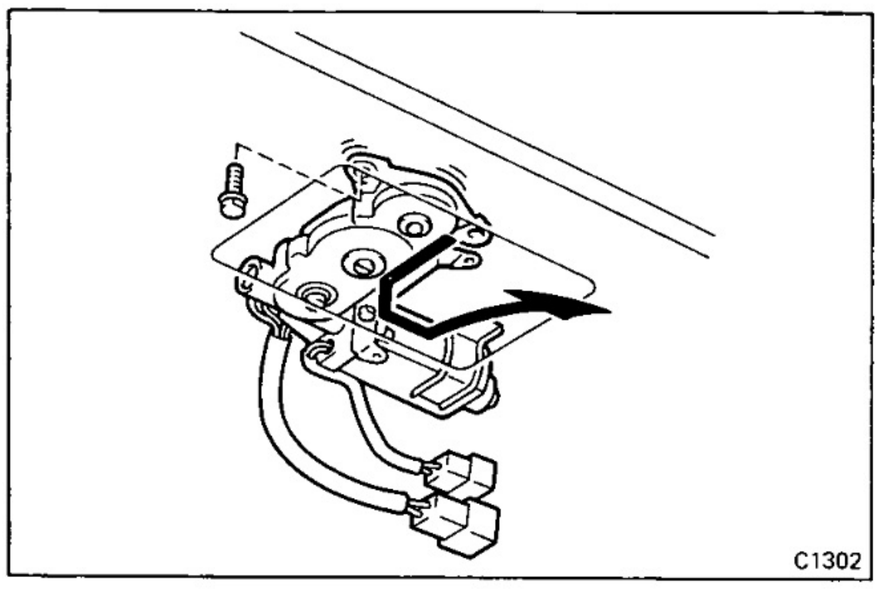

5. REMOVE DRIVE MOTOR

Remove the three screws and the drive motor.

6. REMOVE WIND DEFLECTOR

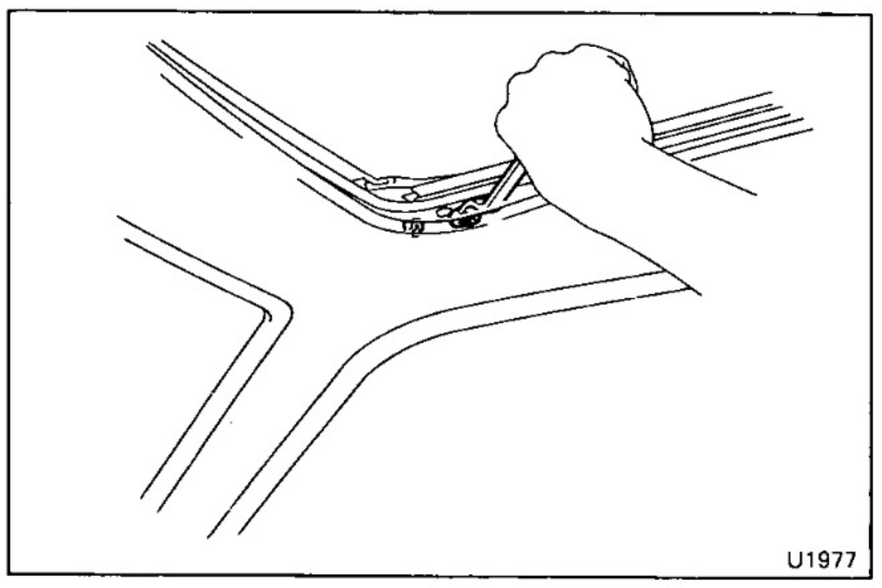

7. REMOVE GUIDE RAIL COVER

(70, 73, 75 Series)
Remove the one bolt from the inside and the two screws from the outside, then remove the guide rail cover.

(60, 62 Series)
Remove the three screws from the outside, then remove the guide rail cover.

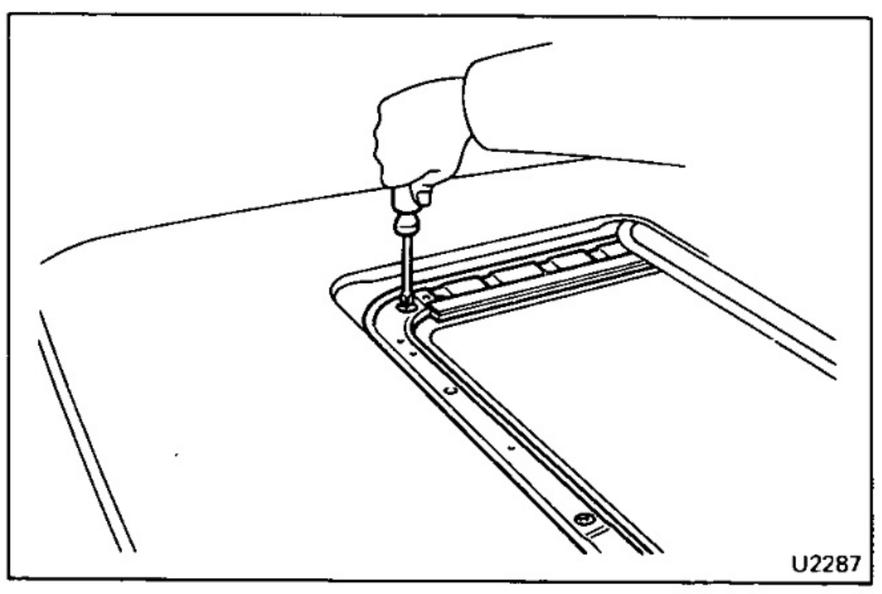

8. REMOVE SLIDING ROOF AND GUIDE RAIL

(a) Apply adhesive tape to protect the body.

(b) Remove the four set screws of the cable guide casing.

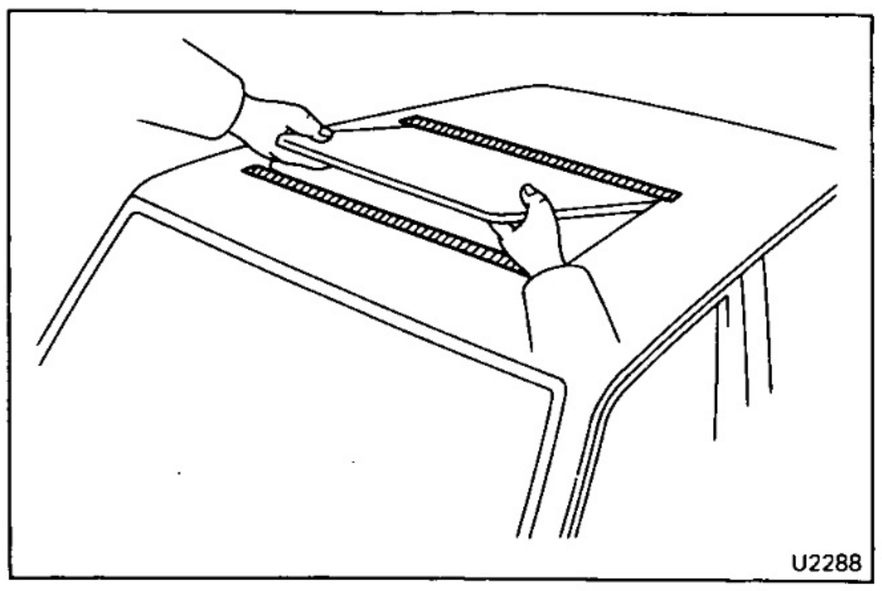

(c) Pull the sliding roof with the guide rail upward and forward to remove.

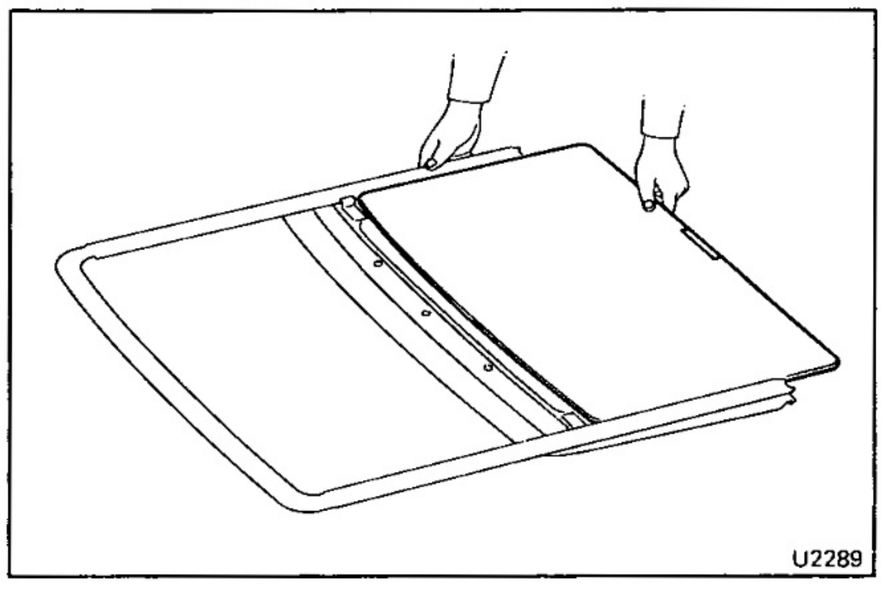

DISASSEMBLY OF SUN ROOF

(See page BO-74)

1. REMOVE SLIDING ROOF HEADLINING
   (a) Pry off the clip.
   (b) Pull the sliding roof headlining rearward to remove.

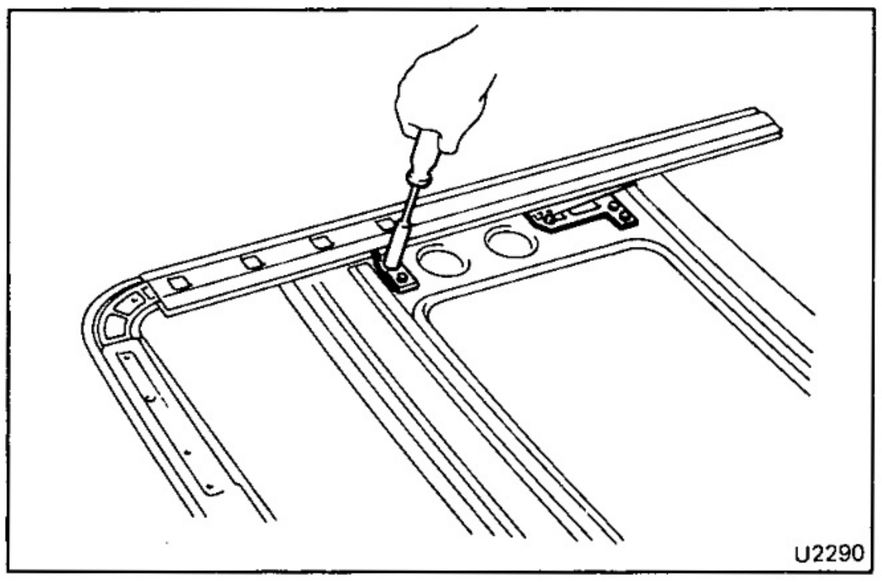

2. NOTE NUMBER OF SHIMS ON FRONT AND REAR
3. REMOVE TWO FRONT SHOE SET NUTS
4. REMOVE THREE REAR SHOE SET NUTS

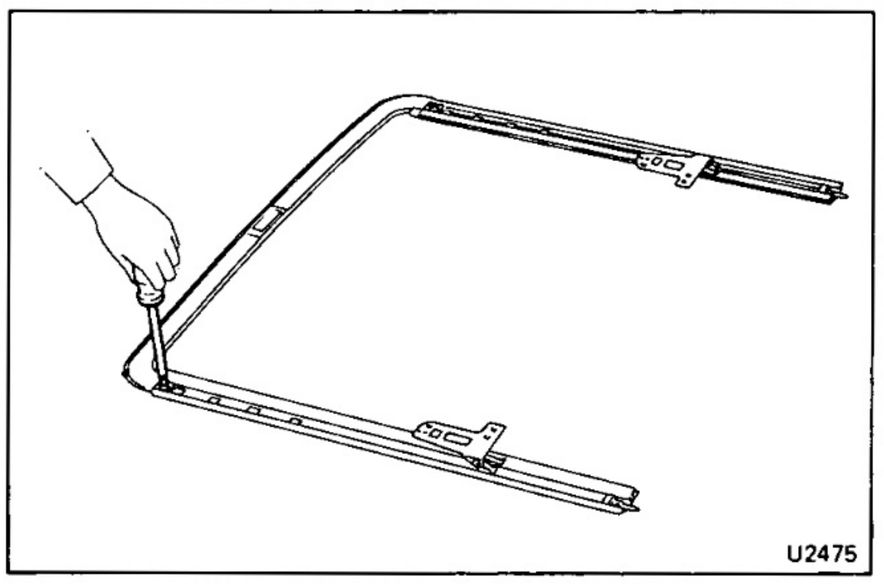

5. REMOVE GUIDE RAIL
   (a) Loosen the screw.
   (b) Pull the guide rail rearward to remove.
6. REMOVE DRIVE CABLES FROM CABLE GUIDE CASING

ASSEMBLY OF ROOF

(See page BO-74)

1. APPLY MP GREASE TO DRIVE CABLE
2. PLACE DRIVE CABLES INTO GUIDE CASING
3. INSTALL GUIDE RAILS ON BOTH SIDES
   (a) Install both side guide rails through the rear and front shoes.
   (b) Install the guide rail and cable guide casing with screws.
   (c) Use butyl tape to cover the cut portion of the weatherstrip at the connection between the cable guide case and guide rail.

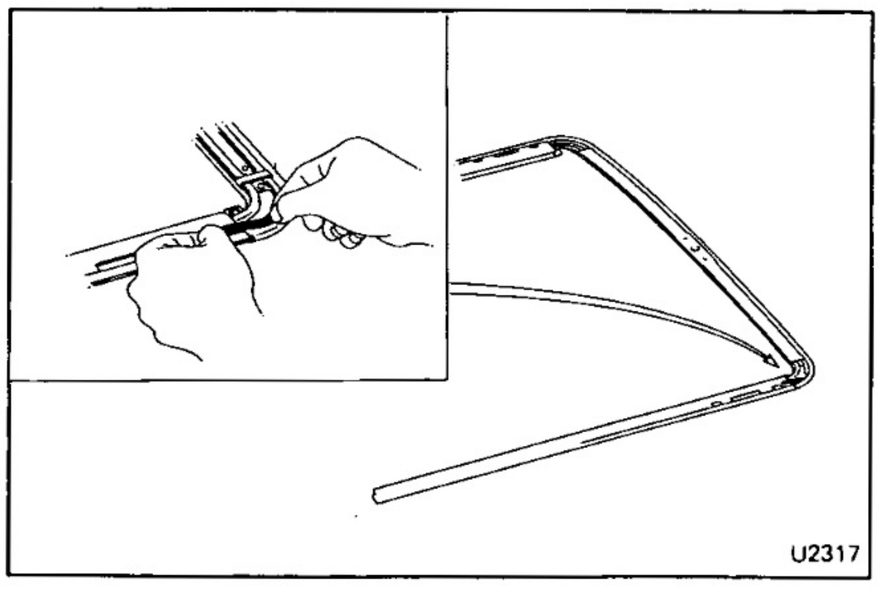

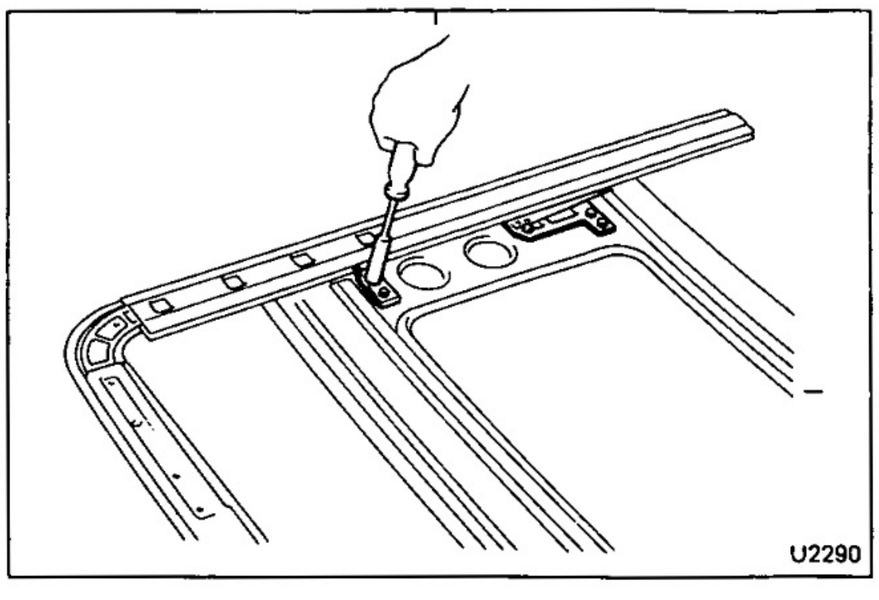

4. INSTALL FRONT AND REAR SHOES ONTO ROOF PANEL

Install the front and rear shoes and shims to their original positions when disassembled.

NOTE: Hand tighten the front shoe nuts firmly tighten the rear shoe nuts.

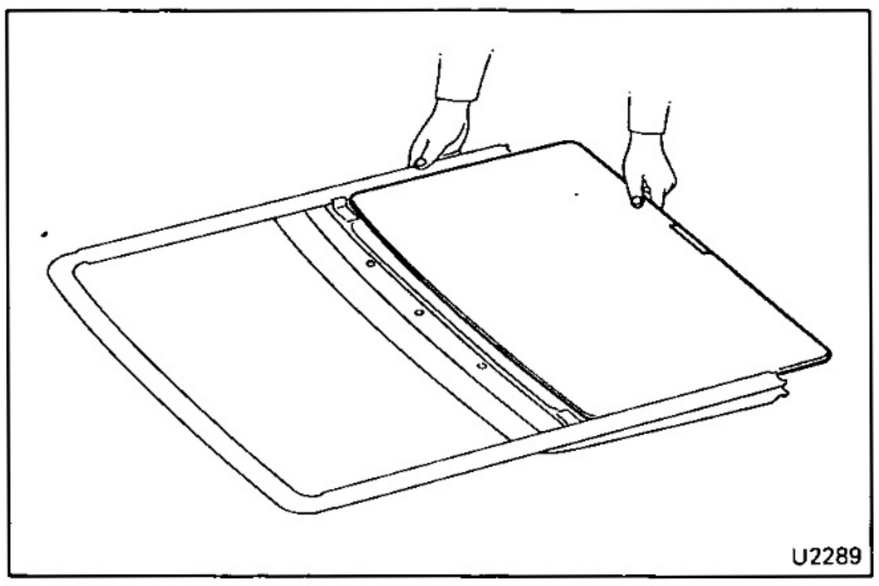

5. ASSEMBLE SLIDING ROOF HEADLINING

Run the headlining through the guide rail and install the clips to the sliding roof.

INSTALLATION OF SUN ROOF

(See page BO-74)

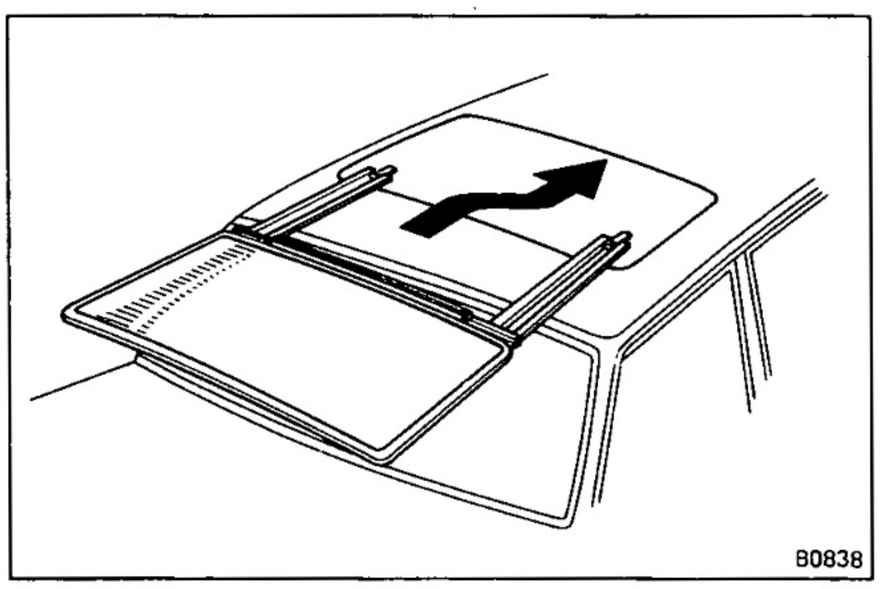

1. INSTALL SLIDING ROOF WITH GUIDE RAIL ONTO ROOF

(a) Install the sliding roof assembly onto the roof.

(b) Tighten the four cable guide casing set screws.

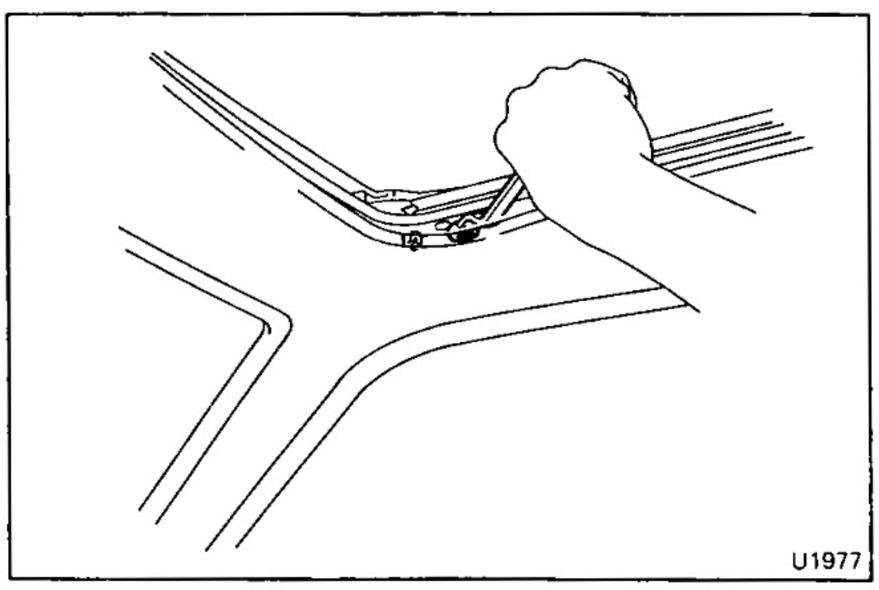

2. INSTALL SIDE RAIL COVER

(70, 73, 75 Series)
Install the side rail cover from the inside with the one bolt and from the outside with the two screws.

(60, 62 Series)
Install the side rail cover from the outside with the three screws.

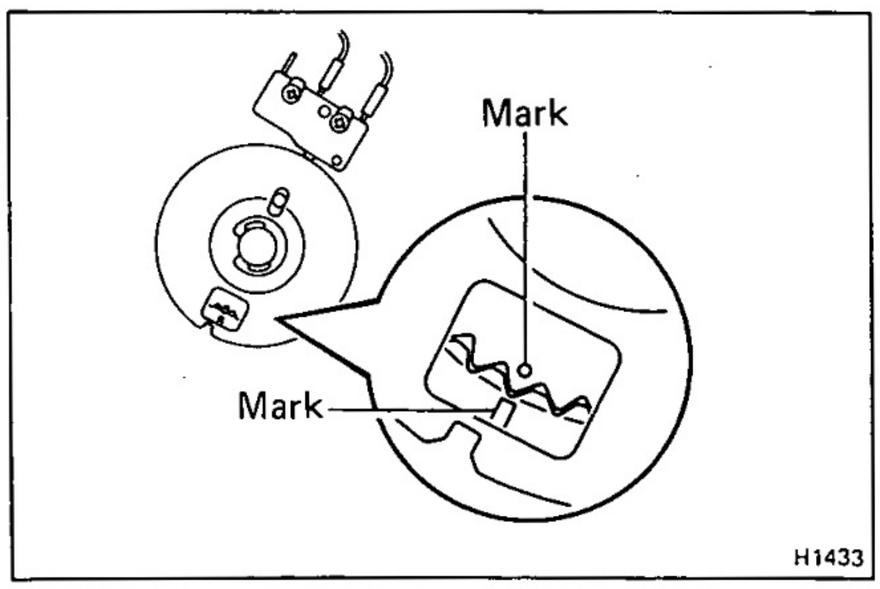

3. INSTALL WIND DEFLECTOR

4. INSTALL DRIVE MOTOR

(a) Fully open the sliding roof.

(b) Peel off tape on motor cam adjusting hole.

(c) Rotate the drive motor cam and align the housing and cam marks.

(d) Adhere tape to motor cam adjusting hole.

(e) Connect the two connectors and install the drive motor with the three bolts.

5. INSTALL SUN ROOF OPENING TRIM
6. ADJUST SLIDING ROOF OPERATION
7. INSTALL CONTROL SWITCH
8. INSTALL SWITCH COVER
9. CONNECT BATTERY CABLE TO NEGATIVE TERMINAL

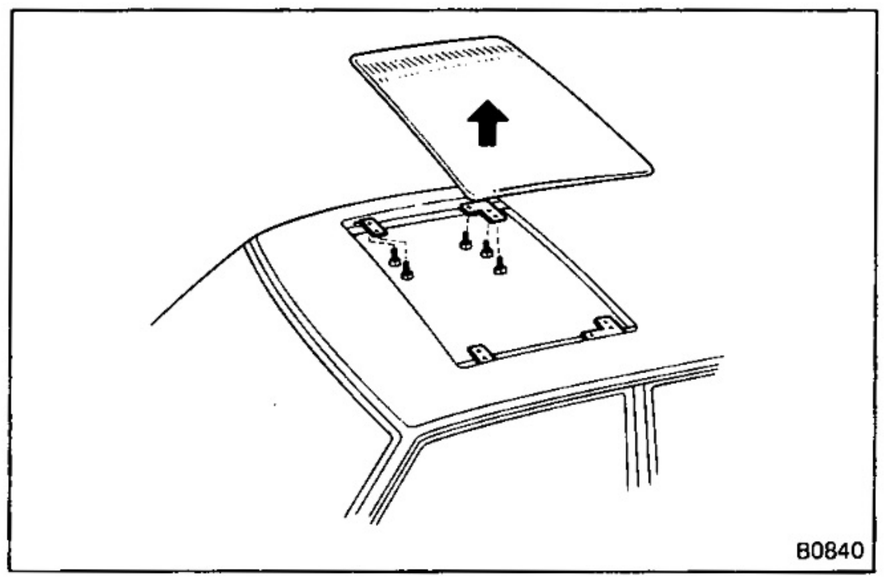

REMOVAL OF SLIDING ROOF PANEL

TO REMOVE SLIDING ROOF PANEL ONLY

(a) Pull loose the clips and slide the headlining rearward.
(b) Remove the front and rear shoe nuts.
(c) Remove the roof panel.

INSTRUMENT PANEL (70,73,75 Series)

COMPONENTS

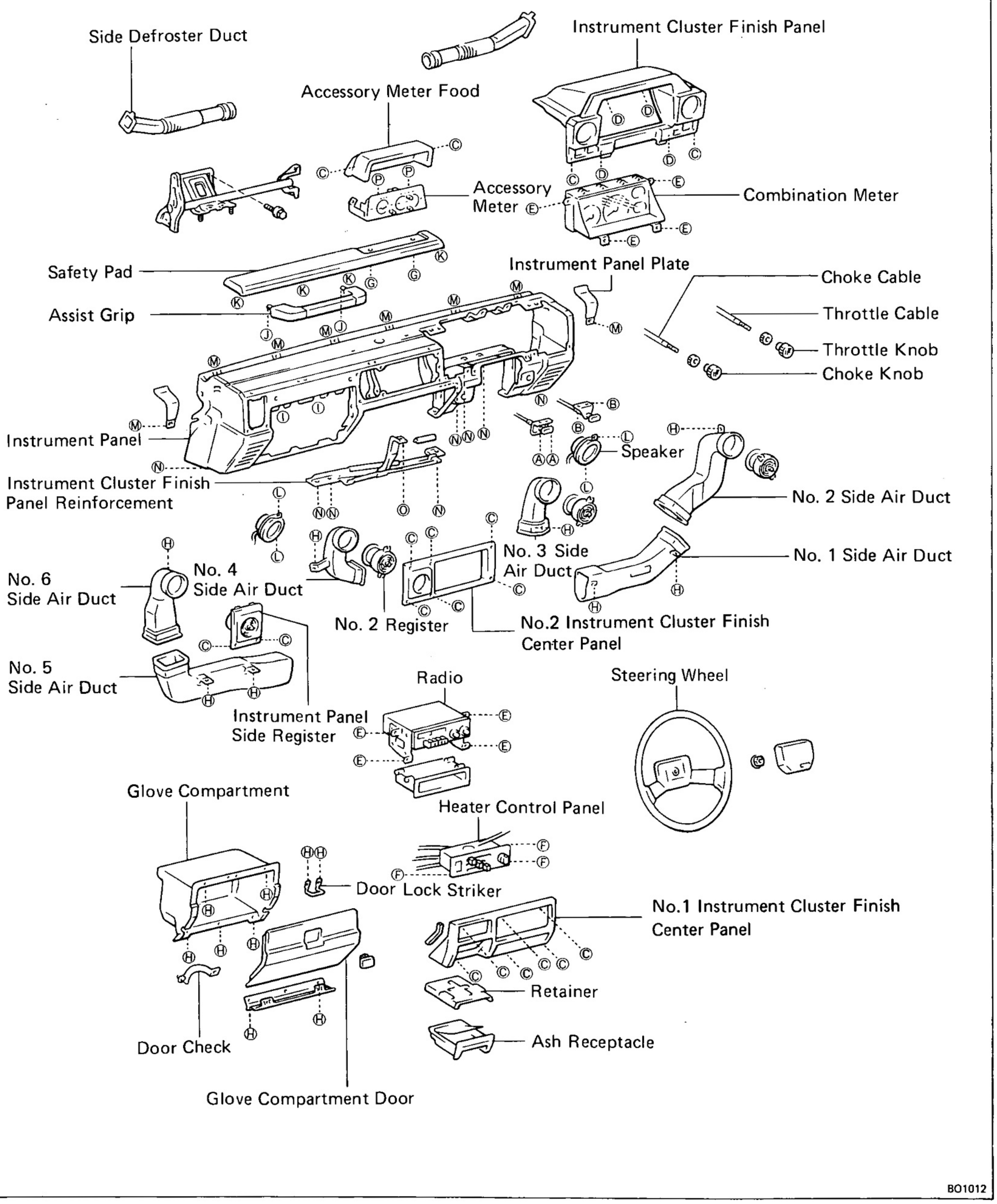

BO1012

NOTE: Screw sizes in the previous illustration are indicated by following the code below for removal and installation of instrument panel.

Code	Shape	Code	Shape	Code	Shape
A	 ϕ 6 L = 16	G	 ϕ 6	L	 ϕ 6
B	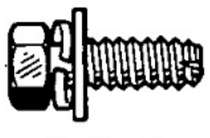 ϕ 6 L = 16	H	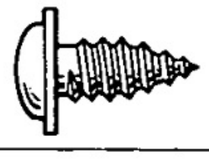 ϕ 5 L = 16	M	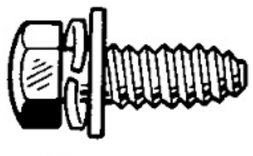 ϕ 6 L = 20
C	 ϕ 5 L = 16	I	 ϕ 6 L = 16	N	 ϕ 6 L = 20
D	 ϕ 5 L = 25	J	 ϕ 6	O	 ϕ 6 L = 10
E	 ϕ 5 L = 16	K	 ϕ 6 L = 14	P	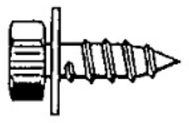 ϕ 6 L = 14
F	 ϕ 5 L = 12				

BO0960

REMOVAL OF INSTRUMENT PANEL

(See page BO-81)

1. DISCONNECT BATTERY CABLE FROM NEGATIVE TERMINAL
2. REMOVE STEERING WHEEL
3. REMOVE STEERING COLUMN COVER

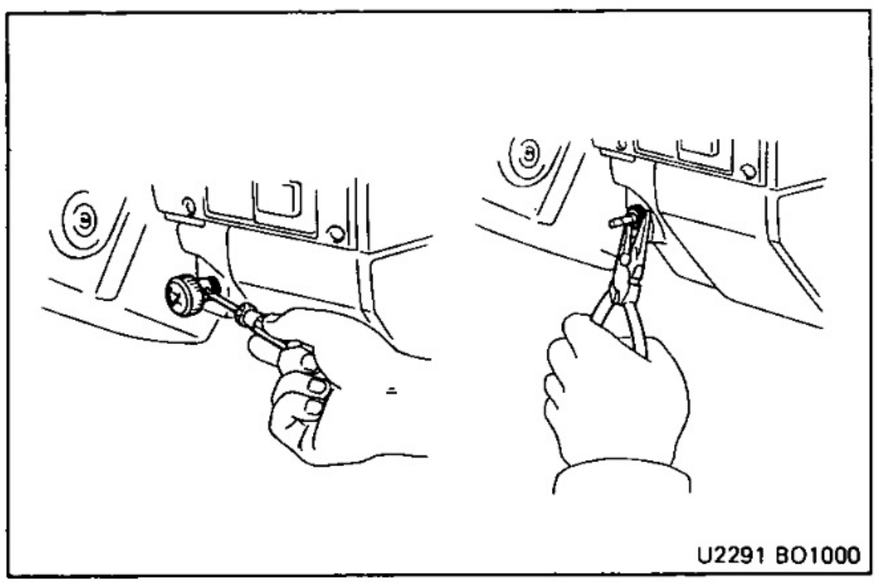

4. REMOVE THROTTLE CABLE
   (a) Using a screwdriver, push in the throttle cable packing and pull off the knob.
   (b) Remove the throttle cable set nut and the cable.

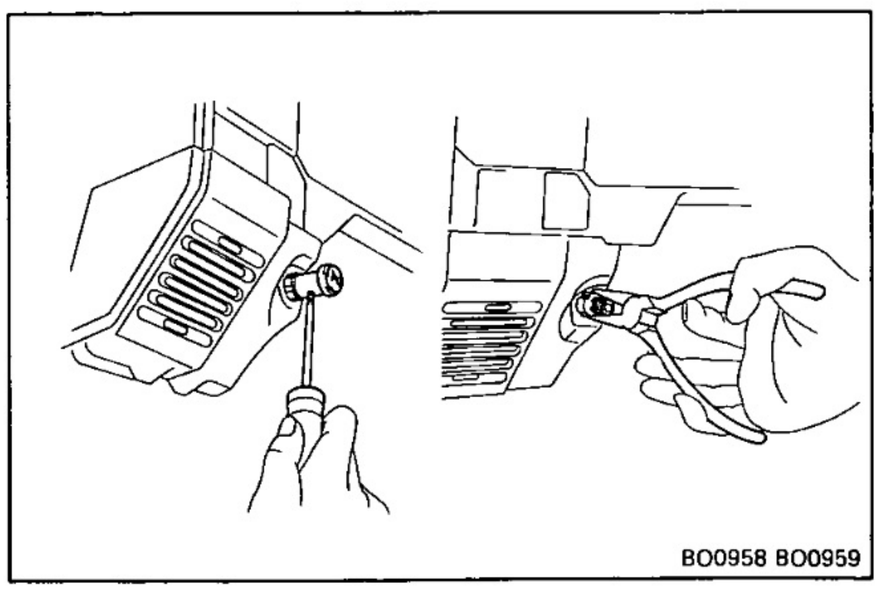

5. REMOVE CHOKE CABLE
   (a) Using a screwdriver, loosen the choke knob set screw and remove the knob.
   (b) Remove the choke cable set nut and the cable.

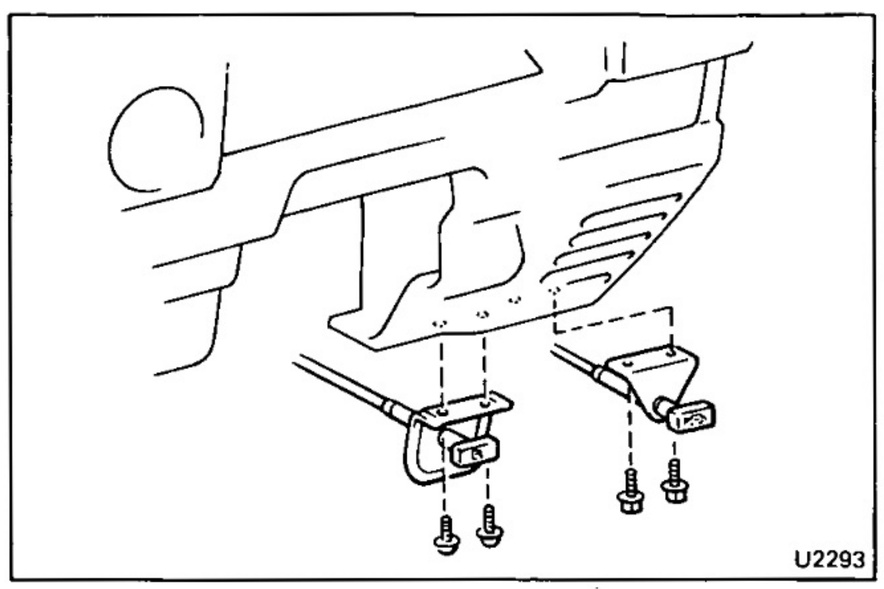

6. REMOVE HOOD LOCK RELEASE LEVER

7. REMOVE FUEL LID OPENER

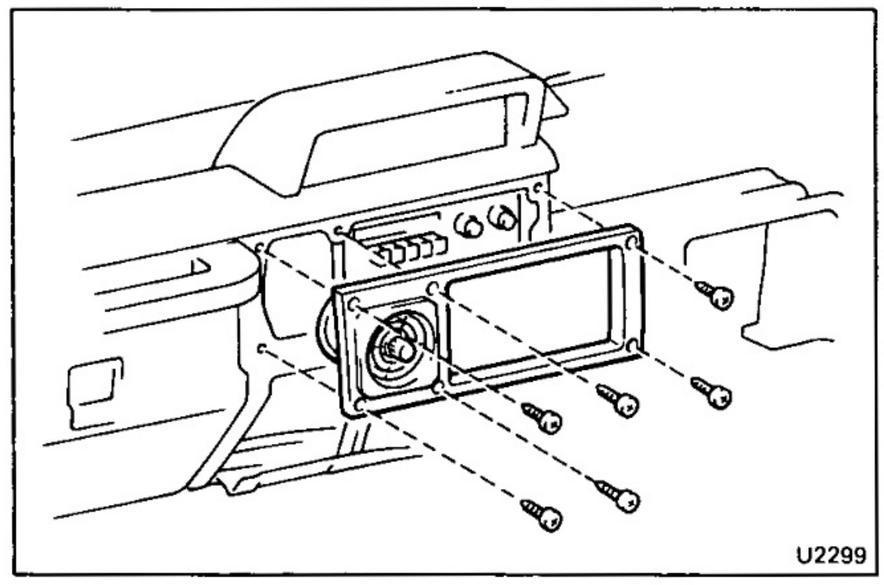

8. REMOVE NO.2 INSTRUMENT CLUSTER FINISH CENTER PANEL

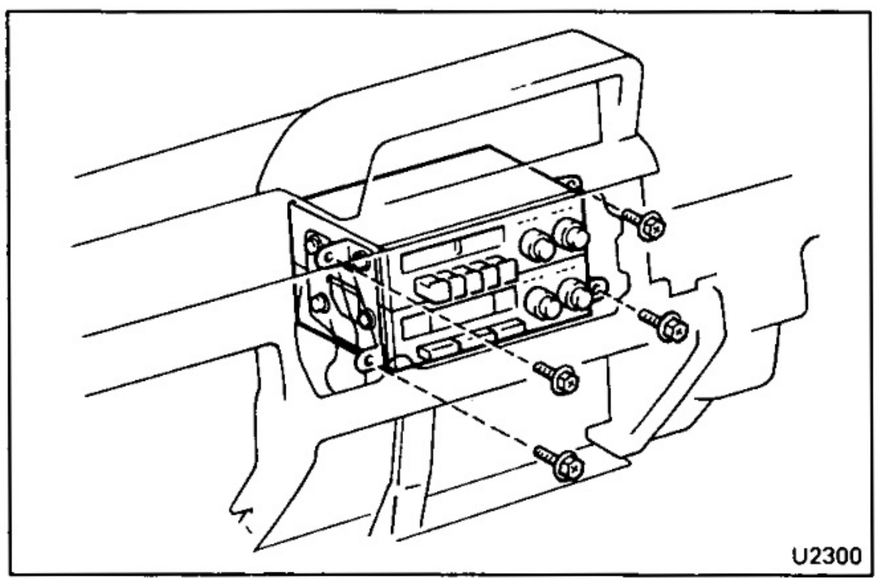

9. REMOVE RADIO AND STEREO

(a) Remove the four screws.

(b) Disconnect the connector and antenna cable, then remove the radio.

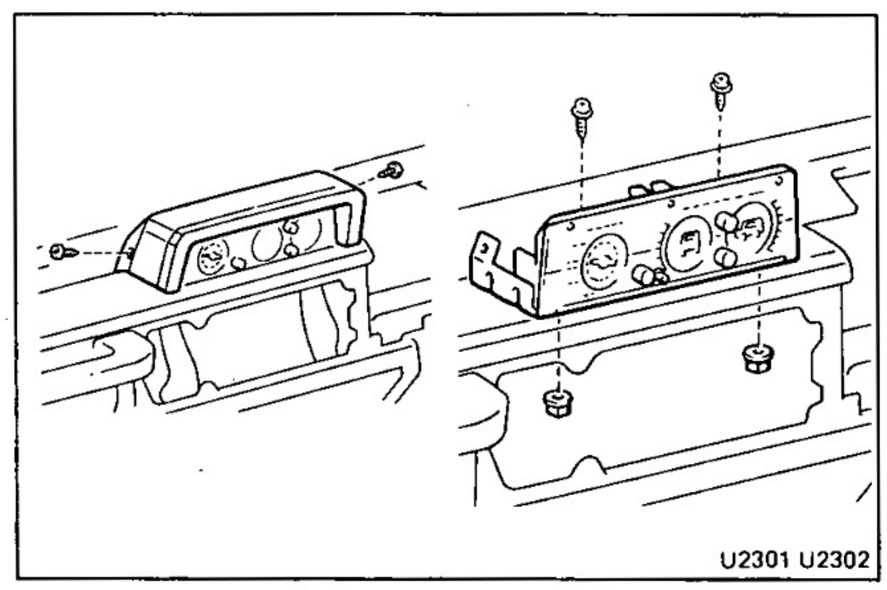

10. REMOVE ACCESSORY METER

(a) Remove the two screws and the hood.

(b) Disconnect the connector, then remove the two nuts and the two screws.

(c) Remove the accessory meter.

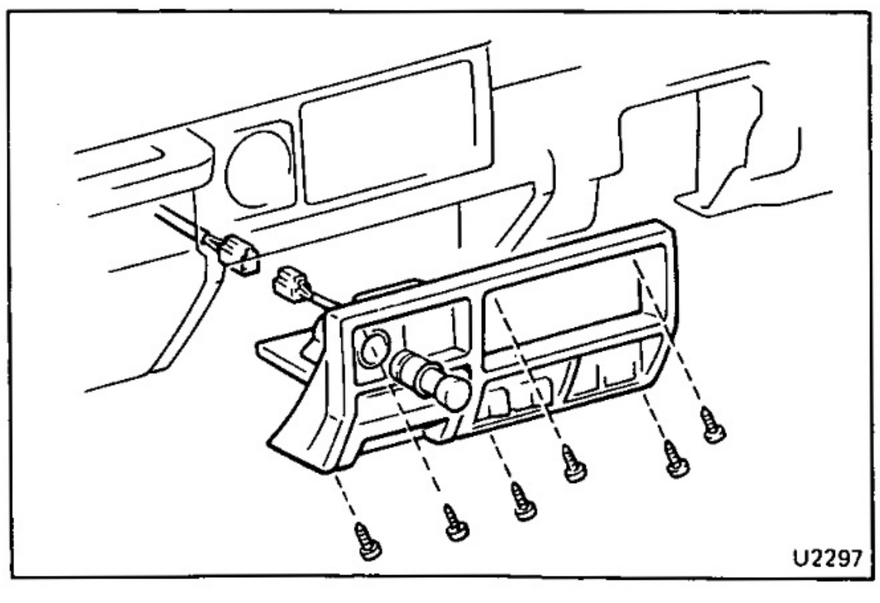

11. REMOVE NO. 1 INSTRUMENT CLUSTER FINISH CENTER PANEL

(a) Remove the six screws.

(b) Disconnect the connectors and remove the panel.

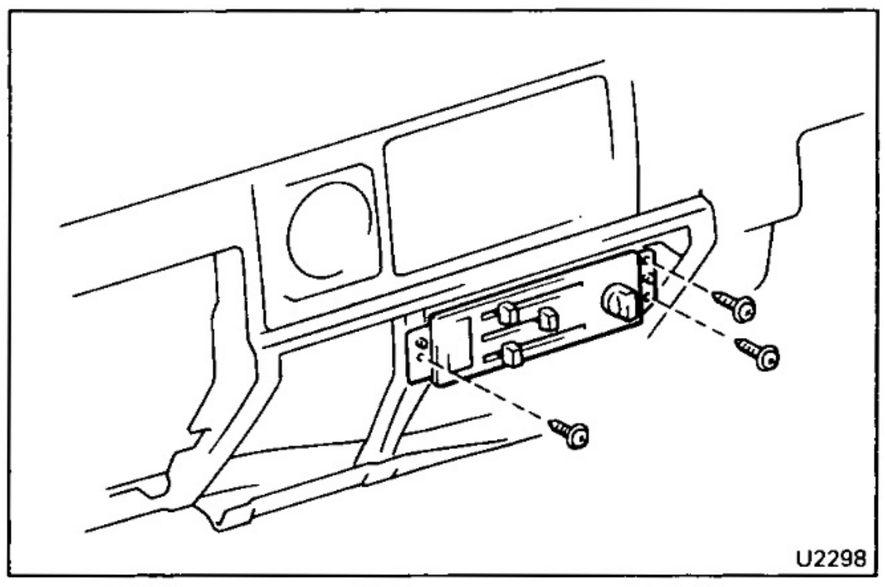

12. REMOVE HEATER CONTROL PANEL

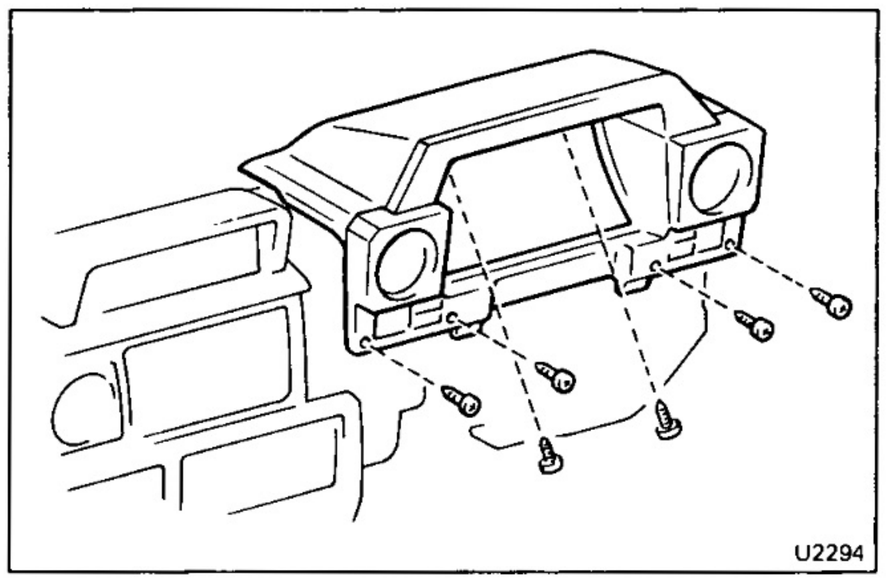

13. REMOVE INSTRUMENT CLUSTER FINISH PANEL

(a) Remove the six screws.

(b) Disconnect the connectors and warning lights, then remove the finish panel.

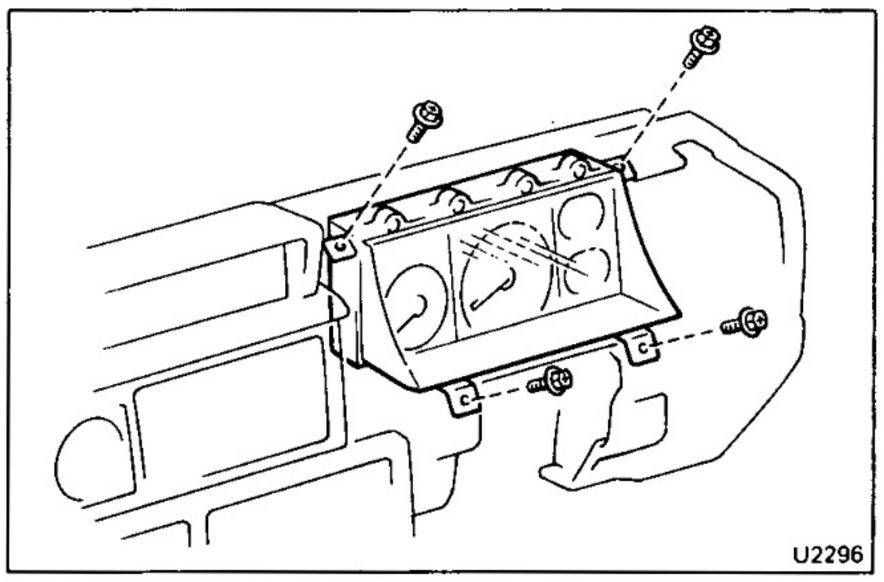

14. REMOVE COMBINATION METER

(a) Remove the four screws.

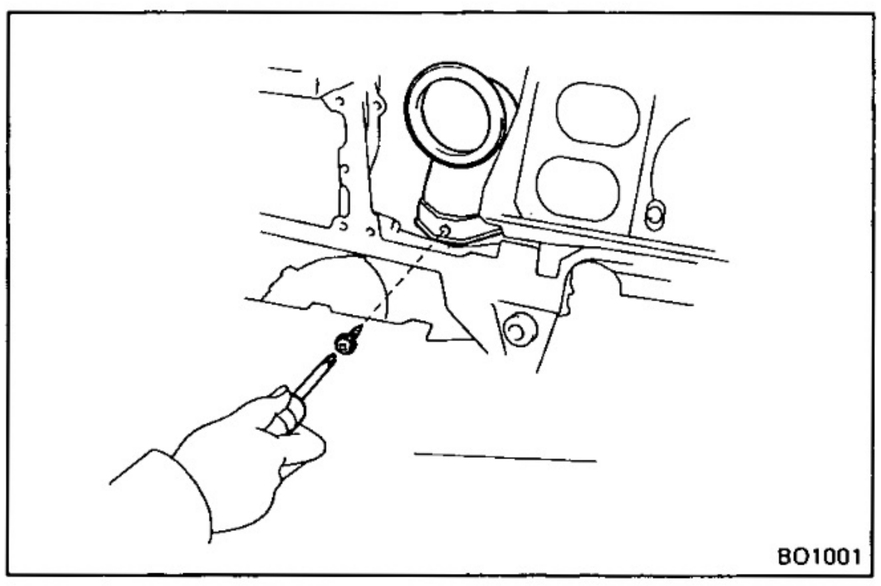

(b) Remove the No.3 side air duct.

(c) Reach in from where the No.3 side air duct has been removed and disconnect the speedometer cable and the two connectors. Remove the combination meter.

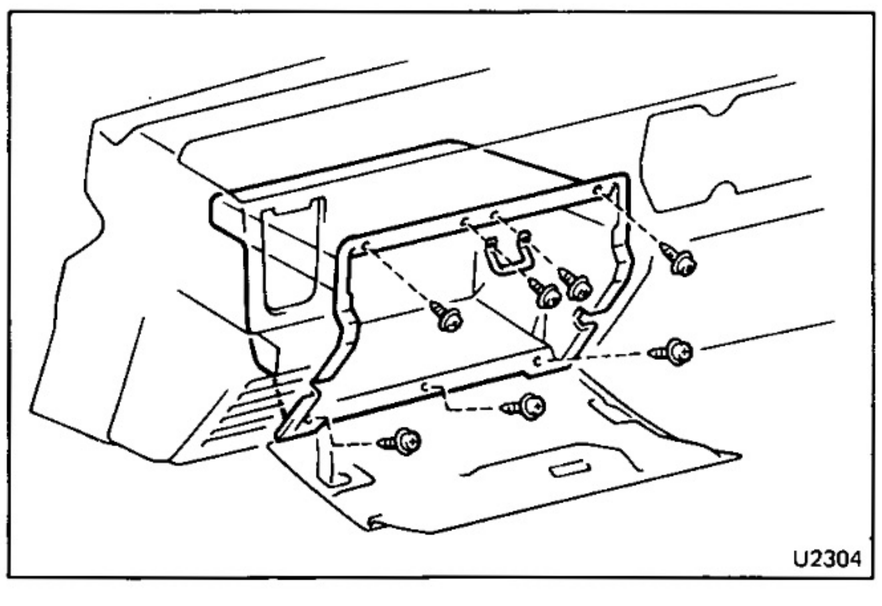

15. REMOVE GLOVE COMPARTMENT

(a) Remove the two screws and the door lock striker.

(b) Remove the five screws and the glove compartment.

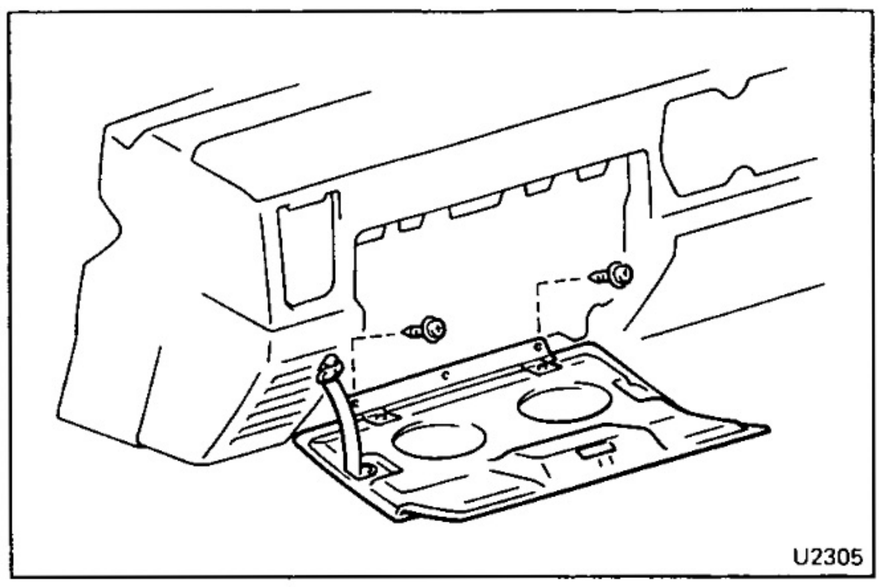

16. REMOVE GLOVE COMPARTMENT DOOR

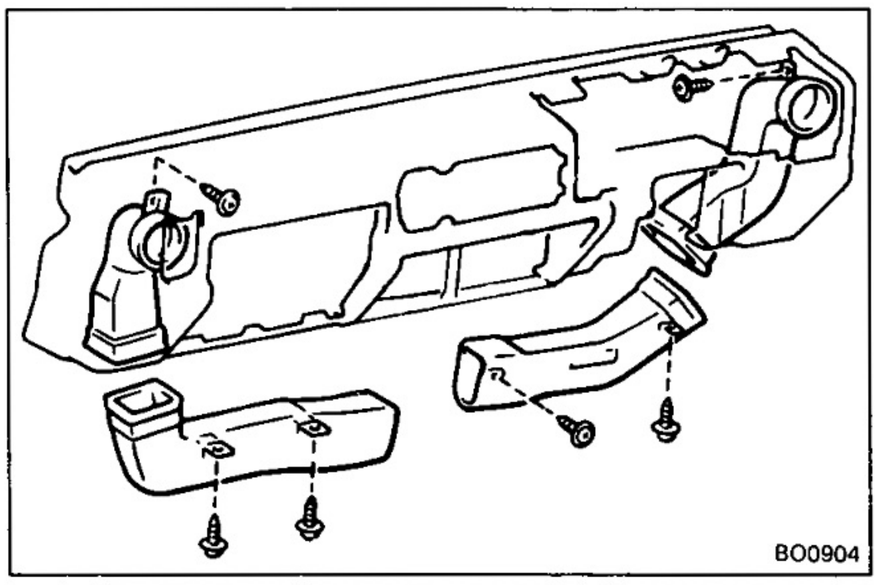

17. REMOVE SIDE AIR DUCT

NOTE: The No. 4 side air duct must be removed.

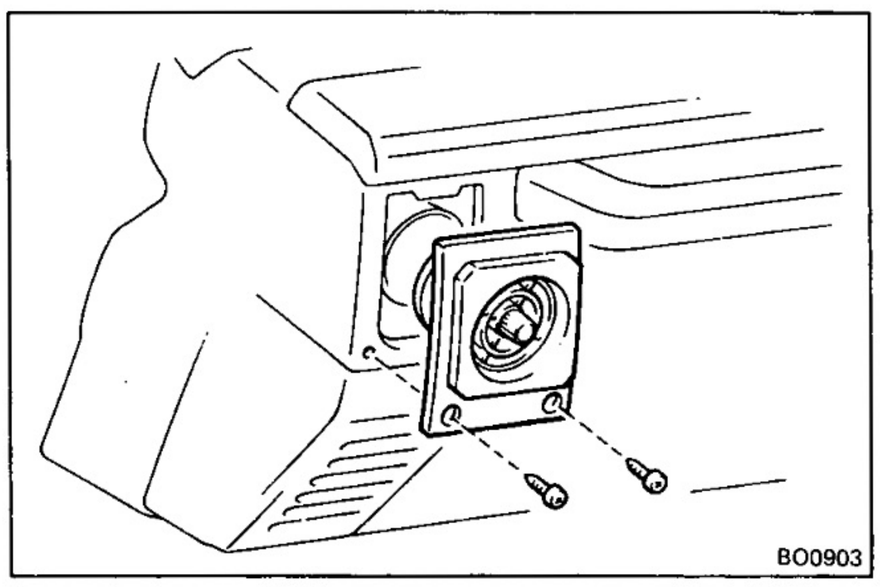

18. REMOVE INSTRUMENT PANEL SIDE REGISTER

19. REMOVE BOTH SIDE DEFROSTER DUCTS

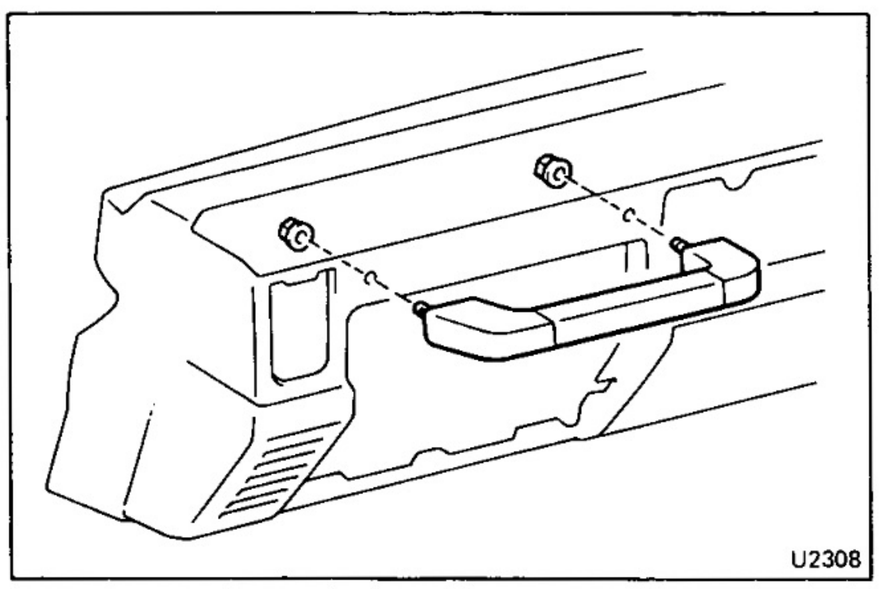

20. REMOVE ASSIST GRIP

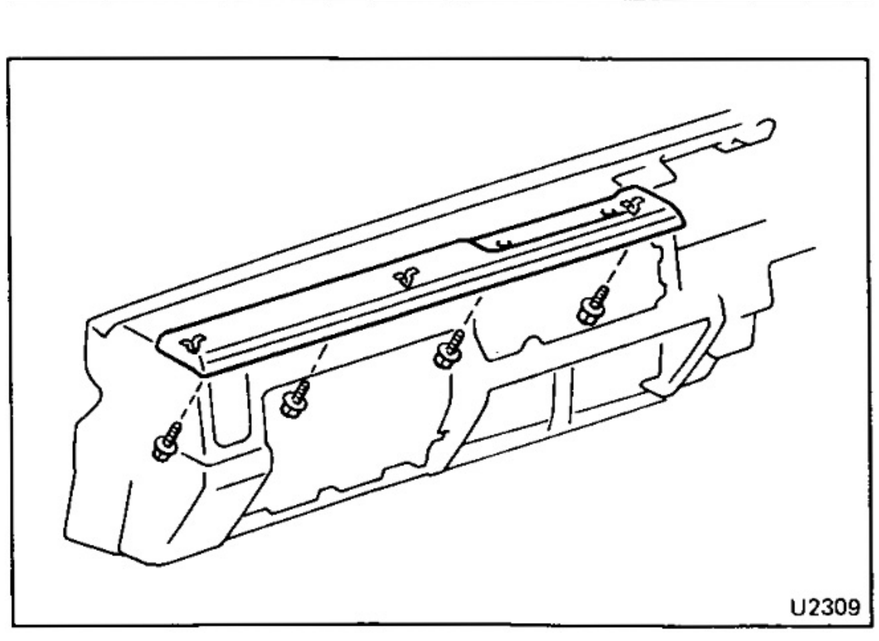

21. REMOVE SAFETY PAD

(a) Remove the four screws.

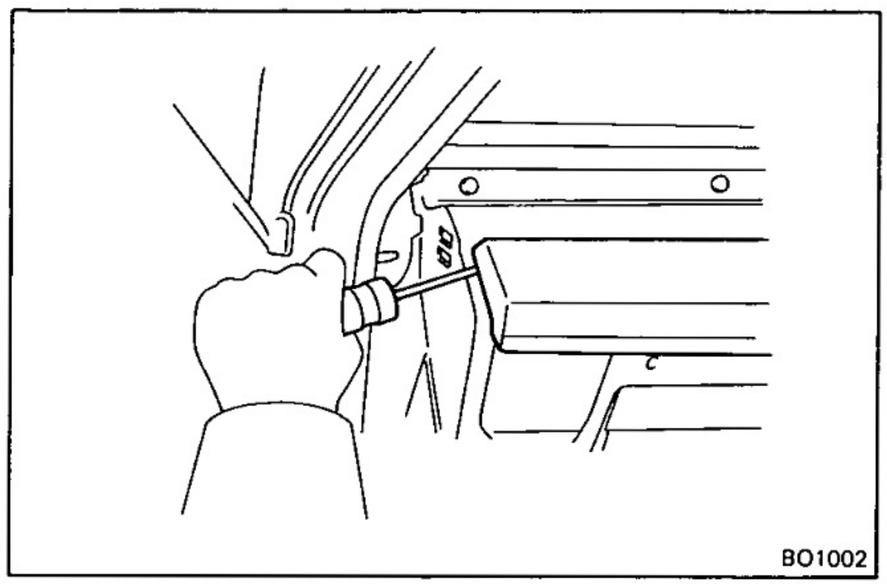

(b) Using a screwdriver, pry up the safety pad and remove it with the three clips.

NOTE: Tape the screwdriver tip before use.

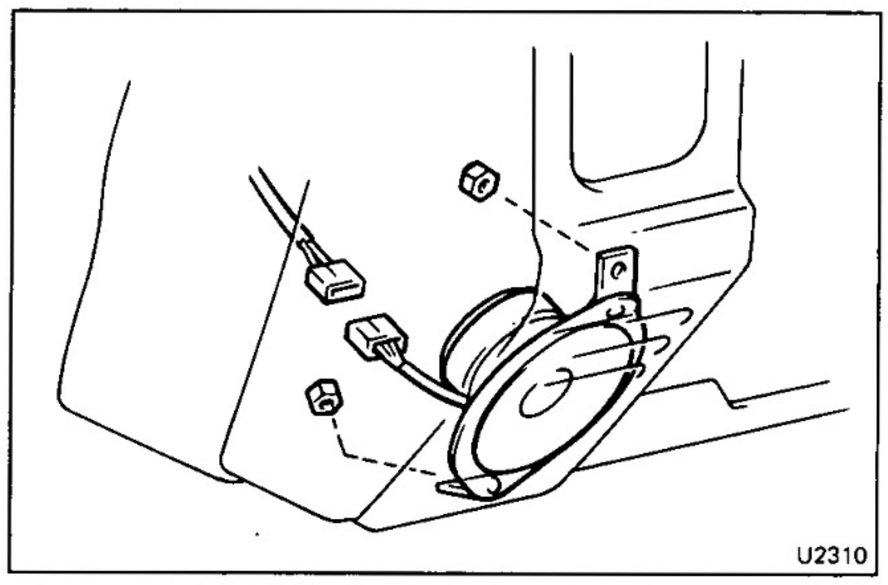

22. REMOVE BOTH SPEAKERS

(a) Disconnect the connector.

(b) Remove the two nuts and speaker.

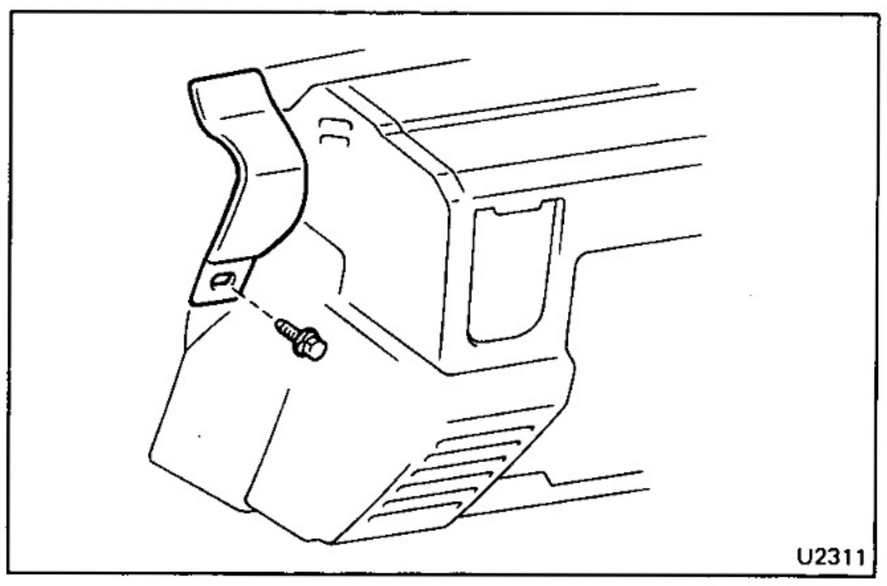

23. REMOVE BOTH INSTRUMENT PANEL PLATES

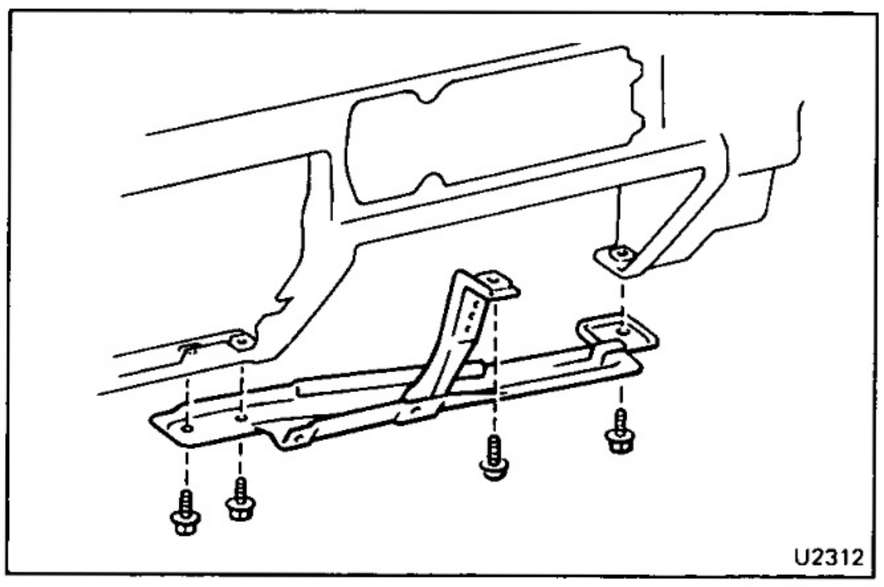

24. REMOVE INSTRUMENT CLUSTER FINISH PANEL REINFORCEMENT

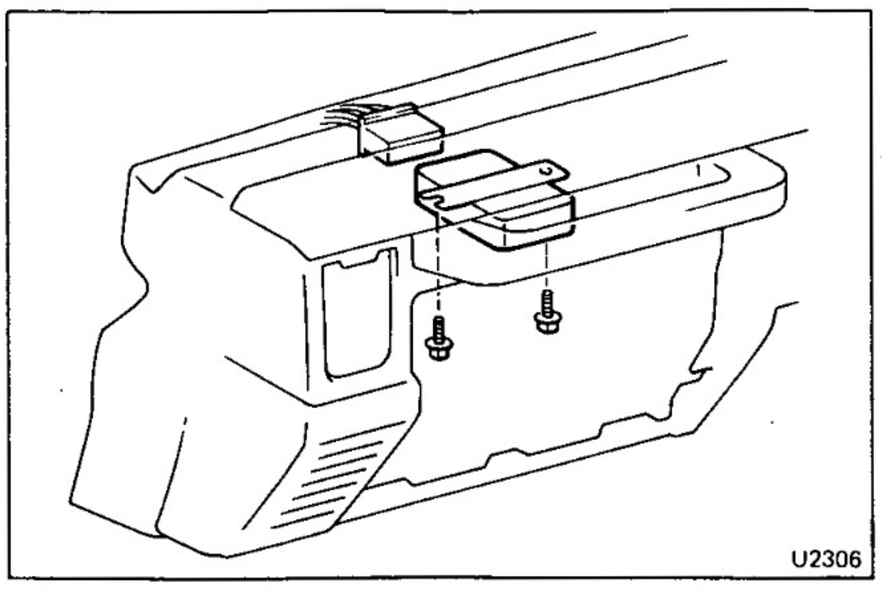

25. REMOVE INSTRUMENT PANEL

(a) Remove the following parts:

(EC)
- Red indicator relay
- Rear fog light relay
- Pre-heating timer (BJ)
- Running light relay (Norway)

(Saudi Arabia)
- Emission control relay
- Seat belt warning buzzer

(Australia)
- Emission control relay
- Preheating timer (BJ, HJ)

(Canada)
- Charge light relay
- Seat belt warning buzzer

(b) Remove the three wiring harness clamps from the instrument panel.

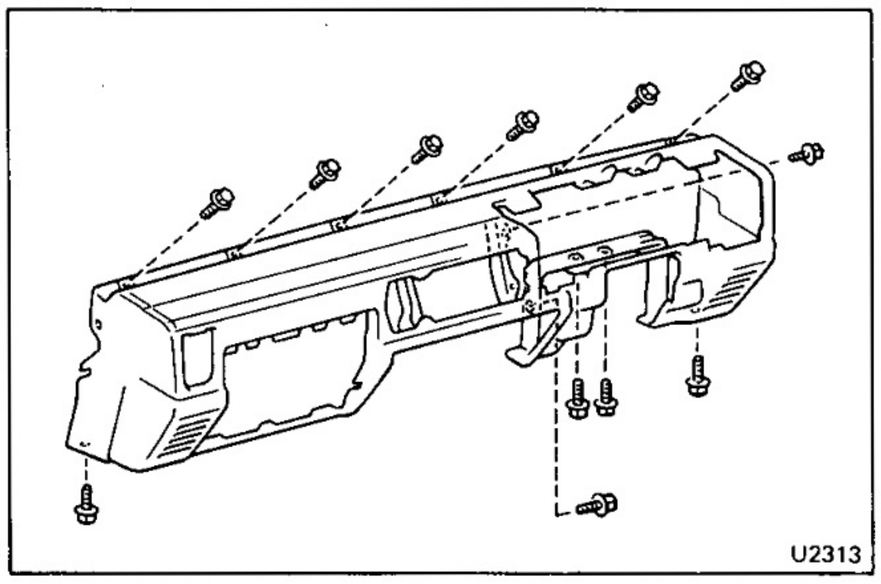

(c) Remove the steering column upper support.

(d) Remove the twelve bolts and the instrument panel.

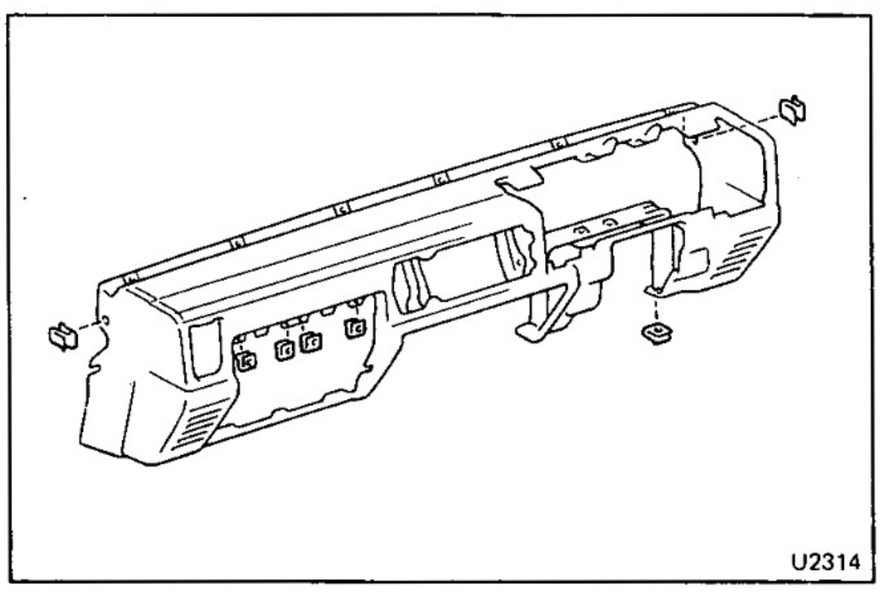

26. REMOVE FOLLOWING PARTS FROM INSTRUMENT PANEL

- Two clips
- Five spring nuts

INSTALLATIONOF INSTRUMENT PANEL

(See page BO-81)

INSTALL INSTRUMENT PANEL IN REVERSE SEQUENCE OF REMOVAL

INSTRUMENT PANEL (60,62 Series)

COMPONENTS

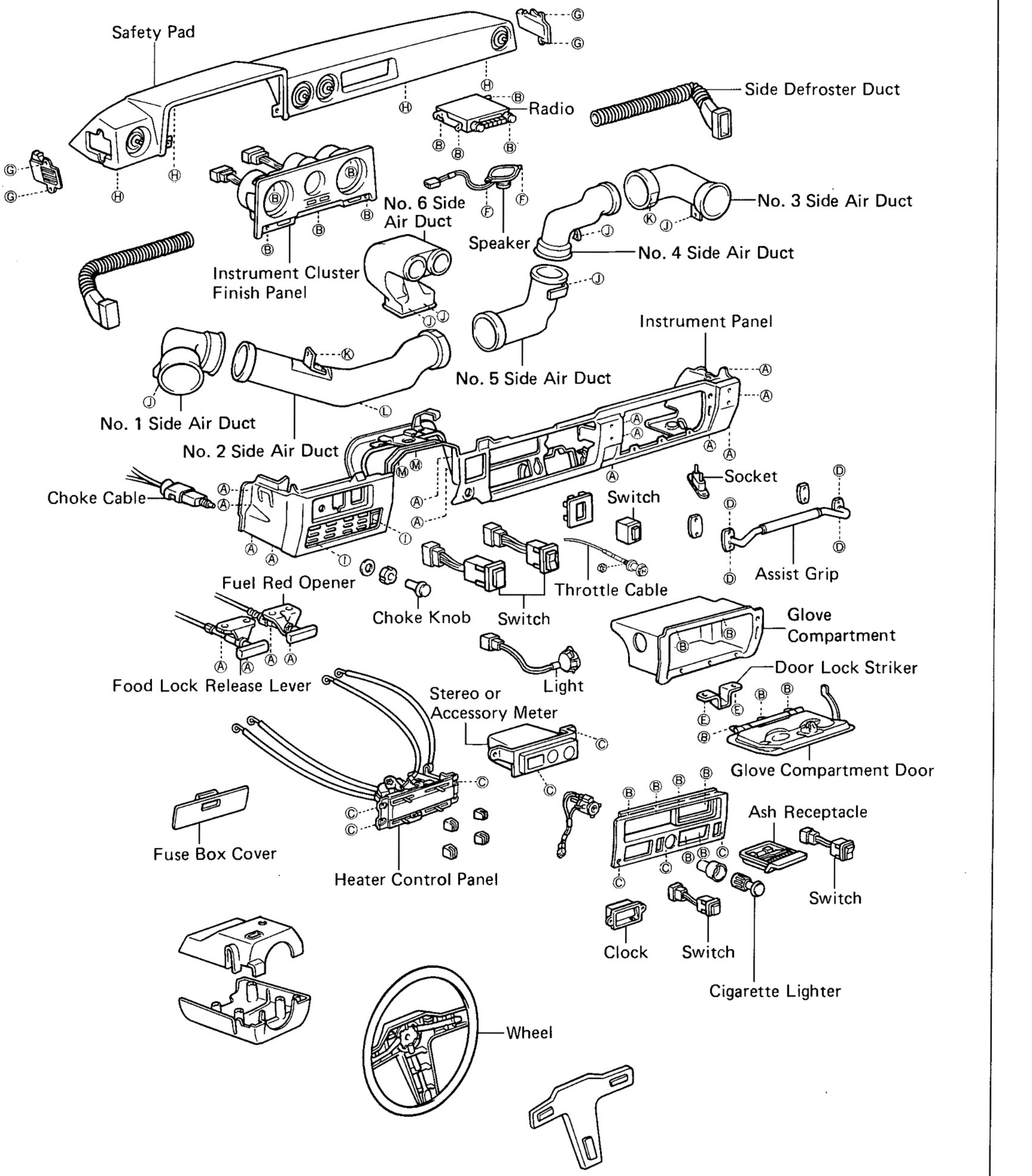

BO0998

NOTE: Screw sizes in the previous illustration are indicated by following the code below for removal and installation of instrument panel.

Code	Shape	Code	Shape	Code	Shape
A	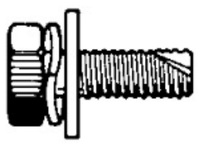 ϕ = 6 L = 16	F	 ϕ = 6	K	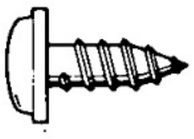 ϕ = 6 L = 16
B	 ϕ = 5 L = 16	G	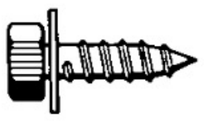 ϕ = 5 L = 16	L	 ϕ = 5 L = 16
C	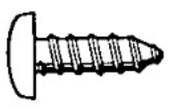 ϕ = 5 L = 15	H	 ϕ = 6	M	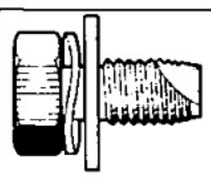 ϕ = 8 L = 16
D	 ϕ = 6 L = 20	I	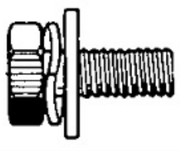 ϕ = 6 L = 14	—	—
E	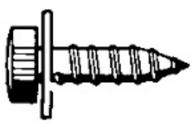 ϕ = 5 L = 16	J	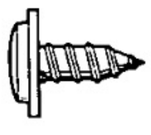 ϕ = 5 L = 12	—	—

BO1109

REMOVAL OF INSTRUMENT PANEL

(See page BO-88)

1. DISCONNECT BATTERY CABLE FROM NEGATIVE TERMINAL
2. REMOVE STEERING WHEEL
3. REMOVE STEERING COLUMN COVER

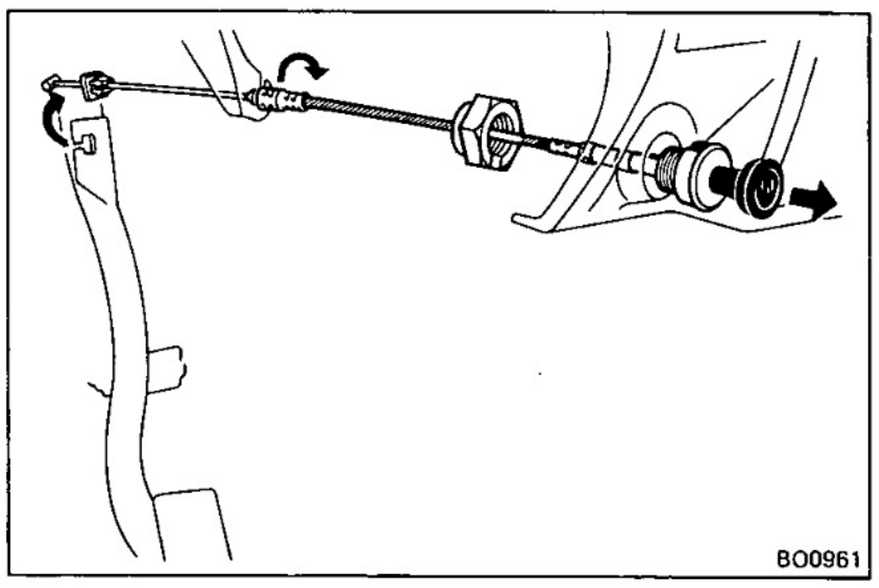

BO0961

4. REMOVE THROTTLE CABLE
   (a) Disconnect the throttle cable from the throttle pedal and retainer.
   (b) Remove the throttle cable set nut and the cable.

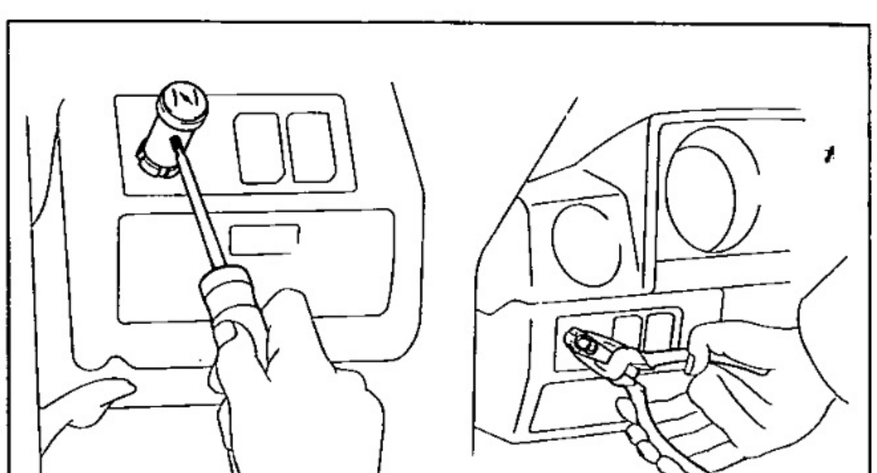

BO0962 BO0963

5. REMOVE CHOKE CABLE
   (a) Using a screwdriver, loosen the choke knob set screw and remove the knob.
   (b) Remove the choke cable set nut and the cable.

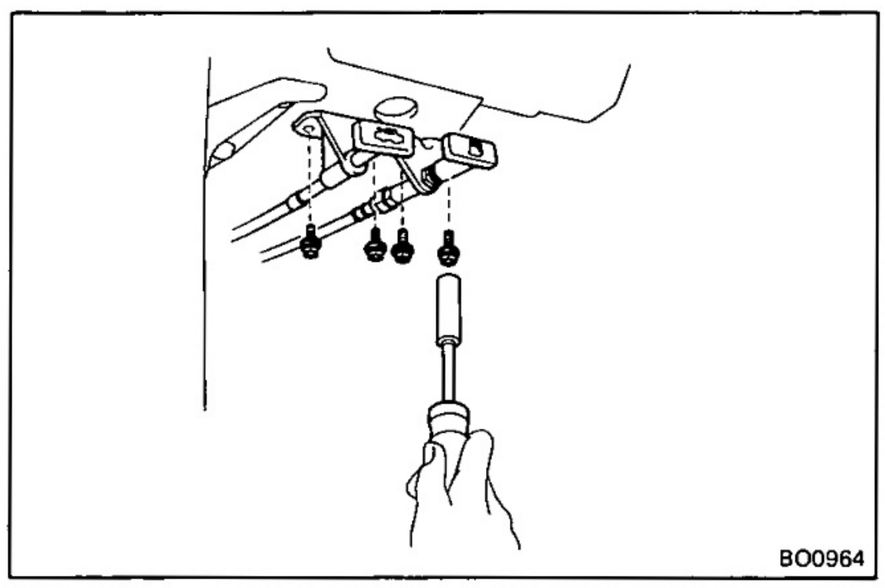

6. REMOVE HOOD LOCK RELEASE LEVER AND FUEL LID OPENER

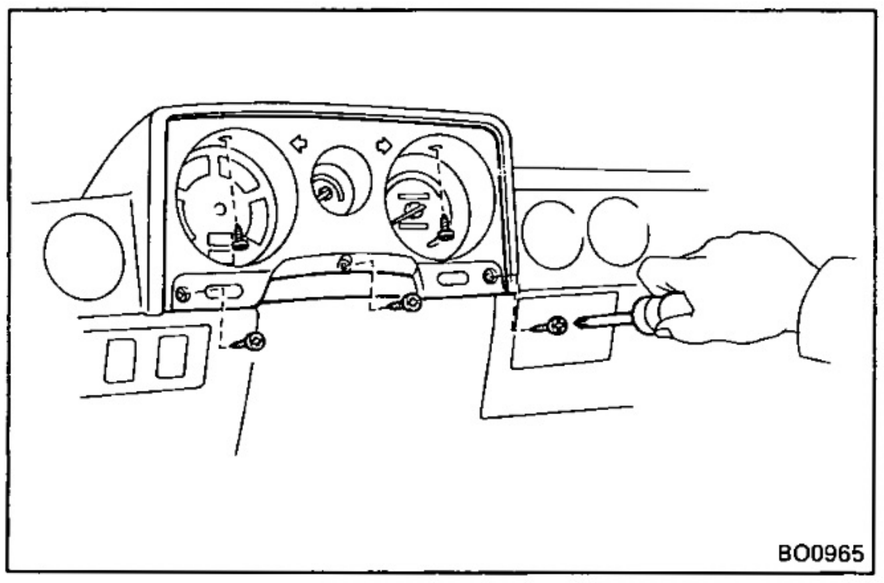

7. REMOVE INSTRUMENT CLUSTER FINISH PANEL WITH COMBINATION METER

(a) Remove the five screws.

(b) Disconnect the speedometer cable and the connectors then remove the instrument cluster finish panel with the combination meter.

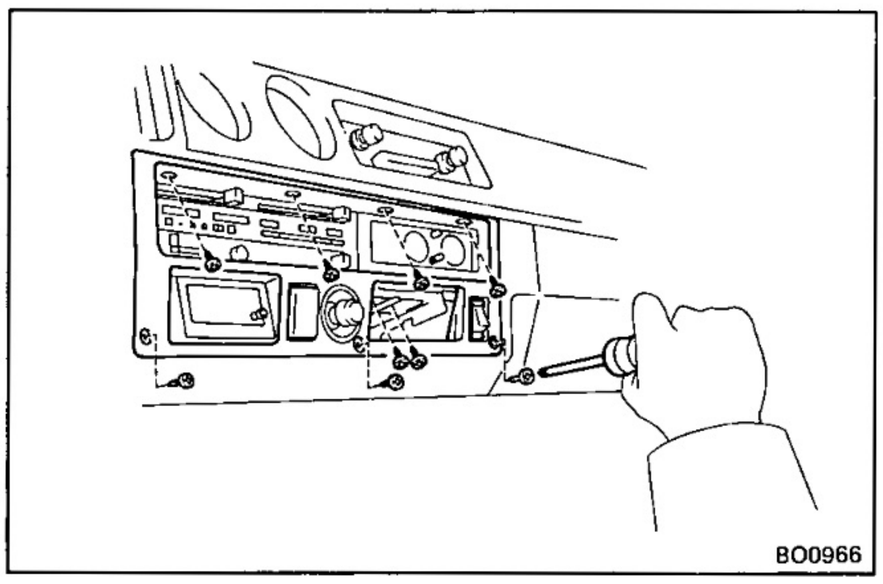

8. REMOVE INSTRUMENT CLUSTER FINISH CENTER PANEL

(a) Remove the nine screws.

(b) Disconnect the connectors and remove the panel.

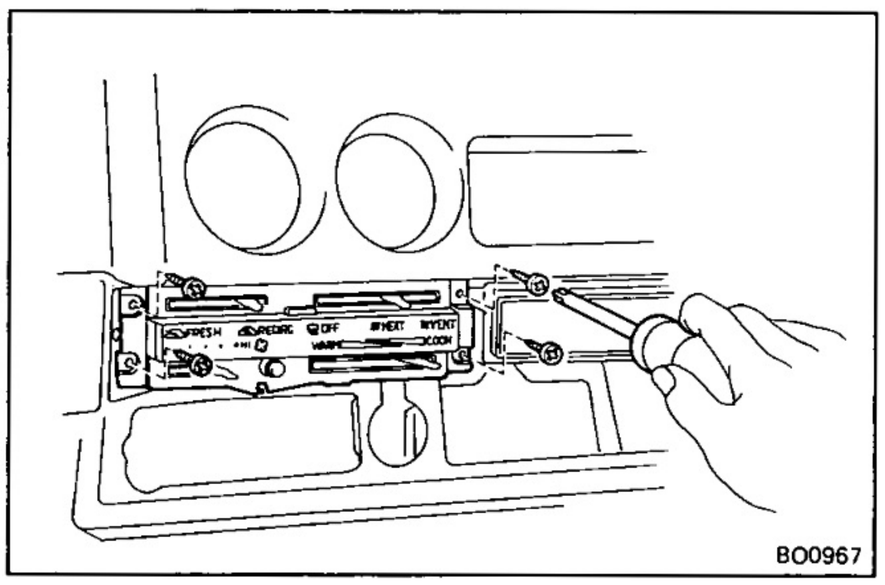

9. REMOVE HEATER CONTROL PANEL

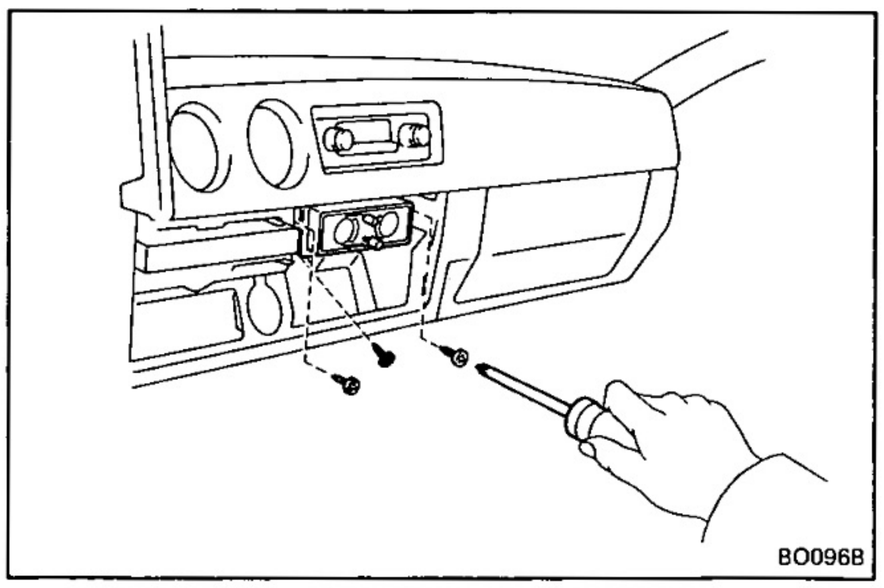

10. REMOVE STEREO OR ACCESSORY METER

(a) Remove the three screws.

(b) Disconnect the connector and remove the stereo or accessory meter.

11. REMOVE ASSIST GRIP FROM INSTRUMENT PANEL

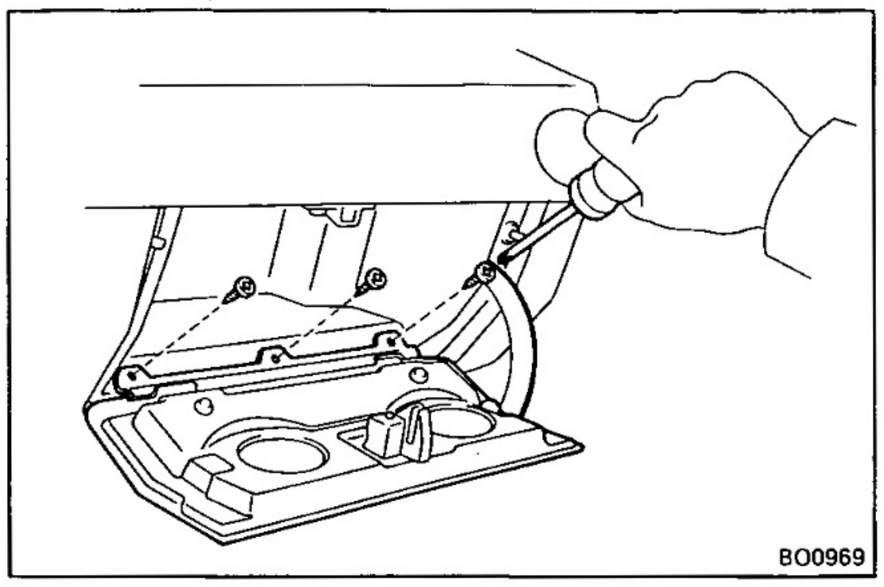

12. REMOVE GLOVE COMPARTMENT

(a) Remove the three screws and the door.

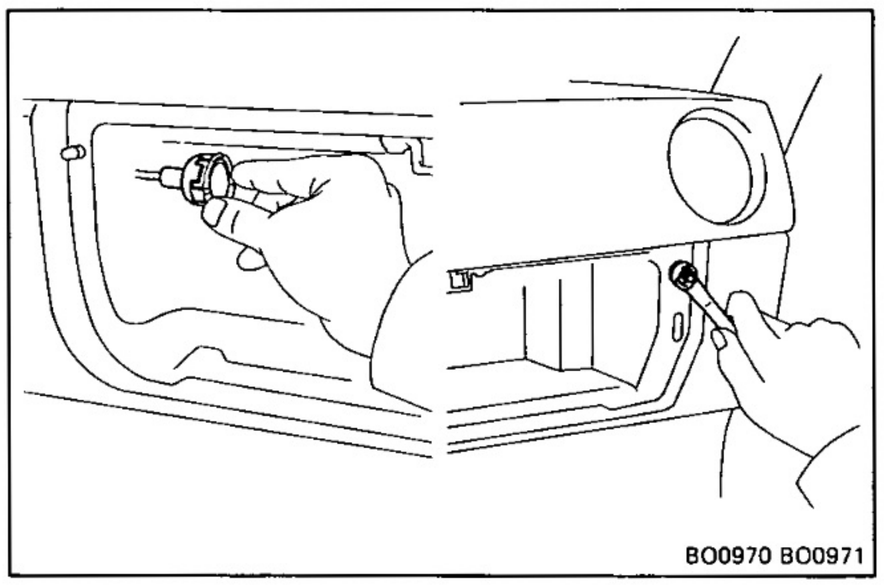

(b) Remove the light and switch.

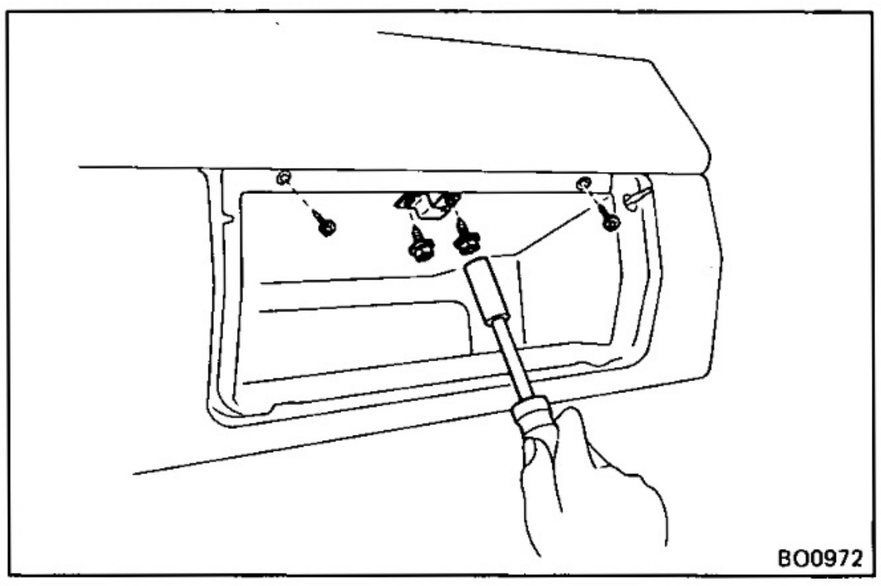

(c) Remove the two screws and the door lock striker.

(d) Remove the two screws and the glove compartment.

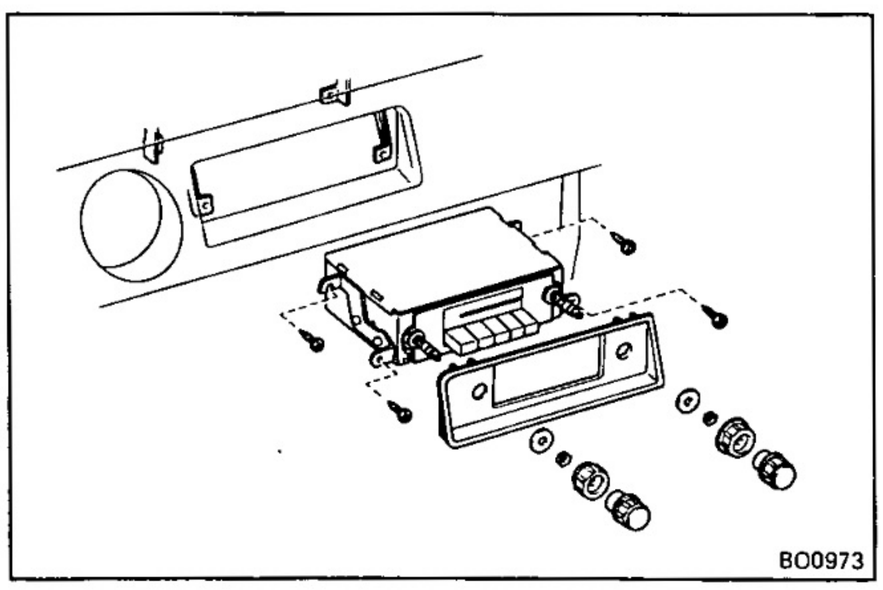

13. REMOVE RADIO

(a) Remove the switch and control knobs.

(b) Remove the two nuts and the plate.

(c) Remove the four screws

(d) Disconnect the radio antenna cable and the connector then remove the radio.

14. REMOVE SPEAKER FROM SAFETY PAD

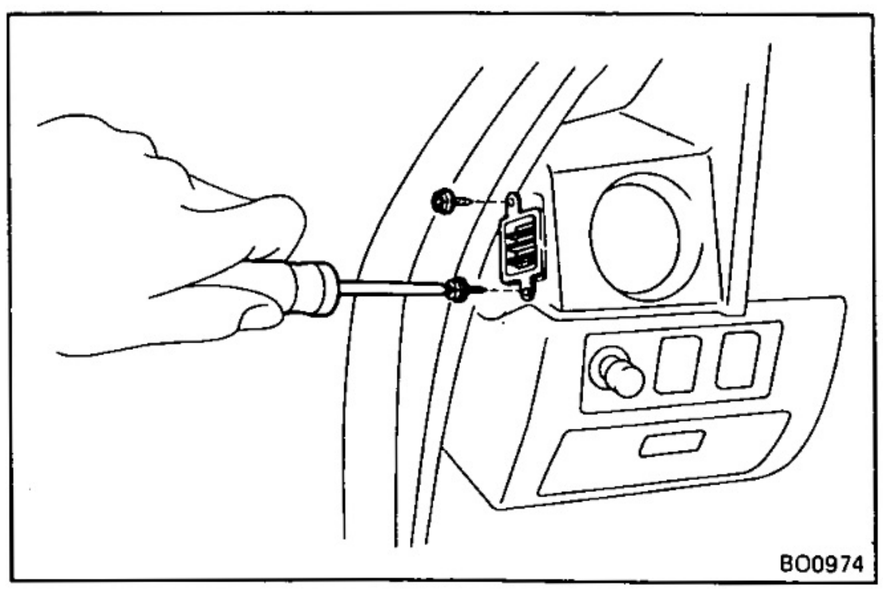

15. REMOVE BOTH SIDE DEFROSTER NOZZLES

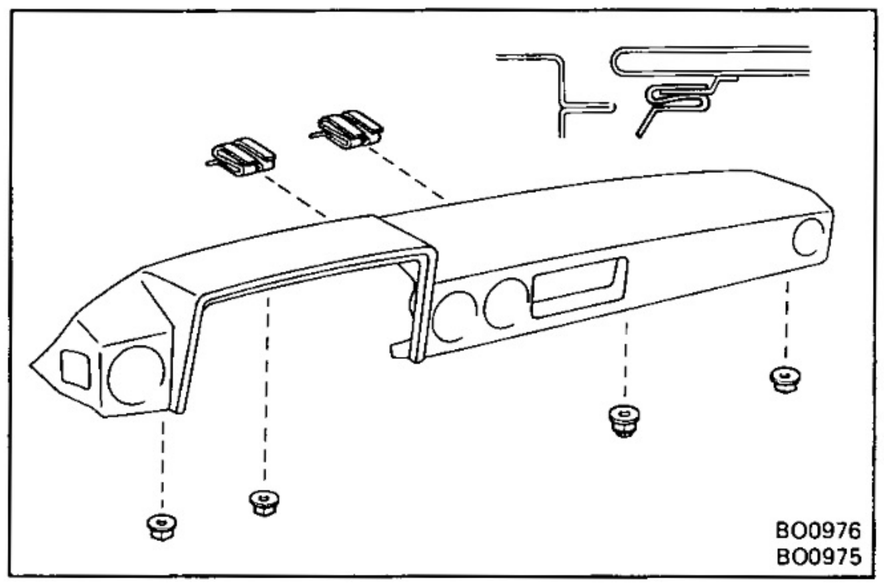

16. REMOVE SAFETY PAD

(a) Remove the four nuts.

(b) Remove the two clips where the safety pad was fastened to the body.

17. REMOVE TWO CLIPS FROM SAFETY PAD

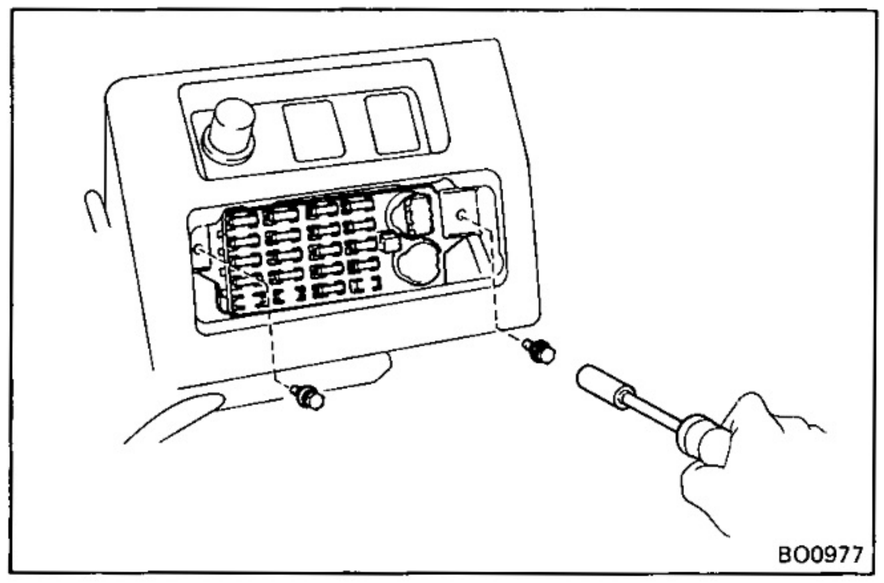

18. REMOVE FUSE BOX FROM INSTRUMENT PANEL

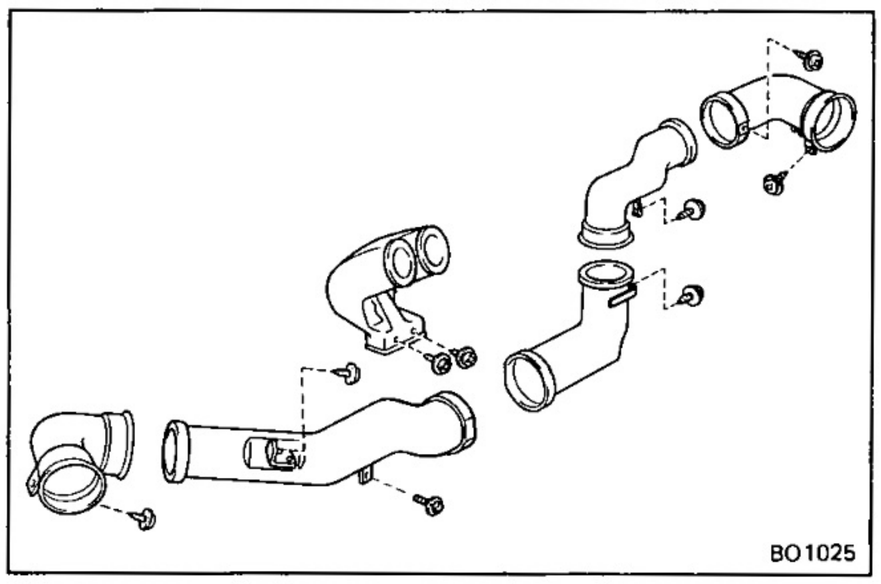

19. REMOVE HEATER DUCTS

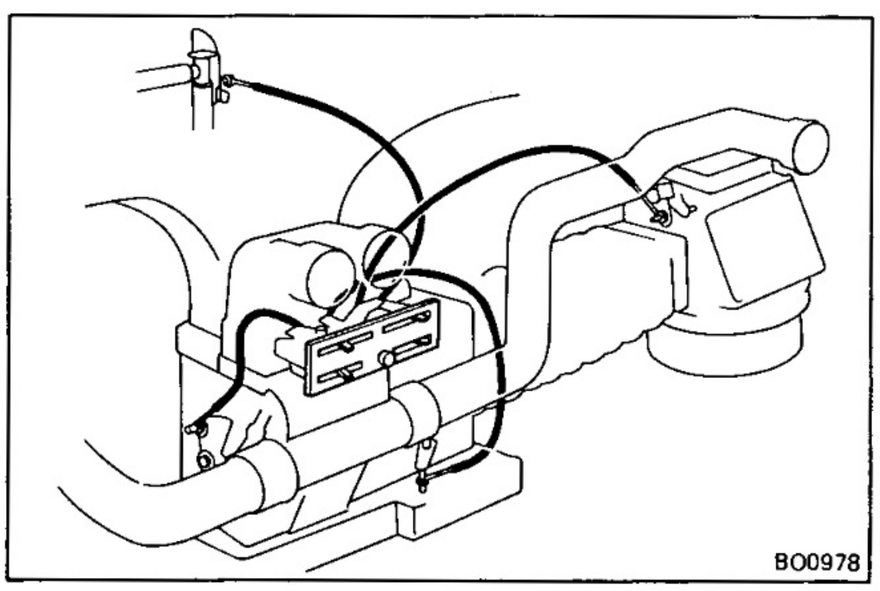

20. REMOVE INSTRUMENT PANEL

(a) Disconnect the control cable indicated left, and insert the heater control panel into the instrument panel.

(b) Remove the connectors from the instrument panel.

(c) Remove the steering column upper from the instrument panel.

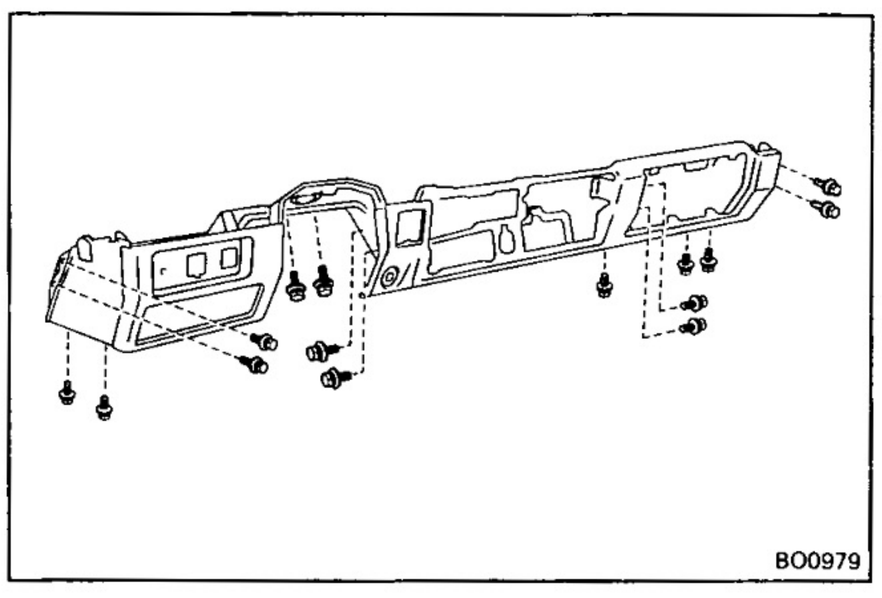

(d) Remove the fifteen bolts and the instrument panel.

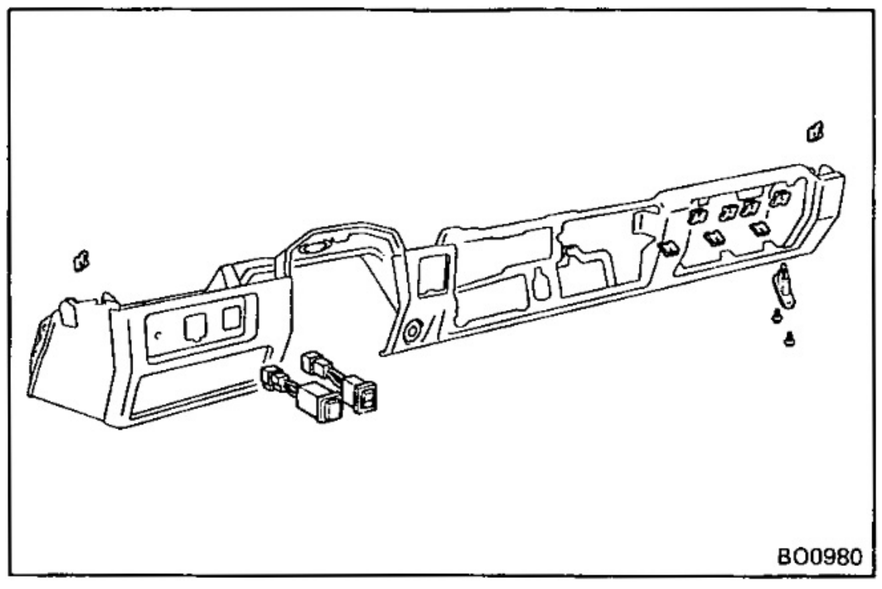

21. **REMOVE FOLLOWING PARTS FROM INSTRUMENT PANEL**
    - Switches
    - Nine clips
    - Socket

INSTALLATION OF INSTRUMENT PANEL

(See page BO-88)

INSTALL PARTS OF INSTRUMENT PANEL IN REVERSE SEQUENCE OF REMOVAL

TARPAULIN

REMOVAL OF TARPAULIN

1. UNPEEL MAGIC TAPE AROUND TARPAULIN SPARS

   70 series 10 places
   73 series 15 places

70 Series

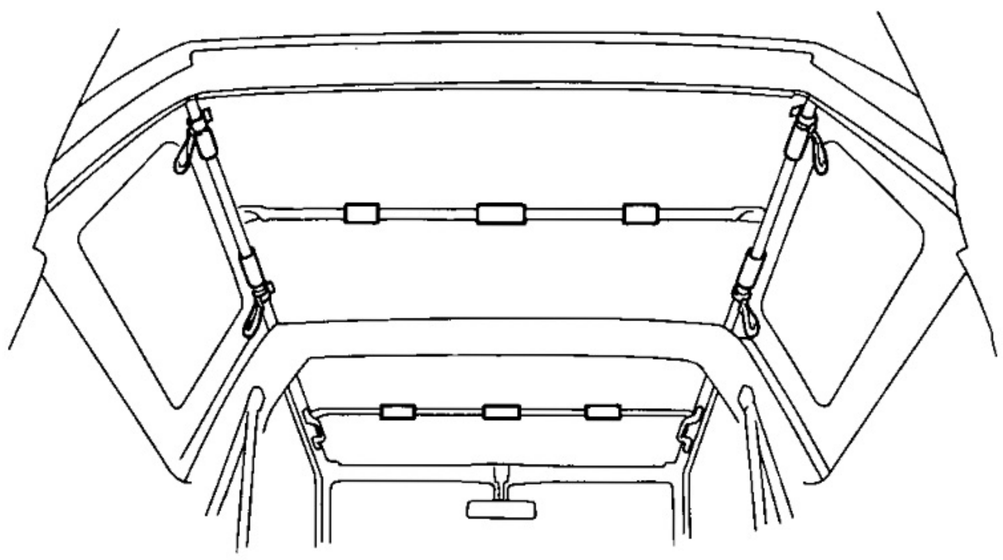

73 Series

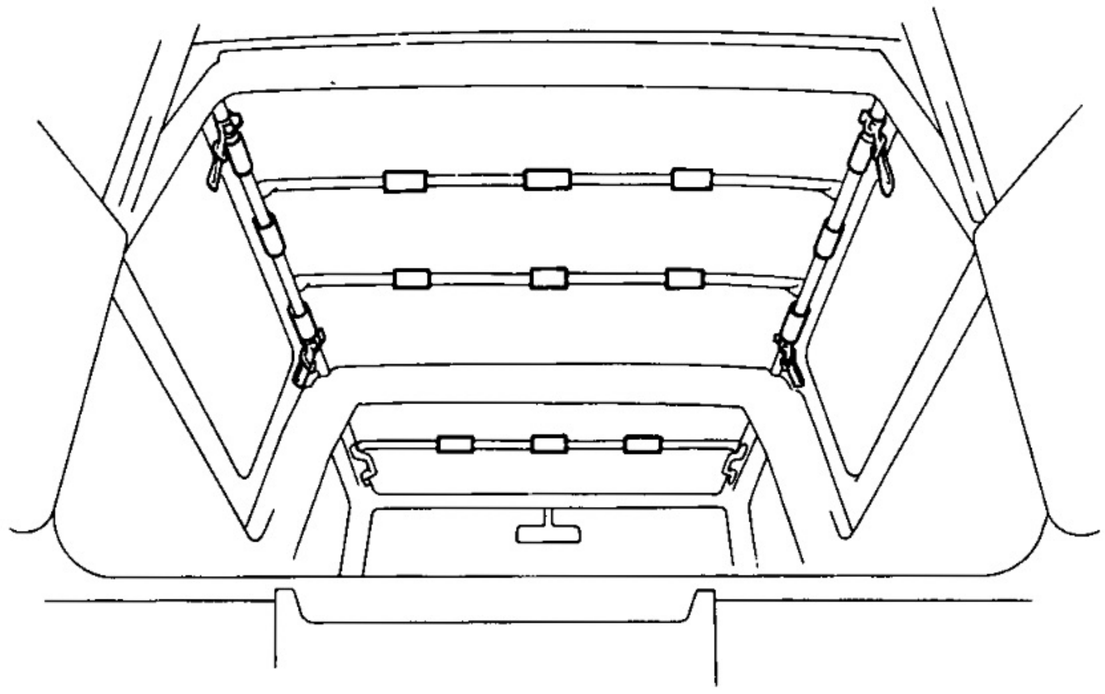

BO0928 BO0929

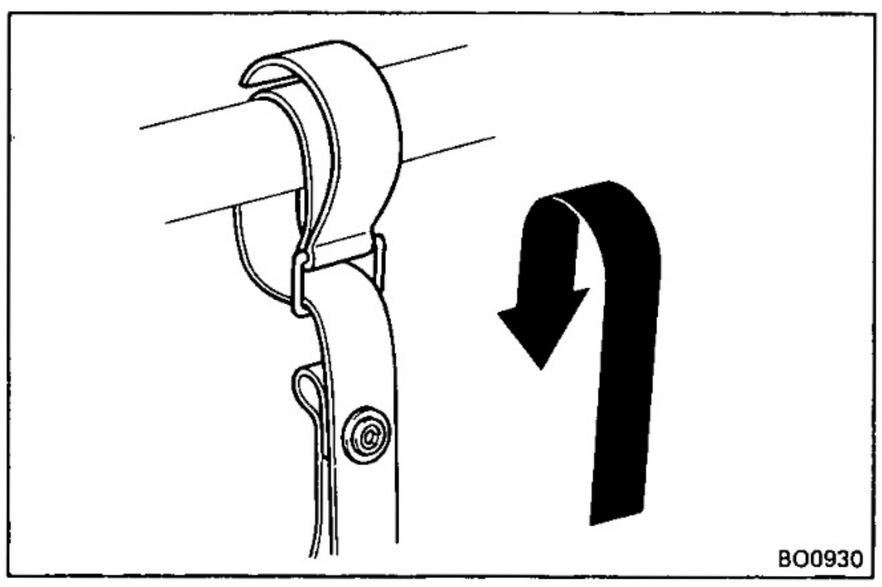

BO0930

2. RELEASE FOUR BELTS WRAPPED AROUND TARPAULIN SPARS (TWO EACH SIDE)

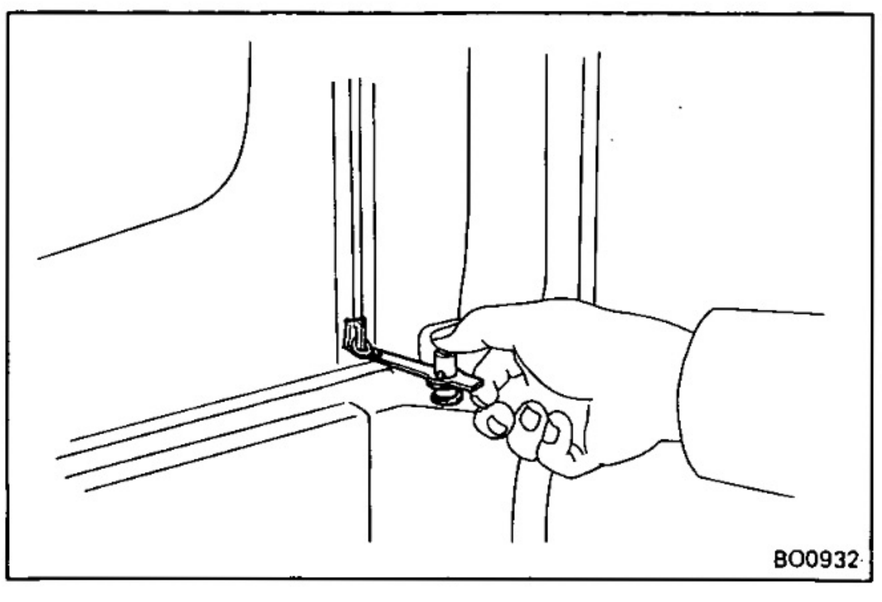

BO0932

3. UNZIP FOUR ZIPPERS (TWO EACH SIDE)

   Release the burglary prevention cock and unzip the zipper.

4. REMOVE TWO BACK DOOR OPENING TRIM CORNER JOINTS AND THREE OPENING TRIMS

5. UNPEEL FIVE STRIPS OF MAGIC TAPE ABOVE BACK DOOR

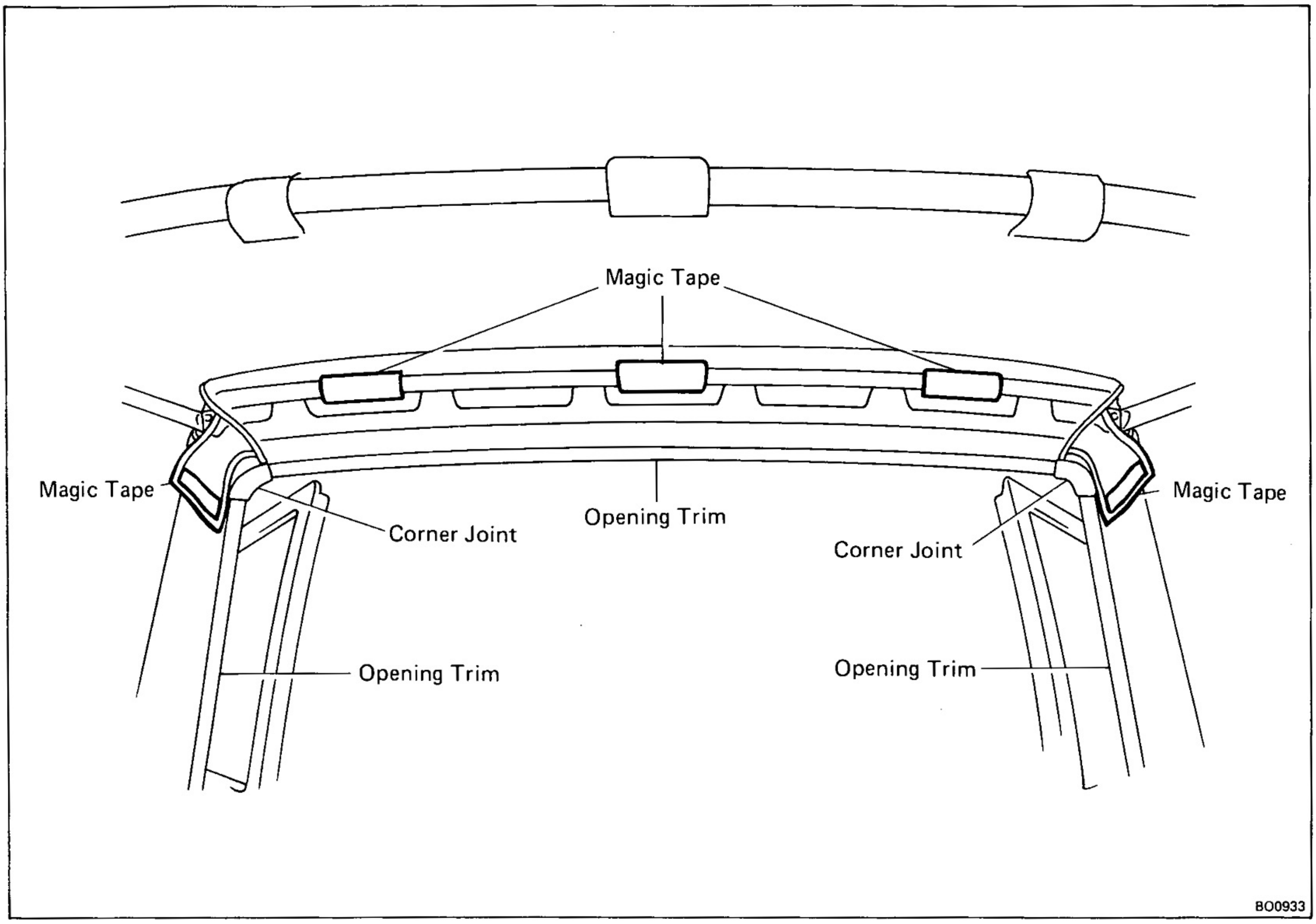

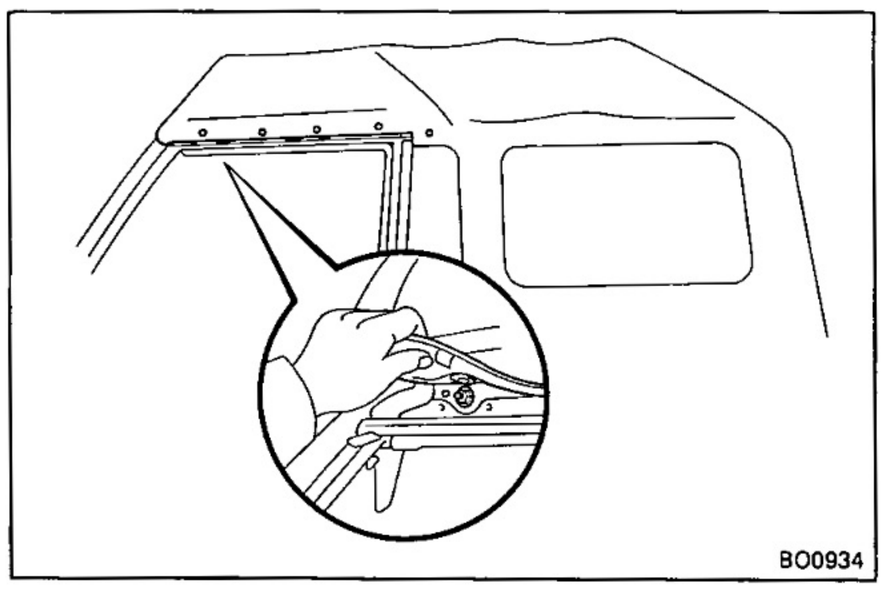

6. DISCONNECT ROOF SIDE RAIL AS WELL AS TEN SNAPS (FIVE EACH SIDE)

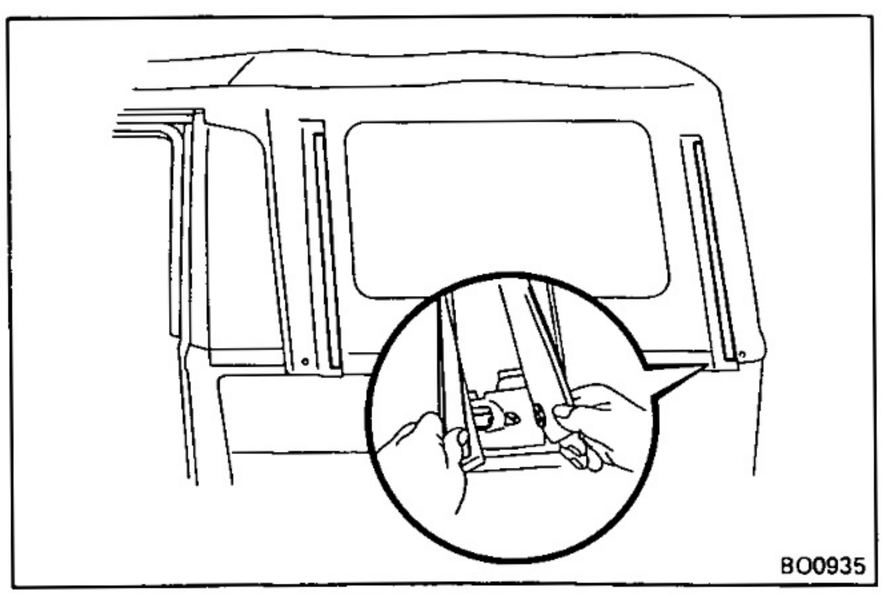

7. UNPEEL TWELVE STRIPS OF MAGIC TAPE OUTSIDE VEHICLE (SIX EACH SIDE), AND UNHOOK FOUR SNAPS (TWO EACH OUTSIDE)

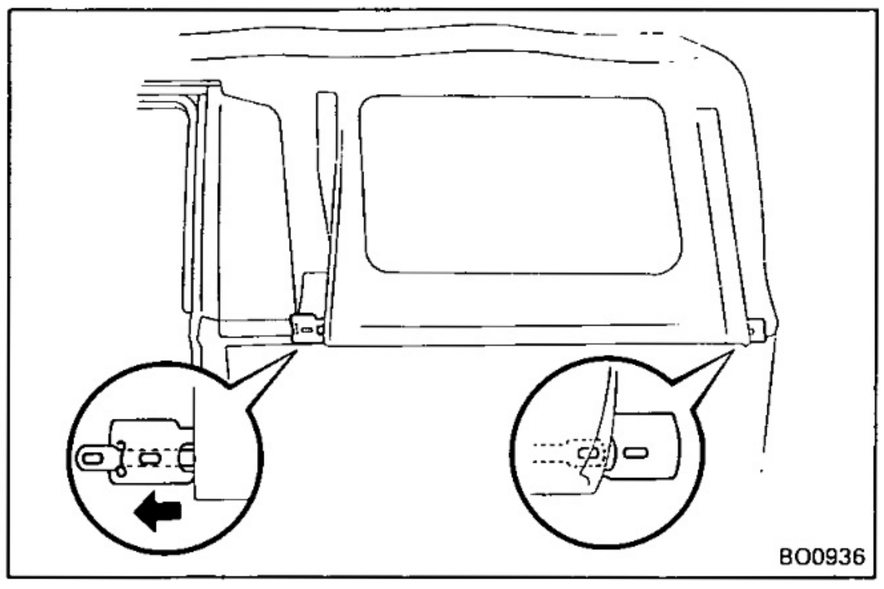

8. **FREE BOTH SIDEWALL PIPES FROM SIDEWALL OF TARPAULIN**

(a) Disconnect both ends of the pipe from the hooks.

(b) From the back end of the pipe, push the pipe forward so the opposite end protrudes a few inches from the service notch and the back end slides out of the service hole.

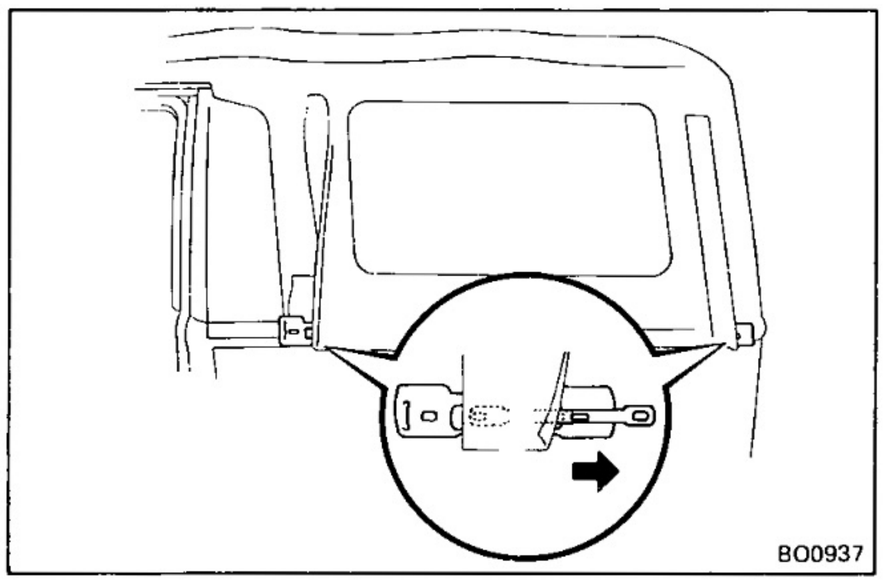

(c) Pull the pipe out by the back end.

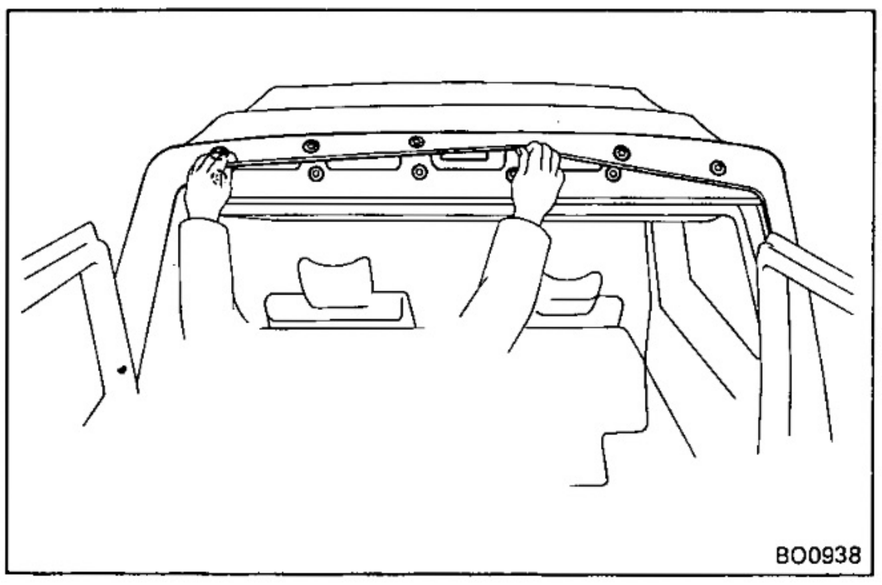

9. **DISCONNECT SIX SNAPS ABOVE BACK DOOR**

10. **SLIDE BOTH WATER SEALS UP AND OUT OF ROLL BAR SIDE CHANNEL**

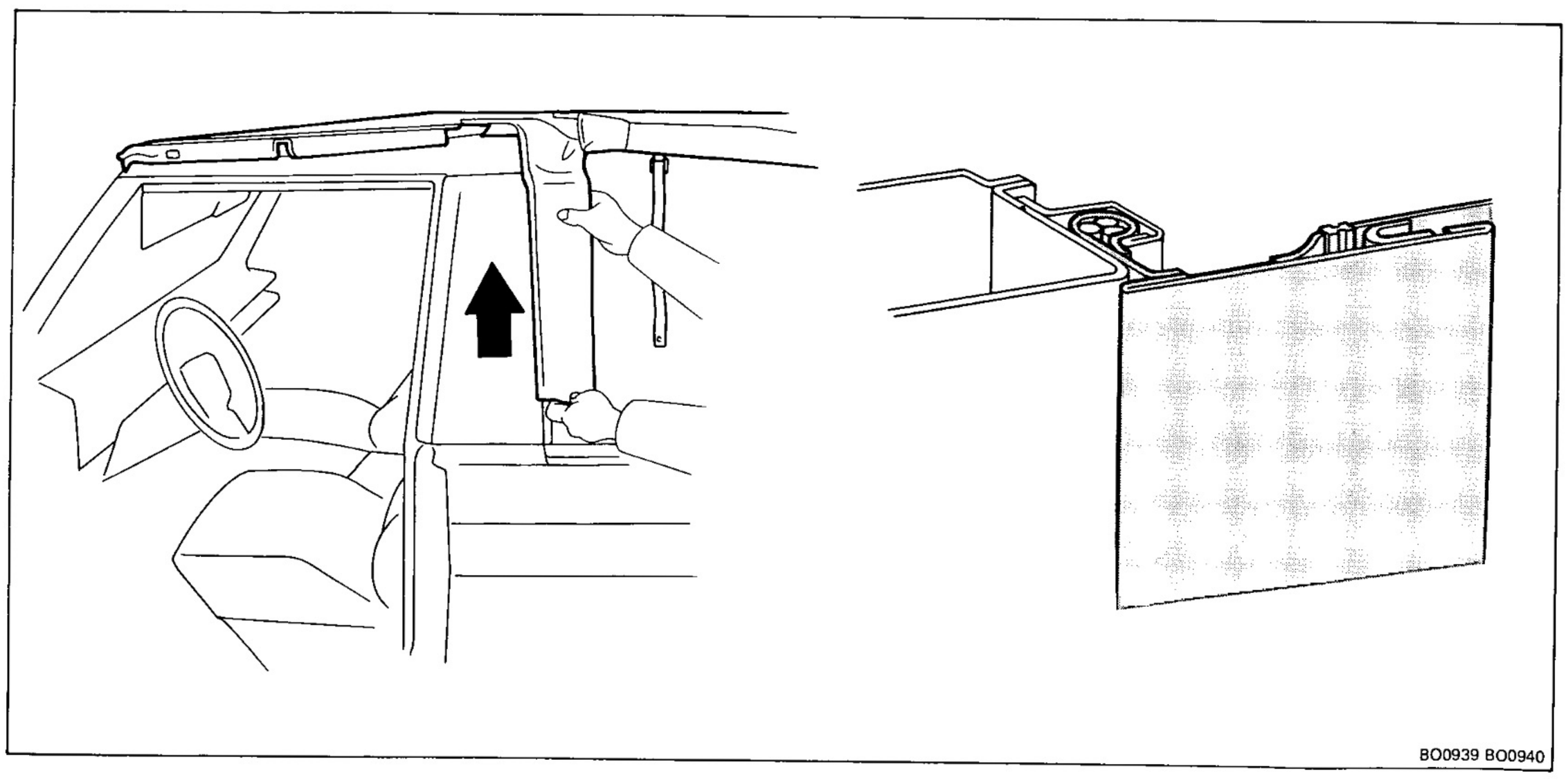

11. SLIDE BOTH WATER SEALS UP AND OUT OF REAR PILLAR CHANNEL

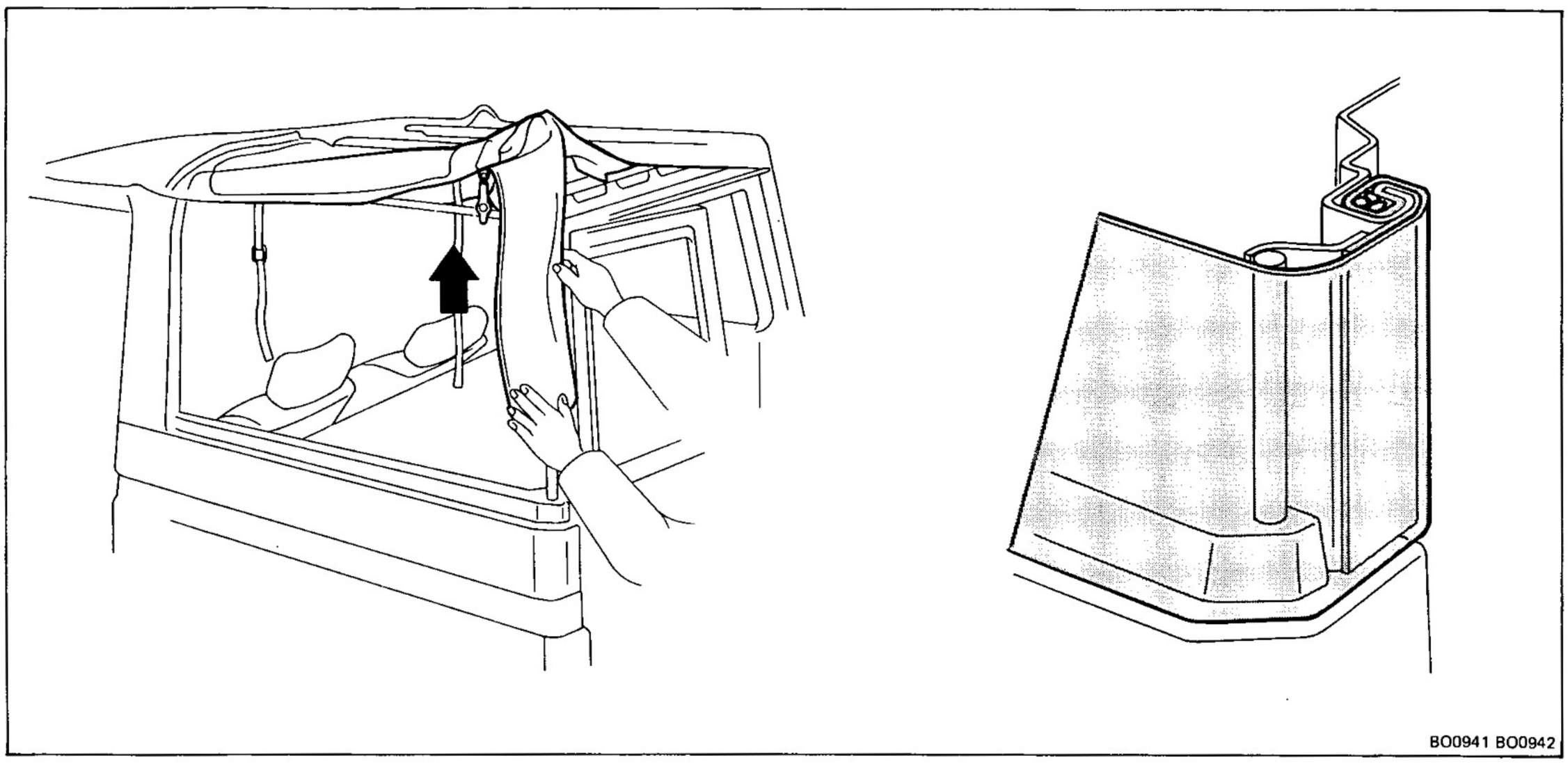

BO0941 BO0942

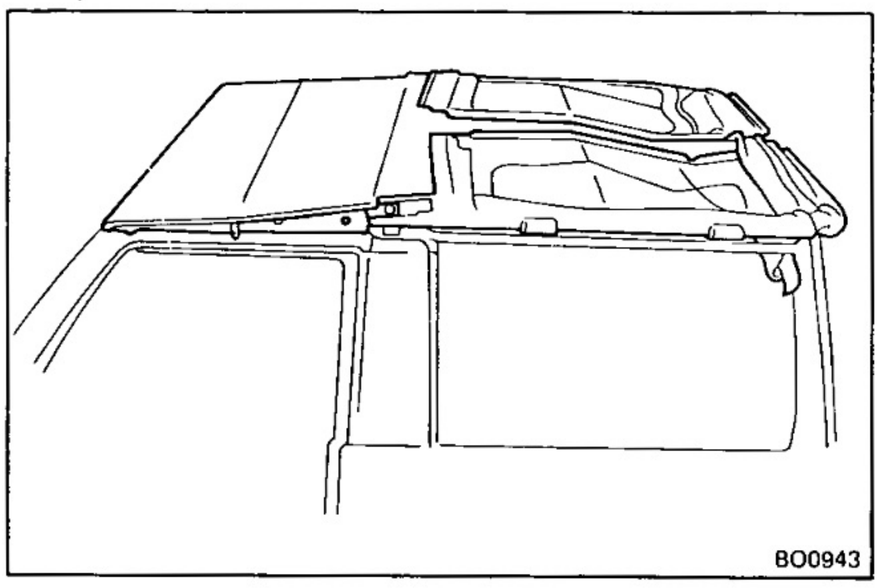

BO0943

12. FLIP UP SIDEWALL ONTO ROOF, ABOVE CARGO COMPARTMENT

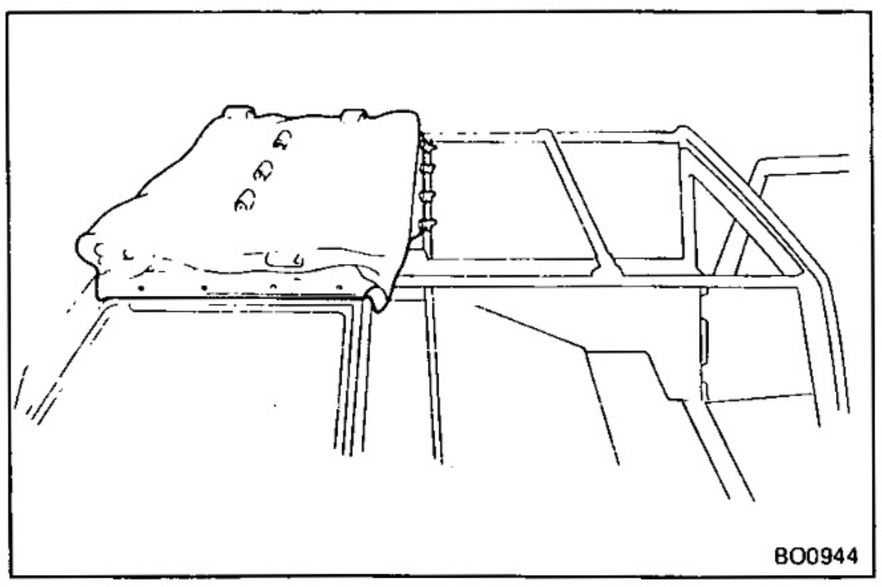

BO0944

13. FLIP FOLDED BACK HALF OF TARPAULIN ONTO ROOF ABOVE DRIVER'S COMPARTMENT

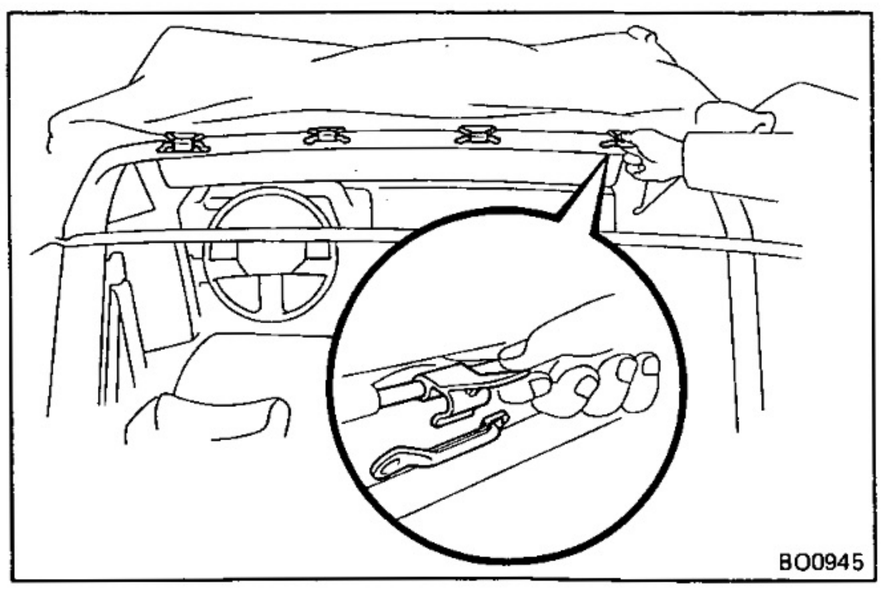

BO0945

14. DISCONNECT FOUR CLIPS ABOVE BACK SIDE OF ROLL BAR

15. SLIDE WHOLE TARPAULIN TO EITHER VEHICLE RIGHT OR LEFT TO FREE FRONT WATER SEAL AND REMOVE TARPAULIN

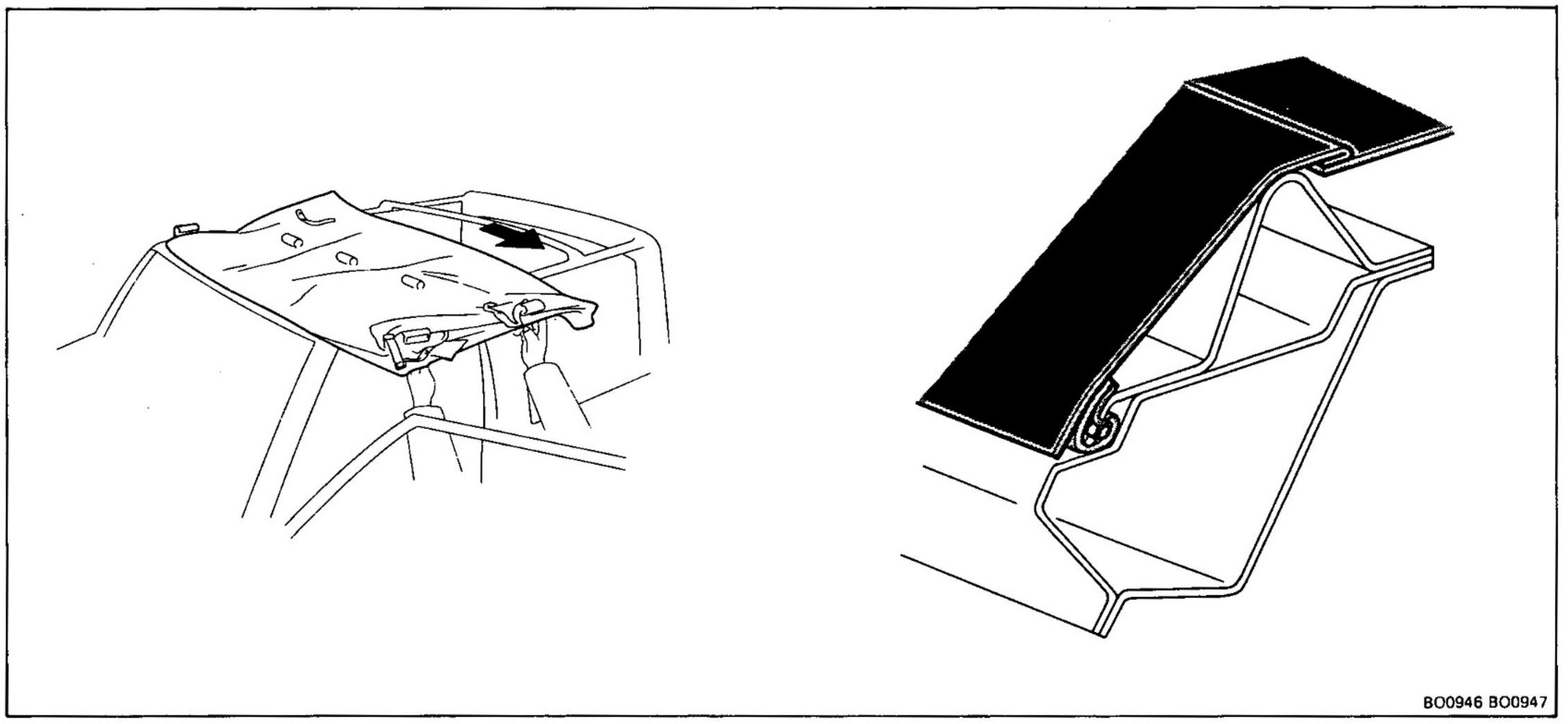

BO0946 BO0947

INSTALLATION OF TARPAULIN

INSTALL TARPAULIN IN REVERSE SEQUENCE OF REMOVAL

NOTE: Before installing the tarpaulin, adjust the positioning of the front and back doors.

TARPAULIN SPARS

COMPONENTS

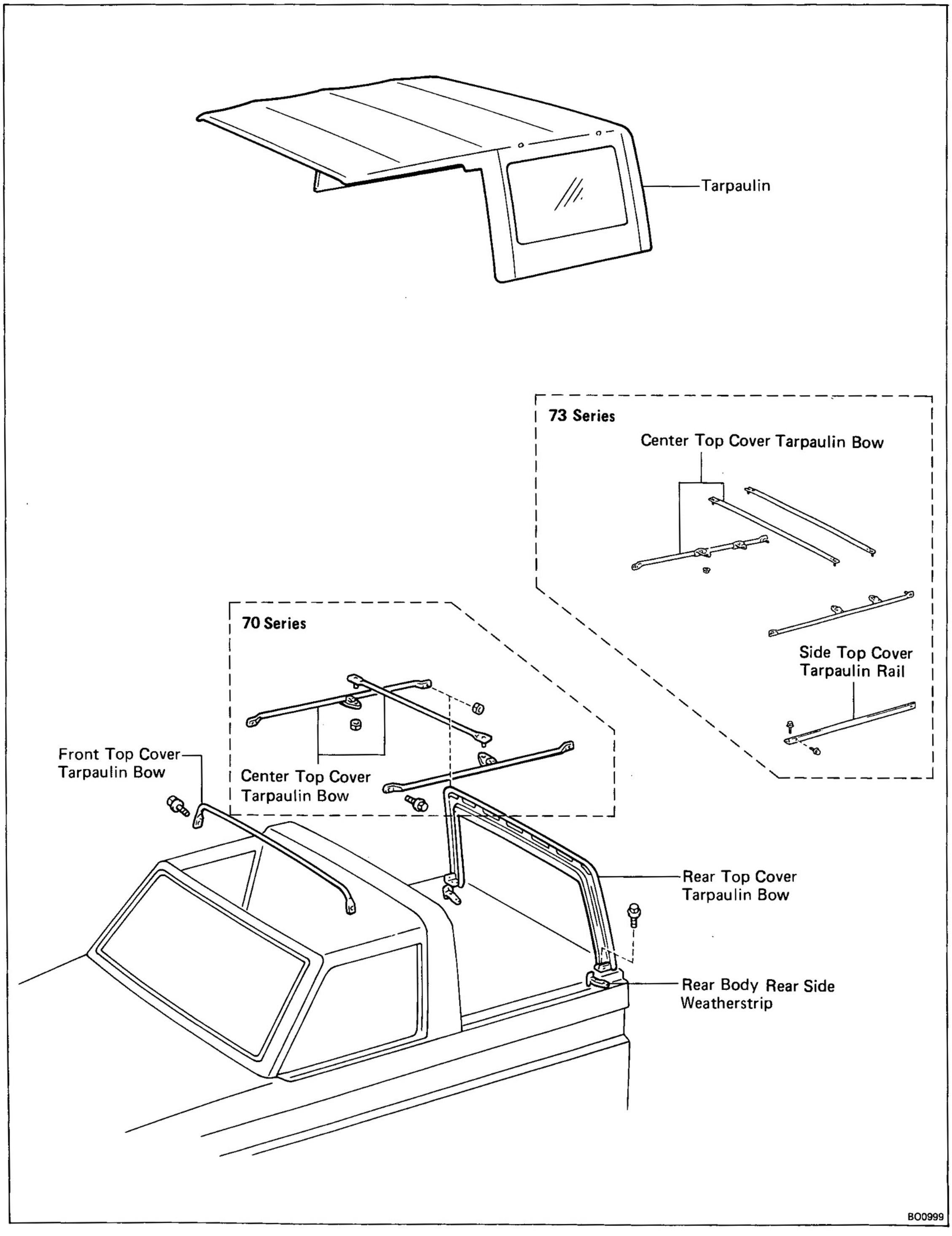

FRP TOP

COMPONENTS

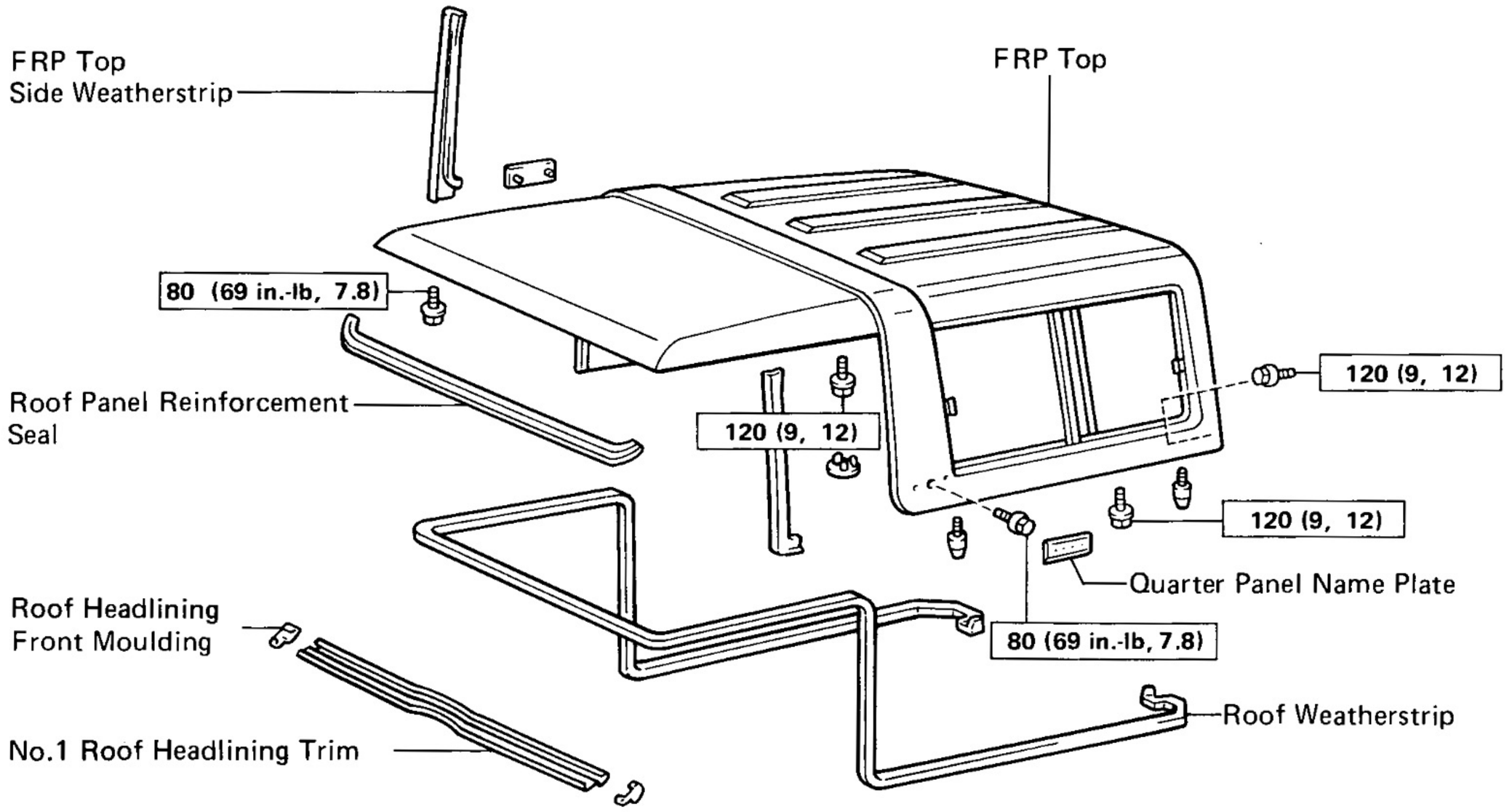

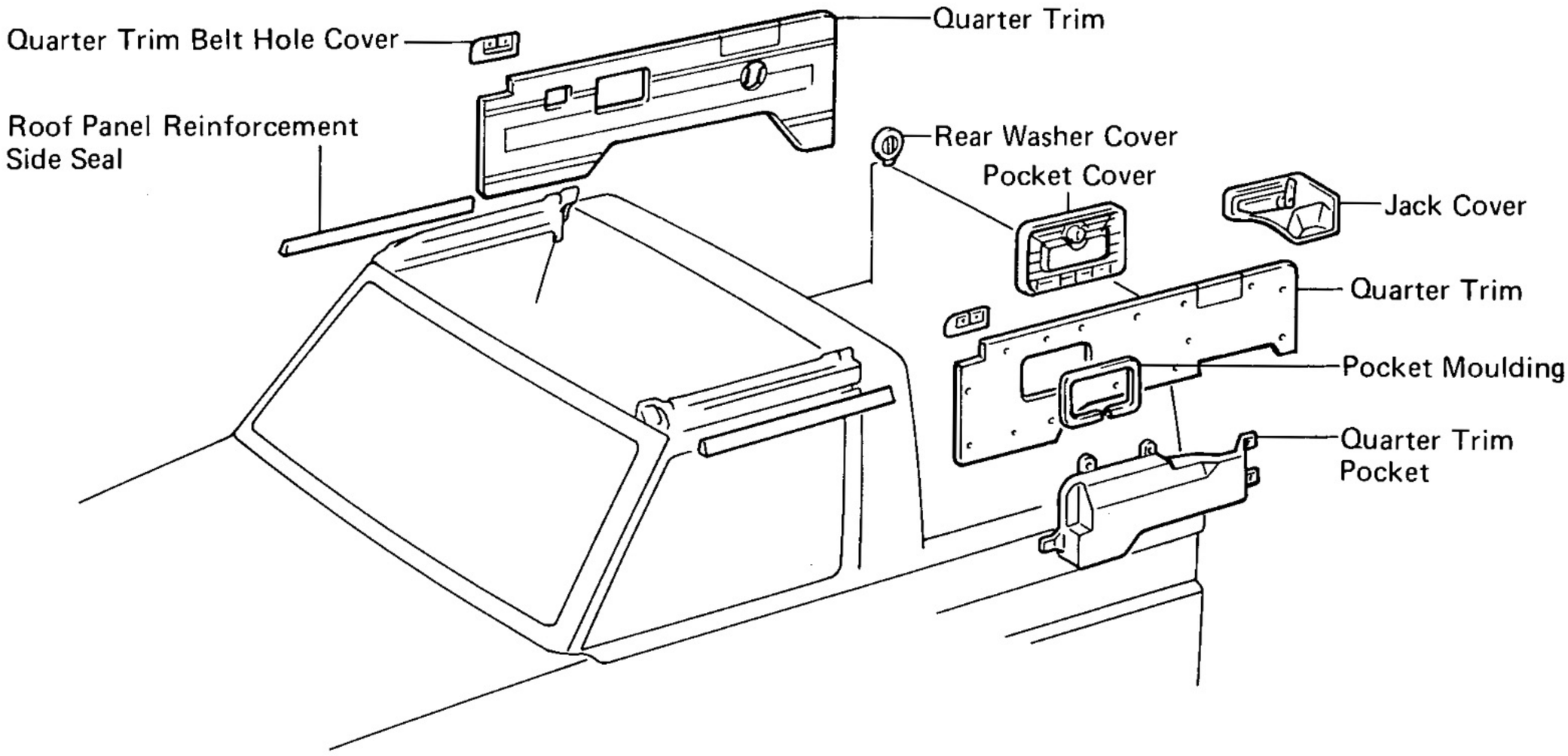

kg-cm (ft-lb, N·m) : Specified torque

U2473

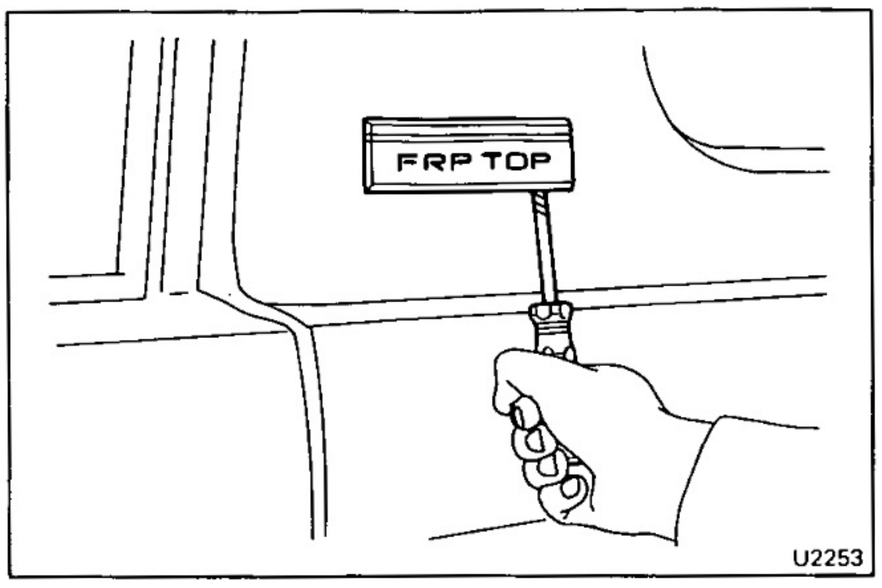

REMOVAL OF FRP TOP

(See page BO-100)

1. REMOVE BOTH QUARTER PANEL NAME PLATES

Using a screwdriver, pry out the name plate from the underside.

NOTE:
1. Tape the screwdriver tip before use.
2. Be careful not to damage the FRP top and name plate.

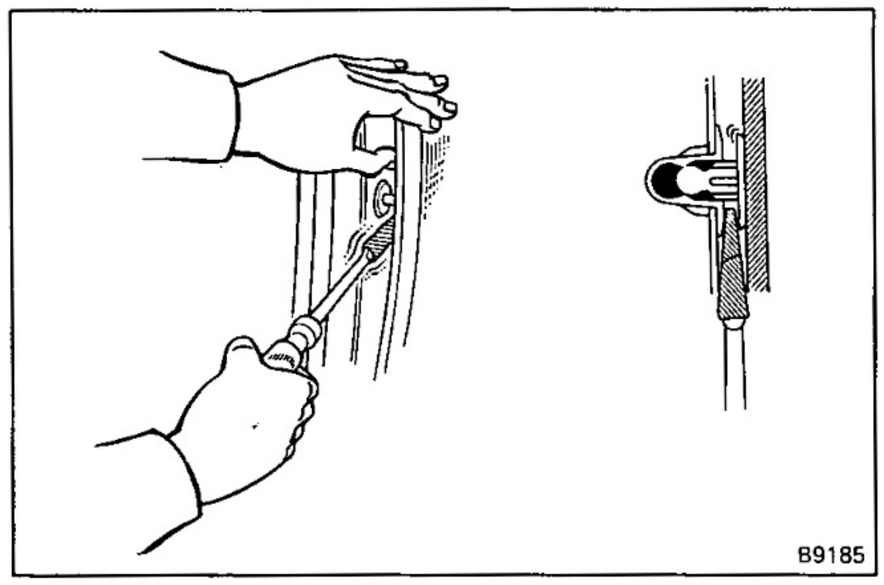

2. REMOVE ROOF HEADLINING FRONT MOULDING AND NO. 1 TRIM

3. REMOVE BOTH QUARTER TRIMS

(a) Remove both quarter trim belt hole covers.

(b) Pry loose the clips with a screwdriver and remove the trim.

NOTE: Tape the screwdriver tip before use.

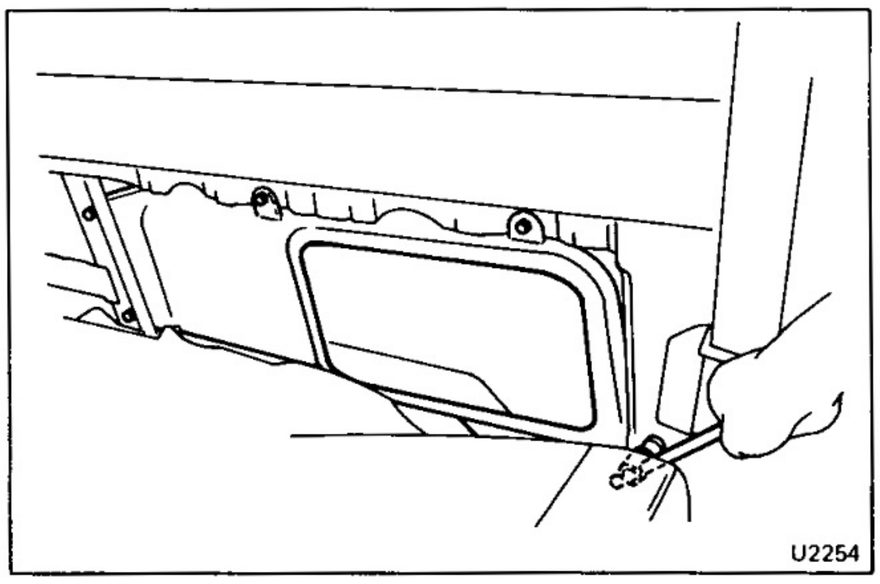

4. REMOVE QUARTER TRIM POCKET

Remove the five bolts and the pocket.

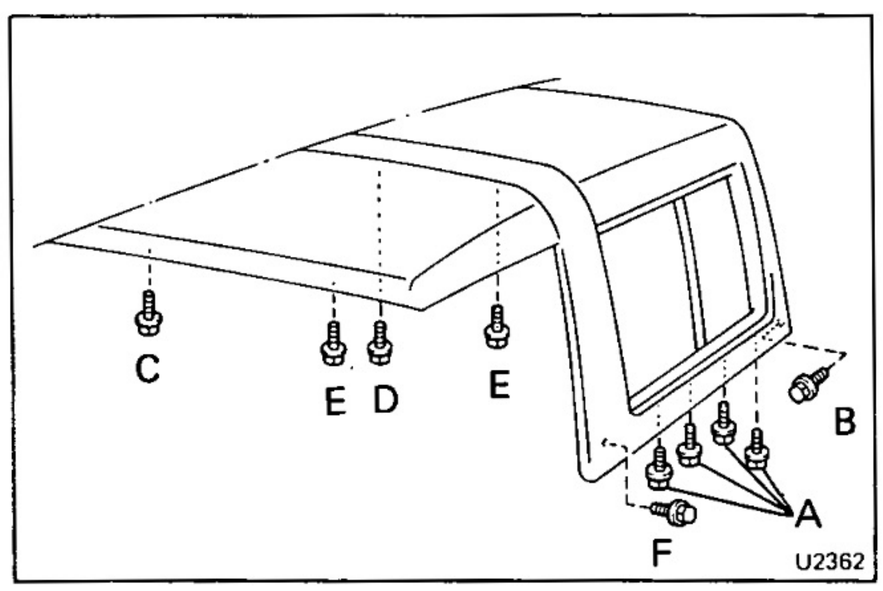

5. REMOVE FRP TOP

(a) Remove the four plugs on the roll bar and the lower rear pillar bolt caps (on FRP TOP, two each side).

(b) Remove the ten bolts (each side) shown in the installation.

NOTE: After removing bolt F, remove the remaining bolts.

(c) Remove the FRP top by pulling directly up.

INSTALLATION OF FRP TOP

(See page BO-100)

INSTALL FRP TOP IN REVERSE SEQUENCE OF REMOVAL

Torque: 6 mm bolt 80 kg-cm (69 in.-lb, 7.8 N·m)
8 mm bolt 120 kg-cm (9 ft-lb, 12 N·m)

NOTE: Tighten the FRP top bolts (ten each side) in the order shown in the illustration.
Check that the seal and weatherstrip are not tangled and install.

ROLL BAR

COMPONENTS

FRP TOP

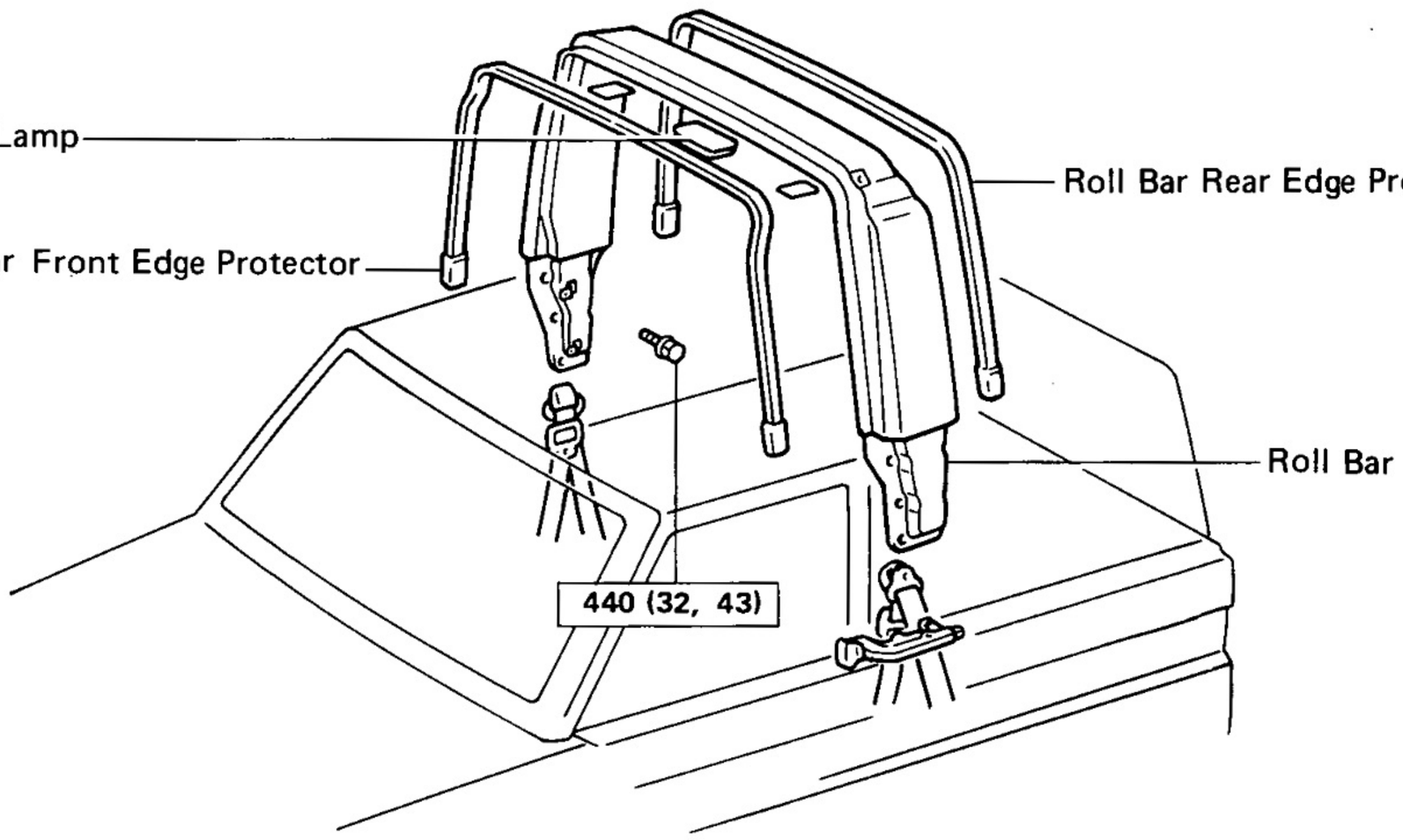

SOFT TOP

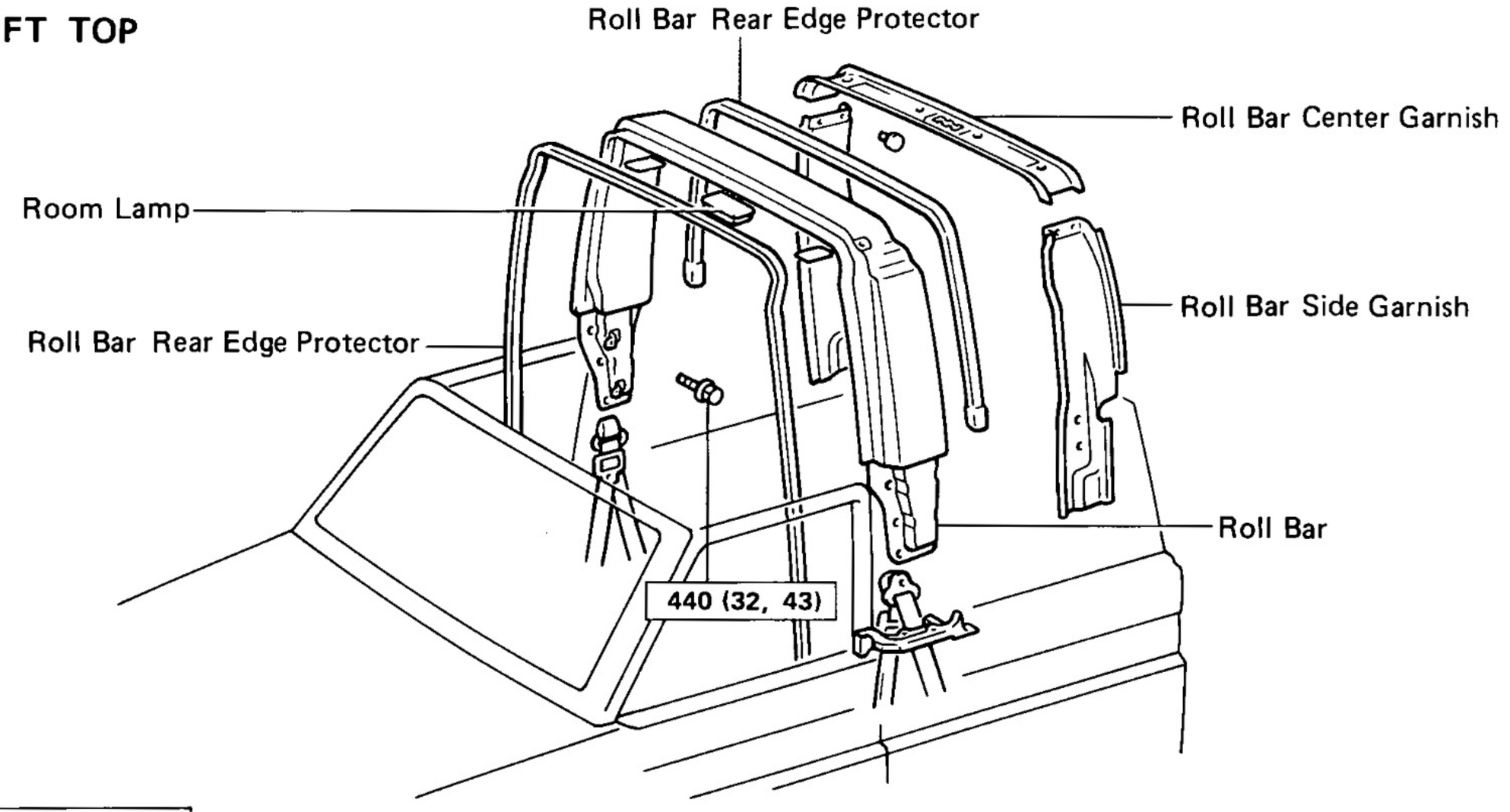

kg-cm (ft-lb, N·m) : Specified torque

BO1022,
BO1023

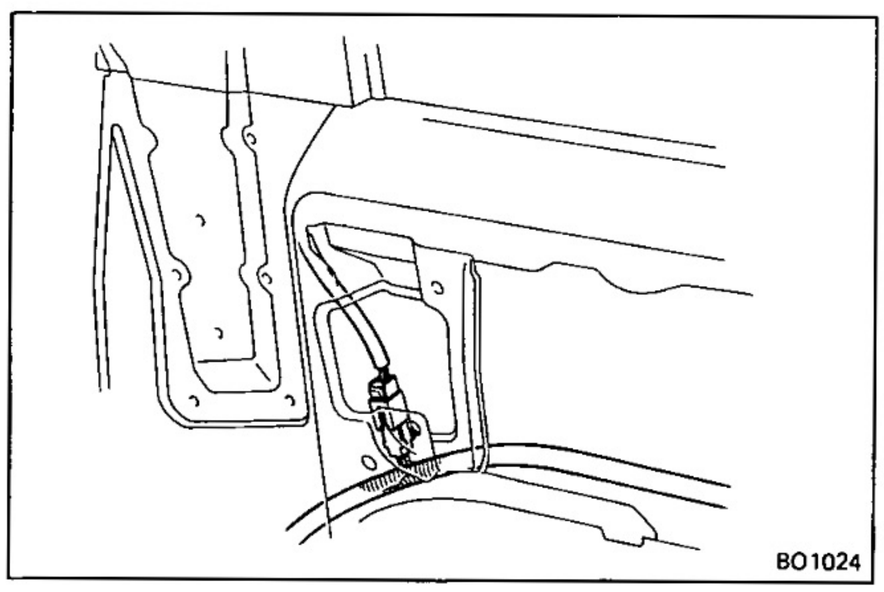

NOTE: Remove the roll bar after disconnecting the wire harness for the room lamp inside the right quarter trim.

SEAT
(70,73,75 Series)
COMPONENTS

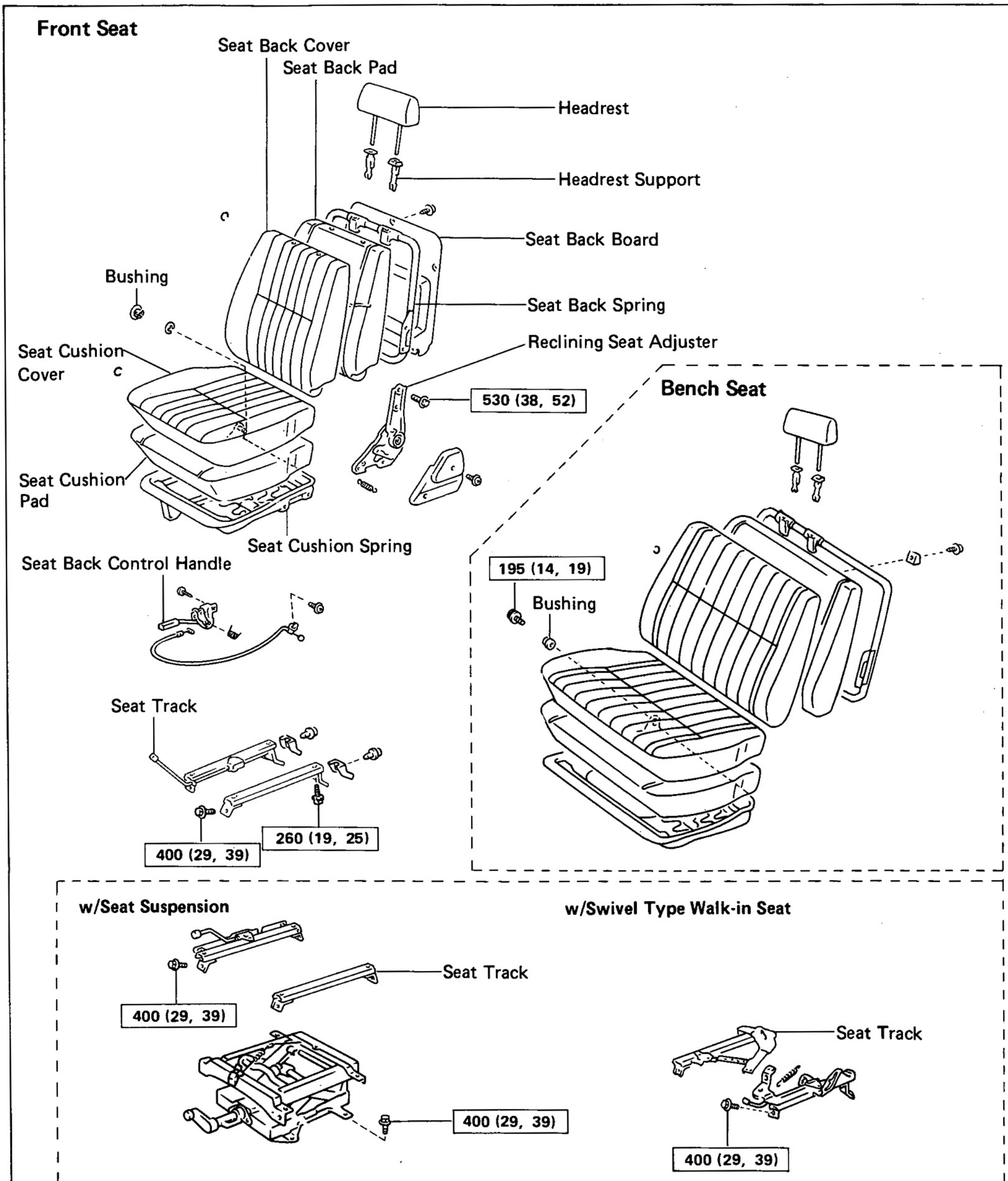

kg-cm (ft-lb, N·m) : Specified torque

BO1104

COMPONENTS(Cont'd)

Rear Bench Seat (70, 73 Series)

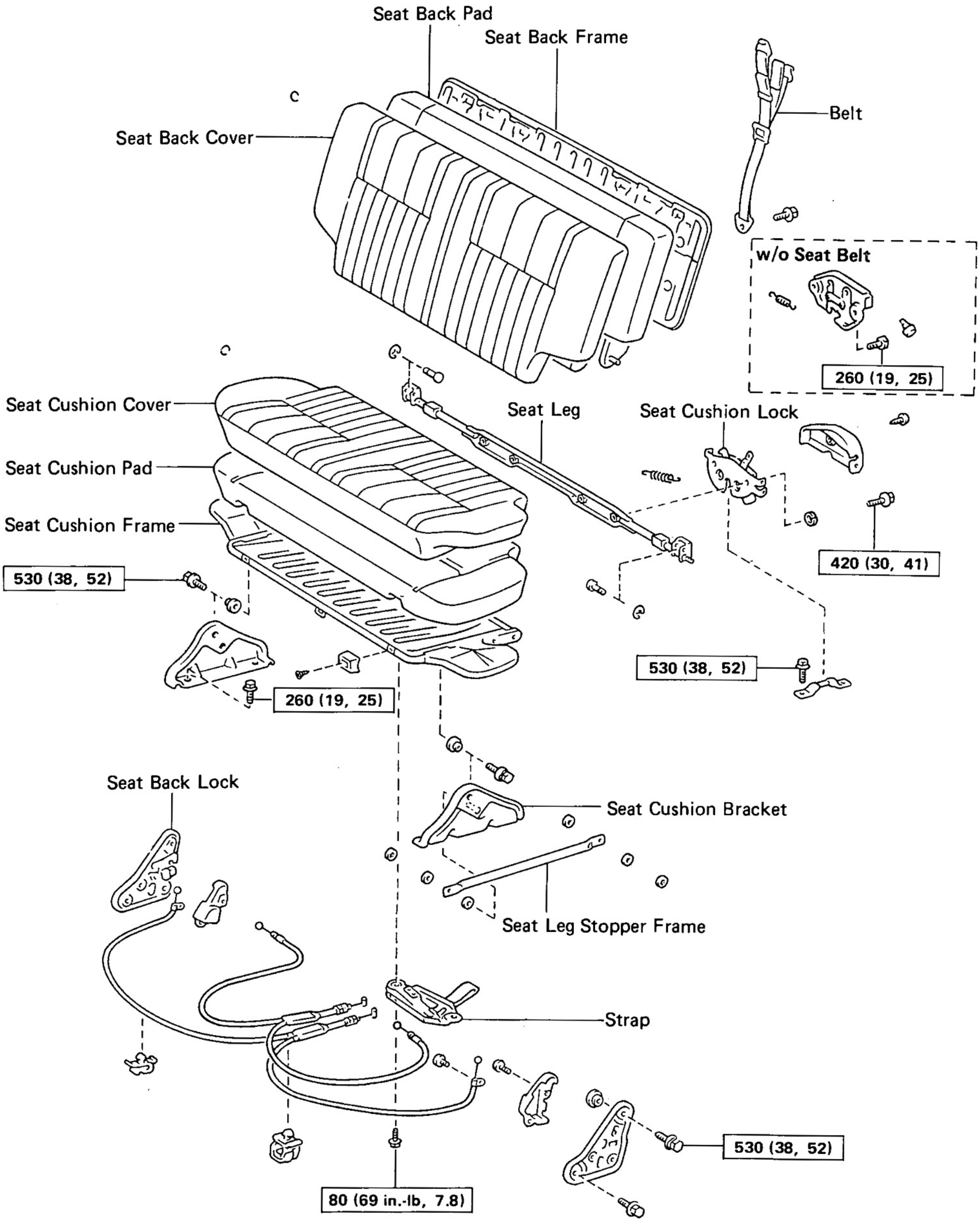

kg-cm (ft-lb, N·m) : Specified torque

BO1110

COMPONENTS(Cont'd)

Rear Bench Seat (75 Series)

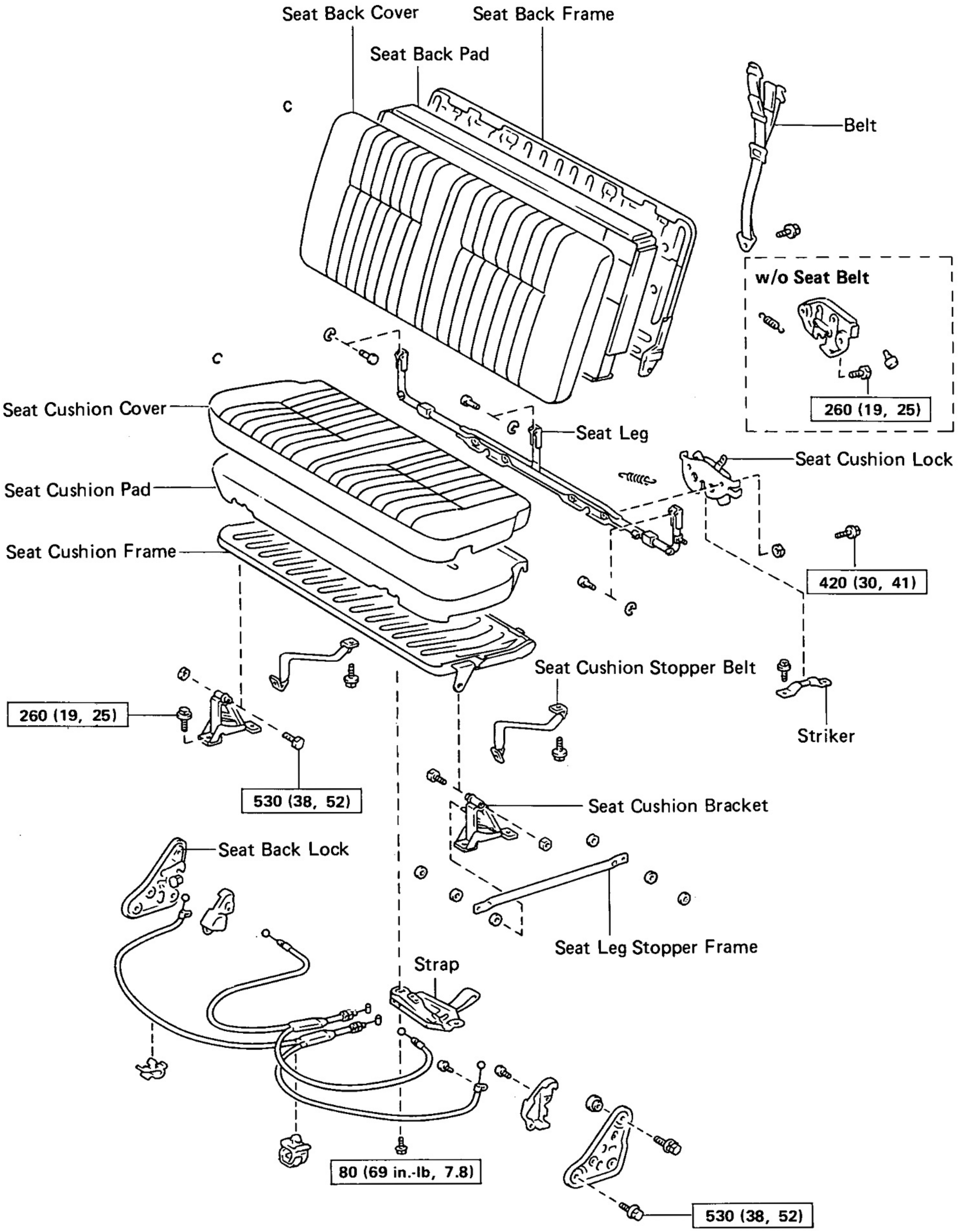

kg-cm (ft-lb, N·m) : Specified torque

BO1111

COMPONENTS(Cont'd)

Rear Parallel Seat

(70 Series)

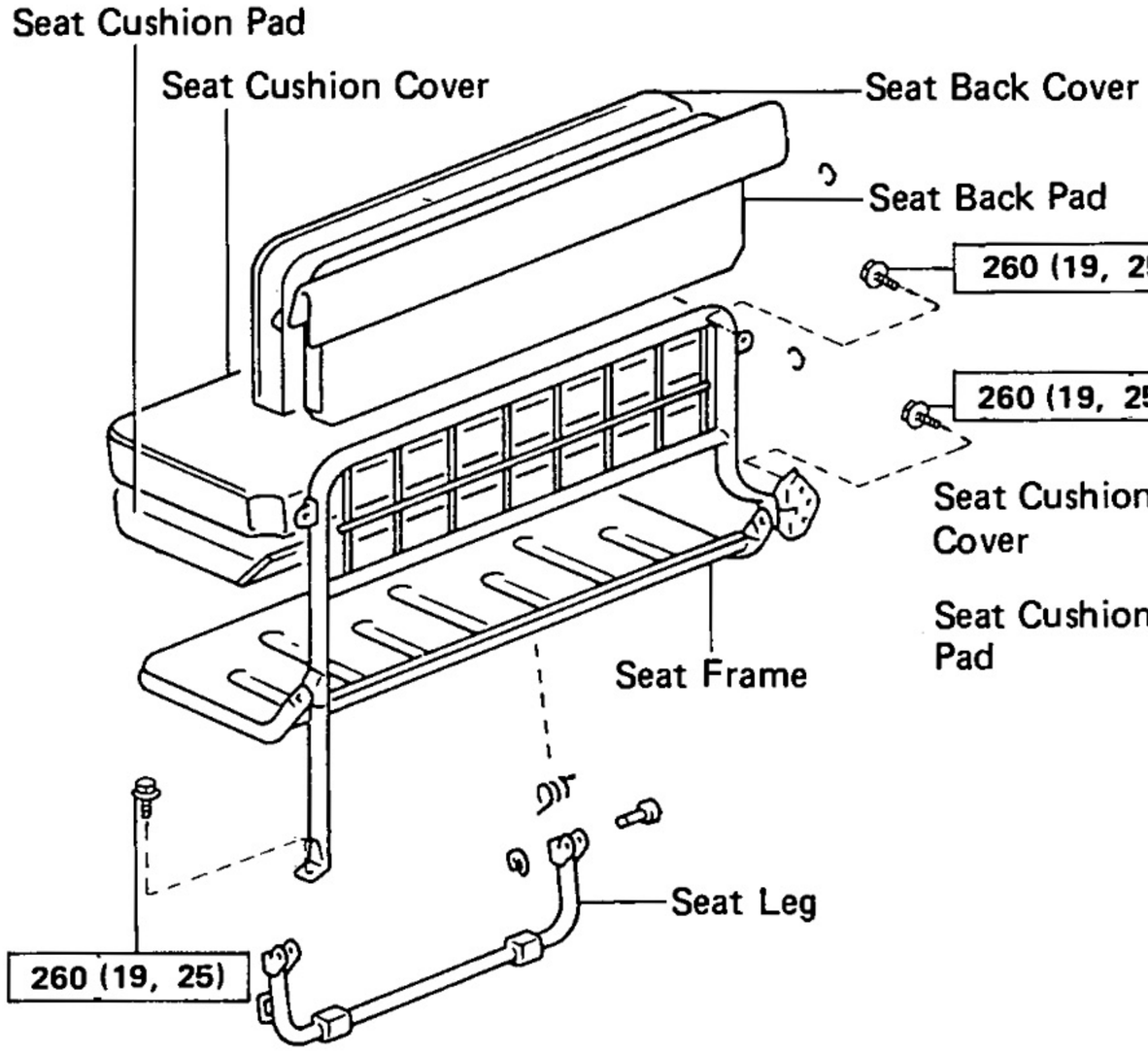

(73 Series)

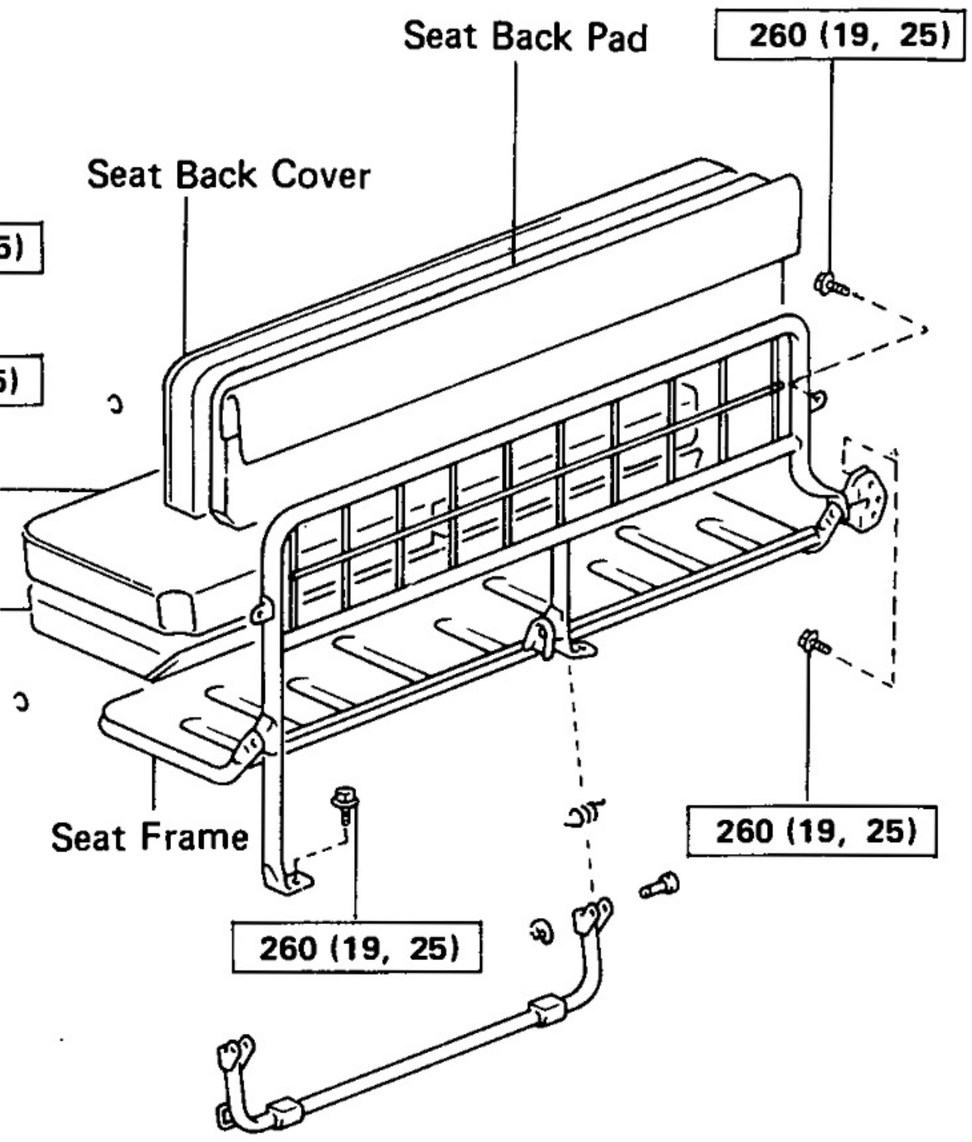

(75V Series)

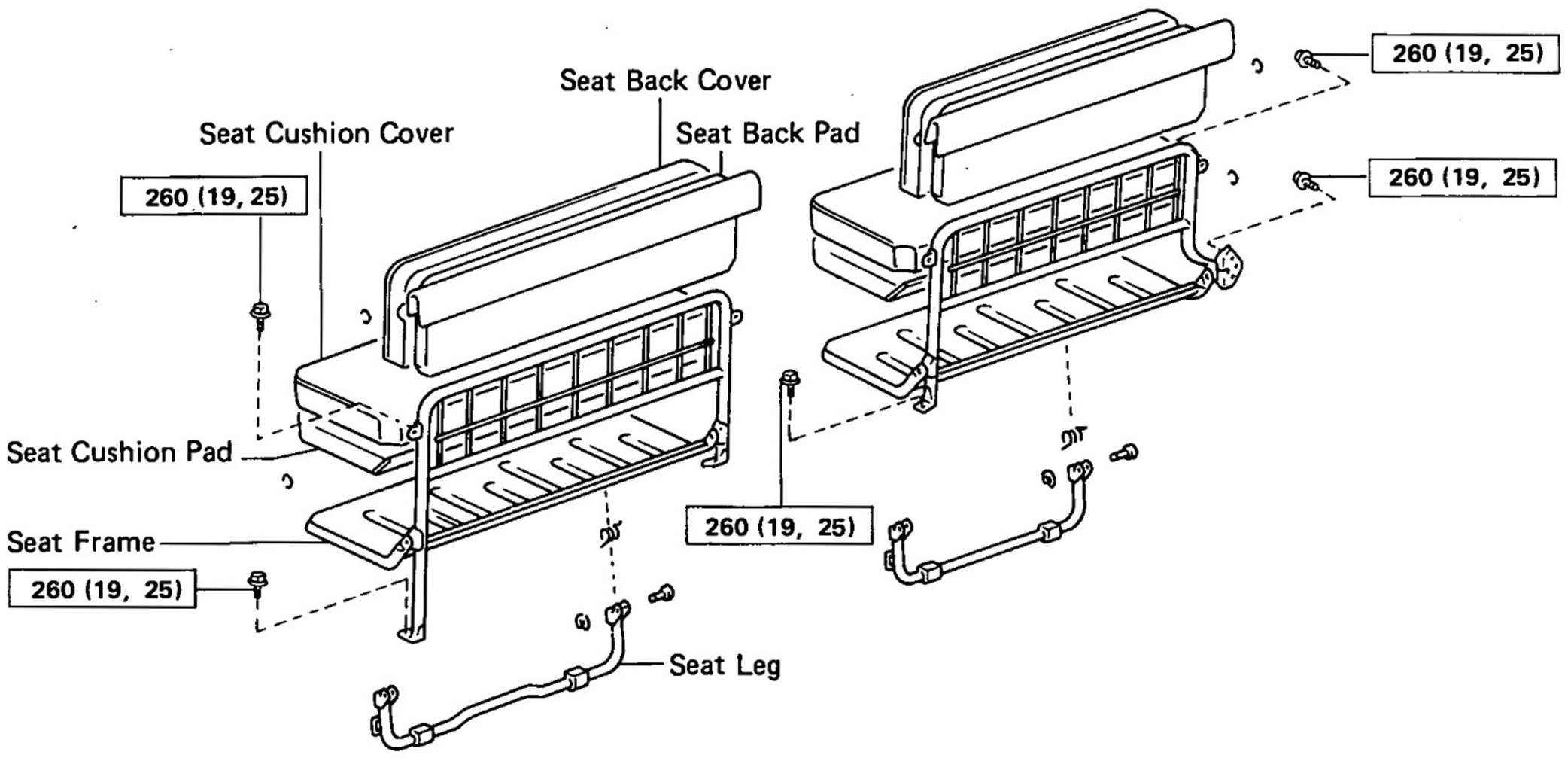

kg-cm (ft-lb, N·m) : Specified torque

BO1106 BO1112
BO1113

COMPONENTS(Cont'd)

Rear Parallel Seat

(75P Series)

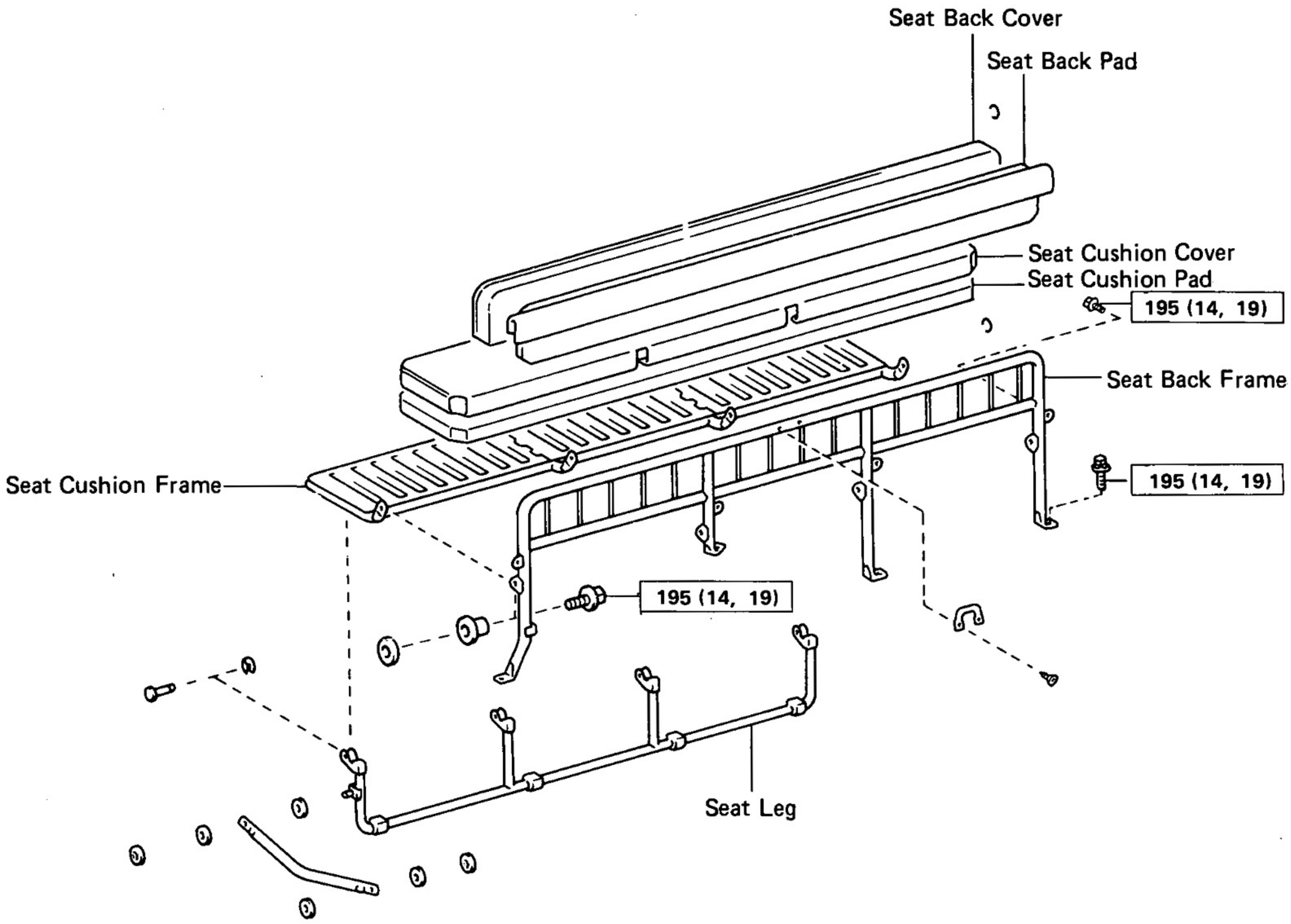

kg-cm (ft-lb, N·m) : Specified torque

BO1114

SEAT
(60,62 Series)
COMPONENTS

Front Seat

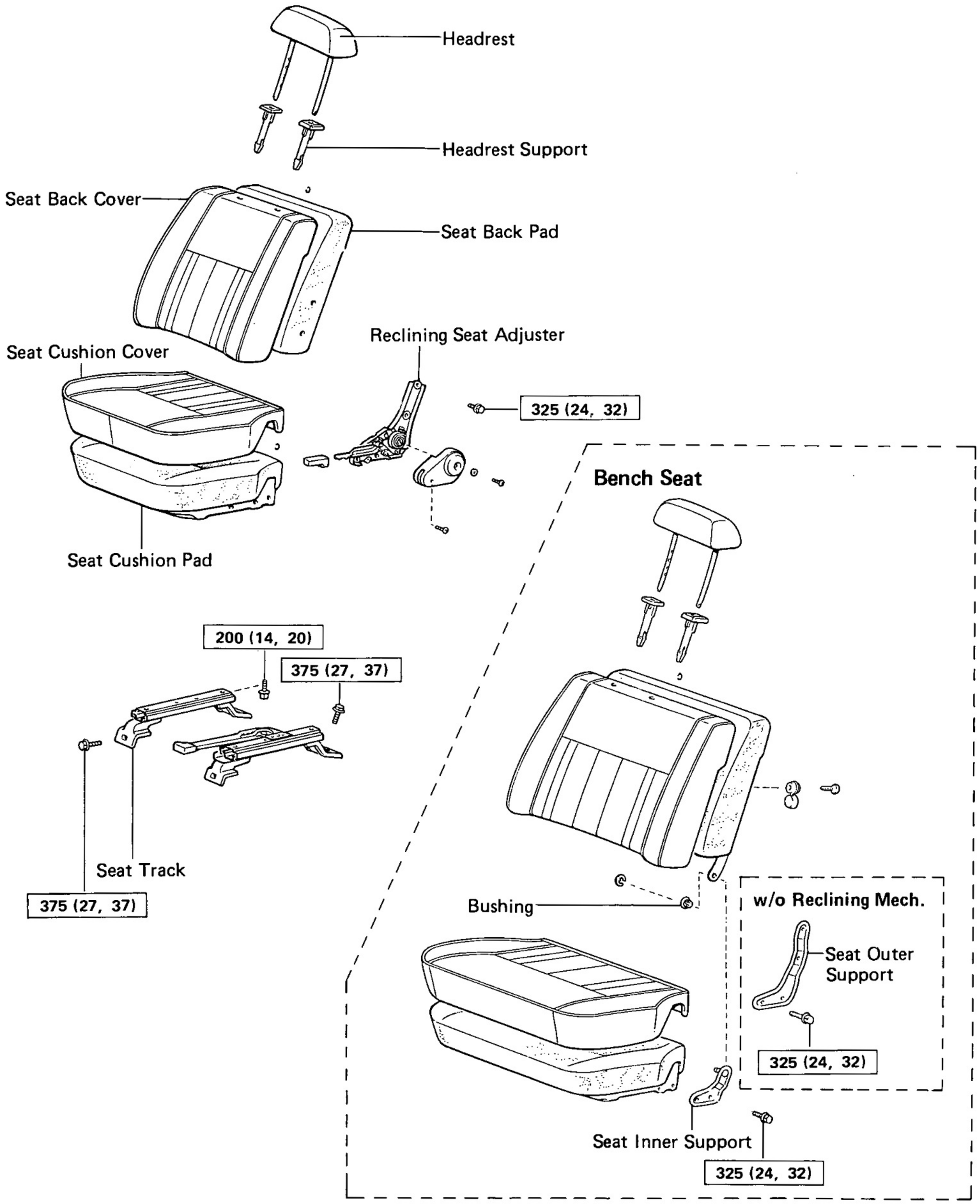

kg-cm (ft-lb, N·m) : Specified torque

801118

COMPONENTS(Cont'd)

Rear Bench Seat

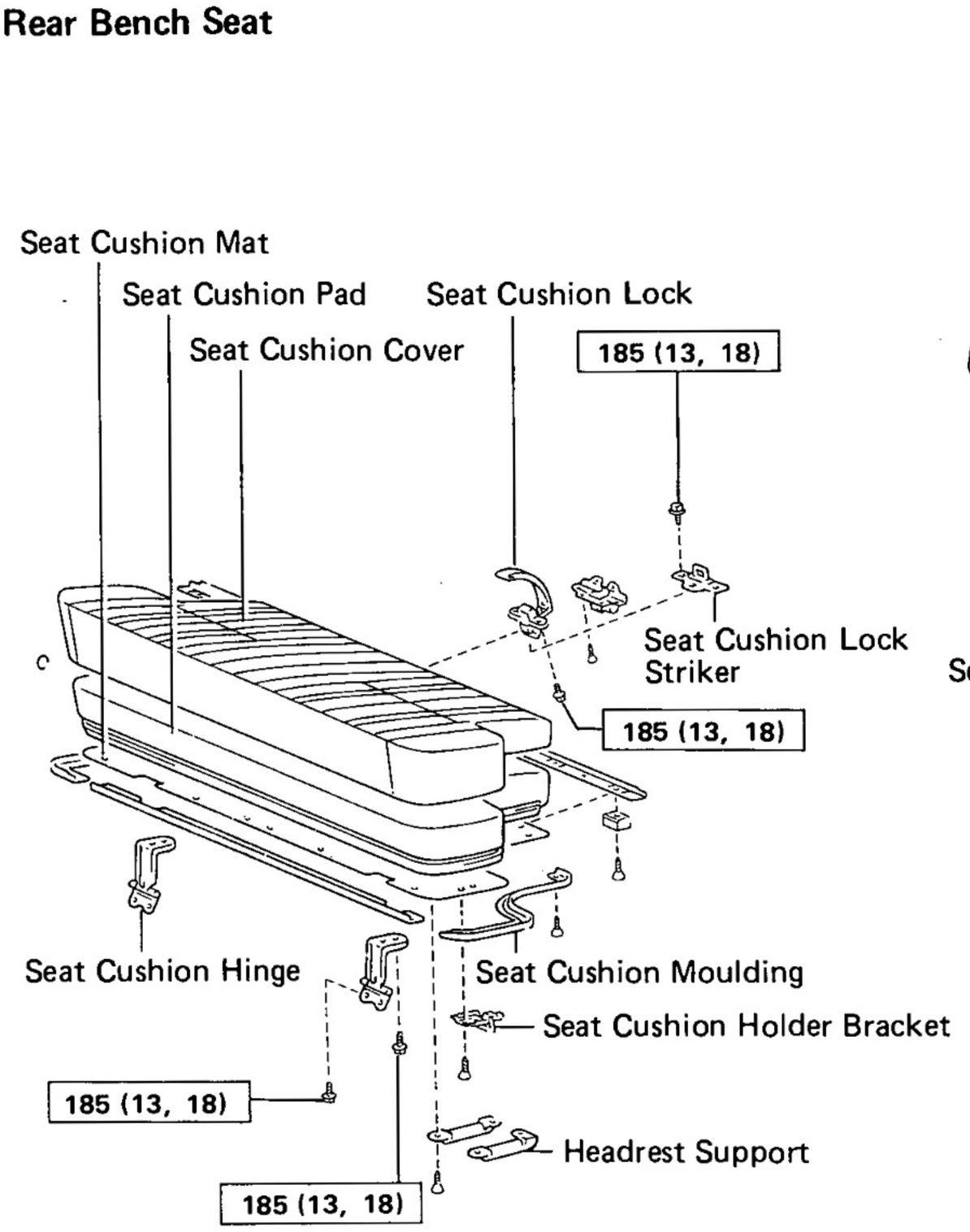

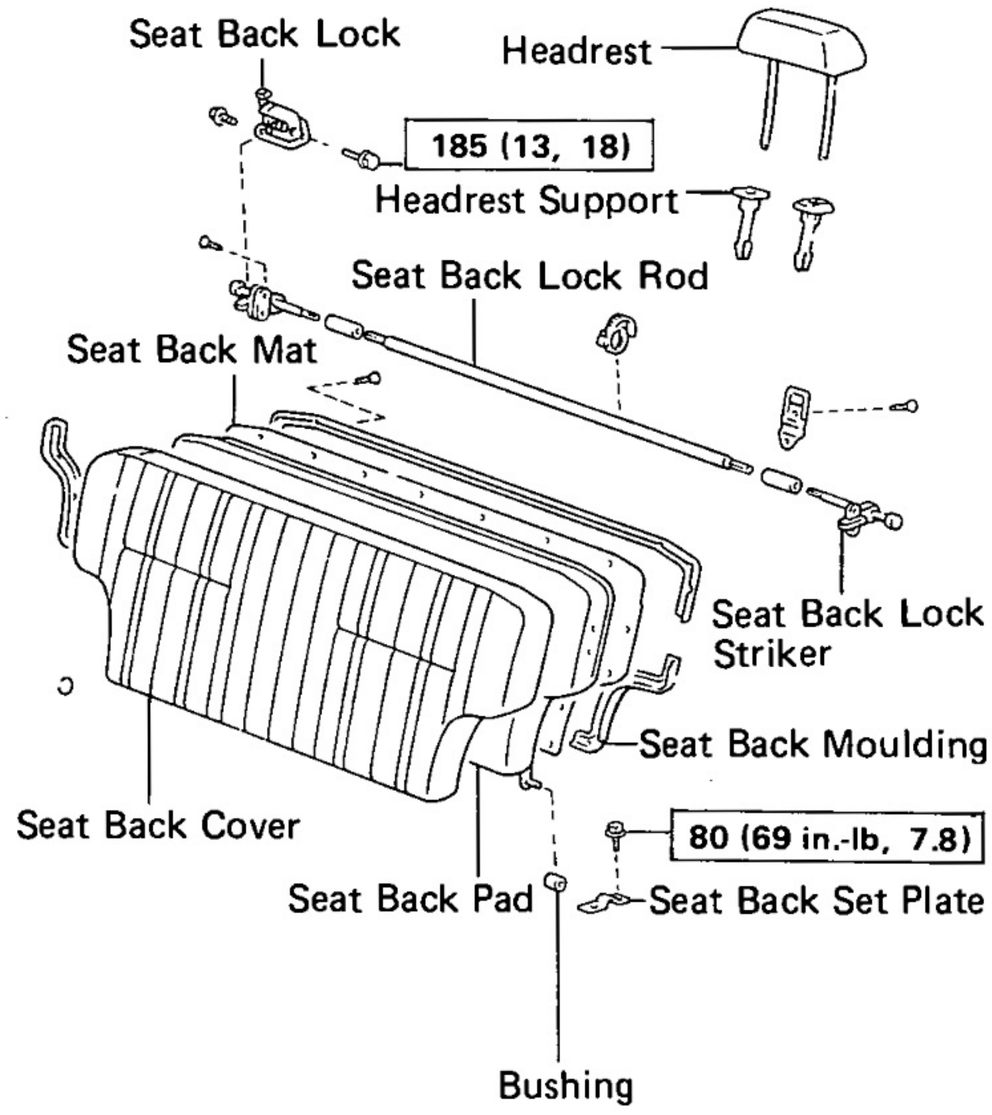

Rear Split Seat

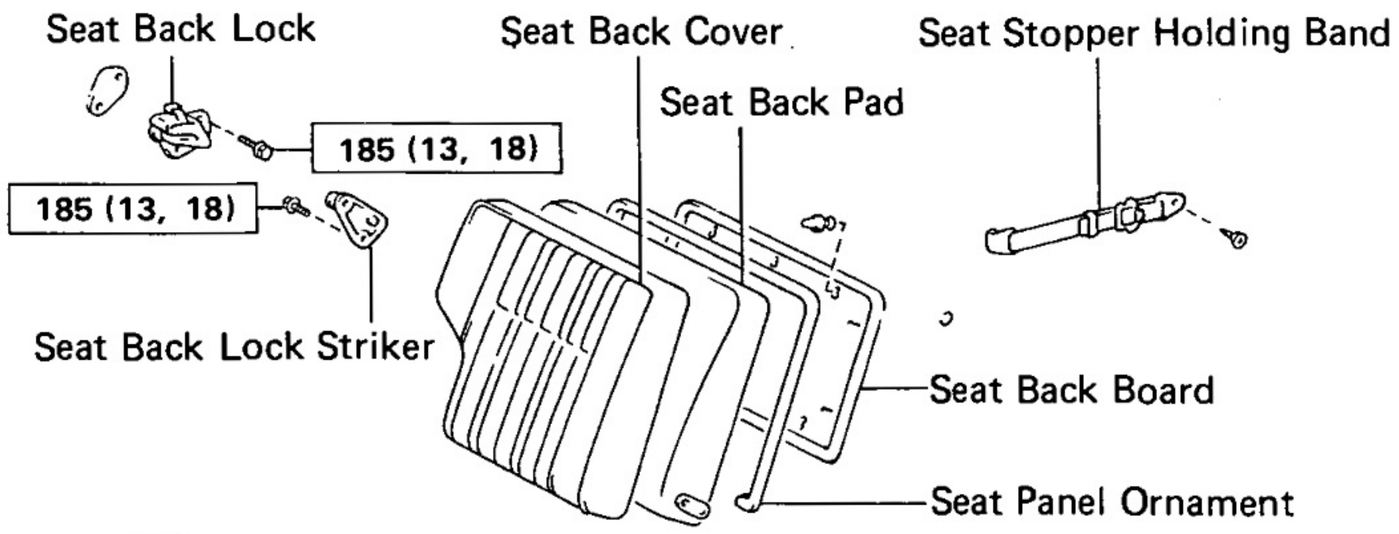

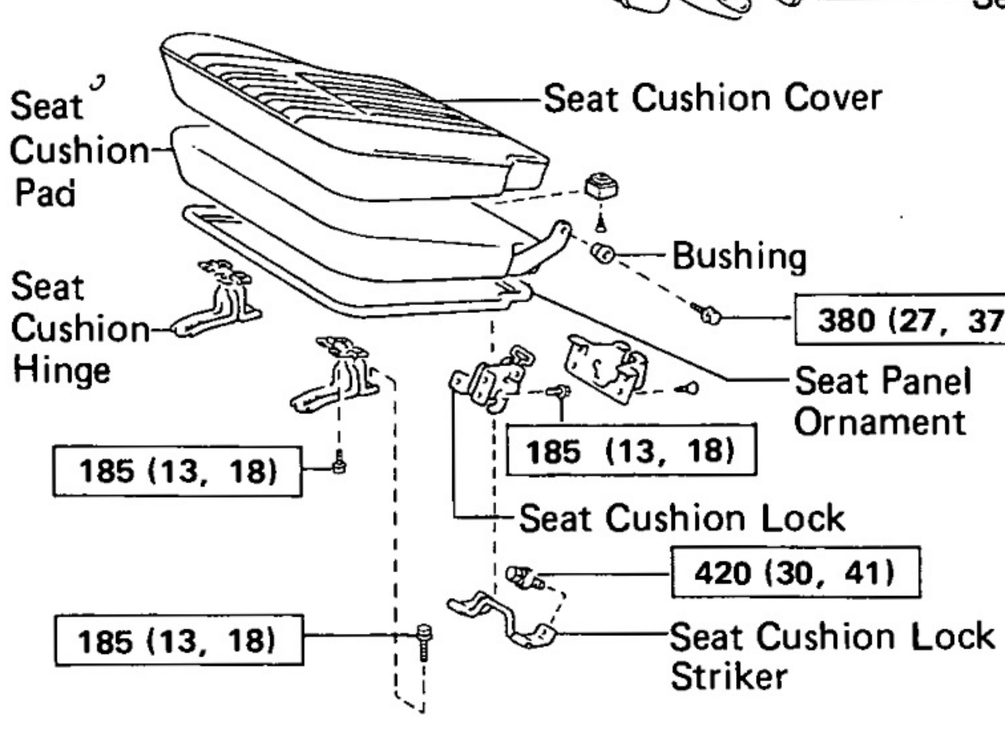

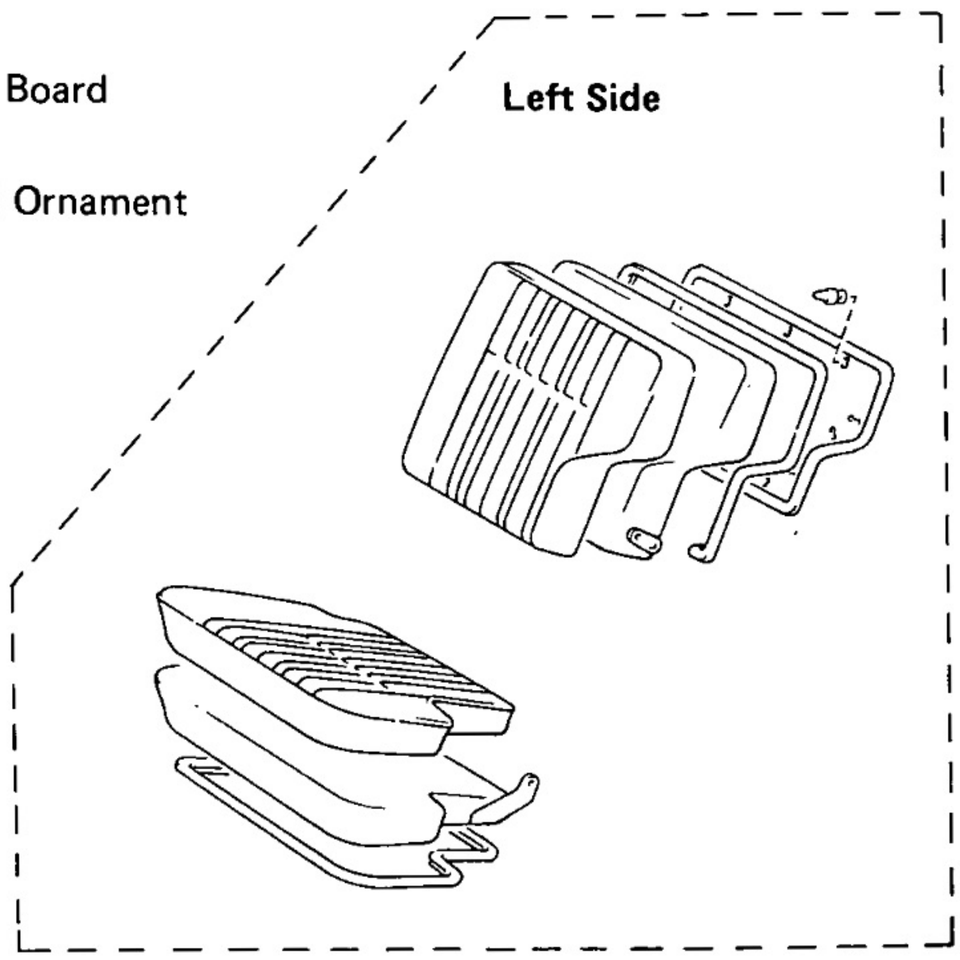

kg-cm (ft-lb, N·m) : Specified torque

BO1119
BO1120

COMPONENTS(Cont'd)

Transverse Seat

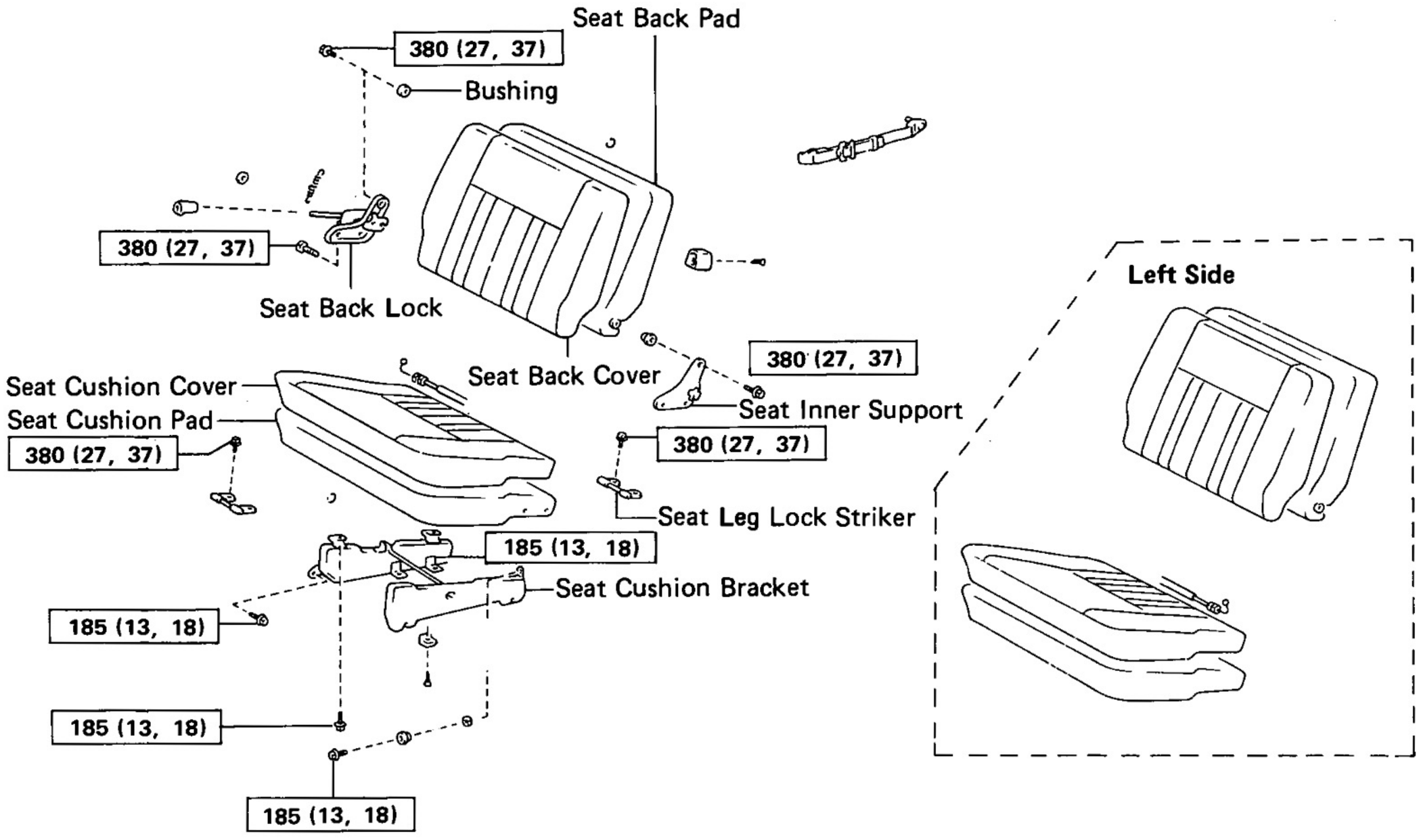

Parallel Seat

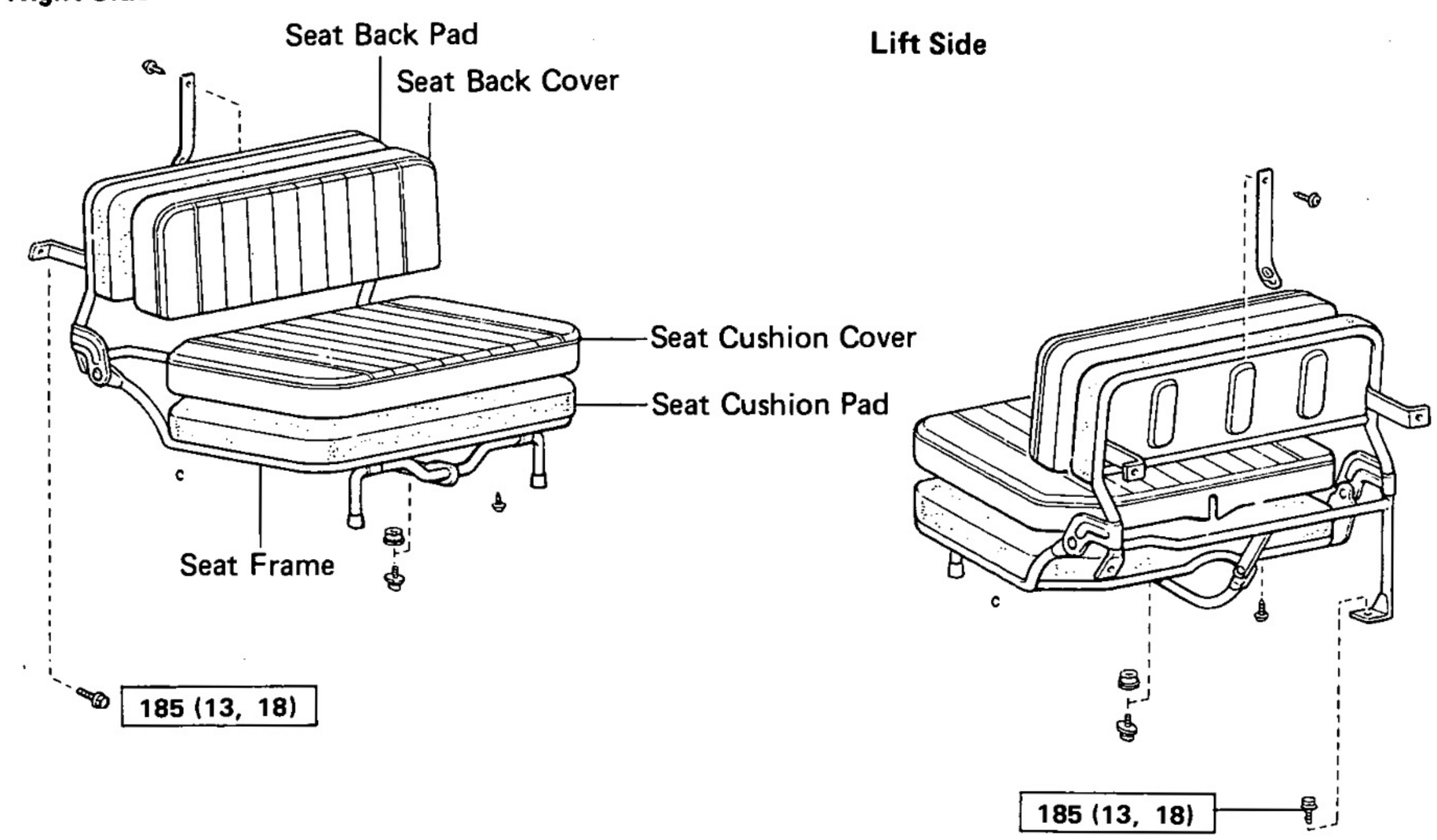

kg-cm (ft-lb, N·m) : Specified torque

BO1121
BO1122

SEAT BELT (70,73,75 Series)

COMPONENTS

Front Seat Belt

(ELR type)

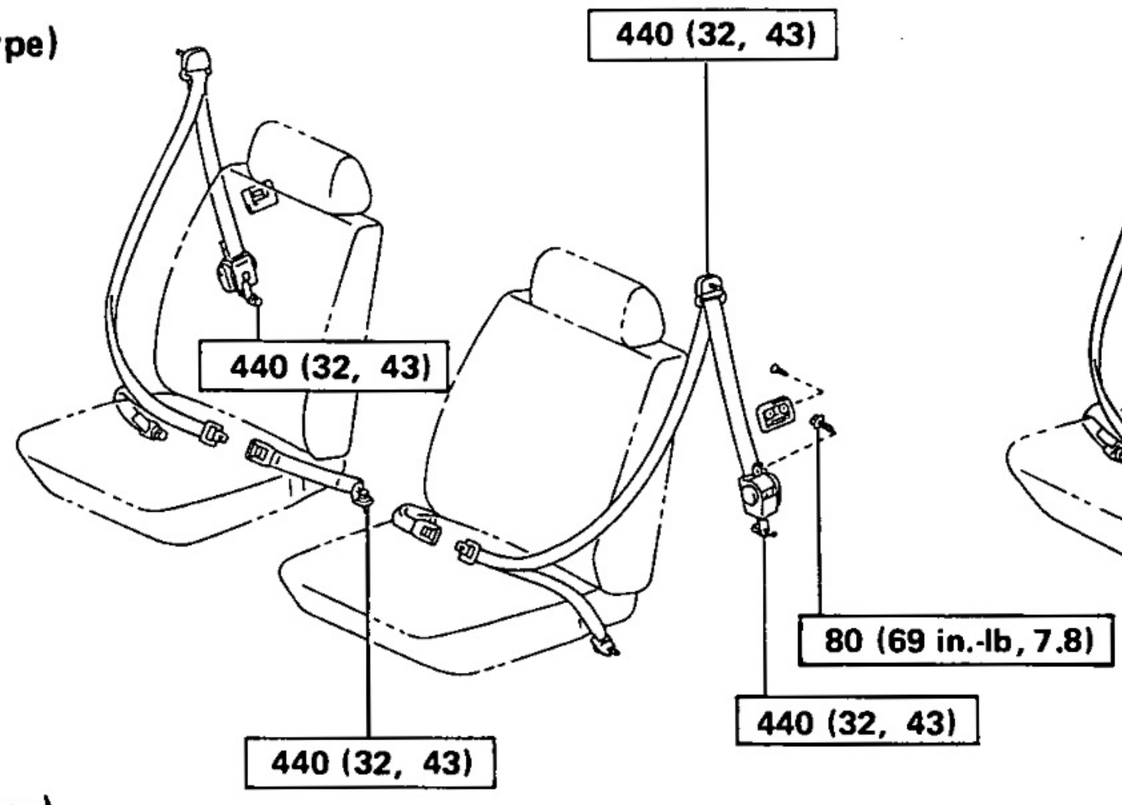

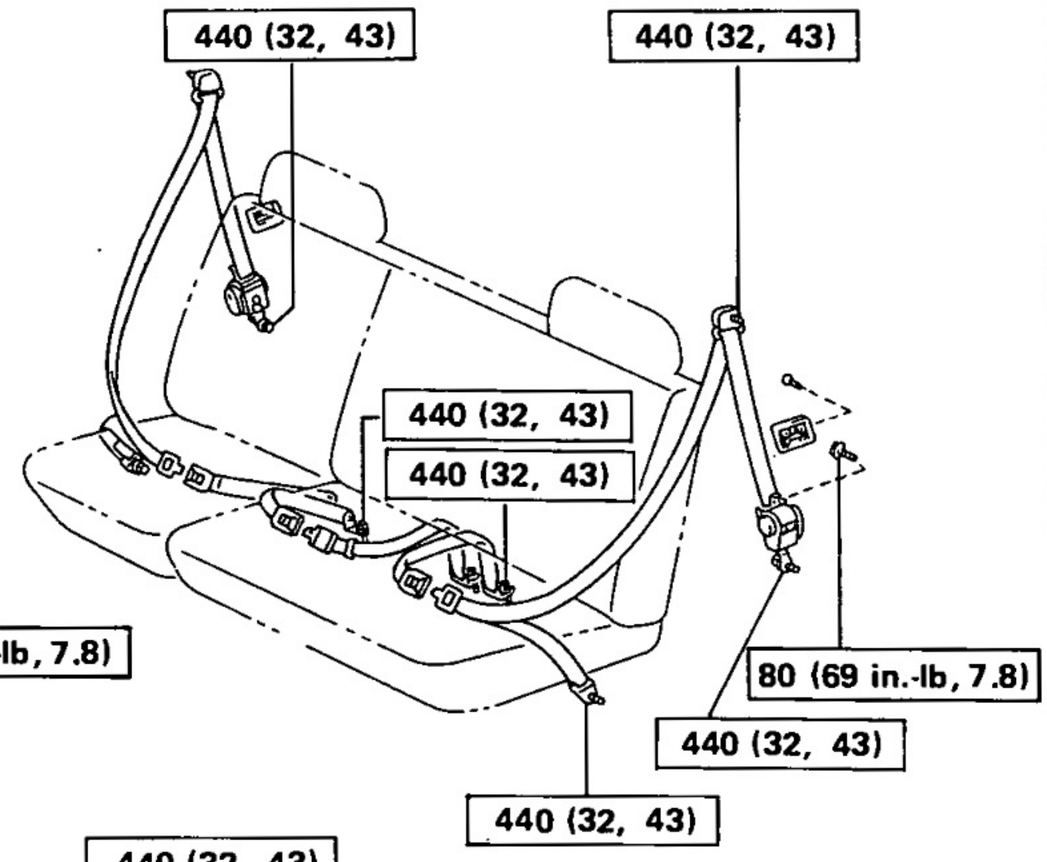

(NR type)

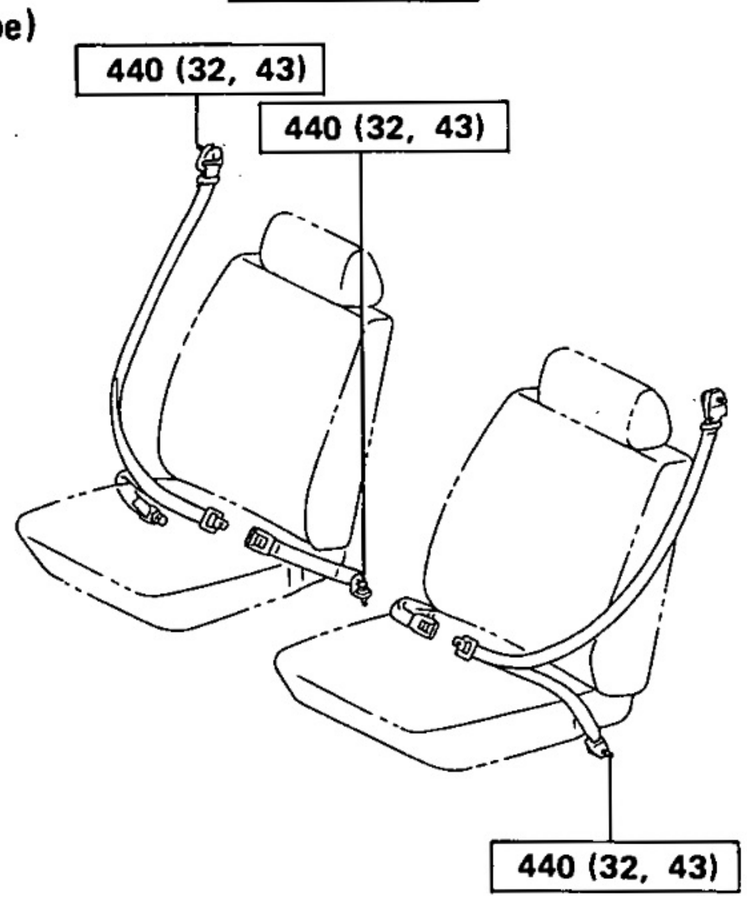

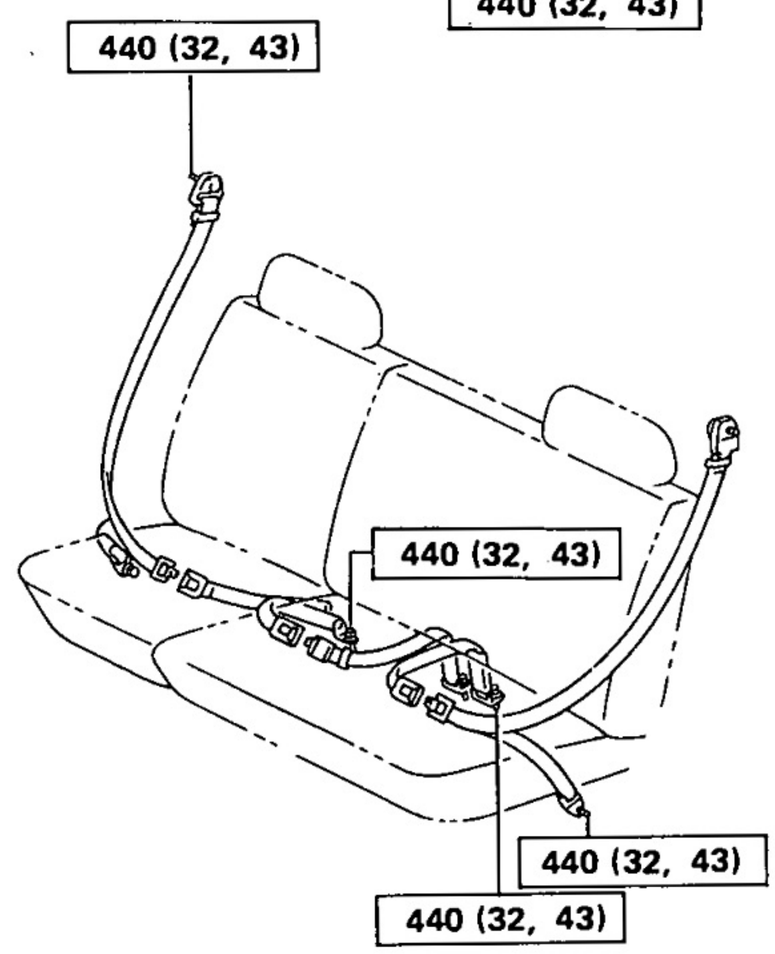

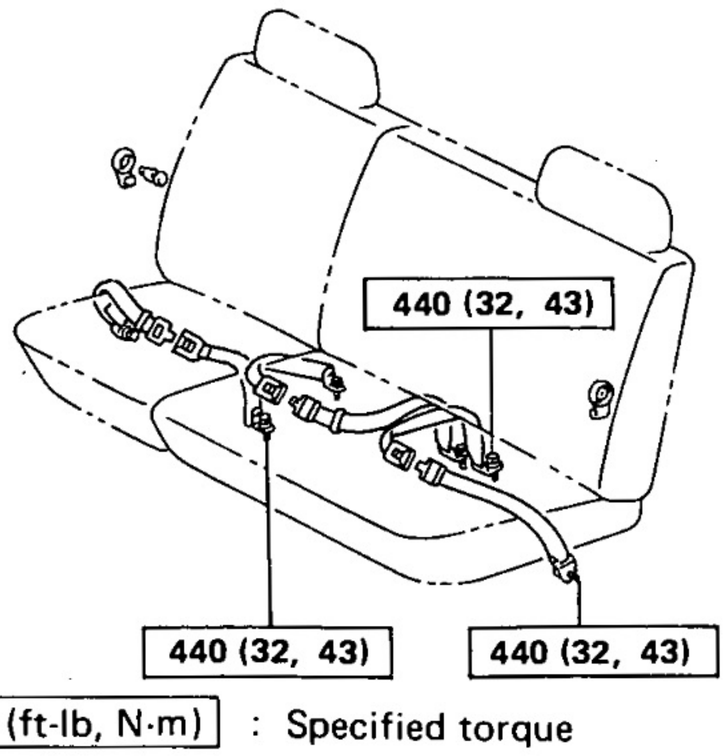

kg-cm (ft-lb, N·m) : Specified torque

BO1107

COMPONENTS(Cont'd)

[Forward Seat] Rear Seat Belt

(ELR type)

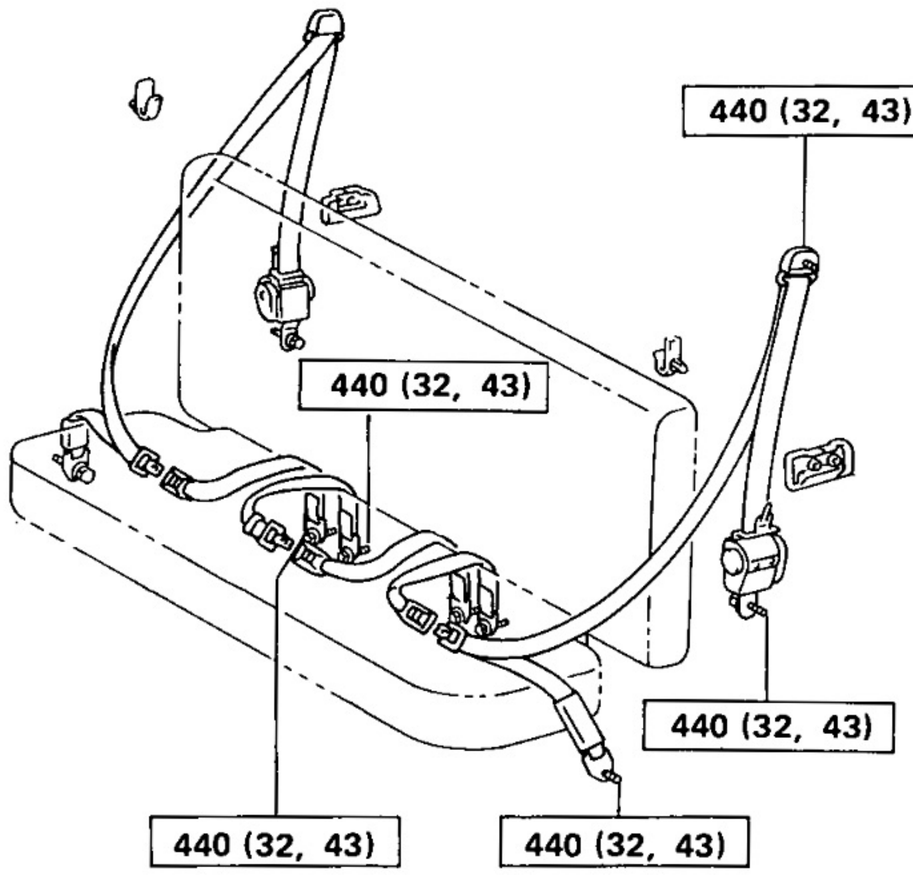

(NR type)

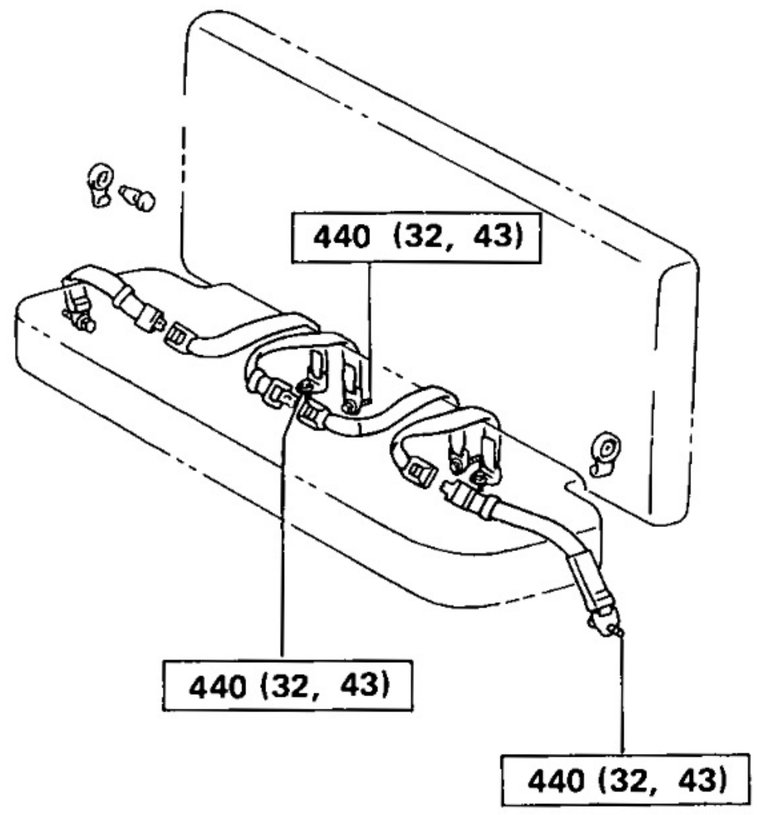

[Parallel Seat]

(NR type)

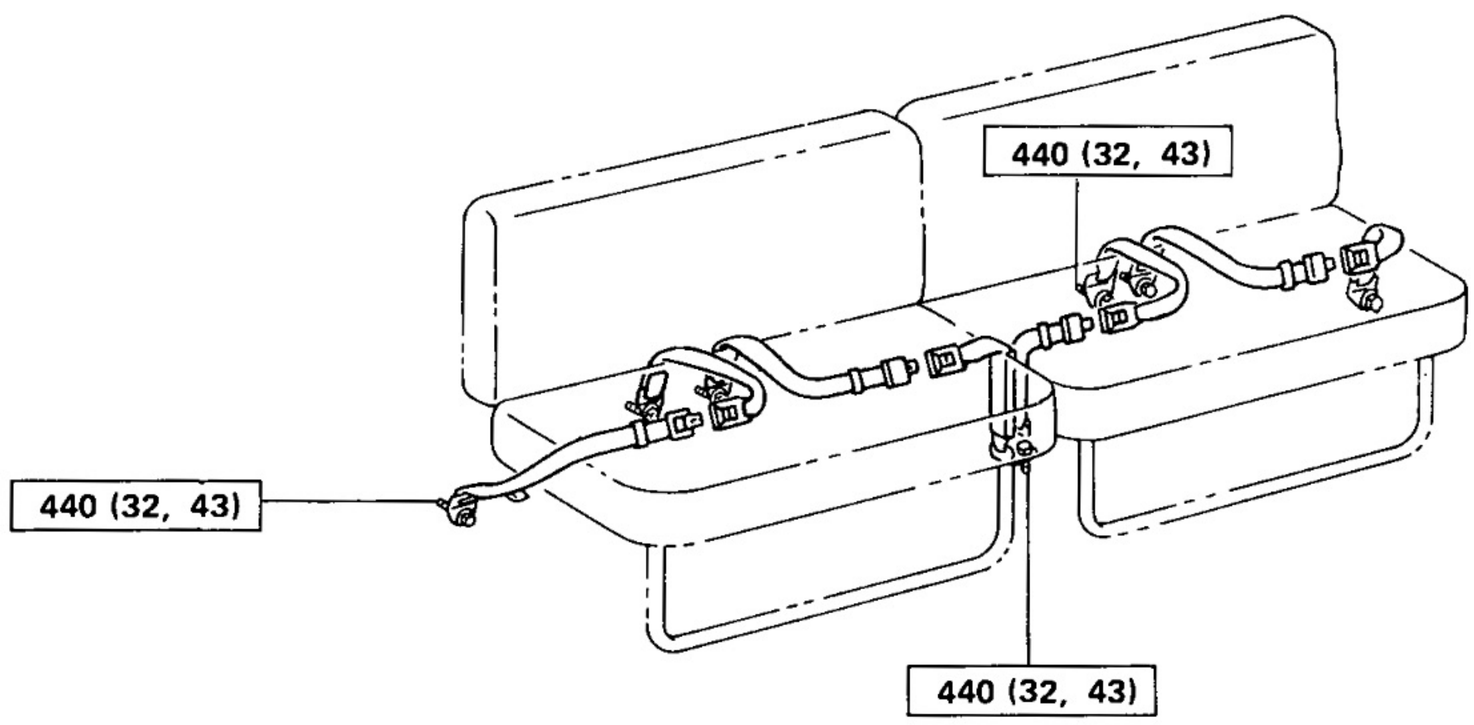

kg-cm (ft-lb, N·m) : Specified torque

BO1108
BO1123

SEAT BELT (60,62 Series)

COMPONENTS

Front Seat Belt

(ELR type)

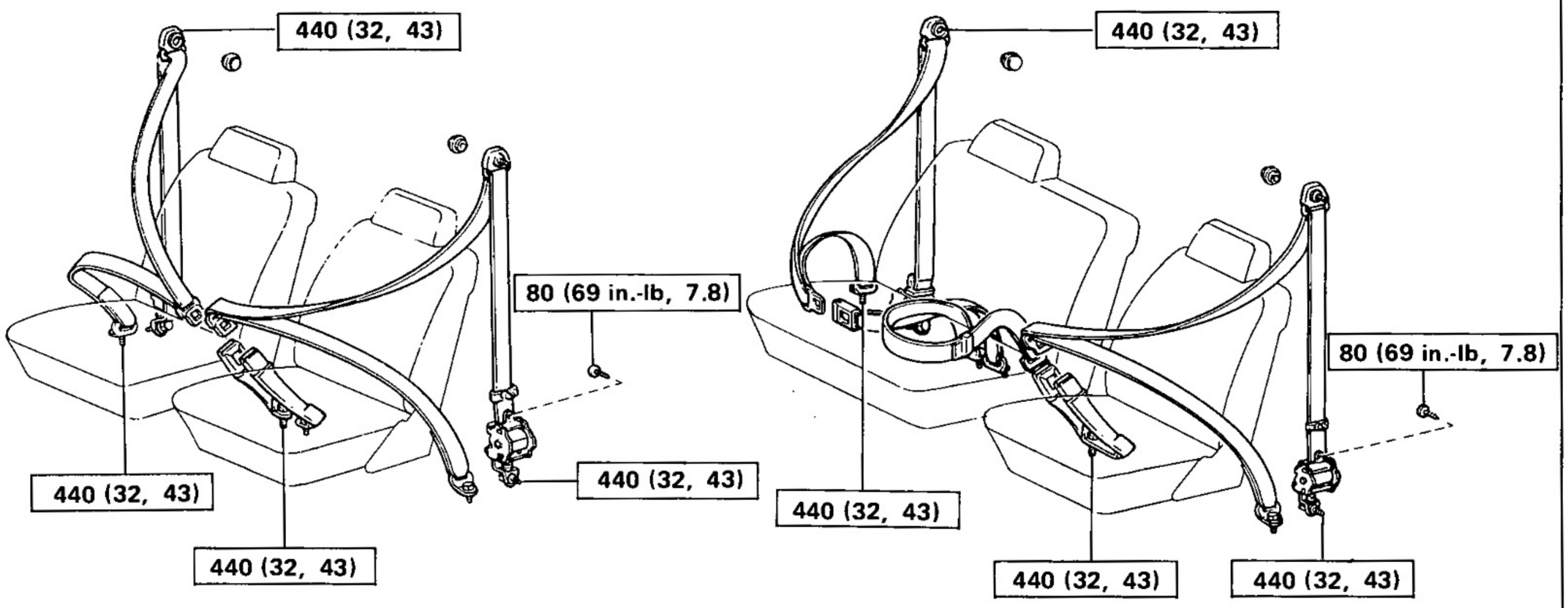

Rear Seat Belt

(ELR type)

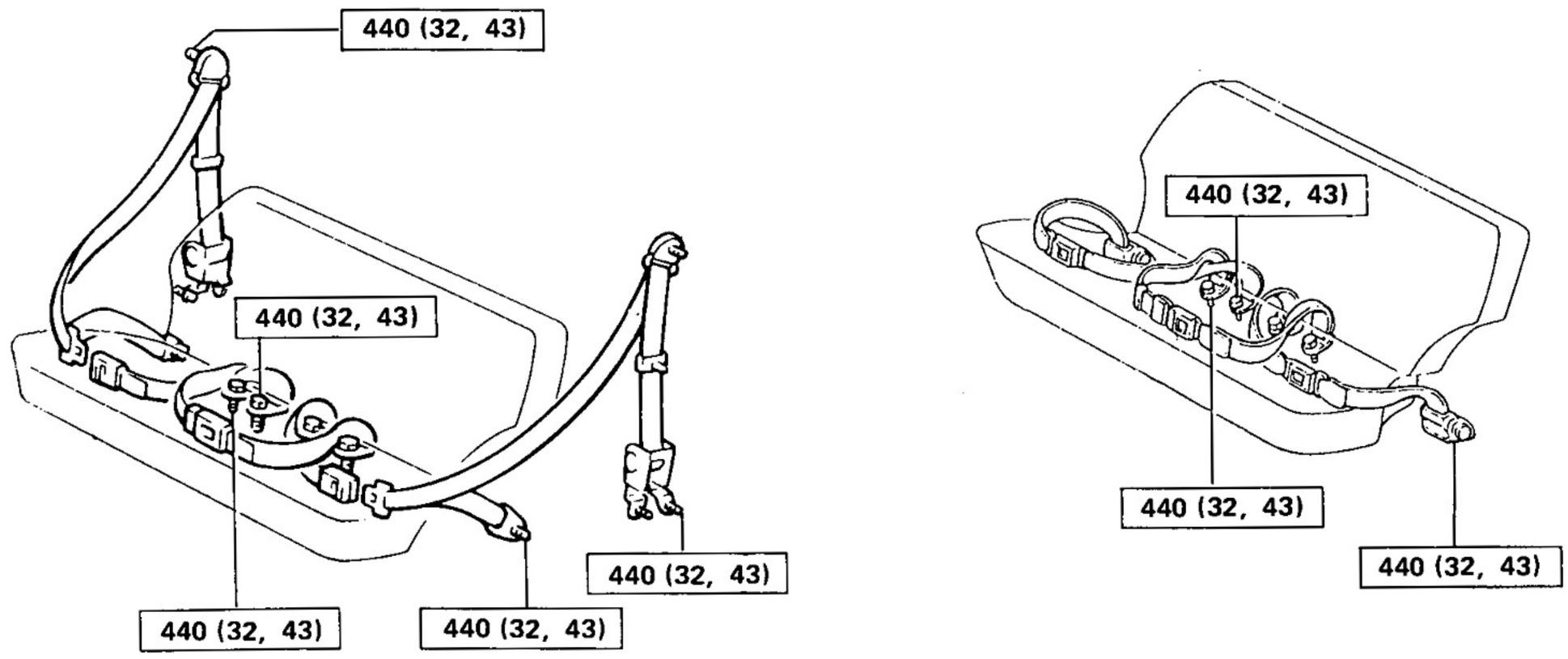

kg-cm (ft-lb, N·m) : Specified torque

BO1124 BO1125
BO1126 BO1127

COMPONENTS(Cont'd)

Rear Seat Belt

(NR type)

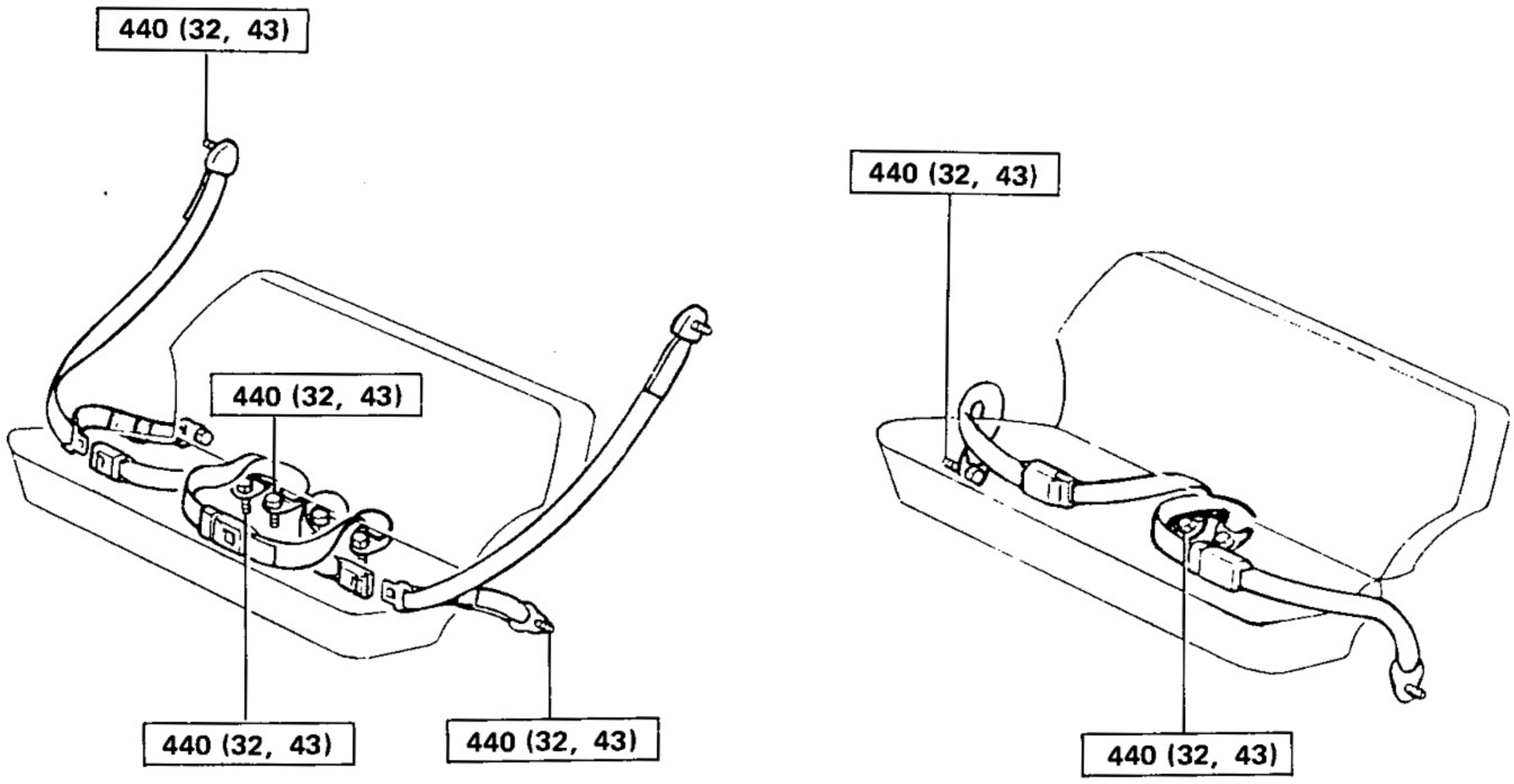

Transverse Seat Belt

(ELR type)

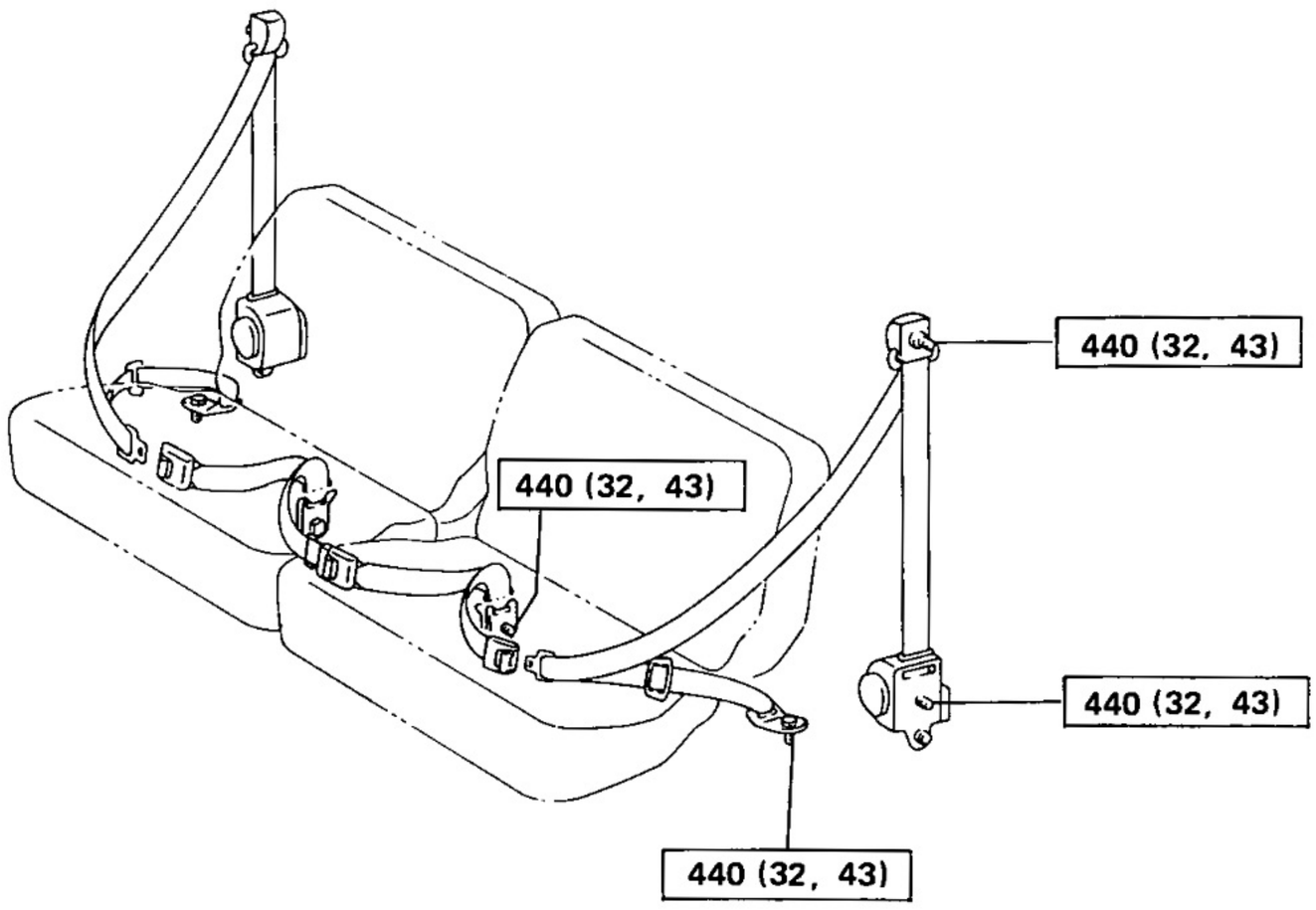

kg-cm (ft-lb, N·m) : Specified torque

BO1128 BO1129
BO1130

FUEL TANK AND LINE

COMPONENTS

70, 73 Series and 75 Subtank

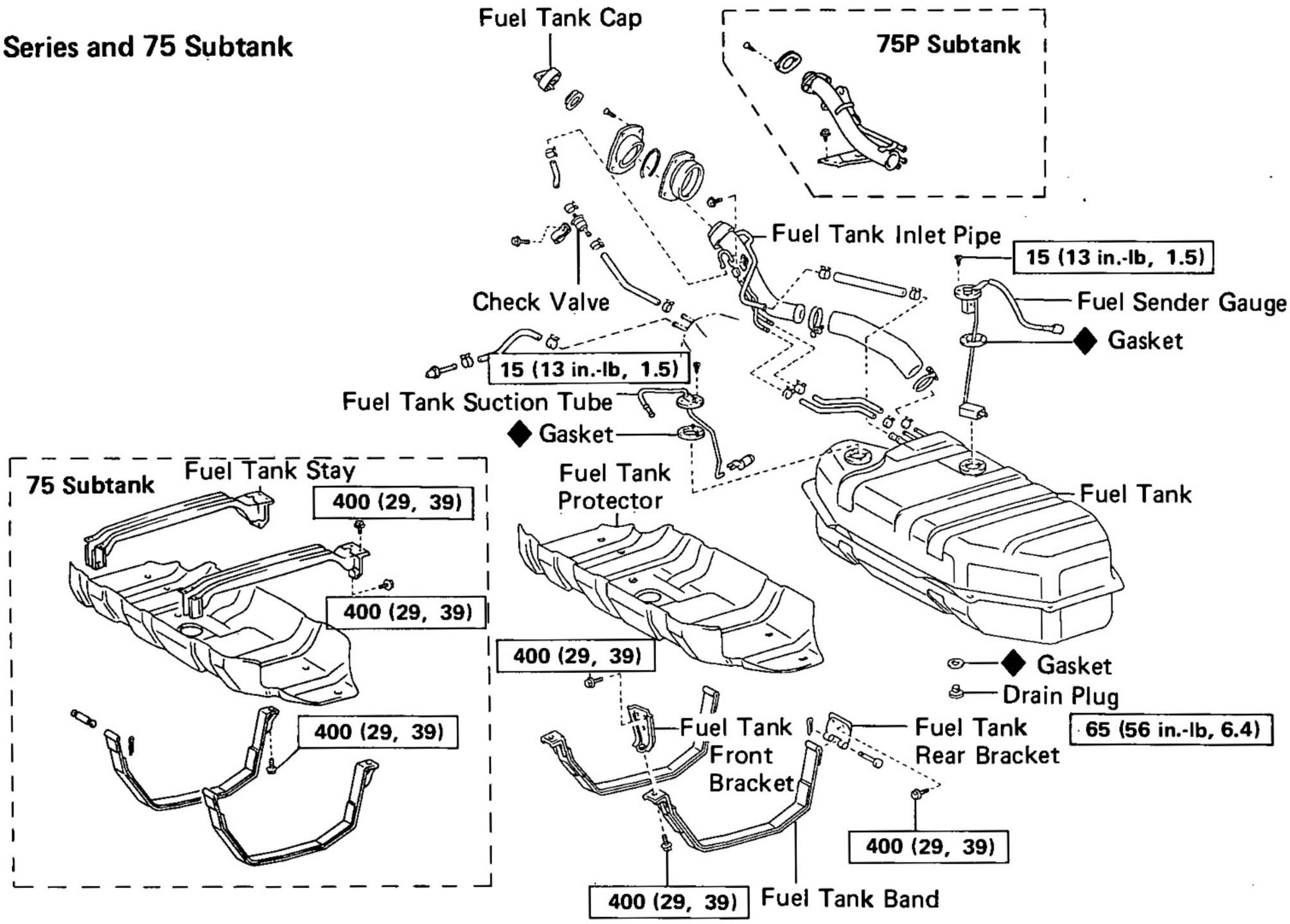

75 Series

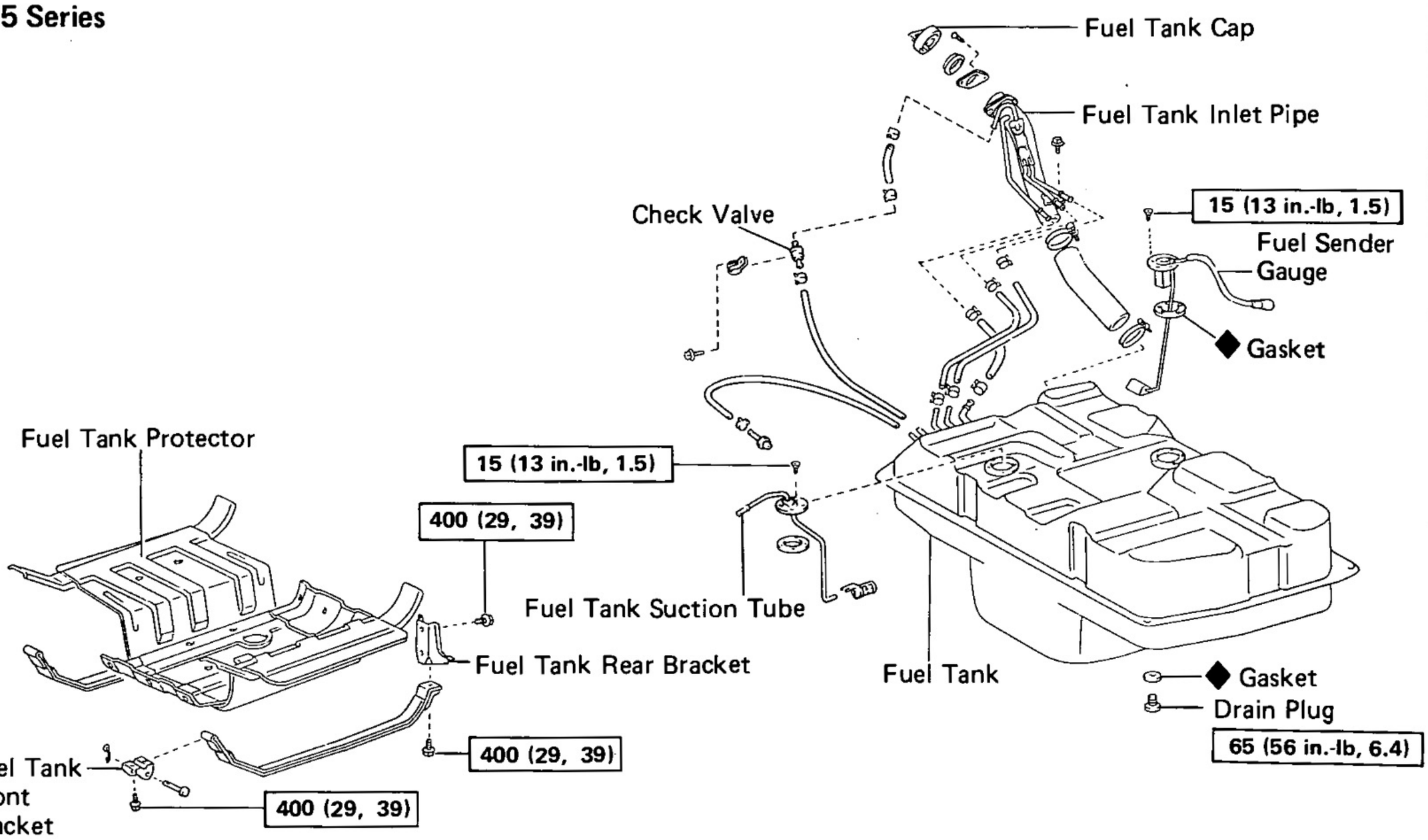

kg-cm (ft-lb, N·m) : Specified torque

◆ : Non-reusable part

BO1134
BO1131

COMPONENTS(Cont'd)

60, 62 Series

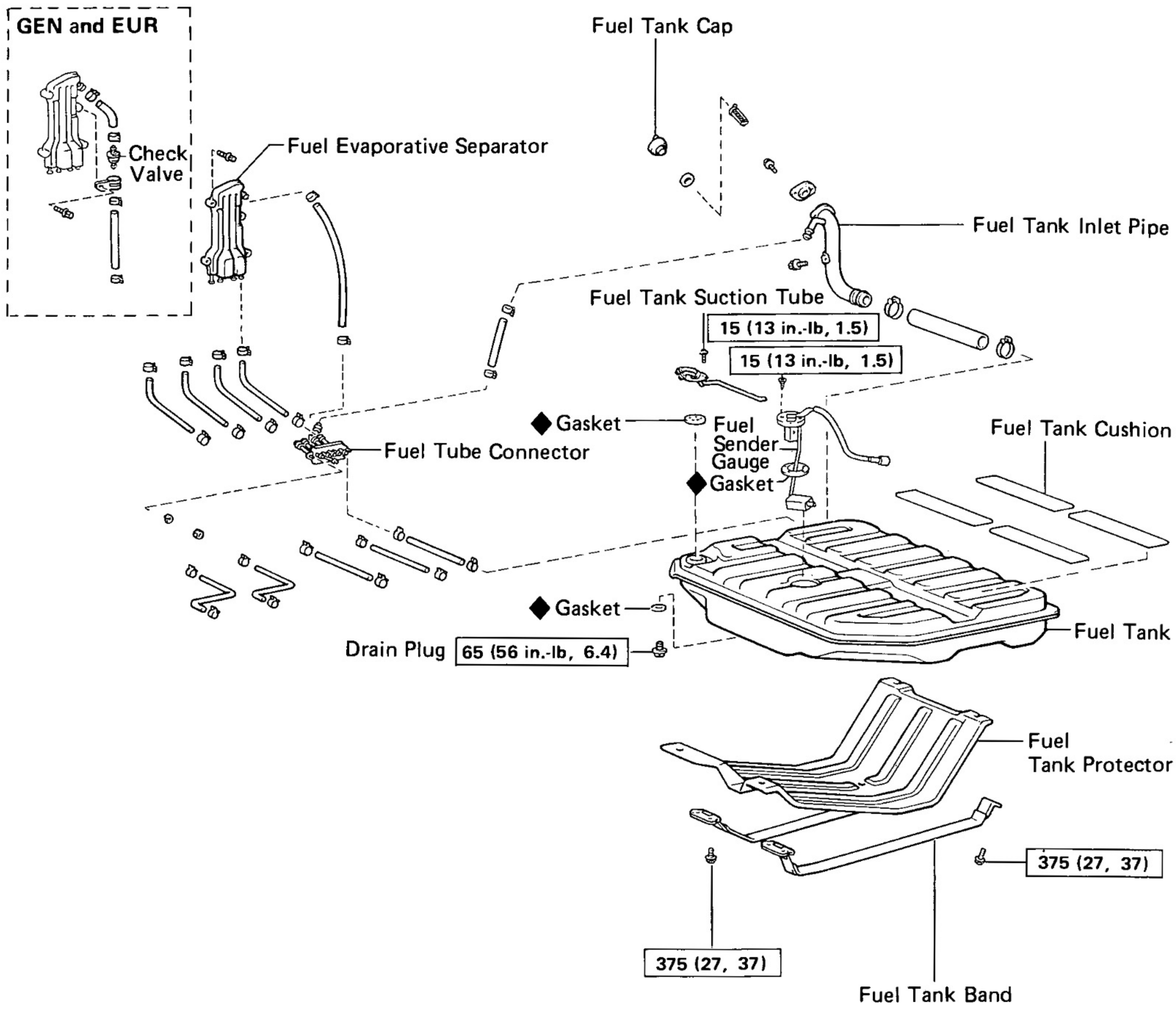

kg-cm (ft-lb, N·m) : Specified torque

◆ : Non-reusable part

BO1132

PRECAUTIONS

1. Always use new gaskets when replacing the fuel tank or component parts.
2. When re-installing, be sure to include the rubber protectors on the upper surfaces of the fuel tank and tank band.
3. Apply the proper torque to all tightening parts.

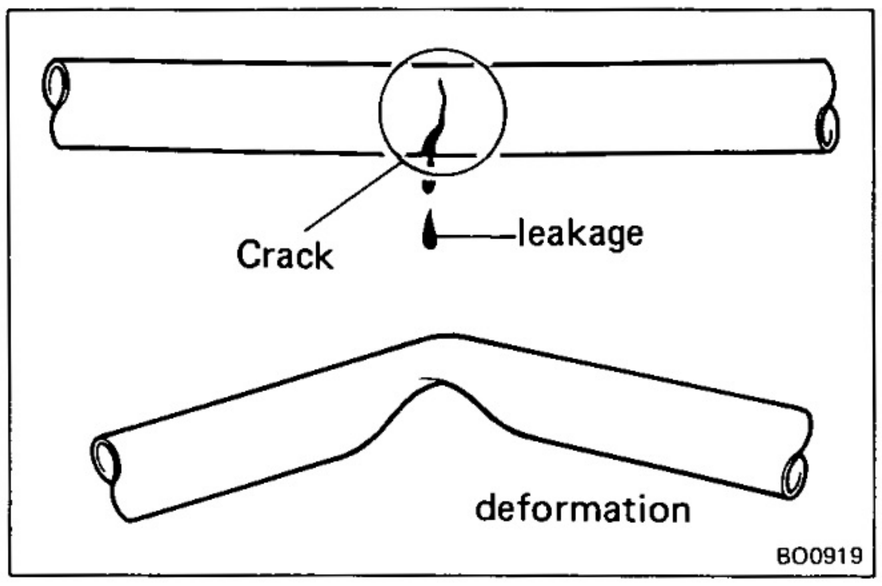

INSPECT FUEL LINES AND CONNECTIONS

(a) Inspect the fuel lines and connections for cracks, leakage or deformation.

(b) Inspect the fuel tank vapor vent system hoses and connections for looseness, sharp bends or damage.

(c) Inspect the fuel tank for deformation, cracks, fuel leakage or tank band looseness.

(d) Inspect the filler neck for damage or fuel leakage.

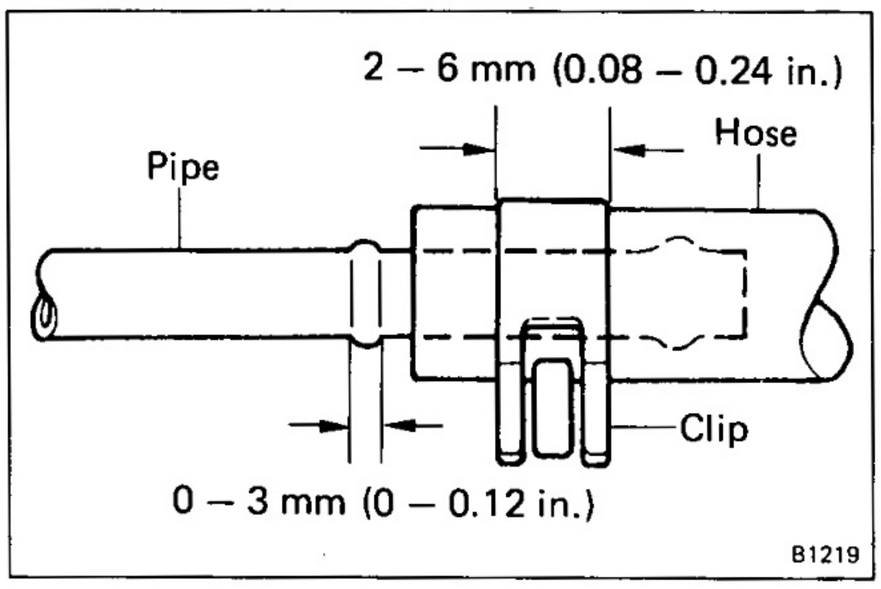

(e) Hose and tube connections should be as shown in the illustration.

If problem is found, repair or replace parts as necessary.

FRAME DIMENSIONS

FJ, BJ 70 Series

Wheel base	2,310 (90.94)

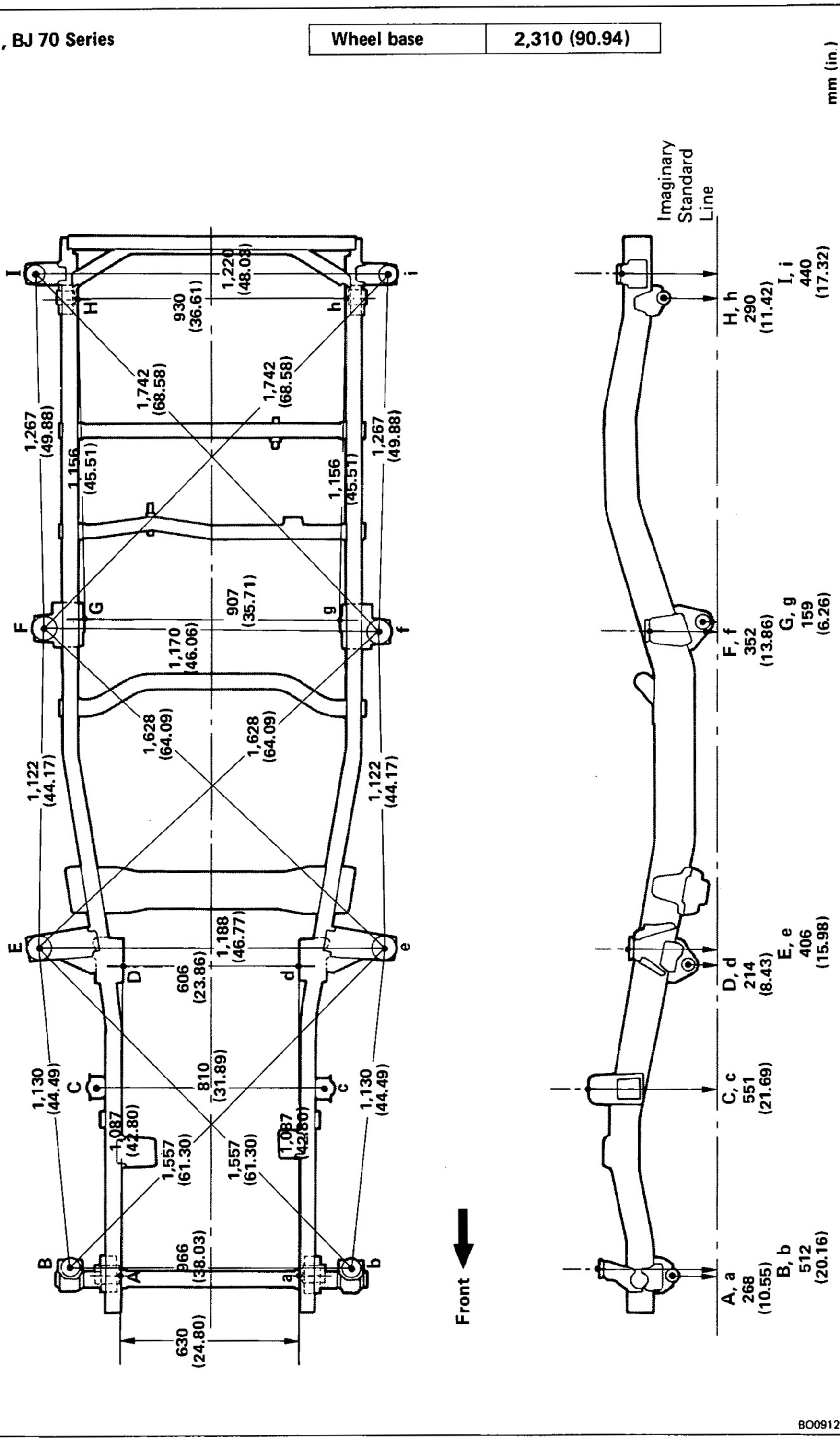

BO0912

mm (in.)

Symbol	Nomenclature	Hole dia.
F, f	Body mounting hole	24 (0.94)
G, g	Rear spring front hanger hole – inner	14 (0.55)
H, h	Rear spring rear hanger hole – inner	35 (1.38)
I, i	Body mounting hole	24 (0.94)
—	—	—

Symbol	Nomenclature	Hole dia.
A, a	Front spring front hanger hole – inner	35 (1.38)
B, b	Body mounting hole	24 (0.94)
C, c	Shock absorber installation hole	16 (0.63)
D, d	Front spring rear hanger hole – inner	14 (0.55)
E, e	Body mounting hole	24 (0.94)

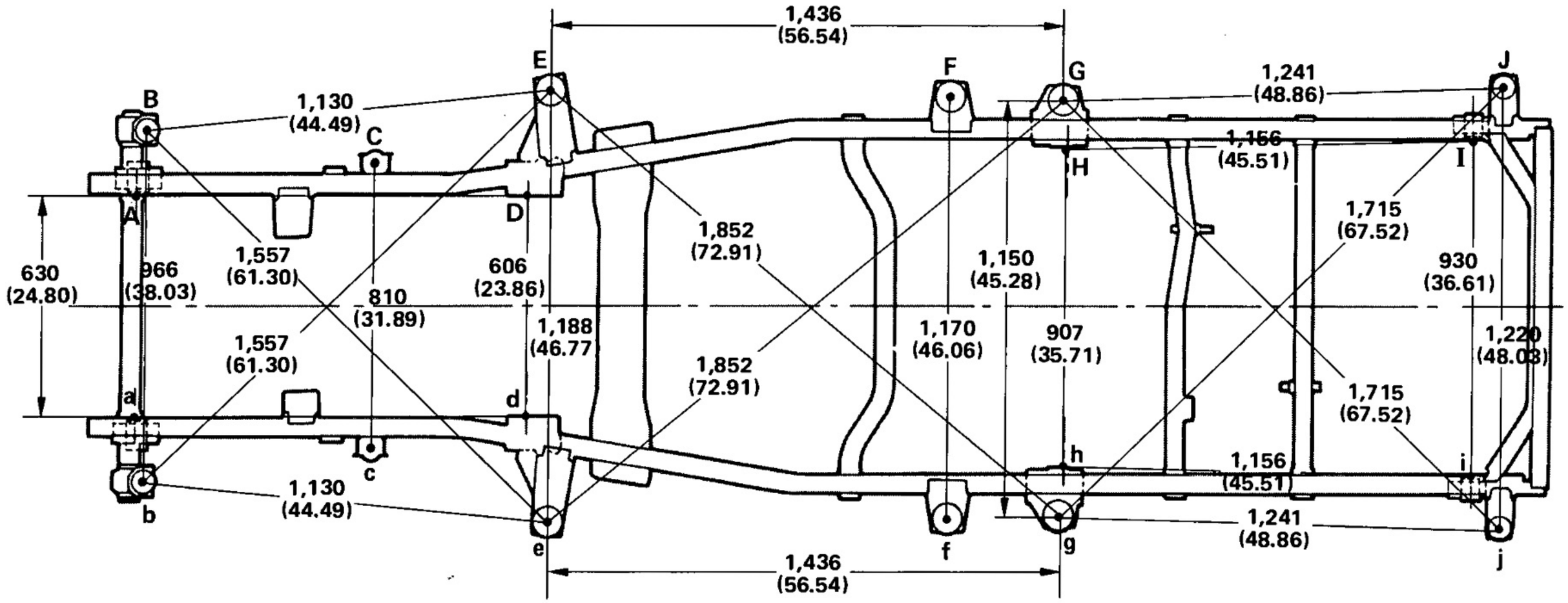

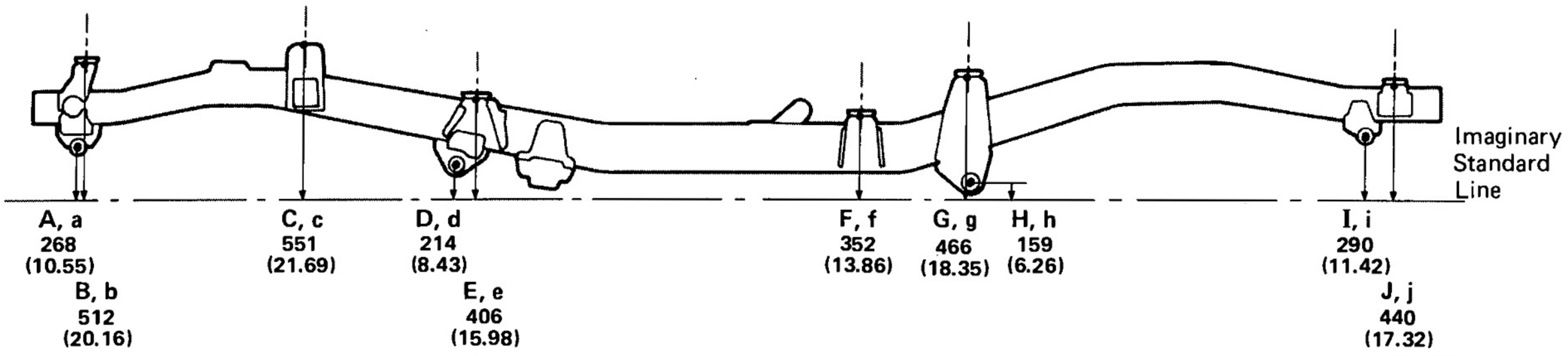

Wheel base 2,600 (102.36)

BO0913

mm (in.)

Symbol	Nomenclature	Hole dia.	Symbol	Nomenclature	Hole dia.
A, a	Front spring front hanger hole — inner	35 (1.38)	F, f	Body mounting hole	24 (0.94)
B, b	Body mounting hole	24 (0.94)	G, g	Body mounting hole	24 (0.94)
C, c	Shock absorber installation hole	16 (0.63)	H, h	Rear spring front hanger hole — inner	14 (0.55)
D, d	Front spring rear hanger hole — inner	14 (0.55)	I, i	Rear spring rear hanger hole — inner	35 (1.38)
E, e	Body mounting hole	24 (0.94)	J, j	Body mounting hole	24 (0.94)

FJ, BJ, HJ 75V Series

Wheel base	2,980 (117.32)

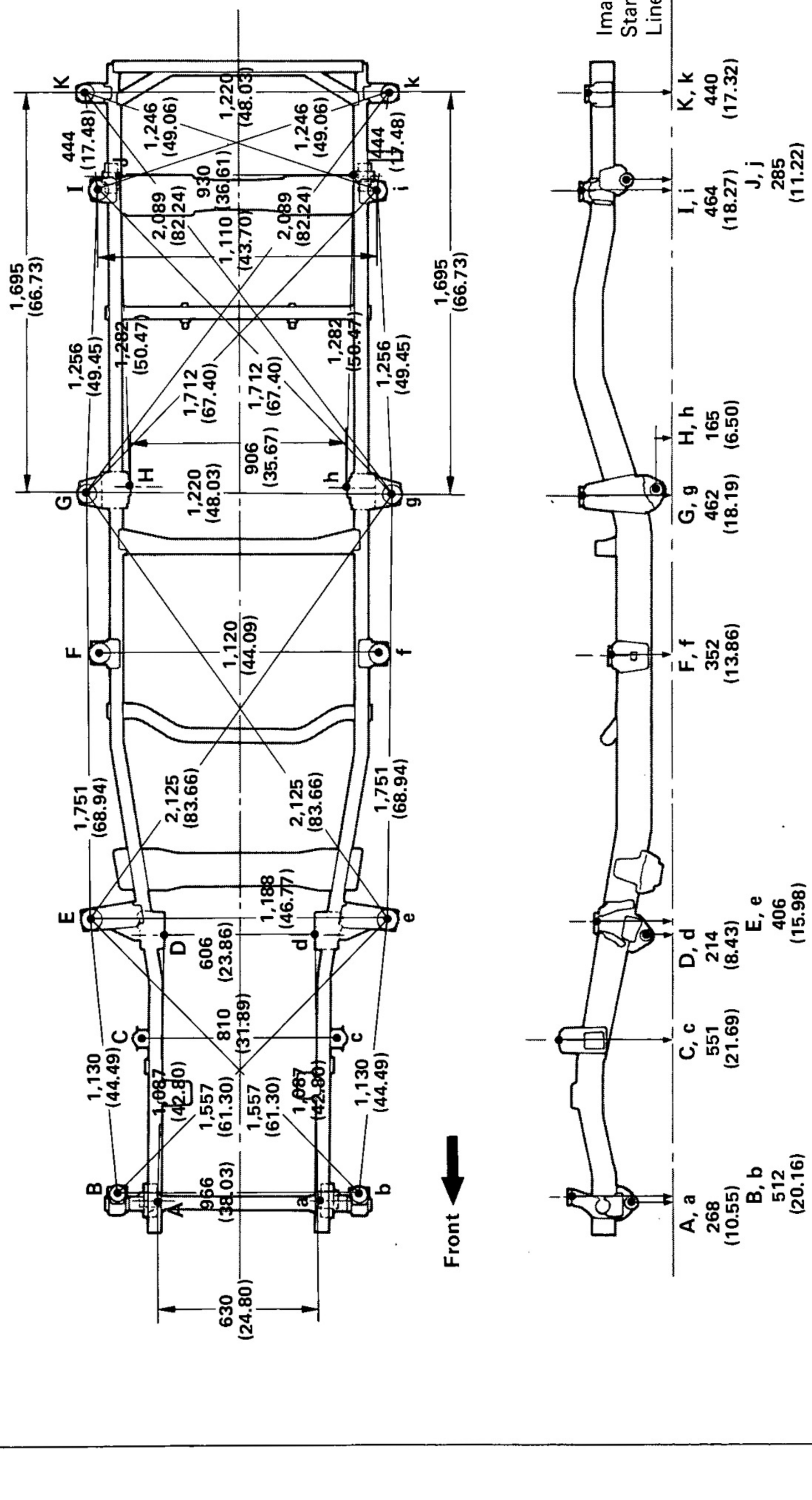

Symbol	Nomenclature	mm (in.) Hole dia.
G, g	Body mounting hole	24 (0.94)
H, h	Rear spring front hanger hole – inner	14 (0.55)
I, i	Body mounting hole	24 (0.94)
J, j	Rear spring rear hanger hole – inner	40 (1.57)
K, k	Body mounting hole	24 (0.94)
–	–	–

Symbol	Nomenclature	Hole dia.
A, a	Front spring front hanger hole – inner	35 (1.38)
B, b	Body mounting hole	24 (0.94)
C, c	Shock absorber installation hole	16 (0.63)
D, d	Front spring rear hanger hole – inner	14 (0.55)
E, e	Body mounting hole	24 (0.94)
F, f	Body mounting hole	24 (0.94)

BO0914

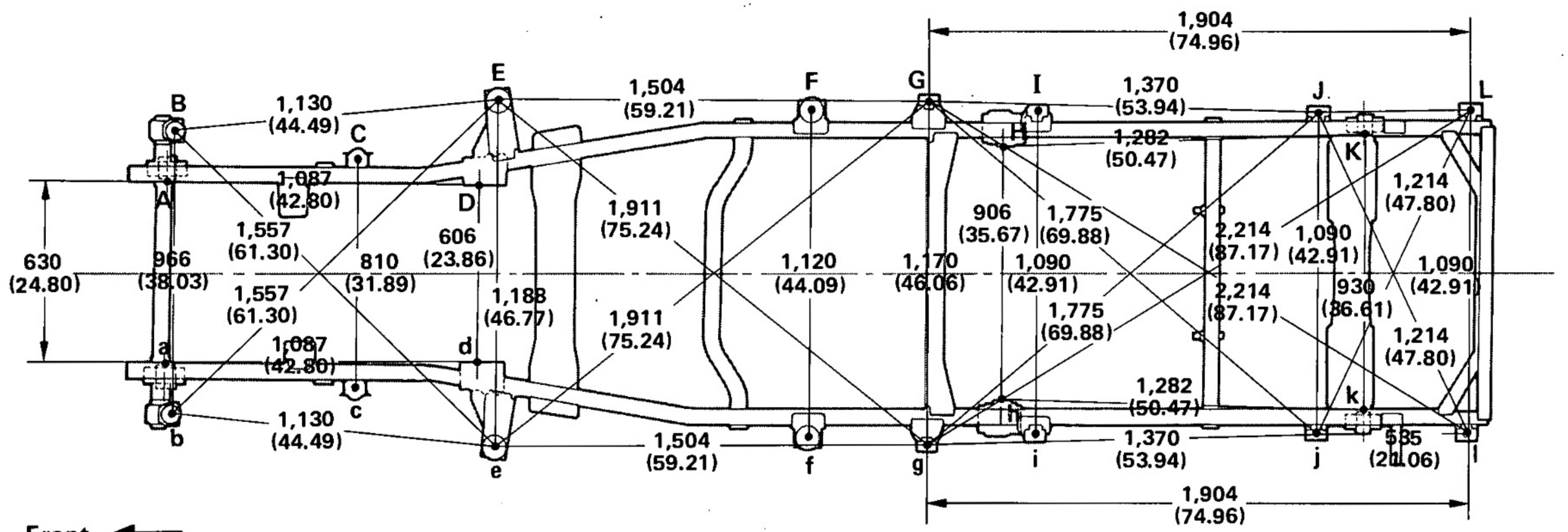

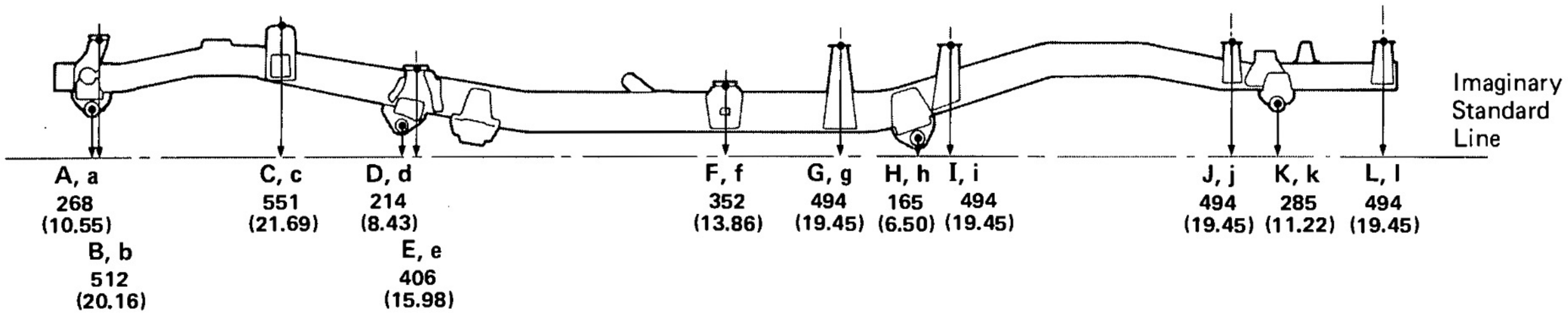

Wheel base
2,980 (117.32)

B00915

mm (in.)

Symbol	Nomenclature	Hole dia.	Symbol	Nomenclature	Hole dia.
A, a	Front spring front hanger hole — inner	35 (1.38)	G, g	Rear body mounting hole	15 (0.59)
B, b	Body mounting hole	24 (0.94)	H, h	Rear spring front hanger hole — inner	14 (0.55)
C, c	Shock absorber installation hole	16 (0.63)	I, i	Rear body mounting hole	15 (0.59)
D, d	Front spring rear hanger hole — inner	14 (0.55)	J, j	Rear body mounting hole	15 (0.59)
E, e	Body mounting hole	24 (0.94)	K, k	Rear spring rear hanger hole — inner	40 (1.57)
F, f	Body mounting hole	24 (0.94)	L, l	Rear body mounting hole	15 (0.59)

FJ 62 Series
BJ, HJ 60 Series

Wheel base
2,730 (107.48)

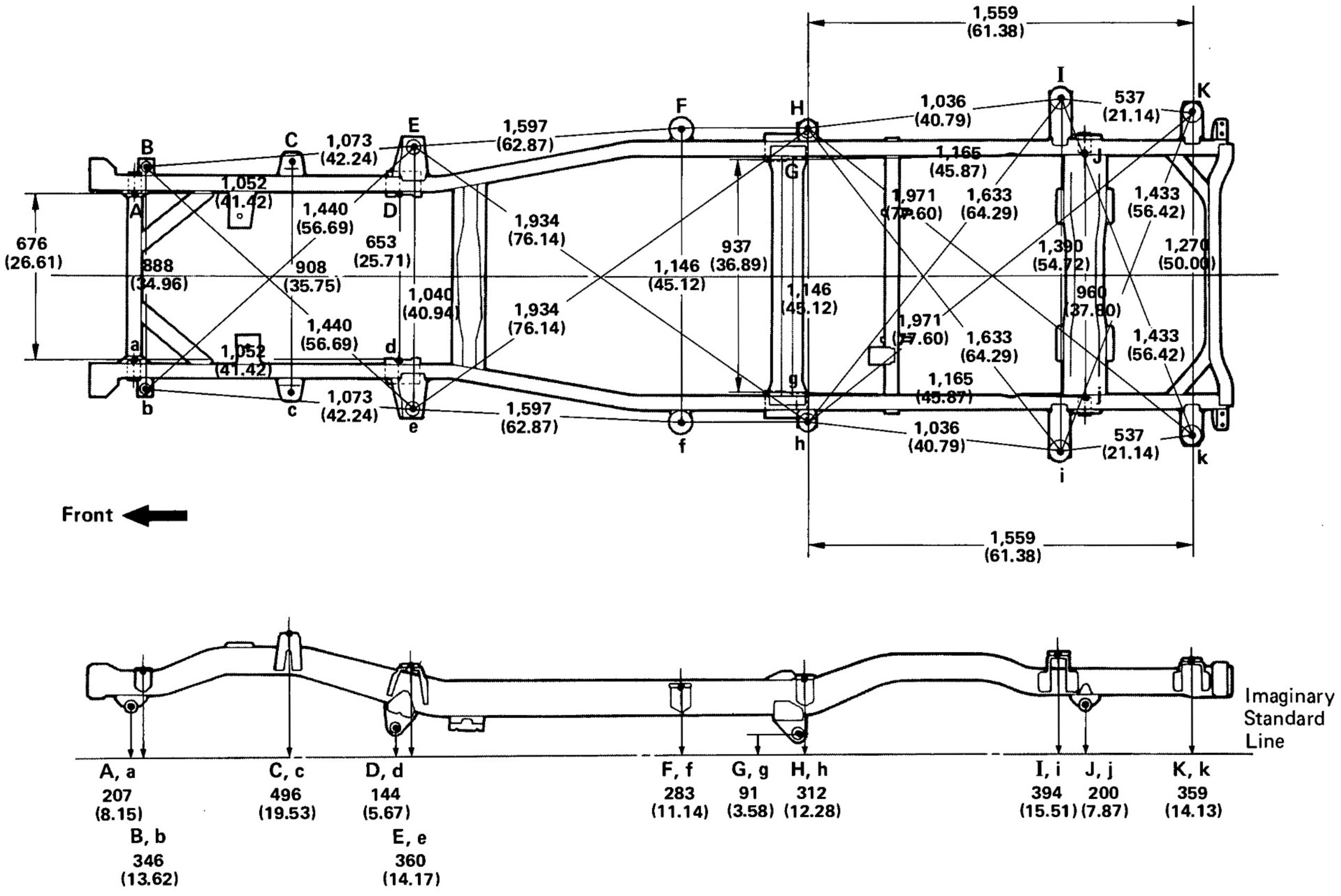

B00916

mm (in.)

Symbol	Nomenclature	Hole dia.	Symbol	Nomenclature	Hole dia.
A, a	Front spring front hanger hole – inner	35 (1.38)	G. g	Rear spring front hanger hole – inner	14 (0.55)
B, b	Body mounting hole	24 (0.94)	H, h	Body mounting hole	24 (0.94)
C, c	Shock absorber installation hole	16 (0.63)	I, i	Body mounting hole	24 (0.94)
D, d	Front spring rear hanger hole – inner	14 (0.55)	J, j	Rear spring rear hanger hole – inner	35 (1.38)
E, e	Body mounting hole	24 (0.94)	K, k	Body mounting hole	24 (0.94)
F, f	Body mounting hole	24 (0.94)	–	–	–

WINCH

	Page
MECHANICAL WINCH	WI-2
Chain Wire	WI-2
Power Take-off (P.T.O)	WI-4
Drive Shaft	WI-12
Winch	WI-22
ELECTRIC WINCH	WI-39
On-Vehicle Inspection	WI-39
Chain Wire	WI-42
Winch	WI-44
Winch Motor with No. 2 Magnet Switch Assembly	WI-63

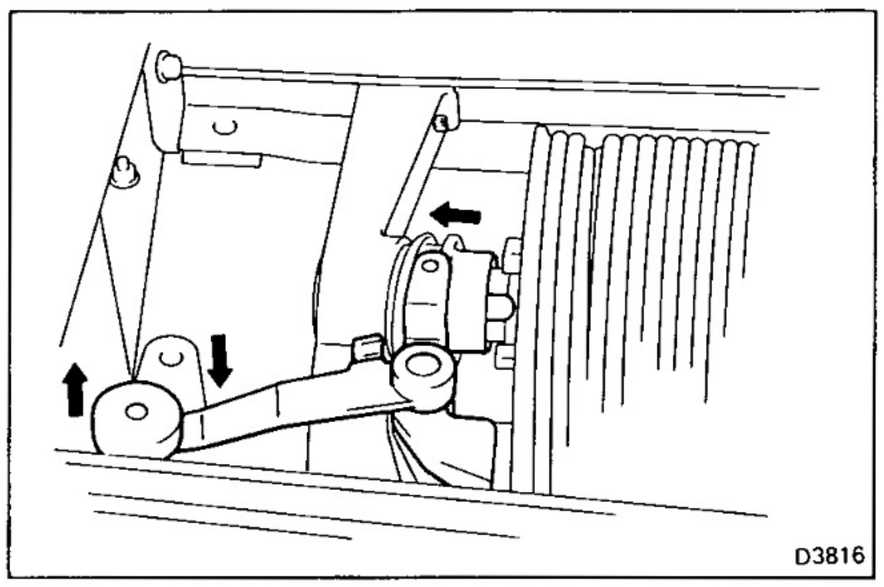

MECHANICAL WINCH

Chain Wire

REMOVAL OF CHAIN WIRE

1. REMOVE CHAIN WIRE

(a) Shift the clutch lever to the free position.

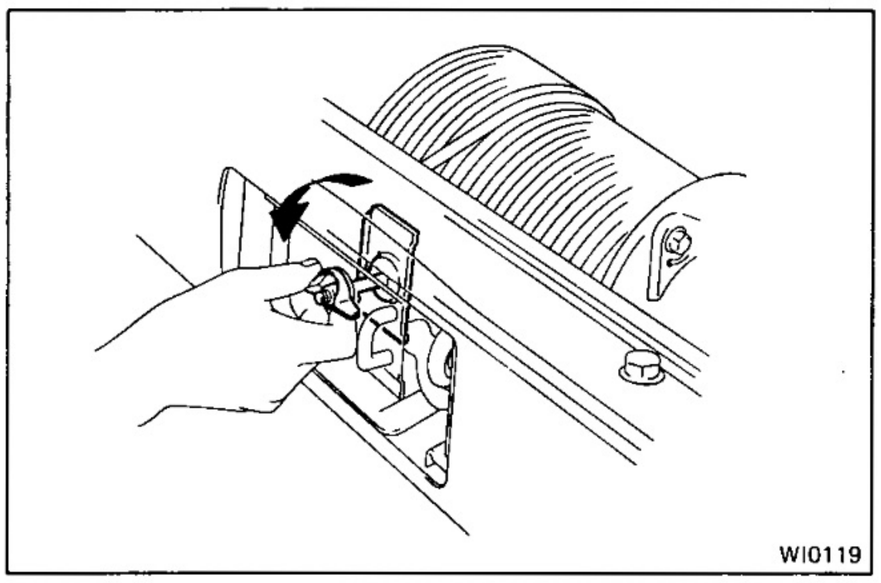

(b) Loosen the wing nut and turn the No. 1 bracket support 90°.

(c) Pull out the No. 1 bracket support together with the chain wire from the drum.

2. REMOVE HOOK HOLDER FROM CHAIN WIRE

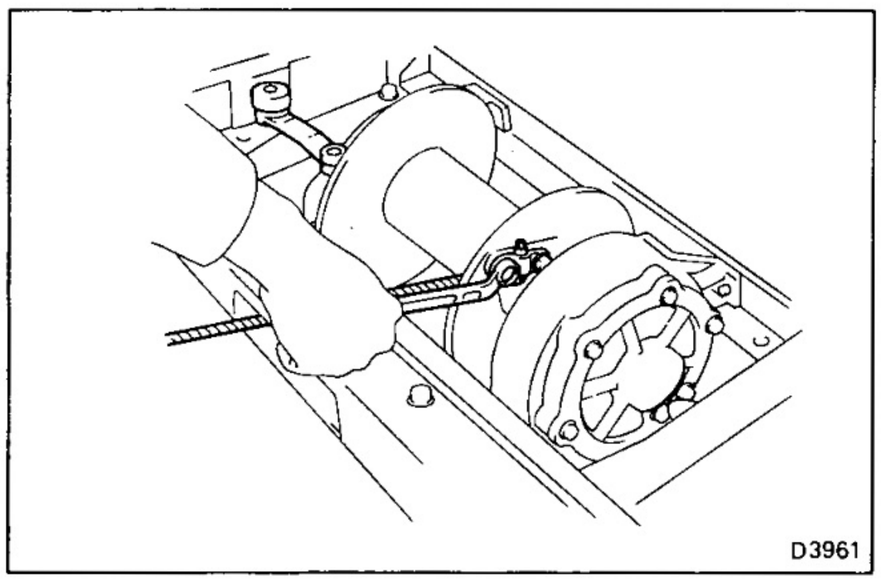

3. REMOVE WIRE LOCK

(a) Shift the clutch lever to the lock position.

(b) Remove the two bolts and wire lock.

INSPECTION OF CHAIN WIRE

INSPECT CHAIN WIRE

Inspect the chain wire for the following items. If damaged, replace the chain wire.

- More than 12 severed strands per wind
- Wire diameter of less than 7.5 mm (0.295 in.)

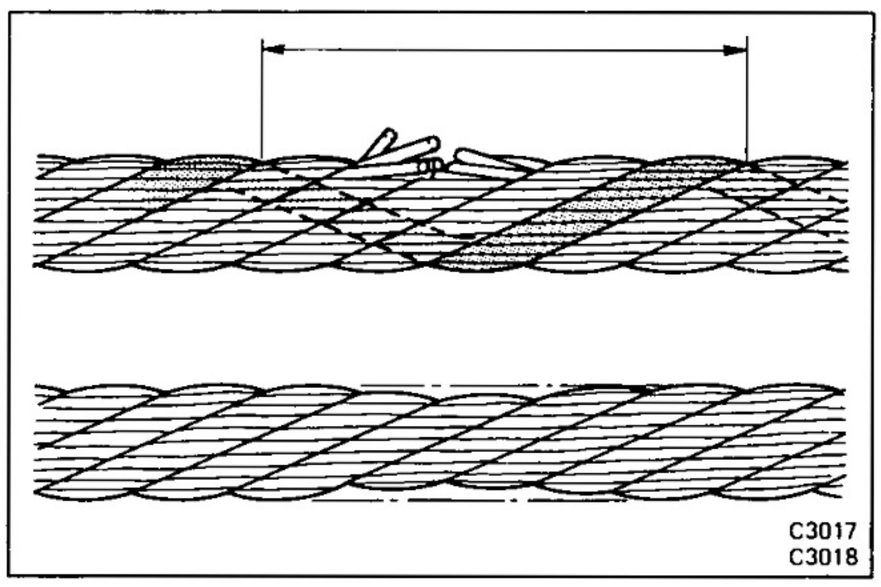

- Kinks
- Corrosion
- Fraying

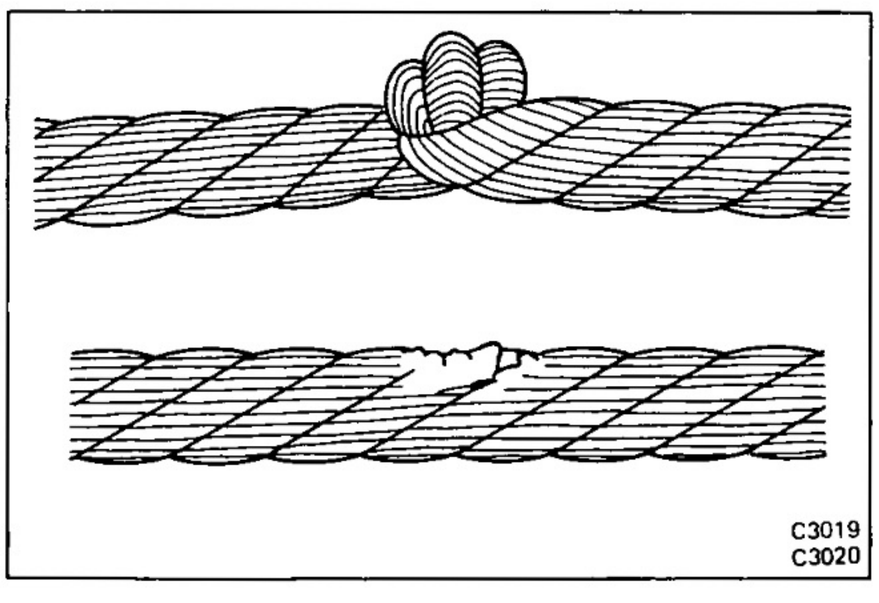

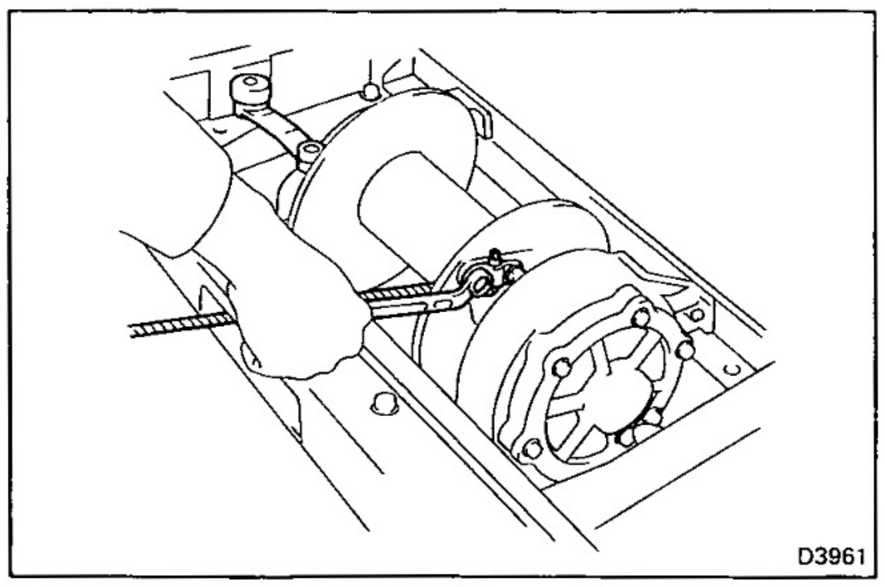

INSTALLATION OF CHAIN WIRE

1. INSTALL WIRE LOCK

(a) Insert the chain wire into the drum side plate hole.

(b) Install the wire lock and chain wire with two bolts. Torque the bolts.

Torque: 120 kg-cm (9 ft-lb, 12 N·m)

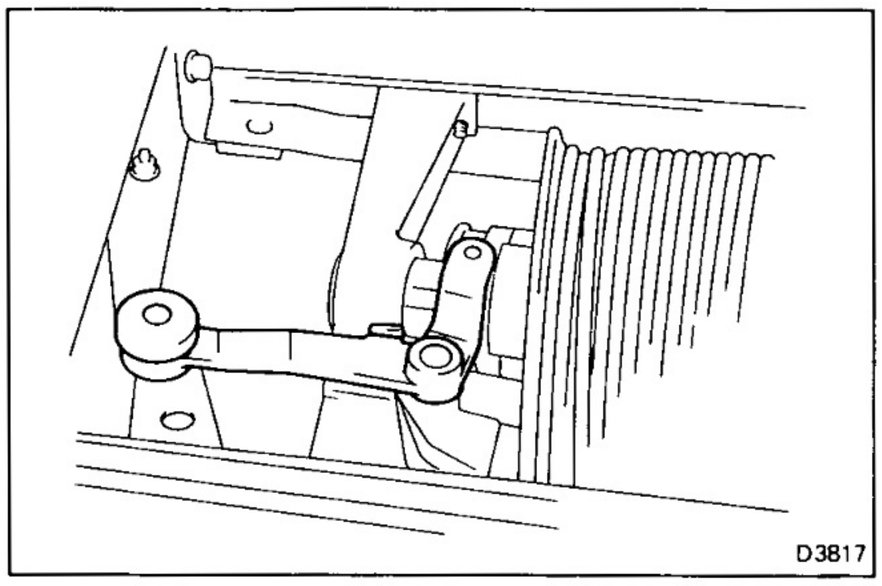

2. WINDING CHAIN WIRE

(a) Confirm the clutch lever is in the "locked" position.

(b) Shift the transfer lever in neutral.

(c) Shift the P.T.O lever to ON.

(d)-1 (Manual Transmission)
Start the engine and slowly shift into the first or second gears.

(d)-2 (Automatic Transmission)
Start the engine and slowly shift into the "L" or "2" ranges.

(e) Pull the chain wire tense and feed into the winch as it winds.

CAUTION: The winch speed varies according to the gear the transmission is in and the speed of the engine. However, for your safety and for the long life of the winch, it is advised that you operate it slowly.
In vehicles with automatic transmissions, operate the winch only with the transmission in the "L" or "2" ranges.

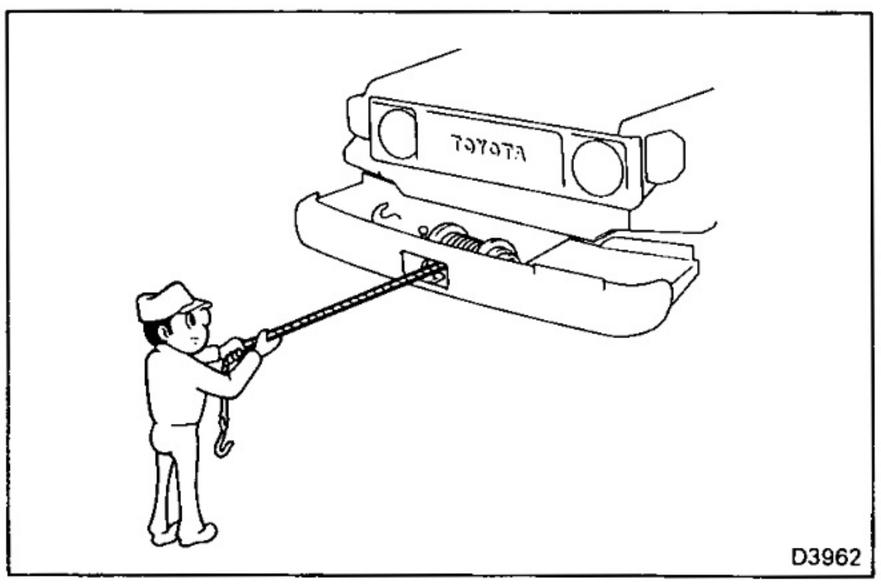

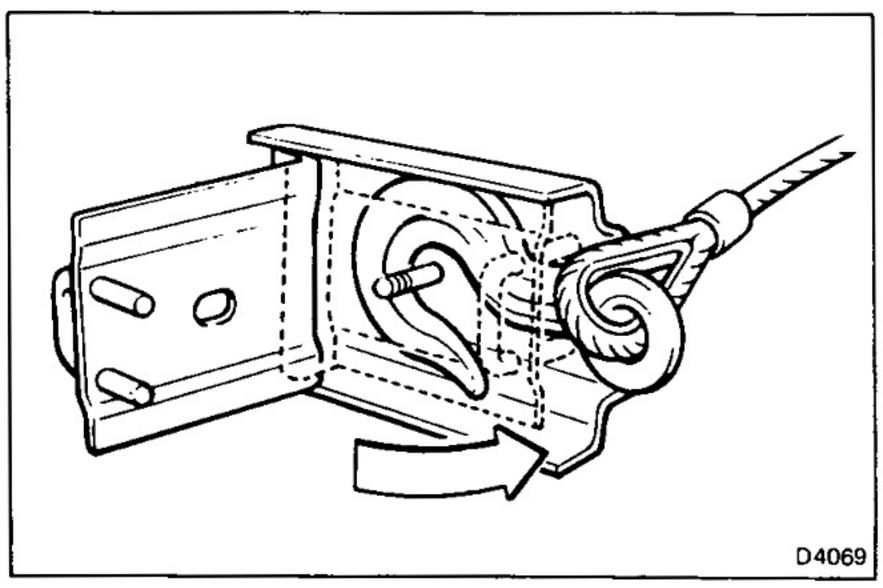

(f) Stop winding with about one meter (40 in.) of the chain wire remaining out.

(g) Stop the engine.

3. INSTALL HOOK HOLDER

(a) Set the wire hook in the hook holder and temporarily tighten the wing nut.

(b) Shift the clutch lever into the free position.

(c) Wind the remaining chain wire.

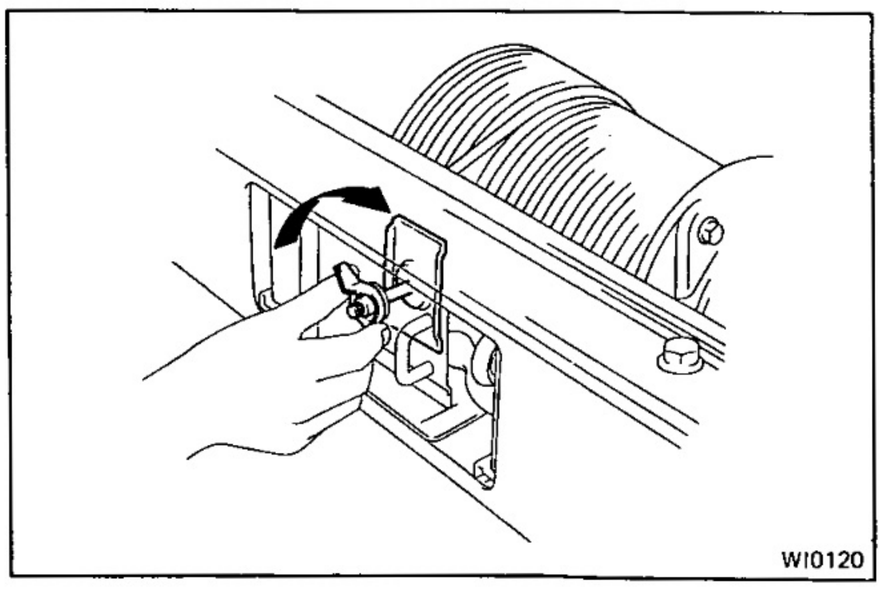

(d) Loosen the wing nut and turn the No. 1 bracket support 90°, then tighten the wing nut.

Power Take-off (P.T.O.)

COMPONENTS

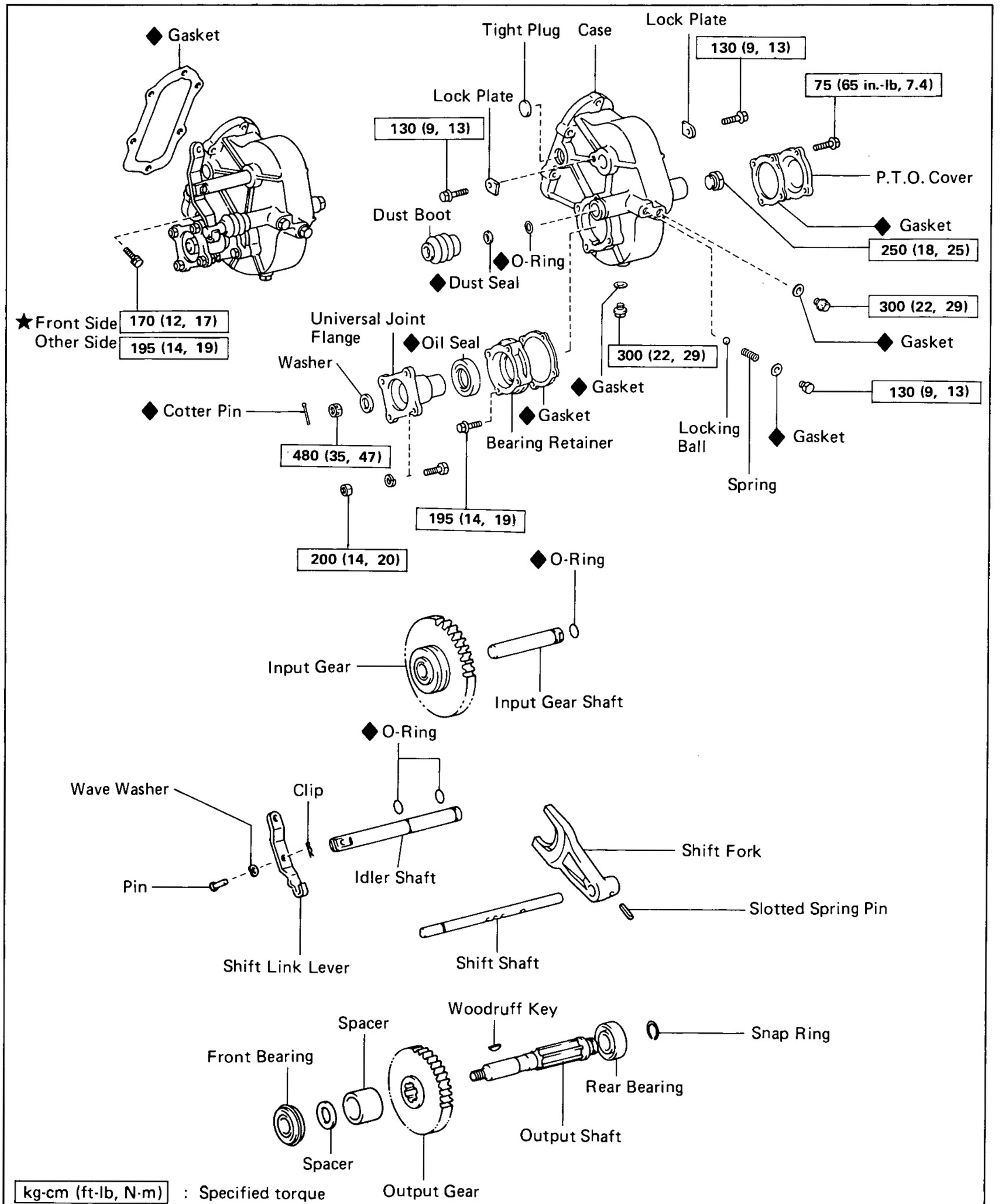

REMOVAL OF P.T.O.

(See page WI-4)

1. REMOVE TRANSMISSION UNDERCOVER

2. DRAIN P.T.O. OIL

   Remove the drain plug and drain the oil.

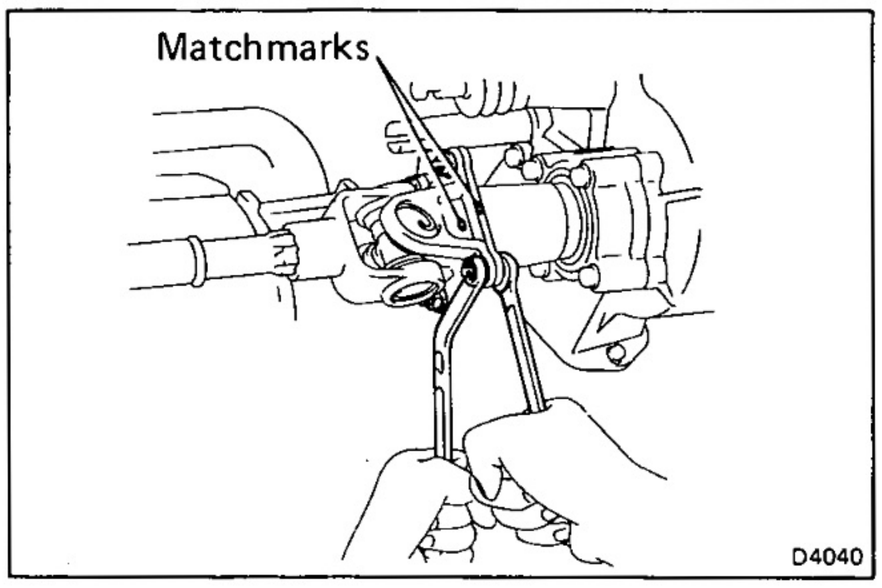

3. DISCONNECT P.T.O. DRIVE SHAFT

   (a) Place matchmarks on the flange of P.T.O. and yoke of drive shaft.

   (b) Remove the four bolts and nuts and disconnect the drive shaft.

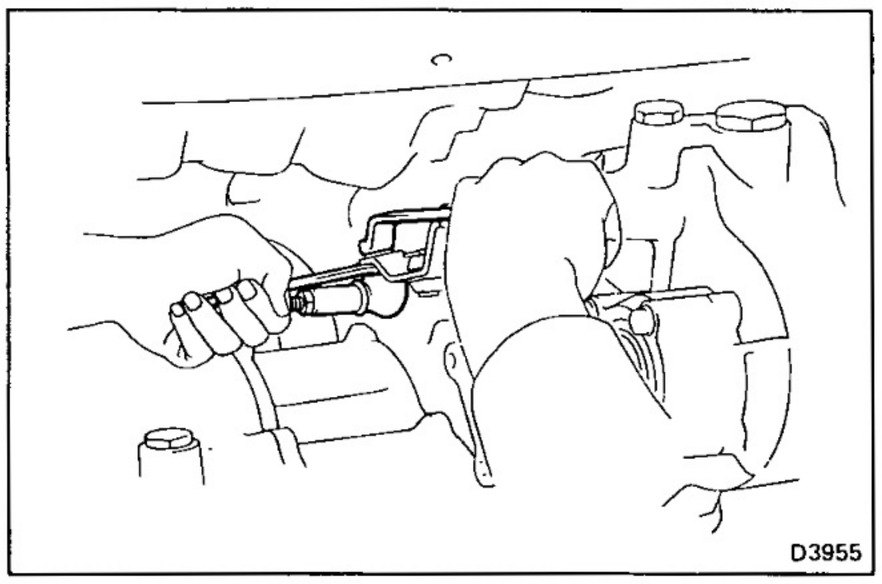

4. DISCONNECT P.T.O. SHIFT ROD

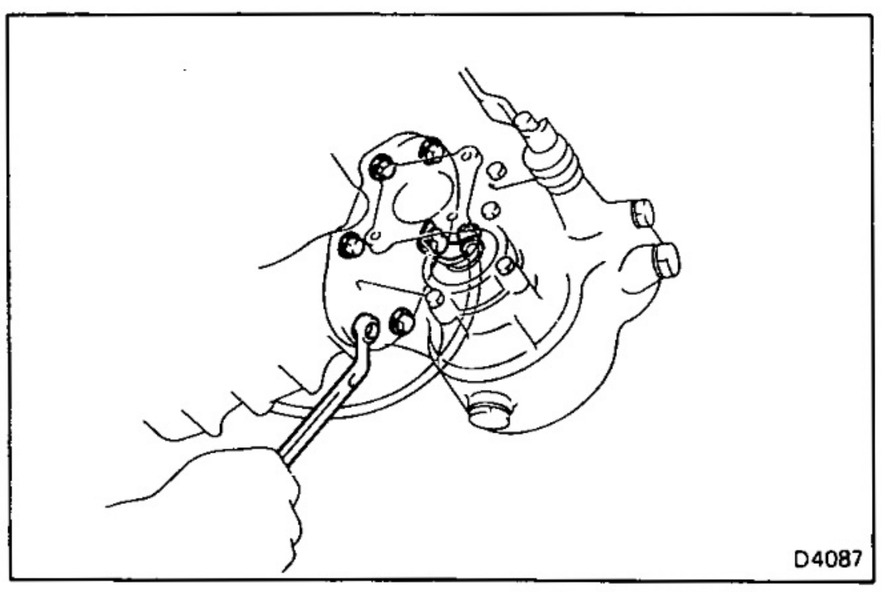

5. REMOVE P.T.O. FROM TRANSMISSION

   (a) Remove the six bolts.

   (b) Lightly tap the P.T.O. case, and then remove the P.T.O. assembly and gasket.

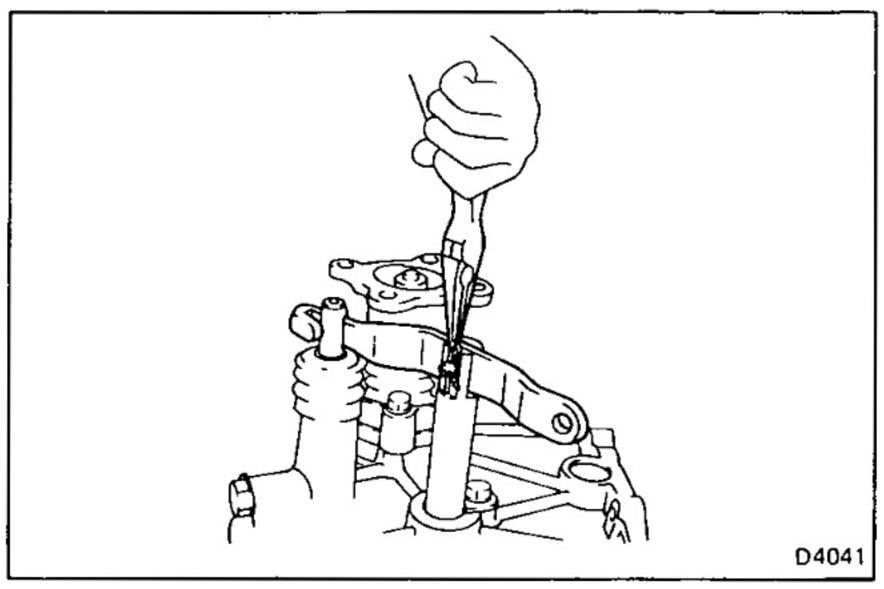

DISASSEMBLY OF DRIVE SHAFT

(See page WI-4)

1. REMOVE SHIFT LINK LEVER

Remove the clip, wave washer, pin and shift link lever.

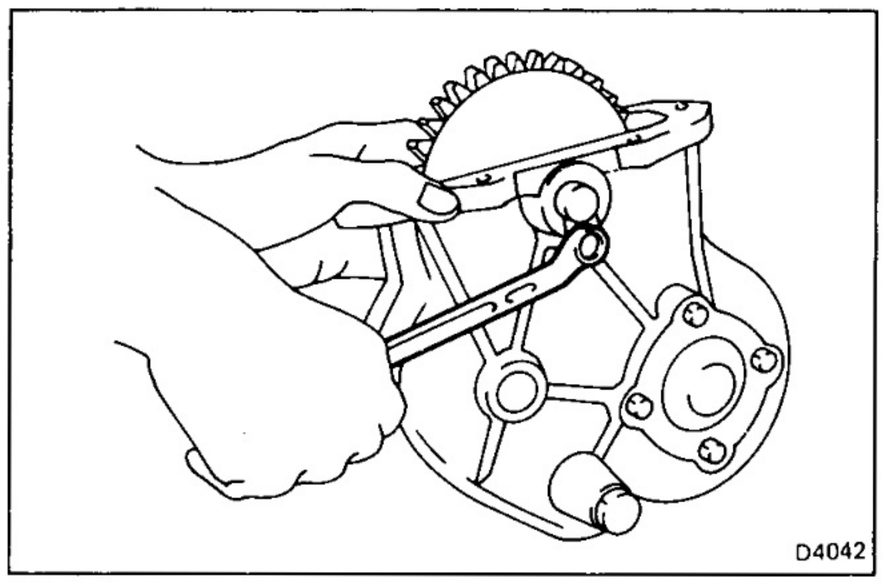

2. REMOVE INPUT GEAR AND SHAFT

(a) Remove the lock plate.

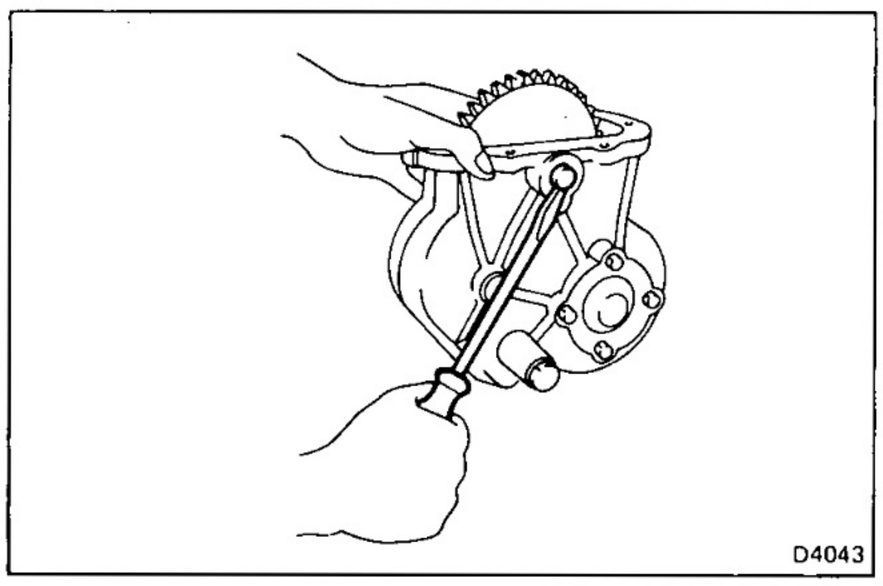

(b) Using a screwdriver, remove the input gear shaft, and remove the input gear.

(c) Remove the O-ring from the shaft.

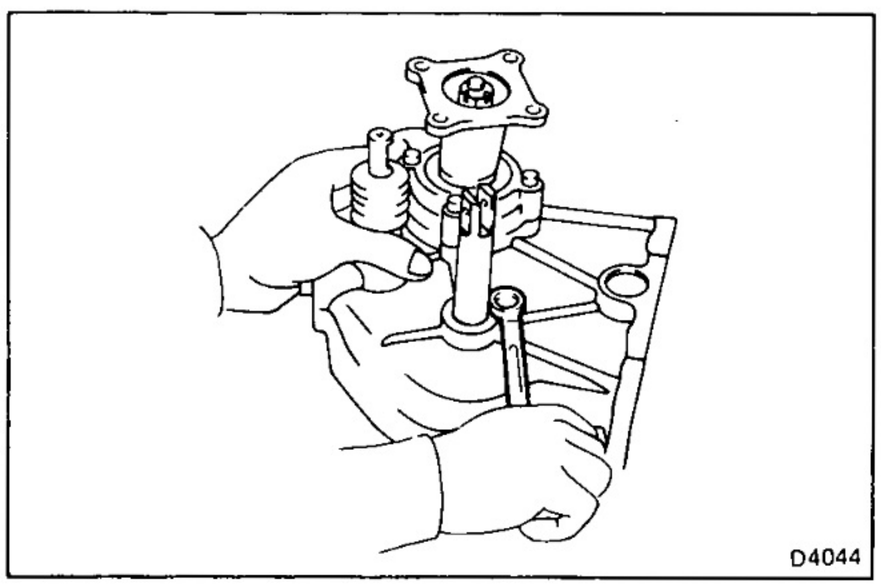

3. REMOVE IDLER SHAFT

(a) Remove the lock plate.

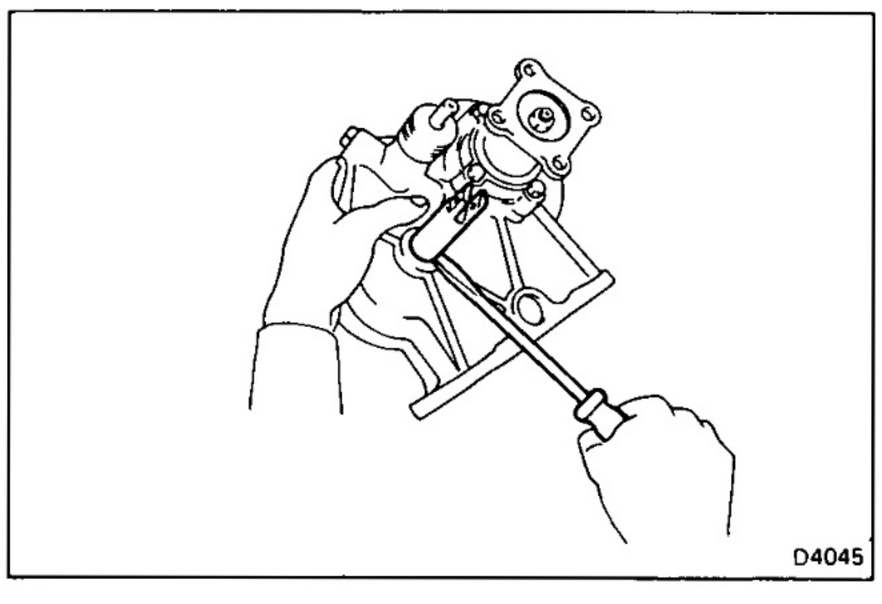

(b) Using a screwdriver, remove the idler shaft.

(c) Remove the two O-rings from the shaft.

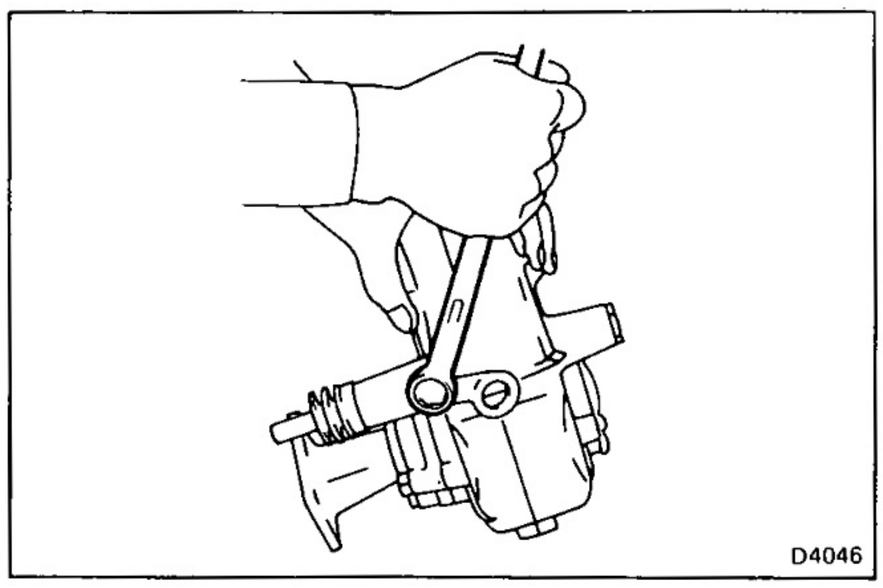

4. REMOVE SHIFT SHAFT AND FORK

(a) Remove the locking ball bolt and gasket.

(b) Remove the spring and locking ball.

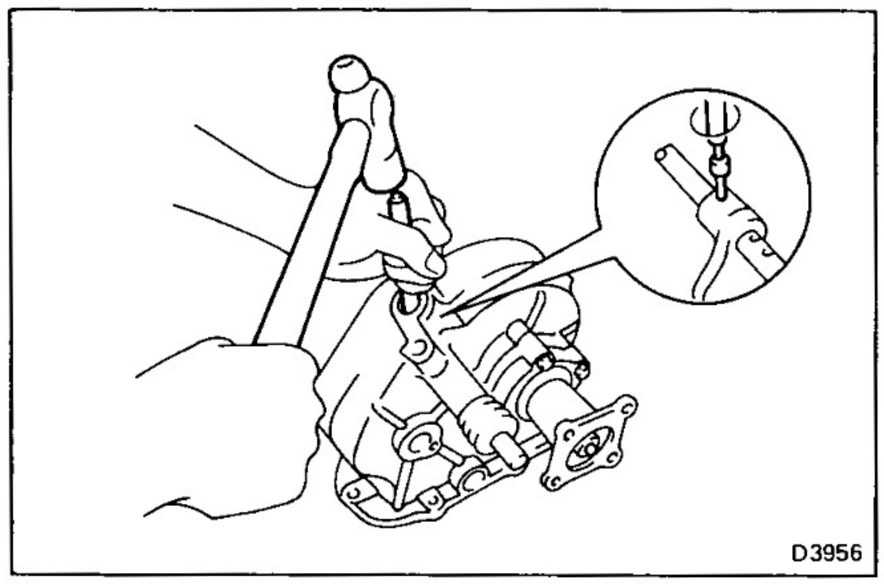

(c) Using a pin punch and hammer, tap out the slotted spring pin.

(d) Remove the dust boot, and then remove the shift shaft and fork.

(e) Remove the dust seal and O-ring.

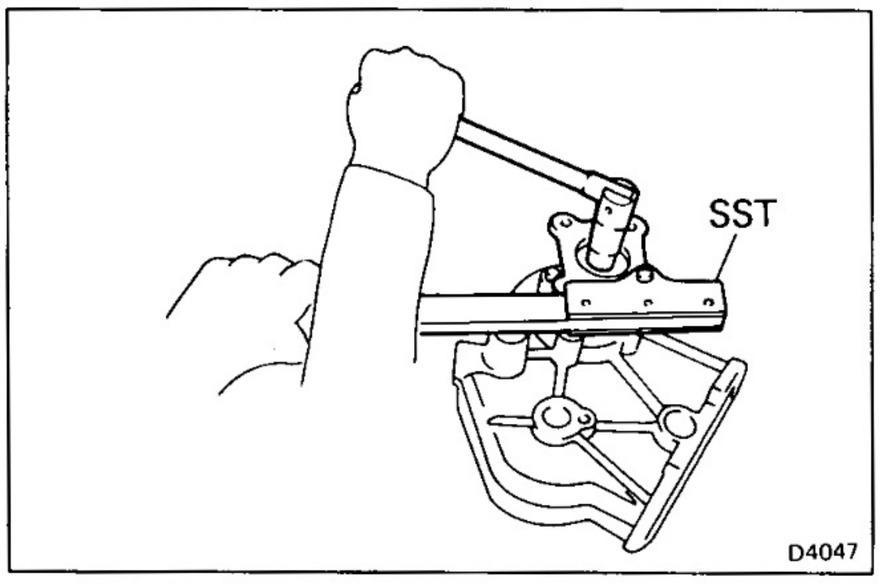

5. REMOVE UNIVERSAL JOINT FLANGE

(a) Remove the cotter pin.

(b) Using SST to hold the flange, remove the nut.

SST 09330-00021

(c) Remove the washer, flange and woodruff key.

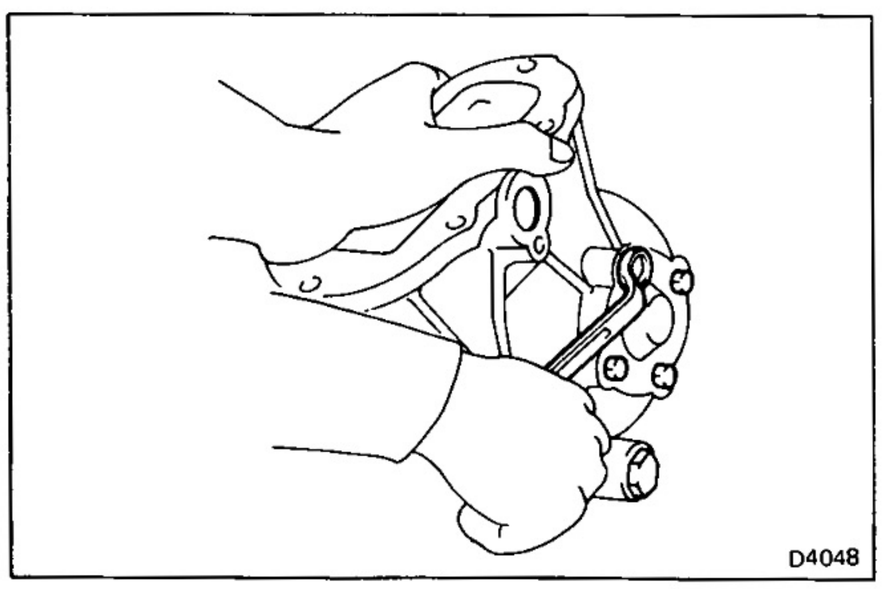

6. REMOVE P.T.O. COVER

(a) Remove the four bolts.

(b) Remove the P.T.O. cover and gasket.

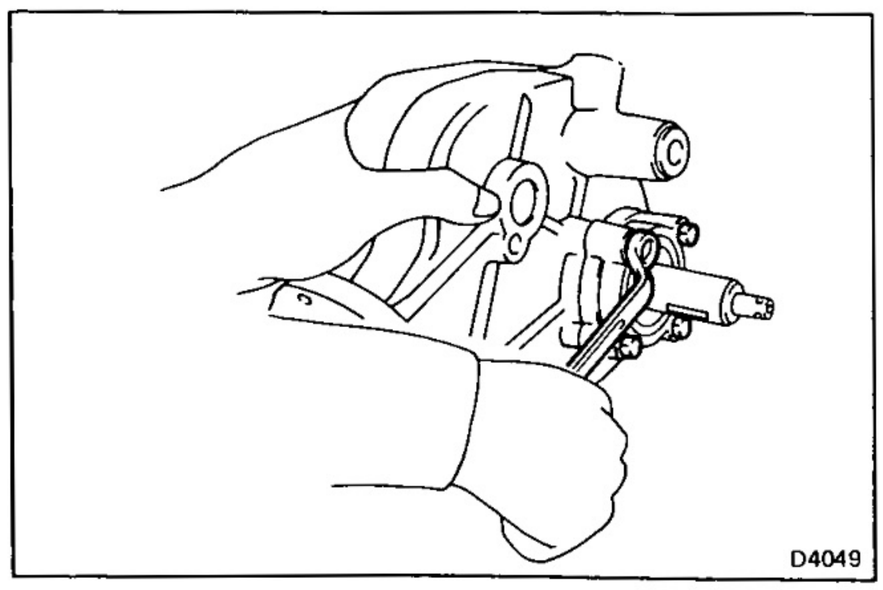

7. REMOVE BEARING RETAINER

(a) Remove the four bolts.

(b) Remove the bearing retainer and gasket.

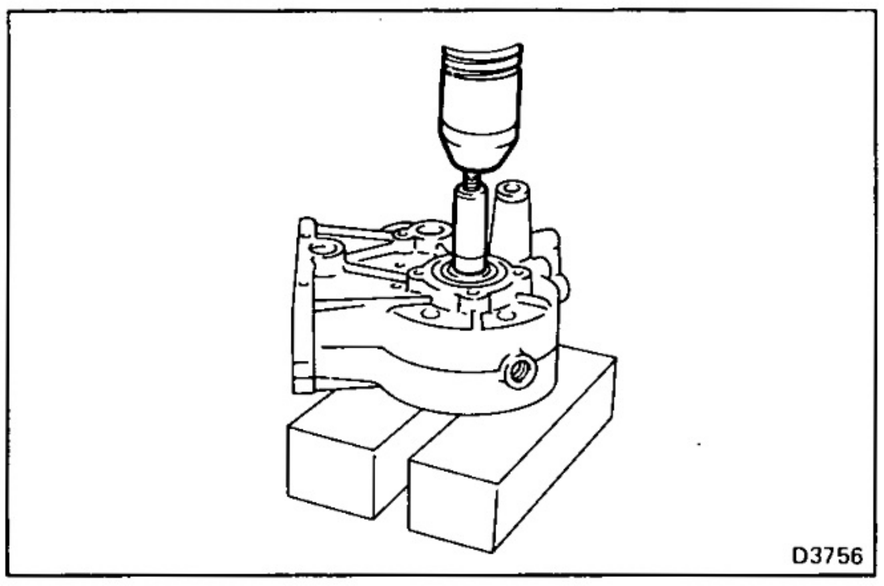

8. REMOVE OUTPUT GEAR AND SHAFT

Using a press, remove the front bearing, two spacers, output gear and shaft.

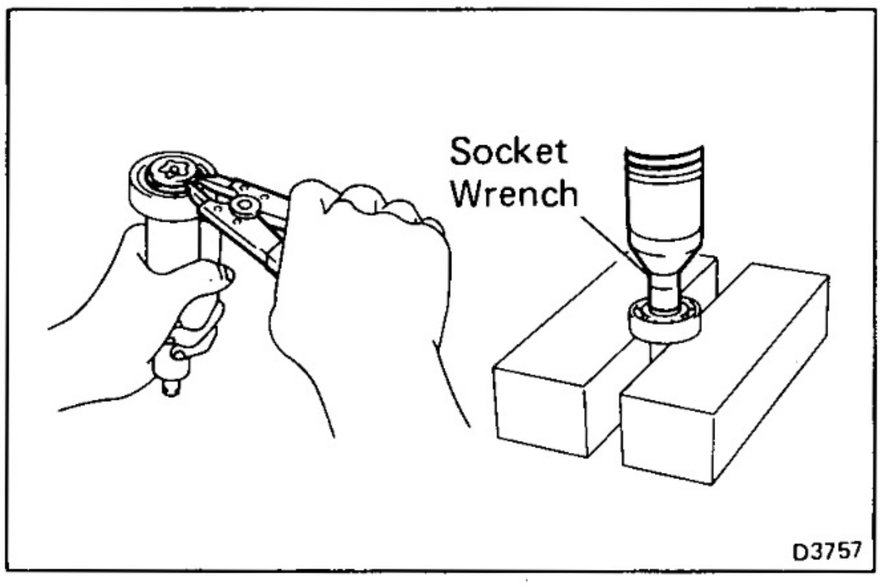

9. REMOVE REAR BEARING FROM OUTPUT SHAFT

(a) Using snap ring pliers, remove the snap ring.

(b) Using a press and 17-mm socket wrench, remove the bearing.

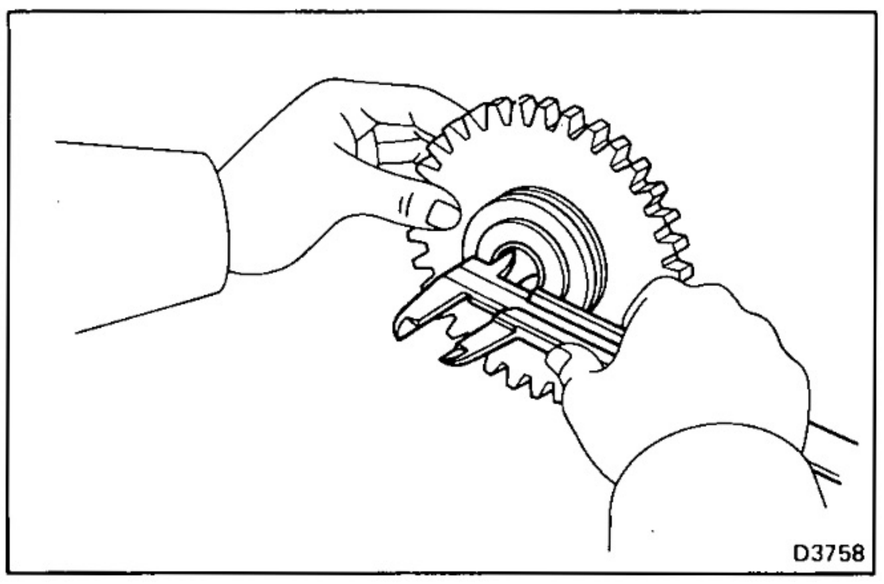

INSPECTION OF P.T.O. COMPONENTS

1. INSPECT INPUT GEAR BUSHING

Using calipers, measure the bushing bore.

Maximum bore: 20.1 mm (0.791 in.)

If the bushing bore is greater than the maximum, replace the input gear assembly.

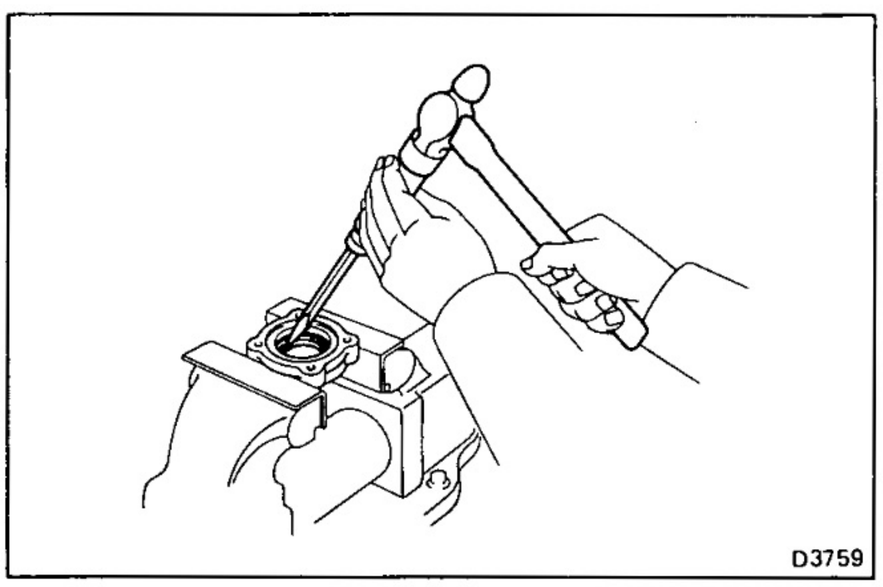

2. REPLACE BEARING RETAINER OIL SEAL

(a) Using a screwdriver, tap out the oil seal.

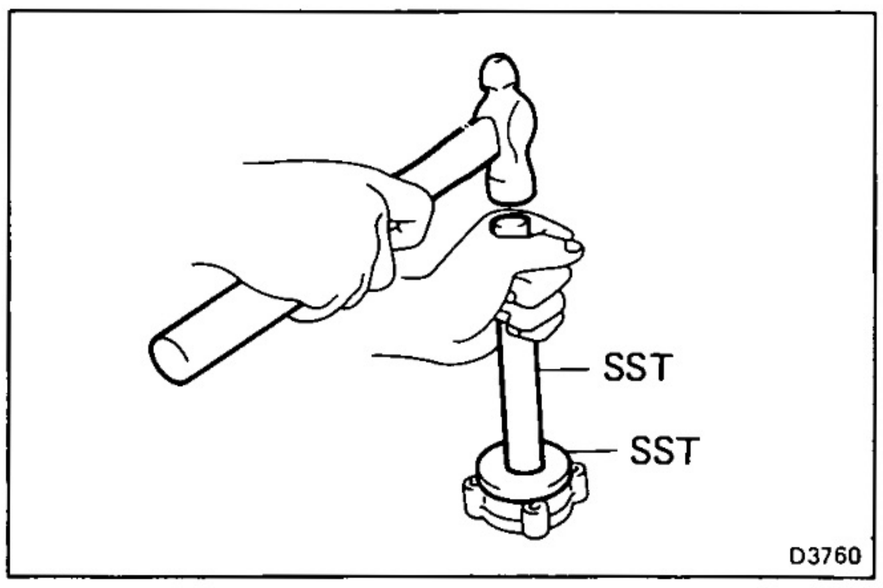

(b) Using SST, install a new oil seal.

SST 09608-35013

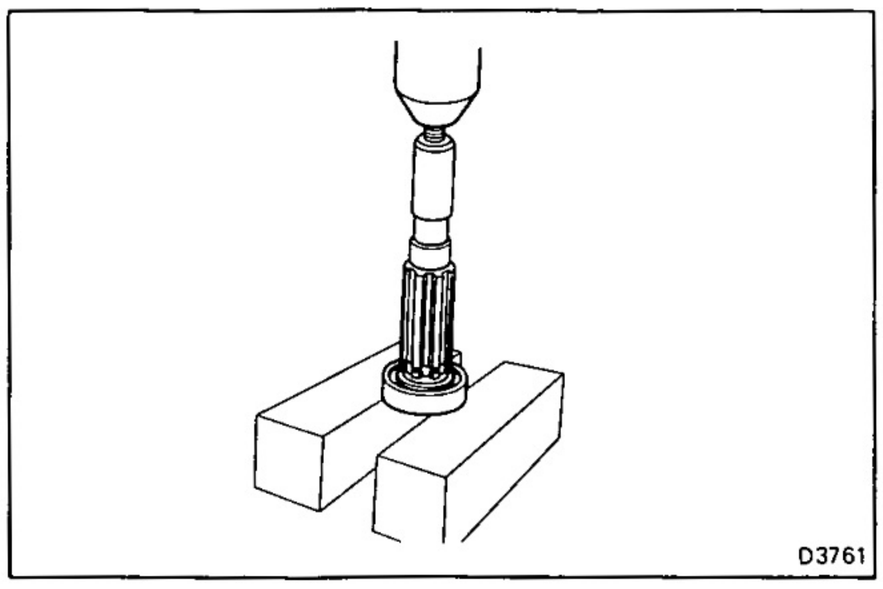

ASSEMBLY OF P.T.O.

(See page WI-4)

1. INSTALL REAR BEARING TO OUTPUT SHAFT

(a) Using a press, install the bearing to the shaft.

(b) Using snap ring pliers, install the snap ring.

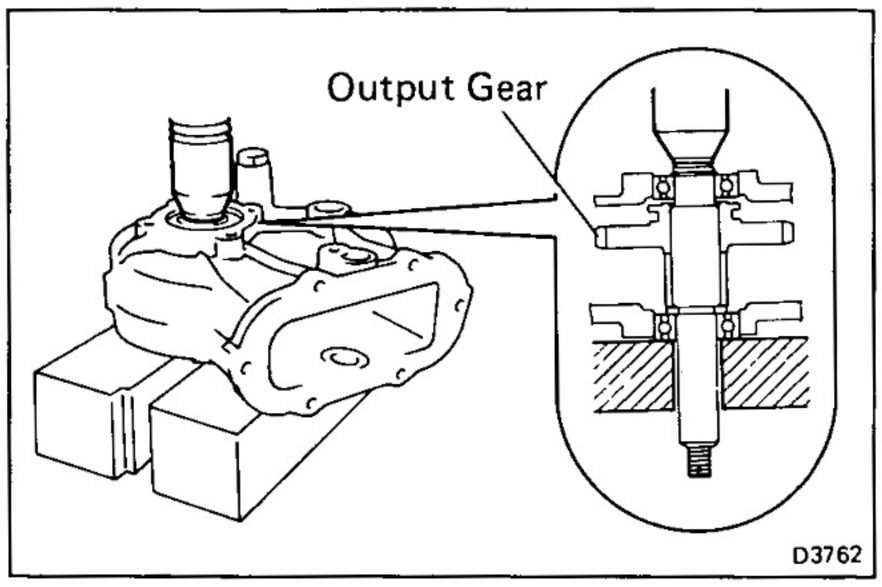

2. INSTALL OUTPUT GEAR AND SHAFT

(a) Install the front bearing, output gear and two spacers to the case as shown.

(b) Put the output shaft into the front bearing through the output gear and two spacers.

(c) Using a press, press the output shaft into the front bearing.

NOTE: Install in proper direction only.

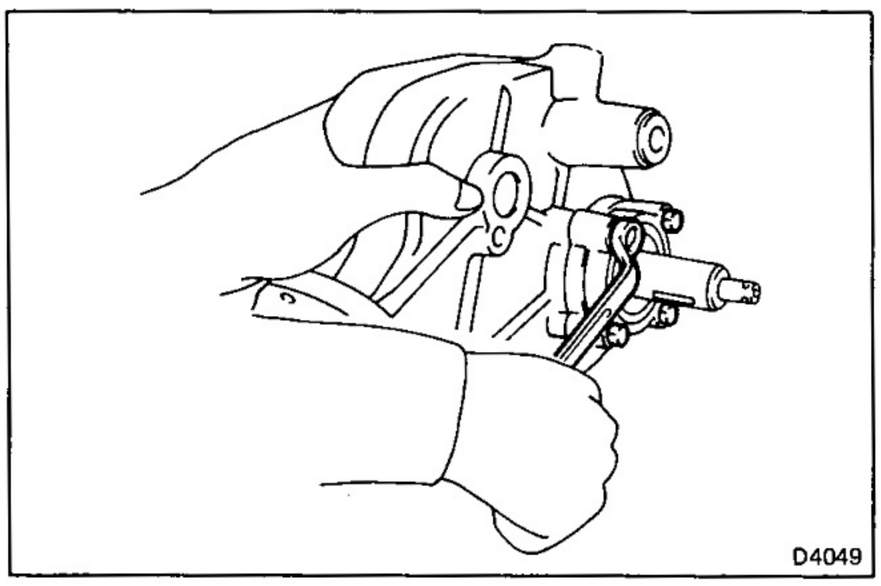

3. INSTALL BEARING RETAINER

Install a new gasket and bearing retainer with four bolts. Torque the bolts.

Torque: 195 kg-cm (14 ft-lb, 19 N·m)

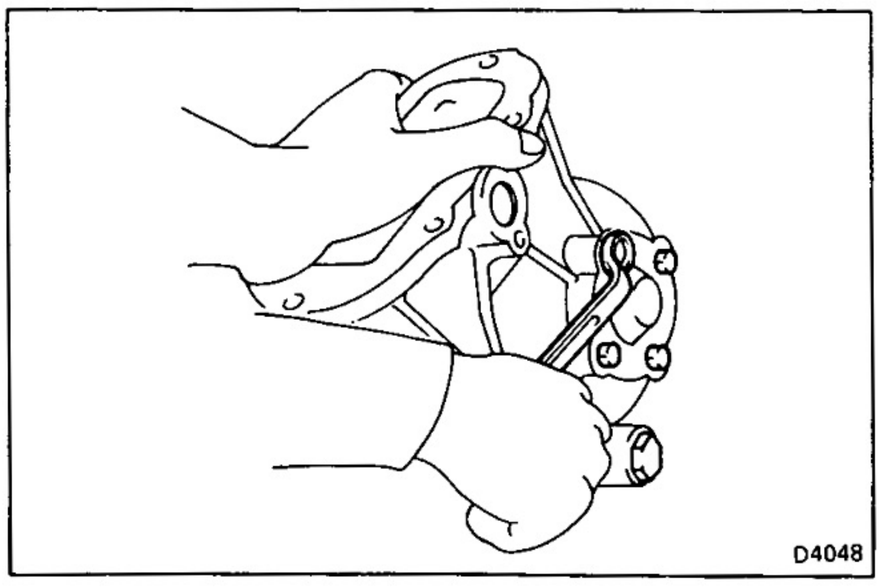

4. INSTALL P.T.O. COVER

Install a new gasket and the cover with four bolts. Torque the bolts.

Torque: 75 kg-cm (65 in.-lb, 7.4 N·m)

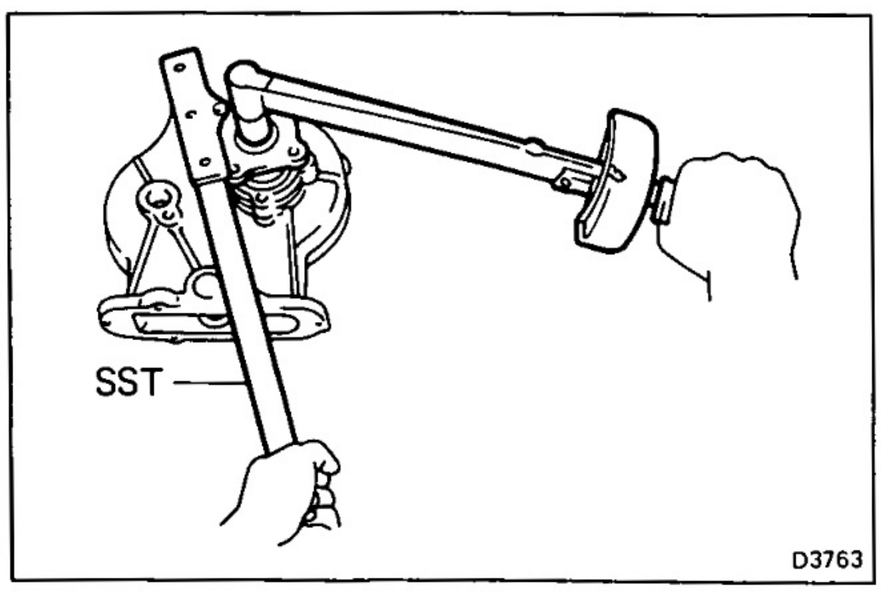

5. INSTALL UNIVERSAL JOINT FLANGE

(a) Install the woodruff key, flange and washer.

(b) Using SST to hold the flange, install the nut. Torque the nut.

SST 09330-00021

Torque: 480 kg-cm (35 ft-lb, 47 N·m)

(c) Install a new cotter pin.

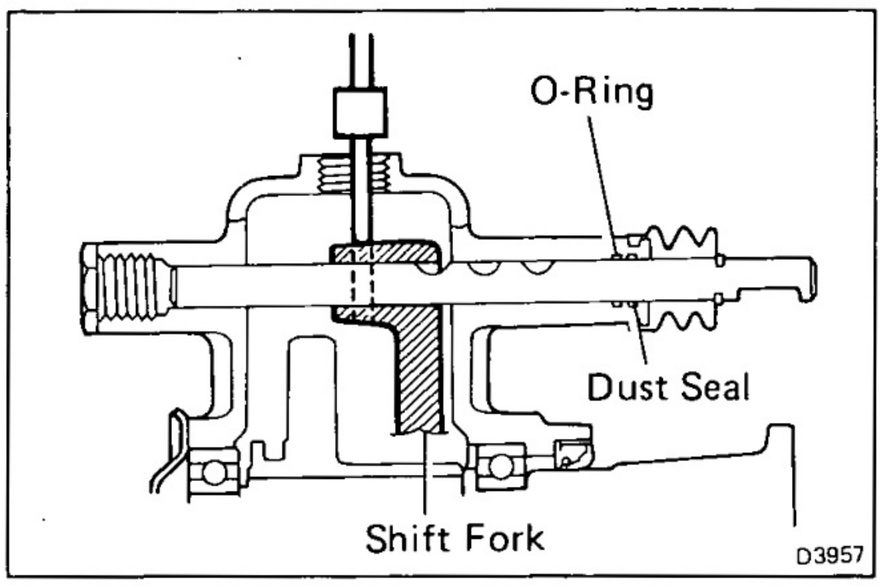

6. INSTALL SHIFT FORK AND SHAFT

(a) Apply MP grease to the O-ring and then install it.

(b) Install the dust seal.

(c) Put the shift fork into the case and install the shift shaft into the case through the shift fork.

NOTE: Install in proper direction only.

(d) Using a pin punch and hammer, drive in the slotted spring pin.

(e) Install the dust boot.

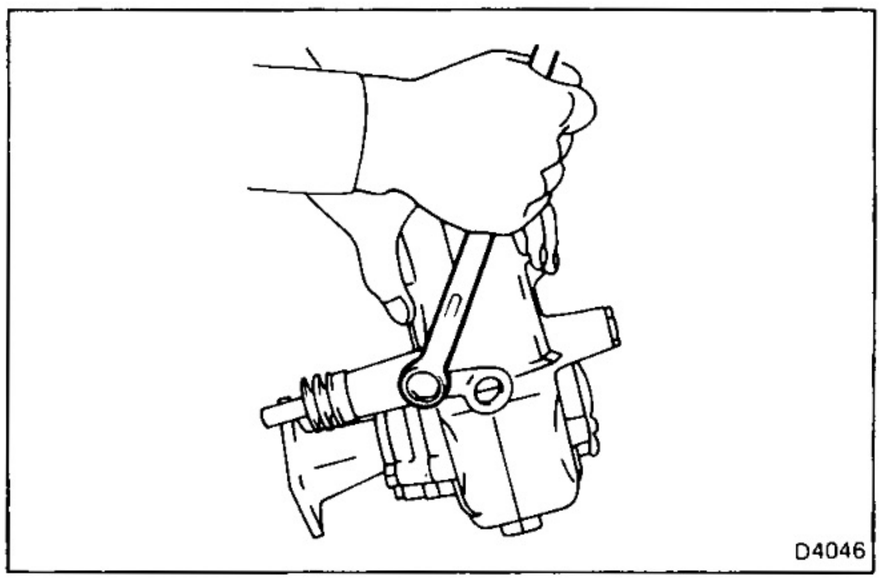

7. INSTALL LOCKING BALL, SPRING, NEW GASKET AND BOLT

Torque: 130 kg-cm (9 ft-lb, 13 N·m)

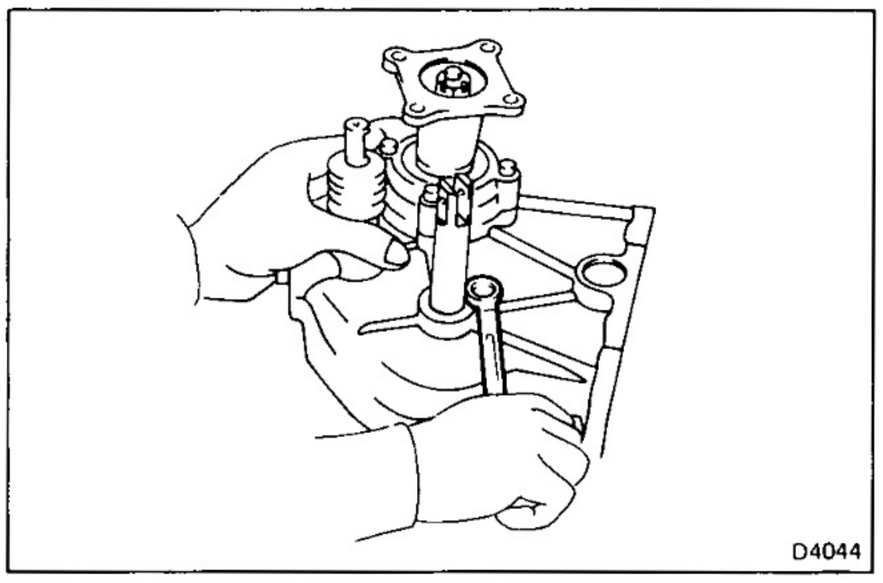

8. INSTALL IDLER SHAFT

(a) Apply MP grease to the O-rings and install the O-rings to the shaft.

(b) Install the shaft into the case with the lock plate and bolt. Torque the bolt.

NOTE: Be careful not to damage the O-ring.

Torque: 130 kg-cm (9 ft-lb, 13 N·m)

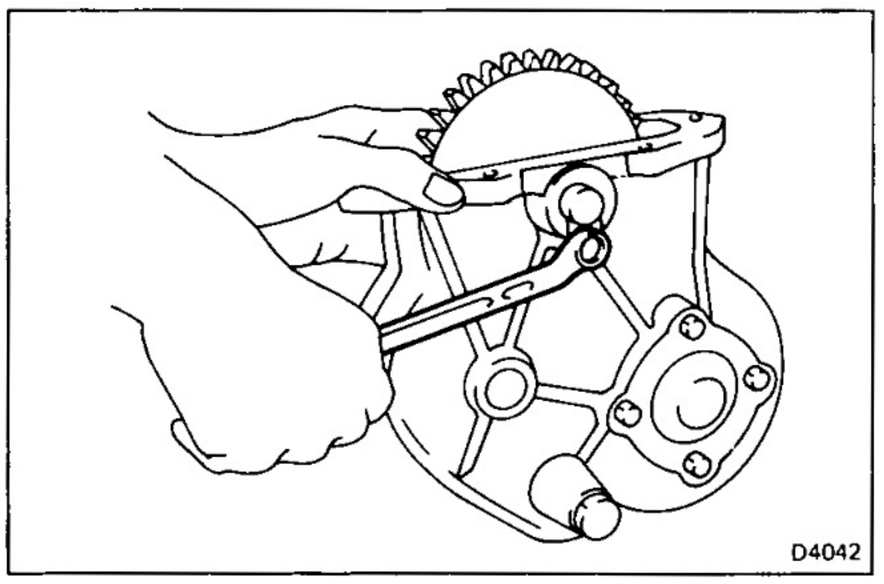

9. INSTALL INPUT GEAR AND SHAFT

(a) Apply MP grease to the O-ring and install the O-ring to the shaft.

(b) Put the input gear to the shift fork.

NOTE: Install in proper direction only.

(c) Install the input gear shaft into the case through the input gear.

(d) Install the lock plate and bolt. Torque the bolts.

Torque: 130 kg-cm (9 ft-lb, 13 N·m)

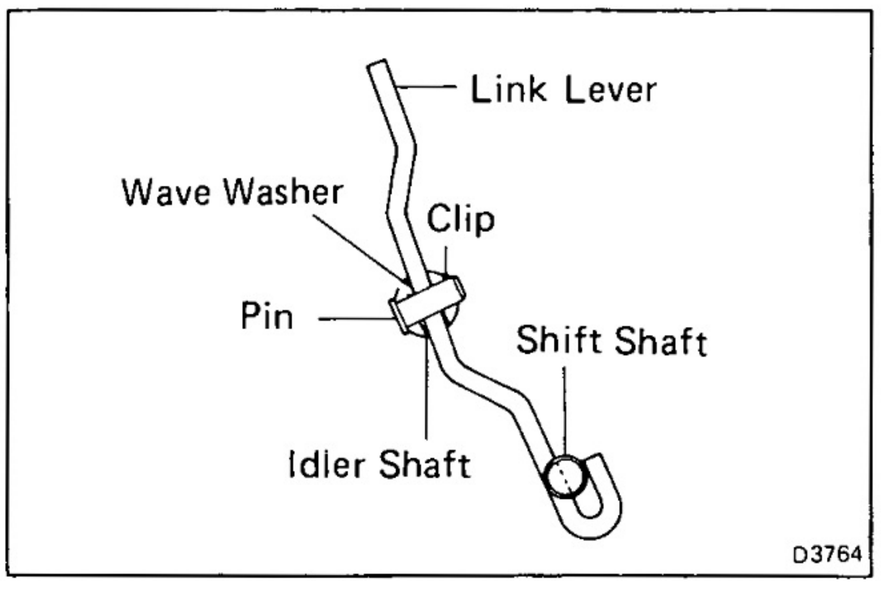

10. INSTALL LINK LEVER

(a) Align the notch of the shift shaft and the hook of the link lever.
Install the link lever onto the idler shaft together with a wave washer.

(b) Insert the pin and install the clip.

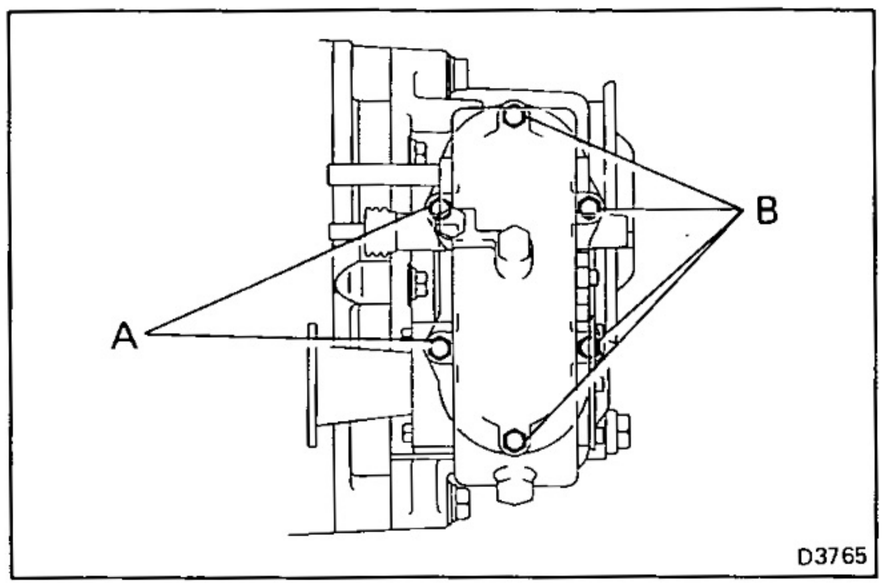

INSTALLATION OF P.T.O.

(See page WI-4)

1. INSTALL P.T.O

   (a) Apply anaerobic adhesive and sealant [THREE BOND 1324 (Part No. 08833-00070) or equivalent] to the threads of the two front side bolts A.

   (b) Install a new gasket and P.T.O. assembly with six bolts. Torque the bolts.

   Torque:

A	Front side	170 kg-cm (12 ft-lb, 17 N·m)
B	Other side	195 kg-cm (14 ft-lb, 19 N·m)

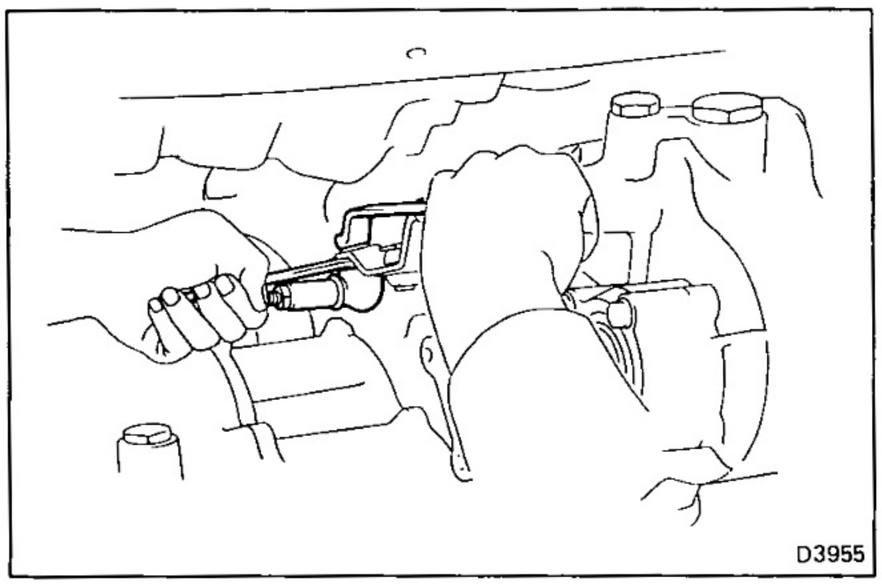

2. CONNECT P.T.O. SHIFT ROD

   Torque: 200 kg-cm (14 ft-lb, 20 N·m)

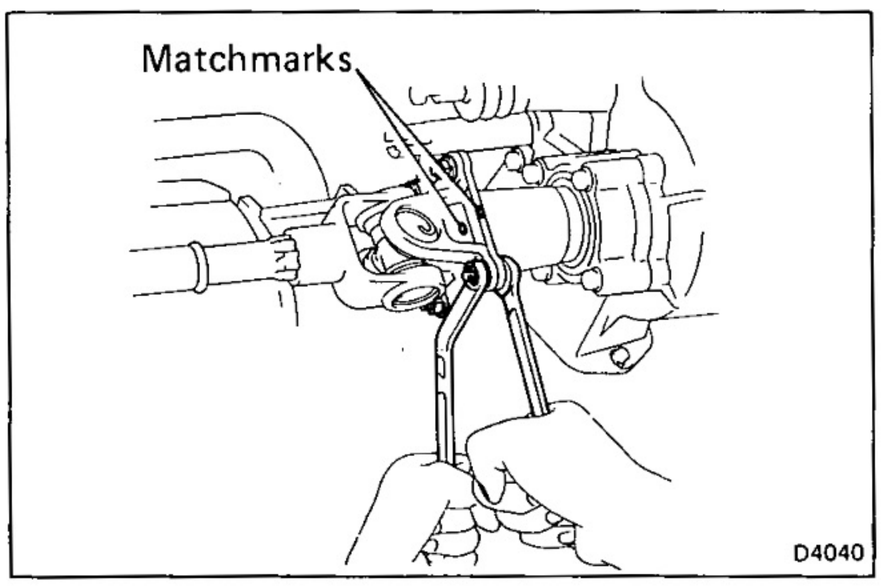

3. CONNECT P.T.O. DRIVE SHAFT

   Align the matchmarks and connect the drive shaft with bolts and nuts. Torque the bolts and nuts.

   Torque: 200 kg-cm (14 ft-lb, 20 N·m)

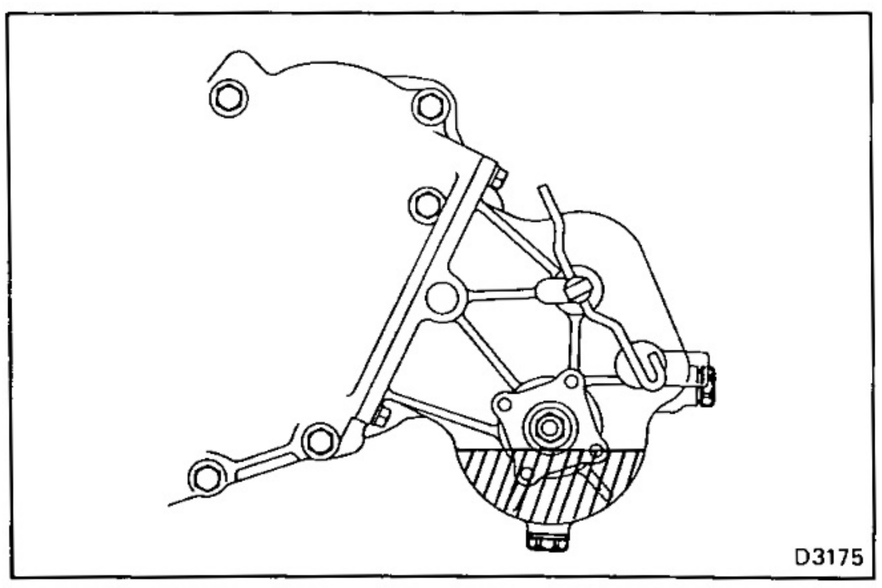

4. FILL P.T.O. WITH TRANSMISSION OIL

   Oil grade: API service GL-4 or GL-5
   SAE-90

   Capacity: about 0.5 liter (0.5 US qts, 0.4 Imp. qts)

5. INSTALL TRANSMISSION UNDERCOVER

Drive Shaft

COMPONENTS

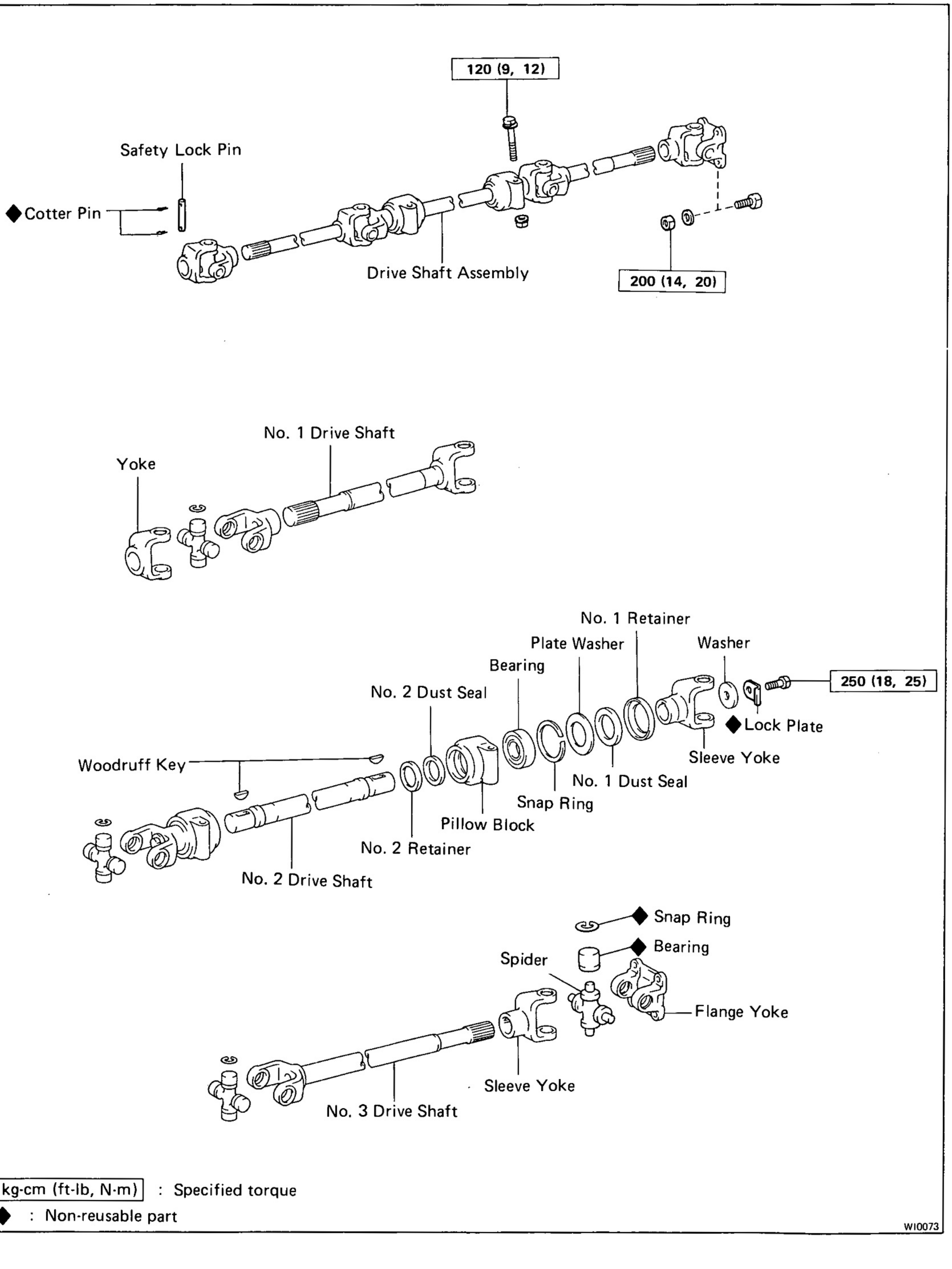

kg-cm (ft-lb, N·m) : Specified torque

◆ : Non-reusable part

WI0073

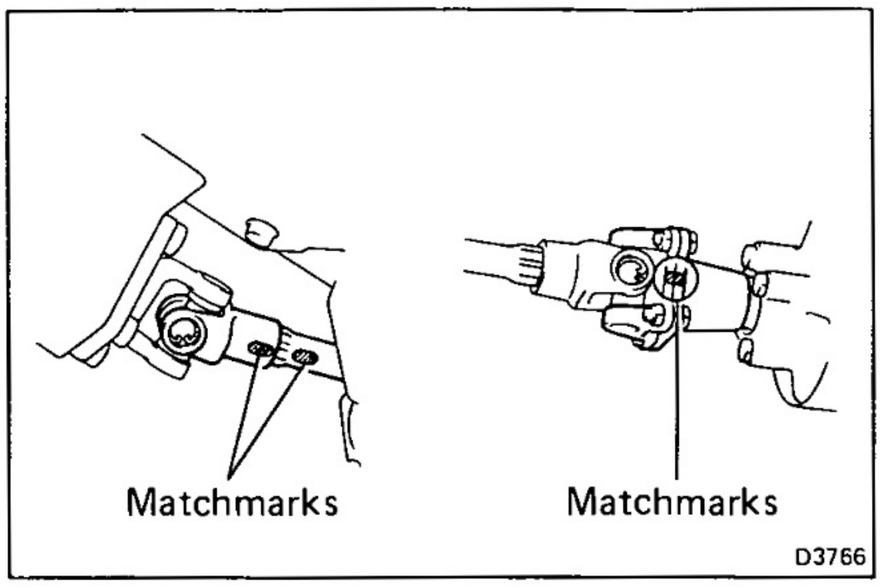

REMOVAL OF DRIVE SHAFT

(See page WI-12)

1. REMOVE ENGINE UNDERCOVER

2. REMOVE TRANSMISSION UNDERCOVER

3. PLACE MATCHMARKS

   Place the matchmarks on the drive shaft and universal joint or P.T.O. companion flange.

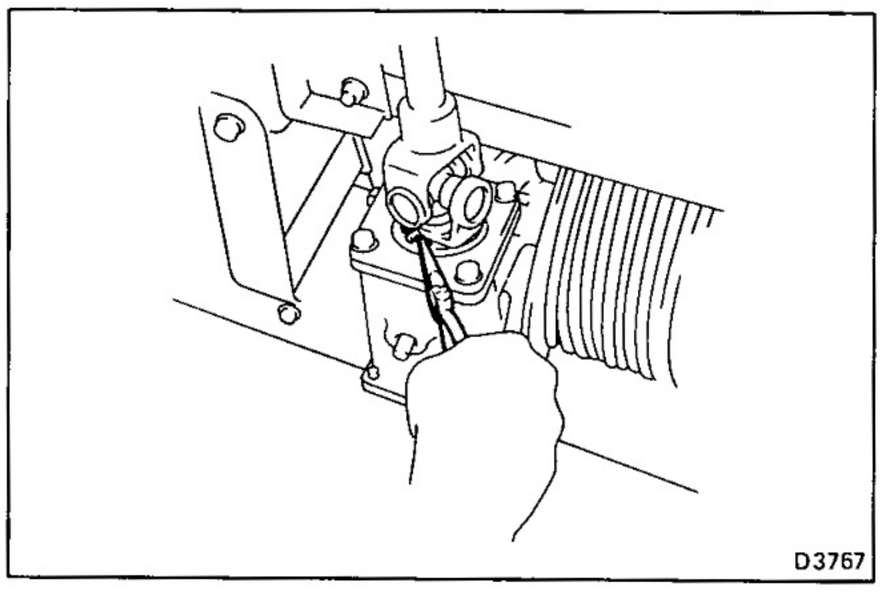

4. REMOVE SAFETY LOCK PIN

   Remove the two cotter pins and safety lock pin.

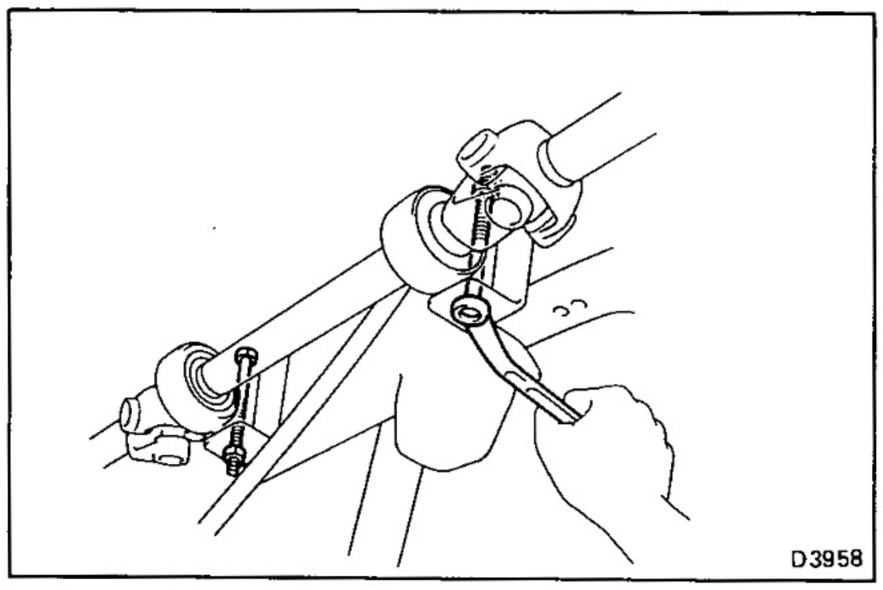

5. DISCONNECT DRIVE SHAFT

   (a) Remove the pillow block set bolts and nuts.

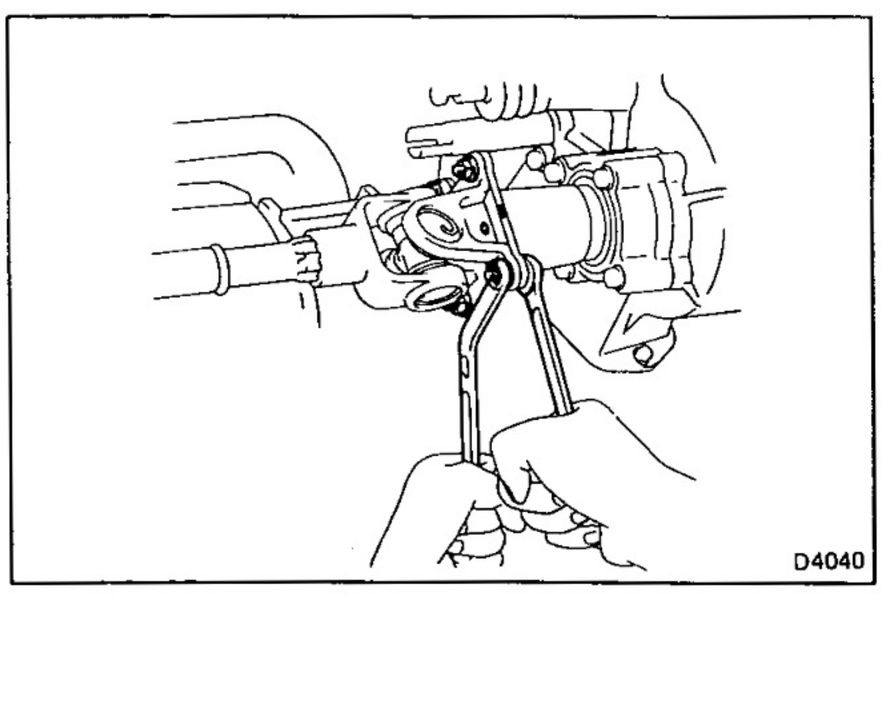

   (b) Remove the P.T.O. companion flange set bolts and nuts, then disconnect the drive shaft assembly.

NOTE: Do not forcefully remove the universal joint.

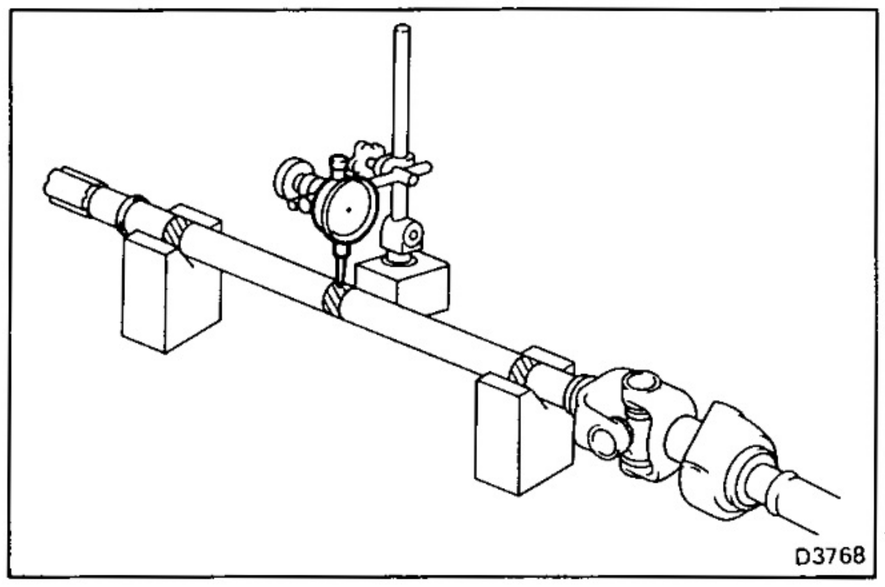

INSPECTION OF DRIVE SHAFT COMPONENTS

1. INSPECT DRIVE SHAFT FOR DAMAGE OR RUNOUT

Maximum runout: 0.7 mm (0.028 in.)

If the shaft runout is greater than the maximum, replace the shaft.

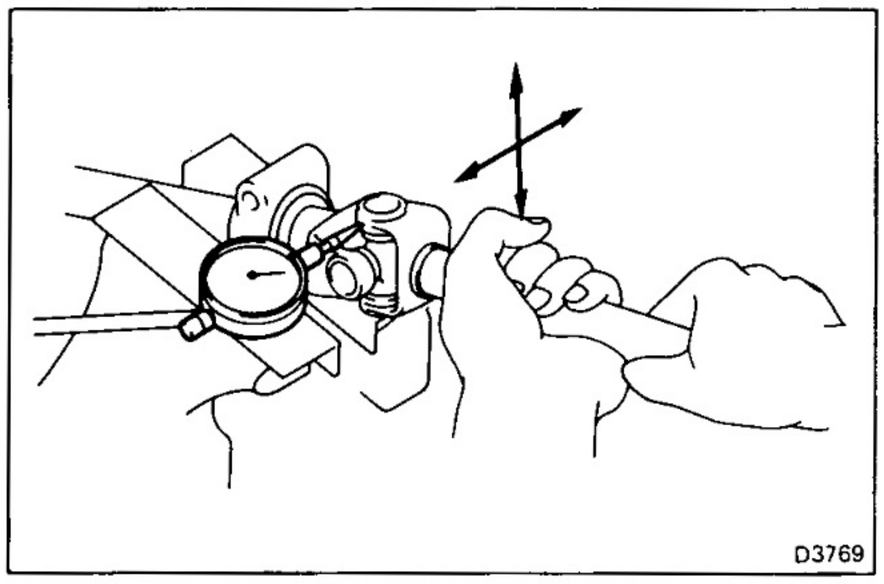

2. INSPECT SPIDER BEARINGS

(a) Inspect the spider bearings for wear or damage.

(b) Check the spider bearing axial play.

Bearing axial play: 0.15 mm (0.0059 in.)

If necessary, replace the spider bearing.

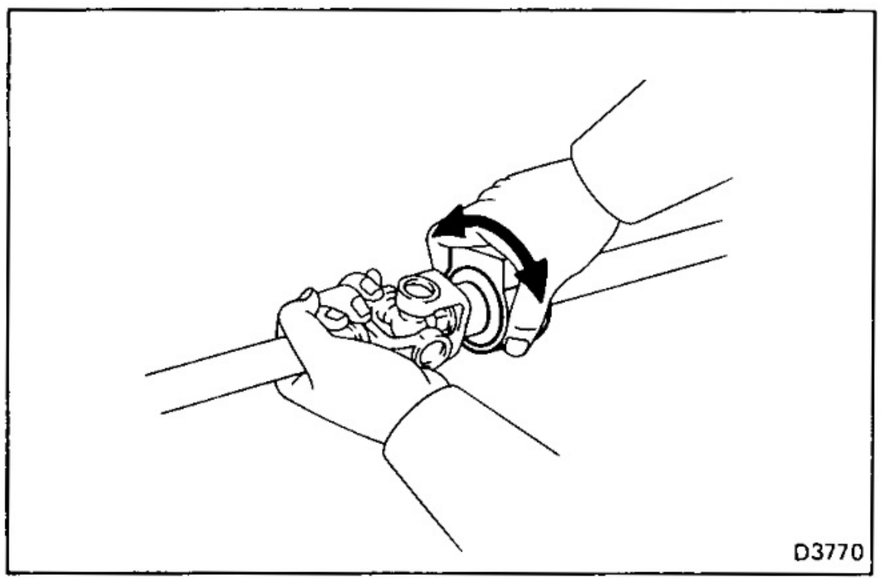

3. INSPECT PILLOW BLOCK BEARING

Check that the bearing turns freely.

If the bearing is damaged, worn or does not turn freely, replace it.

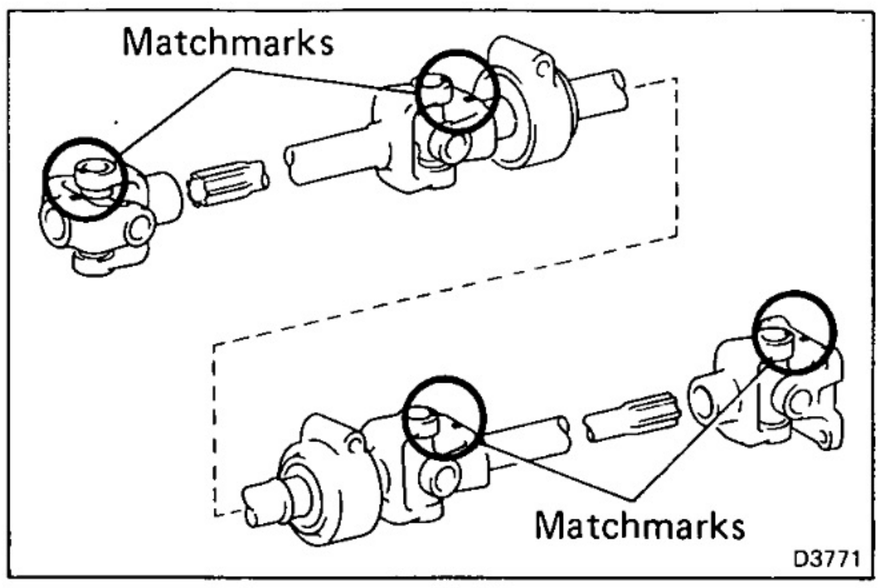

REPLACEMENT OF SPIDER BEARINGS

(See page WI-12)

1. PLACE MATCHMARKS ON DRIVE SHAFT AND YOKES

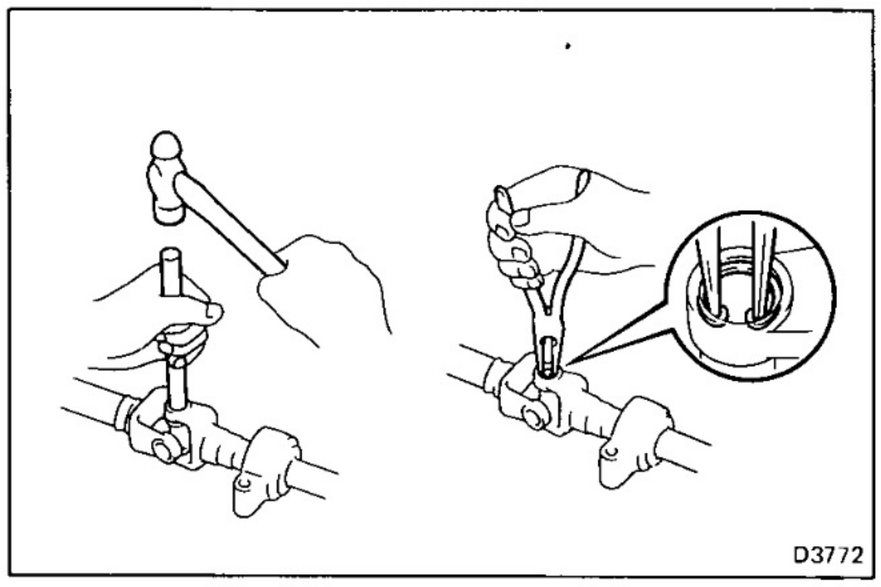

2. REMOVE SNAP RINGS
   (a) Slightly tap in the bearing outer races.
   (b) Using snap ring pliers, remove the four snap rings from the grooves.

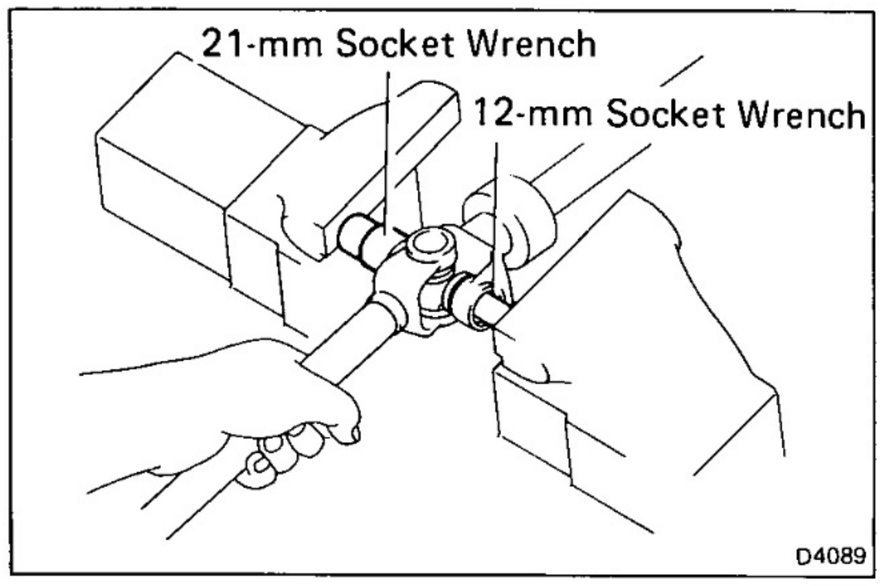

3. REMOVE SPIDER BEARINGS
   (a) Using 12-mm and 21-mm socket wrenches and a vise, press out the bearing.

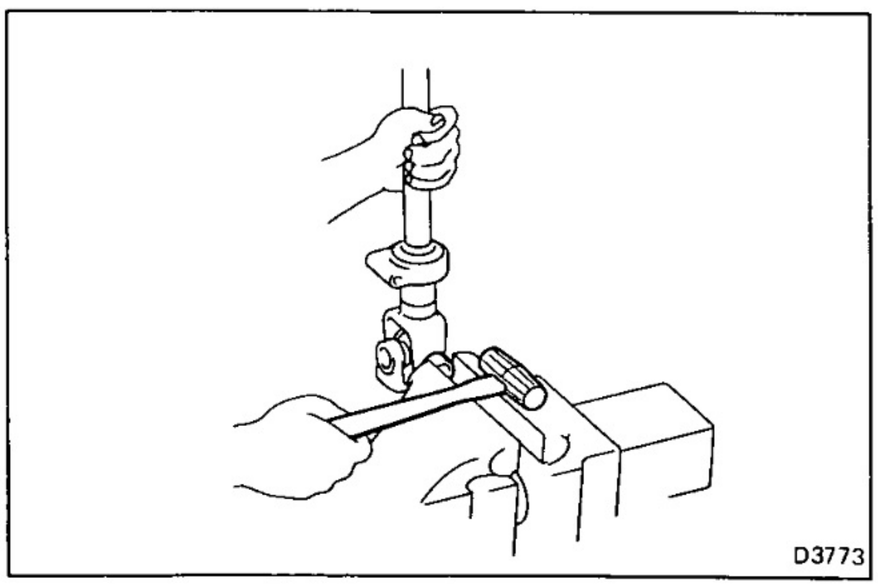

   (b) Clamp the outer bearing race in a vise and tap off the shaft with a plastic hammer or copper hammer.

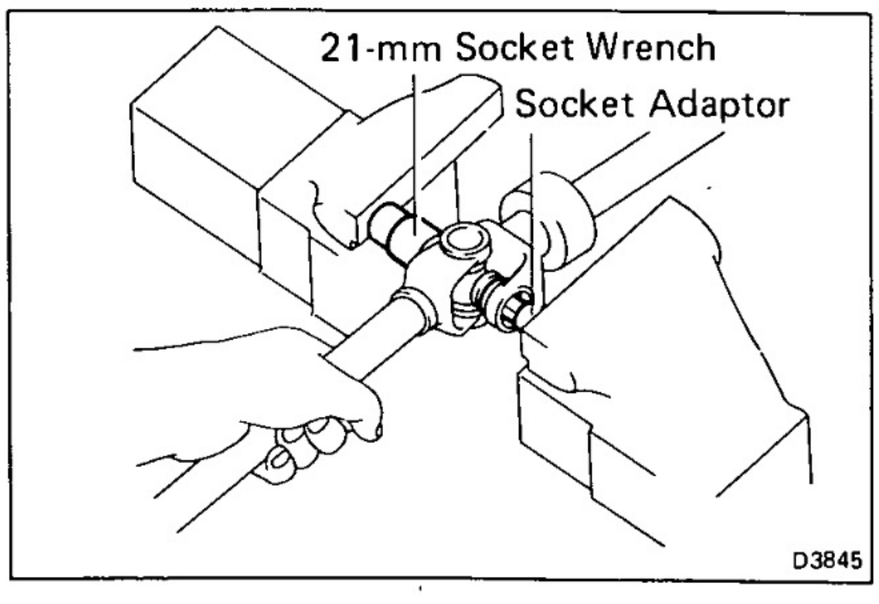

   (c) Using a socket adaptor, 21-mm socket wrench and vise, press out the bearing on the opposite side.
   (d) Remove the bearing on the opposite side in the same procedure as shown in step (b).

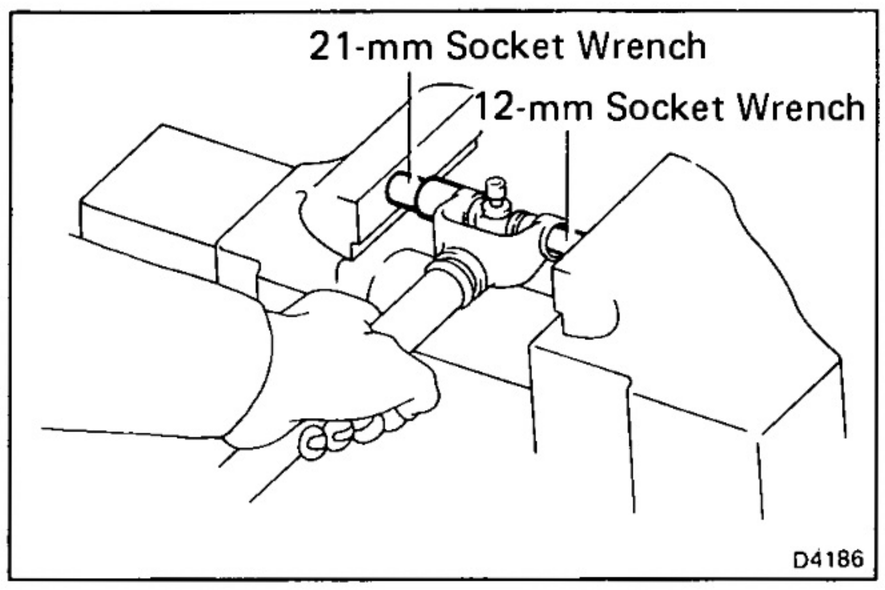

(e) Using 12-mm and 21-mm socket wrenches and a vise, press out the bearing.

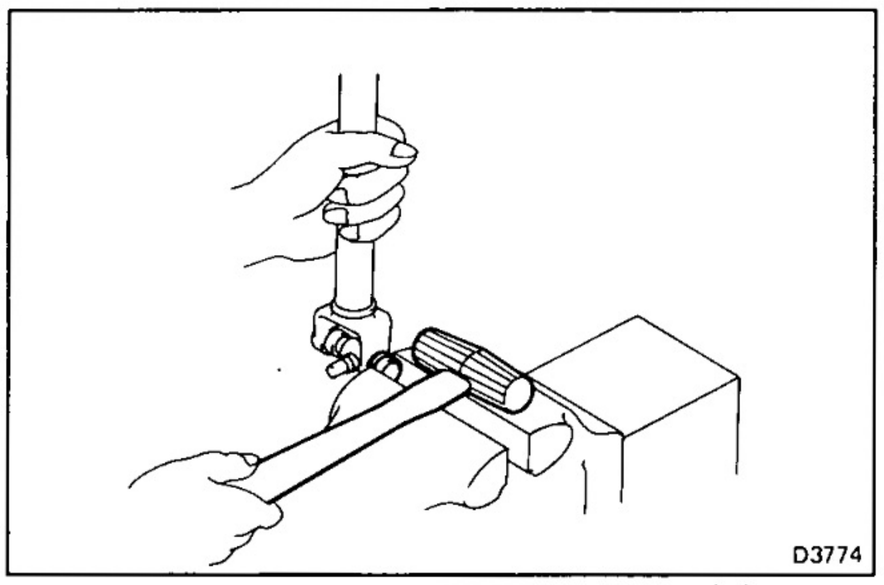

(f) Clamp the outer bearing race in a vise, and tap off the yoke with a plastic hammer or copper hammer.

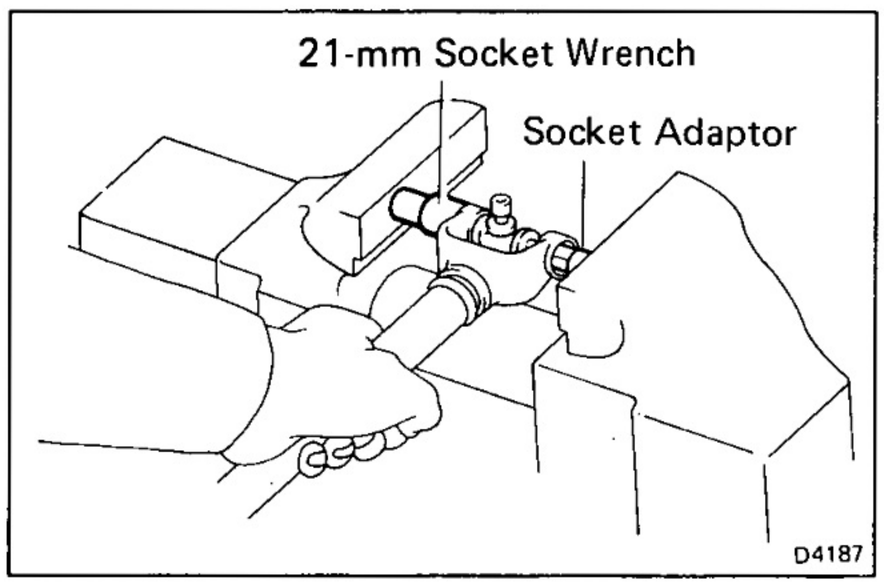

(g) Using a socket adaptor, 21-mm socket wrench and vise, press out the bearing on the opposite side.

(h) Remove the bearing on the opposite side in the same procedure as shown in step (f).

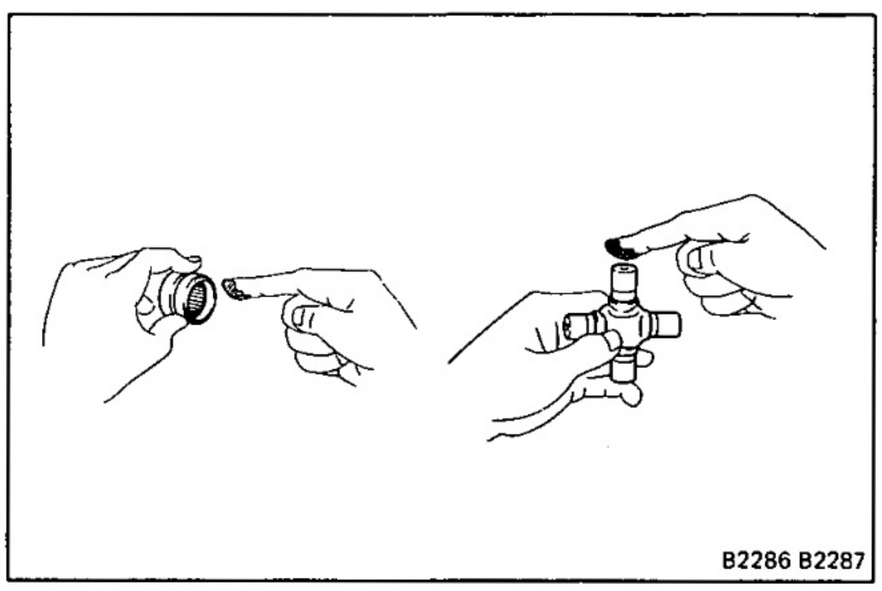

4. INSTALL SPIDER BEARINGS

(a) Apply molybdenum disulphide lithium base grease to the spider and bearings.

NOTE: Be careful not to apply too much grease.

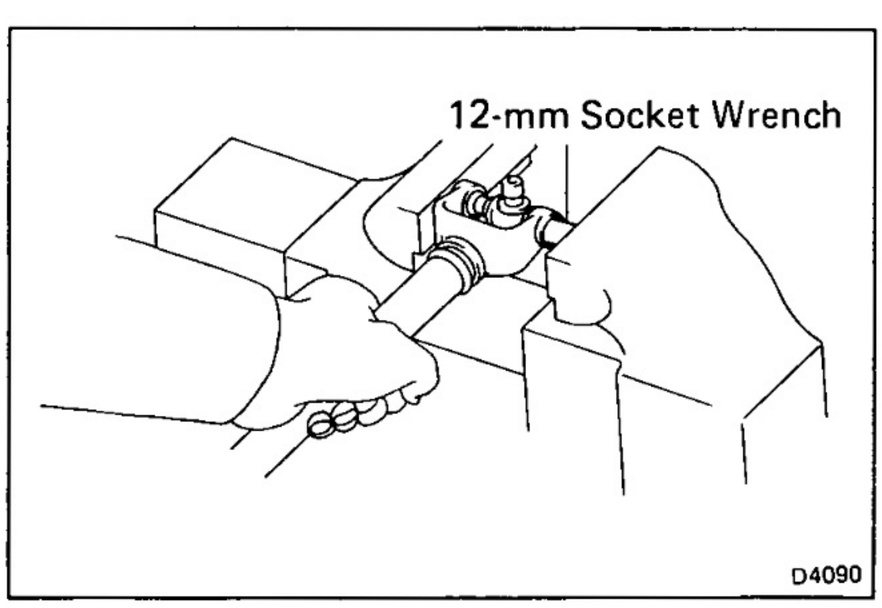

(b) Put the new spider into the yoke.

(c) Using a 12-mm socket wrench and vise, press the bearing onto the spider.

(d) Install the bearing on the opposite side using the procedure in (c).

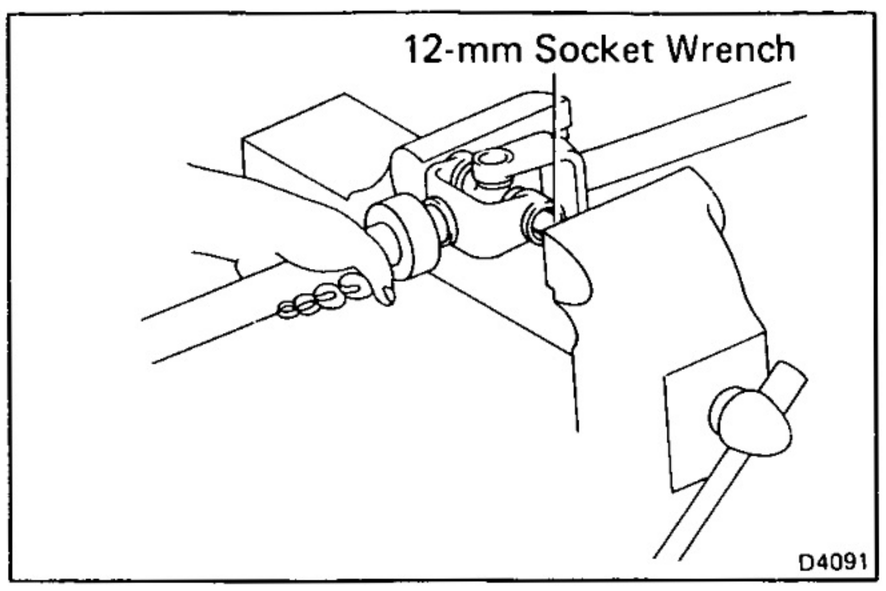

(e) Align the matchmarks on the yoke and shaft.

(f) Install new spider bearings in the shaft side using the procedure in steps (c) and (d).

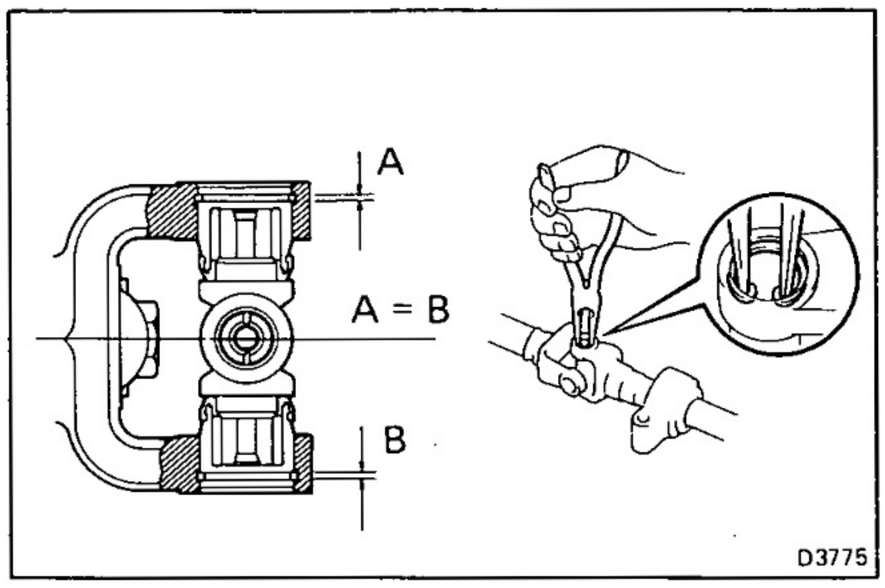

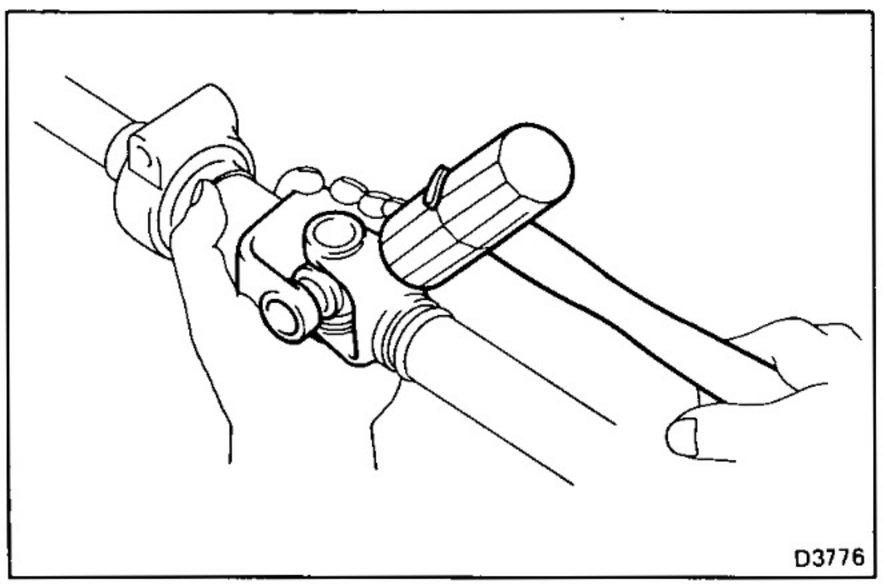

5. INSTALL SNAP RINGS

(a) Install two snap rings of the same thickness which will allow 0 – 0.15 mm (0 – 0.0059 in.) of axial play.

NOTE: Do not reuse the snap rings.

Snap ring thicknesses

Thickness	mm (in.)	Color
1.20	(0.0472)	None
1.25	(0.0492)	Brown
1.30	(0.0512)	Blue

(b) Using a plastic hammer or copper hammer, tap the yoke until there is no clearance between the bearing outer race and snap ring.

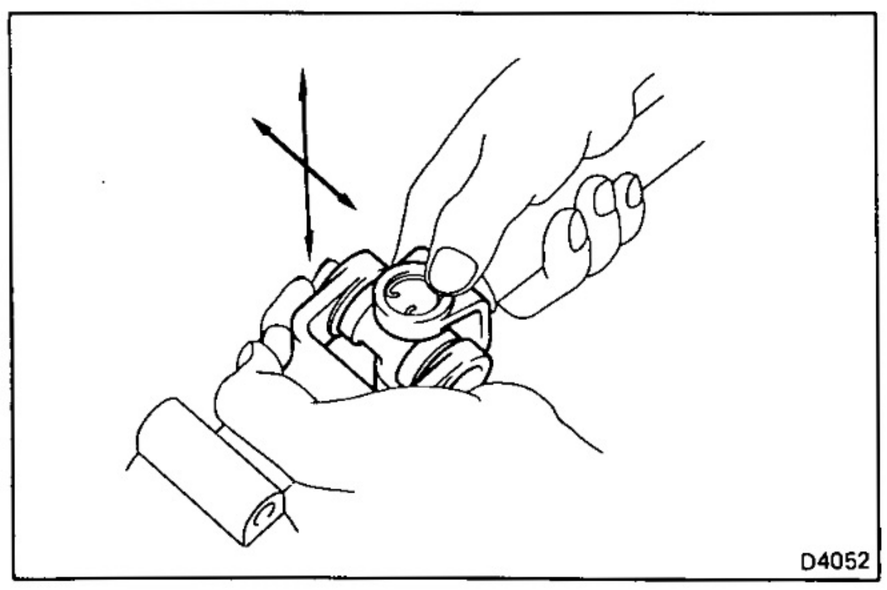

6. CHECK SPIDER BEARING

(a) Check that the spider bearing moves smoothly.

(b) Check the spider bearing axial play.

Bearing axial play: Less than 0.15 mm (0.0059 in.)

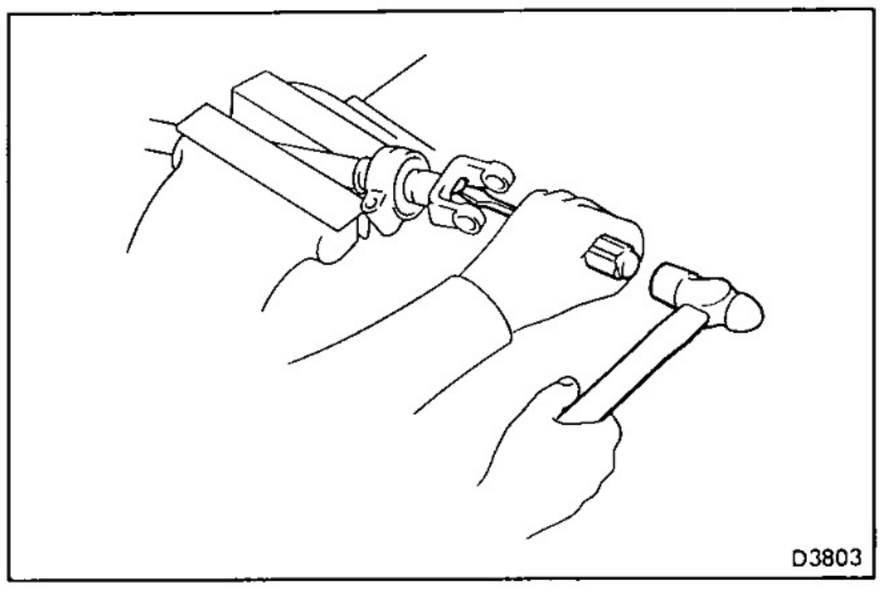

REPLACEMENT OF PILLOW BLOCK BEARING

(See page WI-12)

1. REMOVE UNIVERSAL JOINT
(See page WI-15)

2. REMOVE SLEEVE YOKE

(a) Using a chisel and hammer, loosen the staked part of the lock plate.

(b) Remove the bolt, lock plate and plate washer.

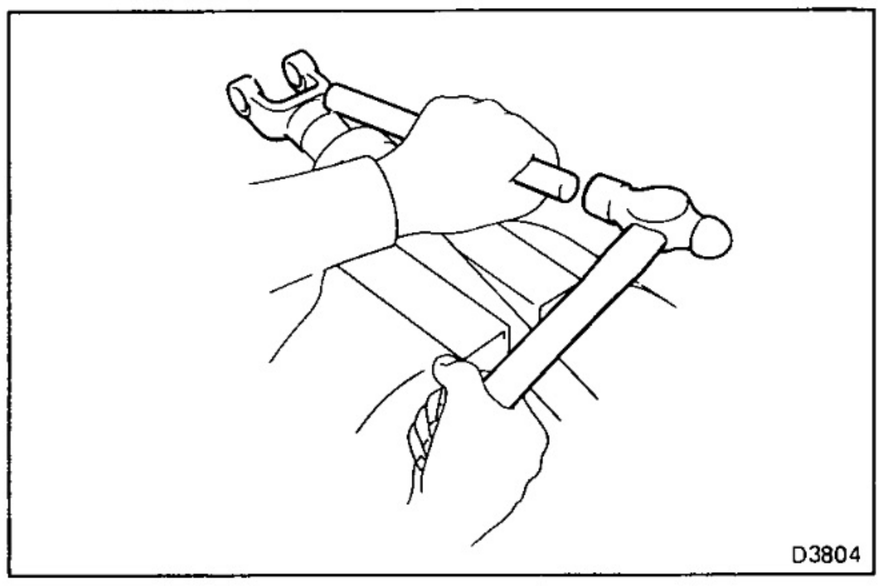

(c) Using a brass bar and hammer, remove the sleeve yoke.

(d) Remove the woodruff key.

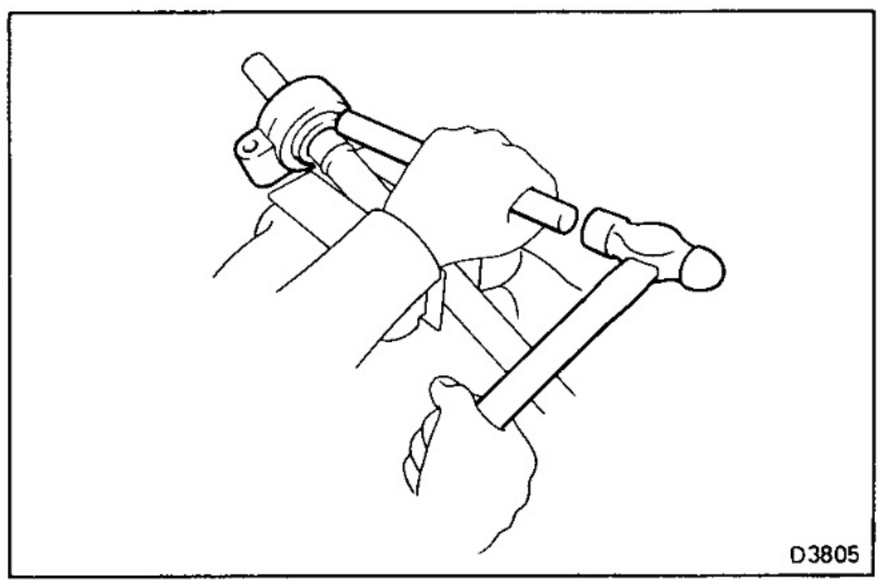

3. REMOVE PILLOW BLOCK

Using a brass bar and hammer, drive out the pillow block.

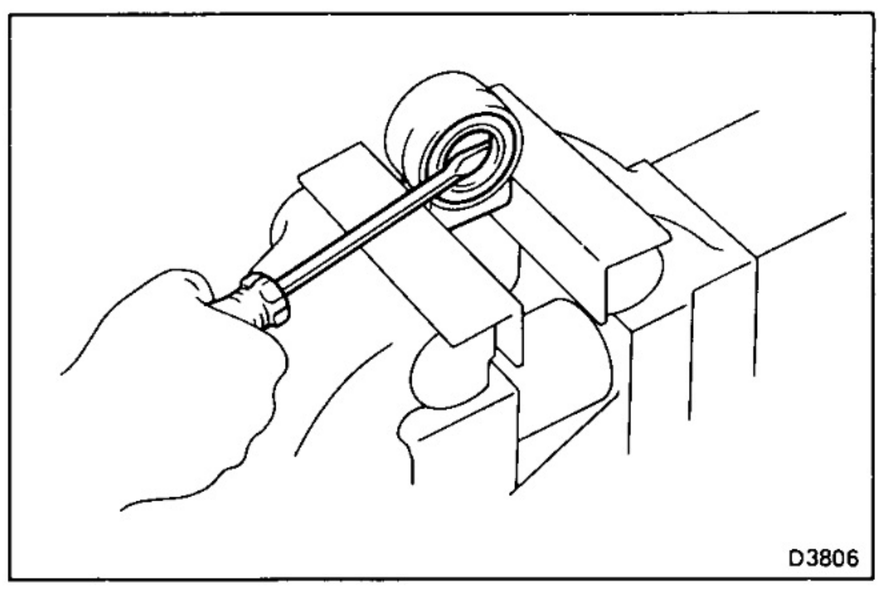

4. REMOVE DUST SEALS, RETAINERS AND PLATE WASHER

(a) Using a screwdriver, pry out the No. 1 dust seal retainer and No. 1 dust seal.

(b) Remove the plate washer.

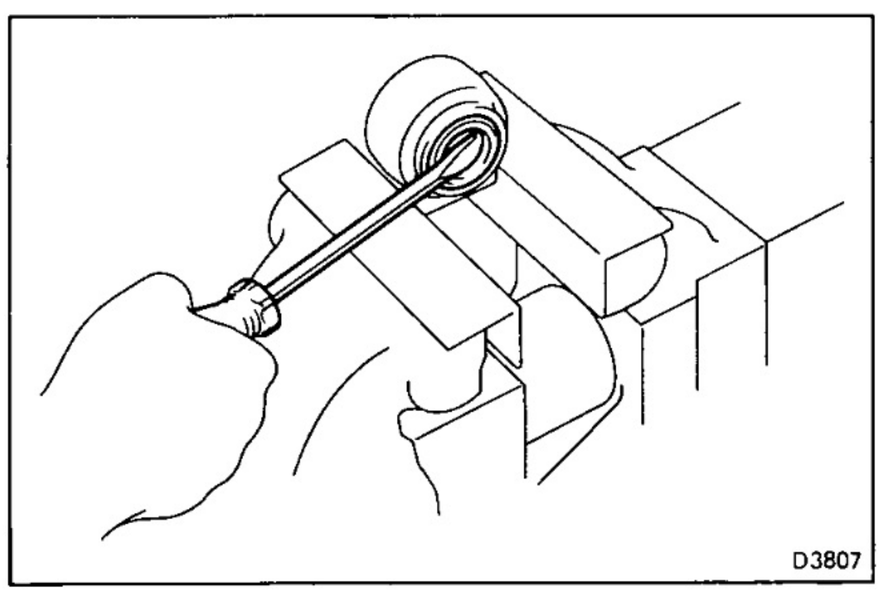

(c) Using a screwdriver, pry out the No. 2 dust seal retainer and No. 2 dust seal.

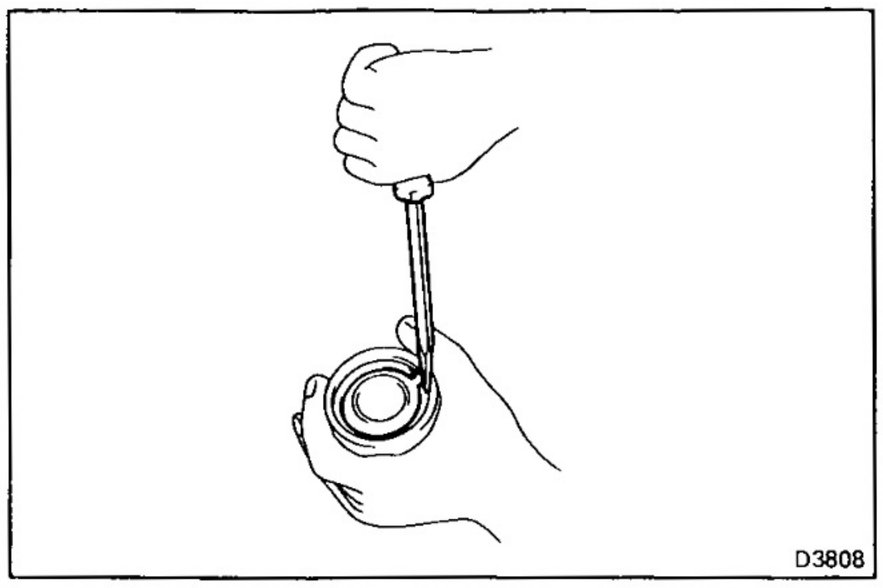

5. REMOVE BEARING

(a) Using a screwdriver, remove the snap ring.

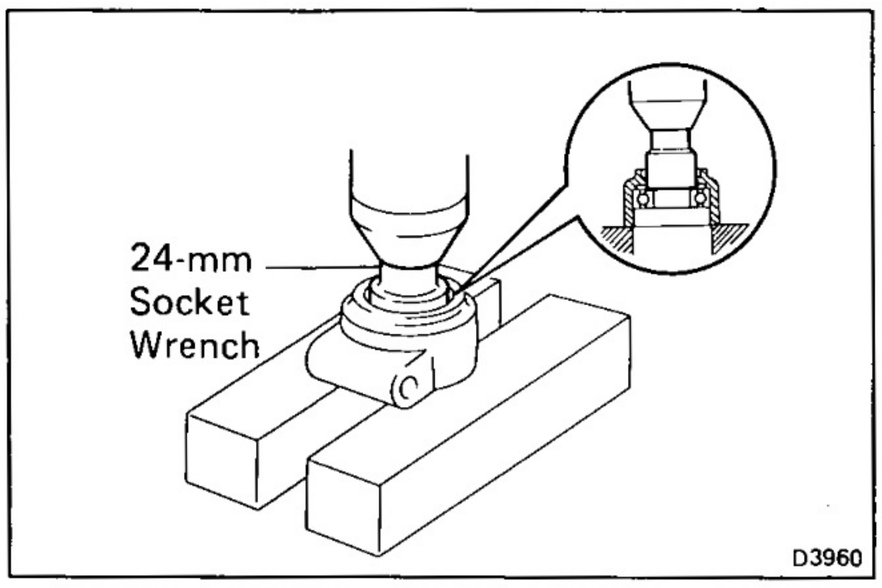

(b) Using a press and 24-mm socket wrench, press out the bearing.

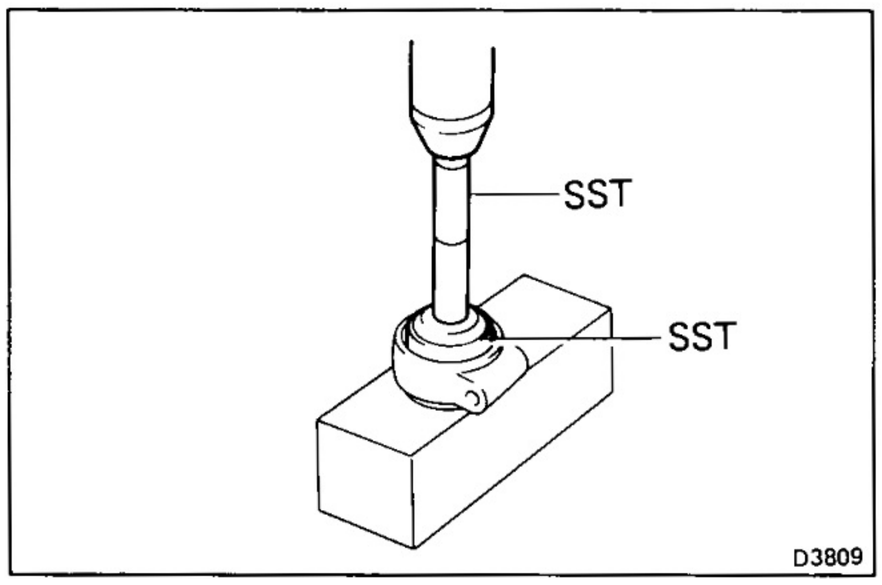

6. INSTALL NEW BEARING

(a) Using a press and SST, install a new bearing.

SST 09608-35013

(b) Install the snap ring.

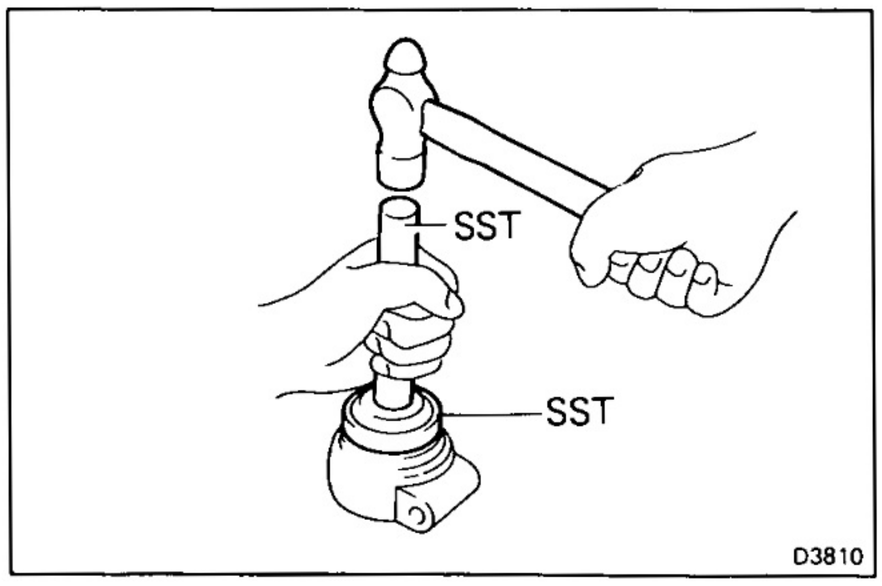

7. INSTALL NO. 2 DUST SEAL AND NO. 2 RETAINER

Using SST, install the No. 2 dust seal and No. 2 retainer.

SST 09608-35013

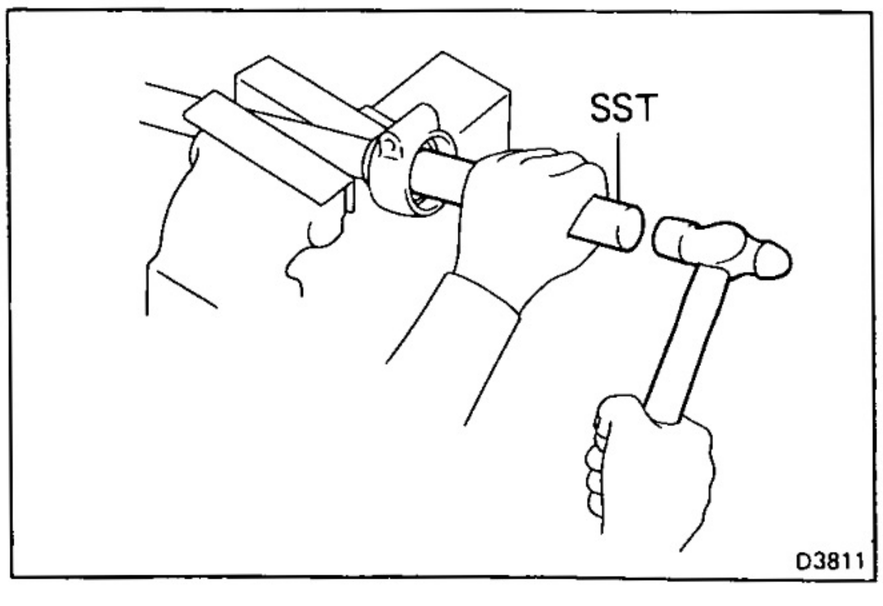

8. INSTALL PILLOW BLOCK

Using SST, install the pillow block.

SST 09612-22011

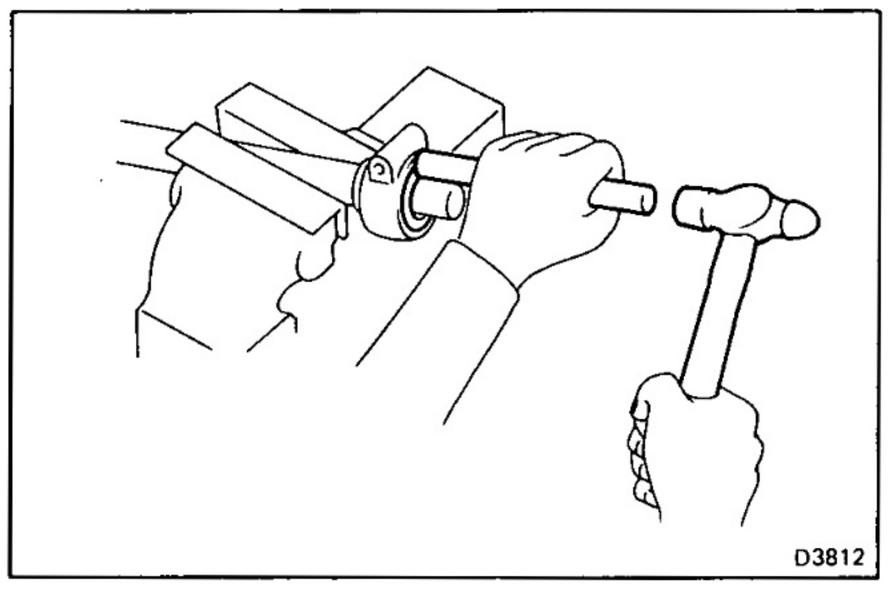

9. **INSTALL PLATE WASHER, NO. 1 DUST SEAL AND NO. 1 RETAINER**

(a) Install the plate washer.

(b) Using a brass bar and hammer, drive in the No. 1 dust seal and No. 1 retainer.

NOTE: Be careful not to damage the retainer.

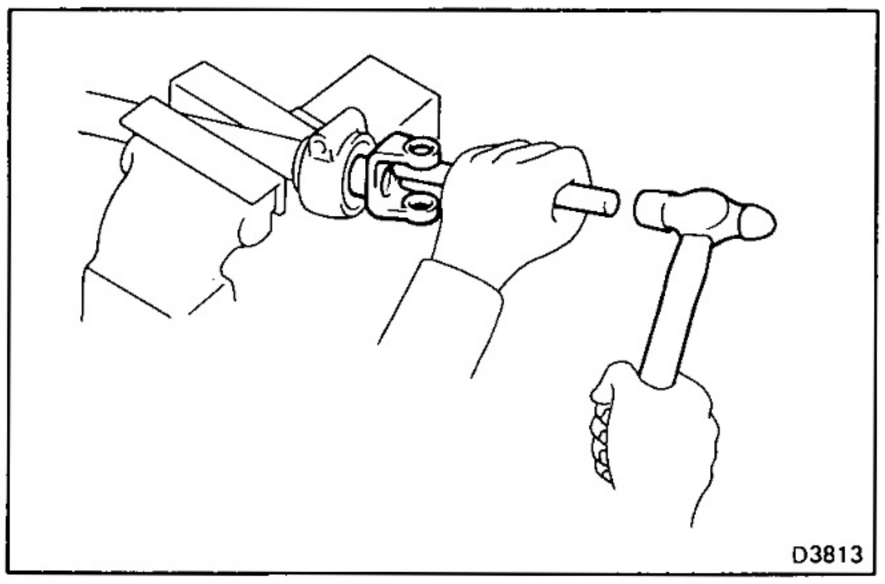

10. **INSTALL SLEEVE YOKE**

(a) Install the woodruff key.

(b) Using a brass bar and hammer, drive in the sleeve yoke.

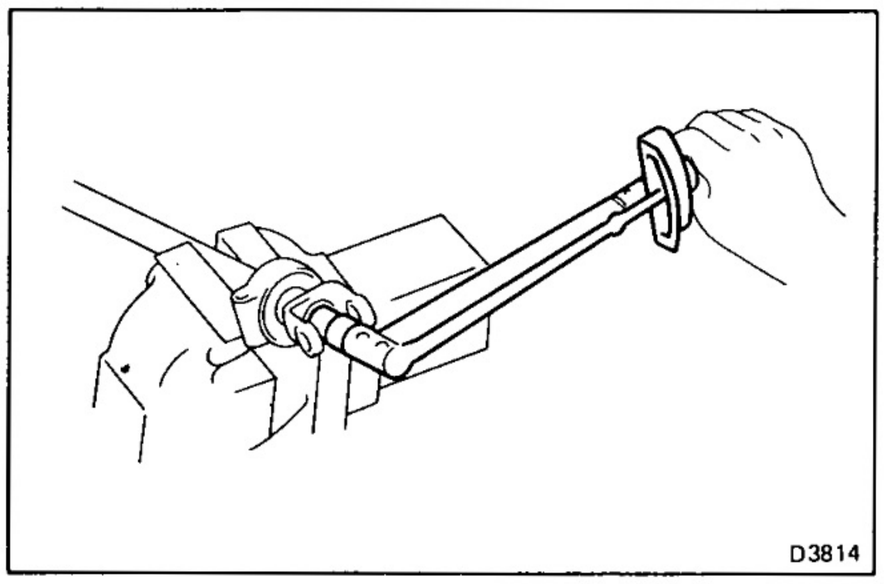

(c) Install the washer, lock plate and bolt. Torque the bolt.

Torque: 250 kg-cm (18 ft-lb, 25 N·m)

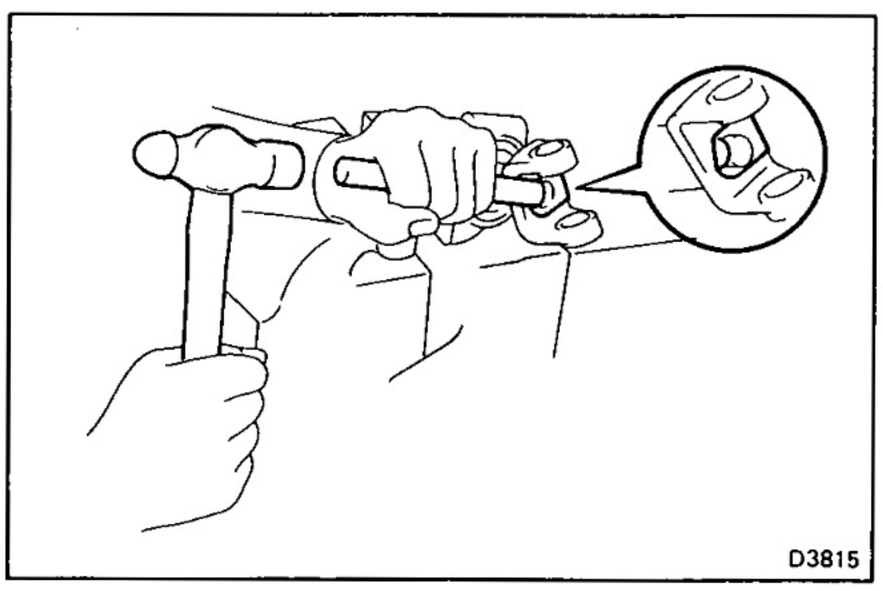

(d) Using a brass bar and hammer, stake the lock plate.

NOTE: Stake claw flush with the flat surface of the bolt.

11. **INSTALL UNIVERSAL JOINT**
(See page WI-16)

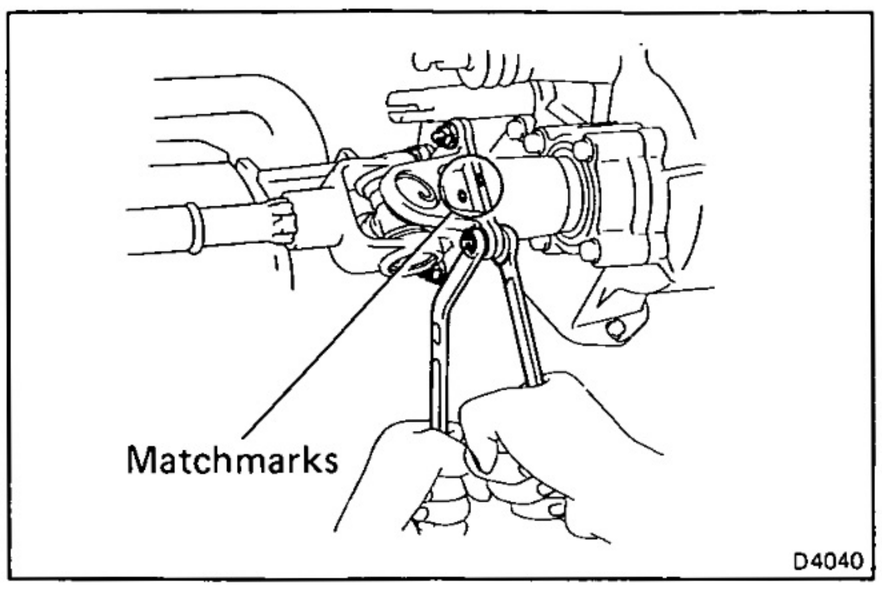

INSTALLATION OF DRIVE SHAFT

(See page WI-12)

1. INSTALL DRIVE SHAFT

(a) Align the matchmarks on the drive shaft and universal joint or P.T.O. companion flange.

(b) Install and torque the bolts and nuts.

Torque: 200 kg-cm (14 ft-lb, 20 N·m)

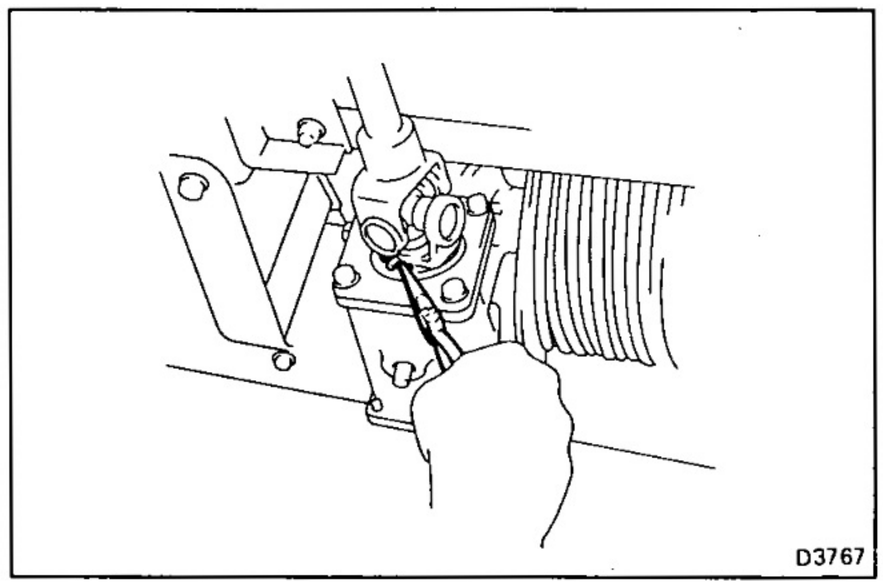

2. INSTALL SAFETY LOCK PIN

(a) Align the safety lock pin hole of the universal joint and worm.

(b) Install the safety lock pin and two cotter pins.

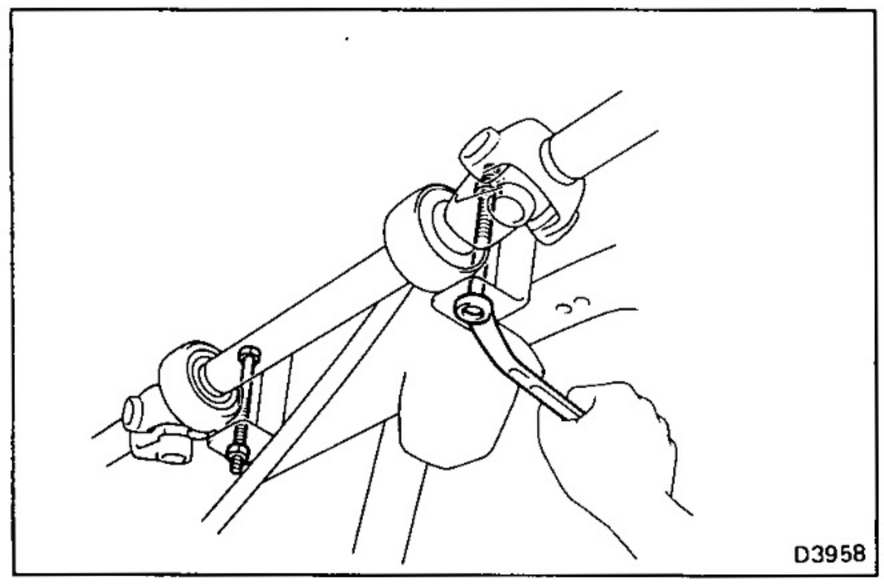

3. INSTALL PILLOW BLOCK

Install the pillow blocks with bolts and nuts. Torque the bolts and nuts.

Torque: 120 kg-cm (9 ft-lb, 12 N·m)

4. INSTALL ENGINE UNDERCOVER

5. INSTALL TRANSMISSION UNDERCOVER

Winch

COMPONENTS

70, 73, 75 Series

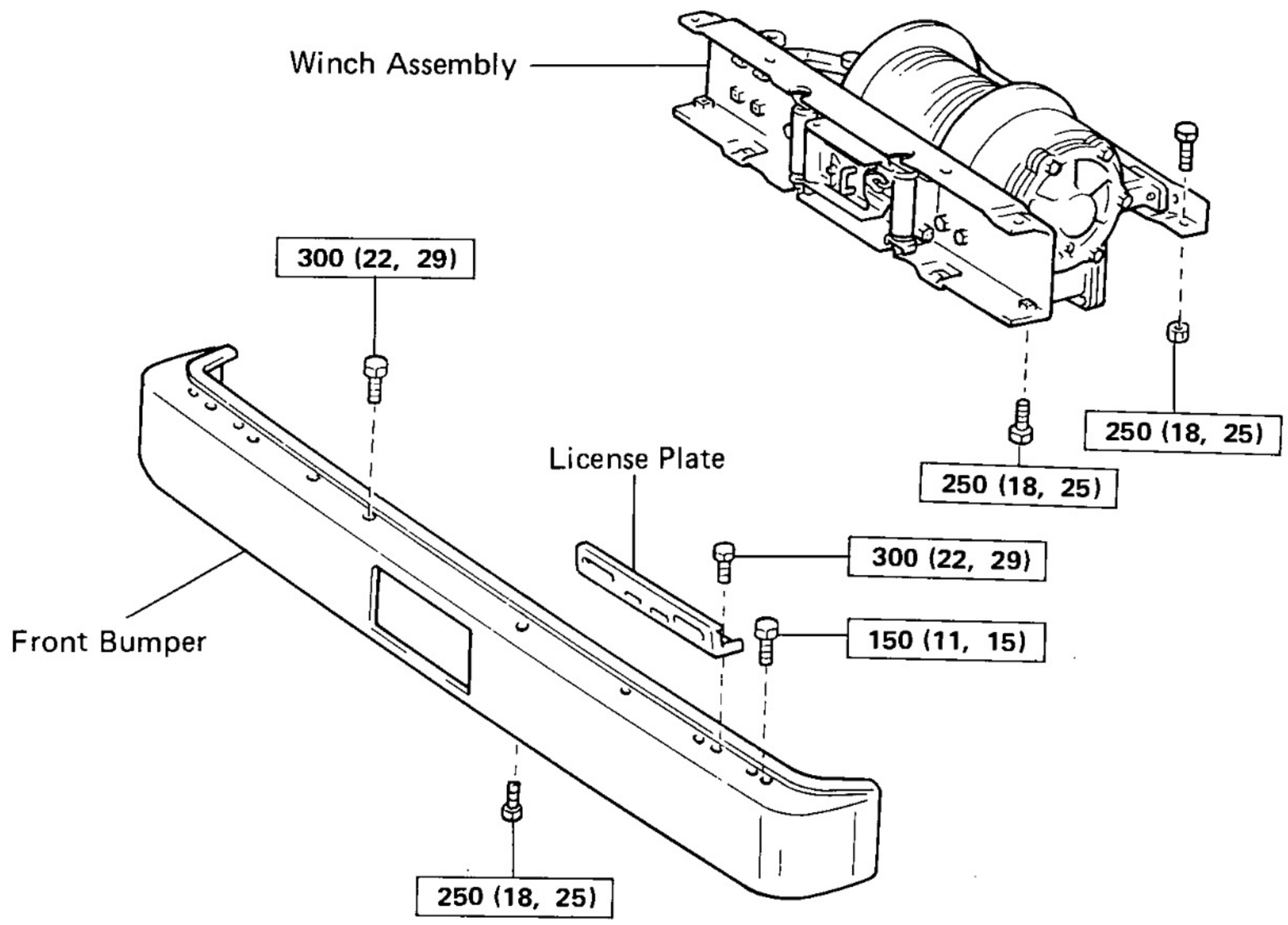

60, 62 Series

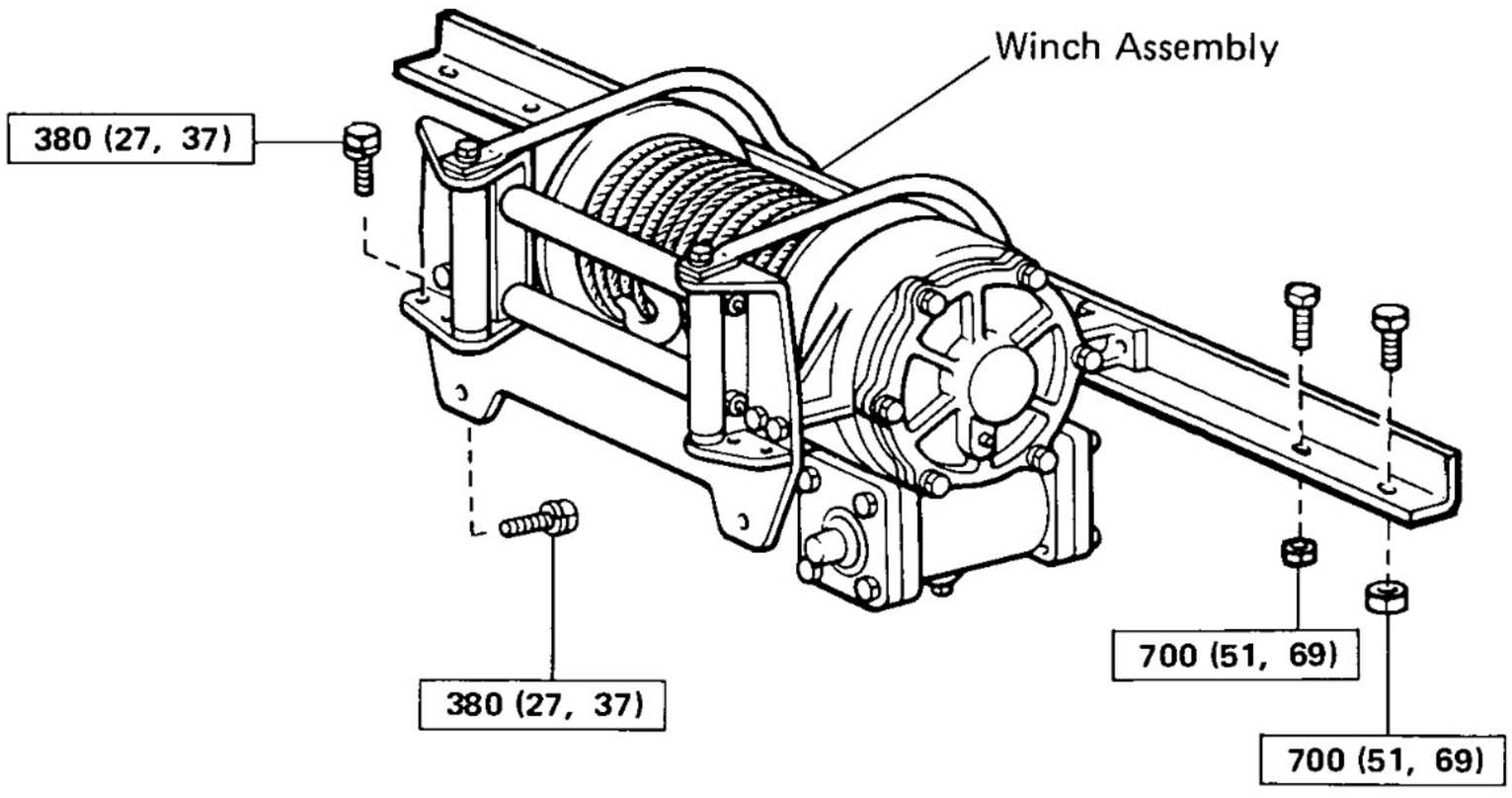

kg-cm (ft-lb, N·m) : Specified torque

WI0086
WI0088

REMOVAL OF WINCH

(See page WI-22)

1. REMOVE CHAIN WIRE
(See page WI-2)

   NOTE: Except when repairing the winch, do not remove the chain wire.

2. DRAIN WINCH OIL

3. DISCONNECT DRIVE SHAFT
(See page WI-13)

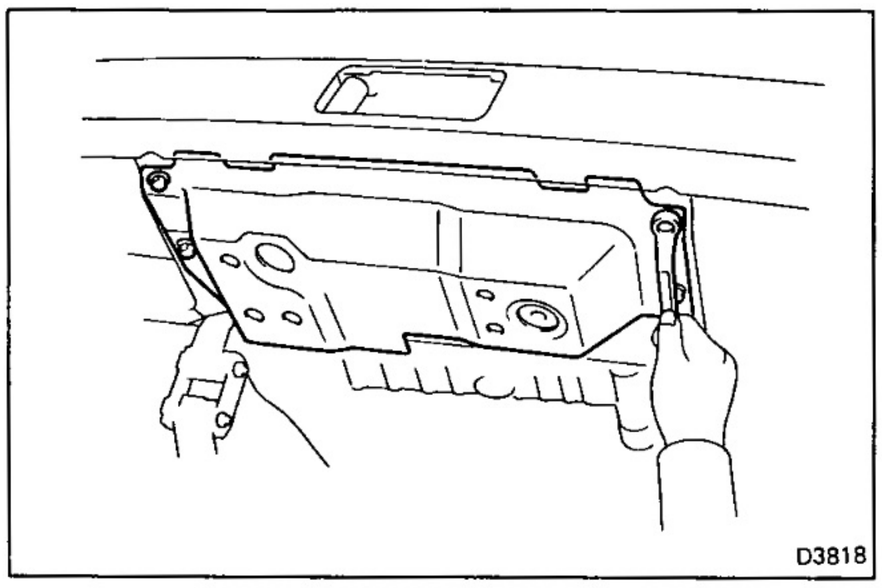

4. (70, 73, 75 Series)
REMOVE WINCH UNDERCOVER

   Remove the four bolts and winch undercover.

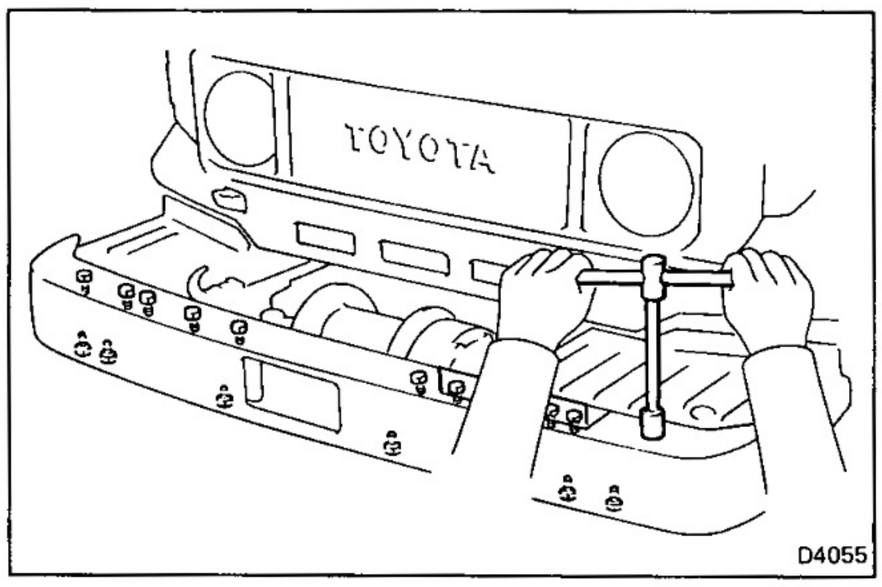

5. (70, 73, 75 Series)
REMOVE FRONT BUMPER

   Remove the 16 bolts, front bumper and license plate bracket.

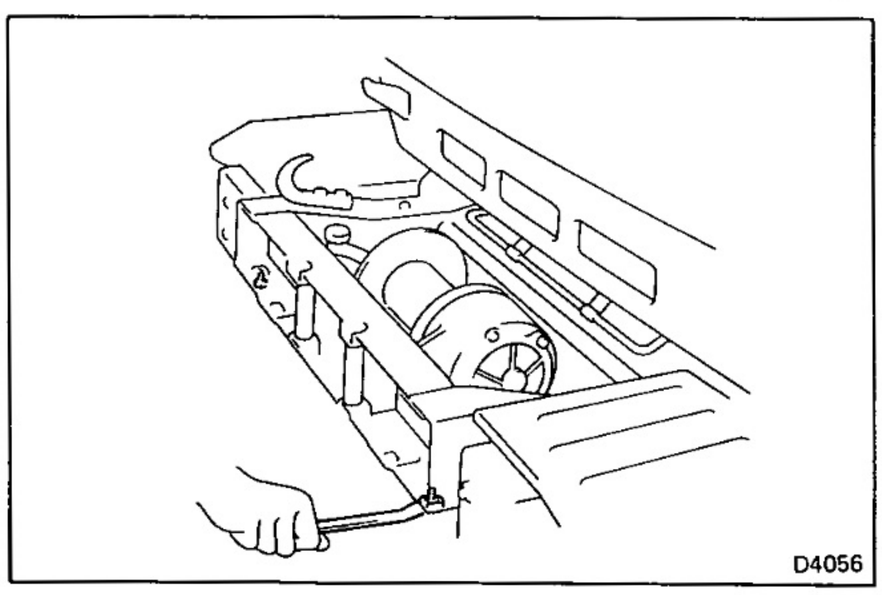

6.-1 (70, 73, 75 Series)
REMOVE WINCH ASSEMBLY

   (a) Remove the two winch roller bracket bolts.

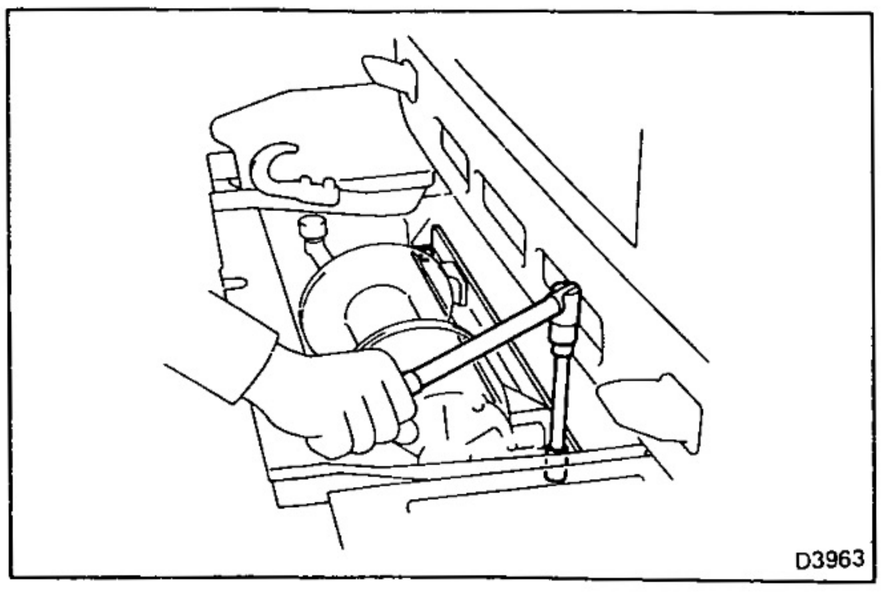

   (b) Remove the two winch rear base member bolts.

   (c) Remove the winch assembly from the vehicle.

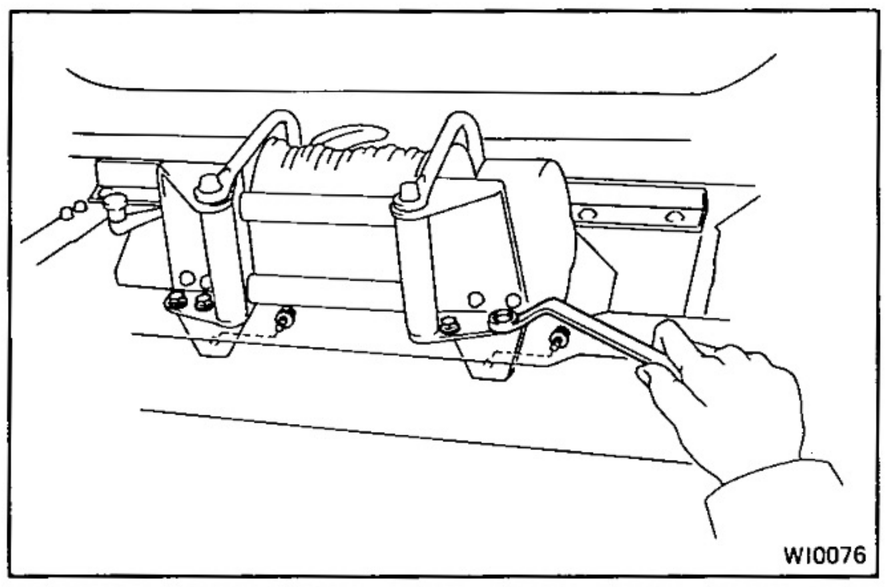

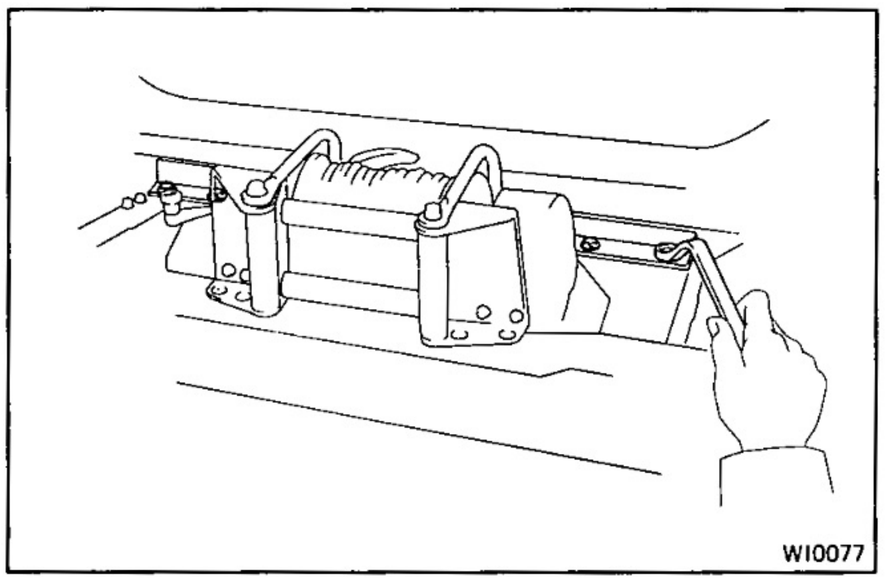

6.-2 (60, 62 Series)
REMOVE WINCH ASSEMBLY

(a) Remove the six winch roller bracket bolts.

(b) Remove the four winch rear base member bolts.

(c) Remove the winch assembly from the vehicle.

COMPONENTS

70, 73, 75 Series

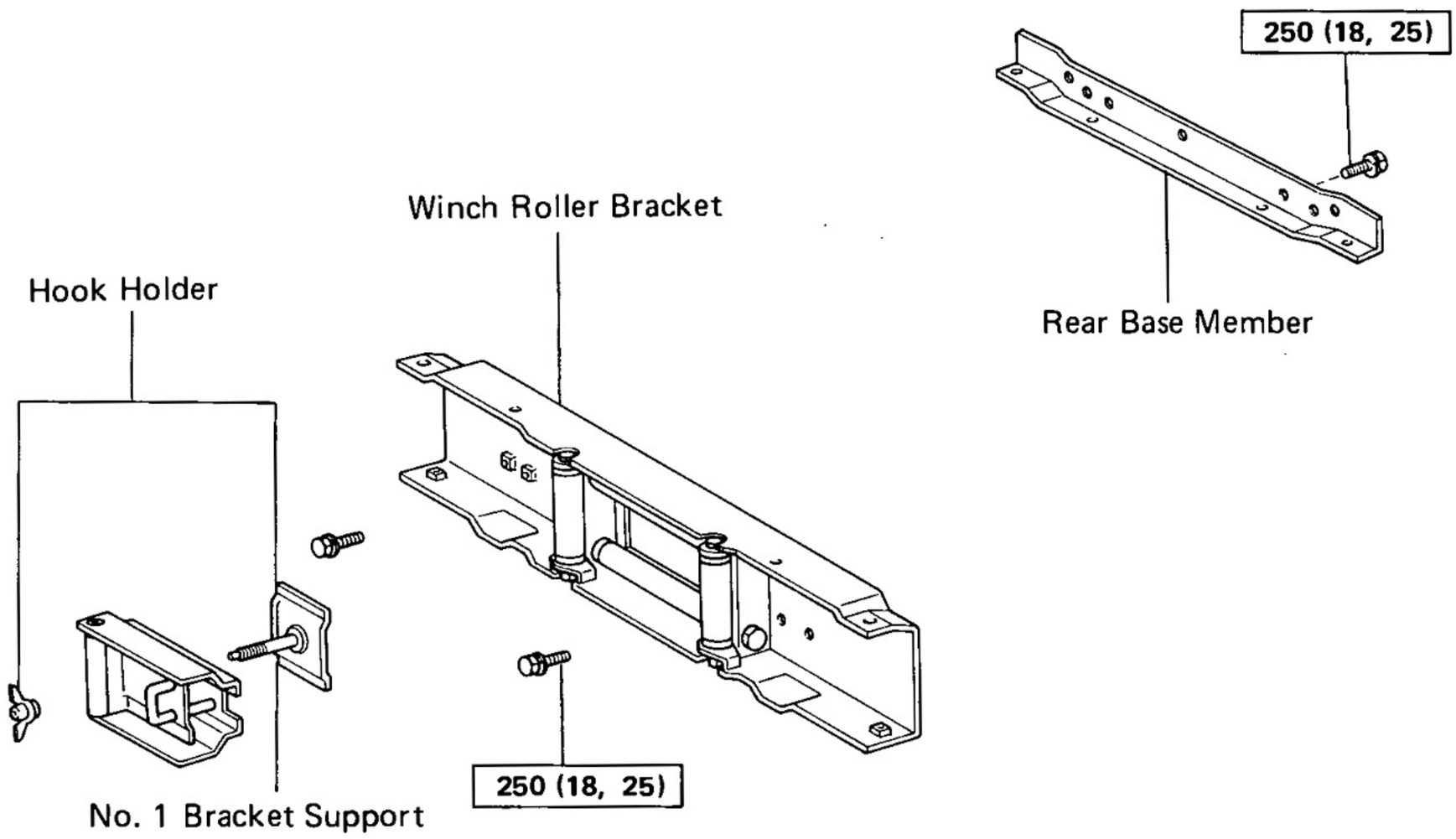

60, 62 Series

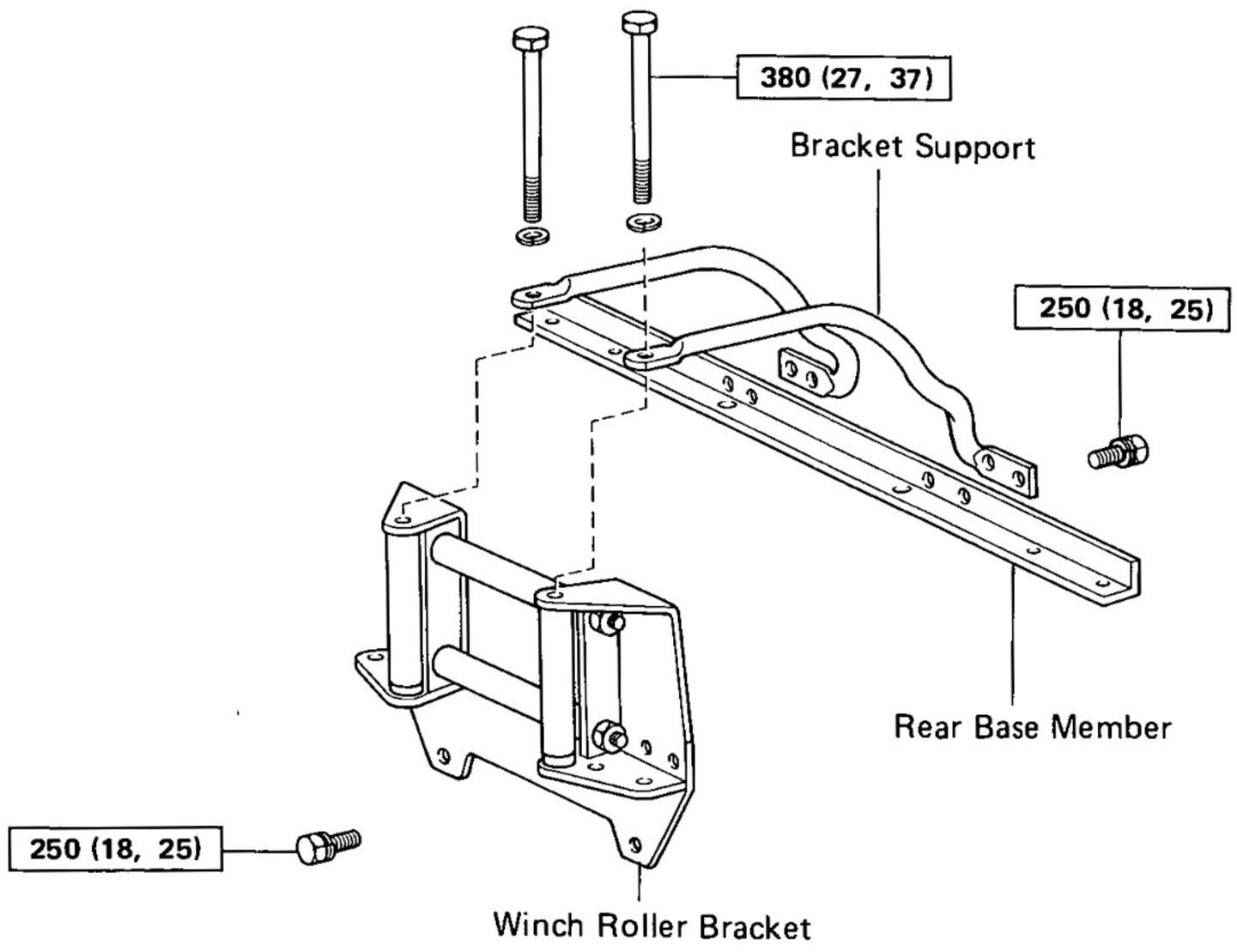

kg-cm (ft-lb, N·m) : Specified torque

WI0108
WI0109

COMPONENTS (Cont'd)

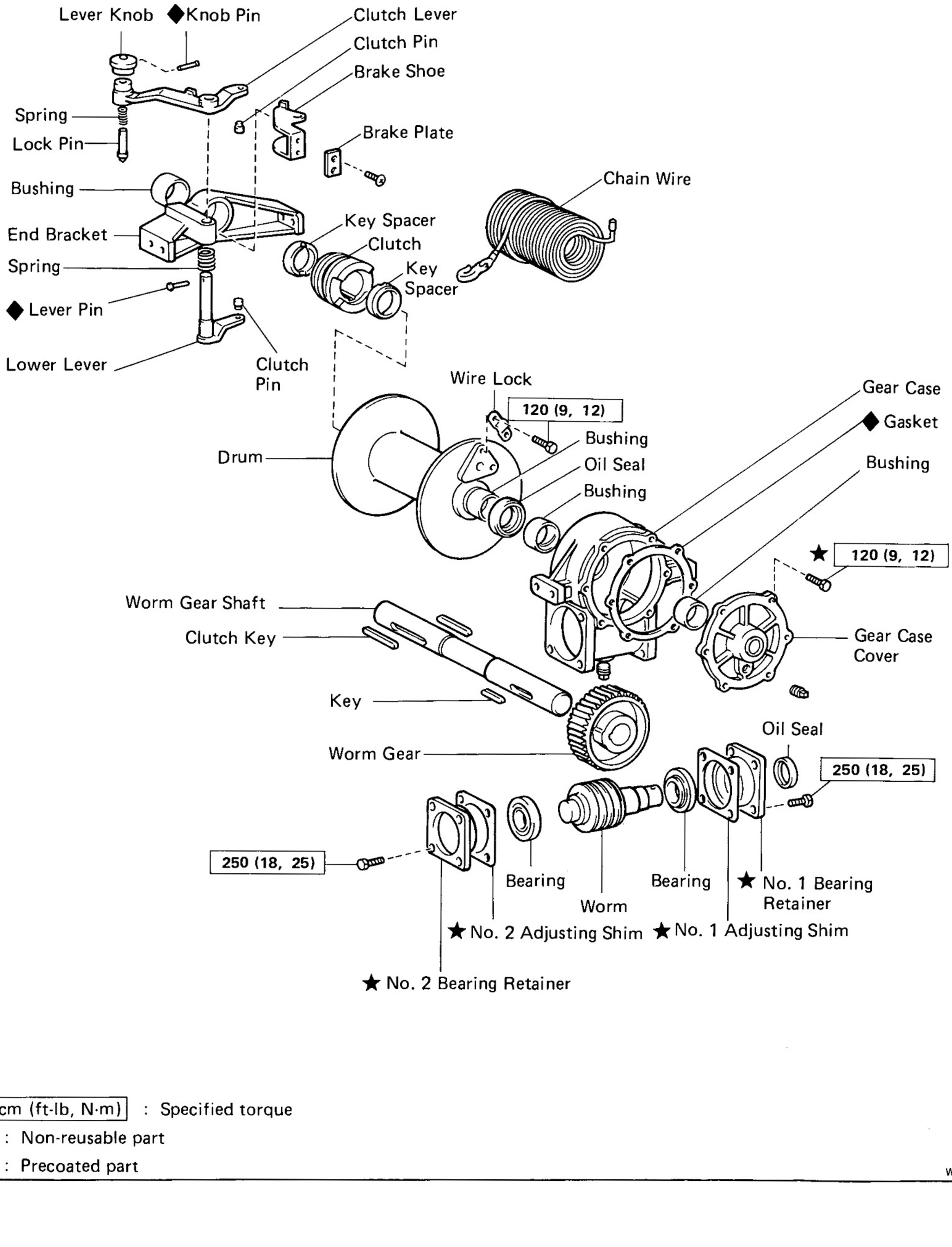

kg-cm (ft-lb, N·m) : Specified torque

◆ : Non-reusable part

★ : Precoated part

WI0075

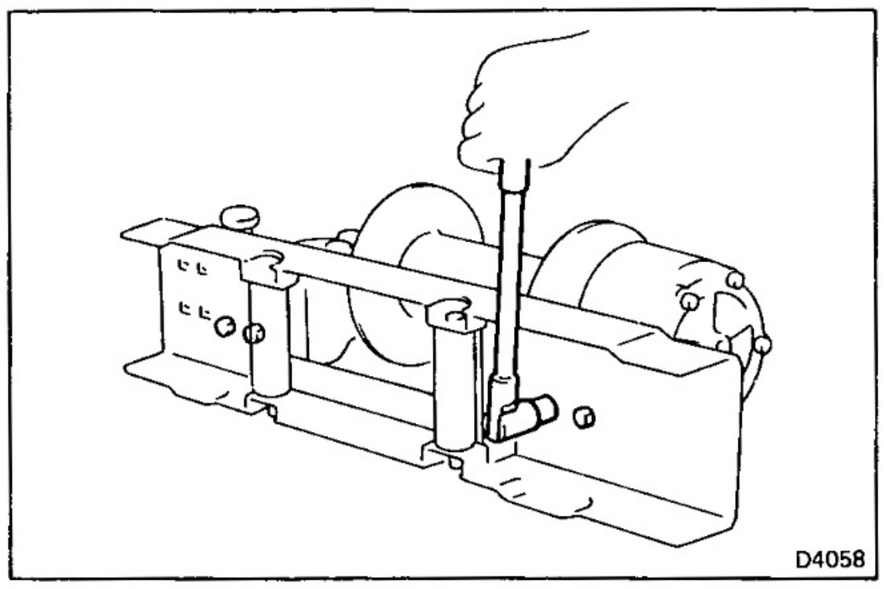

DISASSEMBLY OF WINCH

(See pages WI-25, 26)

1.-1 (70, 73, 75 Series)
REMOVE WINCH ROLLER BRACKET

Remove the four bolts and winch roller bracket.

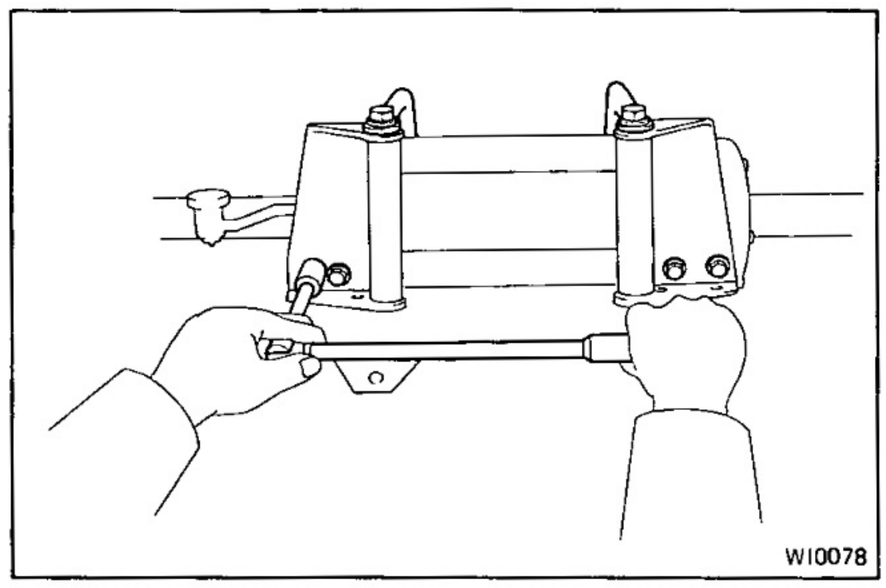

1.-2 (60, 62 Series)
REMOVE WINCH ROLLER BRACKET

(a) Remove the two bracket support bolts.

(b) Remove the four bolts and winch roller bracket.

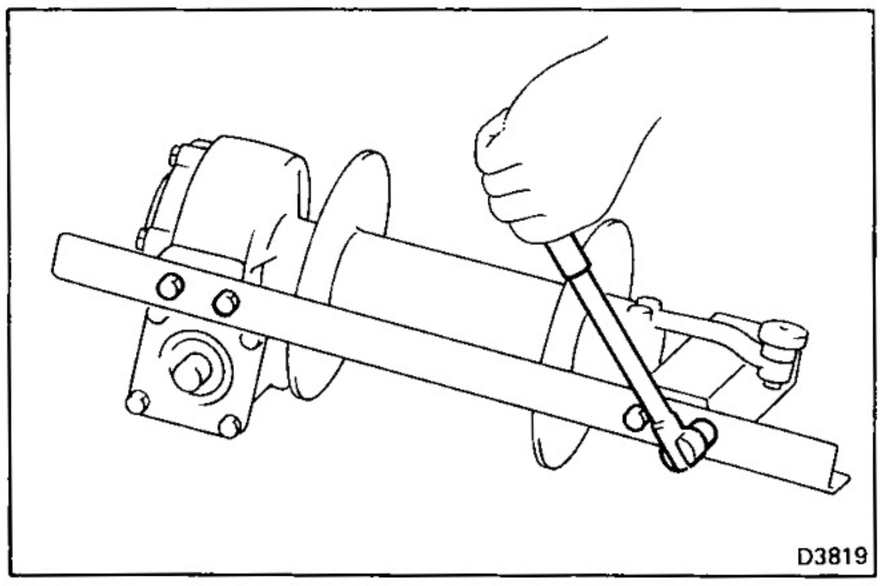

2.-1 (70, 73, 75 Series)
REMOVE REAR BASE MEMBER

Remove the four bolts and rear base member.

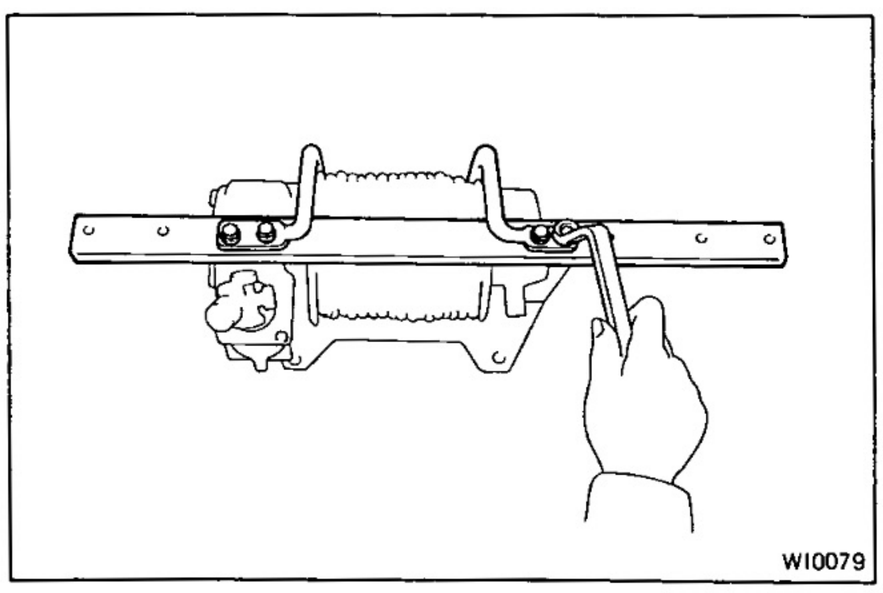

2.-2 (60, 62 Series)
REMOVE BRACKET SUPPORT AND REAR BASE MEMBER

Remove the four bolts and remove the bracket support and rear base member.

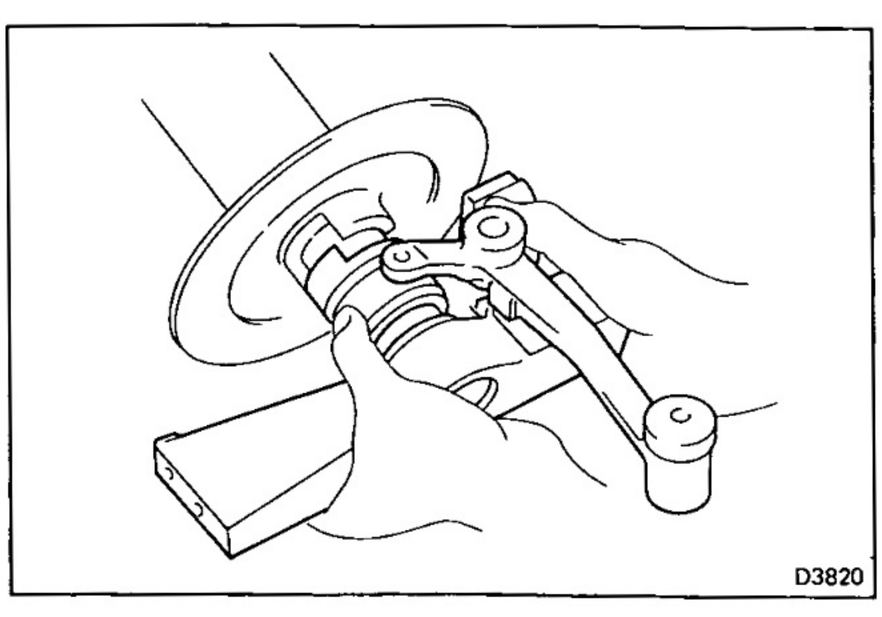

3. REMOVE END BRACKET WITH CLUTCH LEVER, KEY SPACER AND CLUTCH

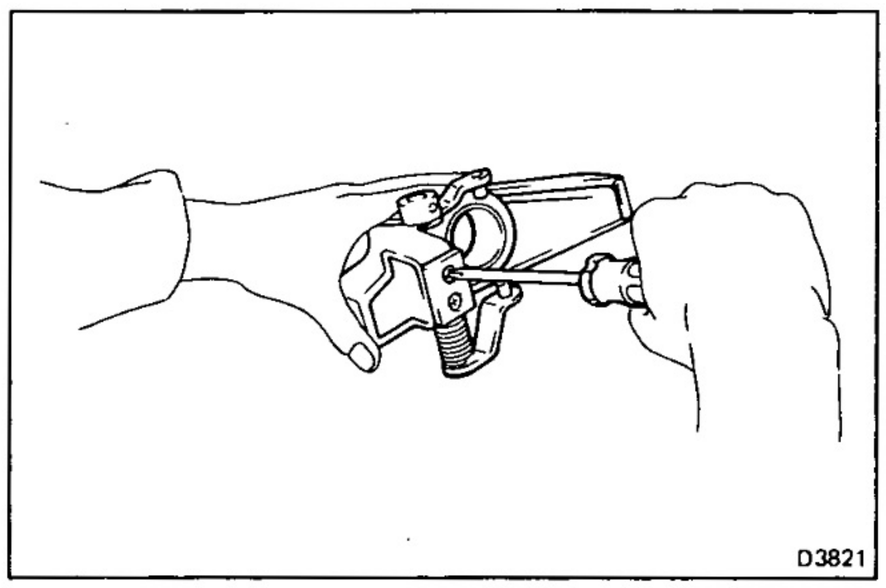

4. REMOVE BRAKE PLATE

Remove the two screws and brake plate.

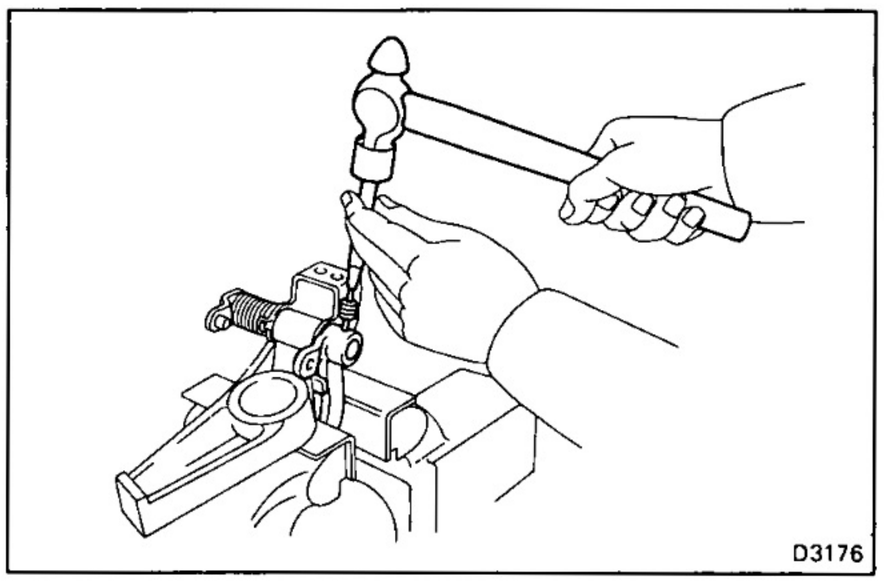

5. DISASSEMBLE CLUTCH LEVER ASSEMBLY

(a) Using a file, file off the staked part of the lever pin.

(b) Using a pin punch and hammer, tap out the lever pin and remove the lower lever, spring and clutch lever.

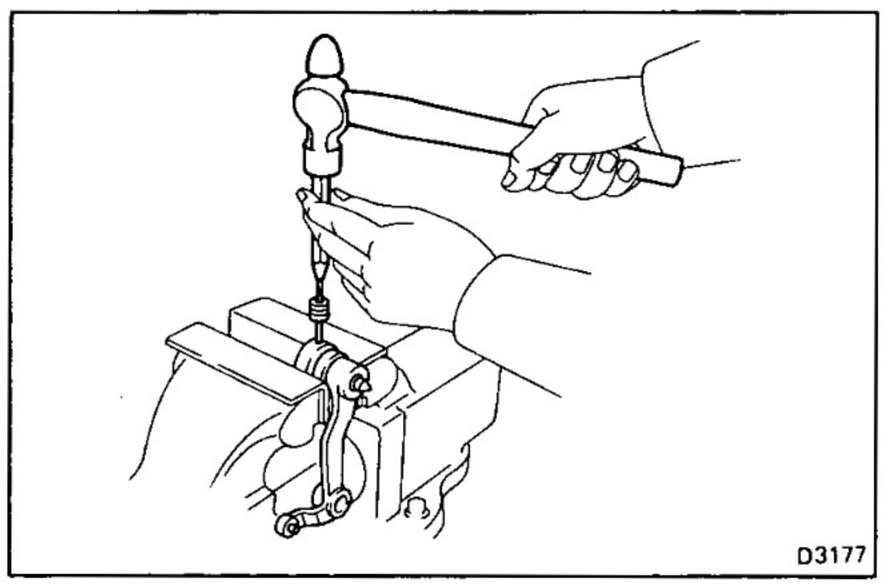

(c) Using a file, file off the staked part of the knob pin.

(d) Using a pin punch and hammer, tap out the knob pin and remove the lever knob, lock pin and spring.

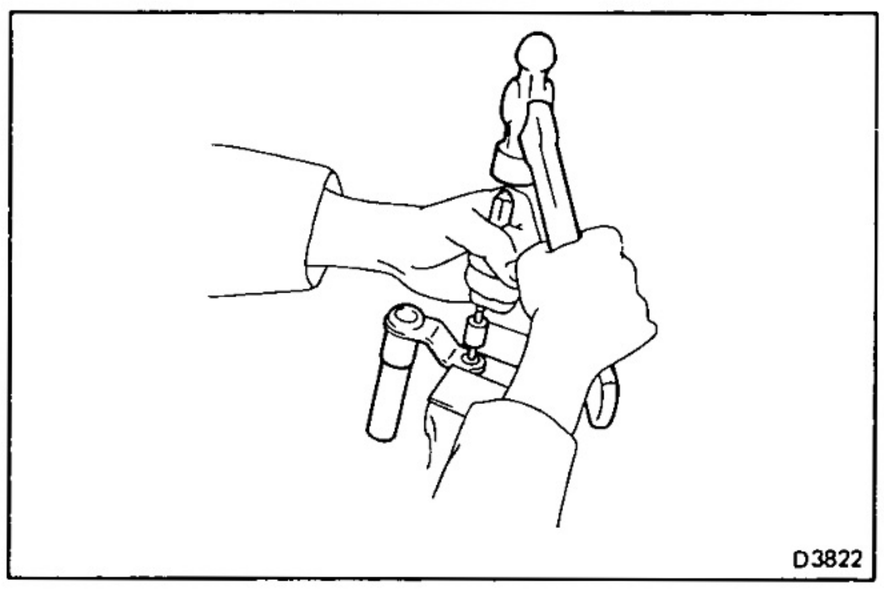

6. REMOVE CLUTCH PIN

Using a pin punch and hammer, tap out the clutch pin.

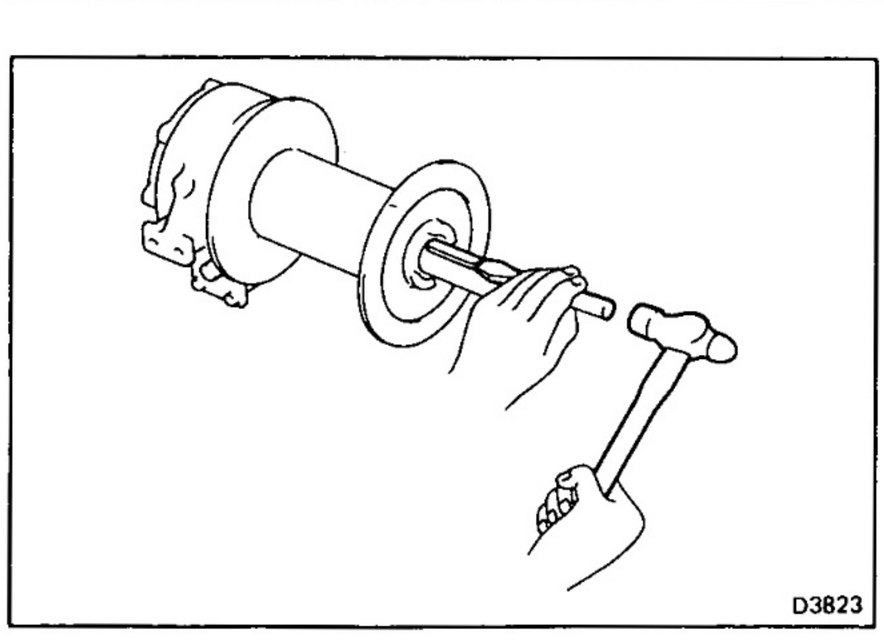

7. REMOVE DRUM

(a) Using a chisel and hammer, remove the two clutch keys.

NOTE: Be careful not to damage the worm gear shaft.

(b) Remove the key spacer.

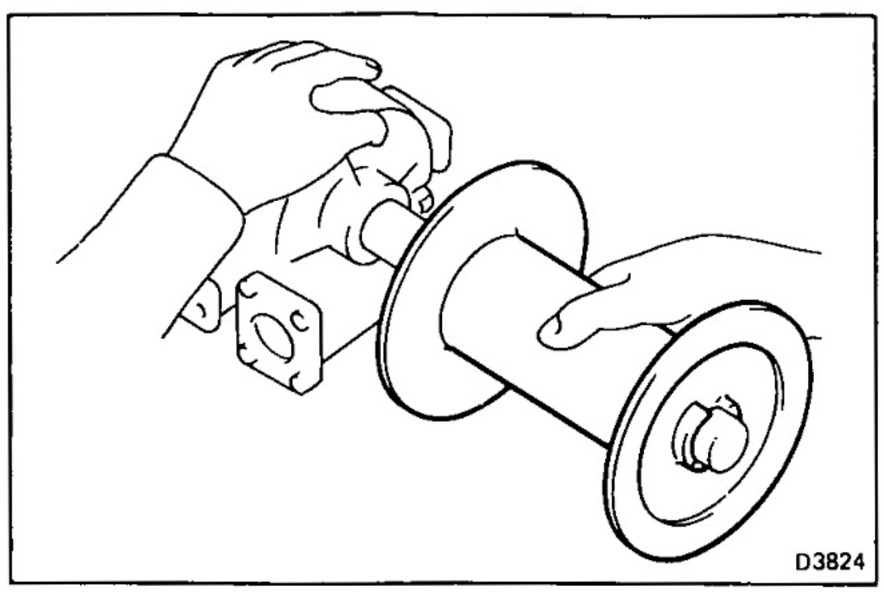

(c) Remove the drum.

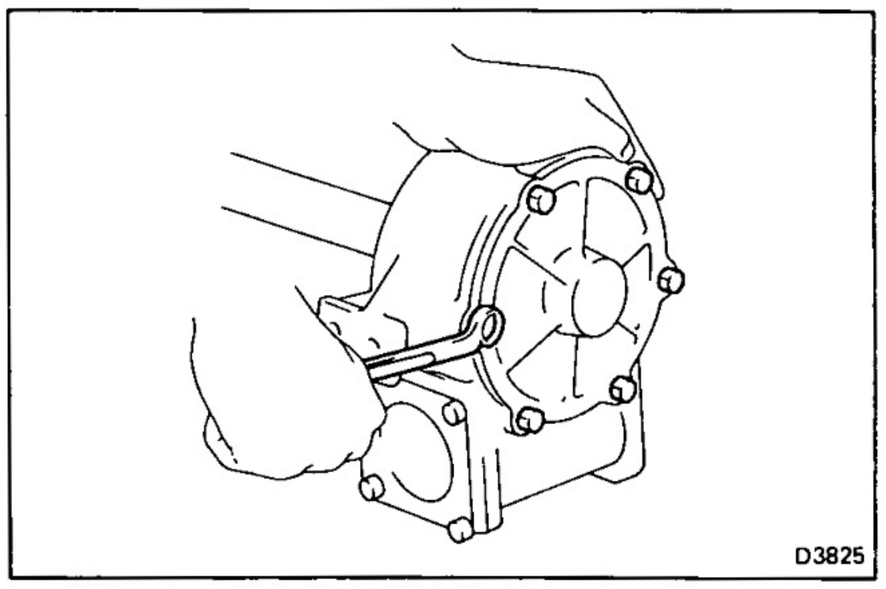

8. REMOVE GEAR CASE COVER

(a) Remove the six bolts.

(b) Using a plastic hammer, lightly tap the gear case cover and remove the gear case cover and gasket.

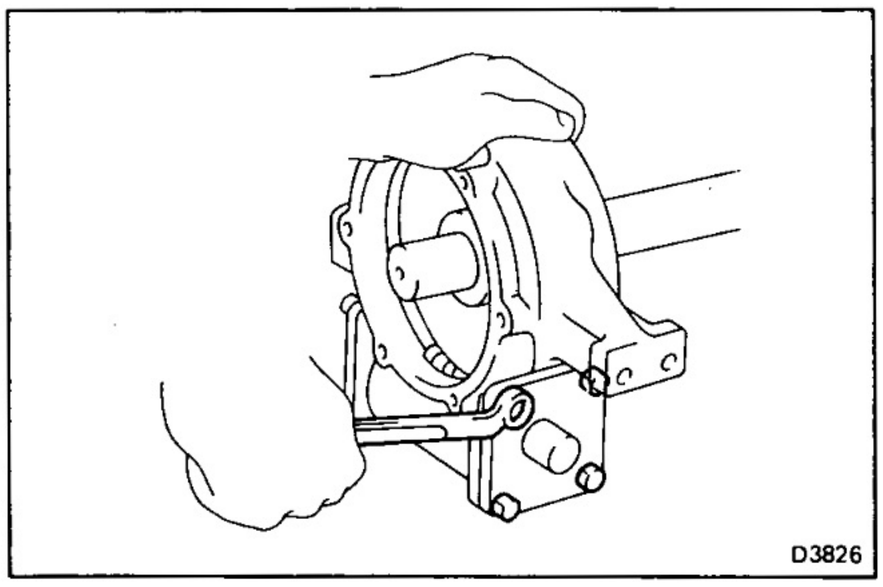

9. REMOVE WORM

(a) Remove the four bolts.

(b) Using a plastic hammer, lightly tap the bearing retainer and remove the No. 1 bearing retainer and No. 1 adjusting shim.

(c) Remove the worm.

(d) Remove the four bolts.

(e) Using a plastic hammer, lightly tap the bearing retainer and remove the No. 2 bearing retainer and No. 2 adjusting shim.

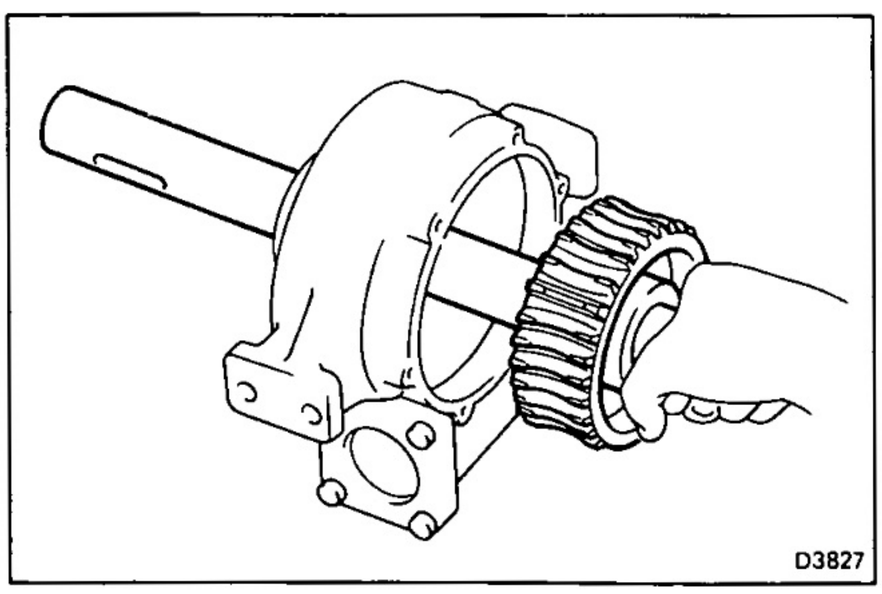

10. REMOVE WORM GEAR AND SHAFT

(a) Remove the worm gear with the shaft.

NOTE: Be careful not to damage the oil seal and bushing.

(b) Remove the worm gear from the shaft.

(c) Using a chisel and hammer, remove the key from the shaft.

NOTE: Be careful not to damage the shaft.

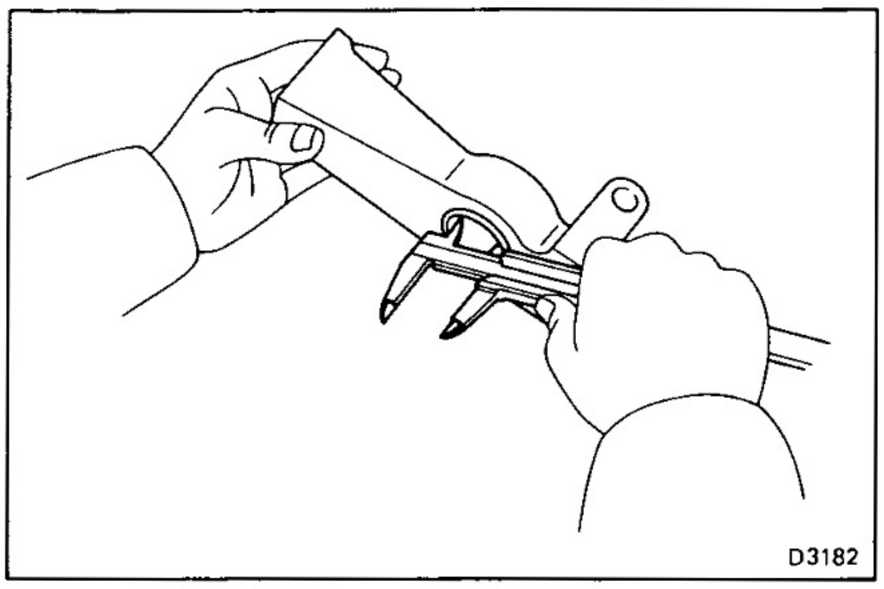

INSPECTION AND REPLACEMENT OF WINCH COMPONENTS

1. INSPECT END BRACKET BUSHING

Using calipers, measure the bushing bore.

Maximum bore: 38.4 mm (1.512 in.)

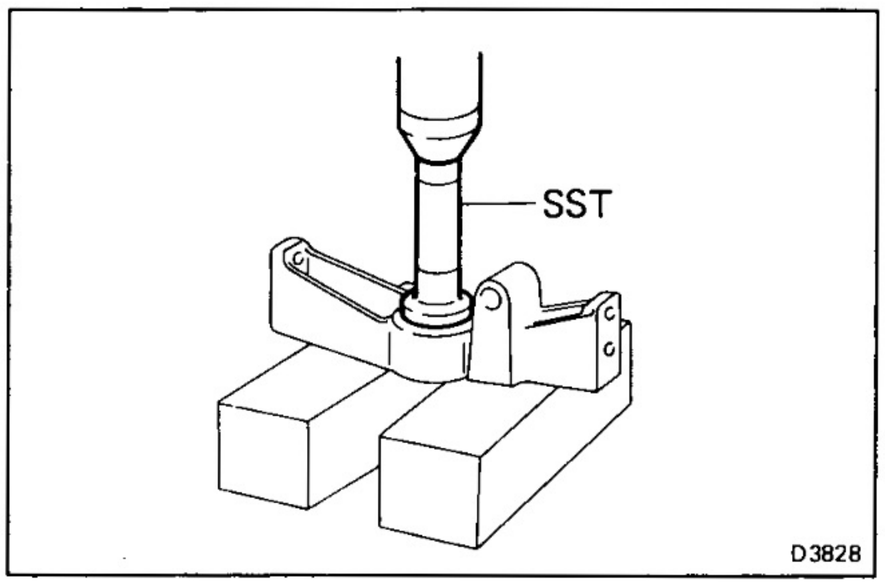

2. IF NECESSARY, REPLACE END COVER BRACKET BUSHING

(a) Using a press and SST, press out the bushing.

SST 09307-30010

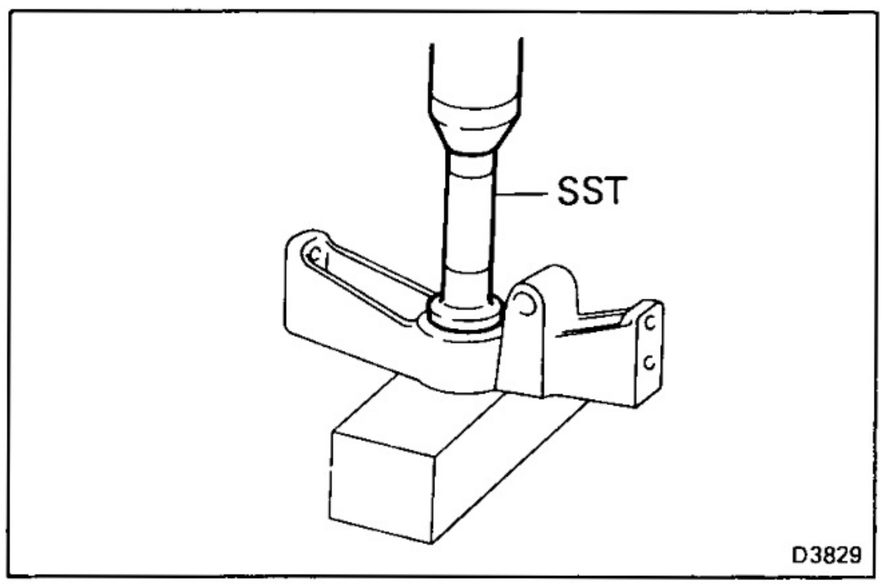

(b) Using a press and SST, press in the new bushing.

SST 09307-30010

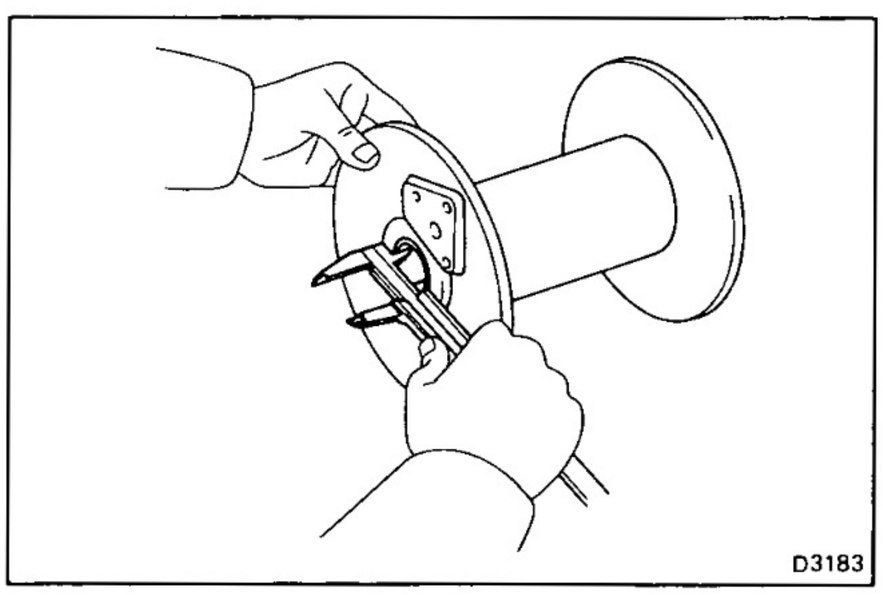

3. INSPECT DRUM BUSHING

Using calipers, measure the bushing bore.

Maximum bore: 38.4 mm (1.512 in.)

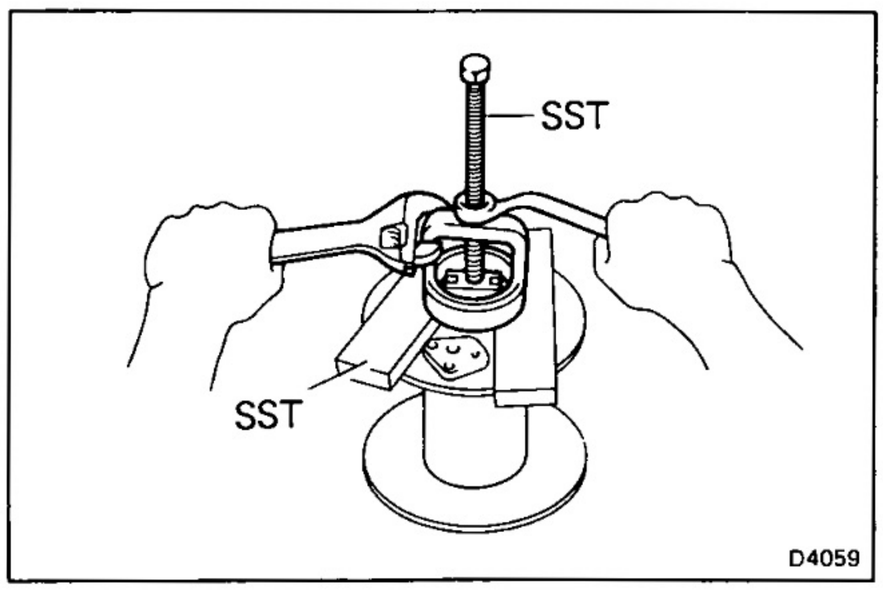

4. IF NECESSARY, REPLACE DRUM BUSHING

(a) Using SST, remove the bushing.

SST 09527-20011 and 09612-65013

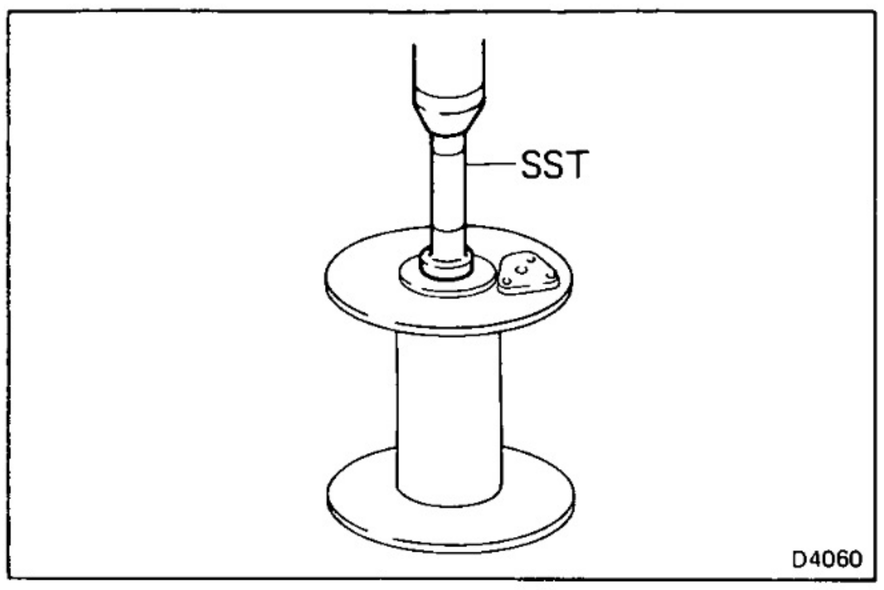

(b) Using a press and SST, press in a new bushing.

SST 09307-30010

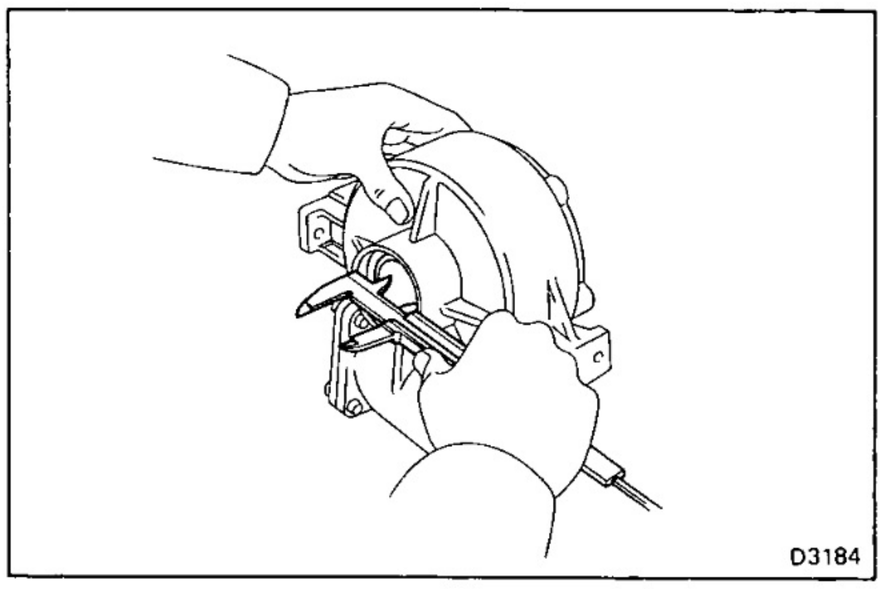

5. INSPECT GEAR CASE BUSHING

(a) Remove the gear case oil seal.
(See step 11 on page WI-33)

(b) Using calipers, measure the bushing bore.

Maximum bore: 38.3 mm (1.508 in.)

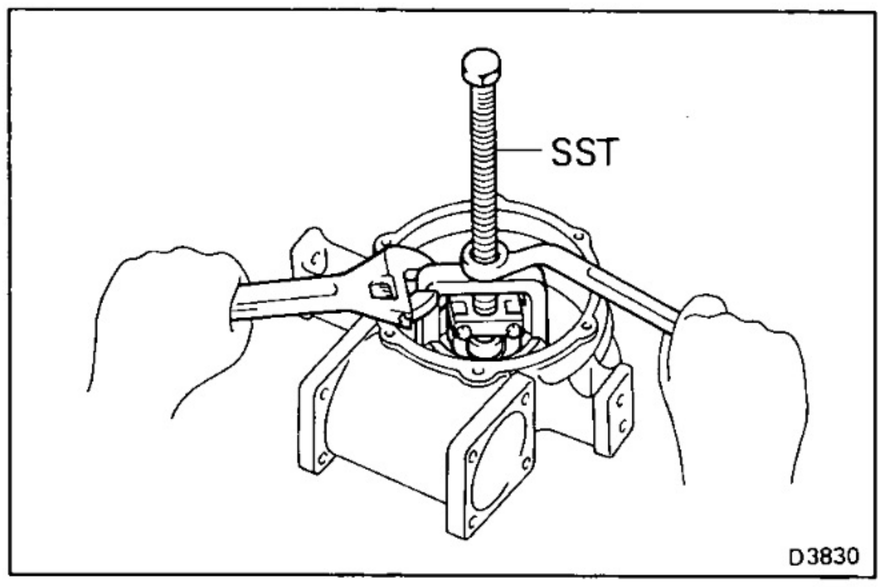

6. IF NECESSARY, REPLACE GEAR CASE BUSHING

(a) Using SST, remove the bushing.

SST 09612-65013

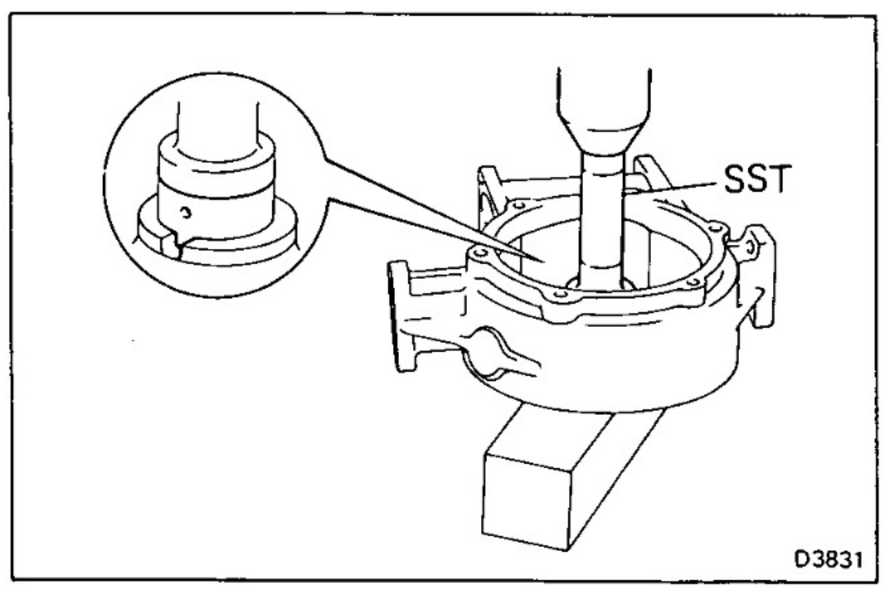

(b) Using a press and SST, press in a new bushing.

SST 09307-30010

NOTE: Align the groove of gear case and the oil hole of bushing.

(c) Install a new oil seal.
(See step 11 on page WI-33)

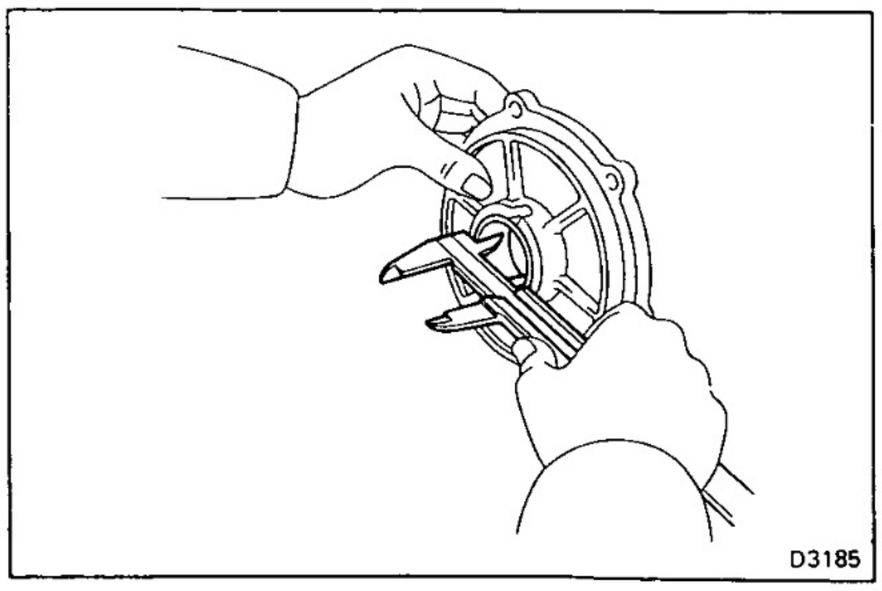

7. INSPECT GEAR CASE COVER BUSHING

Using calipers, measure the bushing bore.

Maximum bore: 38.3 mm (1.508 in.)

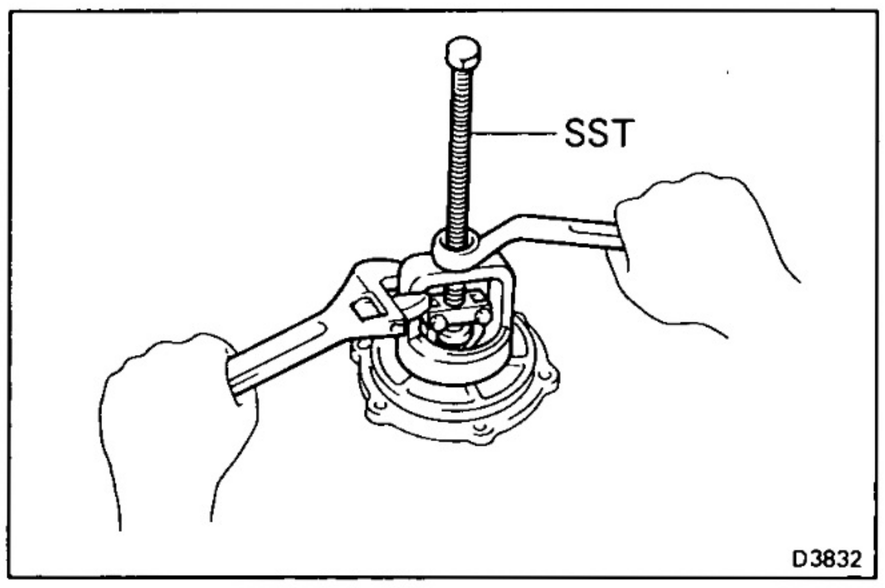

8. **IF NECESSARY, REPLACE GEAR CASE COVER BUSHING**

(a) Using SST, remove the bushing.

SST 09612-65013

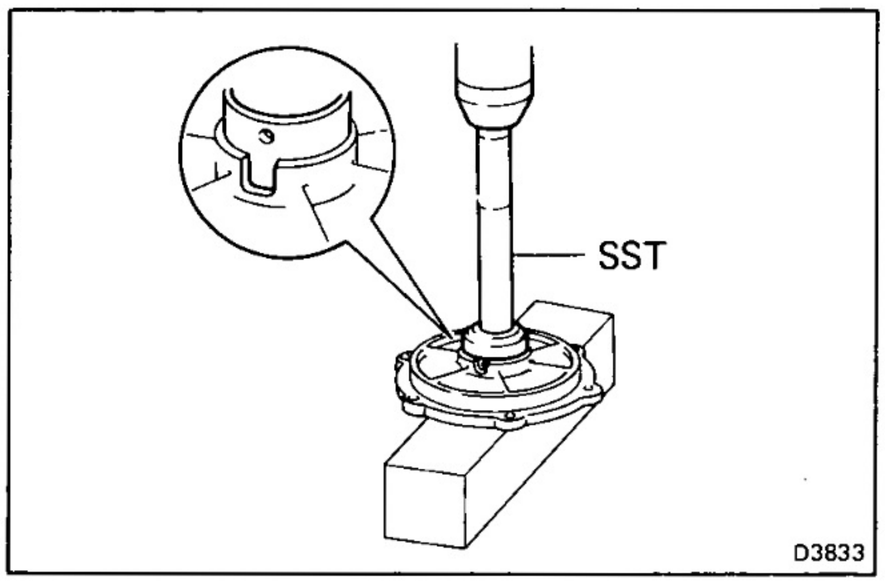

(b) Using a press and SST, press in the new bushing.

SST 09307-30010

NOTE: Align the groove of gear case cover and the oil hole of bushing.

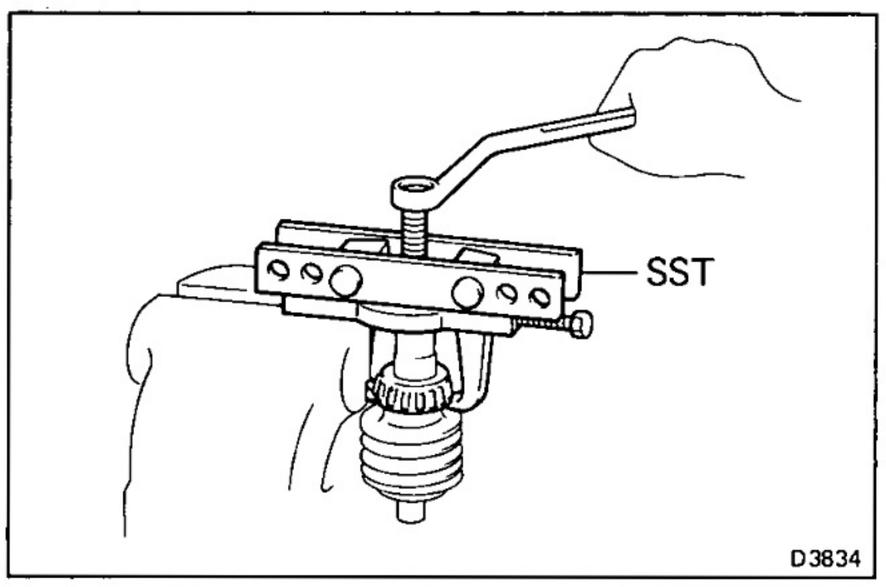

9. **INSPECT WORM BEARING**

Inspect for wear or damage.

10. **IF NECESSARY, REPLACE WORM BEARING**

(a) Using SST, remove the inner bearing.

SST 09950-20016

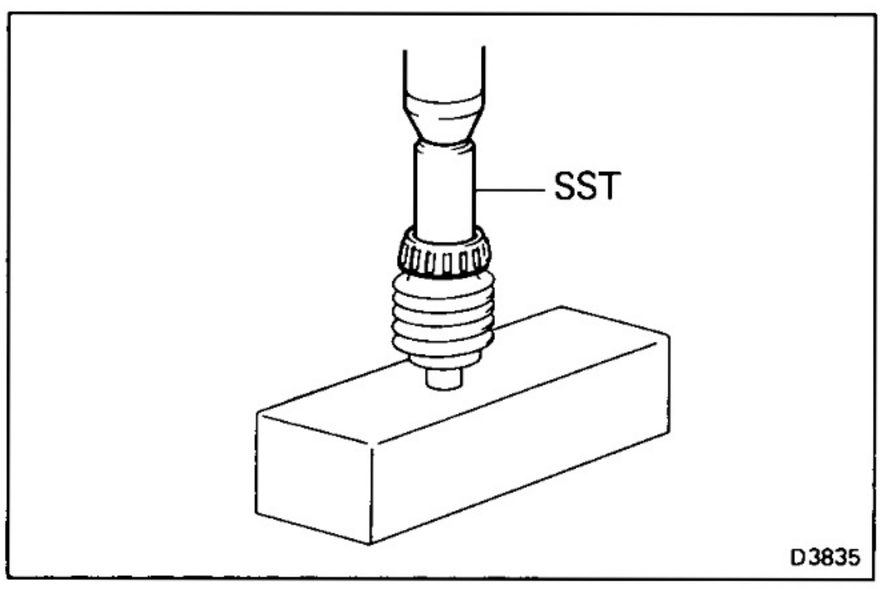

(b) Using a press and SST, press in the new inner bearing.

SST 09632-36010

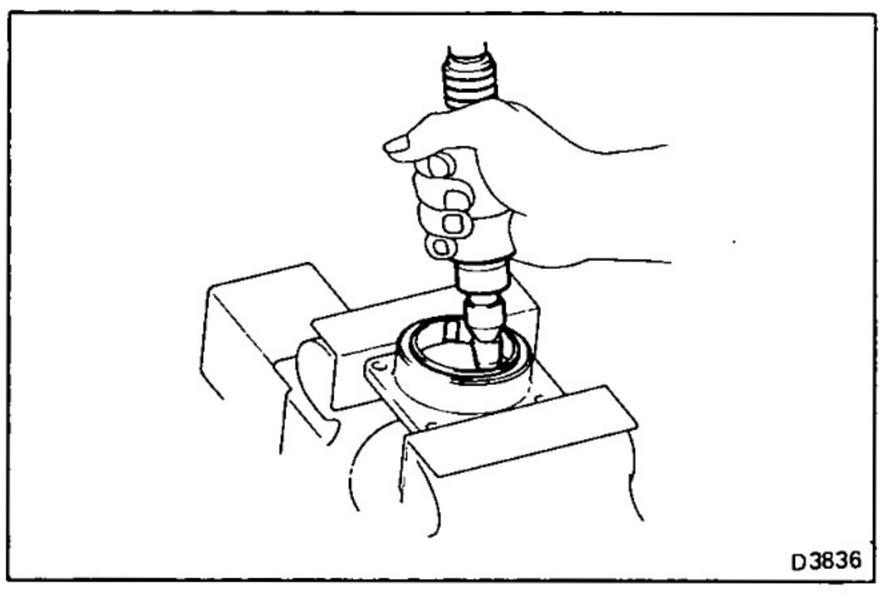

(c) Using an air grinder, grind the bearing outer race.

NOTE: Be careful not to damage the bearing retainer.

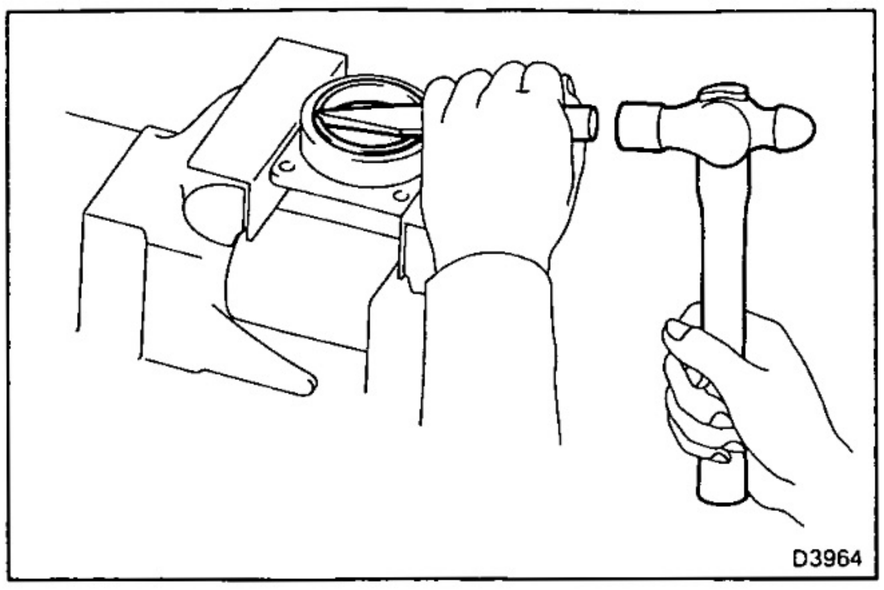

(d) Using a chisel and hammer, remove the bearing outer race.

NOTE: Be careful not to damage the retainer.

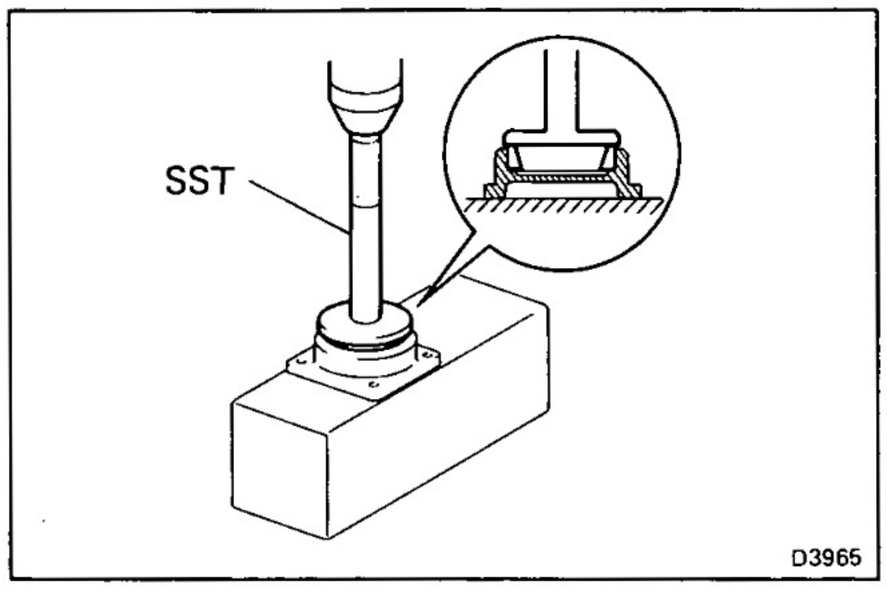

(e) Using a press and SST, press in the new bearing outer race.

SST 09608-35013

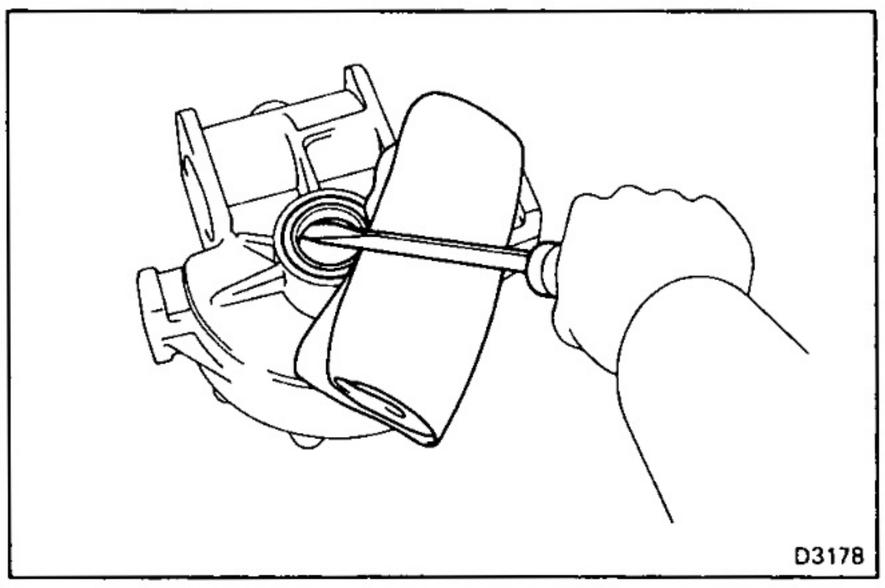

11. REPLACE GEAR CASE OIL SEAL

(a) Using a screwdriver, pry out the oil seal.

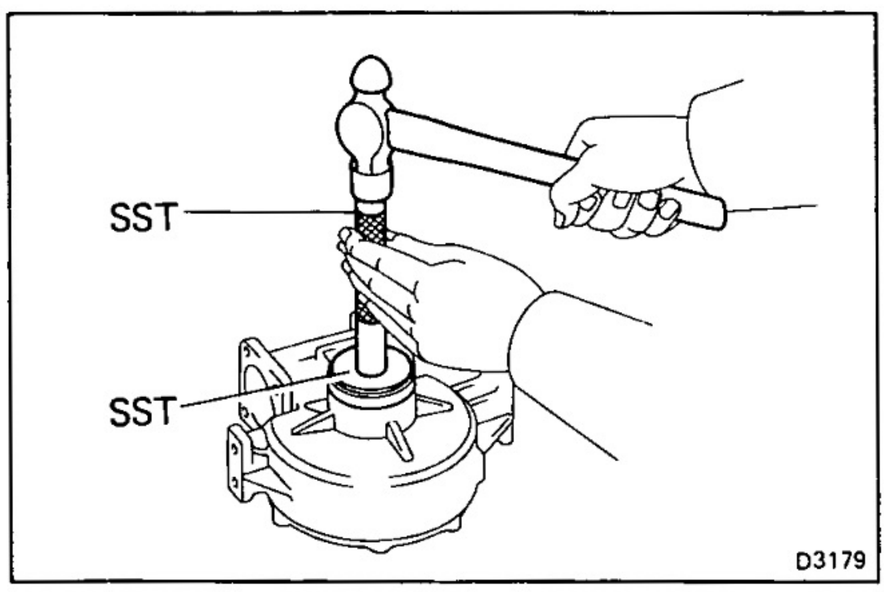

(b) Using SST, install a new oil seal.

SST 09608-35013

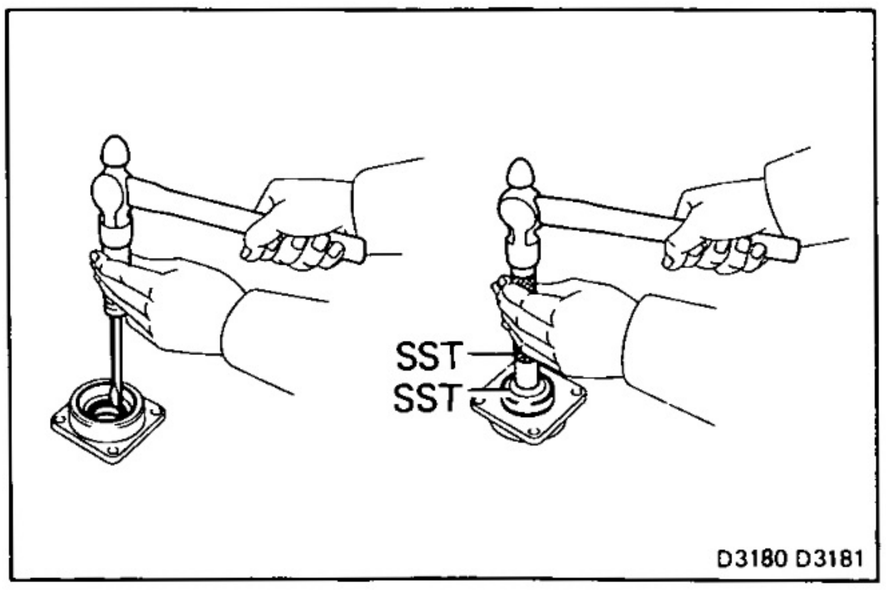

12. REPLACE RETAINER OIL SEAL

(a) Using a screwdriver, tap out the oil seal.

(b) Using SST, install a new oil seal.

SST 09608-35013

ASSEMBLY OF WINCH

(See pages WI-25, 26)

1. APPLY GEAR OIL OR MP GREASE TO PARTS SHOWN BELOW

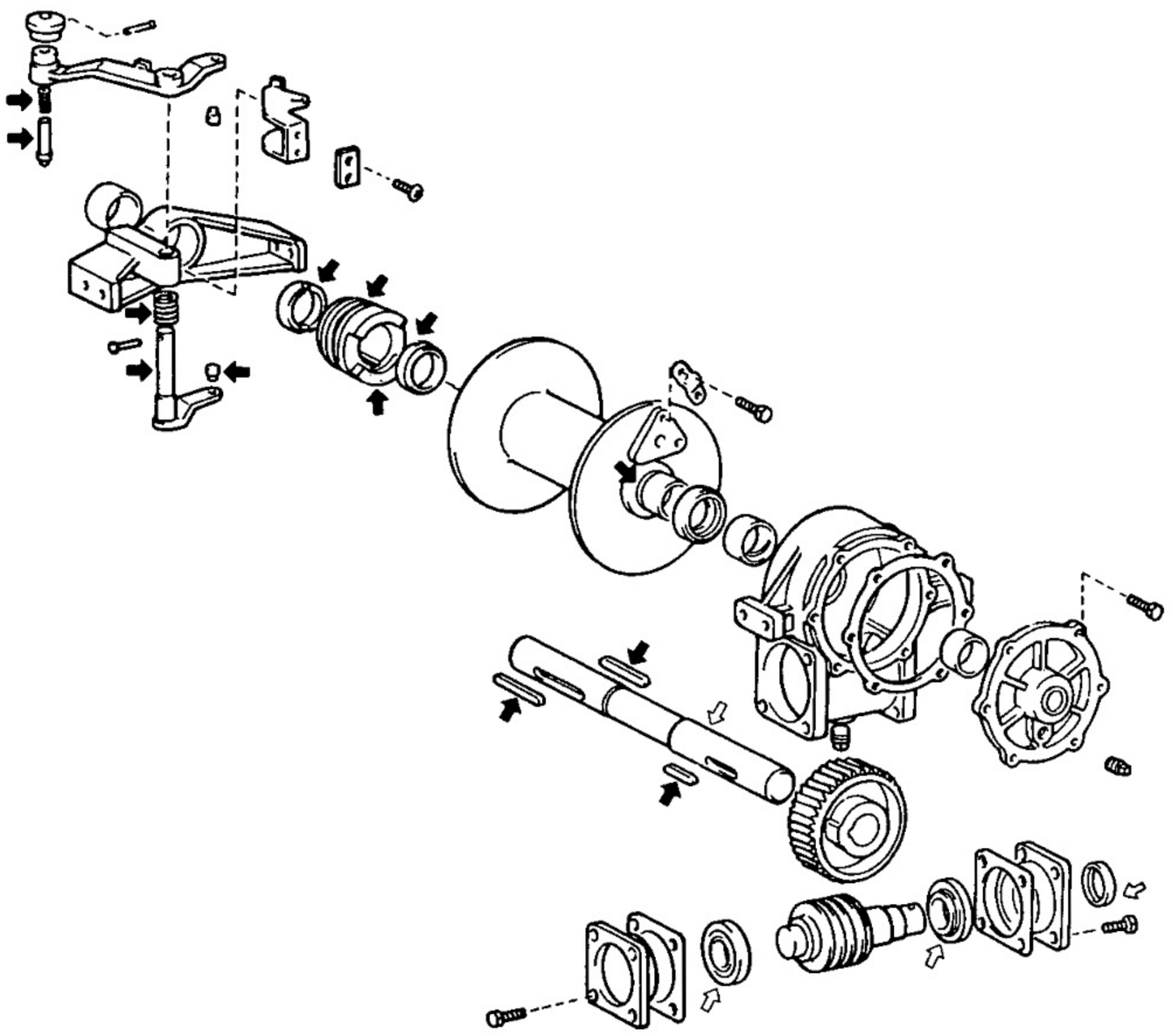

MP Grease
Automatic Transmission Fluid

D4070

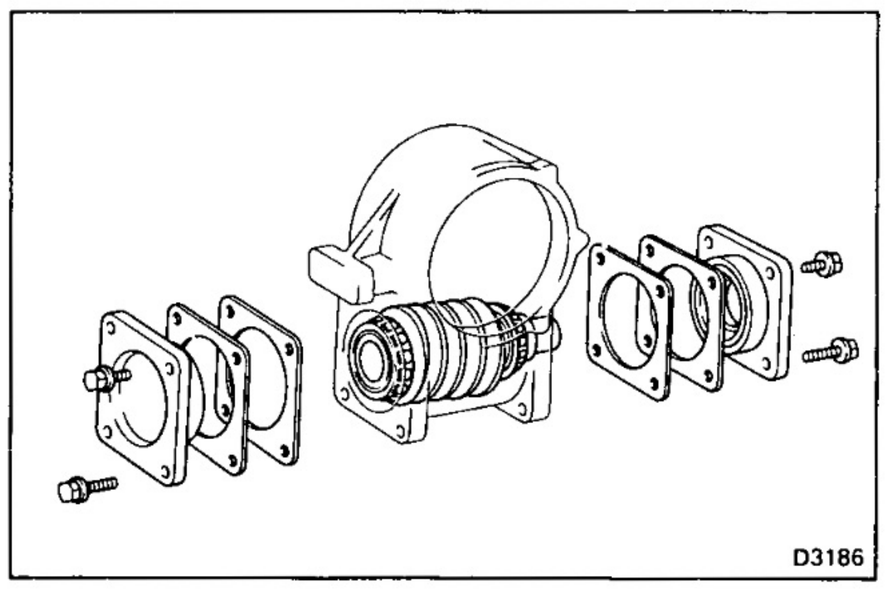

D3186

2. SELECT WORM ADJUSTING SHIMS

(a) Install the two No. 2 adjusting shims and No. 2 bearing retainer with four bolts. Torque the bolts.

Torque: 250 kg-cm (18 ft-lb, 25 N·m)

(b) Put the worm into the gear case.

(c) Install the two No. 1 adjusting shim and No. 1 bearing retainer with four bolts. Torque the bolts.

Torque: 250 kg-cm (18 ft-lb, 25 N·m)

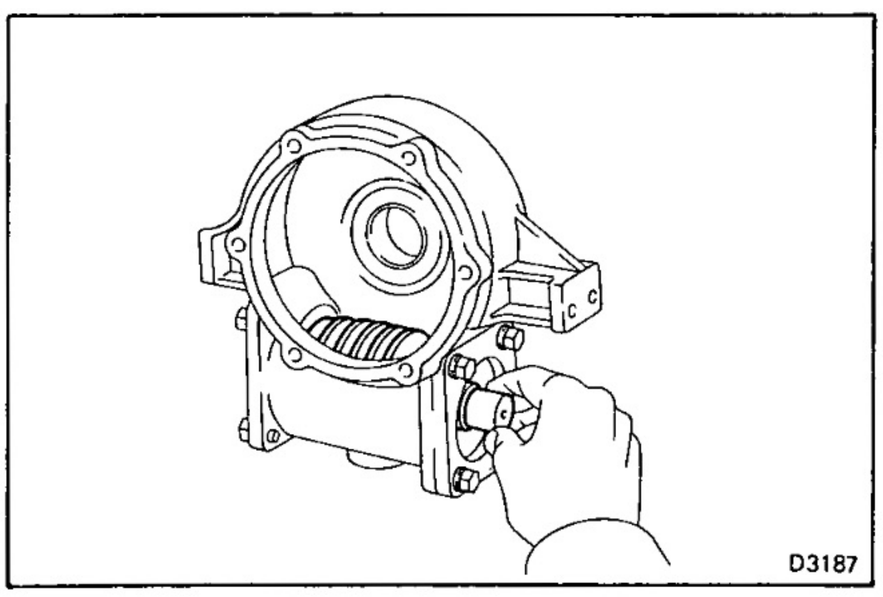

D3187

(d) Rocking the worm to and fro, check for looseness or tightness.

Tightness: Reduce shim one each both side
Looseness: Add shim one each both side

(e) Remove the bearing retainers, adjusting shims and worm.

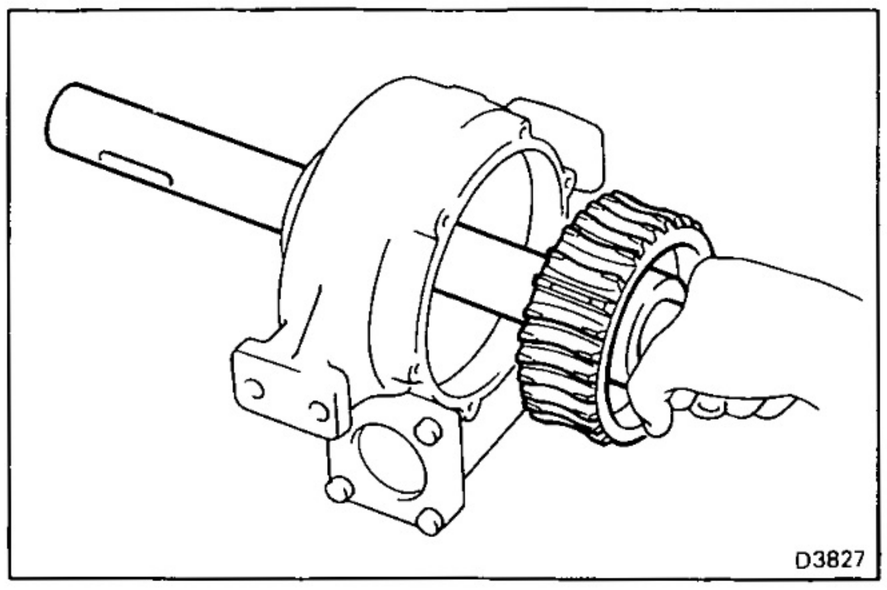

3. INSTALL WORM GEAR AND SHAFT

(a) Install the key and worm gear to the shaft.

(b) Install the worm gear with shaft into the gear case.

NOTE: Be careful not to damage the oil seal and bushing.

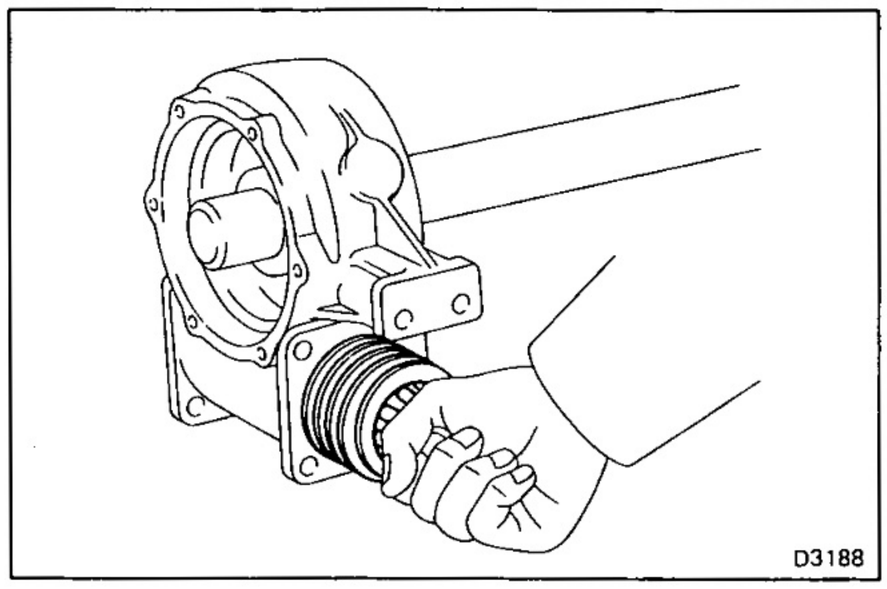

4. INSTALL WORM

(a) Apply seal packing yellow (08826-00012 or such) to the adjusting shims and bearing retainers.

(b) Install the adjusting shims, worm and bearing retainers as shown in step 2, on page WI-33.

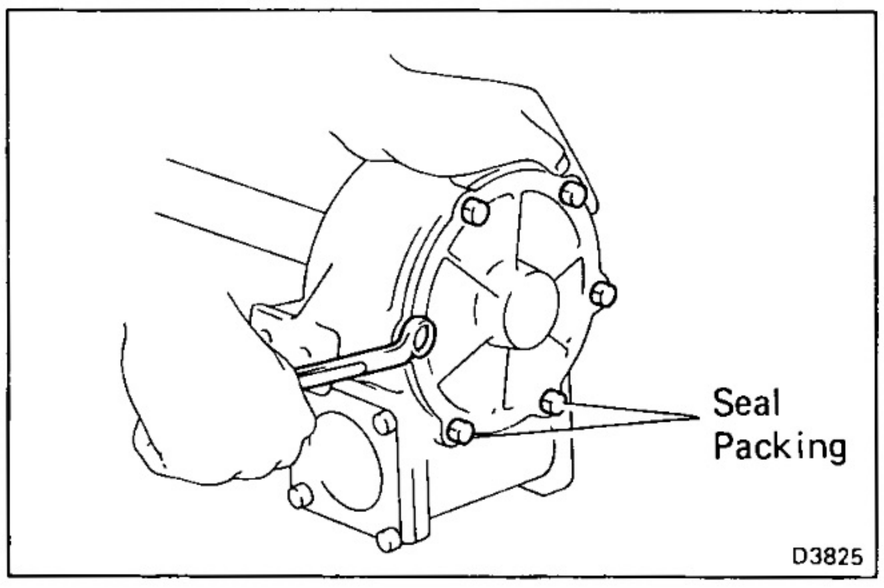

5. INSTALL GEAR CASE COVER

(a) Apply seal packing yellow (08826-00012 or such) to a new gasket and two lower side bolts.

(b) Install a new gasket and gear case cover with six bolts. Torque the bolts.

Torque: 120 kg-cm (9 ft-lb, 12 N·m)

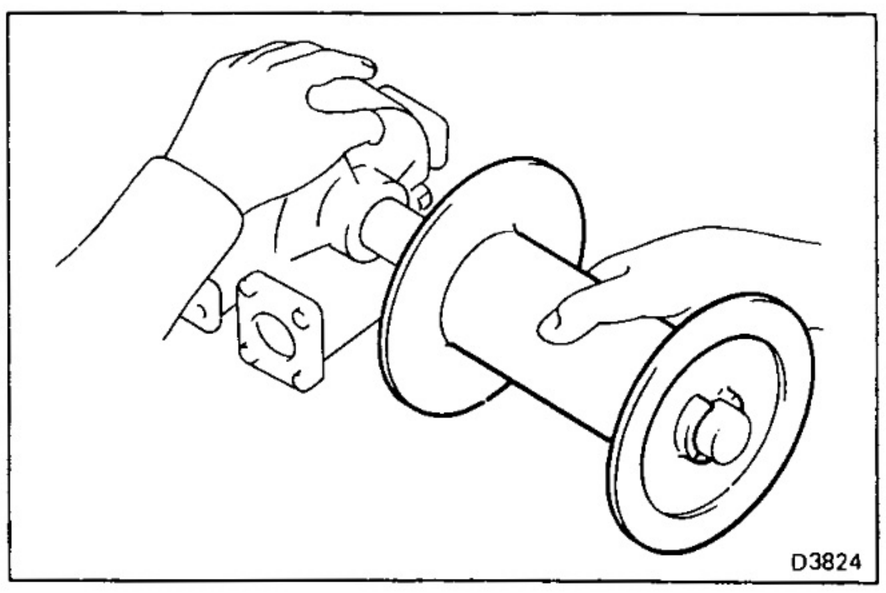

6. INSTALL DRUM

(a) Pack the inside of drum with MP grease.

(b) Insert the worm gear shaft into the drum.

(c) Install the spacer and two clutch keys.

NOTE: Install in proper direction only.

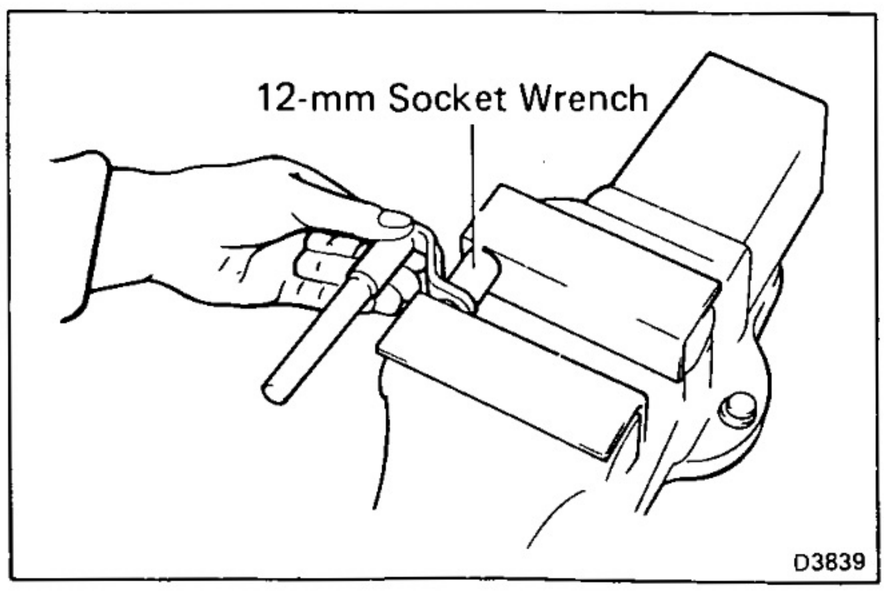

7. INSTALL CLUTCH PIN

Using a 12-mm socket wrench and vise, install the clutch pin.

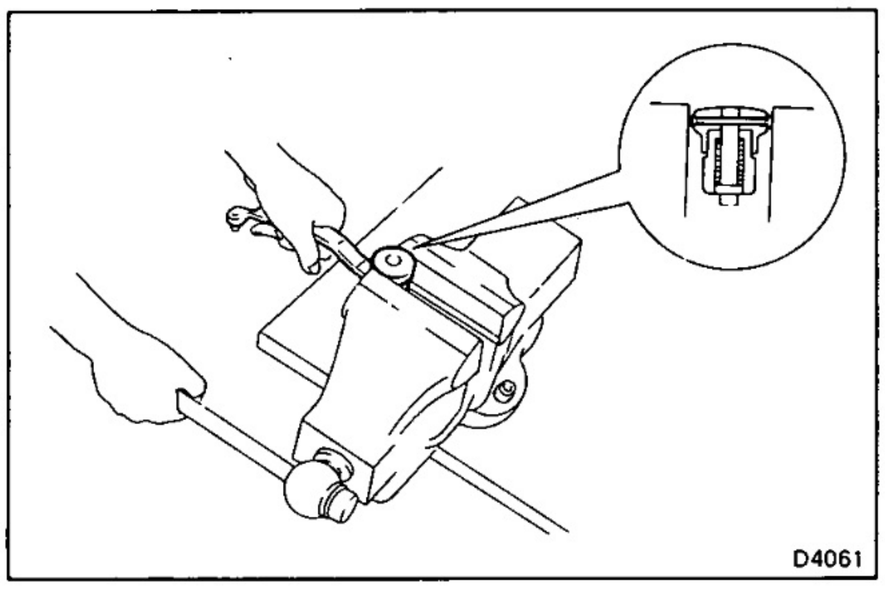

8. INSTALL CLUTCH LEVER

(a) Install the spring, lock pin and knob, and tap in the knob pin.

(b) Using a vise, stake both ends of the knob pin.

(c) Using a file, file off any tips or jags on the staked part of the pin.

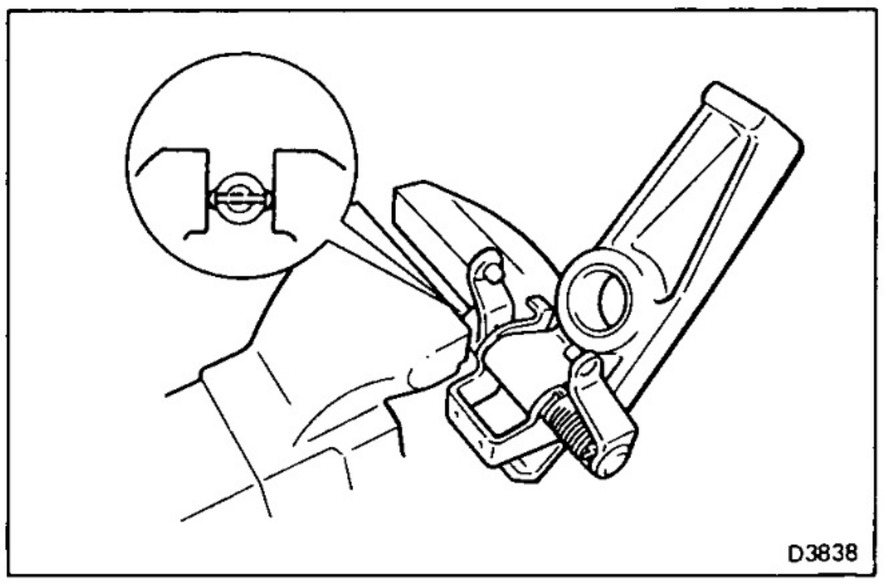

(d) Install the spring, lower lever and clutch lever to the end bracket and then tap in the lever pin.

(e) Using a vise, stake both ends of the pin.

(f) Using a file, file off any tips or jags on the staked part of the pin.

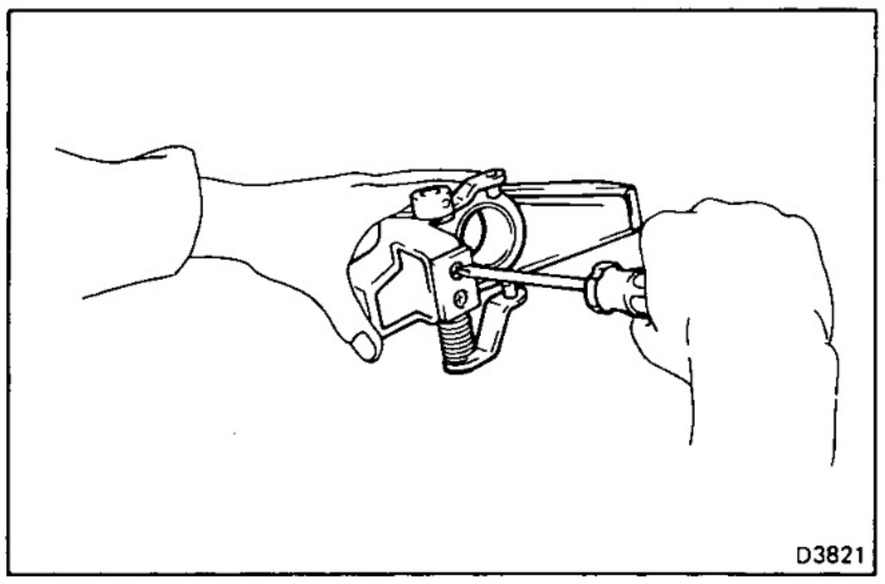

9. INSTALL BRAKE PLATE

Install the brake plate with two screws.

10. INSTALL END BRACKET WITH CLUTCH LEVER

Install the spacer and end bracket with clutch lever to the worm gear shaft.

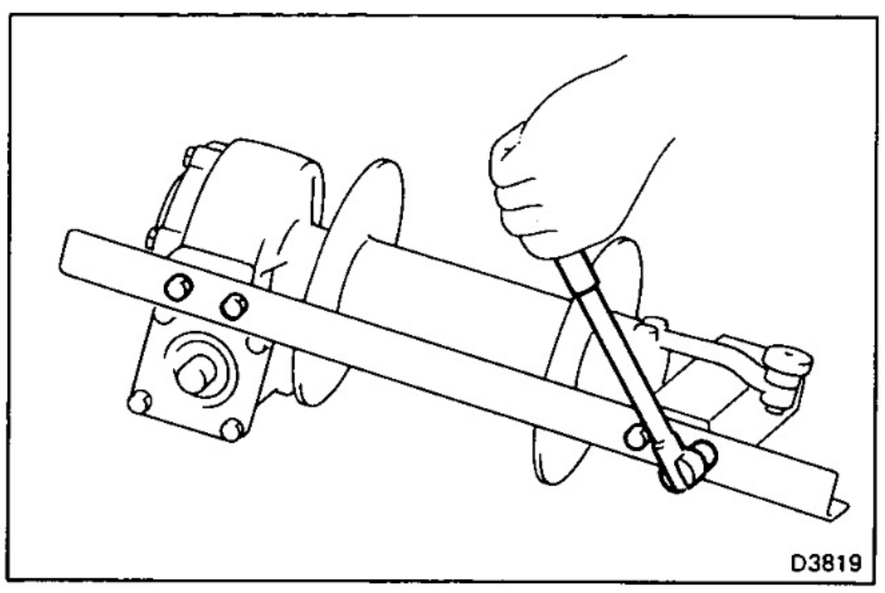

11.-1(70, 73, 75 Series) INSTALL REAR BASE MEMBER

Install the rear base member with four bolts. Torque the bolts.

Torque: 250 kg-cm (18 ft-lb, 25 N·m)

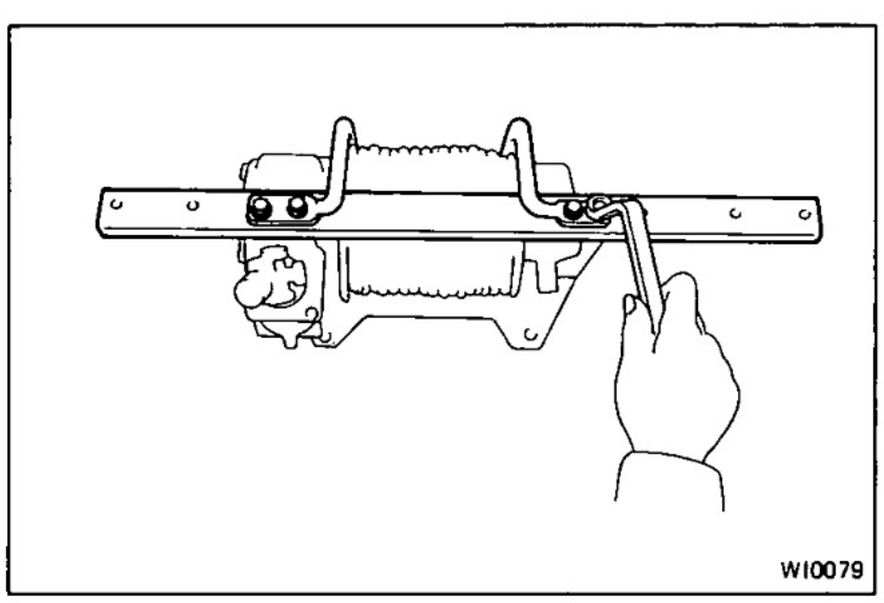

11.-2(60, 62 Series) INSTALL REAR BASE MEMBER AND BRACKET SUPPORT

Install the rear base member and bracket support with four bolts. Torque the bolts.

Torque: 250 kg-cm (18 ft-lb, 25 N·m)

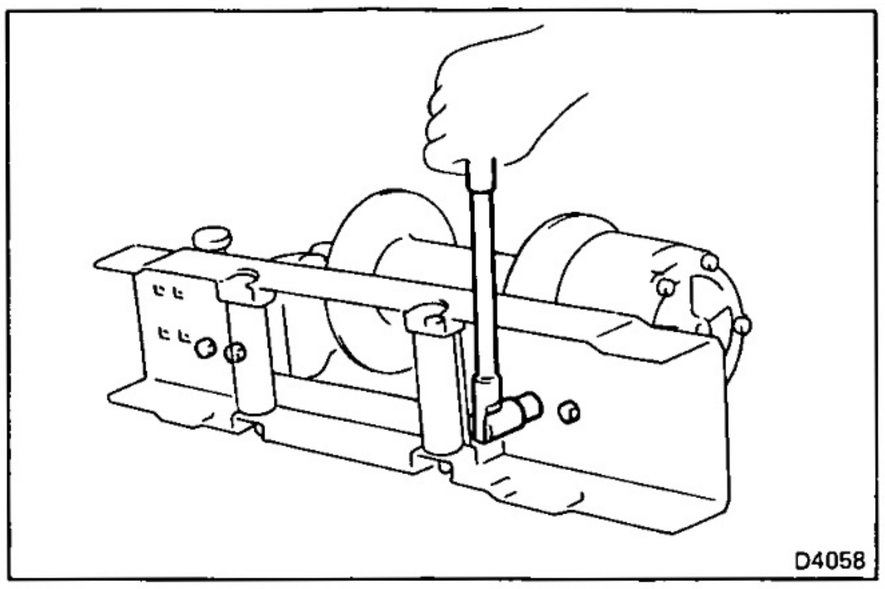

12.-1(70, 73, 75 Series)
INSTALL WINCH ROLLER BRACKET

(a) Install the winch roller bracket with four bolts. Torque the bolts.

Torque: 250 kg-cm (18 ft-lb, 25 N·m)

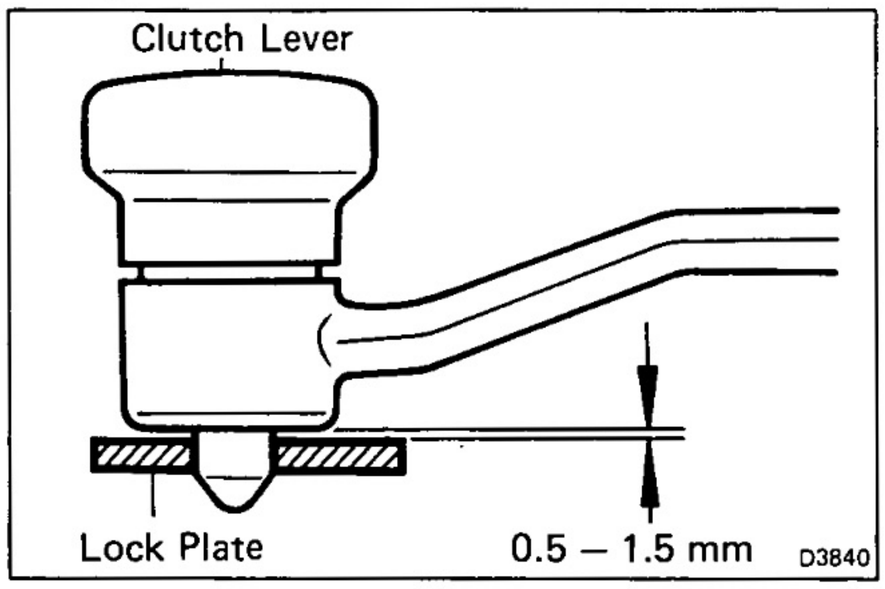

(b) Adjust the clearance of the clutch lever and lock plate with the lock plate set bolts.

Standard clearance: 0.5 – 1.5 mm (0.020 – 0.059 in.)

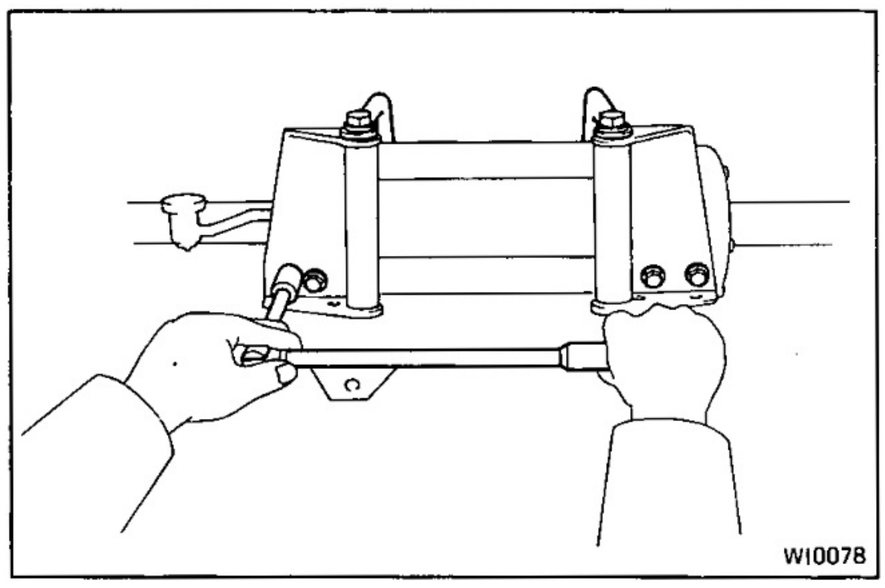

12.-2(60, 62 Series)
INSTALL WINCH ROLLER BRACKET

(a) Install the winch roller bracket with bolts. Torque the bolts.

Torque: 250 kg-cm (18 ft-lb, 25 N·m)

(b) Install the two bracket support bolts. Torque the bolts.

Torque: 380 kg-cm (27 ft-lb, 37 N·m)

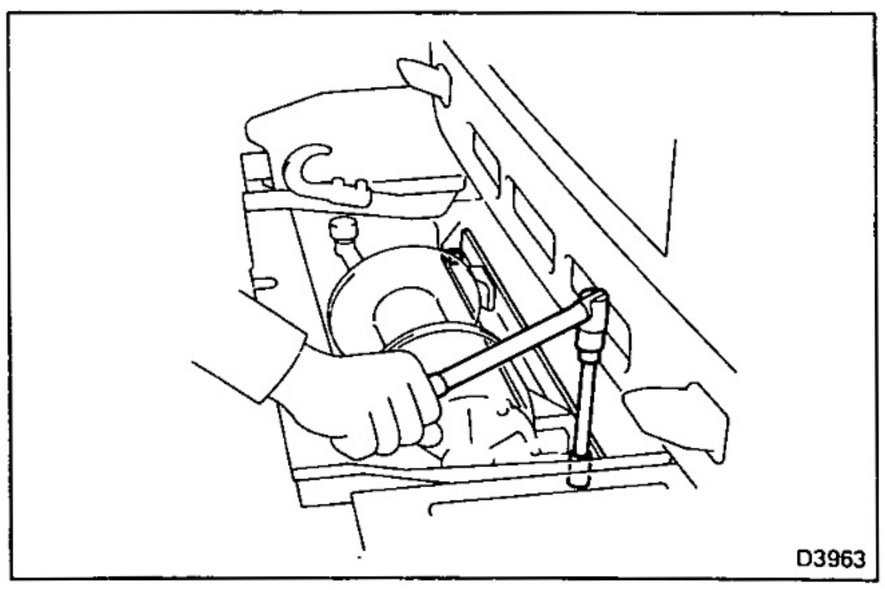

INSTALLATION OF WINCH

(See page WI-22)

1.-1 (70, 73, 75 Series)
INSTALL WINCH ASSEMBLY

(a) Place the winch assembly on the vehicle.

(b) Install the two winch rear base member bolts. Torque the bolts.

Torque: 250 kg-cm (18 ft-lb, 25 N·m)

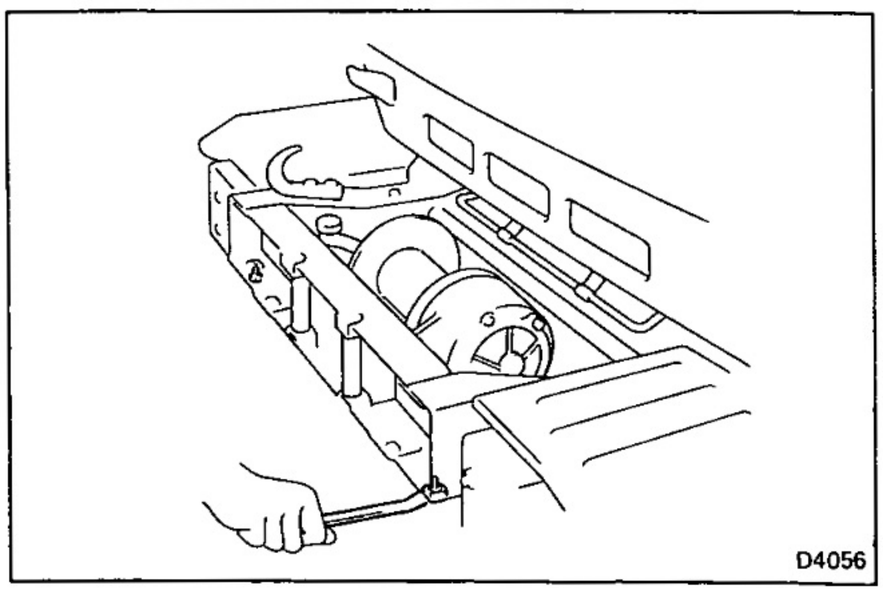

(c) Install the two winch roller bracket bolts. Torque the bolts.

Torque: 250 kg-cm (18 ft-lb, 25 N·m)

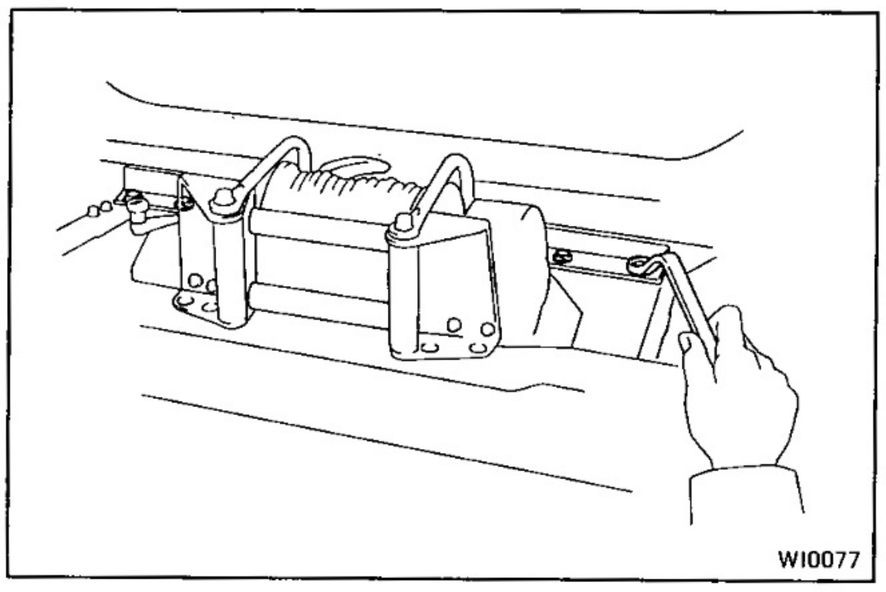

1.-2 (60, 62 Series)
INSTALL WINCH ASSEMBLY

(a) Place the winch assembly on the vehicle.

(b) Install the four winch rear base member bolts. Torque the bolts.

Torque: 700 kg-cm (51 ft-lb, 69 N·m)

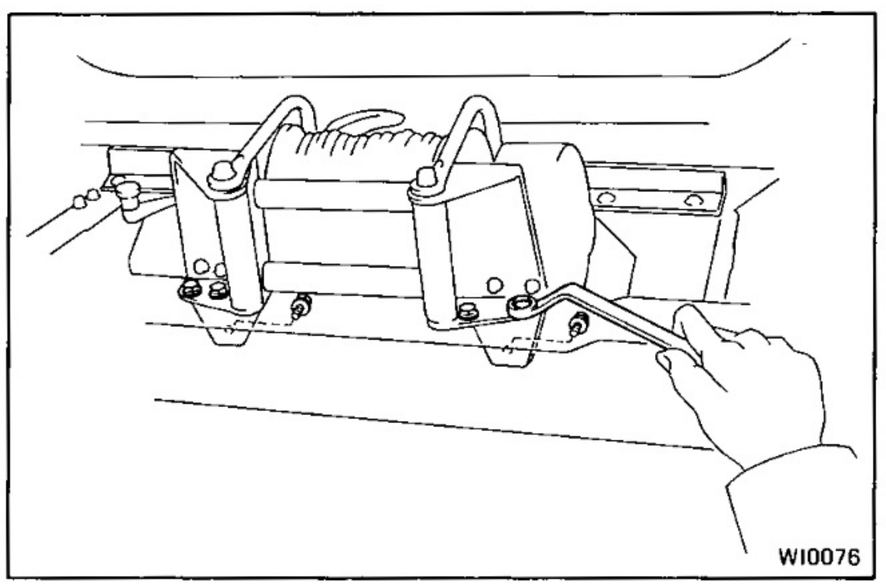

(c) Install the six winch roller bracket bolts. Torque the bolts.

Torque: 380 kg-cm (27 ft-lb, 37 N·m)

(d) Adjust the clearance of the clutch lever and lock plate with the lock plate set bolts as shown in step 12.-1 (b) on page WI-37.

Standard clearance: 0.5 – 1.5 mm (0.020 – 0.059 in.)

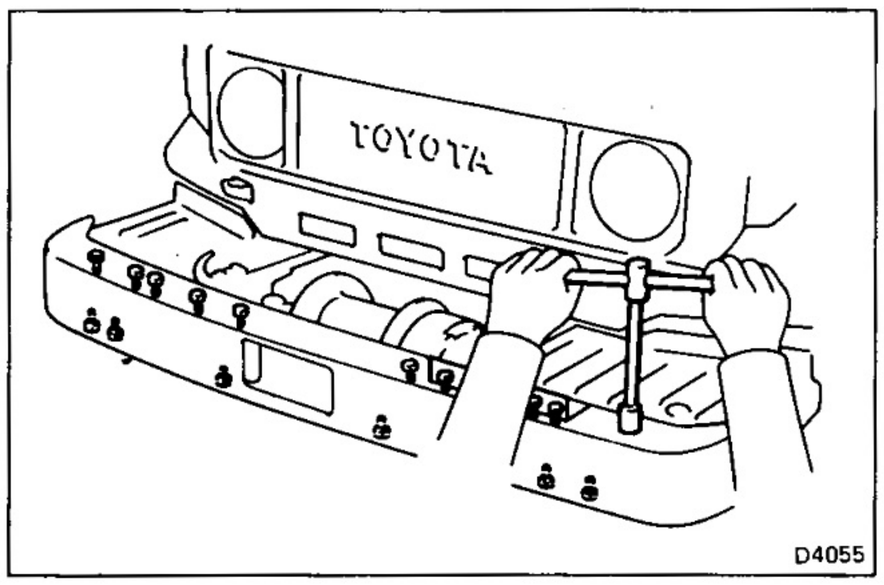

2. (70, 73, 75 Series)
INSTALL FRONT BUMPER

Install the front bumper and license plate bracket with 16 bolts.

Torque: See page WI-22

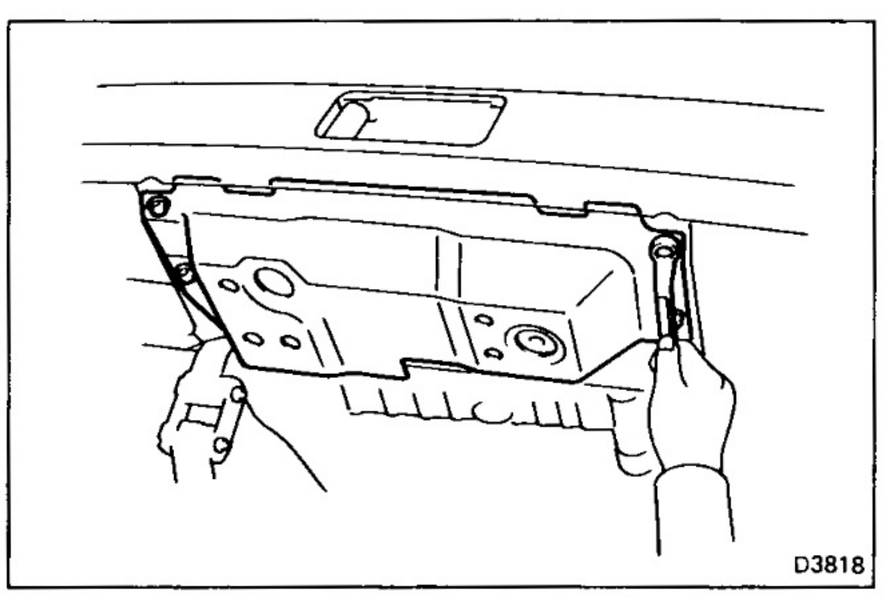

3. (70, 73, 75 Series)
INSTALL WINCH UNDERCOVER

Install the winch undercover with four bolts.

4. CONNECT DRIVE SHAFT
(See page WI-21)

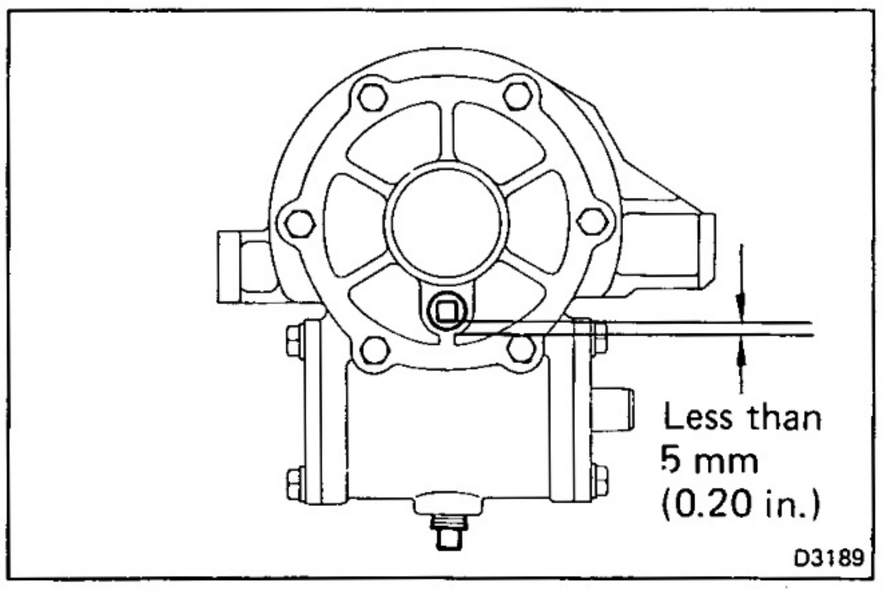

5. FILL WINCH WITH GEAR OIL

Oil grade: API service GL-4
SAE90
Capacity: 0.3 liter (0.3 US qts, 0.3 Imp. qts)

6. INSTALL CHAIN WIRE
(See page WI-3)

ELECTRIC WINCH

On-Vehicle Inspection

NOTE: These tests must be performed within several seconds to avoid discharging the battery.

INSPECTION OF NO. 1 MAGNET SWITCH

1. CONNECT WINCH REMOTE CONTROL SWITCH

2. TURN IGNITION SWITCH ON

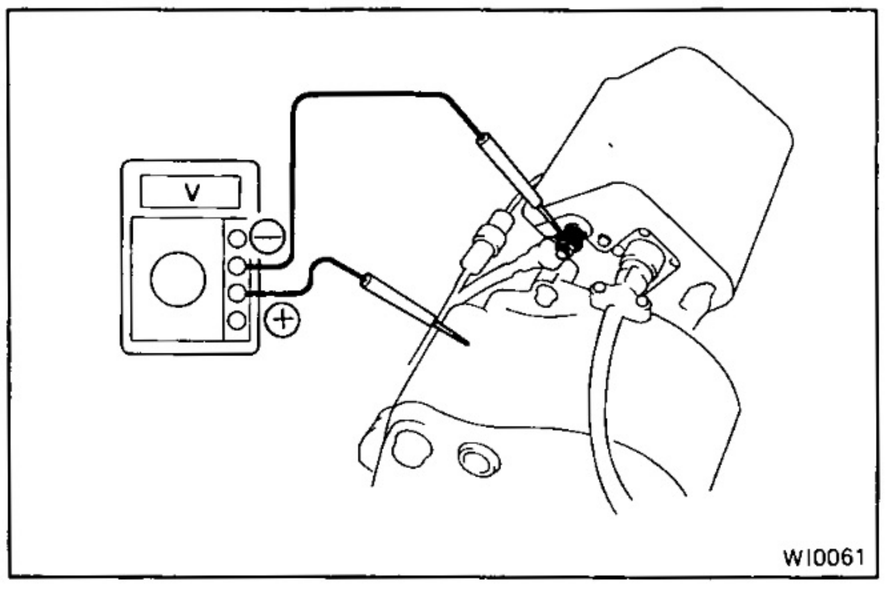

3. INSPECT NO. 1 MAGNET SWITCH

   (a) Using a voltmeter, check the battery voltage at terminal B of the No. 2 magnet switch.

   (b) If no voltage, check for voltage and continuity at the connector of the No. 1 magnet switch.

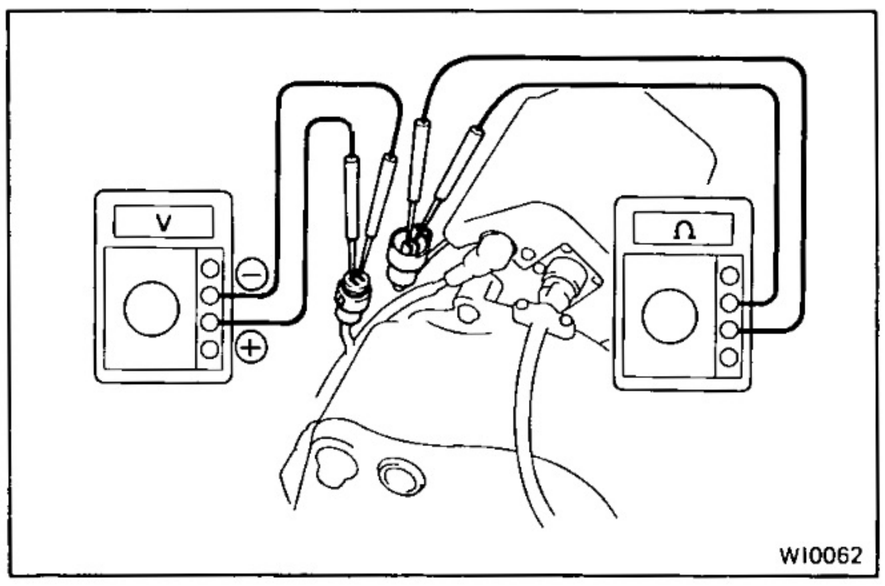

- Using a voltmeter, check the battery voltage between the terminals of the wire harness side connector.
- Using an ohmmeter, check the continuity between the terminals of the winch side connector.

4. TURN IGNITION SWITCH OFF

5. DISCONNECT WINCH REMOTE CONTROL SWITCH

INSPECTION OF NO. 2 MAGNET SWITCH

1. DISCONNECT BATTERY CABLE FROM NEGATIVE TERMINAL

2. DISCONNECT MAGNET SWITCH CABLE FROM BATTERY POSITIVE TERMINAL

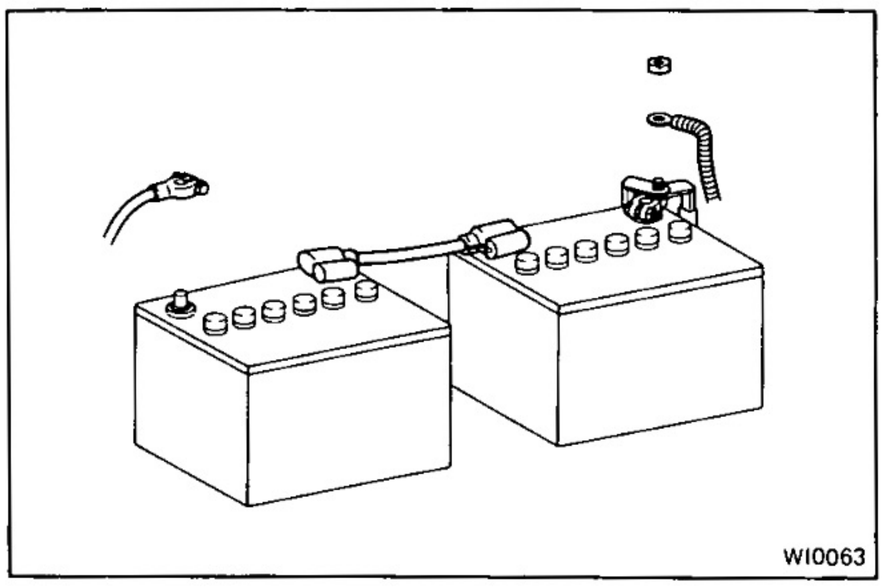

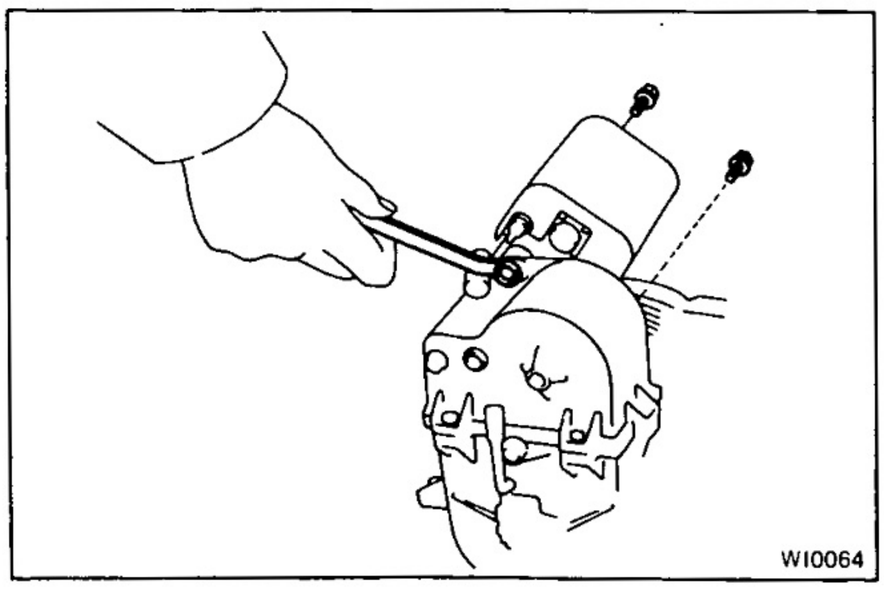

3. (70, 73, 75 Series)
   REMOVE WINCH MOTOR

   Remove the three bolts and motor.

4. REMOVE MAGNET SWITCH COVER

   Remove the four screws and cover.

5. (70, 73, 75 Series)
   TEMPORARILY INSTALL WINCH MOTOR

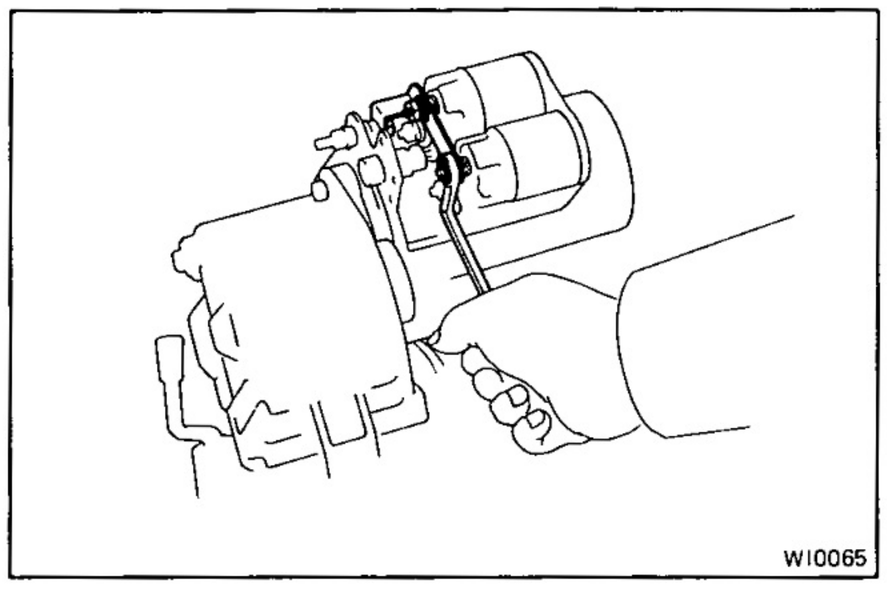

6. **REMOVE TERMINAL PLATE**

   Remove the three nuts and terminal plate.

7. **CONNECT BATTERY CABLE TO NEGATIVE TERMINAL**

8. **CONNECT WINCH REMOTE CONTROL SWITCH**

9. **TURN IGNITION SWITCH ON**

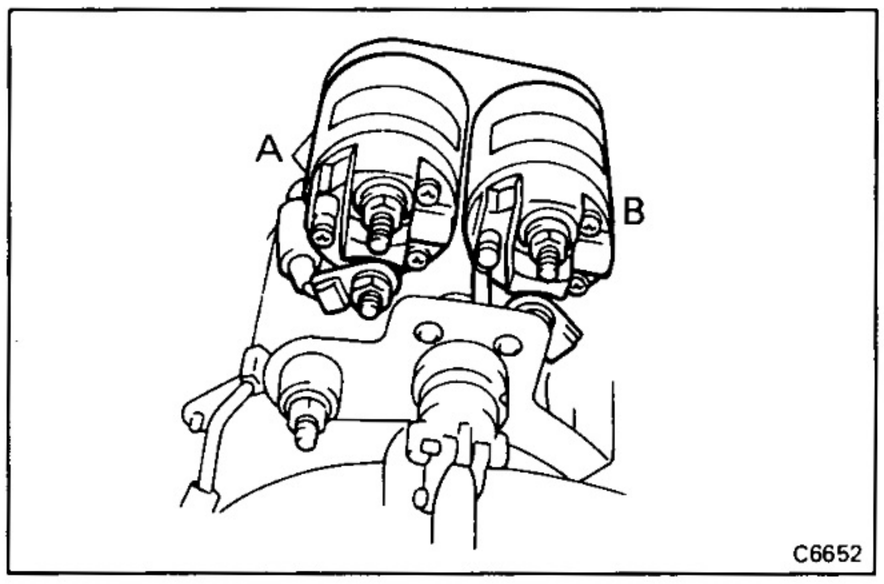

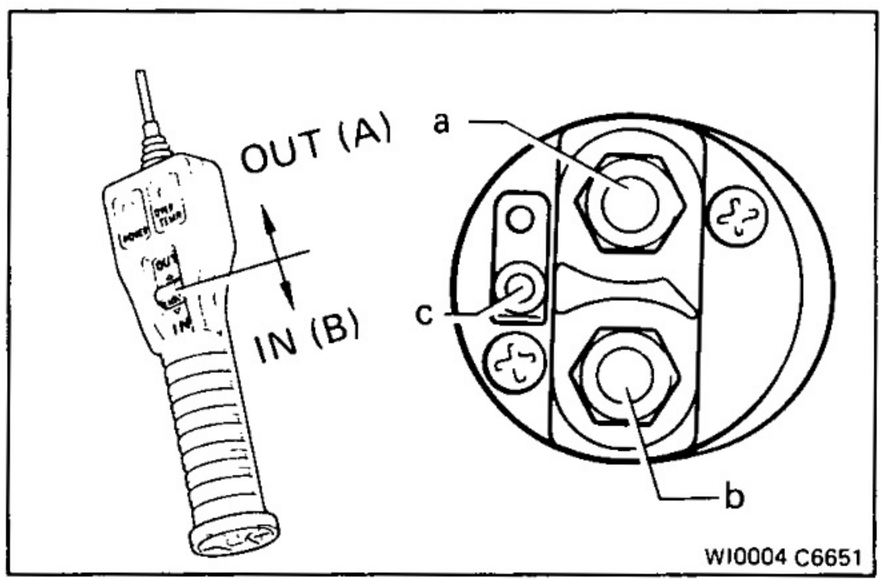

10. **INSPECT NO. 2 MAGNET SWITCH**

    (a) Using an ohmmeter and voltmeter, check operation of both magnet switches with the winch remote control switch in the "NEUTRAL" position.

    Terminal c: No voltage
    Terminal a and b: No continuity

    (b) Using an ohmmeter and voltmeter, check operation of magnet switch A with the winch remote control switch on the "IN" position.

    Terminal c: Battery voltage
    Terminal a and b: Continuity

    (c) Using an ohmmeter and voltmeter, check operation of magnet switch B with the winch remote control switch on the "OUT" position.

    Terminal c: Battery voltage
    Terminal a and b: Continuity

11. **TURN IGNITION SWITCH OFF**

12. **DISCONNECT WINCH REMOTE CONTROL SWITCH**

13. **DISCONNECT BATTERY CABLE FROM NEGATIVE TERMINAL**

14. **INSTALL TERMINAL PLATE**

15. **(70, 73, 75 Series)**
    REMOVE WINCH MOTOR

16. **INSTALL MAGNET SWITCH COVER**

17. **(70, 73, 75 Series)**
    INSTALL WINCH MOTOR

    Torque: 195 kg-cm (14 ft-lb, 19 N·m)

18. **CONNECT MAGNET SWITCH CABLE TO BATTERY**

19. **CONNECT BATTERY CABLE TO NEGATIVE TERMINAL**

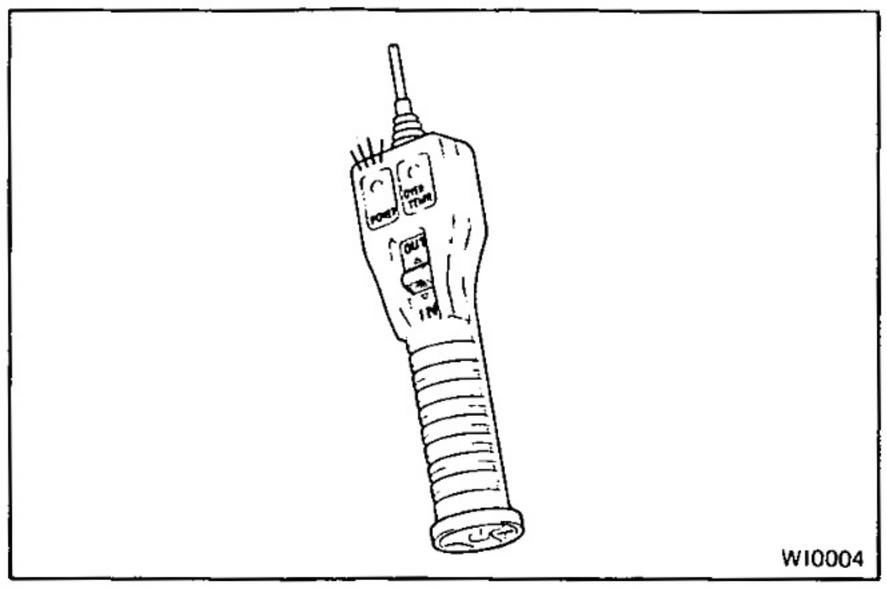

INSPECTION OF WINCH REMOTE CONTROL SWITCH

1. CHECK INDICATOR LIGHT AND BUZZER

(a) The power indicator light will light when the winch remote control switch connector is connected, and turn the ignition switch ON.

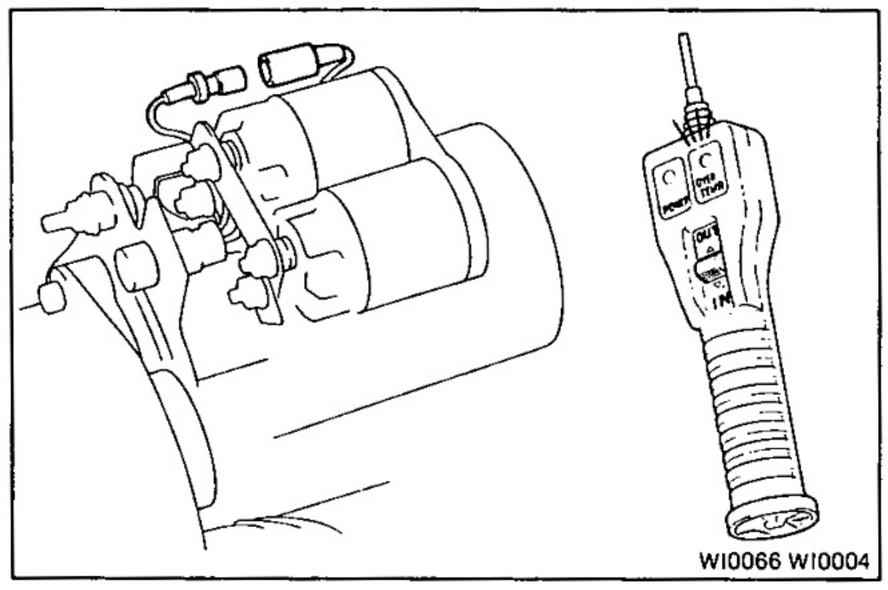

(b) Remove the magnet switch cover.
(70, 73, 75 Series: See steps 1, 3, 4 and 5 on page WI-39)

(c) The overheat temperature indicator light will light and buzzer sound when the thermo switch connector is disconnected, and turn the ignition switch ON.

(d) Install the magnet switch cover.
(70, 73, 75 Series: See steps 15, 16, 17 and 19 on page WI-40)

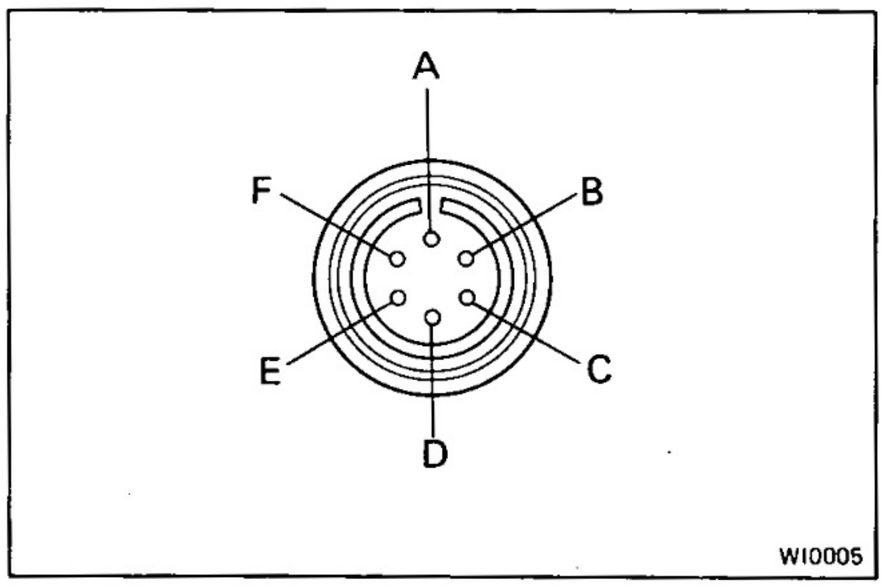

2. CHECK WINCH REMOTE CONTROL SWITCH CIRCUIT

(a) Using an ohmmeter, check for continuity between terminals B and C or B and E with the winch remote control switch on the "NEUTRAL" position.

(b) Using an ohmmeter, check for continuity between terminals B and D with the winch remote control switch on the "IN" position.

(c) Using an ohmmeter, check for continuity between terminals B and F with the winch remote control switch on the "OUT" position.

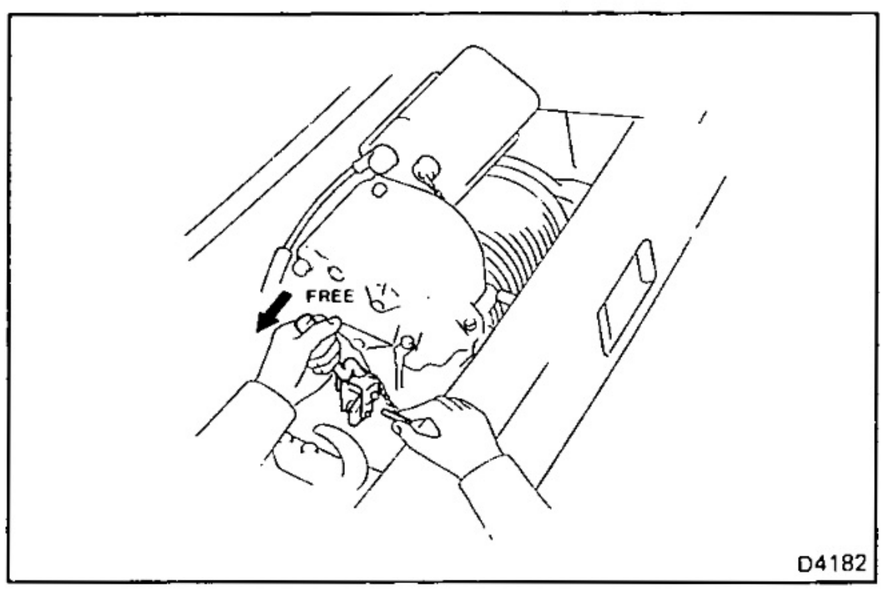

Chain Wire

REMOVAL OF CHAIN WIRE

1. REMOVE CHAIN WIRE

(a) Shift the shift lever to the free position.

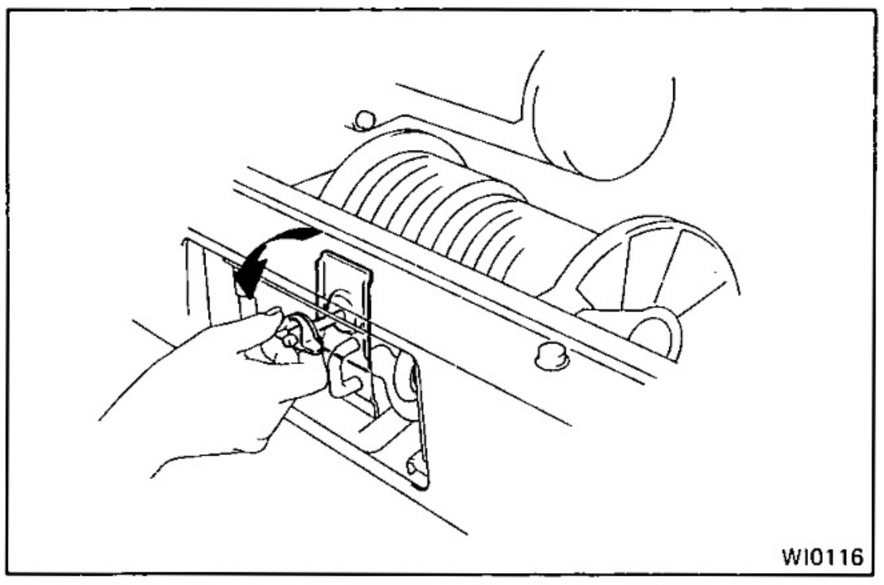

(b) Loosen the wing nut and turn the No. 1 bracket support 90°.

(c) Pull out the No. 1 bracket support together with the chain wire from the drum.

2. REMOVE HOOK HOLDER FROM CHAIN WIRE

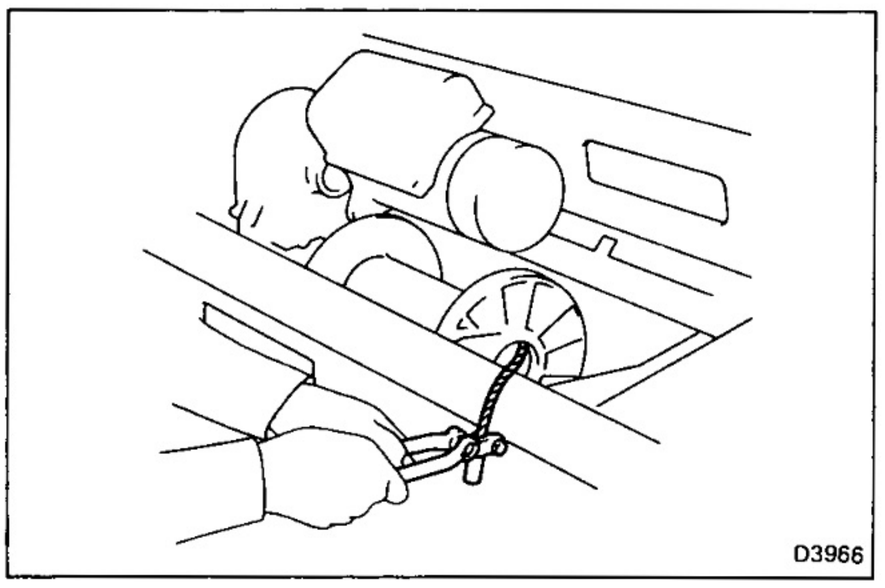

3. REMOVE WIRE LOCK

(a) Remove the drum housing cover and then pull out the lock plate from the drum.

(b) Remove the wire lock and lock plate from the chain wire.

INSPECTION OF CHAIN WIRE

(See page WI-2)

INSTALLATION OF CHAIN WIRE

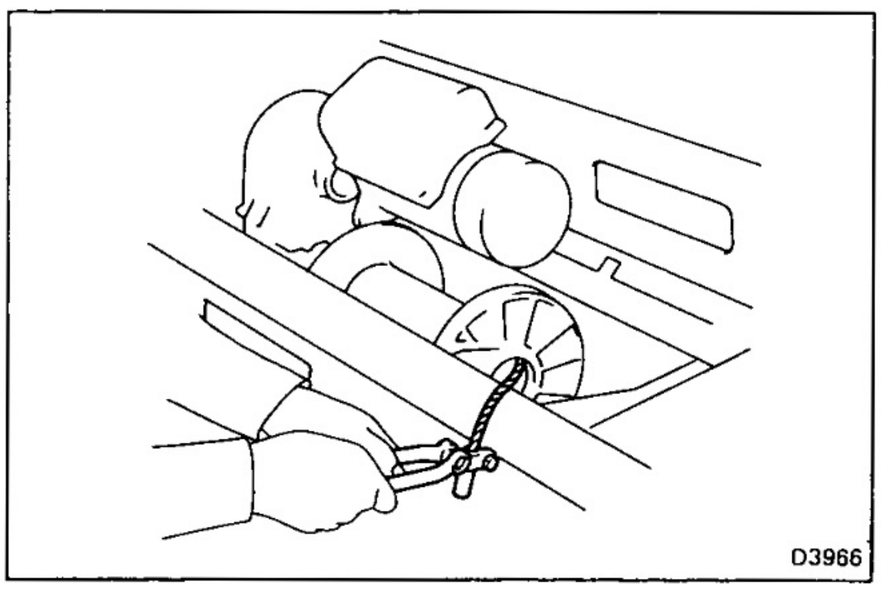

1. INSTALL WIRE LOCK

(a) Insert the chain wire into the wire installation hole of the drum and drum housing cover hole.

(b) Install the wire lock and lock plate to the end of chain wire with the two bolts. Torque the bolts.

Torque: 195 kg-cm (14 ft-lb, 19 N·m)

(c) Install the drum housing cover.

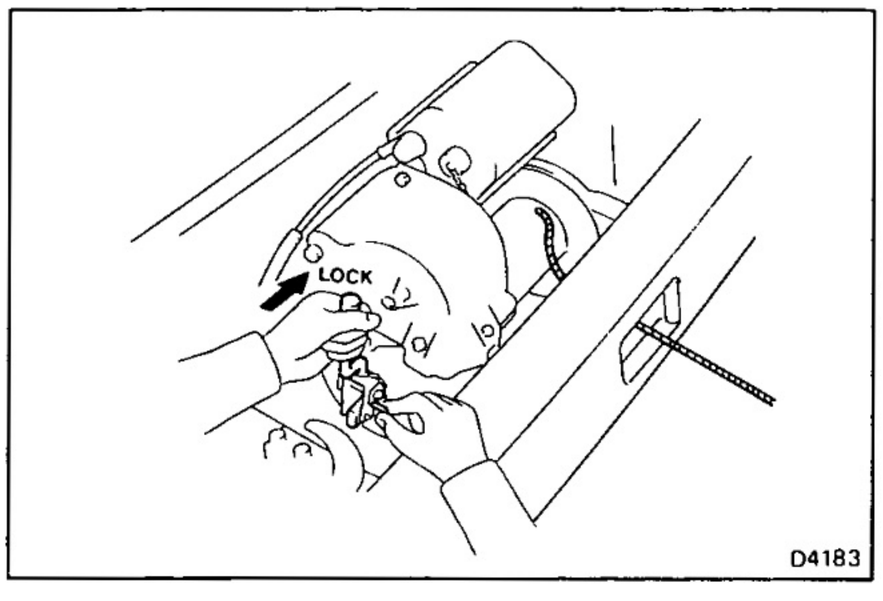

2. WINDING CHAIN WIRE

(a) Shift the hub shift lever in the locked position, and insert the lever lock pin into the hole of the hub shift shaft.

NOTE: If reaching the lever is difficult, move the drum by hand.

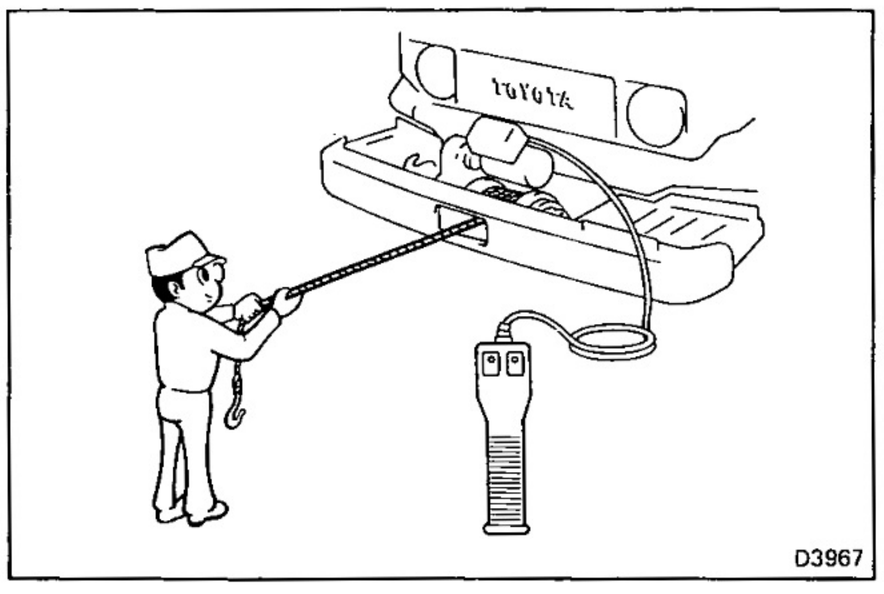

(b) Connect the remote control switch and start the engine.

(c) Confirm that the "power" lamp goes on and place the switch on "IN".

(d) Pull the chain wire tense and feed it to the winch as it winds.

CAUTION: The speed of the winch increases as the end of the cable nears.

(e) Stop winding with about one meter (40 in.) of the chain wire remaining out.

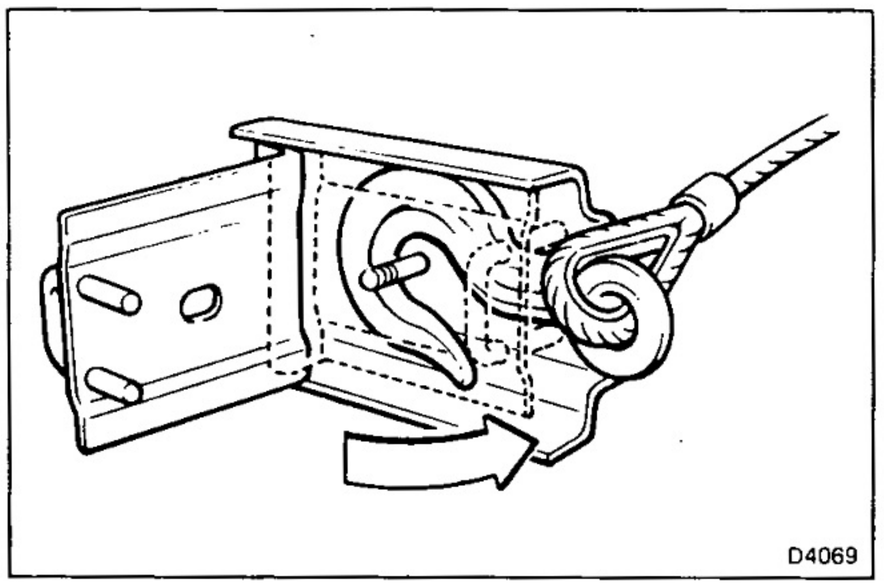

3. INSTALL HOOK HOLDER

(a) Set the wire hook in the hook holder and temporarily tighten the wing nut.

(b) Wind the chain wire until the hook holder enters the bumper.

NOTE: Due to inertia, the drum will continue to rotate for a short time after the switch is off.
To prevent damage to the mechanism switch off the winch with 300 – 400 mm (11.81 – 15.75 in.) of the chain wire remaining.

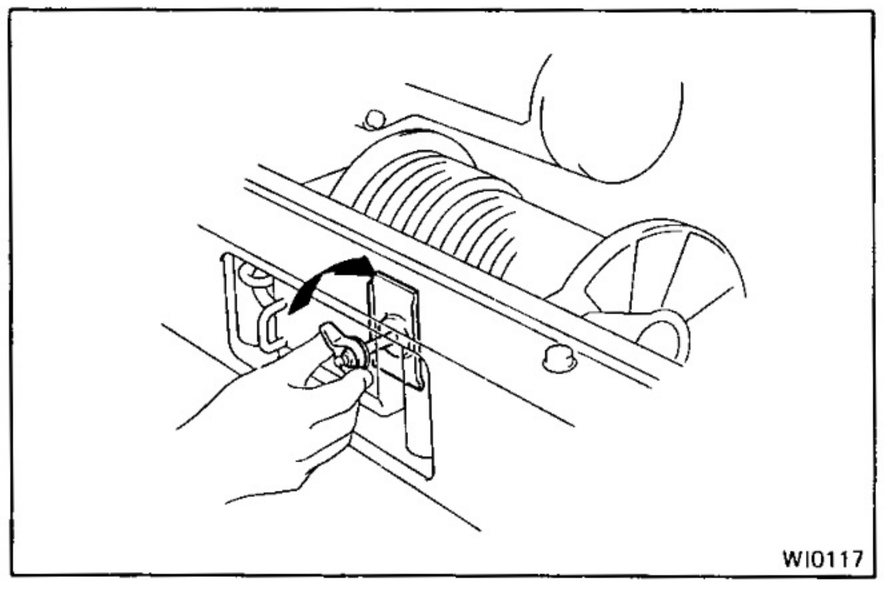

(c) Loosen the wing nut and turn the No. 1 bracket support 90°, then tighten wing nut.

(d) Disconnect the remote control switch and install the connector cover.

Winch

COMPONENTS

70, 73, 75 Series

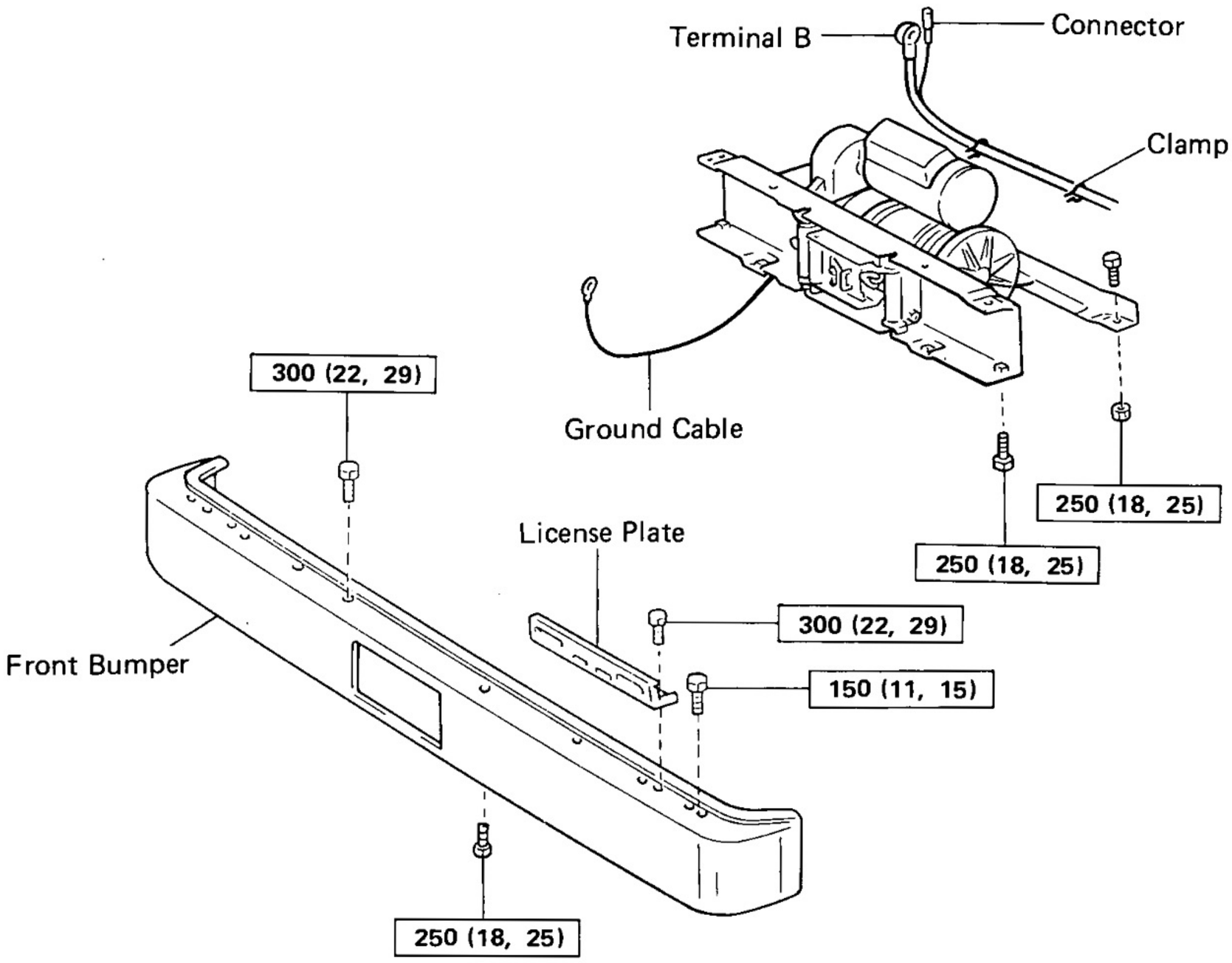

60, 62 Series

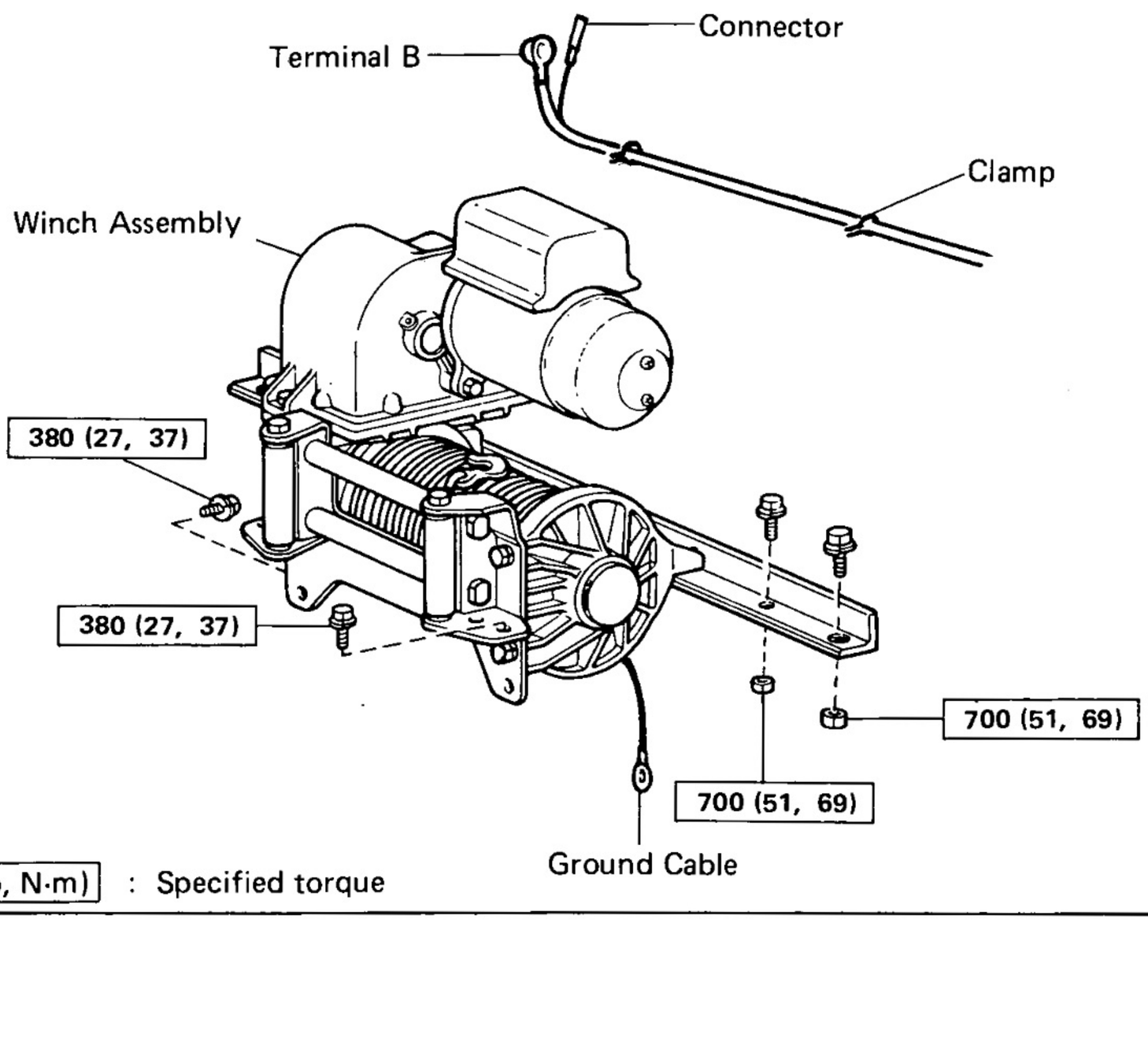

kg-cm (ft-lb, N·m) : Specified torque

WI0090
WI0089

REMOVAL OF WINCH

(See page WI-44)

1. REMOVE CHAIN WIRE
(See page WI-42)

   NOTE: Except when repairing the winch, do not remove the chain wire.

2. DRAIN WINCH FLUID

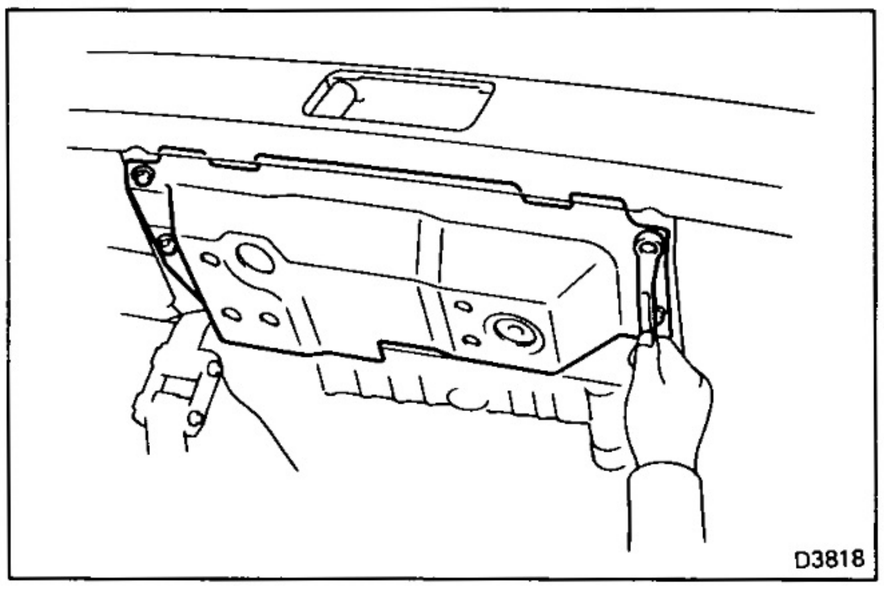

3. (70, 73, 75 Series)
REMOVE WINCH UNDERCOVER

   Remove the four bolts and winch undercover.

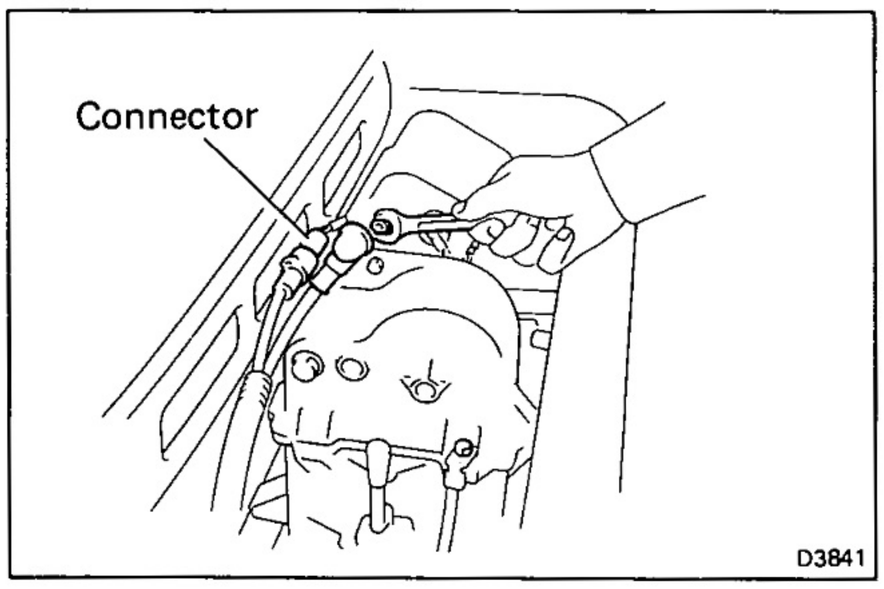

4. DISCONNECT WIRE HARNESS
   (a) Disconnect connector for No. 1 magnet switch.
   (b) Disconnect terminal B.
   (c) Disconnect ground cable at mounting bracket.

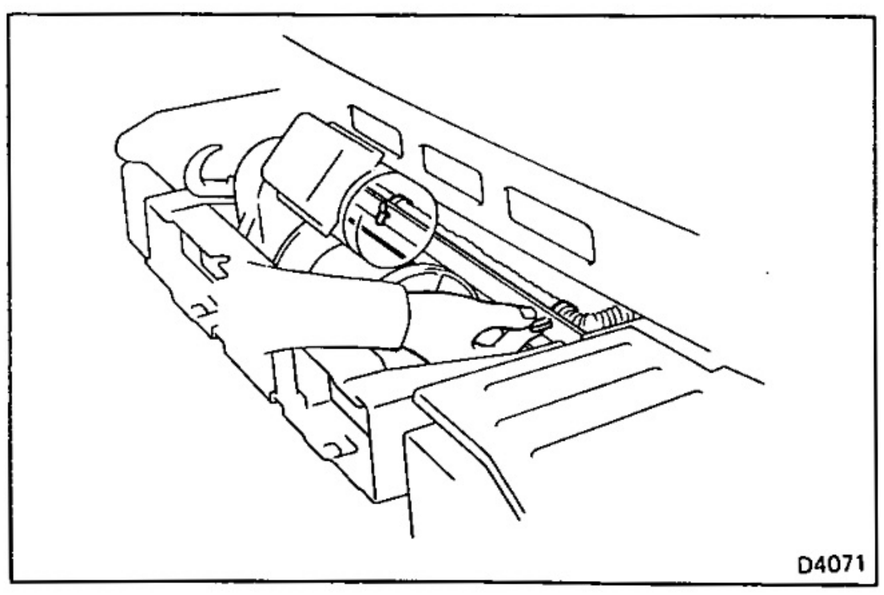

5. REMOVE TWO WIRE HARNESS CLAMPS

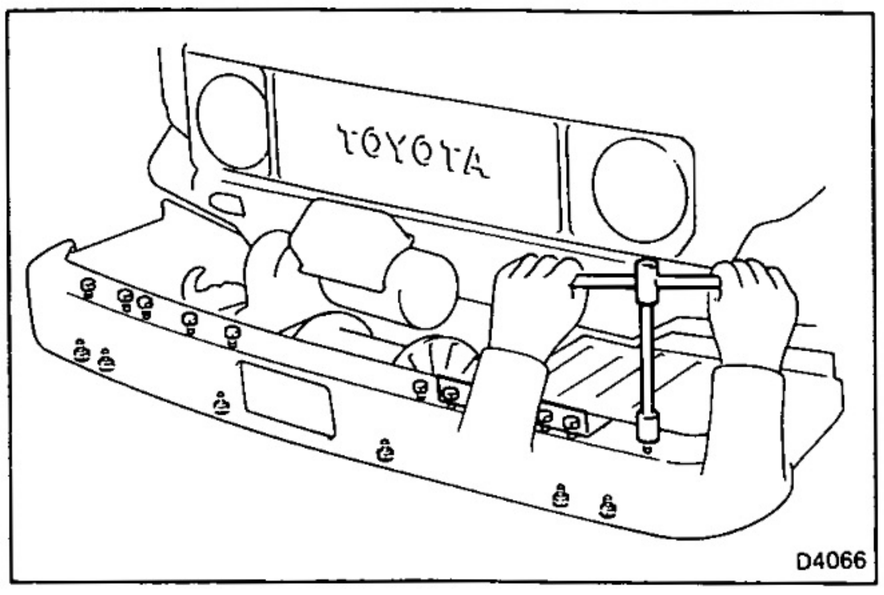

6. (70, 73, 75 Series)
REMOVE FRONT BUMPER

   Remove the 16 bolts, front bumper and license plate bracket.

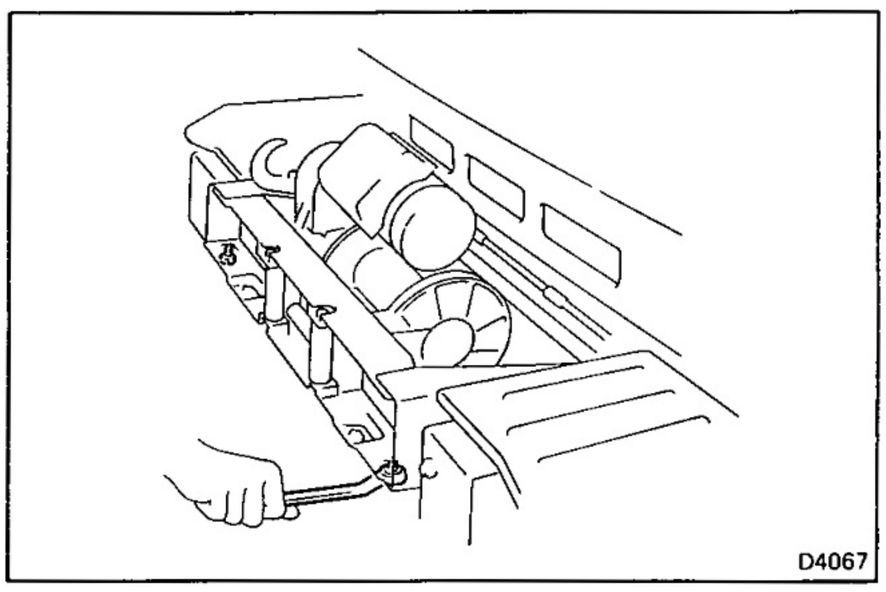

7.-1 (70, 73, 75 Series)
REMOVE WINCH ASSEMBLY

(a) Remove the two winch roller bracket bolts.

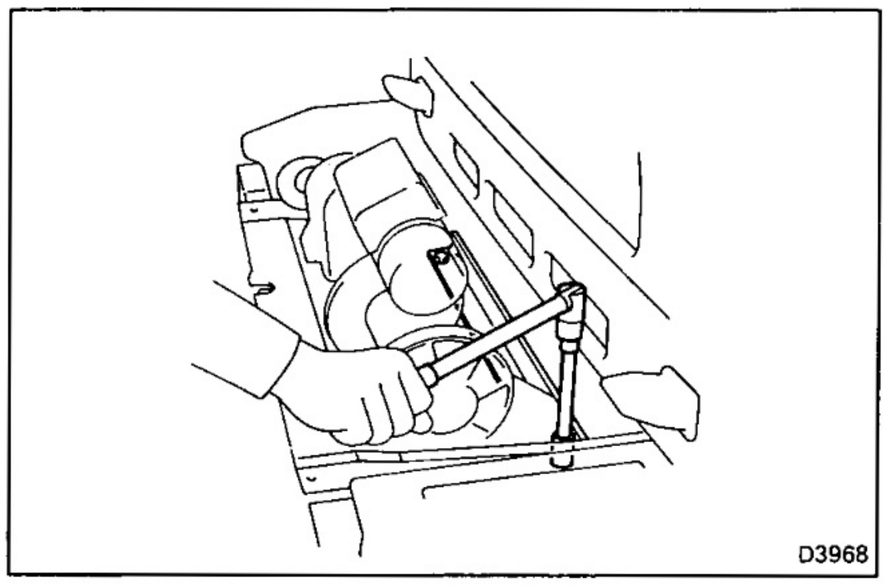

(b) Remove the two winch rear base member bolts.

(c) Remove the winch assembly from the vehicle.

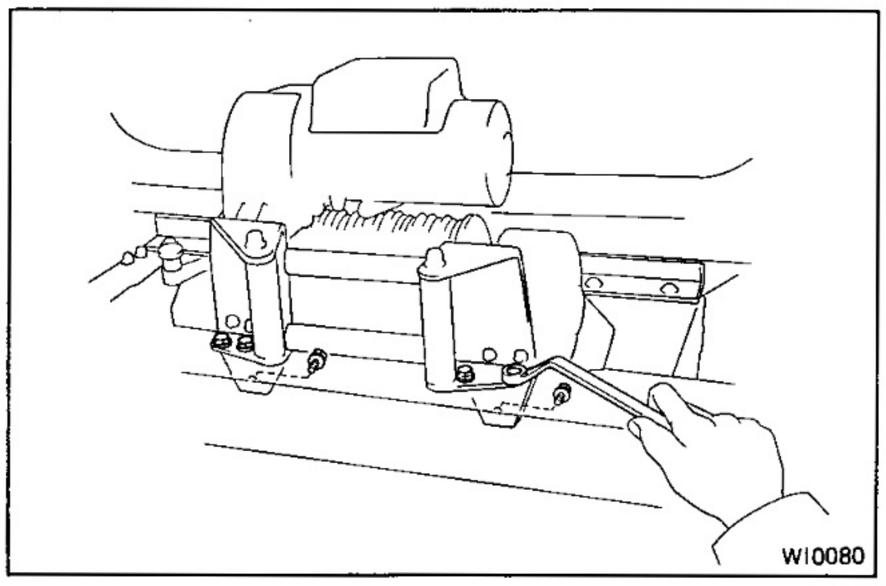

7.-2 (60, 62 Series)
REMOVE WINCH ASSEMBLY

(a) Remove the six winch roller bracket bolts.

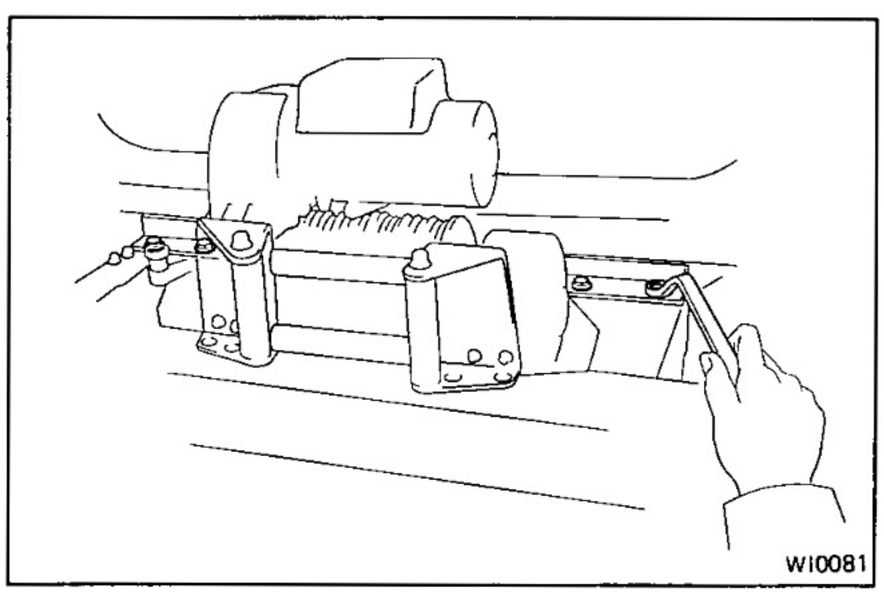

(b) Remove the four winch rear base member bolts.

(c) Remove the winch assembly from the vehicle.

COMPONENTS

70, 73, 75 Series

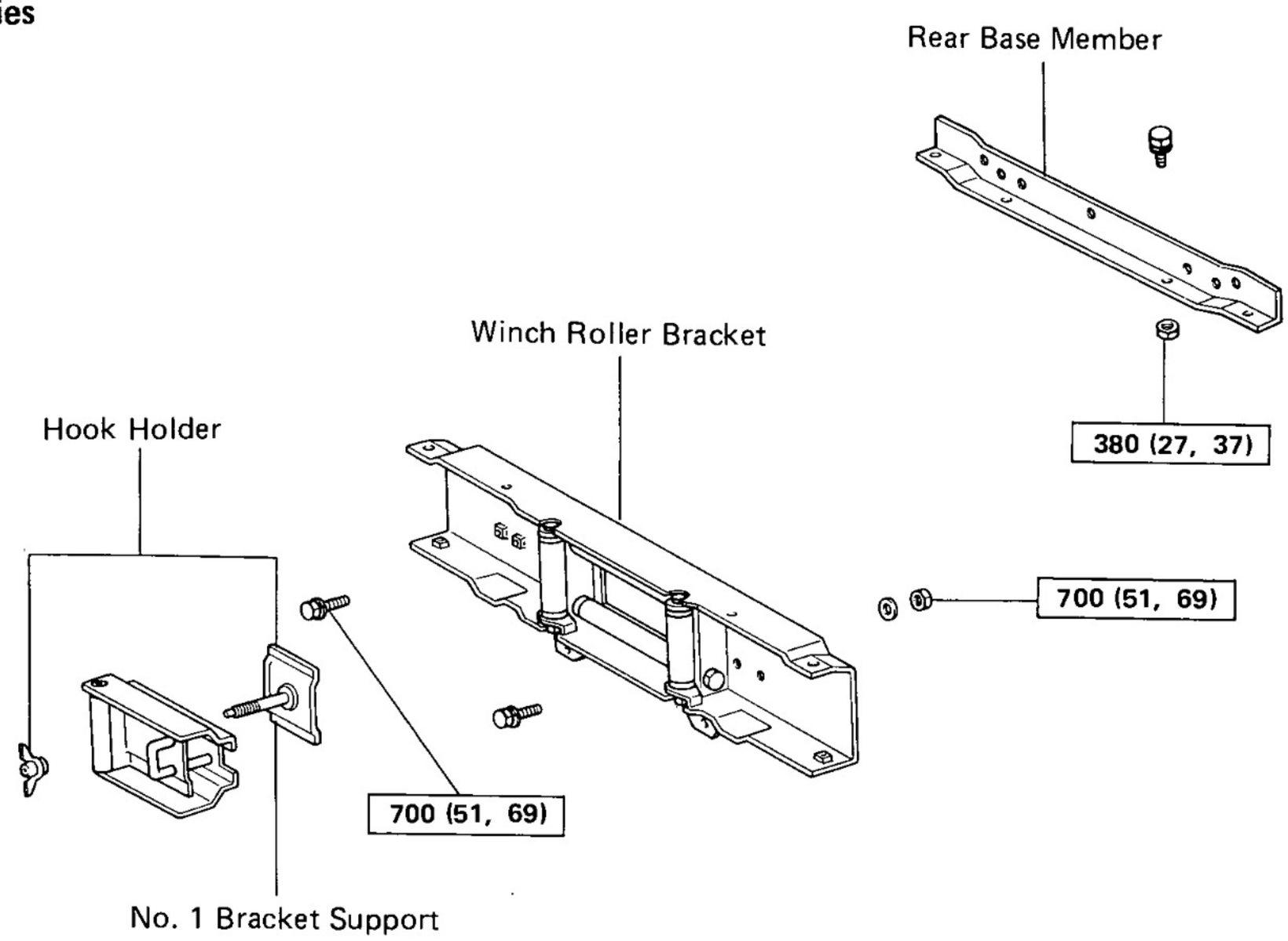

60, 62 Series

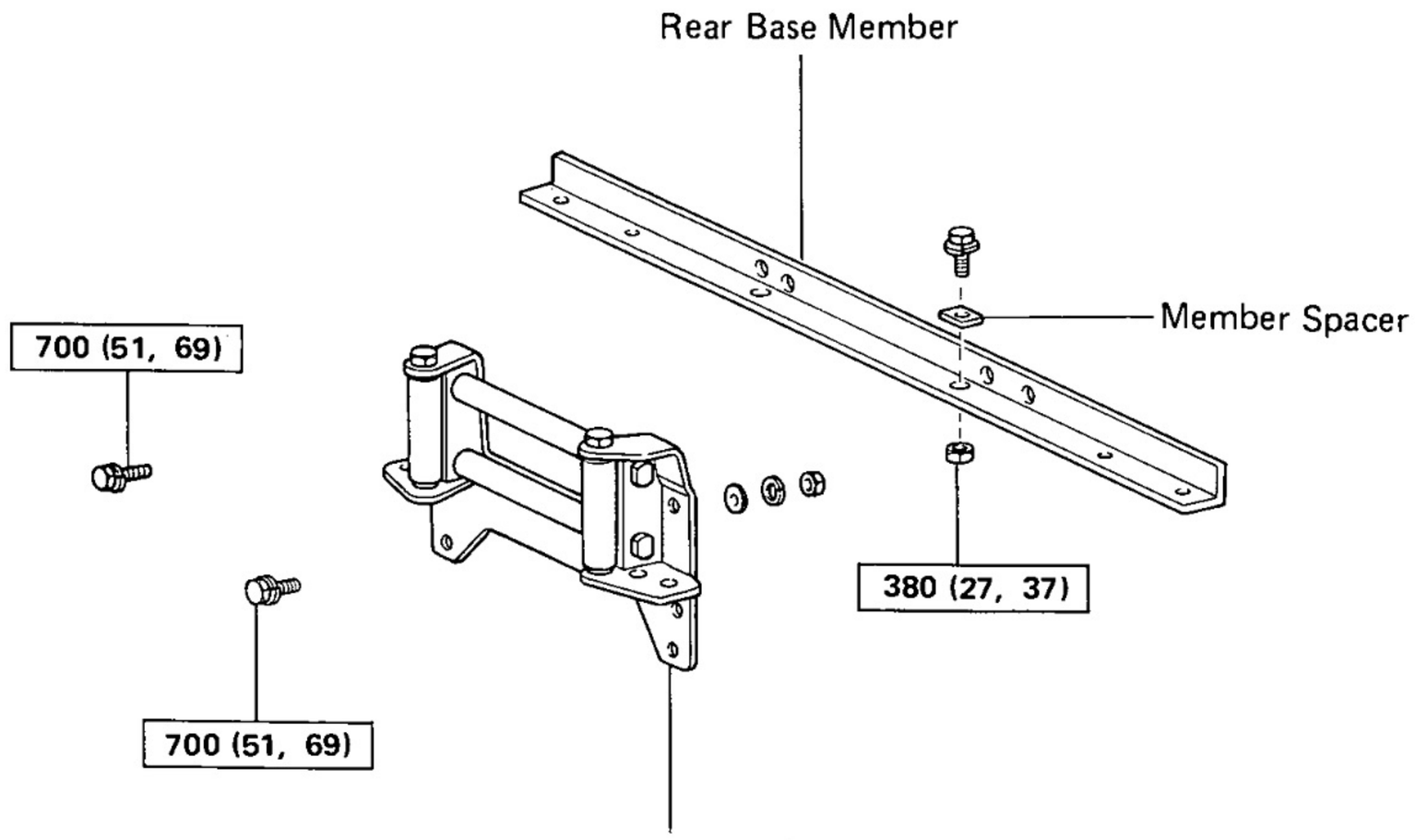

kg-cm (ft-lb, N·m) : Specified torque

WI0110
WI0111

COMPONENTS (Cont'd)

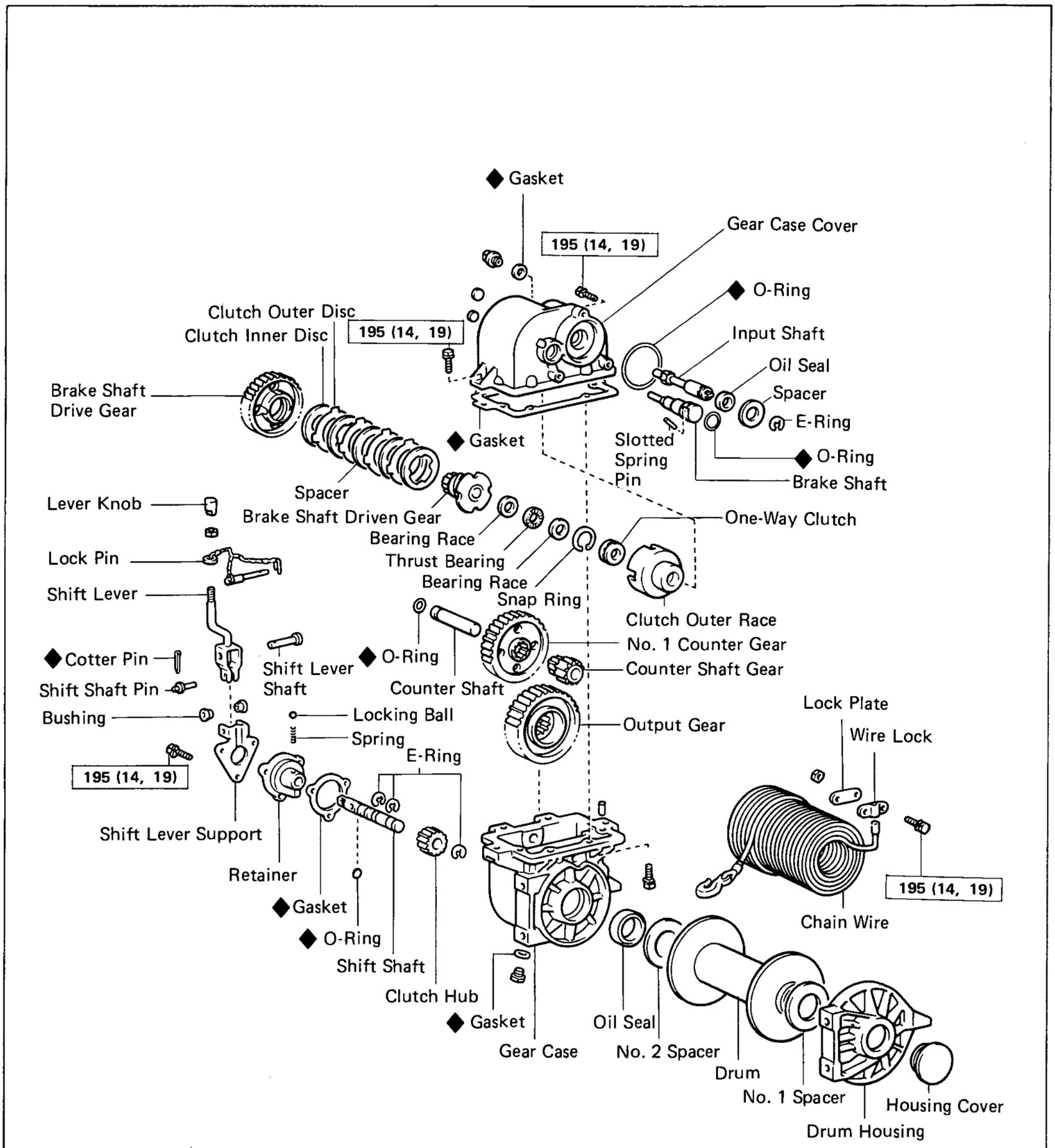

kg-cm (ft-lb, N·m) : Specified torque

◆ : Non-reusable part

WI0082

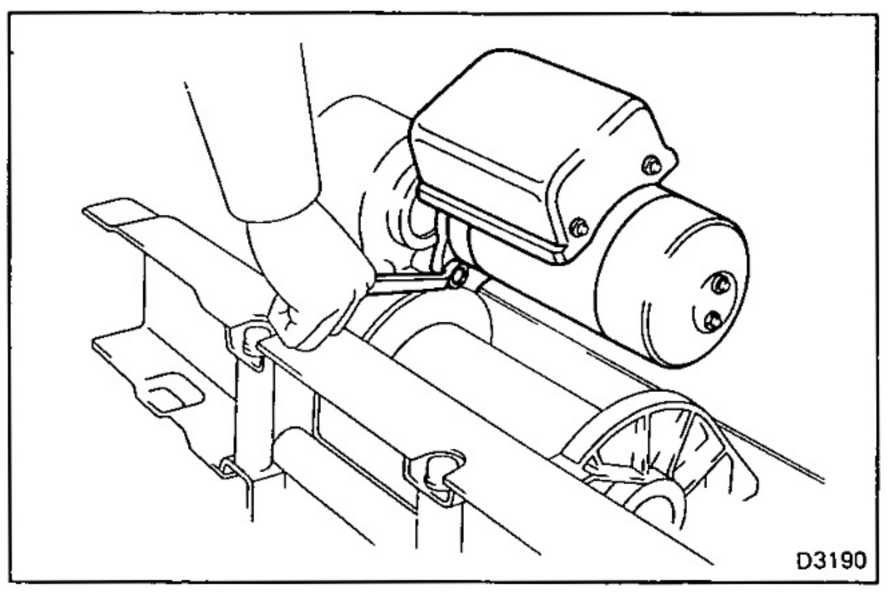

DISASSEMBLY OF WINCH

(See pages WI-47 and 48)

1. REMOVE MOTOR

(a) Remove the three bolts and motor.

(b) Remove the O-ring.

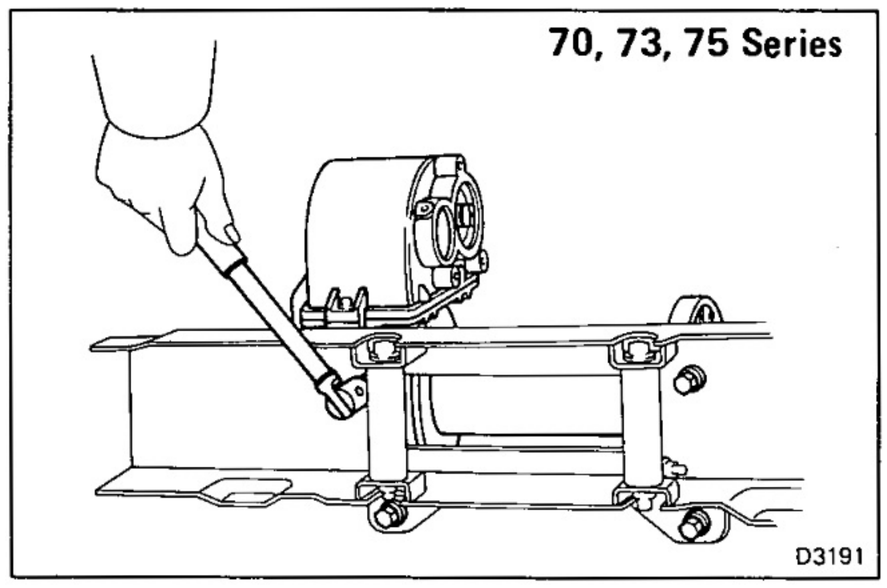

2. REMOVE WINCH ROLLER BRACKET

Remove the four bolts, two nuts and winch roller bracket.

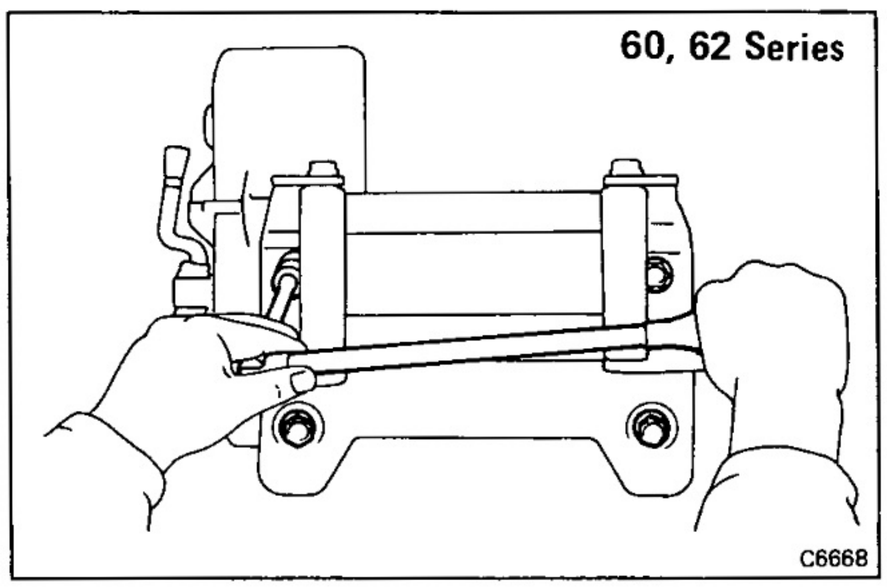

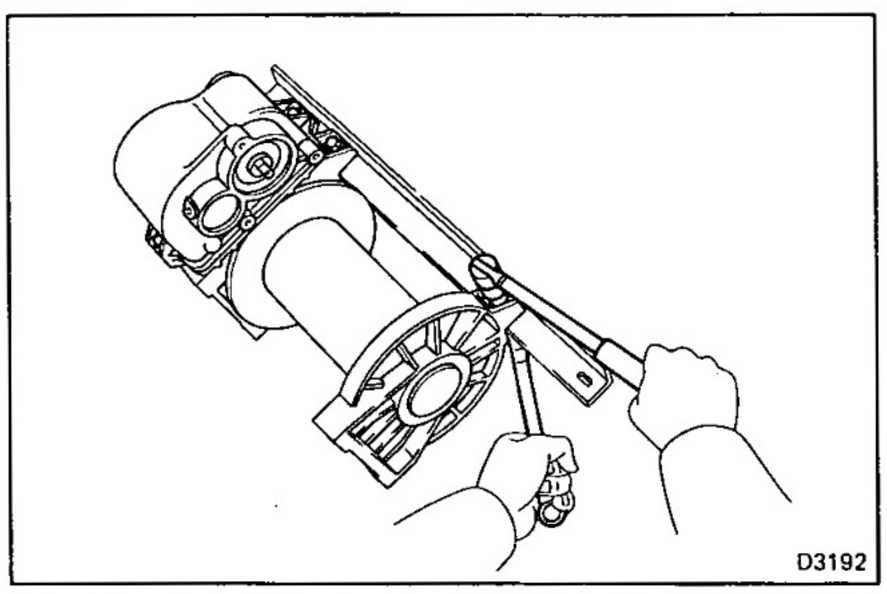

3. REMOVE REAR BASE MEMBER

(60, 62 Series)

Remove the two bolts, member spacers and rear base member.

(70, 73, 75 Series)

Remove the two bolts and rear base member.

4. REMOVE DRUM HOUSING AND NO. 1 SPACER

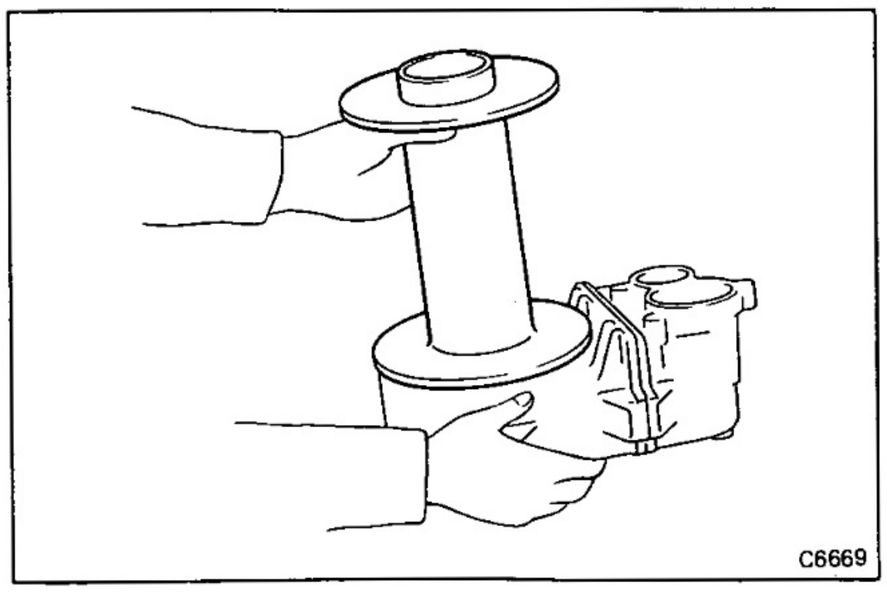

5. REMOVE DRUM AND NO. 2 SPACER

(a) Shift the shift lever to the lock position.

(b) Remove the drum and spacer.

NOTE: Be careful not to damage the oil seal.

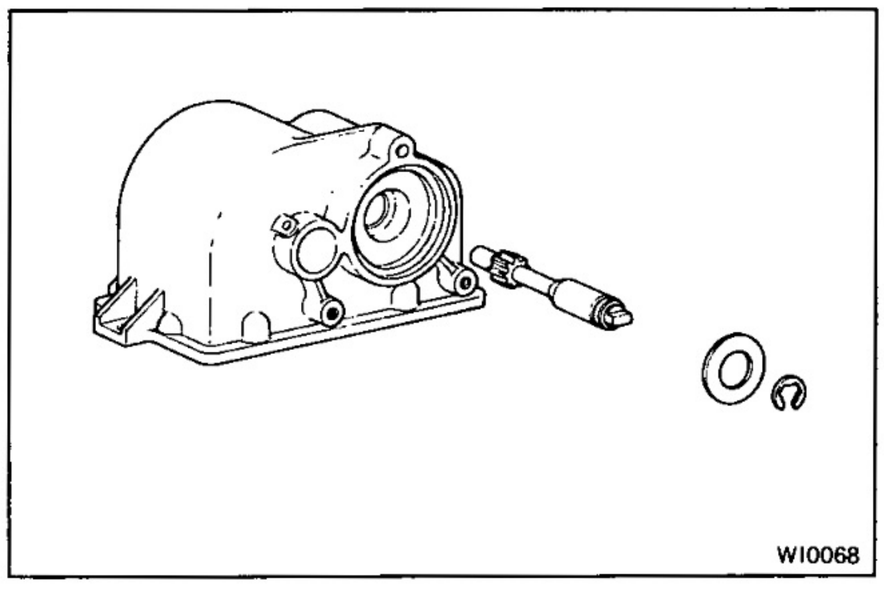

6. REMOVE INPUT SHAFT AND SPACER

(a) Pull out the input shaft with the spacer from the gear case cover.

(b) Remove the E-ring and spacer from the input shaft.

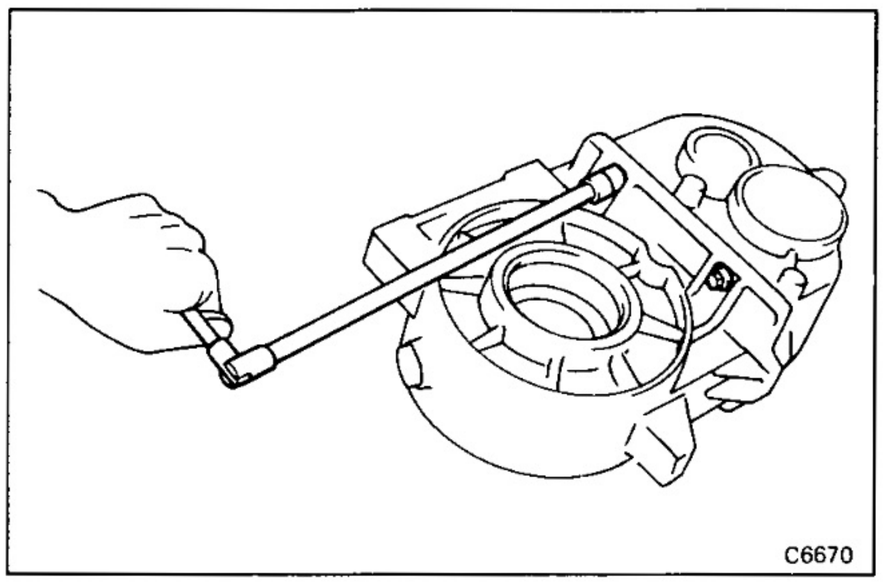

7. REMOVE GEAR CASE COVER AND GASKET FROM GEAR CASE

Remove the six bolts, gear case cover and gasket.

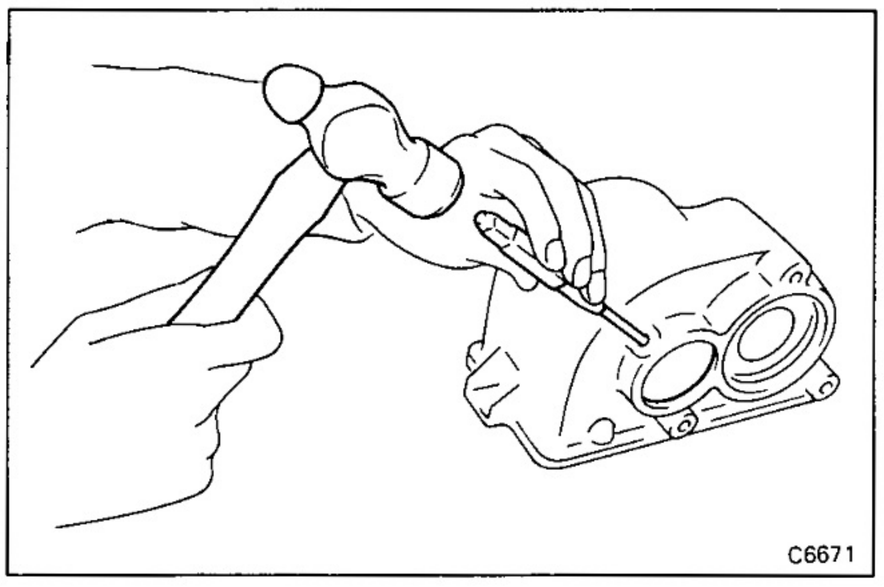

8. REMOVE BRAKE SHAFT AND CLUTCH SUB-ASSEMBLY

(a) Using a pin punch and hammer, drive out the slotted spring pin.

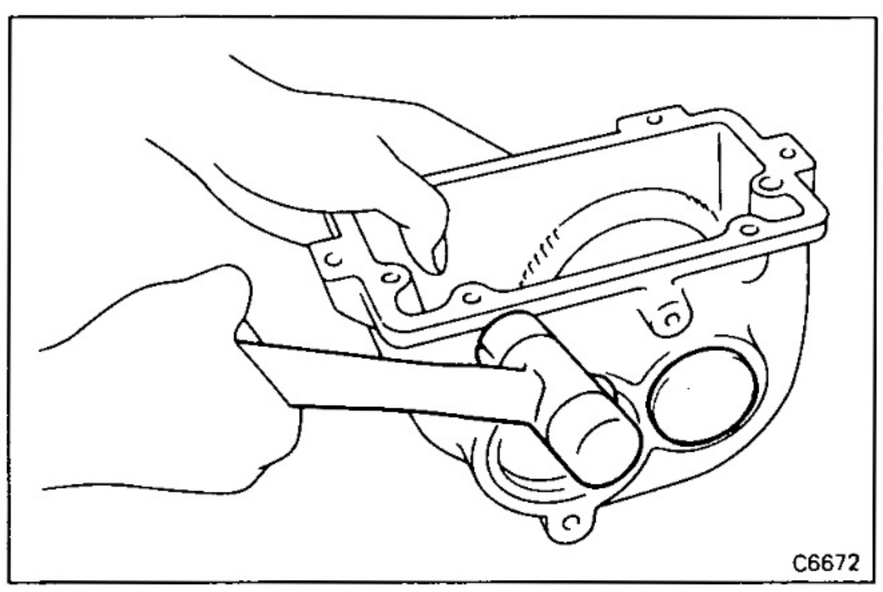

(b) Using a plastic hammer, lightly tap the gear case cover and remove the brake shaft.

(c) Remove the clutch subassembly.

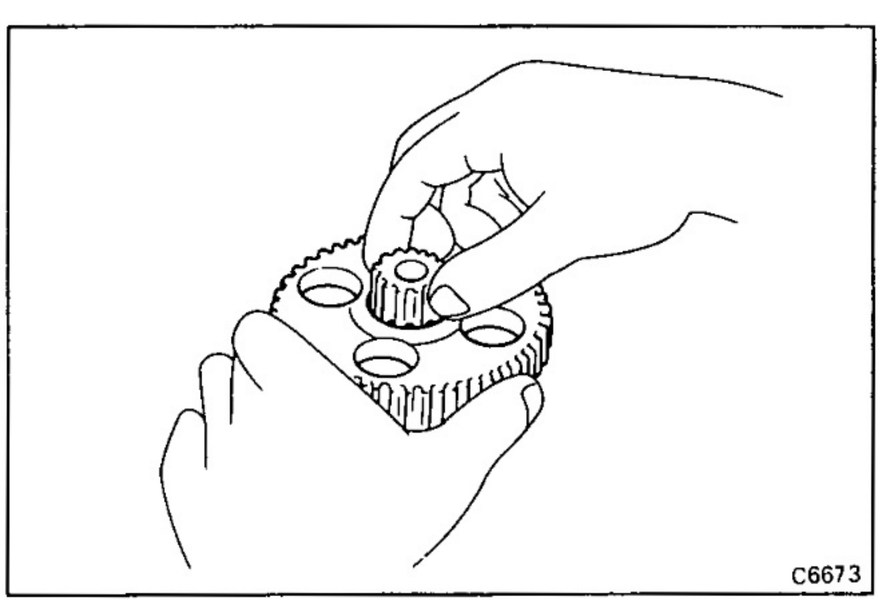

9. DISASSEMBLE CLUTCH SUBASSEMBLY

(a) Remove the clutch outer race, and then remove the thrust bearing and two bearing races.

(b) Turn the brake shaft driven gear counterclockwise and then remove the brake shaft drive gear, four clutch outer discs, four inner discs and spacer from the brake shaft driven gear.

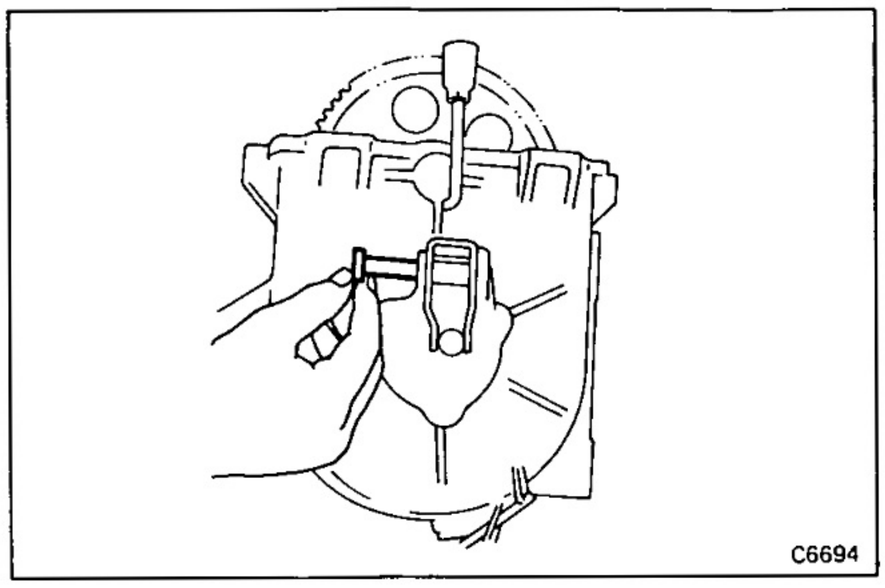

10. REMOVE SHIFT LEVER

(a) Remove the lock pin.

(b) Remove the cotter pin and shift lever shaft.

(c) Remove the shift lever with two bushings.

(d) Remove the shift shaft pin from the shift shaft.

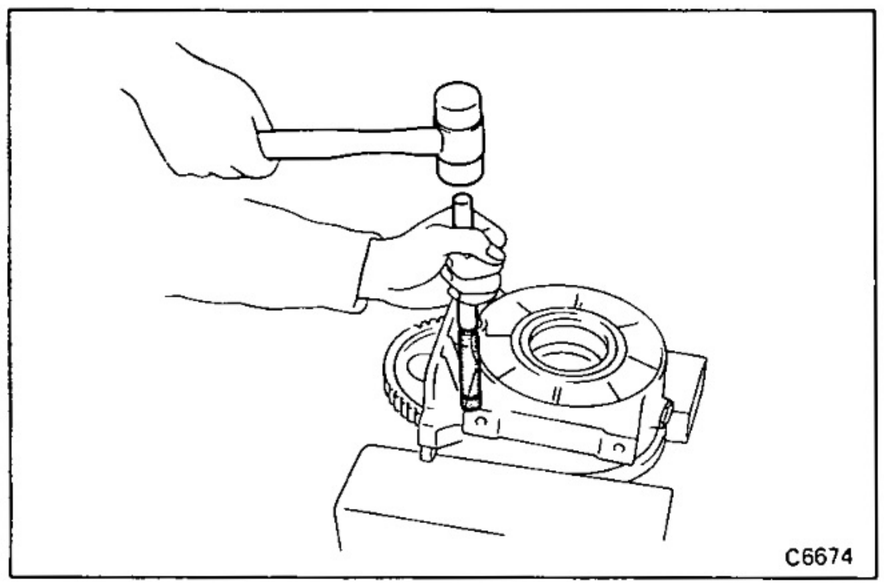

11. REMOVE COUNTER SHAFT, NO. 1 COUNTER GEAR AND COUNTER SHAFT GEAR

(a) Using a brass bar and hammer, drive out the counter shaft from the gear case.

(b) Remove the No. 1 counter gear and counter shaft gear.

(c) Remove the O-ring from the counter shaft.

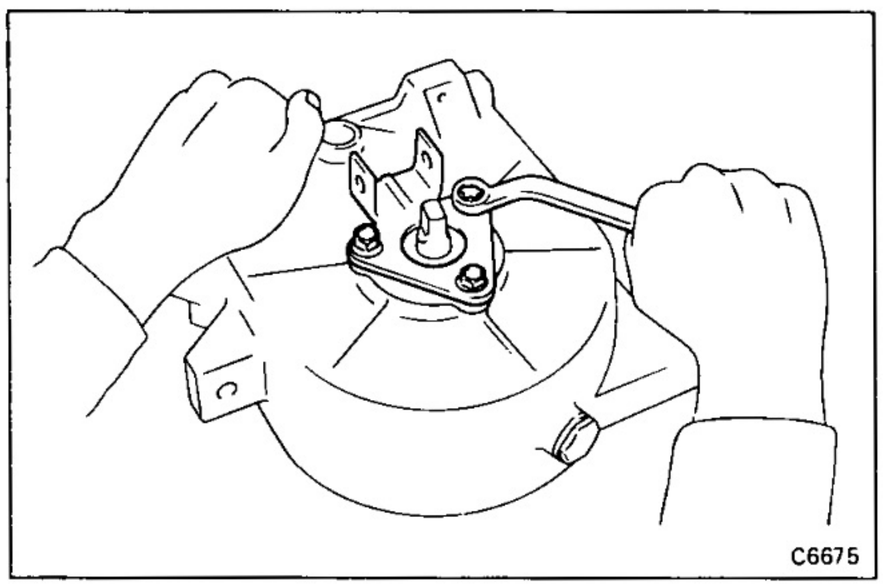

12. REMOVE SHIFT LEVER SUPPORT

Remove the three bolts and support.

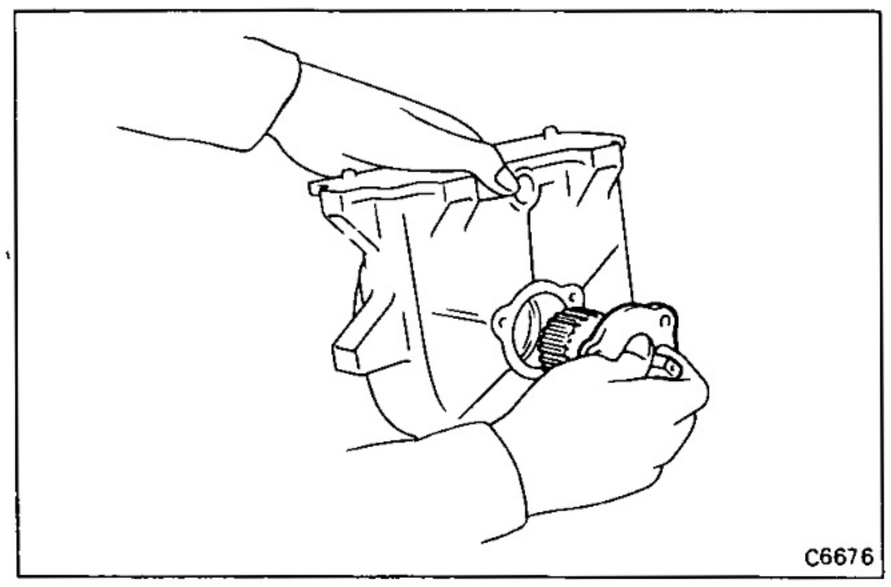

13. REMOVE CLUTCH HUB WITH SHIFT SHAFT, RETAINER AND GASKET

(a) Remove the clutch hub with the shift shaft and retainer.

(b) Remove the gasket.

(c) Remove the output gear.

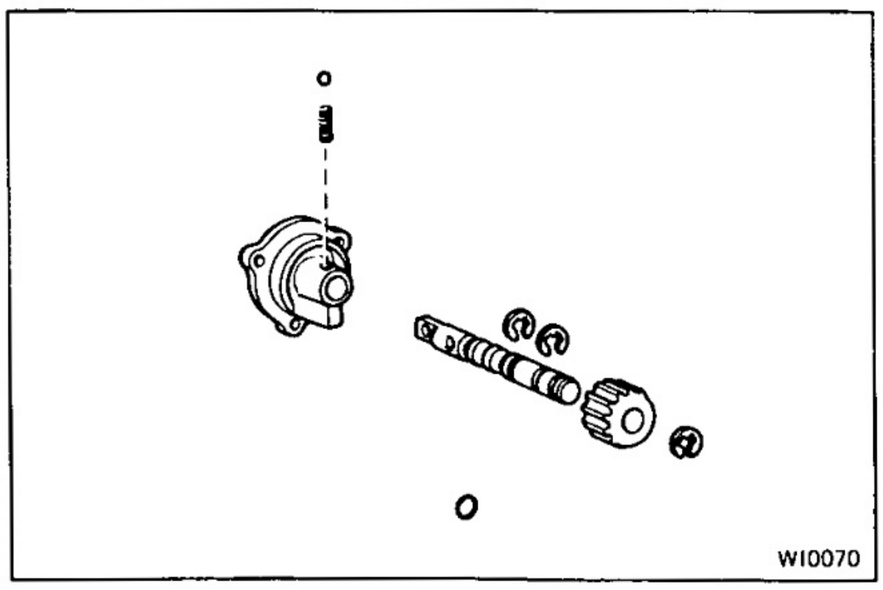

(d) Remove the retainer from the shift shaft.

NOTE: Be careful not to lose the locking ball.

(e) Remove the E-ring and clutch hub.

(f) Remove the O-ring.

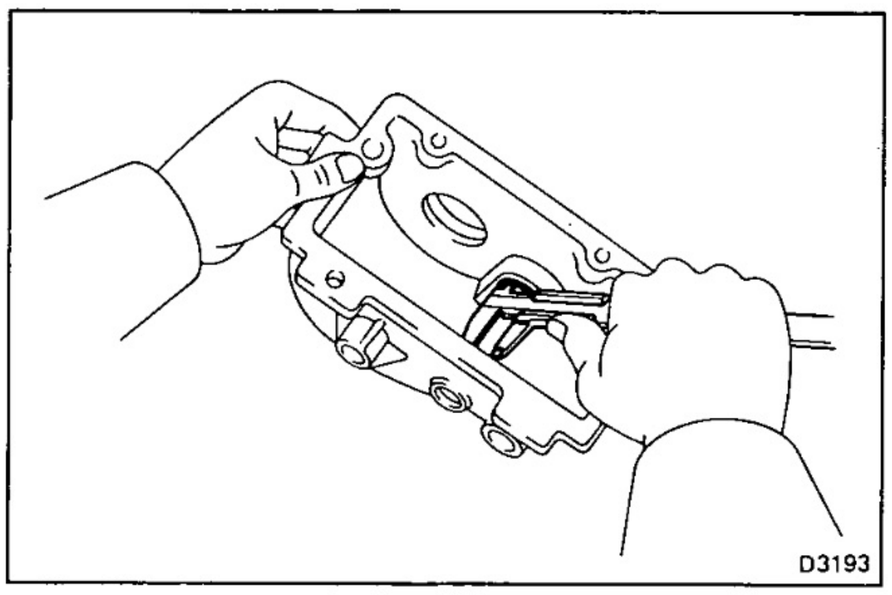

INSPECTION AND REPLACEMENT OF WINCH COMPONENTS

1. INSPECT GEAR CASE COVER BUSHING

Using calipers, measure the bushing bore.

Maximum bore:

Motor side 22.3 mm (0.878 in.)
Case side 14.2 mm (0.559 in.)

If the bushing bore exceeds maximum, replace the gear case cover assembly.

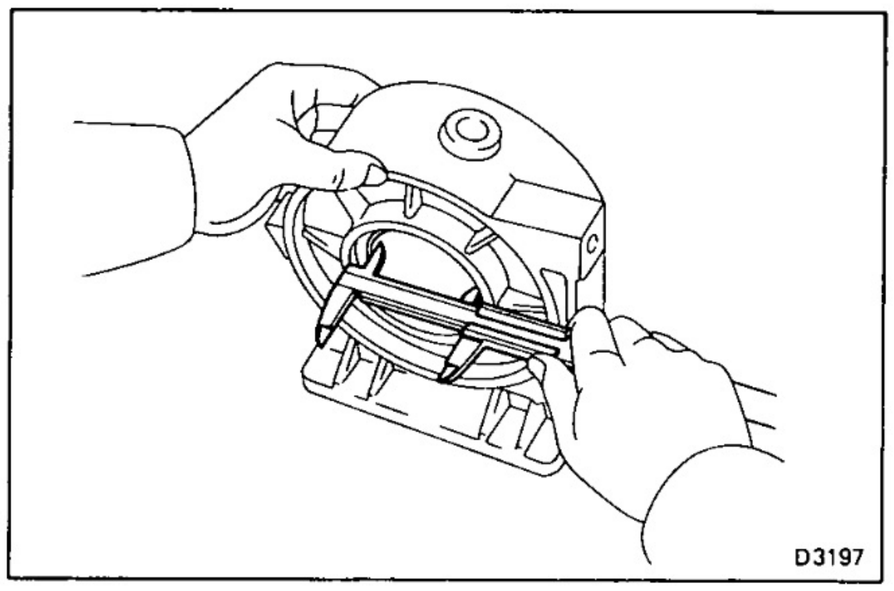

2. INSPECT GEAR CASE BUSHING

Using calipers, measure the bushing bore.

Maximum bore: 75.5 mm (2.972 in.)

If the bushing bore is greater than maximum, replace the gear case assembly.

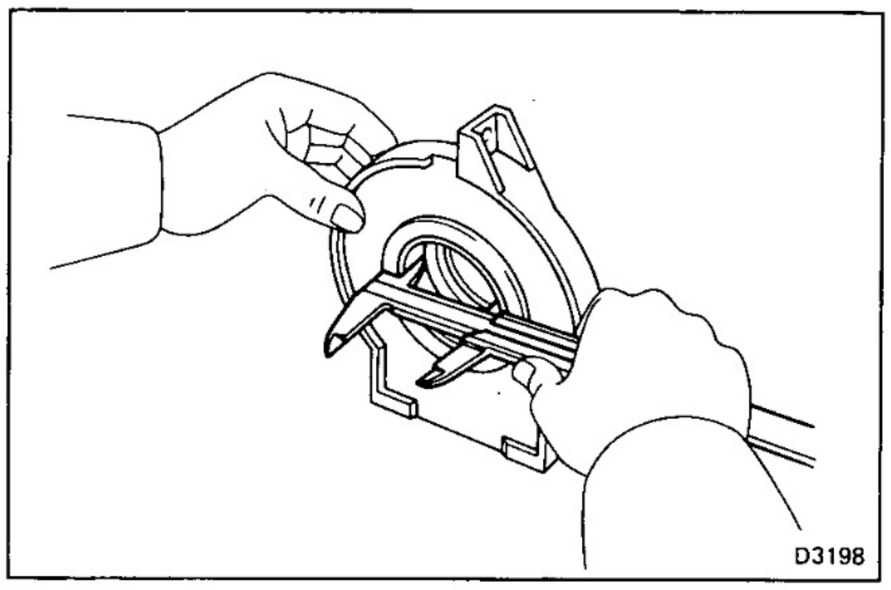

3. INSPECT DRUM HOUSING BUSHING

Using calipers, measure the bushing bore.

Maximum bore: 86.0 mm (3.386 in.)

If the bushing bore is greater than maximum, replace the drum housing assembly.

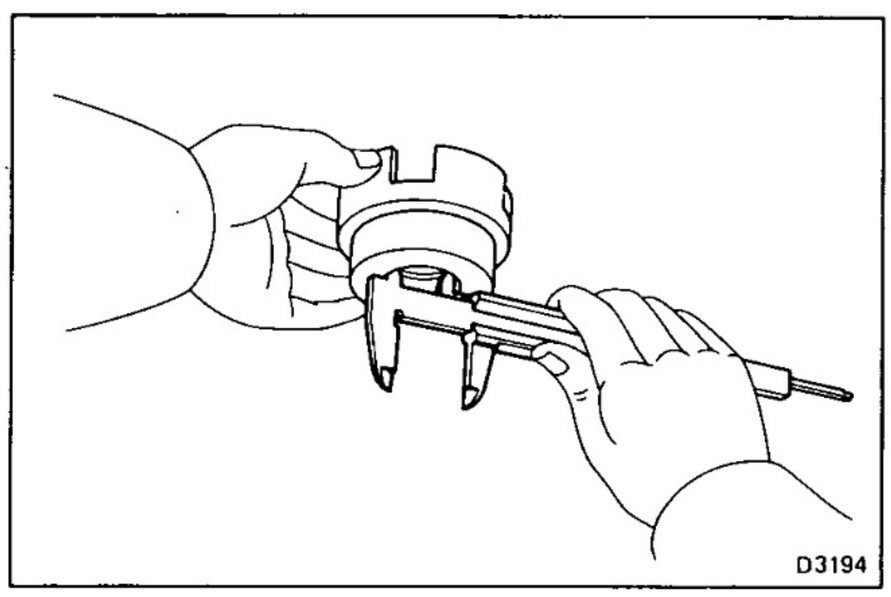

4. INSPECT CLUTCH OUTER RACE BUSHING

Using calipers, measure the bushing bore.

Maximum bore: 37.7 mm (1.484 in.)

If the bushing bore is greater than maximum, replace the clutch outer race assembly.

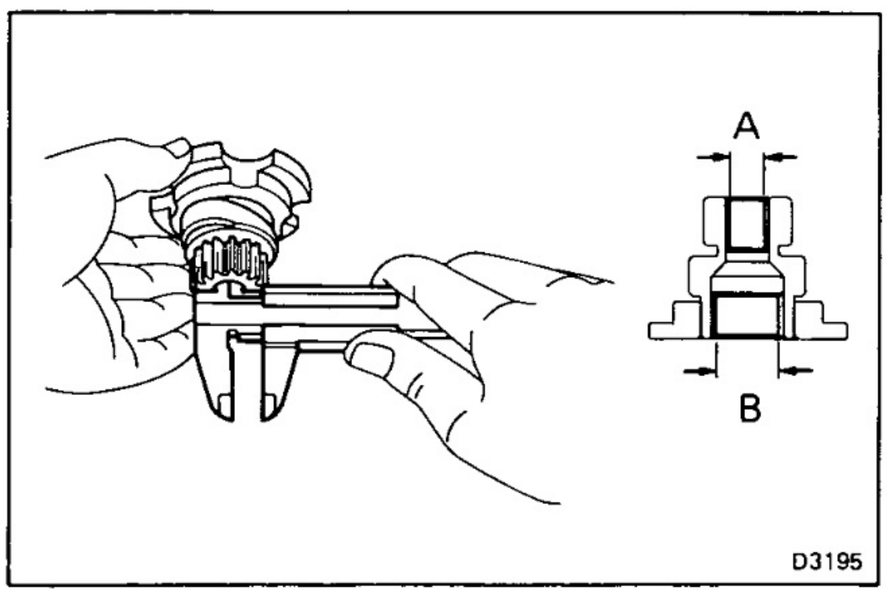

5. INSPECT BRAKE SHAFT DRIVE GEAR BUSHING

Using calipers, measure the bushing bore.

Maximum bore:

A 12.8 mm (0.504 in.)
B 22.3 mm (0.878 in.)

If the bushing bore is greater than maximum, replace the brake shaft drive gear assembly.

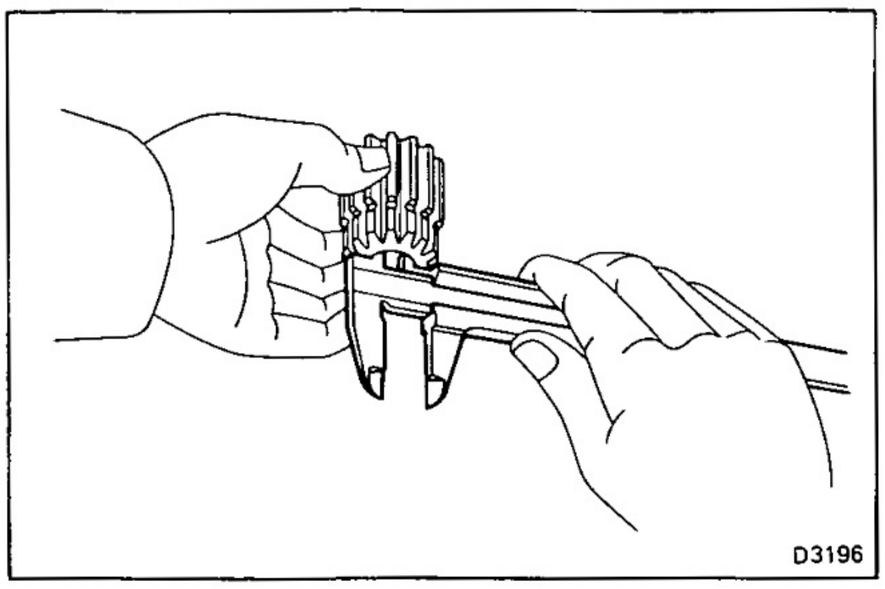

6. **INSPECT COUNTER SHAFT GEAR BUSHING**

Using calipers, measure the bushing bore.

Maximum bore: 18.3 mm (0.720 in.)

If the bushing bore is greater than maximum, replace the counter shaft gear assembly.

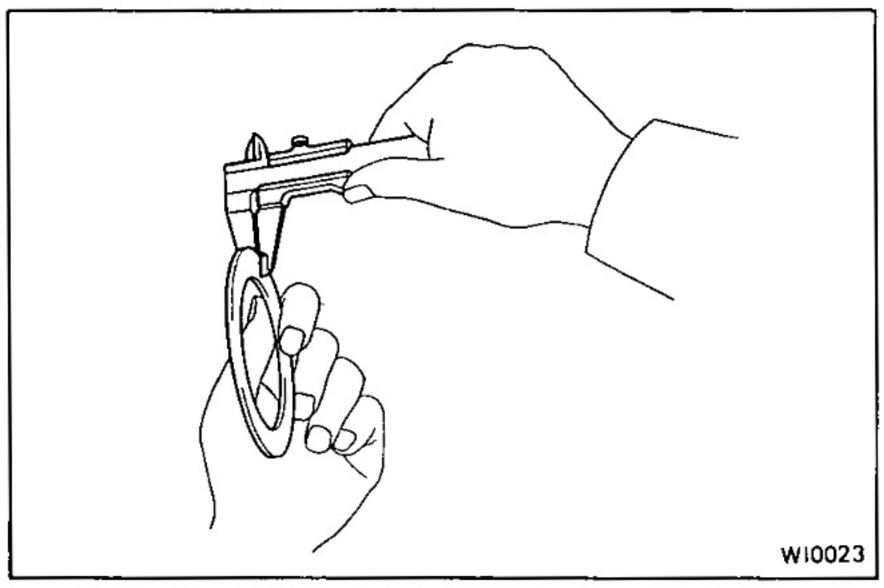

7. **INSPECT CLUTCH OUTER DISC, INNER DISC AND SPACER**

Using calipers, measure the disc and spacer thickness.

Minimum thickness:

Outer disc	**1.0 mm (0.039 in.)**
Inner disc	**1.9 mm (0.075 in.)**
Spacer	**2.0 mm (0.079 in.)**

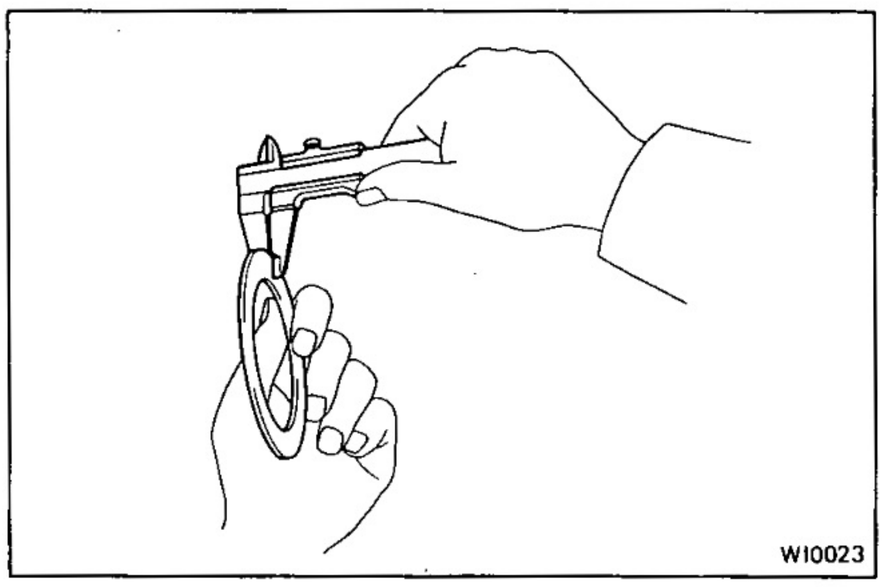

8. **INSPECT NO. 1 AND NO. 2 DRUM SPACERS**

Using calipers, measure the spacer thickness.

Minimum thickness: 1.2 mm (0.047 in.)

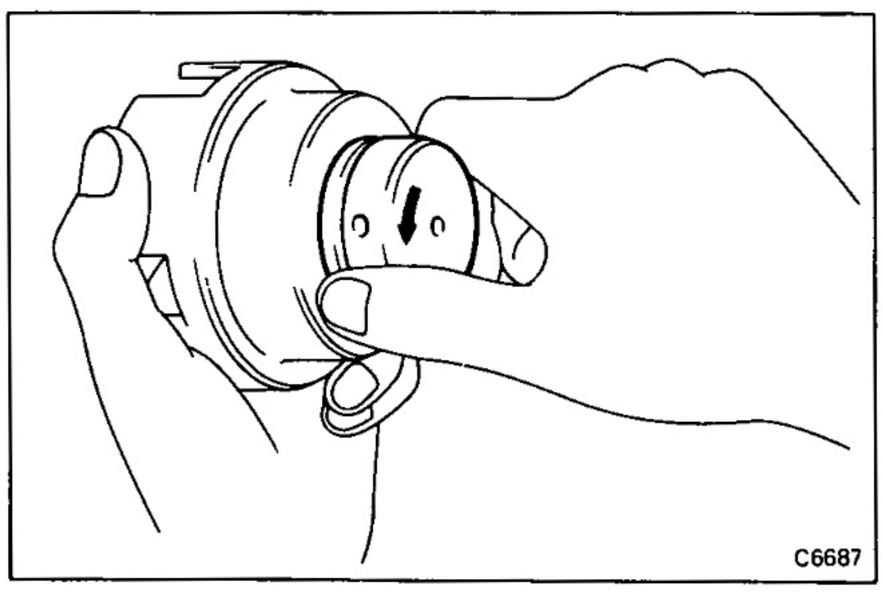

9. **INSPECT ONE-WAY CLUTCH OPERATION**

(a) Install the brake shaft into the one-way clutch.

(b) Hold the clutch outer race and turn the brake shaft. The brake shaft should turn freely counterclockwise and should lock clockwise.

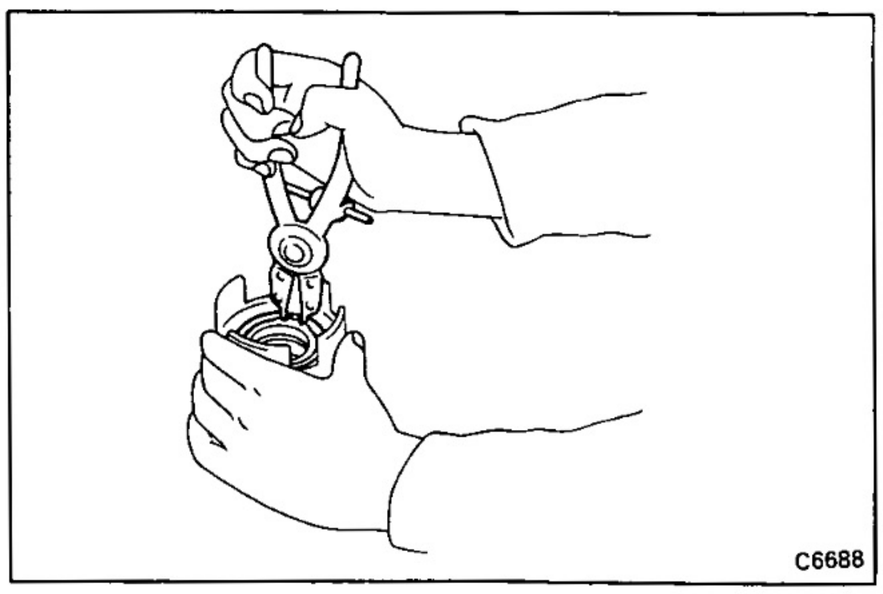

10. **IF NECESSARY, REPLACE ONE-WAY CLUTCH**

(a) Using snap ring pliers, remove the snap ring and then remove the one-way clutch.

(b) Install the new one-way clutch.

NOTE: Install in proper direction only.

(c) Using snap ring pliers, install the snap ring.

(d) Inspect the one-way clutch operation. (See step 9 on this page)

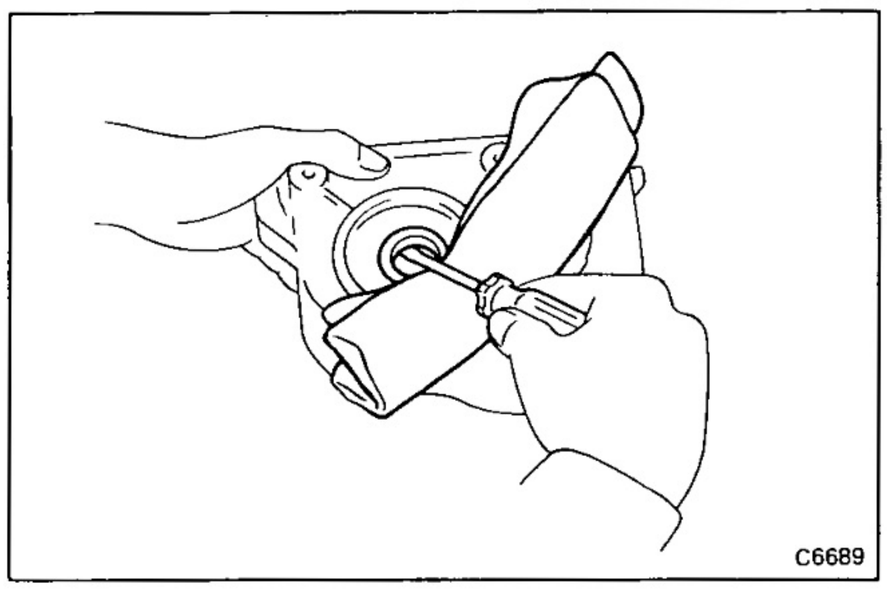

11. INSPECT GEAR CASE COVER OIL SEAL

Inspect for wear or damage.

12. IF NECESSARY, REPLACE OIL SEAL

(a) Using a screwdriver, pry out the oil seal.

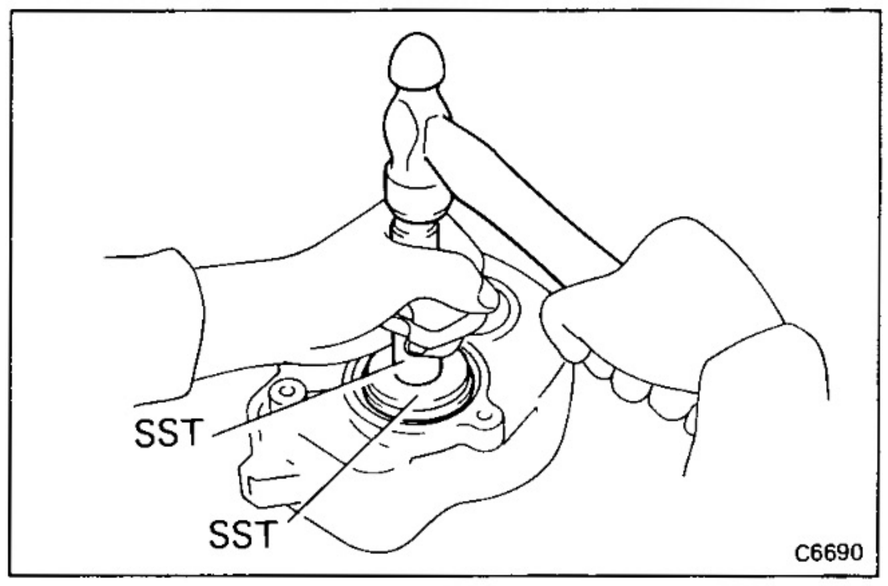

(b) Using SST, drive in the new oil seal.

SST 09608-35013

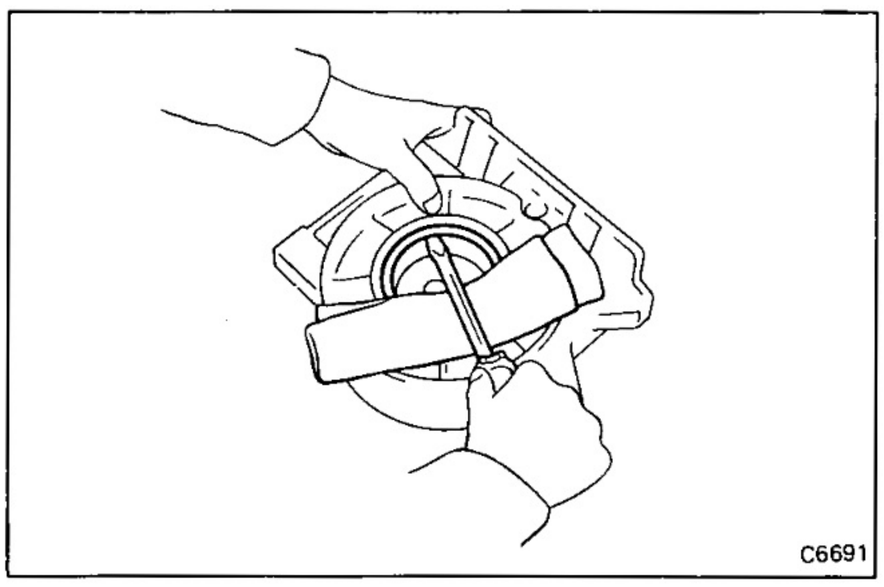

13. INSPECT GEAR CASE OIL SEAL

Inspect for wear or damage.

14. IF NECESSARY, REPLACE OIL SEAL

(a) Using a screwdriver, pry out the oil seal.

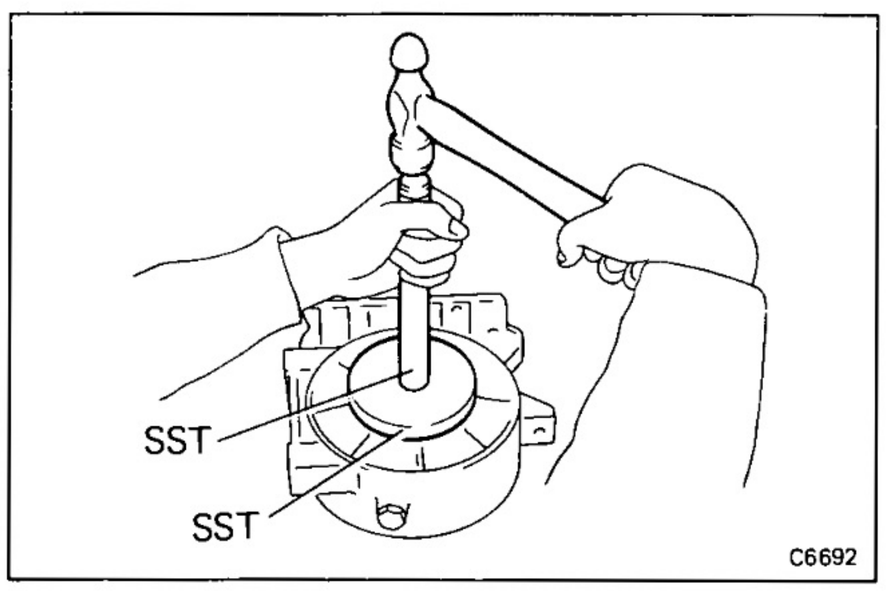

(b) Using SST, drive in the new oil seal.

SST 09608-35013

ASSEMBLY OF WINCH

(See pages WI-47 and 48)

1. APPLY MP GREASE OR AUTOMATIC TRANSMISSION FLUID(ATF) TO PARTS SHOWN BELOW

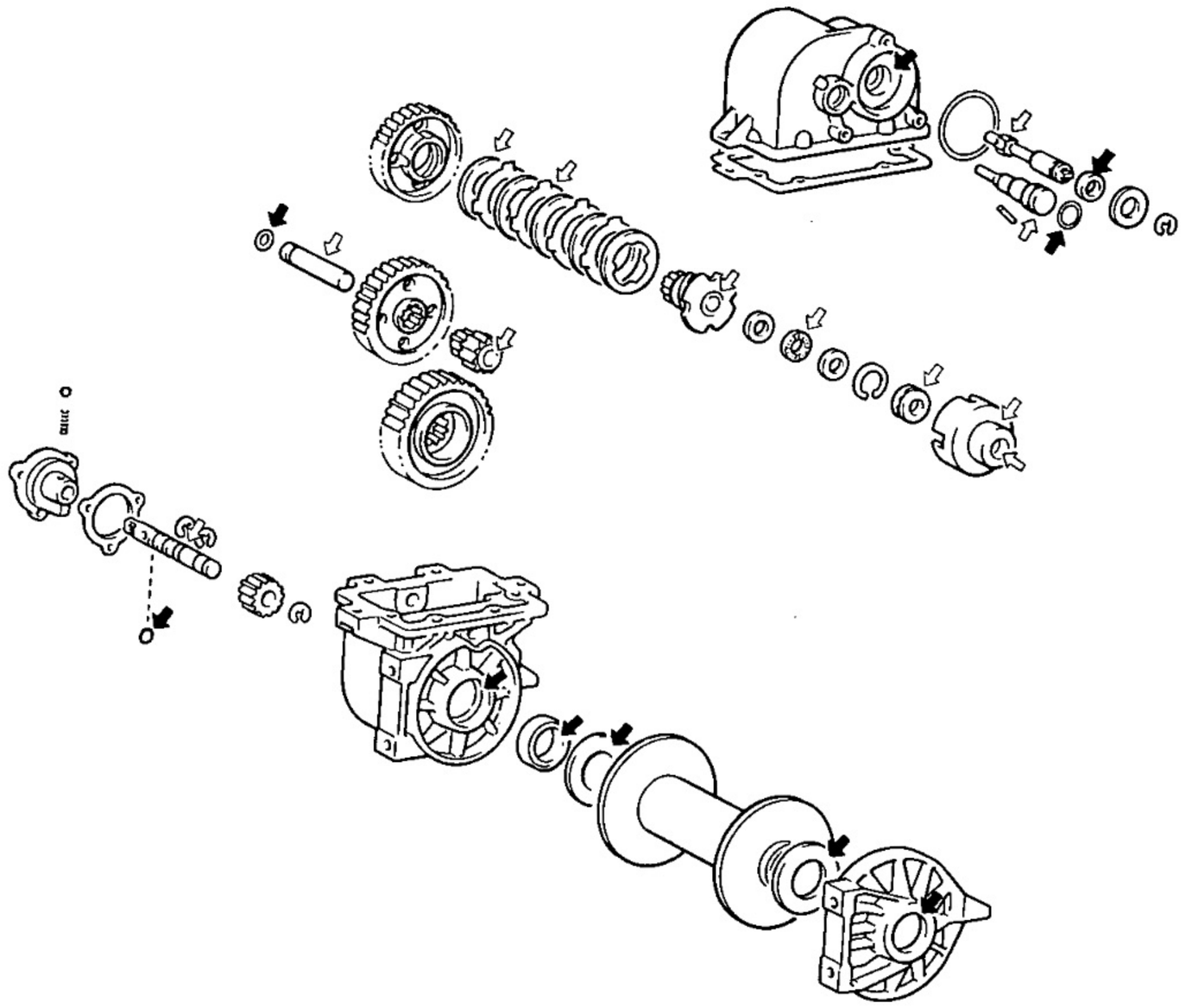

MP Grease
Automatic Transmission Fluid

C7762

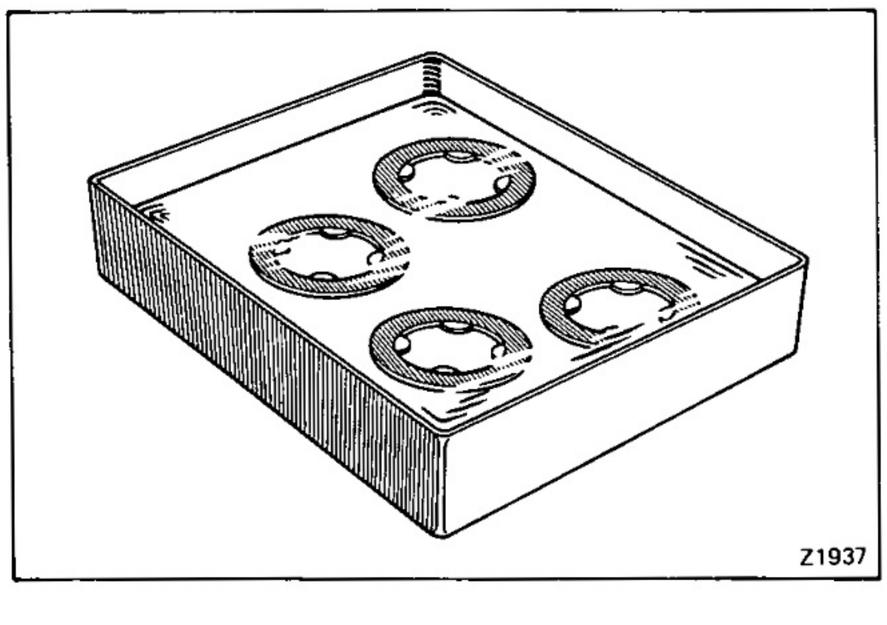

Z1937

NOTE: Before assembling, soak new inner discs in automatic transmission fluid for two hours.

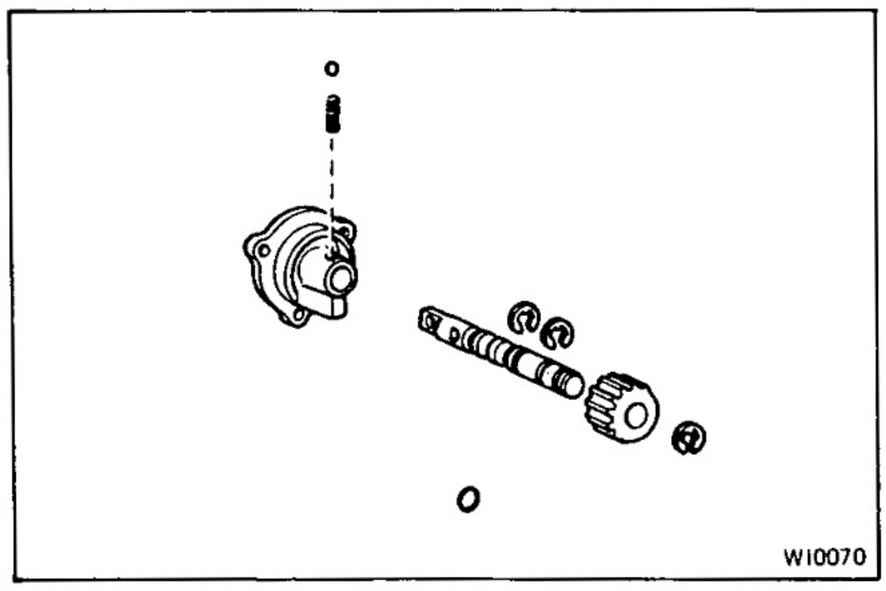

W10070

2. INSTALL CLUTCH HUB, THREE E-RINGS AND O-RING TO SHIFT SHAFT

(a) Install a new O-ring to the shift shaft.

(b) Install the two E-rings to the shift shaft, and then install the clutch hub and E-ring.

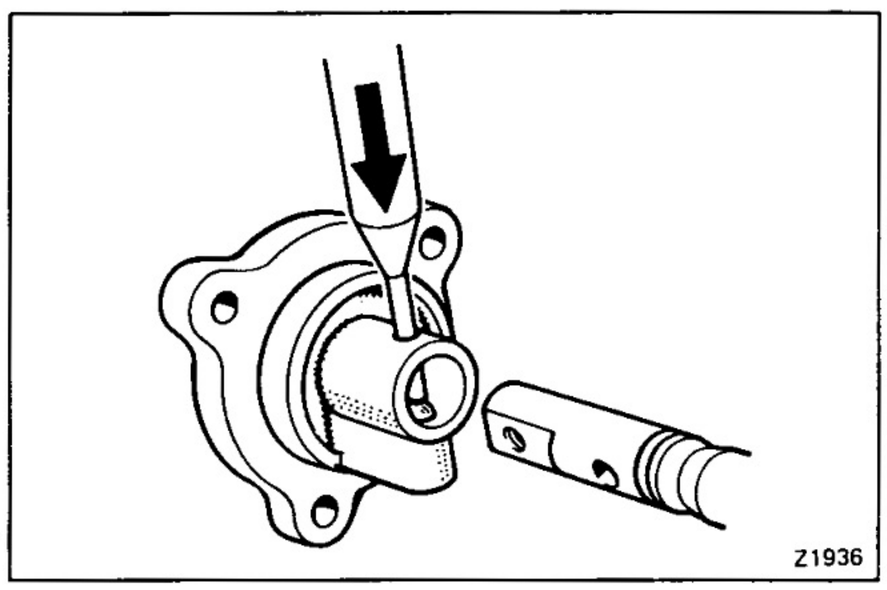

3. **INSTALL SHIFT SHAFT WITH CLUTCH HUB TO RETAINER**

(a) Install the spring and locking ball to the retainer.

(b) Using a pin punch, depress the locking ball, install the shift shaft into the retainer.

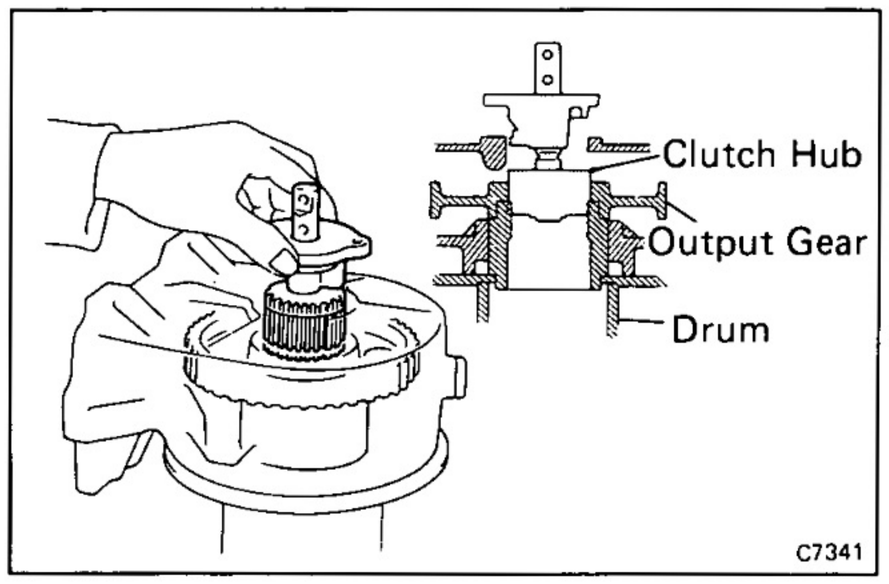

4. **INSTALL OUTPUT GEAR INTO GEAR CASE**

5. **INSTALL NEW GASKET AND CLUTCH HUB WITH SHIFT SHAFT AND RETAINER TO GEAR CASE**

(a) Place a new gasket on the gear case.

(b) Install the clutch hub with shift shaft and retainer into the gear case.

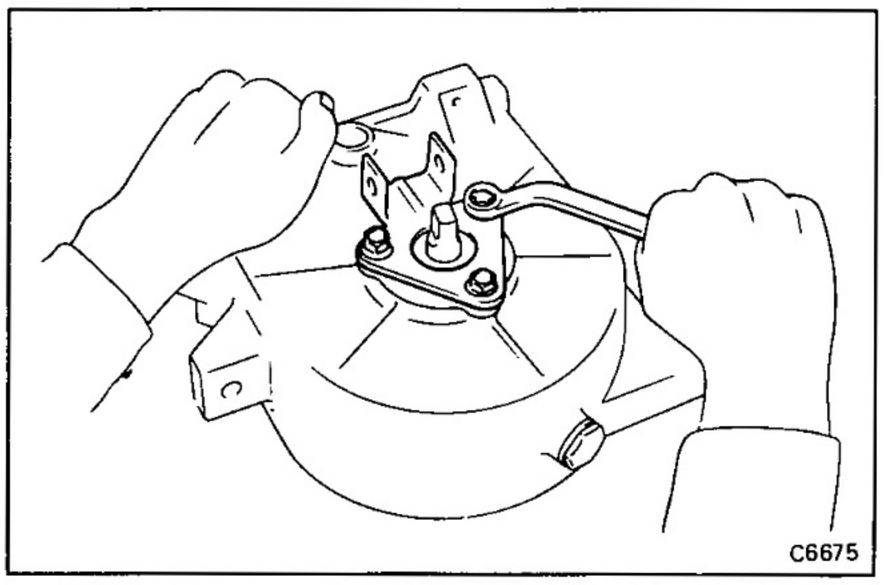

6. **INSTALL SHIFT LEVER SUPPORT**

Torque: 195 kg-cm (14 ft-lb, 19 N·m)

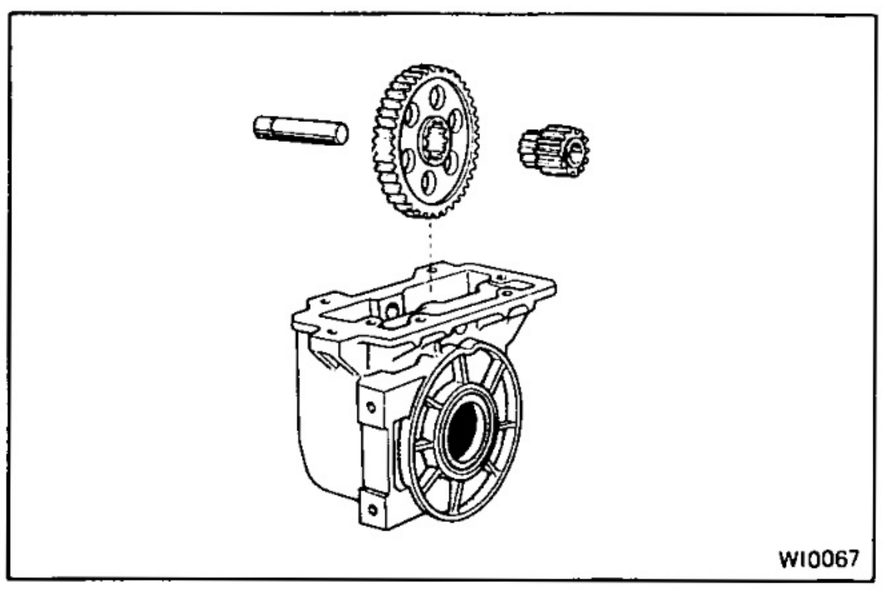

7. **INSTALL COUNTER SHAFT GEAR, NO. 1 COUNTER GEAR AND COUNTER SHAFT**

(a) Install a new O-ring to the counter shaft.

(b) Install the counter shaft gear into the No. 1 counter gear.

(c) Put the No. 1 counter gear with counter shaft gear into the gear case.

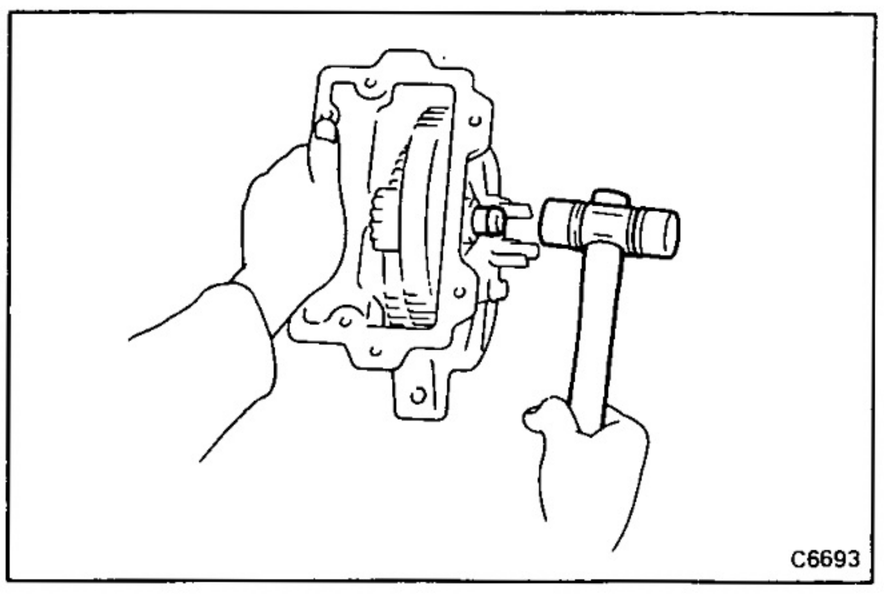

(d) Using a plastic hammer, drive the counter shaft into the gear case through the counter shaft gear.

NOTE: Install in proper direction only.

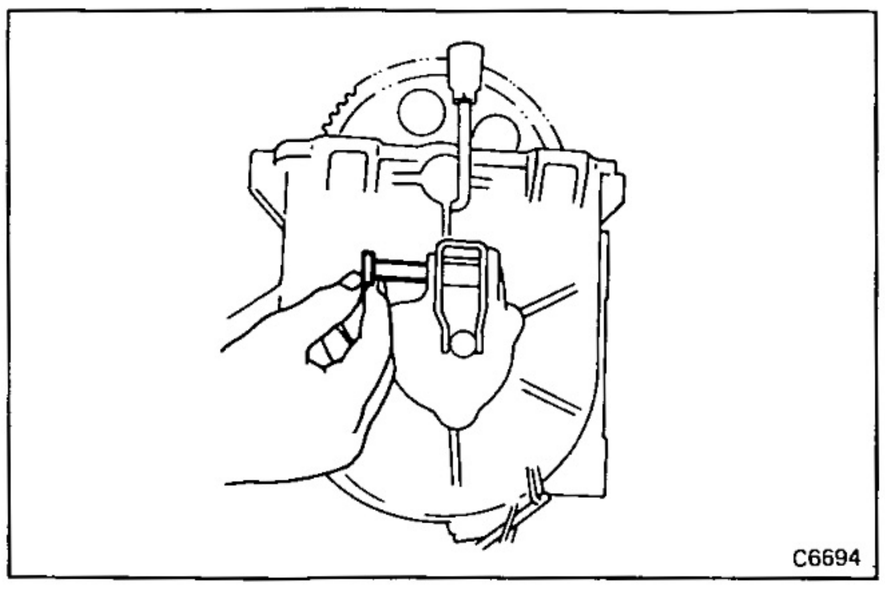

8. INSTALL SHIFT LEVER

(a) Install the shift shaft pin to the shift shaft.

(b) Install the two bushings into the shift lever holes.

(c) Install the shift lever into the support with shift lever shaft.

(d) Install a new cotter pin.

(e) Install the lock pin.

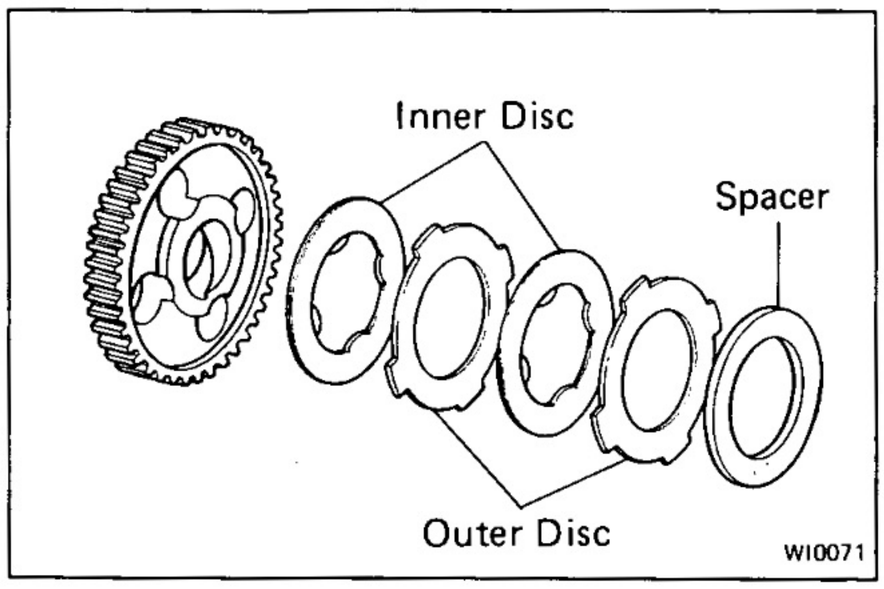

9. ASSEMBLE CLUTCH SUBASSEMBLY

(a) Install the two clutch outer discs, two inner discs and spacer on the brake shaft drive gear.

Install in order: drive gear, inner disc, outer disc, inner disc, outer disc and spacer.

NOTE: Align the notches and tabs.

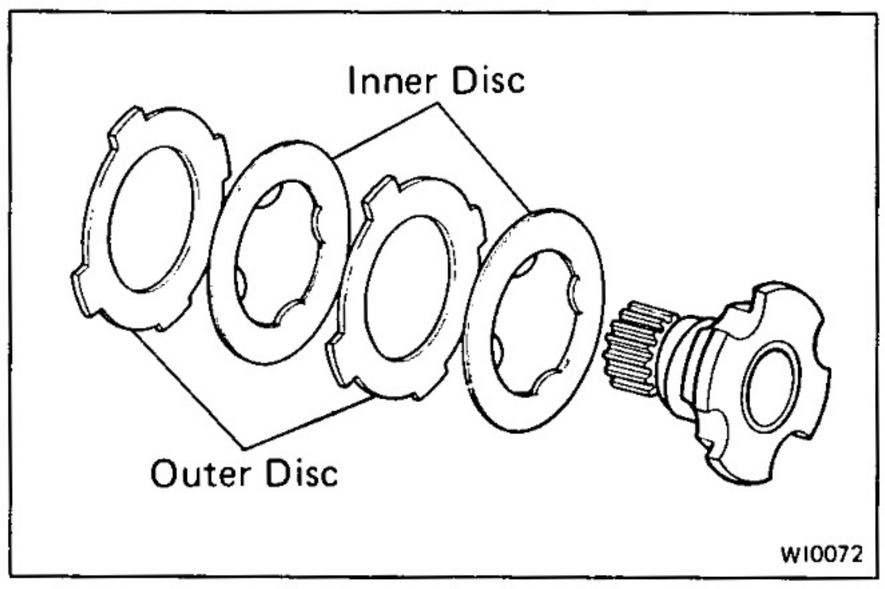

(b) Install the two clutch outer discs, and two inner discs on the brake shaft driven gear.

Install in order: driven gear, inner disc, outer disc, inner disc and outer disc.

NOTE: Align the notches and tabs.

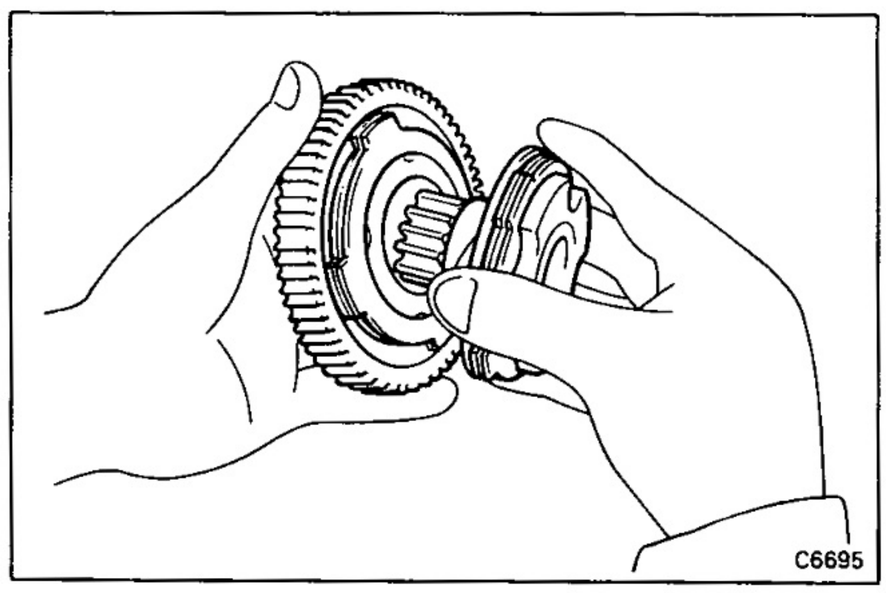

(c) Hold the drive gear with discs, turn the driven gear with discs counterclockwise and assemble them.

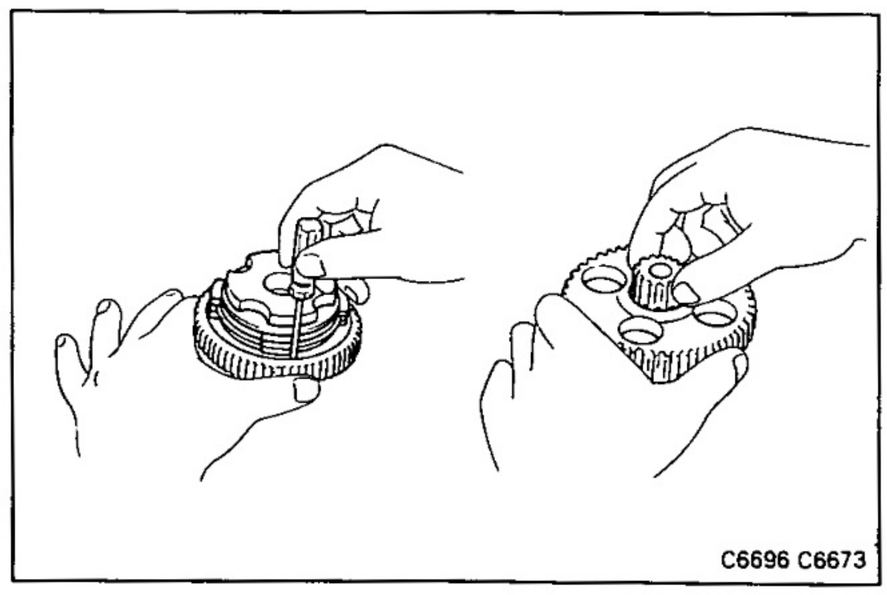

(d) Align the outer disc flukes.

(e) Lock the clutch by turning the driven gear clockwise.

(f) Install the thrust bearing, two bearing races and clutch outer race.

NOTE: Confirm that the thrust bearing and race are aligned in the center.

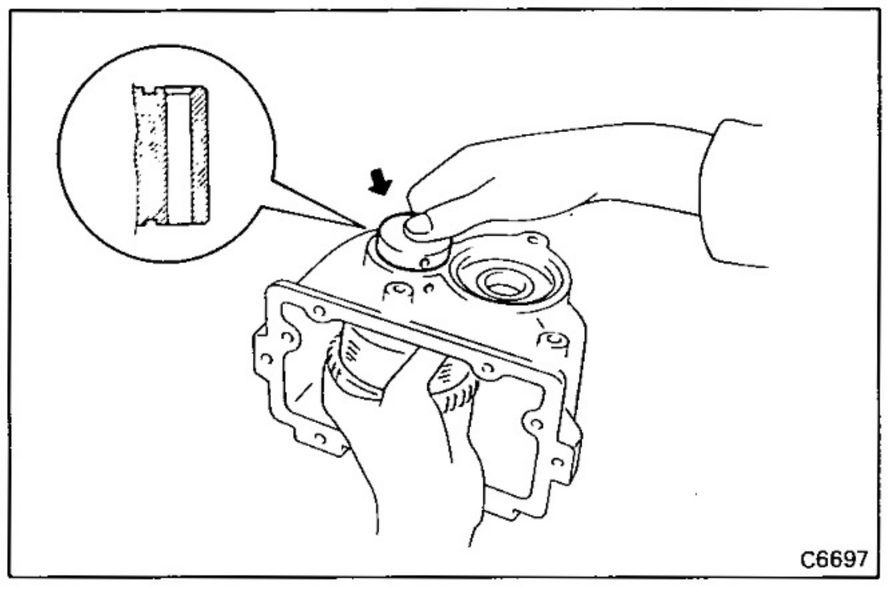

10. INSTALL CLUTCH SUBASSEMBLY AND BRAKE SHAFT

(a) Put the clutch subassembly into the gear case cover.

(b) Install a new O-ring to the brake shaft.

(c) Install the brake shaft into the gear case cover through the clutch subassembly.

NOTE: Align the pin hole of the brake shaft and gear case cover as shown.

(d) Using a pin punch and hammer, tap in a new slotted spring pin.

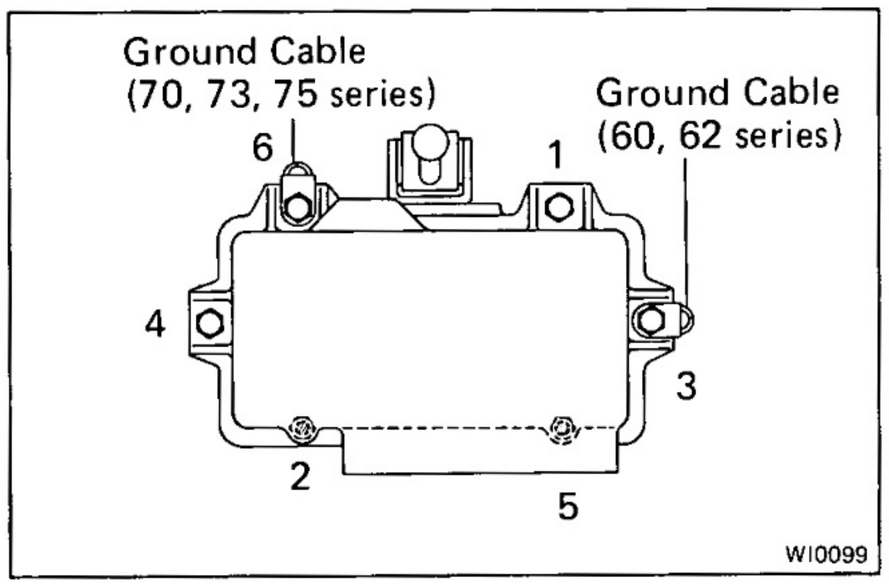

11. INSTALL NEW GASKET AND GEAR CASE COVER

(a) Place a new gasket and gear case cover on the gear case.

(b) Install the set bolts together with the ground cable as shown. Torque the bolts.

Torque: 195 kg-cm (14 ft-lb, 19 N·m)

NOTE: Gradually tighten each bolt in several passes in the sequence shown.

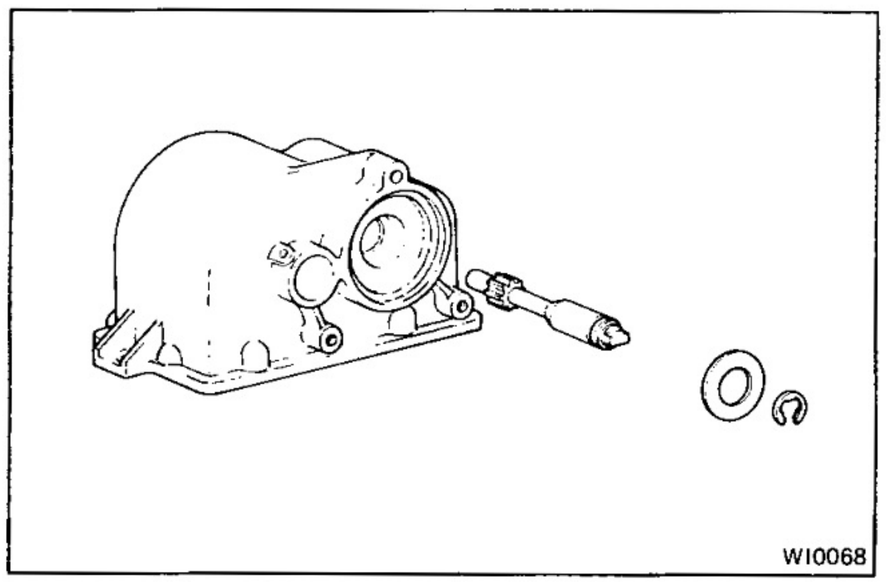

12. INSTALL WINCH INPUT SHAFT

(a) Install the spacer to the input shaft with the E-ring.

(b) Install the input shaft into the gear case cover.

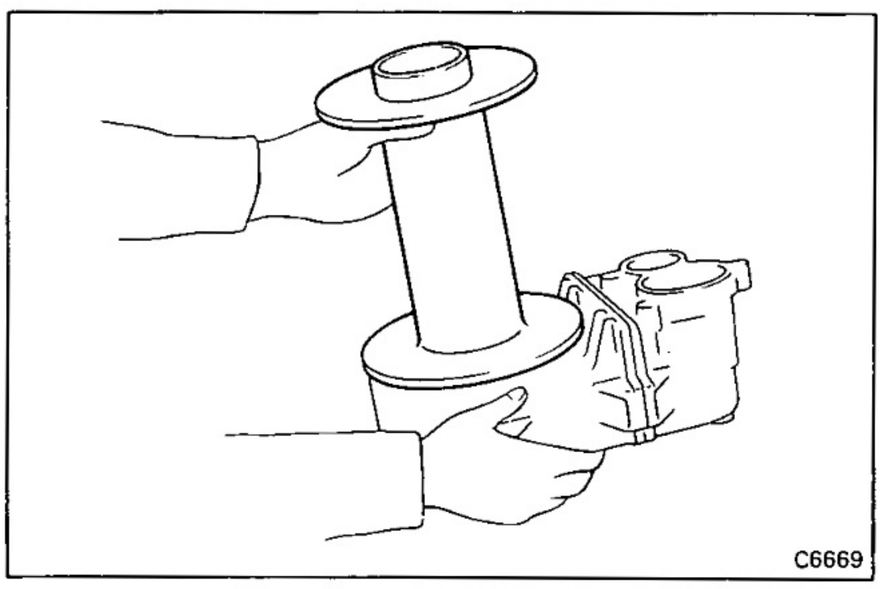

13. INSTALL NO. 2 DRUM SPACER AND DRUM

Install the spacer and drum on the gear case.

14. INSTALL NO. 1 DRUM SPACER AND DRUM HOUSING

Install the spacer and drum housing on the drum.

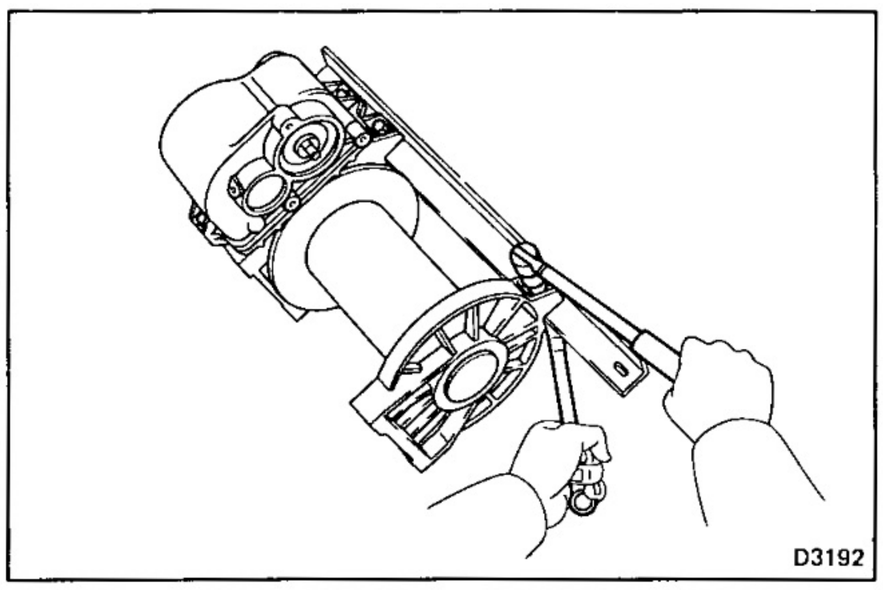

15. INSTALL REAR BASE MEMBER

(70, 73, 75 Series)
Install the rear base member to the winch with two bolts.
Torque the bolts.

Torque: 380 kg-cm (27 ft-lb, 37 N·m)

(60, 62 Series)
Install the rear base member to the winch with two bolts.
Lightly tight the bolts.

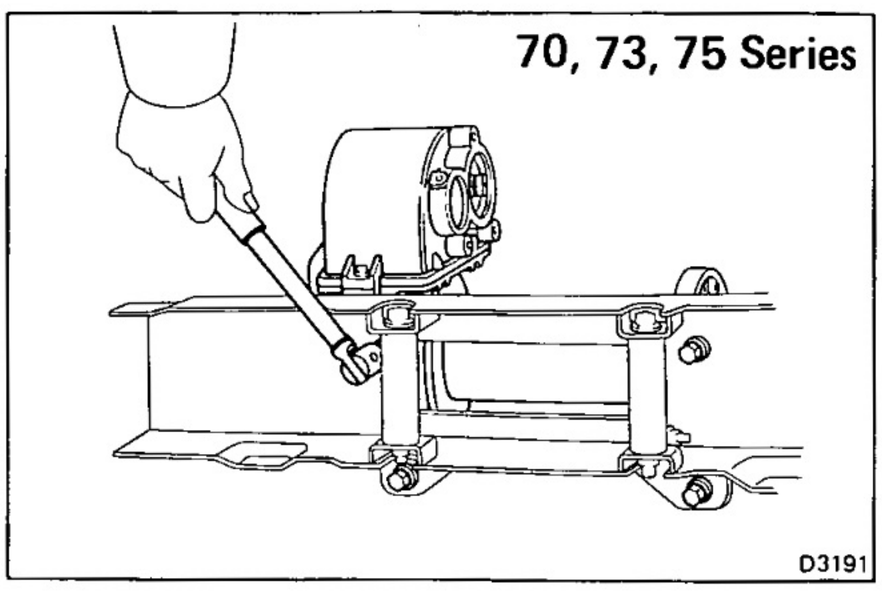

16. INSTALL WINCH ROLLER BRACKET

Install the winch roller bracket with four bolts and two nuts. Torque the bolts.

Torque: 700 kg-cm (51 ft-lb, 69 N·m)

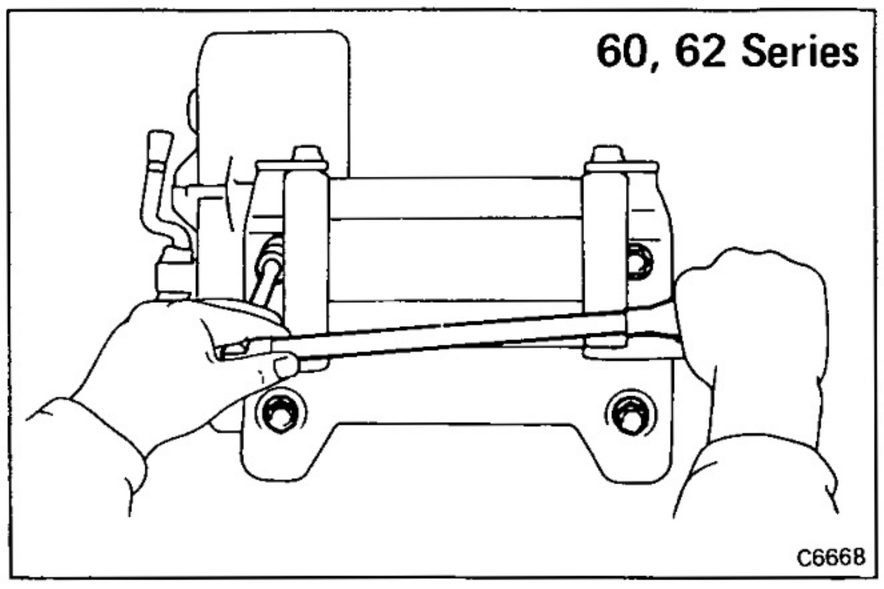

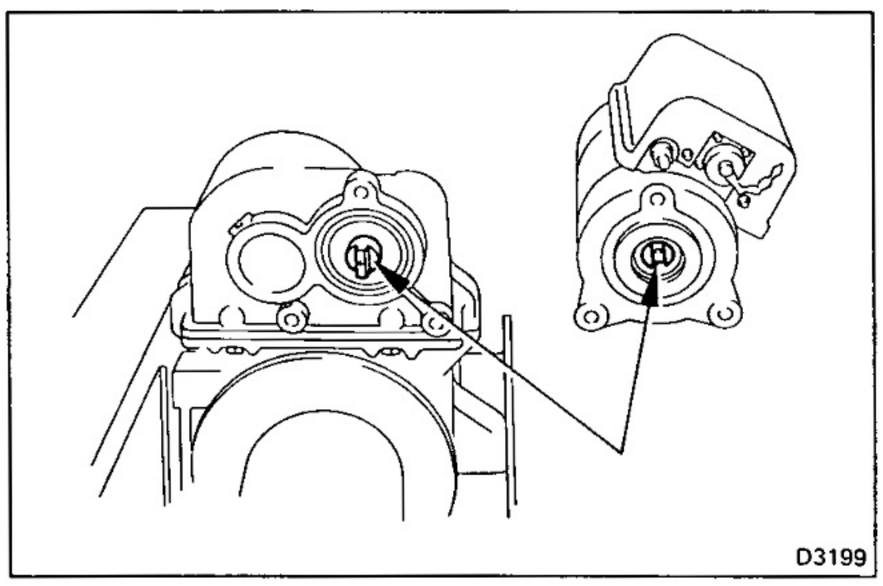

17. INSTALL WINCH MOTOR

(a) Align the grooves of the motor and input shaft, and assemble through the O-ring.

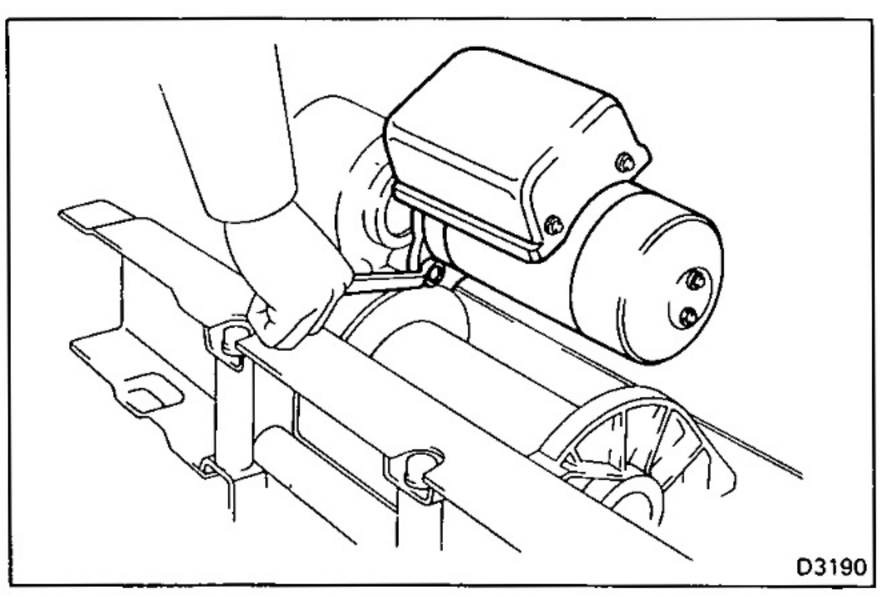

(b) Install and torque the three bolts.

Torque: 195 kg-cm (14 ft-lb, 19 N·m)

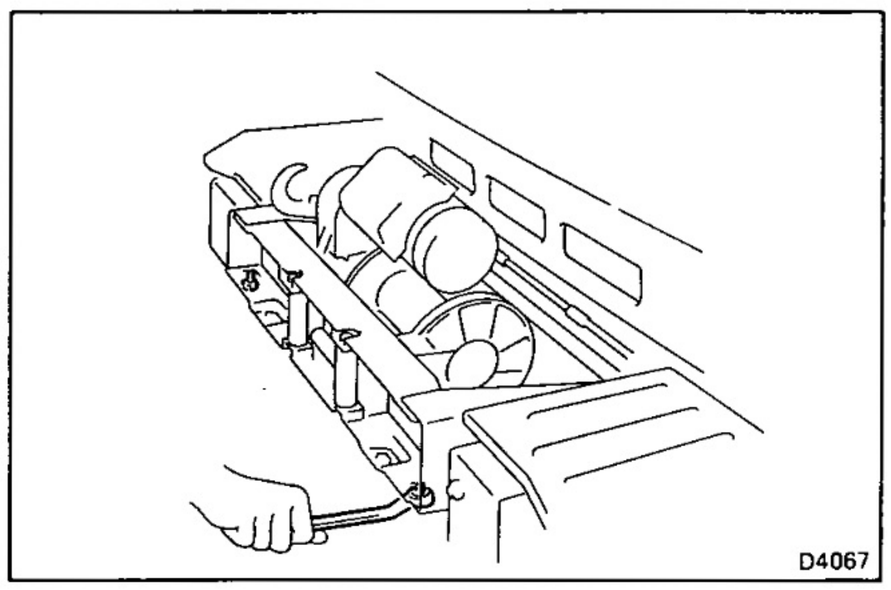

INSTALLATION OF WINCH

(See page WI-44)

1.-1 (70, 73, 75 Series)
INSTALL WINCH ASSEMBLY

(a) Place the winch assembly on the vehicle.

(b) Install the two winch roller bracket bolts. Torque the bolts.

Torque: 250 kg-cm (18 ft-lb, 25 N·m)

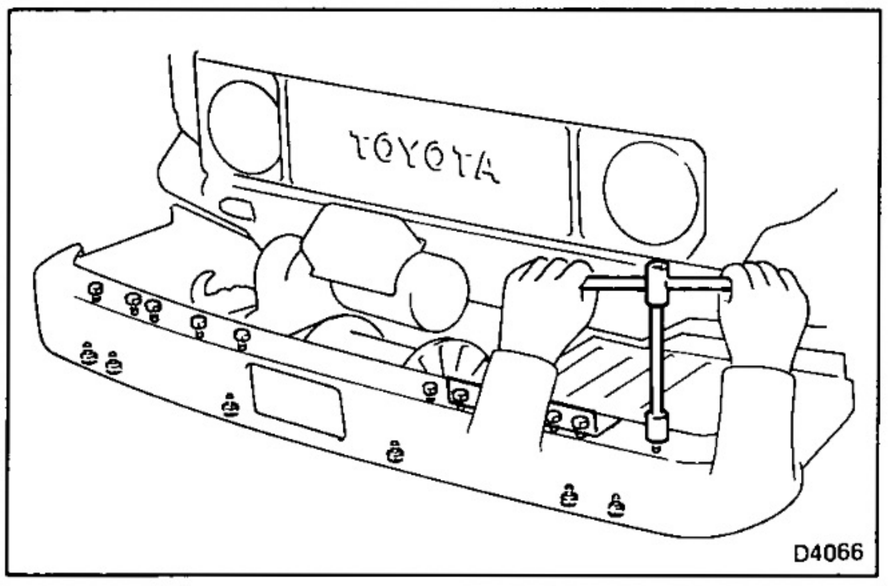

(c) Install the front bumper and license plate bracket with the 16 bolts.

Torque: See page WI-42

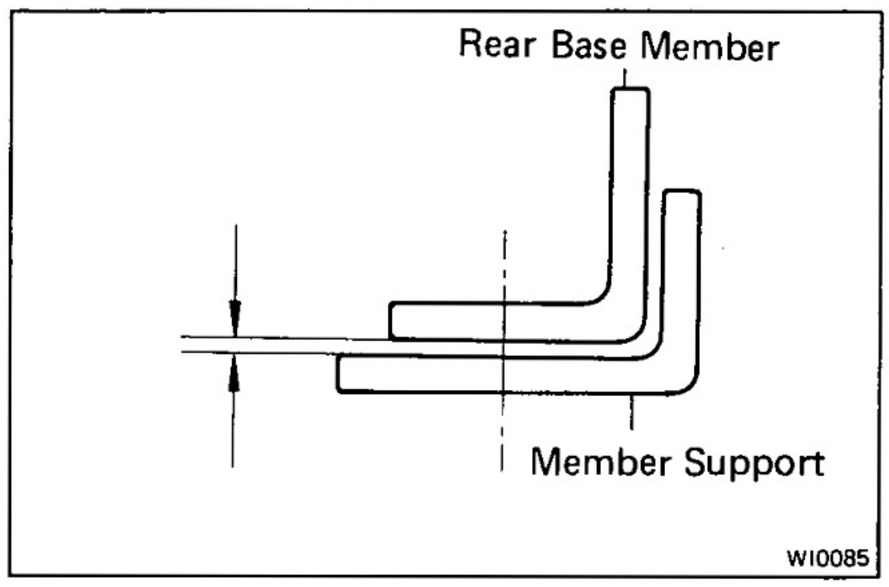

(d) Check the clearance between the rear base member and member support.

Standard clearance: Zero

If necessary, adjust the member support position.

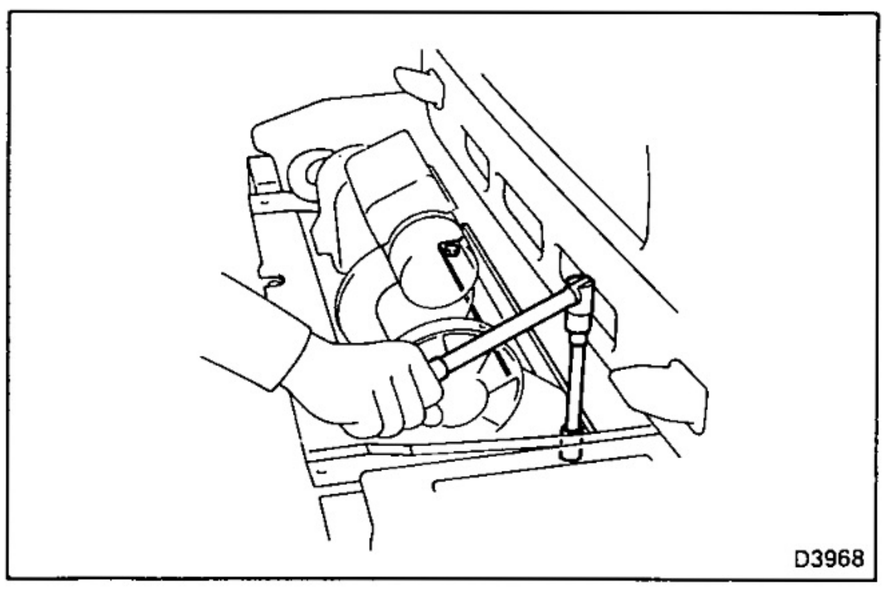

(e) Install and torque the rear base member bolts.

Torque: 250 kg-cm (18 ft-lb, 25 N·m)

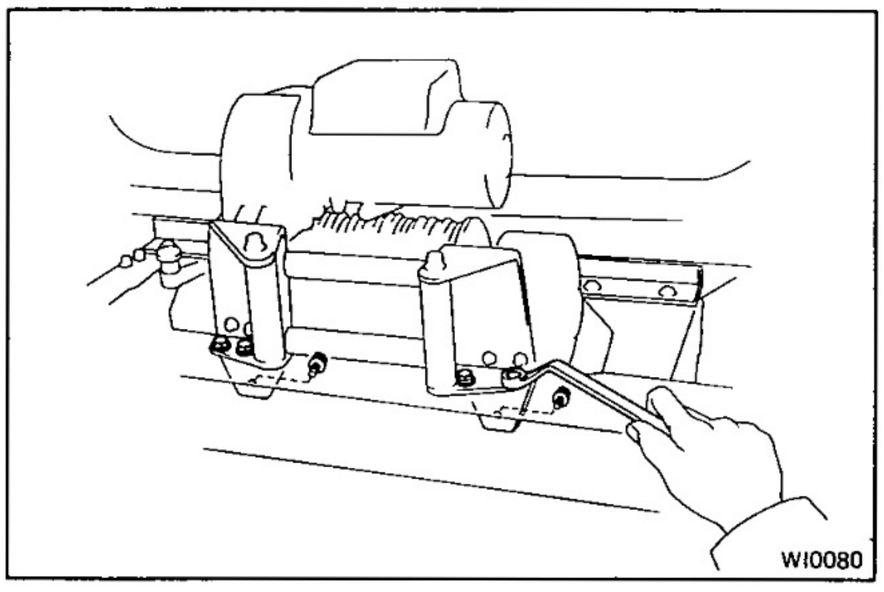

1.-2 (60, 62 Series)
INSTALL WINCH ASSEMBLY

(a) Place the winch assembly on the vehicle.

(b) Install the six winch roller bracket bolts. Torque the bolts.

Torque: 380 kg-cm (27 ft-lb, 37 N·m)

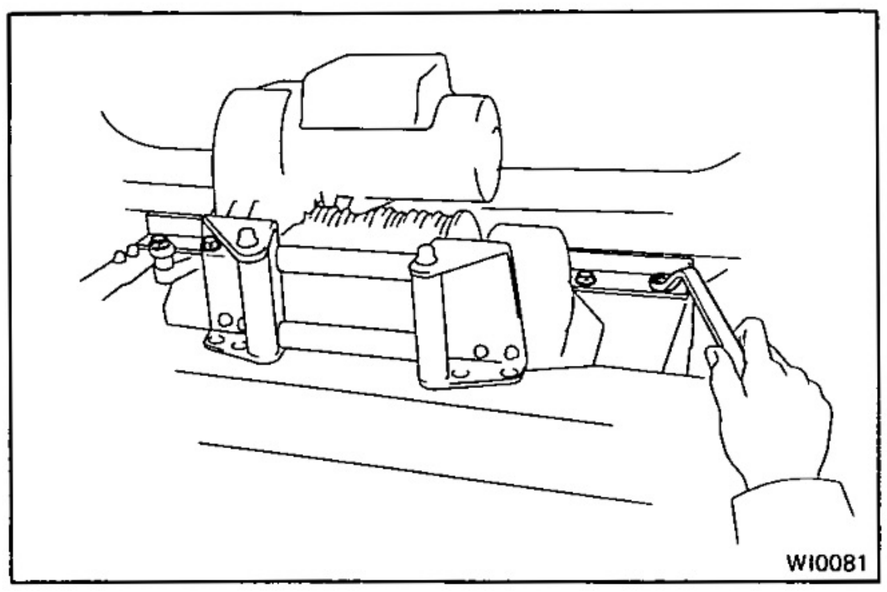

(c) Loosen the rear base member to the winch set bolts.

(d) Install and torque the rear base member to the bracket bolts. Torque the bolts.

Torque: 700 kg-cm (51 ft-lb, 69 N·m)

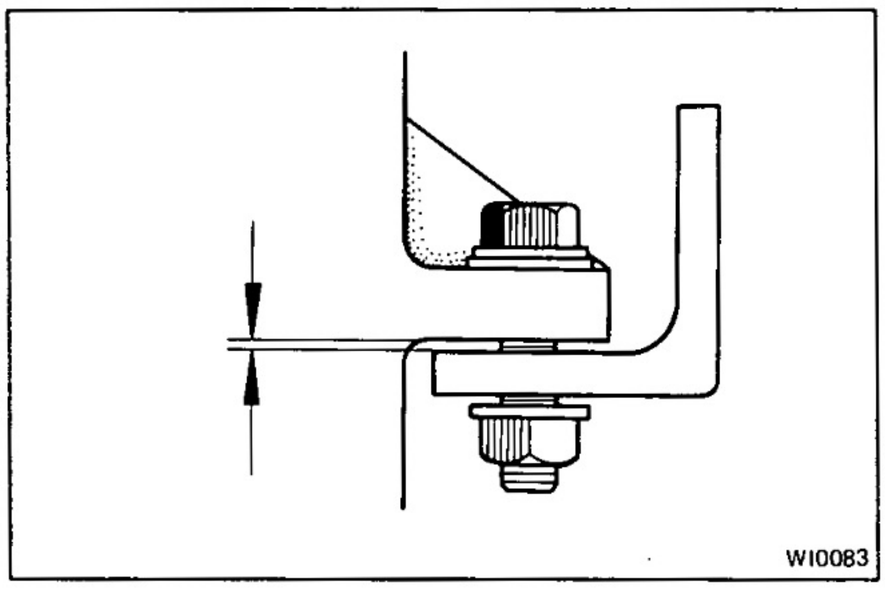

(e) Check the clearance between the rear base member and winch.

Standard clearance: Zero

If necessary, select the member spacer number.

(f) Torque the rear base member to winch bolts.

Torque: 380 kg-cm (27 ft-lb, 37 N·m)

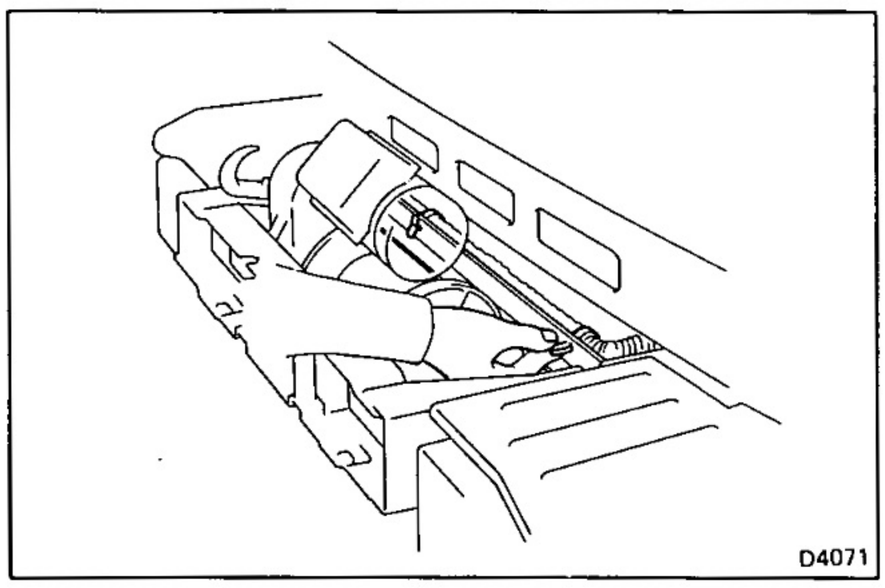

2. INSTALL TWO WIRE HARNESS CLAMPS

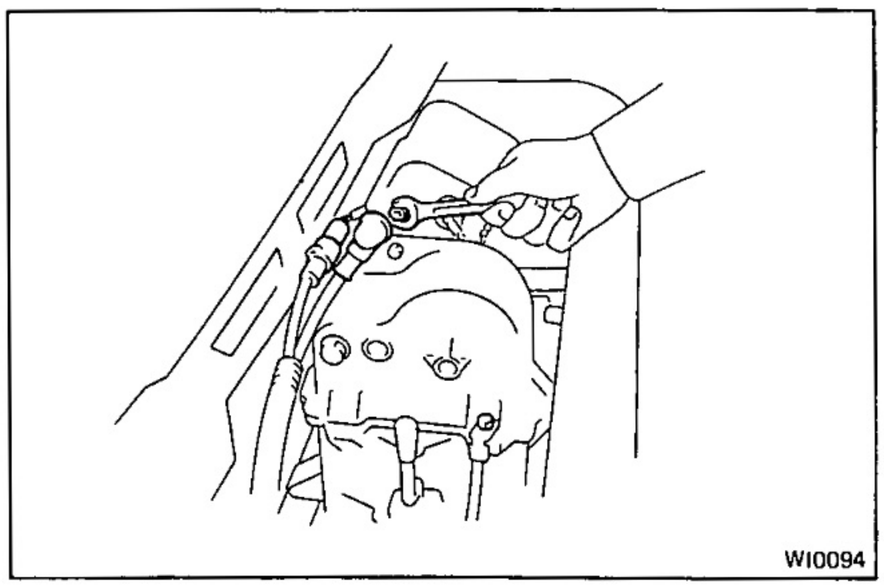

3. CONNECT WIRE HARNESS

(a) Connect terminal B.

(b) Connect ground cable at mounting bracket.

(c) Connect connector for No. 1 magnet switch.

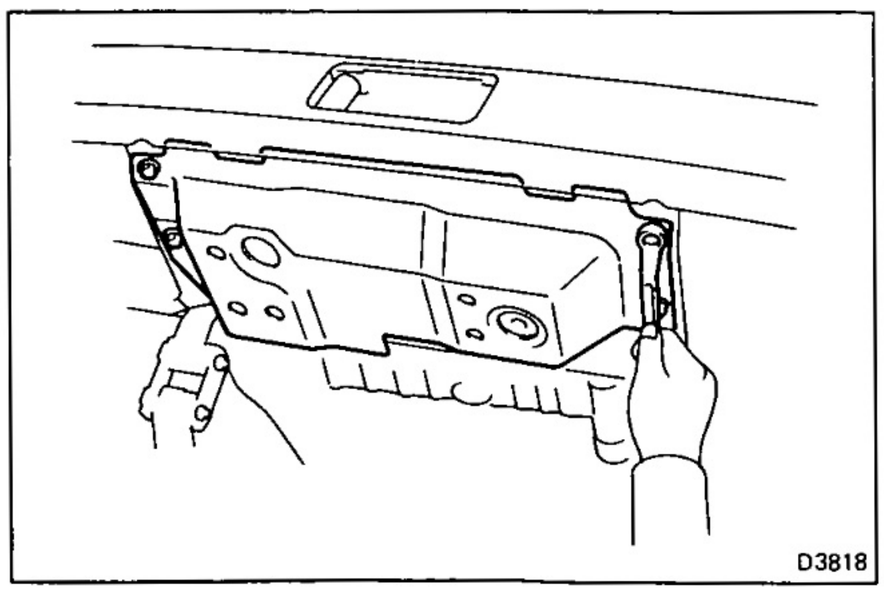

4. (70, 73, 75 Series) INSTALL WINCH UNDERCOVER

Install the winch undercover with the four bolts.

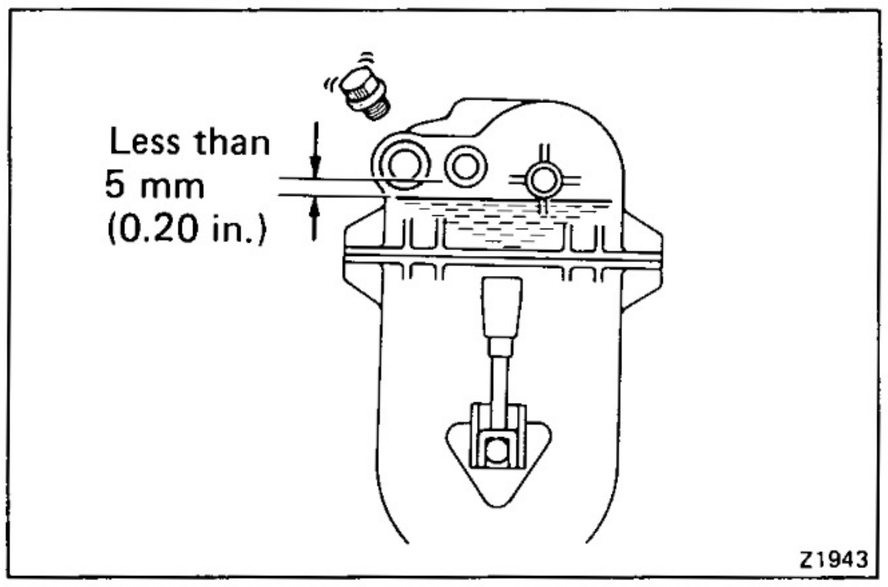

5. FILL WINCH WITH AUTOMATIC TRANSMISSION FLUID

Oil grade: ATF Type F
Capacity: 2.0 liters (2.1 US qts, 1.8 Imp. qts)

6. INSTALL CHAIN WIRE
(See page WI-41)

Winch Motor with No.2 Magnet Switch Assembly

COMPONENTS

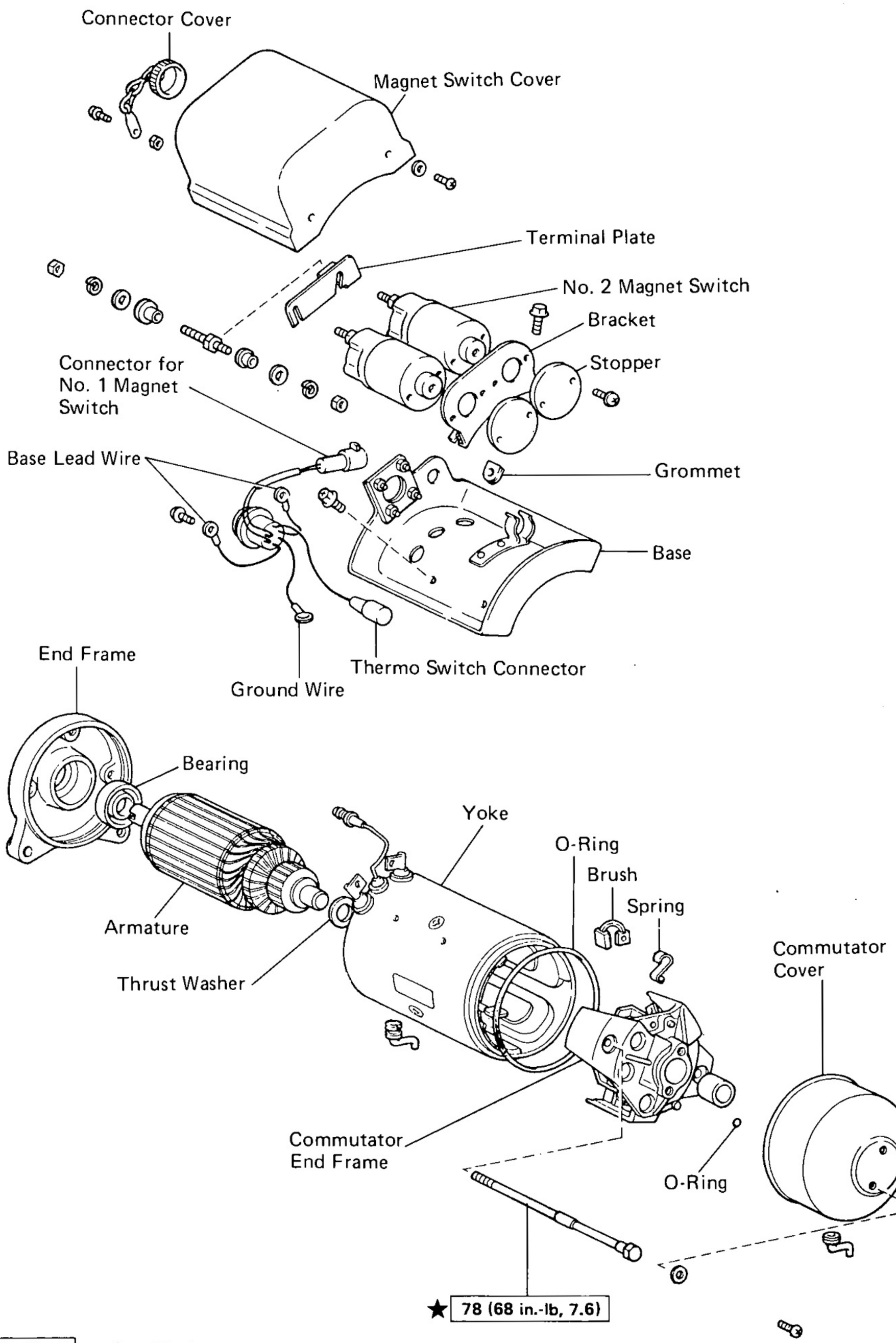

kg-cm (ft-lb, N·m) : Specified torque

★ : Precoated part

D4088

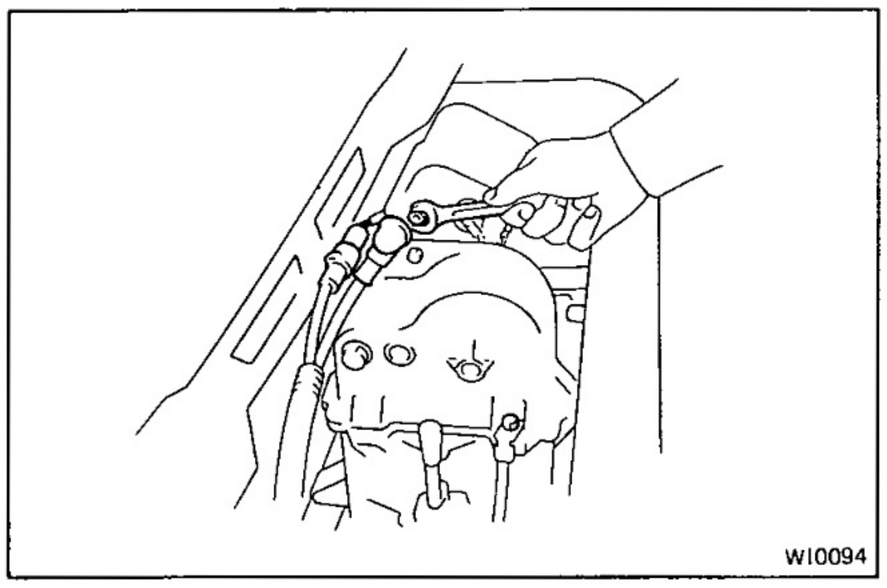

REMOVAL OF WINCH MOTOR WITH NO. 2 MAGNET SWITCH ASSEMBLY

1. REMOVE WINCH MOTOR WITH NO. 2 MAGNET SWITCH ASSEMBLY
   (a) Disconnect the battery cable from the negative terminal.
   (b) Disconnect terminal B and the connector.

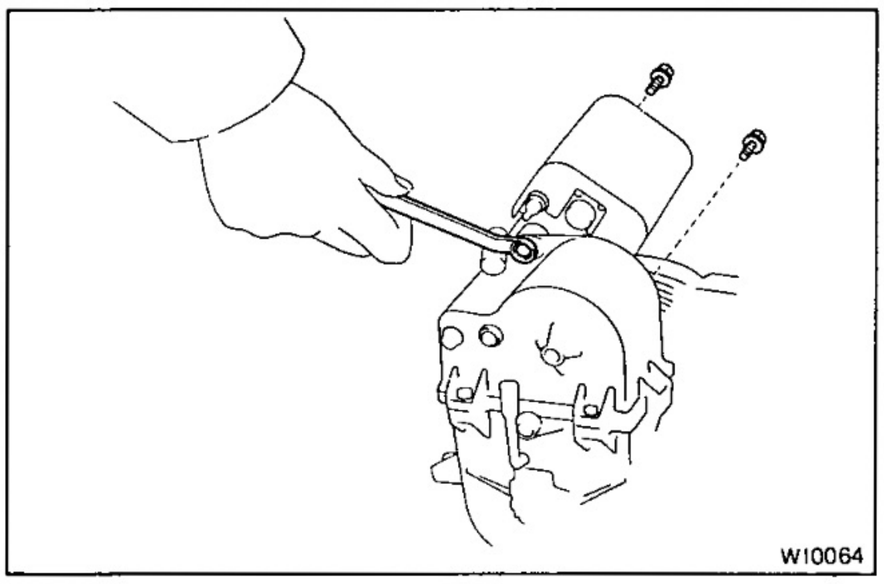

   (c) Remove the three bolts, and then remove the winch motor with No. 2 magnet switch assembly.

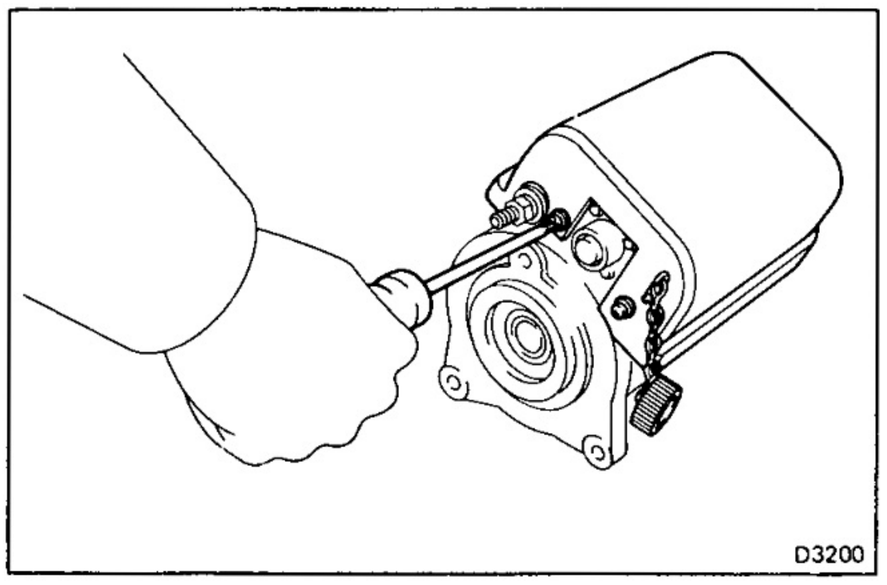

DISASSEMBLY OF NO. 2 MAGNET SWITCH ASSEMBLY

(See page WI-63)

1. REMOVE MAGNET SWITCH COVER
   (a) Remove the connector cover.
   (b) Remove the four screws and cover.

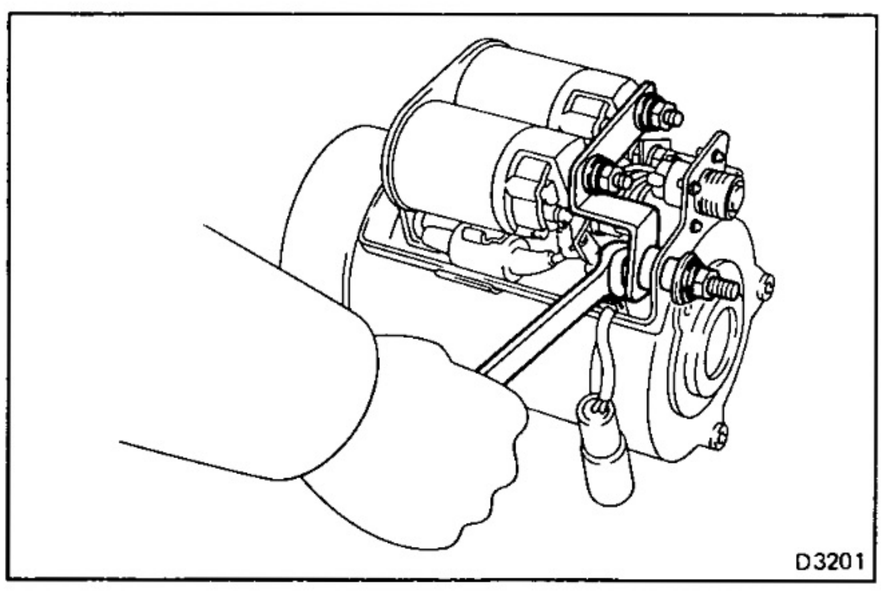

2. REMOVE TERMINAL PLATE
   Remove the three nuts and terminal plate.

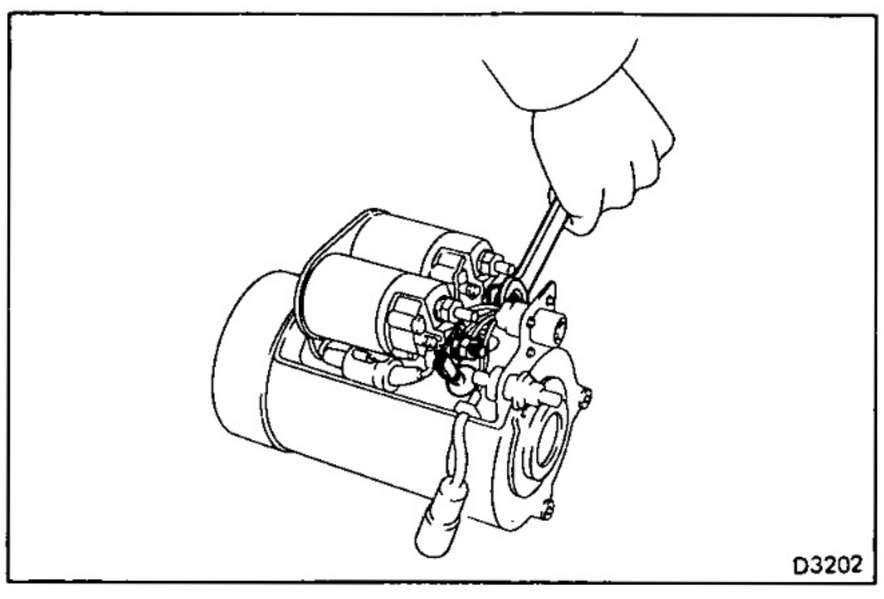

3. REMOVE NO. 2 MAGNET SWITCH
   (a) Remove the two nuts and motor lead wire.
   (b) Remove the two magnet switch bracket bolts.

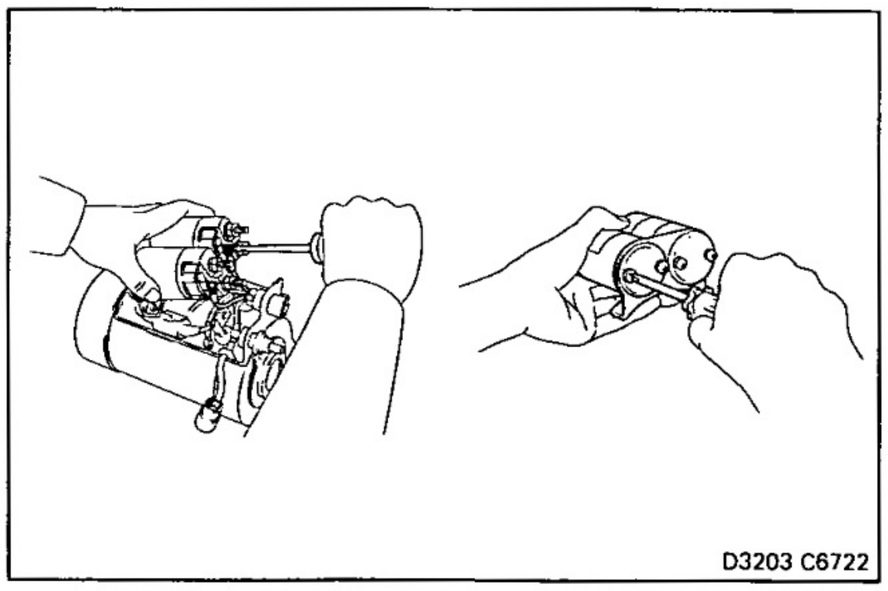
D3203 C6722

(c) Disconnect the base lead wires from the magnet switches.

(d) Remove the four screws, stoppers and bracket.

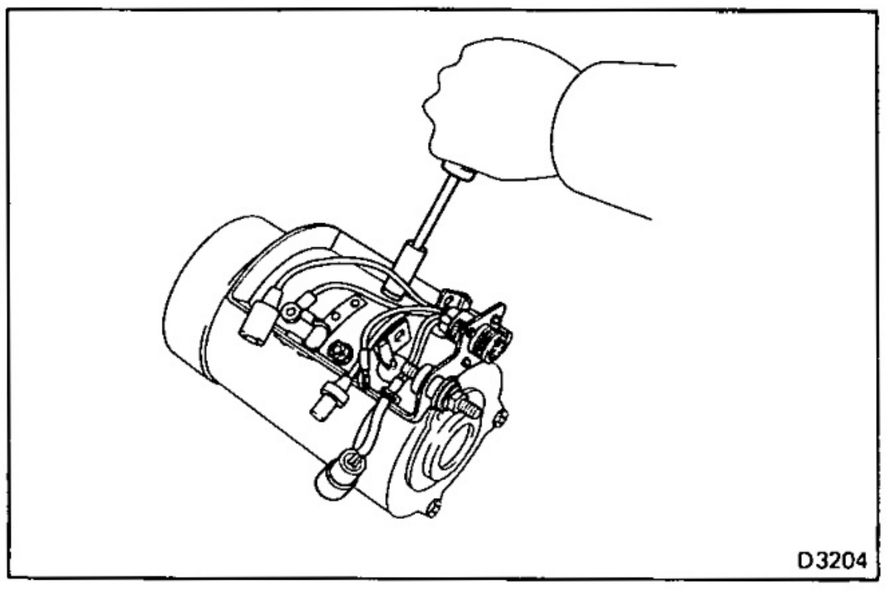
D3204

4. REMOVE BASE

(a) Disconnect the thermo switch connector.

(b) Remove the two bolts and base.

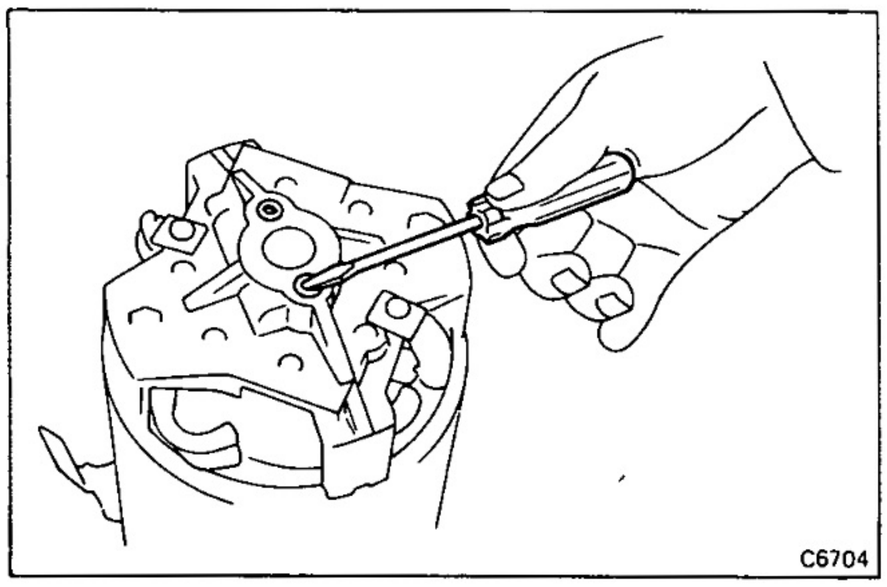
C6704

DISASSEMBLY OF WINCH MOTOR

(See page WI-63)

1. REMOVE COMMUTATOR COVER

(a) Remove the two screws and cover.

(b) Remove the O-ring.

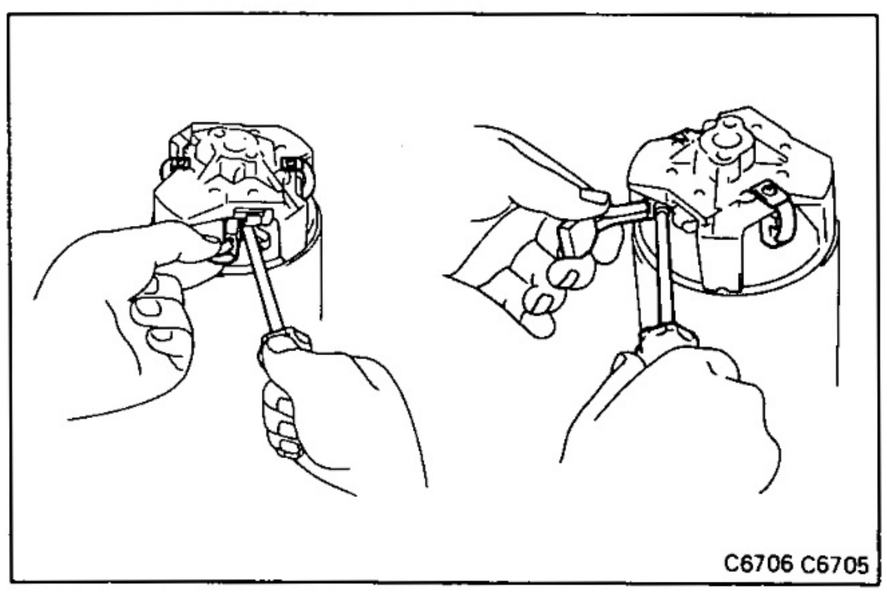
C6706 C6705

2. REMOVE BRUSHES

(a) Using a screwdriver, remove the positive brush from the brush holder.

(b) Remove the two screws and positive brushes.

(c) Remove the two screws.

(d) Using a screwdriver, remove the negative brush from the brush holder.

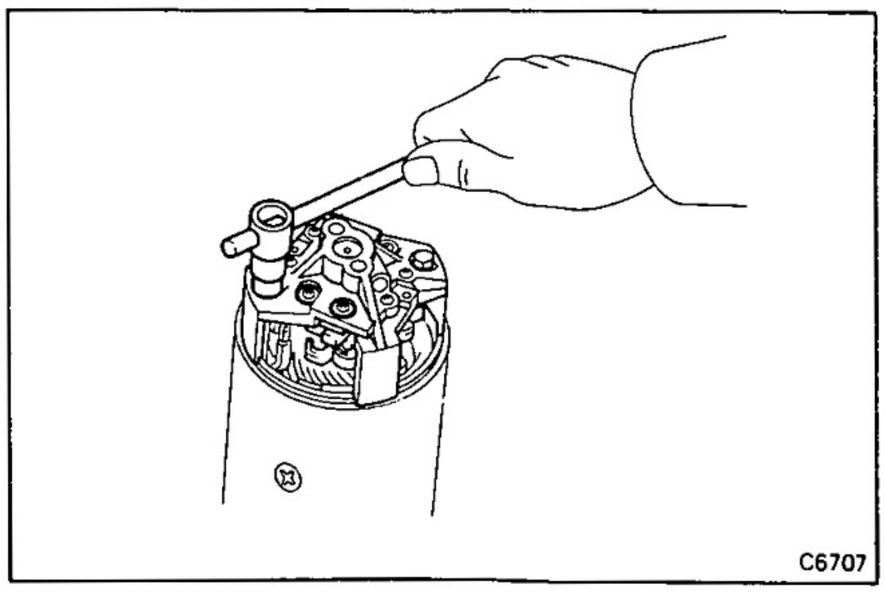
C6707

3. REMOVE COMMUTATOR END FRAME

(a) Remove the two bolts.

(b) Remove the commutator end frame and O-ring.

4. REMOVE END FRAME AND ARMATURE FROM YOKE

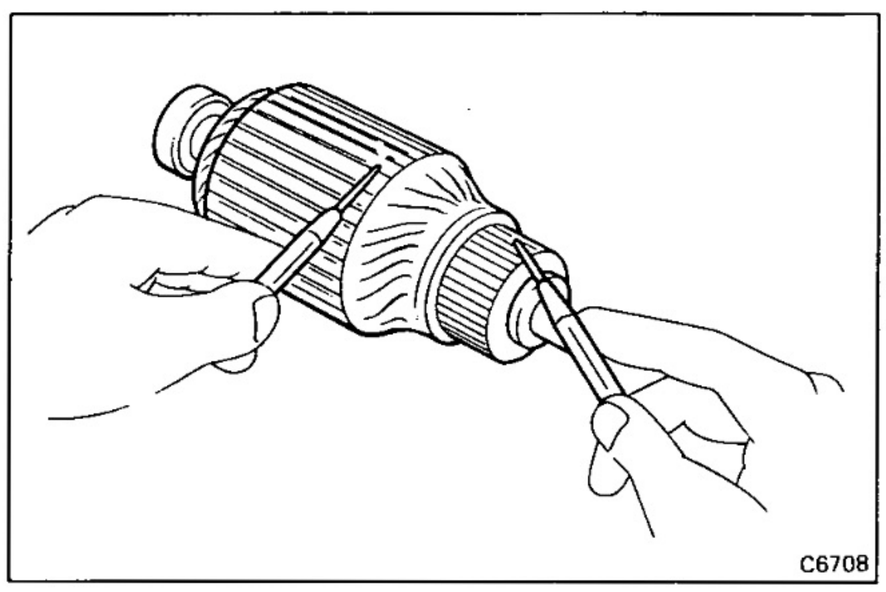
C6708

INSPECTION OF WINCH MOTOR WITH NO.2 MAGNET SWITCH ASSEMBLY

Armature Coil

1. INSPECT THAT COMMUTATOR IS NOT GROUNDED

Using an ohmmeter, check that there is no continuity between the commutator and armature core.
If there is continuity, replace the armature.

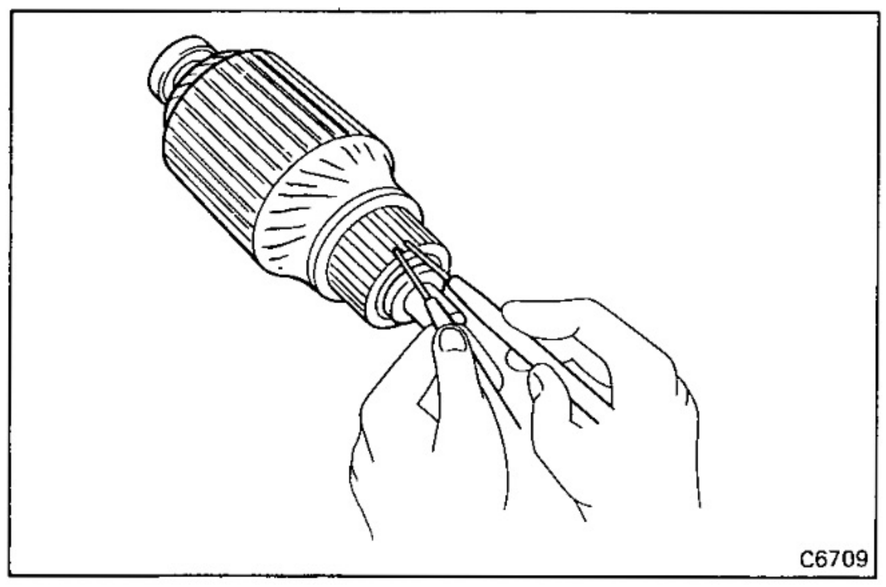
C6709

2. INSPECT COMMUTATOR FOR OPEN CIRCUIT

Using an ohmmeter, check for continuity between the segment of the commutator.
If there is no continuity between any segment, replace the armature.

Commutator

1. INSPECT COMMUTATOR FOR DIRTY OR BURNT SURFACE

If the surface is dirty or burnt, clean with sandpaper (NO. 400) or a lathe.

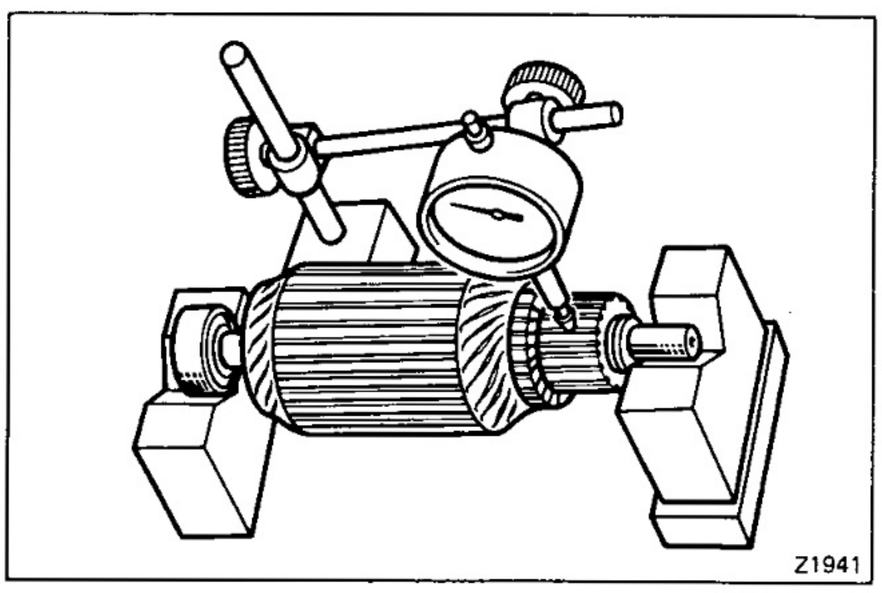
Z1941

2. INSPECT COMMUTATOR CIRCLE RUNOUT

Using a dial indicator, measure the circle runout of the commutator.
If the circle runout is greater than the maximum, correct with a lathe.

Maximum runout: 0.2 mm (0.008 in.) or less

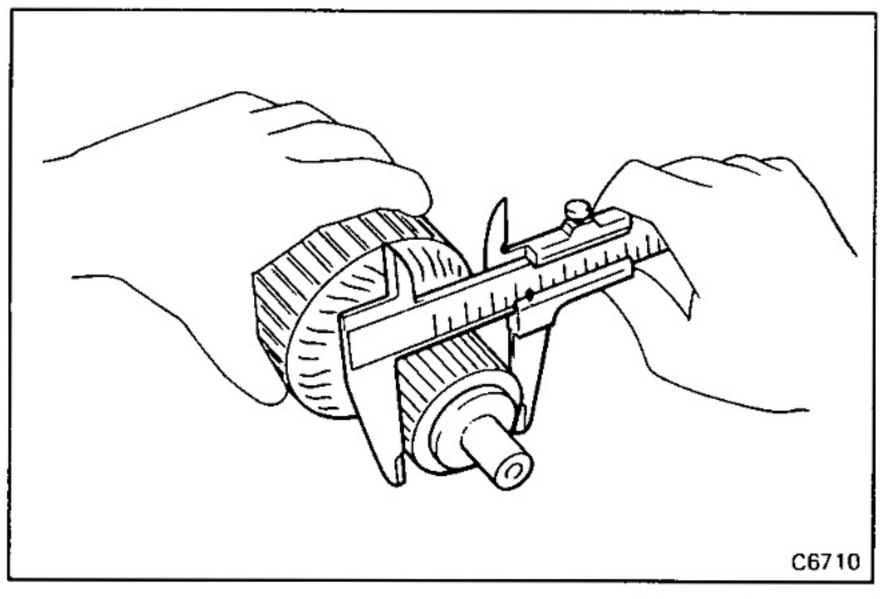
C6710

3. MEASURE DIAMETER OF COMMUTATOR

Using calipers, measure the diameter of the commutator.
If the diameter of the commutator is less than the minimum, replace the armature.

Minimum diameter: 41.0 mm (1.614 in.)

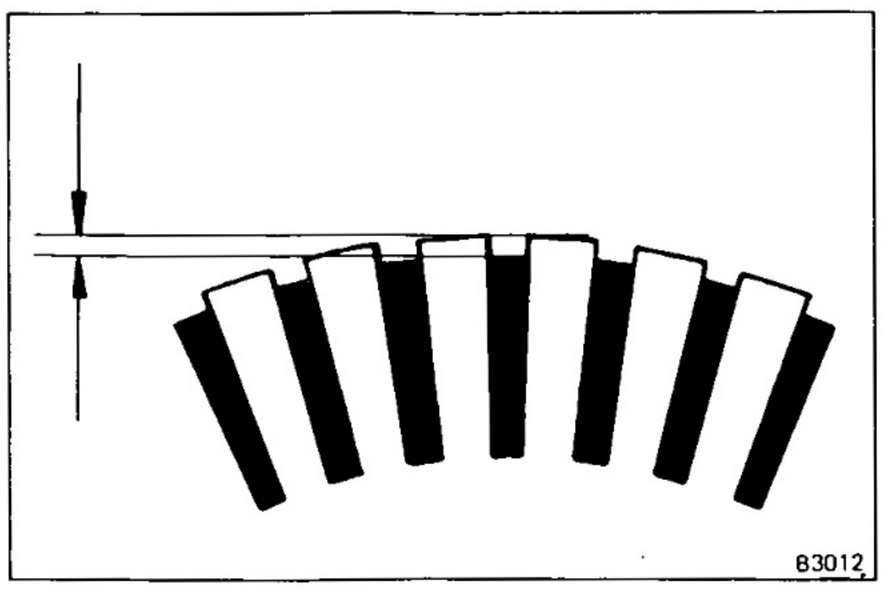

4. INSPECT UNDERCUT DEPTH

Check that the undercut depth is clean and free of foreign particles. Then smooth off the edge.
If the undercut depth is less than the minimum, correct with a hacksaw blade.

Minimum undercut depth: 0.3 mm (0.012 in.)

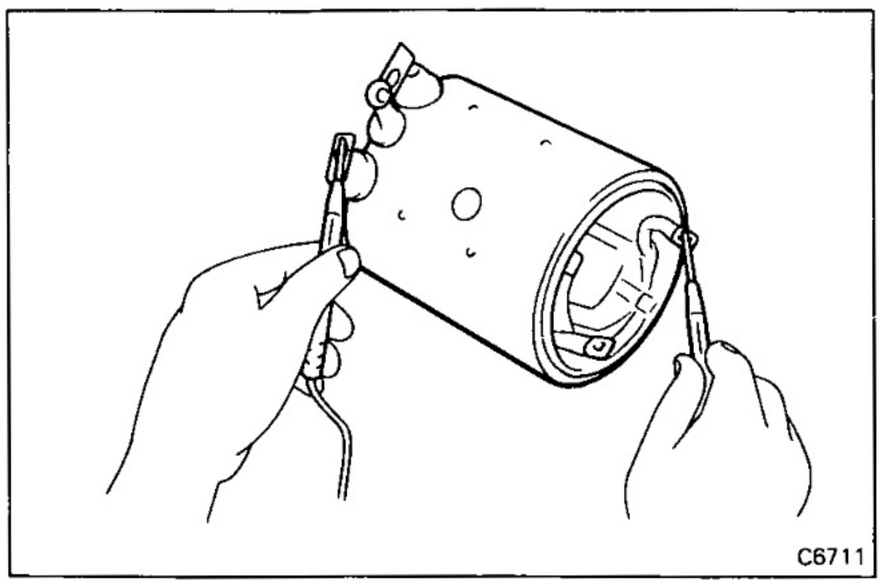

Field Coil

1. INSPECT FIELD COIL FOR OPEN CIRCUIT

Using an ohmmeter, check for continuity between the lead wire and field coil brush lead.
If there is no continuity, replace the field coil.

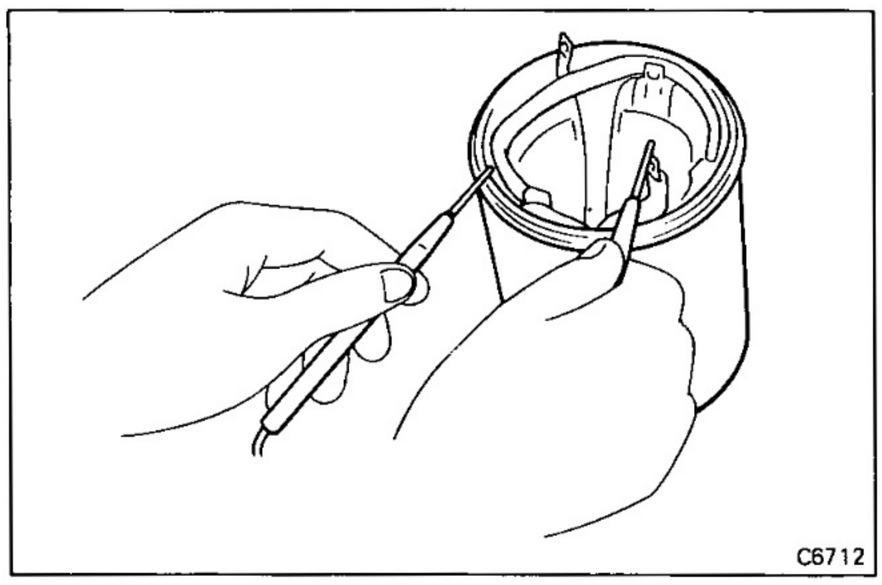

2. INSPECT THAT FIELD COIL IS NOT GROUNDED

Using an ohmmeter, check for continuity between the field coil brush lead and field frame.
If there is continuity, repair or replace the yoke sub-assembly.

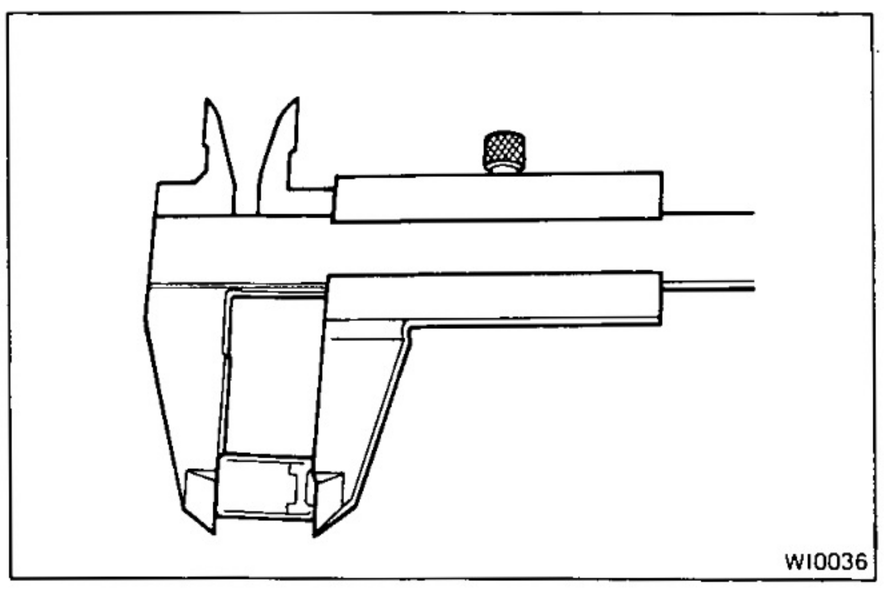

Brush

MEASURE BRUSH LENGTH

Using calipers, measure length of the brush.

Minimum length: 15.0 mm (0.591 in.)

If the brush length is less than the minimum, replace the brush holder assembly.

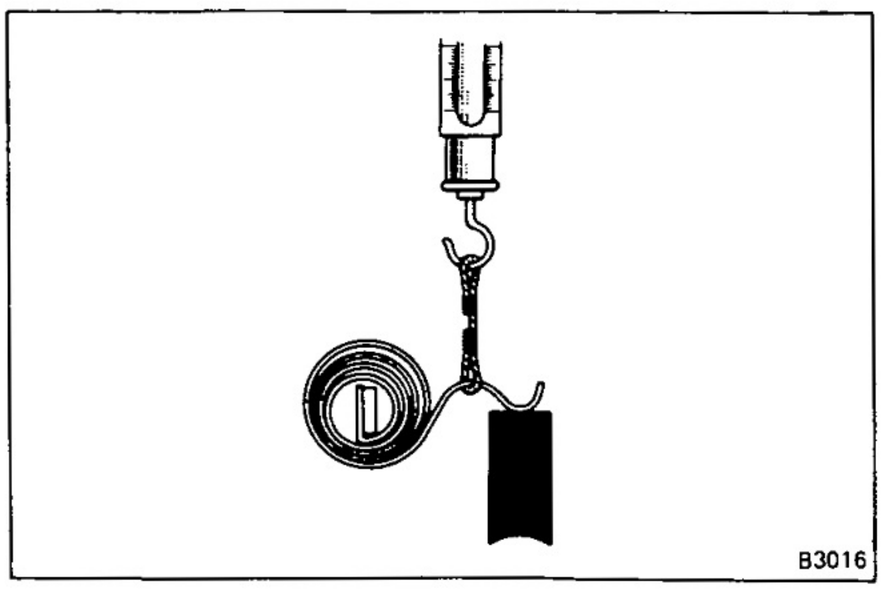

Brush Spring

MEASURE BRUSH SPRING LOAD

Using a pull scale, measure the installed load of the brush spring.

Standard installed load: 3,200 – 4,000 g (7.1 – 8.8 lb, 31 – 39 N)

NOTE: Take the pull scale reading at the very instant the brush spring separates from the brush.

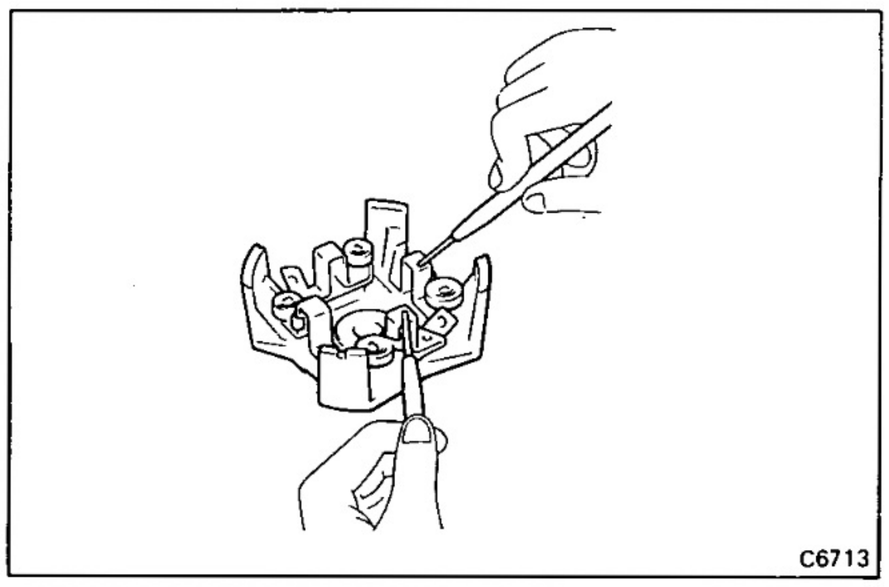

Brush Holder

INSPECT BRUSH HOLDER

Using an ohmmeter, check for continuity between the positive and negative brush holders.
If there is continuity replace the brush holder assembly.

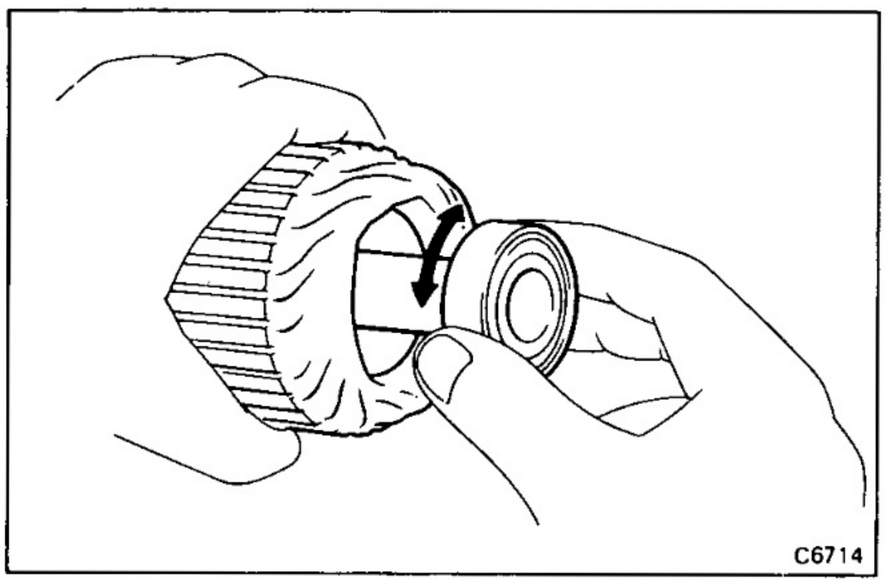

Bearing

1. INSPECT BEARING

Turn each bearing by hand while applying inward force.
If the bearing sticks or resists, replace it.

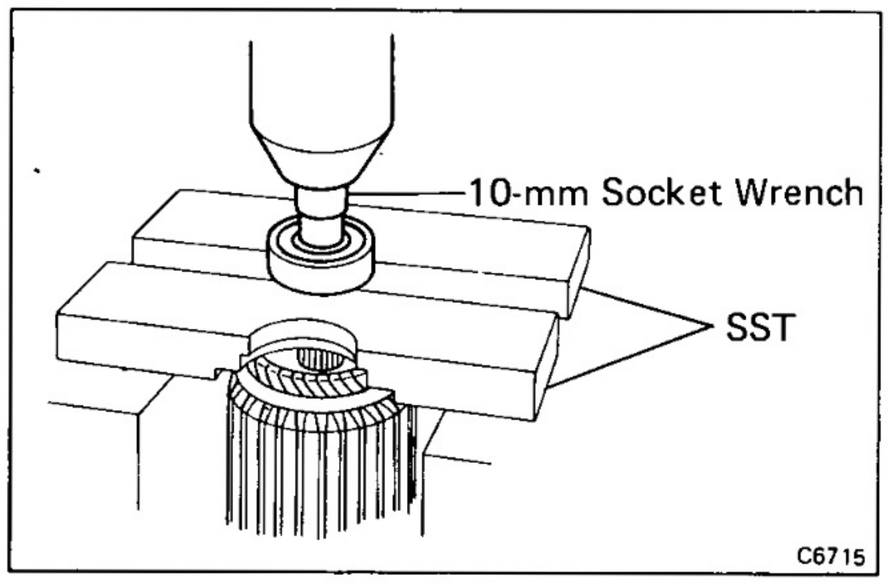

2. IF NECESSARY, REPLACE BEARING

(a) Using a 10-mm socket wrench and SST, remove the bearing from the armature shaft.

SST 09527-20011

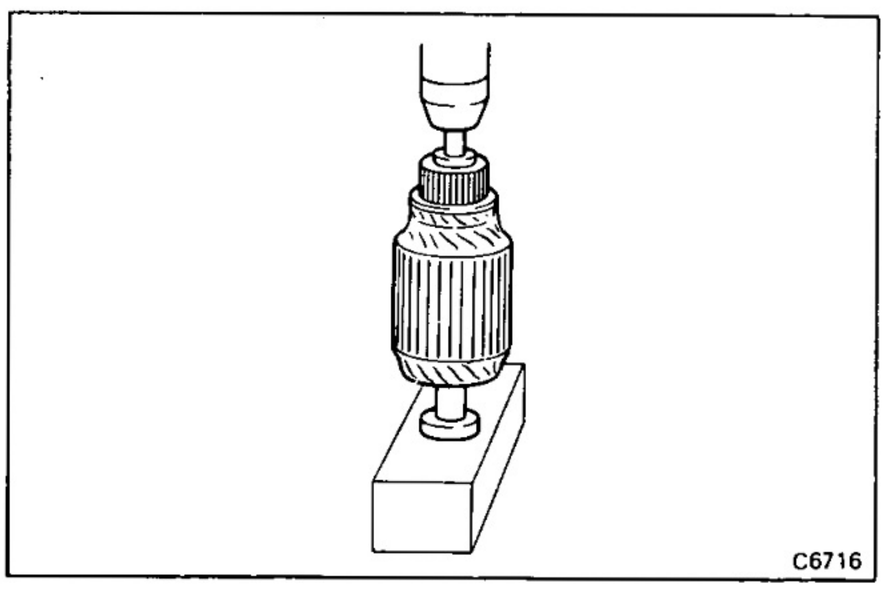

(b) Using a press, install the bearing into the shaft.

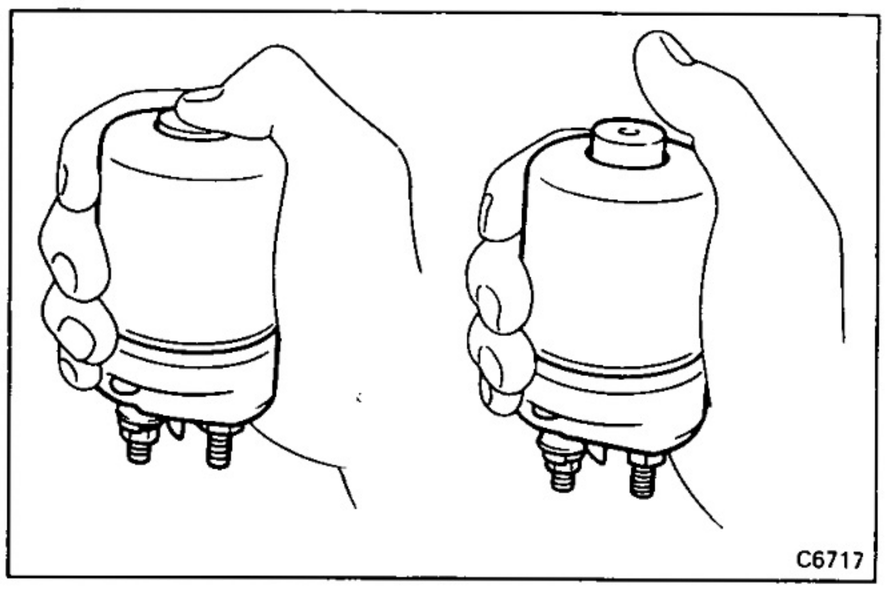

No.2 Magnet Switch

INSPECT NO. 2 MAGNET SWITCH

(a) Push in the plunger and release it. Check that it returns quickly to its original position.

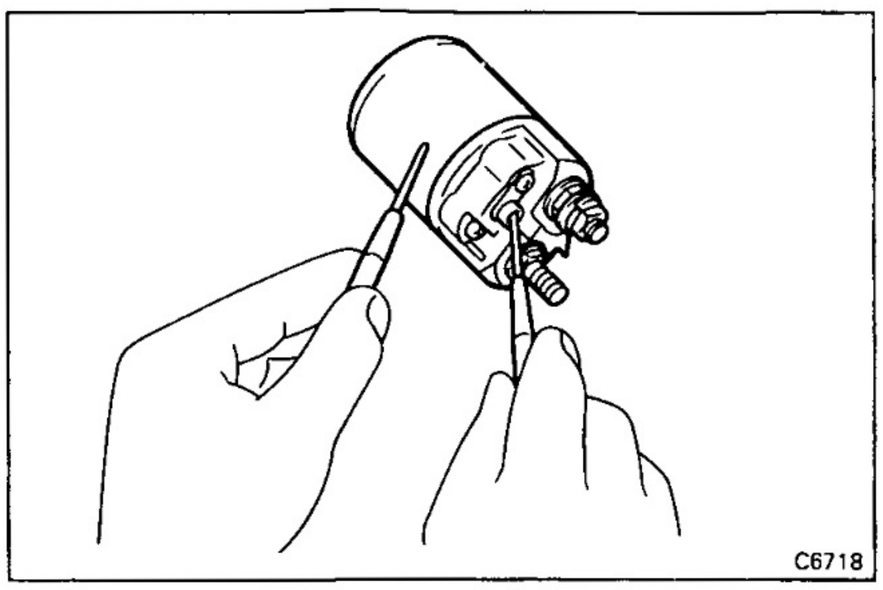

(b) Using an ohmmeter, check for continuity between the base lead wire terminal and magnet switch body. If there is no continuity, replace the magnet switch.

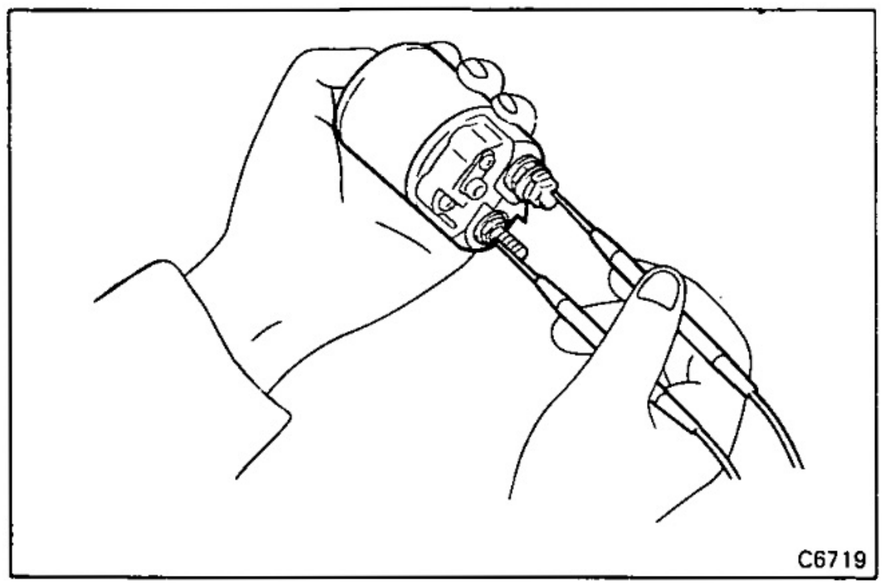

(c) Using an ohmmeter, check for continuity between the main terminals with the plunger pushed in.

(d) Using an ohmmeter, check for no continuity between the terminals with the plunger released.

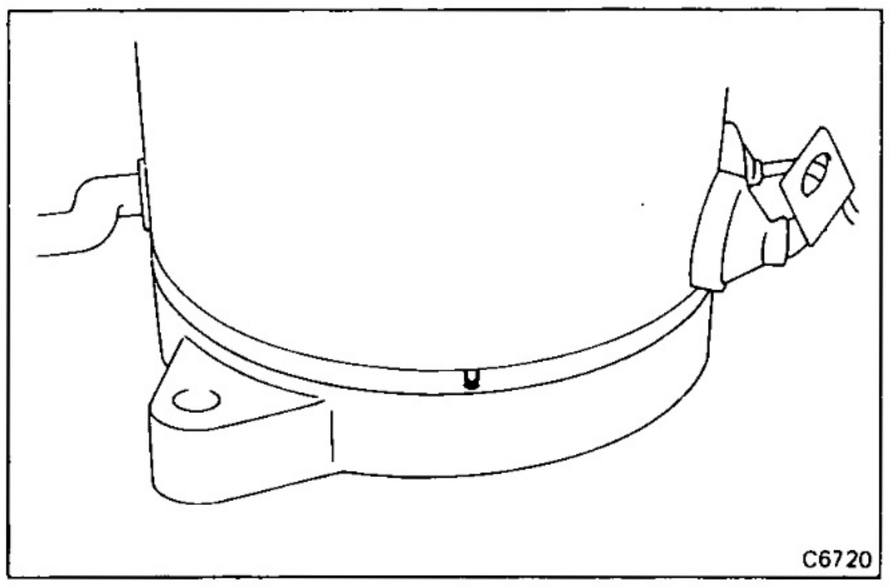

ASSEMBLY OF WINCH MOTOR

(See page WI-63)

1. INSTALL ARMATURE AND YOKE TO END FRAME

Install the armature and yoke to the end frame.

NOTE: Match the protrusion of the yoke with the end frame.

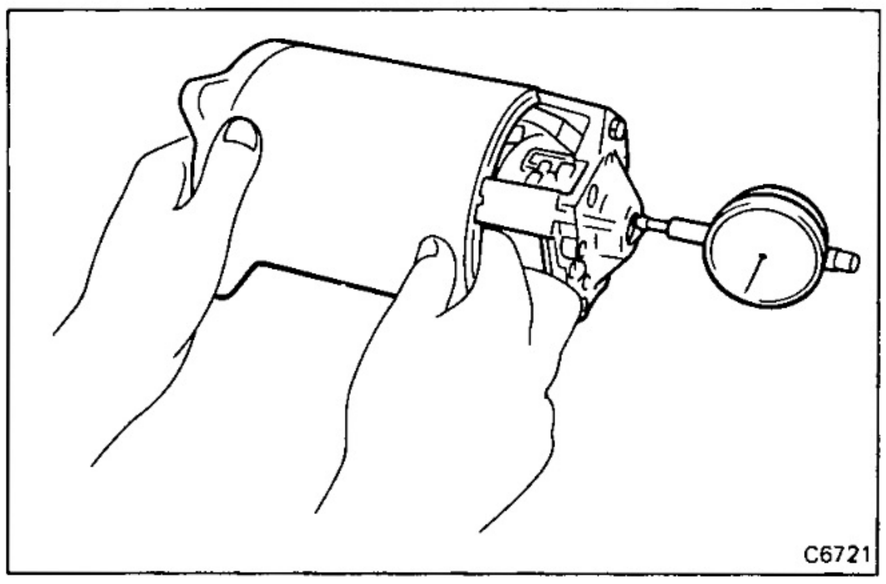

2. CHECK ARMATURE SHAFT THRUST CLEARANCE

(a) Install the thrust washer and commutator end frame with two bolts.

(b) Using a dial gauge, measure the armature shaft thrust clearance.

Standard clearance: 0.05 – 0.50 mm (0.0020 – 0.0197 in.)

If clearance is greater than the standard, replace the thrust washer.

Thrust washer standard thickness: 1.6 mm (0.063 in.)

(c) Remove the commutator end frame and thrust washer.

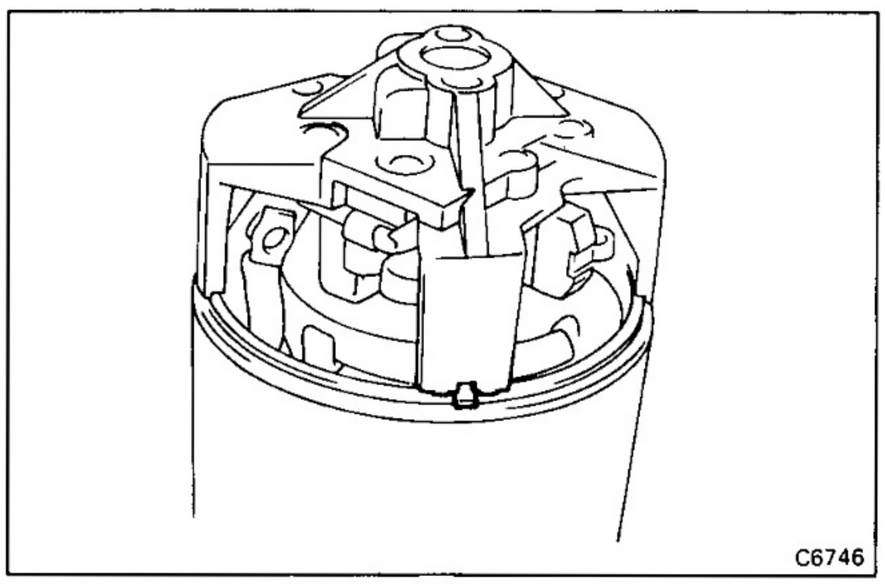

3. INSTALL O-RING, THRUST WASHER AND COMMUTATOR END FRAME

(a) Install the O-ring on the yoke.

(b) Place the commutator end frame on the yoke.

NOTE: Match the protrusion of the yoke with commutator end frame.

(c) Apply anaerobic adhesive and sealant THREE BOND 1324 (Part No. 08833-00070) or equivalent to the threads of the bolts.

(d) Install and torque the bolts.

Torque: 78 kg-cm (68 in.-lb, 7.6 N·m)

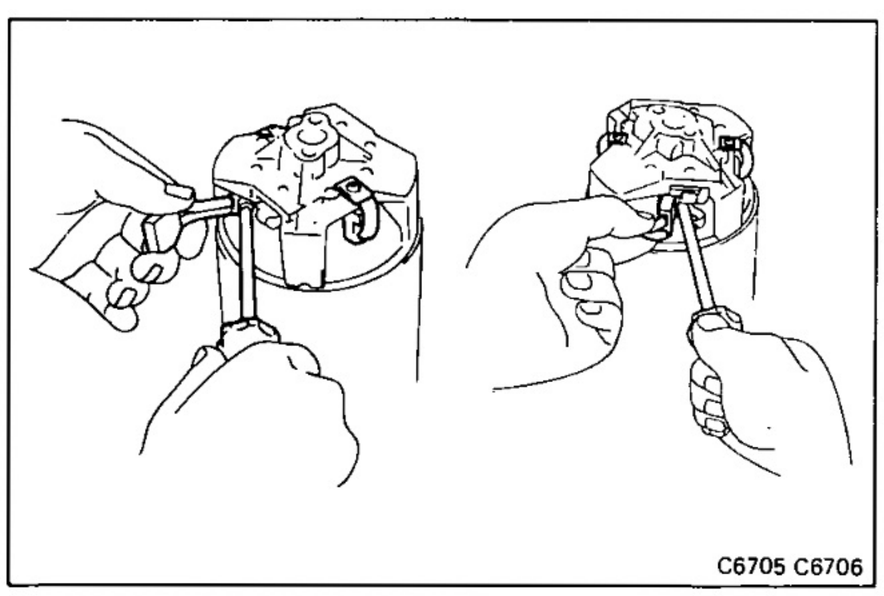

4. INSTALL BRUSHES

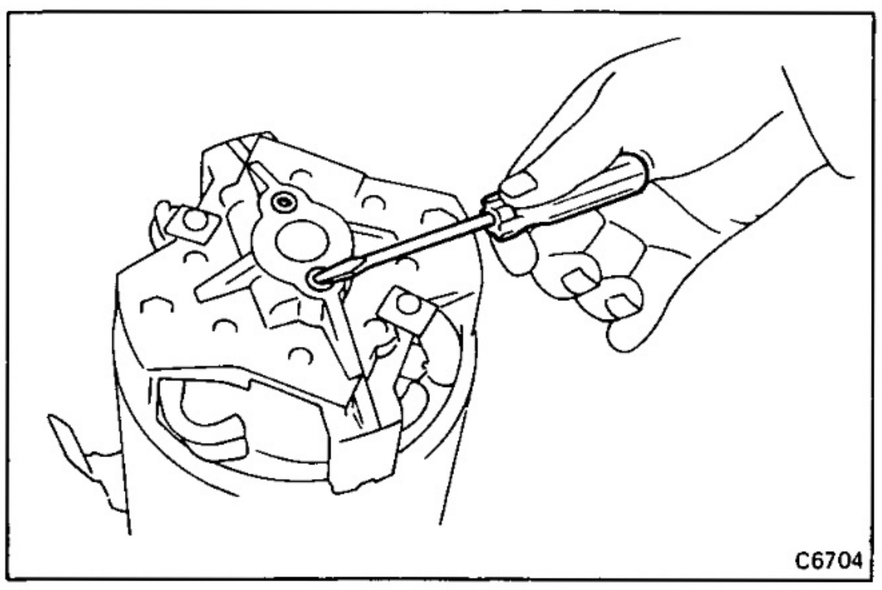

5. INSTALL COMMUTATOR COVER

(a) Place the two O-rings on the commutator end frame.

(b) Install the commutator cover with two screws.

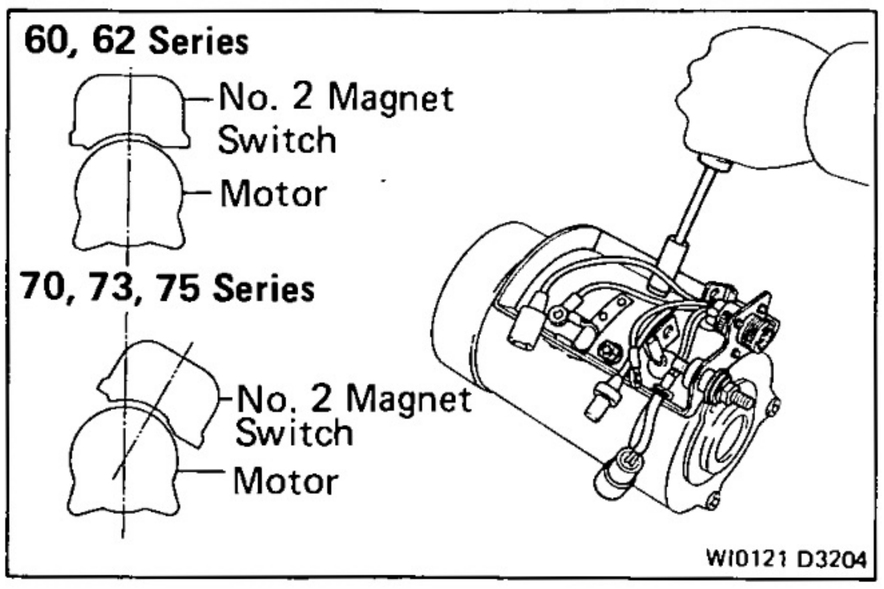

ASSEMBLY OF NO. 2 MAGNET SWITCH ASSEMBLY

(See page WI-63)

1. INSTALL BASE

(a) Set the motor lead wires and thermo switch connector through the base hole.

(b) Install the base on the winch motor with two bolts.

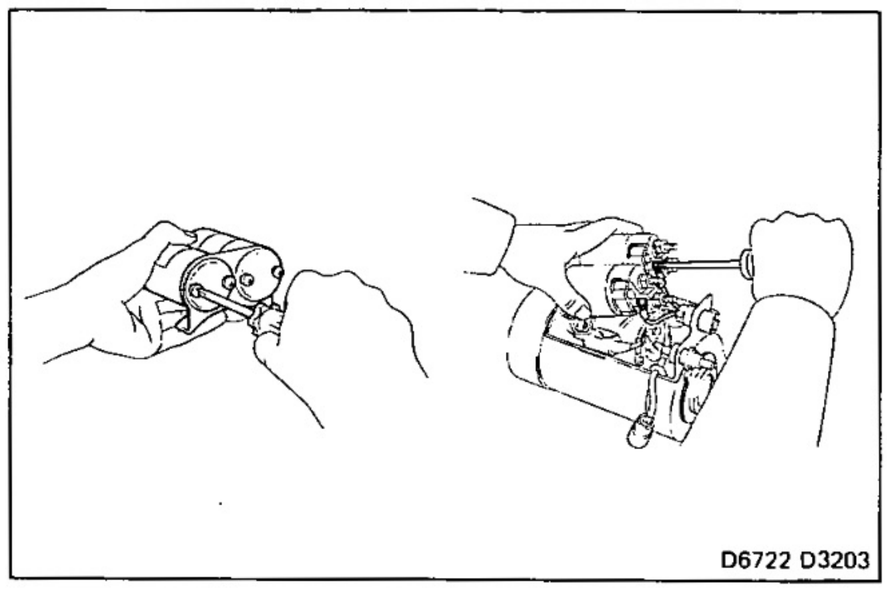

2. INSTALL BRACKET AND STOPPER TO NO. 2 MAGNET SWITCH

(a) Install the bracket and stopper to the magnet switches with screws.

(b) Connect the base lead wires.

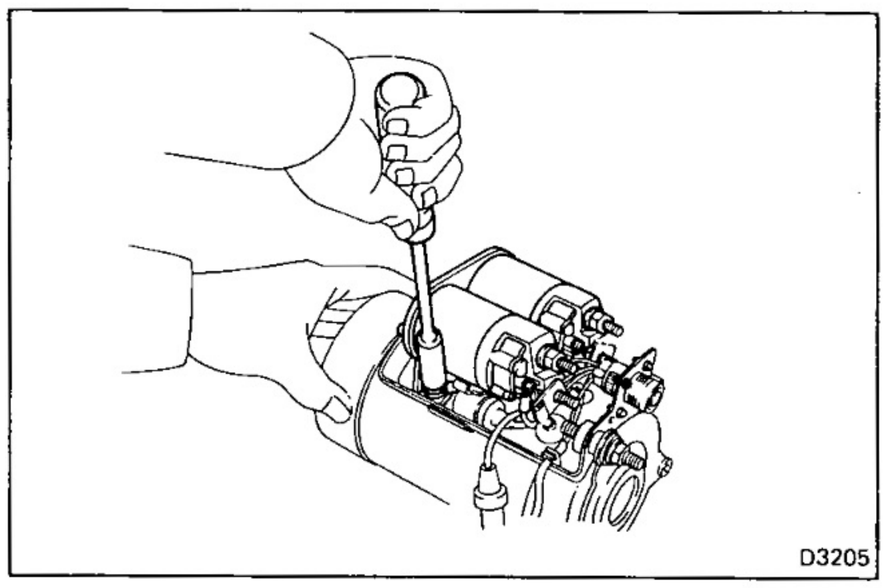

(c) Install the magnet switches with ground wire.

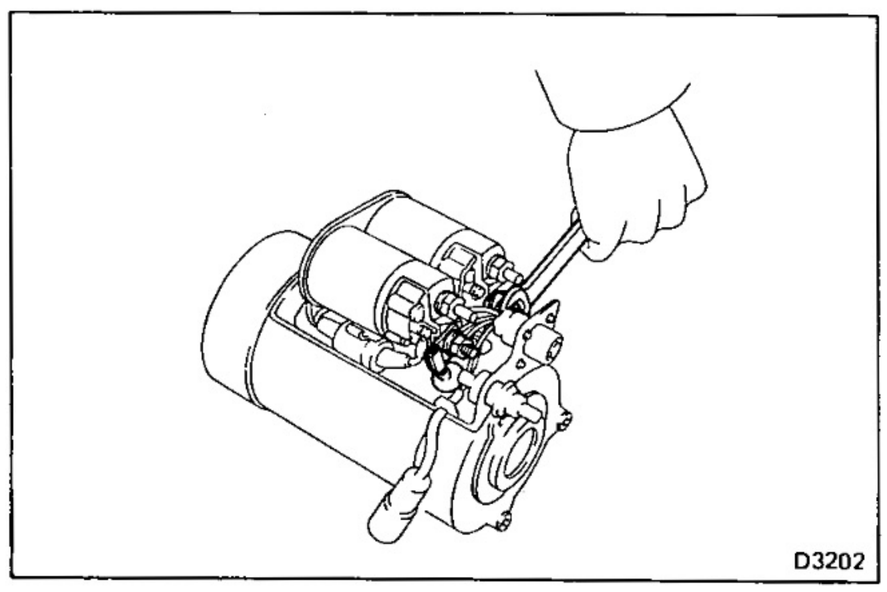

(d) Connect the motor lead wires with nuts.

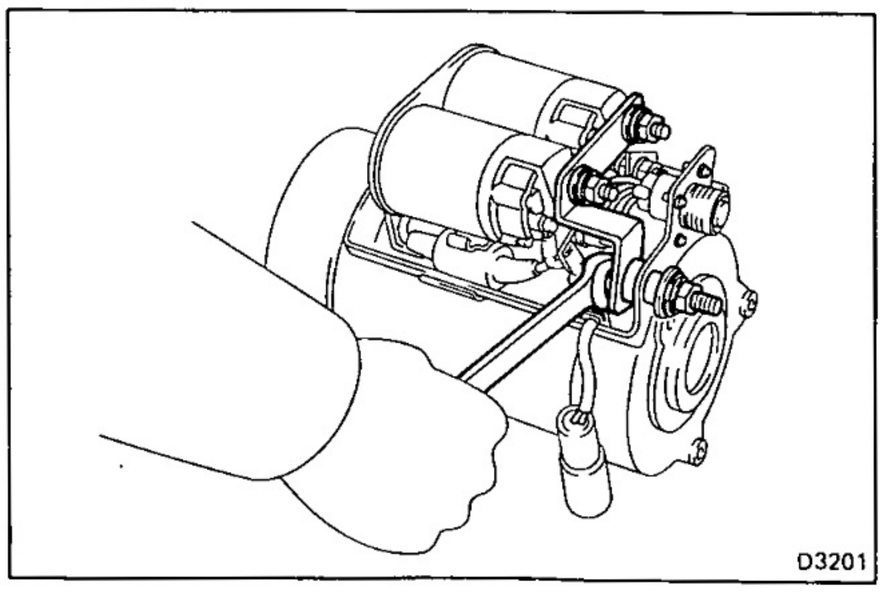

3. INSTALL TERMINAL PLATE

Install the terminal plate to the magnet switches and terminal B with nuts.

4. CONNECT THERMO SWITCH CONNECTOR

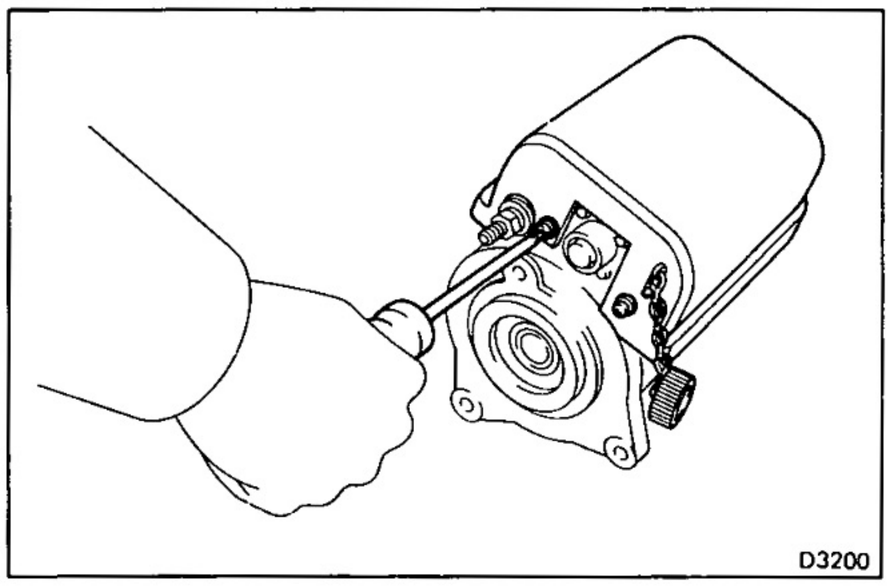

5. INSTALL MAGNET SWITCH COVER

(a) Install magnet switch cover with four screws.

(b) Install the connector cover.

INSTALLATION OF WINCH MOTOR WITH NO. 2 MAGNET SWITCH ASSEMBLY

INSTALL WINCH MOTOR

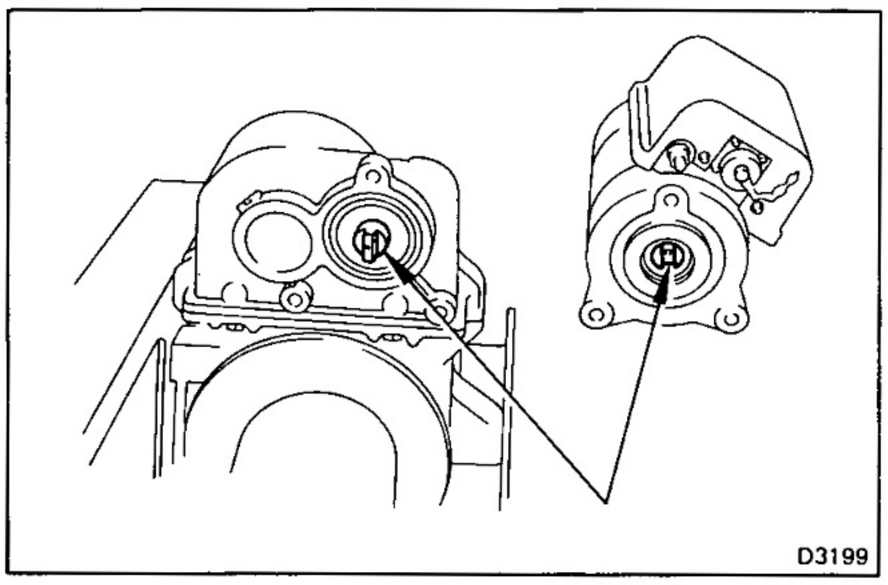

(a) Align the grooves of the motor and input shaft, and assemble through the O-ring.

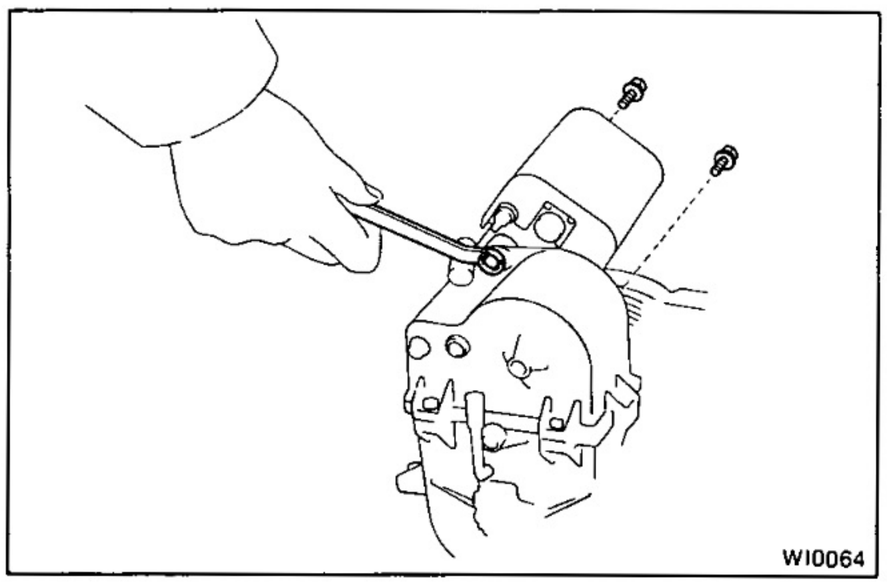

(b) Install and torque the three bolts.

Torque: 195 kg-cm (14 ft-lb, 19 N·m)

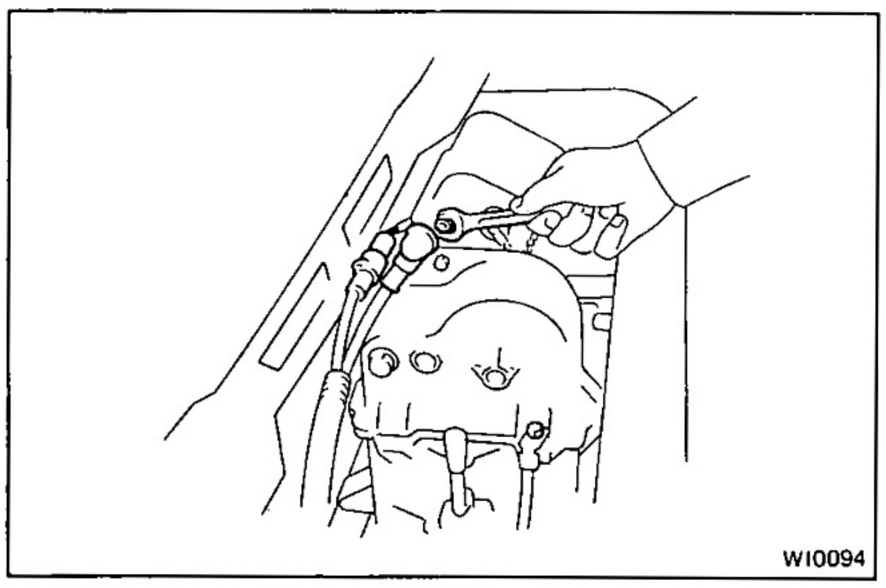

(c) Connect the connector and terminal B.

(d) Connect the battery cable to the negative terminal.

AIR CONDITIONING SYSTEM

	Page
PRECAUTIONS	AC-2
TROUBLESHOOTING	AC-2
Checking of Refrigeration System with Manifold Gauge	AC-4
SPECIAL TOOLS AND EQUIPMENT	AC-8
AIR CONDITIONING SYSTEM CIRCUIT	AC-9
ON-VEHICLE INSPECTION	AC-15
REFRIGERATION SYSTEM	AC-16
Checking of Refrigerant Charge	AC-16
Installation of Manifold Gauge Set	AC-16
Discharging of Refrigeration System	AC-17
Evacuating and Charging of Refrigeration System	AC-17
Performance Test	AC-20
SYSTEM COMPONENTS	AC-22
COMPRESSOR	AC-24
CONDENSER	AC-28
RECEIVER	AC-29
FRONT COOLING UNIT	AC-29
Evaporator	AC-31
Thermistor	AC-31
EXPANSION VALVE	AC-33
A/C SWITCH (60 Series)	AC-33
TEMP. CONTROL RESISTOR (70 Series)	AC-34
REFRIGERANT LINES	AC-34
PRESSURE SWITCH	AC-35
AIR CONDITIONER AMPLIFIER	AC-35
REAR COOLING UNIT (60 Series Dual A/C)	AC-36
MAGNETIC VALVE (60 Series Dual A/C)	AC-37
A/C RELAY	AC-38
VACUUM SWITCHING VALVE (VSV)	AC-40

PRECAUTIONS

1. **When handling refrigerant (R-12), the following precautions should be observed:**
   (a) Always wear eye protection.
   (b) Keep the refrigerant container (service drum) below 40°C (104°F).
   (c) Do not handle refirgerant in an enclosed area or near an open flame.
   (d) Discharge refrigerant slowly when purging the system.
   (e) Be careful that liquid refrigerant does not get on your skin.

2. **If liquid refrigerant gets in your eyes or on the skin:**
   (a) Do not rub.
   (b) Wash the area with a lot of cool water.
   (c) Apply clean petroleum jelly to the skin.
   (d) Rush to a physician or hospital for immediate professional treatment.
   (e) Do not attempt to treat yourself.

3. **When tubing**
   (a) Apply a few drops of refrigeration oil to the seats of the O-ring fittings.
   (b) Tighten the nut using two wrenches to avoid twisting the tube.
   (c) Tighten the O-ring fitting to the specified torque.

Torque specification for O-ring fittings

Fitting size	Torque
0.31 in. Tube	135 kg-cm (10 ft-lb, 13 N·m)
0.50 in. Tube	225 kg-cm (16 ft-lb, 22 N·m)
0.62 in. Tube	325 kg-cm (24 ft-lb, 32 N·m)

TROUBLESHOOTING

Problem	Possible cause	Remedy	Page
No cooling or warm air	Magnetic clutch does not engage		
	(a) A/C fuse blown	Replace fuse and check for short	AC-9 to 14
	(b) Magnetic clutch faulty	Check magnetic clutch	AC-24
	(c) A/C switch faulty	Check A/C switch	AC-33
	(d) Temp. control resistor faulty	Check resistor	AC-34
	(e) Thermistor faulty	Check thermistor	AC-31
	(f) A/C amplifier faulty	Check amplifier	AC-35
	(g) Wiring or ground faulty	Repair as necessary	AC-9 to 14
	(h) Refrigerant empty	Check refrigerant pressure	AC-16
	(i) Heater relay faulty	Check heater relay	AC-9 to 14
	(j) Circuit braker faulty	Check circuit braker	AC-9 to 14
	(k) Pressure switch faulty	Check pressure switch	AC-35
	Compressor does not rotate properly		
	(a) Drive belt loose or broken	Adjust or replace drive belt	AC-27
	(b) Compressor faulty	Check compressor	AC-24
	Expansion valve faulty	Check expansion valve	AC-6, 33
	Leak in system	Leak test system	AC-18
	Fusible plug on receiver blown or clogged screen	Check receiver	AC-29

TROUBLESHOOTING (Cont'd)

Problem	Possible cause	Remedy	Page
No cooling or warm air (Cont'd)	Blower does not operate		
	(a) Heater circuit breaker blown	Reset circuit breaker and check for short	AC-9 to 14
	(b) A/C switch faulty	Check switch	AC-33
	(c) Temp. control resistor faulty	Check resistor	AC-34
	(d) Heater relay faulty	Check heater relay	AC-9 to 14
	(e) Blower motor faulty	Check blower motor	
	(f) Wiring faulty	Repair as necessary	AC-9 to 14
	(g) Magnetic valve faulty	Check magnetic valve	AC-37
Cool air comes out intermittently	Magnetic clutch slipping	Check magnetic clutch	AC-24
	Expansion valve faulty	Check expansion valve	AC-6, 33
	Wiring connection faulty	Repair as necessary	AC-9 to 14
	Excessive moisture in the system	Evacuate and charge system	AC-17
Limited amount of cool air at high speed	Thermistor faulty	Check thermistor	AC-31
	A/C amplifier faulty	Check amplifier	AC-35
Cool air comes out only at high speed	Condenser clogged	Check condenser	AC-28
	Drive belt slipping	Check or replace drive belt	AC-27
	Compressor faulty	Check compressor	AC-24
	Insufficient or too much refrigerant	Check refrigerant charge	AC-4
	Air in system	Evacuate and charge system	AC-17
Insufficient cooling	Condenser clogged	Check condenser	AC-28
	Drive belt slipping	Check or replace drive belt	AC-27
	Magnetic clutch faulty	Check magnetic clutch	AC-24
	Compressor faulty	Check compressor	AC-24
	Expansion valve faulty	Check expansion valve	AC-6, 33
	Thermistor faulty	Check thermistor	AC-31
	A/C amplifier faulty	Check amplifier	AC-35
	Insufficient or too much refrigerant	Check refrigerant charge	AC-4
	Air or excessive compressor oil in system	Evacuate and charge system	AC-17
	Receiver clogged	Check receiver	AC-29
	Water valve set faulty	Reset water valve cable	BE-45, 49
Insufficient velocity of cool air	Evaporator clogged or frosted	Clean evaporator fins or filters	AC-31
	Air leakage from cooling unit or air duct	Repair as necessary	
	Air inlet blocked	Repair as necessary	
	Blower motor faulty	Replace blower motor	

Checking of Refrigeration System with Manifold Gauge

This is a method in which the trouble is located by using a manifold gauge.

Read the manifold gauge pressure with the following established conditions:

(a) Temperature at the air inlet is 30 – 35°C (86 – 95°F)

(b) Engine running at 2,000 rpm

(c) Blower speed set at high

(d) A/C switch ON

(e) Temperature control lever set at cool

NOTE: The gauge indications may vary slightly due to ambient temperature conditions.

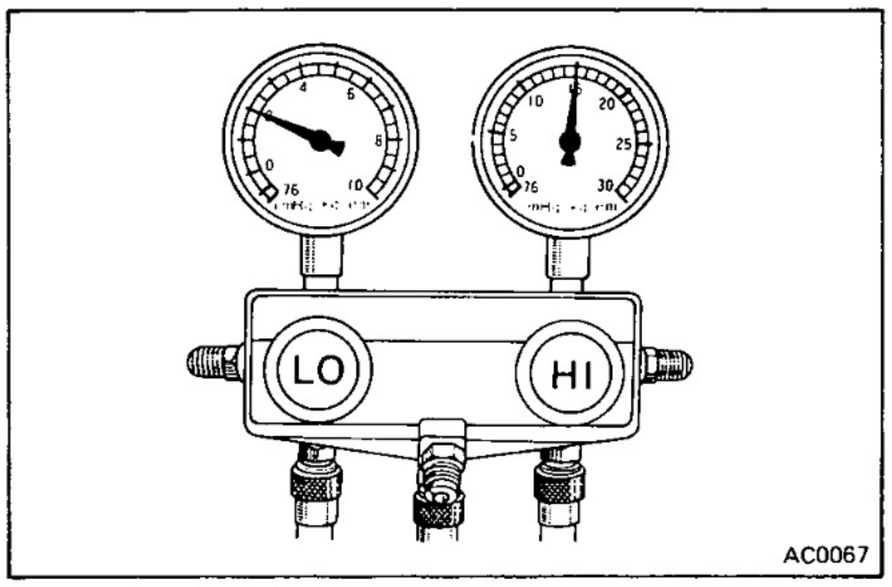

AC0067

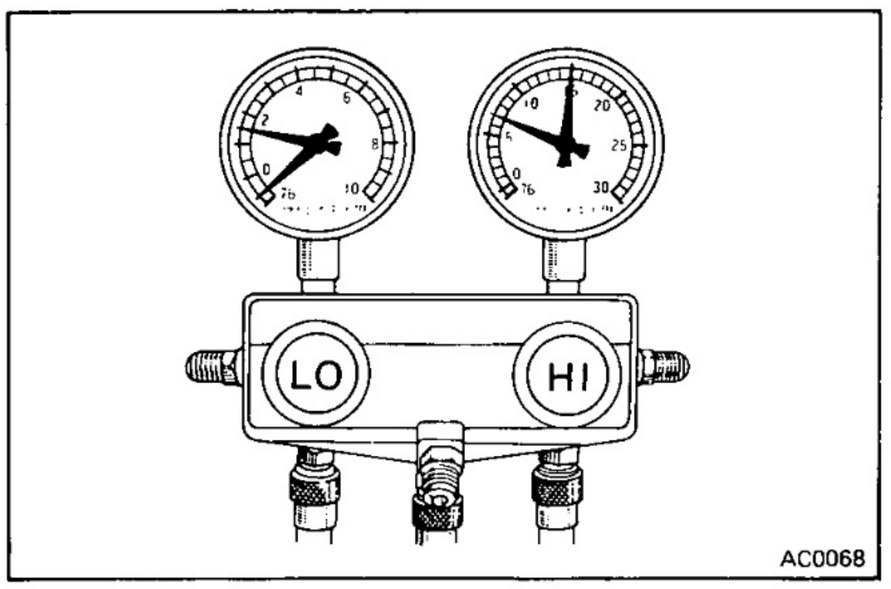

AC0068

1. NORMALLY FUNCTIONING REFRIGERATION SYSTEM

Gauge reading:

Low pressure side	**1.5 – 2.0 kg/cm² (21 – 28 psi, 147 – 196 kPa)**
High pressure side	**14.5 – 15.0 kg/cm² (206 – 213 psi) (1,422 – 1,471 kPa)**

2. MOISTURE PRESENT IN REFRIGERATION SYSTEM

Condition: Periodically cools and then fails to cool

Symptom seen in refrigeration system	Probable cause	Diagnosis	Remedy
During operation, pressure on low pressure side sometimes becomes a vacuum and sometimes normal	Moisture entered in refrigeration system freezes at expansion valve orifice and temporarily stops cycle, but normal state is restored after a time when the ice melts	Drier in oversaturated state ↓ Moisture in refrigeration system freezes at expansion valve orifice and blocks circulation of refrigerant	(1) Replace receiver and drier (2) Remove moisture in cycle through repeated vacuum purging method (3) Charge refrigerant to proper amount

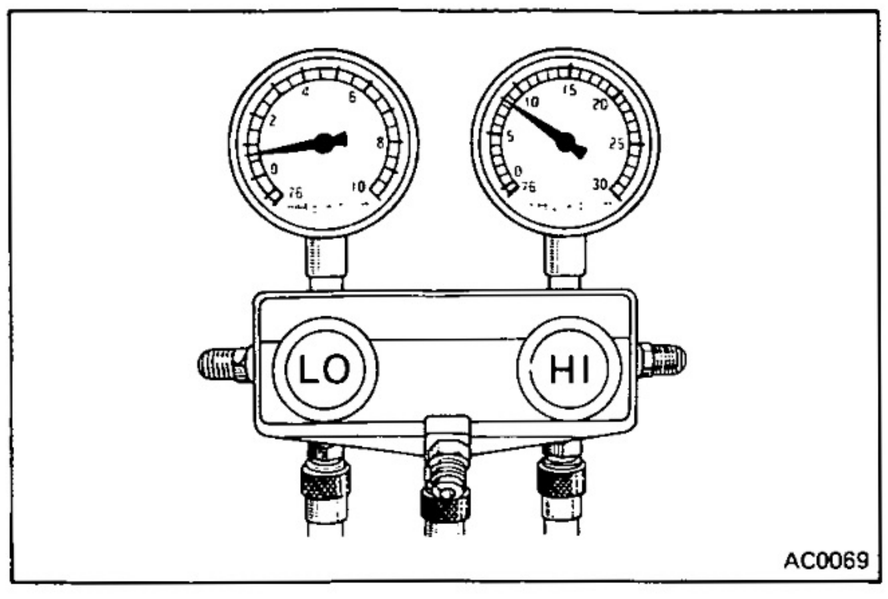

3. INSUFFICIENT REFRIGERANT

Condition: Insufficient cooling

Symptom seen in refrigeration system	Probable cause	Diagnosis	Remedy
Pressure low on both low and high pressure sides Bubbles seen in sight glass Insufficient cooling performance	Gas leakage at some place in refrigeration system	Insufficient refrigerant in system ↓ Refrigerant leaking	(1) Check with leak tester and repair (2) Charge refrigerant to proper amount

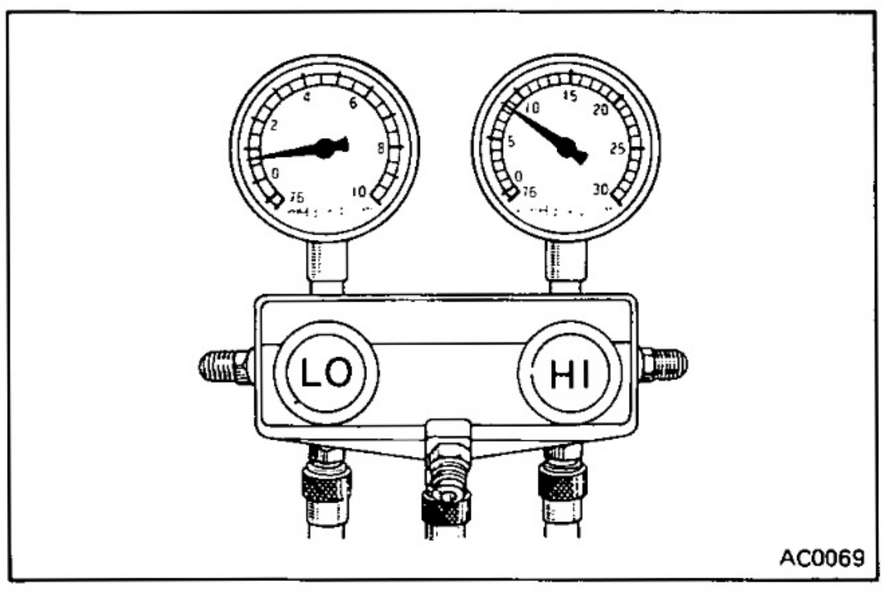

4. POOR CIRCULATION OF REFRIGERANT

Condition: Insufficient cooling

Symptom seen in refrigeration system	Probable cause	Diagnosis	Remedy
Pressure low on both low and high pressure sides Frost on tubes from receiver to unit	Refrigerant flow obstructed by dirt in receiver	Receiver clogged	Replace receiver

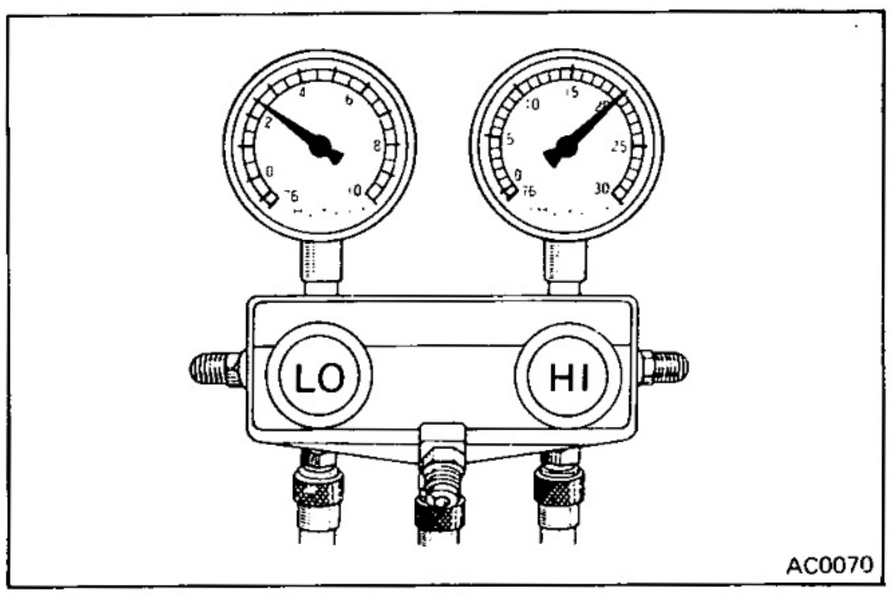

5. REFRIGERANT OVERCHARGE OR INSUFFICIENT COOLING OF CONDENSER

Condition: Does not cool sufficiently

Symptom seen in refrigeration system	Probable cause	Diagnosis	Remedy
Pressures too high on both low and high pressure sides	Unable to develop sufficient performance due to excessive refrigerant in system	Excessive refrigerant in cycle → refrigerant over-charged	(1) Clean condenser (2) Check fan motor operation (3) If (1) and (2) are in normal state, check amount of refrigerant NOTE: Vent out refrigerant through gauge manifold low pressure side by gradually opening valve.
	Condenser cooling insufficient	Condenser cooling insufficient → condenser fins clogged or fan motor faulty	

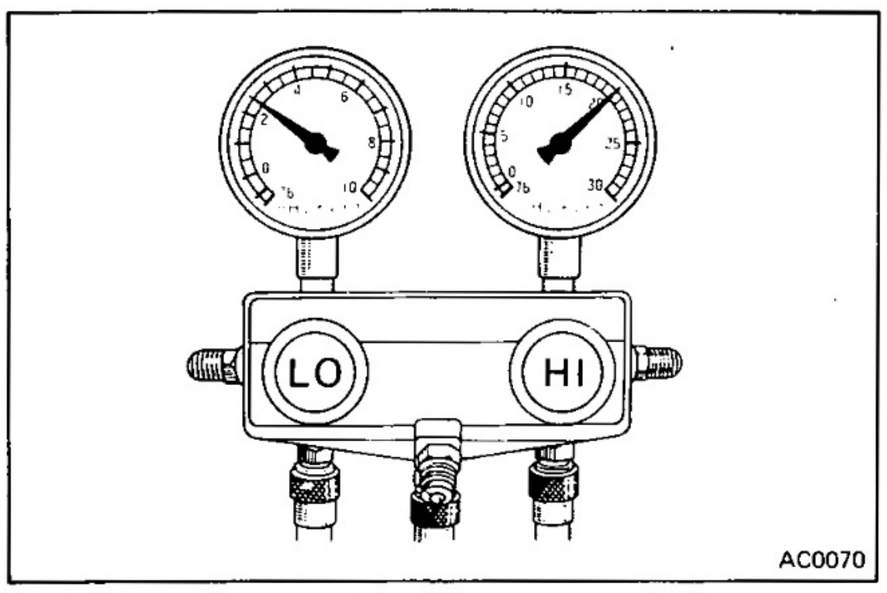

6. EXPANSION VALVE IMPROPERLY MOUNTED/HEAT SENSING TUBE DEFECTIVE (OPENS TOO WIDE)

Condition: Insufficient cooling

Symptom seen in refrigeration system	Probable cause	Diagnosis	Remedy
Pressures too high on both low and high pressure sides Frost or large amount of dew on piping at low pressure side	Trouble in expansion valve or heat sensing tube not installed correctly Refrigerant flow out of adjustment	Excessive refrigerant in low pressure piping ↓ Expansion valve opened too wide	(1) Check heat sensing tube installed condition (2) If (1) is normal, test expansion valve in unit Replace if defective

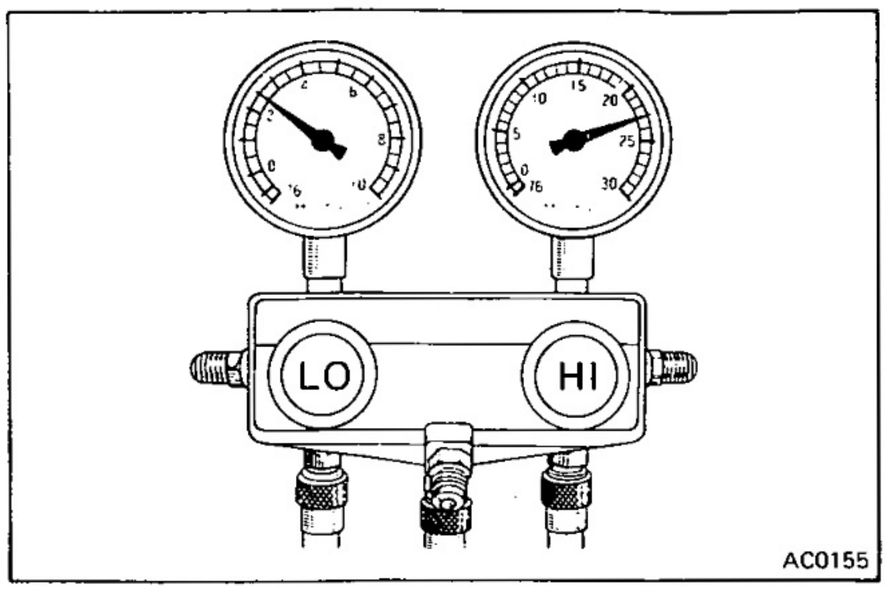

7. AIR PRESENT IN REFRIGERATION SYSTEM

Condition: Does not cool down sufficiently

NOTE: These gauge indications are shown when the refrigeration system has been opened and the refrigerant charged without vacuum purging.

Symptom seen in refrigeration system	Probable cause	Diagnosis	Remedy
Pressures too high on both low and high pressure sides	Air entered refrigeration system	Air present in refrigeration system ↓ Insufficient vacuum purging of new refrigerant	(1) Replace receiver and drier (2) Check compressor oil to see if dirty or insufficient (3) Vacuum purge and charge new refrigerant

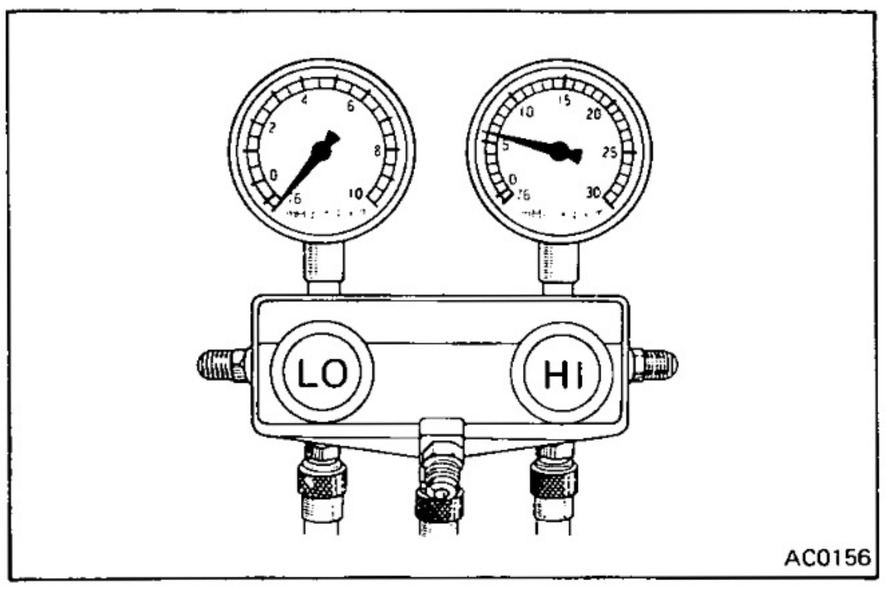

8. REFRIGERANT DOES NOT CIRCULATE

Condition: Does not cool (Cools from time to time in some cases)

Symptom seen in refrigeration system	Probable cause	Diagnosis	Remedy
Vacuum indicated on low pressure side, very low pressure indicated on high pressure side Frost or dew seen on piping before and after receiver and drier or expansion valve	Refrigerant flow obstructed by moisture or dirt in refrigerant freezing or adhering to expansion valve orifice Refrigerant flow obstructed by gas leakage from expansion valve heat sensing tube	Expansion valve orifice clogged ↓ Refrigerant does not flow	Allow to stand for some time and then restart operation to determine if trouble is caused by moisture or dirt. If caused by moisture, refer to step 2 on page AC-4. If caused by dirt, remove expansion valve and clean off dirt by blowing with air. If unable to remove dirt, replace valve. Vacuum purge and charge new refrigerant to proper amount. For gas leakage from heat sensing tube, replace expansion valve.

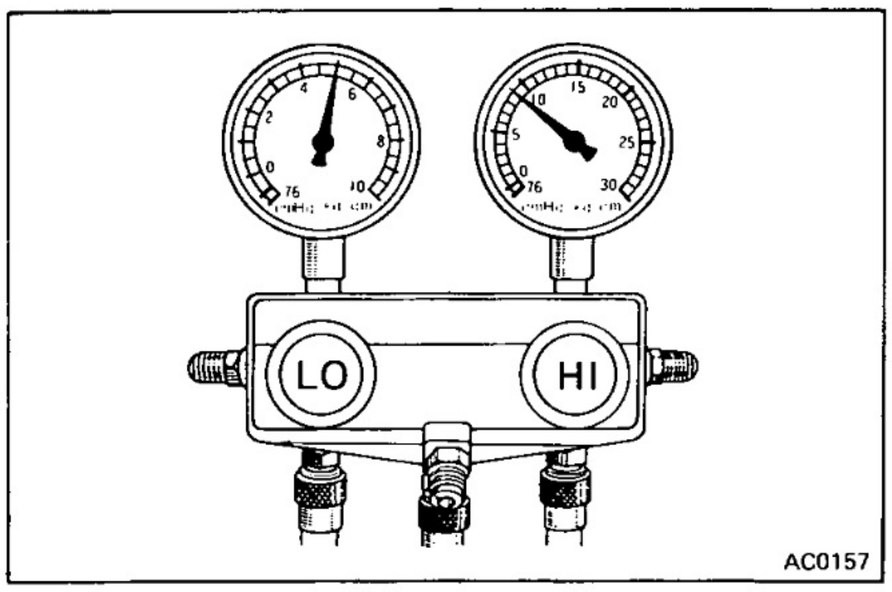

9. INSUFFICIENT COMPRESSION

Condition: Does not cool

Symptom seen in refrigeration system	Probable cause	Diagnosis	Remedy
Pressure too high on low pressure side Pressure too low at high pressure side	Internal leak in compressor	Compression defective ↓ Valve leaking or broken, sliding parts (piston, cylinder, gasket, etc.) broken.	Replace or repair compressor

SPECIAL TOOLS AND EQUIPMENT

Tool	SST No.	Use
Manifold gauge set Ohmmeter	07110-78010	To evacuate and charge system To electrical diagnosis

AIR CONDITIONING SYSTEM CIRCUIT

FJ 60 Series (Single A/C)

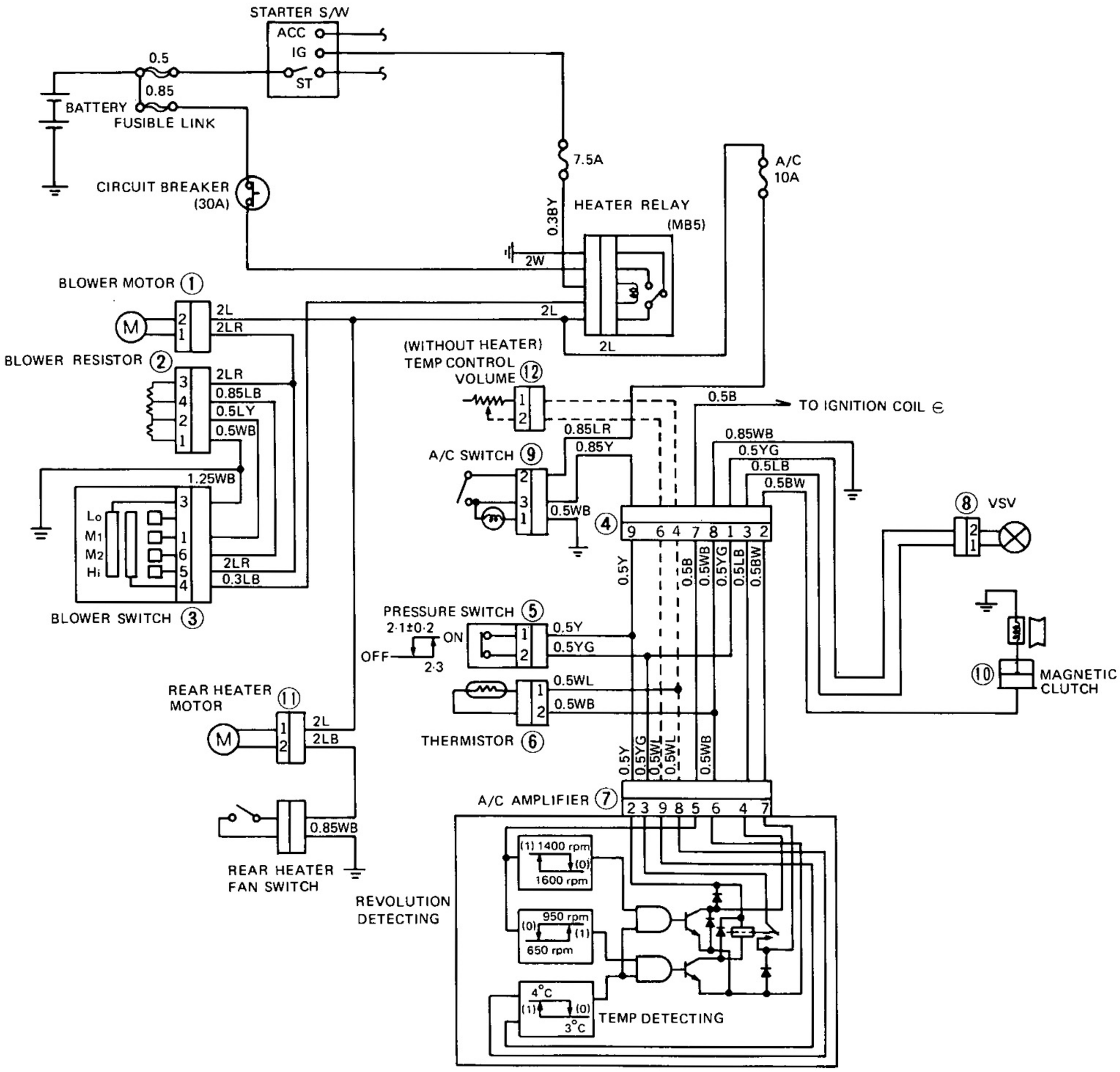

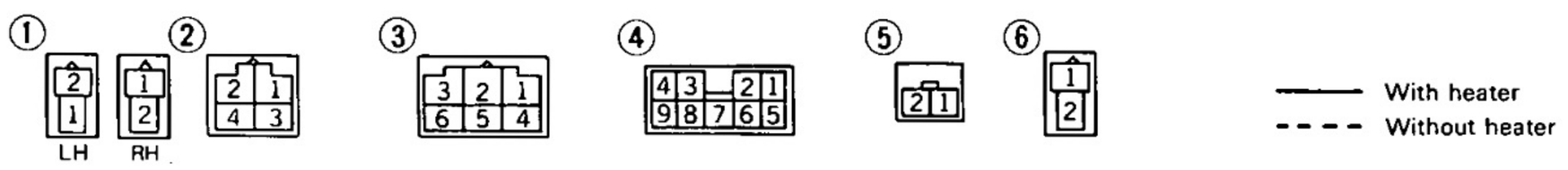

With heater
Without heater

WIRE COLOR CLASSIFICATION

SYM	COLOR	SYM	COLOR	SYM	COLOR
B	Black	WG	White-green	YG	Yellow-green
W	White	WR	White-red	LW	Blue-white
L	Blue	WL	White-blue	LR	Blue-red
BW	Black-white	YB	Yellow-black	LY	Blue-yellow
WB	White-black	YL	Yellow-blue	RG	Red-green

AC0473

AIR CONDITIONING SYSTEM CIRCUIT (Cont'd)

FJ 70 Series

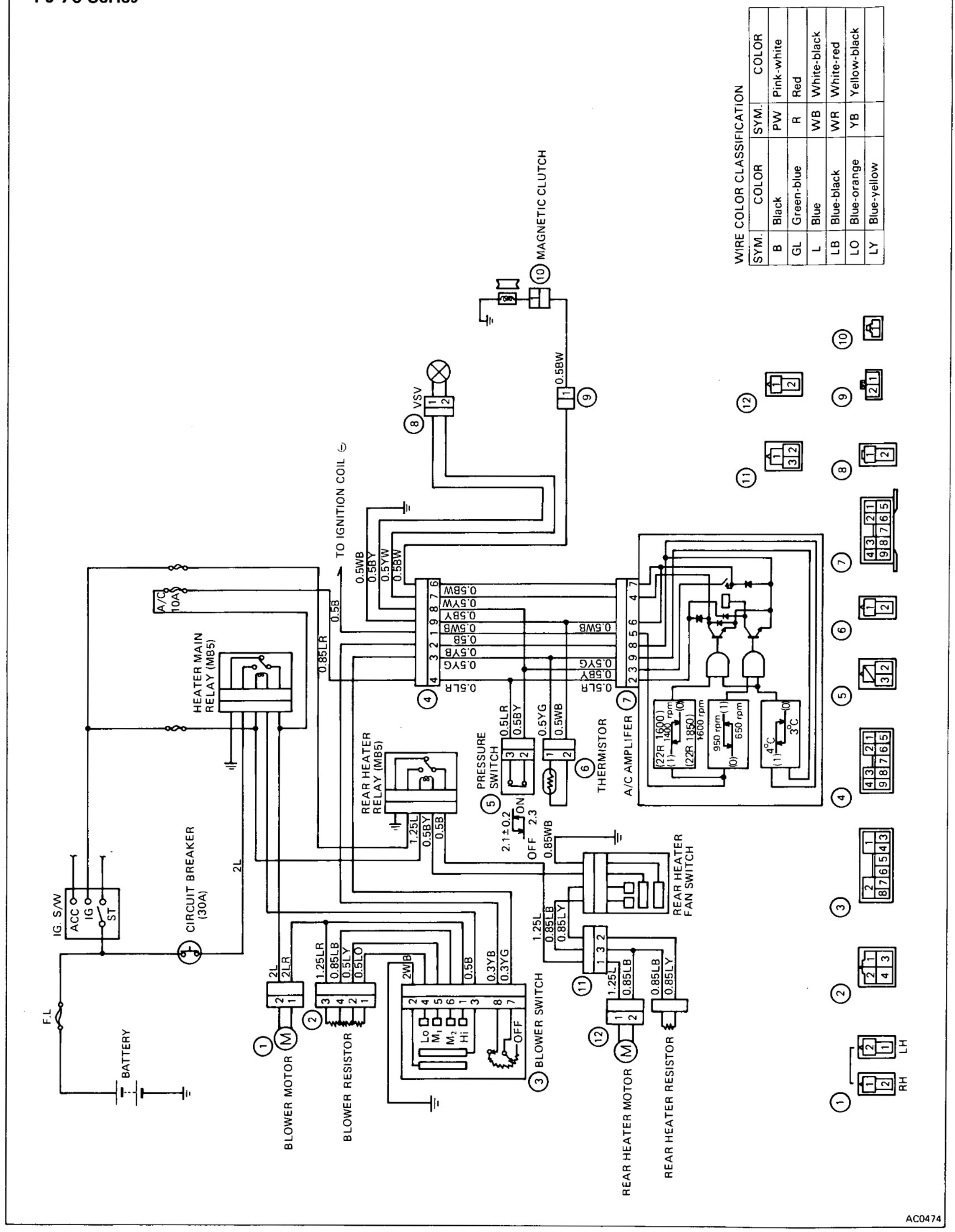

AC0474

AIR CONDITIONING SYSTEM CIRCUIT (Cont'd)

BJ, HJ 60 Series (Single A/C)

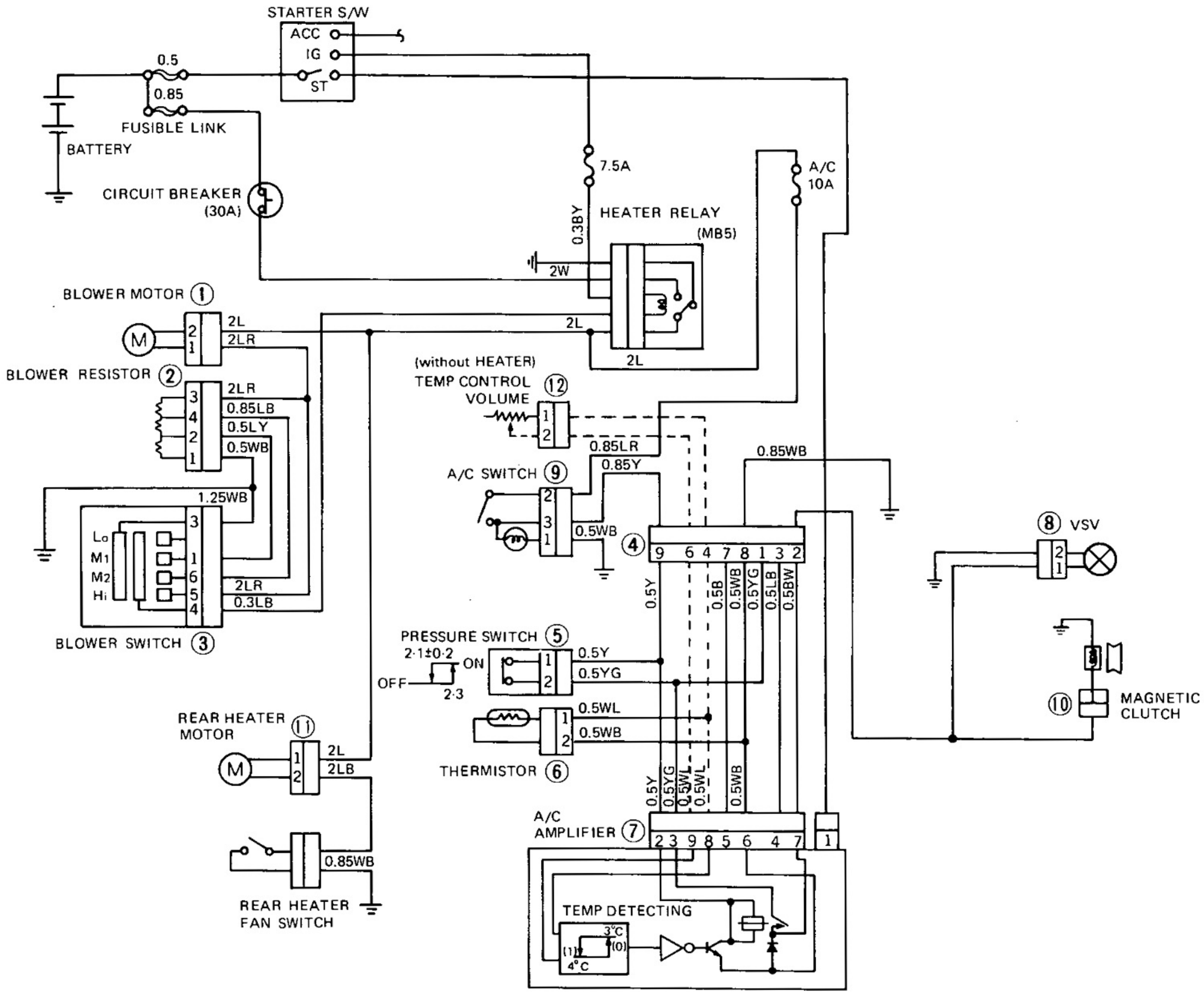

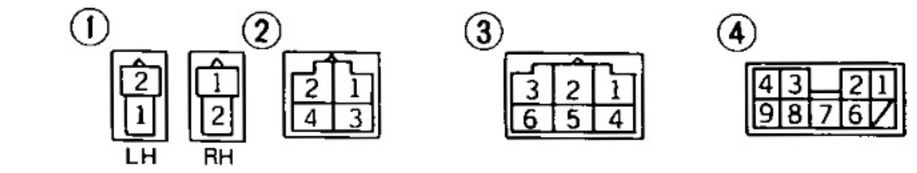

——— With heater
- - - - Without heater

WIRE COLOR CLASSIFICATION

SYM	COLOR	SYM	COLOR	SYM	COLOR
B	Black	W G	White-green	Y G	Yellow-green
W	White	W R	White-red	L W	Blue-white
L	Blue	W L	White-blue	L R	Blue-red
BW	Black-white	Y B	Yellow-black	L Y	Blue-yellow
WB	White-black	Y L	Yellow-blue	R G	Red-green

AC0475

AIR CONDITIONING SYSTEM CIRCUIT (Cont'd)

BJ, HJ 70 Series

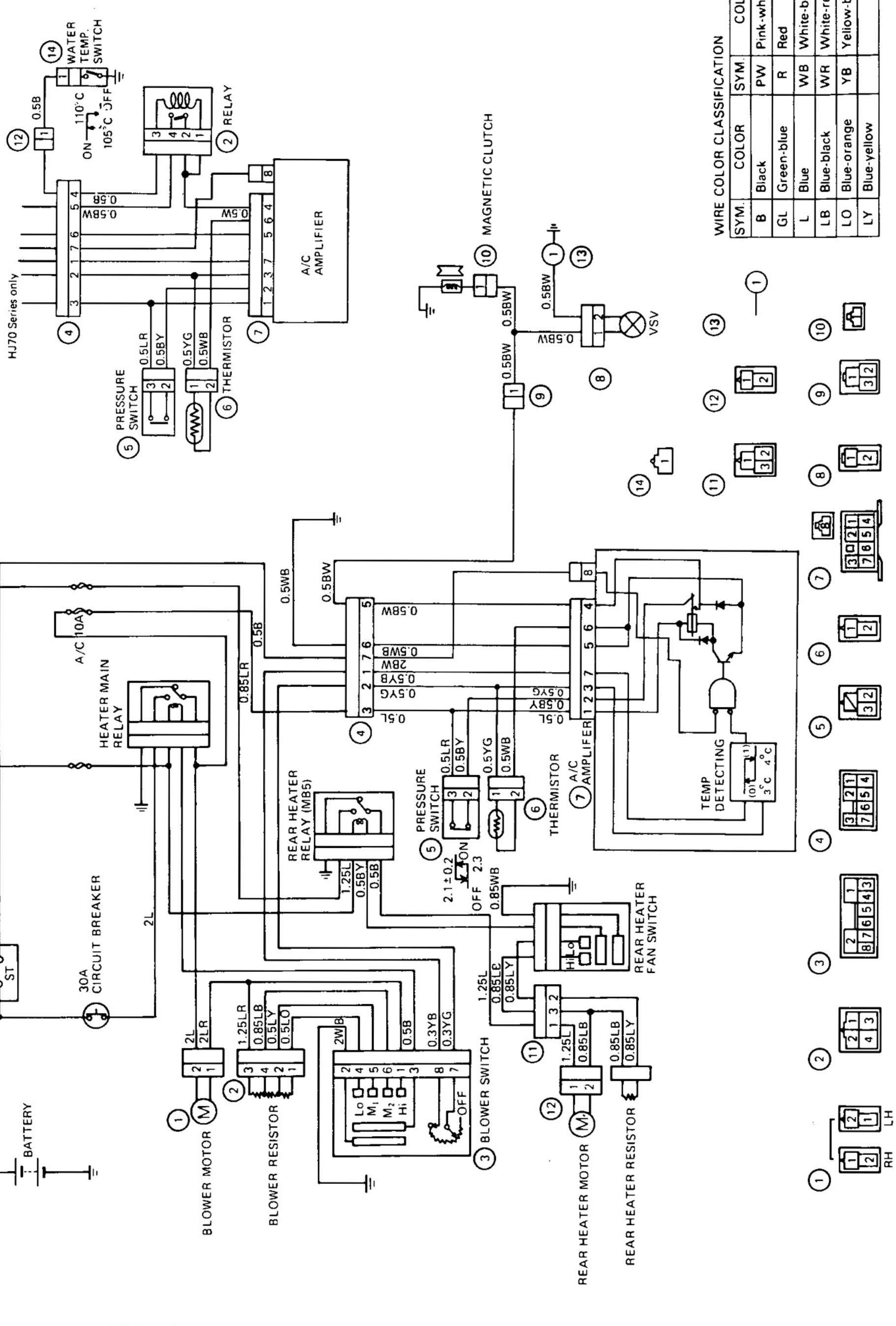

AC0549

AIR CONDITIONING SYSTEM CIRCUIT (Cont'd)

FJ 60 Series (Dual A/C)

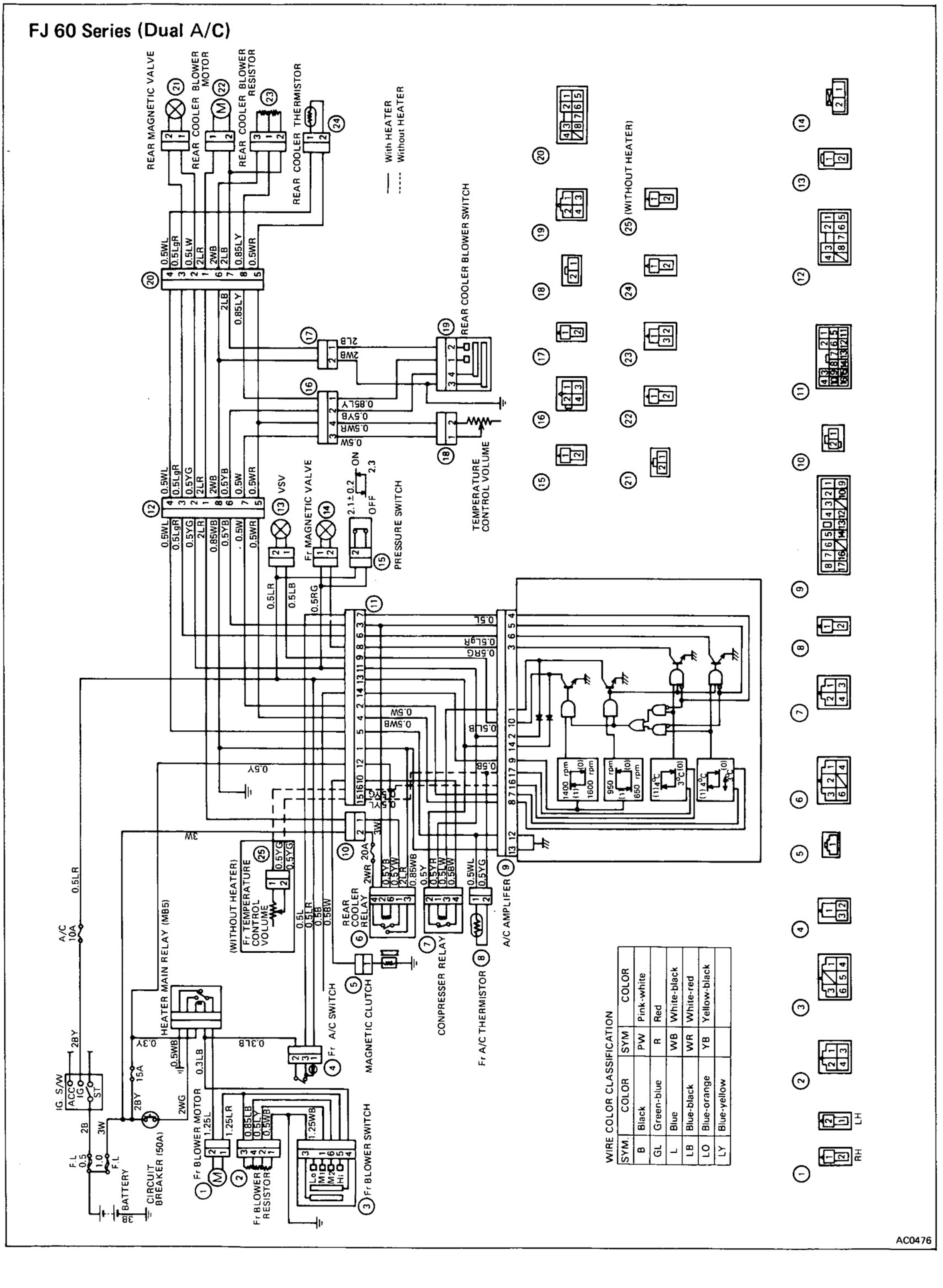

WIRE COLOR CLASSIFICATION

SYM.	COLOR	SYM	COLOR
B	Black	PW	Pink-white
GL	Green-blue	R	Red
L	Blue	WB	White-black
LB	Blue-black	WR	White-red
LO	Blue-orange	YB	Yellow-black
LY	Blue-yellow		

AC0476

AIR CONDITIONING SYSTEM CIRCUIT (Cont'd)

HJ 60 Series (Dual A/C)

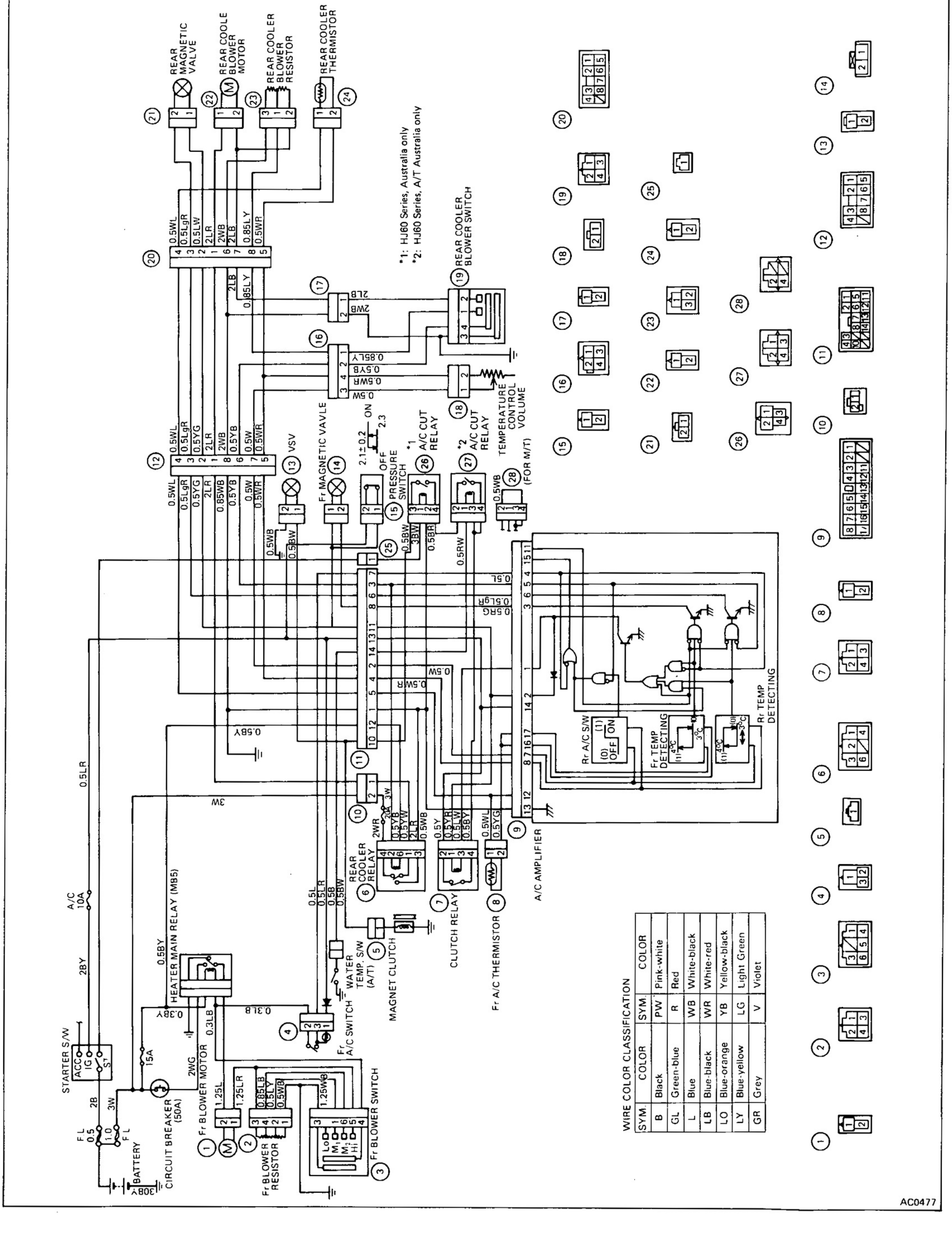

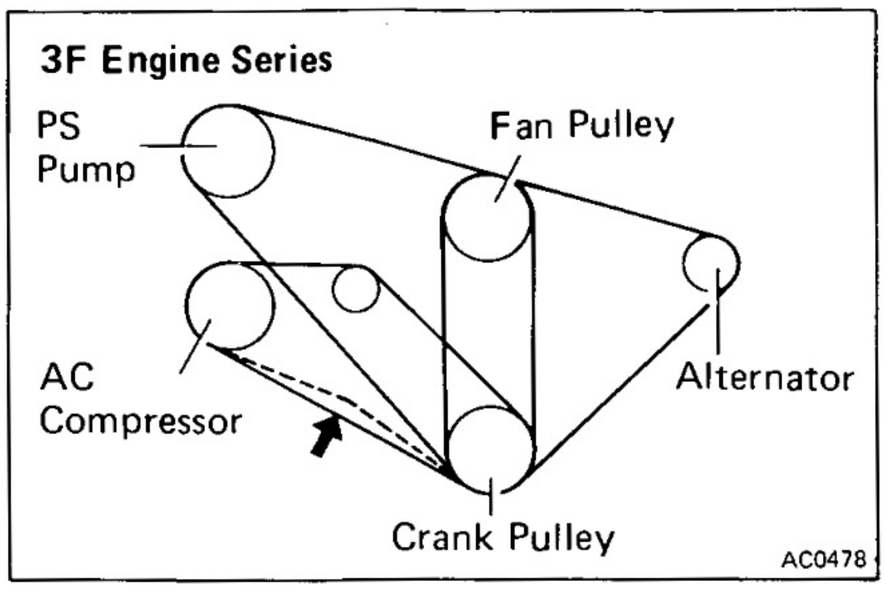

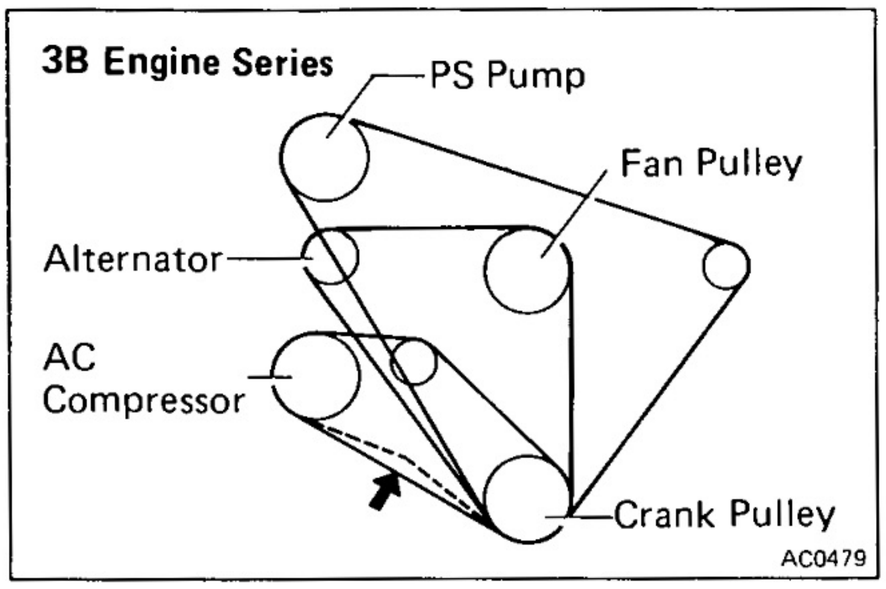

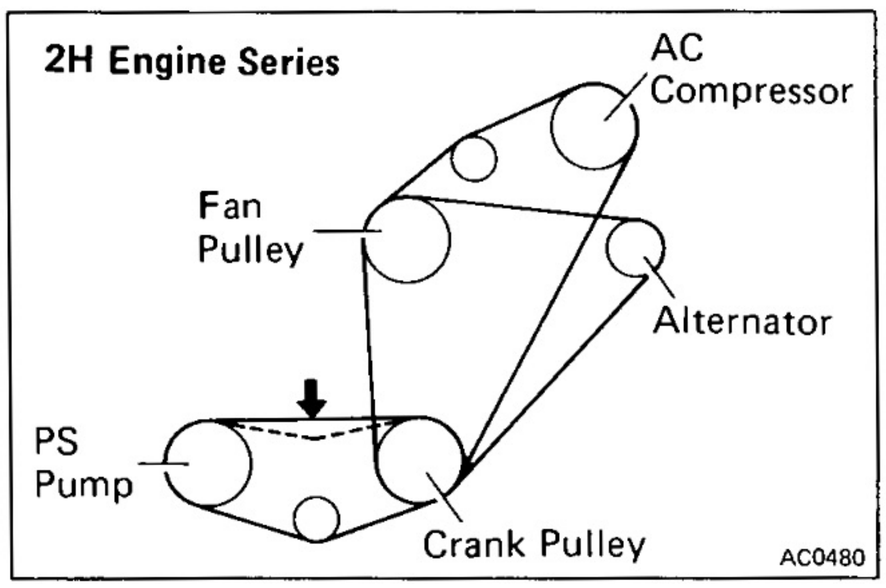

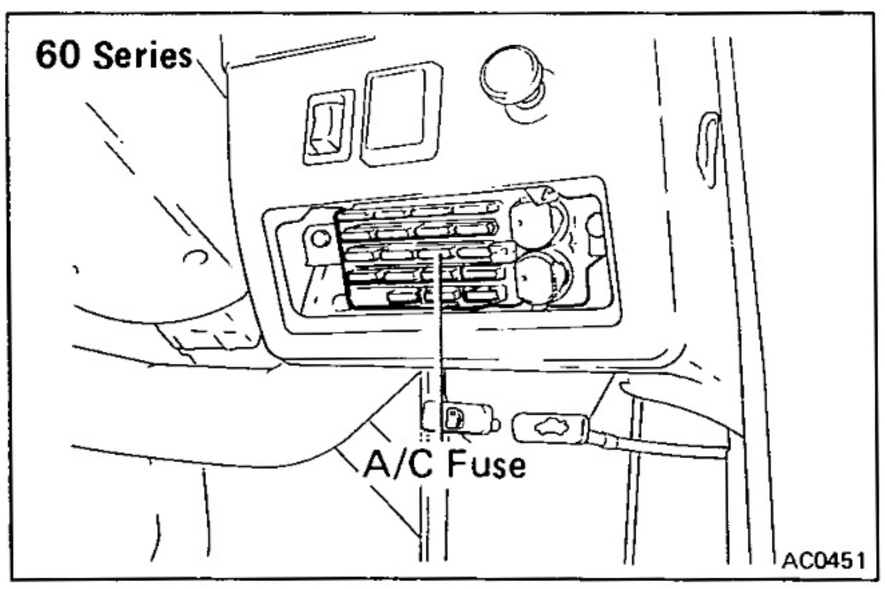

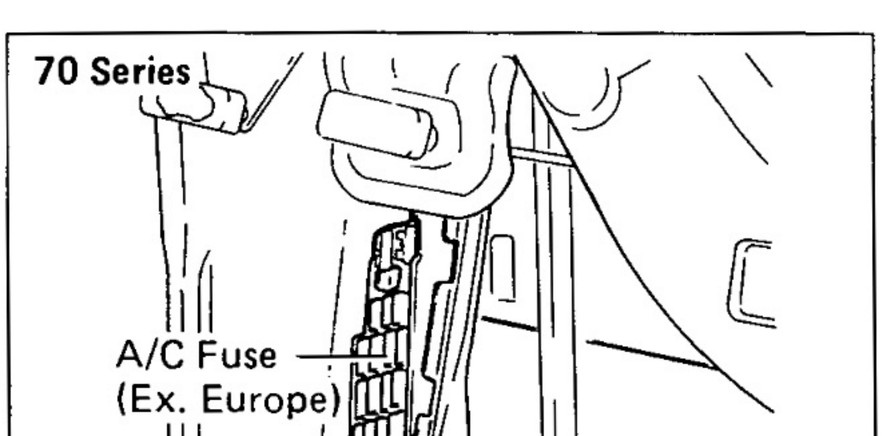

ON-VEHICLE INSPECTION

1. CHECK CONDENSER FINS FOR BLOCKAGE OR DAMAGE

If the fins are clogged, clean them with pressurized water.

CAUTION: **Be careful not to damage the fins.**

2. CHECK DRIVE BELT TENSION

(Ex. Canada)

Drive belt tension at 10 kg (22.0 lb, 98 N):

mm (in.)

Engine	New belt	Used belt
3F	12 – 15 (0.47 – 0.59)	15 – 21 (0.59 – 0.83)
3B	9 – 12 (0.35 – 0.47)	12 – 16 (0.47 – 0.63)
2H	14 – 19 (0.55 – 0.75)	19 – 25 (0.75 – 0.98)

(Canada)

Using a belt tension gauge, check the drive belt tension.

Belt tension gauge:

Nippondenso BTG-20 (95506-00020) or
Borroughs No. BT-33-73F

Drive belt tension:

New belt 125 ± 25 lb
Used belt 80 ± 20 lb

NOTE:

- "New belt" refers to a new belt which has never been used.
- "Used belt" refers to a belt which has been used on a running engine for 5 minutes or more.

3. START ENGINE

4. POSITION THE TEMPERATURE CONTROL RESISTOR ON "MAX COOL" OR TURN ON A/C SWITCH

Check that the A/C operates at each position of the blower switch.

If A/C does not operate, check A/C fuse.

5. CHECK MAGNETIC CLUTCH OPERATION

6. CHECK THAT IDLE INCREASES

When the magnetic clutch engages, engine revolution should increase.

Standard idle up rpm: 3F, 3B 900 – 1,000 rpm
2H 800 – 900 rpm

7. CHECK AMOUNT OF REFRIGERANT

If you can see bubbles in the sight glass, additional refrigerant is needed. (See page AC-16)

8. IF NO OR INSUFFICIENT COOLING, INSPECT FOR LEAKAGE

Using a gas leak tester, inspect each component of the refrigeration system.

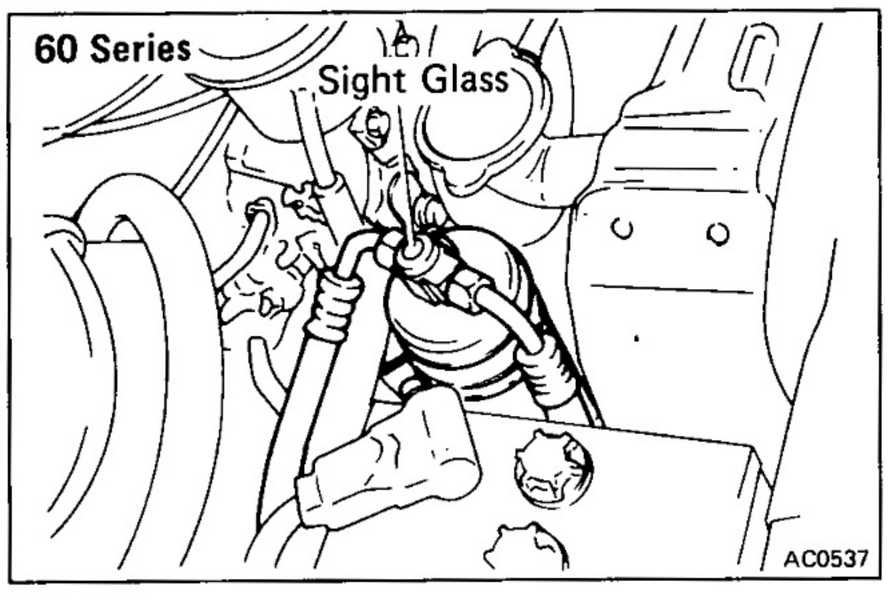

REFRIGERATION SYSTEM

Checking of Refrigerant Charge

1. RUN ENGINE AT FAST IDLE
2. OPERATE AIR CONDITIONER AT MAXIMUM COOLING FOR A FEW MINUTES
3. CHECK AMOUNT OF REFRIGERANT

   Observe the sight glass on the receiver.

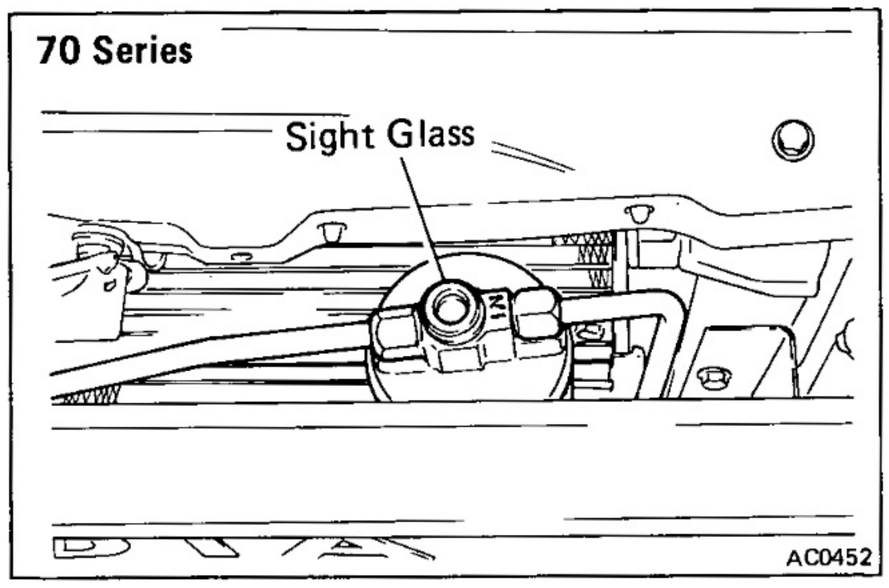

Item	Symptom	Amount of refrigerant	Remedy
1	Bubbles present in sight glass	Insufficient	Check for leak with gas leak tester
2	No bubbles present in sight glass	None, too much or sufficient	Refer to items 3 and 4
3	No temperature difference between compressor inlet and outlet	Empty or nearly empty	Evacuate and charge system. Then check for leak with gas leak tester
4	Temperature between compressor inlet and outlet is noticeably different	Proper or too much	Refer to items 5 and 6
5	Immediately after the air conditioner is turned off, refrigerant in sight glass stays clear	Too much	Discharge the excess refrigerant to specified amount
6	When the air conditioner is turned off, refrigerant foams and then stays clear	Proper	—

Installation of Manifold Gauge Set

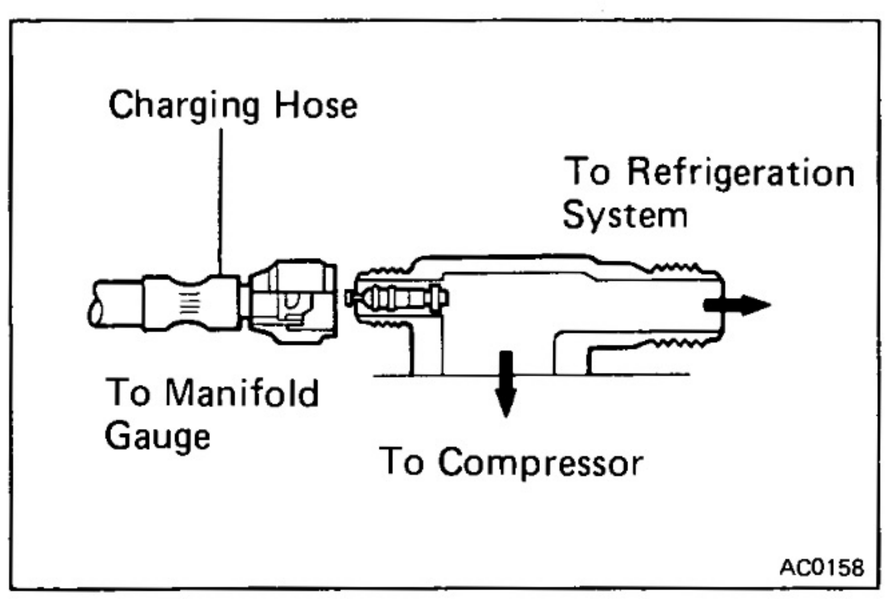

NOTE: Fittings for attaching the manifold gauge set are located on the compressor service valves.

1. CLOSE BOTH HAND VALVES OF MANIFOLD GAUGE SET
2. INSTALL CHARGING HOSES OF GAUGE SET TO SERVICE VALVES

   Connect the low pressure hose to the suction service valve and the high pressure hose to the discharge service valve. Tighten the hose nuts by hand.

   NOTE: Do not apply compressor oil to the seat of the connection.

Discharging of Refrigeration System

1. CONNECT MANIFOLD GAUGE SET TO COMPRESSOR

2. PLACE FREE END OF CENTER HOSE IN A SHOP TOWEL

3. DISCHARGE SYSTEM

   (a) Slowly open the high pressure hand valve to adjust the refrigerant flow. Do not open the valve very much.

   CAUTION: If refrigerant is allowed to escape too fast, compressor oil will be drawn out of the system.

   (b) Check the shop towel to make sure no oil is being discharged.

   If oil is present, partially close the hand valve.

   (c) After the manifold gauge reading drops below 3.5 kg/cm² (50 psi, 343 kPa), slowly open the low pressure valve.

   (d) As the system pressure drops, gradually open both high and low valves until both gauges read 0 kg/cm² (0 psi, 0 kPa).

Evacuating and Charging of Refrigeration System

NOTE:

- Whenever the air conditioning system has been exposed to the atmosphere, it must be evacuated.
- After installation of a component, the system should be evacuated for approximately 15 minutes. A component in service that has been opened for repair should be evacuated for 30 minutes.

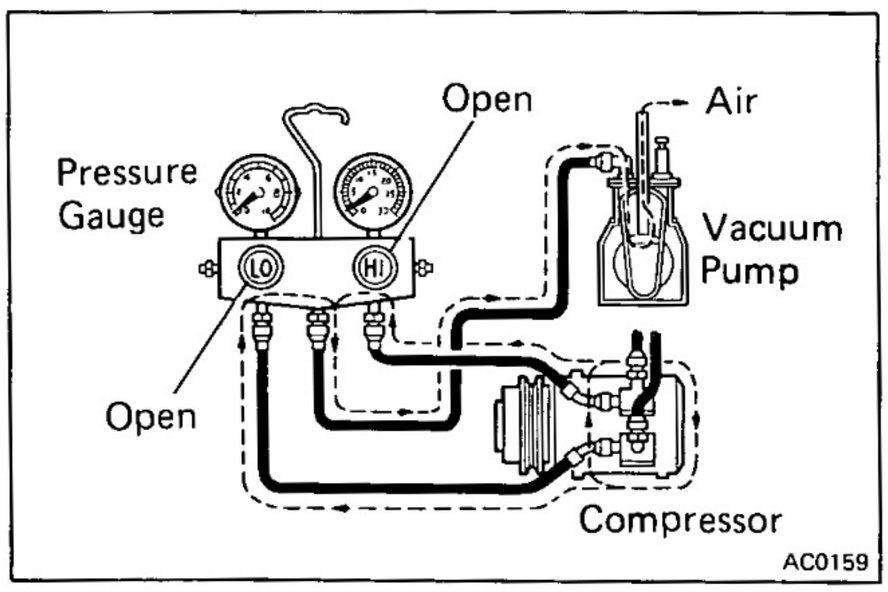

1. EVACUATE SYSTEM

   (a) Connect a manifold gauge set. (See page AC-16)

   (b) Install the center hose of the gauge set to the vacuum pump inlet.

   (c) Run the vacuum pump, and then open both hand valves.

   (d) After about ten minutes, check that the low pressure gauge reads more than 600 mmHg (23.62 in. Hg, 80.0 kPa) of vacuum.

   If the reading is not more than 600 mmHg (23.62 in. Hg, 80.0 kPa), close both valves and stop the vacuum pump. Check the system for leaks and repair as necessary.

   If no leakage is found, continue evacuating the system.

   (e) After the low pressure gauge indicates more than 700 mmHg (27.56 in. Hg, 93.3 kPa) of vacuum, continue evacuating for 15 minutes.

   (f) Close both hand valves, and stop the vacuum pump. Disconnect the hose from the vacuum pump.

The system is now ready for charging.

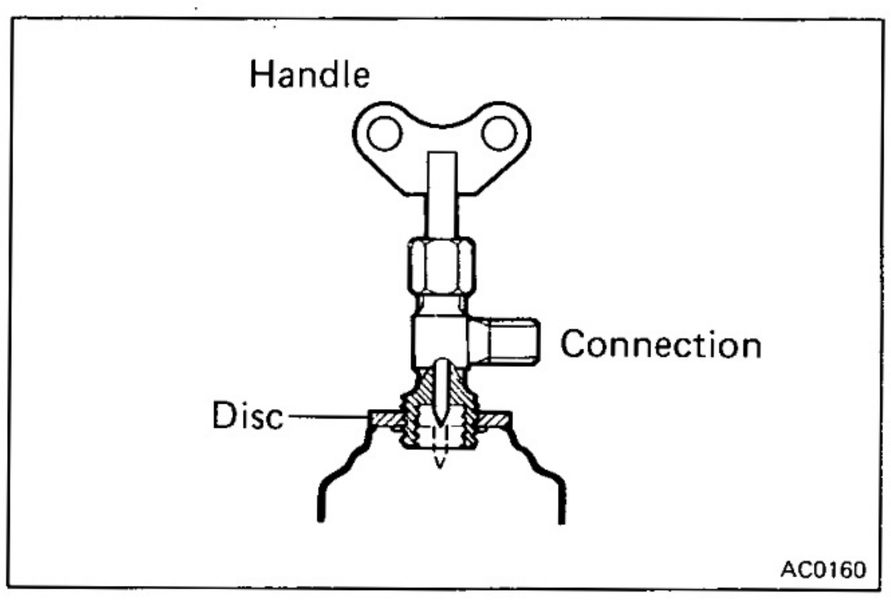

2. INSTALL REFRIGERANT CONTAINER TAP VALVE

CAUTION: Observe the precautions listed in the front of this section.

(a) Before installing the valve on the refrigerant container, turn the handle counterclockwise until the valve needle is fully retracted.

(b) Turn the disc counterclockwise until it reaches its highest position.

Screw down the valve on the refrigerant container.

(c) Connect the center hose to the valve fitting. Turn the disc fully clockwise by hand.

(d) Turn the handle clockwise to make a hole in the sealed tap.

(e) Turn the handle fully counterclockwise to fill the center hose with gas. Do not open the high and low pressure valves.

(f) Loosen the center hose nut connected to the center fitting of the manifold gauge until a hiss can be heard.
Allow air to escape for a few seconds, and then tighten the nut.

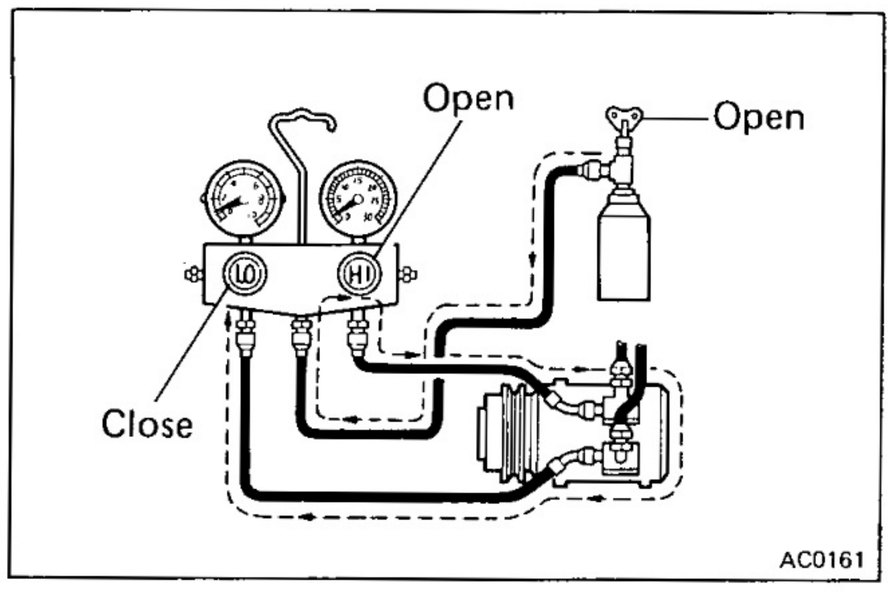

3. TEST SYSTEM FOR LEAKS

NOTE: After evacuating the system, check for leaks.

(a) Install the refrigerant can tap valve as described in step 2.

(b) Open the high pressure valve to charge the system with refrigerant vapor.

(c) When the low pressure gauge reads 1 kg/cm² (14 psi, 98 kPa), close the high pressure valve.

(d) Using a halide gas leak detector, propane torch, or electric leak detector, check the system for leaks.

If a leak is found, repair the faulty component or connection.

(e) After checking and repairing the system, perform the following:

- Turn the container tap handle fully clockwise.
- Disconnect the center hose from the can valve fitting.
- Evacuate the system for at least 15 minutes.

(See step 1 on page AC-16)

4. CHARGE EMPTY SYSTEM (LIQUID)

NOTE: This step is to charge an empty system through the high pressure side with refrigerant in a liquid state. When the refrigerant container is held upside down, refrigerant will enter the system as a liquid.

CAUTION:

- **Never run the engine when charging the system through the high pressure side.**
- **Do not open the low pressure valve when the system is being charged with liquid refrigerant.**

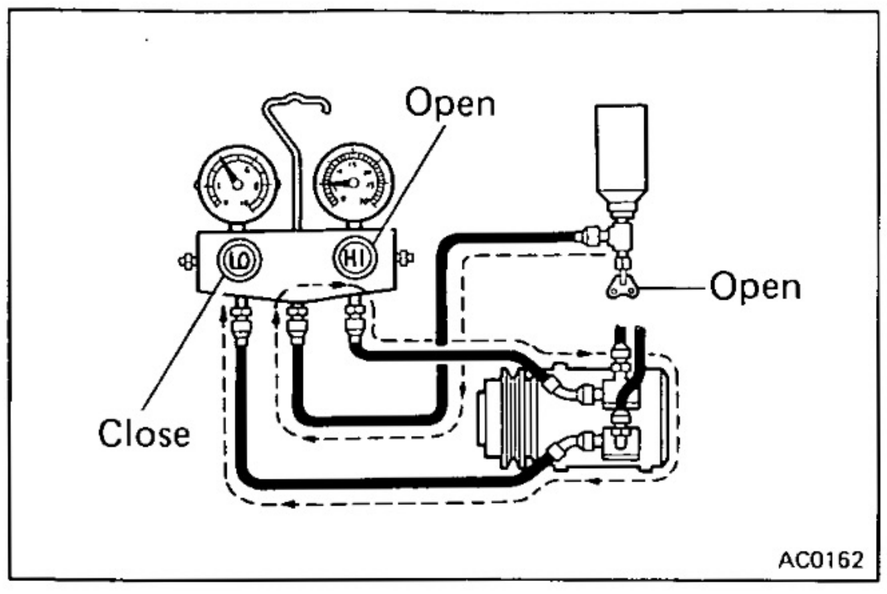

(a) Close both high and low pressure valves completely after the system is evacuated.

(b) Install the refrigerant can tap valve as described in step 2.

(c) Open the high pressure valve fully, and keep the container upside down.

(d) Charge the system with more than one container (400 g, 0.9 lb) than the specified amount. Then, close the high pressure valve.

Specified amount:

Single A/C	**650 – 750 g (1.4 – 1.7 lb)**
Dual A/C	**1,350 – 1,450 g (3.0 – 3.2 lb)**

NOTE:

- A fully charged system is indicated by the receiver sight glass being free of any bubbles.
- If the low pressure gauge does not show a reading, the system is clogged and must be required.

5. CHARGE EMPTY OR PARTIALLY CHARGED SYSTEM (VAPOR)

NOTE:

- This step is to charge the system through the low pressure side with refrigerant in a vapor state. When the refrigerant container is placed rightside up, refrigerant will enter the system as a vapor.
- Put the refrigerant container in a pan of warm water (maximum temperature 40°C (140°F) to keep the vapor pressure in the container slightly higher than vapor pressure in the system.

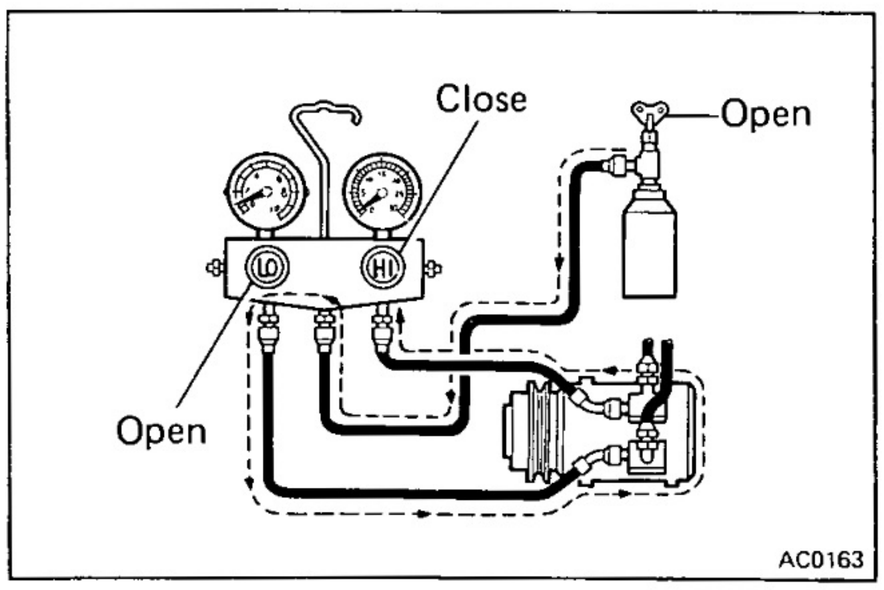

(a) Install the refrigerant can tap valve as described in step 2.

(b) Open the low pressure valve. Adjust the valve so that the low pressure gauge does not read over 4.2 kg/cm² (60 psi, 412 kPa).

(c) Run the engine at fast idle and operate the air conditioner.

CAUTION: Be sure to keep the container in the upright position to prevent liquid refrigerant from being charged into the system through the suction side, resulting in possible damage to the compressor.

(d) Charge the system with more than one container (400 g, 0.9 lb) than the specified amount. Then, close the low pressure valve.

Specified amount:

Single A/C	**650 – 750 g (1.4 – 1.7 lb)**
Dual A/C	**1,350 – 1,450 g (3.0 – 3.2 lb)**

NOTE: A fully charged system is indicated by the receiver sight glass being free of any bubbles.

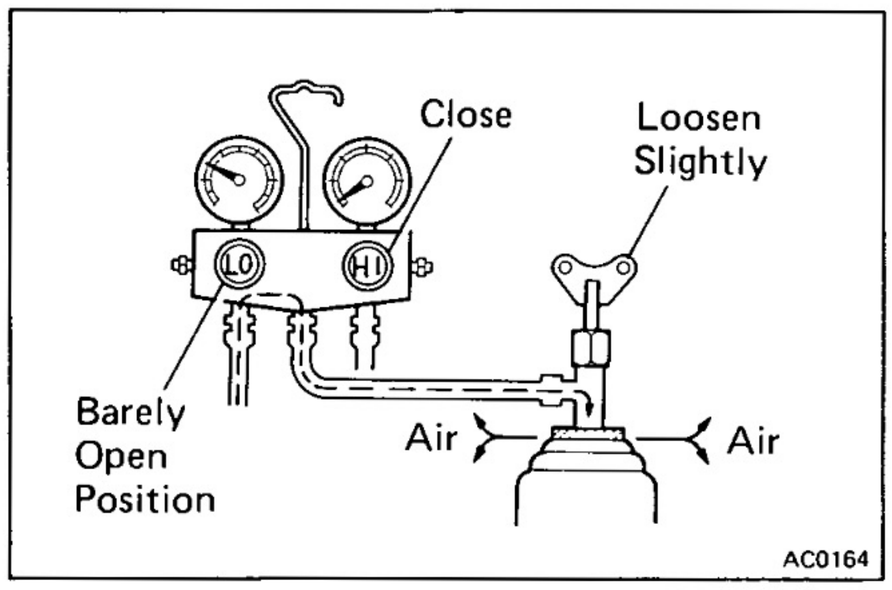

6. IF NECESSARY, CHARGE SYSTEM WITH ANOTHER REFRIGERANT CONTAINER

(a) When the refrigerant container is empty, close the pressure valves.

(b) Remove the can tap valve from the container.

(c) Attach the can tap valve to a new refrigerant container.

(d) Purge the air from the center hose by barely opening the low pressure valve and loosening the valve disc.

(e) Make a hole in the sealed tap of the new container and charge the system.

CAUTION: Be careful not to overcharge the refrigerant as it could cause failure of the bearings and belt.

7. WHEN SYSTEM IS FULLY CHARGED, DISCONNECT MANIFOLD GAUGE SET

(a) Close both low and high pressure valves.

(b) Close the valve of the refrigerant container. If using one pound containers of R-12, allow the remaining refrigerant to escape by slowly removing the charge line.

(c) Turn off the engine.

(d) Using a shop rag, quickly remove both hoses from the compressor service valves.

WARNING: Care must be taken to protect eyes and skin when removing the high pressure hoses.

(e) Put the cap nuts on the service valve fittings.

Performance Test

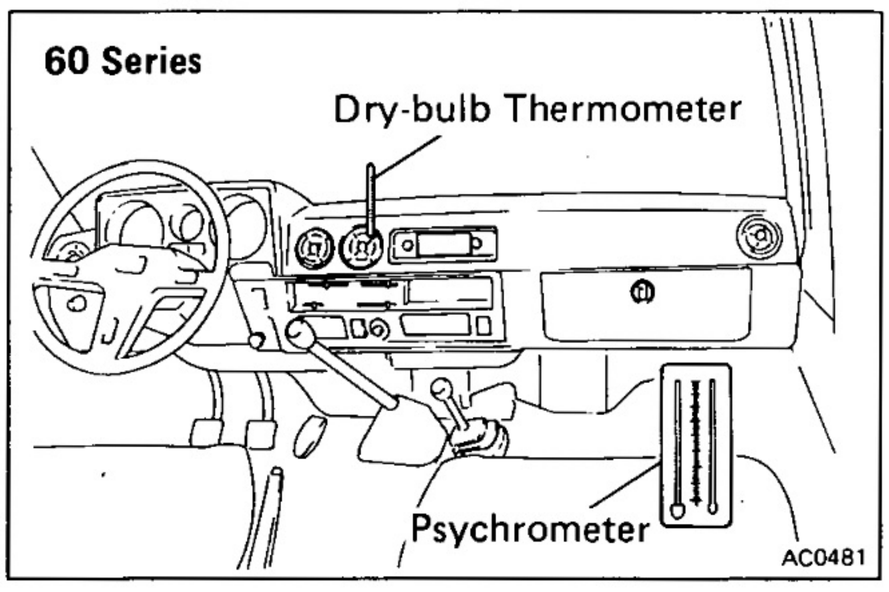

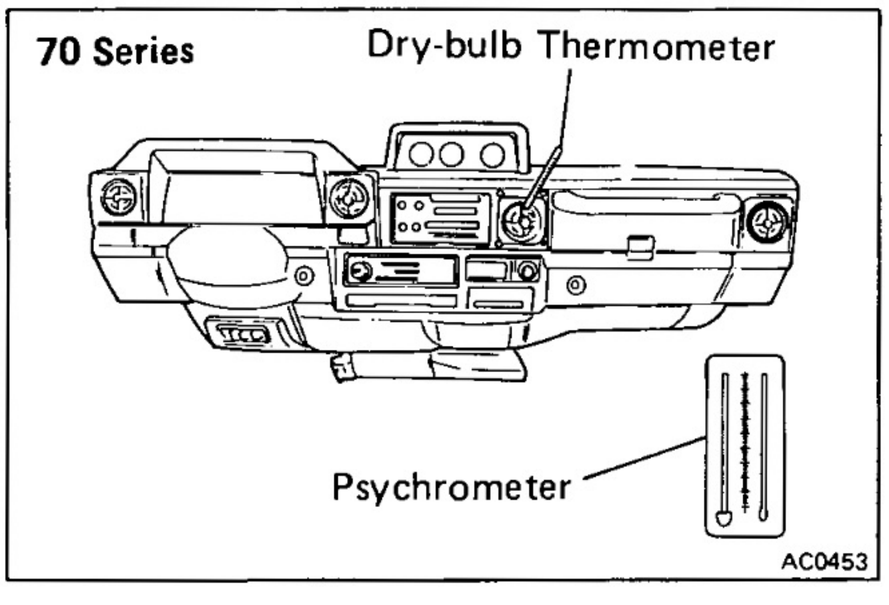

1. INSTALL MANIFOLD GAUGE SET

(a) Close the "HI" and "LO" hand valves.

(b) Connect the high pressure hose to the discharge service valve of the compressor.

(c) Connect the low pressure hose to the suction service valve of the compressor.

2. RUN ENGINE AND OPERATE AIR CONDITIONER

(a) Run the engine at 2,000 rpm.

(b) Set the blower switch at "HI", A/C switch or temp. control switch "ON", temperature control at "COOL", and air flow control at "VENT".

(c) Keep all windows and doors open.

3. POSITION THERMOMETERS

(a) Place a dry bulb thermometer in the cool air outlet.

(b) Place a psychrometer close to the inlet of the cooling unit.

4. **WAIT UNTIL AIR CONDITIONING SYSTEM STABILIZES**

(a) Check that the reading on the high pressure gauge is 14.0 – 15.5 kg/cm² (199 – 220 psi, 1,373 – 1,520 kPa).

If the reading is too high, pour water on the condenser. If the reading is too low, cover the front of the condenser.

(b) Check that the reading on the bulb thermometer at the air inlet is 25 – 35°C (77 – 95°F).

5. **CHECK PERFORMANCE OF AIR CONDITIONING SYSTEM**

(a) Calculate the relative humidity from the psychrometric graph by comparing the wet- and dry-bulb readings of the psychrometer at the air inlet.

HOW TO READ THE GRAPH:

After measuring the temperatures of the wet- and dry-bulb thermometers at the evaporator air inlet, relative humidity (%) can be obtained.

Example: Supposing dry- and wet-bulb temperatures at the evaporator air inlet are 25°C (77°F) and 19.5°C (67°F), respectively. The point of intersection of the dotted lines in the graph is 60%.

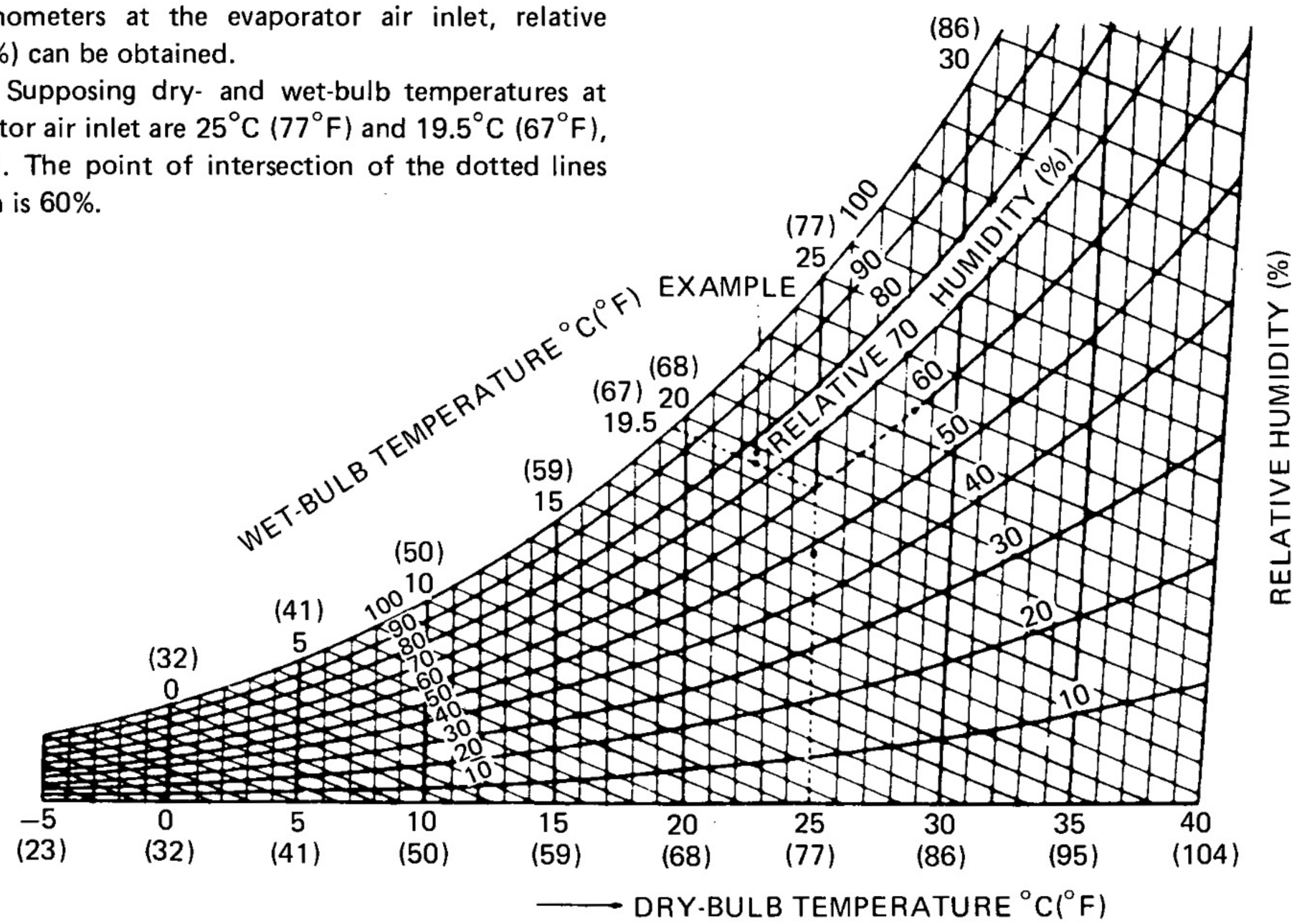

AC0174

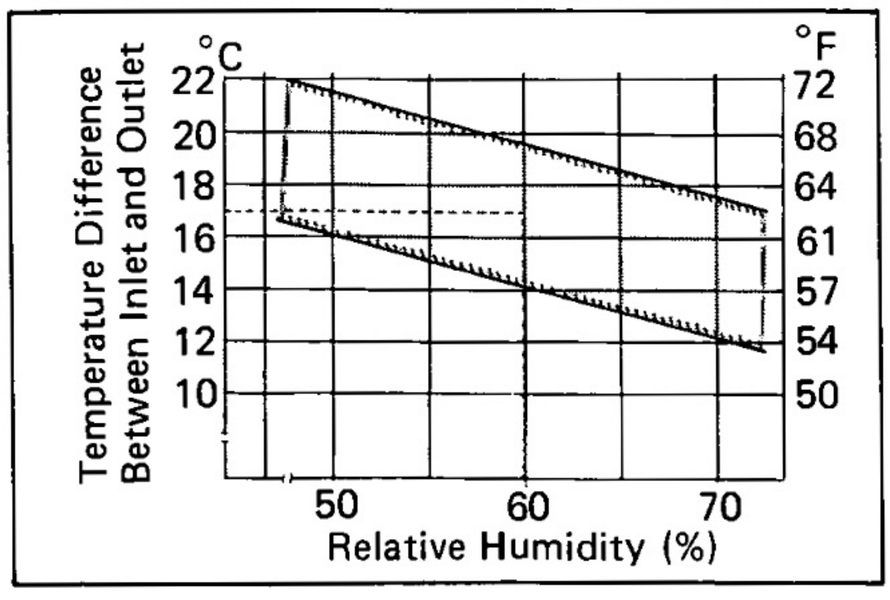

(b) Measure the dry-bulb temperature at the cool air outlet, and calculate the difference between the inlet dry-bulb and outlet dry-bulb temperatures.

(c) Check that the intersection of the relative humidity and temperature difference is between the two hatched lines.

If the intersection is within the two lines, cooling performance is satisfactory.

SYSTEM COMPONENTS

70 Series

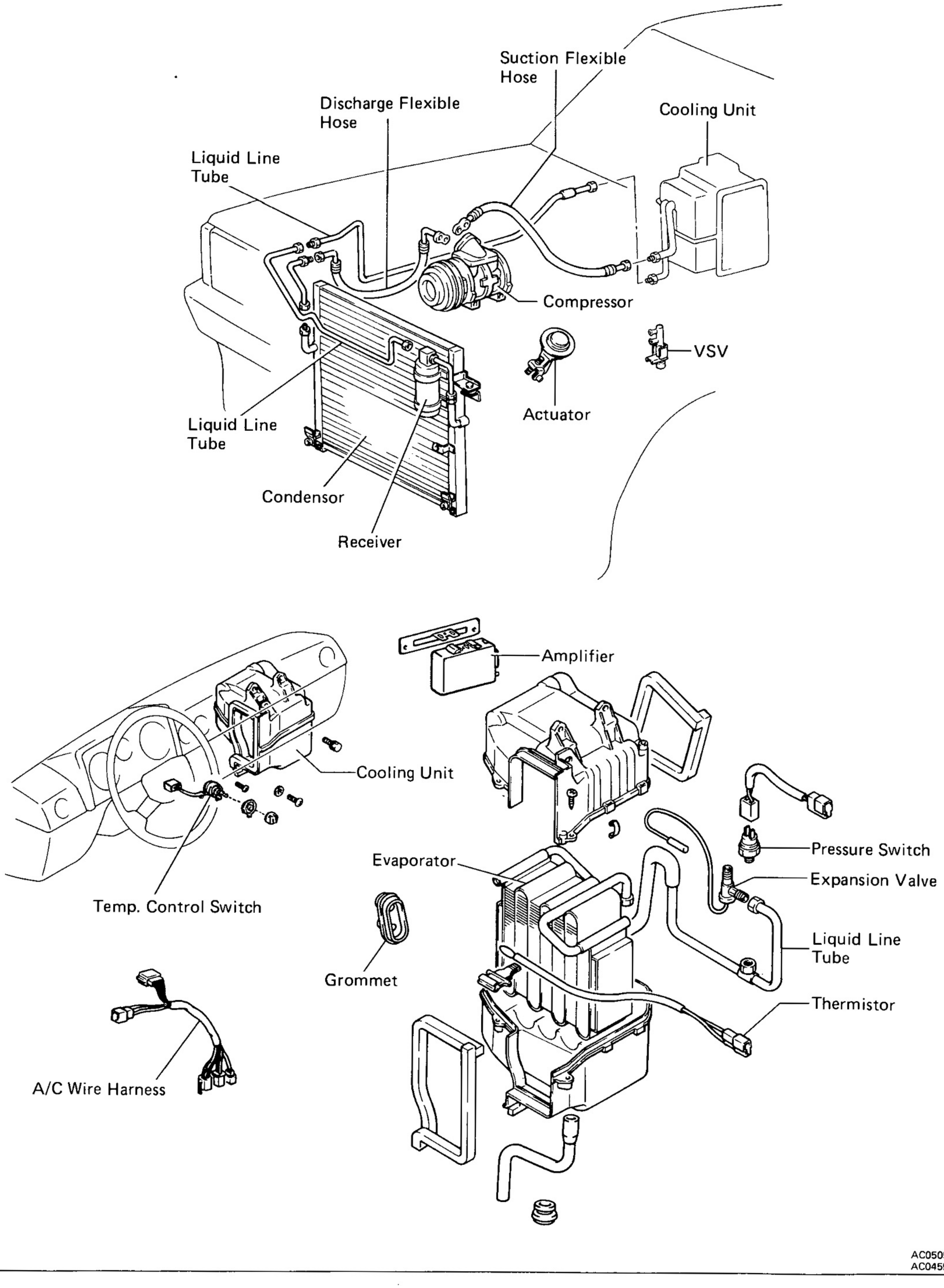

AC0505
AC0455

SYSTEM COMPONENTS (Cont'd)

60 Series Dual A/C

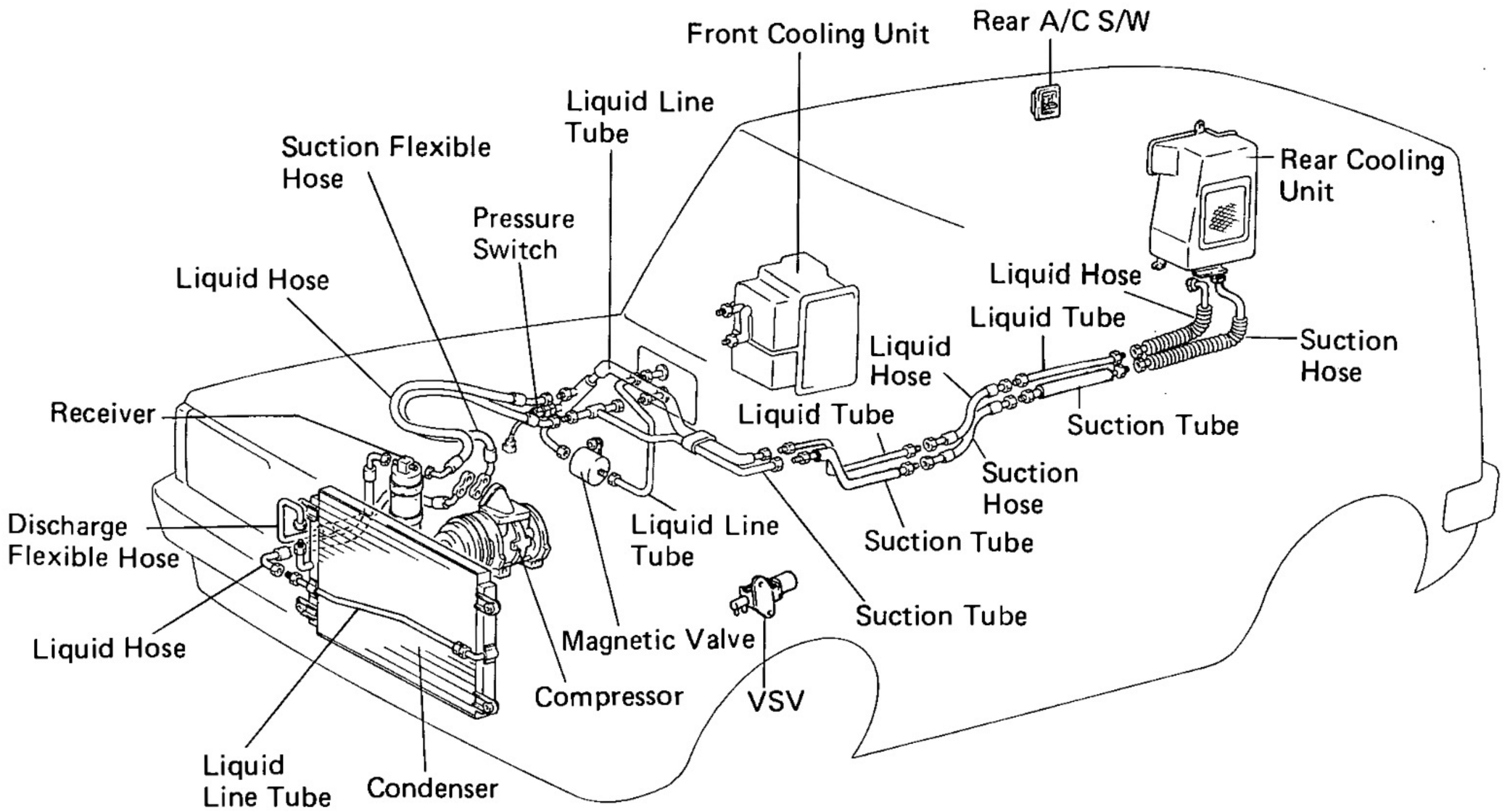

Front Cooling Unit

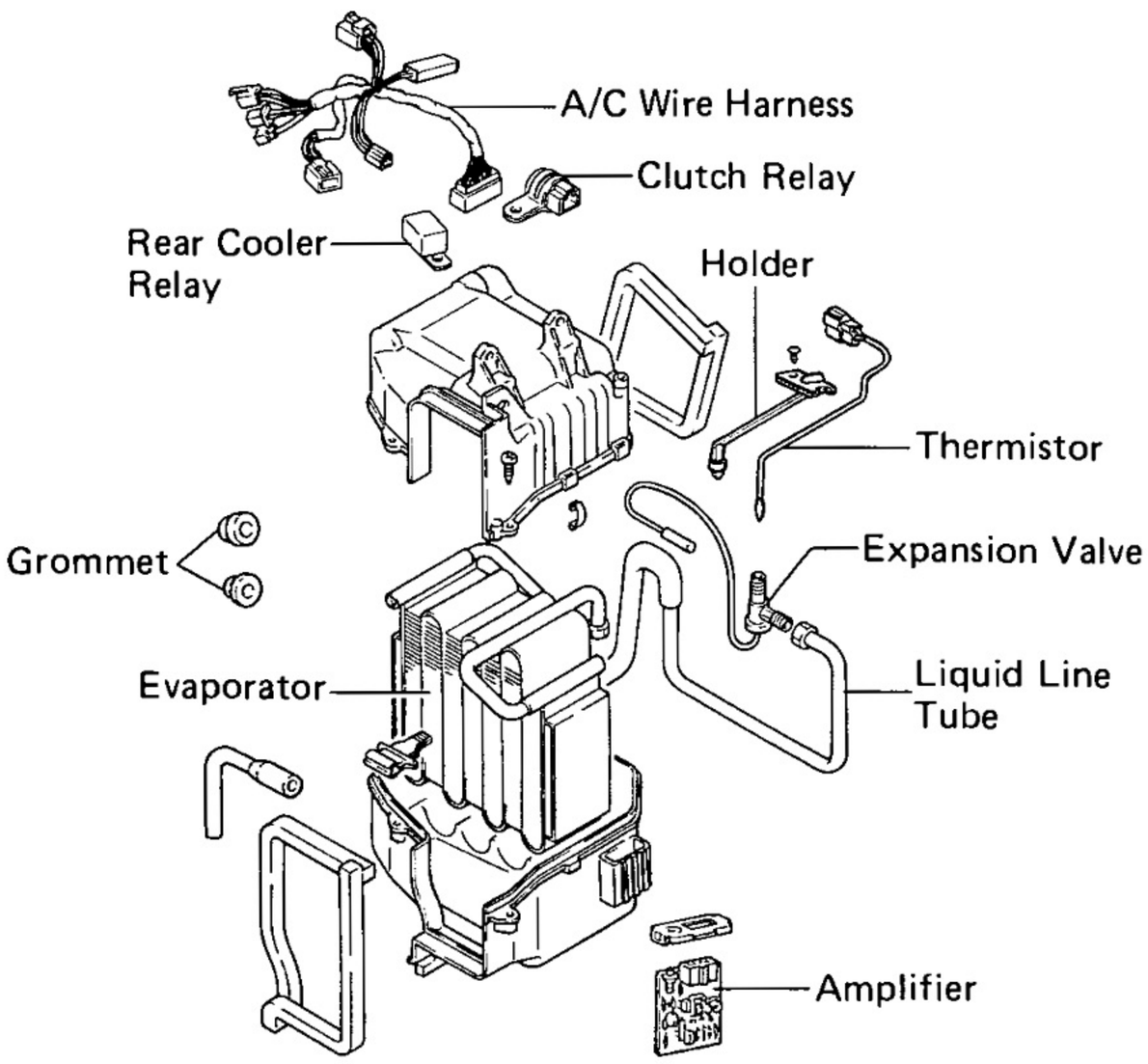

Rear Cooling Unit

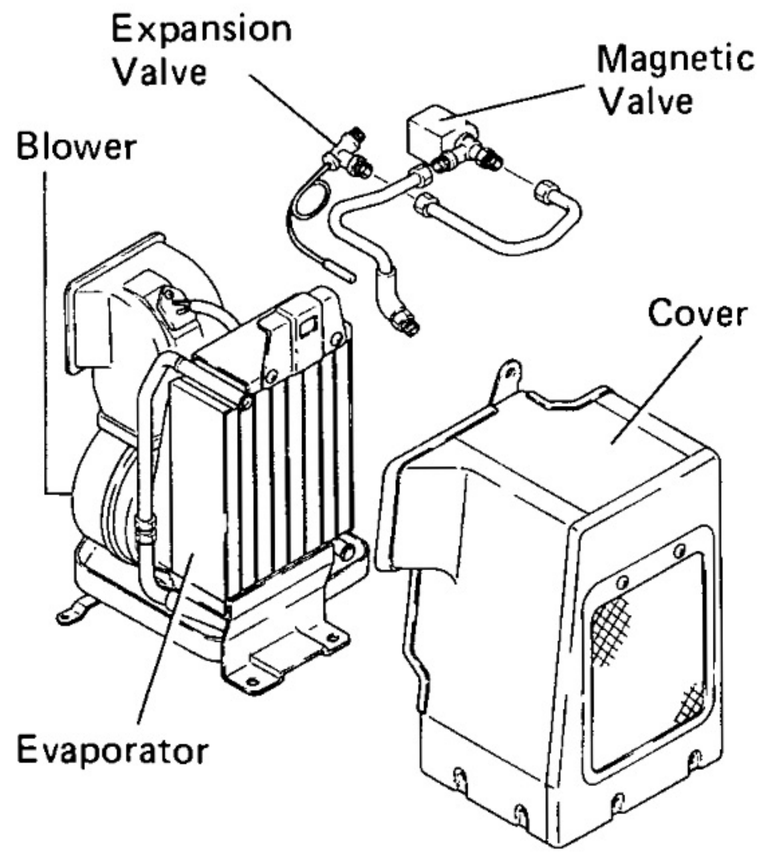

AC0531
AC0482 AC0483

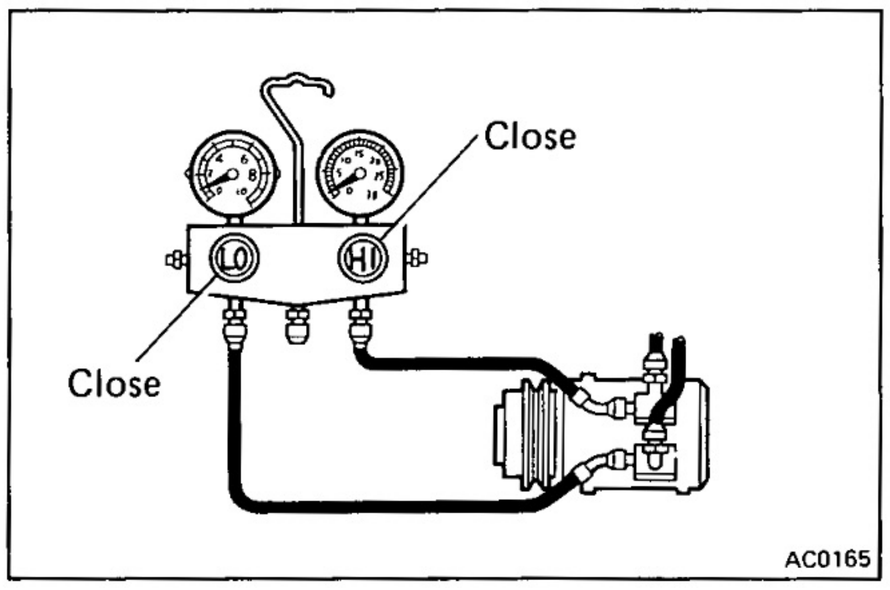

COMPRESSOR

ON-VEHICLE INSPECTION

1. INSTALL MANIFOLD GAUGE SET

(a) Close the "HI" and "LO" hand valves.

(b) Connect the high pressure hose to the discharge service valve of the compressor.

(c) Connect the low pressure hose to the suction service valve of the compressor.

2. RUN ENGINE AT FAST IDLE

3. CHECK COMPRESSOR

(a) High pressure gauge reading is not low and low pressure gauge reading is not higher than normal.

(b) Metallic sound

(c) Leakage from shaft seal

If defects are found, repair the compressor.

4. CHECK MAGNETIC CLUTCH

(a) Inspect the pressure plate and the rotor for signs of oil.

(b) Check the clutch bearings for noise and grease leakage.

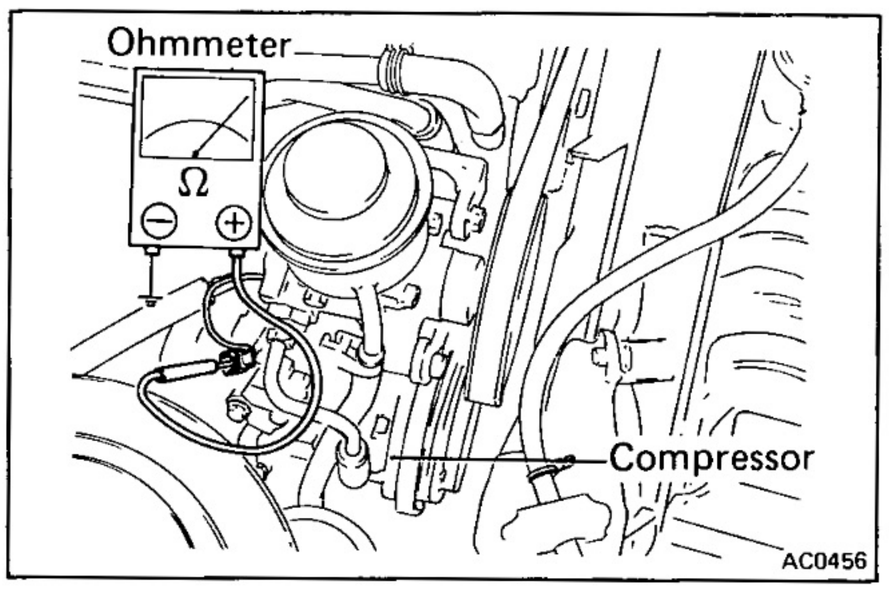

(c) Using an ohmmeter, measure the resistance of the stator coil between the clutch lead wire and ground.

If the resistance is not within tolerance, replace the coil.

Standard resistance: 3.7 ± 0.2Ω at 20°C (68°F)

3F Engine Series

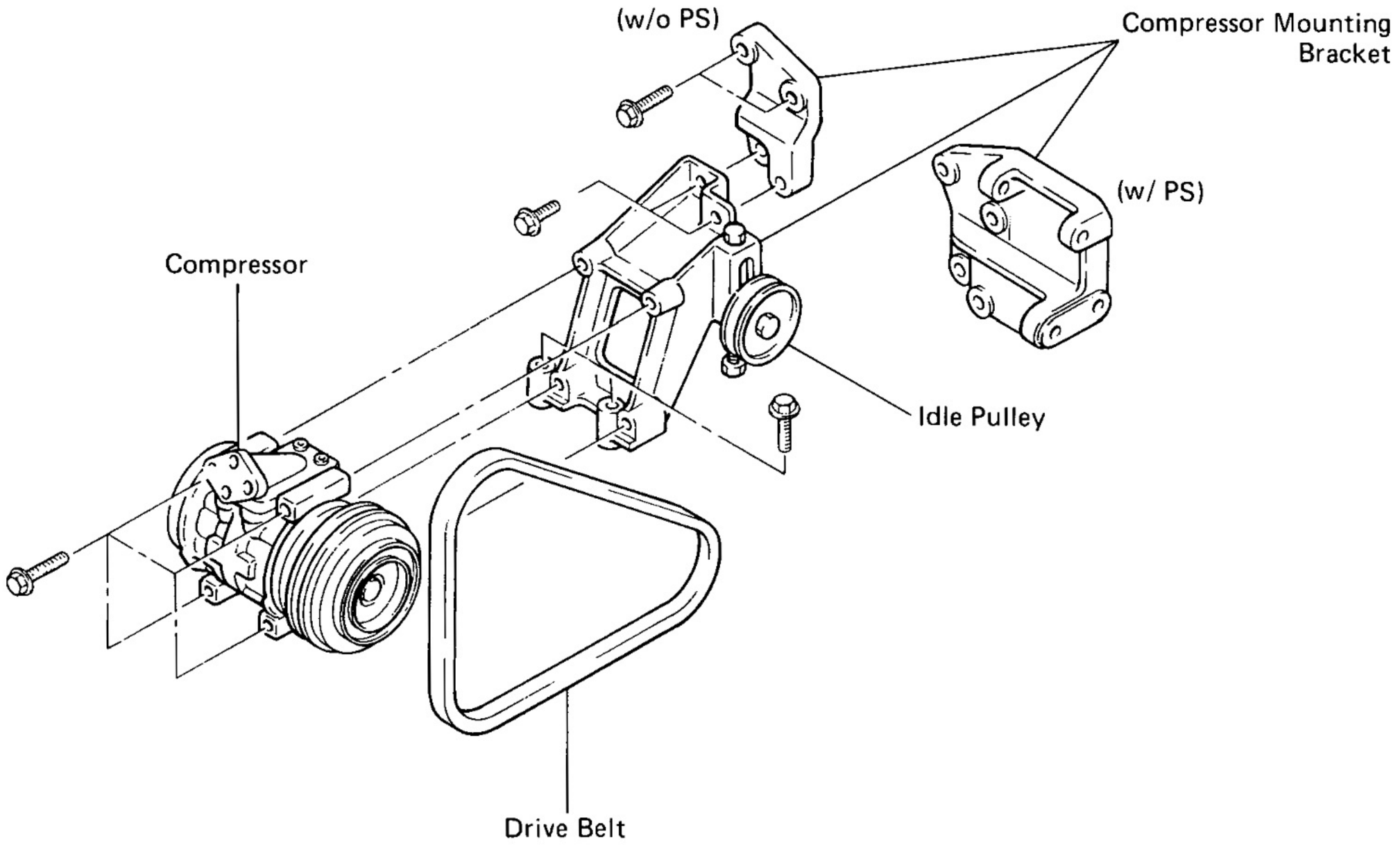

3B Engine Series

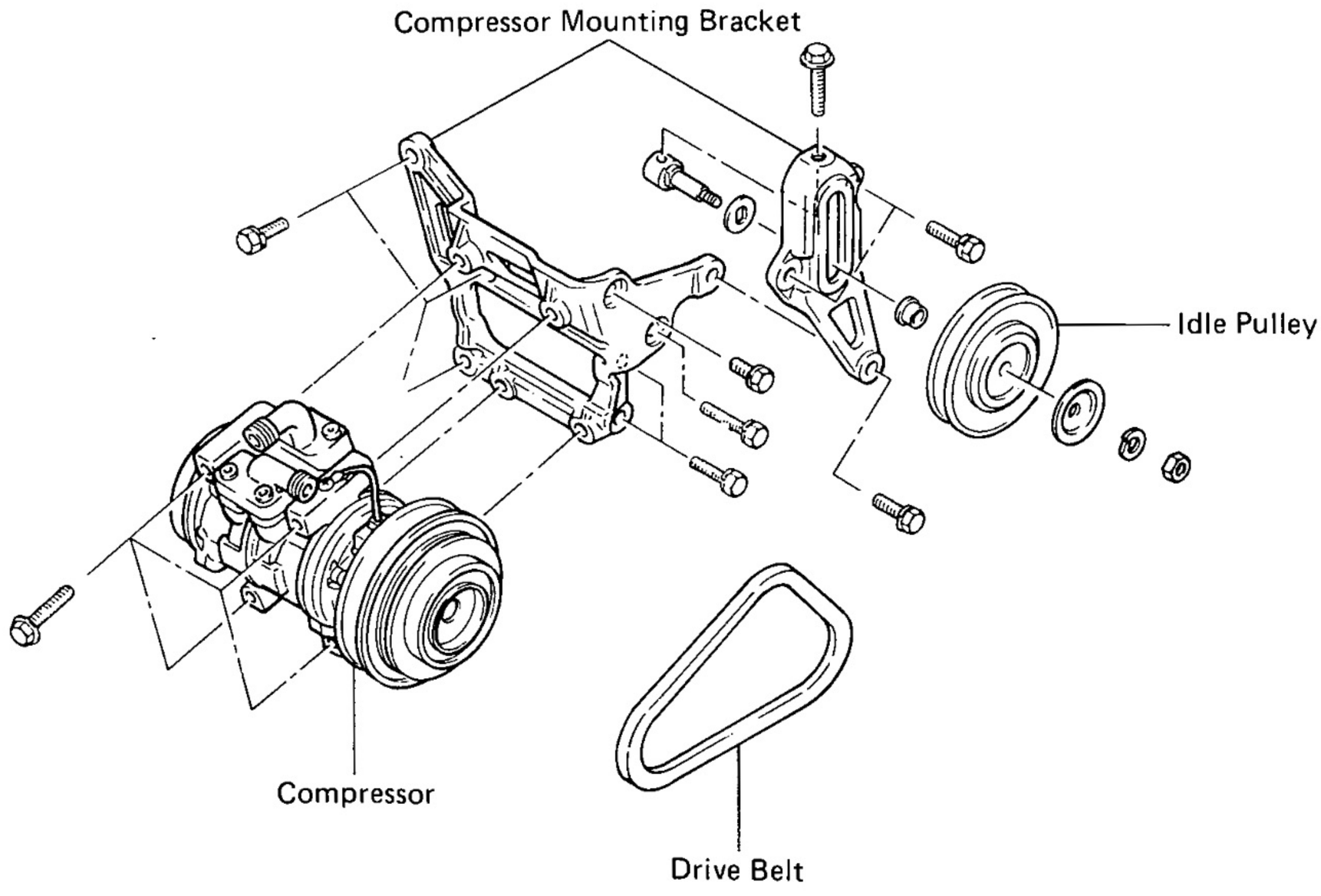

AC0484
AC0485

2H Engine Series

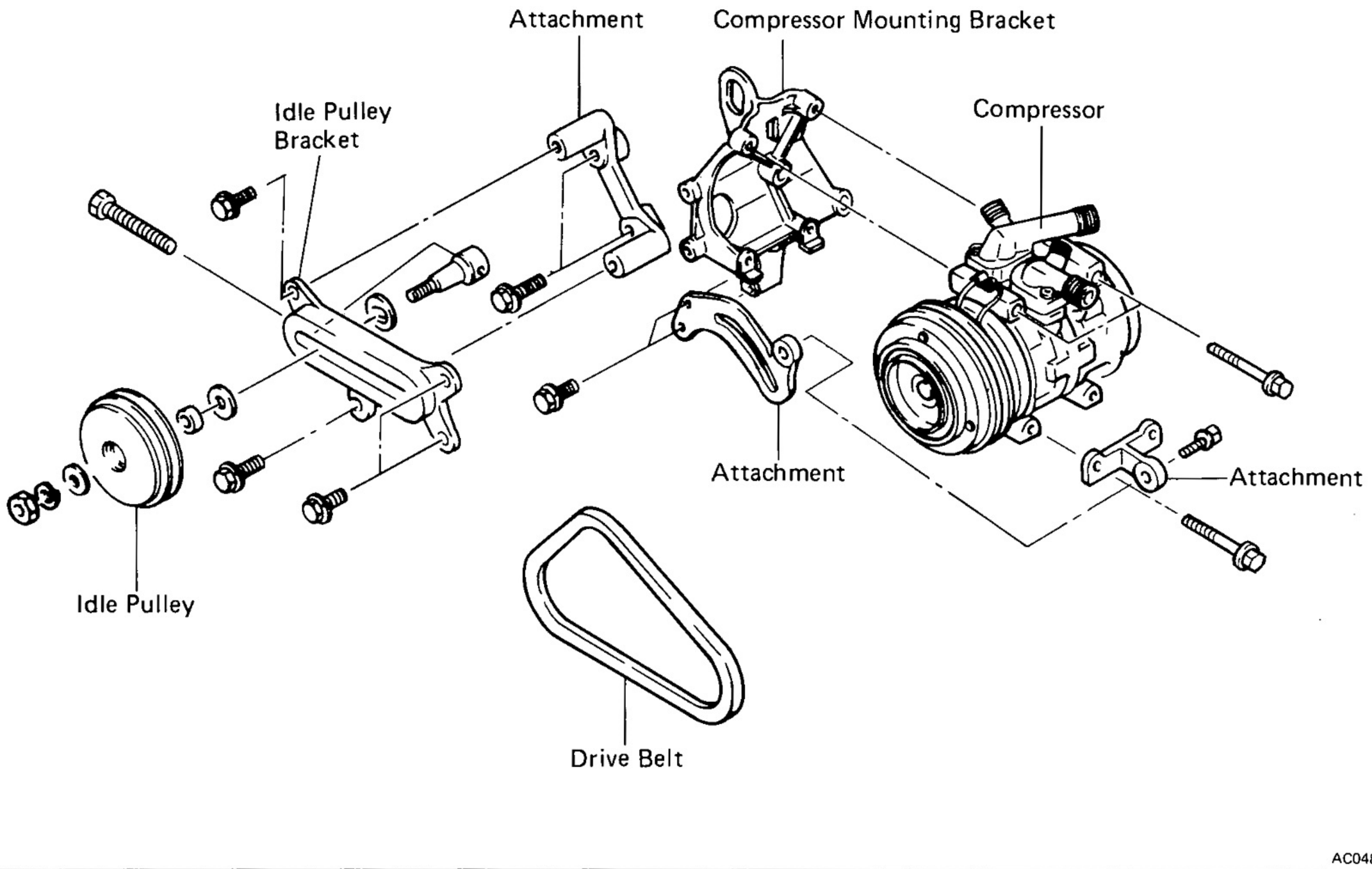

REMOVAL OF COMPRESSOR

1. RUN ENGINE AT IDLE FOR 10 MINUTES WITH AIR CONDITIONING ON

2. DISCONNECT NEGATIVE CABLE FROM BATTERY

3. DISCONNECT CLUTCH LEAD WIRE FROM WIRING HARNESS

4. DISCHARGE REFRIGERANT FROM REFRIGERATION SYSTEM (See page AC-16)

5. DISCONNECT TWO FLEXIBLE HOSES FROM COMPRESSOR SERVICE VALVES

   Cap the open fitting immediately to keep moisture out of the system.

6. REMOVE COMPRESSOR

   (a) Loosen the drive belt.

   (b) Remove the compressor mounting bolts and the compressor.

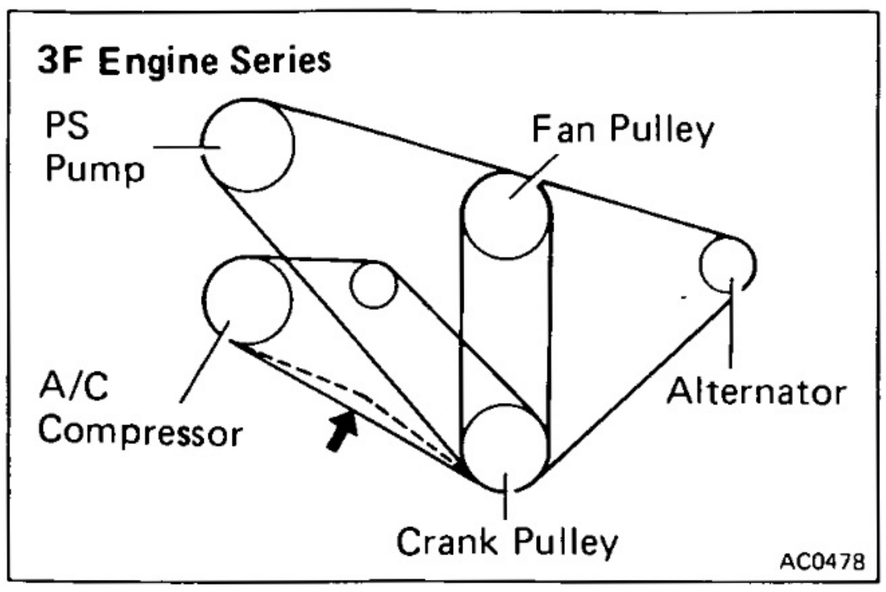

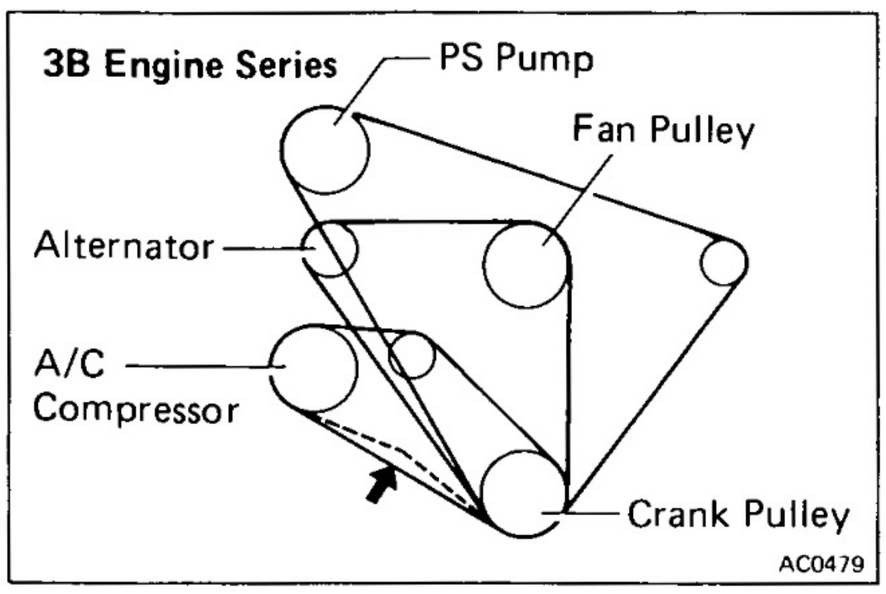

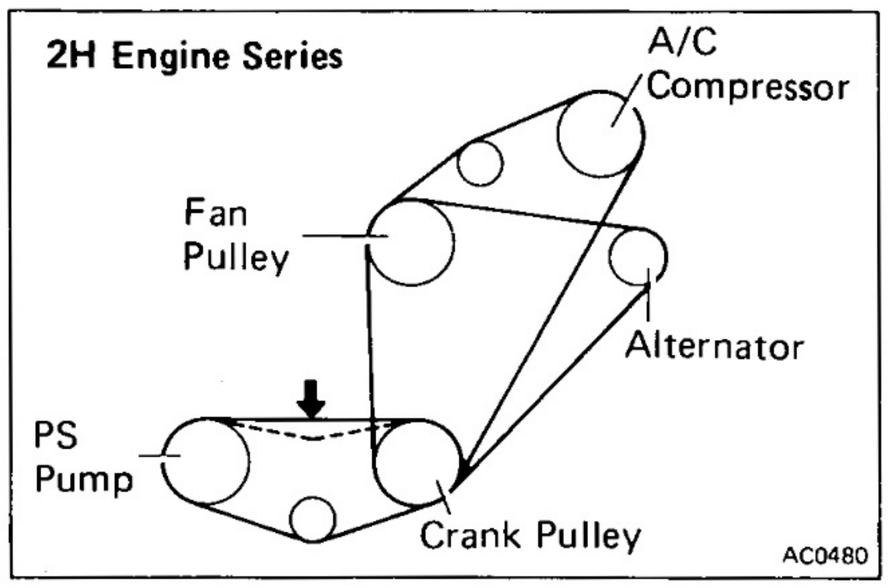

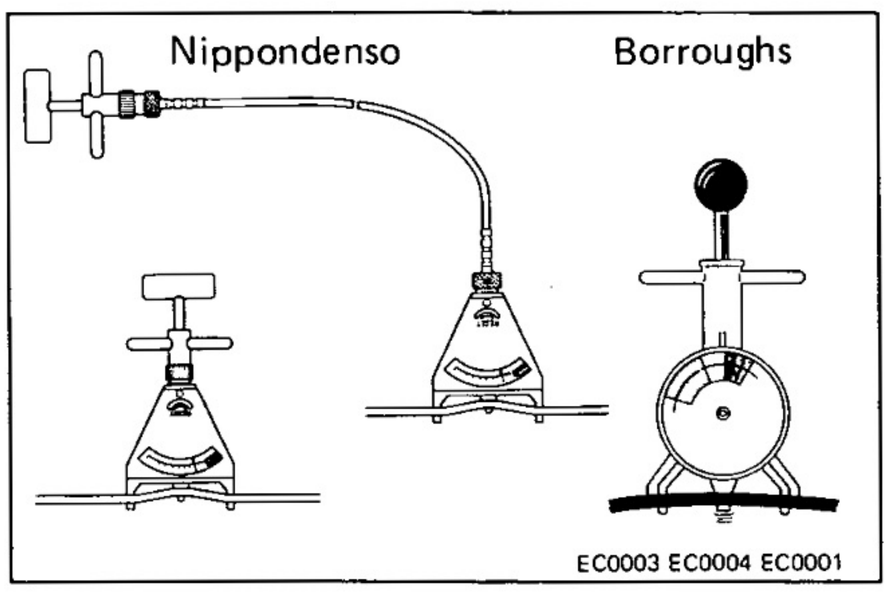

INSTALLATION OF COMPRESSOR

(See pages AC-25, 26)

1. INSTALL COMPRESSOR WITH FOUR MOUNTING BOLTS

2. INSTALL DRIVE BELT

   (a) Install the drive belt to the pulley.

   (b) Tighten the belt with the adjusting bolts.

(Ex. Canada)

Drive belt tension at 10 kg (22.0 lb, 98 N):

mm (in.)

Engine	New belt	Used belt
3F	12 – 15 (0.47 – 0.59)	15 – 21 (0.59 – 0.83)
3B	9 – 12 (0.35 – 0.47)	12 – 16 (0.47 – 0.63)
2H	14 – 19 (0.55 – 0.75)	19 – 25 (0.75 – 0.98)

(Canada)

Using a belt tension gauge, check the drive belt tension.

Belt tension gauge:

Nippondenso BTG-20 (95506-00020) or
Borroughs No. BT-33-73F

Drive belt tension:

New belt 125 ± 25 lb
Used belt 80 ± 20 lb

NOTE:

- "New belt" refers to a new belt which has never been used.
- "Used belt" refers to a belt which has been used on a running engine for 5 minutes or more.

3. CONNECT TWO FLEXIBLE HOSES TO COMPRESSOR SERVICE VALVES

   Torque: Discharge line 225 kg-cm (16 ft-lb, 22 N·m)
   Suction line 325 kg-cm (24 ft-lb, 32 N·m)

4. CONNECT CLUTCH LEAD WIRE TO WIRING HARNESS

5. CONNECT NEGATIVE CABLE TO BATTERY

6. EVACUATE AND CHARGE REFRIGERATION SYSTEM (See page AC-17)

CONDENSER

ON-VEHICLE INSPECTION

1. CHECK CONDENSER FINS FOR BLOCKAGE OR DAMAGE

   If the fins are clogged, wash them with water and dry with compressed air.

   CAUTION: **Be careful not to damage the fins.**

   If the fins are bent, straighten them with a screwdriver or pliers.

2. CHECK CONDENSER FITTINGS FOR LEAKAGE

   Repair as necessary.

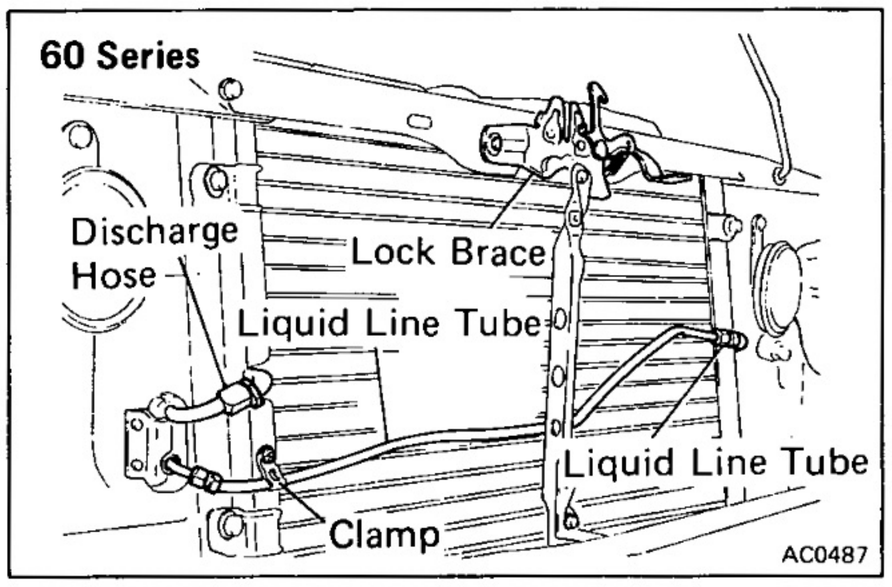

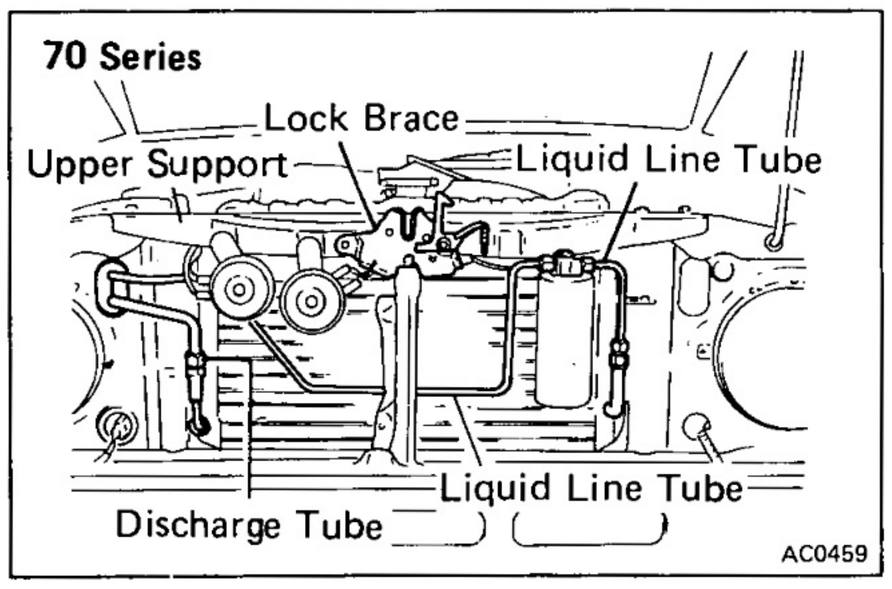

REMOVAL OF CONDENSER (See pages AC-22, 23)

1. DISCHARGE REFRIGERATION SYSTEM (See page AC-17)
2. REMOVE FRONT GRILLE AND HOOD LOCK BRACE
3. REMOVE RADIATOR UPPER SUPPORT (70 Series only)
4. DISCONNECT DISCHARGE TUBE FROM CONDENSER INLET FITTING

5.-1 (60 Series)
DISCONNECT LIQUID LINE TUBE FROM CONDENSER OUTLET FITTING AND LIQUID LINE TUBE CLAMP

5.-2 (70 Series)
DISCONNECT TWO LIQUID LINE TUBES FROM RECEIVER

NOTE: Cap the open fittings immediately to keep moisture out of the system.

6. REMOVE RECEIVER (70 Series only)
7. REMOVE CONDENSER

   Remove the four bolts.

INSTALLATION OF CONDENSER (See pages AC-22, 23)

1. INSTALL CONDENSER

   Install the four bolts, making sure the rubber cushions fit on the mounting flanges correctly.

2. INSTALL RECEIVER (70 Series only)

3.-1 (60 Series)
CONNECT LIQUID LINE TUBE TO CONDENSER, LIQUID LINE TUBE CLAMP AND DISCHARGE HOSE TO CONDENSER

3.-2 (70 Series)
CONNECT TWO LIQUID LINE TUBES TO RECEIVER AND DISCHARGE TUBE TO CONDENSER

Torque: Liquid line tube 135 kg-cm (10 ft-lb, 13 N·m)
Discharge tube 225 kg-cm (16 ft-lb, 22 N·m)

4. INSTALL RADIATOR UPPER SUPPORT (70 Series only)
5. INSTALL FRONT GRILLE AND HOOD LOCK BRACE
6. IF CONDENSER IS REPLACED, ADD COMPRESSOR OIL TO COMPRESSOR Add 40 – 50 cc (1.4 – 1.7 oz)
7. EVACUATE, CHARGE AND TEST REFRIGERATION SYSTEM (See page AC-17)

RECEIVER

ON-VEHICLE INSPECTION

CHECK SIGHT GLASS, FUSIBLE PLUG AND FITTINGS FOR LEAKAGE (See page AC-16)

Use a gas leak tester. Repair as necessary.

REMOVAL OF RECEIVER

(See pages AC-22, 23)

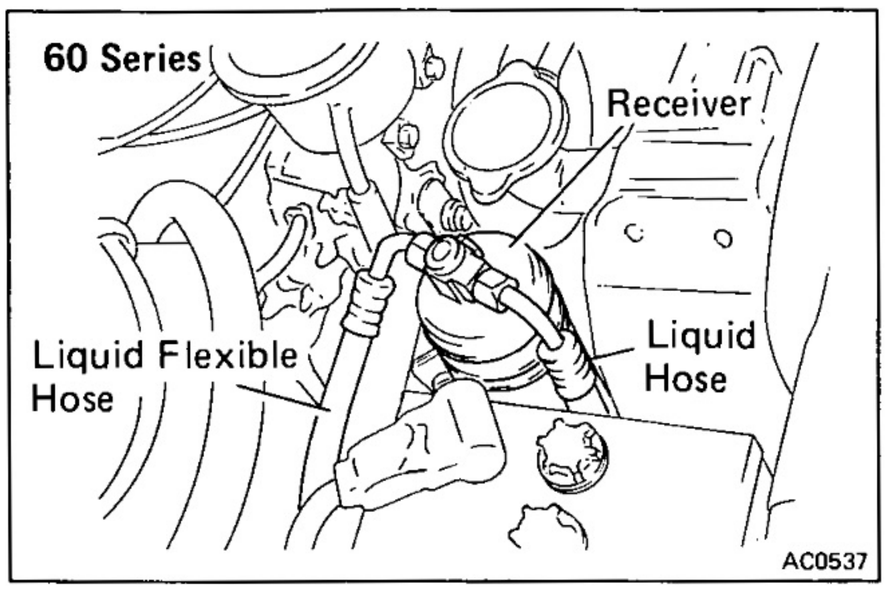

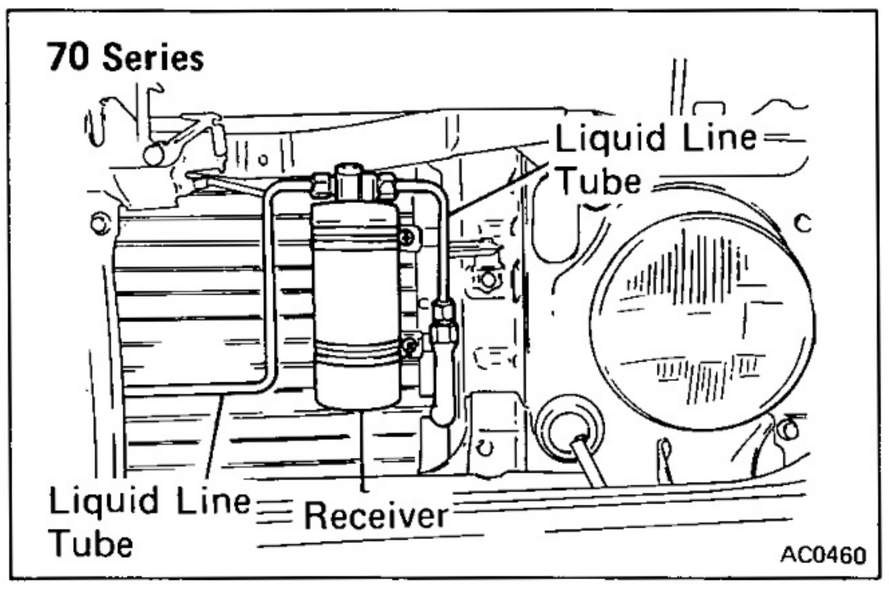

1. DISCHARGE REFRIGERATION SYSTEM (See page AC-17)
2. DISCONNECT TWO LIQUID TUBES FROM RECEIVER

   NOTE: Cap the open fittings immediately to keep moisture out of the system.
3. REMOVE RECEIVER FROM RECEIVER HOLDER

INSTALLATION OF RECEIVER

(See pages AC-22, 23)

1. INSTALL RECEIVER IN RECEIVER HOLDER

   NOTE: Do not remove the caps until ready for connection.
2. CONNECT TWO LIQUID TUBES TO RECEIVER

   Torque: 135 kg-cm (10 ft-lb, 13 N·m)
3. IF RECEIVER WAS REPLACED, ADD COMPRESSOR OIL TO COMPRESSOR

   Add 20 cc (0.7 oz)
4. EVACUATE, CHARGE AND TEST REFRIGERATION SYSTEM (See page AC-17)

FRONT COOLING UNIT

ON-VEHICLE INSPECTION OF EXPANSION VALVE

1. CONNECT MANIFOLD GAUGE TO COMPRESSOR
2. CHECK EXPANSION VALVE OPERATION

   (a) Run the engine at fast idle with the air conditioning on.

   (b) Check that the low pressure reading is between 0.5 – 5.0 kg/cm² (7 – 71 psi, 49 – 490 kPa).

   If the reading is too low, check and replace the expansion valve and/or receiver.

   If the reading is too high, tighten the remote valve holders and/or replace the expansion valve.

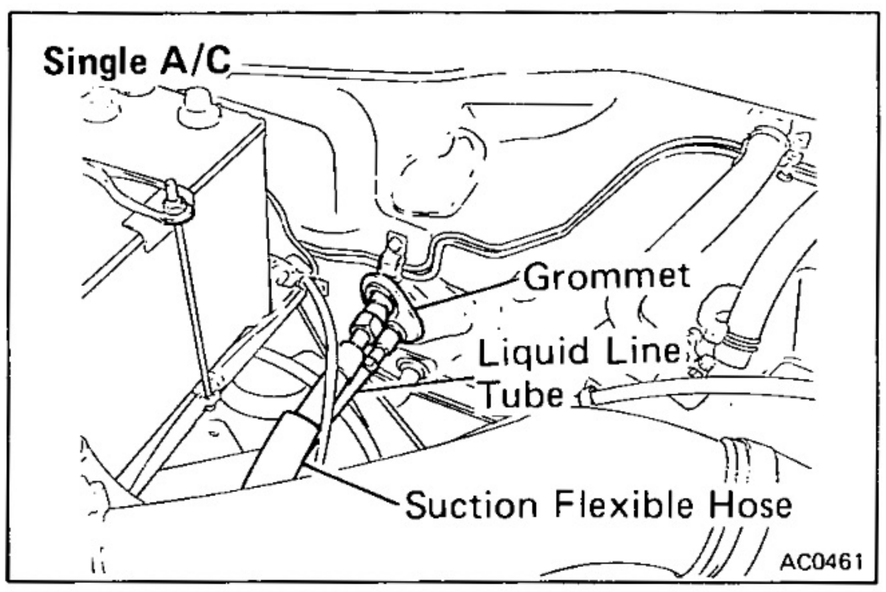

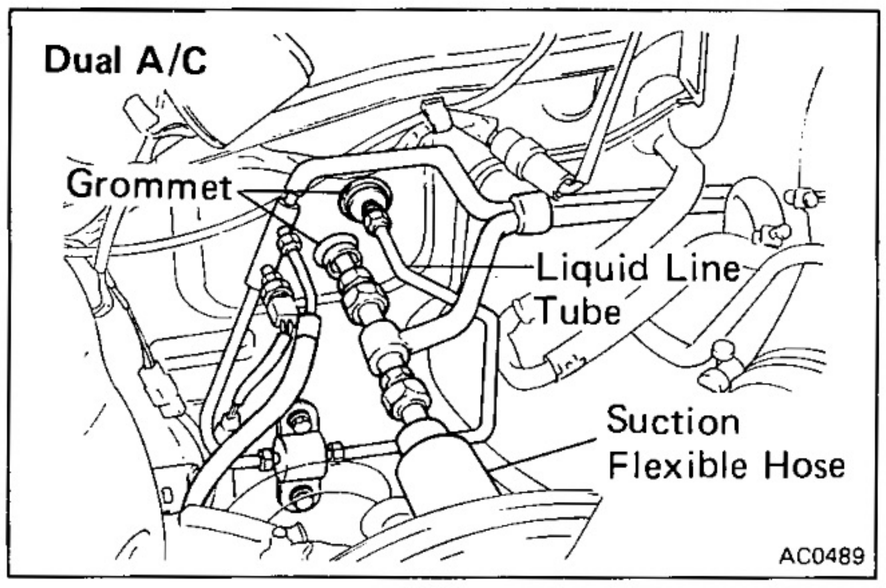

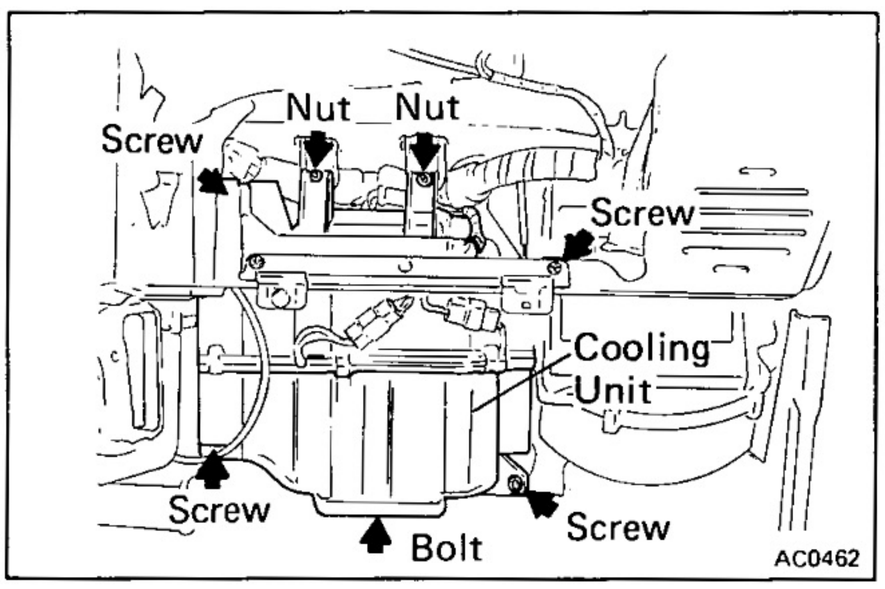

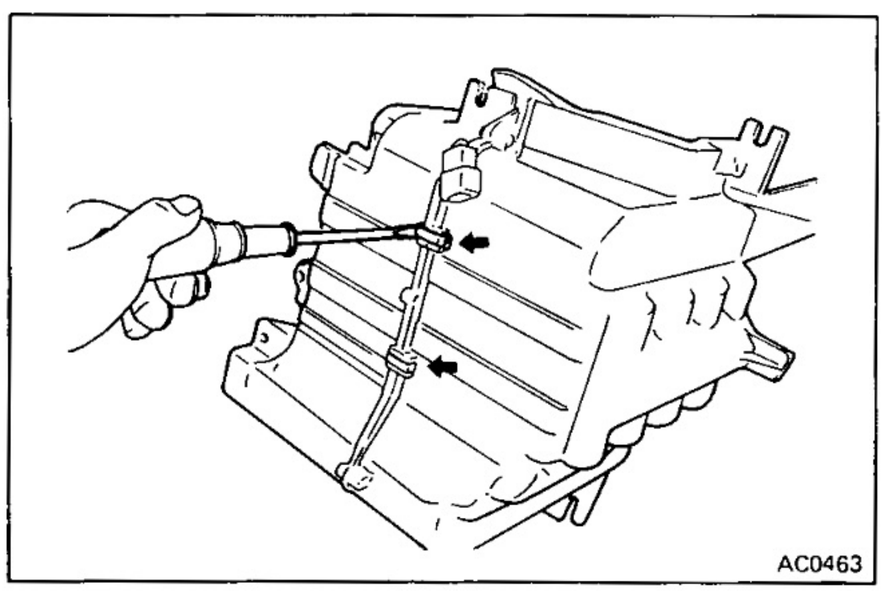

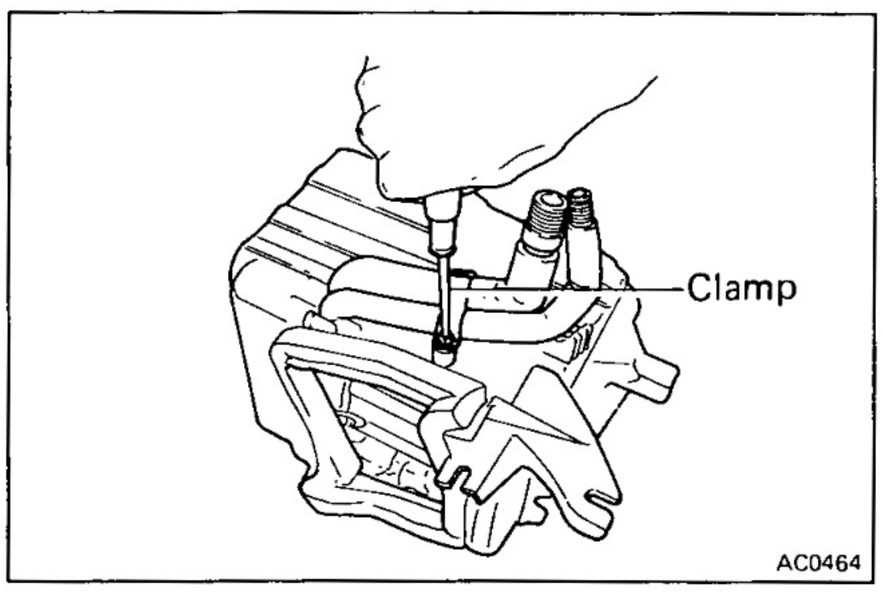

REMOVAL OF FRONT COOLING UNIT

1. DISCONNECT NEGATIVE CABLE FROM BATTERY

2. DISCHARGE REFRIGERATION SYSTEM
(See page AC-17)

3. DISCONNECT SUCTION FLEXIBLE HOSE FROM COOLING UNIT OUTLET FITTING

4. DISCONNECT LIQUID LINE TUBE FROM COOLING UNIT INLET FITTING

NOTE: Cap the open fittings immediately to keep moisture out of the system.

5. REMOVE GROMMETS FROM INLET AND OUTLET FITTINGS

6. REMOVE FOLLOWING COMPONENTS:
   (a) Glove box
   (b) Duct
   (c) Instrument panel brace (70 series only)

7. DISCONNECT FOLLOWING CONNECTOR:
Connector connected to vehicle wire harness

8. REMOVE COOLING UNIT
Remove the two nuts, four screws and one bolt.

9. REMOVE A/C WIRE HARNESS FROM COOLING UNIT

DISASSEMBLY OF FRONT COOLING UNIT

(See pages AC-22, 23)

1. REMOVE LOWER AND UPPER CASE FROM EVAPORATOR

2. REMOVE HOLDER (70 Series only)
Remove two screws.

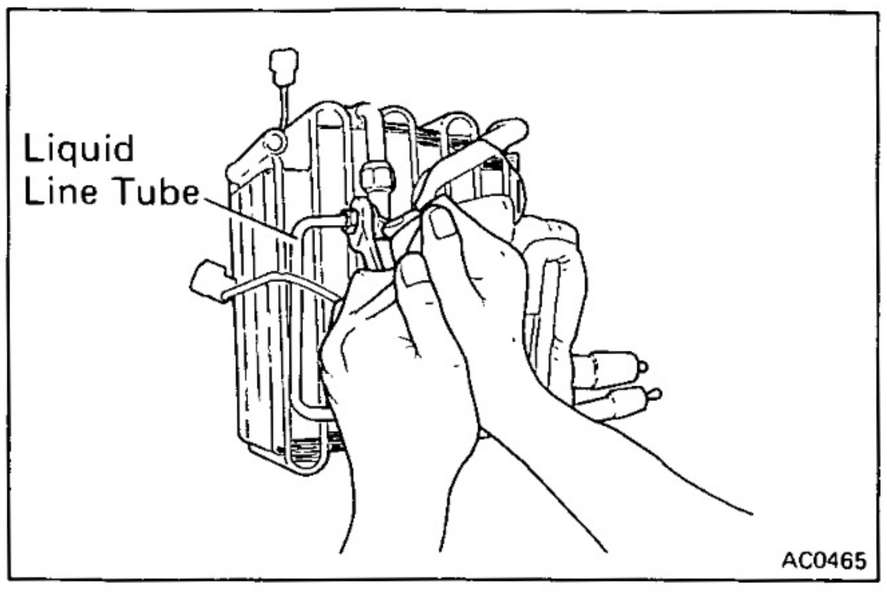

3. REMOVE COMPONENTS FROM EVAPORATOR

(a) Remove the heat insulator.

(b) Disconnect the liquid line tube from inlet fitting of the expansion valve.

(c) Disconnect the expansion valve from the inlet fitting of the evaporator.

(d) Remove the pressure switch, if necessary.

Evaporator

INSPECTION OF EVAPORATOR

1. CHECK EVAPORATOR FINS FOR BLOCKAGE

If the fins are clogged, clean them with compressed air.

CAUTION: **Never use water to clean the evaporator.**

2. CHECK FITTINGS FOR CRACKS OR SCRATCHES

Repair as necessary.

Thermistor

INSPECTION OF THERMISTOR

CHECK THERMISTOR OPERATION

(a) Place the thermistor in cold water. While varying the temperature of the water, measure the resistance at the connector and, at the same time, measure the temperature of the water with a thermometer.

(b) Compare the two readings on the chart.

If the intersection is not between the two lines, replace the thermistor.

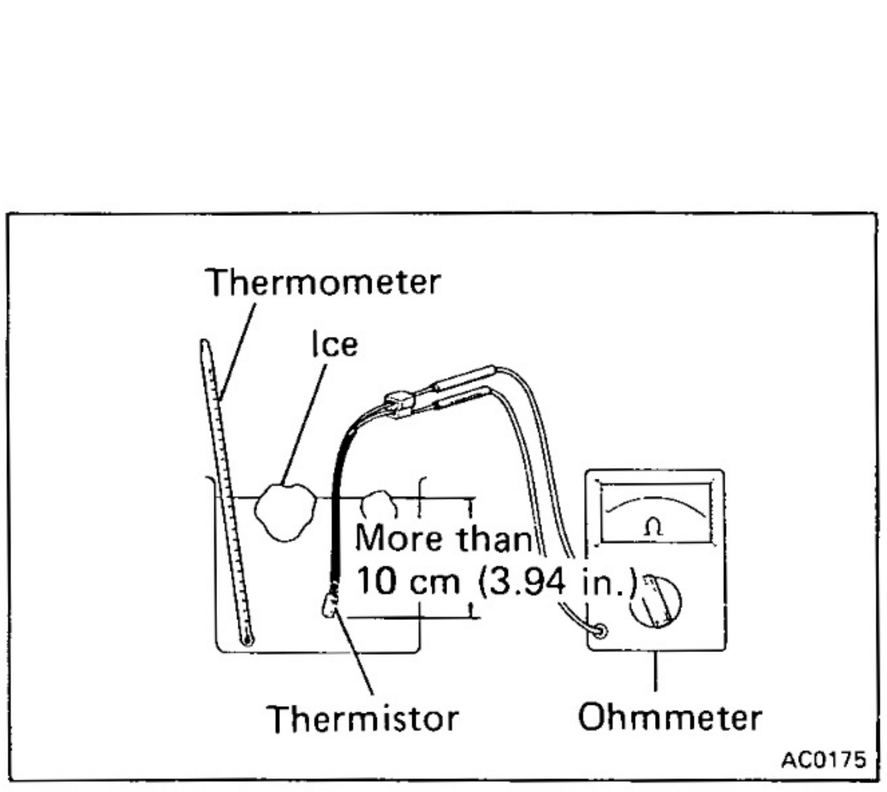

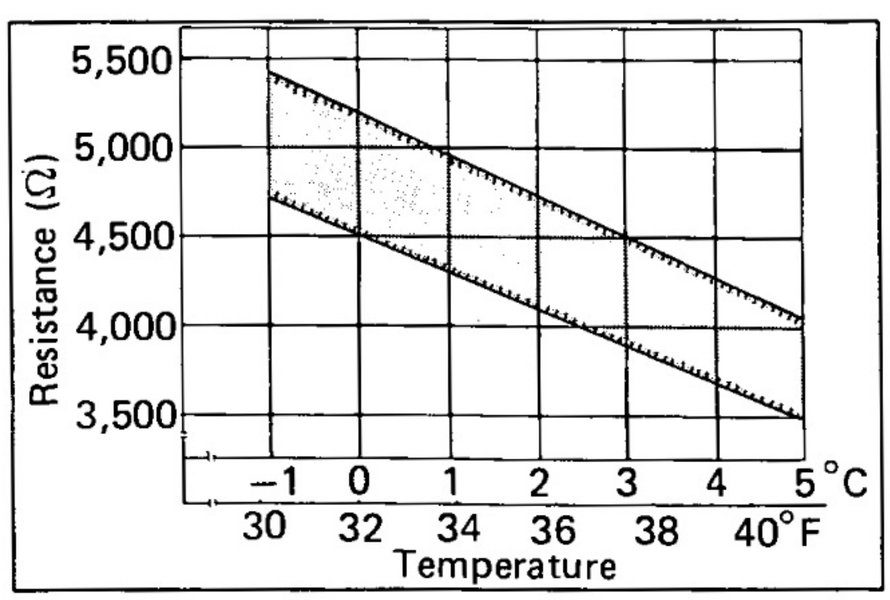

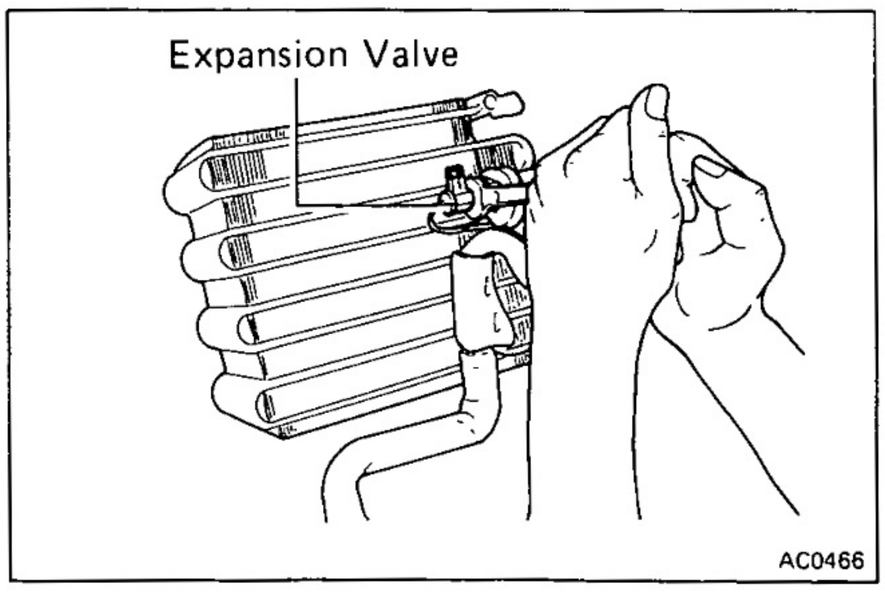

ASSEMBLY OF FRONT COOLING UNIT

(See pages AC-22, 23)

1. INSTALL COMPONENTS ON EVAPORATOR

(a) Connect the expansion valve to the inlet fitting of the evaporator. Torque the nut.

Torque: 235 kg-cm (17 ft-lb, 23 N·m)

NOTE: Be sure that the O-ring is positioned on the tube fitting.

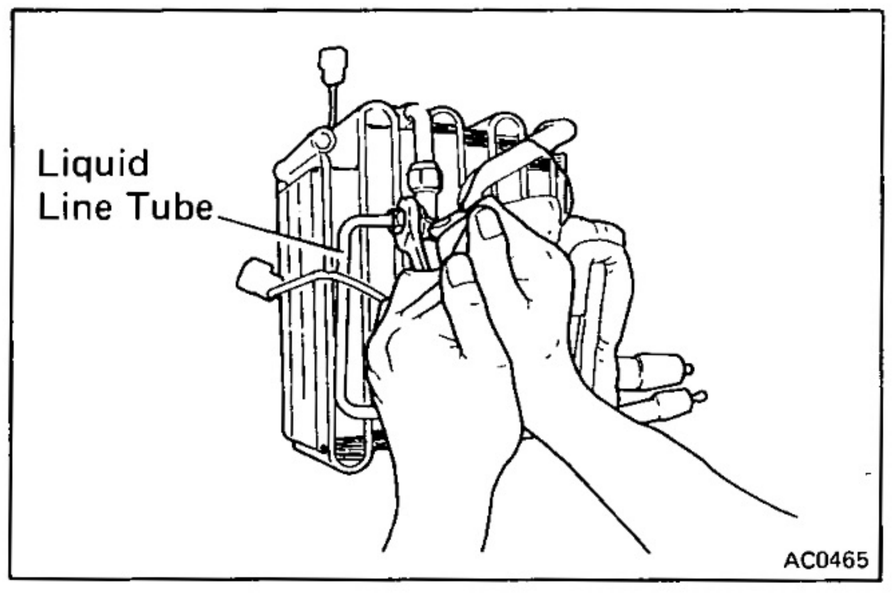

(b) Connect the liquid line tube to the inlet fitting of the expansion valve. Torque the nut.

Torque: 135 kg-cm (10 ft-lb, 13 N·m)

(c) Install the pressure switch if removed.

Torque: 135 kg-cm (10 ft-lb, 13 N·m)

(d) Install the heat insulator.

2. INSTALL THERMISTOR ON EVAPORATOR

3. INSTALL UPPER AND LOWER CASES ON EVAPORATOR

INSTALLATION OF FRONT COOLING UNIT

1. INSTALL A/C WIRE HARNESS TO COOLING UNIT

2. INSTALL COOLING UNIT

Install the cooling unit with the two nuts, four screws and one bolt.

CAUTION: Be careful not to pinch the wire harness while installing the cooling unit.

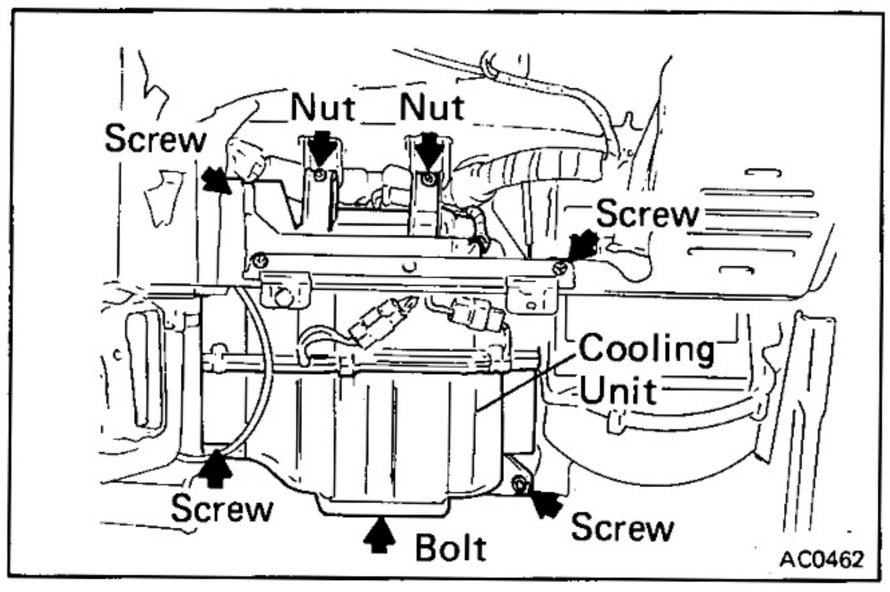

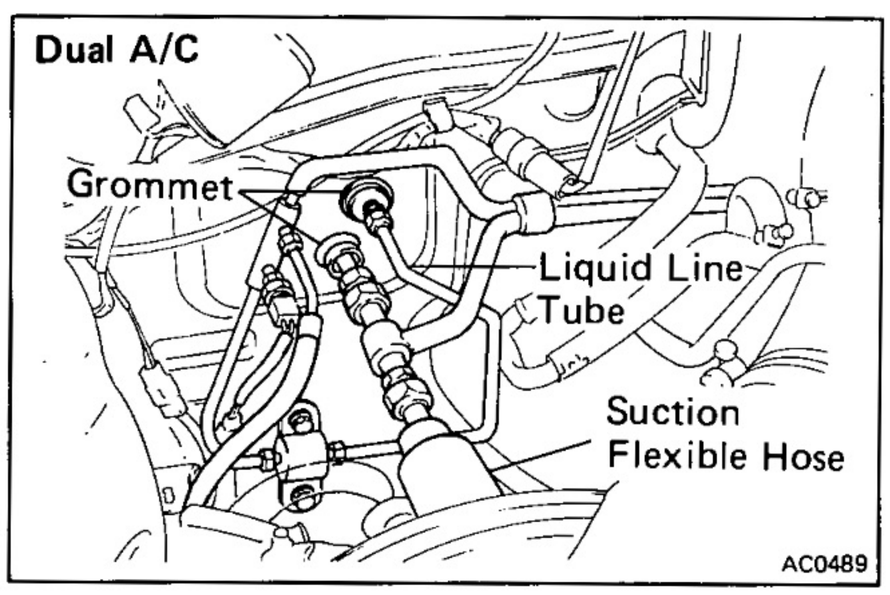

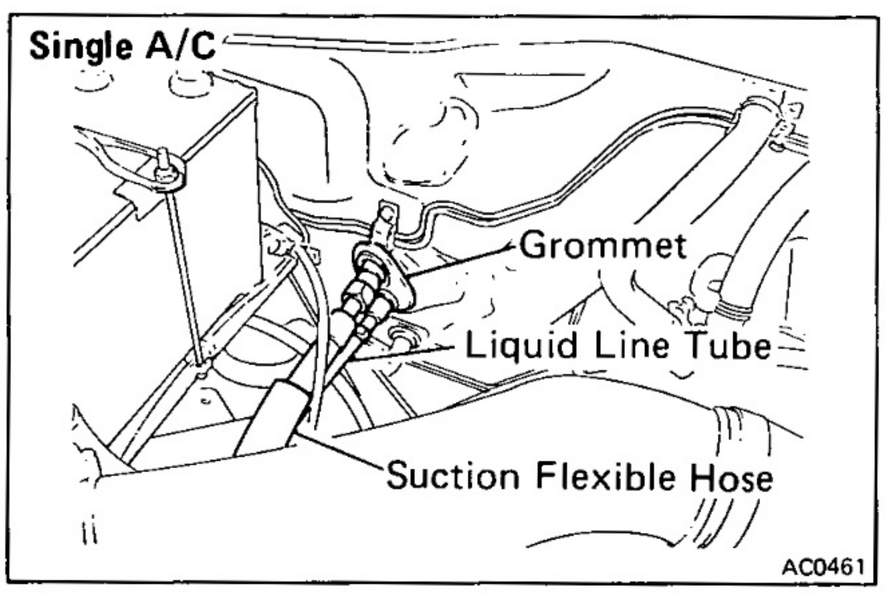

3. INSTALL BRACE (70 Series only)

4. INSTALL GLOVE BOX AND DUCT

5. INSTALL GROMMETS ON INLET AND OUTLET FITTINGS

6. CONNECT LIQUID LINE TUBE TO COOLING UNIT INLET FITTINGS

Torque: 135 kg-cm (10 ft-lb, 13 N·m)

7. CONNECT SUCTION FLEXIBLE HOSE TO COOLING UNIT OUTLET FITTING

Torque: 325 kg-cm (24 ft-lb, 32 N·m)

8. IF EVAPORATOR WAS REPLACED, ADD COMPRESSOR OIL TO COMPRESSOR

Add 40 – 50 cc (1.4 – 1.7 oz)

9. CONNECT NEGATIVE CABLE TO BATTERY

10. EVACUATE, CHARGE AND TEST REFRIGERATION SYSTEM (See page AC-17)

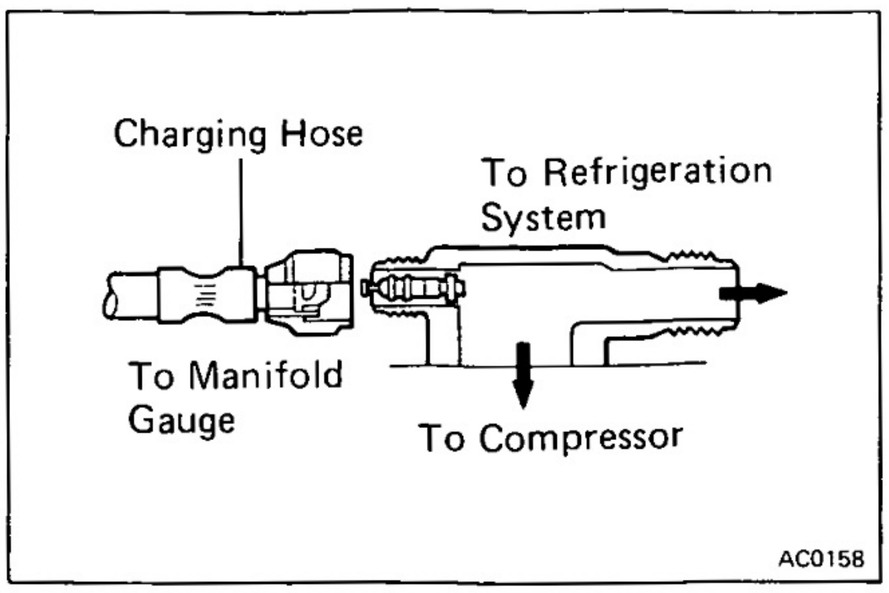

EXPANSION VALVE

ON-VEHICLE INSPECTION

1. CHECK QUANTITY OF GAS DURING REFRIGERATION CYCLE (See page AC-16)

2. INSTALL MANIFOLD GAUGE SET
   (a) Close the high pressure and low pressure valves.
   (b) Connect the high pressure hose to the discharge service valve of the compressor.
   (c) Connect the low pressure hose to the suction service valve of the compressor.

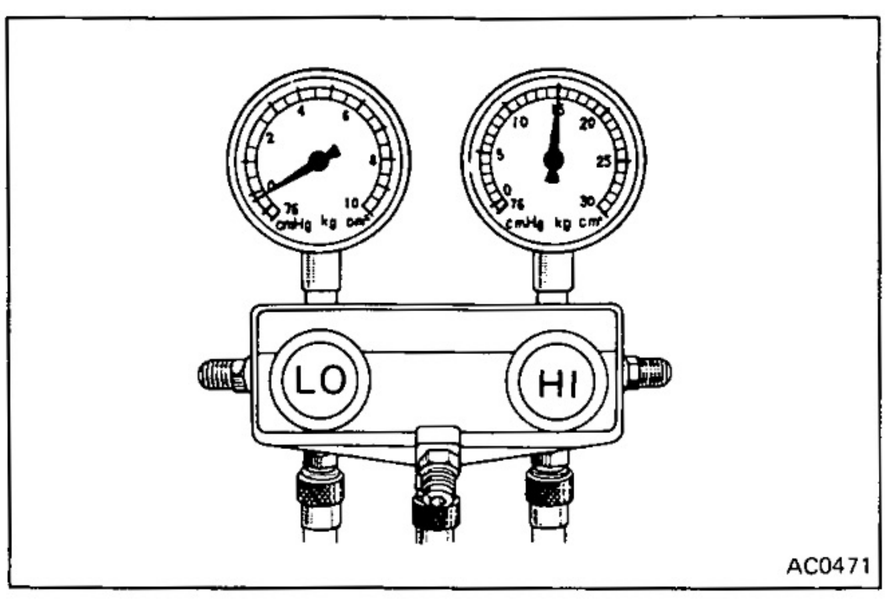

3. RUN ENGINE

   Run the engine at 2,000 rpm for at least 5 minutes.
   Then check that the high pressure reading is 13–15 kg/cm² (185–213 psi, 1,275–1,471 kPa).

4. CHECK EXPANSION VALVE

   If the expansion valve is faulty, the low pressure reading will drop to 0 kg/cm² (0 psi, 0 kPa), otherwise it is OK.

   NOTE: When the low pressure drops to 0 kg/cm² (0 psi, 0 kPa), feel the receiver's "IN" and "OUT" sides for no temperature difference.

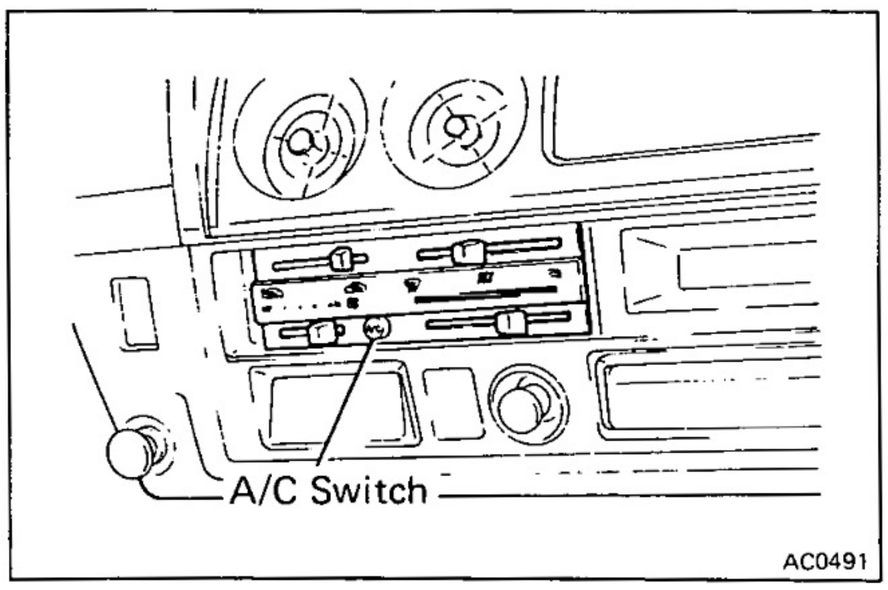

A/C SWITCH (60 Series)

ON-VEHICLE INSPECTION

1. DISCONNECT NEGATIVE CABLE FROM BATTERY

2. REMOVE CENTER CLUSTER PANEL

3. DISCONNECT A/C SWITCH CONNECTOR

4. CHECK A/C SWITCH FOR CONTINUITY

   Using an ohmmeter, check continuity between the terminals for each switch position shown in the table.
   If there is no continuity, replace the A/C switch.

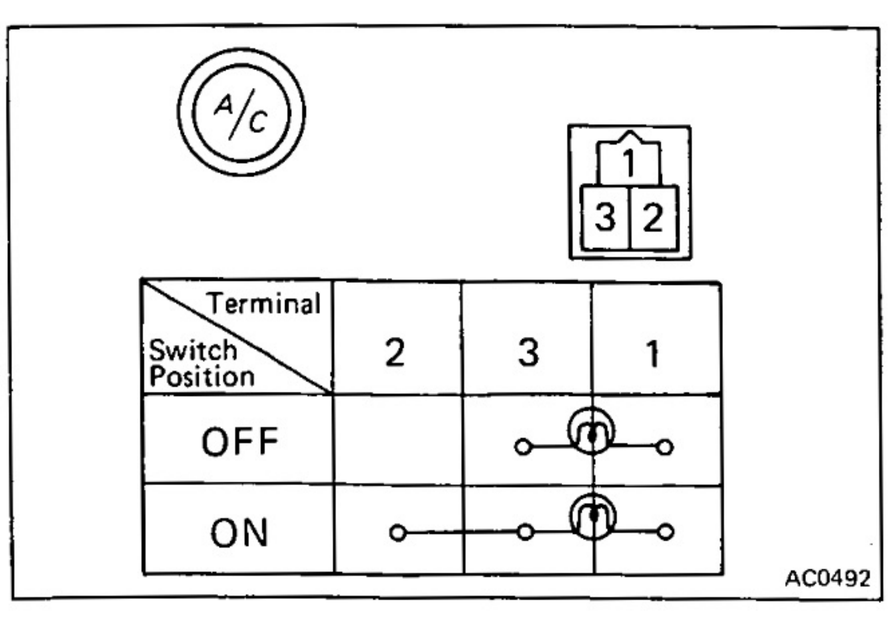

5. CONNECT A/C SWITCH CONNECTOR

6. INSTALL CENTER CLUSTER

7. CONNECT NEGATIVE CABLE TO BATTERY

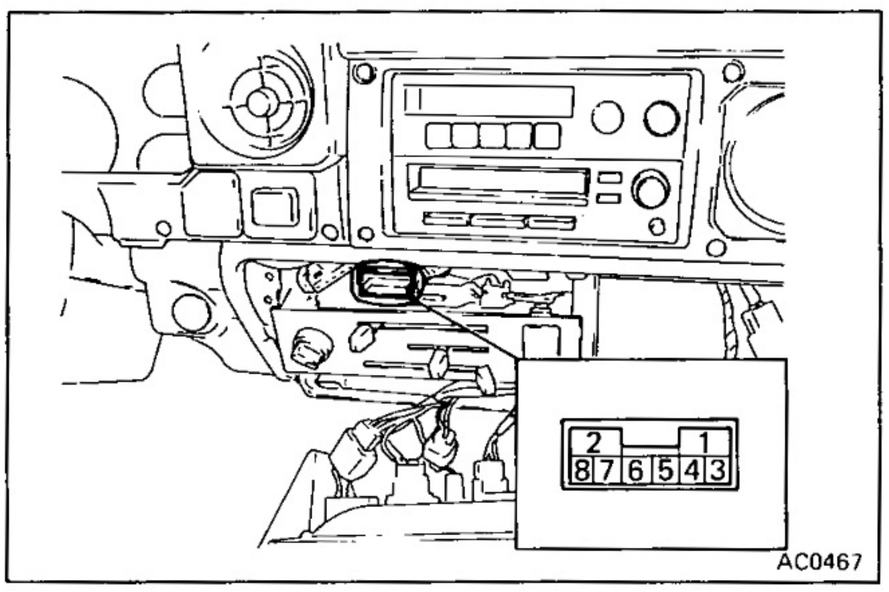

TEMP. CONTROL RESISTOR (70 Series)

ON-VEHICLE INSPECTION

1. DISCONNECT NEGATIVE CABLE FROM BATTERY
2. REMOVE CENTER CLUSTER PANEL
3. DISCONNECT TEMP. CONTROL RESISTOR CONNECTOR

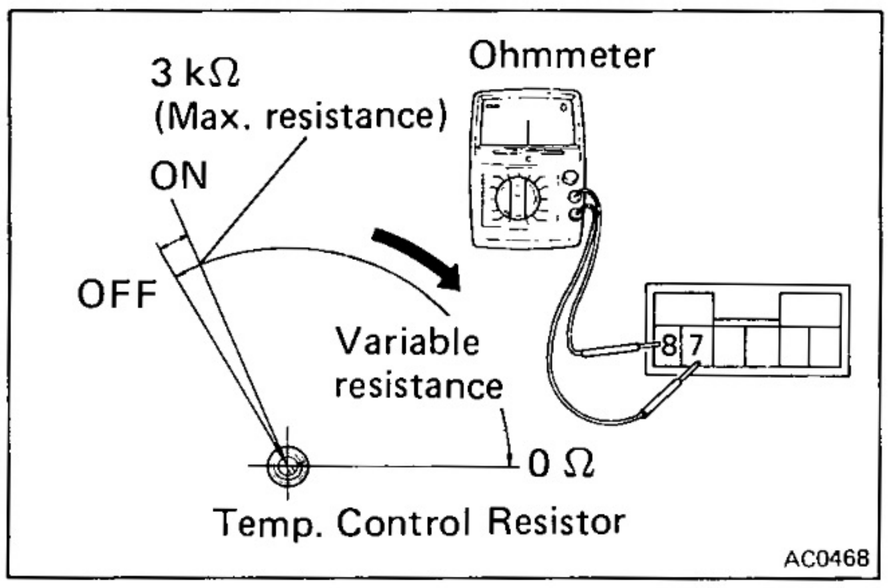

4. CHECK TEMP. CONTROL RESISTOR FOR RESISTANCE

   Using an ohmmeter, check for resistance between the terminals while rotating the resistor.

   If an ohmmeter indicates incorrect resistance, replace the resistor.

5. CONNECT TEMP. CONTROL RESISTOR CONNECTOR
6. INSTALL CENTER CLUSTER PANEL
7. CONNECT NEGATIVE CABLE TO BATTERY

REFRIGERANT LINES

ON-VEHICLE INSPECTION

1. INSPECT HOSES AND TUBES FOR LEAKAGE

   Use a gas leak tester. Replace if necessary.

2. CHECK THAT HOSE AND TUBE CLAMPS ARE NOT LOOSE

   Tighten or replace, as necessary.

REPLACEMENT OF REFRIGERANT LINES

(See pages AC-22, 23)

1. DISCHARGE REFRIGERATION SYSTEM
   (See page AC-17)
2. REPLACE FAULTY TUBE OR HOSE

   NOTE: Cap the open fittings immediately to keep moisture out of the system.

Torque specification for O-ring fittings

Fitting size	Torque
0.31 in. tube for liquid line	135 kg-cm (10 ft-lb, 13 N·m)
0.50 in. tube for discharge line	225 kg-cm (16 ft-lb, 22 N·m)
0.62 in. tube for suction line	325 kg-cm (24 ft-lb, 32 N·m)

3. EVACUATE, CHARGE AND TEST REFRIGERATION SYSTEM (See page AC-17)

PRESSURE SWITCH

(See pages AC-22, 23)

INSPECTION OF PRESSURE SWITCH

1. CHECK REFRIGERANT PRESSURE

(a) Connect the hoses of the manifold gauge set to the compressor service valves and observe the gauge reading.

(b) The gauge reading must be more than 2.1 kg/cm² (30 psi, 206 kPa) when the ambient temperature is higher than 0°C (32°F).

If the pressure is less than 2.1 kg/cm² (30 psi, 206 kPa), charge the refrigerant.

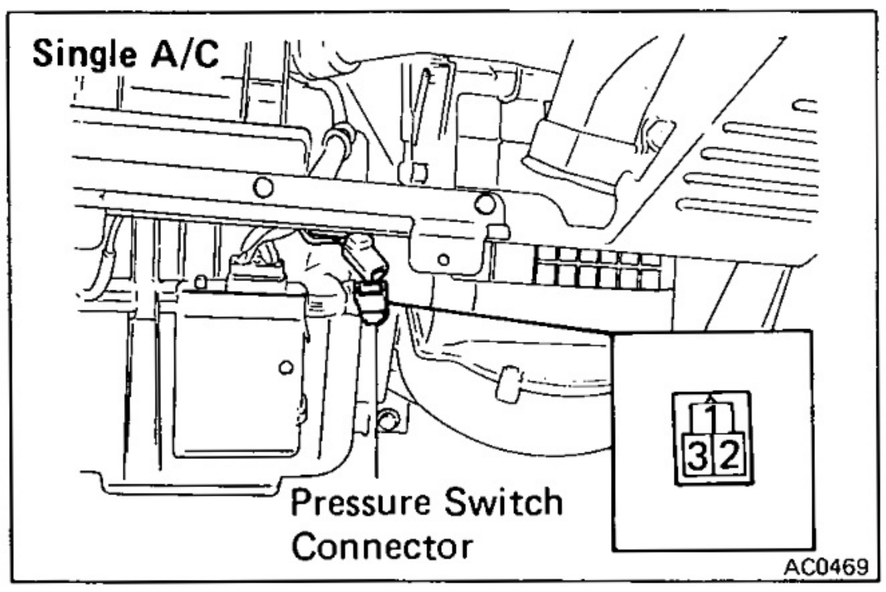

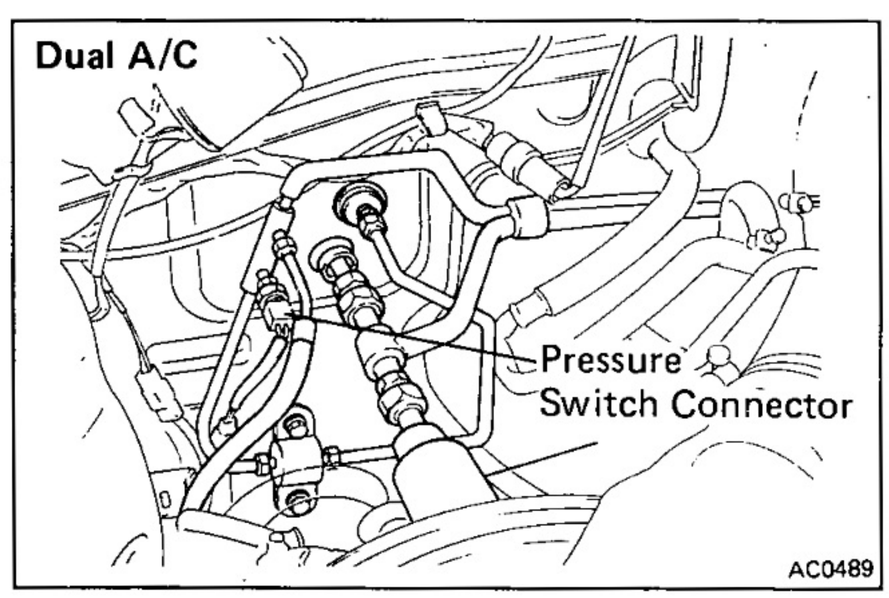

2. CHECK PRESSURE SWITCH

(a) Remove the glove box. (Ex. Dual A/C)

(b) Disconnect the lead wires of the A/C harness.

(c) Using an ohmmeter, check the continuity between the two terminals of the pressure switch.
The ohmmeter must indicate zero ohms.

If there is no continuity, replace the pressure switch.

3. REINSTALL REMOVED PARTS IN REVERSE ORDER

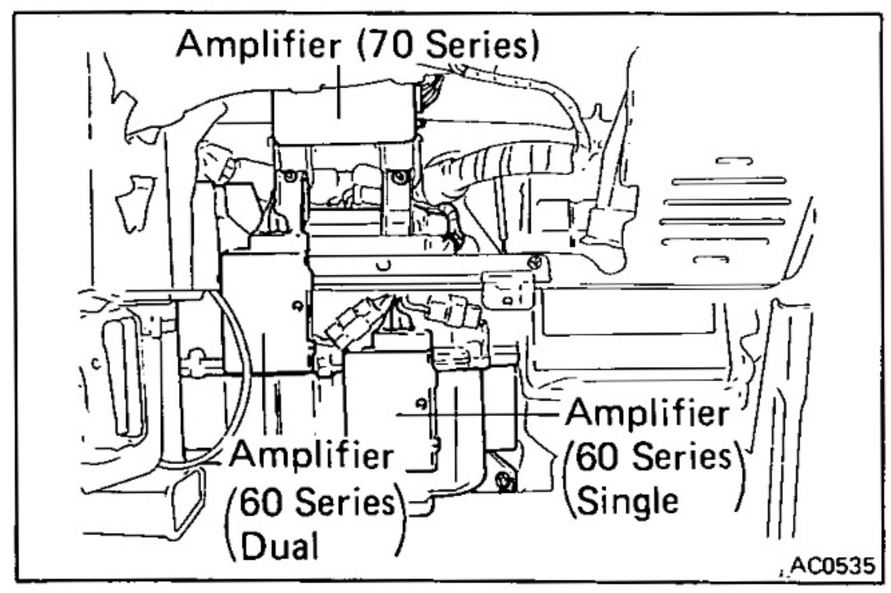

AIR CONDITIONER AMPLIFIER

(See pages AC-22, 23)

INSPECTION OF AIR CONDITIONER AMPLIFIER

CHECK ENGINE SPEED DETECTING CIRCUIT

(a) Run the engine and operate the air conditioner.

(b) Check that the magnetic clutch disengages at the specified engine revolution.

Cut-off rpm: 600 – 700 rpm

If the cut-off rpm is too high, turn the adjusting knob clockwise to adjust.

If the cut-off rpm is too low, turn the adjusting knob counterclockwise to adjust.

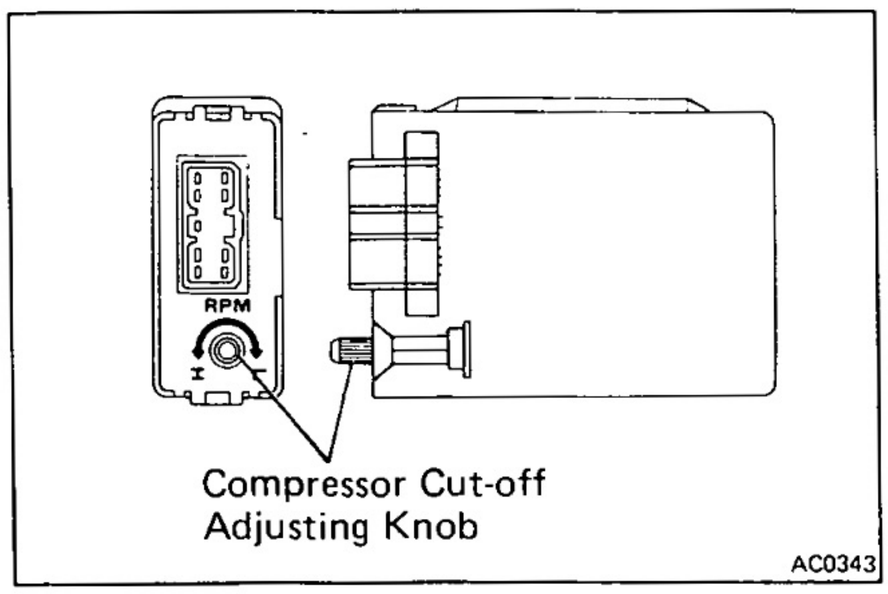

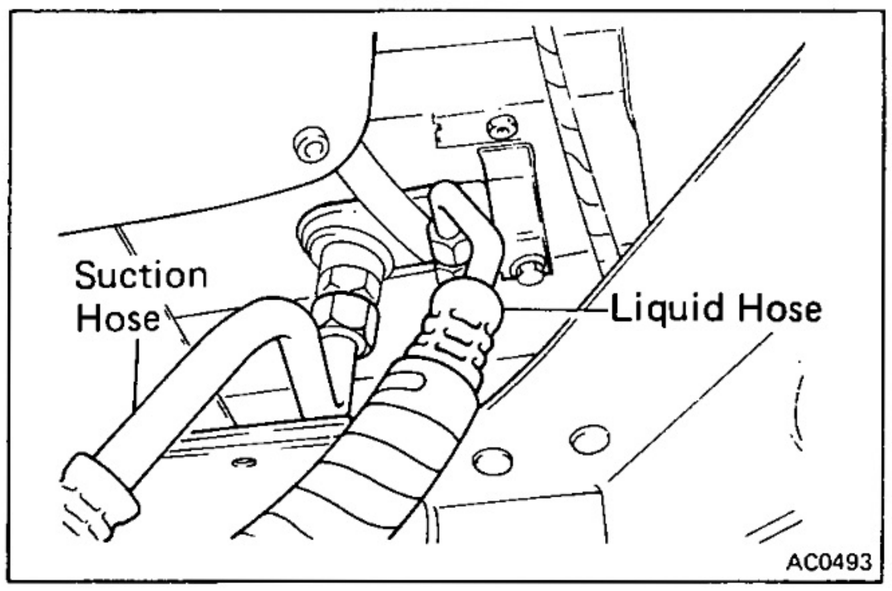

REAR COOLING UNIT (60 Series Dual A/C)

REMOVAL OF COOLING UNIT

1. REMOVE SUCTION HOSE AND LIQUID HOSE

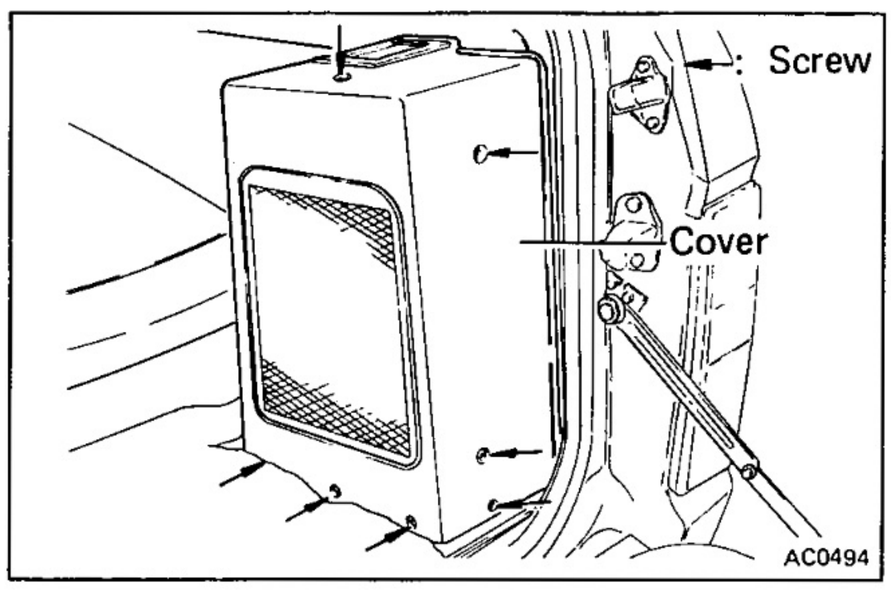

2. REMOVE COVER

Remove seven screws.

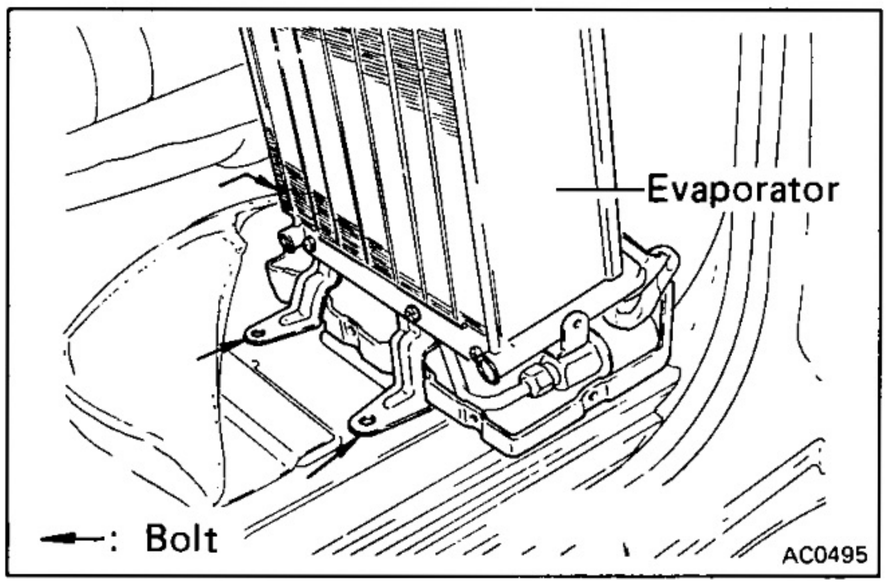

3. REMOVE REAR COOLING UNIT FROM CAR BODY

Remove three bolts.

DISASSEMBLY OF REAR COOLING UNIT

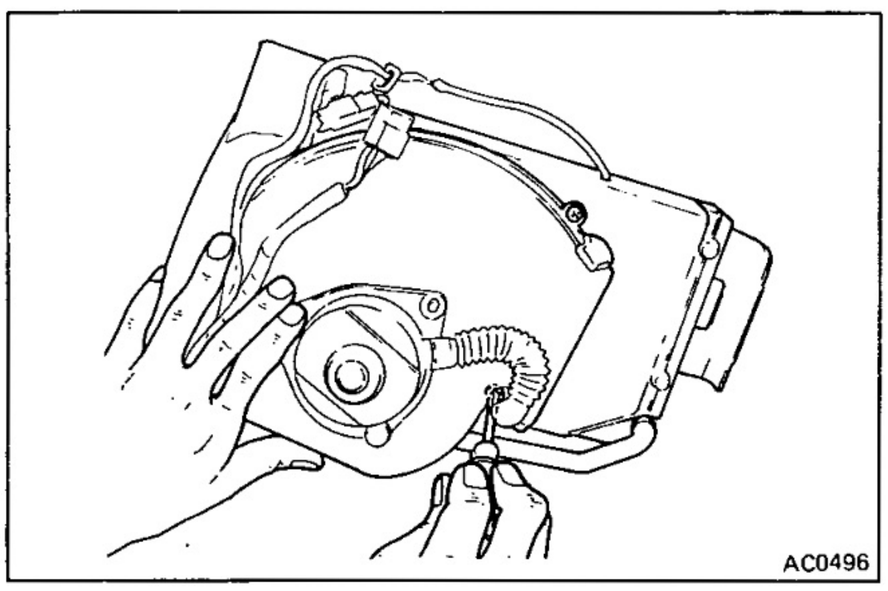

1. REMOVE BLOWER

Remove four screws.

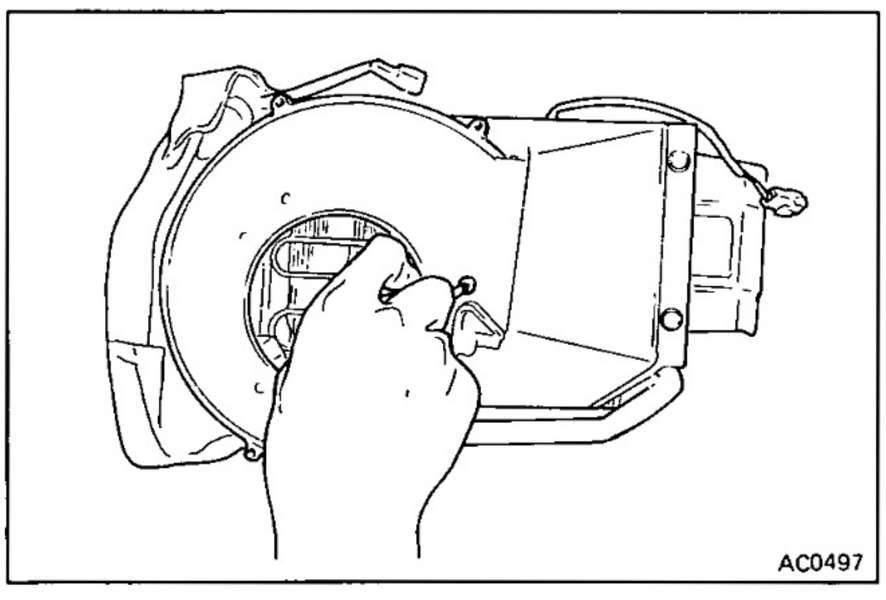

2. REMOVE BLOWER COVER

Remove five screws.

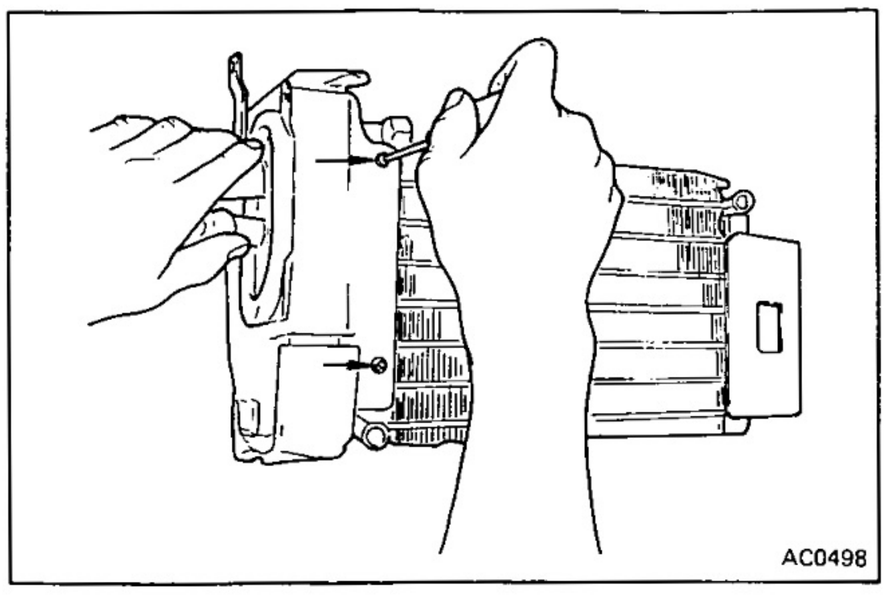

3. REMOVE REAR COOLING UNIT STAY

Remove two long screws.

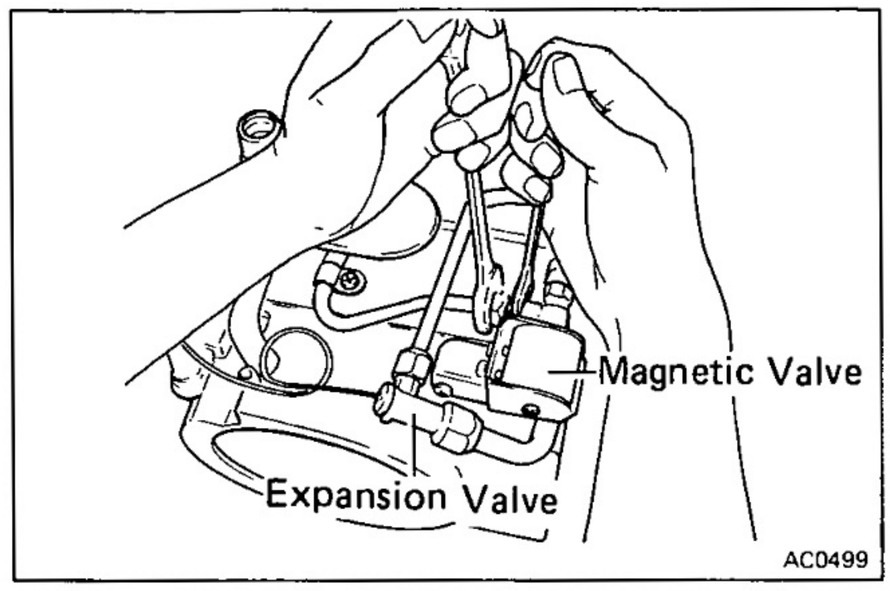

4. REMOVE COMPONENTS FROM REAR COOLING UNIT

(a) Remove the magnetic valve from the cooling unit.

(b) Disconnect the magnetic valve from inlet fitting of expansion valve.

(c) Disconnect the expansion valve from the inlet fitting of the evaporator.

(d) Remove the pressure switch if necessary.

5. CHECK THERMISTOR AND EXPANSION VALVE IN SAME ORDER AS FRONT COOLING UNIT AND EXPANSION VALVE

INSTALLATION OF REAR COOLING UNIT

INSTALL REAR COOLING UNIT IN REVERSE SEQUENCE OF REMOVAL

Torque:

Suction Hose	135 kg-cm (10 ft-lb, 13 N·m)
Discharge Hose	325 kg-cm (24 ft-lb, 32 N·m)

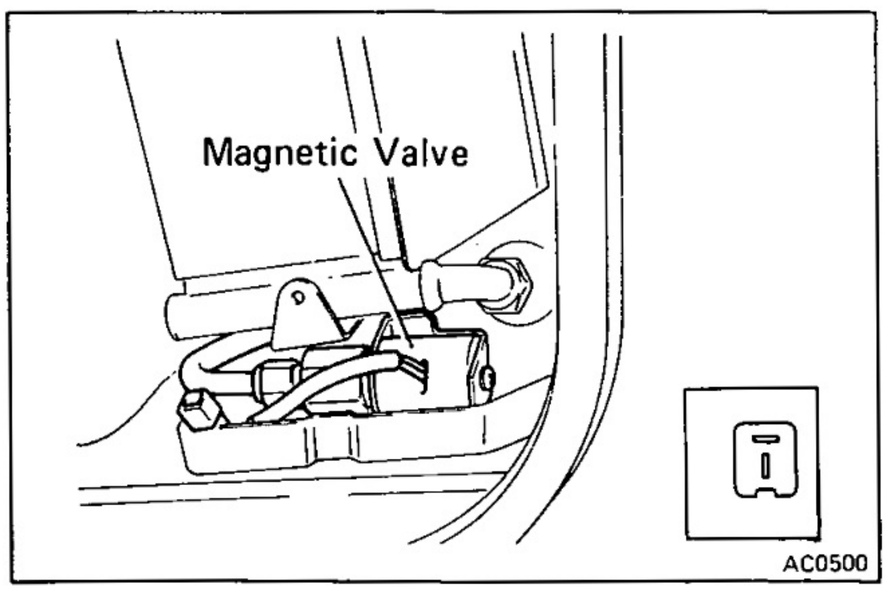

MAGNETIC VALVE (60 Series Dual A/C)

INSPECTION OF MAGNETIC VALVE

CHECK MAGNETIC VALVE OPERATION

	1	2	3	4
Outlet Temperature at Grille (Front)	High	High	Low	Low
Outlet Temperature at Grille (Rear)	High	Low	High	Low
Magnetic Valve (Front)	Open (ON)	Open (ON)	Shut (OFF)	Shut (OFF)
Magnetic Valve (Rear)	Open (ON)	Shut (OFF)	Open (ON)	Shut (OFF)

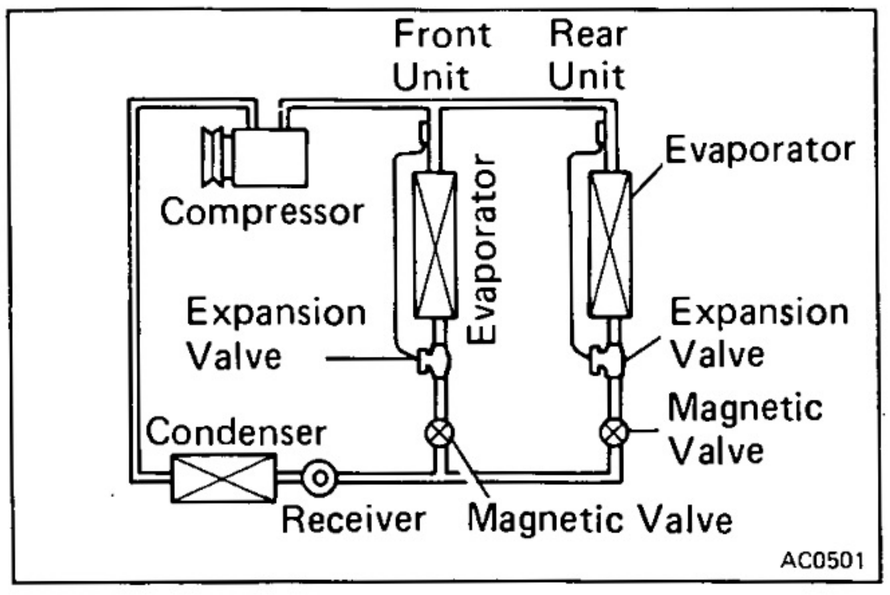

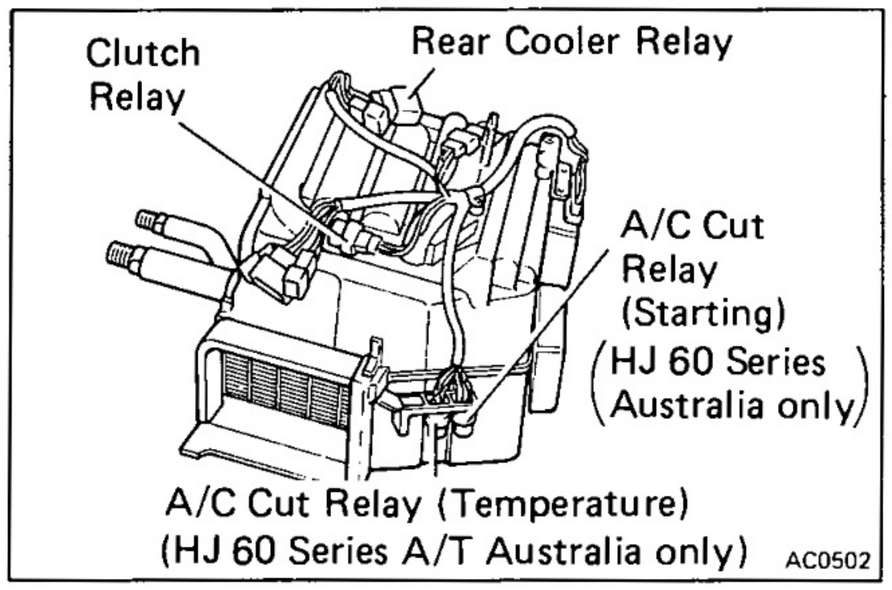

A/C RELAY

INSPECTION OF A/C RELAY

1. REMOVE COVER OF RELAY BOX

2. REMOVE RELAYS

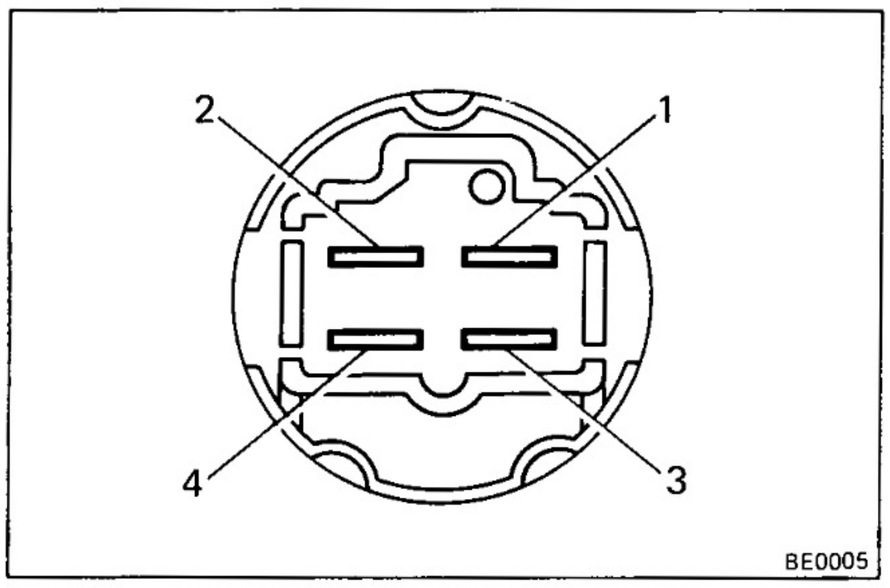

3. INSPECT CLUTCH RELAY GROUND CONNECTION

Check the ground connection between terminal 3 of the wiring connector and body ground.

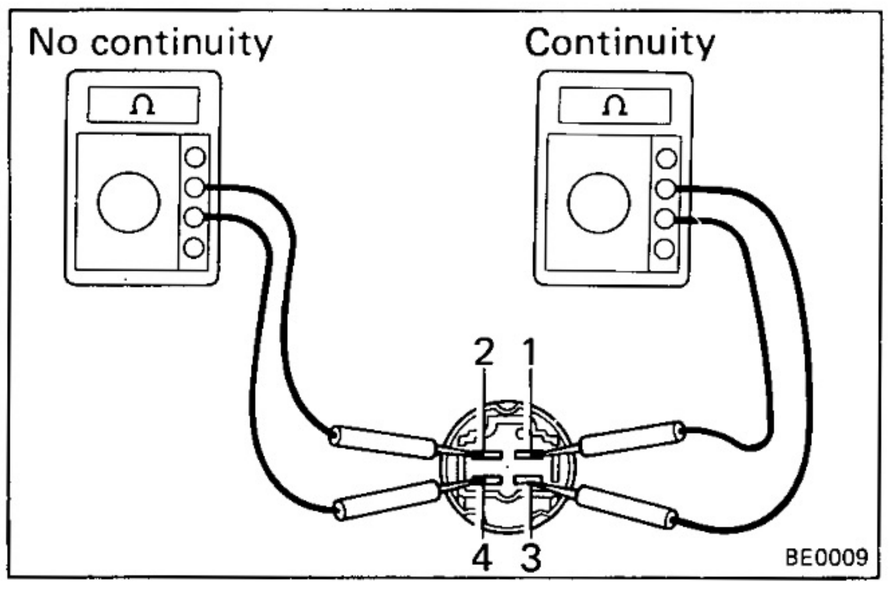

4. INSPECT CLUTCH RELAY CONTINUITY

(a) Check that there is continuity between terminals 1 and 3.

(b) Check that there is no continuity between terminals 2 and 4.

If continuity is not as specified, replace the relay.

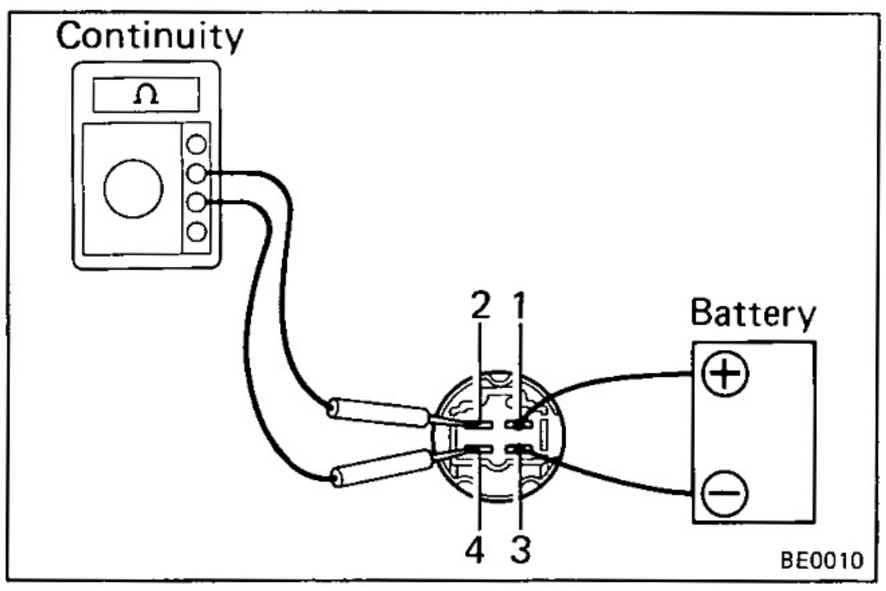

5. INSPECT CLUTCH RELAY OPERATION

(a) Apply battery voltage across terminals 1 and 3.

(b) Check that there is continuity between terminals 2 and 4.

If there is no continuity, replace the relay.

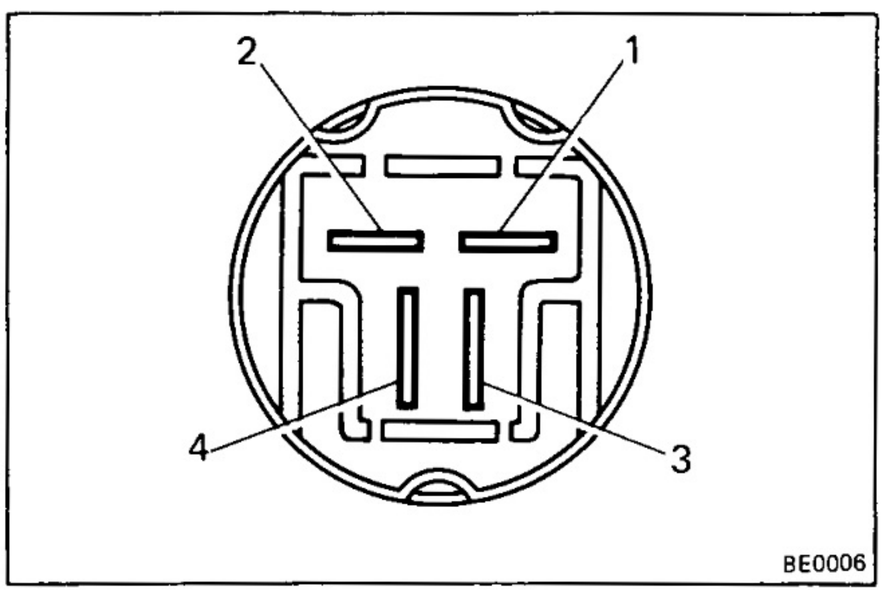

6. (HJ 60 Series Australia only)
INSPECT A/C CUT RELAY (STARTING) GROUND CONNECTION

Check the ground connection between terminal 1 of the wiring connector and body ground, and between terminal 3 and body ground.

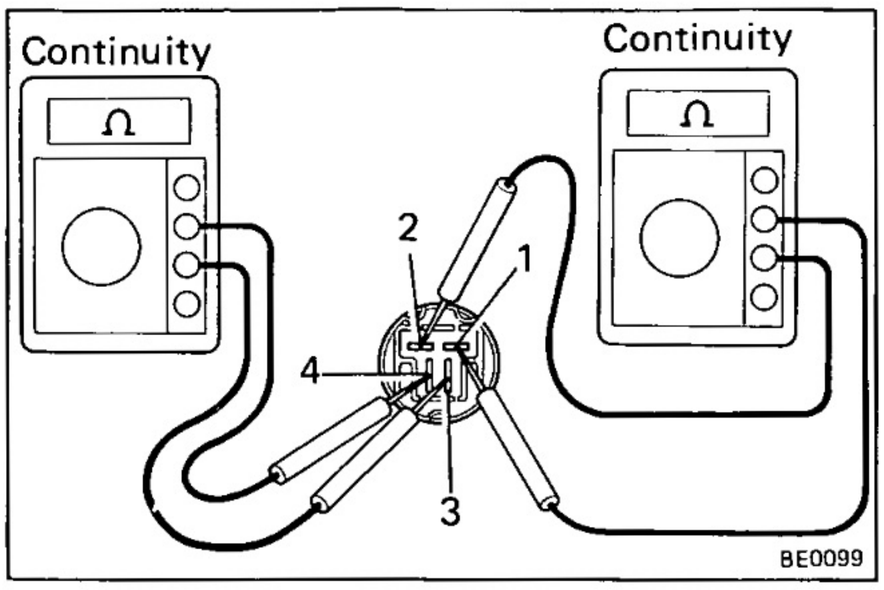

7. **(HJ 60 Series Australia only)**
INSPECT A/C CUT RELAY (STARTING) CONTINUITY

(a) Check that there is continuity between terminals 1 and 2.

(b) Check that there is continuity between terminals 3 and 4.

If there is no continuity, replace the relay.

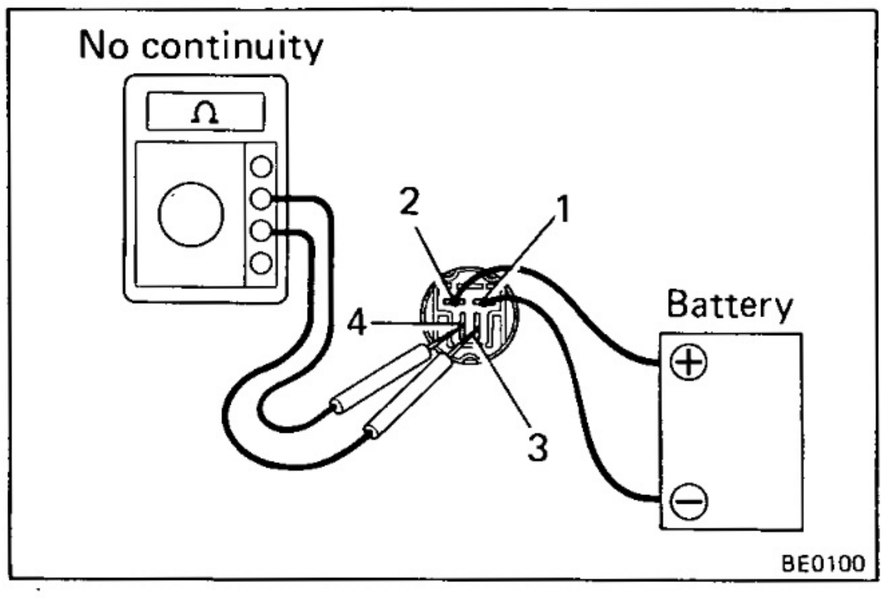

8. **(HJ 60 Series Australia only)**
INSPECT A/C CUT RELAY OPERATION

(a) Apply battery voltage across terminals 1 and 2.

(b) Check that there is no continuity between terminals 3 and 4.

If there is continuity, replace the relay.

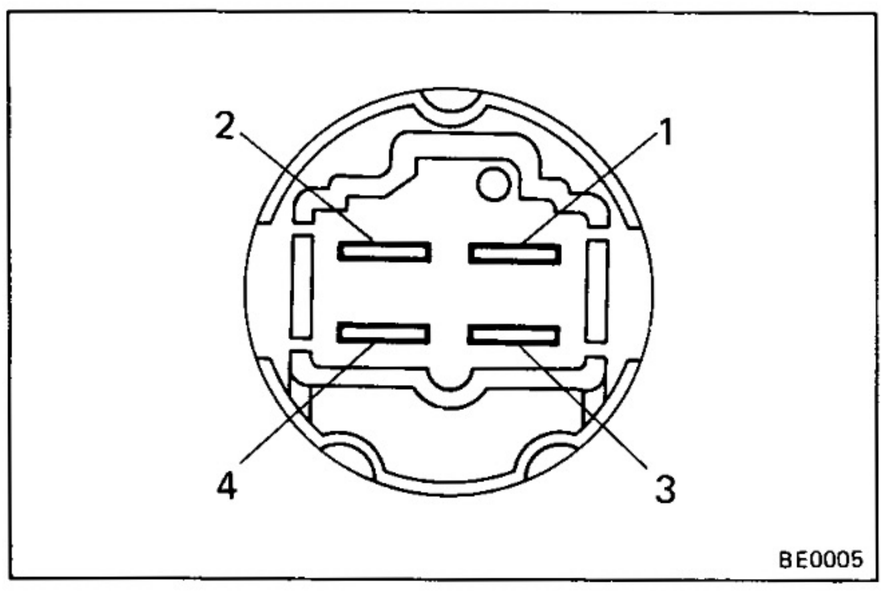

9. **(HJ 60 Series A/T Australia only)**
INSPECT A/C CUT RELAY (TEMPERATURE)

NOTE: Inspect the A/C cut relay (temperature) the same way as the clutch relay.

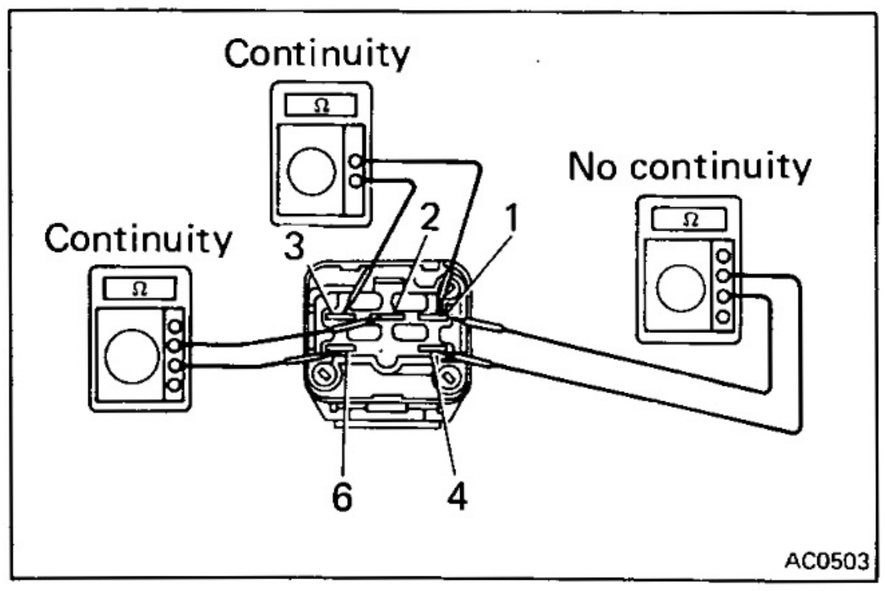

10. **INSPECT REAR COOLER RELAY CONTINUITY**

(a) Check that there is continuity between terminals 1 and 3.

(b) Check that there is continuity between terminals 2 and 6.

(c) Check that there is no continuity between terminals 1 and 4.

If continuity is not as specified, replace the relay.

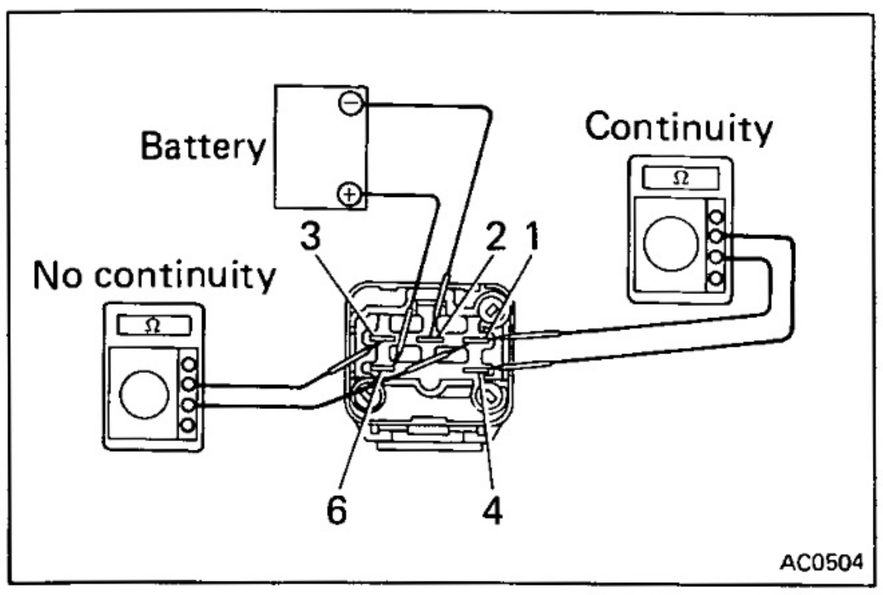

11. **INSPECT REAR COOLER RELAY OPERATION**

(a) Apply battery voltage across terminals 2 and 6.

(b) Check that there is continuity between terminals 1 and 4.

(c) Check that there is no continuity between terminals 1 and 3.

If operation is not as specified, replace the relay.

VACUUM SWITCHING VALVE (VSV)

(See pages AC-22, 23)

INSPECTION OF VSV

1. DISCONNECT VACUUM HOSES AND CONNECTOR FROM VSV

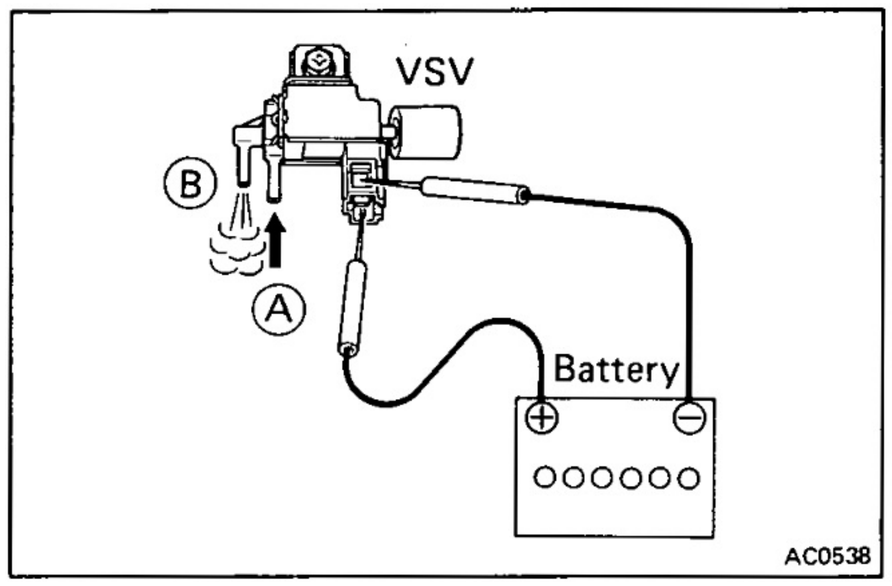

2. CHECK VACUUM CIRCUIT CONTINUITY IN VSV BY BLOWING AIR INTO PIPE

(a) Connect the VSV terminals to the battery terminals as shown.

(b) Blow into pipe Ⓐ and check that air comes out of pipe Ⓑ.

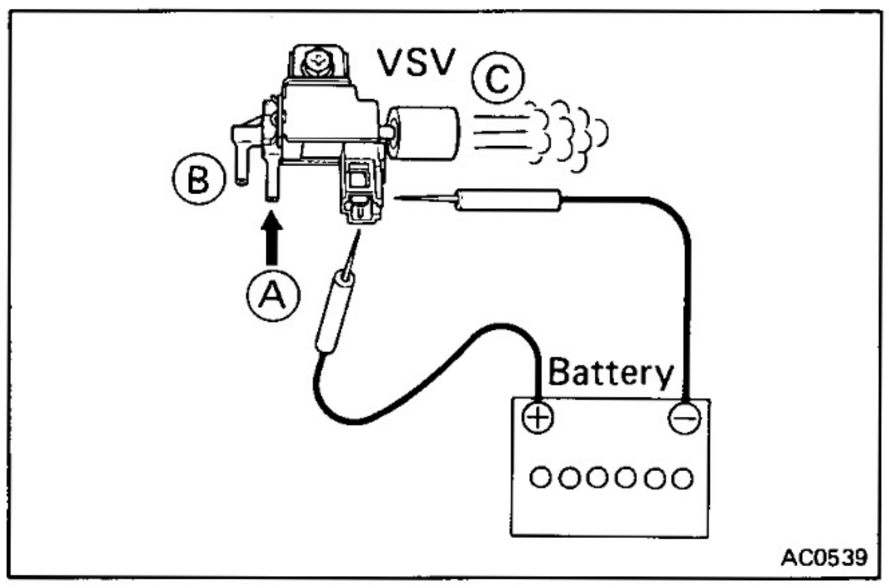

(c) Disconnect the battery.

(d) Blow into pipe Ⓐ and check that air comes out of filter Ⓒ – not out of pipe Ⓑ.

If a problem is found, replace the VSV.

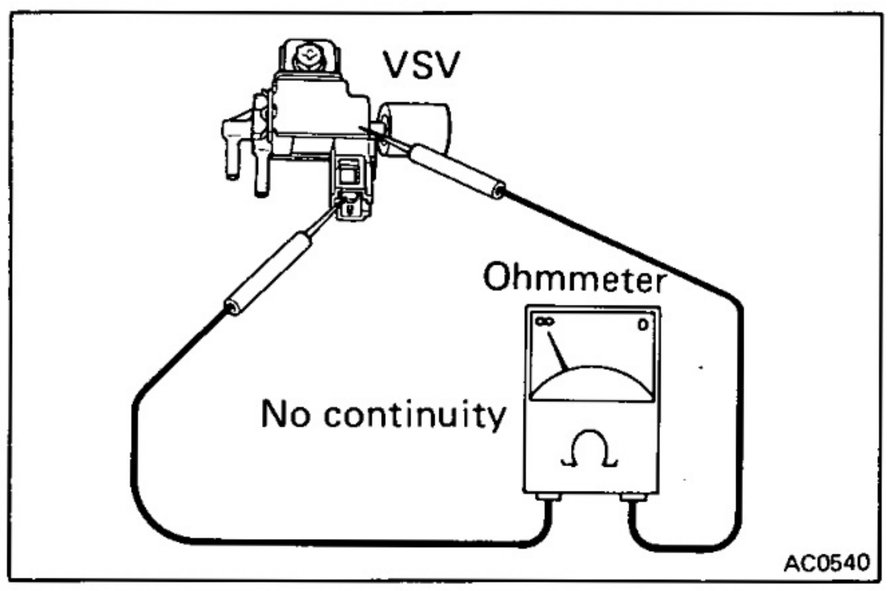

3. CHECK FOR SHORT CIRCUIT

Using an ohmmeter, check that there is no continuity between each terminal and the VSV body.

If a short circuit is found, repair or replace the VSV.

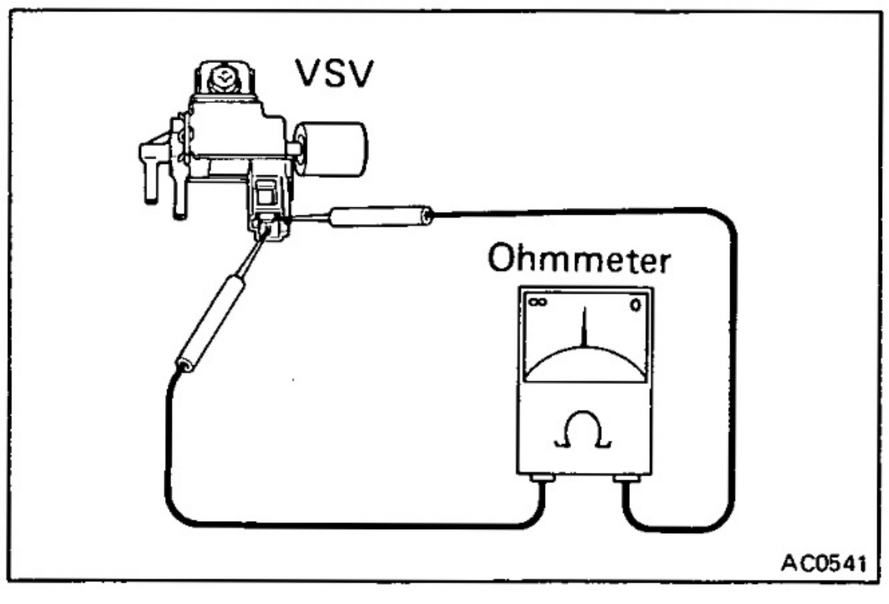

4. CHECK FOR OPEN CIRCUIT

Using an ohmmeter, measure the resistance between two terminals of the VSV.

Specified resistance: 37 – 44Ω at 20°C (68°F)

If the resistance is not within specification, replace the VSV.

SERVICE SPECIFICATIONS

	Page
CLUTCH	A-2
MANUAL TRANSMISSION	A-3
AUTOMATIC TRANSMISSION	A-5
TRANSFER	A-7
PROPELLER SHAFT	A-9
FRONT AXLE AND SUSPENSION	A-10
REAR AXLE AND SUSPENSION	A-14
BRAKE SYSTEM	A-16
STEERING	A-18
BODY	A-22
WINCH	A-24
LUBRICANT	A-26

CLUTCH

Specifications

Pedal height (from asphalt sheet)	FJ·HJ·BJ 60 series		181 mm	7.13 in.
	FJ·HJ 70 series		186 mm	7.32 in.
	BJ 70 series		190 mm	7.48 in.
Pedal freeplay	w/o clutch booster		13 – 23 mm	0.51 – 0.91 in.
	w/ clutch booster		15 – 30 mm	0.59 – 1.18 in.
Push rod play at pedal top			1 – 5 mm	0.04 – 0.20 in.
Booster air valve stroke at pedal top			5 – 9 mm	0.20 – 0.35 in.
Booster push rod to piston clearance		w/SST	0 mm	0 in.
Disc rivet head depth		Limit	0.3 mm	0.012 in.
Disc runout		Limit	0.8 mm	0.031 in.
Diaphragm spring tip alignment		Limit	1.0 mm	0.039 in.
Diaphragm spring finger wear	Depth	Limit	0.6 mm	0.024 in.
	Width	Limit	5.0 mm	0.197 in.
Flywheel runout		Limit	0.2 mm	0.008 in.

Torque Specifications

Part tightened	kg-cm	ft-lb	N·m
Master cylinder x Body	120	9	12
Clutch line union	155	11	15
Clevis lock nut	250	18	25
Master cylinder x Clutch booster	120	9	12
Clutch booster x Bracket	130	9	13
Bracket x Body	120	9	12
Release cylinder set bolt	120	9	12
Release cylinder bleeder plug	110	8	11
Clutch cover x Flywheel	195	14	19
Master cylinder reservoir set bolt	250	18	25
Strup x Clutch pressure plate	195	14	19

MANUAL TRANSMISSION
Specifications

Output shaft				
1st and 2nd gear journal diameter		Limit	43.984 mm	1.7317 in.
Runout		Limit	0.03 mm	0.0012 in.
3rd gear bushing outer diameter		Limit	47.91 mm	1.8862 in.
1st and 2nd gear inner diameter		Limit	50.10 mm	1.9724 in.
3rd gear inner diameter		Limit	46.07 mm	1.8138 in.
Counter gear				
5th gear journal diameter		Limit	31.984 mm	1.2592 in.
Rear bearing journal diameter		Limit	39.957 mm	1.5731 in.
Counter 5th gear inner diameter		Limit	39.07 mm	1.5382 in.
Reverse idler gear inner diameter		Limit	30.10 mm	1.1850 in.
Reverse shift arm shoe to idler groove clearance		Limit	0.7 mm	0.028 in.
Reverse shift arm shoe thickness			8.1 mm	0.319 in.
Gear thrust clearance				
	1st and 2nd	STD	0.175 – 0.325 mm	0.0069 – 0.0128 in.
		Limit	0.35 mm	0.0138 in.
	3rd	STD	0.125 – 0.275 mm	0.0049 – 0.0108 in.
		Limit	0.30 mm	0.0118 in.
	Counter 5th	STD	0.10 – 0.30 mm	0.0039 – 0.0118 in.
		Limit	0.30 mm	0.0118 in.
Gear oil clearance				
	1st and 2nd	STD	0.020 – 0.073 mm	0.0008 – 0.0029 in.
		Limit	0.08 mm	0.0031 in.
	3rd	STD	0.065 – 0.115 mm	0.0026 – 0.0045 in.
		Limit	0.12 mm	0.0047 in.
	Counter 5th	STD	0.015 – 0.068 mm	0.0006 – 0.0027 in.
		Limit	0.07 mm	0.0028 in.
	Reverse idle	STD	0.060 – 0.135 mm	0.0024 – 0.0053 in.
		Limit	0.16 mm	0.0063 in.
Shift fork to hub sleeve clearance		Limit	0.8 mm	0.031 in.
Synchronizer ring to gear clearance				
	3rd, 4th and 5th	Limit	0.8 mm	0.031 in.
Synchronizer ring to gear distance				
	1st gear	Limit	32.5 mm	1.280 in.
	2nd gear	Limit	38.0 mm	1.496 in.
Input shaft snap ring thickness			3.20 – 3.31 mm	0.1260 – 0.1303 in.
			3.31 – 3.42 mm	0.1303 – 0.1346 in.

Specifications (Cont'd)

Output shaft snap ring thickness			
	Mark		
	0	2.40 – 2.45 mm	0.0945 – 0.0965 in.
	1	2.45 – 2.50 mm	0.0965 – 0.0984 in.
	2	2.50 – 2.55 mm	0.0984 – 0.1004 in.
	3	2.55 – 2.60 mm	0.1004 – 0.1024 in.
	4	2.60 – 2.65 mm	0.1024 – 0.1043 in.
	5	2.65 – 2.70 mm	0.1043 – 0.1063 in.
Counter gear snap ring thickness			
	Mark		
	0	2.05 – 2.10 mm	0.0807 – 0.0827 in.
	2	2.15 – 2.20 mm	0.0846 – 0.0866 in.
	4	2.25 – 2.30 mm	0.0886 – 0.0906 in.
Oil seal drive in depth			
Speedometer drive gear		20.0 mm	0.787 in.
5th shift arm shaft		1.0 mm	0.039 in.
Oil seal installed height (H55F only)			
5th shift arm shaft oil seal for case cover		4.0 – 4.5 mm	0.157 – 0.177 in.

Torque Specifications

Part tightened	kg-cm	ft-lb	N·m
Rear bearing retainer	185	13	18
Front bearing retainer	170	12	17
Counter gear rear lock nut	1,300	94	127
5th shift arm x Shaft	380	27	37
Straight screw plug for 5th locking ball and spring	250	18	25
Straight screw plug for reverse restrict pin	190	14	19
Shift and select lever x Shaft	380	27	37
Shift lever housing x Shaft	380	27	37
Clutch housing x Transmission case	650	47	64
Case cover x Transmission case			
H41 and H55F	400	29	39
Reverse shift arm pivot lock nut	250	18	25

AUTOMATIC TRANSMISSION (A440F)

Specifications

Governor pressure (FJ)	Vehicle speed km/h (mph)				
Output shaft rpm	7.50-16-6	7.00-15-6	H-78		
1,000	35 (22)	33 (21)	31 (19)	1.0 – 1.4 kg/cm²	14 – 20 psi	98 – 137 kPa
1,800	64 (40)	59 (37)	57 (35)	2.2 – 2.6 kg/cm²	31 – 37 psi	216 – 255 kPa
3,500	124 (77)	115 (71)	110 (68)	5.7 – 6.3 kg/cm²	81 – 90 psi	559 – 618 kPa
Governor pressure (HJ)	Vehicle speed km/h (mph)				
Output shaft rpm	10R – 15	205 SR – 16			
1,000	34 (21)	33 (21)	1.0 – 1.4 kg/cm²	14 – 20 psi	98 – 137 kPa
1,800	62 (39)	59 (37)	2.4 – 2.8 kg/cm²	34 – 40 psi	235 – 275 kPa
3,500	120 (75)	114 (71)	6.0 – 6.6 kg/cm²	85 – 94 psi	588 – 647 kPa
Line pressure					
Idling		D range	3.7 – 4.3 kg/cm²	53 – 61 psi	363 – 422 kPa
		R range	4.5 – 5.5 kg/cm²	64 – 78 psi	441 – 539 kPa
Stall		D range	11.1–13.6 kg/cm²	158–193 psi	1,089–1,334 kPa
		R range	14.0–17.0 kg/cm²	199–242 psi	1,373–1,667 kPa
Engine stall revolution		3F engine	1,850 ± 150 rpm		
		2H engine	1,900 ± 150 rpm		
Engine idle speed		3F, 2H engine	750 rpm		
Time lag	N range → D range		Less than 0.7 seconds		
	N range → R range		Less than 1.2 seconds		
Throttle cable adjustment					
Throttle valve fully closed (Engine idling)			Between boot end face and inner cable stopper		
			0.5 – 1.5 mm	0.020 – 0.059 in.	
Throttle cable stroke			33 ± 1 mm	1.30 ± 0.04 in.	
Torque converter runout		Limit	0.30 mm	0.0118 in.	
Torque converter installation		3F engine	16.5 mm or more	0.650 in. or more	
		2H engine	41.2 mm or more	1.622 in. or more	
Drive plate runout		Limit	0.20 mm	0.0079 in.	

Shift point schedule (3F engine) km/h (mph)

Tire Size	D range (throttle valve fully open)						(fully closed)		2 range	L range
	1 → 2	2 → 3	3 → OD	OD → 3	3 → 2	2 → 1	Lock-up ON	Lock-up OFF	3 → 2	2 → 1
7.00-16-6 7.50-16-6 7.50R-16-6, 8 9.00-15-6 10R-15	34–47 (21–29)	76–92 (47–57)	120–140 (75–87)	111–130 (69–81)	65–81 (40–50)	31–40 (19–25)	70–90 (43–56)	65–85 (40–53)	80–97 (50–60)	38–50 (24–31)
7.00-15-6 205SR-16	32–44 (20–27)	70–86 (43–53)	113–131 (70–81)	106–122 (66–76)	63–76 (39–47)	29–37 (18–23)	66–85 (41–53)	62–81 (39–50)	76–91 (47–57)	36–47 (22–29)
H78	30–41 (19–25)	69–80 (43–50)	110–122 (68–76)	98–113 (61–70)	56–71 (35–44)	24–35 (15–22)	71–85 (44–53)	66–81 (41–50)	70–84 (43–52)	31–44 (19–27)

Shift point schedule (2H engine) km/h (mph)

7.50R-16-6, 8 10R-15	32–44 (20–27)	68–84 (42–52)	110–129 (68–80)	103–121 (64–75)	58–73 (36–45)	26–36 (16–22)	68–86 (42–53)	64–82 (40–51)	77–93 (48–58)	36–48 (22–30)
205R16C-6 205SR-16	30–40 (19–25)	64–76 (40–47)	103–117 (64–73)	94–110 (58–68)	51–66 (32–41)	21–32 (13–20)	62–78 (39–48)	59–74 (37–46)	69–85 (43–53)	30–43 (19–27)

Torque Specifications

Part tightened		kg-cm	ft-lb	N·m
Engine x Transmission	8 mm	185	13	18
	10 mm	380	27	37
	12 mm	730	53	72
Drive plate x Crankshaft	3F engine	890	64	87
	2H engine	1,000	72	98
Torque converter x Drive plate		290	21	28
Valve body	6 mm	100	7	10
	5 mm	55	48 in.-lb	5.4
Oil pan		70	61 in.-lb	6.9
Oil pan drain plug		280	20	27
Cooler pipe union nut		350	25	34
Testing plug		75	65 in.-lb	7.4
Neutral start switch (bolt)		130	9	13
Neutral start switch (nut)		70	61 in.-lb	6.9
Frame crossmember set bolt		400	29	39
Frame crossmember set nut		600	43	59
PTO x Drive shaft		200	14	20
Exhaust front pipe x Exhaust manifold		630	46	62
Exhaust front pipe x Exhaust tail pipe		400	29	39

TRANSFER
Specifications

Rear output shaft				
High gear journal diameter		Limit	40.009 mm	1.5752 in.
Low gear journal diameter		Limit	40.009 mm	1.5752 in.
Runout			0.03 mm	0.0012 in.
High and low gear oil clearance				
	STD	MTM	0.035 – 0.081 mm	0.0014 – 0.0032 in.
		ATM	0.019 – 0.068 mm	0.0007 – 0.0027 in.
	Limit	MTM	0.081 mm	0.0032 in.
		ATM	0.068 mm	0.0027 in.
High and low gear thrust clearance				
	STD	MTM	0.10 – 0.25 mm	0.0039 – 0.0098 in.
		ATM	0.15 – 0.30 mm	0.0059 – 0.0118 in.
	Limit	MTM	0.25 mm	0.0098 in.
		ATM	0.30 mm	0.0118 in.
Shift fork to hub sleeve clearance		Limit	1.0 mm	0.039 in.
Rear output shaft snap ring thickness				
		Mark		
		11	2.30 – 2.35 mm	0.0906 – 0.0925 in.
		17	2.60 – 2.65 mm	0.1024 – 0.1043 in.
Idler gear thrust clearance				
		STD	0.275 – 0.625 mm	0.0110 – 0.0246 in.
		Limit	0.625 mm	0.0246 in.
Rear output shaft preload				
	New bearing		15 – 24.7 kg-cm	(13.0 – 21.4 in.-lb, 1.5 – 2.4 N·m)
	Reused bearing		7 – 12 kg-cm	(6.1 – 10.4 in.-lb, 0.7 – 1.2 N·m)
Transfer front case shim thickness			2.28 – 2.32 mm	0.0898 – 0.0913 in.
			2.38 – 2.42 mm	0.0937 – 0.0952 in.
			2.48 – 2.52 mm	0.0976 – 0.0992 in.

Specifications (Cont'd)

Rear output shaft preload adjusting shim			
	Mark		
	0	0.15 mm	0.0059 in.
	4	0.4 mm	0.016 in.
	5	0.5 mm	0.020 in.
	6	0.6 mm	0.024 in.
	7	0.7 mm	0.028 in.
	8	0.8 mm	0.031 in.
	9	0.9 mm	0.035 in.
	10	1.0 mm	0.039 in.
	11	1.1 mm	0.043 in.
	12	1.2 mm	0.047 in.
	13	1.3 mm	0.051 in.
	14	1.4 mm	0.055 in.
	15	1.5 mm	0.059 in.
Oil seal drive in depth			
Speedometer driven gear		20 mm	0.787 in.

Torque Specifications

Part tightened		kg-cm	ft-lb	N·m
Transfer front case x Transmission case	17 mm	650	47	64
	14 mm	400	29	39
Transfer front case x Transfer rear case	17 mm	650	47	64
	14 mm	400	29	39
Idler gear shaft lock plate bolt		130	9	13
Front companion flange lock nut		1,300	94	127
Transfer rear case x Transfer case cover No. 2		155	11	15
Transfer rear case x Rear output shaft rear bearing retainer		350	25	34
Rear companion flange lock nut		1,300	94	127
Transmission output shaft lock nut		1,300	94	127
Transfer rear case x Power take-off cover				
	With liquid sealer	170	12	17
	Others	195	14	19
Transfer indicator switch		450	33	44
Speedometer driven gear lock plate bolt		130	9	13
Diaphragm cylinder body x Transfer front case		185	13	18
Diaphragm cylinder cover x Diaphragm cylinder body		185	13	18
Diaphragm cylinder body cover x Diaphragm cylinder cover		75	65 in.-lb	7.4
Suction tube x Diaphragm cylinder body cover		375	27	37
Diaphragm push rod nut		375	27	37

PROPELLER SHAFT

Specifications

Propeller shaft runout	Limit	0.8 mm	0.031 in.
Spider bearing axial play		Less than 0.05 mm	0.0020 in.
Snap ring thickness	Color		
	Uncolored	2.00 mm	0.0787 in.
	Brown	2.03 mm	0.0799 in.
	Blue	2.06 mm	0.0811 in.
	Uncolored	2.09 mm	0.0823 in.

Torque Specifications

Part Tightened	kg-cm	ft-lb	N·m
Propeller shaft x Differential	900	65	88
Propeller shaft x Transfer	900	65	88

FRONT AXLE AND SUSPENSION

Specifications

Destination	Model	Tire size	Cold tire inflation pressure kg/cm² (psi, kPa)			
			Below 80km/h (50mph) Sand Driving		Over 80 km/h (50 mph)	
			Front	Rear	Front	Rear
Canada	BJ70LV	HR78-15(B)	1.5 (21, 147)	2.1 (30, 206)	1.8 (26, 177)	2.2 (31, 216)
	BJ60LG		1.7 (24, 167)	2.2 (31, 216)	2.0 (28, 196)	2.2 (31, 216)
Australia	FJ70RV FJ73RV BJ70RV BJ73RV	7.50-16-6PRLT	1.8 (26, 177)	2.0 (28, 196)	1.8 (26, 177)	2.4 (34, 235)
		7.50R-16-6PRLT	2.0 (28, 196)	2.6 (37, 255)	2.4 (34, 235)	3.0 (43, 294)
		10R15-6PR	1.75 (25, 172)	2.5 (36, 245)	2.1 (30, 206)	2.8 (40, 275)
	FJ75RV FJ75RP FJ75RV FJ75RP	7.50-16-8PRLT	2.4 (34, 235)	3.5 (50, 343)	2.4 (34, 235)	4.0 (57, 392)
		7.50R-16-8PRLT	2.2 (31, 216)	4.3 (61, 422)	2.4 (34, 235)	4.6 (65, 451)
	FJ62RV FJ62RG HJ60RV HJ60RG (w/o Third seat)	7.50R-16-6PRLT	2.2 (31, 216)	3.2 (46, 314)	2.6 (37, 255)	3.5 (50, 343)
		205R 16C 6PR	2.2 (31, 216)	3.0 (43, 294)	2.6 (37, 255)	3.4 (48, 333)
		10R15-6PRLT	2.1 (30, 206)	2.8 (40, 275)	2.5 (36, 245)	3.2 (46, 314)
	FJ62RG HJ60RG (w/ Third seat)	7.50R-16-6PRLT	2.2 (31, 216)	3.5 (50, 343)	2.6 (37, 255)	3.5 (50, 343)
		205R 16C 6PR	2.2 (31, 216)	3.6 (51, 353)	2.6 (37, 255)	3.75 (53, 368)
		10R15-6PRLT	2.1 (30, 206)	3.2 (46, 314)	2.5 (36, 245)	3.5 (50, 343)
Europe	BJ70L(R)V BJ73L(R)V	7.00-16-6PRLT	1.8 (26, 177)	2.4 (34, 235)	2.2 (31, 216)	2.8 (40, 275)
		7.50-16-6PRLT	1.8 (26, 177)	2.0 (28, 196)	1.8 (26, 177)	2.4 (34, 235)
		10R-15-6PRLT	1.75 (25, 172)	2.5 (36, 245)	2.1 (30, 206)	2.8 (40, 275)
		205SR16	1.7 (24, 167)	2.2 (31, 216)	2.0 (28, 196)	2.5 (36, 245)
	BJ75L(R)V	7.50-16-8PRLT	2.4 (34, 235)	3.5 (50, 343)	2.4 (34, 235)	4.0 (57, 392)
		205R 16C 8PRLT	2.0 (28, 196)	4.5 (64, 441)	2.3 (33, 226)	4.5 (64, 441)
	HJ60L(R)V HJ60L (R)G (w/o Third seat)	205SR16	2.0 (28, 196)	2.5 (36, 245)	2.3 (33, 226)	2.8 (40, 275)
		10R15-6PRLT	2.1 (30, 206)	2.8 (40, 275)	2.4 (34, 235)	3.1 (44, 304)
	HJ60LG HJ60RG (w/ Third seat)	205SR16	2.0 (28, 196)	2.5 (36, 245)	2.3 (33, 226)	3.0 (43, 294)
		10R15-6PRLT	2.1 (30, 206)	2.8 (40, 275)	2.5 (36, 245)	3.5 (50, 343)
Others	FJ70·73 series BJ70 series	7.00-15-6PRLT	1.8 (26, 177)	2.6 (37, 255)	2.2 (31, 216)	3.0 (43, 294)
		7.00-16-6PRLT	1.8 (26, 177)	2.4 (34, 235)	2.2 (31, 216)	2.8 (40, 275)
		7.50-16-6PRLT	1.8 (26, 177)	2.0 (28, 196)	1.8 (26, 177)	2.4 (34, 235)
		10R15-6PRLT	1.75 (25, 172)	2.5 (36, 245)	2.1 (30, 206)	2.8 (40, 275)
	FJ·BJ·HJ 75 series	7.50-16-8PRLT	2.4 (34, 235)	3.5 (50, 343)	2.4 (34, 235)	4.0 (57, 392)
		7.50-16-8PRLT	1.8 (26, 177)	–	1.8 (26, 177)	–
		7.50-16-6PR	–	3.5 (50, 343)	–	4.0 (57, 392)
		7.00-16-8PRLT	2.4 (34, 235)	4.25 (60, 417)	2.8 (40, 275)	4.25 (60, 417)

Specifications (Cont'd)

Destination	Model	Tire size	Cold tire inflation pressure kg/cm² (psi, kPa)			
			Below 80 km/h (50 mph) Sand Driving		Over 80 km/h (50 mph)	
			Front	Rear	Front	Rear
Others (Cont'd)	FJ62·BJ60 series HJ60L(R)V HJ60L(R)G	7.00-15-6PRLT	2.4 (34, 235)	3.25 (46, 319)	2.8 (40, 275)	3.25 (46, 319)
		7.00-16-6PRLT	2.0 (28, 196)	3.25 (46, 319)	2.4 (34, 235)	3.25 (46, 319)
		205R16C6PRLT	1.8 (26, 177)	2.6 (37, 255)	2.2 (31, 216)	3.0 (43, 294)
		10R15-6PRLT	2.1 (30, 206)	2.8 (40, 275)	2.5 (36, 245)	3.2 (46, 314)
	HJ60L(R)G	7.50-16-6PRLT	1.8 (26, 177)	3.0 (43, 294)	2.2 (31, 216)	3.5 (50, 343)
		10R15-6PRLT	2.1 (30, 206)	3.2 (46, 314)	2.5 (36, 245)	3.5 (50, 343)

Destination	Model	Tire size	Cold tire inflation pressure kg/cm² (psi, kPa)					
			Normal road Above 110 km/h (68 mph)		Rough road Above 50 km/h (31 mph)		Sandy road Above 15 km/h (9 mph)	
			Front	Rear	Front	Rear	Front	Rear
Others	FJ·BJ75 series	9.00-15-6PRLT (Sand Tire)	2.1 (30, 206)	2.8 (40, 275)	1.75 (25, 172)	2.8 (40, 275)	1.05 (15, 103)	2.45 (35, 240)
	FJ62·BJ·HJ 60 series		2.1 (30, 206)	2.8 (40, 275)	1.75 (25, 172)	2.45 (35, 240)	1.05 (15, 103)	2.45 (35, 240)

Destination	Model	Tire size	Cold tire inflation pressure kg/cm² (psi, kPa)					
			Normal road		Rough road		Sandy road	
			Front	Rear	Front	Rear	Front	Rear
Others	FJ70·73 BJ70 series	7.50R16C-8PR 7.50R16C-8PRLT	2.1 (30, 206)	2.7 (38, 265)	1.6 (23, 157)	2.0 (28, 196)	1.2 (17, 118)	1.5 (21, 147)
	FJ·BJ·HJ 75 series		2.1 (30, 206)	4.0 (57, 392)	1.6 (23, 157)	3.2 (46, 314)	1.2 (17, 118)	2.3 (33, 226)
	HJ60 series (w/o Third seat)		2.1 (30, 206)	3.1 (44, 304)	1.6 (23, 157)	2.4 (34, 235)	1.2 (17, 118)	1.7 (24, 167)
	HJ60L(R)G (w/ Third seat)		2.1 (30, 206)	3.5 (50, 343)	1.6 (23, 157)	2.8 (40, 275)	1.2 (17, 118)	2.0 (18, 196)

Specifications (Cont'd)

Front wheel alignment	Camber			1° ± 45′	
	King pin inclination			9°30′ ± 45′	
	Caster	FJ·BJ 70·73 series		1°05′ ± 1°	
		FJ·BJ·HJ 75L(R)V series		0°45′ ± 1°	
		FJ·BJ·HJ 75L(R)P series		0°55′ ± 1°	
		FJ62, BJ·HJ60L(R)G		0°50′ ± 1°	
		FJ62, BJ·HJ60L(R)V		1°05′ ± 1°	
	Toe-in	Tire		Inspection STD	Adjustment STD
		Radial	10R-15 7.50R-16	−1±2mm (−0.04±0.08 in.)	−1±1mm (−0.04±0.04 in.)
			Other	1 ± 2mm (0.04 ± 0.08 in.)	1 ± 1mm (0.04 ± 0.04 in.)
		Bias		4 ± 2mm (0.16 ± 0.08 in.)	4 ± 1mm (0.16 ± 0.04 in.)
	Wheel angle	Max.	Inside wheel	32°00′ +0° −3°	
			Outside wheel	30°00′	
		at 20° (Outside wheel)	Inside wheel	21°00′	
	Side slip			Less than 3.0 mm/m (0.118 in./3.3 ft)	

Disc wheel lateral runout	Limit	1.2 mm	0.047 in.
Wheel bearing preload (rotating load at hub bolt)	Frictional force of oil seal plus	0.4 – 3.3 kg	0.9 – 7.3 lb 4 – 32 N
Steering knuckle bearing preload (rotating load at knuckle arm end, before installing dust seal)		3.0 – 6.0 kg	6.6 – 13.2 lb 29 – 59 N
Steering knuckle preload adjusting shim thickness		0.1 mm	0.004 in.
		0.2 mm	0.008 in.
		0.3 mm	0.012 in.
		0.5 mm	0.020 in.
		1.0 mm	0.039 in.

Torque Specifications

Part tightened	kg-cm	ft-lb	N·m
Tie rod clamp bolt	375	27	37
Free wheeling hub body (Flange) x Axle hub	315	23	31
Steering knuckle stopper bolt lock nut	450	33	44
Free wheel hub body x Free wheel hub cover	100	7	10
Steering knuckle arm x Housing	975	71	96
Bearing cap x Housing	975	71	96
Knuckle spindle x Housing	475	34	47
Front axle hub bearing lock nut	800	58	78
Disc brake caliper x Steering knuckle	900	65	88
Spring U-bolt x Axle housing	1,250	90	123
Rear spring bracket x Hanger pin	930	67	91
Front spring shackle x Leaf spring	930	67	91
Front shock absorber x Axle housing	650	47	64
Front shock absorber x Frame	260	19	25
Knuckle arm x Tie rod	925	67	91
Propeller shaft x Differential	750	54	74
Stabilizer bar bracket x Axle housing	130	9	13
Stabilizer x Frame	180	13	18
Wheel nut	1,400	101	137

REAR AXLE AND SUSPENSION
Specifications

Rear axle shaft (Semi-floating type)	Axle shaft runout		0.8 mm	0.031 in.
Rear axle shaft and axle hub (Full floating type)	Axle shaft runout		0.8 mm	0.031 in.
	Wheel bearing preload (Starting load at hub bolt)		0.4 – 3.3 kg	0.5 – 7.3 lb 4 – 32 N
	Axle housing and lock nut distance		–0.2–0.9 mm	–0.008 – 0.035 in.
	Hub axial play		Less than 0.1 mm	0.004 in.
Differential	Drive pinion bearing preload	at Starting		
		New bearing	13 – 20 kg-cm	11.3–17.4 in.-lb 1.3–2.0 N·m
		Reused bearing	9 – 13 kg-cm	7.8 – 11.3 in.-lb 0.9 – 1.3 N·m
	Total preload	at Starting	Add drive pinion bearing preload	
		New and reused bearing	4 – 6 kg-cm	3.5–5.2 in.-lb 0.4–0.6 N·m
	Drive pinion to ring gear backlash		0.15 – 0.20 mm	0.0059 – 0.0079 in.
	Pinion gear to side gear backlash		0.02 – 0.24 mm	0.0008 – 0.0094 in.
		LSD	0.05 – 0.24 mm	0.0020 – 0.0094 in.
	Ring gear runout	Limit	0.10 mm	0.0039 in.
	Companion flange runout	Limit		
		Radial	0.10 mm	0.0039 in.
		Lateral	0.10 mm	0.0039 in.
	Ring gear installation temperature		90 – 110°C	194 – 230°F
	Side gear thrust washer thickness			
			1.55 – 1.65 mm	0.0610 – 0.0650 in.
			1.70 – 1.80 mm	0.0669 – 0.0709 in.
			1.85 – 1.95 mm	0.0728 – 0.0768 in.
			2.00 – 2.10 mm	0.0787 – 0.0827 in.
	Drive pinion adjusting plate washer thickness			
			1.05 mm	0.0413 in.
			1.10 mm	0.0433 in.
			1.15 mm	0.0453 in.
			1.20 mm	0.0472 in.
			1.25 mm	0.0492 in.
			1.30 mm	0.0512 in.
			1.35 mm	0.0531 in.
			1.40 mm	0.0551 in.
			1.45 mm	0.0571 in.
			1.50 mm	0.0591 in.
			1.55 mm	0.0610 in.

Specifications (Cont'd)

Differential (Cont'd)	Side gear adjusting shims thickness (LSD)	A	2.20 mm	0.0866 in.
		B	2.25 mm	0.0886 in.
		C	2.30 mm	0.0906 in.
		D	2.35 mm	0.0925 in.
		E	2.40 mm	0.0945 in.
		F	2.45 mm	0.0965 in.
		G	2.50 mm	0.0984 in.
		H	2.55 mm	0.1004 in.
		J	2.60 mm	0.1024 in.
		K	2.65 mm	0.1043 in.
		L	2.70 mm	0.1063 in.
		M	2.75 mm	0.1083 in.
		N	2.80 mm	0.1102 in.

Torque Specifications

	Part tightened	kg-cm	ft-lb	N·m
Rear axle shaft (Semi-floating type)	Differential rear cover x Axle housing	130	9	13
Rear axle shaft and axle hub (Full floating type)	Axle shaft x Axle hub	340	25	33
	Axle hub bearing lock nut	600	43	59
Differential	Propeller shaft x Companion flange	900	65	88
	Drive pinion x Companion flange	2,500–4,500	181–325	245–441
	Ring gear x Differential case	1,125	81	110
	Side bearing cap x Differential carrier	800	58	78
	Differential carrier x Axle housing	475	34	47
	Differential LH case x RH case (LSD)	480	35	47
Rear suspension	Spring U-bolt x Axle housing	1,250	90	123
	Front spring bracket x Hanger pin	925	67	91
	Rear spring shackle x Leaf spring	925	67	91
	Rear shock absorber x Axle housing	375	27	37
	Rear shock absorber x Body	375	27	37
	Stabilizer bar bracket x Axle housing	120	9	12
	Stabilizer box x Link	120	9	12

BRAKE SYSTEM
Specifications

Brake pedal	Pedal height (from asphalt sheet) 70 series		169 – 179 mm	6.65 – 7.05 in.
	60 series		180 mm	7.09 in.
	Pedal freeplay		3 – 6 mm	0.12 – 0.24 in.
	Pedal reserve distance at 50 kg (110.2 lb, 490 N)			
	FJ, BJ, HJ60 series			
	Front disc type		More than 90 mm (3.54 in.)	
	Front drum type		More than 103 mm (4.06 in.)	
	FJ, BJ, HJ70 series			
	Front disc type		More than 80 mm (3.15 in.)	
	Front drum type	(FJ, BJ, HJ 75 series)	More than 90 mm (3.54 in,)	
		(Except 75 series)	More than 100 mm (3.94 in.)	
Brake booster	Booster push rod to piston clearance at Idling vacuum		0.1 – 0.5 mm	0.004 – 0.020 in.
	w/ SST		0 mm	0 in.
Vacuum pump	Blade	Height	13.80 mm	0.5433 in.
		Width	5.95 mm	0.2343 in.
		Length	39.98 mm	1.5740 in.
	Rotation play		1.0 mm	0.039 in.
Front brake (Drum)	Shoe lining thickness	STD	6.5 mm	0.256 in.
		Limit	1.5 mm	0.059 in.
	Drum inside diameter	STD	295.0 mm	11.614 in.
		Limit	297.0 mm	11.693 in.
Front brake (Disc)	Pad thickness	STD	10.0 mm	0.394 in.
		Limit	1.0 mm	0.039 in.
	Disc thickness	STD	20.0 mm	0.787 in.
		Limit	19.0 mm	0.748 in.
	Disc runout	Limit	0.15 mm	0.0059 in.
Rear brake	Drum inside diameter	STD	295.0 mm	11.614 in.
		Limit	297.0 mm	11.693 in.
	Lining thickness	STD	6.5 mm	0.256 in.
		Limit	1.5 mm	0.059 in.
	Drum to shoe clearance		0.6 mm	0.024 in.
Parking brake	Lever travel at 20 kg (44.1 lb, 196 N)		7 – 9 clicks	

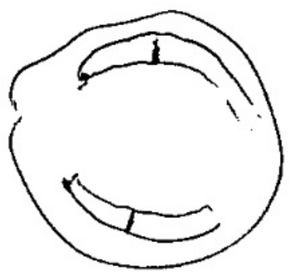

Torque Specifications

Part tightened	kg-cm	ft-lb	N·m
Bleeder plug	110	8	11
Piston stopper bolt x Master cylinder	100	7	10
Outlet plug x Master cylinder	450	33	44
Reservoir set bolt x Master cylinder	250	18	25
Master cylinder x Brake booster	130	9	13
Brake tube union nut	155	11	15
Brake booster x Pedal bracket	130	9	13
Brake booster clevis lock nut	260	19	25
Vacuum pump x Check valve	750	54	74
Vacuum pump x Alternator	80	69 in.-lb	7.8
Alternator x Oil inlet union bolt	140	10	14
Drum brake backing plate x Steering knuckle	475	34	47
Front brake wheel cylinder x Backing plate	185	13	18
Front brake tube clamp	80	69 in.-lb	7.8
Front disc x Front axle hub	475	34	47
Front disc brake cylinder x Steering knuckle	1,250	90	123
Drum brake backing plate x Rear axle housing	1,250	90	123
Parking brake bellcrank bracket x Backing plate	130	9	13
Rear brake wheel cylinder x Backing plate	100	7	10
LSPV x Valve bracket	130	9	13
Load sensing spring x Shackle No. 1	185	13	18
Load sensing spring x Valve bracket	185	13	18
LSPV bracket x Frame	130	9	13
LSPV shackle bracket x Rear axle housing	195	14	19
LSPV shackle lock nut	250	18	25
LSPV shackle No. 2 x Shackle bracket	130	9	13

STEERING
Specifications

Steering	Steering wheel freeplay		40 mm (1.57 in.) or less	
	Snap ring thickness	Color		
		None	1.175 – 1.225 mm	0.0463 – 0.0482 in.
		Brown	1.225 – 1.275 mm	0.0482 – 0.0502 in.
		Blue	1.275 – 1.325 mm	0.0502 – 0.0522 in.
	Spider bearing axial play		0.05 mm (0.0020 in.) or less	
Tilt steering	Collar No.1 outer diameter		17.989 – 17.996 mm	0.7082 – 0.7085 in.
			17.996 – 18.003 mm	0.7085 – 0.7088 in.
			18.003 – 18.010 mm	0.7088 – 0.7091 in.
			18.010 – 18.017 mm	0.7091 – 0.7093 in.
			18.017 – 18.024 mm	0.7093 – 0.7096 in.
	Collar No.2 outer diameter		17.982 – 18.000 mm	0.7080 – 0.7087 in.
			18.000 – 18.018 mm	0.7087 – 0.7094 in.
	Tilt steering support	Mark		
	Shim thickness	None	0.197 – 0.203 mm	0.0078 – 0.0080 in.
		5	0.495 – 0.505 mm	0.0195 – 0.0199 in.
		8	0.795 – 0.805 mm	0.0313 – 0.0317 in.
		14	1.395 – 1.405 mm	0.0549 – 0.0553 in.
		18	1.795 – 1.805 mm	0.0707 – 0.0711 in.
Steering gear housing	Sector shaft thrust clearance		0.05 mm (0.0020 in.) or less	
	Thrust washer thickness		1.95 mm	0.0768 in.
			2.00 mm	0.0787 in.
			2.05 mm	0.0807 in.
	Sector shaft bushing inside diameter	No.		
		1	36.055 – 36.065 mm	1.4195 – 1.4199 in.
		2	36.045 – 36.055 mm	1.4191 – 1.4195 in.
		3	36.035 – 36.045 mm	1.4187 – 1.4191 in.
		4	36.025 – 36.035 mm	1.4183 – 1.4187 in.
	Worm shaft preload (starting)		3.5 – 5 kg-cm	3.0 – 4.3 in.-lb 0.34 – 0.49 N·m
	Total preload (starting)		8 – 11 kg-cm	6.9 – 9.5 in.-lb 0.78 – 1.08 N·m
	Gear housing oil level		12 – 17 mm	0.47 – 0.67 in.
Power steering	Drive belt tension at 10 kg (22 lb, 98 N)			
	3F Engine	New belt	7 – 9.5 mm	0.28 – 0.37 in.
		Used belt	8 – 10 mm	0.31 – 0.39 in.
	3B Engine	New belt	13 – 17 mm	0.51 – 0.67 in.
		Used belt	16 – 22 mm	0.63 – 0.87 in.
	2H Engine	New belt	6.5 – 8.5 mm	0.26 – 0.33 in.
		Used belt	7 – 9 mm	0.28 – 0.35 in.
	Drive belt tension w/ SST	New belt	45 – 55 kg	99.2 – 121.3 lb 441 – 539 N
		Used belt	20 – 35 kg	44.1 – 77.2 lb 196 – 343 N
	Maximum rise of oil level		Below 5 mm (0.20 in.)	
	Oil pressure at idle speed		75 kg/cm^2 (1,067 psi, 7,355 kPa) or more	
	Steering effort		4 kg (8.8 lb, 39 N) or less	
(Vane type pump)	Rotor shaft bushing oil clearance	STD	0.008 – 0.023 mm	0.0003 – 0.0009 in.
		Maximum	0.03 mm	0.0012 in.

Specifications (Cont'd)

Power steering (Vane type pump) Ex. USA (Cont'd)	Rotor to cam ring clearance			0.06 mm (0.0024 in.) or less	
	Vane plate to rotor groove clearance			0.03 mm (0.0012 in.) or less	
	Vane plate				
		Minimum length		14.97 mm	0.5894 in.
		Minimum height		8.1 mm	0.3189 in.
		Minimum thickness		1.77 mm	0.0697 in.
	Vane plate length				
		Rotor and cam ring mark			
			Non	14.996 – 14.998 mm	0.5904 – 0.5905 in.
			1	14.994 – 14.996 mm	0.5903 – 0.5904 in.
			2	14.992 – 14.994 mm	0.5902 – 0.5903 in.
			3	14.990 – 14.992 mm	0.59016 – 0.59024 in.
			4	14.988 – 14.990 mm	0.5901 – 0.5902 in.
	Flow control valve spring length		STD	50 mm	1.97 in.
			Minimum	47 mm	1.85 in.
	Pump rotating torque			2.8 kg-cm (2.4 in.-lb, 0.3 N·m) or less	
(Slipper type pump for USA)	Overall length of rotor and fixed ring				
			STD	0.03 mm	0.0012 in.
			Maximum	0.06 mm	0.0024 in.
	Flow control valve spring length		STD	50 mm	1.97 in.
			Minimum	47 mm	1.85 in.
	Slipper thickness		STD	1.55 mm	0.0610 in.
			Minimum	1.40 mm	0.0551 in.
	Slipper length	STD	w/ Mark	39.932 mm	1.5721 in.
			w/o Mark	39.937 mm	1.5723 in.
		Minimum		39.920 mm	1.5717 in.
	Slipper compression spring length				
			STD	14.0 mm	0.551 in.
			Minimum	13.0 mm	0.512 in.
	Shaft to bushing clearance		STD	0.010 – 0.015 mm	0.0004 – 0.0006 in.
			Maximum	0.03 mm	0.0012 in.
	Pump rotating torque			2.5 kg-cm (2.2 in.-lb, 0.3 N·m) or less	
(Steering gear housing)	Cross shaft adjusting screw thrust crearance			0.03 – 0.05 mm	0.0012 – 0.0020 in.
	Worm bearing preload		at starting	4.0 – 6.5 kg-cm	3.5–5.6 in.-lb 0.4–0.6 N·m
	Total preload		at starting	6.0 – 9.5 kg-cm	5.2–8.2 in.-lb 0.6–0.9 N·m
Steering linkage	Ball joint rotating torque			10 – 30 kg-cm	8.7–26.0 in.-lb 1.0 – 2.9 N·m

Torque Specifications

	Part thightened	kg-cm	ft-lb	N·m
Tilt steering	Pawl set bolt	185	13	18
	Tilt lever retainer	185	13	18
	Tilt steering support x Breakaway bracket	185	13	18
	Tilt steering support stopper bolt	100	7	10
	Tilt steering support x Upper bracket	75	65 in.-lb	7.4
	Breakaway bracket x Column tube	185	13	18
	Column hole cover x Column tube	185	13	18
	Main shaft x Intermediate shaft	250	18	25
	Column hole cover x Body	130	9	13
	Breakaway bracket x Body	250	18	25
	Steering wheel x Main shaft	350	25	34
	Intermediate shaft No.1 x No.2	360	26	35
Rigid steering	Upper bracket x Column tube	75	65 in.-lb	7.4
	Column hole cover x Body	130	9	13
	Column tube x Body	250	18	25
	Steering wheel x Main shaft	350	25	34
	Main shaft x Intermediate shaft	360	26	35
	Intermediate shaft x Worm shaft	360	26	35
Steering gear housing	Worm bearing adjusting screw lock nut	1,500	108	147
	Sector shaft end cover x Gear housing	1,150	83	113
	Sector shaft adjusting screw lock nut	450	33	44
	Gear housing x Frame	1,240	90	122
	Intermediate shaft x Worm shaft	360	26	35
	Joint protector bolt	65	56 in.-lb	6.4
	Pitman arm x Tie rod end	925	67	91
	Pitman arm x Sector shaft	1,800	130	177
Power steering	Pressure port union x Rear housing	700	51	69
	Front housing x Rear housing	470	34	46
	Suction port union x Rear housing	130	9	13
	PS pump x Bracket (3B Engine)	375	27	37
	(3F, 2H Engine)	400	29	39
	PS pump pulley x Rotor shaft (3B Engine)	440	32	43
	(3F, 2H Engine)	480	35	47
	Pressure tube x Pressure port union	450	33	44
	Ball guide clamp set screw	30	26 in.-lb	2.9
	Valve body x Gear housing	470	34	46
	Worm bearing adjusting screw lock nut	500	36	49
	End cover x Gear housing	470	34	46
	Pitman arm x Cross shaft	1,800	130	177
	Cross shaft adjusting screw lock nut	470	34	46
	Gear housing x Frame	1,240	90	122
	Pressure tube x Valve body	450	33	44
	Intermediate shaft x Worm shaft	360	26	35
	Joint protector bolt	65	56 in.-lb	6.4
	Pitman arm x Relay rod	925	67	91
Steering linkage	Tie rod x Knuckle arm	925	67	91
	Relay rod x Tie rod	925	67	91
	Tie rod end clamp bolt	450	33	44

Torque Specifications (Cont'd)

Steering linkage (Cont'd)	Part tightened	kg-cm	ft-lb	N·m
	Relay rod clamp bolt	450	33	44
	Relay rod x Pitman arm	925	67	91
	Steering damper x Relay rod	750	54	74
	Steering damper x Bracket	750	54	74

BODY

Torque Specifications

Part tightened		kg-cm	ft-lb	N·m
FRP top				
FRP top set bolt	6 mm	80	69 in.-lb	7.8
	8 mm	120	9	12
Roll bar				
Roll bar set bolt		440	32	43
Front seat				
(70, 73, 75 series)				
Reclining seat adjuster x Seat back		530	38	52
Reclining seat adjuster x Seat cushion		530	38	52
Seat back x Seat cushion		195	14	19
Seat cushion x Seat track		260	19	25
Seat track x Body	w/o Seat suspension	400	29	39
Seat track x Seat suspension	w/ Seat suspension	400	29	39
(60, 62 series)				
Reclining seat adjuster x Seat back	w/ Seat reclining	325	24	32
Reclining seat adjuster x Seat cushion	w/ Seat reclining	325	24	32
Seat outer support x Seat back	w/o Seat reclining	325	24	32
Seat outer support x Seat cushion	w/o Seat reclining	325	24	32
Seat inner support x Seat cushion		325	24	32
Seat track x Seat cushion		200	14	20
Seat track x Body		375	27	37
Rear bench seat				
(70, 73, 75 series)				
Seat cushion lock x Seat leg	w/o Seat belt	260	19	25
	w/ Seat belt	420	30	41
Striker x Body		530	38	52
Seat cushion bracket x Seat cushion		530	38	52
Seat cushion bracket x Body		260	19	25
Seat back lock x Seat back		530	38	52
Seat back lock x Seat cushion		530	38	52
Strap set bolt		80	69 in.-lb	7.8
(60, 62 series)				
Seat cushion lock x Seat cushion		185	13	18
Seat cushion lock striker x Body		185	13	18
Seat cushion hinge x Seat cushion		185	13	18
Seat cushion hinge x Body		185	13	18
Seat back lock x Body		185	13	18
Seat back set plate set bolt		80	69 in.-lb	7.8

Torque Specifications (Cont'd)

Part tightened		kg-cm	ft-lb	N·m
Rear split seat (60, 62 series)				
Seat cushion lock x Seat cushion		185	13	18
Seat cushion lock striker x Body		420	30	41
Seat cushion hinge x Seat cushion		185	13	18
Seat cushion hinge x Body		185	13	18
Seat back lock x Body		185	13	18
Seat back lock striker x Seat back		185	13	18
Seat back x Seat cushion		380	27	37
Transverse seat (60, 62 series)				
Seat leg lock striker x Body		380	27	37
Seat cushion bracket x Seat cushion		185	13	18
Seat cushion bracket x Body		185	13	18
Seat back lock x Seat back		380	27	37
Seat back lock x Seat cushion		380	27	37
Seat inner support x Seat back		380	27	37
Seat inner support x Seat cushion		380	27	37
Rear parallel seat				
(70, 73, 75V series)				
Seat frame x Body		260	19	25
(75P series)				
Seat frame x Body		195	14	19
(60, 62 series)				
Seat frame x Body		185	13	18
Seat belt				
Seat belt anchor x Body		440	32	43
Fuel tank and line				
(70, 73, 75 series)				
Fuel sender gauge set screw		15	13 in.-lb	1.5
Fuel tank suction tube set screw		15	13 in.-lb	1.5
Fuel tank front bracket x Body		400	29	39
Fuel tank front bracket x Fuel tank band	70, 73 series	400	29	39
Fuel tank rear bracket x Fuel tank band	75 series	400	29	39
Fuel tank band x Fuel tank stay	75 series sub tank	400	29	39
Fuel tank rear bracket x Body		400	29	39
Drain plug		65	56 in.-lb	6.4
(60, 62 series)				
Fuel sender gauge set screw		15	13 in.-lb	1.5
Fuel tank suction tube set screw		15	13 in.-lb	1.5
Fuel tank band x Body		375	27	37
Drain plug		65	56 in.-lb	6.4

WINCH

Mechanical Winch

Specifications

P.T.O.	Input gear bushing	STD	20.04 – 20.08 mm	0.7889 – 0.7905 in.
		Limit	20.1 mm	0.791 in.
	Input gear x Shaft oil clearance	STD	0.040 – 0.093 mm	0.0015 – 0.0036 in.
		Limit	0.10 mm	0.0039 in.
Drive shaft	Drive shaft runout	Limit	0.7 mm	0.028 in.
	Spider bearing axial play	STD	0.15 mm (0.0059 in.) or less	
	Snap ring thicknesses	Color		
		None	1.20 mm	0.0472 in.
		Brown	1.25 mm	0.0492 in.
		Blue	1.30 mm	0.0512 in.
Winch	End bracket bushing	STD	38.000 – 38.039 mm	1.4961 – 1.4976 in.
		Limit	38.4 mm	1.512 in.
	Drum bushing	STD	38.000 – 38.039 mm	1.4961 – 1.4976 in.
		Limit	38.4 mm	1.512 in.
	Gear case bushing	STD	38.000 – 38.025 mm	1.4961 – 1.4970 in.
		Limit	38.3 mm	1.508 in.
	Gear case cover bushing	STD	38.000 – 38.025 mm	1.4961 – 1.4970 in.
		Limit	38.3 mm	1.508 in.
	Clutch lever to lock plate clearance	STD	0.5 – 1.5 mm	0.020 – 0.059 in.

Torque Specifications

Part tightened		kg-cm	ft-lb	N·m
Chain wire	Lock plate x drum	120	9	12
P.T.O.	Bearing retainer x P.T.O. case	195	14	19
	P.T.O. cover x P.T.O. case	75	65 in.-lb	7.4
	Universal joint flange lock nut	480	35	47
	Locking ball bolt	130	9	13
	Idler shaft lock plate	130	9	13
	Input gear shaft lock plate	130	9	13
	P.T.O. x Transfer			
	Front side	170	12	17
	Other side	195	14	19
	P.T.O. shift rod x Link lever	200	14	20
Drive shaft	Drive shaft x Sleeve yoke	250	18	25
	Drive shaft x Universal joint	200	14	20
	x P.T.O. companion flange	200	14	20
	Pillow block	120	9	12
Winch	Worm bearing No.1 retainer	250	18	25
	Worm bearing No.2 retainer	250	18	25
	Gear case cover x Gear case	120	9	12
	Rear base member x Winch	250	18	25
	Winch roller bracket x Winch	250	18	25
	Winch roller bracket x Bracket support (60, 62 series)	380	27	37
	Winch assembly x Vehicle	See page WI-22		

Electric Winch Specifications

Winch	Gear case cover bushing				
	Motor side	STD	22.000 – 22.033 mm	0.8661 – 0.8674 in.	
		Limit	22.3 mm	0.878 in.	
	Case side	STD	14.000 – 14.027 mm	0.5512 – 0.5522 in.	
		Limit	14.2 mm	0.559 in.	
	Gear case bushing	STD	75.000 – 75.046 mm	2.9528 – 2.9546 in.	
		Limit	75.5 mm	2.972 in.	
	Drum housing bushing	STD	85.2 – 85.3 mm	3.354 – 3.358 in.	
		Limit	86.0 mm	3.386 in.	
	Clutch outer race bushing	STD	37.351 – 37.388 mm	1.4705 – 1.4720 in.	
		Limit	37.7 mm	1.484 in.	
	Brake shaft drive gear bushing				
	Drive gear side	STD	12.500 – 12.527 mm	0.4921 – 0.4932 in.	
		Limit	12.8 mm	0.504 in.	
	Other side	STD	22.000 – 22.033 mm	0.8661 – 0.8674 in.	
		Limit	22.3 mm	0.878 in.	
	Counter shaft gear bushing	STD	18.000 – 18.027 mm	0.7087 – 0.7097 in.	
		Limit	18.3 mm	0.720 in.	
	Clutch disc thickness				
	Outer disc	STD	1.45 – 1.65 mm	0.0571 – 0.0650 in.	
		Limit	1.0 mm	0.039 in.	
	Inner disc	STD	2.2 – 2.4 mm	0.087 – 0.094 in.	
		Limit	1.9 mm	0.075 in.	
	Disc spacer thickness	STD	2.4 – 2.7 mm	0.094 – 0.106 in.	
		Limit	2.0 mm	0.079 in.	
	Drum spacer thickness				
	No.1 and No.2	STD	1.88 – 2.12 mm	0.0740 – 0.0835 in.	
		Limit	1.2 mm	0.047 in.	
Motor	Commutator runout	Limit	0.2 mm (0.008 in.) or less		
	Commutator diameter	STD	43.0 mm	1.693 in.	
		Limit	41.0 mm	1.614 in.	
	Commutator mica depth	STD	0.7 mm	0.028 in.	
		Limit	0.3 mm	0.012 in.	
	Brush length	STD	22.0 mm	0.866 in.	
		Limit	15.0 mm	0.591 in.	
	Brush spring installed load	STD	3,200 – 4,000 g	7.1 – 8.8 lb	31 – 39 N
	Armature shaft thrust clearance	STD	0.05 – 0.50 mm	0.0020 – 0.0197 in.	
	Thrust washer thickness	STD	1.6 mm	0.063 in.	

Torque Specifications

Part tightened		kg-cm	ft-lb	N·m
Chain wire	Wire lock x Lock plate	195	14	19
Winch	Shift lever support x Gear case	195	14	19
	Gear case x Gear case cover	195	14	19
	Rear base member x Winch	380	27	37
	Winch roller bracket x Winch	700	51	69
	Motor x Winch	195	14	19
	Winch assembly x Vehicle	See page WI-44		
Motor	Commutator end frame x Yoke	78	68 in.-lb	7.6

LUBRICANT

Item	Capacity			Classification
	Liters	US qts	Imp. qts	
Manual transmission				
H41	3.5	3.7	3.1	API GL-4 or GL-5
H55F	4.9	5.2	4.3	SAE 90
Automatic transmission (A440F)				
Dry fill	15.0	15.9	13.2	ATF DEXRON® II
Drain and refill	5.0	5.3	4.4	
Transfer				
(H41, H55F)	2.2	2.3	1.9	API GL-4 or GL-5 SAE 90
(A440F)	2.1	2.2	1.8	
Differential oil				API GL-5 hypoid gear oil With LSD use LSD oil only.
Front	3.0	3.2	2.6	Above –18°C (0°F) SAE 90
Rear	2.5	2.6	2.2	Below –18°C (0°F) SAE 80W-90 or 80W
Brake fluid	–			SAE F1703, DOT3
Steering gear housing	630 cc	21.3 oz		API GL-4 SAE90
Power steering				ATF DEXRON® or DEXRON® II
Total	6_series	810 cc	27.4 oz	
	7_series	800 cc	27.1 oz	
Reservoir tank		390 cc	13.2 oz	
Power take-off	0.5	0.5	0.4	API GL-4 or GL-5 SAE 90
Mechanical winch	0.3	0.3	0.3	API GL-4 SAE 90
Electric winch	2.0	2.1	1.8	ATF type F

STANDARD BOLT TORQUE SPECIFICATIONS

Page

STANDARD BOLT TORQUE SPECIFICATIONS B-2

STANDARD BOLT TORQUE SPECIFICATIONS

HOW TO DETERMINE BOLT STRENGTH

	Mark	Class		Mark	Class
Hexagon head bolt	 Bolt head No. 4– 5– 6– 7–	4T 5T 6T 7T	Stud bolt	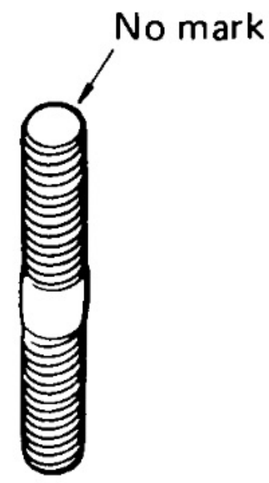 No mark	4T
	 No mark	4T			
Hexagon flange bolt w/washer hexagon bolt	 No mark	4T		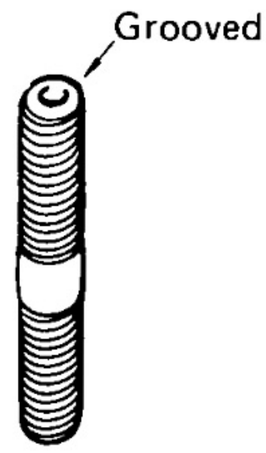 Grooved	6T
Hexagon head bolt	 Two protruding lines	5T			
Hexagon flange bolt w/washer hexagon bolt	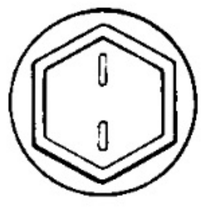 Two protruding lines	6T	Welded bolt	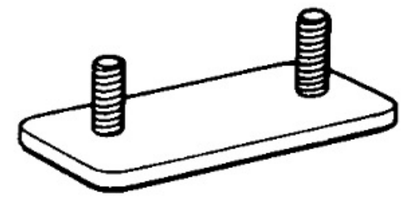	4T
Hexagon head bolt	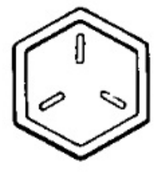 Three protruding lines	7T			

SPECIFIED TORQUE FOR STANDARD BOLTS

Class	Diameter mm	Pitch mm	Hexagon head bolt			Hexagon flange bolt		
			kg-cm	ft-lb	N·m	kg-cm	ft-lb	N·m
4T	6	1	55	48 in.-lb	5.4	60	52 in.-lb	5.9
	8	1.25	130	9	13	145	10	14
	10	1.25	260	19	25	290	21	28
	12	1.25	480	35	47	540	39	53
	14	1.5	760	55	75	850	61	83
	16	1.5	1,150	83	113		—	
5T	6	1	65	56 in.-lb	6.4		—	
	8	1.25	160	12	16		—	
	10	1.25	330	24	32		—	
	12	1.25	600	43	59		—	
	14	1.5	930	67	91		—	
	16	1.5	1,400	101	137		—	
6T	6	1	80	69 in.-lb	7.8	90	78 in.-lb	8.8
	8	1.25	195	14	19	215	16	21
	10	1.25	400	29	39	440	32	43
	12	1.25	730	53	72	810	59	79
	14	1.5		—		1,250	90	123
7T	6	1	110	8	11	120	9	12
	8	1.25	260	19	25	290	21	28
	10	1.25	530	38	52	590	43	58
	12	1.25	970	70	95	1,050	76	103
	14	1.5	1,500	108	147	1,700	123	167
	16	1.5	2,300	166	226		—	

SST AND SSM

	Page
SST (SPECIAL SERVICE TOOLS)	C-2
SSM (SPECIAL SERVICE MATERIALS)	C-7

SST (SPECIAL SERVICE TOOLS)

Section / Illustration • Part No. • Part Name	CL	MT	AT	TF	PR	FA	RA	BR	SR	BO	WI	AC
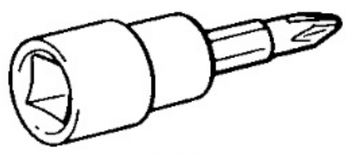 **09060-20010** (Socket Wrench)									●			
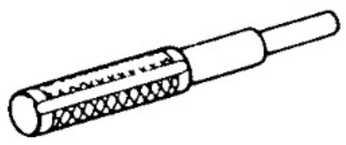 **09201-60011** (Valve Guide Bushing Remover & Replacer)				●								
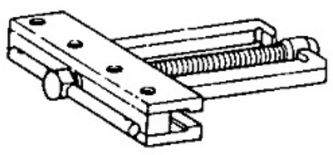 **09213-27010** (Gear Remover)		●										
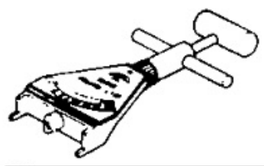 **09216-00020** (Belt Tension Gauge)									●			
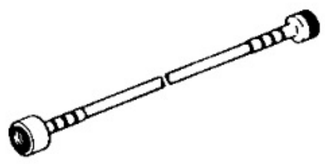 **09216-00030** (Belt Tension Cable)									●			
 **09236-00101** (Water Pump Overhaul Tool Set)									●			
 **09301-20020** (Clutch Guide Tool)	●											
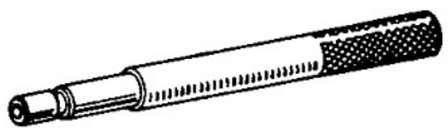 **09301-55022** (Clutch Guide Tool)	●											
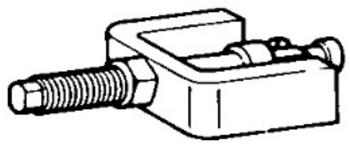 **09303-35011** (Input Shaft Front Bearing Puller)	●											
 **09304-30012** (Input Shaft Front Bearing Replacer)	●											
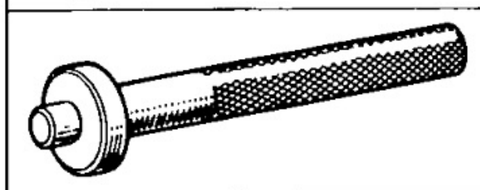 **09304-47010** (Input Shaft Front Bearing Replacer)		●										
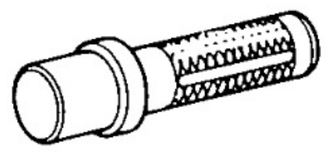 **09307-30010** (Transmission Extension Housing Metal Replacer)											●	
 **09308-00010** (Oil Seal Puller)						●	●		●			
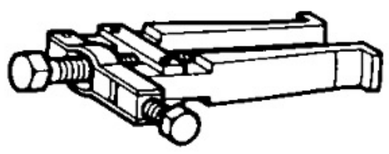 **09308-10010** (Oil Seal Puller)				●		●	●					

SST (SPECIAL SERVICE TOOLS)(Cont'd)

Illustration • Part No. • Part Name	CL	MT	AT	TF	PR	FA	RA	BR	SR	BO	WI	AC
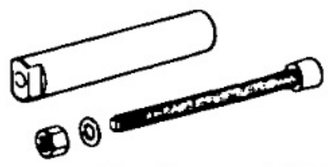 **09309-36033** (Transmission Bearing Replacer)		●		●								
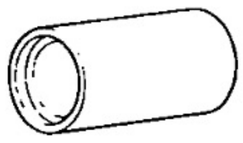 **09309-60010** (Extension Pipe)		●										
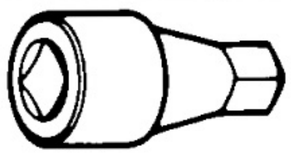 **09313-30021** (Detent Ball Plug Socket)		●										
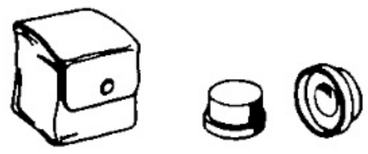 **09315-00021** (Clutch Release Bearing Remover & Replacer)	●											
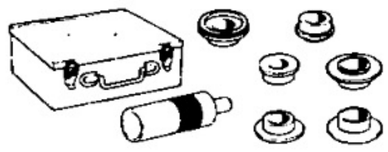 **09316-60010** (Transmission & Transfer Bearing Replacer)		●		●								
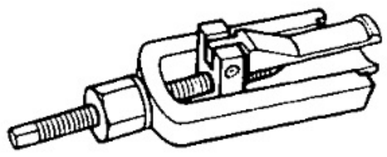 **09319-60020** (Transfer Output Shaft Needle Roller Bearing Remover)				●								
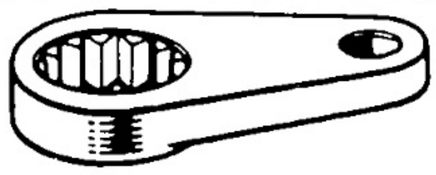 **09326-20011** (Output Shaft Bearing Lock Nut Wrench)		●										
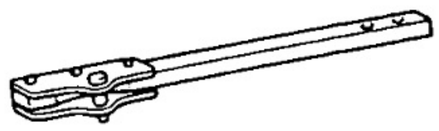 **09330-00021** (Companion Flange Holding Tool)				●			●				●	
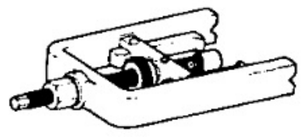 **09332-25010** (Universal Joint Bearing Remover & Replacer)					●							
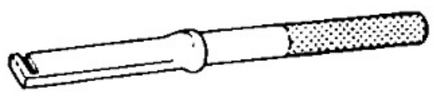 **09333-00012** (Clutch Diaphragm Spring Aligner)	●											
 **09504-00011** (Differential Side Bearing Adjusting Nut Wrench)							●					
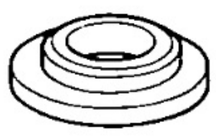 **09506-30011** (Differential Drive Pinion Rear Bearing Cone Replacer)							●					
 **09509-25011** (Rear Axle Bearing Nut Wrench)							●					
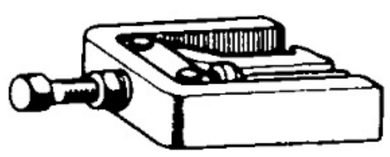 **09514-35011** (Rear Wheel Bearing Puller)				●			●					

SST (SPECIAL SERVICE TOOLS)(Cont'd)

Illustration • Part No. • Part Name / Section	CL	MT	AT	TF	PR	FA	RA	BR	SR	BO	WI	AC
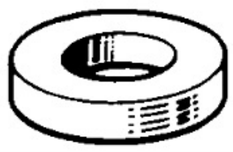 09515-21010 (Rear Axle Shaft Bearing Replacer)		●										
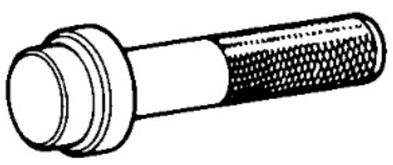 09517-36010 (Rear Axle Shaft Oil Seal Replacer)							●					
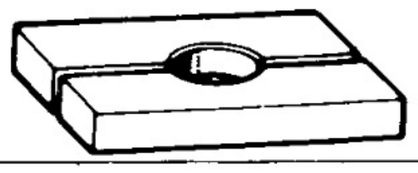 09527-20011 (Rear Axle Shaft Bearing Remover)									●		●	
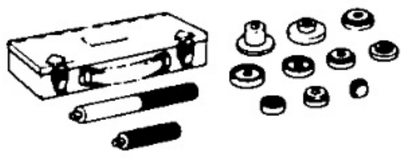 09550-10012 (B Replacer Set)							●		●			
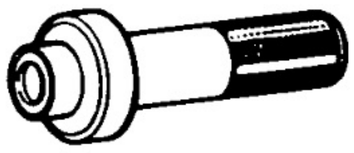 09554-30011 (Differential Oil Seal Replacer)						●	●					
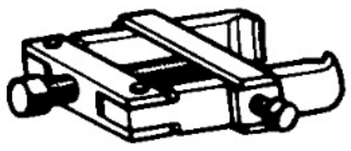 09556-30010 (Drive Pinion Front Bearing Remover)							●					
 09602-10010 (Front Axle Inner Bearing Puller)		●										
 09605-60010 (Steering Knuckle Bearing Cup Replacer)						●						
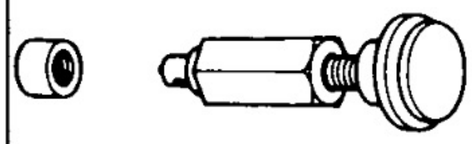 09606-60020 (Steering Knuckle Bearing Cup Remover)						●						
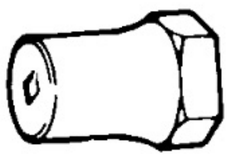 09607-60020 (Front Wheel Adjusting Nut Wrench)						●						
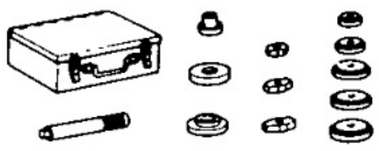 09608-20011 (Front Hub & Drive Pinion Bearing Tool Set)		●		●			●					
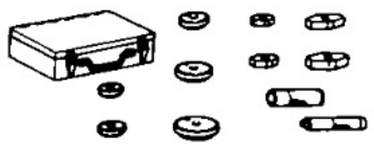 09608-30011 (Front Hub & Drive Pinion Bearing Tool Set)								●				
 09608-35013 (Axle Hub & Drive Pinion Bearing Tool Set)						●	●			●		
 09609-20011 (Steering Wheel Puller)									●			

SST (SPECIAL SERVICE TOOLS)(Cont'd)

Illustration • Part No. • Part Name / Section	CL	MT	AT	TF	PR	FA	RA	BR	SR	BO	WI	AC
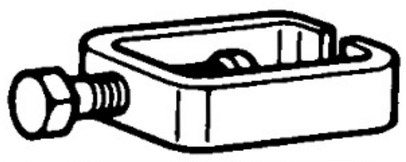 09611-22012 (Tie Rod End Puller)						●			●			
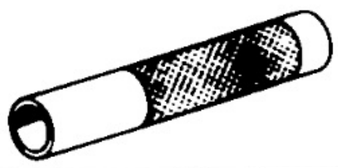 09612-22011 (Tilt Handle Bearing Replacer)									●		●	
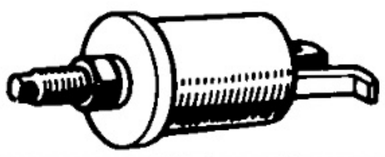 09612-30012 (Steering Worm Bearing Puller)	●							●				
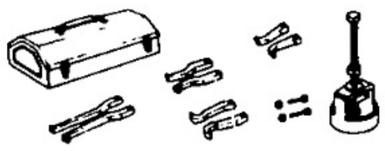 09612-65013 (Steering Worm Bearing Puller)						●			●		●	
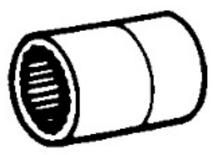 09616-00010 (Steering Worm Bearing Adjusting Socket)									●			
 09616-30020 (Steering Worm Bearing Adjusting Screw Wrench)									●			
 09617-60010 (Worm Bearing Adjusting Screw Lock Nut Wrench)									●			
 09618-60010 (Front Axle & Drive Shaft Bearing Replacer)						●						
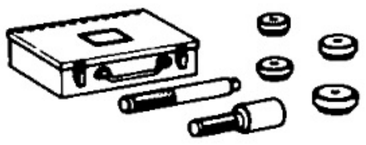 09620-30010 (Steering Gear Box Replacer Set)									●			
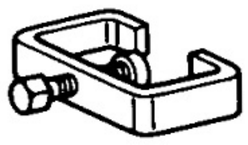 09628-12022 (Ball Joint Puller)									●			
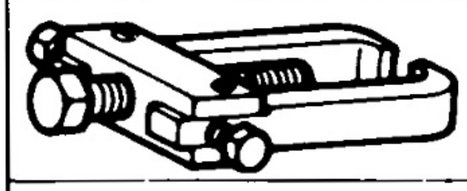 09628-62011 (Ball Joint Puller)									●			
 09630-00011 (Power Steering Gear Housing Overhaul Tool Set)	●								●			
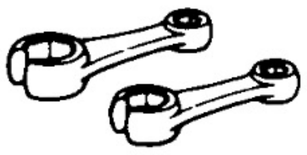 09631-22020 (Power Steering Hose Nut 14 x 17 Wrench)									●			
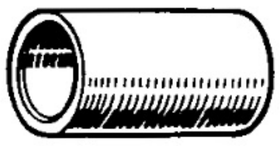 09632-36010 (Steering Vane Pump Bearing Replacer)									●		●	

SST (SPECIAL SERVICE TOOLS)(Cont'd)

Illustration • Part No. • Part Name / Section	CL	MT	AT	TF	PR	FA	RA	BR	SR	BO	WI	AC
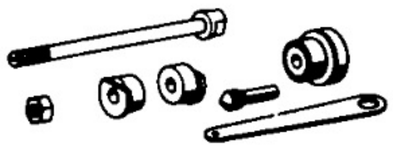 09634-60013 (Steering Knuckle Centering Gauge)						●						
 09703-30010 (Brake Shoe Return Spring Tool)								●				
 09709-29017 (LSPV Gauge Set)								●				
 09718-00010 (Shoe Hold Down Spring Driver)								●				
 09736-27010 (Booster Diaphragm Remover & Replacer)								●				
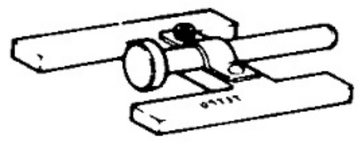 09737-00010 (Brake Booster Push Rod Gauge)	●							●				
 09751-36011 (Brake Tube Union Nut 10 x 12 Wrench)	●					●		●				
 09753-00012 (Brake Booster Overhaul Tool)	●							●				
 09753-30020 (Oil Seal Replacer)	●							●				
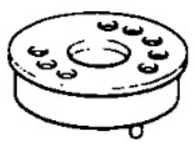 09753-40010 (Base Plate)								●				
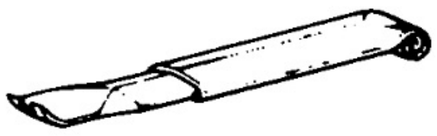 09806-30010 (Windshield Moulding Remover)										●		
 09812-00010 (Door Hinge Set Bolt Wrench Set)										●		
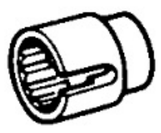 09817-16011 (Back-up Light Switch Tool)		●		●								
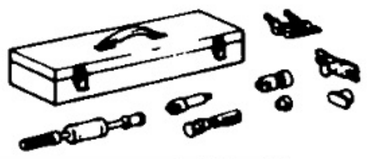 09910-00015 (Puller Set)		●										

SST (SPECIAL SERVICE TOOLS)(Cont'd)

Illustration • Part No. • Part Name	CL	MT	AT	TF	PR	FA	RA	BR	SR	BO	WI	AC
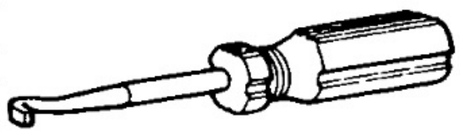 **09921-00010** (Spring Tension Tool)				●								
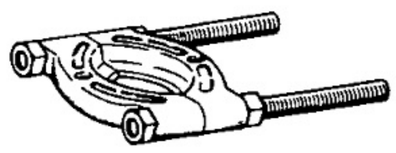 **09950-00020** (Bearing Remover)		●					●					
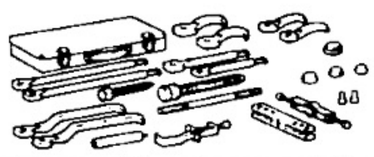 **09950-20016** (Universal Puller)		●		●			●		●		●	
 **09992-00093** (Oil Pressure Gauge Set)			●									

SSM (SPECIAL SERVICE MATERIALS)

Part Name	Part No.	Sec.	Use, etc.
THREE BOND 1324	08833-00070	WI SR	P.T.O. set bolt Upper bracket
Dupont paste No. 4817		BE	Rear window defogger wire
Weatherstrip Primer Weatherstrip Adhesive Butyl Tape Set	AP131 (Adhsion Promotor Union Carbide Corporation) 366ET (Cemedine) IMPON SEALANT (E.I. DU PONT DE NEMOURS) 08850-00065	BO	Windshield (Canada) Windshield (Canada) Side window
Seal Packing Yellow	08826-00012	WI	Mechanical Winch ○ Adjusting shim ○ Bearing retainer ○ Gear case cover and set bolt Electrical Winch ○ Gear case cover set bolt

ELECTRICAL WIRING DIAGRAMS

SYSTEM INDEX

LAND CRUISER (Heavy-Duty) 1985 Production Vehicles (Page 1 to Page 6)

SYSTEMS	LOCATION	SYSTEMS	LOCATION
Air Conditioner, Cooler and Heater	1-6, 2-2	Power Source	1-1, 6-1
Auto Antenna	5-7	Power Windows	4-4
Back-up Lights	3-8	Radio and Tape Player	5-8
Charging	1-2	Rear Air Conditioner	1-8, 2-5
Cigarette Lighter	5-7	Rear Fog Lights	5-6
Clock	5-6	Rear Window Defogger	3-5
Combination Meter	2-7,3-1,6-4	Rear Wiper and Washer	4-1
Door Locks	4-6	Seat Belt Warning	3-2
EDIC	6-2	Starting	1-1, 6-1
Emission Control	1-4	Stop Lights	4-7
Fog Lights	4-7	Sun Roof	4-2
Front Wiper and Washer	3-6	Taillights and Illumination	5-2
Glow Plugs	6-6	Trailer Socket	3-4
Headlights	5-4	Turn Signal and Hazard	3-3
Headlight Cleaner	3-8	Winch	4-1
Horn	3-5	4WD	3-2
Ignition	1-2		
Interior Lights	4-8		

LAND CRUISER (Heavy-Duty) ELECTRICAL WIRING DIAGRAM-1985 Production Vehicles (Page 1 to Page 6)

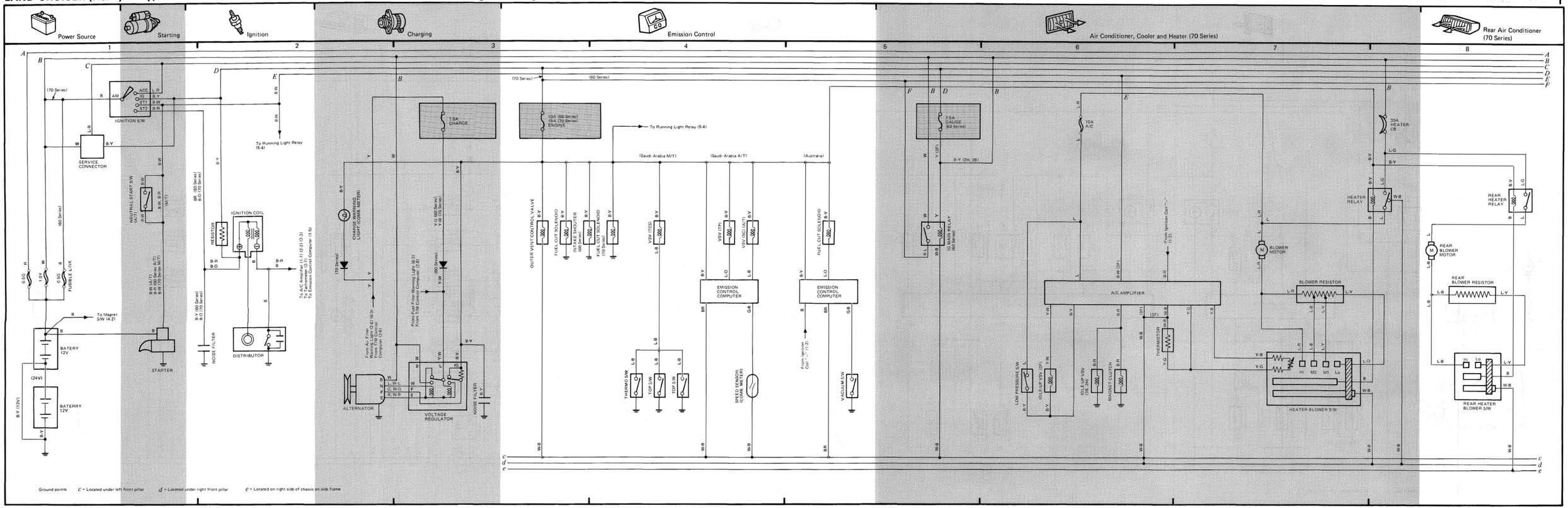

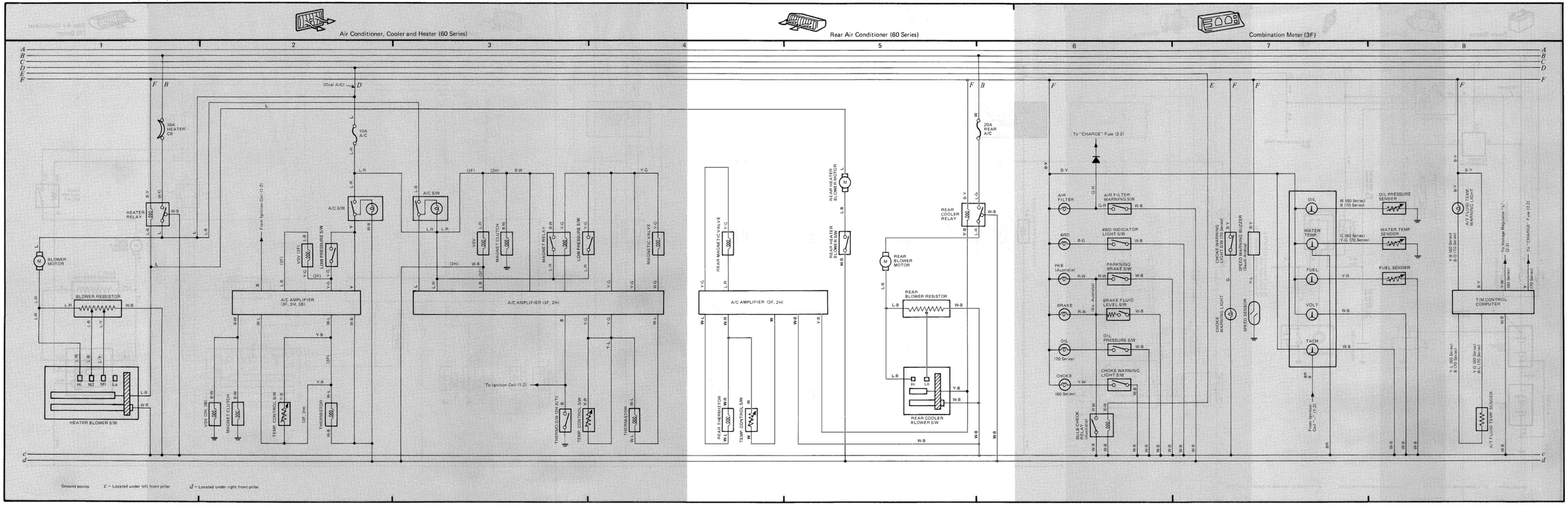
Air Conditioner, Cooler and Heater (60 Series)
Rear Air Conditioner (60 Series)
Combination Meter (3F)
1
2
3
4
5
6
7
8
A
B
C
D
E
F
30A HEATER CB
10A A/C
20A REAR A/C
HEATER RELAY
BLOWER MOTOR
BLOWER RESISTOR
HEATER BLOWER S/W
A/C S/W
A/C AMPLIFIER (3F, 2H, 3B)
A/C AMPLIFIER (3F, 2H)
VSV (2H, 3B)
MAGNET CLUTCH
TEMP. CONTROL S/W
THERMISTOR
LOW PRESSURE S/W
MAGNET RELAY
MAGNETIC VALVE
THERMO S/W (2H-A/T)
REAR MAGNETIC VALVE
REAR THERMISTOR
REAR HEATER BLOWER MOTOR
REAR HEATER BLOWER S/W
REAR COOLER RELAY
REAR BLOWER MOTOR
REAR BLOWER RESISTOR
REAR COOLER BLOWER S/W
To "CHARGE" Fuse (2-2)
AIR FILTER
4WD
PKB (Australia)
BRAKE
OIL (70 Series)
CHOKE (60 Series)
BULB CHECK RELAY (Australia)
AIR FILTER WARNING S/W
4WD INDICATOR LIGHT S/W
PARKING BRAKE S/W
BRAKE FLUID LEVEL S/W
OIL PRESSURE S/W
CHOKE WARNING LIGHT S/W
CHOKE WARNING LIGHT (60 Series)
SPEED SENSOR BUZZER (Saudi Arabia)
CHOKE WARNING LIGHT
SPEED SENSOR
OIL
WATER TEMP.
FUEL
VOLT
TACH
OIL PRESSURE SENDER
WATER TEMP. SENDER
FUEL SENDER
T/M CONTROL COMPUTER
A/T FLUID TEMP. WARNING LIGHT
A/T FLUID TEMP. SENDER
To Ignition Coil (1-2)
From Ignition Coil (1-2)
To Voltage Regulator "L" (60 Series)
To "CHARGE" Fuse (2-2) (70 Series)
Ground points C = Located under left front pillar d = Located under right front pillar

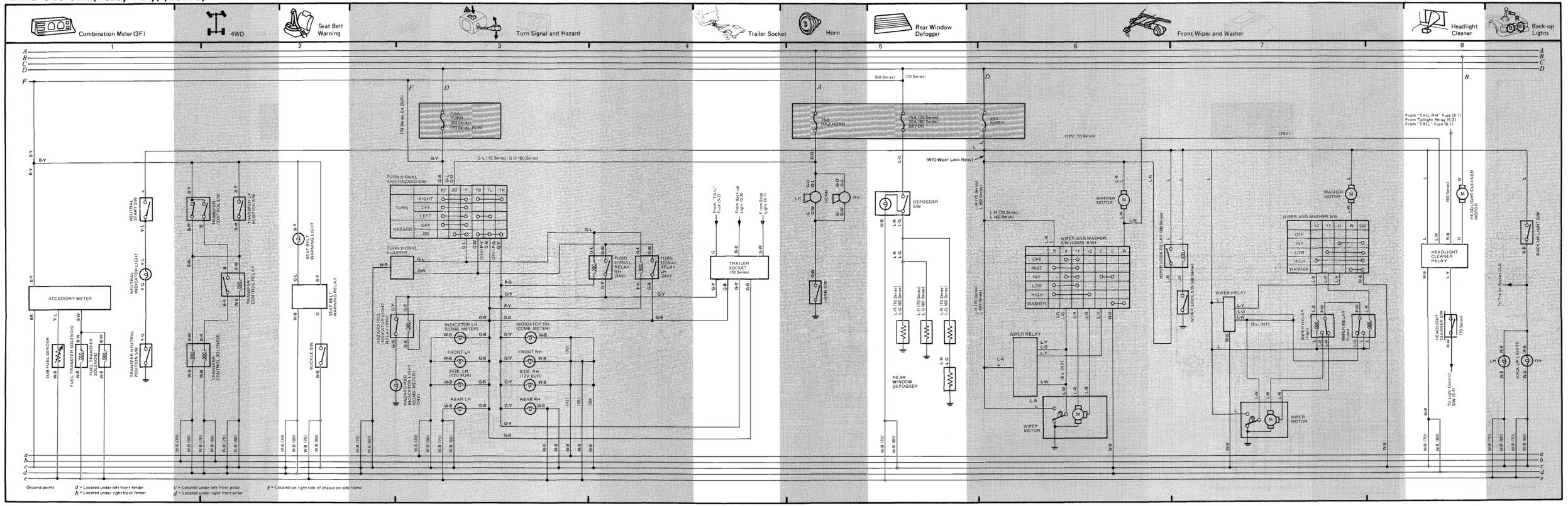
Combination Meter (3F)
4WD
Seat Belt Warning
Turn Signal and Hazard
Trailer Socket
Horn
Rear Window Defogger
Front Wiper and Washer
Headlight Cleaner
Back-up Lights
ACCESSORY METER
TURN SIGNAL AND HAZARD S/W
TURN SIGNAL FLASHER
TURN SIGNAL RELAY RH (24V)
TURN SIGNAL RELAY LH (24V)
TRAILER SOCKET (70 Series)
DEFOGGER S/W
REAR WINDOW DEFOGGER
WIPER AND WASHER S/W (COMB. S/W)
WIPER AND WASHER S/W
WIPER RELAY
WIPER MOTOR
WASHER MOTOR
HEADLIGHT CLEANER RELAY
HEADLIGHT CLEANER MOTOR
BACK-UP LIGHT S/W
BUCKLE S/W
SEAT BELT WARNING RELAY
SEAT BELT WARNING LIGHT
NEUTRAL START S/W
NEUTRAL INDICATOR LIGHT
TRANSFER NEUTRAL POSITION S/W
TRANSFER CONTROL S/W
TRANSFER CONTROL RELAY
TRANSFER CONTROL SOLENOID
SUB FUEL SENDER
FUEL TRANSFER SOLENOID
INDICATOR LH (COMB. METER)
INDICATOR RH (COMB. METER)
FRONT LH
FRONT RH
SIDE LH (12V EUR)
SIDE RH (12V EUR)
REAR LH
REAR RH
HAZARD RED INDICATOR LIGHT (COMB. METER) (24V)
HAZARD RED INDICATOR LIGHT (COMB. METER) (24V)
HORN S/W
HORN
WIPER LOCK RELAY (60 Series)
WIPER LOCK S/W (60 Series)
WIPER RELAY (Low)
WIPER RELAY (High)
WIPER RELAY (Ex. INT)
To Trailer Socket (3-4)
To Light Control S/W (5-4)
From "TAIL RH" Fuse (5-1)
From Taillight Relay (5-2)
From "TAIL" Fuse (5-1)
From Back-up Light (3-8)
From Stop Light (4-7)
(W/O Wiper Lock Relay)
(12V, 70 Series)
(24V)
(60 Series)
(70 Series)
Ground points
a = Located under left front fender
b = Located under right front fender
c = Located under left front pillar
d = Located under right front pillar
e = Located on right side of chassis on side frame

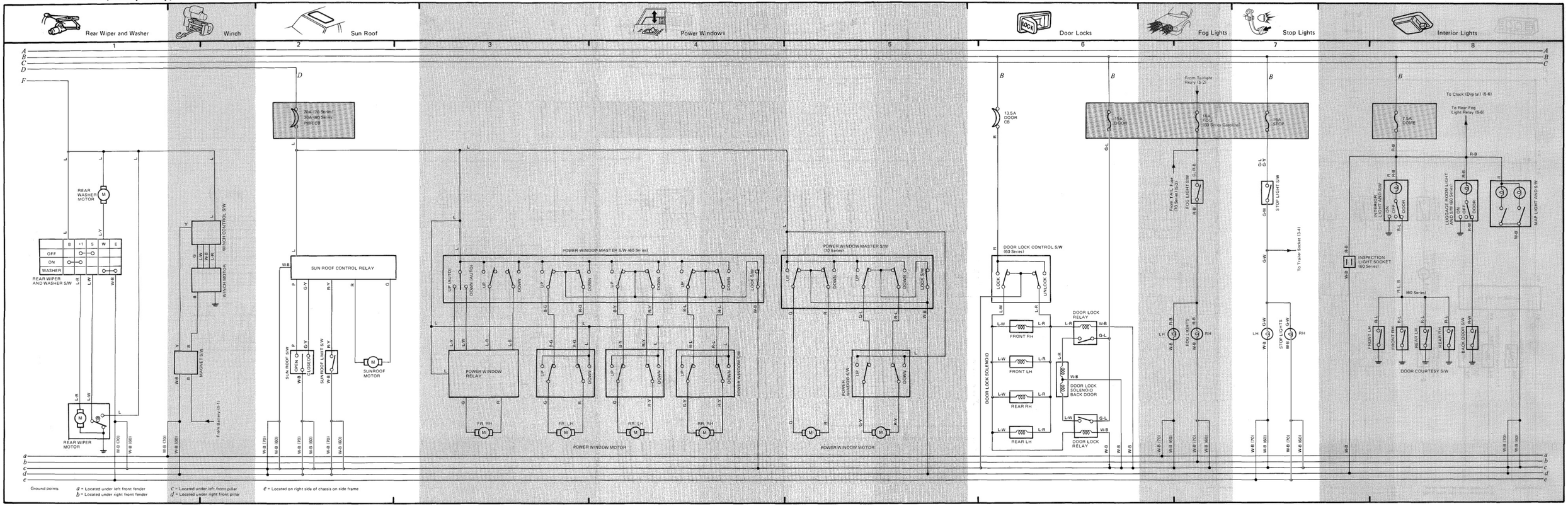
Rear Wiper and Washer
Winch
Sun Roof
Power Windows
Door Locks
Fog Lights
Stop Lights
Interior Lights
1
2
3
4
5
6
7
8
REAR WASHER MOTOR
REAR WIPER AND WASHER S/W
OFF
ON
WASHER
REAR WIPER MOTOR
WINCH CONTROL S/W
WINCH MOTOR
MAGNET S/W
From Battery (+)
20A (70 Series)
30A (60 Series)
PWR CB
SUN ROOF CONTROL RELAY
SUN ROOF S/W
OPEN
CLOSE
SUNROOF LIMIT S/W
SUNROOF MOTOR
POWER WINDOW MASTER S/W (60 Series)
POWER WINDOW MASTER S/W (70 Series)
UP (AUTO)
DOWN (AUTO)
UP
DOWN
LOCK S/W
POWER WINDOW RELAY
POWER WINDOW S/W
FR RH
FR LH
RR RH
RR LH
POWER WINDOW MOTOR
13.5A DOOR CB
DOOR LOCK CONTROL S/W (60 Series)
LOCK
UNLOCK
DOOR LOCK SOLENOID
FRONT RH
FRONT LH
REAR RH
REAR LH
DOOR LOCK RELAY
DOOR LOCK SOLENOID BACK DOOR
From Taillight Relay (5-2)
Front TAIL (For (70 Series) (5-2))
FOG LIGHT S/W
FOG LIGHTS
STOP LIGHT S/W
STOP LIGHTS
To Trailer Socket (3-4)
To Clock (Digital) (5-6)
To Rear Fog Light Relay (5-6)
7.5A DOME
INTERIOR LIGHT (60) S/W
LUGGAGE ROOM LIGHT (60) S/W
MAP LIGHT AND S/W
INSPECTION LIGHT SOCKET (60 Series)
(60 Series)
DOOR COURTESY S/W
Ground points
a = Located under left front fender
b = Located under right front fender
c = Located under left front pillar
d = Located under right front pillar
e = Located on right side of chassis on side frame

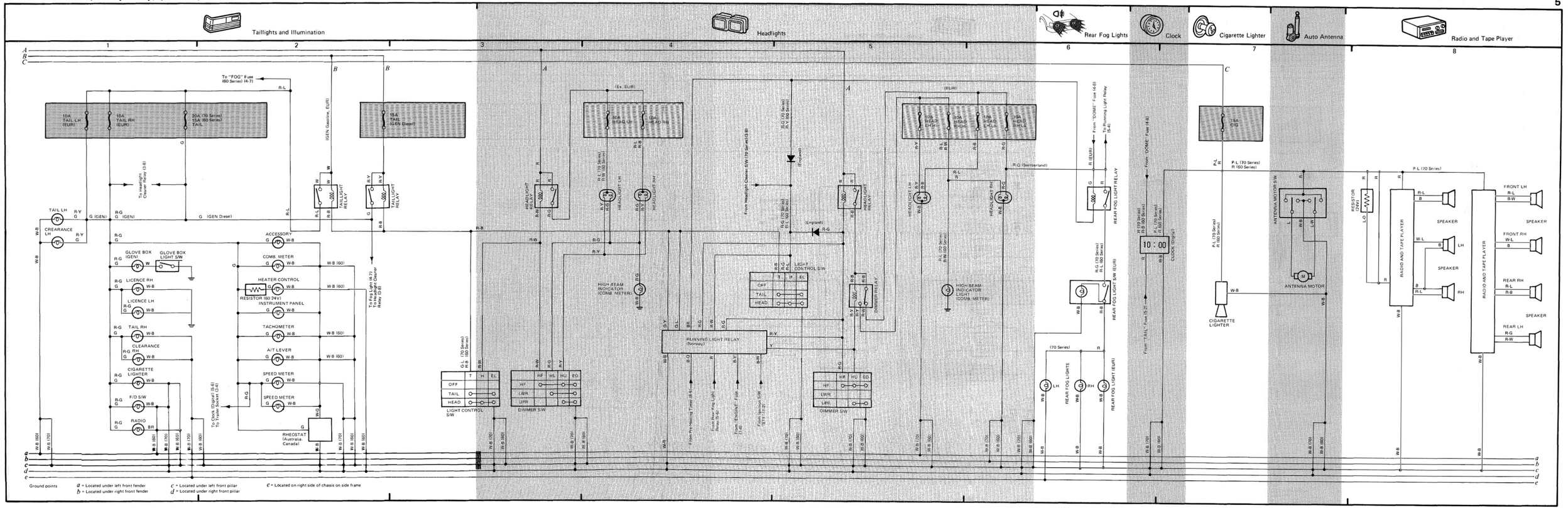
Taillights and Illumination
Headlights
Rear Fog Lights
Clock
Cigarette Lighter
Auto Antenna
Radio and Tape Player
1
2
3
4
5
6
7
8
To "FOG" Fuse (60 Series) (4-7)
10A TAIL LH (EUR)
10A TAIL RH (EUR)
20A (70 Series) 15A (60 Series) TAIL
15A TAIL (GEN Diesel)
10A HEAD LH
10A HEAD RH
10A HEAD LH-Hi
10A HEAD RH-Hi
10A HEAD LH-Lo
10A HEAD RH-Lo
15A CIG
TAIL LH
CREARANCE LH
GLOVE BOX (GEN)
GLOVE BOX LIGHT S/W
LICENCE RH
LICENCE LH
TAIL RH
CLEARANCE RH
CIGARETTE LIGHTER
F/D S/W
RADIO
ACCESSORY
COMB. METER
HEATER CONTROL
RESISTOR (60 24V)
INSTRUMENT PANEL
TACHOMETER
A/T LEVER
SPEED METER
RHEOSTAT (Australia-Canada)
TAILLIGHT RELAY
HEADLIGHT RELAY
HIGH BEAM INDICATOR (COMB. METER)
LIGHT CONTROL S/W
DIMMER RELAY
RUNNING LIGHT RELAY (Norway)
DIMMER S/W
REAR FOG LIGHT RELAY
REAR FOG LIGHTS
REAR FOG LIGHT (EUR)
REAR FOG LIGHT S/W (EUR)
CLOCK (Digital)
CIGARETTE LIGHTER
ANTENNA MOTOR S/W
ANTENNA MOTOR
RESISTOR (24V)
RADIO AND TAPE PLAYER
SPEAKER
FRONT LH
FRONT RH
REAR RH
REAR LH
Ground points
a = Located under left front fender
b = Located under right front fender
c = Located under left front pillar
d = Located under right front pillar
e = Located on right side of chassis on side frame

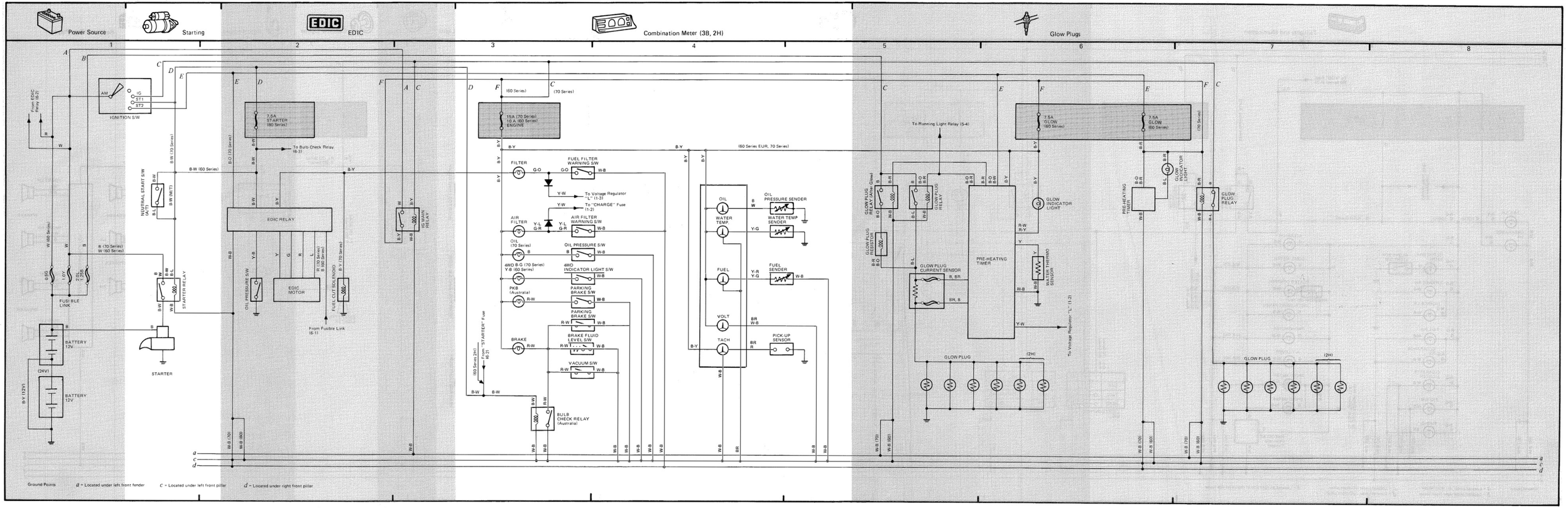
Power Source
Starting
EDIC
EDIC
Combination Meter (3B, 2H)
Glow Plugs
IGNITION S/W
AM
IG
ST1
ST2
From EDIC Relay (6-2)
7.5A STARTER (80 Series)
To Bulb Check Relay (6-3)
INHIBITOR S/W (A/T)
NEUTRAL START S/W (M/T)
EDIC RELAY
EDIC MOTOR
OIL PRESSURE S/W
FUEL CUT SOLENOID
From Fusible Link (6-1)
STARTER RELAY
FUSIBLE LINK
BATTERY 12V
(24V)
STARTER
GLOW RELAY
15A (70 Series) 10 A (80 Series) ENGINE
(60 Series)
(70 Series)
(60 Series EUR, 70 Series)
FILTER
FUEL FILTER WARNING S/W
To Voltage Regulator "L" (1-3)
To "CHARGE" Fuse (1-2)
AIR FILTER
AIR FILTER WARNING S/W
OIL (70 Series)
OIL PRESSURE S/W
4WD IND. LIGHT (60 Series)
4WD INDICATOR LIGHT S/W
PKB (Australia)
PARKING BRAKE S/W
BRAKE
BRAKE FLUID LEVEL S/W
VACUUM S/W
From "STARTER" Fuse (6-2)
BULB CHECK RELAY (Australia)
OIL PRESSURE SENDER
WATER TEMP.
WATER TEMP SENDER
FUEL
FUEL SENDER
VOLT
TACH
PICK-UP SENSOR
To Running Light Relay (5-4)
7.5A GLOW (60 Series)
GLOW PLUG RELAY (Main)
GLOW PLUG RELAY
GLOW PLUG RESISTOR
GLOW PLUG CURRENT SENSOR
PRE-HEATING TIMER
GLOW INDICATOR LIGHT
WATER THERMO SENSOR
To Voltage Regulator "L" (1-2)
GLOW PLUG
(2H)
GLOW INDICATOR LIGHT
GLOW PLUG RELAY
Ground Points
a = Located under left front fender
c = Located under left front pillar
d = Located under right front pillar